2012-2017 TOYOTA CAMRY SERVICE AND REPAIR MANUAL

TEXAS
DH4 S686

GENERAL INFORMATION

Commonly Used Abbreviations

* PLEASE READ THIS FIRST *

NOTE: This article is intended for general information purposes only. This information may not apply to all makes and models. Not all abbreviations are covered as manufacturers add new ones every day.

"A"

A

Amperes

ABS

Anti-Lock Brakes

ABRS

Air Bag Restraint System

AC

Alternating Current

A/C

Air Conditioning

ACCS

A/C Cycling Switch

ACCUM

Accumulator

ACCY

Accessory

ACT

Air Charge Temperature Sensor

ADJ

Adjust or Adjustable

ADV

Advance

AFS

Airflow Sensor

AI

Air Injection

AIR or A.I.R.

Air Injection Reactor

AIS

Air Injection System

Alt.

Alternator or Altitude

Amp./amp/amps

Ampere

ASCS

Air Suction Control Solenoid

ASD

Auto Shutdown

ASDM

Air Bag System Diagnostic Module

ASV

Air Suction Valve

A/T

Automatic Transmission/Transaxle

ATC

Automatic Temperature Control

ATDC

After Top Dead Center

ATF

Automatic Transmission Fluid

ATS

Air Temperature Sensor

Aux.

Auxiliary

Avg.

Average

AXOD

Automatic Transaxle Overdrive (Ford Models Only)

"B"

BAC

By-Pass Air Control

BAP

Barometric Absolute Pressure Sensor

BARO

Barometric

Batt.

Battery

Bbl.

Barrel (Example: 4-Bbl.)

BCM

Body Control Module

BHP

Brake Horsepower

BMAP

Barometric and Manifold Absolute Pressure Sensor

BOO

Brake On-Off Switch

B/P

Backpressure

BPS

Barometric Pressure Sensor

BPT

Backpressure Transducer

BTDC

Before Top Dead Center

BTSI

Brake Transmission Shift Interlock

BTU

British Thermal Unit

BVSV

Bimetallic Vacuum Switching Valve

"C"

° C

Celsius (Degrees)

Calif.

California

CANP

Canister Purge

CARB

California Air Resources Board

CAT

Catalytic Converter

CB

Circuit Breaker

CBD

Closed Bowl Distributor

cc

cubic centimeter

CCC

Close Coupled Catalyst

CCC

Computer Command Control

CCD

Computer Controlled Dwell

CCOT

Cycling Clutch Orifice Tube

CCW

Counterclockwise

CDI

Capacitor Discharge Ignition

CEC

Computerized Engine Control

CID

Cubic Inch Displacement

cm

Centimeter

CMP

Camshaft Position Sensor

CO

Carbon Monoxide

CO_2

Carbon Dioxide

Cont.

Continued

CONV

Convertible

CP

Canister Purge

CKP

Crankshaft Position Sensor

CTS

Coolant Temperature Sensor

Cu. In.

Cubic Inch

CVC

Constant Vacuum Control

CV

Check Valve or Constant Velocity

CW

Clockwise

CYL or Cyl.

Cylinder

C^3 I

Computer Controlled Coil Ignition

C^4

Computer Controlled Catalytic Converter

"D"

"D"

Drive

DC

Direct Current Or Discharge

DDD

Dual Diaphragm Distributor

Def.

Defrost

Defog.

Defogger

DERM

Diagnostic Energy Reserve Module

DFI

Digital Fuel Injection

Diag.

Diagnostic

DTC

Diagnostic Trouble Code

DIC

Driver Information Center

DIS

Distributorless Ignition System

DIST

Distribution

DLC

Data Link Connector

DOC

Diesel Oxidation Catalyst

DOHC

Double Overhead Cam

DOT

Department of Transportation

DPF

Diesel Particulate Filter

DRB-II

Diagnostic Readout Box

DVOM

Digital Volt-Ohmmeter

"E"

EACV

Electric Air Control Valve

EATX

Electronic Automatic Transaxle

EBCM

Electronic Brake Control Module

EBL

Electronic Back Light

ECM

Engine Control Module

ECT

Engine Coolant Temperature Sensor

EDIS

Electronic Distributorless Ignition System

EEC

Electronic Engine Control

EECS

Evaporative Emission Control System

EEPROM

Electronically Erasable PROM

EFE

Early Fuel Evaporation

EGO

Exhaust Gas Oxygen Sensor

EGR

Exhaust Gas Recirculation

EOT

Engine Oil Temperature

ESA

Electronic Spark Advance

ESC

Electronic Spark Control

EST

Electronic Spark Timing

EVAP

Fuel Evaporative System

EVIC

Electronic Vehicle Information Center

EVP

EGR Valve Position Sensor

EWMA

Exponentially Weighted Moving Average (MODE 6)

Exc.

Except

"F"

° F

Fahrenheit (Degrees)

F/B

Fuse Block

Fed.

Federal

FI

Fuel Injection

FICU

Fuel Injection Control Unit

FIPL

Fuel Injector Pump Lever

FLI

Fuel Level Indicator

FPR-VSV

Fuel Pressure Regulator Vacuum Switching Valve

Ft. Lbs.

Foot Pounds

FWD

Front Wheel Drive

"G"

g

grams

Gals.

gallons

GND or GRND

Ground

"H"

HAC

High Altitude Compensation

HC

Hydrocarbons

H/D

Heavy Duty

HO2S

Heated Exhaust Gas Oxygen Sensor

Hg

Mercury

Hgt.

Height

HLDT

Headlight

HO

High Output

HO2S

Heated Oxygen Sensor

HP

High Performance

HSC

High Swirl Combustion

HSO

High Specific Output

HTR

Heater

Hz

Hertz (Cycles Per Second)

"I"

IAC

Idle Air Control

IACV

Idle Air Control Valve

IAT

Intake Air Temperature

IC

Integrated Circuit

ID

Identification

I.D.

Inside Diameter

IFS

Independant Front Suspension

IFS

Inertia Fuel Shutoff (Ford)

Ign.

Ignition

IMRC

Intake Manifold Runner Control

In.

Inches

INCH Lbs.

Inch Pounds

in. Hg

Inches of Mercury

Inj.

Injector

IP

Instrument Panel

IRS

Independant Rear Suspension

ISC

Idle Speed Control

IVD

Interactive Vehicle Dynamics (Ford)

IVSV

Idle Vacuum Switching Valve

"J"

J/B

Junction Block

"K"

KAPWR

Keep Alive Power

k/ohms

kilo-ohms (1000 ohms)

kg

Kilograms (weight)

kg/cm^2

Kilograms Per Square Centimeter

KM/H

Kilometers Per Hour

KOEO

Key On, Engine Off

KOER

Key On, Engine Running

KS

Knock Sensor

kW

Kilowatt

kV

Kilovolt

"L"

L

Liter

lbs. (Lbs. when used in table)

Pounds

LCD

Liquid Crystal Display

L/D

Light Duty

LDP

Leak Detection Pump (Part of EVAP system.)

LED

Light Emitting Diode

LH

Left Hand

"M"

mA

Milliamps

MA or MAF

Mass Airflow

MAFS

Mass Airflow Sensor

MAP

Manifold Absolute Pressure

MAT

Manifold Air Temperature

Mem.

Memory

MEM-CAL

Memory Calibration Chip

mfd.

Microfarads

MFI

Multiport Fuel Injection

MICU

Multiplex Integrated Control Unit (Acura/Honda)

MIL

Malfunction Indicator Light

MPI

Multi-Point (Fuel) Injection

mm

Millimeters

MPH

Miles Per Hour

mV

Millivolts

"N"

NA

Not Available

NAC

NOx Adsorber Catalyst

NCA

No Color Available (Wiring Diagrams)

NGS

New Generation Star

N.m

Newton Meter

No.

Number

Nos.

Numbers

NOx

Oxides of Nitrogen

"O"

O_2

Oxygen

OBD

On-Board Diagnostics

OC

Oxidation Catalyst

OD

Overdrive

O.D.

Outside Diameter

OHC

Overhead Camshaft

OSS

Output Speed Sensor

O/S

Oversize

oz.

Ounce

ozs.

Ounces

"P"

"P"

Park

P/C

Printed Circuit

PCM

Powertrain Control Module

PCS

Purge Control Solenoid

PC-SOL

Purge Control Solenoid

PCV

Positive Crankcase Ventilation

PFI

Port Fuel Injection

PGM-FI

Programmed Fuel Injection

PID

Parameter Identification

PIP

Profile Ignition Pick-up

PNP

Park Neutral Position Switch

P/N

Park/Neutral

PRNDL

Park Reverse Neutral Drive Low

PROM

Programmable Read-Only Memory

psi

Pounds Per Square Inch

P/S

Power Steering

PSPS

Power Steering Pressure Switch

PTC

Positive Temperature Coefficient

PTO

Power Take-Off

Pts.

Pints

Pwr.

Power

"Q"

Qts.

Quarts

"R"

RABS

Rear Anti-Lock Brake System

RECIRC

Recirculation

RH

Right Hand

RPM

Revolutions Per Minute

RWAL

Rear Wheel Anti-Lock Brake

RWD

Rear Wheel Drive

"S"

SAS

Steering Angle Sensor

SBC

Single Bed Converter

SBEC

Single Board Engine Controller

SDARS

Satellite Digital Audio Radio Service

SES

Service Engine Soon

SFI

Sequential (Port) Fuel Injection

SIL

Shift Indicator Light

SIR

Supplemental Inflatable Restraint

SOHC

Single Overhead Cam

SOL or Sol.

Solenoid

SPFI

Sequential Port Fuel Injection

SPK

Spark Control

SPOUT

Spark Output

SRI

Service Reminder Indicator

SRS

Supplemental Restraint System (Air Bag)

STAR

Self-Test Automatic Readout

STO

Self-Test Output

SUB-O_2

Sub Oxygen Sensor

Sw.

Switch

Sys.

System

"T"

TAB

Thermactor Air By-Pass

TAC

Throttle Actuator Module

TAD

Thermactor Air Diverter

TBC

Body Control Module (General Motors)

TBI

Throttle Body Injection

TCC

Torque Converter Clutch

TDC

Top Dead Center

Temp.

Temperature

TFI

Thick Film Ignition

THERMAC

Thermostatic Air Cleaner

TPM

Tire Pressure Monitor

TPMS

Tire Pressure Monitor System

TPS

Throttle Position Sensor/Switch

TS

Temperature Sensor

TV

Thermovalve

TWC

Three-Way Catalyst

"V"

V

Valve

Vac.

Vacuum

VAF

Vane Airflow

VAPS

Variable Assist Power Steering

VCC

Viscous Converter Clutch

VCRM

Variable Control Relay Module

VIN

Vehicle Identification Number

VM

Vacuum Modulator

Volt.

Voltage

VOM

Volt-Ohmmeter (Analog)

VRV

Vacuum Regulator Valve

VSS

Vehicle Speed Sensor

VSV

Vacuum Switching Valve

"W"

W/

With

W/O

Without

WAC

Wide Open Throttle A/C Switch

WOT

Wide Open Throttle

REFRIGERANT

ON-VEHICLE INSPECTION

ON-VEHICLE INSPECTION

1. **INSPECT REFRIGERANT PRESSURE WITH MANIFOLD GAUGE SET**

   HINT:

   The following examples show the readings of a manifold gauge set and the corresponding air conditioning system problems.

   a. Read the manifold gauge pressure when the following conditions are met:
      - Doors are fully open.
      - The power switch is on (READY).
      - The A/C switch is on.
      - The temperature is set to max cool.
      - The blower speed is set to high.
      - Temperature at the air inlet with recirculate selected is 30 to 35°C (86 to 95°F).
      1. Normally functioning air conditioning system.

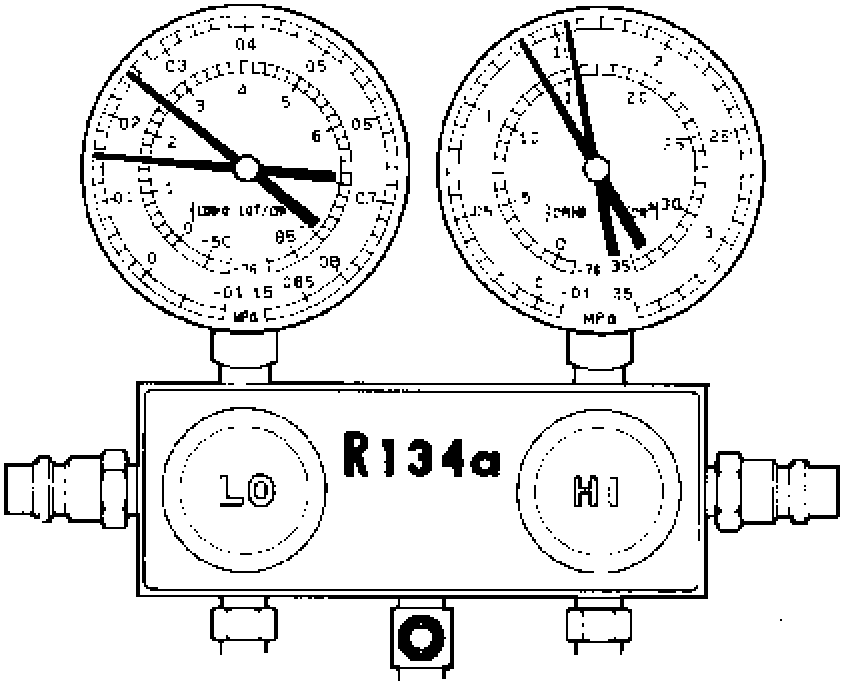

E50573

Fig. 1: Checking A/C Refrigeration Pressure
Courtesy of TOYOTA MOTOR SALES, U.S.A., INC.

GAUGE READING

Pressure Side	Refrigerant Volume
Low	0.15 to 0.25 MPa (1.5 to 2.5 kgf/cm^2 , 21 to 36 psi)
High	1.37 to 1.57 MPa (14 to 16 kgf/cm^2 , 199 to 228 psi)

2. Abnormally functioning air conditioning system.
   a. During operation, pressure on low pressure side cycles between normal and vacuum

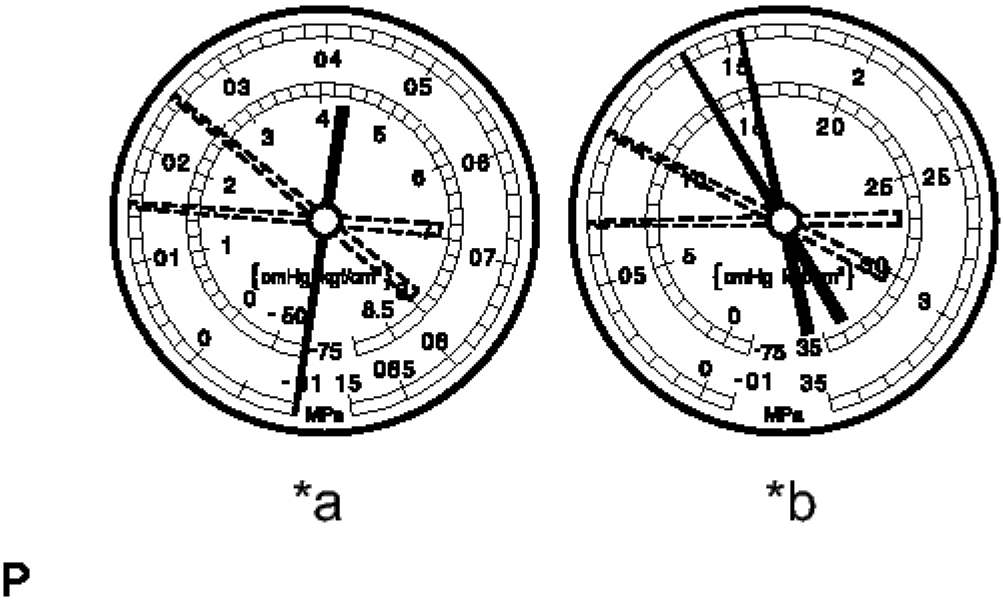

Fig. 2: Identifying LO & HI Pressures
Courtesy of TOYOTA MOTOR SALES, U.S.A., INC.

	Air conditioning system

Symptom	periodically cools and then fails to cool.
Probable Cause	Moisture in air conditioning system freezes at expansion valve orifice, causing refrigerant to temporarily stop circulating
	After system stops, and warms up again, ice melts and normal operation is temporarily restored
Diagnosis	Cooler dryer (integrated into condenser tank) saturated with moisture
	Moisture in air conditioning system freezes at expansion valve orifice and blocks circulation of

	refrigerant
Corrective Actions	Replace cooler dryer
	Remove moisture by repeatedly evacuating air from air conditioning system
	Recharge air conditioning system with proper amount of new or purified refrigerant

TEXT IN ILLUSTRATION

*a	LO
*b	HI

HINT:

For the example above, moisture is present in the air conditioning system.

b. Pressure is low on both low and high pressure sides

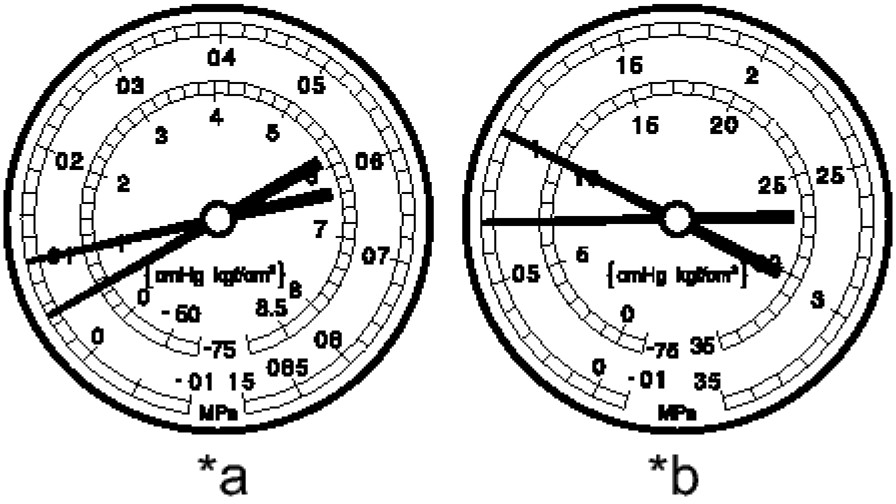

P

Fig. 3: Identifying Low Pressure Reading On LO & HI Pressure Sides
Courtesy of TOYOTA MOTOR SALES, U.S.A., INC.

Symptom	Air conditioning system does not cool effectively. Insufficient cooling performance
Probable Cause	Refrigerant leaks from air conditioning system
Diagnosis	Insufficient refrigerant Refrigerant leaking
	Check for refrigerant leaks and repair if necessary Recharge

Corrective Actions	air conditioning system with proper amount of new or purified refrigerant
	If gauges indicate pressure of close to 0, then it is necessary to evacuate air conditioning system after repairing leak

TEXT IN ILLUSTRATION

*a	LO
*b	HI

HINT:

For the example above, there is insufficient refrigerant.

c. Pressure is low on both low and high pressure sides

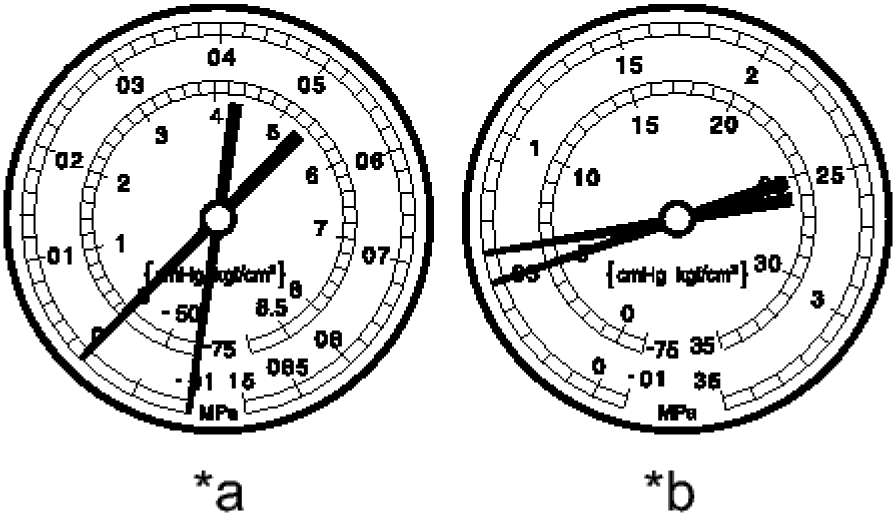

P

Fig. 4: Identifying Poor Refrigerant Circulation
Courtesy of TOYOTA MOTOR SALES, U.S.A., INC.

Symptom	Air conditioning system does not cool effectively.
	Frost exists on pipe from condenser to evaporator unit
Probable Cause	Refrigerant flow is obstructed by dirt inside pipes of condenser core
Diagnosis	Condenser is clogged
Corrective Actions	Replace condenser

TEXT IN ILLUSTRATION

*a	LO
*b	HI

HINT:

For the example above, there is poor circulation of refrigerant

d. Vacuum is indicated on low pressure side and very low pressure is indicated on high pressure side

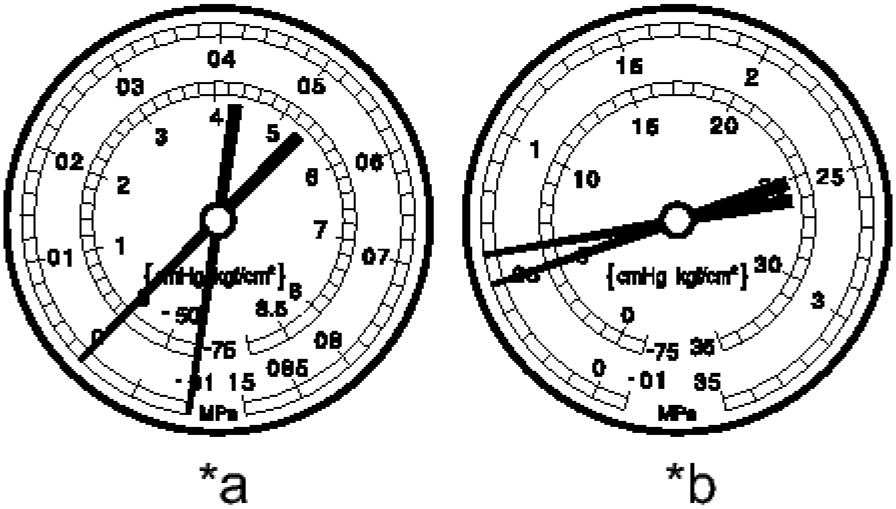

P

Fig. 5: Identifying No Refrigerant Circulation
Courtesy of TOYOTA MOTOR SALES, U.S.A., INC.

Symptom	Air conditioning system does not cool effectively. (System may cool occasionally)
	Frost or condensation is seen on piping on both sides of

	receiver/dryer or expansion valve
Probable Cause	Refrigerant flow is obstructed by moisture or dirt in air conditioning system
	Expansion valve is stuck closed
Diagnosis	Refrigerant does not circulate
Corrective Actions	Replace expansion valve
	Replace condenser
	Evacuate air conditioning system and supply proper amount of new or purified refrigerant

TEXT IN ILLUSTRATION

*a	LO
*b	HI

HINT:

For the example above, the refrigerant does not circulate.

e. Pressure is too high on both low and high pressure sides

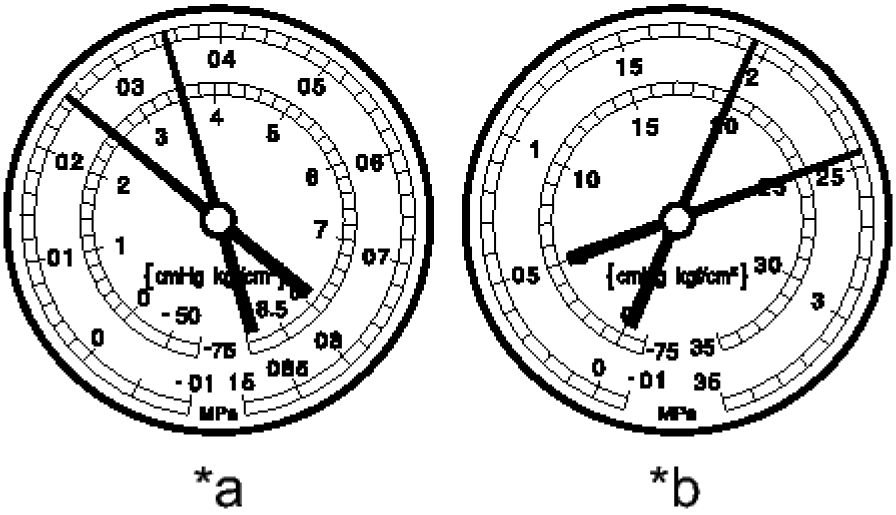

P

Fig. 6: Identifying Overcharged System
Courtesy of TOYOTA MOTOR SALES, U.S.A., INC.

Symptom	Air conditioning system does not cool effectively.
Probable Cause	Unable to develop sufficient performance due to excessive amount of refrigerant
	Cooling effectiveness of condenser is insufficient
	Excessive amount of refrigerant in air conditioning system -->

Diagnosis	excessive refrigerant was added during recharging Cooling effectiveness of condenser is insufficient --> condenser fins are clogged or cooling fan is faulty
Corrective Actions	Clean condenser Check operation of condenser cooling fan If above two corrective actions are normal, check amount of refrigerant and recharge air conditioning system with proper amount of new or purified refrigerant

TEXT IN ILLUSTRATION

*a	LO
*b	HI

HINT:

For the example above, the air conditioning system is overcharged or cooling effectiveness of condenser is insufficient.

f. Pressure is too high on both low and high pressure sides

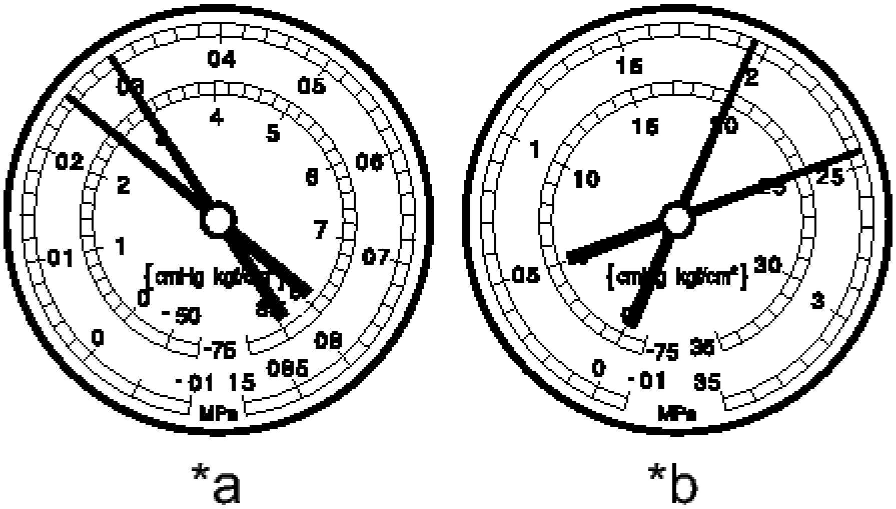

P

Fig. 7: Identifying Air In The System
Courtesy of TOYOTA MOTOR SALES, U.S.A., INC.

Symptom	Air conditioning system does not cool.
	The low pressure piping is too hot to touch
Probable Cause	Air in air conditioning system
Diagnosis	Air present in air conditioning system
	Insufficient vacuum purging when evacuating air

	conditioning system
Corrective Actions	Replace cooler dryer
	Check compressor oil to see if it is dirty or insufficient
	Evacuate air conditioning system and recharge it with new or purified refrigerant

TEXT IN ILLUSTRATION

*a	LO
*b	HI

NOTE: **These gauge indications occur when the air conditioning system has been left open and then recharged without evacuating the system.**

HINT:

For the example above, air is present in the air conditioning system.

g. Pressure is too high on both low and high pressure sides

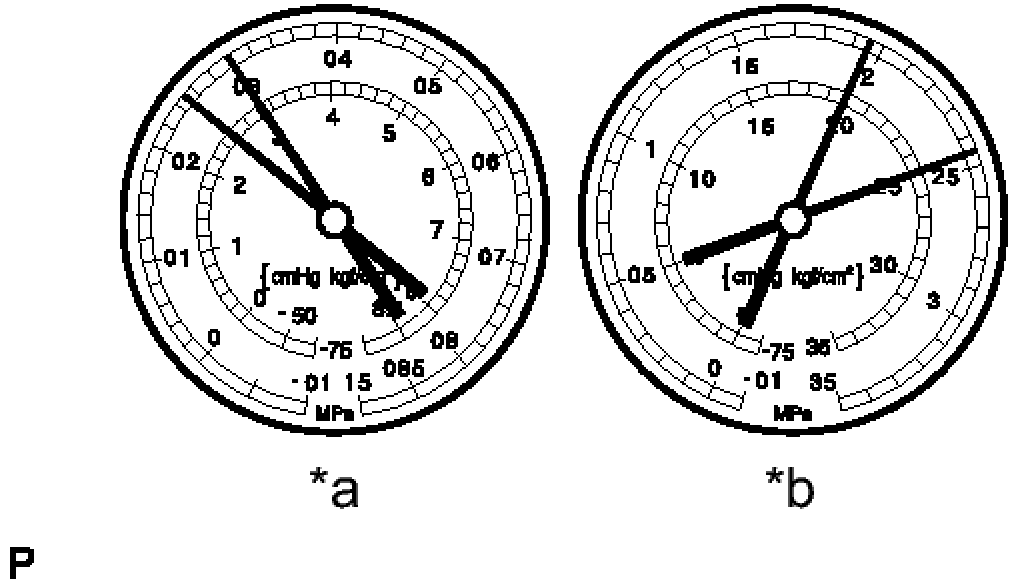

Fig. 8: Identifying Expansion Valve Malfunction
Courtesy of TOYOTA MOTOR SALES, U.S.A., INC.

Symptom	Air conditioning system does not cool effectively.
	Frost or a large amount of condensation on piping on low pressure side
Probable Cause	Expansion valve may be stuck open or metering refrigerant incorrectly
Diagnosis	Excessive refrigerant in low pressure piping
	Expansion

	valve open too wide
Corrective Actions	Replace expansion valve

TEXT IN ILLUSTRATION

*a	LO
*b	HI

HINT:

For the above example, there is an expansion valve malfunction.

h. Pressure is too high on both low and high pressure sides or pressure is too low on high pressure side

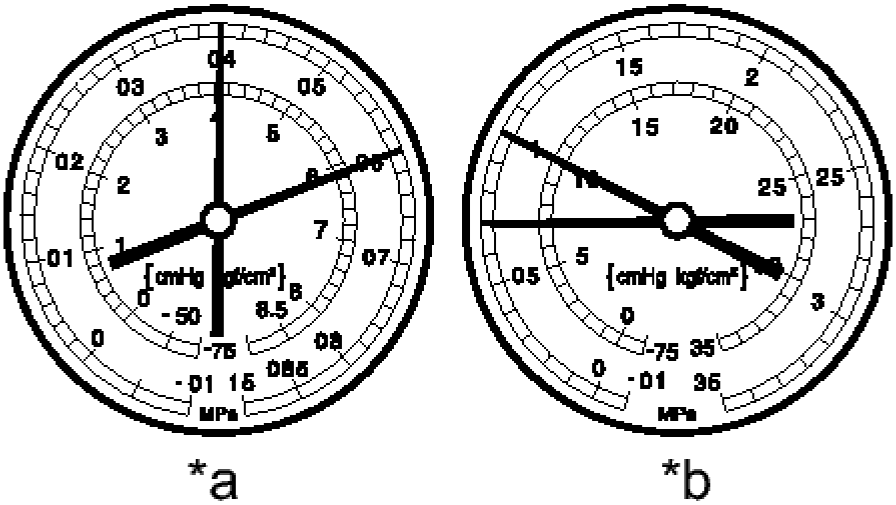
04
03
05
02
06
01
07
0
08
-01
15
085
1
2
3
4
5
6
7
8
8.5
0
-50
-76
cmHg kgf/cm²
MPa
*a
15
2
15
20
25
25
10
5
05
3
cmHg kgf/cm²
0
-75
35
0
-01
35
MPa
*b

P

Fig. 9: Identifying Insufficient Compressor Compression
Courtesy of TOYOTA MOTOR SALES, U.S.A., INC.

Symptom	Air conditioning system does not cool effectively.
	Internal leak

Probable Cause	in compressor
Diagnosis	Low compression
	Leak from a damaged valve or other compressor component
Corrective Actions	Replace compressor

TEXT IN ILLUSTRATION

*a	LO
*b	HI

HINT:

For the above example, there is insufficient compressor compression.

3. Gauge readings (Reference)

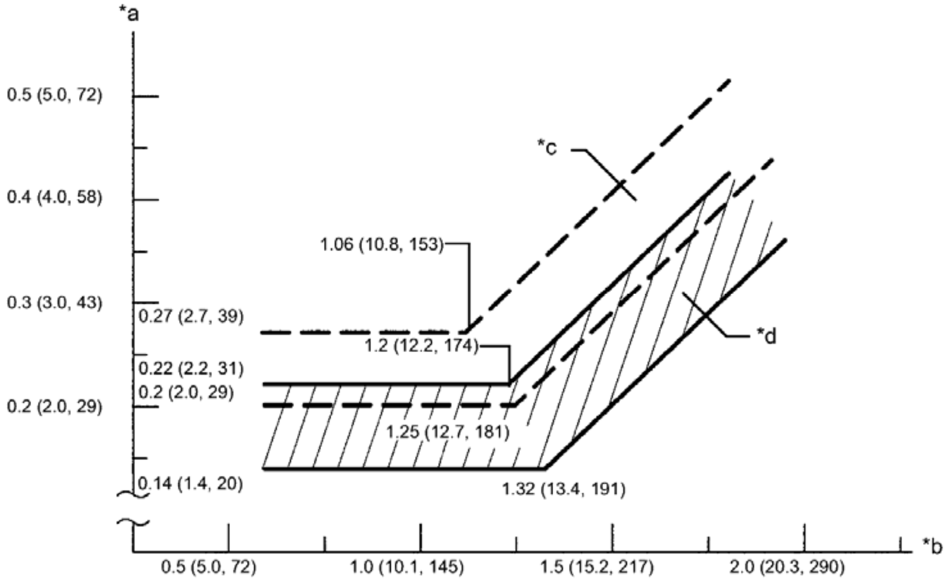

Fig. 10: Identifying Gauge Readings (Reference)
Courtesy of TOYOTA MOTOR SALES, U.S.A., INC.

TEXT IN ILLUSTRATION

*a	Pressure on low pressure side MPa (kgf/cm^2 , psi)	*b	Pressure on high pressure side MPa (kgf/cm^2 , psi)
*c	Blower high zone	*d	Blower low zone

REPLACEMENT

REPLACEMENT

1. **RECOVER REFRIGERANT FROM AIR CONDITIONING SYSTEM**
   a. Turn the power switch on (READY).
   b. Turn the A/C switch on.
   c. Operate the cooler compressor under the conditions shown below:

Item	Condition
Engine Speed	Idling
Operating Time	3 minutes or more
A/C Switch Status	ON
Blower Switch Status	HI
Set Temperature	MAX COOL

This cause most of the compressor oil from the various components of the A/C system to collect in the A/C compressor.

HINT:

It is not necessary to operate the cooler compressor if the A/C does not operate because of compressor lock etc.

   d. Turn the power switch off.
   e. Recover the refrigerant from the air conditioning system using a refrigerant recovery unit.

HINT:

Use the refrigerant recover unit in accordance with the manufacturer's instruction manual.

2. **CHARGE AIR CONDITIONING SYSTEM WITH REFRIGERANT**
    a. Perform vacuum purging using a vacuum pump or appropriate equipment.
    b. Charge the air conditioning system with refrigerant.

Refrigerant type

HFC-134a (R134a)

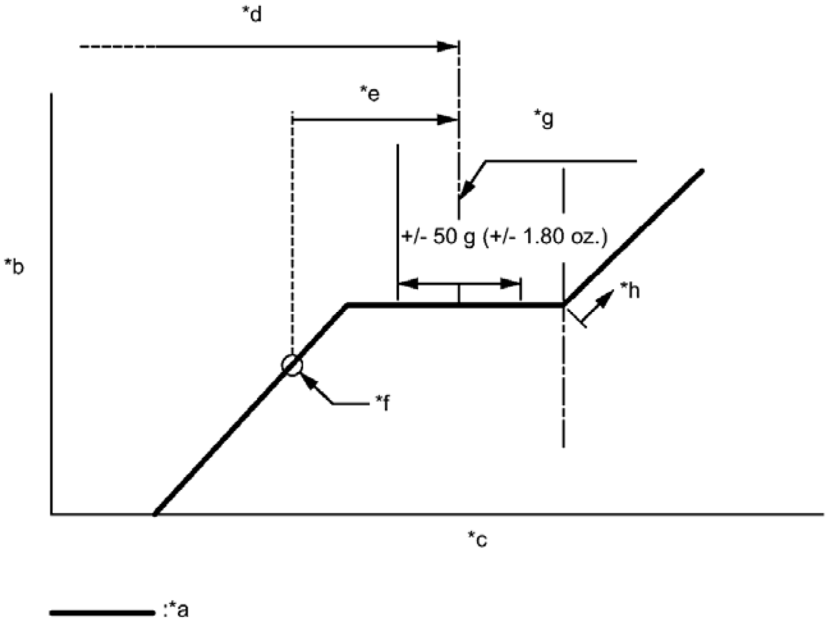

Fig. 11: Identifying State Of Refrigerant Charge Chart
Courtesy of TOYOTA MOTOR SALES, U.S.A., INC.

TEXT IN ILLUSTRATION

*a	Sub-cool System	*b	High Pressure
*c	Refrigerant Amount	*d	Standard charge amount
*e	Charge additional 100g (3.5oz.)	*f	Point where bubbles disappear
	Mean value in		

*g	proper range	*h	Overcharged

Standard charge amount

480 to 580g (16.9 to 20.4oz.)

- **SST: 09985-20010**
  09985-02010
  09985-02050
  09985-02060
  09985-02070
  09985-02080
  09985-02090
  09985-02110
  09985-02130
  09985-02140
  09985-02150

NOTE:

- **Do not turn the A/C switch on before charging the air conditioning system with refrigerant. Doing so may cause the compressor to work without refrigerant, resulting in overheating of the compressor.**
- **The refrigerant amount should be checked by quantity (weight).**
- **The graph above is shown for reference only. This vehicle is not equipped with a sight glass.**

HINT:

Ensure that sufficient refrigerant is available to recharge the system when using a refrigerant recovery unit. Refrigerant recovery units are not always able to recover 100% of the refrigerant from an air conditioning system.

3. **WARM UP COMPRESSOR**
   a. Keep the A/C switch on for at least 2 minutes to warm up the compressor.

NOTE: **To prevent damage to the compressor, be sure to warm up the compressor when turning the air conditioning on after removing and installing air conditioning system lines (including the compressor).**

4. **INSPECT FOR REFRIGERANT LEAK**
   a. After recharging the air conditioning system with refrigerant, inspect for refrigerant leaks using a

halogen leak detector.

b. Carry out the test under the following conditions:
    - Turn the power switch off.
    - Secure good ventilation (the halogen leak detector may react to volatile gases which are not refrigerant, such as gasoline vapor and exhaust gas).
    - Repeat the inspection 2 or 3 times.
    - Measure the pressure to make sure that there is some refrigerant remaining in the air conditioning system.

      Pressure when the compressor is off: approx. 392 to 588 kPa (3.9 to 5.9 kgf/cm^2 , 57 to 85 psi)

c. Using a halogen leak detector, inspect for refrigerant leaks from the air conditioning system.

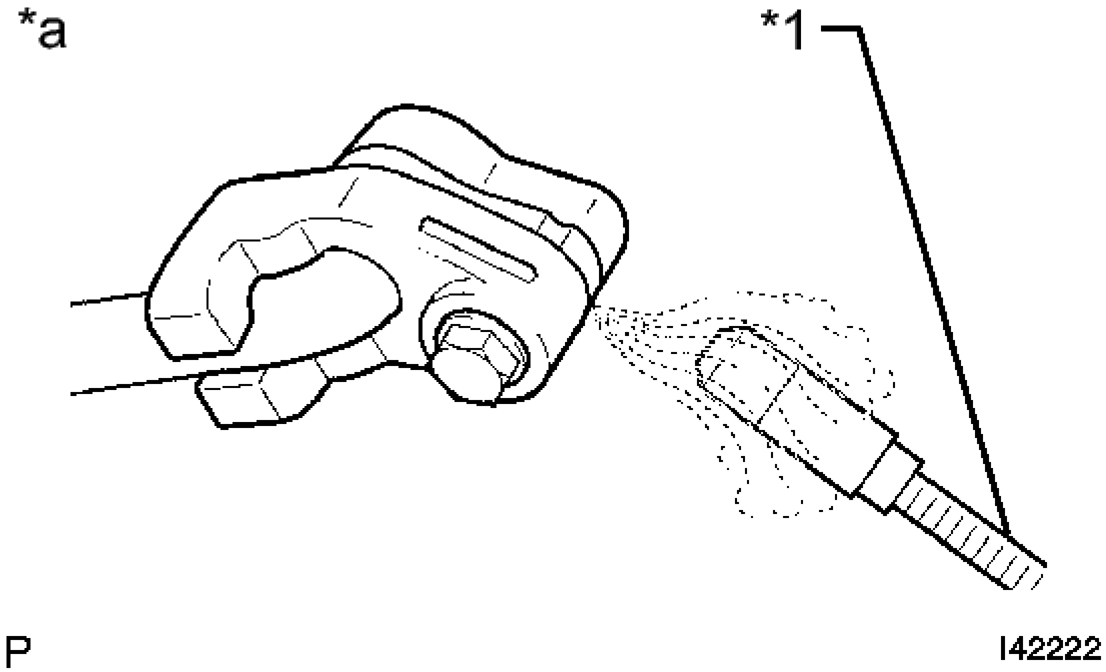

Fig. 12: Identifying Halogen Leak Detector
Courtesy of TOYOTA MOTOR SALES, U.S.A., INC.

TEXT IN ILLUSTRATION

*1	Halogen Leak Detector
*a	Inspect for Leak

d. Bring the halogen leak detector close to the drain hose with the detector power off, and then turn the detector on.

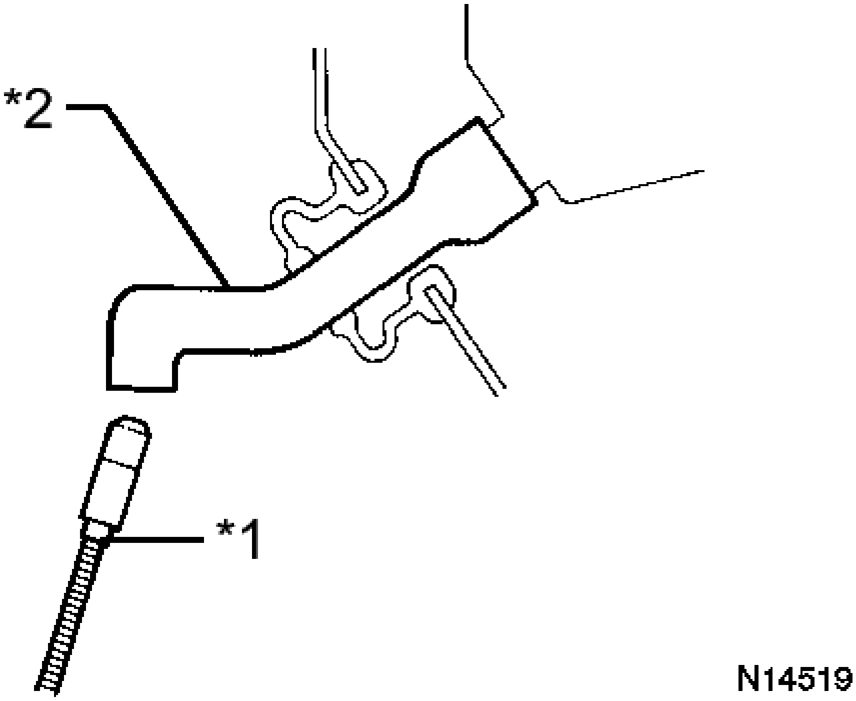

Fig. 13: Identifying Halogen Leak Detector And Drain Hose
Courtesy of TOYOTA MOTOR SALES, U.S.A., INC.

TEXT IN ILLUSTRATION

*1	Halogen Leak Detector
*2	Drain Hose

HINT:

- After the blower motor has stopped, leave the cooling unit for more than 15 minutes.
- Bring the halogen leak detector sensor under the drain hose.
- When bringing the halogen leak detector close to the drain hose, make sure that the halogen leak detector does not react to volatile gases. If it is not possible to avoid interference from volatile gases, the vehicle should be lifted up to allow checking for leaks.

e. If a refrigerant leak is not detected from the drain hose, remove the blower motor control from the cooling unit. Insert the halogen leak detector sensor into the unit and check for a leak.

f. Disconnect the pressure sensor connector and leave it for approximately 20 minutes. Bring the halogen leak detector close to the pressure sensor and check for a leak.

HINT:

When checking for leaks, the presence of oily dirt at a joint can indicate a leak.

REFRIGERANT LINE

COMPONENTS

ILLUSTRATION

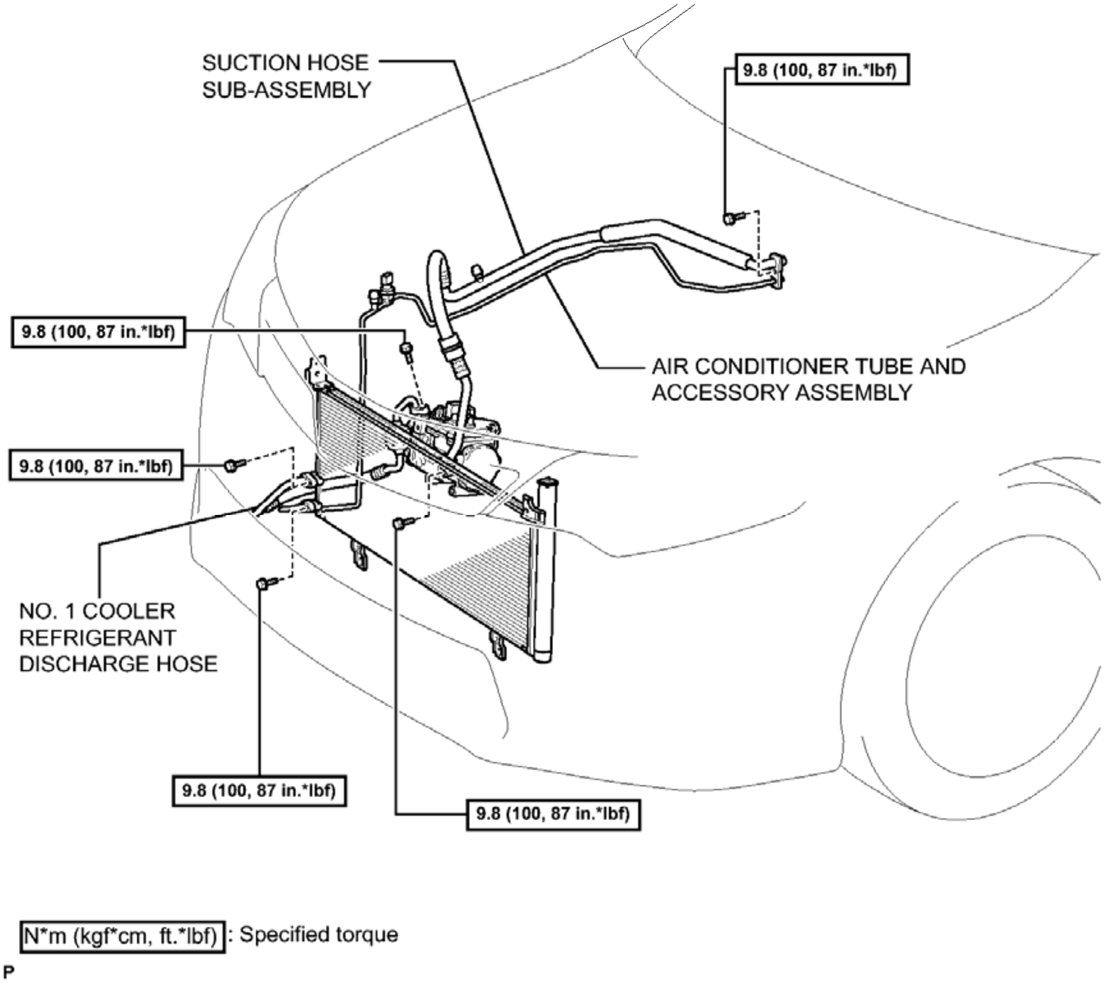
SUCTION HOSE SUB-ASSEMBLY
9.8 (100, 87 in.*lbf)
9.8 (100, 87 in.*lbf)
AIR CONDITIONER TUBE AND ACCESSORY ASSEMBLY
9.8 (100, 87 in.*lbf)
NO. 1 COOLER REFRIGERANT DISCHARGE HOSE
9.8 (100, 87 in.*lbf)
9.8 (100, 87 in.*lbf)
N*m (kgf*cm, ft.*lbf) : Specified torque
P

Fig. 14: Identifying Refrigerant Line Replacement Components With Torque Specifications
Courtesy of TOYOTA MOTOR SALES, U.S.A., INC.

AIR CONDITIONING UNIT

COMPONENTS

ILLUSTRATION

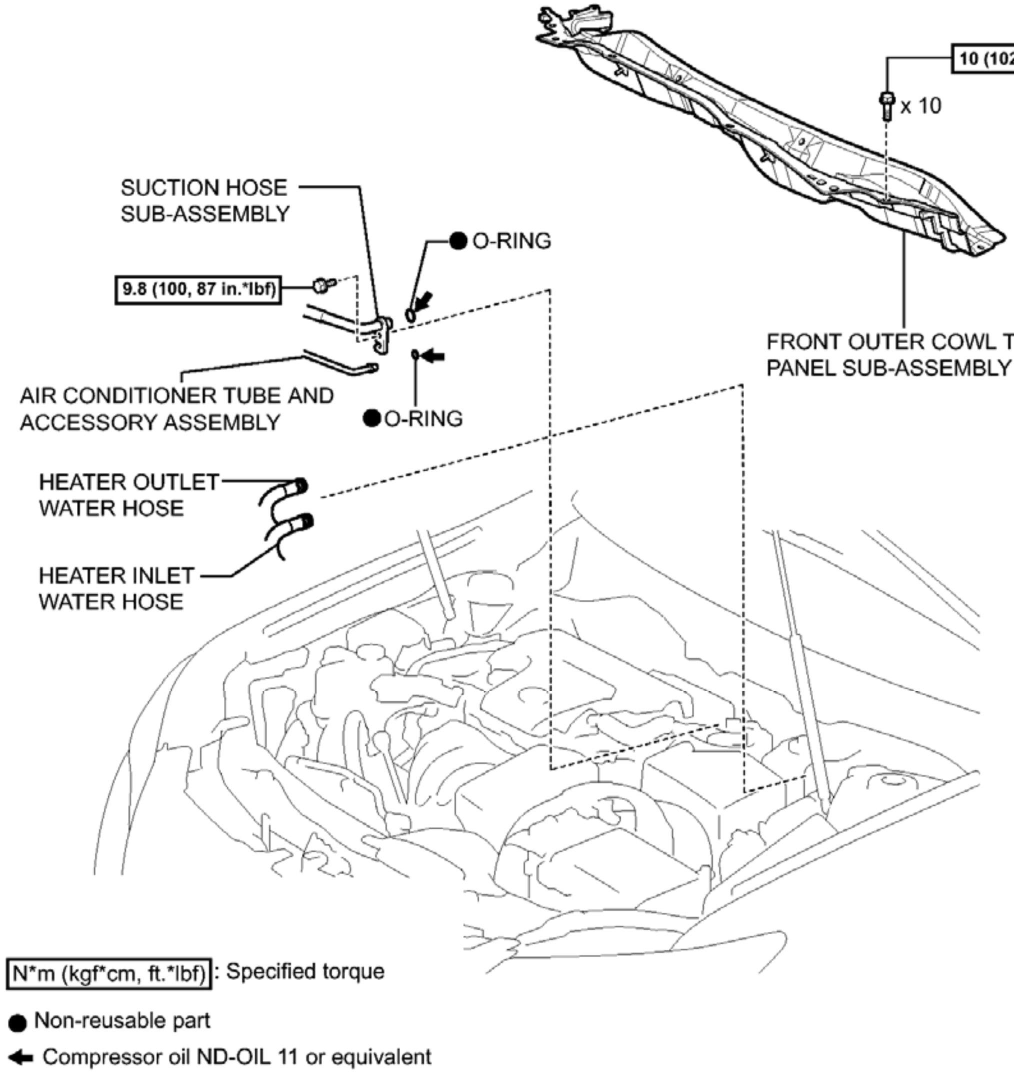
10 (102, 7)
x 10
SUCTION HOSE SUB-ASSEMBLY
O-RING
9.8 (100, 87 in.*lbf)
FRONT OUTER COWL TOP PANEL SUB-ASSEMBLY
AIR CONDITIONER TUBE AND ACCESSORY ASSEMBLY
O-RING
HEATER OUTLET WATER HOSE
HEATER INLET WATER HOSE
N*m (kgf*cm, ft.*lbf) : Specified torque
● Non-reusable part
← Compressor oil ND-OIL 11 or equivalent
P

Fig. 15: Identifying Air Conditioning Unit Replacement Components With Torque Specifications (1 Of 8)
Courtesy of TOYOTA MOTOR SALES, U.S.A., INC.

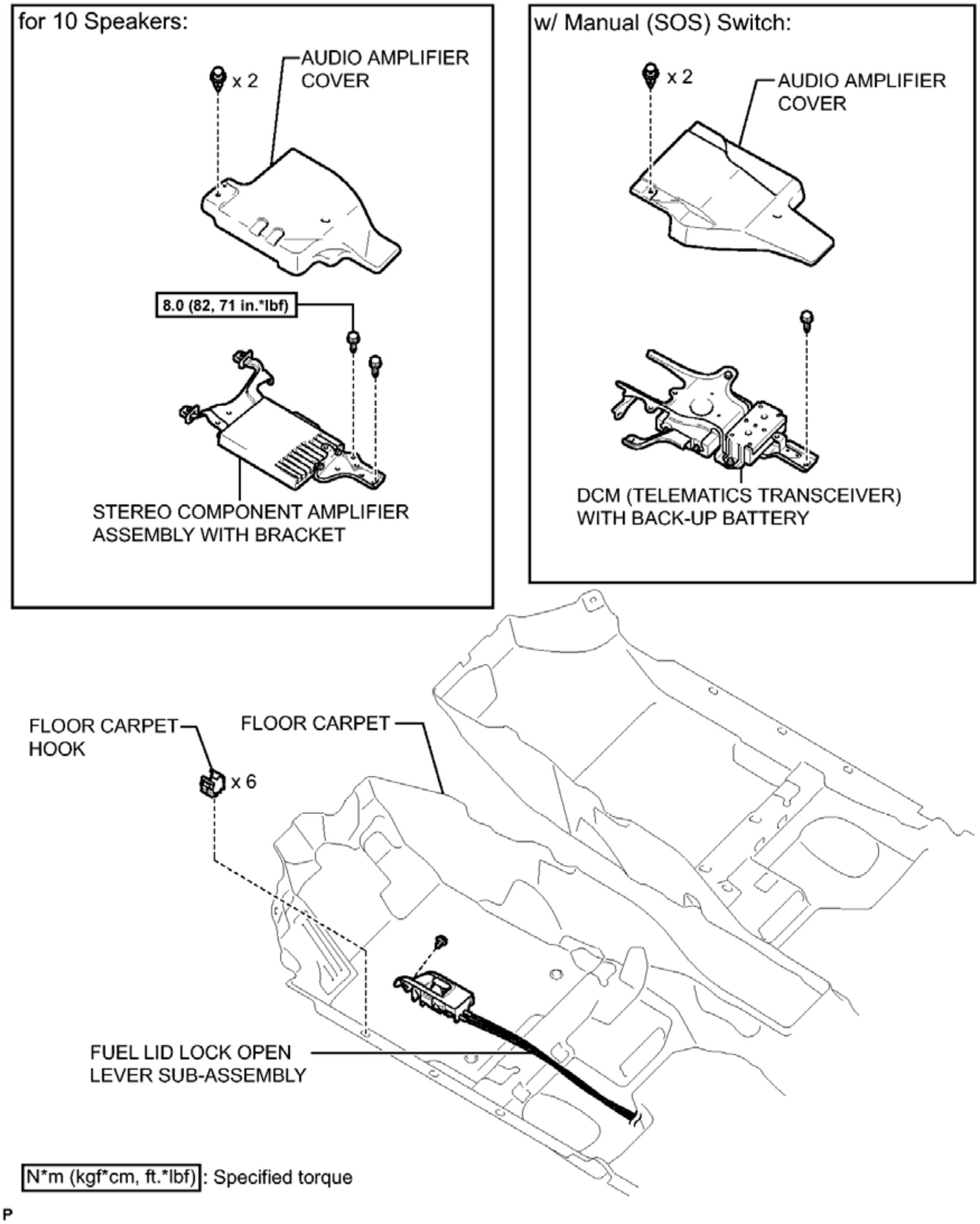
for 10 Speakers:
x 2
AUDIO AMPLIFIER COVER
8.0 (82, 71 in.*lbf)
STEREO COMPONENT AMPLIFIER ASSEMBLY WITH BRACKET
w/ Manual (SOS) Switch:
x 2
AUDIO AMPLIFIER COVER
DCM (TELEMATICS TRANSCEIVER) WITH BACK-UP BATTERY
FLOOR CARPET HOOK
x 6
FLOOR CARPET
FUEL LID LOCK OPEN LEVER SUB-ASSEMBLY
N*m (kgf*cm, ft.*lbf) : Specified torque
P

Fig. 16: Identifying Air Conditioning Unit Replacement Components With Torque Specifications (2 Of 8)
Courtesy of TOYOTA MOTOR SALES, U.S.A., INC.

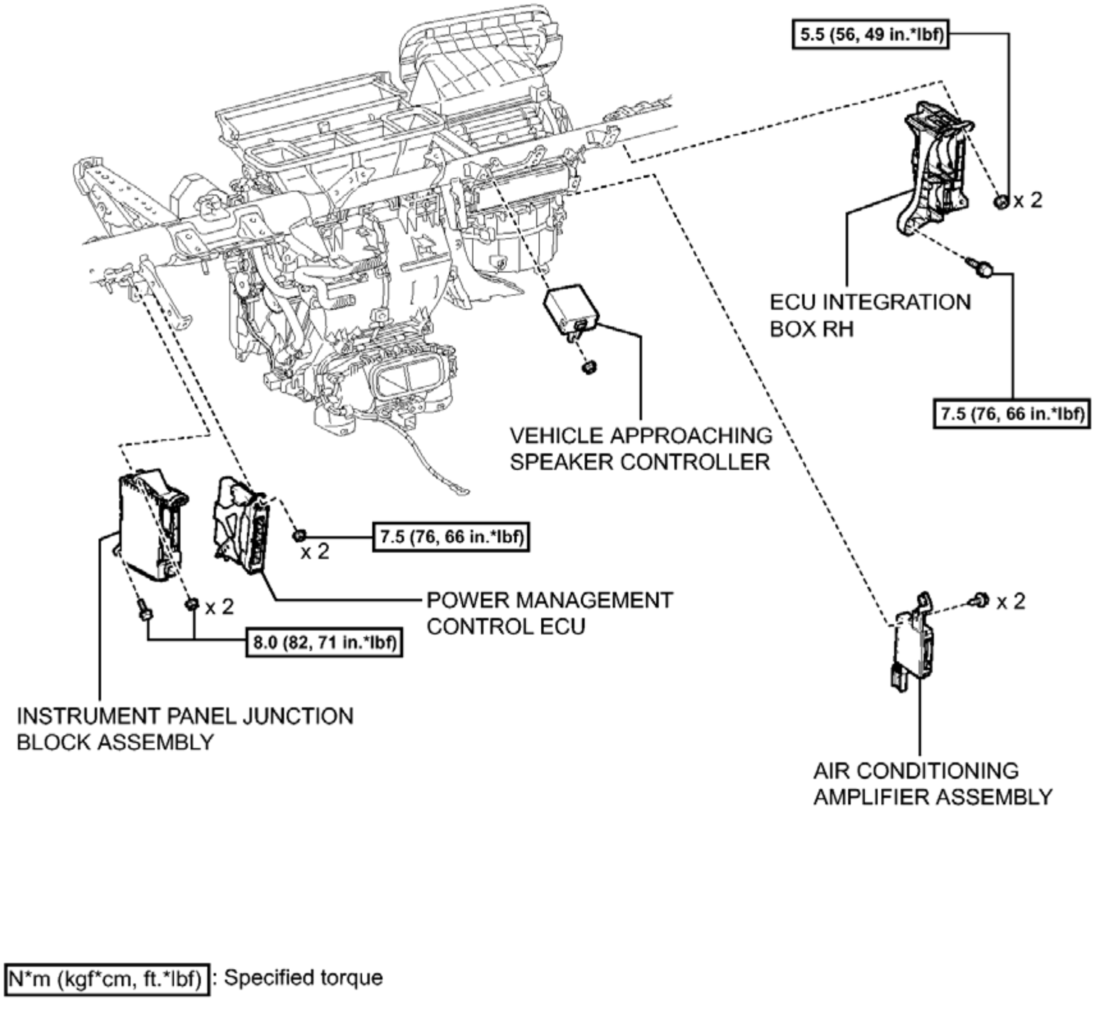
5.5 (56, 49 in.*lbf)
x 2
ECU INTEGRATION
BOX RH
7.5 (76, 66 in.*lbf)
VEHICLE APPROACHING
SPEAKER CONTROLLER
7.5 (76, 66 in.*lbf)
x 2
POWER MANAGEMENT
CONTROL ECU
x 2
8.0 (82, 71 in.*lbf)
INSTRUMENT PANEL JUNCTION
BLOCK ASSEMBLY
x 2
AIR CONDITIONING
AMPLIFIER ASSEMBLY
N*m (kgf*cm, ft.*lbf) : Specified torque
P

Fig. 17: Identifying Air Conditioning Unit Replacement Components With Torque Specifications (3 Of 8)
Courtesy of TOYOTA MOTOR SALES, U.S.A., INC.

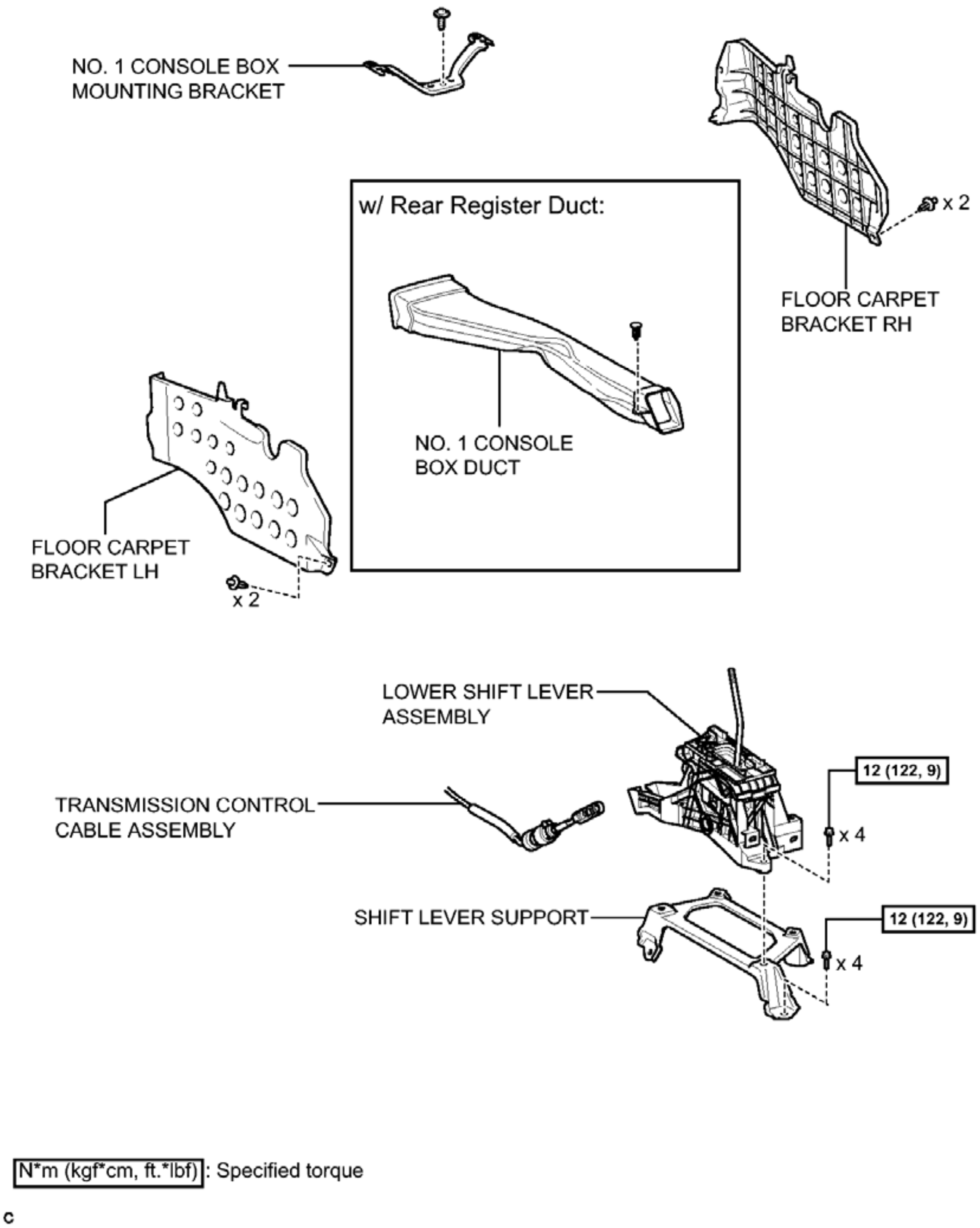
NO. 1 CONSOLE BOX MOUNTING BRACKET
w/ Rear Register Duct:
x 2
FLOOR CARPET BRACKET RH
NO. 1 CONSOLE BOX DUCT
FLOOR CARPET BRACKET LH
x 2
LOWER SHIFT LEVER ASSEMBLY
12 (122, 9)
TRANSMISSION CONTROL CABLE ASSEMBLY
x 4
SHIFT LEVER SUPPORT
12 (122, 9)
x 4
N*m (kgf*cm, ft.*lbf) : Specified torque
c

Fig. 18: Identifying Air Conditioning Unit Replacement Components With Torque Specifications (4 Of 8)
Courtesy of TOYOTA MOTOR SALES, U.S.A., INC.

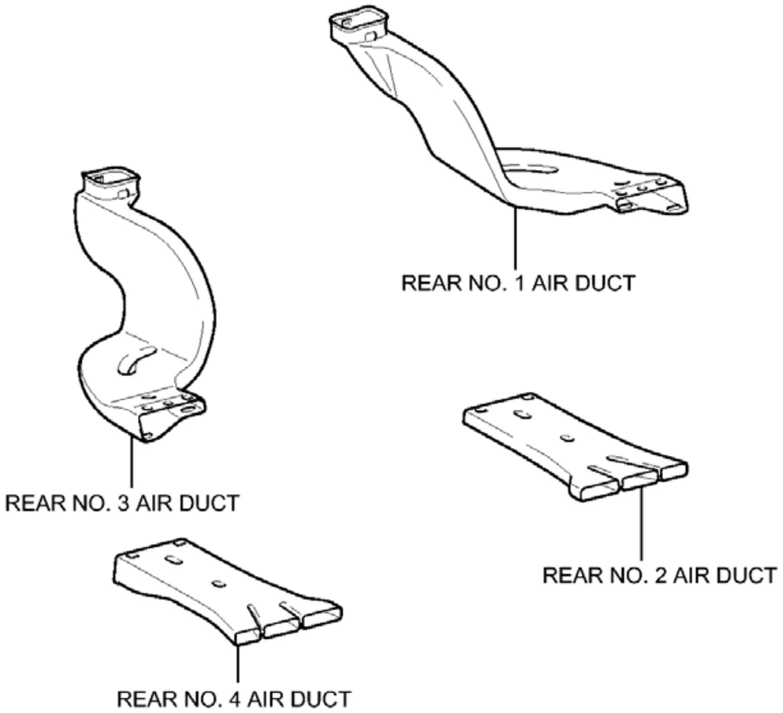
REAR NO. 1 AIR DUCT
REAR NO. 3 AIR DUCT
REAR NO. 2 AIR DUCT
REAR NO. 4 AIR DUCT

P

Fig. 19: Identifying Air Conditioning Unit Replacement Components (5 Of 8)
Courtesy of TOYOTA MOTOR SALES, U.S.A., INC.

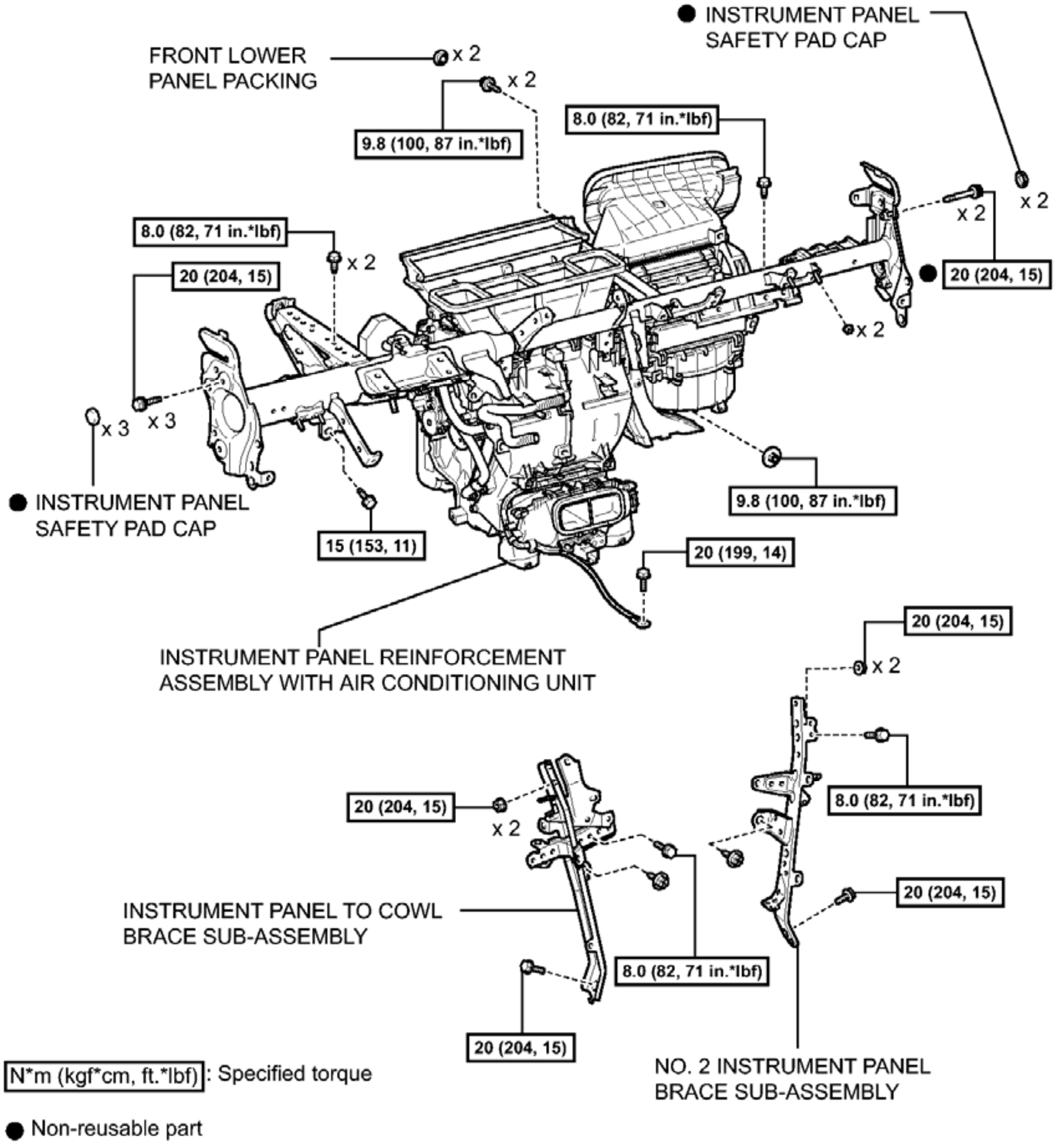
● INSTRUMENT PANEL SAFETY PAD CAP
FRONT LOWER PANEL PACKING
x 2
x 2
9.8 (100, 87 in.*lbf)
8.0 (82, 71 in.*lbf)
x 2
x 2
x 2
● 20 (204, 15)
8.0 (82, 71 in.*lbf)
x 2
20 (204, 15)
x 2
x 3
x 3
● INSTRUMENT PANEL SAFETY PAD CAP
15 (153, 11)
9.8 (100, 87 in.*lbf)
20 (199, 14)
INSTRUMENT PANEL REINFORCEMENT ASSEMBLY WITH AIR CONDITIONING UNIT
20 (204, 15)
x 2
8.0 (82, 71 in.*lbf)
20 (204, 15)
x 2
INSTRUMENT PANEL TO COWL BRACE SUB-ASSEMBLY
20 (204, 15)
8.0 (82, 71 in.*lbf)
20 (204, 15)
NO. 2 INSTRUMENT PANEL BRACE SUB-ASSEMBLY
N*m (kgf*cm, ft.*lbf) : Specified torque
● Non-reusable part

P

Fig. 20: Identifying Air Conditioning Unit Replacement Components With Torque Specifications (6 Of 8)
Courtesy of TOYOTA MOTOR SALES, U.S.A., INC.

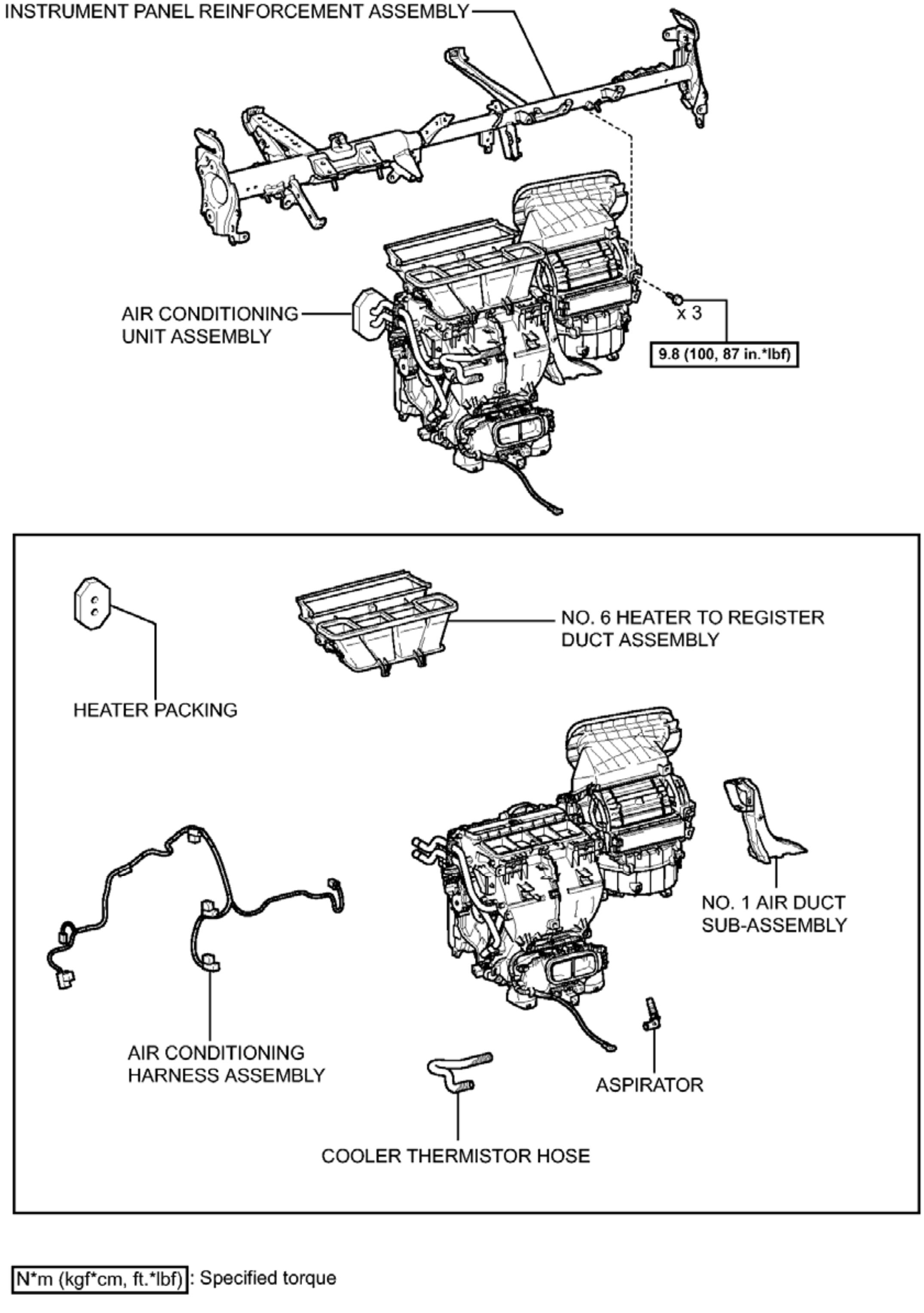
INSTRUMENT PANEL REINFORCEMENT ASSEMBLY
AIR CONDITIONING UNIT ASSEMBLY
x 3
9.8 (100, 87 in.*lbf)
HEATER PACKING
NO. 6 HEATER TO REGISTER DUCT ASSEMBLY
NO. 1 AIR DUCT SUB-ASSEMBLY
AIR CONDITIONING HARNESS ASSEMBLY
ASPIRATOR
COOLER THERMISTOR HOSE
N*m (kgf*cm, ft.*lbf): Specified torque
P

Fig. 21: Identifying Air Conditioning Unit Replacement Components With Torque Specifications (7 Of 8)
Courtesy of TOYOTA MOTOR SALES, U.S.A., INC.

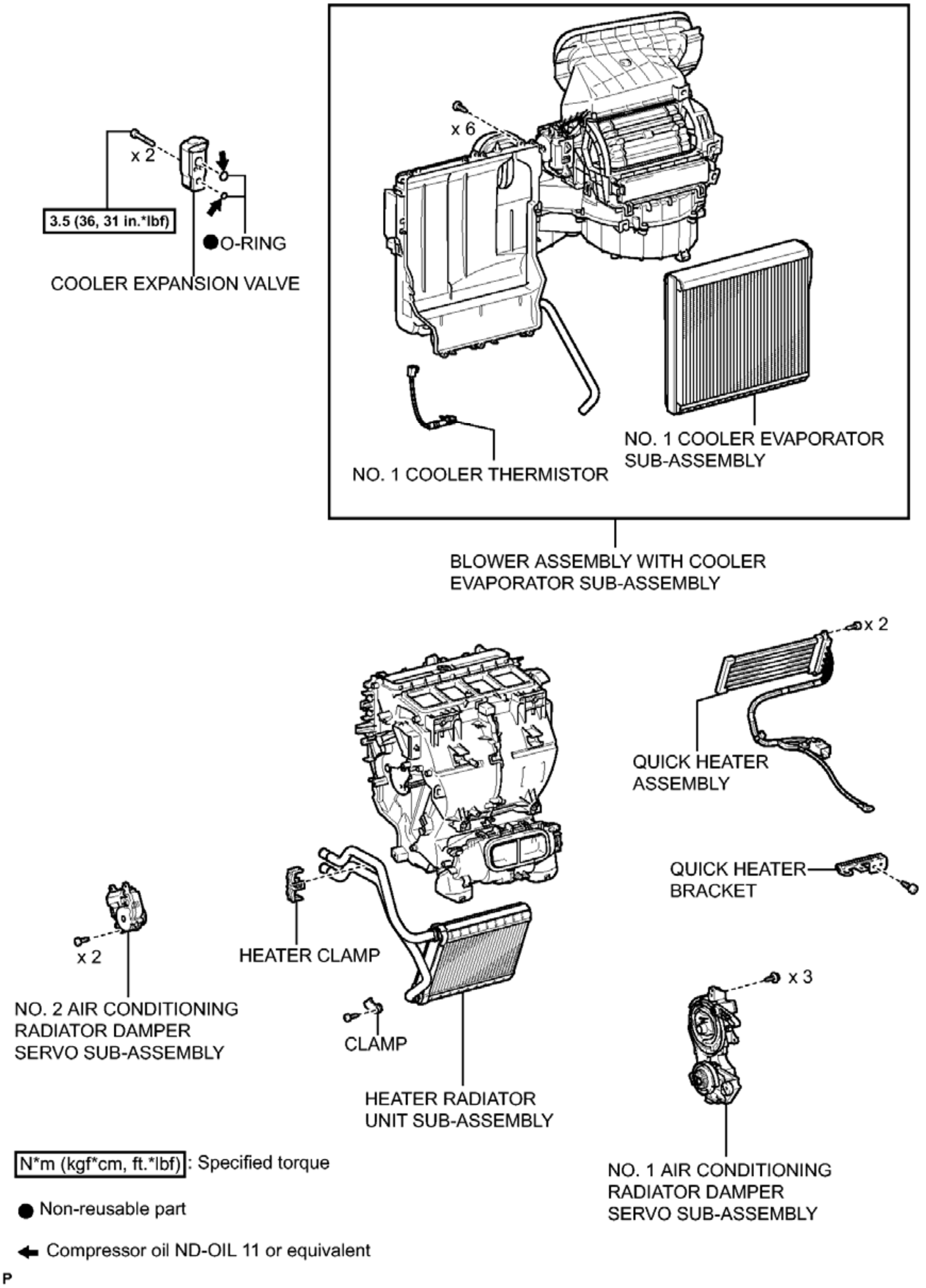
x 2
3.5 (36, 31 in.*lbf)
O-RING
COOLER EXPANSION VALVE
x 6
NO. 1 COOLER THERMISTOR
NO. 1 COOLER EVAPORATOR SUB-ASSEMBLY
BLOWER ASSEMBLY WITH COOLER EVAPORATOR SUB-ASSEMBLY
x 2
QUICK HEATER ASSEMBLY
QUICK HEATER BRACKET
x 2
HEATER CLAMP
NO. 2 AIR CONDITIONING RADIATOR DAMPER SERVO SUB-ASSEMBLY
CLAMP
HEATER RADIATOR UNIT SUB-ASSEMBLY
x 3
NO. 1 AIR CONDITIONING RADIATOR DAMPER SERVO SUB-ASSEMBLY
N*m (kgf*cm, ft.*lbf) : Specified torque
● Non-reusable part
← Compressor oil ND-OIL 11 or equivalent
P

Fig. 22: Identifying Air Conditioning Unit Replacement Components With Torque Specifications (8 Of 8)
Courtesy of TOYOTA MOTOR SALES, U.S.A., INC.

REMOVAL

REMOVAL

NOTE: **Make sure to select FACE mode before disconnecting the cable from the negative (-) auxiliary battery terminal.**

1. **RECOVER REFRIGERANT FROM AIR CONDITIONING SYSTEM** See step 1
2. **REMOVE WINDSHIELD WIPER MOTOR AND LINK ASSEMBLY**

   Refer to **REMOVAL**

3. **REMOVE FRONT OUTER COWL TOP PANEL SUB-ASSEMBLY** . Refer to **REMOVAL - Step 4**
4. **DISCONNECT HEATER OUTLET WATER HOSE**
   a. Using pliers, grip the claws of the clip and slide the clip to disconnect the heater outlet water hose.

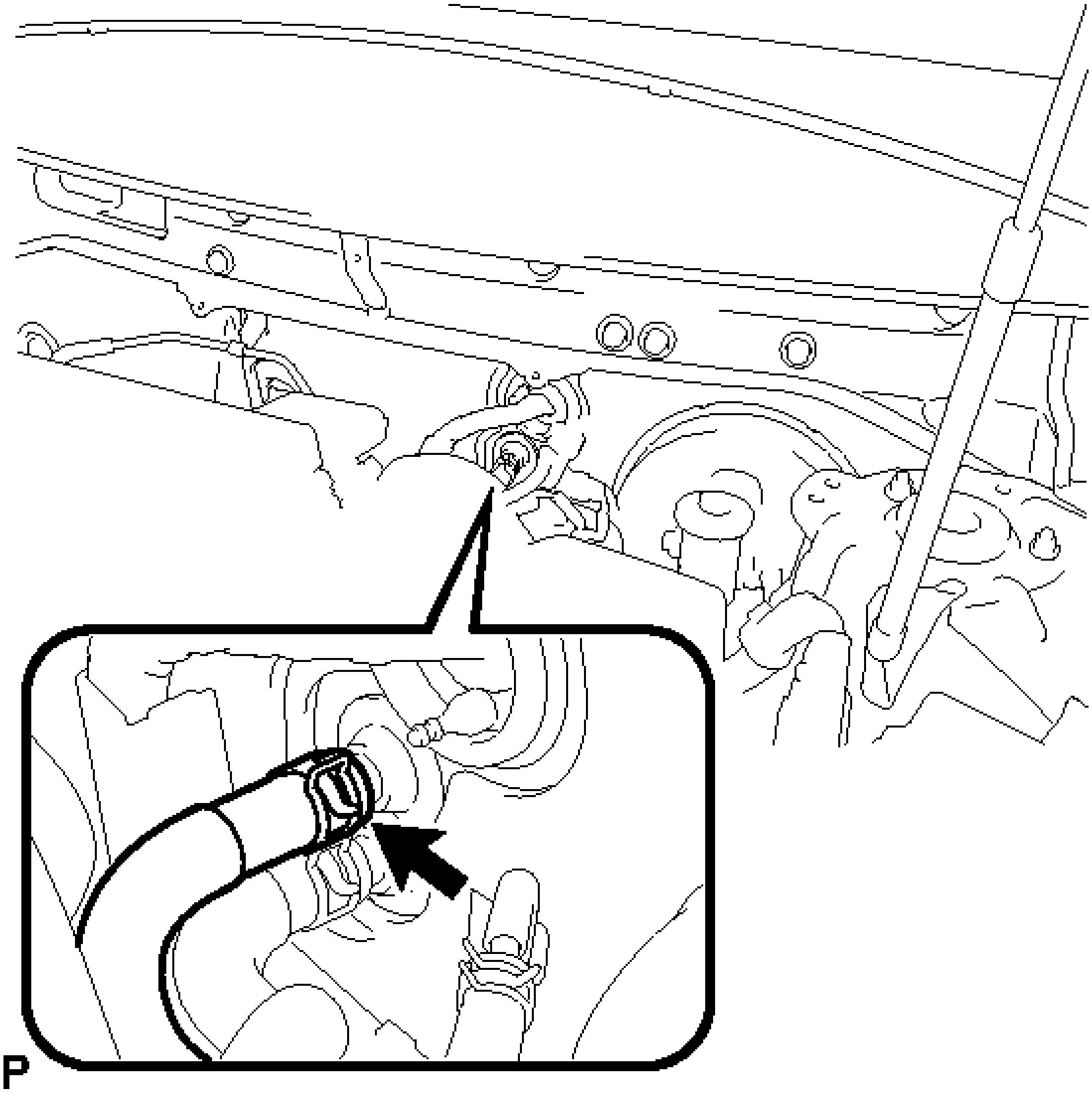

Fig. 23: Identifying Heater Outlet Water Hose Clip

Courtesy of TOYOTA MOTOR SALES, U.S.A., INC.

NOTE:

- **Do not apply excessive force to the heater outlet water hose.**
- **Prepare a drain pan or cloth in case the coolant leaks.**

5. **DISCONNECT HEATER INLET WATER HOSE**
   a. Using pliers, grip the claws of the clip and slide the clip to disconnect the heater inlet water hose.

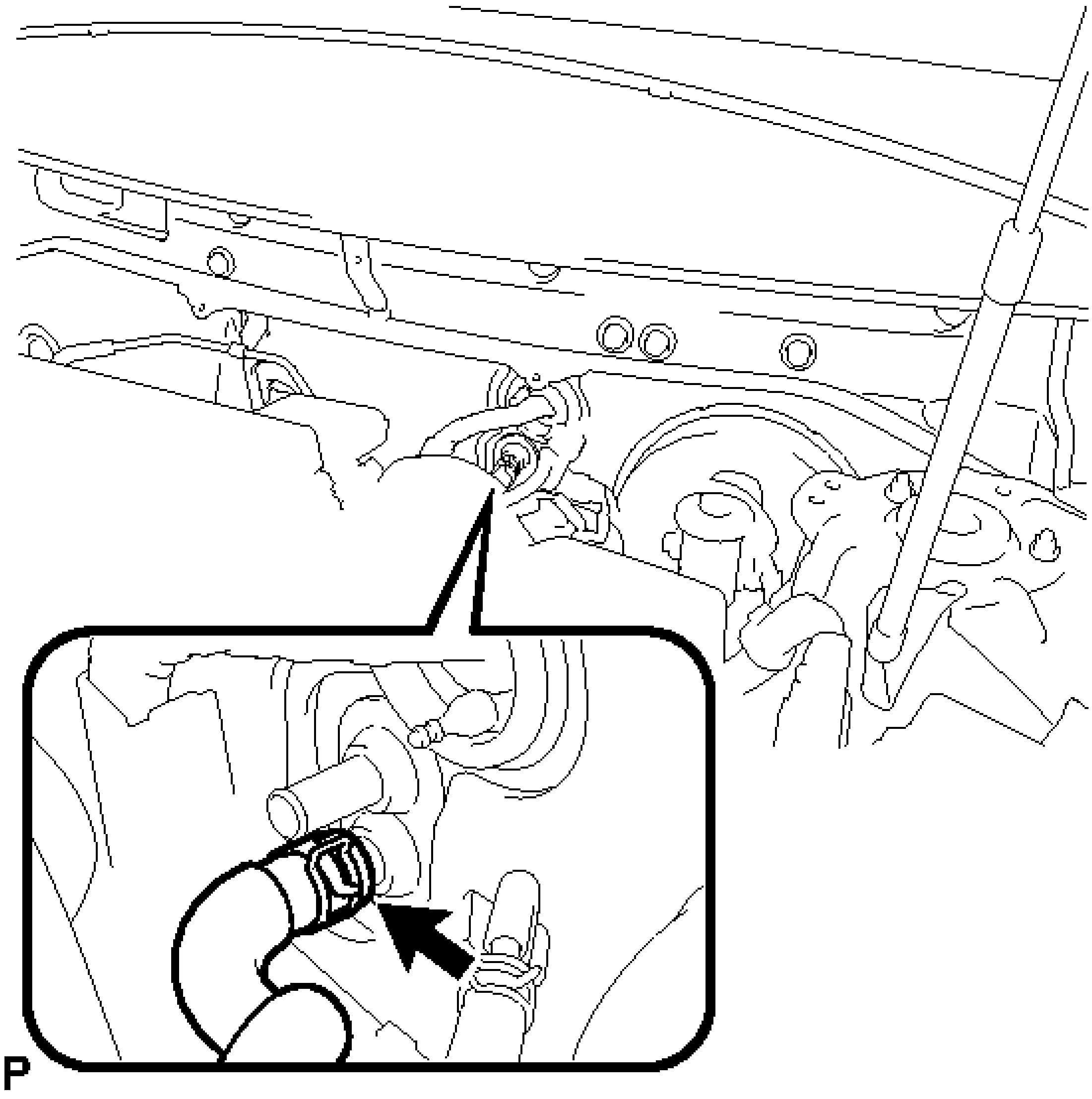

Fig. 24: Identifying Heater Inlet Water Hose Clip
Courtesy of TOYOTA MOTOR SALES, U.S.A., INC.

NOTE:

- **Do not apply excessive force to the heater inlet water hose.**
- **Prepare a drain pan or cloth in case the coolant leaks.**

6. **DISCONNECT SUCTION HOSE SUB-ASSEMBLY**
   a. Remove the bolt, and slide the hook connector.

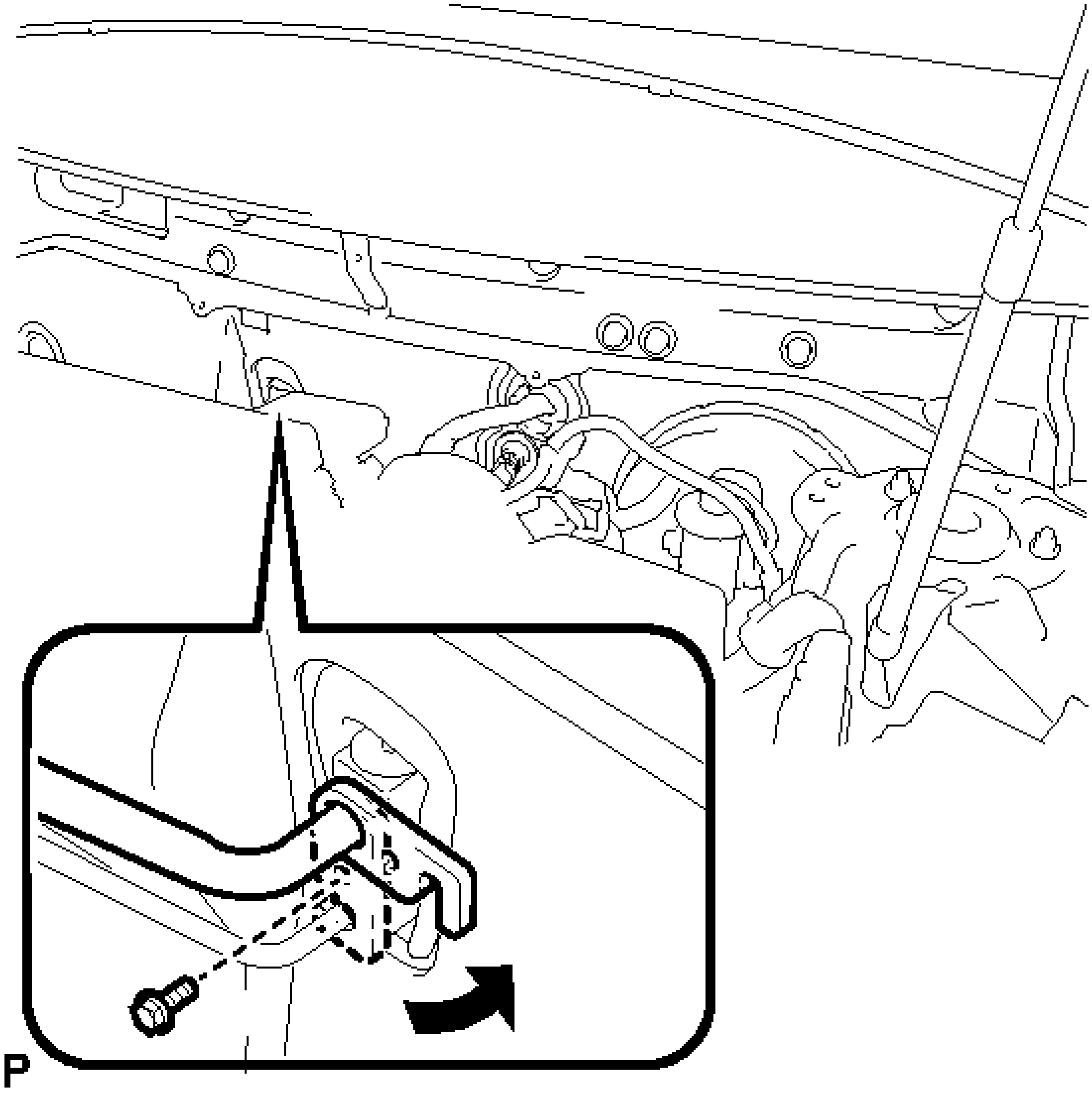

Fig. 25: Identifying Suction Hose Hook Connector And Bolt
Courtesy of TOYOTA MOTOR SALES, U.S.A., INC.

   b. Disconnect the suction hose sub-assembly.
   c. Remove the O-ring from the suction hose sub-assembly.

NOTE: **Seal the openings of the disconnected parts using vinyl tape to prevent entry of moisture and foreign matter.**

7. **DISCONNECT AIR CONDITIONER TUBE AND ACCESSORY ASSEMBLY**
   a. Disconnect the air conditioner tube and accessory assembly.
   b. Remove the O-ring from the air conditioner tube and accessory assembly.

NOTE: **Seal the openings of the disconnected parts using vinyl tape to prevent entry of moisture and foreign matter.**

8. **REMOVE FRONT SEAT ASSEMBLY LH (for Manual Seat)**

   Refer to **REMOVAL**

9. **REMOVE FRONT SEAT ASSEMBLY LH (for Power Seat)**

   Refer to **REMOVAL**

10. **REMOVE AUDIO AMPLIFIER COVER (for 10 Speakers)** . Refer to **REMOVAL - Step 2**
11. **REMOVE STEREO COMPONENT AMPLIFIER ASSEMBLY WITH BRACKET (for 10 Speakers)** . Refer to **REMOVAL - Step 3**
12. **REMOVE FRONT SEAT ASSEMBLY RH (for Manual Seat)**

    HINT:

    Use the same procedure for the RH side and LH side.

13. **REMOVE FRONT SEAT ASSEMBLY RH (for Power Seat)**

    HINT:

    Use the same procedure for the RH side and LH side.

14. **REMOVE AUDIO AMPLIFIER COVER (w/ Manual (SOS) Switch)** . Refer to **REMOVAL - Step 2**
15. **REMOVE DCM (TELEMATICS TRANSCEIVER) WITH BACK-UP BATTERY (w/ Manual (SOS) Switch)** . Refer to **REMOVAL - Step 3**
16. **REMOVE INSTRUMENT PANEL SAFETY PAD ASSEMBLY**

    Refer to **REMOVAL**

17. **REMOVE STEERING POST ASSEMBLY**

    Refer to **REMOVAL**

18. **REMOVE POWER MANAGEMENT CONTROL ECU** . Refer to **REMOVAL - Step 1**
19. **REMOVE INSTRUMENT PANEL JUNCTION BLOCK ASSEMBLY** . Refer to **REMOVAL - Step 2**
20. **REMOVE VEHICLE APPROACHING SPEAKER CONTROLLER** . Refer to **REMOVAL - Step 12**
21. **REMOVE ECU INTEGRATION BOX RH** . Refer to **REMOVAL - Step 12**
22. **REMOVE AIR CONDITIONING AMPLIFIER ASSEMBLY** See step 14
23. **REMOVE FLOOR CARPET HOOK**

a. Disengage the 6 guides.

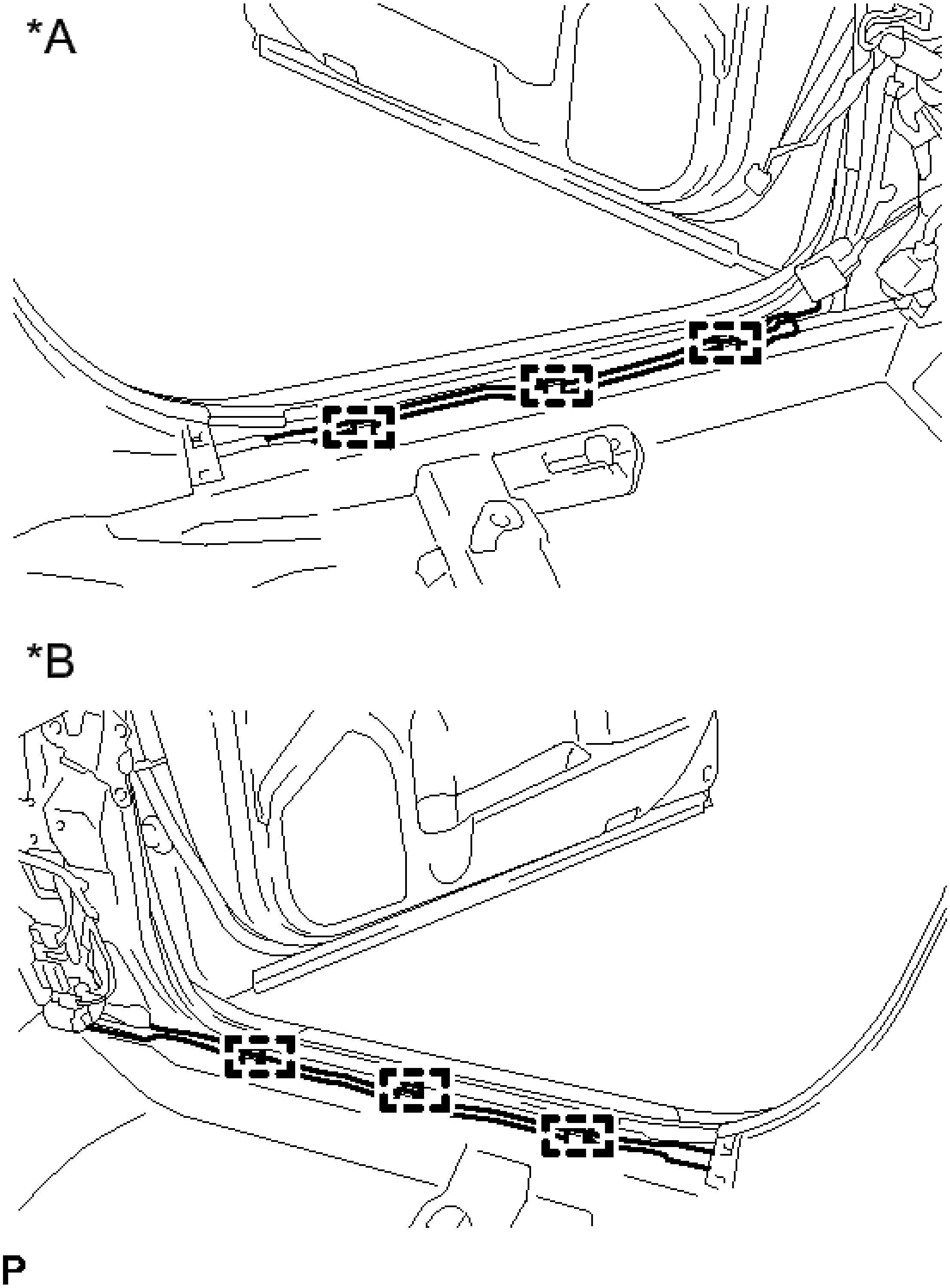

Fig. 26: Identifying Floor Carpet Guides
Courtesy of TOYOTA MOTOR SALES, U.S.A., INC.

TEXT IN ILLUSTRATION

*A	for LH Side
*B	for RH Side

b. Disengage the 6 claws and remove the 6 floor carpet hooks.

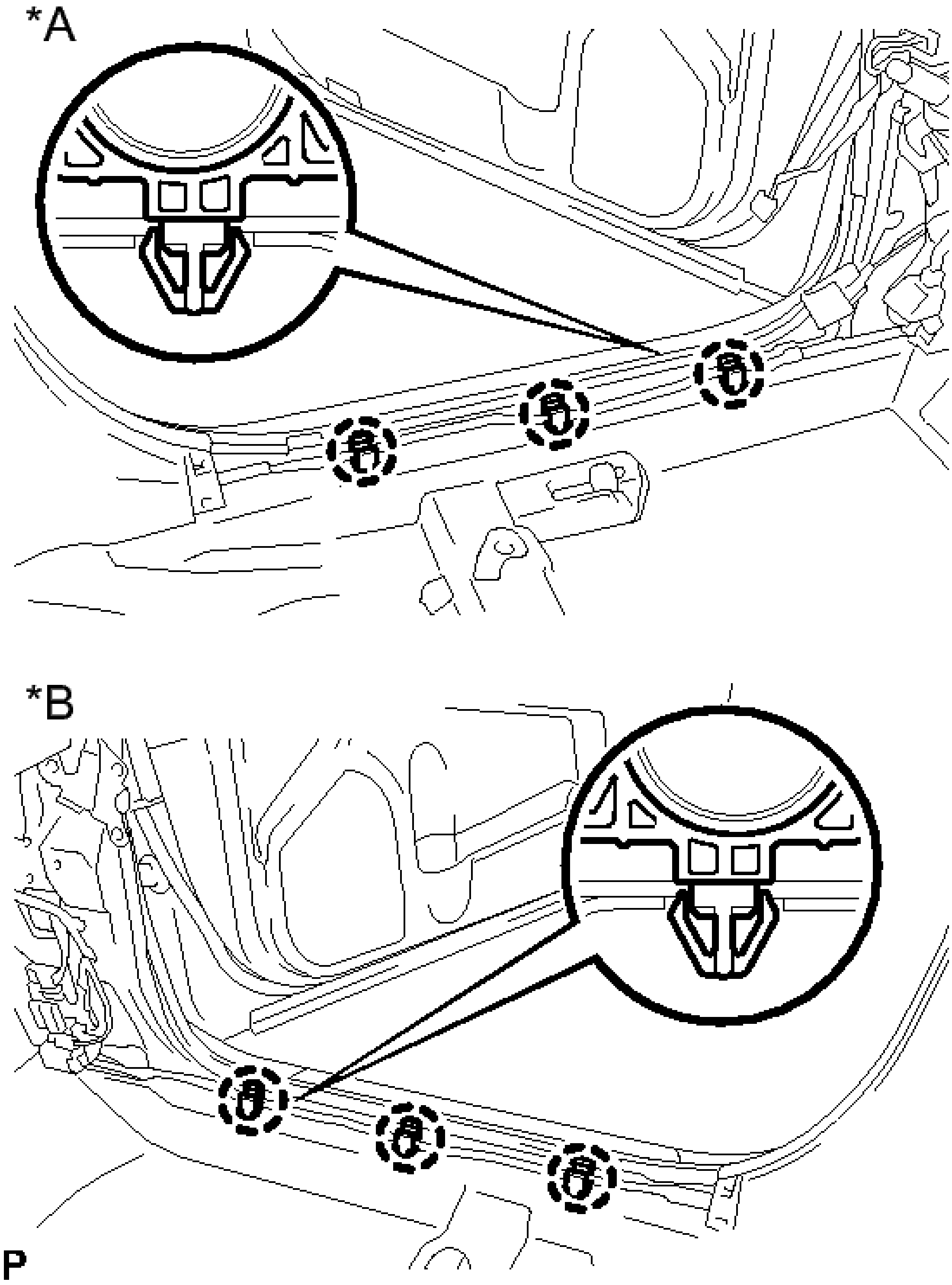

Fig. 27: Identifying Floor Carpet Claws And Hooks
Courtesy of TOYOTA MOTOR SALES, U.S.A., INC.

TEXT IN ILLUSTRATION

	for

*A	LH Side
*B	for RH Side

24. **DISCONNECT FUEL LID LOCK OPEN LEVER SUB-ASSEMBLY**
   a. Remove the screw.

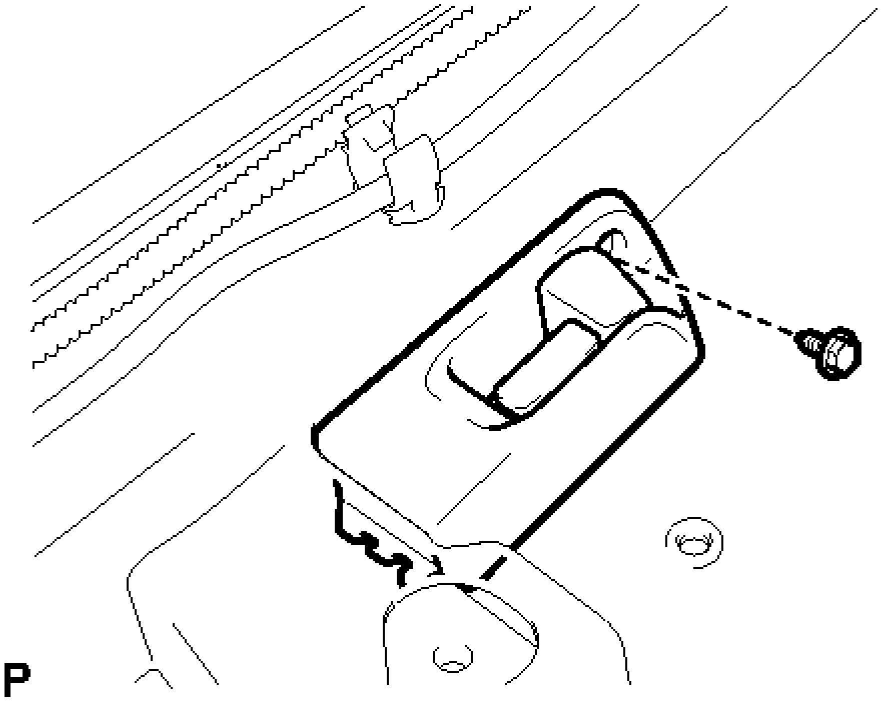

Fig. 28: Identifying Fuel Lid Lock Open Lever Screw
Courtesy of TOYOTA MOTOR SALES, U.S.A., INC.

   b. Disengage the guide to disconnect the fuel lid lock open lever sub-assembly as shown in the illustration.

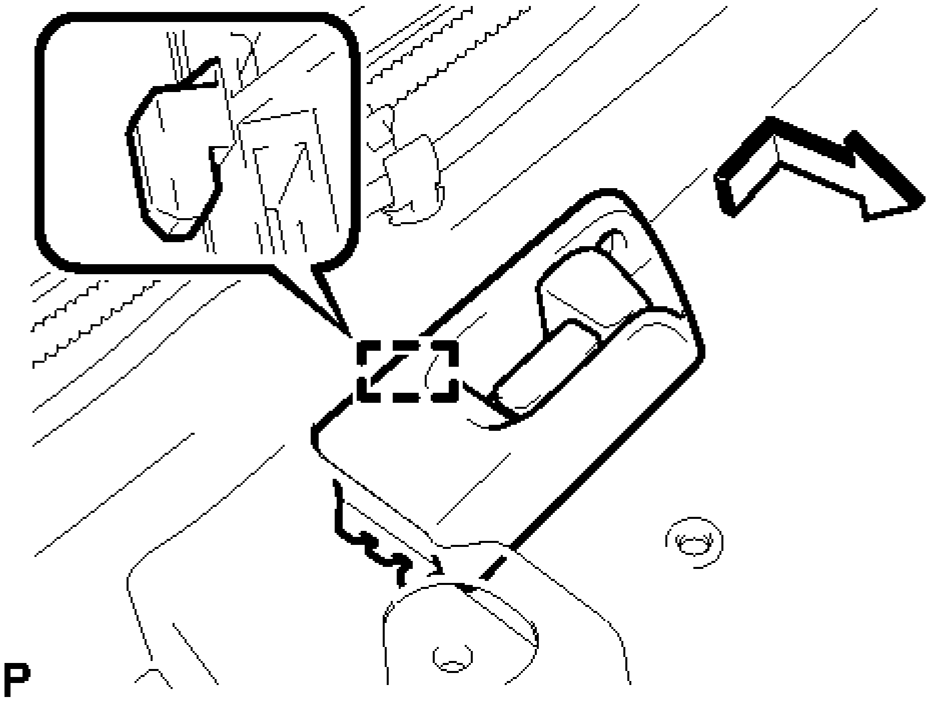

Fig. 29: Identifying Fuel Lid Lock Open Lever Guide
Courtesy of TOYOTA MOTOR SALES, U.S.A., INC.

25. **REMOVE REAR NO. 4 AIR DUCT**
    a. Disengage the guide.

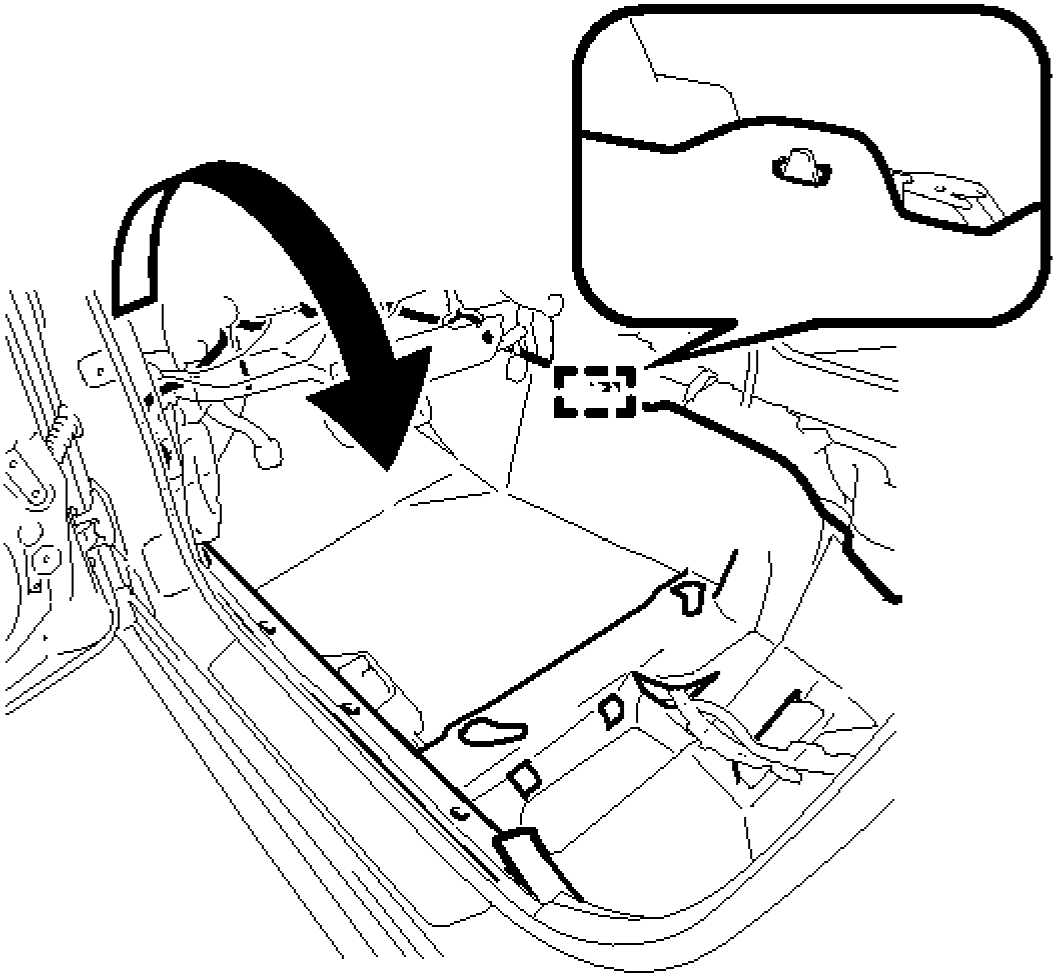

P

Fig. 30: Turning Back The Floor Carpet
Courtesy of TOYOTA MOTOR SALES, U.S.A., INC.

b. Turn back the floor carpet as shown in the illustration.
c. Disengage the 4 claws to remove the rear No. 4 air duct.

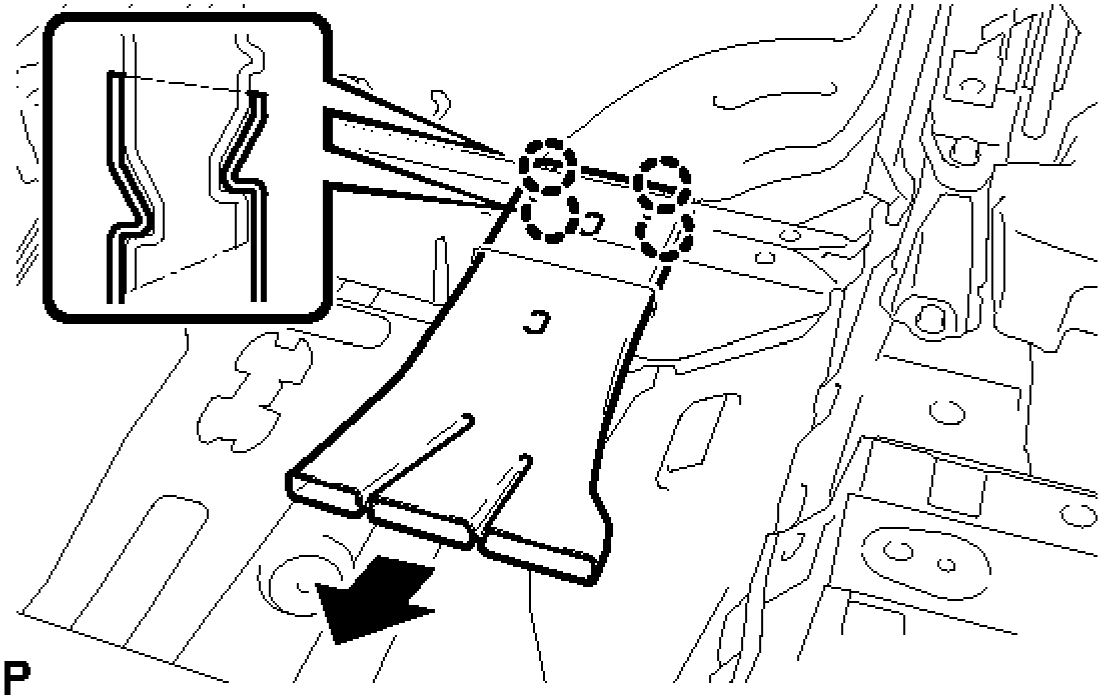

Fig. 31: Identifying Rear No. 4 Air Duct Claws
Courtesy of TOYOTA MOTOR SALES, U.S.A., INC.

26. **REMOVE FLOOR CARPET BRACKET LH**
    a. Remove the 2 clips.

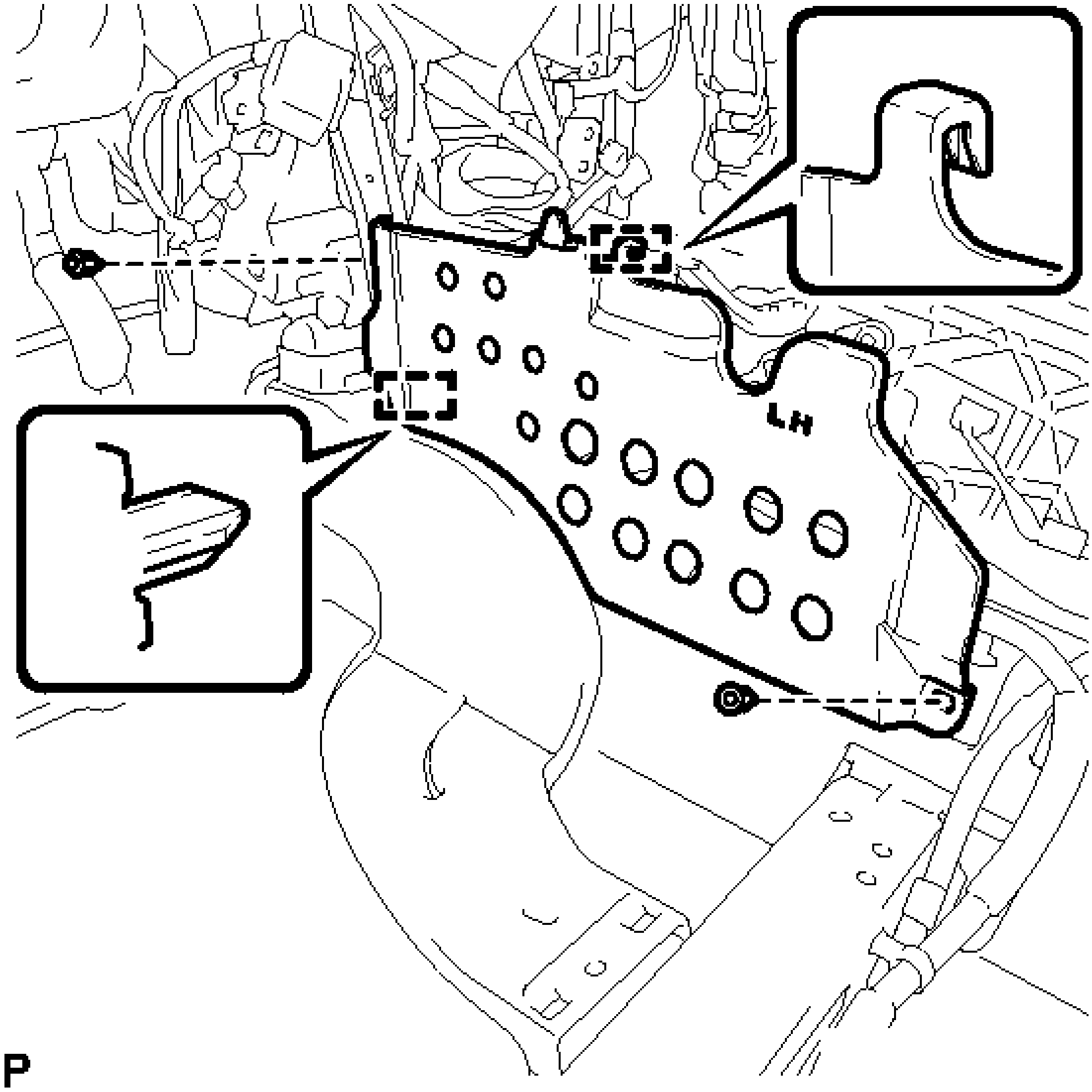

Fig. 32: Identifying Floor Carpet Bracket LH Clips And Guides
Courtesy of TOYOTA MOTOR SALES, U.S.A., INC.

b. Disengage the 2 guides to remove the floor carpet bracket LH.

27. **REMOVE REAR NO. 3 AIR DUCT**

    a. Disengage the 2 claws to remove the rear No. 3 air duct.

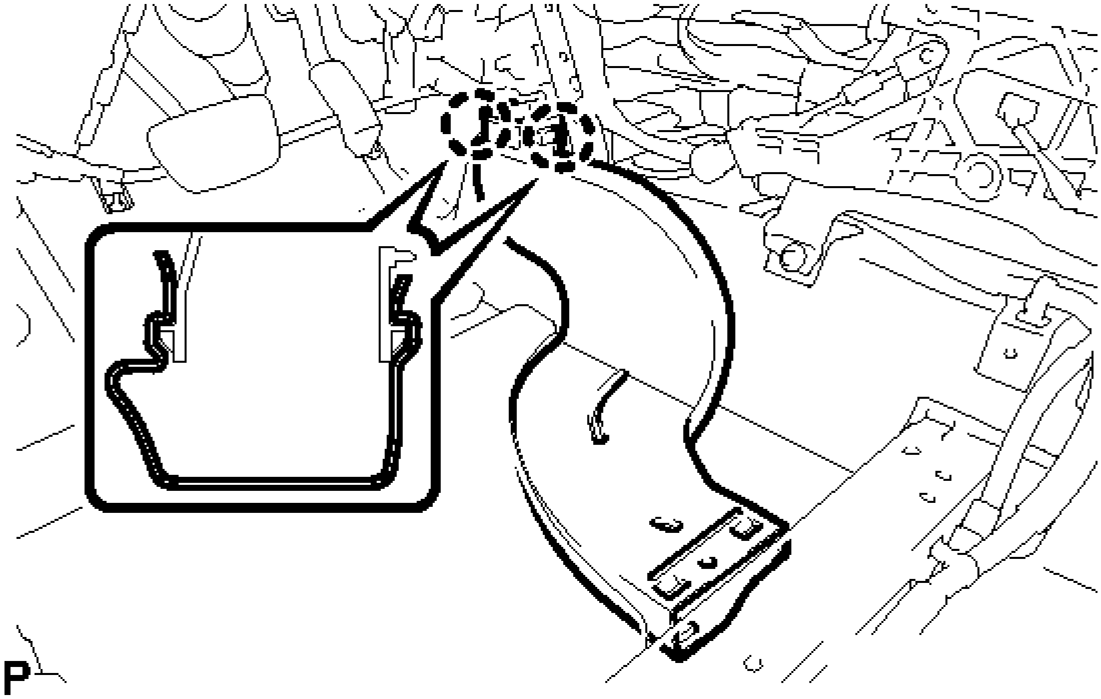

Fig. 33: Identifying Rear No. 3 Air Duct Claws
Courtesy of TOYOTA MOTOR SALES, U.S.A., INC.

28. **REMOVE REAR NO. 2 AIR DUCT**
    a. Disengage the guide.

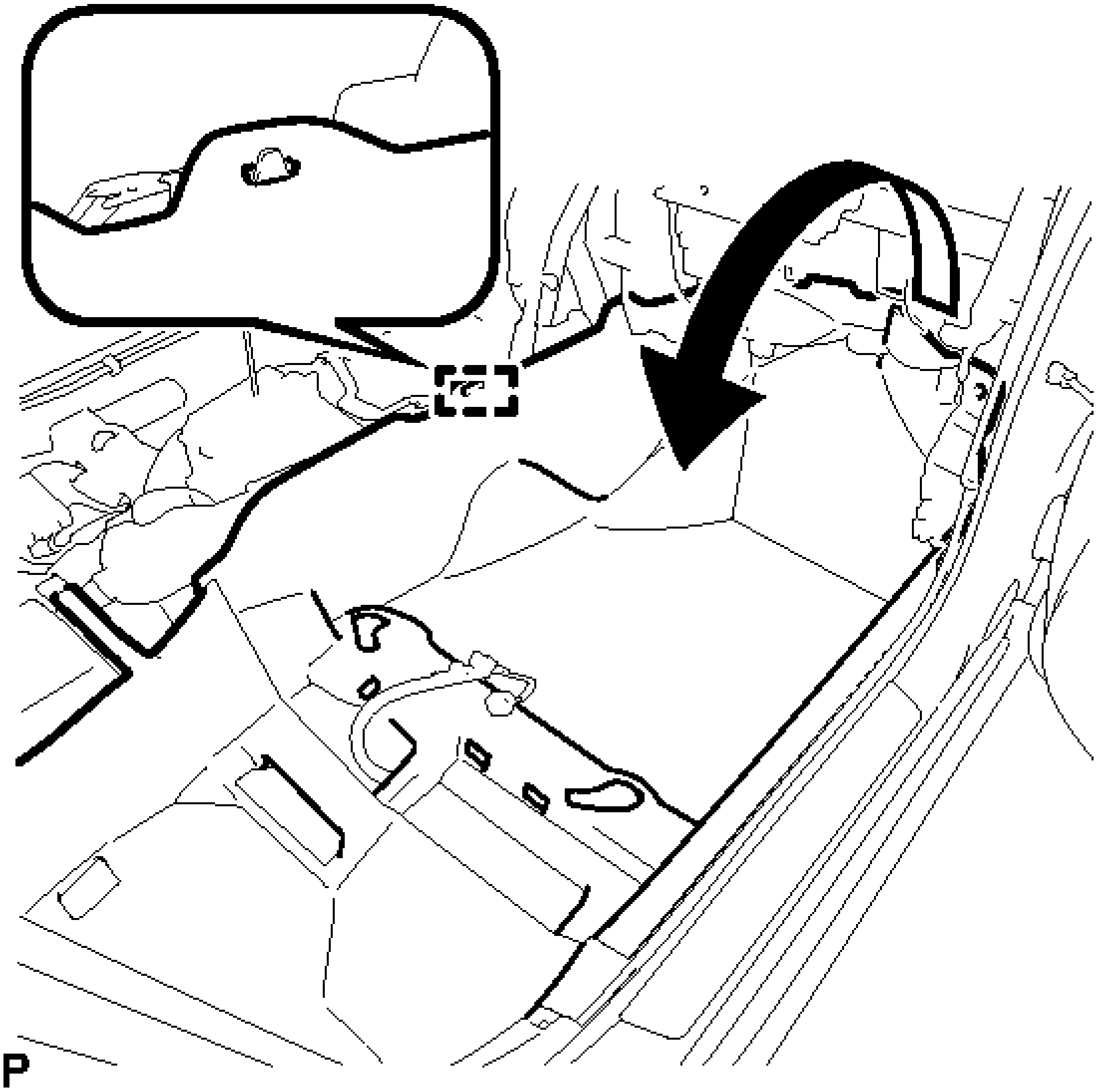

Fig. 34: Turning Back The Floor Carpet
Courtesy of TOYOTA MOTOR SALES, U.S.A., INC.

b. Turn back the floor carpet as shown in the illustration.
c. Disengage the 4 claws to remove the rear No. 2 air duct.

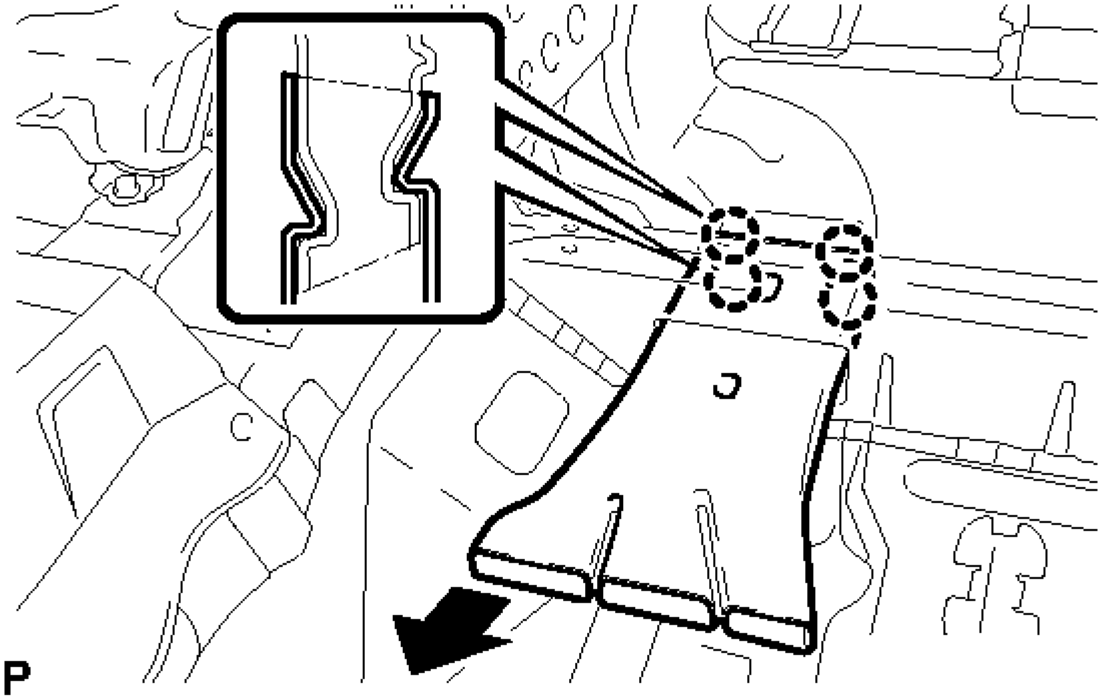

Fig. 35: Identifying Rear No. 2 Air Duct
Courtesy of TOYOTA MOTOR SALES, U.S.A., INC.

29. **REMOVE FLOOR CARPET BRACKET RH**
    a. Remove the 2 clips.

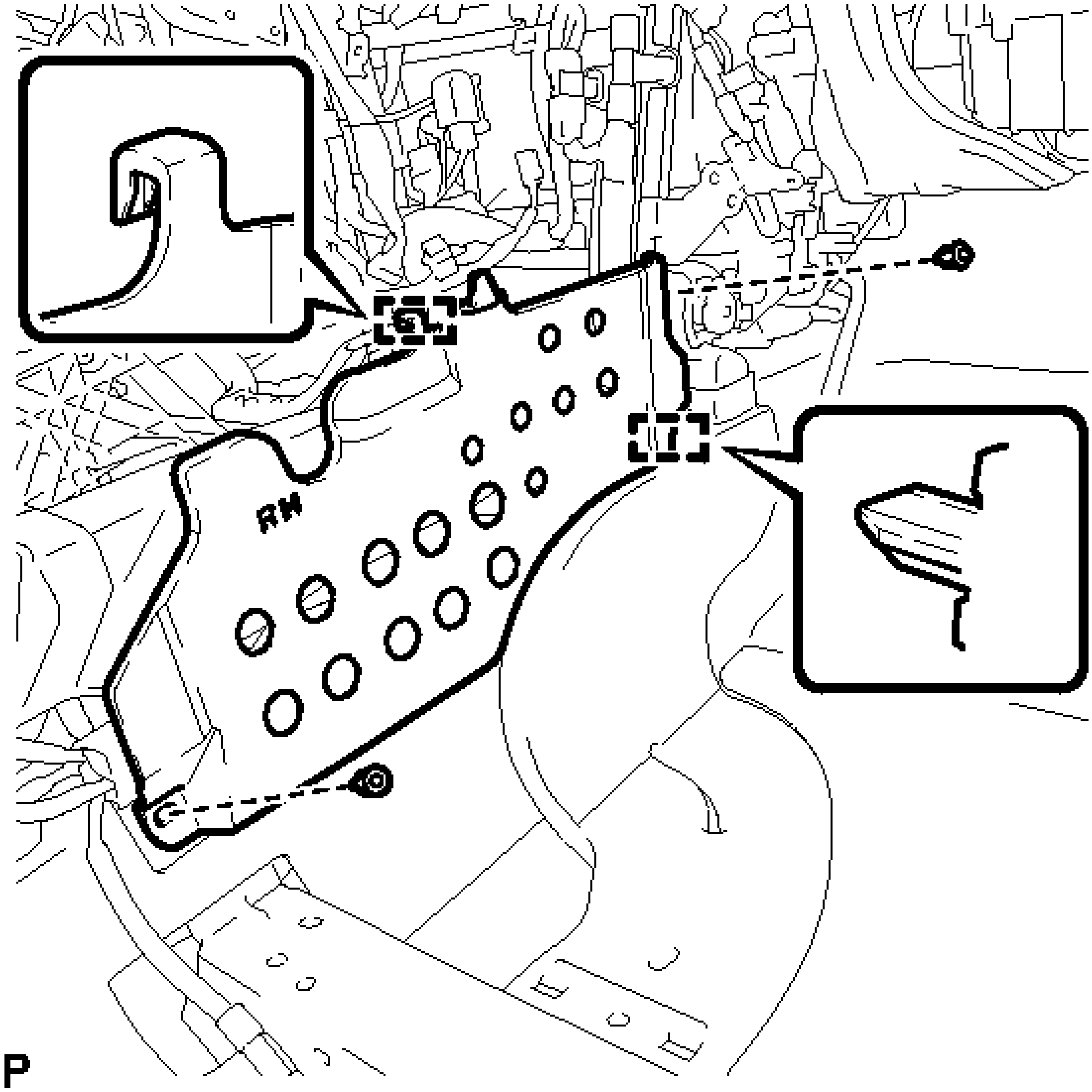

Fig. 36: Identifying Floor Carpet Bracket RH Clips And Guides
Courtesy of TOYOTA MOTOR SALES, U.S.A., INC.

b. Disengage the 2 guides to remove the floor carpet bracket RH.

30. **REMOVE REAR NO. 1 AIR DUCT**

    a. Disengage the 2 claws to remove the rear No. 1 air duct.

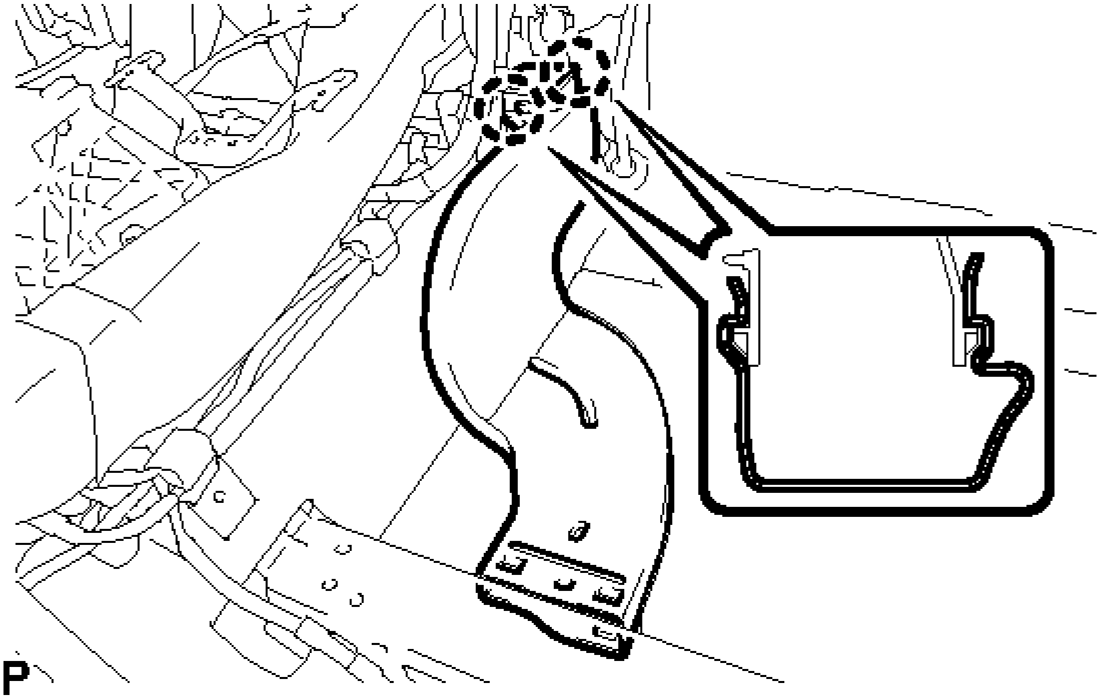

Fig. 37: Identifying Rear No. 1 Air Duct Claws
Courtesy of TOYOTA MOTOR SALES, U.S.A., INC.

31. **REMOVE NO. 1 CONSOLE BOX MOUNTING BRACKET**
    a. Remove the screw and No. 1 console box mounting bracket from the lower shift lever assembly.

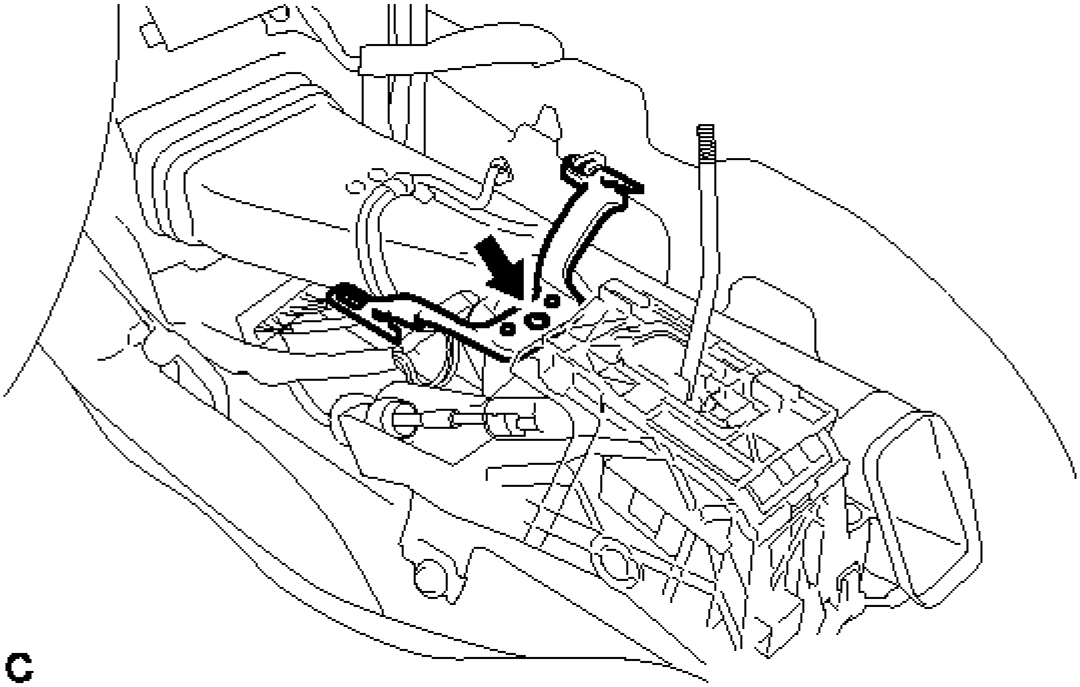

Fig. 38: Identifying No. 1 Console Box Mounting Bracket Screw

Courtesy of TOYOTA MOTOR SALES, U.S.A., INC.

32. **REMOVE NO. 1 CONSOLE BOX DUCT (w/ Rear Register Duct)**
    a. Remove the clip and the No. 1 console box duct.

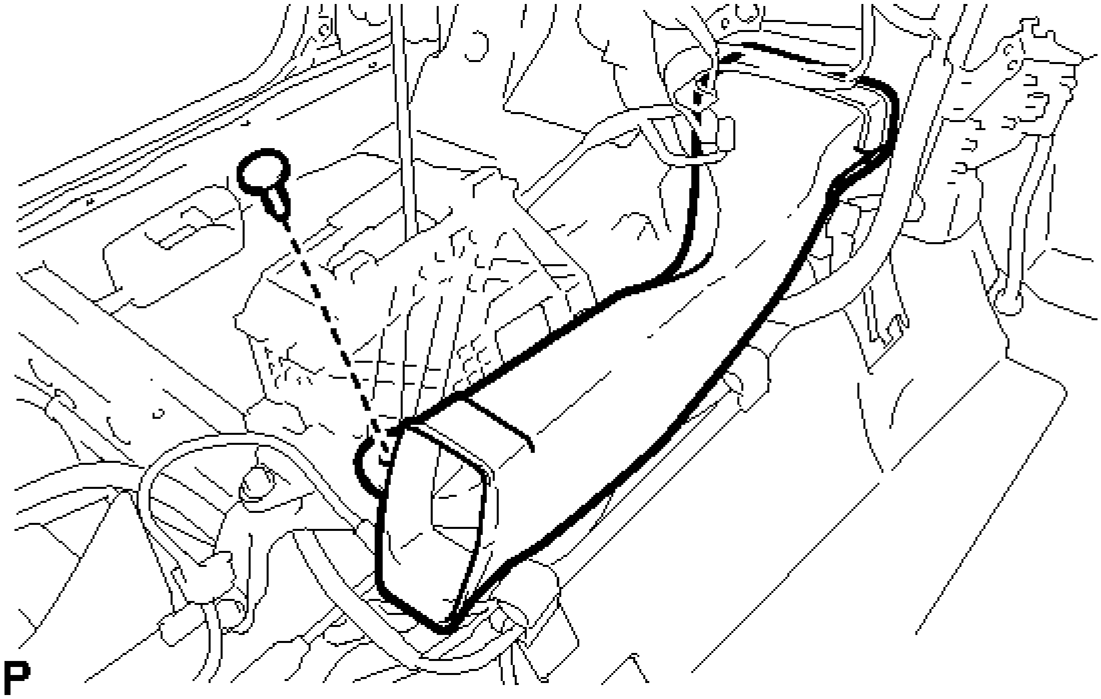

Fig. 39: Identifying No. 1 Console Box Duct (W/ Rear Register Duct) Clip
Courtesy of TOYOTA MOTOR SALES, U.S.A., INC.

33. **REMOVE INSTRUMENT PANEL TO COWL BRACE SUB-ASSEMBLY**
    a. Disconnect each connector.

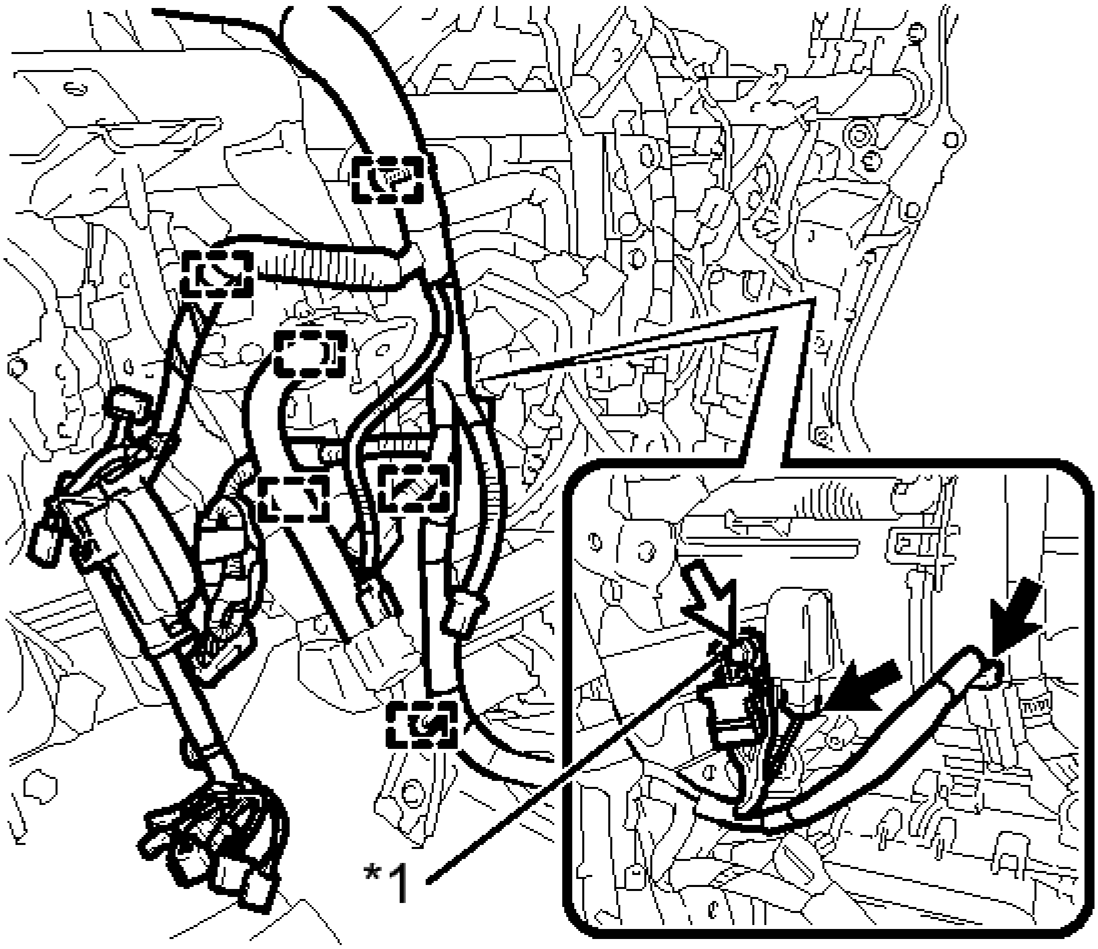

P

Fig. 40: Identifying Wire Harness Connectors And Clamps
Courtesy of TOYOTA MOTOR SALES, U.S.A., INC.

TEXT IN ILLUSTRATION

*1	Earth Wire

b. Disengage each clamp.
c. Disconnect the connector.
d. Disengage each clamp.

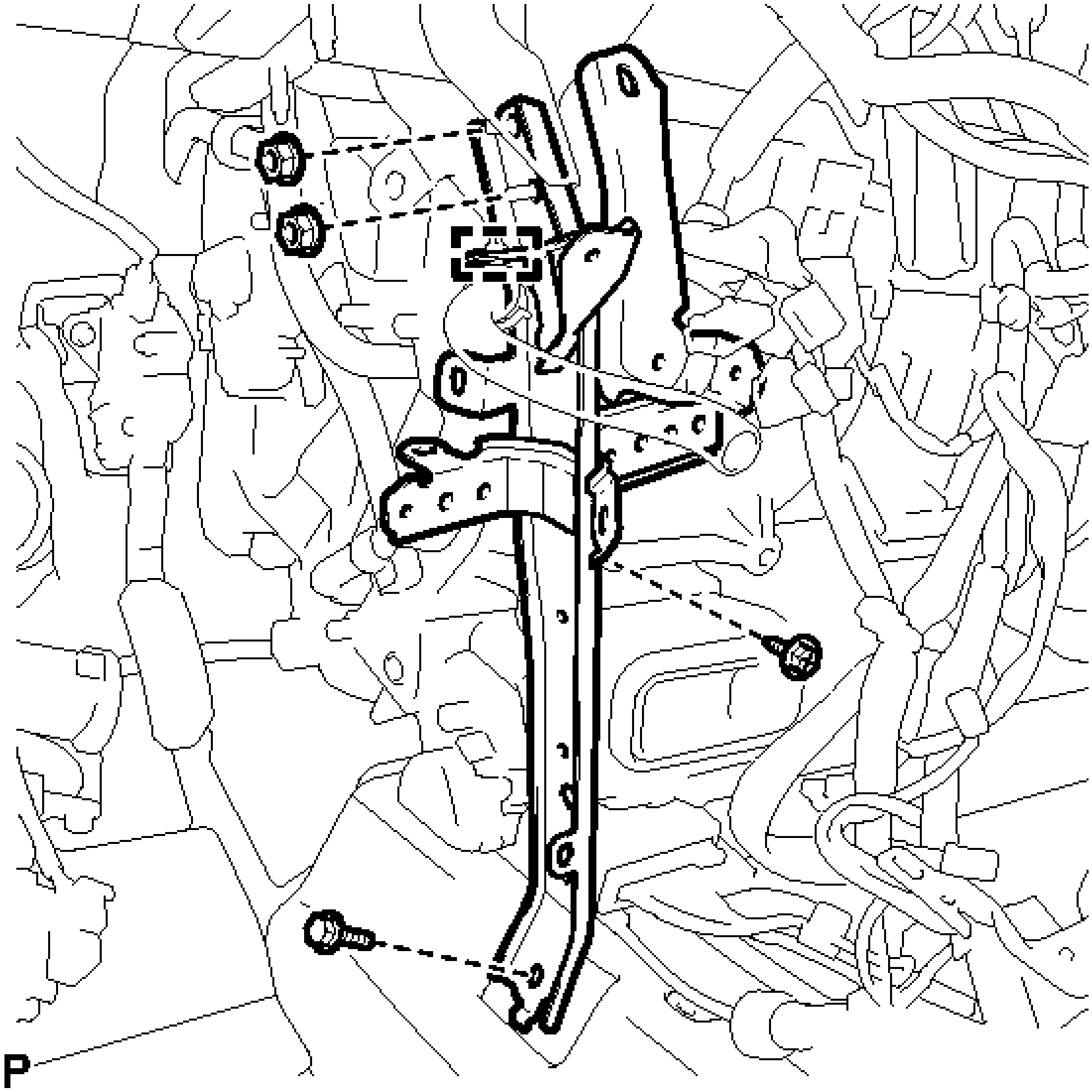

Fig. 41: Identifying Instrument Panel To Cowl Brace Sub-Assembly Bolt, Nuts, And Screw
Courtesy of TOYOTA MOTOR SALES, U.S.A., INC.

e. Remove the bolt and 2 nuts.

f. Remove the screw and the instrument panel to cowl brace sub-assembly.

34. **REMOVE NO. 2 INSTRUMENT PANEL BRACE SUB-ASSEMBLY**

a. Disconnect the connector.

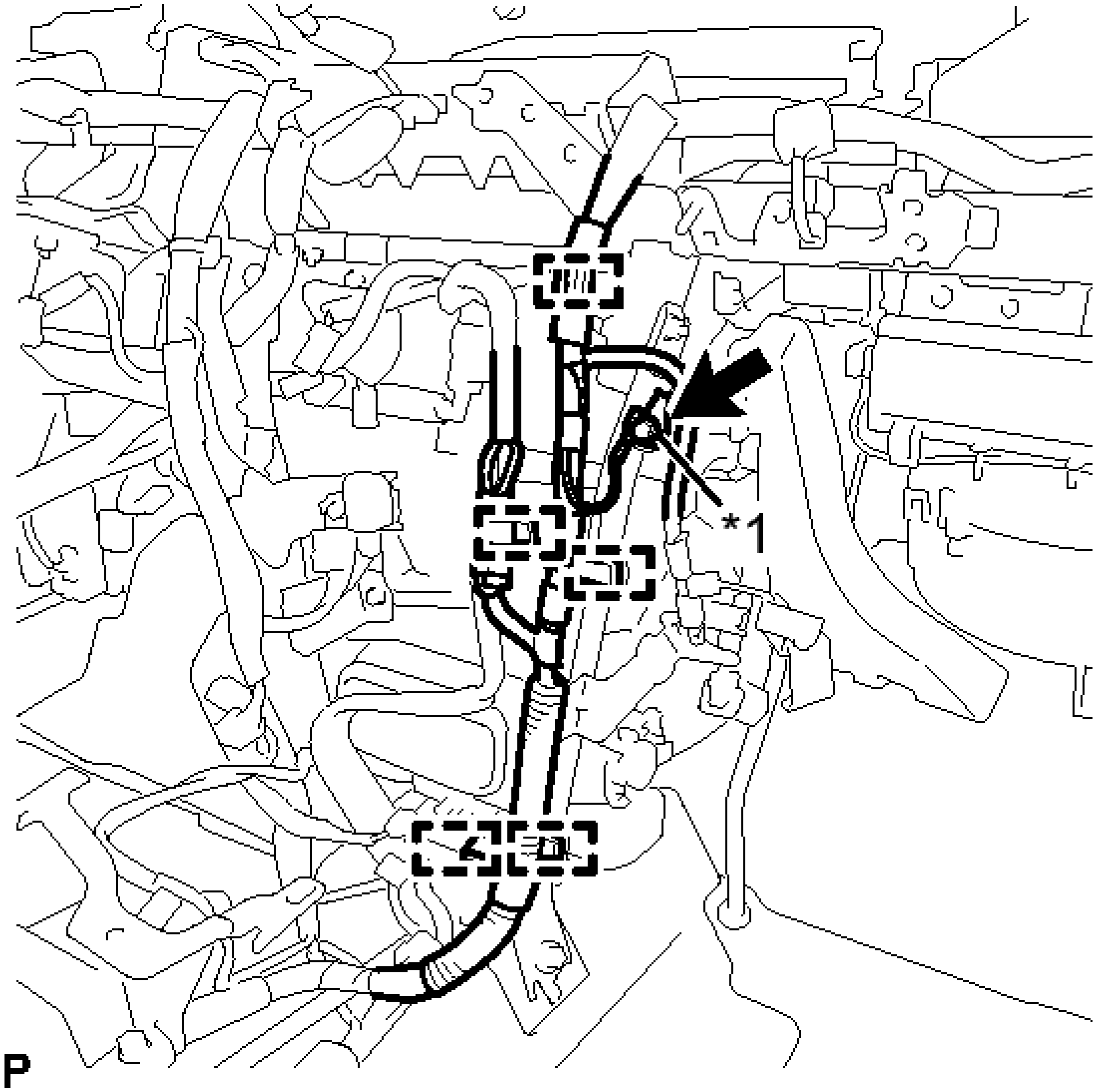

Fig. 42: Identifying Wire Harness Clamps
Courtesy of TOYOTA MOTOR SALES, U.S.A., INC.

TEXT IN ILLUSTRATION

*1	Earth Wire

b. Disengage each clamp.
c. Remove the bolt and disconnect the earth wire.
d. Remove the bolt and 2 nuts.

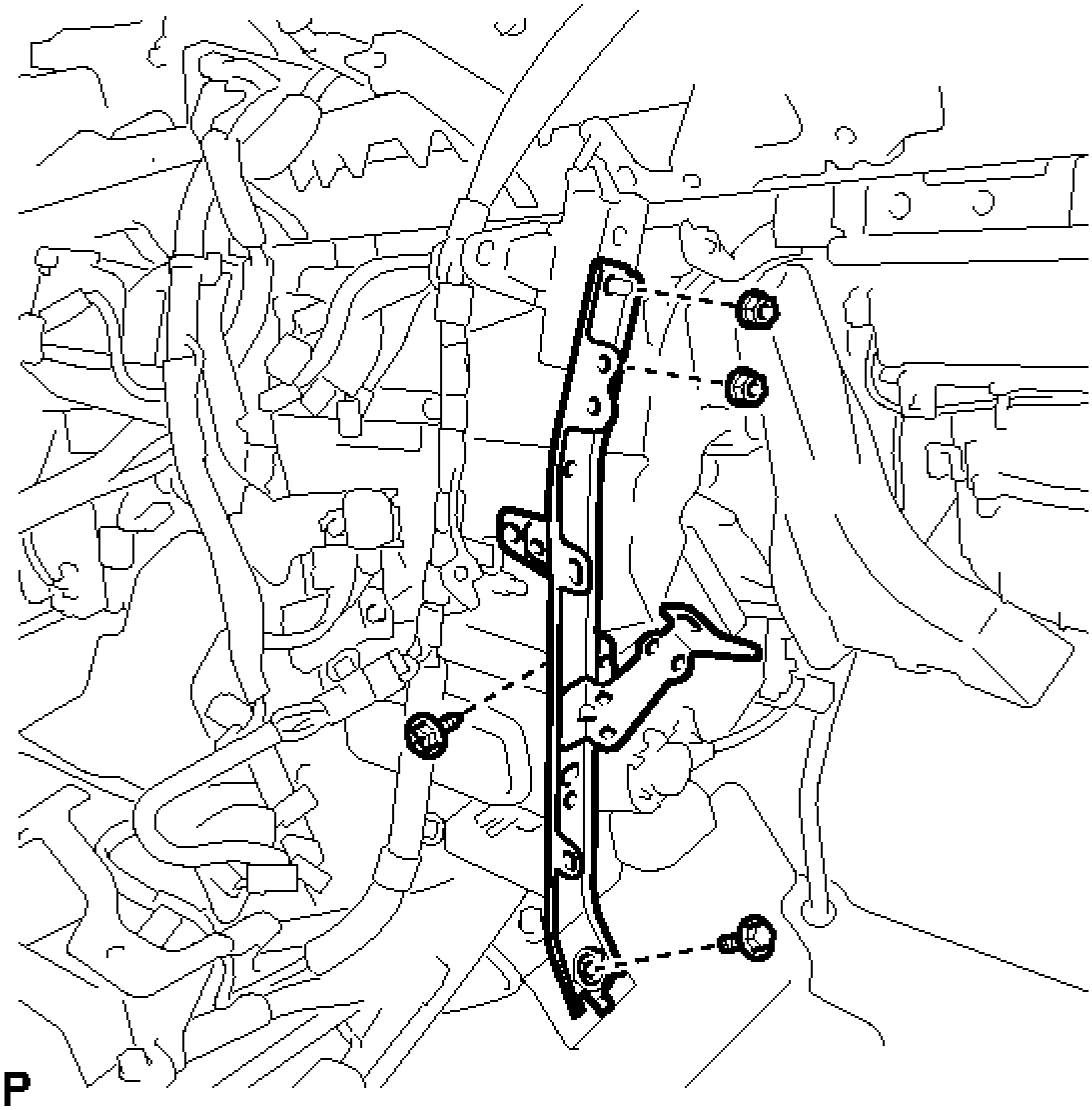

Fig. 43: Identifying No. 2 Instrument Panel Brace Sub-Assembly Bolt, Nuts, And Screw
Courtesy of TOYOTA MOTOR SALES, U.S.A., INC.

e. Remove the screw and the No. 2 instrument panel brace sub-assembly.

35. **REMOVE INSTRUMENT PANEL SAFETY PAD CAP**

a. Put protective tape around the 5 instrument panel safety pad caps.

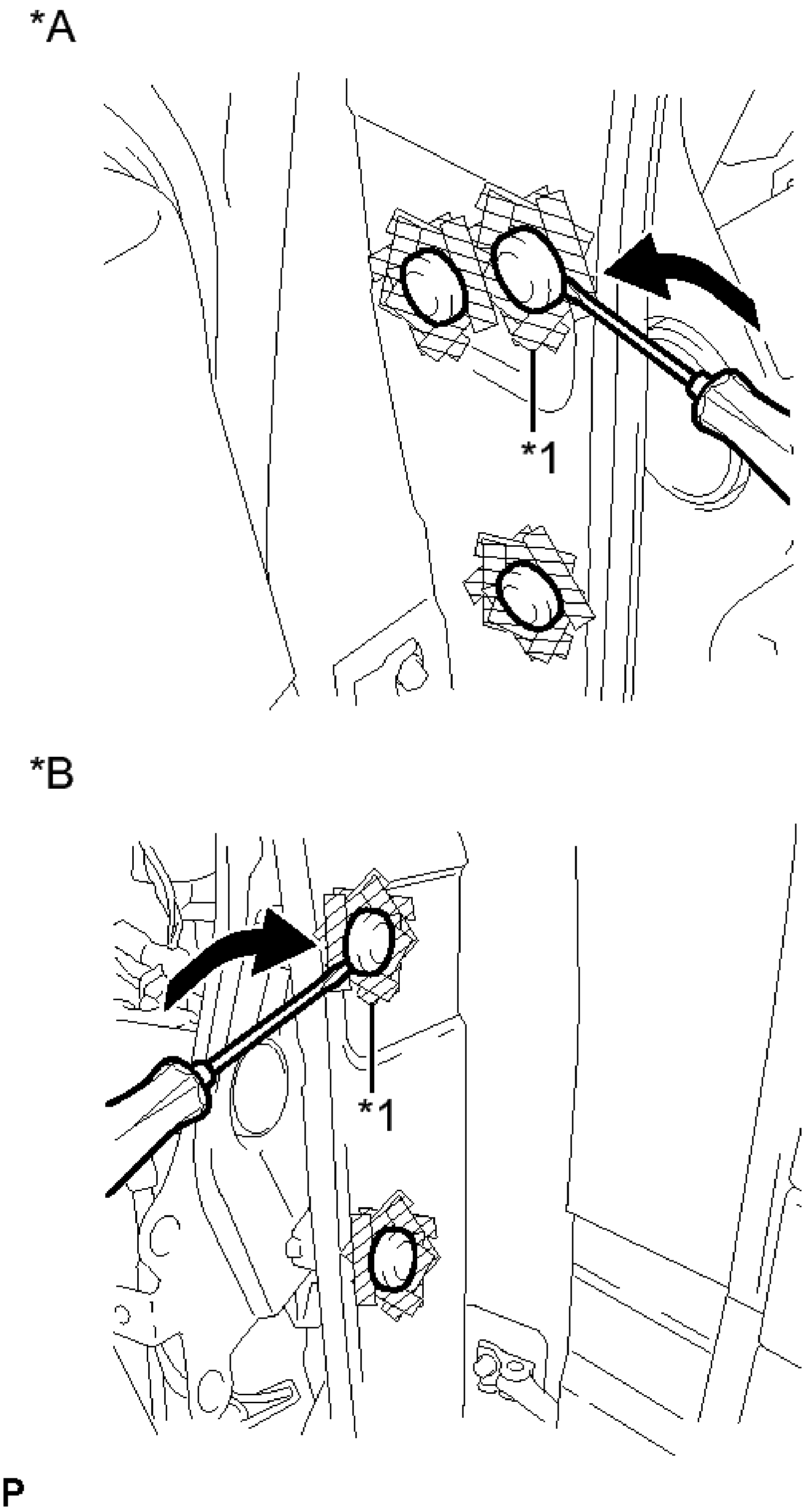

Fig. 44: Identifying Instrument Panel Safety Pad Caps
Courtesy of TOYOTA MOTOR SALES, U.S.A., INC.

TEXT IN ILLUSTRATION

*A	for LH Side
*B	for RH Side
*1	Protective Tape

b. Using a screwdriver, remove the 5 instrument panel safety pad caps.

36. **REMOVE FRONT LOWER PANEL PACKING**

a. Remove the 2 front lower panel packings as shown in the illustration.

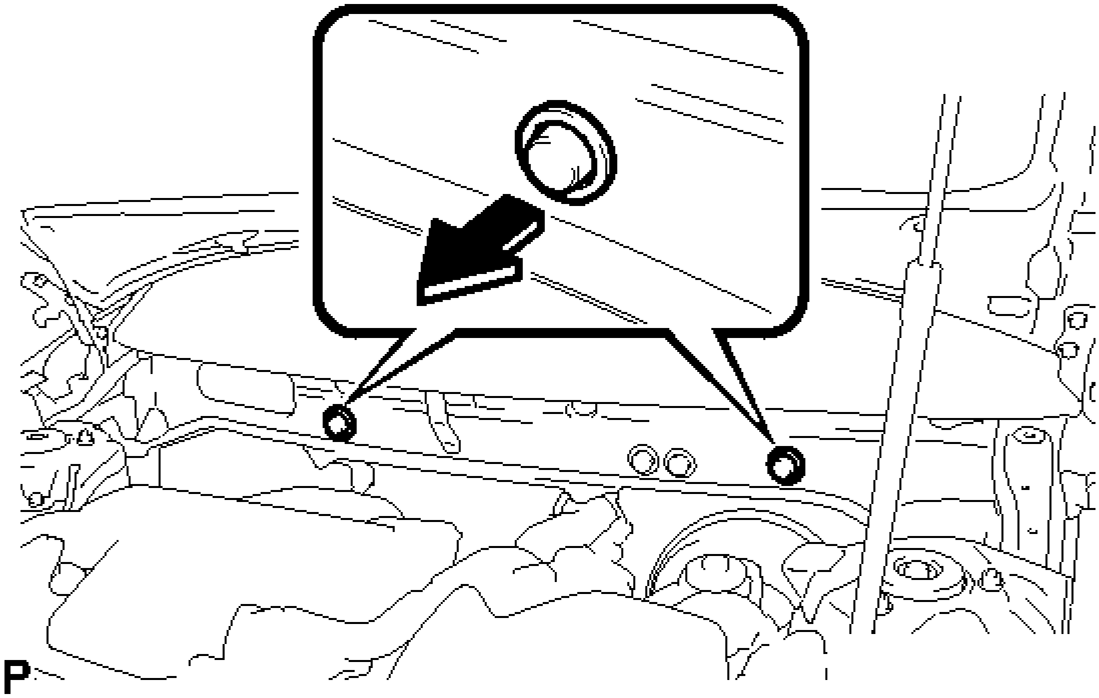

Fig. 45: Identifying Front Lower Panel Packing
Courtesy of TOYOTA MOTOR SALES, U.S.A., INC.

37. **REMOVE INSTRUMENT PANEL REINFORCEMENT ASSEMBLY WITH AIR CONDITIONING UNIT**

NOTE:

- **Be sure to support the air conditioning unit assembly when removing it because failure to do so may cause the bracket of the air conditioning unit assembly to break.**
- **When disassembling the air conditioning unit, eliminate static electricity by touching the vehicle body to prevent the components from being damaged.**

a. Disengage 3 claws to open the 3 clamps.

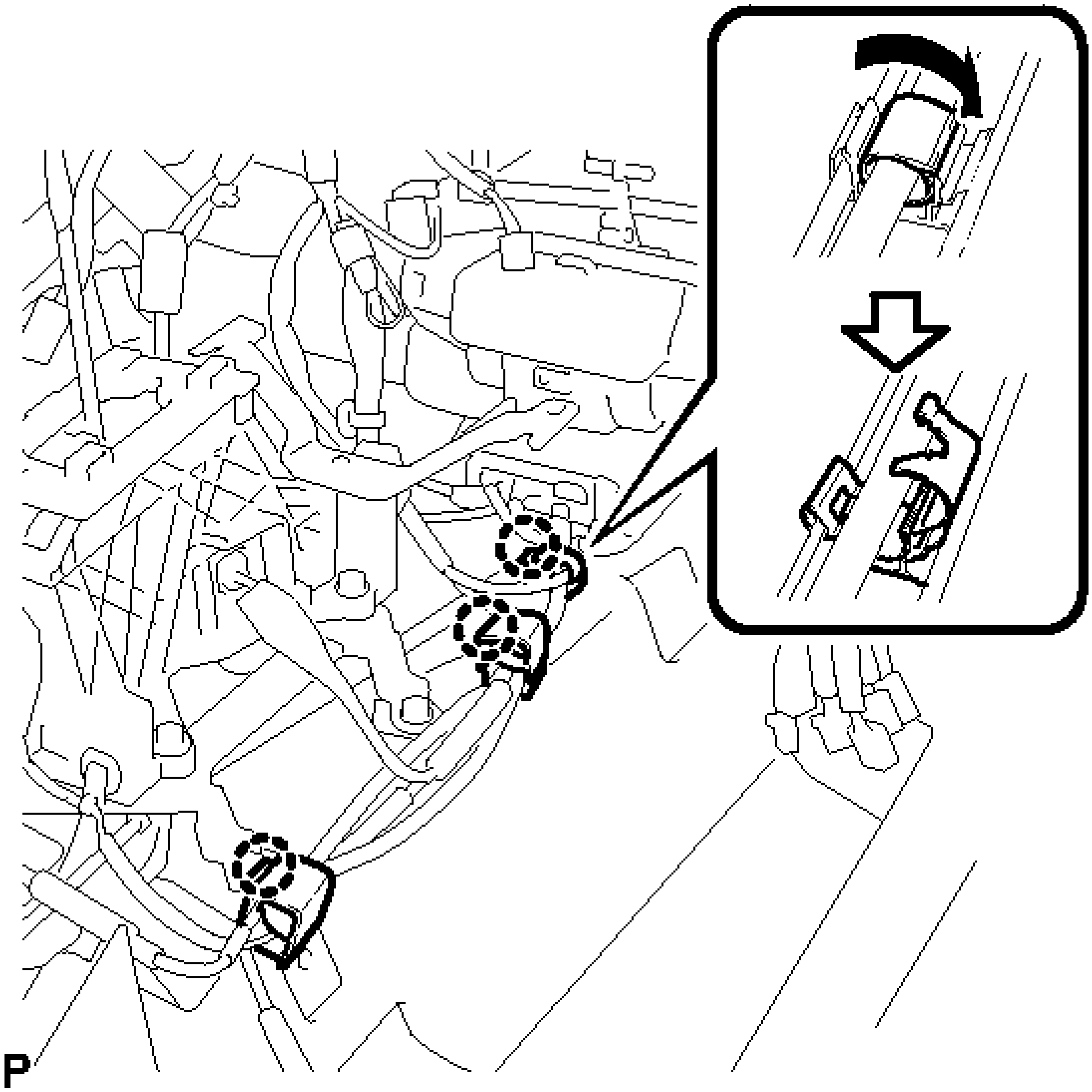

Fig. 46: Disengaging Claws To Open Clamps
Courtesy of TOYOTA MOTOR SALES, U.S.A., INC.

b. Disconnect the center airbag sensor connectors from the center airbag sensor assembly as shown in the illustration.

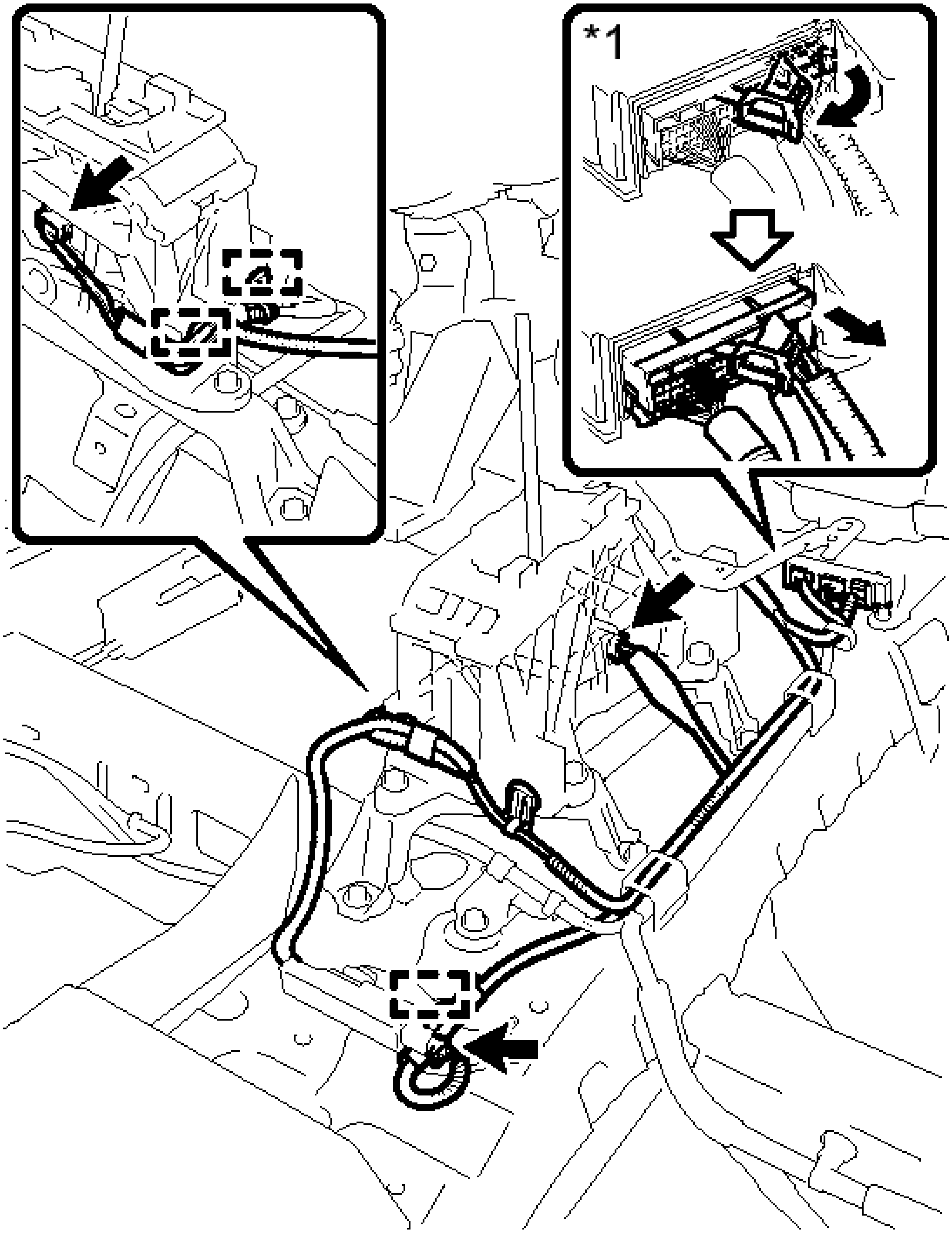

P

Fig. 47: Identifying Center Airbag Sensor Connectors
Courtesy of TOYOTA MOTOR SALES, U.S.A., INC.

TEXT IN ILLUSTRATION

	Center

*1	Airbag Sensor Connector

NOTE: **When disconnecting any airbag connector, take care not to damage the airbag wire harness.**

c. Disconnect the 3 connectors.
d. Disengage the 3 clamps.
e. Move the shift lever to N.
f. Disconnect the end of the transmission control cable assembly from the lower shift lever assembly.

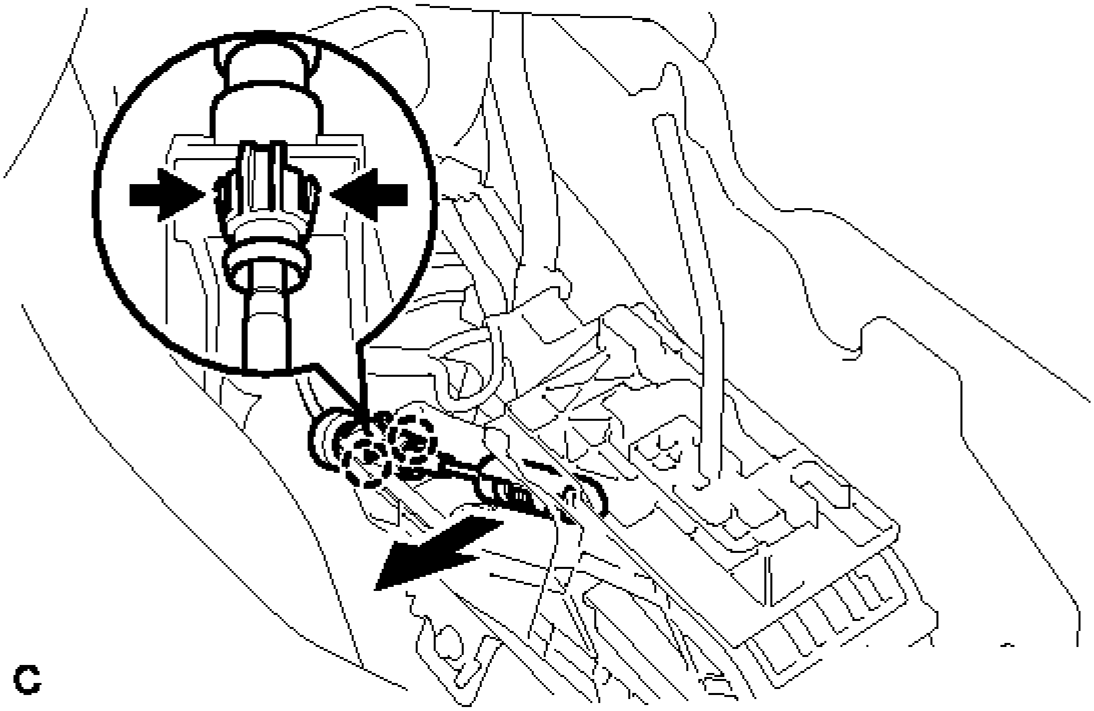

Fig. 48: Identifying Transmission Control Cable Assembly End
Courtesy of TOYOTA MOTOR SALES, U.S.A., INC.

g. Remove the 4 bolts and lower shift lever assembly.

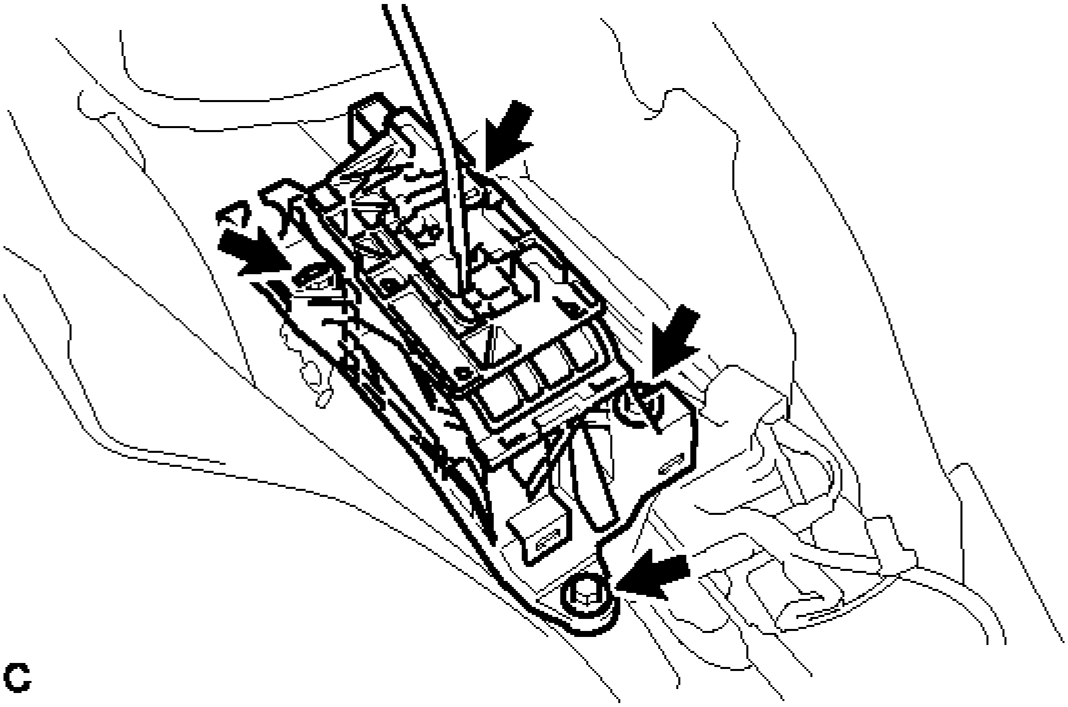

Fig. 49: Identifying Lower Shift Lever Assembly Bolts
Courtesy of TOYOTA MOTOR SALES, U.S.A., INC.

h. Remove the 4 bolts and shift lever support.

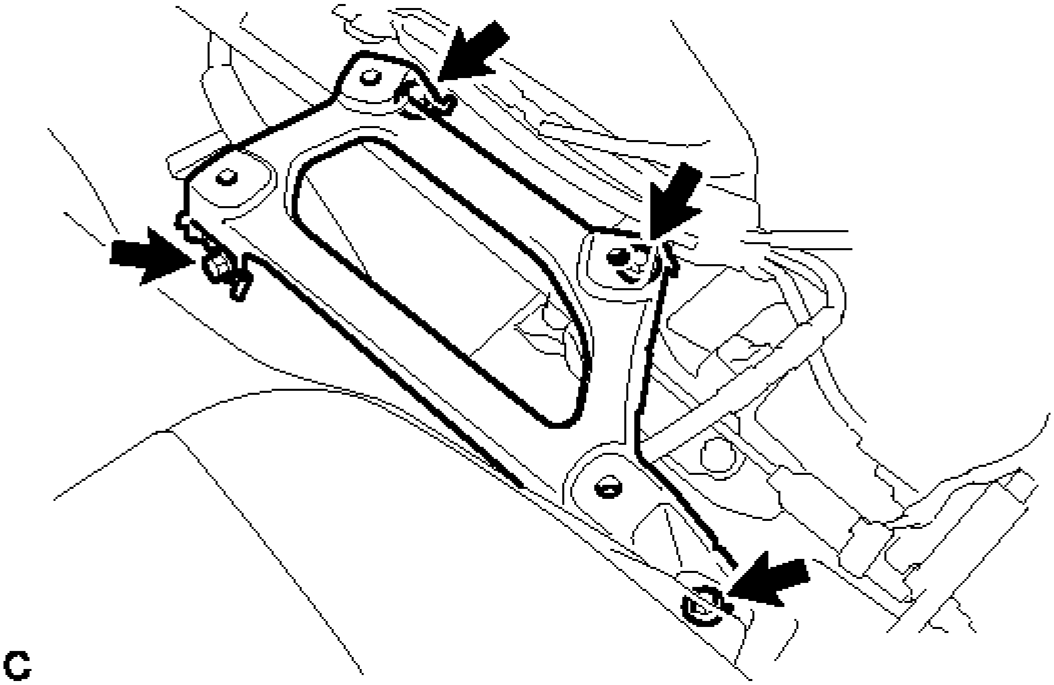

Fig. 50: Identifying Shift Lever Support Bolts
Courtesy of TOYOTA MOTOR SALES, U.S.A., INC.

i. Remove the bolt.

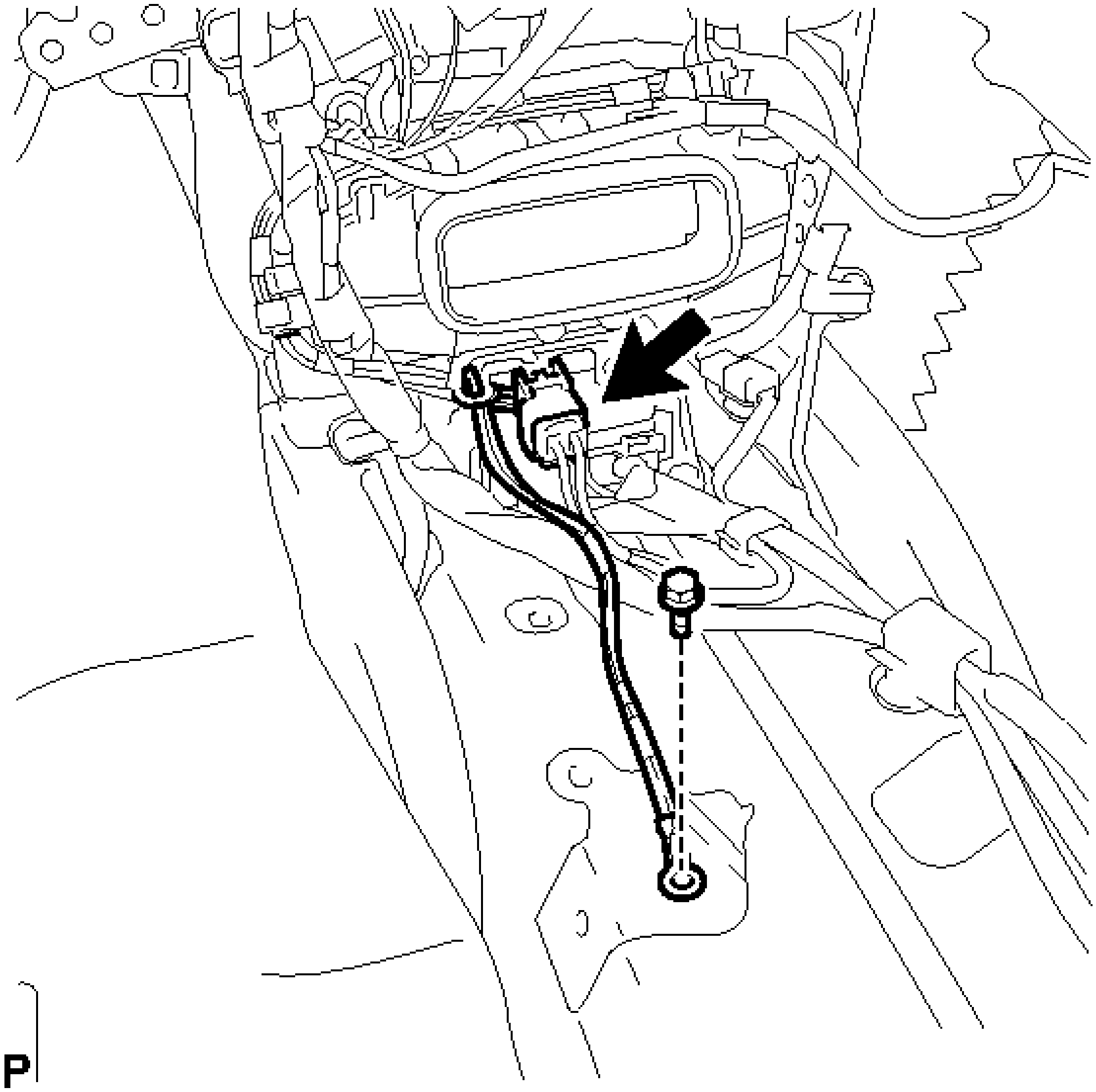

Fig. 51: Identifying Bolt And Connector
Courtesy of TOYOTA MOTOR SALES, U.S.A., INC.

j. Disconnect the connector.

k. Using a screwdriver, disengage the 2 claws to unlock the retainer as shown in the illustration.

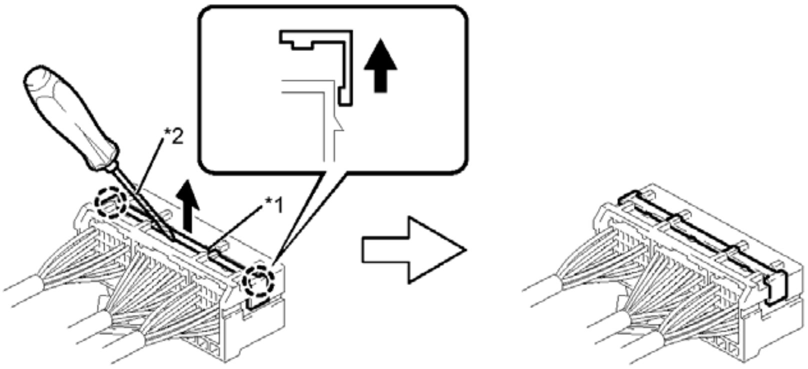

P

Fig. 52: Identifying Claws To Unlock Retainer
Courtesy of TOYOTA MOTOR SALES, U.S.A., INC.

TEXT IN ILLUSTRATION

*1	Retainer	*2	Protective Tape

l. Disengage the claw and disconnect the airbag connector as shown in the illustration.

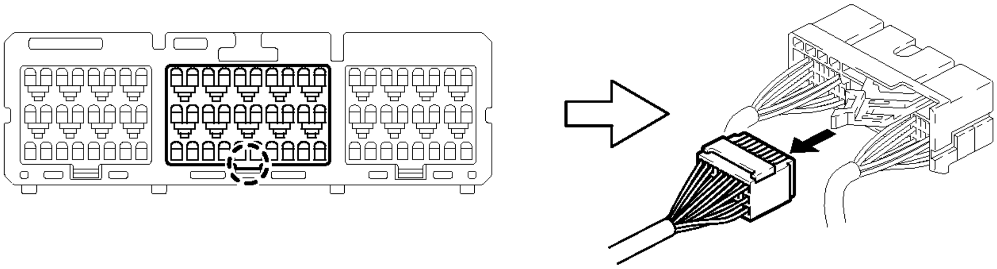

P

Fig. 53: Identifying Airbag Connector
Courtesy of TOYOTA MOTOR SALES, U.S.A., INC.

m. Disengage each clamp.

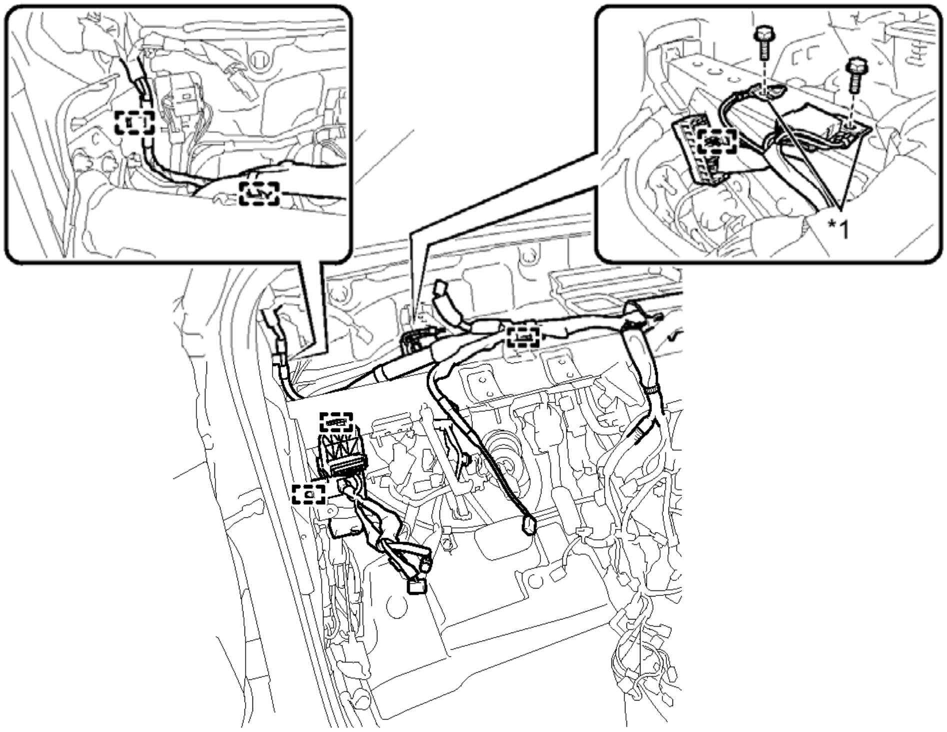

P

Fig. 54: Identifying Wire Harness Clamps
Courtesy of TOYOTA MOTOR SALES, U.S.A., INC.

TEXT IN ILLUSTRATION

*1	Earth Wire	-	-

n. Remove the 2 bolts and disconnect the 2 earth wires.
o. Disconnect the connector.

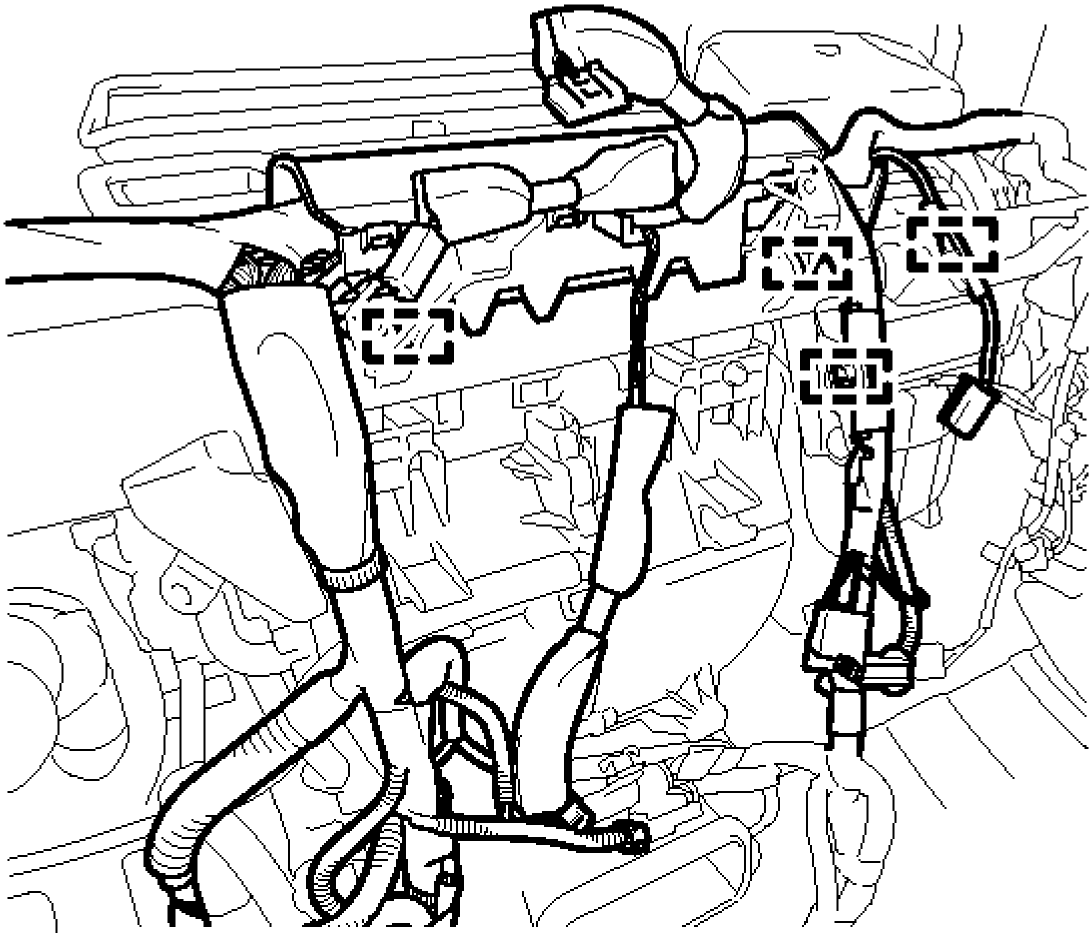

P

Fig. 55: Identifying Wire Harness Clamps
Courtesy of TOYOTA MOTOR SALES, U.S.A., INC.

p. Disengage each clamp.
q. Remove the 2 nuts.
r. Remove the bolt and disconnect the earth wire.

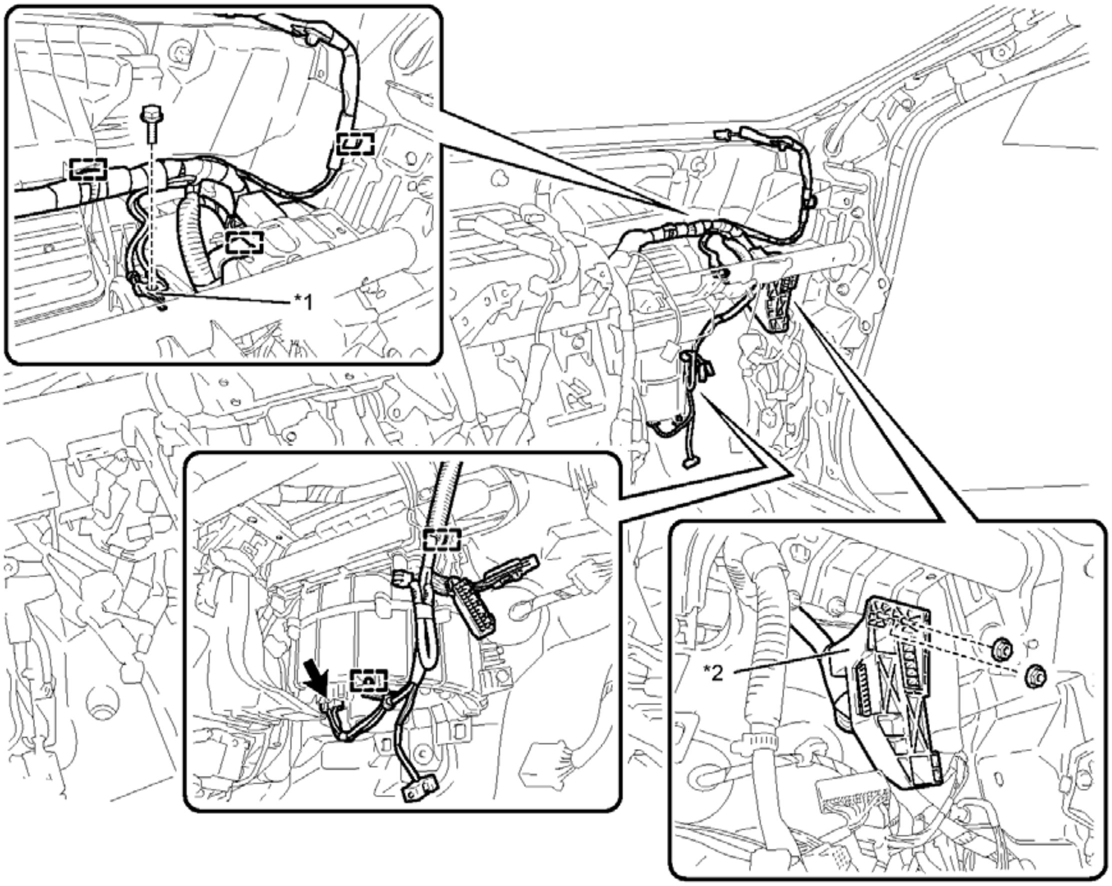

Fig. 56: Identifying Wire Harness Clamps
Courtesy of TOYOTA MOTOR SALES, U.S.A., INC.

TEXT IN ILLUSTRATION

*1	Earth Wire	*2	Connector Holder

s. Disengage each clamp.

t. Remove the 2 bolts.

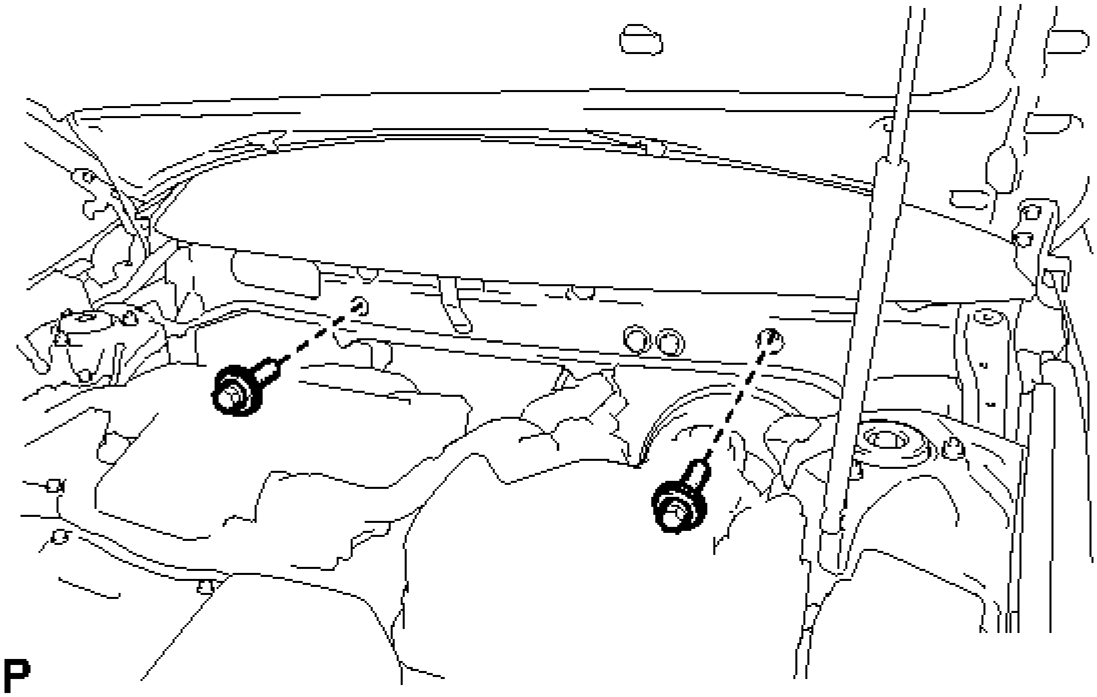

Fig. 57: Identifying Bolts
Courtesy of TOYOTA MOTOR SALES, U.S.A., INC.

u. Remove the 5 bolts and the nut as shown in the illustration.

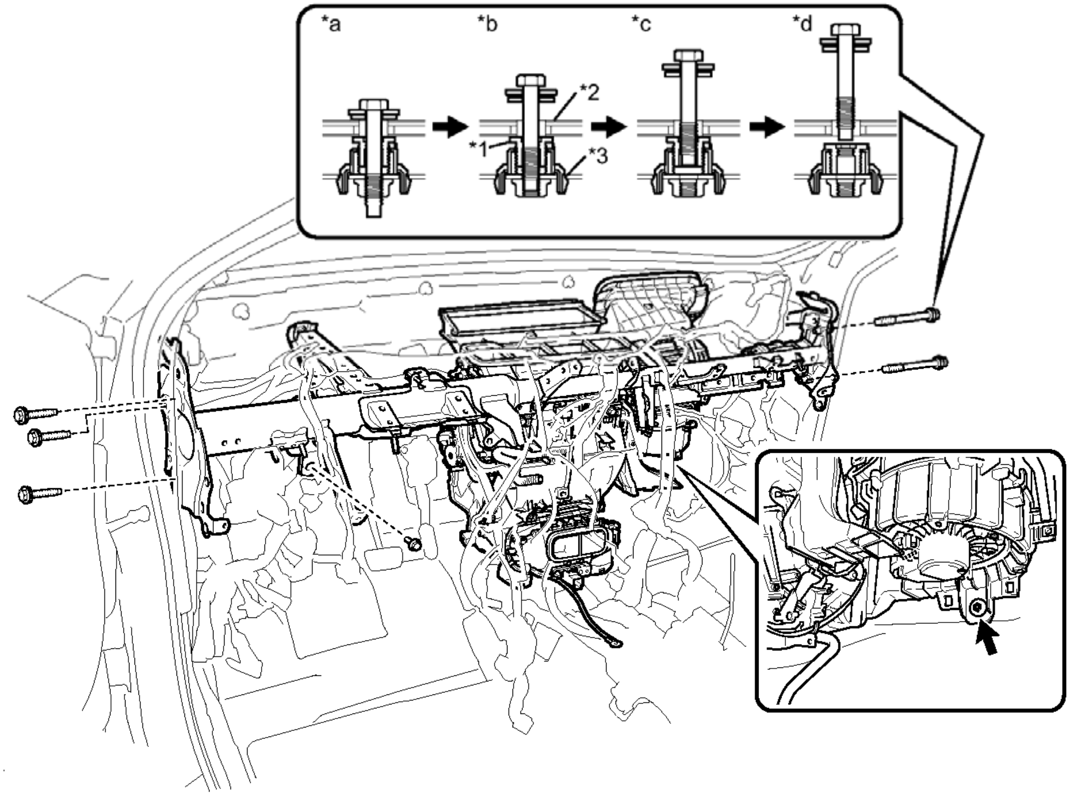

Fig. 58: Identifying Instrument Panel Reinforcement Bolts
Courtesy of TOYOTA MOTOR SALES, U.S.A., INC.

TEXT IN ILLUSTRATION

*1	Movable Collar	*2	Body
*3	Instrument Panel Reinforcement	-	-
*a	Step 1	*b	Step 2
*c	Step 3	*d	Step 4

v. Remove the instrument panel reinforcement assembly with air conditioning unit with the nut.
w. Disconnect the cooler drain hose.
x. Remove the bolt.
y. Disengage the 3 guides and remove the instrument panel reinforcement with air conditioning unit as shown in the illustration.

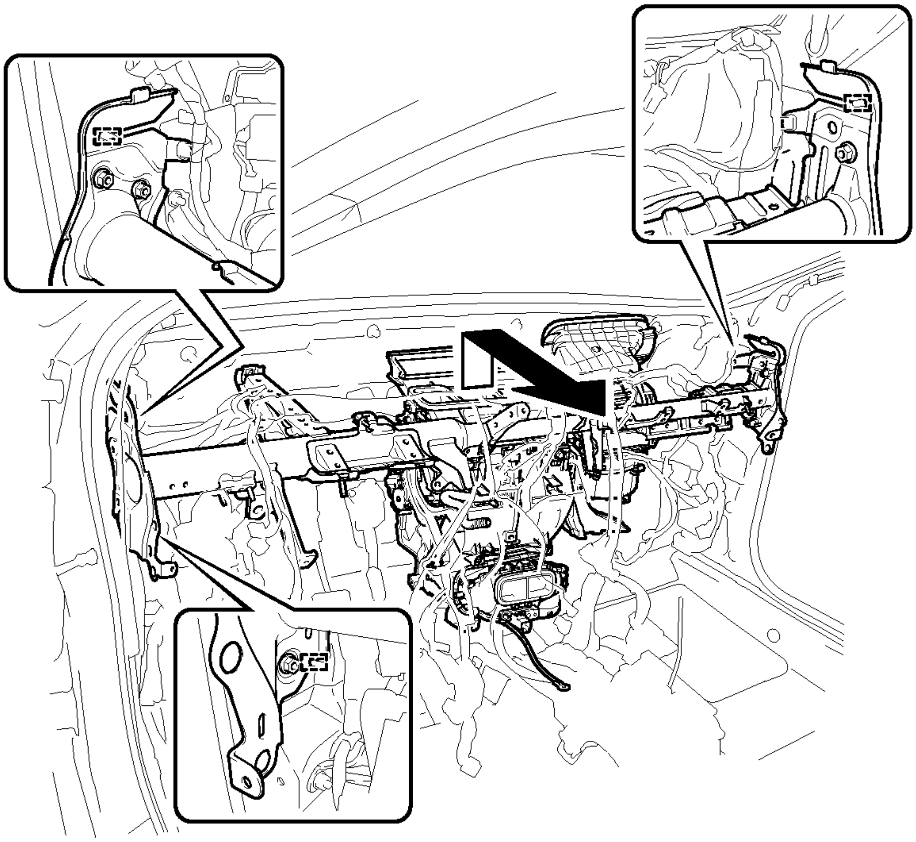

P

Fig. 59: Identifying Instrument Panel Reinforcement Guides
Courtesy of TOYOTA MOTOR SALES, U.S.A., INC.

38. REMOVE AIR CONDITIONING UNIT ASSEMBLY

a. Remove the 3 bolts and the air conditioning unit assembly from the instrument panel reinforcement assembly.

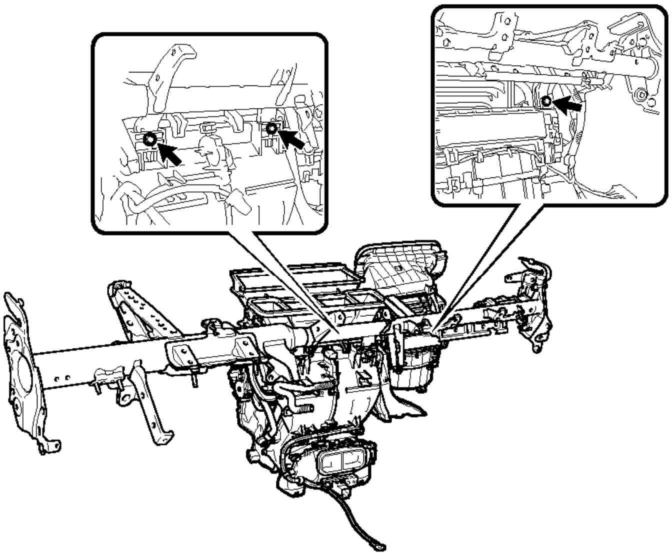

P

Fig. 60: Identifying Air Conditioning Unit Assembly Bolts
Courtesy of TOYOTA MOTOR SALES, U.S.A., INC.

DISASSEMBLY

DISASSEMBLY

1. **REMOVE NO. 1 AIR DUCT SUB-ASSEMBLY**
    a. Disengage the 2 claws and guide, and remove the No. 1 air duct sub-assembly as shown in the illustration.

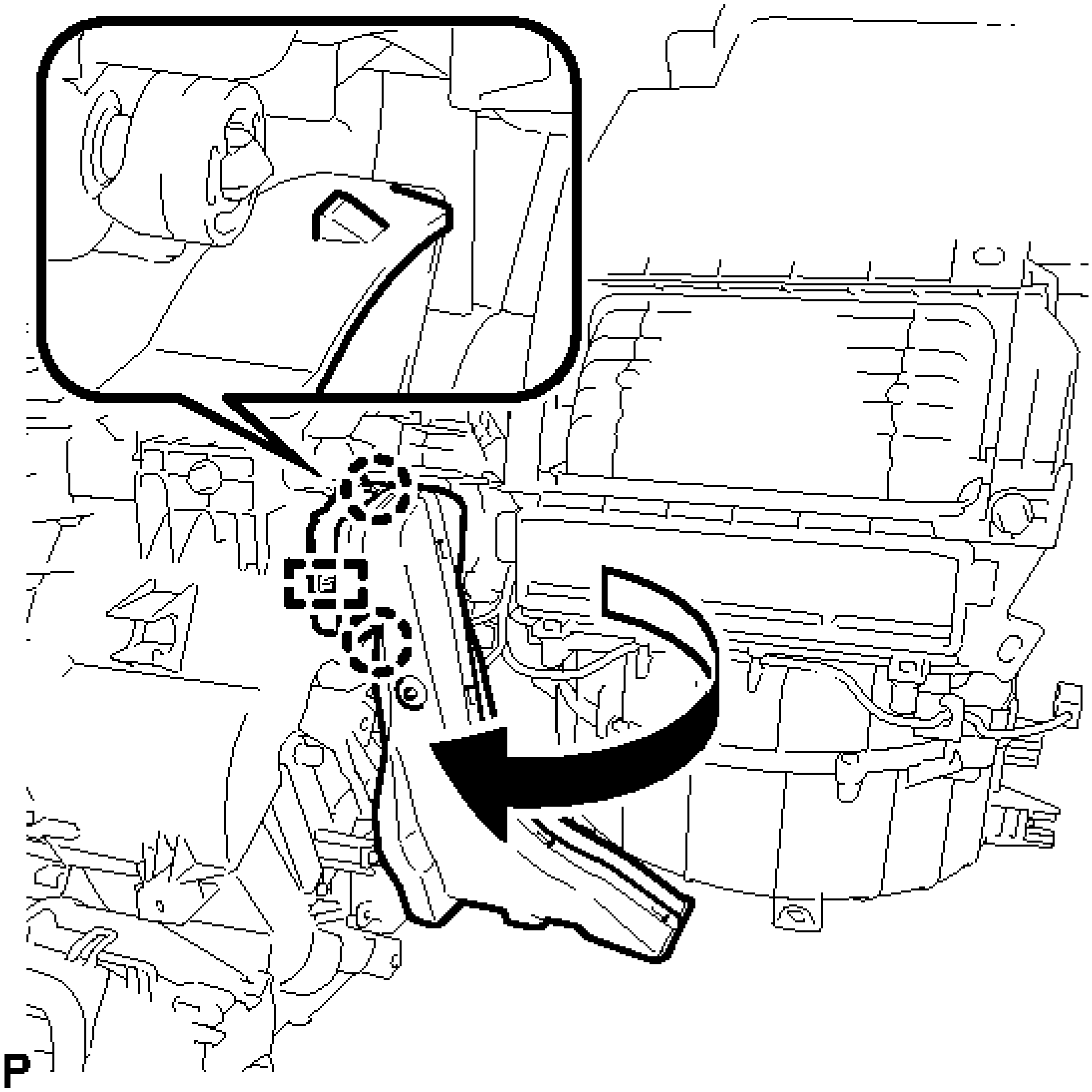

Fig. 61: Identifying No. 1 Air Duct Sub-Assembly Claws And Guide
Courtesy of TOYOTA MOTOR SALES, U.S.A., INC.

2. **REMOVE NO. 6 HEATER TO REGISTER DUCT ASSEMBLY**
    a. Disengage the 2 claws and 2 guides, and remove the No. 6 heater to register duct assembly as shown in the illustration.

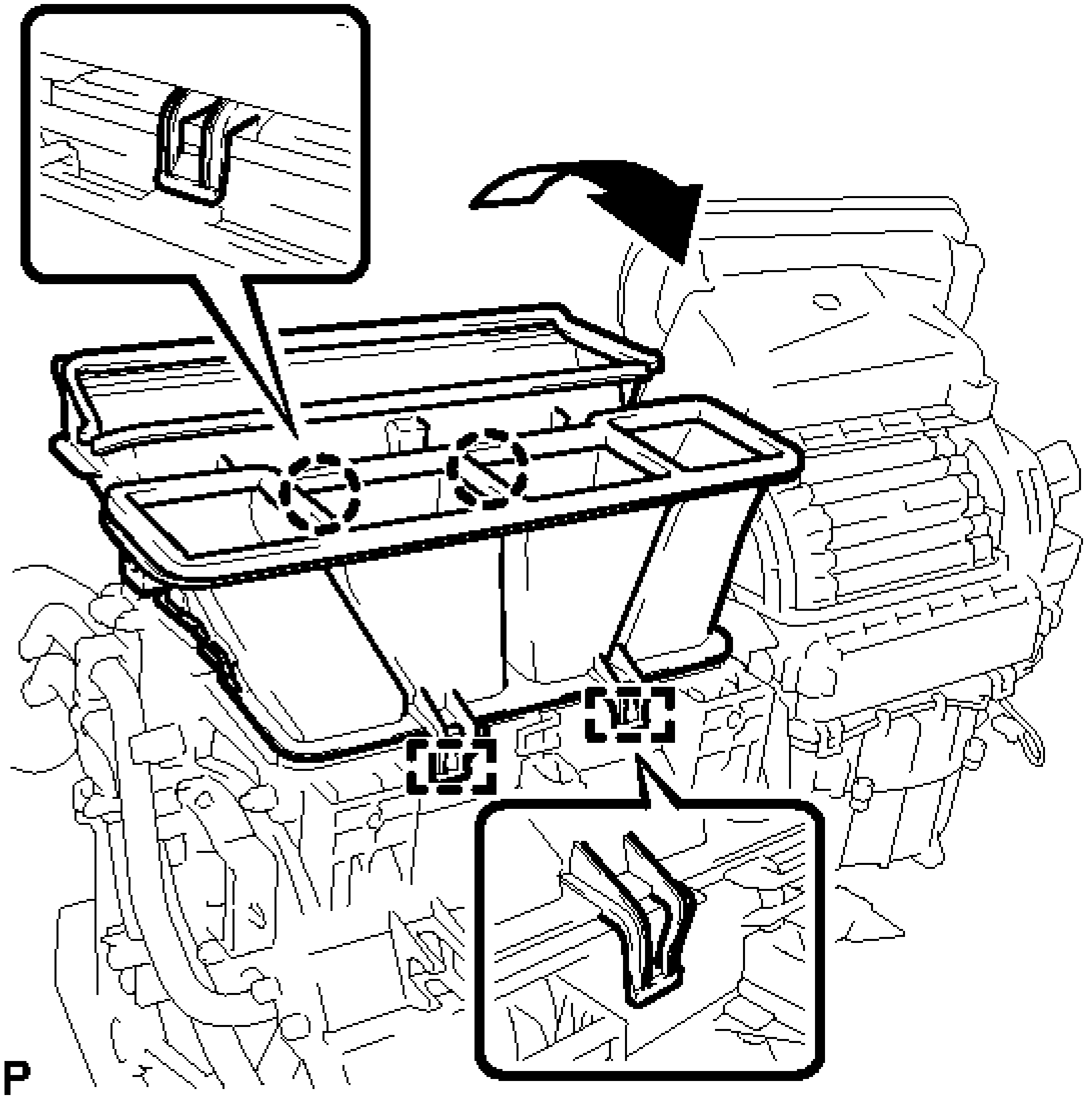

Fig. 62: Identifying No. 6 Heater To Register Duct Claws And Guides
Courtesy of TOYOTA MOTOR SALES, U.S.A., INC.

3. **REMOVE COOLER THERMISTOR HOSE**
   a. Disengage the clamp and remove the cooler thermistor hose.

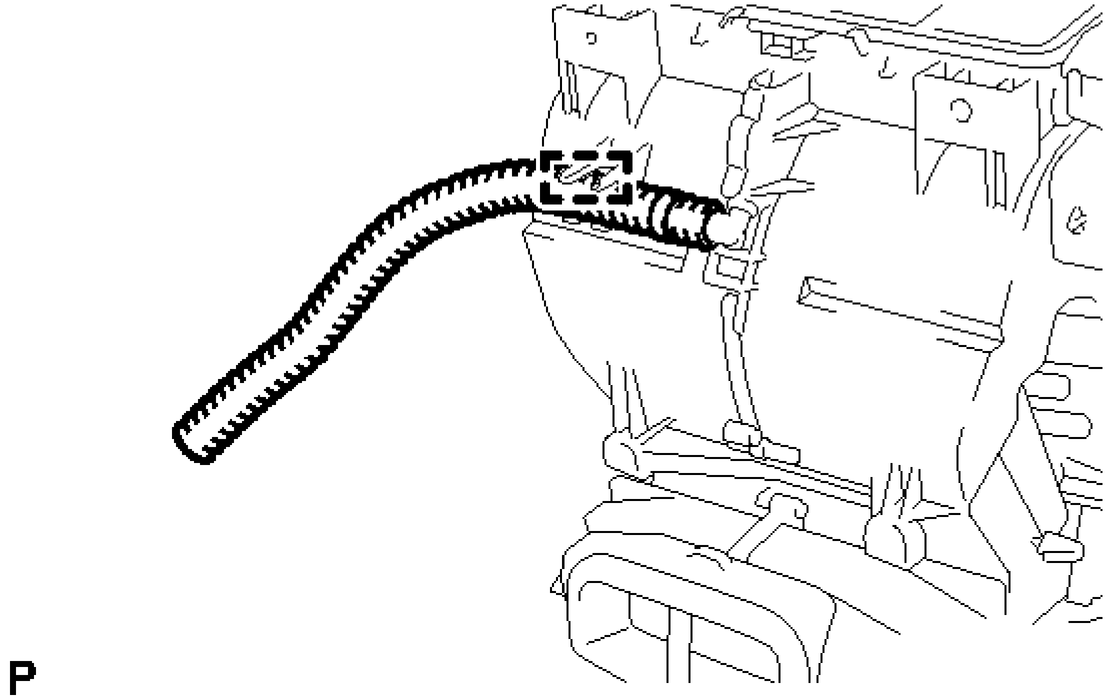

Fig. 63: Identifying Cooler Thermistor Hose
Courtesy of TOYOTA MOTOR SALES, U.S.A., INC.

4. **REMOVE ASPIRATOR**
    a. Disengage the 2 claws and remove the aspirator.

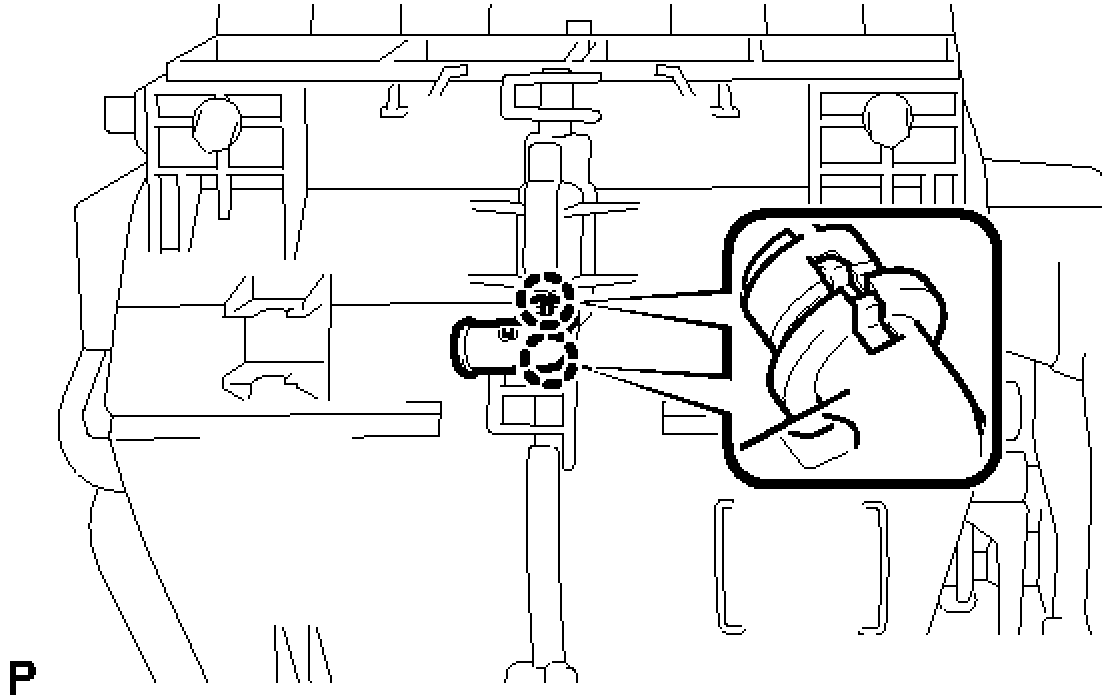

Fig. 64: Identifying Aspirator Claws

Courtesy of TOYOTA MOTOR SALES, U.S.A., INC.

5. **REMOVE AIR CONDITIONING HARNESS ASSEMBLY**
    a. Remove the heater packing as shown in the illustration.

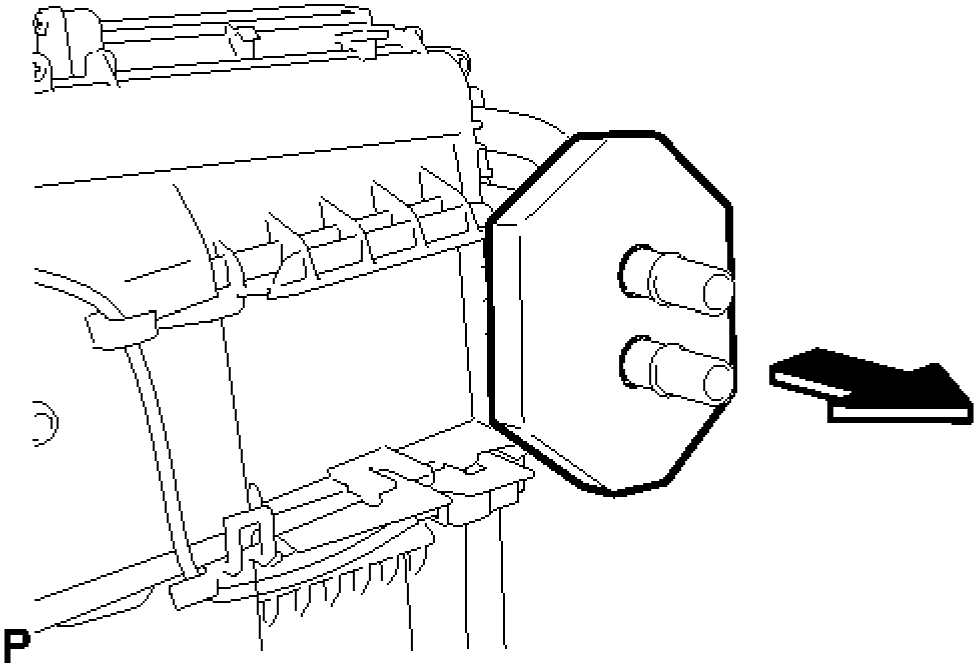

Fig. 65: Removing Heater Packing
Courtesy of TOYOTA MOTOR SALES, U.S.A., INC.

    b. Disconnect the 5 connectors.

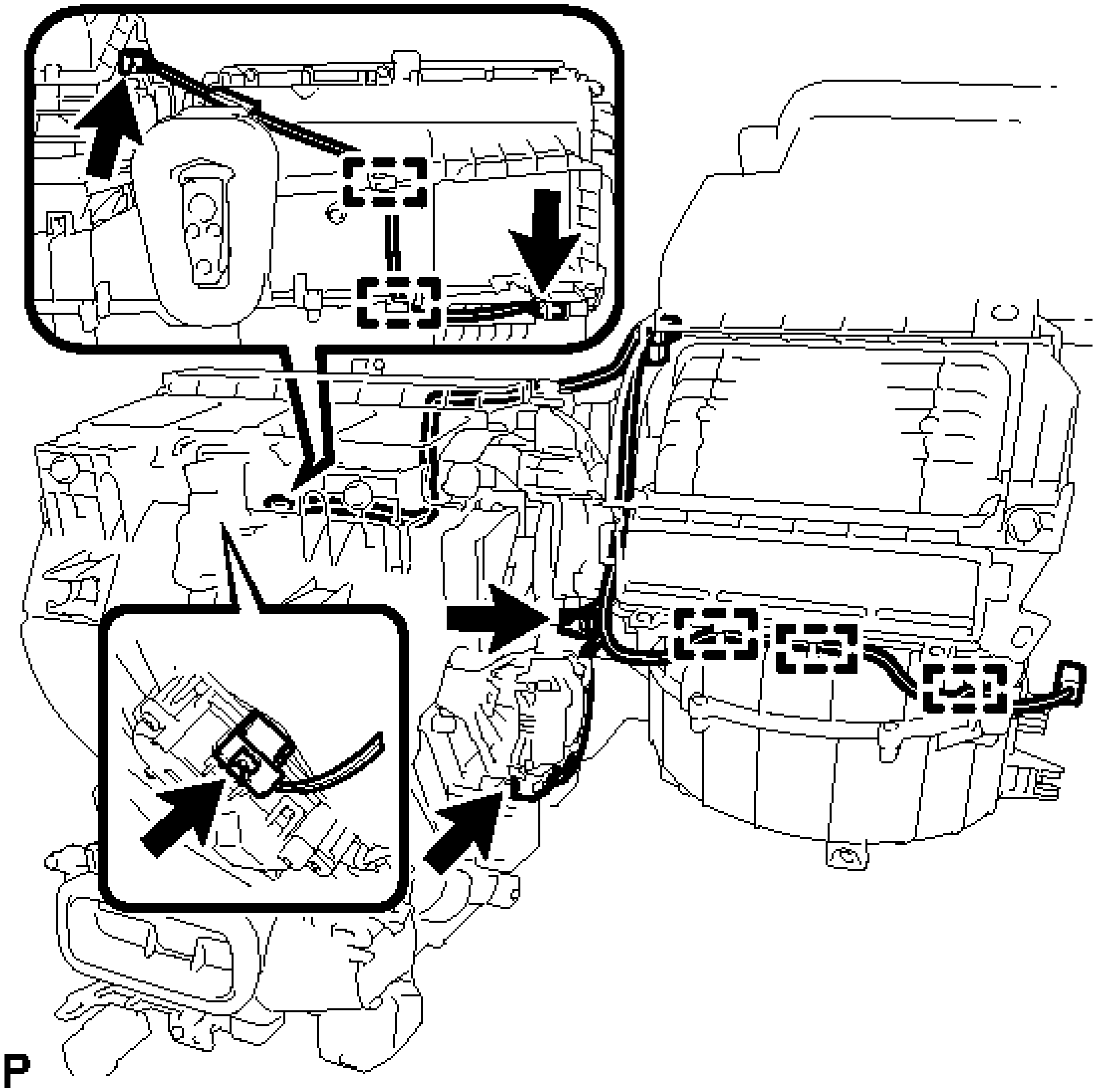

Fig. 66: Identifying Air Conditioning Harness Assembly Clamps
Courtesy of TOYOTA MOTOR SALES, U.S.A., INC.

c. Disengage the 5 clamps and remove the air conditioning harness assembly.

6. **REMOVE COOLER EXPANSION VALVE**
   a. Using a 4 mm hexagon wrench, remove the 2 hexagon bolts and cooler expansion valve.

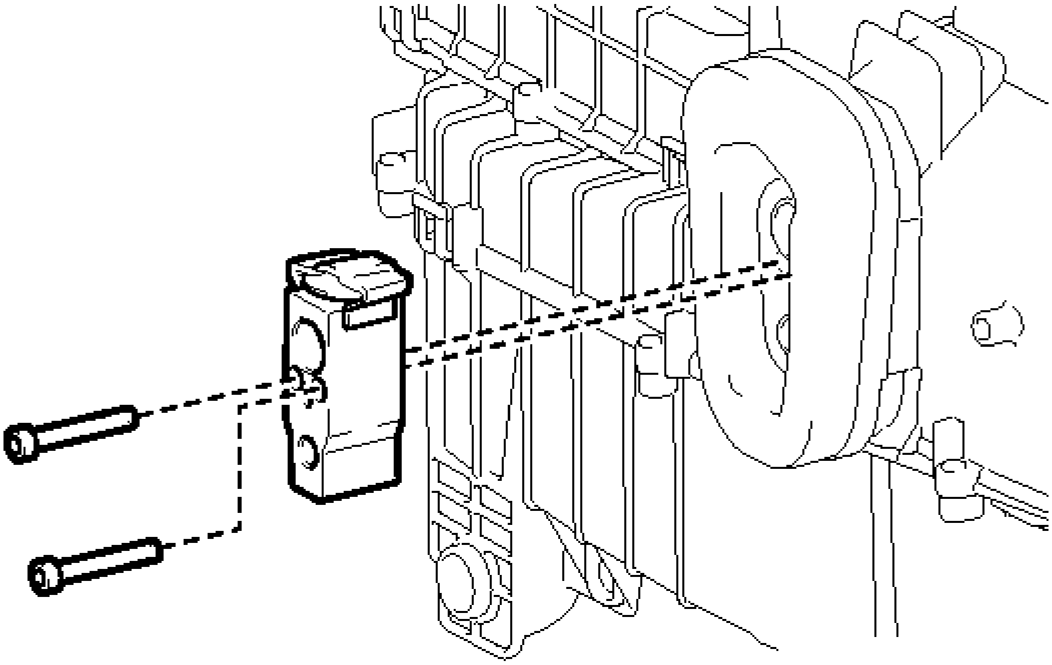

Fig. 67: Identifying Cooler Expansion Valve And Bolts
Courtesy of TOYOTA MOTOR SALES, U.S.A., INC.

7. **REMOVE BLOWER ASSEMBLY WITH COOLER EVAPORATOR SUB-ASSEMBLY** See step 5
8. **REMOVE QUICK HEATER ASSEMBLY**
   a. Disengage the 2 clamps.

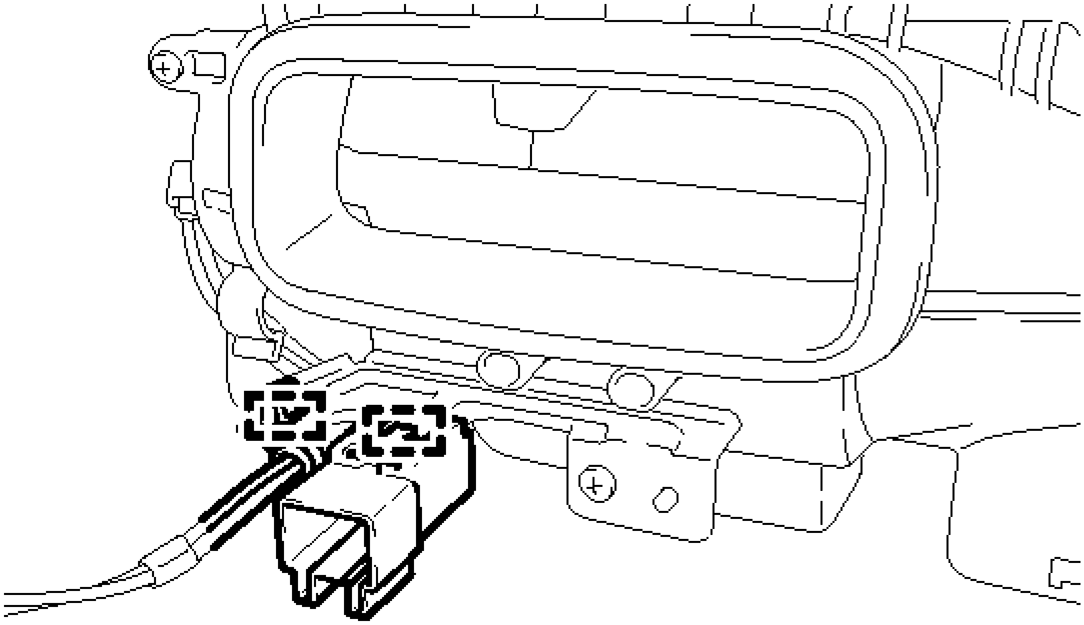

Fig. 68: Identifying Quick Heater Assembly Clamps
Courtesy of TOYOTA MOTOR SALES, U.S.A., INC.

b. Remove the screw.

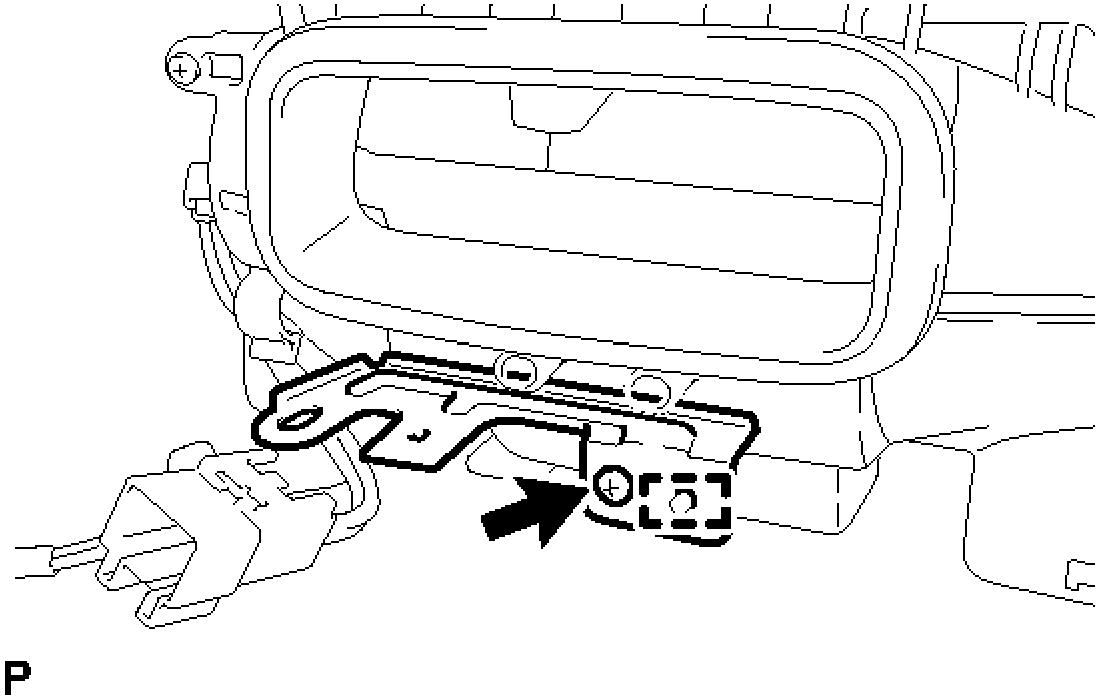

Fig. 69: Identifying Quick Heater Bracket And Screw
Courtesy of TOYOTA MOTOR SALES, U.S.A., INC.

c. Disengage the guide and remove the quick heater bracket.

d. Disengage the 2 clamps.

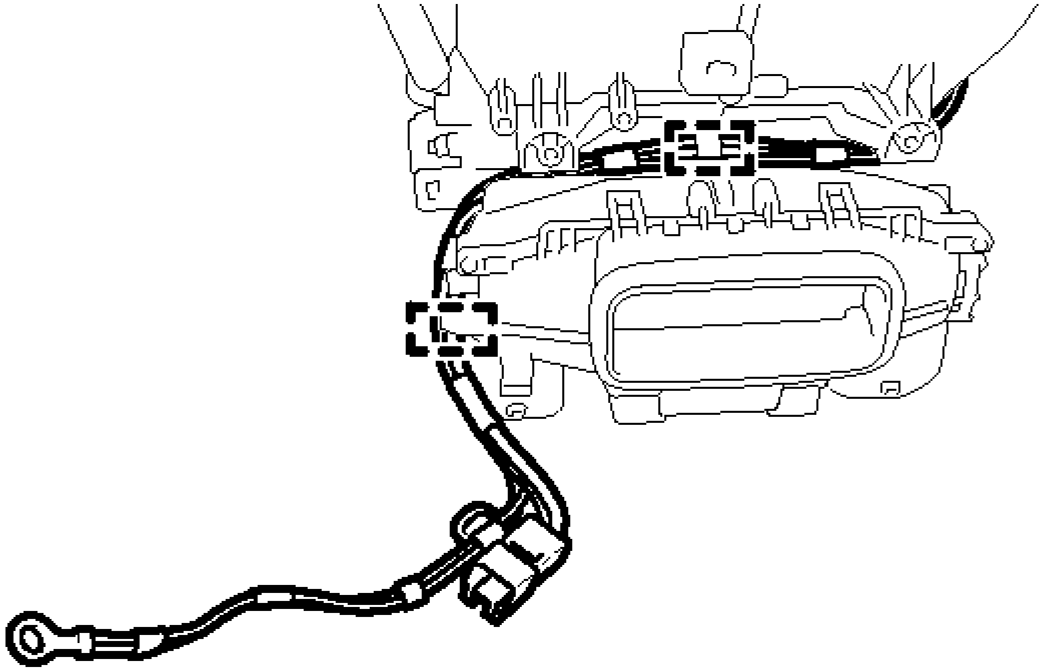

P

Fig. 70: Identifying Quick Heater Assembly Clamps
Courtesy of TOYOTA MOTOR SALES, U.S.A., INC.

e. Remove the 2 screws.

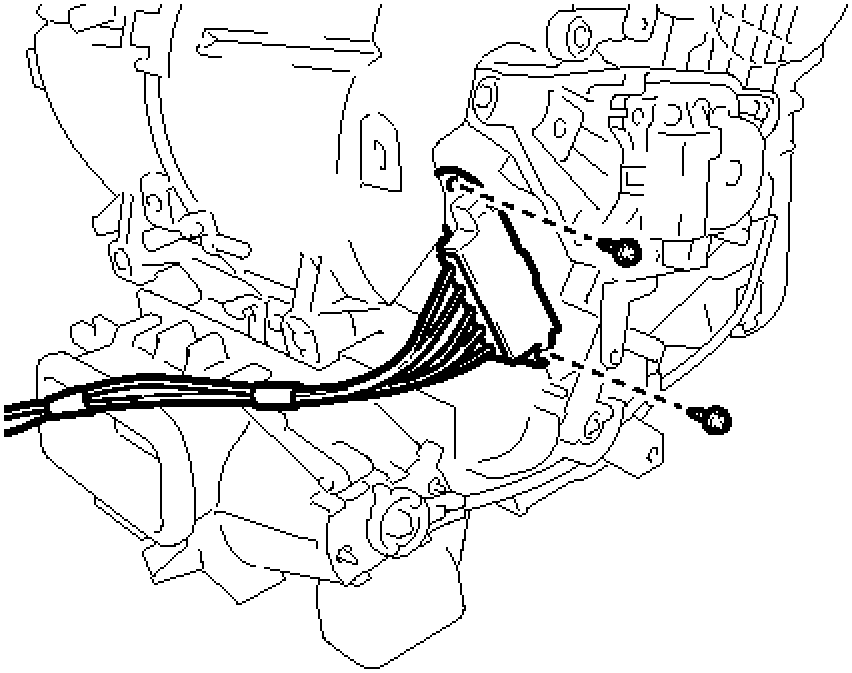

Fig. 71: Identifying Quick Heater Assembly Screws
Courtesy of TOYOTA MOTOR SALES, U.S.A., INC.

f. Remove the quick heater assembly as shown in the illustration.

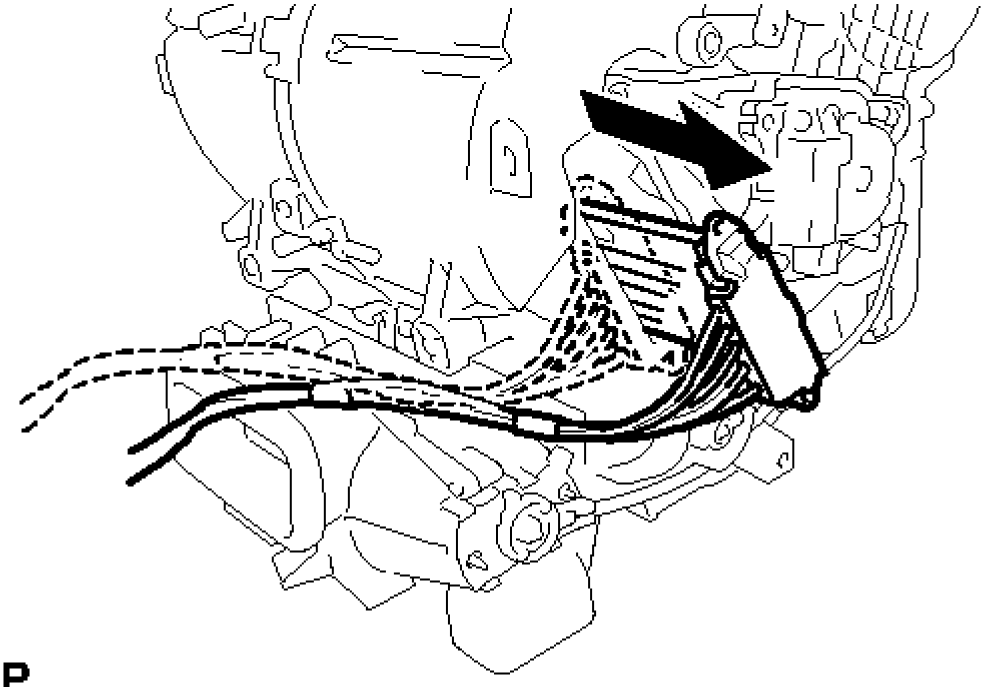

Fig. 72: Removing The Quick Heater Assembly
Courtesy of TOYOTA MOTOR SALES, U.S.A., INC.

9. **REMOVE NO. 1 AIR CONDITIONING RADIATOR DAMPER SERVO SUB-ASSEMBLY**
    a. Remove the 3 screws and then the No. 1 air conditioning radiator damper servo sub-assembly.

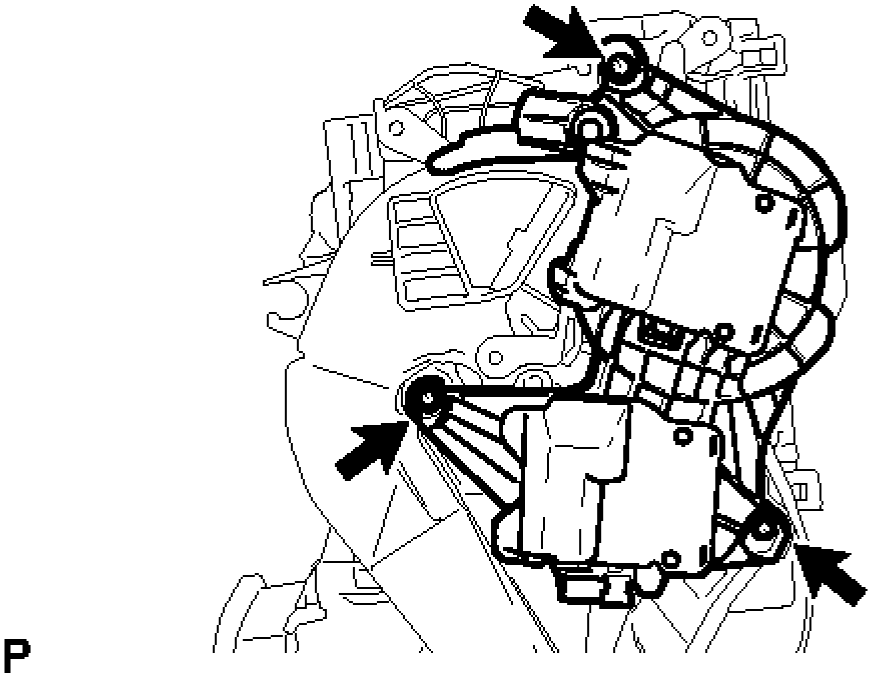

Fig. 73: Identifying No. 1 Air Conditioning Radiator Damper Servo Sub-Assembly Screws
Courtesy of TOYOTA MOTOR SALES, U.S.A., INC.

10. **REMOVE NO. 2 AIR CONDITIONING RADIATOR DAMPER SERVO SUB-ASSEMBLY**
    a. Remove the 2 screws and No. 2 air conditioning radiator damper servo sub-assembly.

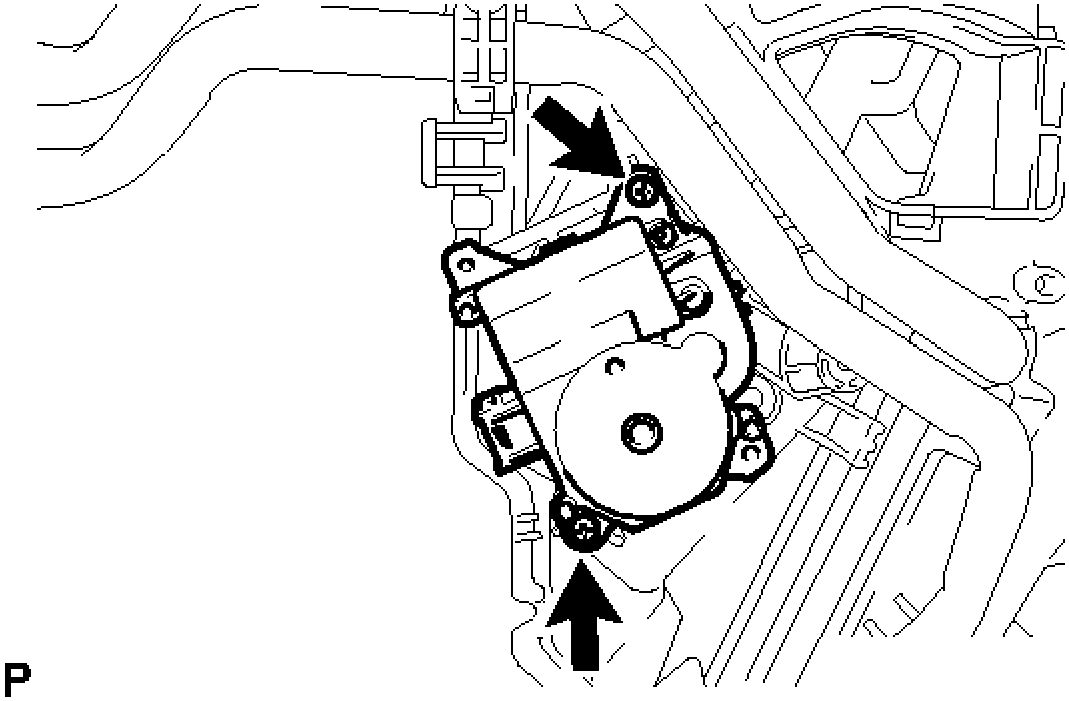

Fig. 74: Locating Air Mix Control Servo Motor Sub-Assembly Screws
Courtesy of TOYOTA MOTOR SALES, U.S.A., INC.

11. **REMOVE HEATER RADIATOR UNIT SUB-ASSEMBLY**
    a. Disengage the 3 claws and remove the heater clamp.

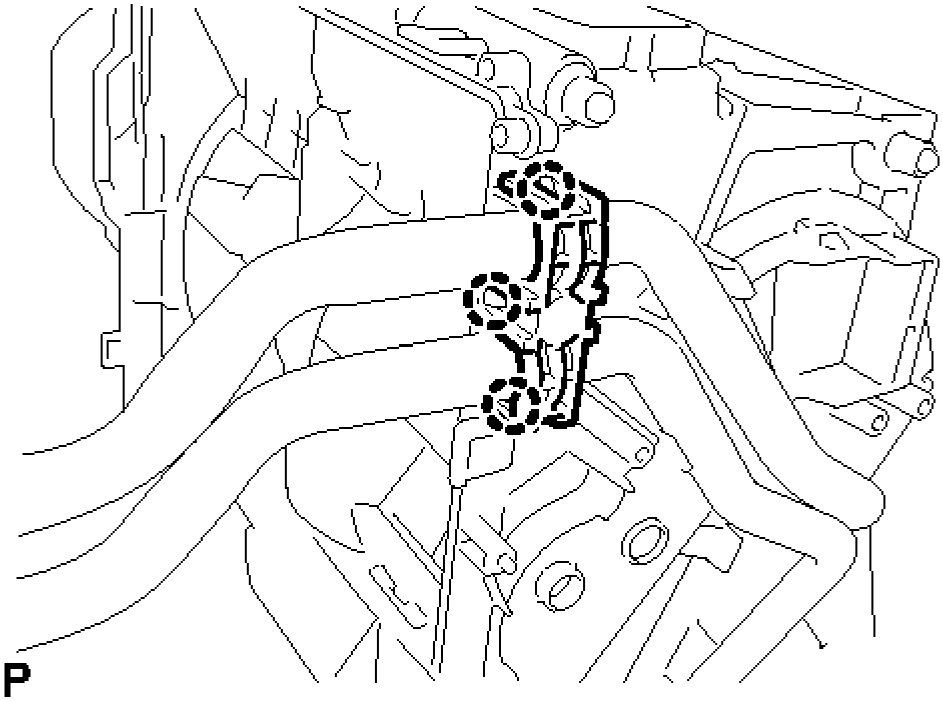

Fig. 75: Identifying Heater Clamp And Claws

Courtesy of TOYOTA MOTOR SALES, U.S.A., INC.

b. Remove the screw and clamp.

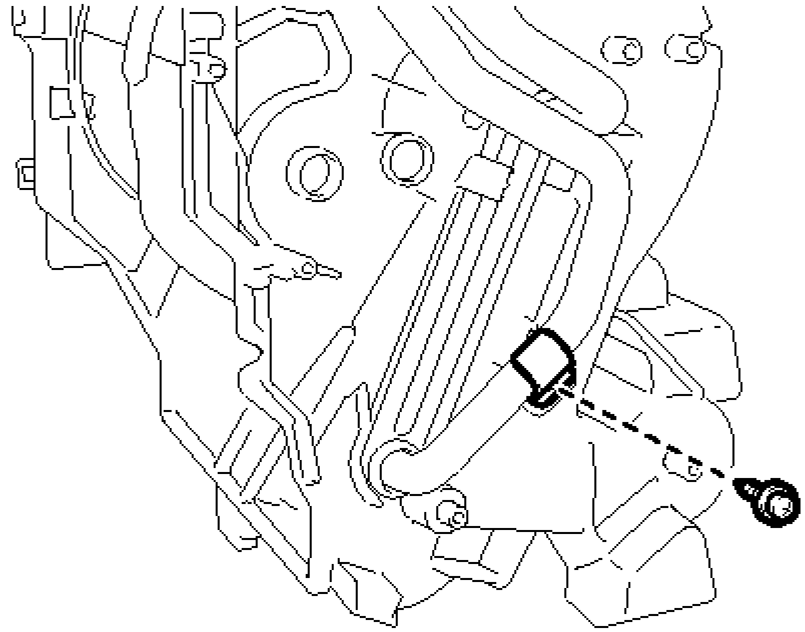

Fig. 76: Identifying Screw And Clamp
Courtesy of TOYOTA MOTOR SALES, U.S.A., INC.

c. Remove the heater radiator unit sub-assembly as shown in the illustration.

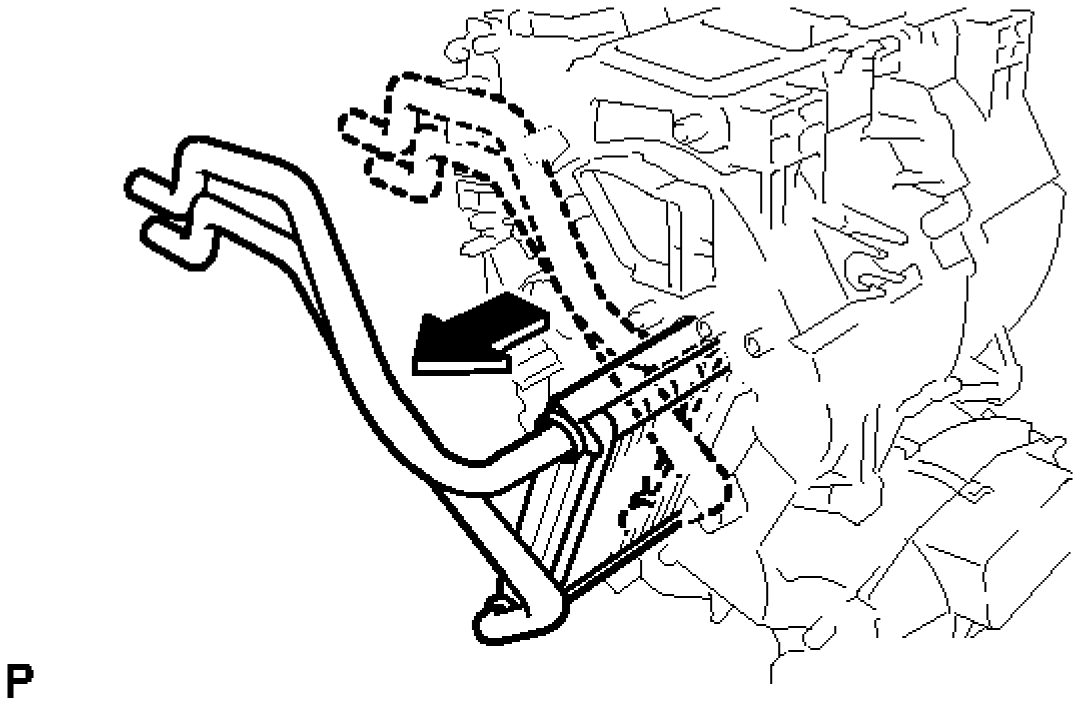

Fig. 77: Removing Heater Radiator Unit Sub-Assembly
Courtesy of TOYOTA MOTOR SALES, U.S.A., INC.

NOTE: **Prepare a drain pan or cloth in case the cooling water leaks.**

12. **REMOVE NO. 1 COOLER THERMISTOR** See step 2
13. **REMOVE NO. 1 COOLER EVAPORATOR SUB-ASSEMBLY**
    a. Remove the No. 1 cooler evaporator sub-assembly from the blower assembly as shown in the illustration.

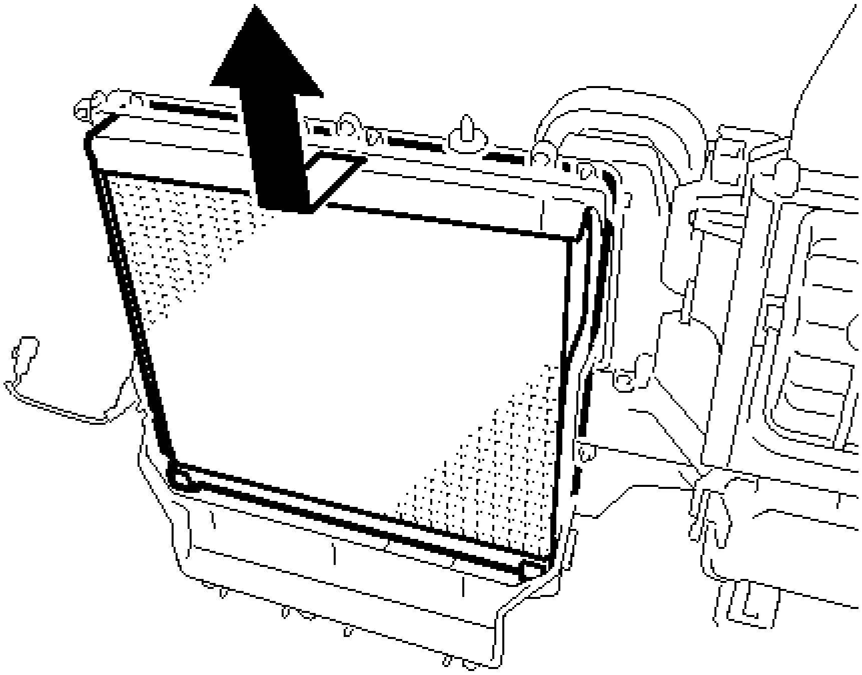

Fig. 78: Removing No. 1 Cooler Evaporator Sub-Assembly
Courtesy of TOYOTA MOTOR SALES, U.S.A., INC.

b. Remove the 2 O-rings from the No. 1 cooler evaporator sub-assembly.

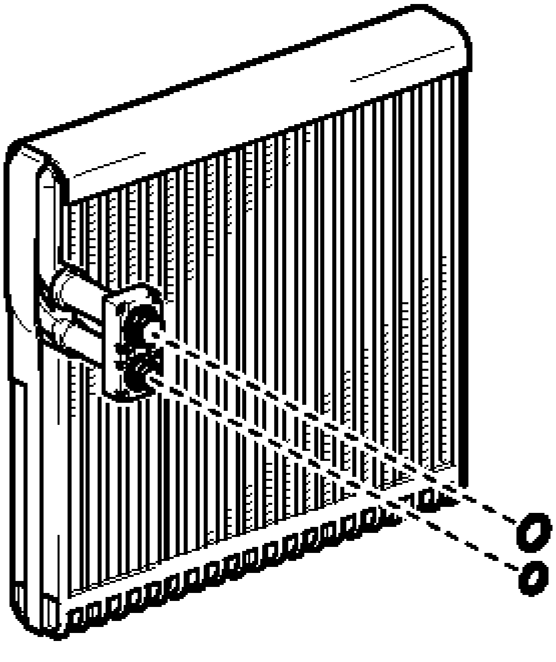

Fig. 79: Installing O-Rings To Cooler Evaporator No. 1
Courtesy of TOYOTA MOTOR SALES, U.S.A., INC.

REASSEMBLY

REASSEMBLY

1. **INSTALL NO. 1 COOLER EVAPORATOR SUB-ASSEMBLY**
    1. Sufficiently apply compressor oil to 2 new O-rings and the fitting surfaces. Install the 2 O-rings to the No. 1 cooler evaporator sub-assembly.

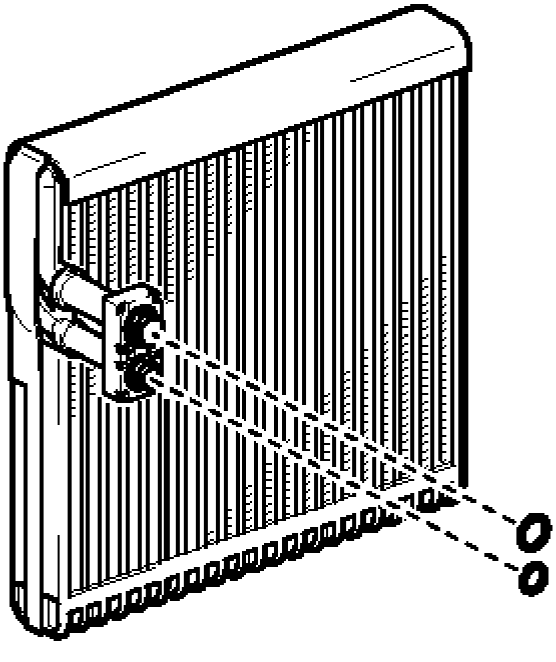

Fig. 80: Installing O-Rings To Cooler Evaporator No. 1
Courtesy of TOYOTA MOTOR SALES, U.S.A., INC.

Compressor oil

ND-OIL 11 or equivalent

b. Install the No. 1 cooler evaporator sub-assembly to the blower assembly.

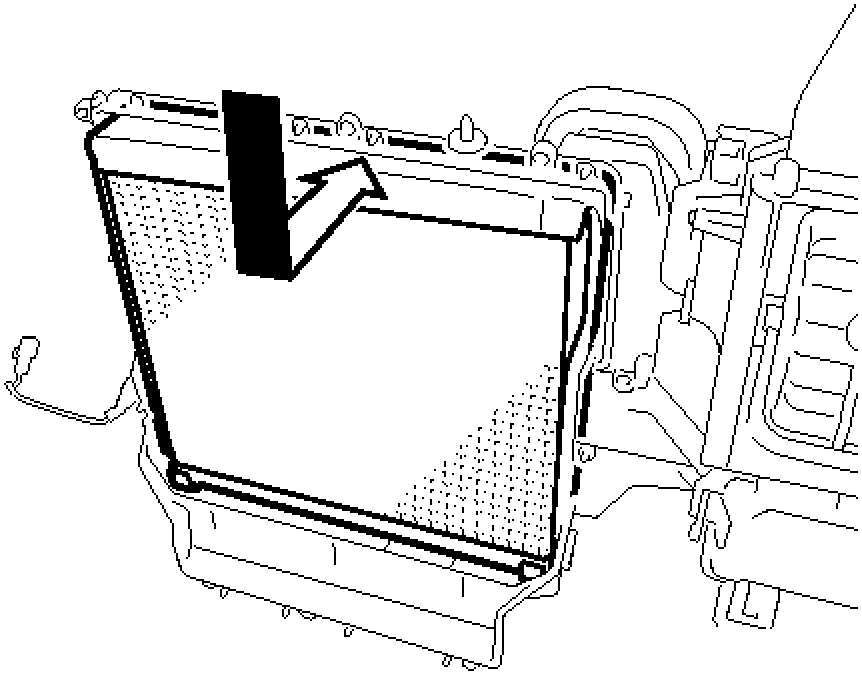

Fig. 81: Installing No. 1 Cooler Evaporator Sub-Assembly
Courtesy of TOYOTA MOTOR SALES, U.S.A., INC.

2. **INSTALL NO. 1 COOLER THERMISTOR** See step 1
3. **INSTALL HEATER RADIATOR UNIT SUB-ASSEMBLY**
    a. Install the heater radiator unit sub-assembly as shown in the illustration.

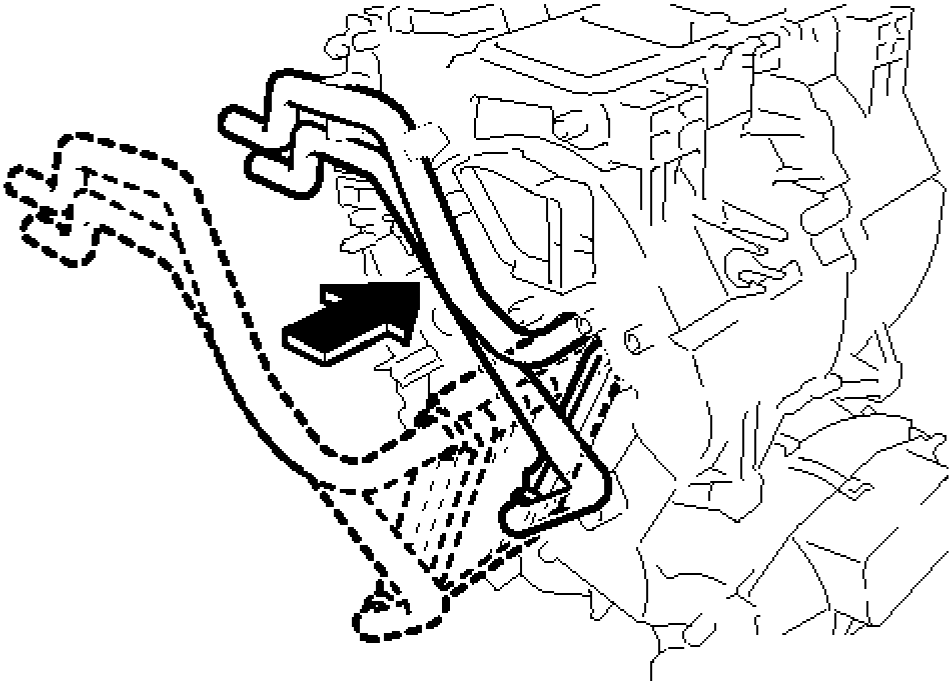

Fig. 82: Installing Heater Radiator Unit Sub-Assembly
Courtesy of TOYOTA MOTOR SALES, U.S.A., INC.

b. Install the clamp with the screw.

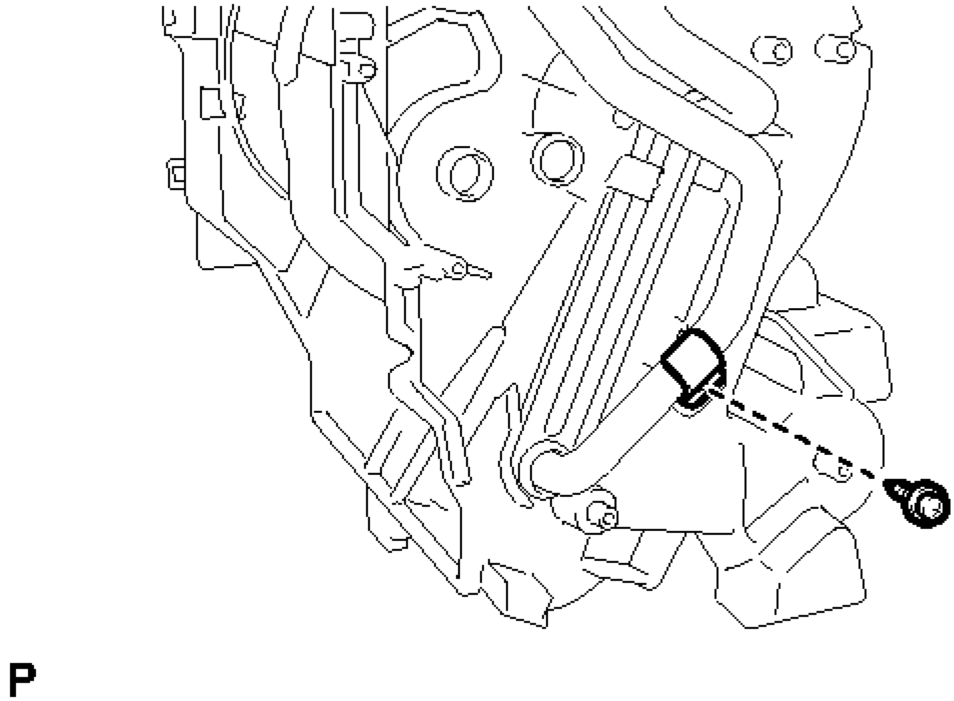

Fig. 83: Identifying Screw And Clamp
Courtesy of TOYOTA MOTOR SALES, U.S.A., INC.

c. Engage the 3 claws and install the heater clamp.

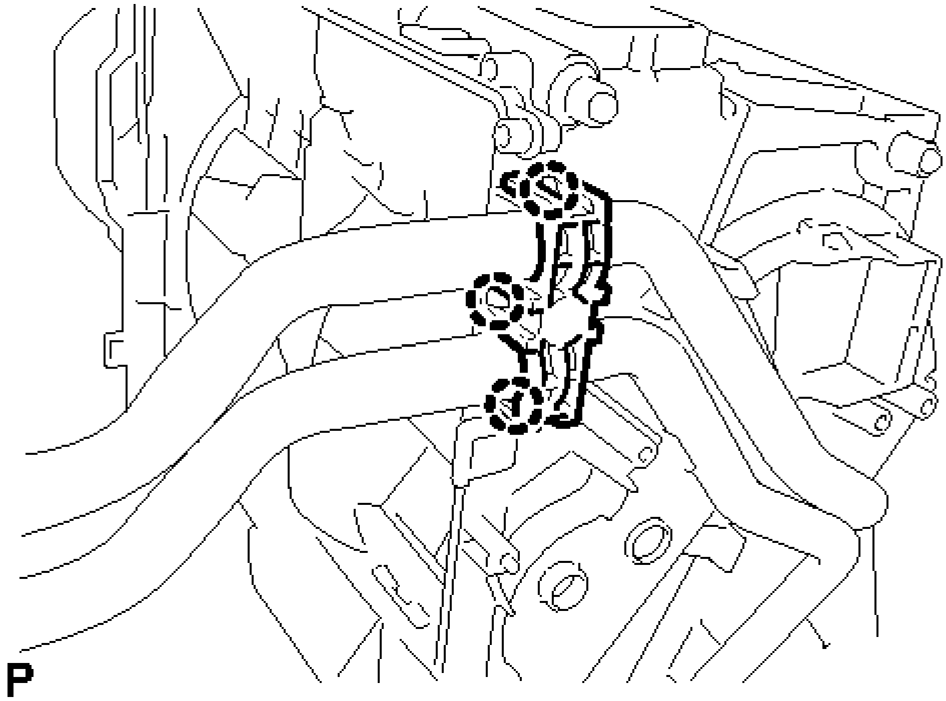

Fig. 84: Identifying Heater Clamp And Claws
Courtesy of TOYOTA MOTOR SALES, U.S.A., INC.

4. **INSTALL NO. 2 AIR CONDITIONING RADIATOR DAMPER SERVO SUB-ASSEMBLY**
   1. Using the reference point, install the No. 2 air conditioning radiator damper servo sub-assembly with the 2 screws.

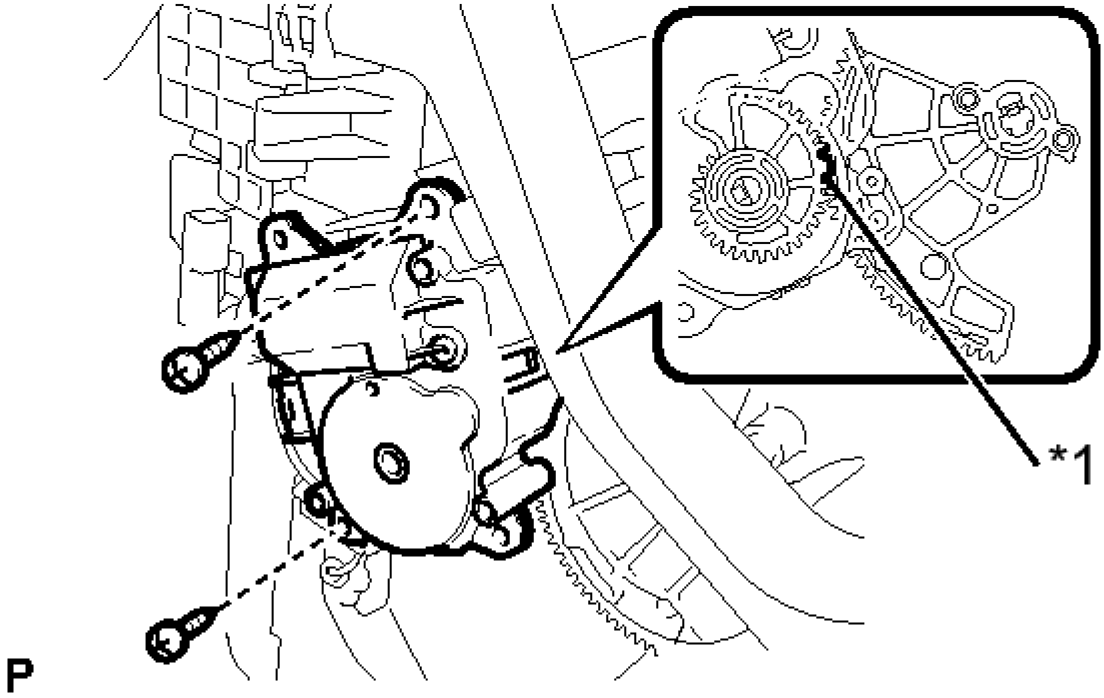

Fig. 85: Identifying Air Mix Damper Servo Sub-Assembly Component Screws
Courtesy of TOYOTA MOTOR SALES, U.S.A., INC.

TEXT IN ILLUSTRATION

*1	Reference Point

5. **INSTALL NO. 1 AIR CONDITIONING RADIATOR DAMPER SERVO SUB-ASSEMBLY**
    a. Check that the slots, links and gears of the No. 1 air conditioning radiator damper servo sub-assembly are positioned in the correct orientation as shown in the illustration.

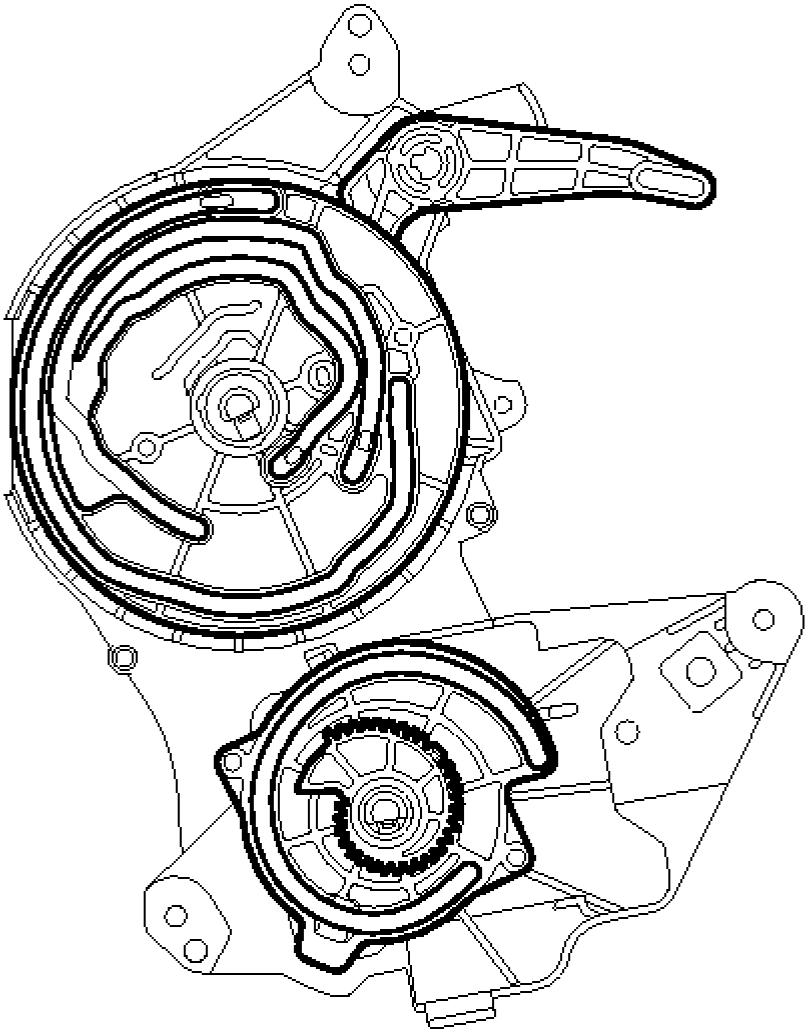

Fig. 86: Correct Orientation Of Slots, Links And Gears Of No. 1 Air Conditioning Radiator Damper Servo Sub-Assembly
Courtesy of TOYOTA MOTOR SALES, U.S.A., INC.

b. Face the contact surfaces of the No. 1 air conditioning radiator damper servo sub-assembly and air conditioning radiator assembly for the No. 1 air conditioning radiator damper servo sub-assembly upward.

c. Rotate the link of the air conditioning radiator assembly all the way to the left as shown in the illustration.

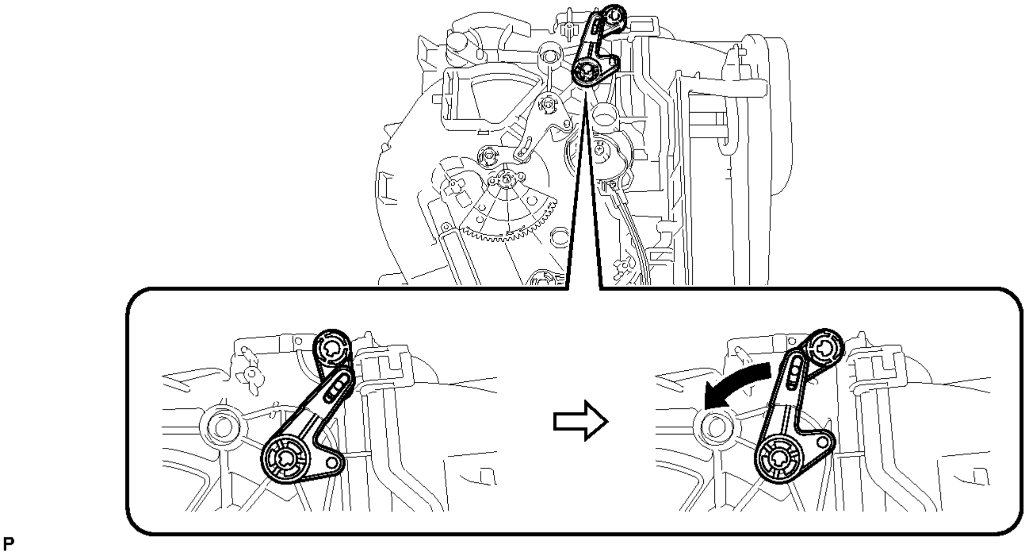

Fig. 87: Rotating Link Of Air Conditioning Radiator Assembly (To The Left)
Courtesy of TOYOTA MOTOR SALES, U.S.A., INC.

d. Rotate the link of the air conditioning radiator assembly to the bottom as shown in the illustration and confirm that the mode switching duct hole is fully closed.

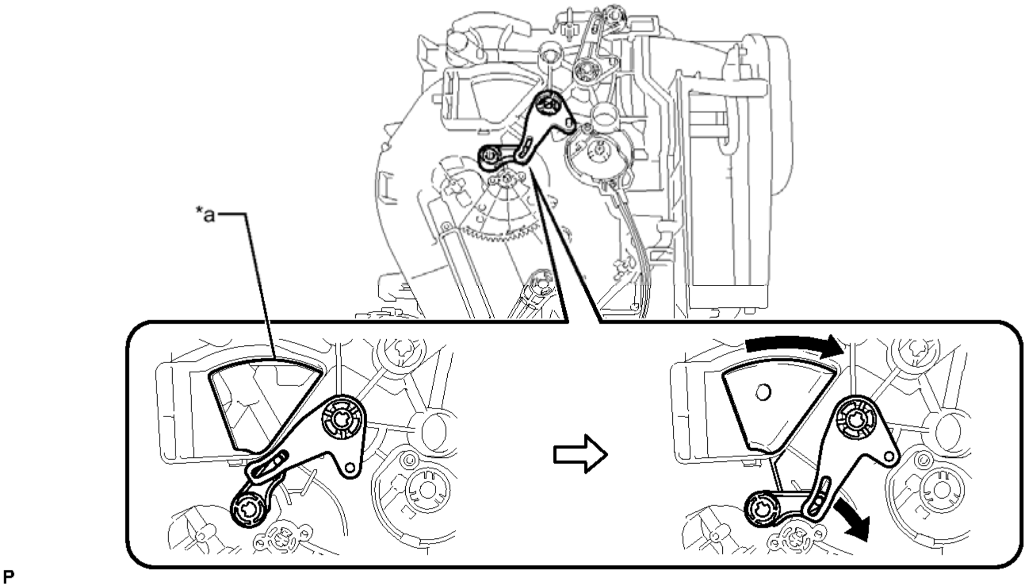

Fig. 88: Rotating Link Of Air Conditioning Radiator Assembly (To The Bottom)
Courtesy of TOYOTA MOTOR SALES, U.S.A., INC.

TEXT IN ILLUSTRATION

*a	Mode Switching Duct Hole	-	-

e. Rotate the lever of the air conditioning radiator assembly to the top as shown in the illustration.

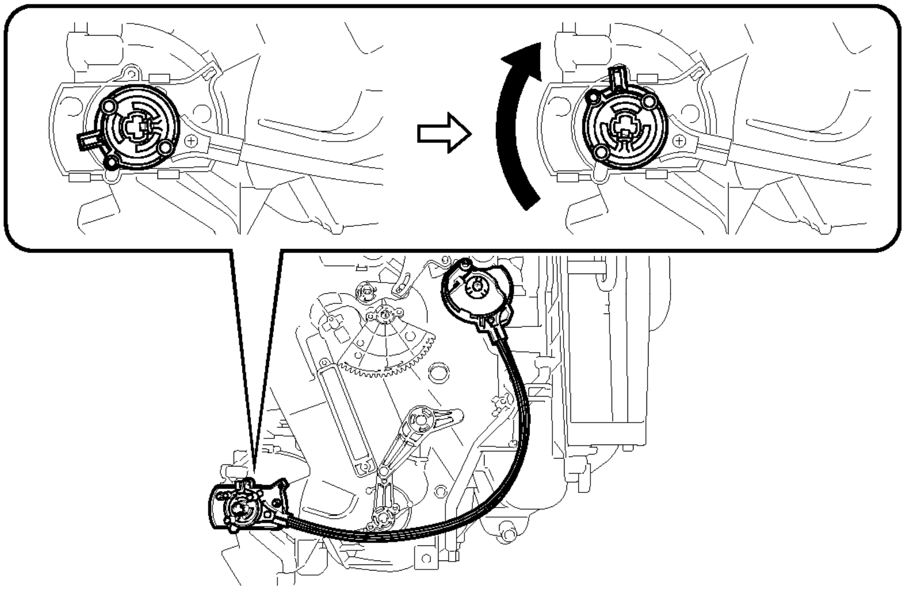

P

Fig. 89: Rotating Lever Of Air Conditioning Radiator Assembly To The Top
Courtesy of TOYOTA MOTOR SALES, U.S.A., INC.

f. Rotate the link of the air conditioning radiator assembly to the in-line position as shown in the illustration.

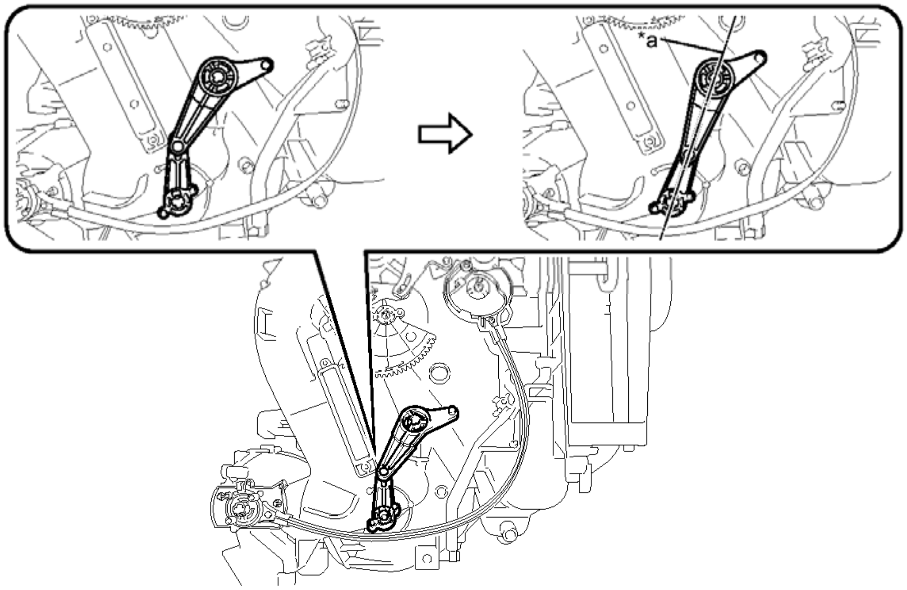

P

Fig. 90: Rotating Link Of Air Conditioning Radiator Assembly (To The In-Line Position)
Courtesy of TOYOTA MOTOR SALES, U.S.A., INC.

TEXT IN ILLUSTRATION

*a	In-line Position	-	-

g. Wrap the upper and lower links with vinyl tape to hold them in the in-line position.

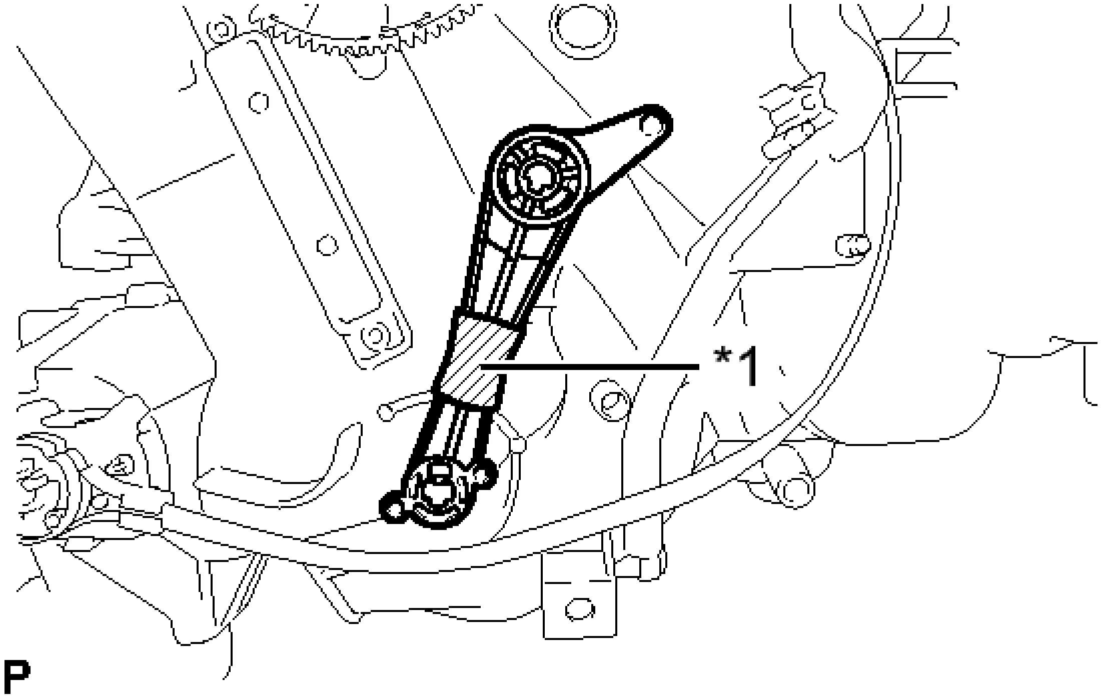

Fig. 91: Wrap Upper And Lower Links With Vinyl Tape
Courtesy of TOYOTA MOTOR SALES, U.S.A., INC.

TEXT IN ILLUSTRATION

*1	Vinyl Tape

h. Install the link of the No. 1 air conditioning radiator damper servo sub-assembly to the link guide pin (A) of the air conditioning radiator assembly as shown in the illustration.

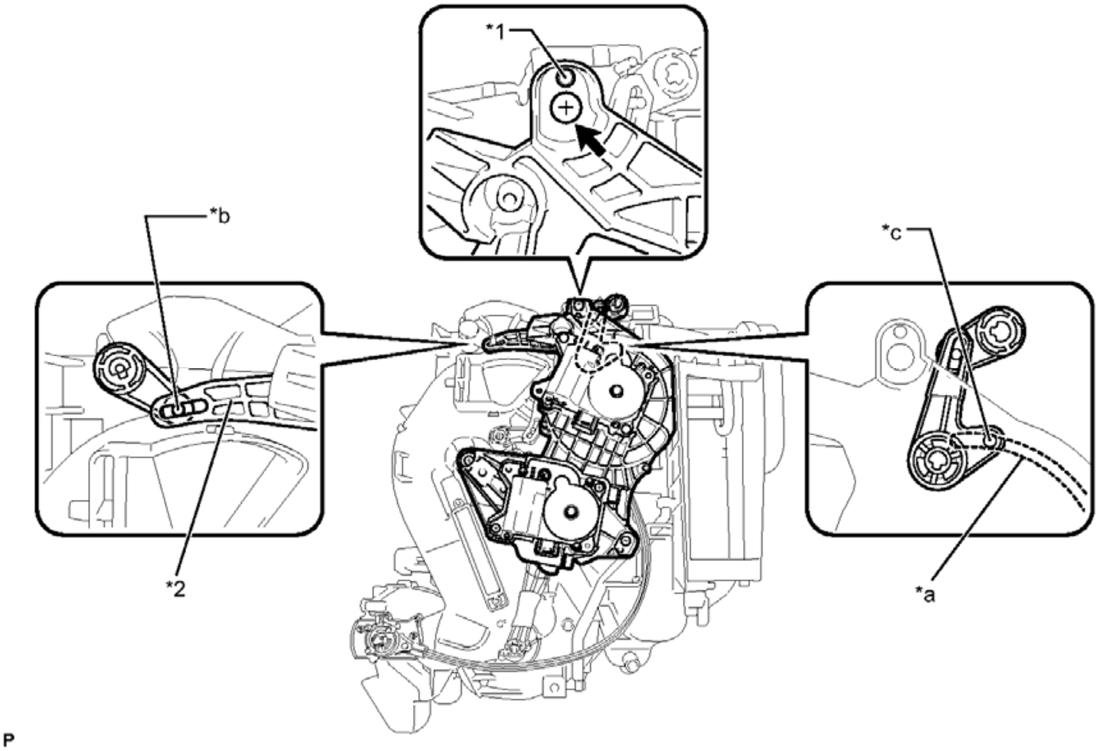

Fig. 92: Identifying No. 1 Air Conditioning Radiator Damper Servo Sub-Assembly Link
Courtesy of TOYOTA MOTOR SALES, U.S.A., INC.

TEXT IN ILLUSTRATION

*1	Guide	*2	No. 1 Air Conditioning Radiator Damper Servo Sub-assembly
*a	No. 1 Air Conditioning Radiator Damper Servo Sub-assembly Slot	*b	Link Guide Pin (A)
*c	Link Guide Pin (B)	-	-

i. Install the guide hole of the No. 1 air conditioning radiator damper servo sub-assembly to the guide pin of the air conditioning radiator assembly as shown in the illustration.
j. Temporarily install the screw (up to 4 or 5 threads).

NOTE:

- **Make sure that the link guide pin (B) is inserted in the No. 1 air conditioning radiator damper servo sub-assembly slot.**
- **Avoid tilting the air conditioning radiator assembly during installation. This helps to prevent the guide pins from coming out of position.**

k. Lift the No. 1 air conditioning radiator damper servo sub-assembly slightly to create clearance.

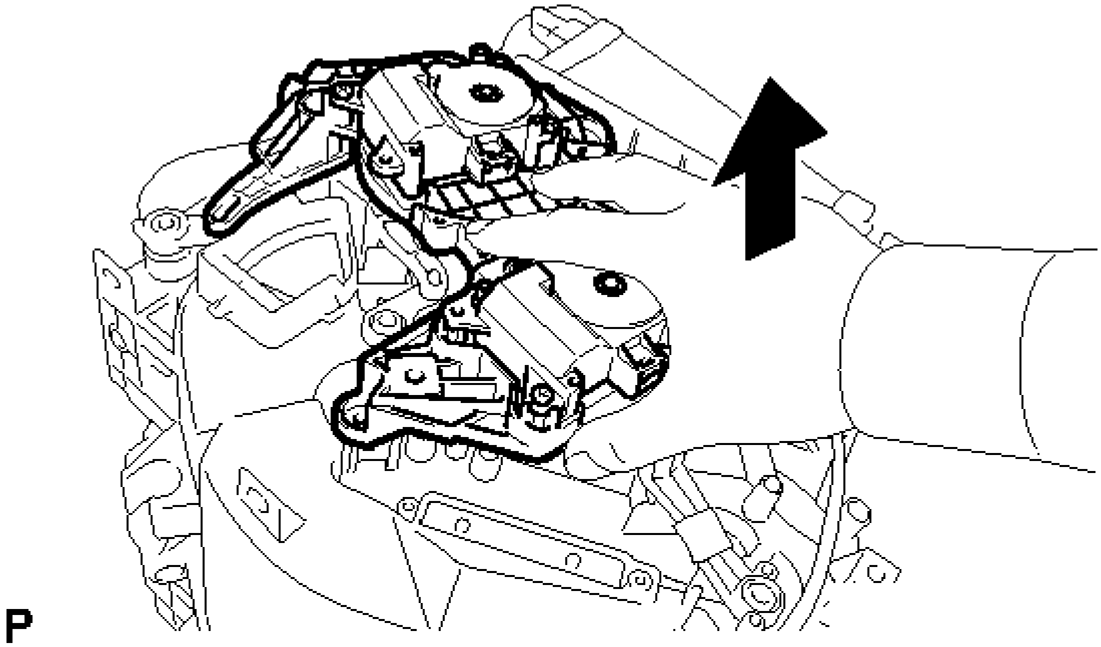

Fig. 93: Lifting Air Outlet Control Servo Motor Sub-Assembly
Courtesy of TOYOTA MOTOR SALES, U.S.A., INC.

l. Move the air conditioning radiator assembly gear so that alignment holes of the No. 1 air conditioning radiator damper servo sub-assembly and air conditioning radiator assembly are aligned.

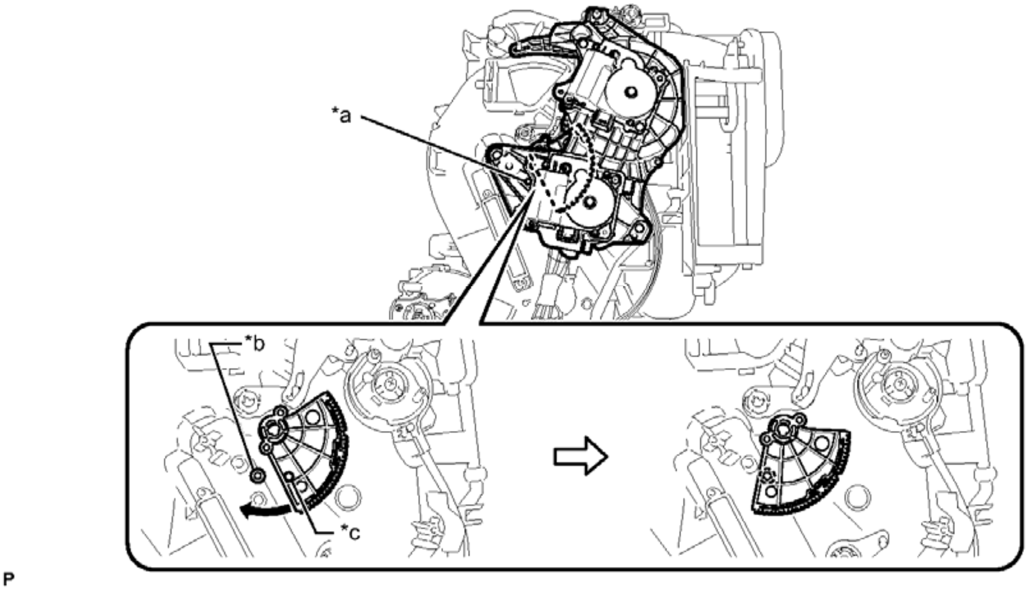

Fig. 94: Aligning No. 1 Air Conditioning Radiator Damper Servo Sub-Assembly And Air Conditioning Radiator Assembly
Courtesy of TOYOTA MOTOR SALES, U.S.A., INC.

TEXT IN ILLUSTRATION

*a	No. 1 Air Conditioning Radiator Damper Servo Sub-assembly Alignment Hole	*b	Air Conditioning Radiator Assembly Alignment Hole
*c	Air Conditioning Radiator Assembly Gear Alignment Hole	-	-

m. Insert a screwdriver into the aligned holes as shown in the illustration.

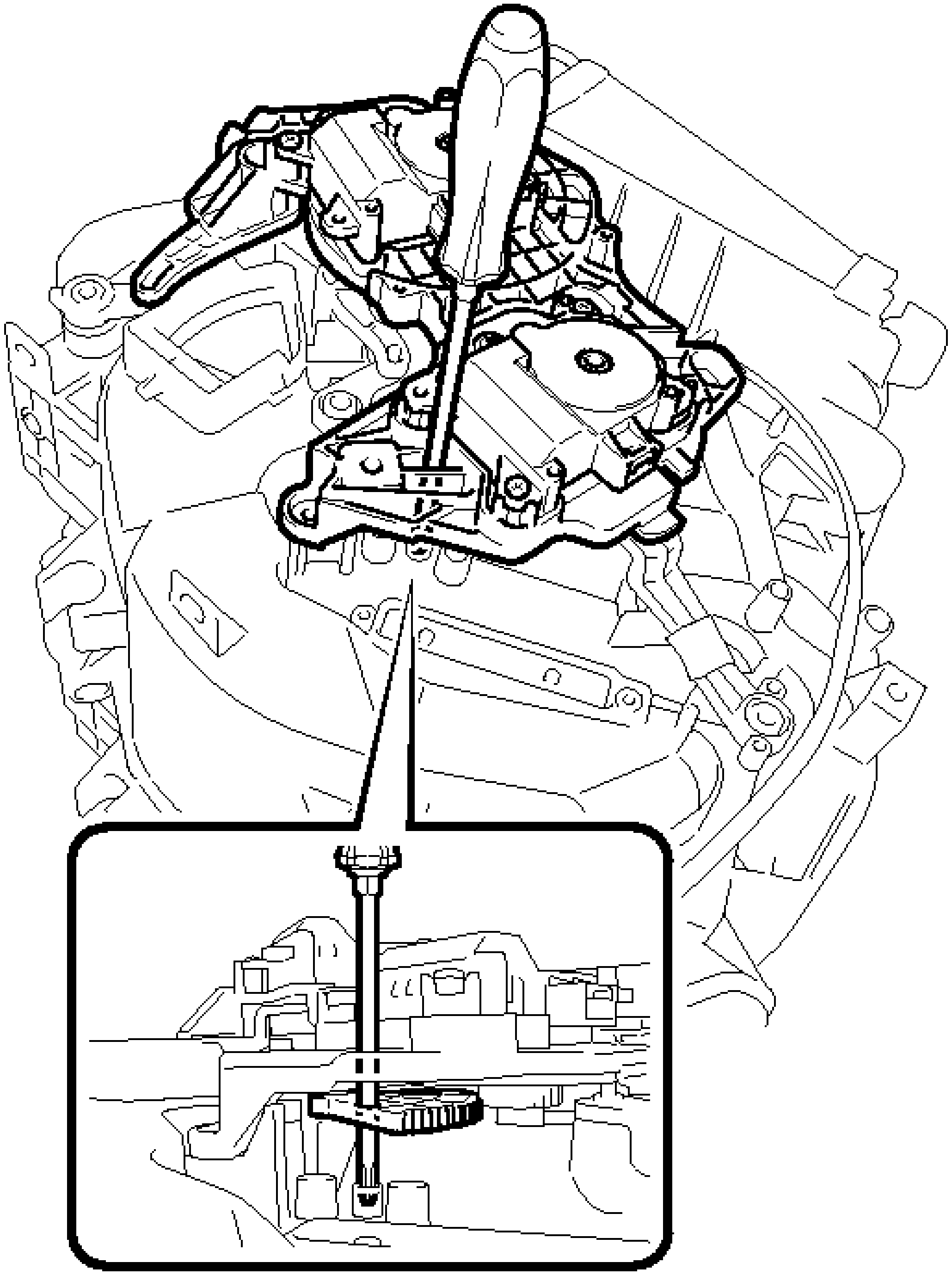

Fig. 95: Aligning Air Outlet Control Servo Motor Sub-Assembly Using Screwdriver
Courtesy of TOYOTA MOTOR SALES, U.S.A., INC.

n. Make sure that all the links and gears are in the positions shown in the illustration.

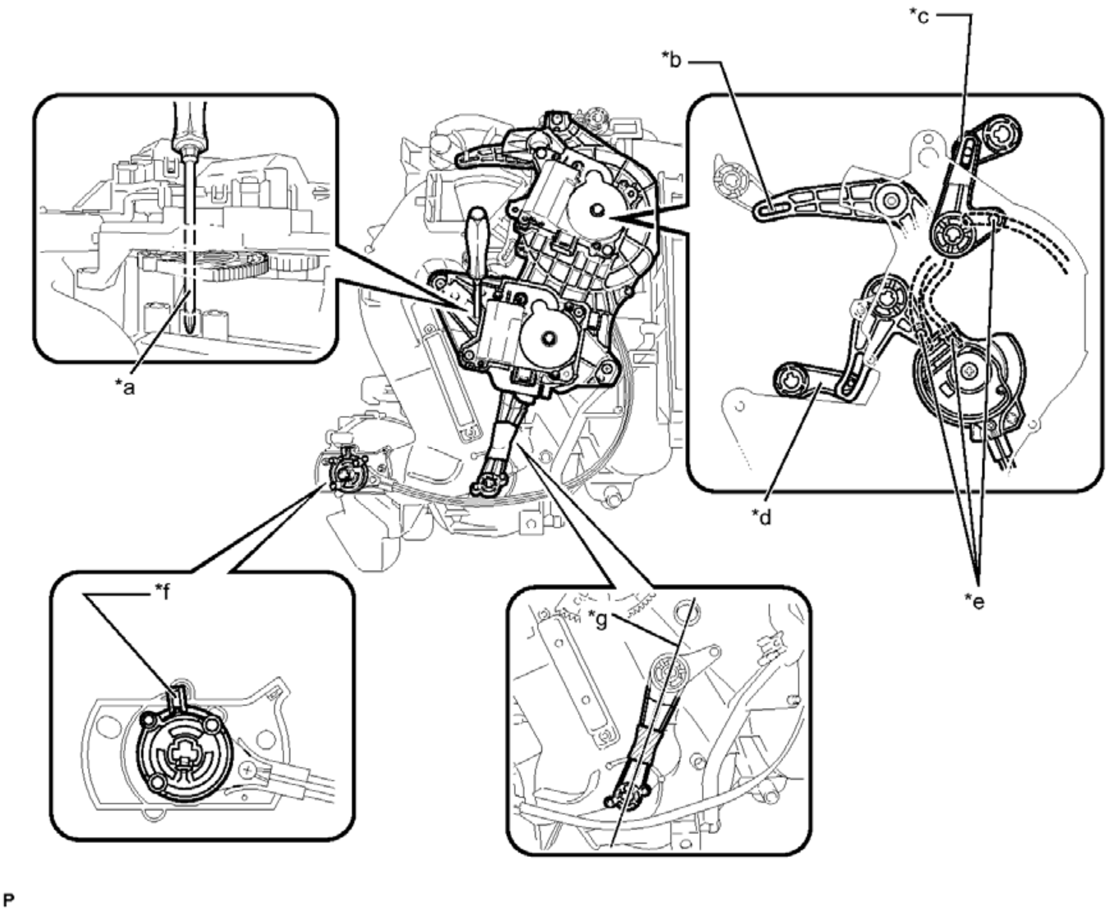

Fig. 96: Proper Link And Gear Positioning
Courtesy of TOYOTA MOTOR SALES, U.S.A., INC.

TEXT IN ILLUSTRATION

*a	Screwdriver is inserted into alignment holes.	*b	Link guide pin is inserted.
*c	Link is positioned to left side.	*d	Link is positioned at bottom.
*e	Each link guide pin is inserted in its No. 1 Air Conditioning radiator damper servo sub-assembly	*f	Lever is positioned at top.

	slot		
*g	Links are in-line.	-	-

o. Push the loose fitting No. 1 air conditioning radiator damper servo sub-assembly into position.

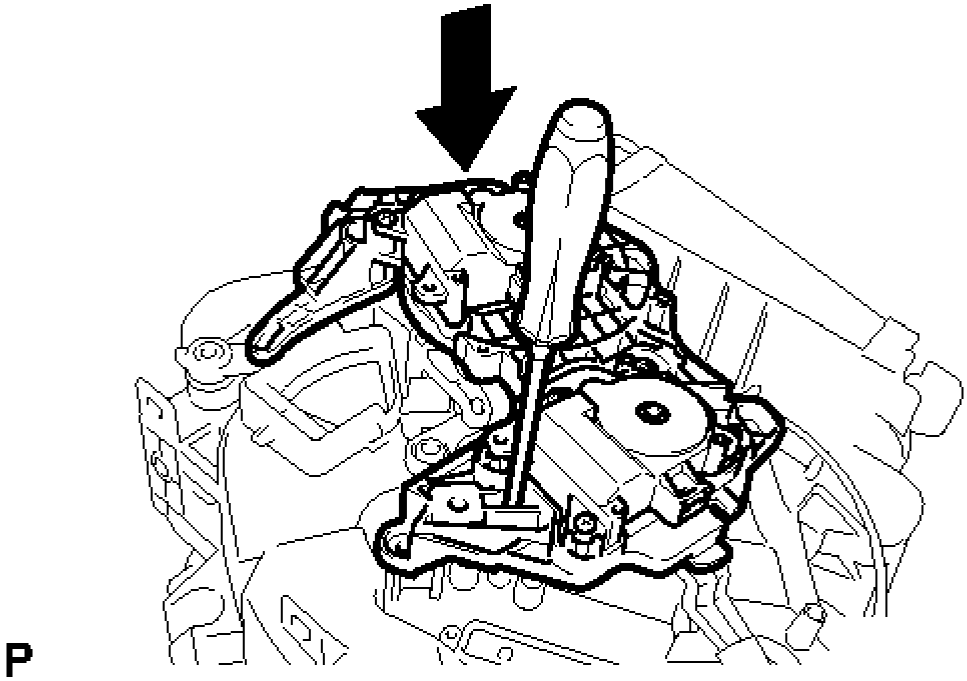

Fig. 97: Pushing Air Outlet Control Servo Motor Sub-Assembly Into Position
Courtesy of TOYOTA MOTOR SALES, U.S.A., INC.

NOTE:

- **Make sure that the No. 1 air conditioning radiator damper servo sub-assembly are fully pushed into position.**
- **After pushing the servos into position, keep them in place by holding them until the screws are installed.**

HINT:

Push the No. 1 air conditioning radiator damper servo sub-assembly until a click sound is heard.

p. Remove the screwdriver.

q. Fully install the top screw, and then install the No. 1 air conditioning radiator damper servo sub-assembly with the 2 remaining screws.

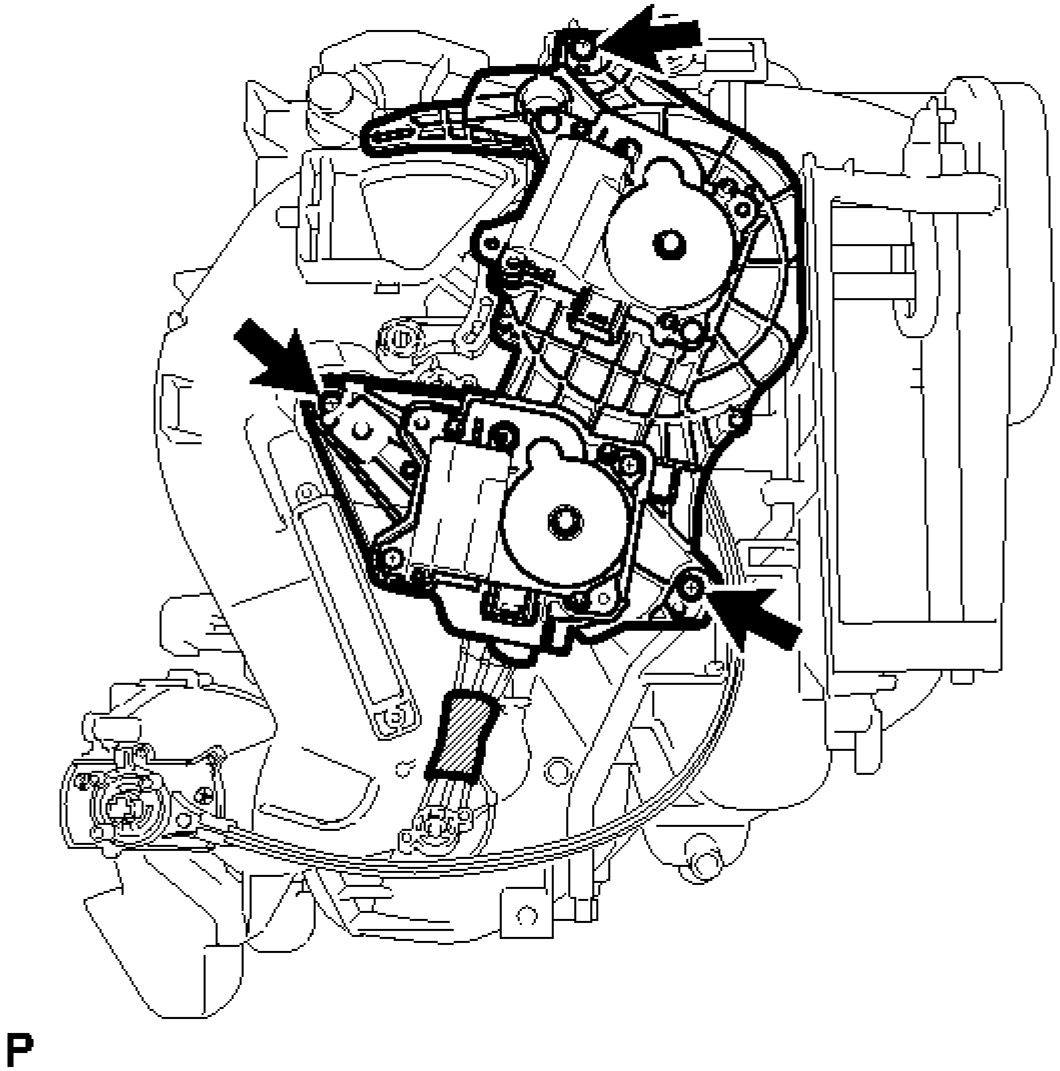

Fig. 98: Identifying Air Outlet Control Servo Motor Sub-Assembly And Screws
Courtesy of TOYOTA MOTOR SALES, U.S.A., INC.

r. Remove the vinyl tape.

6. **INSTALL QUICK HEATER ASSEMBLY**
    a. Insert the quick heater assembly as shown in the illustration.

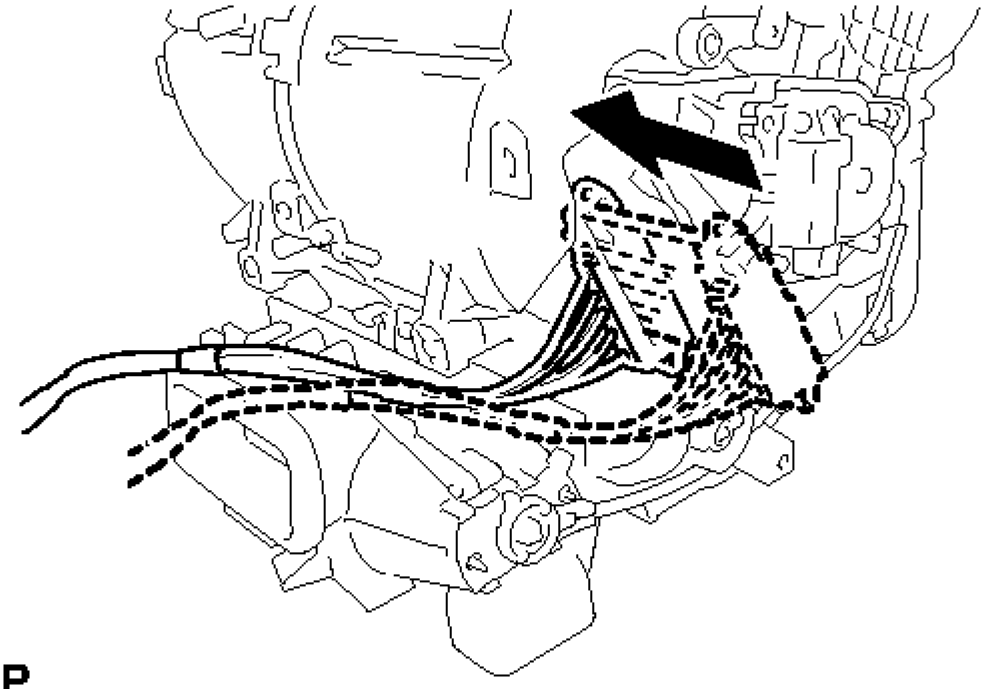

Fig. 99: Installing Quick Heater Assembly
Courtesy of TOYOTA MOTOR SALES, U.S.A., INC.

b. Install the 2 screws.

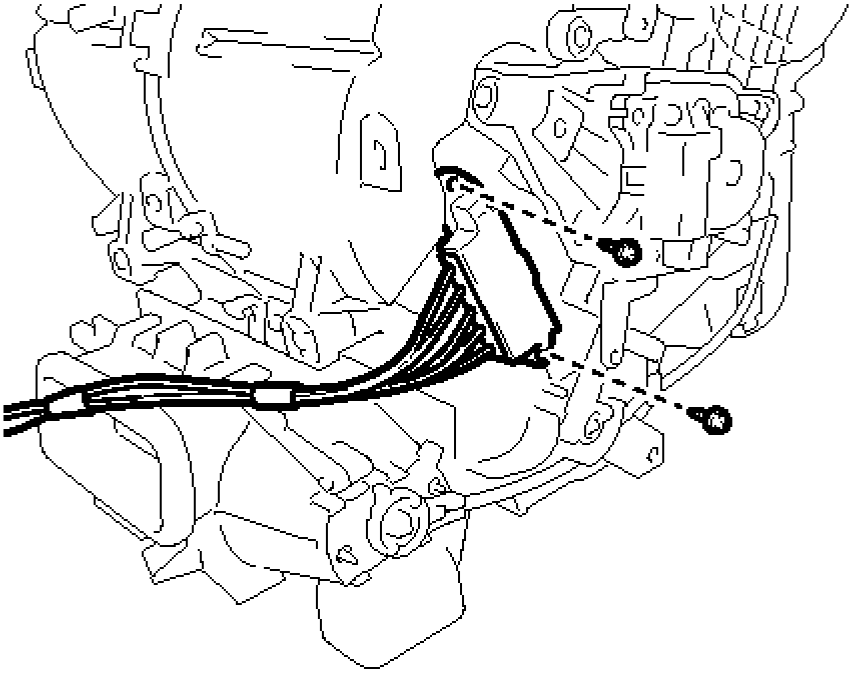

Fig. 100: Identifying Quick Heater Assembly Screws
Courtesy of TOYOTA MOTOR SALES, U.S.A., INC.

c. Engage the 2 clamps.

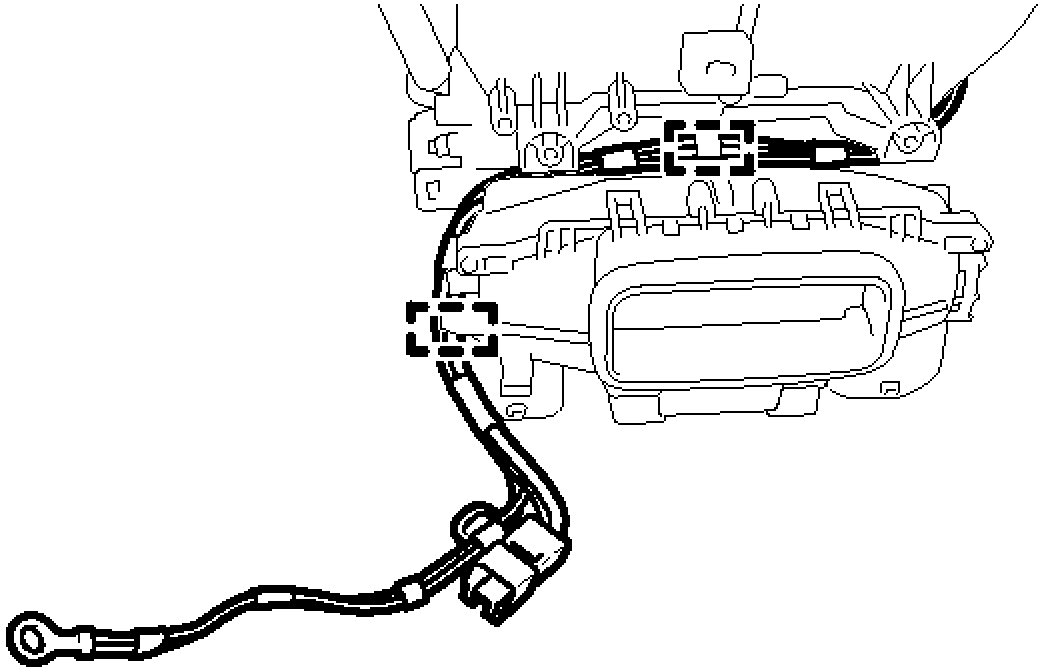

Fig. 101: Identifying Quick Heater Assembly Clamps
Courtesy of TOYOTA MOTOR SALES, U.S.A., INC.

d. Engage the guide.

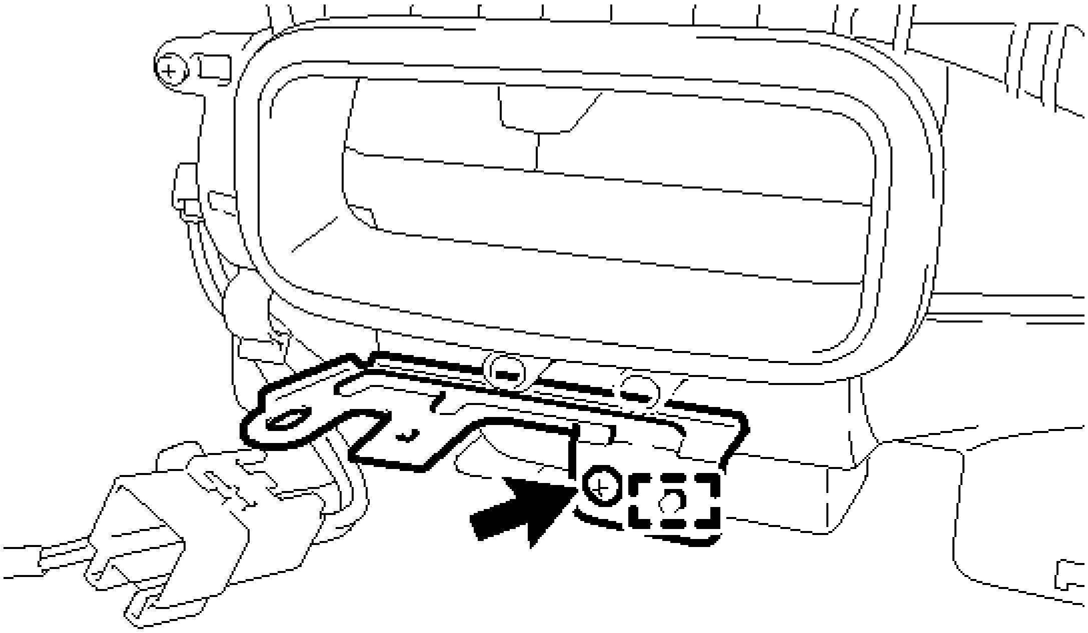

Fig. 102: Identifying Quick Heater Bracket And Screw
Courtesy of TOYOTA MOTOR SALES, U.S.A., INC.

e. Install the quick heater bracket with the screw.
f. Engage the 2 clamps and install the quick heater assembly.

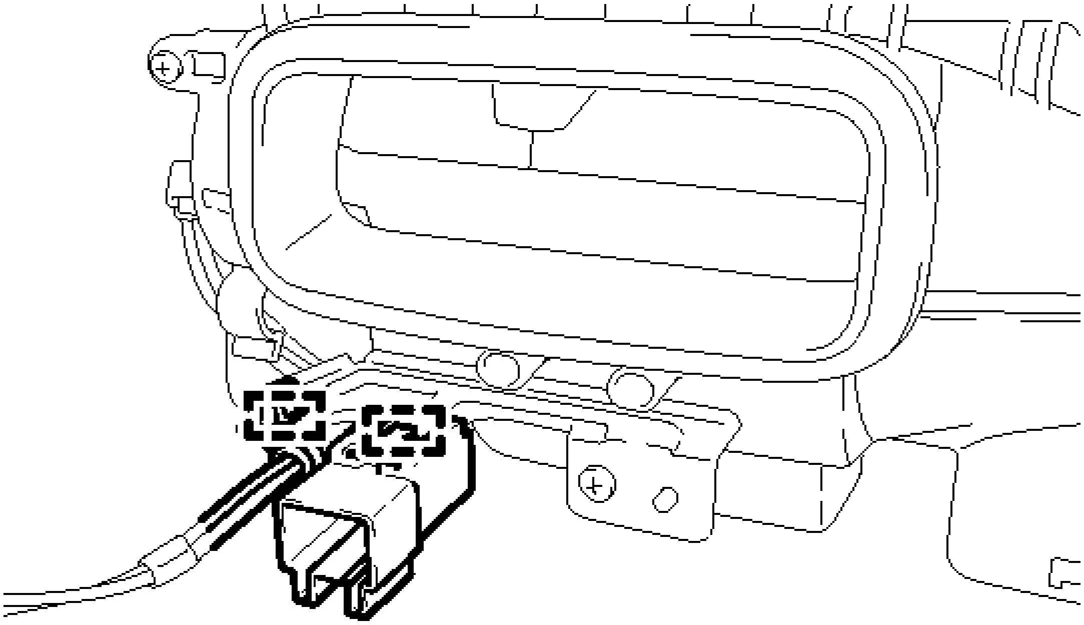

Fig. 103: Identifying Quick Heater Assembly Clamps

Courtesy of TOYOTA MOTOR SALES, U.S.A., INC.

7. **INSTALL BLOWER ASSEMBLY WITH COOLER EVAPORATOR SUB-ASSEMBLY** See step 1
8. **INSTALL COOLER EXPANSION VALVE**
    a. Using a 4 mm hexagon wrench, install the cooler expansion valve with the 2 hexagon bolts.

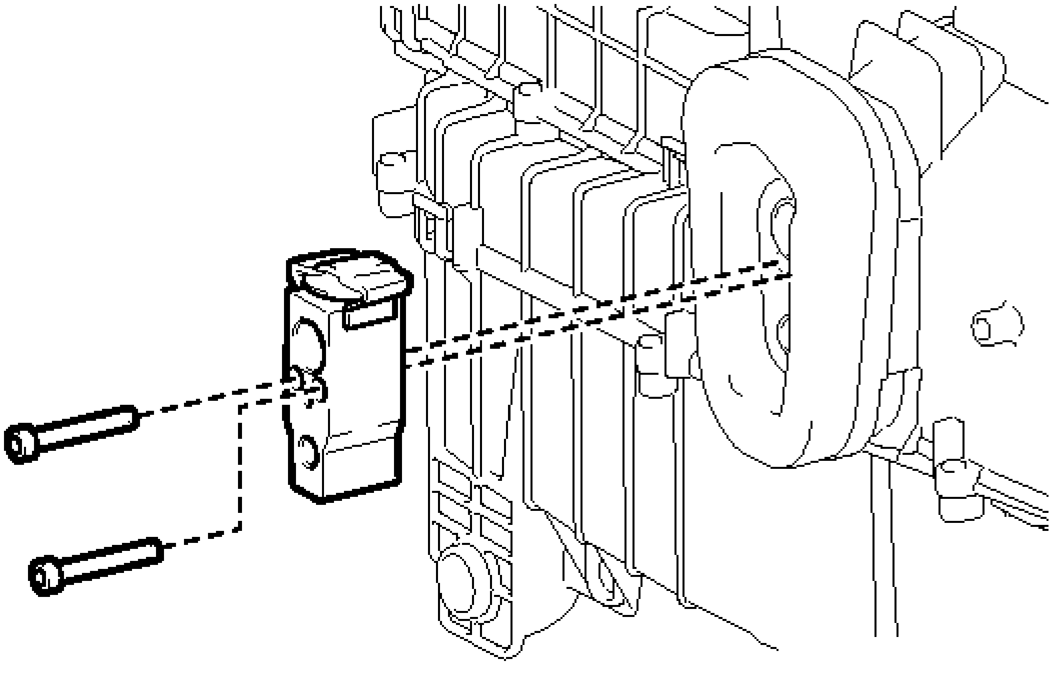

Fig. 104: Identifying Cooler Expansion Valve And Bolts
Courtesy of TOYOTA MOTOR SALES, U.S.A., INC.

Torque: 3.5 N*m (36 kgf*cm, 31 in.*lbf)

9. **INSTALL AIR CONDITIONING HARNESS ASSEMBLY**
    a. Engage the 5 clamps to install air conditioning harness assembly.

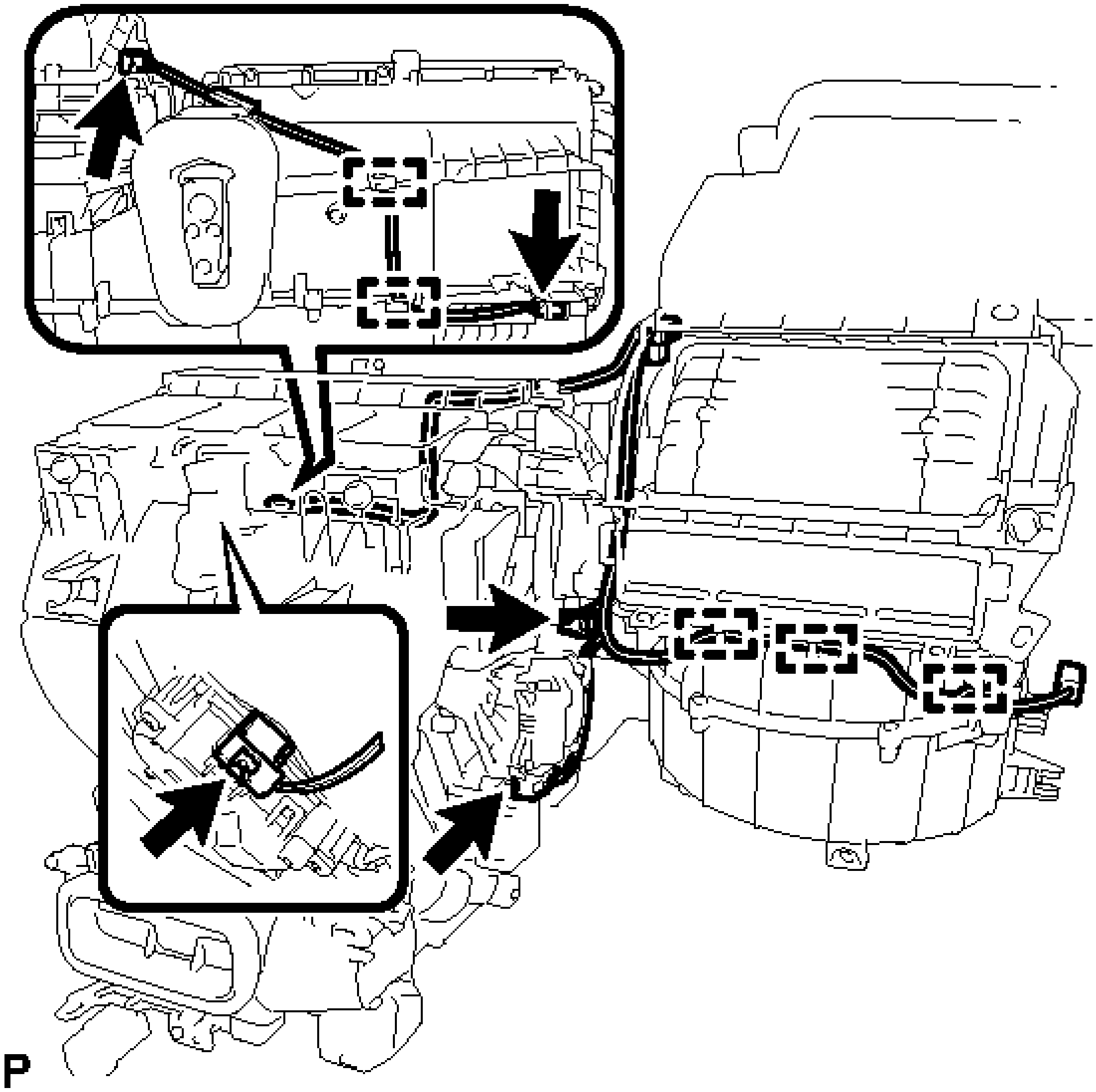

Fig. 105: Identifying Air Conditioning Harness Assembly Clamps
Courtesy of TOYOTA MOTOR SALES, U.S.A., INC.

b. Connect the 5 connectors.
c. Install the heater packing as shown in the illustration.

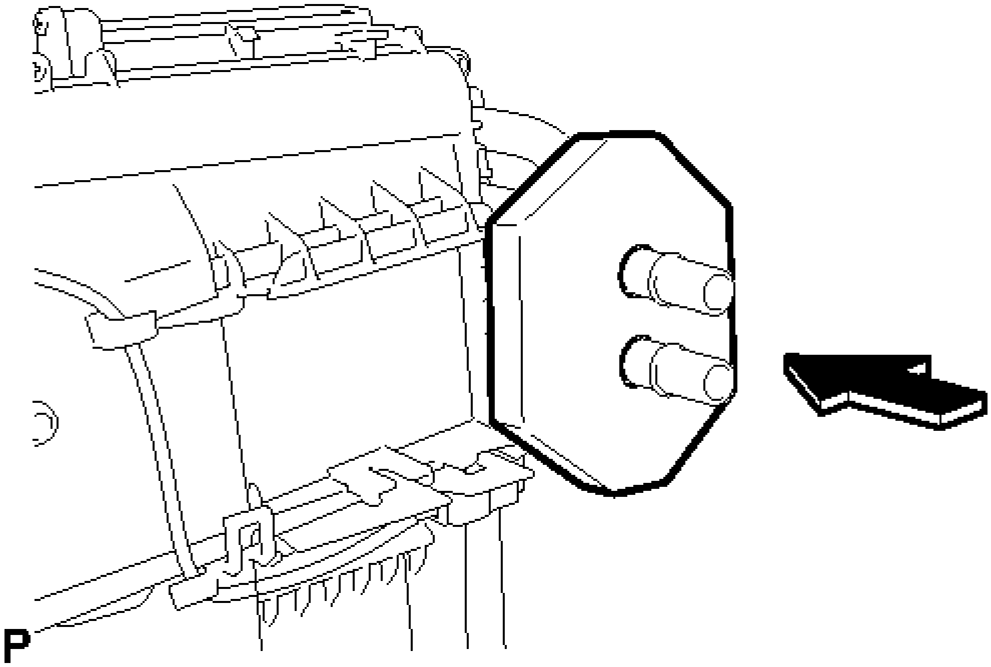

Fig. 106: Installing Heater Packing
Courtesy of TOYOTA MOTOR SALES, U.S.A., INC.

10. **INSTALL ASPIRATOR**
    a. Engage the 2 claws to install the aspirator.

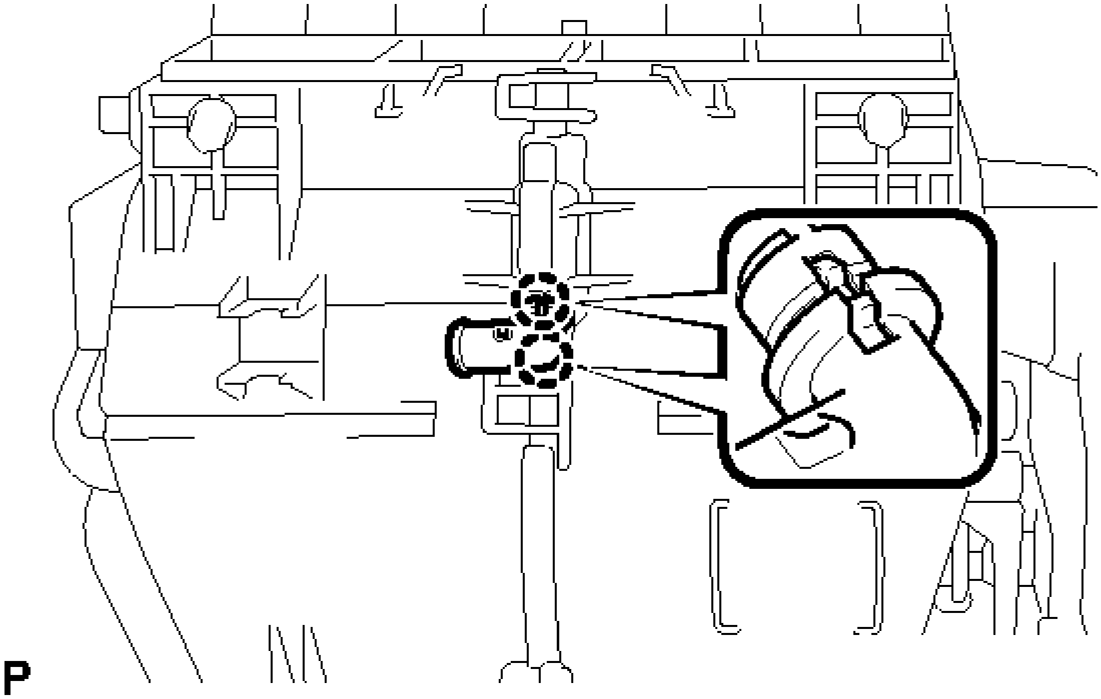

Fig. 107: Identifying Aspirator Claws

Courtesy of TOYOTA MOTOR SALES, U.S.A., INC.

11. **INSTALL COOLER THERMISTOR HOSE**
    a. Engage the clamp to install the cooler thermistor hose.

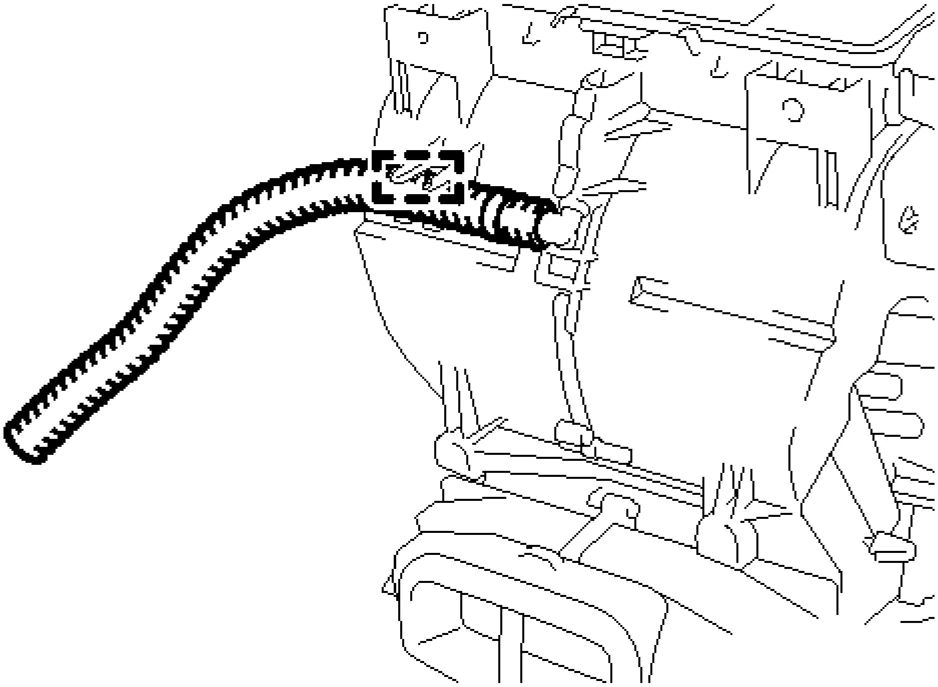

Fig. 108: Identifying Cooler Thermistor Hose
Courtesy of TOYOTA MOTOR SALES, U.S.A., INC.

12. **INSTALL NO. 6 HEATER TO REGISTER DUCT ASSEMBLY**
    a. Engage the 2 claws and 2 guides to install the No. 6 heater to register duct assembly as shown in the illustration.

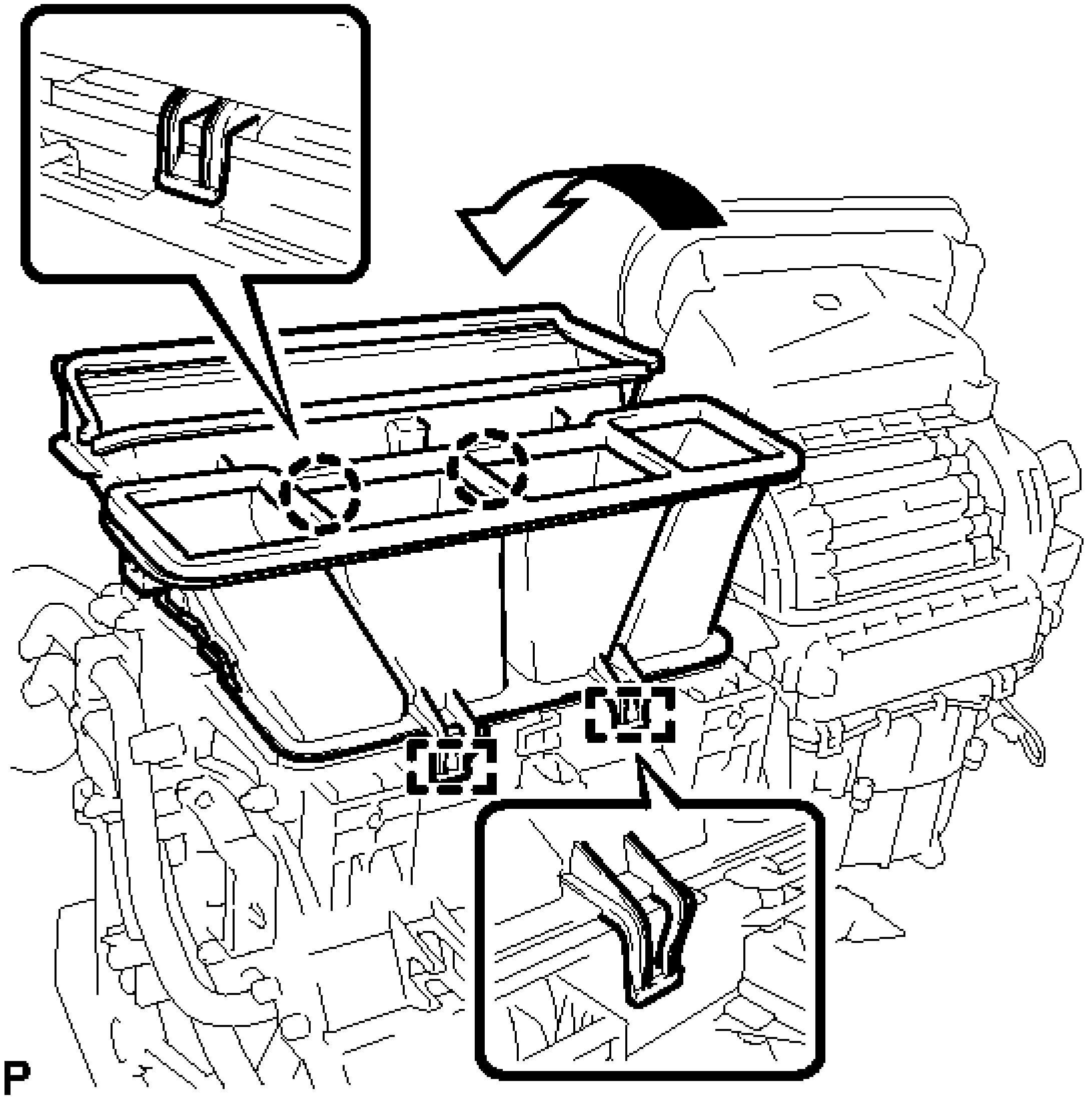

Fig. 109: Identifying No. 6 Heater To Register Duct Claws And Guides
Courtesy of TOYOTA MOTOR SALES, U.S.A., INC.

13. **INSTALL NO. 1 AIR DUCT SUB-ASSEMBLY**
    a. Engage the 2 claws and guide to install the No. 1 air duct sub-assembly as shown in the illustration.

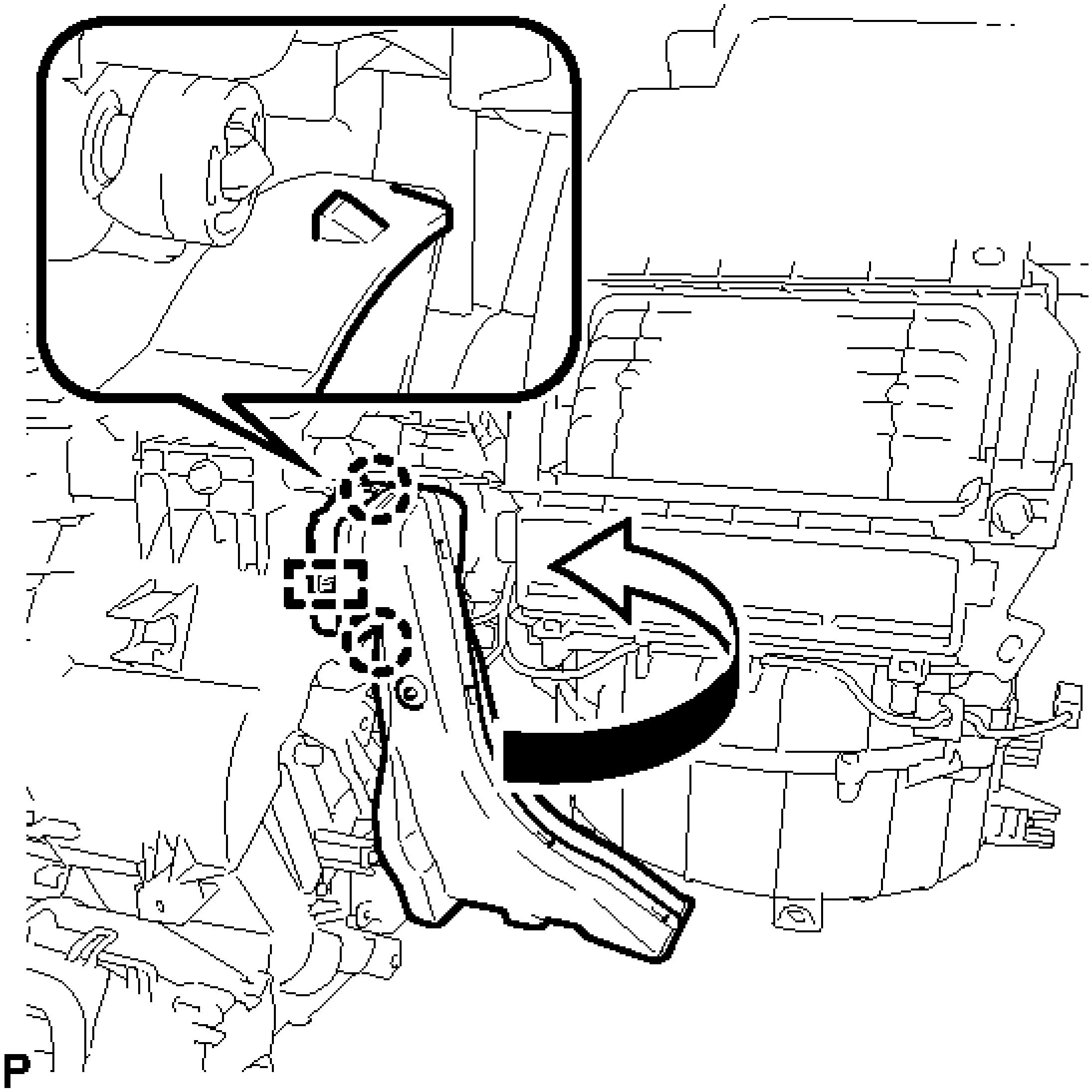

Fig. 110: Identifying No. 1 Air Duct Sub-Assembly Claws And Guide
Courtesy of TOYOTA MOTOR SALES, U.S.A., INC.

INSTALLATION

INSTALLATION

1. **INSTALL AIR CONDITIONING UNIT ASSEMBLY**
    a. Install the air conditioning unit assembly to the instrument panel reinforcement assembly with the 3 bolts.

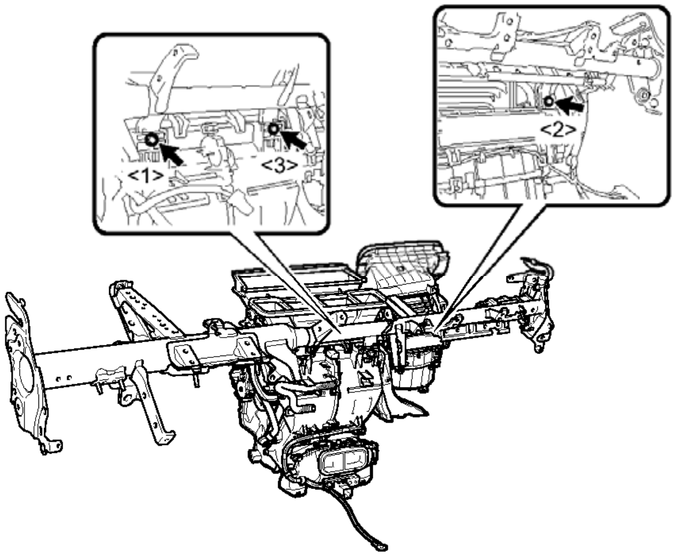

P

Fig. 111: Identifying Air Conditioning Unit Assembly Bolts
Courtesy of TOYOTA MOTOR SALES, U.S.A., INC.

Torque: 9.8 N*m (100 kgf*cm, 87 in.*lbf)

NOTE: **Tighten the bolts in the order shown in the illustration to install the air conditioning unit assembly.**

2. **INSTALL INSTRUMENT PANEL REINFORCEMENT ASSEMBLY WITH AIR CONDITIONING UNIT**

NOTE:

- **Be sure to support the air conditioning unit assembly when removing it because failure to do so may cause the bracket of the air conditioning unit assembly to break.**
- **When installing the air conditioning unit, eliminate static electricity by touching the vehicle body to prevent the components from being damaged.**

a. Disengage the 3 guides and temporarily install the instrument panel reinforcement assembly with air conditioning unit as shown in the illustration.

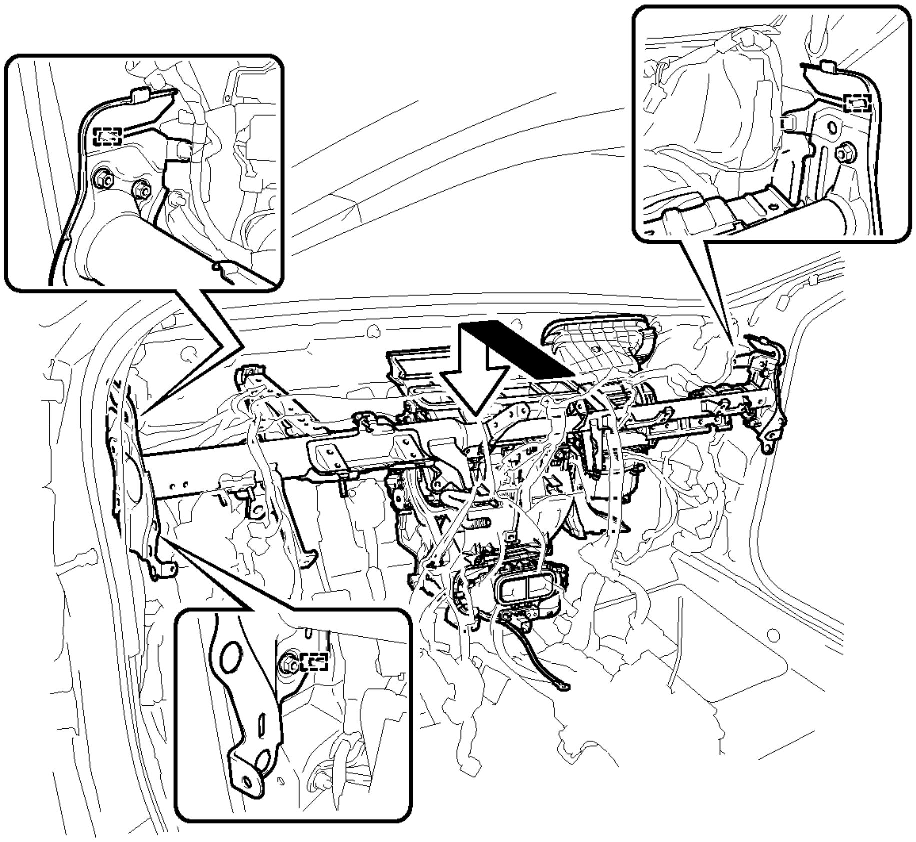

P

Fig. 112: Identifying Instrument Panel Reinforcement Guides
Courtesy of TOYOTA MOTOR SALES, U.S.A., INC.

b. Install the instrument panel reinforcement assembly with the 3 bolts <A> and 2 new bolts <B>in the order shown in the illustration.

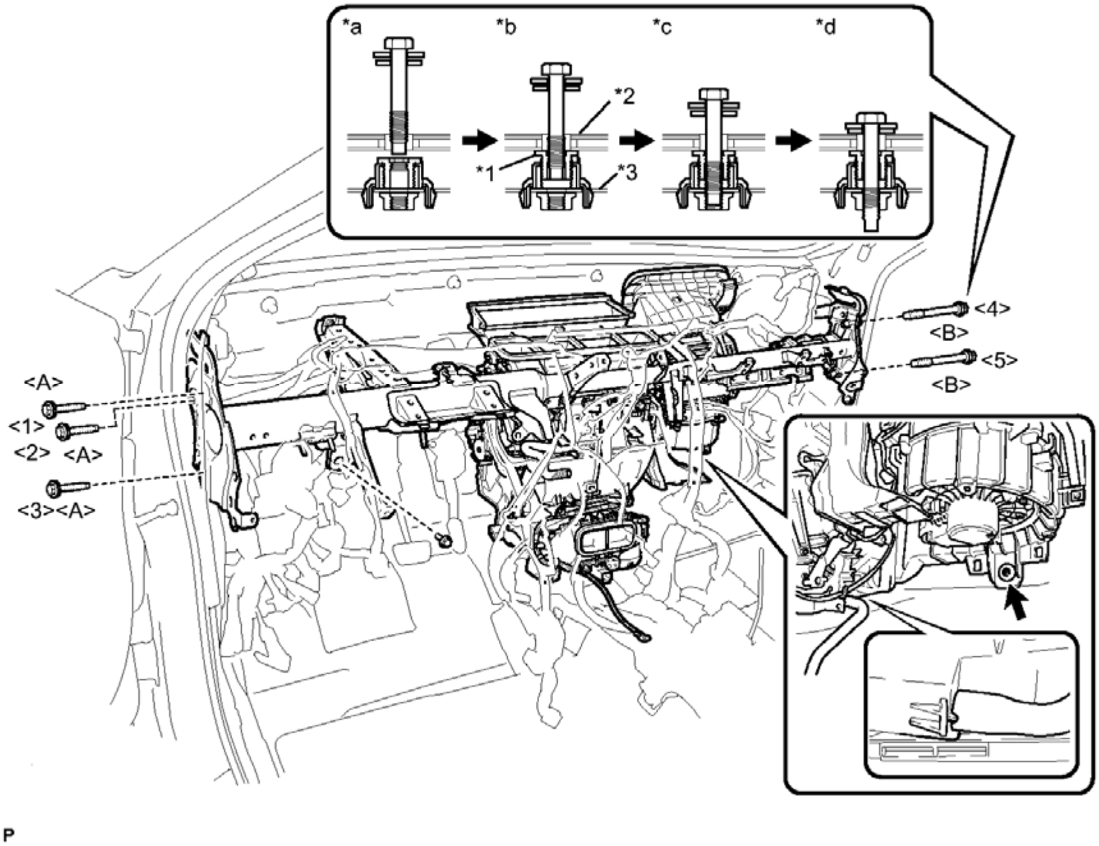

Fig. 113: Identifying Instrument Panel Reinforcement Bolts
Courtesy of TOYOTA MOTOR SALES, U.S.A., INC.

TEXT IN ILLUSTRATION

*1	Movable Collar	*2	Body
*3	Instrument Panel Reinforcement	-	-
*a	Step 1	*b	Step 2
*c	Step 3	*d	Step 4

Torque: 20 N*m (204 kgf*cm, 15 ft.*lbf)

NOTE: **Tighten the bolts in the order shown in the illustration to install the reinforcement assembly.**

c. Install the instrument panel reinforcement assembly with air conditioning unit with the nut.

Torque: 9.8 N*m (100 kgf*cm, 87 in.*lbf)

d. Install the bolt.

Torque: 15 N*m (153 kgf*cm, 11 ft.*lbf)

e. Install the 2 bolts.

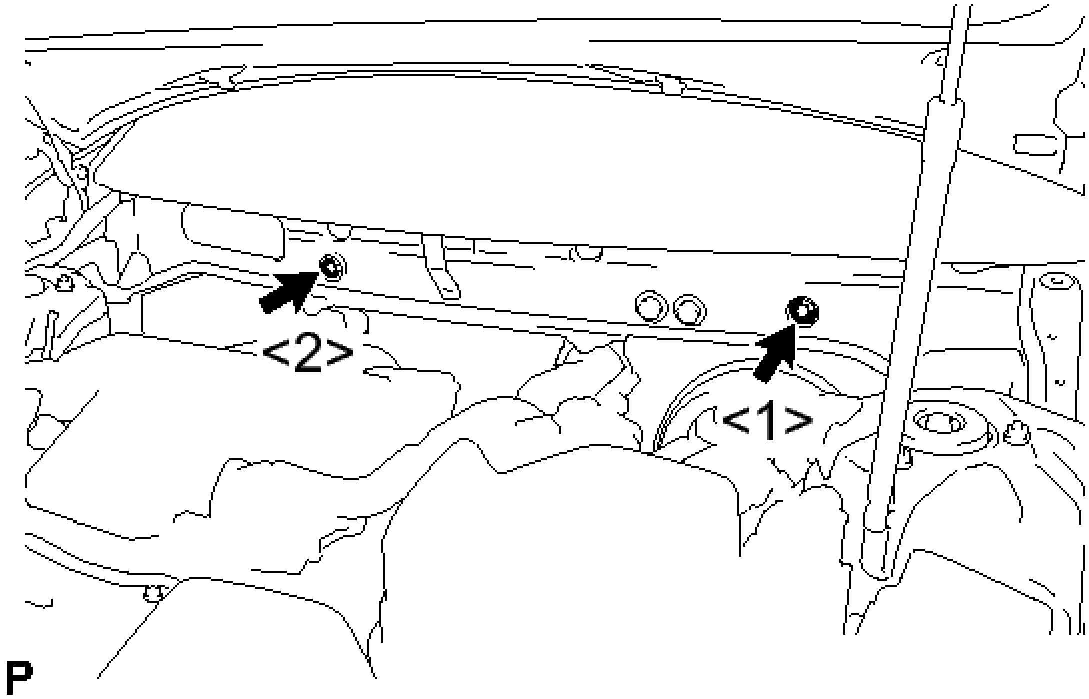

Fig. 114: Identifying Bolts
Courtesy of TOYOTA MOTOR SALES, U.S.A., INC.

Torque: 9.8 N*m (100 kgf*cm, 87 in.*lbf)

NOTE: **Tighten the bolts in the order shown in the illustration.**

f. Install the instrument panel reinforcement assembly with air conditioning unit with the nut.

Torque: 9.8 N*m (100 kgf*cm, 87 in.*lbf)

g. Install the 2 bolts.

Torque: 9.8 N*m (100 kgf*cm, 87 in.*lbf)

h. Engage each clamp.
i. Connect the connector.
j. Install the 2 nuts and connect the connector holder.

k. Install the bolt and connect the earth wire.

Torque: 8.0 N*m (82 kgf*cm, 71 in.*lbf)

l. Engage each clamp.
m. Connect the connector.
n. Install the 2 bolts and connect the 2 earth wires.

Torque: 8.0 N*m (82 kgf*cm, 71 in.*lbf)

o. Engage each clamp.
p. Pass the drain cooler hose through the vehicle securely.

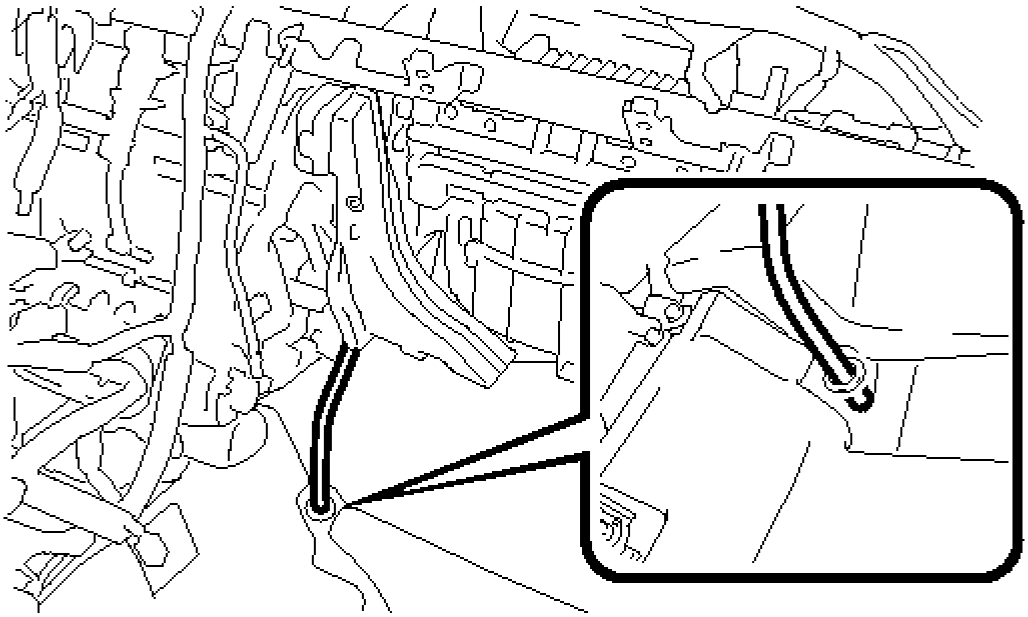

Fig. 115: Identifying Drain Cooler Hose
Courtesy of TOYOTA MOTOR SALES, U.S.A., INC.

NOTE: **Connect the drain cooler hose firmly to prevent water leaks.**

q. Engage each clamp.
r. Connect the connector.
s. Engage each clamp.
t. Engage the claw to connect the airbag connector as shown in the illustration.

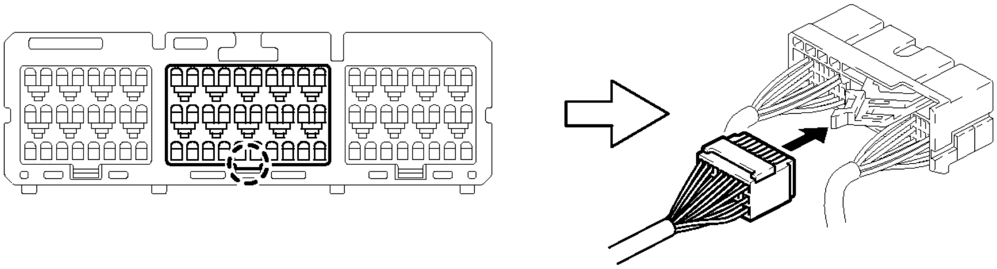

P

Fig. 116: Identifying Airbag Connector
Courtesy of TOYOTA MOTOR SALES, U.S.A., INC.

u. Engage the 2 claws to lock the retainer as shown in the illustration.

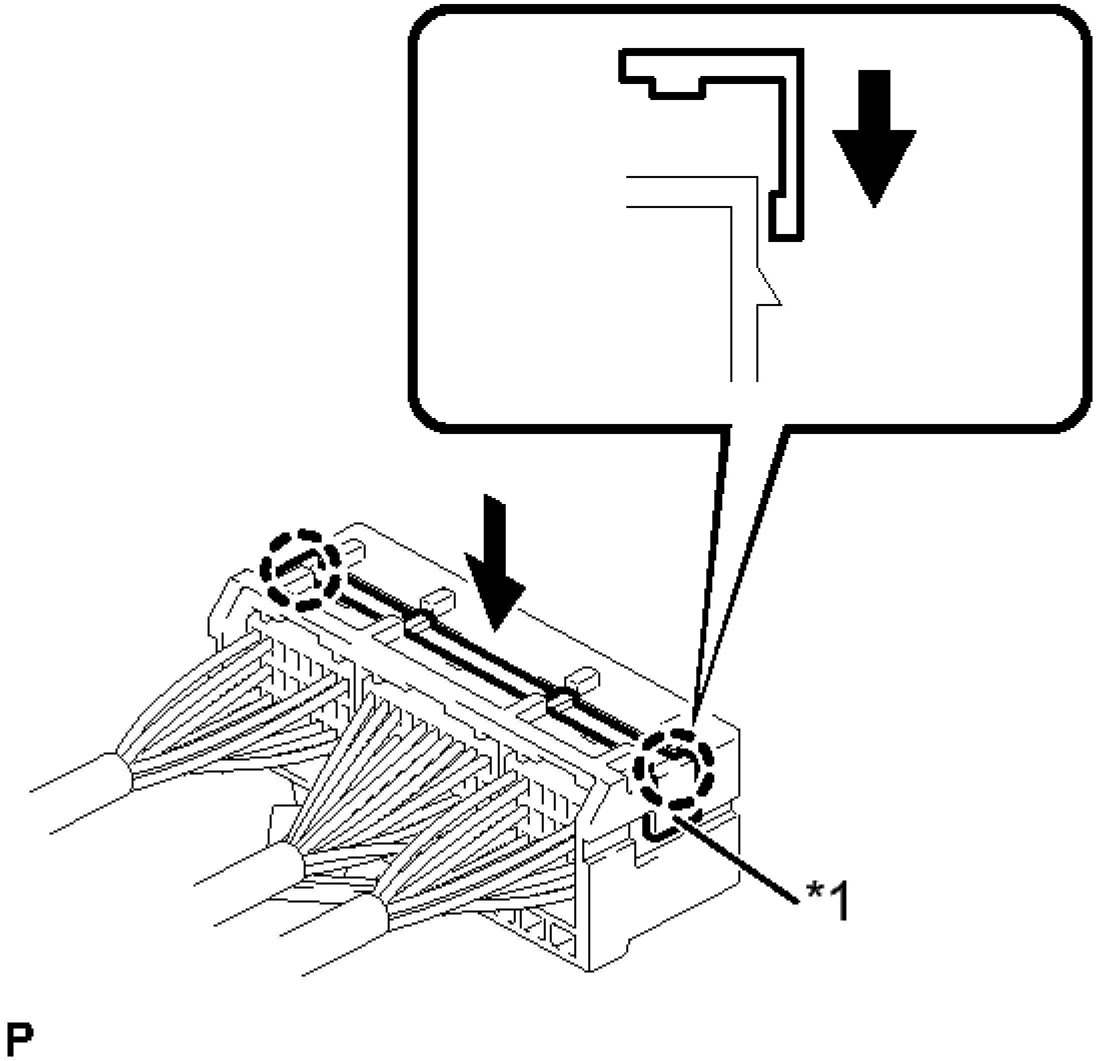

Fig. 117: Identifying Claws To Lock Retainer
Courtesy of TOYOTA MOTOR SALES, U.S.A., INC.

TEXT IN ILLUSTRATION

*1	Retainer

v. Connect the connector.
w. Install the bolt.

Torque: 20 N*m (199 kgf*cm, 14 ft.*lbf)

x. Install the shift lever support with the 4 bolts.

Torque: 12 N*m (122 kgf*cm, 9 ft.*lbf)

y. Check that the park/neutral position switch and the shift lever are in N.

z. Install the lower shift lever assembly with the 4 bolts in the order shown in the illustration.

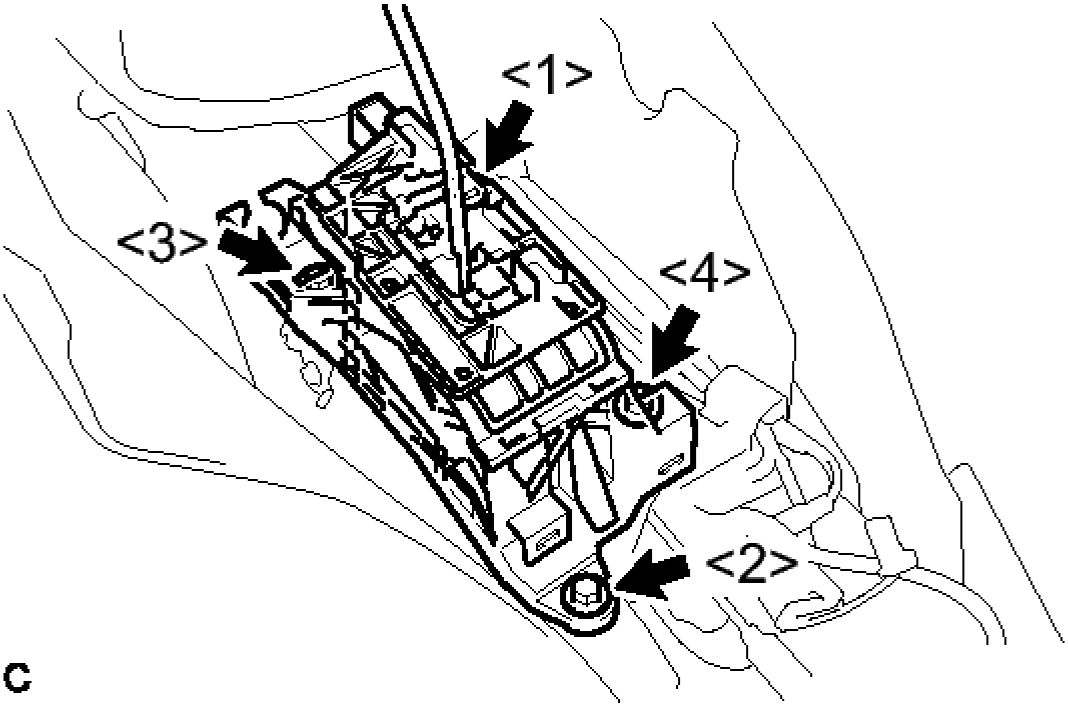

Fig. 118: Identifying Shift Lever Support Bolts
Courtesy of TOYOTA MOTOR SALES, U.S.A., INC.

Torque: 12 N*m (122 kgf*cm, 9 ft.*lbf)

aa. Slide the slider of the transmission control cable assembly in the direction indicated by the arrow and pull the lock piece outward.

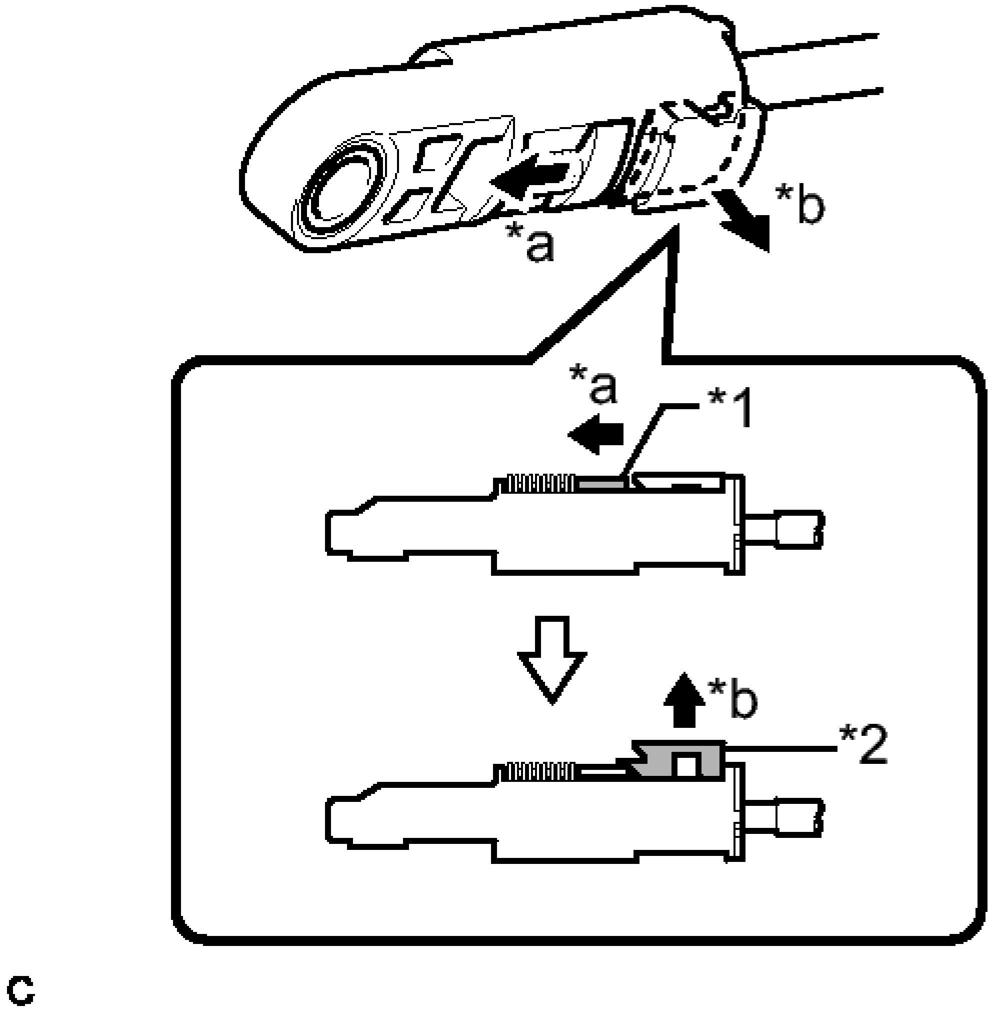

Fig. 119: Identifying Transmission Control Cable Assembly Slider
Courtesy of TOYOTA MOTOR SALES, U.S.A., INC.

TEXT IN ILLUSTRATION

*1	Slider
*2	Lock Piece
*a	Slide
*b	Pull

ab. Install the end of the transmission control cable assembly to the lower shift lever assembly.

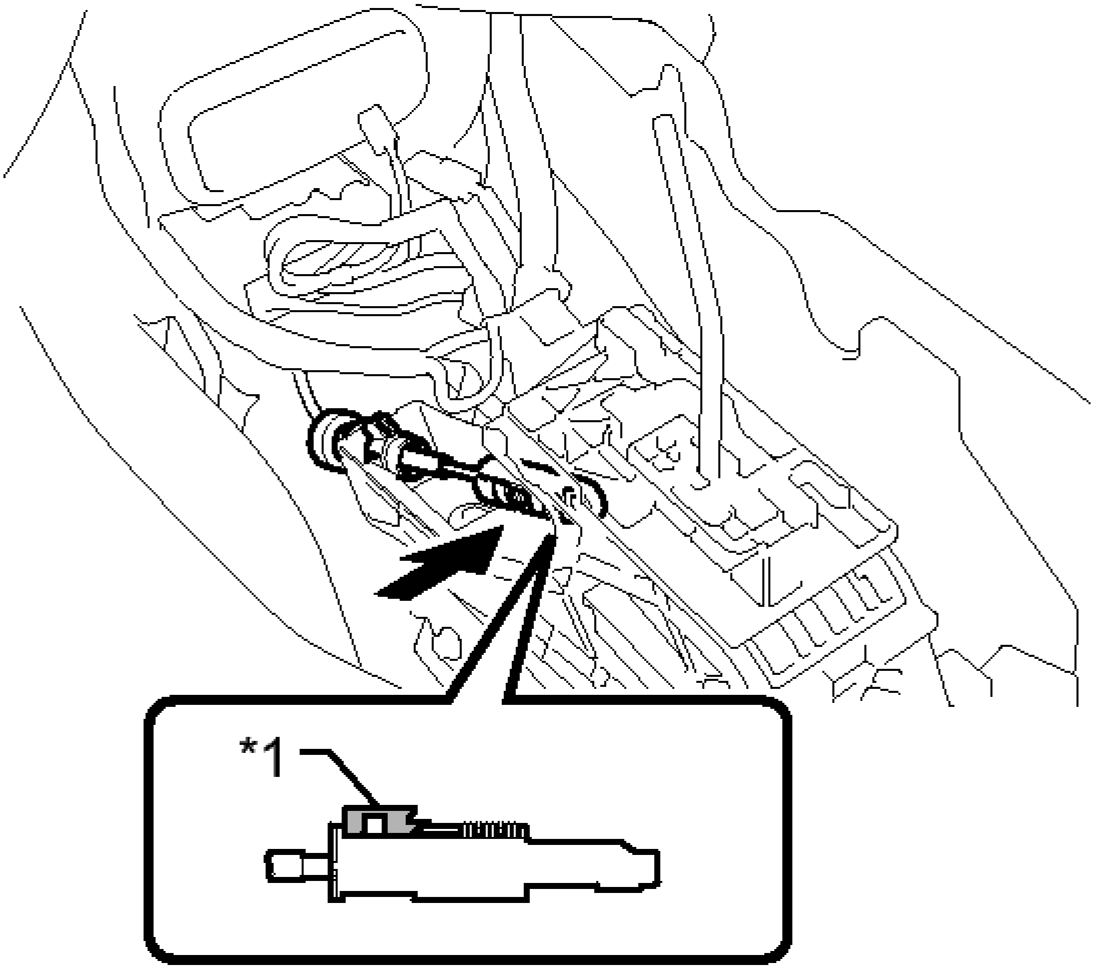

Fig. 120: Installing End Of Transmission Control Cable Assembly
Courtesy of TOYOTA MOTOR SALES, U.S.A., INC.

TEXT IN ILLUSTRATION

*1	Lock Piece

NOTE:	- **Check that the lock piece is pulled up.** - **Install the cable end all the way to the base of the pin.**

ac. Push the lock piece into the adjuster case.

NOTE:	- **Check that the park/neutral position switch and the shift lever are in neutral.**

- **Securely push in the lock piece until the slider lock is engaged.**

ad. Connect each connector.

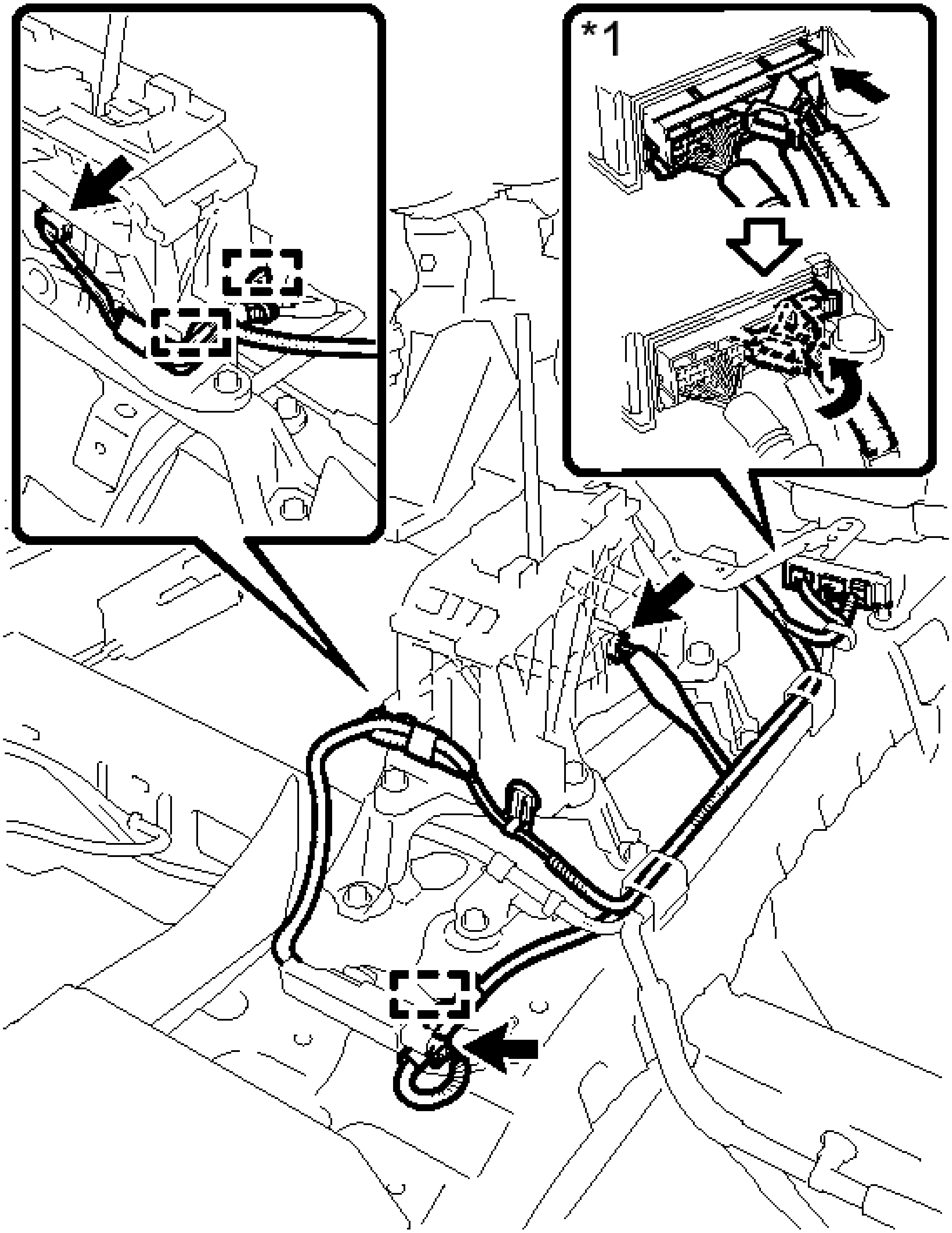

P

Fig. 121: Identifying Center Airbag Sensor Connectors
Courtesy of TOYOTA MOTOR SALES, U.S.A., INC.

TEXT IN ILLUSTRATION

*1	Center Airbag Sensor Connector

ae. Engage the 3 clamps.

af. Connect the center airbag sensor connectors to the center airbag sensor assembly as shown in the illustration.

NOTE: **When connecting any airbag connector, take care not to damage the airbag wire harness.**

ag. Engage the 3 claws to close the 3 clamps as shown in the illustration.

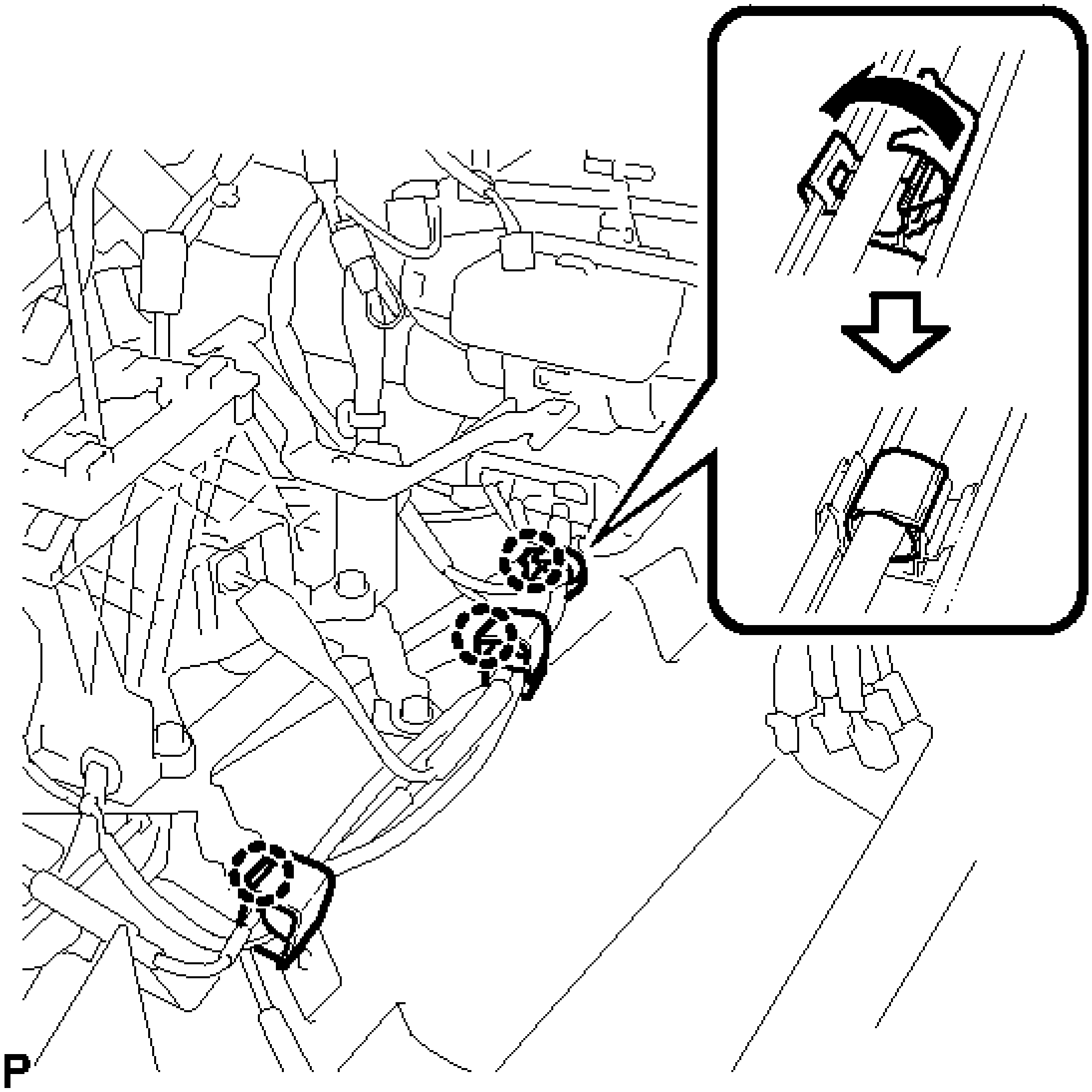

Fig. 122: Engaging Claws To Close Clamps
Courtesy of TOYOTA MOTOR SALES, U.S.A., INC.

3. **INSTALL FRONT LOWER PANEL PACKING**
    a. Install the 2 front lower panel packings shown in the illustration.

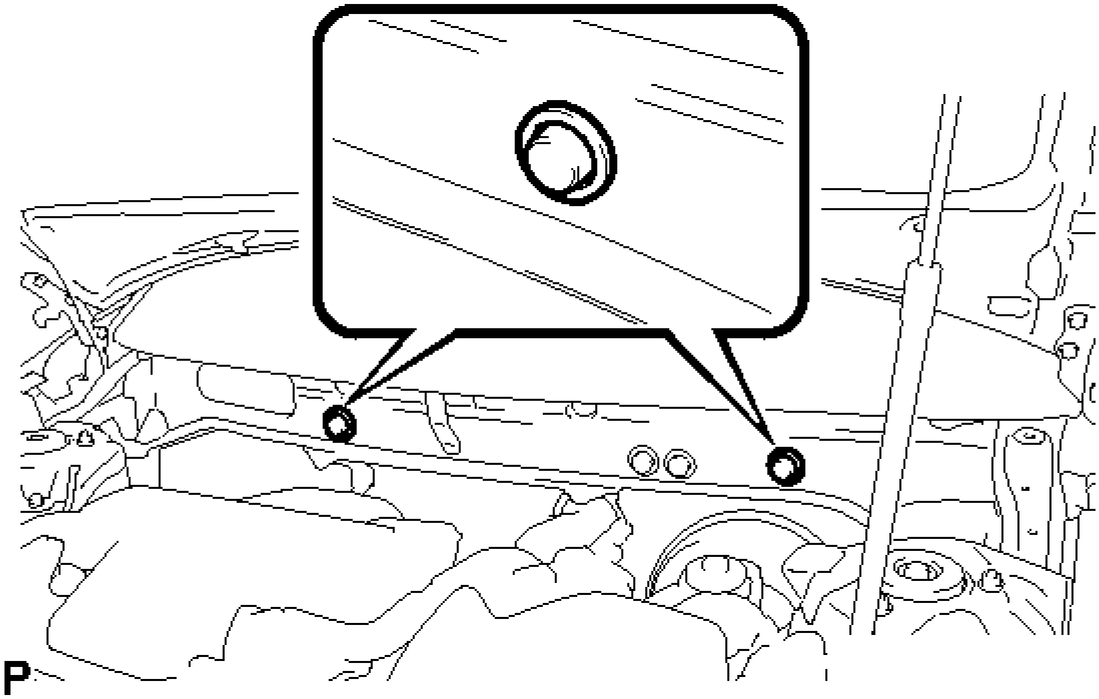

Fig. 123: Identifying Front Lower Panel Packing
Courtesy of TOYOTA MOTOR SALES, U.S.A., INC.

4. **INSTALL INSTRUMENT PANEL SAFETY PAD CAP**
   a. Install 5 new instrument panel safety pad caps.

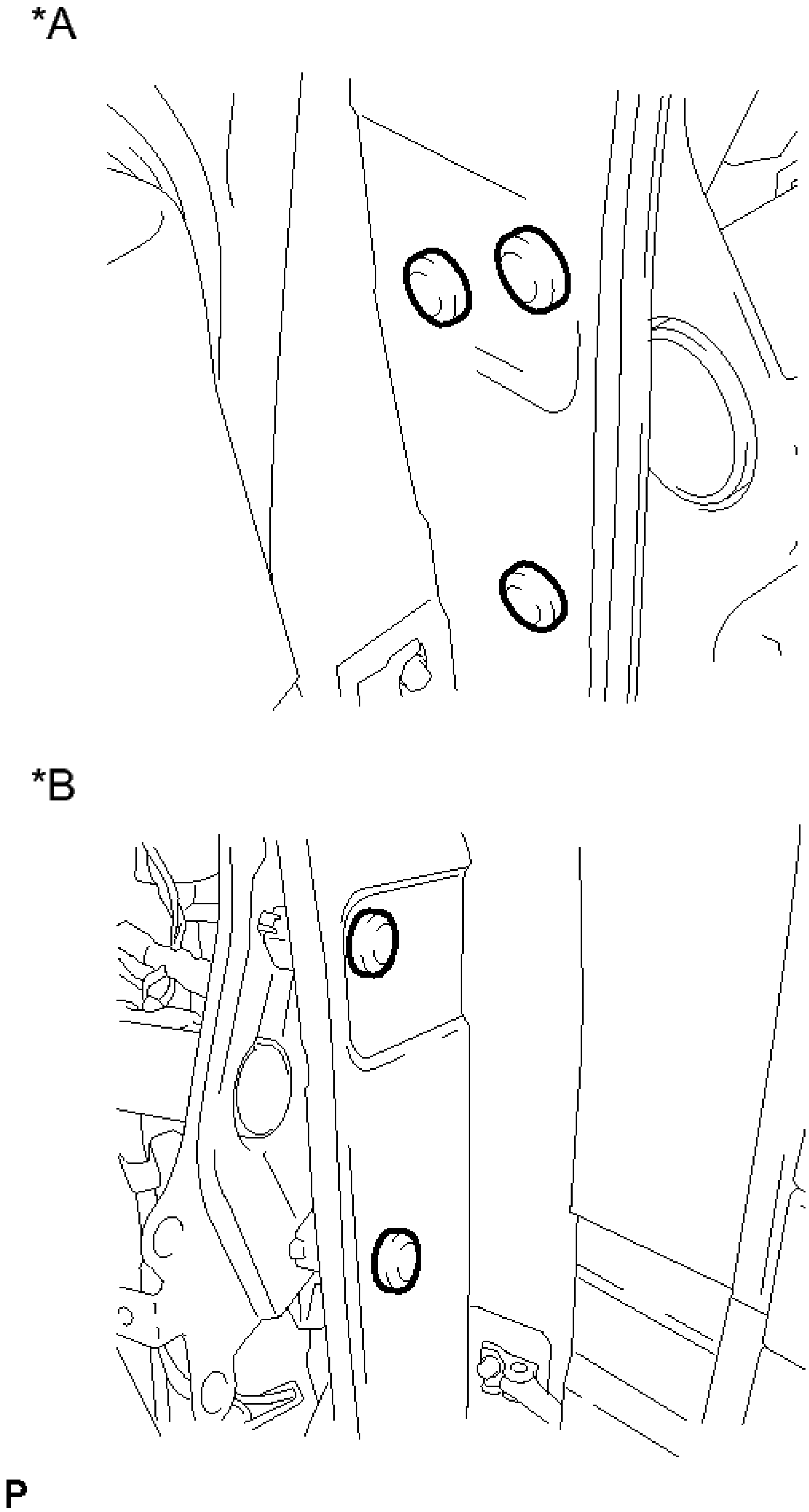

Fig. 124: Identifying Instrument Panel Safety Pad Caps
Courtesy of TOYOTA MOTOR SALES, U.S.A., INC.

TEXT IN ILLUSTRATION

*A	for LH Side
*B	for RH Side

5. **INSTALL NO. 2 INSTRUMENT PANEL BRACE SUB-ASSEMBLY**
    1. Install the screw.
    2. Install the No. 2 instrument panel brace sub-assembly with the bolt and 2 nuts.

       Torque: 20 N*m (204 kgf*cm, 15 ft.*lbf)

    3. Connect the earth wire with the bolt.

       Torque: 8.0 N*m (82 kgf*cm, 71 in.*lbf)

    4. Engage each clamp.
    5. Connect the connector.
6. **INSTALL INSTRUMENT PANEL TO COWL BRACE SUB-ASSEMBLY**
    1. Install the screw.
    2. Install the instrument panel to cowl brace sub-assembly with the bolt and 2 nuts.

       Torque: 20 N*m (204 kgf*cm, 15 ft.*lbf)

    3. Connect the earth wire with the bolt.

       Torque: 8.0 N*m (82 kgf*cm, 71 in.*lbf)

    4. Engage each clamp.
    5. Connect each connector.
7. **INSTALL NO. 1 CONSOLE BOX DUCT (w/ Rear Register Duct)**
    1. Install the No. 1 console box duct with the clip.
8. **INSTALL NO. 1 CONSOLE BOX MOUNTING BRACKET**
    1. Install the No. 1 console mounting bracket with the screw.
9. **INSTALL REAR NO. 3 AIR DUCT**
    1. Engage the 2 claws to install the rear No. 3 air duct.
10. **INSTALL FLOOR CARPET BRACKET LH**
    1. Engage the 2 guides.
    2. Install the floor carpet bracket LH with the 2 clips.
11. **INSTALL REAR NO. 4 AIR DUCT**
    1. Engage the 4 claws to install the rear No. 4 air duct as shown in the illustration.

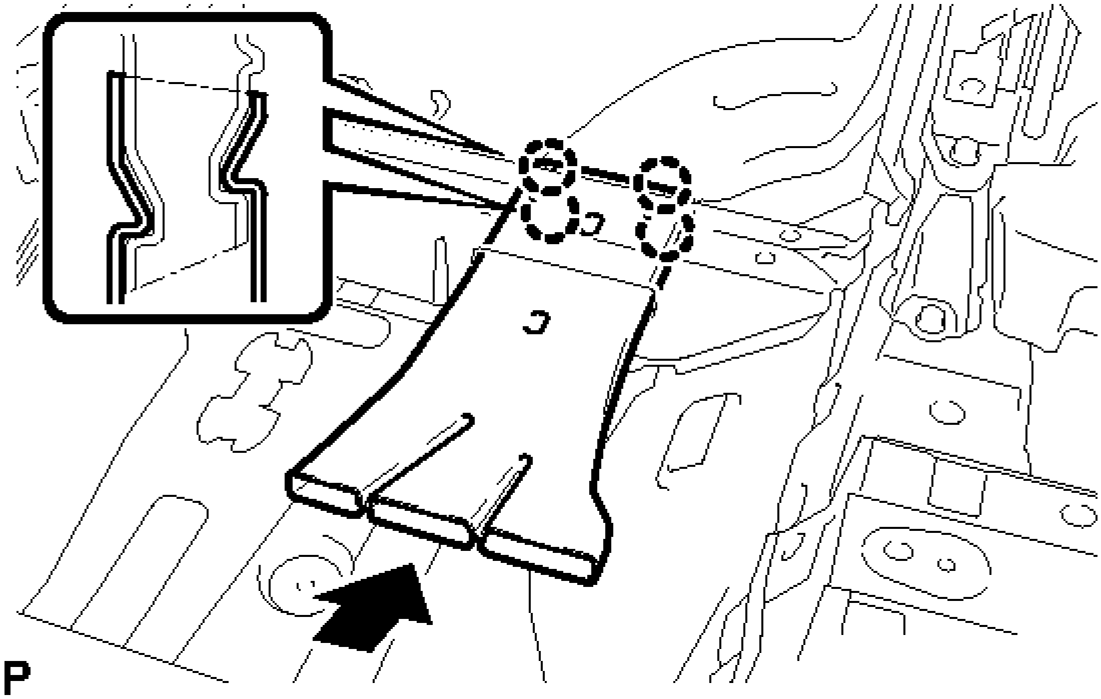

Fig. 125: Identifying Rear No. 4 Air Duct Claws
Courtesy of TOYOTA MOTOR SALES, U.S.A., INC.

b. Engage the guide to install the floor carpet to the original position as shown in the illustration.

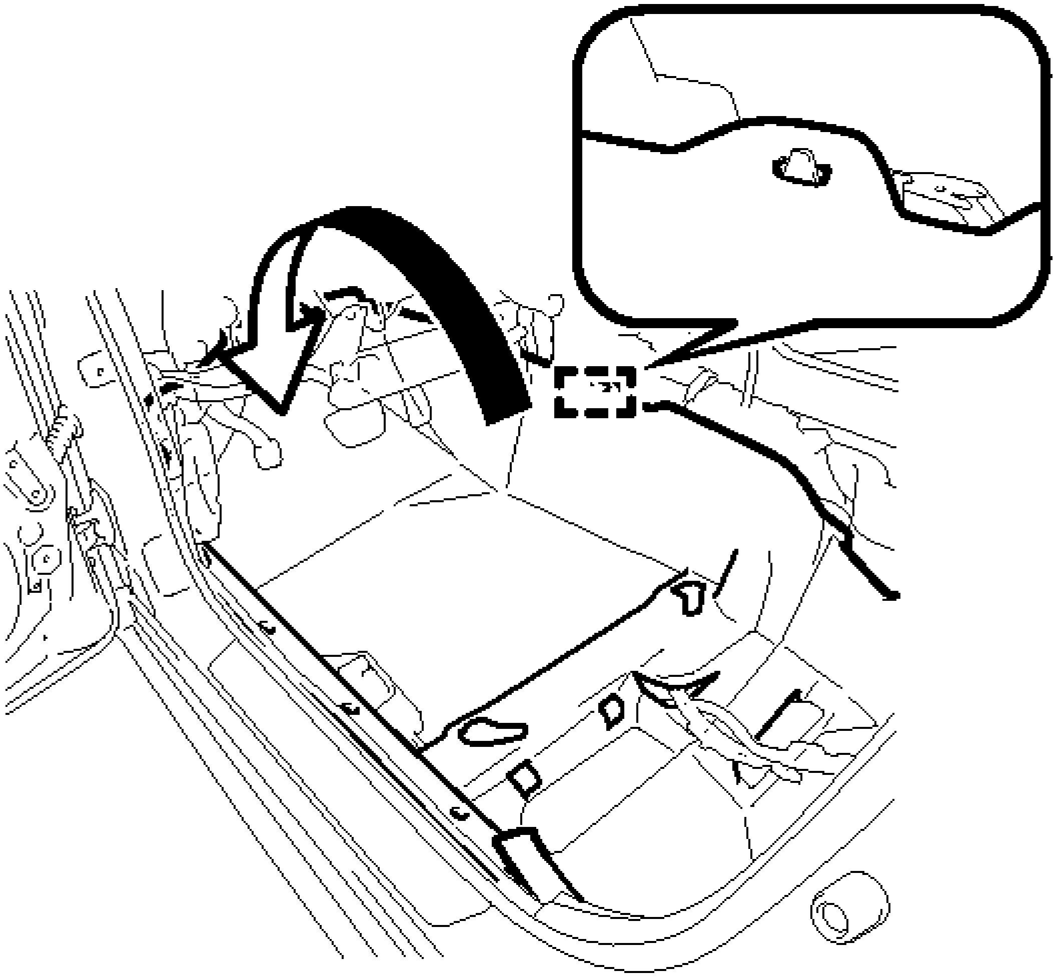

P

Fig. 126: Identifying Floor Carpet Guide
Courtesy of TOYOTA MOTOR SALES, U.S.A., INC.

12. CONNECT FUEL LID LOCK OPEN LEVER SUB-ASSEMBLY

a. Engage the guide to connect the fuel lid lock open lever sub-assembly as shown in the illustration.

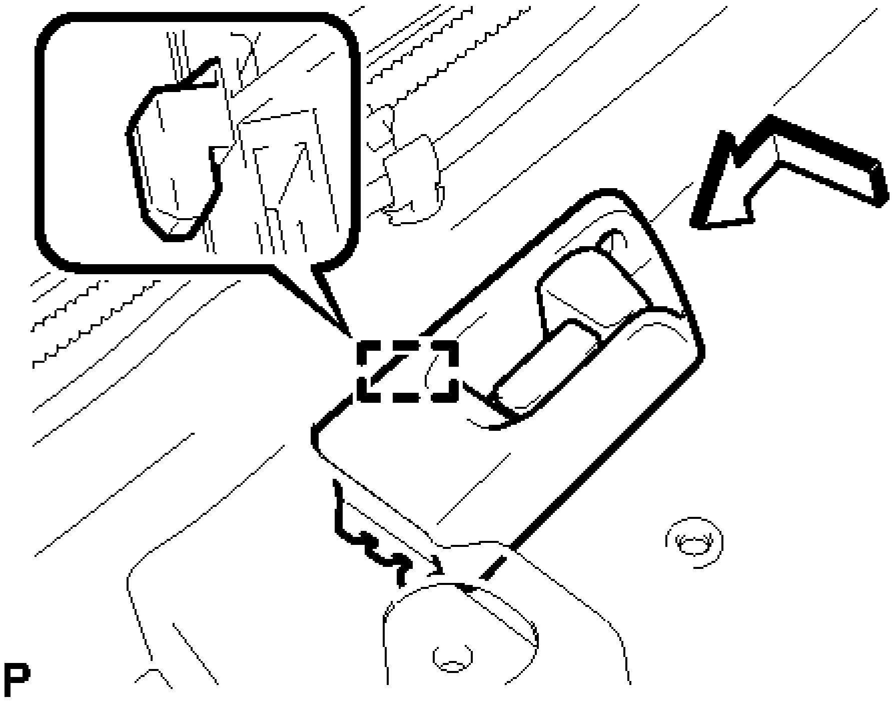

Fig. 127: Identifying Fuel Lid Lock Open Lever Guide
Courtesy of TOYOTA MOTOR SALES, U.S.A., INC.

b. Install the screw.

13. **INSTALL REAR NO. 1 AIR DUCT**
    a. Engage the 2 claws to install the rear No. 1 air duct.
14. **INSTALL FLOOR CARPET BRACKET RH**
    a. Engage the 2 guides.
    b. Install the floor carpet bracket RH with the 2 clips.
15. **INSTALL REAR NO. 2 AIR DUCT**
    a. Engage the 4 claws to install the rear No. 2 air duct as shown in the illustration.

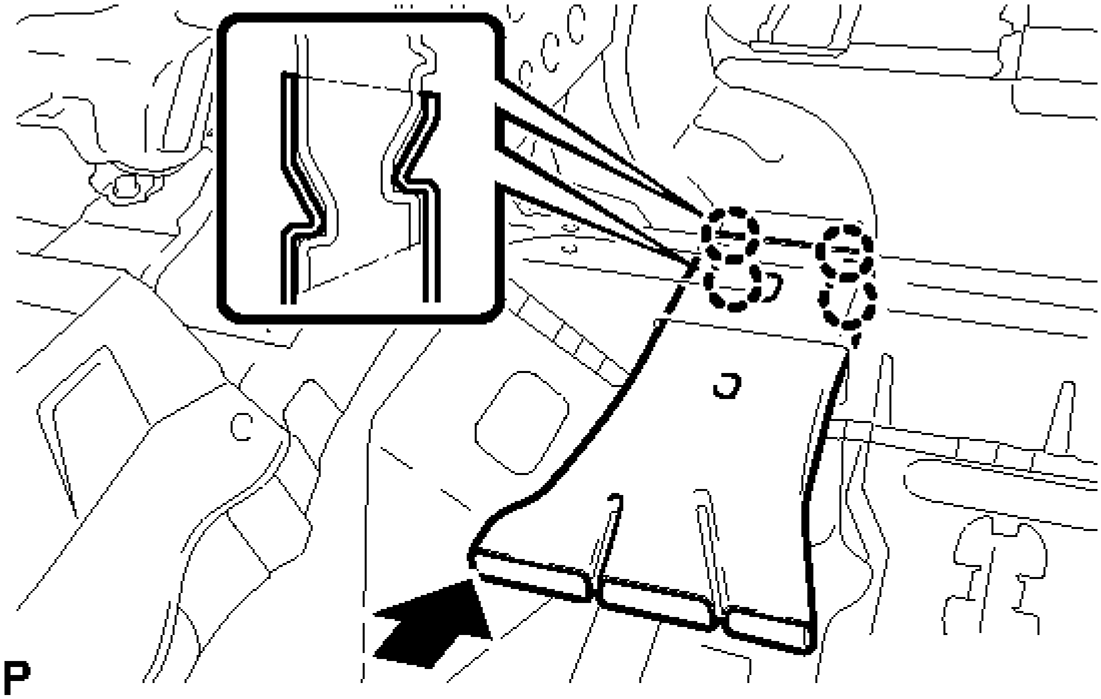

Fig. 128: Identifying Rear No. 2 Air Duct Claws
Courtesy of TOYOTA MOTOR SALES, U.S.A., INC.

b. Engage the guide to install the floor carpet to the original position as shown in the illustration.

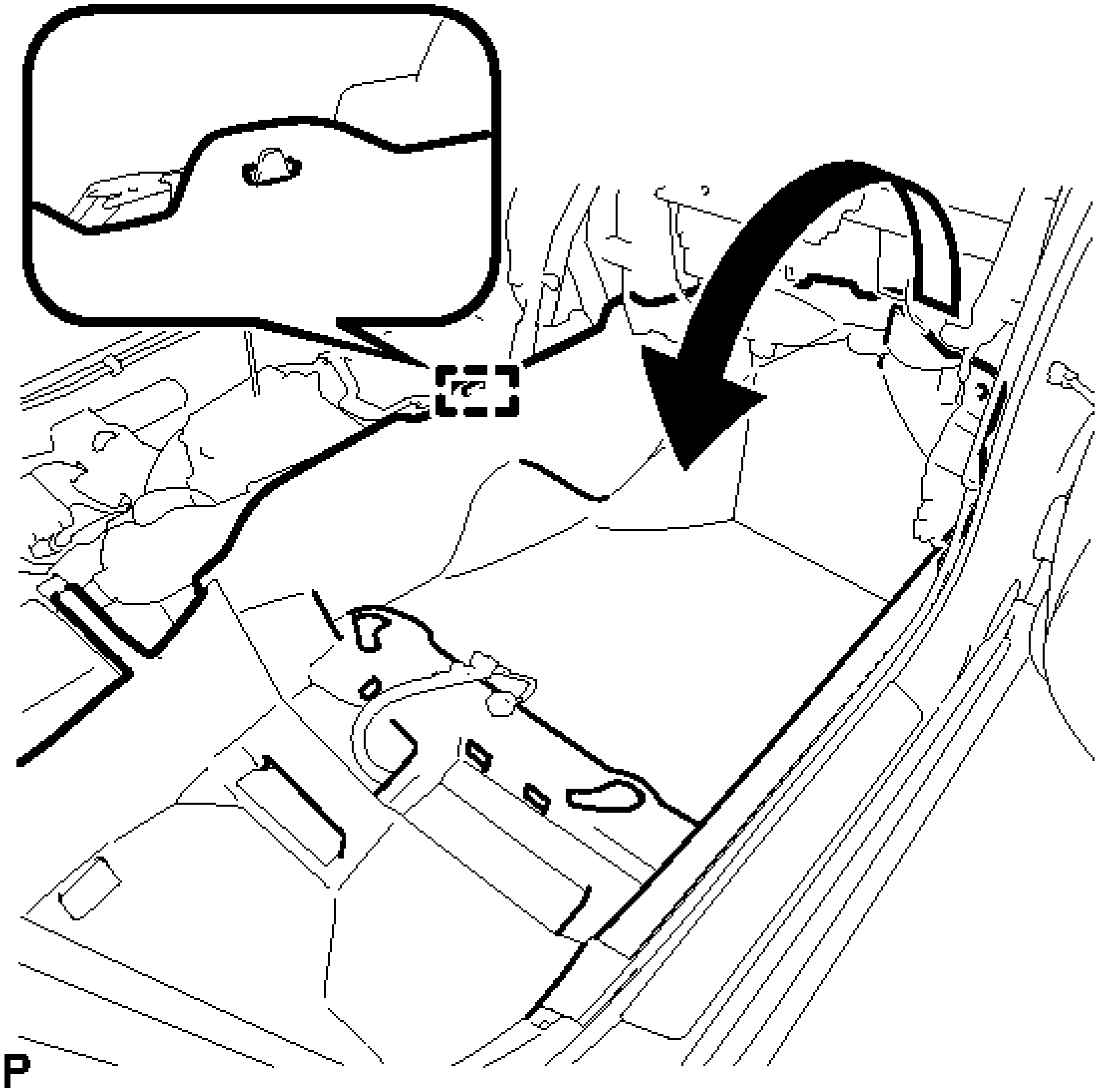

Fig. 129: Identifying Floor Carpet Guide
Courtesy of TOYOTA MOTOR SALES, U.S.A., INC.

16. **INSTALL FLOOR CARPET HOOK**
    a. Engage the 6 claws to install the 6 floor carpet hooks.
    b. Engage the 6 guides.
17. **INSTALL AIR CONDITIONING AMPLIFIER ASSEMBLY** See step 1
18. **INSTALL ECU INTEGRATION BOX RH** . Refer to **INSTALLATION - Step 2**
19. **INSTALL VEHICLE APPROACHING SPEAKER CONTROLLER** . Refer to **INSTALLATION - Step 1**
20. **INSTALL INSTRUMENT PANEL JUNCTION BLOCK ASSEMBLY** . Refer to **INSTALLATION - Step 2**
21. **INSTALL POWER MANAGEMENT CONTROL ECU** . Refer to **INSTALLATION - Step 3**
22. **INSTALL STEERING POST ASSEMBLY**

Refer to **INSTALLATION**

23. **INSTALL INSTRUMENT PANEL SAFETY PAD ASSEMBLY**

    Refer to **INSTALLATION**

24. **INSTALL STEREO COMPONENT AMPLIFIER ASSEMBLY WITH BRACKET (for 10 Speakers)** . Refer to **INSTALLATION - Step 4**
25. **INSTALL AUDIO AMPLIFIER COVER (for 10 Speakers)** . Refer to **INSTALLATION - Step 5**
26. **INSTALL FRONT SEAT ASSEMBLY LH (for Manual Seat)**

    Refer to **INSTALLATION**

27. **INSTALL FRONT SEAT ASSEMBLY LH (for Power Seat)**

    Refer to **INSTALLATION**

28. **INSTALL DCM (TELEMATICS TRANSCEIVER) WITH BACK-UP BATTERY (w/ Manual (SOS) Switch)** . Refer to **INSTALLATION - Step 4**
29. **INSTALL AUDIO AMPLIFIER COVER (w/ Manual (SOS) Switch)** . Refer to **INSTALLATION - Step 5**
30. **INSTALL FRONT SEAT ASSEMBLY RH (for Manual Seat)**

    HINT:

    Use the same procedure for the RH side and LH side.

31. **INSTALL FRONT SEAT ASSEMBLY RH (for Power Seat)**

    HINT:

    Use the same procedure for the RH side and LH side.

32. **CONNECT AIR CONDITIONER TUBE AND ACCESSORY ASSEMBLY**
    a. Remove the vinyl tape from the pipe.
    b. Sufficiently apply compressor oil to a new O-ring and fitting surface of the air conditioner tube and accessory assembly.

       Compressor oil

       ND-OIL 11 or equivalent

    c. Install the O-ring to the air conditioner tube and accessory assembly.
    d. Install the air conditioner tube and accessory assembly.
33. **CONNECT SUCTION HOSE SUB-ASSEMBLY**

a. Remove the vinyl tape from the pipe.
b. Sufficiently apply compressor oil to a new O-ring and the fitting surface of the suction hose sub-assembly.

   Compressor oil

   ND-OIL 11 or equivalent

c. Connect the O-ring to the suction hose sub-assembly.
d. Connect the suction hose sub-assembly.
e. Move the hook connector in the direction indicated by the arrow in the illustration.

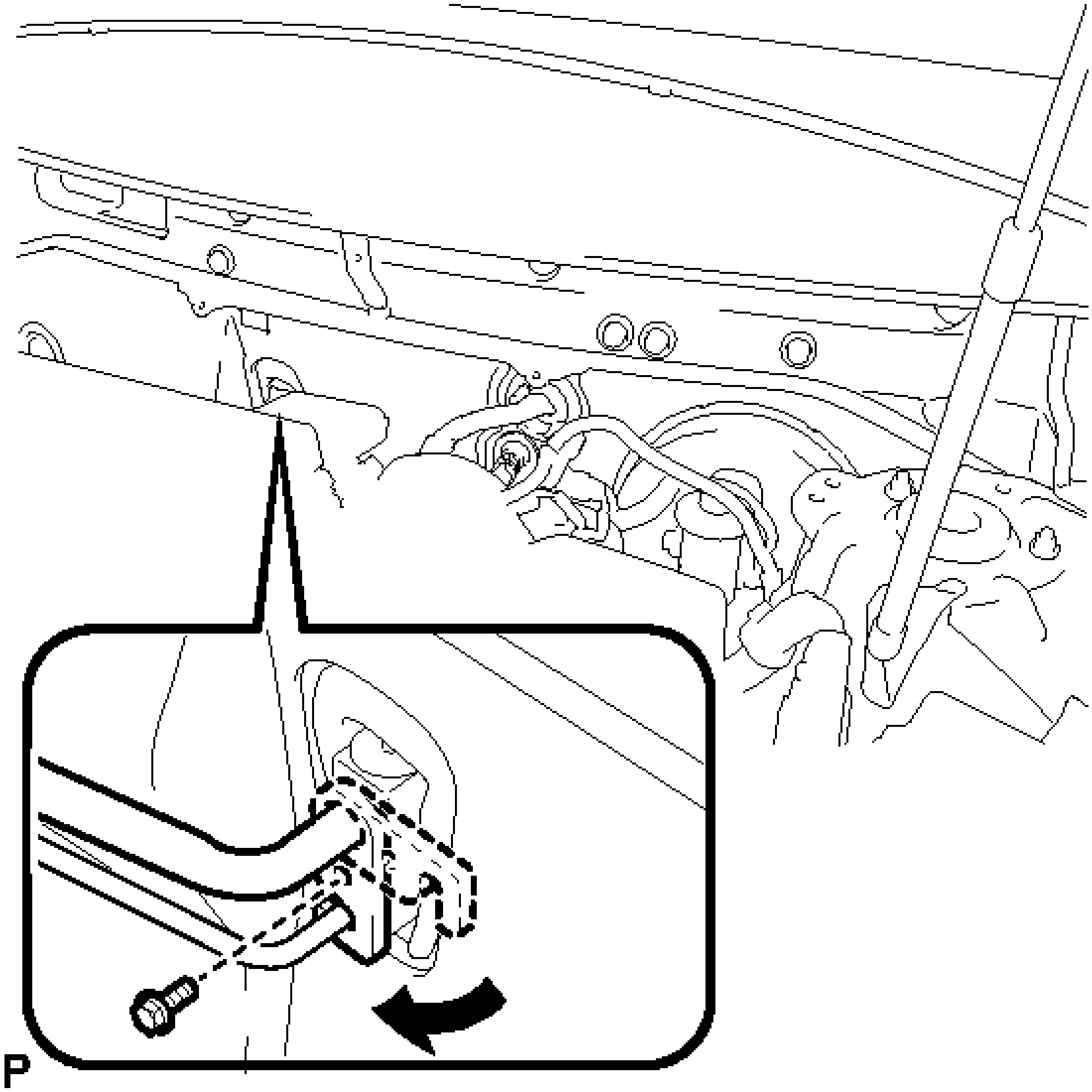

Fig. 130: Identifying Suction Hose Hook Connector And Bolt
Courtesy of TOYOTA MOTOR SALES, U.S.A., INC.

   f. Insert the pipe joint into the fitting hole securely and tighten the bolt.

      Torque: 9.8 N*m (100 kgf*cm, 87 in.*lbf)

34. **CONNECT HEATER INLET WATER HOSE**
    a. Install the heater inlet water hose and attach the clip.
35. **CONNECT HEATER OUTLET WATER HOSE**
    a. Install the heater outlet water hose and attach the clip.
36. **INSTALL FRONT OUTER COWL TOP PANEL SUB-ASSEMBLY** . Refer to **INSTALLATION - Step 18**
37. **INSTALL WINDSHIELD WIPER MOTOR AND LINK ASSEMBLY**

    Refer to **INSTALLATION**

38. **INSPECT FOR COOLANT LEAK (for Engine)** . Refer to **ON-VEHICLE INSPECTION - Step 1**
39. **INSPECT ENGINE COOLANT LEVEL IN RESERVOIR (for Engine)** . Refer to **ON-VEHICLE INSPECTION - Step 2**
40. **CHARGE AIR CONDITIONING SYSTEM WITH REFRIGERANT** See step 2
41. **WARM UP COMPRESSOR** See step 3
42. **INSPECT FOR REFRIGERANT LEAK** See step 4
43. **INITIALIZATION SERVO MOTOR**

    Refer to **INITIALIZATION**

BLOWER UNIT

COMPONENTS

ILLUSTRATION

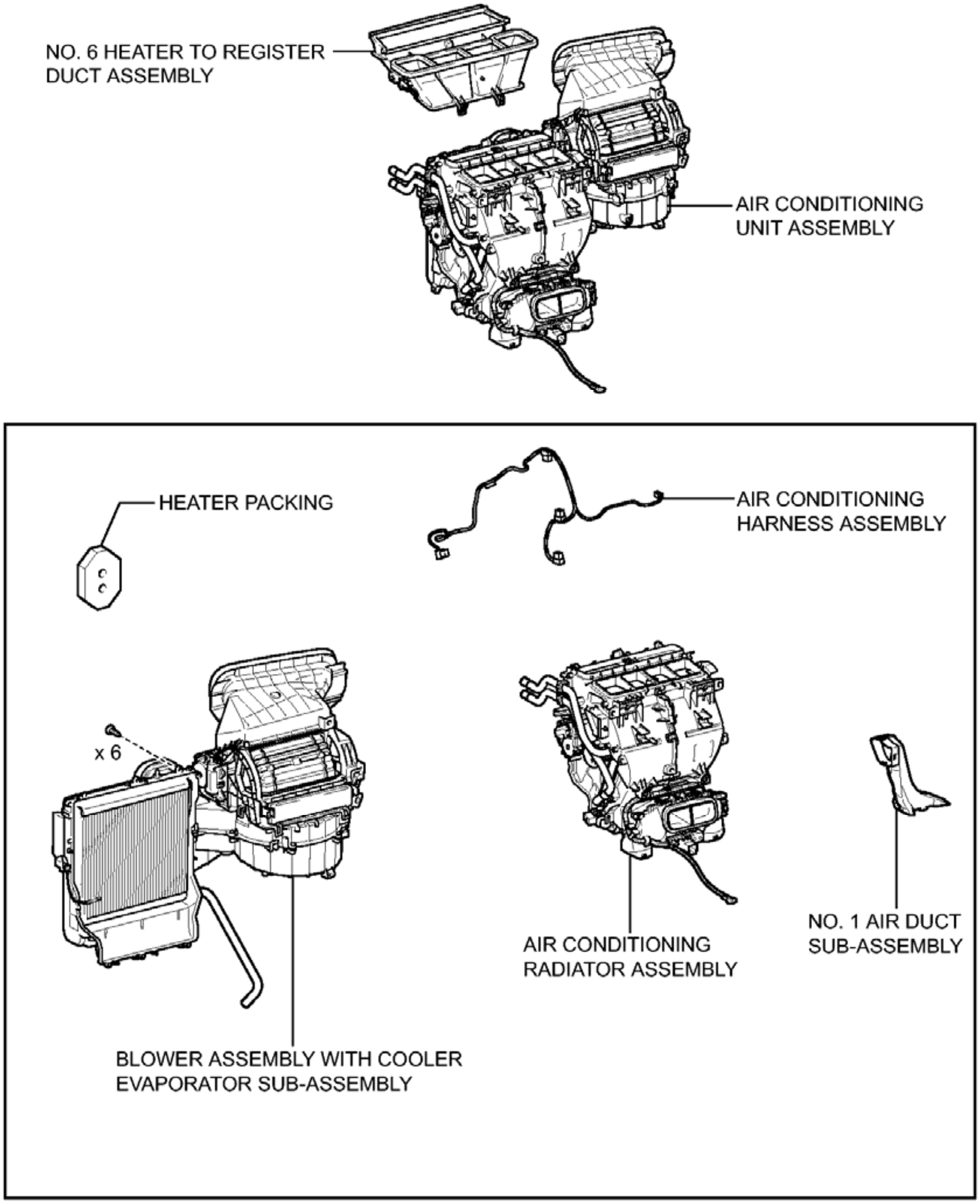
NO. 6 HEATER TO REGISTER DUCT ASSEMBLY
AIR CONDITIONING UNIT ASSEMBLY
HEATER PACKING
AIR CONDITIONING HARNESS ASSEMBLY
x 6
AIR CONDITIONING RADIATOR ASSEMBLY
NO. 1 AIR DUCT SUB-ASSEMBLY
BLOWER ASSEMBLY WITH COOLER EVAPORATOR SUB-ASSEMBLY

P

Fig. 131: Identifying Blower Unit Replacement Components (1 Of 2)
Courtesy of TOYOTA MOTOR SALES, U.S.A., INC.

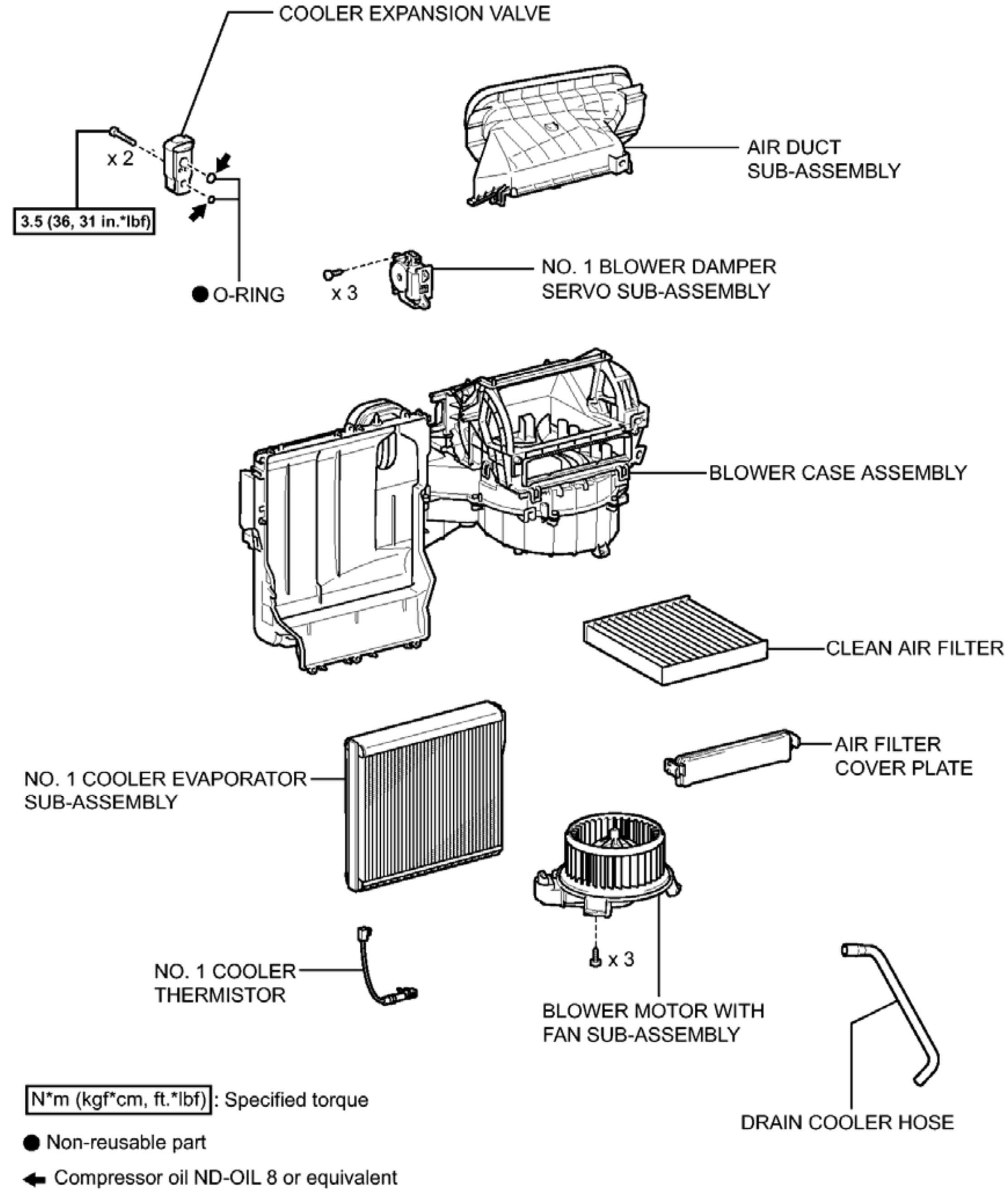
COOLER EXPANSION VALVE
x 2
3.5 (36, 31 in.*lbf)
● O-RING
AIR DUCT SUB-ASSEMBLY
x 3
NO. 1 BLOWER DAMPER SERVO SUB-ASSEMBLY
BLOWER CASE ASSEMBLY
CLEAN AIR FILTER
AIR FILTER COVER PLATE
NO. 1 COOLER EVAPORATOR SUB-ASSEMBLY
NO. 1 COOLER THERMISTOR
x 3
BLOWER MOTOR WITH FAN SUB-ASSEMBLY
DRAIN COOLER HOSE
N*m (kgf*cm, ft.*lbf) : Specified torque
● Non-reusable part
← Compressor oil ND-OIL 8 or equivalent
P

Fig. 132: Identifying Blower Unit Replacement Components With Torque Specifications (2 Of 2)
Courtesy of TOYOTA MOTOR SALES, U.S.A., INC.

REMOVAL

REMOVAL

1. **REMOVE AIR CONDITIONING UNIT ASSEMBLY**

Refer to **REMOVAL**

2. **REMOVE NO. 1 AIR DUCT SUB-ASSEMBLY** See step 1
3. **REMOVE NO. 6 HEATER TO REGISTER DUCT ASSEMBLY** See step 2
4. **REMOVE AIR CONDITIONING HARNESS ASSEMBLY** See step 5
5. **REMOVE BLOWER ASSEMBLY WITH COOLER EVAPORATOR SUB-ASSEMBLY**
    a. Remove the 6 screws.

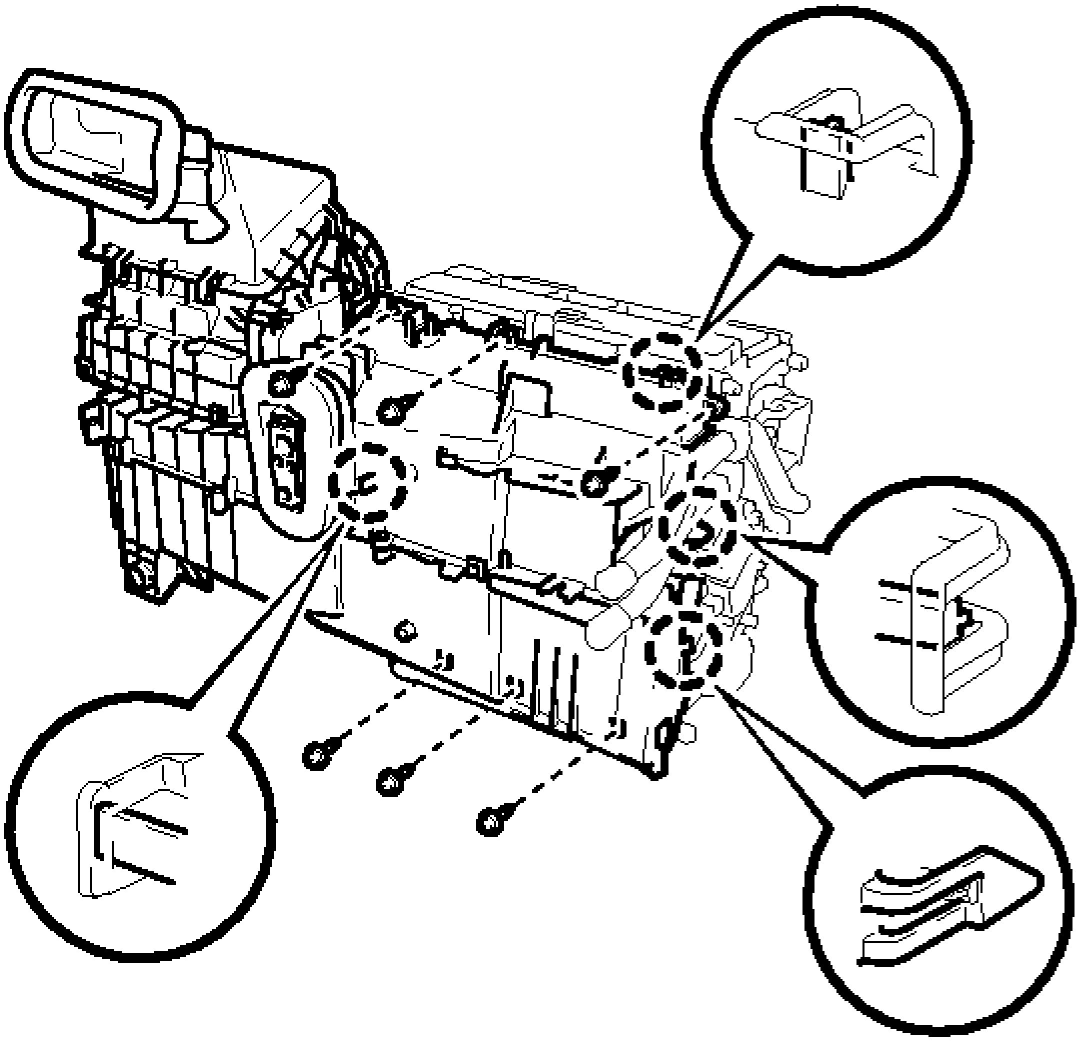

P

Fig. 133: Identifying Blower Assembly Claws
Courtesy of TOYOTA MOTOR SALES, U.S.A., INC.

    b. Disengage the 4 claws and remove the blower assembly with cooler evaporator sub-assembly.

DISASSEMBLY

DISASSEMBLY

1. **REMOVE COOLER EXPANSION VALVE** See step 6
2. **REMOVE NO. 1 COOLER THERMISTOR** See step 2
3. **REMOVE NO. 1 COOLER EVAPORATOR SUB-ASSEMBLY** See step 13
4. **REMOVE DRAIN COOLER HOSE**
    a. Remove the drain cooler hose from the air conditioning radiator assembly.

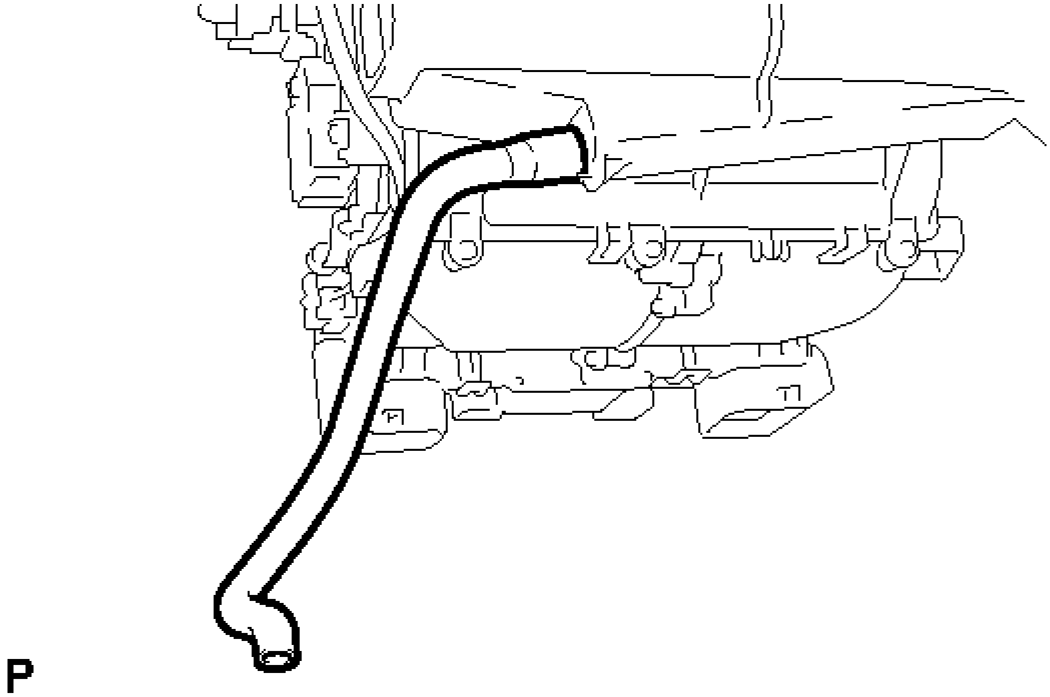

Fig. 134: Identifying Drain Cooler Hose
Courtesy of TOYOTA MOTOR SALES, U.S.A., INC.

5. **REMOVE AIR DUCT SUB-ASSEMBLY**
    a. Disengage the 4 claws and remove the air duct sub-assembly.

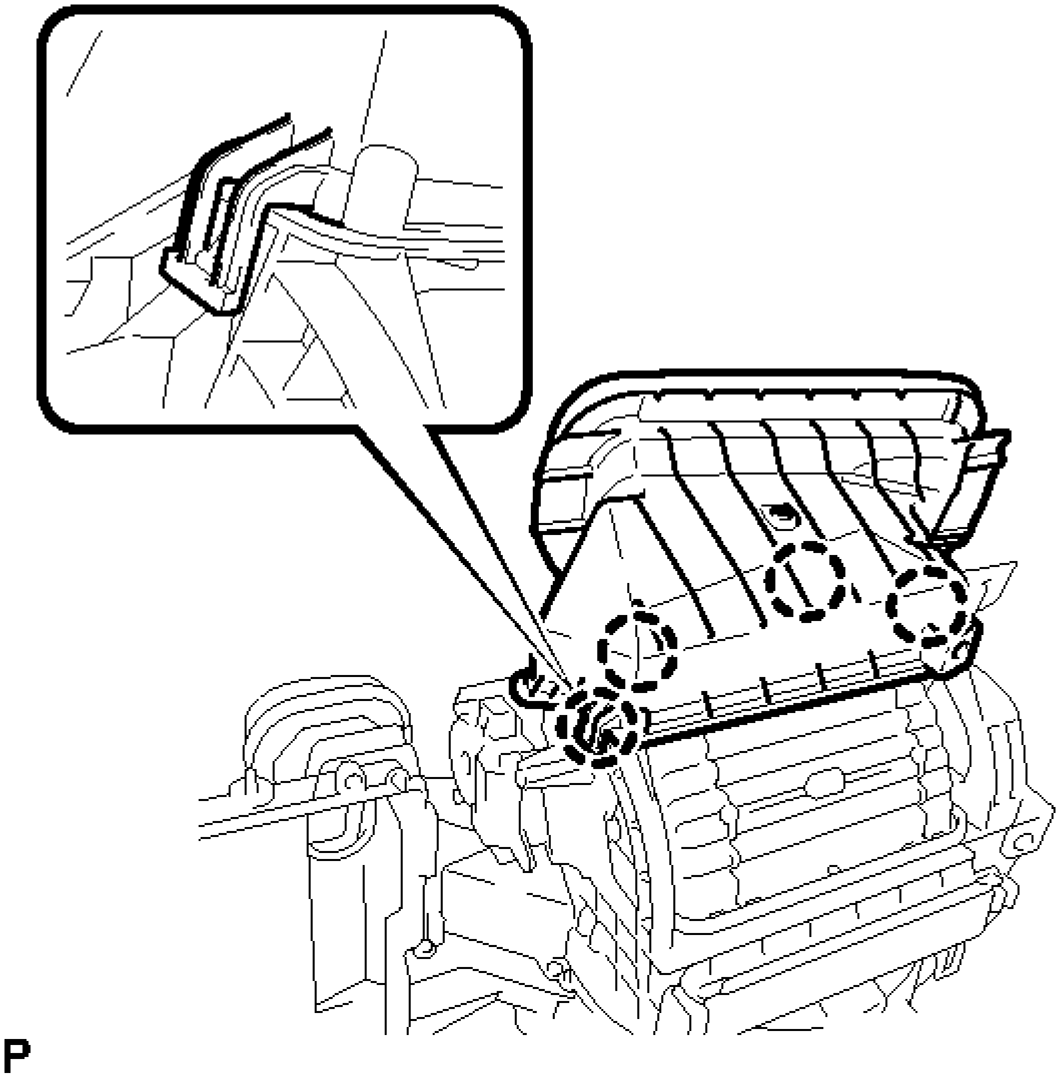

Fig. 135: Identifying Air Duct Sub-Assembly Claws
Courtesy of TOYOTA MOTOR SALES, U.S.A., INC.

6. **REMOVE AIR FILTER COVER PLATE**
    a. Disengage the 2 claws and remove the air filter cover plate.

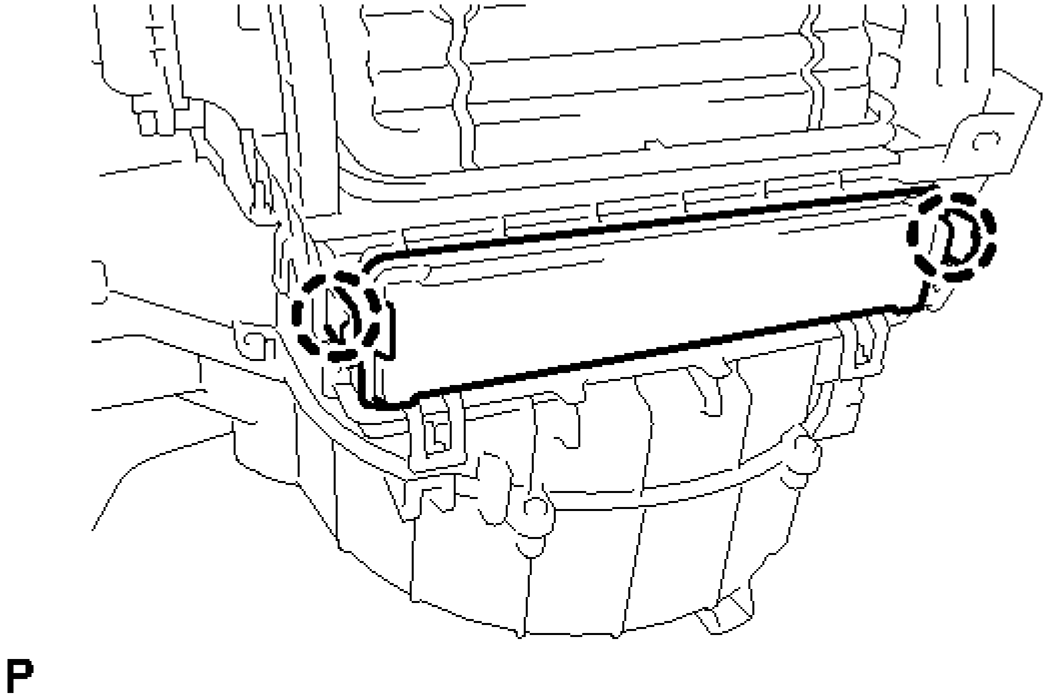

Fig. 136: Identifying Air Filter Cover Plate Claws
Courtesy of TOYOTA MOTOR SALES, U.S.A., INC.

7. **REMOVE CLEAN AIR FILTER**
    a. Remove the clean air filter as shown in the illustration.

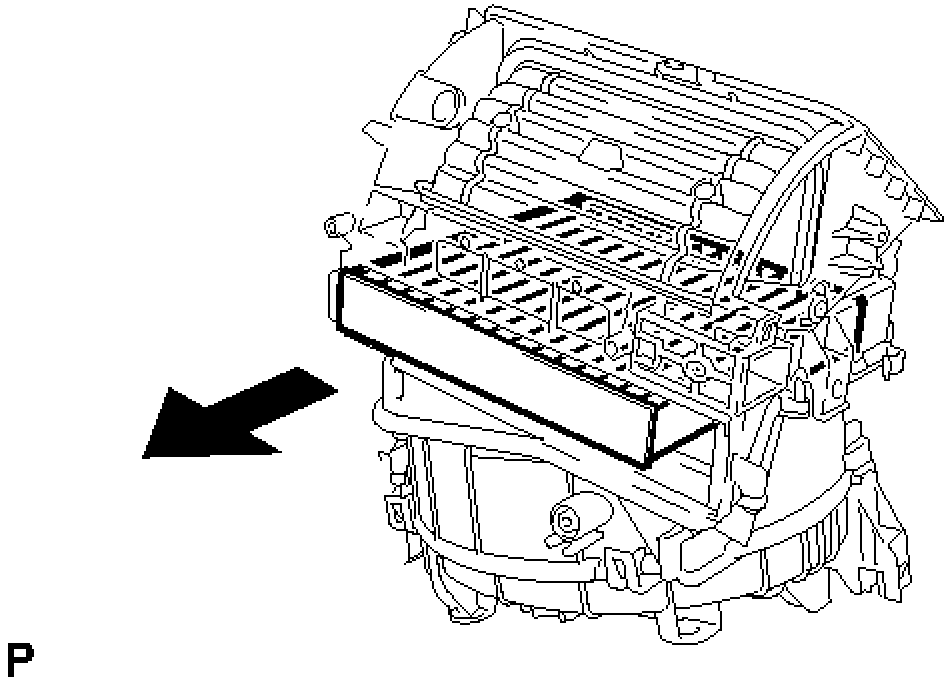

Fig. 137: Removing Air Filter

Courtesy of TOYOTA MOTOR SALES, U.S.A., INC.

8. **REMOVE NO. 1 BLOWER DAMPER SERVO SUB-ASSEMBLY**
    a. Remove the 3 screws and No. 1 blower damper servo sub-assembly.

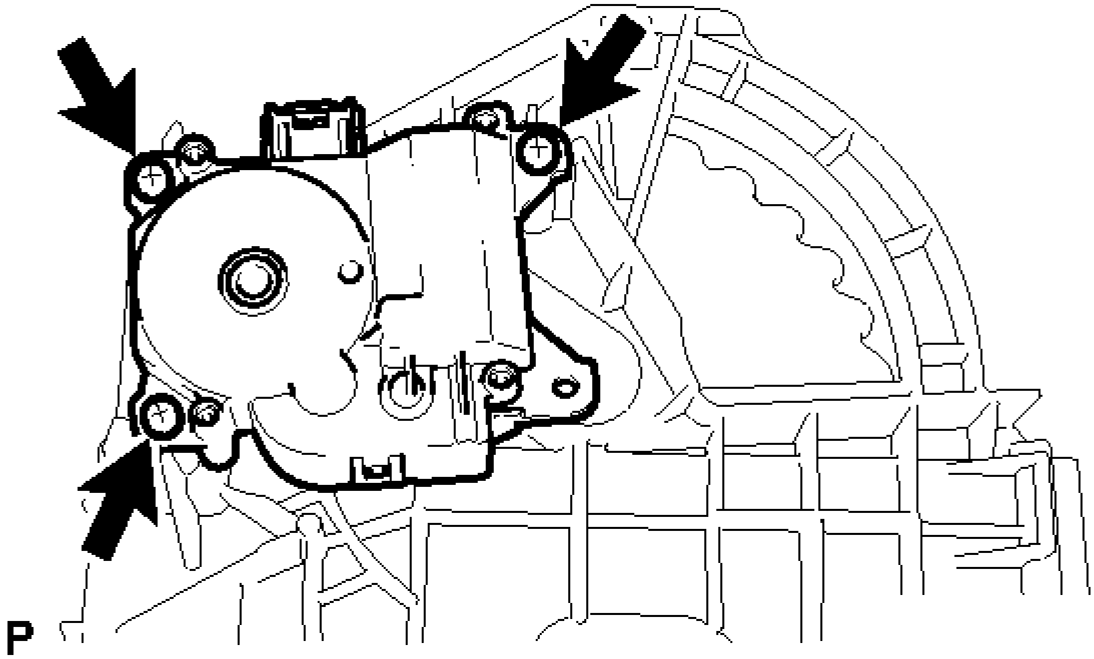

Fig. 138: Identifying No. 1 Blower Damper Servo Sub-Assembly Screws
Courtesy of TOYOTA MOTOR SALES, U.S.A., INC.

9. **REMOVE BLOWER MOTOR WITH FAN SUB-ASSEMBLY**
    a. Remove the 3 screws and blower motor with fan sub-assembly.

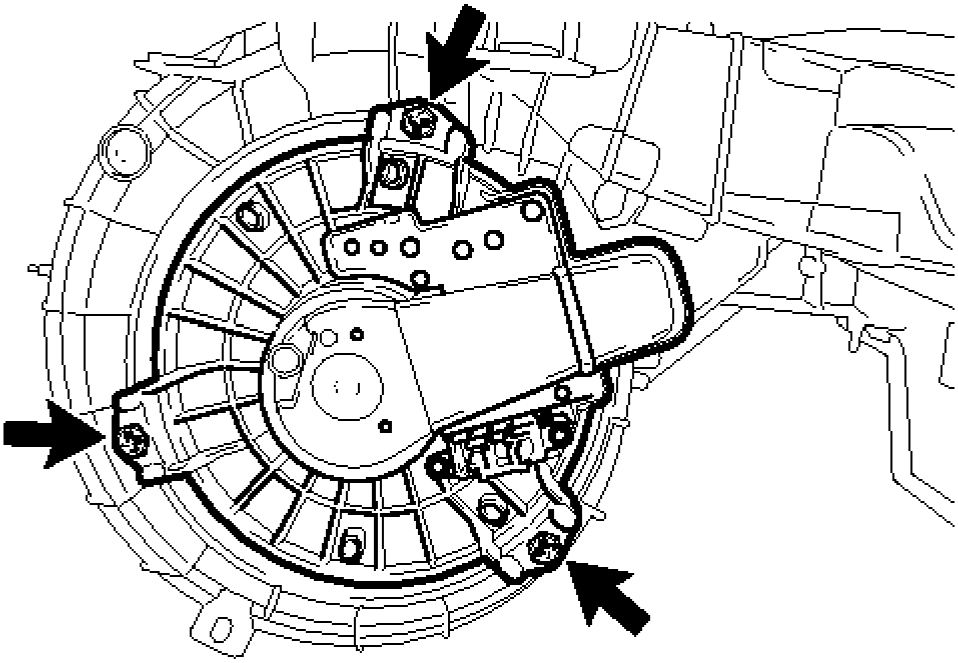

Fig. 139: Identifying Blower Motor With Fan Sub-Assembly Screws
Courtesy of TOYOTA MOTOR SALES, U.S.A., INC.

REASSEMBLY

REASSEMBLY

1. **INSTALL BLOWER MOTOR WITH FAN SUB-ASSEMBLY**
    a. Install the blower motor with fan sub-assembly with the 3 screws.

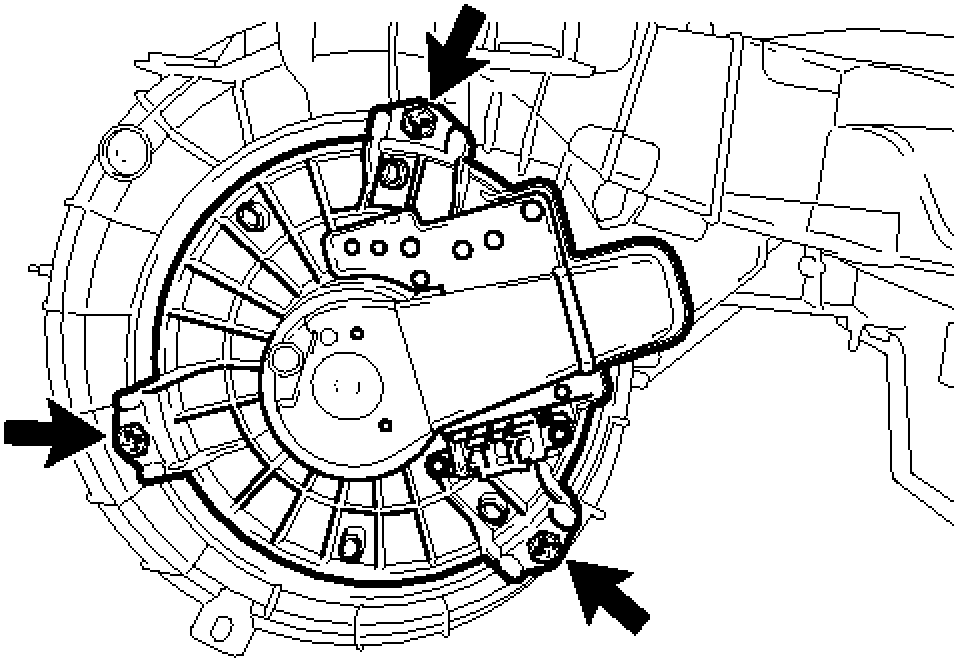

Fig. 140: Identifying Blower Motor With Fan Sub-Assembly Screws
Courtesy of TOYOTA MOTOR SALES, U.S.A., INC.

2. **INSTALL NO. 1 BLOWER DAMPER SERVO SUB-ASSEMBLY**
    a. Install the No. 1 blower damper servo sub-assembly with the 3 screws.

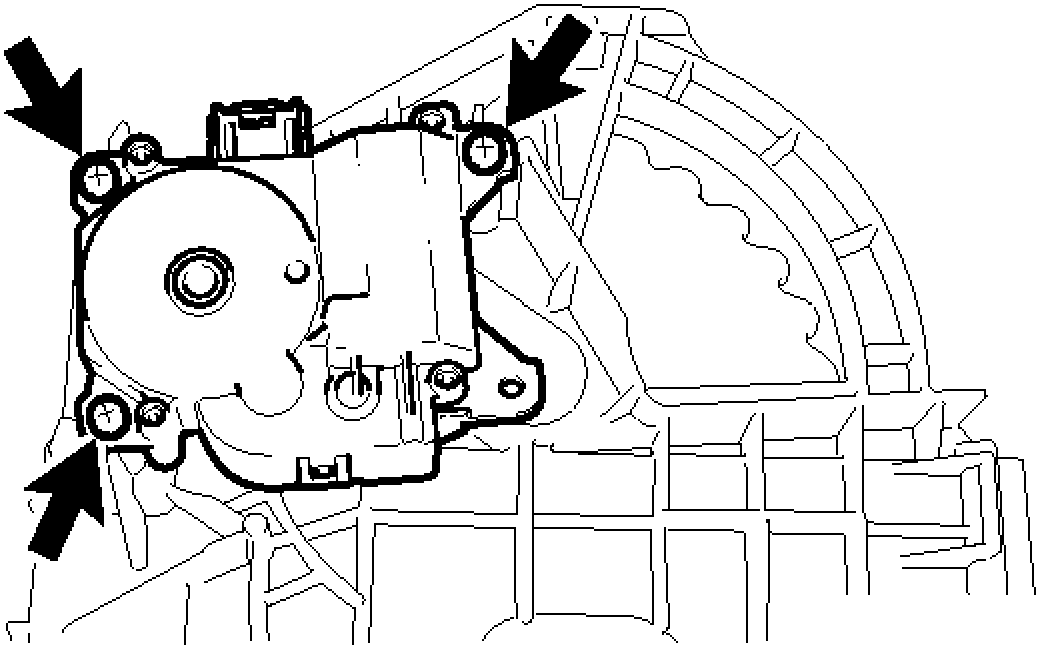

Fig. 141: Identifying No. 1 Blower Damper Servo Sub-Assembly Screws

Courtesy of TOYOTA MOTOR SALES, U.S.A., INC.

3. **INSTALL CLEAN AIR FILTER**
   a. Install the clean air filter as shown in the illustration.

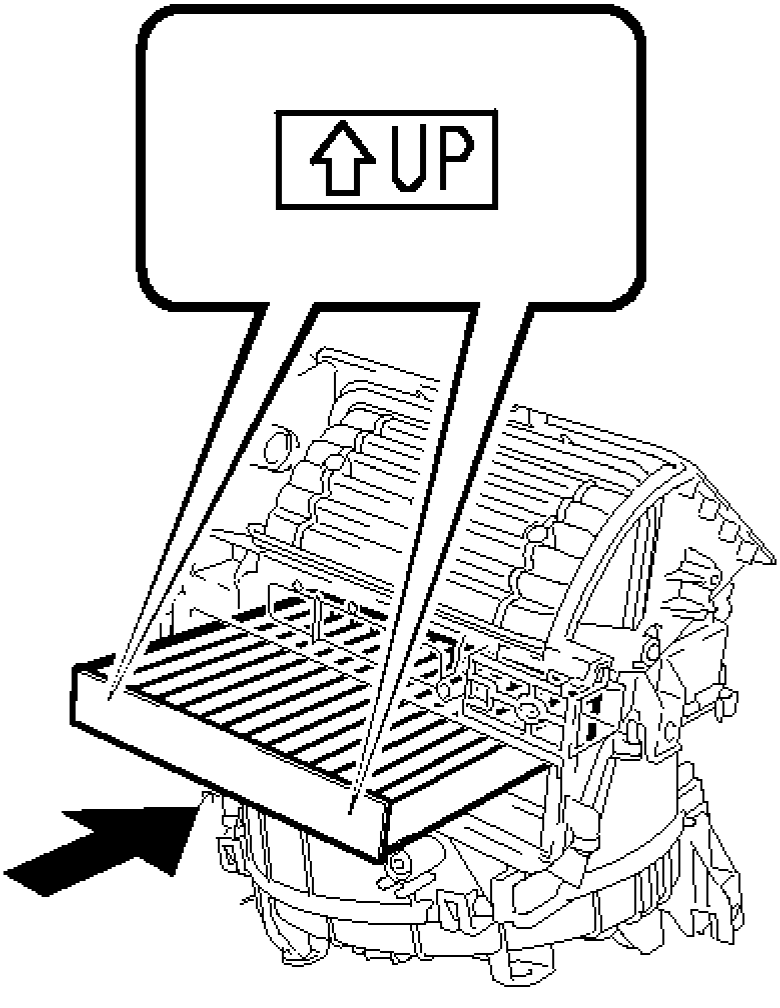

Fig. 142: Installing Air Filter
Courtesy of TOYOTA MOTOR SALES, U.S.A., INC.

4. **INSTALL AIR FILTER COVER PLATE**
   a. Engage the 2 claws to install the air filter cover plate.

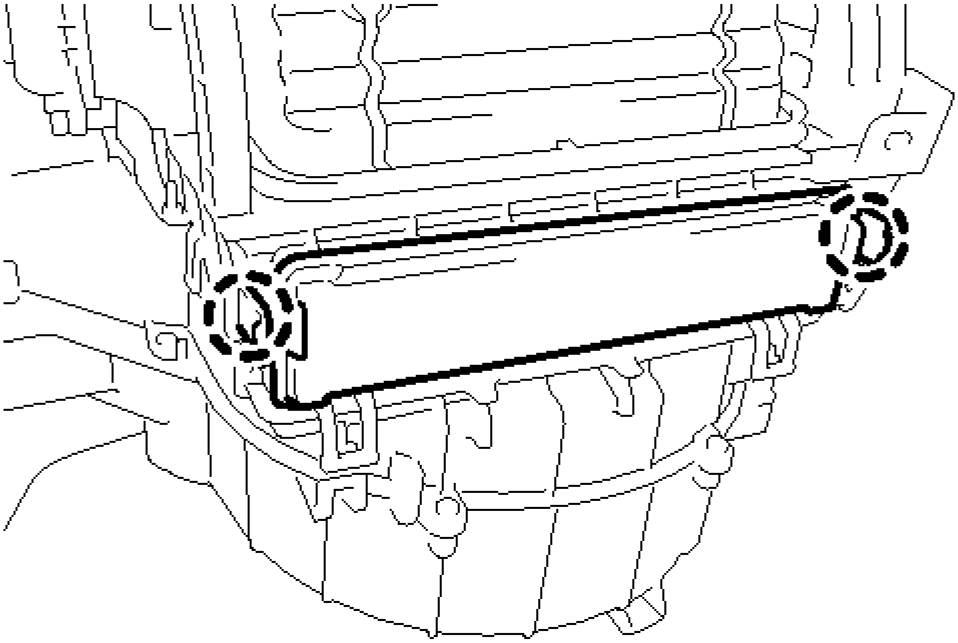

Fig. 143: Identifying Air Filter Cover Plate Claws
Courtesy of TOYOTA MOTOR SALES, U.S.A., INC.

5. **INSTALL AIR DUCT SUB-ASSEMBLY**
    a. Engage the 4 claws to install the air duct sub-assembly.

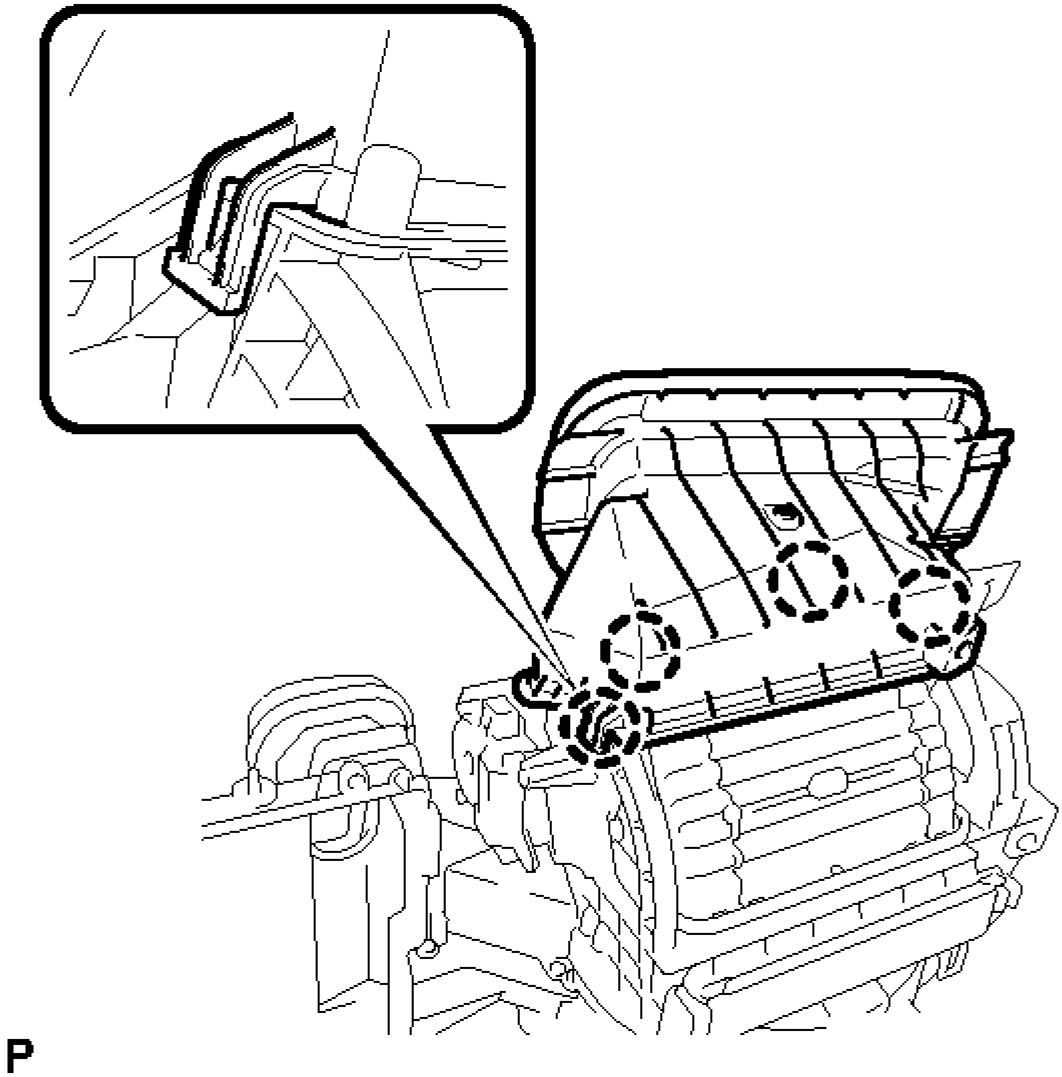

Fig. 144: Identifying Air Duct Sub-Assembly Claws
Courtesy of TOYOTA MOTOR SALES, U.S.A., INC.

6. **INSTALL DRAIN COOLER HOSE**
    a. Install the drain cooler hose to the blower case assembly.

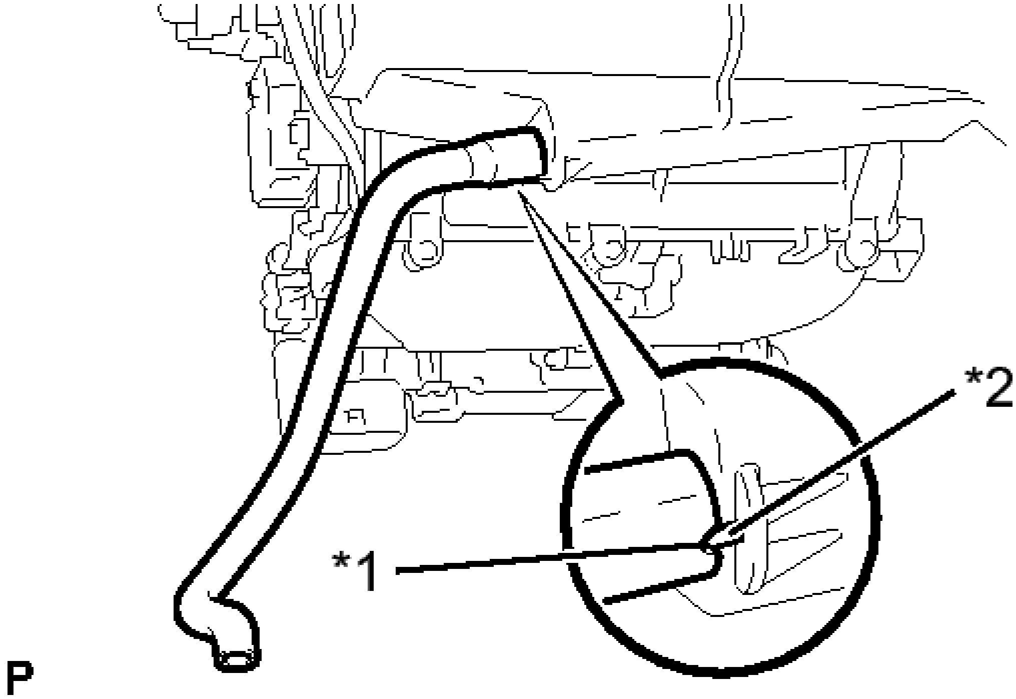

Fig. 145: Identifying Drain Cooler Hose
Courtesy of TOYOTA MOTOR SALES, U.S.A., INC.

TEXT IN ILLUSTRATION

*1	Hose Notch
*2	Blower Case Assembly Rib

7. **INSTALL NO. 1 COOLER EVAPORATOR SUB-ASSEMBLY** See step 1
8. **INSTALL NO. 1 COOLER THERMISTOR** See step 1
9. **INSTALL COOLER EXPANSION VALVE** See step 8

INSTALLATION

INSTALLATION

1. **INSTALL BLOWER ASSEMBLY WITH COOLER EVAPORATOR SUB-ASSEMBLY**
    a. Engage the 4 claws.
    b. Install the blower assembly with cooler evaporator sub-assembly with the 6 screws.
2. **INSTALL AIR CONDITIONING HARNESS ASSEMBLY** See step 9
3. **INSTALL NO. 6 HEATER TO REGISTER DUCT ASSEMBLY** See step 12
4. **INSTALL NO. 1 AIR DUCT SUB-ASSEMBLY** See step 13

5. **INSTALL AIR CONDITIONING UNIT ASSEMBLY**

   Refer to **INSTALLATION**

FRONT BLOWER MOTOR

COMPONENTS

ILLUSTRATION

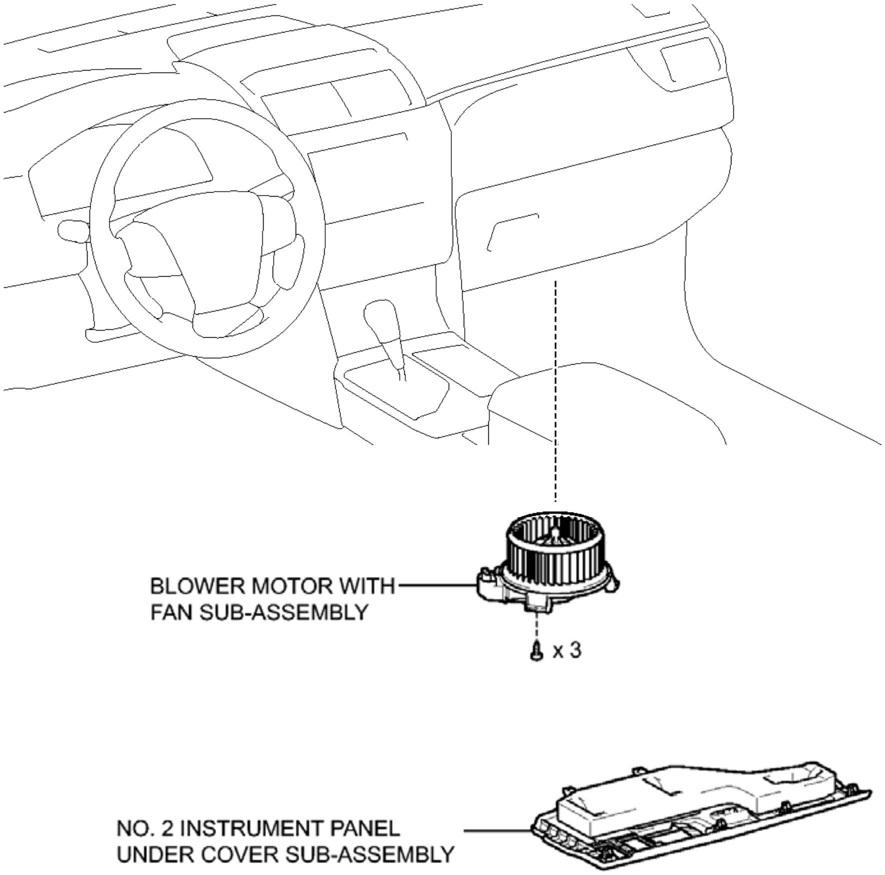
BLOWER MOTOR WITH FAN SUB-ASSEMBLY
x 3
NO. 2 INSTRUMENT PANEL UNDER COVER SUB-ASSEMBLY
P

Fig. 146: Identifying Front Blower Motor Replacement Components
Courtesy of TOYOTA MOTOR SALES, U.S.A., INC.

REMOVAL

REMOVAL

1. **REMOVE NO. 2 INSTRUMENT PANEL UNDER COVER SUB-ASSEMBLY** . Refer to **REMOVAL - Step 35**
2. **REMOVE BLOWER MOTOR WITH FAN SUB-ASSEMBLY**
   1. Disconnect the connector.
   2. Remove the 3 screws and blower motor with fan sub-assembly.

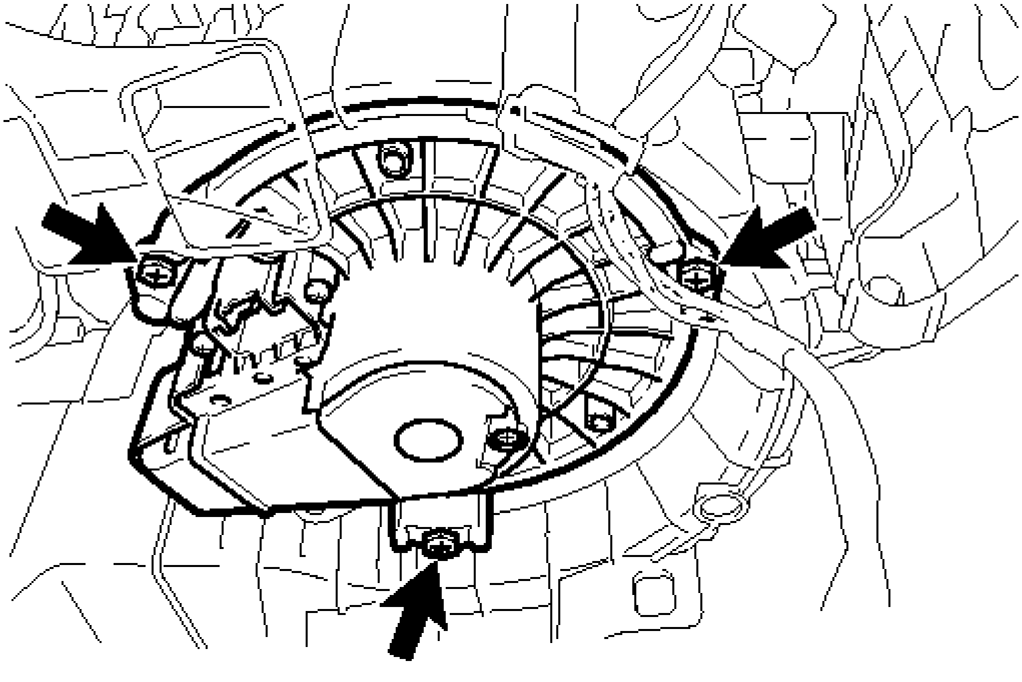

Fig. 147: Identifying Blower Motor With Fan Sub-Assembly Screws
Courtesy of TOYOTA MOTOR SALES, U.S.A., INC.

NOTE: When removing the blower motor with fan sub-assembly, do not damaged or strike it.

INSTALLATION

INSTALLATION

1. **INSTALL BLOWER MOTOR WITH FAN SUB-ASSEMBLY**
   1. Install the blower motor with fan sub-assembly with the 3 screws.

      NOTE: When installing the blower motor with fan sub-assembly do not damaged or strike it.

   2. Connect the connector.
2. **INSTALL NO. 2 INSTRUMENT PANEL UNDER COVER SUB-ASSEMBLY** . Refer to **INSTALLATION - Step 17**

PTC HEATER ASSEMBLY

COMPONENTS

ILLUSTRATION

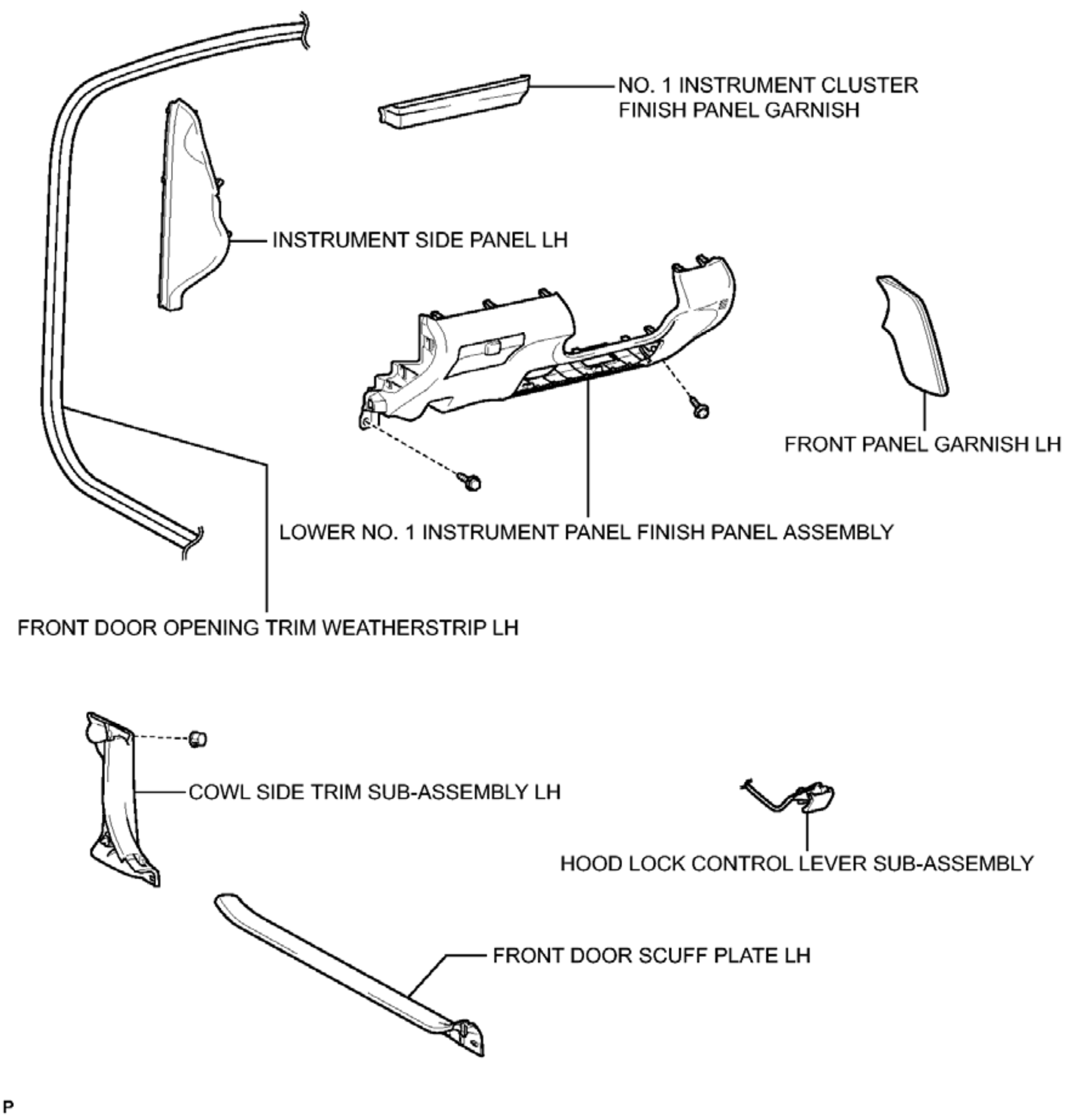
NO. 1 INSTRUMENT CLUSTER FINISH PANEL GARNISH
INSTRUMENT SIDE PANEL LH
FRONT PANEL GARNISH LH
LOWER NO. 1 INSTRUMENT PANEL FINISH PANEL ASSEMBLY
FRONT DOOR OPENING TRIM WEATHERSTRIP LH
COWL SIDE TRIM SUB-ASSEMBLY LH
HOOD LOCK CONTROL LEVER SUB-ASSEMBLY
FRONT DOOR SCUFF PLATE LH
P

Fig. 148: Identifying PTC Heater Assembly Replacement Components (1 Of 6)
Courtesy of TOYOTA MOTOR SALES, U.S.A., INC.

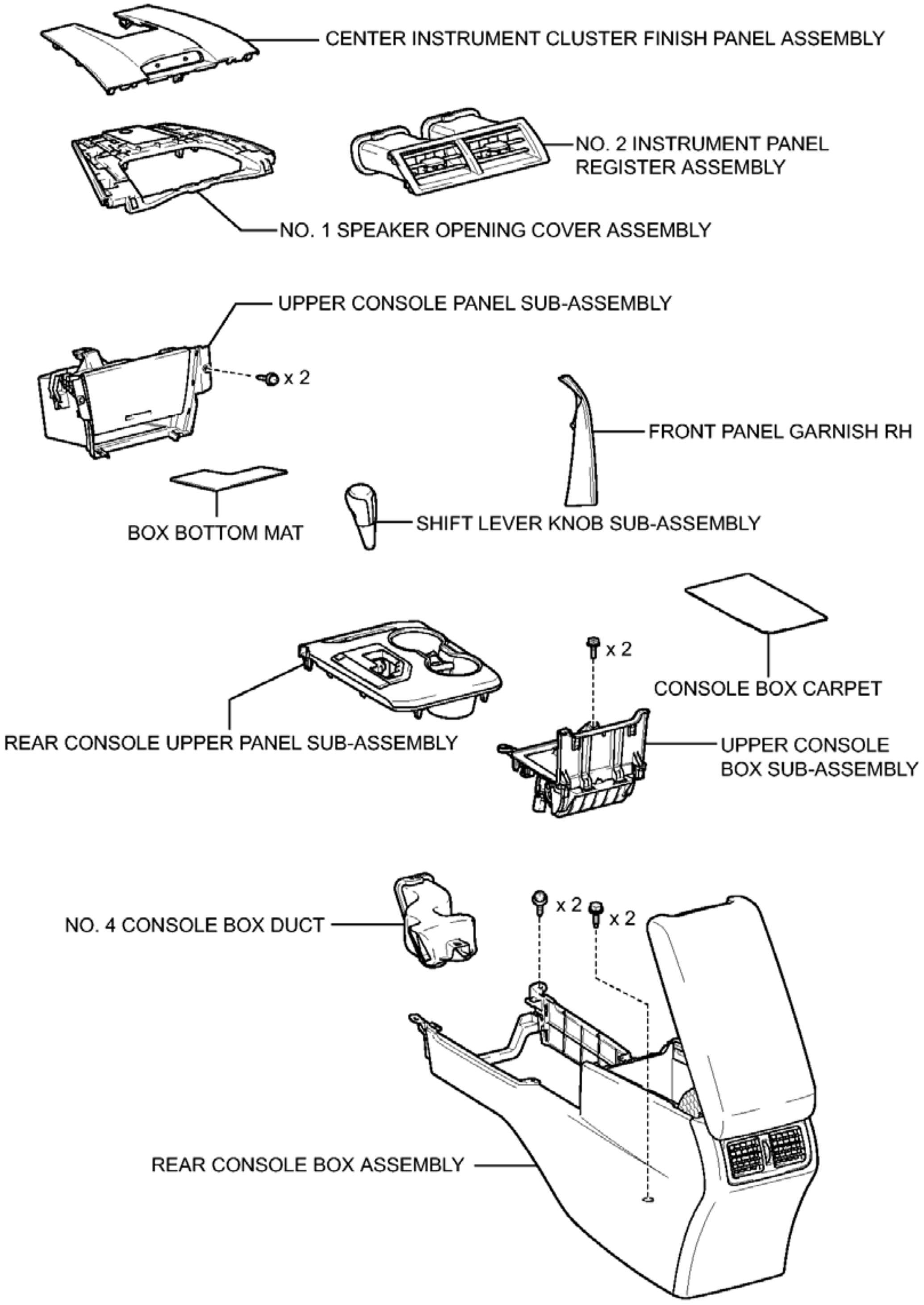
CENTER INSTRUMENT CLUSTER FINISH PANEL ASSEMBLY
NO. 2 INSTRUMENT PANEL REGISTER ASSEMBLY
NO. 1 SPEAKER OPENING COVER ASSEMBLY
UPPER CONSOLE PANEL SUB-ASSEMBLY
x 2
FRONT PANEL GARNISH RH
BOX BOTTOM MAT
SHIFT LEVER KNOB SUB-ASSEMBLY
x 2
CONSOLE BOX CARPET
REAR CONSOLE UPPER PANEL SUB-ASSEMBLY
UPPER CONSOLE BOX SUB-ASSEMBLY
NO. 4 CONSOLE BOX DUCT
x 2
x 2
REAR CONSOLE BOX ASSEMBLY
P

Fig. 149: Identifying PTC Heater Assembly Replacement Components (2 Of 6)
Courtesy of TOYOTA MOTOR SALES, U.S.A., INC.

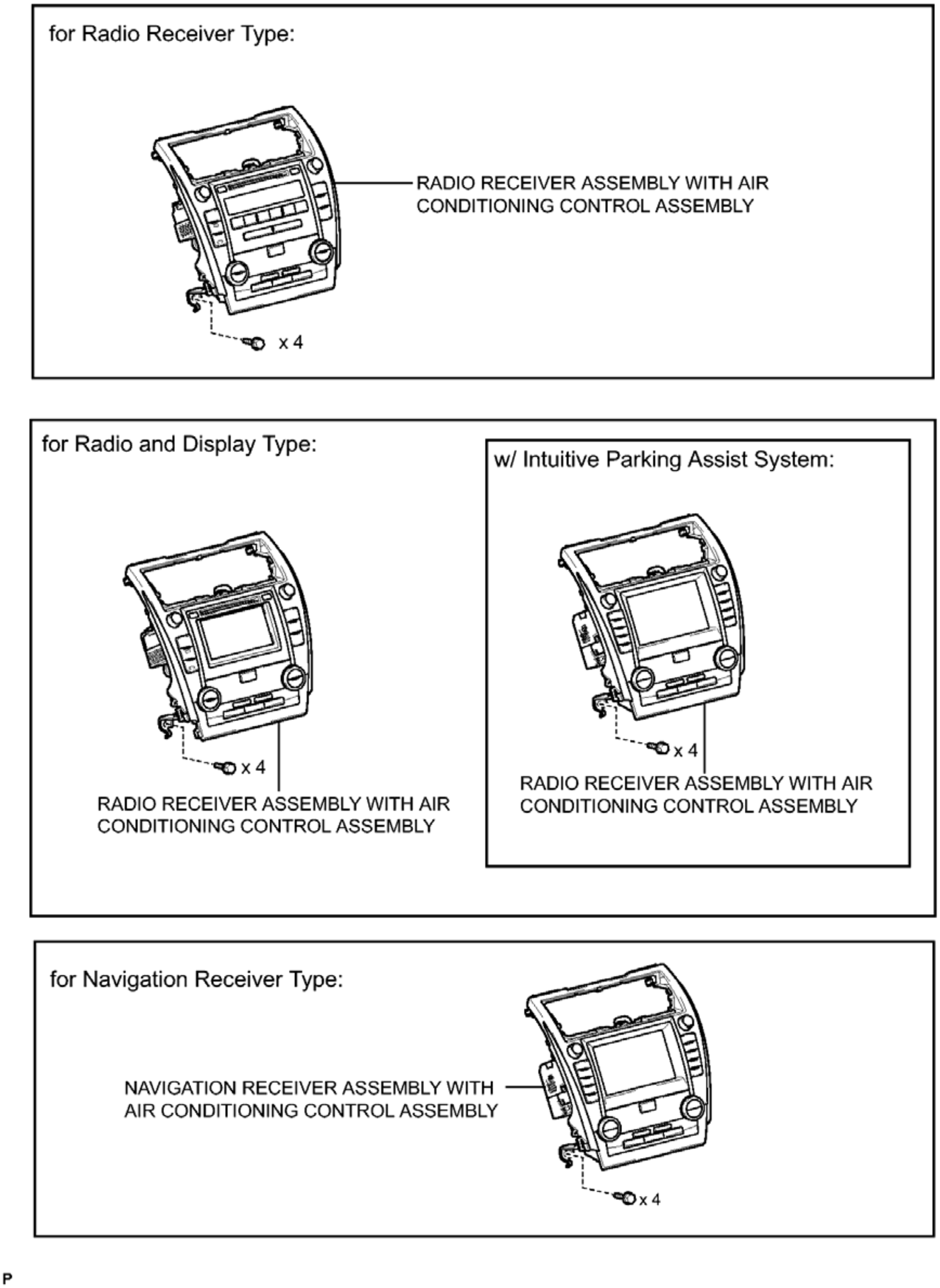
for Radio Receiver Type:
RADIO RECEIVER ASSEMBLY WITH AIR CONDITIONING CONTROL ASSEMBLY
x 4
for Radio and Display Type:
x 4
RADIO RECEIVER ASSEMBLY WITH AIR CONDITIONING CONTROL ASSEMBLY
w/ Intuitive Parking Assist System:
x 4
RADIO RECEIVER ASSEMBLY WITH AIR CONDITIONING CONTROL ASSEMBLY
for Navigation Receiver Type:
NAVIGATION RECEIVER ASSEMBLY WITH AIR CONDITIONING CONTROL ASSEMBLY
x 4
P

Fig. 150: Identifying PTC Heater Assembly Replacement Components (3 Of 6)
Courtesy of TOYOTA MOTOR SALES, U.S.A., INC.

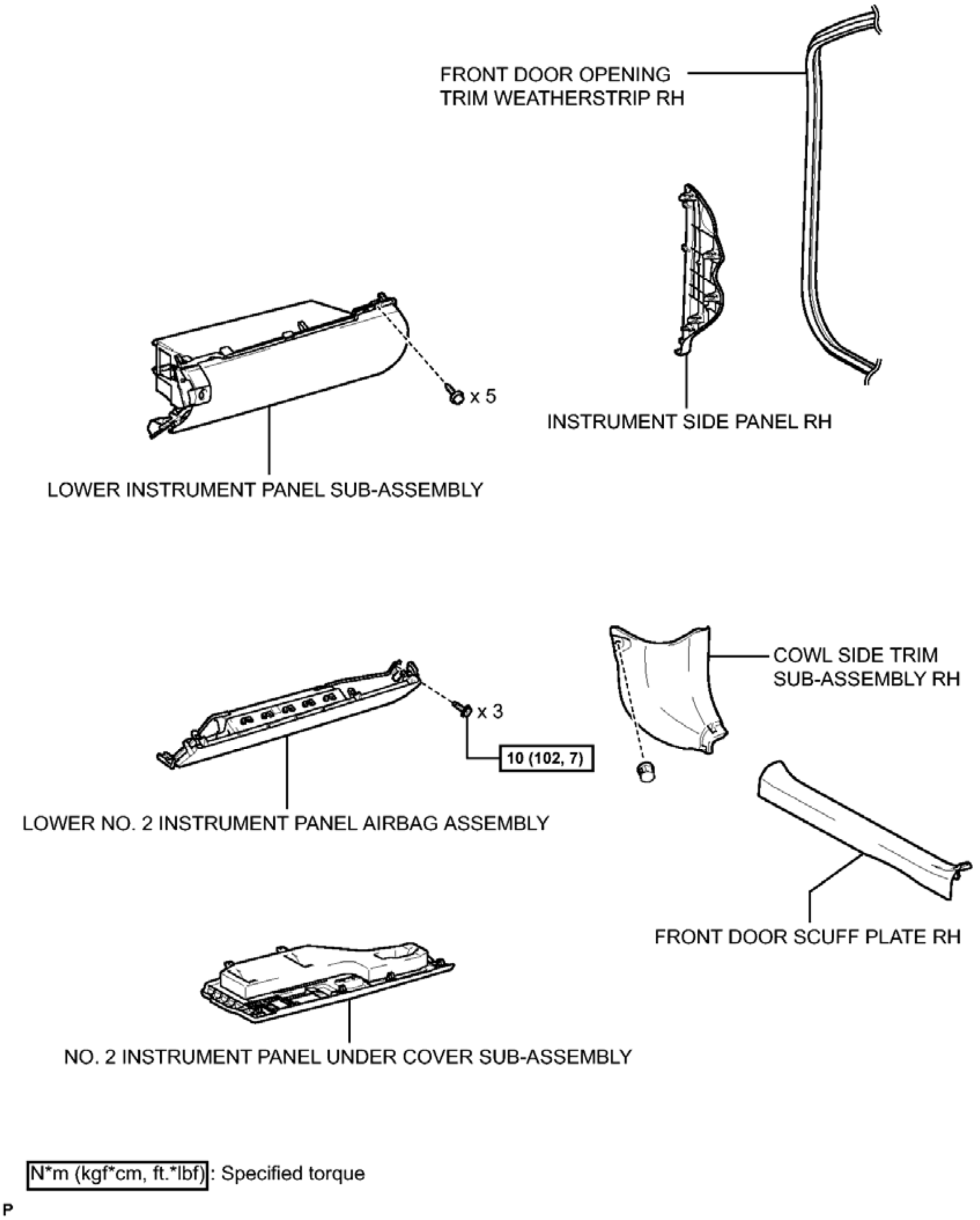
FRONT DOOR OPENING TRIM WEATHERSTRIP RH
x 5
INSTRUMENT SIDE PANEL RH
LOWER INSTRUMENT PANEL SUB-ASSEMBLY
COWL SIDE TRIM SUB-ASSEMBLY RH
x 3
10 (102, 7)
LOWER NO. 2 INSTRUMENT PANEL AIRBAG ASSEMBLY
FRONT DOOR SCUFF PLATE RH
NO. 2 INSTRUMENT PANEL UNDER COVER SUB-ASSEMBLY
N*m (kgf*cm, ft.*lbf): Specified torque
P

Fig. 151: Identifying PTC Heater Assembly Replacement Components With Torque Specifications (4 Of 6)

Courtesy of TOYOTA MOTOR SALES, U.S.A., INC.

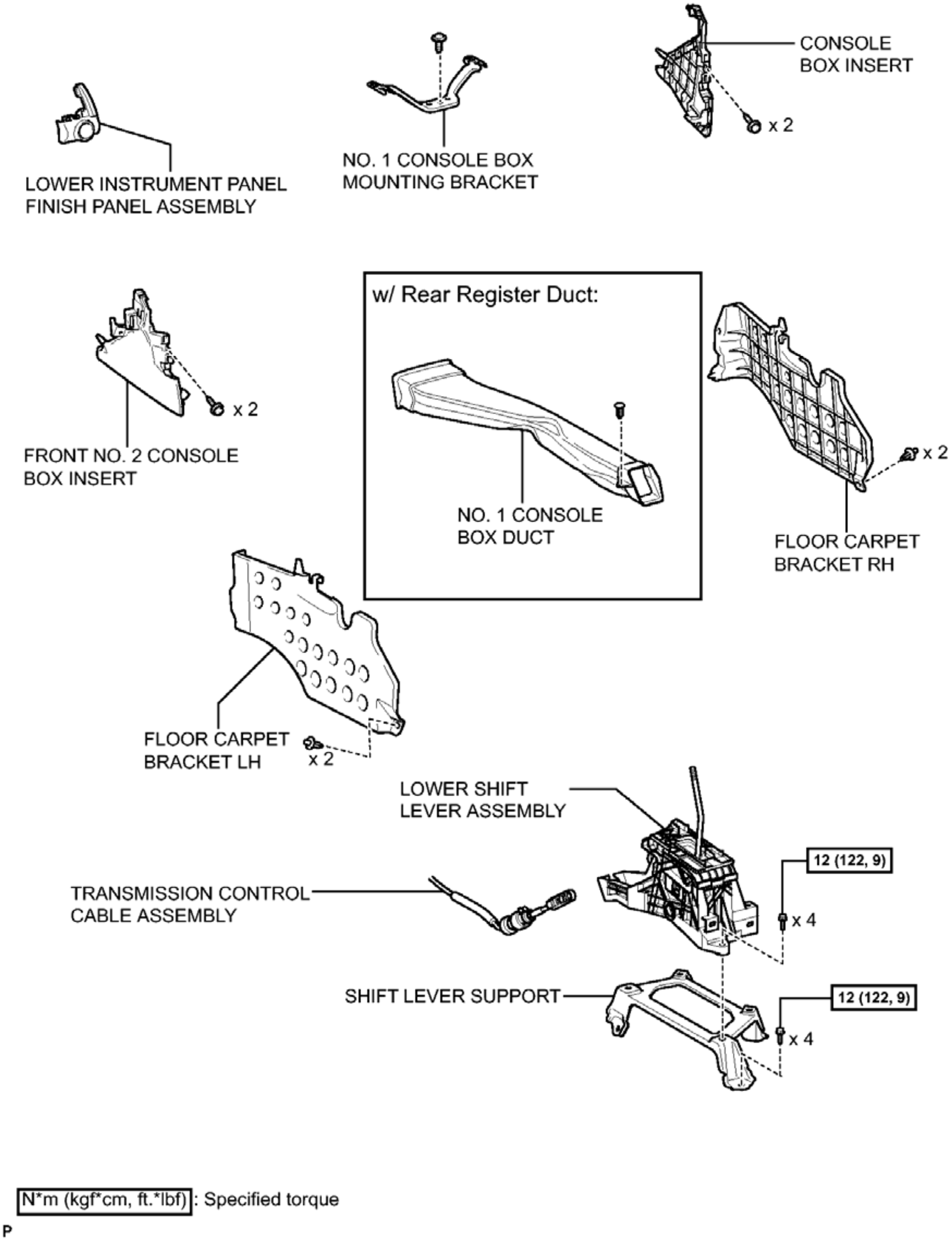
CONSOLE BOX INSERT
x 2
NO. 1 CONSOLE BOX MOUNTING BRACKET
LOWER INSTRUMENT PANEL FINISH PANEL ASSEMBLY
w/ Rear Register Duct:
x 2
FRONT NO. 2 CONSOLE BOX INSERT
NO. 1 CONSOLE BOX DUCT
x 2
FLOOR CARPET BRACKET RH
FLOOR CARPET BRACKET LH
x 2
LOWER SHIFT LEVER ASSEMBLY
12 (122, 9)
TRANSMISSION CONTROL CABLE ASSEMBLY
x 4
SHIFT LEVER SUPPORT
12 (122, 9)
x 4
N*m (kgf*cm, ft.*lbf) : Specified torque
P

Fig. 152: Identifying PTC Heater Assembly Replacement Components With Torque Specifications (5 Of 6)

Courtesy of TOYOTA MOTOR SALES, U.S.A., INC.

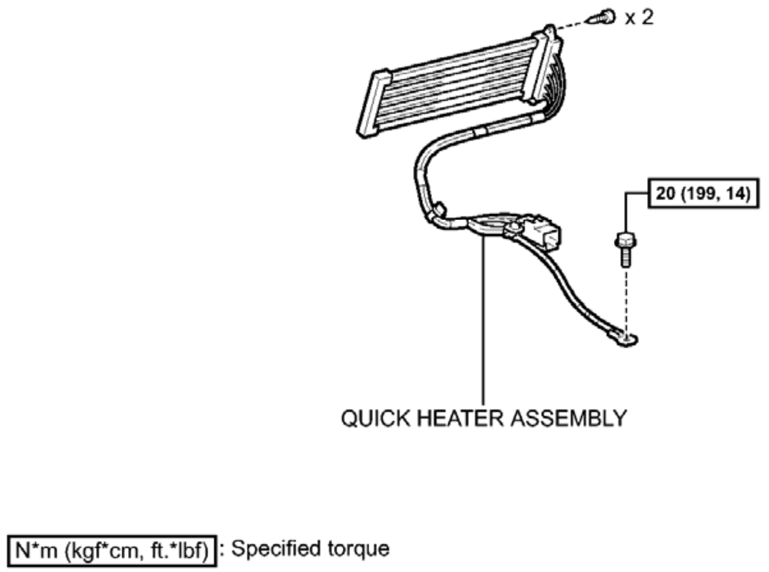
x 2
20 (199, 14)
QUICK HEATER ASSEMBLY
N*m (kgf*cm, ft.*lbf) : Specified torque

P

Fig. 153: Identifying PTC Heater Assembly Replacement Components With Torque Specifications (6 Of 6)
Courtesy of TOYOTA MOTOR SALES, U.S.A., INC.

REMOVAL

REMOVAL

1. **REMOVE FRONT SEAT ASSEMBLY LH (for Manual Seat)**

   Refer to **REMOVAL**

2. **REMOVE FRONT SEAT ASSEMBLY LH (for Power Seat)**

   Refer to **REMOVAL**

3. **REMOVE FRONT SEAT ASSEMBLY RH (for Manual Seat)**

   HINT:

   Use the same procedure as for the LH side.

4. **REMOVE FRONT SEAT ASSEMBLY RH (for Power Seat)**

   HINT:

Use the same procedure as for the LH side.

5. **REMOVE FRONT DOOR SCUFF PLATE LH** . Refer to **REMOVAL - Step 4**
6. **REMOVE COWL SIDE TRIM SUB-ASSEMBLY LH** . Refer to **REMOVAL - Step 5**
7. **DISCONNECT FRONT DOOR OPENING TRIM WEATHERSTRIP LH** . Refer to **REMOVAL - Step 6**
8. **REMOVE INSTRUMENT SIDE PANEL LH** . Refer to **REMOVAL - Step 7**
9. **REMOVE NO. 1 INSTRUMENT CLUSTER FINISH PANEL GARNISH** . Refer to **REMOVAL - Step 8**
10. **REMOVE FRONT PANEL GARNISH LH** . Refer to **REMOVAL - Step 12**
11. **DISCONNECT HOOD LOCK CONTROL LEVER SUB-ASSEMBLY** . Refer to **REMOVAL - Step 13**
12. **REMOVE LOWER NO. 1 INSTRUMENT PANEL FINISH PANEL ASSEMBLY** . Refer to **REMOVAL - Step 14**
13. **REMOVE FRONT PANEL GARNISH RH** . Refer to **REMOVAL - Step 15**
14. **REMOVE SHIFT LEVER KNOB SUB-ASSEMBLY** . Refer to **REMOVAL - Step 16**
15. **REMOVE REAR CONSOLE UPPER PANEL SUB-ASSEMBLY** . Refer to **REMOVAL - Step 17**
16. **REMOVE UPPER CONSOLE BOX SUB-ASSEMBLY** . Refer to **REMOVAL - Step 7**
17. **REMOVE NO. 4 CONSOLE BOX DUCT** . Refer to **REMOVAL - Step 8**
18. **REMOVE CONSOLE BOX CARPET** . Refer to **REMOVAL - Step 9**
19. **REMOVE REAR CONSOLE BOX ASSEMBLY** . Refer to **REMOVAL - Step 10**
20. **REMOVE CENTER INSTRUMENT CLUSTER FINISH PANEL ASSEMBLY** . Refer to **REMOVAL - Step 22**
21. **REMOVE NO. 2 INSTRUMENT PANEL REGISTER ASSEMBLY** . Refer to **REMOVAL - Step 23**
22. **REMOVE BOX BOTTOM MAT** . Refer to **REMOVAL - Step 24**
23. **REMOVE UPPER CONSOLE PANEL SUB-ASSEMBLY** . Refer to **REMOVAL - Step 25**
24. **REMOVE RADIO RECEIVER ASSEMBLY WITH AIR CONDITIONING CONTROL ASSEMBLY (for Radio Receiver Type)** . Refer to **REMOVAL - Step 9**
25. **REMOVE RADIO RECEIVER ASSEMBLY WITH AIR CONDITIONING CONTROL ASSEMBLY (for Radio and Display Type)** . Refer to **REMOVAL - Step 10**
26. **REMOVE NAVIGATION RECEIVER ASSEMBLY WITH AIR CONDITIONING CONTROL ASSEMBLY (for Navigation Receiver Type)** . Refer to **REMOVAL - Step 9**
27. **REMOVE NO. 1 SPEAKER OPENING COVER ASSEMBLY** . Refer to **REMOVAL - Step 29**
28. **REMOVE FRONT DOOR SCUFF PLATE RH** . Refer to **REMOVAL - Step 31**
29. **REMOVE COWL SIDE TRIM SUB-ASSEMBLY RH** . Refer to **REMOVAL - Step 32**
30. **DISCONNECT FRONT DOOR OPENING TRIM WEATHERSTRIP RH** . Refer to **REMOVAL - Step 33**
31. **REMOVE INSTRUMENT SIDE PANEL RH** . Refer to **REMOVAL - Step 34**
32. **REMOVE NO. 2 INSTRUMENT PANEL UNDER COVER SUB-ASSEMBLY** . Refer to **REMOVAL - Step 35**

33. **REMOVE LOWER NO. 2 INSTRUMENT PANEL AIRBAG ASSEMBLY** . Refer to **REMOVAL - Step 9**
34. **REMOVE LOWER INSTRUMENT PANEL SUB-ASSEMBLY** . Refer to **REMOVAL - Step 37**
35. **REMOVE LOWER INSTRUMENT PANEL FINISH PANEL ASSEMBLY** . Refer to **REMOVAL - Step 46**
36. **REMOVE FRONT NO. 2 CONSOLE BOX INSERT** . Refer to **REMOVAL - Step 47**
37. **REMOVE CONSOLE BOX INSERT** . Refer to **REMOVAL - Step 48**
38. **REMOVE FLOOR CARPET BRACKET LH** See step 26
39. **REMOVE FLOOR CARPET BRACKET RH** See step 29
40. **REMOVE NO. 1 CONSOLE BOX MOUNTING BRACKET** See step 31
41. **REMOVE NO. 1 CONSOLE BOX DUCT (w/ Rear Register Duct)** See step 32
42. **REMOVE LOWER SHIFT LEVER ASSEMBLY** . Refer to **REMOVAL - Step 22**
43. **REMOVE SHIFT LEVER SUPPORT** . Refer to **REMOVAL - Step 23**
44. **REMOVE QUICK HEATER ASSEMBLY**
    a. Disconnect the quick heater connector.

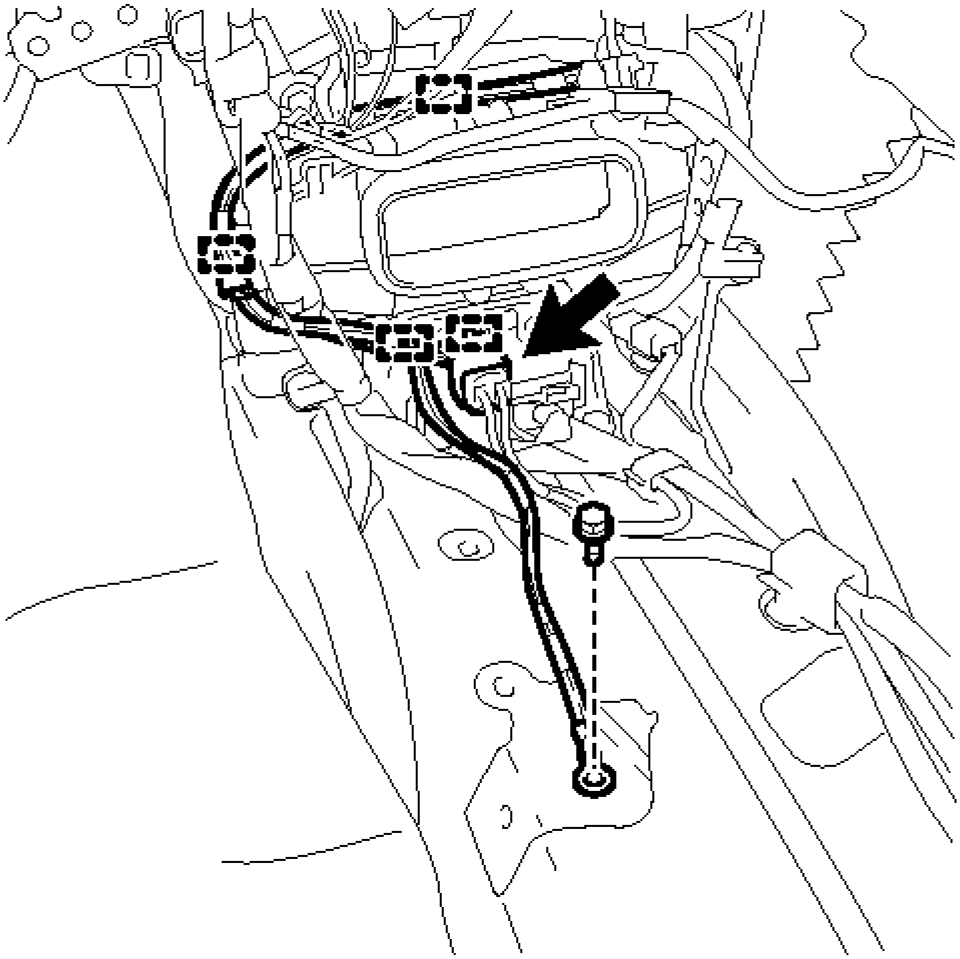

P

Fig. 154: Identifying Quick Heater Connector
Courtesy of TOYOTA MOTOR SALES, U.S.A., INC.

- b. Remove the bolt.
- c. Disengage the 4 clamps.
- d. Remove the 2 screws.

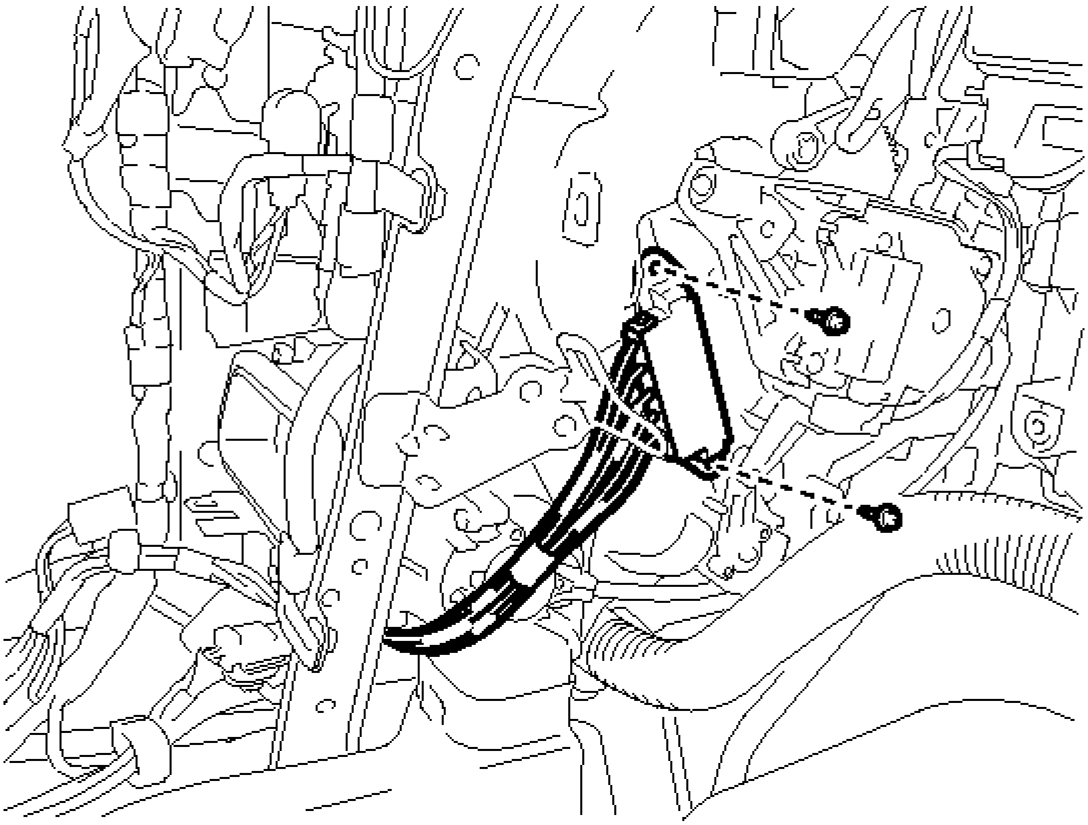

P

Fig. 155: Identifying Quick Heater Assembly Screws
Courtesy of TOYOTA MOTOR SALES, U.S.A., INC.

e. Remove the quick heater assembly as shown in the illustration.

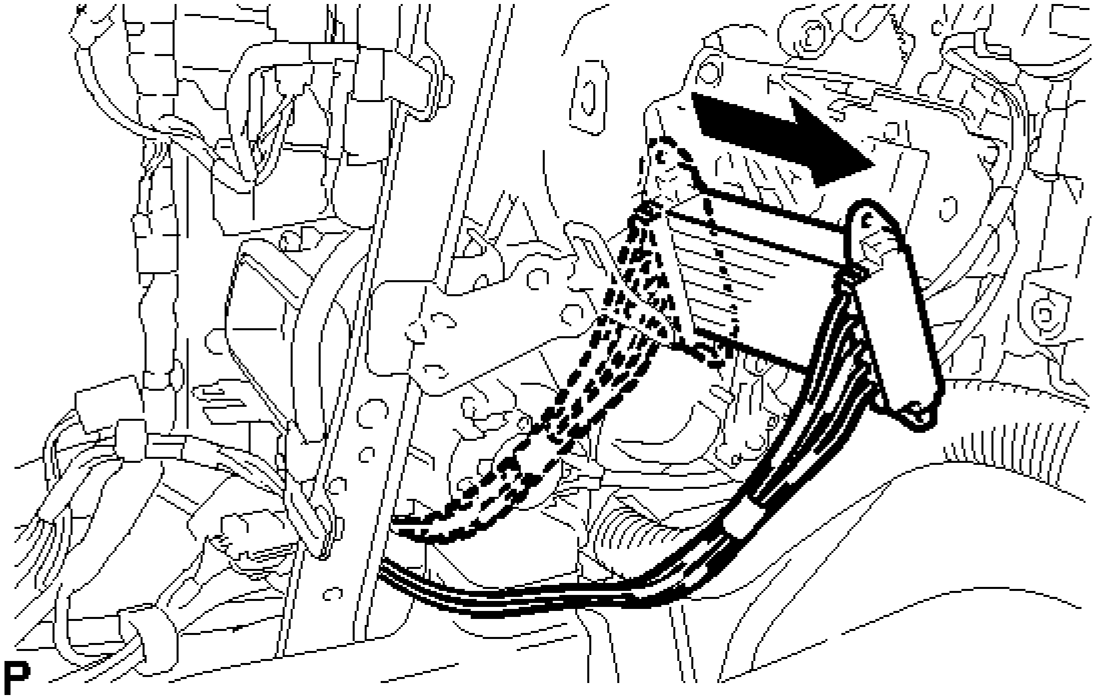

Fig. 156: Removing Quick Heater Assembly
Courtesy of TOYOTA MOTOR SALES, U.S.A., INC.

INSPECTION

INSPECTION

1. **INSPECT QUICK HEATER ASSEMBLY**
    a. Measure the resistance according to the value(s) in the table below.

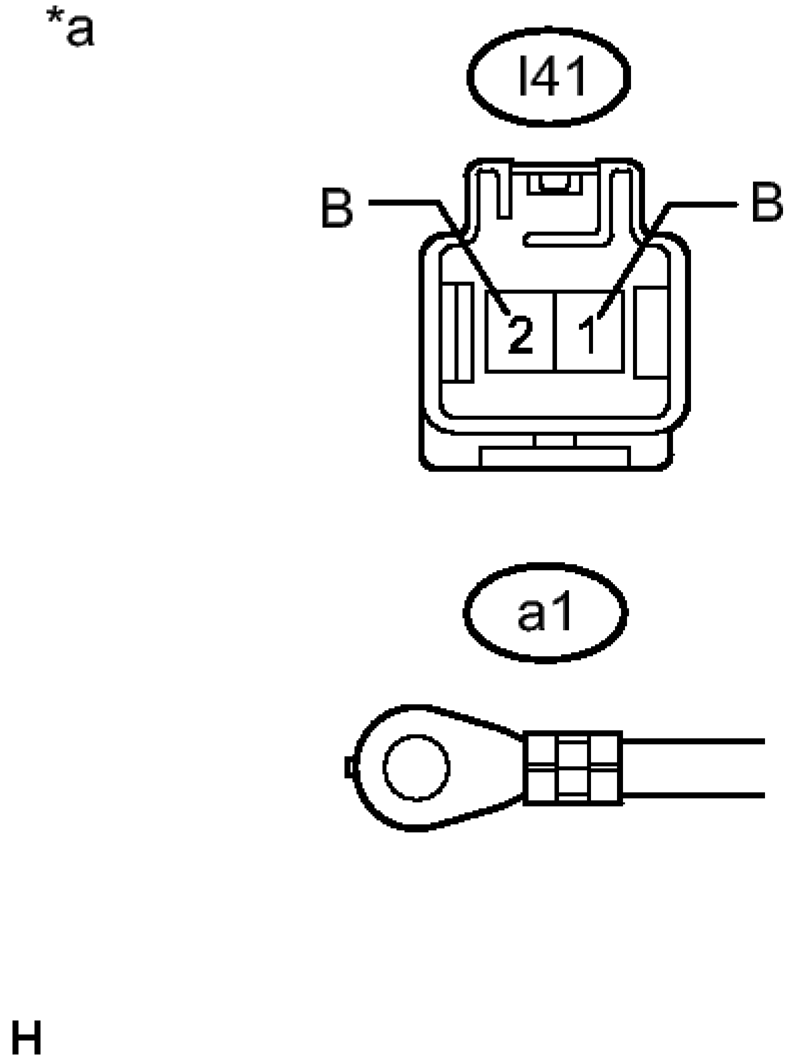

Fig. 157: Identifying Quick Heater Assembly Connector Terminals
Courtesy of TOYOTA MOTOR SALES, U.S.A., INC.

Standard Resistance

Tester Connection	Condition	Specified Condition
I41-1(B) - a1-1(E)	Always	Below 1 ohms
I41-2(B) - a1-1(E)	Always	Below 1 ohms

TEXT IN ILLUSTRATION

	Component without

*a	harness connected (Quick Heater Assembly)

If the result is not as specified, replace the quick heater assembly.

INSTALLATION

INSTALLATION

1. **INSTALL QUICK HEATER ASSEMBLY**
    a. Insert the quick heater assembly as shown in the illustration.

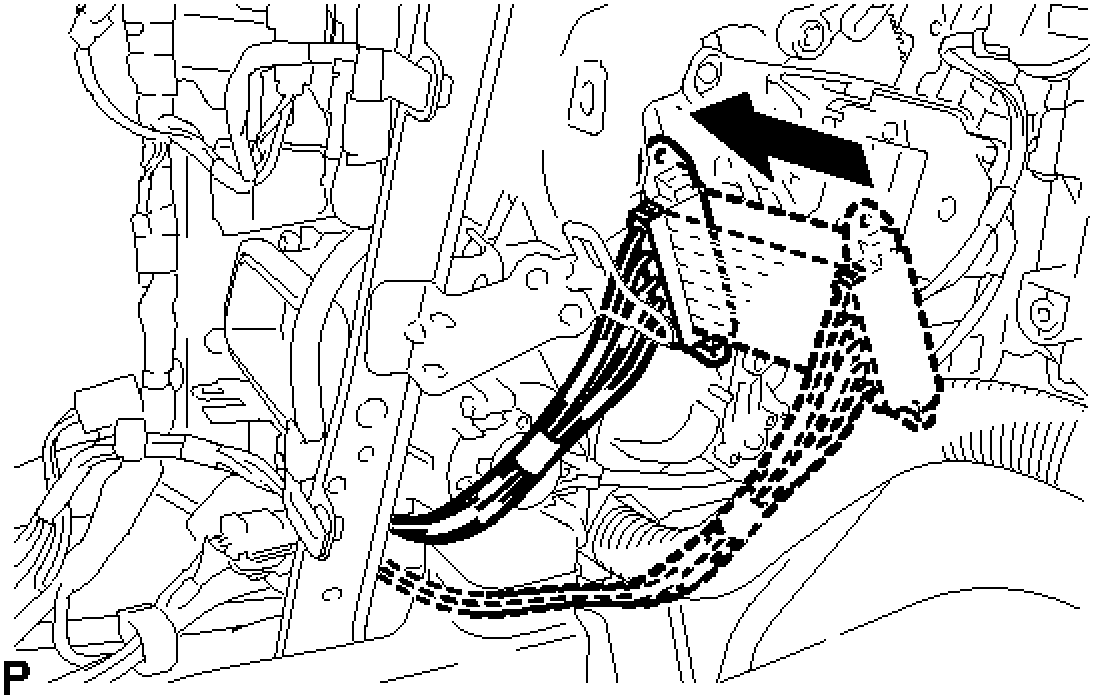

Fig. 158: Installing Quick Heater Assembly
Courtesy of TOYOTA MOTOR SALES, U.S.A., INC.

    b. Install the 2 screws.
    c. Engage the 4 clamps.
    d. Install the quick heater assembly with the bolt.

    Torque: 20 N*m (199 kgf*cm, 14 ft.*lbf)

    e. Connect the quick heater connector.
2. **INSTALL SHIFT LEVER SUPPORT** . Refer to **INSTALLATION - Step 1**

3. **INSTALL LOWER SHIFT LEVER ASSEMBLY** . Refer to **INSTALLATION - Step 2**
4. **INSTALL NO. 1 CONSOLE BOX DUCT (w/ Rear Register Duct)** See step 7
5. **INSTALL NO. 1 CONSOLE BOX MOUNTING BRACKET** See step 8
6. **INSTALL FLOOR CARPET BRACKET LH** See step 10
7. **INSTALL FLOOR CARPET BRACKET RH** See step 14
8. **INSTALL CONSOLE BOX INSERT** . Refer to **INSTALLATION - Step 4**
9. **INSTALL FRONT NO. 2 CONSOLE BOX INSERT** . Refer to **INSTALLATION - Step 5**
10. **INSTALL LOWER INSTRUMENT PANEL FINISH PANEL ASSEMBLY** . Refer to **INSTALLATION - Step 6**
11. **INSTALL LOWER INSTRUMENT PANEL SUB-ASSEMBLY** . Refer to **INSTALLATION - Step 15**
12. **INSTALL LOWER NO. 2 INSTRUMENT PANEL AIRBAG ASSEMBLY** . Refer to **INSTALLATION - Step 1**
13. **INSTALL NO. 2 INSTRUMENT PANEL UNDER COVER SUB-ASSEMBLY** . Refer to **INSTALLATION - Step 17**
14. **INSTALL INSTRUMENT SIDE PANEL RH** . Refer to **INSTALLATION - Step 18**
15. **INSTALL FRONT DOOR OPENING TRIM WEATHERSTRIP RH** . Refer to **INSTALLATION - Step 47**
16. **INSTALL COWL SIDE TRIM SUB-ASSEMBLY RH** . Refer to **INSTALLATION - Step 48**
17. **INSTALL FRONT DOOR SCUFF PLATE RH** . Refer to **INSTALLATION - Step 21**
18. **INSTALL NO. 1 SPEAKER OPENING COVER ASSEMBLY** . Refer to **INSTALLATION - Step 23**
19. **INSTALL RADIO RECEIVER ASSEMBLY WITH AIR CONDITIONING CONTROL ASSEMBLY (for Radio Receiver Type)** . Refer to **INSTALLATION - Step 14**
20. **INSTALL RADIO RECEIVER ASSEMBLY WITH AIR CONDITIONING CONTROL ASSEMBLY (for Radio and Display Type)** . Refer to **INSTALLATION - Step 15**
21. **INSTALL NAVIGATION RECEIVER ASSEMBLY WITH AIR CONDITIONING CONTROL ASSEMBLY (for Navigation Receiver Type)** . Refer to **INSTALLATION - Step 7**
22. **INSTALL UPPER CONSOLE PANEL SUB-ASSEMBLY** . Refer to **INSTALLATION - Step 27**
23. **INSTALL BOX BOTTOM MAT** . Refer to **INSTALLATION - Step 28**
24. **INSTALL NO. 2 INSTRUMENT PANEL REGISTER ASSEMBLY** . Refer to **INSTALLATION - Step 29**
25. **INSTALL CENTER INSTRUMENT CLUSTER FINISH PANEL ASSEMBLY** . Refer to **INSTALLATION - Step 30**
26. **INSTALL REAR CONSOLE BOX ASSEMBLY** . Refer to **INSTALLATION - Step 1**
27. **INSTALL CONSOLE BOX CARPET** . Refer to **INSTALLATION - Step 2**
28. **INSTALL NO. 4 CONSOLE BOX DUCT** . Refer to **INSTALLATION - Step 3**
29. **INSTALL UPPER CONSOLE BOX SUB-ASSEMBLY** . Refer to **INSTALLATION - Step 4**
30. **INSTALL REAR CONSOLE UPPER PANEL SUB-ASSEMBLY** . Refer to **INSTALLATION - Step 35**

31. **INSTALL SHIFT LEVER KNOB SUB-ASSEMBLY** . Refer to **INSTALLATION - Step 36**
32. **INSTALL FRONT PANEL GARNISH RH** . Refer to **INSTALLATION - Step 37**
33. **INSTALL LOWER NO. 1 INSTRUMENT PANEL FINISH PANEL ASSEMBLY** . Refer to **INSTALLATION - Step 38**
34. **CONNECT HOOD LOCK CONTROL LEVER SUB-ASSEMBLY** . Refer to **INSTALLATION - Step 39**
35. **INSTALL NO. 1 INSTRUMENT CLUSTER FINISH PANEL GARNISH** . Refer to **INSTALLATION - Step 44**
36. **INSTALL FRONT PANEL GARNISH LH** . Refer to **INSTALLATION - Step 45**
37. **INSTALL INSTRUMENT SIDE PANEL LH** . Refer to **INSTALLATION - Step 45**
38. **INSTALL FRONT DOOR OPENING TRIM WEATHERSTRIP LH** . Refer to **INSTALLATION - Step 43**
39. **INSTALL COWL SIDE TRIM SUB-ASSEMBLY LH** . Refer to **INSTALLATION - Step 44**
40. **INSTALL FRONT DOOR SCUFF PLATE LH** . Refer to **INSTALLATION - Step 45**
41. **INSTALL FRONT SEAT ASSEMBLY LH (for Manual Seat)**

    Refer to **INSTALLATION**

42. **INSTALL FRONT SEAT ASSEMBLY LH (for Power Seat)**

    Refer to **INSTALLATION**

43. **INSTALL FRONT SEAT ASSEMBLY RH (for Manual Seat)**

    HINT:

    Use the same procedure as for the LH side.

44. **INSTALL FRONT SEAT ASSEMBLY RH (for Power Seat)**

    HINT:

    Use the same procedure as for the LH side.

45. **INSPECT SHIFT LEVER POSITION** . Refer to **ADJUSTMENT - Step 1**

COOLER EXPANSION VALVE

COMPONENTS

ILLUSTRATION

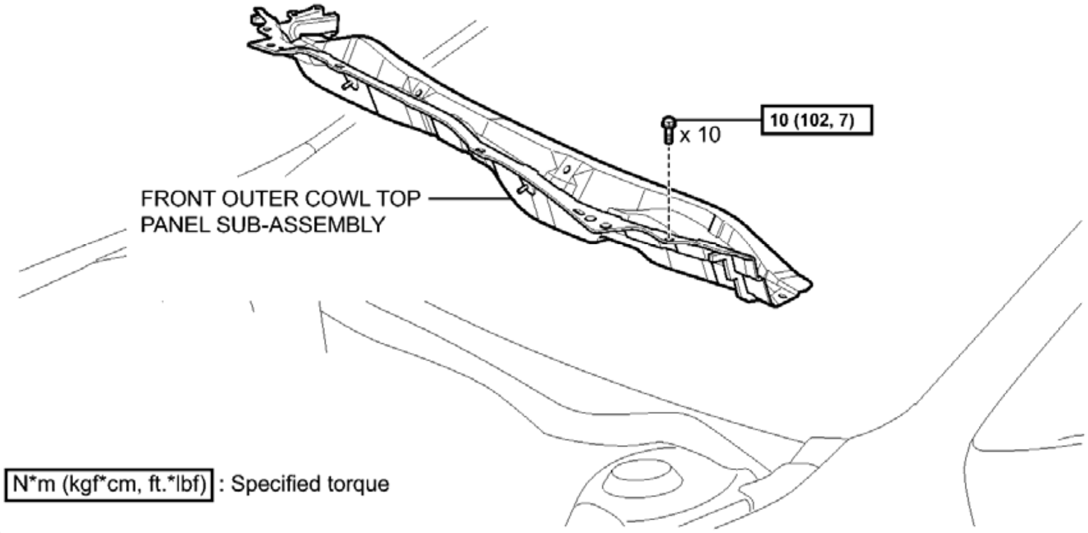
10 (102, 7)
x 10
FRONT OUTER COWL TOP PANEL SUB-ASSEMBLY
N*m (kgf*cm, ft.*lbf) : Specified torque
C

Fig. 159: Identifying Cooler Expansion Valve Replacement Components With Torque Specifications (1 Of 2)
Courtesy of TOYOTA MOTOR SALES, U.S.A., INC.

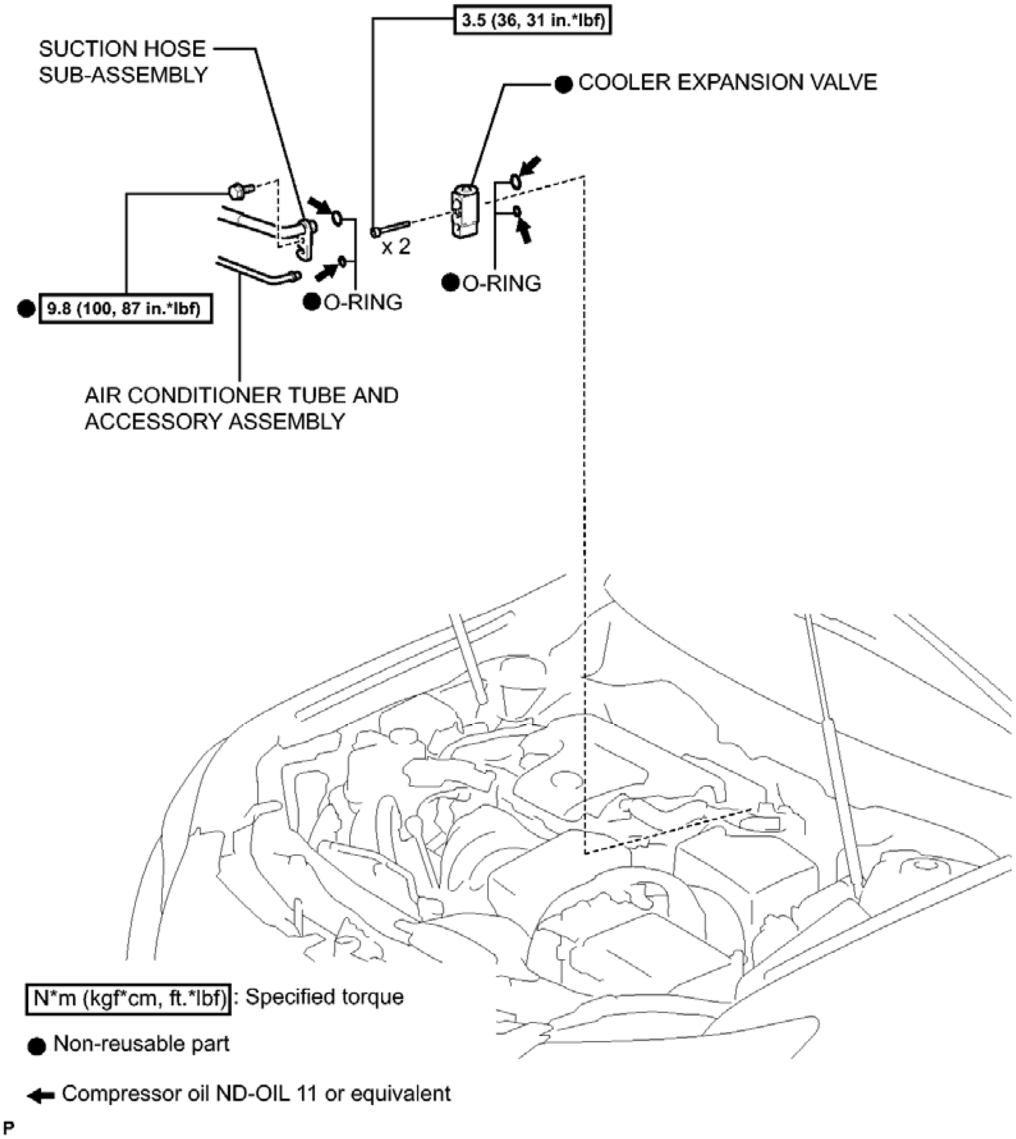
3.5 (36, 31 in.*lbf)
SUCTION HOSE SUB-ASSEMBLY
● COOLER EXPANSION VALVE
x 2
● 9.8 (100, 87 in.*lbf)
●O-RING
●O-RING
AIR CONDITIONER TUBE AND ACCESSORY ASSEMBLY
N*m (kgf*cm, ft.*lbf): Specified torque
● Non-reusable part
← Compressor oil ND-OIL 11 or equivalent
P

Fig. 160: Identifying Cooler Expansion Valve Replacement Components With Torque Specifications (2 Of 2)
Courtesy of TOYOTA MOTOR SALES, U.S.A., INC.

REMOVAL

REMOVAL

NOTE: **When removing the cooler expansion valve by itself, be sure to install a new cooler expansion valve and new bolt for suction hose sub-assembly.**

1. **RECOVER REFRIGERANT FROM AIR CONDITIONING SYSTEM** See step 1

2. **REMOVE WINDSHIELD WIPER MOTOR AND LINK ASSEMBLY**

   Refer to **REMOVAL**

3. **REMOVE FRONT OUTER COWL TOP PANEL SUB-ASSEMBLY** . Refer to **REMOVAL - Step 4**
4. **DISCONNECT SUCTION HOSE SUB-ASSEMBLY** See step 6
5. **DISCONNECT AIR CONDITIONER TUBE AND ACCESSORY ASSEMBLY** See step 7
6. **REMOVE COOLER EXPANSION VALVE**
   a. Using a 4 mm hexagon wrench, remove the 2 hexagon bolts.

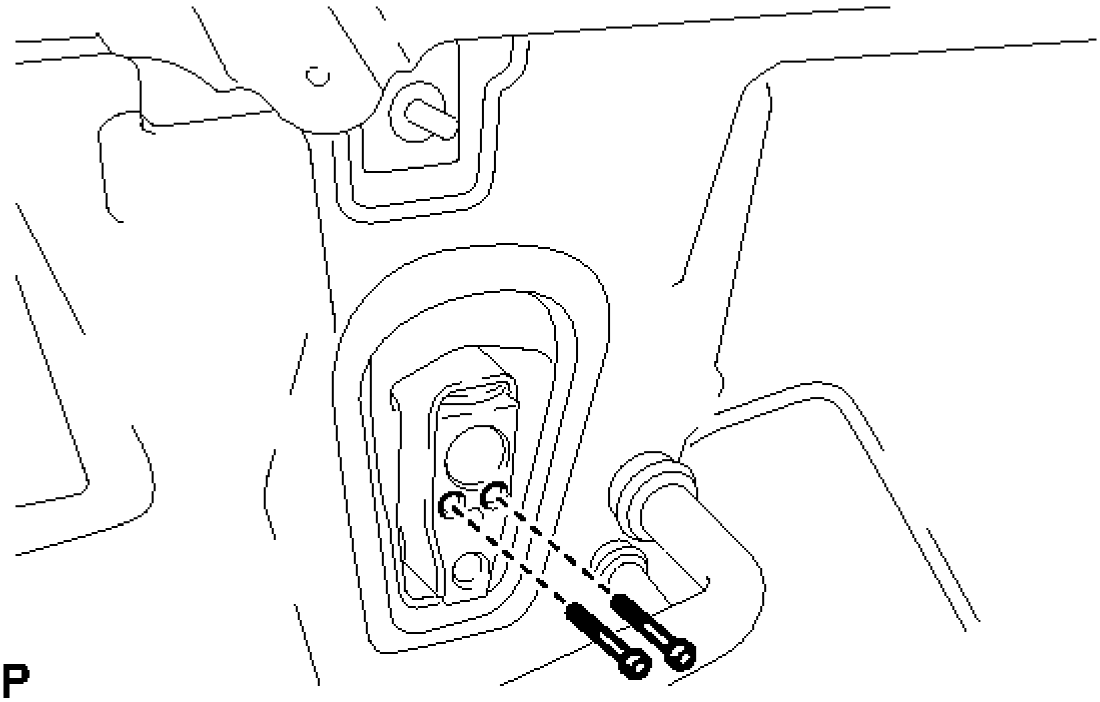

Fig. 161: Identifying Cooler Expansion Valve Bolts
Courtesy of TOYOTA MOTOR SALES, U.S.A., INC.

   b. Temporarily install the bolt for the suction hose sub-assembly halfway to the cooler expansion valve.

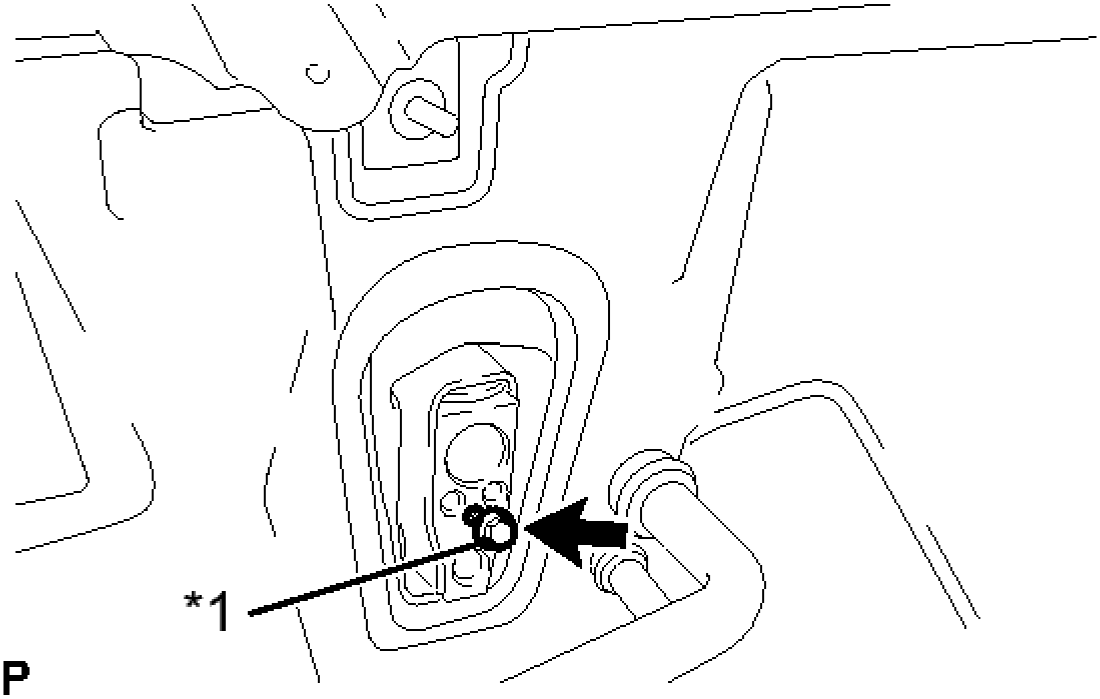

Fig. 162: Identifying Suction Hose Sub-Assembly Bolt
Courtesy of TOYOTA MOTOR SALES, U.S.A., INC.

TEXT IN ILLUSTRATION

*1	Bolt for Suction Hose Sub-assembly

c. Hold the bolt and pull it to remove the cooler expansion valve as shown in the illustration.

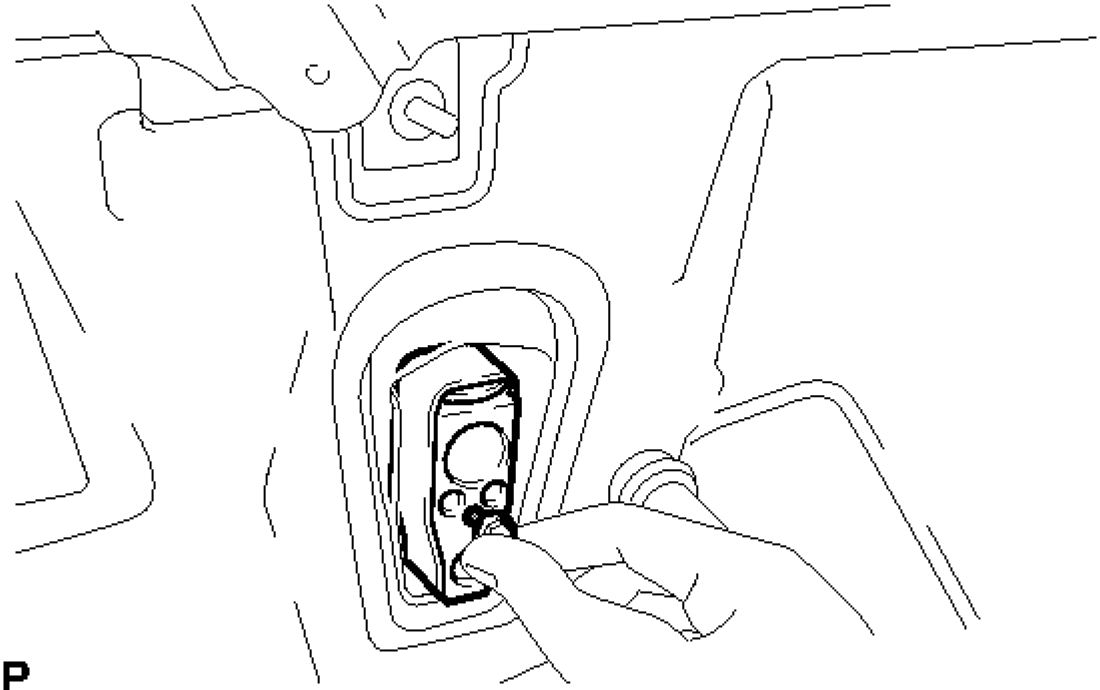

Fig. 163: Removing Cooler Expansion Valve
Courtesy of TOYOTA MOTOR SALES, U.S.A., INC.

d. Remove the 2 O-rings from the No. 1 cooler evaporator sub-assembly.

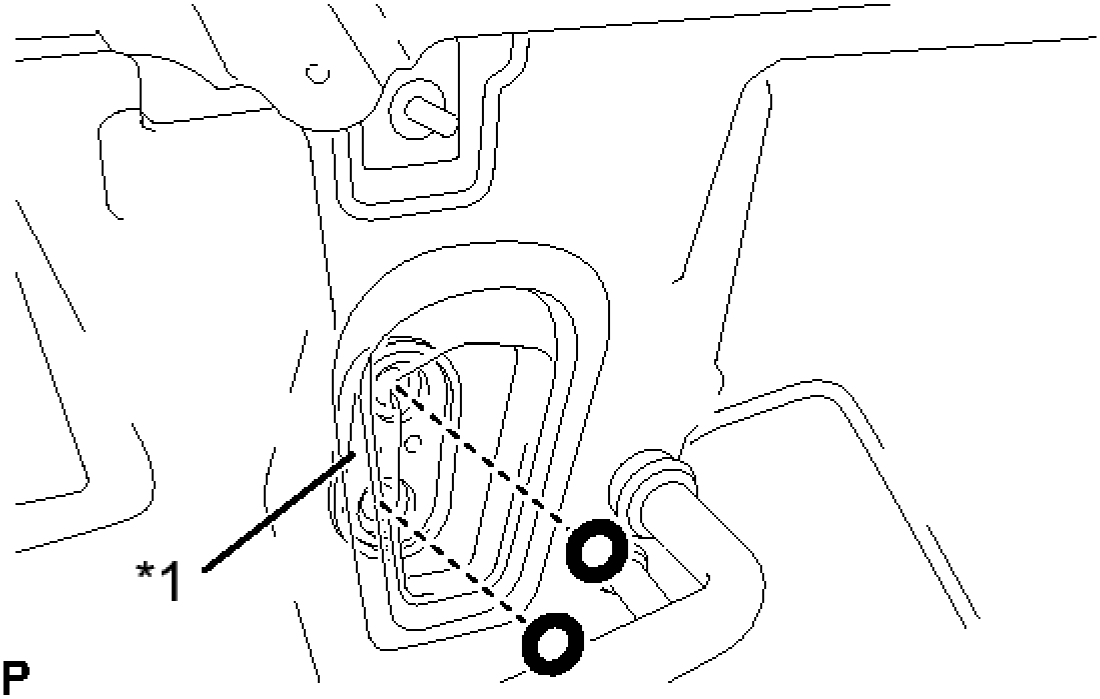

Fig. 164: Identifying No. 1 Cooler Evaporator Sub-Assembly O-Rings
Courtesy of TOYOTA MOTOR SALES, U.S.A., INC.

TEXT IN ILLUSTRATION

*1	No. 1 cooler evaporator sub-assembly

INSTALLATION

INSTALLATION

1. **INSTALL COOLER EXPANSION VALVE**
    a. Apply sufficient compressor oil to 2 new O-rings and the fitting surfaces of the cooler expansion valve.

    Compressor oil

    ND-OIL 11 or equivalent

    b. Install the 2 new O-rings to the No. 1 cooler evaporator sub-assembly.
    c. Using a 4 mm hexagon wrench, install the new cooler expansion valve with the 2 hexagon bolts.

    Torque: 3.5 N*m (36 kgf*cm, 31 in.*lbf)

2. **CONNECT AIR CONDITIONER TUBE AND ACCESSORY ASSEMBLY** See step 32
3. **CONNECT SUCTION HOSE SUB-ASSEMBLY**
    a. Remove the vinyl tape from the hose.
    b. Sufficiently apply compressor oil to a new O-ring and the fitting surface of the suction hose sub-assembly.

    Compressor oil

    ND-OIL 11 or equivalent

    c. Connect the O-ring to the suction hose sub-assembly.
    d. Connect the suction hose sub-assembly.
    e. Move the hook connector in the direction indicated by the arrow in the illustration.

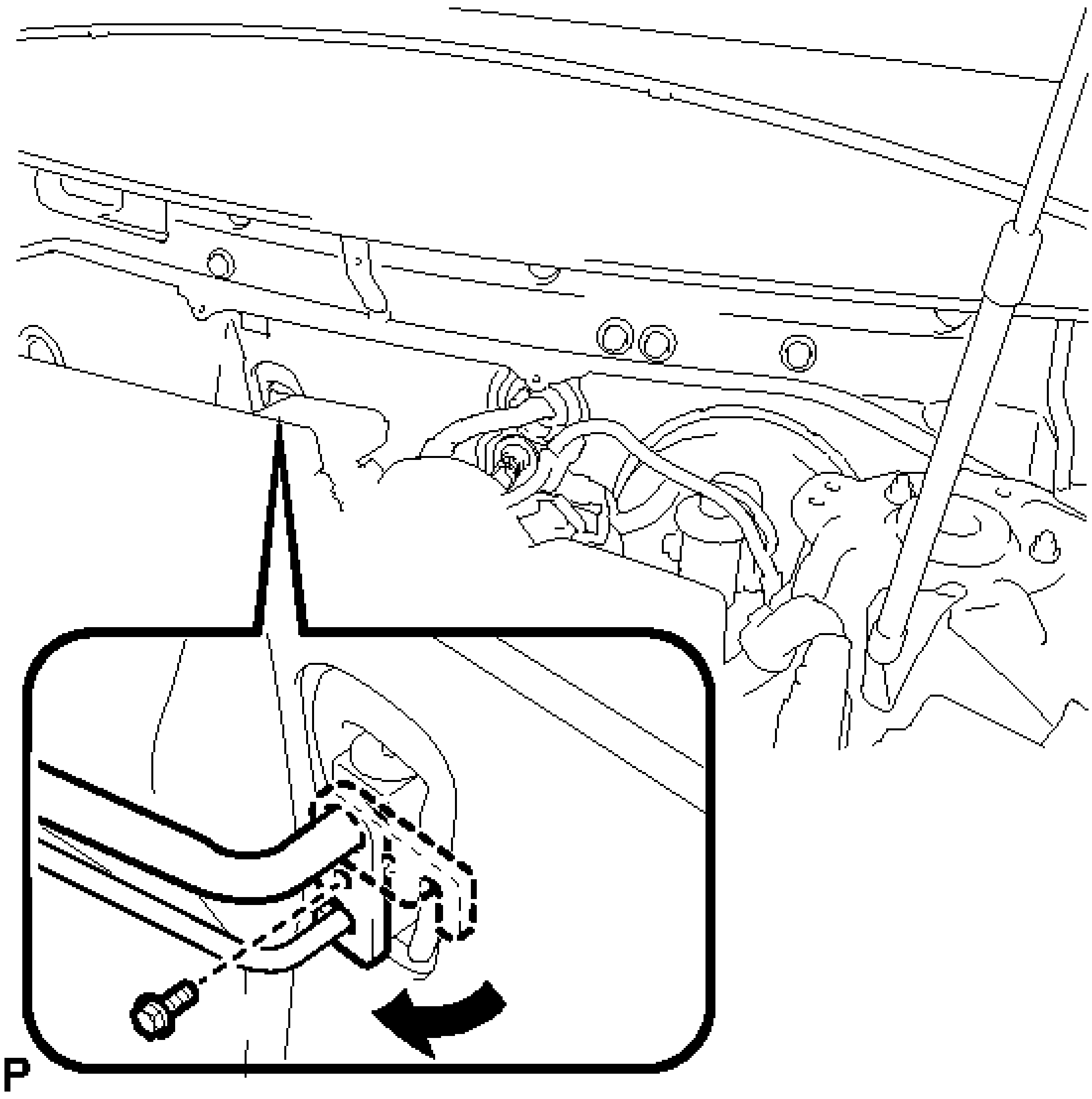

Fig. 165: Identifying Suction Hose Hook Connector And Bolt
Courtesy of TOYOTA MOTOR SALES, U.S.A., INC.

f. Insert the hose joint into the fitting hole securely and tighten a new bolt.

   Torque: 9.8 N*m (100 kgf*cm, 87 in.*lbf)

4. **INSTALL FRONT OUTER COWL TOP PANEL SUB-ASSEMBLY** . Refer to **INSTALLATION - Step 18**
5. **INSTALL WINDSHIELD WIPER MOTOR AND LINK ASSEMBLY**

   Refer to **INSTALLATION**

6. **CHARGE AIR CONDITIONING SYSTEM WITH REFRIGERANT** See step 2
7. **WARM UP COMPRESSOR** See step 3

8. **INSPECT FOR REFRIGERANT LEAK** See step 4

COMPRESSOR

COMPONENTS

ILLUSTRATION

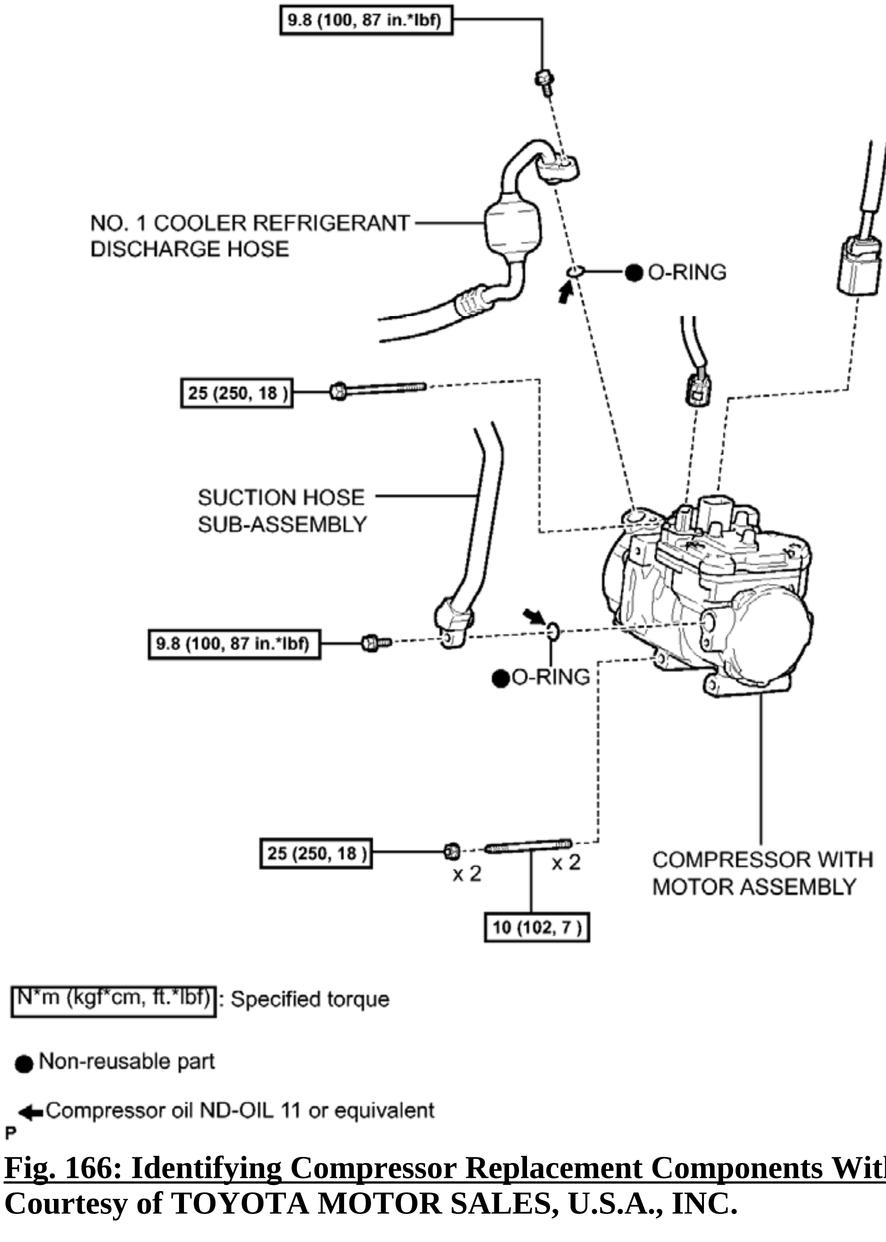
9.8 (100, 87 in.*lbf)
NO. 1 COOLER REFRIGERANT DISCHARGE HOSE
O-RING
25 (250, 18)
SUCTION HOSE SUB-ASSEMBLY
9.8 (100, 87 in.*lbf)
O-RING
25 (250, 18)
x 2
x 2
10 (102, 7)
COMPRESSOR WITH MOTOR ASSEMBLY
N*m (kgf*cm, ft.*lbf) : Specified torque
● Non-reusable part
Compressor oil ND-OIL 11 or equivalent
P

Fig. 166: Identifying Compressor Replacement Components With Torque Specifications
Courtesy of TOYOTA MOTOR SALES, U.S.A., INC.

REMOVAL

REMOVAL

1. **RECOVER REFRIGERANT FROM AIR CONDITIONING SYSTEM** See step 1
2. **REMOVE SERVICE PLUG GRIP**

   Refer to **REMOVAL**

3. **REMOVE RADIATOR ASSEMBLY**

   Refer to **REMOVAL**

4. **CHECK TERMINAL VOLTAGE**
   1. Remove the connector cover assembly. Refer to **REMOVAL - Step 4** .
   2. Check the terminal voltage. Refer to **REMOVAL - Step 5** .
   3. Install the connector cover assembly. Refer to **INSTALLATION - Step 19** .
5. **DISCONNECT NO. 1 COOLER REFRIGERANT DISCHARGE HOSE**
   1. Remove the bolt and disconnect the No. 1 cooler refrigerant discharge hose from the compressor with motor assembly.

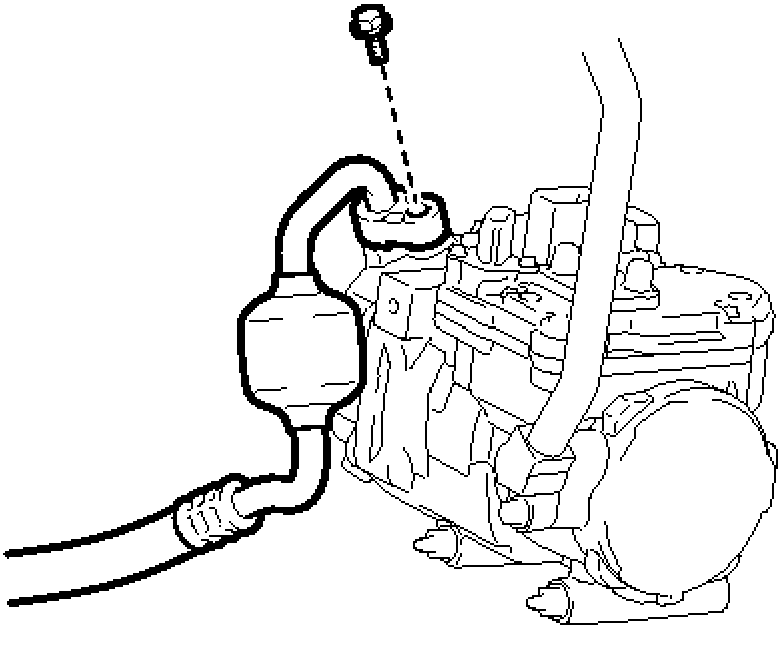

Fig. 167: Identifying No. 1 Cooler Refrigerant Discharge Hose Bolt
Courtesy of TOYOTA MOTOR SALES, U.S.A., INC.

   2. Remove the O-ring from the No. 1 cooler refrigerant discharge hose.

NOTE: **Seal the openings of the disconnected parts using vinyl tape to prevent entry of moisture and foreign matter.**

6. **DISCONNECT SUCTION HOSE SUB-ASSEMBLY**
    a. Remove the bolt and disconnect the suction hose sub-assembly from the compressor with motor assembly.

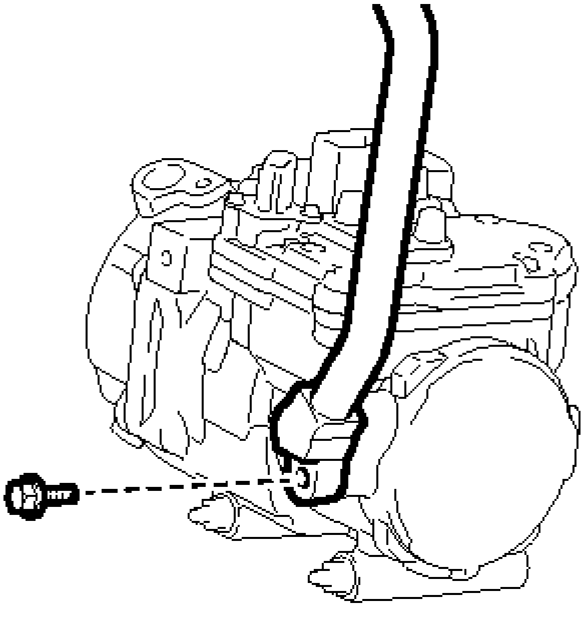

Fig. 168: Identifying Suction Hose Sub-Assembly Bolt
Courtesy of TOYOTA MOTOR SALES, U.S.A., INC.

    b. Remove the O-ring from the suction hose sub-assembly.

NOTE: Seal the openings of the disconnected parts using vinyl tape to prevent entry of moisture and foreign matter.

7. **REMOVE COMPRESSOR WITH MOTOR ASSEMBLY**
    a. Disconnect connector B.

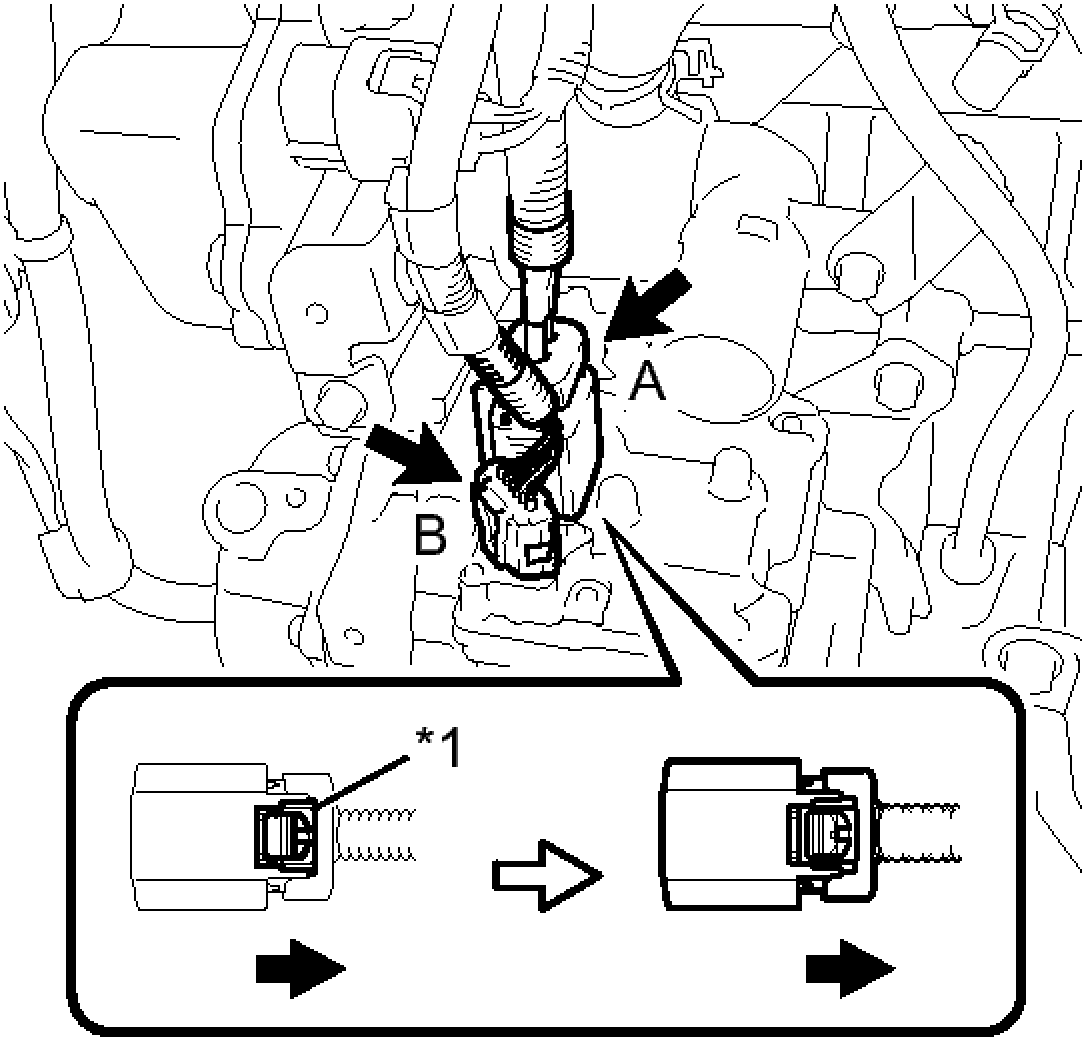

Fig. 169: Identifying Compressor Connectors
Courtesy of TOYOTA MOTOR SALES, U.S.A., INC.

TEXT IN ILLUSTRATION

*1	Green-colored Lock

b. Release the green-colored lock and disconnect connector A as shown in the illustration.

WARNING: **Wear insulated gloves when performing the following steps.**

NOTE: **Insulate the connector by sealing it with tape.**

c. Remove the bolt and 2 nuts and compressor with motor assembly.

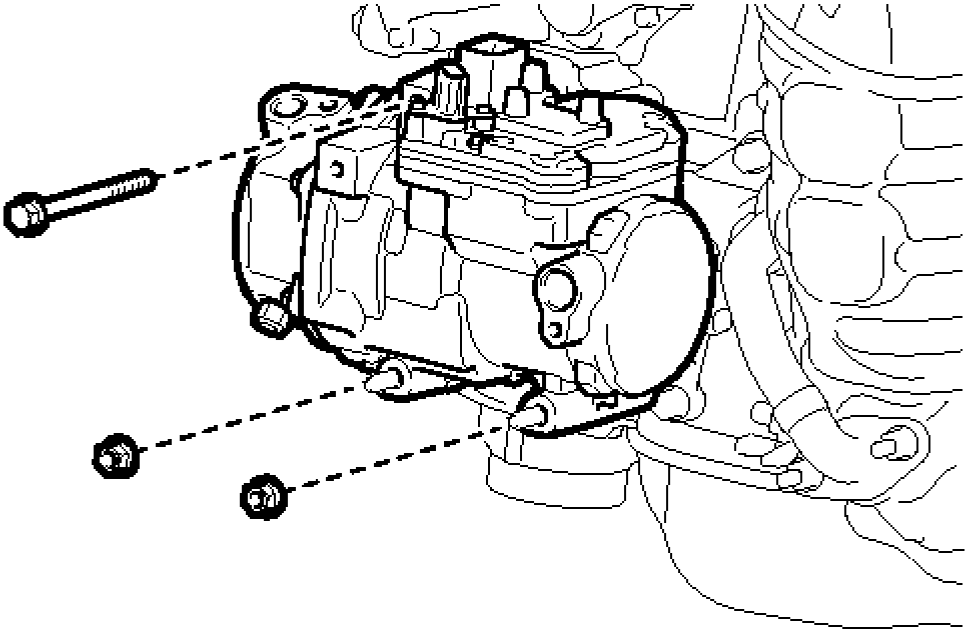

P

Fig. 170: Identifying Compressor Nuts And Bolt
Courtesy of TOYOTA MOTOR SALES, U.S.A., INC.

d. Using an E8 "TORX" socket, remove the 2 stud bolts.

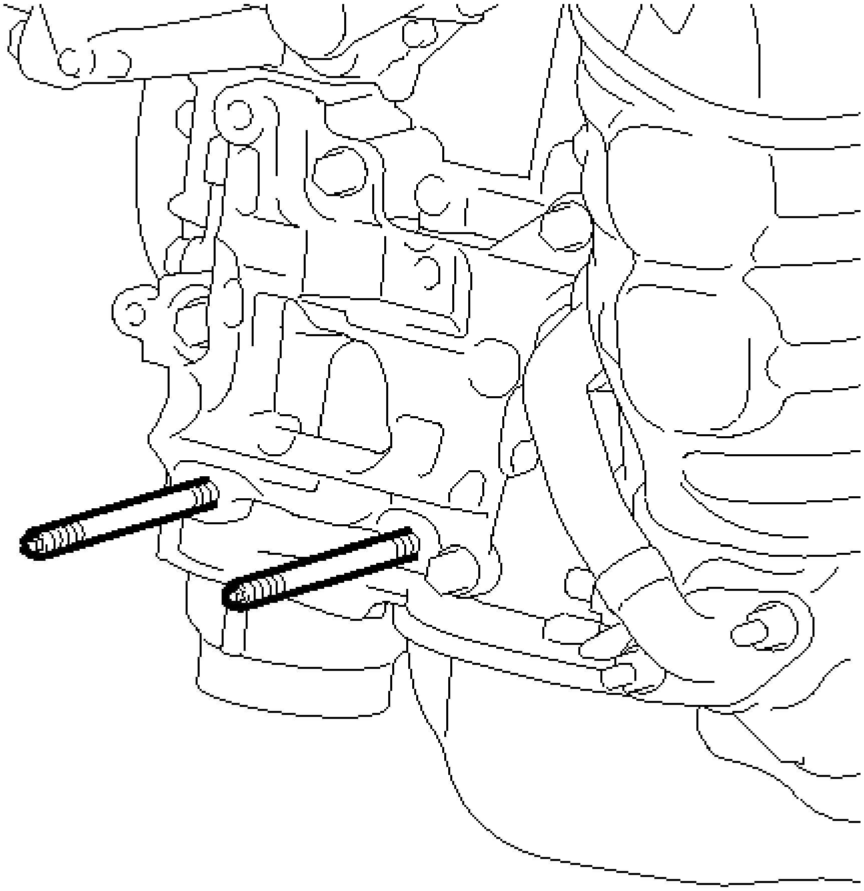

Fig. 171: Identifying Compressor Stud Bolts
Courtesy of TOYOTA MOTOR SALES, U.S.A., INC.

INSTALLATION

INSTALLATION

1. **INSPECT COMPRESSOR OIL**
    a. When replacing the electric inverter compressor with a new one, gradually discharge the refrigerant gas from the service valve, and drain the following amount of oil from the new compressor with motor assembly before installation.

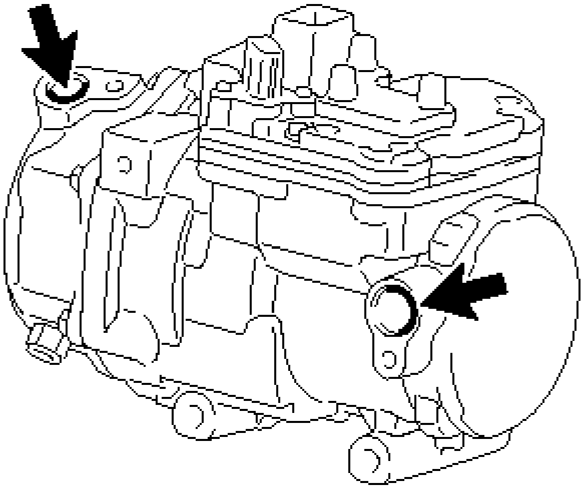

Fig. 172: Identifying Compressor Service Valve And Oil Ports
Courtesy of TOYOTA MOTOR SALES, U.S.A., INC.

Standard

(Oil capacity inside the new compressor with motor assembly: 120 to 135 cc (4.2 to 4.8 fl. oz.)) - (Remaining oil amount in the removed compressor with motor assembly) = (Oil amount to be removed from the new compressor)

NOTE:

- **When checking the compressor oil level, observe the precautions on the cooler removal/installation.**
- **If a new compressor with motor assembly is installed without removing some oil, there will be too much oil in the system due to the oil remaining in the pipes of the vehicle. Excessive oil in the system prevents heat exchange in the refrigeration cycle and causes ineffective cooling.**
- **If the amount of oil remaining in the old compressor with motor assembly is too small, check the air conditioning system for oil leaks.**
- **Be sure to use ND-OIL 11 or equivalent compressor oil. If any compressor oil other than ND-OIL 11 is used, compressor with motor assembly insulation performance may decrease, resulting in a leakage of electric power.**

2. **INSTALL COMPRESSOR WITH MOTOR ASSEMBLY**
   a. Using an E8 "TORX" socket, and install the 2 stud bolts.

Torque: 10 N*m (102 kgf*cm, 7 ft.*lbf)

b. Install the compressor with motor assembly with the bolt and 2 nuts.

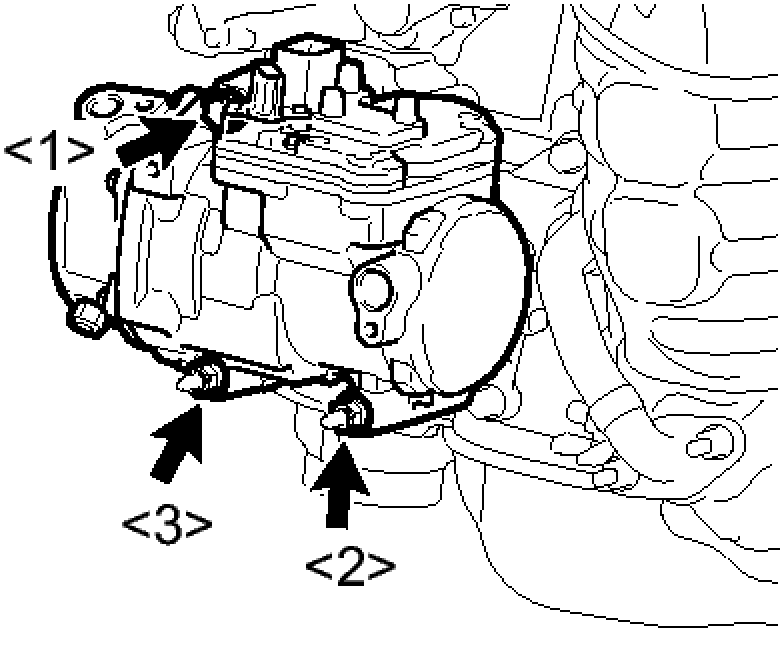

Fig. 173: Order To Tighten Compressor Bolts And Nut
Courtesy of TOYOTA MOTOR SALES, U.S.A., INC.

HINT:

Tighten the 2 bolts and nut in the order shown in the illustration.

Torque: 25 N*m (250 kgf*cm, 18 ft.*lbf)

c. Connect connector A and lock the green-colored lock as shown in the illustration.

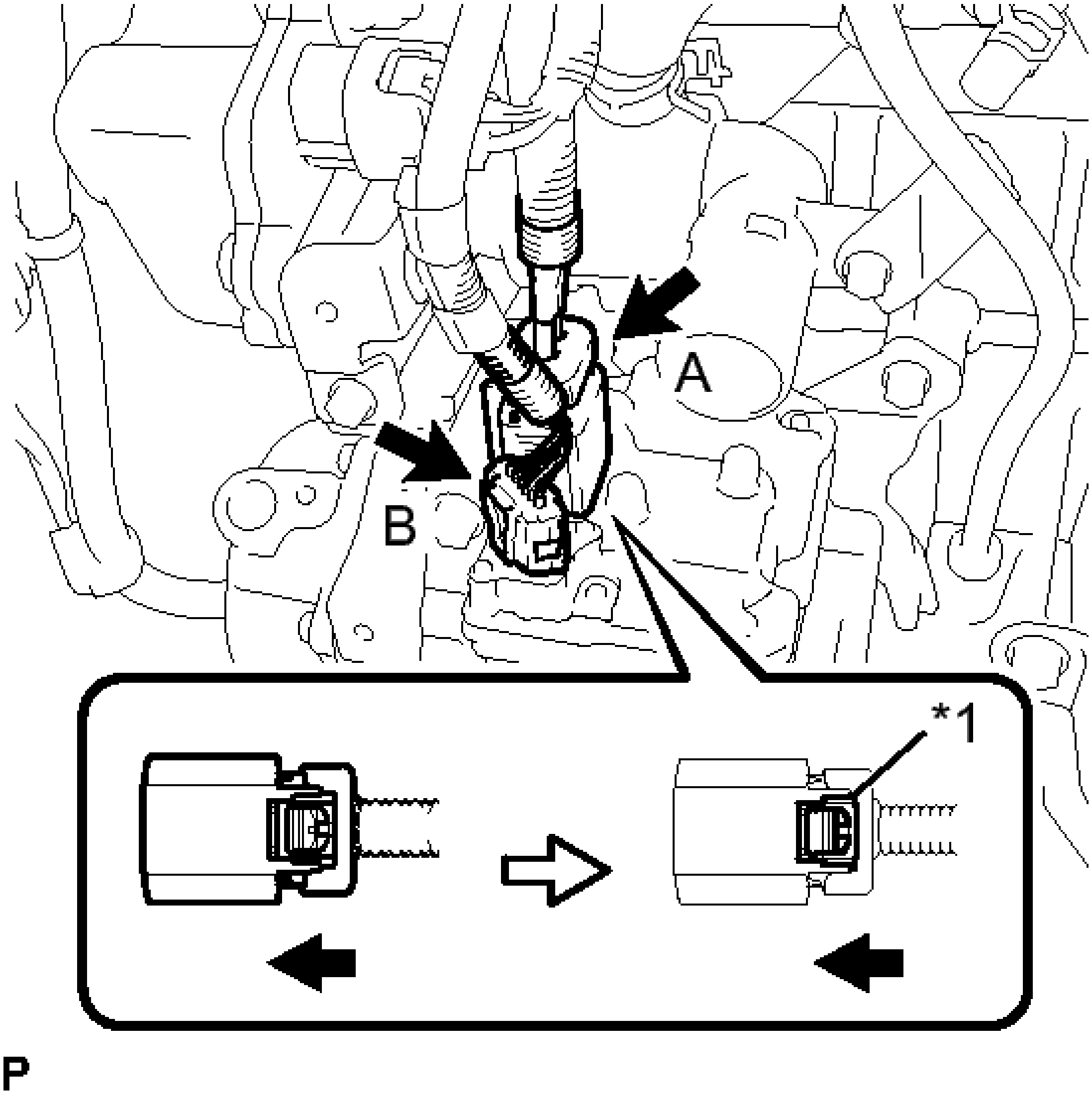

Fig. 174: Identifying Compressor Connectors
Courtesy of TOYOTA MOTOR SALES, U.S.A., INC.

TEXT IN ILLUSTRATION

*1	Green-colored Lock

d. Connect connector B.

3. **CONNECT SUCTION HOSE SUB-ASSEMBLY**
   a. Remove the vinyl tape from the hose.
   b. Sufficiently apply compressor oil to a new O-ring and the fitting surface of the compressor with motor assembly.

      Compressor oil

ND-OIL 11 or equivalent

c. Install the O-ring to the suction hose sub-assembly.

NOTE:

- **Keep the O-ring and O-ring fitting surfaces free from dirt or any foreign objects.**
- **Do not use any compressor oil other than ND-OIL 11 or equivalent. If any compressor oil other than ND-OIL 11 or equivalent is used, compressor motor insulation performance may decrease, resulting in a leakage of electric power.**

d. Install the suction hose sub-assembly to the compressor with motor assembly with the bolt.

Torque: 9.8 N*m (100 kgf*cm, 87 in.*lbf)

4. **CONNECT NO. 1 COOLER REFRIGERANT DISCHARGE HOSE**

a. Remove the vinyl tape from the hose.

b. Sufficiently apply compressor oil to a new O-ring and the fitting surface of the compressor with motor assembly.

Compressor oil

ND-OIL 11 or equivalent

c. Install the O-ring to the No. 1 cooler refrigerant discharge hose.

NOTE:

- **Keep the O-ring and O-ring fitting surfaces free from dirt or any foreign objects.**
- **Do not use any compressor oil other than ND-OIL 11 or equivalent. If any compressor oil other than ND-OIL 11 or equivalent is used, compressor motor insulation performance may decrease, resulting in a leakage of electric power.**

d. Install the No. 1 cooler refrigerant discharge hose to the compressor with motor assembly with the bolt.

Torque: 9.8 N*m (100 kgf*cm, 87 in.*lbf)

5. **INSTALL RADIATOR ASSEMBLY**

Refer to **INSTALLATION**

6. **INSTALL SERVICE PLUG GRIP**

Refer to **INSTALLATION**

7. **CHARGE AIR CONDITIONING SYSTEM WITH REFRIGERANT** See step 2
8. **WARM UP COMPRESSOR** See step 3
9. **INSPECT FOR REFRIGERANT LEAK** See step 4

CONDENSER

COMPONENTS

ILLUSTRATION

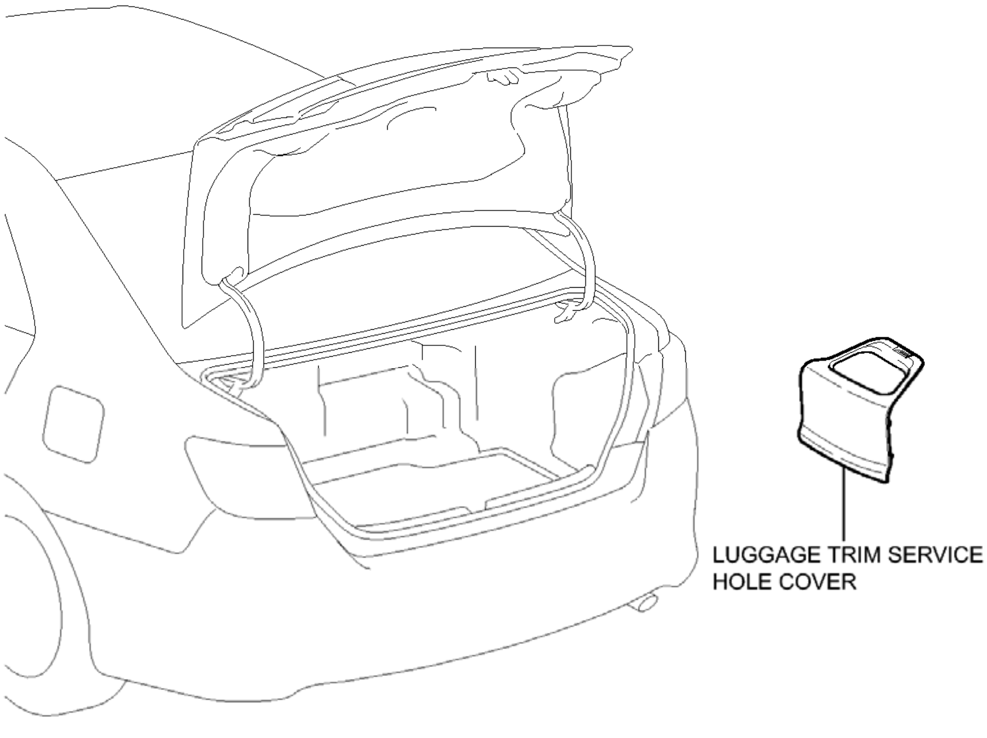
LUGGAGE TRIM SERVICE HOLE COVER
P

Fig. 175: Identifying Condenser Replacement Components (1 Of 3)
Courtesy of TOYOTA MOTOR SALES, U.S.A., INC.

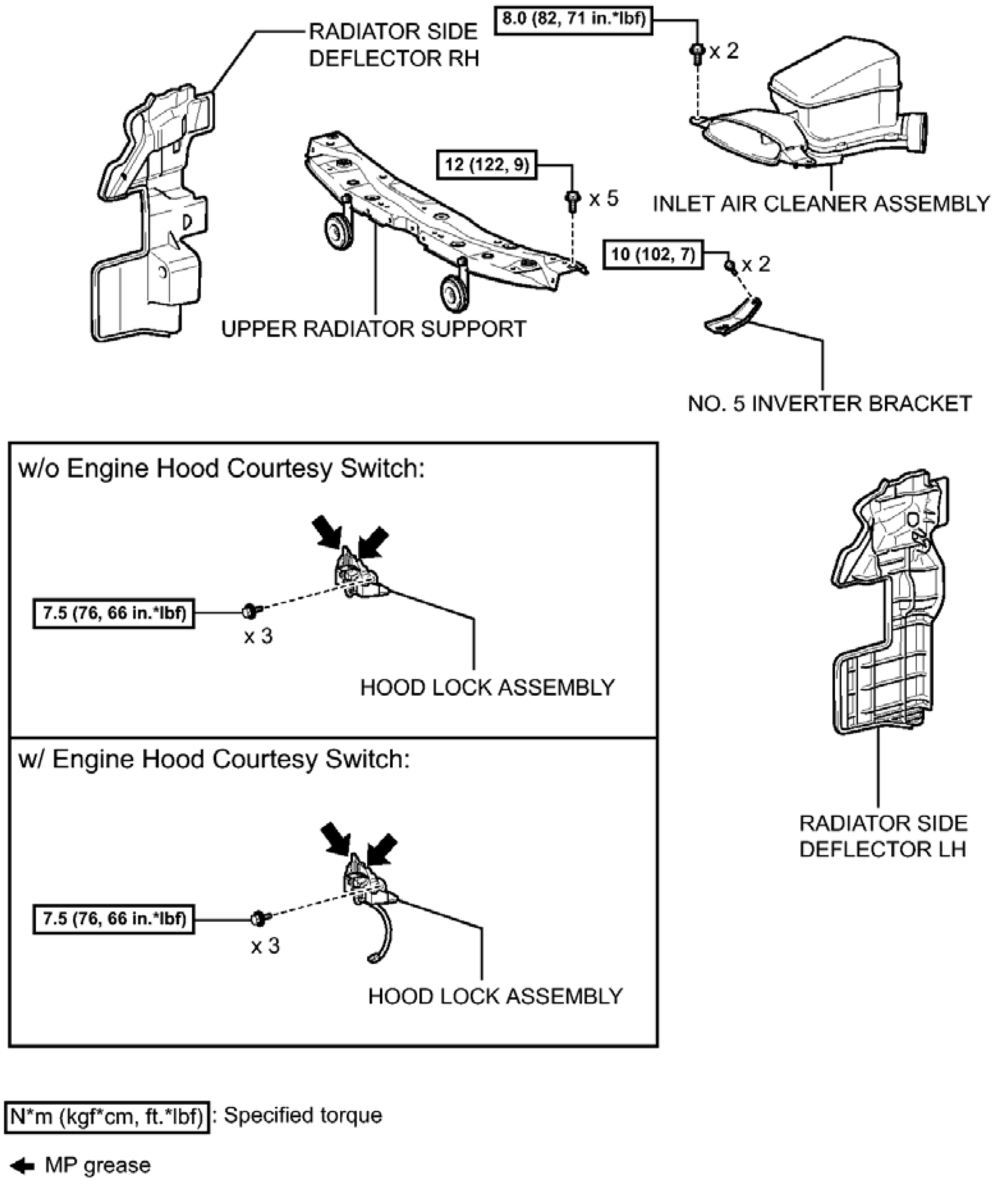
RADIATOR SIDE DEFLECTOR RH
8.0 (82, 71 in.*lbf)
x 2
INLET AIR CLEANER ASSEMBLY
12 (122, 9)
x 5
10 (102, 7)
x 2
UPPER RADIATOR SUPPORT
NO. 5 INVERTER BRACKET
w/o Engine Hood Courtesy Switch:
7.5 (76, 66 in.*lbf)
x 3
HOOD LOCK ASSEMBLY
w/ Engine Hood Courtesy Switch:
7.5 (76, 66 in.*lbf)
x 3
HOOD LOCK ASSEMBLY
RADIATOR SIDE DEFLECTOR LH
N*m (kgf*cm, ft.*lbf): Specified torque
MP grease
P

Fig. 176: Identifying Condenser Replacement Components With Torque Specifications (2 Of 3)

Courtesy of TOYOTA MOTOR SALES, U.S.A., INC.

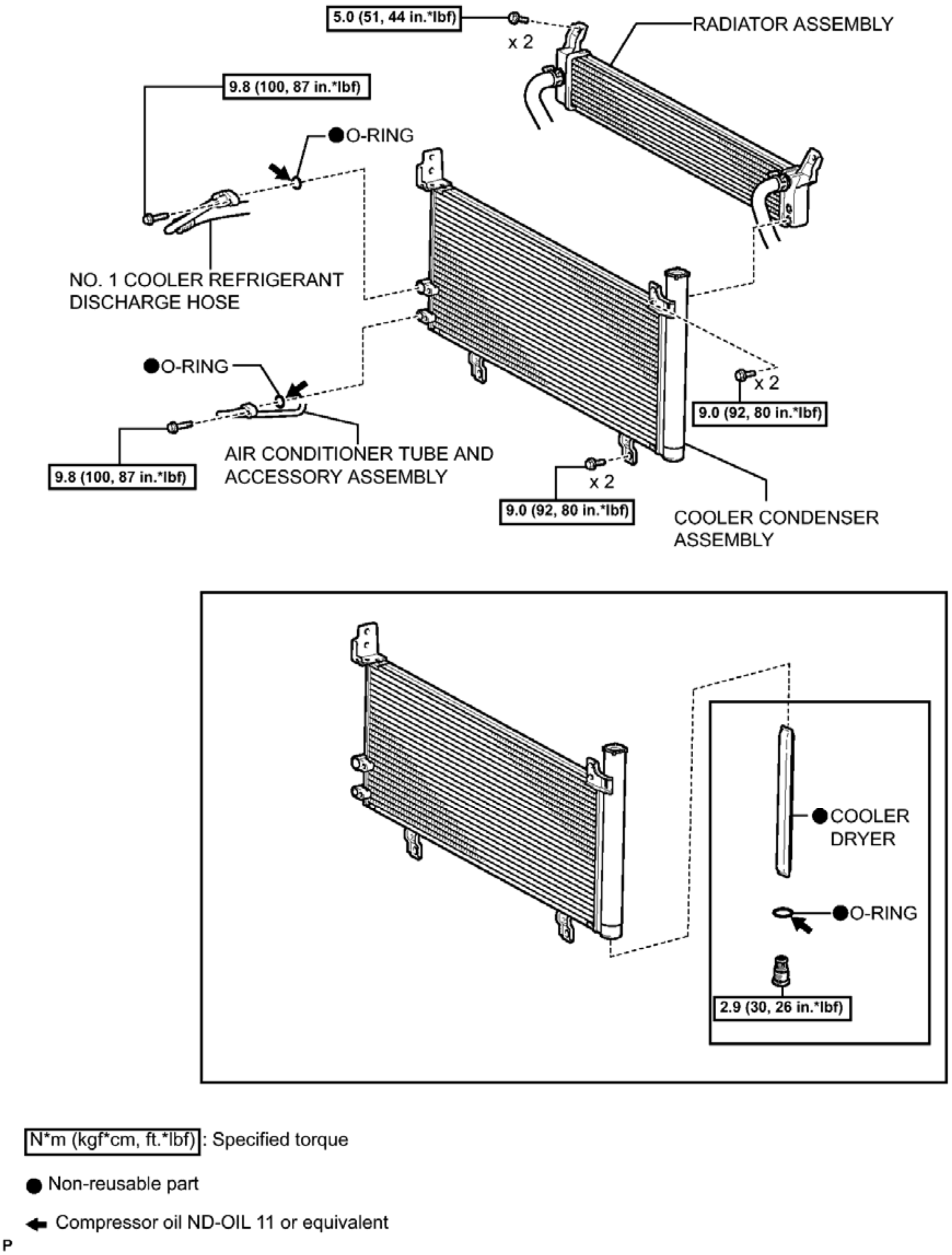
5.0 (51, 44 in.*lbf)
x 2
RADIATOR ASSEMBLY
9.8 (100, 87 in.*lbf)
● O-RING
NO. 1 COOLER REFRIGERANT DISCHARGE HOSE
● O-RING
x 2
9.0 (92, 80 in.*lbf)
9.8 (100, 87 in.*lbf)
AIR CONDITIONER TUBE AND ACCESSORY ASSEMBLY
x 2
9.0 (92, 80 in.*lbf)
COOLER CONDENSER ASSEMBLY
● COOLER DRYER
● O-RING
2.9 (30, 26 in.*lbf)
N*m (kgf*cm, ft.*lbf) : Specified torque
● Non-reusable part
Compressor oil ND-OIL 11 or equivalent
P

Fig. 177: Identifying Condenser Replacement Components With Torque Specifications (3 Of 3)
Courtesy of TOYOTA MOTOR SALES, U.S.A., INC.

ON-VEHICLE INSPECTION

ON-VEHICLE INSPECTION

1. **INSPECT COOLER CONDENSER ASSEMBLY**
    1. If the cooler condenser assembly fins are dirty, clean them with water and dry with compressed air.

       NOTE: Do not damage the cooler condenser assembly fins.

    2. If any cooler condenser assembly fins are bent, straighten them using a screwdriver or pliers.
2. **INSPECT FOR REFRIGERANT LEAK**
    1. Using a halogen leak detector, check pipe joints for refrigerant leaks.
    2. If a refrigerant leak is detected in a joint, check the torque of the joint.

REMOVAL

REMOVAL

1. **PRECAUTION**

   NOTE: After turning the power switch off, waiting time may be required before disconnecting the cable from the negative (-) auxiliary battery terminal. Therefore, make sure to read the disconnecting the cable from the negative (-) auxiliary battery terminal notices before proceeding with work. Refer to PRECAUTION .

2. **RECOVER REFRIGERANT FROM AIR CONDITIONING SYSTEM** See step 1
3. **REMOVE LUGGAGE TRIM SERVICE HOLE COVER** . Refer to **REMOVAL - Step 2**
4. **DISCONNECT CABLE FROM AUXILIARY BATTERY NEGATIVE TERMINAL**

   NOTE: When disconnecting the cable, some systems need to be initialized after the cable is reconnected. Refer to INITIALIZATION .

5. **REMOVE FRONT BUMPER ASSEMBLY**

   Refer to **REMOVAL**

6. **REMOVE INLET AIR CLEANER ASSEMBLY** . Refer to **REMOVAL - Step 30**
7. **REMOVE HOOD LOCK ASSEMBLY** . Refer to **REMOVAL - Step 9**
8. **REMOVE NO. 5 INVERTER BRACKET** . Refer to **REMOVAL - Step 12**
9. **REMOVE UPPER RADIATOR SUPPORT** . Refer to **REMOVAL - Step 18**
10. **REMOVE RADIATOR SIDE DEFLECTOR RH** . Refer to **REMOVAL - Step 10**
11. **REMOVE RADIATOR SIDE DEFLECTOR LH**
    1. Disengage the 3 claws and guide, and remove the radiator side deflector LH as shown in the illustration.

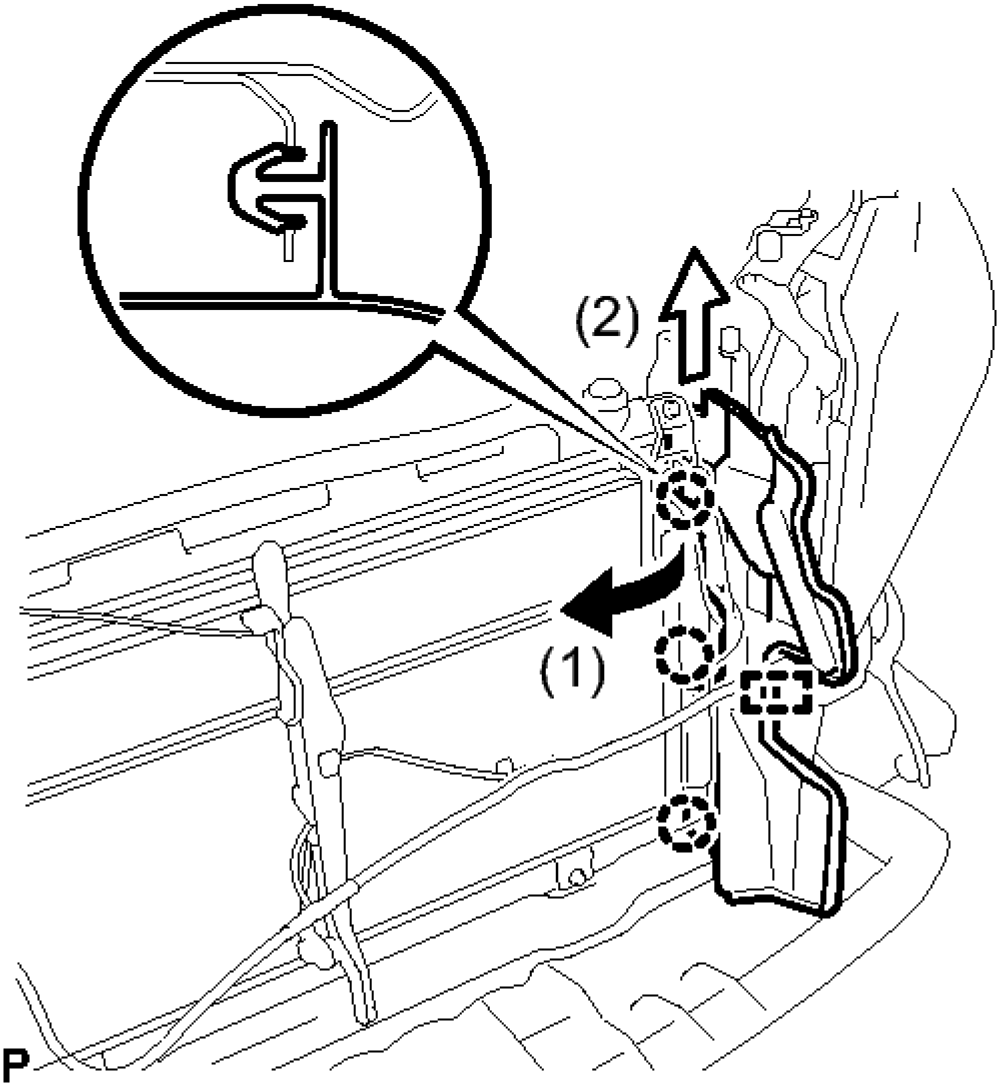

Fig. 178: Identifying Radiator Side Deflector LH Claws And Guide
Courtesy of TOYOTA MOTOR SALES, U.S.A., INC.

12. **DISCONNECT NO. 1 COOLER REFRIGERANT DISCHARGE HOSE**
    a. Remove the bolt and disconnect the No. 1 cooler refrigerant discharge hose from the cooler condenser assembly.

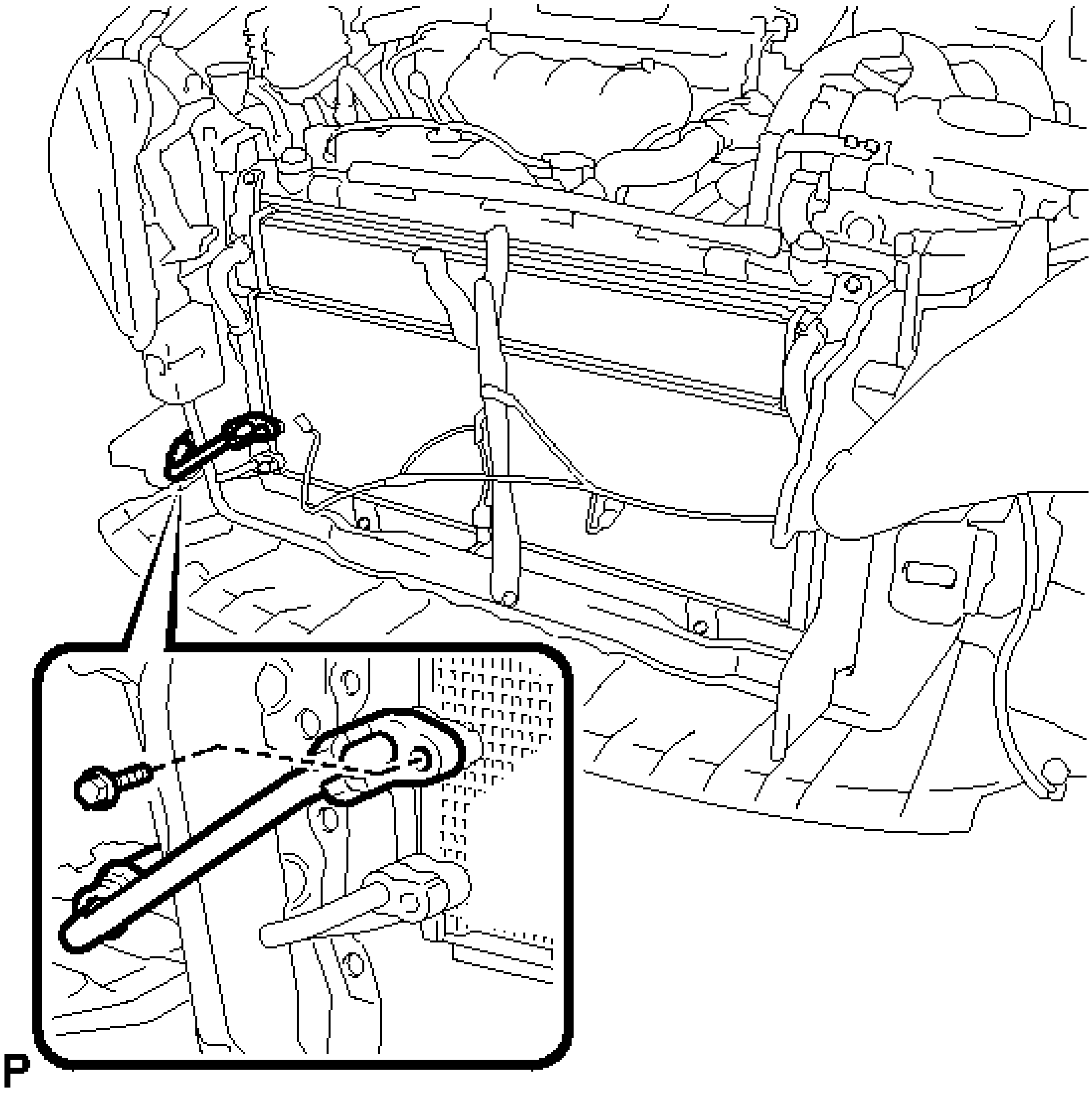

Fig. 179: Identifying No. 1 Cooler Refrigerant Discharge Hose Bolt At Condenser
Courtesy of TOYOTA MOTOR SALES, U.S.A., INC.

b. Remove the O-ring from the No. 1 cooler refrigerant discharge hose.

NOTE: **Seal the openings of the disconnected parts using vinyl tape to prevent entry of moisture and foreign matter.**

13. **DISCONNECT AIR CONDITIONER TUBE AND ACCESSORY ASSEMBLY**

a. Remove the bolt and disconnect the air conditioner tube and accessory assembly from the cooler condenser assembly.

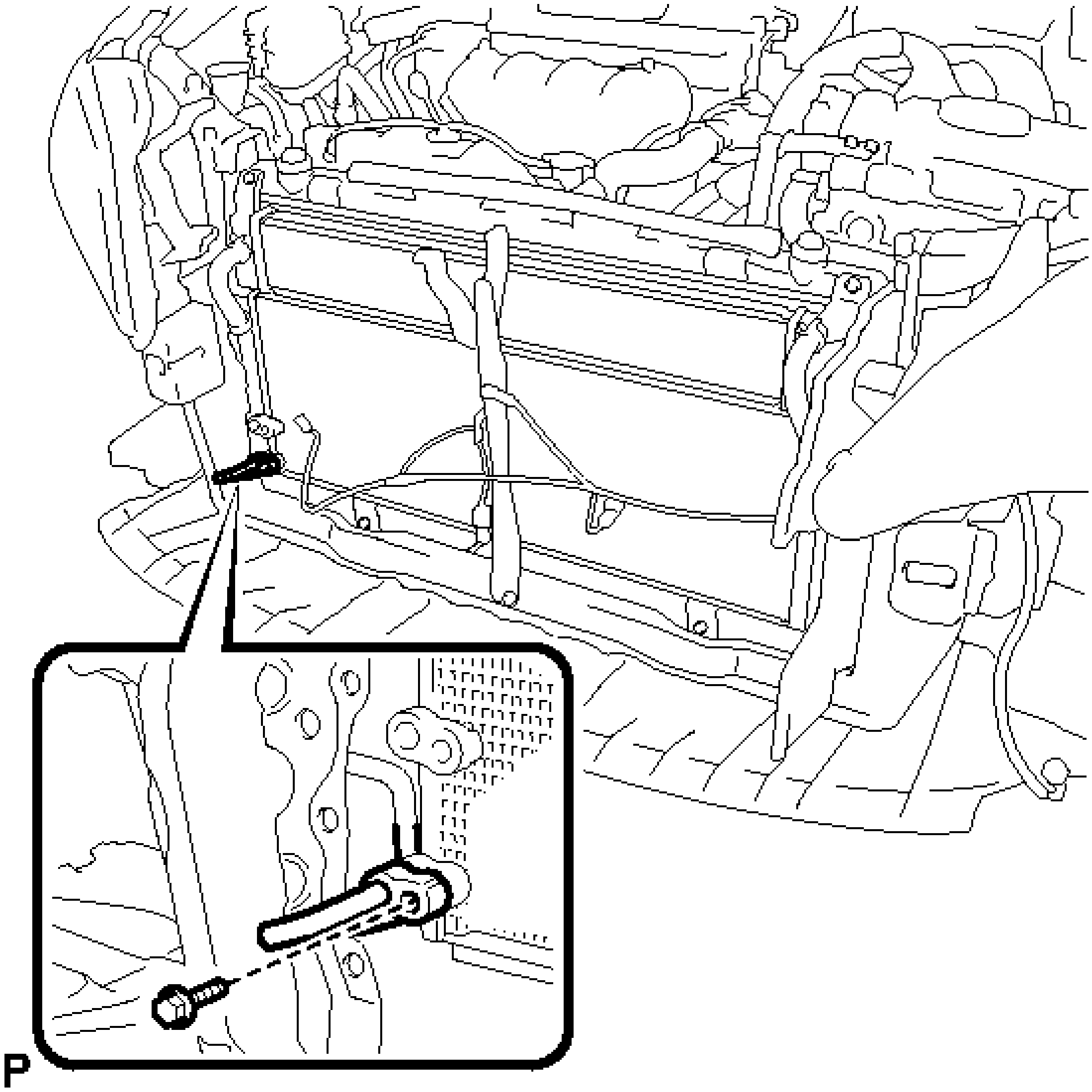

Fig. 180: Identifying Air Conditioner Tube Bolt At Condenser
Courtesy of TOYOTA MOTOR SALES, U.S.A., INC.

b. Remove the O-ring from the air conditioner tube and accessory assembly.

NOTE: **Seal the openings of the disconnected parts using vinyl tape to prevent entry of moisture and foreign matter.**

14. **REMOVE COOLER CONDENSER ASSEMBLY**

a. Remove the 4 bolts.

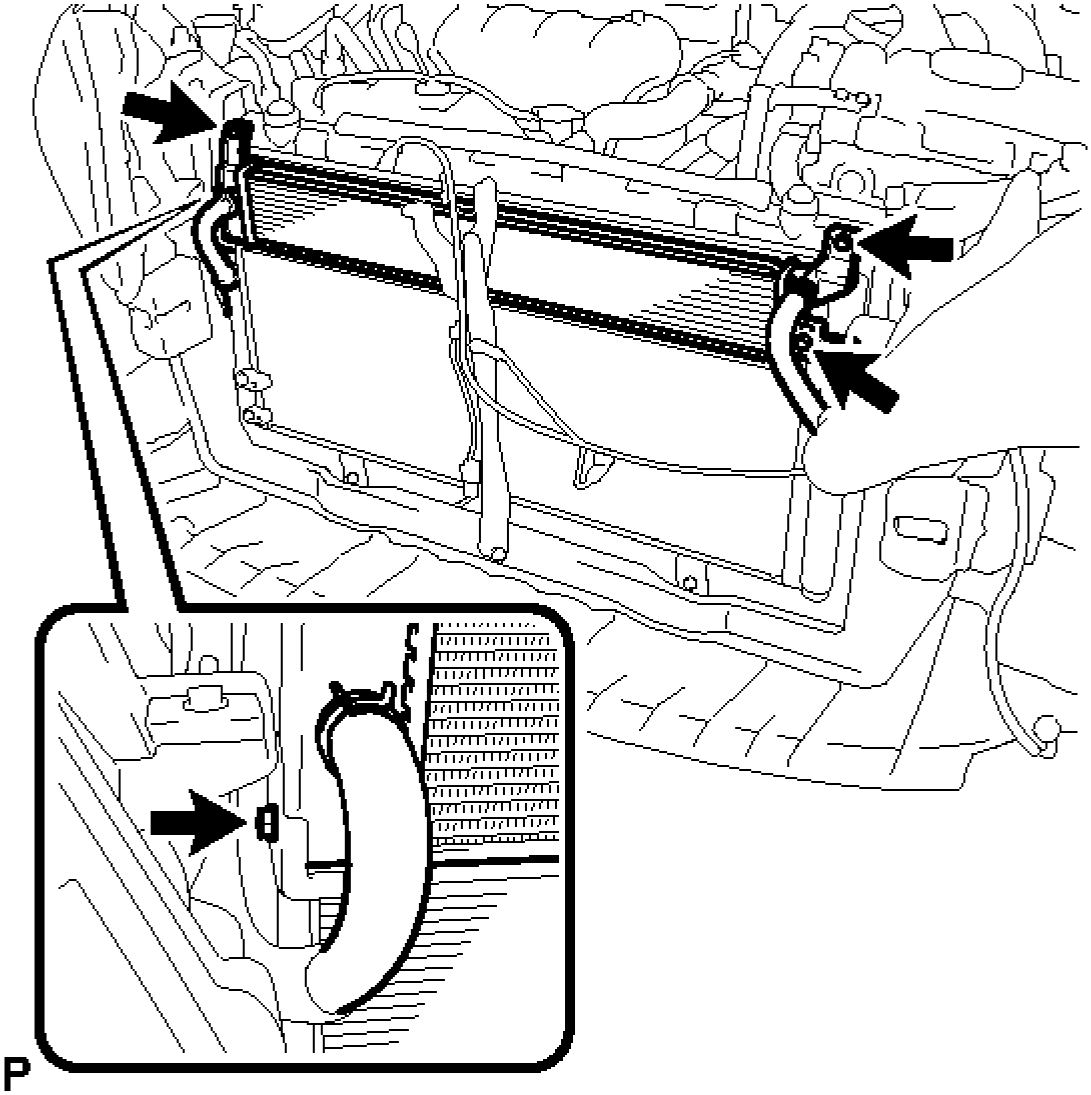

Fig. 181: Identifying Cooler Condenser Bolts
Courtesy of TOYOTA MOTOR SALES, U.S.A., INC.

b. Pull the radiator assembly in the direction indicated by the arrow.

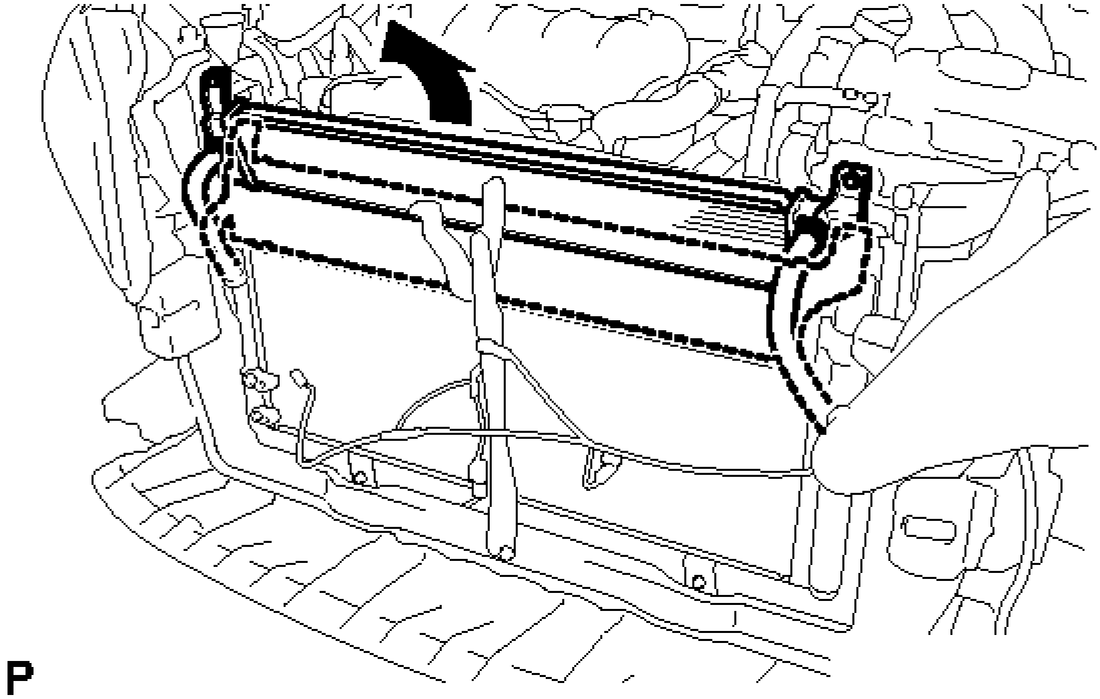

Fig. 182: Pulling The Radiator Assembly
Courtesy of TOYOTA MOTOR SALES, U.S.A., INC.

c. Remove the 2 bolts.

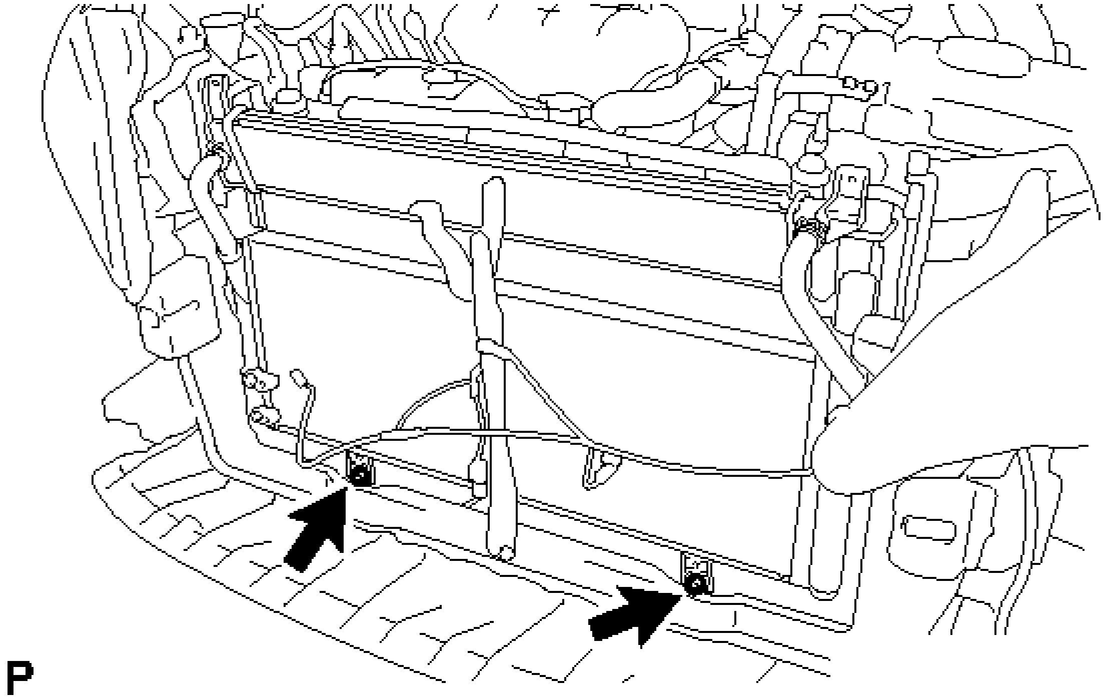

Fig. 183: Identifying Radiator Assembly Bolts
Courtesy of TOYOTA MOTOR SALES, U.S.A., INC.

d. Remove the cooler condenser assembly as shown in the illustration.

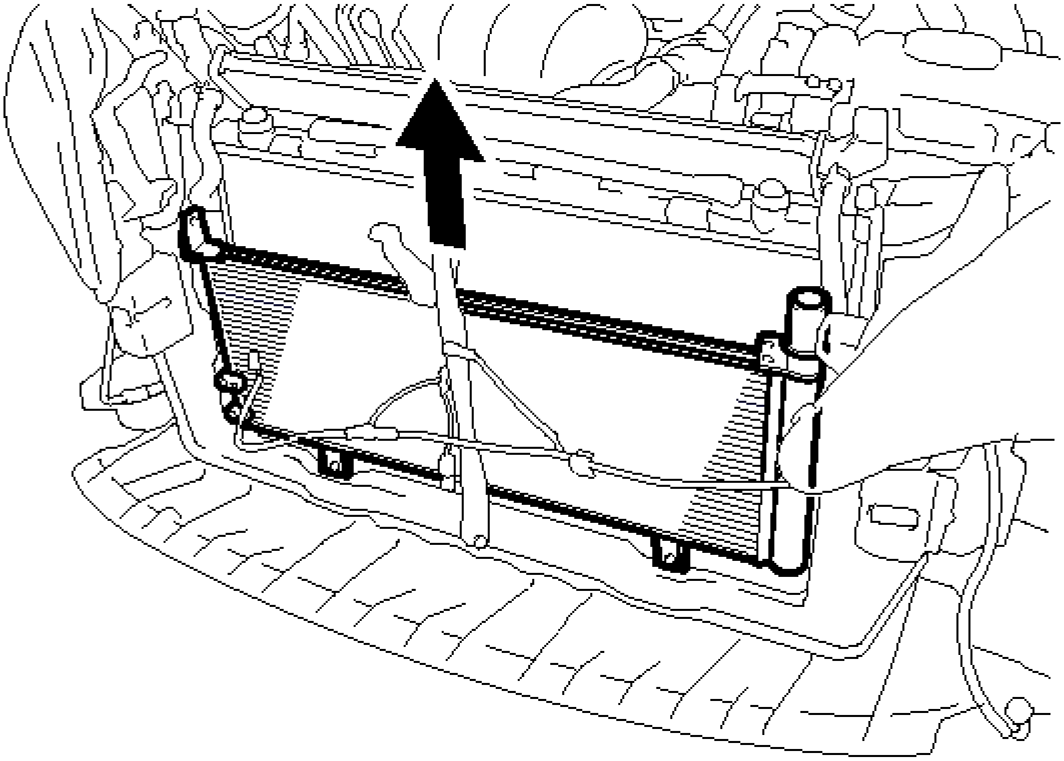

P

Fig. 184: Removing Cooler Condenser Assembly
Courtesy of TOYOTA MOTOR SALES, U.S.A., INC.

DISASSEMBLY

DISASSEMBLY

1. **REMOVE COOLER DRYER**
    a. Using a 14 mm straight hexagon wrench, remove the cap from the modulator.

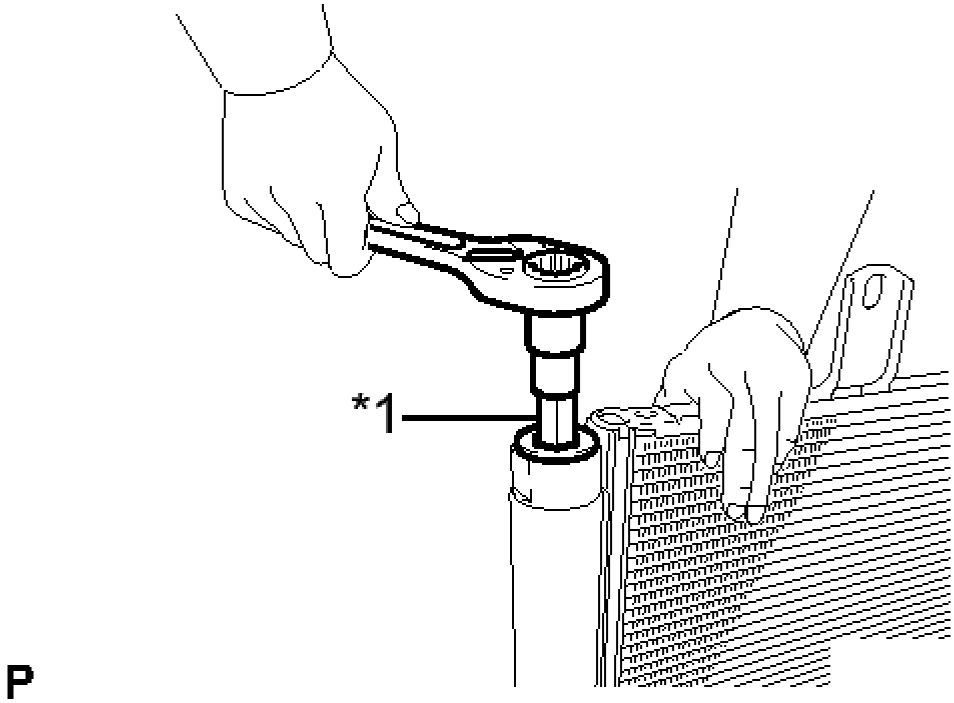

Fig. 185: Identifying Modulator Cap
Courtesy of TOYOTA MOTOR SALES, U.S.A., INC.

TEXT IN ILLUSTRATION

*1	14 mm Straight Hexagon Wrench

b. Using pliers, remove the cooler dryer from the modulator.

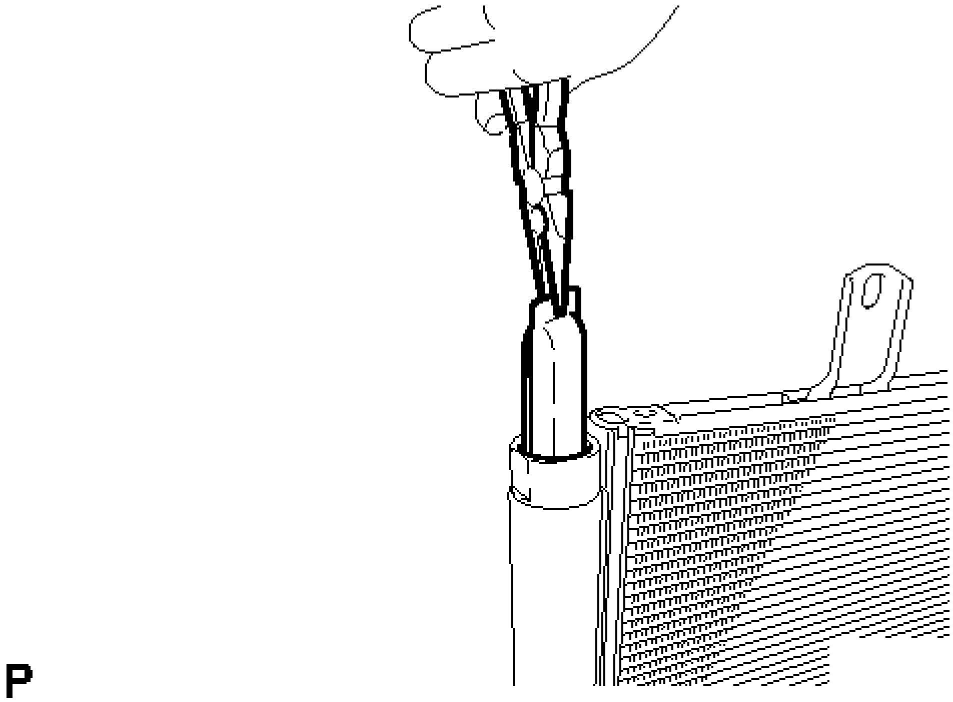

Fig. 186: Identifying Cooler Dryer
Courtesy of TOYOTA MOTOR SALES, U.S.A., INC.

REASSEMBLY

REASSEMBLY

1. **INSTALL COOLER DRYER**
    a. Using pliers, install a new cooler dryer to the modulator.

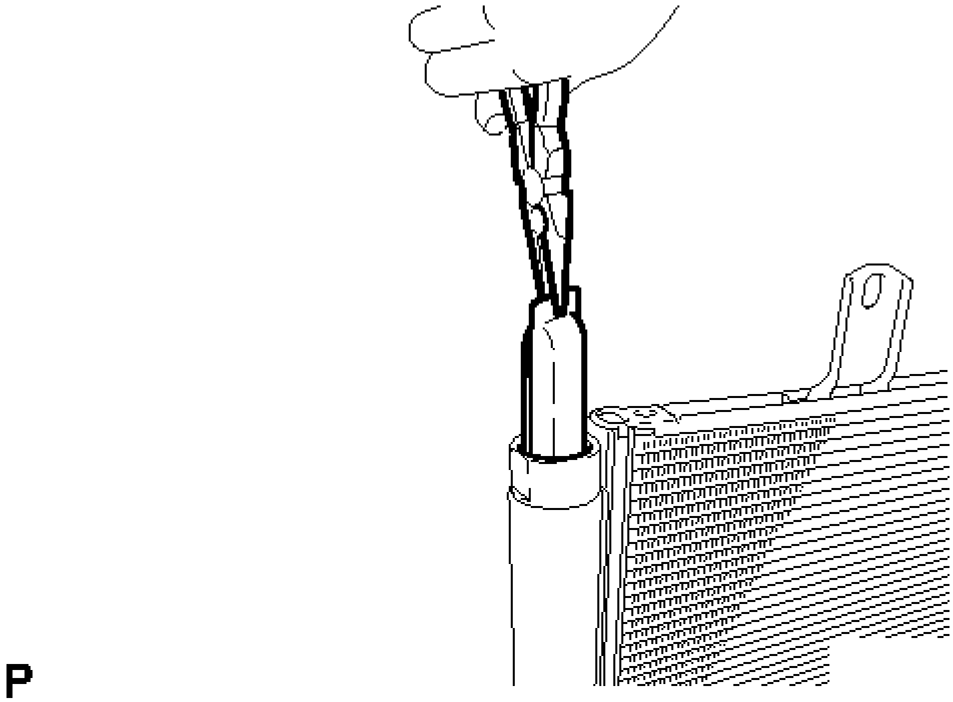

Fig. 187: Identifying Cooler Dryer
Courtesy of TOYOTA MOTOR SALES, U.S.A., INC.

b. Apply a sufficient amount of compressor oil to a new O-ring and the fitting surfaces of the cap.

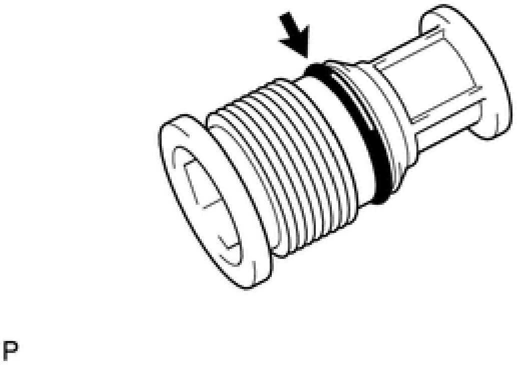

Fig. 188: Compressor Oil Specifications
Courtesy of TOYOTA MOTOR SALES, U.S.A., INC.

Compressor oil

ND-OIL 11 or equivalent

c. Using a 14 mm straight hexagon wrench, install the cap to the modulator.

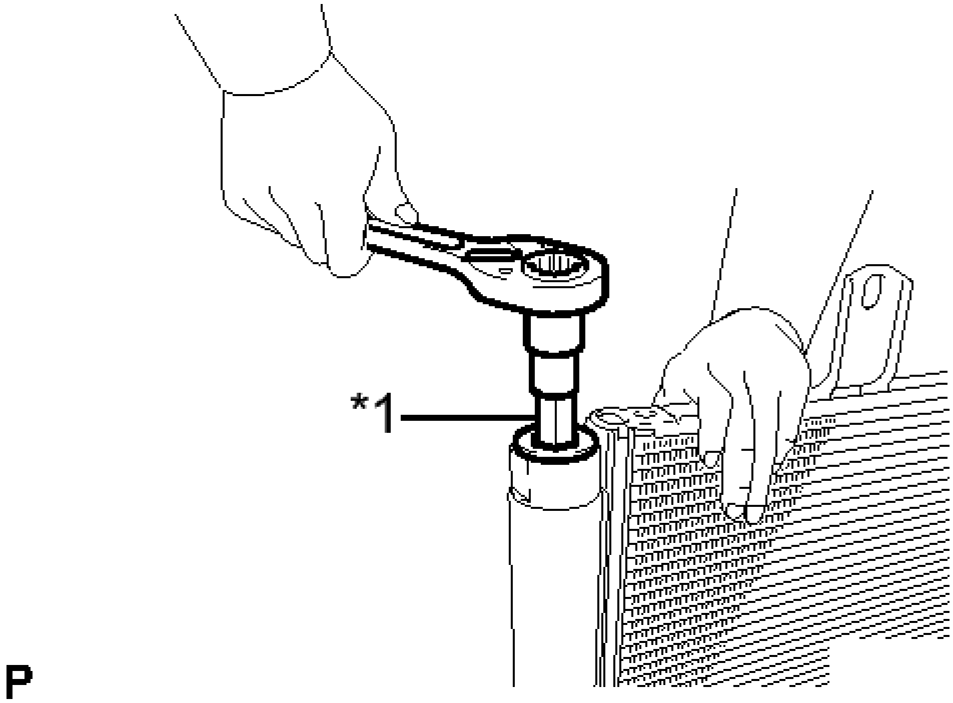

Fig. 189: Identifying Modulator Cap
Courtesy of TOYOTA MOTOR SALES, U.S.A., INC.

TEXT IN ILLUSTRATION

*1	14 mm Straight Hexagon Wrench

Torque: 2.9 N*m (30 kgf*cm, 26 in.*lbf)

NOTE:

- **Keep the O-ring and O-ring fitting surfaces free from dirt or foreign matter.**
- **Do not use any compressor oil other than ND-OIL 11 or equivalent.**

INSTALLATION

INSTALLATION

1. **INSTALL COOLER CONDENSER ASSEMBLY**
    a. Insert the cooler condenser as shown in the illustration.

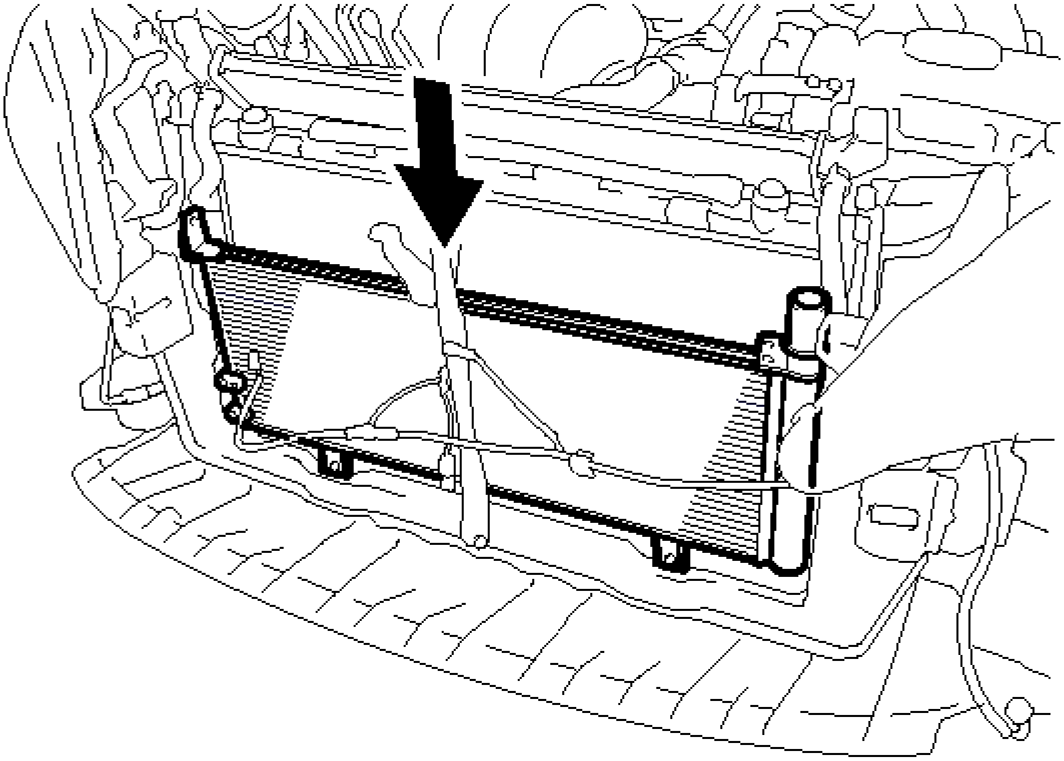

P

<u>Fig. 190: Installing Cooler Condenser Assembly</u>
Courtesy of TOYOTA MOTOR SALES, U.S.A., INC.

b. Temporarily install the 2 bolts <A>.

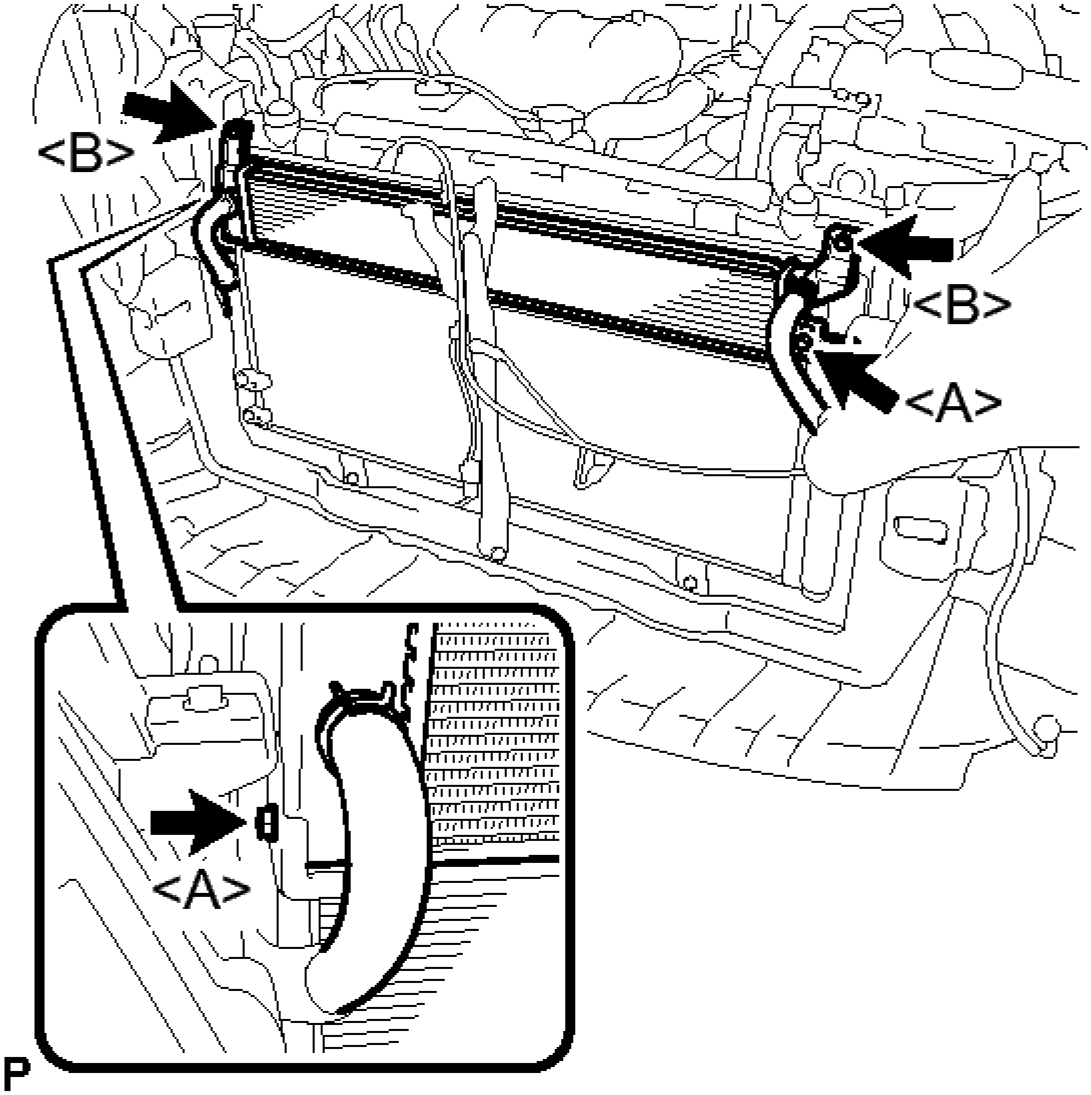

Fig. 191: Identifying Cooler Condenser Bolts
Courtesy of TOYOTA MOTOR SALES, U.S.A., INC.

c. Install the cooler condenser assembly with the 2 bolts <A> and 2 bolts<B>.

Bolt<A>

Torque: 9.0 N*m (92 kgf*cm, 80 in.*lbf)

Bolt<B>

Torque: 5.0 N*m (51 kgf*cm, 44 in.*lbf)

HINT:

If the cooler condenser assembly is replaced with a new one, add compressor oil to the new cooler condenser assembly.

Capacity

40 cc (1.4 fl. oz.)

Compressor oil

ND-OIL 11 or equivalent

2. **CONNECT AIR CONDITIONER TUBE AND ACCESSORY ASSEMBLY**
    1. Remove the vinyl tape from the tube and the connector part of the cooler condenser assembly.
    2. Sufficiently apply compressor oil to a new O-ring and the fitting surface of the tube joint.

       Compressor oil

       ND-OIL 11 or equivalent

    3. Install the O-ring to the air conditioner tube and accessory assembly.
    4. Install the air conditioner tube and accessory assembly to the cooler condenser assembly with the bolt.

       Torque: 9.8 N*m (100 kgf*cm, 87 in.*lbf)

3. **CONNECT NO. 1 COOLER REFRIGERANT DISCHARGE HOSE**
    1. Remove the attached vinyl tape from the pipe and the connecting part of the cooler condenser assembly.
    2. Sufficiently apply compressor oil to a new O-ring and the fitting surface of the pipe joint.

       Compressor oil

       ND-OIL 11 or equivalent

    3. Install the O-ring to the No. 1 cooler refrigerant discharge hose.
    4. Install the No. 1 cooler refrigerant discharge hose to the cooler condenser assembly with the bolt.

       Torque: 9.8 N*m (100 kgf*cm, 87 in.*lbf)

4. **INSTALL RADIATOR SIDE DEFLECTOR LH**
    1. Engage the guide and 3 claws to install the radiator side deflector LH as shown in the illustration.

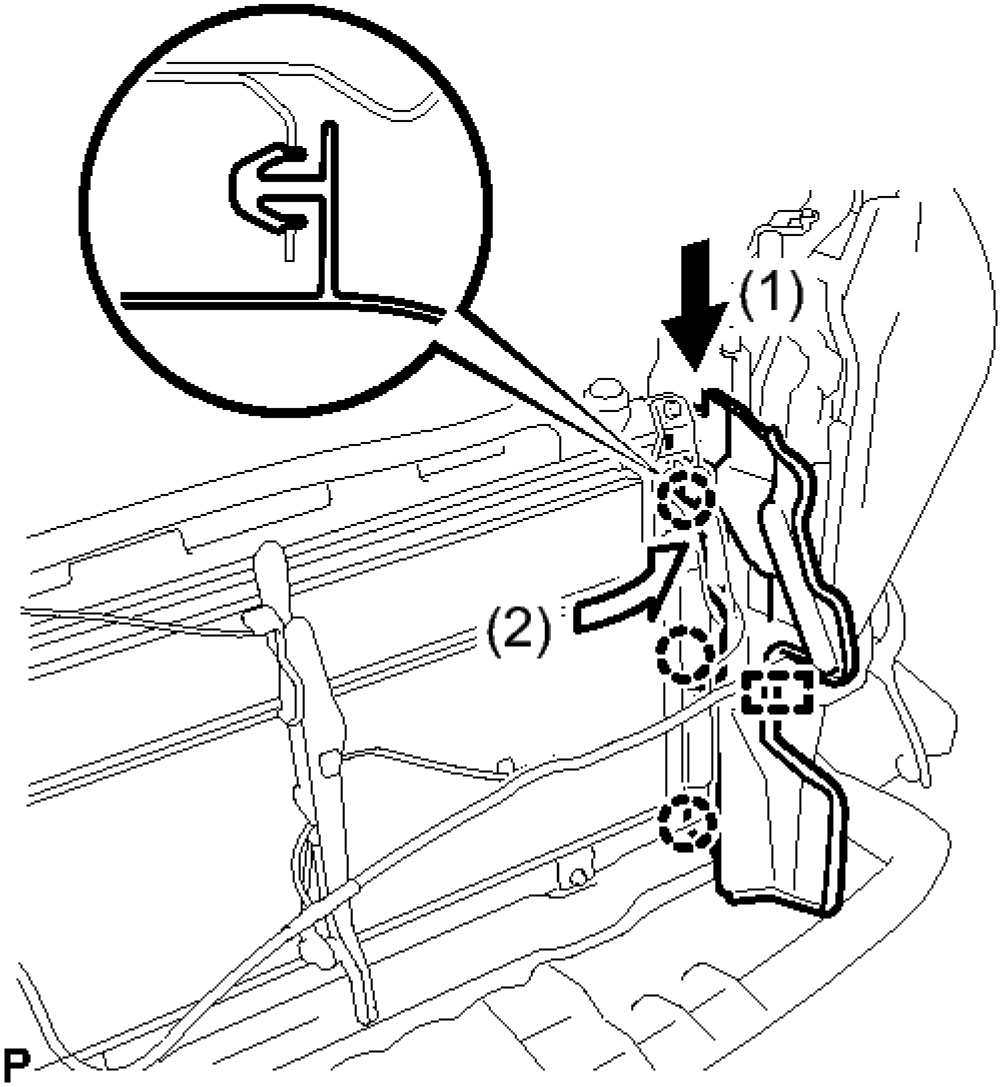

Fig. 192: Identifying Radiator Side Deflector LH Claws And Guide
Courtesy of TOYOTA MOTOR SALES, U.S.A., INC.

5. **INSTALL RADIATOR SIDE DEFLECTOR RH** . Refer to **INSTALLATION - Step 2**
6. **INSTALL UPPER RADIATOR SUPPORT** . Refer to **INSTALLATION - Step 2**
7. **INSTALL HOOD LOCK ASSEMBLY** . Refer to **INSTALLATION - Step 2**
8. **INSTALL NO. 5 INVERTER BRACKET** . Refer to **INSTALLATION - Step 26**
9. **INSTALL INLET AIR CLEANER ASSEMBLY** . Refer to **INSTALLATION - Step 63**
10. **INSTALL FRONT BUMPER ASSEMBLY**

    Refer to **INSTALLATION**

11. **CONNECT CABLE TO AUXILIARY BATTERY NEGATIVE TERMINAL**

    NOTE: **When disconnecting the cable, some systems need to be initialized after**

the cable is reconnected. Refer to INITIALIZATION .

12. **INSTALL LUGGAGE TRIM SERVICE HOLE COVER** . Refer to **INSTALLATION - Step 3**
13. **CHARGE AIR CONDITIONING SYSTEM WITH REFRIGERANT** See step 2
14. **WARM UP COMPRESSOR** See step 3
15. **INSPECT FOR REFRIGERANT LEAK** See step 4
16. **ADJUST HOOD SUB-ASSEMBLY**

    Refer to **ADJUSTMENT - Step 2**

ROOM TEMPERATURE SENSOR

COMPONENTS

ILLUSTRATION

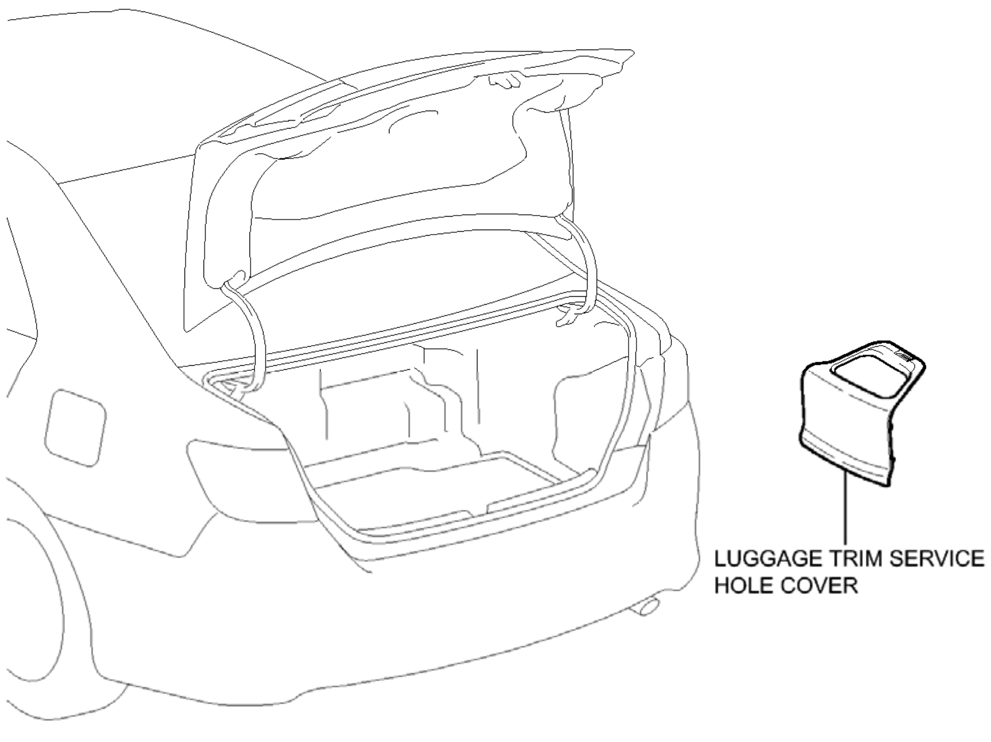

Fig. 193: Identifying Room Temperature Sensor Replacement Components (1 Of 2)
Courtesy of TOYOTA MOTOR SALES, U.S.A., INC.

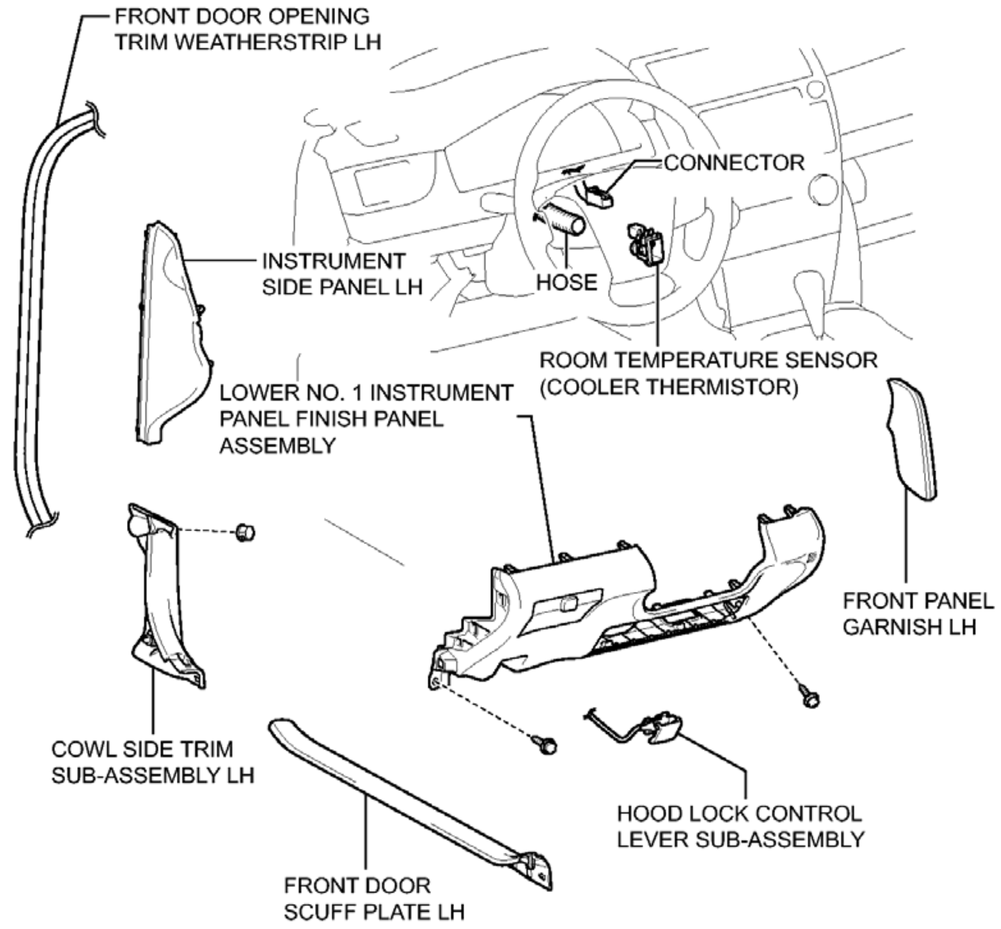
FRONT DOOR OPENING TRIM WEATHERSTRIP LH
CONNECTOR
INSTRUMENT SIDE PANEL LH
HOSE
ROOM TEMPERATURE SENSOR (COOLER THERMISTOR)
LOWER NO. 1 INSTRUMENT PANEL FINISH PANEL ASSEMBLY
FRONT PANEL GARNISH LH
COWL SIDE TRIM SUB-ASSEMBLY LH
HOOD LOCK CONTROL LEVER SUB-ASSEMBLY
FRONT DOOR SCUFF PLATE LH
P

Fig. 194: Identifying Room Temperature Sensor Replacement Components (2 Of 2)
Courtesy of TOYOTA MOTOR SALES, U.S.A., INC.

REMOVAL

REMOVAL

1. **PRECAUTION**

   NOTE: **After turning the power switch off, waiting time may be required before disconnecting the cable from the negative (-) auxiliary battery terminal. Therefore, make sure to read the disconnecting the cable from the negative (-) auxiliary battery terminal notices before proceeding with work. Refer to PRECAUTION .**

2. **REMOVE LUGGAGE TRIM SERVICE HOLE COVER** . Refer to **REMOVAL - Step 2**
3. **DISCONNECT CABLE FROM AUXILIARY BATTERY NEGATIVE TERMINAL**

WARNING: **Wait at least 90 seconds after disconnecting the cable from the negative (-) auxiliary battery terminal to disable the SRS system.**

NOTE: **When disconnecting the cable, some systems need to be initialized after the cable is reconnected. Refer to INITIALIZATION .**

4. **REMOVE FRONT DOOR SCUFF PLATE LH** . Refer to **REMOVAL - Step 4**
5. **REMOVE COWL SIDE TRIM SUB-ASSEMBLY LH** . Refer to **REMOVAL - Step 5**
6. **DISCONNECT FRONT DOOR OPENING TRIM WEATHERSTRIP LH** . Refer to **REMOVAL - Step 6**
7. **REMOVE INSTRUMENT SIDE PANEL LH** . Refer to **REMOVAL - Step 7**
8. **REMOVE FRONT PANEL GARNISH LH** . Refer to **REMOVAL - Step 12**
9. **DISCONNECT HOOD LOCK CONTROL LEVER SUB-ASSEMBLY** . Refer to **REMOVAL - Step 13**
10. **REMOVE LOWER NO. 1 INSTRUMENT PANEL FINISH PANEL ASSEMBLY** . Refer to **REMOVAL - Step 14**
11. **REMOVE ROOM TEMPERATURE SENSOR (COOLER THERMISTOR)**
    a. Disengage the 2 claws as shown in the illustration.

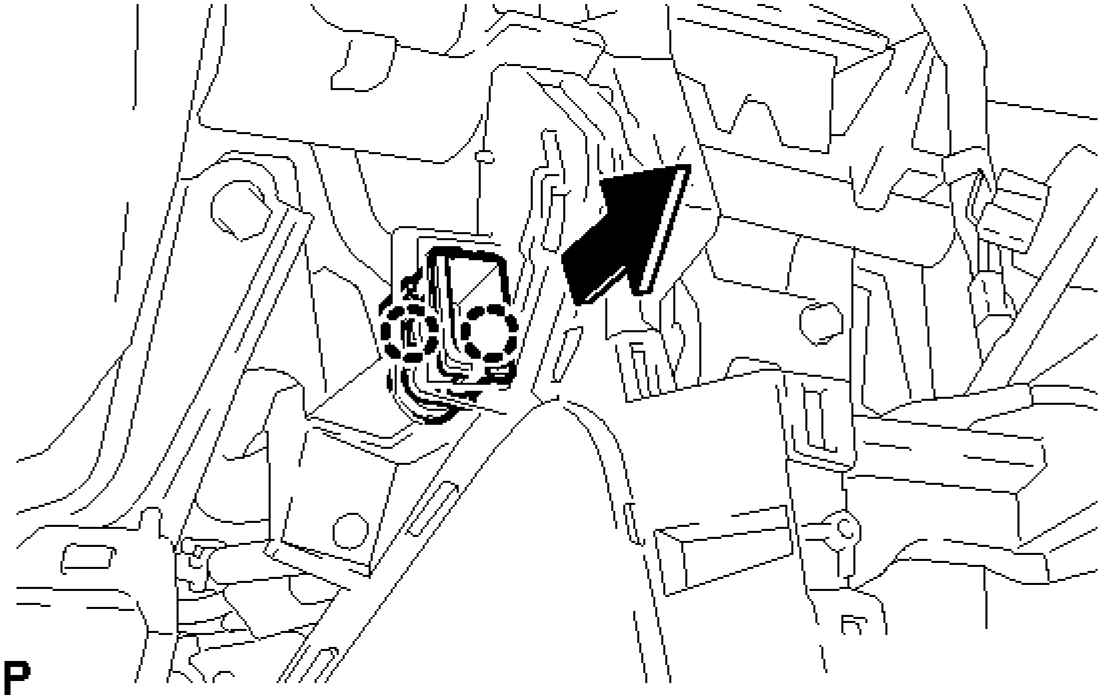

Fig. 195: Removing Room Temperature Sensor Claws
Courtesy of TOYOTA MOTOR SALES, U.S.A., INC.

    b. Disconnect the hose and connector and remove the room temperature sensor (cooler thermistor).

INSPECTION

INSPECTION

1. **INSPECT ROOM TEMPERATURE SENSOR (COOLER THERMISTOR)**
    a. Measure the resistance according to the value(s) in the table below.

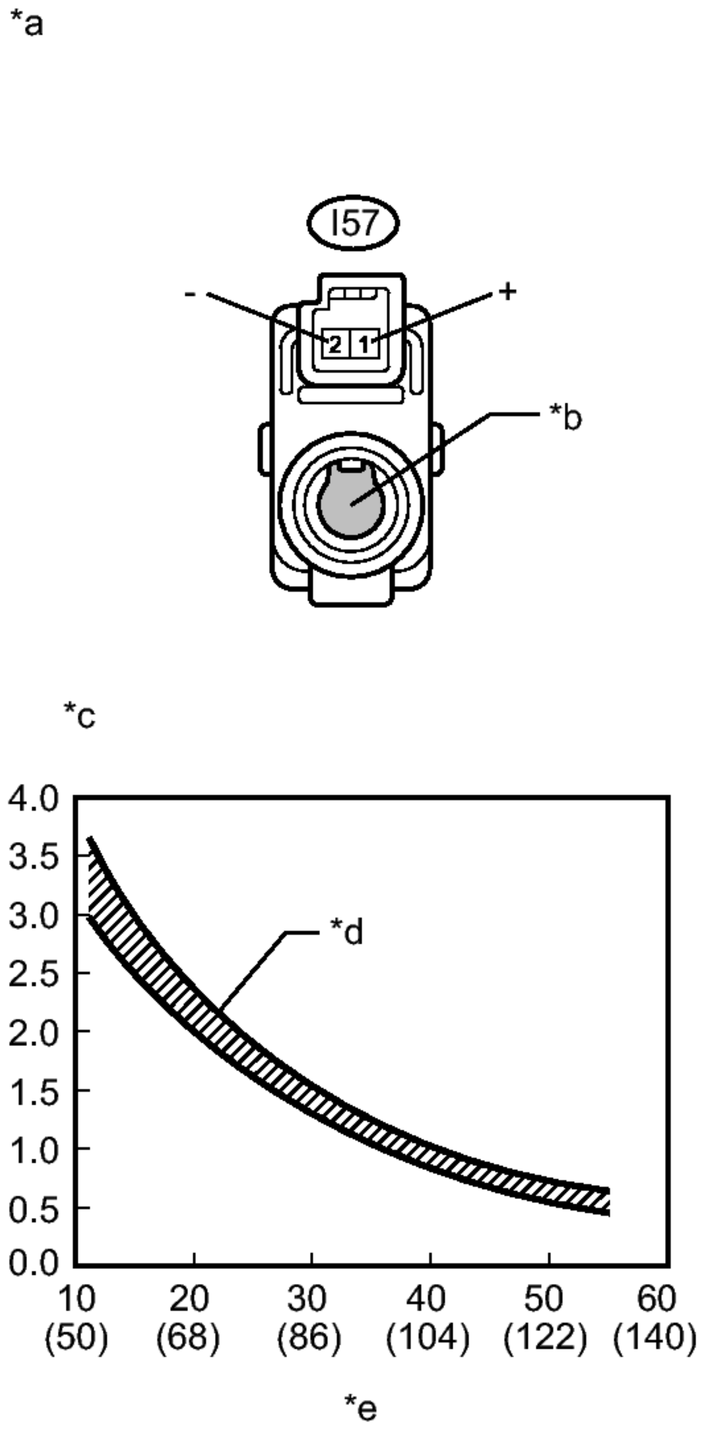
*a
I57
-
+
2
1
*b
*c
4.0
3.5
3.0
2.5
2.0
1.5
1.0
0.5
0.0
*d
10
(50)
20
(68)
30
(86)
40
(104)
50
(122)
60
(140)
*e

Fig. 196: Identifying Room Temperature Sensor Connector Terminal Identification And Resistance Graph
Courtesy of TOYOTA MOTOR SALES, U.S.A., INC.

Standard Resistance

Tester Connection	Condition	Specified Condition
I57-1 (+) - I57-2 (-)	10°C (50°F)	3.00 to 3.73 kohms
I57-1 (+) - I57-2 (-)	15°C (59°F)	2.45 to 2.88 kohms
I57-1 (+) - I57-2 (-)	20°C (68°F)	1.95 to 2.30 kohms
I57-1 (+) - I57-2 (-)	25°C (77°F)	1.60 to 1.80 kohms
I57-1 (+) - I57-2 (-)	30°C (86°F)	1.28 to 1.47 kohms
I57-1 (+) - I57-2 (-)	35°C (95°F)	1.00 to 1.22 kohms
I57-1 (+) - I57-2 (-)	40°C (104°F)	0.80 to 1.00 kohms
I57-1 (+) - I57-2 (-)	45°C (113°F)	0.65 to 0.85 kohms
I57-1 (+) - I57-2 (-)	50°C (122°F)	0.50 to 0.70 kohms
I57-1 (+) - I57-2 (-)	55°C (131°F)	0.44 to 0.60 kohms
I57-1 (+) - I57-2 (-)	60°C (140°F)	0.36 to 0.50 kohms

If the resistance is not as specified, replace the room temperature sensor (cooler thermistor).

TEXT IN ILLUSTRATION

*a	Component without harness connected (Room Temperature Sensor

	(Cooler Thermistor))
*b	Sensing Portion
*c	Resistance (kohms)
*d	Allowable Range
*e	Temperature (°C (°F))

NOTE:

- **Hold the sensor only by its connector. Touching the sensor may change the resistance value.**
- **When measuring, the sensor temperature must be the same as the ambient temperature.**

HINT:

As the temperature increases, the resistance decreases (see the graph).

INSTALLATION

INSTALLATION

1. **INSTALL ROOM TEMPERATURE SENSOR (COOLER THERMISTOR)**
    a. Connect the connector and hose.
    b. Engage the 2 claws to install the room temperature sensor (cooler thermistor) as shown in the illustration.

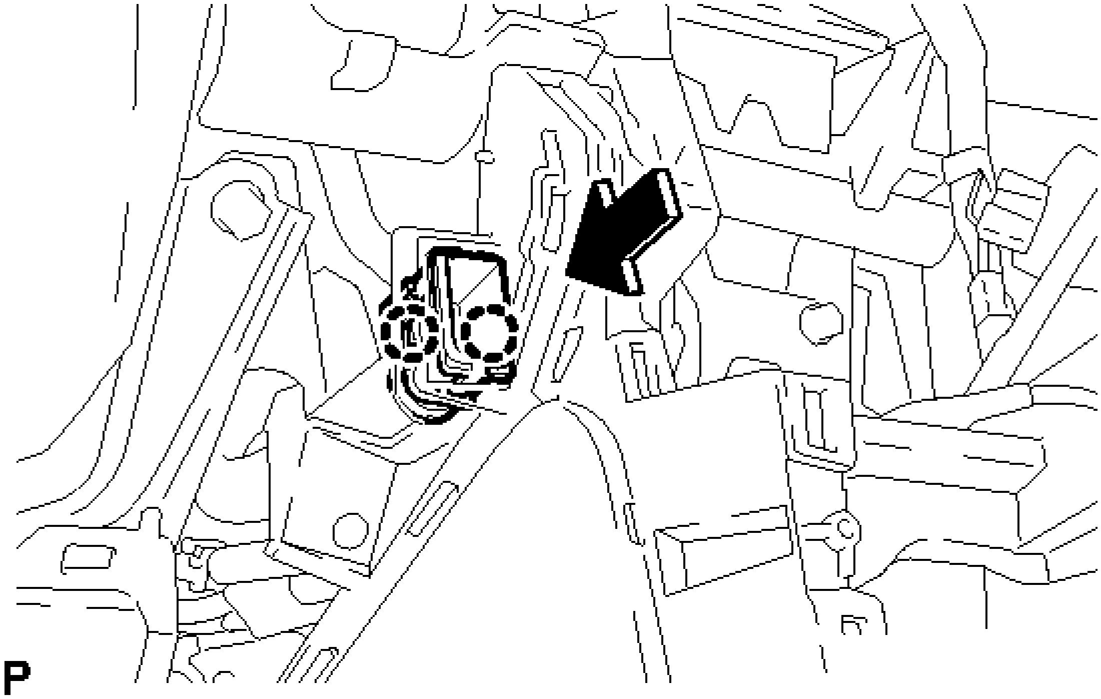

Fig. 197: Installing Room Temperature Sensor
Courtesy of TOYOTA MOTOR SALES, U.S.A., INC.

2. **INSTALL LOWER NO. 1 INSTRUMENT PANEL FINISH PANEL ASSEMBLY** . Refer to **INSTALLATION - Step 38**
3. **CONNECT HOOD LOCK CONTROL LEVER SUB-ASSEMBLY** . Refer to **INSTALLATION - Step 39**
4. **INSTALL FRONT PANEL GARNISH LH** . Refer to **INSTALLATION - Step 40**
5. **INSTALL INSTRUMENT SIDE PANEL LH** . Refer to **INSTALLATION - Step 45**
6. **INSTALL FRONT DOOR OPENING TRIM WEATHERSTRIP LH** . Refer to **INSTALLATION - Step 43**
7. **INSTALL COWL SIDE TRIM SUB-ASSEMBLY LH** . Refer to **INSTALLATION - Step 44**
8. **INSTALL FRONT DOOR SCUFF PLATE LH** . Refer to **INSTALLATION - Step 45**
9. **CONNECT CABLE TO AUXILIARY BATTERY NEGATIVE TERMINAL**

NOTE: **When disconnecting the cable, some systems need to be initialized after the cable is reconnected. Refer to INITIALIZATION .**

10. **INSTALL LUGGAGE TRIM SERVICE HOLE COVER** . Refer to **INSTALLATION - Step 3**

HUMIDITY SENSOR

COMPONENTS

ILLUSTRATION

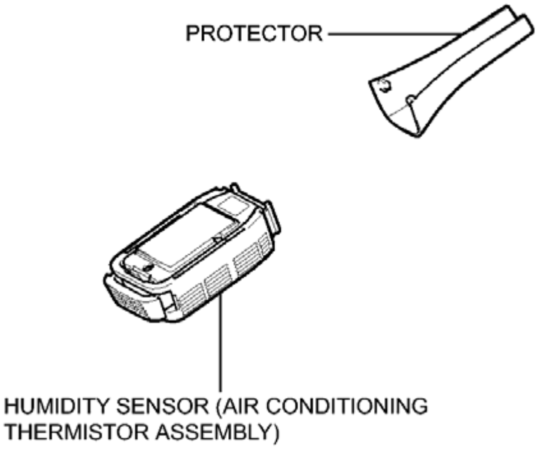
PROTECTOR
HUMIDITY SENSOR (AIR CONDITIONING THERMISTOR ASSEMBLY)
P

Fig. 198: Identifying Humidity Sensor Replacement Components
Courtesy of TOYOTA MOTOR SALES, U.S.A., INC.

REMOVAL

REMOVAL

1. **REMOVE PROTECTOR**
    a. Disengage the 2 claws and remove the protector.

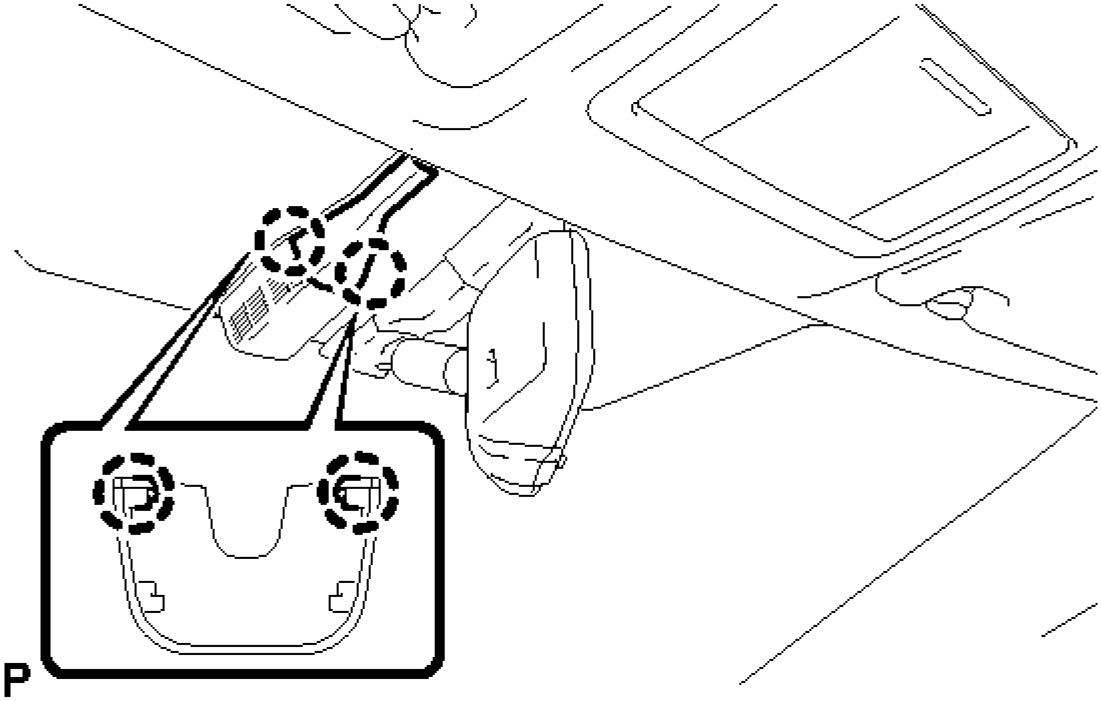

Fig. 199: Identifying Protector Claws
Courtesy of TOYOTA MOTOR SALES, U.S.A., INC.

2. **REMOVE HUMIDITY SENSOR (AIR CONDITIONING THERMISTOR ASSEMBLY)**
   a. Disconnect the connector.

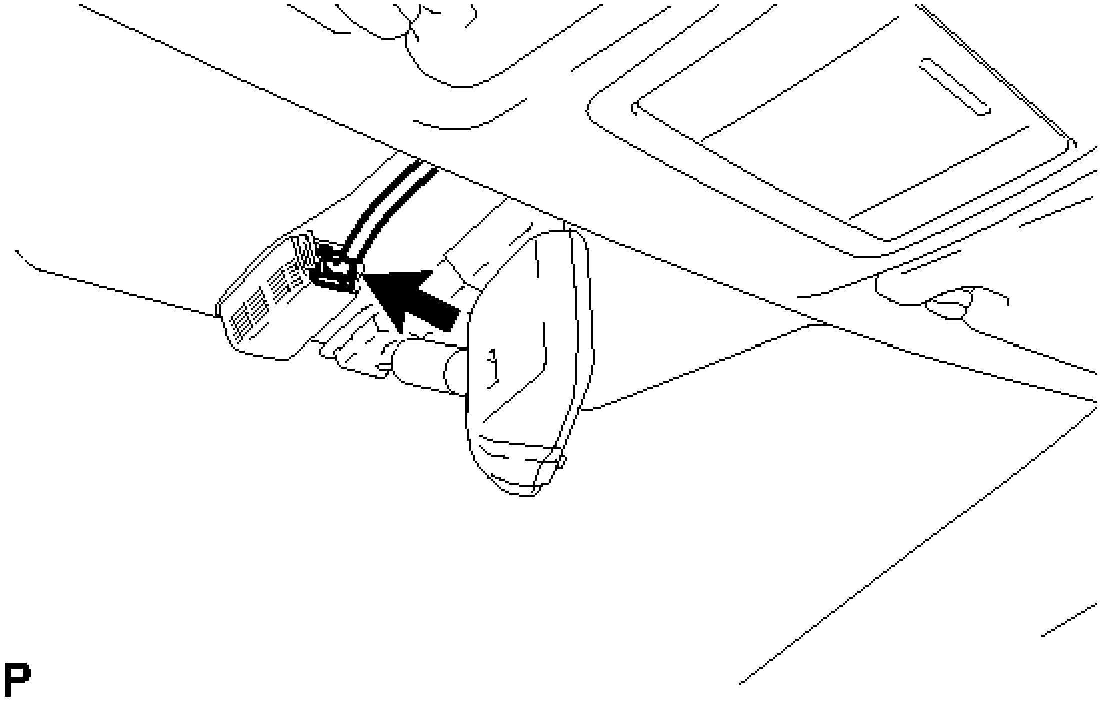

Fig. 200: Identifying Humidity Sensor Connector

Courtesy of TOYOTA MOTOR SALES, U.S.A., INC.

b. Release the stopper by pulling it down.

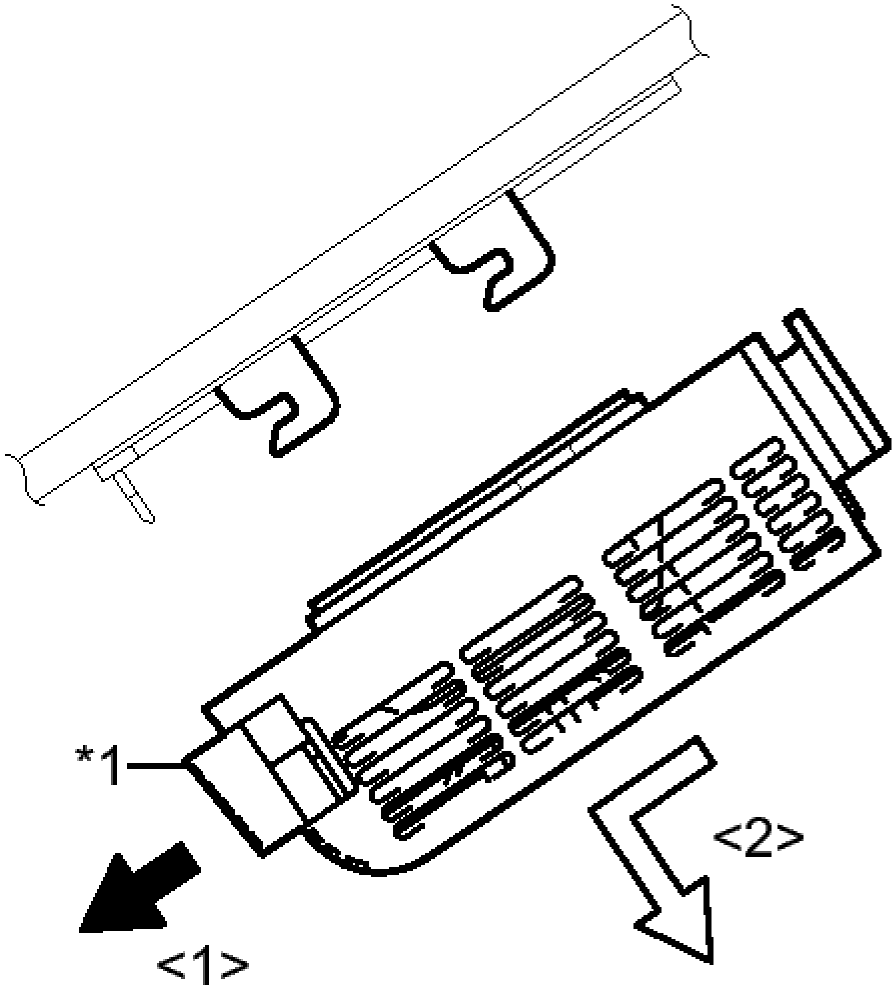

P

Fig. 201: Removing Humidity Sensor & Stopper
Courtesy of TOYOTA MOTOR SALES, U.S.A., INC.

TEXT IN ILLUSTRATION

*1	Stopper

c. Remove the humidity sensor (air conditioning thermistor assembly) as shown in the illustration.

INSPECTION

INSPECTION

1. **INSPECT AIR CONDITIONING THERMISTOR ASSEMBLY**
    a. for Glass temperature sensor
        1. Remove the air conditioning thermistor assembly (glass temperature sensor).

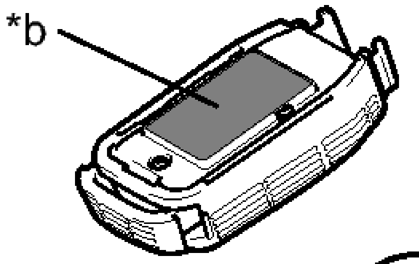

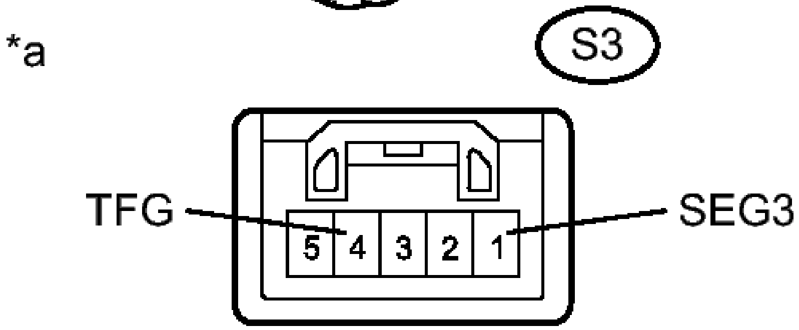
*a
S3
TFG
SEG3
5
4
3
2
1

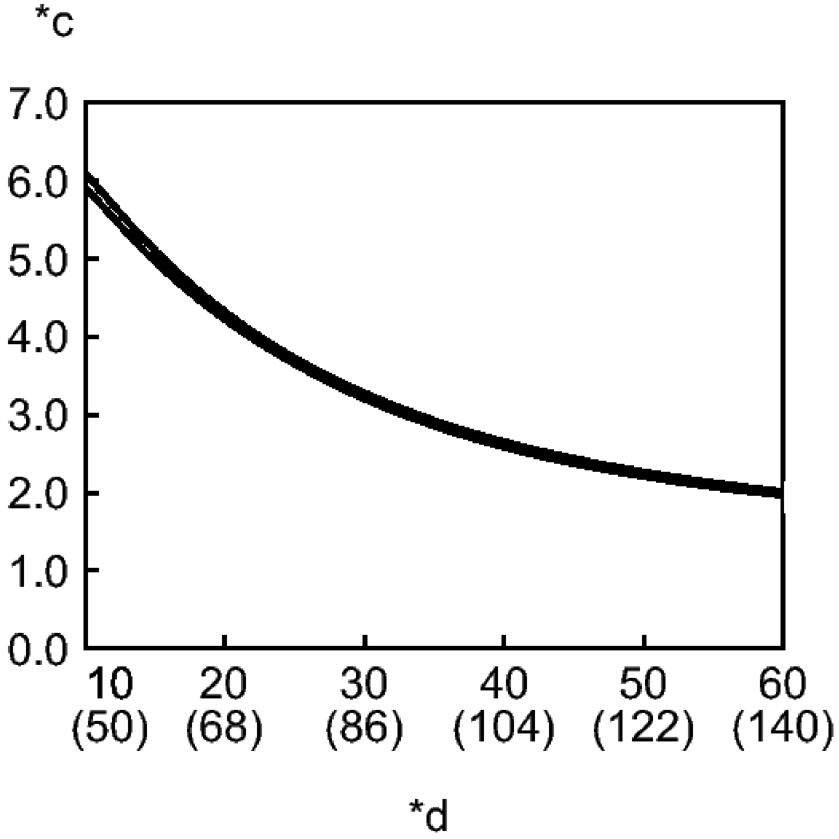

Fig. 202: Identifying Air Conditioning Thermistor Connector Terminal Identification and Graph
Courtesy of TOYOTA MOTOR SALES, U.S.A., INC.

2. Measure the resistance according to the value(s) in the table below.

   Standard Resistance

Tester Connection	Condition	Specified Condition
S3-1 (SEG3) - S3-4 (TFG)	10°C (50°F)	5.92 to 6.09 kohms
S3-1 (SEG3) - S3-4 (TFG)	15°C (59°F)	4.94 to 5.07 kohms
S3-1 (SEG3) - S3-4 (TFG)	20°C (68°F)	4.20 to 4.29 kohms
S3-1 (SEG3) - S3-4 (TFG)	25°C (77°F)	3.64 to 3.70 kohms
S3-1 (SEG3) - S3-4 (TFG)	30°C (86°F)	3.19 to 3.26 kohms
S3-1 (SEG3) - S3-4 (TFG)	35°C (95°F)	2.85 to 2.91 kohms
S3-1 (SEG3) - S3-4 (TFG)	40°C (104°F)	2.58 to 2.64 kohms
S3-1 (SEG3) - S3-4 (TFG)	45°C (113°F)	2.37 to 2.43 kohms
S3-1 (SEG3) - S3-4 (TFG)	50°C (122°F)	2.21 to 2.26 kohms
S3-1 (SEG3) - S3-4 (TFG)	55°C (131°F)	2.07 to 2.12 kohms
S3-1 (SEG3) - S3-4 (TFG)	60°C (140°F)	1.97 to 2.01 kohms

NOTE:

- **Hold the sensor only by its connector. Touching the**

sensor may change the resistance value.

- **When measuring, the sensor temperature must be the same as the ambient temperature.**

HINT:

As the temperature increases, the resistance decreases (see the graph).

If the resistance is not as specified, replace the air conditioning thermistor assembly (glass temperature sensor).

TEXT IN ILLUSTRATION

*a	Component without harness connected (Air Conditioning Thermistor Assembly (Glass Temperature Sensor))
*b	Heat Conduction Sheet Part
*c	Resistance (kohms)
*d	Temperature (°C (°F))

b. for Glass surroundings temperature sensor

   1. Remove the air conditioning thermistor assembly (glass surroundings temperature sensor).

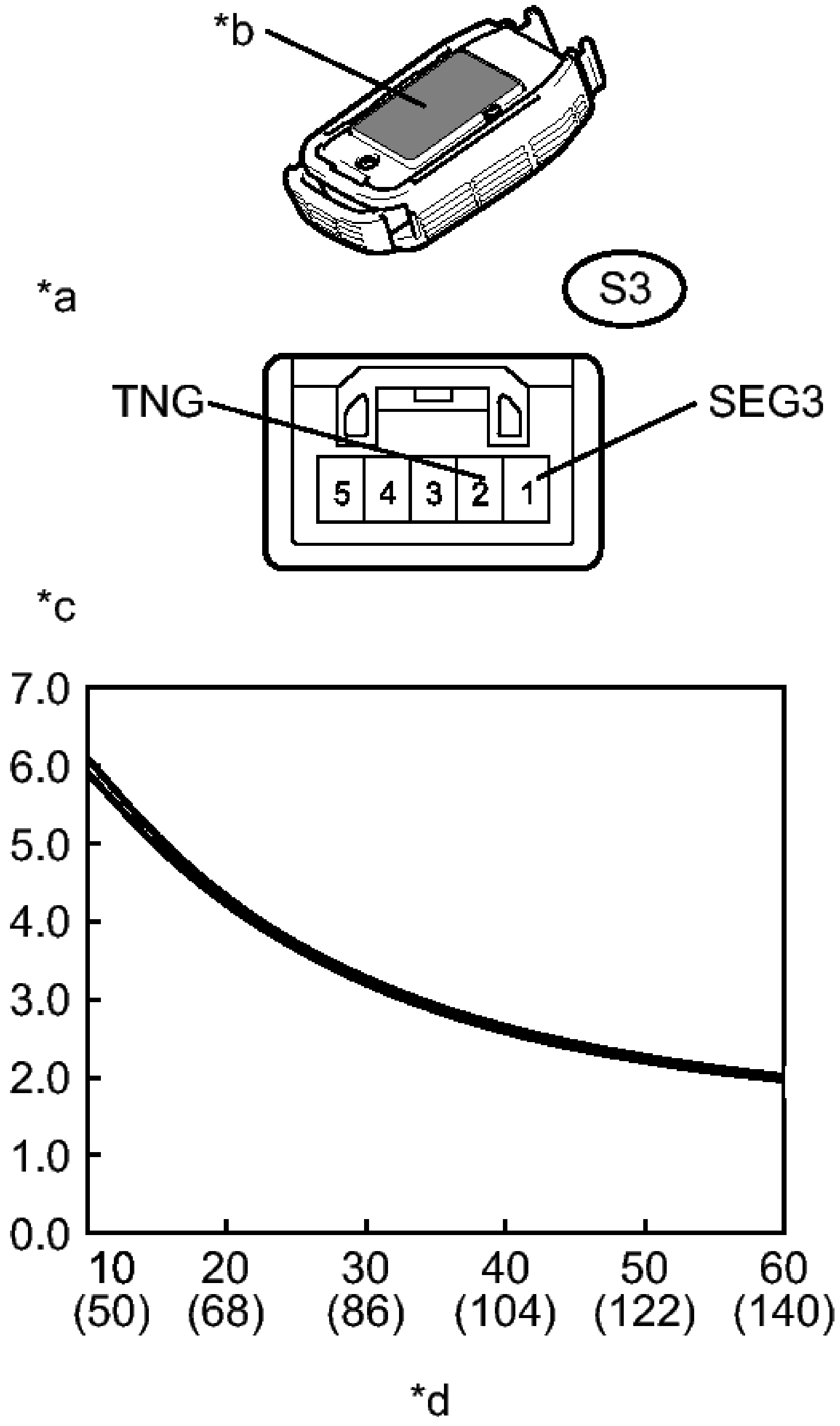
*b
*a
S3
TNG
SEG3
5
4
3
2
1
*c
7.0
6.0
5.0
4.0
3.0
2.0
1.0
0.0
10 (50)
20 (68)
30 (86)
40 (104)
50 (122)
60 (140)
*d

Fig. 203: Identifying Air Conditioning Thermistor Connector Terminal Identification and Graph
Courtesy of TOYOTA MOTOR SALES, U.S.A., INC.

2. Measure the resistance according to the value(s) in the table below.

Standard Resistance

Tester Connection	Condition	Specified Condition
S3-1 (SEG3) - S3-2 (TNG)	10°C (50°F)	5.92 to 6.09 kohms
S3-1 (SEG3) - S3-2 (TNG)	15°C (59°F)	4.94 to 5.07 kohms
S3-1 (SEG3) - S3-2 (TNG)	20°C (68°F)	4.20 to 4.29 kohms
S3-1 (SEG3) - S3-2 (TNG)	25°C (77°F)	3.64 to 3.70 kohms
S3-1 (SEG3) - S3-2 (TNG)	30°C (86°F)	3.19 to 3.26 kohms
S3-1 (SEG3) - S3-2 (TNG)	35°C (95°F)	2.85 to 2.91 kohms
S3-1 (SEG3) - S3-2 (TNG)	40°C (104°F)	2.58 to 2.64 kohms
S3-1 (SEG3) - S3-2 (TNG)	45°C (113°F)	2.37 to 2.43 kohms
S3-1 (SEG3) - S3-2 (TNG)	50°C (122°F)	2.21 to 2.26 kohms
S3-1 (SEG3) - S3-2 (TNG)	55°C (131°F)	2.07 to 2.12 kohms
S3-1 (SEG3) - S3-2 (TNG)	60°C (140°F)	1.97 to 2.01 kohms

NOTE:

- **Hold the sensor only by its connector. Touching the sensor may change the resistance value.**
- **When measuring, the sensor temperature must be the same as the ambient temperature.**

HINT:

As the temperature increases, the resistance decreases (see the graph).

If the resistance is not as specified, replace the air conditioning thermistor assembly (glass surroundings temperature sensor).

TEXT IN ILLUSTRATION

*a	Component without harness connected (Air Conditioning Thermistor Assembly (Glass Surroundings Temperature Sensor))
*b	Heat Conduction Sheet Part
*c	Resistance (kohms)
*d	Temperature (°C (°F))

c. for Humidity sensor

   1. Remove the air conditioning thermistor assembly (humidity sensor) with the connector still connected.

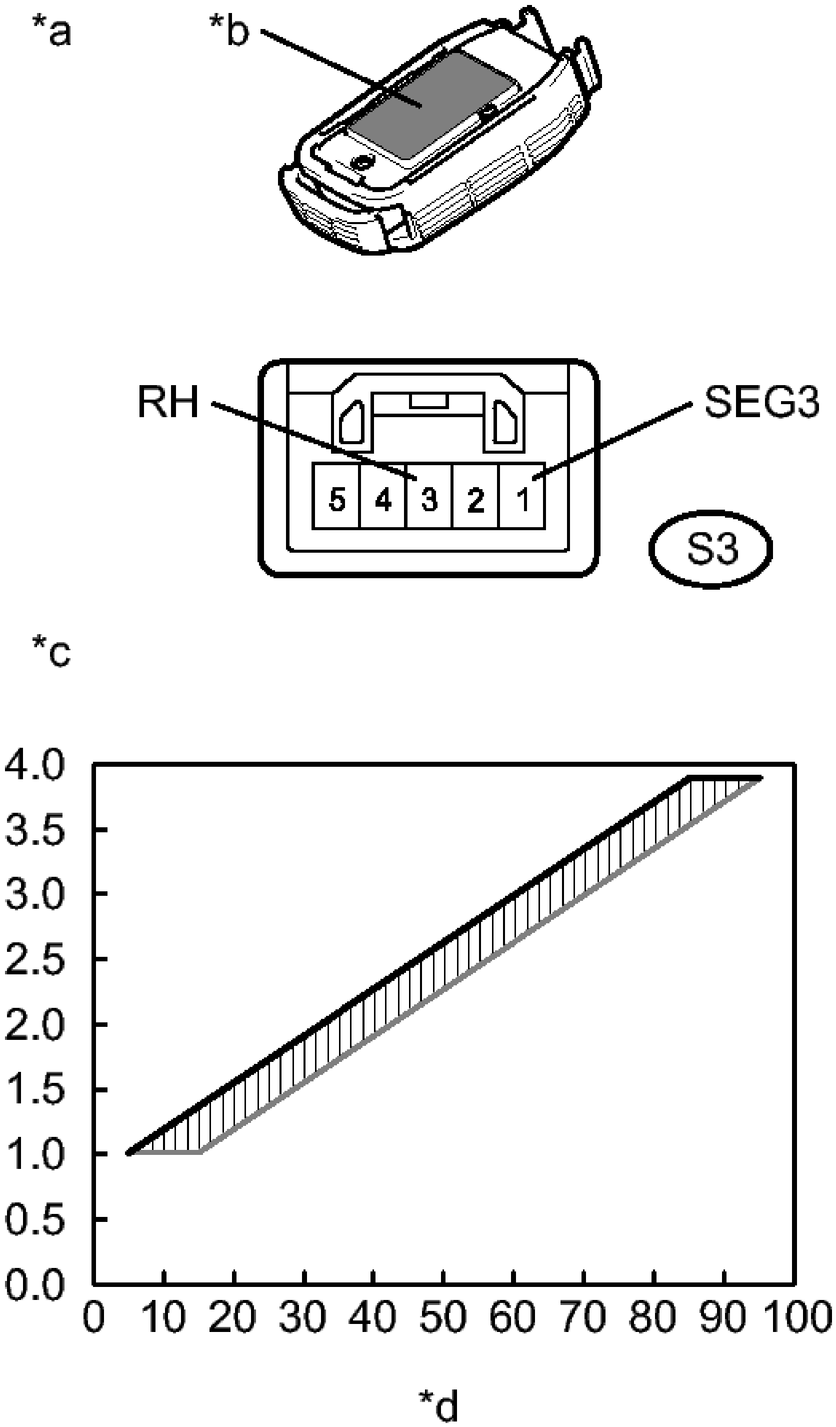
*a
*b
RH
SEG3
5
4
3
2
1
S3
*c
4.0
3.5
3.0
2.5
2.0
1.5
1.0
0.5
0.0
0
10
20
30
40
50
60
70
80
90
100
*d

Fig. 204: Identifying Air Conditioning Thermistor Connector Terminal Identification and Graph
Courtesy of TOYOTA MOTOR SALES, U.S.A., INC.

2. Turn the power switch on (IG).

3. Measure the voltage according to the value(s) in the table below.

   Standard Voltage

Tester Connection	Condition	Specified Condition
S3-1 (SEG3) - S3-3 (RH)	Humidity is 5 to 15 %	1.01 V
S3-1 (SEG3) - S3-3 (RH)	Humidity is 15 to 25 %	1.37 V
S3-1 (SEG3) - S3-3 (RH)	Humidity is 25 to 35 %	1.73 V
S3-1 (SEG3) - S3-3 (RH)	Humidity is 35 to 45 %	2.09 V
S3-1 (SEG3) - S3-3 (RH)	Humidity is 45 to 55 %	2.45 V
S3-1 (SEG3) - S3-3 (RH)	Humidity is 55 to 65 %	2.81 V
S3-1 (SEG3) - S3-3 (RH)	Humidity is 65 to 75 %	3.17 V
S3-1 (SEG3) - S3-3 (RH)	Humidity is 75 to 85 %	3.53 V
S3-1 (SEG3) - S3-3 (RH)	Humidity is 85 to 95 %	3.89 V

NOTE:

- **Do not touch the sensor as body heat will affect the inspection results. When performing the inspection, hold the sensor by its connector.**
- **Allow the sensor to acclimate to the ambient temperature and humidity before performing the inspection.**
- **The specified voltages in the table above are based on inspections performed when the ambient temperature is 25°C (77°F).**

HINT:

As the humidity increases, the voltage increases (see the graph).

If the voltage is not as specified, replace the air conditioning thermistor assembly (humidity sensor).

TEXT IN ILLUSTRATION

*a	Component without harness connected (Air Conditioning Thermistor Assembly (Humidity Sensor))
*b	Heat Conduction Sheet Part
*c	Voltage (V)
*d	Relative Humidity (%)

INSTALLATION

INSTALLATION

1. **INSTALL HUMIDITY SENSOR (AIR CONDITIONING THERMISTOR ASSEMBLY)**
    a. Engage the 2 brackets, and carefully install the humidity sensor (air conditioning thermistor assembly) to the glass surface, preventing air bubbles from forming between the contact surfaces.

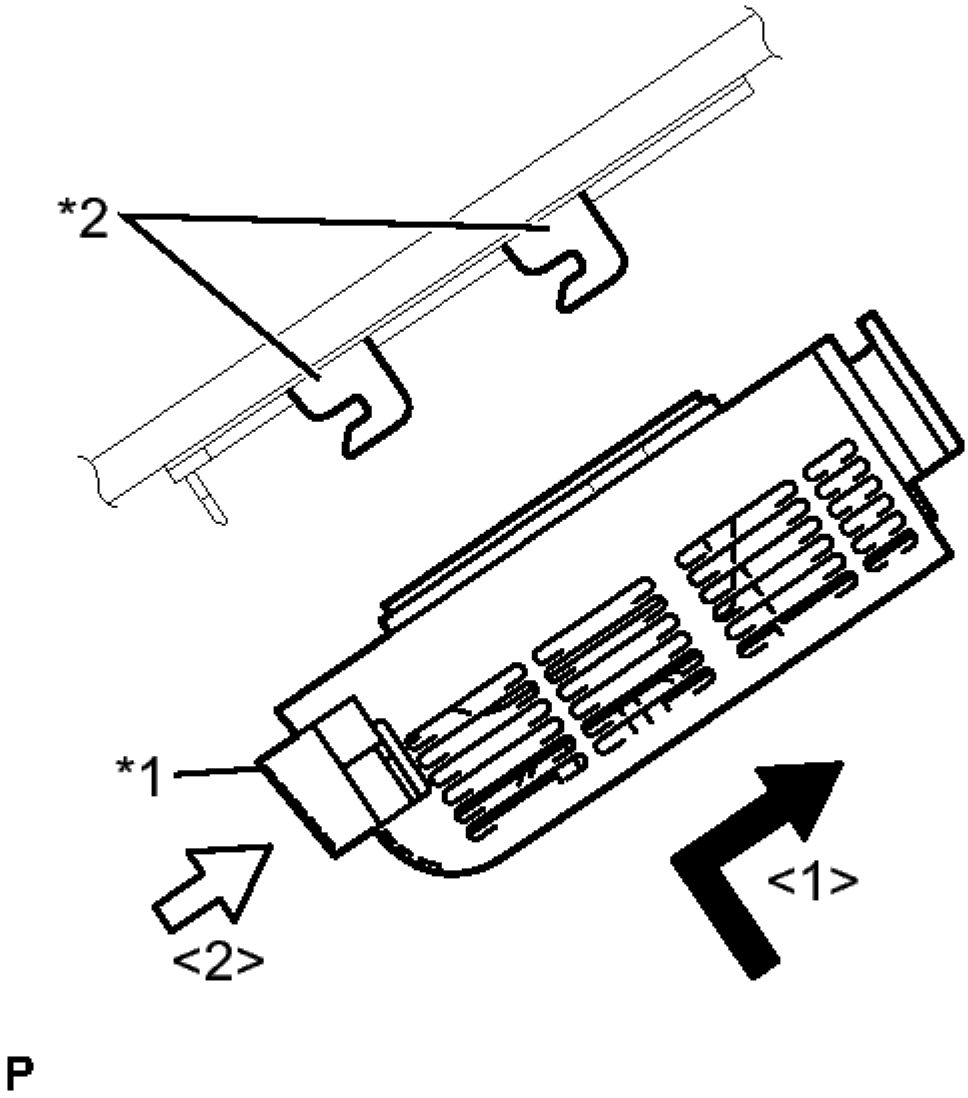

Fig. 205: Installing Humidity Sensor To Glass Surface & Guides
Courtesy of TOYOTA MOTOR SALES, U.S.A., INC.

TEXT IN ILLUSTRATION

*1	Stopper
*2	Bracket

b. Push in the stopper.
c. Connect the connector.

2. **INSTALL PROTECTOR**
   a. Engage the 2 claws and temporarily install the protector.

AMBIENT TEMPERATURE SENSOR

COMPONENTS

ILLUSTRATION

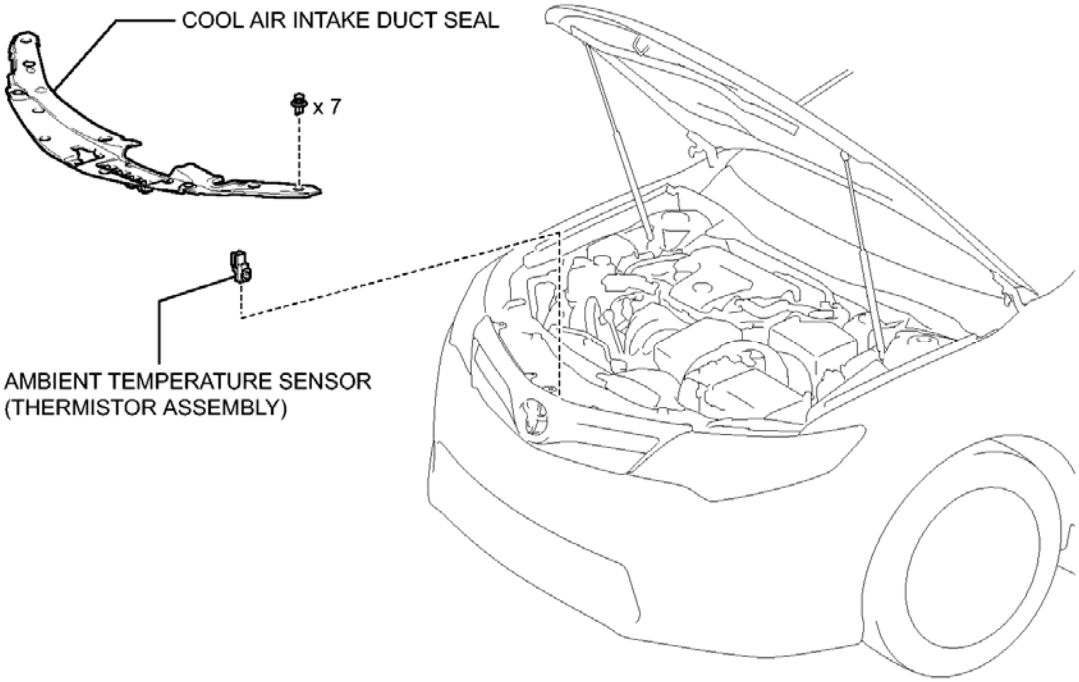
COOL AIR INTAKE DUCT SEAL
x 7
AMBIENT TEMPERATURE SENSOR
(THERMISTOR ASSEMBLY)

P

Fig. 206: Identifying Ambient Temperature Sensor Replacement Components
Courtesy of TOYOTA MOTOR SALES, U.S.A., INC.

REMOVAL

REMOVAL

1. **REMOVE COOL AIR INTAKE DUCT SEAL** . Refer to **REMOVAL - Step 1**
2. **REMOVE AMBIENT TEMPERATURE SENSOR (THERMISTOR ASSEMBLY)**
   a. Disconnect the connector.

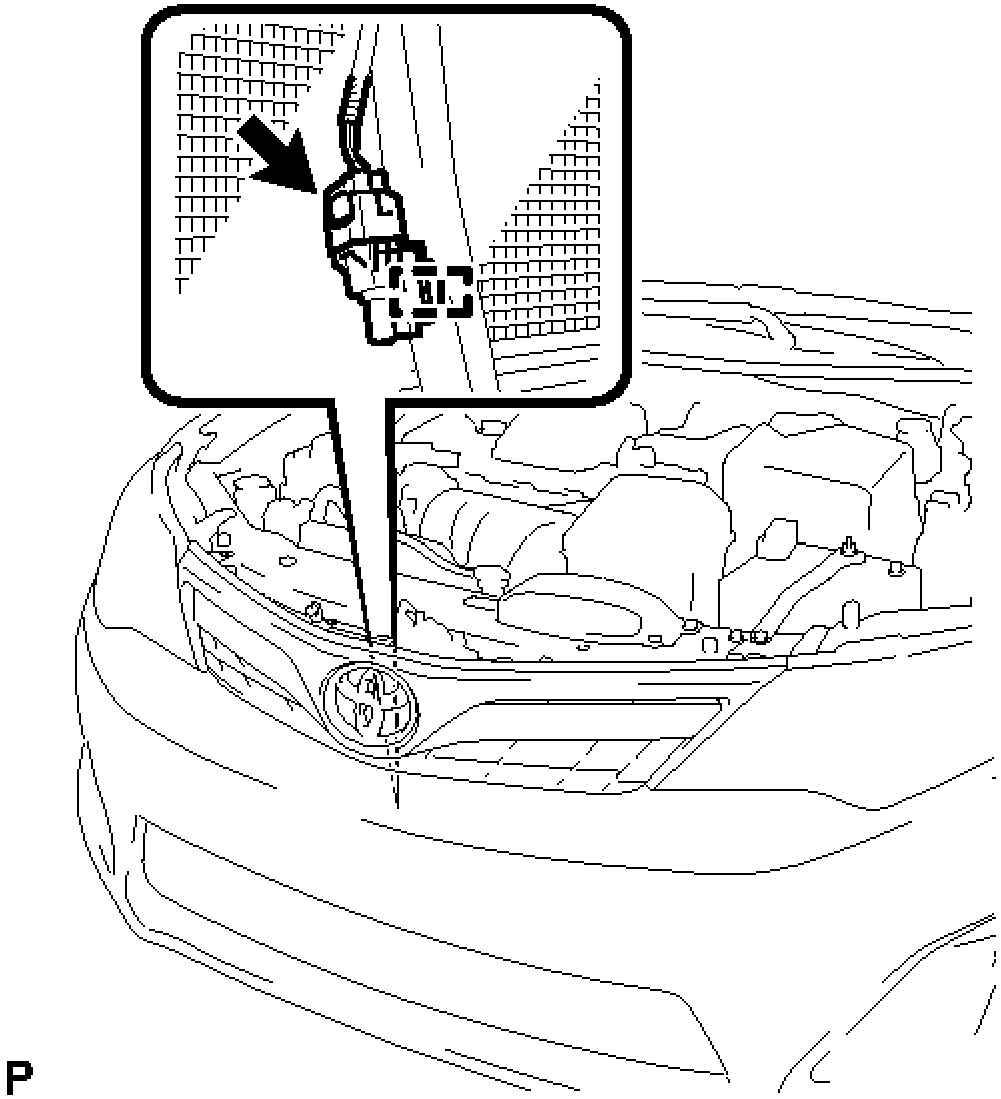

Fig. 207: Identifying Ambient Temperature Sensor Connector Location
Courtesy of TOYOTA MOTOR SALES, U.S.A., INC.

b. Disengage the clamp and remove the ambient temperature sensor (thermistor assembly).

INSPECTION

INSPECTION

1. **INSPECT AMBIENT TEMPERATURE SENSOR (THERMISTOR ASSEMBLY)**
   a. Measure the resistance according to the value(s) in the table below.

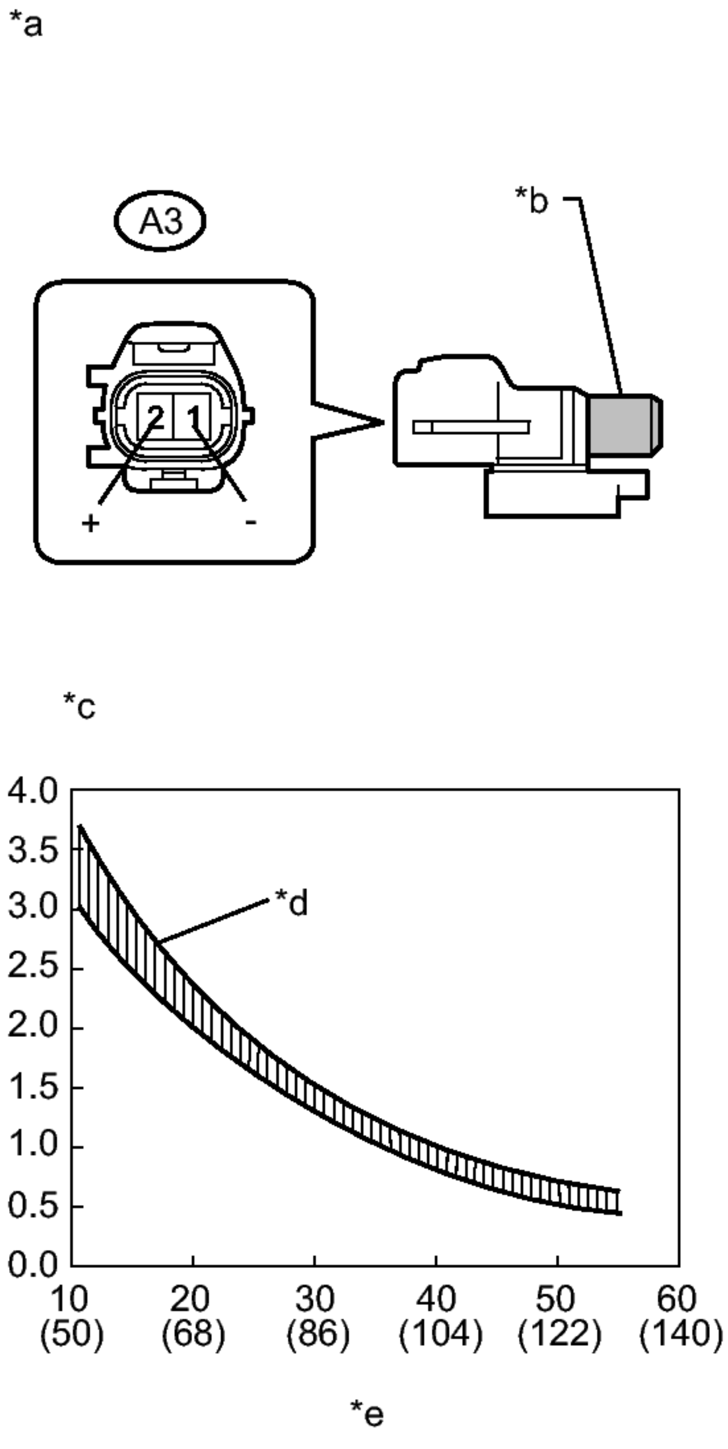
*a
A3
2
1
+
-
*b
*c
4.0
3.5
3.0
2.5
2.0
1.5
1.0
0.5
0.0
*d
10 (50)
20 (68)
30 (86)
40 (104)
50 (122)
60 (140)
*e

Fig. 208: Identifying Ambient Temperature Sensor Connector Terminal Identification and Graph
Courtesy of TOYOTA MOTOR SALES, U.S.A., INC.

Standard Resistance

Tester Connection	Condition	Specified Condition
A3-1 (-) - A3-2 (+)	10°C (50°F)	3.00 to 3.73 kohms
A3-1 (-) - A3-2 (+)	15°C (59°F)	2.45 to 2.88 kohms
A3-1 (-) - A3-2 (+)	20°C (68°F)	1.95 to 2.30 kohms
A3-1 (-) - A3-2 (+)	25°C (77°F)	1.60 to 1.80 kohms
A3-1 (-) - A3-2 (+)	30°C (86°F)	1.28 to 1.47 kohms
A3-1 (-) - A3-2 (+)	35°C (95°F)	1.00 to 1.22 kohms
A3-1 (-) - A3-2 (+)	40°C (104°F)	0.80 to 1.00 kohms
A3-1 (-) - A3-2 (+)	45°C (113°F)	0.65 to 0.85 kohms
A3-1 (-) - A3-2 (+)	50°C (122°F)	0.50 to 0.70 kohms
A3-1 (-) - A3-2 (+)	55°C (131°F)	0.44 to 0.60 kohms
A3-1 (-) - A3-2 (+)	60°C (140°F)	0.36 to 0.50 kohms

If the resistance is not as specified, replace the ambient temperature sensor (thermistor assembly).

TEXT IN ILLUSTRATION

*a	Component without harness connected (Ambient Temperature Sensor

	(Thermistor Assembly))
*b	Sensing Portion
*c	Resistance (kohms)
*d	Allowable Range
*e	Temperature (°C (°F))

NOTE:

- **Hold the sensor only by its connector. Touching the sensor may change the resistance value.**
- **When measuring, the sensor temperature must be the same as the ambient temperature.**

HINT:

As the temperature increases, the resistance decreases (see the graph).

INSTALLATION

INSTALLATION

1. **INSTALL AMBIENT TEMPERATURE SENSOR (THERMISTOR ASSEMBLY)**
    a. Engage the clamp to install the ambient temperature sensor (thermistor assembly).
    b. Connect the connector.
2. **INSTALL COOL AIR INTAKE DUCT SEAL** . Refer to **INSTALLATION - Step 4**

FRONT EVAPORATOR TEMPERATURE SENSOR

COMPONENTS

ILLUSTRATION

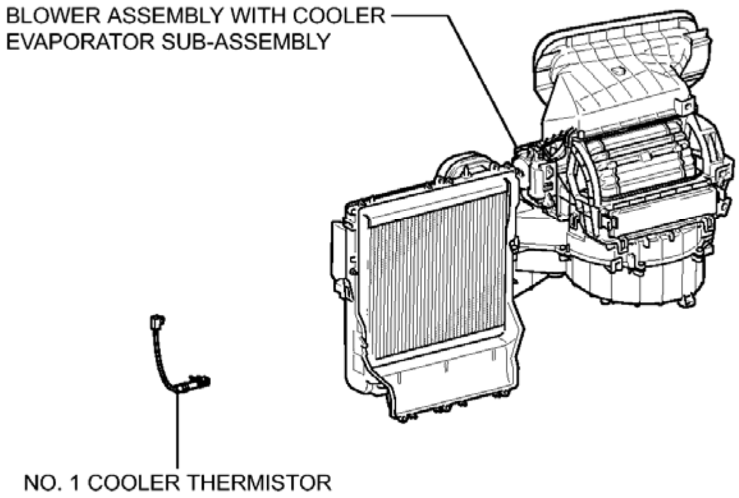
BLOWER ASSEMBLY WITH COOLER EVAPORATOR SUB-ASSEMBLY
NO. 1 COOLER THERMISTOR

P

Fig. 209: Identifying Front Evaporator Temperature Sensor Replacement Components
Courtesy of TOYOTA MOTOR SALES, U.S.A., INC.

REMOVAL

REMOVAL

1. **REMOVE BLOWER ASSEMBLY WITH COOLER EVAPORATOR SUB-ASSEMBLY** See step 5
2. **REMOVE NO. 1 COOLER THERMISTOR**
    a. Disengage the 2 clamps.

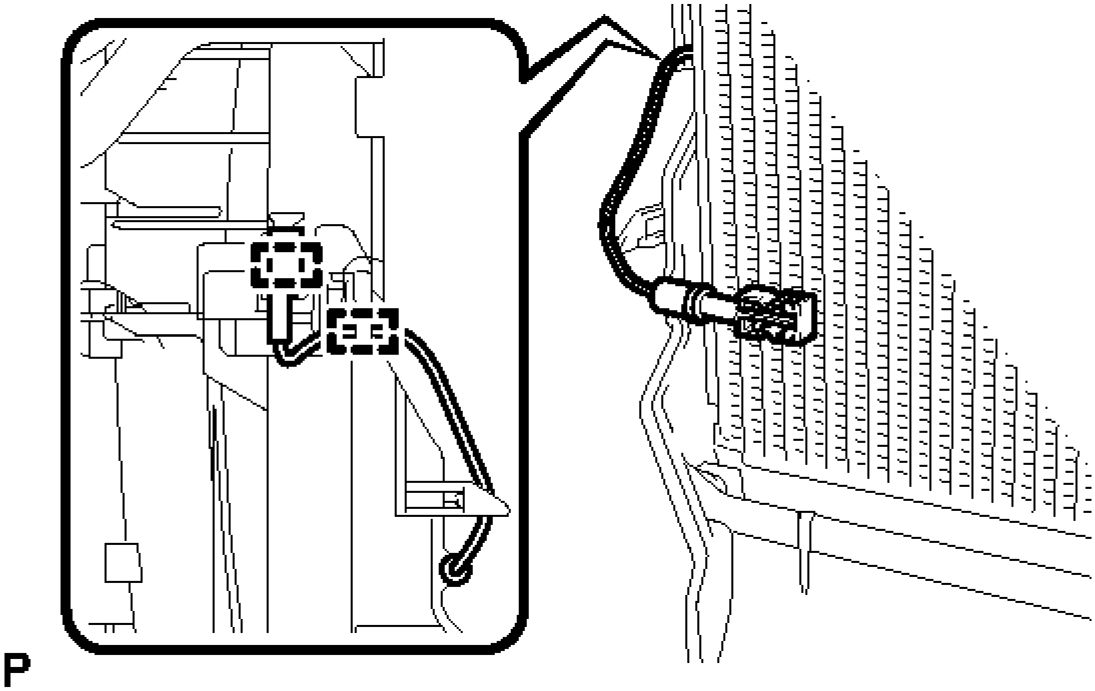

Fig. 210: Identifying No. 1 Cooler Thermistor Clamps
Courtesy of TOYOTA MOTOR SALES, U.S.A., INC.

b. Remove the No. 1 cooler thermistor.

INSPECTION

INSPECTION

1. **INSPECT EVAPORATOR TEMPERATURE SENSOR (NO. 1 COOLER THERMISTOR)**
    a. Measure the resistance according to the value(s) in the table below.

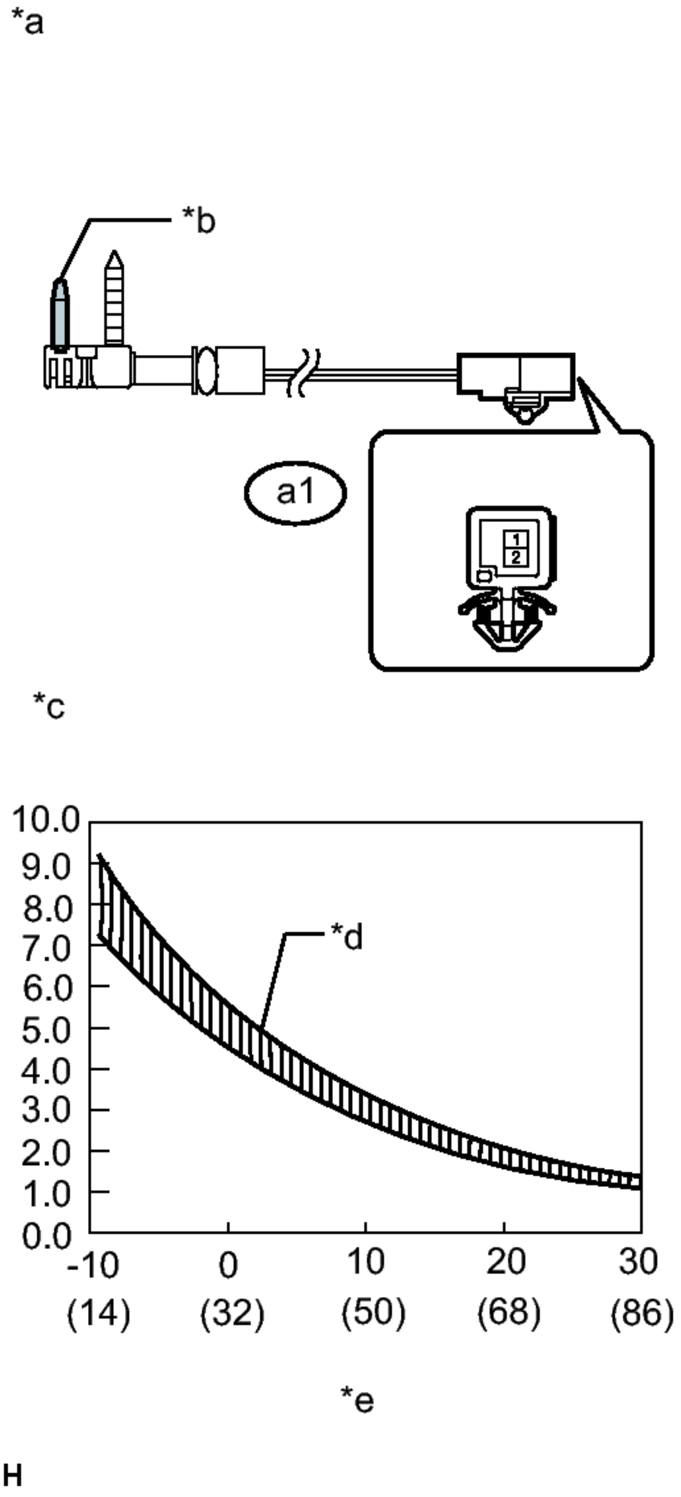
*a
*b
a1
1
2
*c
10.0
9.0
8.0
7.0
6.0
5.0
4.0
3.0
2.0
1.0
0.0
*d
-10
(14)
0
(32)
10
(50)
20
(68)
30
(86)
*e
H

Fig. 211: Identifying Evaporator Temperature Sensor Connector Terminal Identification And Graph
Courtesy of TOYOTA MOTOR SALES, U.S.A., INC.

Standard Resistance

Tester Connection	Condition	Specified Condition
a1-1 - a1-2	-10°C (14°F)	7.30 to 9.10 kohms
a1-1 - a1-2	-5°C (23°F)	5.65 to 6.95 kohms
a1-1 - a1-2	0°C (32°F)	4.40 to 5.35 kohms
a1-1 - a1-2	5°C (41°F)	3.40 to 4.15 kohms
a1-1 - a1-2	10°C (50°F)	2.70 to 3.25 kohms
a1-1 - a1-2	15°C (59°F)	2.14 to 2.58 kohms
a1-1 - a1-2	20°C (68°F)	1.71 to 2.05 kohms
a1-1 - a1-2	25°C (77°F)	1.38 to 1.64 kohms
a1-1 - a1-2	30°C (86°F)	1.11 to 1.32 kohms

If the resistance is not as specified, replace the evaporator temperature sensor (No. 1 cooler thermistor).

TEXT IN ILLUSTRATION

*a	Component without harness connected (Evaporator Temperature Sensor (No. 1 Cooler Thermistor))
*b	Sensing Portion
	Resistance

*c	(kohms)
*d	Allowable Range
*e	Temperature (°C (°F))

NOTE:

- **Hold the sensor only by its connector. Touching the sensor may change the resistance value.**
- **When measuring, the sensor temperature must be the same as the ambient temperature.**

HINT:

As the temperature increases, the resistance decreases (see the graph).

INSTALLATION

INSTALLATION

1. **INSTALL NO. 1 COOLER THERMISTOR**
    a. Install the No. 1 cooler thermistor as shown in the illustration.

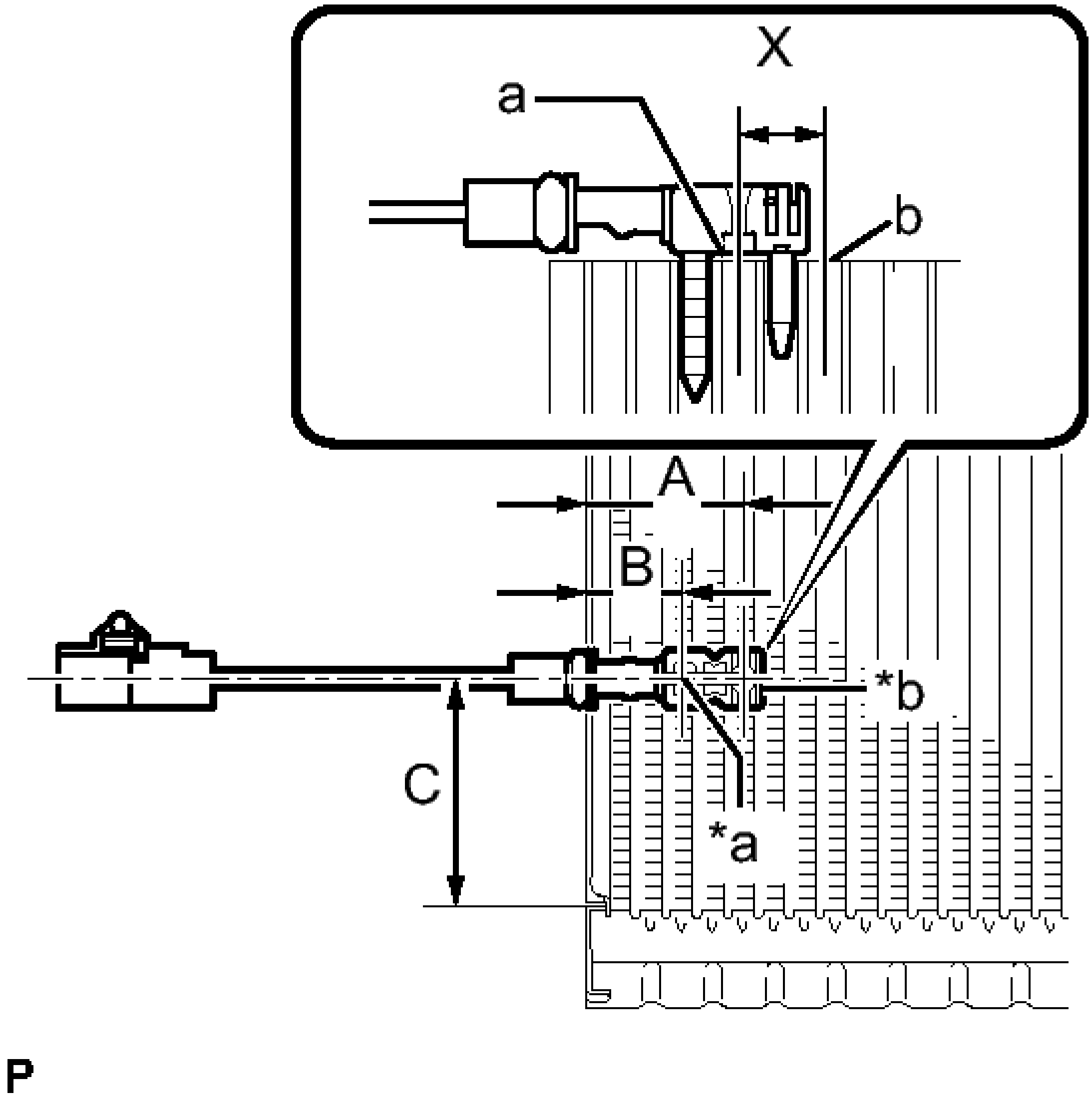

Fig. 212: Installing No. 1 Cooler Thermistor
Courtesy of TOYOTA MOTOR SALES, U.S.A., INC.

Part	Length	
A	34.3 mm	1.35 in.
B	20.9 mm	0.82 in.
C	50 mm	1.96 in.

TEXT IN ILLUSTRATION

*a	Fixed Part
*b	Sensor

	Part

NOTE:

- **Be sure to insert the thermistor only once because reinserting it into the same position will not allow it to be firmly secured.**
- **When reusing the evaporator, insert the thermistor one row next to the one that has been used previously (X in the illustration).**
- **After inserting the thermistor, do not apply excessive force to the wire.**
- **Directly insert the thermistor until the edge of plastic case "a" comes into contact with evaporator "b".**

b. Engage the 2 clamps.

2. **INSTALL BLOWER ASSEMBLY WITH COOLER EVAPORATOR SUB-ASSEMBLY** See step 1

SOLAR SENSOR

COMPONENTS

ILLUSTRATION

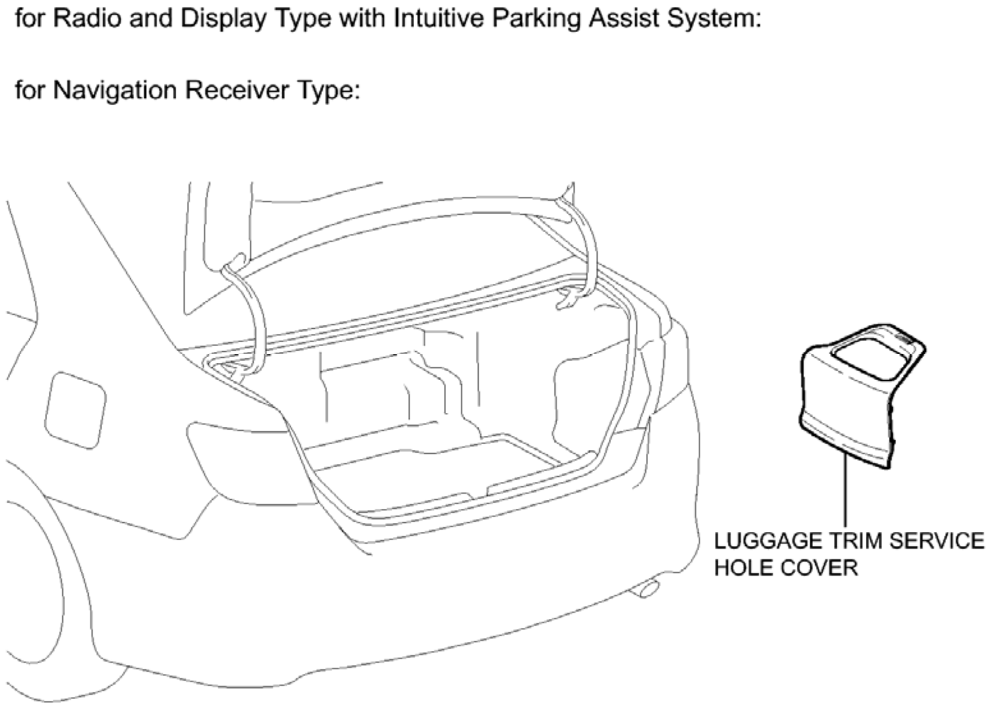
for Radio and Display Type with Intuitive Parking Assist System:
for Navigation Receiver Type:
LUGGAGE TRIM SERVICE HOLE COVER
P

Fig. 213: Identifying Solar Sensor Replacement Components (1 Of 3)
Courtesy of TOYOTA MOTOR SALES, U.S.A., INC.

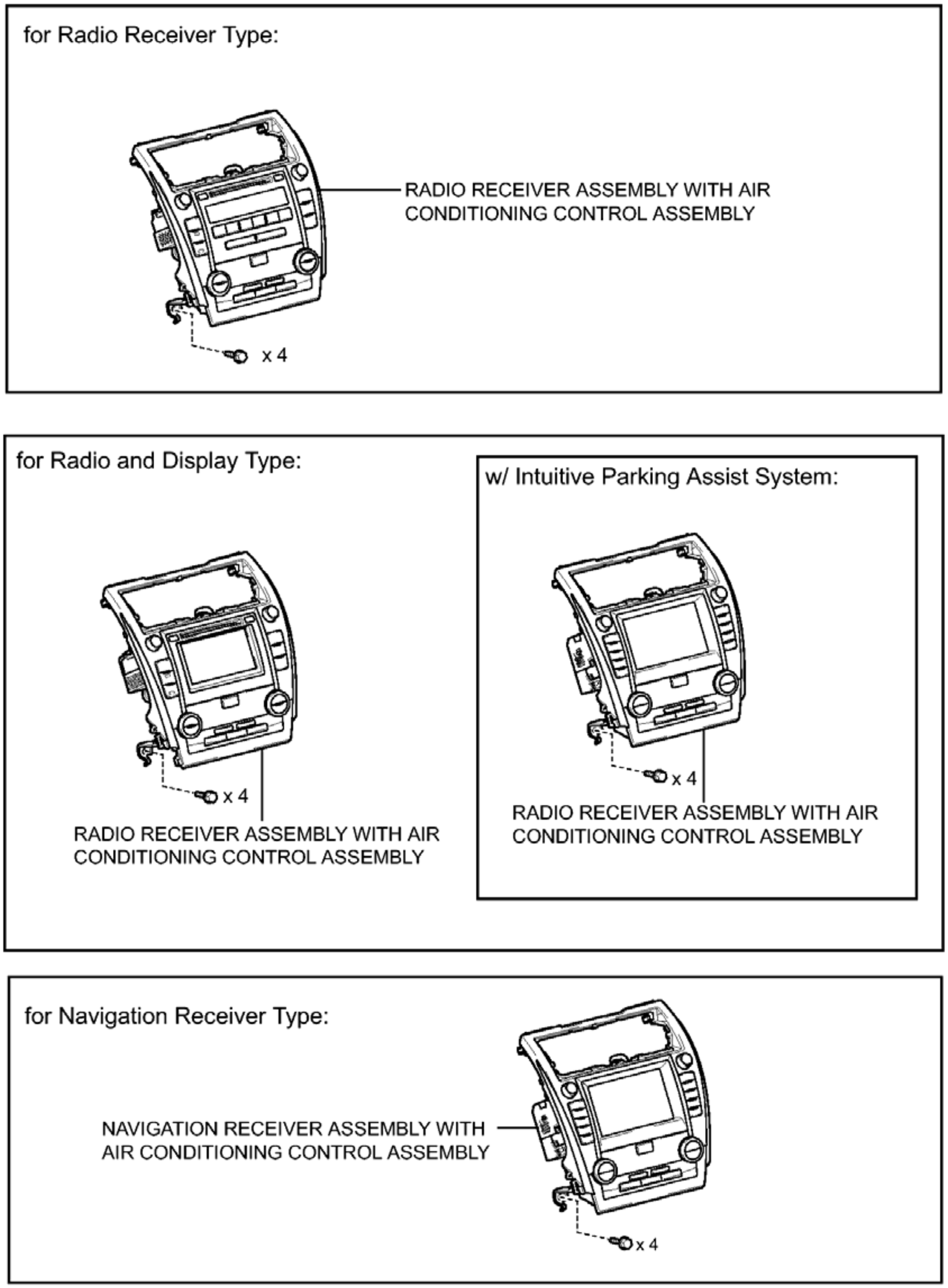
for Radio Receiver Type:
RADIO RECEIVER ASSEMBLY WITH AIR CONDITIONING CONTROL ASSEMBLY
x 4
for Radio and Display Type:
x 4
RADIO RECEIVER ASSEMBLY WITH AIR CONDITIONING CONTROL ASSEMBLY
w/ Intuitive Parking Assist System:
x 4
RADIO RECEIVER ASSEMBLY WITH AIR CONDITIONING CONTROL ASSEMBLY
for Navigation Receiver Type:
NAVIGATION RECEIVER ASSEMBLY WITH AIR CONDITIONING CONTROL ASSEMBLY
x 4

P

Fig. 214: Identifying Solar Sensor Replacement Components (2 Of 3)

Courtesy of TOYOTA MOTOR SALES, U.S.A., INC.

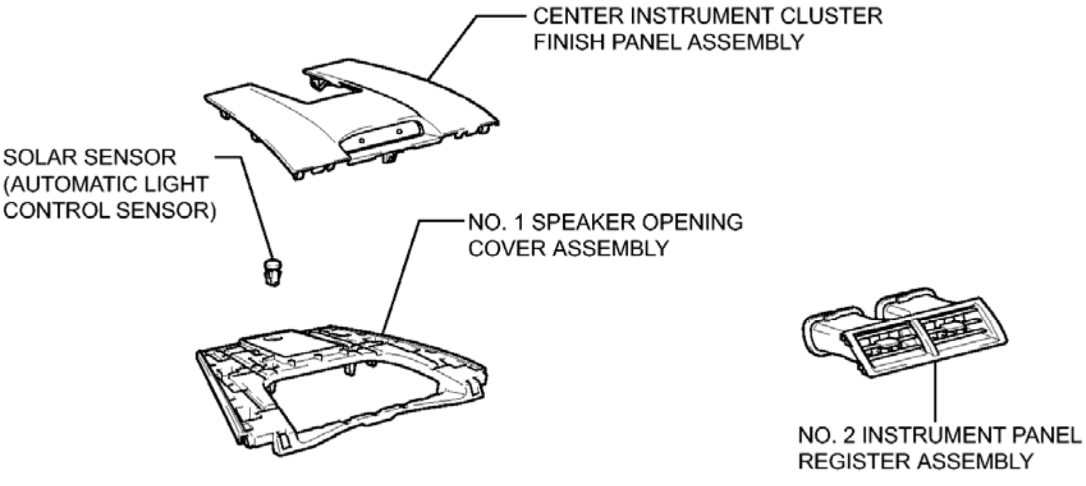
CENTER INSTRUMENT CLUSTER FINISH PANEL ASSEMBLY
SOLAR SENSOR (AUTOMATIC LIGHT CONTROL SENSOR)
NO. 1 SPEAKER OPENING COVER ASSEMBLY
NO. 2 INSTRUMENT PANEL REGISTER ASSEMBLY

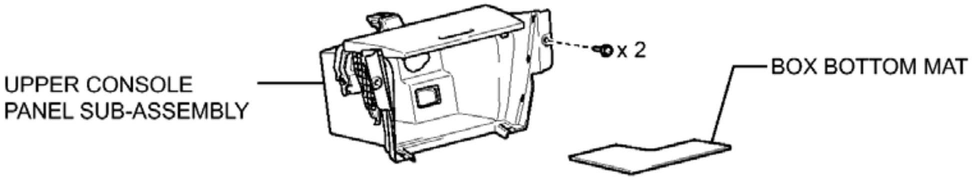
x 2
BOX BOTTOM MAT
UPPER CONSOLE PANEL SUB-ASSEMBLY

P

Fig. 215: Identifying Solar Sensor Replacement Components (3 Of 3)
Courtesy of TOYOTA MOTOR SALES, U.S.A., INC.

REMOVAL

REMOVAL

1. **PRECAUTION**

NOTE: **After turning the power switch off, waiting time may be required before disconnecting the cable from the negative (-) auxiliary battery terminal. Therefore, make sure to read the disconnecting the cable from the negative (-) auxiliary battery terminal notices before proceeding with work. Refer to PRECAUTION .**

2. **REMOVE LUGGAGE TRIM SERVICE HOLE COVER**

   for Radio and Display Type with Intuitive Parking Assist System: Refer to **REMOVAL - Step 2**

   for Navigation Receiver Type: Refer to **REMOVAL - Step 2**

3. **DISCONNECT CABLE FROM AUXILIARY BATTERY NEGATIVE TERMINAL (for Radio and Display Type with Intuitive Parking Assist System)**

   NOTE: **When disconnecting the cable, some systems need to be initialized after the cable is reconnected. Refer to INITIALIZATION .**

4. **DISCONNECT CABLE FROM AUXILIARY BATTERY NEGATIVE TERMINAL (for Navigation Receiver Type)**

   NOTE: **When disconnecting the cable, some systems need to be initialized after the cable is reconnected. Refer to INITIALIZATION .**

5. **REMOVE REAR CONSOLE BOX ASSEMBLY**

   Refer to **REMOVAL**

6. **REMOVE BOX BOTTOM MAT** . Refer to **REMOVAL - Step 24**
7. **REMOVE UPPER CONSOLE PANEL SUB-ASSEMBLY** . Refer to **REMOVAL - Step 25**
8. **REMOVE CENTER INSTRUMENT CLUSTER FINISH PANEL ASSEMBLY** . Refer to **REMOVAL - Step 22**
9. **REMOVE NO. 2 INSTRUMENT PANEL REGISTER ASSEMBLY** . Refer to **REMOVAL - Step 23**
10. **REMOVE RADIO RECEIVER ASSEMBLY WITH AIR CONDITIONING CONTROL ASSEMBLY (for Radio Receiver Type)** . Refer to **REMOVAL - Step 9**
11. **REMOVE RADIO RECEIVER ASSEMBLY WITH AIR CONDITIONING CONTROL ASSEMBLY (for Radio and Display Type)** . Refer to **REMOVAL - Step 10**
12. **REMOVE NAVIGATION RECEIVER ASSEMBLY WITH AIR CONDITIONING CONTROL ASSEMBLY (for Navigation Receiver Type)** . Refer to **REMOVAL - Step 9**
13. **REMOVE NO. 1 SPEAKER OPENING COVER ASSEMBLY** . Refer to **REMOVAL - Step 29**
14. **REMOVE SOLAR SENSOR (AUTOMATIC LIGHT CONTROL SENSOR)**
    a. Disengage the 2 claws and remove the solar sensor (automatic light control sensor).

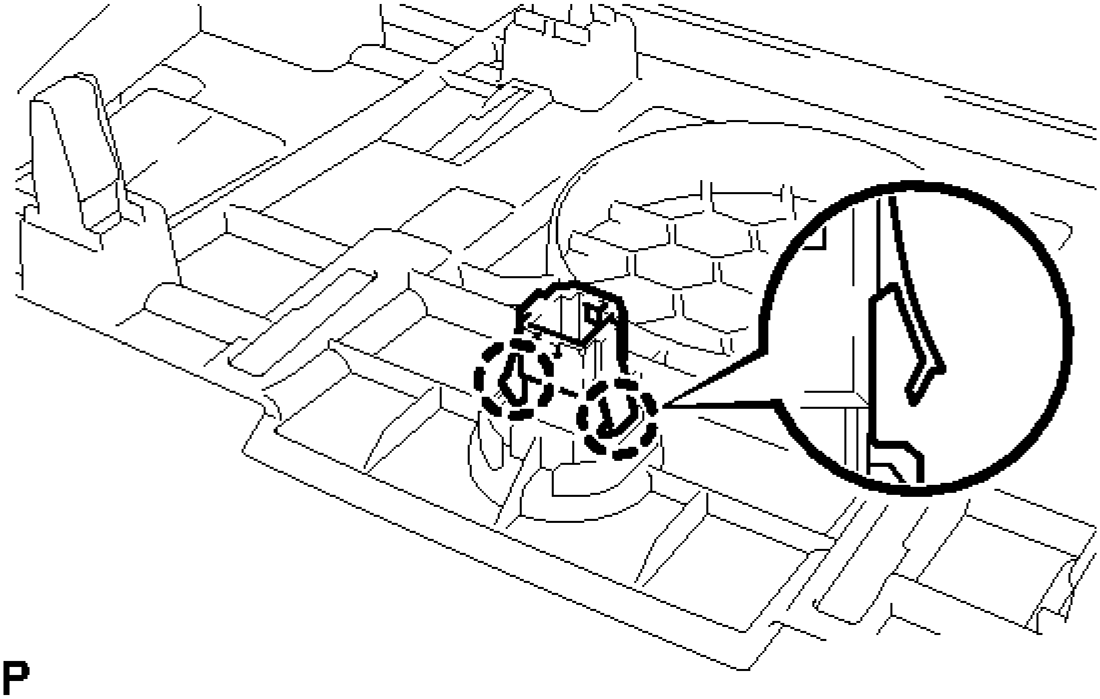

Fig. 216: Identifying Solar Sensor Claws
Courtesy of TOYOTA MOTOR SALES, U.S.A., INC.

INSPECTION

INSPECTION

1. **INSPECT SOLAR SENSOR (AUTOMATIC LIGHT CONTROL SENSOR)**
    a. Disconnect the I61 solar sensor (automatic light control sensor) connector.

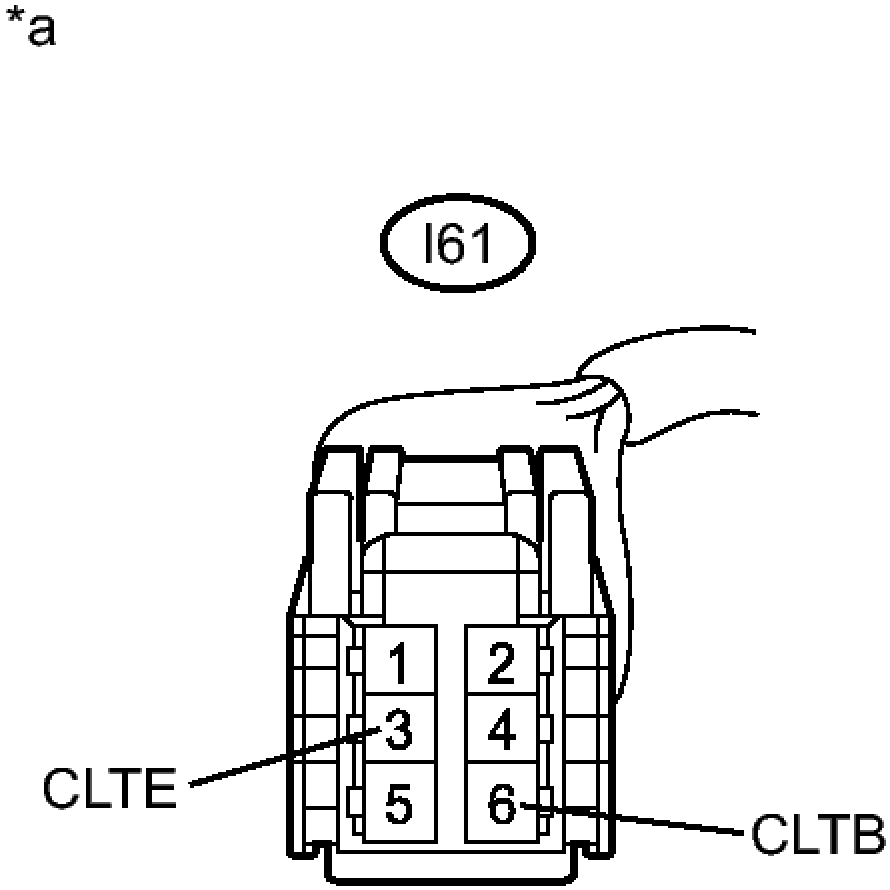

Fig. 217: Identifying I61 Solar Sensor Connector Terminals
Courtesy of TOYOTA MOTOR SALES, U.S.A., INC.

b. Measure the voltage according to the value(s) in the table below.

Standard Voltage

Tester Connection	Condition	Specified Condition
I61-6 (CLTB) - I61-3 (CLTE)	Power switch off	Below 1 V
I61-6 (CLTB) - I61-3	Power switch on	11 to 14 V

(CLTE)	(IG)	

TEXT IN ILLUSTRATION

*a	Front view of wire harness connector (to Solar Sensor (Automatic Light Control Sensor))

If the voltage is not as specified, repair or replace the wire harness or connector.

c. Reconnect the I61 solar sensor (automatic light control sensor) connector.

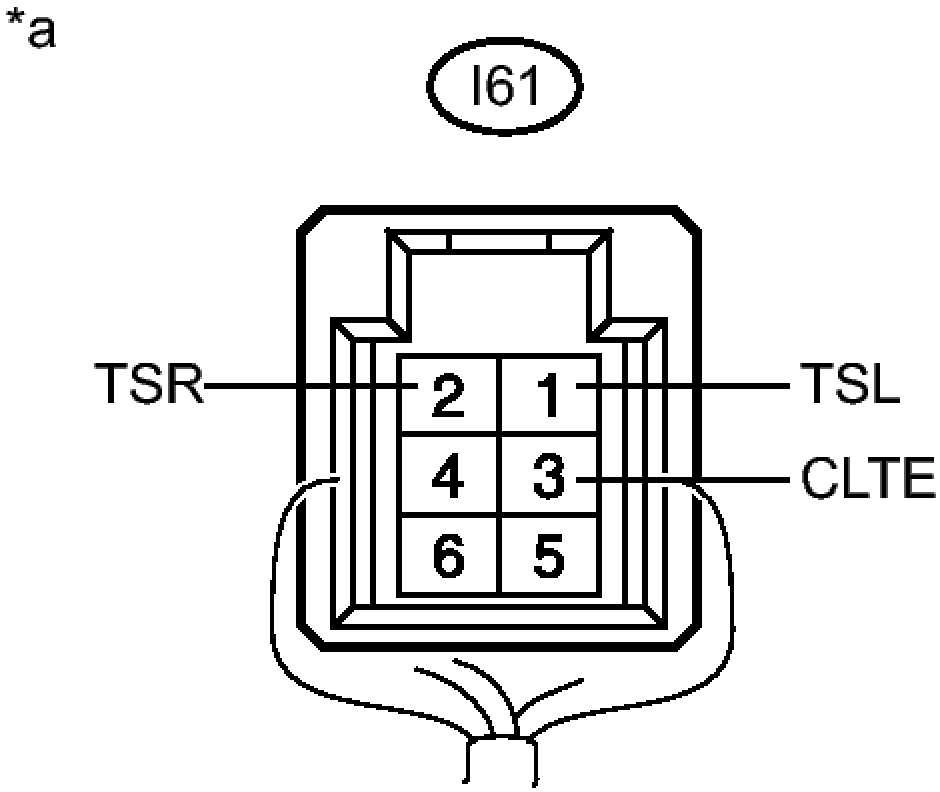

Fig. 218: Identifying I61 Solar Sensor Connector Terminals
Courtesy of TOYOTA MOTOR SALES, U.S.A., INC.

d. Turn the power switch on (IG).
e. Measure the voltage according to the value(s) in the table below.

Standard Voltage

Tester Connection	Condition	Specified Condition
I61-1 (TSL) - I613 (CLTE)	Sensor is exposed to electric light	0.8 to 4.3 V
I61-1 (TSL)	Sensor is	

- I61-3 (CLTE)	covered with a cloth	Below 0.8 V
I61-2 (TSR) - I61-3 (CLTE)	Sensor is exposed to electric light	0.8 to 4.3 V
I61-2 (TSR) - I61-3 (CLTE)	Sensor is covered with a cloth	Below 0.8 V

TEXT IN ILLUSTRATION

*a	Component with harness connected (Solar Sensor (Automatic Light Control Sensor))

NOTE:

- **The connection procedure for using a digital tester such as a TOYOTA electrical tester is shown above. When using an analog tester, connect the negative (-) lead to terminal 1 (2) and the positive (+) lead to terminal 6 of the solar sensor (automatic light control sensor).**
- **Do not bring the positive and negative tester probes too close to each other as a short circuit may occur.**

HINT:

- Use an incandescent light for inspection. Bring it within about 30 cm (11.8 in.) of the solar sensor (automatic light control sensor).
- As the inspection light is moved away from the sensor, the voltage decreases.

If the voltage is not as specified, replace the solar sensor (automatic light control sensor).

INSTALLATION

INSTALLATION

1. **INSTALL SOLAR SENSOR (AUTOMATIC LIGHT CONTROL SENSOR)**

   a. Engage the 2 claws to install the solar sensor (automatic light control sensor).

2. **INSTALL NO. 1 SPEAKER OPENING COVER ASSEMBLY** . Refer to **INSTALLATION - Step 23**
3. **INSTALL RADIO RECEIVER ASSEMBLY WITH AIR CONDITIONING CONTROL ASSEMBLY (for Radio Receiver Type)** . Refer to **INSTALLATION - Step 14**
4. **INSTALL RADIO RECEIVER ASSEMBLY WITH AIR CONDITIONING CONTROL ASSEMBLY (for Radio and Display Type)** . Refer to **INSTALLATION - Step 15**
5. **INSTALL NAVIGATION RECEIVER ASSEMBLY WITH AIR CONDITIONING CONTROL ASSEMBLY (for Navigation Receiver Type)** . Refer to **INSTALLATION - Step 7**
6. **INSTALL NO. 2 INSTRUMENT PANEL REGISTER ASSEMBLY** . Refer to **INSTALLATION - Step 29**
7. **INSTALL CENTER INSTRUMENT CLUSTER FINISH PANEL ASSEMBLY** . Refer to **INSTALLATION - Step 30**
8. **INSTALL UPPER CONSOLE PANEL SUB-ASSEMBLY** . Refer to **INSTALLATION - Step 27**
9. **INSTALL BOX BOTTOM MAT** . Refer to **INSTALLATION - Step 28**
10. **INSTALL REAR CONSOLE BOX ASSEMBLY**

    Refer to **INSTALLATION**

11. **CONNECT CABLE TO AUXILIARY BATTERY NEGATIVE TERMINAL (for Radio and Display Type with Intuitive Parking Assist System)**

    NOTE: When disconnecting the cable, some systems need to be initialized after the cable is reconnected. Refer to INITIALIZATION .

12. **CONNECT CABLE TO AUXILIARY BATTERY NEGATIVE TERMINAL (for Navigation Receiver Type)**

    NOTE: When disconnecting the cable, some systems need to be initialized after the cable is reconnected. Refer to INITIALIZATION .

13. **INSTALL LUGGAGE TRIM SERVICE HOLE COVER**

    for Radio and Display Type with Intuitive Parking Assist System: Refer to **INSTALLATION - Step 3**

    for Navigation Receiver Type: Refer to **INSTALLATION - Step 3**

AIR CONDITIONING PRESSURE SENSOR

COMPONENTS

ILLUSTRATION

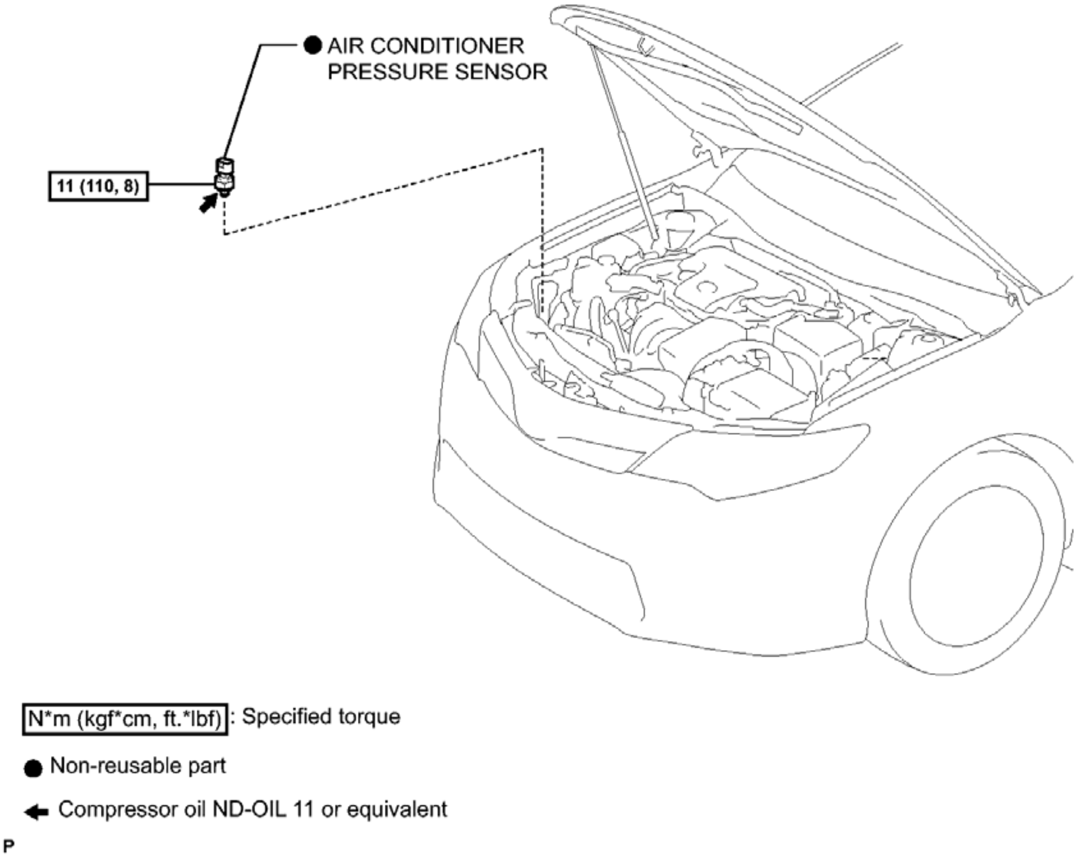
AIR CONDITIONER PRESSURE SENSOR
11 (110, 8)
N*m (kgf*cm, ft.*lbf) : Specified torque
● Non-reusable part
Compressor oil ND-OIL 11 or equivalent
P

Fig. 219: Identifying Air Conditioning Pressure Sensor Replacement Components With Torque Specifications
Courtesy of TOYOTA MOTOR SALES, U.S.A., INC.

ON-VEHICLE INSPECTION

ON-VEHICLE INSPECTION

1. **INSPECT AIR CONDITIONING PRESSURE SENSOR**
    a. Check the wire harness.
        1. Disconnect the A55 air conditioning pressure sensor connector.
        2. Disconnect the I77 air conditioning amplifier assembly connector.
        3. Measure the resistance according to the value(s) in the table below.

        Standard Resistance

Tester Connection	Condition	Specified Condition
A55-1 (-) - I77-13 (SG-2)	Always	Below 1 ohms
A55-2 (PR) - I77-9 (PRE)	Always	Below 1 ohms
A55-3 (+) - I77-10 (S5-3)	Always	Below 1 ohms
A55-1 (-) - Body ground	Always	10 kohms or higher
A55-2 (PR) - Body ground	Always	10 kohms or higher
A10-3 (+) - Body ground	Always	10 kohms or higher

If the resistance is not as specified, repair the wire harness.

4. Reconnect the I77 air conditioning amplifier assembly connector.
5. Turn the power switch on (IG).
6. Measure the voltage according to the value(s) in the table below.

Standard Voltage

Tester Connection	Switch condition	Specified Condition
A55-3 (+) - Body ground	Power switch on (IG)	4.75 to 5.25 V

If the voltage is not as specified, repair the wire harness or replace air conditioning amplifier assembly.

b. Check the air conditioning pressure sensor.
    1. Install a manifold gauge set.
    2. Connect the connector to the air conditioning pressure sensor.
    3. Turn the power switch on (READY).
    4. Turn the A/C switch on.
    5. Measure the voltage according to the value(s) in the table below.

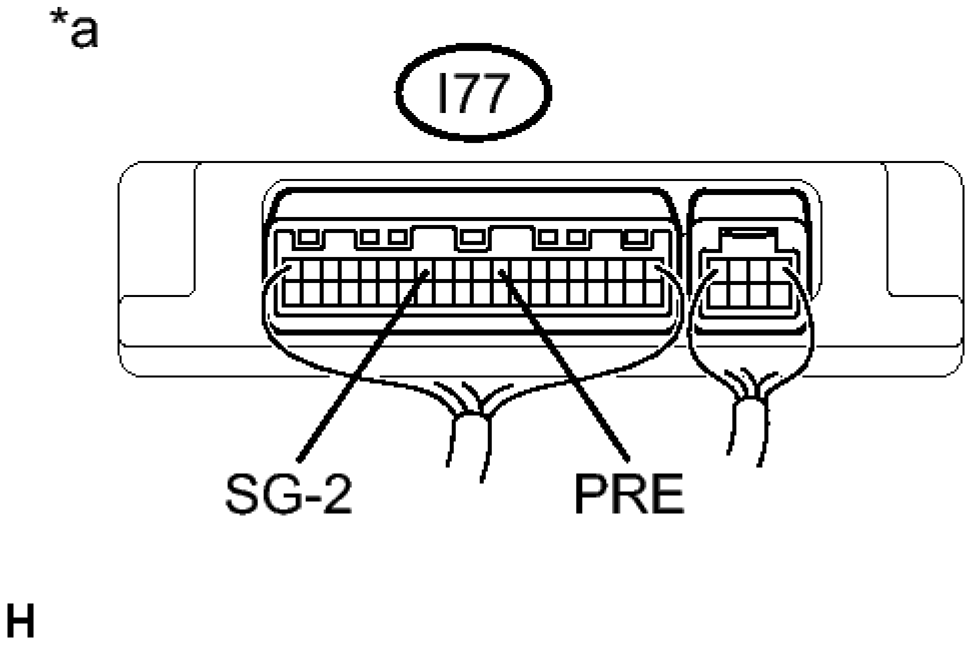

Fig. 220: Identifying Air Conditioning Amplifier Connector Terminals
Courtesy of TOYOTA MOTOR SALES, U.S.A., INC.

HINT:

Check from the rear of the connector while it is connected to the air conditioning amplifier.

Standard Voltage

Tester Connection	Condition	Specified Condition
I77-9 (PRE) - I77-13 (SG-2)	Refrigerant pressure: (less than 3025 kPa (30.9 kgf/cm2, 439 psi) and more than 176 kPa (1.8 kgf/cm2, 25 psi))	0.50 to 4.80 V

If the voltage is not as specified, replace the air conditioning pressure sensor.

TEXT IN ILLUSTRATION

*a	Component with harness connected (Air Conditioning Amplifier)

REMOVAL

REMOVAL

1. **RECOVER REFRIGERANT FROM AIR CONDITIONING SYSTEM** See step 1
2. **REMOVE AIR CONDITIONER PRESSURE SENSOR**
    a. Disconnect the connector.
    b. Remove the air conditioner pressure sensor.

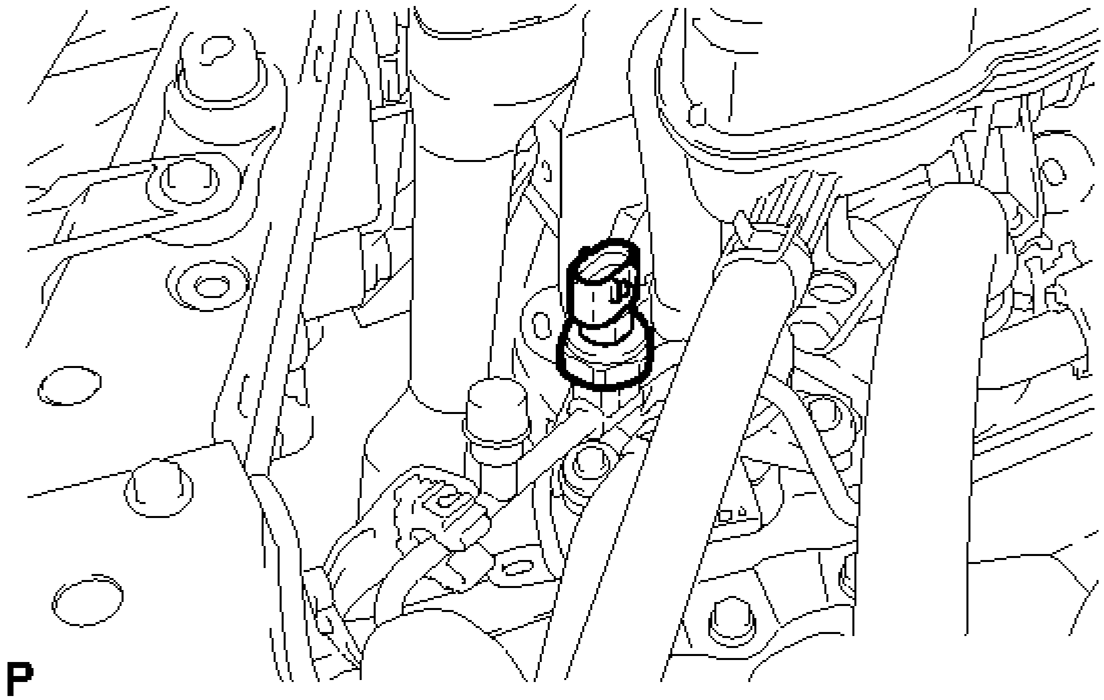

Fig. 221: Identifying Air Conditioner Pressure Sensor
Courtesy of TOYOTA MOTOR SALES, U.S.A., INC.

NOTE: **Do not deform the piping.**

INSTALLATION

INSTALLATION

1. **INSTALL AIR CONDITIONER PRESSURE SENSOR**

a. Apply a sufficient amount of compressor oil to a new air conditioner pressure sensor.

Compressor oil

ND-OIL 11 or equivalent

NOTE:

- **Keep the O-ring and O-ring fitting surfaces clean from dirt or any foreign matter.**
- **Do not use any compressor oil other than ND-OIL 11 or equivalent. If any compressor oil other than ND-OIL 11 or equivalent is used, compressor motor insulation performance may decrease, resulting in a leakage of electric power.**

b. Install the new air conditioner pressure sensor.

Torque: 11 N*m (110 kgf*cm, 8 ft.*lbf)

NOTE:

- **Do not deform the piping.**
- **Make sure to confirm that the piping does not disengage from the plastic clamp.**

c. Connect the connector.

2. **CHARGE AIR CONDITIONING SYSTEM WITH REFRIGERANT** See step 2
3. **WARM UP COMPRESSOR** See step 3
4. **INSPECT FOR REFRIGERANT LEAK** See step 4

AIR CONDITIONING PANEL

COMPONENTS

ILLUSTRATION

for Radio and Display Type with Intuitive Parking Assist System:

for Navigation Receiver Type:

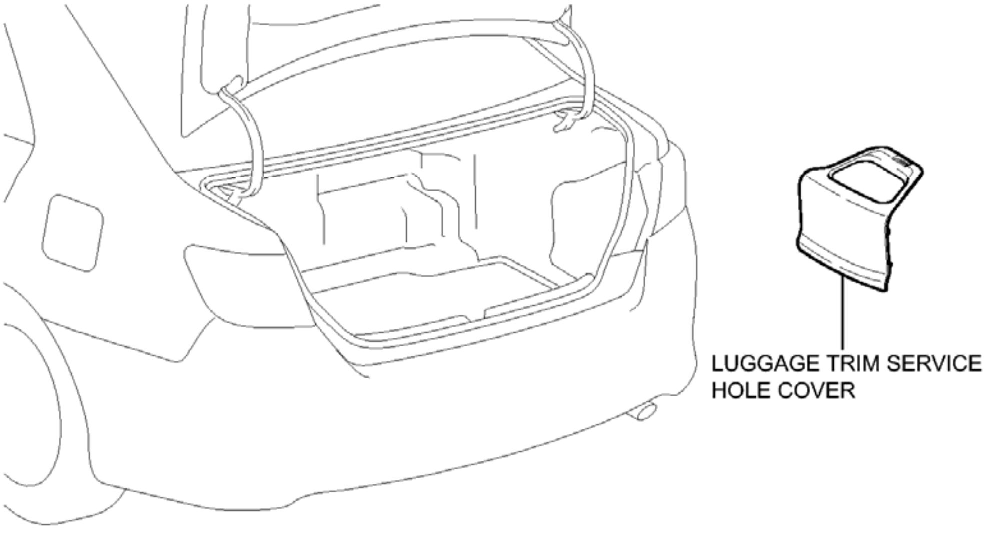
LUGGAGE TRIM SERVICE HOLE COVER
P

Fig. 222: Identifying Air Conditioning Panel Replacement Components (1 Of 5)
Courtesy of TOYOTA MOTOR SALES, U.S.A., INC.

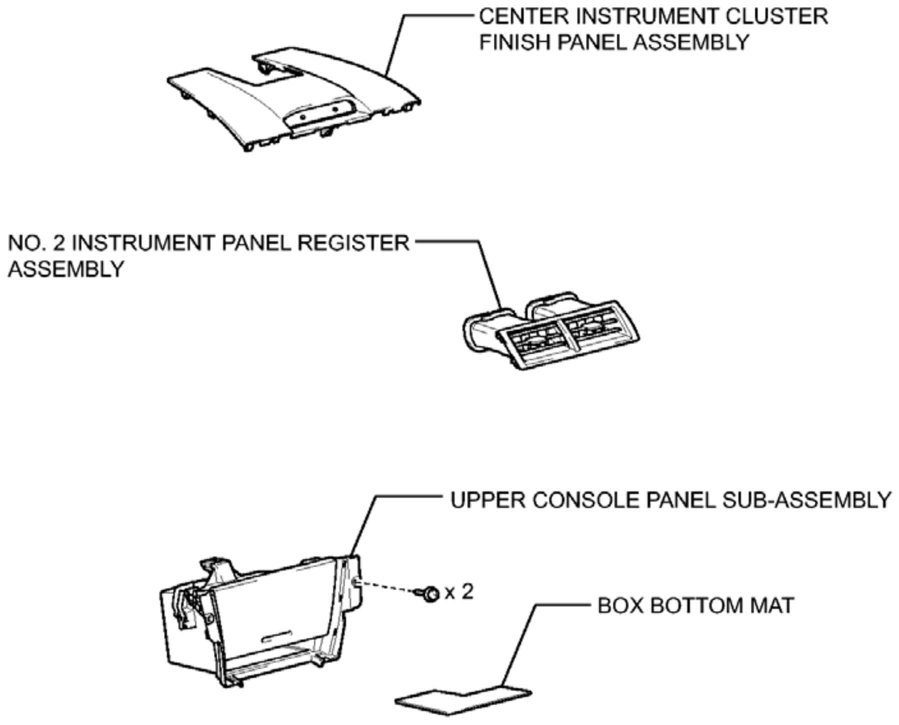
CENTER INSTRUMENT CLUSTER FINISH PANEL ASSEMBLY
NO. 2 INSTRUMENT PANEL REGISTER ASSEMBLY
UPPER CONSOLE PANEL SUB-ASSEMBLY
x 2
BOX BOTTOM MAT

P

Fig. 223: Identifying Air Conditioning Panel Replacement Components (2 Of 5)
Courtesy of TOYOTA MOTOR SALES, U.S.A., INC.

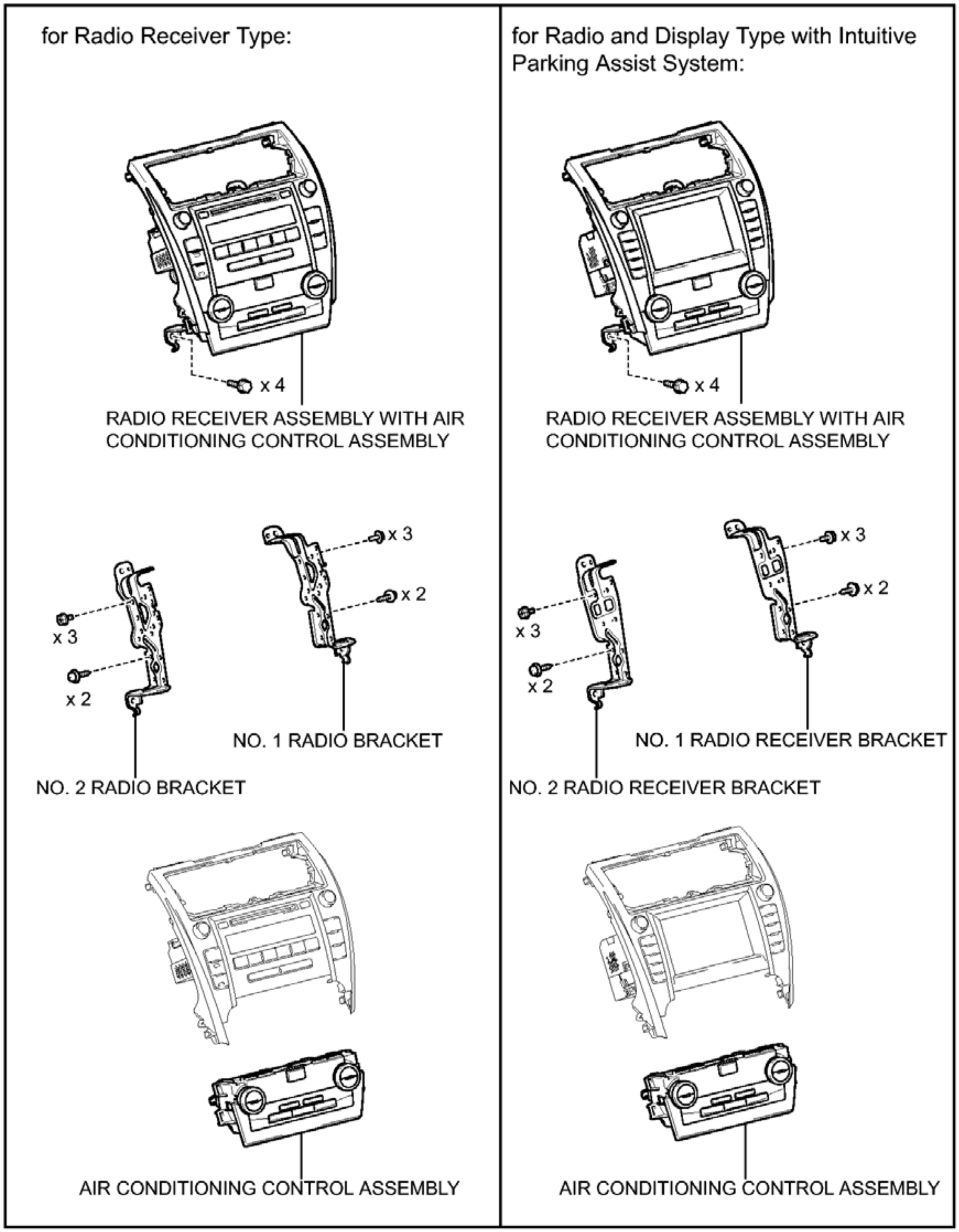
for Radio Receiver Type:
for Radio and Display Type with Intuitive Parking Assist System:
x 4
RADIO RECEIVER ASSEMBLY WITH AIR CONDITIONING CONTROL ASSEMBLY
x 4
RADIO RECEIVER ASSEMBLY WITH AIR CONDITIONING CONTROL ASSEMBLY
x 3
x 2
x 3
x 2
NO. 1 RADIO BRACKET
NO. 2 RADIO BRACKET
x 3
x 2
x 3
x 2
NO. 1 RADIO RECEIVER BRACKET
NO. 2 RADIO RECEIVER BRACKET
AIR CONDITIONING CONTROL ASSEMBLY
AIR CONDITIONING CONTROL ASSEMBLY

P

Fig. 224: Identifying Air Conditioning Panel Replacement Components (3 Of 5)
Courtesy of TOYOTA MOTOR SALES, U.S.A., INC.

for Radio and Display Type:

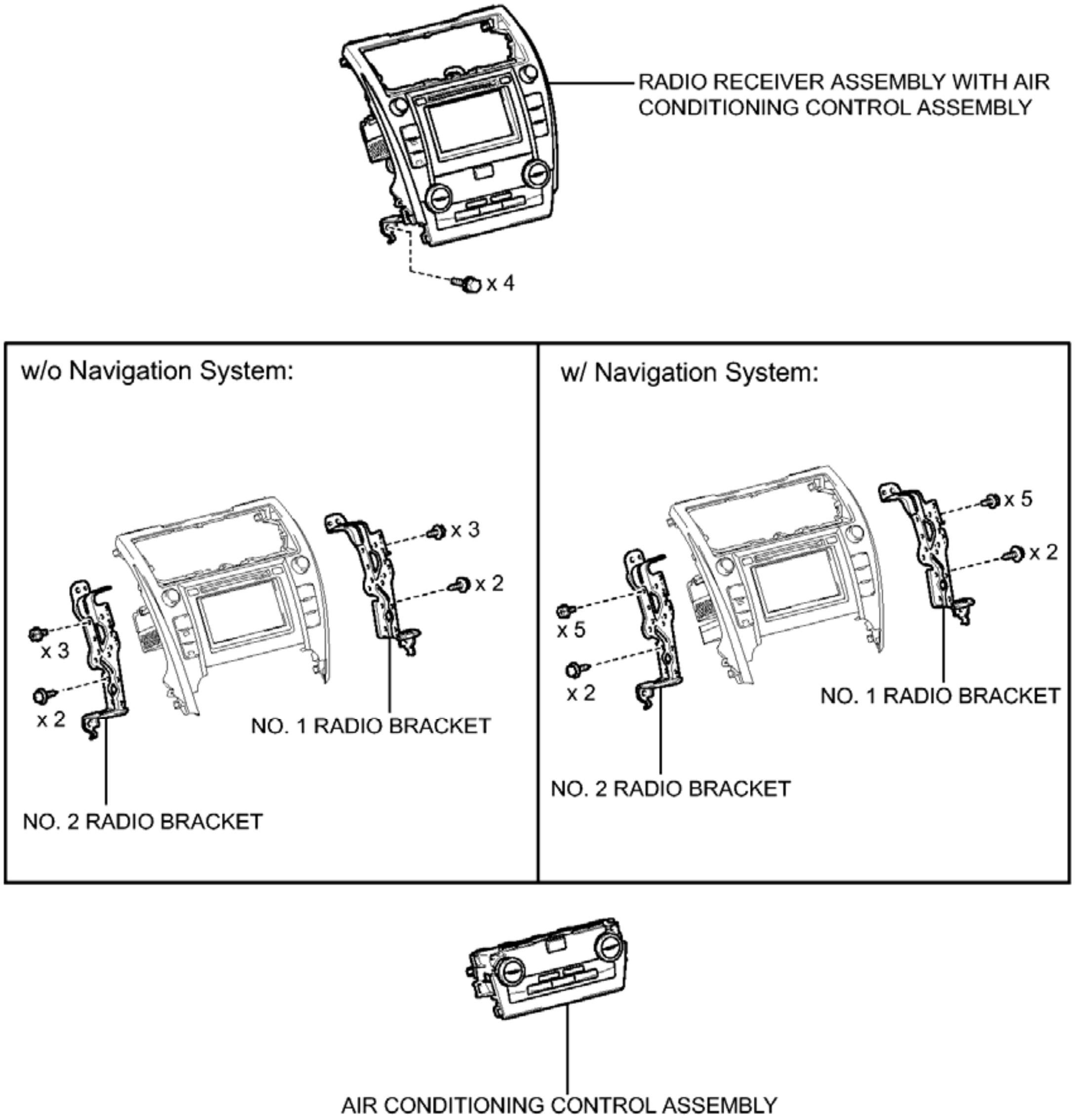
RADIO RECEIVER ASSEMBLY WITH AIR CONDITIONING CONTROL ASSEMBLY
x 4
w/o Navigation System:
x 3
x 2
x 3
x 2
NO. 1 RADIO BRACKET
NO. 2 RADIO BRACKET
w/ Navigation System:
x 5
x 2
x 5
x 2
NO. 1 RADIO BRACKET
NO. 2 RADIO BRACKET
AIR CONDITIONING CONTROL ASSEMBLY
P

Fig. 225: Identifying Air Conditioning Panel Replacement Components (4 Of 5)
Courtesy of TOYOTA MOTOR SALES, U.S.A., INC.

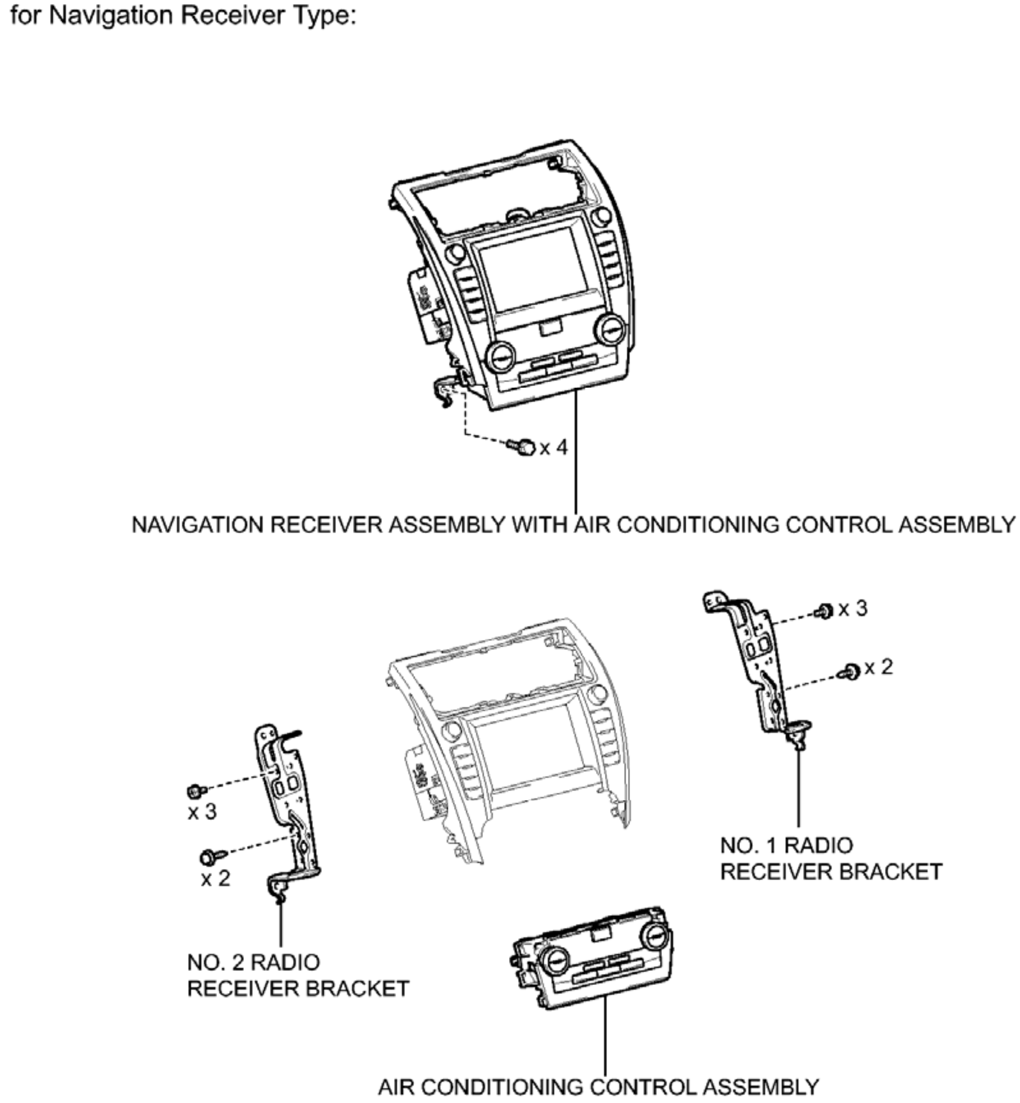
for Navigation Receiver Type:
x 4
NAVIGATION RECEIVER ASSEMBLY WITH AIR CONDITIONING CONTROL ASSEMBLY
x 3
x 2
NO. 1 RADIO RECEIVER BRACKET
x 3
x 2
NO. 2 RADIO RECEIVER BRACKET
AIR CONDITIONING CONTROL ASSEMBLY

P

Fig. 226: Identifying Air Conditioning Panel Replacement Components (5 Of 5)
Courtesy of TOYOTA MOTOR SALES, U.S.A., INC.

REMOVAL

REMOVAL

1. **PRECAUTION**

NOTE: **After turning the power switch off, waiting time may be required before disconnecting the cable from the negative (-) auxiliary battery terminal. Therefore, make sure to read the disconnecting the cable from the negative (-) auxiliary battery terminal notices before proceeding with work.**

Refer to PRECAUTION .

2. **REMOVE LUGGAGE TRIM SERVICE HOLE COVER**

   for Radio and Display Type with Intuitive Parking Assist System: Refer to **REMOVAL - Step 2**

   for Navigation Receiver Type: Refer to **REMOVAL - Step 2**

3. **DISCONNECT CABLE FROM AUXILIARY BATTERY NEGATIVE TERMINAL (for Radio and Display Type with Intuitive Parking Assist System)**

   NOTE: **When disconnecting the cable, some systems need to be initialized after the cable is reconnected. Refer to INITIALIZATION .**

4. **DISCONNECT CABLE FROM AUXILIARY BATTERY NEGATIVE TERMINAL (for Navigation Receiver Type)**

   NOTE: **When disconnecting the cable, some systems need to be initialized after the cable is reconnected. Refer to INITIALIZATION .**

5. **REMOVE UPPER CONSOLE PANEL SUB-ASSEMBLY** . Refer to **REMOVAL - Step 25**
6. **REMOVE REAR CONSOLE BOX ASSEMBLY**

   Refer to **REMOVAL**

7. **REMOVE CENTER INSTRUMENT CLUSTER FINISH PANEL ASSEMBLY** . Refer to **REMOVAL - Step 22**
8. **REMOVE NO. 2 INSTRUMENT PANEL REGISTER ASSEMBLY** . Refer to **REMOVAL - Step 23**
9. **REMOVE BOX BOTTOM MAT** . Refer to **REMOVAL - Step 24**
10. **REMOVE RADIO RECEIVER ASSEMBLY WITH AIR CONDITIONING CONTROL ASSEMBLY (for Radio Receiver Type)** . Refer to **REMOVAL - Step 9**
11. **REMOVE RADIO RECEIVER ASSEMBLY WITH AIR CONDITIONING CONTROL ASSEMBLY (for Radio and Display Type)** . Refer to **REMOVAL - Step 10**
12. **REMOVE NAVIGATION RECEIVER ASSEMBLY WITH AIR CONDITIONING CONTROL ASSEMBLY (for Navigation Receiver Type)** . Refer to **REMOVAL - Step 9**
13. **REMOVE NO. 1 RADIO BRACKET (for Radio Receiver Type)** . Refer to **REMOVAL - Step 11**
14. **REMOVE NO. 2 RADIO BRACKET (for Radio Receiver Type)** . Refer to **REMOVAL - Step 12**
15. **REMOVE NO. 1 RADIO BRACKET (for Radio and Display Type)** . Refer to **REMOVAL - Step 13**
16. **REMOVE NO. 2 RADIO BRACKET (for Radio and Display Type)** . Refer to **REMOVAL - Step 14**
17. **REMOVE NO. 1 RADIO RECEIVER BRACKET (for Radio and Display Type with Intuitive Parking Assist System)** . Refer to **REMOVAL - Step 15**
18. **REMOVE NO. 2 RADIO RECEIVER BRACKET (for Radio and Display Type with Intuitive**

Parking Assist System) . Refer to **REMOVAL - Step 16**

19. **REMOVE NO. 1 RADIO RECEIVER BRACKET (for Navigation Receiver Type)** . Refer to **REMOVAL - Step 10**
20. **REMOVE NO. 2 RADIO RECEIVER BRACKET (for Navigation Receiver Type)** . Refer to **REMOVAL - Step 11**
21. **REMOVE AIR CONDITIONING CONTROL ASSEMBLY**
    a. Disengage the 4 clips and guide, and remove the air conditioning control assembly as shown in the illustration.

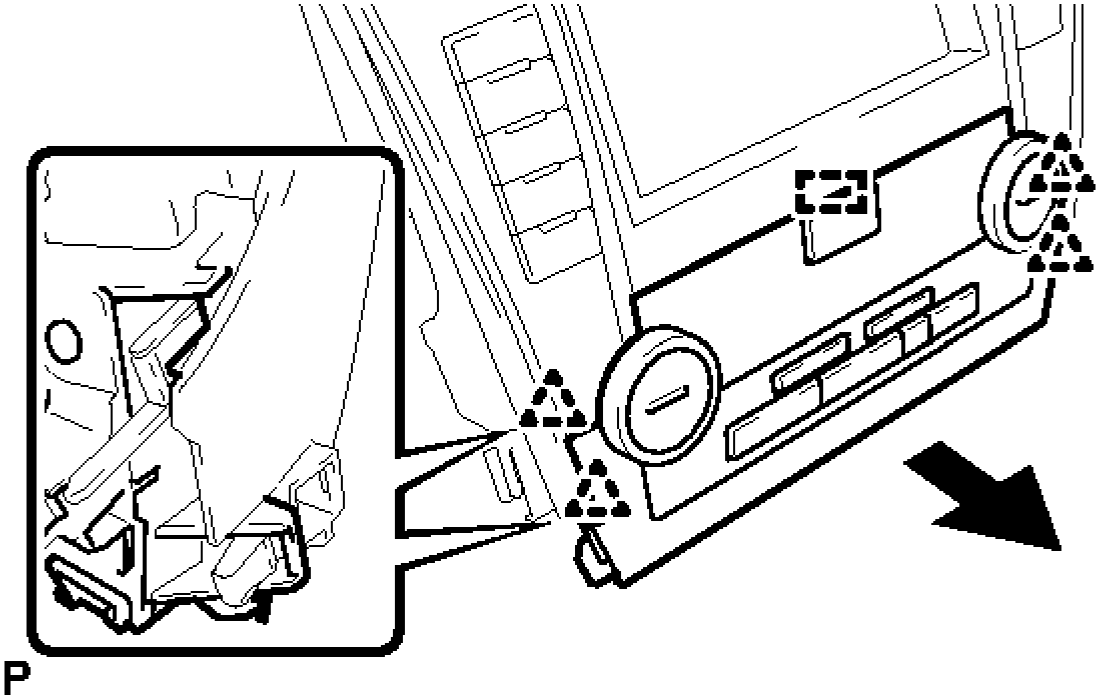

Fig. 227: Removing Air Conditioning Control Assembly
Courtesy of TOYOTA MOTOR SALES, U.S.A., INC.

INSTALLATION

INSTALLATION

1. **INSTALL AIR CONDITIONING CONTROL ASSEMBLY**
    a. Engage the guide and 4 clips to install the air conditioning control assembly as shown in the illustration.

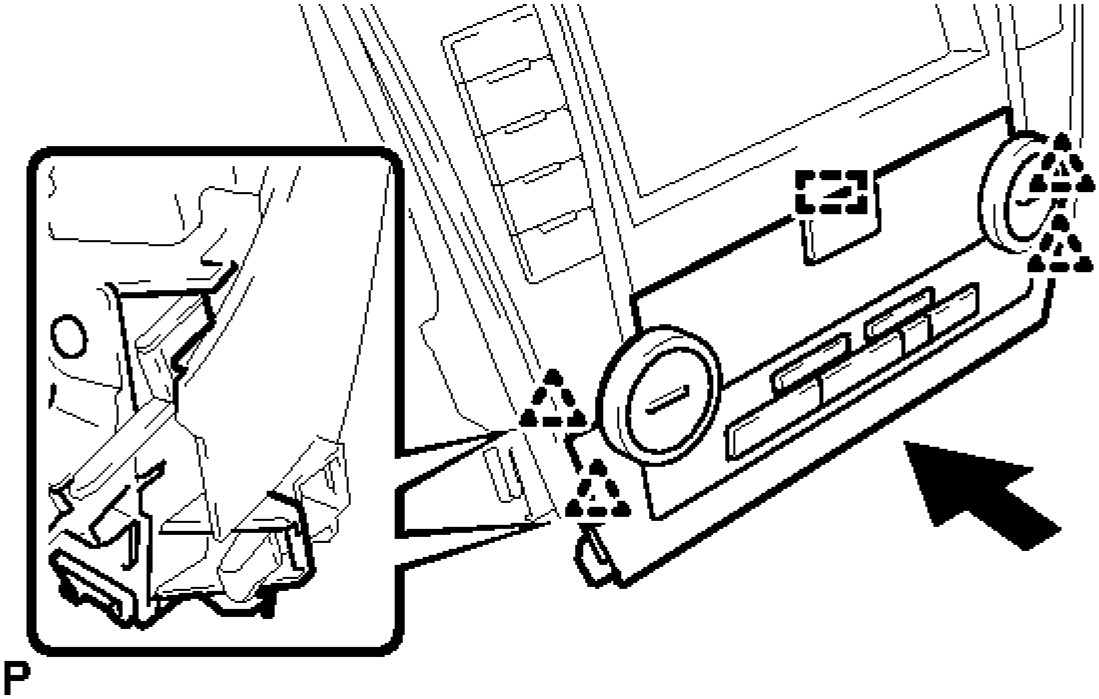

Fig. 228: Installing Air Conditioning Control
Courtesy of TOYOTA MOTOR SALES, U.S.A., INC.

2. **INSTALL NO. 1 RADIO BRACKET (for Radio Receiver Type)** . Refer to INSTALLATION - Step 8
3. **INSTALL NO. 2 RADIO BRACKET (for Radio Receiver Type)** . Refer to INSTALLATION - Step 9
4. **INSTALL NO. 1 RADIO BRACKET (for Radio and Display Type)** . Refer to INSTALLATION - Step 10
5. **INSTALL NO. 2 RADIO BRACKET (for Radio and Display Type)** . Refer to INSTALLATION - Step 11
6. **INSTALL NO. 1 RADIO RECEIVER BRACKET (for Radio and Display Type with Intuitive Parking Assist System)** . Refer to INSTALLATION - Step 12
7. **INSTALL NO. 2 RADIO RECEIVER BRACKET (for Radio and Display Type with Intuitive Parking Assist System)** . Refer to INSTALLATION - Step 13
8. **INSTALL NO. 1 RADIO RECEIVER BRACKET (for Navigation Receiver Type)** . Refer to INSTALLATION - Step 5
9. **INSTALL NO. 2 RADIO RECEIVER BRACKET (for Navigation Receiver Type)** . Refer to INSTALLATION - Step 6
10. **INSTALL RADIO RECEIVER ASSEMBLY WITH AIR CONDITIONING CONTROL ASSEMBLY (for Radio Receiver Type)** . Refer to INSTALLATION - Step 14
11. **INSTALL RADIO RECEIVER ASSEMBLY WITH AIR CONDITIONING CONTROL ASSEMBLY (for Radio and Display Type)** . Refer to INSTALLATION - Step 15
12. **INSTALL NAVIGATION RECEIVER ASSEMBLY WITH AIR CONDITIONING CONTROL ASSEMBLY (for Navigation Receiver Type)** . Refer to INSTALLATION - Step 7

13. **INSTALL NO. 2 INSTRUMENT PANEL REGISTER ASSEMBLY** . Refer to **INSTALLATION - Step 29**
14. **INSTALL CENTER INSTRUMENT CLUSTER FINISH PANEL ASSEMBLY** . Refer to **INSTALLATION - Step 30**
15. **INSTALL UPPER CONSOLE PANEL SUB-ASSEMBLY** . Refer to **INSTALLATION - Step 27**
16. **INSTALL BOX BOTTOM MAT** . Refer to **INSTALLATION - Step 28**
17. **INSTALL REAR CONSOLE BOX ASSEMBLY**

    Refer to **INSTALLATION**

18. **CONNECT CABLE TO AUXILIARY BATTERY NEGATIVE TERMINAL (for Radio and Display Type with Intuitive Parking Assist System)**

    NOTE: When disconnecting the cable, some systems need to be initialized after the cable is reconnected. Refer to INITIALIZATION .

19. **CONNECT CABLE TO AUXILIARY BATTERY NEGATIVE TERMINAL (for Navigation Receiver Type)**

    NOTE: When disconnecting the cable, some systems need to be initialized after the cable is reconnected. Refer to INITIALIZATION .

20. **INSTALL LUGGAGE TRIM SERVICE HOLE COVER**

    for Radio and Display Type with Intuitive Parking Assist System: Refer to **INSTALLATION - Step 3**

    for Navigation Receiver Type: Refer to **INSTALLATION - Step 3**

ECO SWITCH

COMPONENTS

ILLUSTRATION

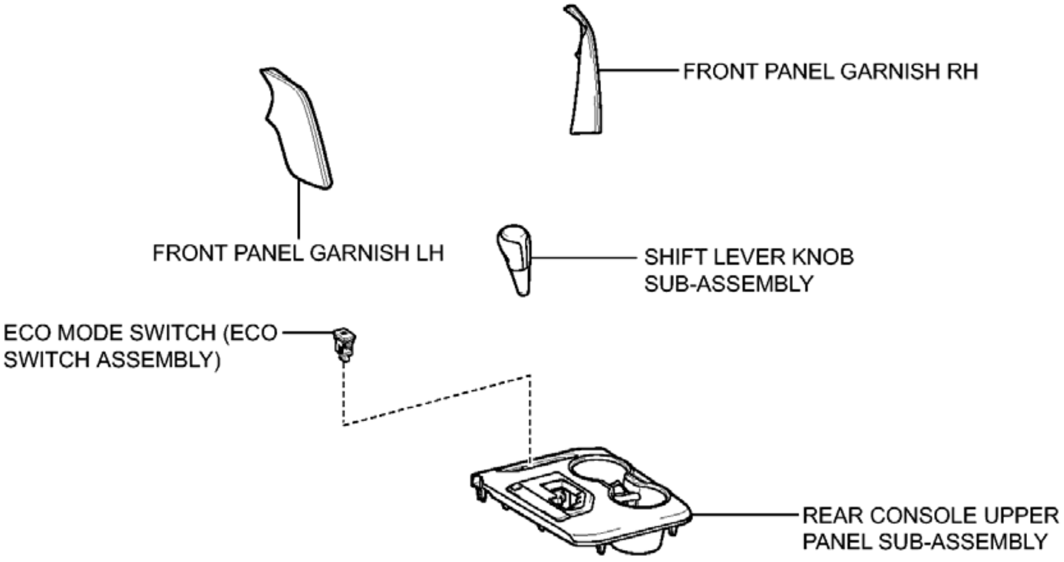
FRONT PANEL GARNISH RH
FRONT PANEL GARNISH LH
SHIFT LEVER KNOB SUB-ASSEMBLY
ECO MODE SWITCH (ECO SWITCH ASSEMBLY)
REAR CONSOLE UPPER PANEL SUB-ASSEMBLY
P

Fig. 229: Identifying ECO Switch Replacement Components
Courtesy of TOYOTA MOTOR SALES, U.S.A., INC.

REMOVAL

REMOVAL

1. **REMOVE FRONT PANEL GARNISH LH** . Refer to **REMOVAL - Step 12**
2. **REMOVE FRONT PANEL GARNISH RH** . Refer to **REMOVAL - Step 15**
3. **REMOVE SHIFT LEVER KNOB SUB-ASSEMBLY** . Refer to **REMOVAL - Step 16**
4. **REMOVE REAR CONSOLE UPPER PANEL SUB-ASSEMBLY** . Refer to **REMOVAL - Step 17**
5. **REMOVE ECO MODE SWITCH (ECO SWITCH ASSEMBLY)**
    a. Disengage the 2 claws and remove the ECO mode switch (eco switch assembly).

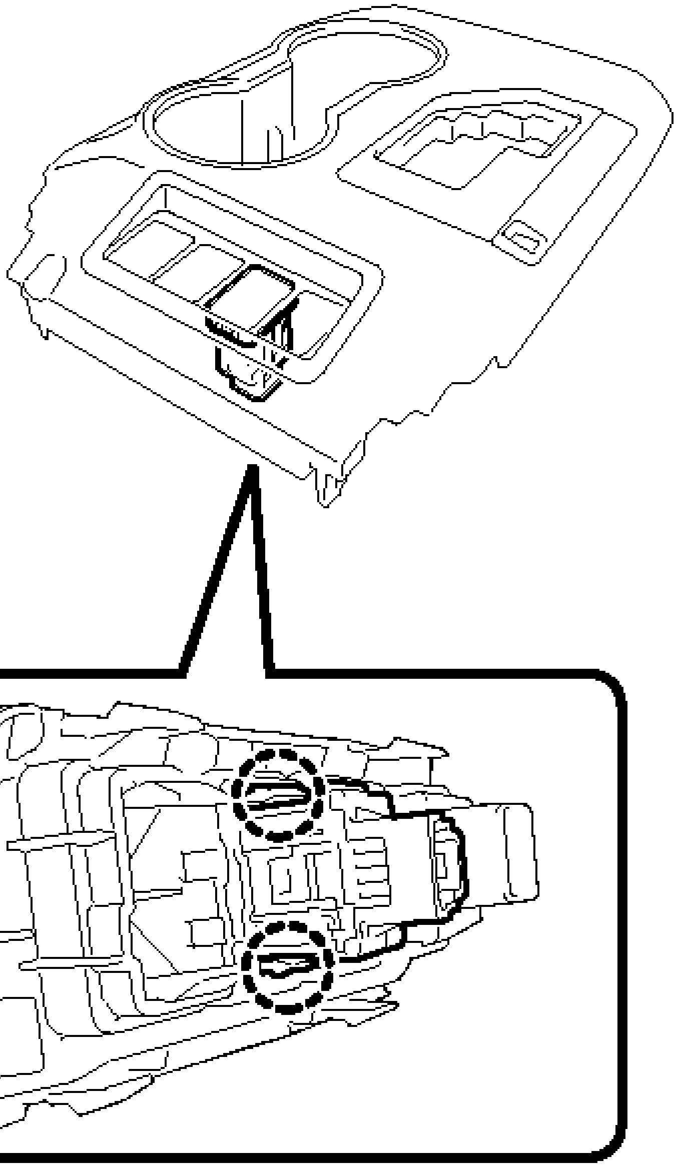

Fig. 230: Identifying ECO Switch Component And Claws
Courtesy of TOYOTA MOTOR SALES, U.S.A., INC.

INSPECTION

INSPECTION

1. **INSPECT ECO MODE SWITCH (ECO SWITCH ASSEMBLY)**
    a. Measure the resistance according to the value(s) in the table below.

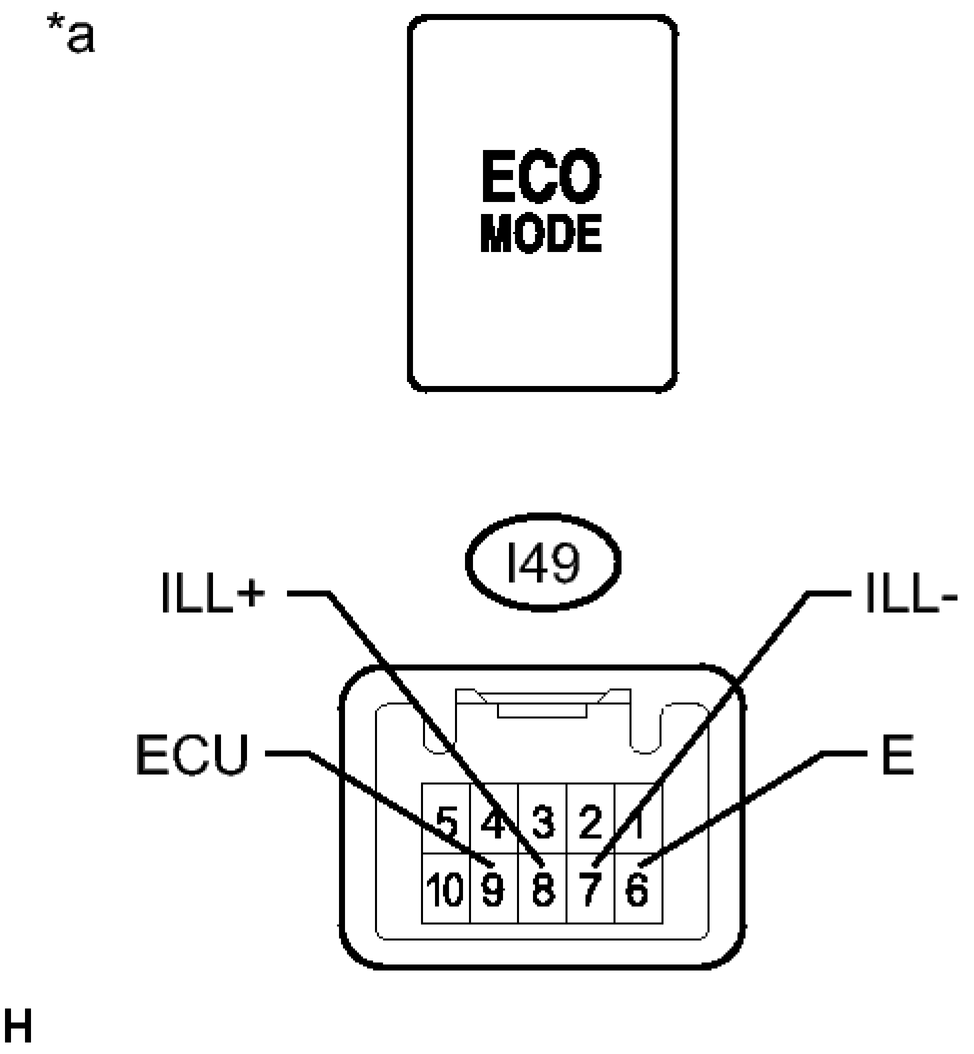
*a
ECO
MODE
I49
ILL+
ILL-
ECU
E
5
4
3
2
1
10
9
8
7
6
H

Fig. 231: Identifying ECO Mode Switch Connector Terminal Identification
Courtesy of TOYOTA MOTOR SALES, U.S.A., INC.

Standard Resistance

Tester Connection	Switch Condition	Specified Condition
I49-6 (E) - I49-9	ECO mode switch (eco	Below 1

(ECU)	switch assembly) on	ohms
I49-6 (E) - I49-9 (ECU)	ECO mode switch (eco switch assembly) off	10 kohms or higher

TEXT IN ILLUSTRATION

*a	Component without harness connected (ECO Mode Switch (Eco Switch Assembly))

If the result is not as specified, replace the ECO mode switch (eco switch assembly).

b. Check that the switch illuminates.
   1. Apply auxiliary battery voltage to the ion generator switch assembly and check that the switch illuminates.

      OK

Tester Connection	Specified Condition
Auxiliary battery positive (+) --> Terminal 8 (ILL+) Auxiliary battery negative (-) --> Terminal 7 (ILL-)	Illuminates

If the result is not as specified, replace the ECO mode switch (eco switch assembly).

INSTALLATION

INSTALLATION

1. **INSTALL ECO MODE SWITCH (ECO SWITCH ASSEMBLY)**
    a. Engage the 2 claws to install the ECO mode switch (eco switch assembly).
2. **INSTALL REAR CONSOLE UPPER PANEL SUB-ASSEMBLY** . Refer to **INSTALLATION - Step 35**
3. **INSTALL SHIFT LEVER KNOB SUB-ASSEMBLY** . Refer to **INSTALLATION - Step 36**
4. **INSTALL FRONT PANEL GARNISH RH** . Refer to **INSTALLATION - Step 37**
5. **INSTALL FRONT PANEL GARNISH LH** . Refer to **INSTALLATION - Step 40**

AIR CONDITIONING AMPLIFIER

COMPONENTS

ILLUSTRATION

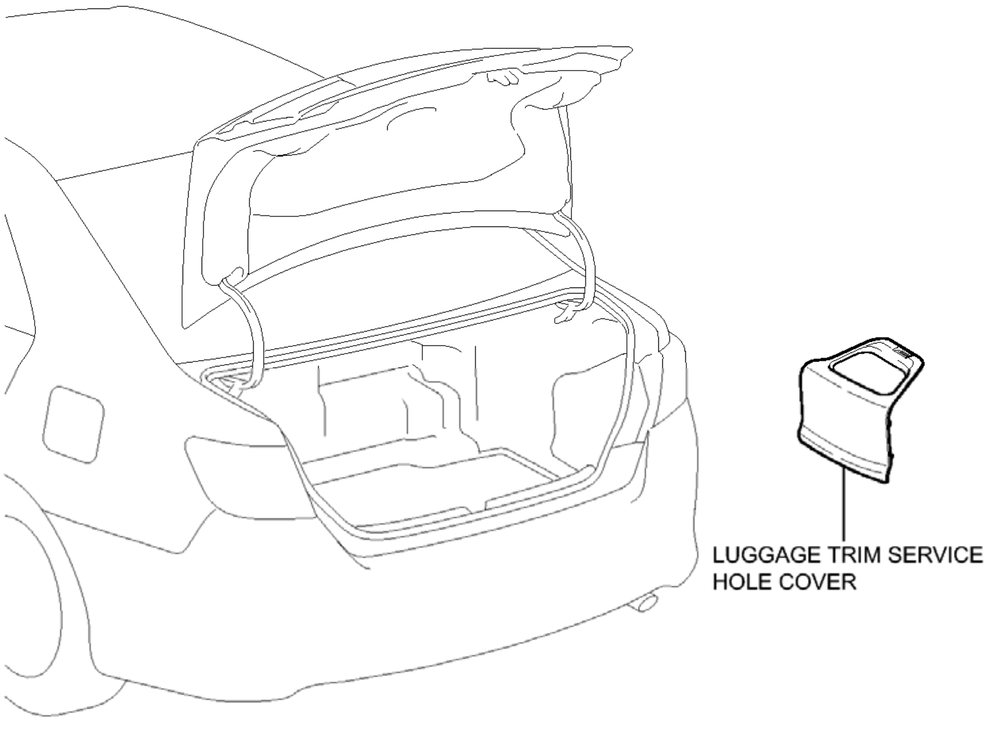

Fig. 232: Identifying Air Conditioning Amplifier Replacement Components (1 Of 2)
Courtesy of TOYOTA MOTOR SALES, U.S.A., INC.

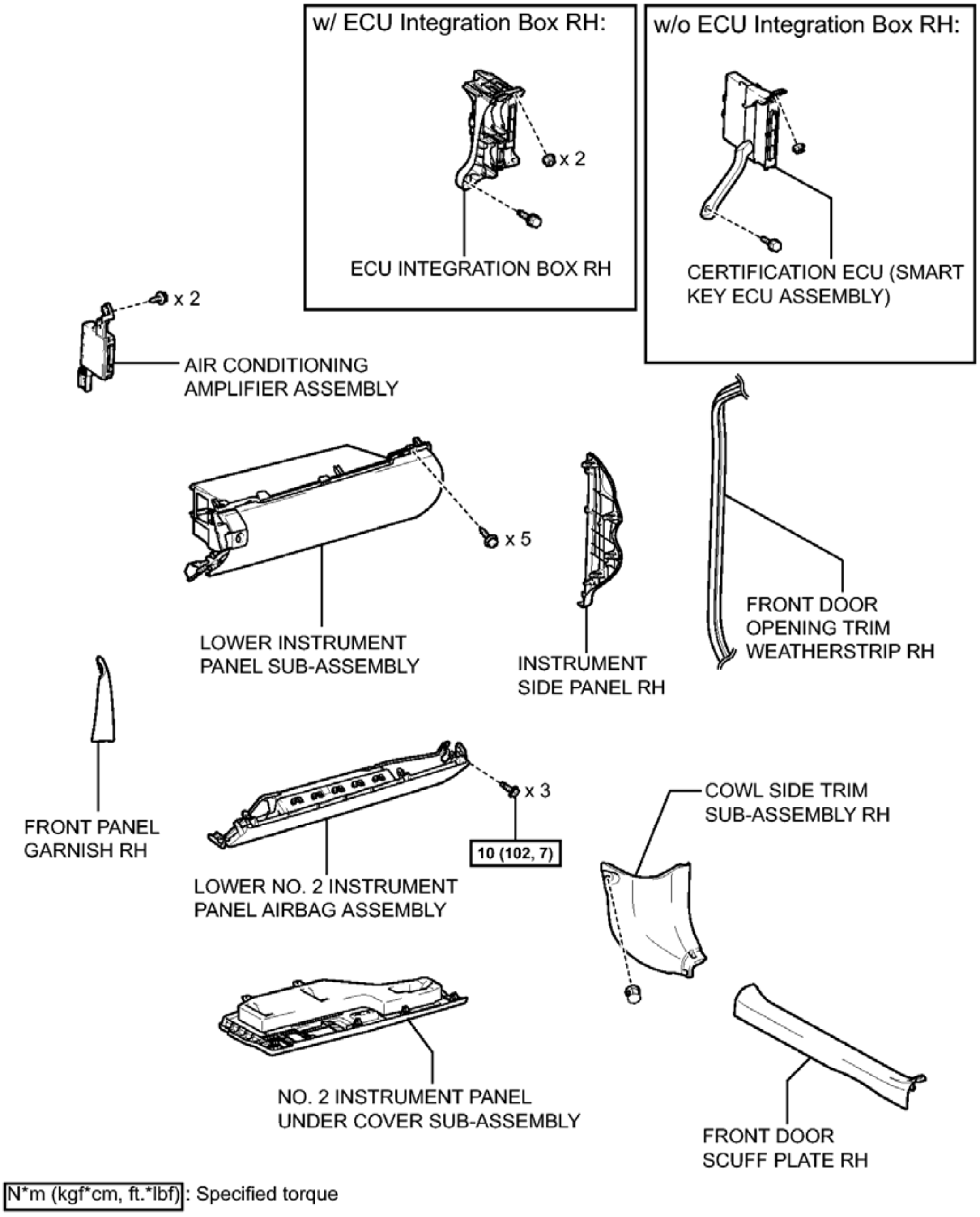
w/ ECU Integration Box RH:
x 2
ECU INTEGRATION BOX RH
w/o ECU Integration Box RH:
CERTIFICATION ECU (SMART KEY ECU ASSEMBLY)
x 2
AIR CONDITIONING AMPLIFIER ASSEMBLY
x 5
LOWER INSTRUMENT PANEL SUB-ASSEMBLY
INSTRUMENT SIDE PANEL RH
FRONT DOOR OPENING TRIM WEATHERSTRIP RH
FRONT PANEL GARNISH RH
x 3
10 (102, 7)
LOWER NO. 2 INSTRUMENT PANEL AIRBAG ASSEMBLY
COWL SIDE TRIM SUB-ASSEMBLY RH
NO. 2 INSTRUMENT PANEL UNDER COVER SUB-ASSEMBLY
FRONT DOOR SCUFF PLATE RH
N*m (kgf*cm, ft.*lbf): Specified torque
P

Fig. 233: Identifying Air Conditioning Amplifier Replacement Components With Torque Specifications (2 Of 2)
Courtesy of TOYOTA MOTOR SALES, U.S.A., INC.

REMOVAL

REMOVAL

1. **PRECAUTION**

NOTE: **After turning the power switch off, waiting time may be required before disconnecting the cable from the negative (-) auxiliary battery terminal. Therefore, make sure to read the disconnecting the cable from the negative (-) auxiliary battery terminal notices before proceeding with work. Refer to PRECAUTION .**

2. **REMOVE LUGGAGE TRIM SERVICE HOLE COVER** . Refer to **REMOVAL - Step 2**
3. **DISCONNECT CABLE FROM AUXILIARY BATTERY NEGATIVE TERMINAL**

WARNING: **Wait at least 90 seconds after disconnecting the cable from the negative (-) auxiliary battery terminal to disable the SRS system.**

NOTE: **When disconnecting the cable, some systems need to be initialized after the cable is reconnected. Refer to INITIALIZATION .**

4. **REMOVE FRONT DOOR SCUFF PLATE RH**

   HINT:

   Use the same procedure for the RH side and LH side. Refer to **REMOVAL - Step 4** .

5. **REMOVE COWL SIDE TRIM SUB-ASSEMBLY RH**

   HINT:

   Use the same procedure for the RH side and LH side. Refer to **REMOVAL - Step 5** .

6. **DISCONNECT FRONT DOOR OPENING TRIM WEATHERSTRIP RH** . Refer to **REMOVAL - Step 33**
7. **REMOVE INSTRUMENT SIDE PANEL RH** . Refer to **REMOVAL - Step 34**
8. **REMOVE FRONT PANEL GARNISH RH** . Refer to **REMOVAL - Step 15**
9. **REMOVE NO. 2 INSTRUMENT PANEL UNDER COVER SUB-ASSEMBLY** . Refer to **REMOVAL - Step 35**
10. **REMOVE LOWER NO. 2 INSTRUMENT PANEL AIRBAG ASSEMBLY** . Refer to **REMOVAL - Step 9**
11. **REMOVE LOWER INSTRUMENT PANEL SUB-ASSEMBLY** . Refer to **REMOVAL - Step 37**
12. **REMOVE CERTIFICATION ECU (SMART KEY ECU ASSEMBLY) (w/o ECU Integration Box RH)** . Refer to **REMOVAL - Step 12**
13. **REMOVE ECU INTEGRATION BOX RH (w/ ECU Integration Box RH)** . Refer to **REMOVAL - Step 12**
14. **REMOVE AIR CONDITIONING AMPLIFIER ASSEMBLY**
    1. Disconnect each connector.
    2. Remove the 2 screws.

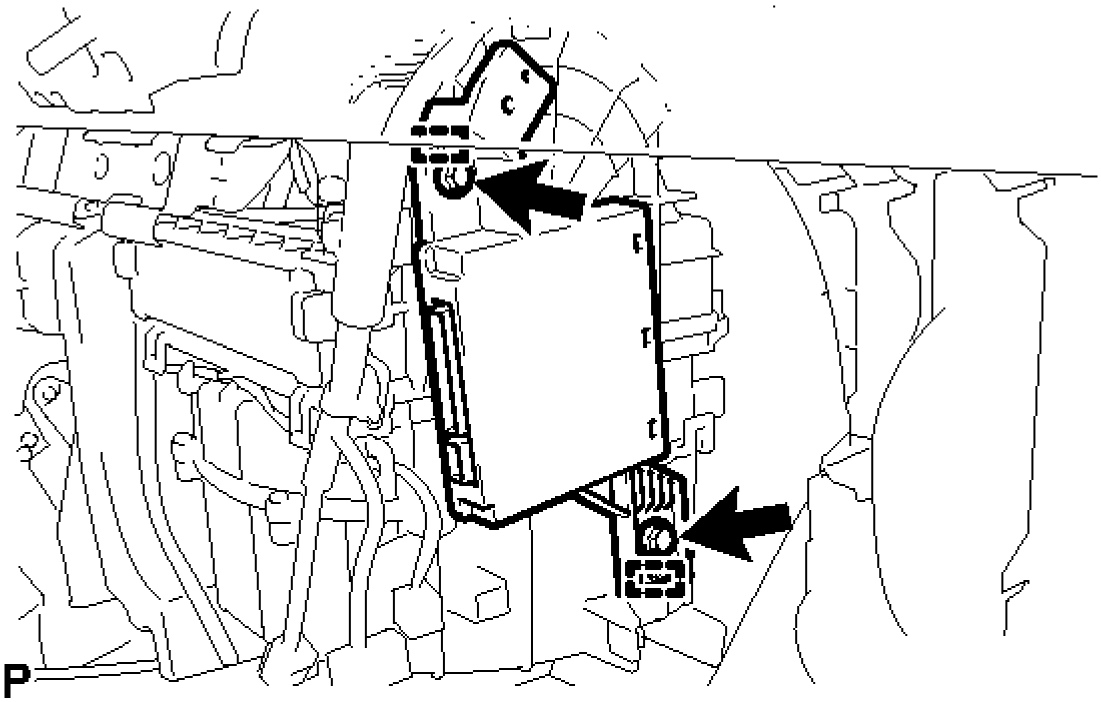

Fig. 234: Identifying Air Conditioning Amplifier Screws
Courtesy of TOYOTA MOTOR SALES, U.S.A., INC.

c. Disengage the 2 guides and remove the air conditioning amplifier assembly.

INSTALLATION

INSTALLATION

1. **INSTALL AIR CONDITIONING AMPLIFIER ASSEMBLY**
    a. Engage the 2 guides.
    b. Install the air conditioning amplifier assembly with the 2 screws.
    c. Connect each connector.
2. **INSTALL CERTIFICATION ECU (SMART KEY ECU ASSEMBLY) (w/o ECU Integration Box RH)** . Refer to **INSTALLATION - Step 2**
3. **INSTALL ECU INTEGRATION BOX RH (w/ ECU Integration Box RH)** . Refer to **INSTALLATION - Step 2**
4. **INSTALL LOWER INSTRUMENT PANEL SUB-ASSEMBLY** . Refer to **INSTALLATION - Step 15**
5. **INSTALL LOWER NO. 2 INSTRUMENT PANEL AIRBAG ASSEMBLY** . Refer to **INSTALLATION - Step 1**
6. **INSTALL NO. 2 INSTRUMENT PANEL UNDER COVER SUB-ASSEMBLY** . Refer to **INSTALLATION - Step 17**
7. **INSTALL INSTRUMENT SIDE PANEL RH** . Refer to **INSTALLATION - Step 18**
8. **INSTALL FRONT PANEL GARNISH RH** . Refer to **INSTALLATION - Step 37**

9. **CONNECT FRONT DOOR OPENING TRIM WEATHERSTRIP RH** . Refer to **INSTALLATION - Step 47**
10. **INSTALL COWL SIDE TRIM SUB-ASSEMBLY RH**

    HINT:

    Use the same procedure for the RH side and LH side. Refer to **INSTALLATION - Step 44** .

11. **INSTALL FRONT DOOR SCUFF PLATE RH**

    HINT:

    Use the same procedure for the RH side and LH side. Refer to **INSTALLATION - Step 45** .

12. **CONNECT CABLE TO AUXILIARY BATTERY NEGATIVE TERMINAL**

    NOTE: **When disconnecting the cable, some systems need to be initialized after the cable is reconnected. Refer to INITIALIZATION .**

13. **INSTALL LUGGAGE TRIM SERVICE HOLE COVER** . Refer to **INSTALLATION - Step 3**
14. **INSPECT SRS WARNING LIGHT**

    for Separate Type Yaw Rate Sensor: Refer to **DIAGNOSIS SYSTEM**

    for Built-in Type Yaw Rate Sensor: Refer to **DIAGNOSIS SYSTEM**

RELAY (W/ PTC HEATER)

ON-VEHICLE INSPECTION

ON-VEHICLE INSPECTION

1. **INSPECT PTC HEATER RELAY (PTC HTR NO. 1, PTC HTR NO. 2)**

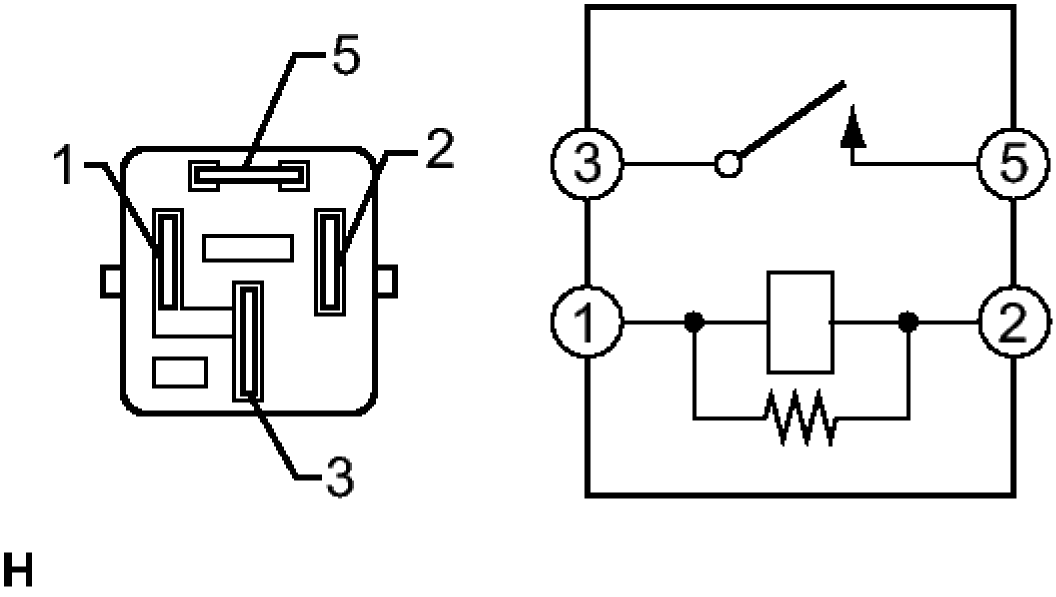

Fig. 235: Inspecting PTC Heater Relay
Courtesy of TOYOTA MOTOR SALES, U.S.A., INC.

a. Measure the resistance according to the value(s) in the table below.

Standard Resistance

Tester Connection	Condition	Specified Condition
3 - 5	Auxiliary battery voltage not applied to terminals 1 and 2	10 kohms or higher
3 - 5	Auxiliary battery voltage applied to terminals 1 and 2	Below 1 ohms

If the result is not as specified, replace the relay.

REFRIGERANT

ON-VEHICLE INSPECTION

ON-VEHICLE INSPECTION

1. **INSPECT REFRIGERANT PRESSURE WITH MANIFOLD GAUGE SET**

   HINT:

   The following examples show the readings of a manifold gauge set and the corresponding air conditioning system problems.

   a. Read the manifold gauge pressure when the following conditions are met:
      - Doors are fully open.
      - The engine is idling.
      - The A/C switch is on.
      - The temperature is set to max cool.
      - The blower speed is set to high.
      - Temperature at the air inlet with recirculate selected is 30 to 35°C (86 to 95°F).
      1. Normally functioning air conditioning system.

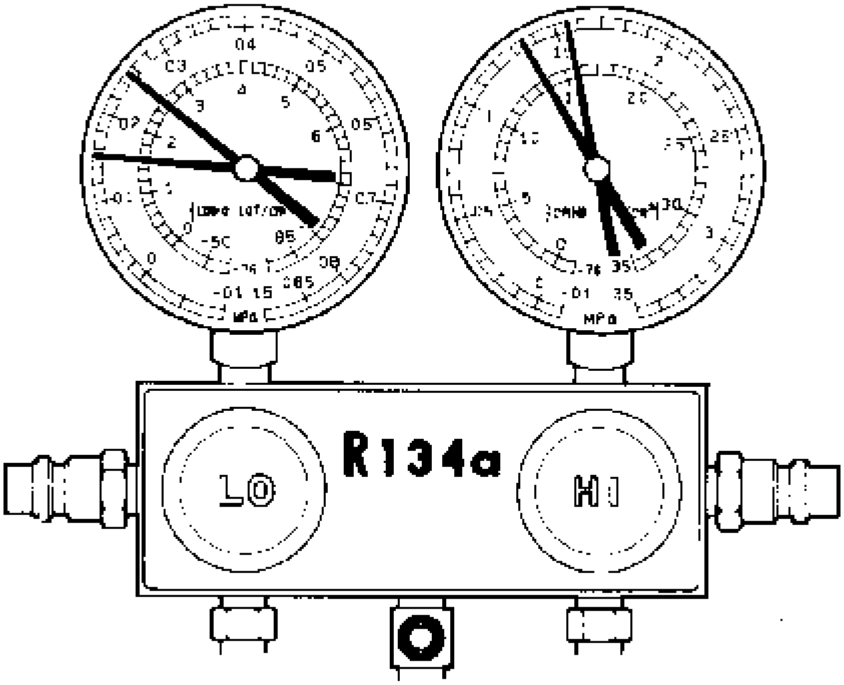

E50573

Fig. 1: Checking Refrigerant Pressure - Normally Functioning Refrigeration System
Courtesy of TOYOTA MOTOR SALES, U.S.A., INC.

GAUGE READING

Pressure Side	Refrigerant Volume
Low	0.15 to 0.25 MPa (1.5 to 2.5 kgf/cm^2 , 21 to 36 psi)
High	1.37 to 1.57 MPa (14 to 16 kgf/cm^2 , 199 to 228 psi)

2. Abnormally functioning air conditioning system.
    a. During operation, pressure on low pressure side cycles between normal and vacuum

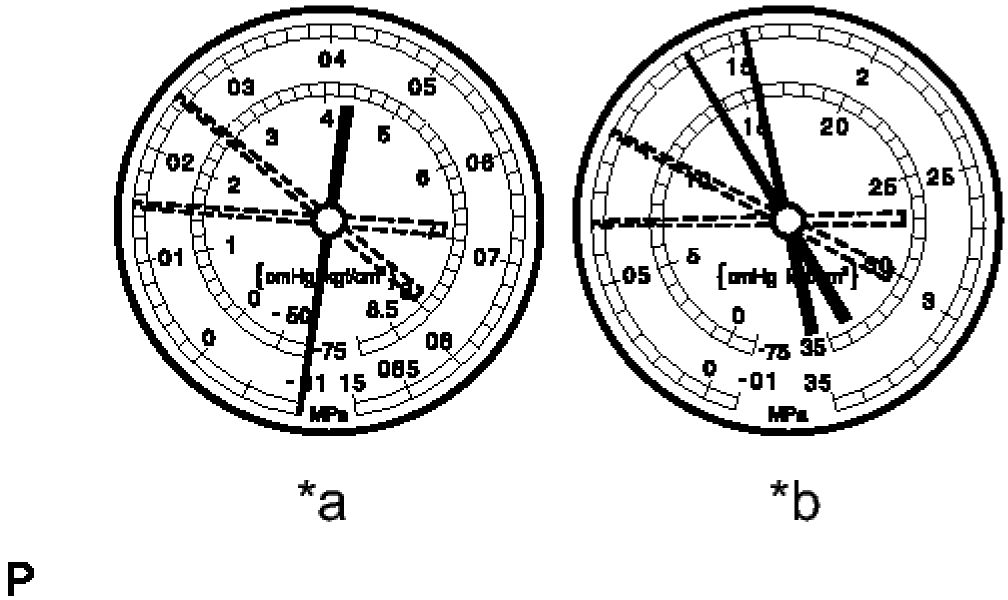

Fig. 2: Checking Refrigerant Pressure - Moisture Present In Air Conditioning System
Courtesy of TOYOTA MOTOR SALES, U.S.A., INC.

	Air conditioning

Symptom	system periodically cools and then fails to cool.
Probable Cause	Moisture in air conditioning system freezes at expansion valve orifice, causing refrigerant to temporarily stop circulating
	After system stops, and warms up again, ice melts and normal operation is temporarily restored
Diagnosis	Cooler dryer (integrated into condenser tank) saturated with moisture
	Moisture in air conditioning system freezes at expansion valve orifice and blocks circulation

	of refrigerant
Corrective Actions	Replace cooler dryer
	Remove moisture by repeatedly evacuating air from air conditioning system
	Recharge air conditioning system with proper amount of new or purified refrigerant

TEXT IN ILLUSTRATION

*a	LO
*b	HI

HINT:

For the example above, moisture is present in the air conditioning system.

b. Pressure is low on both low and high pressure sides

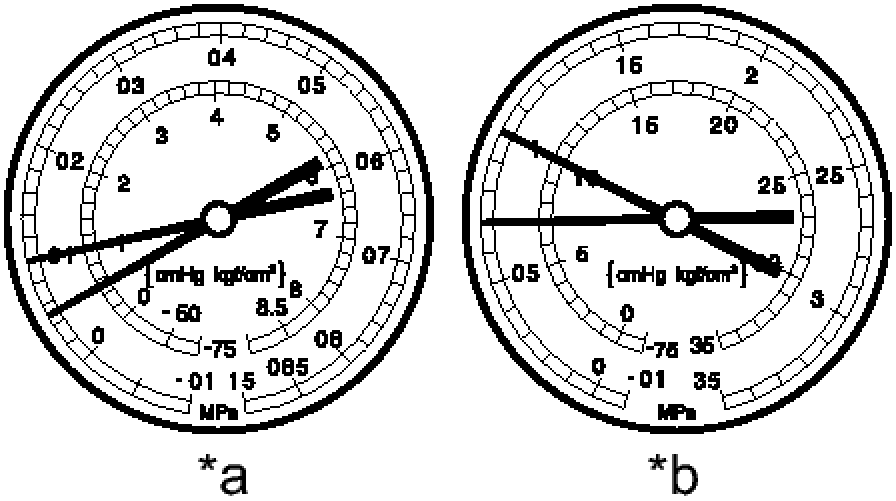

P

Fig. 3: Checking Refrigerant Pressure - Insufficient Refrigerant
Courtesy of TOYOTA MOTOR SALES, U.S.A., INC.

Symptom	Air conditioning system does not cool effectively.
	Insufficient cooling performance
Probable Cause	Refrigerant leaks from air conditioning system
Diagnosis	Insufficient refrigerant
	Refrigerant leaking
	Check for refrigerant leaks and repair if necessary
	Recharge

Corrective Actions	air conditioning system with proper amount of new or purified refrigerant
	If gauges indicate pressure of close to 0, then it is necessary to evacuate air conditioning system after repairing leak

TEXT IN ILLUSTRATION

*a	LO
*b	HI

HINT:

For the example above, there is insufficient refrigerant.

c. Pressure is low on both low and high pressure sides

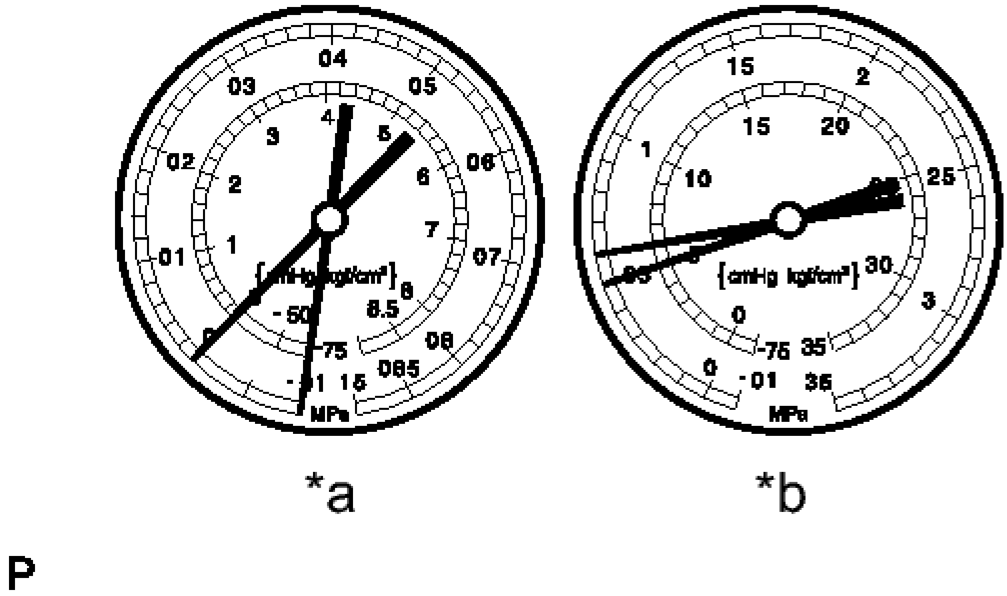

Fig. 4: Checking Refrigerant Pressure - Poor Circulation Refrigerant
Courtesy of TOYOTA MOTOR SALES, U.S.A., INC.

Symptom	Air conditioning system does not cool effectively.
	Frost exists on pipe from condenser to evaporator unit
Probable Cause	Refrigerant flow is obstructed by dirt inside pipes of condenser core
Diagnosis	Condenser is clogged
Corrective Actions	Replace condenser

TEXT IN ILLUSTRATION

*a	LO
*b	HI

HINT:

For the example above, there is poor circulation of refrigerant

d. Vacuum is indicated on low pressure side and very low pressure is indicated on high pressure side

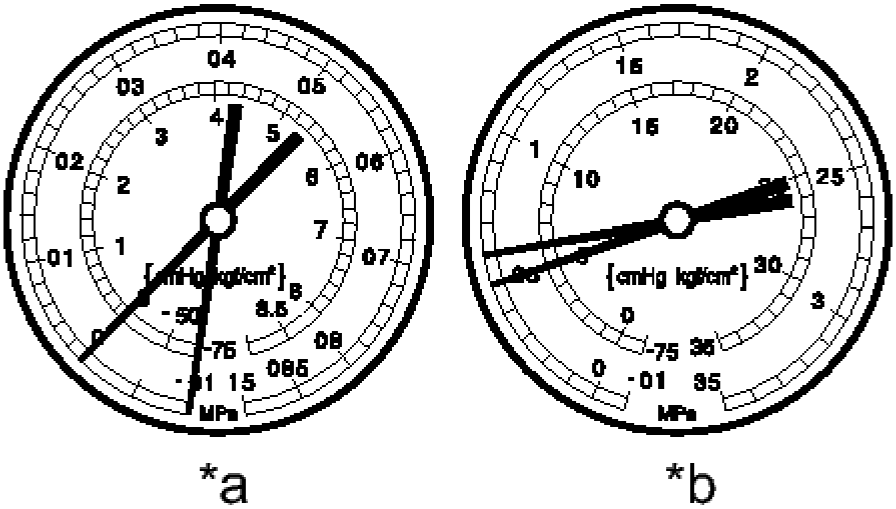

P

Fig. 5: Checking Refrigerant Pressure - Refrigerant Does Not Circulate
Courtesy of TOYOTA MOTOR SALES, U.S.A., INC.

Symptom	Air conditioning system does not cool effectively. (System may cool occasionally)
	Frost or condensation is seen on piping on both sides of

	receiver/dryer or expansion valve
Probable Cause	Refrigerant flow is obstructed by moisture or dirt in air conditioning system
	Expansion valve is stuck closed
Diagnosis	Refrigerant does not circulate
Corrective Actions	Replace expansion valve
	Replace condenser
	Evacuate air conditioning system and supply proper amount of new or purified refrigerant

TEXT IN ILLUSTRATION

*a	LO
*b	HI

HINT:

For the example above, the refrigerant does not circulate.

e. Pressure is too high on both low and high pressure sides

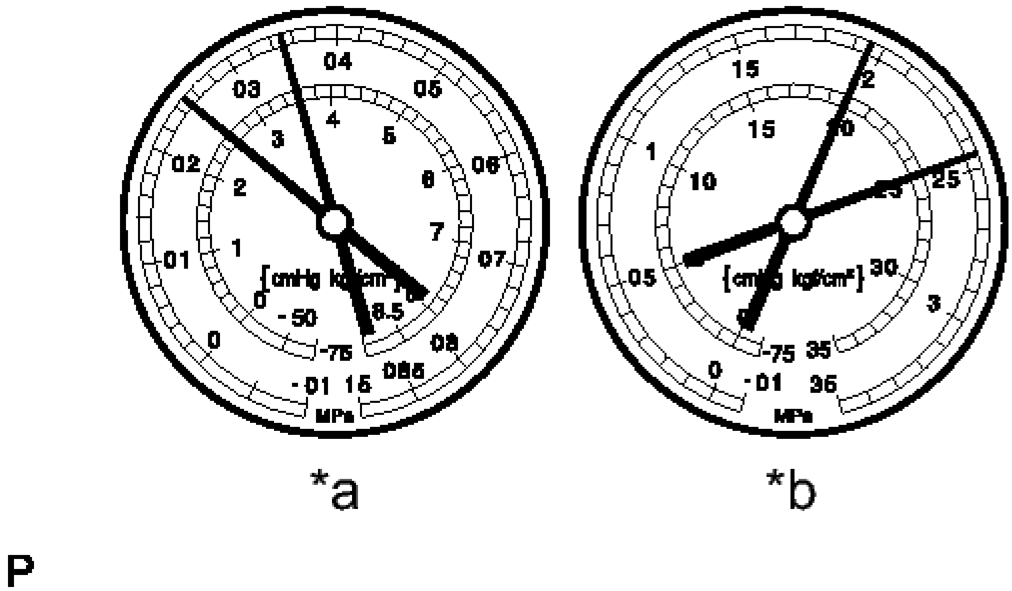

Fig. 6: Checking Refrigerant Pressure - Air Conditioning System Is Overcharged Or Cooling Effectiveness Of Condenser Is Insufficient
Courtesy of TOYOTA MOTOR SALES, U.S.A., INC.

Symptom	Air conditioning system does not cool effectively.
Probable Cause	Unable to develop sufficient performance due to excessive amount of refrigerant
	Cooling effectiveness of condenser is insufficient
	Excessive amount of refrigerant in air conditioning

Diagnosis	system --> excessive refrigerant was added during recharging Cooling effectiveness of condenser is insufficient --> condenser fins are clogged or cooling fan is faulty
Corrective Actions	Clean condenser Check operation of condenser cooling fan If above two corrective actions are normal, check amount of refrigerant and recharge air conditioning system with proper amount of new or purified refrigerant

TEXT IN ILLUSTRATION

*a	LO
*b	HI

HINT:

For the example above, the air conditioning system is overcharged or cooling effectiveness of condenser is insufficient.

f. Pressure is too high on both low and high pressure sides

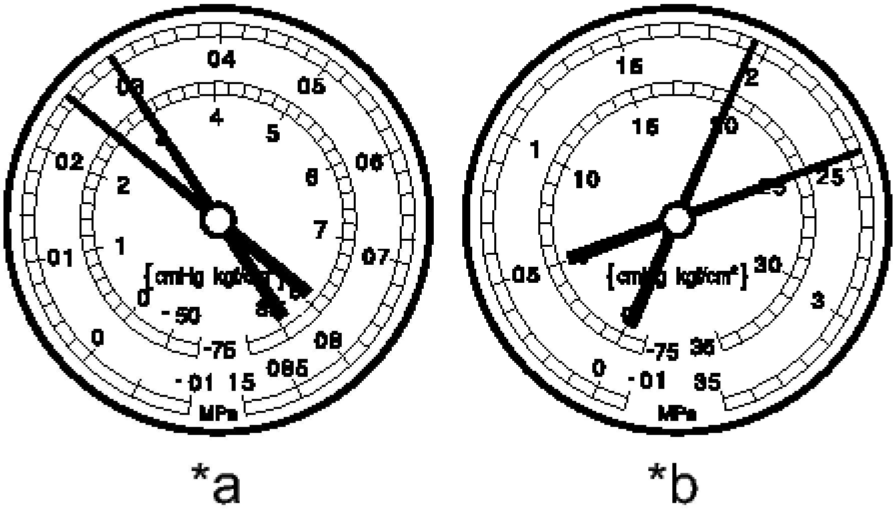
04
03
05
02
06
01
07
0
08
-01
15
085
4
5
2
6
1
7
{cmHg kgf/cm²}
0
-50
-75
MPa
*a
15
2
1
10
25
05
30
3
-75
35
0
-01
35
MPa
*b

P

Fig. 7: Checking Refrigerant Pressure - Air Conditioning System Has Been Left Open And Recharged Without Evacuating System
Courtesy of TOYOTA MOTOR SALES, U.S.A., INC.

Symptom	Air conditioning system does not cool.
	The low pressure piping is too hot to touch
Probable Cause	Air in air conditioning system
Diagnosis	Air present in air conditioning system
	Insufficient vacuum purging when evacuating

	air conditioning system
Corrective Actions	Replace cooler drier
	Check compressor oil to see if it is dirty or insufficient
	Evacuate air conditioning system and recharge it with new or purified refrigerant

TEXT IN ILLUSTRATION

*a	LO
*b	HI

NOTE: **These gauge indications occur when the air conditioning system has been left open and then recharged without evacuating the system.**

HINT:

For the example above, air is present in the air conditioning system.

g. Pressure is too high on both low and high pressure sides

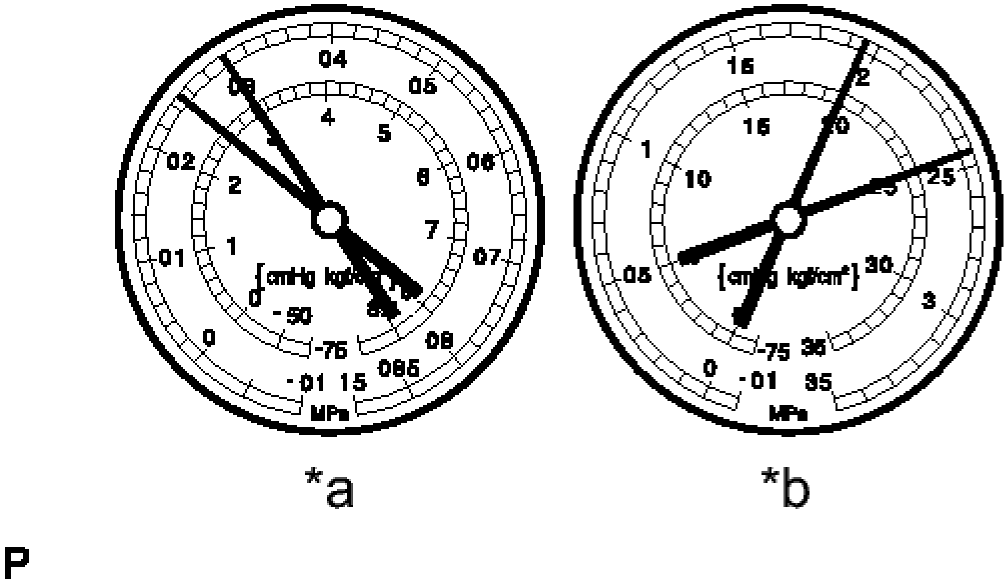

Fig. 8: Checking Refrigerant Pressure - Expansion Valve Malfunction
Courtesy of TOYOTA MOTOR SALES, U.S.A., INC.

Symptom	Air conditioning system does not cool effectively.
	Frost or a large amount of condensation on piping on low pressure side
Probable Cause	Expansion valve may be stuck open or metering refrigerant incorrectly
Diagnosis	Excessive refrigerant in low pressure piping
	Expansion

	valve open too wide
Corrective Actions	Replace expansion valve

TEXT IN ILLUSTRATION

*a	LO
*b	HI

HINT:

For the above example, there is an expansion valve malfunction.

h. Pressure is too high on both low and high pressure sides or pressure is too low on high pressure side

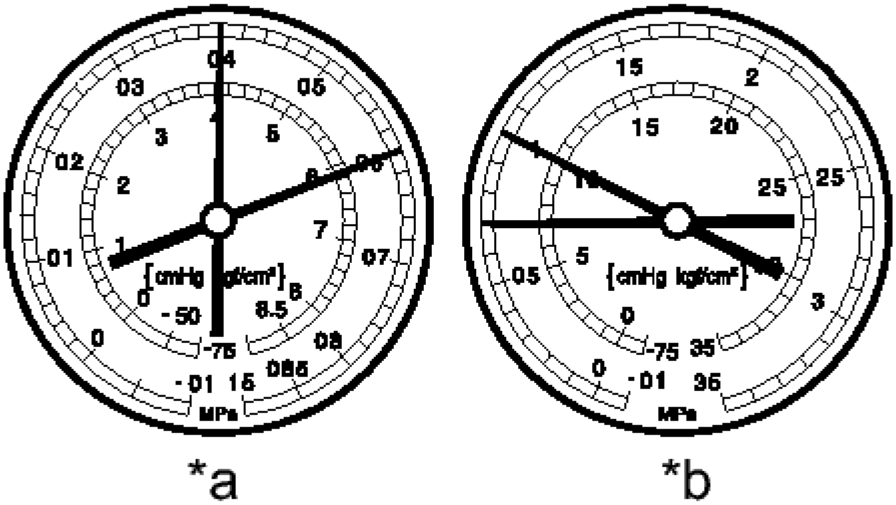
04
03
05
02
06
01
07
0
08
-01
15
085
MPa
1
2
3
4
5
6
7
8
8.5
0
-50
-75
{cmHg kgf/cm²}
15
2
15
20
25
25
10
5
05
3
0
-75
35
0
-01
35
MPa
{cmHg kgf/cm²}
*a
*b

P

Fig. 9: Checking Refrigerant Pressure - Insufficient Compressor Compression
Courtesy of TOYOTA MOTOR SALES, U.S.A., INC.

Symptom	Air conditioning system does not cool effectively.
	Internal leak

Probable Cause	in compressor
Diagnosis	Low compression
	Leak from a damaged valve or other compressor component
Corrective Actions	Replace compressor

TEXT IN ILLUSTRATION

*a	LO
*b	HI

HINT:

For the above example, there is insufficient compressor compression.

3. Gauge readings (Reference)

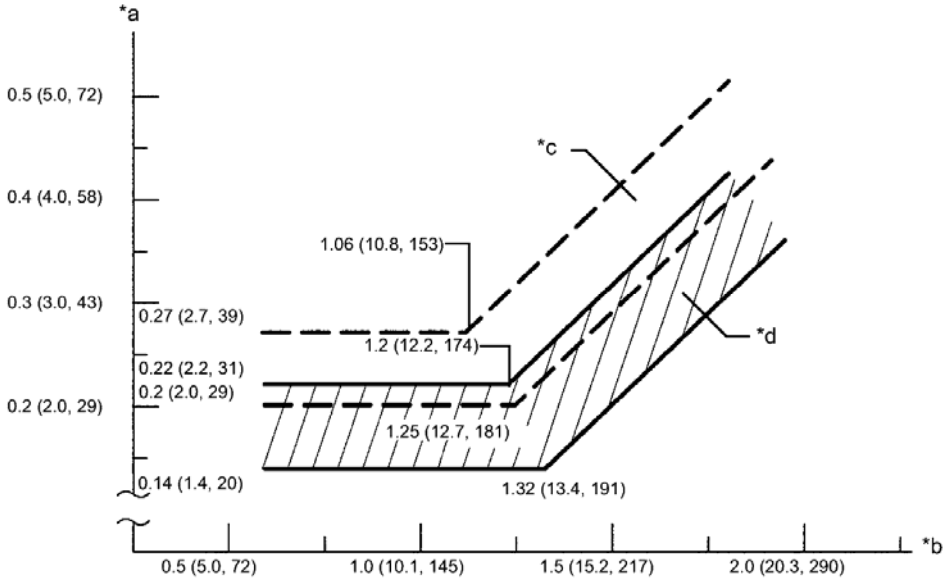

Fig. 10: Identifying Gauge Readings (Reference)
Courtesy of TOYOTA MOTOR SALES, U.S.A., INC.

TEXT IN ILLUSTRATION

*a	Pressure on low pressure side MPa (kgf/cm^2 , psi)	*b	Pressure on high pressure side MPa (kgf/cm^2 , psi)
*c	Blower high zone	*d	Blower low zone

REPLACEMENT

REPLACEMENT

1. **RECOVER REFRIGERANT FROM AIR CONDITIONING SYSTEM**
    a. Turn the A/C switch on.
    b. Operate the air conditioning with a set temperature of 25°C (77°F) and the blower at low for 10 minutes to circulate the refrigerant. This causes most of the compressor oil from the various components of the air conditioning system to collect in the air conditioning compressor.
    c. Turn the ignition switch off.
    d. Recover the refrigerant from the air conditioning system using a refrigerant recovery unit.
2. **CHARGE AIR CONDITIONING SYSTEM WITH REFRIGERANT**
    a. Perform vacuum purging using a vacuum pump or appropriate equipment.
    b. Charge the air conditioning system with refrigerant.

    Refrigerant type

    HFC-134a (R134a)

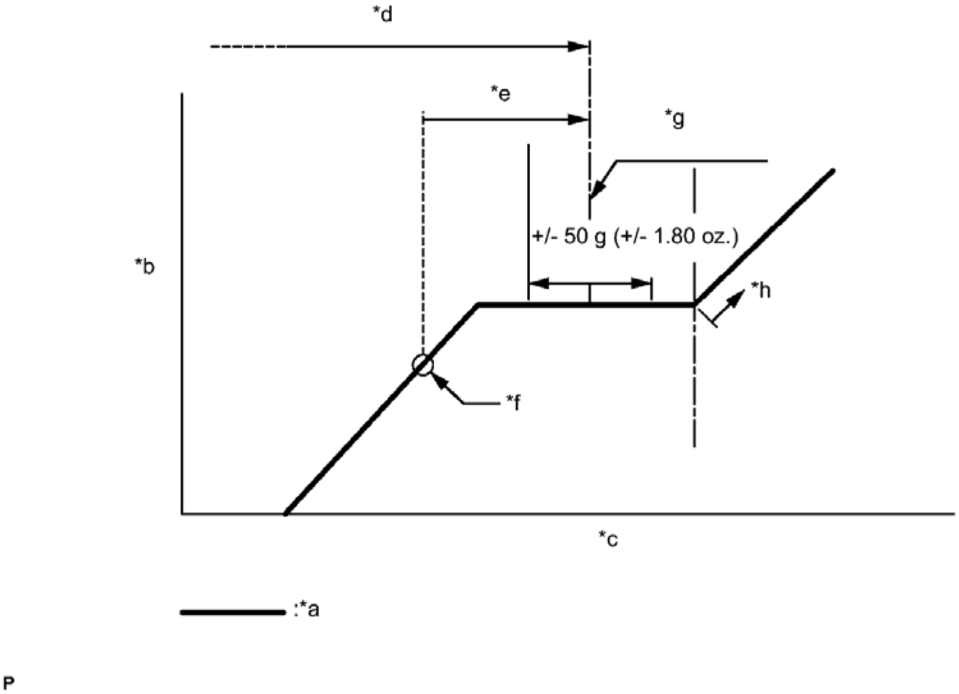

Fig. 11: Identifying State Of Refrigerant Charge Chart
Courtesy of TOYOTA MOTOR SALES, U.S.A., INC.

TEXT IN ILLUSTRATION

*a	Sub-cool System	*b	High Pressure
*c	Refrigerant Amount	*d	Standard charge amount
*e	Charge additional 100g (3.5oz.)	*f	Point where bubbles disappear
*g	Mean value in proper range	*h	Overcharged

Standard charge amount

480 to 580g (16.9 to 20.4oz.)

- **SST: 09985-20010**
  09985-02010
  09985-02050

09985-02060

09985-02070

09985-02080

09985-02090

09985-02110

09985-02130

09985-02140

09985-02150

NOTE:

- **Do not turn the A/C switch on before charging the air conditioning system with refrigerant. Doing so may cause the compressor to work without refrigerant, resulting in overheating of the compressor.**
- **The refrigerant amount should be checked by quantity (weight).**
- **The graph above is shown for reference only. This vehicle is not equipped with a sight glass.**

HINT:

Ensure that sufficient refrigerant is available to recharge the system when using a refrigerant recovery unit. Refrigerant recovery units are not always able to recover 100% of the refrigerant from an air conditioning system.

3. **WARM UP ENGINE**
   a. Keep the A/C switch on for at least 2 minutes to warm up the compressor.

NOTE: **To prevent damage to the compressor, be sure to warm up the compressor when turning the air conditioning on after removing and installing air conditioning system lines (including the compressor).**

4. **INSPECT FOR REFRIGERANT LEAK**
   a. After recharging the air conditioning system with refrigerant, inspect for refrigerant leaks using a halogen leak detector.
   b. Carry out the test under the following conditions:
      - Ignition switch off.
      - Secure good ventilation (the halogen leak detector may react to volatile gases which are not refrigerant, such as gasoline vapor and exhaust gas).
      - Repeat the inspection 2 or 3 times.
      - Measure the pressure to make sure that there is some refrigerant remaining in the air conditioning system.

      Pressure when the compressor is off: approx. 392 to 588 kPa (3.9 to 5.9 kgf/cm^2 , 57 to 85 psi)

c. Using a halogen leak detector, inspect for refrigerant leaks from the air conditioning system.

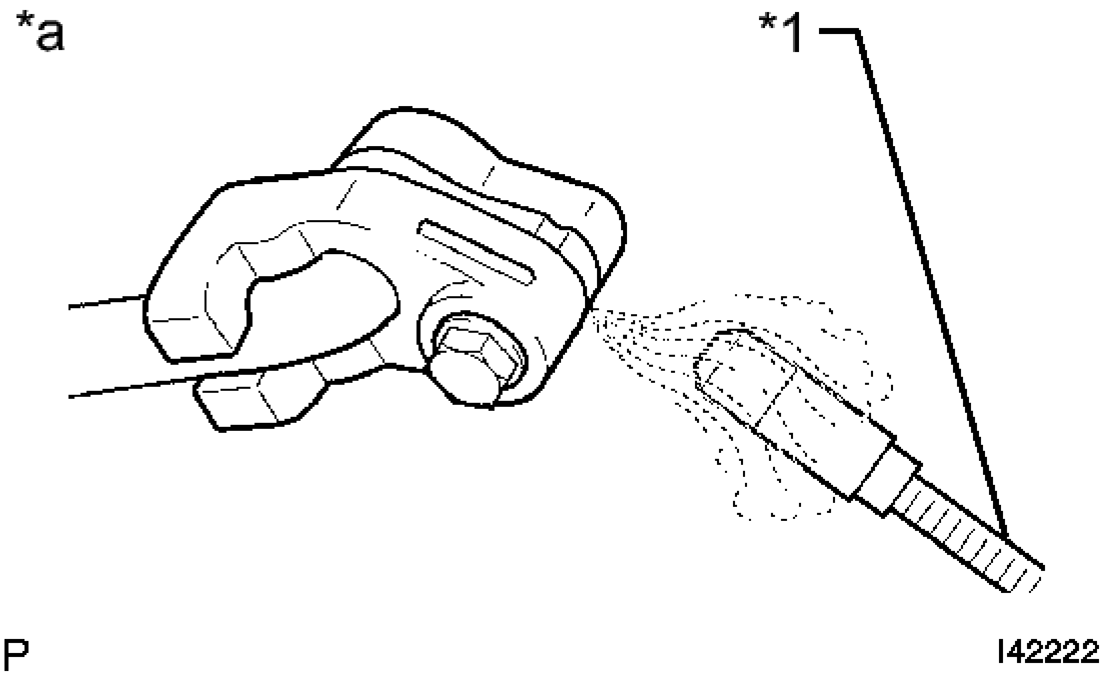

Fig. 12: Identifying Halogen Leak Detector
Courtesy of TOYOTA MOTOR SALES, U.S.A., INC.

TEXT IN ILLUSTRATION

*1	Halogen Leak Detector
*a	Inspect for Leak

d. Bring the halogen leak detector close to the drain hose with the detector power off, and then turn the detector on.

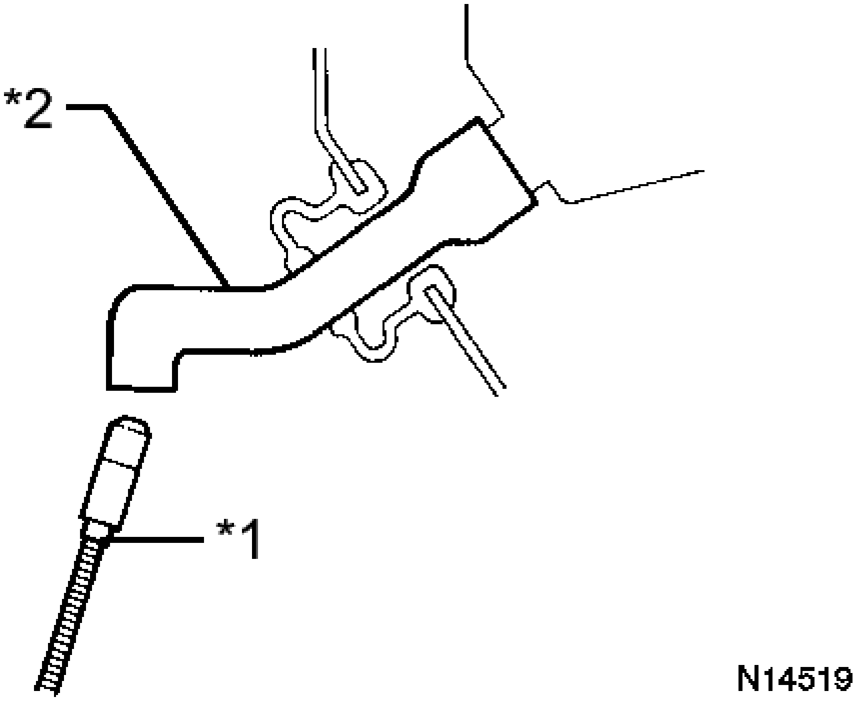

Fig. 13: Identifying Halogen Leak Detector And Drain Hose
Courtesy of TOYOTA MOTOR SALES, U.S.A., INC.

TEXT IN ILLUSTRATION

*1	Halogen Leak Detector
*2	Drain Hose

HINT:

- After the blower motor has stopped, leave the cooling unit for more than 15 minutes.
- Bring the halogen leak detector sensor under the drain hose.
- When bringing the halogen leak detector close to the drain hose, make sure that the halogen leak detector does not react to volatile gases. If it is not possible to avoid interference from volatile gases, the vehicle should be lifted up to allow checking for leaks.

e. If a refrigerant leak is not detected from the drain hose, remove the blower motor control from the cooling unit. Insert the halogen leak detector sensor into the unit and check for a leak.

f. Disconnect the pressure sensor connector and leave it for approximately 20 minutes. Bring the halogen leak detector close to the pressure sensor and check for a leak.

HINT:

When checking for leaks, the presence of oily dirt at a joint can indicate a leak.

REFRIGERANT LINE

COMPONENTS

ILLUSTRATION

for 2AR-FE:

for TMMK made:

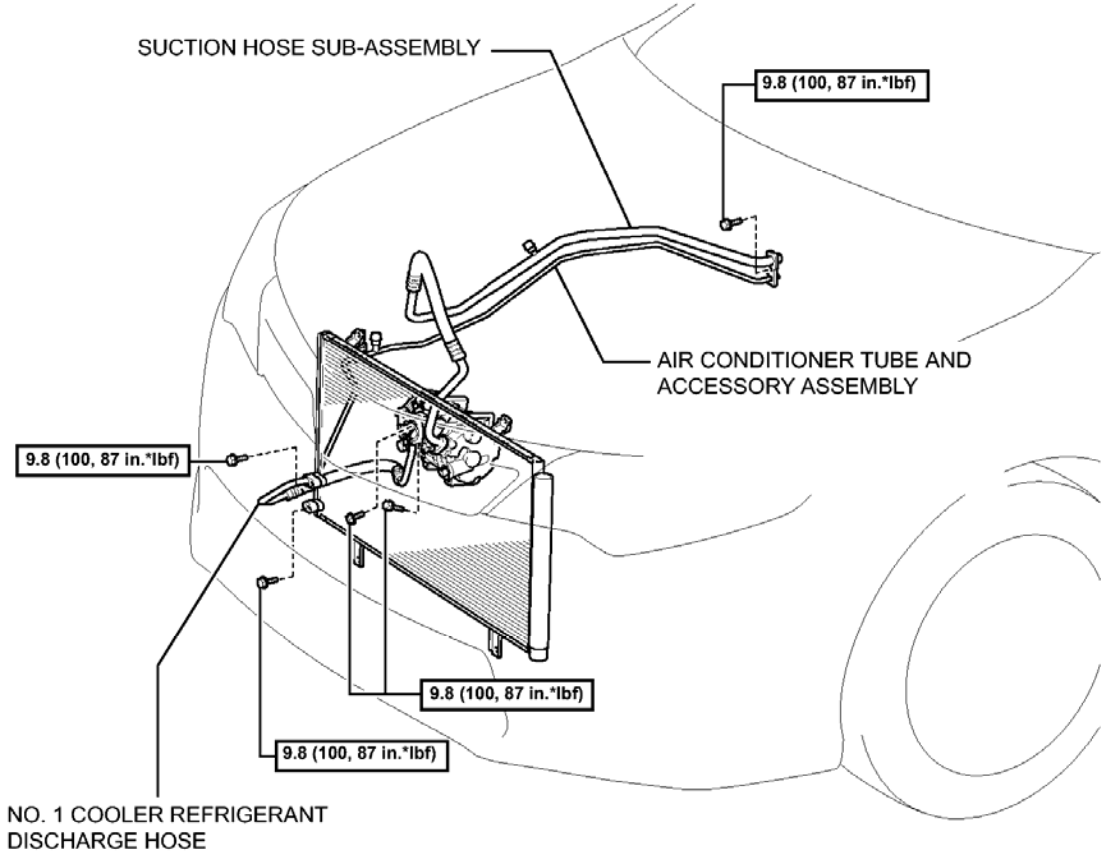
SUCTION HOSE SUB-ASSEMBLY
9.8 (100, 87 in.*lbf)
AIR CONDITIONER TUBE AND ACCESSORY ASSEMBLY
9.8 (100, 87 in.*lbf)
9.8 (100, 87 in.*lbf)
9.8 (100, 87 in.*lbf)
NO. 1 COOLER REFRIGERANT DISCHARGE HOSE

N*m (kgf*cm, ft.*lbf): Specified torque

P

Fig. 14: Identifying Refrigerant Line (For 2AR-FE) (For TMMK Made) Replacement Components With Torque Specifications (1 Of 3)

Courtesy of TOYOTA MOTOR SALES, U.S.A., INC.

ILLUSTRATION

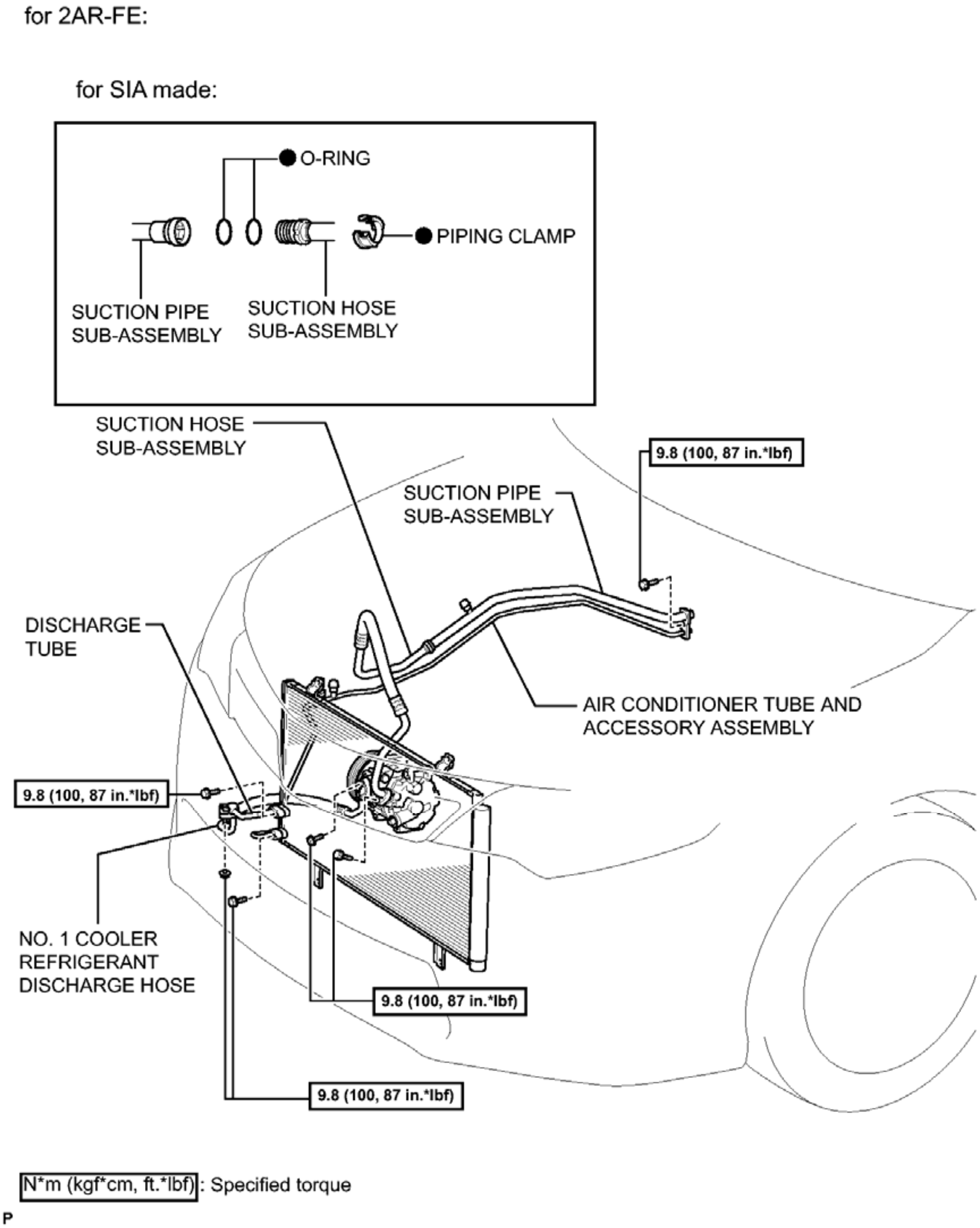
for 2AR-FE:
for SIA made:
O-RING
PIPING CLAMP
SUCTION PIPE SUB-ASSEMBLY
SUCTION HOSE SUB-ASSEMBLY
SUCTION HOSE SUB-ASSEMBLY
9.8 (100, 87 in.*lbf)
SUCTION PIPE SUB-ASSEMBLY
DISCHARGE TUBE
AIR CONDITIONER TUBE AND ACCESSORY ASSEMBLY
9.8 (100, 87 in.*lbf)
NO. 1 COOLER REFRIGERANT DISCHARGE HOSE
9.8 (100, 87 in.*lbf)
9.8 (100, 87 in.*lbf)
N*m (kgf*cm, ft.*lbf): Specified torque
P

Fig. 15: Identifying Refrigerant Line (For 2AR-FE) (For SIA Made) Replacement Components With Torque Specifications (2 Of 3)

Courtesy of TOYOTA MOTOR SALES, U.S.A., INC.

ILLUSTRATION

for 2GR-FE:

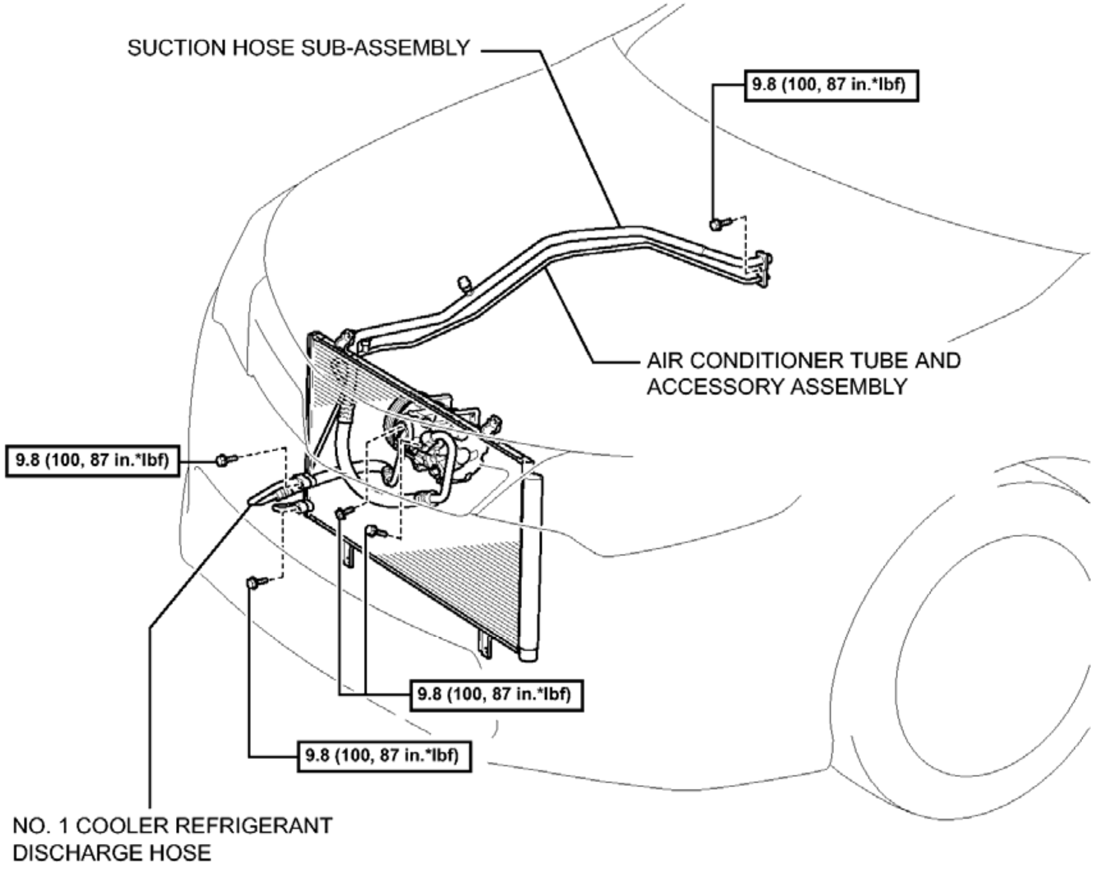
SUCTION HOSE SUB-ASSEMBLY
9.8 (100, 87 in.*lbf)
AIR CONDITIONER TUBE AND ACCESSORY ASSEMBLY
9.8 (100, 87 in.*lbf)
9.8 (100, 87 in.*lbf)
9.8 (100, 87 in.*lbf)
NO. 1 COOLER REFRIGERANT DISCHARGE HOSE

N*m (kgf*cm, ft.*lbf): Specified torque
P

Fig. 16: Identifying Refrigerant Line (For 2GR-FE) Replacement Components With Torque Specifications (3 Of 3)
Courtesy of TOYOTA MOTOR SALES, U.S.A., INC.

REMOVAL

REMOVAL

1. **RECOVER REFRIGERANT FROM AIR CONDITIONING SYSTEM (for SIA Made)** . See step 1.

2. **REMOVE PIPING CLAMP (for SIA Made)**
    a. While pressing the end of the suction hose sub-assembly into the end of the suction pipe sub-assembly, use pliers to squeeze together both sides of the piping clamp until it breaks apart.

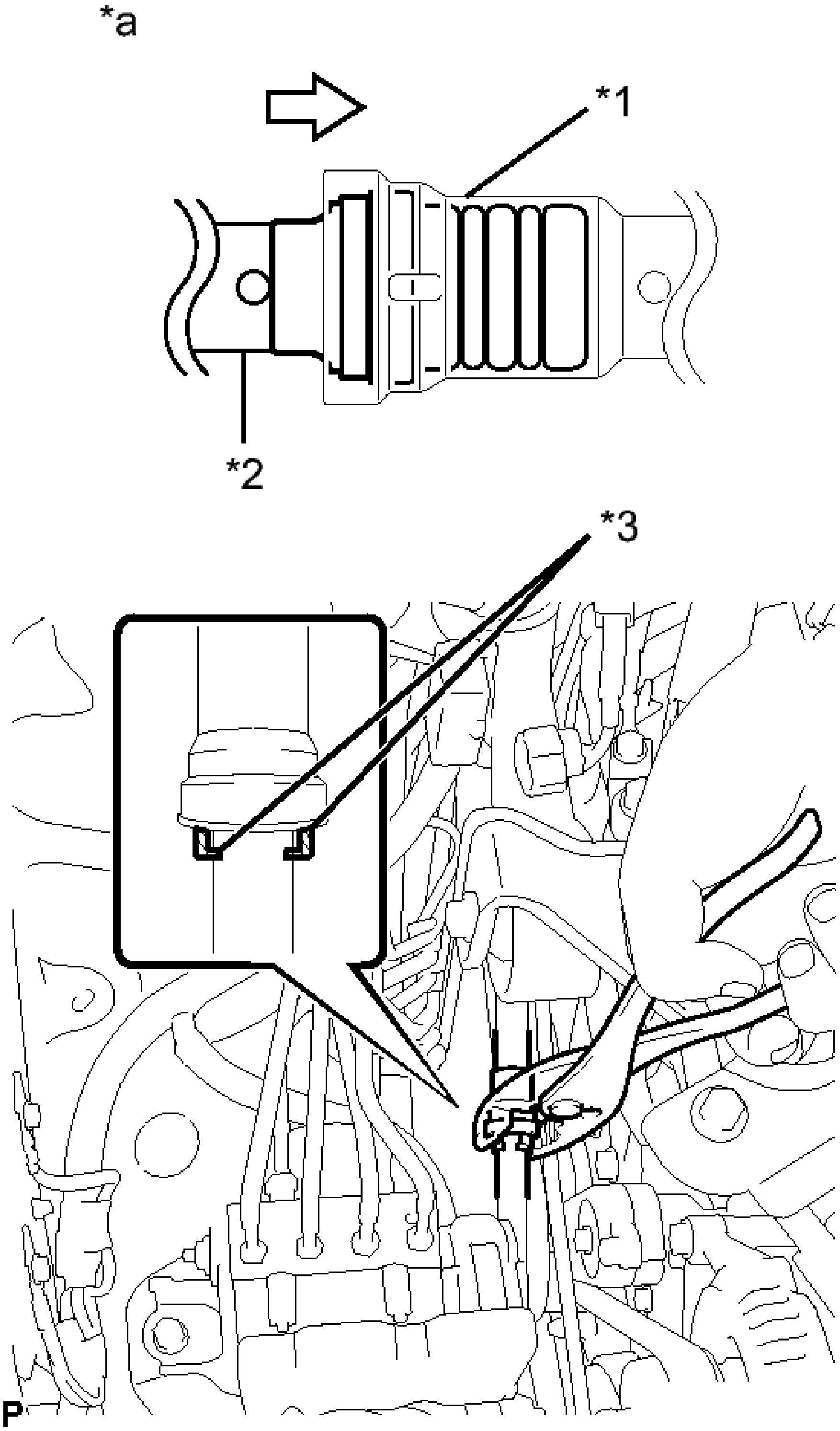

Fig. 17: Removing Piping Clamp (For SIA Made)
Courtesy of TOYOTA MOTOR SALES, U.S.A., INC.

TEXT IN ILLUSTRATION

*1	Suction pipe Sub-assembly
*2	Suction Hose Sub-assembly
*3	Piping Clamp
*a	Press In

NOTE: **Make sure that fragments of the piping clamp do not enter the piping.**

b. Separate the suction hose sub-assembly.

NOTE: **Clean off any dirt or water near the ends of the suction hose sub-assembly and suction tube sub-assembly.**

c. Remove the 2 O-rings from the suction hose sub-assembly.

NOTE: **Wrap the open ends of the separated suction pipe sub-assembly and suction hose sub-assembly with vinyl tape to prevent dirt or water from entering.**

INSTALLATION

INSTALLATION

1. **INSTALL PIPING CLAMP (for SIA Made)**
    a. Remove the vinyl tape from the open ends of the suction pipe sub-assembly and suction hose sub-assembly.
    b. Install a new piping clamp onto the suction hose sub-assembly.

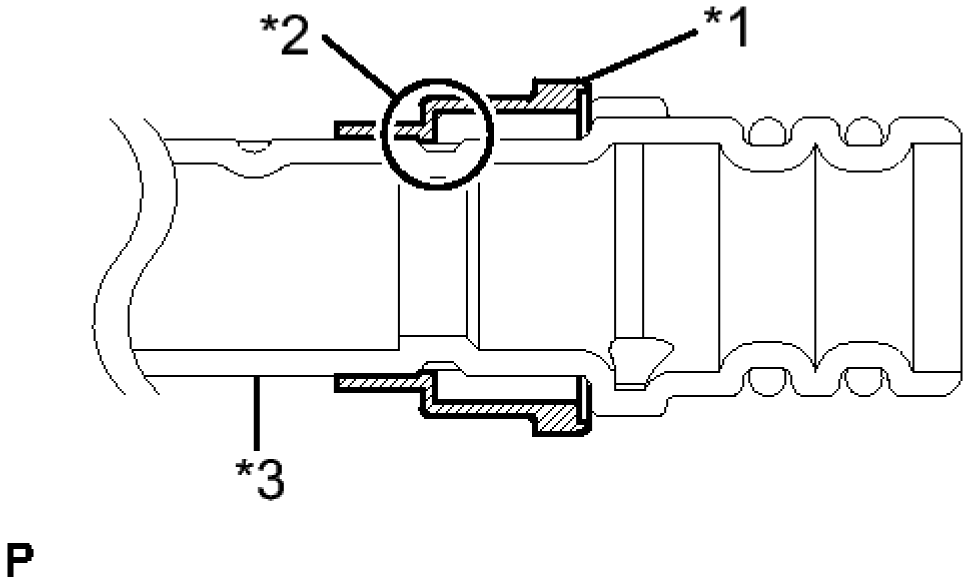

Fig. 18: Identifying Piping Clamp (For SIA Made)
Courtesy of TOYOTA MOTOR SALES, U.S.A., INC.

TEXT IN ILLUSTRATION

*1	Piping Clamp
*2	Groove
*3	Suction Hose Sub-assembly

NOTE: **Securely engage the inside step of the piping clamp in the suction hose groove.**

c. Thoroughly coat 2 new O-rings and the contact surface of the suction hose sub-assembly with compressor oil (ND-OIL8).
d. Install the 2 O-rings onto the suction hose sub-assembly.

NOTE: **Do not let foreign matter adhere to the O-ring or O-ring seal.**

e. Engage the suction tube sub-assembly and suction hose sub-assembly by matching the alignment marks.

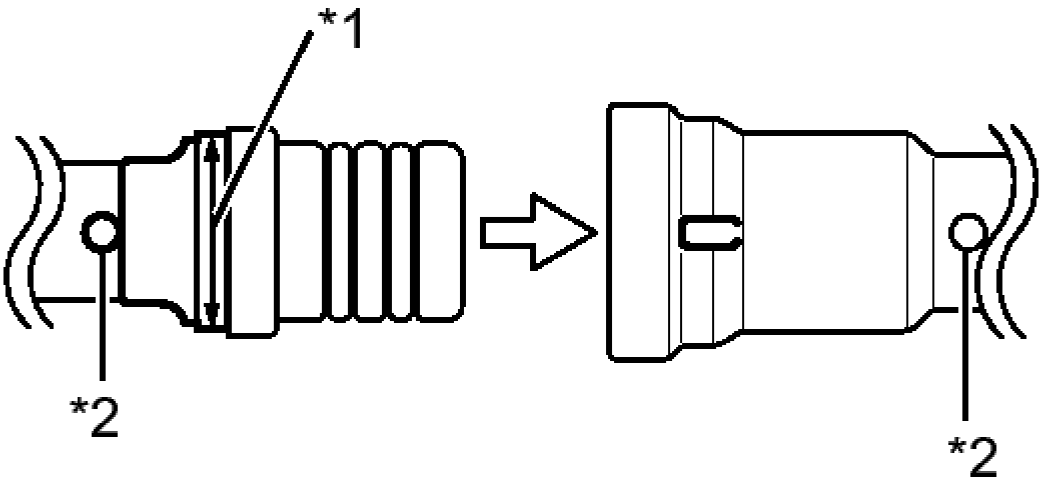

P

Fig. 19: Installing Piping Clamp (For SIA Made)
Courtesy of TOYOTA MOTOR SALES, U.S.A., INC.

TEXT IN ILLUSTRATION

*1	Large Diameter Section of Piping Clamp
*2	Alignment Mark

NOTE: **Insert them by holding the pipe, not the piping clamp.**

f. Securely insert the piping clamp to the point where the large diameter section of the piping clamp is covered by the suction pipe sub-assembly.

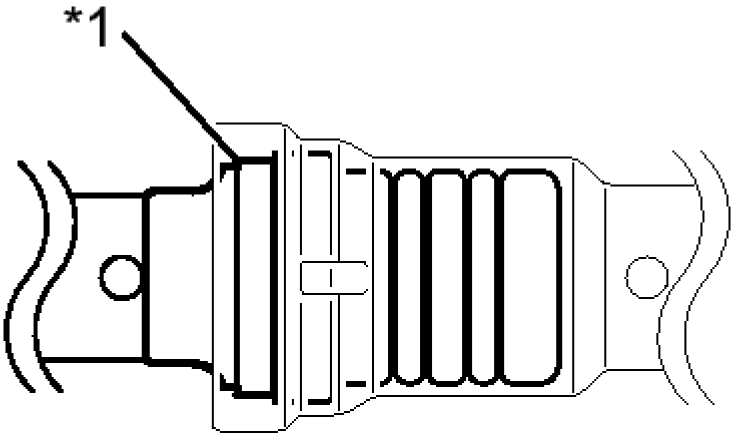

P

Fig. 20: Identifying Large Diameter Section of Piping Clamp
Courtesy of TOYOTA MOTOR SALES, U.S.A., INC.

TEXT IN ILLUSTRATION

*1	Large Diameter Section of Piping Clamp

HINT:

- When inserting, make sure that a click sound is heard.
- Check that the suction pipe is securely inserted by pulling it.

2. **CHARGE AIR CONDITIONING SYSTEM WITH REFRIGERANT (for SIA Made)** . See step 2.
3. **WARM UP ENGINE (for SIA Made)** . See step 3.
4. **INSPECT FOR REFRIGERANT LEAK (for SIA Made)** . See step 4.

AIR CONDITIONING UNIT

COMPONENTS

ILLUSTRATION

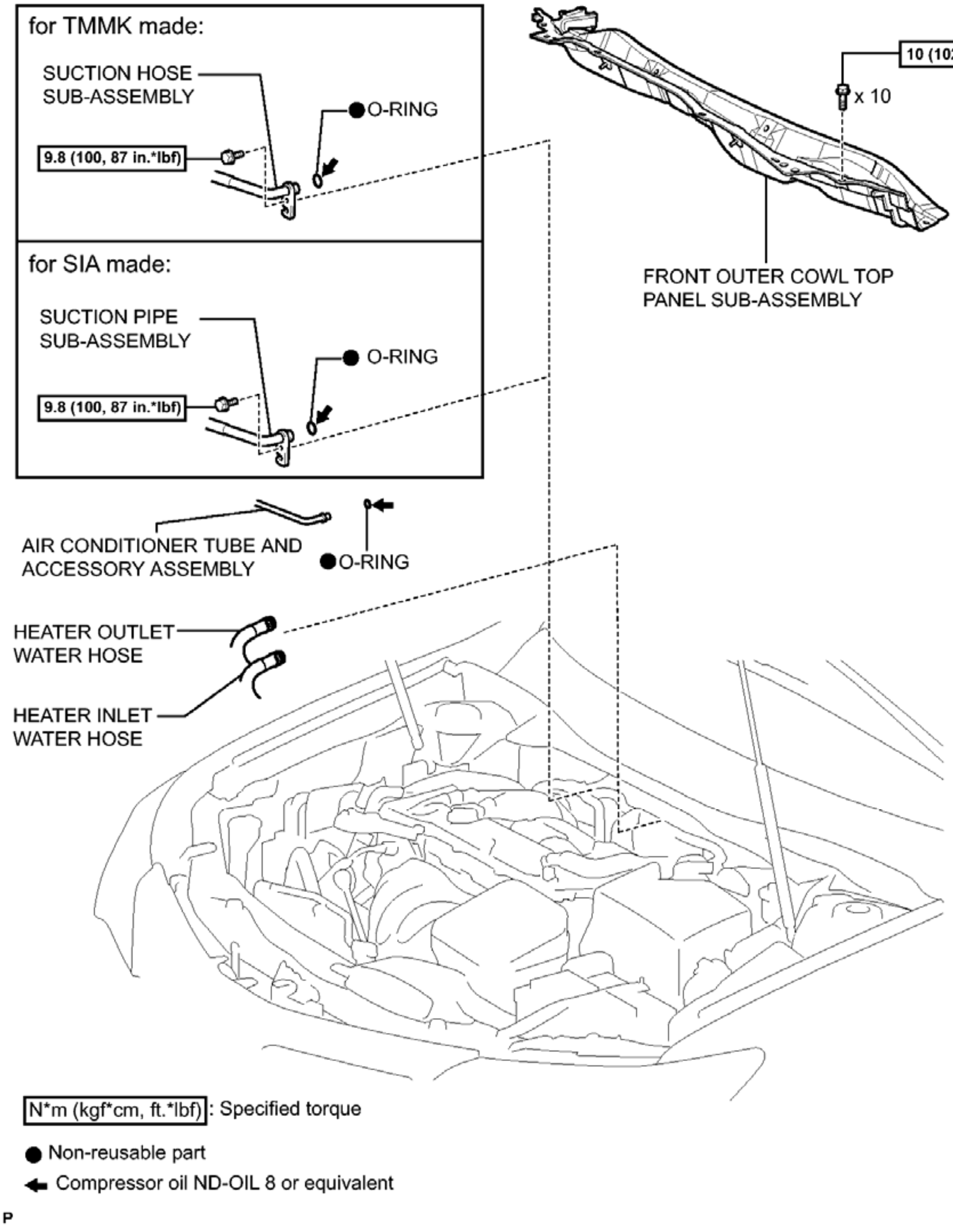
for TMMK made:
SUCTION HOSE SUB-ASSEMBLY
O-RING
9.8 (100, 87 in.*lbf)
for SIA made:
SUCTION PIPE SUB-ASSEMBLY
O-RING
9.8 (100, 87 in.*lbf)
AIR CONDITIONER TUBE AND ACCESSORY ASSEMBLY
O-RING
HEATER OUTLET WATER HOSE
HEATER INLET WATER HOSE
10 (102, 7)
x 10
FRONT OUTER COWL TOP PANEL SUB-ASSEMBLY
N*m (kgf*cm, ft.*lbf): Specified torque
● Non-reusable part
Compressor oil ND-OIL 8 or equivalent
P

Fig. 21: Identifying Air Conditioning Unit Replacement Components With Torque Specifications (1 Of 8)
Courtesy of TOYOTA MOTOR SALES, U.S.A., INC.

ILLUSTRATION

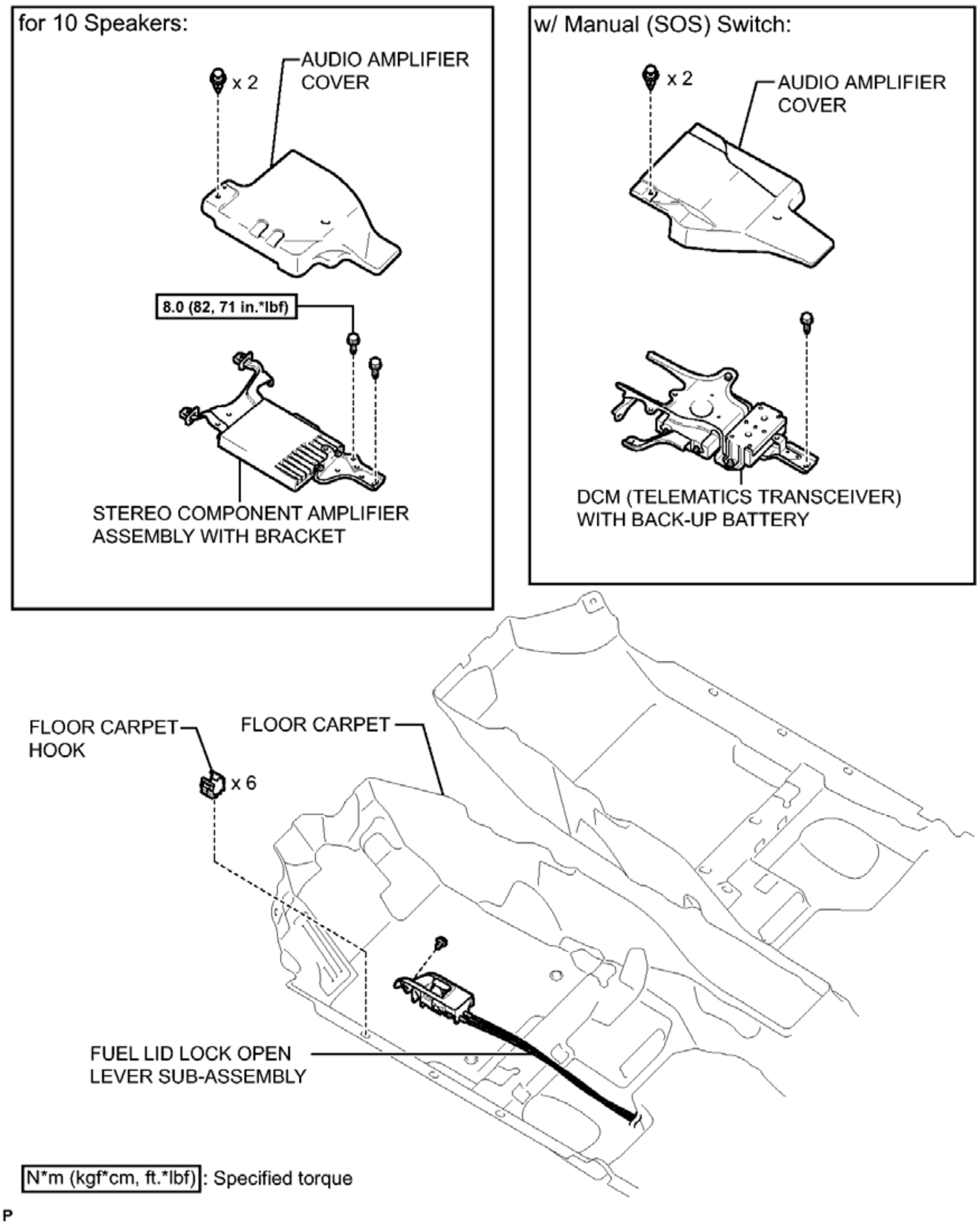
for 10 Speakers:
x 2
AUDIO AMPLIFIER COVER
8.0 (82, 71 in.*lbf)
STEREO COMPONENT AMPLIFIER ASSEMBLY WITH BRACKET
w/ Manual (SOS) Switch:
x 2
AUDIO AMPLIFIER COVER
DCM (TELEMATICS TRANSCEIVER) WITH BACK-UP BATTERY
FLOOR CARPET HOOK
x 6
FLOOR CARPET
FUEL LID LOCK OPEN LEVER SUB-ASSEMBLY
N*m (kgf*cm, ft.*lbf) : Specified torque
P

Fig. 22: Identifying Air Conditioning Unit Replacement Components With Torque Specifications (2 Of 8)
Courtesy of TOYOTA MOTOR SALES, U.S.A., INC.

ILLUSTRATION

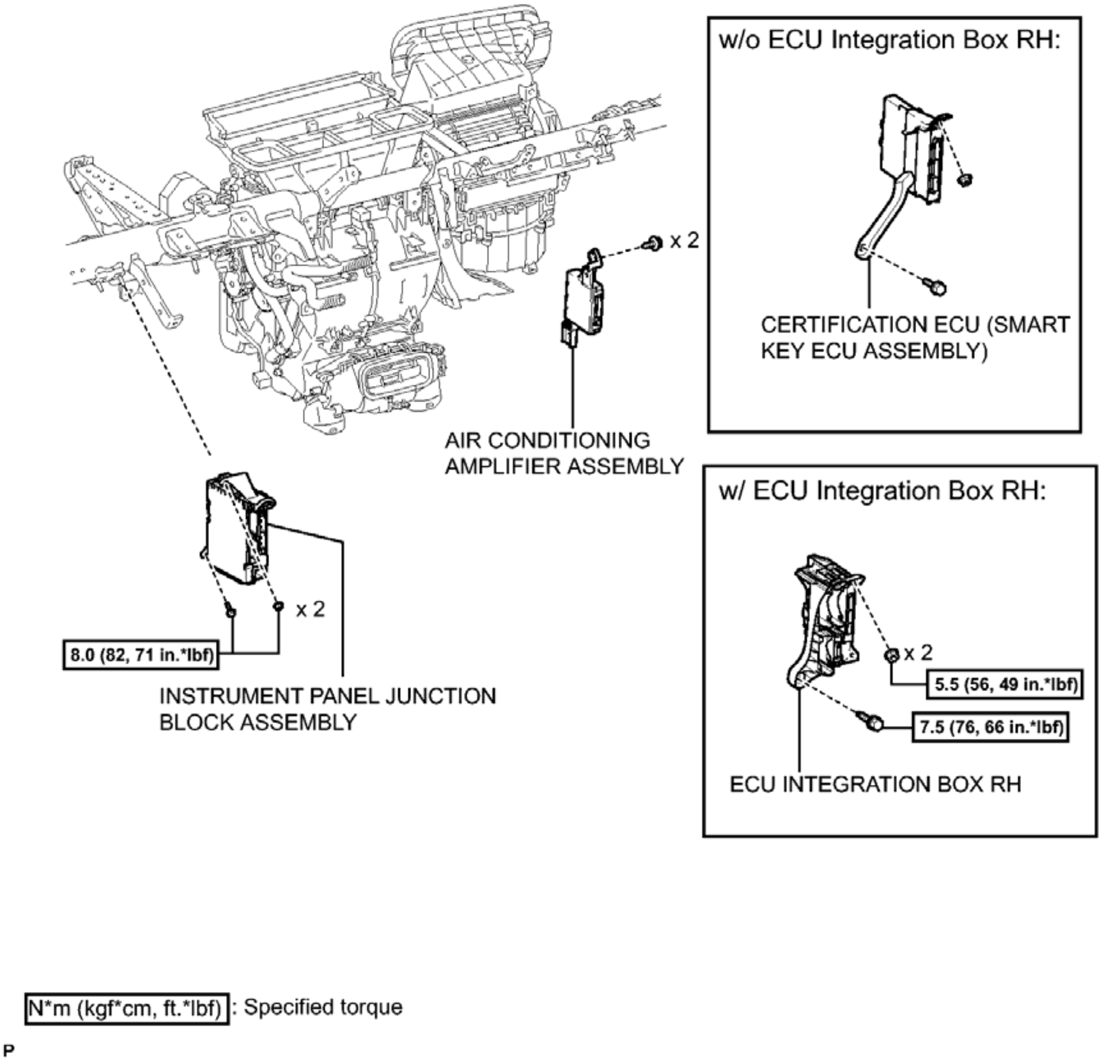
w/o ECU Integration Box RH:
CERTIFICATION ECU (SMART KEY ECU ASSEMBLY)
x 2
AIR CONDITIONING AMPLIFIER ASSEMBLY
w/ ECU Integration Box RH:
x 2
5.5 (56, 49 in.*lbf)
7.5 (76, 66 in.*lbf)
ECU INTEGRATION BOX RH
x 2
8.0 (82, 71 in.*lbf)
INSTRUMENT PANEL JUNCTION BLOCK ASSEMBLY
N*m (kgf*cm, ft.*lbf) : Specified torque
P

Fig. 23: Identifying Air Conditioning Unit Replacement Components With Torque Specifications (3 Of 8)
Courtesy of TOYOTA MOTOR SALES, U.S.A., INC.

ILLUSTRATION

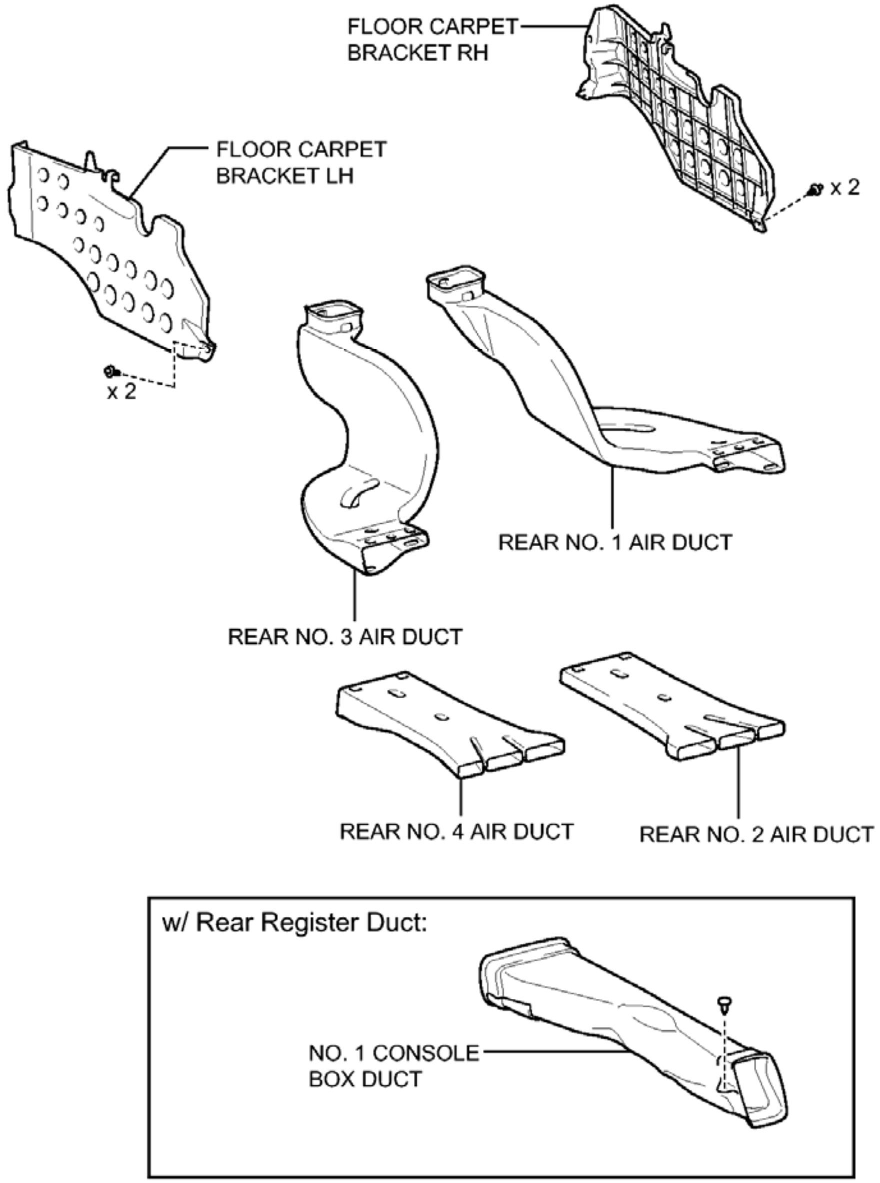
FLOOR CARPET BRACKET RH
x 2
FLOOR CARPET BRACKET LH
x 2
REAR NO. 1 AIR DUCT
REAR NO. 3 AIR DUCT
REAR NO. 4 AIR DUCT
REAR NO. 2 AIR DUCT
w/ Rear Register Duct:
NO. 1 CONSOLE BOX DUCT

P

Fig. 24: Identifying Air Conditioning Unit Replacement Components (4 Of 8)
Courtesy of TOYOTA MOTOR SALES, U.S.A., INC.

ILLUSTRATION

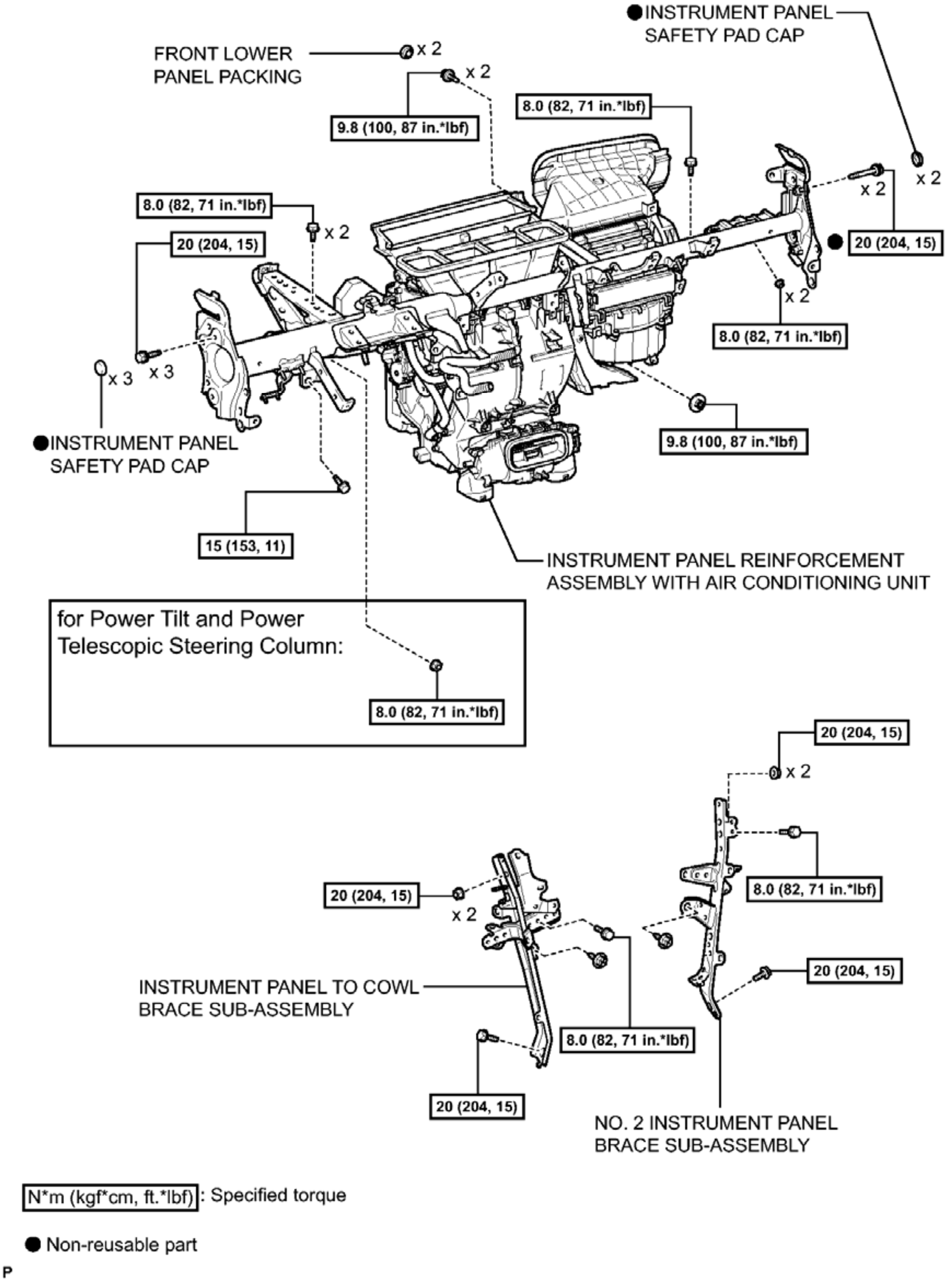
●INSTRUMENT PANEL SAFETY PAD CAP
FRONT LOWER PANEL PACKING
x 2
x 2
9.8 (100, 87 in.*lbf)
8.0 (82, 71 in.*lbf)
x 2
x 2
● 20 (204, 15)
8.0 (82, 71 in.*lbf)
x 2
20 (204, 15)
x 2
8.0 (82, 71 in.*lbf)
x 3
x 3
9.8 (100, 87 in.*lbf)
●INSTRUMENT PANEL SAFETY PAD CAP
15 (153, 11)
INSTRUMENT PANEL REINFORCEMENT ASSEMBLY WITH AIR CONDITIONING UNIT
for Power Tilt and Power Telescopic Steering Column:
8.0 (82, 71 in.*lbf)
20 (204, 15)
x 2
8.0 (82, 71 in.*lbf)
20 (204, 15)
x 2
20 (204, 15)
INSTRUMENT PANEL TO COWL BRACE SUB-ASSEMBLY
8.0 (82, 71 in.*lbf)
20 (204, 15)
NO. 2 INSTRUMENT PANEL BRACE SUB-ASSEMBLY
N*m (kgf*cm, ft.*lbf) : Specified torque
● Non-reusable part
P

Fig. 25: Identifying Air Conditioning Unit Replacement Components With Torque Specifications (5 Of 8)
Courtesy of TOYOTA MOTOR SALES, U.S.A., INC.

ILLUSTRATION

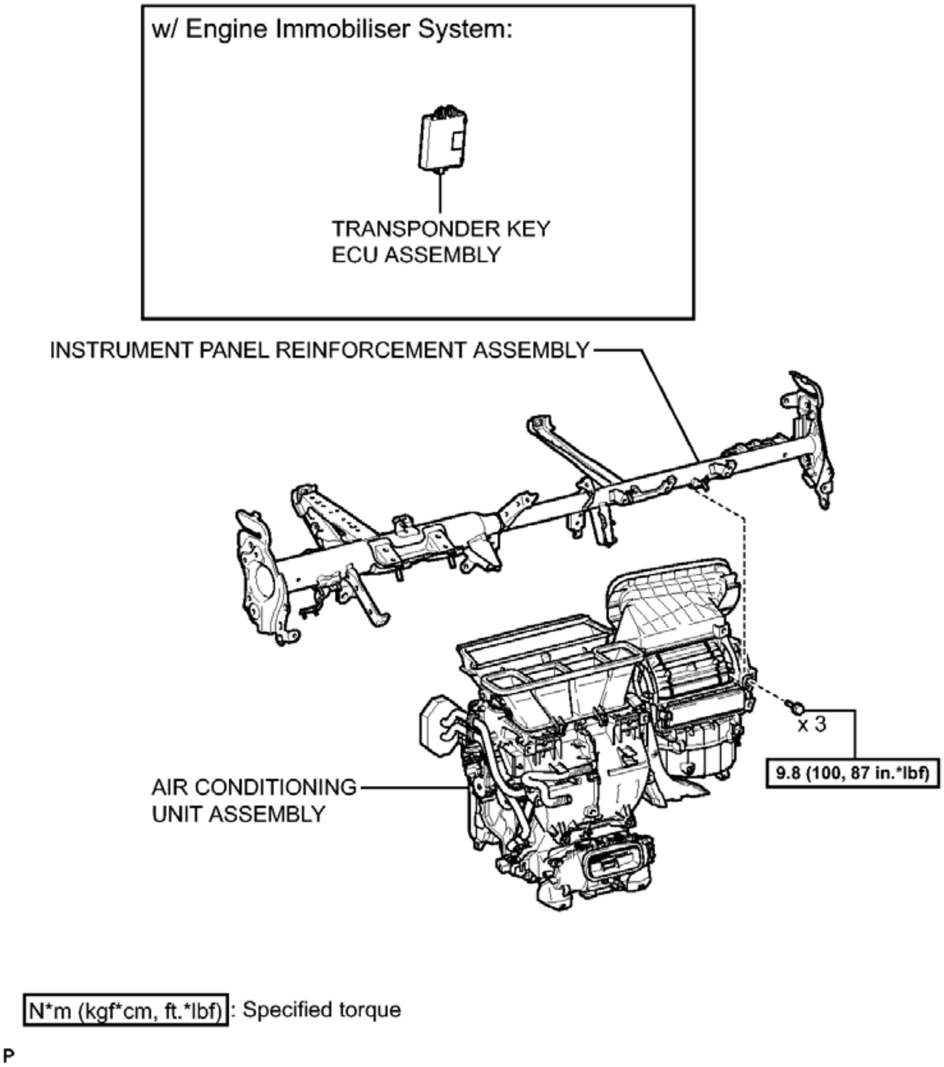
w/ Engine Immobiliser System:
TRANSPONDER KEY ECU ASSEMBLY
INSTRUMENT PANEL REINFORCEMENT ASSEMBLY
x 3
9.8 (100, 87 in.*lbf)
AIR CONDITIONING UNIT ASSEMBLY
N*m (kgf*cm, ft.*lbf) : Specified torque
P

Fig. 26: Identifying Air Conditioning Unit Replacement Components With Torque Specifications (6 Of 8)
Courtesy of TOYOTA MOTOR SALES, U.S.A., INC.

ILLUSTRATION

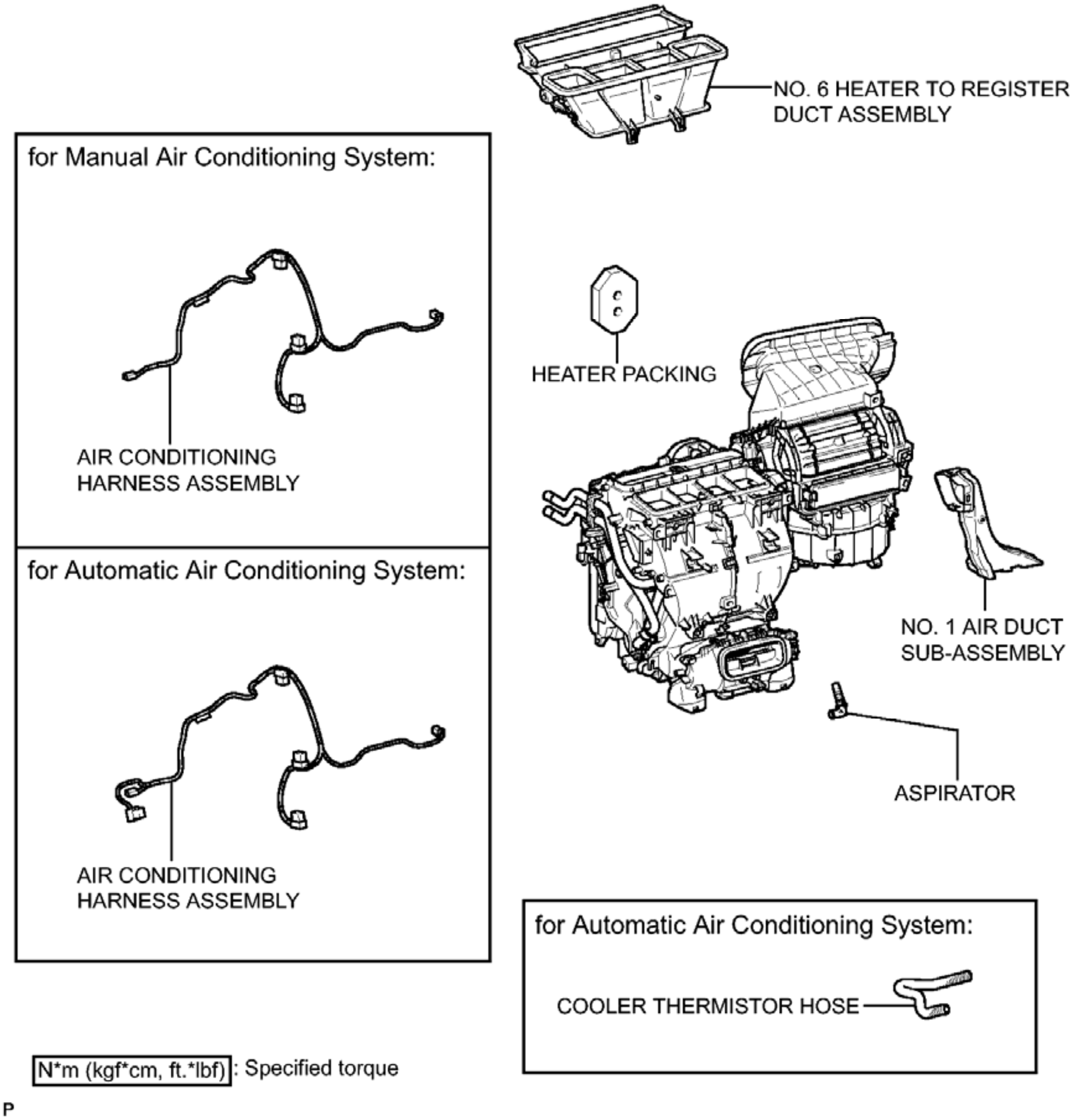
NO. 6 HEATER TO REGISTER DUCT ASSEMBLY
for Manual Air Conditioning System:
AIR CONDITIONING HARNESS ASSEMBLY
HEATER PACKING
NO. 1 AIR DUCT SUB-ASSEMBLY
for Automatic Air Conditioning System:
AIR CONDITIONING HARNESS ASSEMBLY
ASPIRATOR
for Automatic Air Conditioning System:
COOLER THERMISTOR HOSE
N*m (kgf*cm, ft.*lbf) : Specified torque
P

Fig. 27: Identifying Air Conditioning Unit Replacement Components With Torque Specifications (7 Of 8)
Courtesy of TOYOTA MOTOR SALES, U.S.A., INC.

ILLUSTRATION

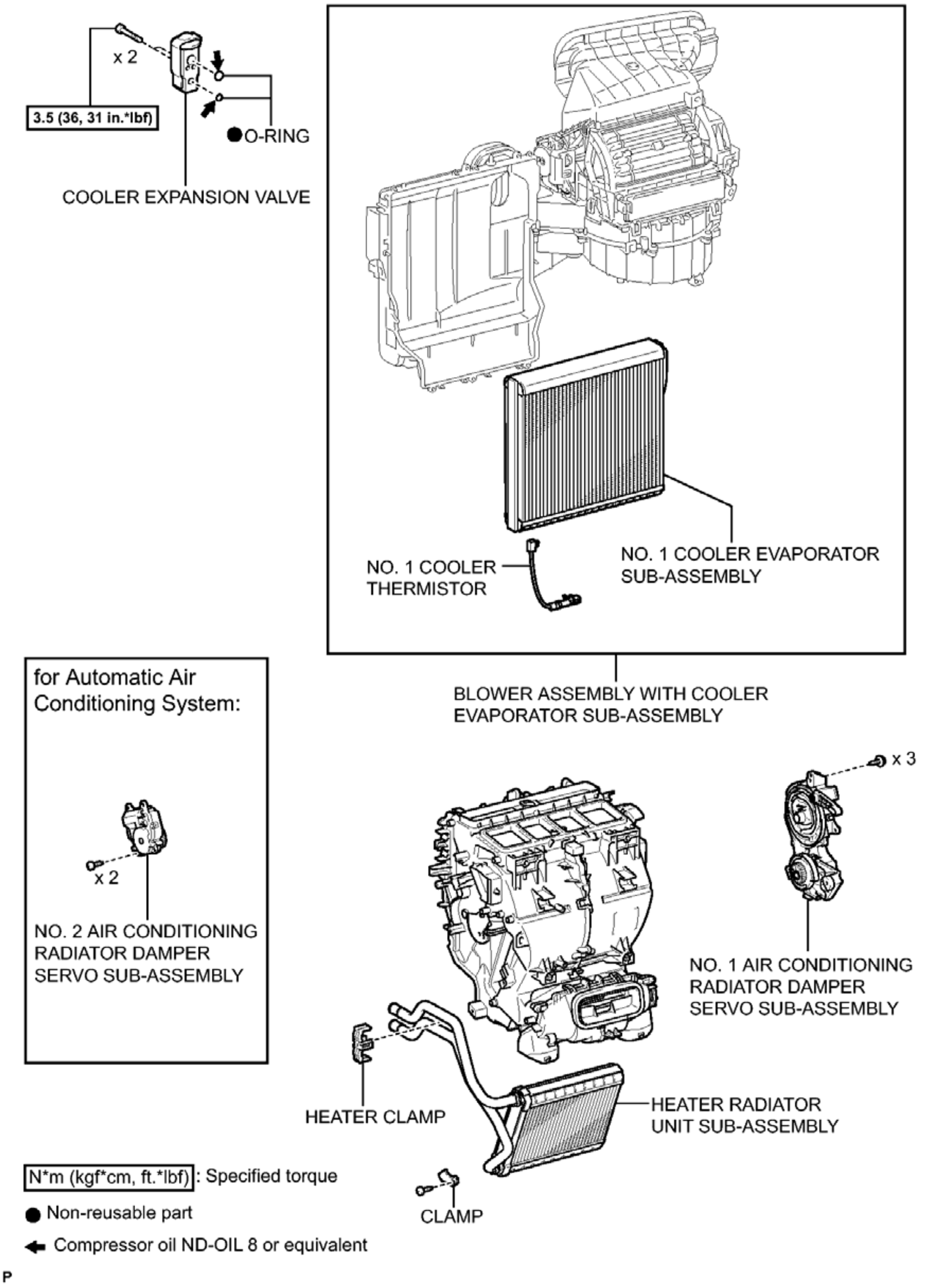
x 2
3.5 (36, 31 in.*lbf)
● O-RING
COOLER EXPANSION VALVE
NO. 1 COOLER THERMISTOR
NO. 1 COOLER EVAPORATOR SUB-ASSEMBLY
BLOWER ASSEMBLY WITH COOLER EVAPORATOR SUB-ASSEMBLY
for Automatic Air Conditioning System:
x 2
NO. 2 AIR CONDITIONING RADIATOR DAMPER SERVO SUB-ASSEMBLY
x 3
NO. 1 AIR CONDITIONING RADIATOR DAMPER SERVO SUB-ASSEMBLY
HEATER CLAMP
HEATER RADIATOR UNIT SUB-ASSEMBLY
CLAMP
N*m (kgf*cm, ft.*lbf) : Specified torque
● Non-reusable part
← Compressor oil ND-OIL 8 or equivalent
P

Fig. 28: Identifying Air Conditioning Unit Replacement Components With Torque Specifications (8 Of 8)
Courtesy of TOYOTA MOTOR SALES, U.S.A., INC.

REMOVAL

REMOVAL

NOTE: Make sure to select FACE mode before disconnecting the cable from the negative (-) battery terminal.

1. **RECOVER REFRIGERANT FROM AIR CONDITIONING SYSTEM** . See step 1.
2. **REMOVE WINDSHIELD WIPER MOTOR AND LINK ASSEMBLY**

   Refer to **REMOVAL** .

3. **REMOVE FRONT OUTER COWL TOP PANEL SUB-ASSEMBLY** . Refer to **REMOVAL - Step 3** .
4. **DISCONNECT HEATER OUTLET WATER HOSE**
   a. Using pliers, grip the claws of the clip and slide the clip to disconnect the heater outlet water hose.

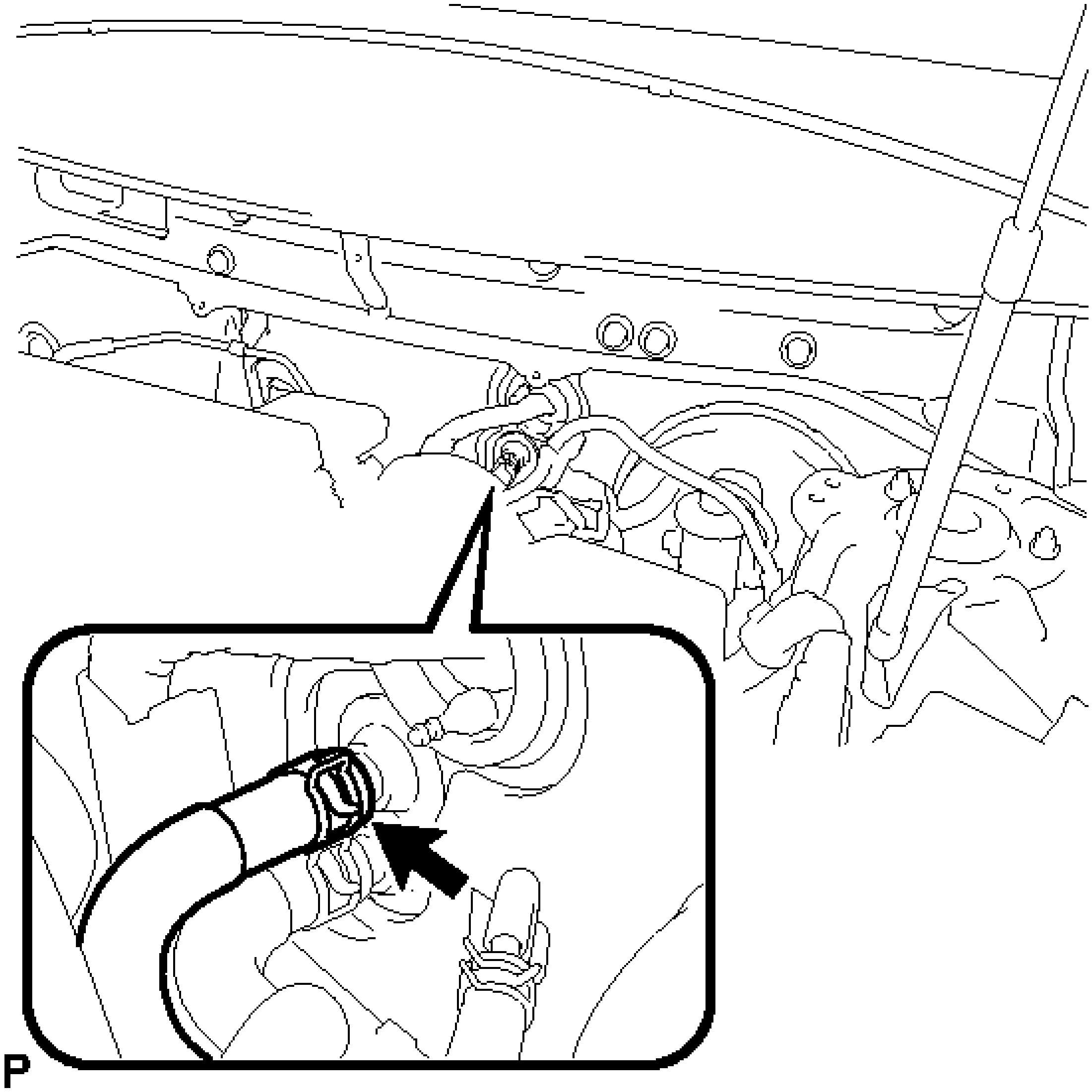

Fig. 29: Locating Heater Outlet Water Hose
Courtesy of TOYOTA MOTOR SALES, U.S.A., INC.

NOTE:

- **Do not apply excessive force to the heater outlet water hose.**
- **Prepare a drain pan or cloth in case the coolant leaks.**

5. **DISCONNECT HEATER INLET WATER HOSE**
    a. Using pliers, grip the claws of the clip and slide the clip to disconnect the heater inlet water hose.

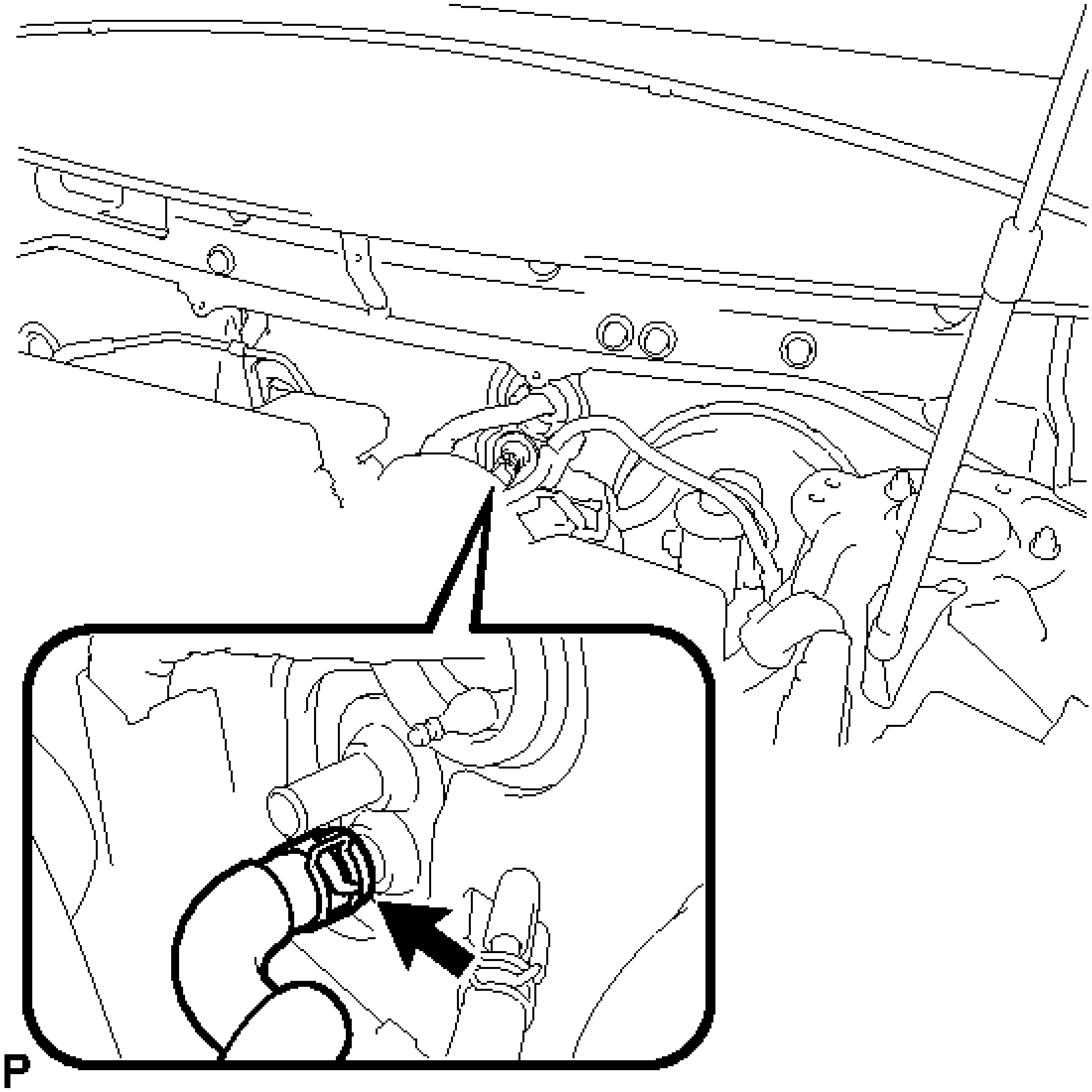

Fig. 30: Locating Heater Inlet Water Hose
Courtesy of TOYOTA MOTOR SALES, U.S.A., INC.

NOTE:

- **Do not apply excessive force to the heater inlet water hose.**
- **Prepare a drain pan or cloth in case the coolant leaks.**

6. **DISCONNECT SUCTION HOSE SUB-ASSEMBLY (for TMMK Made)**
   a. Remove the bolt, and slide the hook connector.

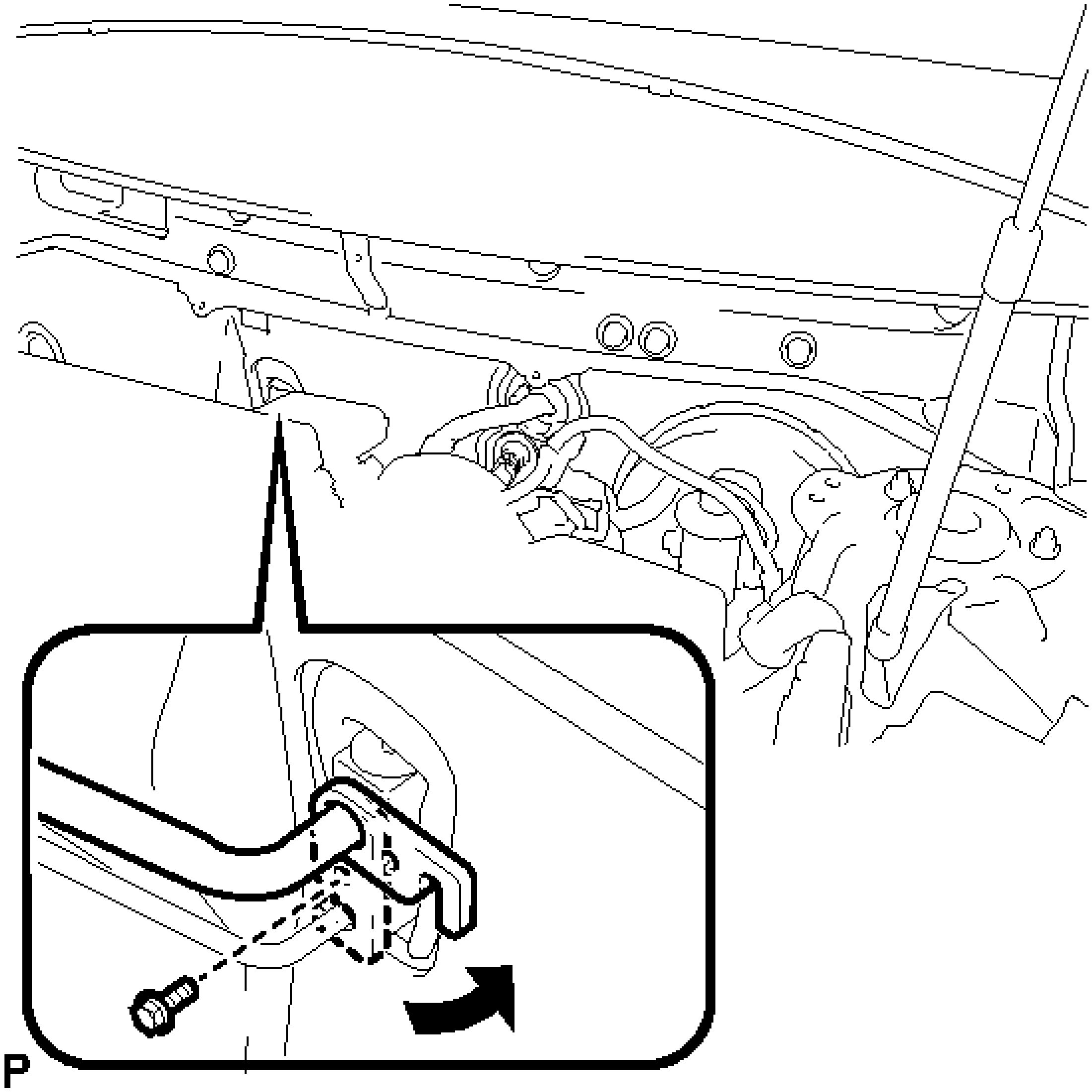

Fig. 31: Disconnecting Suction Hose Hook Connector And Bolt
Courtesy of TOYOTA MOTOR SALES, U.S.A., INC.

   b. Disconnect the suction hose sub-assembly.
   c. Remove the O-ring from the suction hose sub-assembly.

NOTE: **Seal the openings of the disconnected parts using vinyl tape to prevent entry of moisture and foreign matter.**

7. **DISCONNECT SUCTION PIPE SUB-ASSEMBLY (for SIA Made)**
   a. Remove the bolt, and slide the hook connector.

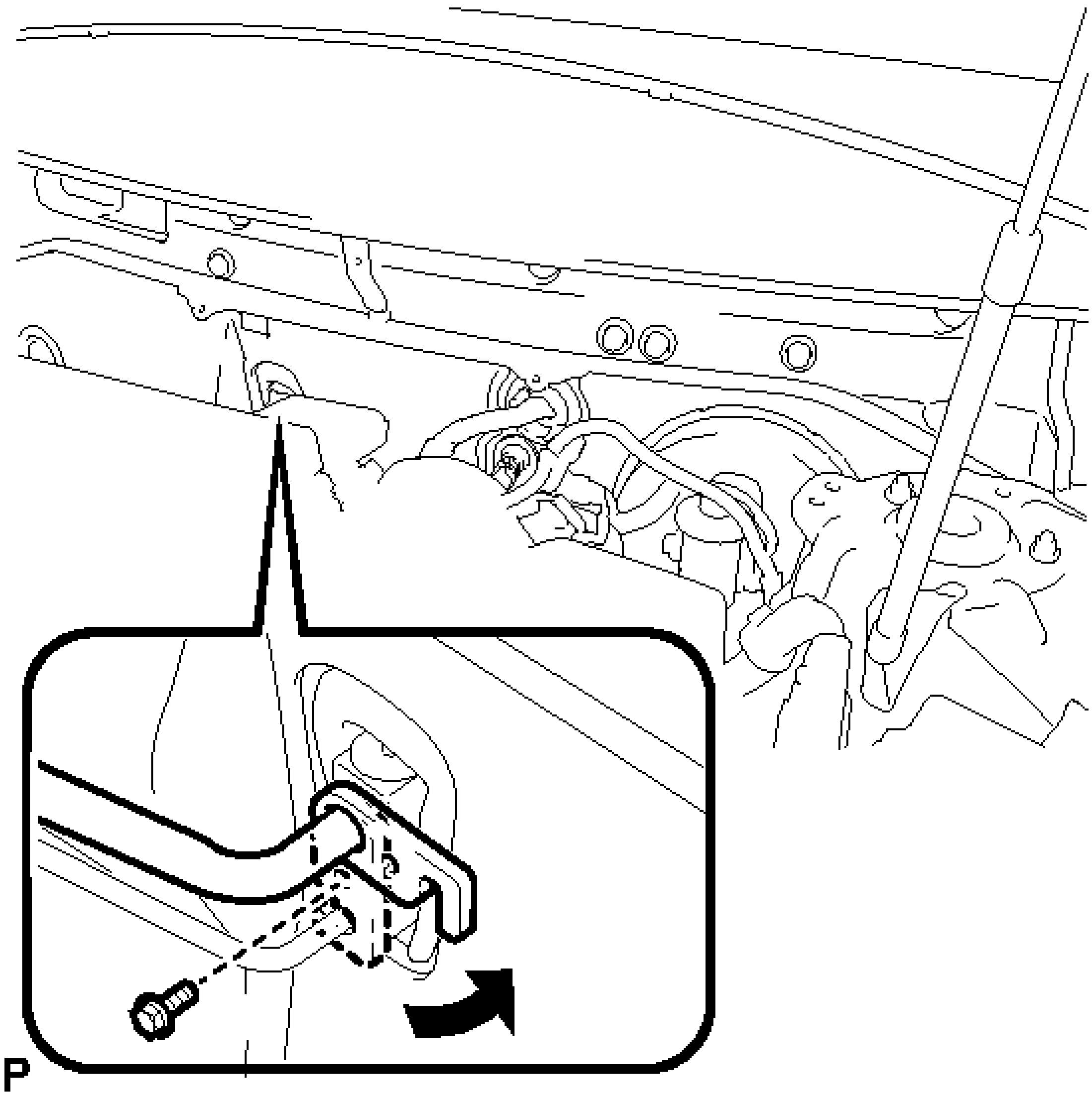

Fig. 32: Disconnecting Suction Hose Hook Connector And Bolt
Courtesy of TOYOTA MOTOR SALES, U.S.A., INC.

b. Disconnect the suction pipe sub-assembly.
c. Remove the O-ring from the suction pipe sub-assembly.

NOTE: Seal the openings of the disconnected parts using vinyl tape to prevent entry of moisture and foreign matter.

8. **DISCONNECT AIR CONDITIONER TUBE AND ACCESSORY ASSEMBLY**

a. Disconnect the air conditioner tube and accessory assembly.
b. Remove the O-ring from the air conditioner tube and accessory assembly.

NOTE: Seal the openings of the disconnected parts using vinyl tape to prevent entry of moisture and foreign matter.

9. **REMOVE FRONT SEAT ASSEMBLY LH (for TMMK Made Manual Seat)**

   Refer to **REMOVAL** .

10. **REMOVE FRONT SEAT ASSEMBLY LH (for TMMK Made Power Seat)**

    Refer to **REMOVAL** .

11. **REMOVE FRONT SEAT ASSEMBLY LH (for SIA Made Manual Seat)**

    Refer to **REMOVAL** .

12. **REMOVE FRONT SEAT ASSEMBLY LH (for SIA Made Power Seat)**

    Refer to **REMOVAL** .

13. **REMOVE AUDIO AMPLIFIER COVER (for 10 Speakers)** . Refer to **REMOVAL - Step 2** .
14. **REMOVE STEREO COMPONENT AMPLIFIER ASSEMBLY WITH BRACKET (for 10 Speakers)** . Refer to **REMOVAL - Step 3** .
15. **REMOVE FRONT SEAT ASSEMBLY RH (for TMMK Made Manual Seat)**

    HINT:

    Use the same procedure for the RH side and LH side.

16. **REMOVE FRONT SEAT ASSEMBLY RH (for TMMK Made Power Seat)**

    HINT:

    Use the same procedure for the RH side and LH side.

17. **REMOVE FRONT SEAT ASSEMBLY RH (for SIA Made Manual Seat)**

    HINT:

    Use the same procedure for the RH side and LH side.

18. **REMOVE FRONT SEAT ASSEMBLY RH (for SIA Made Power Seat)**

    HINT:

    Use the same procedure for the RH side and LH side.

19. **REMOVE AUDIO AMPLIFIER COVER (w/ Manual (SOS) Switch)** . Refer to **REMOVAL - Step 2** .
20. **REMOVE DCM (TELEMATICS TRANSCEIVER) WITH BACK-UP BATTERY (w/ Manual**

(SOS) Switch) . Refer to **REMOVAL - Step 3** .

21. **REMOVE INSTRUMENT PANEL SAFETY PAD ASSEMBLY**

    Refer to **REMOVAL** .

22. **REMOVE LOWER NO. 1 INSTRUMENT PANEL AIRBAG ASSEMBLY** . Refer to **REMOVAL - Step 9** .
23. **REMOVE STEERING COLUMN ASSEMBLY**

    Refer to **REMOVAL** .

24. **REMOVE INSTRUMENT PANEL JUNCTION BLOCK ASSEMBLY** . Refer to **REMOVAL - Step 2** .
25. **REMOVE CERTIFICATION ECU (SMART KEY ECU ASSEMBLY) (w/o ECU Integration Box RH)** . Refer to **REMOVAL - Step 12** .
26. **REMOVE ECU INTEGRATION BOX RH (w/ ECU Integration Box RH)** . Refer to **REMOVAL - Step 11** .
27. **REMOVE AIR CONDITIONING AMPLIFIER ASSEMBLY** . See step 13.
28. **REMOVE FLOOR CARPET HOOK**
    a. Disengage the 6 guides.

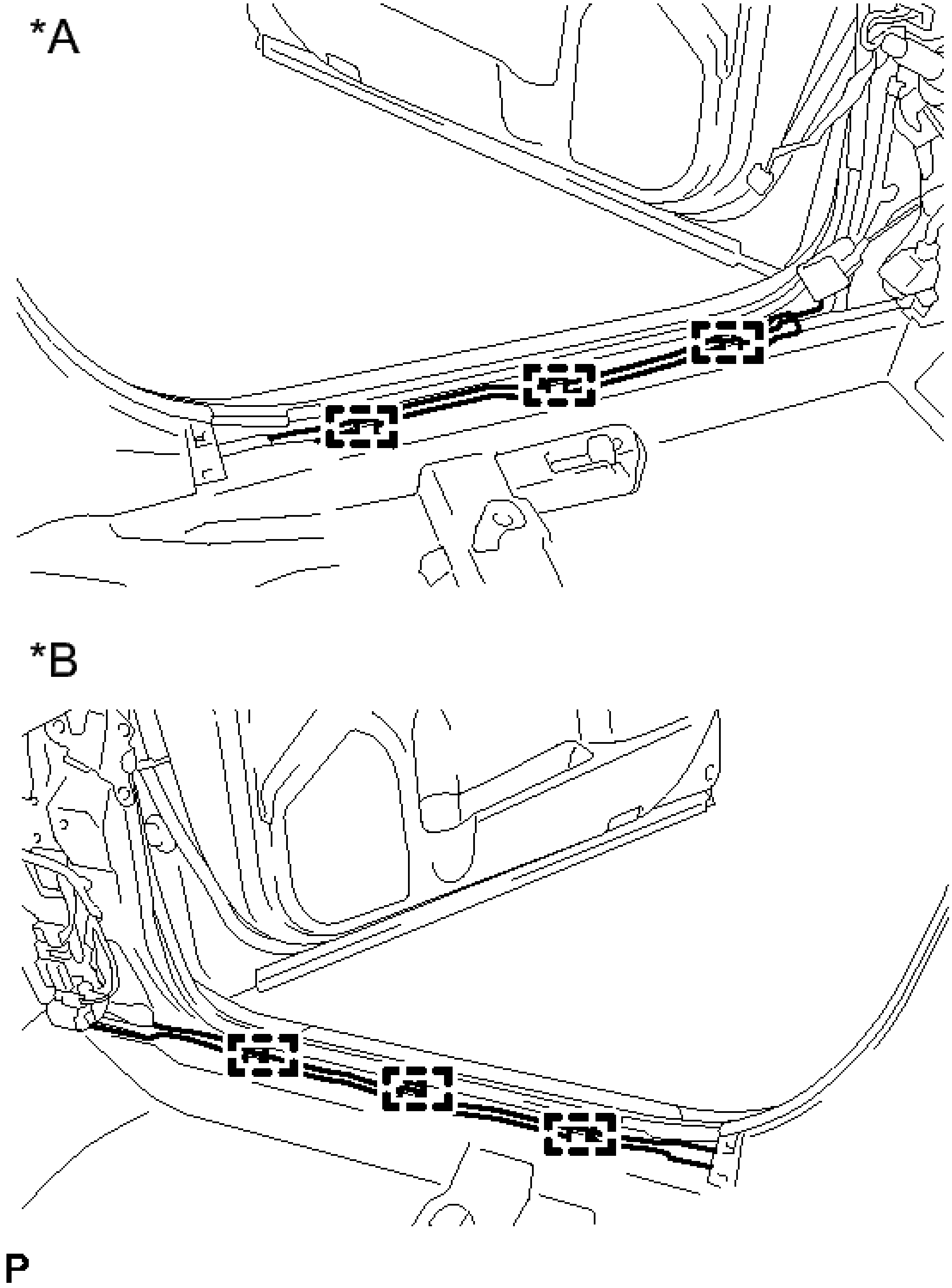

Fig. 33: Identifying Floor Carpet Guides
Courtesy of TOYOTA MOTOR SALES, U.S.A., INC.

TEXT IN ILLUSTRATION

	for

*A	LH Side
*B	for RH Side

b. Disengage the 6 claws and remove the 6 floor carpet hooks.

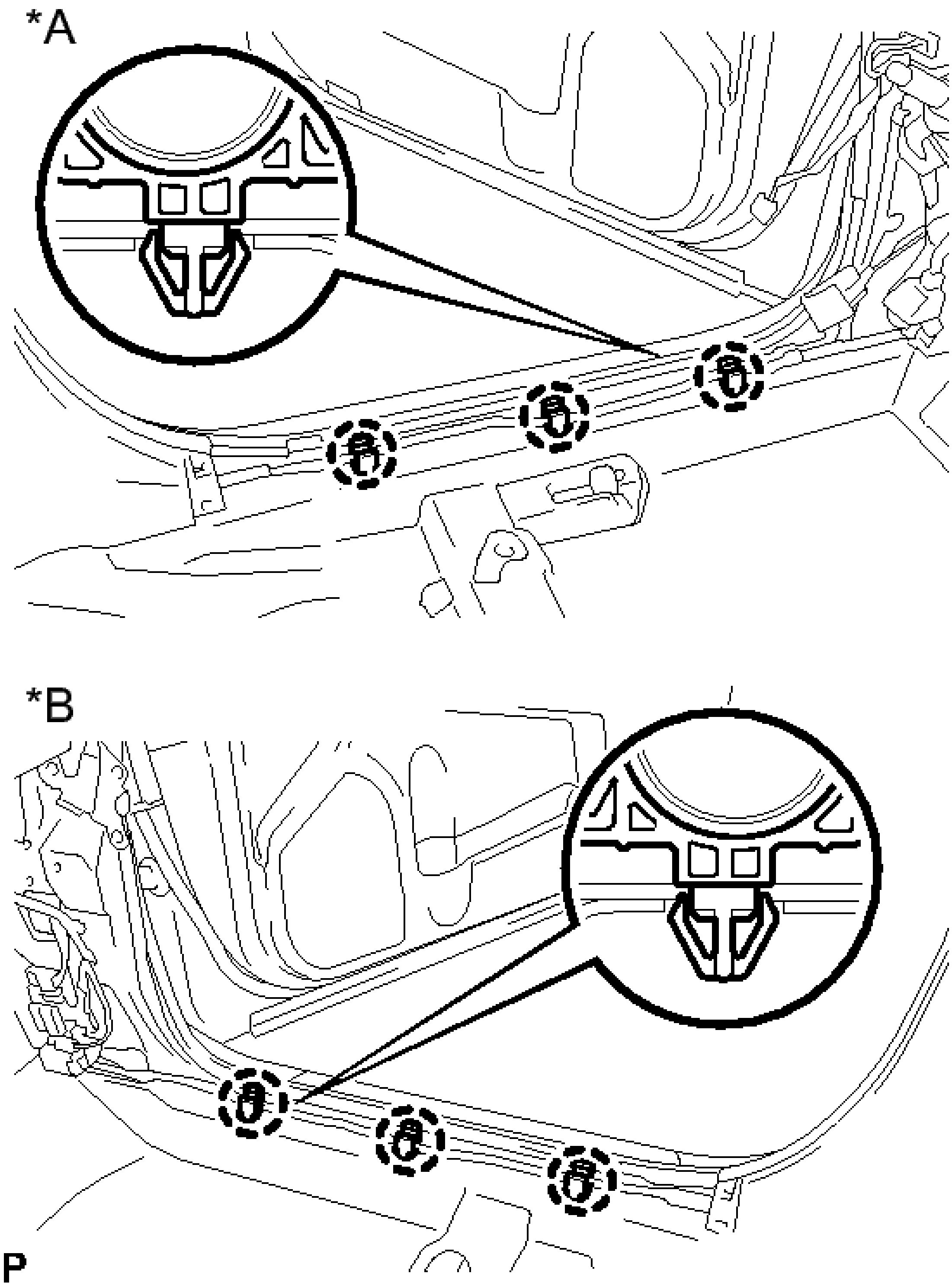

Fig. 34: Identifying Floor Carpet Claws And Hooks
Courtesy of TOYOTA MOTOR SALES, U.S.A., INC.

TEXT IN ILLUSTRATION

	for

*A	LH Side
*B	for RH Side

29. **DISCONNECT FUEL LID LOCK OPEN LEVER SUB-ASSEMBLY**
    a. Remove the screw.

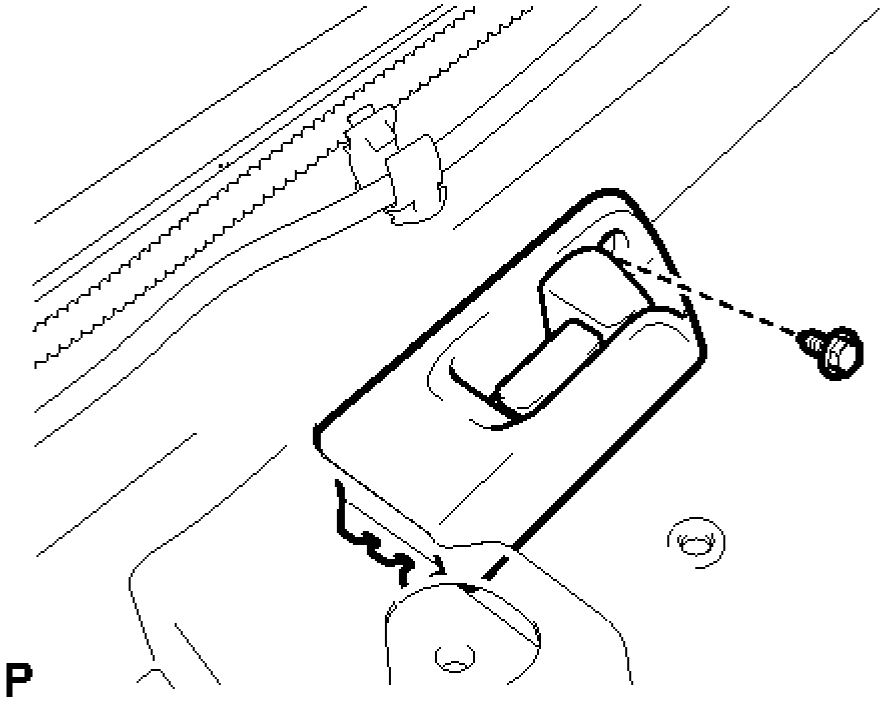

Fig. 35: Identifying Fuel Lid Lock Open Lever Screw
Courtesy of TOYOTA MOTOR SALES, U.S.A., INC.

b. Disengage the guide to disconnect the fuel lid lock open lever sub-assembly as shown in the illustration.

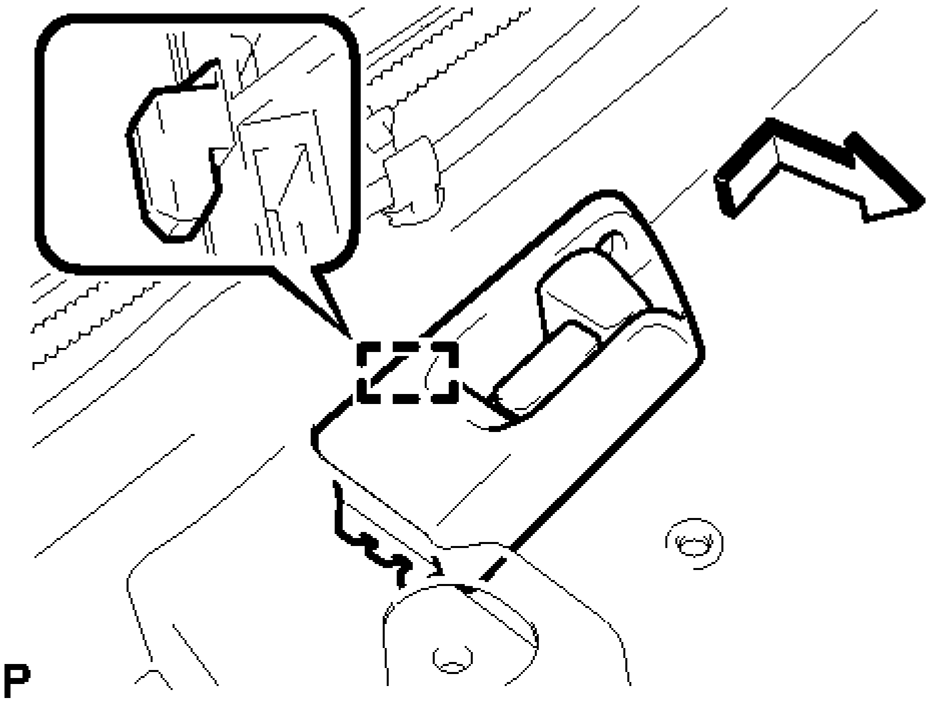

Fig. 36: Disconnecting Fuel Lid Lock Open Lever Guide
Courtesy of TOYOTA MOTOR SALES, U.S.A., INC.

30. **REMOVE REAR NO. 4 AIR DUCT**
    a. Disengage the guide.

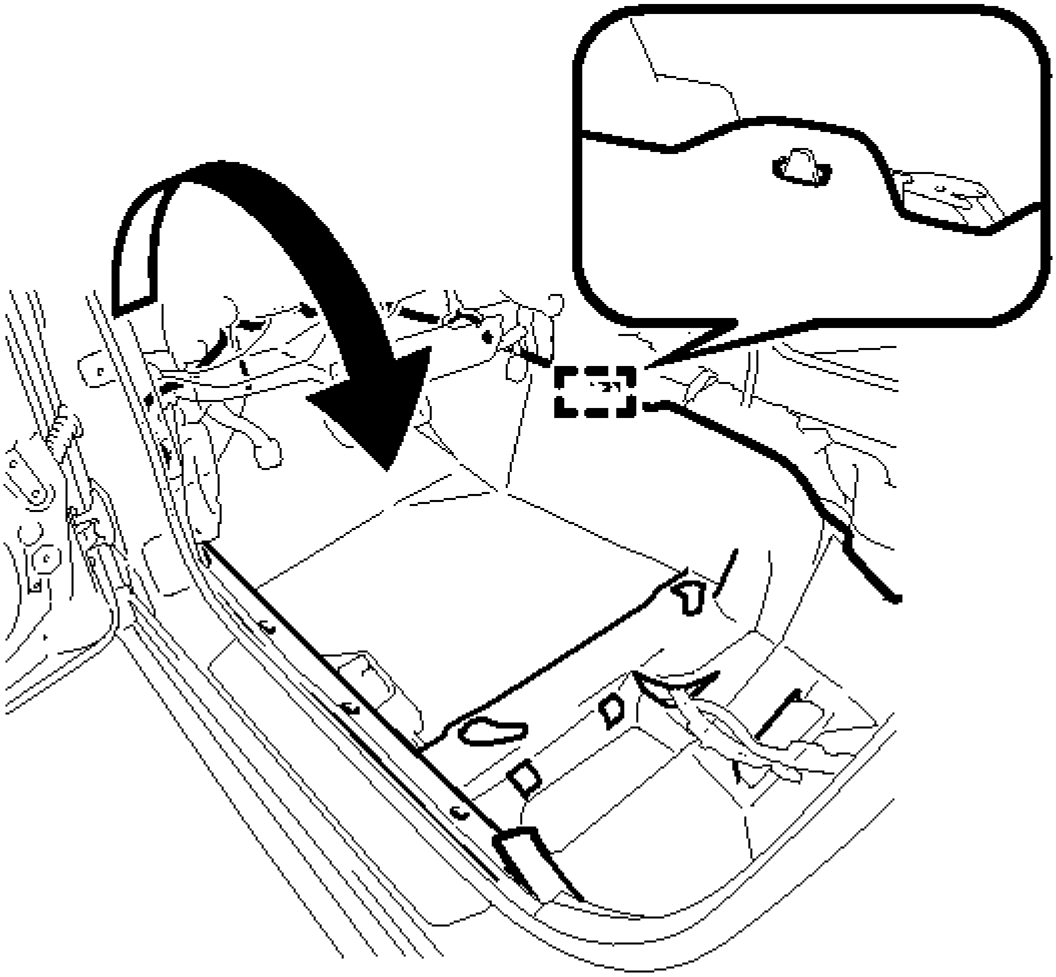

P

Fig. 37: Turning Back The Floor Carpet
Courtesy of TOYOTA MOTOR SALES, U.S.A., INC.

b. Turn back the floor carpet as shown in the illustration.
c. Disengage the 4 claws to remove the rear No. 4 air duct.

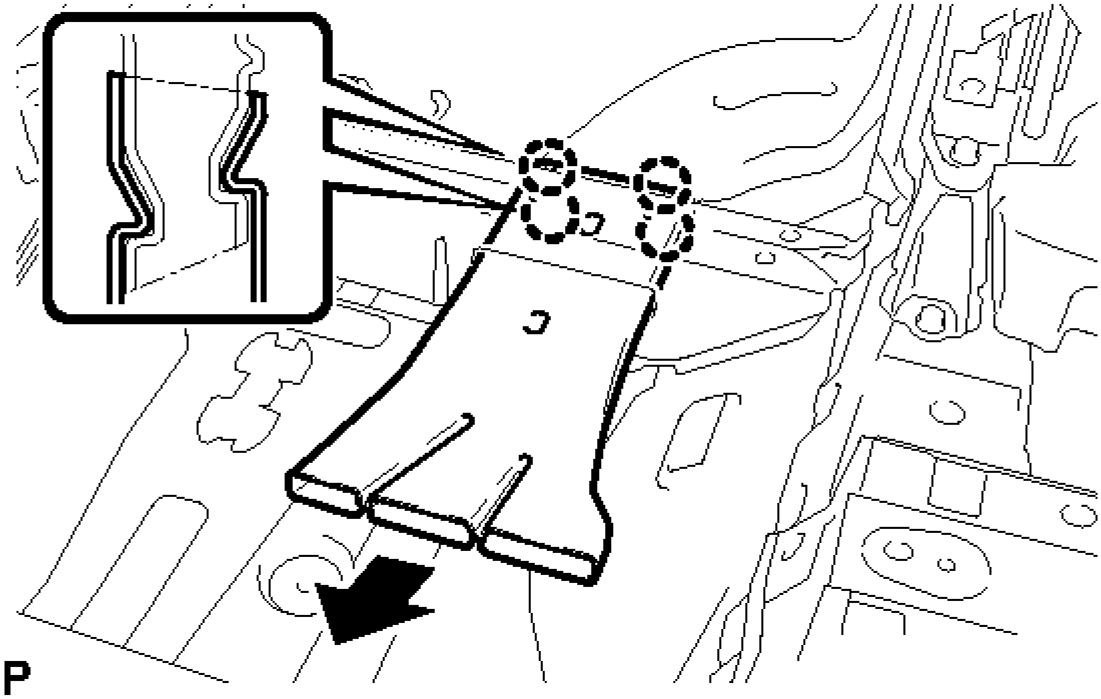

Fig. 38: Removing Rear No. 4 Air Duct Claws
Courtesy of TOYOTA MOTOR SALES, U.S.A., INC.

31. **REMOVE FLOOR CARPET BRACKET LH**
    a. Remove the 2 clips.

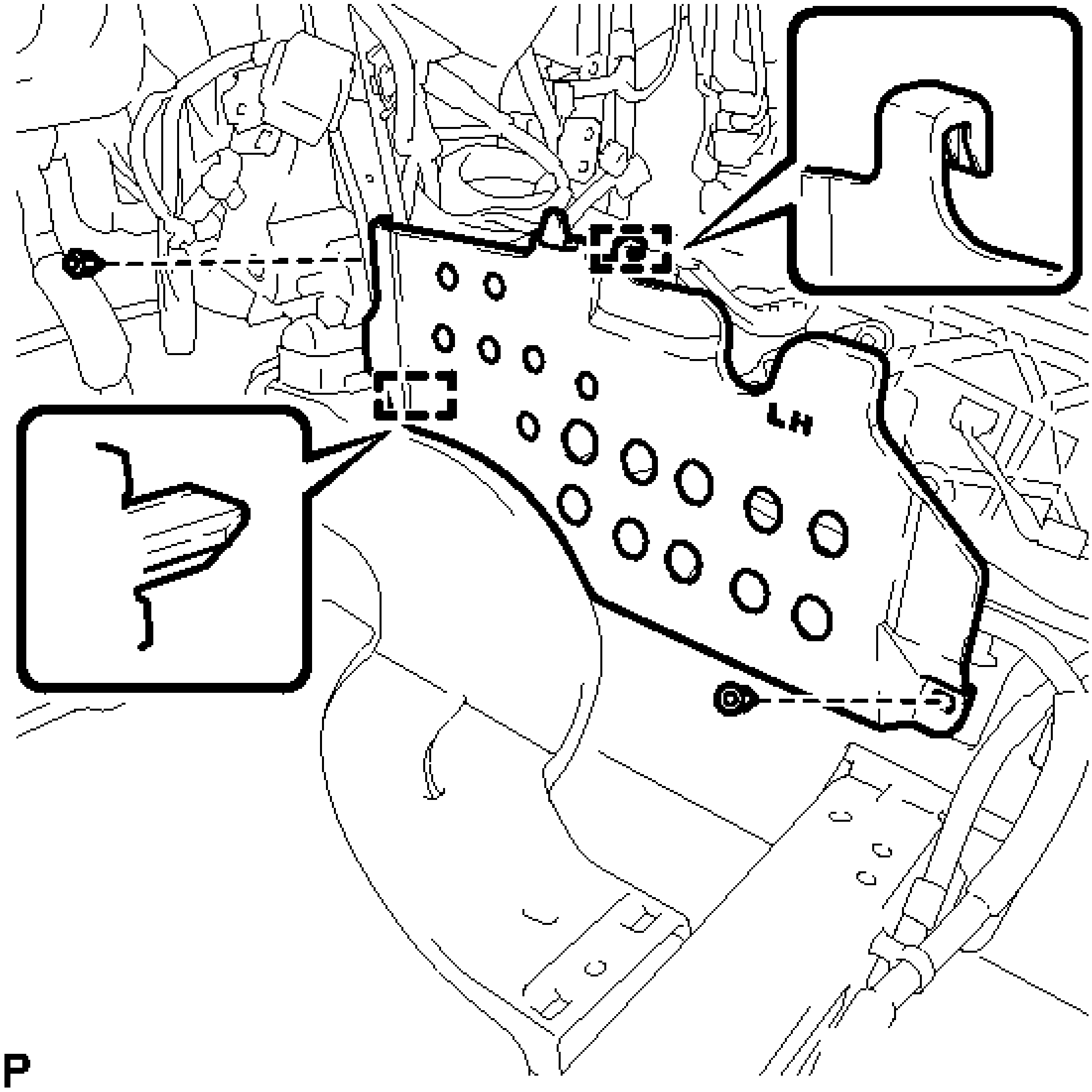

Fig. 39: Identifying Floor Carpet Bracket LH Clips And Guides
Courtesy of TOYOTA MOTOR SALES, U.S.A., INC.

b. Disengage the 2 guides to remove the floor carpet bracket LH.

32. **REMOVE REAR NO. 3 AIR DUCT**

a. Disengage the 2 claws to remove the rear No. 3 air duct.

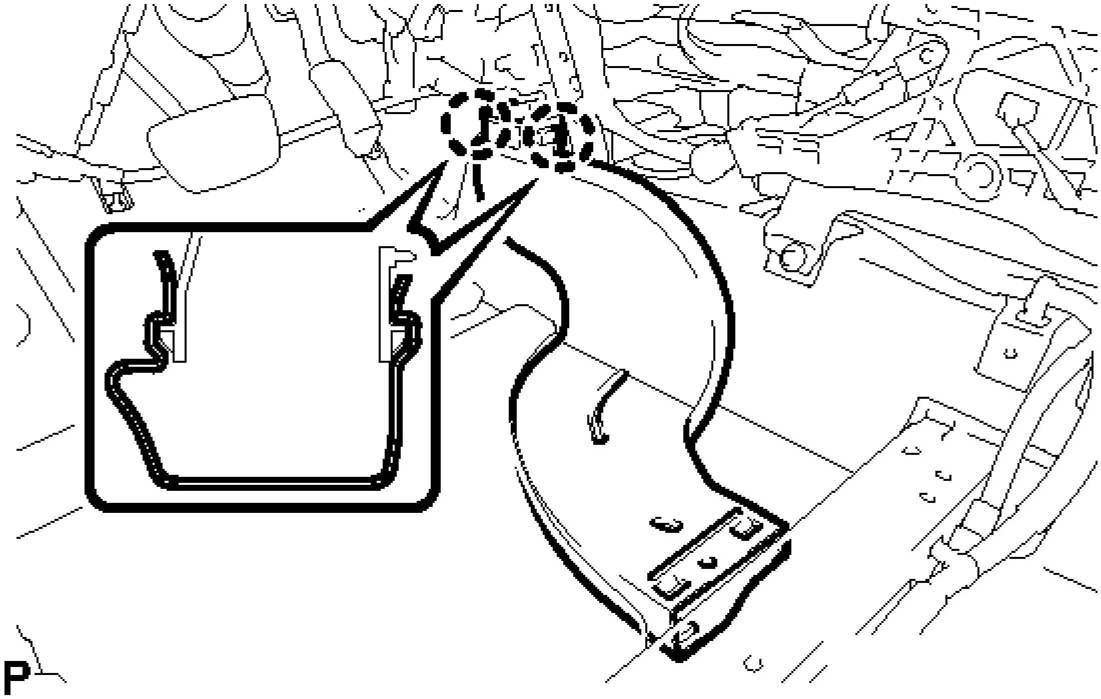

Fig. 40: Identifying Rear No. 3 Air Duct Claws
Courtesy of TOYOTA MOTOR SALES, U.S.A., INC.

33. **REMOVE REAR NO. 2 AIR DUCT**

    a. Disengage the guide.

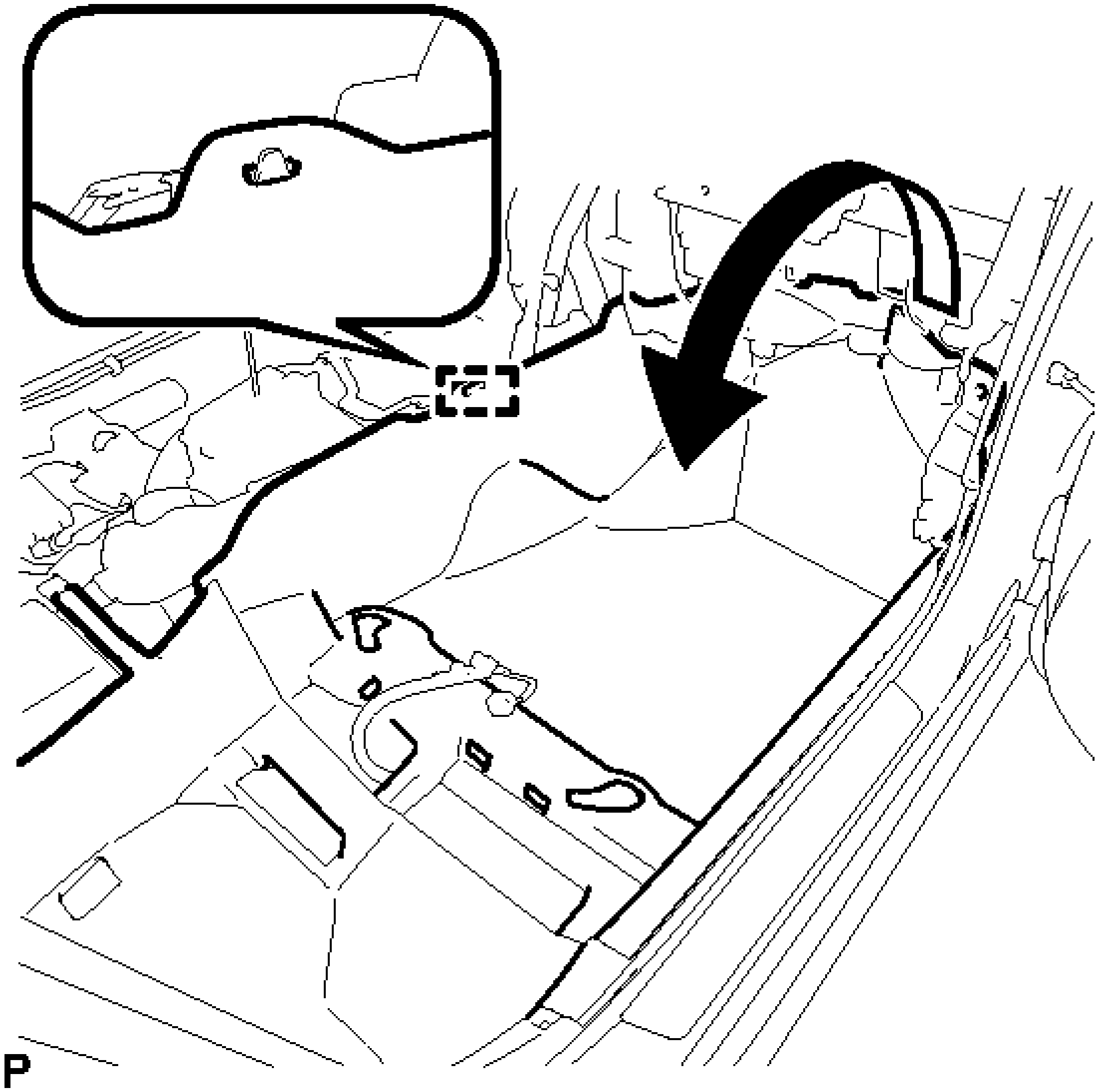

Fig. 41: Turning Back The Floor Carpet
Courtesy of TOYOTA MOTOR SALES, U.S.A., INC.

b. Turn back the floor carpet as shown in the illustration.
c. Disengage the 4 claws to remove the rear No. 2 air duct.

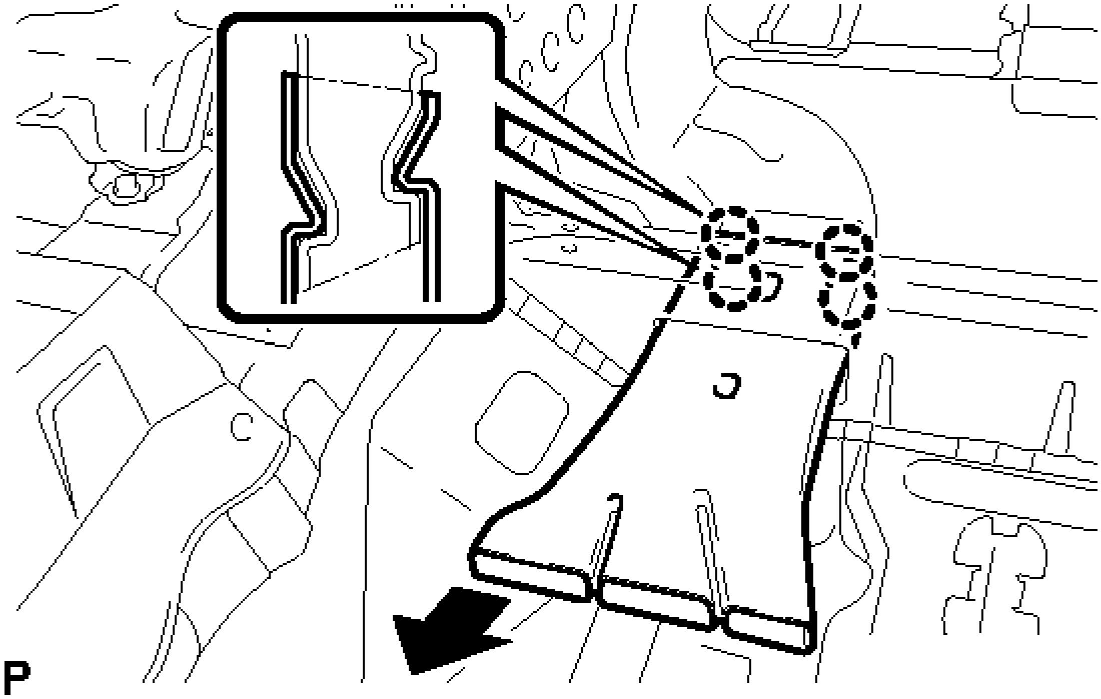

Fig. 42: Removing Rear No. 2 Air Duct
Courtesy of TOYOTA MOTOR SALES, U.S.A., INC.

34. **REMOVE FLOOR CARPET BRACKET RH**
    a. Remove the 2 clips.

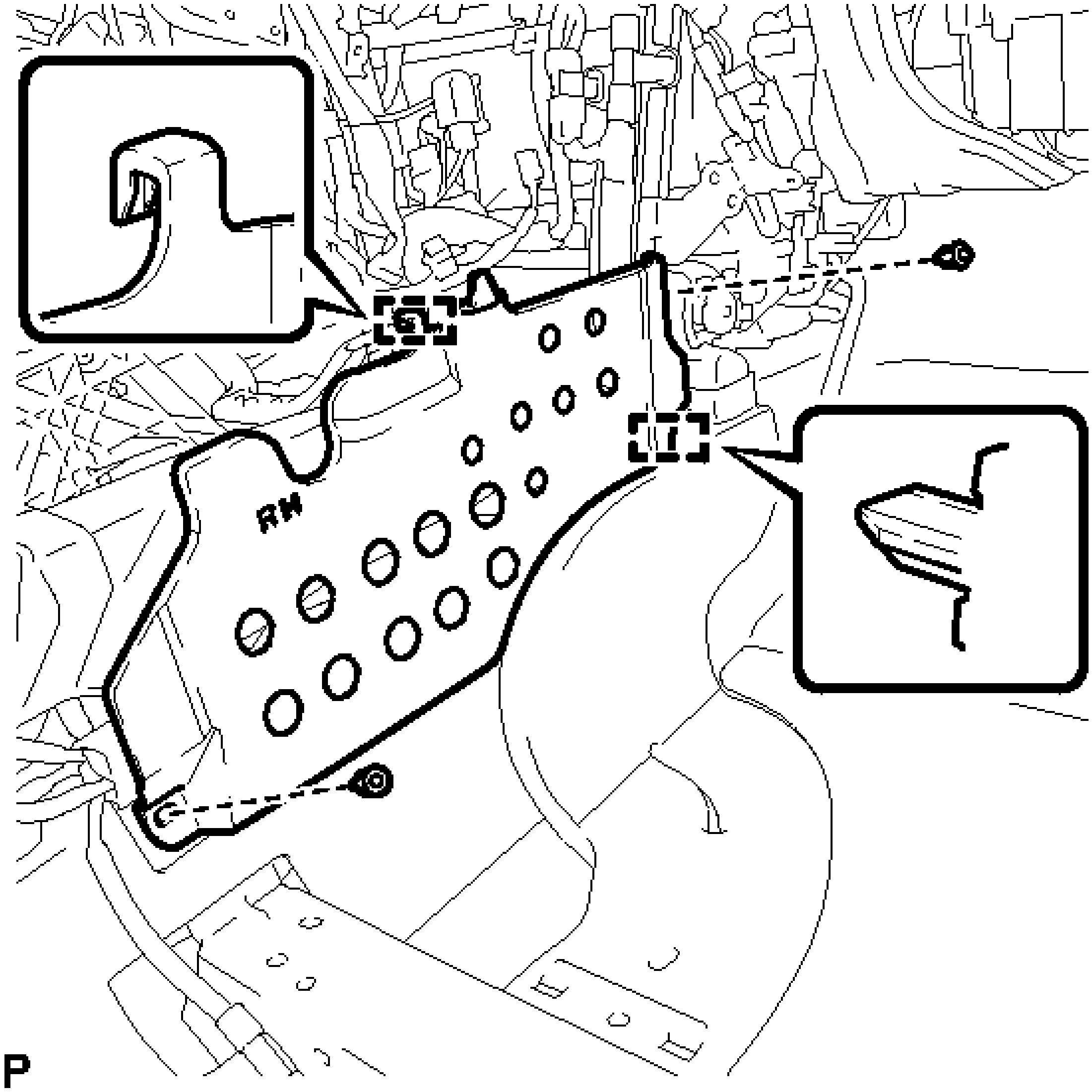

Fig. 43: Identifying Floor Carpet Bracket RH Clips And Guides
Courtesy of TOYOTA MOTOR SALES, U.S.A., INC.

b. Disengage the 2 guides to remove the floor carpet bracket RH.

35. **REMOVE REAR NO. 1 AIR DUCT**

    a. Disengage the 2 claws to remove the rear No. 1 air duct.

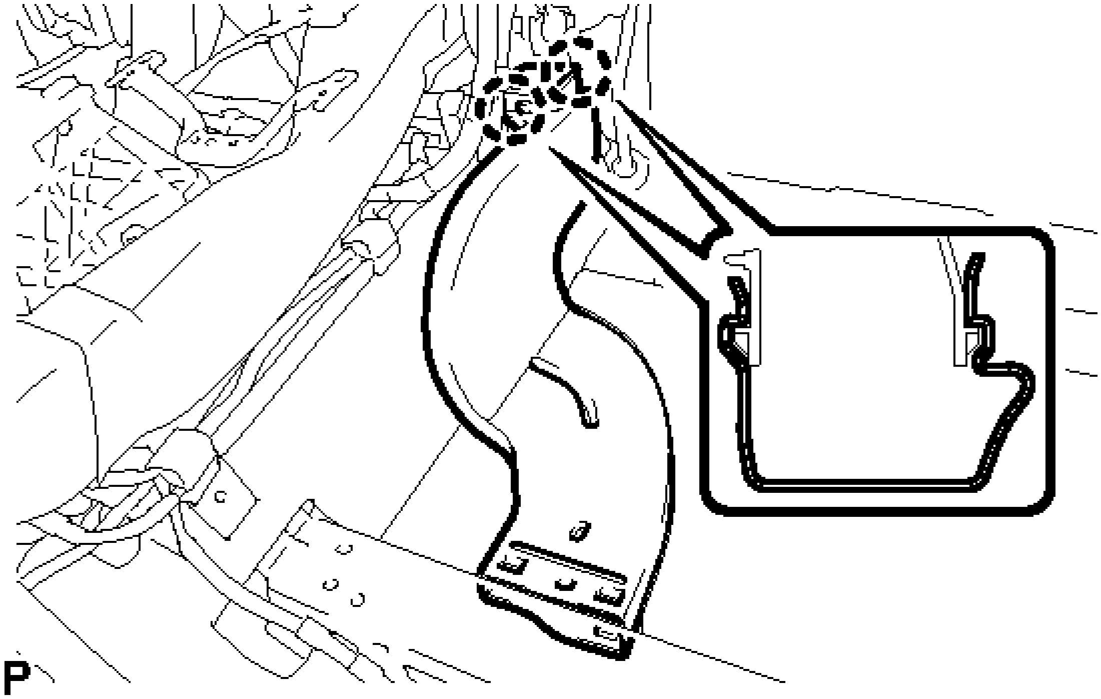

Fig. 44: Identifying Rear No. 1 Air Duct Claws
Courtesy of TOYOTA MOTOR SALES, U.S.A., INC.

36. **REMOVE NO. 1 CONSOLE BOX DUCT (w/ Rear Register Duct)**
    a. Remove the clip and the No. 1 console box duct.

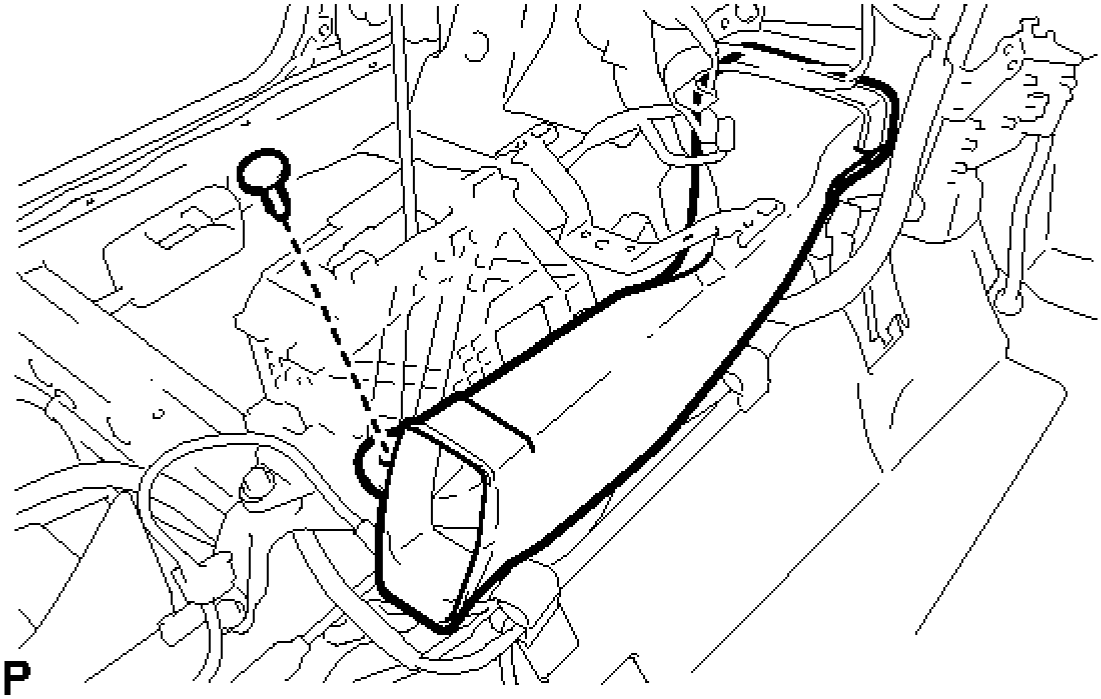

Fig. 45: Identifying No. 1 Console Box Duct (w/ Rear Register Duct)

Courtesy of TOYOTA MOTOR SALES, U.S.A., INC.

37. **REMOVE INSTRUMENT PANEL TO COWL BRACE SUB-ASSEMBLY**

  a. Disconnect each connector.

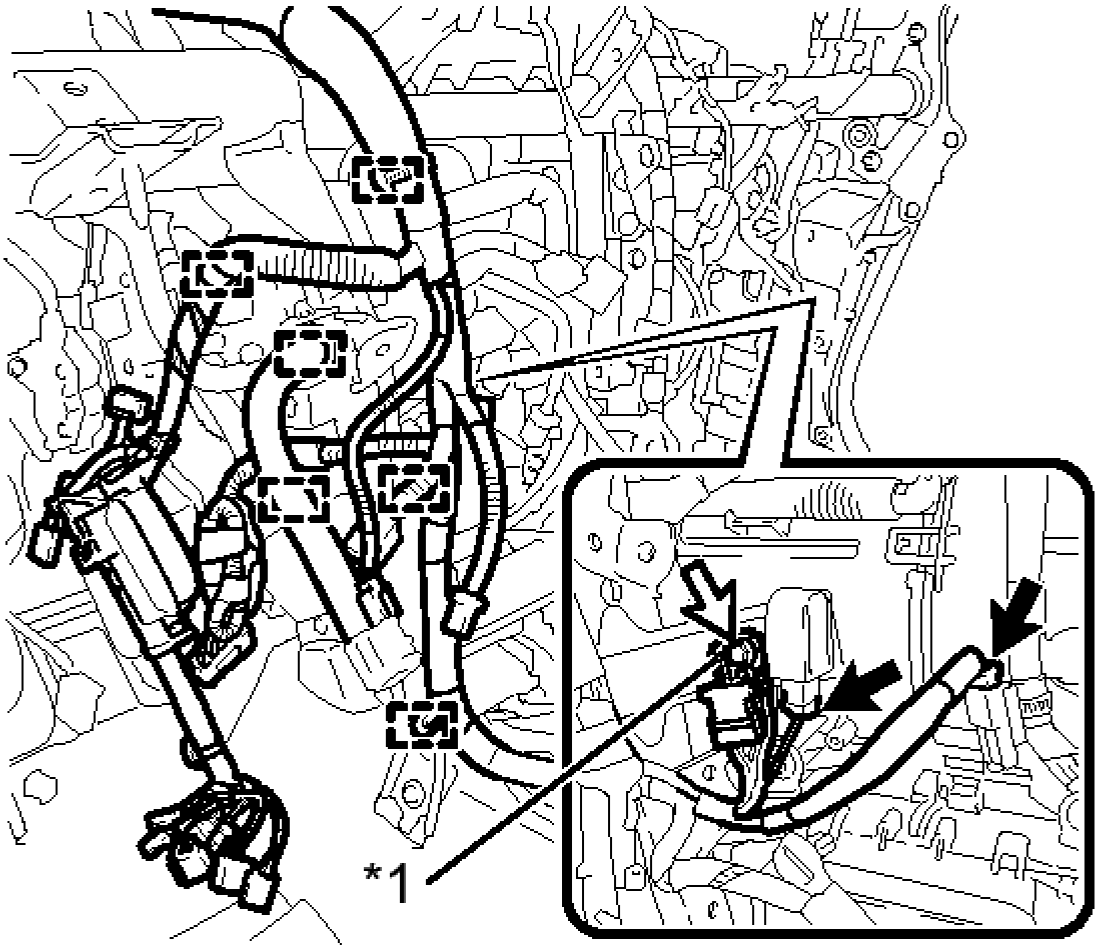

P

Fig. 46: Identifying Wire Harness Connectors And Clamps
Courtesy of TOYOTA MOTOR SALES, U.S.A., INC.

TEXT IN ILLUSTRATION

*1	Earth Wire

  b. Disengage each clamp.

  c. Disconnect the connector.

  d. Remove the bolt and disconnect the earth wire.

e. Remove the bolt and 2 nuts.

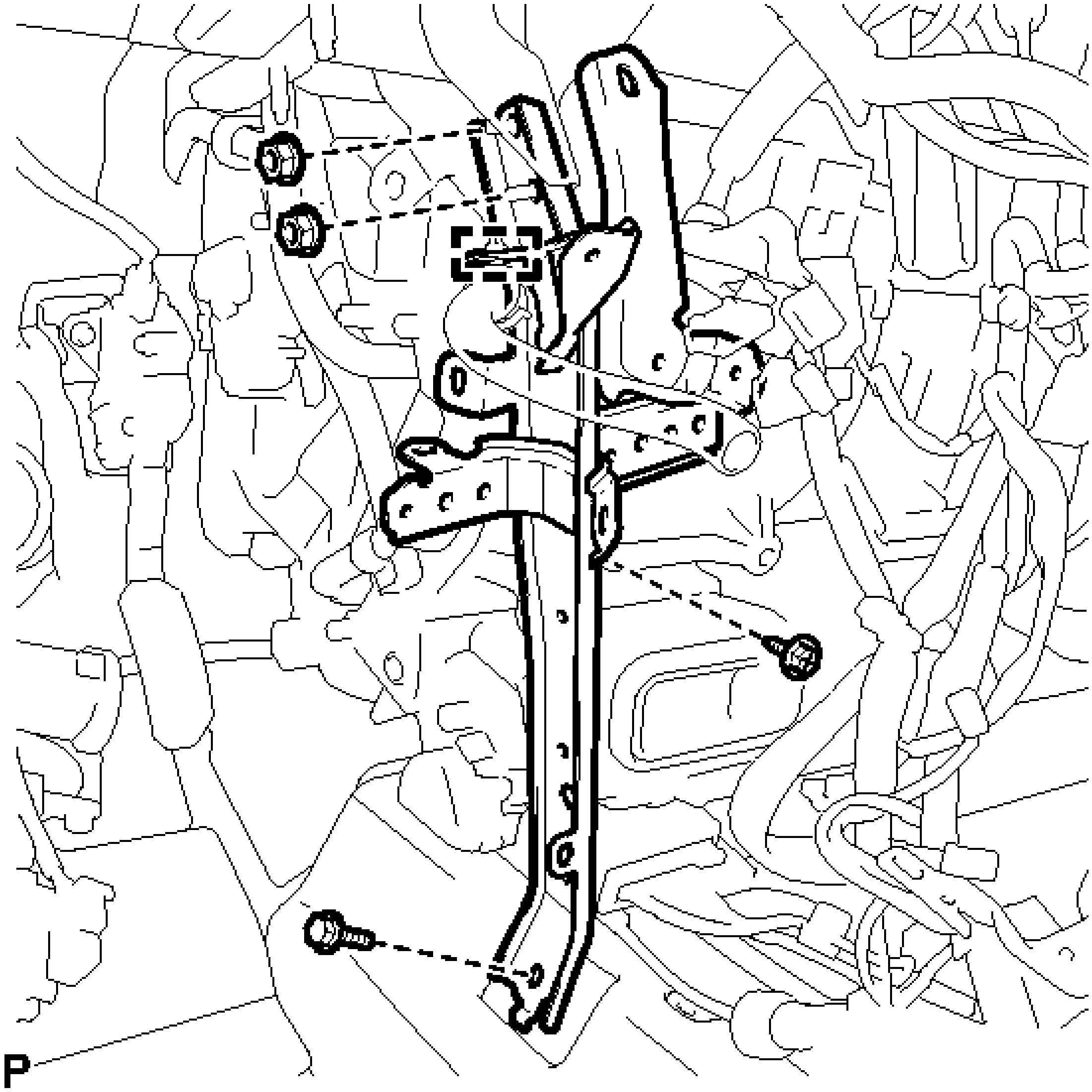

Fig. 47: Identifying Instrument Panel To Cowl Brace Sub-Assembly Bolt, Nuts, And Screw
Courtesy of TOYOTA MOTOR SALES, U.S.A., INC.

f. Remove the screw and the instrument panel to cowl brace sub-assembly.

38. **REMOVE NO. 2 INSTRUMENT PANEL BRACE SUB-ASSEMBLY**

a. Disconnect the connector.

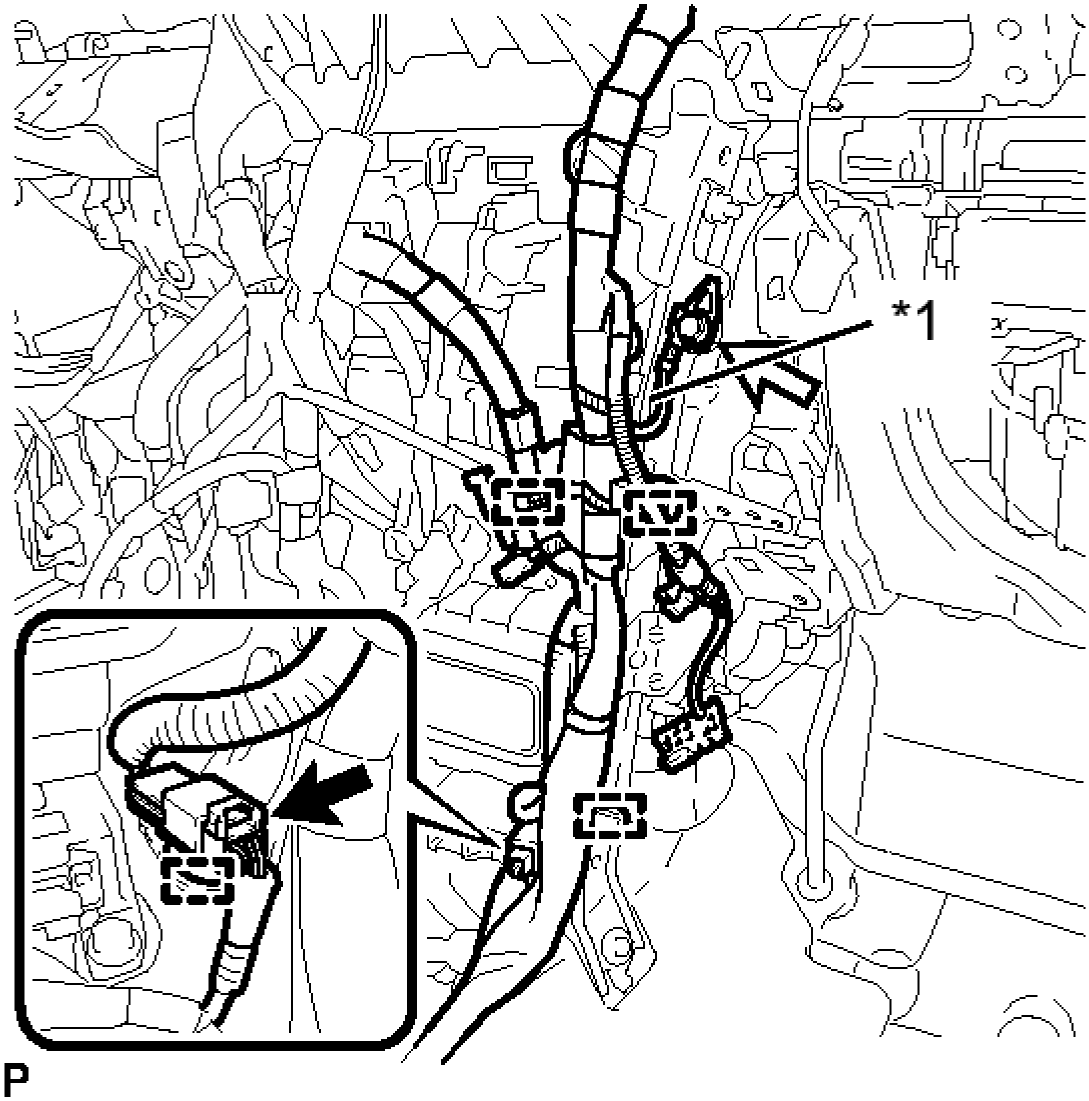

Fig. 48: Identifying Wire Harness Connectors And Clamps
Courtesy of TOYOTA MOTOR SALES, U.S.A., INC.

TEXT IN ILLUSTRATION

*1	Earth Wire

b. Disengage each clamp.
c. Remove the bolt and disconnect the earth wire.
d. Remove the bolt and 2 nuts.

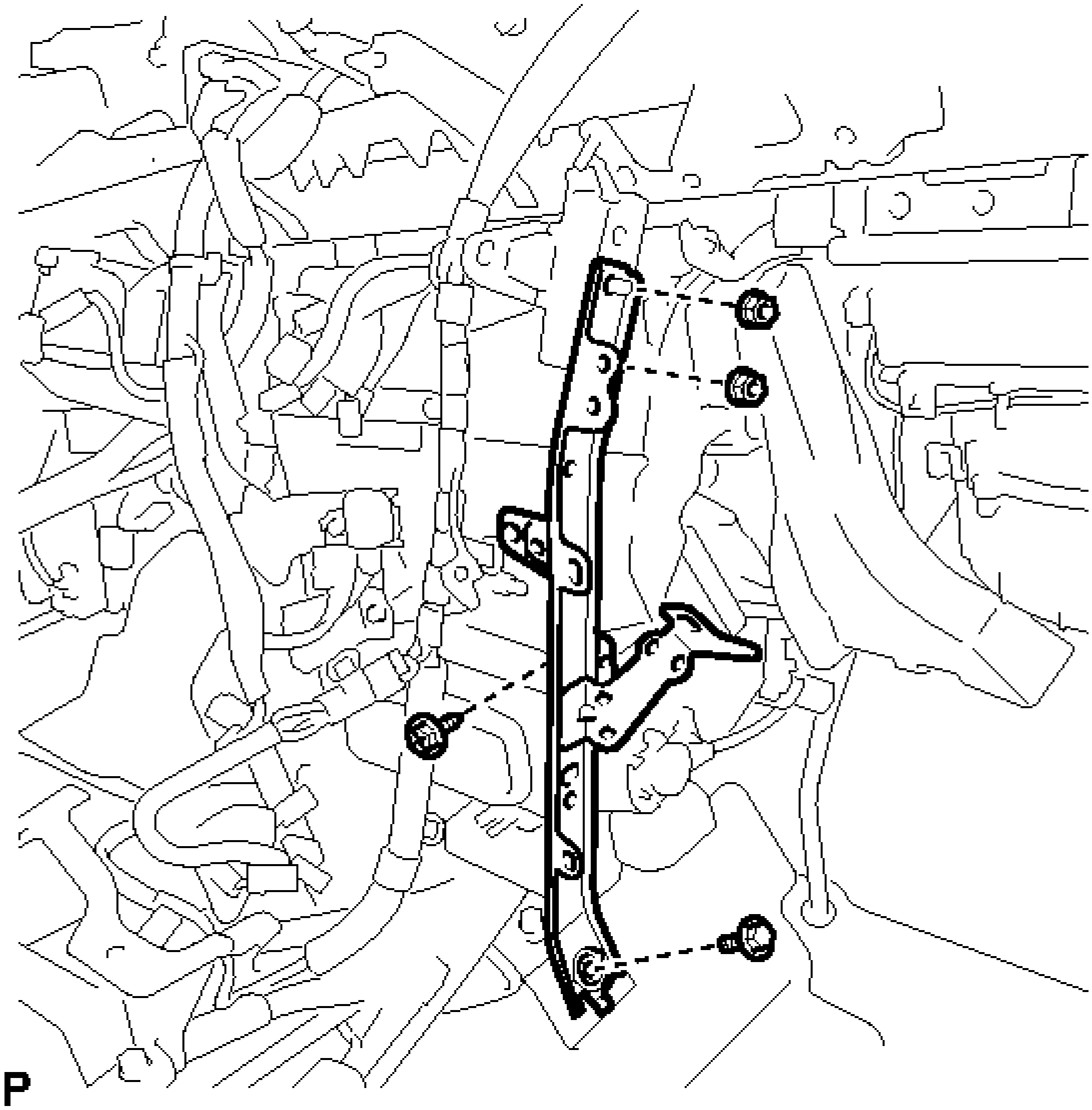

Fig. 49: Identifying No. 2 Instrument Panel Brace Sub-Assembly Bolt, Nuts, And Screw
Courtesy of TOYOTA MOTOR SALES, U.S.A., INC.

e. Remove the screw and the No. 2 instrument panel brace sub-assembly.

39. **REMOVE INSTRUMENT PANEL SAFETY PAD CAP**

a. Put protective tape around the 5 instrument panel safety pad caps.

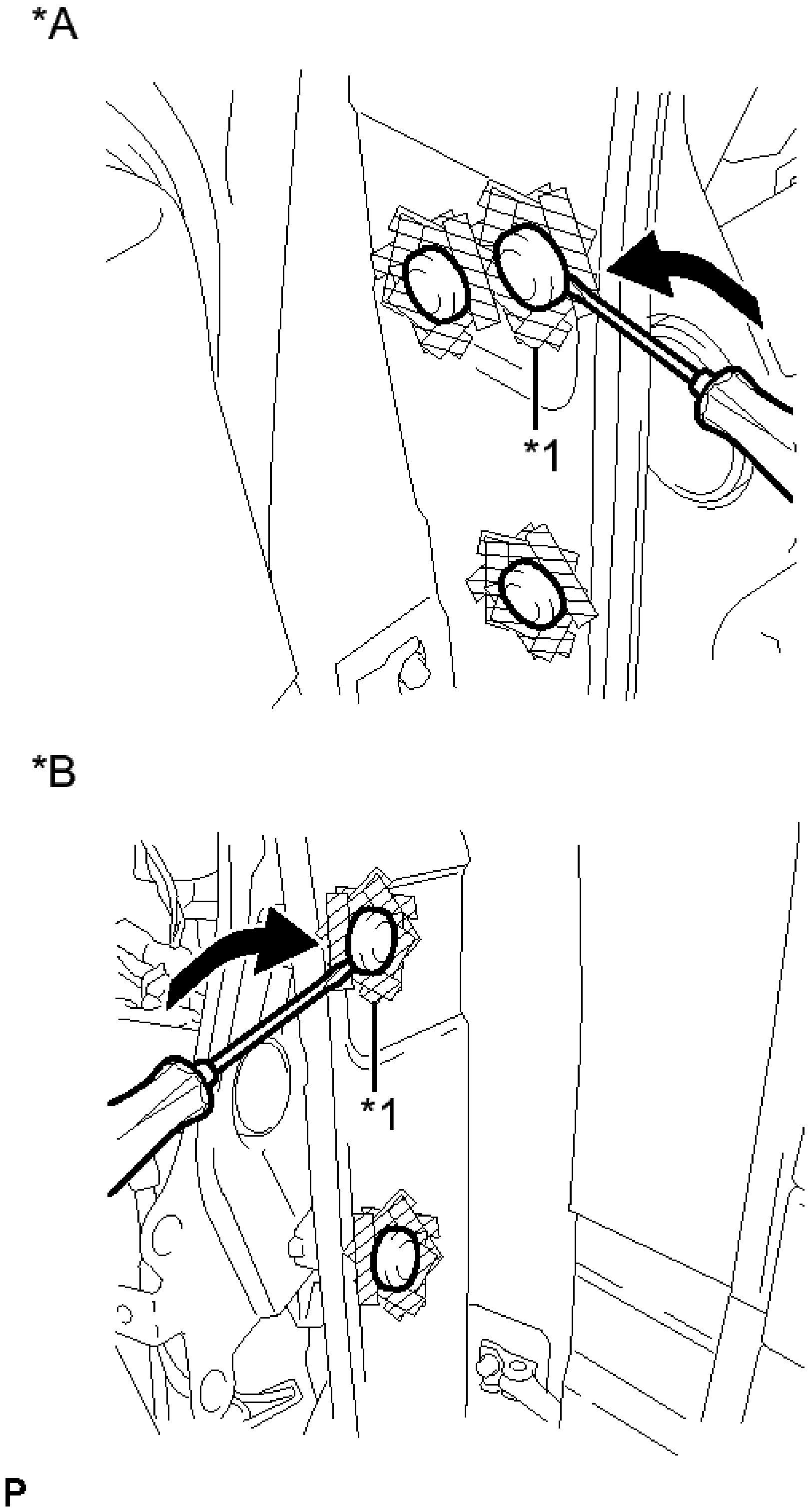

Fig. 50: Identifying Instrument Panel Safety Pad Caps
Courtesy of TOYOTA MOTOR SALES, U.S.A., INC.

TEXT IN ILLUSTRATION

*A	for LH Side
*B	for RH Side
*1	Protective Tape

b. Using a screwdriver, remove the 5 instrument panel safety pad caps.

40. REMOVE FRONT LOWER PANEL PACKING

a. Remove the 2 front lower panel packings as shown in the illustration.

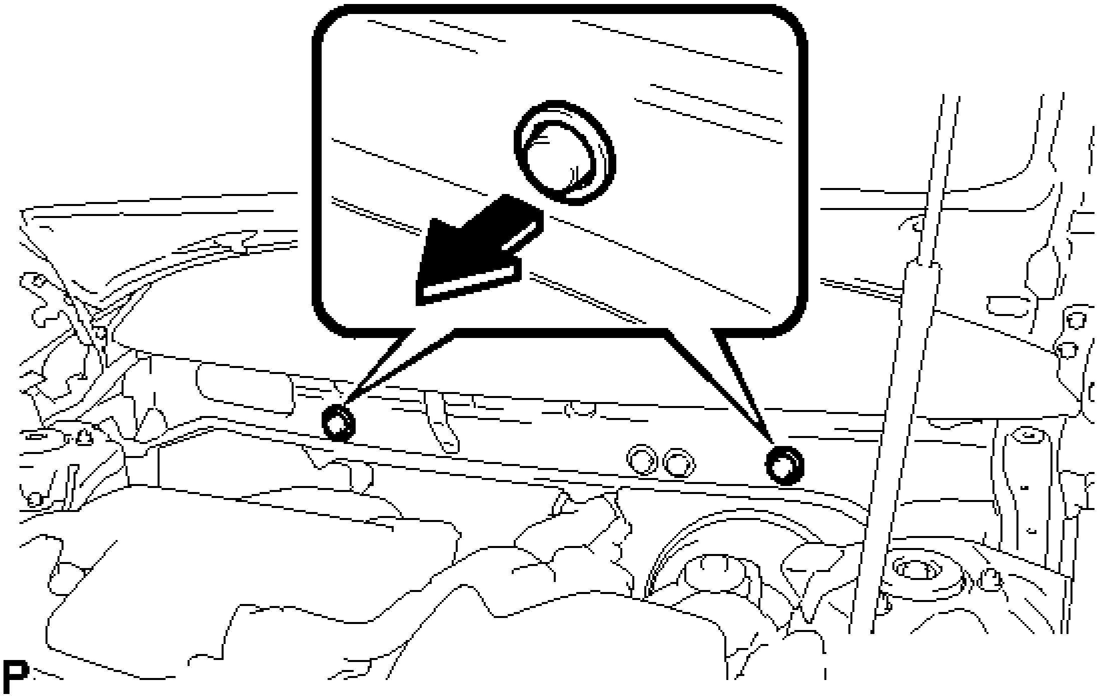

Fig. 51: Identifying Front Lower Panel Packing
Courtesy of TOYOTA MOTOR SALES, U.S.A., INC.

41. REMOVE INSTRUMENT PANEL REINFORCEMENT ASSEMBLY WITH AIR CONDITIONING UNIT

NOTE:

- **Be sure to support the air conditioning unit assembly when removing it because failure to do so may cause the bracket of the air conditioning unit assembly to break.**
- **When disassembling the air conditioning unit, eliminate static electricity by touching the vehicle body to prevent the components from being damaged.**

a. for 10 Speakers:

1. Disengage the 3 clamps.

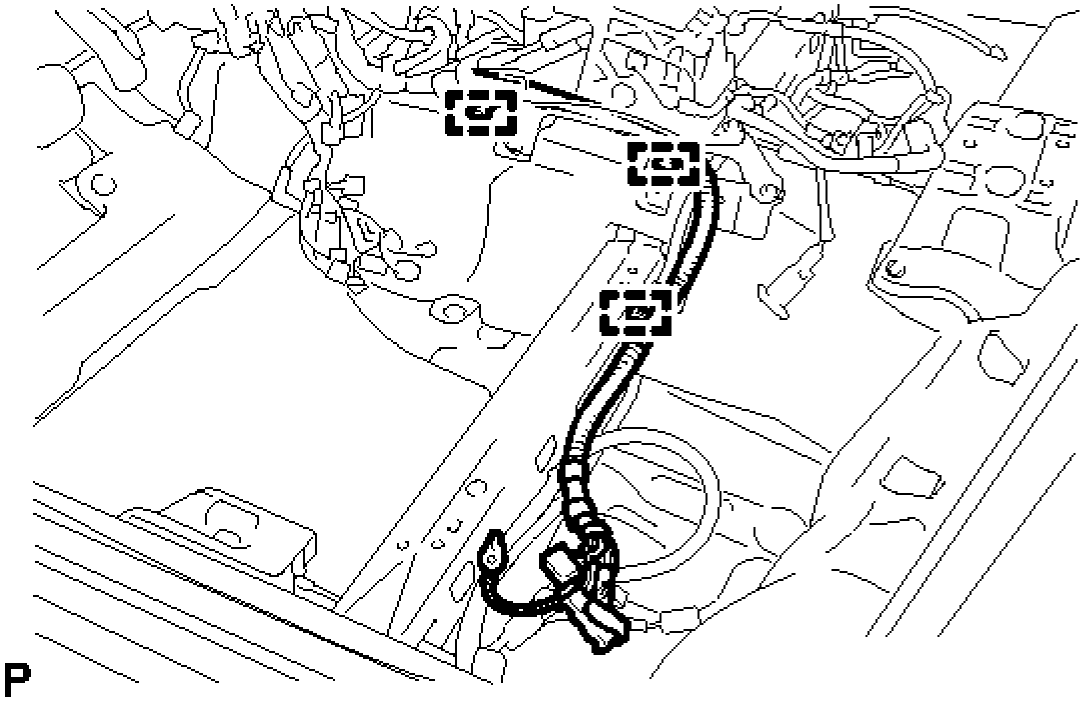

Fig. 52: Locating Instrument Panel Reinforcement Assembly With Air Conditioning Unit Clamps (For 10 Speakers)
Courtesy of TOYOTA MOTOR SALES, U.S.A., INC.

b. w/ Manual (SOS) Switch:
   1. Disengage the clamp.

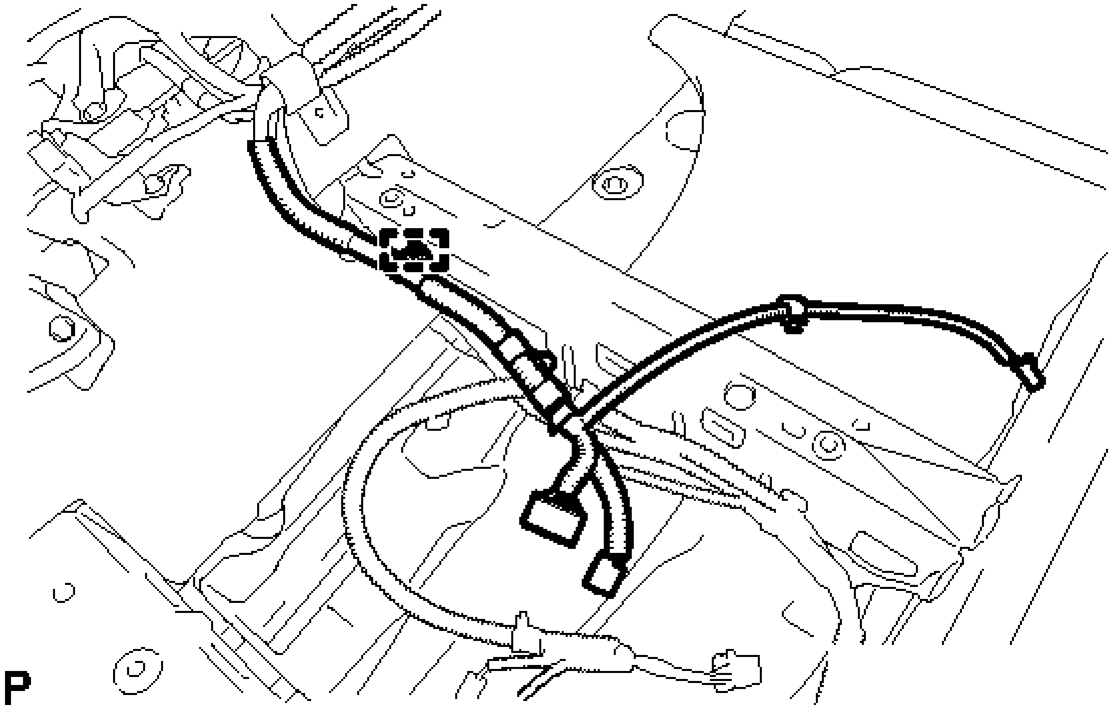

Fig. 53: Locating Instrument Panel Reinforcement Assembly With Air Conditioning Unit Clamp (w/ Manual (SOS) Switch)
Courtesy of TOYOTA MOTOR SALES, U.S.A., INC.

c. Disengage 3 claw to open the 3 clamps.

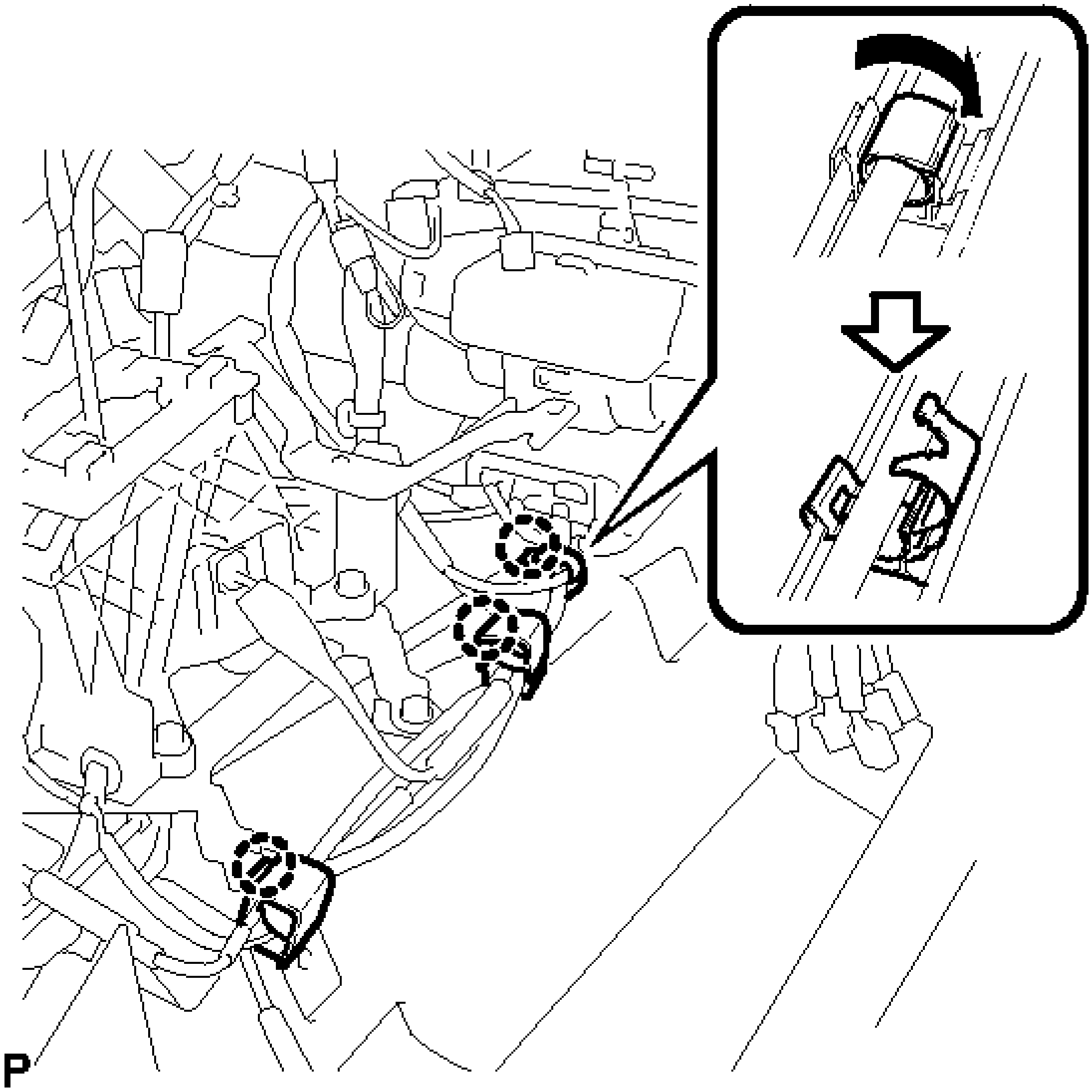

Fig. 54: Disengaging Claws To Open Clamps
Courtesy of TOYOTA MOTOR SALES, U.S.A., INC.

d. Disconnect the connector from the airbag sensor assembly as shown in the illustration.

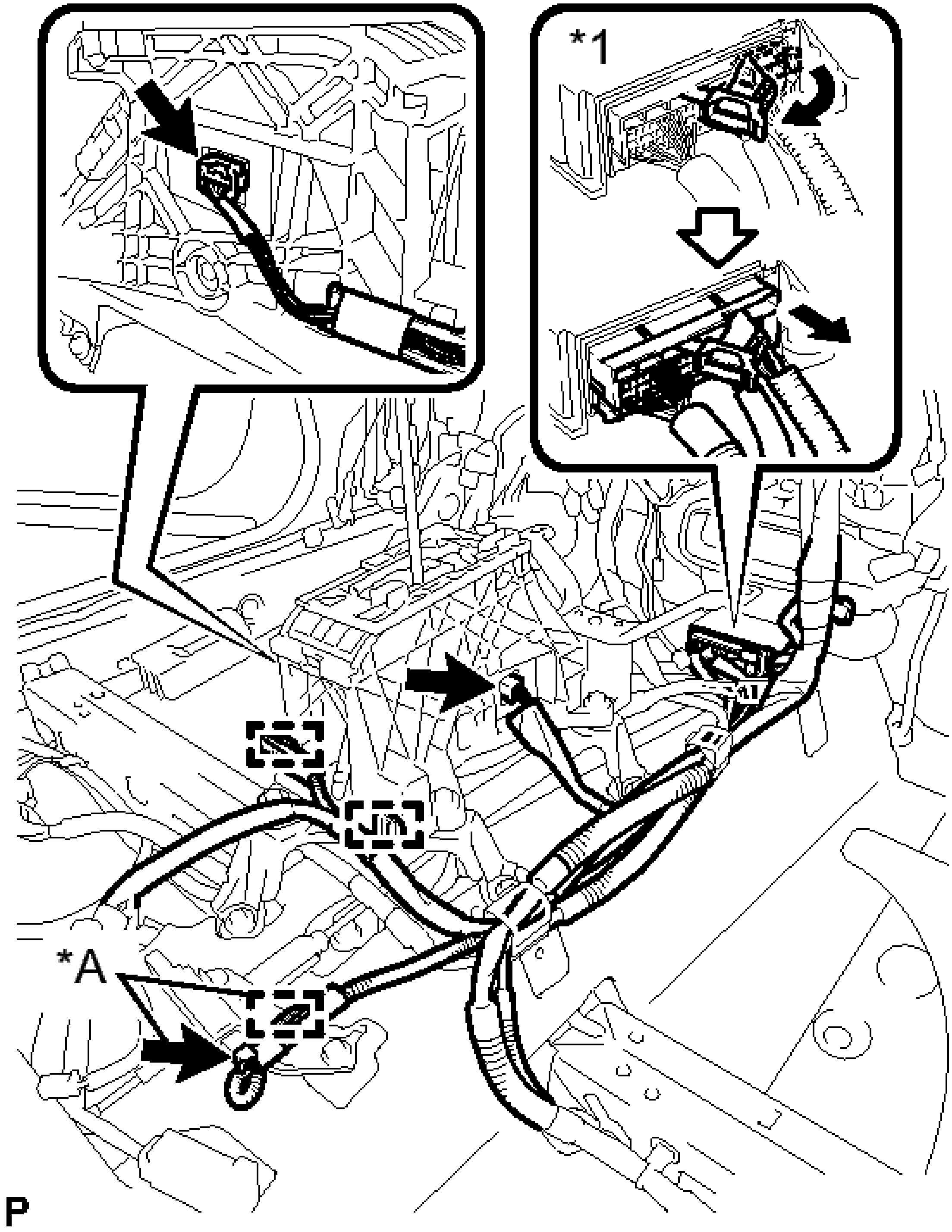

Fig. 55: Locating Airbag Sensor Assembly Connector And Clamps
Courtesy of TOYOTA MOTOR SALES, U.S.A., INC.

TEXT IN ILLUSTRATION

	w/ Smart

*A	Key System
*1	Airbag Sensor Assembly

NOTE: When disconnecting any airbag connector, take care not to damage the airbag wire harness.

e. Disconnect the connector.
f. Disengage each clamp.
g. Using a screwdriver, disengage the 2 claws to unlock the retainer as shown in the illustration.

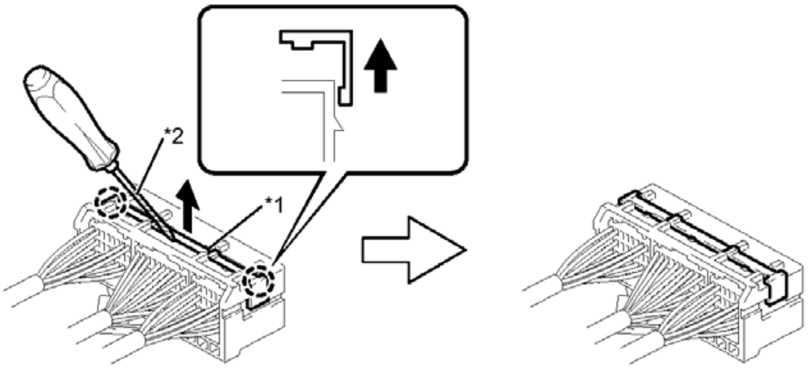

P

Fig. 56: Identifying Claws To Unlock Retainer
Courtesy of TOYOTA MOTOR SALES, U.S.A., INC.

TEXT IN ILLUSTRATION

*1	Retainer	*2	Protective Tape

h. Disengage the claw and disconnect the airbag connector as shown in the illustration.

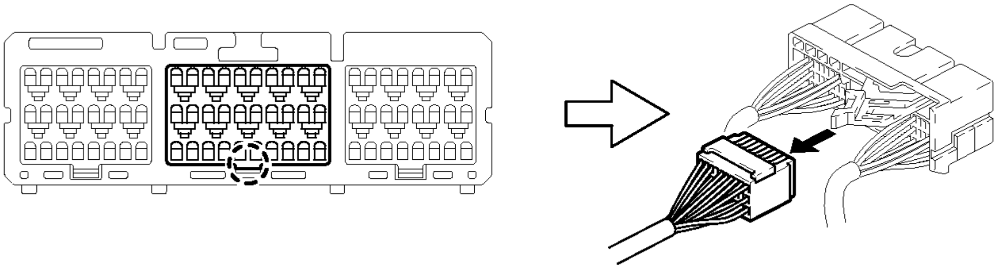

P

Fig. 57: Identifying Airbag Connector
Courtesy of TOYOTA MOTOR SALES, U.S.A., INC.

i. Disengage each clamp.

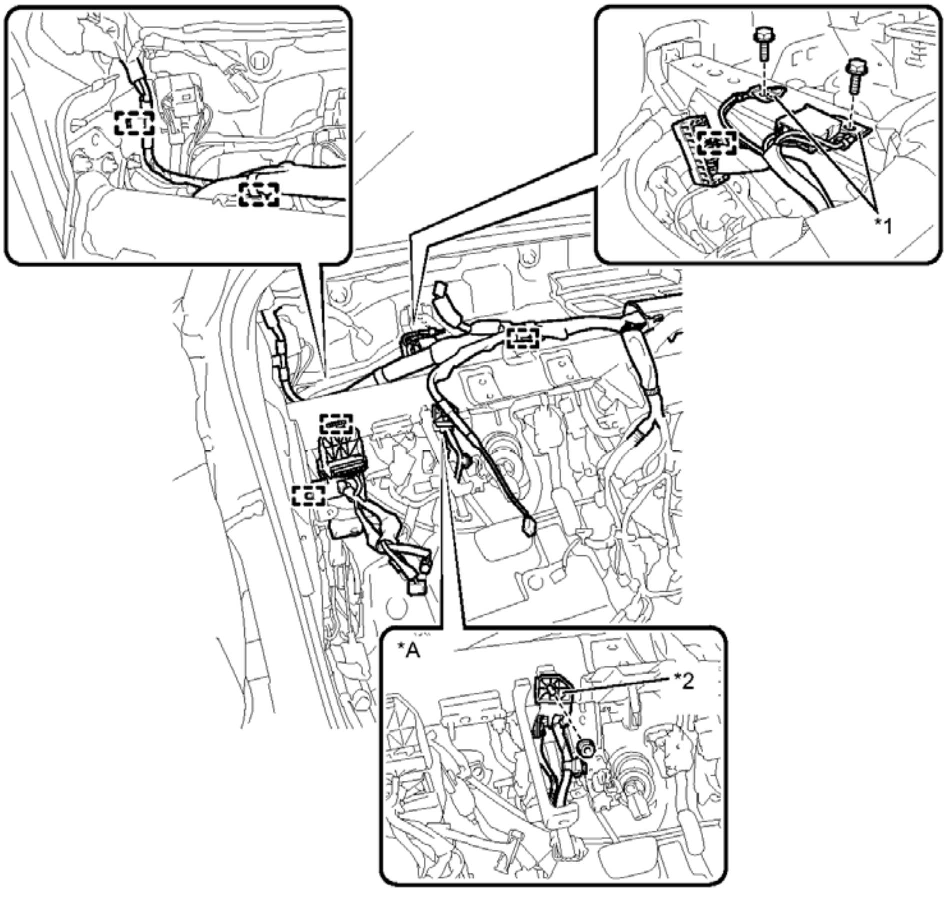

P

Fig. 58: Identifying Power Tilt And Power Telescopic Steering Column Fasteners
Courtesy of TOYOTA MOTOR SALES, U.S.A., INC.

TEXT IN ILLUSTRATION

*A	for Power Tilt and Power Telescopic Steering Column	-	-
*1	Earth Wire	*2	Protector

j. Disengage each clamp.
k. for Power Tilt and Power Telescopic Steering Column:
    1. Remove the nut and disconnect the protector.
l. Disconnect the connector.

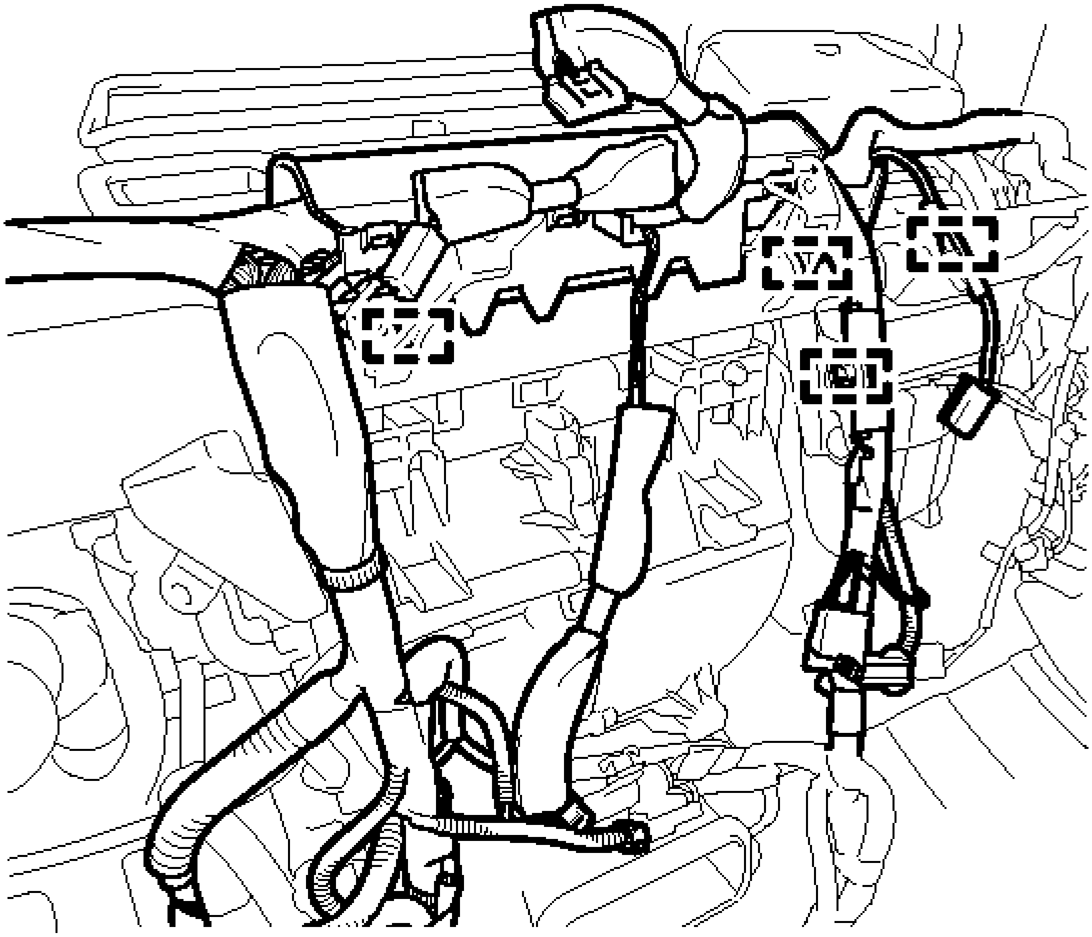

P

Fig. 59: Identifying Wire Harness Clamps

Courtesy of TOYOTA MOTOR SALES, U.S.A., INC.

m. Disengage each clamp.
n. Remove the bolt and disconnect the earth wire.

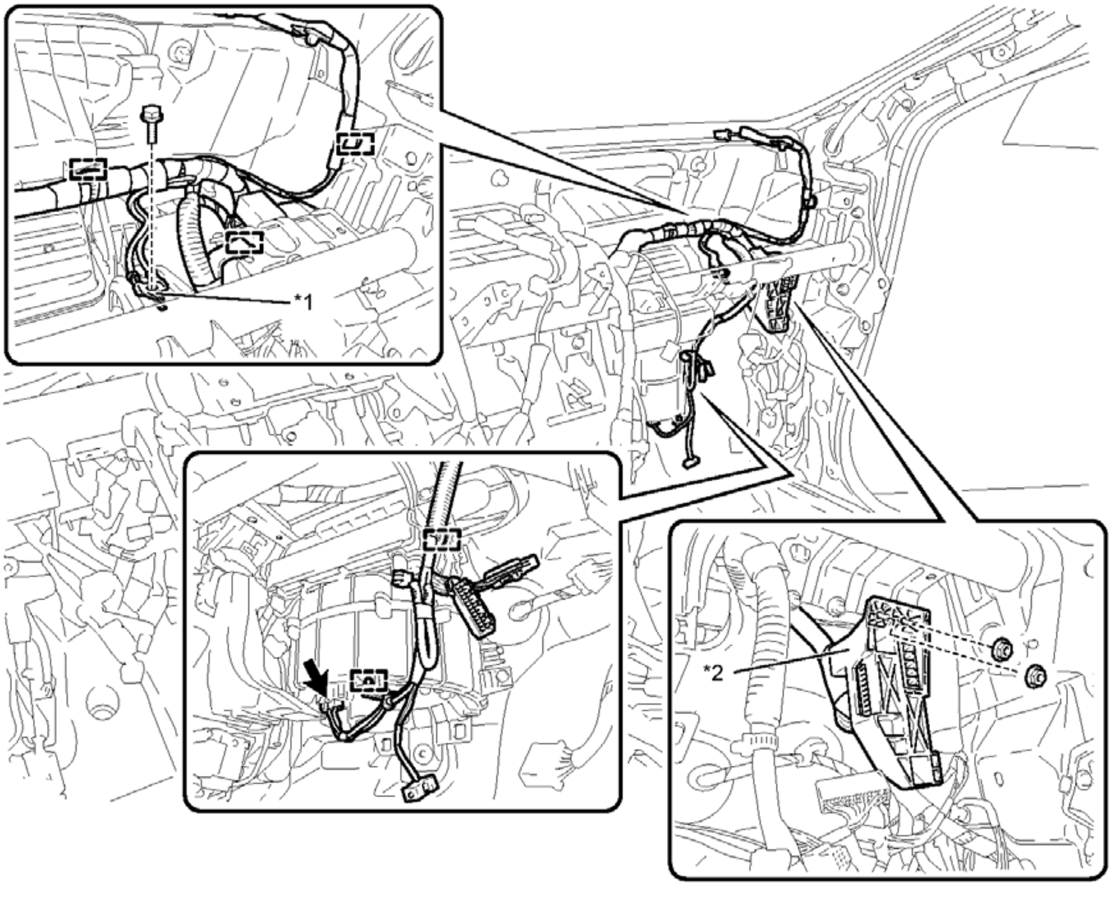

Fig. 60: Identifying Wire Harness Clamps
Courtesy of TOYOTA MOTOR SALES, U.S.A., INC.

TEXT IN ILLUSTRATION

*1	Earth Wire	*2	Connector Holder

o. Remove the 2 nuts and disconnect the connector holder.
p. Disconnect the connector.
q. Disengage each clamp.
r. Remove the 2 bolts.

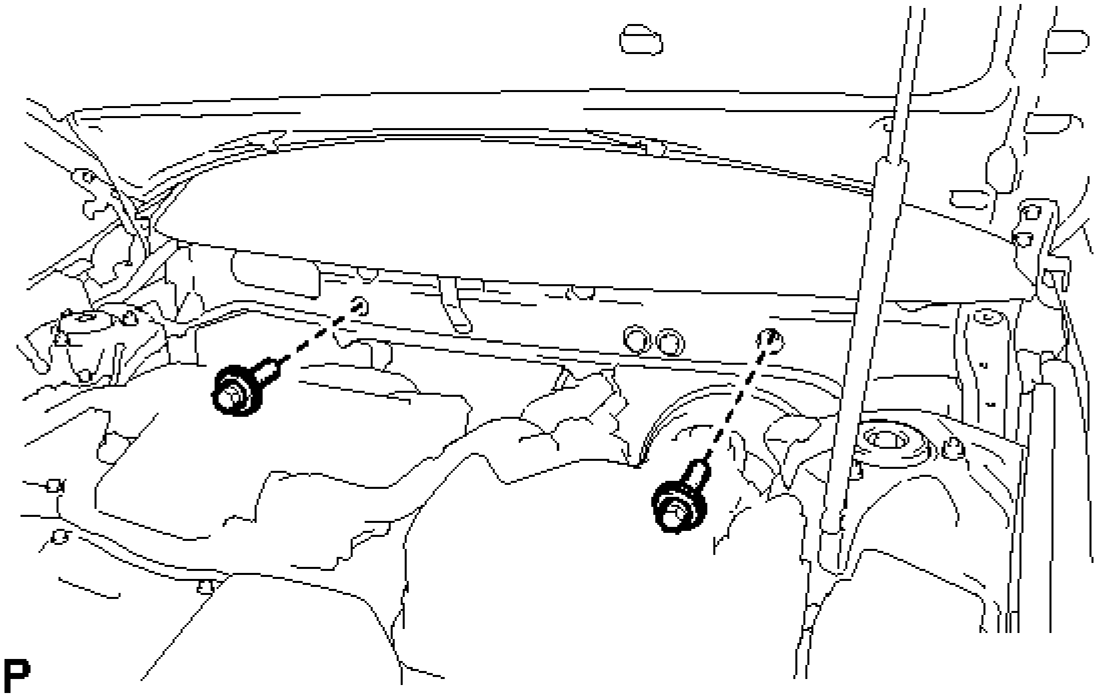

Fig. 61: Identifying Connector Bolts
Courtesy of TOYOTA MOTOR SALES, U.S.A., INC.

s. Remove the 5 bolts and the nut as shown in the illustration.

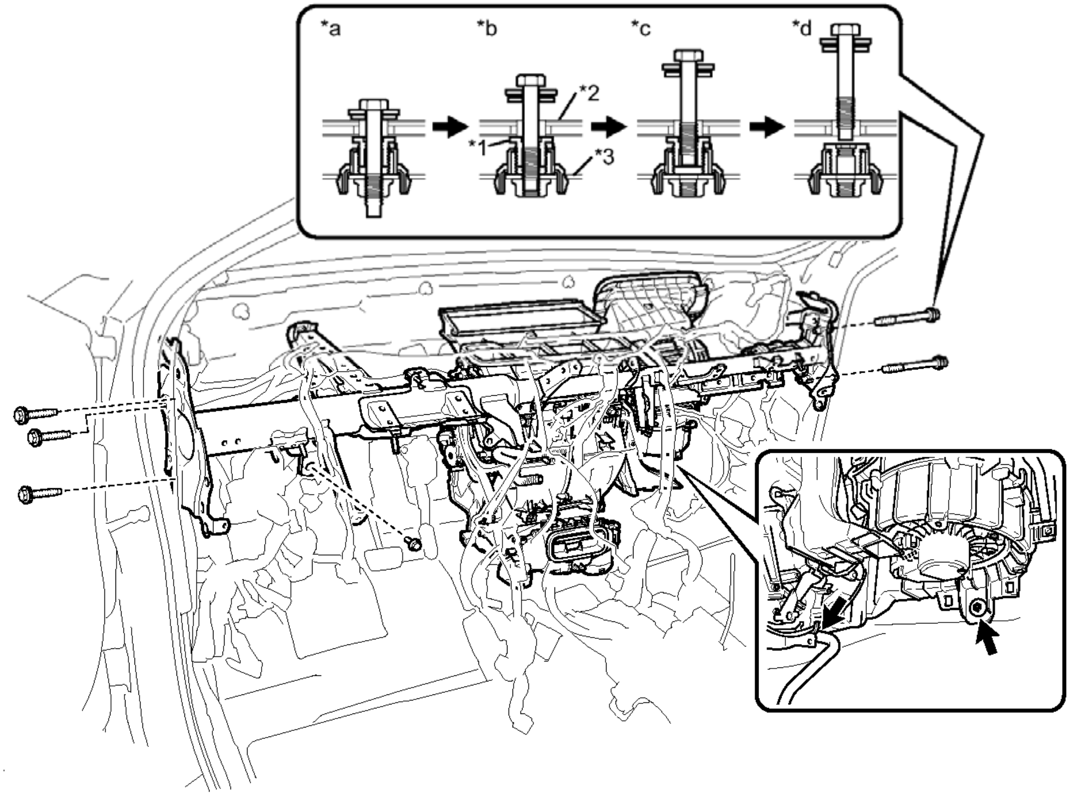

P

Fig. 62: Removing Instrument Panel Reinforcement And Movable Collar
Courtesy of TOYOTA MOTOR SALES, U.S.A., INC.

TEXT IN ILLUSTRATION

*1	Movable Collar	*2	Body
*3	Instrument Panel Reinforcement	-	-
*a	Step 1	*b	Step 2
*c	Step 3	*d	Step 4

t. Disconnect the cooler drain hose.

u. Disengage the 3 guides and remove the instrument panel reinforcement with air conditioning unit as shown in the illustration.

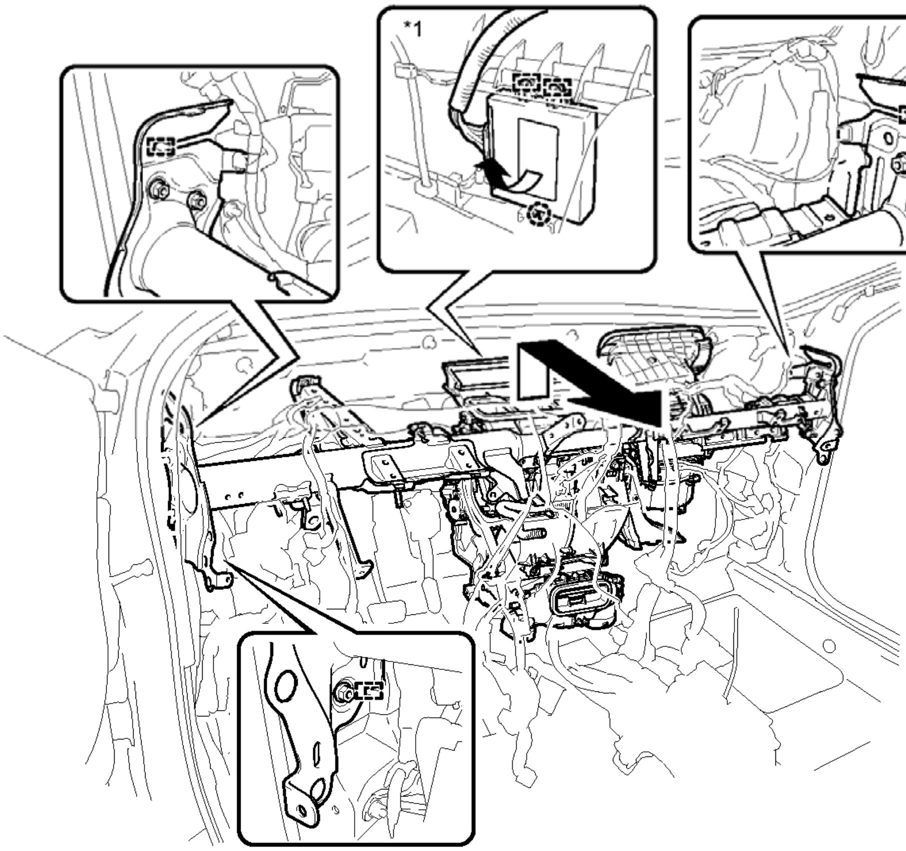

P

Fig. 63: Removing Instrument Panel Reinforcement Assembly With Air Conditioning Unit
Courtesy of TOYOTA MOTOR SALES, U.S.A., INC.

TEXT IN ILLUSTRATION

*1	w/ Engine Immobiliser System	-	-

- v. w/ Engine Immobiliser System:
  1. Disengage the claw and 2 guides and remove the transponder key ECU assembly as shown in the illustration.

42. **REMOVE TRANSPONDER KEY ECU ASSEMBLY (w/ Engine Immobiliser System)**
  - a. Disconnect the connector and remove the transponder key ECU assembly.

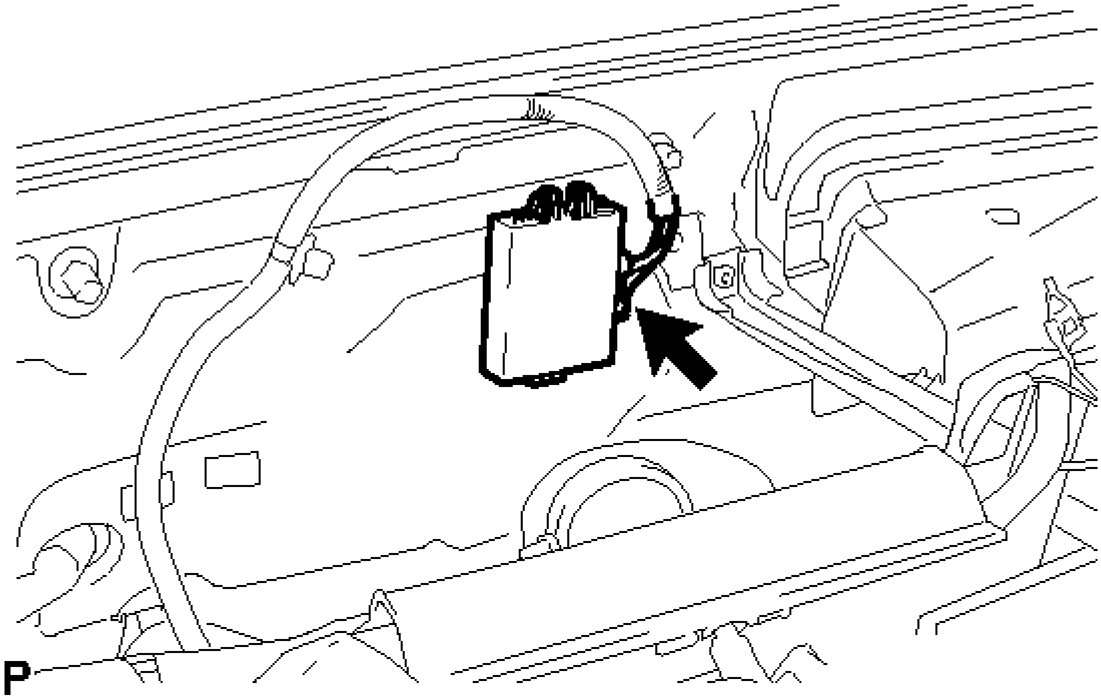

Fig. 64: Locating Transponder Key ECU Assembly (w/ Engine Immobiliser System)
Courtesy of TOYOTA MOTOR SALES, U.S.A., INC.

43. **REMOVE AIR CONDITIONING UNIT ASSEMBLY**
    a. Remove the 3 bolts and the air conditioning unit assembly from the instrument panel reinforcement assembly.

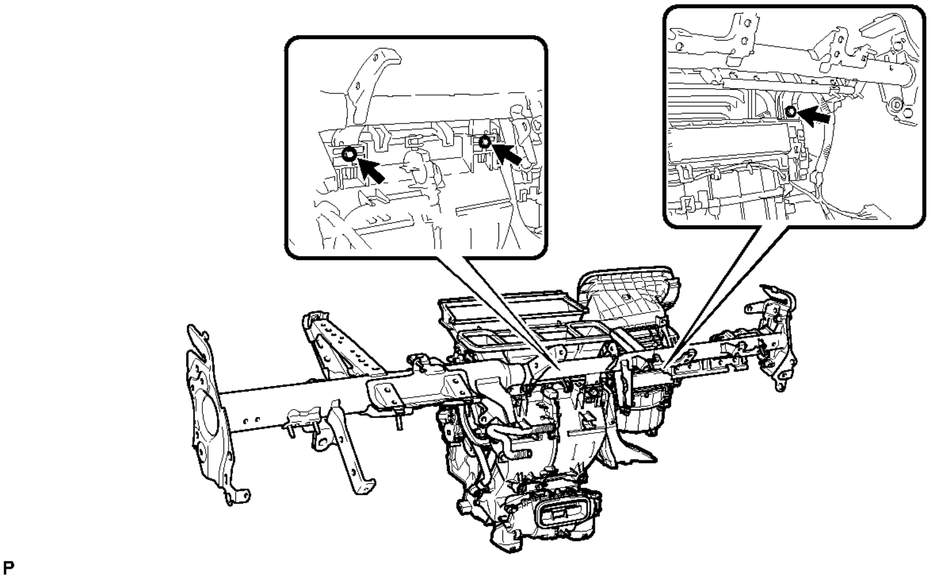

Fig. 65: Locating Air Conditioning Unit Assembly Bolts
Courtesy of TOYOTA MOTOR SALES, U.S.A., INC.

DISASSEMBLY

DISASSEMBLY

1. **REMOVE NO. 1 AIR DUCT SUB-ASSEMBLY**
    1. Disengage the 2 claws and guide, and remove the No. 1 air duct sub-assembly as shown in the illustration.

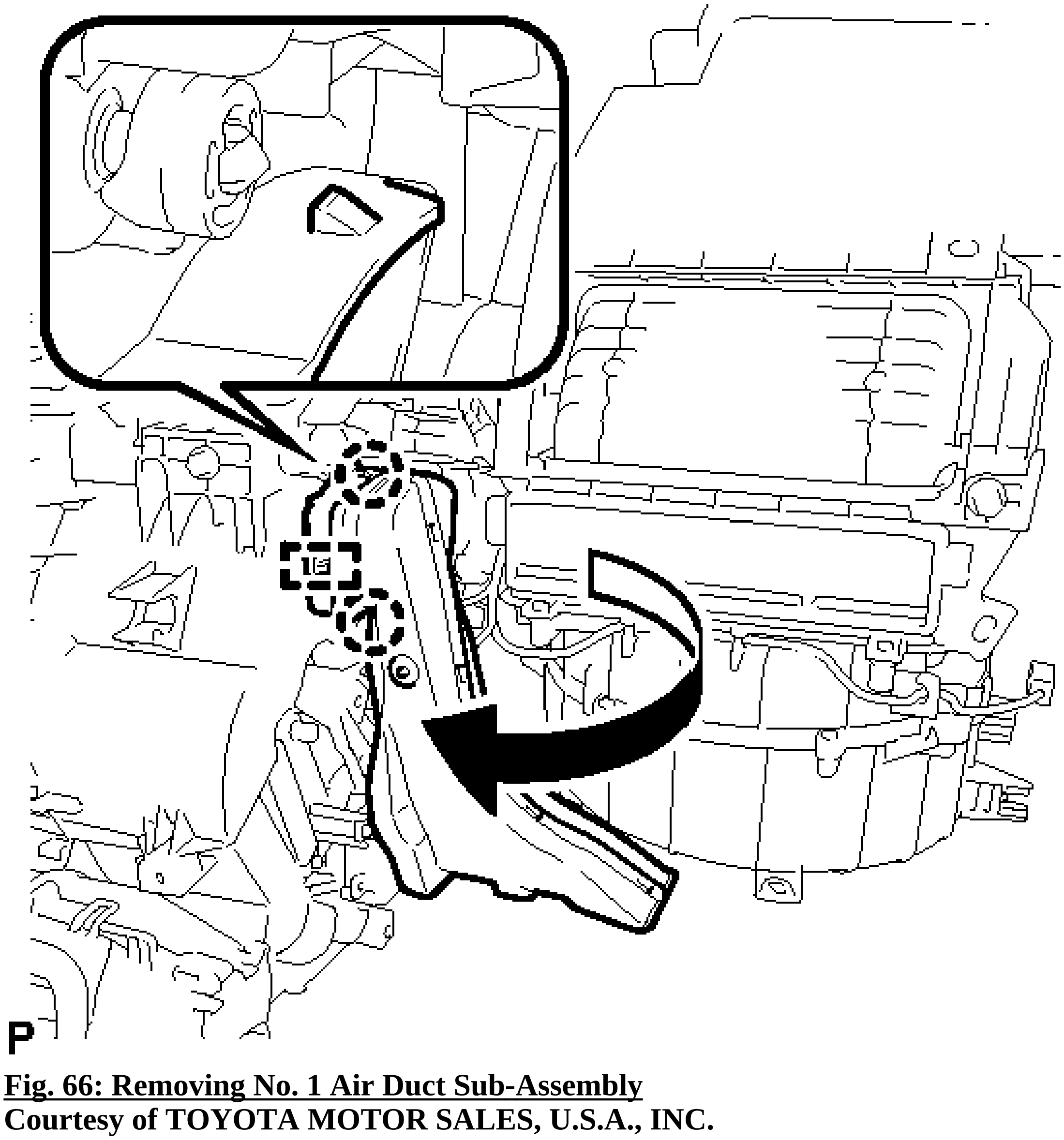

Fig. 66: Removing No. 1 Air Duct Sub-Assembly
Courtesy of TOYOTA MOTOR SALES, U.S.A., INC.

2. **REMOVE NO. 6 HEATER TO REGISTER DUCT ASSEMBLY**
    1. Disengage the 2 claws and 2 guides, and remove the No. 6 heater to register duct assembly as shown in the illustration.

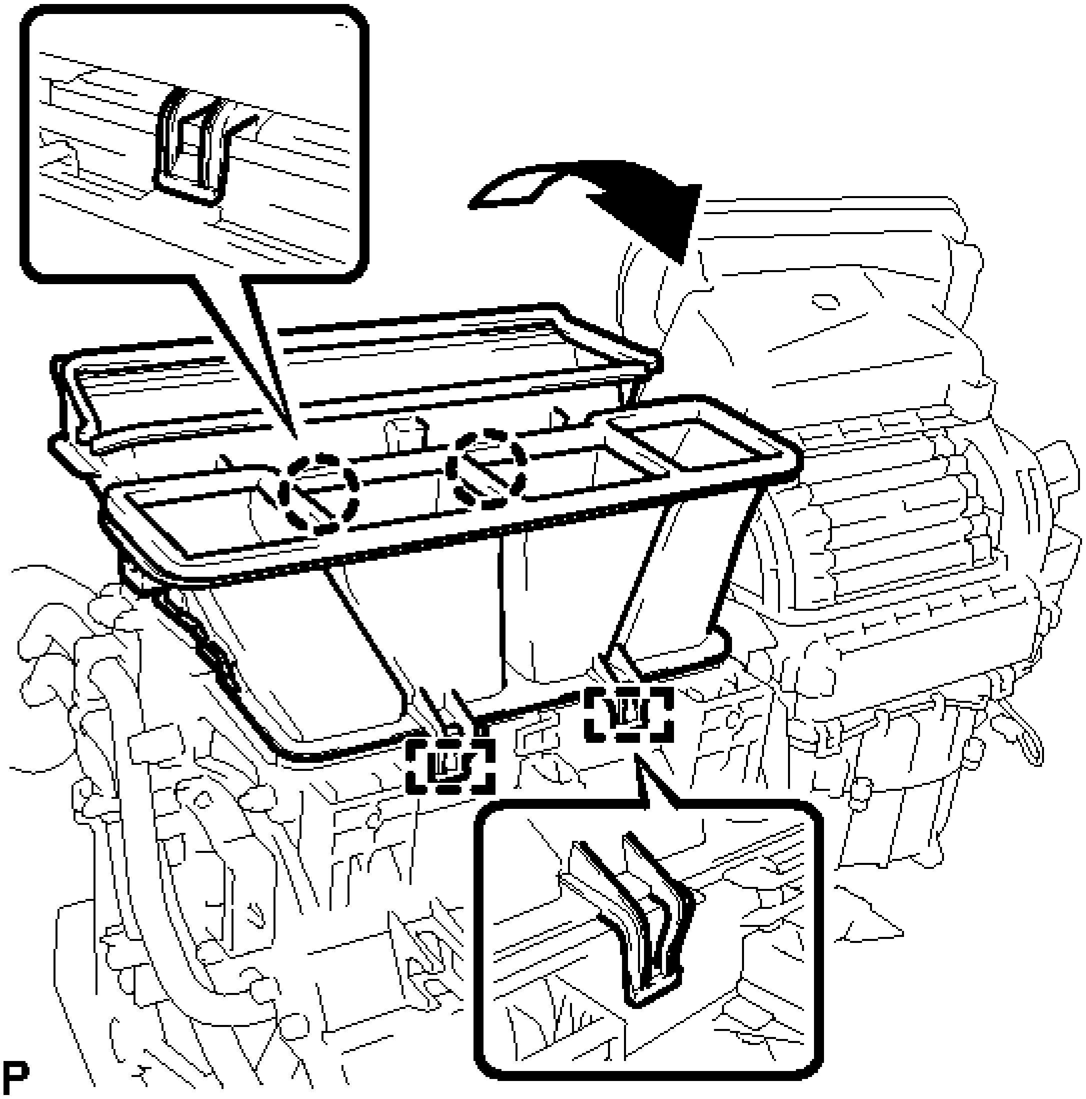

Fig. 67: Identifying No. 6 Heater To Register Duct Claws And Guides
Courtesy of TOYOTA MOTOR SALES, U.S.A., INC.

3. **REMOVE COOLER THERMISTOR HOSE (for Automatic Air Conditioning System)**
    a. Disengage the clamp and remove the cooler thermistor hose.

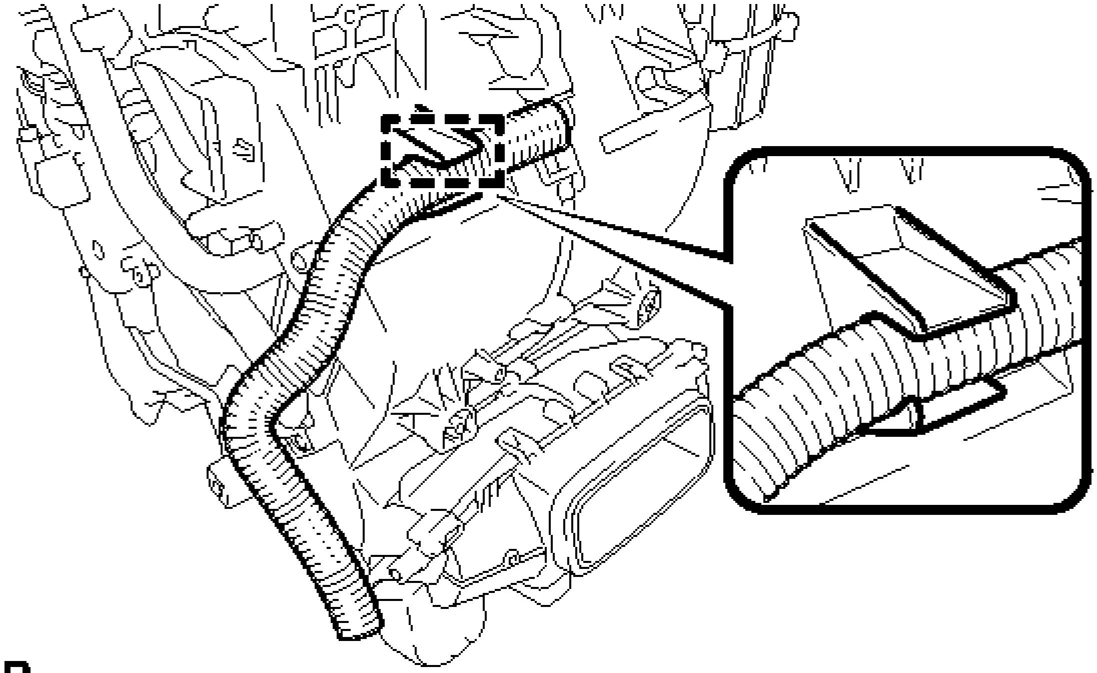

P

Fig. 68: Locating Cooler Thermistor Hose (For Automatic Air Conditioning System) Clamp
Courtesy of TOYOTA MOTOR SALES, U.S.A., INC.

4. **REMOVE ASPIRATOR**
   a. Disengage the 2 claws and remove the aspirator.

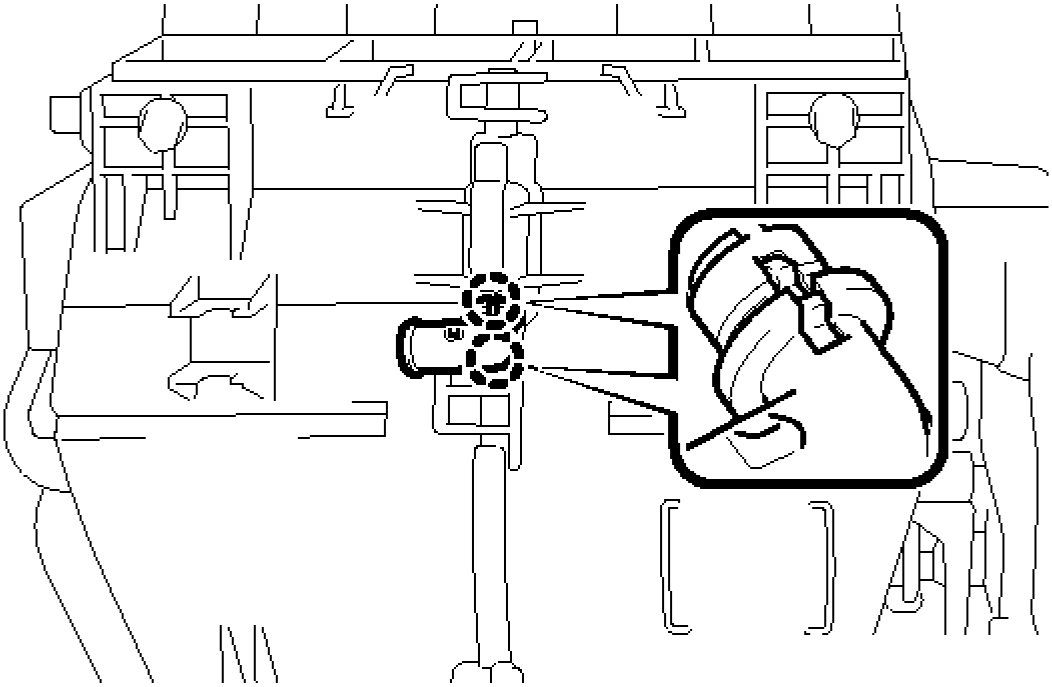

P

Fig. 69: Identifying Aspirator Claws

Courtesy of TOYOTA MOTOR SALES, U.S.A., INC.

5. **REMOVE AIR CONDITIONING HARNESS ASSEMBLY (for Manual Air Conditioning System)**
   a. Remove the heater packing as shown in the illustration.

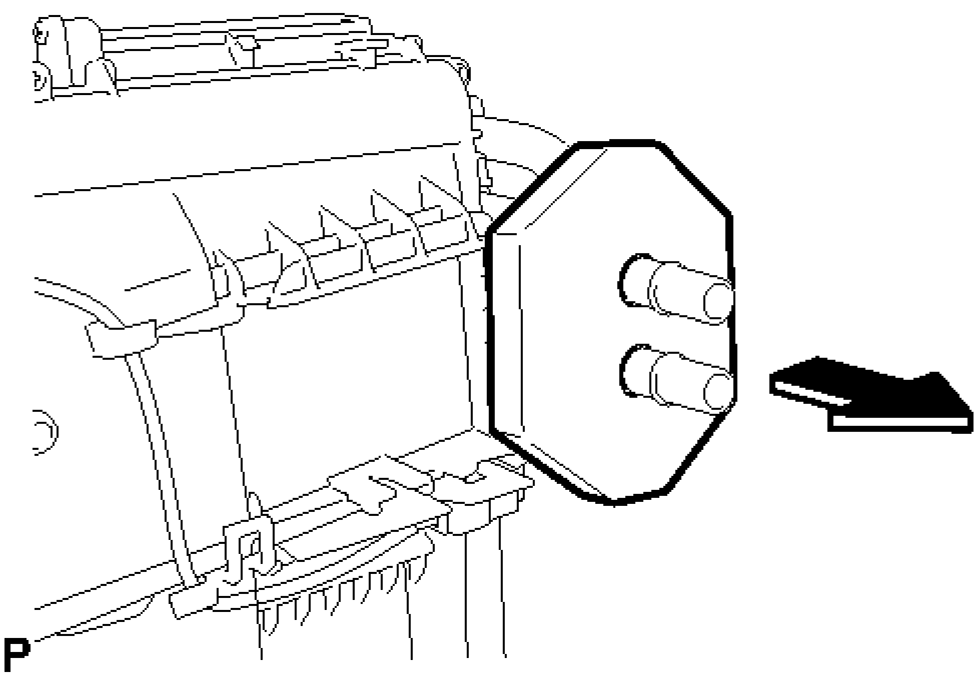

Fig. 70: Removing Heater Packing
Courtesy of TOYOTA MOTOR SALES, U.S.A., INC.

   b. Disconnect the 4 connectors.

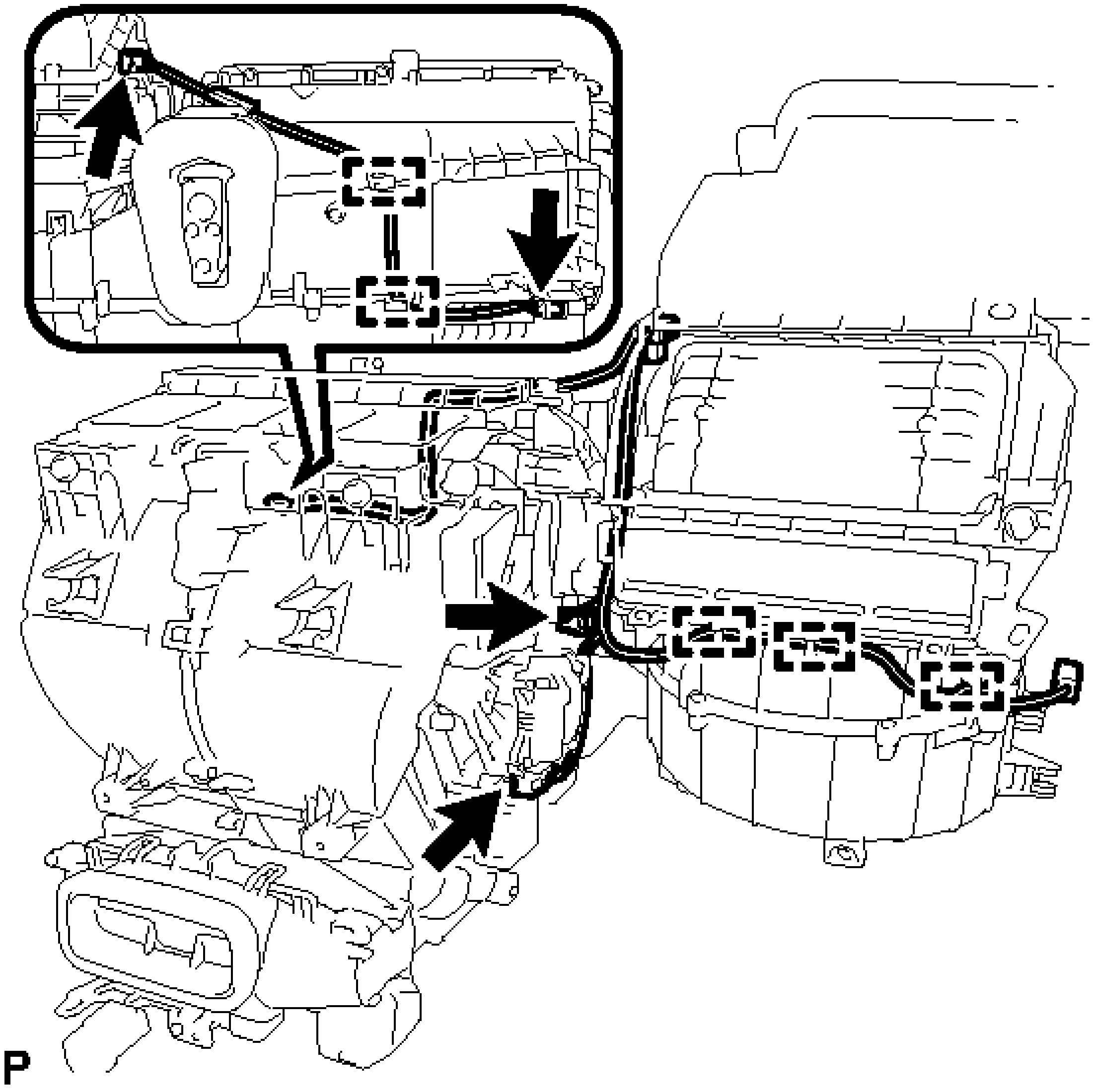

Fig. 71: Identifying Air Conditioning Harness Assembly Clamps
Courtesy of TOYOTA MOTOR SALES, U.S.A., INC.

c. Disengage the 5 clamps and remove the air conditioning harness assembly.

6. **REMOVE AIR CONDITIONING HARNESS ASSEMBLY (for Automatic Air Conditioning System)**

   a. Remove the heater packing as shown in the illustration.

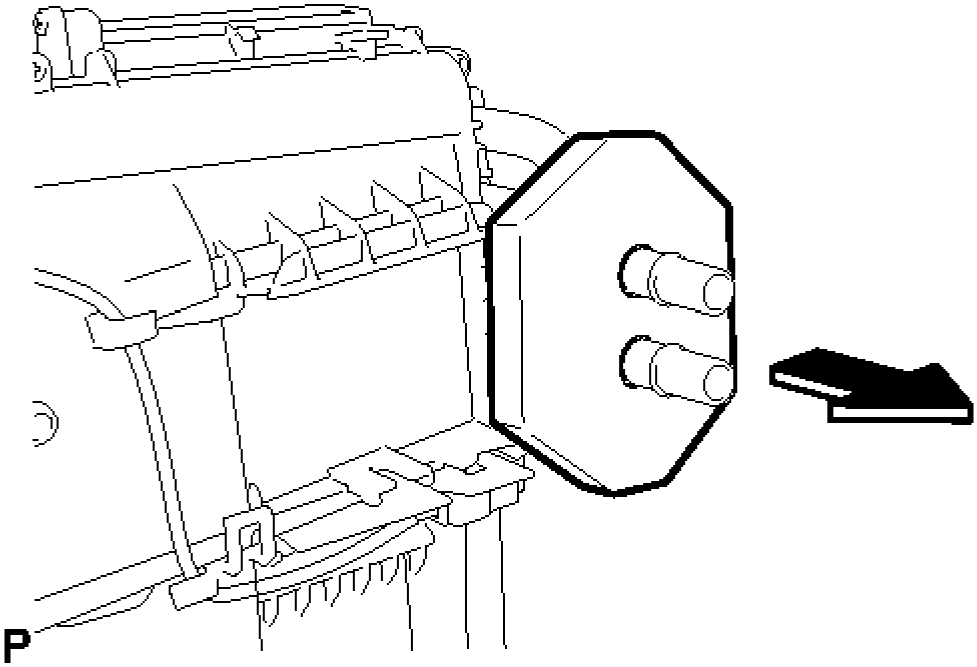

Fig. 72: Removing Heater Packing
Courtesy of TOYOTA MOTOR SALES, U.S.A., INC.

b. Disconnect the 5 connectors.

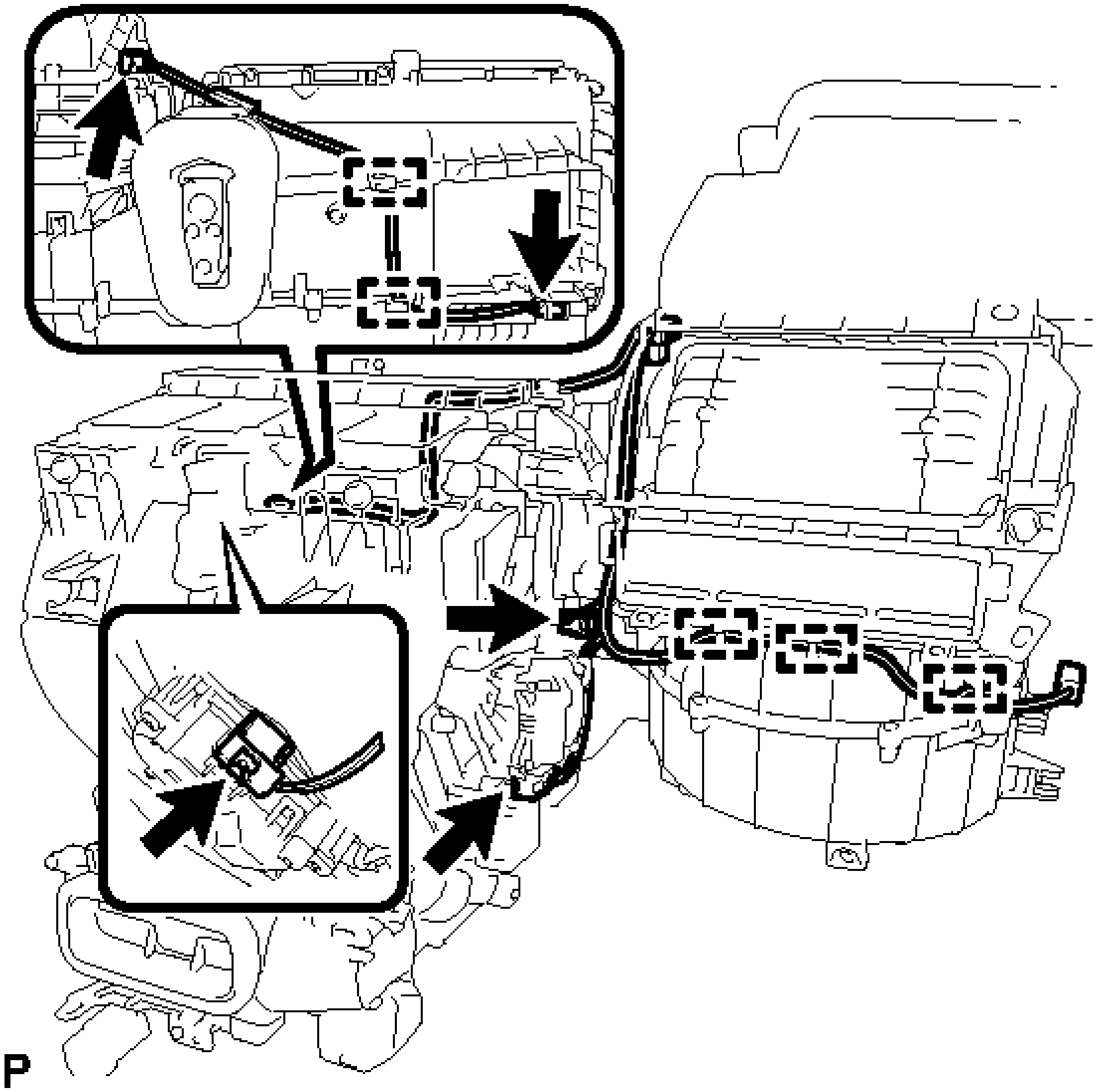

Fig. 73: Identifying Air Conditioning Harness Assembly Clamps
Courtesy of TOYOTA MOTOR SALES, U.S.A., INC.

c. Disengage the 5 clamps and remove the air conditioning harness assembly.

7. **REMOVE COOLER EXPANSION VALVE**
   a. Using a 4 mm hexagon wrench, remove the 2 hexagon bolts and cooler expansion valve.

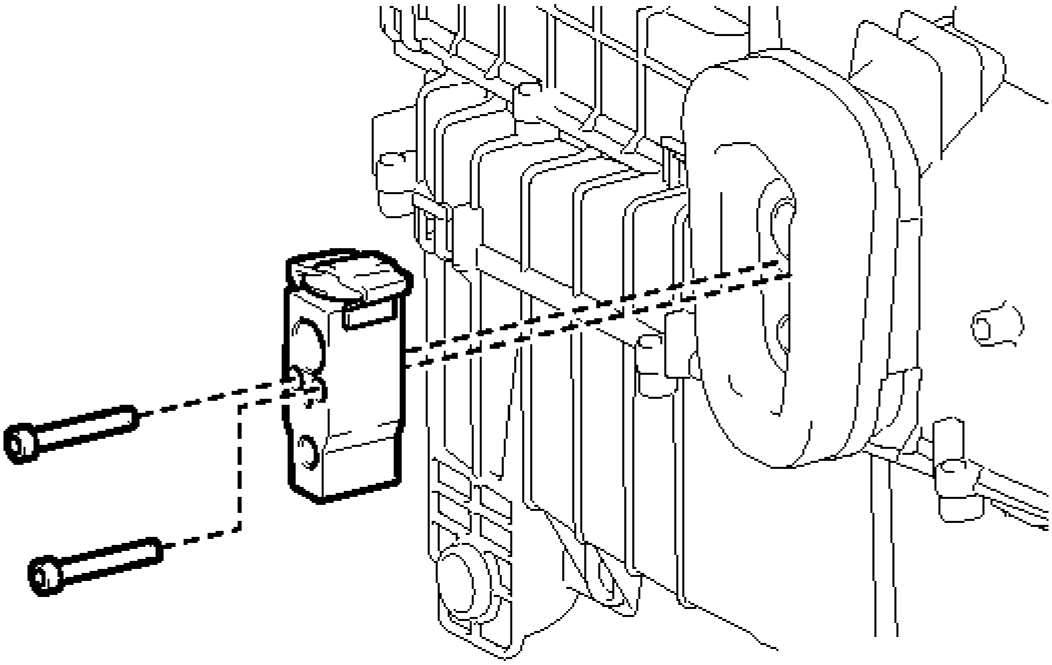

Fig. 74: Identifying Cooler Expansion Valve And Bolts
Courtesy of TOYOTA MOTOR SALES, U.S.A., INC.

8. **REMOVE BLOWER ASSEMBLY WITH COOLER EVAPORATOR SUB-ASSEMBLY** . See step 6.
9. **REMOVE NO. 1 COOLER THERMISTOR** . See step 2.
10. **REMOVE NO. 1 COOLER EVAPORATOR SUB-ASSEMBLY**
    a. Remove the No. 1 cooler evaporator sub-assembly from the blower assembly as shown in the illustration.

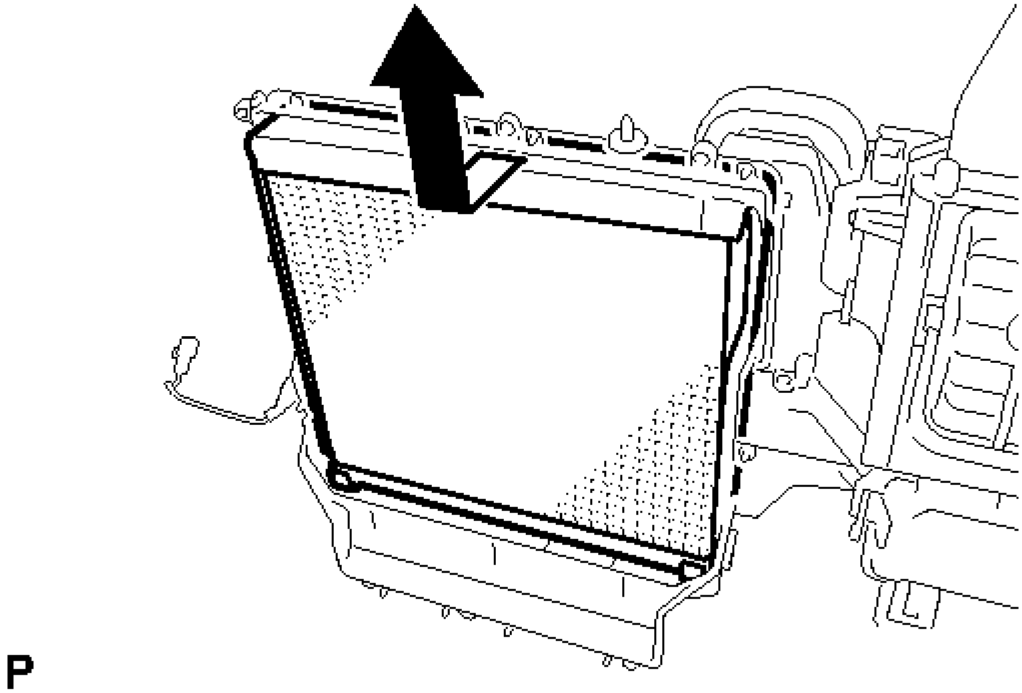

Fig. 75: Removing No. 1 Cooler Evaporator Sub-Assembly
Courtesy of TOYOTA MOTOR SALES, U.S.A., INC.

b. Remove the 2 O-rings from the No. 1 cooler evaporator sub-assembly.

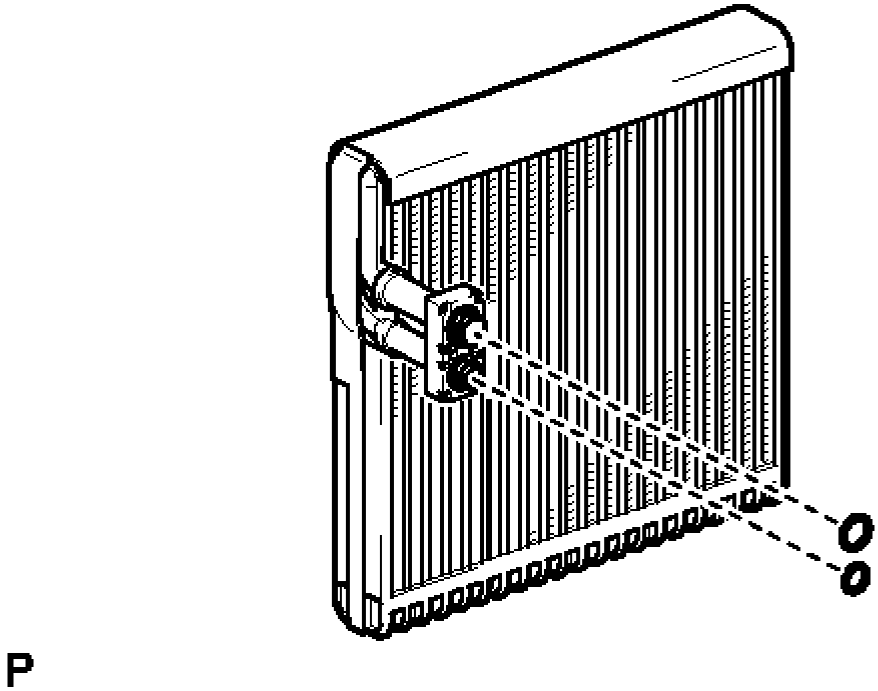

Fig. 76: Identifying O-Rings To Cooler Evaporator No. 1
Courtesy of TOYOTA MOTOR SALES, U.S.A., INC.

11. **REMOVE NO. 2 AIR CONDITIONING RADIATOR DAMPER SERVO SUB-ASSEMBLY (for Automatic Air Conditioning System)**
    a. Remove the 2 screws and No. 2 air conditioning radiator damper servo sub-assembly.

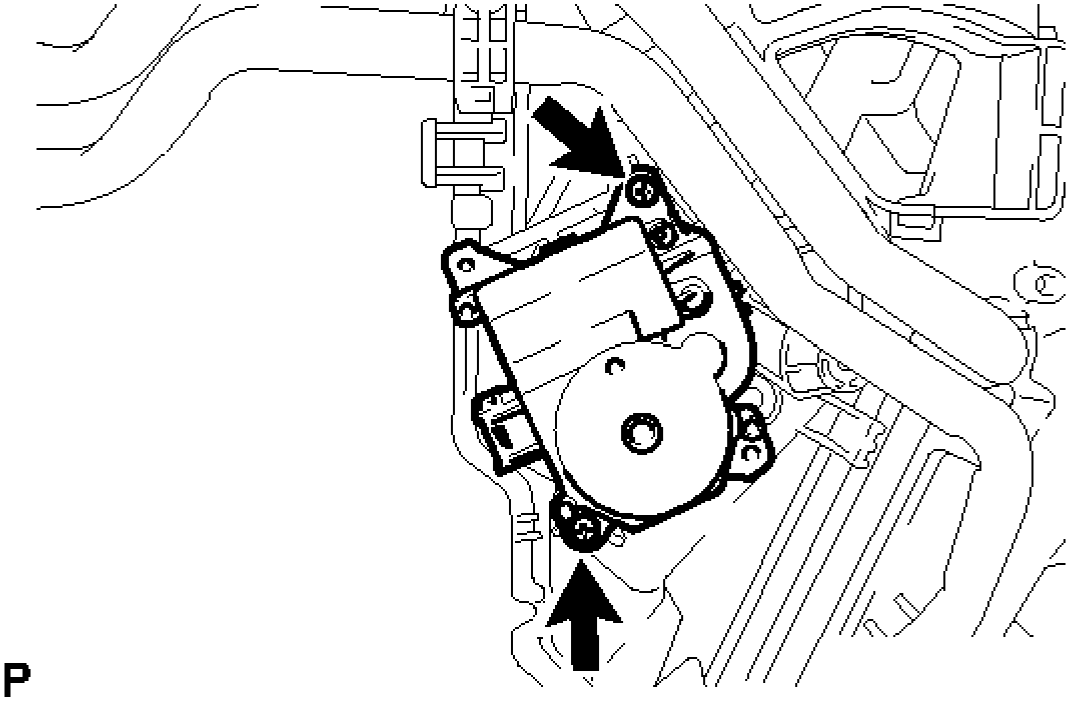

Fig. 77: Locating Air Mix Control Servo Motor Sub-Assembly Screws
Courtesy of TOYOTA MOTOR SALES, U.S.A., INC.

12. **REMOVE HEATER RADIATOR UNIT SUB-ASSEMBLY**
    a. Disengage the 3 claws and remove the heater clamp.

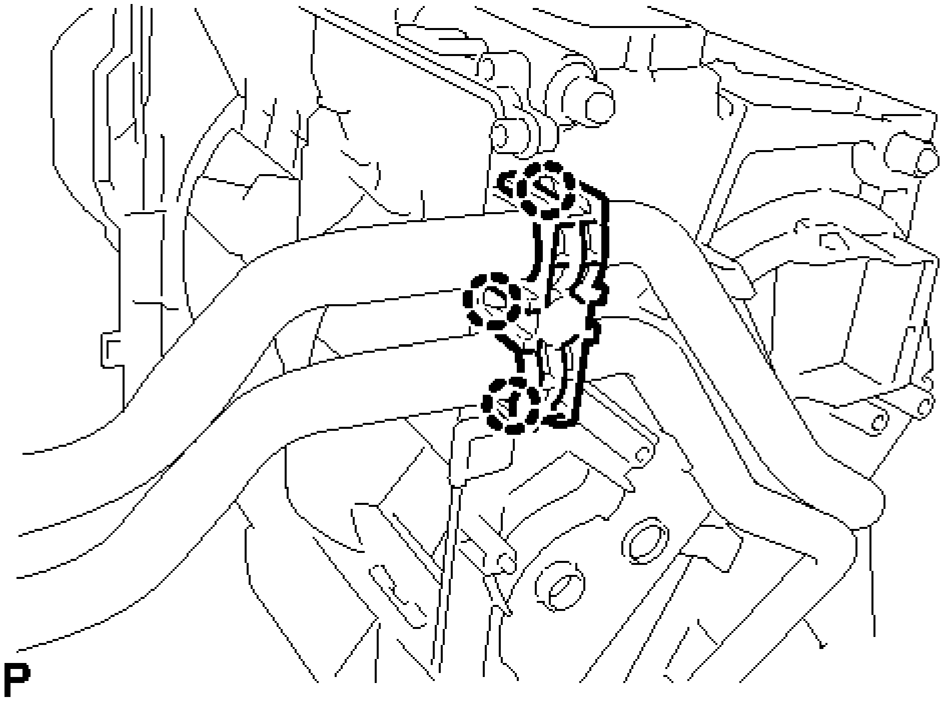

Fig. 78: Identifying Heater Clamp And Claws
Courtesy of TOYOTA MOTOR SALES, U.S.A., INC.

b. Remove the screw and clamp.

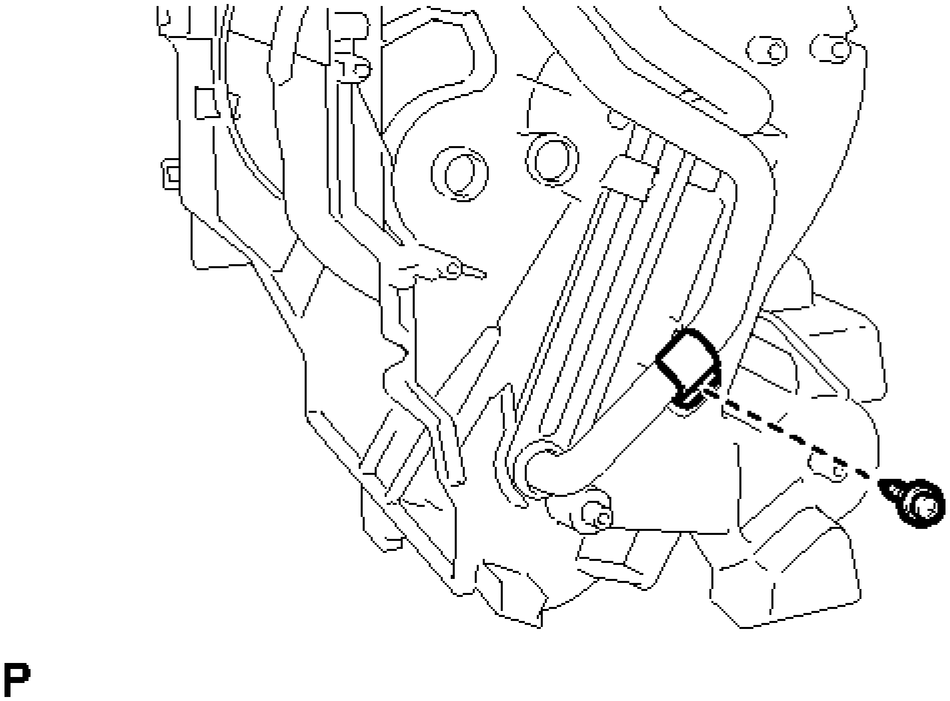

Fig. 79: Identifying Screw And Clamp
Courtesy of TOYOTA MOTOR SALES, U.S.A., INC.

c. Remove the heater radiator unit sub-assembly from the air conditioning radiator assembly as shown in the illustration.

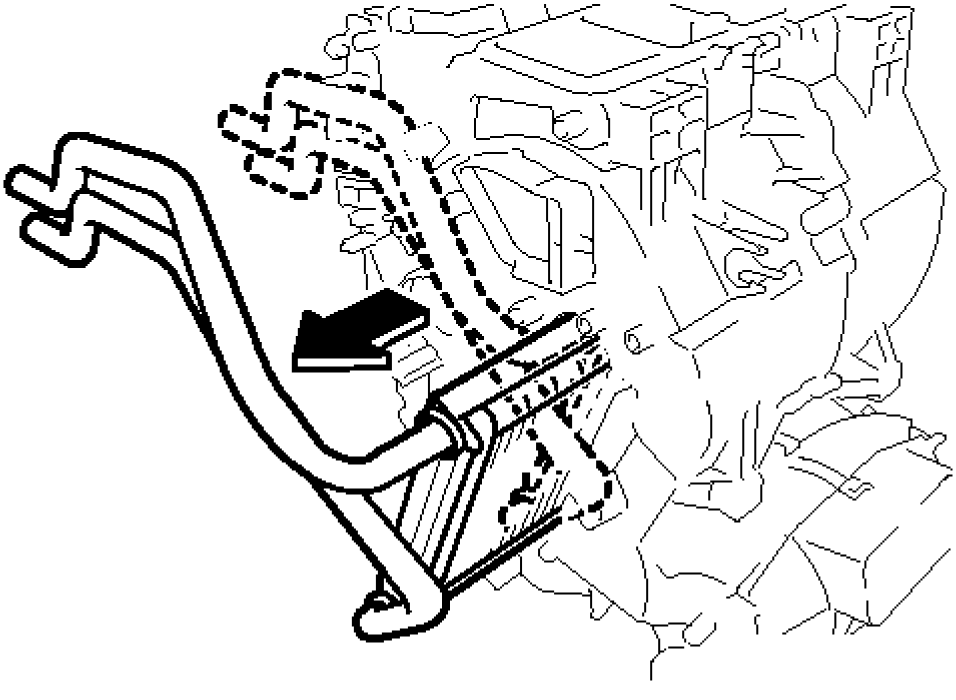

P

Fig. 80: Removing Heater Radiator Unit Sub-Assembly
Courtesy of TOYOTA MOTOR SALES, U.S.A., INC.

NOTE: Prepare a drain pan or cloth in case the cooling water leaks.

13. **REMOVE NO. 1 AIR CONDITIONING RADIATOR DAMPER SERVO SUB-ASSEMBLY**
    a. Remove the 3 screws and then the No. 2 air conditioning radiator damper servo sub-assembly.

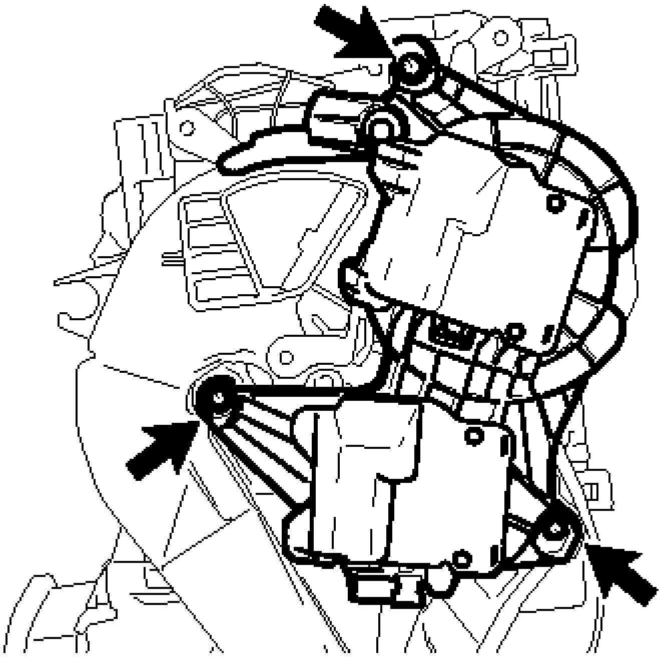

Fig. 81: Identifying No. 1 Air Conditioning Radiator Damper Servo Sub-Assembly Screws
Courtesy of TOYOTA MOTOR SALES, U.S.A., INC.

REASSEMBLY

REASSEMBLY

1. **INSTALL NO. 1 AIR CONDITIONING RADIATOR DAMPER SERVO SUB-ASSEMBLY**
   a. Check that the slots, links and gears of the No. 1 air conditioning radiator damper servo sub-assembly are positioned in the correct orientation as shown in the illustration.

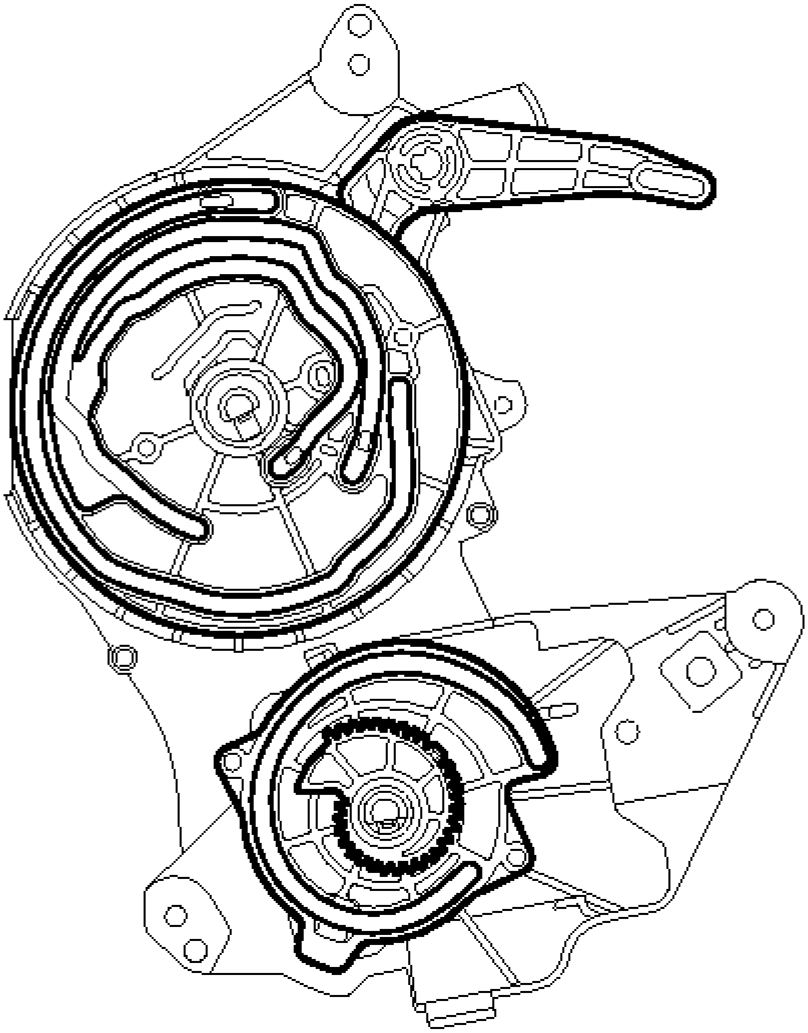

Fig. 82: Correct Orientation Of Slots, Links And Gears Of No. 1 Air Conditioning Radiator Damper Servo Sub-Assembly
Courtesy of TOYOTA MOTOR SALES, U.S.A., INC.

b. Face the contact surfaces of the No. 1 air conditioning radiator damper servo sub-assembly and air conditioning radiator assembly for the No. 1 air conditioning radiator damper servo sub-assembly upward.

c. Rotate the link of the air conditioning radiator assembly all the way to the left as shown in the illustration.

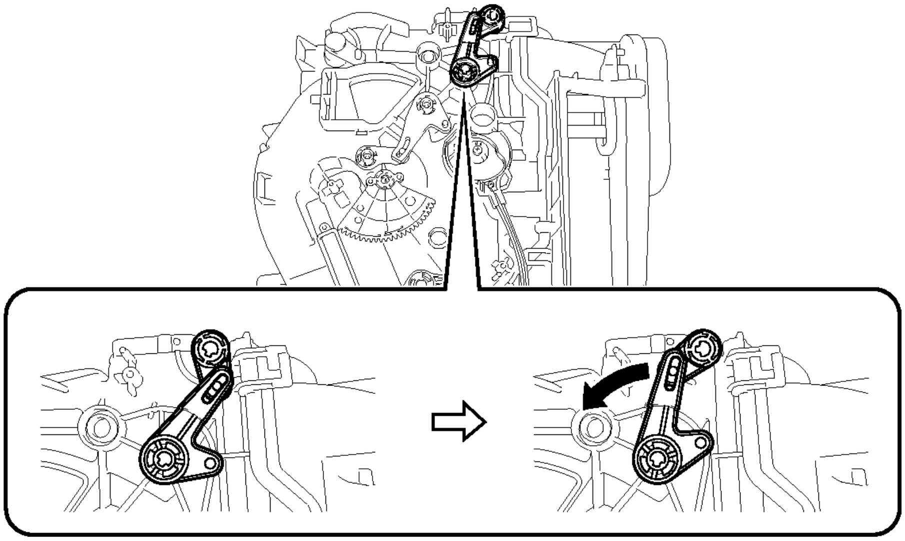

P

Fig. 83: Rotating Link Of Air Conditioning Radiator Assembly (To The Left)
Courtesy of TOYOTA MOTOR SALES, U.S.A., INC.

d. Rotate the link of the air conditioning radiator assembly to the bottom as shown in the illustration and confirm that the mode switching duct hole is fully closed.

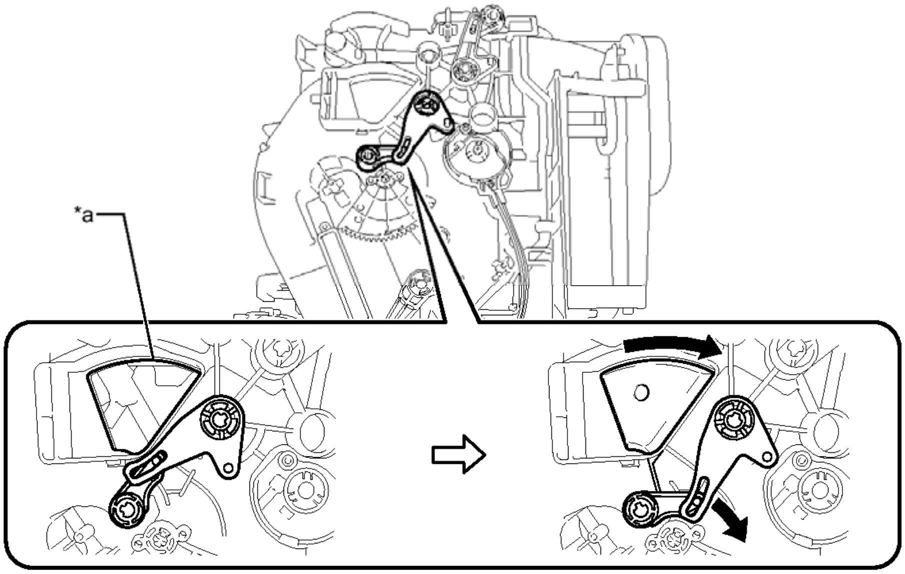

P

Fig. 84: Rotating Link Of Air Conditioning Radiator Assembly (To The Bottom)
Courtesy of TOYOTA MOTOR SALES, U.S.A., INC.

TEXT IN ILLUSTRATION

*a	Mode Switching Duct	-	-

	Hole		

e. Rotate the lever of the air conditioning radiator assembly to the top as shown in the illustration.

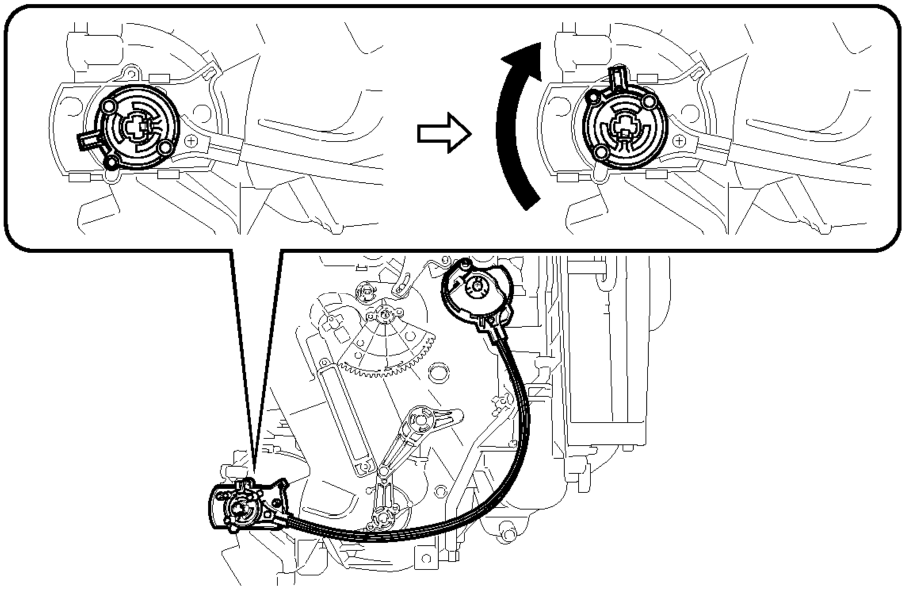

P

Fig. 85: Rotating Lever Of Air Conditioning Radiator Assembly (To The Top)
Courtesy of TOYOTA MOTOR SALES, U.S.A., INC.

f. Rotate the link of the air conditioning radiator assembly to the in-line position as shown in the illustration.

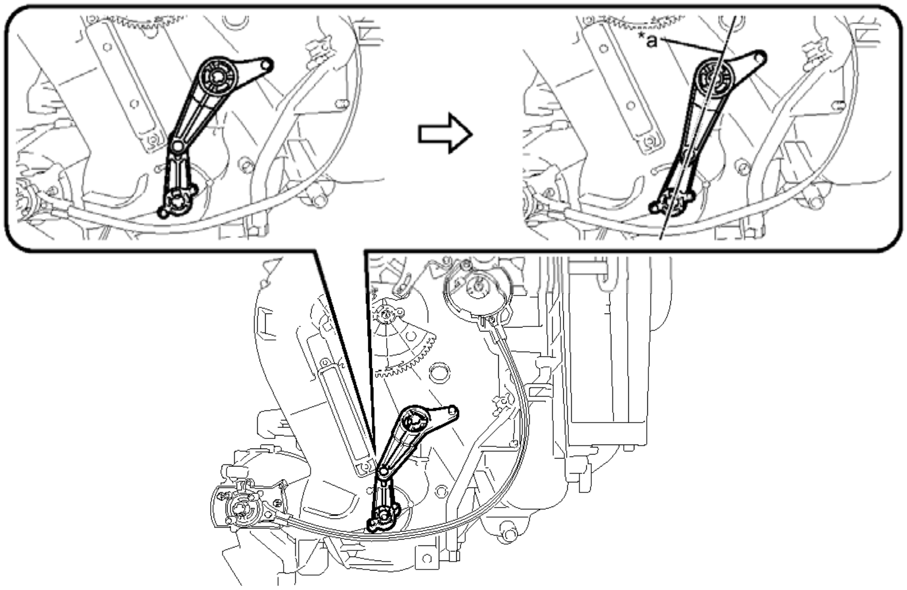

P

Fig. 86: Rotating Link Of Air Conditioning Radiator Assembly (To The In-Line Position)
Courtesy of TOYOTA MOTOR SALES, U.S.A., INC.

TEXT IN ILLUSTRATION

*a	In-line Position	-	-

g. Wrap the upper and lower links with vinyl tape to hold them in the in-line position.

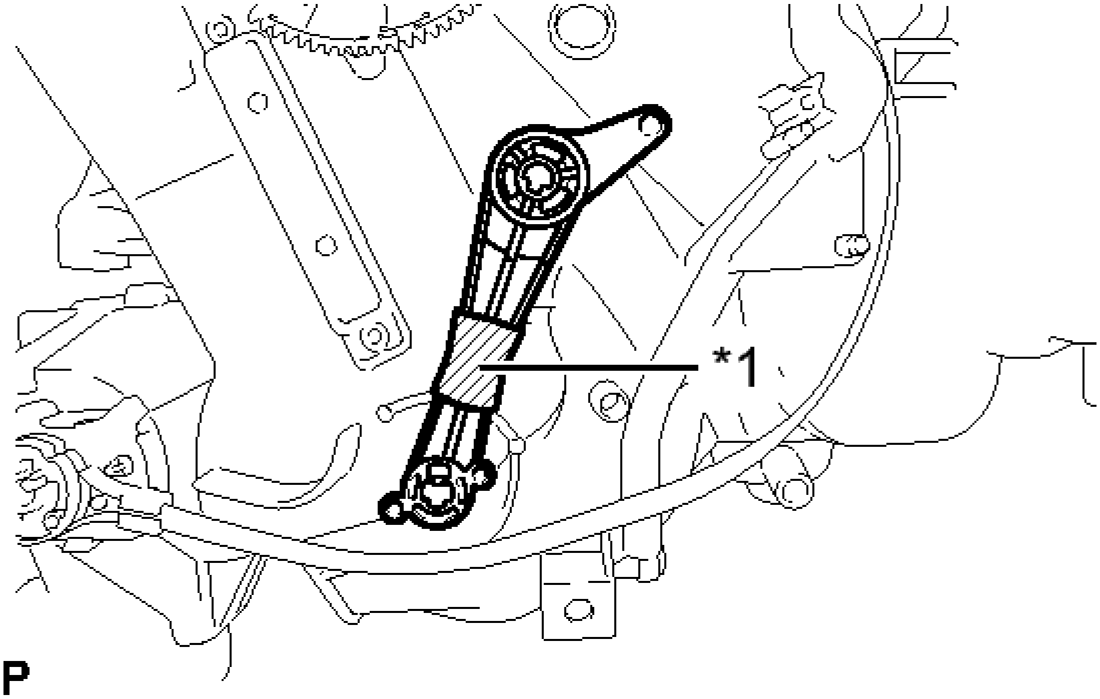

Fig. 87: Identifying Vinyl Tape Wrap On Upper And Lower Links
Courtesy of TOYOTA MOTOR SALES, U.S.A., INC.

TEXT IN ILLUSTRATION

*1	Vinyl Tape

h. Install the link of the No. 1 air conditioning radiator damper servo sub-assembly to the link guide pin (A) of the air conditioning radiator assembly as shown in the illustration.

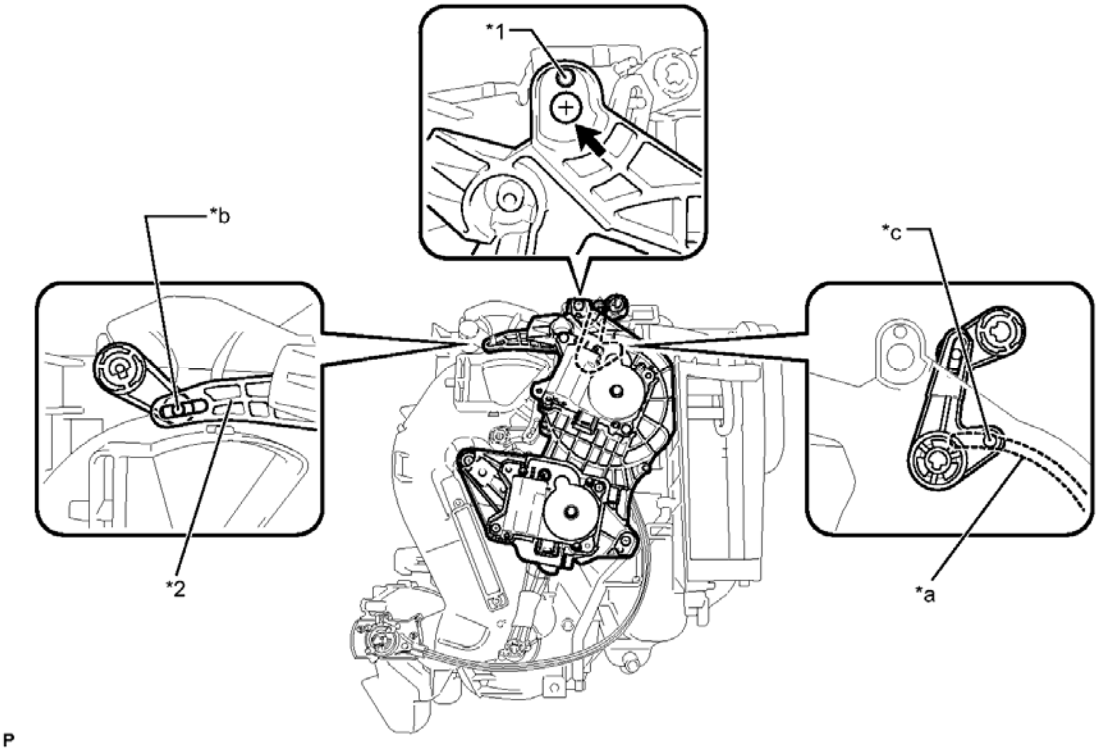

Fig. 88: Identifying No. 1 Air Conditioning Radiator Damper Servo Sub-Assembly Link
Courtesy of TOYOTA MOTOR SALES, U.S.A., INC.

TEXT IN ILLUSTRATION

*1	Guide	*2	No. 1 Air Conditioning Radiator Damper Servo Sub-assembly
*a	No. 1 Air Conditioning Radiator Damper Servo Sub-assembly Slot	*b	Link Guide Pin (A)
*c	Link Guide Pin (B)	-	-

i. Install the guide hole of the No. 1 air conditioning radiator damper servo sub-assembly to the guide pin of the air conditioning radiator assembly as shown in the illustration.
j. Temporarily install the screw (up to 4 or 5 threads).

NOTE:

- **Make sure that the link guide pin (B) is inserted in the No. 1 air**

conditioning radiator damper servo sub-assembly slot.

- **Avoid tilting the air conditioning radiator assembly during installation. This helps to prevent the guide pins from coming out of position.**

k. Lift the No. 1 air conditioning radiator damper servo sub-assembly slightly to create clearance.

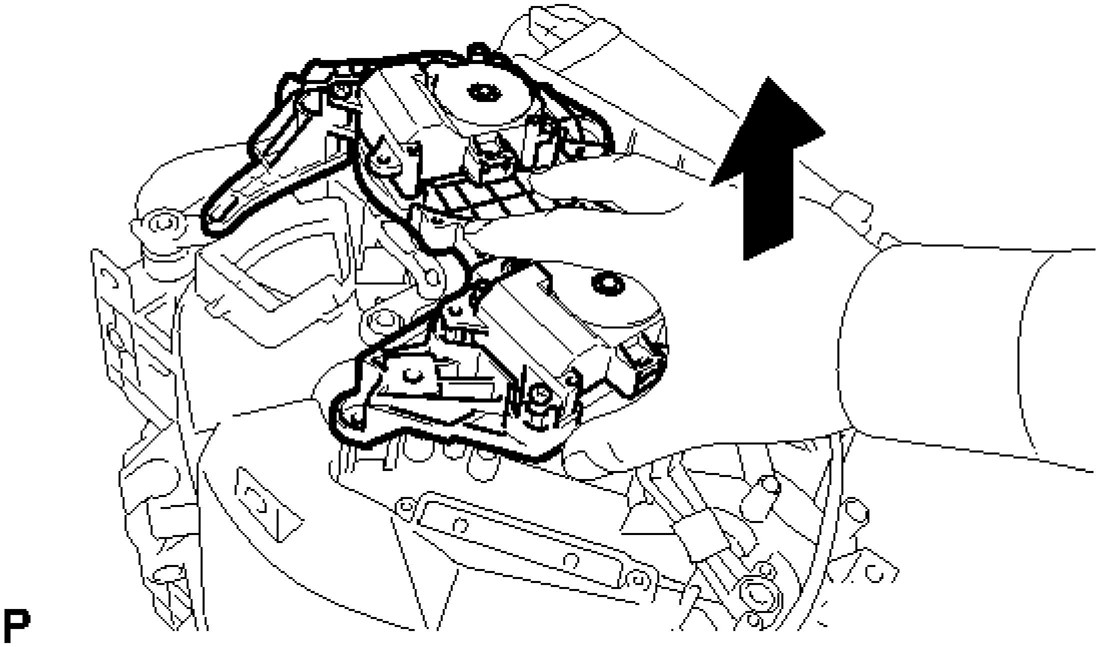

Fig. 89: Lifting Air Outlet Control Servo Motor Sub-Assembly
Courtesy of TOYOTA MOTOR SALES, U.S.A., INC.

l. Move the air conditioning radiator assembly gear so that alignment holes of the No. 1 air conditioning radiator damper servo sub-assembly and air conditioning radiator assembly are aligned.

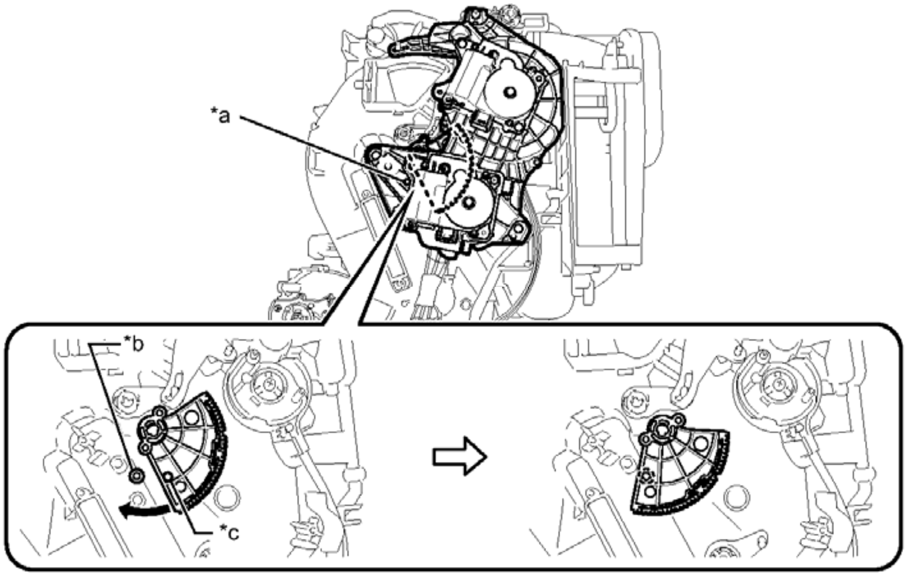

Fig. 90: Aligning No. 1 Air Conditioning Radiator Damper Servo Sub-Assembly And Air Conditioning Radiator Assembly
Courtesy of TOYOTA MOTOR SALES, U.S.A., INC.

TEXT IN ILLUSTRATION

*a	No. 1 Air Conditioning Radiator Damper Servo Sub-assembly Alignment Hole	*b	Air Conditioning Radiator Assembly Alignment Hole
*c	Air Conditioning Radiator Assembly Alignment Gear Alignment Hole	-	-

m. Insert a screwdriver into the aligned holes as shown in the illustration.

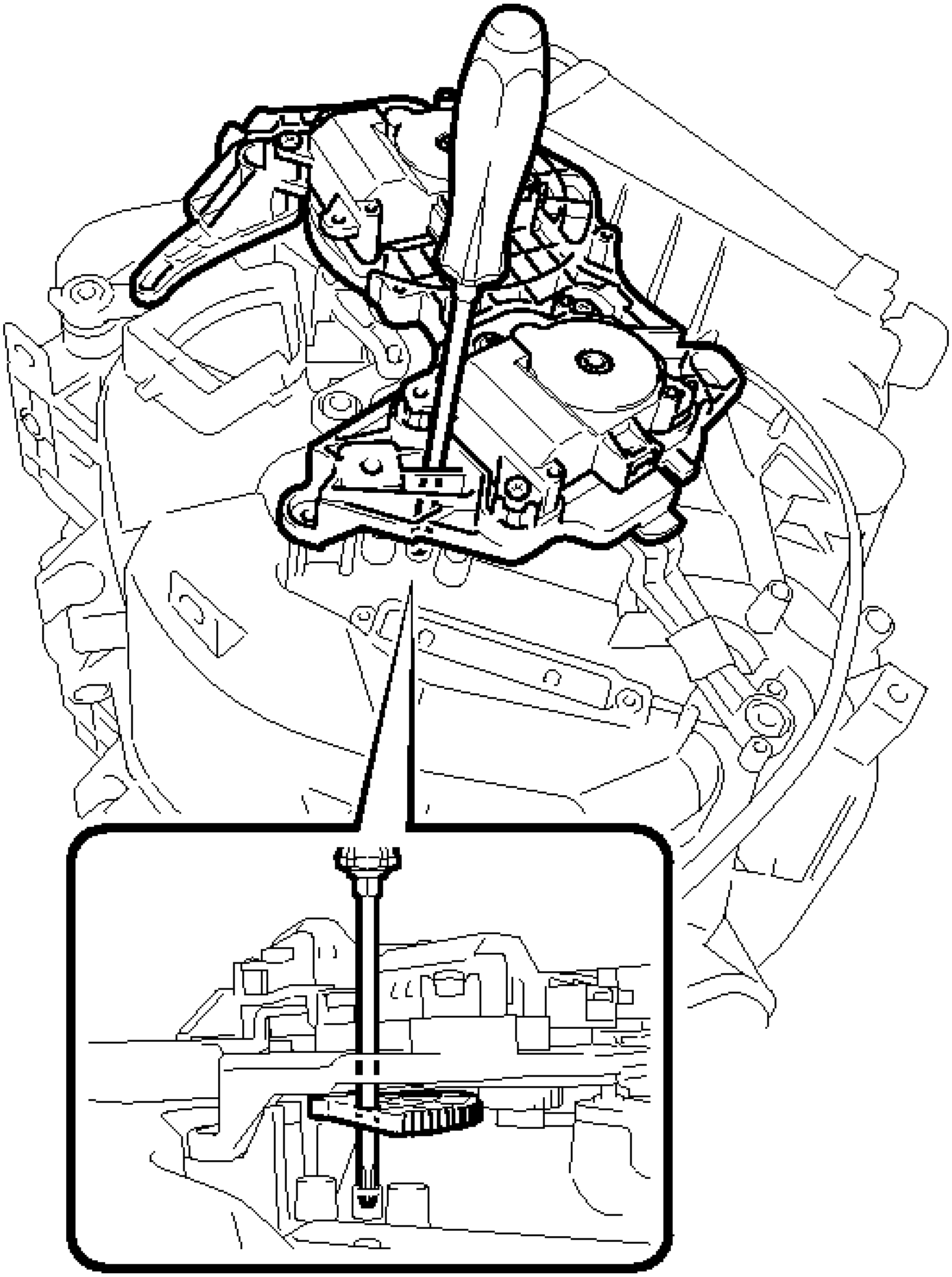

Fig. 91: Aligning Air Outlet Control Servo Motor Sub-Assembly Using Screwdriver
Courtesy of TOYOTA MOTOR SALES, U.S.A., INC.

n. Make sure that all the links and gears are in the positions shown in the illustration.

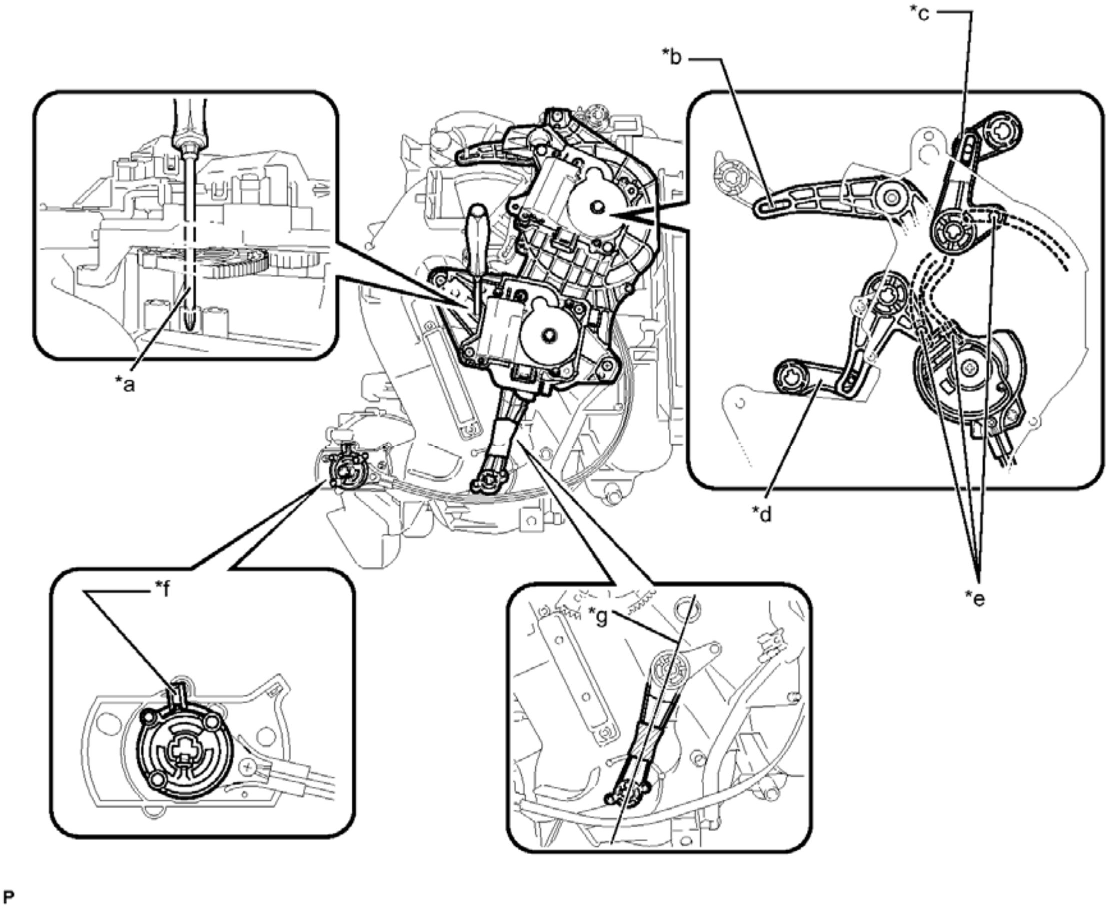

Fig. 92: Proper Link And Gear Positioning
Courtesy of TOYOTA MOTOR SALES, U.S.A., INC.

TEXT IN ILLUSTRATION

*a	Screwdriver is inserted into alignment holes.	*b	Link guide pin is inserted.
*c	Link is positioned to left side.	*d	Link is positioned at bottom.
*e	Each link guide pin is inserted in its air outlet control servo motor slot.	*f	Lever is positioned at top.
*g	Links are in-line.	-	-

o. Push the loose fitting No. 1 air conditioning radiator damper servo sub-assembly into position.

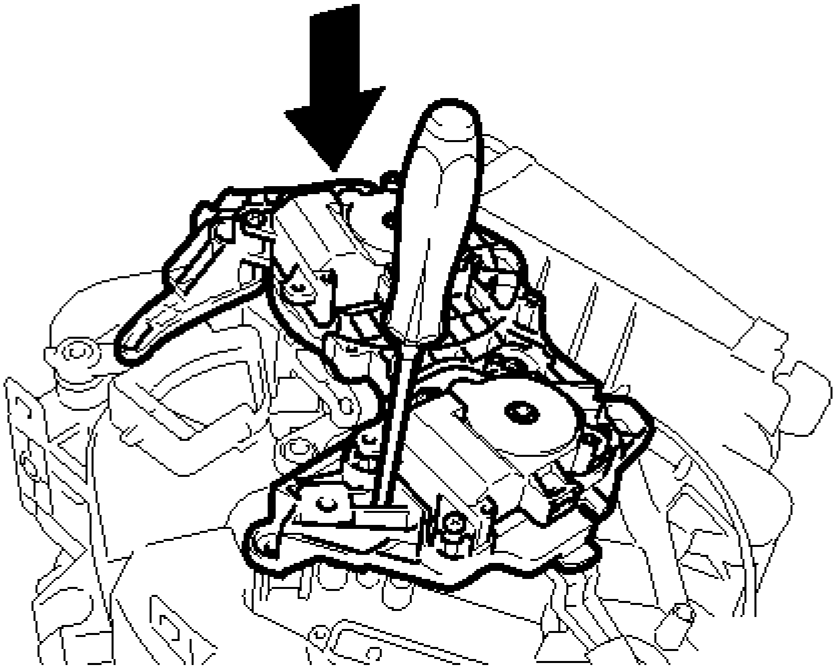

Fig. 93: Pushing Air Outlet Control Servo Motor Sub-Assembly Into Position
Courtesy of TOYOTA MOTOR SALES, U.S.A., INC.

NOTE:	- **Make sure that the No. 1 air conditioning radiator damper servo sub-assembly are fully pushed into position.** - **After pushing the servos into position, keep them in place by holding them until the screws are installed.**

HINT:

Push the No. 1 air conditioning radiator damper servo sub-assembly until a click sound is heard.

p. Remove the screwdriver.

q. Fully install the top screw, and then install the No. 1 air conditioning radiator damper servo sub-assembly with the 2 remaining screws.

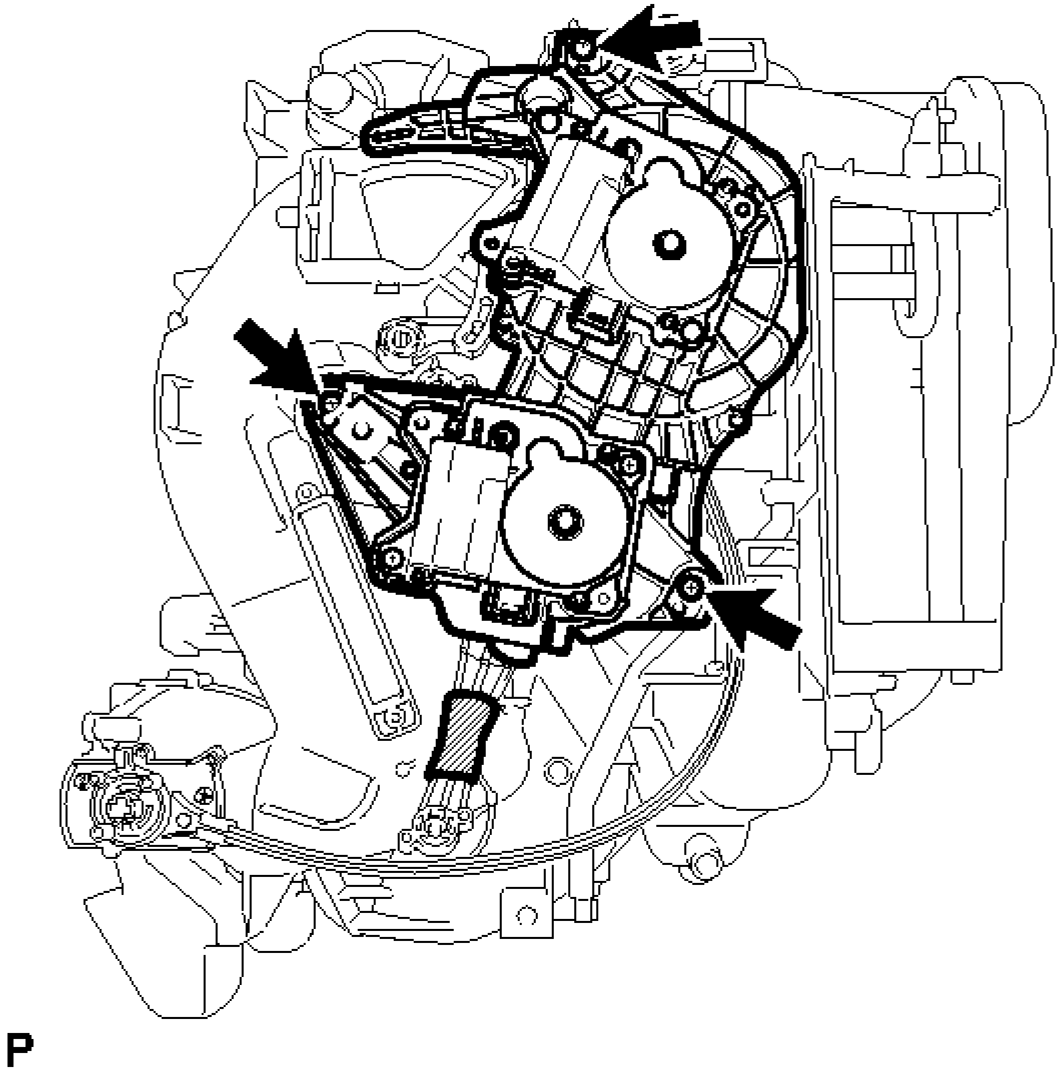

Fig. 94: Identifying Air Outlet Control Servo Motor Sub-Assembly And Screws
Courtesy of TOYOTA MOTOR SALES, U.S.A., INC.

r. Remove the vinyl tape.

2. **INSTALL HEATER RADIATOR UNIT SUB-ASSEMBLY**
    a. Install the heater radiator unit sub-assembly to the air conditioner radiator assembly.

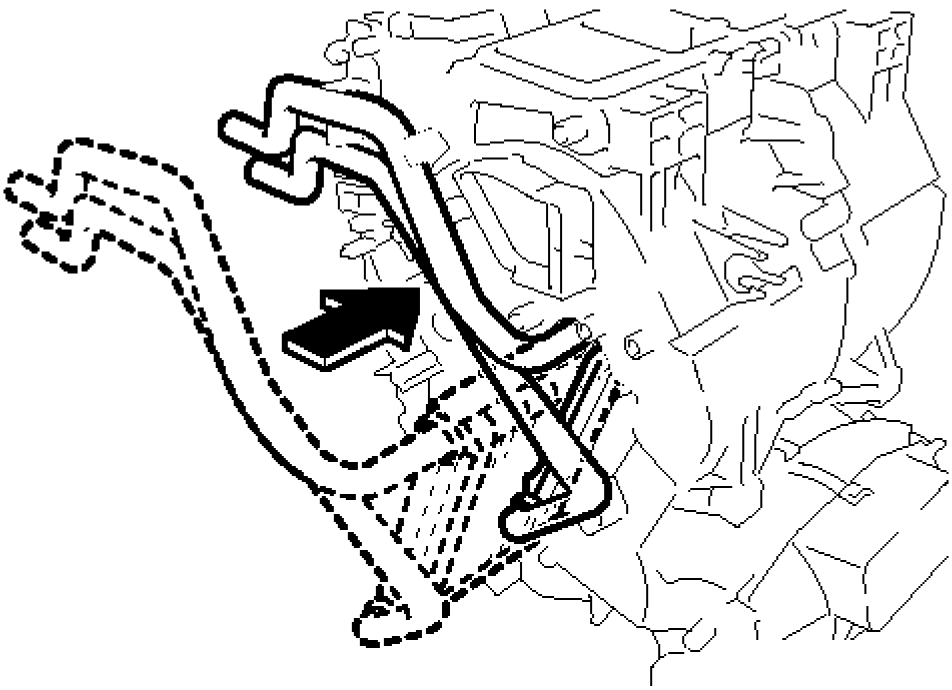

Fig. 95: Installing Heater Radiator Unit Sub-Assembly
Courtesy of TOYOTA MOTOR SALES, U.S.A., INC.

b. Install the clamp with the screw.

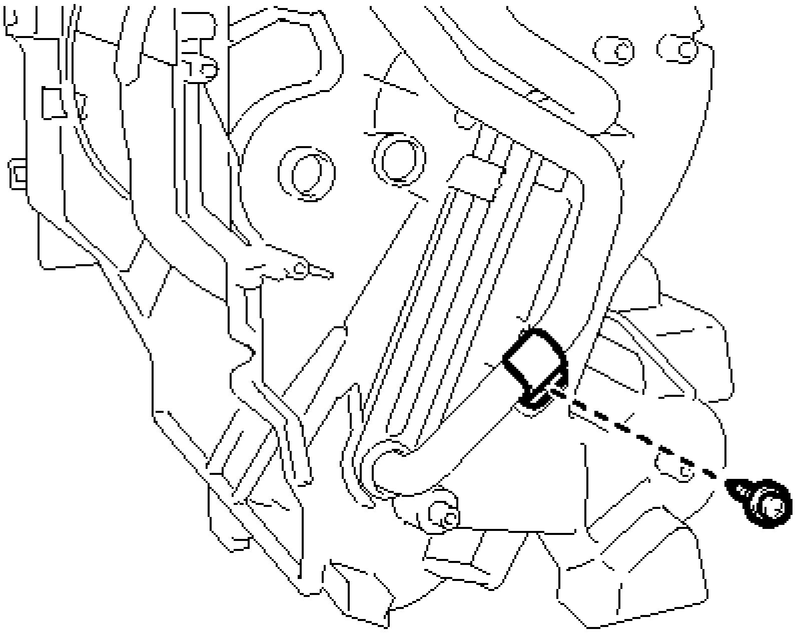

Fig. 96: Identifying Screw And Clamp
Courtesy of TOYOTA MOTOR SALES, U.S.A., INC.

c. Engage the 3 claws and install the heater clamp.

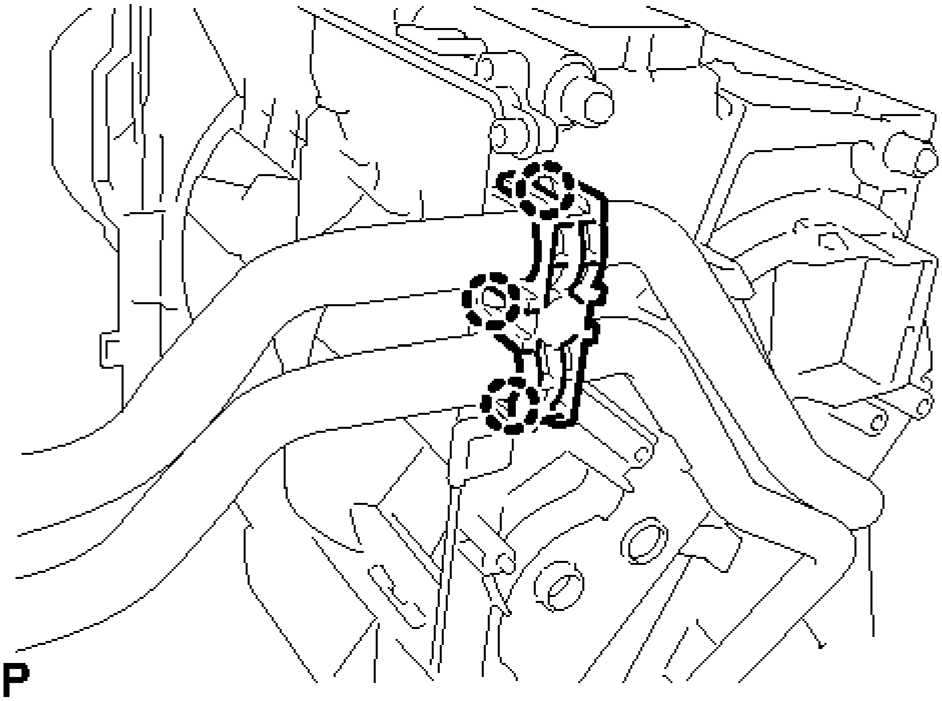

Fig. 97: Identifying Heater Clamp And Claws
Courtesy of TOYOTA MOTOR SALES, U.S.A., INC.

3. **INSTALL NO. 2 AIR CONDITIONING RADIATOR DAMPER SERVO SUB-ASSEMBLY (for Automatic Air Conditioning System)**
   a. Using the reference point, install the No. 2 air conditioning radiator damper servo sub-assembly with the 2 screws.

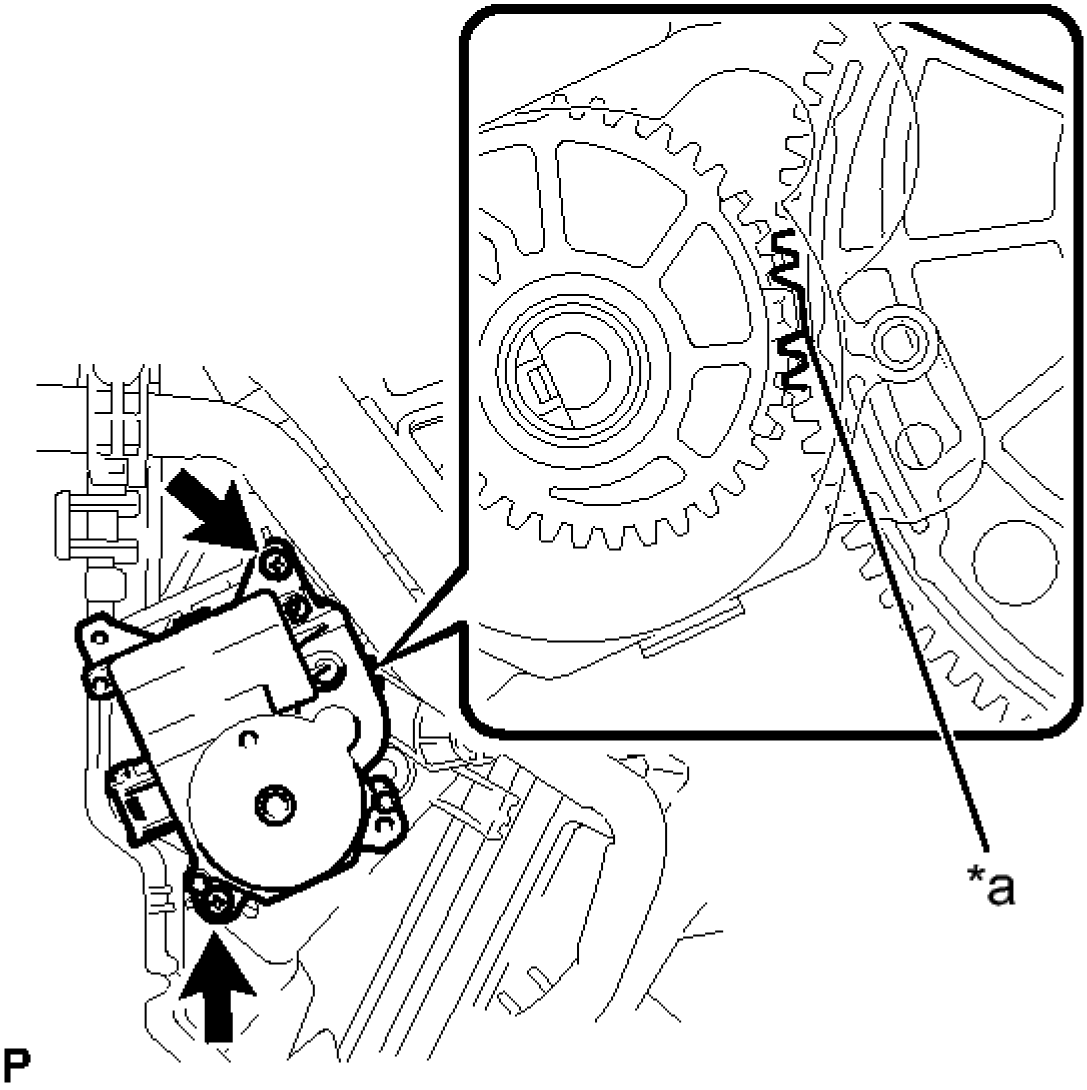

Fig. 98: Identifying No. 2 Air Conditioning Radiator Damper Servo Sub-Assembly Screws
Courtesy of TOYOTA MOTOR SALES, U.S.A., INC.

TEXT IN ILLUSTRATION

*a	Reference Point

4. **INSTALL NO. 1 COOLER THERMISTOR** . See step 1.
5. **INSTALL NO. 1 COOLER EVAPORATOR SUB-ASSEMBLY**
    a. Sufficiently apply compressor oil to 2 new O-rings and the fitting surfaces. Install the 2 O-rings to the No. 1 cooler evaporator sub-assembly.

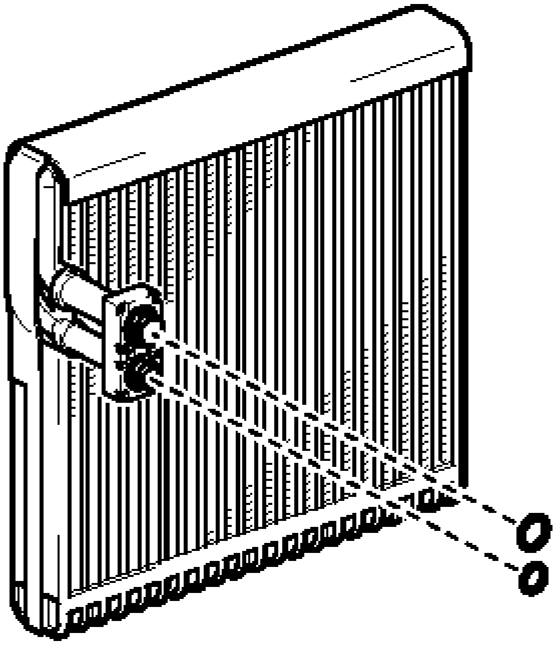

P

Fig. 99: Identifying O-Rings To Cooler Evaporator No. 1
Courtesy of TOYOTA MOTOR SALES, U.S.A., INC.

Compressor oil

ND-OIL 8 or equivalent

b. Install the No. 1 cooler evaporator sub-assembly to the blower assembly.

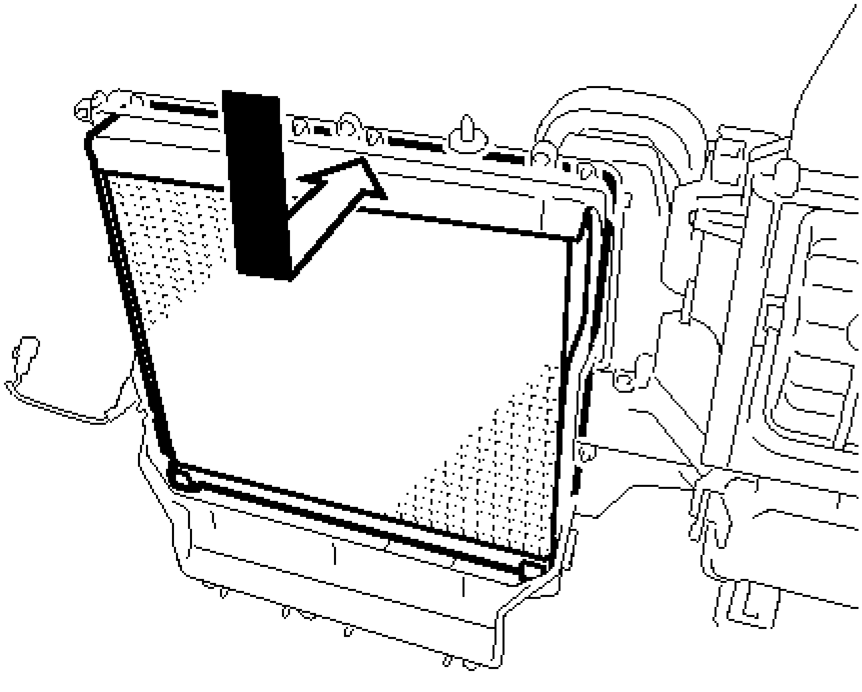

Fig. 100: Installing No. 1 Cooler Evaporator Sub-Assembly
Courtesy of TOYOTA MOTOR SALES, U.S.A., INC.

6. **INSTALL BLOWER ASSEMBLY WITH COOLER EVAPORATOR SUB-ASSEMBLY** . See step 1.
7. **INSTALL COOLER EXPANSION VALVE**
   a. Using a 4 mm hexagon wrench, install the cooler expansion valve with the 2 hexagon bolts.

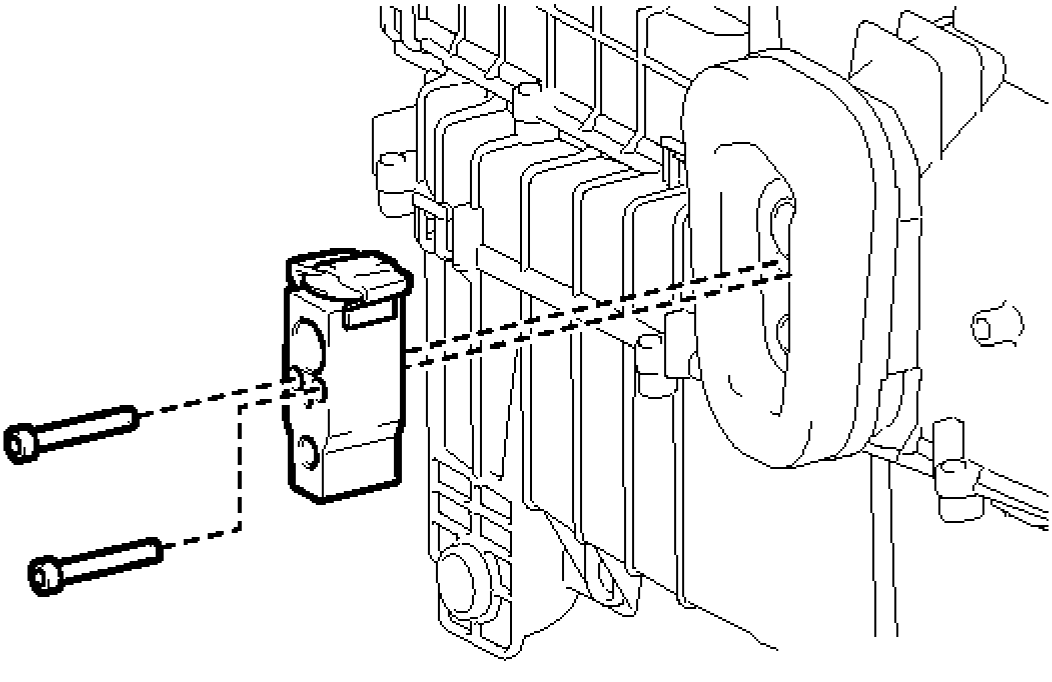

Fig. 101: Identifying Cooler Expansion Valve And Bolts
Courtesy of TOYOTA MOTOR SALES, U.S.A., INC.

Torque: 3.5 N*m (36 kgf*cm, 31 in.*lbf)

8. **INSTALL AIR CONDITIONING HARNESS ASSEMBLY (for Manual Air Conditioning System)**
   a. Engage the 5 clamps to install air conditioning harness assembly.

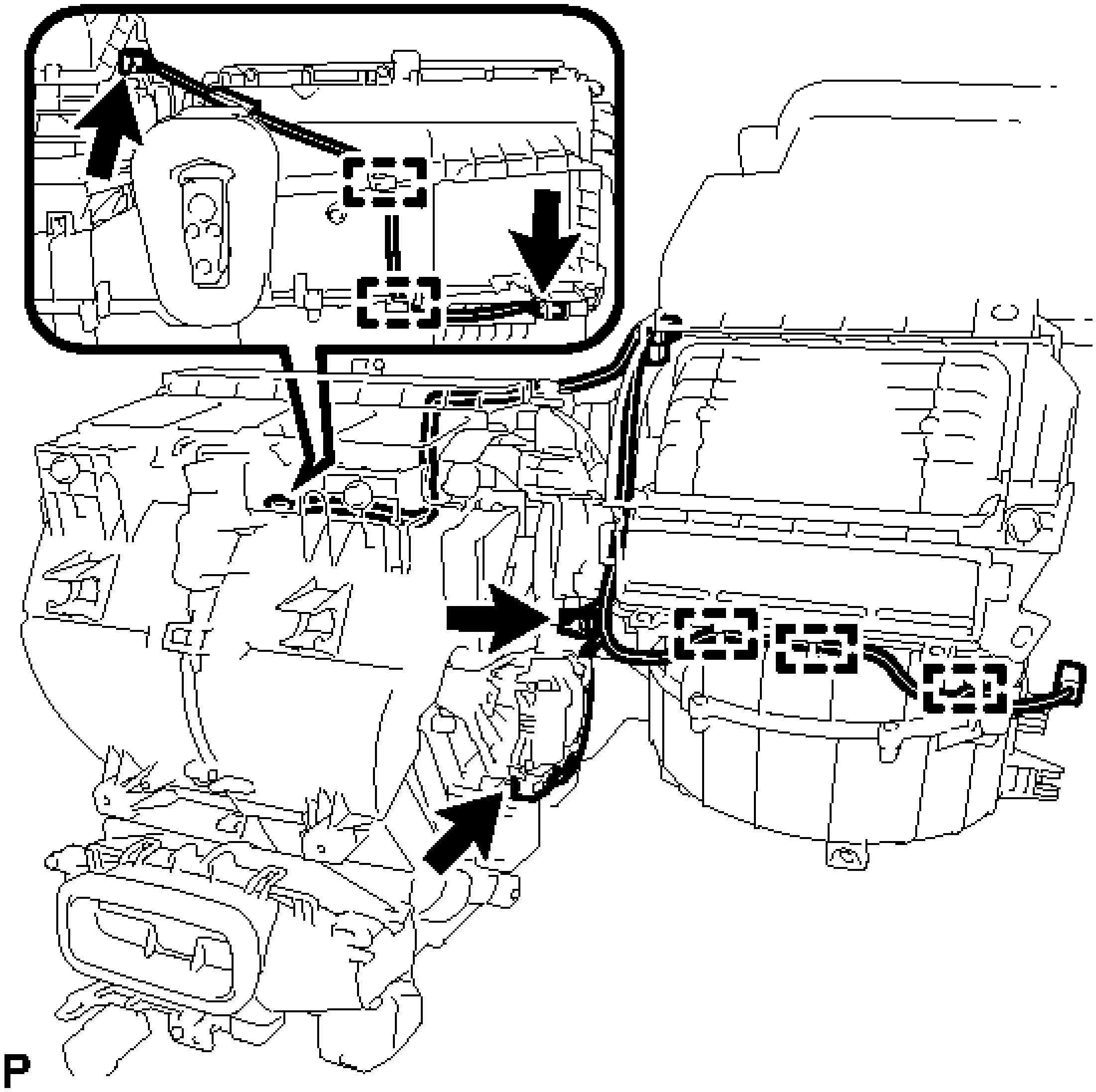

Fig. 102: Identifying Air Conditioning Harness Assembly Clamps
Courtesy of TOYOTA MOTOR SALES, U.S.A., INC.

b. Connect the 4 connectors.
c. Install the heater packing as shown in the illustration.

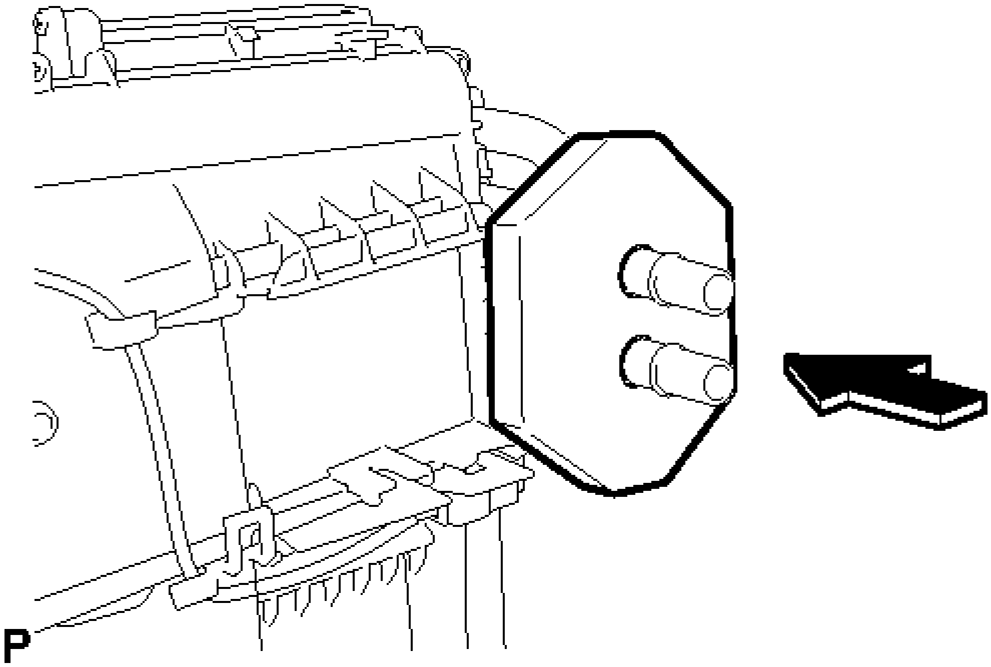

Fig. 103: Installing Heater Packing
Courtesy of TOYOTA MOTOR SALES, U.S.A., INC.

9. **INSTALL AIR CONDITIONING HARNESS ASSEMBLY (for Automatic Air Conditioning System)**
   a. Engage the 5 clamps to install air conditioning harness assembly.

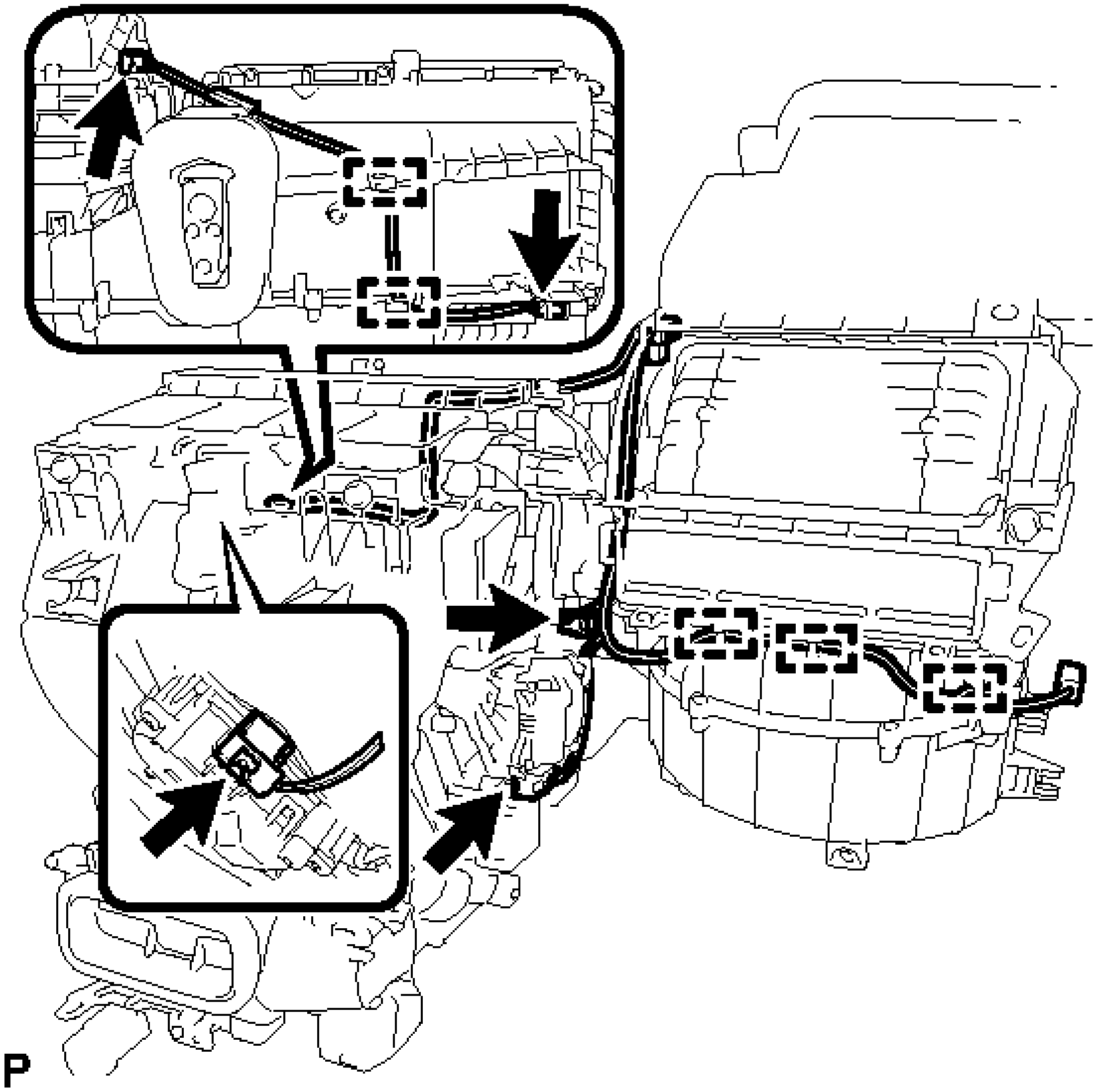

Fig. 104: Identifying Air Conditioning Harness Assembly Clamps
Courtesy of TOYOTA MOTOR SALES, U.S.A., INC.

b. Connect the 5 connectors.
c. Install the heater packing as shown in the illustration.

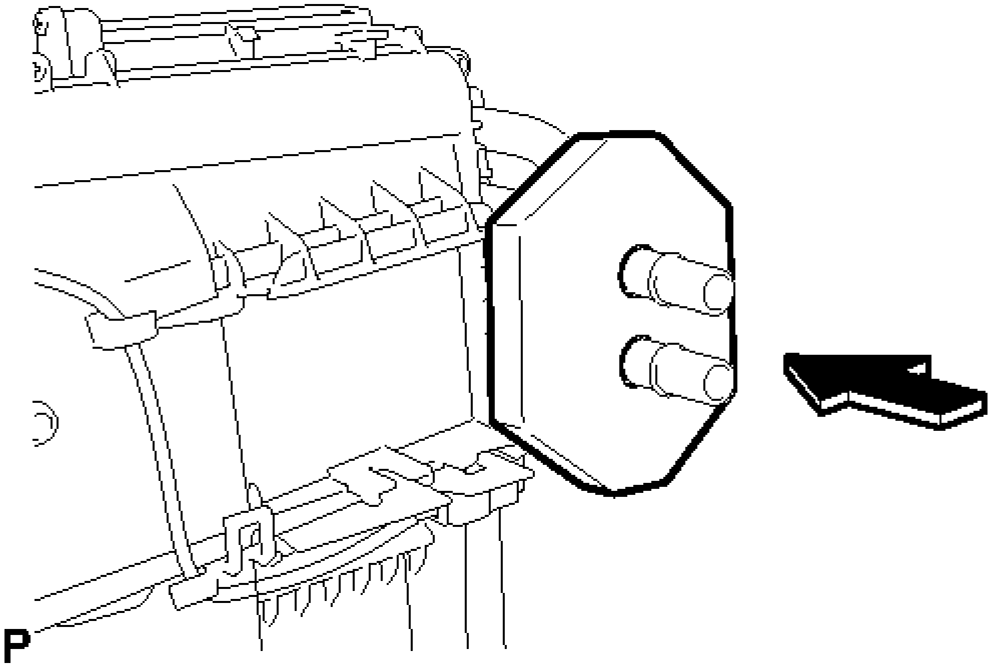

Fig. 105: Installing Heater Packing
Courtesy of TOYOTA MOTOR SALES, U.S.A., INC.

10. **INSTALL ASPIRATOR**
    a. Engage the 2 claws to install the aspirator.

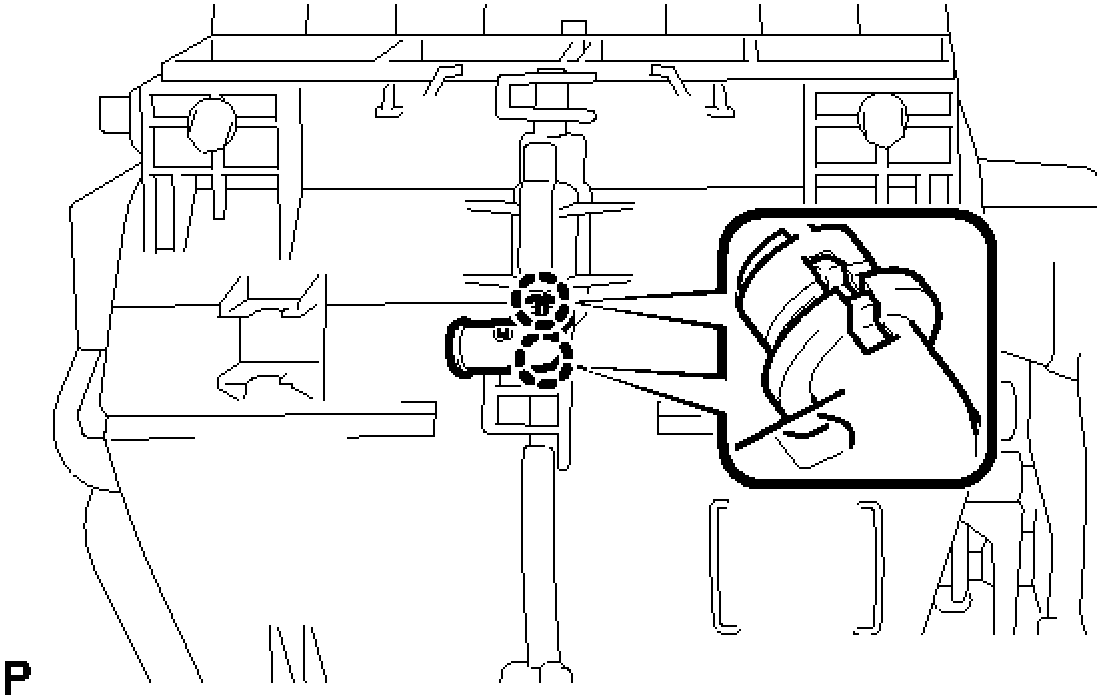

Fig. 106: Identifying Aspirator Claws

Courtesy of TOYOTA MOTOR SALES, U.S.A., INC.

11. **INSTALL COOLER THERMISTOR HOSE (for Automatic Air Conditioning System)**
    a. Engage the clamp to install the cooler thermistor hose.

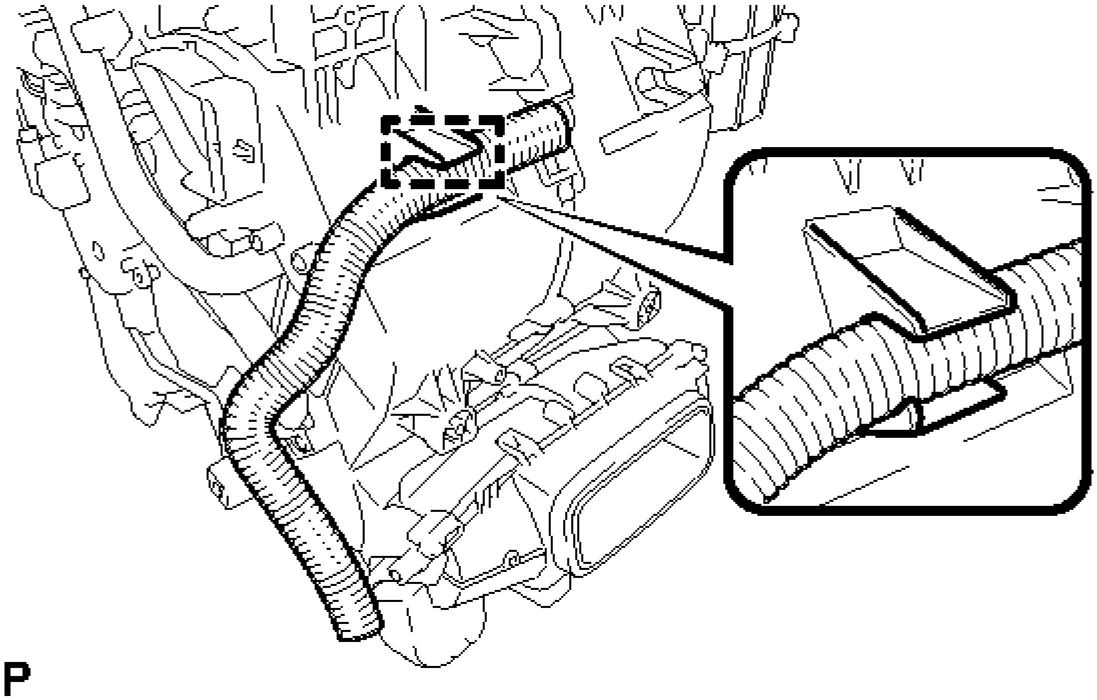

Fig. 107: Locating Cooler Thermistor Hose (For Automatic Air Conditioning System) Clamp
Courtesy of TOYOTA MOTOR SALES, U.S.A., INC.

12. **INSTALL NO. 6 HEATER TO REGISTER DUCT ASSEMBLY**
    a. Engage the 2 claws and 2 guides to install the No. 6 heater to register duct assembly as shown in the illustration.

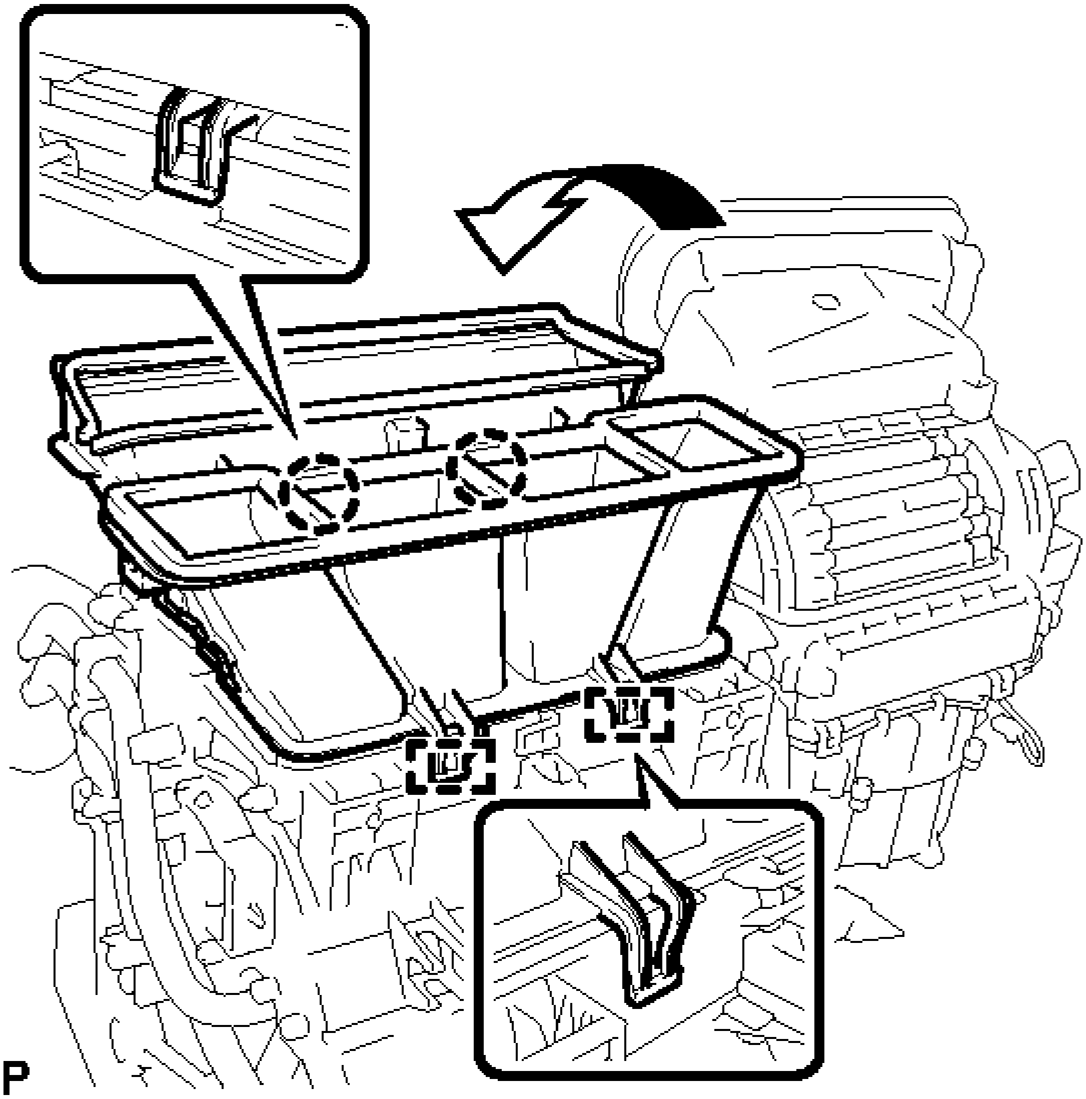

Fig. 108: Identifying No. 6 Heater To Register Duct Claws And Guides
Courtesy of TOYOTA MOTOR SALES, U.S.A., INC.

13. **INSTALL NO. 1 AIR DUCT SUB-ASSEMBLY**
    a. Engage the 2 claws and guide to install the No. 1 air duct sub-assembly as shown in the illustration.

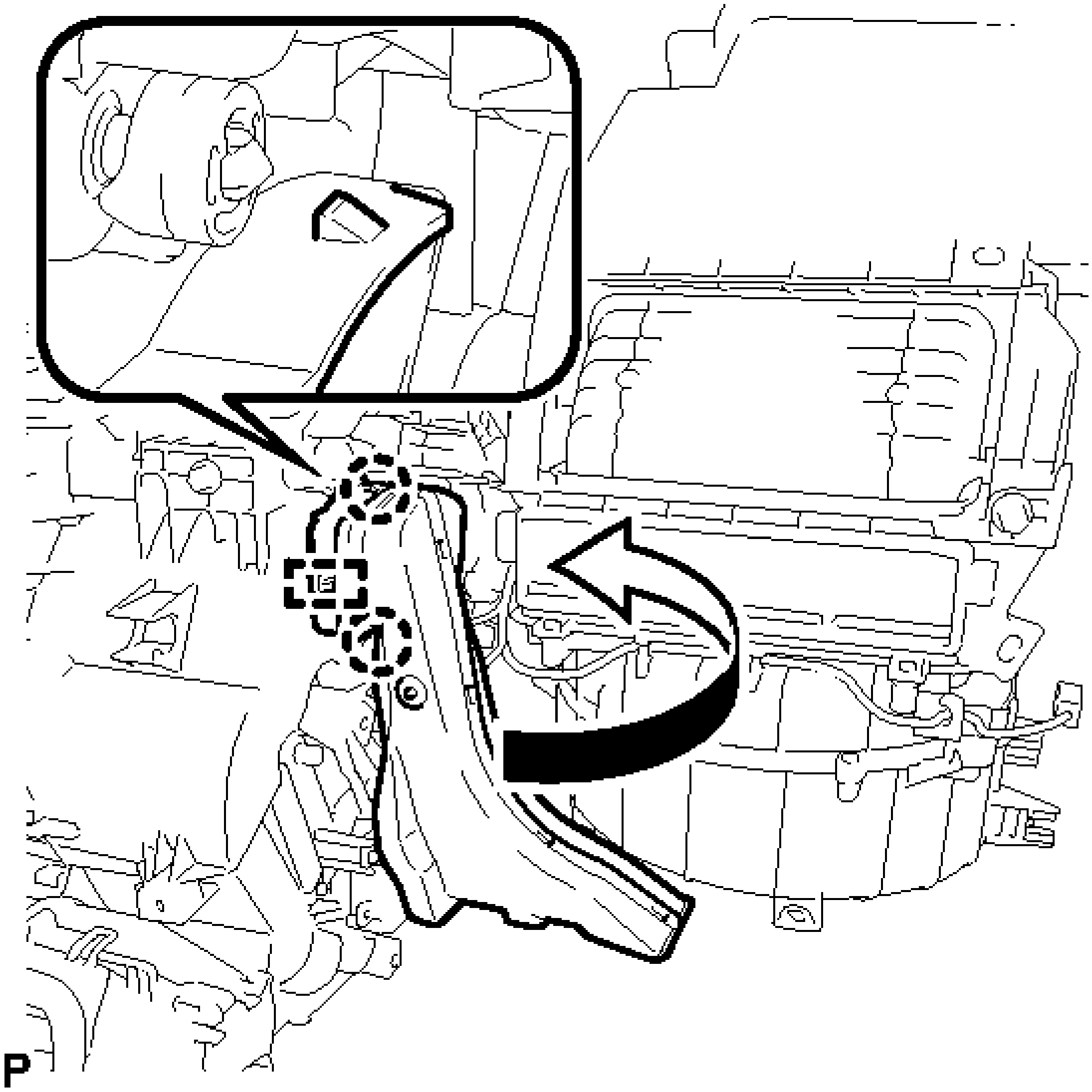

Fig. 109: Installing No. 1 Air Duct Sub-Assembly
Courtesy of TOYOTA MOTOR SALES, U.S.A., INC.

INSTALLATION

INSTALLATION

1. **INSTALL AIR CONDITIONING UNIT ASSEMBLY**
   1. Install the air conditioning unit assembly to the instrument panel reinforcement assembly with the 3 bolts.

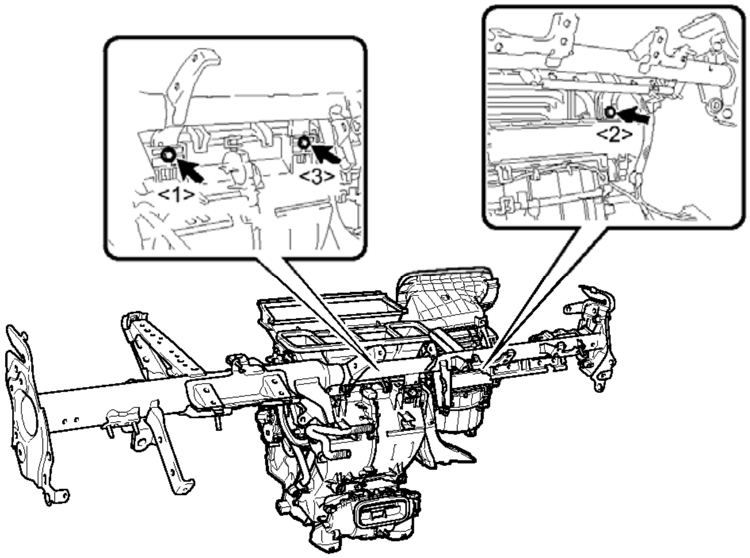

P

Fig. 110: Locating Air Conditioning Unit Assembly Bolts With Tightening Sequence
Courtesy of TOYOTA MOTOR SALES, U.S.A., INC.

Torque: 9.8 N*m (100 kgf*cm, 87 in.*lbf)

NOTE: **Tighten the bolts in the order shown in the illustration to install the air conditioning unit assembly.**

2. **INSTALL TRANSPONDER KEY ECU ASSEMBLY (w/ Engine Immobiliser System)**
    a. Connect the connector and install the transponder key ECU assembly.
3. **INSTALL INSTRUMENT PANEL REINFORCEMENT ASSEMBLY WITH AIR CONDITIONING UNIT**

NOTE:

- **Be sure to support the air conditioning unit assembly when removing it because failure to do so may cause the bracket of the air conditioning unit assembly to break.**
- **When installing the air conditioning unit, eliminate static electricity by touching the vehicle body to prevent the components from being damaged.**

    a. w/ Engine Immobiliser System:
        1. Disengage the 3 guides and temporarily install the instrument panel reinforcement assembly with air conditioning unit as shown in the illustration.

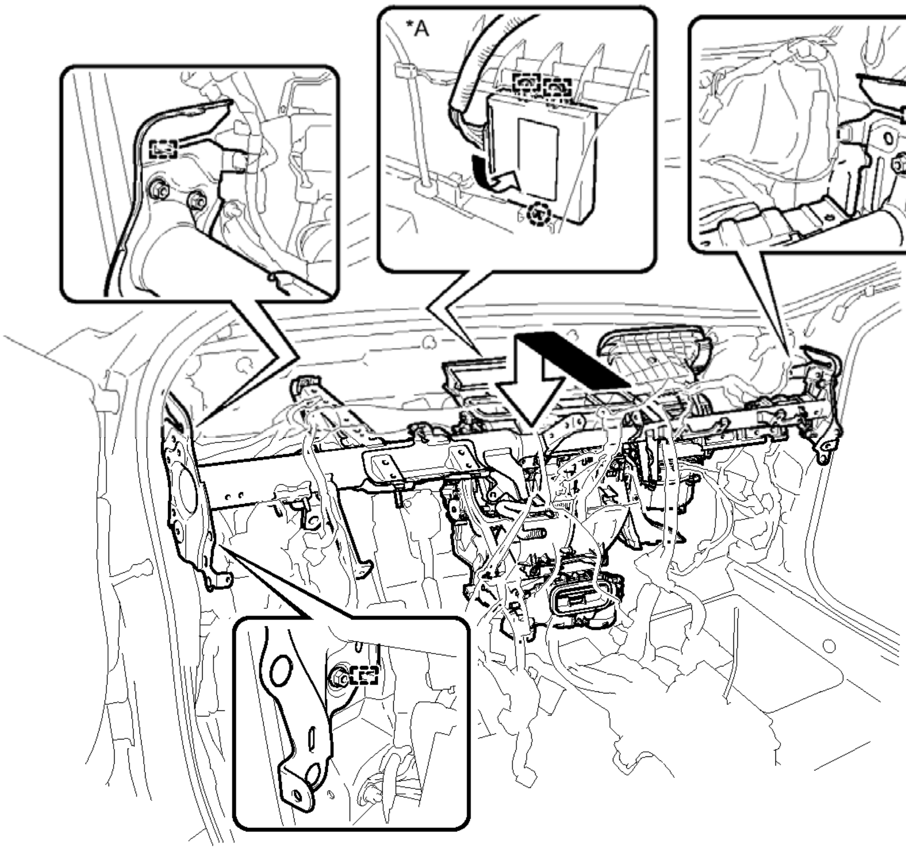

P

Fig. 111: Installing Instrument Panel Reinforcement Assembly With Air Conditioning Unit
Courtesy of TOYOTA MOTOR SALES, U.S.A., INC.

TEXT IN ILLUSTRATION

*A	w/ Engine Immobiliser System	-	-

b. Install the instrument panel reinforcement assembly with the 3 bolts <A> and 2 new bolts <B>in the order shown in the illustration.

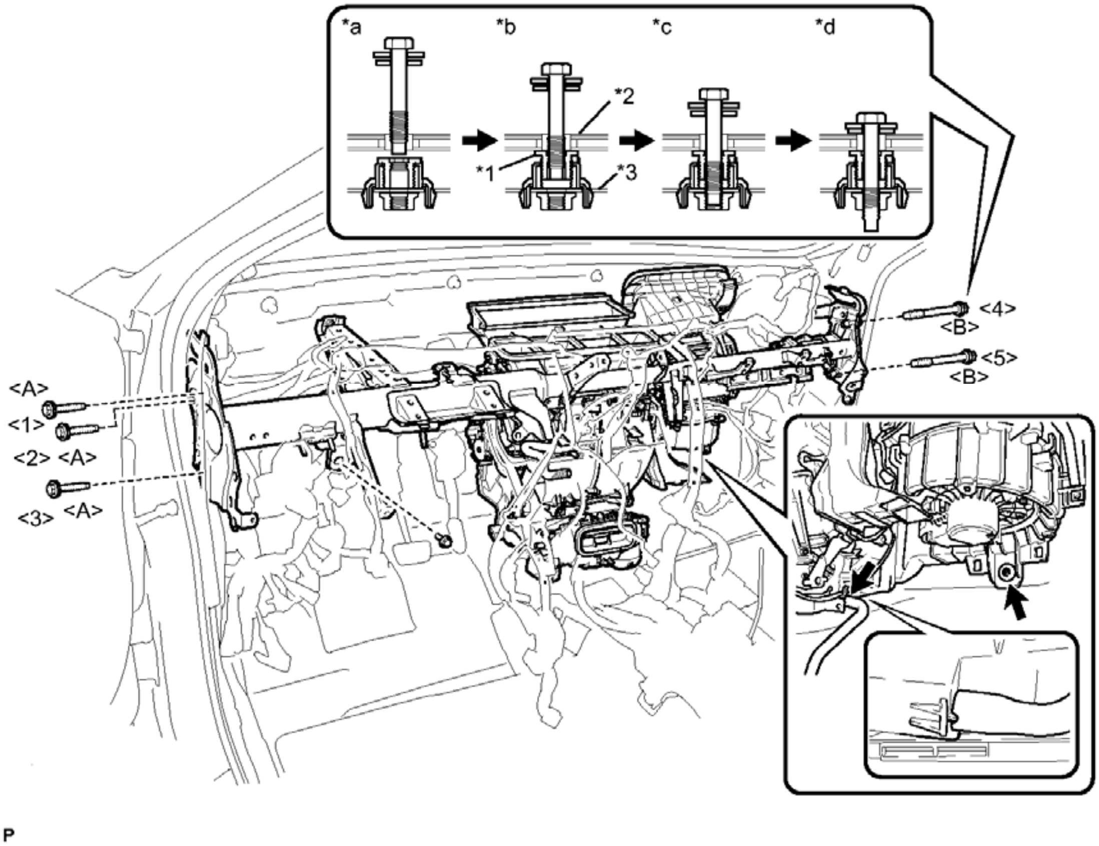

Fig. 112: Installing Instrument Panel Reinforcement And Movable Collar
Courtesy of TOYOTA MOTOR SALES, U.S.A., INC.

TEXT IN ILLUSTRATION

*1	Movable Collar	*2	Body
*3	Instrument Panel Reinforcement	-	-
*a	Step 1	*b	Step 2
*c	Step 3	*d	Step 4

Torque: 20 N*m (204 kgf*cm, 15 ft.*lbf)

NOTE: **Tighten the bolts in the order shown in the illustration to install the reinforcement assembly.**

c. Install the bolt.

Torque: 15 N*m (153 kgf*cm, 11 ft.*lbf)

d. Install the instrument panel reinforcement assembly with air conditioning unit with the nut.

Torque: 9.8 N*m (100 kgf*cm, 87 in.*lbf)

e. Pass the cooler drain hose through the vehicle securely.

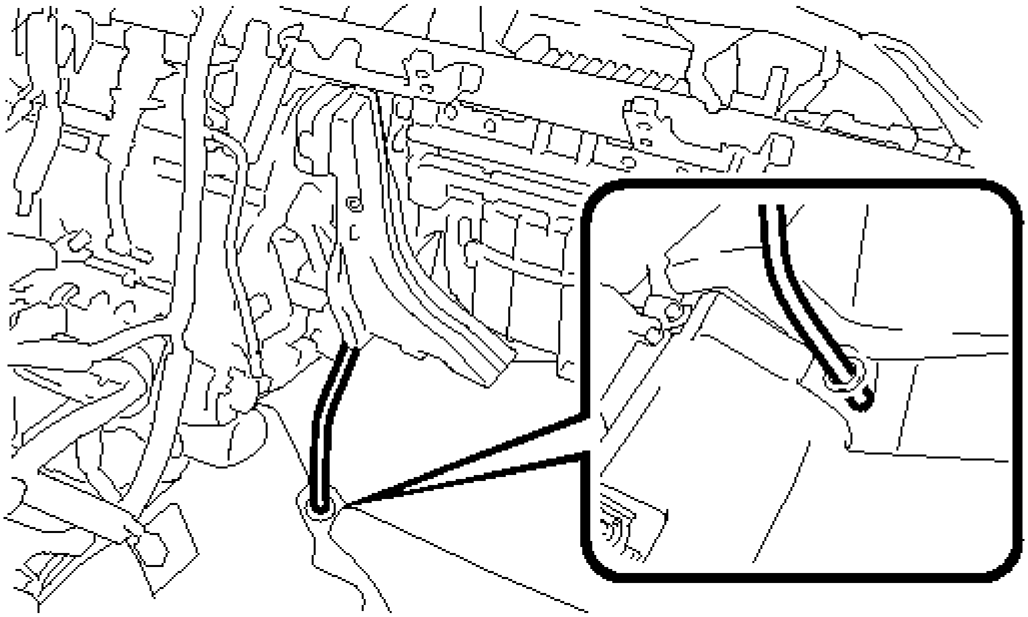

Fig. 113: Identifying Drain Cooler Hose
Courtesy of TOYOTA MOTOR SALES, U.S.A., INC.

NOTE: **Connect the cooler drain hose firmly to prevent water leaks.**

f. Install the 2 bolts.

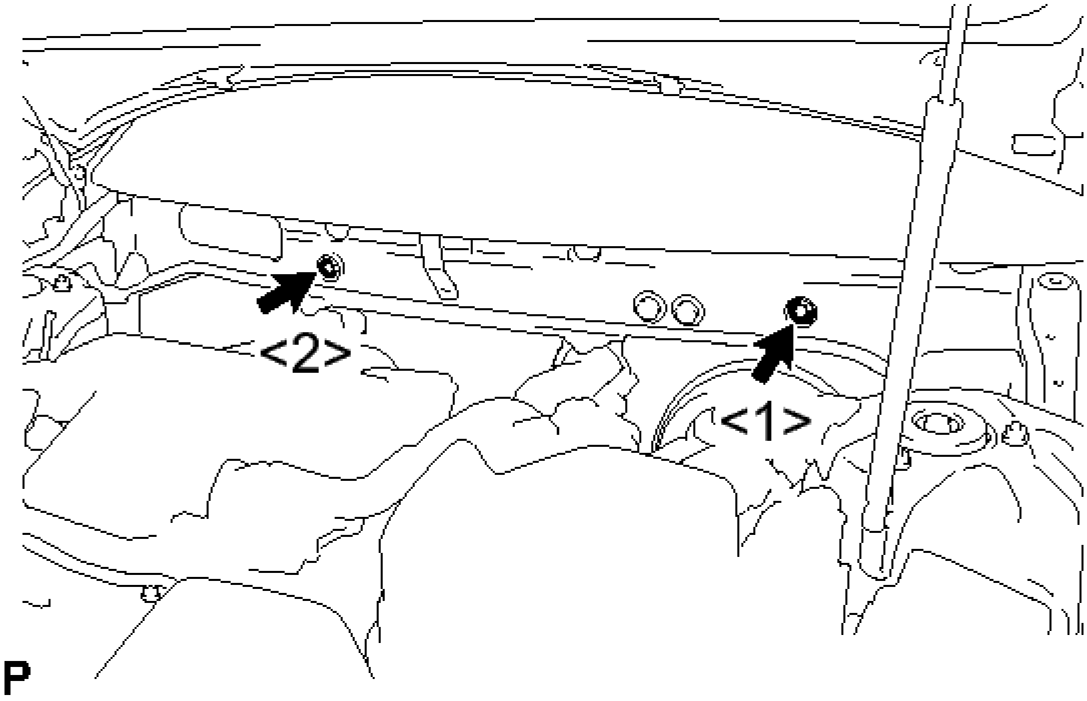

Fig. 114: Identifying Connector Bolts With Tightening Sequence
Courtesy of TOYOTA MOTOR SALES, U.S.A., INC.

Torque: 9.8 N*m (100 kgf*cm, 87 in.*lbf)

NOTE: Tighten the bolts in the order shown in the illustration.

g. Engage each clamp.
h. Connect each connector.
i. Connect the bolts and connect the 3 earth wires.

Torque: 8.0 N*m (82 kgf*cm, 71 in.*lbf)

j. for Power Tilt and Power Telescopic Steering Column:
    1. Connect the protector with the nut.

    Torque: 8.0 N*m (82 kgf*cm, 71 in.*lbf)

k. Engage the claw to connect the airbag connector as shown in the illustration.

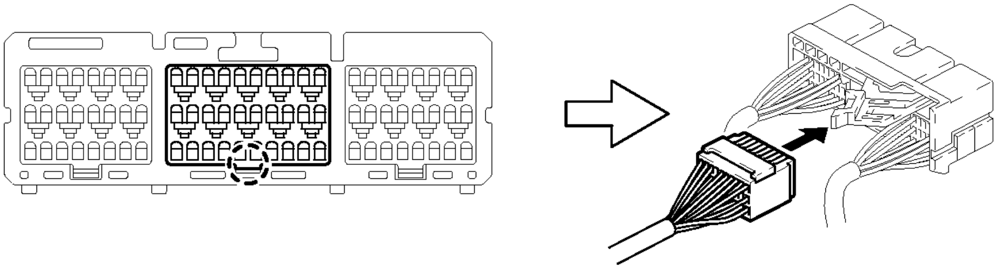

P

Fig. 115: Identifying Airbag Connector
Courtesy of TOYOTA MOTOR SALES, U.S.A., INC.

l. Engage the 2 claws to lock the retainer as shown in the illustration.

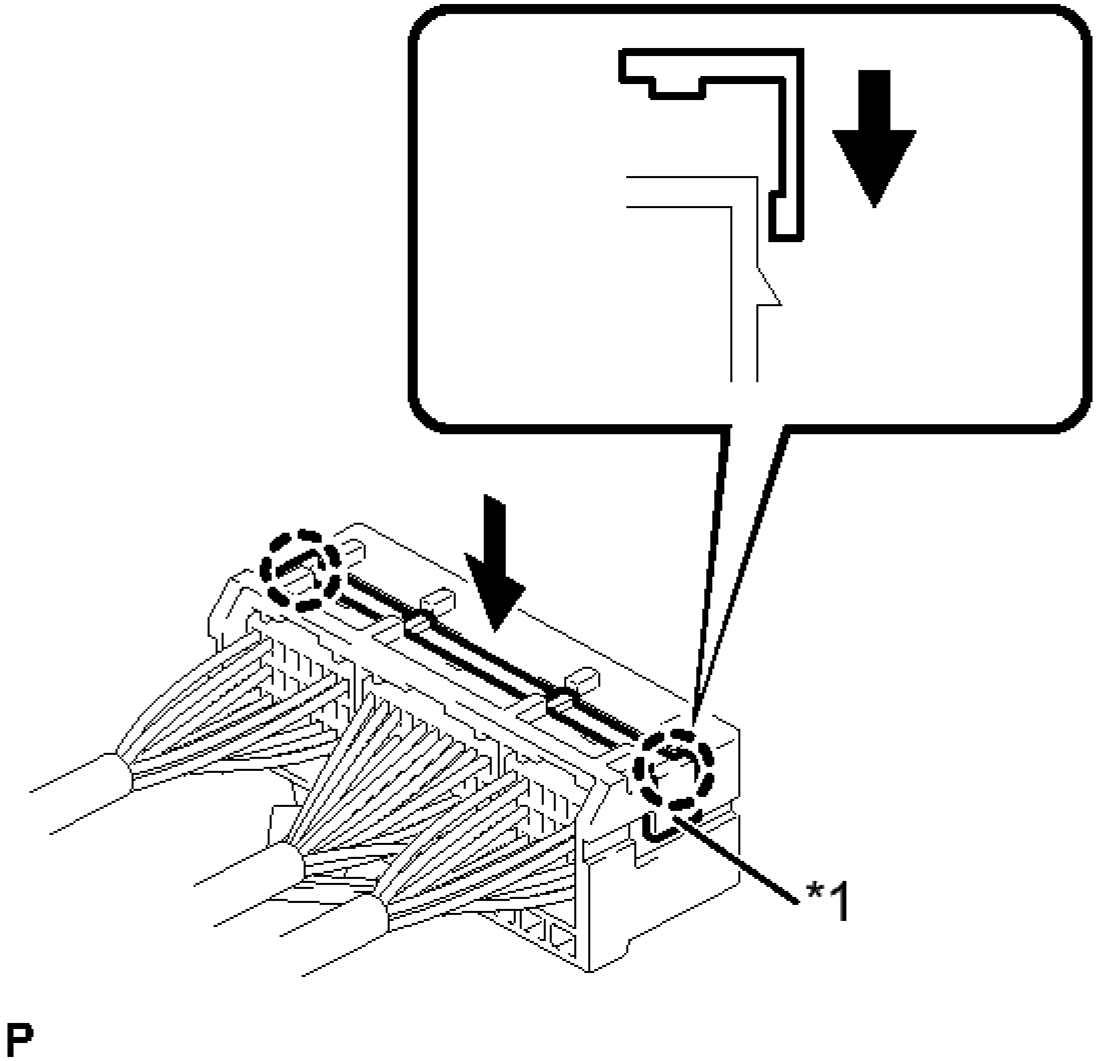

Fig. 116: Identifying Claws To Lock Retainer
Courtesy of TOYOTA MOTOR SALES, U.S.A., INC.

TEXT IN ILLUSTRATION

*1	Retainer

m. Engage each clamp.

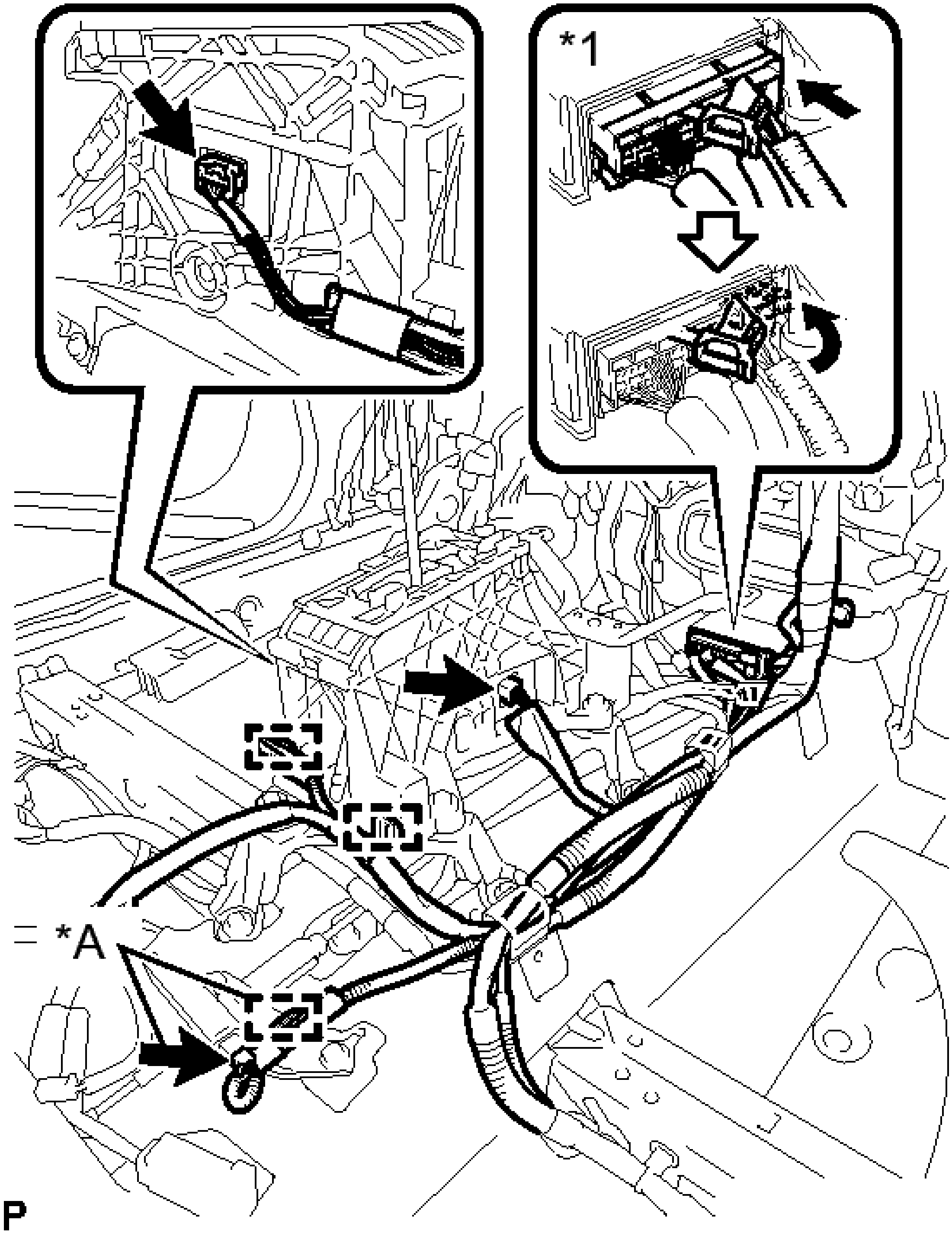

Fig. 117: Locating Airbag Sensor Assembly Connector And Clamps
Courtesy of TOYOTA MOTOR SALES, U.S.A., INC.

TEXT IN ILLUSTRATION

	w/ Smart

*A	Key System
*a	Airbag Sensor Assembly

n. Connect each connector.
o. Engage the 2 clamps.
p. Connect the connector to the airbag sensor assembly as shown in the illustration.

NOTE: **When connecting any airbag connector, take care not to damage the airbag wire harness.**

q. Engage the 3 claws to close the 3 clamps as shown in the illustration.

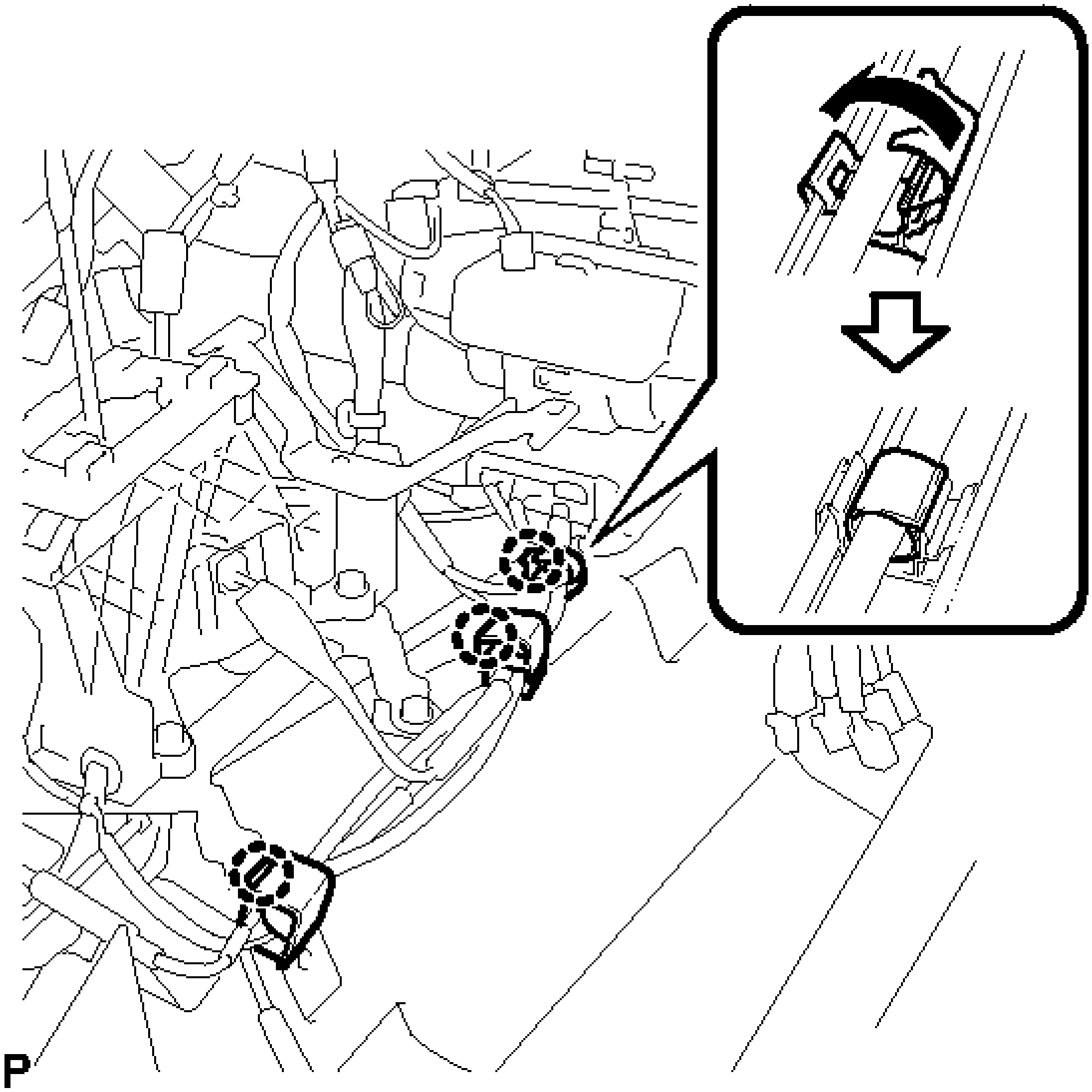

Fig. 118: Engaging Claws To Close Clamps
Courtesy of TOYOTA MOTOR SALES, U.S.A., INC.

r. w/ Manual (SOS) Switch:
    1. Engage the clamp.
s. for 10 Speakers:
    1. Engage the 3 clamps.

4. **INSTALL FRONT LOWER PANEL PACKING**
    a. Install the 2 front lower panel packings shown in the illustration.

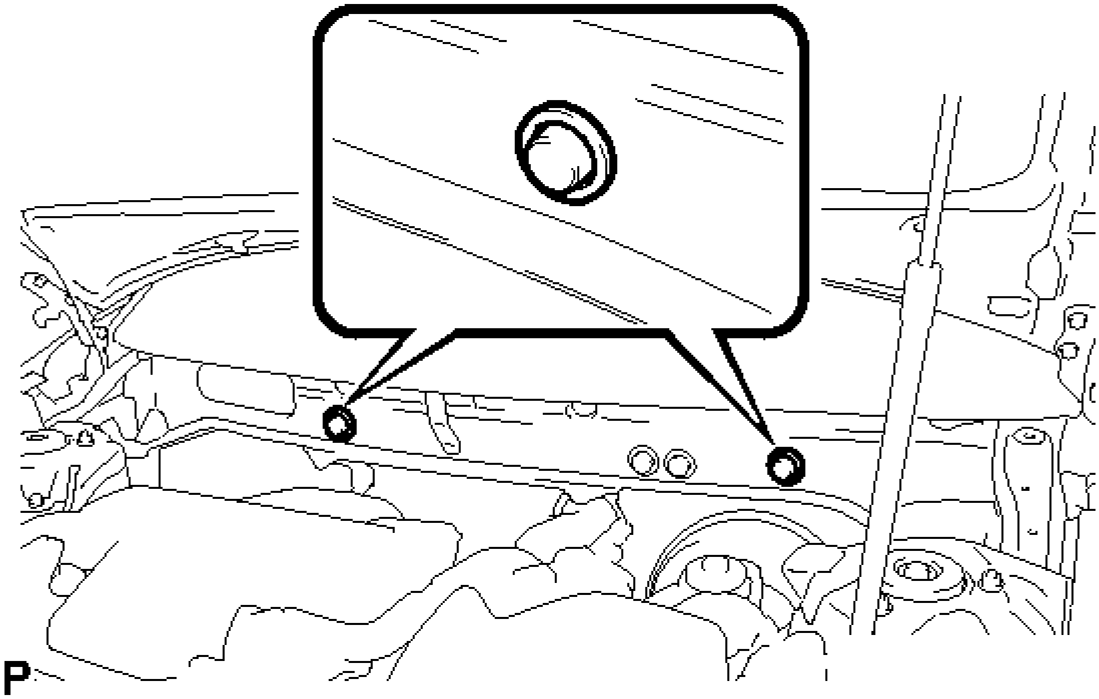

Fig. 119: Identifying Front Lower Panel Packing
Courtesy of TOYOTA MOTOR SALES, U.S.A., INC.

5. **INSTALL INSTRUMENT PANEL SAFETY PAD CAP**
    a. Install 5 new instrument panel safety pad caps.

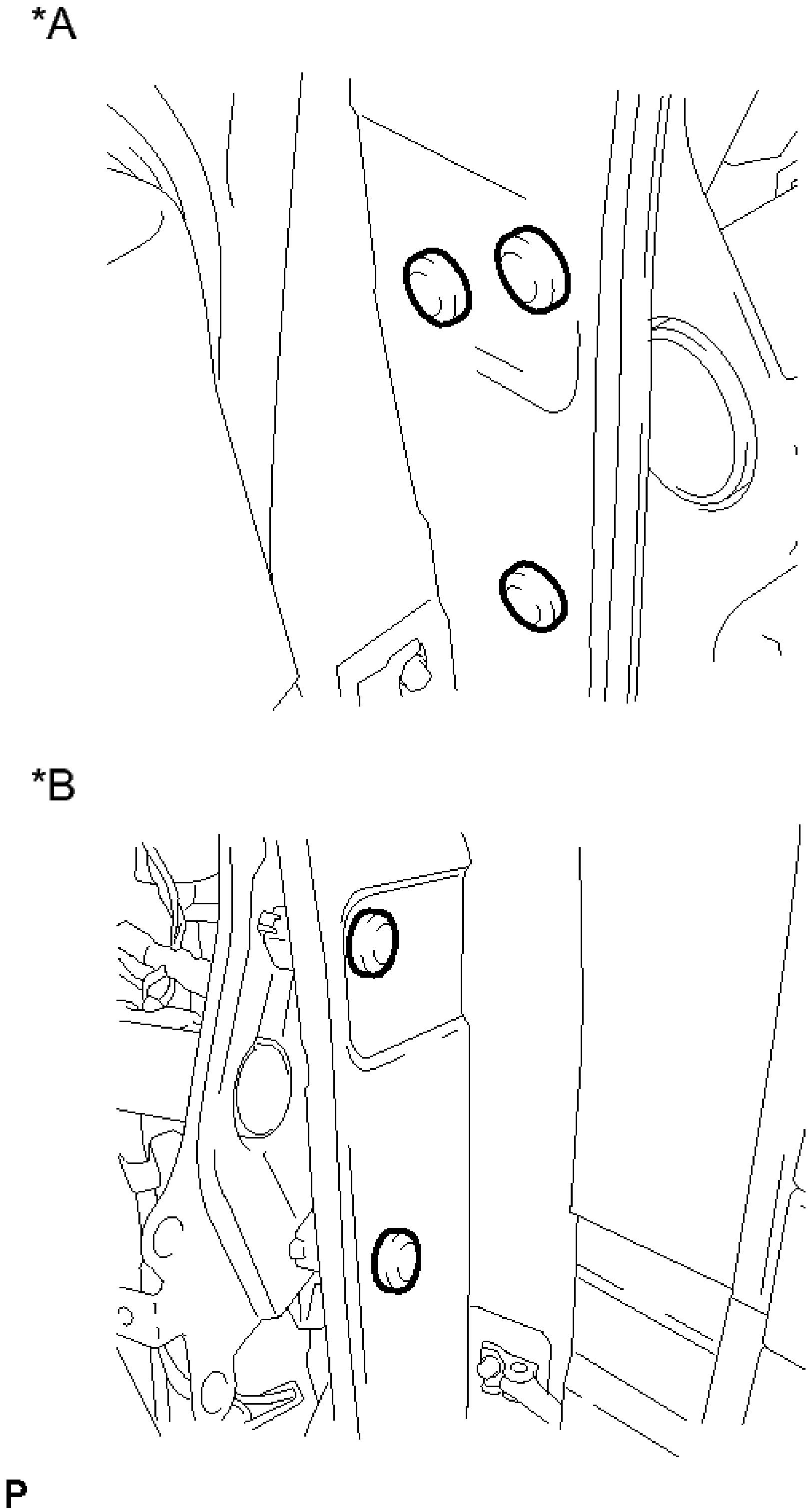

Fig. 120: Identifying Instrument Panel Safety Pad Caps
Courtesy of TOYOTA MOTOR SALES, U.S.A., INC.

TEXT IN ILLUSTRATION

*A	for LH Side
*B	for RH Side

6. **INSTALL NO. 2 INSTRUMENT PANEL BRACE SUB-ASSEMBLY**
    1. Install the screw and 2 nuts.

        Nut

        Torque: 20 N*m (204 kgf*cm, 15 ft.*lbf)

    2. Install the No. 2 instrument panel brace sub-assembly with the bolt.

        Torque: 20 N*m (204 kgf*cm, 15 ft.*lbf)

    3. Connect the earth wire with the bolt.

        Torque: 8.0 N*m (82 kgf*cm, 71 in.*lbf)

    4. Engage each clamp.
    5. Connect the connector.
7. **INSTALL INSTRUMENT PANEL TO COWL BRACE SUB-ASSEMBLY**
    1. Install the screw and 2 nuts.

        Nut

        Torque: 20 N*m (204 kgf*cm, 15 ft.*lbf)

    2. Install the instrument panel to cowl brace sub-assembly with the bolt.

        Torque: 20 N*m (204 kgf*cm, 15 ft.*lbf)

    3. Connect the earth wire with the bolt.

        Torque: 8.0 N*m (82 kgf*cm, 71 in.*lbf)

    4. Engage each clamp.
    5. Connect each connector.
8. **INSTALL NO. 1 CONSOLE BOX DUCT (w/ Rear Register Duct)**
    1. Install the No. 1 console box duct with the clip.
9. **INSTALL REAR NO. 3 AIR DUCT**

a. Engage the 2 claws to install the rear No. 3 air duct.

10. **INSTALL FLOOR CARPET BRACKET LH**

  a. Engage the 2 guides.
  b. Install the floor carpet bracket LH with the 2 clips.

11. **INSTALL REAR NO. 4 AIR DUCT**

  a. Engage the 4 claws to install the rear No. 4 air duct as shown in the illustration.

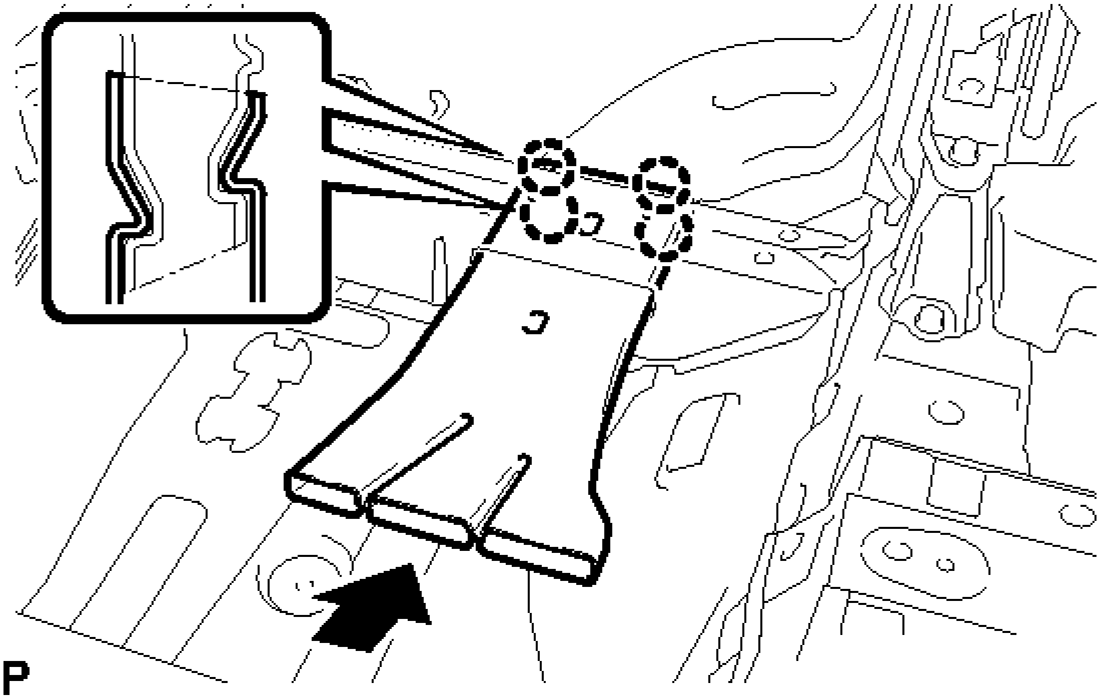

Fig. 121: Installing Rear No. 4 Air Duct Claws
Courtesy of TOYOTA MOTOR SALES, U.S.A., INC.

  b. Engage the guide to install the floor carpet to the original position as shown in the illustration.

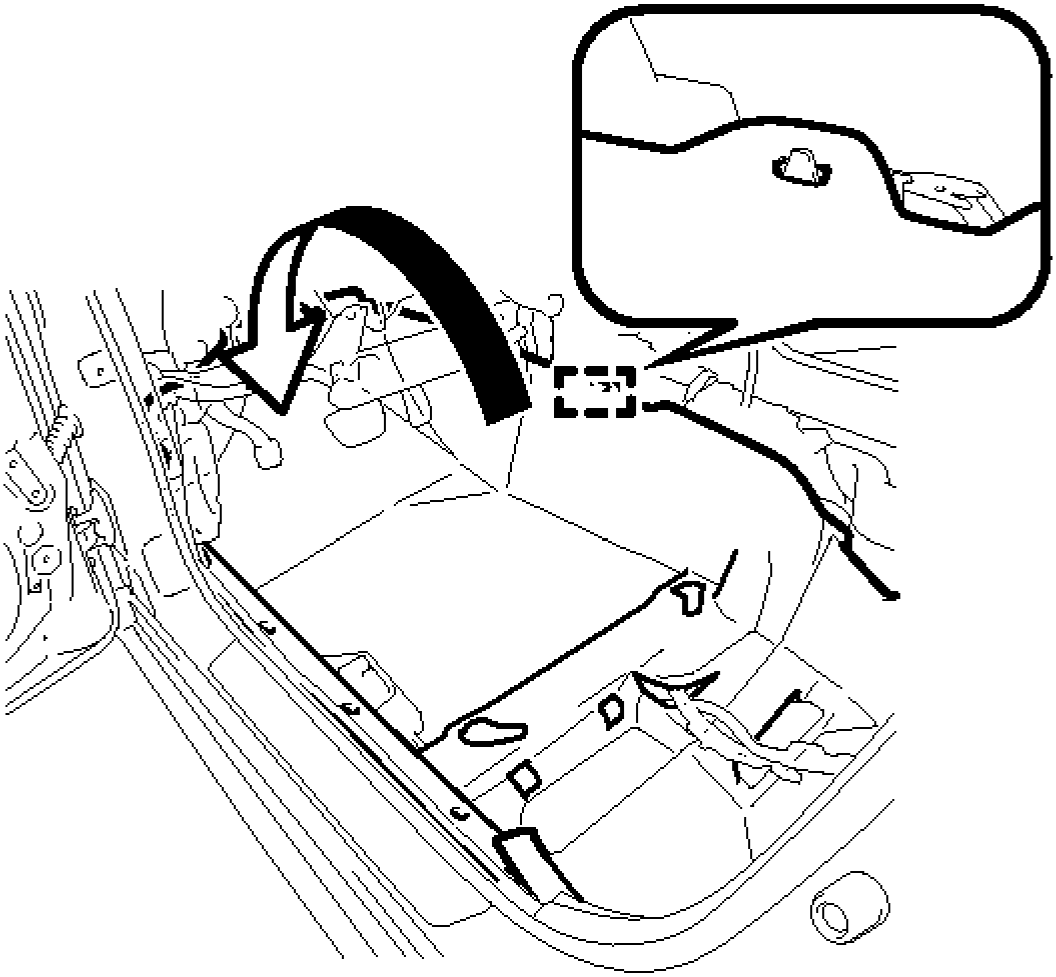

Fig. 122: Installing Floor Carpet
Courtesy of TOYOTA MOTOR SALES, U.S.A., INC.

12. **CONNECT FUEL LID LOCK OPEN LEVER SUB-ASSEMBLY**
    a. Engage the guide to connect the fuel lid lock open lever sub-assembly as shown in the illustration.

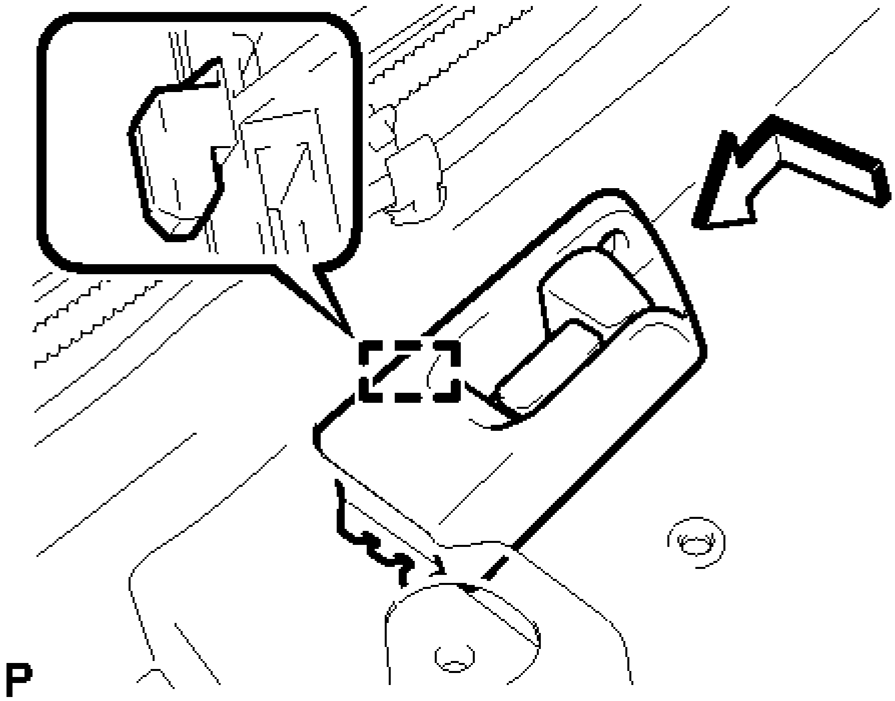

Fig. 123: Connecting Fuel Lid Lock Open Lever Guide
Courtesy of TOYOTA MOTOR SALES, U.S.A., INC.

b. Install the screw.

13. **INSTALL REAR NO. 1 AIR DUCT**
    a. Engage the 2 claws to install the rear No. 1 air duct.
14. **INSTALL FLOOR CARPET BRACKET RH**
    a. Engage the 2 guides.
    b. Install the floor carpet bracket RH with the 2 clips.
15. **INSTALL REAR NO. 2 AIR DUCT**
    a. Engage the 4 claws to install the rear No. 2 air duct as shown in the illustration.

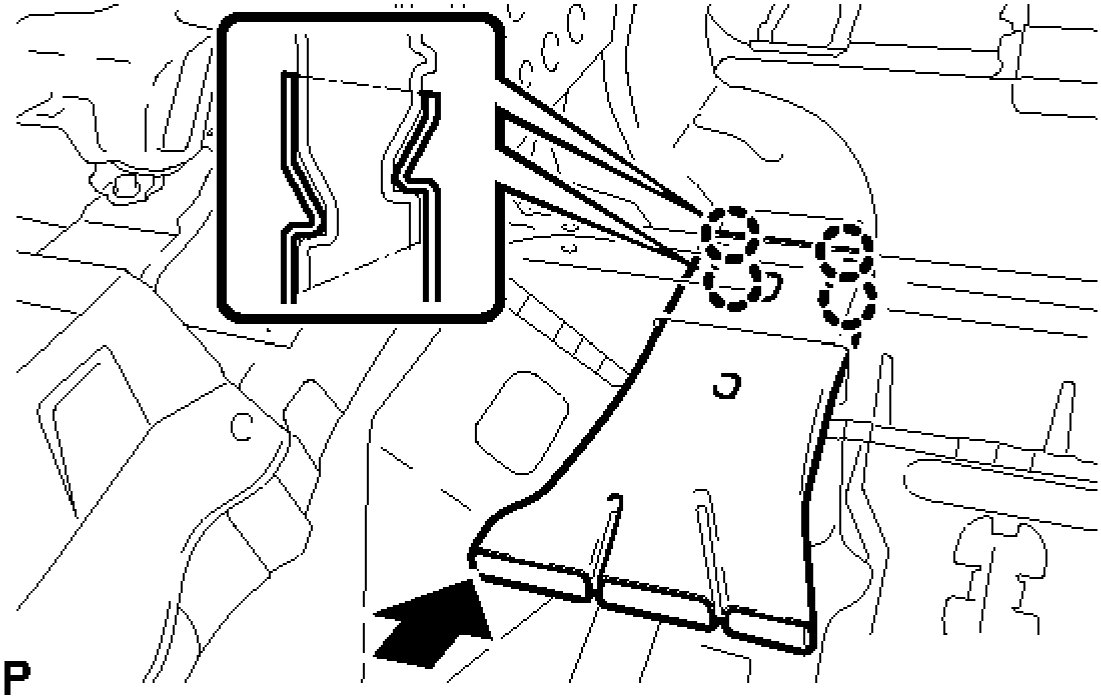

Fig. 124: Installing Rear No. 2 Air Duct Claws
Courtesy of TOYOTA MOTOR SALES, U.S.A., INC.

b. Engage the guide to install the floor carpet to the original position as shown in the illustration.

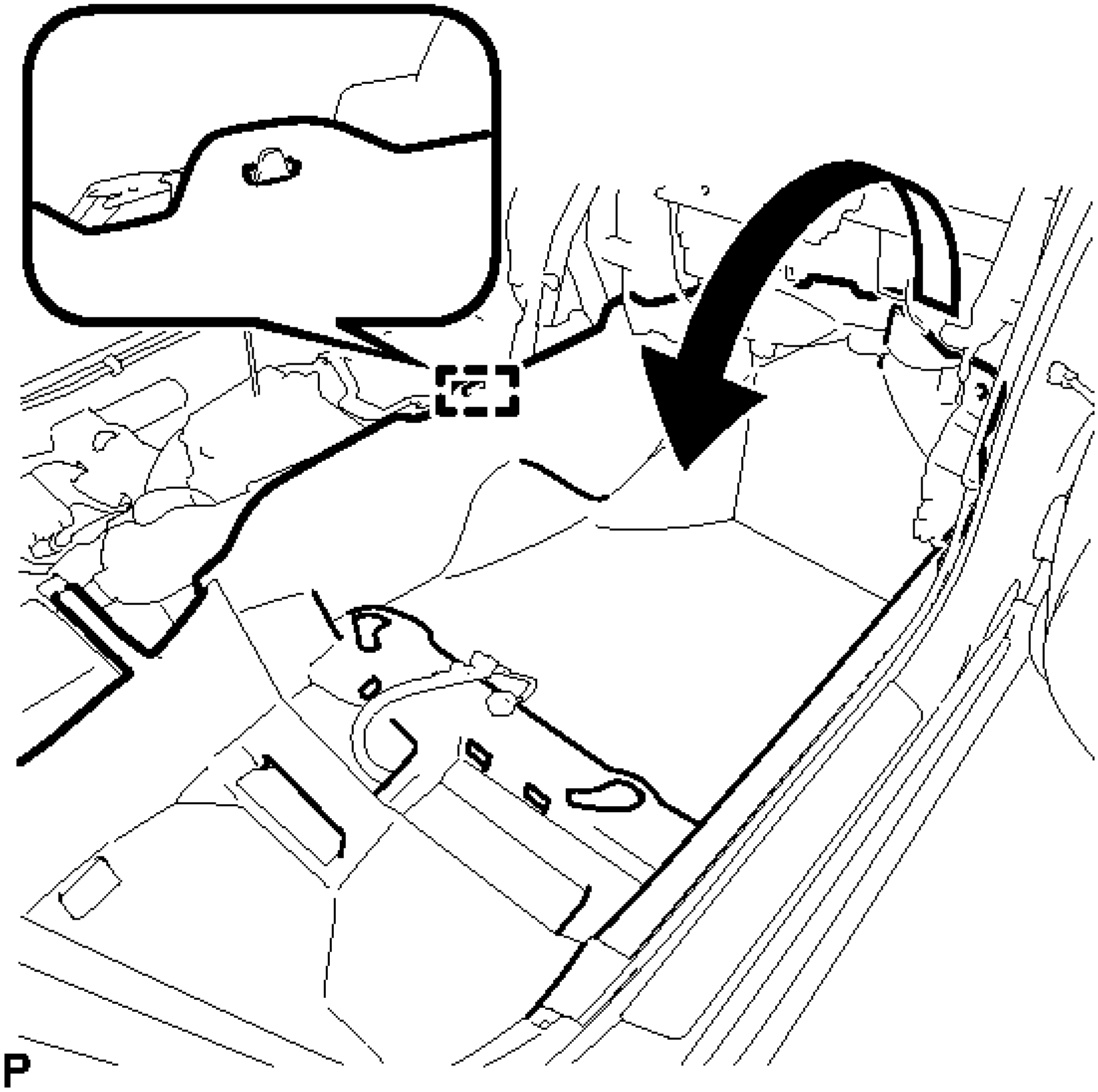

Fig. 125: Turning Back The Floor Carpet
Courtesy of TOYOTA MOTOR SALES, U.S.A., INC.

16. **INSTALL FLOOR CARPET HOOK**
    1. Engage the 6 claws to install the 6 floor carpet hooks.
    2. Engage the 6 guides.
17. **INSTALL AIR CONDITIONING AMPLIFIER ASSEMBLY** . See step 1.
18. **INSTALL CERTIFICATION ECU (SMART KEY ECU ASSEMBLY) (w/o ECU Integration Box RH)** . Refer to **INSTALLATION - Step 1** .
19. **INSTALL ECU INTEGRATION BOX RH (w/ ECU Integration Box RH)** . Refer to **INSTALLATION - Step 2** .
20. **INSTALL STEERING COLUMN ASSEMBLY**

    Refer to **INSTALLATION** .

21. **INSTALL LOWER NO. 1 INSTRUMENT PANEL AIRBAG ASSEMBLY** . Refer to **INSTALLATION - Step 1** .
22. **INSTALL INSTRUMENT PANEL SAFETY PAD ASSEMBLY**

    Refer to **INSTALLATION** .

23. **INSTALL STEREO COMPONENT AMPLIFIER ASSEMBLY WITH BRACKET (for 10 Speakers)** . Refer to **INSTALLATION - Step 4** .
24. **INSTALL AUDIO AMPLIFIER COVER (for 10 Speakers)** . Refer to **INSTALLATION - Step 5** .
25. **INSTALL FRONT SEAT ASSEMBLY LH (for TMMK Made Manual Seat)**

    Refer to **INSTALLATION** .

26. **INSTALL FRONT SEAT ASSEMBLY LH (for TMMK Made Power Seat)**

    Refer to **INSTALLATION** .

27. **INSTALL FRONT SEAT ASSEMBLY LH (for SIA Made Manual Seat)**

    Refer to **INSTALLATION** .

28. **INSTALL FRONT SEAT ASSEMBLY LH (for SIA Made Power Seat)**

    Refer to **INSTALLATION** .

29. **INSTALL DCM (TELEMATICS TRANSCEIVER) WITH BACK-UP BATTERY (w/ Manual (SOS) Switch)** . Refer to **INSTALLATION - Step 4** .
30. **INSTALL AUDIO AMPLIFIER COVER (w/ Manual (SOS) Switch)** . Refer to **INSTALLATION - Step 5** .
31. **INSTALL FRONT SEAT ASSEMBLY RH (for TMMK Made Manual Seat)**

    HINT:

    Use the same procedure for the RH side and LH side.

32. **INSTALL FRONT SEAT ASSEMBLY RH (for TMMK Made Power Seat)**

    HINT:

    Use the same procedure for the RH side and LH side.

33. **INSTALL FRONT SEAT ASSEMBLY RH (for SIA Made Manual Seat)**

    HINT:

    Use the same procedure for the RH side and LH side.

34. **INSTALL FRONT SEAT ASSEMBLY RH (for SIA Made Power Seat)**

HINT:

Use the same procedure for the RH side and LH side.

35. **CONNECT AIR CONDITIONER TUBE AND ACCESSORY ASSEMBLY**
    a. Remove the vinyl tape from the pipe.
    b. Sufficiently apply compressor oil to a new O-ring and fitting surface of the air conditioning tube and accessory assembly.

       Compressor oil

       ND-OIL 8 or equivalent

    c. Install the O-ring to the air conditioning tube and accessory assembly.
    d. Install the air conditioning tube and accessory assembly.
36. **CONNECT SUCTION HOSE SUB-ASSEMBLY (for TMMK Made)**
    a. Remove the vinyl tape from the pipe.
    b. Sufficiently apply compressor oil to a new O-ring and the fitting surface of the suction hose sub-assembly.

       Compressor oil

       ND-OIL 8 or equivalent

    c. Connect the O-ring to the suction hose sub-assembly.
    d. Connect the suction hose sub-assembly.
    e. Move the hook connector in the direction indicated by the arrow in the illustration.

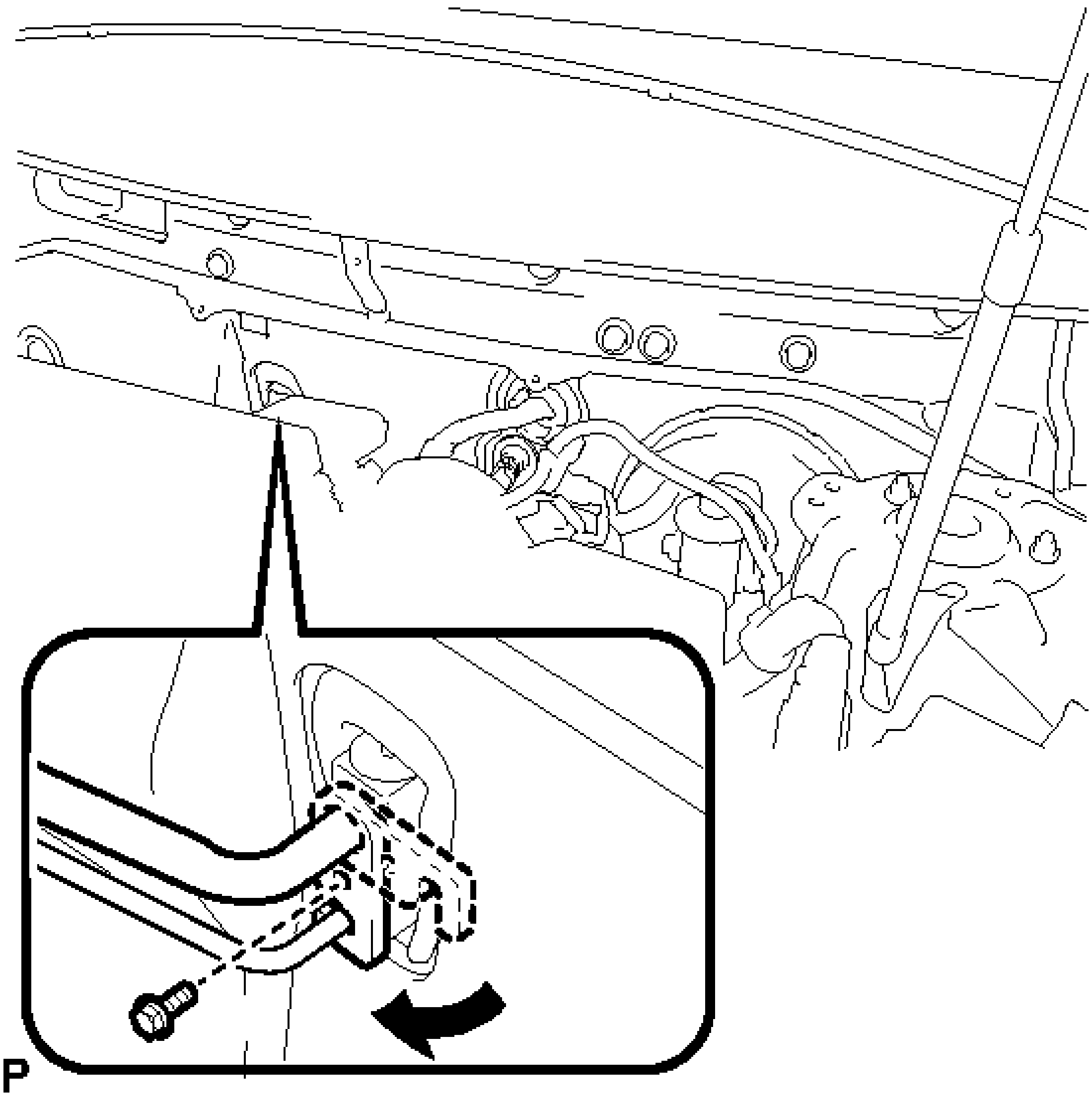

Fig. 126: Connecting Suction Hose Hook Connector And Bolt
Courtesy of TOYOTA MOTOR SALES, U.S.A., INC.

f. Insert the pipe joint into the fitting hole securely and tighten the bolt.

   Torque: 9.8 N*m (100 kgf*cm, 87 in.*lbf)

37. **CONNECT SUCTION PIPE SUB-ASSEMBLY (for SIA Made)**
   a. Remove the vinyl tape from the pipe.
   b. Sufficiently apply compressor oil to a new O-ring and the fitting surface of the suction pipe sub-assembly.

      Compressor oil

      ND-OIL 8 or equivalent

c. Connect the O-ring to the suction pipe sub-assembly.
d. Connect the suction pipe sub-assembly.
e. Move the hook connector in the direction indicated by the arrow in the illustration.

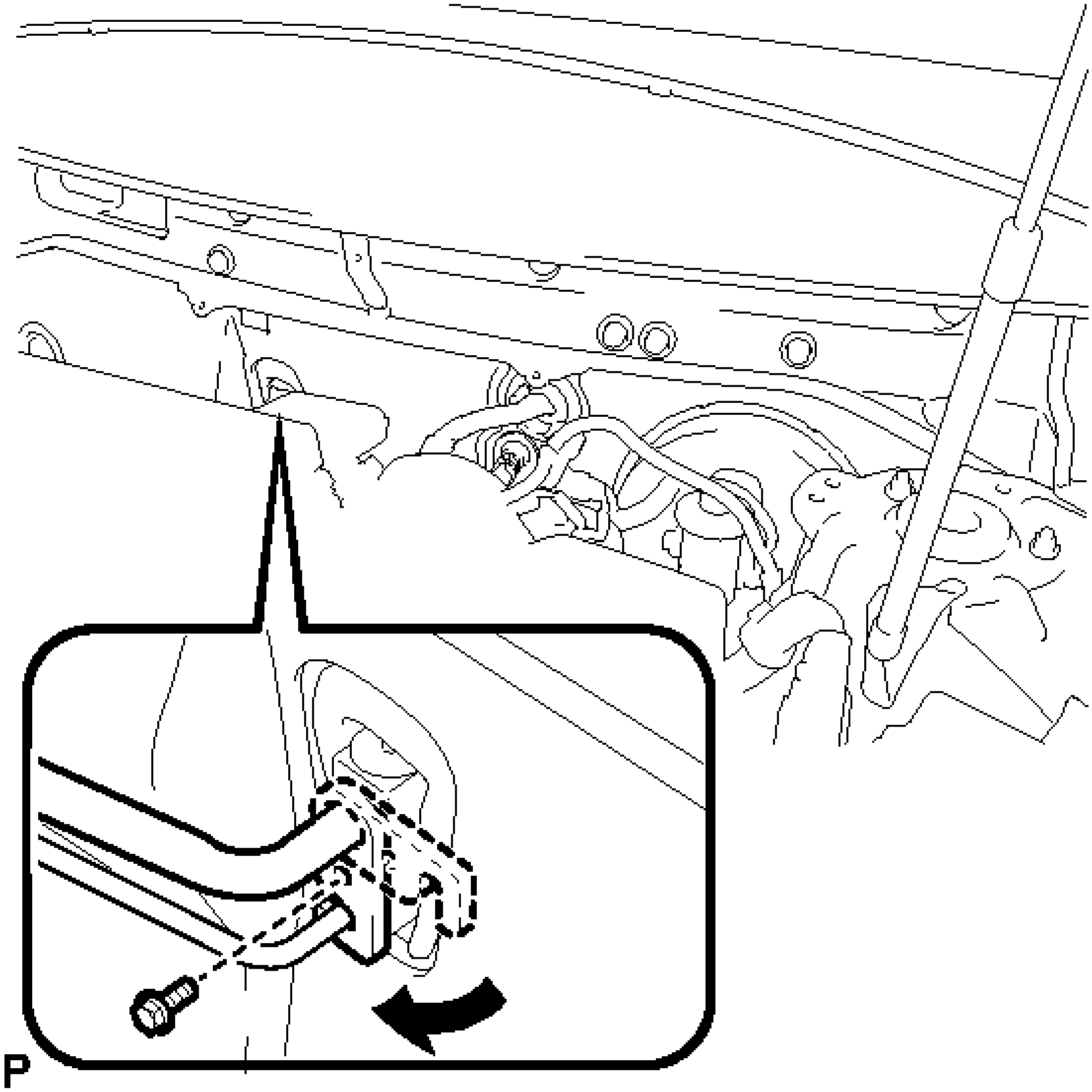

Fig. 127: Connecting Suction Hose Hook Connector And Bolt
Courtesy of TOYOTA MOTOR SALES, U.S.A., INC.

f. Insert the pipe joint into the fitting hole securely and tighten the bolt.

Torque: 9.8 N*m (100 kgf*cm, 87 in.*lbf)

38. **CONNECT HEATER INLET WATER HOSE**
    a. Install the heater inlet water hose and attach the clip.
39. **CONNECT HEATER OUTLET WATER HOSE**
    a. Install the heater outlet water hose and attach the clip.

40. **INSTALL FRONT OUTER COWL TOP PANEL SUB-ASSEMBLY** . Refer to **INSTALLATION - Step 14** .
41. **INSTALL WINDSHIELD WIPER MOTOR AND LINK ASSEMBLY**

    Refer to **INSTALLATION** .

42. **ADD ENGINE COOLANT (for 2AR-FE)** . Refer to **REPLACEMENT - Step 2** .
43. **ADD ENGINE COOLANT (for 2GR-FE)** . Refer to **REPLACEMENT - Step 2** .
44. **INSPECT FOR COOLANT LEAK (for 2AR-FE)** . Refer to **ON-VEHICLE INSPECTION - Step 1** .
45. **INSPECT FOR COOLANT LEAK (for 2GR-FE)** . Refer to **ON-VEHICLE INSPECTION - Step 1** .
46. **CHARGE AIR CONDITIONING SYSTEM WITH REFRIGERANT** . See step 2.
47. **WARM UP ENGINE** . See step 3.
48. **INSPECT FOR REFRIGERANT LEAK** . See step 4.
49. **INITIALIZATION SERVO MOTOR (for Automatic Air Conditioning System)**

    Refer to **INITIALIZATION** .

50. **INITIALIZATION SERVO MOTOR (for Manual Air Conditioning System)**

    Refer to **INITIALIZATION** .

BLOWER UNIT

COMPONENTS

ILLUSTRATION

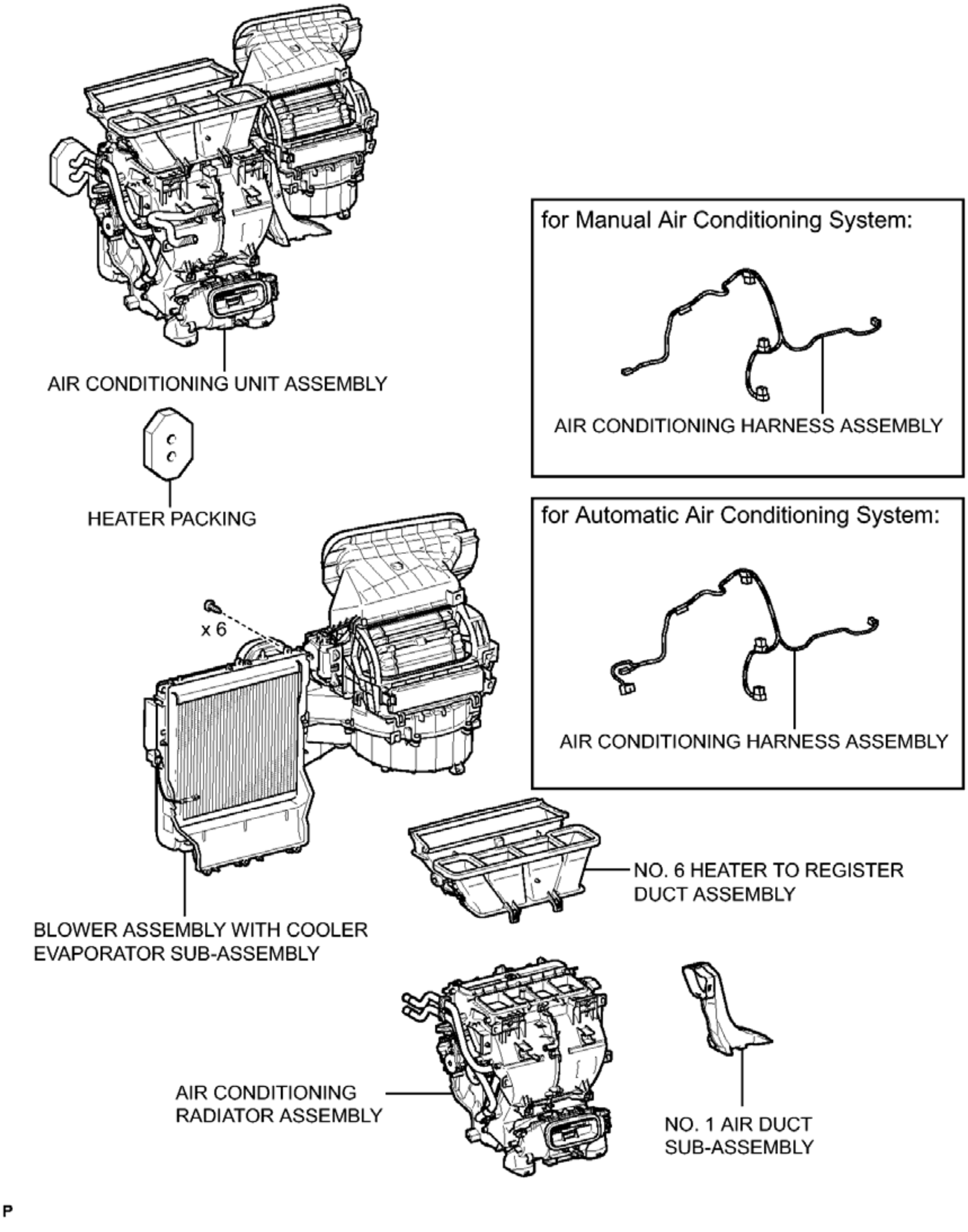
AIR CONDITIONING UNIT ASSEMBLY
HEATER PACKING
for Manual Air Conditioning System:
AIR CONDITIONING HARNESS ASSEMBLY
for Automatic Air Conditioning System:
AIR CONDITIONING HARNESS ASSEMBLY
x 6
BLOWER ASSEMBLY WITH COOLER EVAPORATOR SUB-ASSEMBLY
NO. 6 HEATER TO REGISTER DUCT ASSEMBLY
AIR CONDITIONING RADIATOR ASSEMBLY
NO. 1 AIR DUCT SUB-ASSEMBLY
P

Fig. 128: Identifying Blower Unit Replacement Components (1 Of 2)
Courtesy of TOYOTA MOTOR SALES, U.S.A., INC.

ILLUSTRATION

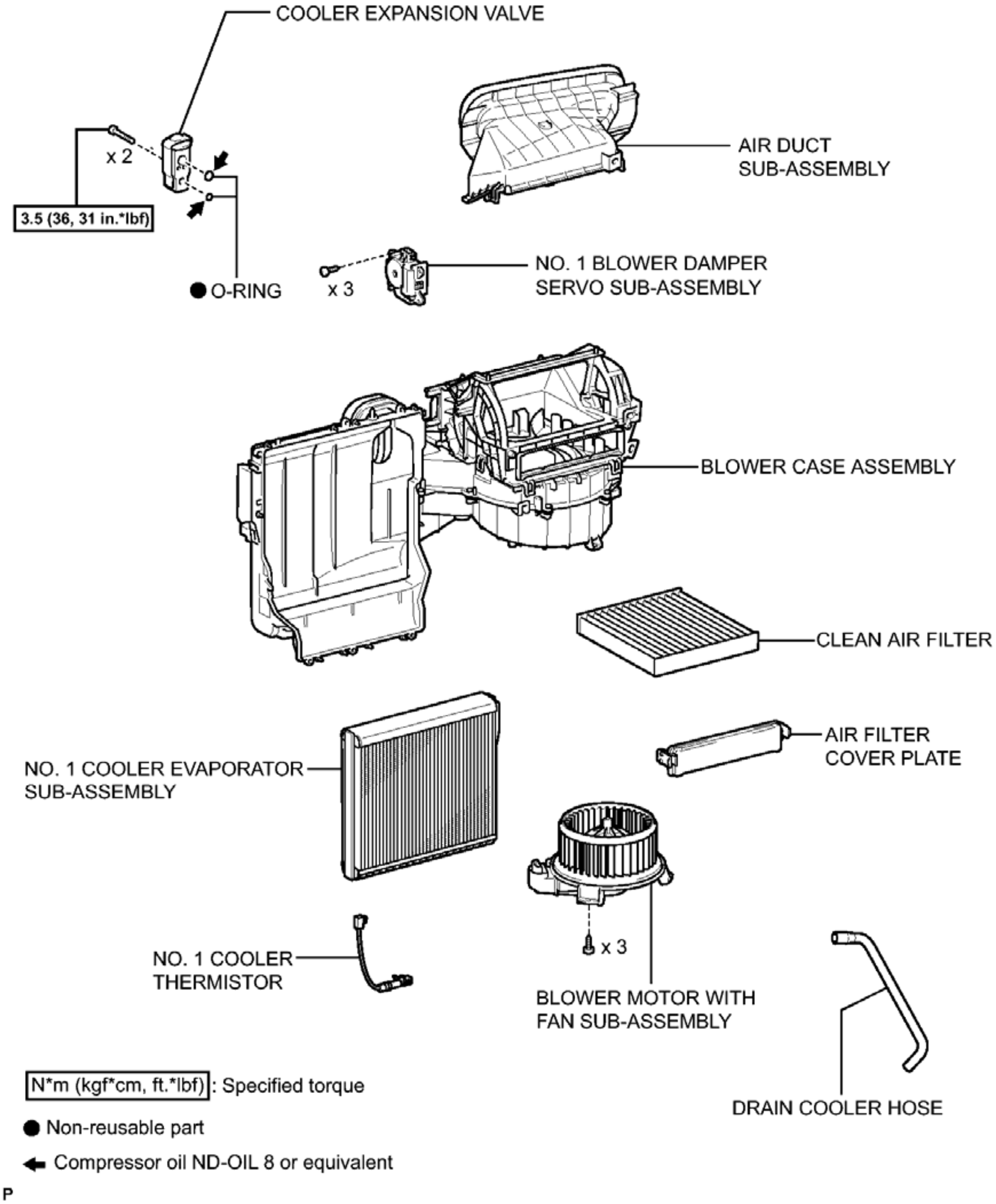
COOLER EXPANSION VALVE
x 2
3.5 (36, 31 in.*lbf)
● O-RING
AIR DUCT SUB-ASSEMBLY
x 3
NO. 1 BLOWER DAMPER SERVO SUB-ASSEMBLY
BLOWER CASE ASSEMBLY
CLEAN AIR FILTER
AIR FILTER COVER PLATE
NO. 1 COOLER EVAPORATOR SUB-ASSEMBLY
x 3
NO. 1 COOLER THERMISTOR
BLOWER MOTOR WITH FAN SUB-ASSEMBLY
DRAIN COOLER HOSE
N*m (kgf*cm, ft.*lbf) : Specified torque
● Non-reusable part
← Compressor oil ND-OIL 8 or equivalent
P

Fig. 129: Identifying Blower Unit Replacement Components With Torque Specifications (2 Of 2)
Courtesy of TOYOTA MOTOR SALES, U.S.A., INC.

REMOVAL

REMOVAL

1. **REMOVE AIR CONDITIONING UNIT ASSEMBLY**

Refer to **REMOVAL**.

2. **REMOVE NO. 1 AIR DUCT SUB-ASSEMBLY** . See step 1.
3. **REMOVE NO. 6 HEATER TO REGISTER DUCT ASSEMBLY** . See step 2.
4. **REMOVE AIR CONDITIONING HARNESS ASSEMBLY (for Manual Air Conditioning System)** . See step 5.
5. **REMOVE AIR CONDITIONING HARNESS ASSEMBLY (for Automatic Air Conditioning System)** . See step 6.
6. **REMOVE BLOWER ASSEMBLY WITH COOLER EVAPORATOR SUB-ASSEMBLY**
    a. Remove the 6 screws.

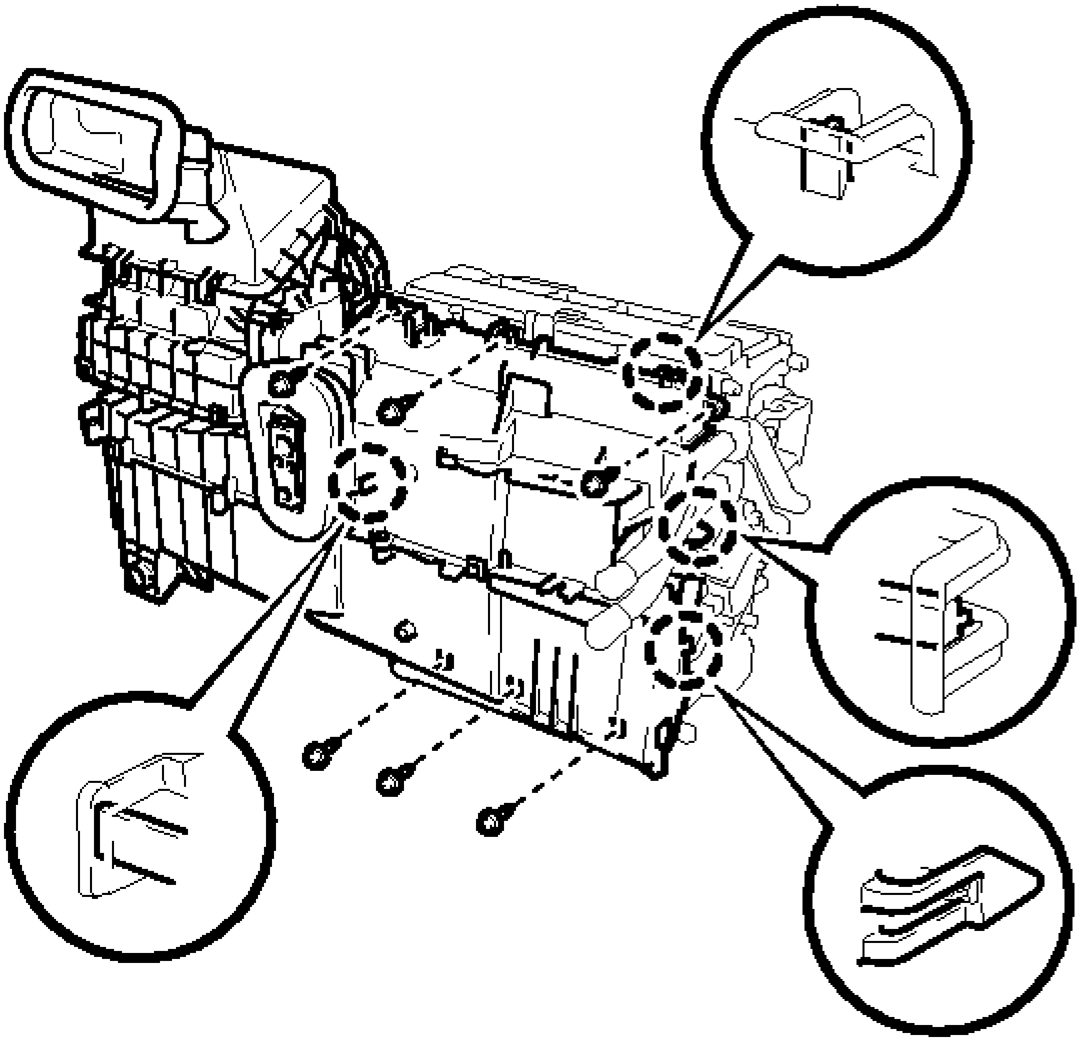

P

Fig. 130: Identifying Blower Assembly Claws
Courtesy of TOYOTA MOTOR SALES, U.S.A., INC.

b. Disengage the 4 claws and remove the blower assembly with cooler evaporator sub-assembly.

DISASSEMBLY

DISASSEMBLY

1. **REMOVE COOLER EXPANSION VALVE** . See step 7.
2. **REMOVE NO. 1 COOLER THERMISTOR** . See step 2.
3. **REMOVE NO. 1 COOLER EVAPORATOR SUB-ASSEMBLY** . See step 10.
4. **REMOVE DRAIN COOLER HOSE**
    a. Remove the drain cooler hose from the blower case assembly.

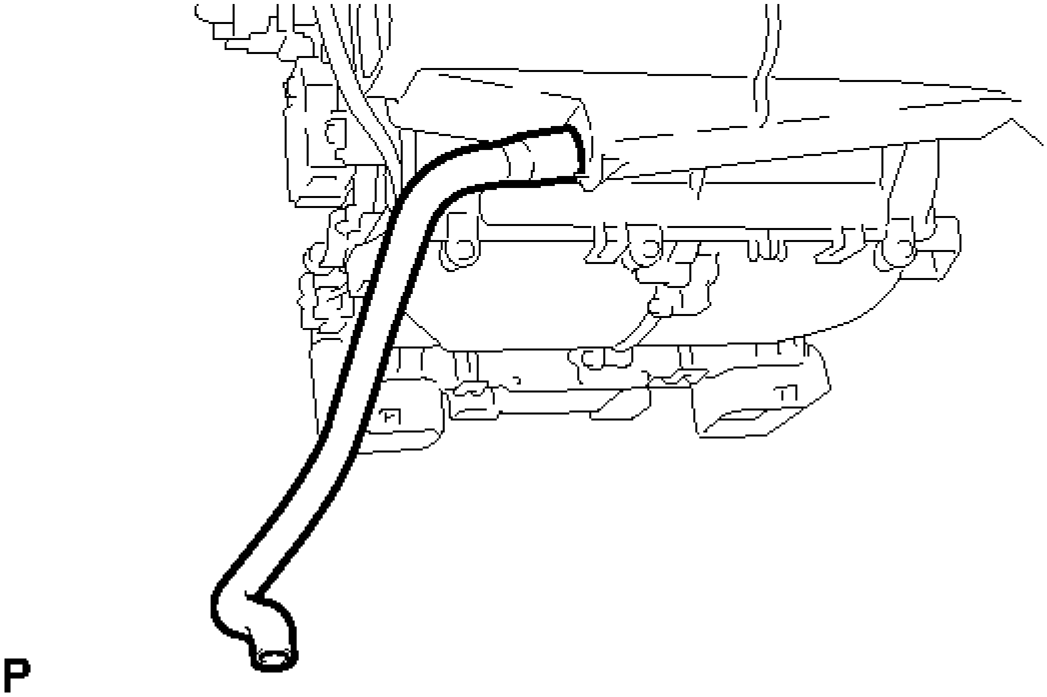

Fig. 131: Identifying Drain Cooler Hose
Courtesy of TOYOTA MOTOR SALES, U.S.A., INC.

5. **REMOVE AIR DUCT SUB-ASSEMBLY**
    a. Disengage the 4 claws and remove the air duct sub-assembly.

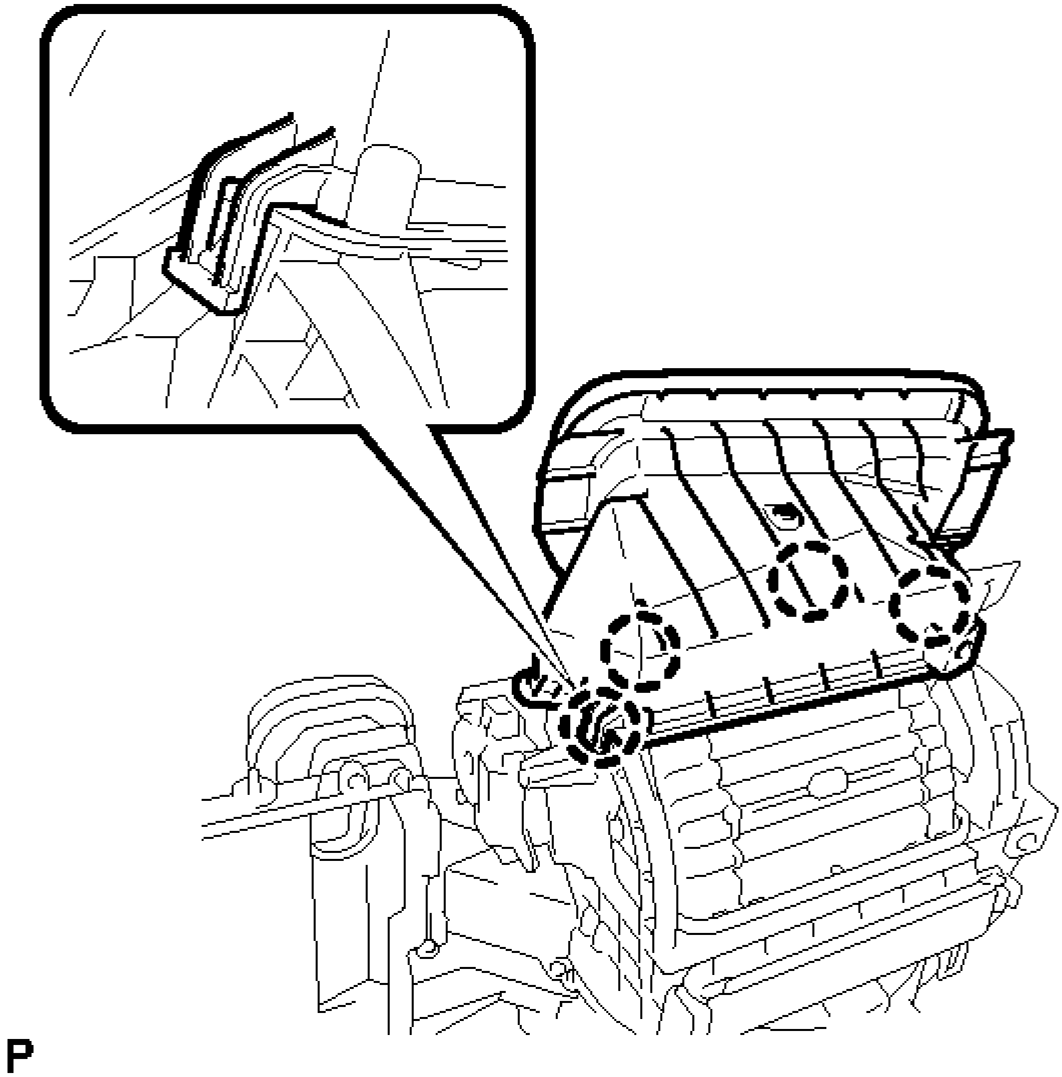

Fig. 132: Identifying Air Duct Sub-Assembly Claws
Courtesy of TOYOTA MOTOR SALES, U.S.A., INC.

6. **REMOVE AIR FILTER COVER PLATE**
    a. Disengage the 2 claws and remove the air filter cover plate.

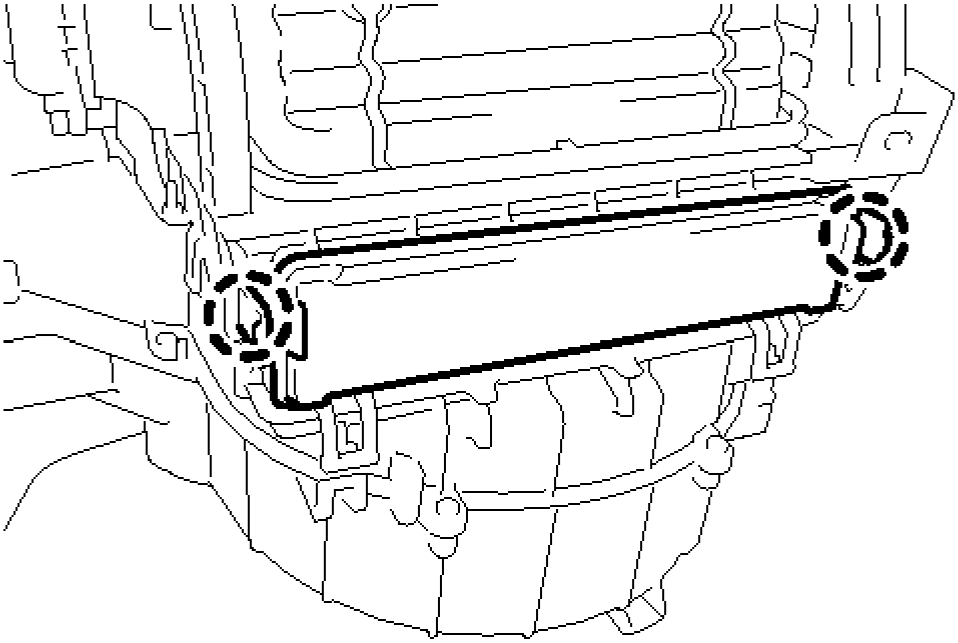

Fig. 133: Identifying Air Filter Cover Plate Claws
Courtesy of TOYOTA MOTOR SALES, U.S.A., INC.

7. **REMOVE CLEAN AIR FILTER**
    a. Remove the clean air filter as shown in the illustration.

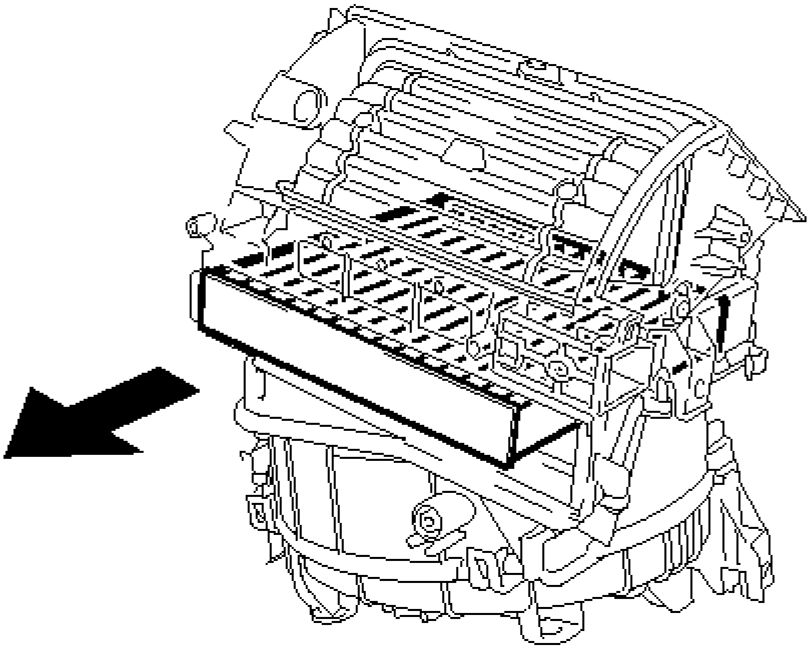

Fig. 134: Removing Air Filter

Courtesy of TOYOTA MOTOR SALES, U.S.A., INC.

8. **REMOVE NO. 1 BLOWER DAMPER SERVO SUB-ASSEMBLY**
    a. Remove the 3 screws and No. 1 blower damper servo sub-assembly.

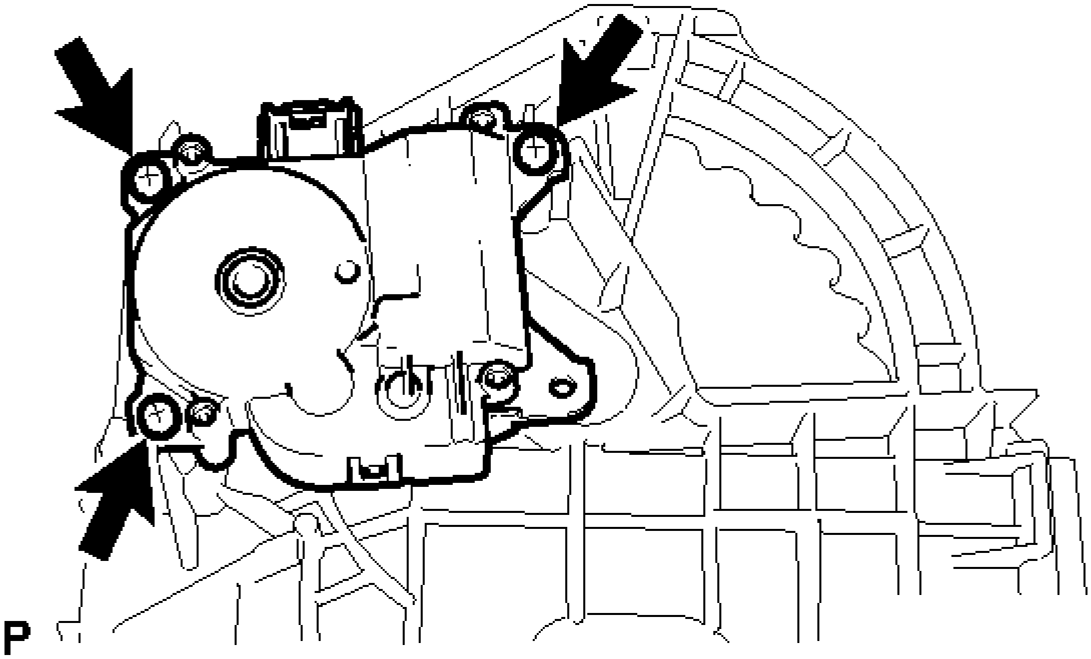

Fig. 135: Identifying No. 1 Blower Damper Servo Sub-Assembly Screws
Courtesy of TOYOTA MOTOR SALES, U.S.A., INC.

9. **REMOVE BLOWER MOTOR WITH FAN SUB-ASSEMBLY**
    a. Remove the 3 screws and blower motor with fan sub-assembly.

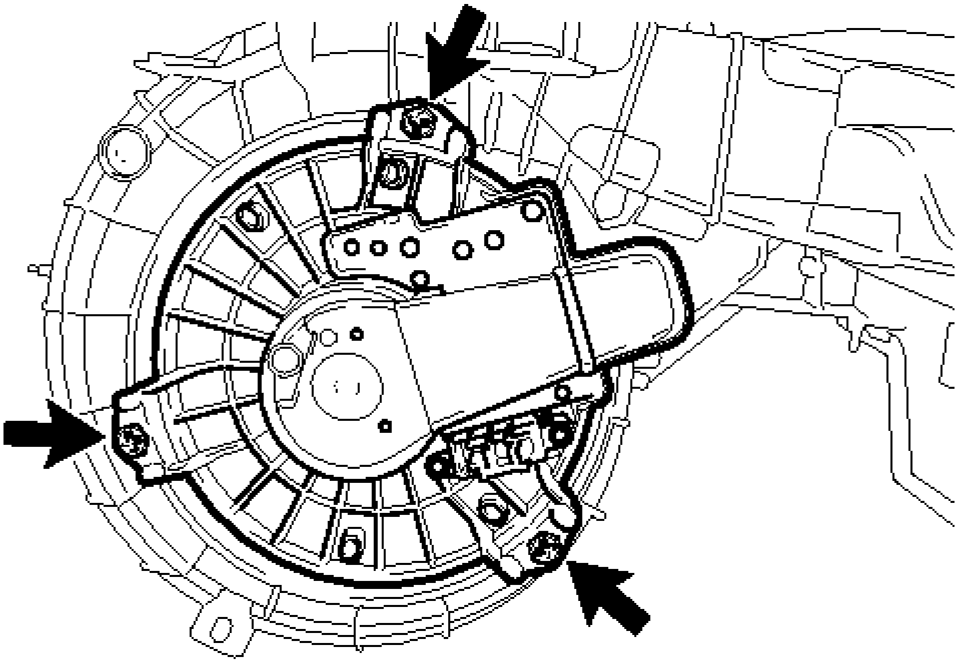

Fig. 136: Identifying Blower Motor With Fan Sub-Assembly Screws
Courtesy of TOYOTA MOTOR SALES, U.S.A., INC.

REASSEMBLY

REASSEMBLY

1. **INSTALL BLOWER MOTOR WITH FAN SUB-ASSEMBLY**
    a. Install the blower motor with fan sub-assembly with the 3 screws.

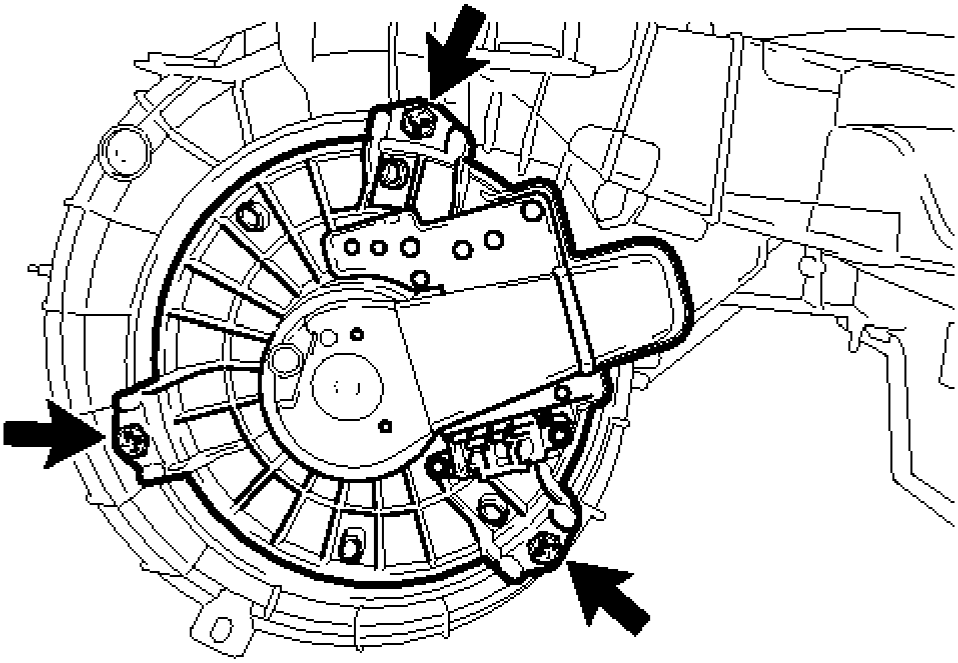

Fig. 137: Identifying Blower Motor With Fan Sub-Assembly Screws
Courtesy of TOYOTA MOTOR SALES, U.S.A., INC.

2. **INSTALL NO. 1 BLOWER DAMPER SERVO SUB-ASSEMBLY**
    a. Install the No. 1 blower damper servo sub-assembly with the 3 screws.

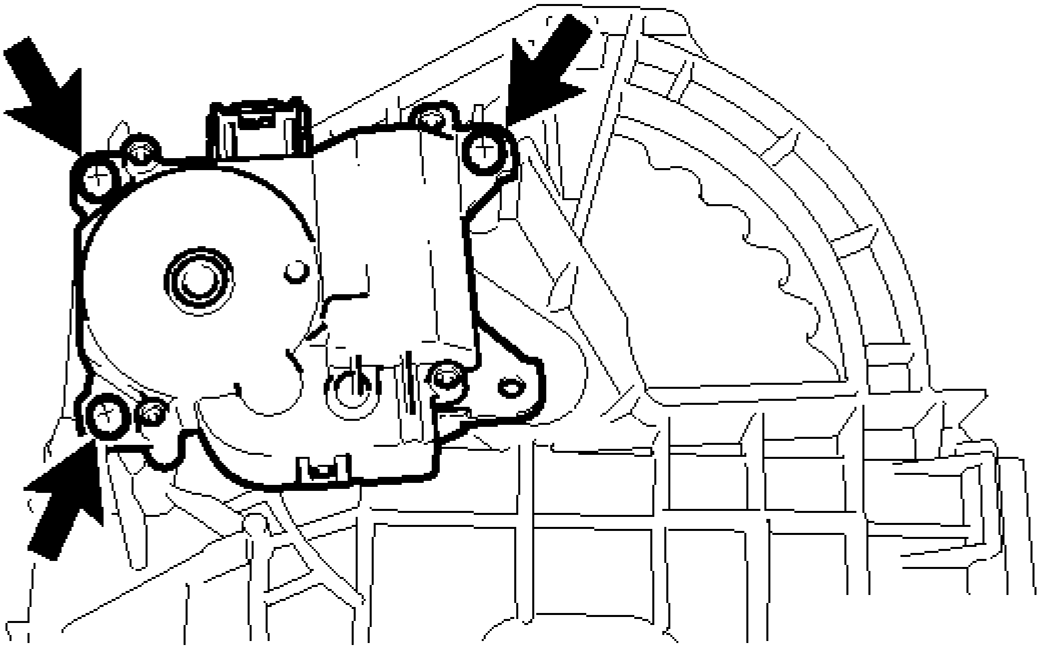

Fig. 138: Identifying No. 1 Blower Damper Servo Sub-Assembly Screws

Courtesy of TOYOTA MOTOR SALES, U.S.A., INC.

3. **INSTALL CLEAN AIR FILTER**
    a. Install the clean air filter as shown in the illustration.

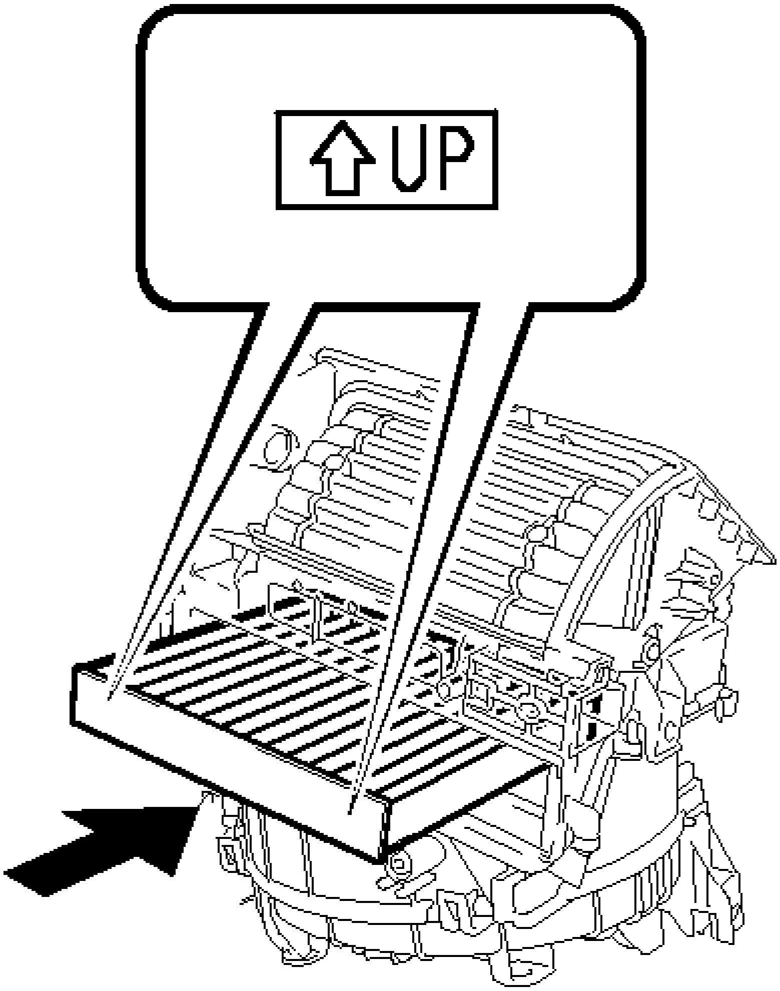

Fig. 139: Installing Air Filter
Courtesy of TOYOTA MOTOR SALES, U.S.A., INC.

4. **INSTALL AIR FILTER COVER PLATE**
    a. Engage the 2 claws to install the air filter cover plate.

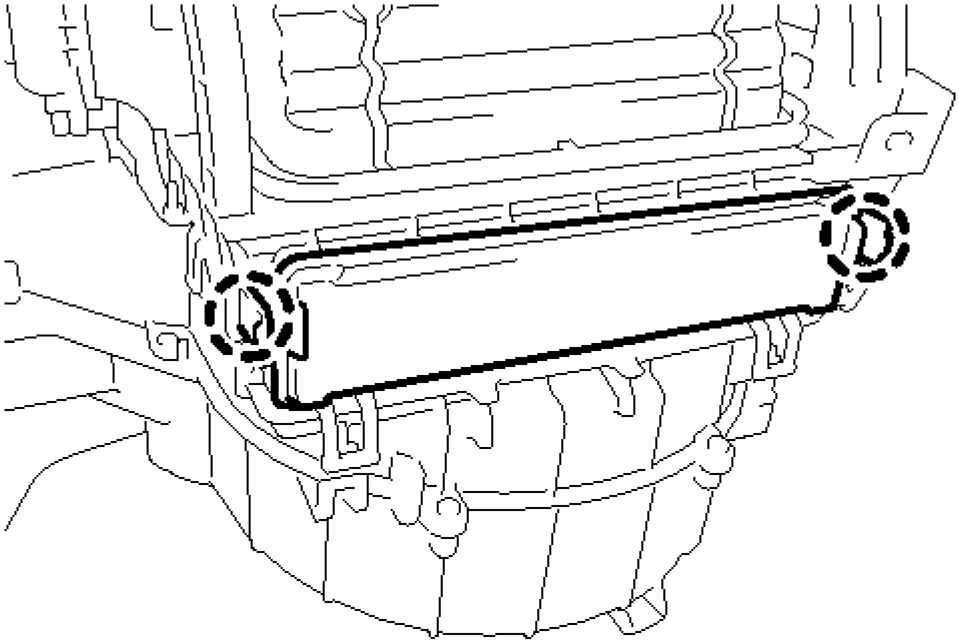

Fig. 140: Identifying Air Filter Cover Plate Claws
Courtesy of TOYOTA MOTOR SALES, U.S.A., INC.

5. **INSTALL AIR DUCT SUB-ASSEMBLY**
    a. Engage the 4 claws to install the air duct sub-assembly.

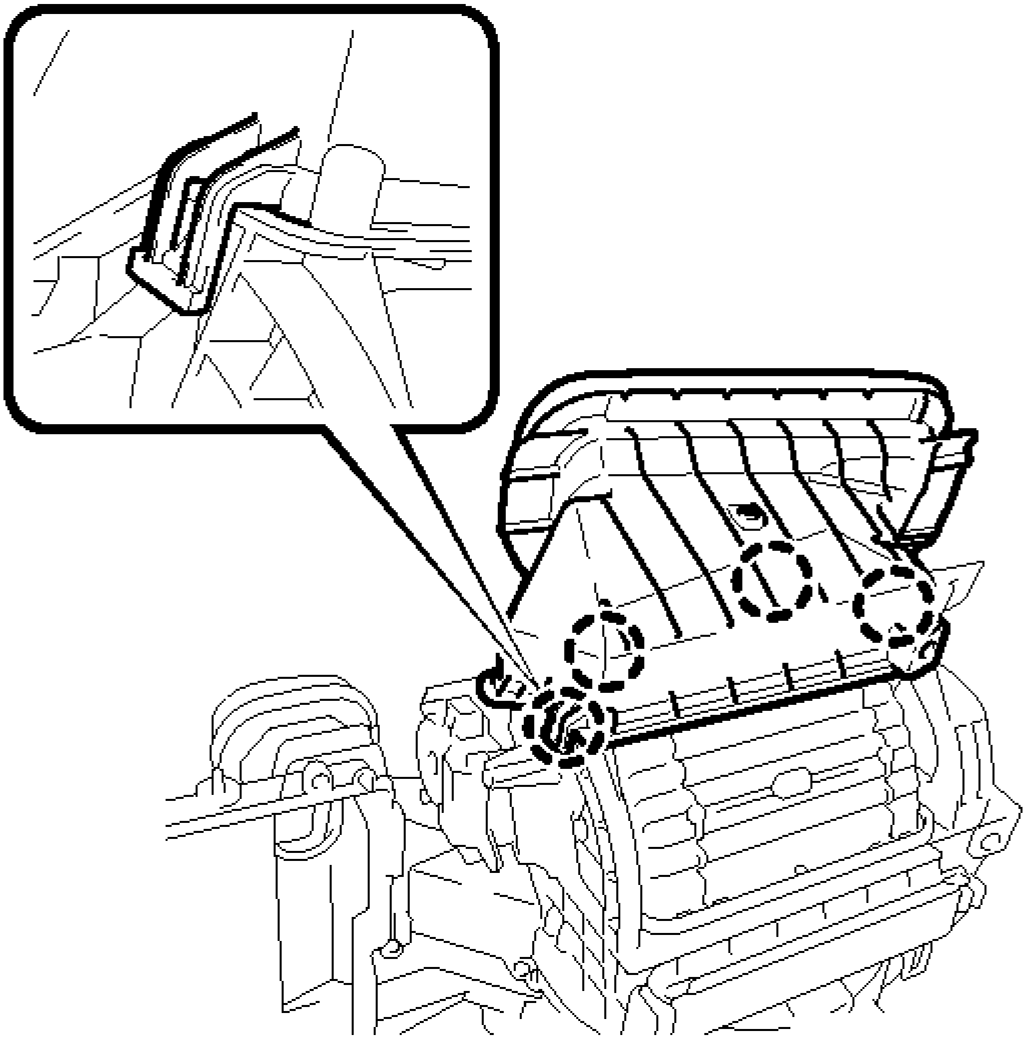

Fig. 141: Identifying Air Duct Sub-Assembly Claws
Courtesy of TOYOTA MOTOR SALES, U.S.A., INC.

6. **INSTALL DRAIN COOLER HOSE**
    a. Install the drain cooler hose as shown in the illustration.

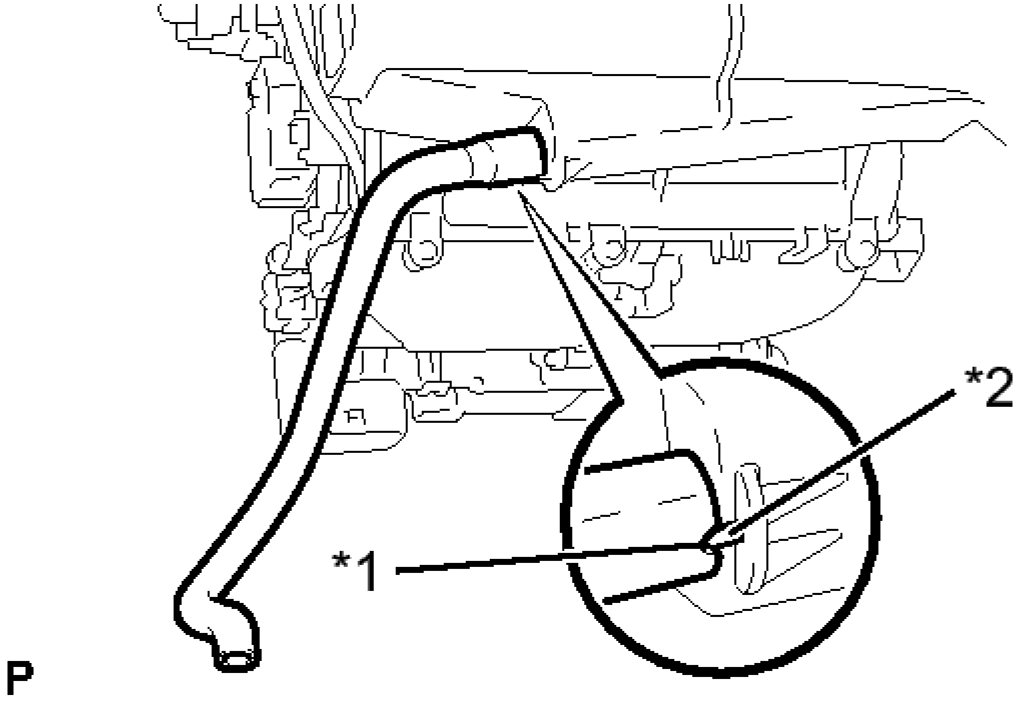

Fig. 142: Identifying Drain Cooler Hose
Courtesy of TOYOTA MOTOR SALES, U.S.A., INC.

TEXT IN ILLUSTRATION

*1	Hose Notch
*2	Blower Case Assembly Rib

7. **INSTALL NO. 1 COOLER EVAPORATOR SUB-ASSEMBLY** . See step 5.
8. **INSTALL NO. 1 COOLER THERMISTOR** . See step 1.
9. **INSTALL COOLER EXPANSION VALVE** . See step 7.

INSTALLATION

INSTALLATION

1. **INSTALL BLOWER ASSEMBLY WITH COOLER EVAPORATOR SUB-ASSEMBLY**
    a. Engage the 2 claws.
    b. Install the blower assembly with cooler evaporator sub-assembly with the 6 screws.
    c. Engage the 3 clamps.
2. **INSTALL AIR CONDITIONING HARNESS ASSEMBLY (for Manual Air Conditioning System)** . See step 8.

3. **INSTALL AIR CONDITIONING HARNESS ASSEMBLY (for Automatic Air Conditioning System)** . See step 9.
4. **INSTALL AIR CONDITIONING AMPLIFIER ASSEMBLY** . See step 1.
5. **INSTALL NO. 6 HEATER TO REGISTER DUCT ASSEMBLY** . See step 12.
6. **INSTALL NO. 1 AIR DUCT SUB-ASSEMBLY** . See step 13.
7. **INSTALL AIR CONDITIONING UNIT ASSEMBLY**

   Refer to **INSTALLATION**.

FRONT BLOWER MOTOR

COMPONENTS

ILLUSTRATION

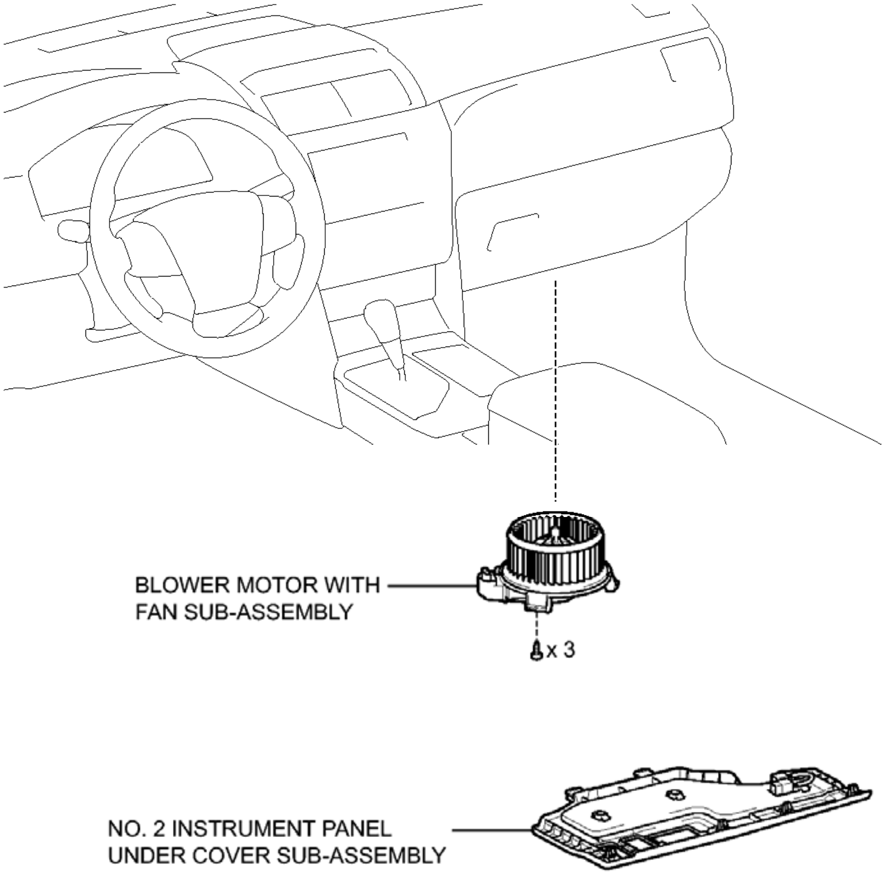
BLOWER MOTOR WITH FAN SUB-ASSEMBLY
x 3
NO. 2 INSTRUMENT PANEL UNDER COVER SUB-ASSEMBLY
P

Fig. 143: Identifying Front Blower Motor Replacement Components

Courtesy of TOYOTA MOTOR SALES, U.S.A., INC.

REMOVAL

REMOVAL

1. **REMOVE NO. 2 INSTRUMENT PANEL UNDER COVER SUB-ASSEMBLY** . Refer to **REMOVAL - Step 36** .
2. **REMOVE BLOWER MOTOR WITH FAN SUB-ASSEMBLY**
   a. Disconnect the connector.
   b. Remove the 3 screws and blower motor with fan sub-assembly.

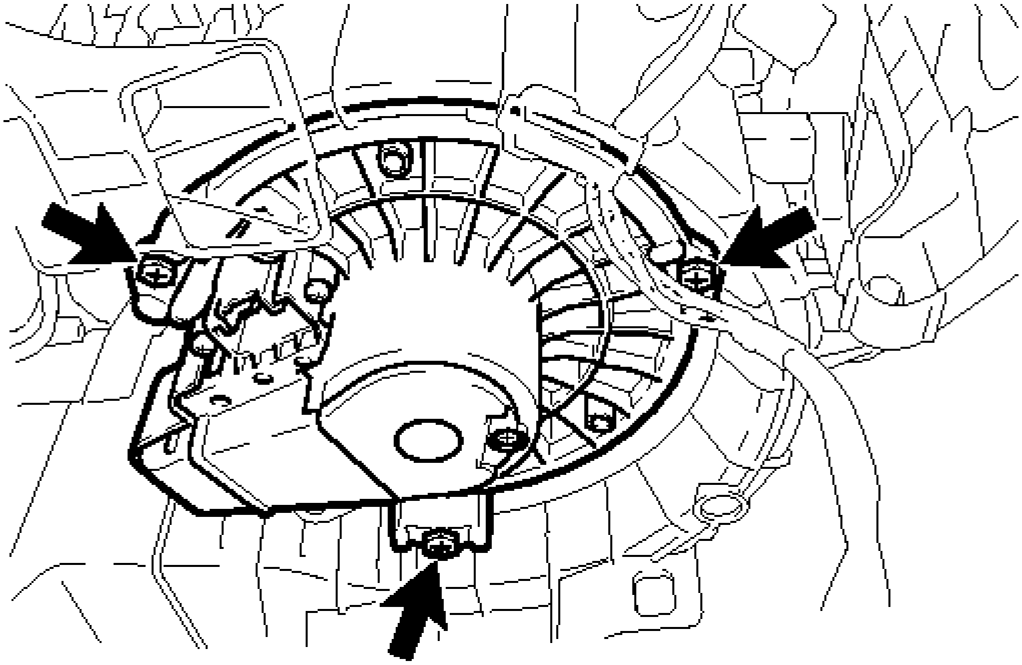

Fig. 144: Identifying Blower Motor With Fan Sub-Assembly Screws
Courtesy of TOYOTA MOTOR SALES, U.S.A., INC.

NOTE: **Do not remove the blower motor with fan sub-assembly if it has been damaged or impacted.**

INSTALLATION

INSTALLATION

1. **INSTALL BLOWER MOTOR WITH FAN SUB-ASSEMBLY**
   a. Install the blower motor with fan sub-assembly with the 3 screws.

NOTE: **Do not install the blower motor with fan sub-assembly if it has been**

damaged or impacted.

b. Connect the connector.

2. **INSTALL NO. 2 INSTRUMENT PANEL UNDER COVER SUB-ASSEMBLY** . Refer to **INSTALLATION - Step 17** .

COOLER EXPANSION VALVE

COMPONENTS

ILLUSTRATION

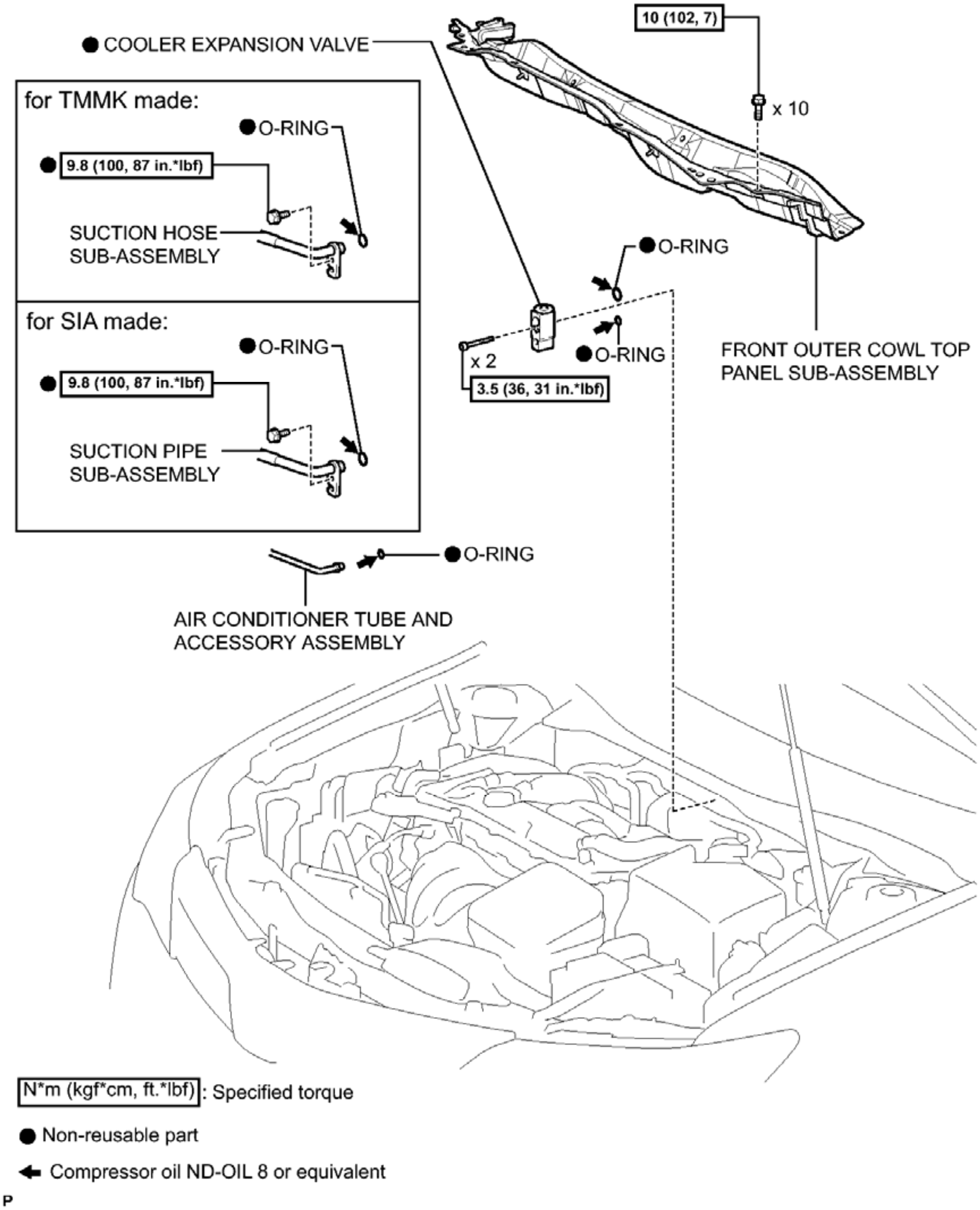
● COOLER EXPANSION VALVE
10 (102, 7)
x 10
for TMMK made:
● O-RING
● 9.8 (100, 87 in.*lbf)
SUCTION HOSE SUB-ASSEMBLY
for SIA made:
● O-RING
● 9.8 (100, 87 in.*lbf)
SUCTION PIPE SUB-ASSEMBLY
● O-RING
x 2
3.5 (36, 31 in.*lbf)
● O-RING
FRONT OUTER COWL TOP PANEL SUB-ASSEMBLY
● O-RING
AIR CONDITIONER TUBE AND ACCESSORY ASSEMBLY
N*m (kgf*cm, ft.*lbf) : Specified torque
● Non-reusable part
Compressor oil ND-OIL 8 or equivalent
P

Fig. 145: Identifying Cooler Expansion Valve Replacement Components With Torque Specifications
Courtesy of TOYOTA MOTOR SALES, U.S.A., INC.

REMOVAL

REMOVAL

NOTE: **When removing the cooler expansion valve by itself, be sure to install a new**

cooler expansion valve and new bolt for suction hose sub-assembly.

1. **RECOVER REFRIGERANT FROM AIR CONDITIONING SYSTEM** . See step 1.
2. **REMOVE WINDSHIELD WIPER MOTOR AND LINK ASSEMBLY**

   Refer to **REMOVAL** .

3. **REMOVE FRONT OUTER COWL TOP PANEL SUB-ASSEMBLY** . Refer to **REMOVAL - Step 3** .
4. **DISCONNECT SUCTION HOSE SUB-ASSEMBLY (for TMMK Made)** . See step 6.
5. **DISCONNECT SUCTION PIPE SUB-ASSEMBLY (for SIA Made)** . See step 7.
6. **DISCONNECT AIR CONDITIONER TUBE AND ACCESSORY ASSEMBLY** . See step 8.
7. **REMOVE COOLER EXPANSION VALVE**
   a. Using a 4 mm hexagon wrench, remove the 2 hexagon bolts.

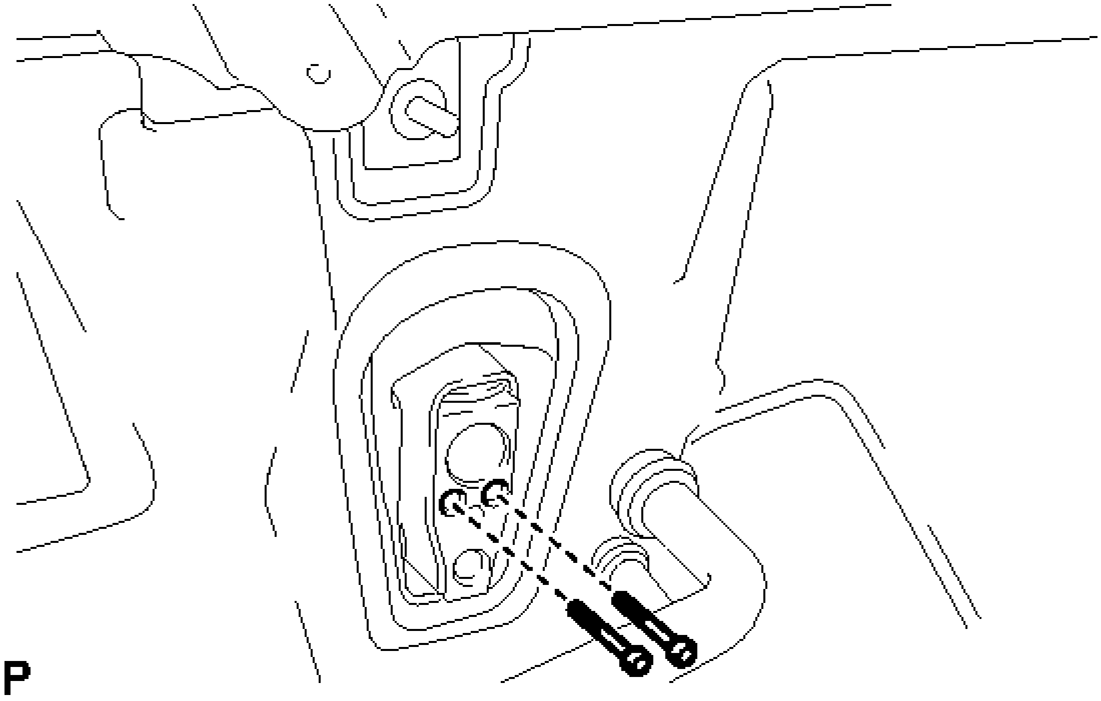

Fig. 146: Identifying Cooler Expansion Valve Bolts
Courtesy of TOYOTA MOTOR SALES, U.S.A., INC.

   b. Temporarily install the bolt for the suction hose sub-assembly halfway to the cooler expansion valve.

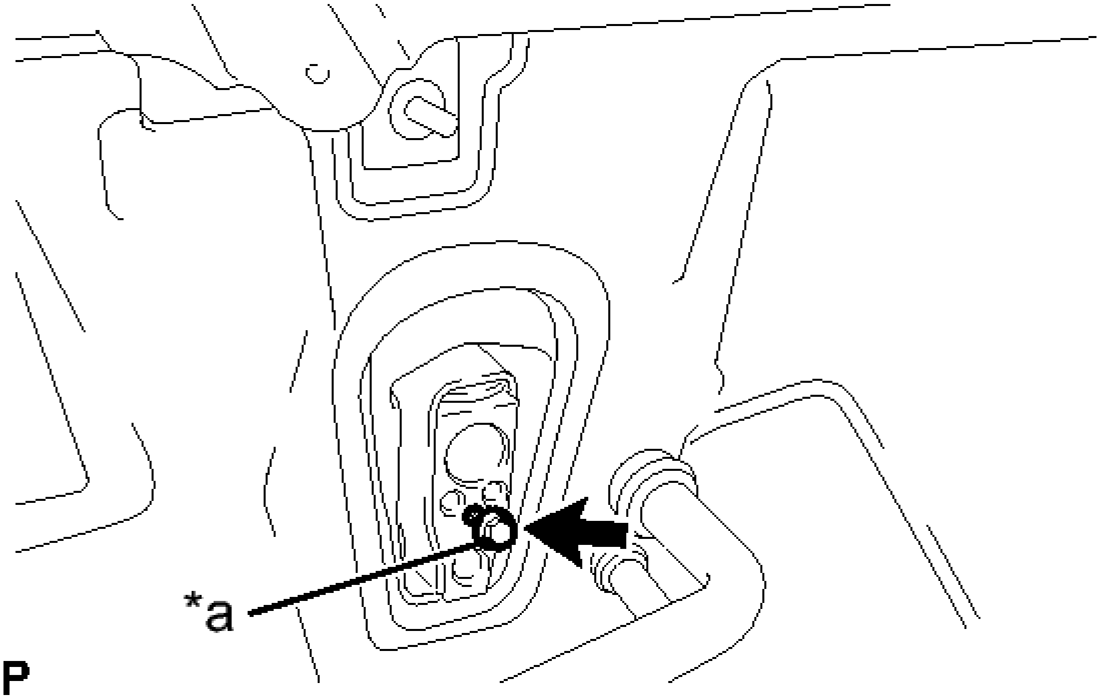

Fig. 147: Identifying Cooler Expansion Valve Bolt
Courtesy of TOYOTA MOTOR SALES, U.S.A., INC.

TEXT IN ILLUSTRATION

*a	Bolt for Suction Hose Sub-assembly

c. Hold the bolt and pull it to remove the cooler expansion valve as shown in the illustration.

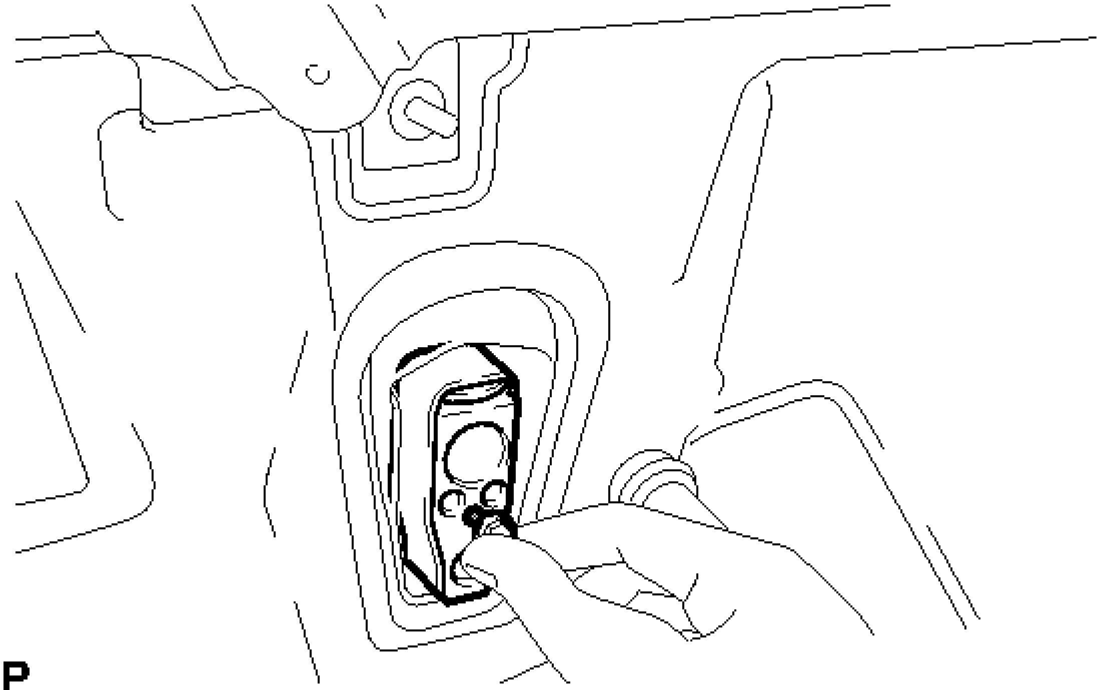

Fig. 148: Removing Cooler Expansion Valve
Courtesy of TOYOTA MOTOR SALES, U.S.A., INC.

d. Remove the 2 O-rings from the No. 1 cooler evaporator sub-assembly.

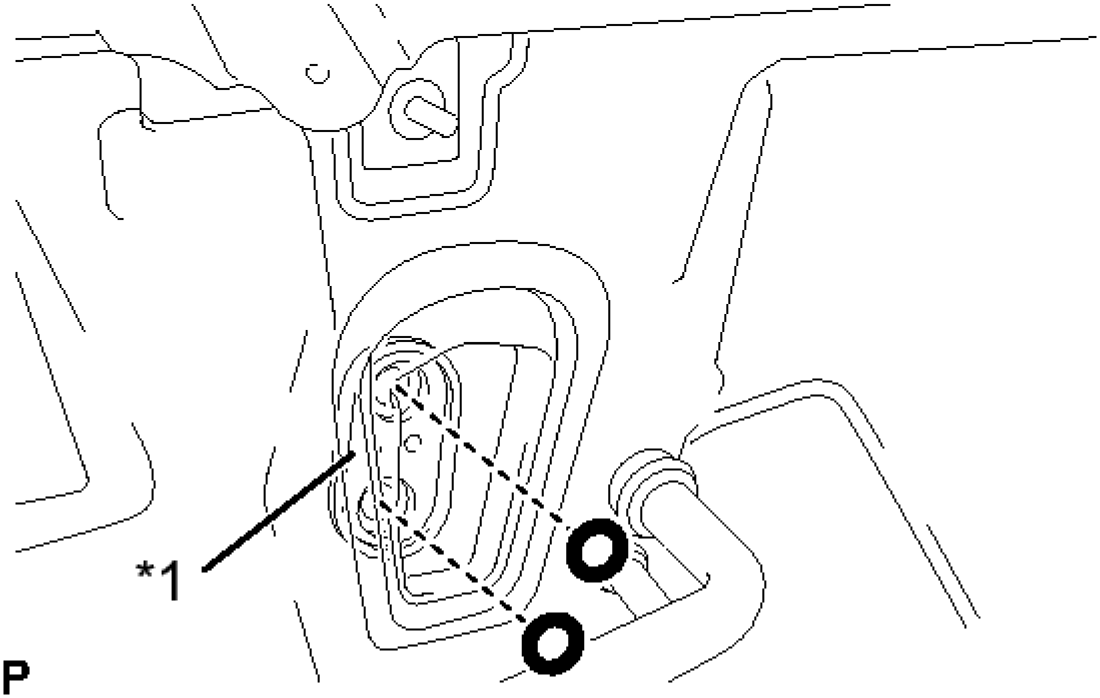

Fig. 149: Identifying No. 1 Cooler Evaporator Sub-Assembly O-Rings
Courtesy of TOYOTA MOTOR SALES, U.S.A., INC.

TEXT IN ILLUSTRATION

*1	No. 1 cooler evaporator sub-assembly

INSTALLATION

INSTALLATION

1. **INSTALL COOLER EXPANSION VALVE**
    1. Apply sufficient compressor oil to 2 new O-rings and the fitting surfaces of the cooler expansion valve.

       Compressor oil

       ND-OIL8 or equivalent

    2. Install the 2 new O-rings to the No. 1 cooler evaporator sub-assembly.
    3. Using a 4 mm hexagon wrench, install the new cooler expansion valve with the 2 hexagon bolts.

       Torque: 3.5 N*m (36 kgf*cm, 31 in.*lbf)

2. **CONNECT AIR CONDITIONER TUBE AND ACCESSORY ASSEMBLY** . See step 35.
3. **CONNECT SUCTION HOSE SUB-ASSEMBLY (for TMMK Made)**
    1. Remove the vinyl tape from the pipe.
    2. Sufficiently apply compressor oil to a new O-ring and the fitting surface of the suction hose sub-assembly.

       Compressor oil

       ND-OIL 8 or equivalent

    3. Connect the O-ring to the suction hose sub-assembly.
    4. Connect the suction hose sub-assembly.
    5. Move the hook connector in the direction indicated by the arrow in the illustration.

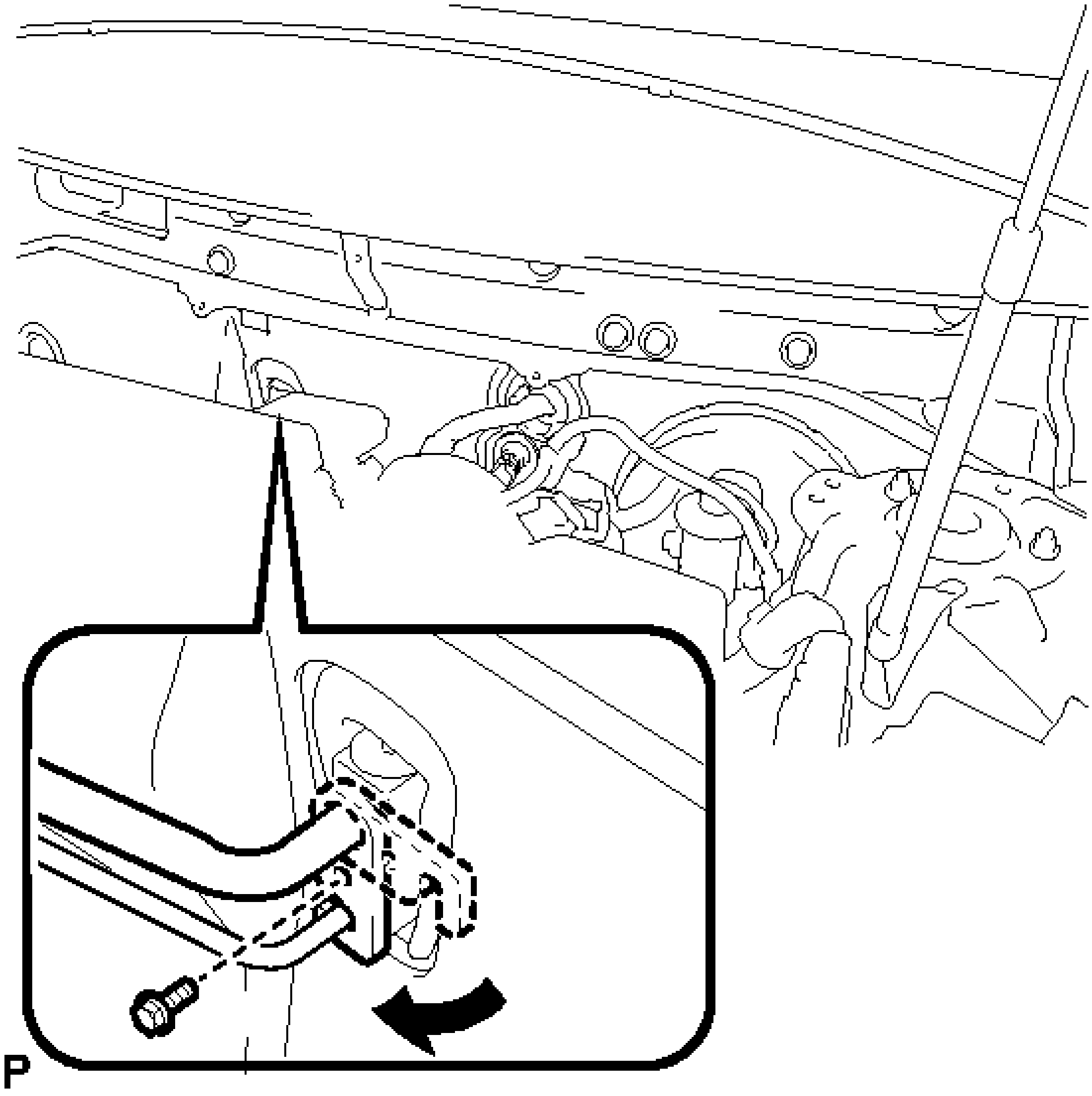

Fig. 150: Connecting Suction Hose Hook Connector And Bolt
Courtesy of TOYOTA MOTOR SALES, U.S.A., INC.

f. Insert the pipe joint into the fitting hole securely and tighten a new bolt.

 Torque: 9.8 N*m (100 kgf*cm, 87 in.*lbf)

4. **CONNECT SUCTION PIPE SUB-ASSEMBLY (for SIA Made)**
 a. Remove the vinyl tape from the pipe.
 b. Sufficiently apply compressor oil to a new O-ring and the fitting surface of the suction pipe sub-assembly.

 Compressor oil

 ND-OIL 8 or equivalent

c. Connect the O-ring to the suction pipe sub-assembly.
d. Connect the suction pipe sub-assembly.
e. Move the hook connector in the direction indicated by the arrow in the illustration.

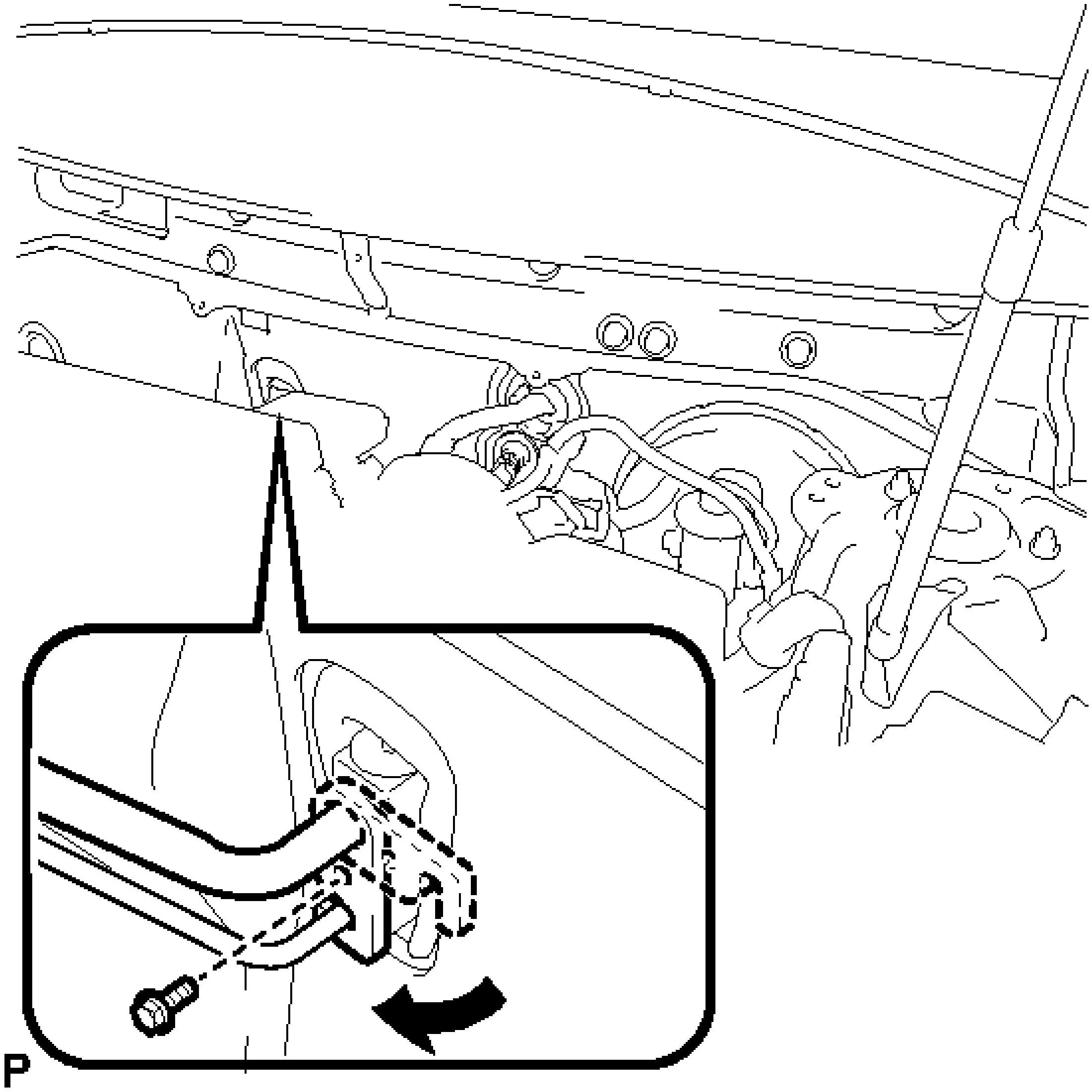

Fig. 151: Connecting Suction Hose Hook Connector And Bolt
Courtesy of TOYOTA MOTOR SALES, U.S.A., INC.

f. Insert the pipe joint into the fitting hole securely and tighten a new bolt.

Torque: 9.8 N*m (100 kgf*cm, 87 in.*lbf)

5. **INSTALL FRONT OUTER COWL TOP PANEL SUB-ASSEMBLY** . Refer to **INSTALLATION - Step 14** .
6. **INSTALL WINDSHIELD WIPER MOTOR AND LINK ASSEMBLY**

Refer to **INSTALLATION** .

7. **CHARGE AIR CONDITIONING SYSTEM WITH REFRIGERANT** . See step 2.
8. **WARM UP ENGINE** . See step 3.
9. **INSPECT FOR REFRIGERANT LEAK** . See step 4.

COMPRESSOR (FOR 2AR-FE)

COMPONENTS

ILLUSTRATION

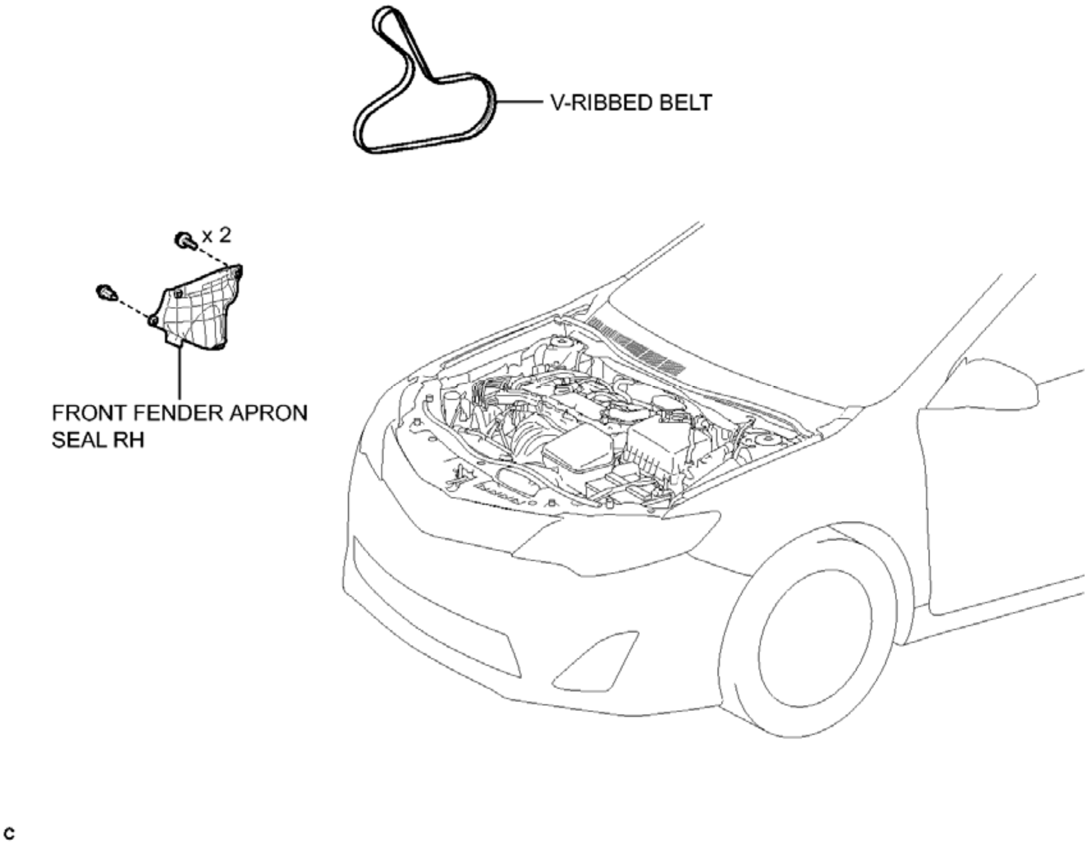
V-RIBBED BELT
x 2
FRONT FENDER APRON SEAL RH
c

Fig. 152: Identifying Compressor (For 2AR-FE) Replacement Components (1 Of 2)
Courtesy of TOYOTA MOTOR SALES, U.S.A., INC.

ILLUSTRATION

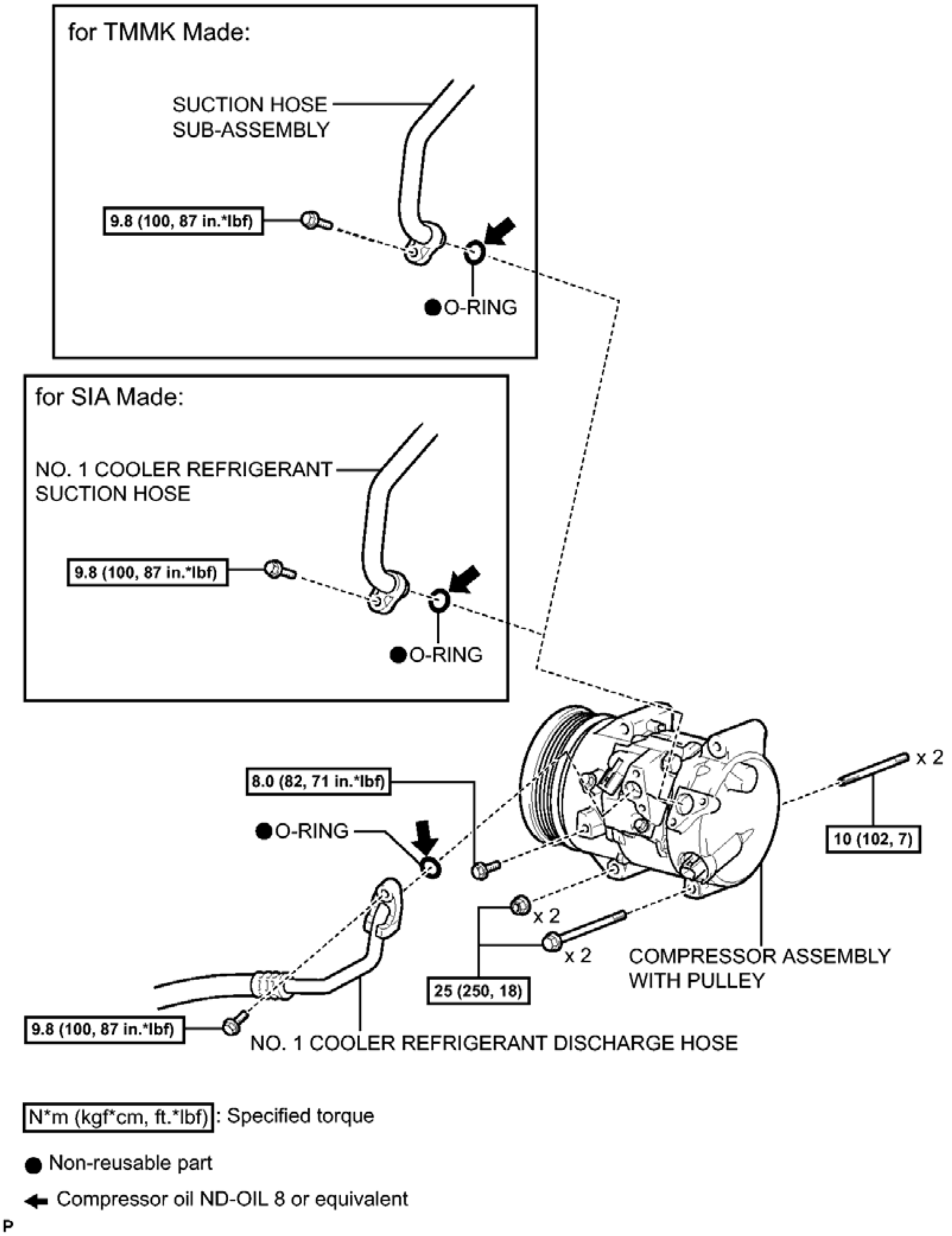
for TMMK Made:
SUCTION HOSE SUB-ASSEMBLY
9.8 (100, 87 in.*lbf)
● O-RING
for SIA Made:
NO. 1 COOLER REFRIGERANT SUCTION HOSE
9.8 (100, 87 in.*lbf)
● O-RING
8.0 (82, 71 in.*lbf)
● O-RING
x 2
10 (102, 7)
x 2
x 2
25 (250, 18)
COMPRESSOR ASSEMBLY WITH PULLEY
9.8 (100, 87 in.*lbf)
NO. 1 COOLER REFRIGERANT DISCHARGE HOSE
N*m (kgf*cm, ft.*lbf): Specified torque
● Non-reusable part
← Compressor oil ND-OIL 8 or equivalent
P

Fig. 153: Identifying Compressor (For 2AR-FE) Replacement Components With Torque Specifications (2 Of 2)

Courtesy of TOYOTA MOTOR SALES, U.S.A., INC.

ON-VEHICLE INSPECTION

ON-VEHICLE INSPECTION

1. **INSPECT COMPRESSOR FOR METALLIC SOUND**

a. Check if there is abnormal metallic sound from the compressor when the A/C switch is on and the compressor operates.

If abnormal metallic sound is heard, replace the compressor assembly with pulley.

2. **INSPECT REFRIGERANT PRESSURE**

HINT:

Refer to **ON-VEHICLE INSPECTION**.

3. **INSPECT FOR LEAKAGE OF REFRIGERANT**

a. Using a gas leak detector, check for leakage of refrigerant.

If there is any leakage, replace the compressor assembly with pulley.

4. **INSPECT COMPRESSOR ASSEMBLY WITH PULLEY**

a. Check operation of compressor assembly with pulley.

    1. Start the engine.
    2. Inspect the compressor pulley.

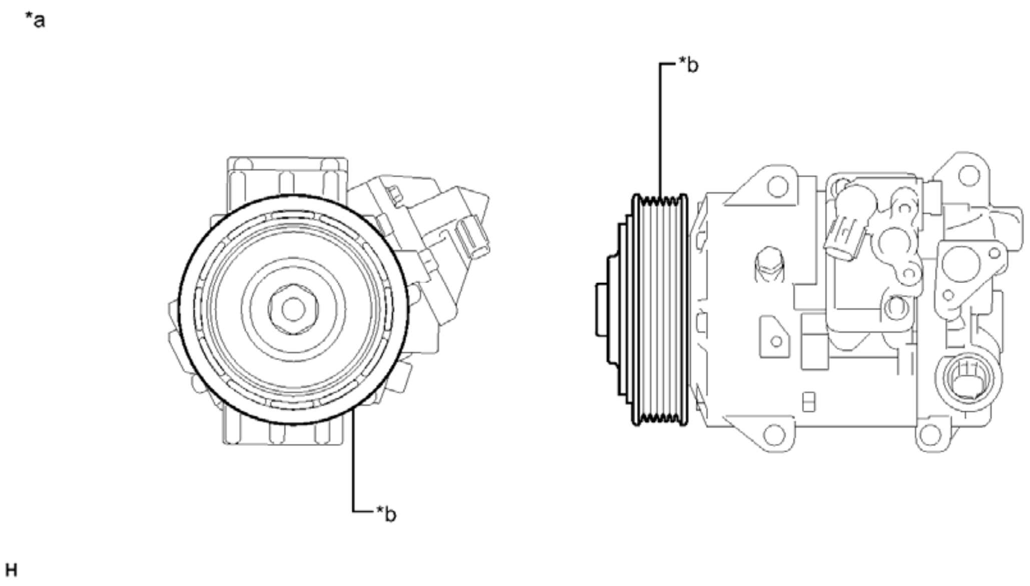

Fig. 154: Identifying Compressor Assembly With Pulley
Courtesy of TOYOTA MOTOR SALES, U.S.A., INC.

TEXT IN ILLUSTRATION

*a	Compressor Assembly with Pulley	*b	Pulley

Standard

The compressor shaft rotates along with the pulley.

If the result is not as specified, replace the compressor assembly with pulley.

REMOVAL

REMOVAL

1. **RECOVER REFRIGERANT FROM AIR CONDITIONING SYSTEM** . See step 1.
2. **REMOVE RADIATOR ASSEMBLY**

   Refer to **REMOVAL** .

3. **REMOVE FRONT FENDER APRON SEAL RH**
4. **REMOVE V-RIBBED BELT** . Refer to **REMOVAL - Step 5** .
5. **DISCONNECT NO. 1 COOLER REFRIGERANT DISCHARGE HOSE**
   a. Remove the bolt.

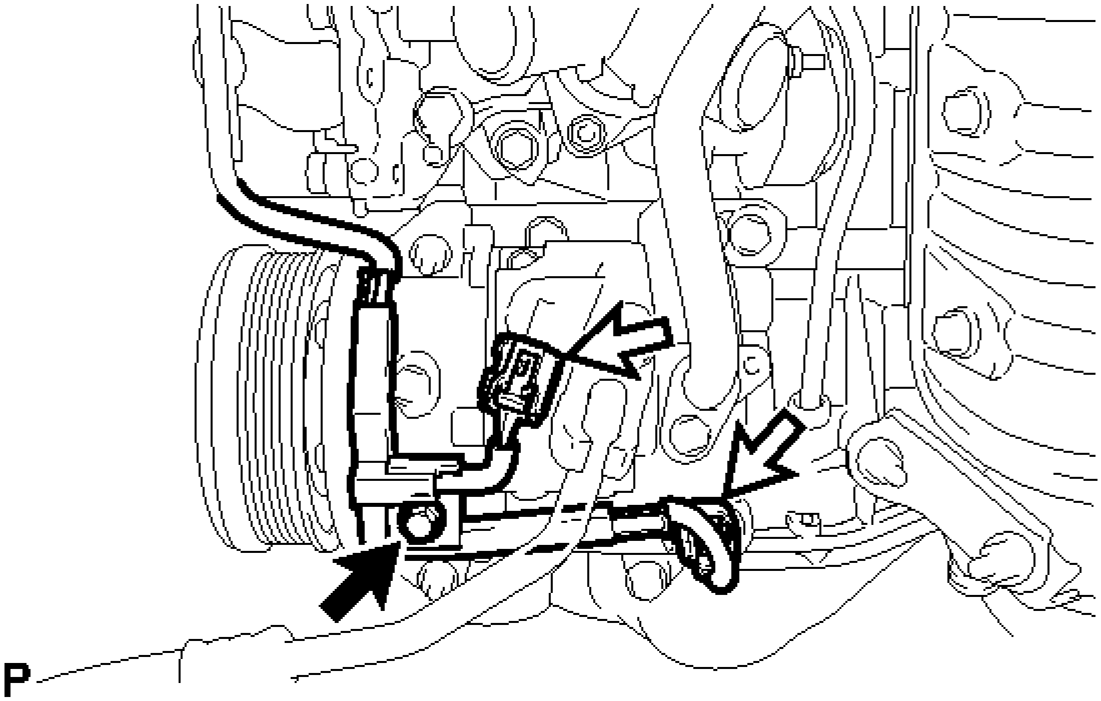

Fig. 155: Identifying Compressor Assembly Connectors And Bolt
Courtesy of TOYOTA MOTOR SALES, U.S.A., INC.

   b. Disconnect the 2 connectors.
   c. Remove the bolt and disconnect the No. 1 cooler refrigerant discharge hose from the compressor assembly with pulley.

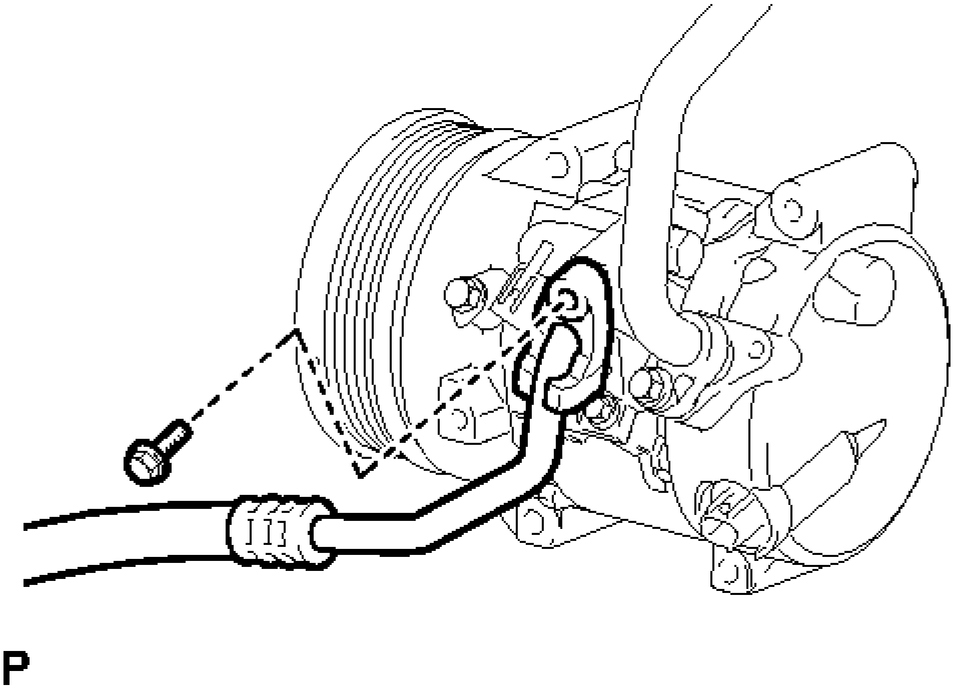

Fig. 156: Identifying No. 1 Cooler Refrigerant Discharge Hose Bolt
Courtesy of TOYOTA MOTOR SALES, U.S.A., INC.

d. Remove the O-ring from the No. 1 cooler refrigerant discharge hose.

NOTE: Seal the openings of the disconnected parts using vinyl tape to prevent entry of moisture and foreign matter.

6. **DISCONNECT SUCTION HOSE SUB-ASSEMBLY (for TMMK Made)**
   a. Remove the bolt and disconnect the suction hose sub-assembly from the compressor assembly with pulley.

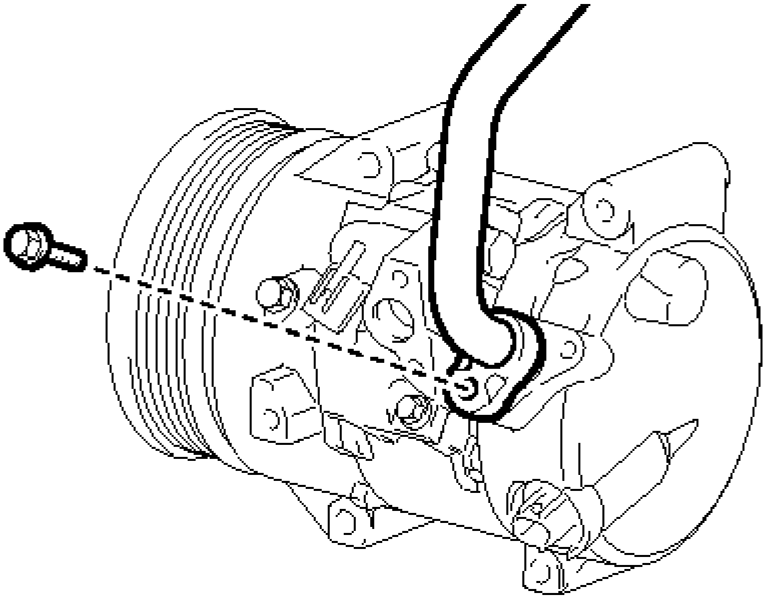

Fig. 157: Identifying Suction Hose Sub-Assembly And Bolt
Courtesy of TOYOTA MOTOR SALES, U.S.A., INC.

b. Remove the O-ring from the suction hose sub-assembly.

NOTE: **Seal the openings of the disconnected parts using vinyl tape to prevent entry of moisture and foreign matter.**

7. **DISCONNECT NO. 1 COOLER REFRIGERANT SUCTION HOSE (for SIA Made)**

   a. Remove the bolt and disconnect the No. 1 cooler refrigerant suction hose from the compressor assembly with pulley.

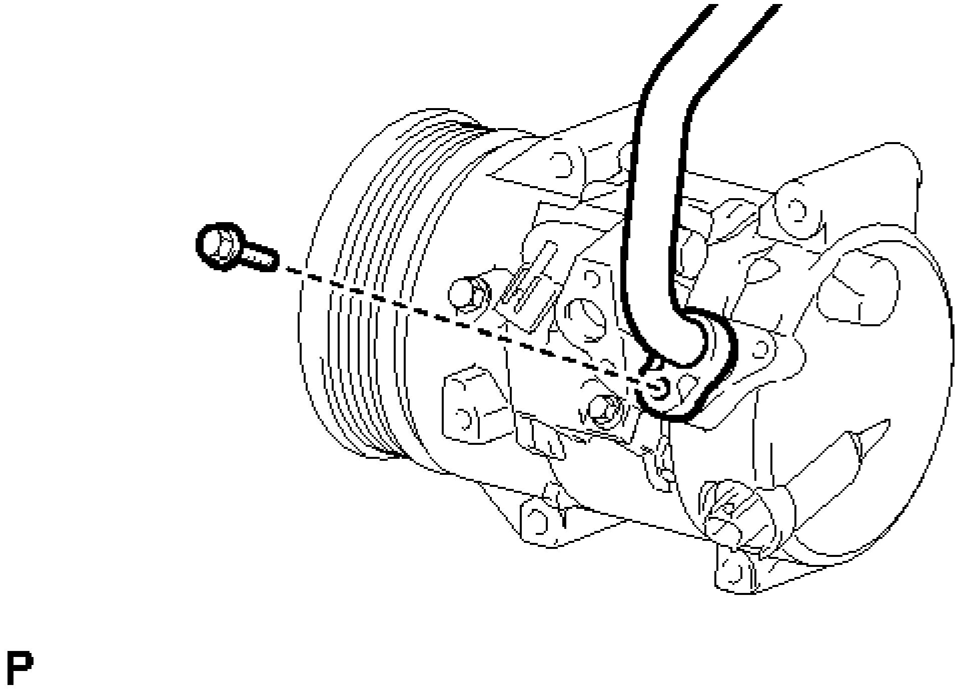

Fig. 158: Identifying Suction Hose Sub-Assembly And Bolt
Courtesy of TOYOTA MOTOR SALES, U.S.A., INC.

b. Remove the O-ring from the No. 1 cooler refrigerant suction hose.

NOTE: **Seal the openings of the disconnected parts using vinyl tape to prevent entry of moisture and foreign matter.**

8. **REMOVE COMPRESSOR ASSEMBLY WITH PULLEY**
   a. Remove the 2 bolts and 2 nuts.

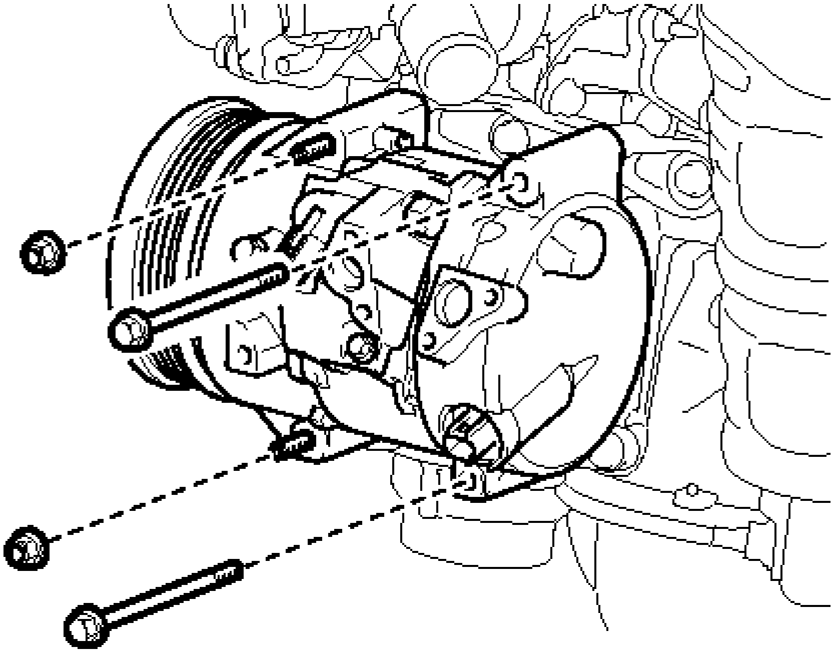

Fig. 159: Identifying Compressor Assembly With Pulley And Fasteners
Courtesy of TOYOTA MOTOR SALES, U.S.A., INC.

b. Using an E8 "TORX" socket, remove the 2 stud bolts and compressor assembly with pulley.

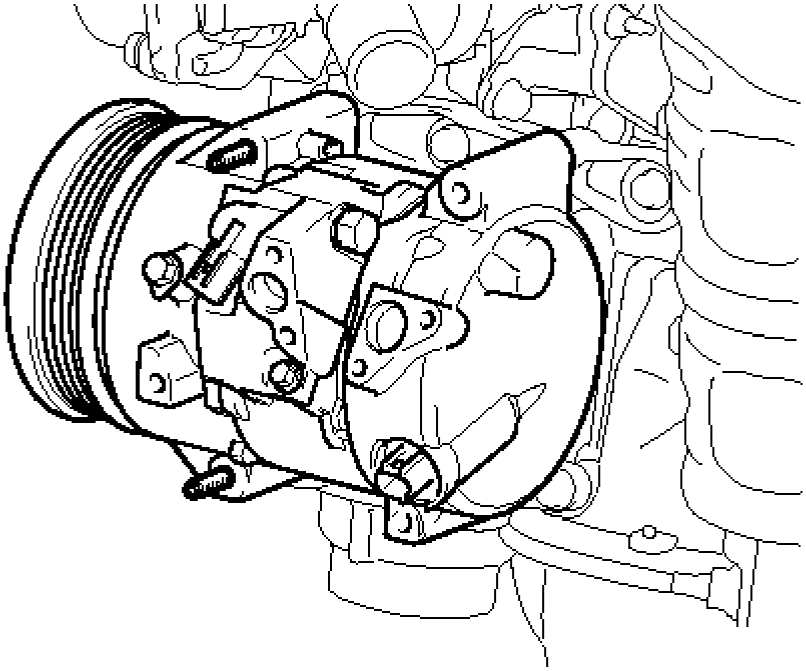

Fig. 160: Identifying Compressor Assembly With Pulley And Stud Bolts
Courtesy of TOYOTA MOTOR SALES, U.S.A., INC.

HINT:

Leave the 2 stud bolts in the vehicle with the remaining in the compressor assembly with pulley.

INSPECTION

INSPECTION

1. **INSPECT COMPRESSOR ASSEMBLY WITH PULLEY (COMPRESSOR SOLENOID)**
    1. Measure the resistance according to the value(s) in the table below.

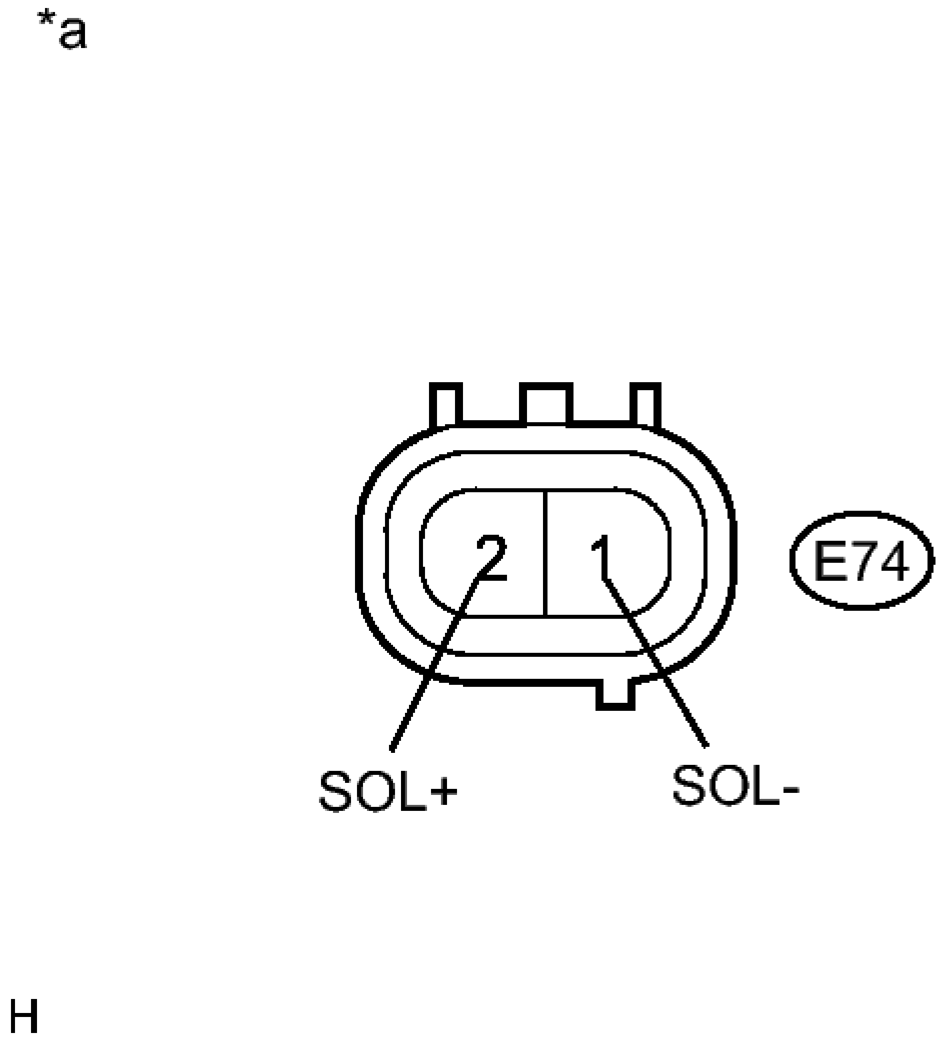

Fig. 161: Inspecting Compressor Assembly With Pulley (Compressor Solenoid) Connector
Courtesy of TOYOTA MOTOR SALES, U.S.A., INC.

Standard resistance

Tester Connection	Condition	Specified Condition
E74-1 (SOL-) - E74-2 (SOL+)	20°C (68°F)	10 to 11 ohms

TEXT IN ILLUSTRATION

*a	Component without harness connected (Compressor Assembly with Pulley (Compressor Solenoid))

If the resistance is not as specified, replace the compressor assembly with pulley.

INSTALLATION

INSTALLATION

1. **ADJUST COMPRESSOR OIL LEVEL**
    a. When replacing the compressor with a new one:
        1. Remove the drain bolt (washer).

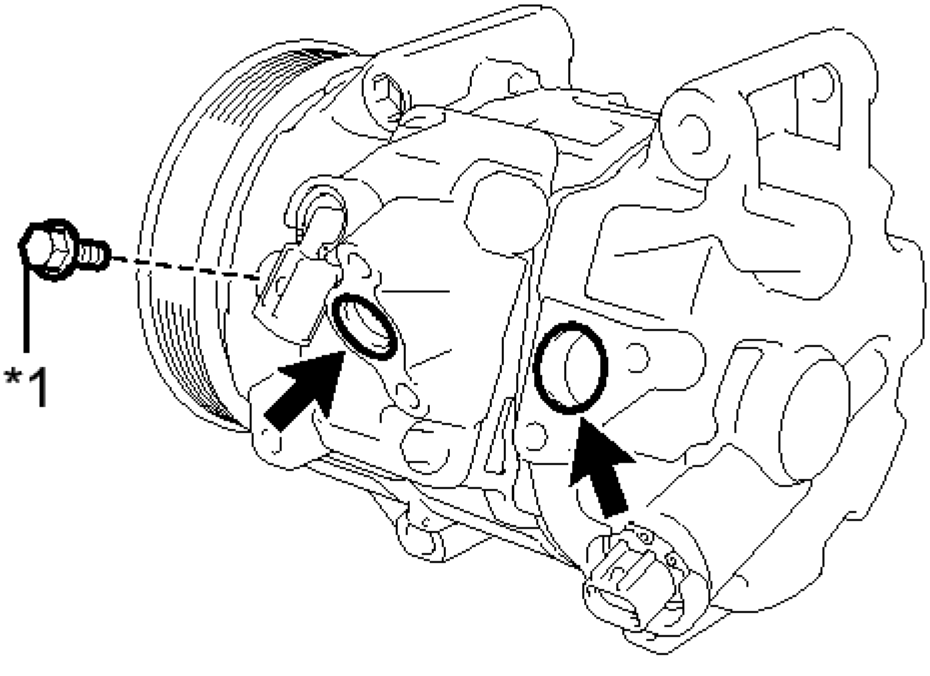

Fig. 162: Locating Compressor Drain Bolts
Courtesy of TOYOTA MOTOR SALES, U.S.A., INC.

TEXT IN ILLUSTRATION

*1	Drain bolt (washer)

2. Gradually discharge the inert gas from the service valve. Then drain the following amount of oil from the new compressor before installation so that the amount of oil contained in it is the same as that in the compressor to be replaced.

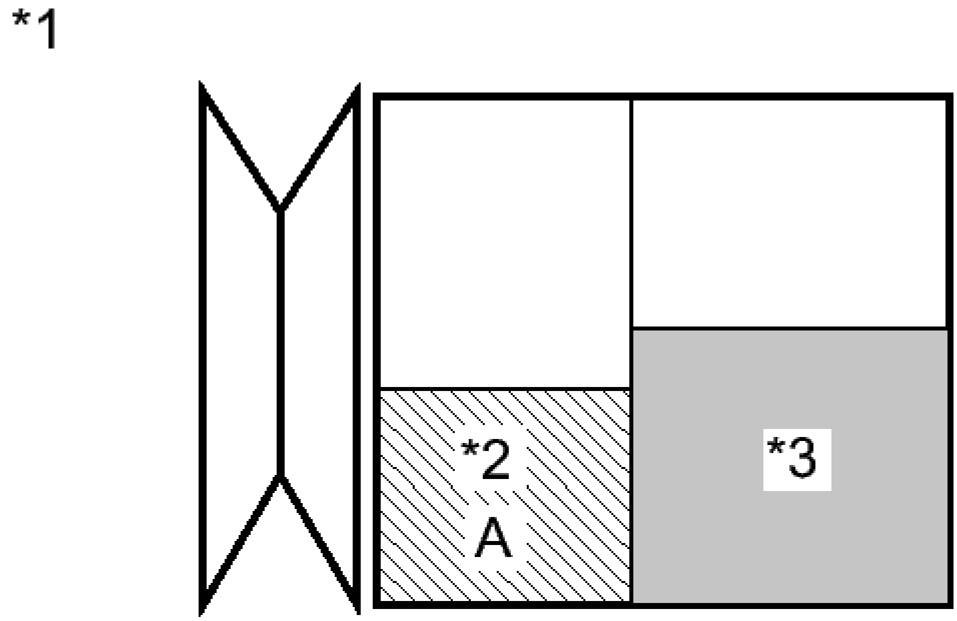

Fig. 163: View Of Oil Amount Drained From Removed Cooler Compressor Assembly And Reserve Chamber
Courtesy of TOYOTA MOTOR SALES, U.S.A., INC.

HINT:

New compressors are filled with sufficient oil for the whole air conditioning system. Therefore, it is necessary to drain oil from the new compressor to compensate for oil remaining in the condenser and cooling unit.

TEXT IN ILLUSTRATION

*1	Removed Compressor
*2	Amount of oil drain from removed compressor
*3	Amount of oil remaining in the reserve chamber (60 cc (3.66 fl.oz))

Standard

(The amount of oil inside a new compressor: 100 (+15) cc (6.10 (+0.92) fl.oz)) - (The amount of oil remaining in the old compressor A + oil remaining in the reserve chamber: 60 cc (3.66 fl.oz)) = (The amount of oil to be removed from the new compressor)

NOTE:

- **When A + 60 cc (3.66 fl.oz) exceeds the standard oil fill volume specified for the compressor by part number, install the compressor without adjusting the oil volume.**

  Example:

  If A = 45 cc (2.75 fl.oz), A + 60 cc (3.66 fl.oz) = 105 cc (6.41 fl.oz). If the standard volume is 100 cc (6.10 fl.oz), install the compressor as is.

- **When checking the compressor oil level, observe the precautions for cooler removal/installation.**
- **If the amount of oil remaining in the removed compressor is too low, check for oil leaks.**
- **Use ND-OIL8 or equivalent for compressor oil.**

3. Install the drain bolt (washer).

   Torque: 30 N*m (306 kgf*cm, 22 ft.*lbf)

b. If draining the oil is difficult, drain the oil using the following procedure:
   1. Remove the suction seal cap.
   2. Lightly shake the compressor with the suction port facing down, and drain the oil (*1).

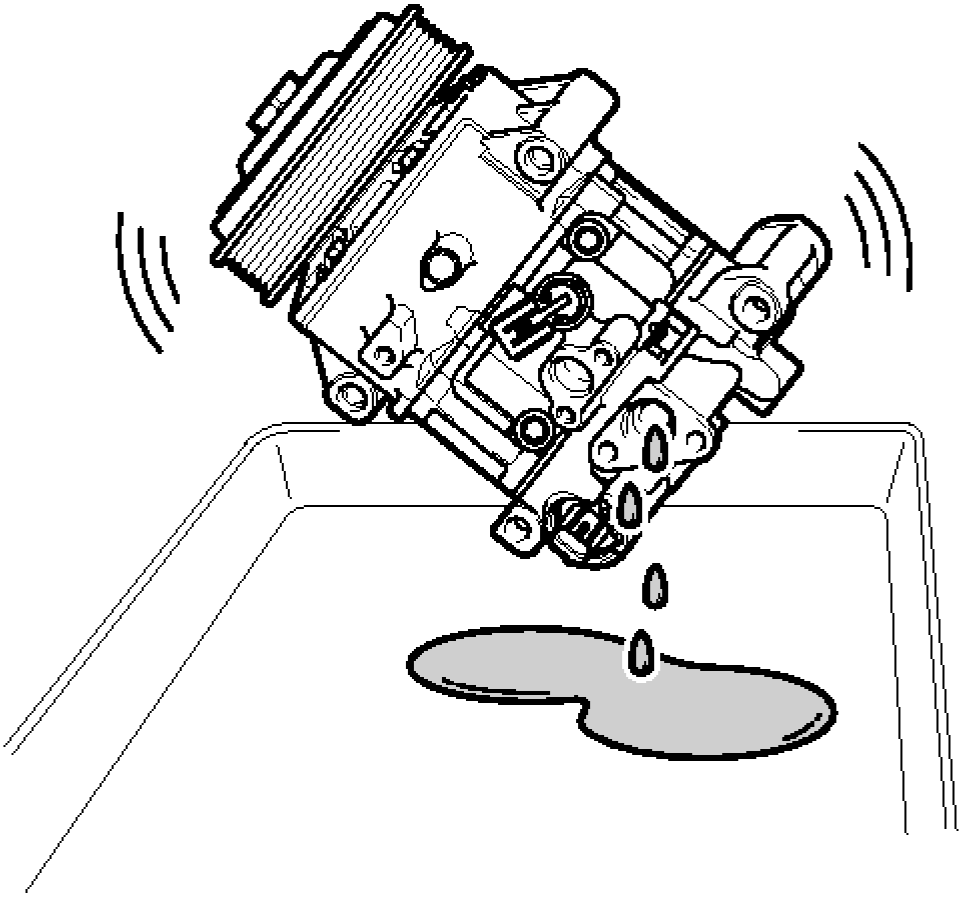

Fig. 164: Identifying Draining Oil From Compressor
Courtesy of TOYOTA MOTOR SALES, U.S.A., INC.

NOTE: **Do not allow the pulley to come into contact with the compressor oil.**

c. With the DL pulley facing down, rotate the pulley in the direction shown by the arrow 10 times at a rate of approximately once every 2 seconds (*2).

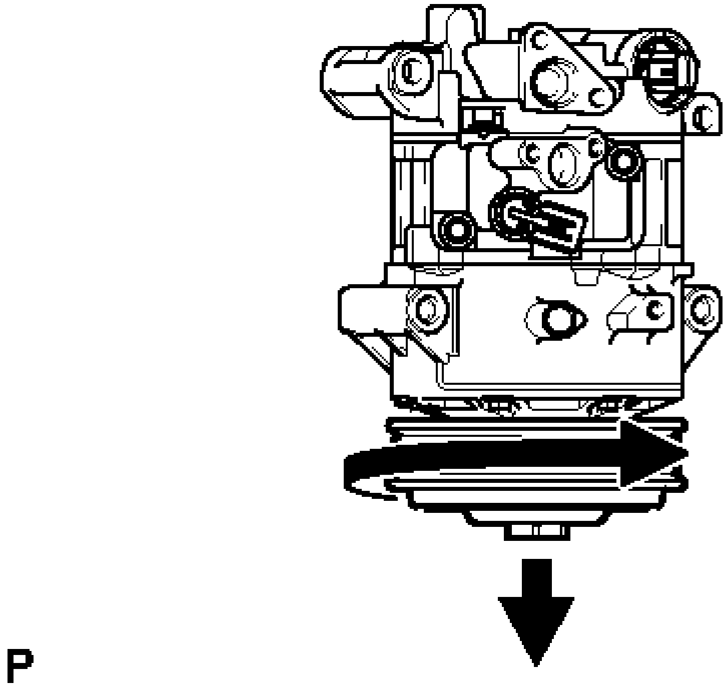

Fig. 165: Rotating Pulley To Remove Oil (1 Of 2)
Courtesy of TOYOTA MOTOR SALES, U.S.A., INC.

WARNING: **If the pulley is rotated, refrigerant or oil might splash out. Thus, keep your face away from the compressor port.**

d. Rotate the pulley once in the direction shown by the arrow while quickly turning the compressor so the pulley is up (*3).

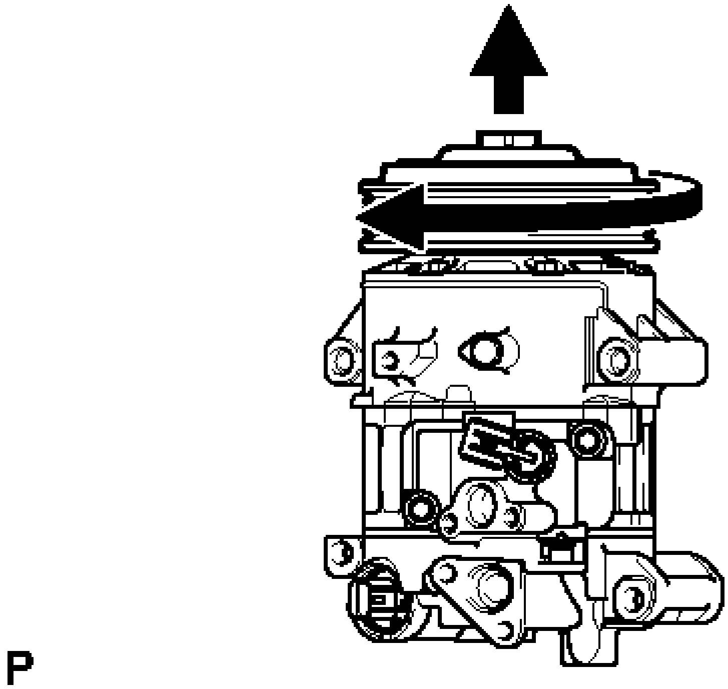

Fig. 166: Rotating Pulley To Remove Oil (2 Of 2)
Courtesy of TOYOTA MOTOR SALES, U.S.A., INC.

e. Proceed with the above procedure (*1) and drain the oil (*4).
f. Drain the oil by repeating the procedures above approximately 5 times (from (*2) to (*4)).

2. **INSTALL COMPRESSOR ASSEMBLY WITH PULLEY**
   a. Using an E8 "TORX" socket, temporarily install the compressor assembly with pulley with the 2 stud bolts.

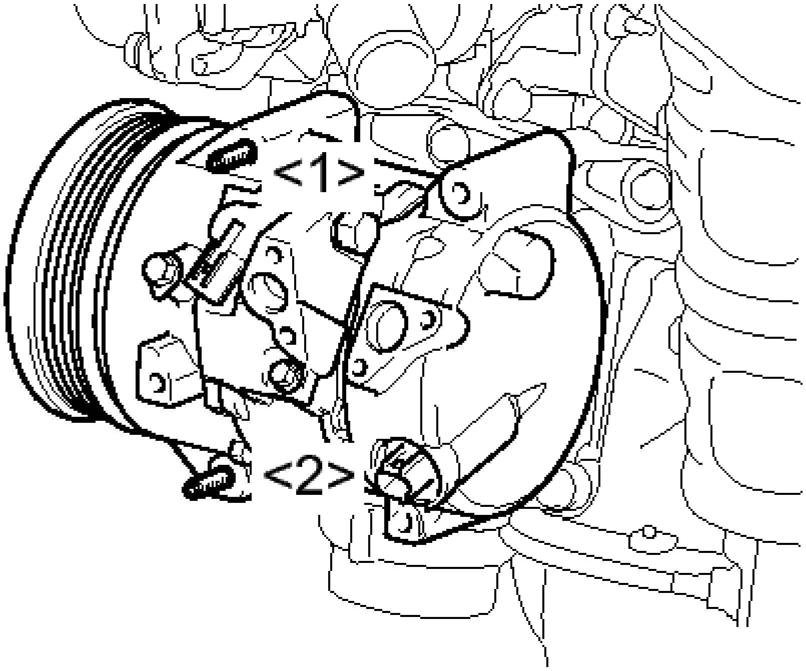

P

Fig. 167: Identifying Compressor Assembly With Pulley And Stud Bolts With Tightening Sequence
Courtesy of TOYOTA MOTOR SALES, U.S.A., INC.

Torque: 10 N*m (102 kgf*cm, 7 ft.*lbf)

HINT:

Tighten the stud bolts in the order shown in the illustration.

b. Install the compressor assembly with pulley with the 2 bolts and 2 nuts.

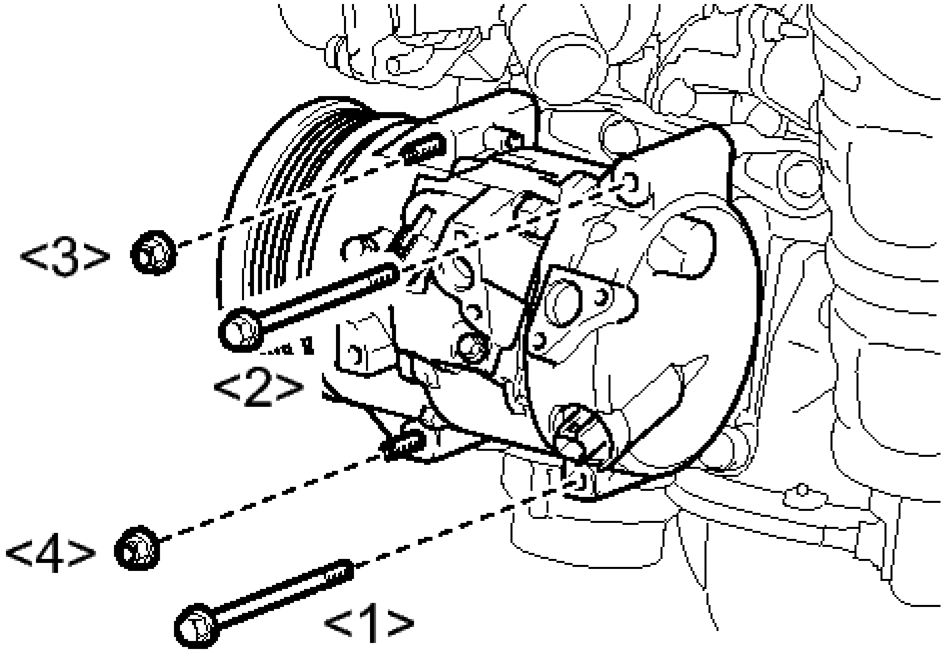

Fig. 168: Identifying Compressor Assembly With Pulley And Fasteners With Tightening Sequence
Courtesy of TOYOTA MOTOR SALES, U.S.A., INC.

Torque: 25 N*m (250 kgf*cm, 18 ft.*lbf)

HINT:

Tighten the bolts and nuts in the order shown in the illustration to install the compressor.

3. **INSTALL NO. 1 COOLER REFRIGERANT DISCHARGE HOSE**
    1. Remove the attached vinyl tape from the hose.
    2. Apply sufficient compressor oil to a new O-ring and the fitting surface of the compressor and pulley.

       Compressor oil

       ND-OIL 8 or equivalent

    3. Install the O-ring to the No. 1 cooler refrigerant discharge hose.
    4. Install the No. 1 cooler refrigerant discharge hose onto the compressor and pulley with the bolt.

       Torque: 9.8 N*m (100 kgf*cm, 87 in.*lbf)

4. **INSTALL SUCTION HOSE SUB-ASSEMBLY (for TMMK Made)**
    1. Remove the attached vinyl tape from the hose.

   b. Apply sufficient compressor oil to a new O-ring and the fitting surface of the compressor and pulley.

      Compressor oil

      ND-OIL 8 or equivalent

   c. Install the O-ring onto the suction hose sub-assembly.
   d. Install the suction hose sub-assembly onto the compressor assembly with pulley with the bolt.

      Torque: 9.8 N*m (100 kgf*cm, 87 in.*lbf)

   e. Connect the 2 connectors.
   f. Install the bolt.

      Torque: 8.0 N*m (82 kgf*cm, 71 in.*lbf)

5. **INSTALL NO. 1 COOLER REFRIGERANT SUCTION HOSE (for SIA Made)**
   a. Remove the attached vinyl tape from the hose.
   b. Apply sufficient compressor oil to a new O-ring and the fitting surface of the compressor and pulley.

      Compressor oil

      ND-OIL 8 or equivalent

   c. Install the O-ring onto the No. 1 cooler refrigerant suction hose.
   d. Install the No. 1 cooler refrigerant suction hose onto the compressor assembly with pulley with the bolt.

      Torque: 9.8 N*m (100 kgf*cm, 87 in.*lbf)

   e. Connect the 2 connectors.
   f. Install the bolt.

      Torque: 8.0 N*m (82 kgf*cm, 71 in.*lbf)

6. **INSTALL V-RIBBED BELT** . Refer to **INSTALLATION - Step 1** .
7. **INSTALL FRONT FENDER APRON SEAL RH**
8. **INSTALL RADIATOR ASSEMBLY**

   Refer to **INSTALLATION** .

9. **CHARGE AIR CONDITIONING SYSTEM WITH REFRIGERANT** . See step 2.
10. **WARM UP ENGINE** . See step 3.

11. **INSPECT FOR REFRIGERANT LEAK** . See step 4.

COMPRESSOR (FOR 2GR-FE)

COMPONENTS

ILLUSTRATION

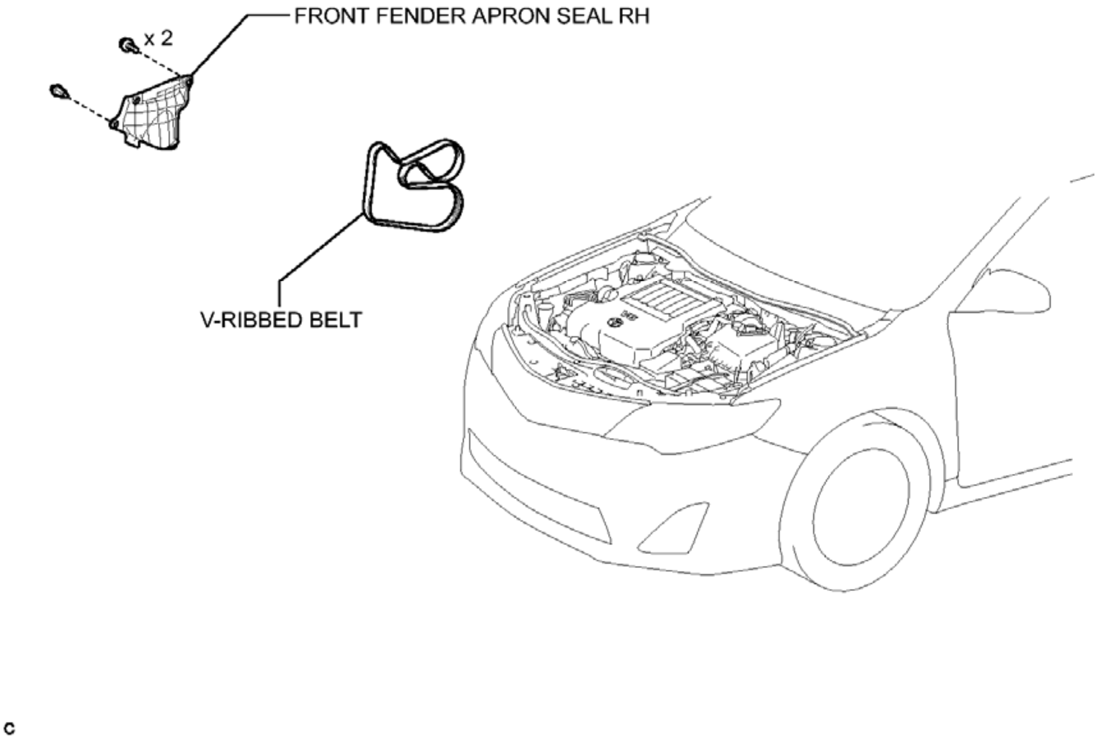
FRONT FENDER APRON SEAL RH
x 2
V-RIBBED BELT
C

Fig. 169: Identifying Compressor (For 2GR-FE) Replacement Components (1 Of 2)
Courtesy of TOYOTA MOTOR SALES, U.S.A., INC.

ILLUSTRATION

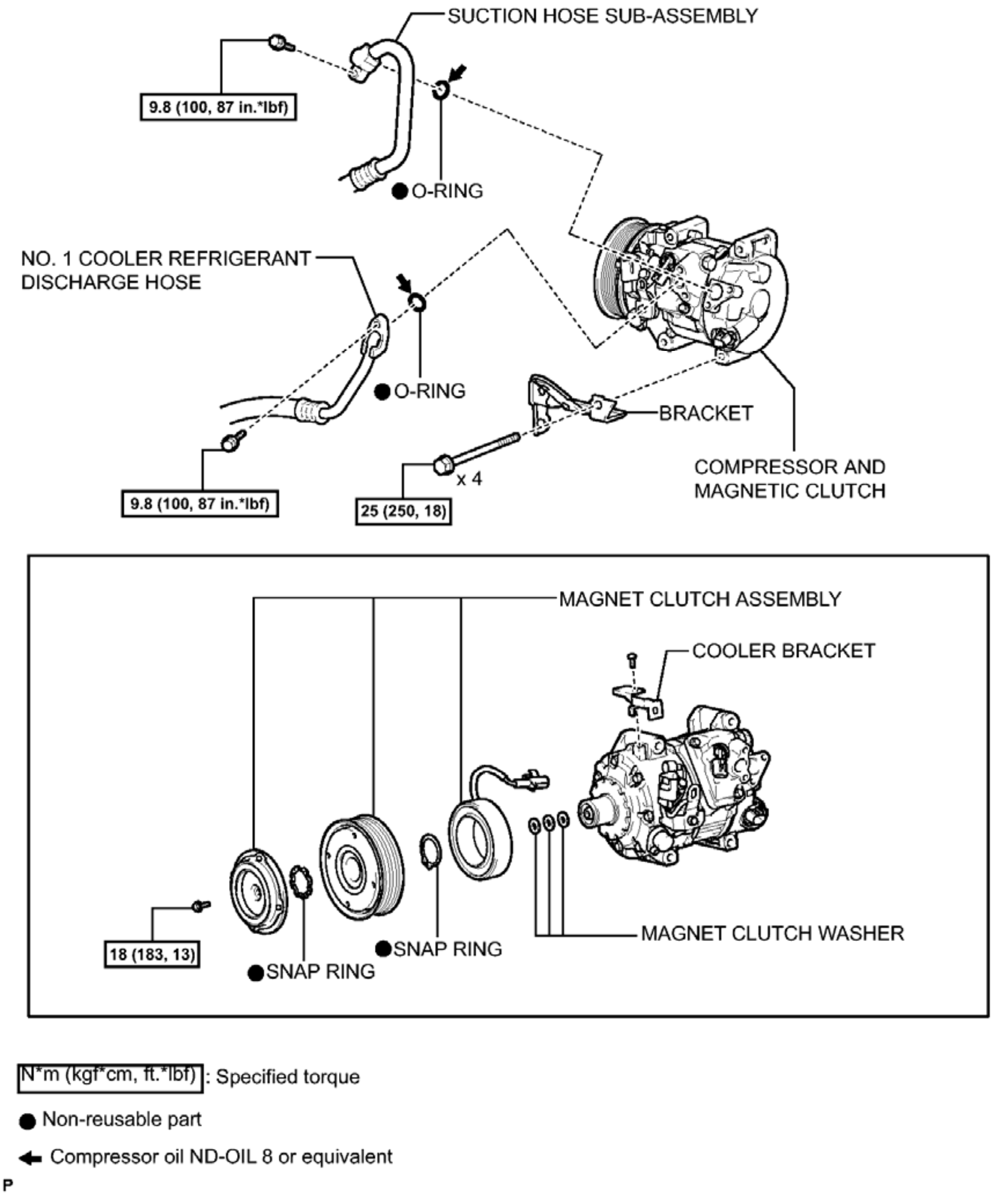
SUCTION HOSE SUB-ASSEMBLY
9.8 (100, 87 in.*lbf)
● O-RING
NO. 1 COOLER REFRIGERANT DISCHARGE HOSE
● O-RING
BRACKET
9.8 (100, 87 in.*lbf)
x 4
25 (250, 18)
COMPRESSOR AND MAGNETIC CLUTCH
MAGNET CLUTCH ASSEMBLY
COOLER BRACKET
18 (183, 13)
● SNAP RING
● SNAP RING
MAGNET CLUTCH WASHER
N*m (kgf*cm, ft.*lbf) : Specified torque
● Non-reusable part
← Compressor oil ND-OIL 8 or equivalent
P

Fig. 170: Identifying Compressor (For 2GR-FE) Replacement Components With Torque Specifications (2 Of 2)

Courtesy of TOYOTA MOTOR SALES, U.S.A., INC.

REMOVAL

REMOVAL

1. **RECOVER REFRIGERANT FROM AIR CONDITIONING SYSTEM** . See step 1.

2. **REMOVE RADIATOR ASSEMBLY**

   Refer to **REMOVAL** .

3. **REMOVE FRONT FENDER APRON SEAL RH**
4. **REMOVE V-RIBBED BELT** . Refer to **REMOVAL - Step 5** .
5. **DISCONNECT NO. 1 COOLER REFRIGERANT DISCHARGE HOSE**
   a. Disconnect the 3 connectors.

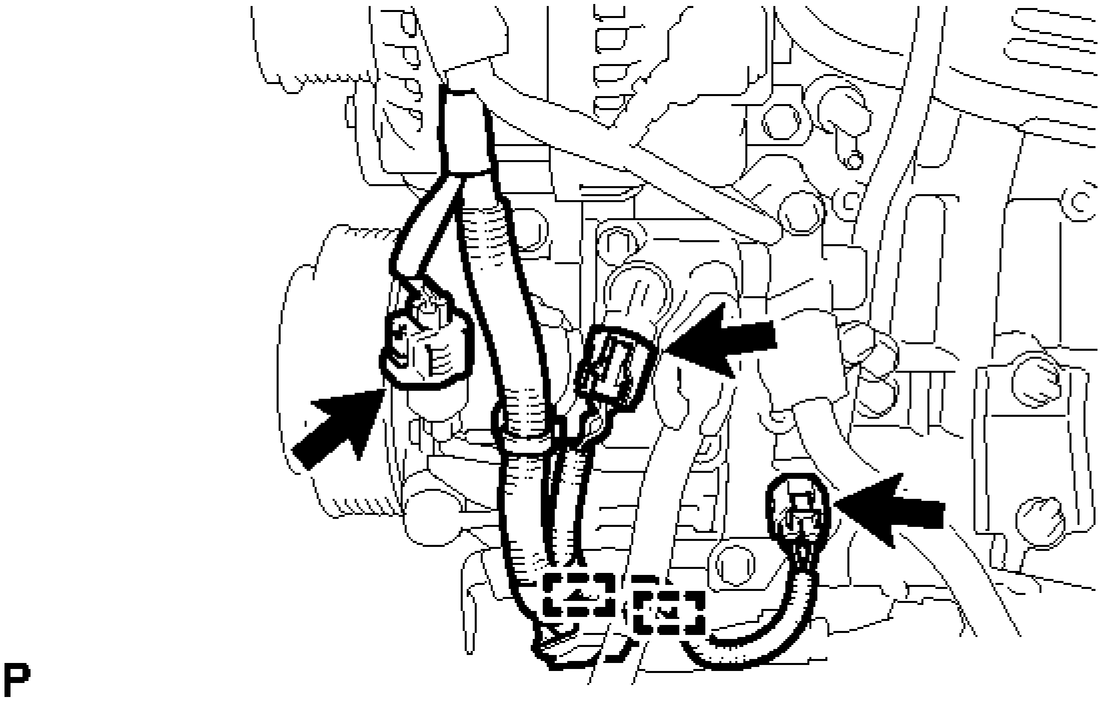

Fig. 171: Identifying Compressor Assembly Connectors
Courtesy of TOYOTA MOTOR SALES, U.S.A., INC.

   b. Disengage the 2 clamps.
   c. Remove the bolt and disconnect the No. 1 cooler refrigerant discharge hose from the compressor and magnetic clutch.

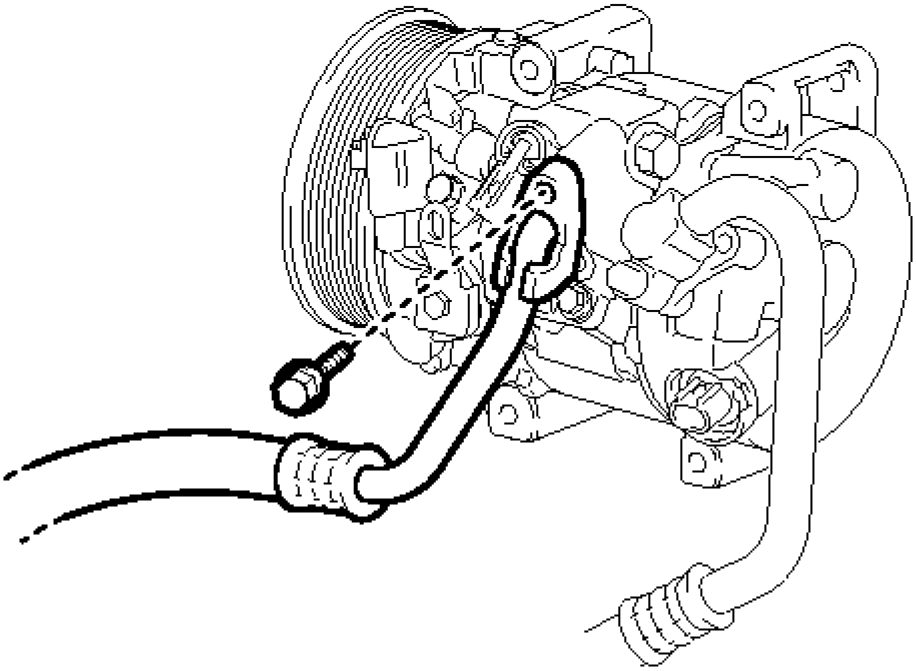

Fig. 172: Identifying No. 1 Cooler Refrigerant Discharge Hose Bolt
Courtesy of TOYOTA MOTOR SALES, U.S.A., INC.

d. Remove the O-ring from the No. 1 cooler refrigerant discharge hose.

NOTE: **Seal the openings of the disconnected parts using vinyl tape to prevent moisture and foreign matter from entering them.**

6. **DISCONNECT SUCTION HOSE SUB-ASSEMBLY**
   a. Remove the bolt and disconnect the suction hose sub-assembly from the compressor and magnetic clutch.

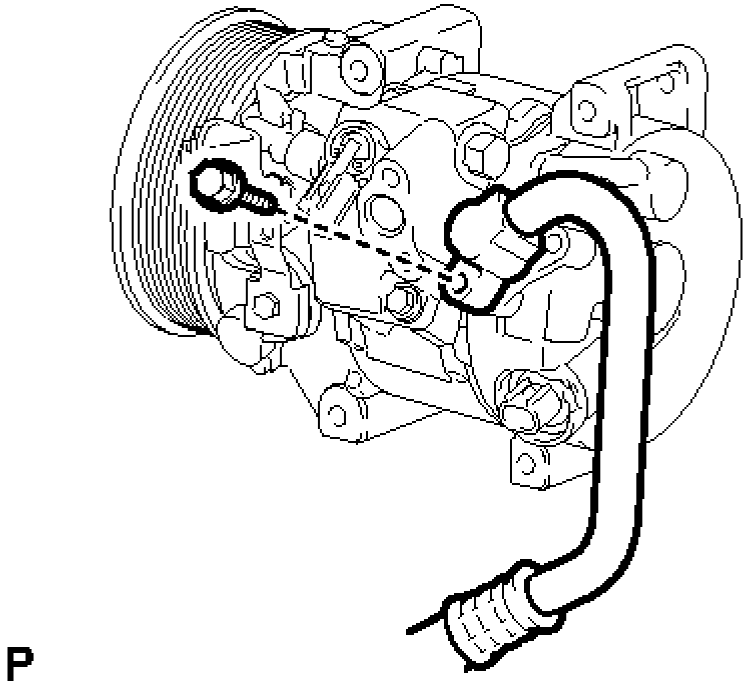

Fig. 173: Identifying Suction Hose Sub-Assembly And Bolt
Courtesy of TOYOTA MOTOR SALES, U.S.A., INC.

b. Remove the O-ring from the suction hose sub-assembly.

NOTE: **Seal the openings of the disconnected parts using vinyl tape to prevent moisture and foreign matter from entering them.**

7. **REMOVE COMPRESSOR AND MAGNETIC CLUTCH**

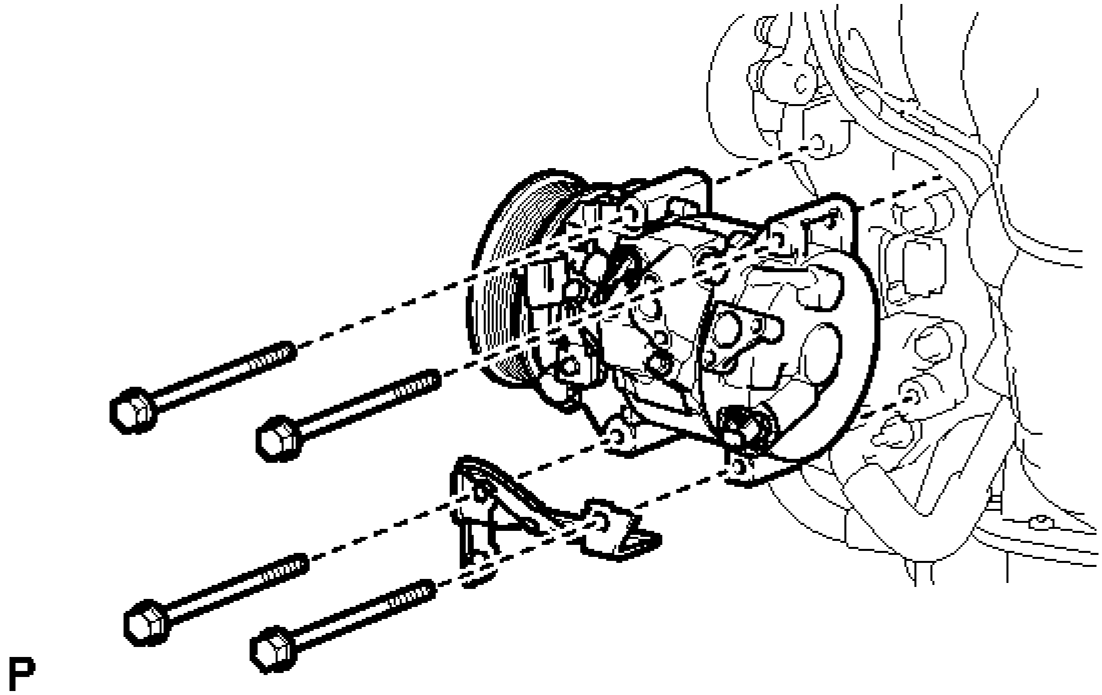

Fig. 174: Identifying Compressor And Magnetic Clutch Fasteners
Courtesy of TOYOTA MOTOR SALES, U.S.A., INC.

a. Remove the 4 bolts and compressor and magnetic clutch and bracket.

DISASSEMBLY

DISASSEMBLY

1. **REMOVE COOLER BRACKET**
    a. Disconnect the connector.

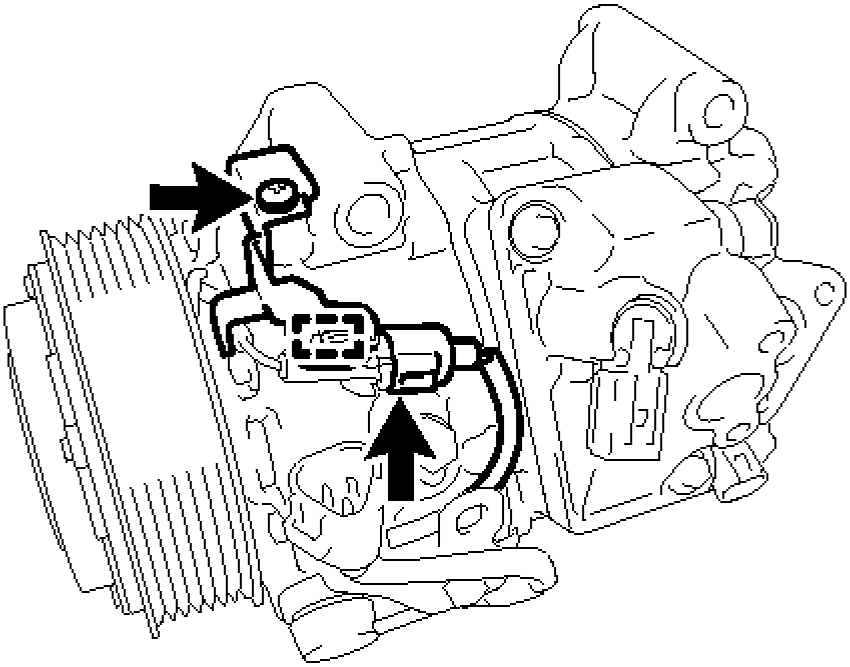

Fig. 175: Identifying Cooler Bracket Connector And Fasteners
Courtesy of TOYOTA MOTOR SALES, U.S.A., INC.

b. Disengage the clamp.
c. Remove the screw and cooler bracket.

2. **REMOVE MAGNET CLUTCH ASSEMBLY**
   a. Clamp the cooler compressor in a vise between aluminum plates.

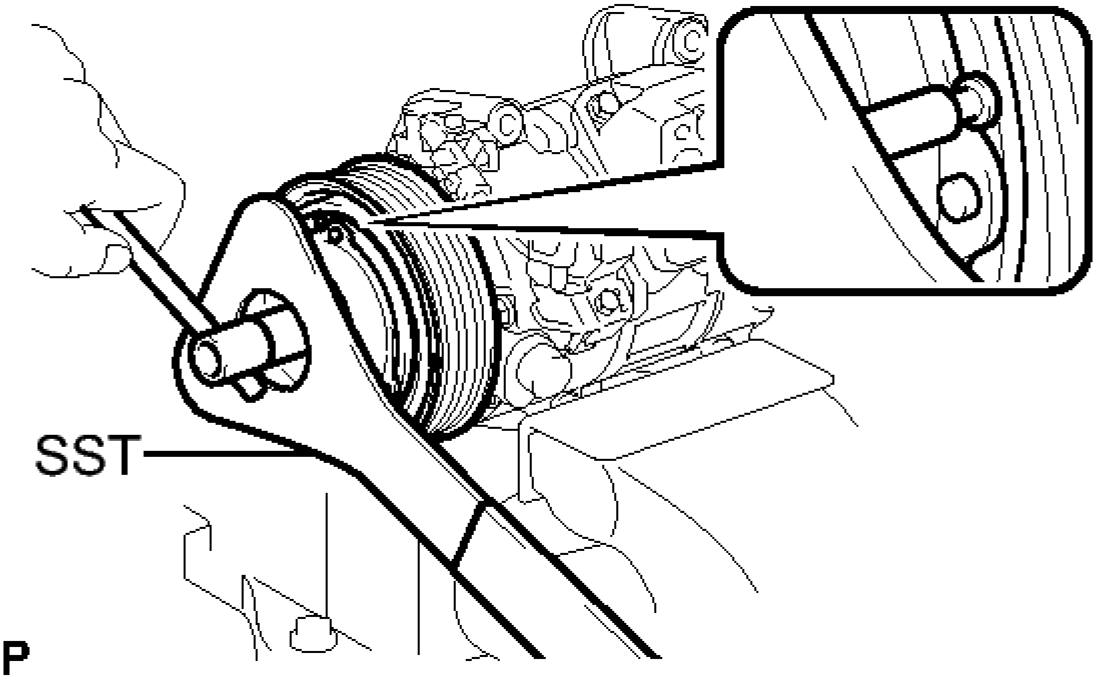

Fig. 176: Removing Magnet Clutch Assembly Using SST
Courtesy of TOYOTA MOTOR SALES, U.S.A., INC.

b. Using SST, hold the magnet clutch hub.
    - **SST: 07112-76060**

c. Remove the bolt, magnet clutch hub and magnet clutch washer(s).

    HINT:

    There is no set number of magnet clutch washers that are used for adjusting clutch clearance.

d. Using a snap ring expander, remove the snap ring and magnet clutch rotor.

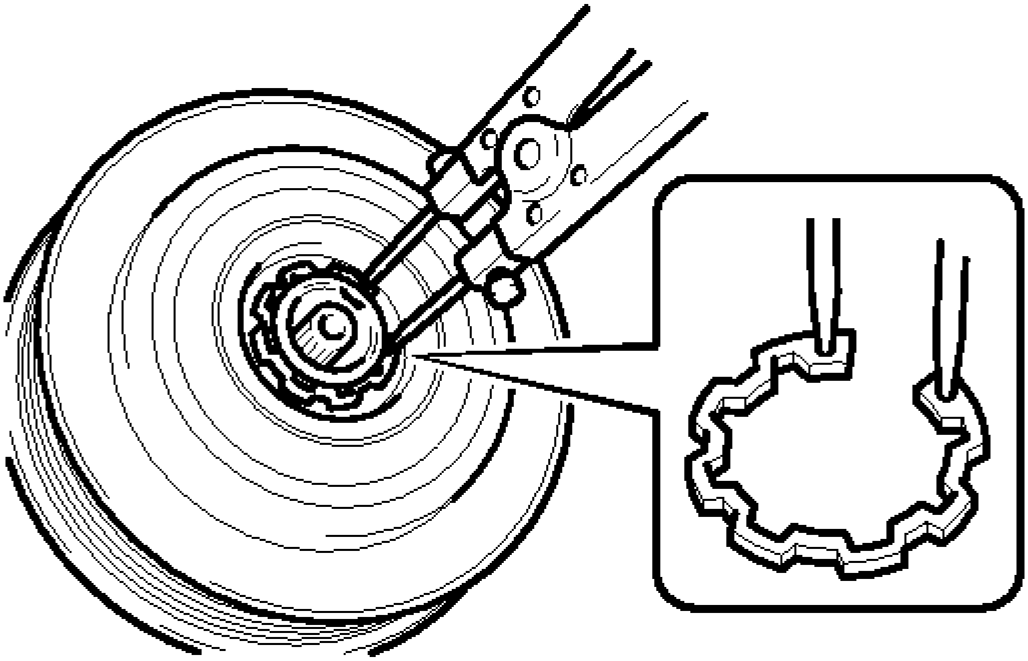

Fig. 177: Identifying Snap Ring And Magnet Clutch Rotor
Courtesy of TOYOTA MOTOR SALES, U.S.A., INC.

NOTE: **Do not damage the seal cover of the bearing when removing the snap ring.**

e. Disengage the clamp.
f. Using a snap ring expander, remove the snap ring and magnet clutch stator.

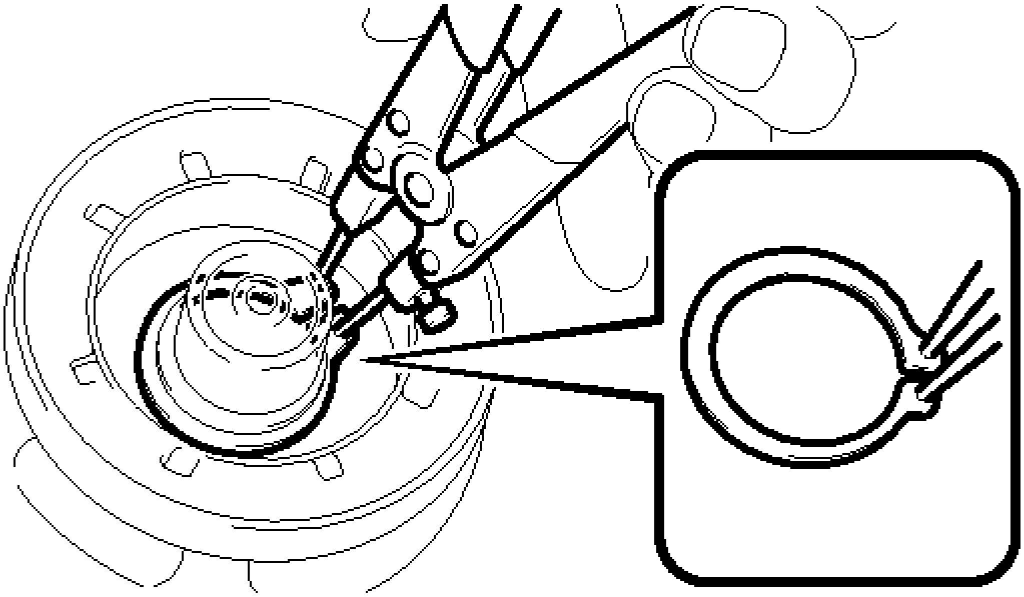

Fig. 178: Identifying Snap Ring And Magnet Clutch Stator
Courtesy of TOYOTA MOTOR SALES, U.S.A., INC.

INSPECTION

INSPECTION

1. **INSPECT COOLER COMPRESSOR ASSEMBLY (A/C LOCK SENSOR)**
   a. Measure the resistance according to the value(s) in the table below.

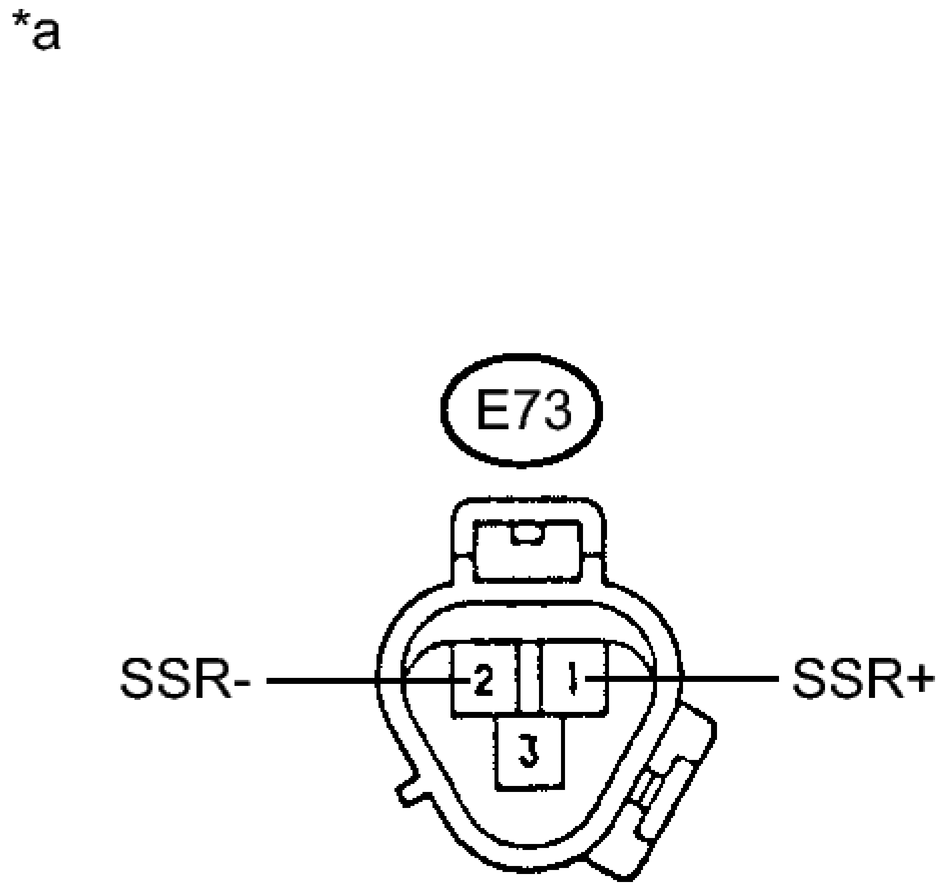

Fig. 179: Inspecting Cooler Compressor Assembly (A/C Lock Sensor) Connector
Courtesy of TOYOTA MOTOR SALES, U.S.A., INC.

Standard Resistance

Tester Connection	Condition	Specified Condition
E73-1 (SSR+) - E73-2 (SSR-)	20°C (68°F)	160 to 320 ohms

TEXT IN ILLUSTRATION

	Component without harness

*a	connected (Cooler Compressor Assembly (A/C Lock Sensor))

If the resistance is not as specified, replace the cooler compressor assembly.

2. **INSPECT COOLER COMPRESSOR ASSEMBLY (COMPRESSOR SOLENOID)**
   a. Measure the resistance according to the value(s) in the table below.

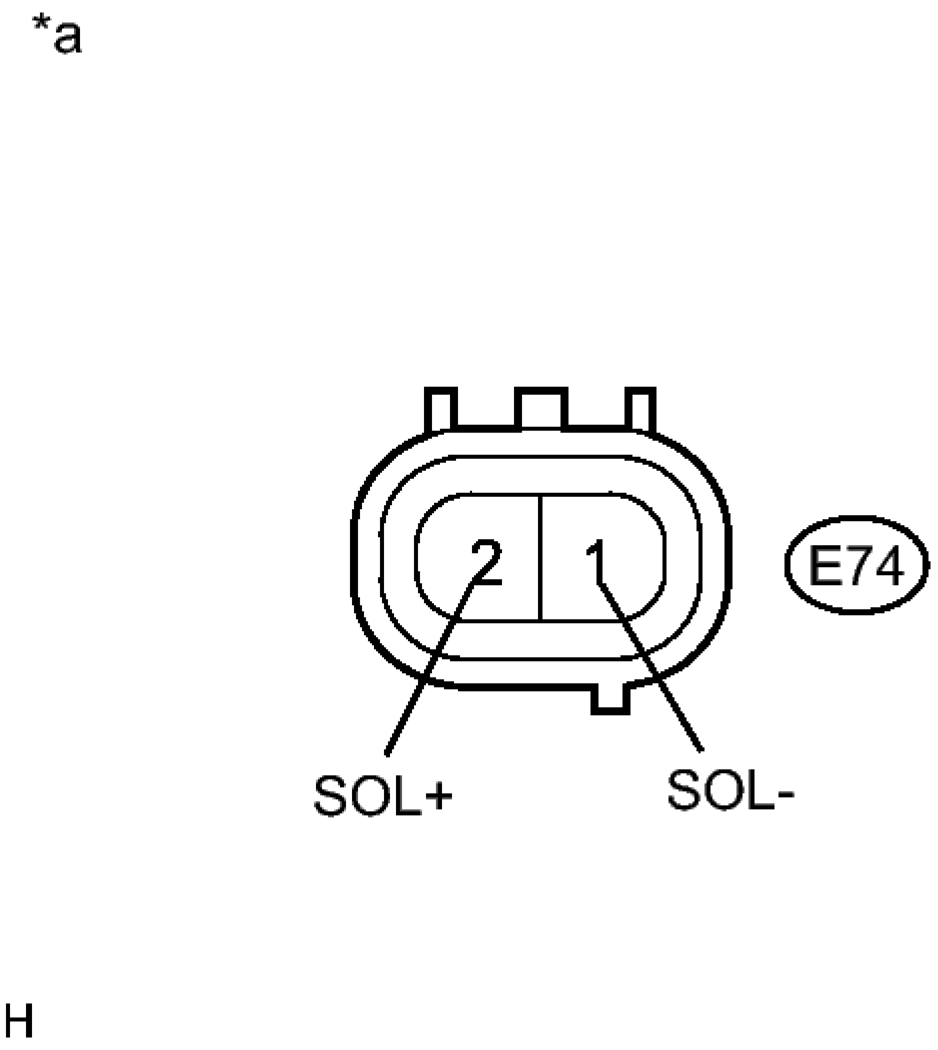

Fig. 180: Inspecting Cooler Compressor Assembly (Compressor Solenoid) Connectors
Courtesy of TOYOTA MOTOR SALES, U.S.A., INC.

Standard Resistance

Tester Connection	Condition	Specified Condition
E74-1 (SOL-) - E74-2 (SOL+)	20°C (68° F)	10 to 11 ohms

TEXT IN ILLUSTRATION

*a	Component without harness connected (Cooler Compressor Assembly (Compressor Solenoid))

If the resistance is not as specified, replace the cooler compressor assembly.

3. **INSPECT COOLER COMPRESSOR ASSEMBLY**
    a. Disconnect the E73 cooler compressor assembly connector.
    b. Disconnect the a2 magnetic clutch assembly connector.
    c. Measure the resistance according to the value(s) in the table below.

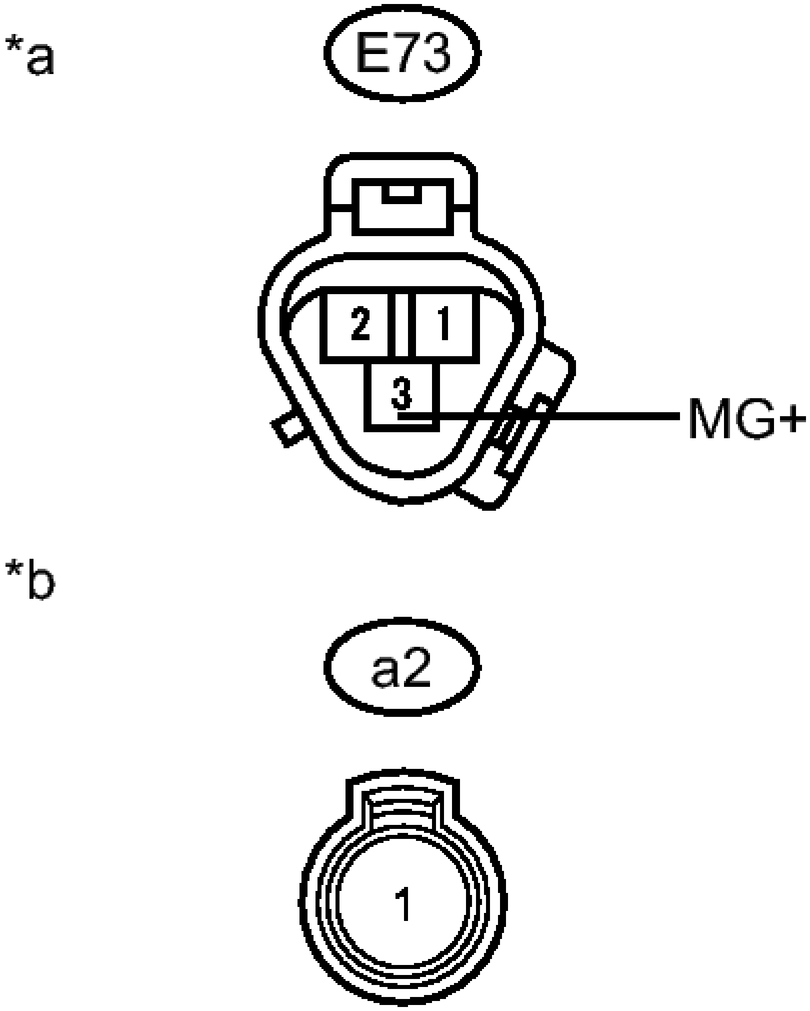

Fig. 181: Inspecting E73 Cooler Compressor Assembly & A2 Magnetic Clutch Assembly Connectors
Courtesy of TOYOTA MOTOR SALES, U.S.A., INC.

Standard Resistance

Tester Connection	Condition	Specified Condition
E73-3 (MG+) - a2-1	Always	Below 1 ohms
E73-3 (MG+) - Body ground	Always	10 kohms or higher

If the resistance is not as specified, replace the cooler compressor assembly.

TEXT IN ILLUSTRATION

*a	Component without harness connected (Cooler Compressor Assembly)
*b	Component without harness connected (Magnetic Clutch Assembly)

REASSEMBLY

REASSEMBLY

1. **INSTALL MAGNET CLUTCH ASSEMBLY**
    a. Install the magnet clutch stator with the parts aligned as shown in the illustration.

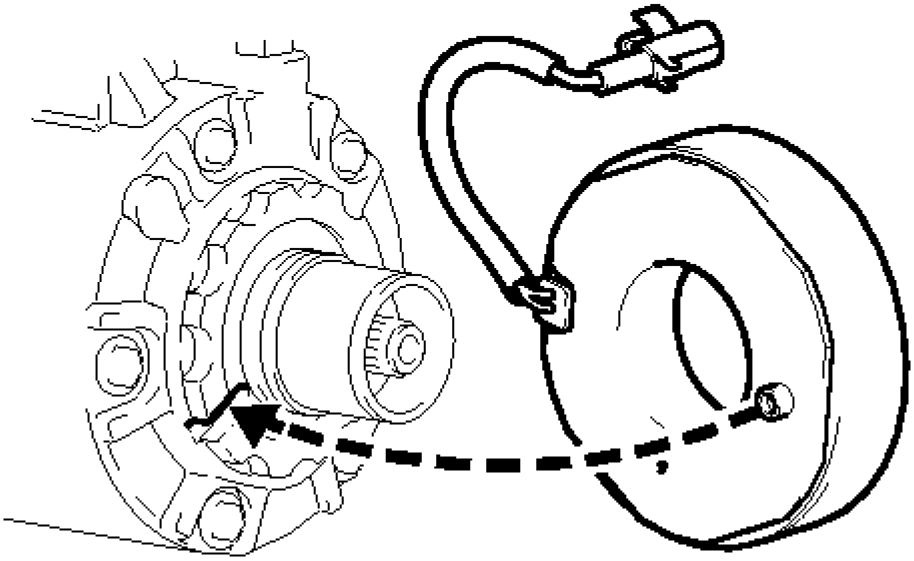

Fig. 182: Installing Magnet Clutch Assembly
Courtesy of TOYOTA MOTOR SALES, U.S.A., INC.

b. Using a snap ring expander, install a new snap ring with the chamfered side facing outward.

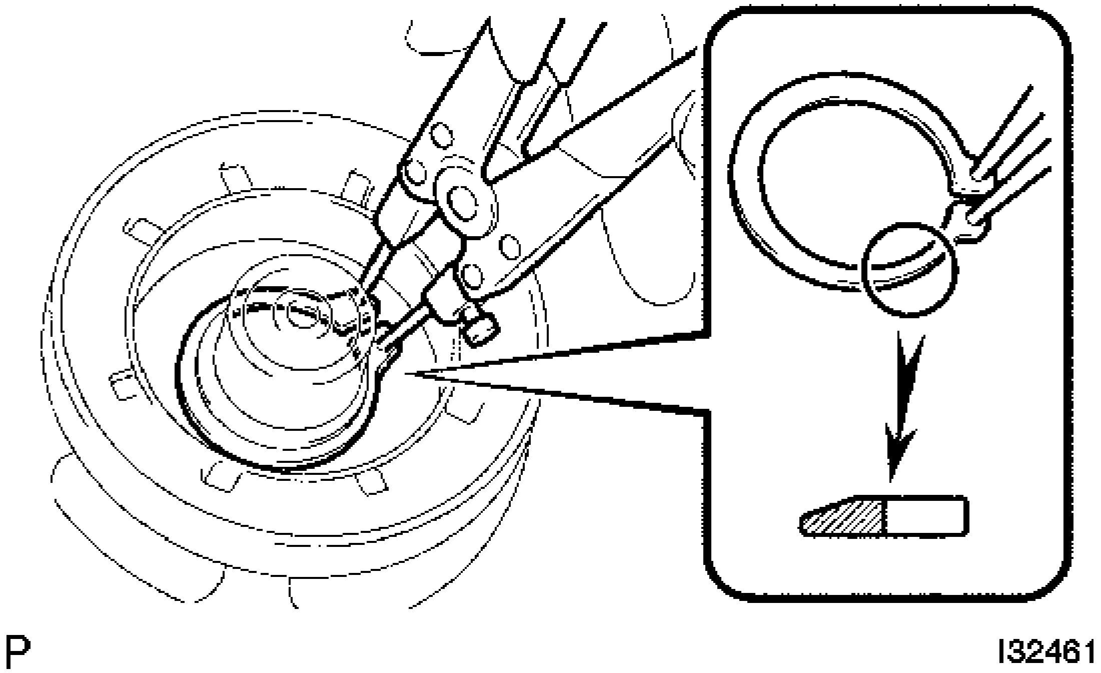

Fig. 183: Installing Snap Ring
Courtesy of TOYOTA MOTOR SALES, U.S.A., INC.

c. Engage the clamp.

d. Using a snap ring expander, install the magnet clutch rotor and a new snap ring with the chamfered side facing outward.

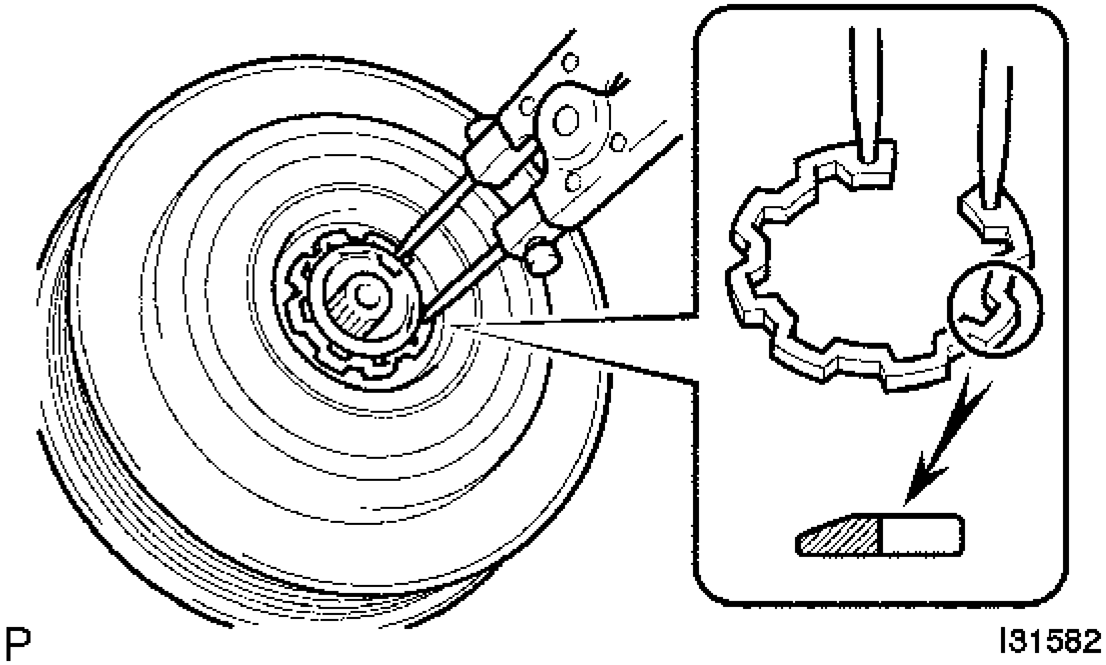

Fig. 184: Installing Snap Ring
Courtesy of TOYOTA MOTOR SALES, U.S.A., INC.

NOTE: **Do not damage the seal cover of the bearing when installing the snap ring.**

e. Install the magnet clutch washer(s) and magnet clutch hub.

NOTE: **Do not change the combination of the magnet clutch washer(s) used before disassembly.**

f. Using SST, hold the magnet clutch hub and install the bolt.

- **SST: 07112-76060**

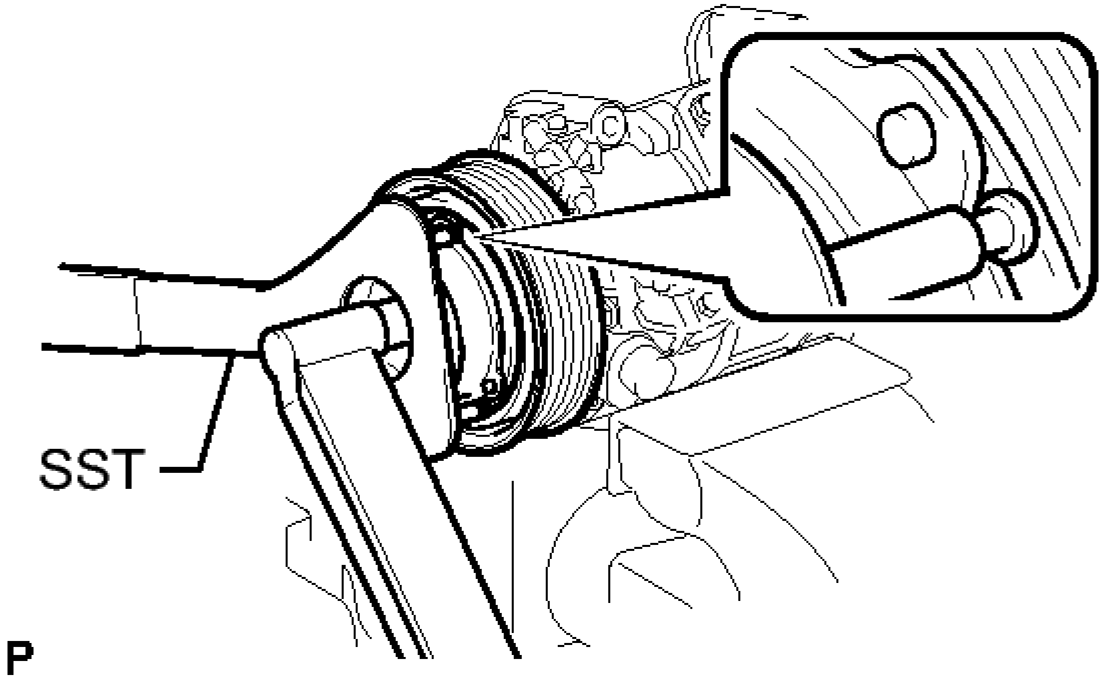

Fig. 185: Installing Magnet Clutch Assembly Using SST
Courtesy of TOYOTA MOTOR SALES, U.S.A., INC.

Torque: 18 N*m (183 kgf*cm, 13 ft.*lbf)

NOTE: Make sure that there is no foreign matter or oil on the compressor shaft, bolt, and clutch hub.

2. **INSTALL COOLER BRACKET**
   1. Install the cooler bracket with the screw.

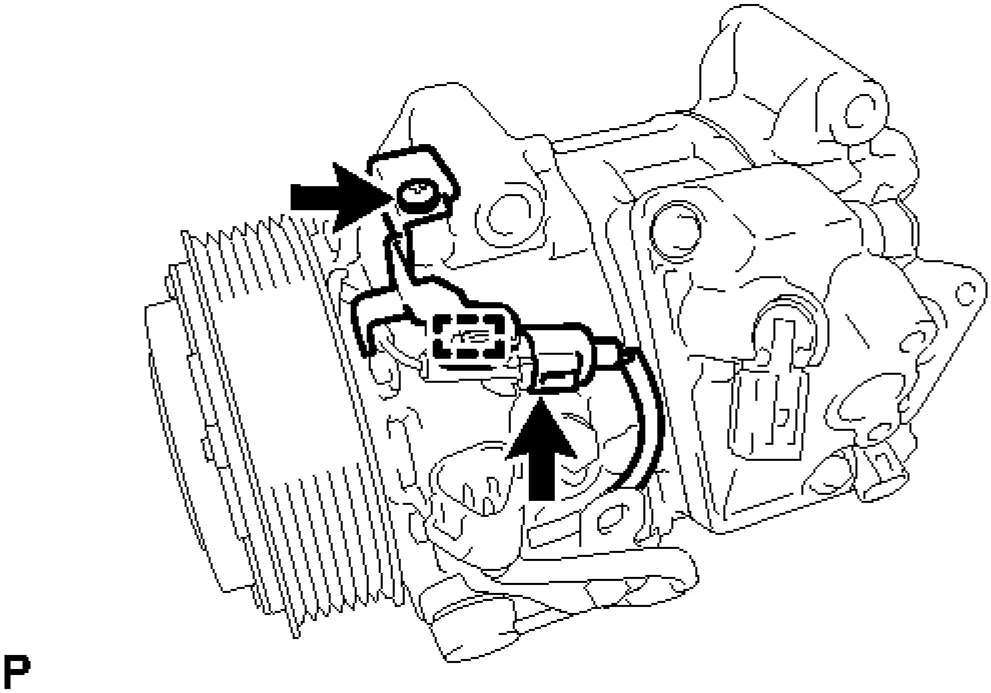

Fig. 186: Identifying Cooler Bracket Connector And Fasteners
Courtesy of TOYOTA MOTOR SALES, U.S.A., INC.

b. Engage the clamp.
c. Connect the connector.

3. **INSPECT MAGNET CLUTCH CLEARANCE**
   a. Clamp the cooler compressor in a vise between aluminum plates.

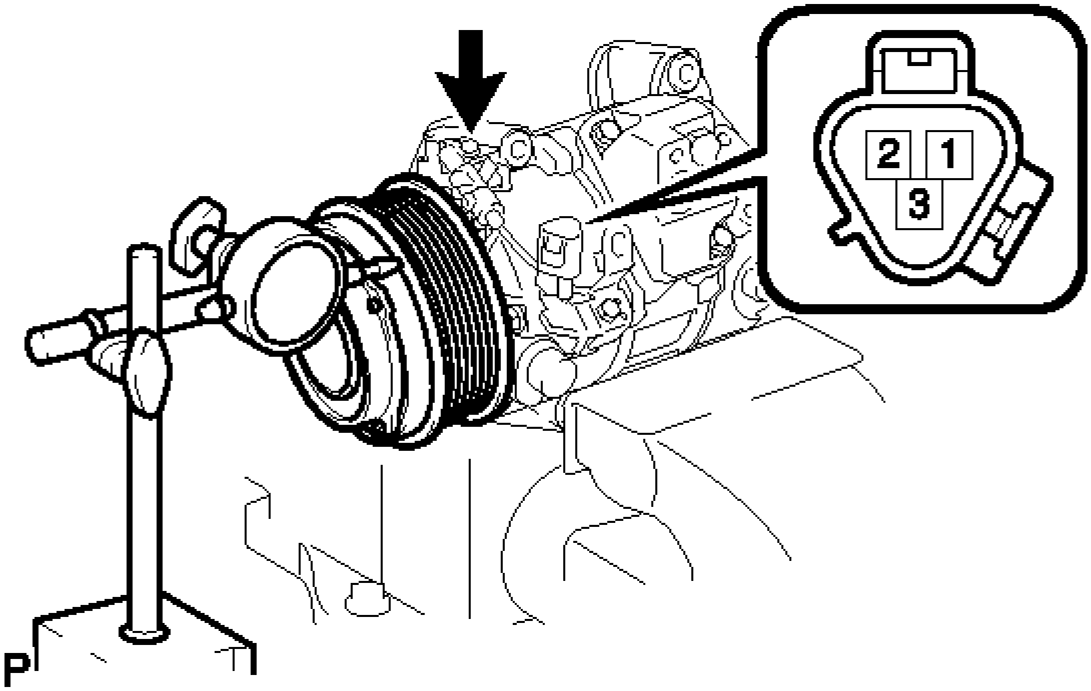

Fig. 187: Measuring Magnet Clutch Clearance
Courtesy of TOYOTA MOTOR SALES, U.S.A., INC.

b. Set the dial indicator to the magnet clutch hub.
c. Connect a battery positive lead to terminal 3 of the magnet clutch connector and a negative lead to the ground wire. Turn the magnet clutch on and off and measure the clearance.

Standard clearance

0.35 to 0.60 mm (0.014 to 0.024 in.)

If the measured value is not within the standard clearance, remove the magnet clutch hub and adjust the clearance using magnet clutch washers to obtain the standard clearance.

Magnet clutch washer thickness

0.1 mm (0.004 in.)

0.3 mm (0.012 in.)

0.5 mm (0.020 in.)

NOTE: **Adjustment should be performed with 3 or fewer magnet clutch washers.**

d. Remove the cooler compressor from the vise.

INSTALLATION

INSTALLATION

1. **ADJUST COMPRESSOR OIL**
    a. When replacing the compressor with a new one:
        1. Remove the drain bolt (washer).

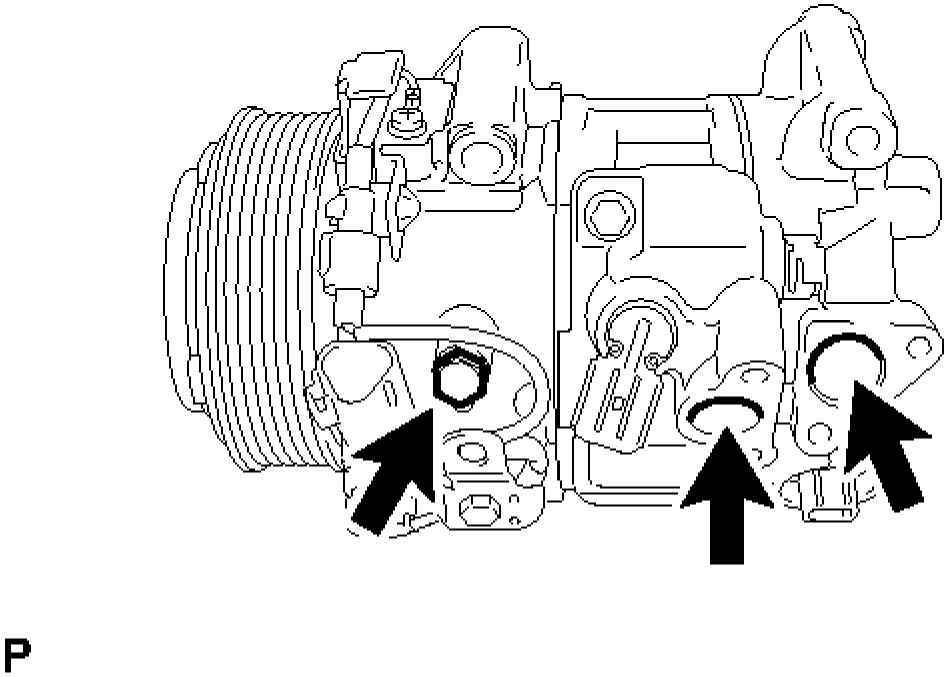

Fig. 188: Locating Compressor Drain Bolts
Courtesy of TOYOTA MOTOR SALES, U.S.A., INC.

TEXT IN ILLUSTRATION

*1	Drain bolt (washer)

        2. Gradually discharge the inert gas from the service valve. Then drain the following amount of oil from the new compressor before installation so that the amount of oil contained in it is the same as that in the compressor to be replaced.

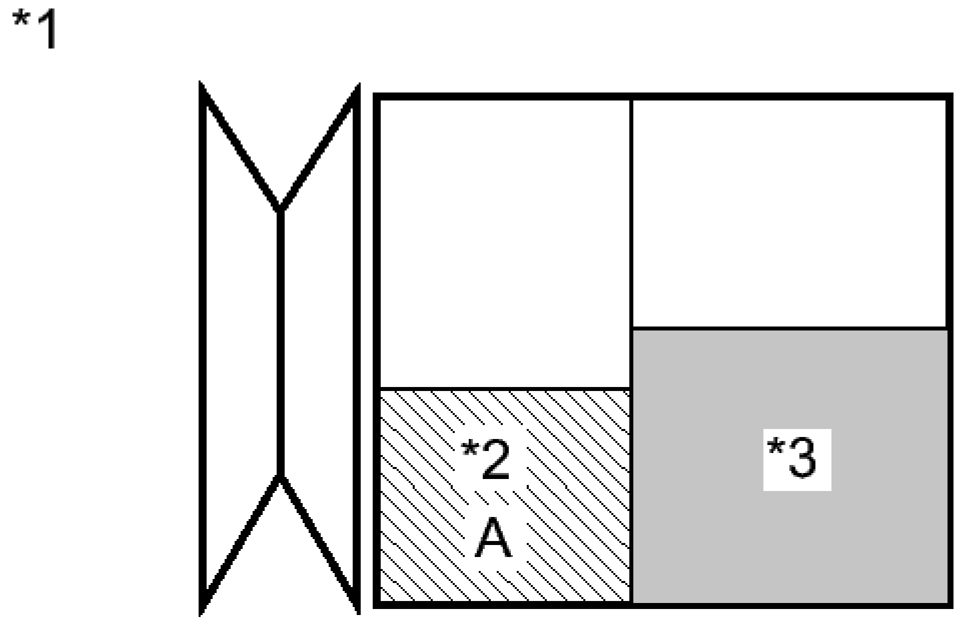

Fig. 189: View Of Oil Amount Drained From Removed Cooler Compressor Assembly And Reserve Chamber
Courtesy of TOYOTA MOTOR SALES, U.S.A., INC.

HINT:

New compressors are filled with sufficient oil for the whole air conditioning system. Therefore, it is necessary to drain oil from the new compressor to compensate for oil remaining in the condenser and cooling unit.

TEXT IN ILLUSTRATION

*1	Removed Compressor
*2	Amount of oil drain from removed compressor
*3	Amount of oil remaining in the reserve chamber (60 cc (3.66 fl.oz))

Standard

(The amount of oil inside a new compressor: 100 (+15) cc (6.10 (+0.92) fl.oz)) - (The amount of oil remaining in the old compressor A + oil remaining in the reserve chamber: 60 cc (3.66 fl.oz)) = (The amount of oil to be removed when replacing the compressor)

NOTE:

- **When A + 60 cc (3.66 fl.oz) exceeds the standard oil fill volume specified for the compressor by part number, install the compressor without adjusting the oil volume.**

  Example:

  If A = 45 cc (2.75 fl.oz), A + 60 cc (3.66 fl.oz) = 105 cc (6.41 fl.oz). If the standard volume is 100 cc (6.10 fl.oz), install the compressor as is.

- **When checking the compressor oil level, observe the precautions for cooler removal/installation.**
- **If the amount of oil remaining in the removed compressor is too low, check for oil leaks.**
- **Use ND-OIL8 or equivalent for compressor oil.**

3. Install the drain bolt (washer).

   Torque: 30 N*m (306 kgf*cm, 22 ft.*lbf)

b. If draining the oil is difficult, drain the oil using the following procedure:

   1. Remove the suction seal cap.
   2. Lightly shake the compressor with the suction port facing down, and drain the oil (*1).

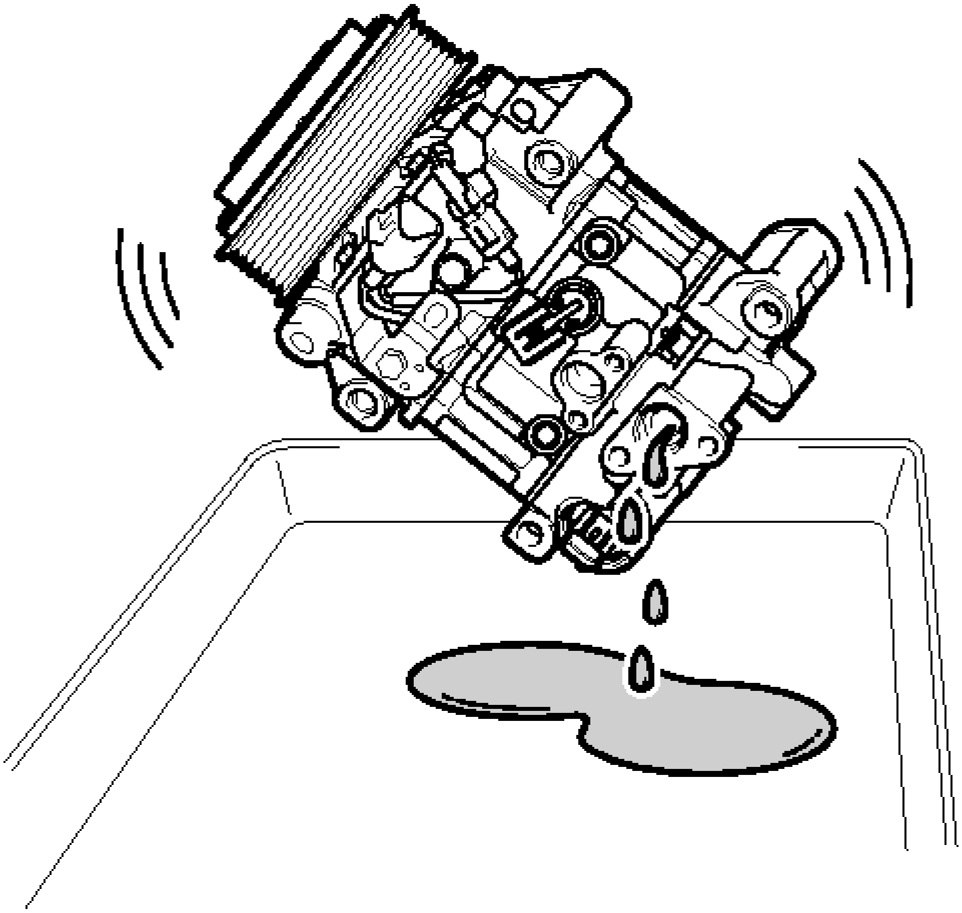

P

Fig. 190: Identifying Draining Oil From Compressor
Courtesy of TOYOTA MOTOR SALES, U.S.A., INC.

NOTE: **Do not allow the pulley to come into contact with the compressor oil.**

c. With the pulley facing down, rotate the hub in the direction shown by the arrow 10 times at a rate of approximately once every 2 seconds (*2).

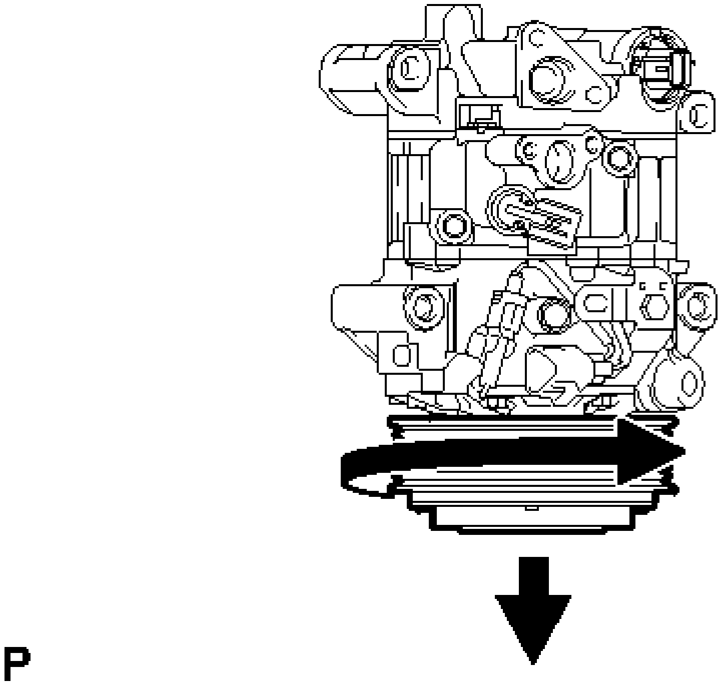

Fig. 191: Rotating Pulley To Remove Oil (1 Of 2)
Courtesy of TOYOTA MOTOR SALES, U.S.A., INC.

WARNING: **If the pulley is rotated, refrigerant or oil might splash out. Thus, keep your face away from the compressor port.**

d. Rotate the hub once in the direction shown by the arrow while quickly turning the compressor so the pulley is up (*3).

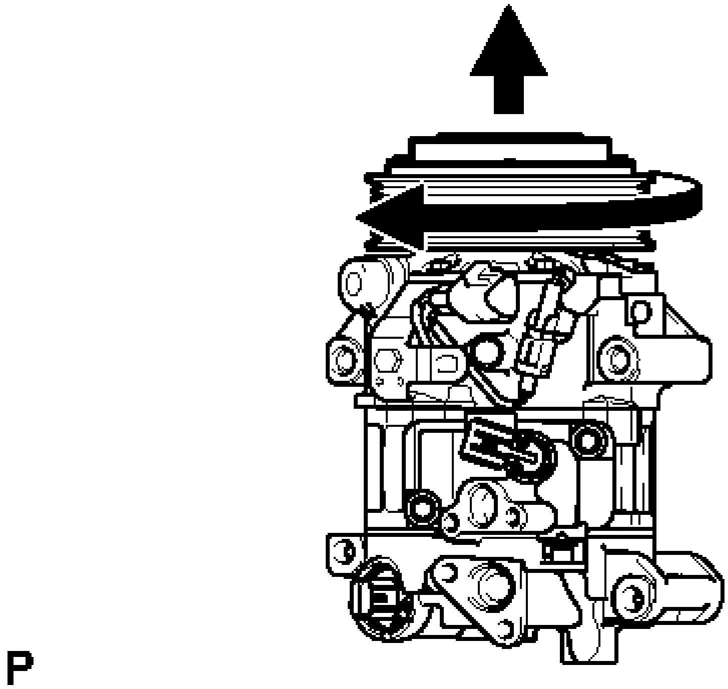

Fig. 192: Rotating Pulley To Remove Oil (2 Of 2)
Courtesy of TOYOTA MOTOR SALES, U.S.A., INC.

e. Proceed with the above procedure (*1) and drain the oil (*4).
f. Drain the oil by repeating the procedures above approximately 5 times (from (*2) to (*4)).

2. **INSTALL COMPRESSOR AND MAGNETIC CLUTCH**
   a. Install the compressor and magnetic clutch and bracket with the 4 bolts.

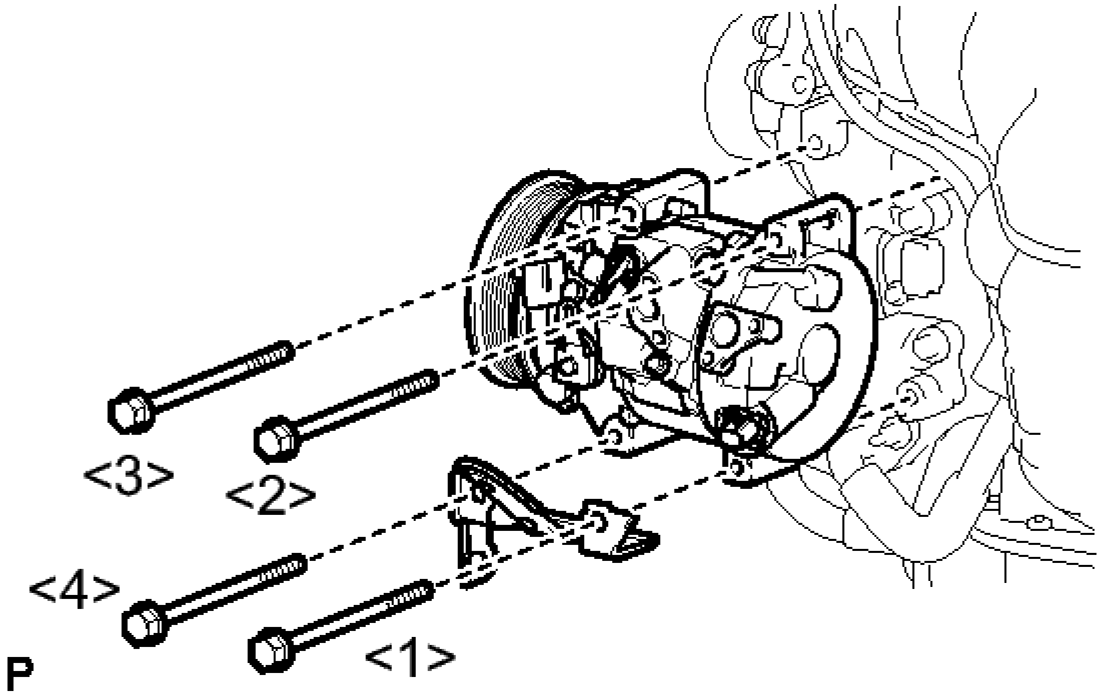

Fig. 193: Identifying Compressor And Magnetic Clutch Fasteners With Tightening Sequence
Courtesy of TOYOTA MOTOR SALES, U.S.A., INC.

Torque: 25 N*m (250 kgf*cm, 18 ft.*lbf)

NOTE: **Tighten the bolts in the order shown in the illustration to install the cooler compressor.**

3. **CONNECT SUCTION HOSE SUB-ASSEMBLY**
    a. Remove the vinyl tape from the hose and compressor and magnetic clutch.
    b. Sufficiently apply compressor oil to a new O-ring and the fitting surface of the compressor and magnetic clutch.

       Compressor oil

       ND-OIL 8 or equivalent

    c. Install the O-ring to the suction hose sub-assembly.
    d. Connect the suction hose sub-assembly to the compressor and magnetic clutch with the bolt.

       Torque: 9.8 N*m (100 kgf*cm, 87 in.*lbf)

4. **CONNECT NO. 1 COOLER REFRIGERANT DISCHARGE HOSE**
    a. Remove the vinyl tape from the hose and compressor and magnetic clutch.
    b. Sufficiently apply compressor oil to a new O-ring and the fitting surface of the compressor and magnetic clutch.

Compressor oil

ND-OIL 8 or equivalent

c. Install the O-ring to the No. 1 cooler refrigerant discharge hose.
d. Connect the No. 1 cooler refrigerant discharge hose to the compressor and magnetic clutch with the bolt.

Torque: 9.8 N*m (100 kgf*cm, 87 in.*lbf)

e. Engage the 2 clamps and connect the 3 connectors.

5. **INSTALL V-RIBBED BELT** . Refer to **INSTALLATION - Step 1** .
6. **INSTALL FRONT FENDER APRON SEAL RH**
7. **INSTALL RADIATOR ASSEMBLY**

   Refer to **INSTALLATION** .

8. **CHARGE AIR CONDITIONING SYSTEM WITH REFRIGERANT** . See step 2.
9. **WARM UP ENGINE** . See step 3.
10. **INSPECT FOR REFRIGERANT LEAK** . See step 4.

CONDENSER

COMPONENTS

ILLUSTRATION

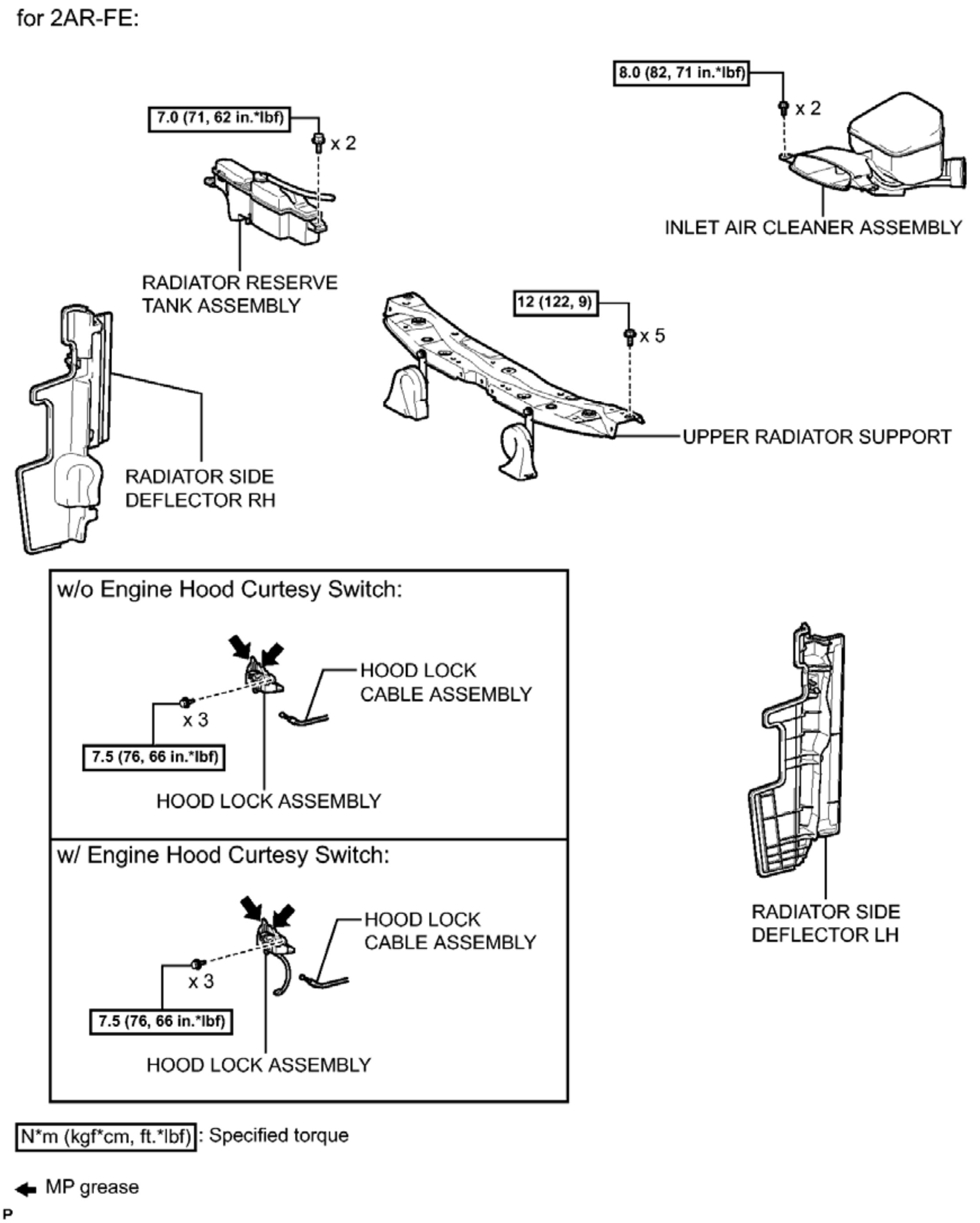
for 2AR-FE:
8.0 (82, 71 in.*lbf)
x 2
7.0 (71, 62 in.*lbf)
x 2
INLET AIR CLEANER ASSEMBLY
RADIATOR RESERVE TANK ASSEMBLY
12 (122, 9)
x 5
UPPER RADIATOR SUPPORT
RADIATOR SIDE DEFLECTOR RH
w/o Engine Hood Curtesy Switch:
HOOD LOCK CABLE ASSEMBLY
x 3
7.5 (76, 66 in.*lbf)
HOOD LOCK ASSEMBLY
w/ Engine Hood Curtesy Switch:
HOOD LOCK CABLE ASSEMBLY
x 3
7.5 (76, 66 in.*lbf)
HOOD LOCK ASSEMBLY
RADIATOR SIDE DEFLECTOR LH
N*m (kgf*cm, ft.*lbf): Specified torque
MP grease
P

Fig. 194: Identifying Condenser (For 2AR-FE) Replacement Components With Torque Specifications (1 Of 3)
Courtesy of TOYOTA MOTOR SALES, U.S.A., INC.

ILLUSTRATION

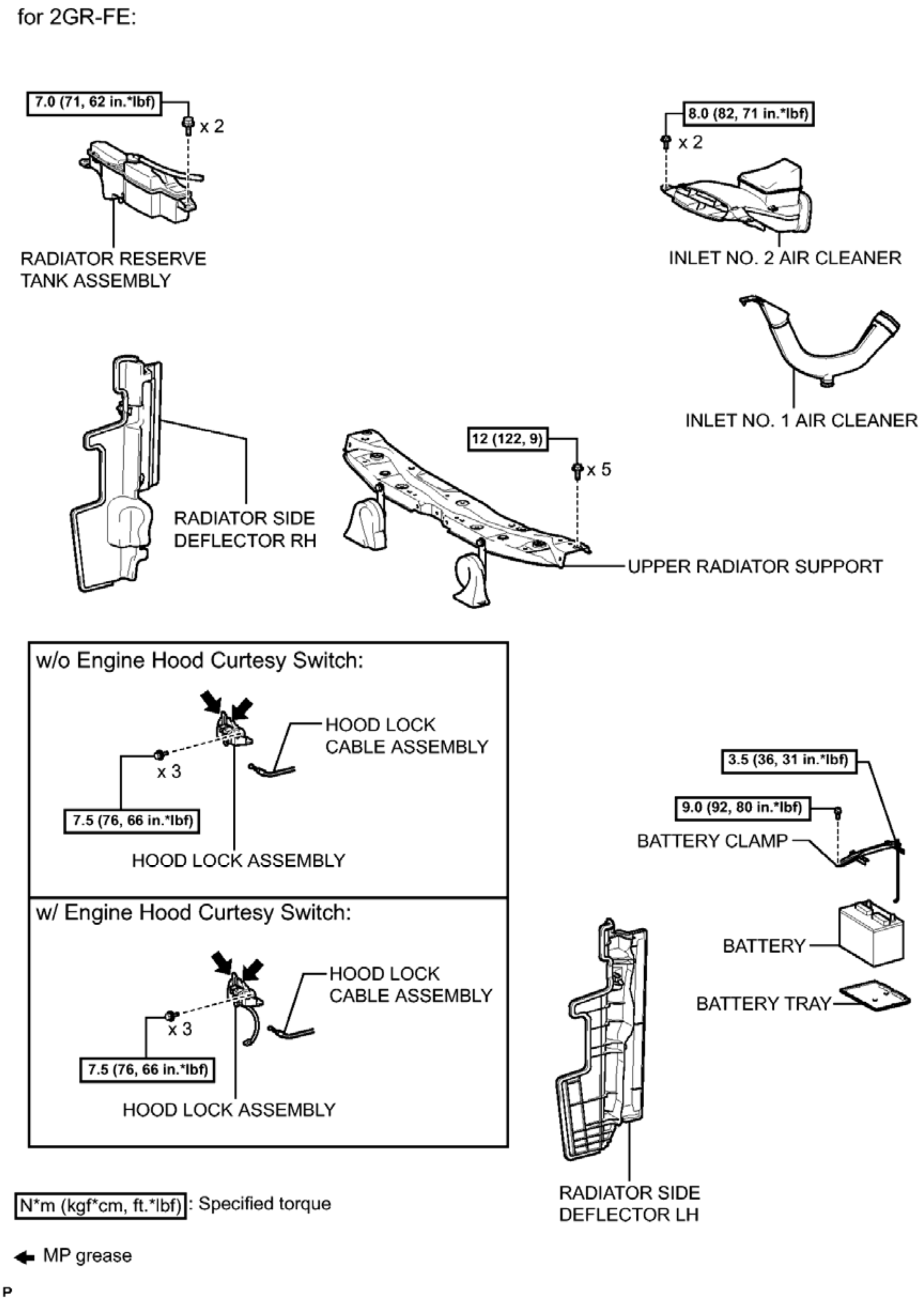
for 2GR-FE:
7.0 (71, 62 in.*lbf)
x 2
RADIATOR RESERVE TANK ASSEMBLY
8.0 (82, 71 in.*lbf)
x 2
INLET NO. 2 AIR CLEANER
INLET NO. 1 AIR CLEANER
RADIATOR SIDE DEFLECTOR RH
12 (122, 9)
x 5
UPPER RADIATOR SUPPORT
w/o Engine Hood Curtesy Switch:
HOOD LOCK CABLE ASSEMBLY
x 3
7.5 (76, 66 in.*lbf)
HOOD LOCK ASSEMBLY
w/ Engine Hood Curtesy Switch:
HOOD LOCK CABLE ASSEMBLY
x 3
7.5 (76, 66 in.*lbf)
HOOD LOCK ASSEMBLY
3.5 (36, 31 in.*lbf)
9.0 (92, 80 in.*lbf)
BATTERY CLAMP
BATTERY
BATTERY TRAY
RADIATOR SIDE DEFLECTOR LH
N*m (kgf*cm, ft.*lbf) : Specified torque
MP grease
P

Fig. 195: Identifying Condenser (For 2GR-FE) Replacement Components With Torque Specifications (2 Of 3)

Courtesy of TOYOTA MOTOR SALES, U.S.A., INC.

ILLUSTRATION

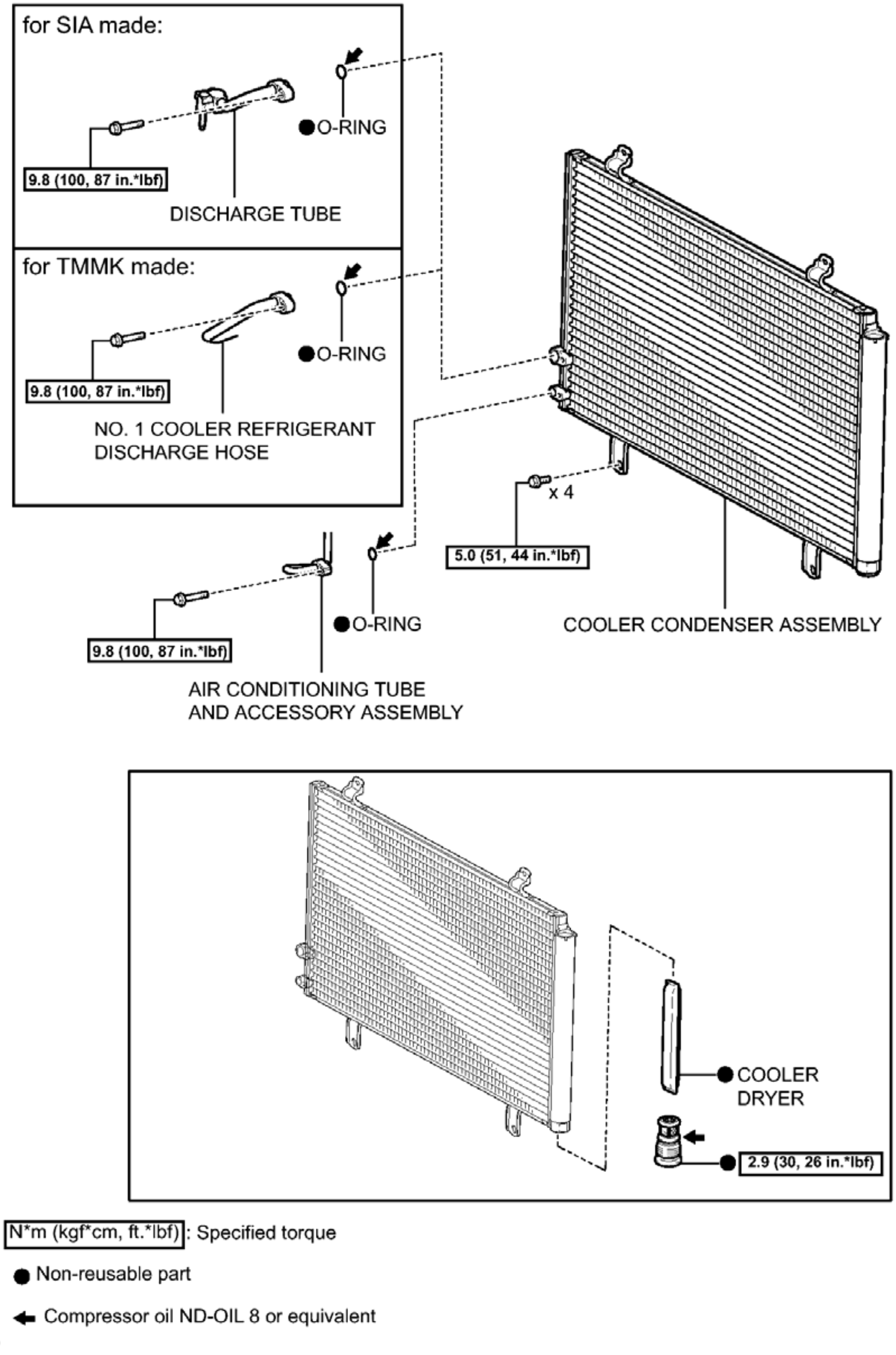
for SIA made:
●O-RING
9.8 (100, 87 in.*lbf)
DISCHARGE TUBE
for TMMK made:
●O-RING
9.8 (100, 87 in.*lbf)
NO. 1 COOLER REFRIGERANT DISCHARGE HOSE
x 4
5.0 (51, 44 in.*lbf)
●O-RING
9.8 (100, 87 in.*lbf)
COOLER CONDENSER ASSEMBLY
AIR CONDITIONING TUBE AND ACCESSORY ASSEMBLY
●COOLER DRYER
● 2.9 (30, 26 in.*lbf)
N*m (kgf*cm, ft.*lbf): Specified torque
● Non-reusable part
← Compressor oil ND-OIL 8 or equivalent
P

Fig. 196: Identifying Condenser Replacement Components With Torque Specifications (3 Of 3)
Courtesy of TOYOTA MOTOR SALES, U.S.A., INC.

ON-VEHICLE INSPECTION

ON-VEHICLE INSPECTION

1. **INSPECT COOLER CONDENSER ASSEMBLY**
    1. If the cooler condenser assembly fins are dirty, clean them with water and dry with compressed air.

        NOTE: **Do not damage the cooler condenser assembly fins.**

    2. If any cooler condenser assembly fins are bent, straighten them using a screwdriver or pliers.
2. **INSPECT FOR REFRIGERANT LEAK**
    1. Using a halogen leak detector, check pipe joints for refrigerant leaks.
    2. If a refrigerant leak is detected in a joint, check the torque of the joint.

REMOVAL

REMOVAL

1. **PRECAUTION**

    NOTE: **After turning the ignition switch off, waiting time may be required before disconnecting the cable from the negative (-) battery terminal. Therefore, make sure to read the disconnecting the cable from the negative (-) battery terminal notices before proceeding with work. Refer to PRECAUTION .**

2. **RECOVER REFRIGERANT FROM AIR CONDITIONING SYSTEM** . See step 1.
3. **DISCONNECT CABLE FROM NEGATIVE BATTERY TERMINAL**

    NOTE: **When disconnecting the cable, some systems need to be initialized after the cable is reconnected. Refer to INITIALIZATION .**

4. **REMOVE FRONT BUMPER ASSEMBLY**

    Refer to **REMOVAL** .

5. **REMOVE BATTERY (for 2GR-FE)** . Refer to **REMOVAL - Step 22** .
6. **REMOVE INLET AIR CLEANER ASSEMBLY (for 2AR-FE)** . Refer to **REMOVAL - Step 19** .
7. **REMOVE INLET NO. 2 AIR CLEANER (for 2GR-FE)** . Refer to **REMOVAL - Step 18** .
8. **REMOVE INLET NO. 1 AIR CLEANER (for 2GR-FE)** . Refer to **REMOVAL - Step 23** .
9. **REMOVE RADIATOR RESERVE TANK ASSEMBLY (for 2AR-FE)** . Refer to **REMOVAL - Step 11** .
10. **REMOVE RADIATOR RESERVE TANK ASSEMBLY (for 2GR-FE)** . Refer to **REMOVAL - Step 13** .
11. **REMOVE HOOD LOCK ASSEMBLY** . Refer to **REMOVAL - Step 9** .

12. **REMOVE UPPER RADIATOR SUPPORT (for 2AR-FE)** . Refer to **REMOVAL - Step 15** .
13. **REMOVE UPPER RADIATOR SUPPORT (for 2GR-FE)** . Refer to **REMOVAL - Step 17** .
14. **REMOVE RADIATOR SIDE DEFLECTOR LH**
    a. Disengage the 3 claws and guide remove the radiator side deflector LH.

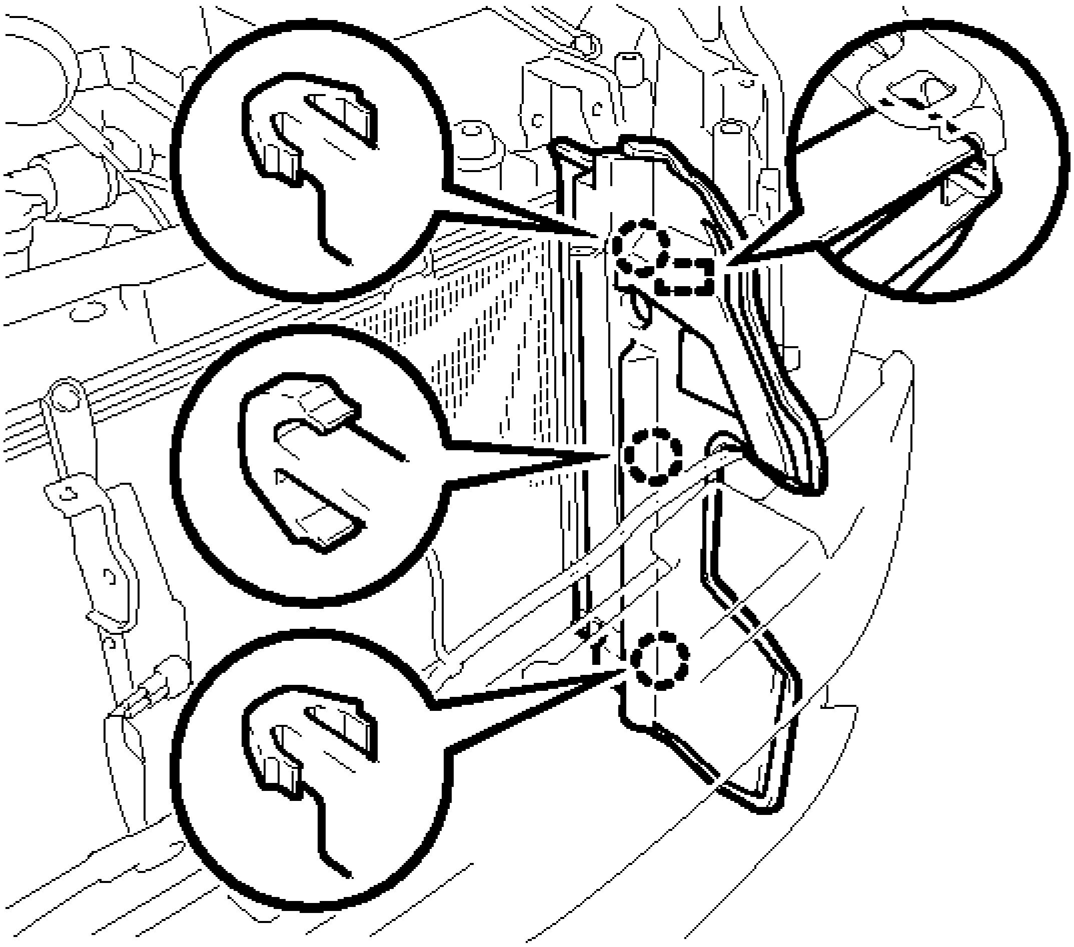

Fig. 197: Identifying Radiator Side Deflector LH Guide And Claws
Courtesy of TOYOTA MOTOR SALES, U.S.A., INC.

15. **REMOVE RADIATOR SIDE DEFLECTOR RH**
    a. Disengage the 3 claws and guide remove the radiator side deflector RH.

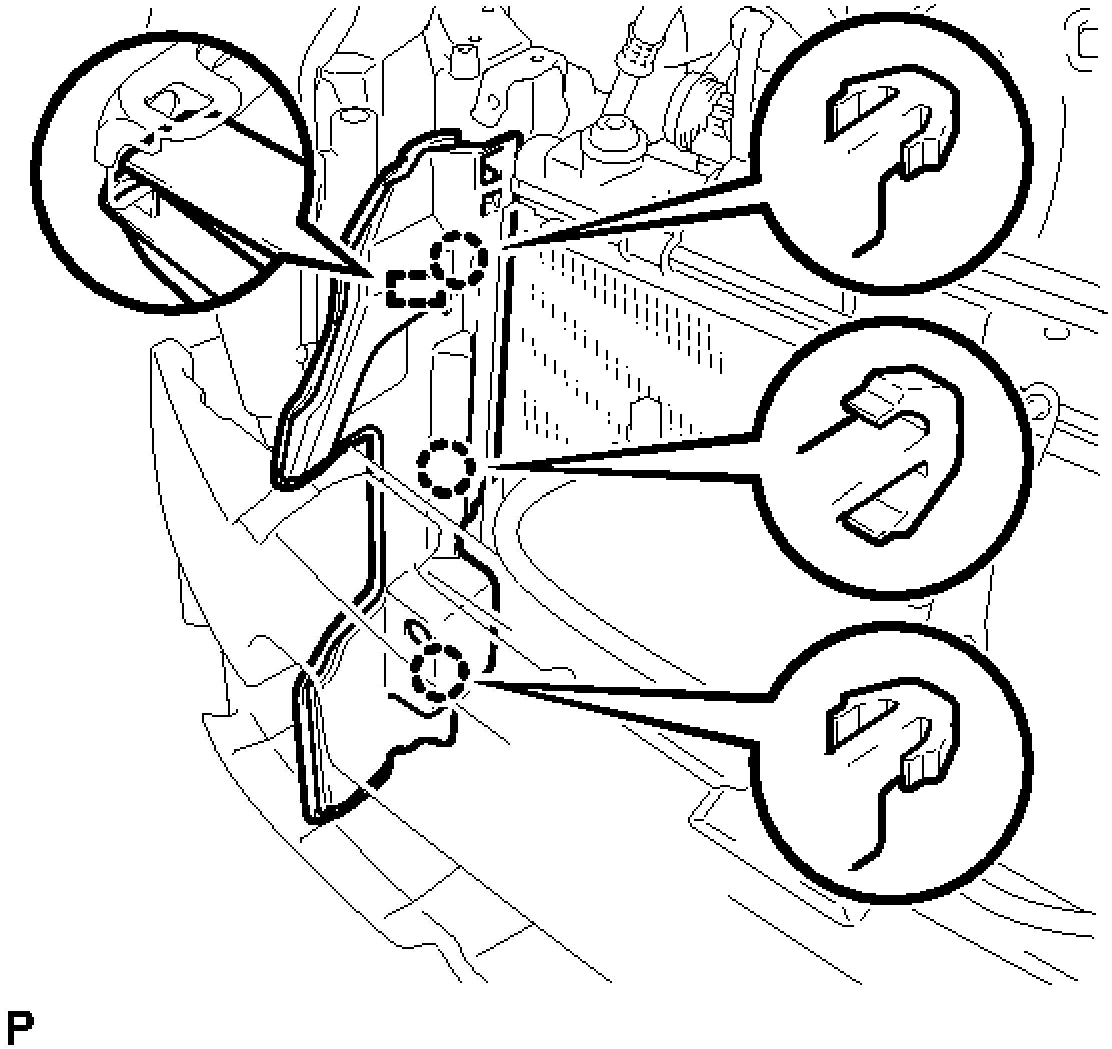

Fig. 198: Identifying Radiator Side Deflector RH Guide And Claws
Courtesy of TOYOTA MOTOR SALES, U.S.A., INC.

16. **DISCONNECT NO. 1 COOLER REFRIGERANT DISCHARGE HOSE (for TMMK Made)**
    1. Remove the bolt and disconnect the No. 1 cooler refrigerant discharge hose from the condenser.

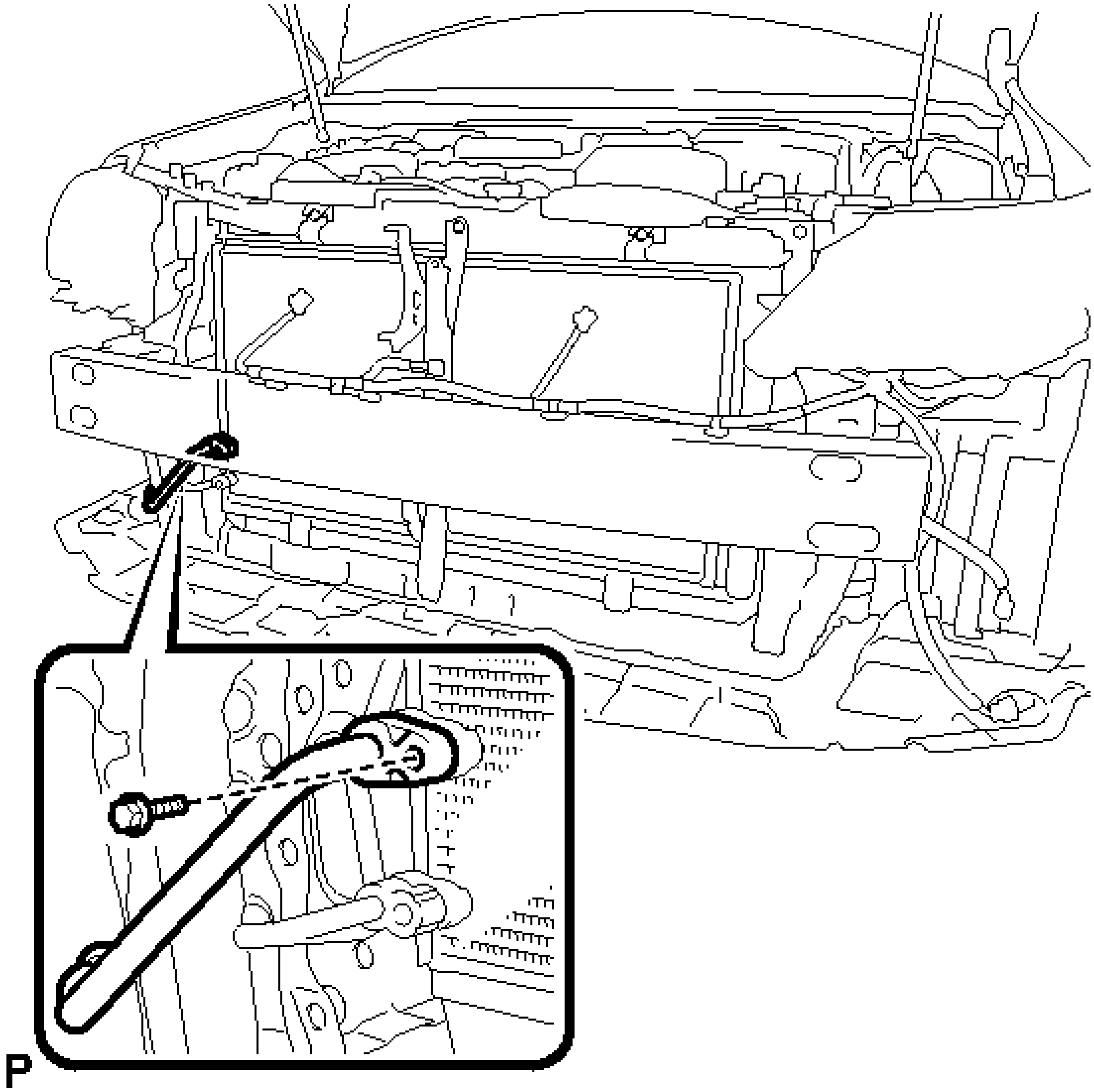

Fig. 199: Locating No. 1 Cooler Refrigerant Discharge Hose (For TMMK Made) Bolt
Courtesy of TOYOTA MOTOR SALES, U.S.A., INC.

b. Remove the O-ring from the No. 1 cooler refrigerant discharge hose.

NOTE: **Seal the openings of the disconnected parts using vinyl tape to prevent entry of moisture and foreign matter.**

17. **DISCONNECT DISCHARGE TUBE (for SIA Made)**
    a. Remove the bolt and disconnect the discharge tube from the condenser.

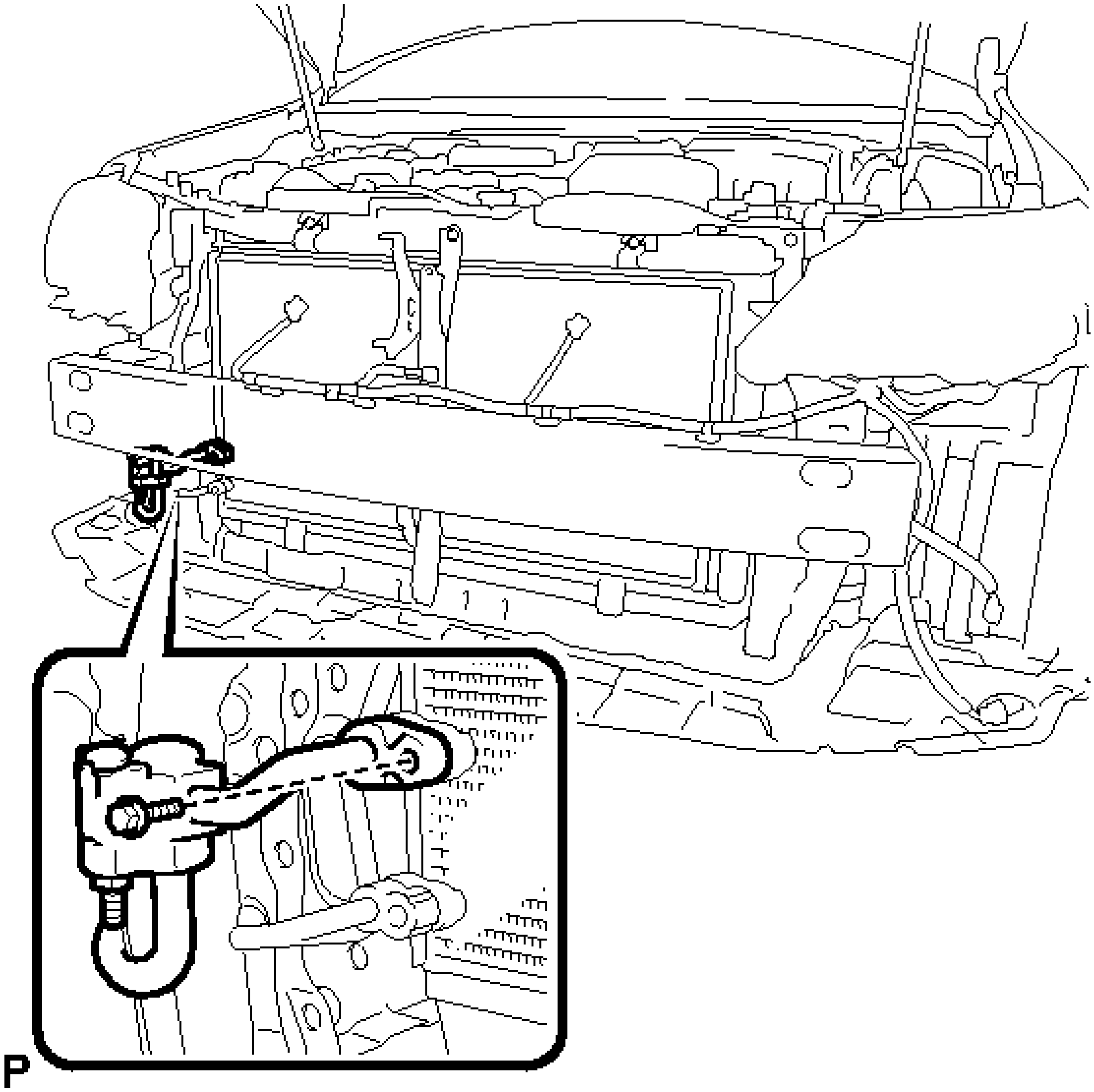

Fig. 200: Locating Discharge Tube (For SIA Made) Bolt
Courtesy of TOYOTA MOTOR SALES, U.S.A., INC.

b. Remove the O-ring from the discharge tube.

NOTE: Seal the openings of the disconnected parts using vinyl tape to prevent entry of moisture and foreign matter.

18. **DISCONNECT AIR CONDITIONING TUBE AND ACCESSORY ASSEMBLY**

a. Remove the bolt and disconnect the air conditioning tube and accessory assembly from the condenser.

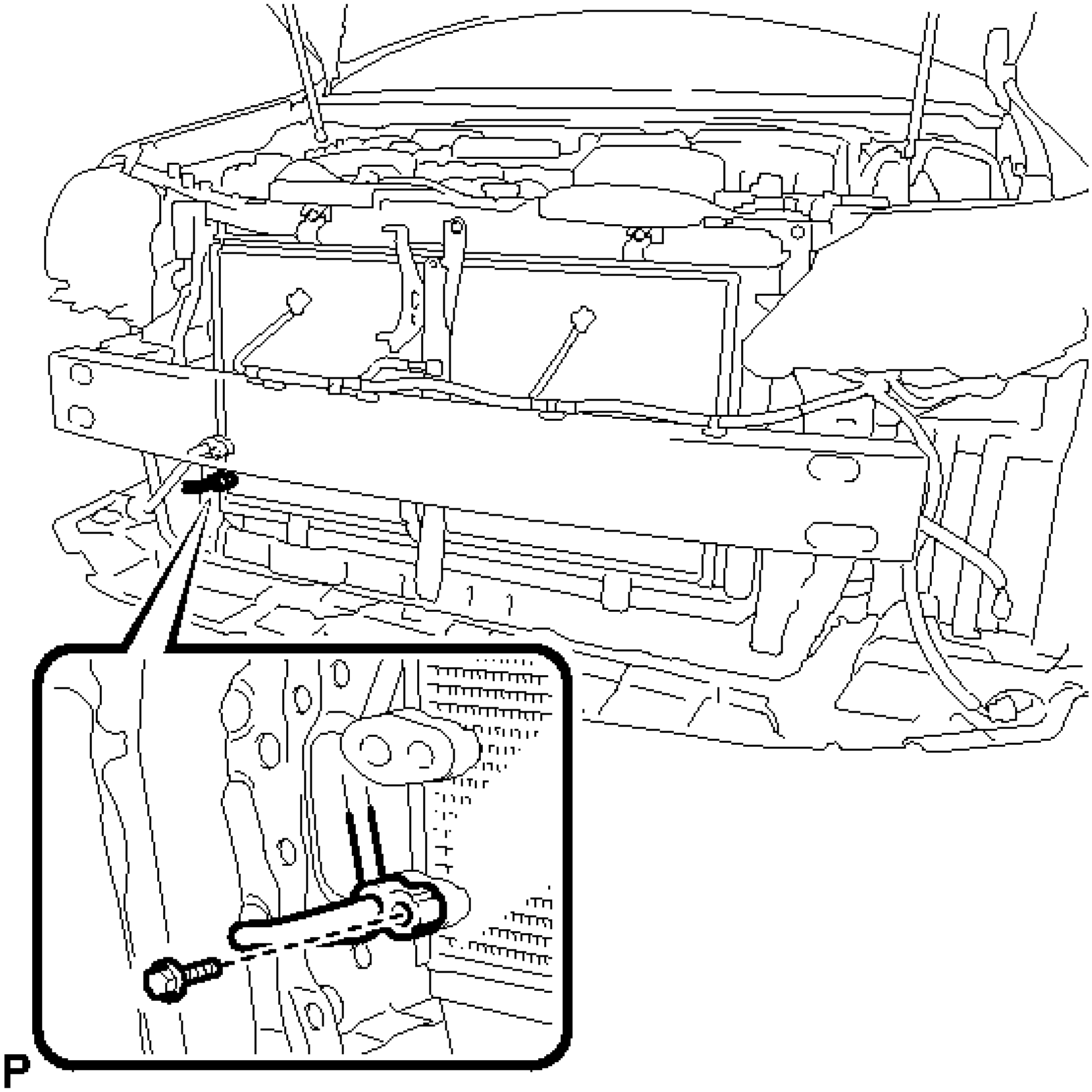

Fig. 201: Locating Air Conditioning Tube And Accessory Assembly Bolt
Courtesy of TOYOTA MOTOR SALES, U.S.A., INC.

b. Remove the O-ring from the air conditioning tube and accessory assembly.

NOTE: **Seal the openings of the disconnected parts using vinyl tape to prevent entry of moisture and foreign matter.**

19. **REMOVE COOLER CONDENSER ASSEMBLY**
    a. Remove the 4 bolts.

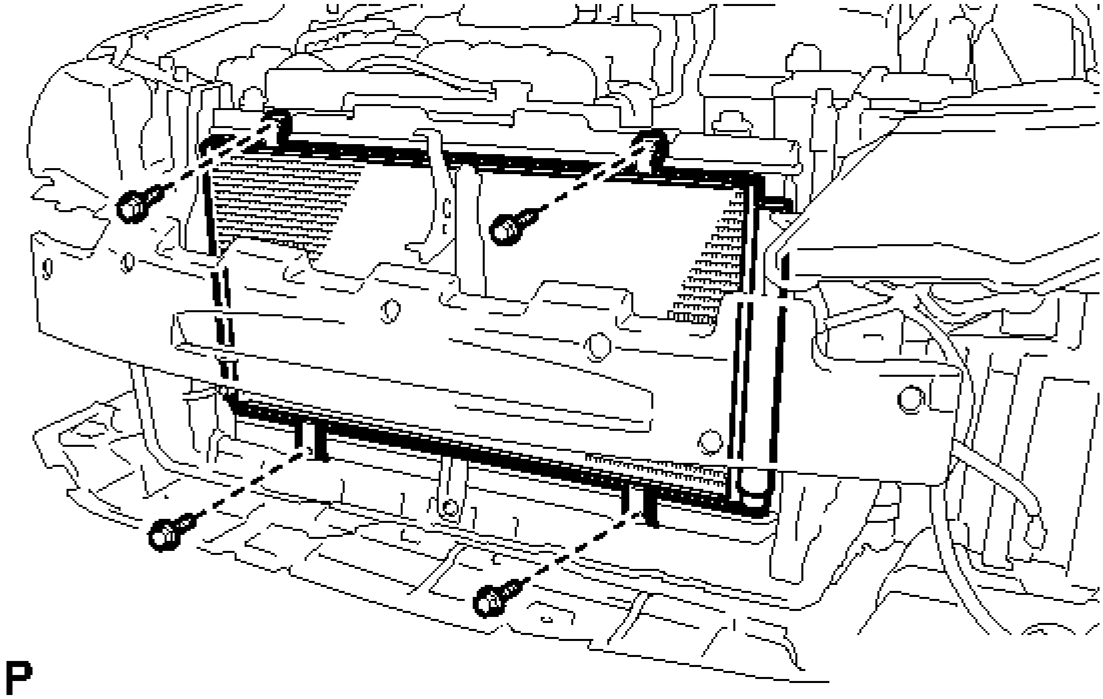

Fig. 202: Locating Cooler Condenser Assembly Bolts
Courtesy of TOYOTA MOTOR SALES, U.S.A., INC.

b. Disengage the 2 guides and remove the cooler condenser assembly as shown in the illustration.

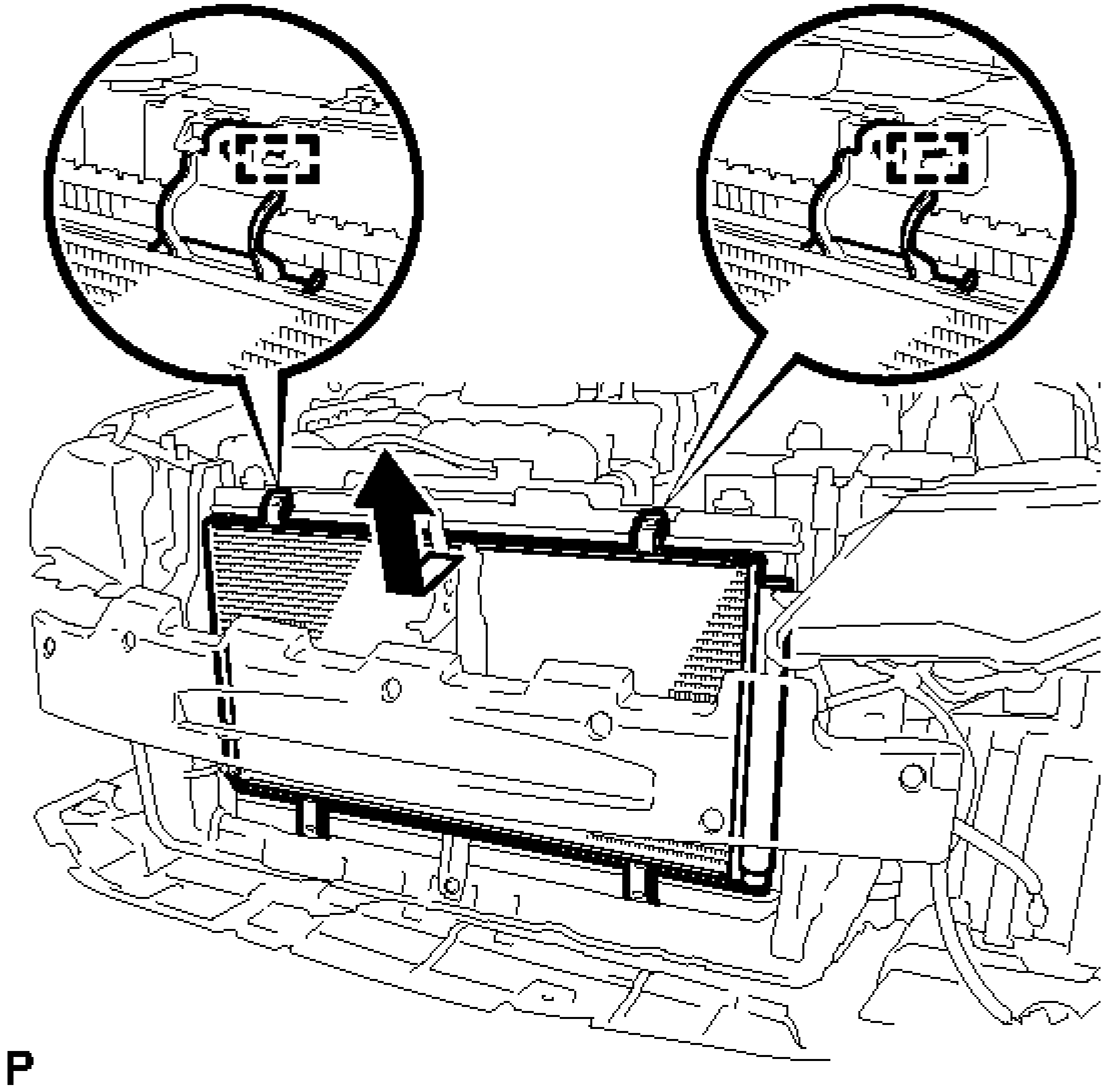

Fig. 203: Removing Cooler Condenser Assembly
Courtesy of TOYOTA MOTOR SALES, U.S.A., INC.

DISASSEMBLY

DISASSEMBLY

1. **REMOVE COOLER DRYER**
    a. Using a 14 mm straight hexagon wrench, remove the cap from the modulator.

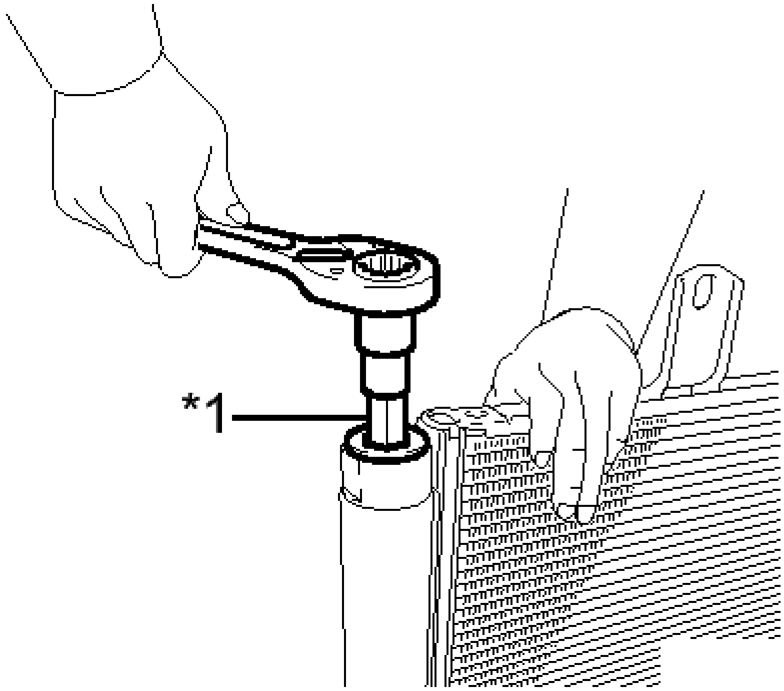

Fig. 204: Identifying Modulator Cap
Courtesy of TOYOTA MOTOR SALES, U.S.A., INC.

TEXT IN ILLUSTRATION

*1	14 mm Straight Hexagon Wrench

b. Using pliers, remove the cooler dryer from the modulator.

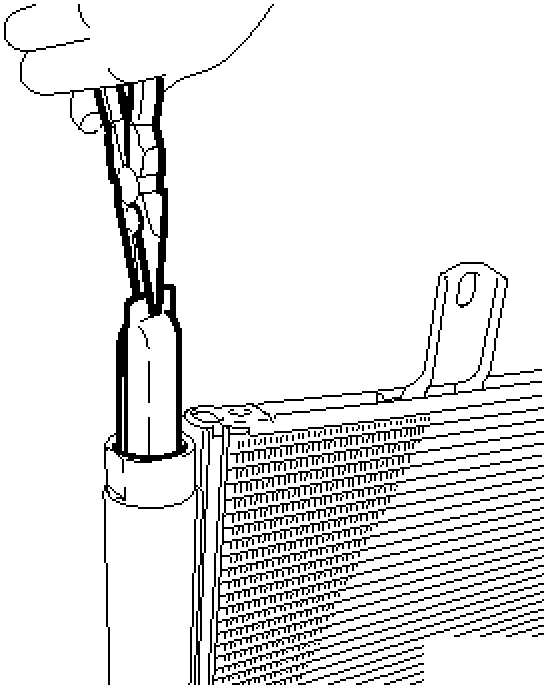

Fig. 205: Identifying Cooler Dryer
Courtesy of TOYOTA MOTOR SALES, U.S.A., INC.

REASSEMBLY

REASSEMBLY

1. **INSTALL COOLER DRYER**
   a. Using pliers, install a new cooler dryer to the modulator.

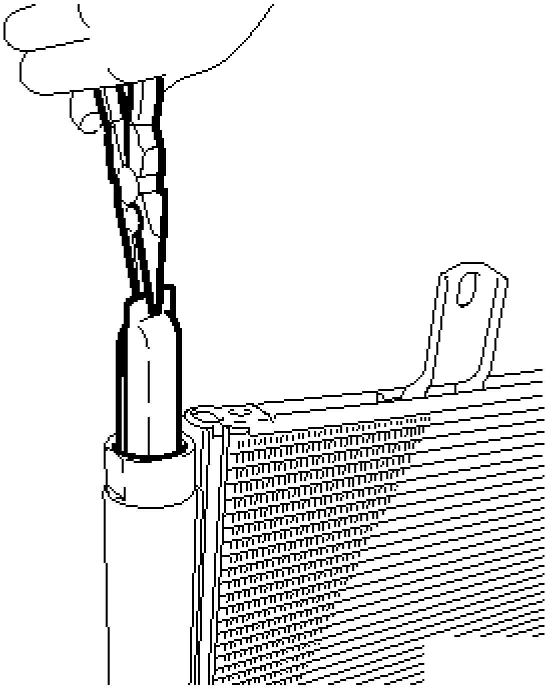

P

Fig. 206: Identifying Cooler Dryer
Courtesy of TOYOTA MOTOR SALES, U.S.A., INC.

b. Apply a sufficient amount of compressor oil to a new O-ring and the fitting surfaces of the cap.

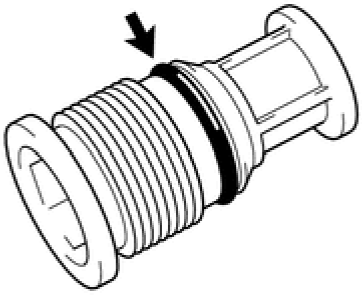

P

Fig. 207: View Of O-Ring On Cap
Courtesy of TOYOTA MOTOR SALES, U.S.A., INC.

Compressor oil

ND-OIL 8 or equivalent

c. Using a 14 mm straight hexagon wrench, install the cap to the modulator.

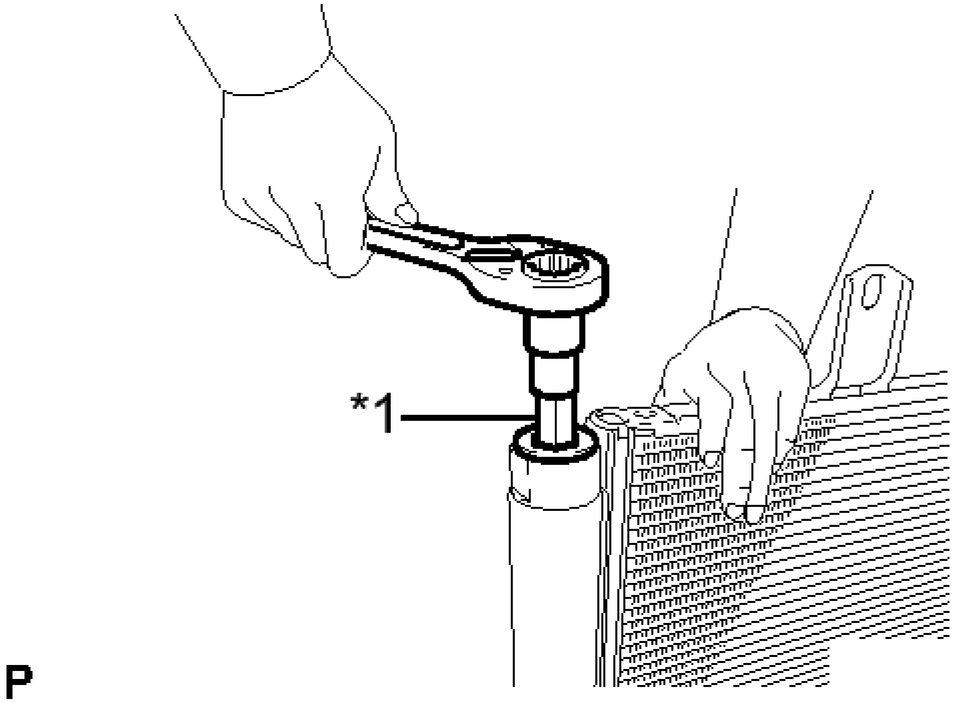

Fig. 208: Identifying Modulator Cap
Courtesy of TOYOTA MOTOR SALES, U.S.A., INC.

TEXT IN ILLUSTRATION

*1	14 mm Straight Hexagon Wrench

Torque: 2.9 N*m (30 kgf*cm, 26 in.*lbf)

NOTE:

- **Keep the O-ring and O-ring fitting surfaces free from dirt or foreign matter.**
- **Do not use any compressor oil other than ND-OIL 8 or equivalent.**

INSTALLATION

INSTALLATION

1. **INSTALL COOLER CONDENSER ASSEMBLY**
   a. Engage the 2 guides as shown in the illustration.

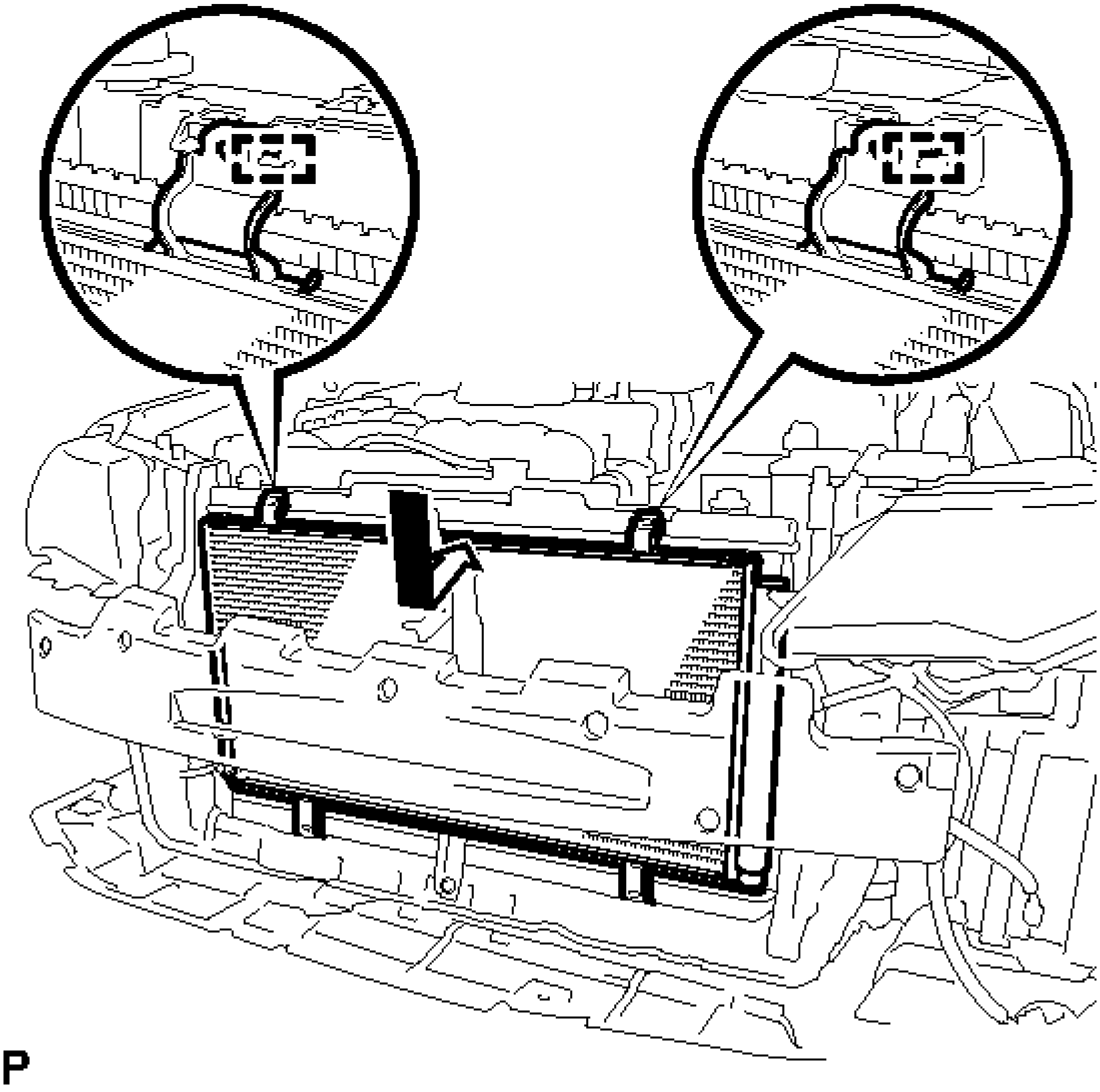

Fig. 209: Installing Cooler Condenser Assembly
Courtesy of TOYOTA MOTOR SALES, U.S.A., INC.

b. Install the cooler condenser assembly with the 4 bolts.

Torque: 5.0 N*m (51 kgf*cm, 44 in.*lbf)

HINT:

If the condenser is replaced with a new one, add compressor oil to the new condenser.

Capacity

40 cc (1.4 fl. oz.)

Compressor oil

ND-8 or equivalent

2. **CONNECT AIR CONDITIONING TUBE AND ACCESSORY ASSEMBLY**
    a. Remove the vinyl tape from the tube and the connecting part of the cooler condenser assembly.
    b. Sufficiently apply compressor oil to a new O-ring to the fitting surface of the tube joint.

    Compressor oil

    ND-OIL 8 or equivalent

    c. Install the O-ring to the air conditioning tube and accessory assembly.
    d. Install the air conditioning tube and accessory assembly to the cooler condenser assembly with the bolt.

    Torque: 9.8 N*m (100 kgf*cm, 87 in.*lbf)

3. **CONNECT NO. 1 COOLER REFRIGERANT DISCHARGE HOSE (for TMMK Made)**
    a. Remove the vinyl tape from the pipe and the connecting part of the cooler condenser assembly.
    b. Sufficiently apply compressor oil to a new O-ring to the fitting surface of the pipe joint.

    Compressor oil

    ND-OIL 8 or equivalent

    c. Install the O-ring to the No. 1 cooler refrigerant discharge hose.
    d. Install the No. 1 cooler refrigerant discharge hose to the cooler condenser assembly with the bolt.

    Torque: 9.8 N*m (100 kgf*cm, 87 in.*lbf)

4. **CONNECT DISCHARGE TUBE (for SIA Made)**
    a. Remove the vinyl tape from the pipe and the connecting part of the cooler condenser assembly.
    b. Sufficiently apply compressor oil to a new O-ring and the fitting surface of the pipe joint.

    Compressor oil

    ND-OIL 8 or equivalent

    c. Install the O-ring the discharge tube.

    Torque: 9.8 N*m (100 kgf*cm, 87 in.*lbf)

    d. Install the discharge tube to the cooler condenser assembly with the bolt.
5. **INSTALL RADIATOR SIDE DEFLECTOR LH**
    a. Engage the guide and 3 claws to install the radiator side deflector LH.

6. **INSTALL RADIATOR SIDE DEFLECTOR RH**
    a. Engage the guide and 3 claws to install the radiator side deflector RH.
7. **INSTALL UPPER RADIATOR SUPPORT (for 2AR-FE)** . Refer to **INSTALLATION - Step 2** .
8. **INSTALL UPPER RADIATOR SUPPORT (for 2GR-FE)** . Refer to **INSTALLATION - Step 2** .
9. **INSTALL HOOD LOCK ASSEMBLY** . Refer to **INSTALLATION - Step 2** .
10. **INSTALL RADIATOR RESERVE TANK ASSEMBLY (for 2AR-FE)** . Refer to **INSTALLATION - Step 6** .
11. **INSTALL RADIATOR RESERVE TANK ASSEMBLY (for 2GR-FE)** . Refer to **INSTALLATION - Step 6** .
12. **INSTALL INLET AIR CLEANER ASSEMBLY (for 2AR-FE)** . Refer to **INSTALLATION - Step 53** .
13. **INSTALL INLET NO. 1 AIR CLEANER (for 2GR-FE)** . Refer to **INSTALLATION - Step 54** .
14. **INSTALL INLET NO. 2 AIR CLEANER (for 2GR-FE)** . Refer to **INSTALLATION - Step 59** .
15. **INSTALL BATTERY (for 2GR-FE)** . Refer to **INSTALLATION - Step 55** .
16. **INSTALL FRONT BUMPER ASSEMBLY**

    Refer to **INSTALLATION** .

17. **CONNECT CABLE TO NEGATIVE BATTERY TERMINAL**

    NOTE: When disconnecting the cable, some systems need to be initialized after the cable is reconnected. Refer to INITIALIZATION .

18. **CHARGE AIR CONDITIONING SYSTEM WITH REFRIGERANT** . See step 2.
19. **WARM UP ENGINE** . See step 3.
20. **INSPECT FOR REFRIGERANT LEAK** . See step 4.
21. **ADJUST HOOD SUB-ASSEMBLY**

    Refer to **ADJUSTMENT** .

ROOM TEMPERATURE SENSOR

COMPONENTS

ILLUSTRATION

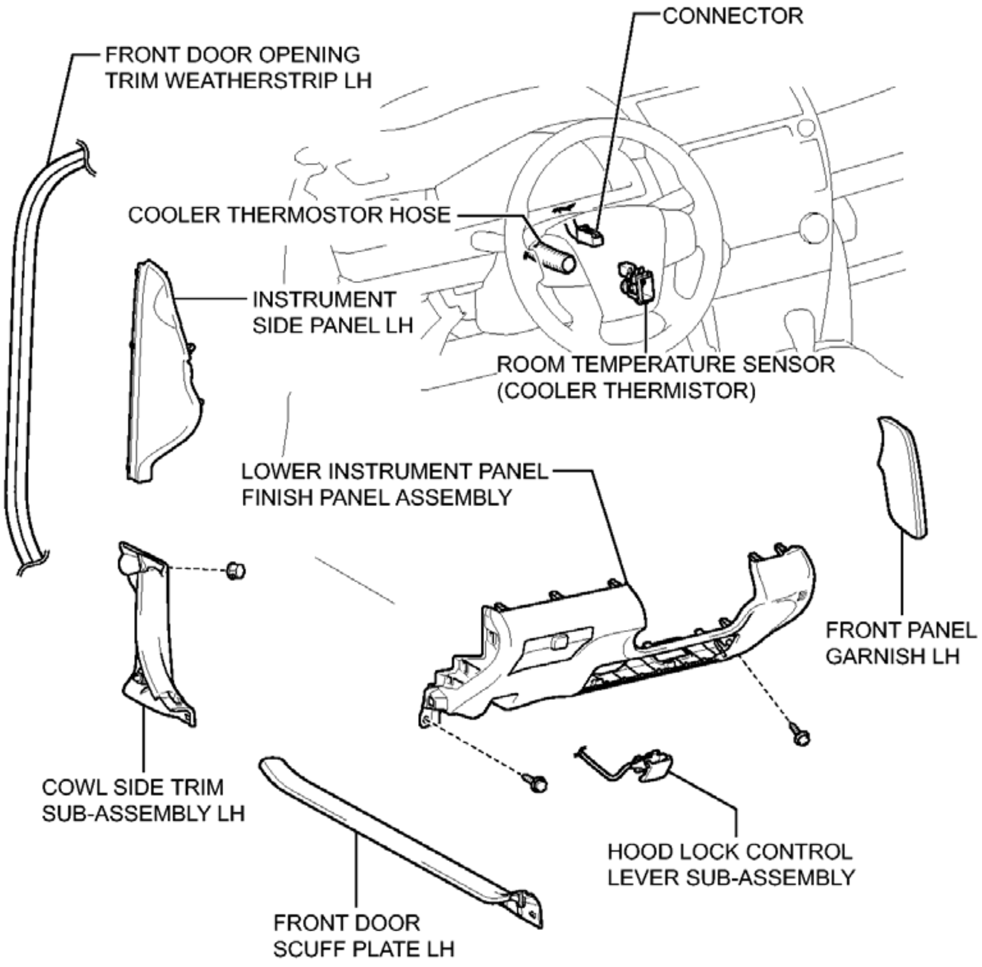
CONNECTOR
FRONT DOOR OPENING TRIM WEATHERSTRIP LH
COOLER THERMOSTOR HOSE
INSTRUMENT SIDE PANEL LH
ROOM TEMPERATURE SENSOR (COOLER THERMISTOR)
LOWER INSTRUMENT PANEL FINISH PANEL ASSEMBLY
FRONT PANEL GARNISH LH
COWL SIDE TRIM SUB-ASSEMBLY LH
HOOD LOCK CONTROL LEVER SUB-ASSEMBLY
FRONT DOOR SCUFF PLATE LH
P

Fig. 210: Identifying Room Temperature Sensor Replacement Components
Courtesy of TOYOTA MOTOR SALES, U.S.A., INC.

REMOVAL

REMOVAL

1. **REMOVE FRONT DOOR SCUFF PLATE LH** . Refer to **REMOVAL - Step 3** .
2. **REMOVE COWL SIDE TRIM SUB-ASSEMBLY LH** . Refer to **REMOVAL - Step 4** .
3. **DISCONNECT FRONT DOOR OPENING TRIM WEATHERSTRIP LH** . Refer to **REMOVAL - Step 5** .
4. **REMOVE INSTRUMENT SIDE PANEL LH** . Refer to **REMOVAL - Step 6** .
5. **REMOVE FRONT PANEL GARNISH LH** . Refer to **REMOVAL - Step 11** .
6. **DISCONNECT HOOD LOCK CONTROL LEVER SUB-ASSEMBLY** . Refer to **REMOVAL - Step 12** .
7. **REMOVE LOWER INSTRUMENT PANEL FINISH PANEL ASSEMBLY** . Refer to **REMOVAL -**

Step 47 .

8. **REMOVE ROOM TEMPERATURE SENSOR (COOLER THERMISTOR)**
    a. Disengage the 2 claws as shown in the illustration.

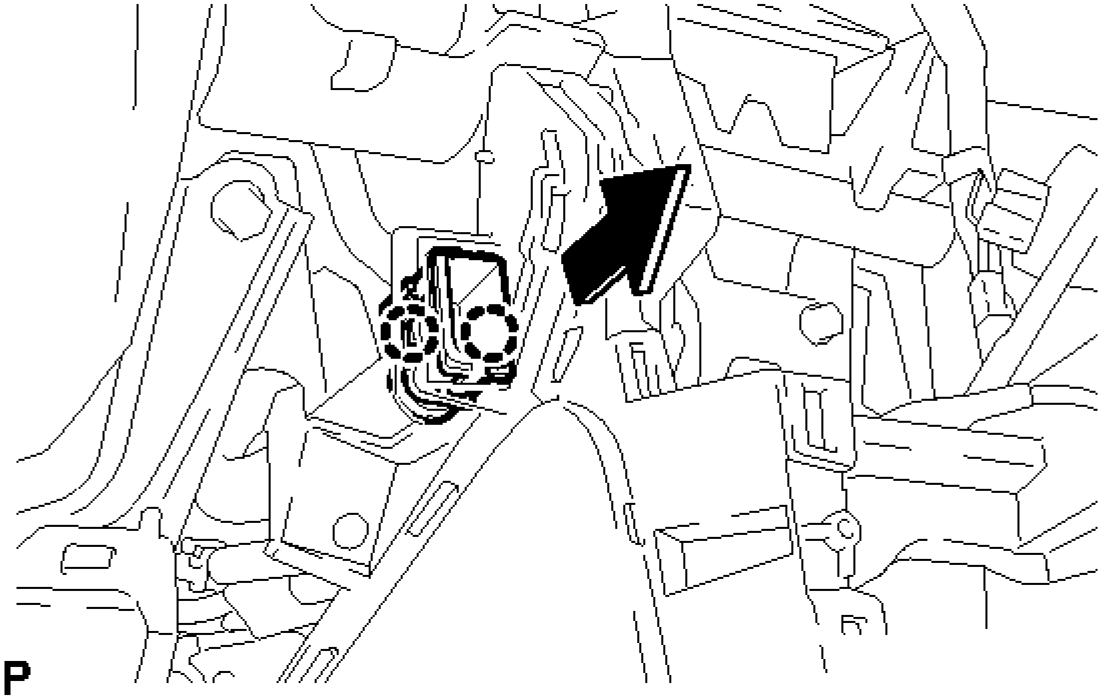

Fig. 211: Removing Room Temperature Sensor
Courtesy of TOYOTA MOTOR SALES, U.S.A., INC.

    b. Disconnect the cooler thermistor hose and connector and remove the room temperature sensor (cooler thermistor).

INSPECTION

INSPECTION

1. **INSPECT ROOM TEMPERATURE SENSOR (COOLER THERMISTOR)**
    a. Measure the resistance according to the value(s) in the table below.

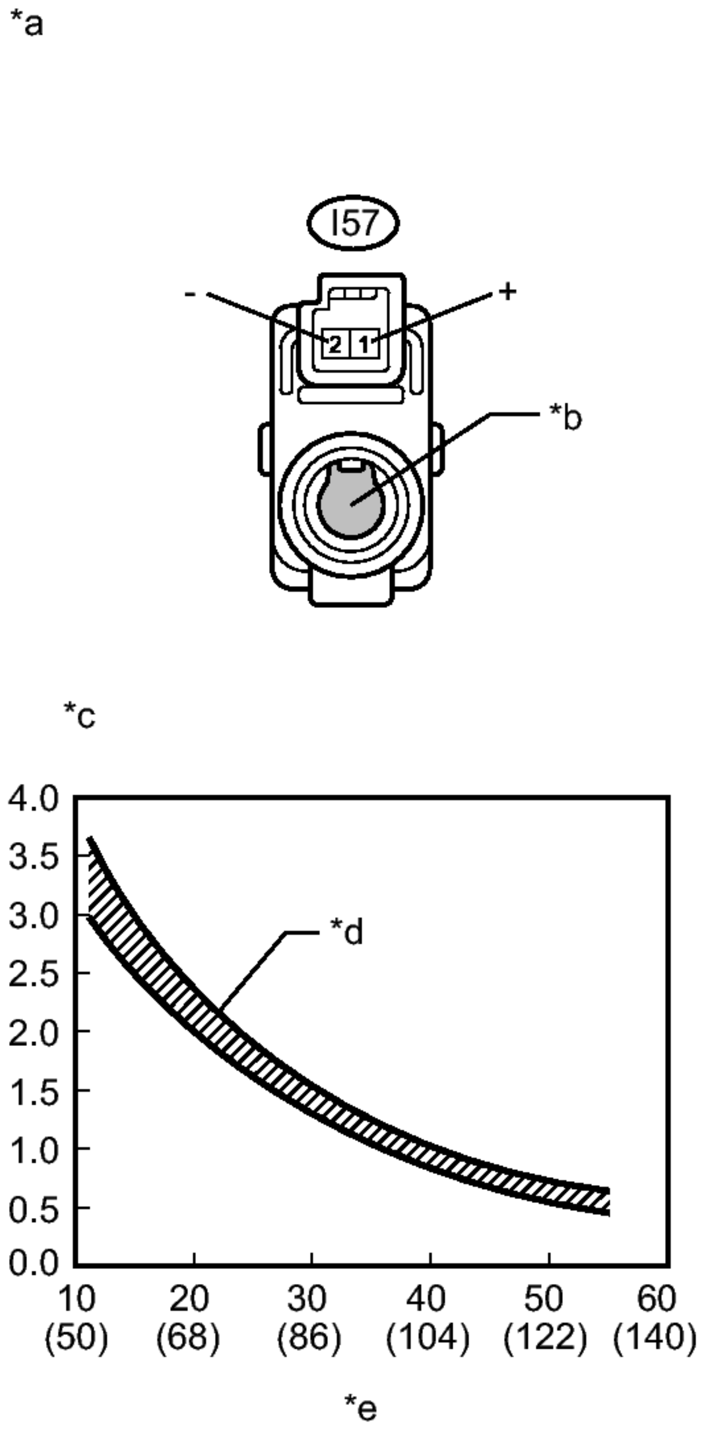
*a
I57
-
+
2
1
*b
*c
4.0
3.5
3.0
2.5
2.0
1.5
1.0
0.5
0.0
*d
10
(50)
20
(68)
30
(86)
40
(104)
50
(122)
60
(140)
*e

Fig. 212: Inspecting Room Temperature Sensor (Cooler Thermistor) With Graph
Courtesy of TOYOTA MOTOR SALES, U.S.A., INC.

Standard Resistance

Tester Connection	Condition	Specified Condition
I57-1 (+) - I57-2 (-)	10°C (50°F)	3.00 to 3.73 kohms
I57-1 (+) - I57-2 (-)	15°C (59°F)	2.45 to 2.88 kohms
I57-1 (+) - I57-2 (-)	20°C (68°F)	1.95 to 2.30 kohms
I57-1 (+) - I57-2 (-)	25°C (77°F)	1.60 to 1.80 kohms
I57-1 (+) - I57-2 (-)	30°C (86°F)	1.28 to 1.47 kohms
I57-1 (+) - I57-2 (-)	35°C (95°F)	1.00 to 1.22 kohms
I57-1 (+) - I57-2 (-)	40°C (104°F)	0.80 to 1.00 kohms
I57-1 (+) - I57-2 (-)	45°C (113°F)	0.65 to 0.85 kohms
I57-1 (+) - I57-2 (-)	50°C (122°F)	0.50 to 0.70 kohms
I57-1 (+) - I57-2 (-)	55°C (131°F)	0.44 to 0.60 kohms
I57-1 (+) - I57-2 (-)	60°C (140°F)	0.36 to 0.50 kohms

If the resistance is not as specified, replace the room temperature sensor (cooler thermistor).

TEXT IN ILLUSTRATION

*a	Component without harness connected (Room Temperature Sensor

	(Cooler Thermistor))
*b	Sensing Portion
*c	Resistance (kohms)
*d	Allowable Range
*e	Temperature (°C (°F))

NOTE:

- **Hold the sensor only by its connector. Touching the sensor may change the resistance value.**
- **When measuring, the sensor temperature must be the same as the ambient temperature.**

HINT:

As the temperature increases, the resistance decreases (see the graph found in **Fig. 212**).

INSTALLATION

INSTALLATION

1. **INSTALL ROOM TEMPERATURE SENSOR (COOLER THERMISTOR)**
    a. Connect the connector and cooler thermistor hose.
    b. Engage the 2 claws to install the room temperature sensor (cooler thermistor) as shown in the illustration.

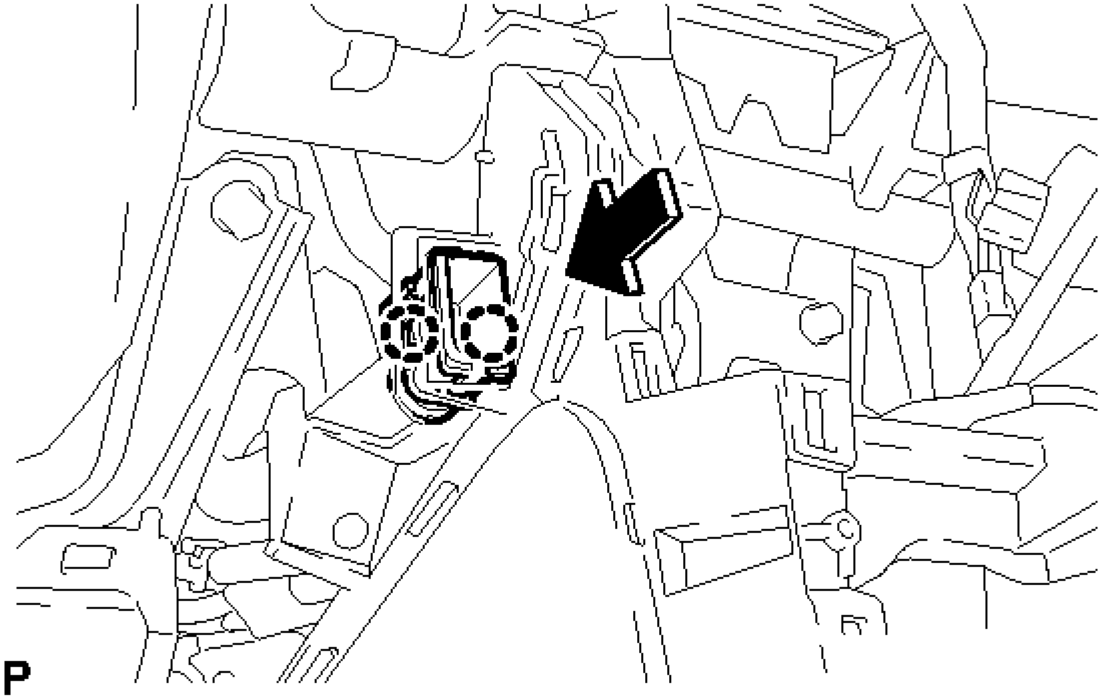

Fig. 213: Installing Room Temperature Sensor
Courtesy of TOYOTA MOTOR SALES, U.S.A., INC.

2. **INSTALL LOWER INSTRUMENT PANEL FINISH PANEL ASSEMBLY** . Refer to **INSTALLATION - Step 6** .
3. **CONNECT HOOD LOCK CONTROL LEVER SUB-ASSEMBLY** . Refer to **INSTALLATION - Step 41** .
4. **INSTALL FRONT PANEL GARNISH LH** . Refer to **INSTALLATION - Step 42** .
5. **INSTALL INSTRUMENT SIDE PANEL LH** . Refer to **INSTALLATION - Step 47** .
6. **INSTALL FRONT DOOR OPENING TRIM WEATHERSTRIP LH** . Refer to **INSTALLATION - Step 42** .
7. **INSTALL COWL SIDE TRIM SUB-ASSEMBLY LH** . Refer to **INSTALLATION - Step 43** .
8. **INSTALL FRONT DOOR SCUFF PLATE LH** . Refer to **INSTALLATION - Step 44** .

AMBIENT TEMPERATURE SENSOR

COMPONENTS

ILLUSTRATION

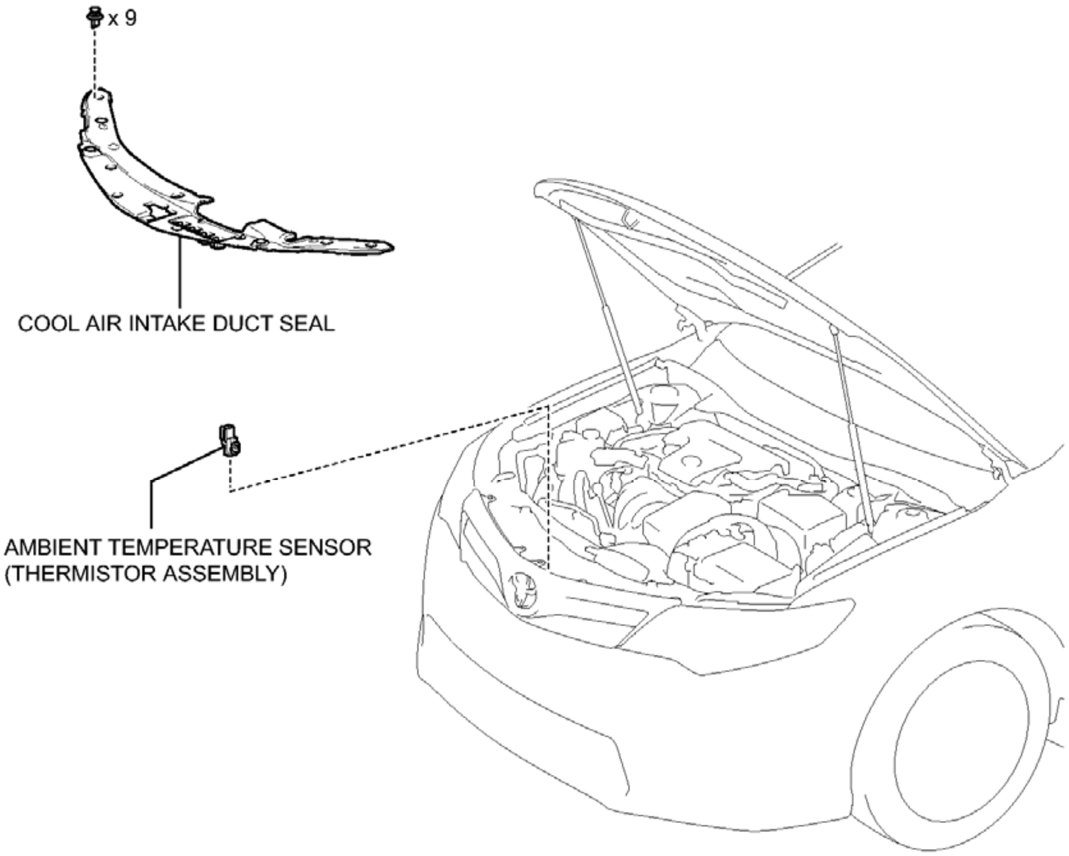
x 9
COOL AIR INTAKE DUCT SEAL
AMBIENT TEMPERATURE SENSOR
(THERMISTOR ASSEMBLY)
P

Fig. 214: Identifying Ambient Temperature Sensor Replacement Components
Courtesy of TOYOTA MOTOR SALES, U.S.A., INC.

REMOVAL

REMOVAL

1. **REMOVE COOL AIR INTAKE DUCT SEAL** . Refer to **REMOVAL - Step 1** .
2. **REMOVE AMBIENT TEMPERATURE SENSOR (THERMISTOR ASSEMBLY)**
    a. Disconnect the connector.

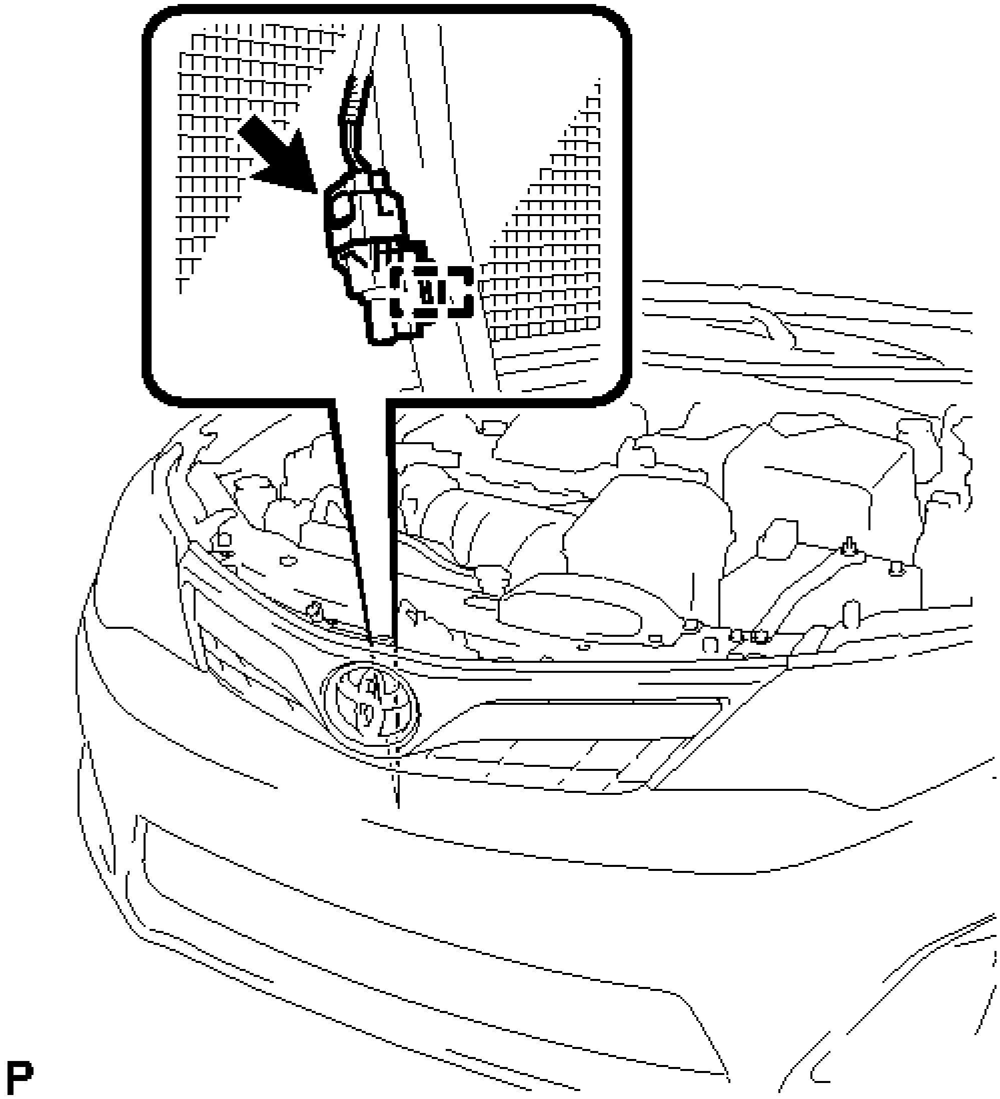

Fig. 215: Locating Ambient Temperature Sensor Connector
Courtesy of TOYOTA MOTOR SALES, U.S.A., INC.

b. Disengage the clamp and remove the ambient temperature sensor (thermistor assembly).

INSPECTION

INSPECTION

1. **INSPECT AMBIENT TEMPERATURE SENSOR (THERMISTOR ASSEMBLY)**
    a. Measure the resistance according to the value(s) in the table below.

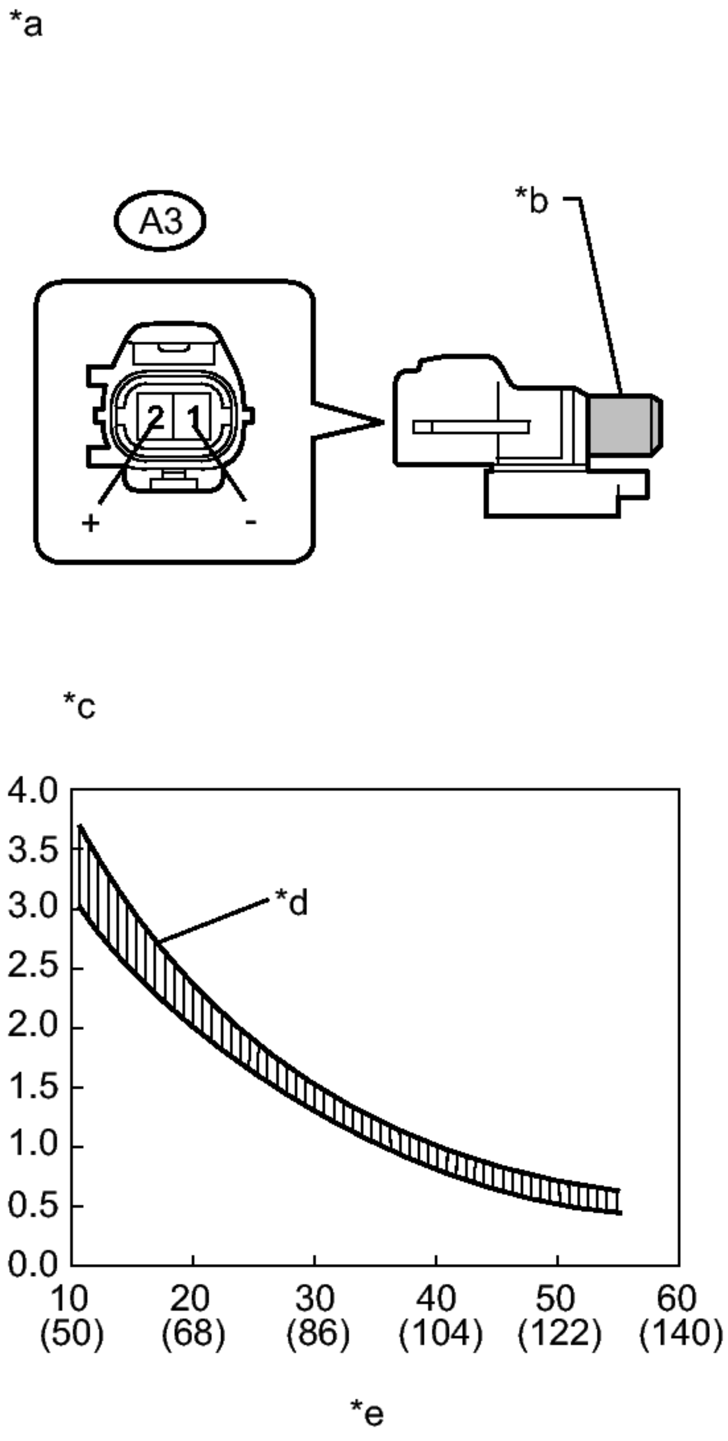
*a
A3
2
1
+
-
*b
*c
4.0
3.5
3.0
2.5
2.0
1.5
1.0
0.5
0.0
*d
10
(50)
20
(68)
30
(86)
40
(104)
50
(122)
60
(140)
*e

Fig. 216: Inspecting Ambient Temperature Sensor (Thermistor Assembly) With Graph
Courtesy of TOYOTA MOTOR SALES, U.S.A., INC.

Standard resistance

Tester Connection	**Condition**	**Specified Condition**
A3-1 (-) - A3-2 (+)	10°C (50°F)	3.00 to 3.73 kohms
A3-1 (-) - A3-2 (+)	15°C (59°F)	2.45 to 2.88 kohms
A3-1 (-) - A3-2 (+)	20°C (68°F)	1.95 to 2.30 kohms
A3-1 (-) - A3-2 (+)	25°C (77°F)	1.60 to 1.80 kohms
A3-1 (-) - A3-2 (+)	30°C (86°F)	1.28 to 1.47 kohms
A3-1 (-) - A3-2 (+)	35°C (95°F)	1.00 to 1.22 kohms
A3-1 (-) - A3-2 (+)	40°C (104°F)	0.80 to 1.00 kohms
A3-1 (-) - A3-2 (+)	45°C (113°F)	0.65 to 0.85 kohms
A3-1 (-) - A3-2 (+)	50°C (122°F)	0.50 to 0.70 kohms
A3-1 (-) - A3-2 (+)	55°C (131°F)	0.44 to 0.60 kohms
A3-1 (-) - A3-2 (+)	60°C (140°F)	0.36 to 0.50 kohms

If the resistance is not as specified, replace the ambient temperature sensor (thermistor assembly).

TEXT IN ILLUSTRATION

*a	Component without harness connected (Ambient Temperature Sensor

	(Thermistor Assembly))
*b	Sensing Portion
*c	Resistance (kohms)
*d	Allowable Range
*e	Temperature (°C (°F))

NOTE:

- **Even slightly touching the sensor may change the resistance value. Be sure to hold the connector of the sensor.**
- **When measuring, the sensor temperature must be the same as the ambient temperature.**

HINT:

As the temperature increases, the resistance decreases (see the graph found in **Fig. 216**).

INSTALLATION

INSTALLATION

1. **INSTALL AMBIENT TEMPERATURE SENSOR (THERMISTOR ASSEMBLY)**
    a. Engage the clamp to install the ambient temperature sensor (thermistor assembly).
    b. Connect the connector.
2. **INSTALL COOL AIR INTAKE DUCT SEAL** . Refer to **INSTALLATION - Step 4** .

FRONT EVAPORATOR TEMPERATURE SENSOR

COMPONENTS

ILLUSTRATION

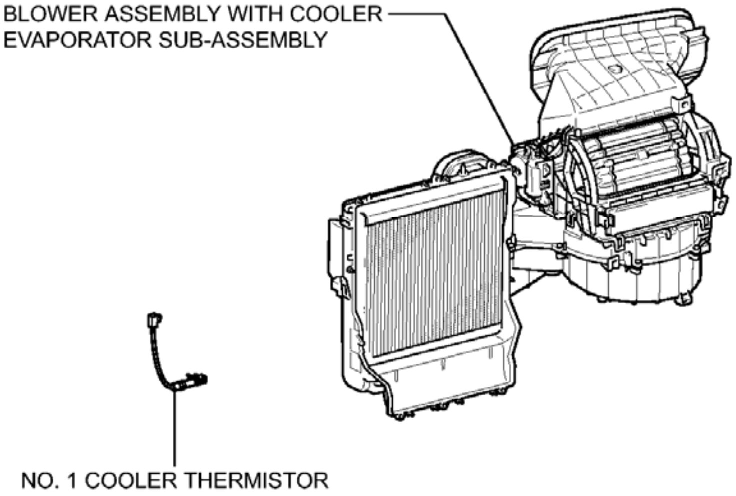
BLOWER ASSEMBLY WITH COOLER EVAPORATOR SUB-ASSEMBLY
NO. 1 COOLER THERMISTOR

P

Fig. 217: Identifying Front Evaporator Temperature Sensor Replacement Components
Courtesy of TOYOTA MOTOR SALES, U.S.A., INC.

REMOVAL

REMOVAL

1. **REMOVE BLOWER ASSEMBLY WITH COOLER EVAPORATOR SUB-ASSEMBLY**

   Refer to **REMOVAL**.

2. **REMOVE NO. 1 COOLER THERMISTOR**
   a. Disengage the 2 clamps.

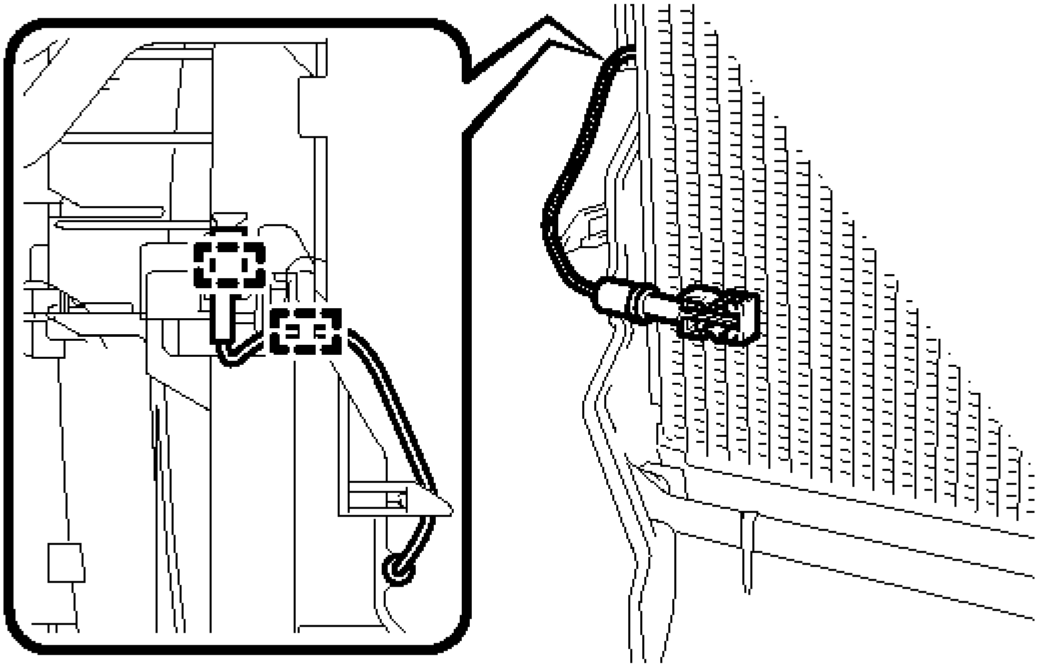

Fig. 218: Identifying No. 1 Cooler Thermistor Clamps
Courtesy of TOYOTA MOTOR SALES, U.S.A., INC.

b. Remove the No. 1 cooler thermistor.

INSPECTION

INSPECTION

1. **INSPECT EVAPORATOR TEMPERATURE SENSOR (NO. 1 COOLER THERMISTOR)**
   a. Measure the resistance according to the value(s) in the table below.

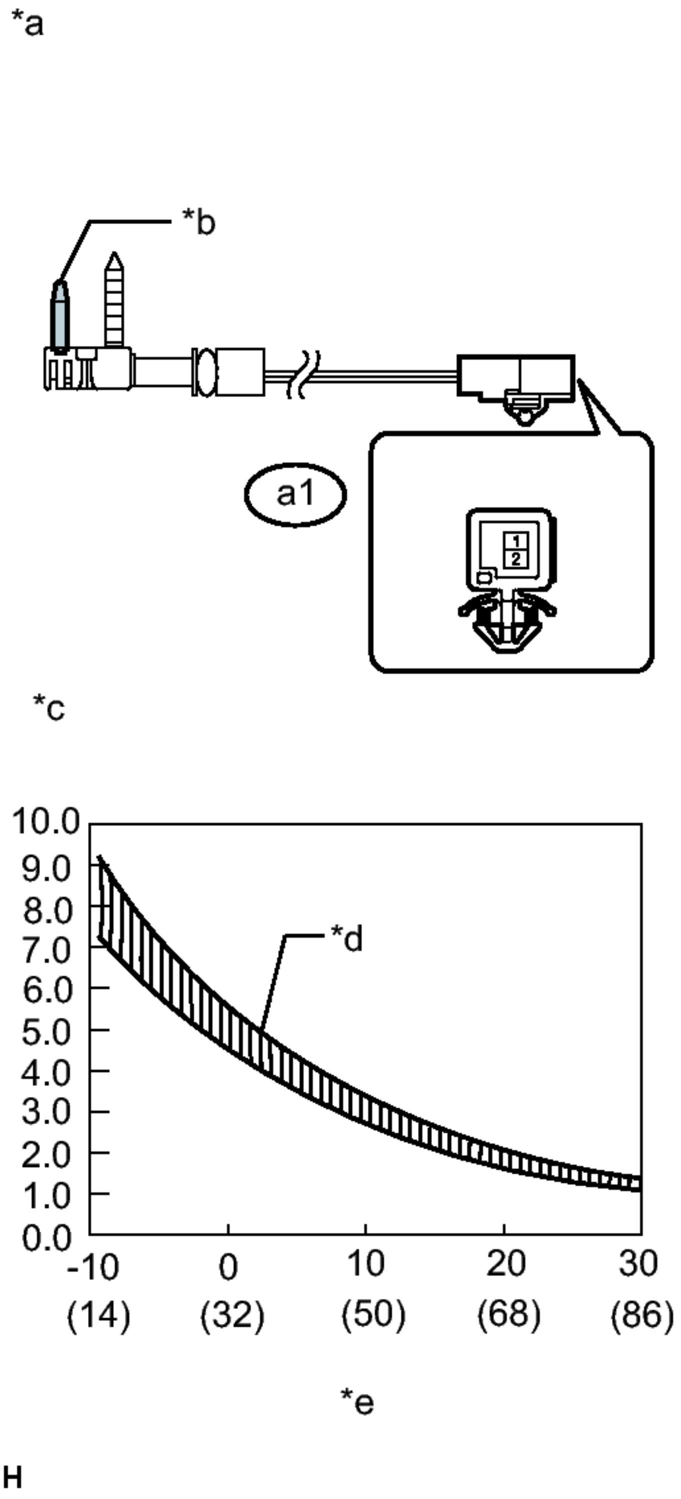
*a
*b
a1
1
2
*c
10.0
9.0
8.0
7.0
6.0
5.0
4.0
3.0
2.0
1.0
0.0
*d
-10
(14)
0
(32)
10
(50)
20
(68)
30
(86)
*e
H

Fig. 219: Inspecting Evaporator Temperature Sensor (No. 1 Cooler Thermistor) With Graph
Courtesy of TOYOTA MOTOR SALES, U.S.A., INC.

Standard resistance

Tester Connection	Condition	Specified Condition
a1-1 - a1-2	-10°C (14°F)	7.30 to 9.10 kohms
a1-1 - a1-2	-5°C (23° F)	5.65 to 6.95 kohms
a1-1 - a1-2	0°C (32° F)	4.40 to 5.35 kohms
a1-1 - a1-2	5°C (41° F)	3.40 to 4.15 kohms
a1-1 - a1-2	10°C (50° F)	2.70 to 3.25 kohms
a1-1 - a1-2	15°C (59° F)	2.14 to 2.58 kohms
a1-1 - a1-2	20°C (68° F)	1.71 to 2.05 kohms
a1-1 - a1-2	25°C (77° F)	1.38 to 1.64 kohms
a1-1 - a1-2	30°C (86° F)	1.11 to 1.32 kohms

TEXT IN ILLUSTRATION

*a	Component without harness connected (Evaporator Temperature Sensor (No. 1 Cooler Thermistor))
*b	Sensing Portion
*c	Resistance (kohms)
*d	Allowable Range

*e	Temperature (°C (°F))

If the resistance is not as specified, replace the evaporator temperature sensor (No. 1 cooler thermistor).

NOTE:

- **Hold the sensor only by its connector. Touching the sensor may change the resistance value.**
- **When measuring, the sensor temperature must be the same as the ambient temperature.**

HINT:

As the temperature increases, the resistance decreases (see the graph found in **Fig. 219**).

INSTALLATION

INSTALLATION

1. **INSTALL NO. 1 COOLER THERMISTOR**
   a. Install the No. 1 cooler thermistor as shown in the illustration.

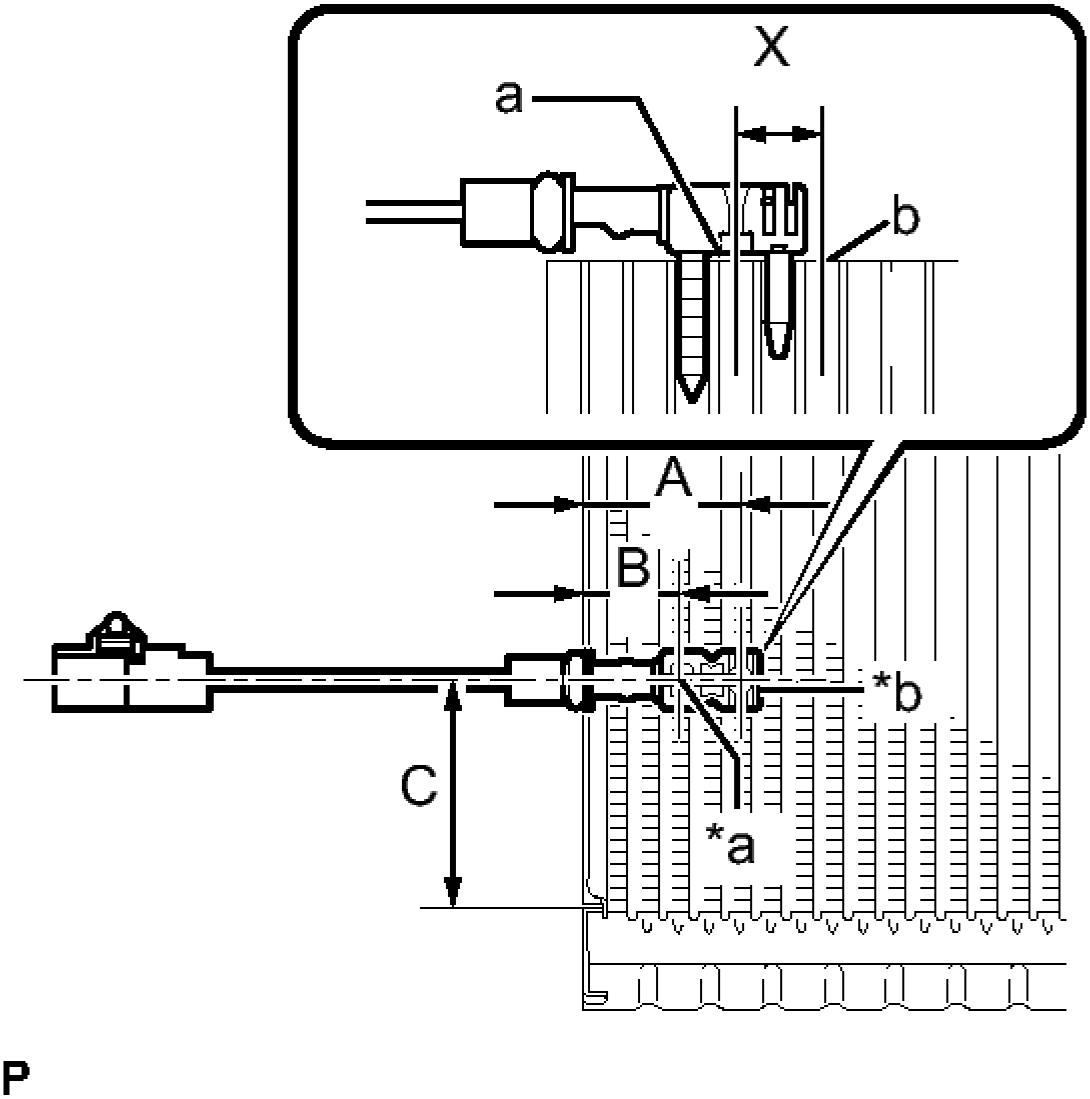

Fig. 220: Installing No. 1 Cooler Thermistor
Courtesy of TOYOTA MOTOR SALES, U.S.A., INC.

Part	Length	
A	34.3 mm	1.35 in.
B	20.9 mm	0.82 in.
C	50 mm	1.96 in.

TEXT IN ILLUSTRATION

*a	Fixed Part
*b	Sensor

Part

NOTE:

- **Be sure to insert the thermistor only once because reinserting it into the same position will not allow it to be firmly secured.**
- **When reusing the evaporator, insert the thermistor one row next to the one that has been used previously (X in the illustration).**
- **After inserting the thermistor, do not apply excessive force to the wire.**
- **Directly insert the thermistor until the edge of plastic case "a" comes into contact with evaporator "b".**

b. Engage the 2 clamps.

2. **INSTALL BLOWER ASSEMBLY WITH COOLER EVAPORATOR SUB-ASSEMBLY**

Refer to **INSTALLATION**.

SOLAR SENSOR

COMPONENTS

ILLUSTRATION

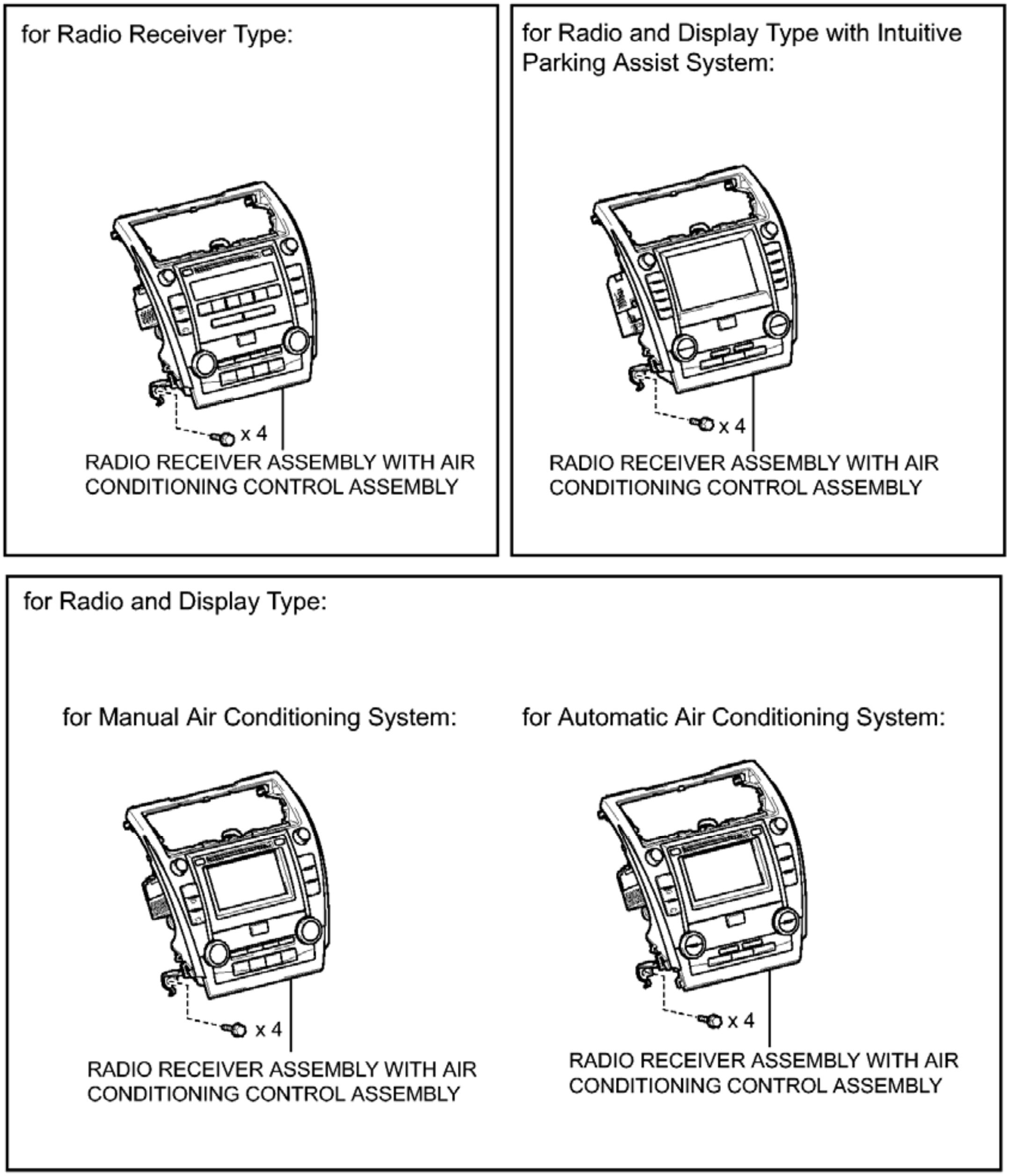
for Radio Receiver Type:
x 4
RADIO RECEIVER ASSEMBLY WITH AIR CONDITIONING CONTROL ASSEMBLY
for Radio and Display Type with Intuitive Parking Assist System:
x 4
RADIO RECEIVER ASSEMBLY WITH AIR CONDITIONING CONTROL ASSEMBLY
for Radio and Display Type:
for Manual Air Conditioning System:
x 4
RADIO RECEIVER ASSEMBLY WITH AIR CONDITIONING CONTROL ASSEMBLY
for Automatic Air Conditioning System:
x 4
RADIO RECEIVER ASSEMBLY WITH AIR CONDITIONING CONTROL ASSEMBLY

P

Fig. 221: Identifying Solar Sensor Replacement Components (1 Of 2)
Courtesy of TOYOTA MOTOR SALES, U.S.A., INC.

ILLUSTRATION

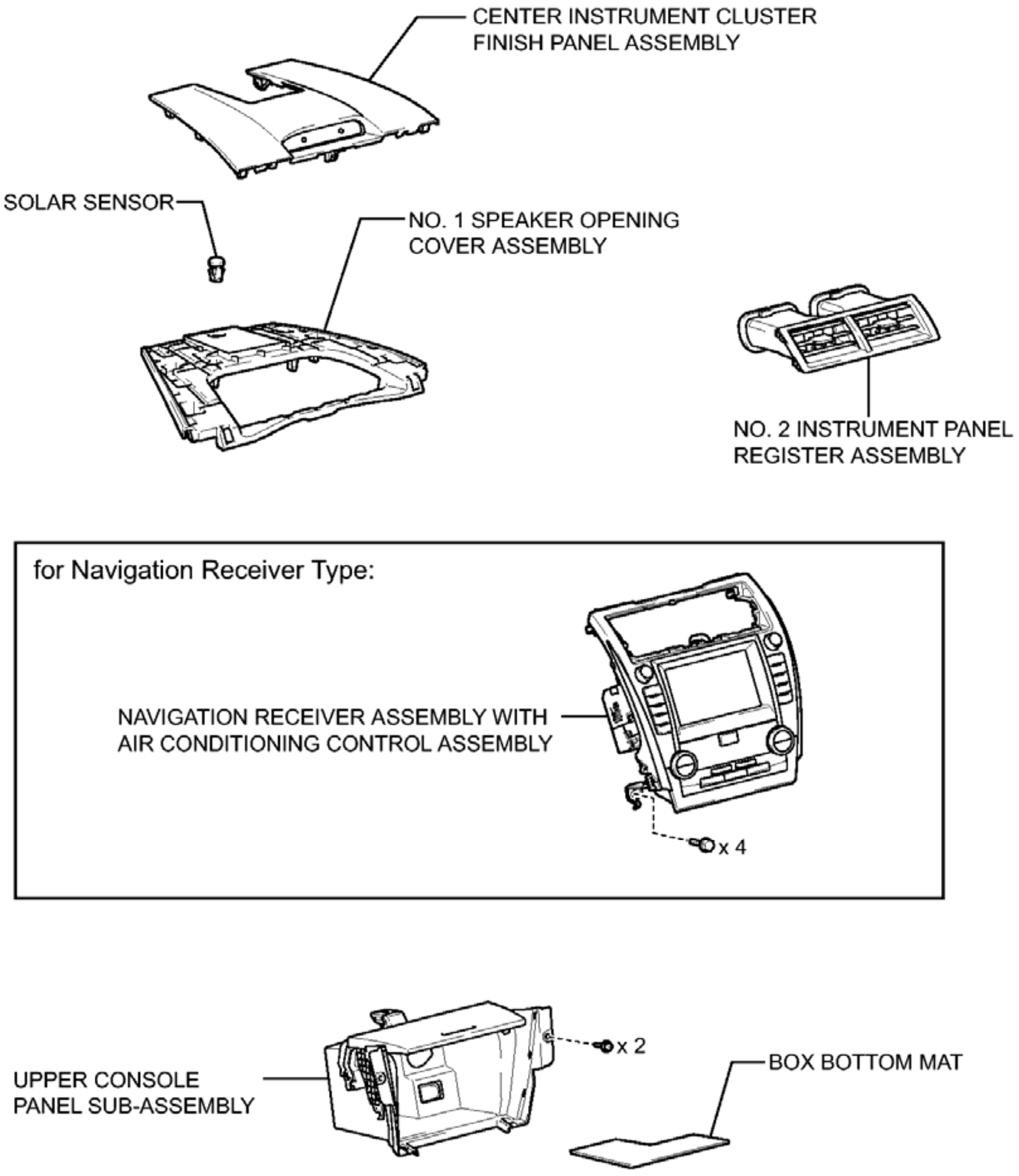
CENTER INSTRUMENT CLUSTER FINISH PANEL ASSEMBLY
SOLAR SENSOR
NO. 1 SPEAKER OPENING COVER ASSEMBLY
NO. 2 INSTRUMENT PANEL REGISTER ASSEMBLY
for Navigation Receiver Type:
NAVIGATION RECEIVER ASSEMBLY WITH AIR CONDITIONING CONTROL ASSEMBLY
x 4
x 2
UPPER CONSOLE PANEL SUB-ASSEMBLY
BOX BOTTOM MAT

P

Fig. 222: Identifying Solar Sensor Replacement Components (2 Of 2)
Courtesy of TOYOTA MOTOR SALES, U.S.A., INC.

REMOVAL

REMOVAL

1. **PRECAUTION**

NOTE: **After turning the ignition switch off, waiting time may be required before disconnecting the cable from the negative (-) battery terminal. Therefore, make sure to read the disconnecting the cable from the negative (-) battery terminal notices before proceeding with work. Refer to PRECAUTION .**

2. **DISCONNECT CABLE FROM NEGATIVE BATTERY TERMINAL (for Radio and Display Type with Intuitive Parking Assist System)**

   NOTE: **When disconnecting the cable, some systems need to be initialized after the cable is reconnected. Refer to INITIALIZATION .**

3. **DISCONNECT CABLE FROM NEGATIVE BATTERY TERMINAL (for Navigation Receiver Type)**

   NOTE: **When disconnecting the cable, some systems need to be initialized after the cable is reconnected. Refer to INITIALIZATION .**

4. **REMOVE REAR CONSOLE BOX ASSEMBLY**

   Refer to **REMOVAL** .

5. **REMOVE BOX BOTTOM MAT** . Refer to **REMOVAL - Step 25** .
6. **REMOVE UPPER CONSOLE PANEL SUB-ASSEMBLY** . Refer to **REMOVAL - Step 26** .
7. **REMOVE CENTER INSTRUMENT CLUSTER FINISH PANEL ASSEMBLY** . Refer to **REMOVAL - Step 23** .
8. **REMOVE NO. 2 INSTRUMENT PANEL REGISTER ASSEMBLY** . Refer to **REMOVAL - Step 24** .
9. **REMOVE RADIO RECEIVER ASSEMBLY WITH AIR CONDITIONING CONTROL ASSEMBLY (for Radio Receiver Type)** . Refer to **REMOVAL - Step 8** .
10. **REMOVE RADIO RECEIVER ASSEMBLY WITH AIR CONDITIONING CONTROL ASSEMBLY (for Radio and Display Type)** . Refer to **REMOVAL - Step 9** .
11. **REMOVE NAVIGATION RECEIVER ASSEMBLY WITH AIR CONDITIONING CONTROL ASSEMBLY (for Navigation Receiver Type)** . Refer to **REMOVAL - Step 8** .
12. **REMOVE NO. 1 SPEAKER OPENING COVER ASSEMBLY** . Refer to **REMOVAL - Step 30** .
13. **REMOVE SOLAR SENSOR**
    a. Disengage the 2 claws and remove the solar sensor.

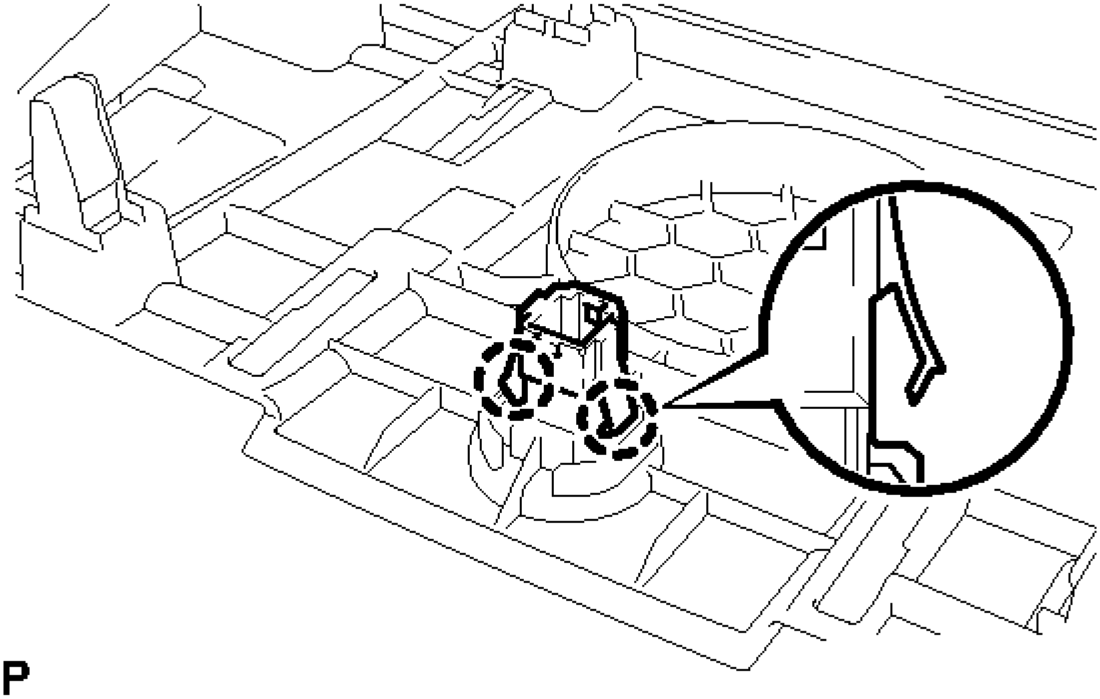

Fig. 223: Identifying Solar Sensor Claws
Courtesy of TOYOTA MOTOR SALES, U.S.A., INC.

INSPECTION

INSPECTION

1. **INSPECT SOLAR SENSOR (AUTOMATIC LIGHT CONTROL SENSOR)**
   a. Disconnect the solar sensor (automatic light control sensor) connector.

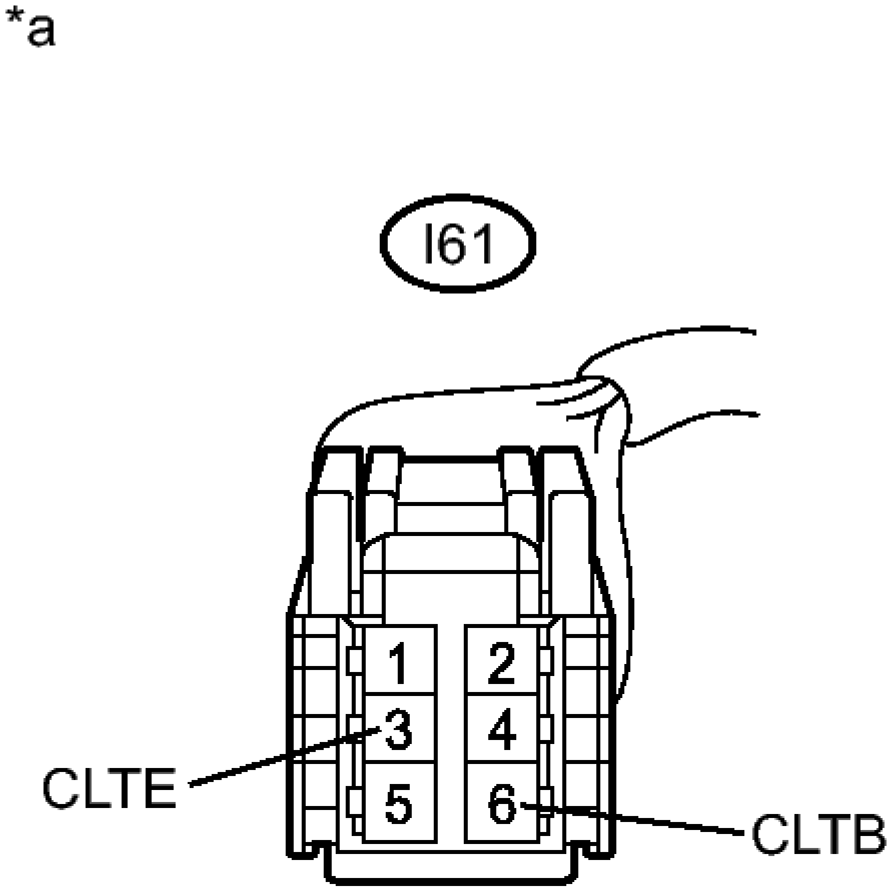

Fig. 224: Inspecting Solar Sensor (Automatic Light Control Sensor)
Courtesy of TOYOTA MOTOR SALES, U.S.A., INC.

b. Measure the voltage according to the value(s) in the table below.

Standard Voltage

Tester Connection	Condition	Specified Condition
I61-6 (CLTB) - I61-3 (CLTE)	Ignition switch off	Below 1 V
I61-6 (CLTB) - I61-3	Ignition switch	11 to 14 V

(CLTE)	ON	

TEXT IN ILLUSTRATION

*a	Front view of wire harness connector (to Solar Sensor (Automatic Light Control Sensor))

If the voltage is not as specified, repair or replace the wire harness or connector.

c. Reconnect the solar sensor (automatic light control sensor) connector.

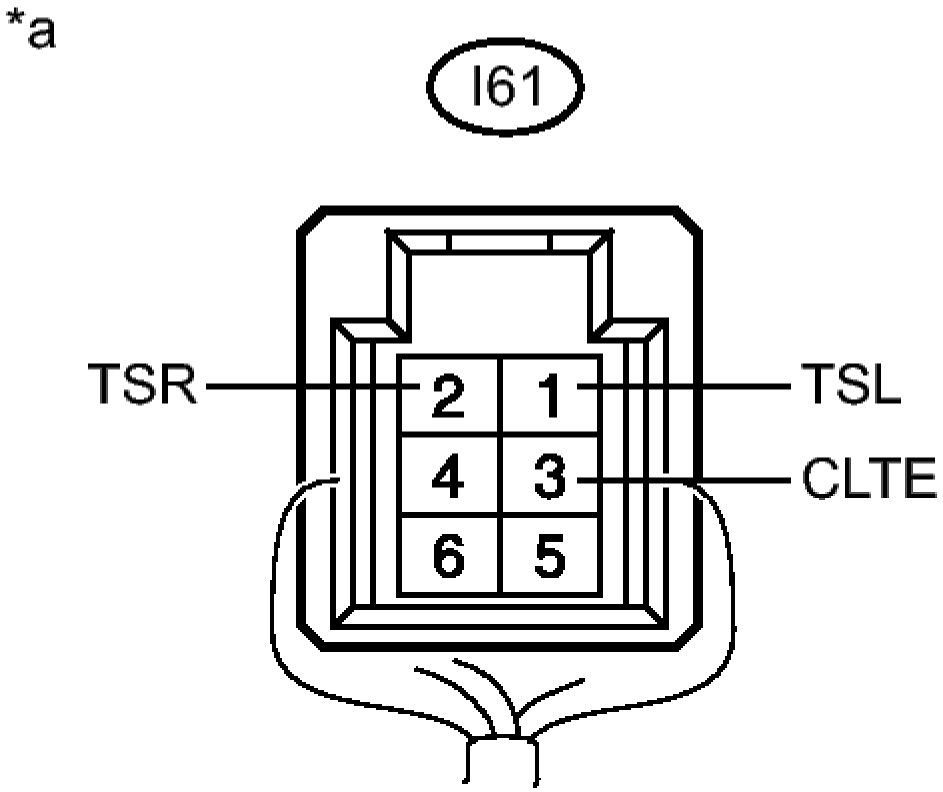

Fig. 225: Inspecting Solar Sensor (Automatic Light Control Sensor)
Courtesy of TOYOTA MOTOR SALES, U.S.A., INC.

d. Turn the ignition switch to ON.
e. Measure the voltage according to the value(s) in the table below.

Standard Voltage

Tester Connection	Condition	Specified Condition
I61-1 (TSL) - I61-3 (CLTE)	Sensor is exposed to electric light	0.8 to 4.3 V
I61-1 (TSL)	Sensor is	

- I61-3 (CLTE)	covered with a cloth	Below 0.8 V
I61-2 (TSR) - I61-3 (CLTE)	Sensor is exposed to electric light	0.8 to 4.3 V
I61-2 (TSR) - I61-3 (CLTE)	Sensor is covered with a cloth	Below 0.8 V

TEXT IN ILLUSTRATION

*a	Component with harness connected (Solar Sensor (Automatic Light Control Sensor))

NOTE:

- **The connection procedure for using a digital tester such as a TOYOTA electrical tester is shown above. When using an analog tester, connect the positive (+) lead to terminal 1 (2) and the negative (-) lead to terminal 6 of the solar sensor (automatic light control sensor).**
- **Do not bring the positive and negative tester probes too close to each other as a short circuit may occur.**

HINT:

- Use an incandescent light for inspection. Bring it within about 30 cm (11.8 in.) of the solar sensor (automatic light control sensor).
- As the inspection light is moved away from the sensor, the voltage decreases.

If the voltage is not as specified, replace the solar sensor (automatic light control sensor).

INSTALLATION

INSTALLATION

1. **INSTALL SOLAR SENSOR**

a. Engage the 2 claws to install the solar sensor.

2. **INSTALL NO. 1 SPEAKER OPENING COVER ASSEMBLY** . Refer to **INSTALLATION - Step 23** .
3. **INSTALL RADIO RECEIVER ASSEMBLY WITH AIR CONDITIONING CONTROL ASSEMBLY (for Radio Receiver Type)** . Refer to **INSTALLATION - Step 14** .
4. **INSTALL RADIO RECEIVER ASSEMBLY WITH AIR CONDITIONING CONTROL ASSEMBLY (for Radio and Display Type)** . Refer to **INSTALLATION - Step 15** .
5. **INSTALL NAVIGATION RECEIVER ASSEMBLY WITH AIR CONDITIONING CONTROL ASSEMBLY (for Navigation Receiver Type)** . Refer to **INSTALLATION - Step 7** .
6. **INSTALL NO. 2 INSTRUMENT PANEL REGISTER ASSEMBLY** . Refer to **INSTALLATION - Step 29** .
7. **INSTALL CENTER INSTRUMENT CLUSTER FINISH PANEL ASSEMBLY** . Refer to **INSTALLATION - Step 30** .
8. **INSTALL UPPER CONSOLE PANEL SUB-ASSEMBLY** . Refer to **INSTALLATION - Step 27** .
9. **INSTALL BOX BOTTOM MAT** . Refer to **INSTALLATION - Step 28** .
10. **INSTALL REAR CONSOLE BOX ASSEMBLY**

    Refer to **INSTALLATION** .

11. **CONNECT CABLE TO NEGATIVE BATTERY TERMINAL (for Radio and Display Type with Intuitive Parking Assist System)**

    NOTE: **When disconnecting the cable, some systems need to be initialized after the cable is reconnected. Refer to INITIALIZATION .**

12. **CONNECT CABLE TO NEGATIVE BATTERY TERMINAL (for Navigation Receiver Type)**

    NOTE: **When disconnecting the cable, some systems need to be initialized after the cable is reconnected. Refer to INITIALIZATION .**

AIR CONDITIONING PRESSURE SENSOR

COMPONENTS

ILLUSTRATION

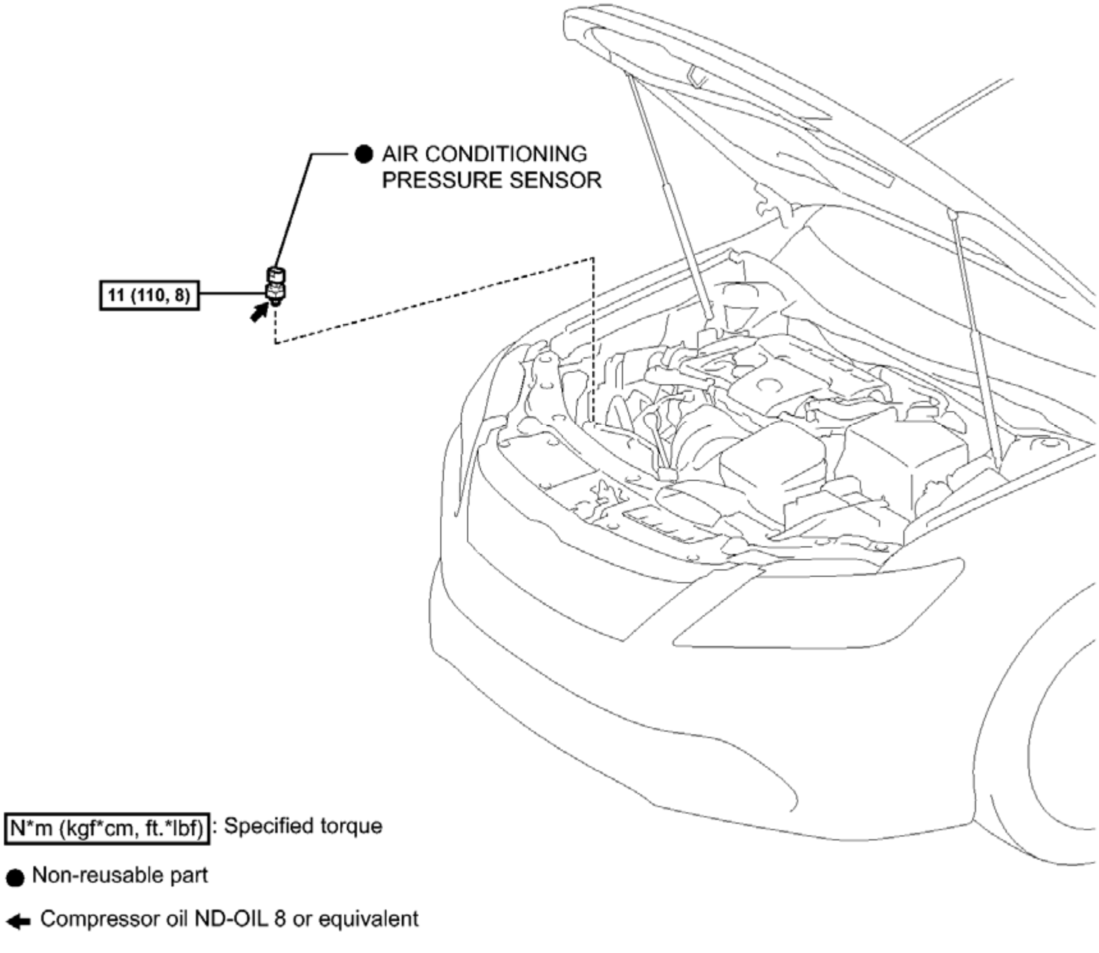
AIR CONDITIONING PRESSURE SENSOR
11 (110, 8)
N*m (kgf*cm, ft.*lbf): Specified torque
● Non-reusable part
Compressor oil ND-OIL 8 or equivalent
P

Fig. 226: Identifying Air Conditioning Pressure Sensor Replacement Components With Torque Specifications
Courtesy of TOYOTA MOTOR SALES, U.S.A., INC.

ON-VEHICLE INSPECTION

ON-VEHICLE INSPECTION

1. **INSPECT AIR CONDITIONING PRESSURE SENSOR**
    a. Check the wire harness.
        1. Disconnect the A55 air conditioning pressure sensor connector.
        2. Disconnect the I77 air conditioning amplifier assembly connector.
        3. Measure the resistance according to the value(s) in the table below.

        Standard Resistance

Tester Connection	Condition	Specified Condition
A55-1 (-) - I77-13 (SG-2)	Always	Below 1 ohms
A55-2 (PR) - I77-9 (PRE)	Always	Below 1 ohms
A55-3 (+) - I77-10 (S5-3)	Always	Below 1 ohms
A55-1 (-) - Body ground	Always	10 kohms or higher
A55-2 (PR) - Body ground	Always	10 kohms or higher
A55-3 (+) - Body ground	Always	10 kohms or higher

If the resistance is not as specified, repair the wire harness.

4. Reconnect the I77 air conditioning amplifier assembly connector.
5. Turn the ignition switch to ON.
6. Measure the voltage according to the value(s) in the table below.

   Standard Voltage

Tester Connection	Switch condition	Specified Condition
A55-3 (+) - Body ground	Ignition switch ON	4.75 to 5.25 V

   If the voltage is not as specified, repair the wire harness or replace air conditioning amplifier assembly.

b. Check the air conditioning pressure sensor.
   1. Connect the connector to the air conditioning pressure sensor.
   2. Install a manifold gauge set.
   3. Warm up the engine.
   4. Turn the A/C switch on.
   5. Measure the voltage according to the value(s) in the table below.

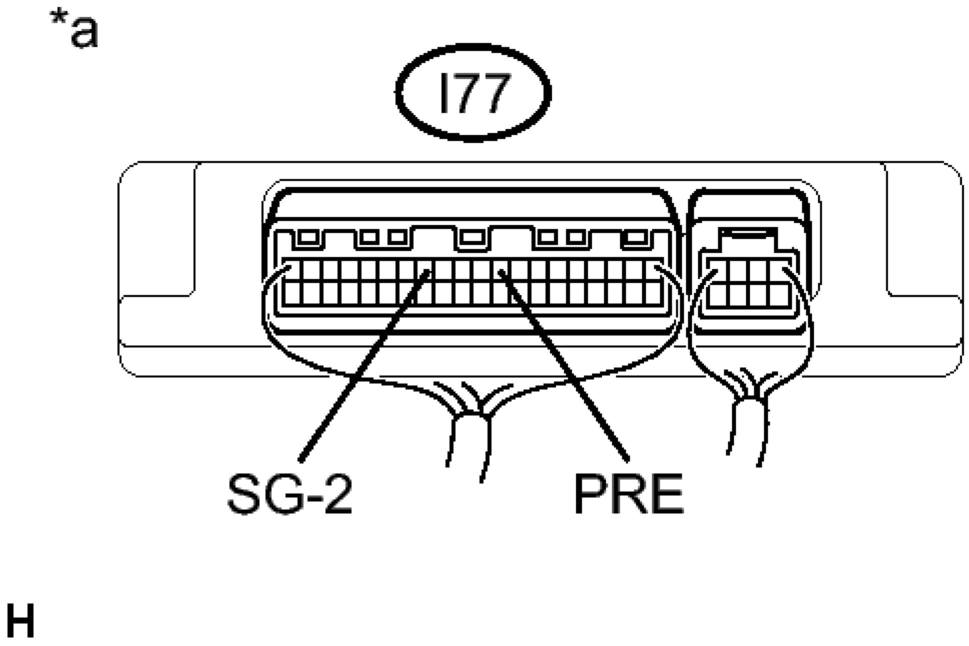

Fig. 227: Inspecting Air Conditioning Pressure Sensor
Courtesy of TOYOTA MOTOR SALES, U.S.A., INC.

HINT:

Check from the rear of the connector while it is connected to the air conditioning amplifier.

Standard Voltage

Tester Connection	Condition	Specified Condition
I77-9 (PRE) - I77-13 (SG-2)	Refrigerant pressure: (less than 3025 kPa (30.9 kgf/cm^2 , 439 psi) and more than 176 kPa (1.8 kgf/cm^2 , 25 psi))	0.50 to 4.80 V

If the voltage is not as specified, replace the air conditioning pressure sensor.

TEXT IN ILLUSTRATION

*a	Component with harness connected (Air Conditioning Amplifier)

REMOVAL

REMOVAL

1. **RECOVER REFRIGERANT FROM AIR CONDITIONING SYSTEM** . See step 1.
2. **REMOVE AIR CONDITIONER PRESSURE SENSOR**
    a. Disconnect the connector.
    b. Remove the air conditioner pressure sensor.

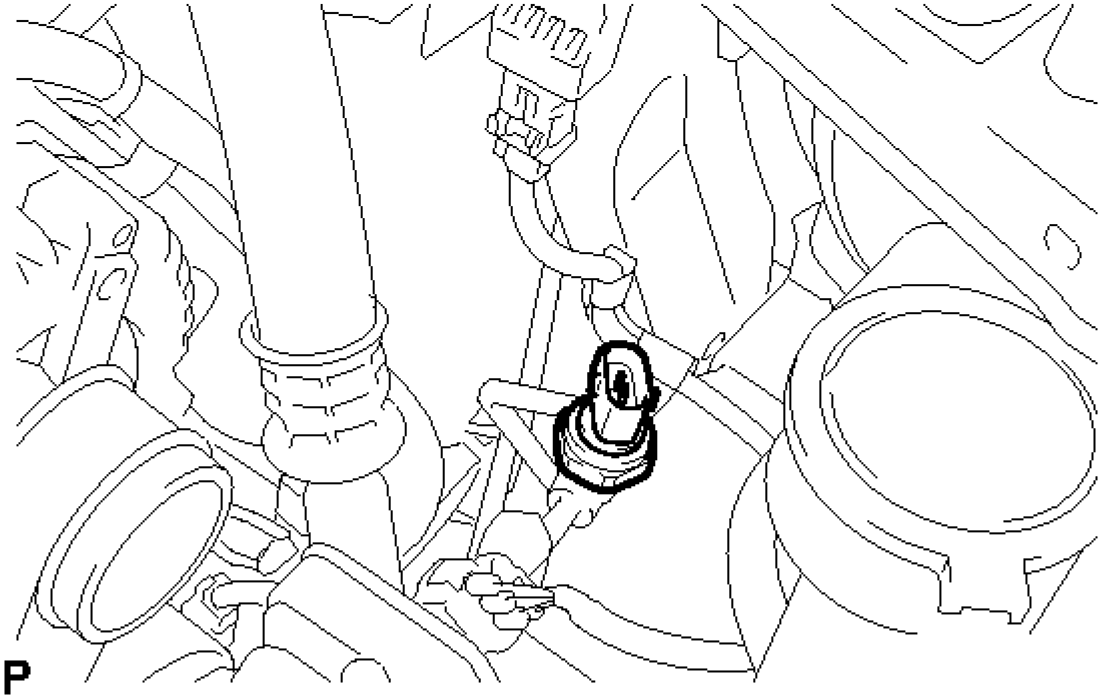

Fig. 228: Identifying Air Conditioner Pressure Sensor
Courtesy of TOYOTA MOTOR SALES, U.S.A., INC.

NOTE: **Do not deform the piping.**

INSTALLATION

INSTALLATION

1. **INSTALL AIR CONDITIONER PRESSURE SENSOR**

a. Apply a sufficient amount of compressor oil to a new air conditioner pressure sensor.

   Compressor oil

   ND-OIL 8 or equivalent

   NOTE:

   - **Keep the O-ring and O-ring fitting surfaces clean from dirt or any foreign matter.**
   - **Do not use any compressor oil other than ND-OIL 8 or equivalent. If any compressor oil other than ND-OIL 8 or equivalent is used, compressor motor insulation performance may decrease, resulting in a leakage of electric power.**

b. Install the new air conditioner pressure sensor.

   Torque: 11 N*m (110 kgf*cm, 8 ft.*lbf)

   NOTE:

   - **Do not deform the piping.**
   - **Make sure to confirm that the piping does not disengage from the plastic clamp.**

c. Connect the connector.

2. **CHARGE AIR CONDITIONING SYSTEM WITH REFRIGERANT** . See step 2.
3. **WARM UP ENGINE** . See step 3.
4. **INSPECT FOR REFRIGERANT LEAK** . See step 4.

AIR CONDITIONING PANEL

COMPONENTS

ILLUSTRATION

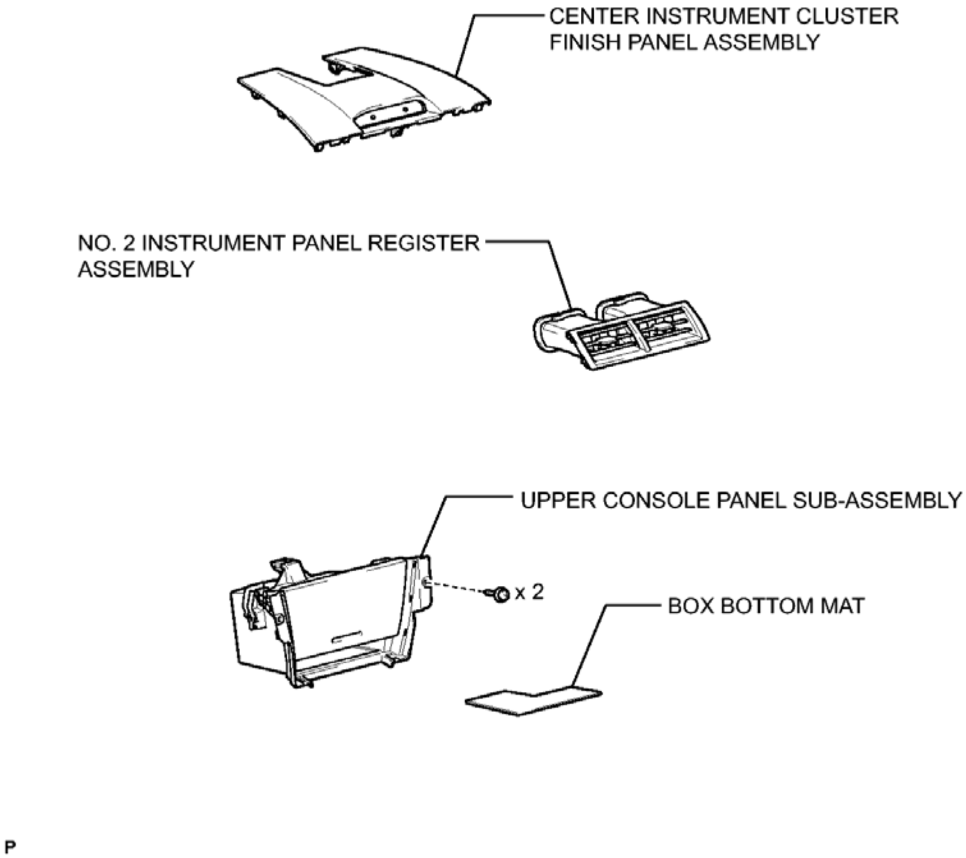
CENTER INSTRUMENT CLUSTER FINISH PANEL ASSEMBLY
NO. 2 INSTRUMENT PANEL REGISTER ASSEMBLY
UPPER CONSOLE PANEL SUB-ASSEMBLY
x 2
BOX BOTTOM MAT
P

Fig. 229: Identifying Air Conditioning Panel Replacement Components (1 Of 5)
Courtesy of TOYOTA MOTOR SALES, U.S.A., INC.

ILLUSTRATION

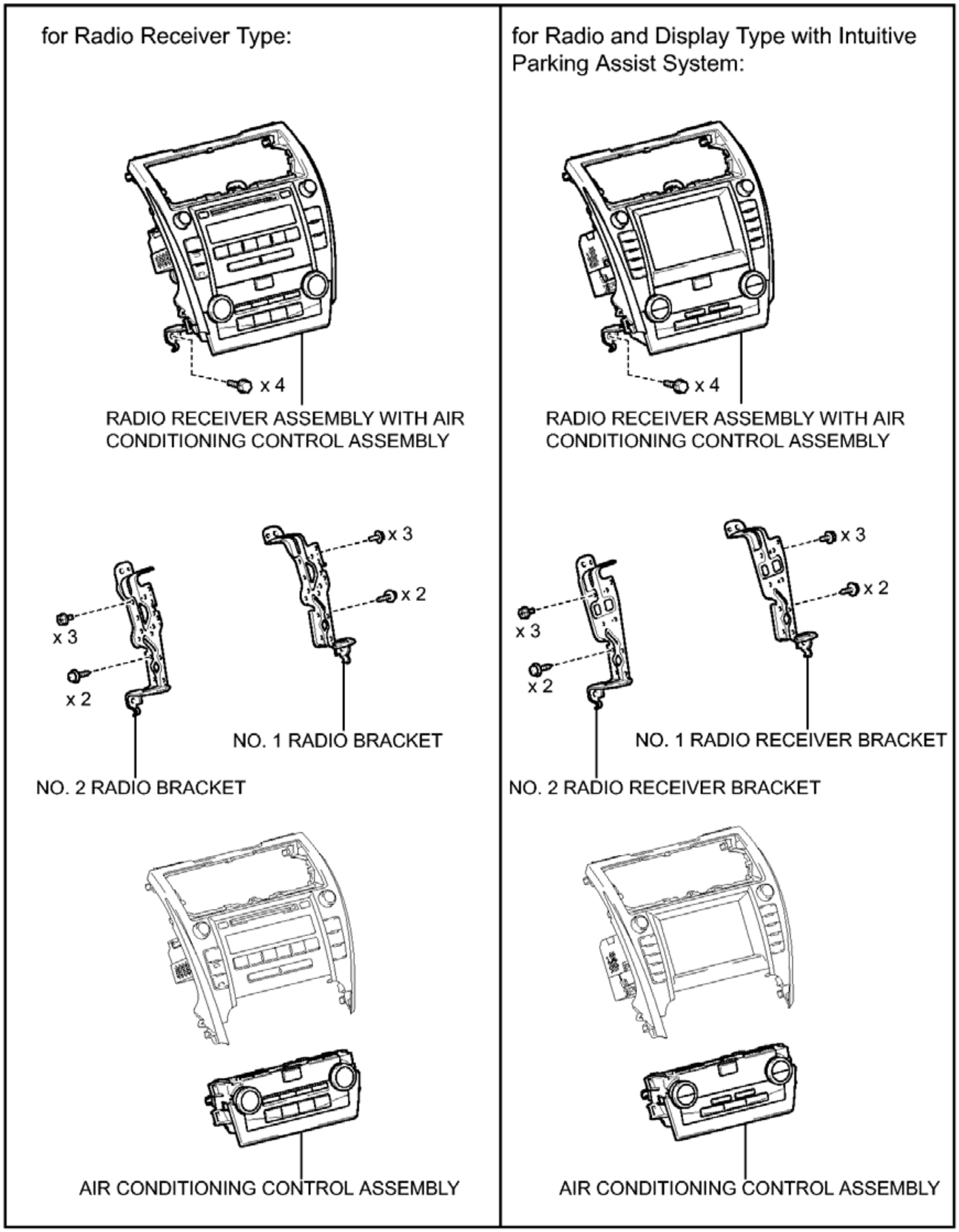
for Radio Receiver Type:
for Radio and Display Type with Intuitive Parking Assist System:
x 4
RADIO RECEIVER ASSEMBLY WITH AIR CONDITIONING CONTROL ASSEMBLY
x 4
RADIO RECEIVER ASSEMBLY WITH AIR CONDITIONING CONTROL ASSEMBLY
x 3
x 2
x 3
x 2
NO. 1 RADIO BRACKET
NO. 2 RADIO BRACKET
x 3
x 2
x 3
x 2
NO. 1 RADIO RECEIVER BRACKET
NO. 2 RADIO RECEIVER BRACKET
AIR CONDITIONING CONTROL ASSEMBLY
AIR CONDITIONING CONTROL ASSEMBLY
P

Fig. 230: Identifying Air Conditioning Panel Replacement Components (2 Of 5)
Courtesy of TOYOTA MOTOR SALES, U.S.A., INC.

ILLUSTRATION

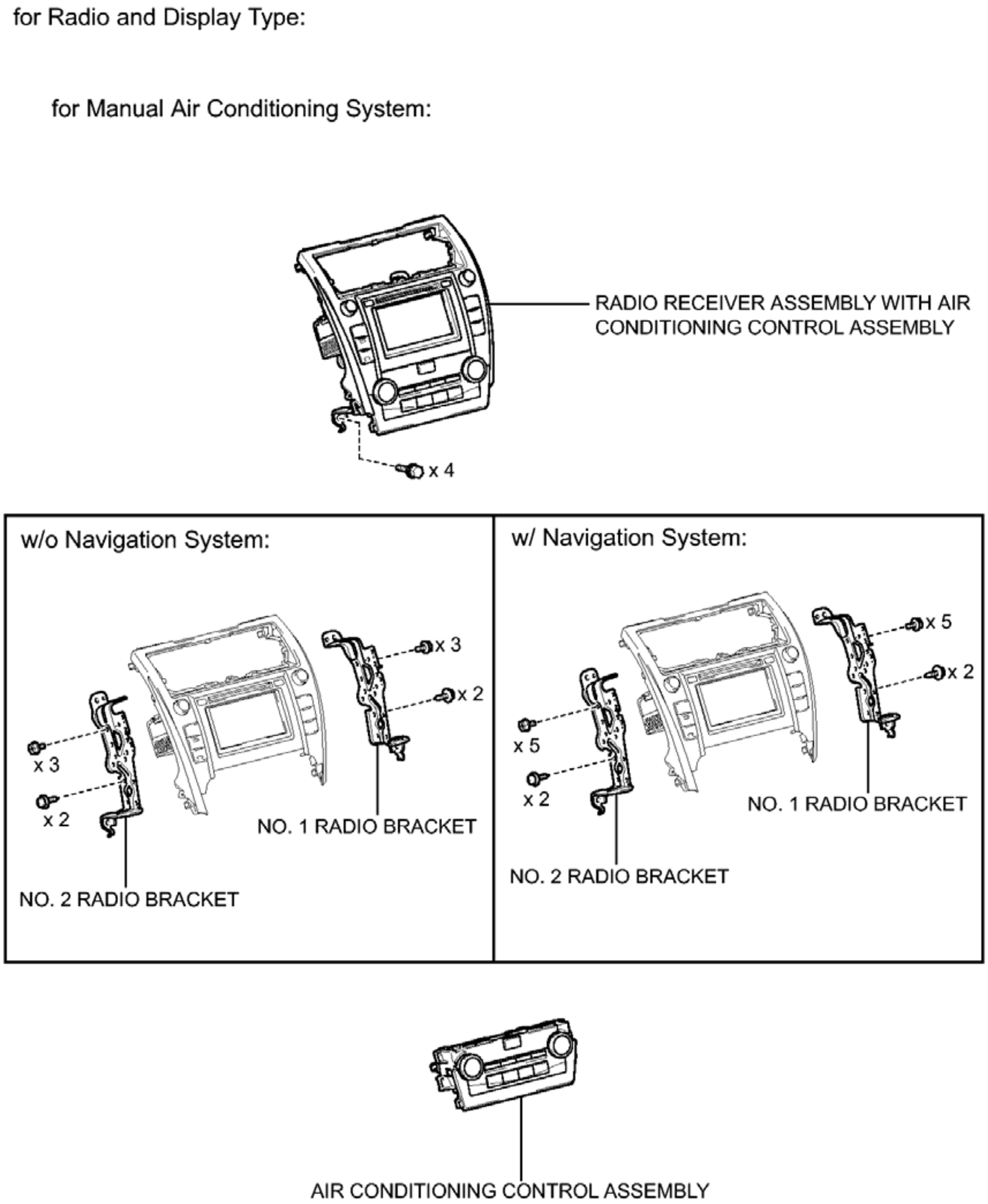
for Radio and Display Type:
for Manual Air Conditioning System:
RADIO RECEIVER ASSEMBLY WITH AIR CONDITIONING CONTROL ASSEMBLY
x 4
w/o Navigation System:
x 3
x 2
x 3
x 2
NO. 1 RADIO BRACKET
NO. 2 RADIO BRACKET
w/ Navigation System:
x 5
x 2
x 5
x 2
NO. 1 RADIO BRACKET
NO. 2 RADIO BRACKET
AIR CONDITIONING CONTROL ASSEMBLY

P

Fig. 231: Identifying Air Conditioning Panel Replacement Components (3 Of 5)
Courtesy of TOYOTA MOTOR SALES, U.S.A., INC.

ILLUSTRATION

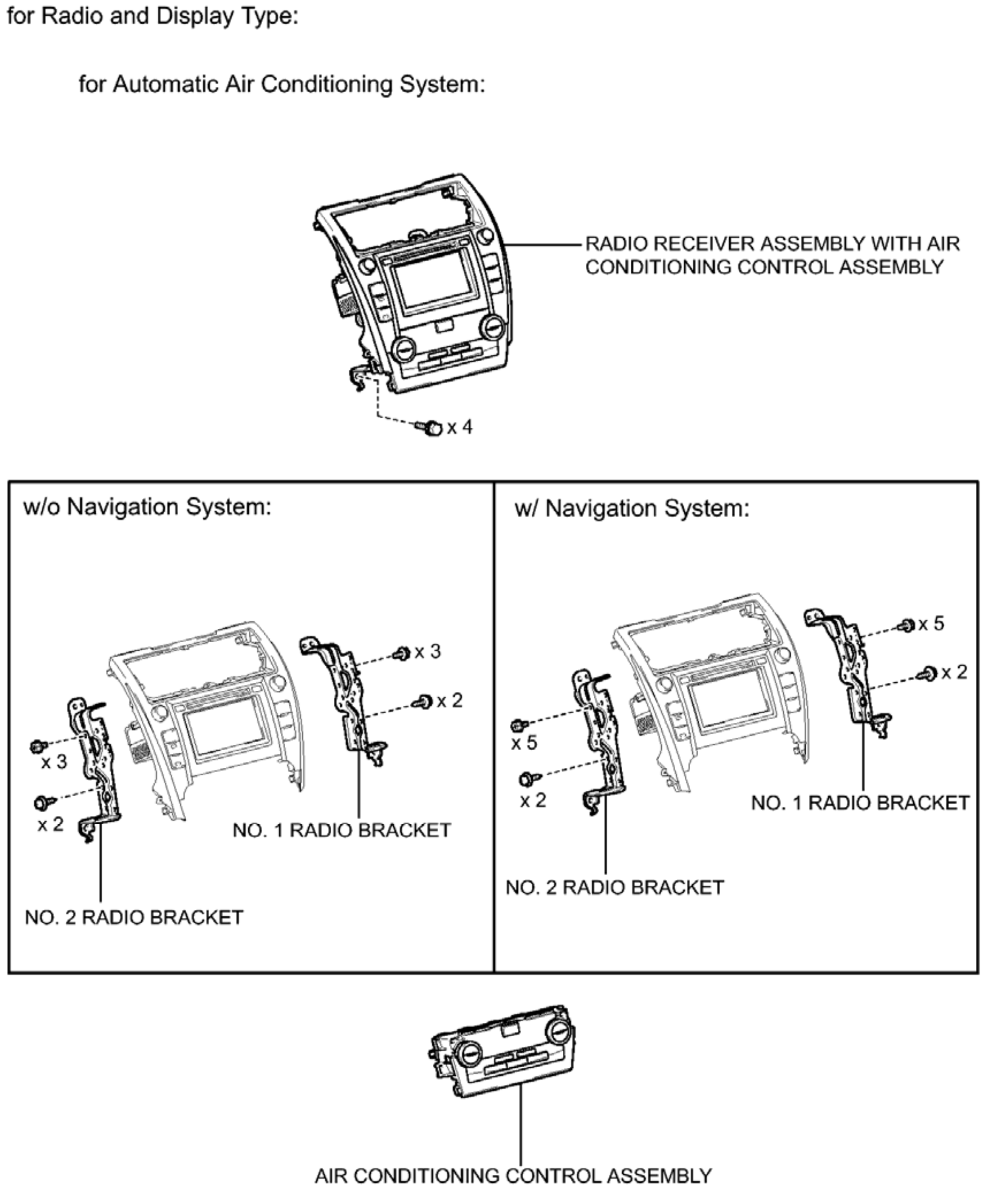
for Radio and Display Type:
for Automatic Air Conditioning System:
RADIO RECEIVER ASSEMBLY WITH AIR CONDITIONING CONTROL ASSEMBLY
x 4
w/o Navigation System:
x 3
x 2
x 3
x 2
NO. 1 RADIO BRACKET
NO. 2 RADIO BRACKET
w/ Navigation System:
x 5
x 2
x 5
x 2
NO. 1 RADIO BRACKET
NO. 2 RADIO BRACKET
AIR CONDITIONING CONTROL ASSEMBLY
P

Fig. 232: Identifying Air Conditioning Panel Replacement Components (4 Of 5)
Courtesy of TOYOTA MOTOR SALES, U.S.A., INC.

ILLUSTRATION

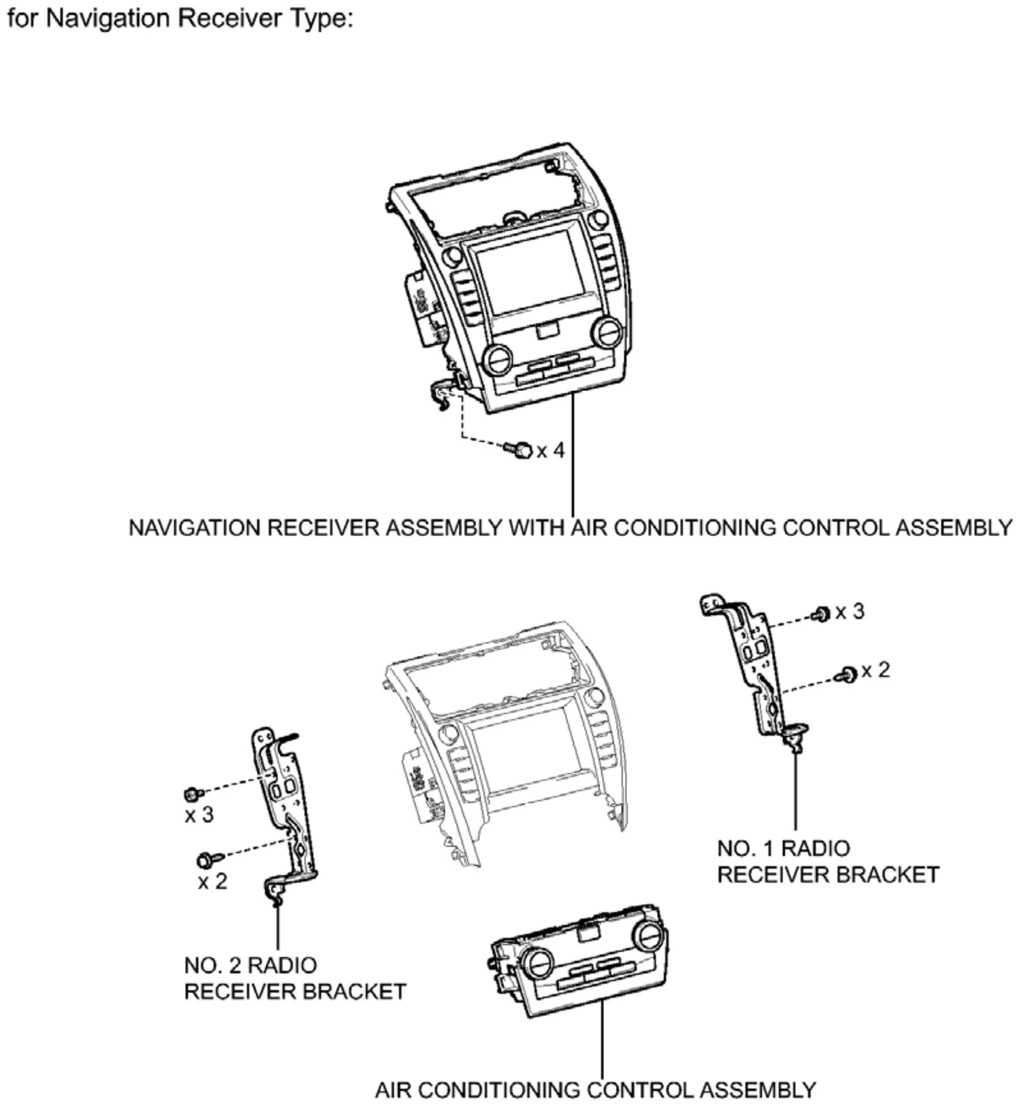
for Navigation Receiver Type:
x 4
NAVIGATION RECEIVER ASSEMBLY WITH AIR CONDITIONING CONTROL ASSEMBLY
x 3
x 2
NO. 1 RADIO RECEIVER BRACKET
x 3
x 2
NO. 2 RADIO RECEIVER BRACKET
AIR CONDITIONING CONTROL ASSEMBLY

P

Fig. 233: Identifying Air Conditioning Panel Replacement Components (5 Of 5)
Courtesy of TOYOTA MOTOR SALES, U.S.A., INC.

REMOVAL

REMOVAL

1. **PRECAUTION**

   NOTE: **After turning the ignition switch off, waiting time may be required before disconnecting the cable from the negative (-) battery terminal. Therefore, make sure to read the disconnecting the cable from the negative (-) battery terminal notices before proceeding with work. Refer to PRECAUTION .**

2. **DISCONNECT CABLE FROM NEGATIVE BATTERY TERMINAL (for Radio and Display Type with Intuitive Parking Assist System)**

   NOTE: When disconnecting the cable, some systems need to be initialized after the cable is reconnected. Refer to INITIALIZATION .

3. **DISCONNECT CABLE FROM NEGATIVE BATTERY TERMINAL (for Navigation Receiver Type)**

   NOTE: When disconnecting the cable, some systems need to be initialized after the cable is reconnected. Refer to INITIALIZATION .

4. **REMOVE REAR CONSOLE BOX ASSEMBLY**

   Refer to **REMOVAL** .

5. **REMOVE BOX BOTTOM MAT** . Refer to **REMOVAL - Step 25** .
6. **REMOVE UPPER CONSOLE PANEL SUB-ASSEMBLY** . Refer to **REMOVAL - Step 26** .
7. **REMOVE CENTER INSTRUMENT CLUSTER FINISH PANEL ASSEMBLY** . Refer to **REMOVAL - Step 23** .
8. **REMOVE NO. 2 INSTRUMENT PANEL REGISTER ASSEMBLY** . Refer to **REMOVAL - Step 24** .
9. **REMOVE RADIO RECEIVER ASSEMBLY WITH AIR CONDITIONING CONTROL ASSEMBLY (for Radio Receiver Type)** . Refer to **REMOVAL - Step 8** .
10. **REMOVE RADIO RECEIVER ASSEMBLY WITH AIR CONDITIONING CONTROL ASSEMBLY (for Radio and Display Type)** . Refer to **REMOVAL - Step 9** .
11. **REMOVE NAVIGATION RECEIVER ASSEMBLY WITH AIR CONDITIONING CONTROL ASSEMBLY (for Navigation Receiver Type)** . Refer to **REMOVAL - Step 8** .
12. **REMOVE NO. 1 RADIO BRACKET (for Radio Receiver Type)** . Refer to **REMOVAL - Step 10** .
13. **REMOVE NO. 2 RADIO BRACKET (for Radio Receiver Type)** . Refer to **REMOVAL - Step 11** .
14. **REMOVE NO. 1 RADIO BRACKET (for Radio and Display Type)** . Refer to **REMOVAL - Step 12** .
15. **REMOVE NO. 2 RADIO BRACKET (for Radio and Display Type)** . Refer to **REMOVAL - Step 13** .
16. **REMOVE NO. 1 RADIO RECEIVER BRACKET (for Radio and Display Type with Intuitive Parking Assist System)** . Refer to **REMOVAL - Step 14** .
17. **REMOVE NO. 2 RADIO RECEIVER BRACKET (for Radio and Display Type with Intuitive Parking Assist System)** . Refer to **REMOVAL - Step 15** .
18. **REMOVE NO. 1 RADIO RECEIVER BRACKET (for Navigation Receiver Type)** . Refer to **REMOVAL - Step 9** .
19. **REMOVE NO. 2 RADIO RECEIVER BRACKET (for Navigation Receiver Type)** . Refer to **REMOVAL - Step 10** .
20. **REMOVE AIR CONDITIONING CONTROL ASSEMBLY**

a. Disengage the 4 clips and guide, and remove the air conditioning control assembly as shown in the illustration.

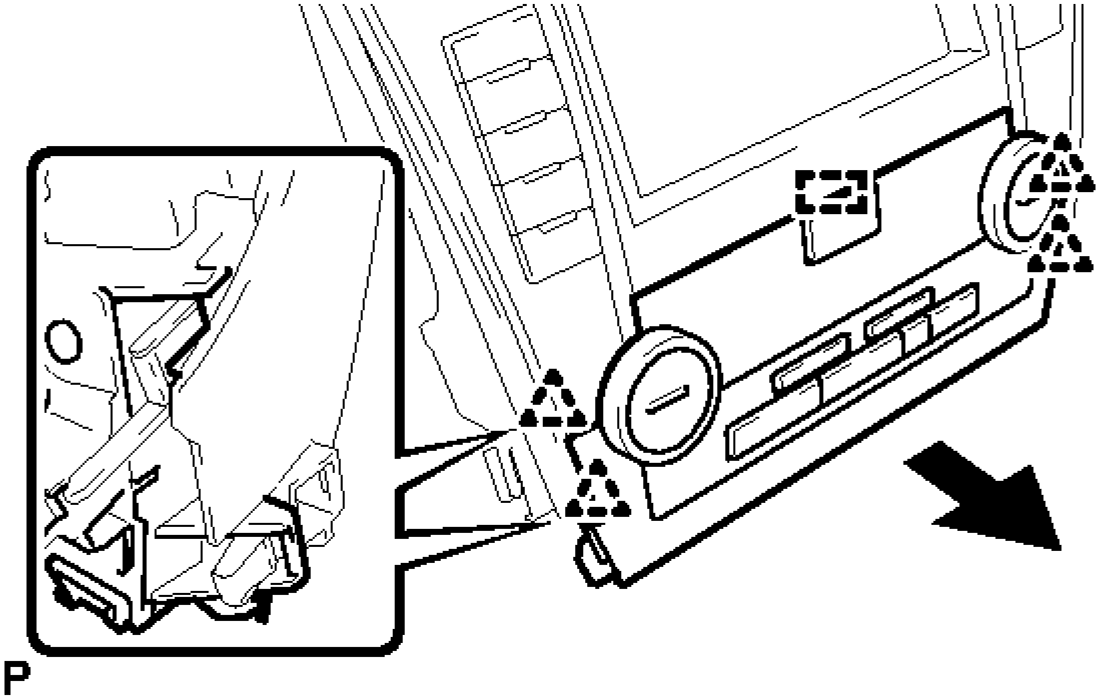

Fig. 234: Removing Air Conditioning Control Assembly
Courtesy of TOYOTA MOTOR SALES, U.S.A., INC.

INSTALLATION

INSTALLATION

1. **INSTALL AIR CONDITIONING CONTROL ASSEMBLY**
   a. Engage the guide and 4 clips to install the air conditioning control assembly as shown in the illustration.

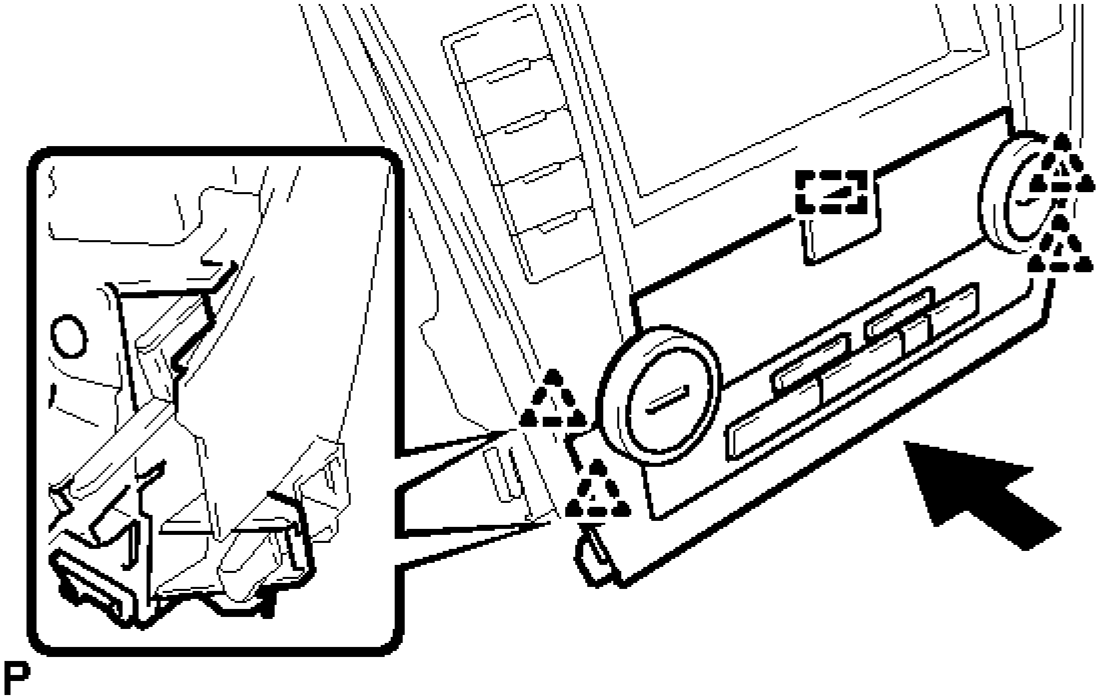

Fig. 235: Installing Air Conditioning Control
Courtesy of TOYOTA MOTOR SALES, U.S.A., INC.

2. **INSTALL NO. 1 RADIO BRACKET (for Radio Receiver Type)** . Refer to **INSTALLATION - Step 8** .
3. **INSTALL NO. 2 RADIO BRACKET (for Radio Receiver Type)** . Refer to **INSTALLATION - Step 9** .
4. **INSTALL NO. 1 RADIO BRACKET (for Radio and Display Type)** . Refer to **INSTALLATION - Step 10** .
5. **INSTALL NO. 2 RADIO BRACKET (for Radio and Display Type)** . Refer to **INSTALLATION - Step 11** .
6. **INSTALL NO. 1 RADIO RECEIVER BRACKET (for Radio and Display Type with Intuitive Parking Assist System)** . Refer to **INSTALLATION - Step 12** .
7. **INSTALL NO. 2 RADIO RECEIVER BRACKET (for Radio and Display Type with Intuitive Parking Assist System)** . Refer to **INSTALLATION - Step 13** .
8. **INSTALL NO. 1 RADIO RECEIVER BRACKET (for Navigation Receiver Type)** . Refer to **INSTALLATION - Step 5** .
9. **INSTALL NO. 2 RADIO RECEIVER BRACKET (for Navigation Receiver Type)** . Refer to **INSTALLATION - Step 6** .
10. **INSTALL RADIO RECEIVER ASSEMBLY WITH AIR CONDITIONING CONTROL ASSEMBLY (for Radio Receiver Type)** . Refer to **INSTALLATION - Step 14** .
11. **INSTALL RADIO RECEIVER ASSEMBLY WITH AIR CONDITIONING CONTROL ASSEMBLY (for Radio and Display Type)** . Refer to **INSTALLATION - Step 15** .
12. **INSTALL NAVIGATION RECEIVER ASSEMBLY WITH AIR CONDITIONING CONTROL ASSEMBLY (for Navigation Receiver Type)** . Refer to **INSTALLATION - Step 7** .

13. **INSTALL NO. 2 INSTRUMENT PANEL REGISTER ASSEMBLY** . Refer to **INSTALLATION - Step 29** .
14. **INSTALL CENTER INSTRUMENT CLUSTER FINISH PANEL ASSEMBLY** . Refer to **INSTALLATION - Step 30** .
15. **INSTALL UPPER CONSOLE PANEL SUB-ASSEMBLY** . Refer to **INSTALLATION - Step 27** .
16. **INSTALL BOX BOTTOM MAT** . Refer to **INSTALLATION - Step 28** .
17. **INSTALL REAR CONSOLE BOX ASSEMBLY**

    Refer to **INSTALLATION** .

18. **CONNECT CABLE TO NEGATIVE BATTERY TERMINAL (for Radio and Display Type with Intuitive Parking Assist System)**

    NOTE: When disconnecting the cable, some systems need to be initialized after the cable is reconnected. Refer to INITIALIZATION .

19. **CONNECT CABLE TO NEGATIVE BATTERY TERMINAL (for Navigation Receiver Type)**

    NOTE: When disconnecting the cable, some systems need to be initialized after the cable is reconnected. Refer to INITIALIZATION .

AIR CONDITIONING AMPLIFIER

COMPONENTS

ILLUSTRATION

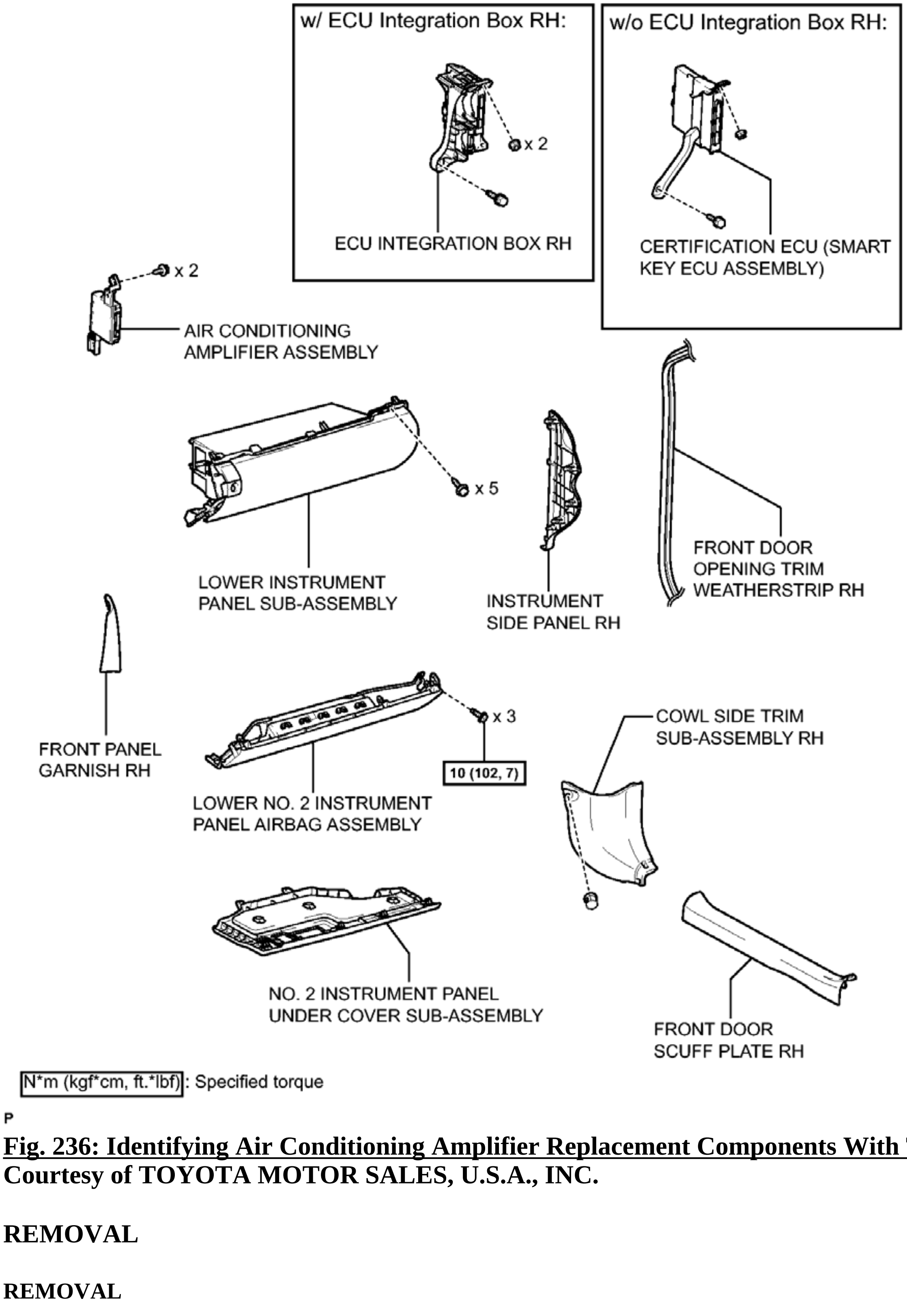
w/ ECU Integration Box RH:
x 2
ECU INTEGRATION BOX RH
w/o ECU Integration Box RH:
CERTIFICATION ECU (SMART KEY ECU ASSEMBLY)
x 2
AIR CONDITIONING AMPLIFIER ASSEMBLY
x 5
LOWER INSTRUMENT PANEL SUB-ASSEMBLY
INSTRUMENT SIDE PANEL RH
FRONT DOOR OPENING TRIM WEATHERSTRIP RH
FRONT PANEL GARNISH RH
x 3
10 (102, 7)
LOWER NO. 2 INSTRUMENT PANEL AIRBAG ASSEMBLY
COWL SIDE TRIM SUB-ASSEMBLY RH
NO. 2 INSTRUMENT PANEL UNDER COVER SUB-ASSEMBLY
FRONT DOOR SCUFF PLATE RH
N*m (kgf*cm, ft.*lbf): Specified torque
P

Fig. 236: Identifying Air Conditioning Amplifier Replacement Components With Torque Specifications
Courtesy of TOYOTA MOTOR SALES, U.S.A., INC.

REMOVAL

REMOVAL

1. **PRECAUTION**

NOTE: **After turning the ignition switch off, waiting time may be required before disconnecting the cable from the negative (-) battery terminal. Therefore, make sure to read the disconnecting the cable from the negative (-) battery terminal notices before proceeding with work. Refer to PRECAUTION .**

2. **DISCONNECT CABLE FROM NEGATIVE BATTERY TERMINAL**

   WARNING: **Wait at least 90 seconds after disconnecting the cable from the negative (-) battery terminal to disable the SRS system.**

   NOTE: **When disconnecting the cable, some systems need to be initialized after the cable is reconnected. Refer to INITIALIZATION .**

3. **REMOVE FRONT DOOR SCUFF PLATE RH**

   HINT:

   Use the same procedure for the RH side and LH side. Refer to **REMOVAL - Step 3** .

4. **REMOVE COWL SIDE TRIM SUB-ASSEMBLY RH**

   HINT:

   Use the same procedure for the RH side and LH side. Refer to **REMOVAL - Step 4** .

5. **DISCONNECT FRONT DOOR OPENING TRIM WEATHERSTRIP RH** . Refer to **REMOVAL - Step 34** .
6. **REMOVE INSTRUMENT SIDE PANEL RH** . Refer to **REMOVAL - Step 35** .
7. **REMOVE FRONT PANEL GARNISH RH** . Refer to **REMOVAL - Step 14** .
8. **REMOVE NO. 2 INSTRUMENT PANEL UNDER COVER SUB-ASSEMBLY** . Refer to **REMOVAL - Step 36** .
9. **REMOVE LOWER NO. 2 INSTRUMENT PANEL AIRBAG ASSEMBLY** . Refer to **REMOVAL - Step 8** .
10. **REMOVE LOWER INSTRUMENT PANEL SUB-ASSEMBLY** . Refer to **REMOVAL - Step 38** .
11. **REMOVE CERTIFICATION ECU (SMART KEY ECU ASSEMBLY) (w/o ECU Integration Box RH)** . Refer to **REMOVAL - Step 12** .
12. **REMOVE ECU INTEGRATION BOX RH (w/ ECU Integration Box RH)** . Refer to **REMOVAL - Step 11** .
13. **REMOVE AIR CONDITIONING AMPLIFIER ASSEMBLY**
    1. Disconnect each connector.
    2. Remove the 2 screws.

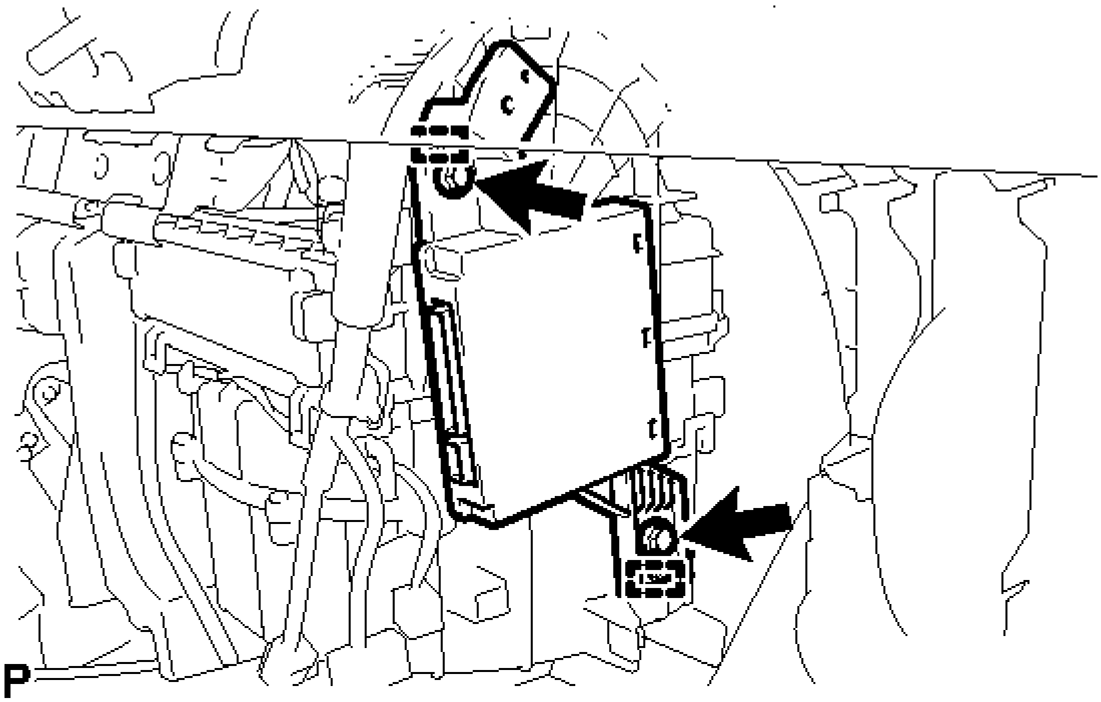

Fig. 237: Identifying Air Conditioning Amplifier Screws
Courtesy of TOYOTA MOTOR SALES, U.S.A., INC.

c. Disengage the 2 guides and remove the air conditioning amplifier assembly.

INSTALLATION

INSTALLATION

1. **INSTALL AIR CONDITIONING AMPLIFIER ASSEMBLY**
   a. Engage the 2 guides.
   b. Install the air conditioning amplifier assembly with the 2 screws.
   c. Connect each connector.
2. **INSTALL CERTIFICATION ECU (SMART KEY ECU ASSEMBLY) (w/o ECU Integration Box RH)** . Refer to **INSTALLATION - Step 1** .
3. **INSTALL ECU INTEGRATION BOX RH (w/ ECU Integration Box RH)** . Refer to **INSTALLATION - Step 2** .
4. **INSTALL LOWER INSTRUMENT PANEL SUB-ASSEMBLY** . Refer to **INSTALLATION - Step 15** .
5. **INSTALL LOWER NO. 2 INSTRUMENT PANEL AIRBAG ASSEMBLY** . Refer to **INSTALLATION - Step 1** .
6. **INSTALL NO. 2 INSTRUMENT PANEL UNDER COVER SUB-ASSEMBLY** . Refer to **INSTALLATION - Step 17** .
7. **INSTALL FRONT PANEL GARNISH RH** . Refer to **INSTALLATION - Step 39** .
8. **INSTALL INSTRUMENT SIDE PANEL RH** . Refer to **INSTALLATION - Step 18** .

9. **CONNECT FRONT DOOR OPENING TRIM WEATHERSTRIP RH** . Refer to **INSTALLATION - Step 46** .
10. **INSTALL COWL SIDE TRIM SUB-ASSEMBLY RH**

    HINT:

    Use the same procedure for the RH side and LH side. Refer to **INSTALLATION - Step 43** .

11. **INSTALL FRONT DOOR SCUFF PLATE RH**

    HINT:

    Use the same procedure for the RH side and LH side. Refer to **INSTALLATION - Step 44** .

12. **CONNECT CABLE TO NEGATIVE BATTERY TERMINAL**

    NOTE: **When disconnecting the cable, some systems need to be initialized after the cable is reconnected. Refer to INITIALIZATION .**

13. **SRS WARNING LIGHT**

    For Built-in Type Yaw Rate Sensor: Refer to **DIAGNOSIS SYSTEM** .

    For Separate Type Yaw Rate Sensor: Refer to **DIAGNOSIS SYSTEM** .

RADIO RECEIVER

COMPONENTS

ILLUSTRATION

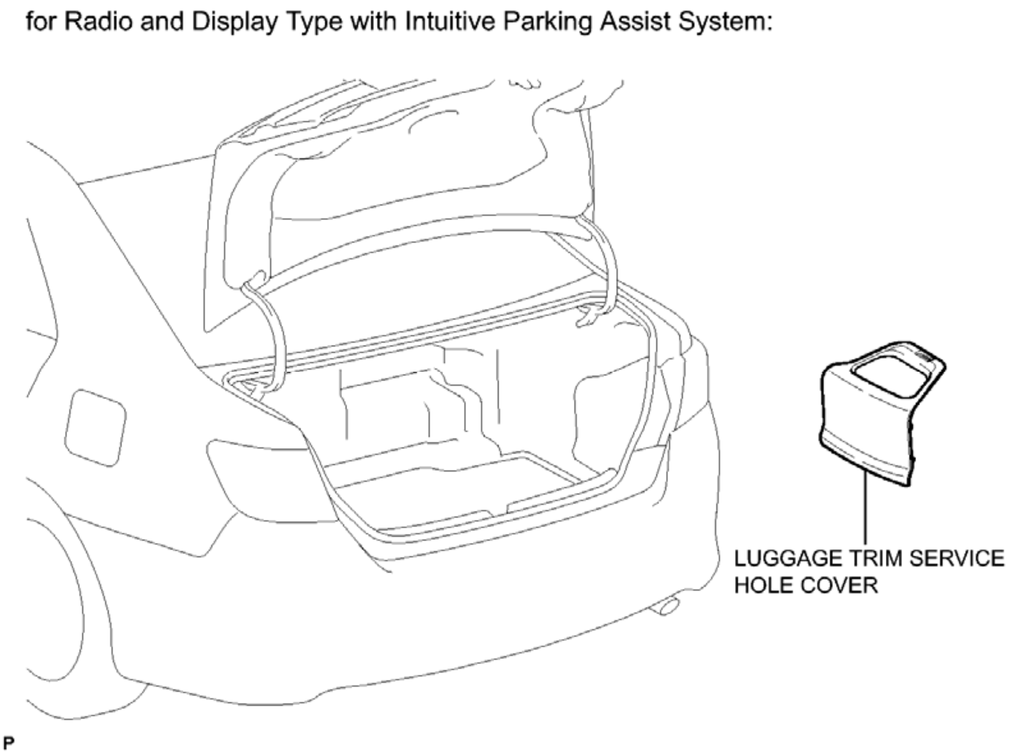
for Radio and Display Type with Intuitive Parking Assist System:
LUGGAGE TRIM SERVICE HOLE COVER
P

Fig. 1: Identifying Radio Receiver Replacement Components (1 Of 5)
Courtesy of TOYOTA MOTOR SALES, U.S.A., INC.

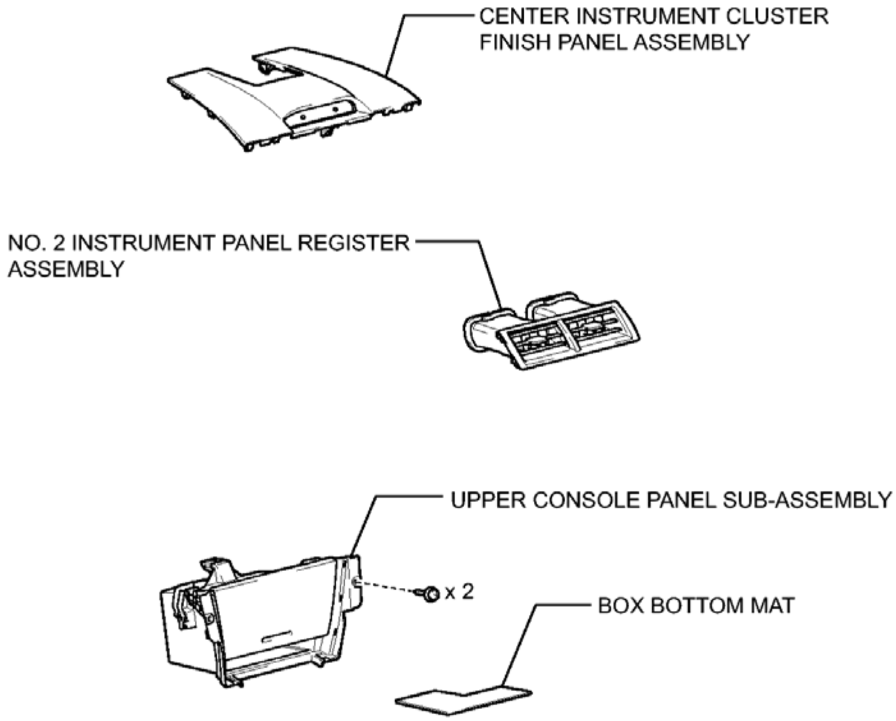
CENTER INSTRUMENT CLUSTER FINISH PANEL ASSEMBLY
NO. 2 INSTRUMENT PANEL REGISTER ASSEMBLY
UPPER CONSOLE PANEL SUB-ASSEMBLY
x 2
BOX BOTTOM MAT

P

Fig. 2: Identifying Radio Receiver Replacement Components (2 Of 5)
Courtesy of TOYOTA MOTOR SALES, U.S.A., INC.

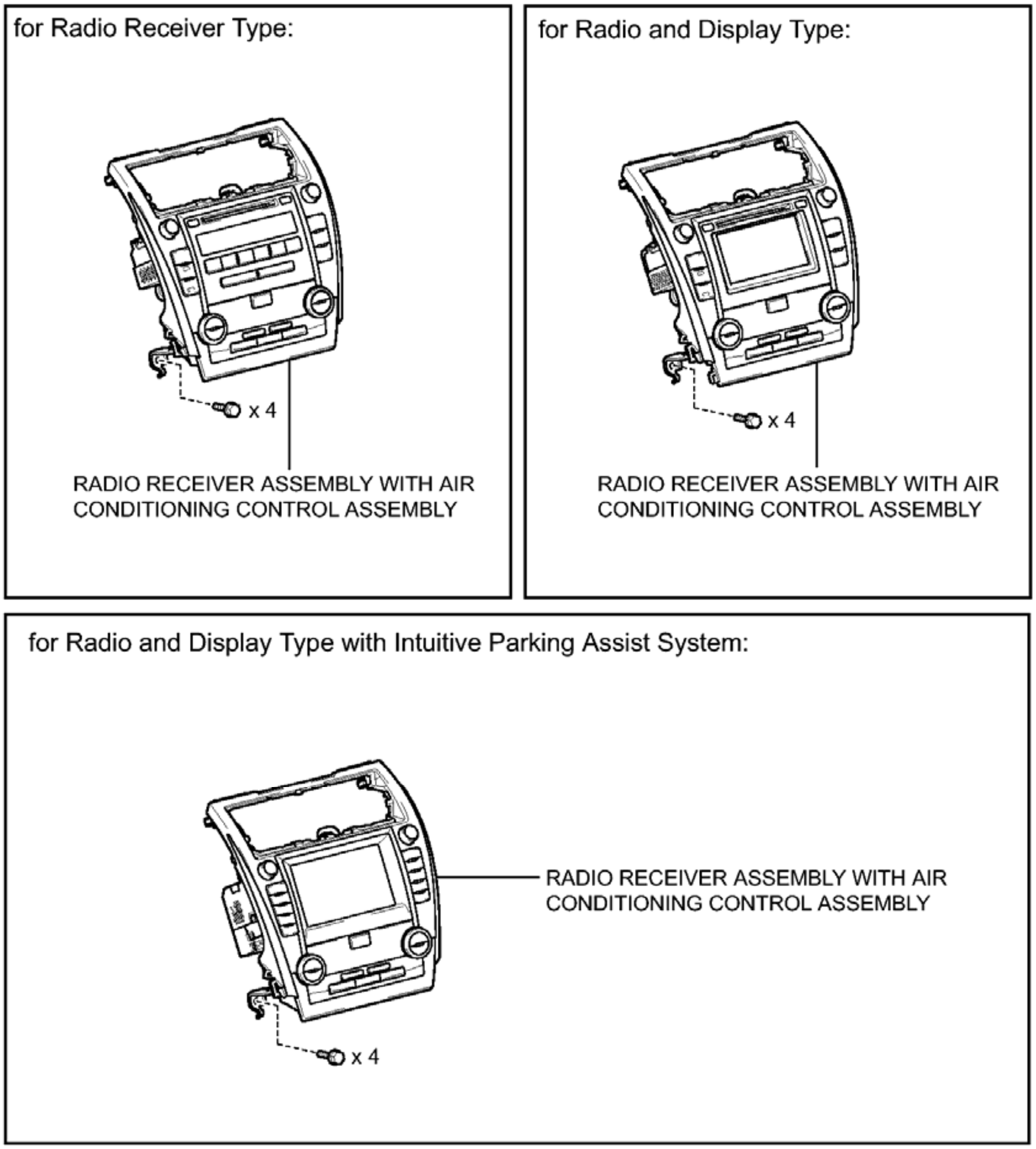
for Radio Receiver Type:
x 4
RADIO RECEIVER ASSEMBLY WITH AIR CONDITIONING CONTROL ASSEMBLY
for Radio and Display Type:
x 4
RADIO RECEIVER ASSEMBLY WITH AIR CONDITIONING CONTROL ASSEMBLY
for Radio and Display Type with Intuitive Parking Assist System:
RADIO RECEIVER ASSEMBLY WITH AIR CONDITIONING CONTROL ASSEMBLY
x 4

P

Fig. 3: Identifying Radio Receiver Replacement Components (3 Of 5)
Courtesy of TOYOTA MOTOR SALES, U.S.A., INC.

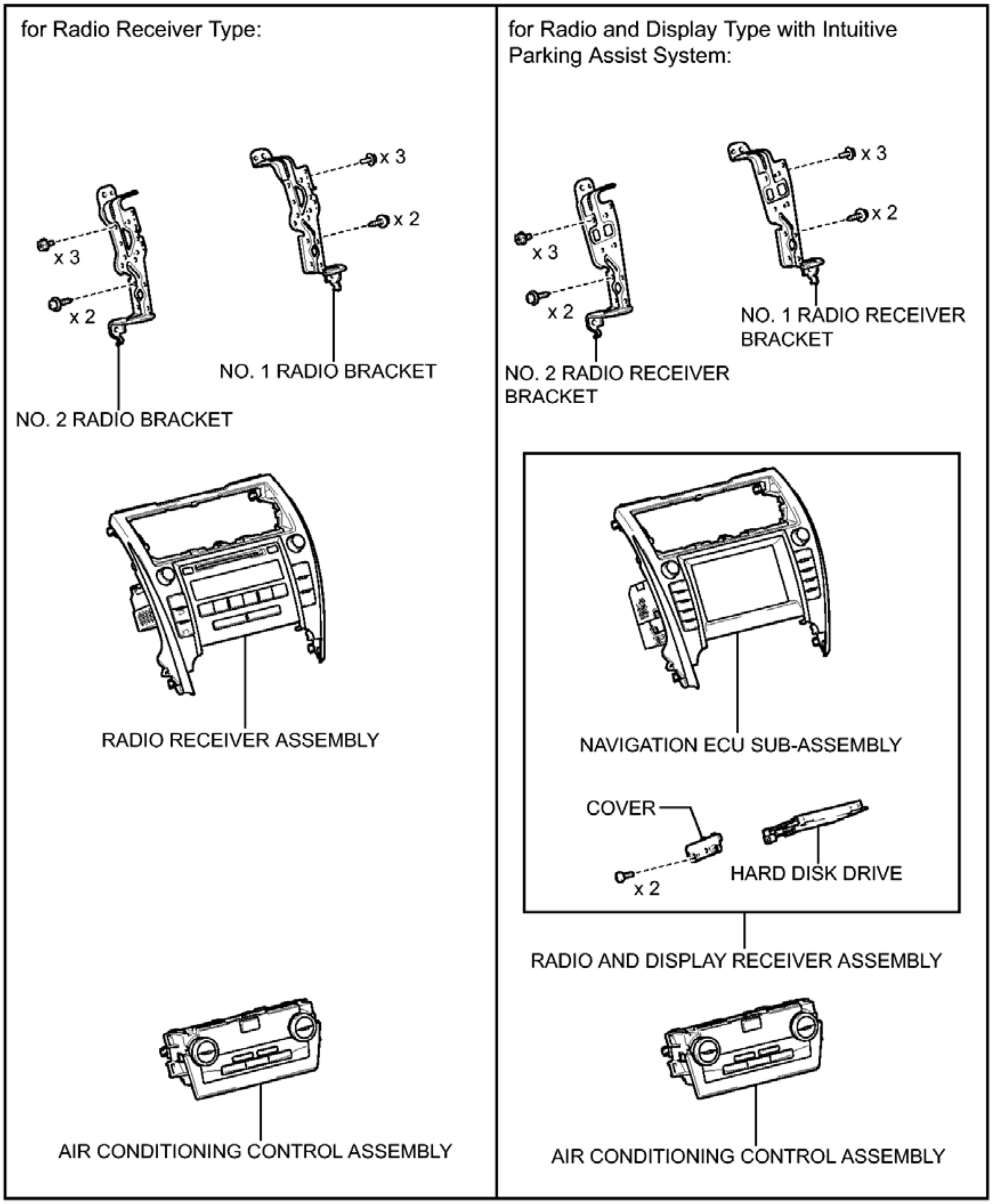
for Radio Receiver Type:
x 3
x 2
x 3
x 2
NO. 1 RADIO BRACKET
NO. 2 RADIO BRACKET
RADIO RECEIVER ASSEMBLY
AIR CONDITIONING CONTROL ASSEMBLY
for Radio and Display Type with Intuitive Parking Assist System:
x 3
x 2
x 3
x 2
NO. 1 RADIO RECEIVER BRACKET
NO. 2 RADIO RECEIVER BRACKET
NAVIGATION ECU SUB-ASSEMBLY
COVER
x 2
HARD DISK DRIVE
RADIO AND DISPLAY RECEIVER ASSEMBLY
AIR CONDITIONING CONTROL ASSEMBLY
P

Fig. 4: Identifying Radio Receiver Replacement Components (4 Of 5)
Courtesy of TOYOTA MOTOR SALES, U.S.A., INC.

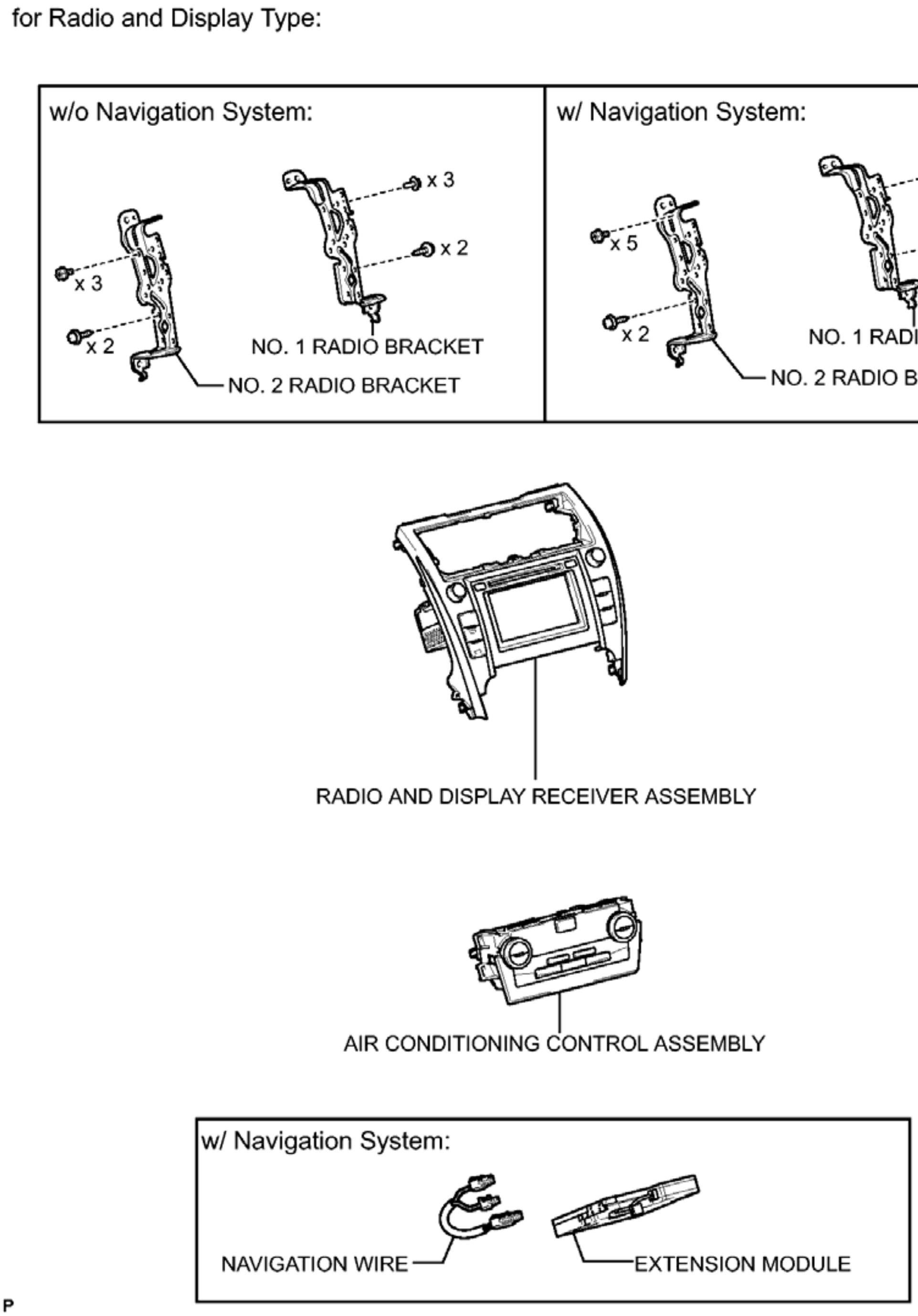
for Radio and Display Type:
w/o Navigation System:
x 3
x 2
x 3
x 2
NO. 1 RADIO BRACKET
NO. 2 RADIO BRACKET
w/ Navigation System:
x 5
x 2
x 5
x 2
NO. 1 RADIO BRACKET
NO. 2 RADIO BRACKET
RADIO AND DISPLAY RECEIVER ASSEMBLY
AIR CONDITIONING CONTROL ASSEMBLY
w/ Navigation System:
NAVIGATION WIRE
EXTENSION MODULE
P

Fig. 5: Identifying Radio Receiver Replacement Components (5 Of 5)
Courtesy of TOYOTA MOTOR SALES, U.S.A., INC.

REMOVAL

REMOVAL

1. **PRECAUTION (for Radio and Display Type with Intuitive Parking Assist System)**

NOTE:

- **After turning the power switch off, waiting time may be required before disconnecting the cable from the negative (-) auxiliary battery terminal. Therefore, make sure to read the disconnecting the cable from the negative (-) auxiliary battery terminal notices before proceeding with work. Refer to PRECAUTION .**
- **A Hard Disk Drive (HDD) is built into the radio and display receiver assembly to store multi-media data, and is used for the audio and visual system. Therefore, care must be taken when handling the radio and display receiver assembly.**
- **When removing the hard disk drive, eliminate static electricity by touching the vehicle body to prevent components from being damaged.**

2. **REMOVE LUGGAGE TRIM SERVICE HOLE COVER (for Radio and Display Type with Intuitive Parking Assist System)** . Refer to **REMOVAL - Step 2**
3. **DISCONNECT CABLE FROM AUXILIARY BATTERY NEGATIVE TERMINAL (for Radio and Display Type with Intuitive Parking Assist System)**

   NOTE: **When disconnecting the cable, some systems need to be initialized after the cable is reconnected. Refer to INITIALIZATION .**

4. **REMOVE REAR CONSOLE BOX ASSEMBLY**

   Refer to **REMOVAL**

5. **REMOVE BOX BOTTOM MAT** . Refer to **REMOVAL - Step 24**
6. **REMOVE UPPER CONSOLE PANEL SUB-ASSEMBLY** . Refer to **REMOVAL - Step 25**
7. **REMOVE CENTER INSTRUMENT CLUSTER FINISH PANEL ASSEMBLY** . Refer to **REMOVAL - Step 22**
8. **REMOVE NO. 2 INSTRUMENT PANEL REGISTER ASSEMBLY** . Refer to **REMOVAL - Step 23**
9. **REMOVE RADIO RECEIVER ASSEMBLY WITH AIR CONDITIONING CONTROL ASSEMBLY (for Radio Receiver Type)**
   1. Apply protective tape to the area shown in the illustration.

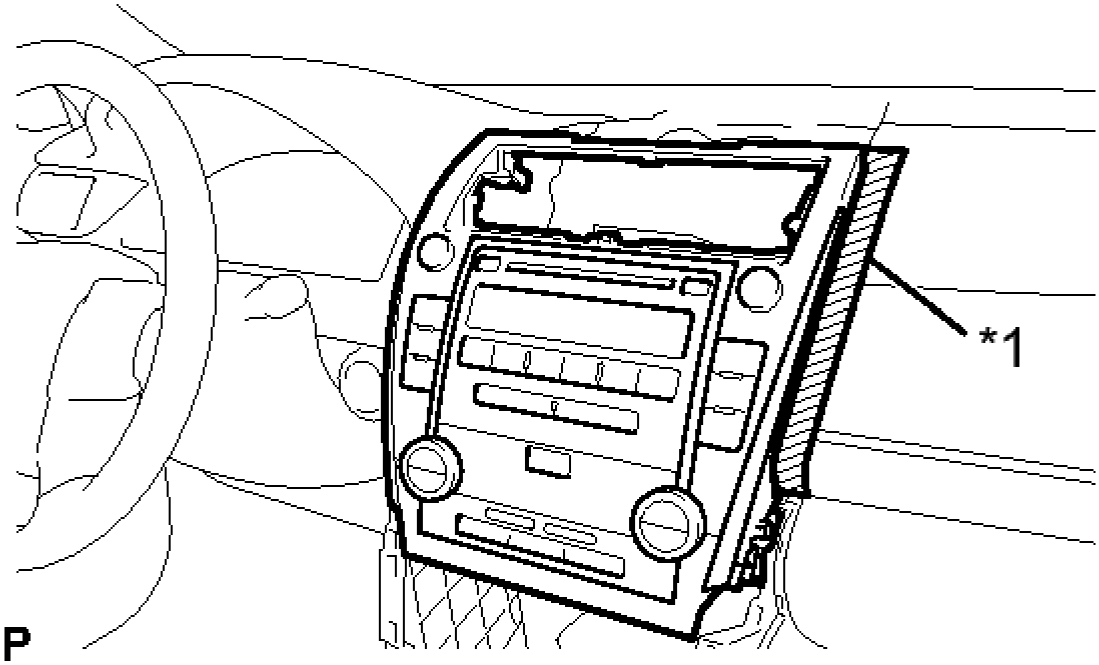

Fig. 6: Identifying Protective Tape
Courtesy of TOYOTA MOTOR SALES, U.S.A., INC.

TEXT IN ILLUSTRATION

*1	Protective Tape

b. Remove the 4 bolts.

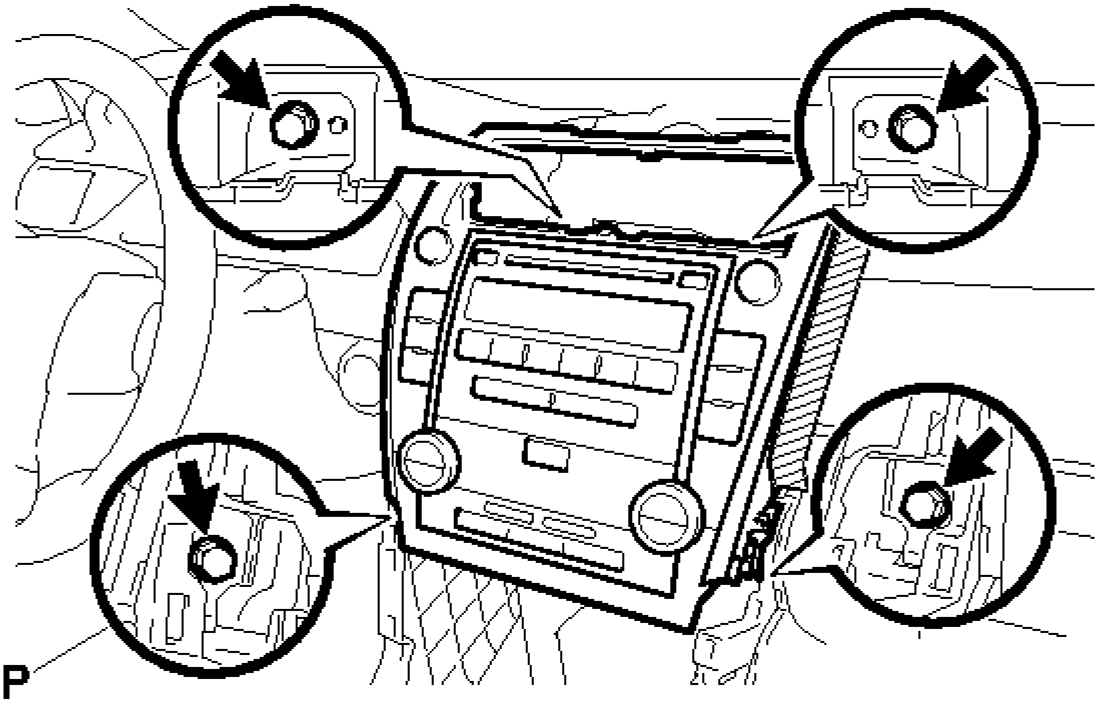

Fig. 7: Identifying Radio Receiver Assembly Bolts
Courtesy of TOYOTA MOTOR SALES, U.S.A., INC.

c. Pull the radio receiver assembly with air conditioning control assembly toward the rear of the vehicle and disengage the 8 clips.

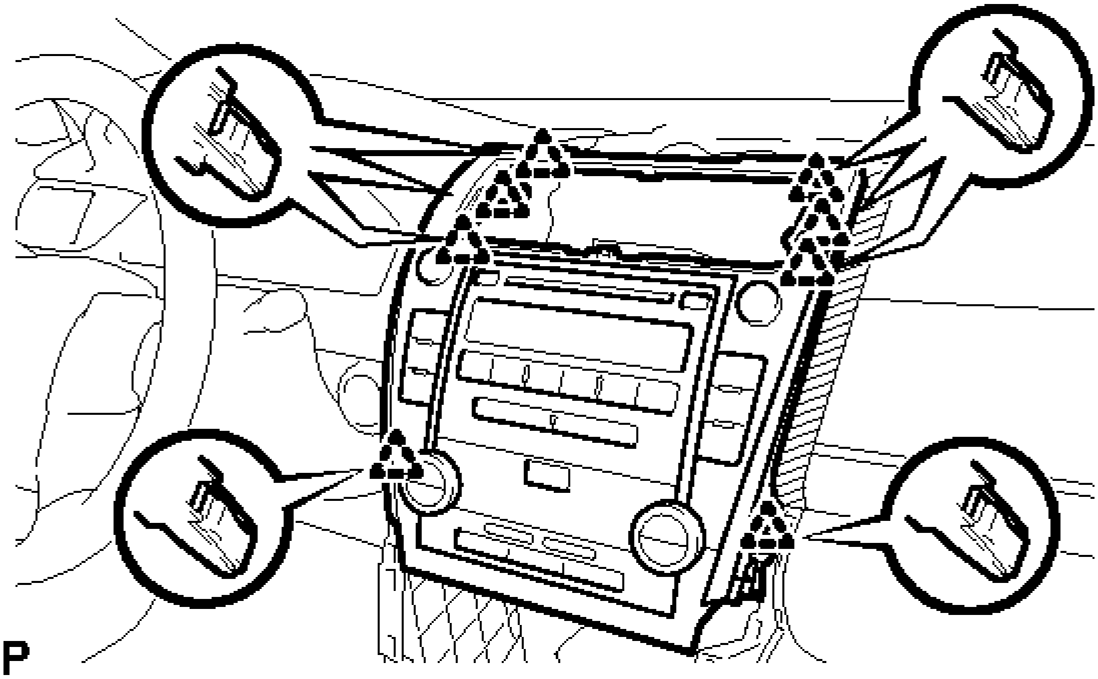

Fig. 8: Identifying Radio Receiver Assembly Clips

Courtesy of TOYOTA MOTOR SALES, U.S.A., INC.

d. Disconnect each connector and remove the radio receiver assembly with air conditioning control assembly.

10. REMOVE RADIO RECEIVER ASSEMBLY WITH AIR CONDITIONING CONTROL ASSEMBLY (for Radio and Display Type)

a. Apply protective tape to the areas shown in the illustration.

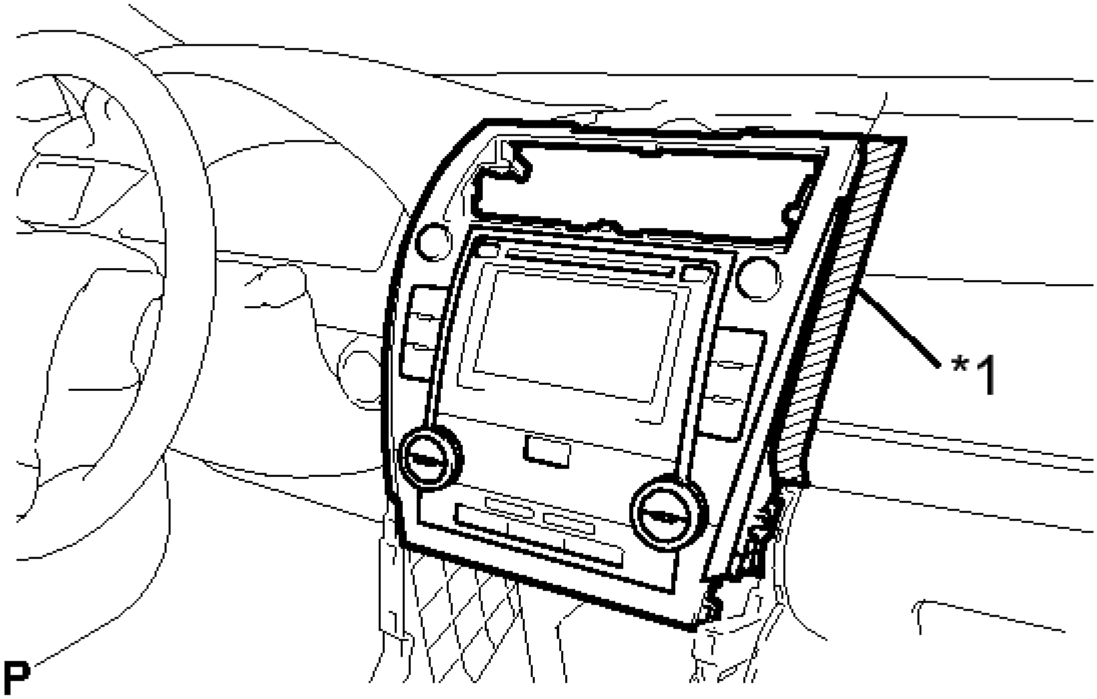

Fig. 9: Identifying Protective Tape
Courtesy of TOYOTA MOTOR SALES, U.S.A., INC.

TEXT IN ILLUSTRATION

*1	Protective Tape

b. Remove the 4 bolts.

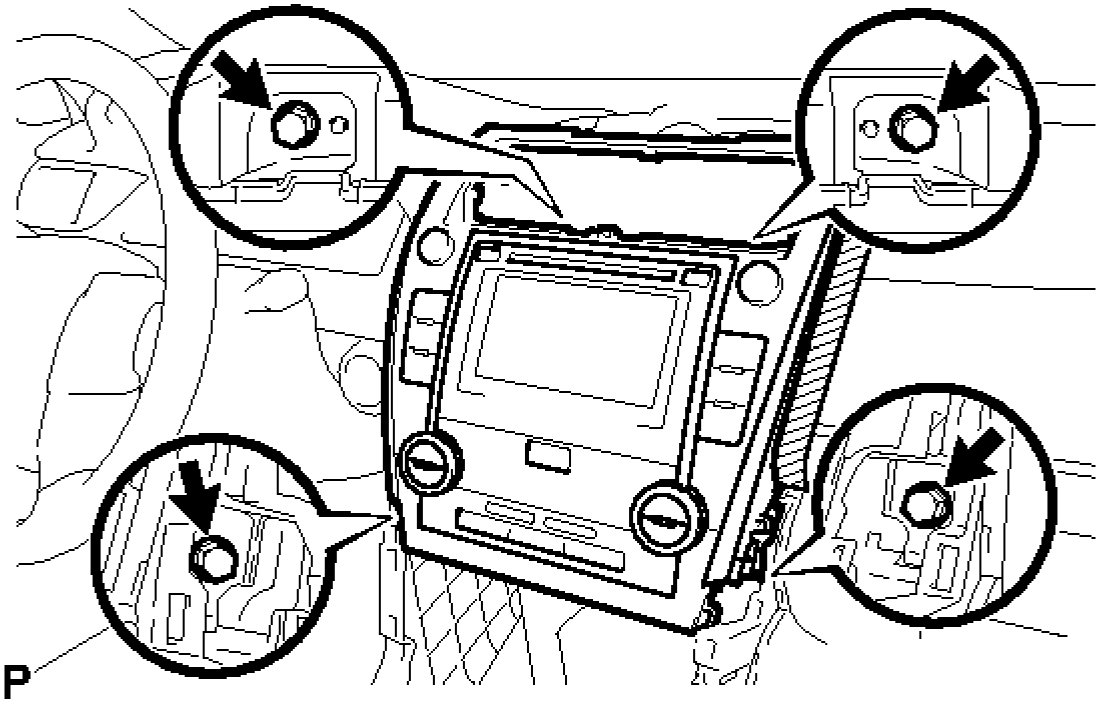

Fig. 10: Identifying Radio Receiver Assembly Bolts
Courtesy of TOYOTA MOTOR SALES, U.S.A., INC.

c. Pull the radio receiver assembly with air conditioning control assembly toward the rear of the vehicle and disengage the 8 clips.

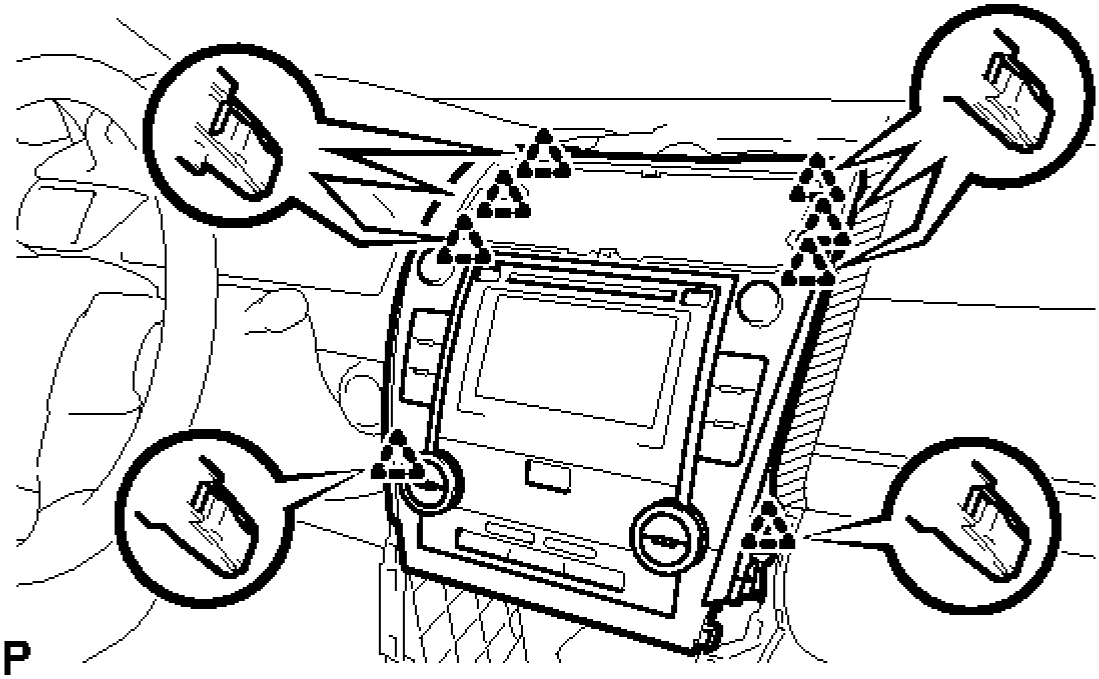

Fig. 11: Identifying Radio Receiver Assembly Clips

Courtesy of TOYOTA MOTOR SALES, U.S.A., INC.

d. Disconnect each connector and remove the radio receiver assembly with air conditioning control assembly.

HINT:

w/ Navigation System:

Do not disconnect the extension module connector.

11. **REMOVE NO. 1 RADIO BRACKET (for Radio Receiver Type)**
    a. Remove the 5 screws and No. 1 radio bracket.

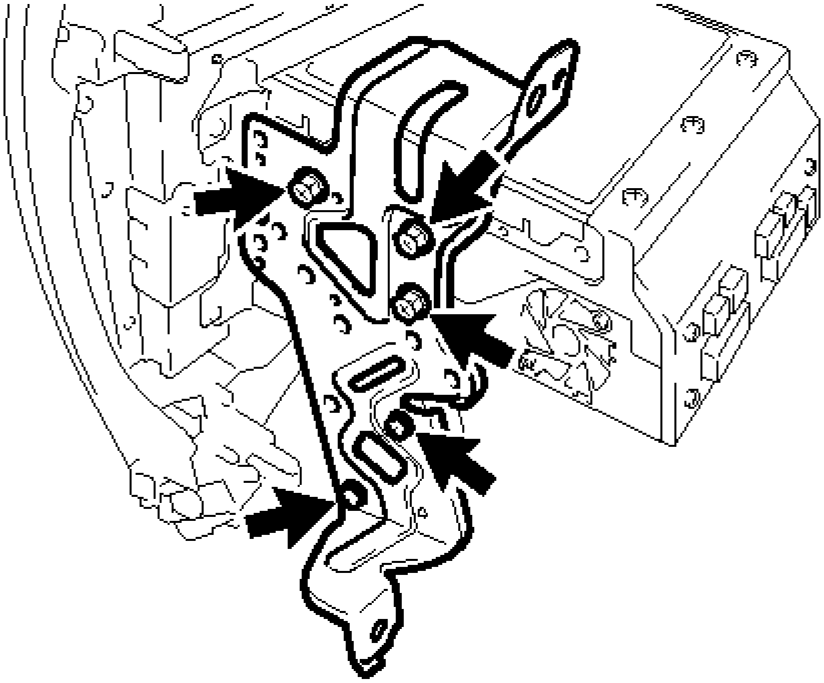

Fig. 12: Identifying No. 1 Radio Bracket And Screws
Courtesy of TOYOTA MOTOR SALES, U.S.A., INC.

12. **REMOVE NO. 2 RADIO BRACKET (for Radio Receiver Type)**
    a. Remove the 5 screws and No. 2 radio bracket.

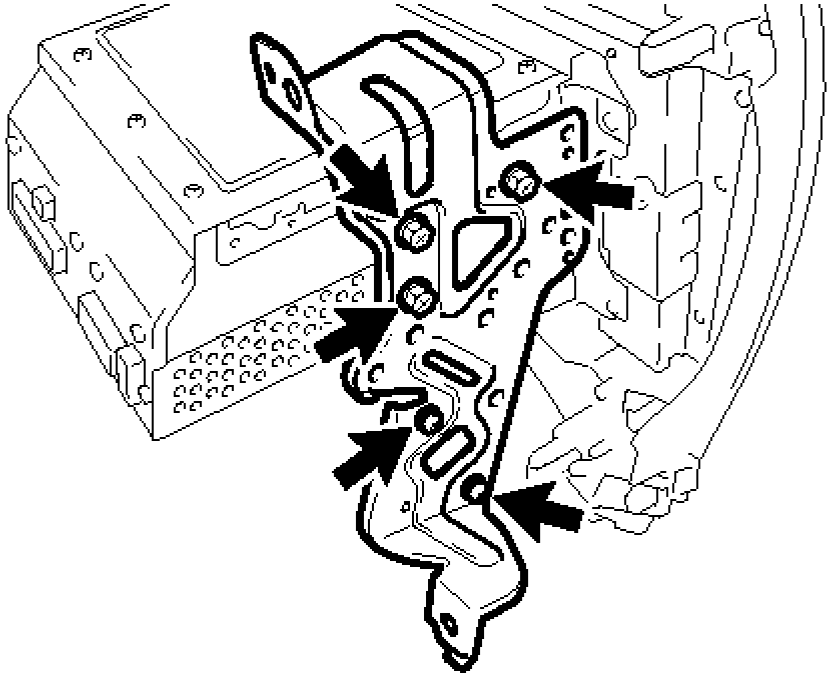

Fig. 13: Identifying No. 2 Radio Bracket And Screws
Courtesy of TOYOTA MOTOR SALES, U.S.A., INC.

13. **REMOVE NO. 1 RADIO BRACKET (for Radio and Display Type)**
    a. w/o Navigation System:
        1. Remove the 5 screws and No. 1 radio bracket.

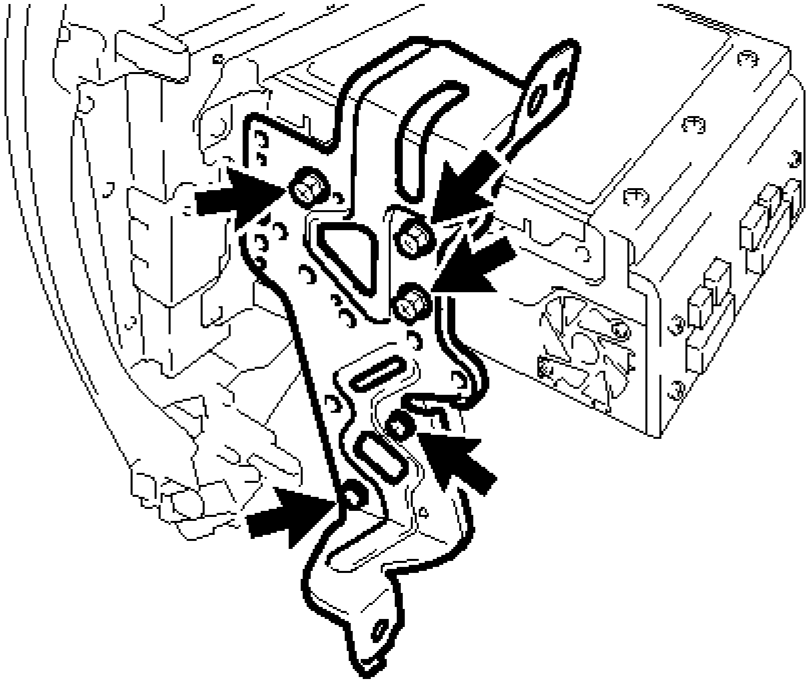

Fig. 14: Identifying No. 1 Radio Bracket And Screws
Courtesy of TOYOTA MOTOR SALES, U.S.A., INC.

b. w/ Navigation System:
   1. Remove the 7 screws and No. 1 radio bracket.

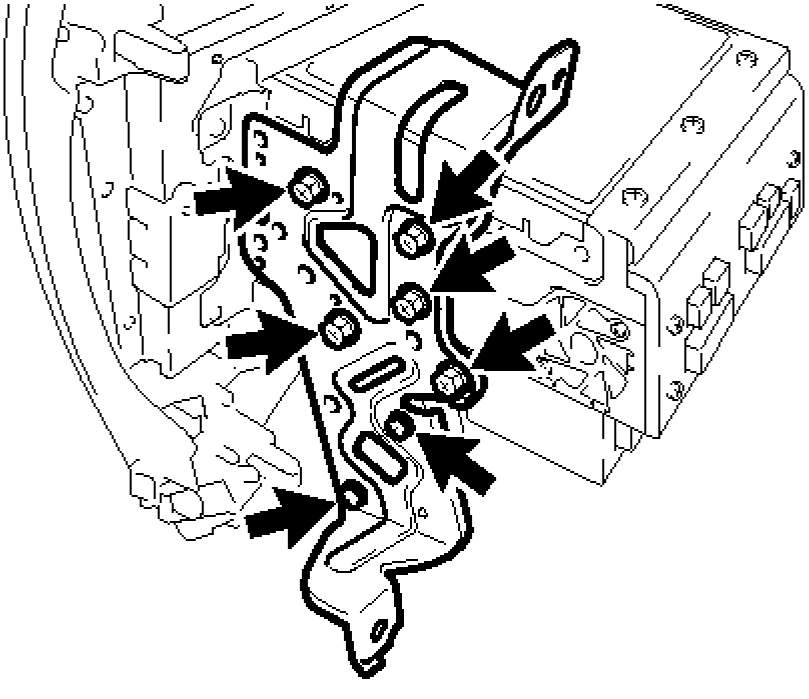

Fig. 15: Identifying No. 1 Radio Bracket And Screws
Courtesy of TOYOTA MOTOR SALES, U.S.A., INC.

14. **REMOVE NO. 2 RADIO BRACKET (for Radio and Display Type)**
    a. w/o Navigation System:
       1. Remove the 5 screws and No. 2 radio bracket.

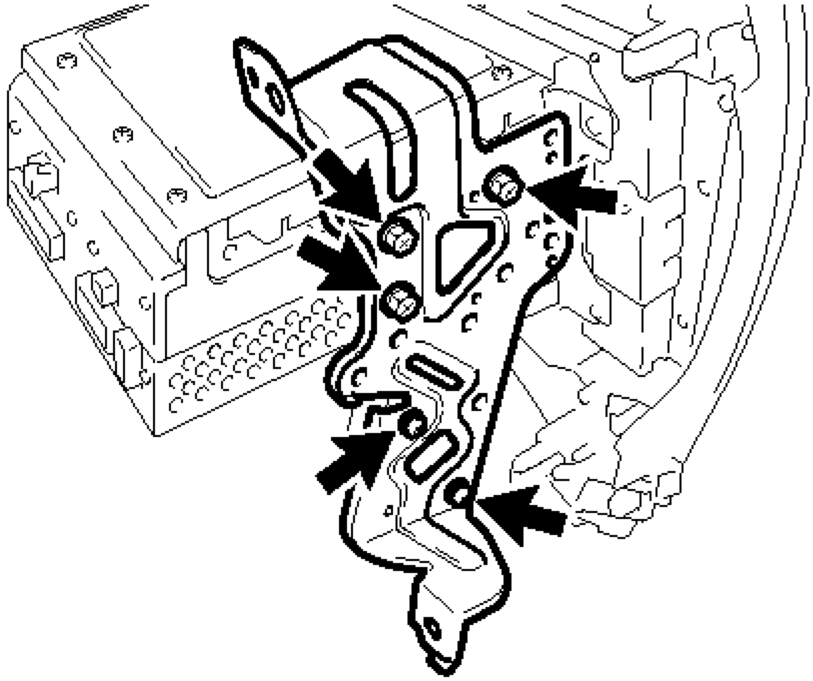

Fig. 16: Identifying No. 2 Radio Bracket And Screws
Courtesy of TOYOTA MOTOR SALES, U.S.A., INC.

b. w/ Navigation System:
   1. Remove the 7 screws and No. 2 radio bracket.

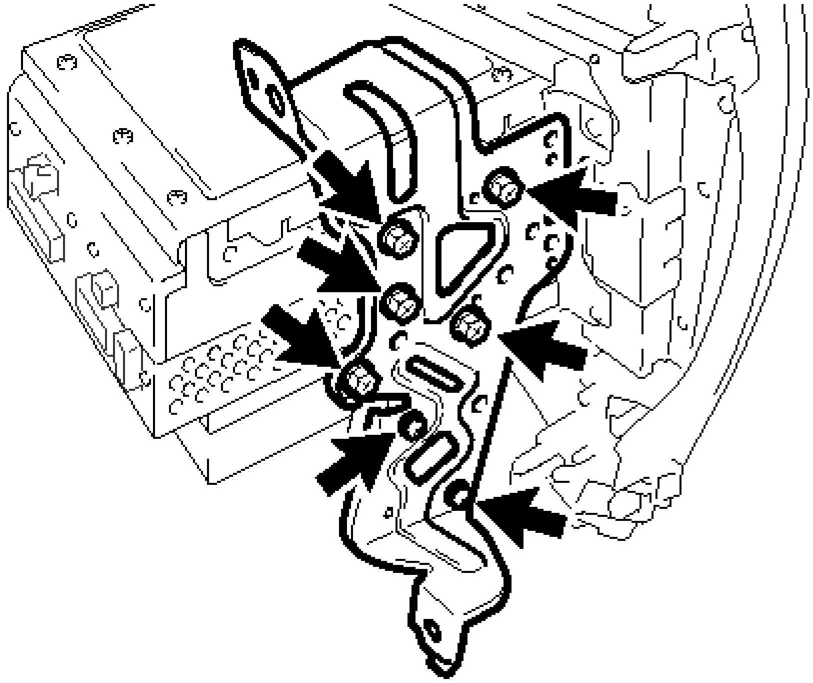

Fig. 17: Identifying No. 2 Radio Bracket And Screws

Courtesy of TOYOTA MOTOR SALES, U.S.A., INC.

15. **REMOVE NO. 1 RADIO RECEIVER BRACKET (for Radio and Display Type with Intuitive Parking Assist System)**
    1. Remove the 5 screws and No. 1 radio receiver bracket.

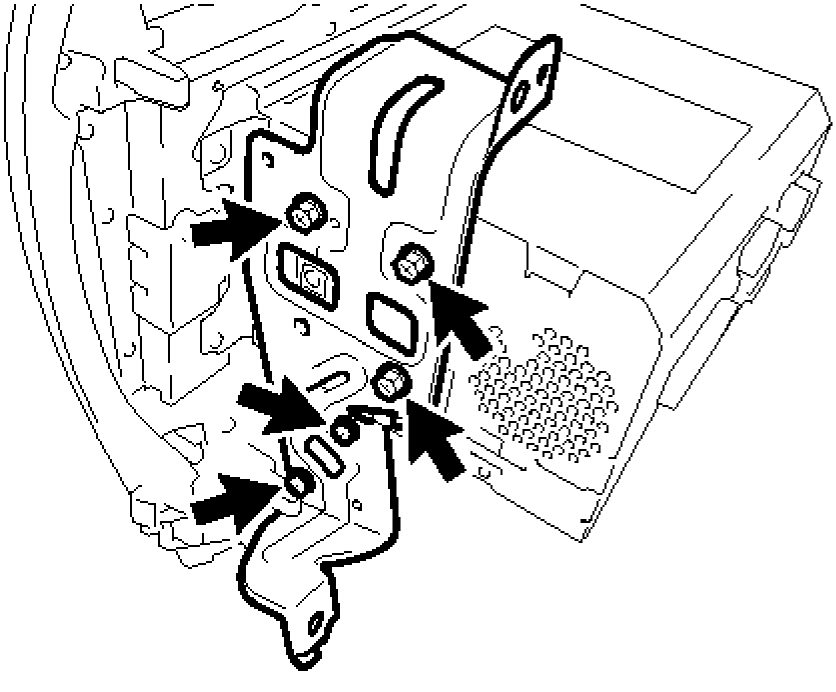

Fig. 18: Identifying No. 1 Radio Bracket And Screws
Courtesy of TOYOTA MOTOR SALES, U.S.A., INC.

16. **REMOVE NO. 2 RADIO RECEIVER BRACKET (for Radio and Display Type with Intuitive Parking Assist System)**
    1. Remove the 5 screws and No. 2 radio receiver bracket.

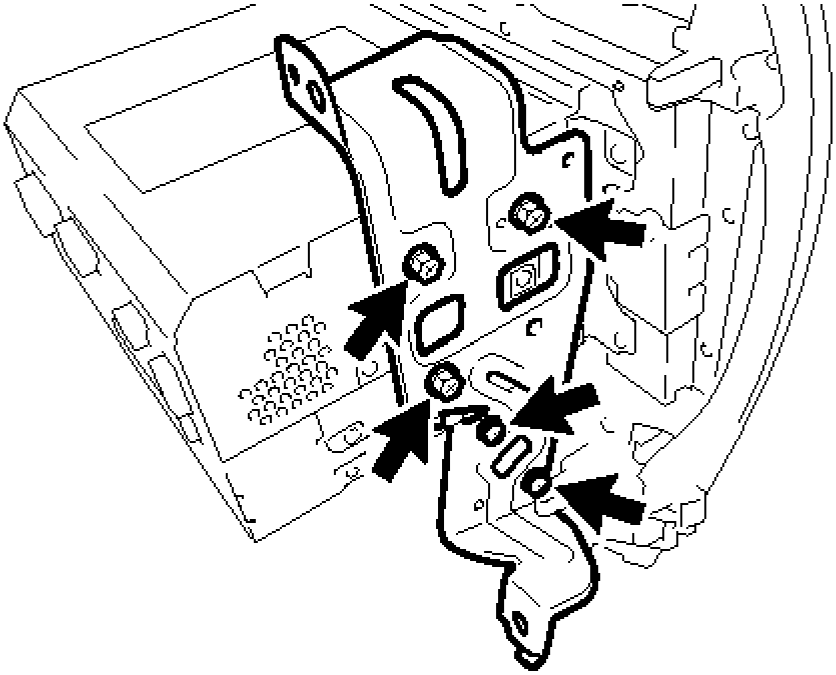

Fig. 19: Identifying No. 2 Radio Bracket And Screws
Courtesy of TOYOTA MOTOR SALES, U.S.A., INC.

17. **REMOVE AIR CONDITIONING CONTROL ASSEMBLY** . Refer to **REMOVAL - Step 21**
18. **REMOVE EXTENSION MODULE (for Radio and Display Type)**

    w/ Navigation System: Refer to **REMOVAL - Step 10**

19. **REMOVE RADIO RECEIVER ASSEMBLY (for Radio Receiver Type)**
20. **REMOVE RADIO AND DISPLAY RECEIVER ASSEMBLY (for Radio and Display Type)**
21. **REMOVE HARD DISK DRIVE (for Radio and Display Type with Intuitive Parking Assist System)** . Refer to **REMOVAL - Step 13**
22. **REMOVE NAVIGATION ECU SUB-ASSEMBLY (for Radio and Display Type with Intuitive Parking Assist System)**

INSTALLATION

INSTALLATION

1. **PRECAUTION (for Radio and Display Type with Intuitive Parking Assist System)**

    NOTE: **When installing the hard disk drive, eliminate static electricity by touching the vehicle body to prevent components from being damaged.**

2. **INSTALL RADIO RECEIVER ASSEMBLY (for Radio Receiver Type)**
3. **INSTALL RADIO AND DISPLAY RECEIVER ASSEMBLY (for Radio and Display Type)**

4. **INSTALL NAVIGATION ECU SUB-ASSEMBLY (for Radio and Display Type with Intuitive Parking Assist System)**
5. **INSTALL HARD DISK DRIVE (for Radio and Display Type with Intuitive Parking Assist System)** . Refer to **INSTALLATION - Step 2**
6. **INSTALL EXTENSION MODULE (for Radio and Display Type)**

   w/ Navigation System: Refer to **INSTALLATION - Step 1**

7. **INSTALL AIR CONDITIONING CONTROL ASSEMBLY** . Refer to **INSTALLATION - Step 1**
8. **INSTALL NO. 1 RADIO BRACKET (for Radio Receiver Type)**
   a. Install the No. 1 radio bracket with the 5 screws.
9. **INSTALL NO. 2 RADIO BRACKET (for Radio Receiver Type)**
   a. Install the No. 2 radio bracket with the 5 screws.
10. **INSTALL NO. 1 RADIO BRACKET (for Radio and Display Type)**
    a. w/o Navigation System:
       1. Install the No. 1 radio bracket with the 5 screws.
    b. w/ Navigation System:
       1. Install the No. 1 radio bracket with the 7 screws.
11. **INSTALL NO. 2 RADIO BRACKET (for Radio and Display Type)**
    a. w/o Navigation System:
       1. Install the No. 2 radio bracket with the 5 screws.
    b. w/ Navigation System:
       1. Install the No. 2 radio bracket with the 7 screws.
12. **INSTALL NO. 1 RADIO RECEIVER BRACKET (for Radio and Display Type with Intuitive Parking Assist System)**
    a. Install the No. 1 radio receiver bracket with the 5 screws.
13. **INSTALL NO. 2 RADIO RECEIVER BRACKET (for Radio and Display Type with Intuitive Parking Assist System)**
    a. Install the No. 2 radio receiver bracket with the 5 screws.
14. **INSTALL RADIO RECEIVER ASSEMBLY WITH AIR CONDITIONING CONTROL ASSEMBLY (for Radio Receiver Type)**
    a. Connect each connector.
    b. Engage the 8 clips to the vehicle body to temporarily install the radio receiver assembly with air conditioning control assembly.
    c. Install the radio receiver assembly with air conditioning control assembly with the 4 bolts.
15. **INSTALL RADIO RECEIVER ASSEMBLY WITH AIR CONDITIONING CONTROL ASSEMBLY (for Radio and Display Type)**
    a. Connect each connector.
    b. Engage the 8 clips to the vehicle body to temporarily install the radio receiver assembly with air conditioning control assembly.

   c. Install the radio receiver assembly with air conditioning control assembly with the 4 bolts.

16. **INSTALL NO. 2 INSTRUMENT PANEL REGISTER ASSEMBLY** . Refer to **INSTALLATION - Step 29**
17. **INSTALL CENTER INSTRUMENT CLUSTER FINISH PANEL ASSEMBLY** . Refer to **INSTALLATION - Step 30**
18. **INSTALL UPPER CONSOLE PANEL SUB-ASSEMBLY** . Refer to **INSTALLATION - Step 27**
19. **INSTALL BOX BOTTOM MAT** . Refer to **INSTALLATION - Step 28**
20. **INSTALL REAR CONSOLE BOX ASSEMBLY**

    Refer to **INSTALLATION**

21. **CONNECT CABLE TO AUXILIARY BATTERY NEGATIVE TERMINAL (for Radio and Display Type with Intuitive Parking Assist System)**

    NOTE: **When disconnecting the cable, some systems need to be initialized after the cable is reconnected. Refer to INITIALIZATION .**

22. **INSTALL LUGGAGE TRIM SERVICE HOLE COVER (for Radio and Display Type with Intuitive Parking Assist System)** . Refer to **INSTALLATION - Step 3**
23. **INSPECT HARD DISK DRIVE (for Radio and Display Type with Intuitive Parking Assist System)**

    Refer to **OPERATION CHECK**

24. **REPLACED OPERATION (w/ Parking Assist Monitor System)**

    Refer to **CALIBRATION**

STEREO COMPONENT AMPLIFIER

COMPONENTS

ILLUSTRATION

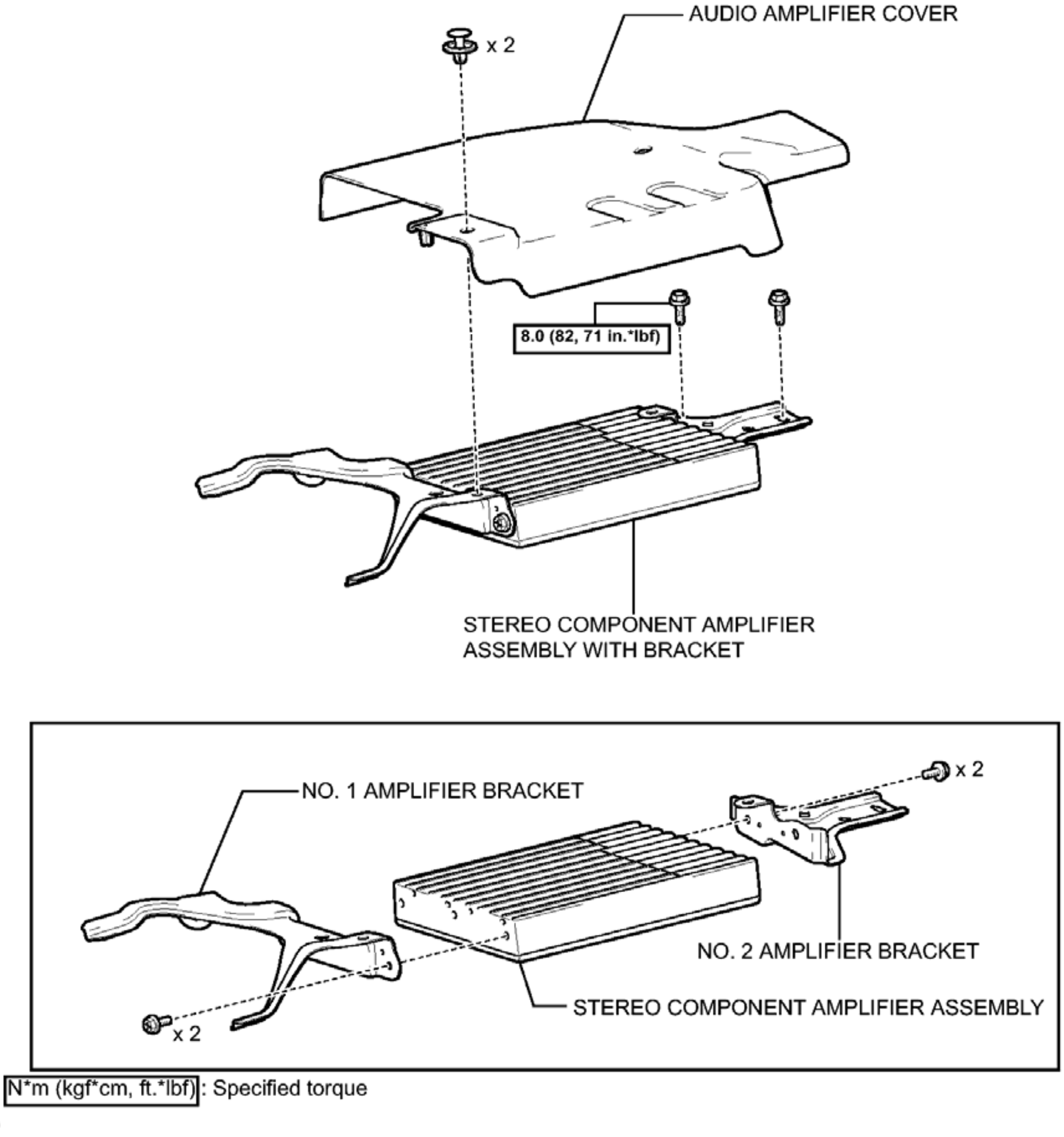
AUDIO AMPLIFIER COVER
x 2
8.0 (82, 71 in.*lbf)
STEREO COMPONENT AMPLIFIER
ASSEMBLY WITH BRACKET
NO. 1 AMPLIFIER BRACKET
x 2
NO. 2 AMPLIFIER BRACKET
STEREO COMPONENT AMPLIFIER ASSEMBLY
x 2
N*m (kgf*cm, ft.*lbf) : Specified torque
P

Fig. 20: Identifying Stereo Component Amplifier Replacement Components With Torque Specifications
Courtesy of TOYOTA MOTOR SALES, U.S.A., INC.

REMOVAL

REMOVAL

1. **REMOVE FRONT SEAT ASSEMBLY LH**

   Refer to **REMOVAL**

2. **REMOVE AUDIO AMPLIFIER COVER**
   a. Using a clip remover, remove the 2 clips and audio amplifier cover.

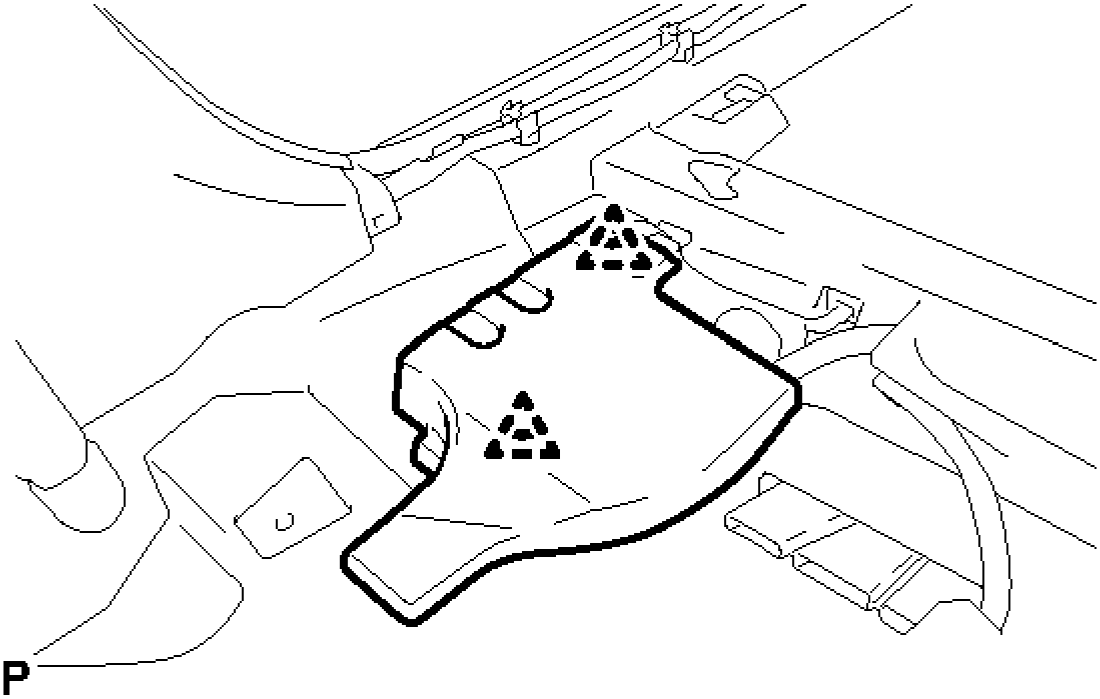

Fig. 21: Identifying Audio Amplifier Cover Clips
Courtesy of TOYOTA MOTOR SALES, U.S.A., INC.

3. **REMOVE STEREO COMPONENT AMPLIFIER ASSEMBLY WITH BRACKET**
   a. Remove the bolt and disconnect the ground wire.

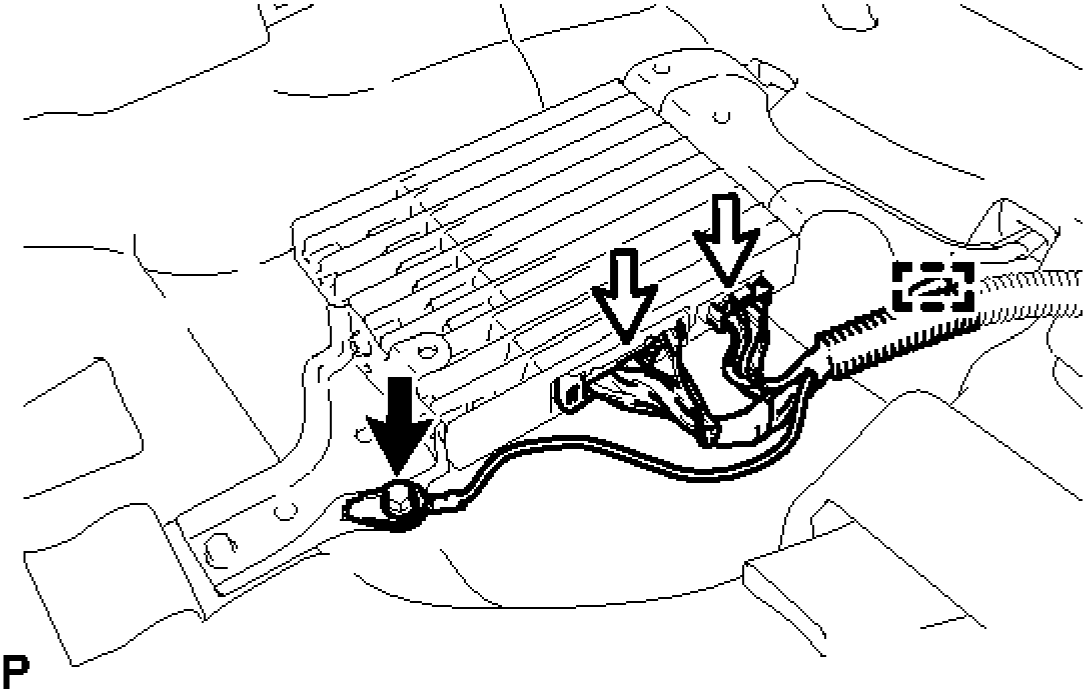

Fig. 22: Identifying Stereo Component Amplifier Assembly Connectors And Ground Wire

Bolt
Courtesy of TOYOTA MOTOR SALES, U.S.A., INC.

b. Disconnect each connector.
c. Disengage the clamp.
d. Remove the bolt.

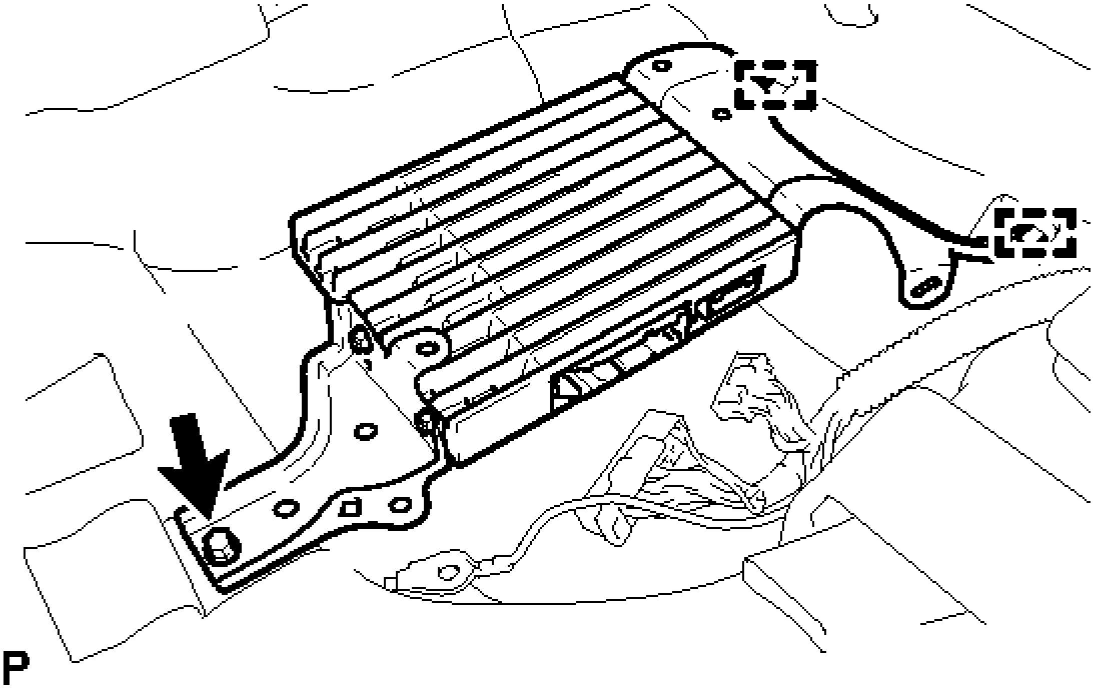

Fig. 23: Identifying Stereo Component Amplifier Assembly Guides
Courtesy of TOYOTA MOTOR SALES, U.S.A., INC.

e. Disengage the 2 guides and remove the stereo component amplifier assembly with bracket.

4. **REMOVE NO. 2 AMPLIFIER BRACKET**
   a. Remove the 2 screws and No. 2 amplifier bracket.

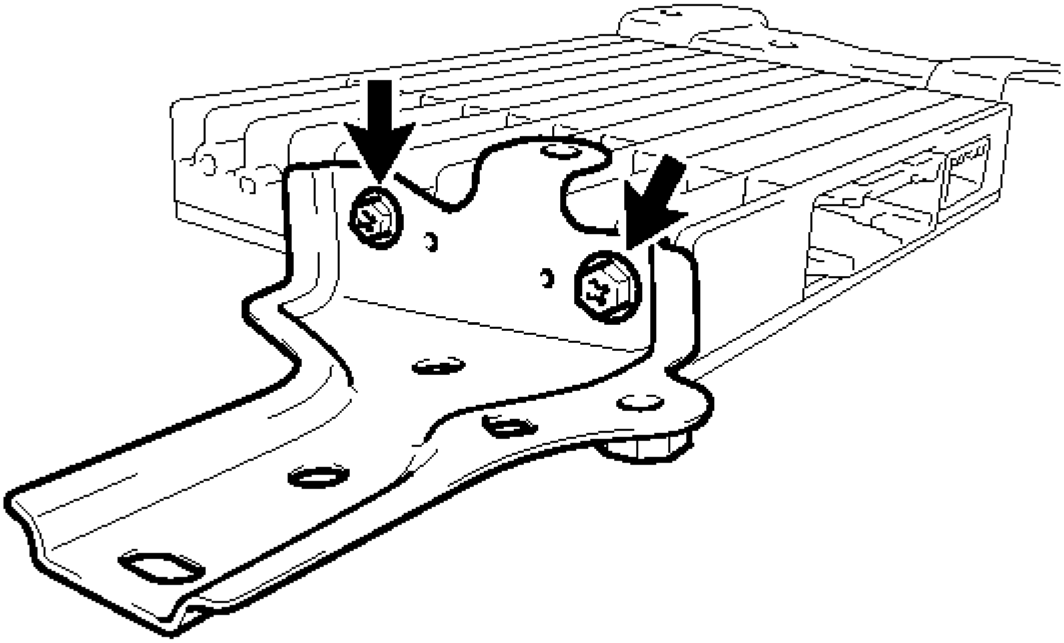

Fig. 24: Identifying No. 2 Amplifier Bracket Screws
Courtesy of TOYOTA MOTOR SALES, U.S.A., INC.

5. **REMOVE NO. 1 AMPLIFIER BRACKET**
    a. Remove the 2 screws and No. 1 amplifier bracket.

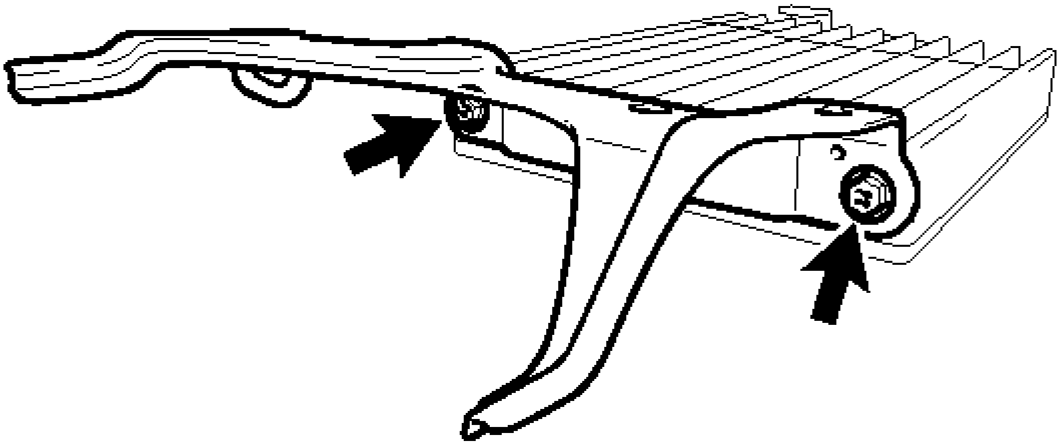

Fig. 25: Identifying No. 1 Amplifier Bracket Screws

Courtesy of TOYOTA MOTOR SALES, U.S.A., INC.

6. **REMOVE STEREO COMPONENT AMPLIFIER ASSEMBLY**

INSTALLATION

INSTALLATION

1. **INSTALL STEREO COMPONENT AMPLIFIER ASSEMBLY**
2. **INSTALL NO. 1 AMPLIFIER BRACKET**
    a. Install the No. 1 amplifier bracket with the 2 screws.
3. **INSTALL NO. 2 AMPLIFIER BRACKET**
    a. Install the No. 2 amplifier bracket with the 2 screws.
4. **INSTALL STEREO COMPONENT AMPLIFIER ASSEMBLY WITH BRACKET**
    a. Engage the 2 guides to the vehicle body to temporarily install the stereo component amplifier assembly with bracket.
    b. Install the stereo component amplifier assembly with bracket with the bolt.
    c. Engage the clamp.
    d. Connect each connector.
    e. Connect the ground wire with the bolt.

        Torque: 8.0 N*m (82 kgf*cm, 71 in.*lbf)

5. **INSTALL AUDIO AMPLIFIER COVER**
    a. Install the audio amplifier cover with the 2 clips.
6. **INSTALL FRONT SEAT ASSEMBLY LH**

    Refer to **INSTALLATION**

FRONT DOOR SPEAKER

COMPONENTS

ILLUSTRATION

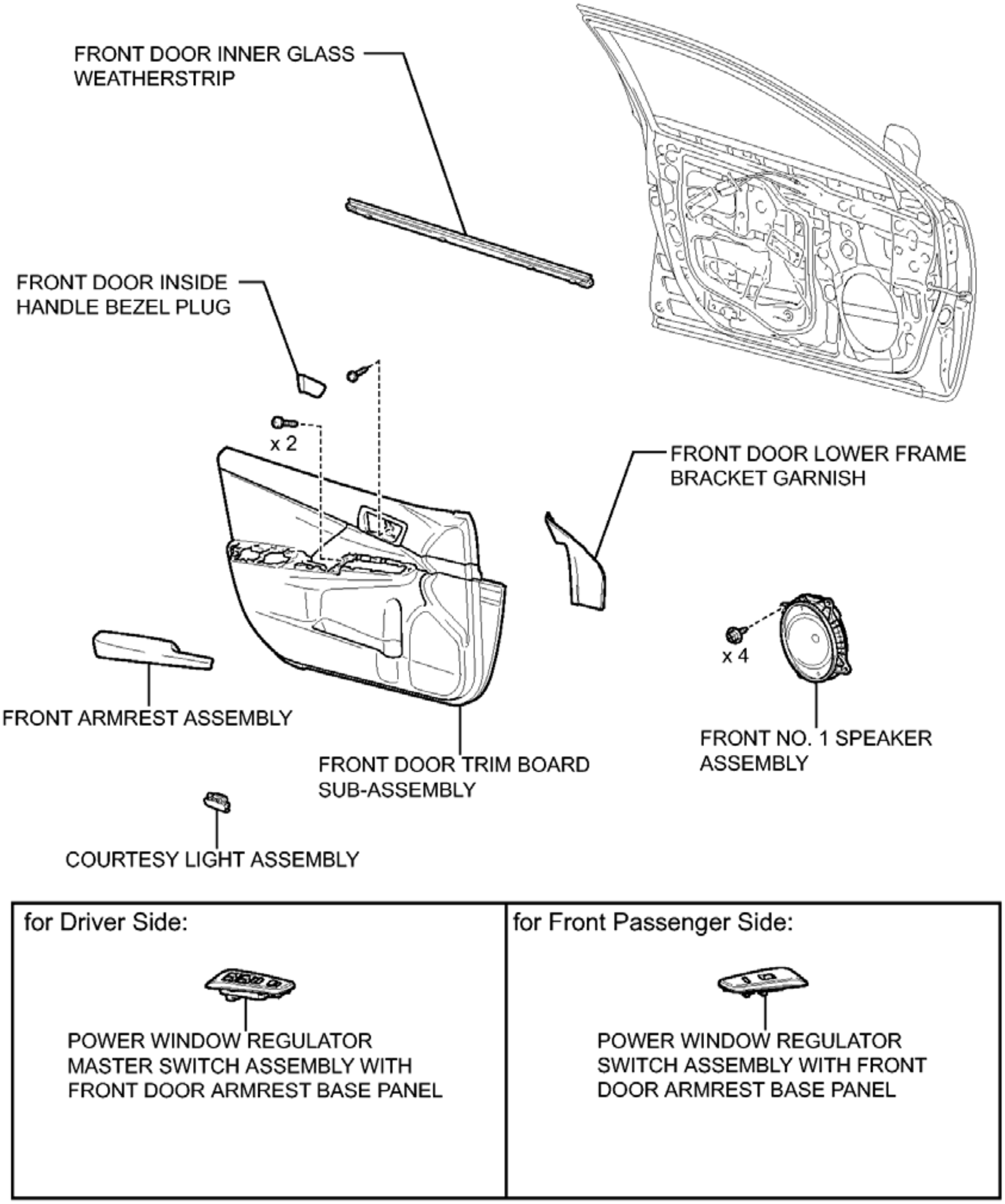
FRONT DOOR INNER GLASS WEATHERSTRIP
FRONT DOOR INSIDE HANDLE BEZEL PLUG
x 2
FRONT DOOR LOWER FRAME BRACKET GARNISH
x 4
FRONT ARMREST ASSEMBLY
FRONT NO. 1 SPEAKER ASSEMBLY
FRONT DOOR TRIM BOARD SUB-ASSEMBLY
COURTESY LIGHT ASSEMBLY
for Driver Side:
POWER WINDOW REGULATOR MASTER SWITCH ASSEMBLY WITH FRONT DOOR ARMREST BASE PANEL
for Front Passenger Side:
POWER WINDOW REGULATOR SWITCH ASSEMBLY WITH FRONT DOOR ARMREST BASE PANEL

P

Fig. 26: Identifying Front Door Speaker Replacement Components
Courtesy of TOYOTA MOTOR SALES, U.S.A., INC.

REMOVAL

REMOVAL

1. **REMOVE FRONT DOOR INSIDE HANDLE BEZEL PLUG** . Refer to **DISASSEMBLY - Step 4**

2. **REMOVE FRONT DOOR LOWER FRAME BRACKET GARNISH** . Refer to **DISASSEMBLY - Step 5**
3. **REMOVE POWER WINDOW REGULATOR MASTER SWITCH ASSEMBLY WITH FRONT DOOR ARMREST BASE PANEL (for Driver Side)** . Refer to **DISASSEMBLY - Step 6**
4. **REMOVE POWER WINDOW REGULATOR SWITCH ASSEMBLY WITH FRONT DOOR ARMREST BASE PANEL (for Front Passenger Side)** . Refer to **DISASSEMBLY - Step 7**
5. **REMOVE FRONT ARMREST ASSEMBLY** . Refer to **DISASSEMBLY - Step 8**
6. **REMOVE COURTESY LIGHT ASSEMBLY** . Refer to **REMOVAL - Step 1**
7. **REMOVE FRONT DOOR TRIM BOARD SUB-ASSEMBLY** . Refer to **DISASSEMBLY - Step 10**
8. **REMOVE FRONT DOOR INNER GLASS WEATHERSTRIP** . Refer to **DISASSEMBLY - Step 12**
9. **REMOVE FRONT NO. 1 SPEAKER ASSEMBLY**
   a. Disconnect the connector.

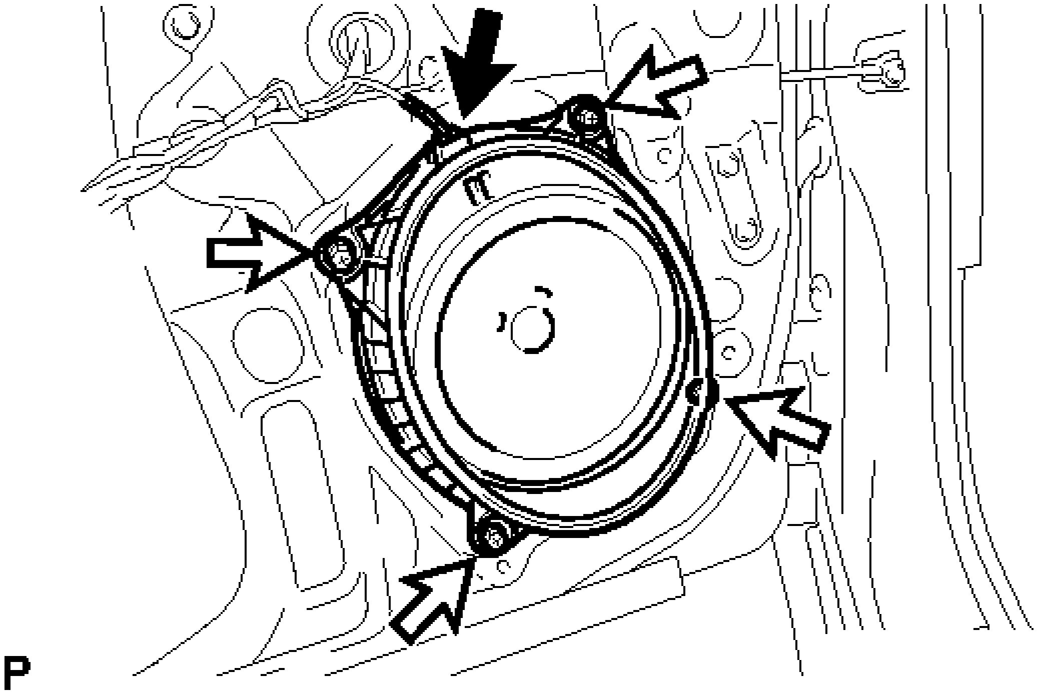

Fig. 27: Identifying Front No. 1 Speaker Assembly Screws And Connector
Courtesy of TOYOTA MOTOR SALES, U.S.A., INC.

   b. Remove the 4 screws.
   c. Disengage the 2 claws and remove the front No. 1 speaker assembly.

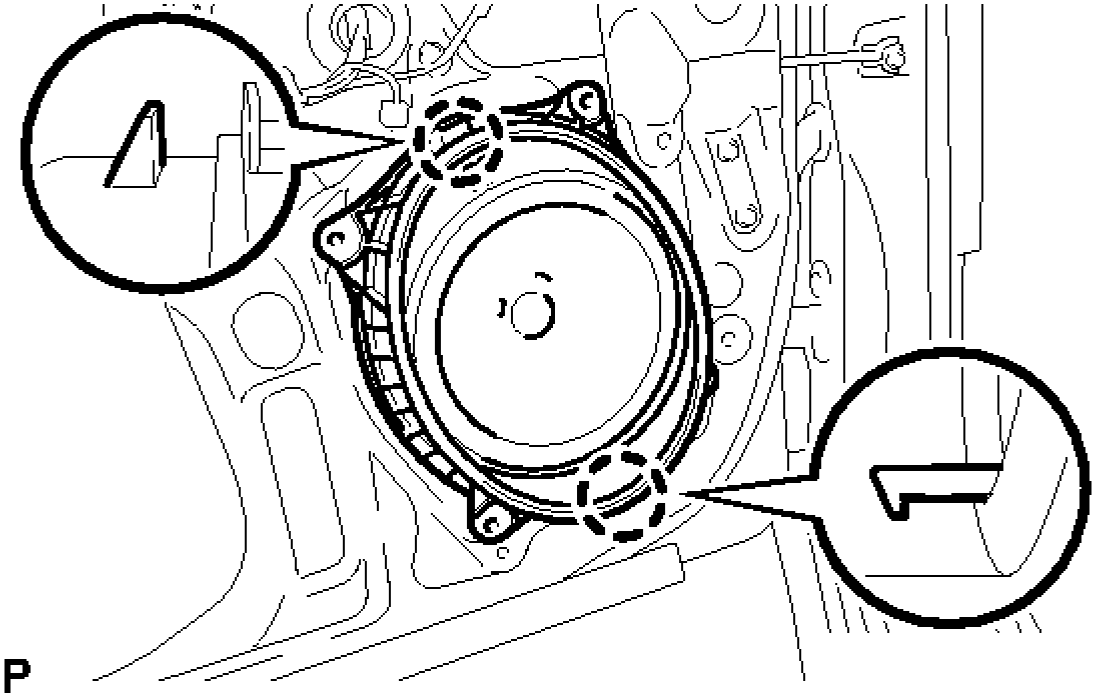

Fig. 28: Identifying Front No. 1 Speaker Assembly Claws
Courtesy of TOYOTA MOTOR SALES, U.S.A., INC.

NOTE: Do not touch the speaker cone.

INSPECTION

INSPECTION

1. **INSPECT FRONT NO. 1 SPEAKER ASSEMBLY (for 6 Speakers)**
    a. With the speaker installed, check that there is no looseness or other abnormalities.
    b. Check that there is no foreign matter in the speaker, no tears on the speaker cone or other abnormalities.
    c. Measure the resistance of the speaker.

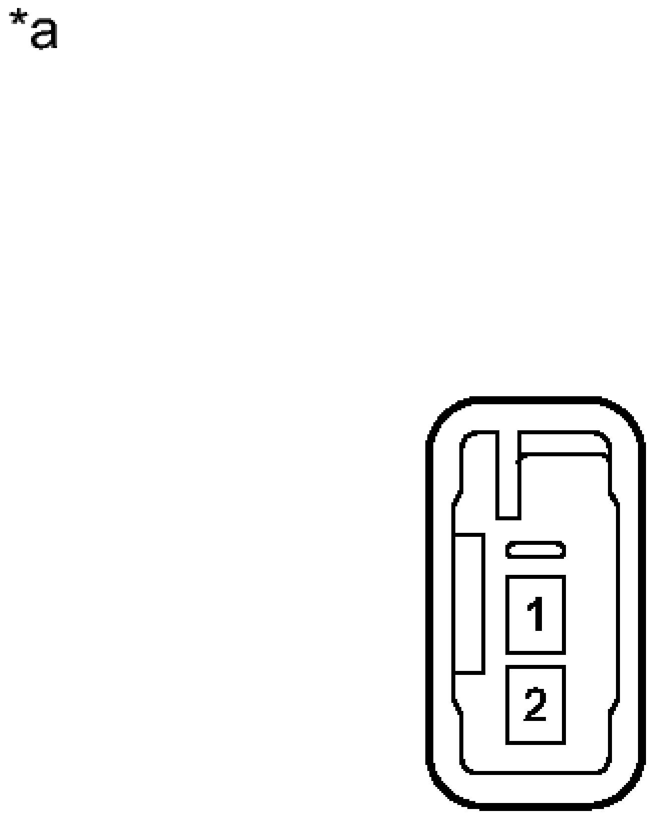

Fig. 29: Identifying Rear Speaker Connector
Courtesy of TOYOTA MOTOR SALES, U.S.A., INC.

Standard Resistance

Tester Connection	Condition	Specified Condition
1 - 2	Always	3.2 to 4.8 ohms

If the result is not as specified, replace the speaker.

TEXT IN ILLUSTRATION

	Component without

*a	harness connected (Front No. 1 Speaker Assembly)

2. **INSPECT FRONT NO. 1 SPEAKER ASSEMBLY (for 10 Speakers)**
    1. With the speaker installed, check that there is no looseness or other abnormalities.
    2. Check that there is no foreign matter in the speaker, no tears on the speaker cone or other abnormalities.
    3. Measure the resistance of the speaker.

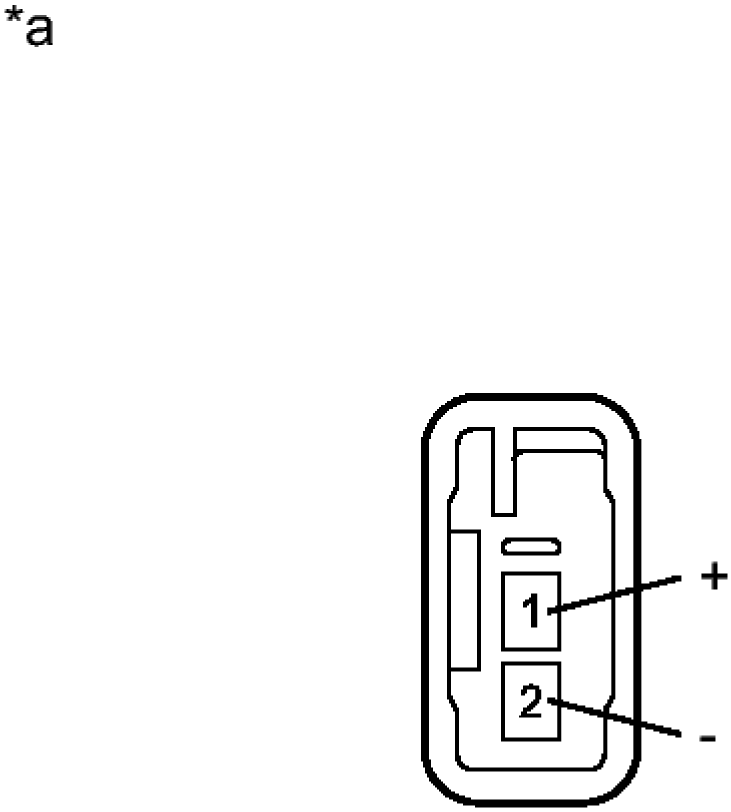

Fig. 30: Identifying Front No. 1 Speaker Assembly Connector Terminals
Courtesy of TOYOTA MOTOR SALES, U.S.A., INC.

Standard Resistance

Tester Connection	Condition	Specified Condition
1 (+) - 2 (-)	Always	4.6 to 6.6 ohms

If the result is not as specified, replace the speaker.

TEXT IN ILLUSTRATION

*a	Component without harness connected (Front No. 1 Speaker Assembly)

INSTALLATION

INSTALLATION

1. **INSTALL FRONT NO. 1 SPEAKER ASSEMBLY**
    a. Engage the 2 claws to the vehicle body to temporarily install the front No. 1 speaker assembly.
    b. Install the front No. 1 speaker assembly with the 4 screws.

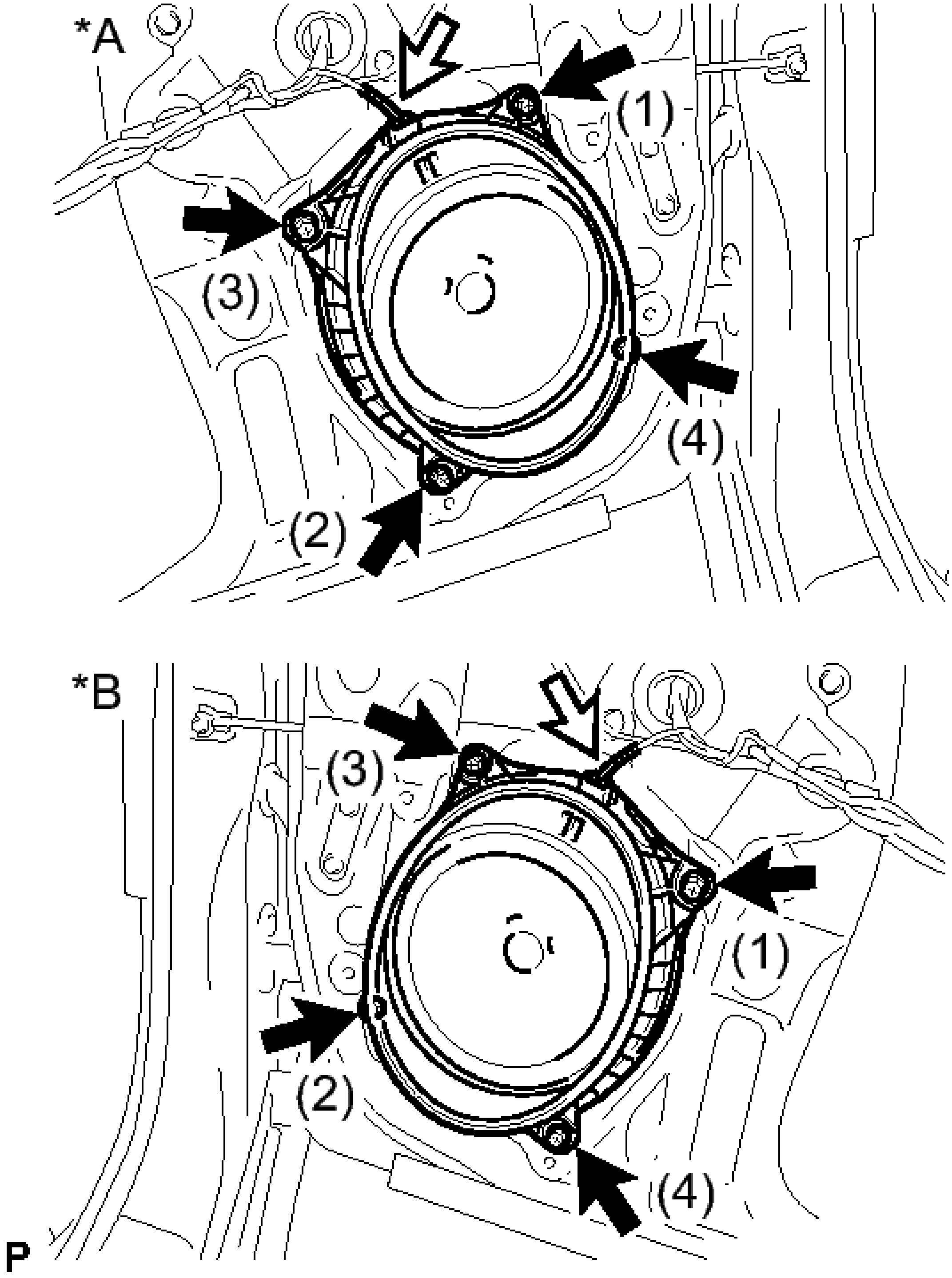
*A
(1)
(3)
(4)
(2)
*B
(3)
(1)
(2)
(4)
P

Fig. 31: Identifying Front No. 1 Speaker Assembly Screws (LH/RH Sides)
Courtesy of TOYOTA MOTOR SALES, U.S.A., INC.

*A	LH Side

*B	RH Side

NOTE: **Do not touch the speaker cone.**

HINT:

Install the screws in the order shown in the illustration.

c. Connect the connector.

2. **INSTALL FRONT DOOR INNER GLASS WEATHERSTRIP** . Refer to **REASSEMBLY - Step 37**
3. **INSTALL FRONT DOOR TRIM BOARD SUB-ASSEMBLY** . Refer to **REASSEMBLY - Step 39**
4. **INSTALL COURTESY LIGHT ASSEMBLY** . Refer to **INSTALLATION - Step 1**
5. **INSTALL FRONT ARMREST ASSEMBLY** . Refer to **REASSEMBLY - Step 41**
6. **INSTALL POWER WINDOW REGULATOR MASTER SWITCH ASSEMBLY WITH FRONT DOOR ARMREST BASE PANEL (for Driver Side)** . Refer to **REASSEMBLY - Step 42**
7. **INSTALL POWER WINDOW REGULATOR SWITCH ASSEMBLY WITH FRONT DOOR ARMREST BASE PANEL (for Front Passenger Side)** . Refer to **REASSEMBLY - Step 43**
8. **INSTALL FRONT DOOR LOWER FRAME BRACKET GARNISH** . Refer to **REASSEMBLY - Step 44**
9. **INSTALL FRONT DOOR INSIDE HANDLE BEZEL PLUG** . Refer to **REASSEMBLY - Step 45**

INSTRUMENT PANEL SPEAKER

COMPONENTS

ILLUSTRATION

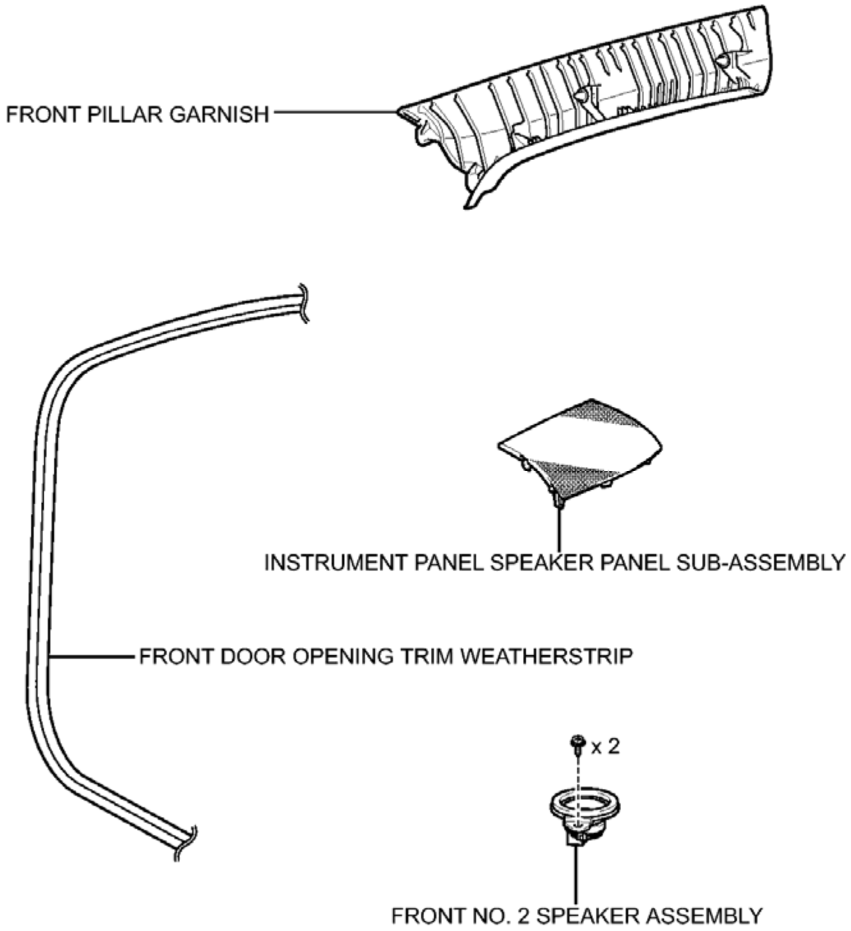
FRONT PILLAR GARNISH
INSTRUMENT PANEL SPEAKER PANEL SUB-ASSEMBLY
FRONT DOOR OPENING TRIM WEATHERSTRIP
x 2
FRONT NO. 2 SPEAKER ASSEMBLY
P

Fig. 32: Identifying Instrument Panel Speaker Replacement Components (1 Of 3)
Courtesy of TOYOTA MOTOR SALES, U.S.A., INC.

for 10 Speakers:

except Radio and Display Type without Intuitive Parking Assist System:

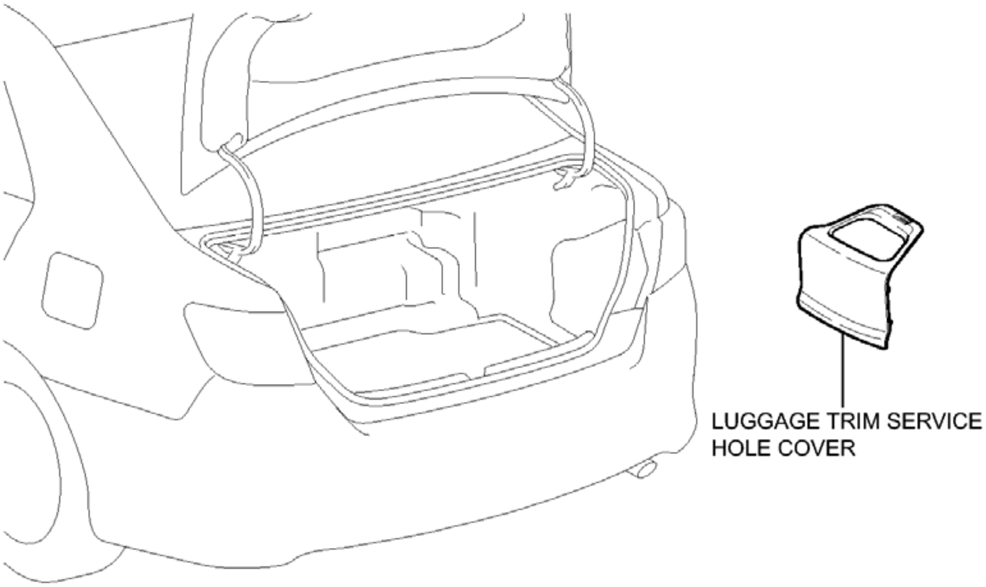
LUGGAGE TRIM SERVICE
HOLE COVER

P

Fig. 33: Identifying Instrument Panel Speaker Replacement Components (2 Of 3)
Courtesy of TOYOTA MOTOR SALES, U.S.A., INC.

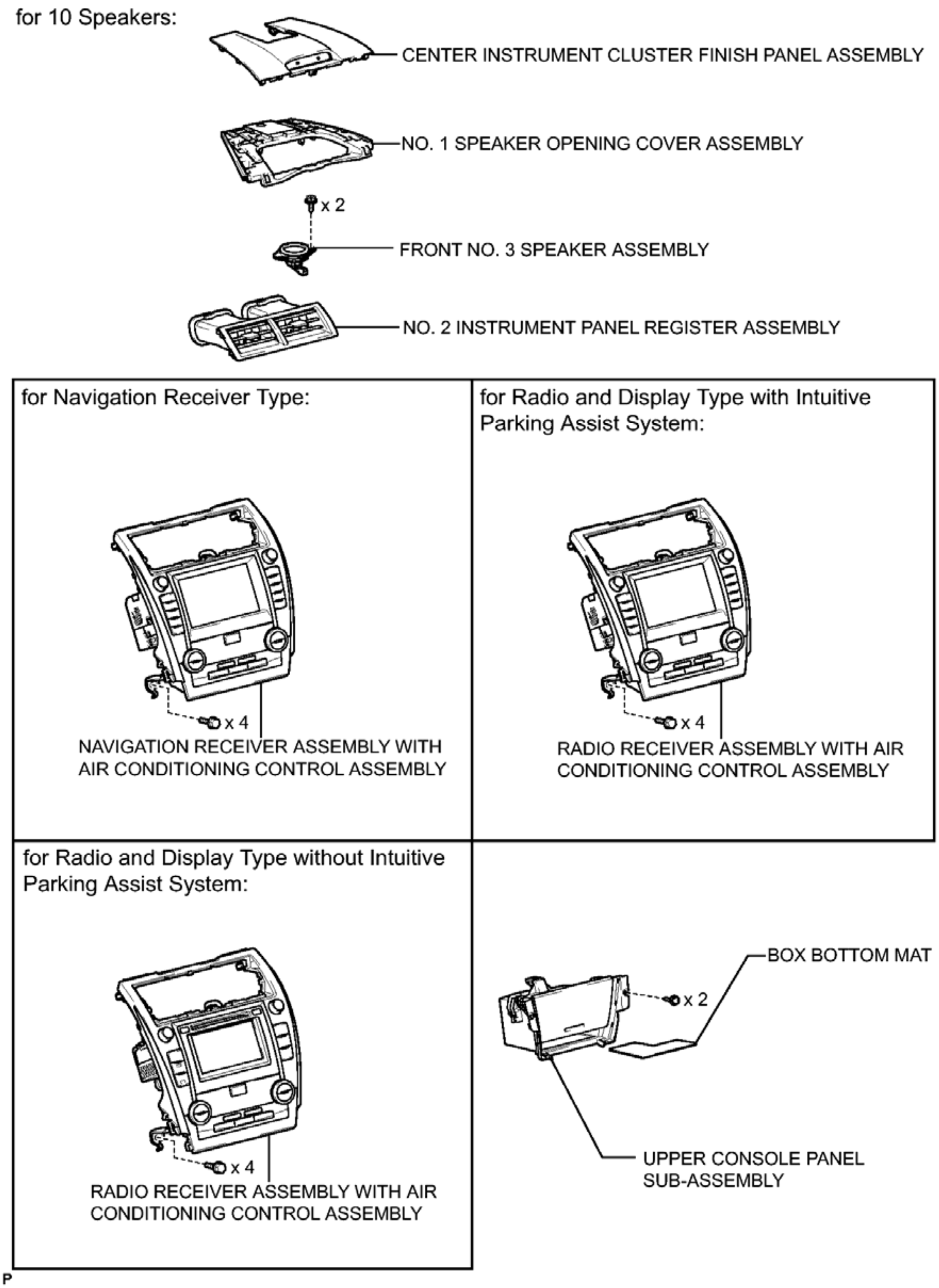
for 10 Speakers:
CENTER INSTRUMENT CLUSTER FINISH PANEL ASSEMBLY
NO. 1 SPEAKER OPENING COVER ASSEMBLY
x 2
FRONT NO. 3 SPEAKER ASSEMBLY
NO. 2 INSTRUMENT PANEL REGISTER ASSEMBLY
for Navigation Receiver Type:
x 4
NAVIGATION RECEIVER ASSEMBLY WITH AIR CONDITIONING CONTROL ASSEMBLY
for Radio and Display Type with Intuitive Parking Assist System:
x 4
RADIO RECEIVER ASSEMBLY WITH AIR CONDITIONING CONTROL ASSEMBLY
for Radio and Display Type without Intuitive Parking Assist System:
x 4
RADIO RECEIVER ASSEMBLY WITH AIR CONDITIONING CONTROL ASSEMBLY
BOX BOTTOM MAT
x 2
UPPER CONSOLE PANEL SUB-ASSEMBLY
P

Fig. 34: Identifying Instrument Panel Speaker Replacement Components (3 Of 3)
Courtesy of TOYOTA MOTOR SALES, U.S.A., INC.

REMOVAL

REMOVAL

1. **PRECAUTION (for 10 Speakers)**

   NOTE: **except Radio and Display Type without Intuitive Parking Assist System:**

   After turning the power switch off, waiting time may be required before disconnecting the cable from the negative (-) auxiliary battery terminal. Therefore, make sure to read the disconnecting the cable from the negative (-) auxiliary battery terminal notices before proceeding with work. Refer to PRECAUTION .

2. **DISCONNECT FRONT DOOR OPENING TRIM WEATHERSTRIP** . Refer to **REMOVAL - Step 6**
3. **REMOVE FRONT PILLAR GARNISH** . Refer to **REMOVAL - Step 7**
4. **REMOVE INSTRUMENT PANEL SPEAKER PANEL SUB-ASSEMBLY** . Refer to **REMOVAL - Step 41**
5. **REMOVE FRONT NO. 2 SPEAKER ASSEMBLY**
   1. Remove the 2 screws.

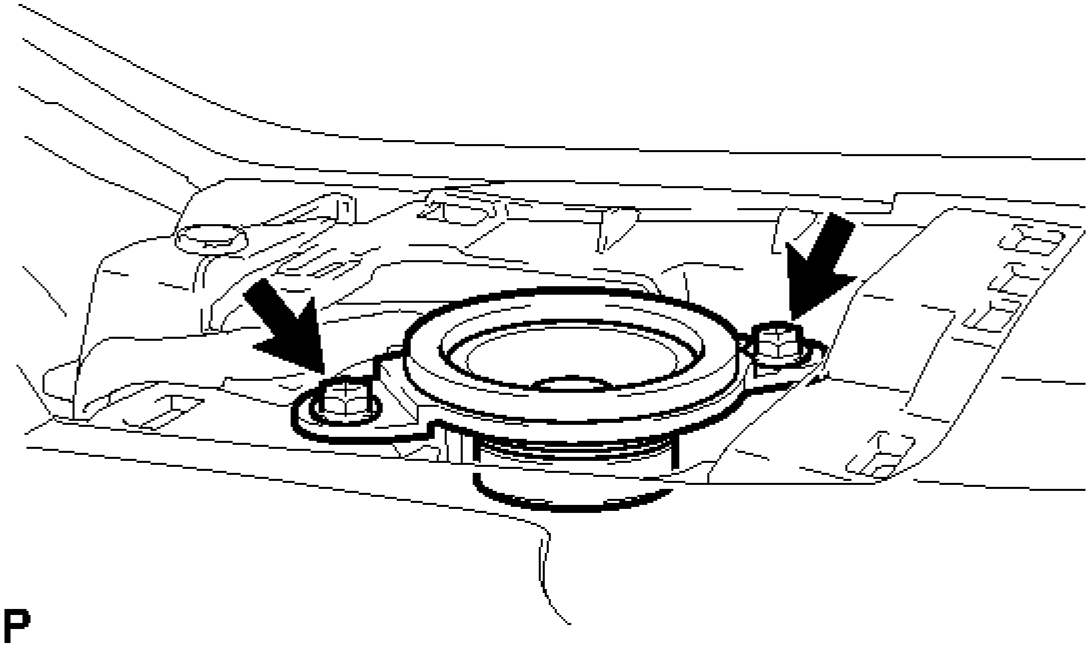

Fig. 35: Identifying No. 2 Speaker Assembly Screws
Courtesy of TOYOTA MOTOR SALES, U.S.A., INC.

   2. Lift the front No. 2 speaker assembly and disconnect the connector to remove the speaker.

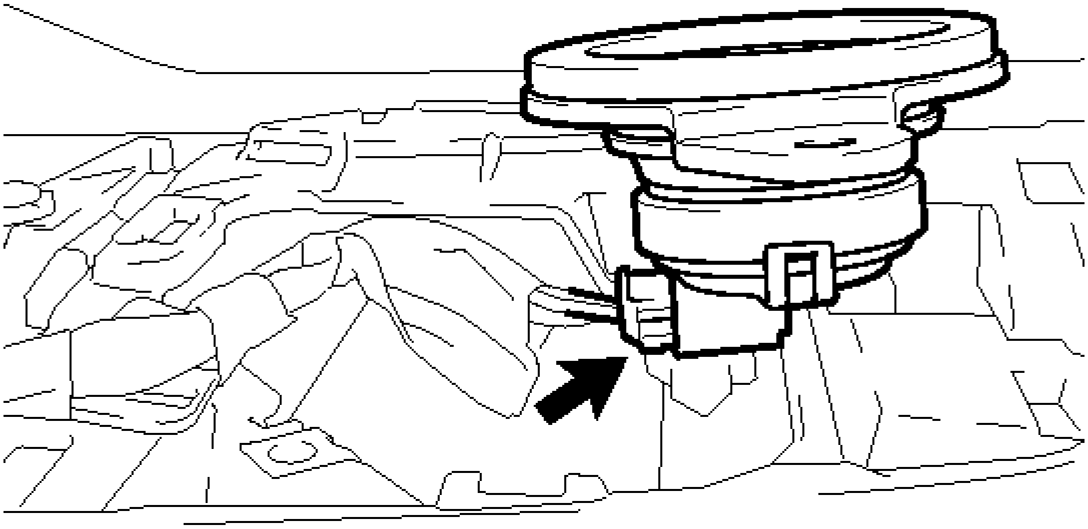

Fig. 36: Identifying No. 2 Speaker Assembly Connector
Courtesy of TOYOTA MOTOR SALES, U.S.A., INC.

NOTE: **Do not touch the speaker cone.**

6. **REMOVE LUGGAGE TRIM SERVICE HOLE COVER (for 10 Speakers)**

   except Radio and Display Type without Intuitive Parking Assist System: Refer to **REMOVAL - Step 2**

7. **DISCONNECT CABLE FROM AUXILIARY BATTERY NEGATIVE TERMINAL (for 10 Speakers)**

   NOTE: **except Radio and Display Type without Intuitive Parking Assist System:**

   When disconnecting the cable, some systems need to be initialized after the cable is reconnected. Refer to INITIALIZATION .

8. **REMOVE REAR CONSOLE BOX ASSEMBLY (for 10 Speakers)**

   Refer to **REMOVAL**

9. **REMOVE BOX BOTTOM MAT (for 10 Speakers)** . Refer to **REMOVAL - Step 24**
10. **REMOVE UPPER CONSOLE PANEL SUB-ASSEMBLY (for 10 Speakers)** . Refer to **REMOVAL - Step 25**
11. **REMOVE CENTER INSTRUMENT CLUSTER FINISH PANEL ASSEMBLY (for 10 Speakers)** . Refer to **REMOVAL - Step 22**

12. **REMOVE NO. 2 INSTRUMENT PANEL REGISTER ASSEMBLY (for 10 Speakers)** . Refer to **REMOVAL - Step 23**
13. **REMOVE RADIO RECEIVER ASSEMBLY WITH AIR CONDITIONING CONTROL ASSEMBLY (for 10 Speakers)**

    for Radio and Display Type: See step 10

14. **REMOVE NAVIGATION RECEIVER ASSEMBLY WITH AIR CONDITIONING CONTROL ASSEMBLY (for 10 Speakers)**

    for Navigation Receiver Type: Refer to **REMOVAL - Step 9**

15. **REMOVE NO. 1 SPEAKER OPENING COVER ASSEMBLY (for 10 Speakers)** . Refer to **REMOVAL - Step 29**
16. **REMOVE FRONT NO. 3 SPEAKER ASSEMBLY (for 10 Speakers)**
    1. Remove the 2 screws.

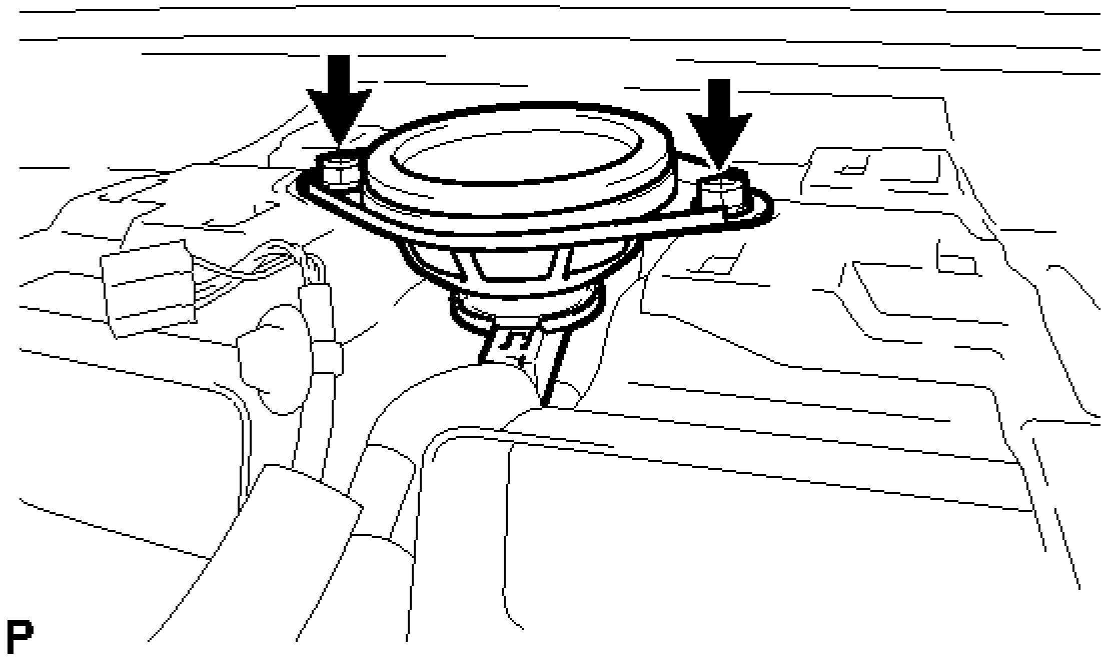

Fig. 37: Identifying Front No. 3 Speaker Assembly Screws
Courtesy of TOYOTA MOTOR SALES, U.S.A., INC.

    2. Lift the front No. 3 speaker assembly and disconnect the connector to remove the speaker.

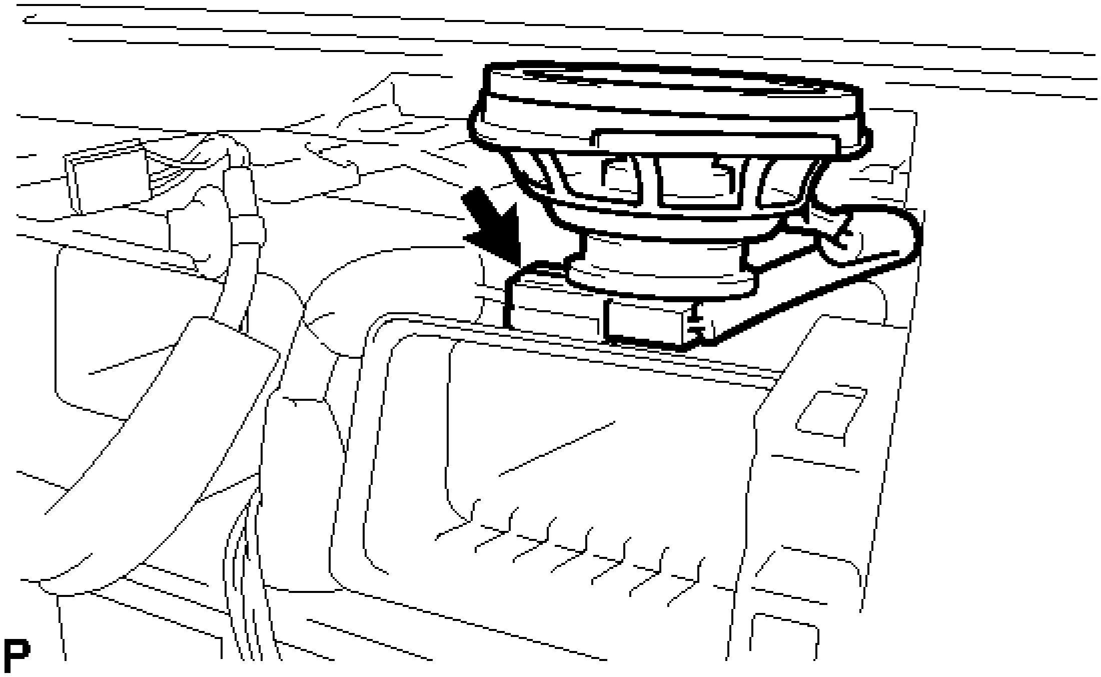

Fig. 38: Identifying Front No. 3 Speaker Assembly Connector
Courtesy of TOYOTA MOTOR SALES, U.S.A., INC.

NOTE: **Do not touch the speaker cone.**

INSPECTION

INSPECTION

1. **INSPECT FRONT NO. 2 SPEAKER ASSEMBLY (for 6 Speakers)**
    1. With the speaker installed, check that there is no looseness or other abnormalities.
    2. Check that there is no foreign matter in the speaker, no tears on the speaker cone or other abnormalities.
    3. Measure the resistance of the speaker.

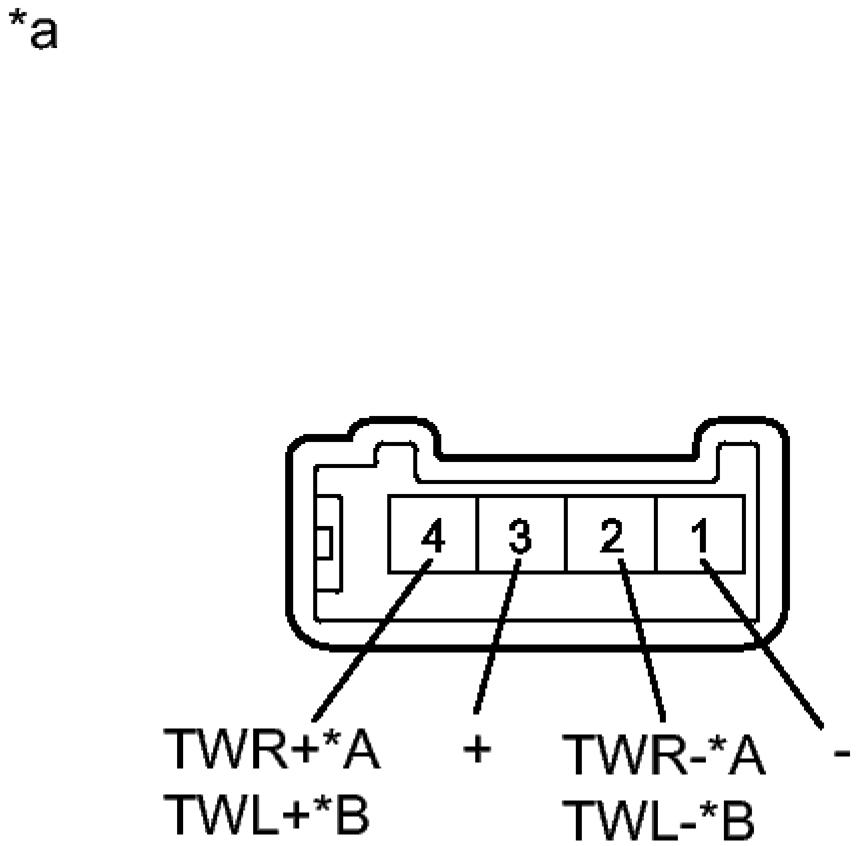

Fig. 39: Identifying Front No. 2 Speaker Assembly Connector Terminals
Courtesy of TOYOTA MOTOR SALES, U.S.A., INC.

Standard Resistance

Tester Connection	Condition	Specified Condition
2 (TWR-) - 4 (TWR+)	Always	10 kohms or higher
1 (-) - 2 (TWR-)	Always	Below 1 ohms
3 (+) - 4 (TWR+)	Always	Below 1 ohms
2 (TWL-) - 4 (TWL+)	Always	10 kohms or higher

1 (-) - 2 (TWL-)	Always	Below 1 ohms
3 (+) - 4 (TWL+)	Always	Below 1 ohms

If the result is not as specified, replace the speaker.

TEXT IN ILLUSTRATION

*A	for RH
*B	for LH
*a	Component without harness connected (Front No. 2 Speaker Assembly)

d. When there is a possibility that either the right or left speaker is malfunctioning, interchange the speakers and perform an inspection. If the malfunction disappears after interchanging the speakers, replace the malfunctioning speaker.

HINT:

Connect all connectors to the speakers when performing an inspection. If the result is not as specified, replace the speaker.

2. **INSPECT FRONT NO. 2 SPEAKER ASSEMBLY (for 10 Speakers)**
   a. With the speaker installed, check that there is no looseness or other abnormalities.
   b. Check that there is no foreign matter in the speaker, no tears on the speaker cone or other abnormalities.
   c. Measure the resistance of the speaker.

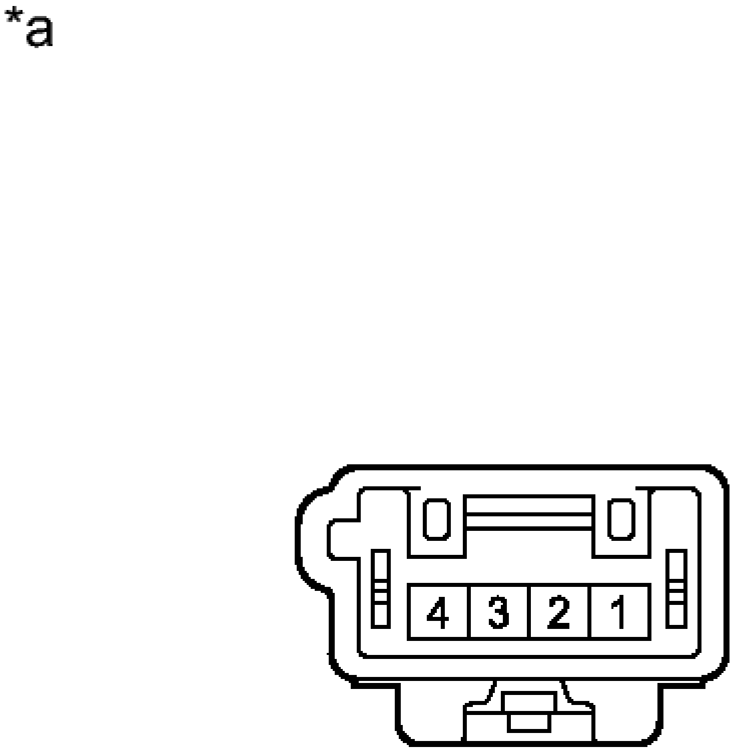

Fig. 40: Identifying Front No. 2 Speaker Assembly Connector Terminals
Courtesy of TOYOTA MOTOR SALES, U.S.A., INC.

Standard Resistance

Tester Connection	Condition	Specified Condition
3 - 4	Always	3.4 to 5.2 ohms

If the result is not as specified, replace the speaker.

TEXT IN ILLUSTRATION

	Component without

*a	harness connected (Front No. 2 Speaker Assembly)

3. INSPECT FRONT NO. 3 SPEAKER ASSEMBLY (for 10 Speakers)

a. With the speaker installed, check that there is no looseness or other abnormalities.

b. Check that there is no foreign matter in the speaker, no tears on the speaker cone or other abnormalities.

c. Measure the resistance of the speaker.

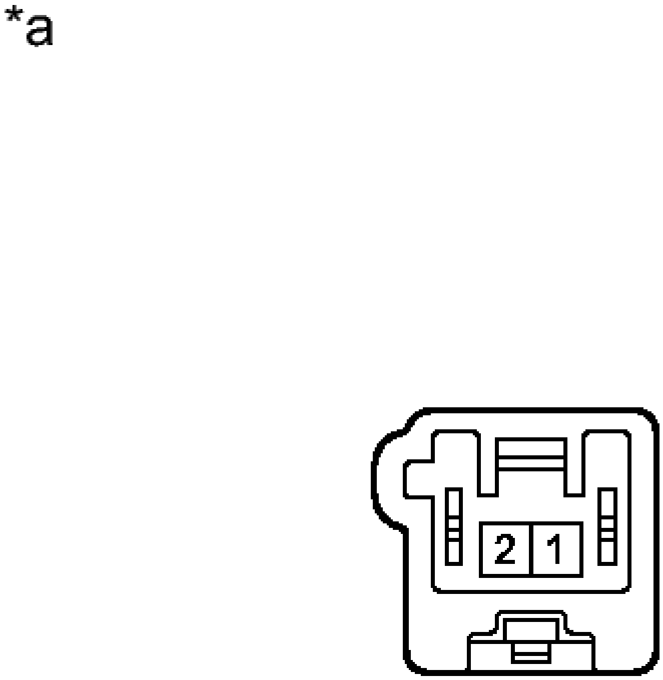

Fig. 41: Identifying Front No. 3 Speaker Assembly Connector Terminals
Courtesy of TOYOTA MOTOR SALES, U.S.A., INC.

Standard Resistance

Tester Connection	Condition	Specified Condition
1 - 2	Always	6.8 to 10.2 ohms

If the result is not as specified, replace the speaker.

TEXT IN ILLUSTRATION

*a	Component without harness connected (Front No. 3 Speaker Assembly)

INSTALLATION

INSTALLATION

1. **INSTALL FRONT NO. 2 SPEAKER ASSEMBLY**
    a. Connect the connector.
    b. Install the front No. 2 speaker assembly with the 2 screws.

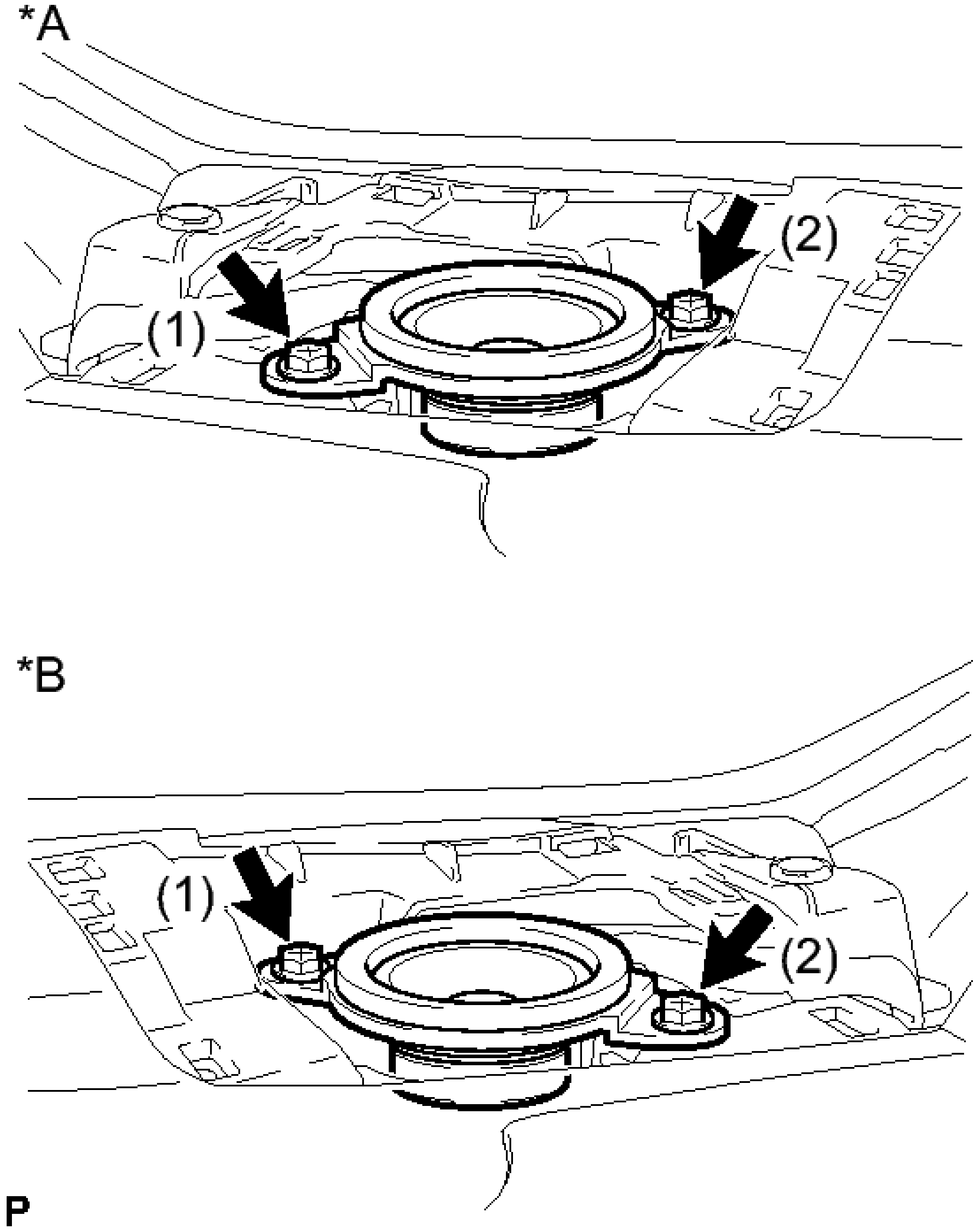

Fig. 42: Identifying Front No. 2 Speaker Assembly Screws
Courtesy of TOYOTA MOTOR SALES, U.S.A., INC.

TEXT IN ILLUSTRATION

	LH

*A	Side
*B	RH Side

NOTE: **Do not touch the speaker cone.**

HINT:

Install the screws in the order shown in the illustration.

2. **INSTALL INSTRUMENT PANEL SPEAKER PANEL SUB-ASSEMBLY** . Refer to **INSTALLATION - Step 8**
3. **INSTALL FRONT PILLAR GARNISH** . Refer to **INSTALLATION - Step 42**
4. **INSTALL FRONT DOOR OPENING TRIM WEATHERSTRIP**

   for LH side: Refer to **INSTALLATION - Step 43**

   for RH side: Refer to **INSTALLATION - Step 47**

5. **INSTALL FRONT NO. 3 SPEAKER ASSEMBLY (for 10 Speakers)**
   a. Connect the connector.
   b. Install the front No. 3 speaker assembly with the 2 screws.

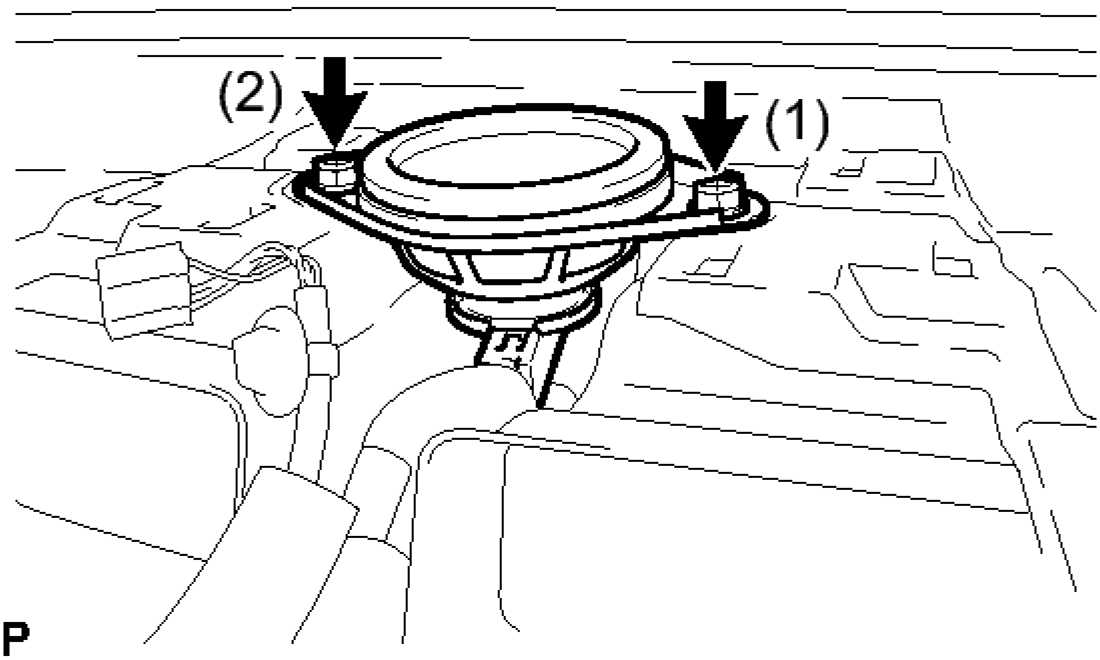

Fig. 43: Identifying Front No. 3 Speaker Assembly Screws
Courtesy of TOYOTA MOTOR SALES, U.S.A., INC.

NOTE: **Do not touch the speaker cone.**

HINT:

Install the screws in the order shown in the illustration.

6. **INSTALL NO. 1 SPEAKER OPENING COVER ASSEMBLY (for 10 Speakers)** . Refer to **INSTALLATION - Step 23**
7. **INSTALL RADIO RECEIVER ASSEMBLY WITH AIR CONDITIONING CONTROL ASSEMBLY (for 10 Speakers)**

   for Radio and Display Type: See step 15

8. **INSTALL NAVIGATION RECEIVER ASSEMBLY WITH AIR CONDITIONING CONTROL ASSEMBLY (for 10 Speakers)**

   for Navigation Receiver Type: Refer to **INSTALLATION - Step 7**

9. **INSTALL NO. 2 INSTRUMENT PANEL REGISTER ASSEMBLY (for 10 Speakers)** . Refer to **INSTALLATION - Step 29**
10. **INSTALL CENTER INSTRUMENT CLUSTER FINISH PANEL ASSEMBLY (for 10 Speakers)** . Refer to **INSTALLATION - Step 30**
11. **INSTALL UPPER CONSOLE PANEL SUB-ASSEMBLY (for 10 Speakers)** . Refer to **INSTALLATION - Step 27**
12. **INSTALL BOX BOTTOM MAT (for 10 Speakers)** . Refer to **INSTALLATION - Step 28**
13. **INSTALL REAR CONSOLE BOX ASSEMBLY (for 10 Speakers)**

    Refer to **INSTALLATION**

14. **CONNECT CABLE TO AUXILIARY BATTERY NEGATIVE TERMINAL (for 10 Speakers)**

    NOTE: **except Radio and Display Type without Intuitive Parking Assist System:**

    When disconnecting the cable, some systems need to be initialized after the cable is reconnected. Refer to INITIALIZATION .

15. **INSTALL LUGGAGE TRIM SERVICE HOLE COVER (for 10 Speakers)**

    except Radio and Display Type without Intuitive Parking Assist System: Refer to **INSTALLATION - Step 3**

REAR PACKAGE TRAY SPEAKER

COMPONENTS

ILLUSTRATION

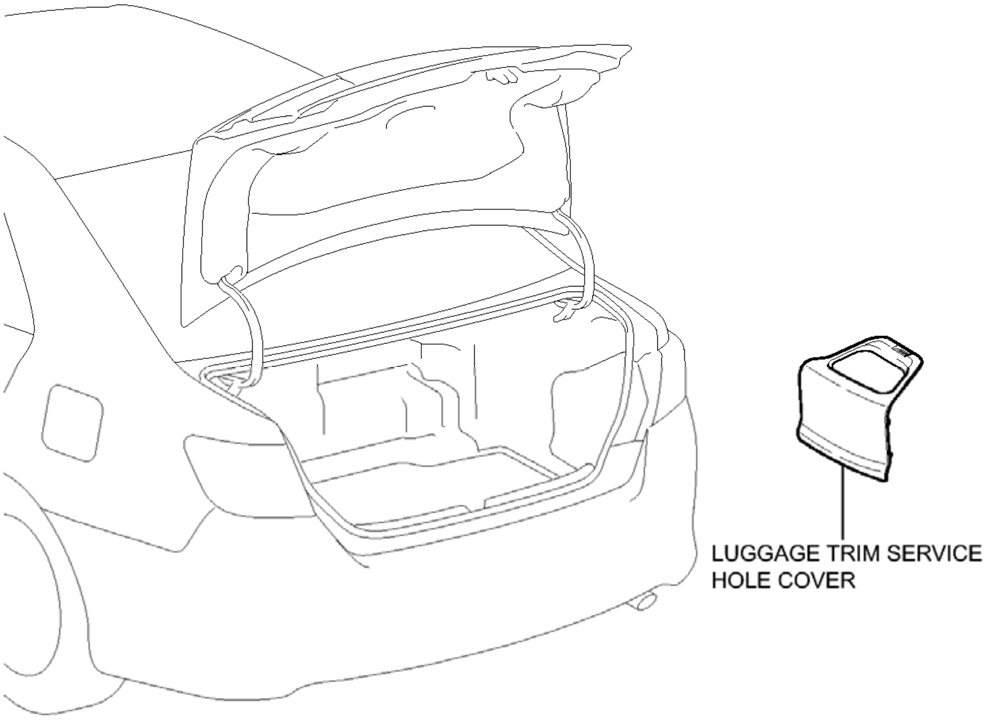
LUGGAGE TRIM SERVICE
HOLE COVER

P

Fig. 44: Identifying Rear Package Tray Speaker Replacement Components (1 Of 3)
Courtesy of TOYOTA MOTOR SALES, U.S.A., INC.

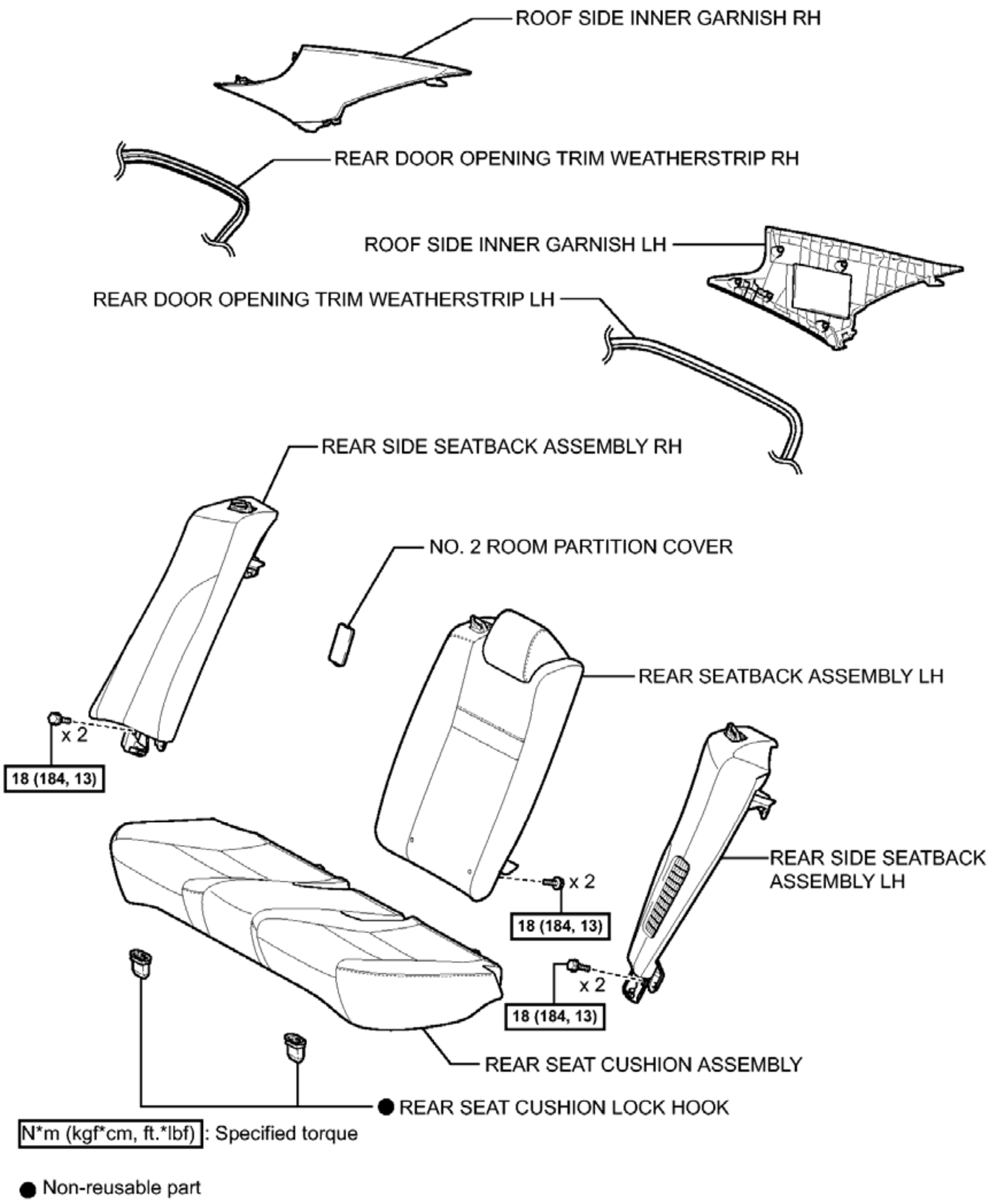
ROOF SIDE INNER GARNISH RH
REAR DOOR OPENING TRIM WEATHERSTRIP RH
ROOF SIDE INNER GARNISH LH
REAR DOOR OPENING TRIM WEATHERSTRIP LH
REAR SIDE SEATBACK ASSEMBLY RH
NO. 2 ROOM PARTITION COVER
REAR SEATBACK ASSEMBLY LH
x 2
18 (184, 13)
x 2
18 (184, 13)
REAR SIDE SEATBACK ASSEMBLY LH
x 2
18 (184, 13)
REAR SEAT CUSHION ASSEMBLY
● REAR SEAT CUSHION LOCK HOOK
N*m (kgf*cm, ft.*lbf) : Specified torque
● Non-reusable part
P

Fig. 45: Identifying Rear Package Tray Speaker Replacement Components With Torque Specifications (2 Of 3)

Courtesy of TOYOTA MOTOR SALES, U.S.A., INC.

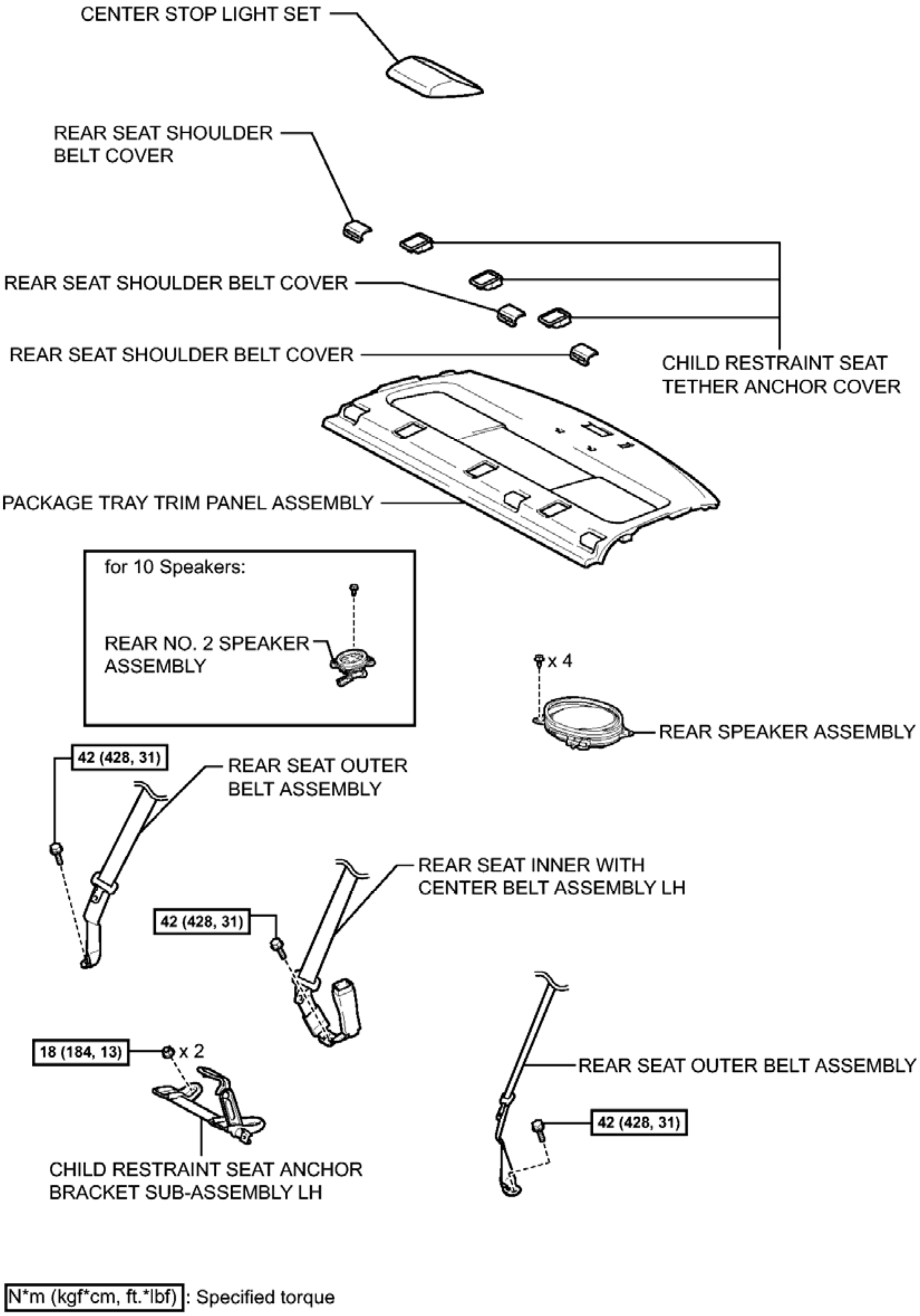
CENTER STOP LIGHT SET
REAR SEAT SHOULDER BELT COVER
REAR SEAT SHOULDER BELT COVER
REAR SEAT SHOULDER BELT COVER
CHILD RESTRAINT SEAT TETHER ANCHOR COVER
PACKAGE TRAY TRIM PANEL ASSEMBLY
for 10 Speakers:
REAR NO. 2 SPEAKER ASSEMBLY
x 4
REAR SPEAKER ASSEMBLY
42 (428, 31)
REAR SEAT OUTER BELT ASSEMBLY
REAR SEAT INNER WITH CENTER BELT ASSEMBLY LH
42 (428, 31)
18 (184, 13)
x 2
REAR SEAT OUTER BELT ASSEMBLY
42 (428, 31)
CHILD RESTRAINT SEAT ANCHOR BRACKET SUB-ASSEMBLY LH
N*m (kgf*cm, ft.*lbf) : Specified torque
P

Fig. 46: Identifying Rear Package Tray Speaker Replacement Components With Torque Specifications (3 Of 3)
Courtesy of TOYOTA MOTOR SALES, U.S.A., INC.

REMOVAL

REMOVAL

1. **PRECAUTION**

   NOTE: **After turning the power switch off, waiting time may be required before disconnecting the cable from the negative (-) auxiliary battery terminal. Therefore, make sure to read the disconnecting the cable from the negative (-) auxiliary battery terminal notices before proceeding with work. Refer to PRECAUTION .**

2. **REMOVE LUGGAGE TRIM SERVICE HOLE COVER** . Refer to **REMOVAL - Step 2**
3. **DISCONNECT CABLE FROM AUXILIARY BATTERY NEGATIVE TERMINAL**

   WARNING: **Wait at least 90 seconds after disconnecting the cable from the negative (-) auxiliary battery terminal to disable the SRS system.**

   NOTE: **When disconnecting the cable, some systems need to be initialized after the cable is reconnected. Refer to INITIALIZATION .**

4. **REMOVE REAR SEAT CUSHION ASSEMBLY** . Refer to **REMOVAL - Step 4**
5. **REMOVE REAR SEAT CUSHION LOCK HOOK** . Refer to **REMOVAL - Step 5**
6. **REMOVE NO. 2 ROOM PARTITION COVER** . Refer to **REMOVAL - Step 7**
7. **REMOVE REAR SEATBACK ASSEMBLY LH** . Refer to **REMOVAL - Step 8**
8. **REMOVE REAR SIDE SEATBACK ASSEMBLY LH** . Refer to **REMOVAL - Step 9**
9. **REMOVE REAR SIDE SEATBACK ASSEMBLY RH** . Refer to **REMOVAL - Step 10**
10. **DISCONNECT REAR DOOR OPENING TRIM WEATHERSTRIP LH** . Refer to **REMOVAL - Step 13**
11. **DISCONNECT REAR DOOR OPENING TRIM WEATHERSTRIP RH** . Refer to **REMOVAL - Step 14**
12. **REMOVE ROOF SIDE INNER GARNISH LH** . Refer to **REMOVAL - Step 25**
13. **REMOVE ROOF SIDE INNER GARNISH RH**

    HINT:

    Use the same procedure as for the LH side.

14. **DISCONNECT REAR SEAT OUTER BELT ASSEMBLY (for LH Side)** . Refer to **REMOVAL - Step 14**
15. **DISCONNECT REAR SEAT OUTER BELT ASSEMBLY (for RH Side)** . Refer to **REMOVAL - Step 15**
16. **REMOVE CHILD RESTRAINT SEAT ANCHOR BRACKET SUB-ASSEMBLY LH** . Refer to

REMOVAL - Step 11

17. **DISCONNECT REAR SEAT INNER WITH CENTER BELT ASSEMBLY LH** . Refer to **REMOVAL - Step 20**
18. **REMOVE CENTER STOP LIGHT SET** . Refer to **REMOVAL - Step 1**
19. **REMOVE CHILD RESTRAINT SEAT TETHER ANCHOR COVER** . Refer to **REMOVAL - Step 19**
20. **REMOVE REAR SEAT SHOULDER BELT COVER** . Refer to **REMOVAL - Step 20**
21. **REMOVE PACKAGE TRAY TRIM PANEL ASSEMBLY** . Refer to **REMOVAL - Step 21**
22. **REMOVE REAR SPEAKER ASSEMBLY**
    1. Disconnect the connector.

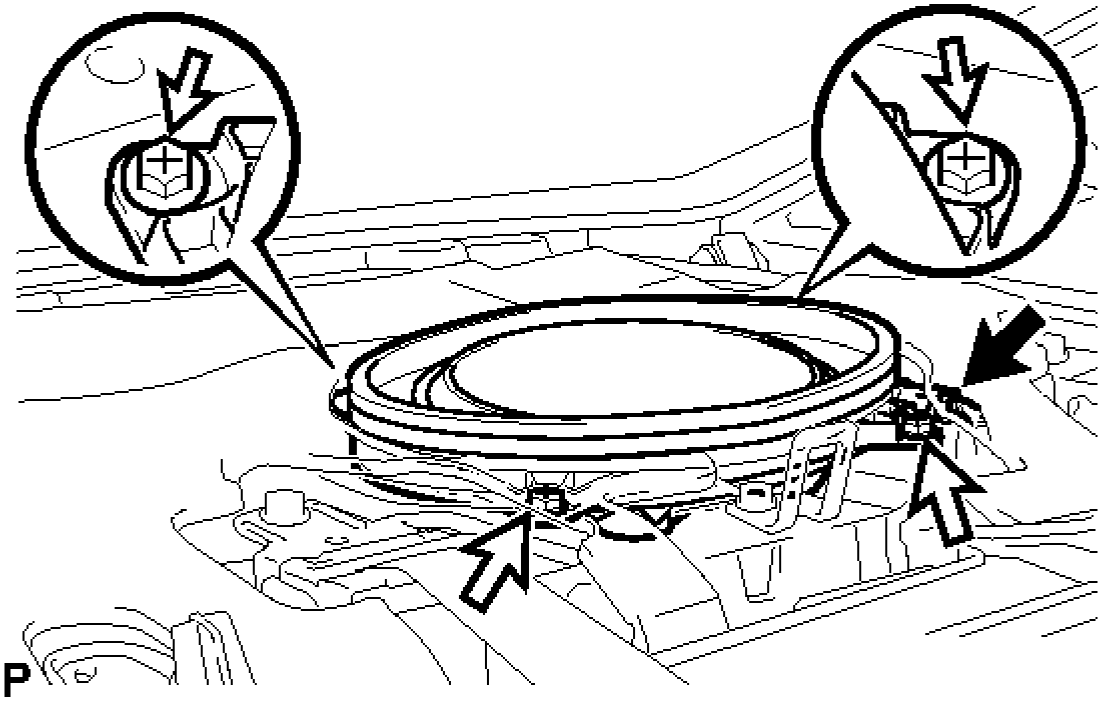

Fig. 47: Identifying Rear Speaker Assembly Screws
Courtesy of TOYOTA MOTOR SALES, U.S.A., INC.

b. Remove the 4 screws and rear speaker assembly.

NOTE: Do not touch the cone part of the speaker.

HINT:

If the rear speaker assembly is difficult to remove, turn back the No. 1 upper back panel hole cover so that the rear speaker assembly can be removed.

23. **REMOVE REAR NO. 2 SPEAKER ASSEMBLY (for 10 Speakers)**
    1. Disconnect the connector.

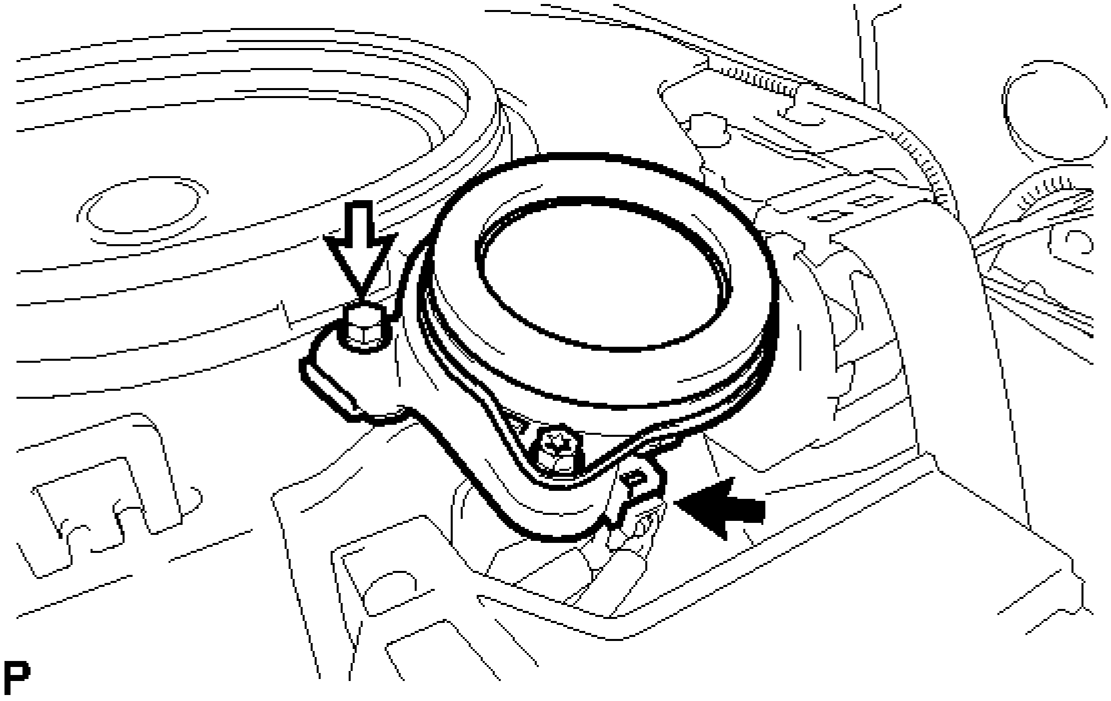

Fig. 48: Identifying Rear No. 2 Speaker Assembly Bolt And Connector
Courtesy of TOYOTA MOTOR SALES, U.S.A., INC.

b. Remove the bolt and rear No. 2 speaker assembly.

NOTE: Do not touch the cone part of the speaker.

INSPECTION

INSPECTION

1. **INSPECT REAR SPEAKER ASSEMBLY**
    a. With the speaker installed, check that there is no looseness or other abnormalities.
    b. Check that there is no foreign matter in the speaker, no tears on the speaker cone or other abnormalities.
    c. Measure the resistance of the speaker.

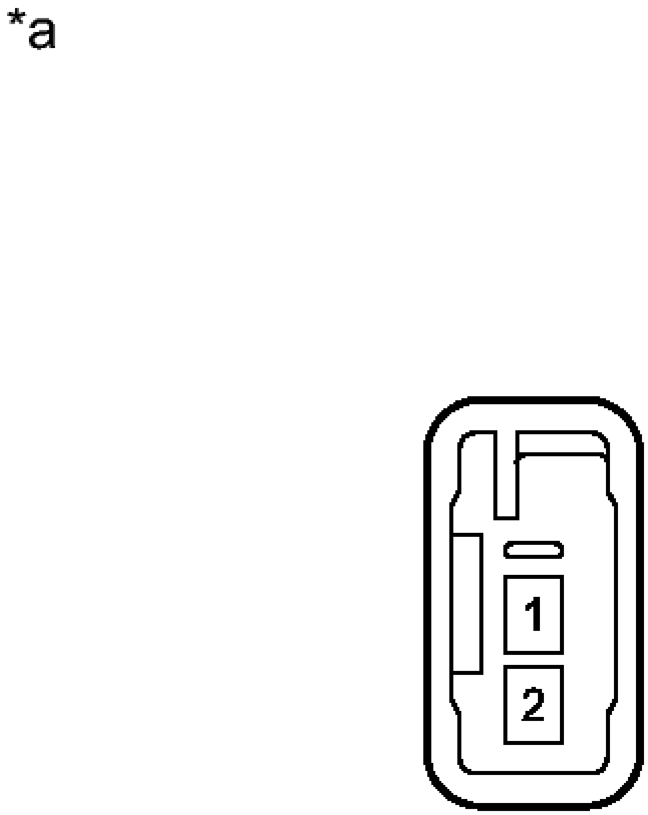

Fig. 49: Identifying Rear Speaker Connector
Courtesy of TOYOTA MOTOR SALES, U.S.A., INC.

Standard Resistance

FOR 6 SPEAKERS:

Tester Connection	Condition	Specified Condition
1 - 2	Always	3.2 to 4.8 ohms

FOR 10 SPEAKERS:

Tester Connection	Condition	Specified Condition
1 - 2	Always	4.8 to 6.8

		ohms

If the result is not as specified, replace the speaker.

TEXT IN ILLUSTRATION

*a	Component without harness connected (Rear Speaker Assembly)

2. **INSPECT REAR NO. 2 SPEAKER ASSEMBLY (for 10 Speakers)**
    a. With the speaker installed, check that there is no looseness or other abnormalities.
    b. Check that there is no foreign matter in the speaker, no tears on the speaker cone or other abnormalities.
    c. Measure the resistance of the speaker.

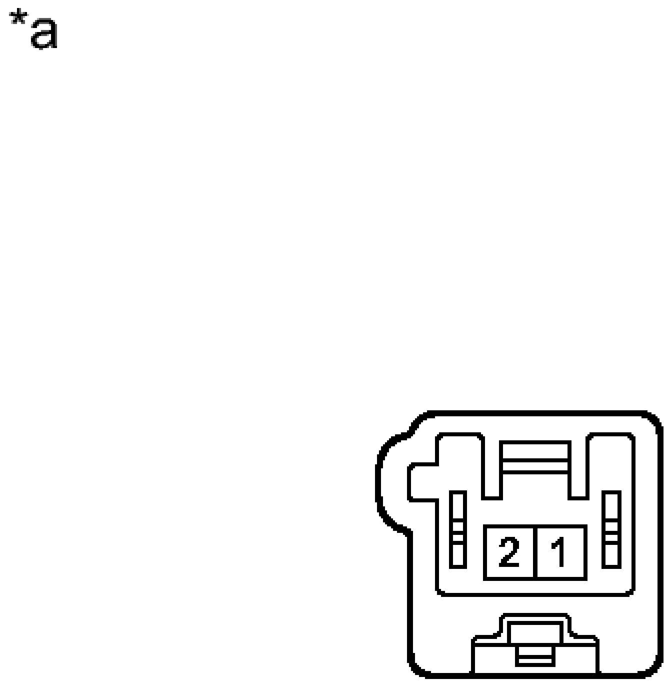

Fig. 50: Identifying Rear No. 2 Speaker Assembly Connector Terminals
Courtesy of TOYOTA MOTOR SALES, U.S.A., INC.

Standard Resistance

Tester Connection	Condition	Specified Condition
1 - 2	Always	6.8 to 10.2 ohms

If the result is not as specified, replace the speaker.

TEXT IN ILLUSTRATION

	Component without

*a	harness connected (Rear No. 2 Speaker Assembly)

INSTALLATION

INSTALLATION

1. **INSTALL REAR SPEAKER ASSEMBLY**
    a. Install the rear speaker assembly with the 4 screws.

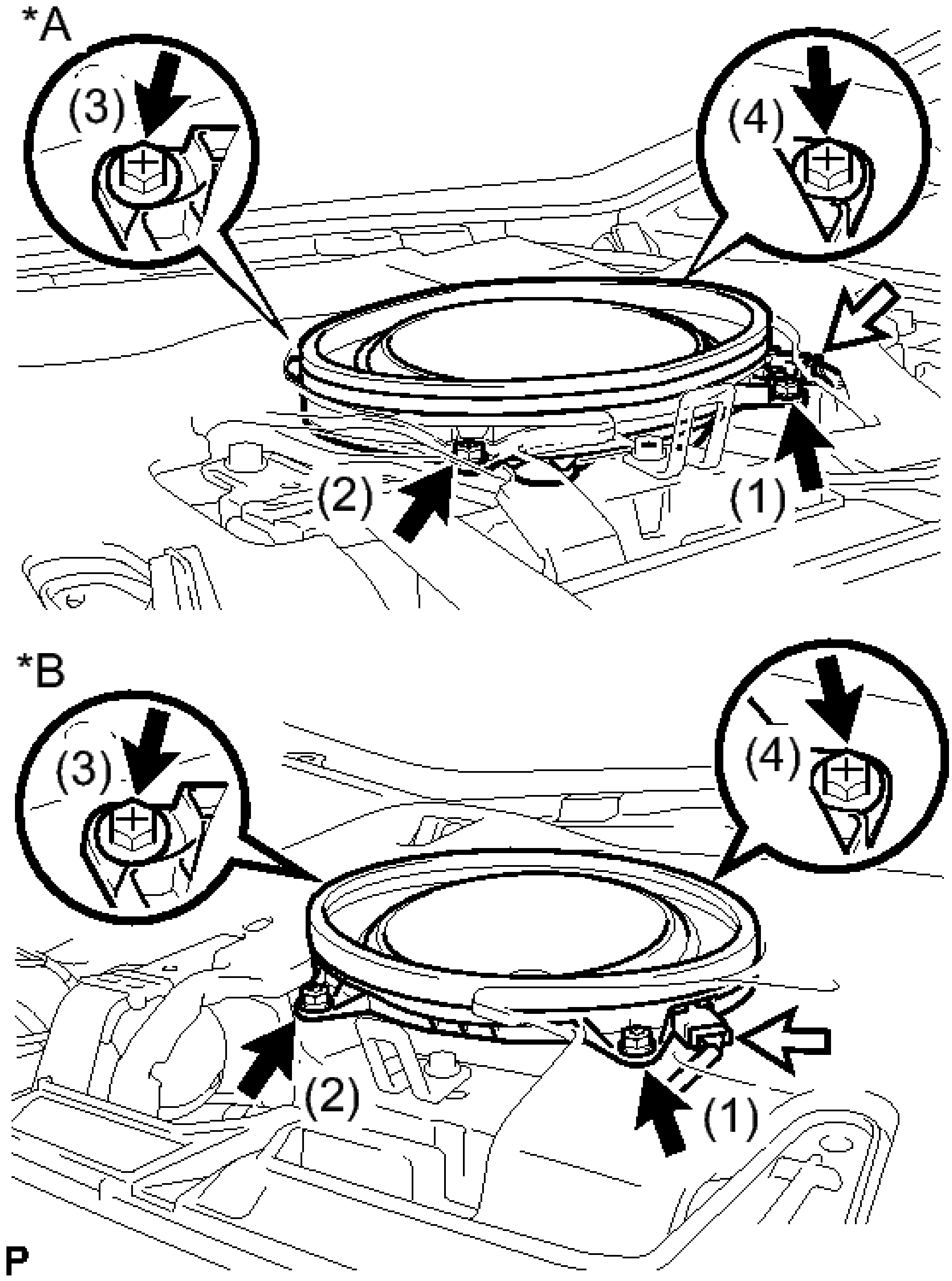
*A
(3)
(4)
(2)
(1)
*B
(3)
(4)
(2)
(1)
P

Fig. 51: Identifying Rear Speaker Assembly Screws

Courtesy of TOYOTA MOTOR SALES, U.S.A., INC.

TEXT IN ILLUSTRATION

	LH

*A	Side
*B	RH Side

NOTE: **Do not touch the cone part of the speaker.**

HINT:

Install the screws in the order shown in the illustration.

   b. Connect the connector.

2. **INSTALL REAR NO. 2 SPEAKER ASSEMBLY (for 10 Speakers)**
   a. Install the rear No. 2 speaker assembly with the bolt.

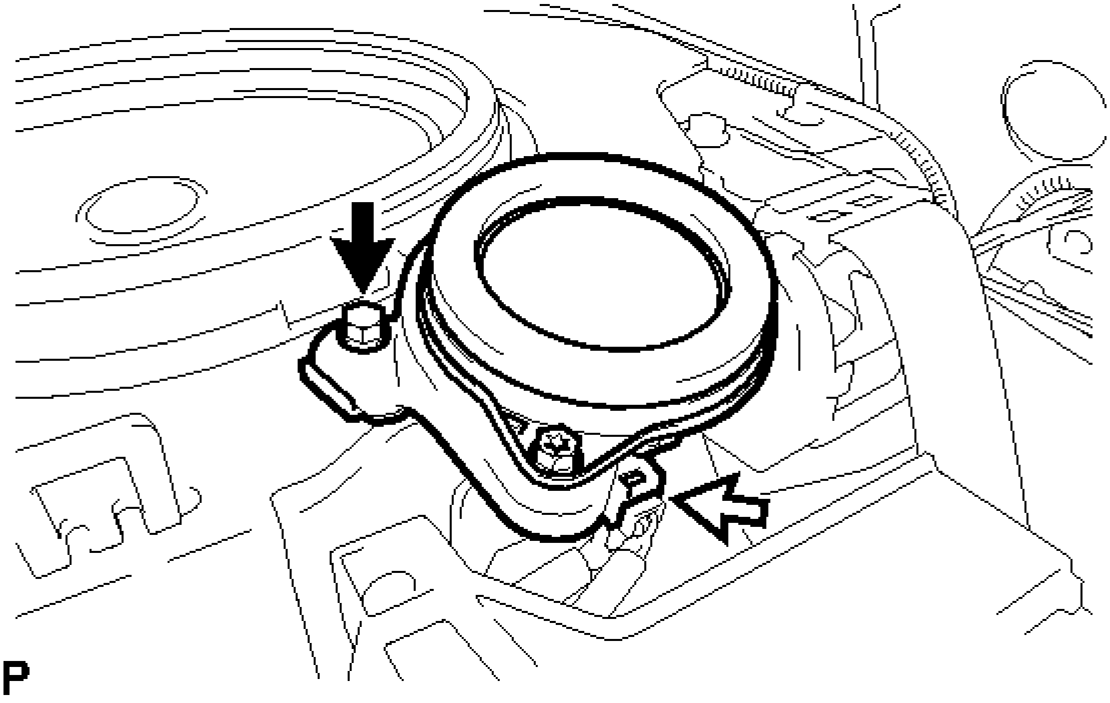

Fig. 52: Identifying Rear No. 2 Speaker Assembly Bolt And Connector
Courtesy of TOYOTA MOTOR SALES, U.S.A., INC.

NOTE: **Do not touch the cone part of the speaker.**

   b. Connect the connector.

3. **INSTALL PACKAGE TRAY TRIM PANEL ASSEMBLY** . Refer to **INSTALLATION - Step 3**
4. **INSTALL REAR SEAT SHOULDER BELT COVER** . Refer to **INSTALLATION - Step 4**
5. **INSTALL CHILD RESTRAINT SEAT TETHER ANCHOR COVER** . Refer to **INSTALLATION - Step 5**
6. **INSTALL CENTER STOP LIGHT SET** . Refer to **INSTALLATION - Step 1**

7. **CONNECT REAR SEAT INNER WITH CENTER BELT ASSEMBLY LH** . Refer to **INSTALLATION - Step 7**
8. **INSTALL CHILD RESTRAINT SEAT ANCHOR BRACKET SUB-ASSEMBLY LH** . Refer to **INSTALLATION - Step 1**
9. **CONNECT REAR SEAT OUTER BELT ASSEMBLY (for LH Side)** . Refer to **INSTALLATION - Step 9**
10. **CONNECT REAR SEAT OUTER BELT ASSEMBLY (for RH Side)** . Refer to **INSTALLATION - Step 10**
11. **INSTALL ROOF SIDE INNER GARNISH LH** . Refer to **INSTALLATION - Step 21**
12. **INSTALL ROOF SIDE INNER GARNISH RH**

    HINT:

    Use the same procedure as for the LH side.

13. **INSTALL REAR DOOR OPENING TRIM WEATHERSTRIP LH** . Refer to **INSTALLATION - Step 26**
14. **INSTALL REAR DOOR OPENING TRIM WEATHERSTRIP RH** . Refer to **INSTALLATION - Step 33**
15. **INSTALL REAR SIDE SEATBACK ASSEMBLY LH** . Refer to **INSTALLATION - Step 1**
16. **INSTALL REAR SIDE SEATBACK ASSEMBLY RH** . Refer to **INSTALLATION - Step 2**
17. **INSTALL REAR SEATBACK ASSEMBLY LH** . Refer to **INSTALLATION - Step 3**
18. **INSTALL NO. 2 ROOM PARTITION COVER** . Refer to **INSTALLATION - Step 4**
19. **INSTALL REAR SEAT CUSHION LOCK HOOK** . Refer to **INSTALLATION - Step 6**
20. **INSTALL REAR SEAT CUSHION ASSEMBLY** . Refer to **INSTALLATION - Step 7**
21. **CONNECT CABLE TO AUXILIARY BATTERY NEGATIVE TERMINAL**

    NOTE: **When disconnecting the cable, some systems need to be initialized after the cable is reconnected. Refer to INITIALIZATION .**

22. **INSTALL LUGGAGE TRIM SERVICE HOLE COVER** . Refer to **INSTALLATION - Step 3**
23. **INSPECT SRS WARNING LIGHT**

    for Built-in Type Yaw Rate Sensor: Refer to **DIAGNOSIS SYSTEM**

    for Separate Type Yaw Rate Sensor: Refer to **DIAGNOSIS SYSTEM**

RADIO ANTENNA CORD

COMPONENTS

ILLUSTRATION

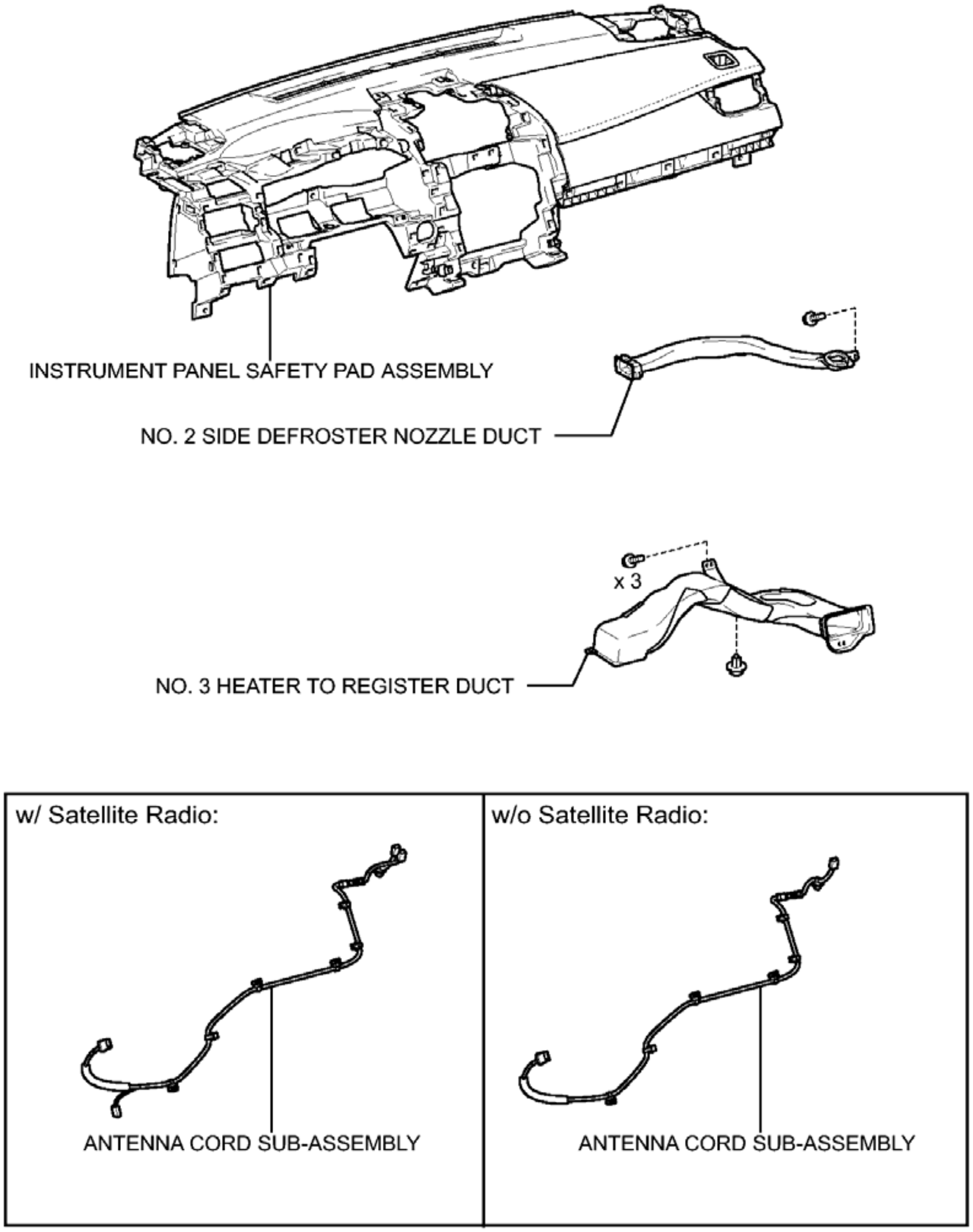
INSTRUMENT PANEL SAFETY PAD ASSEMBLY
NO. 2 SIDE DEFROSTER NOZZLE DUCT
x 3
NO. 3 HEATER TO REGISTER DUCT
w/ Satellite Radio:
ANTENNA CORD SUB-ASSEMBLY
w/o Satellite Radio:
ANTENNA CORD SUB-ASSEMBLY
P

Fig. 53: Identifying Radio Antenna Cord Replacement Components (1 Of 3)
Courtesy of TOYOTA MOTOR SALES, U.S.A., INC.

w/o Sliding Roof:

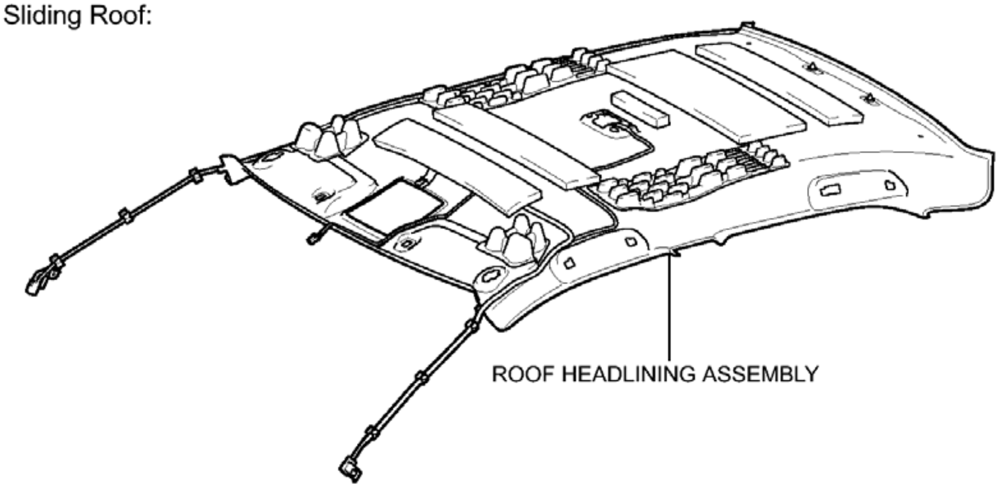
ROOF HEADLINING ASSEMBLY

w/ Sliding Roof:

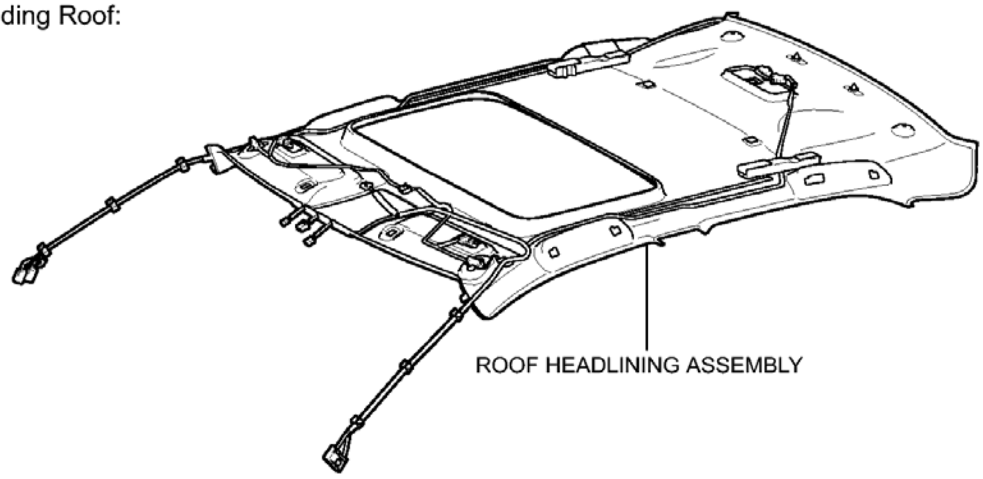
ROOF HEADLINING ASSEMBLY

P

Fig. 54: Identifying Radio Antenna Cord Replacement Components (2 Of 3)
Courtesy of TOYOTA MOTOR SALES, U.S.A., INC.

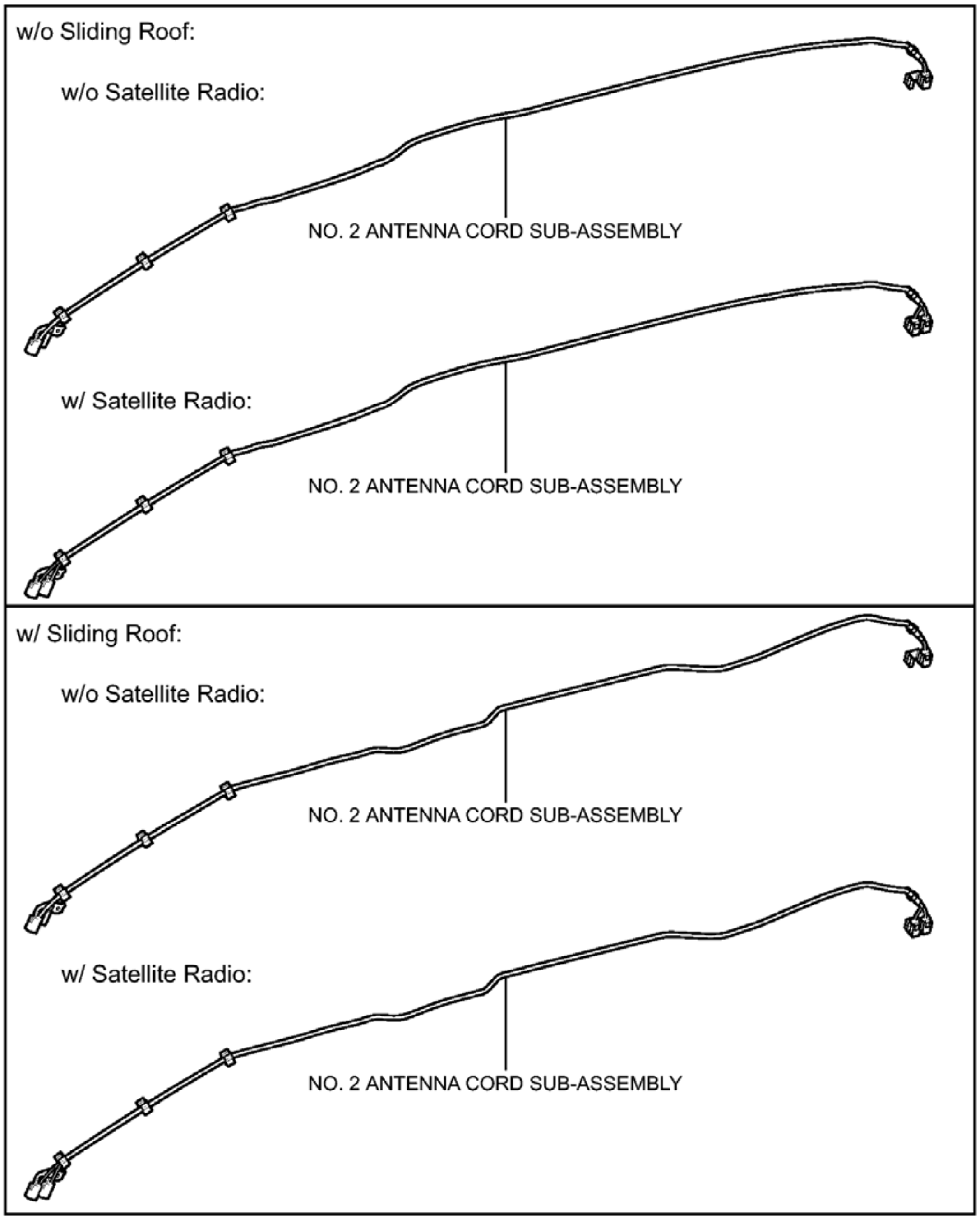
w/o Sliding Roof:
w/o Satellite Radio:
NO. 2 ANTENNA CORD SUB-ASSEMBLY
w/ Satellite Radio:
NO. 2 ANTENNA CORD SUB-ASSEMBLY
w/ Sliding Roof:
w/o Satellite Radio:
NO. 2 ANTENNA CORD SUB-ASSEMBLY
w/ Satellite Radio:
NO. 2 ANTENNA CORD SUB-ASSEMBLY
P

Fig. 55: Identifying Radio Antenna Cord Replacement Components (3 Of 3)
Courtesy of TOYOTA MOTOR SALES, U.S.A., INC.

REMOVAL

REMOVAL

1. **REMOVE INSTRUMENT PANEL SAFETY PAD ASSEMBLY**

Refer to **REMOVAL**

2. **REMOVE NO. 3 HEATER TO REGISTER DUCT** . Refer to **DISASSEMBLY - Step 5**
3. **REMOVE NO. 2 SIDE DEFROSTER NOZZLE DUCT** . Refer to **DISASSEMBLY - Step 6**
4. **REMOVE ANTENNA CORD SUB-ASSEMBLY**
   a. Disengage the 8 clamps and remove the antenna cord sub-assembly.

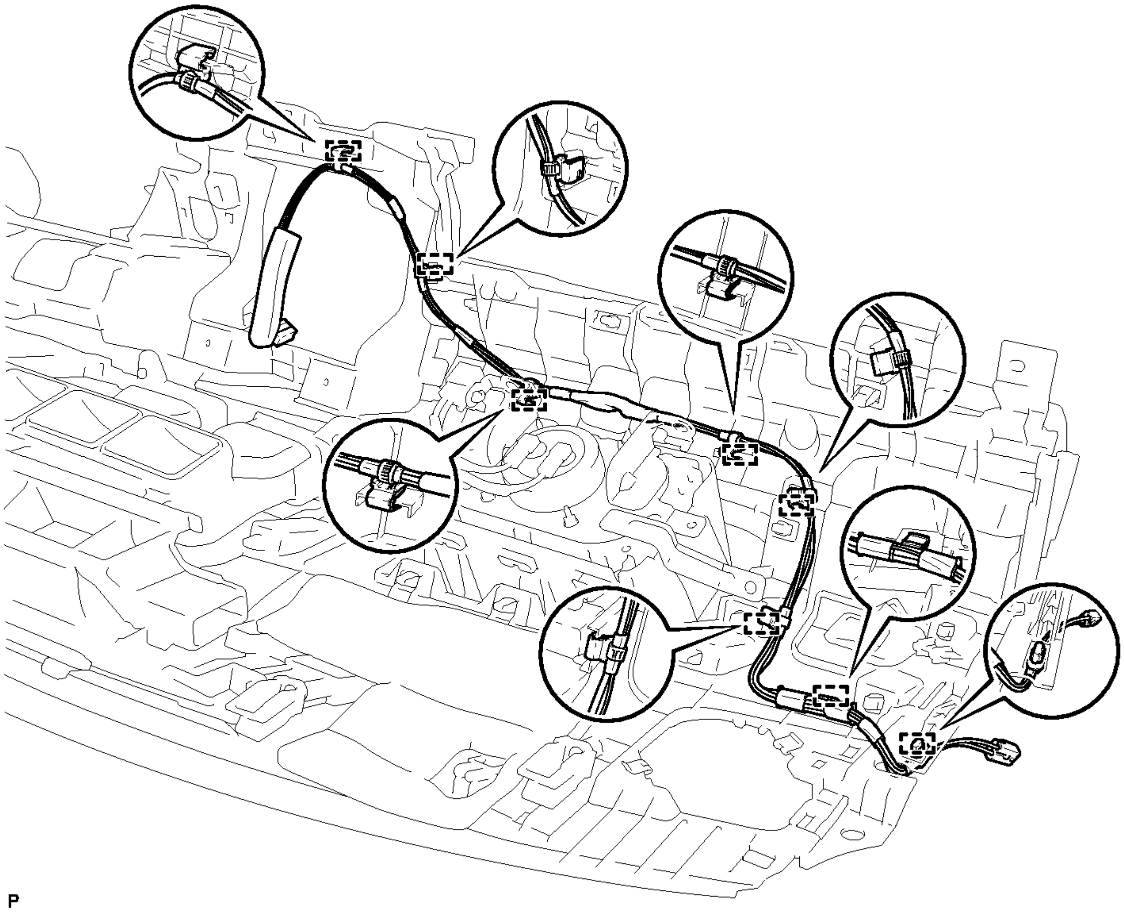

Fig. 56: Identifying Antenna Cord Sub-Assembly Clamps
Courtesy of TOYOTA MOTOR SALES, U.S.A., INC.

5. **REMOVE ROOF HEADLINING ASSEMBLY**

   Refer to **REMOVAL**

6. **REMOVE NO. 2 ANTENNA CORD SUB-ASSEMBLY**
   a. Peel back the tape used to secure the antenna cord only to the extent that allows removal of the No. 2 antenna cord sub-assembly.

   HINT:

   Tape is not available as a supply part. Try to leave as much tape as possible on the roof headlining so that the tape can be reused.

b. Remove the No. 2 antenna cord sub-assembly from the roof headlining.

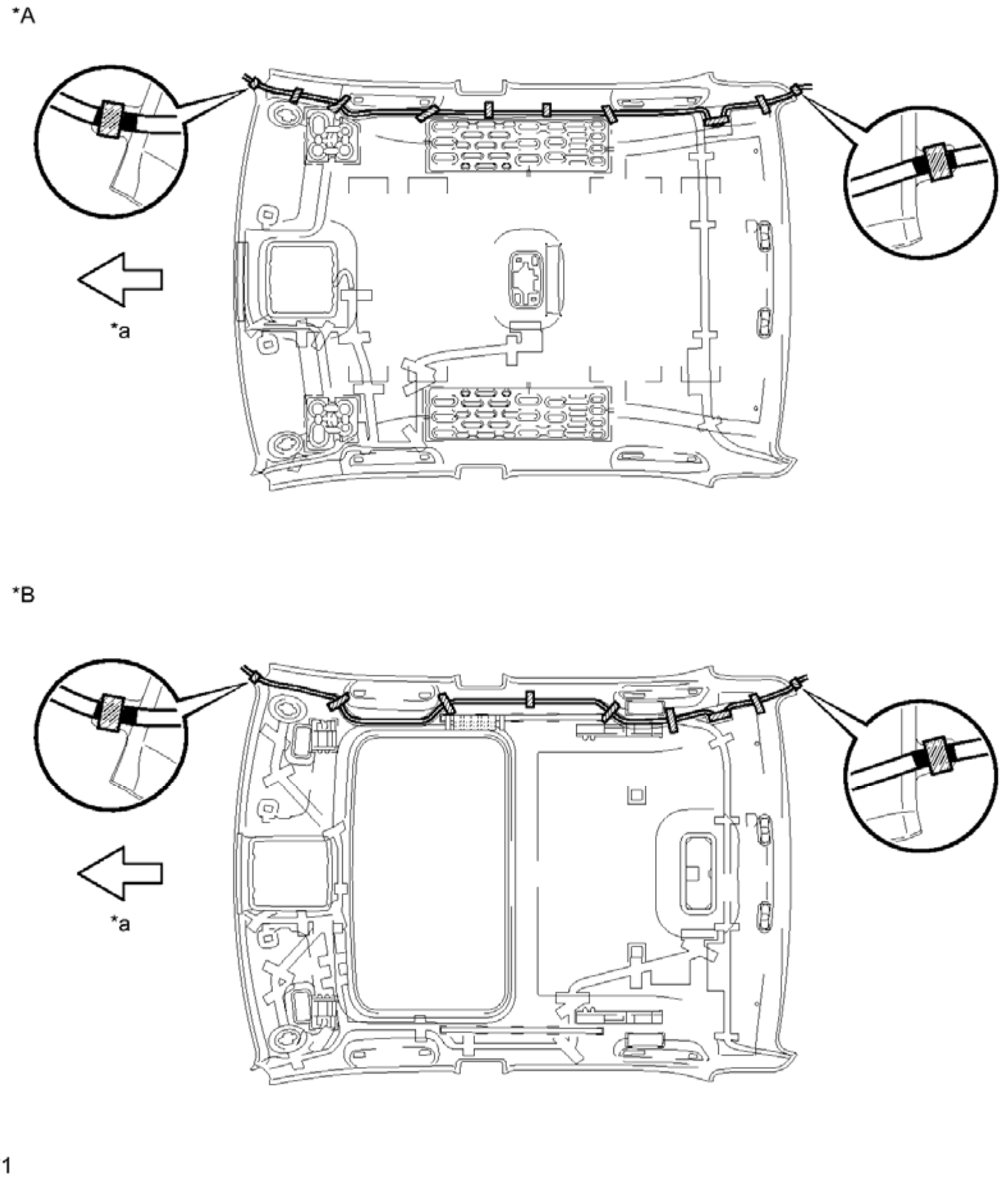

Fig. 57: Identifying No. 2 Antenna Cord Sub-Assembly
Courtesy of TOYOTA MOTOR SALES, U.S.A., INC.

TEXT IN ILLUSTRATION

*A	w/o Sliding Roof	*B	w/ Sliding Roof
*1	Tape	-	-

*a	Front	-	-

INSTALLATION

INSTALLATION

1. INSTALL NO. 2 ANTENNA CORD SUB-ASSEMBLY

HINT:

The double-sided tape and tape are not available as supply parts. If these pieces of still have enough adhesion to secure the roof headlining and antenna cord, reuse them. If the roof headlining has been replaced with a new one, or if the tape and/or the double-sided tape is no longer sticky, apply new tape following the procedure below.

a. Apply new double-sided tape.

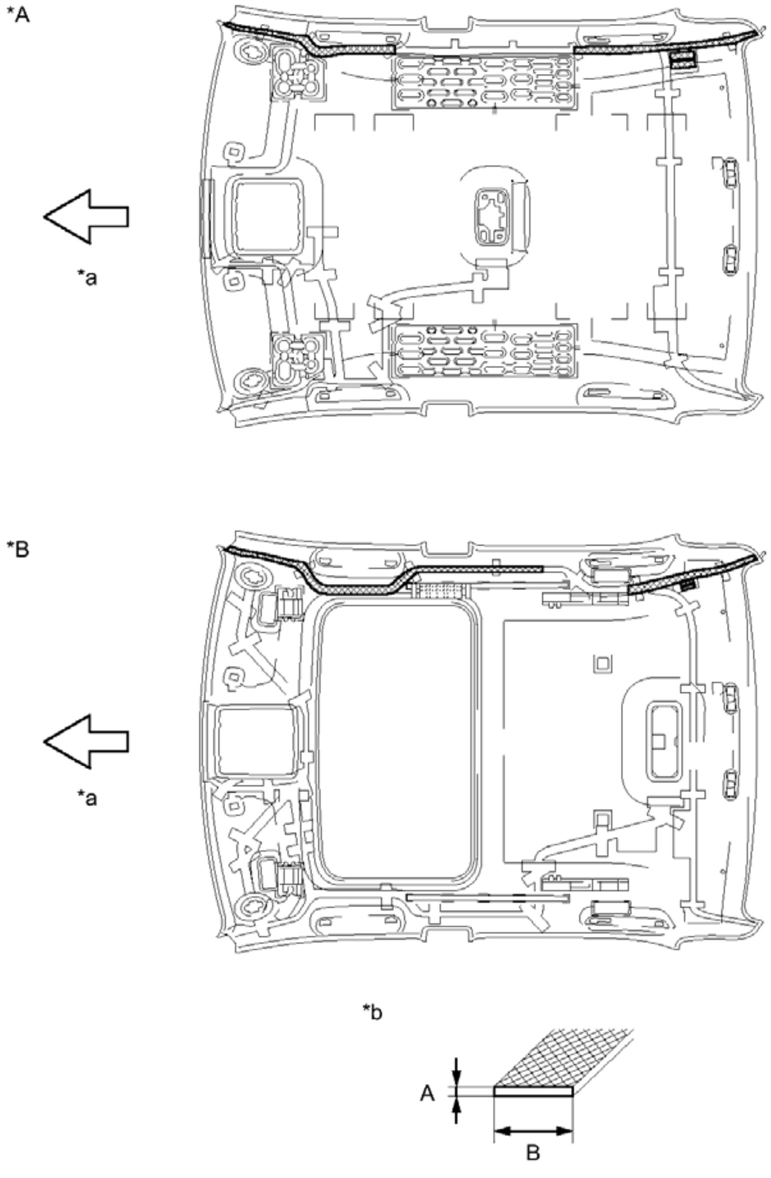

Fig. 58: Identifying No. 2 Antenna Cord Sub-Assembly

Courtesy of TOYOTA MOTOR SALES, U.S.A., INC.

TEXT IN ILLUSTRATION

*A	w/o Sliding Roof	*B	w/ Sliding Roof
*1	Double-sided Tape	-	-
*a	Front	*b	Double-sided

			Tape Size

DOUBLE-SIDED TAPE SIZE

Area	**Dimension**
A	1.0 mm (0.0394 in.)
B	10.0 mm (0.394 in.)

1. Remove the old double-sided tape from the roof headlining assembly.
2. Prepare the appropriate amount of new double-sided tape.

   HINT:

   Be careful not to touch the adhesive surface.

3. Apply the double-sided tape to the roof headlining while aligning the tape with the markings on the roof headlining assembly.
4. Peel off the release paper from the double-sided tape.

b. Install the No. 2 antenna cord sub-assembly to the roof headlining assembly from the front of the vehicle.

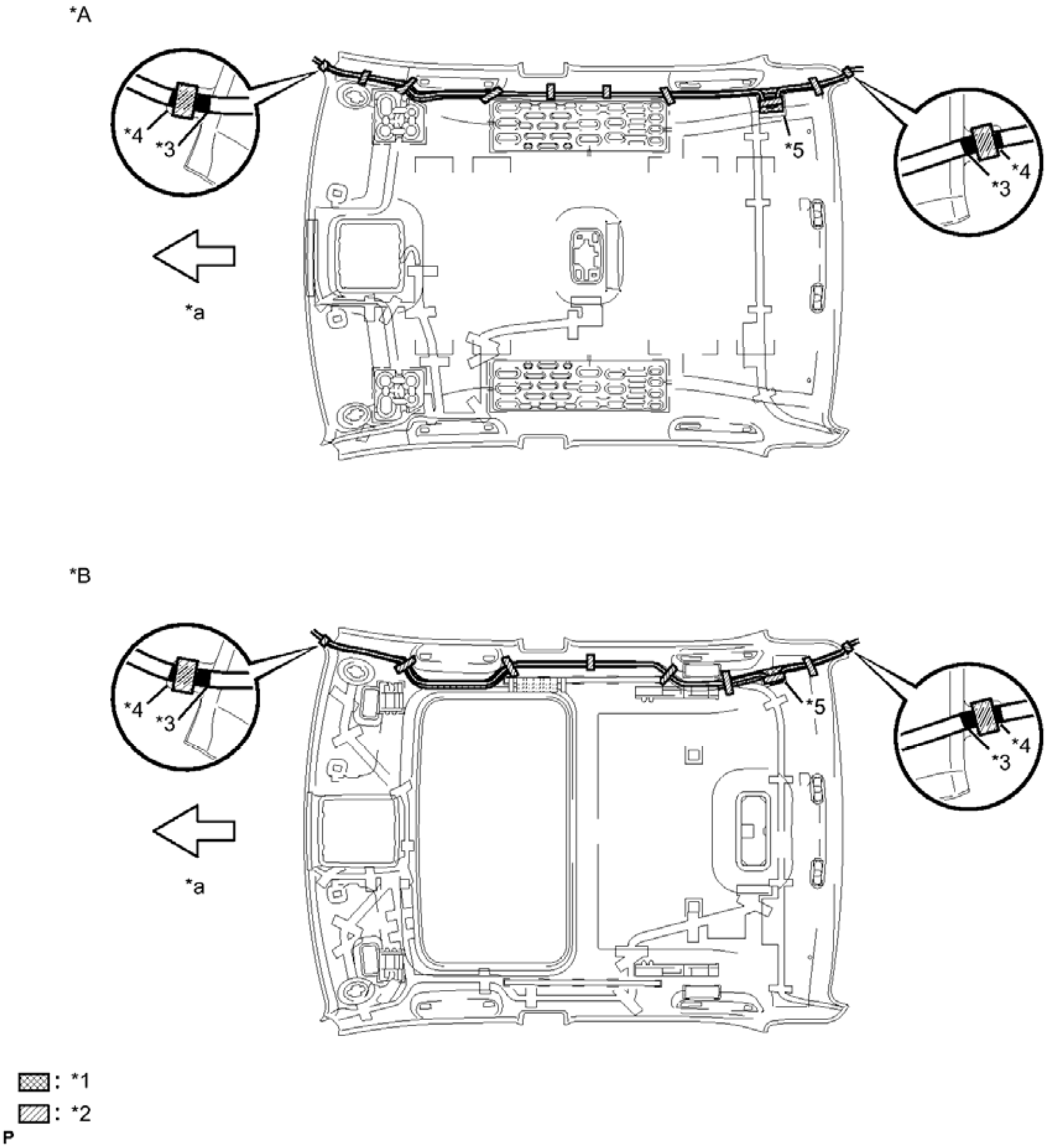

Fig. 59: Installing The No. 2 Antenna Cord Sub-Assembly
Courtesy of TOYOTA MOTOR SALES, U.S.A., INC.

TEXT IN ILLUSTRATION

*A	w/o Sliding Roof	*B	w/ Sliding Roof
*1	Double-sided Tape	*2	Tape
*3	Marking Tape	*4	Protrusion
*5	Adjustment Area	-	-

*a	Front	-	-

HINT:

Align the taped part of the antenna cable with the protrusion of the roof headlining, and apply tape to secure the cable to the headlining.

c. Put the strips of tape back to the positions shown in the illustration in order to secure the antenna cord to the roof headlining assembly.

HINT:

- If the tape is no longer sticky, use other tape, such as packing tape, that has enough adhesion to secure the antenna cord to the roof headlining assembly.
- For the right front corner of the roof headlining assembly, align the marking tape on the antenna cord with the protrusion of the roof headlining, and wrap tape around the antenna cord and roof headlining assembly once or twice to securely hold them.
- For the right rear corner of the roof headlining assembly, align the marking tape on the antenna cord with the rear edge of the roof headlining, and secure the antenna cord to the roof headlining assembly with tape.
- If the entire length of the antenna cord does not fit, adjust the length by tucking in the cord at the area shown in the illustration.

2. **INSTALL ROOF HEADLINING ASSEMBLY**

   Refer to **INSTALLATION**

3. **INSTALL ANTENNA CORD SUB-ASSEMBLY**
   a. Engage the 8 clamps to install the antenna cord sub-assembly.
4. **INSTALL NO. 2 SIDE DEFROSTER NOZZLE DUCT** . Refer to **REASSEMBLY - Step 6**
5. **INSTALL NO. 3 HEATER TO REGISTER DUCT** . Refer to **REASSEMBLY - Step 7**
6. **INSTALL INSTRUMENT PANEL SAFETY PAD ASSEMBLY**

   Refer to **INSTALLATION**

AMPLIFIER ANTENNA

COMPONENTS

ILLUSTRATION

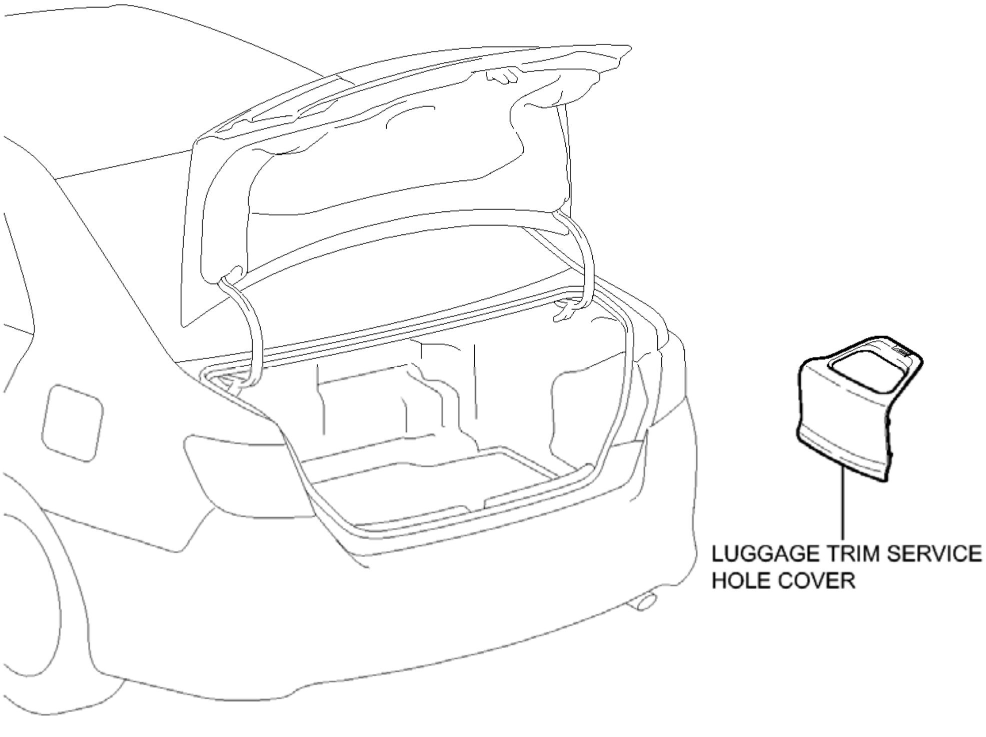
LUGGAGE TRIM SERVICE HOLE COVER
P

Fig. 60: Identifying Amplifier Antenna Replacement Components (1 Of 2)
Courtesy of TOYOTA MOTOR SALES, U.S.A., INC.

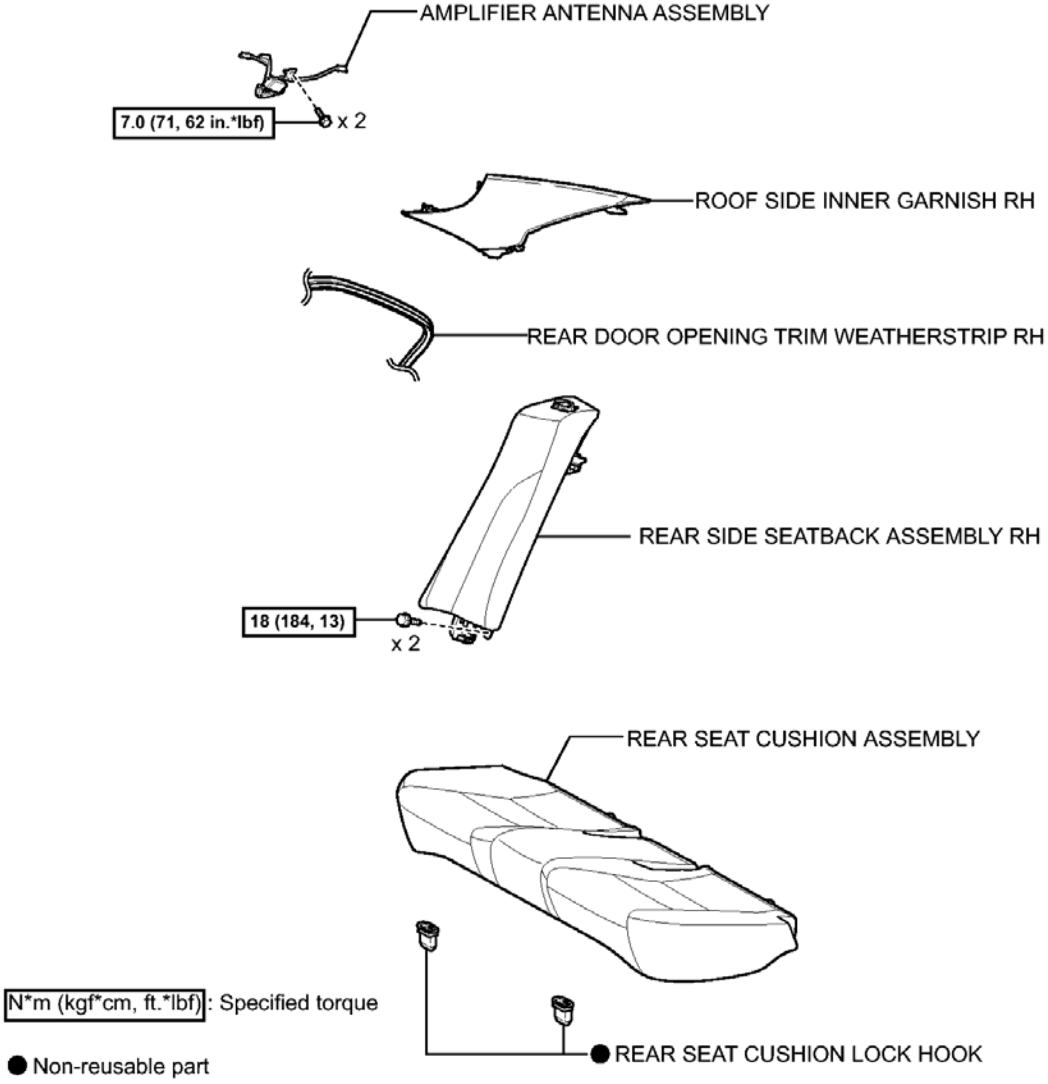
AMPLIFIER ANTENNA ASSEMBLY
7.0 (71, 62 in.*lbf)
x 2
ROOF SIDE INNER GARNISH RH
REAR DOOR OPENING TRIM WEATHERSTRIP RH
REAR SIDE SEATBACK ASSEMBLY RH
18 (184, 13)
x 2
REAR SEAT CUSHION ASSEMBLY
N*m (kgf*cm, ft.*lbf): Specified torque
● Non-reusable part
● REAR SEAT CUSHION LOCK HOOK
P

Fig. 61: Identifying Amplifier Antenna Replacement Components With Torque Specifications (2 Of 2)
Courtesy of TOYOTA MOTOR SALES, U.S.A., INC.

REMOVAL

REMOVAL

1. **PRECAUTION**

NOTE: **After turning the power switch off, waiting time may be required before disconnecting the cable from the negative (-) auxiliary battery terminal. Therefore, make sure to read the disconnecting the cable from the negative (-) auxiliary battery terminal notices before proceeding with work.**

Refer to PRECAUTION .

2. **REMOVE LUGGAGE TRIM SERVICE HOLE COVER** . Refer to **REMOVAL - Step 2**
3. **DISCONNECT CABLE FROM AUXILIARY BATTERY NEGATIVE TERMINAL**

WARNING: **Wait at least 90 seconds after disconnecting the cable from the negative (-) auxiliary battery terminal to disable the SRS system.**

NOTE: **When disconnecting the cable, some systems need to be initialized after the cable is reconnected. Refer to INITIALIZATION .**

4. **REMOVE REAR SEAT CUSHION ASSEMBLY** . Refer to **REMOVAL - Step 4**
5. **REMOVE REAR SEAT CUSHION LOCK HOOK** . Refer to **REMOVAL - Step 5**
6. **REMOVE REAR SIDE SEATBACK ASSEMBLY RH** . Refer to **REMOVAL - Step 10**
7. **DISCONNECT REAR DOOR OPENING TRIM WEATHERSTRIP RH** . Refer to **REMOVAL - Step 14**
8. **REMOVE ROOF SIDE INNER GARNISH RH**

HINT:

Use the same procedure as for the LH side. Refer to **REMOVAL - Step 25** .

9. **REMOVE AMPLIFIER ANTENNA ASSEMBLY**
   a. Disconnect the 4 connectors and disengage the clamp.

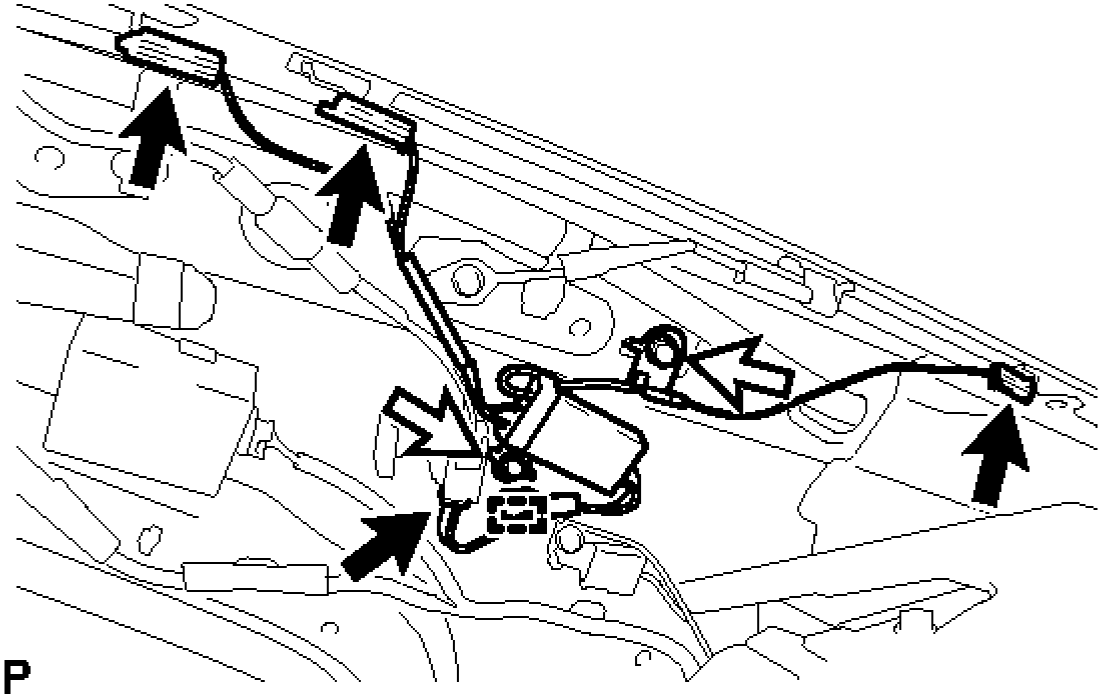

Fig. 62: Identifying Amplifier Antenna Assembly Connectors And Clamp
Courtesy of TOYOTA MOTOR SALES, U.S.A., INC.

b. Remove the 2 bolts and the amplifier antenna assembly.

INSTALLATION

INSTALLATION

1. **INSTALL AMPLIFIER ANTENNA ASSEMBLY**
    a. Install the amplifier antenna assembly with the 2 bolts.

    Torque: 7.0 N*m (71 kgf*cm, 62 in.*lbf)

    b. Connect the 4 connectors and engage the clamp.
2. **INSTALL ROOF SIDE INNER GARNISH RH**

    HINT:

    Use the same procedure as for the LH side. Refer to **INSTALLATION - Step 21** .
3. **INSTALL REAR DOOR OPENING TRIM WEATHERSTRIP RH** . Refer to **INSTALLATION - Step 33**
4. **INSTALL REAR SIDE SEATBACK ASSEMBLY RH** . Refer to **INSTALLATION - Step 2**
5. **INSTALL REAR SEAT CUSHION LOCK HOOK** . Refer to **INSTALLATION - Step 6**
6. **INSTALL REAR SEAT CUSHION ASSEMBLY** . Refer to **INSTALLATION - Step 7**
7. **CONNECT CABLE TO AUXILIARY BATTERY NEGATIVE TERMINAL**

    NOTE: When disconnecting the cable, some systems need to be initialized after the cable is reconnected. Refer to INITIALIZATION .
8. **INSTALL LUGGAGE TRIM SERVICE HOLE COVER** . Refer to **INSTALLATION - Step 3**
9. **INSPECT SRS WARNING LIGHT**

    for Built-in Type Yaw Rate Sensor: Refer to **DIAGNOSIS SYSTEM**

    for Separate Type Yaw Rate Sensor: Refer to **DIAGNOSIS SYSTEM**

STEREO JACK ADAPTER ASSEMBLY

COMPONENTS

ILLUSTRATION

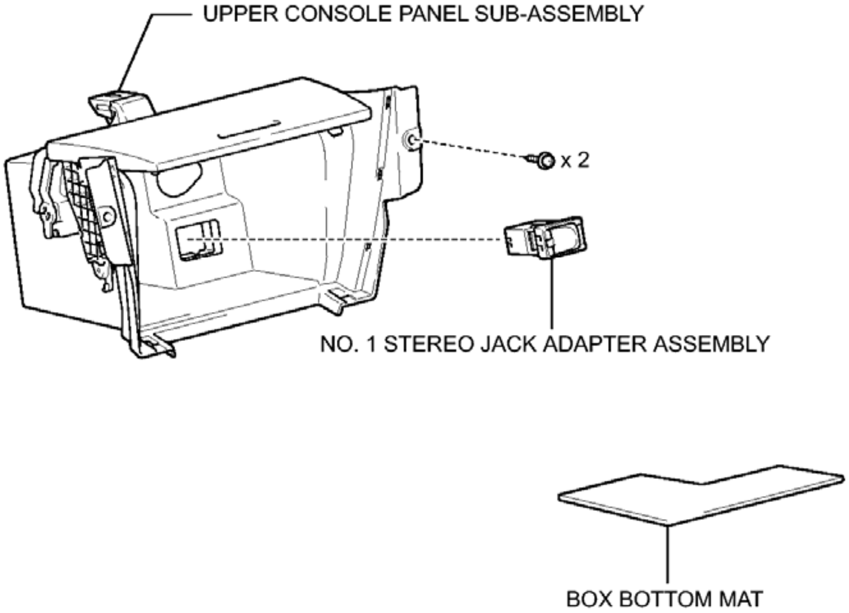
UPPER CONSOLE PANEL SUB-ASSEMBLY
x 2
NO. 1 STEREO JACK ADAPTER ASSEMBLY
BOX BOTTOM MAT
P

Fig. 63: Identifying Stereo Jack Adapter Assembly Replacement Components
Courtesy of TOYOTA MOTOR SALES, U.S.A., INC.

REMOVAL

REMOVAL

1. **REMOVE REAR CONSOLE BOX ASSEMBLY**

   Refer to **REMOVAL**

2. **REMOVE BOX BOTTOM MAT** . Refer to **REMOVAL - Step 24**
3. **REMOVE UPPER CONSOLE PANEL SUB-ASSEMBLY** . Refer to **REMOVAL - Step 25**
4. **REMOVE NO. 1 STEREO JACK ADAPTER ASSEMBLY**
   a. Disengage the 2 claws to remove the No. 1 stereo jack adapter assembly.

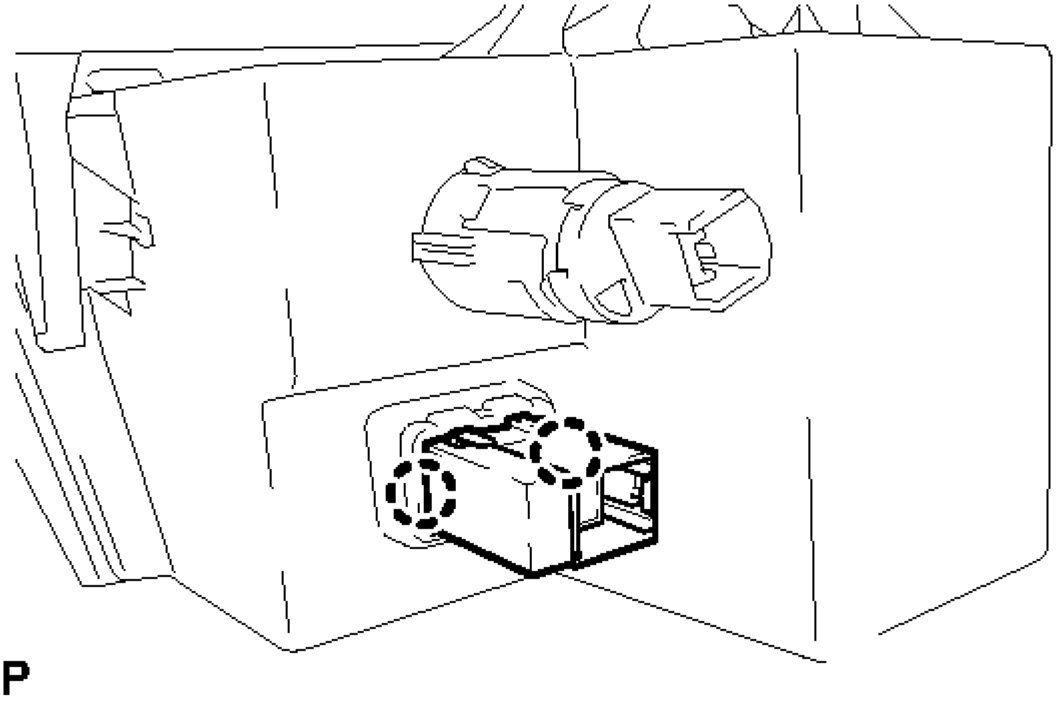

Fig. 64: Identifying No. 1 Stereo Jack Adapter Assembly Claws
Courtesy of TOYOTA MOTOR SALES, U.S.A., INC.

INSTALLATION

INSTALLATION

1. **INSTALL NO. 1 STEREO JACK ADAPTER ASSEMBLY**
    a. Engage the 2 claws to install the No. 1 stereo jack adapter assembly.
2. **INSTALL UPPER CONSOLE PANEL SUB-ASSEMBLY** . Refer to **INSTALLATION - Step 27**
3. **INSTALL BOX BOTTOM MAT** . Refer to **INSTALLATION - Step 28**
4. **INSTALL REAR CONSOLE BOX ASSEMBLY**

    Refer to **INSTALLATION**

WINDOW GLASS ANTENNA WIRE

ON-VEHICLE INSPECTION

ON-VEHICLE INSPECTION

1. **INSPECT WINDOW GLASS ANTENNA WIRE**
    a. Check for continuity of the antenna.

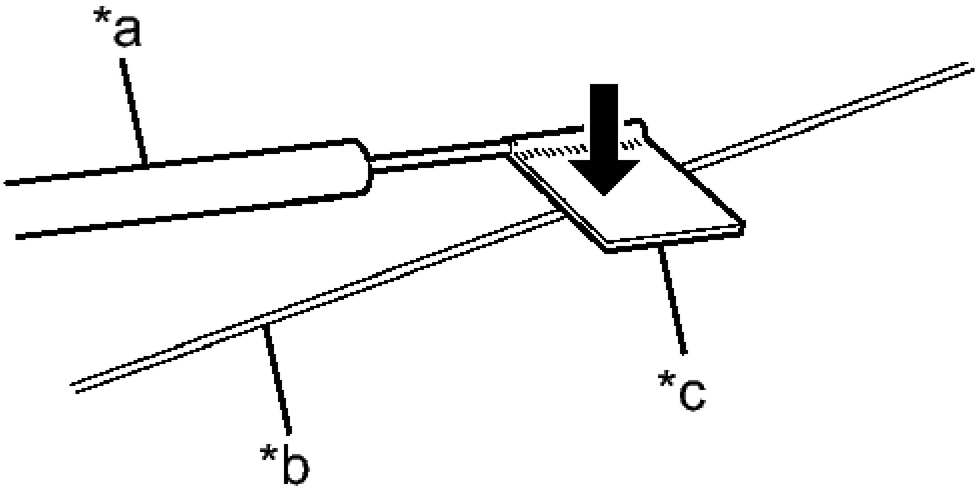

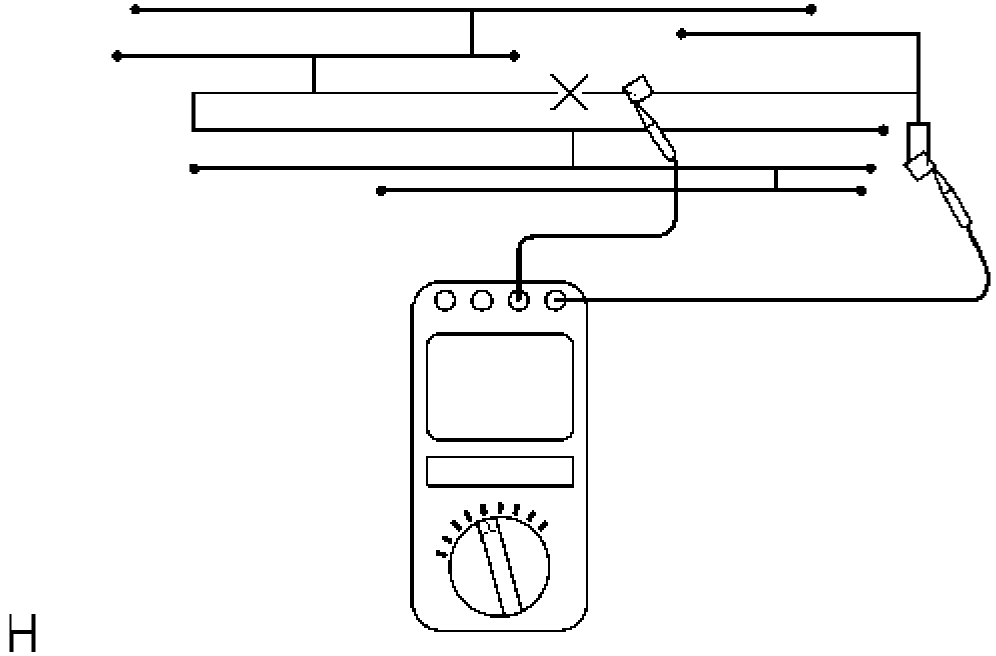

Fig. 65: Checking For Continuity Of Each Antenna Wire
Courtesy of TOYOTA MOTOR SALES, U.S.A., INC.

TEXT IN ILLUSTRATION

	Tester

*a	Probe
*b	Antenna Wire
*c	Tin Foil

HINT:

Check for continuity at the center of each antenna wire as shown in the illustration.

NOTE:

- **When cleaning the glass, wipe it in the direction of the wire with a soft dry cloth. Take care not to damage the wire. Do not use detergents or glass cleaners with abrasive ingredients.**
- **When measuring resistance, wrap a piece of tin foil around the tip of the negative probe and press the foil against the wire with your finger, as shown in the illustration.**

OK

There is continuity in the antenna.

If the result is not as specified, repair the window glass antenna wire.

REPAIR

REPAIR

1. **REPAIR WINDOW GLASS ANTENNA WIRE**

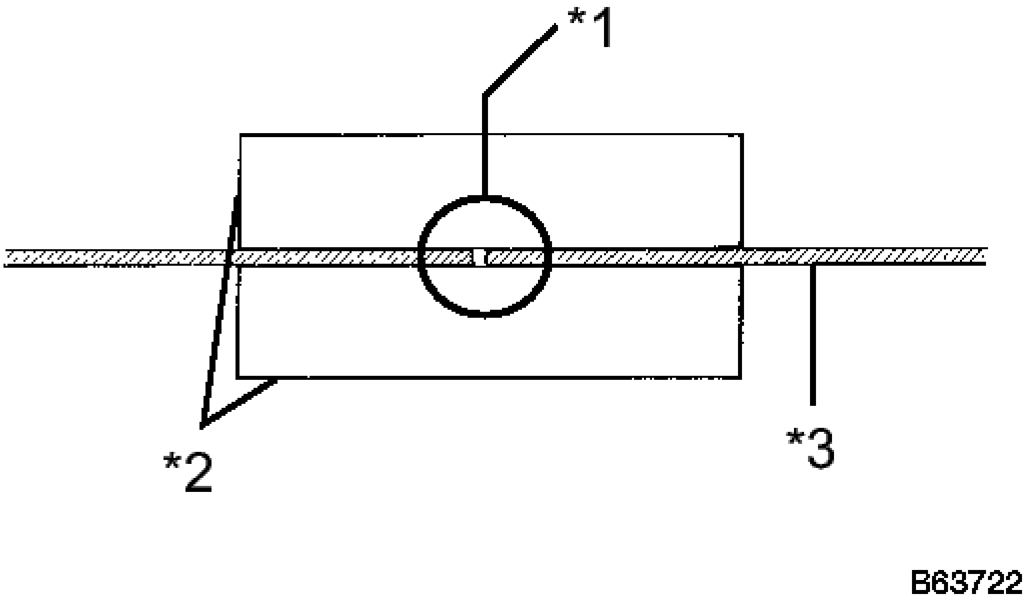

Fig. 66: Identifying Window Glass Antenna Wire
Courtesy of TOYOTA MOTOR SALES, U.S.A., INC.

TEXT IN ILLUSTRATION

*1	Repair Point
*2	Masking Tape
*3	Broken Wire

a. Clean the broken wire tips with a grease, wax and silicone remover.
b. Place masking tape along both sides of the wire to be repaired.
c. Thoroughly mix the repair agent (Dupont paste No. 4817 or equivalent).
d. Using a fine tip brush, apply a small amount of the repair agent to the wire.

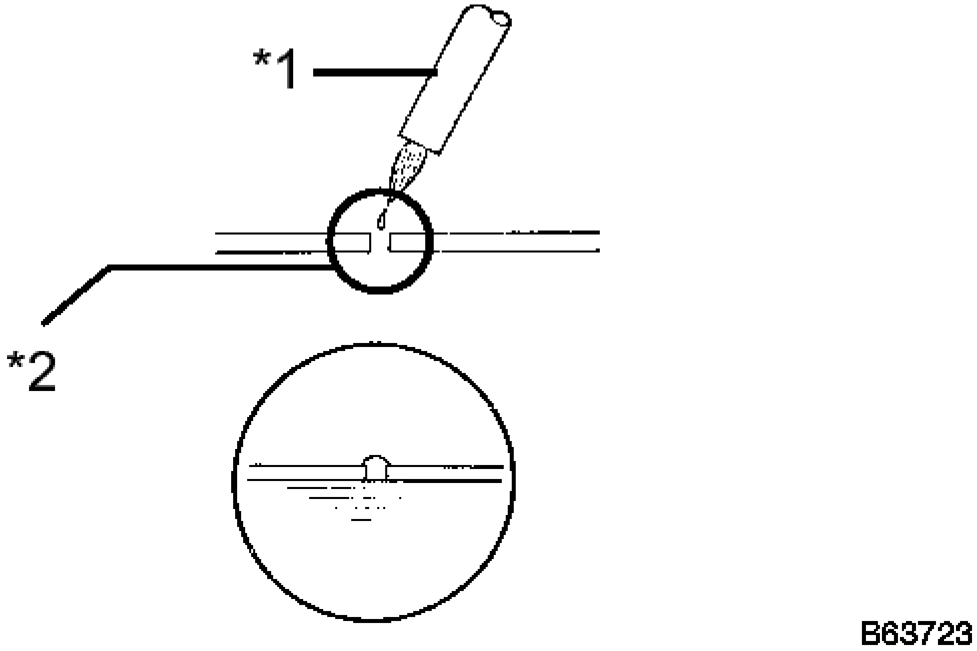

Fig. 67: Applying Repair Agent To Wire
Courtesy of TOYOTA MOTOR SALES, U.S.A., INC.

TEXT IN ILLUSTRATION

*1	Fine Tip Brush
*2	Repair Point

e. After a few minutes, remove the masking tape.

SATELLITE RADIO ANTENNA

COMPONENTS

ILLUSTRATION

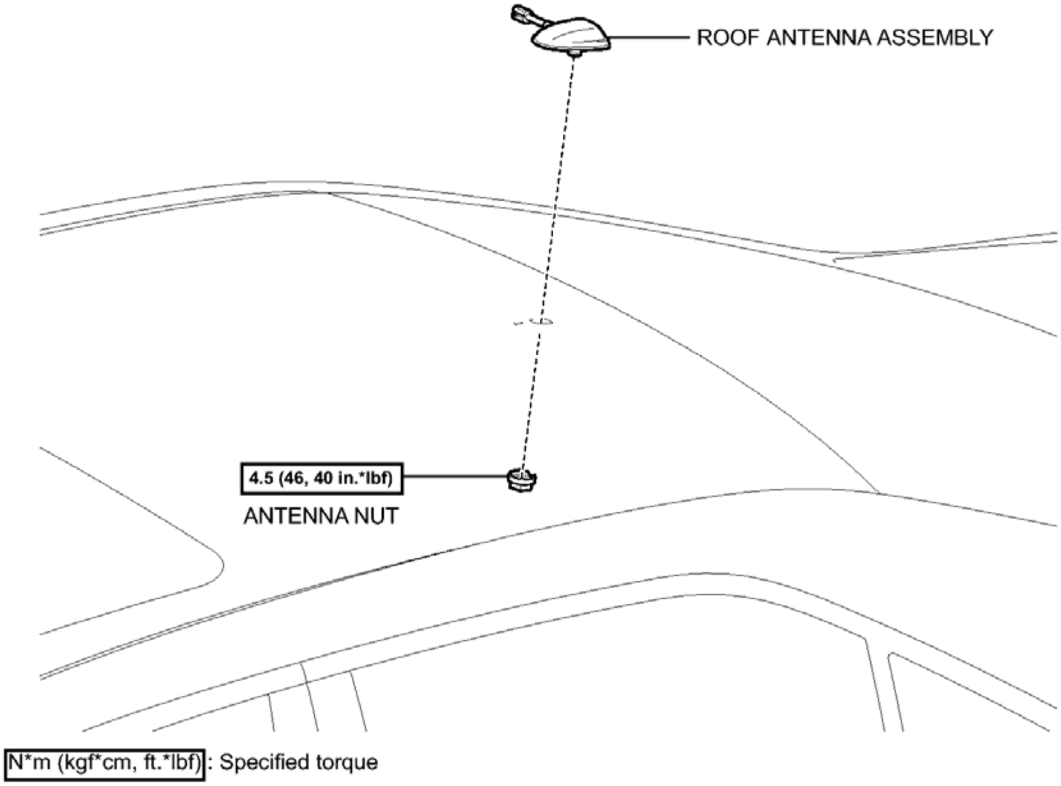
ROOF ANTENNA ASSEMBLY
4.5 (46, 40 in.*lbf)
ANTENNA NUT
N*m (kgf*cm, ft.*lbf): Specified torque
P

Fig. 68: Identifying Satellite Radio Antenna Replacement Components With Torque Specifications
Courtesy of TOYOTA MOTOR SALES, U.S.A., INC.

REMOVAL

REMOVAL

1. **REMOVE ROOF HEADLINING ASSEMBLY**

   Refer to **REMOVAL**

2. **REMOVE ROOF ANTENNA ASSEMBLY**
   a. Disconnect the connector.

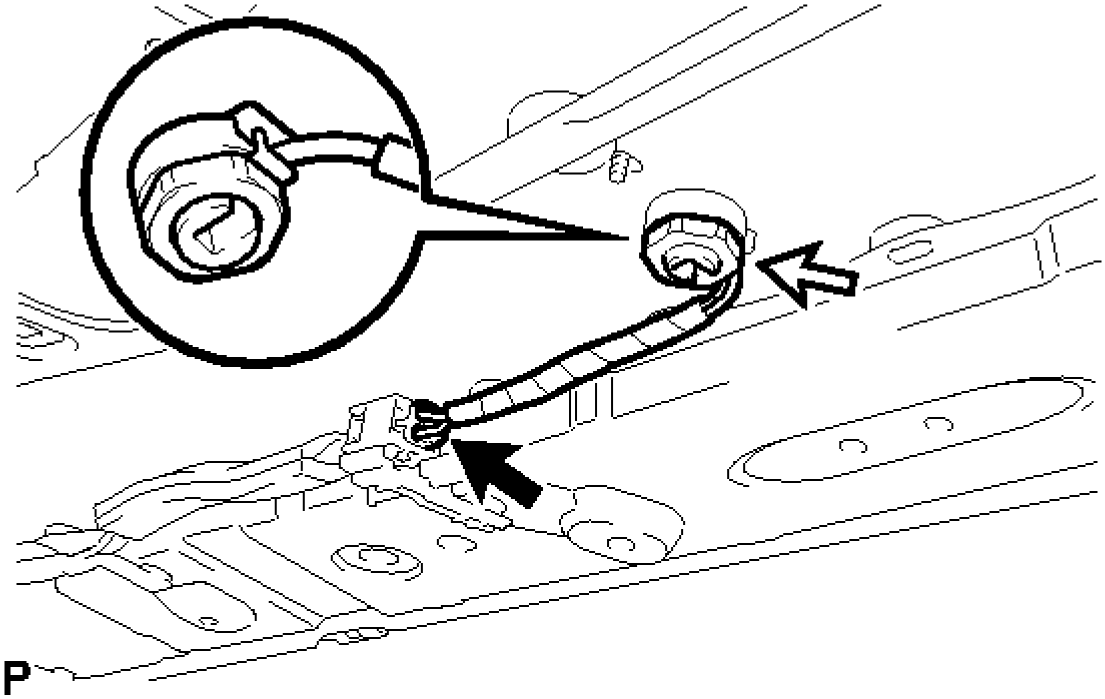

Fig. 69: Identifying Roof Antenna Nut And Connector
Courtesy of TOYOTA MOTOR SALES, U.S.A., INC.

b. Remove the antenna nut.
c. Disengage the 2 claws.

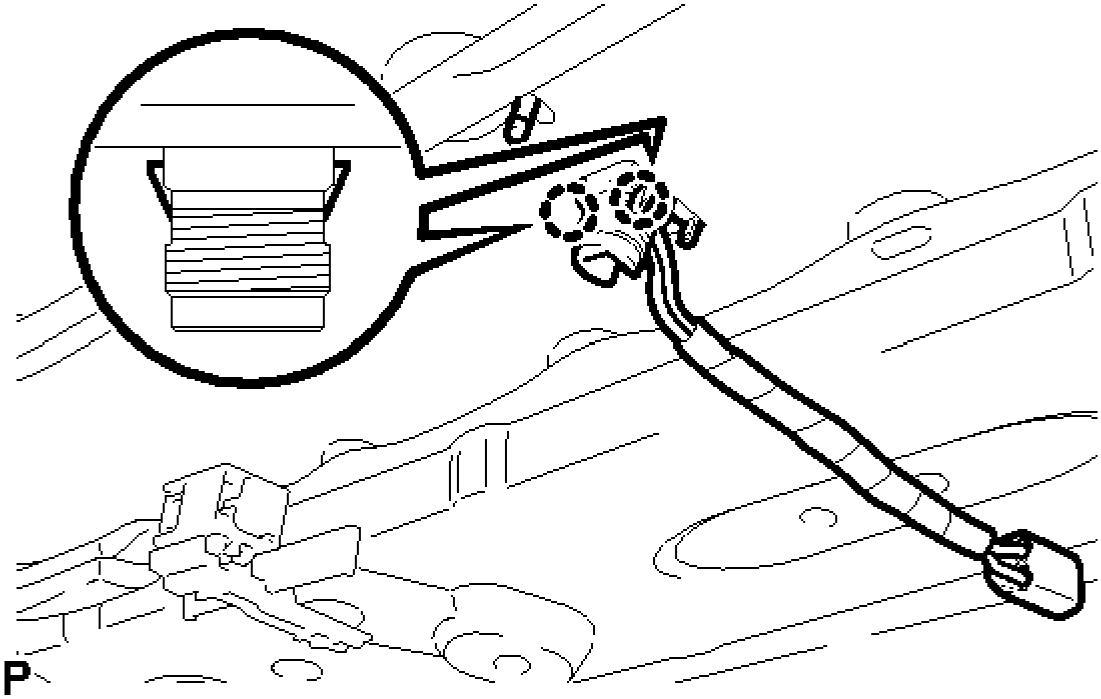

Fig. 70: Identifying Roof Antenna Claws

Courtesy of TOYOTA MOTOR SALES, U.S.A., INC.

d. Disengage the 3 guides and remove the roof antenna assembly.

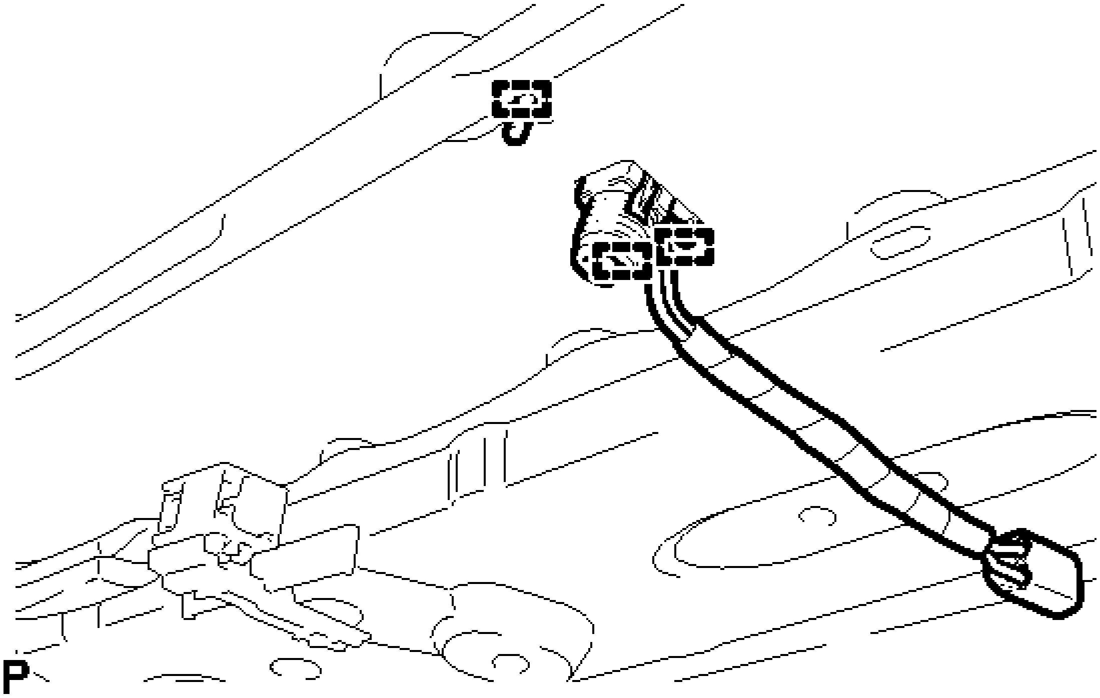

Fig. 71: Identifying Roof Antenna Guides
Courtesy of TOYOTA MOTOR SALES, U.S.A., INC.

INSTALLATION

INSTALLATION

1. **INSTALL ROOF ANTENNA ASSEMBLY**
    a. Engage the 3 guides and 2 claws to the vehicle body to temporarily install the roof antenna assembly.
    b. Place the antenna cord in the cutout of the antenna nut.

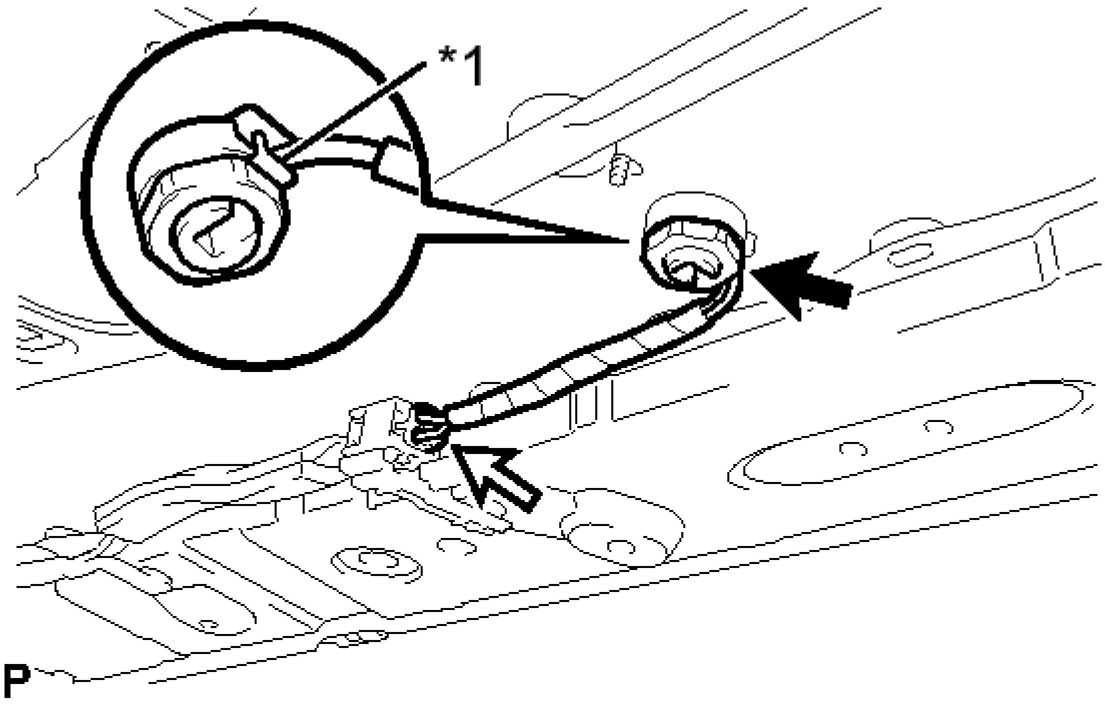

Fig. 72: Identifying Roof Antenna Nut And Connector
Courtesy of TOYOTA MOTOR SALES, U.S.A., INC.

TEXT IN ILLUSTRATION

*1	Cutout

c. Install the roof antenna assembly with the antenna nut.

   Torque: 4.5 N*m (46 kgf*cm, 40 in.*lbf)

d. Connect the connector.

2. **INSTALL ROOF HEADLINING ASSEMBLY**

   Refer to **INSTALLATION**

NOISE FILTER

COMPONENTS

ILLUSTRATION

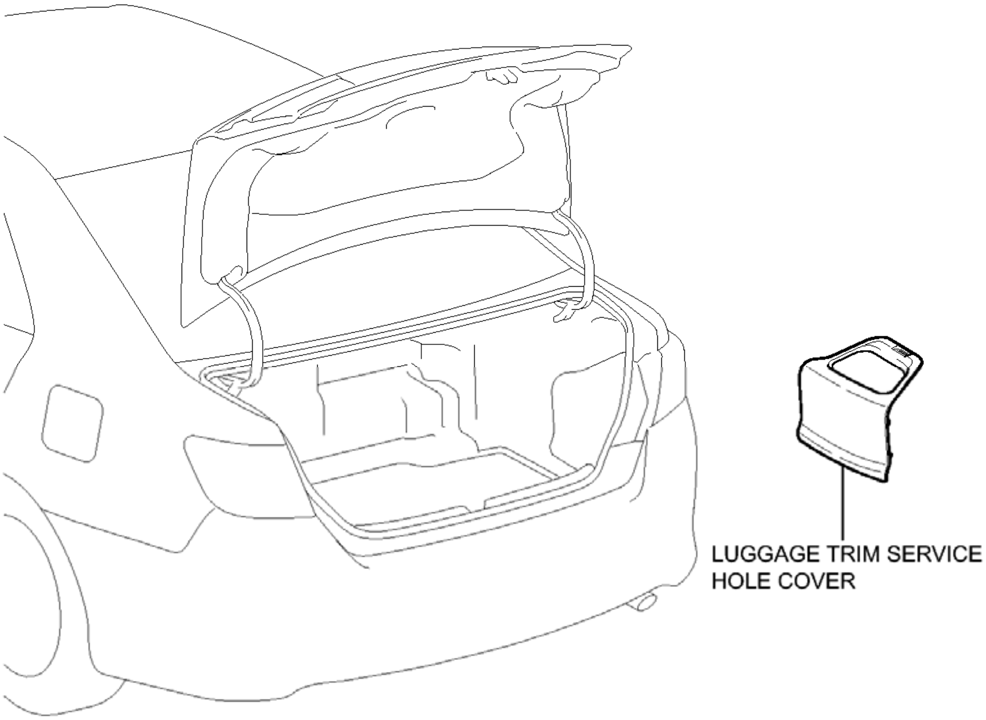
LUGGAGE TRIM SERVICE HOLE COVER
P

Fig. 73: Identifying Noise Filter Replacement Components (1 Of 2)
Courtesy of TOYOTA MOTOR SALES, U.S.A., INC.

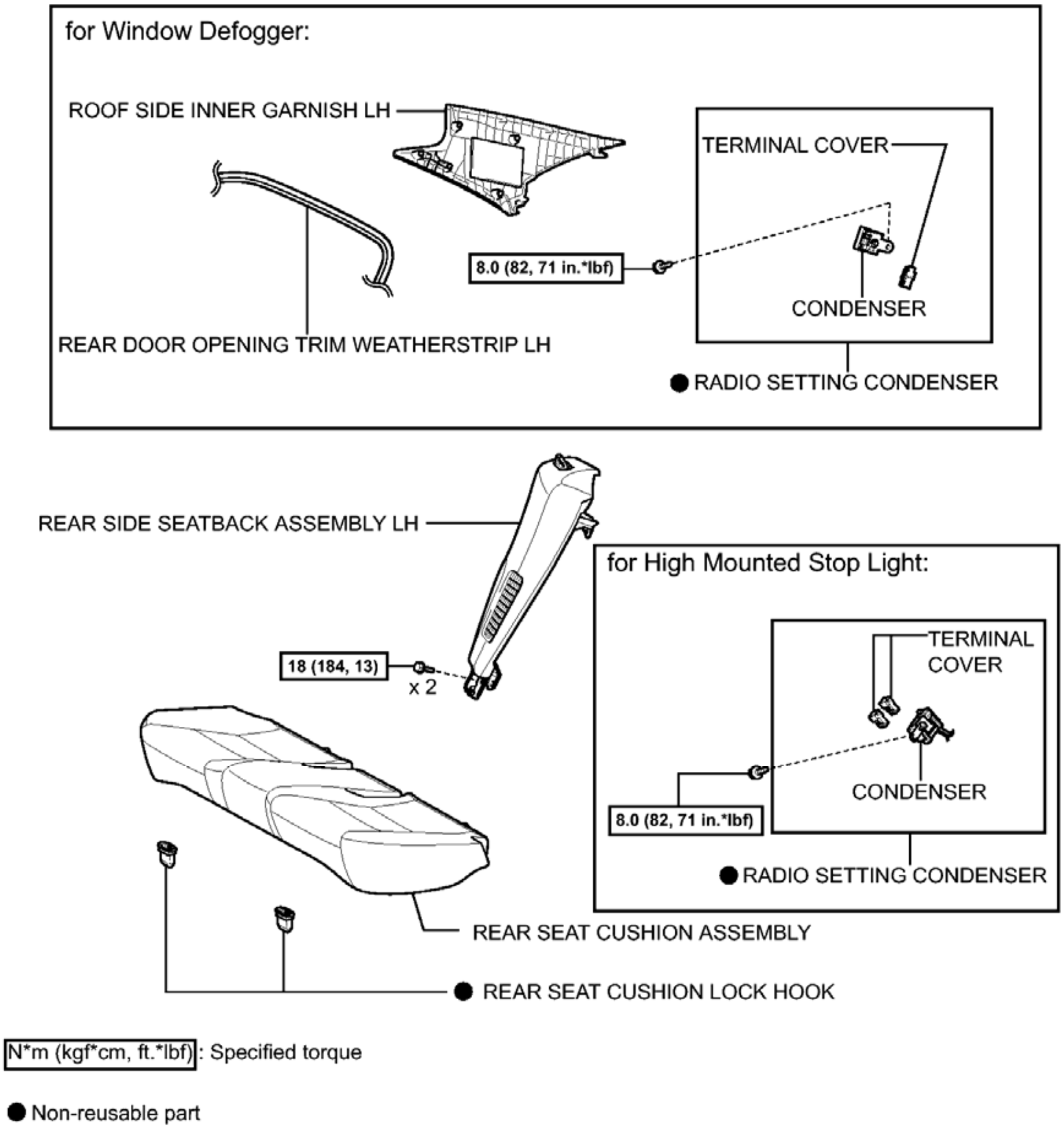
for Window Defogger:
ROOF SIDE INNER GARNISH LH
TERMINAL COVER
8.0 (82, 71 in.*lbf)
CONDENSER
REAR DOOR OPENING TRIM WEATHERSTRIP LH
● RADIO SETTING CONDENSER
REAR SIDE SEATBACK ASSEMBLY LH
for High Mounted Stop Light:
TERMINAL COVER
18 (184, 13)
x 2
CONDENSER
8.0 (82, 71 in.*lbf)
● RADIO SETTING CONDENSER
REAR SEAT CUSHION ASSEMBLY
● REAR SEAT CUSHION LOCK HOOK
N*m (kgf*cm, ft.*lbf): Specified torque
● Non-reusable part

P

Fig. 74: Identifying Noise Filter Replacement Components With Torque Specifications (2 Of 2)
Courtesy of TOYOTA MOTOR SALES, U.S.A., INC.

ON-VEHICLE INSPECTION

ON-VEHICLE INSPECTION

1. **INSPECT RADIO SETTING CONDENSER (for High Mounted Stop Light)**
    a. With the radio setting condenser installed, check that there is no looseness or other abnormalities.
    b. Remove the bolt.
    c. Disengage the clamp and disconnect the radio setting condenser with wire harness from the vehicle body.

d. Measure the resistance and voltage of the radio setting condenser according to the value(s) in the table below.

NOTE: **Before measuring the resistance and voltage, be sure to use insulated probes to avoid a short circuit between the tester terminal and bracket.**

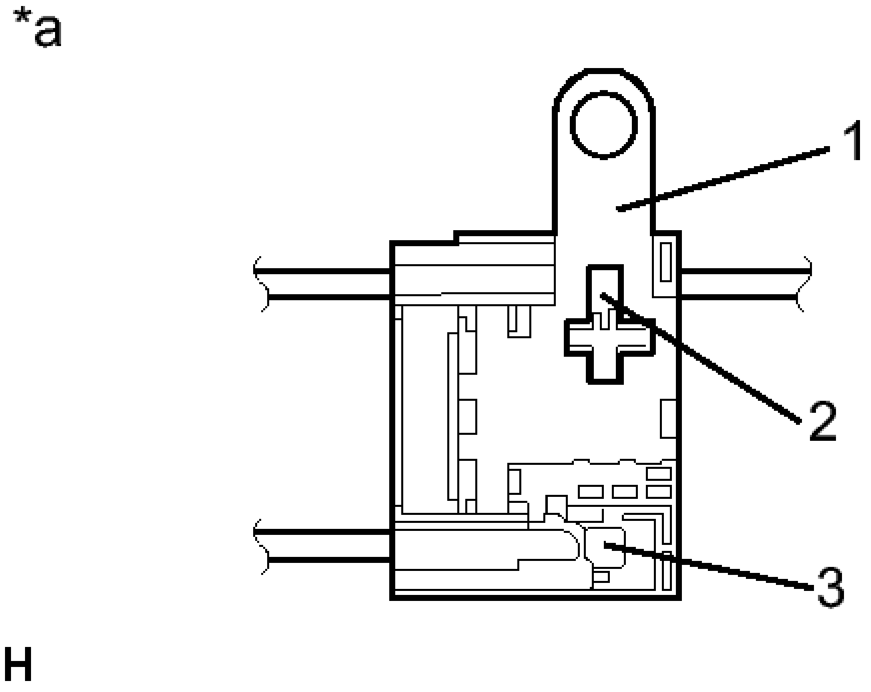

Fig. 75: Inspecting Radio Setting Condenser
Courtesy of TOYOTA MOTOR SALES, U.S.A., INC.

Standard Resistance

Tester Connection	Condition	Specified Condition
1 - 2	• Power switch off • High mounted stop light off • Window defogger off • Luggage compartment room light off	10 kohms or higher
1 - 3		10 kohms or higher
1 - Body ground		Below 1 ohms

Standard Voltage

Tester Connection	Condition	Specified Condition
2 - Body ground	• Power switch on (IG) • High mounted stop light off • Window defogger off • Luggage compartment room light off	Below 1 V
3 - Body ground		Below 1 V
2 - Body ground	• Power switch on (IG) • High mounted stop light on • Window defogger on • Luggage compartment room light on	11 to 14 V
3 - Body ground		11 to 14 V

TEXT IN ILLUSTRATION

*a	Radio Setting Condenser

2. **INSPECT RADIO SETTING CONDENSER (for Window Defogger)**
    a. With the radio setting condenser installed, check that there is no looseness or other abnormalities.
    b. Remove the bolt.
    c. Disengage the 2 clamps and disconnect the radio setting condenser with wire harness from the vehicle body.
    d. Measure the resistance and voltage of the radio setting condenser according to the value(s) in the table below.

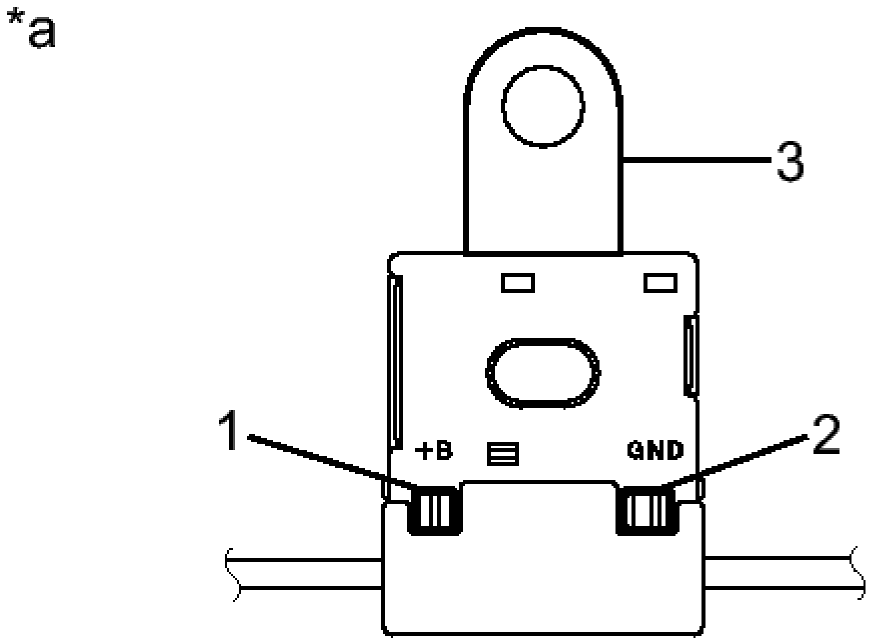

Fig. 76: Identifying Radio Setting Condenser Connector Terminals
Courtesy of TOYOTA MOTOR SALES, U.S.A., INC.

Standard Resistance

Tester Connection	Condition	Specified Condition
1 (+B) - 2 (GND)	• Power switch off • High mounted stop light off • Window defogger off • Luggage compartment room light off	10 kohms or higher
3 - Body ground		Below 1 ohms

Standard Voltage

Tester Connection	Condition	Specified Condition
	• Power switch on	

1 - Body ground	(IG) • High mounted stop light off • Window defogger off • Luggage compartment room light off	Below 1 V
1 - Body ground	• Power switch on (IG) • High mounted stop light on • Window defogger on • Luggage compartment room light on	11 to 14 V

TEXT IN ILLUSTRATION

*a	Radio Setting Condenser

REMOVAL

REMOVAL

1. **PRECAUTION**

   NOTE: **After turning the power switch off, waiting time may be required before disconnecting the cable from the negative (-) auxiliary battery terminal. Therefore, make sure to read the disconnecting the cable from the negative (-) auxiliary battery terminal notices before proceeding with work. Refer to PRECAUTION .**

2. **REMOVE LUGGAGE TRIM SERVICE HOLE COVER** . Refer to **REMOVAL - Step 2**
3. **DISCONNECT CABLE FROM AUXILIARY BATTERY NEGATIVE TERMINAL**

   WARNING: **Wait at least 90 seconds after disconnecting the cable from the**

negative (-) auxiliary battery terminal to disable the SRS system.

NOTE: **When disconnecting the cable, some systems need to be initialized after the cable is reconnected. Refer to INITIALIZATION .**

4. **REMOVE REAR SEAT CUSHION ASSEMBLY** . Refer to **REMOVAL - Step 4**
5. **REMOVE REAR SEAT CUSHION LOCK HOOK** . Refer to **REMOVAL - Step 5**
6. **REMOVE REAR SIDE SEATBACK ASSEMBLY LH** . Refer to **REMOVAL - Step 9**
7. **REMOVE RADIO SETTING CONDENSER (for High Mounted Stop Light)**

NOTE: **When the terminal covers are removed, the radio setting condenser must be replaced because the terminal covers and condenser are supplied as a set.**

a. Remove the bolt.

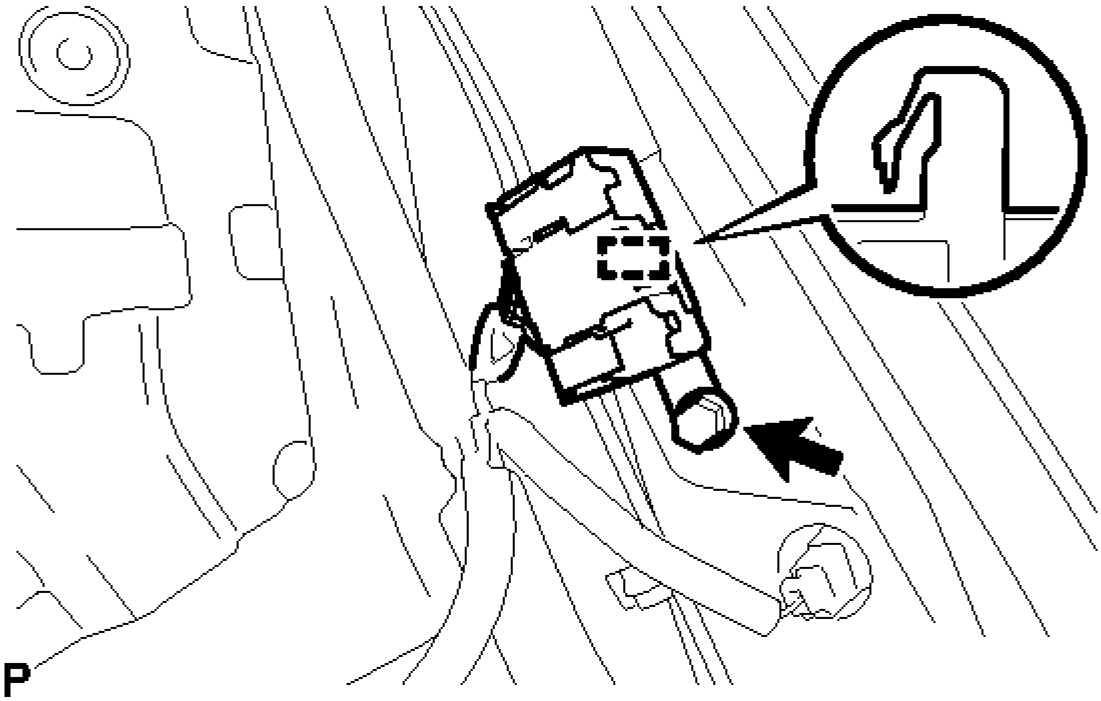

Fig. 77: Identifying Radio Setting Condenser Bolt
Courtesy of TOYOTA MOTOR SALES, U.S.A., INC.

b. Disengage the clamp and disconnect the radio setting condenser with wire harness from the vehicle body.
c. Disengage the claw and pull out the cover as shown in the illustration.

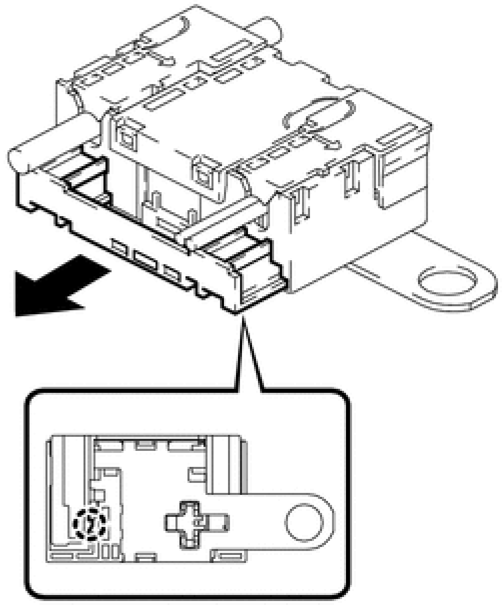

P

Fig. 78: Identifying Radio Setting Condenser, Clamps & Claws
Courtesy of TOYOTA MOTOR SALES, U.S.A., INC.

d. Using a screwdriver, disengage the 6 claws and remove the 2 terminal covers with wire harness from the condenser.

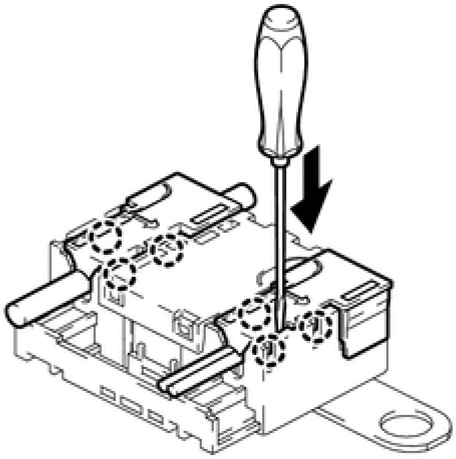

P

Fig. 79: Disengaging Claws
Courtesy of TOYOTA MOTOR SALES, U.S.A., INC.

e. Using a screwdriver, bend back and break off the claw as shown in the illustration.

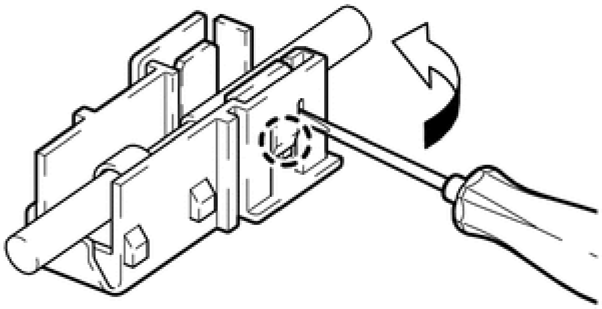

Fig. 80: Identifying Bending The Claw
Courtesy of TOYOTA MOTOR SALES, U.S.A., INC.

f. Remove the terminal cover from the wire harness.

NOTE:

- **Make sure to hold the wire harness on the crimping side of the terminal when disconnecting the wire harness from the terminal cover.**
- **Make sure not to bend the exposed wire when disconnecting the wire harness from the terminal cover.**
- **Check for deformation of the terminal after the wire harness has been removed from the terminal cover.**

8. **DISCONNECT REAR DOOR OPENING TRIM WEATHERSTRIP LH (for Window Defogger)** . Refer to **REMOVAL - Step 13**
9. **REMOVE ROOF SIDE INNER GARNISH LH (for Window Defogger)** . Refer to **REMOVAL - Step 25**
10. **REMOVE RADIO SETTING CONDENSER (for Window Defogger)**

NOTE: **When the terminal cover is removed, the radio setting condenser must be replaced because the terminal cover and condenser are supplied as a set.**

a. Remove the bolt.

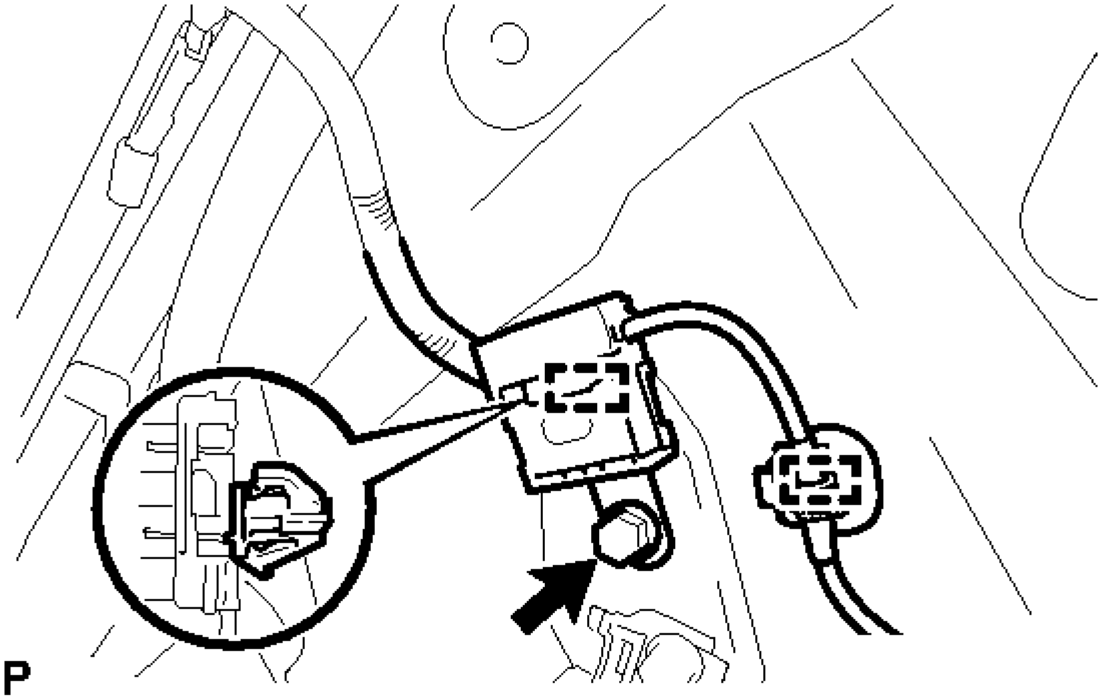

Fig. 81: Identifying Radio Setting Condenser Bolt
Courtesy of TOYOTA MOTOR SALES, U.S.A., INC.

b. Disengage the 2 clamps and disconnect the radio setting condenser with wire harness from the vehicle body.
c. Using a screwdriver, disengage the 3 claws and remove the terminal cover with wire harness from the condenser.

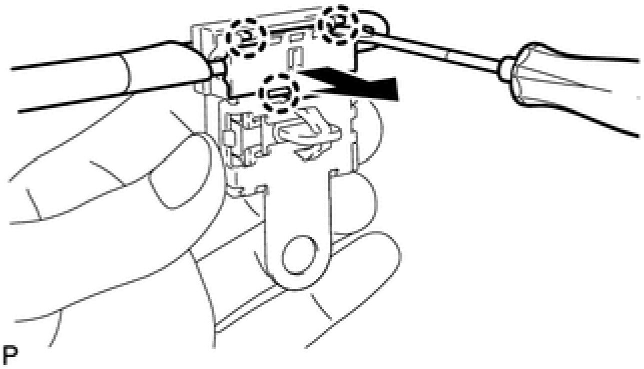

Fig. 82: Removing Terminal Cover
Courtesy of TOYOTA MOTOR SALES, U.S.A., INC.

d. Using a screwdriver, bend back and break off the claw as shown in the illustration.

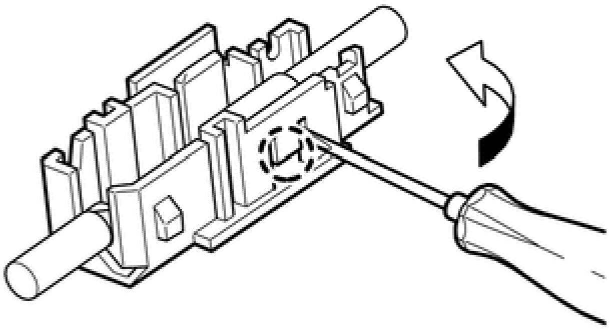

Fig. 83: Breaking Claw with Screwdriver
Courtesy of TOYOTA MOTOR SALES, U.S.A., INC.

e. Remove the terminal cover from the wire harness.

NOTE:

- **Make sure to hold the wire harness on the crimping side of the terminal when disconnecting the wire harness from the terminal cover.**
- **Make sure not to bend the exposed wire when disconnecting the wire harness from the terminal cover.**
- **Check for deformation of the terminal after the wire harness has been removed from the terminal cover.**

INSTALLATION

INSTALLATION

1. **INSTALL RADIO SETTING CONDENSER (for Window Defogger)**
   a. Engage the claw to install a new terminal cover to the wire harness.

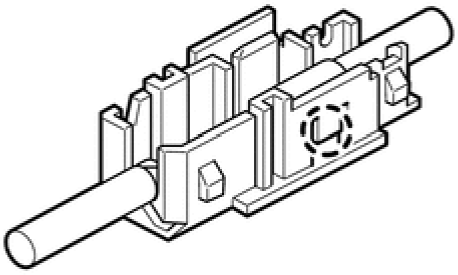

Fig. 84: Identifying Claw And Terminal Cover
Courtesy of TOYOTA MOTOR SALES, U.S.A., INC.

NOTE:

- **Make sure to hold the wire harness so that the crimping side of the terminal is facing up when installing the wire harness to the terminal cover.**
- **Make sure not to bend the exposed wire when installing the wire harness to the terminal cover.**
- **Do not use excessive force when inserting the wire harness into the terminal cover.**
- **If the terminal cover has been deformed at installation, replace the terminal and terminal cover with new ones.**

b. Engage the 3 claws to install the new terminal cover with wire harness to a new condenser.

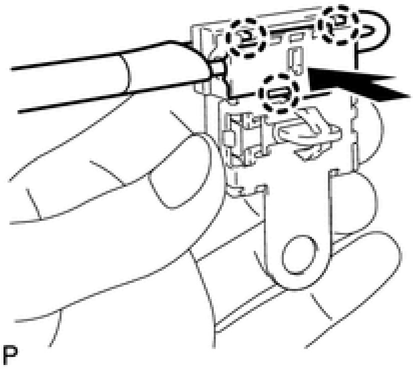

Fig. 85: Identifying New Terminal Cover With Wire Harness
Courtesy of TOYOTA MOTOR SALES, U.S.A., INC.

NOTE:

- **Do not use excessive force when inserting the terminal cover into the condenser.**
- **If the terminal cover has been deformed at installation, replace the terminal, terminal cover and condenser with new ones.**

c. Engage the 2 clamps to temporarily install a new radio setting condenser with wire harness.
d. Install the new radio setting condenser with the bolt.

Torque: 8.0 N*m (82 kgf*cm, 71 in.*lbf)

2. **INSTALL ROOF SIDE INNER GARNISH LH (for Window Defogger)** . Refer to **INSTALLATION - Step 21**
3. **INSTALL REAR DOOR OPENING TRIM WEATHERSTRIP LH (for Window Defogger)** . Refer to **INSTALLATION - Step 26**
4. **INSTALL RADIO SETTING CONDENSER (for High Mounted Stop Light)**

a. Engage the claw to install a new terminal cover to the wire harness.

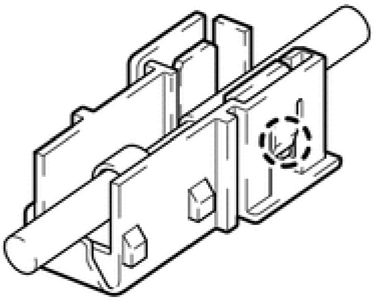

P

Fig. 86: Installing Radio Setting Condenser
Courtesy of TOYOTA MOTOR SALES, U.S.A., INC.

NOTE:

- **Make sure to hold the wire harness so that the crimping side of the terminal is facing up when installing the wire harness to the terminal cover.**
- **Make sure not to bend the exposed wire when installing the wire harness to the terminal cover.**
- **Do not use excessive force when inserting the wire harness into the terminal cover.**
- **If the terminal cover has been deformed at installation, replace the terminal and terminal cover with new ones.**

b. Engage the 6 claws to install the 2 new terminal covers with wire harness to a new condenser.

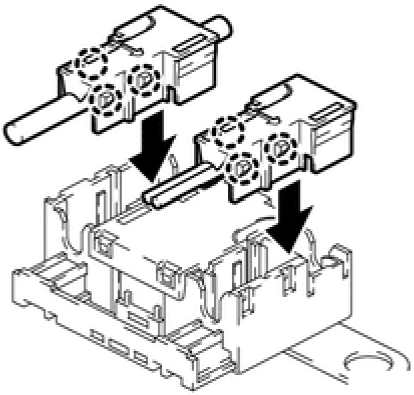

P

Fig. 87: Engaging Claws & Installing Terminal Covers
Courtesy of TOYOTA MOTOR SALES, U.S.A., INC.

NOTE:

- **Do not use excessive force when inserting the terminal cover into the condenser.**
- **If the terminal cover has been deformed at installation, replace**

the terminal, terminal cover and condenser with new ones.

c. Engage the claw to insert the cover as shown in the illustration.

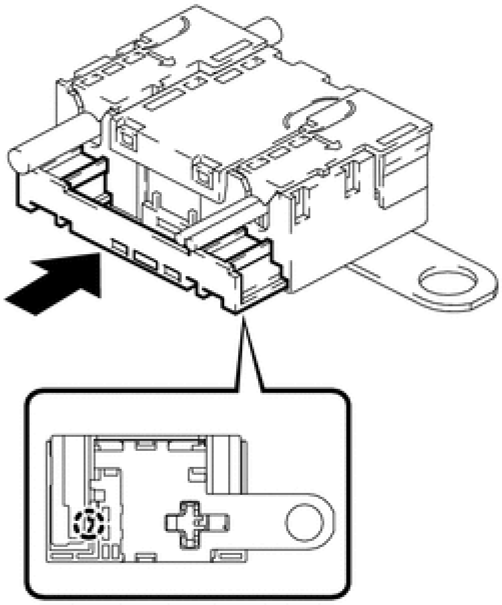

P

Fig. 88: Engaging Claw
Courtesy of TOYOTA MOTOR SALES, U.S.A., INC.

d. Engage the clamp to temporarily install a new radio setting condenser with wire harness.
e. Install the new radio setting condenser with the bolt.

Torque: 8.0 N*m (82 kgf*cm, 71 in.*lbf)

5. **INSTALL REAR SIDE SEATBACK ASSEMBLY LH** . Refer to **INSTALLATION - Step 1**
6. **INSTALL REAR SEAT CUSHION LOCK HOOK** . Refer to **INSTALLATION - Step 6**
7. **INSTALL REAR SEAT CUSHION ASSEMBLY** . Refer to **INSTALLATION - Step 7**
8. **CONNECT CABLE TO AUXILIARY BATTERY NEGATIVE TERMINAL**

NOTE: **When disconnecting the cable, some systems need to be initialized after the cable is reconnected. Refer to INITIALIZATION .**

9. **INSTALL LUGGAGE TRIM SERVICE HOLE COVER** . Refer to **INSTALLATION - Step 3**
10. **INSPECT SRS WARNING LIGHT**

for Built-in Type Yaw Rate Sensor: Refer to **DIAGNOSIS SYSTEM**

for Separate Type Yaw Rate Sensor: Refer to **DIAGNOSIS SYSTEM**

RADIO RECEIVER

COMPONENTS

ILLUSTRATION

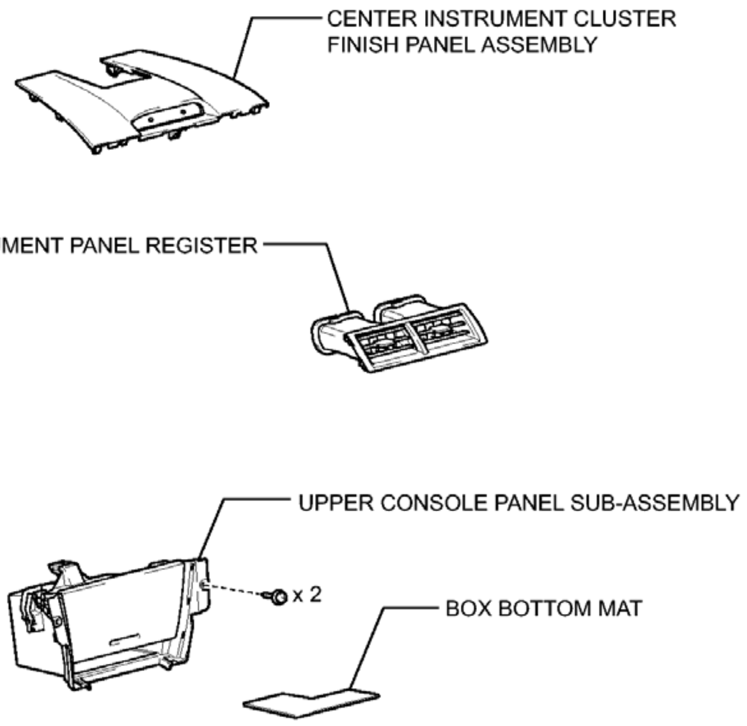
CENTER INSTRUMENT CLUSTER FINISH PANEL ASSEMBLY
NO. 2 INSTRUMENT PANEL REGISTER ASSEMBLY
UPPER CONSOLE PANEL SUB-ASSEMBLY
x 2
BOX BOTTOM MAT

P

Fig. 1: Identifying Radio Receiver Replacement Components (1 Of 4)
Courtesy of TOYOTA MOTOR SALES, U.S.A., INC.

ILLUSTRATION

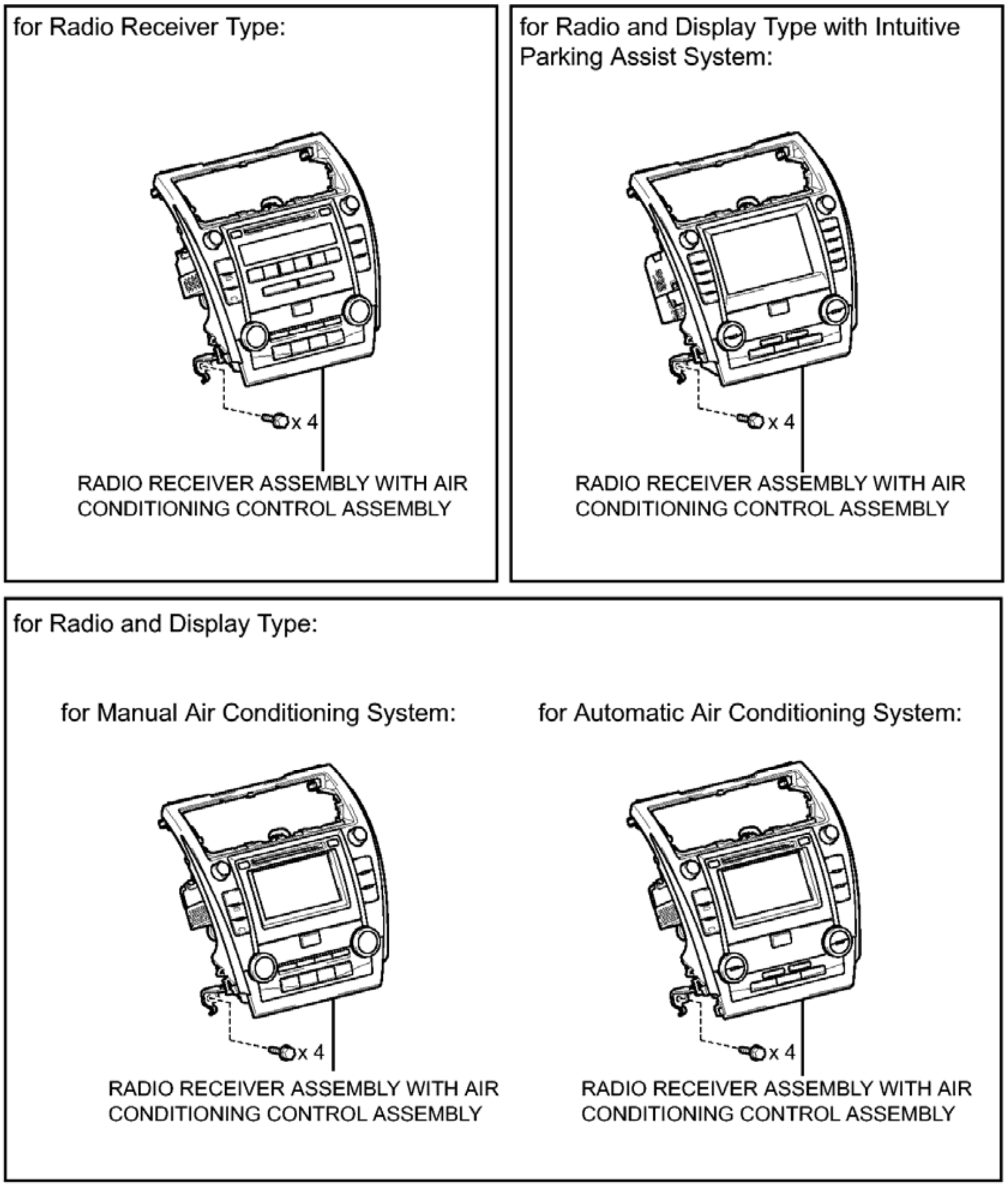
for Radio Receiver Type:
x 4
RADIO RECEIVER ASSEMBLY WITH AIR CONDITIONING CONTROL ASSEMBLY
for Radio and Display Type with Intuitive Parking Assist System:
x 4
RADIO RECEIVER ASSEMBLY WITH AIR CONDITIONING CONTROL ASSEMBLY
for Radio and Display Type:
for Manual Air Conditioning System:
x 4
RADIO RECEIVER ASSEMBLY WITH AIR CONDITIONING CONTROL ASSEMBLY
for Automatic Air Conditioning System:
x 4
RADIO RECEIVER ASSEMBLY WITH AIR CONDITIONING CONTROL ASSEMBLY
P

Fig. 2: Identifying Radio Receiver Replacement Components (2 Of 4)
Courtesy of TOYOTA MOTOR SALES, U.S.A., INC.

ILLUSTRATION

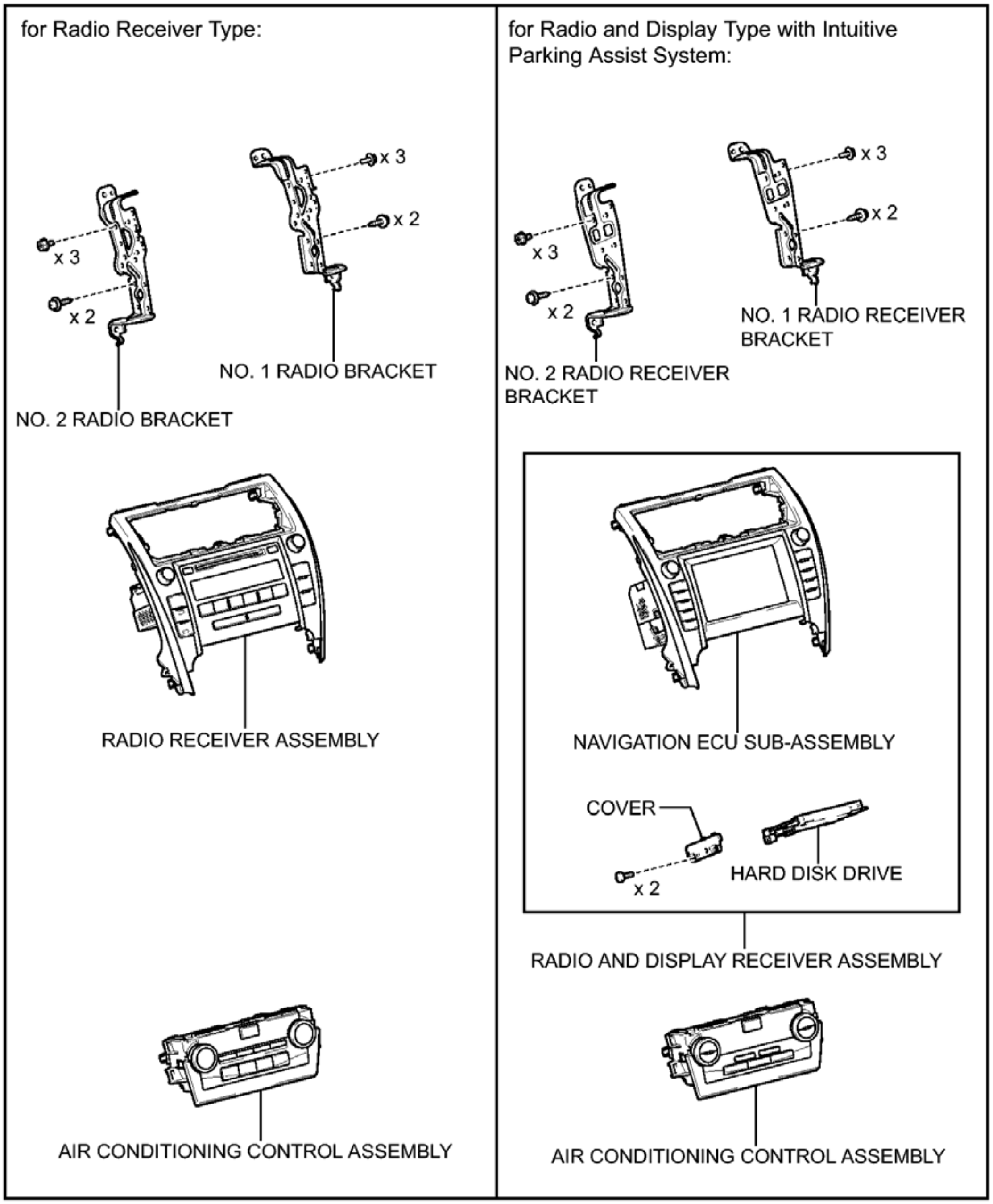
for Radio Receiver Type:
x 3
x 2
x 3
x 2
NO. 1 RADIO BRACKET
NO. 2 RADIO BRACKET
RADIO RECEIVER ASSEMBLY
AIR CONDITIONING CONTROL ASSEMBLY
for Radio and Display Type with Intuitive Parking Assist System:
x 3
x 2
x 3
x 2
NO. 1 RADIO RECEIVER BRACKET
NO. 2 RADIO RECEIVER BRACKET
NAVIGATION ECU SUB-ASSEMBLY
COVER
x 2
HARD DISK DRIVE
RADIO AND DISPLAY RECEIVER ASSEMBLY
AIR CONDITIONING CONTROL ASSEMBLY

P

Fig. 3: Identifying Radio Receiver Replacement Components (3 Of 4)
Courtesy of TOYOTA MOTOR SALES, U.S.A., INC.

ILLUSTRATION

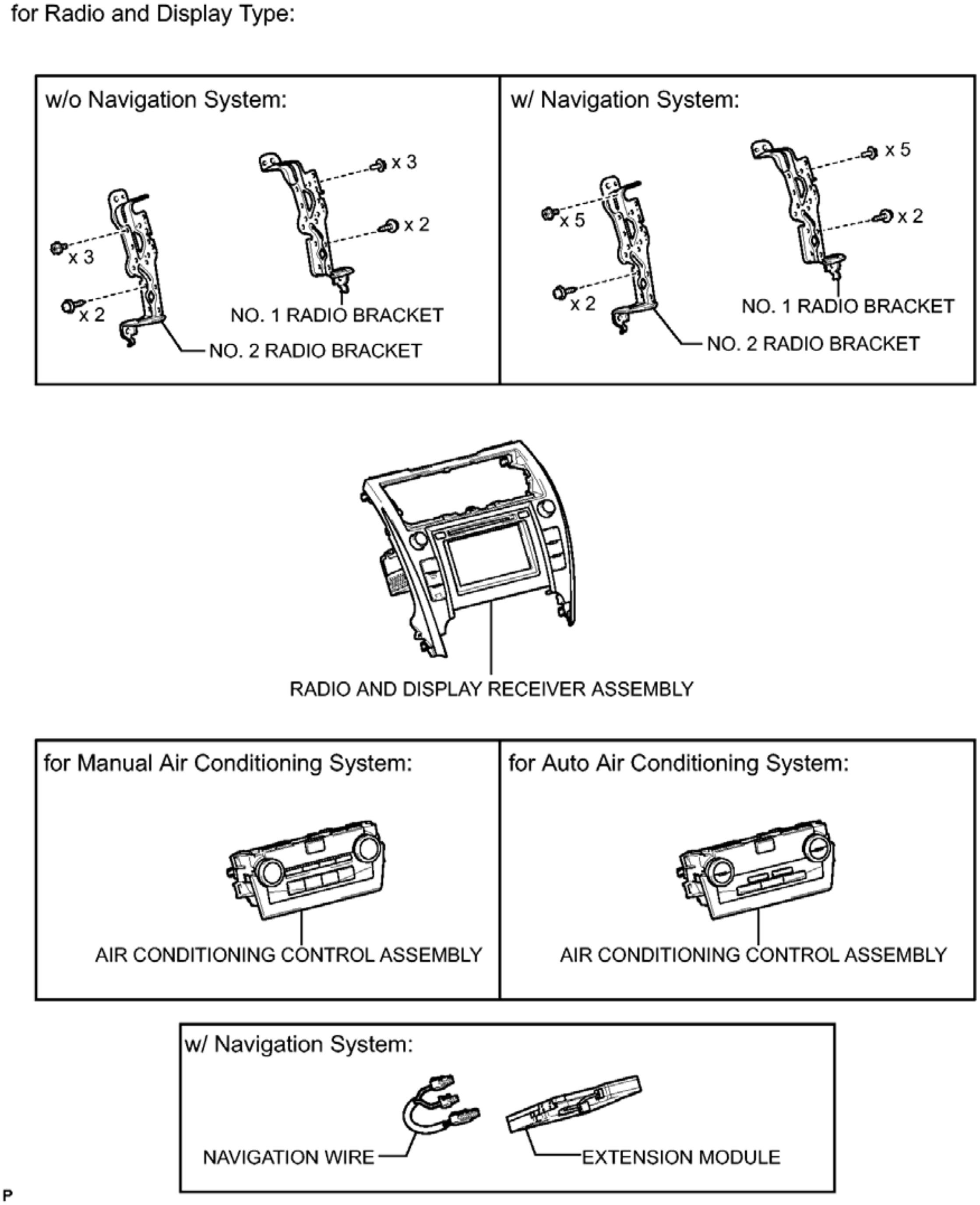
for Radio and Display Type:
w/o Navigation System:
x 3
x 2
x 3
x 2
NO. 1 RADIO BRACKET
NO. 2 RADIO BRACKET
w/ Navigation System:
x 5
x 2
x 5
x 2
NO. 1 RADIO BRACKET
NO. 2 RADIO BRACKET
RADIO AND DISPLAY RECEIVER ASSEMBLY
for Manual Air Conditioning System:
AIR CONDITIONING CONTROL ASSEMBLY
for Auto Air Conditioning System:
AIR CONDITIONING CONTROL ASSEMBLY
w/ Navigation System:
NAVIGATION WIRE
EXTENSION MODULE
P

Fig. 4: Identifying Radio Receiver Replacement Components (4 Of 4)
Courtesy of TOYOTA MOTOR SALES, U.S.A., INC.

REMOVAL

REMOVAL

1. **PRECAUTION (for Radio and Display Type with Intuitive Parking Assist System)**

NOTE:

- **After turning the ignition switch off, waiting time may be required before disconnecting the cable from the negative (-) battery terminal. Therefore, make sure to read the disconnecting the cable from the negative (-) battery terminal notices before proceeding with work. Refer to PRECAUTION .**
- **A Hard Disk Drive (HDD) is built into the radio and display receiver assembly to store multi-media data, and is used for the audio and visual system. Therefore, care must be taken when handling the radio and display receiver assembly.**
- **When removing the hard disc drive, eliminate static electricity by touching the vehicle body to prevent components from being damaged.**

2. **DISCONNECT CABLE FROM NEGATIVE BATTERY TERMINAL (for Radio and Display Type with Intuitive Parking Assist System)**

   NOTE: **When disconnecting the cable, some systems need to be initialized after the cable is reconnected. Refer to INITIALIZATION .**

3. **REMOVE REAR CONSOLE BOX ASSEMBLY**

   Refer to **REMOVAL** .

4. **REMOVE BOX BOTTOM MAT** . Refer to **REMOVAL - Step 25** .
5. **REMOVE UPPER CONSOLE PANEL SUB-ASSEMBLY** . Refer to **REMOVAL - Step 26** .
6. **REMOVE CENTER INSTRUMENT CLUSTER FINISH PANEL ASSEMBLY** . Refer to **REMOVAL - Step 23** .
7. **REMOVE NO. 2 INSTRUMENT PANEL REGISTER ASSEMBLY** . Refer to **REMOVAL - Step 24** .
8. **REMOVE RADIO RECEIVER ASSEMBLY WITH AIR CONDITIONING CONTROL ASSEMBLY (for Radio Receiver Type)**
   a. Apply protective tape to the area shown in the illustration.

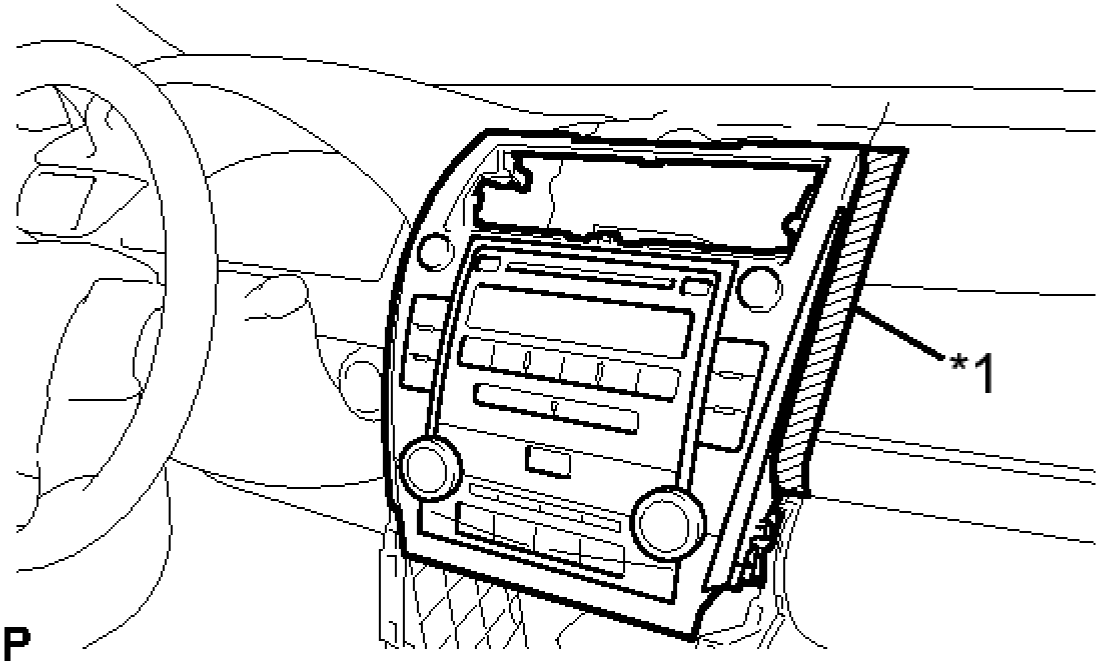

Fig. 5: Identifying Protective Tape Around Radio Receiver Assembly With Air Conditioning Control Assembly (For Radio Receiver Type)
Courtesy of TOYOTA MOTOR SALES, U.S.A., INC.

TEXT IN ILLUSTRATION

*1	Protective Tape

b. Remove the 4 bolts.

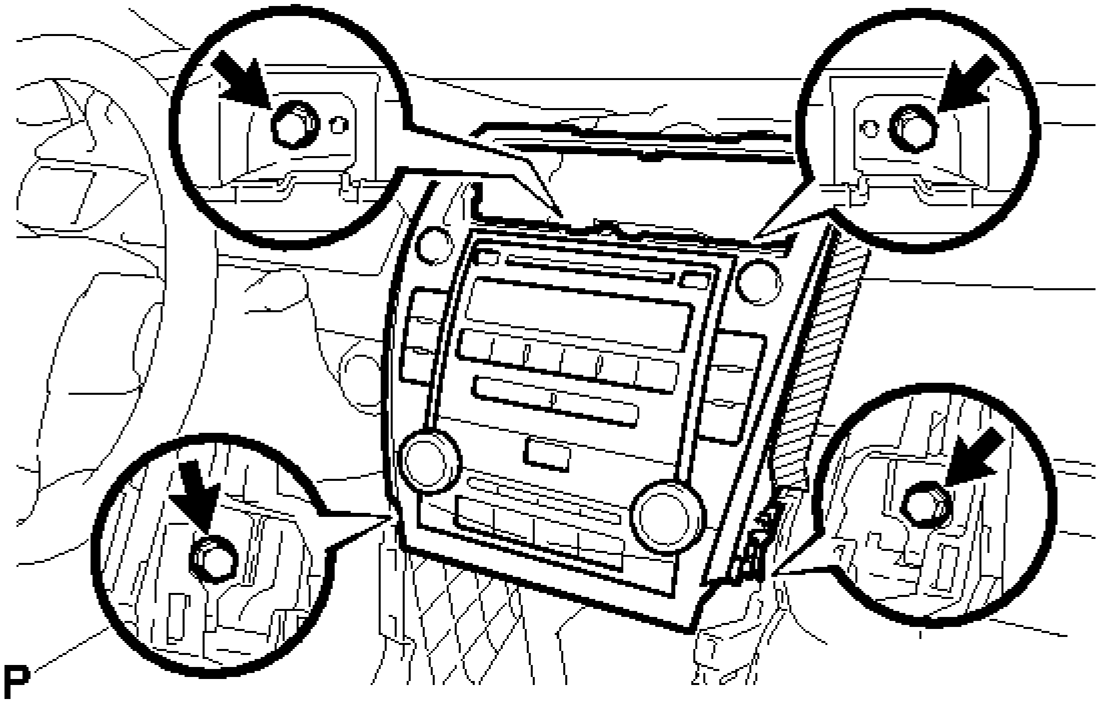

Fig. 6: Identifying Radio Receiver Assembly With Air Conditioning Control Assembly (For Radio Receiver Type) Bolts
Courtesy of TOYOTA MOTOR SALES, U.S.A., INC.

c. Pull the radio receiver assembly with air conditioning control assembly toward the rear of the vehicle and disengage the 8 clips.

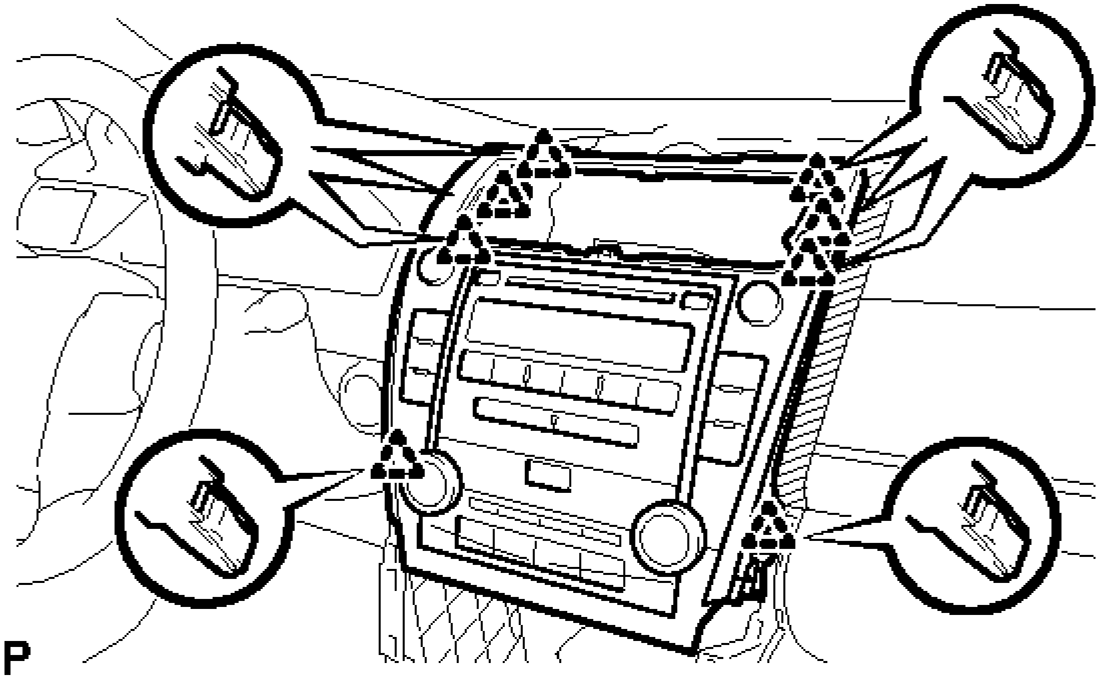

Fig. 7: Identifying Radio Receiver Assembly With Air Conditioning Control Assembly (For Radio Receiver Type) Clips
Courtesy of TOYOTA MOTOR SALES, U.S.A., INC.

d. Disconnect each connector and remove the radio receiver assembly with air conditioning control assembly.

9. **REMOVE RADIO RECEIVER ASSEMBLY WITH AIR CONDITIONING CONTROL ASSEMBLY (for Radio and Display Type)**

   a. Apply protective tape to the area shown in the illustration.

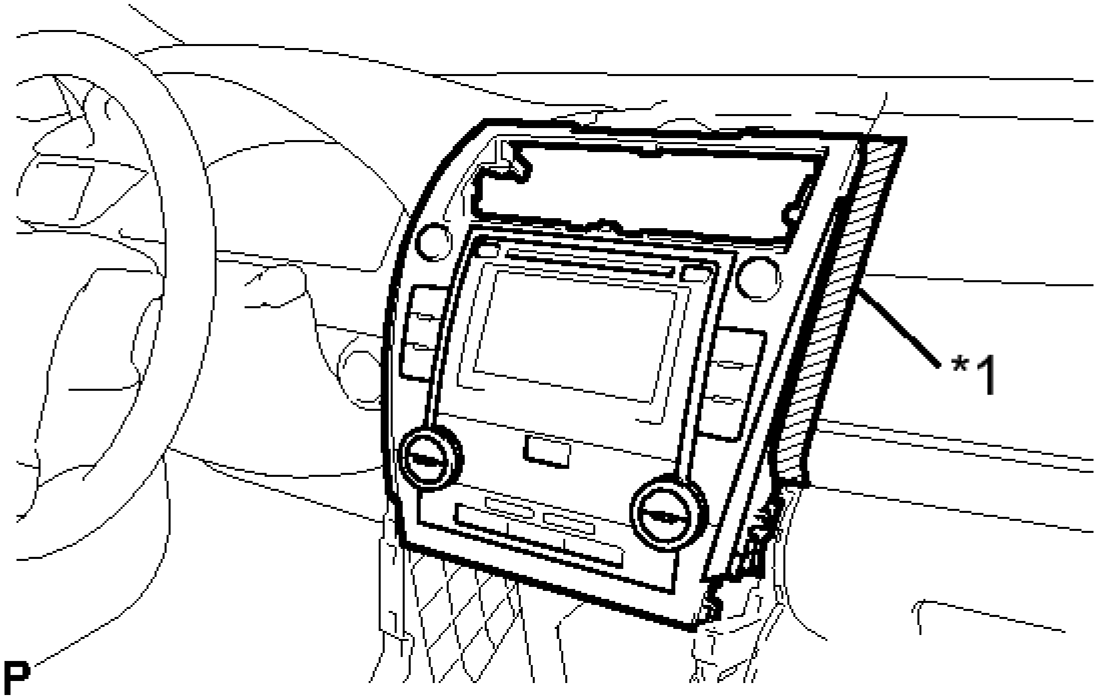

Fig. 8: Identifying Protective Tape Around Radio Receiver Assembly With Air Conditioning Control Assembly (For Radio And Display Type)
Courtesy of TOYOTA MOTOR SALES, U.S.A., INC.

TEXT IN ILLUSTRATION

*1	Protective Tape

b. Remove the 4 bolts.

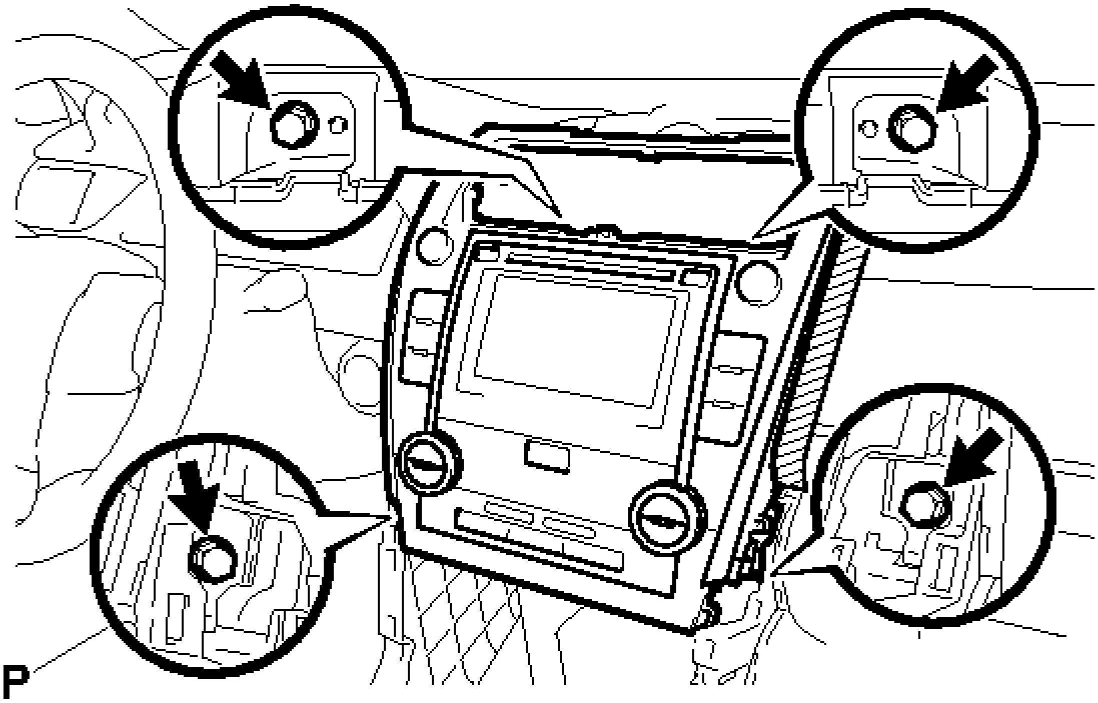

Fig. 9: Identifying Radio Receiver Assembly With Air Conditioning Control Assembly (For Radio And Display Type) Bolts
Courtesy of TOYOTA MOTOR SALES, U.S.A., INC.

c. Pull the radio receiver assembly with air conditioning control assembly toward the rear of the vehicle and disengage the 8 clips.

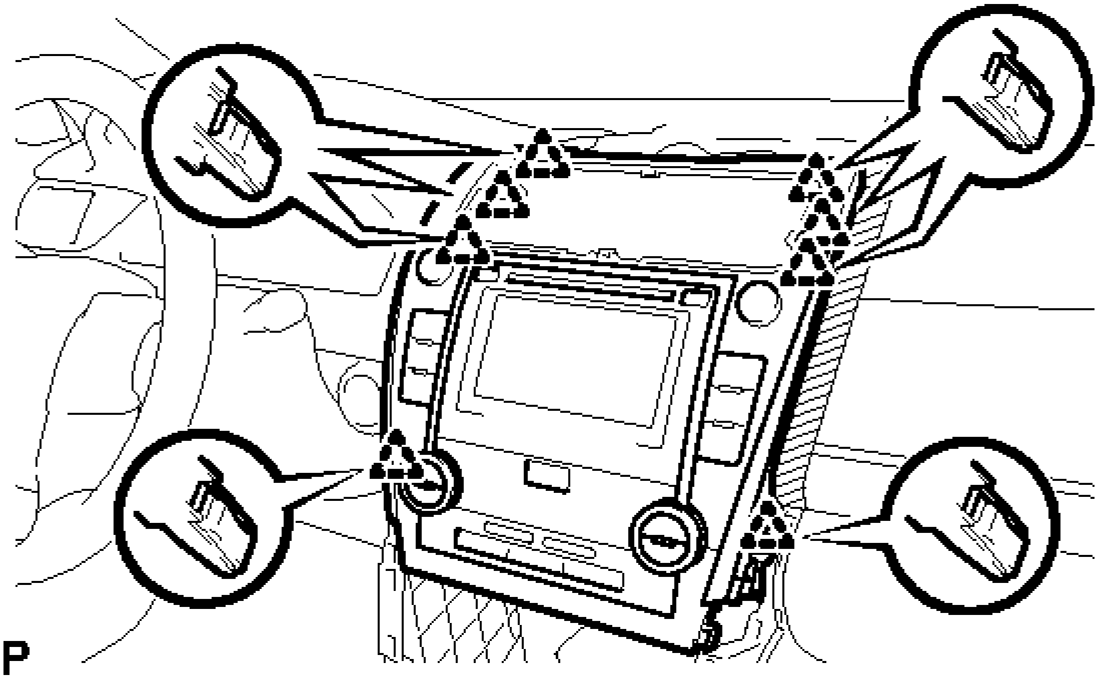

Fig. 10: Identifying Radio Receiver Assembly With Air Conditioning Control Assembly (For Radio And Display Type) Clips
Courtesy of TOYOTA MOTOR SALES, U.S.A., INC.

d. Disconnect each connector and remove the radio receiver assembly with air conditioning control assembly.

HINT:

w/ Navigation System:

Do not disconnect the extension module connector.

10. **REMOVE NO. 1 RADIO BRACKET (for Radio Receiver Type)**
    a. Remove the 5 screws and No. 1 radio bracket.

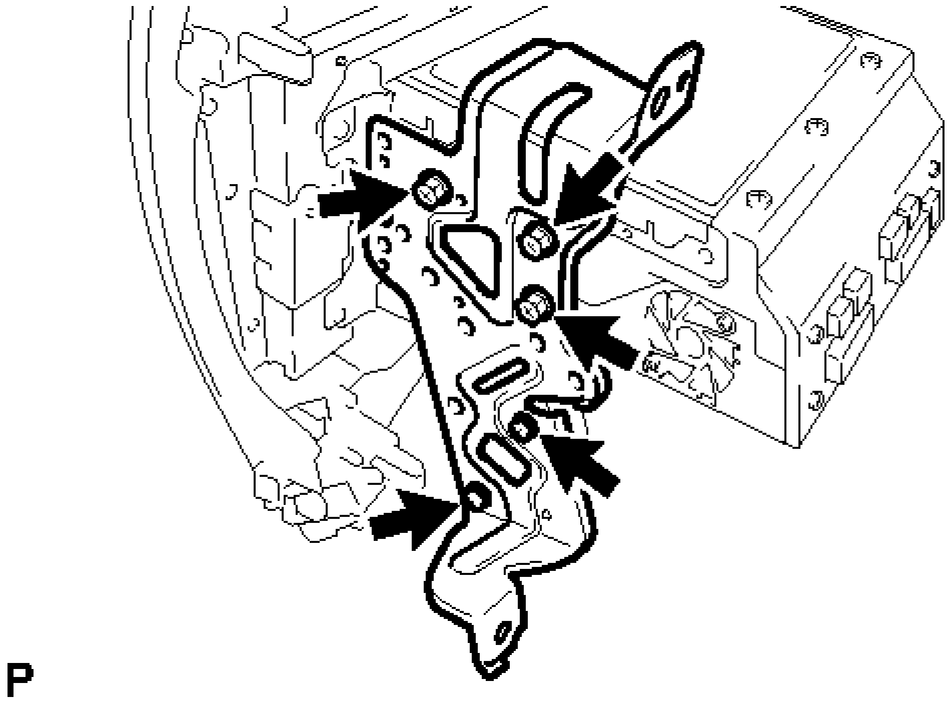

Fig. 11: Locating No. 1 Radio Bracket Fasteners (For Radio Receiver Type)
Courtesy of TOYOTA MOTOR SALES, U.S.A., INC.

11. **REMOVE NO. 2 RADIO BRACKET (for Radio Receiver Type)**
    a. Remove the 5 screws and No. 2 radio bracket.

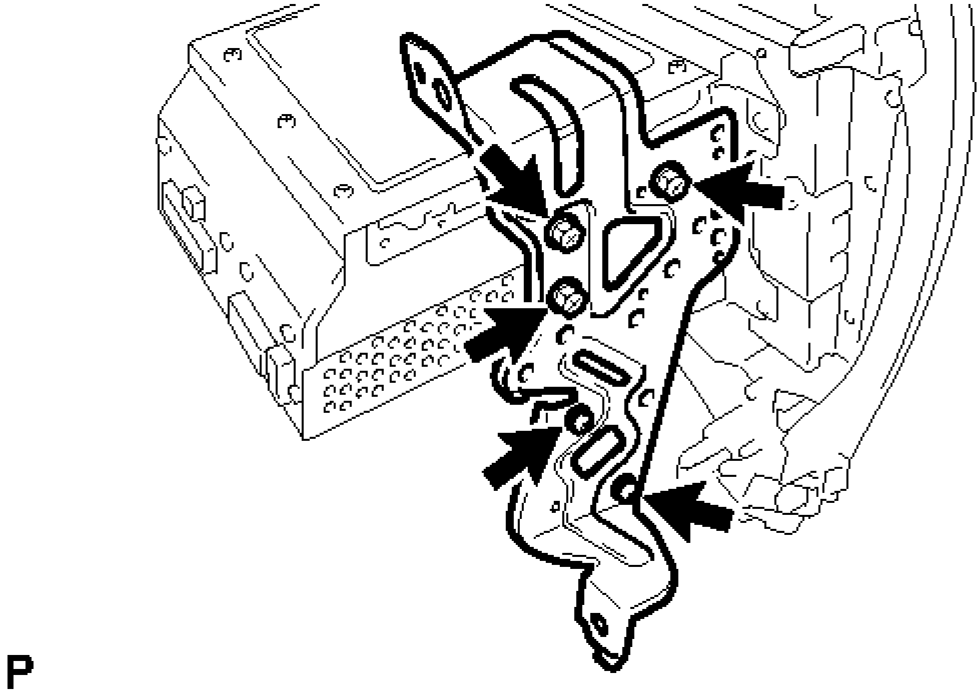

Fig. 12: Locating No. 2 Radio Bracket Fasteners (For Radio Receiver Type)
Courtesy of TOYOTA MOTOR SALES, U.S.A., INC.

12. **REMOVE NO. 1 RADIO BRACKET (for Radio and Display Type)**
    a. w/o Navigation System:
        1. Remove the 5 screws and No. 1 radio bracket.

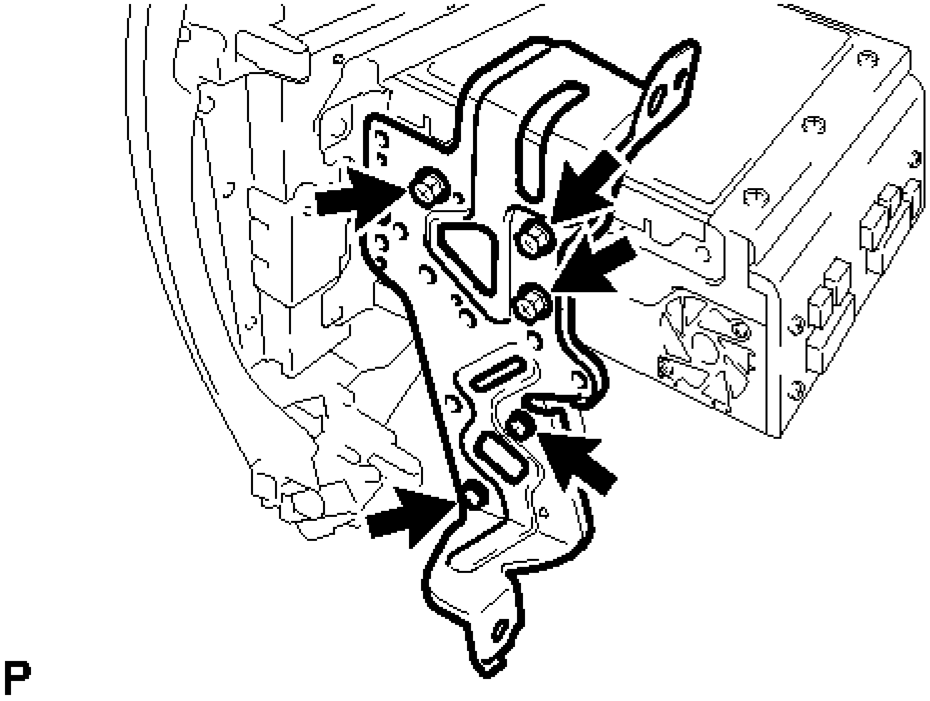

Fig. 13: Locating No. 1 Radio Bracket Fasteners (For Radio And Display Type) (w/o Navigation System)
Courtesy of TOYOTA MOTOR SALES, U.S.A., INC.

b. w/ Navigation System:
    1. Remove the 7 screws and No. 1 radio bracket.

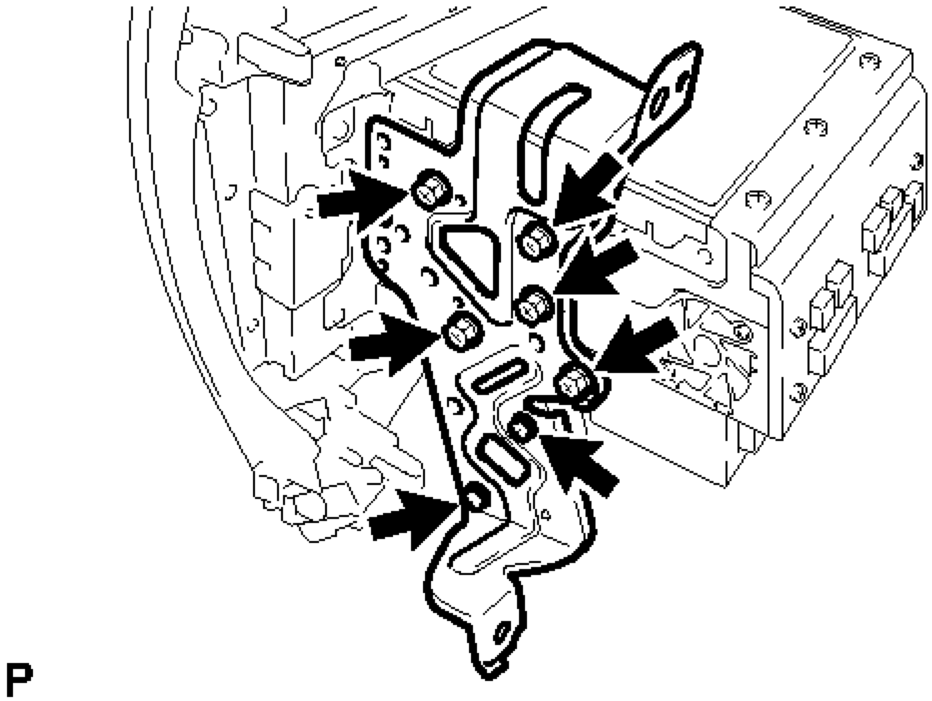

Fig. 14: Locating No. 1 Radio Bracket Fasteners (For Radio And Display Type) (w/ Navigation System)
Courtesy of TOYOTA MOTOR SALES, U.S.A., INC.

13. **REMOVE NO. 2 RADIO BRACKET (for Radio and Display Type)**
    a. w/o Navigation System:
        1. Remove the 5 screws and No. 2 radio bracket.

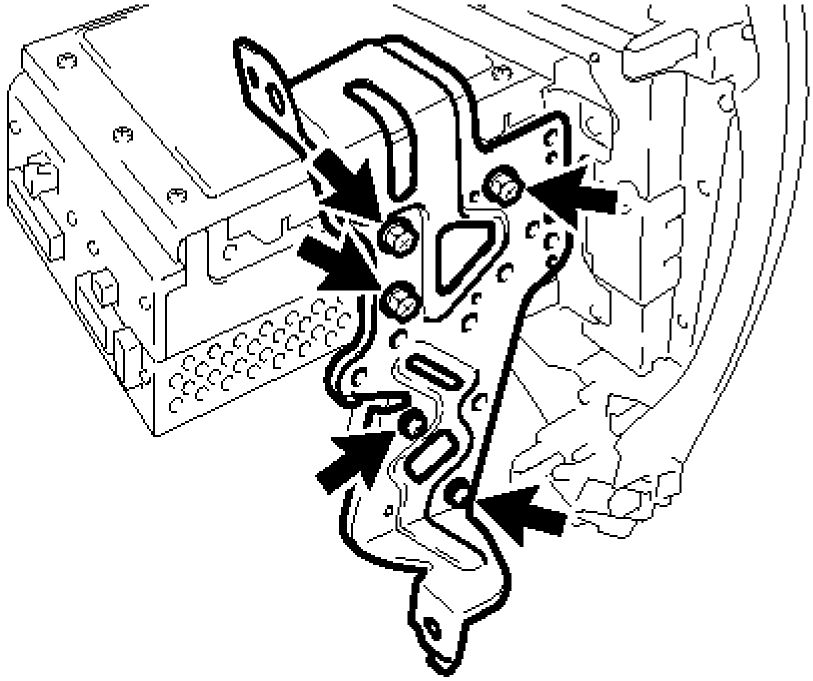

Fig. 15: Locating No. 2 Radio Bracket Fasteners (For Radio And Display Type) (w/o Navigation System)
Courtesy of TOYOTA MOTOR SALES, U.S.A., INC.

b. w/ Navigation System:
   1. Remove the 7 screws and No. 2 radio bracket.

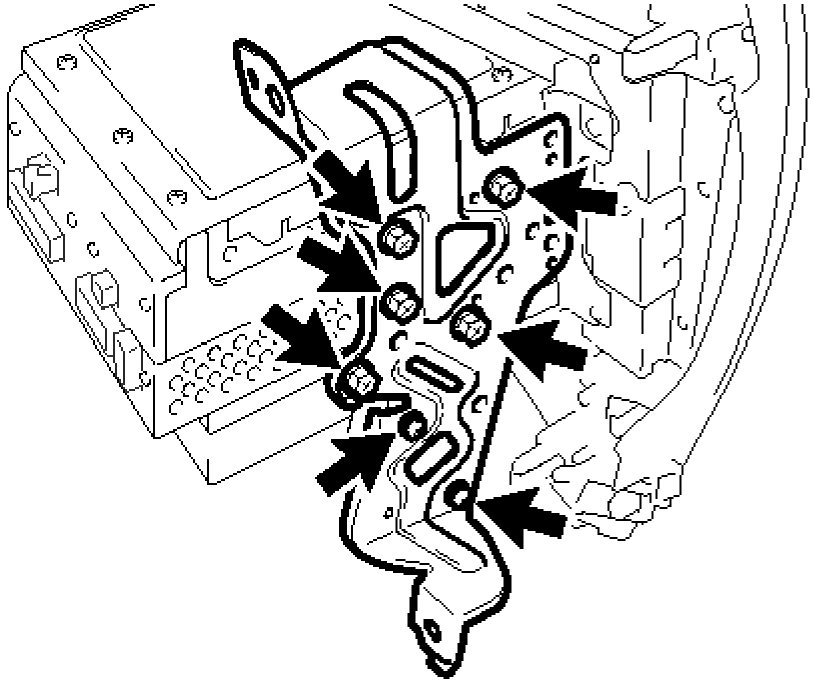

Fig. 16: Locating No. 2 Radio Bracket Fasteners (For Radio And Display Type) (w/ Navigation System)
Courtesy of TOYOTA MOTOR SALES, U.S.A., INC.

14. **REMOVE NO. 1 RADIO RECEIVER BRACKET (for Radio and Display Type with Intuitive Parking Assist System)**
    1. Remove the 5 screws and No. 1 radio receiver bracket.

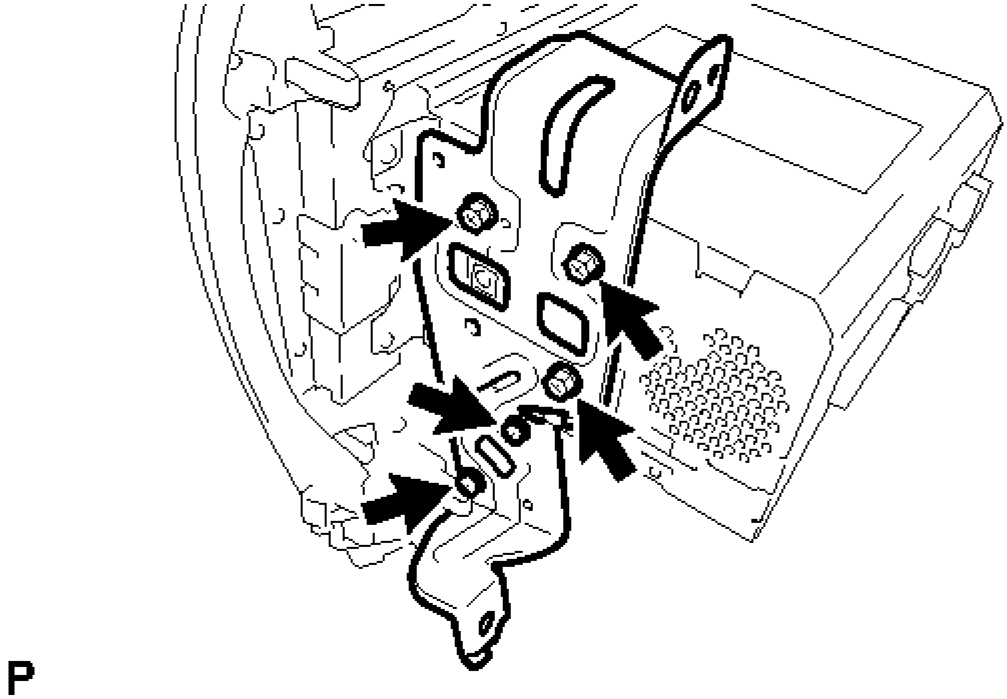

Fig. 17: Locating No. 1 Radio Receiver Bracket Fasteners (For Radio And Display Type With Intuitive Parking Assist System)
Courtesy of TOYOTA MOTOR SALES, U.S.A., INC.

15. **REMOVE NO. 2 RADIO RECEIVER BRACKET (for Radio and Display Type with Intuitive Parking Assist System)**
    1. Remove the 5 screws and No. 2 radio receiver bracket.

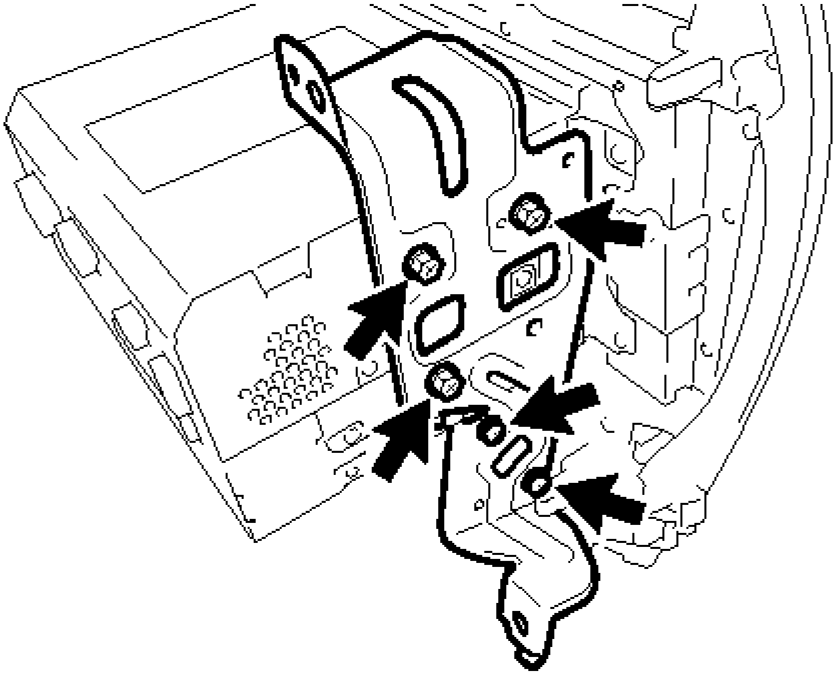

Fig. 18: Locating No. 2 Radio Receiver Bracket Fasteners (For Radio And Display Type With Intuitive Parking Assist System)
Courtesy of TOYOTA MOTOR SALES, U.S.A., INC.

16. **REMOVE AIR CONDITIONING CONTROL ASSEMBLY** . Refer to **REMOVAL - Step 20** .
17. **REMOVE EXTENSION MODULE (for Radio and Display Type)**

    w/ Navigation System: Refer to **REMOVAL - Step 10** .

18. **REMOVE RADIO RECEIVER ASSEMBLY (for Radio Receiver Type)**
19. **REMOVE RADIO AND DISPLAY RECEIVER ASSEMBLY (for Radio and Display Type)**
20. **REMOVE HARD DISK DRIVE (for Radio and Display Type with Intuitive Parking Assist System)** . Refer to **REMOVAL - Step 12** .
21. **REMOVE NAVIGATION ECU SUB-ASSEMBLY (for Radio and Display Type with Intuitive Parking Assist System)**

INSTALLATION

INSTALLATION

1. **PRECAUTION (for Radio and Display Type with Intuitive Parking Assist System)**

    NOTE: **When installing the hard disc drive, eliminate static electricity by touching the vehicle body to prevent components from being damaged.**

2. **INSTALL RADIO RECEIVER ASSEMBLY (for Radio Receiver Type)**

3. **INSTALL RADIO AND DISPLAY RECEIVER ASSEMBLY (for Radio and Display Type)**
4. **INSTALL NAVIGATION ECU SUB-ASSEMBLY (for Radio and Display Type with Intuitive Parking Assist System)**
5. **INSTALL HARD DISK DRIVE (for Radio and Display Type with Intuitive Parking Assist System)** . Refer to **INSTALLATION - Step 2** .
6. **INSTALL EXTENSION MODULE (for Radio and Display Type)**

   w/ Navigation System: Refer to **INSTALLATION** .

7. **INSTALL AIR CONDITIONING CONTROL ASSEMBLY** . Refer to **INSTALLATION - Step 1** .
8. **INSTALL NO. 1 RADIO BRACKET (for Radio Receiver Type)**
   a. Install the No. 1 radio bracket with the 5 screws.
9. **INSTALL NO. 2 RADIO BRACKET (for Radio Receiver Type)**
   a. Install the No. 2 radio bracket with the 5 screws.
10. **INSTALL NO. 1 RADIO BRACKET (for Radio and Display Type)**
    a. w/o Navigation System:
       1. Install the No. 1 radio bracket with the 5 screws.
    b. w/ Navigation System:
       1. Install the No. 1 radio bracket with the 7 screws.
11. **INSTALL NO. 2 RADIO BRACKET (for Radio and Display Type)**
    a. w/o Navigation System:
       1. Install the No. 2 radio bracket with the 5 screws.
    b. w/ Navigation System:
       1. Install the No. 2 radio bracket with the 7 screws.
12. **INSTALL NO. 1 RADIO RECEIVER BRACKET (for Radio and Display Type with Intuitive Parking Assist System)**
    a. Install the No. 1 radio receiver bracket with the 5 screws.
13. **INSTALL NO. 2 RADIO RECEIVER BRACKET (for Radio and Display Type with Intuitive Parking Assist System)**
    a. Install the No. 2 radio receiver bracket with the 5 screws.
14. **INSTALL RADIO RECEIVER ASSEMBLY WITH AIR CONDITIONING CONTROL ASSEMBLY (for Radio Receiver Type)**
    a. Connect each connector.
    b. Engage the 8 clips to the vehicle body to temporarily install the radio receiver assembly with air conditioning control assembly.
    c. Install the radio receiver assembly with air conditioning control assembly with the 4 bolts.
15. **INSTALL RADIO RECEIVER ASSEMBLY WITH AIR CONDITIONING CONTROL ASSEMBLY (for Radio and Display Type)**
    a. Connect each connector.
    b. Engage the 8 clips to the vehicle body to temporarily install the radio receiver assembly with air

conditioning control assembly.

c. Install the radio receiver assembly with air conditioning control assembly with the 4 bolts.

16. **INSTALL NO. 2 INSTRUMENT PANEL REGISTER ASSEMBLY** . Refer to **INSTALLATION - Step 29** .
17. **INSTALL CENTER INSTRUMENT CLUSTER FINISH PANEL ASSEMBLY** . Refer to **INSTALLATION - Step 30** .
18. **INSTALL UPPER CONSOLE PANEL SUB-ASSEMBLY** . Refer to **INSTALLATION - Step 27** .
19. **INSTALL BOX BOTTOM MAT** . Refer to **INSTALLATION - Step 28** .
20. **INSTALL REAR CONSOLE BOX ASSEMBLY**

    Refer to **INSTALLATION** .

21. **CONNECT CABLE TO NEGATIVE BATTERY TERMINAL (for Radio and Display Type with Intuitive Parking Assist System)**

    NOTE: When disconnecting the cable, some systems need to be initialized after the cable is reconnected. Refer to INITIALIZATION .

22. **INSPECT HARD DISK DRIVE (for Radio and Display Type with Intuitive Parking Assist System)**

    Refer to **OPERATION CHECK** .

23. **REPLACED OPERATION (w/ Parking Assist Monitor System)**

    Refer to **CALIBRATION** .

STEREO COMPONENT AMPLIFIER

COMPONENTS

ILLUSTRATION

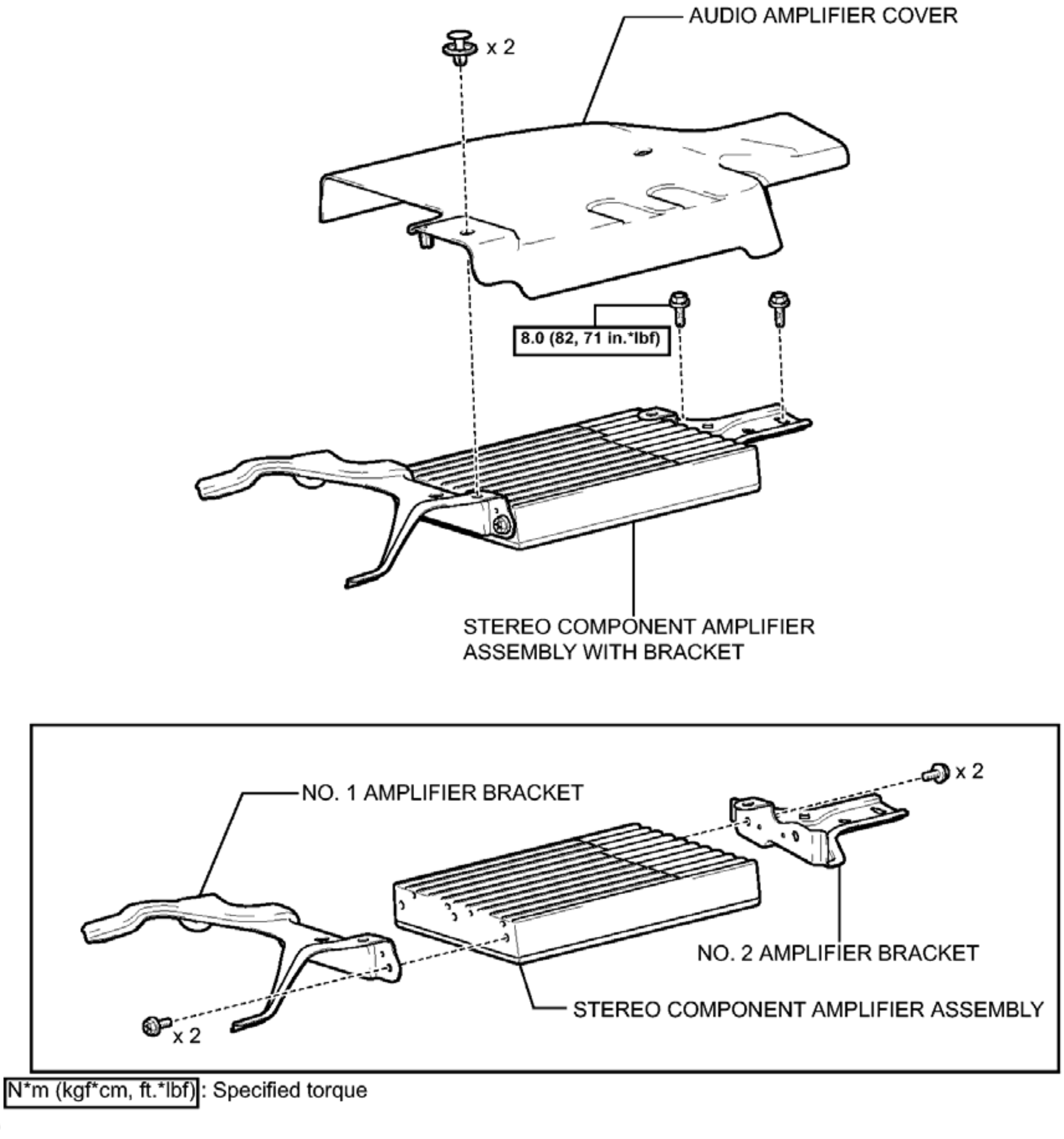
AUDIO AMPLIFIER COVER
x 2
8.0 (82, 71 in.*lbf)
STEREO COMPONENT AMPLIFIER ASSEMBLY WITH BRACKET
NO. 1 AMPLIFIER BRACKET
x 2
NO. 2 AMPLIFIER BRACKET
STEREO COMPONENT AMPLIFIER ASSEMBLY
x 2
N*m (kgf*cm, ft.*lbf) : Specified torque
P

Fig. 19: Identifying Stereo Component Amplifier Replacement Components With Torque Specifications
Courtesy of TOYOTA MOTOR SALES, U.S.A., INC.

REMOVAL

REMOVAL

1. **REMOVE FRONT SEAT ASSEMBLY LH**

   Refer to **REMOVAL** .

2. **REMOVE AUDIO AMPLIFIER COVER**
   a. Using a clip remover, remove the 2 clips and audio amplifier cover.

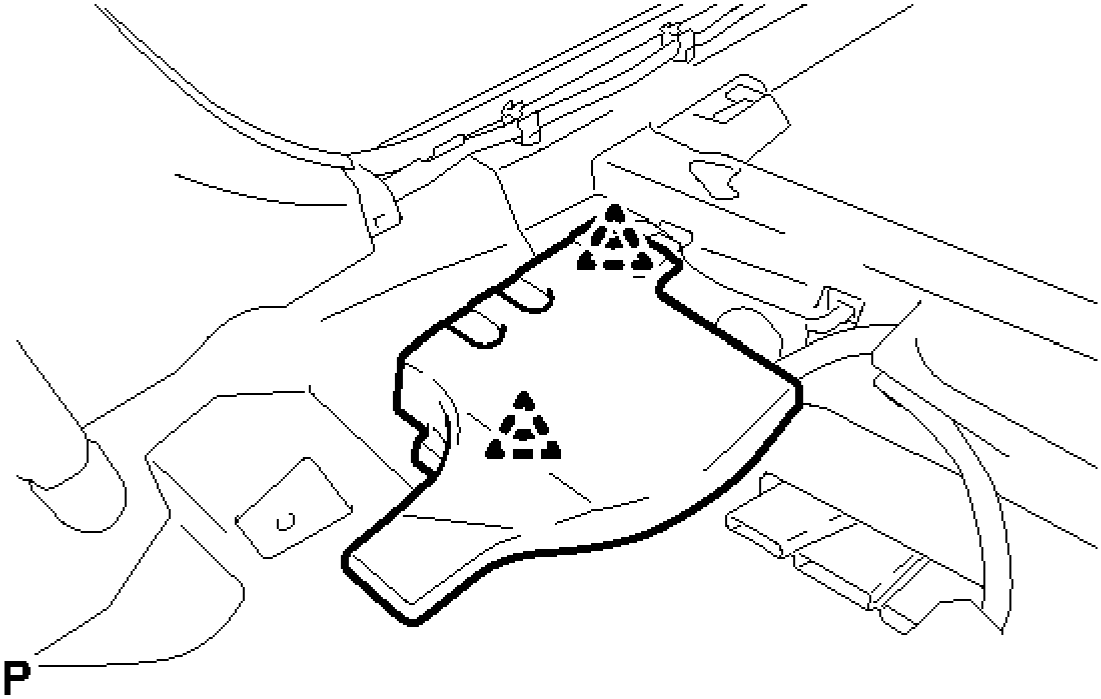

Fig. 20: Locating Audio Amplifier Cover Clips
Courtesy of TOYOTA MOTOR SALES, U.S.A., INC.

3. **REMOVE STEREO COMPONENT AMPLIFIER ASSEMBLY WITH BRACKET**
   a. Remove the bolt and disconnect the ground wire.

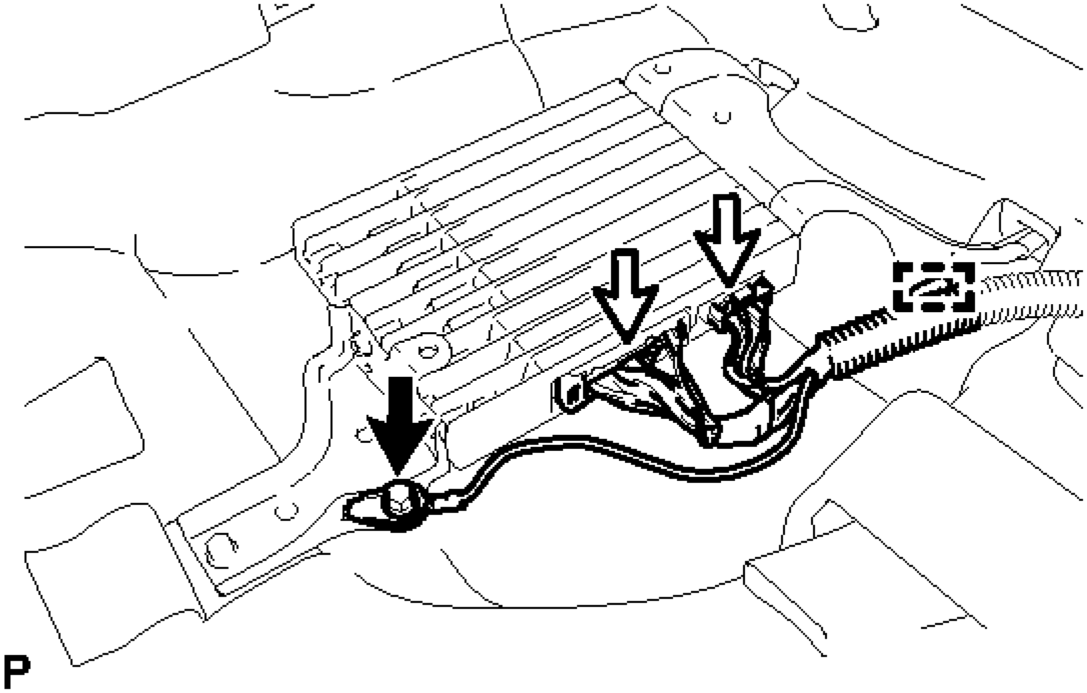

Fig. 21: Locating Stereo Component Amplifier Assembly With Bracket, Ground Wire Bolt

And Connectors
Courtesy of TOYOTA MOTOR SALES, U.S.A., INC.

b. Disconnect each connector.
c. Disengage the clamp.
d. Remove the bolt.

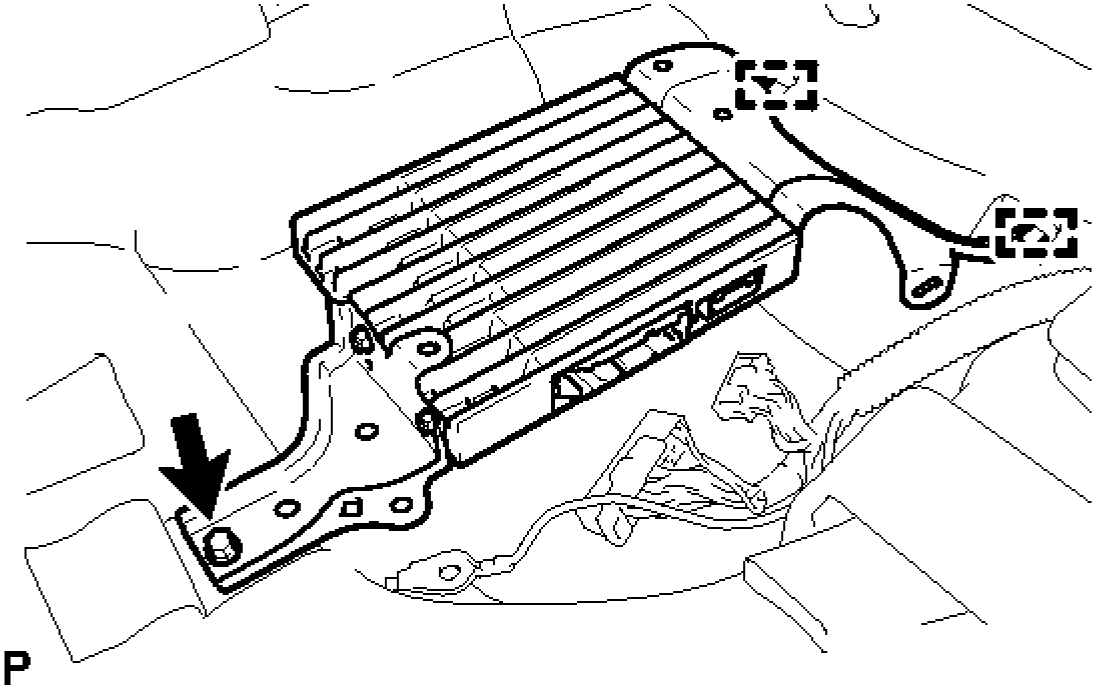

Fig. 22: Locating Stereo Component Amplifier Assembly With Bracket Bolt And Clamps
Courtesy of TOYOTA MOTOR SALES, U.S.A., INC.

e. Disengage the 2 guides and remove the stereo component amplifier assembly with bracket.

4. **REMOVE NO. 2 AMPLIFIER BRACKET**
    a. Remove the 2 screws and No. 2 amplifier bracket.

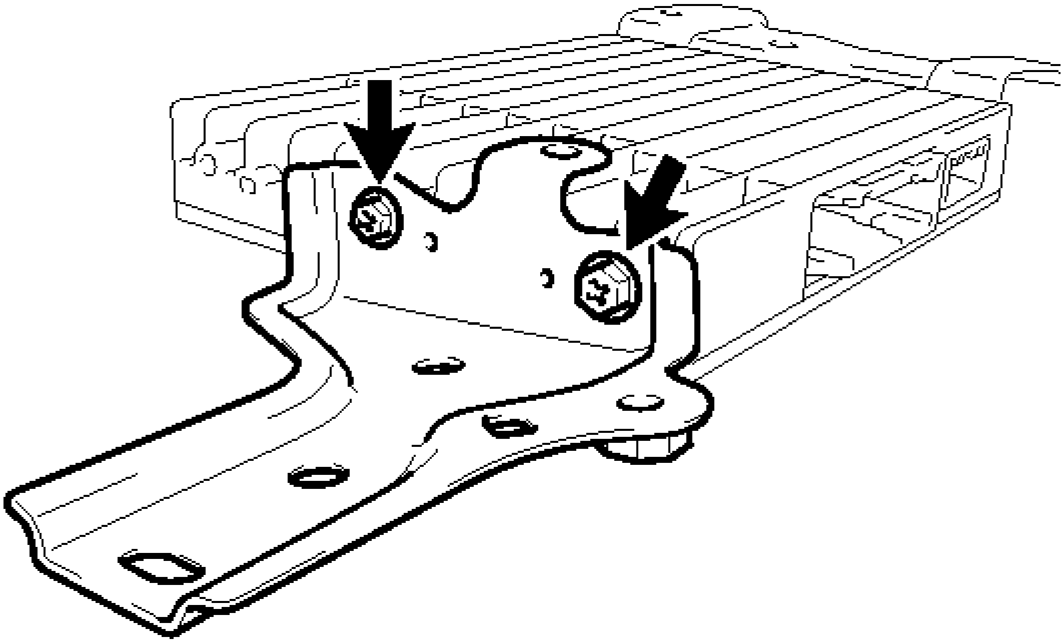

Fig. 23: Locating No. 2 Amplifier Bracket Fasteners
Courtesy of TOYOTA MOTOR SALES, U.S.A., INC.

5. **REMOVE NO. 1 AMPLIFIER BRACKET**
    a. Remove the 2 screws and No. 1 amplifier bracket.

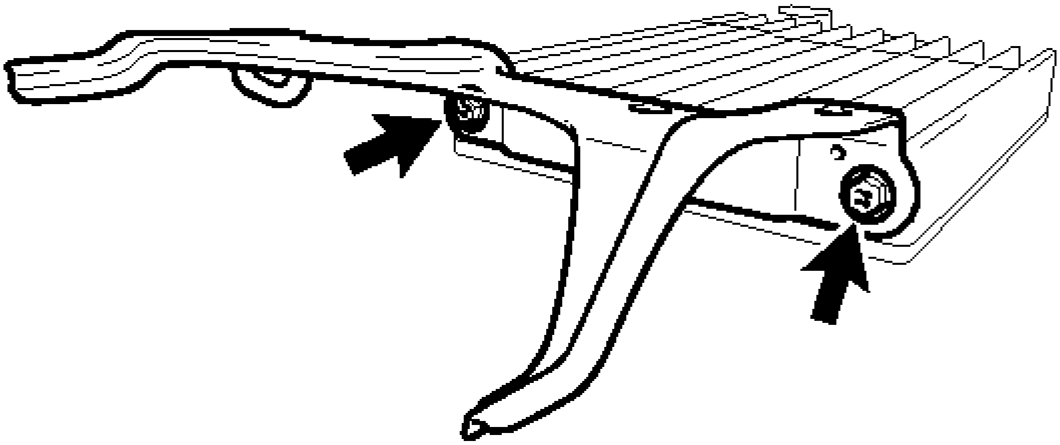

Fig. 24: Locating No. 1 Amplifier Bracket Fasteners

Courtesy of TOYOTA MOTOR SALES, U.S.A., INC.

6. **REMOVE STEREO COMPONENT AMPLIFIER ASSEMBLY**

INSTALLATION

INSTALLATION

1. **INSTALL STEREO COMPONENT AMPLIFIER ASSEMBLY**
2. **INSTALL NO. 1 AMPLIFIER BRACKET**
    a. Install the No. 1 amplifier bracket with the 2 screws.
3. **INSTALL NO. 2 AMPLIFIER BRACKET**
    a. Install the No. 2 amplifier bracket with the 2 screws.
4. **INSTALL STEREO COMPONENT AMPLIFIER ASSEMBLY WITH BRACKET**
    a. Engage the 2 guides to the vehicle body to temporarily install the stereo component amplifier assembly with bracket.
    b. Install the stereo component amplifier assembly with bracket with the bolt.
    c. Engage the clamp.
    d. Connect each connector.
    e. Connect the ground wire with the bolt.

    Torque: 8.0 N*m (82 kgf*cm, 71 in.*lbf)

5. **INSTALL AUDIO AMPLIFIER COVER**
    a. Install the audio amplifier cover with the 2 clips.
6. **INSTALL FRONT SEAT ASSEMBLY LH**

    Refer to **INSTALLATION** .

FRONT DOOR SPEAKER

COMPONENTS

ILLUSTRATION

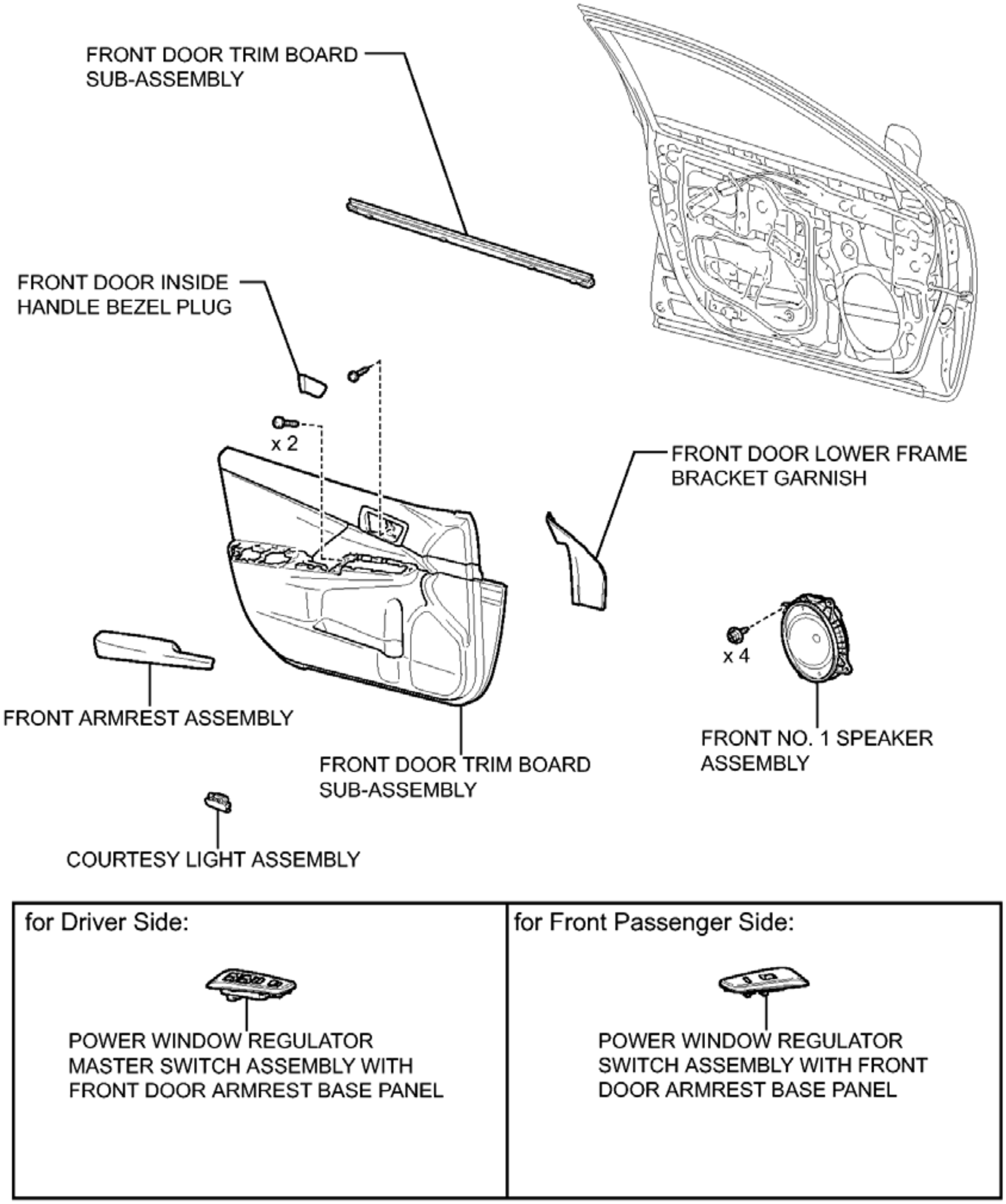
FRONT DOOR TRIM BOARD SUB-ASSEMBLY
FRONT DOOR INSIDE HANDLE BEZEL PLUG
x 2
FRONT DOOR LOWER FRAME BRACKET GARNISH
x 4
FRONT ARMREST ASSEMBLY
FRONT DOOR TRIM BOARD SUB-ASSEMBLY
FRONT NO. 1 SPEAKER ASSEMBLY
COURTESY LIGHT ASSEMBLY
for Driver Side:
POWER WINDOW REGULATOR MASTER SWITCH ASSEMBLY WITH FRONT DOOR ARMREST BASE PANEL
for Front Passenger Side:
POWER WINDOW REGULATOR SWITCH ASSEMBLY WITH FRONT DOOR ARMREST BASE PANEL
P

Fig. 25: Identifying Front Door Speaker Replacement Components
Courtesy of TOYOTA MOTOR SALES, U.S.A., INC.

REMOVAL

REMOVAL

1. **REMOVE FRONT DOOR INSIDE HANDLE BEZEL PLUG** . Refer to **DISASSEMBLY - Step 3** .

2. **REMOVE FRONT DOOR LOWER FRAME BRACKET GARNISH** . Refer to **DISASSEMBLY - Step 4** .
3. **REMOVE POWER WINDOW REGULATOR MASTER SWITCH ASSEMBLY WITH FRONT DOOR ARMREST BASE PANEL (for Driver Side)** . Refer to **DISASSEMBLY - Step 5** .
4. **REMOVE POWER WINDOW REGULATOR SWITCH ASSEMBLY WITH FRONT DOOR ARMREST BASE PANEL (for Front Passenger Side)** . Refer to **DISASSEMBLY - Step 6** .
5. **REMOVE FRONT ARMREST ASSEMBLY** . Refer to **DISASSEMBLY - Step 7** .
6. **REMOVE COURTESY LIGHT ASSEMBLY** . Refer to **REMOVAL - Step 1** .
7. **REMOVE FRONT DOOR TRIM BOARD SUB-ASSEMBLY** . Refer to **DISASSEMBLY - Step 9** .
8. **REMOVE FRONT DOOR INNER GLASS WEATHERSTRIP** . Refer to **DISASSEMBLY - Step 11** .
9. **REMOVE FRONT NO. 1 SPEAKER ASSEMBLY**
    a. Disconnect the connector.

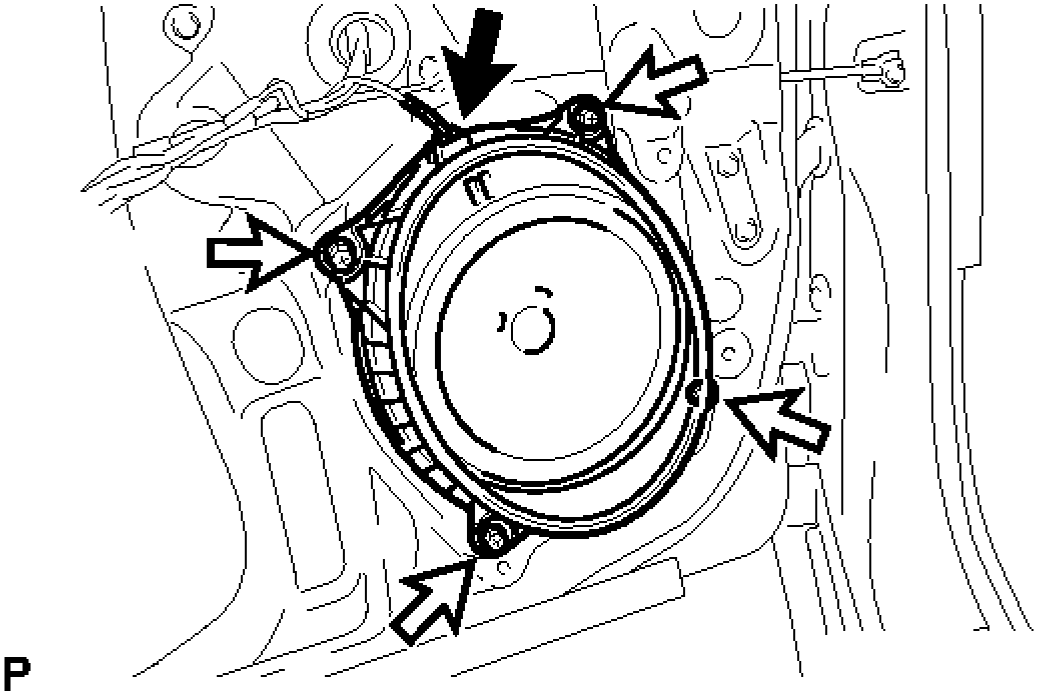

Fig. 26: Locating Front No. 1 Speaker Assembly Fasteners And Connector
Courtesy of TOYOTA MOTOR SALES, U.S.A., INC.

    b. Remove the 4 screws.
    c. Disengage the 2 claws and remove the front No. 1 speaker assembly.

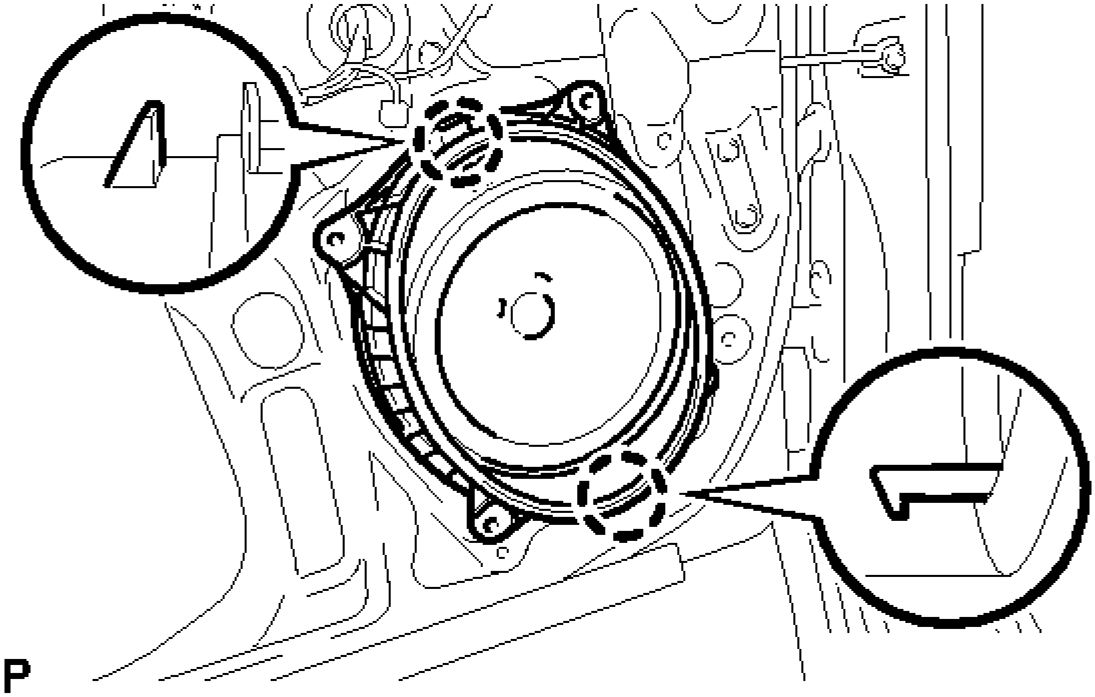

Fig. 27: Locating Front No. 1 Speaker Assembly Claws
Courtesy of TOYOTA MOTOR SALES, U.S.A., INC.

NOTE: Do not touch the speaker cone.

INSPECTION

INSPECTION

1. **INSPECT FRONT NO. 1 SPEAKER ASSEMBLY (for 6 Speakers)**
    1. With the speaker installed, check that there is no looseness or other abnormalities.
    2. Check that there is no foreign matter in the speaker, no tears on the speaker cone or other abnormalities.
    3. Measure the resistance of the speaker.

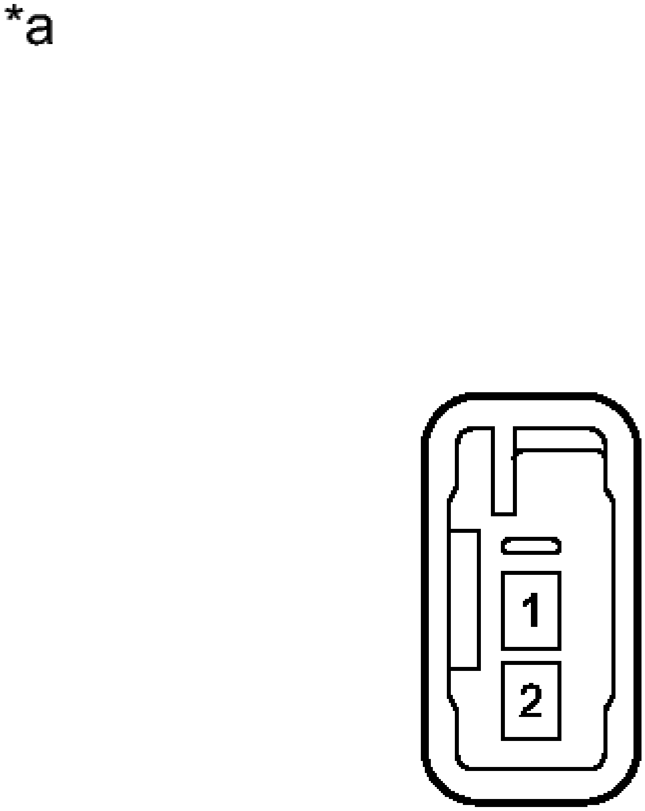

Fig. 28: Identifying Speaker Connector
Courtesy of TOYOTA MOTOR SALES, U.S.A., INC.

Standard Resistance

Tester Connection	Condition	Specified Condition
1 - 2	Always	3.2 to 4.8 ohms

If the result is not as specified, replace the speaker.

TEXT IN ILLUSTRATION

	Component without

*a	harness connected (Front No. 1 Speaker Assembly)

2. **INSPECT FRONT NO. 1 SPEAKER ASSEMBLY (for 10 Speakers)**
    1. With the speaker installed, check that there is no looseness or other abnormalities.
    2. Check that there is no foreign matter in the speaker, no tears on the speaker cone or other abnormalities.
    3. Measure the resistance of the speaker.

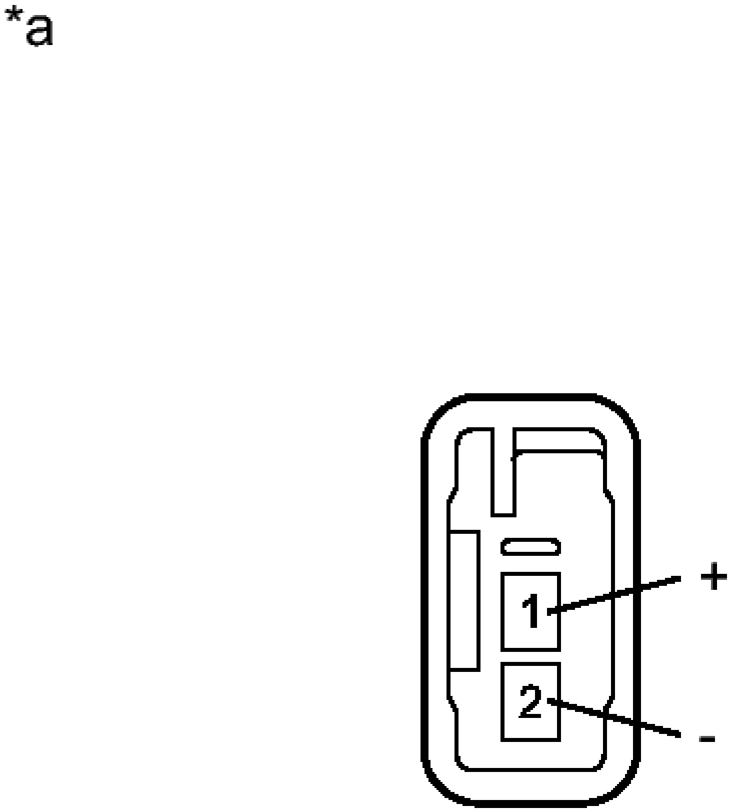

Fig. 29: Inspecting Speaker Connector
Courtesy of TOYOTA MOTOR SALES, U.S.A., INC.

Standard Resistance

Tester Connection	Condition	Specified Condition
1 (+) - 2 (-)	Always	4.6 to 6.6 ohms

If the result is not as specified, replace the speaker.

TEXT IN ILLUSTRATION

*a	Component without harness connected (Front No. 1 Speaker Assembly)

INSTALLATION

INSTALLATION

1. **INSTALL FRONT NO. 1 SPEAKER ASSEMBLY**
    a. Engage the 2 claws to the vehicle body to temporarily install the front No. 1 speaker assembly.
    b. Install the front No. 1 speaker assembly with the 4 screws.

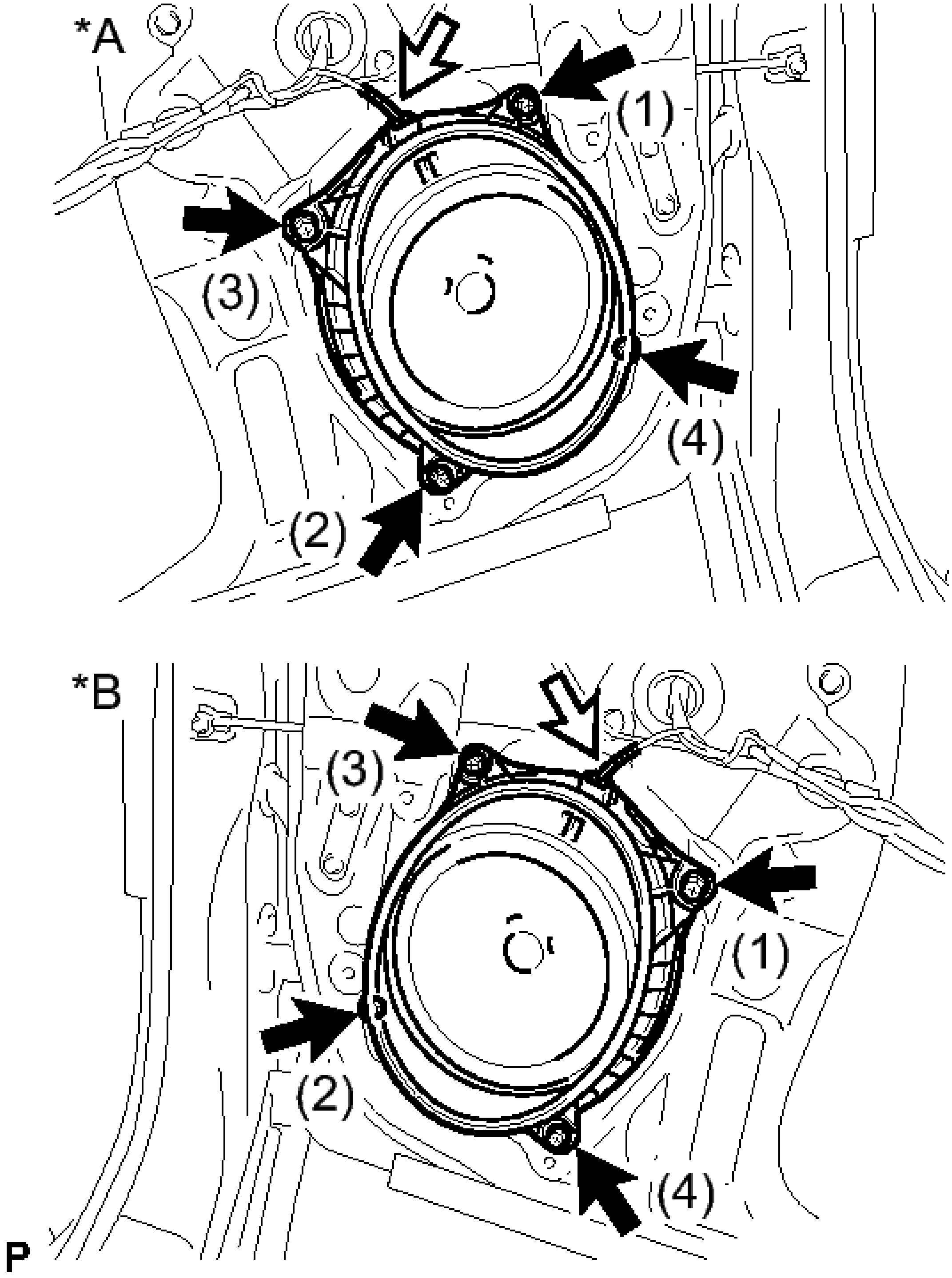
*A
(1)
(3)
(4)
(2)
*B
(3)
(1)
(2)
(4)
P

Fig. 30: Locating Front No. 1 Speaker Assembly Fasteners And Connector
Courtesy of TOYOTA MOTOR SALES, U.S.A., INC.

*A	LH Side

*B	RH Side

NOTE: **Do not touch the speaker cone.**

HINT:

Install the screws in the order shown in the illustration.

c. Connect the connector.

2. **INSTALL FRONT DOOR INNER GLASS WEATHERSTRIP** . Refer to **REASSEMBLY - Step 38** .
3. **INSTALL FRONT DOOR TRIM BOARD SUB-ASSEMBLY** . Refer to **REASSEMBLY - Step 40** .
4. **INSTALL COURTESY LIGHT ASSEMBLY** . Refer to **INSTALLATION - Step 1** .
5. **INSTALL FRONT ARMREST ASSEMBLY** . Refer to **REASSEMBLY - Step 42** .
6. **INSTALL POWER WINDOW REGULATOR MASTER SWITCH ASSEMBLY WITH FRONT DOOR ARMREST BASE PANEL (for Driver Side)** . Refer to **REASSEMBLY - Step 43** .
7. **INSTALL POWER WINDOW REGULATOR SWITCH ASSEMBLY WITH FRONT DOOR ARMREST BASE PANEL (for Front Passenger Side)** . Refer to **REASSEMBLY - Step 44** .
8. **INSTALL FRONT DOOR LOWER FRAME BRACKET GARNISH** . Refer to **REASSEMBLY - Step 45** .
9. **INSTALL FRONT DOOR INSIDE HANDLE BEZEL PLUG** . Refer to **REASSEMBLY - Step 46** .

INSTRUMENT PANEL SPEAKER

COMPONENTS

ILLUSTRATION

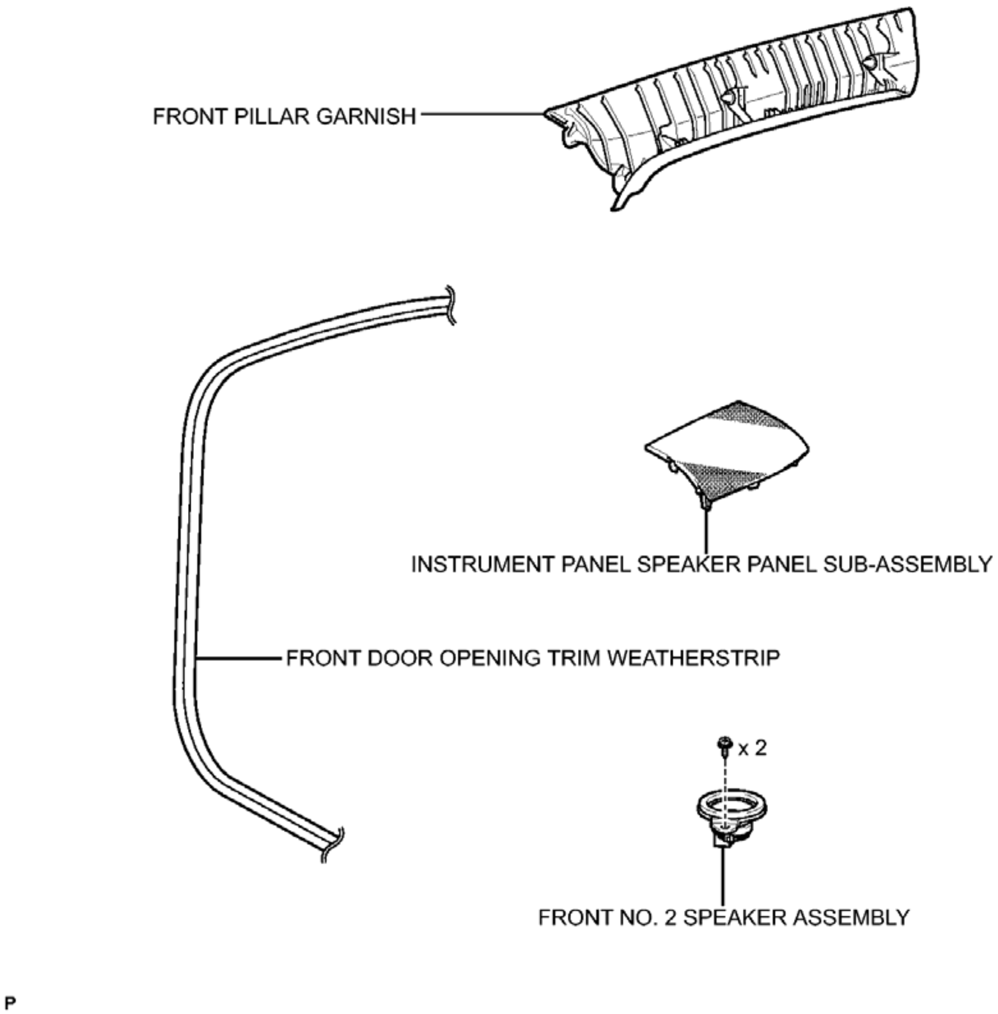
FRONT PILLAR GARNISH
INSTRUMENT PANEL SPEAKER PANEL SUB-ASSEMBLY
FRONT DOOR OPENING TRIM WEATHERSTRIP
x 2
FRONT NO. 2 SPEAKER ASSEMBLY
P

Fig. 31: Identifying Instrument Panel Speaker Replacement Components (1 Of 2)
Courtesy of TOYOTA MOTOR SALES, U.S.A., INC.

ILLUSTRATION

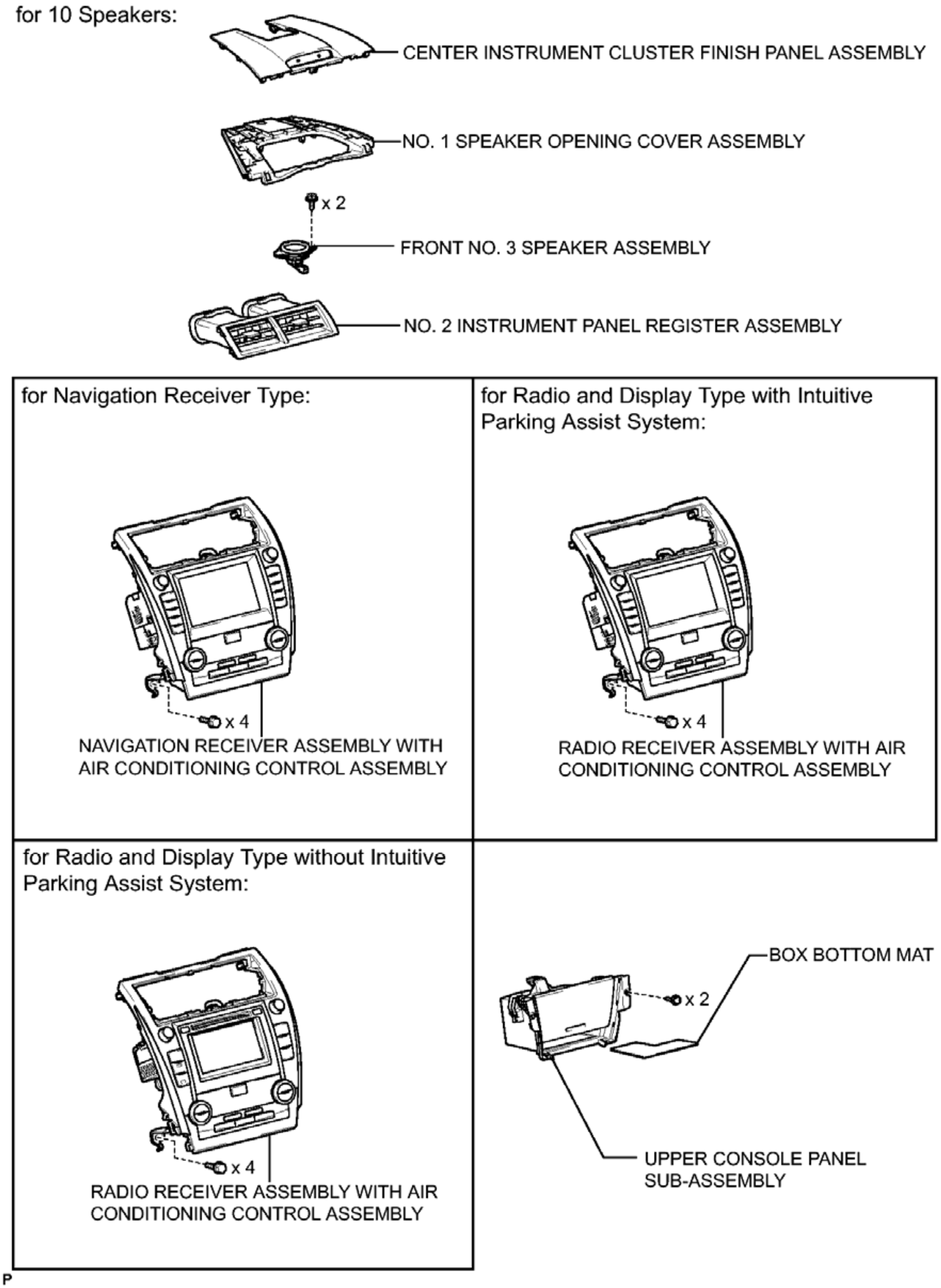
for 10 Speakers:
CENTER INSTRUMENT CLUSTER FINISH PANEL ASSEMBLY
NO. 1 SPEAKER OPENING COVER ASSEMBLY
x 2
FRONT NO. 3 SPEAKER ASSEMBLY
NO. 2 INSTRUMENT PANEL REGISTER ASSEMBLY
for Navigation Receiver Type:
x 4
NAVIGATION RECEIVER ASSEMBLY WITH AIR CONDITIONING CONTROL ASSEMBLY
for Radio and Display Type with Intuitive Parking Assist System:
x 4
RADIO RECEIVER ASSEMBLY WITH AIR CONDITIONING CONTROL ASSEMBLY
for Radio and Display Type without Intuitive Parking Assist System:
x 4
RADIO RECEIVER ASSEMBLY WITH AIR CONDITIONING CONTROL ASSEMBLY
BOX BOTTOM MAT
x 2
UPPER CONSOLE PANEL SUB-ASSEMBLY
P

Fig. 32: Identifying Instrument Panel Speaker Replacement Components (2 Of 2)
Courtesy of TOYOTA MOTOR SALES, U.S.A., INC.

REMOVAL

REMOVAL

1. **PRECAUTION (for 10 Speakers)**

   NOTE: **except Radio and Display Type without Intuitive Parking Assist System:**

   After turning the ignition switch off, waiting time may be required before disconnecting the cable from the negative (-) battery terminal. Therefore, make sure to read the disconnecting the cable from the negative (-) battery terminal notices before proceeding with work. Refer to PRECAUTION .

2. **DISCONNECT FRONT DOOR OPENING TRIM WEATHERSTRIP** . Refer to **REMOVAL - Step 5** .
3. **REMOVE FRONT PILLAR GARNISH** . Refer to **REMOVAL - Step 6** .
4. **REMOVE INSTRUMENT PANEL SPEAKER PANEL SUB-ASSEMBLY** . Refer to **REMOVAL - Step 42** .
5. **REMOVE FRONT NO. 2 SPEAKER ASSEMBLY**
   a. Remove the 2 screws.

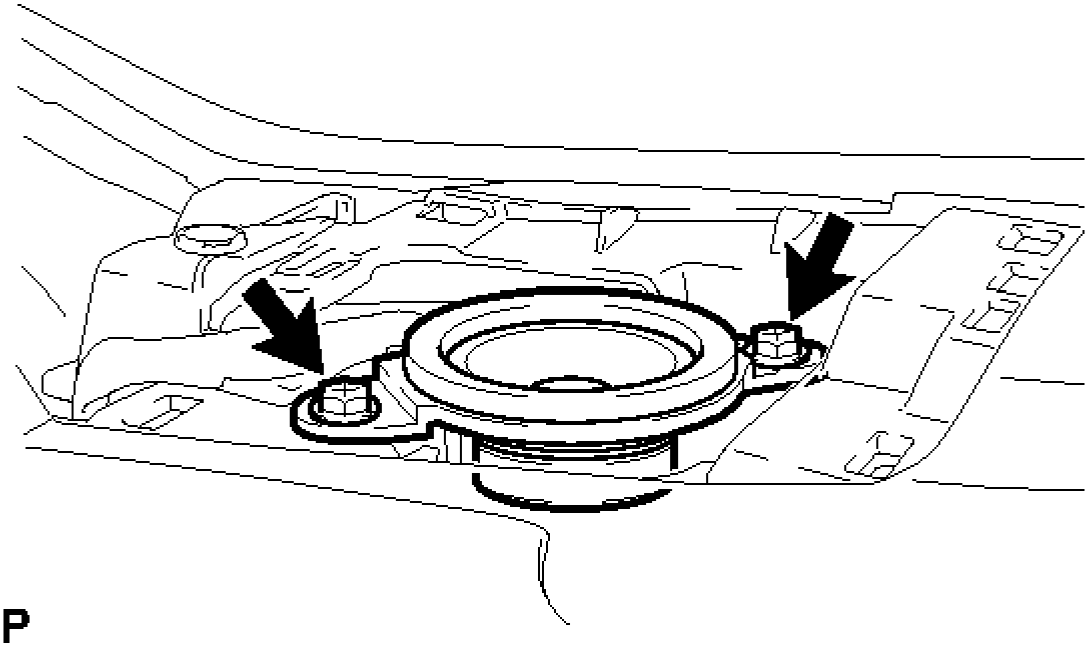

Fig. 33: Identifying Front No. 2 Speaker Assembly Fasteners
Courtesy of TOYOTA MOTOR SALES, U.S.A., INC.

   b. Lift the front No. 2 speaker assembly and disconnect the connector to remove the speaker.

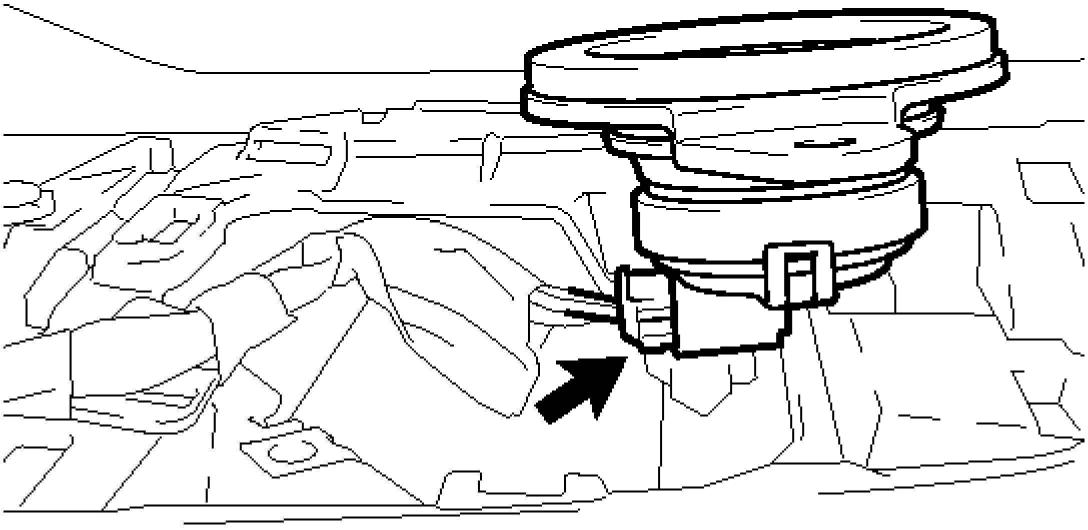

Fig. 34: Identifying Front No. 2 Speaker Assembly Connector
Courtesy of TOYOTA MOTOR SALES, U.S.A., INC.

NOTE: **Do not touch the speaker cone.**

6. **DISCONNECT CABLE FROM NEGATIVE BATTERY TERMINAL (for 10 Speakers)**

   NOTE: **except Radio and Display Type without Intuitive Parking Assist System:**

   When disconnecting the cable, some systems need to be initialized after the cable is reconnected. Refer to INITIALIZATION .

7. **REMOVE REAR CONSOLE BOX ASSEMBLY (for 10 Speakers)**

   Refer to **REMOVAL** .

8. **REMOVE BOX BOTTOM MAT (for 10 Speakers)** . Refer to **REMOVAL - Step 25** .
9. **REMOVE UPPER CONSOLE PANEL SUB-ASSEMBLY (for 10 Speakers)** . Refer to **REMOVAL - Step 26** .
10. **REMOVE CENTER INSTRUMENT CLUSTER FINISH PANEL ASSEMBLY (for 10 Speakers)** . Refer to **REMOVAL - Step 23** .
11. **REMOVE NO. 2 INSTRUMENT PANEL REGISTER ASSEMBLY (for 10 Speakers)** . Refer to **REMOVAL - Step 24** .
12. **REMOVE RADIO RECEIVER ASSEMBLY WITH AIR CONDITIONING CONTROL ASSEMBLY (for 10 Speakers)**

For Radio and Display Receiver Type: See step 9.

13. **REMOVE NAVIGATION RECEIVER ASSEMBLY WITH AIR CONDITIONING CONTROL ASSEMBLY (for 10 Speakers)**

    For Navigation Receiver Type: Refer to **REMOVAL - Step 8** .

14. **REMOVE NO. 1 SPEAKER OPENING COVER ASSEMBLY (for 10 Speakers)** . Refer to **REMOVAL - Step 30** .
15. **REMOVE FRONT NO. 3 SPEAKER ASSEMBLY (for 10 Speakers)**
    a. Remove the 2 screws.

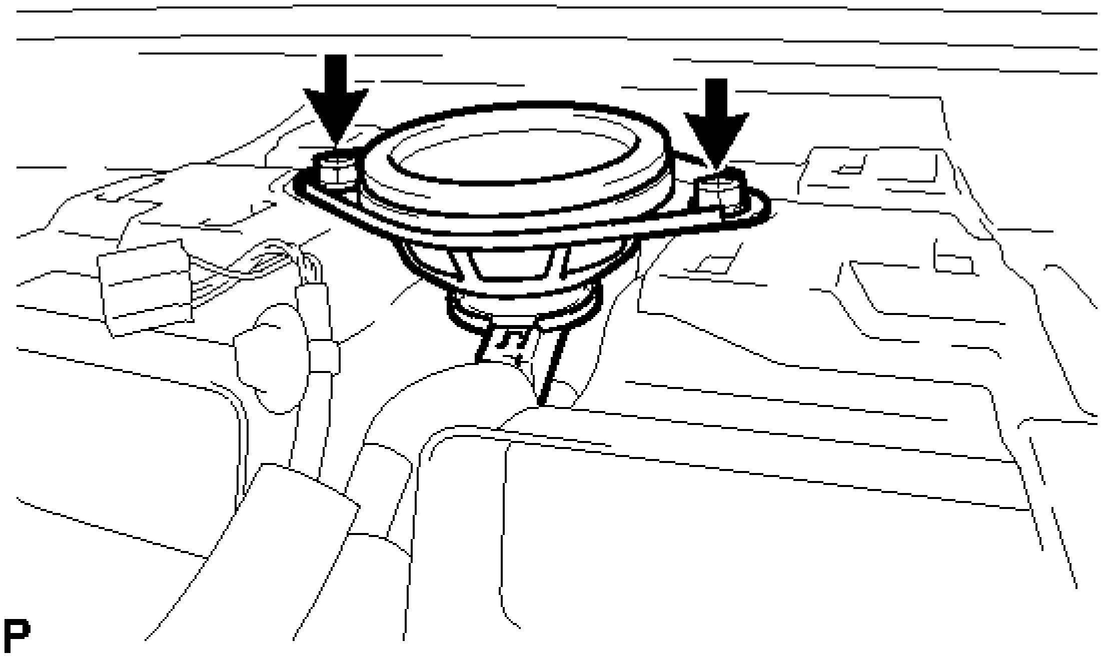

Fig. 35: Identifying Front No. 3 Speaker Assembly Fasteners (For 10 Speakers)
Courtesy of TOYOTA MOTOR SALES, U.S.A., INC.

    b. Lift the front No. 3 speaker assembly and disconnect the connector to remove the speaker.

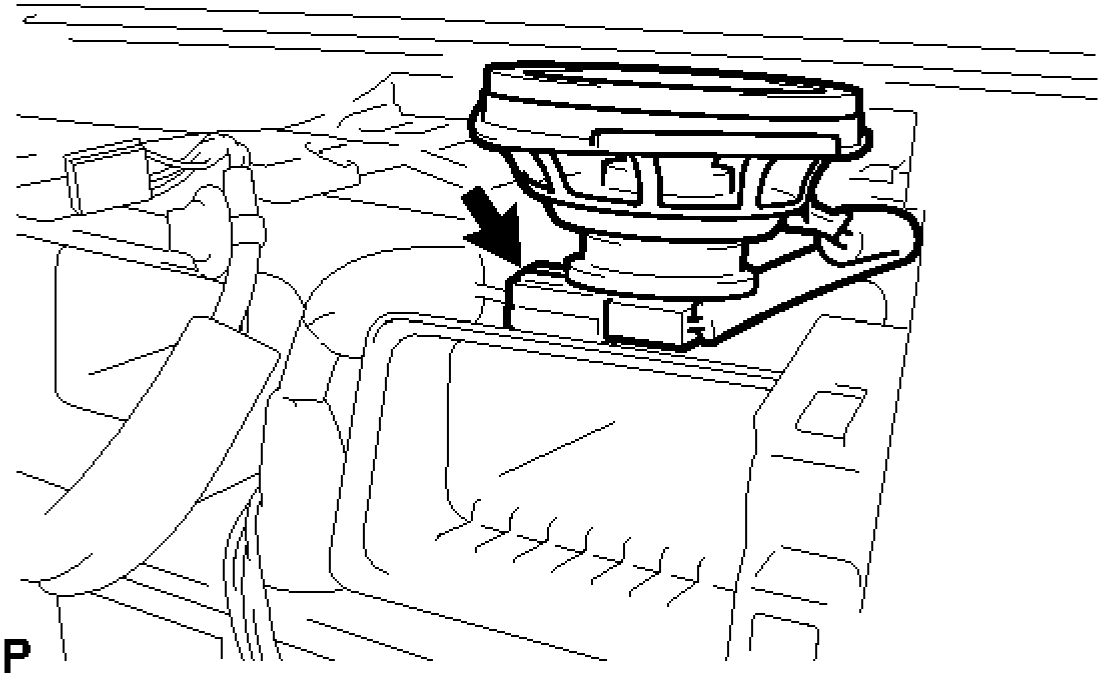

Fig. 36: Identifying Front No. 3 Speaker Assembly Connector (For 10 Speakers)
Courtesy of TOYOTA MOTOR SALES, U.S.A., INC.

NOTE: Do not touch the speaker cone.

INSPECTION

INSPECTION

1. **INSPECT FRONT NO. 2 SPEAKER ASSEMBLY (for 6 Speakers)**
    a. With the speaker installed, check that there is no looseness or other abnormalities.
    b. Check that there is no foreign matter in the speaker, no tears on the speaker cone or other abnormalities.
    c. Measure the resistance of the speaker.

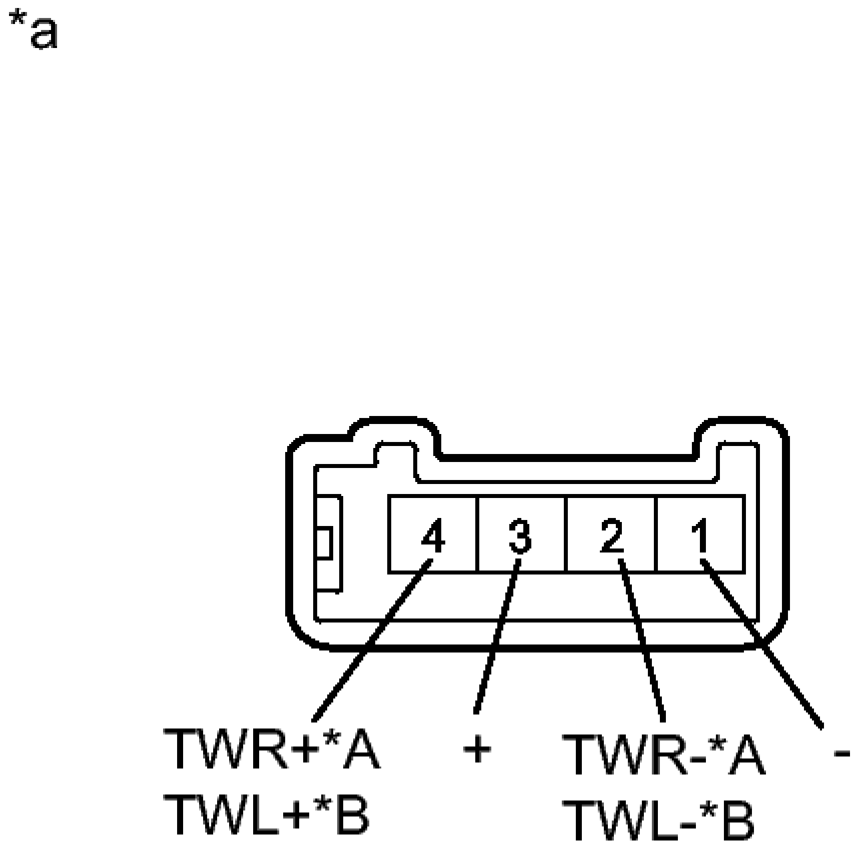

Fig. 37: Inspecting Front No. 2 Speaker Assembly (For 6 Speakers)
Courtesy of TOYOTA MOTOR SALES, U.S.A., INC.

Standard Resistance

Tester Connection	Condition	Specified Condition
2 (TWR-) - 4 (TWR+)	Always	10 kohms or higher
1 (-) - 2 (TWR-)	Always	Below 1 ohms
3 (+) - 4 (TWR+)	Always	Below 1 ohms
2 (TWL-) - 4 (TWL+)	Always	10 kohms or higher

1 (-) - 2 (TWL-)	Always	Below 1 ohms
3 (+) - 4 (TWL+)	Always	Below 1 ohms

If the result is not as specified, replace the speaker.

TEXT IN ILLUSTRATION

*A	for RH
*B	for LH
*a	Component without harness connected (Front No. 2 Speaker Assembly)

d. When there is a possibility that either the right or left speaker is malfunctioning, interchange the speakers and perform an inspection. If the malfunction disappears after interchanging the speakers, replace the malfunctioning speaker.

HINT:

Connect all connectors to the speakers when performing an inspection. If the result is not as specified, replace the speaker.

2. **INSPECT FRONT NO. 2 SPEAKER ASSEMBLY (for 10 Speakers)**
   a. With the speaker installed, check that there is no looseness or other abnormalities.
   b. Check that there is no foreign matter in the speaker, no tears on the speaker cone or other abnormalities.
   c. Measure the resistance of the speaker.

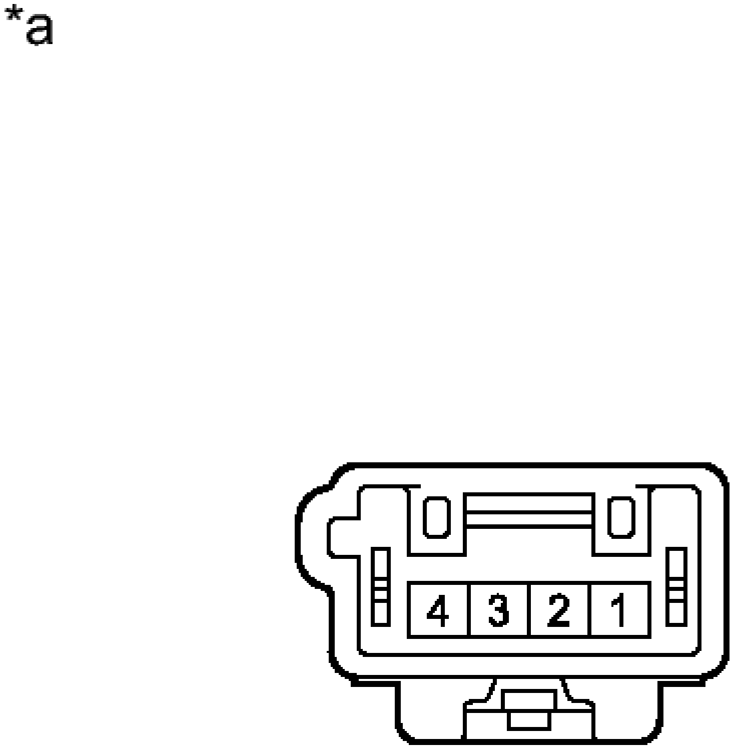

Fig. 38: Identifying Front No. 2 Speaker Assembly (For 10 Speakers)
Courtesy of TOYOTA MOTOR SALES, U.S.A., INC.

Standard Resistance

Tester Connection	Condition	Specified Condition
3 - 4	Always	3.4 to 5.2 ohms

If the result is not as specified, replace the speaker.

TEXT IN ILLUSTRATION

	Component without

*a	harness connected (Front No. 2 Speaker Assembly)

3. **INSPECT FRONT NO. 3 SPEAKER ASSEMBLY (for 10 Speakers)**
    a. With the speaker installed, check that there is no looseness or other abnormalities.
    b. Check that there is no foreign matter in the speaker, no tears on the speaker cone or other abnormalities.
    c. Measure the resistance of the speaker.

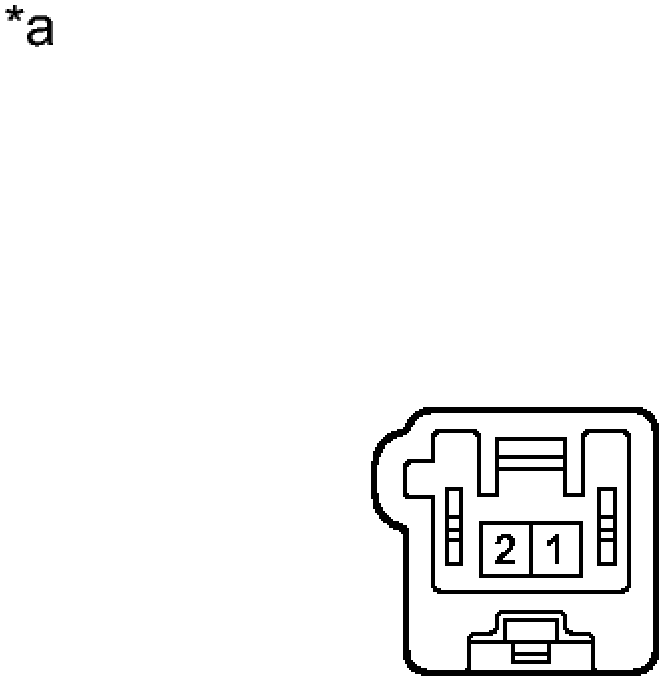

Fig. 39: Identifying Front No. 3 Speaker Assembly (For 10 Speakers)
Courtesy of TOYOTA MOTOR SALES, U.S.A., INC.

Standard Resistance

Tester Connection	Condition	Specified Condition
1 - 2	Always	6.8 to 10.2 ohms

If the result is not as specified, replace the speaker.

TEXT IN ILLUSTRATION

*a	Component without harness connected (Front No. 3 Speaker Assembly)

INSTALLATION

INSTALLATION

1. **INSTALL FRONT NO. 2 SPEAKER ASSEMBLY**
    a. Connect the connector.
    b. Install the front No. 2 speaker assembly with the 2 screws.

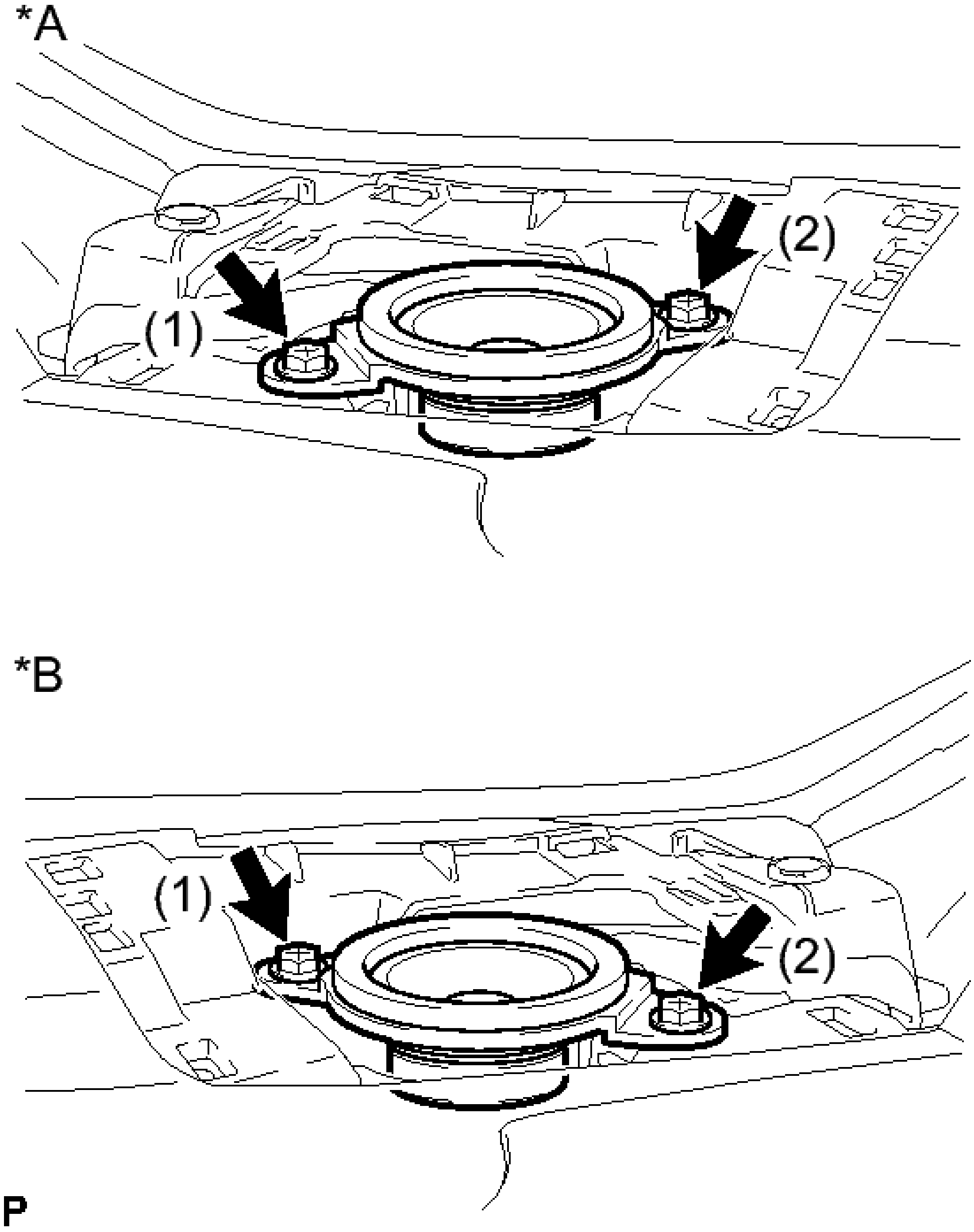

Fig. 40: Identifying Front No. 2 Speaker Assembly Fasteners
Courtesy of TOYOTA MOTOR SALES, U.S.A., INC.

TEXT IN ILLUSTRATION

	LH

*A	Side
*B	RH Side

NOTE: Do not touch the speaker cone.

HINT:

Install the screws in the order shown in the illustration.

2. **INSTALL INSTRUMENT PANEL SPEAKER PANEL SUB-ASSEMBLY** . Refer to **INSTALLATION - Step 8** .
3. **INSTALL FRONT PILLAR GARNISH** . Refer to **INSTALLATION - Step 41** .
4. **INSTALL FRONT DOOR OPENING TRIM WEATHERSTRIP**

   For LH side: Refer to **INSTALLATION - Step 42** .

   For RH side: Refer to **INSTALLATION - Step 46** .

5. **INSTALL FRONT NO. 3 SPEAKER ASSEMBLY (for 10 Speakers)**
   a. Connect the connector.
   b. Install the front No. 3 speaker assembly with the 2 screws.

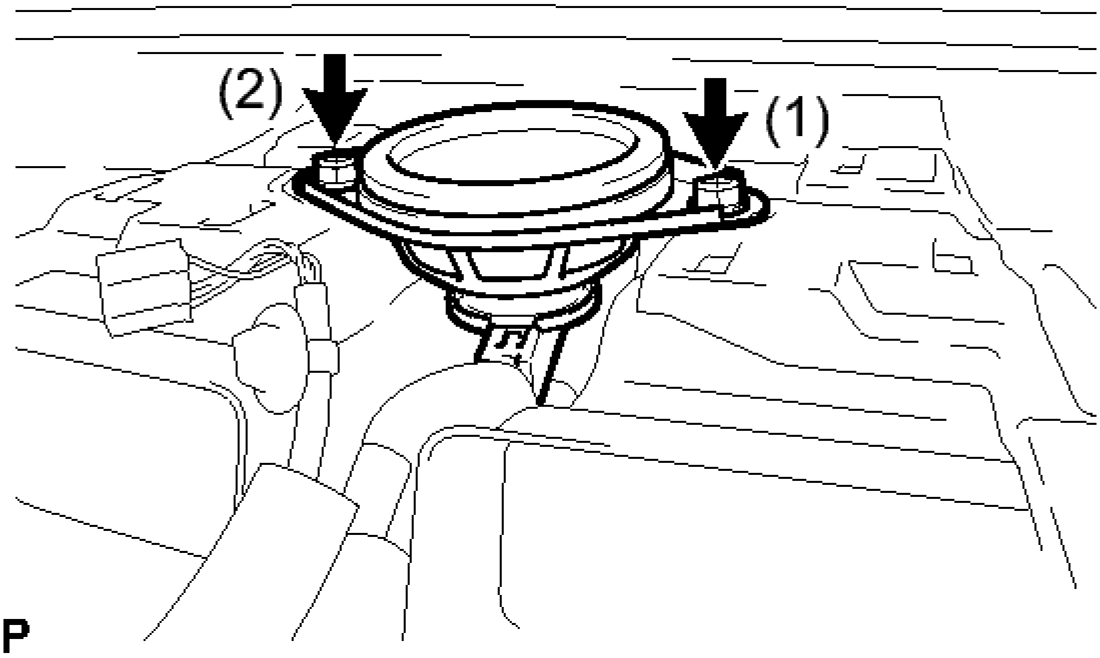

Fig. 41: Identifying Front No. 3 Speaker Assembly Fasteners (For 10 Speakers)
Courtesy of TOYOTA MOTOR SALES, U.S.A., INC.

NOTE: **Do not touch the speaker cone.**

HINT:

Install the screws in the order shown in the illustration.

6. **INSTALL NO. 1 SPEAKER OPENING COVER ASSEMBLY (for 10 Speakers)** . Refer to **INSTALLATION - Step 23** .
7. **INSTALL RADIO RECEIVER ASSEMBLY WITH AIR CONDITIONING CONTROL ASSEMBLY (for 10 Speakers)**

   For Radio and Display Receiver Type: See step 15.

8. **INSTALL NAVIGATION RECEIVER ASSEMBLY WITH AIR CONDITIONING CONTROL ASSEMBLY (for 10 Speakers)**

   For Navigation Receiver Type: Refer to **INSTALLATION - Step 7** .

9. **INSTALL NO. 2 INSTRUMENT PANEL REGISTER ASSEMBLY (for 10 Speakers)** . Refer to **INSTALLATION - Step 29** .
10. **INSTALL CENTER INSTRUMENT CLUSTER FINISH PANEL ASSEMBLY (for 10 Speakers)** . Refer to **INSTALLATION - Step 30** .
11. **INSTALL UPPER CONSOLE PANEL SUB-ASSEMBLY (for 10 Speakers)** . Refer to **INSTALLATION - Step 27** .
12. **INSTALL BOX BOTTOM MAT (for 10 Speakers)** . Refer to **INSTALLATION - Step 28** .
13. **INSTALL REAR CONSOLE BOX ASSEMBLY (for 10 Speakers)**

    Refer to **INSTALLATION** .

14. **CONNECT CABLE TO NEGATIVE BATTERY TERMINAL (for 10 Speakers)**

NOTE: **except Radio and Display Type without Intuitive Parking Assist System:**

When disconnecting the cable, some systems need to be initialized after the cable is reconnected. Refer to INITIALIZATION .

REAR PACKAGE TRAY SPEAKER

COMPONENTS

ILLUSTRATION

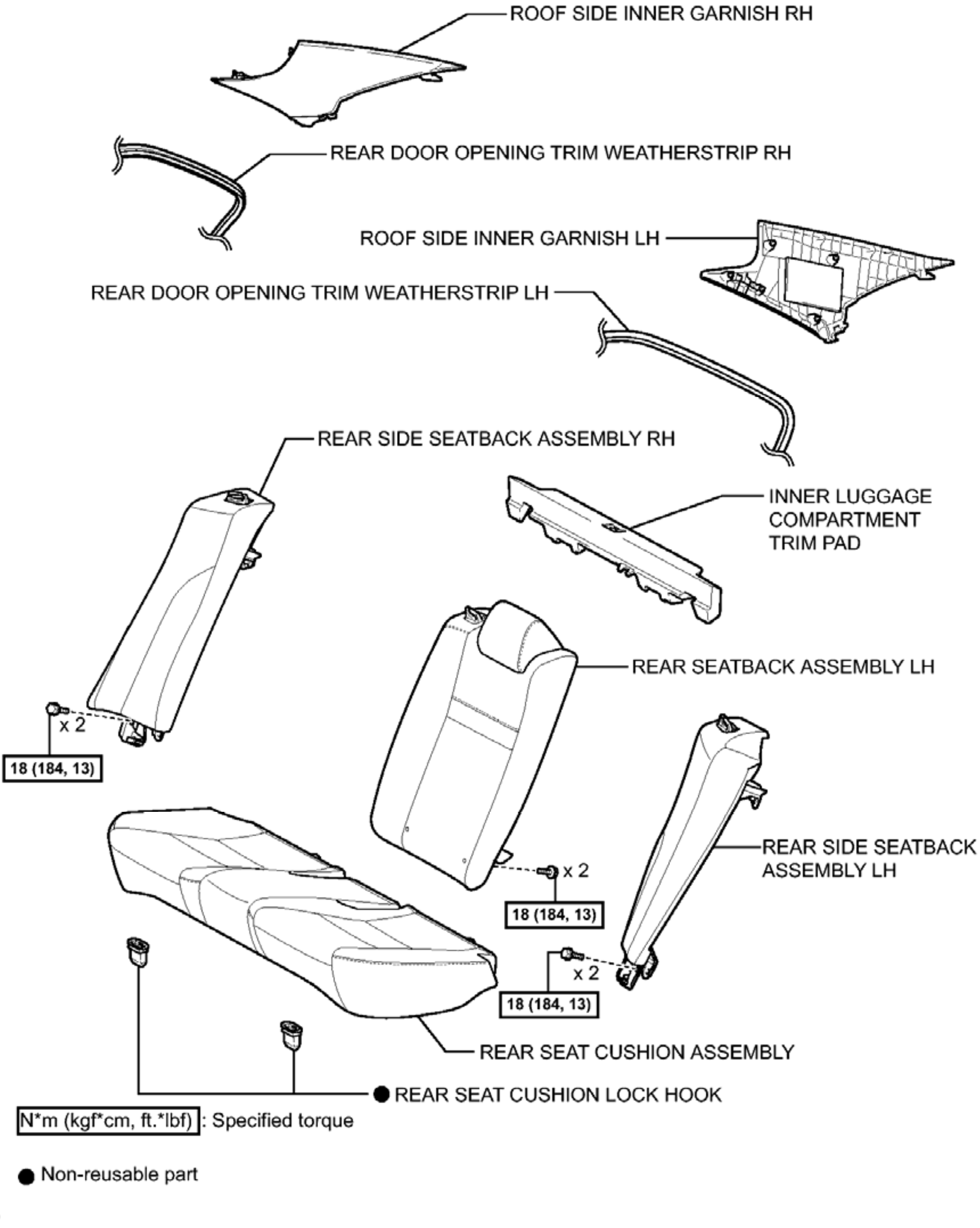
ROOF SIDE INNER GARNISH RH
REAR DOOR OPENING TRIM WEATHERSTRIP RH
ROOF SIDE INNER GARNISH LH
REAR DOOR OPENING TRIM WEATHERSTRIP LH
REAR SIDE SEATBACK ASSEMBLY RH
INNER LUGGAGE COMPARTMENT TRIM PAD
REAR SEATBACK ASSEMBLY LH
x 2
18 (184, 13)
x 2
18 (184, 13)
REAR SIDE SEATBACK ASSEMBLY LH
x 2
18 (184, 13)
REAR SEAT CUSHION ASSEMBLY
● REAR SEAT CUSHION LOCK HOOK
N*m (kgf*cm, ft.*lbf) : Specified torque
● Non-reusable part
P

Fig. 42: Identifying Rear Package Tray Speaker Replacement Components With Torque Specifications (1 Of 2)

Courtesy of TOYOTA MOTOR SALES, U.S.A., INC.

ILLUSTRATION

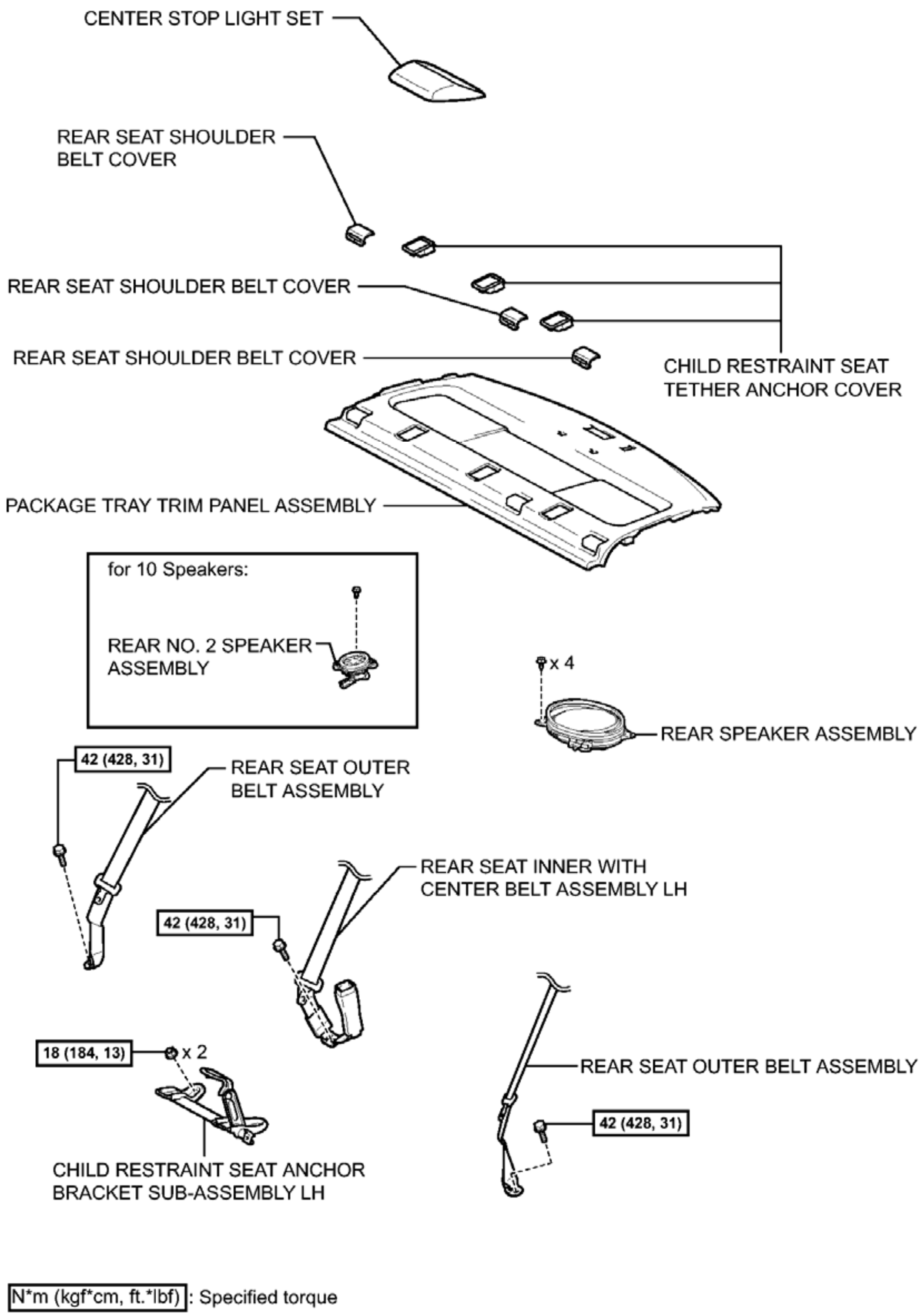
CENTER STOP LIGHT SET
REAR SEAT SHOULDER BELT COVER
REAR SEAT SHOULDER BELT COVER
REAR SEAT SHOULDER BELT COVER
CHILD RESTRAINT SEAT TETHER ANCHOR COVER
PACKAGE TRAY TRIM PANEL ASSEMBLY
for 10 Speakers:
REAR NO. 2 SPEAKER ASSEMBLY
x 4
REAR SPEAKER ASSEMBLY
42 (428, 31)
REAR SEAT OUTER BELT ASSEMBLY
REAR SEAT INNER WITH CENTER BELT ASSEMBLY LH
42 (428, 31)
18 (184, 13)
x 2
REAR SEAT OUTER BELT ASSEMBLY
42 (428, 31)
CHILD RESTRAINT SEAT ANCHOR BRACKET SUB-ASSEMBLY LH
N*m (kgf*cm, ft.*lbf) : Specified torque
P

Fig. 43: Identifying Rear Package Tray Speaker Replacement Components With Torque Specifications (2 Of 2)

Courtesy of TOYOTA MOTOR SALES, U.S.A., INC.

REMOVAL

REMOVAL

1. **PRECAUTION**

   NOTE: **After turning the ignition switch off, waiting time may be required before disconnecting the cable from the negative (-) battery terminal. Therefore, make sure to read the disconnecting the cable from the negative (-) battery terminal notices before proceeding with work. Refer to PRECAUTION .**

2. **DISCONNECT CABLE FROM NEGATIVE BATTERY TERMINAL**

   WARNING: **Wait at least 90 seconds after disconnecting the cable from the negative (-) battery terminal to disable the SRS system.**

   NOTE: **When disconnecting the cable, some systems need to be initialized after the cable is reconnected. Refer to INITIALIZATION .**

3. **REMOVE REAR SEAT CUSHION ASSEMBLY** . Refer to **REMOVAL - Step 3** .
4. **REMOVE REAR SEAT CUSHION LOCK HOOK** . Refer to **REMOVAL - Step 4** .
5. **REMOVE INNER LUGGAGE COMPARTMENT TRIM PAD** . Refer to **REMOVAL - Step 5** .
6. **REMOVE REAR SEATBACK ASSEMBLY LH** . Refer to **REMOVAL - Step 6** .
7. **REMOVE REAR SIDE SEATBACK ASSEMBLY LH** . Refer to **REMOVAL - Step 8** .
8. **REMOVE REAR SIDE SEATBACK ASSEMBLY RH** . Refer to **REMOVAL - Step 9** .
9. **DISCONNECT REAR DOOR OPENING TRIM WEATHERSTRIP LH** . Refer to **REMOVAL - Step 12** .
10. **DISCONNECT REAR DOOR OPENING TRIM WEATHERSTRIP RH** . Refer to **REMOVAL - Step 13** .
11. **REMOVE ROOF SIDE INNER GARNISH LH** . Refer to **REMOVAL - Step 24** .
12. **REMOVE ROOF SIDE INNER GARNISH RH**

    HINT:

    Use the same procedure as for the LH side.

13. **DISCONNECT REAR SEAT OUTER BELT ASSEMBLY (for LH Side)** . Refer to **REMOVAL - Step 13** .
14. **DISCONNECT REAR SEAT OUTER BELT ASSEMBLY (for RH Side)** . Refer to **REMOVAL - Step 14** .
15. **REMOVE CHILD RESTRAINT SEAT ANCHOR BRACKET SUB-ASSEMBLY LH** . Refer to **REMOVAL - Step 10** .
16. **DISCONNECT REAR SEAT INNER WITH CENTER BELT ASSEMBLY LH** . Refer to

REMOVAL - Step 19 .

17. **REMOVE CENTER STOP LIGHT SET** . Refer to **REMOVAL - Step 1** .
18. **REMOVE CHILD RESTRAINT SEAT TETHER ANCHOR COVER** . Refer to **REMOVAL - Step 18** .
19. **REMOVE REAR SEAT SHOULDER BELT COVER** . Refer to **REMOVAL - Step 19** .
20. **REMOVE PACKAGE TRAY TRIM PANEL ASSEMBLY** . Refer to **REMOVAL - Step 20** .
21. **REMOVE REAR SPEAKER ASSEMBLY**
    a. Disconnect the connector.

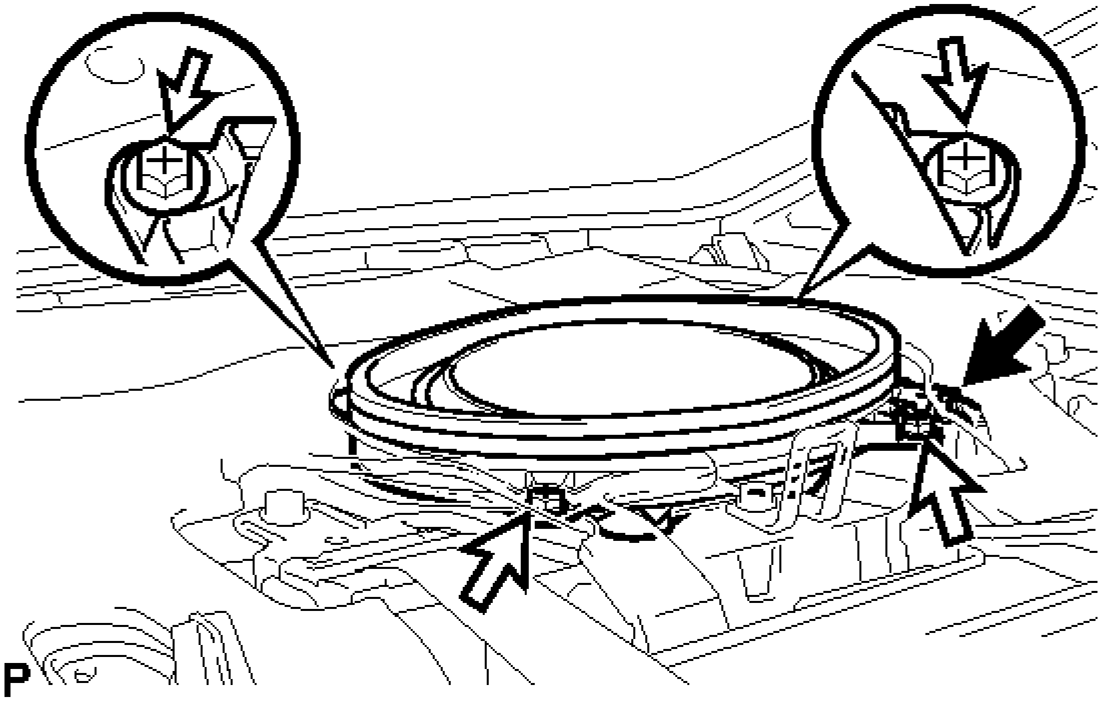

Fig. 44: Locating Rear Speaker Assembly Fasteners
Courtesy of TOYOTA MOTOR SALES, U.S.A., INC.

b. Remove the 4 screws and rear speaker assembly.

NOTE: **Do not touch the cone part of the speaker.**

HINT:

If the rear speaker assembly is difficult to remove, turn back the No. 1 upper back panel hole cover so that the rear speaker assembly can be removed.

22. **REMOVE REAR NO. 2 SPEAKER ASSEMBLY (for 10 Speakers)**
    a. Disconnect the connector.

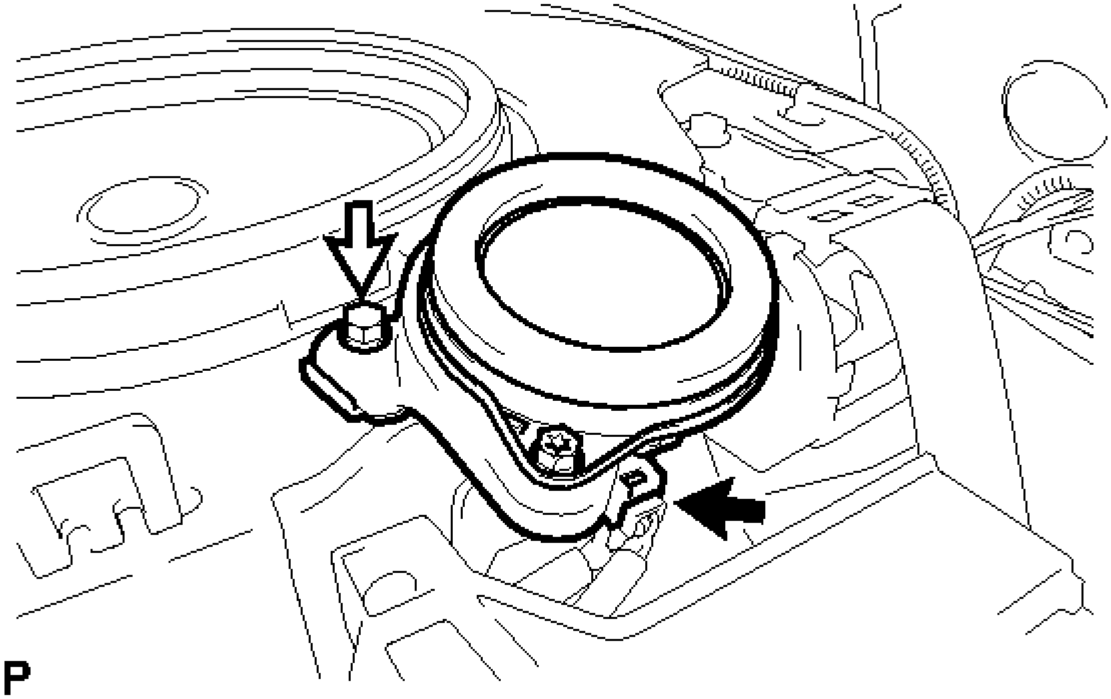

Fig. 45: Locating Rear No. 2 Speaker Assembly Faster And Connector (For 10 Speakers)
Courtesy of TOYOTA MOTOR SALES, U.S.A., INC.

b. Remove the bolt and rear No. 2 speaker assembly.

NOTE: Do not touch the cone part of the speaker.

INSPECTION

INSPECTION

1. **INSPECT REAR SPEAKER ASSEMBLY**
    a. With the speaker installed, check that there is no looseness or other abnormalities.
    b. Check that there is no foreign matter in the speaker, no tears on the speaker cone or other abnormalities.
    c. Measure the resistance of the speaker.

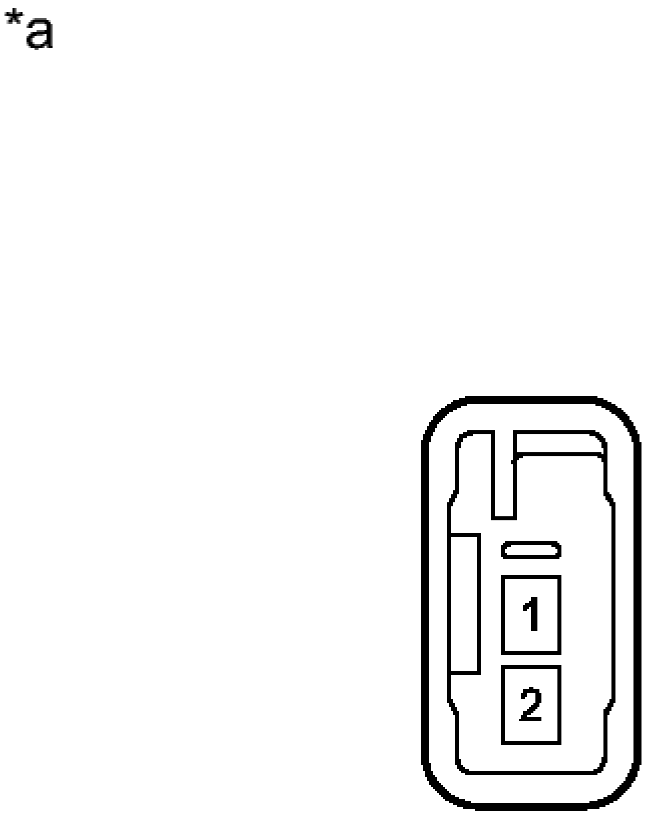

Fig. 46: Identifying Speaker Connector
Courtesy of TOYOTA MOTOR SALES, U.S.A., INC.

Standard Resistance

FOR 6 SPEAKERS:

Tester Connection	Condition	Specified Condition
1 - 2	Always	3.2 to 4.8 ohms

FOR 10 SPEAKERS:

Tester Connection	Condition	Specified Condition
1 - 2	Always	4.8 to 6.8

		ohms

If the result is not as specified, replace the speaker.

TEXT IN ILLUSTRATION

*a	Component without harness connected (Rear Speaker Assembly)

2. **INSPECT REAR NO. 2 SPEAKER ASSEMBLY (for 10 Speakers)**
    a. With the speaker installed, check that there is no looseness or other abnormalities.
    b. Check that there is no foreign matter in the speaker, no tears on the speaker cone or other abnormalities.
    c. Measure the resistance of the speaker.

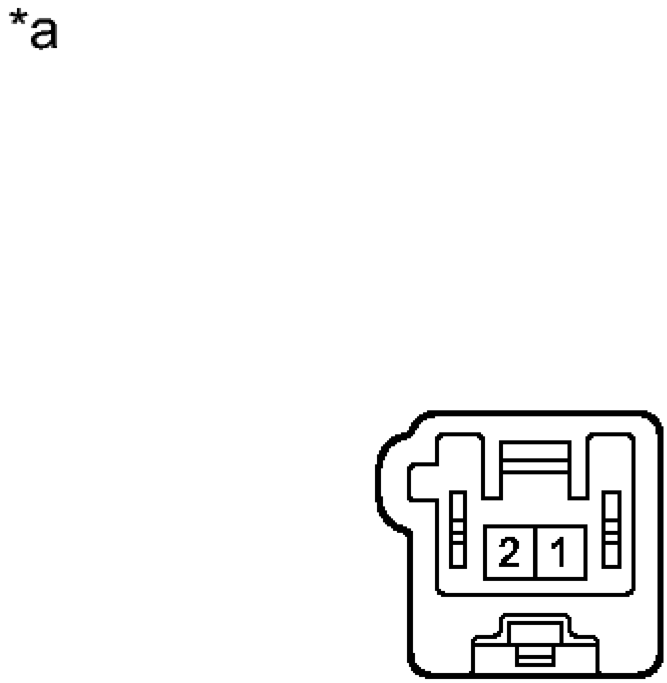

Fig. 47: Identifying Rear No. 2 Speaker Assembly (For 10 Speakers)
Courtesy of TOYOTA MOTOR SALES, U.S.A., INC.

Standard Resistance

Tester Connection	Condition	Specified Condition
1 - 2	Always	6.8 to 10.2 ohms

If the result is not as specified, replace the speaker.

TEXT IN ILLUSTRATION

	Component without

*a	harness connected (Rear No. 2 Speaker Assembly)

INSTALLATION

INSTALLATION

1. **INSTALL REAR SPEAKER ASSEMBLY**
    a. Install the rear speaker assembly with the 4 screws.

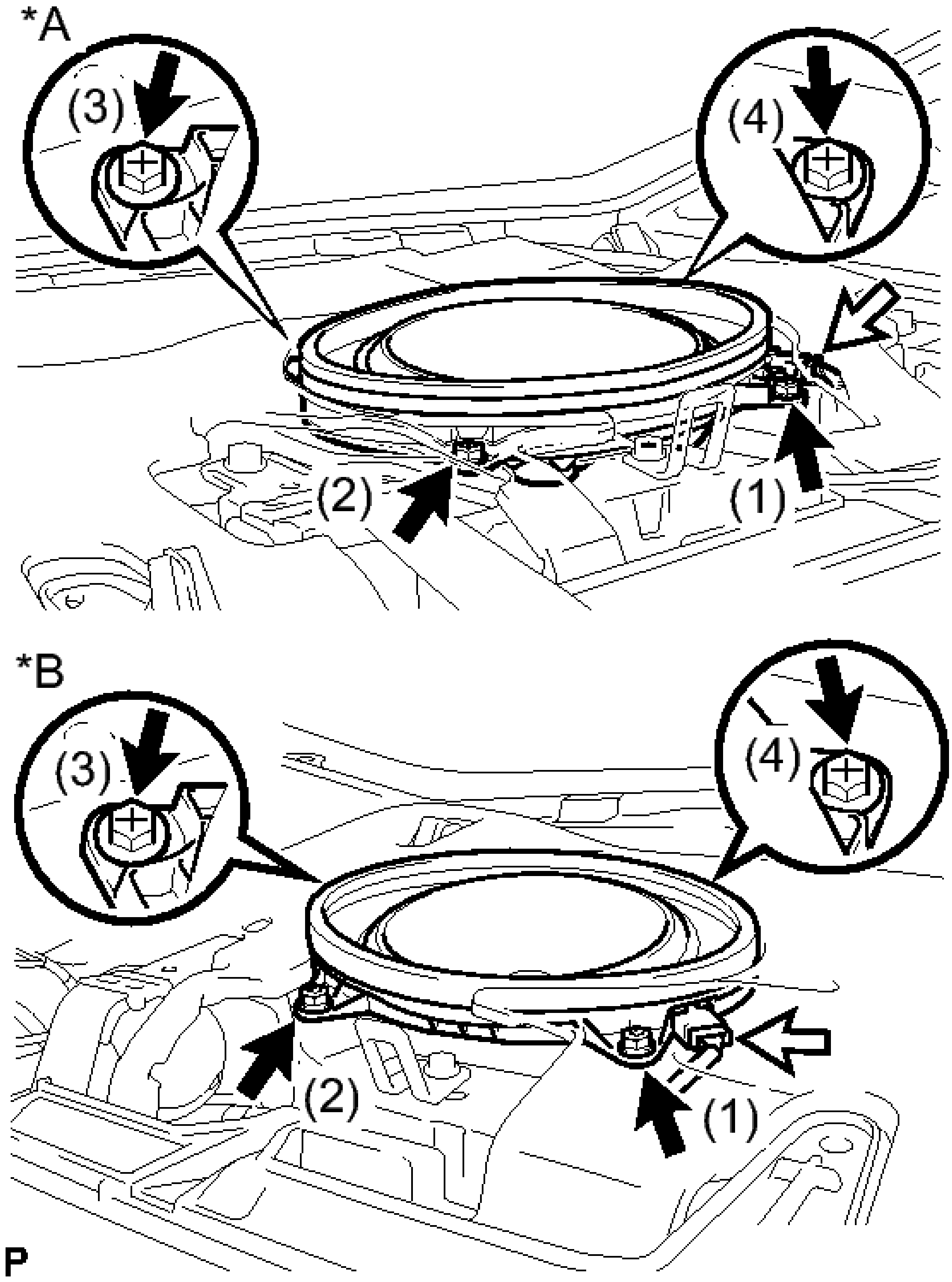

Fig. 48: Locating Rear Speaker Assembly Fasteners And Connector

Courtesy of TOYOTA MOTOR SALES, U.S.A., INC.

TEXT IN ILLUSTRATION

	LH

*A	Side
*B	RH Side

NOTE: **Do not touch the cone part of the speaker.**

HINT:

Install the screws in the order shown in the illustration.

b. Connect the connector.

2. **INSTALL REAR NO. 2 SPEAKER ASSEMBLY (for 10 Speakers)**
   a. Install the rear No. 2 speaker assembly with the bolt.

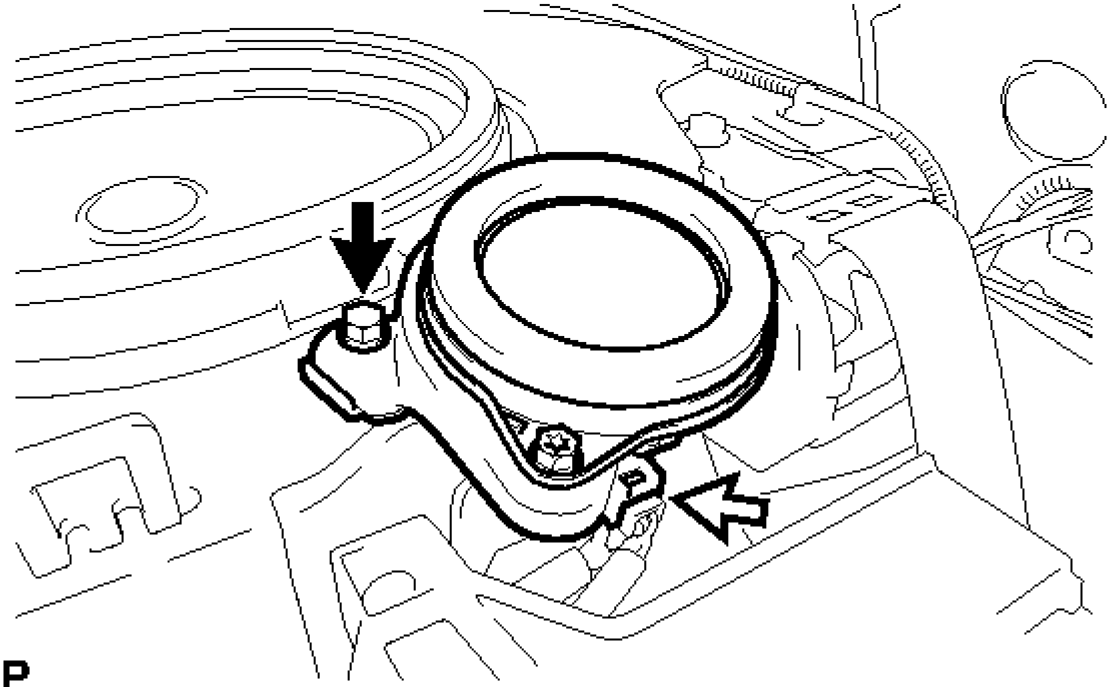

P

Fig. 49: Locating Rear No. 2 Speaker Assembly Faster And Connector (For 10 Speakers)
Courtesy of TOYOTA MOTOR SALES, U.S.A., INC.

NOTE: **Do not touch the cone part of the speaker.**

   b. Connect the connector.
3. **INSTALL PACKAGE TRAY TRIM PANEL ASSEMBLY** . Refer to **INSTALLATION - Step 3** .
4. **INSTALL REAR SEAT SHOULDER BELT COVER** . Refer to **INSTALLATION - Step 4** .
5. **INSTALL CHILD RESTRAINT SEAT TETHER ANCHOR COVER** . Refer to **INSTALLATION - Step 5** .
6. **INSTALL CENTER STOP LIGHT SET** . Refer to **INSTALLATION - Step 1** .

7. **CONNECT REAR SEAT INNER WITH CENTER BELT ASSEMBLY LH** . Refer to **INSTALLATION - Step 7** .
8. **INSTALL CHILD RESTRAINT SEAT ANCHOR BRACKET SUB-ASSEMBLY LH** . Refer to **INSTALLATION - Step 1** .
9. **CONNECT REAR SEAT OUTER BELT ASSEMBLY (for LH Side)** . Refer to **INSTALLATION - Step 9** .
10. **CONNECT REAR SEAT OUTER BELT ASSEMBLY (for RH Side)** . Refer to **INSTALLATION - Step 10** .
11. **INSTALL ROOF SIDE INNER GARNISH LH** . Refer to **INSTALLATION - Step 20** .
12. **INSTALL ROOF SIDE INNER GARNISH RH**

    HINT:

    Use the same procedure as for the LH side.

13. **INSTALL REAR DOOR OPENING TRIM WEATHERSTRIP LH** . Refer to **INSTALLATION - Step 25** .
14. **INSTALL REAR DOOR OPENING TRIM WEATHERSTRIP RH** . Refer to **INSTALLATION - Step 32** .
15. **INSTALL REAR SIDE SEATBACK ASSEMBLY LH** . Refer to **INSTALLATION - Step 2** .
16. **INSTALL REAR SIDE SEATBACK ASSEMBLY RH** . Refer to **INSTALLATION - Step 1** .
17. **INSTALL REAR SEATBACK ASSEMBLY LH** . Refer to **INSTALLATION - Step 4** .
18. **INSTALL INNER LUGGAGE COMPARTMENT TRIM PAD** . Refer to **INSTALLATION - Step 5** .
19. **INSTALL REAR SEAT CUSHION LOCK HOOK** . Refer to **INSTALLATION - Step 6** .
20. **INSTALL REAR SEAT CUSHION ASSEMBLY** . Refer to **INSTALLATION - Step 7** .
21. **CONNECT CABLE TO NEGATIVE BATTERY TERMINAL**

    NOTE: **When disconnecting the cable, some systems need to be initialized after the cable is reconnected. Refer to INITIALIZATION .**

22. **INSPECT SRS WARNING LIGHT**

    For Built-in Type Yaw Rate Sensor: Refer to **DIAGNOSIS SYSTEM** .

    For Separate Type Yaw Rate Sensor: Refer to **DIAGNOSIS SYSTEM** .

RADIO ANTENNA CORD

COMPONENTS

ILLUSTRATION

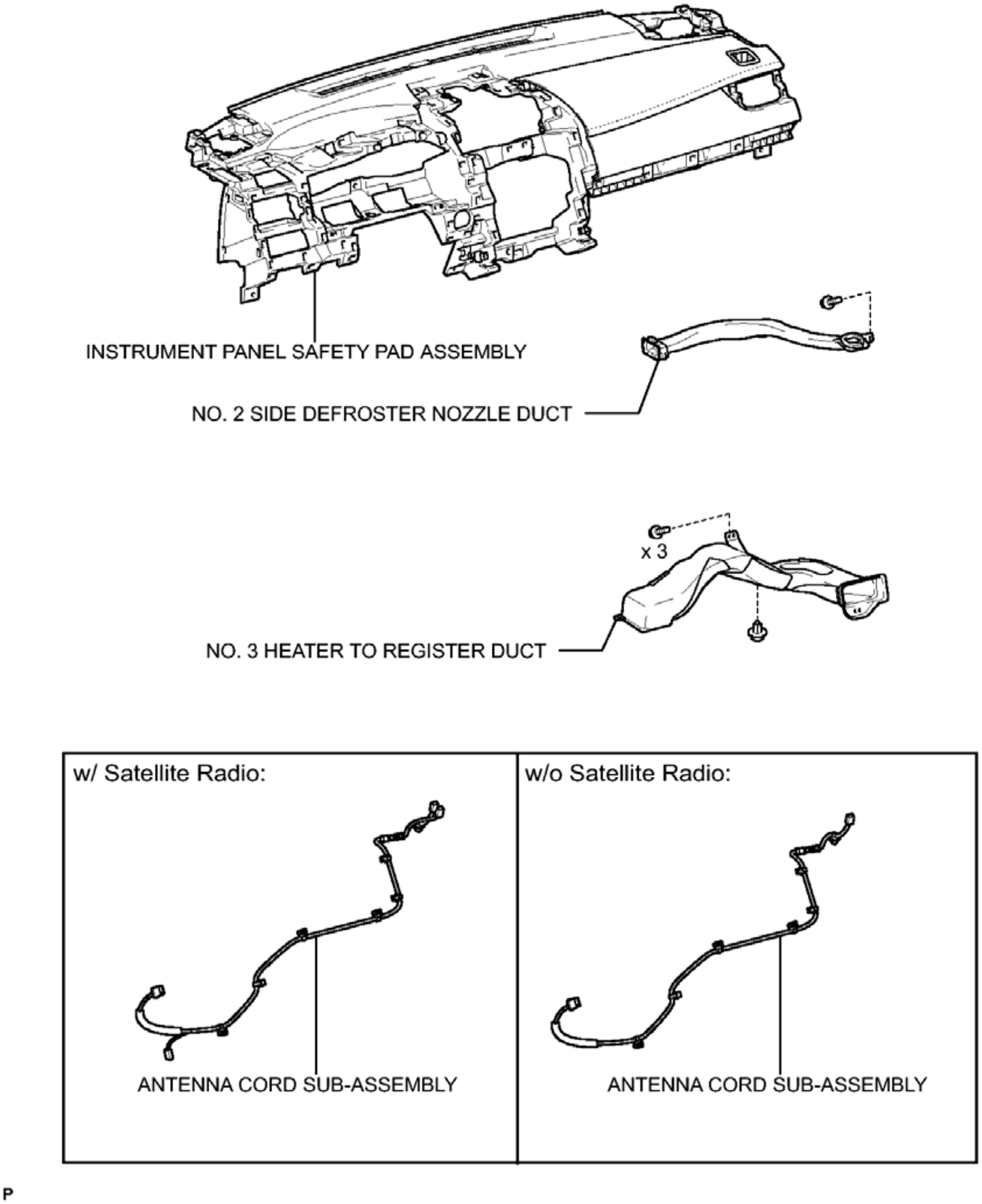
INSTRUMENT PANEL SAFETY PAD ASSEMBLY
NO. 2 SIDE DEFROSTER NOZZLE DUCT
x 3
NO. 3 HEATER TO REGISTER DUCT
w/ Satellite Radio:
ANTENNA CORD SUB-ASSEMBLY
w/o Satellite Radio:
ANTENNA CORD SUB-ASSEMBLY
P

Fig. 50: Identifying Radio Antenna Cord Replacement Components (1 Of 3)
Courtesy of TOYOTA MOTOR SALES, U.S.A., INC.

ILLUSTRATION

w/o Sliding Roof:

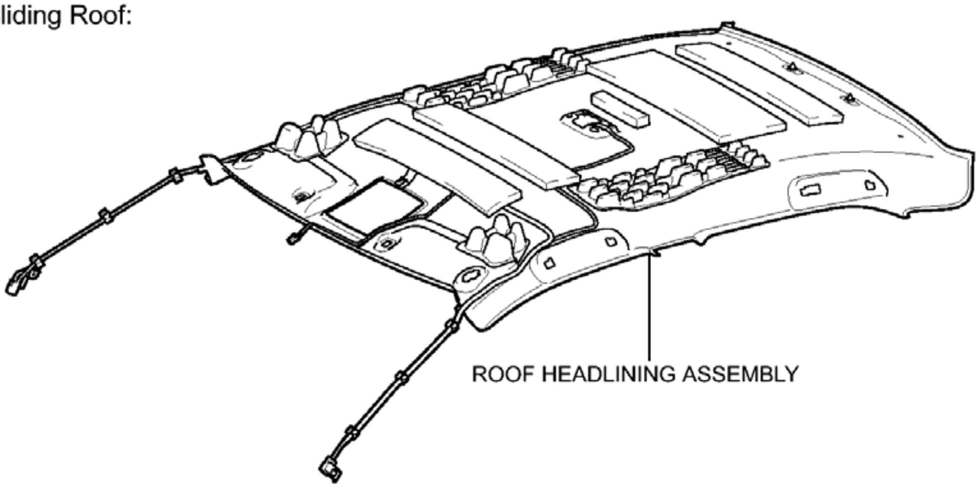
ROOF HEADLINING ASSEMBLY

w/ Sliding Roof:

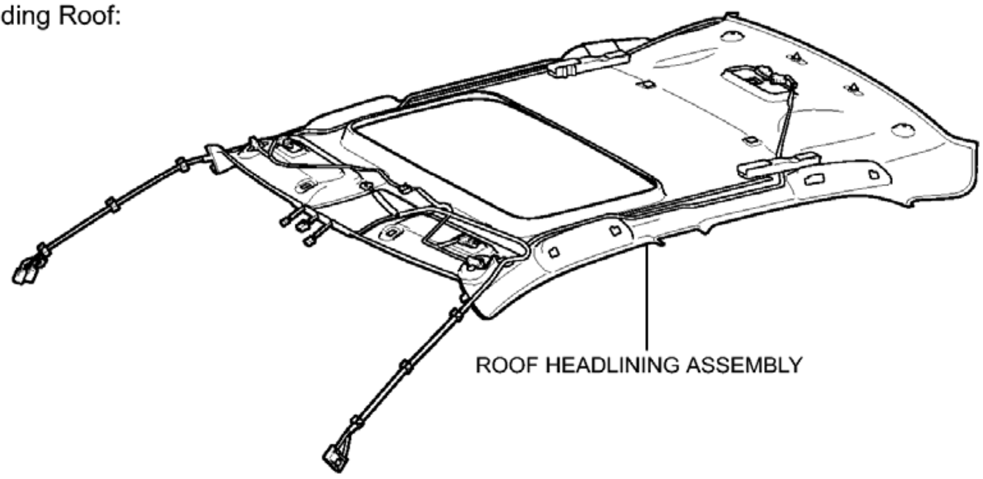
ROOF HEADLINING ASSEMBLY

P

Fig. 51: Identifying Radio Antenna Cord Replacement Components (2 Of 3)
Courtesy of TOYOTA MOTOR SALES, U.S.A., INC.

ILLUSTRATION

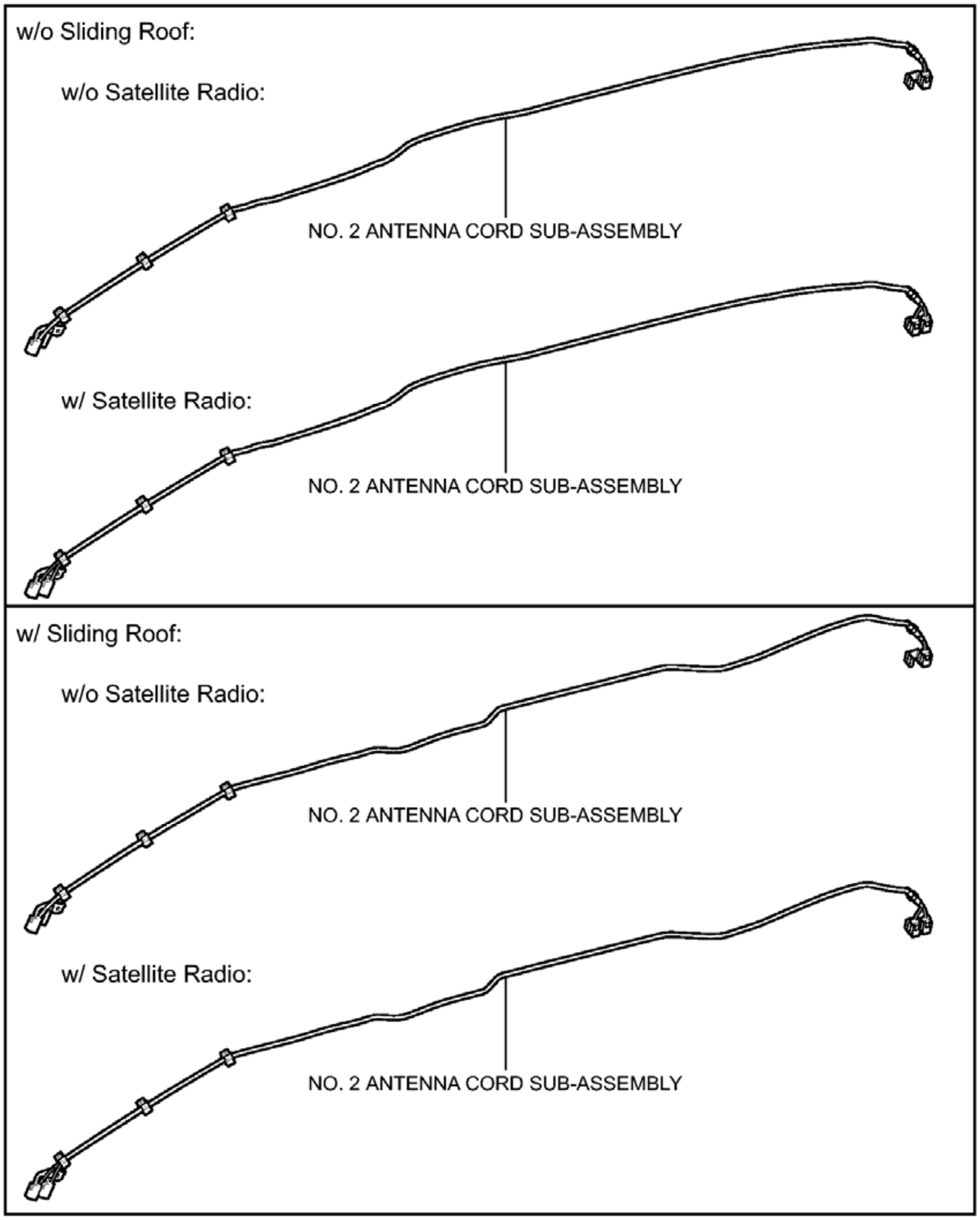
w/o Sliding Roof:
w/o Satellite Radio:
NO. 2 ANTENNA CORD SUB-ASSEMBLY
w/ Satellite Radio:
NO. 2 ANTENNA CORD SUB-ASSEMBLY
w/ Sliding Roof:
w/o Satellite Radio:
NO. 2 ANTENNA CORD SUB-ASSEMBLY
w/ Satellite Radio:
NO. 2 ANTENNA CORD SUB-ASSEMBLY
P

Fig. 52: Identifying Radio Antenna Cord Replacement Components (3 Of 3)
Courtesy of TOYOTA MOTOR SALES, U.S.A., INC.

REMOVAL

REMOVAL

1. **REMOVE INSTRUMENT PANEL SAFETY PAD ASSEMBLY**

Refer to **REMOVAL** .

2. **REMOVE NO. 3 HEATER TO REGISTER DUCT** . Refer to **DISASSEMBLY - Step 5** .
3. **REMOVE NO. 2 SIDE DEFROSTER NOZZLE DUCT** . Refer to **DISASSEMBLY - Step 6** .
4. **REMOVE ANTENNA CORD SUB-ASSEMBLY**
    a. Disengage the 8 clamps and remove the antenna cord sub-assembly.

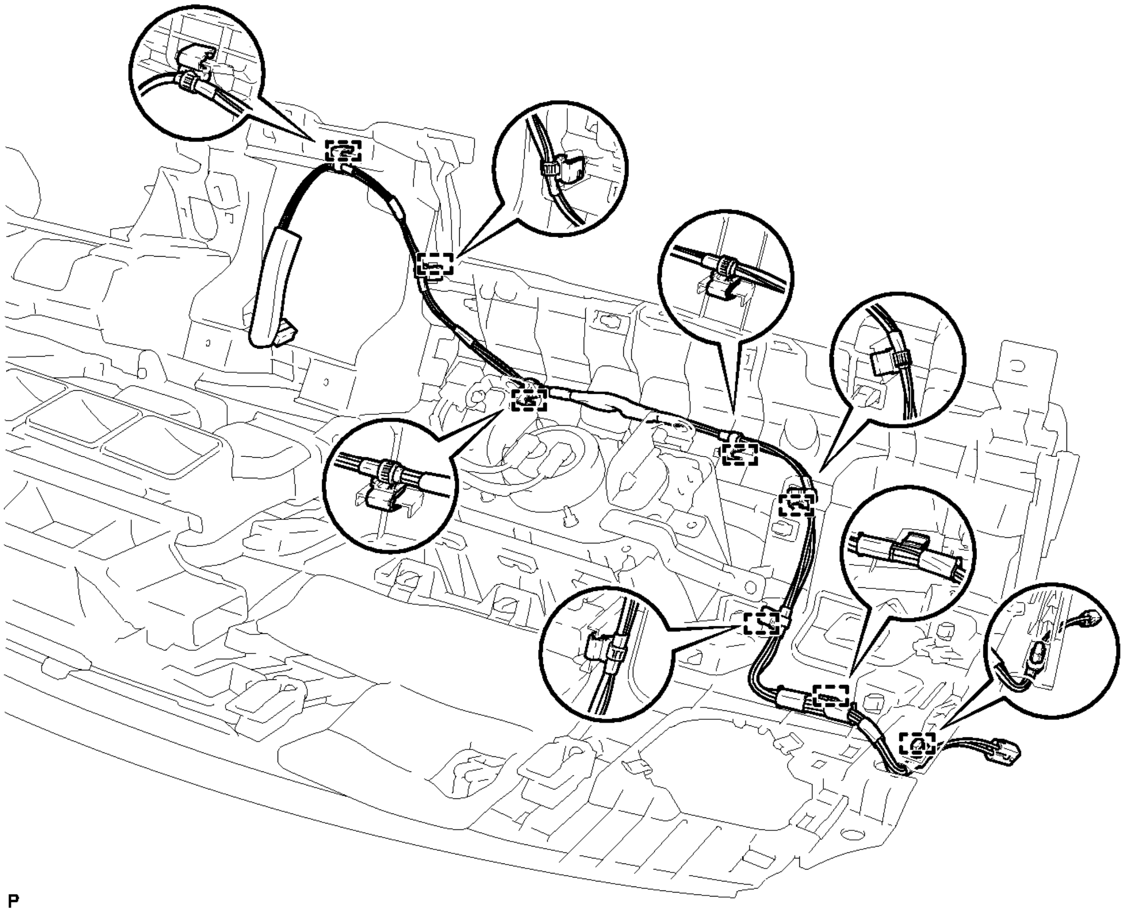

Fig. 53: Locating Antenna Cord Sub-Assembly Clamps
Courtesy of TOYOTA MOTOR SALES, U.S.A., INC.

5. **REMOVE ROOF HEADLINING ASSEMBLY**

Refer to **REMOVAL** .

6. **REMOVE NO. 2 ANTENNA CORD SUB-ASSEMBLY**
    a. Peel back the tape used to secure the antenna cord only to the extent that allows removal of the No. 2 antenna cord sub-assembly.

HINT:

Tape is not available as a supply part. Try to leave as much tape as possible on the roof headlining so that the tape can be reused.

b. Remove the No. 2 antenna cord sub-assembly from the roof headlining.

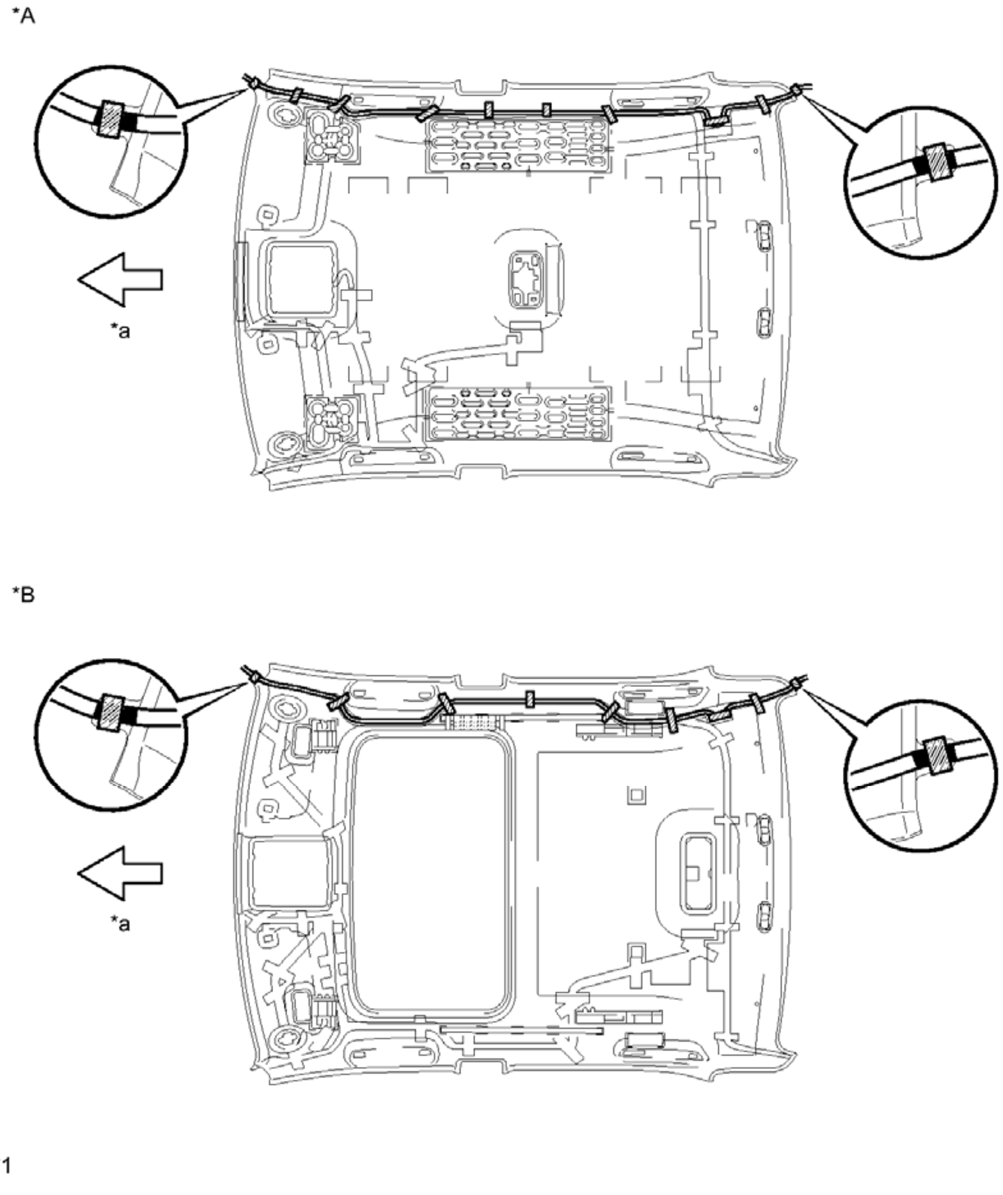

Fig. 54: Identifying No. 2 Antenna Cord Sub-Assembly
Courtesy of TOYOTA MOTOR SALES, U.S.A., INC.

TEXT IN ILLUSTRATION

*A	w/o Sliding Roof	*B	w/ Sliding Roof
*1	Tape	-	-

*a	Front	-	-

INSTALLATION

INSTALLATION

1. INSTALL NO. 2 ANTENNA CORD SUB-ASSEMBLY

HINT:

The double-sided tape and tape are not available as supply parts. If these pieces of tape still have enough adhesion to secure the roof headlining and antenna cord, reuse them. If the roof headlining has been replaced with a new one, or if the tape and/or the double-sided tape is no longer sticky, apply new tape following the procedure below.

a. Apply new double-sided tape.

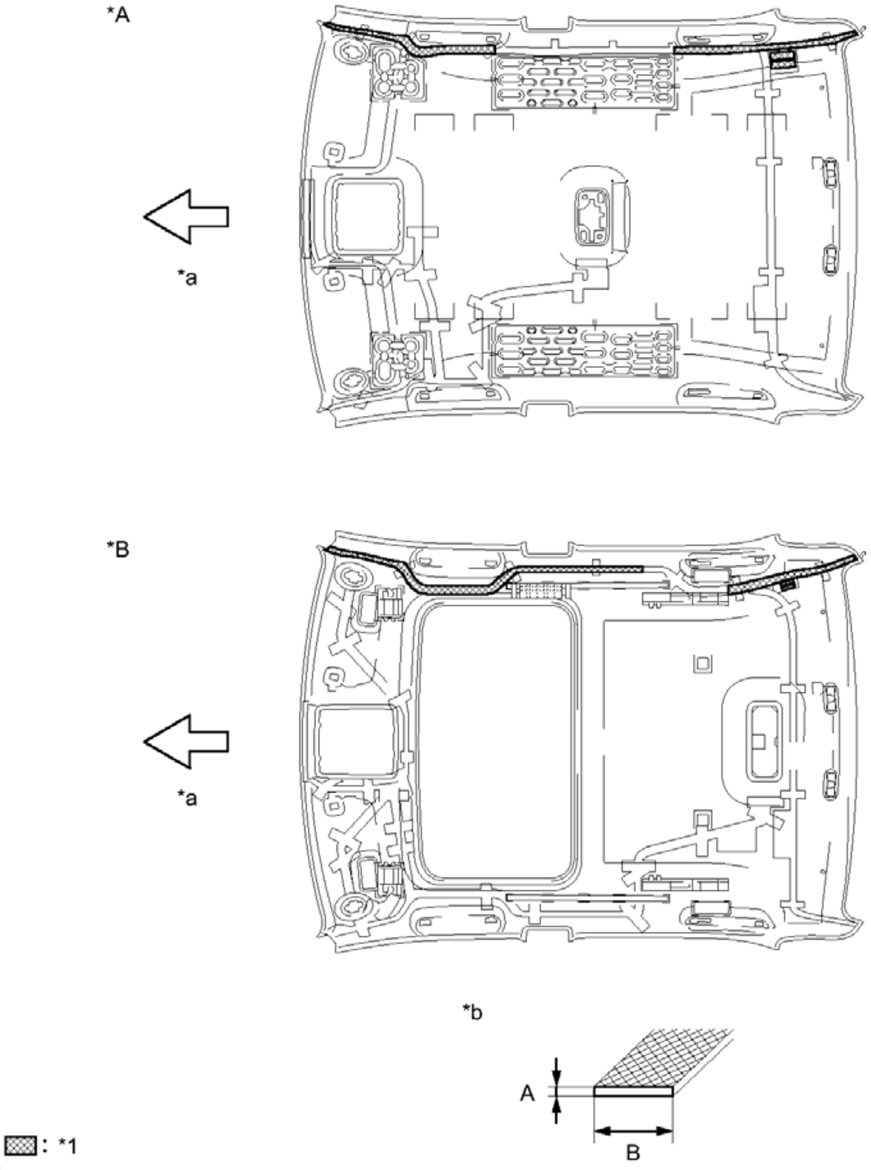

Fig. 55: Identifying No. 2 Antenna Cord Sub-Assembly With New Double-Sided Tape
Courtesy of TOYOTA MOTOR SALES, U.S.A., INC.

TEXT IN ILLUSTRATION

*A	w/o Sliding Roof	*B	w/ Sliding Roof
*1	Double-sided Tape	-	-
*a	Front	*b	Double-sided

			Tape Size

DOUBLE-SIDED TAPE SIZE

Area	**Dimension**
A	1.0 mm (0.0394 in.)
B	10.0 mm (0.394 in.)

1. Remove the old double-sided tape from the roof headlining assembly.
2. Prepare the appropriate amount of new double-sided tape.

   HINT:

   Be careful not to touch the adhesive surface.

3. Apply the double-sided tape to the roof headlining while aligning the tape with the markings on the roof headlining assembly.
4. Peel off the release paper from the double-sided tape.

b. Install the No. 2 antenna cord sub-assembly to the roof headlining assembly from the front of the vehicle.

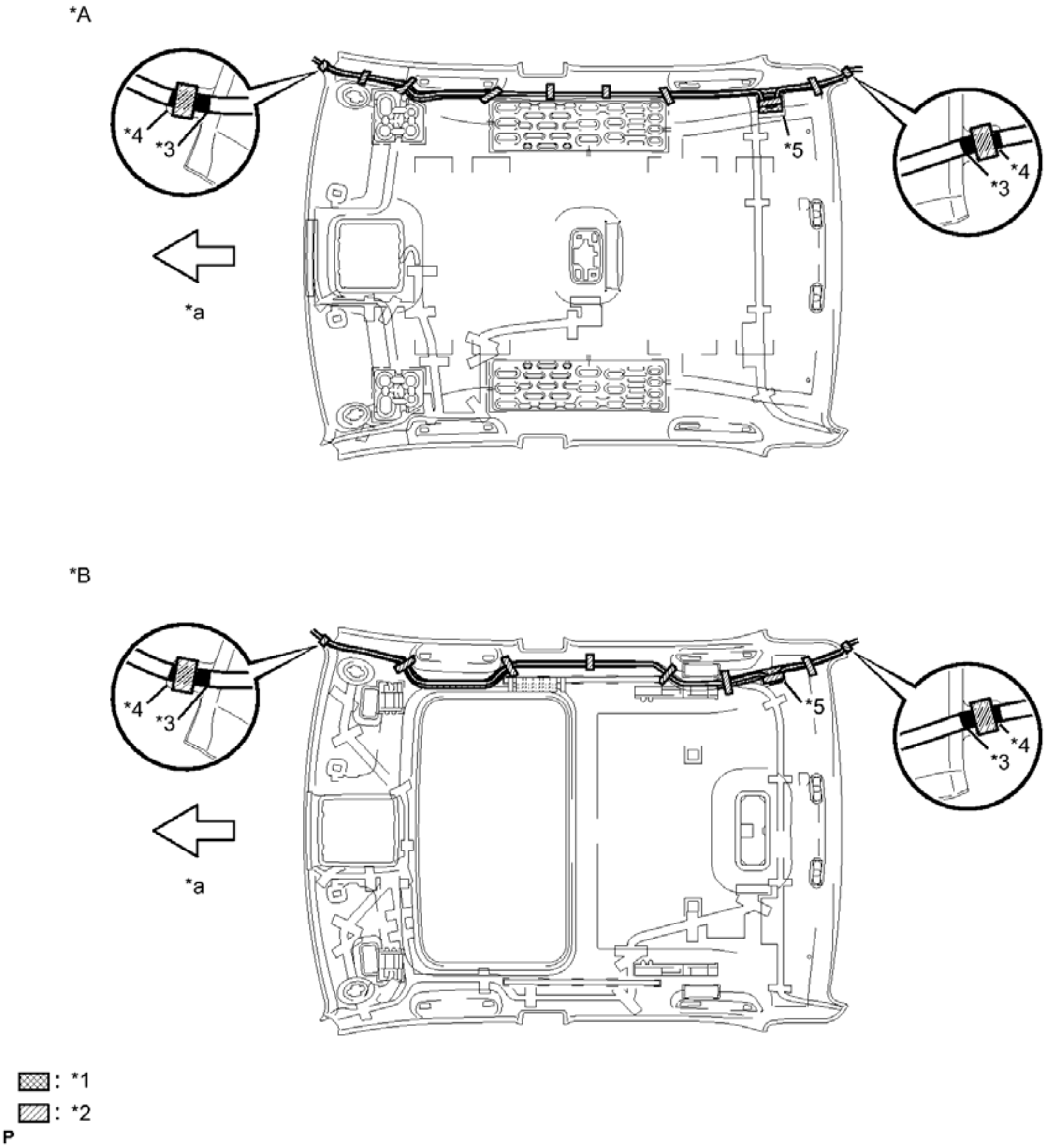

Fig. 56: Identifying No. 2 Antenna Cord Sub-Assembly
Courtesy of TOYOTA MOTOR SALES, U.S.A., INC.

TEXT IN ILLUSTRATION

*A	w/o Sliding Roof	*B	w/ Sliding Roof
*1	Double-sided Tape	*2	Tape
*3	Marking Tape	*4	Protrusion
*5	Adjustment Area	-	-

*a	Front	-	-

HINT:

Align the taped part of the antenna cable with the protrusion of the roof headlining, and apply tape to secure the cable to the headlining.

c. Put the strips of tape back to the positions shown in the illustration in order to secure the antenna cord to the roof headlining assembly.

HINT:

- If the tape is no longer sticky, use other tape, such as packing tape, that has enough adhesion to secure the antenna cord to the roof headlining assembly.
- For the right front corner of the roof headlining assembly, align the marking tape on the antenna cord with the protrusion of the roof headlining, and wrap tape around the antenna cord and roof headlining assembly once or twice to securely hold them.
- For the right rear corner of the roof headlining assembly, align the marking tape on the antenna cord with the rear edge of the roof headlining, and secure the antenna cord to the roof headlining assembly with tape.
- If the entire length of the antenna cord does not fit, adjust the length by tucking in the cord at the area shown in the illustration.

2. **INSTALL ROOF HEADLINING ASSEMBLY**

   Refer to **INSTALLATION** .

3. **INSTALL ANTENNA CORD SUB-ASSEMBLY**
   a. Engage the 8 clamps to install the antenna cord sub-assembly.
4. **INSTALL NO. 2 SIDE DEFROSTER NOZZLE DUCT** . Refer to **REASSEMBLY - Step 6** .
5. **INSTALL NO. 3 HEATER TO REGISTER DUCT** . Refer to **REASSEMBLY - Step 7** .
6. **INSTALL INSTRUMENT PANEL SAFETY PAD ASSEMBLY**

   Refer to **INSTALLATION** .

AMPLIFIER ANTENNA

COMPONENTS

ILLUSTRATION

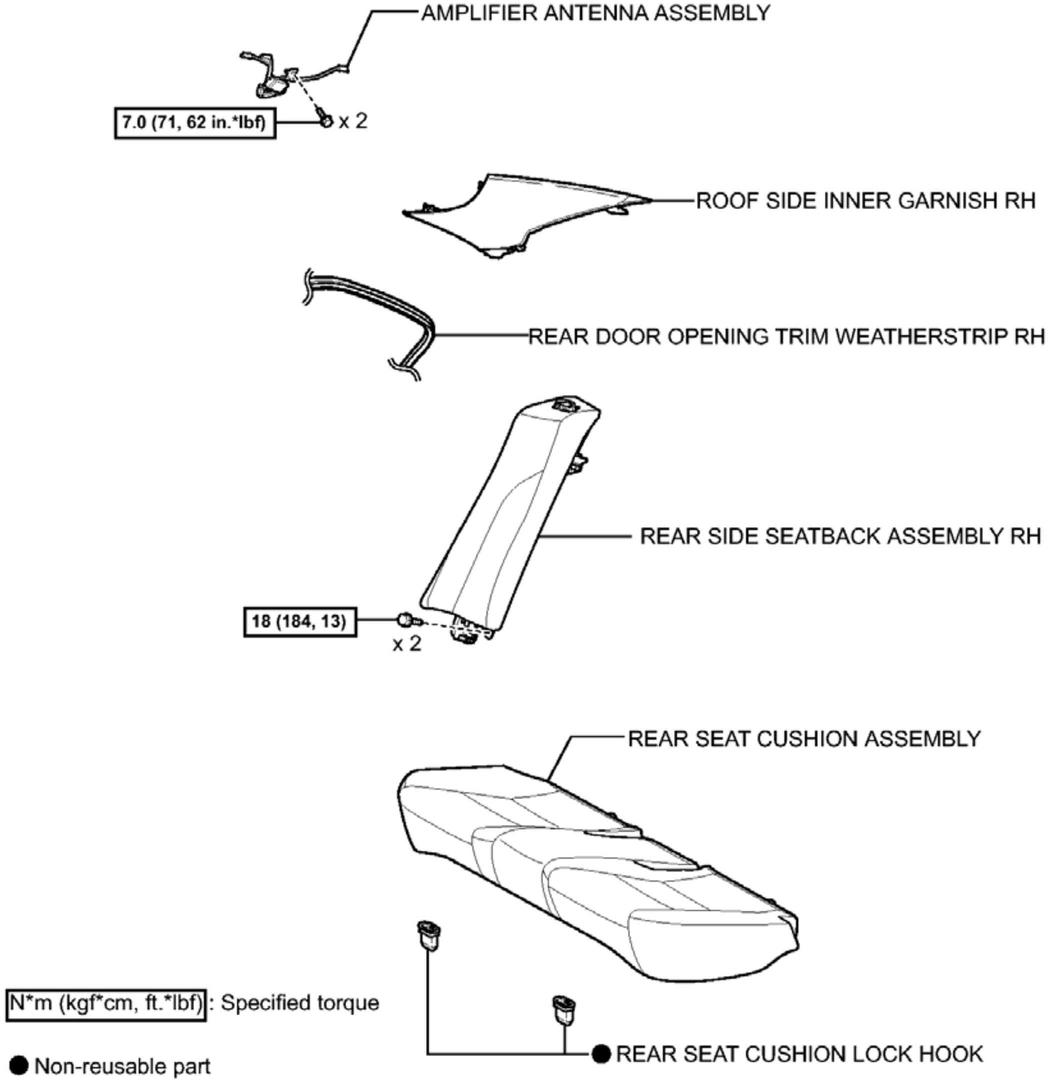
AMPLIFIER ANTENNA ASSEMBLY
7.0 (71, 62 in.*lbf)
x 2
ROOF SIDE INNER GARNISH RH
REAR DOOR OPENING TRIM WEATHERSTRIP RH
REAR SIDE SEATBACK ASSEMBLY RH
18 (184, 13)
x 2
REAR SEAT CUSHION ASSEMBLY
N*m (kgf*cm, ft.*lbf): Specified torque
● Non-reusable part
● REAR SEAT CUSHION LOCK HOOK

P

Fig. 57: Identifying Amplifier Antenna Replacement Components With Torque Specifications
Courtesy of TOYOTA MOTOR SALES, U.S.A., INC.

REMOVAL

REMOVAL

1. **PRECAUTION**

NOTE: **After turning the ignition switch off, waiting time may be required before disconnecting the cable from the negative (-) battery terminal. Therefore, make sure to read the disconnecting the cable from the negative (-) battery terminal notices before proceeding with work. Refer to PRECAUTION .**

2. **DISCONNECT CABLE FROM NEGATIVE BATTERY TERMINAL**

WARNING: **Wait at least 90 seconds after disconnecting the cable from the negative (-) battery terminal to disable the SRS system.**

NOTE: **When disconnecting the cable, some systems need to be initialized after the cable is reconnected. Refer to INITIALIZATION .**

3. **REMOVE REAR SEAT CUSHION ASSEMBLY** . Refer to **REMOVAL - Step 3** .
4. **REMOVE REAR SEAT CUSHION LOCK HOOK** . Refer to **REMOVAL - Step 4** .
5. **REMOVE REAR SIDE SEATBACK ASSEMBLY RH** . Refer to **REMOVAL - Step 9** .
6. **DISCONNECT REAR DOOR OPENING TRIM WEATHERSTRIP RH** . Refer to **REMOVAL - Step 13** .
7. **REMOVE ROOF SIDE INNER GARNISH RH**

   HINT:

   Use the same procedure as for the LH side. Refer to **REMOVAL - Step 24** .

8. **REMOVE AMPLIFIER ANTENNA ASSEMBLY**
   a. Disconnect the 4 connectors and disengage the clamp.

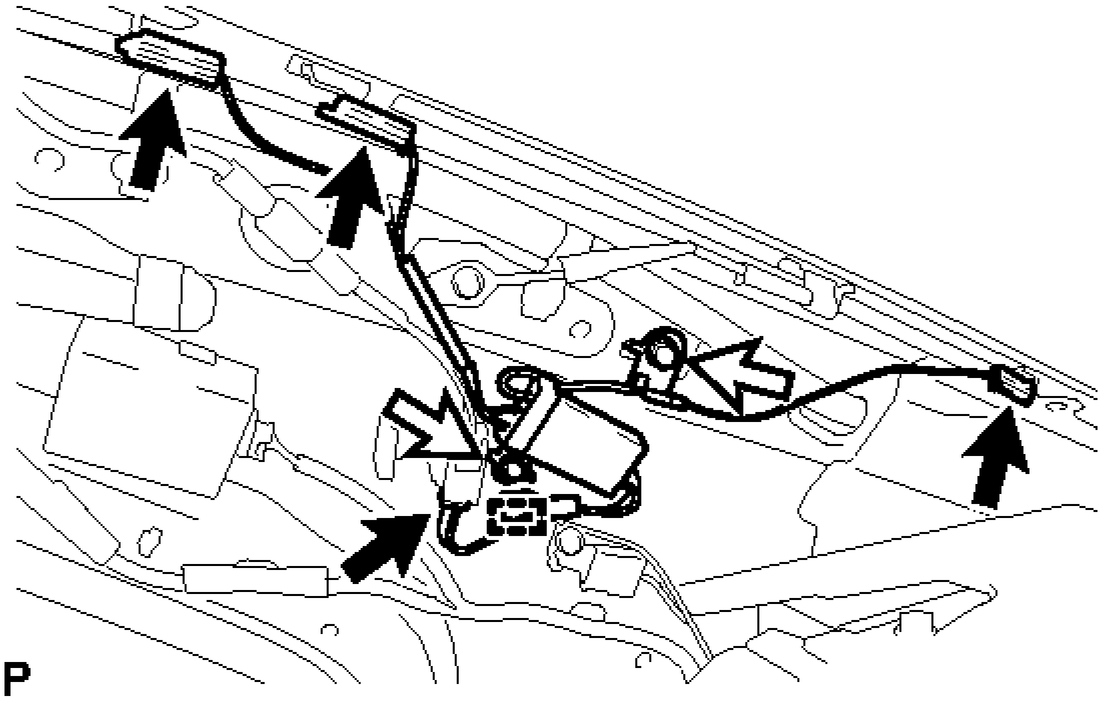

Fig. 58: Identifying Amplifier Antenna Assembly Connectors And Fasteners
Courtesy of TOYOTA MOTOR SALES, U.S.A., INC.

   b. Remove the 2 bolts and the amplifier antenna assembly.

INSTALLATION

INSTALLATION

1. **INSTALL AMPLIFIER ANTENNA ASSEMBLY**
   a. Install the amplifier antenna assembly with the 2 bolts.

      Torque: 7.0 N*m (71 kgf*cm, 62 in.*lbf)

   b. Connect the 4 connectors and engage the clamp.
2. **INSTALL ROOF SIDE INNER GARNISH RH**

   HINT:

   Use the same procedure as for the LH side. Refer to **INSTALLATION - Step 20** .

3. **INSTALL REAR DOOR OPENING TRIM WEATHERSTRIP RH** . Refer to **INSTALLATION - Step 32** .
4. **INSTALL REAR SIDE SEATBACK ASSEMBLY RH** . Refer to **INSTALLATION - Step 1** .
5. **INSTALL REAR SEAT CUSHION LOCK HOOK** . Refer to **INSTALLATION - Step 6** .
6. **INSTALL REAR SEAT CUSHION ASSEMBLY** . Refer to **INSTALLATION - Step 7** .
7. **DISCONNECT CABLE TO NEGATIVE BATTERY TERMINAL**

   NOTE: **When disconnecting the cable, some systems need to be initialized after the cable is reconnected. Refer to INITIALIZATION .**

8. **INSPECT SRS WARNING LIGHT**

   For Built-in Type Yaw Rate Sensor: Refer to **DIAGNOSIS SYSTEM** .

   For Separate Type Yaw Rate Sensor: Refer to **DIAGNOSIS SYSTEM** .

STEREO JACK ADAPTER ASSEMBLY

COMPONENTS

ILLUSTRATION

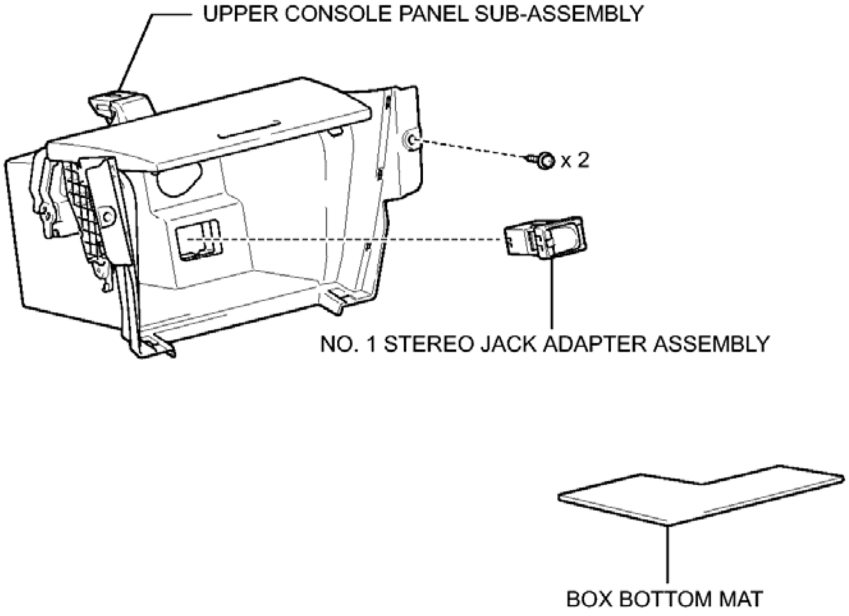
UPPER CONSOLE PANEL SUB-ASSEMBLY
x 2
NO. 1 STEREO JACK ADAPTER ASSEMBLY
BOX BOTTOM MAT

P

Fig. 59: Identifying Stereo Jack Adapter Assembly Replacement Components
Courtesy of TOYOTA MOTOR SALES, U.S.A., INC.

REMOVAL

REMOVAL

1. **REMOVE REAR CONSOLE BOX ASSEMBLY**

   Refer to **REMOVAL** .

2. **REMOVE BOX BOTTOM MAT** . Refer to **REMOVAL - Step 25** .
3. **REMOVE UPPER CONSOLE PANEL SUB-ASSEMBLY** . Refer to **REMOVAL - Step 26** .
4. **REMOVE NO. 1 STEREO JACK ADAPTER ASSEMBLY**
   1. Disengage the 2 claws to remove the No. 1 stereo jack adapter assembly.

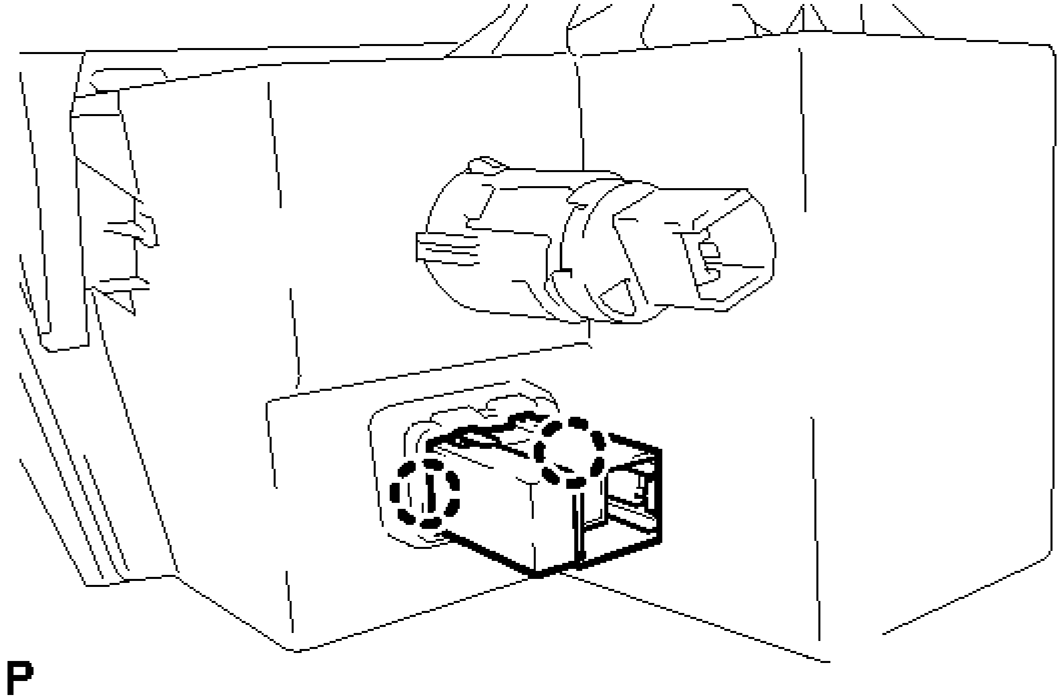

Fig. 60: Identifying No. 1 Stereo Jack Adapter Assembly Claws
Courtesy of TOYOTA MOTOR SALES, U.S.A., INC.

INSTALLATION

INSTALLATION

1. **INSTALL NO. 1 STEREO JACK ADAPTER ASSEMBLY**
    a. Engage the 2 claws to install the No. 1 stereo jack adapter assembly.
2. **INSTALL UPPER CONSOLE PANEL SUB-ASSEMBLY** . Refer to **INSTALLATION - Step 27** .
3. **INSTALL BOX BOTTOM MAT** . Refer to **INSTALLATION - Step 28** .
4. **INSTALL REAR CONSOLE BOX ASSEMBLY**

    Refer to **INSTALLATION** .

WINDOW GLASS ANTENNA WIRE

ON-VEHICLE INSPECTION

ON-VEHICLE INSPECTION

1. **INSPECT WINDOW GLASS ANTENNA WIRE**
    a. Check for continuity of the antenna.

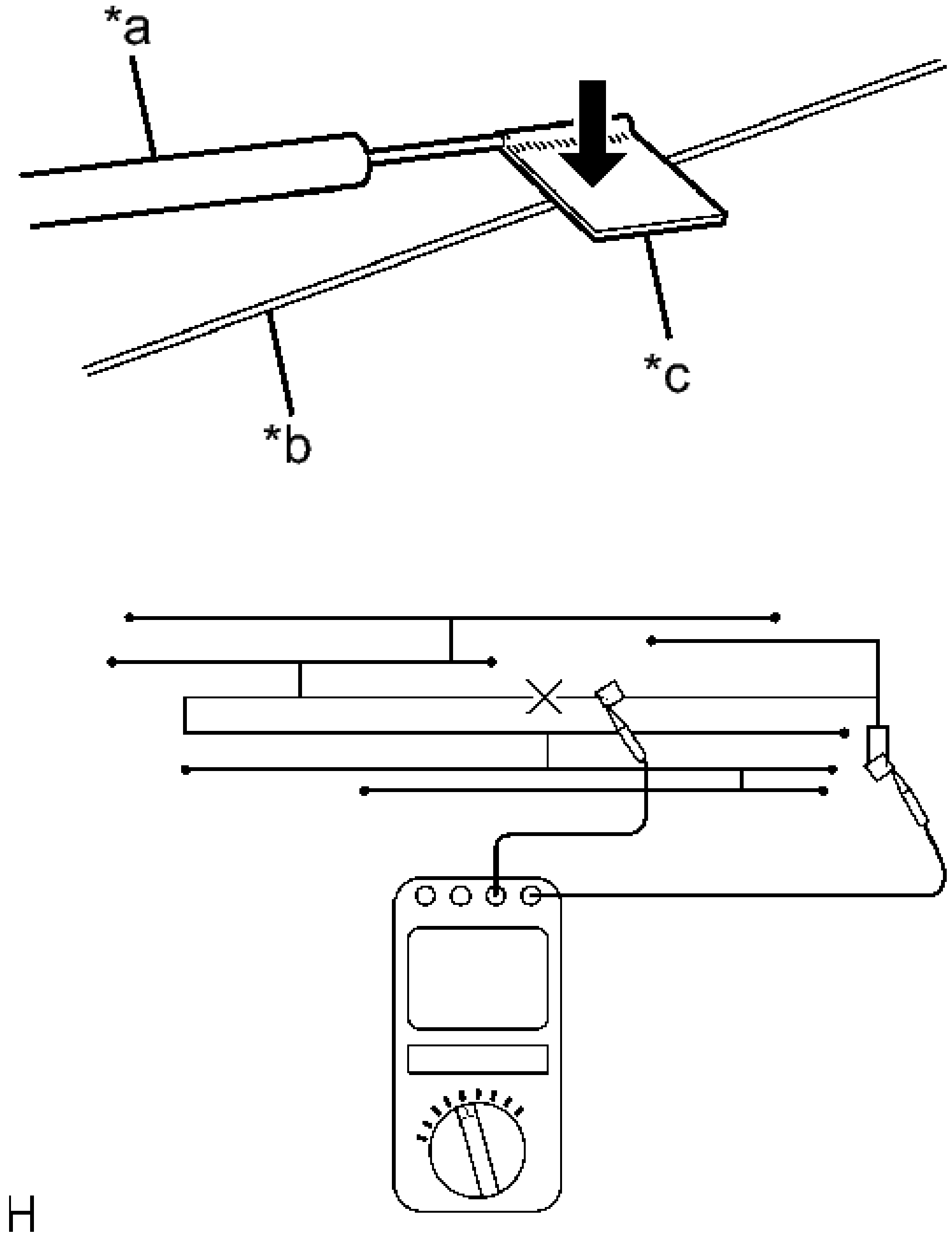

Fig. 61: Checking For Continuity Of Each Antenna Wire
Courtesy of TOYOTA MOTOR SALES, U.S.A., INC.

TEXT IN ILLUSTRATION

	Tester

*a	Probe
*b	Antenna Wire
*c	Tin Foil

HINT:

Check for continuity at the center of each antenna wire as shown in the illustration.

NOTE:

- **When cleaning the glass, wipe it in the direction of the wire with a soft dry cloth. Take care not to damage the wire. Do not use detergents or glass cleaners with abrasive ingredients.**
- **When measuring resistance, wrap a piece of tin foil around the tip of the negative probe and press the foil against the wire with your finger, as shown in the illustration.**

OK

There is continuity in the antenna.

If the result is not as specified, repair the window glass antenna wire.

REPAIR

REPAIR

1. **REPAIR WINDOW GLASS ANTENNA WIRE**

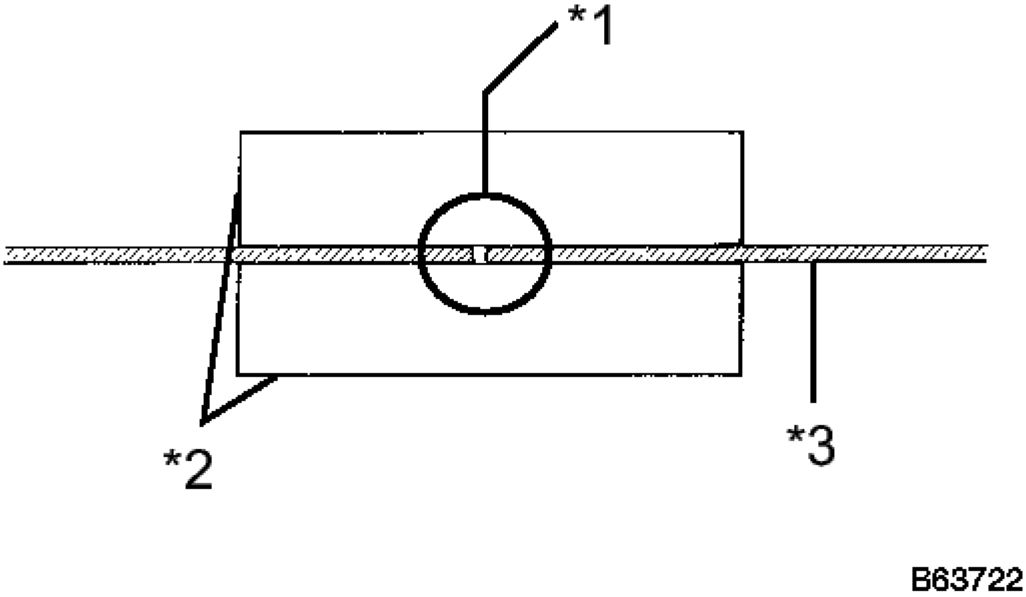

Fig. 62: Identifying Window Glass Antenna Wire Repair Point
Courtesy of TOYOTA MOTOR SALES, U.S.A., INC.

TEXT IN ILLUSTRATION

*1	Repair Point
*2	Masking Tape
*3	Broken Wire

a. Clean the broken wire tips with a grease, wax and silicone remover.
b. Place masking tape along both sides of the wire to be repaired.
c. Thoroughly mix the repair agent (Dupont paste No. 4817 or equivalent).
d. Using a fine tip brush, apply a small amount of the repair agent to the wire.

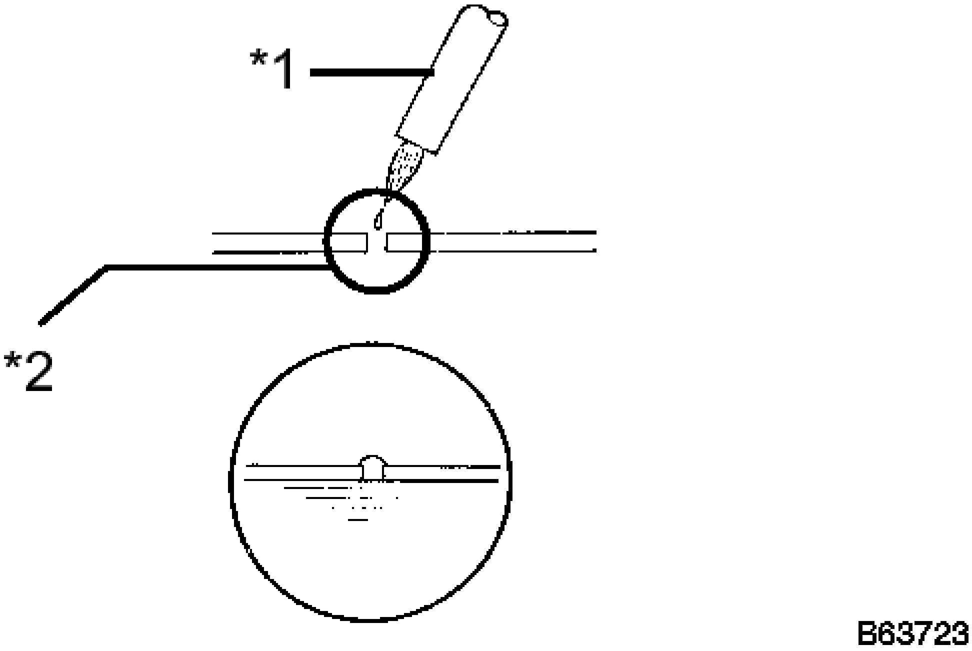

Fig. 63: Applying Repair Agent To Wire
Courtesy of TOYOTA MOTOR SALES, U.S.A., INC.

TEXT IN ILLUSTRATION

*1	Fine Tip Brush
*2	Repair Point

e. After a few minutes, remove the masking tape.

SATELLITE RADIO ANTENNA

COMPONENTS

ILLUSTRATION

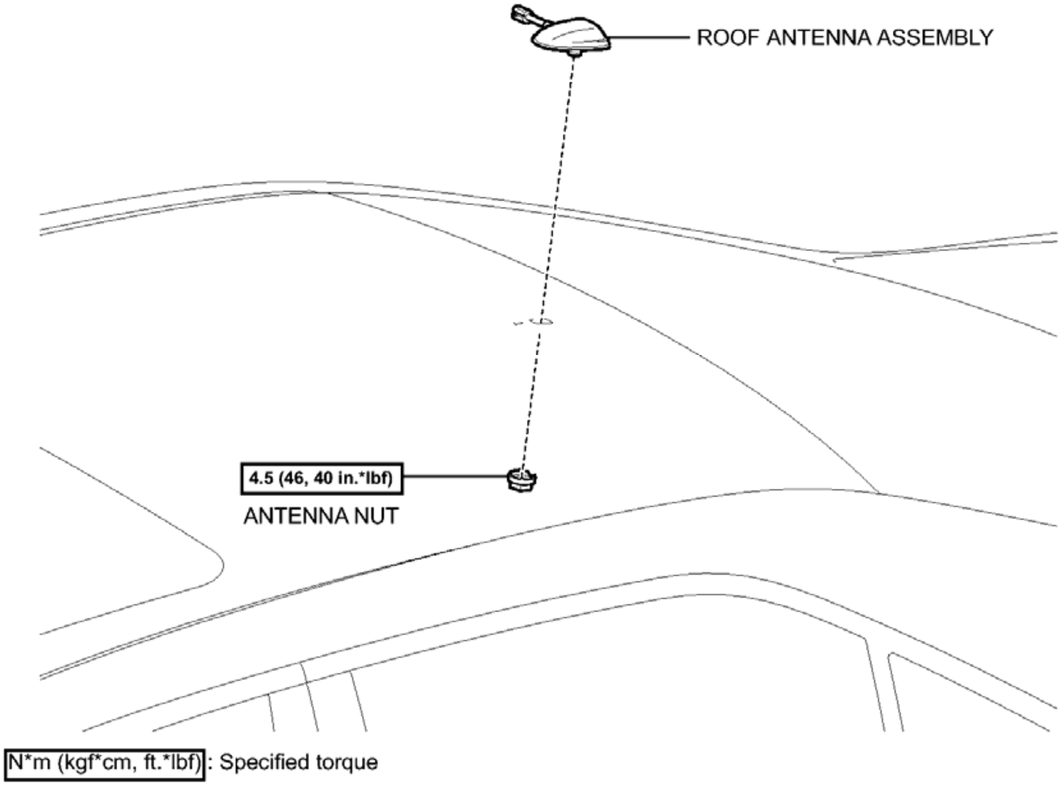
ROOF ANTENNA ASSEMBLY
4.5 (46, 40 in.*lbf)
ANTENNA NUT
N*m (kgf*cm, ft.*lbf): Specified torque
P

Fig. 64: Identifying Satellite Radio Antenna Replacement Components With Torque Specifications
Courtesy of TOYOTA MOTOR SALES, U.S.A., INC.

REMOVAL

REMOVAL

1. **REMOVE ROOF HEADLINING ASSEMBLY**

   Refer to **REMOVAL** .

2. **REMOVE ROOF ANTENNA ASSEMBLY**
   a. Disconnect the connector.

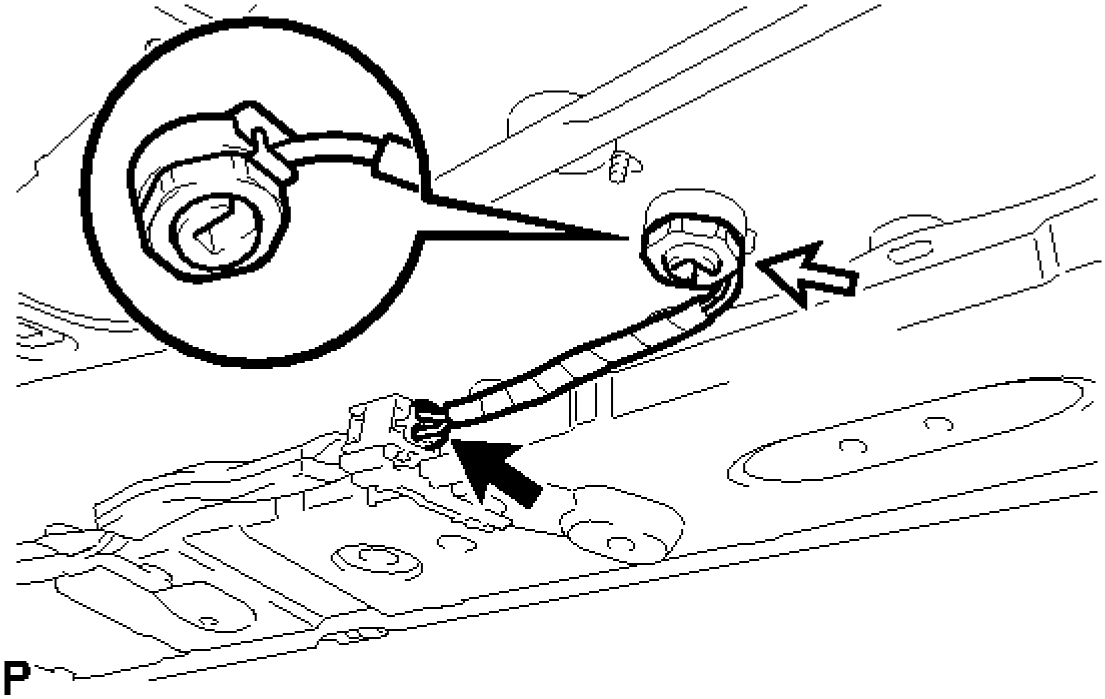

Fig. 65: Locating Roof Antenna Assembly Connector And Fastener
Courtesy of TOYOTA MOTOR SALES, U.S.A., INC.

b. Remove the antenna nut.
c. Disengage the 2 claws.

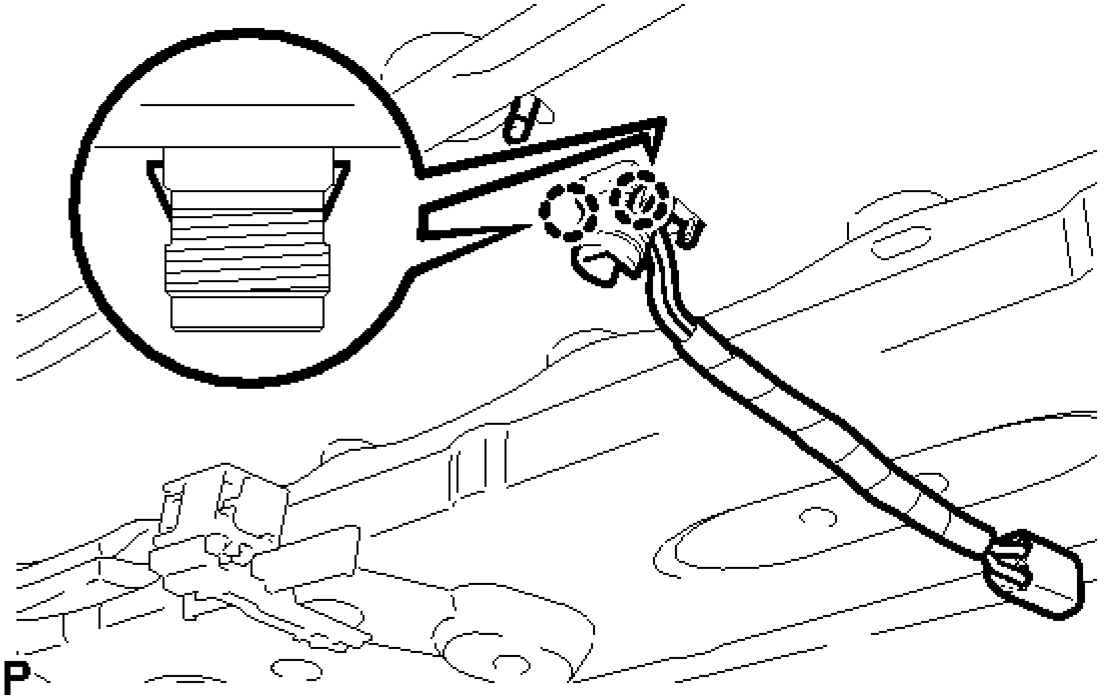

Fig. 66: Locating Roof Antenna Assembly Claws

Courtesy of TOYOTA MOTOR SALES, U.S.A., INC.

d. Disengage the 3 guides and remove the roof antenna assembly.

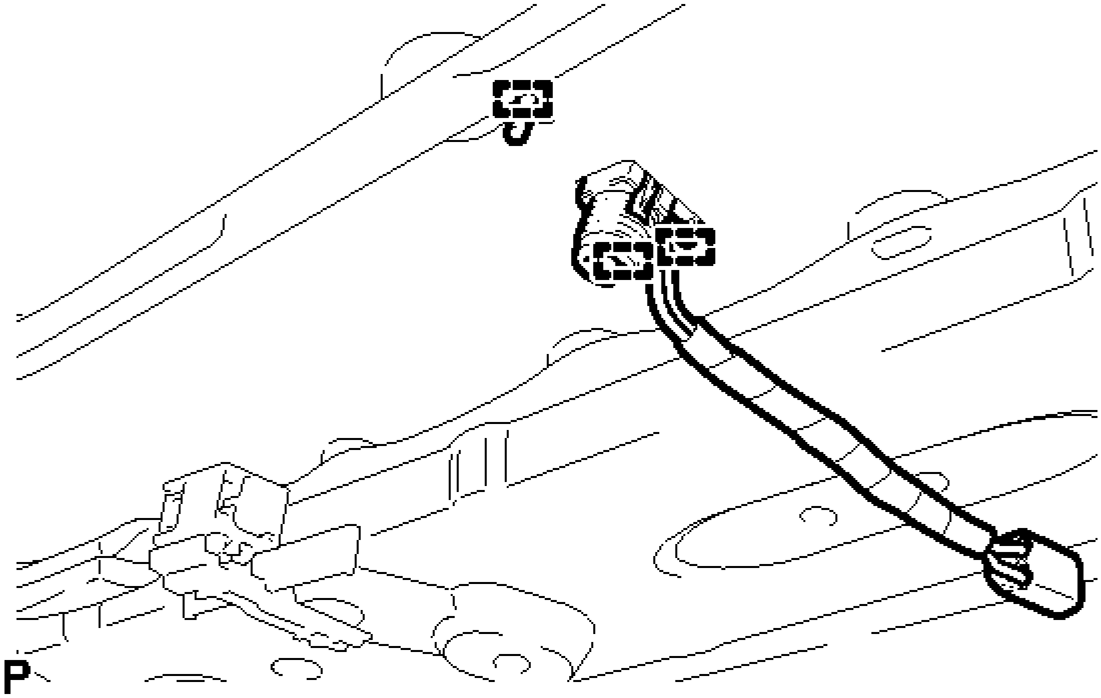

Fig. 67: Locating Roof Antenna Assembly Guides
Courtesy of TOYOTA MOTOR SALES, U.S.A., INC.

INSTALLATION

INSTALLATION

1. **INSTALL ROOF ANTENNA ASSEMBLY**
    a. Engage the 3 guides and 2 claws to the vehicle body to temporarily install the roof antenna assembly.
    b. Place the antenna cord in the cutout of the antenna nut.

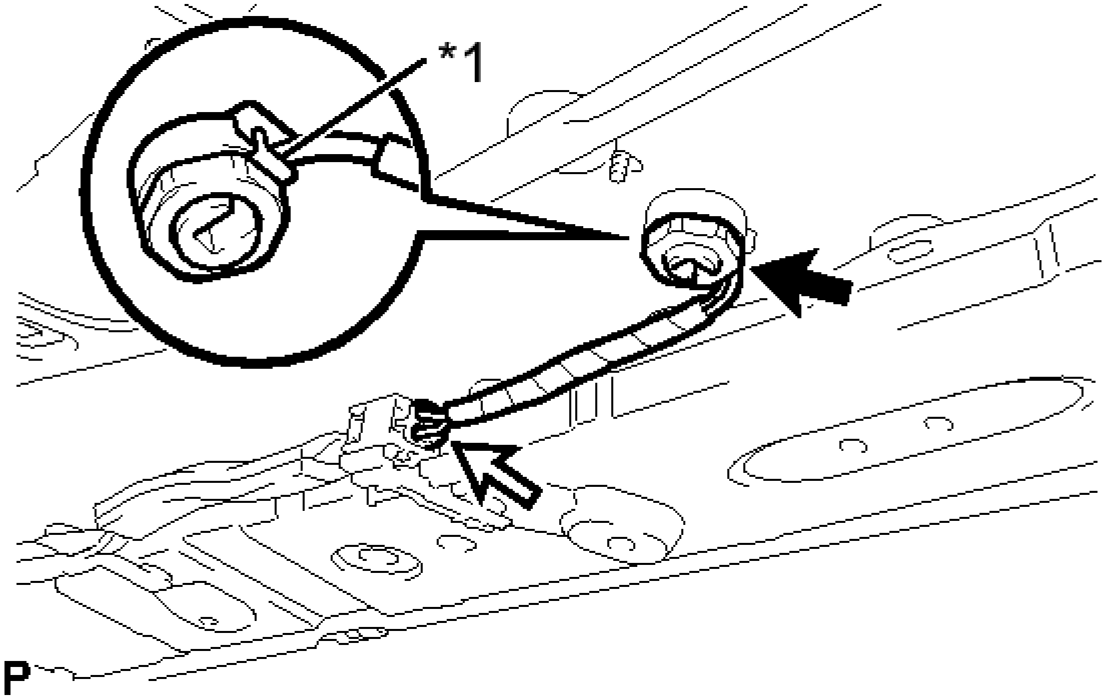

Fig. 68: Locating Roof Antenna Assembly Connector And Fastener
Courtesy of TOYOTA MOTOR SALES, U.S.A., INC.

TEXT IN ILLUSTRATION

*1	Cutout

c. Install the roof antenna assembly with the antenna nut.

   Torque: 4.5 N*m (46 kgf*cm, 40 in.*lbf)

d. Connect the connector.

2. **INSTALL ROOF HEADLINING ASSEMBLY**

   Refer to **INSTALLATION** .

NOISE FILTER

COMPONENTS

ILLUSTRATION

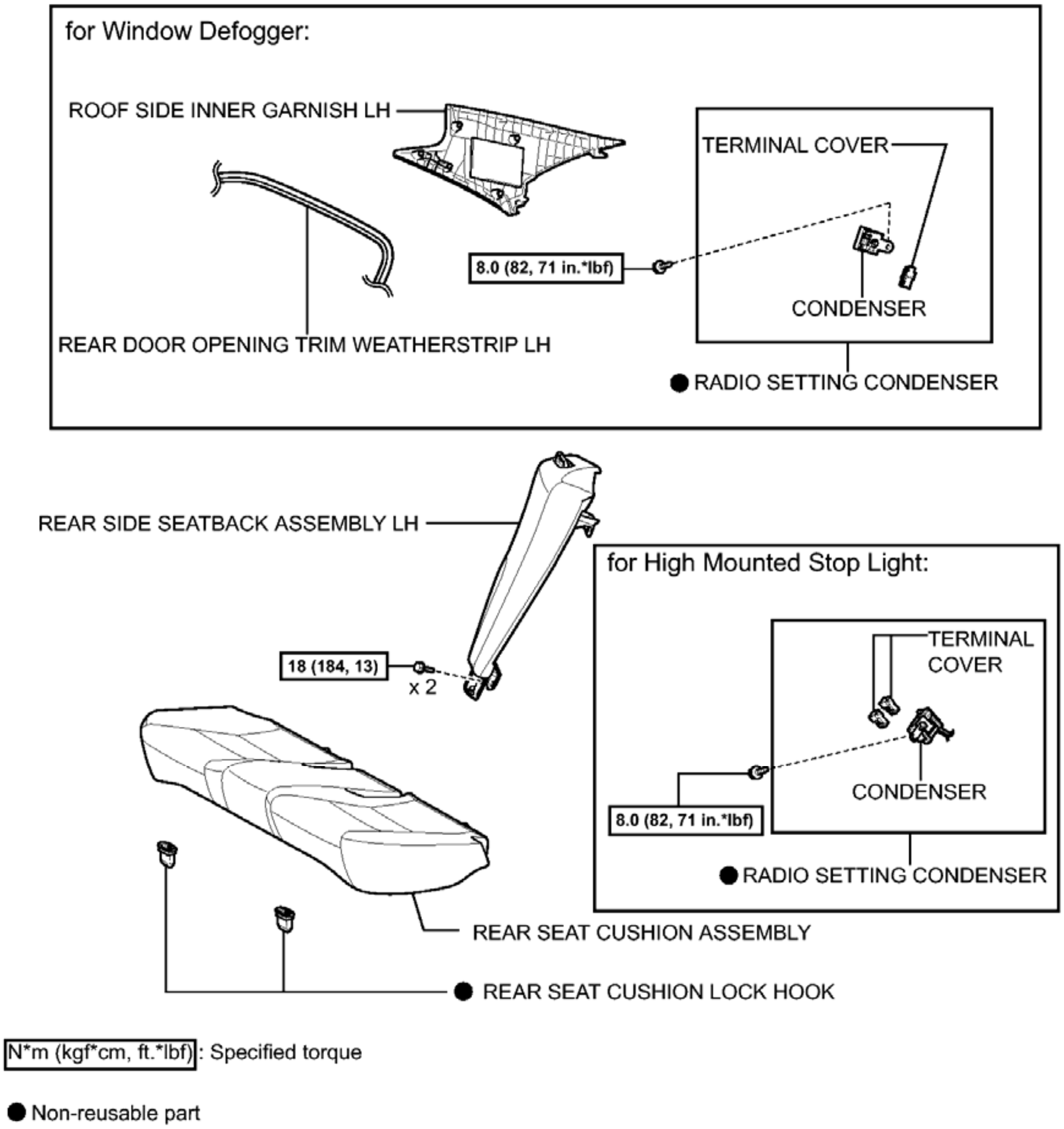
for Window Defogger:
ROOF SIDE INNER GARNISH LH
TERMINAL COVER
8.0 (82, 71 in.*lbf)
CONDENSER
REAR DOOR OPENING TRIM WEATHERSTRIP LH
● RADIO SETTING CONDENSER
REAR SIDE SEATBACK ASSEMBLY LH
for High Mounted Stop Light:
TERMINAL COVER
18 (184, 13)
x 2
CONDENSER
8.0 (82, 71 in.*lbf)
● RADIO SETTING CONDENSER
REAR SEAT CUSHION ASSEMBLY
● REAR SEAT CUSHION LOCK HOOK
N*m (kgf*cm, ft.*lbf): Specified torque
● Non-reusable part
P

Fig. 69: Identifying Noise Filter Replacement Components With Torque Specifications
Courtesy of TOYOTA MOTOR SALES, U.S.A., INC.

ON-VEHICLE INSPECTION

ON-VEHICLE INSPECTION

1. **INSPECT RADIO SETTING CONDENSER (for High Mounted Stop Light)**
    a. With the radio setting condenser installed, check that there is no looseness or other abnormalities.
    b. Remove the bolt.
    c. Disengage the clamp and disconnect the radio setting condenser with wire harness from the vehicle body.

d. Measure the resistance and voltage of the radio setting condenser according to the value(s) in the table below.

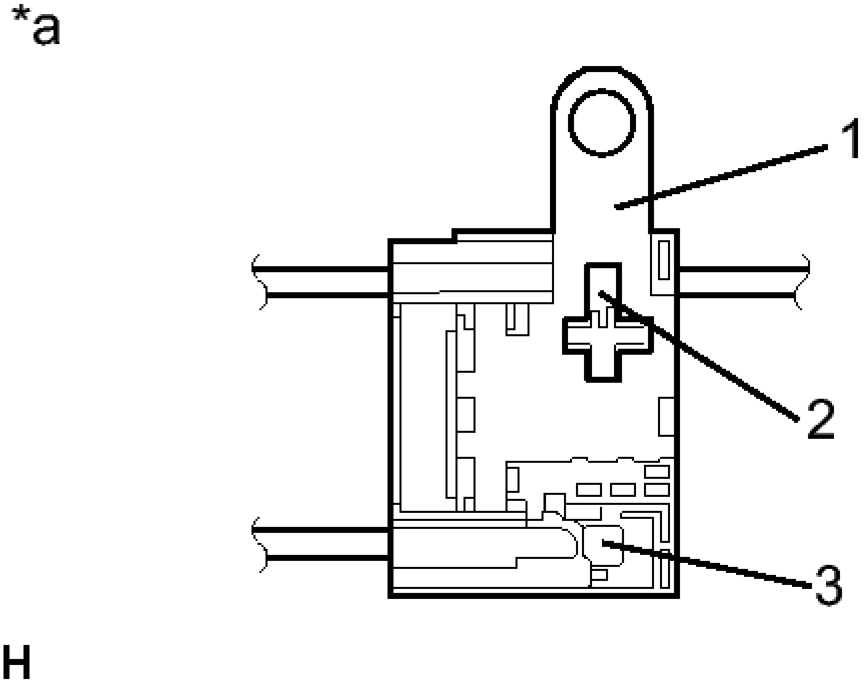

Fig. 70: Inspecting Radio Setting Condenser (For High Mounted Stop Light)
Courtesy of TOYOTA MOTOR SALES, U.S.A., INC.

NOTE: **Before measuring the resistance and voltage, be sure to use insulated probes to avoid a short circuit between the tester terminal and bracket.**

Standard Resistance

Tester Connection	Condition	Specified Condition
1 - 2	• Ignition switch off • High mounted stop light off • Window defogger off • Luggage compartment room light off	10 kohms or higher
1 - 3		10 kohms or higher
1 - Body ground		Below 1 ohms

Standard Voltage

Tester Connection	Condition	Specified Condition
2 - Body ground	• Ignition switch ON • High mounted stop light off • Window defogger off • Luggage compartment room light off	Below 1 V
3 - Body ground		Below 1 V
2 - Body ground	• Ignition switch ON • High mounted stop light on • Window defogger on • Luggage compartment room light on	11 to 14 V
3 - Body ground		11 to 14 V

TEXT IN ILLUSTRATION

*a	Radio Setting Condenser

2. **INSPECT RADIO SETTING CONDENSER (for Window Defogger)**
   a. With the radio setting condenser installed, check that there is no looseness or other abnormalities.
   b. Remove the bolt.
   c. Disengage the 2 clamps and disconnect the radio setting condenser with wire harness from the vehicle body.
   d. Measure the resistance and voltage of the radio setting condenser according to the value(s) in the table below.

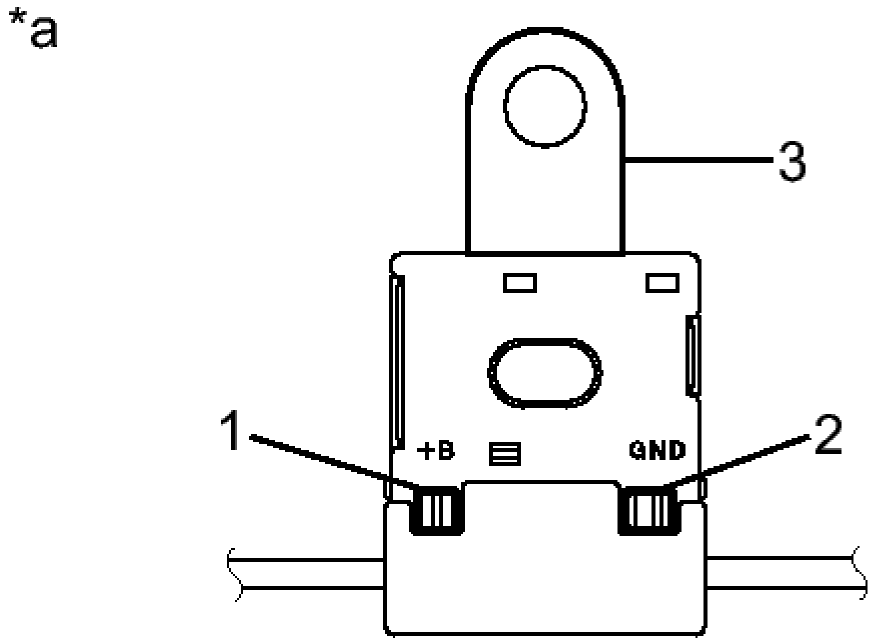

Fig. 71: Inspecting Radio Setting Condenser (For Window Defogger)
Courtesy of TOYOTA MOTOR SALES, U.S.A., INC.

Standard Resistance

Tester Connection	Condition	Specified Condition
1 (+B) - 2 (GND)	• Ignition switch off • High Mounted Stop Light off • Window Defogger turned off • Luggage compartment room light off	10 kohms or higher
3 - Body ground		Below 1 ohms

Standard Resistance

Tester Connection	Condition	Specified Condition

1 - Body ground	• Ignition switch ON • High Mounted Stop Light off • Window Defogger turned off • Luggage compartment room light off	10 kohms or higher
1 - Body ground	• Ignition switch ON • High Mounted Stop Light on • Window Defogger turned on • Luggage compartment room light on	Below 1 ohms

TEXT IN ILLUSTRATION

*a	Radio Setting Condenser

REMOVAL

REMOVAL

1. **PRECAUTION**

   NOTE: **After turning the ignition switch off, waiting time may be required before disconnecting the cable from the negative (-) battery terminal. Therefore, make sure to read the disconnecting the cable from the negative (-) battery terminal notices before proceeding with work. Refer to PRECAUTION .**

2. **DISCONNECT CABLE FROM NEGATIVE BATTERY TERMINAL**

WARNING: **Wait at least 90 seconds after disconnecting the cable from the negative (-) battery terminal to disable the SRS system.**

NOTE: **When disconnecting the cable, some systems need to be initialized after the cable is reconnected. Refer to INITIALIZATION .**

3. **REMOVE REAR SEAT CUSHION ASSEMBLY** . Refer to **REMOVAL - Step 3** .
4. **REMOVE REAR SEAT CUSHION LOCK HOOK** . Refer to **REMOVAL - Step 4** .
5. **REMOVE REAR SIDE SEATBACK ASSEMBLY LH** . Refer to **REMOVAL - Step 8** .
6. **REMOVE RADIO SETTING CONDENSER (for High Mounted Stop Light)**

NOTE: **When the terminal covers are removed, the radio setting condenser must be replaced because the terminal covers and condenser are supplied as a set.**

a. Remove the bolt.

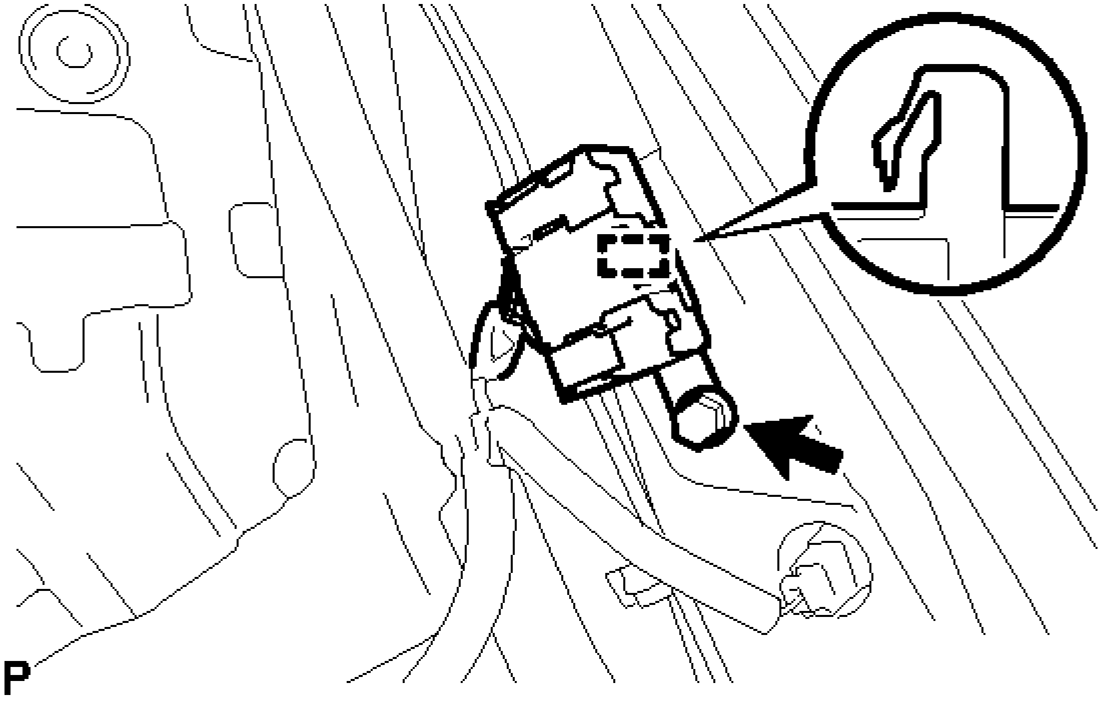

Fig. 72: Locating Radio Setting Condenser Bolt And Clamp (For High Mounted Stop Light)
Courtesy of TOYOTA MOTOR SALES, U.S.A., INC.

b. Disengage the clamp and disconnect the radio setting condenser with wire harness from the vehicle body.

c. Disengage the claw and pull out the cover as shown in the illustration.

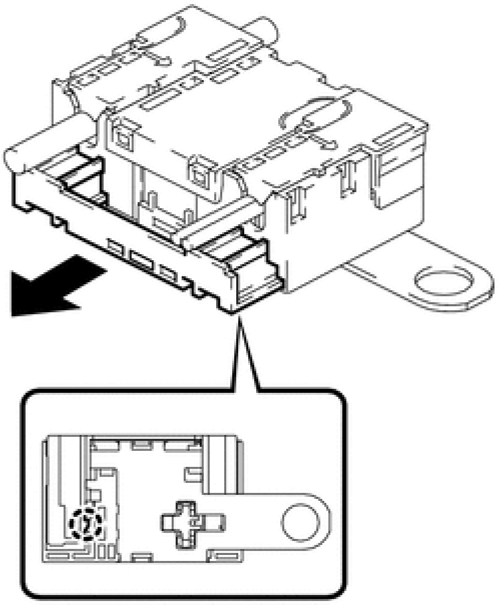

P

Fig. 73: Removing Radio Setting Condenser (For High Mounted Stop Light)
Courtesy of TOYOTA MOTOR SALES, U.S.A., INC.

d. Using a screwdriver, disengage the 6 claws and remove the 2 terminal covers with wire harness from the condenser.

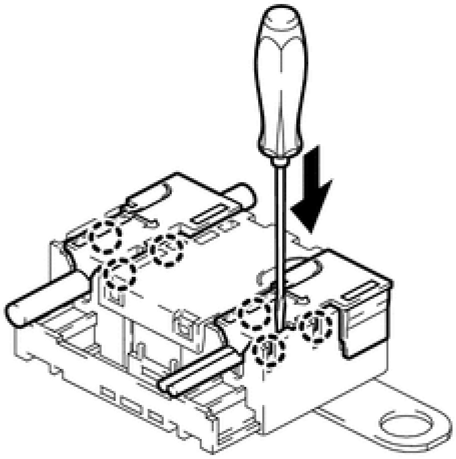

P

Fig. 74: Disengaging Claws (For High Mounted Stop Light)
Courtesy of TOYOTA MOTOR SALES, U.S.A., INC.

e. Using a screwdriver, bend back and break off the claw as shown in the illustration.

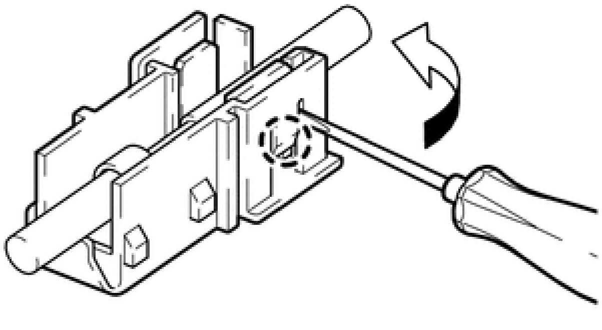

Fig. 75: Bending The Claw (For High Mounted Stop Light)
Courtesy of TOYOTA MOTOR SALES, U.S.A., INC.

f. Remove the terminal cover from the wire harness.

NOTE:

- **Make sure to hold the wire harness on the crimping side of the terminal when disconnecting the wire harness from the terminal cover.**
- **Make sure not to bend the exposed wire when disconnecting the wire harness from the terminal cover.**
- **Check for deformation of the terminal after the wire harness has been removed from the terminal cover.**

7. **DISCONNECT REAR DOOR OPENING TRIM WEATHERSTRIP LH (for Window Defogger)** . Refer to **REMOVAL - Step 12** .
8. **REMOVE ROOF SIDE INNER GARNISH LH (for Window Defogger)** . Refer to **REMOVAL - Step 24** .
9. **REMOVE RADIO SETTING CONDENSER (for Window Defogger)**

NOTE: **When the terminal cover is removed, the radio setting condenser must be replaced because the terminal cover and condenser are supplied as a set.**

a. Remove the bolt.

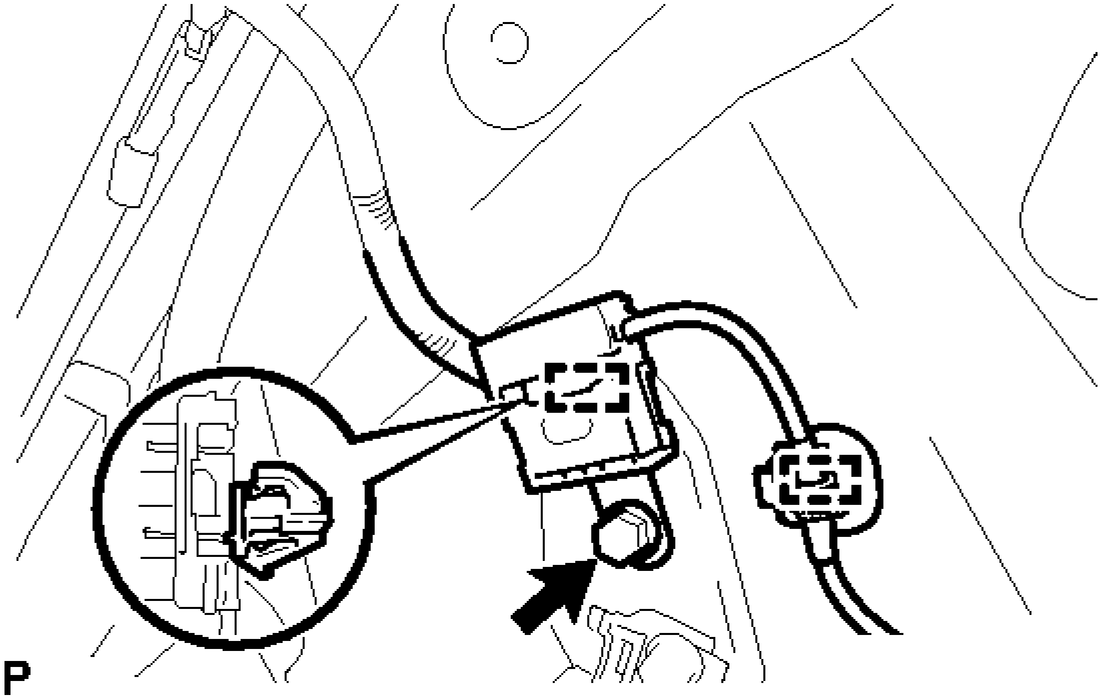

Fig. 76: Locating Radio Setting Condenser Bolt And Clamps (For Window Defogger)
Courtesy of TOYOTA MOTOR SALES, U.S.A., INC.

b. Disengage the 2 clamps and disconnect the radio setting condenser with wire harness from the vehicle body.
c. Using a screwdriver, disengage the 3 claws and remove the terminal cover with wire harness from the condenser.

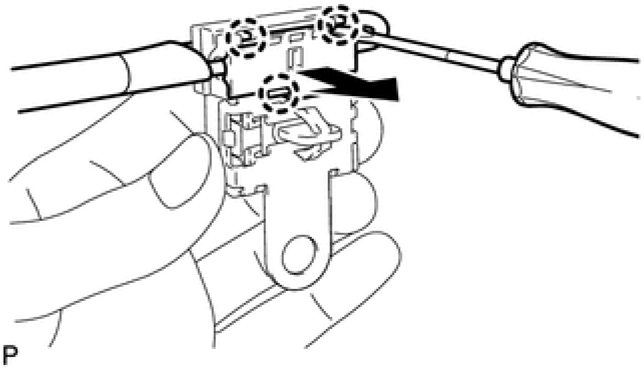

Fig. 77: Disengaging Claws (For Window Defogger)
Courtesy of TOYOTA MOTOR SALES, U.S.A., INC.

d. Using a screwdriver, bend back and break off the claw as shown in the illustration.

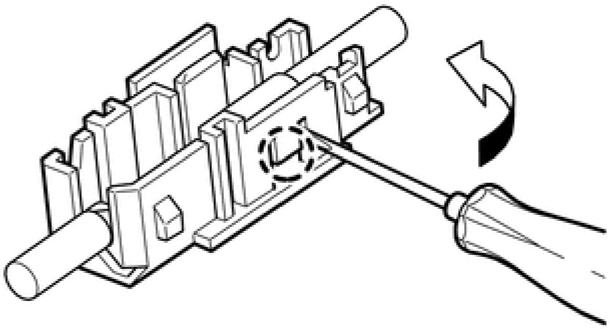

Fig. 78: Bending The Claw (For Window Defogger)
Courtesy of TOYOTA MOTOR SALES, U.S.A., INC.

e. Remove the terminal cover from the wire harness.

NOTE:

- **Make sure to hold the wire harness on the crimping side of the terminal when disconnecting the wire harness from the terminal cover.**
- **Make sure not to bend the exposed wire when disconnecting the wire harness from the terminal cover.**
- **Check for deformation of the terminal after the wire harness has been removed from the terminal cover.**

INSTALLATION

INSTALLATION

1. **INSTALL RADIO SETTING CONDENSER (for Window Defogger)**
    a. Engage the claw to install a new terminal cover to the wire harness.

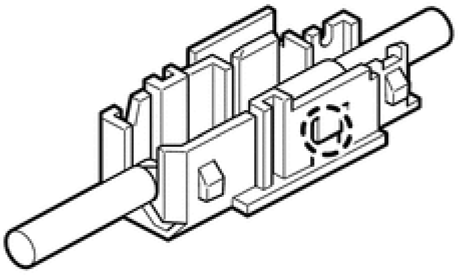

Fig. 79: Identifying Claw And Terminal Cover (For Window Defogger)
Courtesy of TOYOTA MOTOR SALES, U.S.A., INC.

NOTE:

- **Make sure to hold the wire harness so that the crimping side of the terminal is facing up when installing the wire harness to the terminal cover.**
- **Make sure not to bend the exposed wire when installing the wire harness to the terminal cover.**
- **Do not use excessive force when inserting the wire harness into the terminal cover.**
- **If the terminal cover has been deformed at installation, replace the terminal and terminal cover with new ones.**

b. Engage the 3 claws to install the new terminal cover with wire harness to a new condenser.

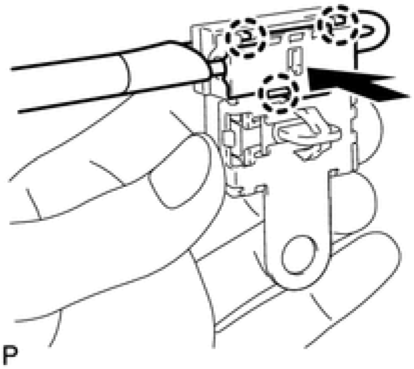

Fig. 80: Engaging Claws (For Window Defogger)
Courtesy of TOYOTA MOTOR SALES, U.S.A., INC.

NOTE:

- **Do not use excessive force when inserting the terminal cover into the condenser.**
- **If the terminal cover has been deformed at installation, replace the terminal, terminal cover and condenser with new ones.**

c. Engage the 2 clamps to temporarily install a new radio setting condenser with wire harness.

d. Install the new radio setting condenser with the bolt.

Torque: 8.0 N*m (82 kgf*cm, 71 in.*lbf)

2. **INSTALL ROOF SIDE INNER GARNISH LH (for Window Defogger)** . Refer to **INSTALLATION - Step 20** .
3. **INSTALL REAR DOOR OPENING TRIM WEATHERSTRIP LH (for Window Defogger)** . Refer to **INSTALLATION - Step 25** .
4. **INSTALL RADIO SETTING CONDENSER (for High Mounted Stop Light)**
   a. Engage the claw to install a new terminal cover to the wire harness.

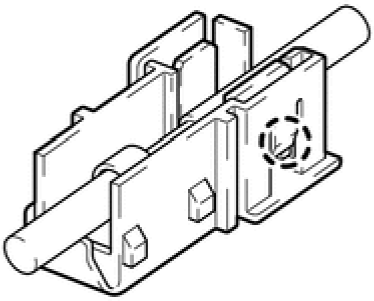

Fig. 81: Identifying Claw And Terminal Cover (For High Mounted Stop Light)
Courtesy of TOYOTA MOTOR SALES, U.S.A., INC.

NOTE:

- **Make sure to hold the wire harness so that the crimping side of the terminal is facing up when installing the wire harness to the terminal cover.**
- **Make sure not to bend the exposed wire when installing the wire harness to the terminal cover.**
- **Do not use excessive force when inserting the wire harness into the terminal cover.**
- **If the terminal cover has been deformed at installation, replace the terminal and terminal cover with new ones.**

b. Engage the 6 claws to install the 2 new terminal covers with wire harness to a new condenser.

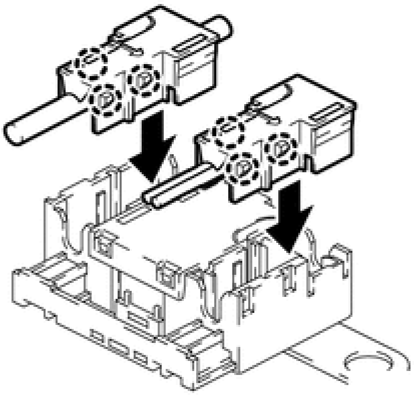

Fig. 82: Engaging Claws & Installing Terminal Covers (For High Mounted Stop Light)
Courtesy of TOYOTA MOTOR SALES, U.S.A., INC.

NOTE:

- **Do not use excessive force when inserting the terminal cover into the condenser.**
- **If the terminal cover has been deformed at installation, replace**

the terminal, terminal cover and condenser with new ones.

c. Engage the claw to insert the cover as shown in the illustration.

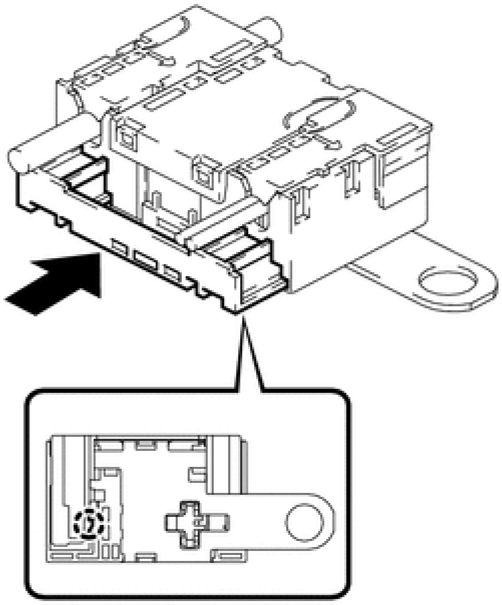

P

Fig. 83: Installing Radio Setting Condenser (For High Mounted Stop Light)
Courtesy of TOYOTA MOTOR SALES, U.S.A., INC.

d. Engage the clamp to temporarily install a new radio setting condenser with wire harness.
e. Install the new radio setting condenser with the bolt.

Torque: 8.0 N*m (82 kgf*cm, 71 in.*lbf)

5. **INSTALL REAR SIDE SEATBACK ASSEMBLY LH** . Refer to **INSTALLATION - Step 2** .
6. **INSTALL REAR SEAT CUSHION LOCK HOOK** . Refer to **INSTALLATION - Step 6** .
7. **INSTALL REAR SEAT CUSHION ASSEMBLY** . Refer to **INSTALLATION - Step 7** .
8. **CONNECT CABLE TO NEGATIVE BATTERY TERMINAL**

NOTE: **When disconnecting the cable, some systems need to be initialized after the cable is reconnected. Refer to INITIALIZATION .**

9. **INSPECT SRS WARNING LIGHT**

For Built-in Type Yaw Rate Sensor: Refer to **DIAGNOSIS SYSTEM** .

For Separate Type Yaw Rate Sensor: Refer to **DIAGNOSIS SYSTEM** .

AUTOMATIC TRANSAXLE SYSTEM

DTC P0500: VEHICLE SPEED SENSOR "A"

DESCRIPTION

The speed sensors detect the wheel speed and send the appropriate signals to the skid control ECU. The skid control ECU converts these wheel speed signals into a 4-pulse signal and outputs it to the TCM via the combination meter. The TCM determines the vehicle speed based on the frequency of these pulse signals.

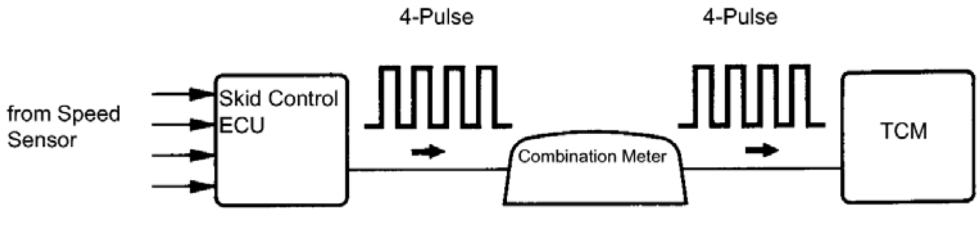

Fig. 1: Vehicle Speed Sensor Communication Diagram
Courtesy of TOYOTA MOTOR SALES, U.S.A., INC.

DTC No.	DTC Detection Condition	Trouble Area
P0500	When the ECT sensor is normal and the counter gear speed is 300 RPM or more, the vehicle speed signal is not input for 2 seconds or more.	• Open or short in vehicle speed signal circuit • Combination meter • Vehicle speed sensor (Brake control system) • Skid control ECU (Brake control system) • TCM

MONITOR DESCRIPTION

The TCM assumes that the vehicle is being driven when the transmission counter gear indicates more than 300 RPM and over 30 seconds have passed since the park/neutral position switch assembly was turned off. If there is no vehicle speed signal with these conditions satisfied, the TCM concludes that there is a vehicle speed signal malfunction. The TCM will turn on the MIL and a DTC will be set.

MONITOR STRATEGY

Related DTCs	P0500: Vehicle Speed Sensor Circuit
Required sensors/components (Main)	Vehicle speed sensor, Combination meter, ABS ECU
Required sensors/components (Sub)	Counter gear Speed (CS) sensor, ECT sensor
Frequency of operation	Continuous
Duration	2 seconds
MIL operation	Immediately
Sequence operation	None

TYPICAL ENABLING CONDITIONS

Engine	Running
Transmission counter gear revolution	300 RPM or more
Battery voltage	8 V or more
Engine switch	on (IG)
Starter	OFF
Either a or b is met	
a. All of the following conditions are met	
ECT	20°C (68°F) or more
ECT sensor fail	Not detected
Time after PNP switch ON to OFF	2 sec. or more
b. All of the following conditions are met	
ECT	Less than 20°C (68°F)
ECT sensor fail	Detected
Time after PNP switch ON to OFF	30 sec. or more

TYPICAL MALFUNCTION THRESHOLDS

Vehicle speed sensor signal	No pulse input

WIRING DIAGRAM

Refer to **WIRING DIAGRAM**

When a DTC P0500 is output, a ground short in the wiring of terminal SPD or an internal ground short in the relevant ECU is suspected.

INSPECTION PROCEDURE

NOTE: **Perform the universal trip to clear permanent DTCs. Refer to DTC CHECK / CLEAR .**

PROCEDURE

1. **READ VALUE USING TECHSTREAM (VEHICLE SPEED)**
    1. Drive the vehicle and check whether the operation of the speedometer in the combination meter assembly is normal.

       HINT:

       - The vehicle speed sensor is operating normally if the speedometer reading is normal.
       - If the speedometer does not operate, check it by following the procedure described for a speedometer malfunction.
    2. Connect the Techstream to the DLC3.
    3. Turn the engine switch on (IG).
    4. Turn the Techstream on.
    5. Enter the following menus: Powertrain / ECT / Data List / Vehicle Speed.
    6. Drive the vehicle.
    7. Read the value displayed on the Techstream.

       OK

       Vehicle speeds displayed on tester and speedometer display are equal.

    NG --> See step 2

    OK --> See step 6

2. **CHECK COMBINATION METER ASSEMBLY (SPD SIGNAL WAVEFORM)**
    1. Inspect the combination meter assembly using an oscilloscope.

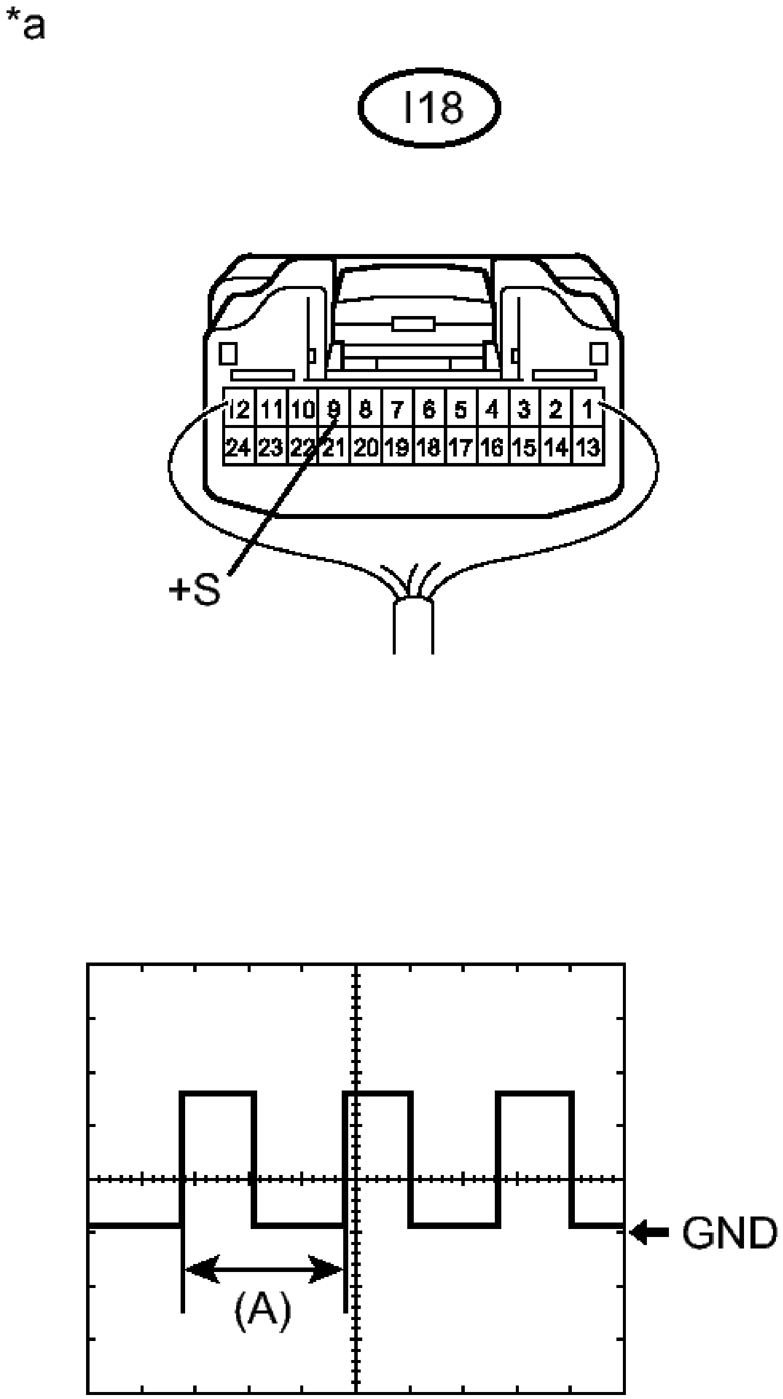
*a
I18
12 11 10 9 8 7 6 5 4 3 2 1
24 23 22 21 20 19 18 17 16 15 14 13
+S
GND
(A)

Fig. 2: Checking Combination Meter Assembly (SPD Signal Waveform)
Courtesy of TOYOTA MOTOR SALES, U.S.A., INC.

1. Move the shift lever to N.
2. Jack up the vehicle.

3. Turn the engine switch on (IG).
4. Measure the voltage between the terminal of the combination meter assembly and the body ground while the wheel is turned slowly.

   Standard Voltage

Tester Connection	Switch Condition	Specified Condition
I18-9 (+S) - Body ground	Engine switch on (IG)	Voltage generated intermittently

   TEXT IN ILLUSTRATION

*a	Component with harness connected (Combination Meter Assembly)

   HINT:

   The output voltage should fluctuate up and down, similarly to the diagram, when the wheel is turned slowly.

NG --> See step 5

OK: Go to next step

3. **CHECK HARNESS AND CONNECTOR (COMBINATION METER ASSEMBLY - TCM)**
   a. Disconnect the combination meter assembly connector.
   b. Disconnect the TCM connector.
   c. Measure the resistance according to the value(s) in the table below.

      Standard Resistance (Check for Open)

Tester Connection	Condition	Specified Condition
I18-9 (+S) - E7-3 (SPD)	Always	Below 1 ohms

   d. Reconnect the combination meter assembly connector.
   e. Reconnect the TCM connector.

NG --> REPAIR OR REPLACE HARNESS OR CONNECTOR (COMBINATION METER

ASSEMBLY - TCM)

OK --> See step 4

4. **REPLACE TCM. Refer to COMPONENTS**
5. **GO TO METER / GAUGE SYSTEM (SPEED SIGNAL CIRCUIT). Refer to Speed Signal Circuit**
6. **SYMPTOM SIMULATION AND DTC CHECK. Refer to HOW TO PROCEED WITH TROUBLESHOOTING**

DTC P0560: SYSTEM VOLTAGE

DESCRIPTION

The battery supplies electricity to the TCM even when the engine switch is off. This power allows the TCM to store data such as DTC history and freeze frame data. If the battery voltage falls below a minimum level, these memories are cleared and the TCM determines that there is a malfunction in the power supply circuit. When the engine is next started, the TCM will illuminate the MIL and set the DTC.

DTC No.	DTC Detection Condition	Trouble Area
P0560	Open in TCM back-up power source circuit. DTC is detected for 3 sec. or more (1 trip detection logic).	• Open in back-up power source circuit • SFI system • TCM

HINT:

If DTC P0560 is set, the TCM does not store other DTCs.

MONITOR STRATEGY

Related DTCs	P0560: TCM system voltage
Required Sensors/Components (Main)	TCM
Required Sensors/Components (Sub)	-
Frequency of Operation	Continuous
Duration	3 seconds
MIL Operation	Immediate (MIL illuminated after next engine start)
Sequence of Operation	None

TYPICAL ENABLING CONDITIONS

Monitor runs whenever following DTCs are not present:	None
Stand-by RAM	Initialized

TYPICAL MALFUNCTION THRESHOLDS

TCM power source	Less than 3.5 V

WIRING DIAGRAM

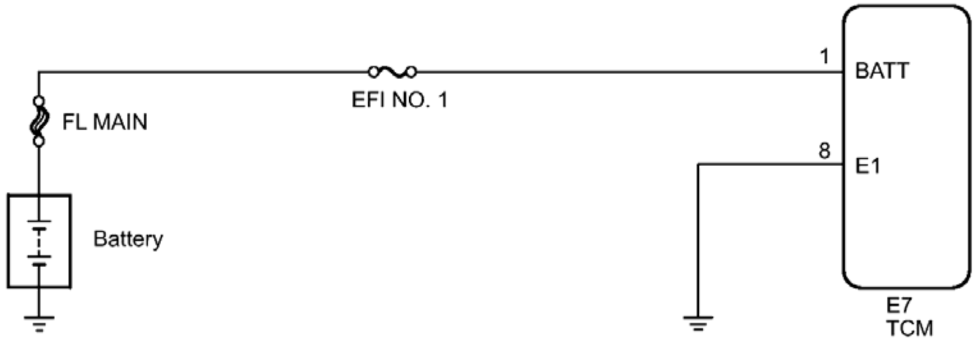

Fig. 3: TCM Circuit Wiring Diagram
Courtesy of TOYOTA MOTOR SALES, U.S.A., INC.

INSPECTION PROCEDURE

NOTE: **Perform the universal trip to clear permanent DTCs. Refer to DTC CHECK / CLEAR .**

PROCEDURE

1. **CHECK DTC OUTPUT**
    a. Connect the Techstream to the DLC3.
    b. Turn the engine switch on (IG).
    c. Turn the Techstream on.
    d. Enter the following menus: Powertrain / Engine / Trouble Codes.
    e. Read the DTCs using the Techstream.

Result

Display (DTC Output)	Proceed to
No DTC	A
P0560 is output	

(engine control system)	B

B --> See step 4

A: Go to next step

2. **INSPECT TCM (POWER SOURCE, GROUND)**
    1. Disconnect the TCM connector.
    2. Measure the voltage according to the value(s) in the table below.

       Standard Voltage

Tester Connection	Condition	Specified Condition
E7-1 (BATT) - E7-8 (E1)	Always	11 to 14 V

    3. Measure the resistance according to the value(s) in the table below.

       Standard Resistance

Tester Connection	Condition	Specified Condition
E7-8 (E1) - Body ground	Always	Below 1 ohms

   NG --> REPAIR OR REPLACE HARNESS OR CONNECTOR (TCM - BATTERY, BODY GROUND)

   OK --> See step 3

3. **REPLACE TCM. Refer to COMPONENTS**
4. **GO TO DTC P0560 (ENGINE CONTROL SYSTEM / SFI SYSTEM). Refer to DTC P0560: System Voltage**

DTC P0617: STARTER RELAY CIRCUIT HIGH

DESCRIPTION

While the engine is being cranked, battery voltage is applied to terminal STA of the TCM.

If the TCM detects the Starter Control (STA) signal while the vehicle is being driven, it determines that there is a malfunction in the STA circuit. The TCM then illuminates the MIL and sets the DTC.

This monitor runs when the vehicle is driven at 20 km/h (12.43 mph) for over 20 seconds.

DTC No.	DTC Detection Condition	Trouble Area
P0617	When conditions (a), (b) and (c) are met, positive (+B) battery voltage 10.5 V or more applied to TCM for 20 seconds (1 trip detection logic): (a) Vehicle speed more than 20 km/h (12.43 mph) (b) Engine speed more than 1000 RPM (c) STA signal ON	• Park/Neutral Position switch • Starter relay circuit • Cranking holding function circuit • TCM

MONITOR STRATEGY

Related DTCs	P0617: Starter signal
Required Sensors/Components (Main)	STARTER relay, PNP switch, engine switch
Required Sensors/Components (Sub)	Vehicle speed sensor (VSS), Crankshaft Position (CKP) sensor
Frequency of Operation	Continuous
Duration	20 seconds
MIL Operation	Immediate
Sequence of Operation	None

TYPICAL ENABLING CONDITIONS

Monitor runs whenever these DTCs are not present:	None
Battery voltage	10.5 V or more
Vehicle speed	12.43 mph (20 km/h) or more
Engine speed	1, 000 RPM or more

TYPICAL MALFUNCTION THRESHOLDS

Starter signal	ON

WIRING DIAGRAM

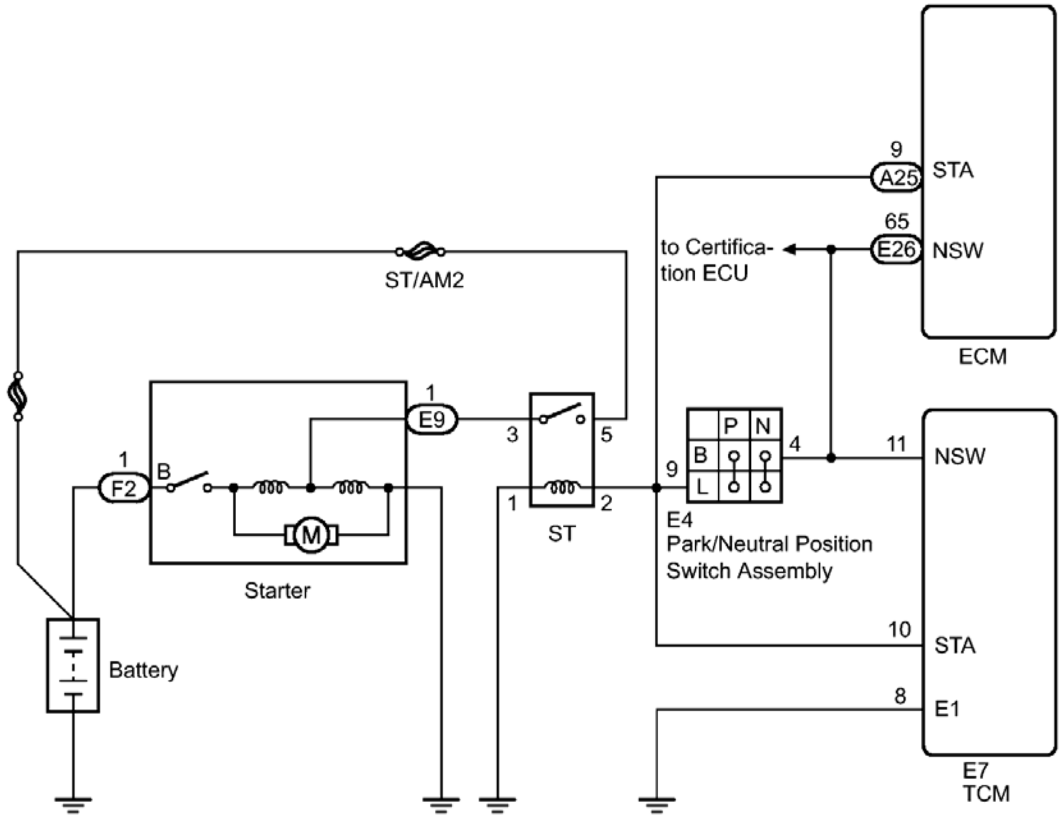

9
A25
STA
65
E26
NSW
to Certifica-
tion ECU
ECM
ST/AM2
1
E9
3
5
ST
1
2
1
F2
B
M
Starter
P
N
B
L
4
9
E4
Park/Neutral Position
Switch Assembly
11
NSW
10
STA
8
E1
E7
TCM
Battery

Fig. 4: Park/Neutral Position Switch Circuit Wiring Diagram
Courtesy of TOYOTA MOTOR SALES, U.S.A., INC.

INSPECTION PROCEDURE

NOTE: **Perform the universal trip to clear permanent DTCs. Refer to DTC CHECK / CLEAR .**

HINT:

- The following troubleshooting flowchart is based on the premise that the engine is cranked normally. If the engine does not crank, proceed to the problem symptoms table. Refer to **PROBLEM SYMPTOMS TABLE** .
- Read freeze frame data using the Techstream. The TCM records vehicle and driving condition information as freeze frame data the moment a DTC is stored. When troubleshooting, freeze frame data can be helpful in determining whether the vehicle was running or stopped, whether the engine was warmed up or not, whether the air-fuel ratio was lean or rich, as well as other data recorded at the time of a malfunction. Refer to **FREEZE FRAME DATA** .

PROCEDURE

1. **READ VALUE USING TECHSTREAM (STARTER SIGNAL)**
    1. Connect the Techstream to the DLC3.
    2. Turn the engine switch on (IG).
    3. Turn the Techstream on.
    4. Enter the following menus: Powertrain / ECT / Data List.

Tester Display	Measurement Item/Range	Normal Condition	Diagnostic Note
Starter Signal	Starter signal/ Open or Close	Open: Starter operating Close: Starter not operating	-

    5. Crank the engine.
    6. Read the value displayed on the Techstream.

OK

Tester Display	Condition	Specified Condition
Starter Signal	Engine switch on (IG)	Close
Starter Signal	Engine is cranking	Open

NG --> See step 3

OK --> See step 2

2. **CHECK FOR INTERMITTENT PROBLEMS. Refer to ELECTRONIC CIRCUIT INSPECTION PROCEDURE**
3. **INSPECT PARK/NEUTRAL POSITION SWITCH ASSEMBLY**
    1. Disconnect the park/neutral position switch connector.

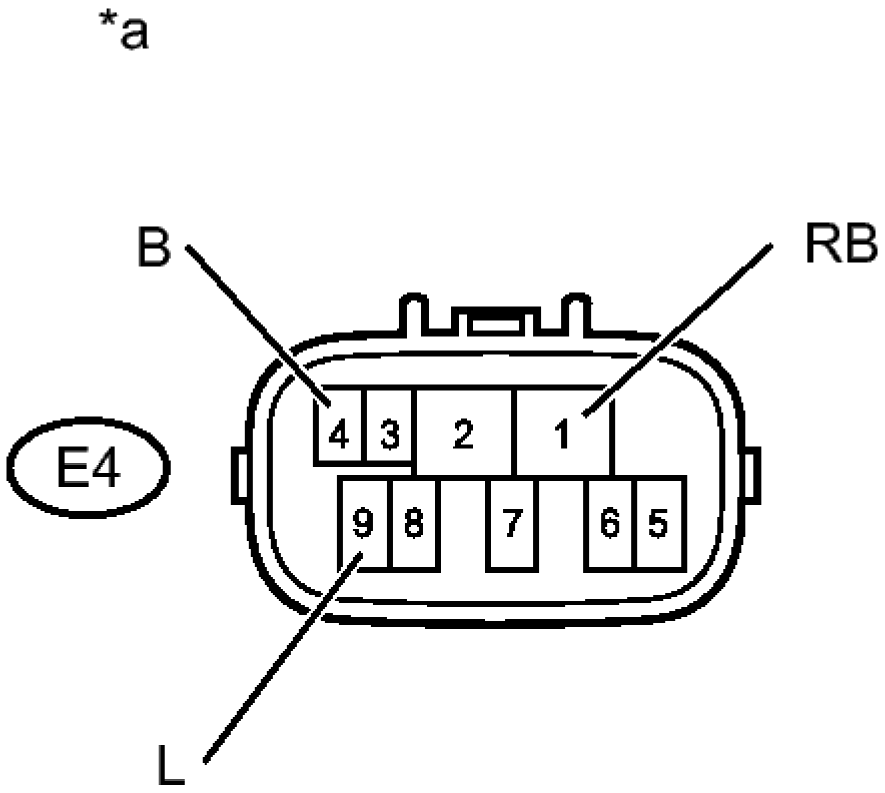

Fig. 5: Checking Park/Neutral Position Switch Assembly
Courtesy of TOYOTA MOTOR SALES, U.S.A., INC.

b. Measure the resistance according to the value(s) in the table below when the shift lever is moved to each position.

Standard Resistance

Tester Connection	Condition	Specified Condition
E4-4 (B) - E4-9 (L)	P	Below 1 ohms
	N	Below 1 ohms
	Except P and N	10 kohms or higher

E4-1 (RB) - E4-9 (L)	P	10 kohms or higher
	R	10 kohms or higher
	N	10 kohms or higher
	D	10 kohms or higher

TEXT IN ILLUSTRATION

*a	Component without harness connected (Park/Neutral Position Switch)

NG --> See step 7

OK: Go to next step

4. **CHECK HARNESS AND CONNECTOR (TCM - PARK/NEUTRAL POSITION SWITCH)**
    a. Disconnect the TCM connector.

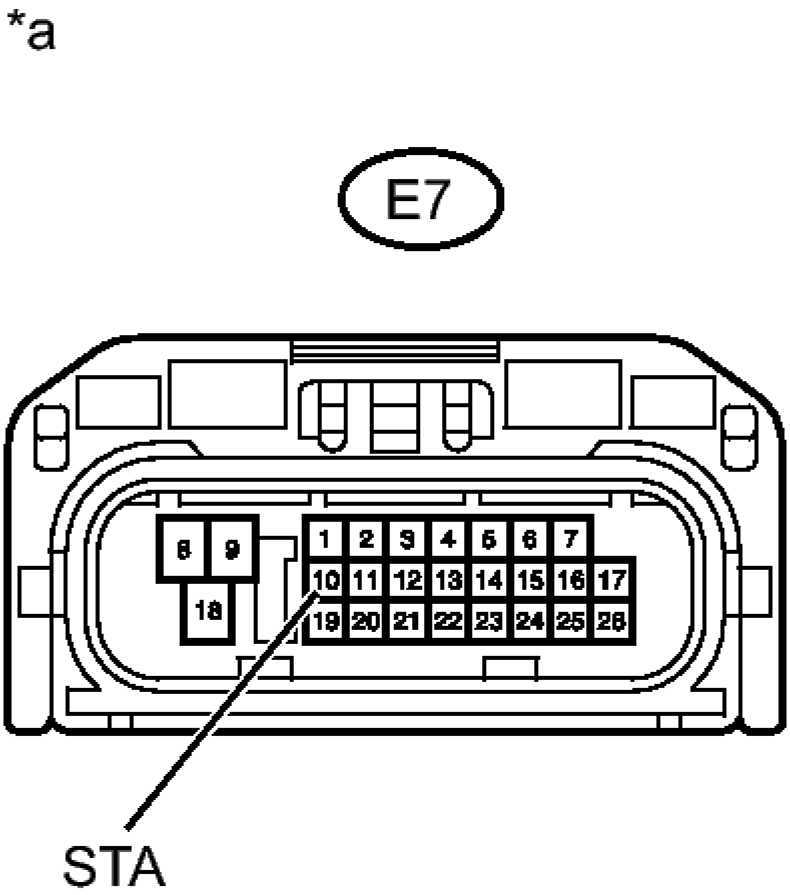
*a
E7
8
9
18
1
2
3
4
5
6
7
10
11
12
13
14
15
16
17
19
20
21
22
23
24
25
26
STA

Fig. 6: Checking Harness And Connector (TCM - Park/Neutral Position Switch)
Courtesy of TOYOTA MOTOR SALES, U.S.A., INC.

b. Remove the ST relay from the engine room relay block and junction block assembly.
c. Disconnect the park/neutral position switch connector.
d. Measure the voltage according to the value(s) in the table below.

Standard Voltage

Tester Connection	Condition	Specified Condition
E7-10 (STA) - Body ground	Engine switch on (IG)	Below 1 V

TEXT IN ILLUSTRATION

*a	Front view of wire harness connector (to TCM)

NG --> REPAIR OR REPLACE HARNESS OR CONNECTOR

OK: Go to next step

5. **CHECK WHETHER DTC OUTPUT RECURS**
    1. Connect the Techstream to the DLC3.
    2. Turn the engine switch on (IG).
    3. Turn the Techstream on.
    4. Clear the DTCs. Refer to **DTC CHECK / CLEAR** .
    5. Drive the vehicle in accordance with the driving pattern described in the Confirmation Driving Pattern.
    6. Enter the following menus: Powertrain / ECT/ Trouble Codes.
    7. Read the DTCs.

RESULT:

Result	**Proceed to**
DTC is not output	OK
DTC P0617 is output	NG

NG --> See step 6

OK --> END

6. **REPLACE TCM. Refer to** COMPONENTS
7. **REPLACE PARK/NEUTRAL POSITION SWITCH ASSEMBLY. Refer to** COMPONENTS

DTC P062F: INTERNAL CONTROL MODULE EEPROM ERROR

DESCRIPTION

The TCM monitors its internal operation and it will set this DTC when it detects an internal malfunction.

DTC No.	DTC Detection Condition	Trouble Area
P062F	TCM internal error (EEPROM)	TCM

MONITOR DESCRIPTION

The TCM monitors its internal operation. If the internal operation is malfunctioning, the TCM illuminates the MIL and sets a DTC.

MONITOR STRATEGY

Related DTCs	P062F: Internal control module EEPROM error
Required sensors/Components (Main)	TCM
Required sensors/Components (Related)	-
Frequency of operation	Once per driving cycle
Duration	11 seconds
MIL operation	Immediate
Sequence of operation	None

TYPICAL ENABLING CONDITIONS

Monitor runs whenever following DTCs not present	None
Time after engine start	10 seconds or more
Battery voltage	8 V or higher
Engine switch	on (IG)
Starter	OFF

TYPICAL MALFUNCTION THRESHOLDS

Permanent fault code data	Mismatch (3 times or more)

INSPECTION PROCEDURE

NOTE:

- **After turning engine switch off, waiting time may be required before disconnecting the cable from the negative (-) battery terminal. Therefore, make sure to read the disconnecting the cable from the negative (-) battery terminal notices before proceeding with work. Refer to PRECAUTION .**
- **Perform the universal trip to clear permanent DTCs. Refer to DTC CHECK / CLEAR .**

PROCEDURE

1. **READ OUTPUT DTC (DTC P062F)**
    1. Connect the Techstream to the DLC3.
    2. Turn the engine switch on (IG).
    3. Turn the Techstream on.
    4. Clear DTCs. Refer to **DTC CHECK / CLEAR** .
    5. Turn the engine switch off and turn the Techstream off.
    6. Disconnect the Techstream.
    7. Disconnect the cable from the negative (-) battery terminal and wait for 1 minute.
    8. Connect the cable to the negative (-) battery terminal.
    9. Connect the Techstream to the DLC3.
    10. Turn the engine switch on (IG).
    11. Turn the Techstream on.
    12. Select the following menu items: Powertrain / ECT / Trouble Codes.
    13. Read DTCs.

    RESULT

Result	Proceed to
No output	A
P062F	B

    B --> See step 3

    A --> See step 2

2. **CHECK FOR INTERMITTENT PROBLEMS. Refer to ELECTRONIC CIRCUIT INSPECTION PROCEDURE**
3. **REPLACE TCM. Refer to COMPONENTS**

DTC P0705: TRANSMISSION RANGE SENSOR CIRCUIT MALFUNCTION (PRNDL INPUT)

DESCRIPTION

The park/neutral position switch assembly detects the shift lever position and sends signals to the TCM.

DTC No.	DTC Detection Condition	Trouble Area
	(A) Any 2 or more signals of the following are ON simultaneously (2-trip detection logic)	

P0705	• NSW input signal is ON. • R input signal is ON. • D input signal is ON. (B) All switches are OFF simultaneously for NSW, R and D.	• Open or short in park/neutral position switch assembly circuit • Park/neutral position switch assembly • TCM

MONITOR DESCRIPTION

These DTCs indicate a problem with the park/neutral position switch assembly and the wire harness in the park/neutral position switch assembly circuit.

The park/neutral position switch assembly detects the shift lever position and sends signals to the TCM.

For safety, the park/neutral position switch assembly detects the shift lever position so that the engine can be started only when the shift lever is in P or N.

The park/neutral position switch assembly sends a signal to the TCM according to the shift lever position (R or D). The TCM determines that there is a problem with the switch or related parts if it receives more than 1 position signal simultaneously. The TCM will turn on the MIL and store the DTC.

MONITOR STRATEGY

Related DTCs	P0705: Park/neutral position switch/Verify switch input
Required sensors/Components	Park/neutral position switch assembly
Frequency of operation	Continuous
Duration	Condition (A): 2 sec. Condition (B): 60 sec.
MIL operation	2 driving cycles
Sequence of operation	None

TYPICAL ENABLING CONDITIONS

The monitor will run whenever the following DTCs are not present	None
Engine switch	on (IG)
Battery voltage	10.5 V or more

TYPICAL MALFUNCTION THRESHOLDS

When either condition below is met: Condition (A) or (B)

Condition (A)

When 2 or more of the following signals are input at the same time:

Park neutral position switch (NSW)	ON
R position switch	ON
D position switch	ON

Condition (B)

When all conditions below are met:

Park neutral position switch (NSW)	OFF
R position switch	OFF
D position switch	OFF

COMPONENT OPERATING RANGE

Park/neutral position switch assembly	The park/neutral position switch sends only one signal to the TCM

WIRING DIAGRAM

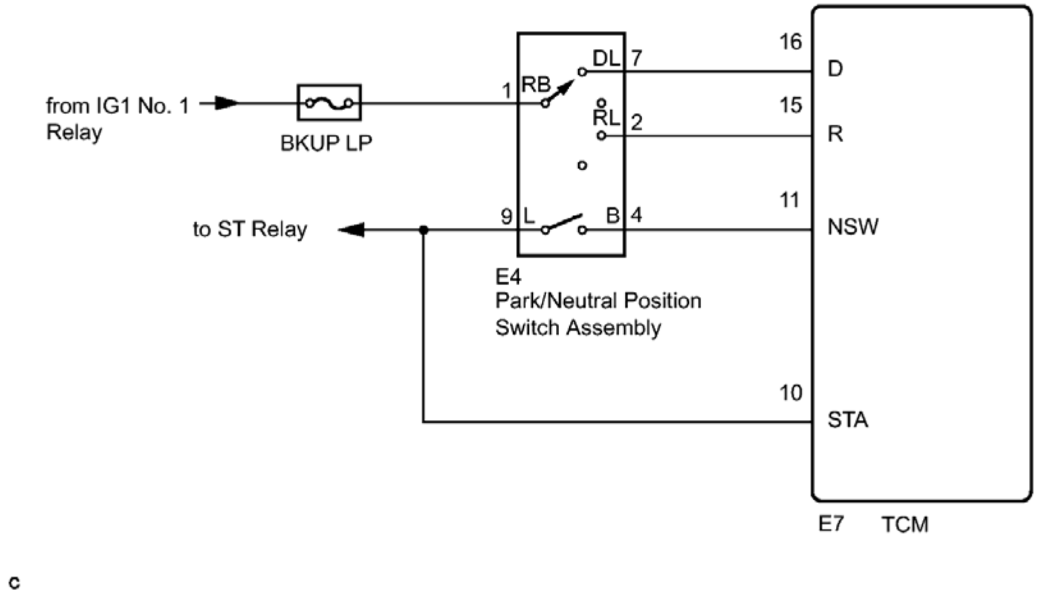
from IG1 No. 1
Relay
BKUP LP
to ST Relay
1
RB
DL
7
RL
2
9
L
B
4
E4
Park/Neutral Position
Switch Assembly
16
D
15
R
11
NSW
10
STA
E7
TCM
c

Fig. 7: Park/Neutral Position Switch Assembly Circuit Wiring Diagram
Courtesy of TOYOTA MOTOR SALES, U.S.A., INC.

INSPECTION PROCEDURE

NOTE:	**Perform the universal trip to clear permanent DTCs. Refer to DTC CHECK / CLEAR .**

HINT:

Using the Techstream to read the Data List allows the values or states of switches, sensors, actuators and other items to be read without removing any parts. This non-intrusive inspection can be very useful because intermittent conditions or signals may be discovered before parts or wiring is disturbed. Reading the Data List information early in troubleshooting is one way to save diagnostic time.

NOTE:	**In the table below, the values listed under "Normal Condition" are reference values. Do not depend solely on these reference values when deciding whether a part is faulty or not.**

1. Warm up the engine.
2. Turn the engine switch off.
3. Connect the Techstream to the DLC3.
4. Turn the engine switch on (IG).
5. Turn the Techstream on.

6. Enter the following menus: Powertrain / ECT / Data List.
7. According to the display on the Techstream, read the Data List.

Tester Display	Measurement Item / Range	Normal Condition	Diagnostic Note
Neutral Position SW Signal	PNP switch status / ON or OFF	- ON: Shift lever is in P or N - OFF: Shift lever is not in P or N	When the shift lever position displayed on the Techstream differs from the actual position, adjustment of the PNP switch or the shift cable may be incorrect.
Shift SW Status (R Range)	PNP switch status / ON or OFF	- ON: Shift lever is in R - OFF: Shift lever is not in R	When the shift lever position displayed on the Techstream differs from the actual position, adjustment of the PNP switch or the shift cable may be incorrect.
Shift SW	PNP switch	- ON: Shift lever is in D or S	When the shift lever position displayed on the Techstream differs from the

Status (D Range)	status / ON or OFF	• OFF: Shift lever is not in D or S	actual position, adjustment of the PNP switch or the shift cable may be incorrect.

PROCEDURE

1. **CHECK HARNESS AND CONNECTOR (BATTERY - PARK/NEUTRAL POSITION SWITCH)**
    a. Disconnect the park/neutral position switch assembly connector.

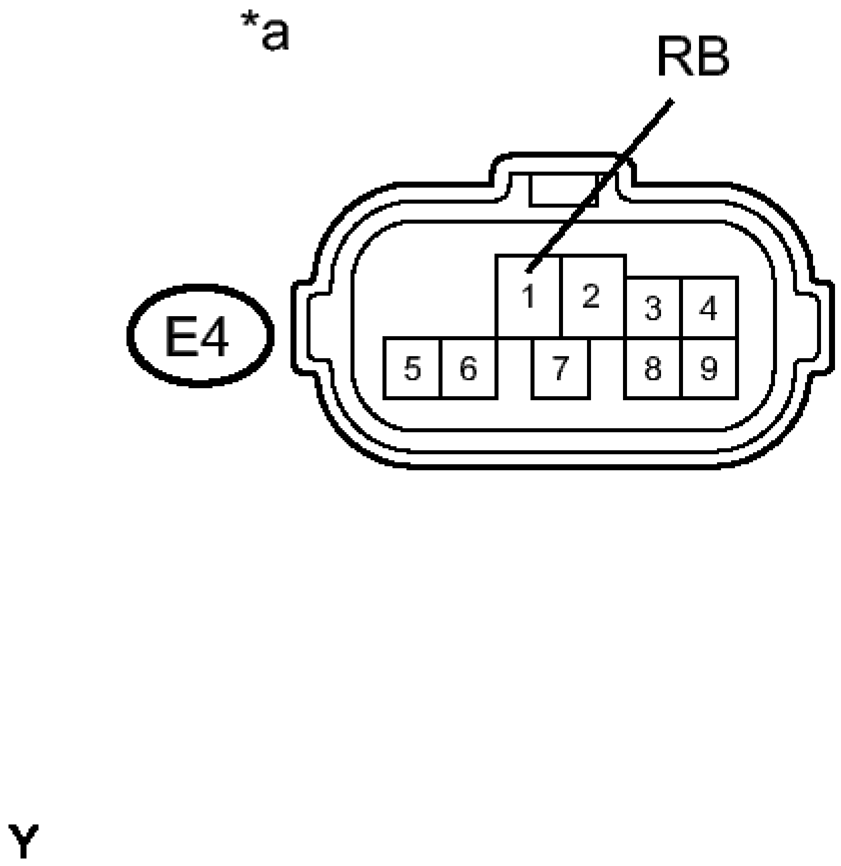

Fig. 8: Checking Harness And Connector (Battery - Park/Neutral Position Switch)

Courtesy of TOYOTA MOTOR SALES, U.S.A., INC.

b. Turn the engine switch on (IG).
c. Measure the voltage according to the value(s) in the table below.

Standard Voltage

Tester Connection	Switch Condition	Specified Condition
E4-1 (RB) - Body ground	Engine switch on (IG)	11 to 14 V

TEXT IN ILLUSTRATION

*a	Front view of wire harness connector (to Park/Neutral Position Switch Assembly)

NG --> REPAIR OR REPLACE HARNESS OR CONNECTOR

OK: Go to next step

2. **CHECK HARNESS AND CONNECTOR (OUTPUT SIGNAL)**
   a. Turn the engine switch on (IG).

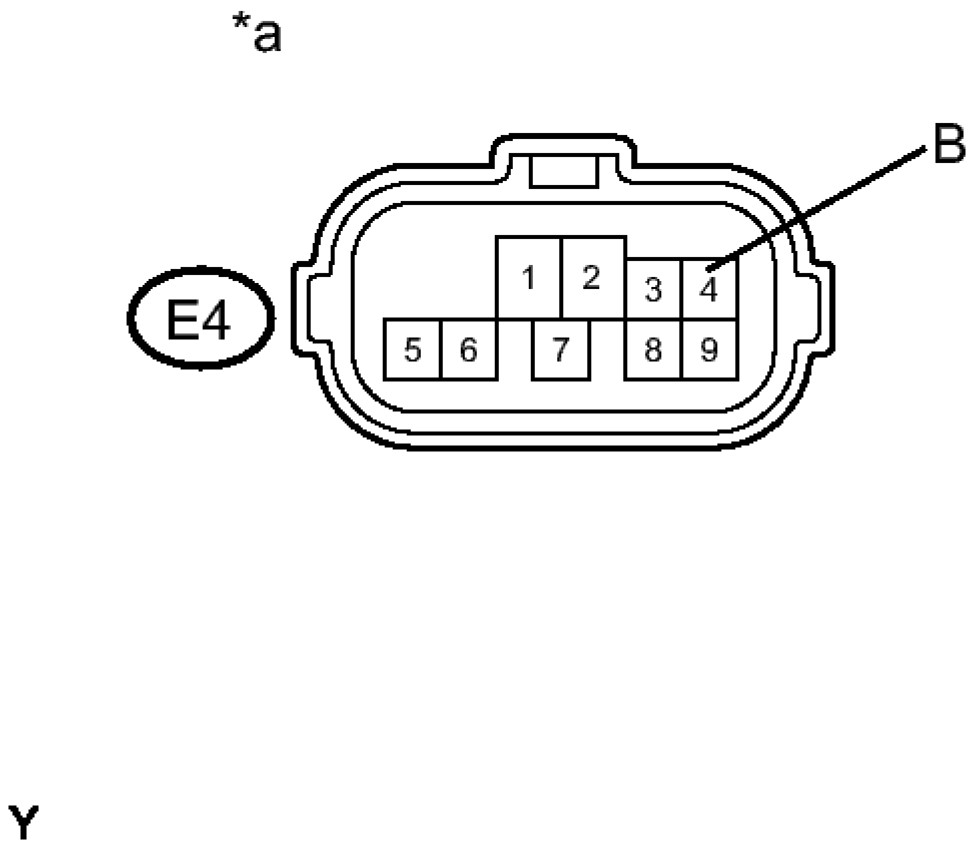

Fig. 9: Checking Harness And Connector (Output Signal)
Courtesy of TOYOTA MOTOR SALES, U.S.A., INC.

b. Measure the voltage according to the value(s) in the table below.

Standard Voltage

Tester Connection	Switch Condition	Specified Condition
E4-4 (B) - Body ground	Engine switch on (IG)	11 to 14 V

TEXT IN ILLUSTRATION

	Front view

*a	of wire harness connector (to Park/Neutral Position Switch Assembly)

NG --> See step 5

OK: Go to next step

3. **INSPECT PARK/NEUTRAL POSITION SWITCH ASSEMBLY**
   a. Disconnect the park/neutral position switch assembly connector.

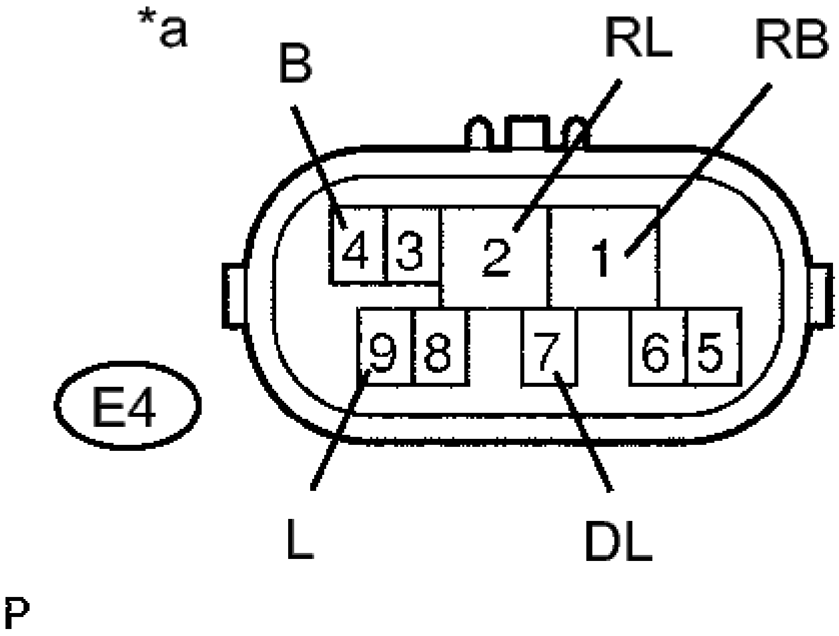
*a
B
RL
RB
4
3
2
1
9
8
7
6
5
E4
L
DL
P

Fig. 10: Checking Park/Neutral Position Switch Assembly
Courtesy of TOYOTA MOTOR SALES, U.S.A., INC.

b. Measure the resistance according to the value(s) in the table below when the shift lever is moved to each position.

Standard Resistance

Tester Connection	Shift Lever Position	Specified Condition
E4-4 (B) - E4-9 (L)	P or N	Below 1 ohms
	Except P and N	10 kohms or higher
E4-1 (RB) - E4-2 (RL)	R	Below 1 ohms
	Except R	10 kohms or higher
E4-1 (RB) - E4-7 (DL)	D, S, "+" or "-"	Below 1 ohms
	Except D, S, "+" and "-"	10 kohms or higher

TEXT IN ILLUSTRATION

*a	Component without harness connected (Park/Neutral Position Switch Assembly)

NG --> See step 7

OK: Go to next step

4. **CHECK HARNESS AND CONNECTOR (PARK/NEUTRAL POSITION SWITCH - TCM)**
   a. Connect the park/neutral position switch Assembly connector.

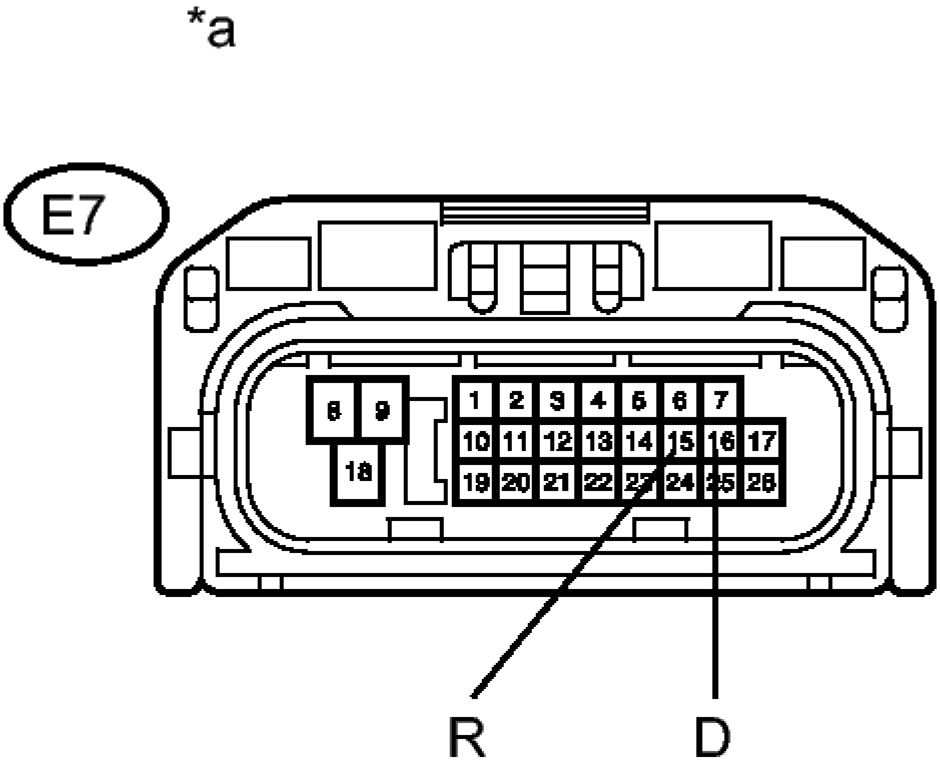
*a
E7
8
9
18
1
2
3
4
5
6
7
10
11
12
13
14
15
16
17
19
20
21
22
23
24
25
26
R
D

Fig. 11: Checking Harness And Connector (Park/Neutral Position Switch - TCM)
Courtesy of TOYOTA MOTOR SALES, U.S.A., INC.

b. Disconnect the TCM connectors.
c. Turn the engine switch on (IG), and measure the voltage according to the value(s) in the table below when the shift lever is moved to each position.

Standard Voltage

Tester Connection	Shift Lever Position	Specified Condition
E7-15 (R) - Body ground	R	11 to 14 V*
	Except	Below 1

	R	V
E7-16 (D) - Body ground	D, S, "+" or "-"	11 to 14 V
	Except D, S, "+" and "-"	Below 1 V

TEXT IN ILLUSTRATION

*a	Front view of wire harness connector (to TCM)

HINT:

*: The voltage will drop slightly due to lighting up of the back up light.

NG --> REPAIR OR REPLACE HARNESS OR CONNECTOR

OK --> See step 6

5. **CHECK HARNESS AND CONNECTOR (PARK/NEUTRAL POSITION SWITCH - TCM)**
   a. Turn the engine switch off.
   b. Disconnect the TCM connector.
   c. Disconnect the park/neutral position switch Assembly connector.
   d. Measure the resistance according to the value(s) in the table below.

Standard Resistance (Check for Open)

Tester Connection	**Condition**	**Specified Condition**
E4-4 (B) - E7-11 (NSW)	Always	Below 1 ohms

Standard Resistance (Check for Short)

Tester Connection	**Condition**	**Specified Condition**
E4-4 (B) or E7-11		

(NSW) - Body ground and other terminals	Always	10 kohms or higher

NG --> REPAIR OR REPLACE HARNESS OR CONNECTOR

OK --> See step 6

6. **REPLACE TCM. Refer to COMPONENTS**
7. **REPLACE PARK/NEUTRAL POSITION SWITCH ASSEMBLY. Refer to COMPONENTS**

DTC P0711: TRANSMISSION FLUID TEMPERATURE SENSOR "A" PERFORMANCE

DESCRIPTION

The Automatic Transmission Fluid (ATF) temperature sensor converts the fluid temperature into a resistance value for use by the TCM.

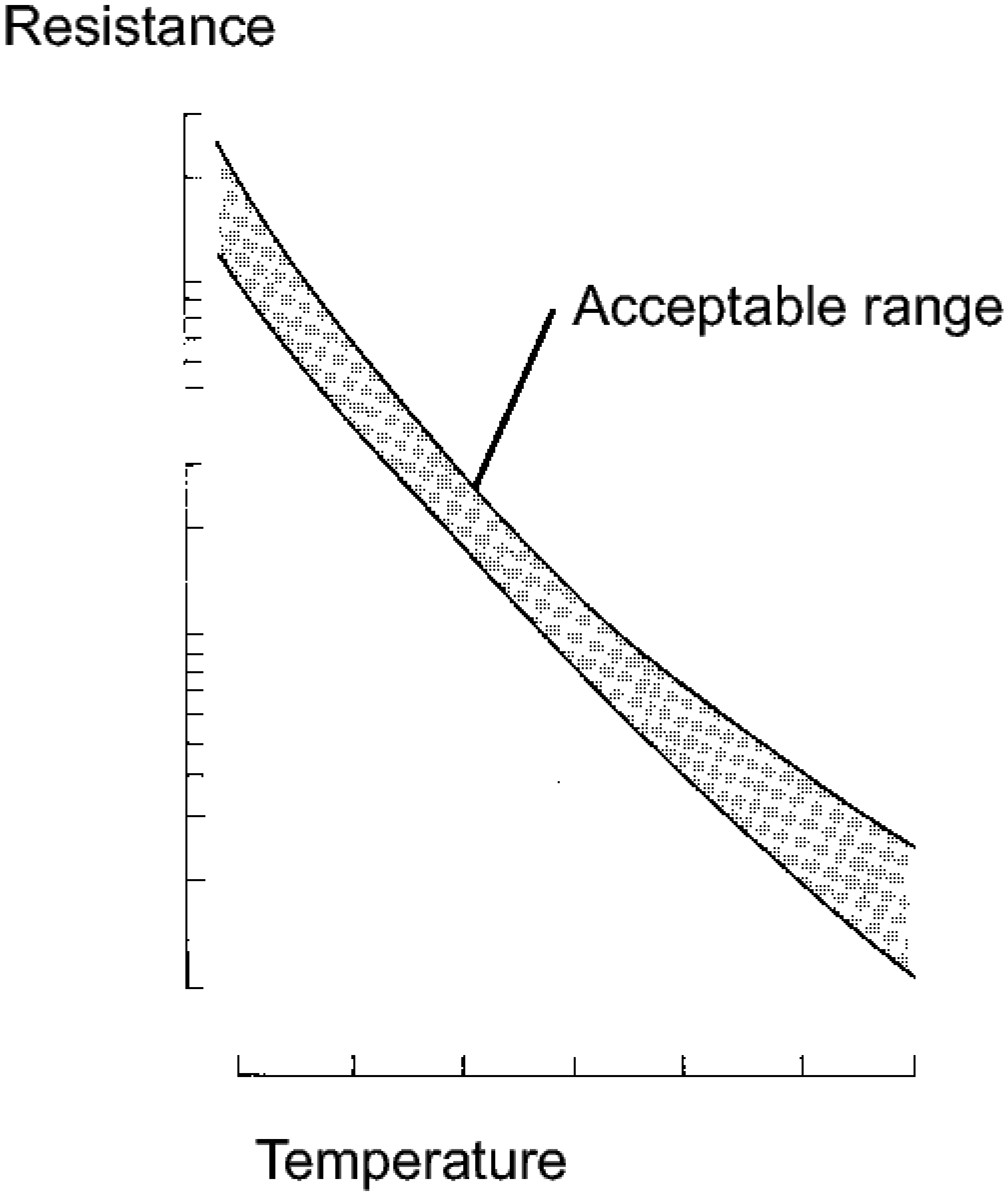

Fig. 12: Temperature And Resistance Graph
Courtesy of TOYOTA MOTOR SALES, U.S.A., INC.

The TCM applies a voltage to the temperature sensor through terminal THO1 of the TCM.

The sensor resistance changes with the transmission fluid temperature. As the temperature becomes higher, the

sensor resistance decreases.

One terminal of the sensor is grounded so that the sensor resistance decreases and the voltage goes down as the temperature becomes higher.

The TCM calculates the fluid temperature based on the voltage signal.

DTC No.	DTC Detection Condition	Trouble Area
P0711	One of the following conditions (A), (B) or (C) is met: (A) (a), (b) and (c) are detected: (2-trip detection logic) • (a) Intake air and engine coolant temperatures are more than 15°C (59°F) at engine start • (b) Soak time is more than 5 hours • (c) After normal driving for over 10 min. and 5 km (3 mile) or more, ATF temperature is less than 20°C (68°F) (B) Both (a) and (b) are detected: (2-trip detection logic) • (a) Intake air and engine coolant temperatures are more than -10°C (14°F) at engine start • (b) After normal driving for over 18 min. and 20 sec. and 8 km (5 mile) or more, ATF temperature is less than 20°C (68°F) (C) Both (a) and (b) are detected: (2-trip detection logic) • (a) Engine coolant temperature is less than 35°C (95°F) at engine start • (b) ATF temperature is 110°C (230°F) or more when engine coolant temperature reaches 60°C (140°F)	ATF temperature sensor

MONITOR DESCRIPTION

This DTC indicates that there is a problem with output signals from the automatic transmission fluid (ATF) temperature sensor and that the sensor itself is defective. The ATF temperature sensor converts the ATF temperature into an electrical resistance value. Based on the resistance, the TCM determines the ATF temperature and detects an open or short in the ATF temperature circuit or a fault of the ATF temperature sensor.

After running the vehicle for a certain period, the ATF temperature should increase. If the ATF temperature is below 20°C (68°F) after running the vehicle for a certain period, the TCM interprets this as a fault turns on the MIL, and stores the DTC.

MONITOR STRATEGY

Related DTCs	P0711: ATF temperature sensor
Required sensors/Components	ATF temperature sensor (TFT sensor)
Frequency of operation	Continuous
Duration	Condition A, B, C and D: 3 sec. Condition E: Continuous
MIL operation	2 driving cycles
Sequence of operation	None

TYPICAL ENABLING CONDITIONS

ALL:

The monitor will run whenever this DTC is not present. (Not circuit malfunction)	P0712, P0713 (ATF temperature sensor circuit (TFT sensor)) P0115, P0117, P0118 (ECT sensor circuit) P0112, P0113 (IAT sensor circuit) P0715, P0717 (Turbine speed sensor circuit) P0791, P0793 (Intermediate shaft speed sensor circuit) P0748 (Shift solenoid valve SL1 circuit) P0778 (Shift solenoid valve SL2 circuit) P0798 (Shift solenoid valve SL3 circuit) P2810 (Shift solenoid valve SL4 circuit) P0327, P0328, (KCS sensor circuit) P0120, P0121, P0122, P0123, P0220, P0222, P0223, P0604, P0606, P060A, P060B, P060D, P060E, P0657, P1607, P2102, P2103, P2111, P2112, P2118, P2119, P2135 ((ETCS) Electronic throttle control system) U0100 (CAN communication system) P2610 (Soak timer circuit)
TFT (Transmission fluid temperature) sensor circuit	No circuit malfunction
ECT (Engine coolant temperature) sensor circuit	No circuit malfunction
IAT (Intake air temperature) sensor circuit	No circuit malfunction
Turbine speed sensor circuit	No circuit malfunction
Intermediate shaft speed sensor	No circuit malfunction

Shift solenoid valve SL1 circuit	No circuit malfunction
Shift solenoid valve SL2 circuit	No circuit malfunction
Shift solenoid valve SL3 circuit	No circuit malfunction
Shift solenoid valve SL4 circuit	No circuit malfunction
(KCS) Knock control sensor circuit	No circuit malfunction
Soak timer circuit	No circuit malfunction
(ETCS) Electronic throttle control system	Not system down
CAN communication system	Not system down
Engine	Starting
Time after engine start	12 sec. or more
ECT (Engine coolant temperature)	-15°C (5°F) or more

CONDITION A:

Time after engine start except for continuing shift position "N" or "P" *2	10 min. or more
Driving distance after engine start *3	5 km (3.1 miles) or more
IAT *4	15°C (59°F) or more
ECT (12 sec. after engine start)	15°C (59°F) or more
Soak time	5 hours or more
Accumulated driving time *1	100 sec. or more

CONDITION B:

Time after engine start except for continuing shift position "N" or "P" *2	18 min. and 20 sec. or more
Driving distance after engine start *3	8 km (5 miles) or more
IAT *4	-10°C (14°F) or more
ECT (12 sec. after engine start)	-10°C (14°F) or more
Accumulated driving time *1	185 sec. or more

CONDITION C:

Time after engine start except for continuing shift position "N" or "P" *2	30 min. or more
Driving distance after engine start *3	15 km (9.3 miles) or more
IAT *4	-15°C (5°F) or more
ECT (12 sec. after engine start)	-15°C (5°F) or more
Accumulated driving time *1	400 sec. or more

CONDITION D:

Time after engine start except for continuing shift position "N" or "P" *2	40 min. or more
Driving distance after engine start *3	20 km (12.4 miles) or more
Accumulated driving time *1	550 sec. or more

CONDITION E:

Time after ECT reaches 60°C (140°F)	10 sec. or more
TFT (12 sec. after engine start)	110°C (230°F) or more
ECT (12 sec. after engine start)	35°C (95°F) or less

HINT:

*1: Following conditions are met

Engine speed - Turbine speed	10 RPM or more
Output speed	400 RPM or more
Throttle valve opening angle	3% or more
Shift position	Not "N" or "P"
Engine	Starting
However, accumulated driving time is cleared	
When following condition met	
Duration time from shift position "N" or "P"	600 sec. or more

*2: Time after engine start except for continuing

Shift position "N" or "P" is cleared	
When following condition met	
Duration time from shift position "N" or "P"	600 sec. or more

*3: Driving distance is cleared when following condition met

Duration time from shift position "N" or "P"	600 sec. or more

*4: Minimum select of following IAT

IAT (12 sec. after engine start)	
When following condition met	
IAT at duration time from shift position "N" or "P"	600 sec. or more

TYPICAL MALFUNCTION THRESHOLDS

CONDITION A, B, C AND D:

TFT	Less than 20°C (68°F) (THO = -10°C (14°F) at engine start) (Conditions vary with THO at engine)

CONDITION E:

TFT	110°C (230°F) or more

COMPONENT OPERATING RANGE

TFT	Atmospheric temperature - approx. 130°C (266°F)

WIRING DIAGRAM

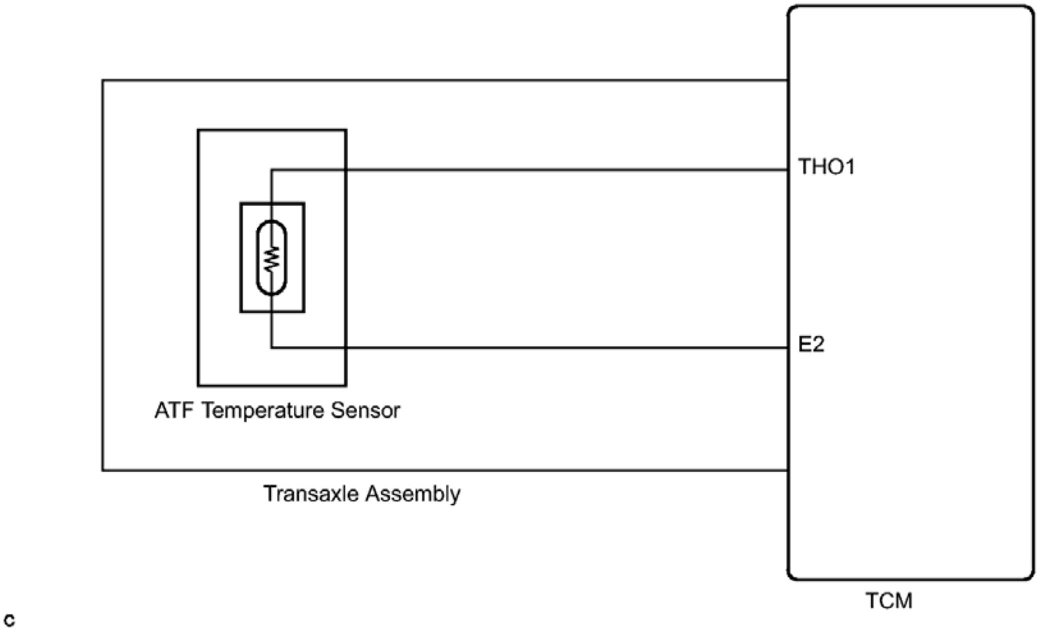

Fig. 13: ATF Temperature Sensor Circuit Diagram
Courtesy of TOYOTA MOTOR SALES, U.S.A., INC.

INSPECTION PROCEDURE

NOTE:

- **Perform the universal trip to clear permanent DTCs. Refer to DTC CHECK / CLEAR .**
- **If DTCs P0711 and P2610 are output simultaneously, confirm that the ATF temperature is as specified in "Normal Condition" using the Techstream first. When the ATF temperature is as specified in "Normal Condition", perform troubleshooting for DTC P2610. Refer to DIAGNOSTIC TROUBLE CODE CHART .**
- **In the table below, the value listed under "Normal Condition" are reference values.**

HINT:

Using the Techstream to read the Data List allows the values or states of switches, sensors, actuators and other items to be read without removing any parts. This non-intrusive inspection can be very useful because intermittent conditions or signals may be discovered before parts or wiring is disturbed. Reading the Data List information early in troubleshooting is one way to save diagnostic time.

1. Warm up the engine.
2. Turn the engine switch off.
3. Connect the Techstream to the DLC3.
4. Turn the engine switch on (IG).
5. Turn the Techstream on.
6. Enter the following menus: Powertrain / ECT / Data List.
7. According to the display on the Techstream, read the Data List.

TCM

Tester Display	Measurement Item/Range	Normal Condition	Diagnostic Note
A/T Oil Temperature 1	ATF temperature sensor value/ Min.: -40°C (-40°F) Max.: 215°C (419°F)	• After stall speed test: Approximately 80°C (176°F) • While engine is cold: Equal to ambient temperature	If value is -40°C (-40°F) or 150°C (302°F), ATF temperature sensor circuit is open or short circuited

HINT:

When DTC P0712 is output and the Techstream indicates 150°C (302°F) or more, there is a short circuit.

When DTC P0713 is output and the Techstream indicates -40°C (-40°F), there is an open circuit.

Measure the resistance between terminal THO1 (OT) and body ground.

Temperature Displayed	Malfunction
-40°C (-40°F)	Open circuit
150°C (302°F) or more	Short circuit

HINT:

If a circuit related to the ATF temperature sensor becomes open, P0713 is immediately set (in 0.5 seconds). When P0713 is set, P0711 cannot be detected.

It is not necessary to inspect the circuit when P0711 is set.

PROCEDURE

1. **CHECK OTHER DTCS OUTPUT (IN ADDITION TO DTC P0711)**
    a. Connect the Techstream to the DLC3.
    b. Turn the engine switch on (IG).
    c. Turn the Techstream on.
    d. Enter the following menus: Powertrain / ECT / Trouble Codes.
    e. Read the DTCs using the Techstream.

    Result

Display (DTC Output)	Proceed to
Only P0711 is output	A
P0711 and other DTC	B

    HINT:

    If any other codes besides P0711 are output, perform troubleshooting for those DTCs first.

    B --> See step 3

    A: Go to next step

2. **CHECK TRANSMISSION FLUID LEVEL**
    a. Check the transmission fluid level. Refer to **ADJUSTMENT** .

    OK

    Automatic transmission fluid level is correct.

    NG --> ADJUST FLUID LEVEL

    OK --> See step 4

3. **GO TO DTC CHART. Refer to DIAGNOSTIC TROUBLE CODE CHART**

4. **REPLACE ATF TEMPERATURE SENSOR ASSEMBLY. Refer to COMPONENTS**

DTC P0712: TRANSMISSION FLUID TEMPERATURE SENSOR "A" CIRCUIT LOW INPUT; DTC P0713: TRANSMISSION FLUID TEMPERATURE SENSOR "A" CIRCUIT HIGH INPUT

DESCRIPTION

The Automatic Transmission Fluid (ATF) temperature sensor converts the fluid temperature into a resistance value for use by the TCM.

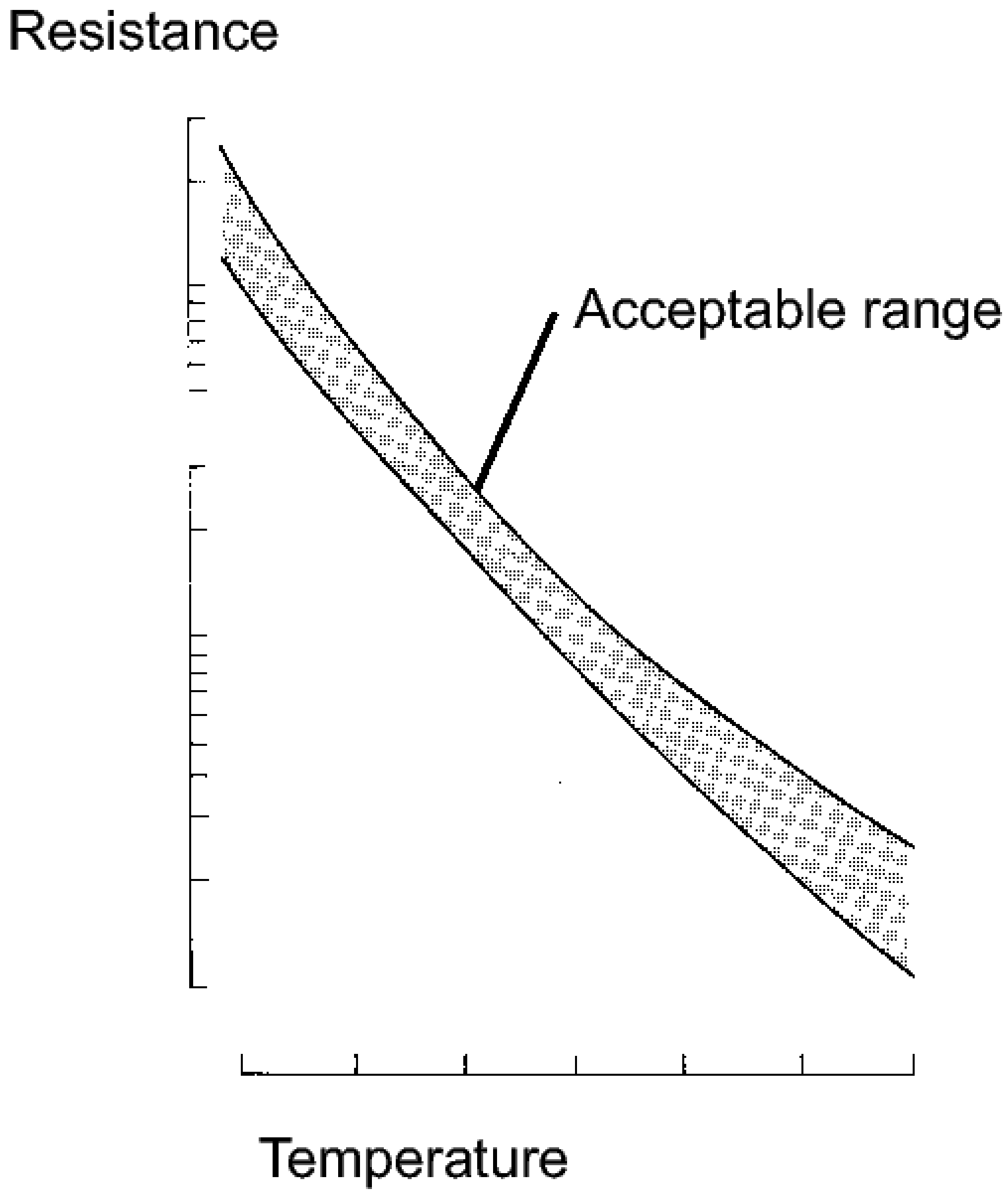

Fig. 14: Temperature And Resistance Graph
Courtesy of TOYOTA MOTOR SALES, U.S.A., INC.

The TCM applies a voltage to the temperature sensor through terminal THO1 of the TCM.

The sensor resistance changes with the transmission fluid temperature. As the temperature becomes higher, the

sensor resistance decreases.

One terminal of the sensor is grounded so that the sensor resistance decreases and the voltage goes down as the temperature becomes higher.

The TCM calculates the fluid temperature based on the voltage signal.

DTC No.	DTC Detection Condition	Trouble Area
P0712	ATF temperature sensor resistance is less than 79 ohms for 0.5 sec. or more (1-trip detection logic)	• Short in ATF temperature sensor circuit • Transmission wire • ATF temperature sensor • TCM
P0713	ATF temperature sensor resistance is more than 156 kohms for 0.5 seconds or more. Either of the following conditions is met (1 trip detection logic):	• Open in ATF temperature sensor circuit • Transmission wire • ATF temperature sensor • TCM
	Condition (A): 394 seconds or more have elapsed after the engine start when engine coolant temperature or intake air temperature is -29.375°C (- 20.875°F) or less.	
	Condition (B): 10 seconds or more have elapsed after the engine start when engine coolant temperature and intake air temperature are more than - 29.375°C (- 20.875°F).	

MONITOR DESCRIPTION

These DTCs indicate an open or short in the automatic transmission fluid (ATF) temperature sensor circuit. The automatic transmission fluid (ATF) temperature sensor converts ATF temperature into an electrical resistance value. Based on the resistance, the TCM determines the ATF temperature, and the TCM detects an open or short in the ATF temperature circuit. If the resistance value of the ATF temperature is less than 79 ohms*1 or more than 156 kohms*2, the TCM interprets this as a fault in the ATF sensor or wiring. The TCM will turn on the MIL and store the DTC.

*1: 150°C (302°F) or more is indicated regardless of the actual ATF temperature.

*2: -40°C (-40°F) is indicated regardless of the actual ATF temperature.

HINT:

The ATF temperature can be checked on the Techstream display.

MONITOR STRATEGY

Related DTCs	P0712: ATF temperature sensor/Range check (Low resistance) P0713: ATF temperature sensor/Range check (High resistance)
Required sensors/Components	ATF temperature sensor (TFT sensor)
Frequency of operation	Continuous
Duration	0.5 sec.
MIL operation	Immediate
Sequence of operation	None

TYPICAL ENABLING CONDITIONS

P0712: RANGE CHECK (LOW RESISTANCE)

The monitor will run whenever these DTCs are not present.	None
Battery voltage	8 V or more
Engine switch	on (IG)

P0713: Range check (High resistance)

One of the following conditions is met: Condition (A) or (B)

CONDITION (A)

Engine coolant temperature (ECT) or intake air temperature (IAT) at engine start	-29.375°C (-20.875°F) or less
Time after	394 seconds

engine start	or more
ECT sensor circuit fail (P0115, P0117, P0118)	Not detected
IAT sensor circuit fail (P0112, P0113)	Not detected

CONDITION (B)

Engine coolant temperature (ECT) or intake air temperature (IAT) at engine start	More than -29.375° C (-20.875° F)
Time after engine start	10 seconds or more
ECT sensor circuit fail (P0115, P0117, P0118)	Not detected
IAT sensor circuit fail (P0112, P0113)	Not detected

TYPICAL MALFUNCTION THRESHOLDS

P0712: RANGE CHECK (LOW RESISTANCE)

ATF (TFT) sensor resistance	Less than 79 ohms

P0713: RANGE CHECK (HIGH RESISTANCE)

ATF (TFT) sensor resistance	More than 156 kohms

COMPONENT OPERATING RANGE

ATF (TFT) sensor resistance	79 to 156 kohms

WIRING DIAGRAM

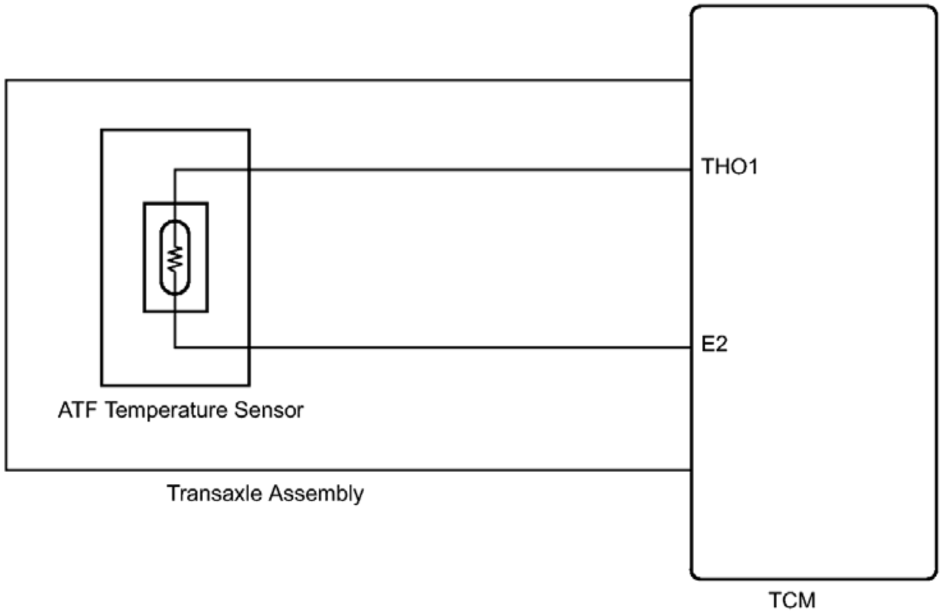

Fig. 15: ATF Temperature Sensor Circuit Diagram
Courtesy of TOYOTA MOTOR SALES, U.S.A., INC.

INSPECTION PROCEDURE

NOTE: **Perform the universal trip to clear permanent DTCs. Refer to DTC CHECK / CLEAR .**

HINT:

Using the Techstream to read the Data List allows the values or states of switches, sensors, actuators and other items to be read without removing any parts. This non-intrusive inspection can be very useful because intermittent conditions or signals may be discovered before parts or wiring is disturbed. Reading the Data List information early in troubleshooting is one way to save diagnostic time.

NOTE: **In the table below, the values listed under "Normal Condition" are reference values. Do not depend solely on these reference values when deciding whether a part is faulty or not.**

1. Warm up the engine.
2. Turn the engine switch off.
3. Connect the Techstream to the DLC3.
4. Turn the engine switch on (IG).
5. Turn the Techstream on.

6. Enter the following menus: Powertrain / ECT / Data List.
7. According to the display on the Techstream, read the Data List.

TCM

Tester Display	Measurement Item/Range	Normal Condition	Diagnostic Note
A/T Oil Temperature 1	ATF temperature sensor value/ Min.: -40°C (-40°F) Max.: 215°C (419°F)	• After stall speed test: Approximately 80°C (176°F) • While engine is cold: Equal to ambient temperature	If value is -40°C (-40°F) or 150°C (302°F), ATF temperature sensor circuit is open or short circuited

HINT:

When DTC P0712 is output and the Techstream indicates 150°C (302°F) or more, there is a short circuit.

When DTC P0713 is output and the Techstream indicates -40°C (-40°F), there is an open circuit.

Measure the resistance between terminal THO1 (OT) and body ground.

Temperature Displayed	Malfunction
-40°C (-40°F)	Open circuit
150°C (302°F) or more	Short circuit

HINT:

If the circuit related to the ATF temperature sensor becomes open, P0713 is immediately set (in 0.5 seconds). When P0713 is set, P0711 cannot be detected.

It is not necessary to inspect the circuit when P0711 is set.

PROCEDURE

1. **INSPECT TRANSMISSION WIRE (ATF TEMPERATURE SENSOR)**
    a. Remove the TCM from the transaxle.

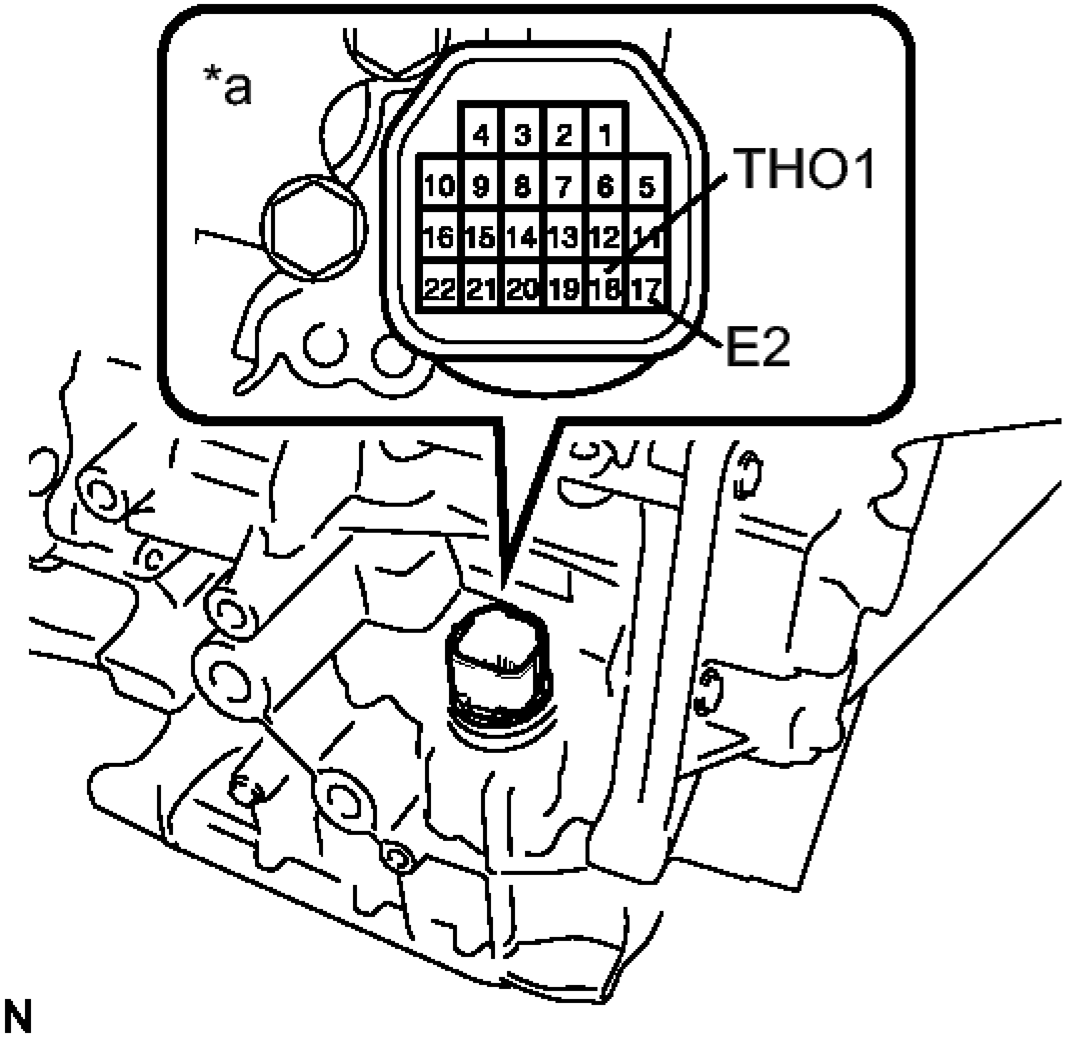
*a
4
3
2
1
10
9
8
7
6
5
16
15
14
13
12
11
22
21
20
19
18
17
THO1
E2
N

Fig. 16: Checking Resistance Of Transmission Wire (ATF Temperature Sensor)
Courtesy of TOYOTA MOTOR SALES, U.S.A., INC.

b. Measure the resistance according to the value(s) in the table below.

Standard Resistance

Tester Connection	Condition	Specified Condition
17 (E2) - 18 (THO1)	Always	79 ohms to 156 kohms
17 (E2) - Body ground and other terminals	Always	10 kohms or higher

18 (THO1) - Body ground and other terminals	Always	10 kohms or higher

HINT:

If the resistance is out of the specified range with the ATF temperature shown in the table below, the driveability of the vehicle may decrease.

ATF Temperature	Specified Condition
10°C (50°F)	5 to 8 kohms
25°C (77°F)	2.5 to 4.5 kohms
110°C (230°F)	0.22 to 0.28 kohms

TEXT IN ILLUSTRATION

*a	Component without harness connected (Transmission Wire)

NG --> See step 2

OK --> See step 4

2. **INSPECT ATF TEMPERATURE SENSOR**
    a. Disconnect the ATF temperature sensor connector from the transmission wire.

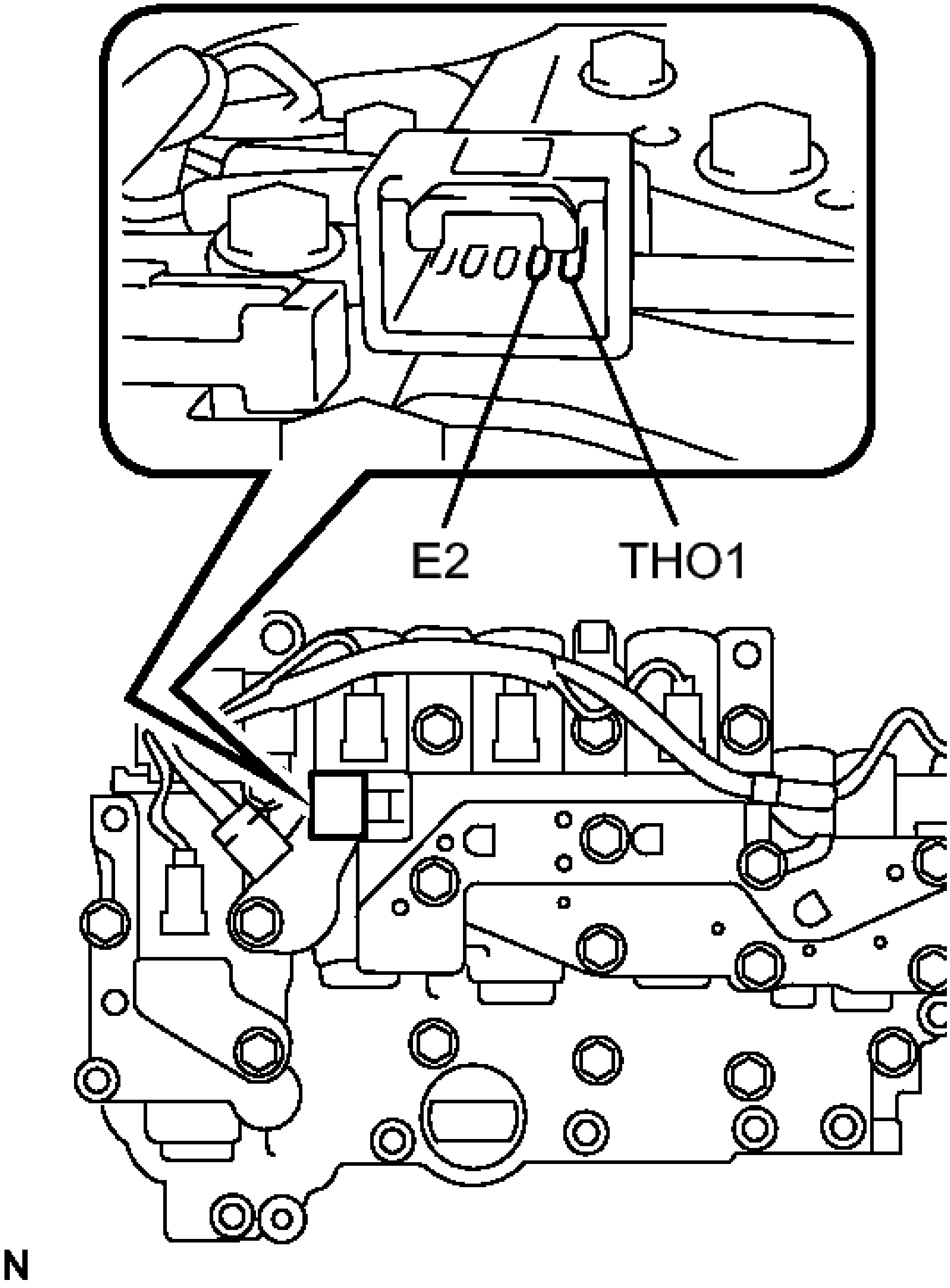

Fig. 17: Checking ATF Temperature Sensor Resistance
Courtesy of TOYOTA MOTOR SALES, U.S.A., INC.

b. Measure the resistance according to the value(s) in the table below.

Standard Resistance

Tester Connection	**Condition**	**Specified Condition**
E2 - THO1	Always	79 ohms to 156 kohms
E2 - Body ground and other terminals	Always	10 kohms or higher
THO1 - Body ground and other terminals	Always	10 kohms or higher

HINT:

If the resistance is out of the specified range with the ATF temperature shown in the table below, the driveability of the vehicle may decrease.

ATF Temperature	Specified Condition
10°C (50°F)	5 to 8 kohms
25°C (77°F)	2.5 to 4.5 kohms
110°C (230°F)	0.22 to 0.28 kohms

NG --> See step 5

OK --> See step 3

3. **REPLACE TRANSMISSION WIRE. Refer to COMPONENTS**
4. **REPLACE TCM. Refer to COMPONENTS**
5. **REPLACE ATF TEMPERATURE SENSOR ASSEMBLY. Refer to COMPONENTS**

DTC P0715: INPUT / TURBINE SPEED SENSOR CIRCUIT MALFUNCTION; DTC P0717: INPUT SPEED SENSOR CIRCUIT NO SIGNAL

DESCRIPTION

This sensor detects the rotation speed of the turbine which shows the input revolution (speed) of the transaxle. By comparing the input turbine speed signal (NT) with the counter gear speed sensor signal (NC), the TCM detects the shift timing of the gears and appropriately controls the engine torque and hydraulic pressure according to various conditions, thus, providing smooth gear shifts.

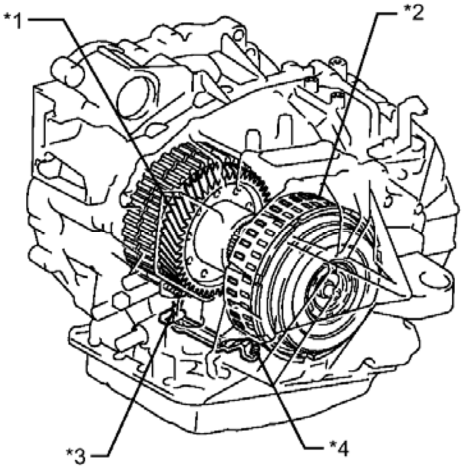

N

Fig. 18: Identifying Counter Gear, Clutch Drum, Input Speed Sensor And Output Speed Sensor
Courtesy of TOYOTA MOTOR SALES, U.S.A., INC.

TEXT IN ILLUSTRATION

*1	Counter Gear	*2	Clutch Drum
*3	Output Speed Sensor NC	*4	Input Speed Sensor NT

DTC No.	DTC Detection Condition	Trouble Area
P0715	When the speed sensor input voltage is either more than 1.9 V or less than 0.1 V for 4.5 seconds or more.(1-trip detection logic)	• Transmission revolution sensor (speed sensor NT) • Transmission wire • TCM
P0717	TCM detects conditions (a), (b) and (c) continuously for 5 sec. or more: (1-trip detection logic) (a) Vehicle speed: 50 km/h (31 mph) or more (b) Park/neutral position switch (R) is OFF (c) Speed sensor (NT): less than 300 RPM	

MONITOR DESCRIPTION

The NT terminal of the TCM detects a revolution signal from the speed sensor (NT) (input RPM). The TCM calculates gear shifts comparing the speed sensor (NT) with the speed sensor (NC).

While the vehicle is operating in 2nd, 3rd, 4th or 5th gear with the shift lever in D, if the input shaft revolution (speed) is less than 300 RPM*1 although the output shaft revolution (speed) is more than 1000 RPM*2, the TCM interprets this as a fault, illuminates the MIL and stores the DTC.

*1: Pulse is not output or is irregularly output.

*2: The vehicle speed is 50 km/h (31 mph) or more.

MONITOR STRATEGY

Related DTCs	P0715: Speed sensor (NT)/Range check P0717: Speed sensor (NT)/Verify pulse input
Required sensors/Components	Speed sensor (NT), Speed sensor (NC)
Frequency of operation	Continuous
Duration	P0715: 4.5 sec. P0717: 5 sec.
MIL operation	Immediate
Sequence of operation	None

TYPICAL ENABLING CONDITIONS

P0715:

Battery voltage	8 V or more
Engine switch	on (IG)
Starter	OFF

P0717:

The monitor will run whenever this DTC is not present.	P0500 (VSS) P0748, P0778, P0798 (Shift solenoid valve (range))
Shift change	Shift change is completed before starting next shift change operation
TCM selected gear	2nd, 3rd, 4th, 5th or 6th
Output shaft RPM	1, 000 RPM or more
R switch	OFF
NSW switch	OFF
Engine	Running
Battery voltage	8 V or more
Engine switch	on (IG)

Starter	OFF
Transmission range switch circuit	Not malfunction
Turbine speed sensor range check	Not malfunction

TYPICAL MALFUNCTION THRESHOLDS

P0715:

Sensor voltage	Less than 0.1 V or more than 1.9 V

P0717:

Sensor signal RPM	Less than 300 RPM

COMPONENT OPERATING RANGE

Speed sensor (NT)	Turbine speed is equal to engine speed with lock-up ON

WIRING DIAGRAM

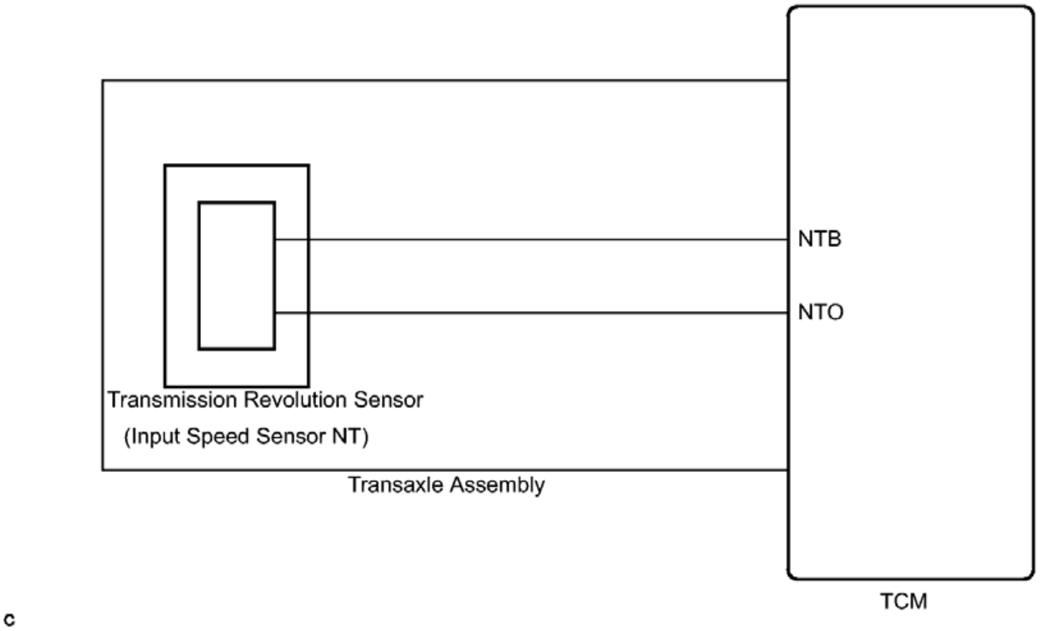
NTB
NTO
Transmission Revolution Sensor
(Input Speed Sensor NT)
Transaxle Assembly
TCM
c

Fig. 19: Transmission Revolution Sensor Circuit Wiring Diagram
Courtesy of TOYOTA MOTOR SALES, U.S.A., INC.

INSPECTION PROCEDURE

NOTE: Perform the universal trip to clear permanent DTCs. Refer to DTC CHECK / CLEAR .

HINT:

Using the Techstream to read the Data List allows the values or states of switches, sensors, actuators and other items to be read without removing any parts. This non-intrusive inspection can be very useful because intermittent conditions or signals may be discovered before parts or wiring is disturbed. Reading the Data List information early in troubleshooting is one way to save diagnostic time.

NOTE: **In the table below, the values listed under "Normal Condition" are reference values. Do not depend solely on these reference values when deciding whether a part is faulty or not.**

1. Warm up the engine.
2. Turn the engine switch off.
3. Connect the Techstream to the DLC3.
4. Turn the engine switch on (IG).
5. Turn the Techstream on.
6. Enter the following menus: Powertrain / ECT / Data List.
7. According to the display on the Techstream, read the Data List.

TCM

Tester Display	Measurement Item/Range	Normal Condition	Diagnostic Note
SPD (NT)	Input shaft speed/ Min.: 0 RPM Max.: 12750 RPM	Lock-up is • ON (after warming up engine): Input turbine speed (NT) is equal to engine speed • OFF (idling with shift lever in N): Input turbine speed	Data is displayed in increments of 50 RPM

		(NT) is nearly equal to engine speed	

HINT:

- SPD (NT) is always 0 while driving: Open or short in the sensor or circuit.
- SPD (NT) is always more than 0 and less than 300 RPM while driving the vehicle at 50 km/h (31 mph) or more: Sensor trouble, improper installation, or intermittent connection trouble of the circuit.

PROCEDURE

1. **INSPECT TRANSMISSION REVOLUTION SENSOR (SPEED SENSOR INSTALLATION)**
    a. Remove the valve body assembly.
    b. Make sure that the connector is properly connected, and check the speed sensor installation. Refer to **INSTALLATION** .

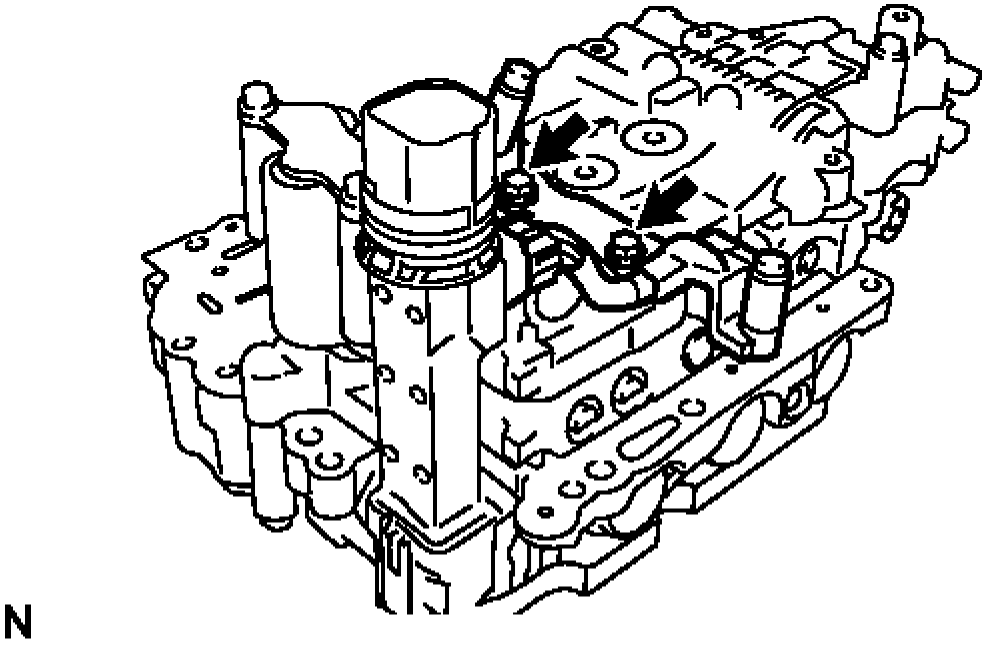

Fig. 20: Inspecting Transmission Revolution Sensor (Speed Sensor Installation)
Courtesy of TOYOTA MOTOR SALES, U.S.A., INC.

OK

The installation bolt is tightened properly and there is no clearance between the sensor and transaxle case.

NG --> See step 6

OK: Go to next step

2. **INSPECT TRANSMISSION WIRE**
    a. Remove the TCM.

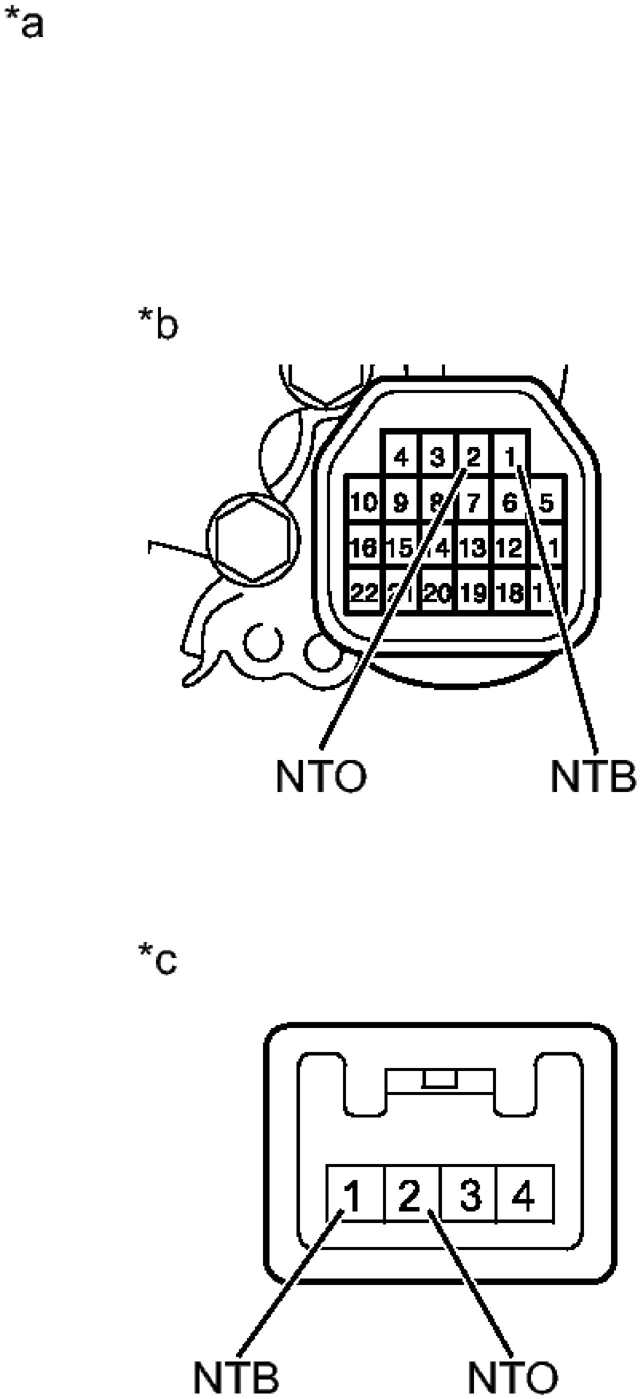
*a
*b
4 3 2 1
10 9 8 7 6 5
16 15 14 13 12 11
22 21 20 19 18 17
NTO
NTB
*c
1 2 3 4
NTB
NTO

Fig. 21: Checking Resistance Of Transmission Wire
Courtesy of TOYOTA MOTOR SALES, U.S.A., INC.

b. Disconnect the speed sensor connector from the transmission wire.
c. Measure the resistance according to the value(s) in the table below.

Standard Resistance

Tester Condition	Condition	Specified Condition
1 (NTB) sensor side - 1 (NTB) TCM side	Always	Below 1 ohms
2 (NTO) sensor side - 2 (NTO) TCM side	Always	Below 1 ohms
1 (NTB) sensor side - Body ground and other terminals	Always	10 kohms or higher
2 (NTO) sensor side - Body ground and other terminals	Always	10 kohms or higher

TEXT IN ILLUSTRATION

*a	Component without harness connected (Transmission Wire)
*b	TCM Side
*c	Sensor Side

NG --> See step 7

OK: Go to next step

3. **REPLACE TRANSMISSION REVOLUTION SENSOR**

Refer to **COMPONENTS**

NEXT: Go to next step

4. **CHECK IF DTC OUTPUT RECURS (SEE IF DTC P0715 AND/OR P0717 OUTPUT AGAIN)**
   a. Connect the Techstream to the DLC3.
   b. Start the engine and turn the Techstream on.
   c. Clear the DTCs. Refer to **DTC CHECK / CLEAR** .

      HINT:

      Write down the currently output DTCs before clearing them.

   d. Perform the monitor drive pattern. Refer to **MONITOR DRIVE PATTERN** .
   e. Enter the following menus: Powertrain / ECT / Trouble Codes.
   f. Read the DTCs using the Techstream.

      Result

Display (DTC Output)	Proceed to
Only "P0715 or P0717" is output	A
No output	B

B --> END

A --> See step 5

5. **REPLACE TCM. Refer to COMPONENTS**
6. **REPAIR OR REPLACE TRANSMISSION REVOLUTION SENSOR. Refer to COMPONENTS**
7. **REPLACE TRANSMISSION WIRE. Refer to COMPONENTS**

DTC P0724: BRAKE SWITCH "B" CIRCUIT HIGH

DESCRIPTION

The purpose of this circuit is to prevent the engine from stalling when the brakes are suddenly applied while driving in the lock-up condition.

When the brake pedal is depressed, this switch sends a signal to the TCM. Then the TCM cancels the operation of the lock-up clutch while braking is in progress.

DTC No.	DTC Detection Condition	Trouble Area
P0724	The stop light switch remains ON even when the vehicle is driven in a STOP (less than 3 km/h (1.86 mph)) and GO (30 km/h (18.65 mph) or more) fashion 5 times. (2-trip detection logic).	• Short in stop light switch signal circuit • Stop light switch • TCM

MONITOR DESCRIPTION

This DTC indicates that the stop light switch remains ON. When the stop light switch remains ON during "stop and go" driving, the TCM interprets this as a fault in the stop light switch, illuminates the MIL, and stores the DTC. The vehicle must stop (less than 3 km/h (1.86 mph)) and go (30 km/h (18.65 mph) or more) five times for two consecutive driving cycles in order to set this DTC.

MONITOR STRATEGY

Related DTCs	P0724: Stop light switch/Range check/Rationality
Required sensors/Components	Stop light switch
Frequency of operation	Continuous
Duration	GO and STOP 5 times
MIL operation	2 driving cycles
Sequence of operation	None

TYPICAL ENABLING CONDITIONS

GO and STOP are defined as follows;

THE STOP LIGHT SWITCH REMAINS ON DURING GO AND STOP 5 TIMES.

The monitor will run whenever this DTC is not present.	None
GO: (Vehicle speed is 18.65 mph (30 km/h) or more)	18.65 mph (30 km/h) or more
STOP: (Vehicle speed is less than 1.86 mph (3 km/h))	Less than 1.86 mph (3 km/h)
Starter	OFF
Battery voltage	8 V or more
Engine switch	on (IG)

TYPICAL MALFUNCTION THRESHOLDS

Switch status	ON stuck

WIRING DIAGRAM

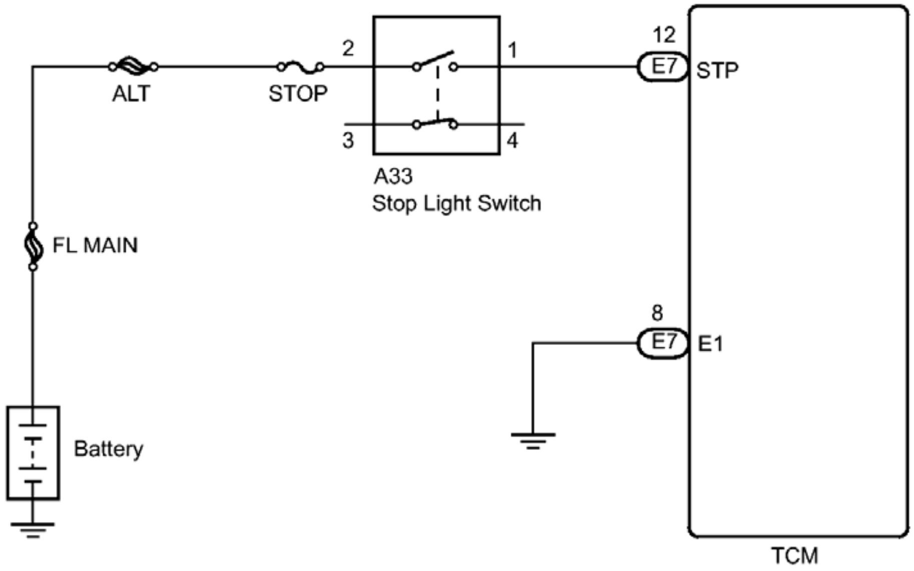

Fig. 22: Stop Light Switch Circuit Wiring Diagram
Courtesy of TOYOTA MOTOR SALES, U.S.A., INC.

INSPECTION PROCEDURE

NOTE: **Perform the universal trip to clear permanent DTCs. Refer to DTC CHECK / CLEAR .**

PROCEDURE

1. **READ VALUE USING DATA LIST (STP SIGNAL)**

   HINT:

   Using the Techstream to read the Data List allows the values or states of switches, sensors, actuators and other items to be read without removing any parts. This non-intrusive inspection can be very useful because intermittent conditions or signals may be discovered before parts or wiring is disturbed. Reading the Data List information early in troubleshooting is one way to save diagnostic time.

   NOTE: **In the table below, the values listed under "Normal Condition" are reference values. Do not depend solely on these reference values when deciding whether a part is faulty or not.**

   a. Turn the engine switch off.
   b. Connect the Techstream to the DLC3.

c. Turn the engine switch on (IG).
d. Turn the Techstream on.
e. Enter the following menus: Powertrain / ECT / Data List.
f. According to the display on the Techstream, read the Data List.

OK

Tester Display	Measurement Item/Range	Normal Condition	Diagnostic Note
Stop Light Switch	Stop light switch status/ ON or OFF	Brake pedal is - ON: Depressed - OFF: Released	-

NOTE: In the table above, the conditions listed under "Normal Condition" are reference conditions. Do not depend solely on these reference conditions when deciding whether a part is faulty.

NG --> See step 2

OK --> CHECK FOR INTERMITTENT PROBLEMS

2. **CHECK STOP LIGHT SWITCH ASSEMBLY INSTALLATION**
    a. Check the stop light switch assembly installation. Refer to **INSTALLATION** .

OK

Stop light switch assembly is installed correctly.

NG --> SECURELY REINSTALL STOP LIGHT SWITCH ASSEMBLY

OK: Go to next step

3. **INSPECT STOP LIGHT SWITCH ASSEMBLY**
    a. Inspect the stop light switch assembly. Refer to **INSPECTION** .

NG --> See step 5

OK: Go to next step

4. **CHECK HARNESS AND CONNECTOR (STOP LIGHT SWITCH ASSEMBLY - TCM)**
    a. Install the stop light switch assembly.

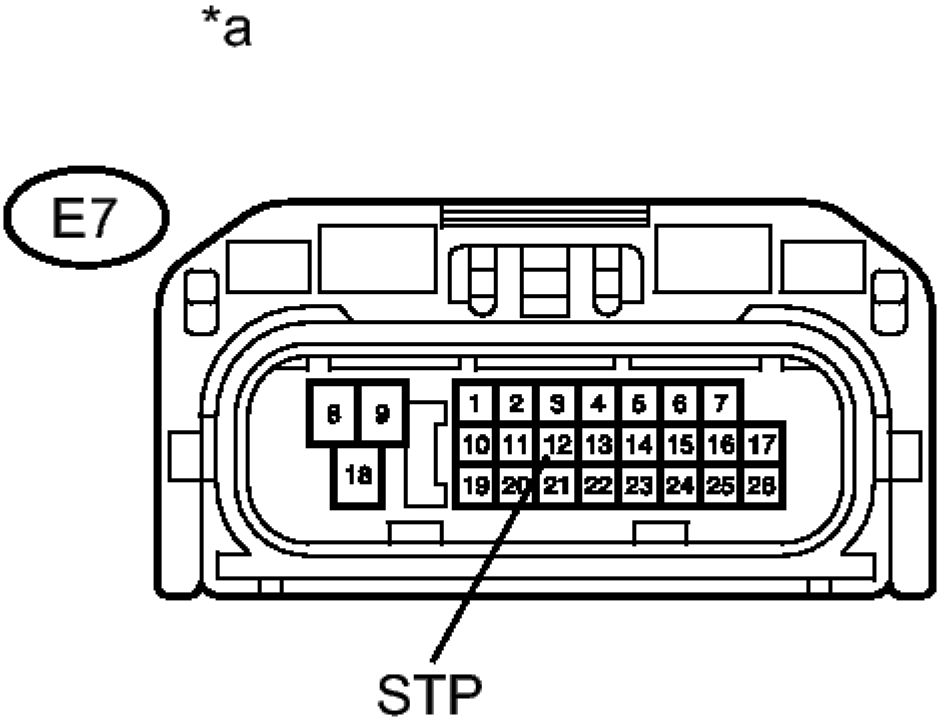
*a
E7
1
2
3
4
5
6
7
8
9
10
11
12
13
14
15
16
17
18
19
20
21
22
23
24
25
26
STP

Fig. 23: Checking Harness And Connector (Stop Light Switch Assembly - TCM)
Courtesy of TOYOTA MOTOR SALES, U.S.A., INC.

b. Connect the stop light switch connector.
c. Disconnect the TCM connector.
d. Measure the voltage according to the value(s) in the table below when the brake pedal is depressed and released.

Standard Voltage

Tester Connection	Condition	Specified Condition
E7-12 (STP) - Body	Brake pedal is depressed	7.5 to 14 V

ground		
E7-12 (STP) - Body ground	Brake pedal is released	Below 1 V

TEXT IN ILLUSTRATION

*1	Front view of wire harness connector (to TCM)

NG --> REPAIR OR REPLACE HARNESS OR CONNECTOR

OK --> See step 6

5. **REPLACE STOP LIGHT SWITCH ASSEMBLY. Refer to COMPONENTS**
6. **REPLACE TCM. Refer to COMPONENTS**

DTC P0741: TORQUE CONVERTER CLUTCH SOLENOID PERFORMANCE (SHIFT SOLENOID VALVE SL)

SYSTEM DESCRIPTION

The TCM uses signals from the throttle position sensor, air-flow meter, turbine (input) speed sensor, intermediate (counter gear) speed sensor and crankshaft position sensor to help determine the engagement timing of the lock-up clutch. The TCM monitors the engagement of the clutch using the turbine (input) speed sensor, intermediate (counter gear) speed sensor and crankshaft position sensor.

Then the TCM compares the engagement condition of the lock-up clutch with the lock-up schedule in the TCM memory to detect shift solenoid valve SL, valve body and torque converter clutch mechanical problems.

DTC No.	DTC Detection Condition	Trouble Area
P0741	When both of the following are detected (2-trip detection logic): • Lock-up does not occur when requested. • Transmission fluid pressure switch No. 3 is ON.	• Shift solenoid valve SL remains closed • Valve body is blocked • Torque converter assembly • Automatic transaxle (clutch, brake or gear etc.) • Line pressure is too low

MONITOR DESCRIPTION

Torque converter lock-up is controlled by the TCM based on the speed sensor (NT), speed sensor (NC), engine speed, engine load, engine temperature, vehicle speed, transmission fluid temperature, and gear selection. The TCM determines the lock-up status of the torque converter by comparing the engine speed (NE) to the input turbine RPM (NT). The TCM calculates the actual transmission gear by comparing the input turbine RPM (NT) to the counter gear RPM (NC). When conditions are appropriate, the TCM requests "lock-up" by applying control voltage to shift solenoid SL. When SL is turned on, it applies pressure to the lock-up relay valve and locks the torque converter clutch.

If the TCM detects no lock-up after lock-up has been requested or if it detects lock-up when it is not requested, the TCM interprets this as a fault in shift solenoid valve SL or lock-up system performance. The TCM will turn on the MIL and store the DTC.

HINT:

Example:

When any of the following is met, the system judges it as a malfunction.

- There is a difference in rotation (speed) between the input side (engine speed) and output side (input turbine speed) of the torque converter when the TCM commands lock-up.

  (Engine speed is at least 70 RPM greater than the input turbine speed.)

MONITOR STRATEGY

Related DTCs	P0741: Shift solenoid valve SL OFF malfunction
Required sensors/Components	Shift solenoid valve SL, Speed sensor (NT), Speed sensor (NC), Crankshaft position sensor (NE), Throttle position sensor (VPA1), Mass air flow sensor (MAF), Transmission temperature sensor (THO1), Engine coolant temperature sensor (ECT)
Frequency of operation	Continuous
Duration	OFF malfunction 3.5 sec.
MIL operation	2 driving cycles
Sequence of operation	None

TYPICAL ENABLING CONDITIONS

ALL:

	P0712, P0713 (ATF temperature sensor circuit (TFT sensor)) P0115, P0117, P0118 (ECT sensor circuit)

The monitor will run whenever this DTC is not present. (Not circuit malfunction)	P0715, P0717 (Turbine speed sensor circuit) P0791, P0793 (Intermediate shaft speed sensor circuit) P0748 (Shift solenoid valve SL1 circuit) P0778 (Shift solenoid valve SL2 circuit) P0798 (Shift solenoid valve SL3 circuit) P2810 (Shift solenoid valve SL4 circuit) P2759 (Shift solenoid valve SLU circuit) P2769, P2770 (Shift solenoid valve SL circuit) P0327, P0328, P0332, P0333 (KCS sensor circuit) P0120, P0121, P0122, P0123, P0220, P0222, P0223, P0604, P0606, P060A, P060B, P060D, P060E, P0657, P1607, P2102, P2103, P2111, P2112, P2118, P2119, P2135 ((ETCS) Electronic throttle control system) U0100 (CAN communication system)
ECT (Engine coolant temperature)	40°C (104°F) or more
Spark advance from Max. retard timing by KCS control	0°CA or more
Transmission range	"D"
TFT (Transmission fluid temperature)	-10°C (14°F) or more
TFT (Transmission fluid temperature) sensor circuit	No circuit malfunction
ECT (Engine coolant temperature) sensor circuit	No circuit malfunction
Turbine speed sensor circuit	No circuit malfunction
Intermediate shaft speed sensor circuit	No circuit malfunction
Shift solenoid valve SL1 circuit	No circuit malfunction
Shift solenoid valve SL2 circuit	No circuit malfunction
Shift solenoid valve SL3 circuit	No circuit malfunction
Shift solenoid valve SL4 circuit	No circuit malfunction
Shift solenoid valve SLU circuit	No circuit malfunction
Shift solenoid valve SL circuit	No circuit malfunction
(KCS) Knock control sensor circuit	No circuit malfunction
(ETCS) Electronic throttle control system	Not system down
CAN communication system	Not system down
Engine	Starting
TCM selected gear	Not 1st
Vehicle speed	15.5 mph (25 km/h) or more
Turbine speed/Output speed (NT/NO) with 1st	3.304 to 7.724
Turbine speed/Output speed (NT/NO) with 2nd	1.901 to 2.340
Turbine speed/Output speed (NT/NO) with 3rd	1.399 to 1.649
Turbine speed/Output speed (NT/NO) with 4th	0.998 to 1.138
Turbine speed/Output speed (NT/NO) with 5th	0.705 to 0.836
Turbine speed/Output speed (NT/NO) with 6th	0.568 to 0.695

TYPICAL MALFUNCTION THRESHOLDS

OFF MALFUNCTION:

Following conditions are met	(a) and (b)
(a) Engine Speed - Turbine speed	70 RPM or more
(b) Transmission fluid pressure switch	ON

INSPECTION PROCEDURE

NOTE: **Perform the universal trip to clear permanent DTCs. Refer to DTC CHECK / CLEAR .**

HINT:

Using the Techstream to perform Active Tests allows relays, VSVs, actuators and other items to be operated without removing any parts. This non-intrusive functional inspection can be very useful because intermittent operation may be discovered before parts or wiring is disturbed. Performing Active Tests early in troubleshooting is one way to save diagnostic time. Data List information can be displayed while performing Active Tests.

1. **PERFORM ACTIVE TEST**
    a. Warm up the engine.
    b. Turn the engine switch off.
    c. Connect the Techstream to the DLC3.
    d. Turn the engine switch on (IG).
    e. Turn the Techstream on.
    f. Enter the following menus: Powertrain / ECT / Active Test.
    g. According to the display on the Techstream, perform the Active Test.

Tester Display	Test Part	Control Range	Diagnostic Note
Activate the Lock Up	Controls the shift solenoid SLU and SL to set the automatic	ON/OFF	Can be used to check SLU and SL solenoid operation. [Vehicle Condition] • Throttle valve opening angle: Less than

	transaxle to the lock-up condition.		20% • Vehicle speed:60 km/h (37 mph) or more, and 6th gear

HINT:

This test can be conducted when the vehicle speed is 60 km/h (37 mph) or more.

h. Lightly depress the accelerator pedal and check that the engine speed does not change abruptly.

HINT:

- When changing the accelerator pedal opening angle while driving, if the engine speed does not change, lock-up is on.
- Slowly release, but not fully, the accelerator pedal in order to decelerate. (Fully releasing the pedal will close the throttle valve and lock-up may be turned off.)

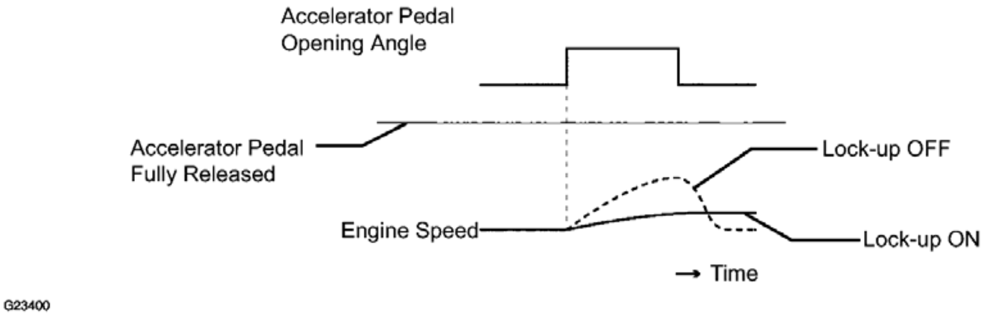

Fig. 24: Accelerator Pedal Opening Angle Graph
Courtesy of TOYOTA MOTOR SALES, U.S.A., INC.

PROCEDURE

1. **CHECK OTHER DTCS OUTPUT (IN ADDITION TO DTC P0741)**
    a. Connect the Techstream to the DLC3.
    b. Turn the engine switch on (IG).
    c. Turn the Techstream on.
    d. Enter the following menus: Powertrain / ECT / Trouble Codes.
    e. Read the DTCs using the Techstream.

Result

Display (DTC Output)	Proceed to
Only "P0741" is output	A
"P0741" and other DTCs	B

HINT:

If any other codes besides "P0741" are output, perform the troubleshooting for those DTCs first.

B --> See step 8

A: Go to next step

2. **CHECK TRANSMISSION WIRE**
    a. Remove the TCM from the transaxle.

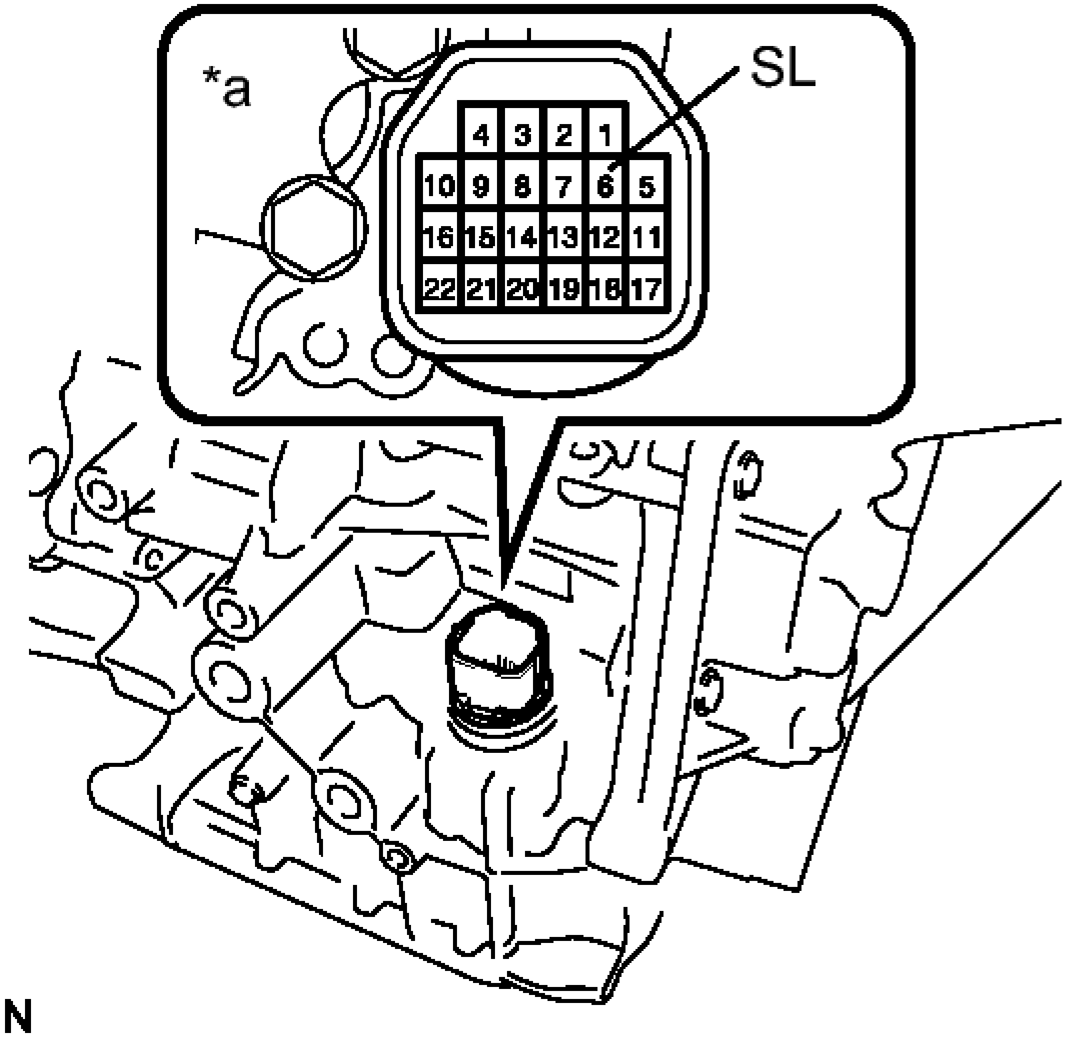
*a
SL
4
3
2
1
10
9
8
7
6
5
16
15
14
13
12
11
22
21
20
19
18
17
N

Fig. 25: Checking Transmission Wire Resistance
Courtesy of TOYOTA MOTOR SALES, U.S.A., INC.

b. Measure the resistance according to the value(s) in the table below.

Standard Resistance

Tester Connection	Condition	Specified Condition
6 (SL) - Body ground	20°C (68°F)	11 to 15 ohms

TEXT IN ILLUSTRATION

	Component

*a	without harness connected (Transmission Wire)

NG --> See step 6

OK: Go to next step

3. **INSPECT SHIFT SOLENOID VALVE SL (OPERATION)**
    a. Remove shift solenoid valve SL.

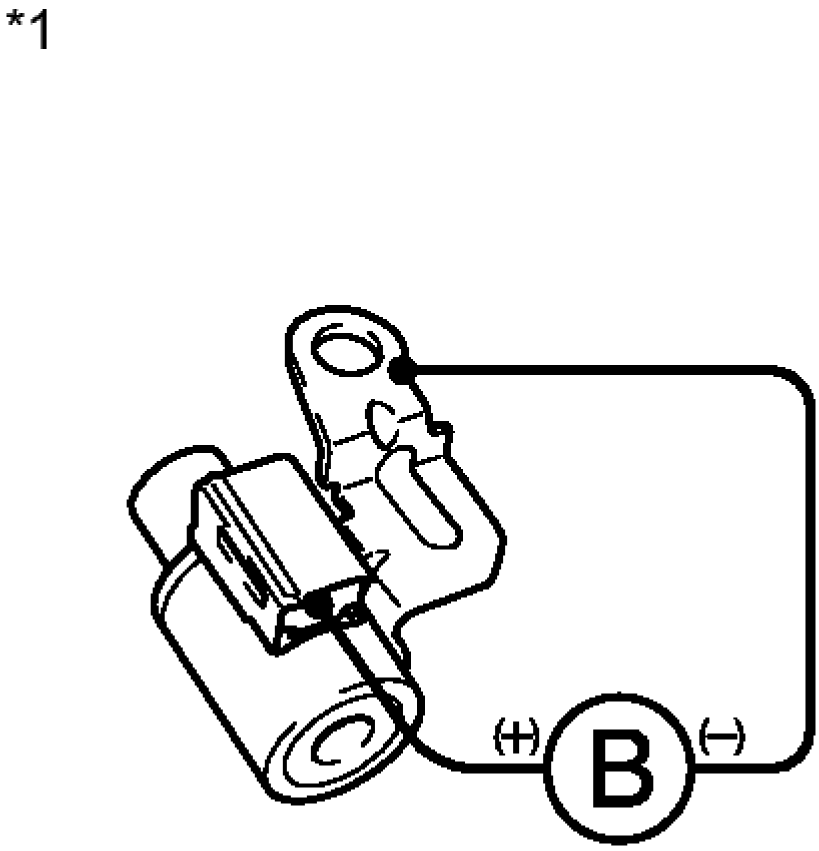

Fig. 26: Inspecting Shift Solenoid Valve SL (Operation)
Courtesy of TOYOTA MOTOR SALES, U.S.A., INC.

b. Connect a battery positive (+) lead to the terminal of the solenoid valve connector, and a negative (-) lead to the solenoid body. Then check that the valve moves and makes an operating sound.

OK

Valve moves and makes an operating sound.

TEXT IN ILLUSTRATION

*1	Shift Solenoid Valve SL

NG --> See step 9

OK: Go to next step

4. **INSPECT TRANSMISSION VALVE BODY ASSEMBLY**
   a. Check the transmission valve body assembly. Refer to **REMOVAL** .

   OK

   There are no foreign objects on each valve and they operate smoothly.

NG --> See step 12

OK: Go to next step

5. **INSPECT TORQUE CONVERTER ASSEMBLY**
   a. Check the torque converter assembly. Refer to **INSPECTION** .

   OK

   The torque converter operates normally.

NG --> See step 11

OK --> See step 7

6. **INSPECT SHIFT SOLENOID VALVE SL (RESISTANCE)**
   a. Remove shift solenoid valve SL.

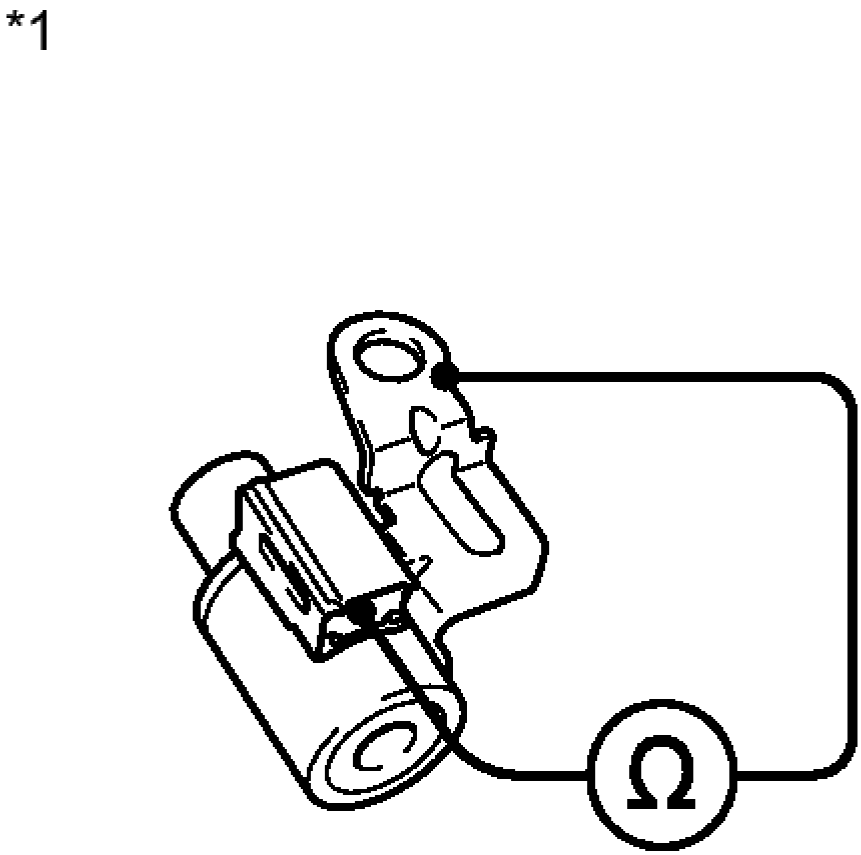

Fig. 27: Checking Shift Solenoid Valve SL Resistance
Courtesy of TOYOTA MOTOR SALES, U.S.A., INC.

b. Measure the resistance according to the value(s) in the table below.

Standard Resistance

Tester Connection	Condition	Specified Condition
Solenoid Connector (SL) - Solenoid Body (SL)	20°C (68° F)	11 to 15 ohms

TEXT IN ILLUSTRATION

*1	Shift Solenoid Valve SL

NG --> See step 9

OK --> See step 10

7. **REPAIR OR REPLACE AUTOMATIC TRANSAXLE ASSEMBLY. Refer to COMPONENTS**
8. **GO TO DTC CHART. Refer to DIAGNOSTIC TROUBLE CODE CHART**
9. **REPLACE SHIFT SOLENOID VALVE SL. Refer to COMPONENTS**
10. **REPLACE TRANSMISSION WIRE. Refer to COMPONENTS**
11. **REPLACE TORQUE CONVERTER ASSEMBLY. Refer to COMPONENTS**
12. **REPAIR OR REPLACE TRANSMISSION VALVE BODY ASSEMBLY. Refer to COMPONENTS**

DTC P0746: PRESSURE CONTROL SOLENOID "A" PERFORMANCE (SHIFT SOLENOID VALVE SL1)

SYSTEM DESCRIPTION

The TCM uses the vehicle speed signal and signals from the transmission speed sensors (NC, NT) to detect the actual gear (1st, 2nd, 3rd, 4th, 5th or 6th gear).

Then the TCM compares the actual gear with the shift schedule in the TCM memory to detect mechanical problems of the shift solenoid valves and valve body.

DTC No.	DTC Detection Condition	Trouble Area
P0746	The engine revs freely when 1st, 2nd, 3rd, or 4th gear is commanded (2-trip detection logic). When either of the following is detected twice (2-trip detection logic): • When 5th gear is commanded, 4th gear is engaged. • When 6th gear is commanded, 4th gear is engaged	• Shift solenoid valve SL1 remains open or closed • Valve body is blocked • Automatic transaxle (clutch, brake or gear etc.)

MONITOR DESCRIPTION

The TCM commands gear shifts by turning the shift solenoid valves on and off. According to the input shaft revolution (speed), intermediate (counter) shaft revolution (speed) and output shaft revolution (speed), the TCM detects the actual gear (1st, 2nd, 3rd, 4th, 5th or 6th gear). When the gear commanded by the TCM and the actual gear are not the same, the TCM illuminates the MIL and stores the DTC.

MONITOR STRATEGY

Related DTCs	P0746: Shift solenoid valve SL1 OFF malfunction Shift solenoid valve SL1 ON malfunction
Required sensors/Components	Shift solenoid valve SL1, Speed sensor (NT), Speed sensor (NC), Crankshaft position sensor (NE)
Frequency of operation	Continuous
Duration	ON malfunction: 0.8 sec. OFF malfunction: 0.5 sec.
MIL operation	2 driving cycles
Sequence of operation	None

TYPICAL ENABLING CONDITIONS

ALL:

The monitor will run whenever this DTC is not present. (Not circuit malfunction)	P0712, P0713 (ATF temperature sensor circuit (TFT sensor)) P0115, P0117, P0118 (ECT sensor circuit) P0715, P0717 (Turbine speed sensor circuit) P0791, P0793 (Intermediate shaft speed sensor circuit) P0748 (Shift solenoid valve SL1 circuit) P0778 (Shift solenoid valve SL2 circuit) P0798 (Shift solenoid valve SL3 circuit) P2810 (Shift solenoid valve SL4 circuit) P0327, P0328, P0332, P0333 (KCS sensor circuit) P0120, P0121, P0122, P0123, P0220, P0222, P0223, P0604, P0606, P060A, P060B, P060D, P060E, P0657, P1607, P2102, P2103, P2111, P2112, P2118, P2119, P2135 ((ETCS) Electronic throttle control system) U0100 (CAN communication system)
Transmission range	"D"
TFT (Transmission fluid temperature)	-10°C (14°F) or more
TFT (Transmission fluid temperature) sensor circuit	No circuit malfunction
ECT (Engine coolant temperature) sensor circuit	No circuit malfunction
Turbine speed sensor circuit	No circuit malfunction
Intermediate shaft speed sensor circuit	No circuit malfunction
Shift solenoid valve SL1 circuit	No circuit malfunction
Shift solenoid valve SL2 circuit	No circuit malfunction
Shift solenoid valve SL3 circuit	No circuit malfunction

Shift solenoid valve SL4 circuit	No circuit malfunction
(KCS) Knock control sensor circuit	No circuit malfunction
(ETCS) Electronic throttle control system	Not system down
CAN communication system	Not system down
Engine	Starting

OFF MALFUNCTION:

TCM selected gear	1st, 2nd, 3rd or 4th
TCM indicated pressure value of SL1	1, 200 kPa
Throttle valve opening angle	3% or more

ON MALFUNCTION:

TCM selected gear	5th or 6th
Vehicle speed	1.2 mph (2 km/h) or more
ETC (Engine coolant temperature)	40°C (104°F) or more
Throttle valve opening angle	4.5% or more at engine speed 2, 000 RPM (Varies with engine speed)

TYPICAL MALFUNCTION THRESHOLDS

Either of the following conditions is met:

OFF MALFUNCTION:

Turbine speed - Output speed x Gear ratio	1, 000 RPM or more

ON MALFUNCTION:

Input (turbine) speed/Intermediate shaft speed when output speed less than 1, 000 RPM	0.998 to 1.138

INSPECTION PROCEDURE

NOTE: **Perform the universal trip to clear permanent DTCs. Refer to DTC CHECK / CLEAR .**

PROCEDURE

1. **CHECK OTHER DTCS OUTPUT (IN ADDITION TO DTC P0746)**
    1. Connect the Techstream to the DLC3.
    2. Turn the engine switch on (IG).
    3. Turn the Techstream on.
    4. Enter the following menus: Powertrain / ECT / Trouble Codes.
    5. Read the DTCs using the Techstream.

    Result

Display (DTC Output)	Proceed to
Only "P0746" is output	A
"P0746" and other DTCs	B

    HINT:

    If a solenoid is stuck OFF, DTCs for several solenoids including the malfunctioning solenoid will be detected.

A --> See step 3

B: Go to next step

2. **PERFORM ACTIVE TEST USING TECHSTREAM**

NOTE: **This test should always be performed with at least 2 people.**

1. Warm up the engine.
2. Turn the engine switch off.
3. Connect the Techstream to the DLC3.
4. Turn the engine switch on (IG).
5. Turn the Techstream on.
6. Enter the following menus: Powertrain / ECT / Active Test.
7. According to the display on the Techstream, perform the Active Test.

HINT:

Comparing the gear commanded by the Active Test with the actual gear enables confirmation of the problem. Refer to **FAIL-SAFE CHART** .

Tester Display	Test Part	Control Range	Diagnostic Note
Control the Shift Position	Operates the shift solenoid valves to allow gears to be selected manually.	• Press "-->" button: Upshift occurs • Press "<--" button: Downshift occurs	Can be used to check the operation of the shift solenoid valves. Upshifts and downshifts should be performed consecutively. A 10-second interval is required between gear changes. Do not downshift at high speeds. Doing so will damage the automatic transaxle. [Vehicle Condition] 50 km/h (30 mph) or less

NOTE:

- **This test can be conducted when the vehicle is stopped.**
- **When shifting gears using the Active Test function, do not operate the accelerator pedal for 2 seconds before and after shifting gears.**

HINT:

The gear commanded by the TCM is shown in the Data List / Shift Status display on the Techstream.

h. Check the vehicle speed and the gear when the engine speed is 1000 RPM.

HINT:

Because the torque converter clutch has not engaged, it may be difficult to obtain the speeds specified in 4th, 5th, and 6th gear, however a difference of speed should still be evident following each gear change.

Standard

1st	**2nd**	**3rd**	**4th**	**5th**	**6th**
8 to 12 km/h (5 to 7.5 mph)	15 to 19 km/h (9.3 to 11.8 mph)	21 to 25 km/h (13.0 to 15.5 mph)	31 to 35 km/h (19.3 to 21.7 mph)	44 to 48 km/h (27.3 to 29.8 mph)	52 to 56 km/h (32.3 to 34.8 mph)

i. Compare the TCM commanded gear and the actual gear.

Result

Actuator Gear during Malfunction		**TCM Commanded Gear**						**Proceed to**
		1st	**2nd**	**3rd**	**4th**	**5th**	**6th**	
Shift solenoid SL1	Stuck ON	1st	2nd	3rd	4th	4th	4th	A
	Stuck OFF	N*1	N*1	N*1	N*1	5th	6th	
Shift solenoid SL2	Stuck ON	4th	4th	4th	4th	5th	6th	B
	Stuck OFF	1st	2nd	3rd	1st	N*1	N*1	
Shift solenoid SL3	Stuck ON	2nd	2nd	3rd	4th	5th	6th	C
	Stuck OFF	1st	1st	3rd	4th	5th	N*1	
Shift solenoid SL4	Stuck ON*3	3rd	3rd	3rd	4th	5th	5th	D
	Stuck OFF	1st	2nd	1st	4th	N*1	6th	
Shift solenoid SLT	Stuck ON	N*2	N*2	N*2	N*2	N*2	N*2	E
	Stuck OFF*3	1st	2nd	3rd	4th	5th	6th	

HINT:

- *1: Neutral
- *2: If shift solenoid SLT is stuck on, the line pressure will be low. Therefore, the amount of

torque that can be transmitted by each gear is lower than the normal limit. When the engine power exceeds this lowered limit, the engine speed will increase freely.

- *3: When shift solenoid SLT is stuck off, gear shifting is normal.

B --> See step 8

C --> See step 9

D --> See step 10

E --> See step 11

A: Go to next step

3. **INSPECT SHIFT SOLENOID VALVE SL1**
    a. Remove shift solenoid valve SL1.

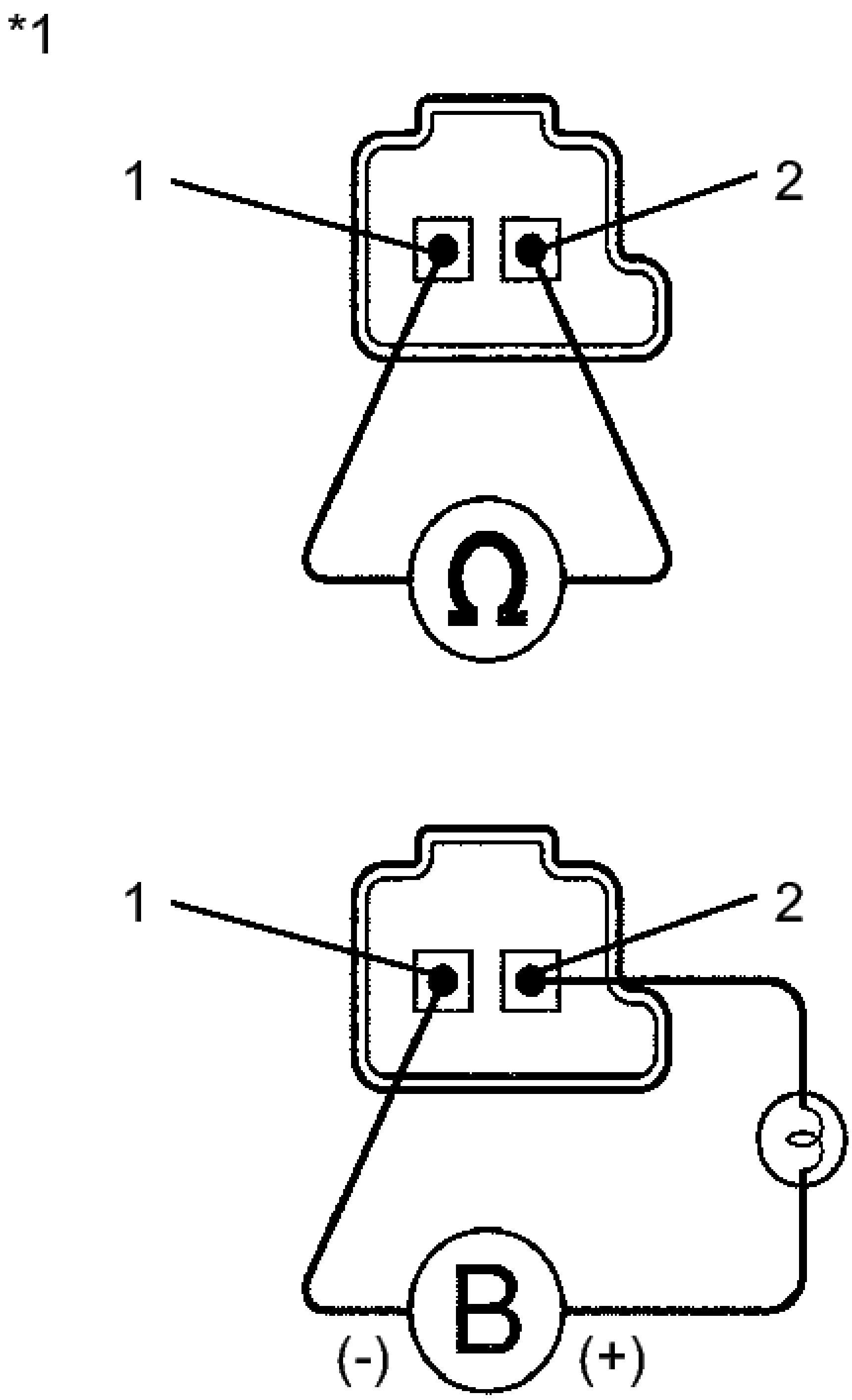

Fig. 28: Checking Shift Solenoid Valve SL1 Resistance
Courtesy of TOYOTA MOTOR SALES, U.S.A., INC.

b. Measure the resistance according to the value(s) in the table below.

Standard Resistance

Tester Connection	Condition	Specified Condition
1 - 2	20°C (68° F)	5.0 to 5.6 ohms

TEXT IN ILLUSTRATION

*1	Shift Solenoid Valve SL1

c. Connect a battery positive (+) lead with a 21 W bulb to terminal 2 and a negative (-) lead to terminal 1 of the solenoid valve connector. Then check that the valve moves and makes an operating sound.

   OK

   Valve moves and makes an operating sound.

NG --> See step 6

OK: Go to next step

4. **INSPECT TRANSMISSION VALVE BODY ASSEMBLY**
   a. Check the transmission valve body assembly. Refer to **REMOVAL** .

      OK

      There are no foreign objects on each valve and they operate smoothly.

NG --> See step 7

OK --> See step 5

5. **REPAIR OR REPLACE AUTOMATIC TRANSAXLE ASSEMBLY. Refer to COMPONENTS**
6. **REPLACE SHIFT SOLENOID VALVE SL1. Refer to COMPONENTS**
7. **REPAIR OR REPLACE TRANSMISSION VALVE BODY ASSEMBLY. Refer to COMPONENTS**
8. **GO TO DTC CHART (RELATED SHIFT SOLENOID VALVE (SL2) PERFORMANCE DTC P0776). Refer to DTC P0776: Pressure Control Solenoid "B" Performance (Shift Solenoid Valve SL2)**
9. **GO TO DTC CHART (RELATED SHIFT SOLENOID VALVE (SL3) PERFORMANCE DTC P0796). Refer to DTC P0796: Pressure Control Solenoid "C" Performance (Shift Solenoid Valve**

SL3)

10. **GO TO DTC CHART (RELATED SHIFT SOLENOID VALVE (SL4) PERFORMANCE DTC P2808). Refer to DTC P2808: Pressure Control Solenoid "G" Performance (Shift Solenoid Valve SL4)**
11. **GO TO DTC CHART (RELATED SHIFT SOLENOID VALVE (SLT) PERFORMANCE DTC P2714). Refer to DTC P2714: Pressure Control Solenoid "D" Performance (Shift Solenoid Valve SLT)**

DTC P0748: PRESSURE CONTROL SOLENOID "A" ELECTRICAL (SHIFT SOLENOID VALVE SL1)

DESCRIPTION

Changing from 1st to 6th is performed by the TCM turning shift solenoid valves SL1, SL2, SL3, SL4 and SL on and off. If an open or short circuit occurs in any of the shift solenoid valves, the TCM controls the remaining normal shift solenoid valves to allow the vehicle to be operated. Refer to **FAIL-SAFE CHART** .

DTC No.	DTC Detection Condition	Trouble Area
P0748	The TCM checks for an open or short in the shift solenoid valve SL1 circuit while driving and shifting between 4th and 5th gears. (1-trip detection logic) • Output signal duty equals 100%. (NOTE: SL1 output signal duty is less than 100% under normal condition.)	• Open or short in shift solenoid valve SL1 circuit • Shift solenoid valve SL1 • TCM

MONITOR DESCRIPTION

This DTC indicates an open or short in the shift solenoid valve SL1 circuit. The TCM commands gear shifts by turning the shift solenoid valves on or off. When there is an open or short circuit in any shift solenoid valve circuit, the TCM detects the problem and illuminates the MIL and stores the DTC. The TCM also performs the fail-safe function and turns the other normal shift solenoid valves on or off. (In case of an open or short circuit, the TCM stops sending current to the circuit.)

While driving and shifting between 4th and 5th gears, if the TCM detects an open or short in the shift solenoid valve SL1 circuit, the TCM determines there is a malfunction. Refer to **FAIL-SAFE CHART** .

MONITOR STRATEGY

Related DTCs	P0748: Shift solenoid valve SL1/Range check
Required sensors/Components	Shift solenoid valve SL1
Frequency of operation	Continuous
Duration	1 sec.

MIL operation	Immediate
Sequence of operation	None

TYPICAL ENABLING CONDITIONS

ALL

The monitor will run whenever the following DTCs are not present	None
Engine switch	on (IG)
Starter	OFF

CONDITION (A)

Battery voltage	12 V or more

CONDITION (B)

Battery voltage	10 V or more and less than 12 V
CPU commanded duty	Less than 75%

TYPICAL MALFUNCTION THRESHOLDS

CONDITION (A) AND (B)

Output duty cycle	100% or more

COMPONENT OPERATING RANGE

Output duty cycle	More than 3% and less than 100%

WIRING DIAGRAM

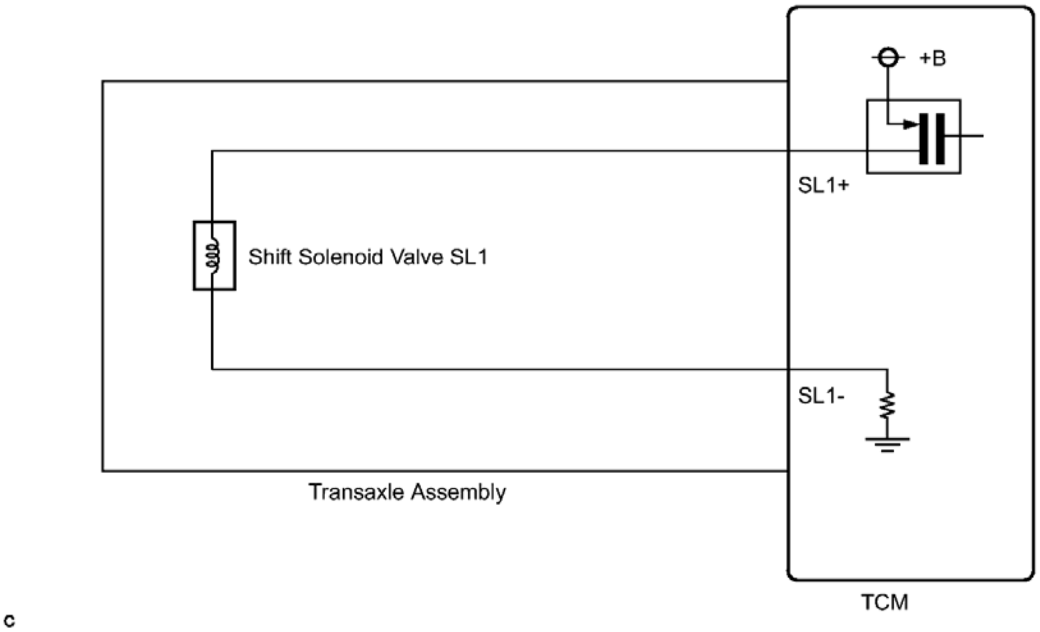
+B
SL1+
Shift Solenoid Valve SL1
SL1-
Transaxle Assembly
TCM
c

Fig. 29: Shift Solenoid Valve SL1 Circuit Wiring Diagram
Courtesy of TOYOTA MOTOR SALES, U.S.A., INC.

INSPECTION PROCEDURE

NOTE: **Perform the universal trip to clear permanent DTCs. Refer to DTC CHECK / CLEAR .**

HINT:

The following table shows normal operation of the shift solenoid valve SL1 when the shift lever is in D:

TCM commanded gear	1st	2nd	3rd	4th	5th	6th
Shift solenoid valve SL1	ON	ON	ON	ON	OFF	OFF

PROCEDURE

1. **INSPECT TRANSMISSION WIRE (SL1)**
    a. Remove the TCM from the transaxle.

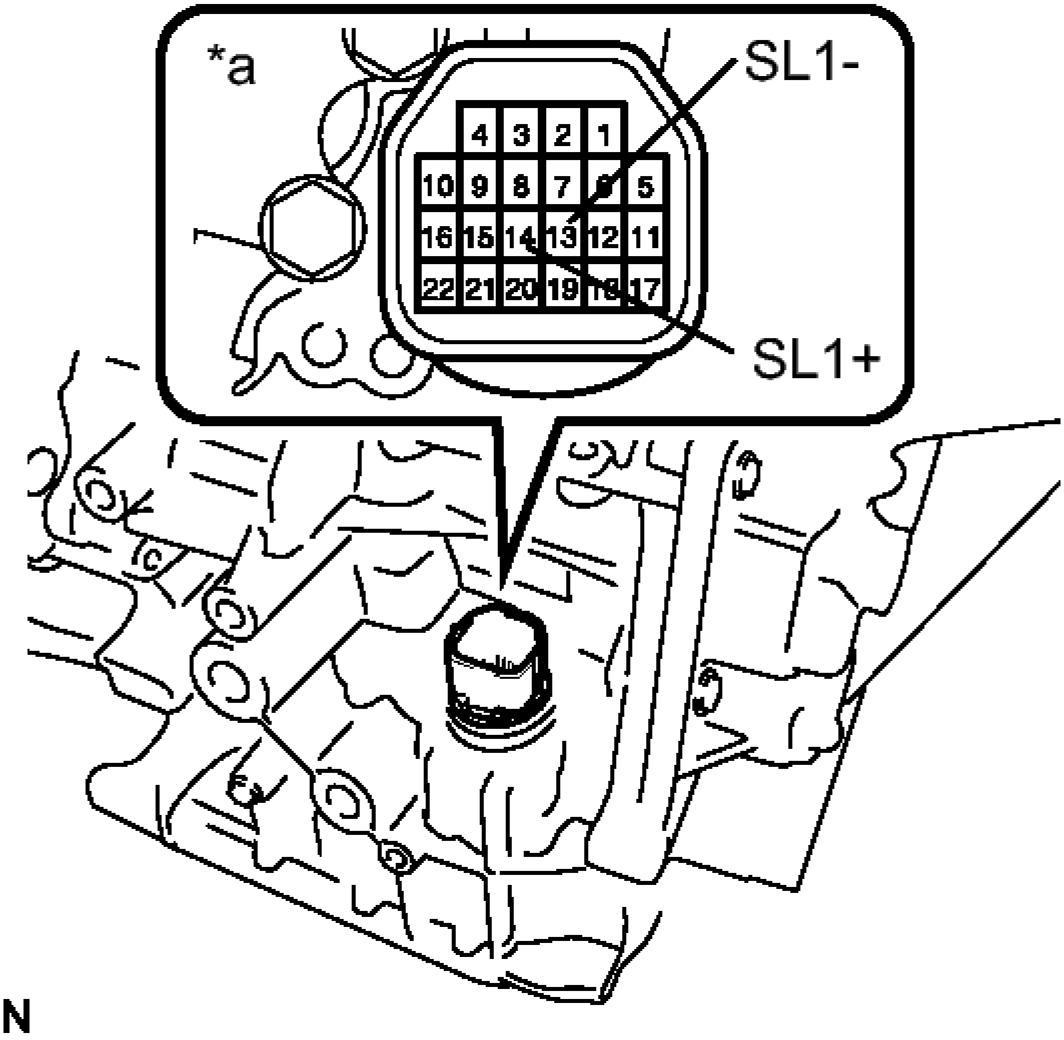
*a
SL1-
SL1+
4
3
2
1
10
9
8
7
6
5
16
15
14
13
12
11
22
21
20
19
18
17
N

Fig. 30: Checking Transmission Wire (SL1)
Courtesy of TOYOTA MOTOR SALES, U.S.A., INC.

b. Measure the resistance according to the value(s) in the table below.

Standard Resistance

Tester Connection	Condition	Specified Condition
14 (SL1+) - 13 (SL1-)	20°C (68°F)	5.0 to 5.6 ohms
14 (SL1+) - Body ground and other terminals	Always	10 kohms or higher

13 (SL1-) - Body ground and other terminals	Always	10 kohms or higher

TEXT IN ILLUSTRATION

*a	Component without harness connected (Transmission Wire)

NG --> See step 2

OK --> See step 3

2. **INSPECT SHIFT SOLENOID VALVE SL1**
    a. Remove shift solenoid valve SL1.

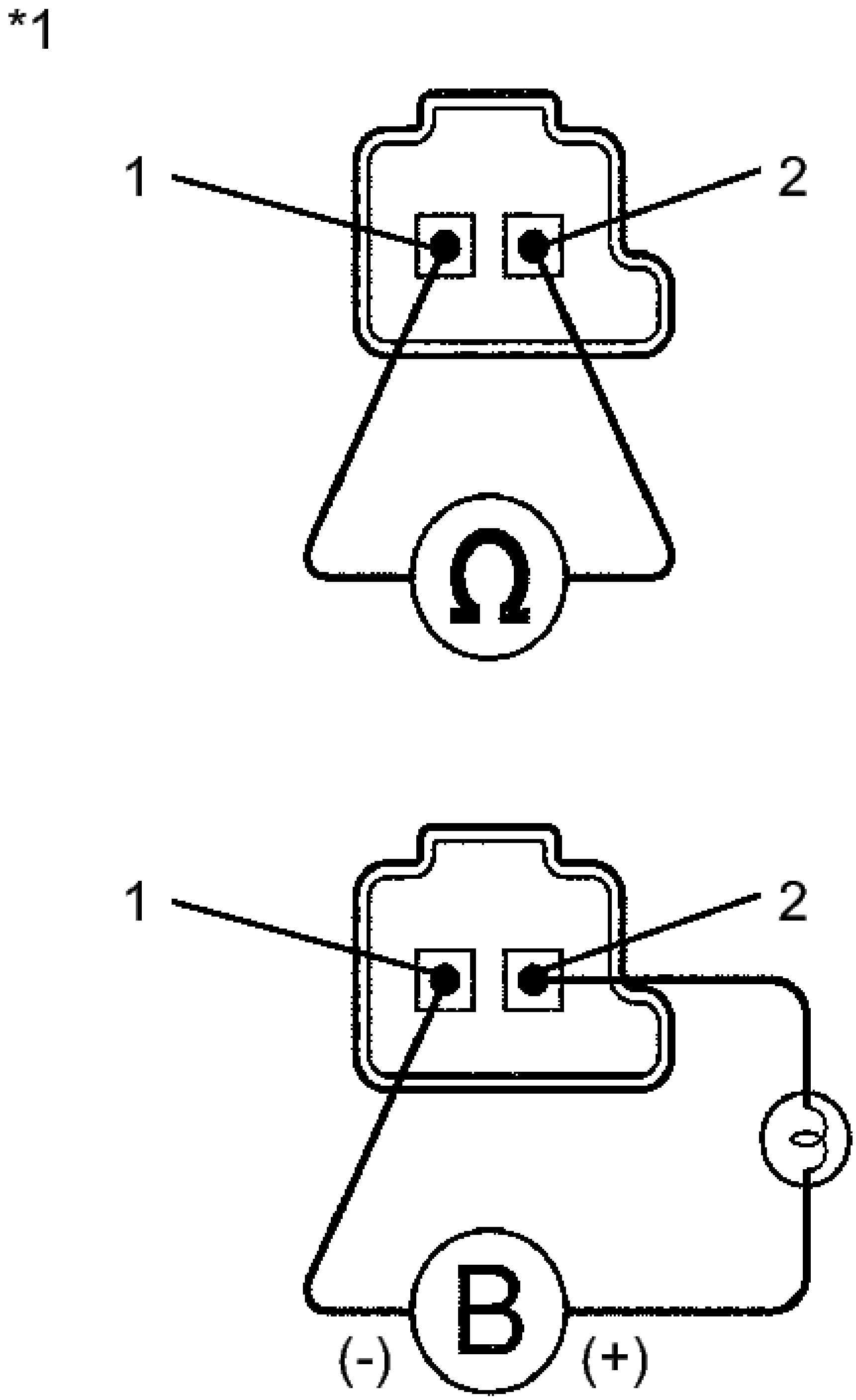

Fig. 31: Checking Shift Solenoid Valve SL1 Resistance
Courtesy of TOYOTA MOTOR SALES, U.S.A., INC.

b. Measure the resistance according to the value(s) in the table below.

Standard Resistance

Tester Connection	Condition	Specified Condition
1 - 2	20°C (68° F)	5.0 to 5.6 ohms

TEXT IN ILLUSTRATION

*1	Shift Solenoid Valve SL1

c. Connect a battery positive (+) lead with a 21 W bulb to terminal 2 and a negative (-) lead to terminal 1 of the solenoid valve connector. Then check that the valve moves and makes an operating sound.

   OK

   Valve moves and makes an operating sound.

NG --> See step 4

OK --> See step 5

3. **REPLACE TCM. Refer to COMPONENTS**
4. **REPLACE SHIFT SOLENOID VALVE SL1. Refer to COMPONENTS**
5. **REPLACE TRANSMISSION WIRE. Refer to COMPONENTS**

DTC P0776: PRESSURE CONTROL SOLENOID "B" PERFORMANCE (SHIFT SOLENOID VALVE SL2)

SYSTEM DESCRIPTION

The TCM uses the vehicle speed signal and signals from the transmission speed sensors (NC, NT) to detect the actual gear (1st, 2nd, 3rd, 4th, 5th or 6th gear).

Then the TCM compares the actual gear with the shift schedule in the TCM memory to detect mechanical problems of the shift solenoid valves and valve body.

DTC No.	DTC Detection Condition	Trouble Area
	The engine revs freely when 4th, 5th, or 6th gear is commanded (2-trip detection logic). When any of the following is detected twice (2-trip detection logic):	• Shift solenoid valve SL2 remains open or closed

P0776	- When 1st gear is commanded, 4th gear is engaged. - When 2nd gear is commanded, 4th gear is engaged. - When 3rd gear is commanded, 4th gear is engaged.	- Valve body is blocked - Automatic transaxle (clutch, brake or gear etc.)

MONITOR DESCRIPTION

The TCM commands gear shifts by turning the shift solenoid valves on and off. According to the input shaft revolution (speed), intermediate (counter) shaft revolution (speed) and output shaft revolution (speed), the TCM detects the actual gear (1st, 2nd, 3rd, 4th, 5th or 6th gear). When the gear commanded by the TCM and the actual gear are not the same, the TCM illuminates the MIL and stores the DTC.

MONITOR STRATEGY

Related DTCs	P0776: Shift solenoid valve SL2/OFF malfunction Shift solenoid valve SL2/ON malfunction
Required sensors/Components	Shift solenoid valve SL2, Speed sensor (NT), Speed sensor (NC), Crankshaft position sensor (NE)
Frequency of operation	Continuous
Duration	OFF malfunction 0.5 sec. ON malfunction 0.8 sec.
MIL operation	2 driving cycles
Sequence of operation	None

TYPICAL ENABLING CONDITIONS

ALL:

The monitor will run whenever this DTC is not present. (Not circuit malfunction)	P0712, P0713 (ATF temperature sensor circuit (TFT sensor)) P0115, P0117, P0118 (ECT sensor circuit) P0715, P0717 (Turbine speed sensor circuit) P0791, P0793 (Intermediate shaft speed sensor circuit) P0748 (Shift solenoid valve SL1 circuit) P0778 (Shift solenoid valve SL2 circuit) P0798 (Shift solenoid valve SL3 circuit) P2810 (Shift solenoid valve SL4 circuit) P0327, P0328, P0332, P0333 (KCS sensor circuit)

	P0120, P0121, P0122, P0123, P0220, P0222, P0223, P0604, P0606, P060A, P060B, P060D, P060E, P0657, P1607, P2102, P2103, P2111, P2112, P2118, P2119, P2135 ((ETCS) Electronic throttle control system) U0100 (CAN communication system)
Transmission range	"D"
TFT (Transmission fluid temperature)	-10°C (14°F) or more
TFT (Transmission fluid temperature) sensor circuit	No circuit malfunction
ECT (Engine coolant temperature) sensor circuit	No circuit malfunction
Turbine speed sensor circuit	No circuit malfunction
Intermediate shaft speed sensor circuit	No circuit malfunction
Shift solenoid valve SL1 circuit	No circuit malfunction
Shift solenoid valve SL2 circuit	No circuit malfunction
Shift solenoid valve SL3 circuit	No circuit malfunction
Shift solenoid valve SL4 circuit	No circuit malfunction
(KCS) Knock control sensor circuit	No circuit malfunction
(ETCS) Electronic throttle control system	Not system down
CAN communication system	Not system down
Engine	Starting

OFF MALFUNCTION:

TCM selected gear	4th, 5th or 6th
TCM indicated pressure value of SL2	1, 200 kPa
Throttle valve opening angle	3% or more

ON MALFUNCTION (A):

TCM selected gear	1st
Vehicle speed	1.2 mph (2 km/h) to 24.9 mph (40 km/h)
ECT (Engine coolant temperature)	40°C (104°F) or more
Engine speed - Turbine speed	50 RPM or more

ON MALFUNCTION (B):

TCM selected gear	2nd
Throttle valve opening angle	4.5% or more at engine speed 2, 000 RPM (Varies with engine speed)
Vehicle speed	1.2 mph (2 km/h) or more
ECT (Engine coolant temperature)	40°C (104°F) or more

ON MALFUNCTION (C):

TCM selected gear	3rd

Throttle valve opening angle	4.5% or more at engine speed 2, 000 RPM (Varies with engine speed)
Vehicle speed	1.2 mph (2 km/h) or more
ECT (Engine coolant temperature)	40°C (104°F) or more

TYPICAL MALFUNCTION THRESHOLDS

OFF MALFUNCTION:

Input (turbine) speed-Intermediate shaft speed x Gear ratio	1, 000 RPM or more

ON MALFUNCTION:

Input (turbine) speed/Intermediate shaft speed when output speed less than 1, 000 RPM	0.998 to 1.138

INSPECTION PROCEDURE

NOTE: **Perform the universal trip to clear permanent DTCs. Refer to DTC CHECK / CLEAR .**

PROCEDURE

1. **CHECK OTHER DTCS OUTPUT (IN ADDITION TO DTC P0776)**
   a. Connect the Techstream to the DLC3.
   b. Turn the engine switch on (IG).
   c. Turn the Techstream on.
   d. Enter the following menus: Powertrain / ECT / Trouble Codes.
   e. Read the DTCs using the Techstream.

   Result

Display (DTC Output)	Proceed to
Only "P0776" is output	A
"P0776" and other DTCs are output	B

HINT:

If a solenoid is stuck OFF, DTCs for several solenoids including the malfunctioning solenoid will be detected.

A --> See step 3

B: Go to next step

2. **PERFORM ACTIVE TEST USING TECHSTREAM**

NOTE: **This test should always be performed with at least 2 people.**

a. Warm up the engine.
b. Turn the engine switch off.
c. Connect the Techstream to the DLC3.
d. Turn the engine switch on (IG).
e. Turn the Techstream on.
f. Enter the following menus: Powertrain / ECT / Active Test.
g. According to the display on the Techstream, perform the Active Test.

HINT:

Comparing the gear commanded by the Active Test with the actual gear enables confirmation of the problem. Refer to **FAIL-SAFE CHART** .

Tester Display	Test Details	Control Range	Diagnostic Note
Control the Shift Position	Operates the shift solenoid valves to allow gears to be selected	• Press "-->" button: Upshift occurs • Press "<--" button: Downshift	Can be used to check the operation of the shift solenoid valves. Upshifts and downshifts should be performed consecutively. A 10-second interval is required between gear changes. Do not

	manually.	occurs	downshift at high speeds. Doing so will damage the automatic transaxle. [Vehicle Condition] 50 km/h (30 mph) or less

NOTE:

- **This test can be conducted when the vehicle is stopped.**
- **When shifting gears using the Active Test function, do not operate the accelerator pedal for 2 seconds before and after shifting gears.**

HINT:

The gear commanded by the TCM is shown in the Data List / Shift Status display on the Techstream.

h. Check the vehicle speed and the gear when the engine speed is 1000 RPM.

HINT:

Because the torque converter clutch has not engaged, it may be difficult to obtain the speeds specified in 4th, 5th, and 6th gear, however a difference of speed should still be evident following each gear change.

Standard

1st	2nd	3rd	4th	5th	6th
8 to 12 km/h (5 to 7.5 mph)	15 to 19 km/h (9.3 to 11.8 mph)	21 to 25 km/h (13.0 to 15.5 mph)	31 to 35 km/h (19.3 to 21.7 mph)	44 to 48 km/h (27.3 to 29.8 mph)	52 to 56 km/h (32.3 to 34.8 mph)

i. Compare the TCM commanded gear and the actual gear.

Result

Actuator Gear	TCM Commanded Gear						Proceed to

during Malfunction		**1st**	**2nd**	**3rd**	**4th**	**5th**	**6th**	
Shift solenoid SL1	Stuck ON	1st	2nd	3rd	4th	4th	4th	A
	Stuck OFF	N*1	N*1	N*1	N*1	5th	6th	
Shift solenoid SL2	Stuck ON	4th	4th	4th	4th	5th	6th	B
	Stuck OFF	1st	2nd	3rd	1st	N*1	N*1	
Shift solenoid SL3	Stuck ON	2nd	2nd	3rd	4th	5th	6th	C
	Stuck OFF	1st	1st	3rd	4th	5th	N*1	
Shift solenoid SL4	Stuck ON*3	3rd	3rd	3rd	4th	5th	5th	D
	Stuck OFF	1st	2nd	1st	4th	N*1	6th	
Shift solenoid SLT	Stuck ON	N*2	N*2	N*2	N*2	N*2	N*2	E
	Stuck OFF*3	1st	2nd	3rd	4th	5th	6th	

HINT:

- *1: Neutral
- *2: If shift solenoid SLT is stuck on, the line pressure will be low. Therefore, the amount of torque that can be transmitted by each gear is lower than the normal limit. When the engine power exceeds this lowered limit, the engine speed will increase freely.
- *3: When shift solenoid SLT is stuck off, gear shifting is normal.

A --> See step 8

C --> See step 9

D --> See step 10

E --> See step 11

B: Go to next step

3. **INSPECT SHIFT SOLENOID VALVE SL2**
    a. Remove shift solenoid valve SL2.

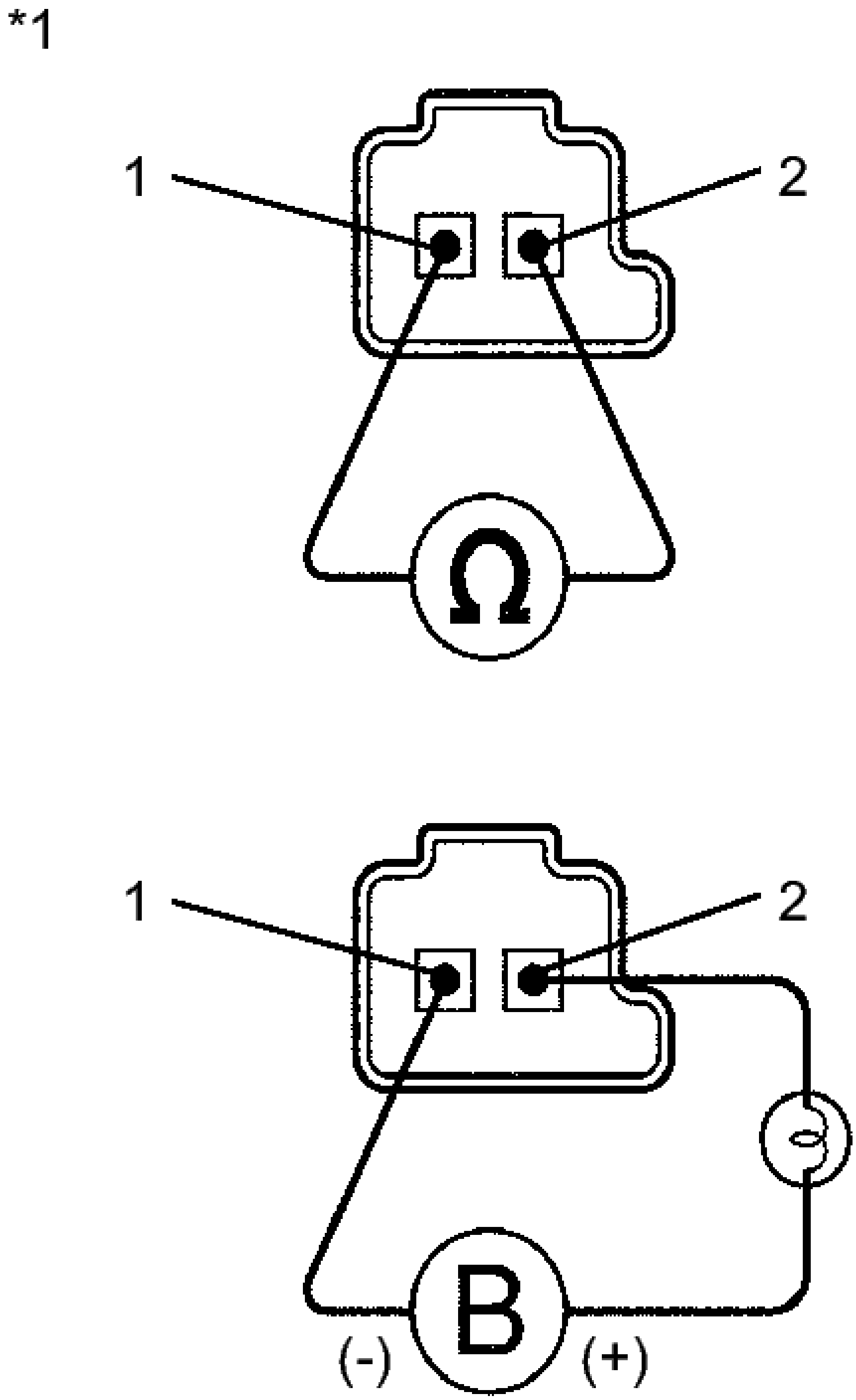

Fig. 32: Checking Shift Solenoid Valve SL2 Resistance
Courtesy of TOYOTA MOTOR SALES, U.S.A., INC.

b. Measure the resistance according to the value(s) in the table below.

Standard Resistance

Tester Connection	Condition	Specified Condition
1 - 2	20°C (68° F)	5.0 to 5.6 ohms

TEXT IN ILLUSTRATION

*1	Shift Solenoid Valve SL2

c. Connect a battery positive (+) lead with a 21 W bulb to terminal 2 and a negative (-) lead to terminal 1 of the solenoid valve connector. Then check that the valve moves and makes an operating sound.

OK

Valve moves and makes an operating sound.

NG --> See step 6

OK: Go to next step

4. **INSPECT TRANSMISSION VALVE BODY ASSEMBLY**
   a. Check the transmission valve body assembly. Refer to **REMOVAL** .

   OK

   There are no foreign objects on each valve and they operate smoothly.

NG --> See step 7

OK --> See step 5

5. **REPLACE AUTOMATIC TRANSAXLE ASSEMBLY. Refer to COMPONENTS**
6. **REPLACE SHIFT SOLENOID VALVE SL2. Refer to COMPONENTS**
7. **REPAIR OR REPLACE TRANSMISSION VALVE BODY ASSEMBLY. Refer to COMPONENTS**
8. **GO TO DTC CHART (RELATED SHIFT SOLENOID VALVE (SL1) PERFORMANCE DTC P0746). Refer to DTC P0746: Pressure Control Solenoid "A" Performance (Shift Solenoid Valve SL1)**
9. **GO TO DTC CHART (RELATED SHIFT SOLENOID VALVE (SL3) PERFORMANCE DTC P0796). Refer to DTC P0796: Pressure Control Solenoid "C" Performance (Shift Solenoid Valve**

SL3)

10. **GO TO DTC CHART (RELATED SHIFT SOLENOID VALVE (SL4) PERFORMANCE DTC P2808). Refer to DTC P2808: Pressure Control Solenoid "G" Performance (Shift Solenoid Valve SL4)**
11. **GO TO DTC CHART (RELATED SHIFT SOLENOID VALVE (SLT) PERFORMANCE DTC P2714). Refer to DTC P2714: Pressure Control Solenoid "D" Performance (Shift Solenoid Valve SLT)**

DTC P0778: PRESSURE CONTROL SOLENOID "B" ELECTRICAL (SHIFT SOLENOID VALVE SL2)

DESCRIPTION

Changing from 1st to 6th is performed by the TCM turning shift solenoid valves SL1, SL2, SL3, SL4 and SL on and off. If an open or short circuit occurs in any of the shift solenoid valves, the TCM controls the remaining normal shift solenoid valves to allow the vehicle to be operated. Refer to **FAIL-SAFE CHART** .

DTC No.	DTC Detection Condition	Trouble Area
P0778	The TCM checks for an open or short in the shift solenoid valve SL2 circuit while driving and shifting gears. (1-trip detection logic) • Output signal duty equals to 100%. (NOTE: SL2 output signal duty is less than 100% under normal condition.)	• Open or short in shift solenoid valve SL2 circuit • Shift solenoid valve SL2 • TCM

MONITOR DESCRIPTION

This DTC indicates an open or short in the shift solenoid valve SL2 circuit. The TCM commands gear shifts by turning the shift solenoid valves on or off. When there is an open or short circuit in any of the shift solenoid valve circuits, the TCM detects the problem and illuminates the MIL and stores the DTC. The TCM also performs the fail-safe function and turns the other normal shift solenoid valves on or off. (In case of an open or short circuit, the TCM stops sending current to the circuit.)

While driving and shifting gears, if the TCM detects an open or short in the shift solenoid valve SL2 circuit, the TCM determines there is a malfunction. Refer to **FAIL-SAFE CHART** .

MONITOR STRATEGY

Related DTCs	P0778: Shift solenoid valve SL2/Range check
Required sensors/Components	Shift solenoid valve SL2
Frequency of operation	Continuous
Duration	1 sec.
MIL operation	Immediate

Sequence of operation	None

TYPICAL ENABLING CONDITIONS

ALL

The monitor will run whenever the following DTCs are not present	None
Engine switch	on (IG)
Starter	OFF

CONDITION (A)

Battery voltage	12 V or more

CONDITION (B)

Battery voltage	10 V or more and less than 12 V
CPU commanded duty	Less than 75%

TYPICAL MALFUNCTION THRESHOLDS

CONDITION (A) AND (B)

Output duty cycle	100% or more

COMPONENT OPERATING RANGE

Output duty cycle	More than 3% and less than 100%

WIRING DIAGRAM

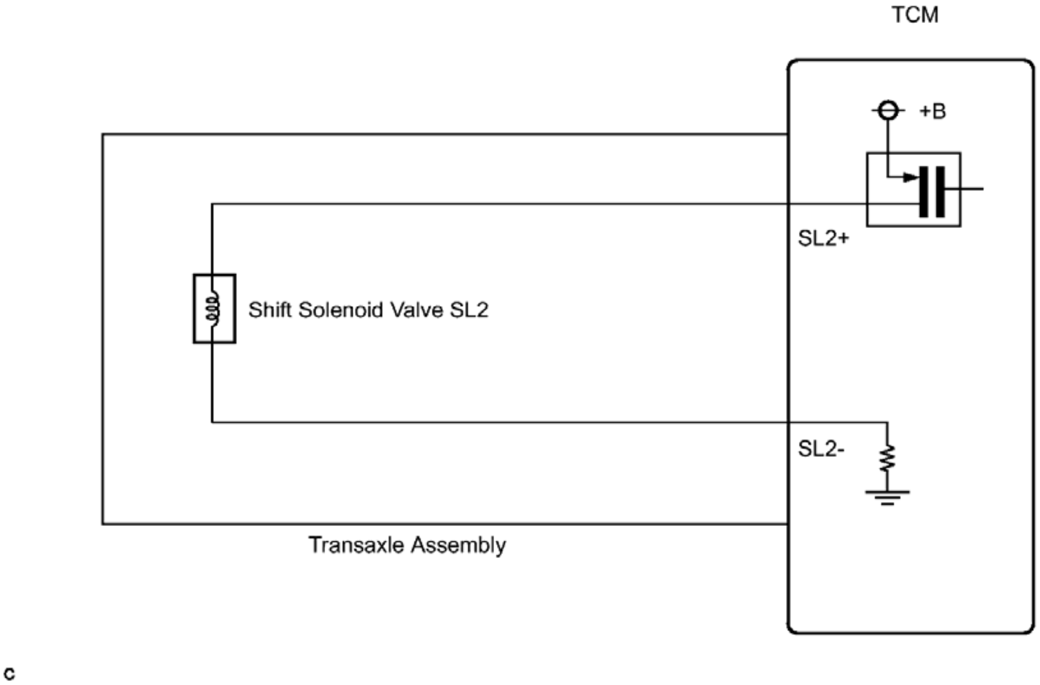
TCM
+B
SL2+
Shift Solenoid Valve SL2
SL2-
Transaxle Assembly
c

Fig. 33: Shift Solenoid Valve SL2 Circuit Wiring Diagram
Courtesy of TOYOTA MOTOR SALES, U.S.A., INC.

INSPECTION PROCEDURE

NOTE: **Perform the universal trip to clear permanent DTCs. Refer to DTC CHECK / CLEAR .**

HINT:

The following table shows normal operation of the shift solenoid valve SL2 when the shift lever is in D:

TCM commanded gear	1st	2nd	3rd	4th	5th	6th
Shift solenoid valve SL2	OFF	OFF	OFF	ON	ON	ON

PROCEDURE

1. **INSPECT TRANSMISSION WIRE (SL2)**
   a. Remove the TCM from the transaxle.

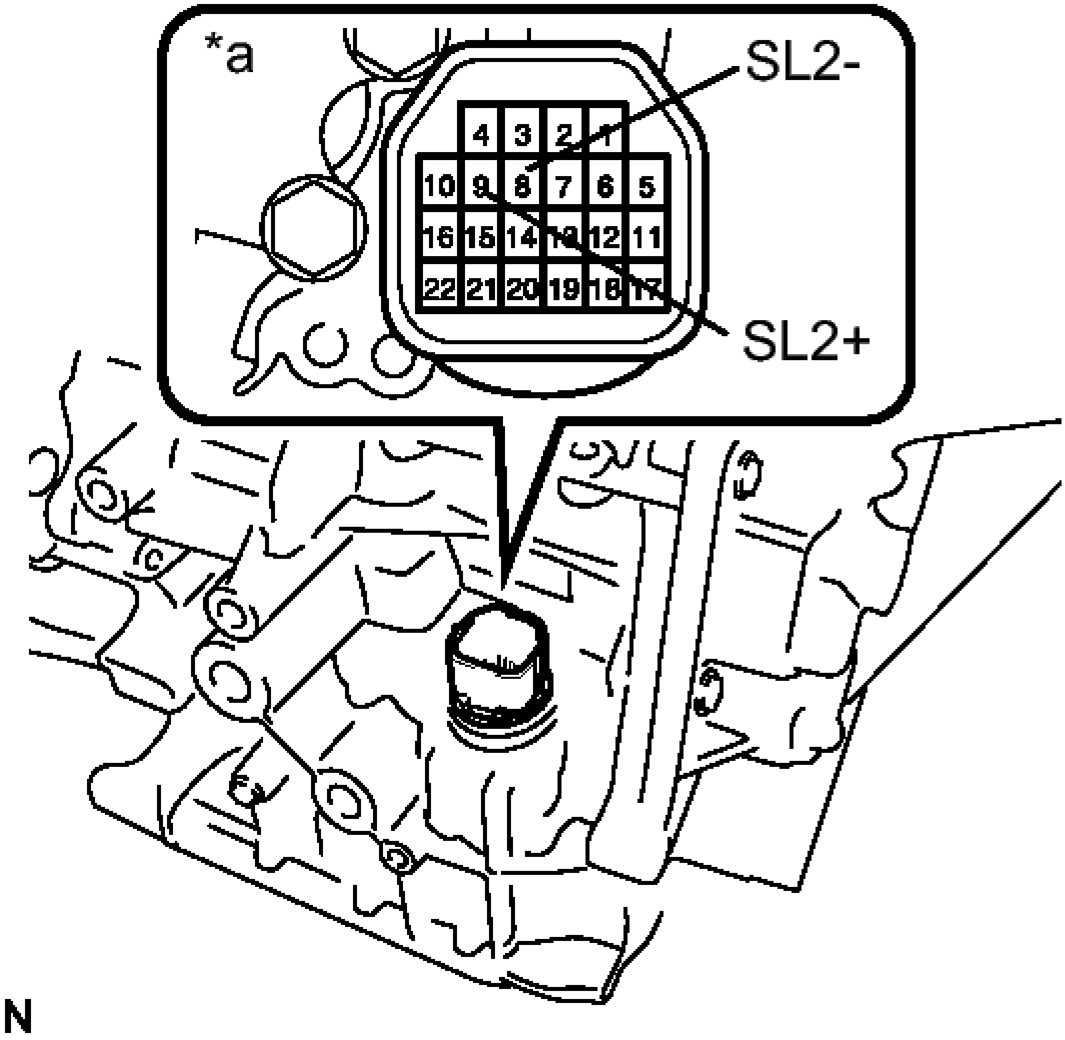
*a
SL2-
SL2+
4 3 2 1
10 9 8 7 6 5
16 15 14 13 12 11
22 21 20 19 18 17
N

Fig. 34: Checking Resistance Of Transmission Wire (SL2)
Courtesy of TOYOTA MOTOR SALES, U.S.A., INC.

b. Measure the resistance according to the value(s) in the table below.

Standard Resistance

Tester Connection	Condition	Specified Condition
9 (SL2+) - 8 (SL2-)	20°C (68°F)	5.0 to 5.6 ohms
9 (SL2+) - Body ground and other terminals	Always	10 kohms or higher

8 (SL2-) - Body ground and other terminals	Always	10 kohms or higher

TEXT IN ILLUSTRATION

*a	Component without harness connected (Transmission Wire)

NG --> See step 2

OK --> See step 4

2. **INSPECT SHIFT SOLENOID VALVE SL2**
    a. Remove shift solenoid valve SL2.

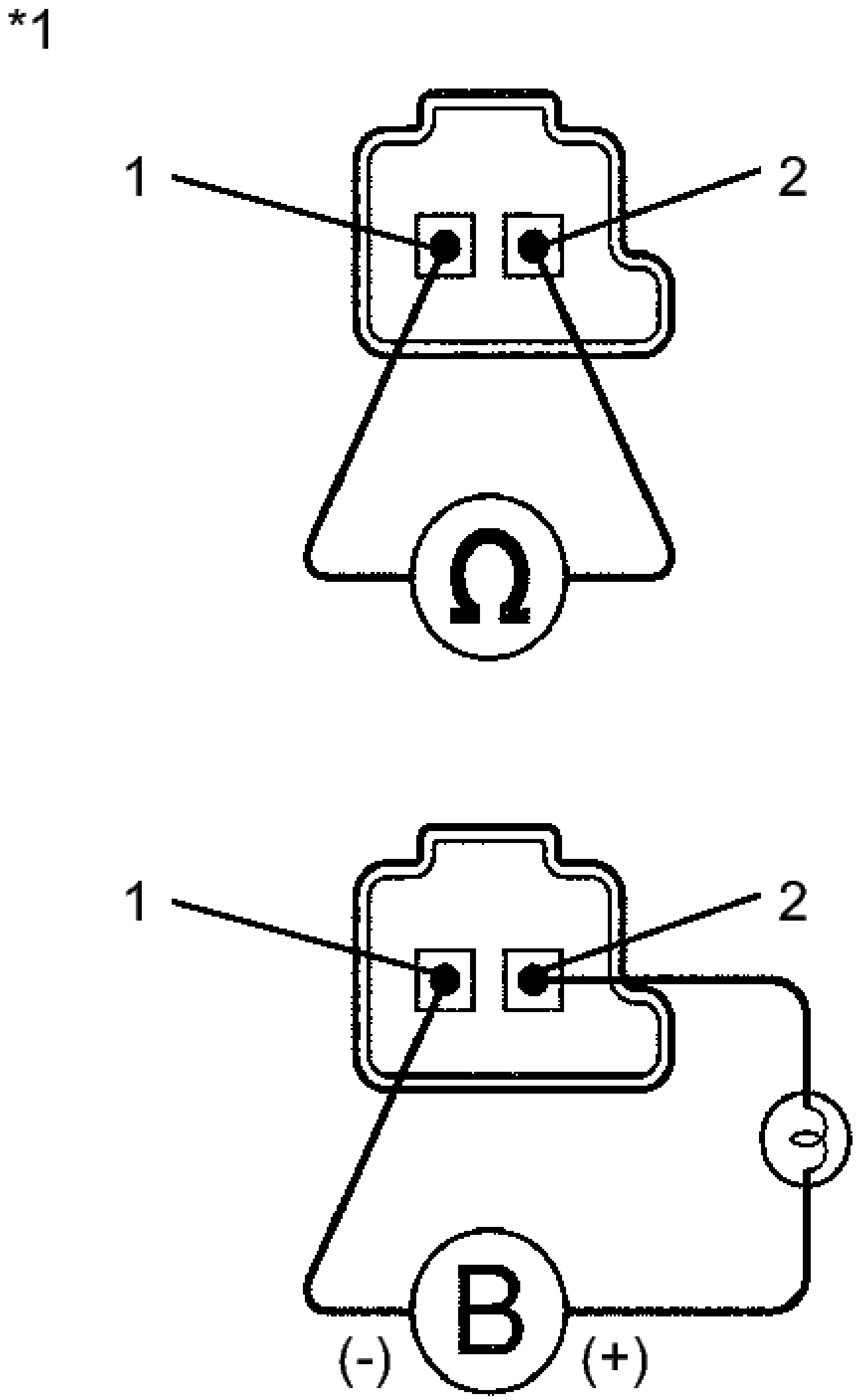

Fig. 35: Checking Shift Solenoid Valve SL2 Resistance
Courtesy of TOYOTA MOTOR SALES, U.S.A., INC.

b. Measure the resistance according to the value(s) in the table below.

Standard Resistance

Tester Connection	Condition	Specified Condition
1 - 2	20°C (68° F)	5.0 to 5.6 ohms

TEXT IN ILLUSTRATION

*1	Shift Solenoid Valve SL2

c. Connect a battery positive (+) lead with a 21 W bulb to terminal 2 and a negative (-) lead to terminal 1 of the solenoid valve connector. Then check that the valve moves and makes an operating sound.

   OK

   Valve moves and makes an operating sound.

NG --> See step 5

OK --> See step 3

3. **REPLACE TRANSMISSION WIRE. Refer to COMPONENTS**
4. **REPLACE TCM. Refer to COMPONENTS**
5. **REPLACE SHIFT SOLENOID VALVE SL2. Refer to COMPONENTS**

DTC P0791: INTERMEDIATE SHAFT SPEED SENSOR "A" CIRCUIT; DTC P0793: INTERMEDIATE SHAFT SPEED SENSOR "A"

DESCRIPTION

This sensor detects the rotation speed of the counter gear which shows the output speed of transaxle. By comparing the input turbine speed signal (NT) with the counter gear speed sensor signal (NC), the TCM detects the shift timing of the gears and appropriately controls the engine torque and hydraulic pressure according to various conditions, thus, providing smooth gear shifts.

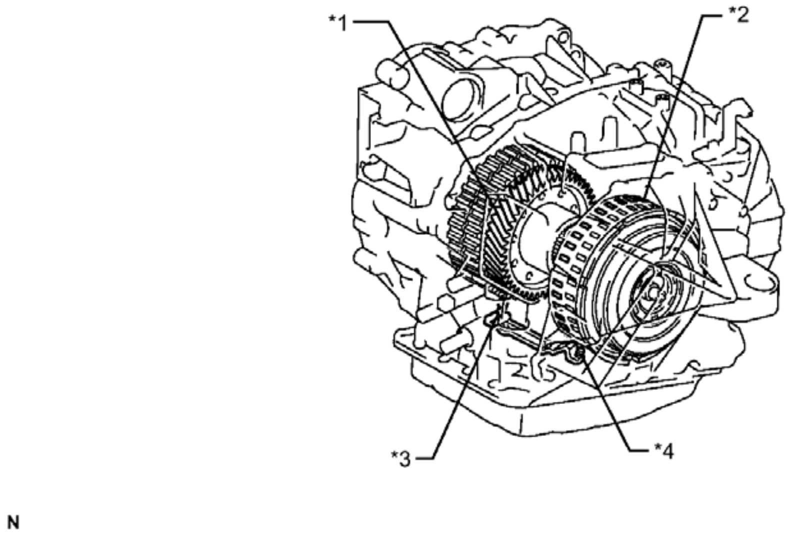

Fig. 36: Identifying Counter Gear, Clutch Drum, Input Speed Sensor And Output Speed Sensor
Courtesy of TOYOTA MOTOR SALES, U.S.A., INC.

TEXT IN ILLUSTRATION

*1	Counter Gear	*2	Clutch Drum
*3	Output Speed Sensor NC	*4	Input Speed Sensor NT

DTC No.	DTC Detection Condition	Trouble Area
P0791	When the speed sensor input voltage is either more than 1.9 V or less than 0.1 V for 2 seconds or more. (1-trip detection logic)	• Transmission revolution sensor (speed sensor NC) • Transmission wire • TCM
P0793	When the vehicle speed is 25 km/h (15.5 mph) or higher, the counter gear speed is less than 300 RPM for 2 seconds or more. (1-trip detection logic)	

MONITOR DESCRIPTION

The NT terminal of the TCM detects a revolution signal from the speed sensor (NT) (input RPM). The TCM calculates a gear shifts by comparing the speed sensor (NT) with the speed sensor (NC).

While the vehicle is operating in 2nd, 3rd, 4th or 5th gear with the shift lever in D, if the input shaft revolution is less than 300 RPM*1 although the output shaft revolution is more than 1000 RPM*2, the TCM interprets this as a fault, illuminates the MIL and stores the DTC.

*1: Pulse is not output or is irregularly output.

*2: The vehicle speed is 50 km/h (31 mph) or more.

MONITOR STRATEGY

Related DTCs	P0791: Speed sensor (NC)/Range check P0793: Speed sensor (NC)/Verify pulse input
Required sensors/Components	Speed sensor (NT), Speed sensor (NC)
Frequency of operation	Continuous
Duration	2 sec.
MIL operation	Immediate
Sequence of operation	None

TYPICAL ENABLING CONDITIONS

The monitor will run whenever this DTC is not present.	P0500 (VSS) P0748, P0778, P0798 (Shift solenoid valve (range))
Vehicle speed	15.5 mph (25 km/h) or more
Battery voltage	8 V or more
Engine switch	on (IG)
Starter	OFF

TYPICAL MALFUNCTION THRESHOLDS

P0791:

Sensor voltage	Less than 0.1 V or more than 1.9 V

P0793:

Sensor signal RPM	Less than 300 RPM

WIRING DIAGRAM

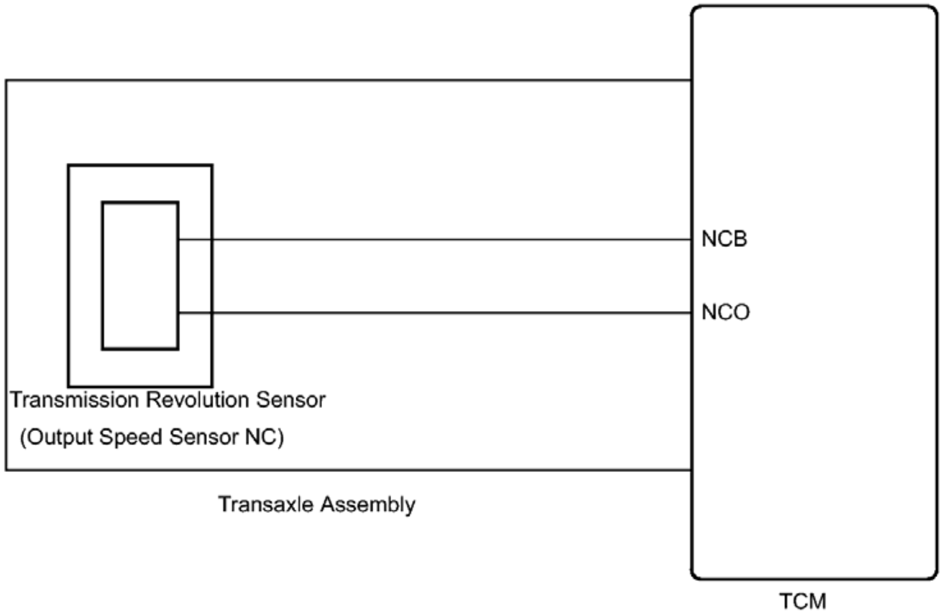

c

Fig. 37: Transmission Revolution Sensor Circuit Wiring Diagram
Courtesy of TOYOTA MOTOR SALES, U.S.A., INC.

INSPECTION PROCEDURE

NOTE: **Perform the universal trip to clear permanent DTCs. Refer to DTC CHECK / CLEAR .**

1. **DATA LIST**

   HINT:

   Using the Techstream to read the Data List allows the values or states of switches, sensors, actuators and other items to be read without removing any parts. This non-intrusive inspection can be very useful because intermittent conditions or signals may be discovered before parts or wiring is disturbed. Reading the Data List information early in troubleshooting is one way to save diagnostic time.

   NOTE: **In the table below, the values listed under "Normal Condition" are reference values. Do not depend solely on these reference values when deciding whether a part is faulty or not.**

   a. Warm up the engine.
   b. Turn the engine switch off.
   c. Connect the Techstream to the DLC3.
   d. Turn the engine switch on (IG).

e. Turn the Techstream on.
f. Enter the following menus: Powertrain / ECT / Data List.
g. According to the display on the Techstream, read the Data List.

Item	Measurement Item/Range (display)	Normal Condition	Diagnostic Note
SPD (NC)	Counter gear speed/ Min.: 0 RPM, Max.: 12750 RPM	-	Data is displayed in increments of 50 RPM

HINT:

- SPD (NC) is always 0 while driving: Open or short in the sensor or circuit.
- SPD (NC) is always more than 0 and less than 300 RPM while driving the vehicle at 50 km/h (31 mph) or more: Sensor trouble, improper installation, or intermittent connection trouble of the circuit.

PROCEDURE

1. **INSPECT TRANSMISSION REVOLUTION SENSOR (SPEED SENSOR INSTALLATION)**
   a. Remove the valve body assembly.
   b. Make sure that the connector is properly connected, and check the speed sensor installation. Refer to **INSTALLATION** .

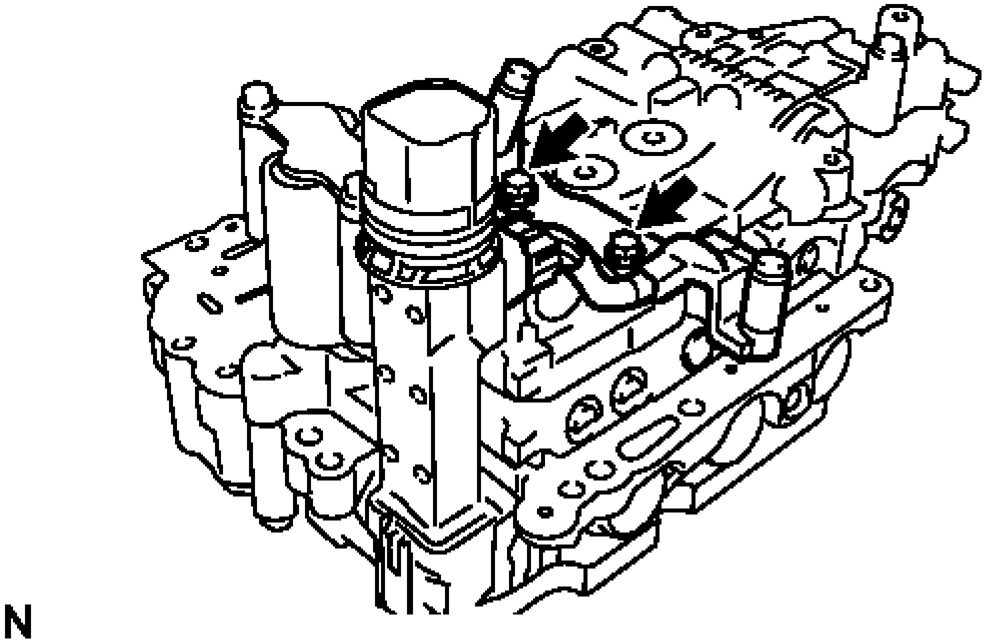

Fig. 38: Inspecting Transmission Revolution Sensor (Speed Sensor Installation)
Courtesy of TOYOTA MOTOR SALES, U.S.A., INC.

OK

The installation bolts are tightened properly and there is no clearance between the sensor and transaxle case.

NG --> See step 6

OK: Go to next step

2. **INSPECT TRANSMISSION WIRE**
    a. Remove the TCM.

*a

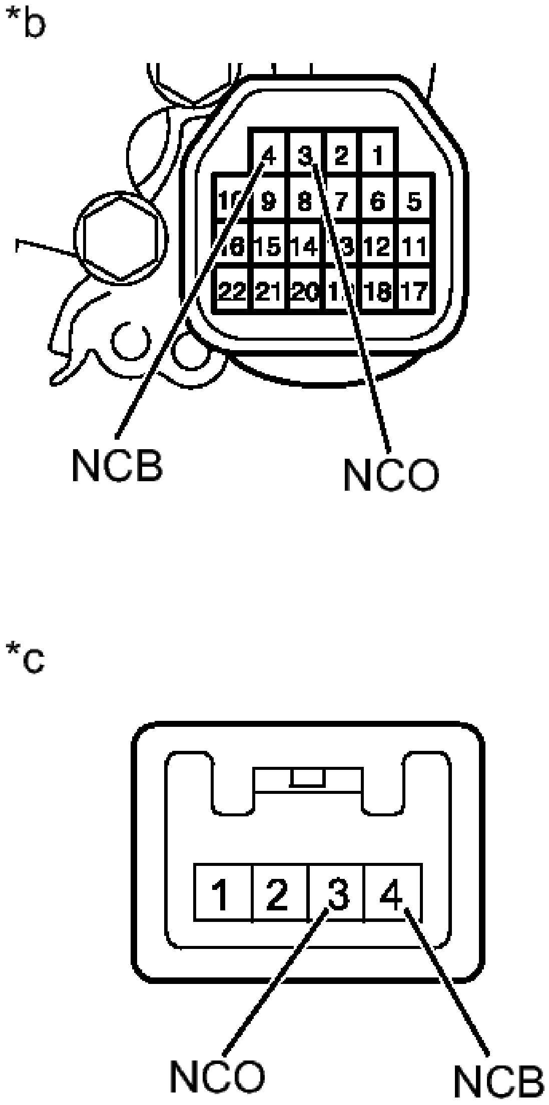
*b
4
3
2
1
9
8
7
6
5
15
14
12
11
22
21
20
18
17
NCB
NCO
*c
1
2
3
4
NCO
NCB

Fig. 39: Checking Resistance Transmission Wire
Courtesy of TOYOTA MOTOR SALES, U.S.A., INC.

b. Disconnect the speed sensor connector from the transmission wire.
c. Measure the resistance according to the value(s) in the table below.

Standard Resistance

Tester Condition	**Condition**	**Specified Condition**
3 (NCO) sensor side - 3 (NCO) TCM side	Always	Below 1 ohms
4 (NCB) sensor side - 4 (NCB) TCM side	Always	Below 1 ohms
3 (NCO) sensor side - Body ground and other terminals	Always	10 kohms or higher
4 (NCB) sensor side - Body ground and other terminals	Always	10 kohms or higher

TEXT IN ILLUSTRATION

*a	Component without harness connected (Transmission Wire)
*b	TCM side
*c	Sensor Side

NG --> See step 7

OK: Go to next step

3. **REPLACE TRANSMISSION REVOLUTION SENSOR**

Refer to **COMPONENTS**

NEXT: Go to next step

4. **CHECK IF DTC OUTPUT RECURS (SEE IF DTC P0791 AND/OR P0793 IS OUTPUT AGAIN)**
    a. Connect the Techstream to the DLC3.
    b. Start the engine and turn the Techstream on.
    c. Clear the DTCs. Refer to **DTC CHECK / CLEAR** .

    HINT:

    Write down the currently output DTCs before clearing them.

    d. Perform the monitor drive pattern. Refer to **MONITOR DRIVE PATTERN** .
    e. Enter the following menus: Powertrain / ECT / Trouble Codes.
    f. Read the DTCs using the Techstream.

    Result

Display (DTC Output)	Proceed to
Only "P0791 or P0793" is output	A
No output	B

B --> END

A --> See step 5

5. **REPLACE TCM. Refer to COMPONENTS**
6. **REPAIR OR REPLACE TRANSMISSION REVOLUTION SENSOR. Refer to COMPONENTS**
7. **REPLACE TRANSMISSION WIRE. Refer to COMPONENTS**

DTC P0796: PRESSURE CONTROL SOLENOID "C" PERFORMANCE (SHIFT SOLENOID VALVE SL3)

SYSTEM DESCRIPTION

The TCM uses the vehicle speed signal and signals from the transmission speed sensors (NC, NT) to detect the actual gear (1st, 2nd, 3rd, 4th, 5th or 6th gear).

Then the TCM compares the actual gear with the shift schedule in the TCM memory to detect mechanical problems of the shift solenoid valves and valve body.

DTC No.	DTC Detection Condition	Trouble Area
P0796	The engine revs freely when 2nd or 6th gear is commanded (2-trip detection logic). When the following is detected twice (2-trip detection logic): • When 1st gear is commanded, 2nd gear is engaged.	• Shift solenoid valve SL3 remains open or closed. • Valve body is blocked. • Automatic transaxle (clutch, brake or gear etc.)

MONITOR DESCRIPTION

The TCM commands gear shifts by turning the shift solenoid valves on and off. According to the input shaft revolution (speed), intermediate (counter) shaft revolution (speed) and output shaft revolution (speed), the TCM detects the actual gear (1st, 2nd, 3rd, 4th, 5th or 6th gear). When the gear commanded by the TCM and the actual gear are not the same, the TCM illuminates the MIL and stores the DTC.

MONITOR STRATEGY

Related DTCs	P0796: Shift solenoid valve SL3/OFF malfunction Shift solenoid valve SL3/ON malfunction
Required sensors/Components	Shift solenoid valve SL3, Speed sensor (NT), Speed sensor (NC), Crankshaft position sensor (NE)
Frequency of operation	Continuous
Duration	OFF malfunction (A) and (B) 0.5 sec. OFF malfunction (C) and (D) 0.8 sec. ON malfunction 0.8 sec.
MIL operation	2 driving cycles
Sequence of operation	None

TYPICAL ENABLING CONDITIONS

ALL:

	P0712, P0713 (ATF temperature sensor circuit (TFT sensor)) P0115, P0117, P0118 (ECT sensor circuit) P0715, P0717 (Turbine speed sensor circuit)

The monitor will run whenever this DTC is not present. (Not circuit malfunction)	P0791, P0793 (Intermediate shaft speed sensor circuit) P0748 (Shift solenoid valve SL1 circuit) P0778 (Shift solenoid valve SL2 circuit) P0798 (Shift solenoid valve SL3 circuit) P2810 (Shift solenoid valve SL4 circuit) P0327, P0328, P0332, P0333 (KCS sensor circuit) P0120, P0121, P0122, P0123, P0220, P0222, P0223, P0604, P0606, P060A, P060B, P060D, P060E, P0657, P1607, P2102, P2103, P2111, P2112, P2118, P2119, P2135 ((ETCS) Electronic throttle control system) U0100 (CAN communication system)
Transmission range	"D"
TFT (Transmission fluid temperature)	-10°C (14°F) or more
TFT (Transmission fluid temperature) sensor circuit	No circuit malfunction
ECT (Engine coolant temperature) sensor circuit	No circuit malfunction
Turbine speed sensor circuit	No circuit malfunction
Intermediate shaft speed sensor circuit	No circuit malfunction
Shift solenoid valve SL1 circuit	No circuit malfunction
Shift solenoid valve SL2 circuit	No circuit malfunction
Shift solenoid valve SL3 circuit	No circuit malfunction
Shift solenoid valve SL4 circuit	No circuit malfunction
(KCS) Knock control sensor circuit	No circuit malfunction
(ETCS) Electronic throttle control system	Not system down
CAN communication system	Not system down
Engine	Starting

OFF MALFUNCTION (A):

TCM selected gear	2nd
Throttle valve opening angle	3% or more
TCM indicated pressure value of SL1	1, 200 kPa
TCM indicated pressure value of SL2	0 kPa
TCM indicated pressure value of SL3	1, 200 kPa

OFF MALFUNCTION (B):

TCM selected gear	6th
Throttle valve opening angle	3% or more
TCM indicated pressure value of SL1	0 kPa
TCM indicated pressure value of SL2	1, 200 kPa
TCM indicated pressure value of SL3	1, 200 kPa

OFF MALFUNCTION (C):

TCM selected gear	2nd
Throttle valve opening angle:	
(When condition "D" is not detected)	4.5% or more at engine speed 2, 000 RPM (condition varies with engine speed)
(When condition "D" is detected)	0.5% or more at engine speed 750 RPM (condition varies with output speed)
ECT (engine coolant temperature)	40°C (104°F) or more

OFF MALFUNCTION (D):

Throttle valve opening angle	0.5% or more at engine speed 750 RPM (condition varies with output speed)

ON MALFUNCTION:

TCM selected gear	1st
Vehicle speed	1.2 mph (2 km/h) or more
Engine speed - Turbine speed	50 RPM or more
ECT (engine coolant temperature)	40°C (104°F) or more

TYPICAL MALFUNCTION THRESHOLDS

Either of the following conditions is met: OFF malfunction (A) or (B) or ((C) and (D)), or ON malfunctions

2 detections are necessary per driving cycle:

1st detection; temporary flag ON

2nd detection; pending fault code ON

OFF MALFUNCTION (A):

Turbine speed - Output speed x 2nd gear ratio	1, 000 RPM or more

OFF MALFUNCTION (B):

Turbine speed - Output speed x 6th gear ratio	1, 000 RPM or more

OFF MALFUNCTION (C):

Input (turbine) speed/Intermediate shaft speed	3.304 to 7.724

OFF MALFUNCTION (D):

Input (turbine) speed/Intermediate shaft speed	3.304 to 7.724

ON MALFUNCTION:

Input (turbine) speed/Intermediate shaft speed	1.901 to 2.340

INSPECTION PROCEDURE

NOTE: **Perform the universal trip to clear permanent DTCs. Refer to DTC CHECK / CLEAR .**

PROCEDURE

1. **CHECK OTHER DTCS OUTPUT (IN ADDITION TO DTC P0796)**
   1. Connect the Techstream to the DLC3.
   2. Turn the engine switch on (IG).
   3. Turn the Techstream on.
   4. Enter the following menus: Powertrain / ECT / Trouble Codes.
   5. Read the DTCs using the Techstream.

   Result

Display (DTC Output)	Proceed to
Only "P0796" is output	A
"P0796" and other DTCs are output	B

   HINT:

   If a solenoid is stuck off, DTCs for several solenoids including the malfunctioning solenoid will be detected.

   A --> See step 3

   B: Go to next step

2. **PERFORM ACTIVE TEST USING TECHSTREAM**

   NOTE: **This test should always be performed with at least 2 people.**

   1. Warm up the engine.
   2. Turn the engine switch off.
   3. Connect the Techstream to the DLC3.

d. Turn the engine switch on (IG).
e. Turn the Techstream on.
f. Enter the following menus: Powertrain / ECT / Active Test.
g. According to the display on the Techstream, perform the Active Test.

HINT:

Comparing the gear commanded by the Active Test with the actual gear enables confirmation of the problem. Refer to **FAIL-SAFE CHART** .

Tester Display	Test Details	Control Range	Diagnostic Note
Control the Shift Position	Operates the shift solenoid valves to allow gears to be selected manually.	• Press "-->" button: Upshift occurs • Press "<--" button: Downshift occurs	Can be used to check the operation of the shift solenoid valves. Upshifts and downshifts should be performed consecutively. A 10-second interval is required between gear changes. Do not downshift at high speeds. Doing so will damage the automatic transaxle. [Vehicle Condition] 50 km/h (31 mph) or less

NOTE:

- **This test can be conducted when the vehicle is stopped.**
- **When shifting gears using the Active Test function, do not operate the accelerator pedal for 2 seconds before and after shifting gears.**

HINT:

The gear commanded by the TCM is shown in the Data List / Shift Status display on the Techstream.

h. Check the vehicle speed and the gear when the engine speed is 1000 RPM.

HINT:

Because the torque converter clutch has not engaged, it may be difficult to obtain the speeds specified in 4th, 5th, and 6th gear, however a difference of speed should still be evident following each gear change.

Standard

1st	2nd	3rd	4th	5th	6th
8 to 12 km/h (5 to 7.5 mph)	15 to 19 km/h (9.3 to 11.8 mph)	21 to 25 km/h (13.0 to 15.5 mph)	31 to 35 km/h (19.3 to 21.7 mph)	44 to 48 km/h (27.3 to 29.8 mph)	52 to 56 km/h (32.3 to 34.8 mph)

i. Compare the TCM commanded gear and the actual gear.

Result

Actuator Gear during Malfunction		TCM Commanded Gear						Proceed to
		1st	2nd	3rd	4th	5th	6th	
Shift solenoid SL1	Stuck ON	1st	2nd	3rd	4th	4th	4th	A
	Stuck OFF	N*1	N*1	N*1	N*1	5th	6th	
Shift solenoid SL2	Stuck ON	4th	4th	4th	4th	5th	6th	B
	Stuck OFF	1st	2nd	3rd	1st	N*1	N*1	
Shift solenoid SL3	Stuck ON	2nd	2nd	3rd	4th	5th	6th	C
	Stuck OFF	1st	1st	3rd	4th	5th	N*1	
Shift solenoid SL4	Stuck ON*3	3rd	3rd	3rd	4th	5th	5th	D
	Stuck OFF	1st	2nd	1st	4th	N*1	6th	
Shift solenoid SLT	Stuck ON	N*2	N*2	N*2	N*2	N*2	N*2	E
	Stuck OFF*3	1st	2nd	3rd	4th	5th	6th	

HINT:

- *1: Neutral
- *2: If shift solenoid SLT is stuck on, the line pressure will be low. Therefore, the amount of torque that can be transmitted by each gear is lower than the normal limit. When the engine power exceeds this lowered limit, the engine speed will increase freely.
- *3: When shift solenoid SLT is stuck off, gear shifting is normal.

A --> See step 8

B --> See step 9

D --> See step 10

E --> See step 11

C: Go to next step

3. **INSPECT SHIFT SOLENOID VALVE SL3**
    a. Remove shift solenoid valve SL3.

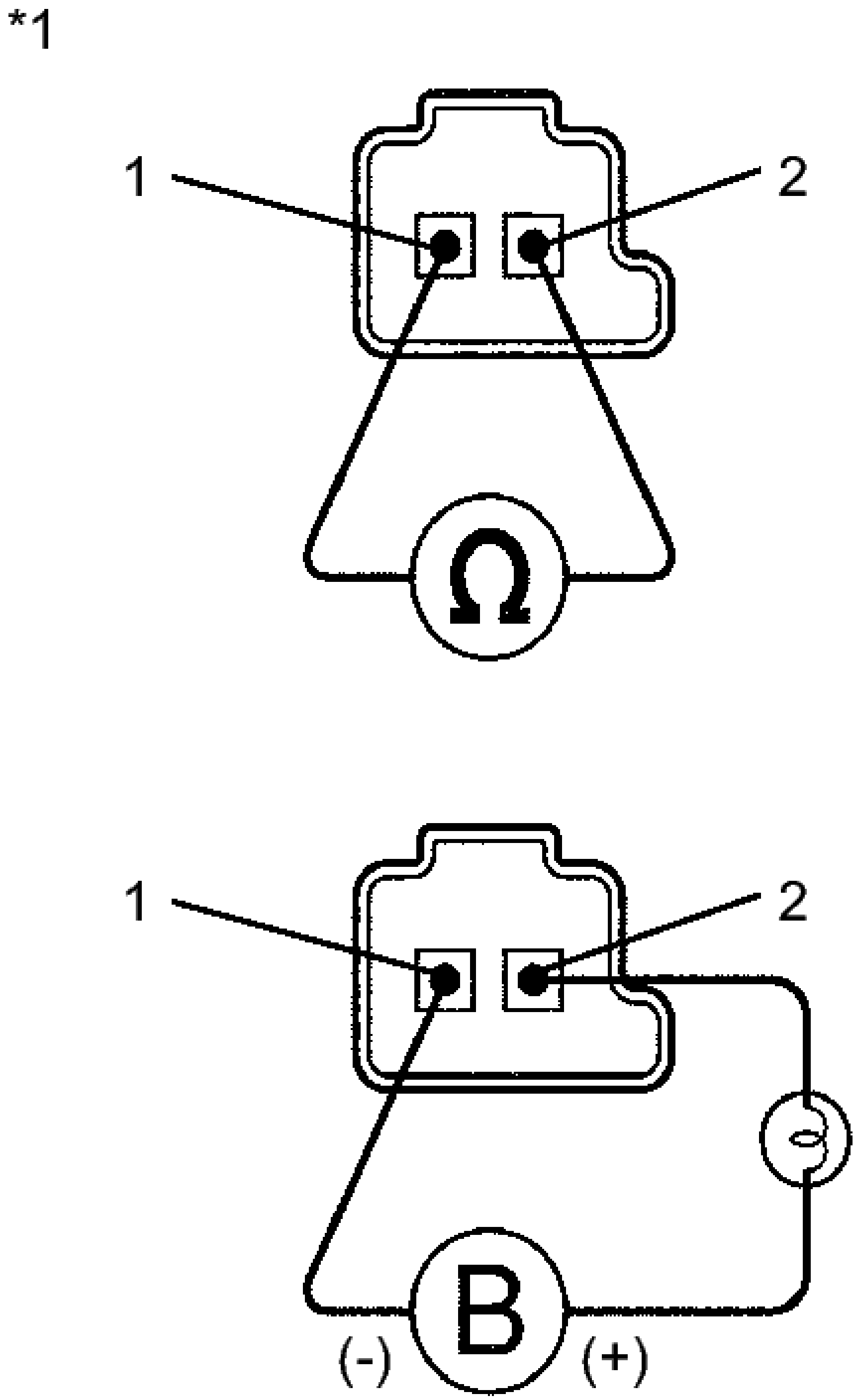

Fig. 40: Checking Shift Solenoid Valve SL3 Resistance
Courtesy of TOYOTA MOTOR SALES, U.S.A., INC.

b. Measure the resistance according to the value(s) in the table below.

Standard Resistance

Tester Connection	**Condition**	**Specified Condition**
1 - 2	20°C (68° F)	5.0 to 5.6 ohms

TEXT IN ILLUSTRATION

*1	Shift Solenoid Valve SL3

c. Connect a battery positive (+) lead with a 21 W bulb to terminal 2 and a negative (-) lead to terminal 1 of the solenoid valve connector. Then check that the valve moves and makes an operating sound.

   OK

   Valve moves and makes an operating sound.

NG --> See step 6

OK: Go to next step

4. **INSPECT TRANSMISSION VALVE BODY ASSEMBLY**
   a. Check the transmission valve body assembly. Refer to **REMOVAL** .

      OK

      There are no foreign objects on each valve and they operate smoothly.

NG --> See step 7

OK --> See step 5

5. **REPLACE AUTOMATIC TRANSAXLE ASSEMBLY. Refer to COMPONENTS**
6. **REPLACE SHIFT SOLENOID VALVE SL3. Refer to COMPONENTS**
7. **REPAIR OR REPLACE TRANSMISSION VALVE BODY ASSEMBLY. Refer to COMPONENTS**
8. **GO TO DTC CHART (RELATED SHIFT SOLENOID VALVE (SL1) PERFORMANCE DTC P0746). Refer to DTC P0746: Pressure Control Solenoid "A" Performance (Shift Solenoid Valve SL1)**
9. **GO TO DTC CHART (RELATED SHIFT SOLENOID VALVE (SL2) PERFORMANCE DTC P0776). Refer to DTC P0776: Pressure Control Solenoid "B" Performance (Shift Solenoid Valve**

SL2)

10. **GO TO DTC CHART (RELATED SHIFT SOLENOID VALVE (SL4) PERFORMANCE DTC P2808). Refer to DTC P2808: Pressure Control Solenoid "G" Performance (Shift Solenoid Valve SL4)**
11. **GO TO DTC CHART (RELATED SHIFT SOLENOID VALVE (SLT) PERFORMANCE DTC P2714). Refer to DTC P2714: Pressure Control Solenoid "D" Performance (Shift Solenoid Valve SLT)**

DTC P0798: PRESSURE CONTROL SOLENOID "C" ELECTRICAL (SHIFT SOLENOID VALVE SL3)

DESCRIPTION

Changing from 1st to 6th is performed by the TCM turning shift solenoid valves SL1, SL2, SL3, SL4 and SL on and off. If an open or short circuit occurs in any of the shift solenoid valves, the TCM controls the remaining normal shift solenoid valves to allow the vehicle to be operated. Refer to **FAIL-SAFE CHART** .

DTC No.	DTC Detection Condition	Trouble Area
P0798	The TCM checks for an open or short in the shift solenoid valve SL3 circuit while driving and shifting gears. (1-trip detection logic) • Output signal duty equals to 100%. (NOTE: SL3 output signal duty is less than 100% under normal condition.)	• Open or short in shift solenoid valve SL3 circuit • Shift solenoid valve SL3 • TCM

MONITOR DESCRIPTION

The TCM commands gear shifts by turning the shift solenoid valves on or off. When there is an open or short circuit in any shift solenoid valve circuit, the TCM detects the problem and illuminates the MIL and stores the DTC. And the TCM performs the fail-safe function and turns the other normal shift solenoid valves on or off (In case of an open or short circuit, the TCM stops sending current to the circuit.)

Refer to **FAIL-SAFE CHART** .

MONITOR STRATEGY

Related DTCs	P0798: Shift solenoid valve SL3/Range check
Required sensors/Components	Shift solenoid valve SL3
Frequency of operation	Continuous
Duration	1 sec.
MIL operation	Immediate
Sequence of operation	None

TYPICAL ENABLING CONDITIONS

ALL

The monitor will run whenever the following DTCs are not present	None
Engine switch	on (IG)
Starter	OFF

CONDITION (A)

Battery voltage	12 V or more

CONDITION (B)

Battery voltage	10 V or more and less than 12 V
CPU commanded duty	Less than 75%

TYPICAL MALFUNCTION THRESHOLDS

CONDITION (A) AND (B)

Output duty cycle	100% or more

COMPONENT OPERATING RANGE

Output duty cycle	More than 3% and less than 100%

WIRING DIAGRAM

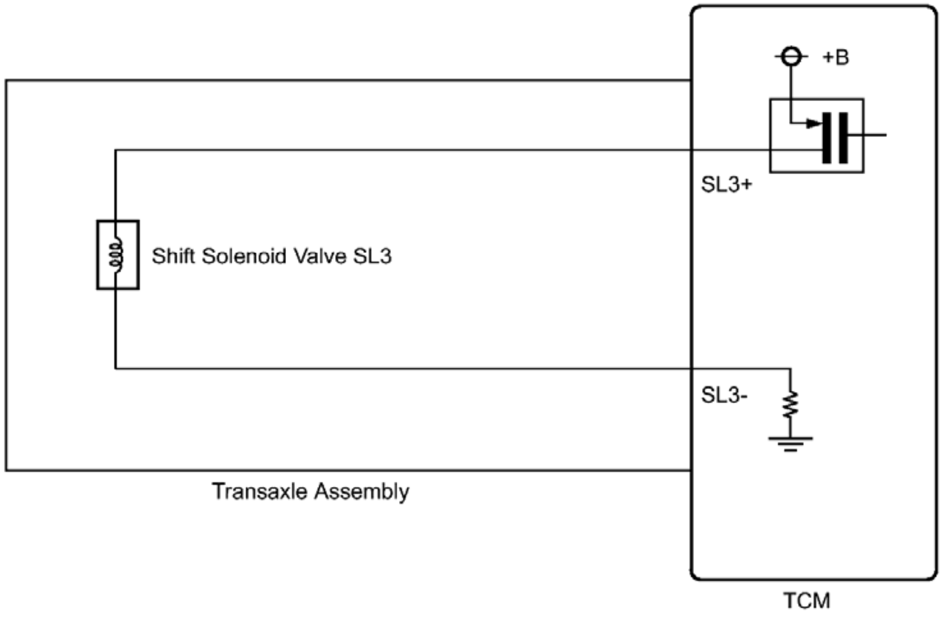
+B
SL3+
Shift Solenoid Valve SL3
SL3-
Transaxle Assembly
TCM
c

Fig. 41: Shift Solenoid Valve SL3 Circuit Wiring Diagram
Courtesy of TOYOTA MOTOR SALES, U.S.A., INC.

INSPECTION PROCEDURE

NOTE: **Perform the universal trip to clear permanent DTCs. Refer to DTC CHECK / CLEAR .**

PROCEDURE

1. **INSPECT TRANSMISSION WIRE (SL3)**
    a. Remove the TCM from the transaxle.

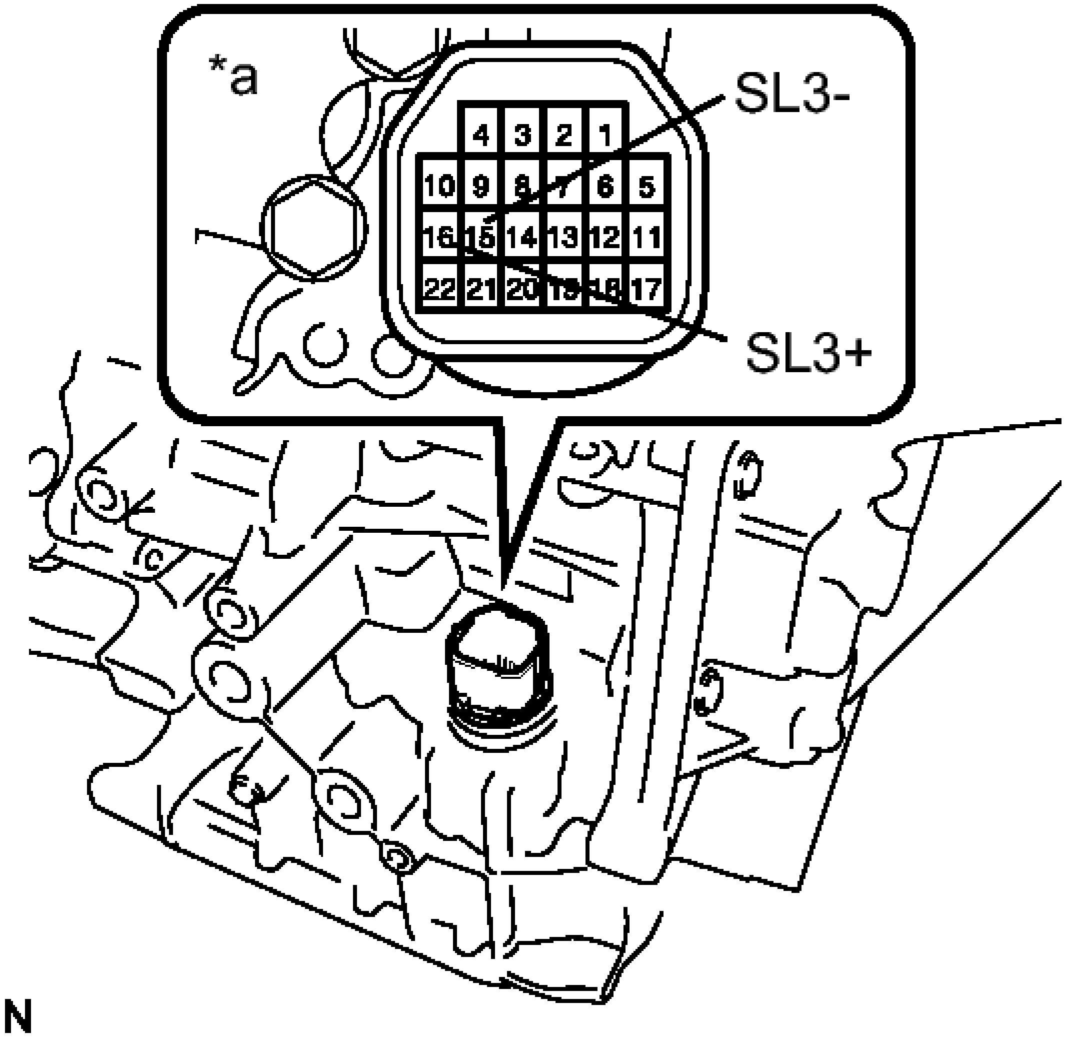
*a
4 3 2 1
10 9 8 7 6 5
16 15 14 13 12 11
22 21 20 19 18 17
SL3-
SL3+
N

Fig. 42: Checking Resistance Of Transmission Wire (SL3)
Courtesy of TOYOTA MOTOR SALES, U.S.A., INC.

b. Measure the resistance according to the value(s) in the table below.

Standard Resistance

Tester Connection	Condition	Specified Condition
16 (SL3+) - 15 (SL3-)	20°C (68°F)	5.0 to 5.6 ohms
16 (SL3+) - Body ground and other terminals	Always	10 kohms or higher

15 (SL3-) - Body ground and other terminals	Always	10 kohms or higher

TEXT IN ILLUSTRATION

*a	Component without harness connected (Transmission Wire)

NG --> See step 2

OK --> See step 4

2. **INSPECT SHIFT SOLENOID VALVE SL3**
    a. Remove shift solenoid valve SL3.

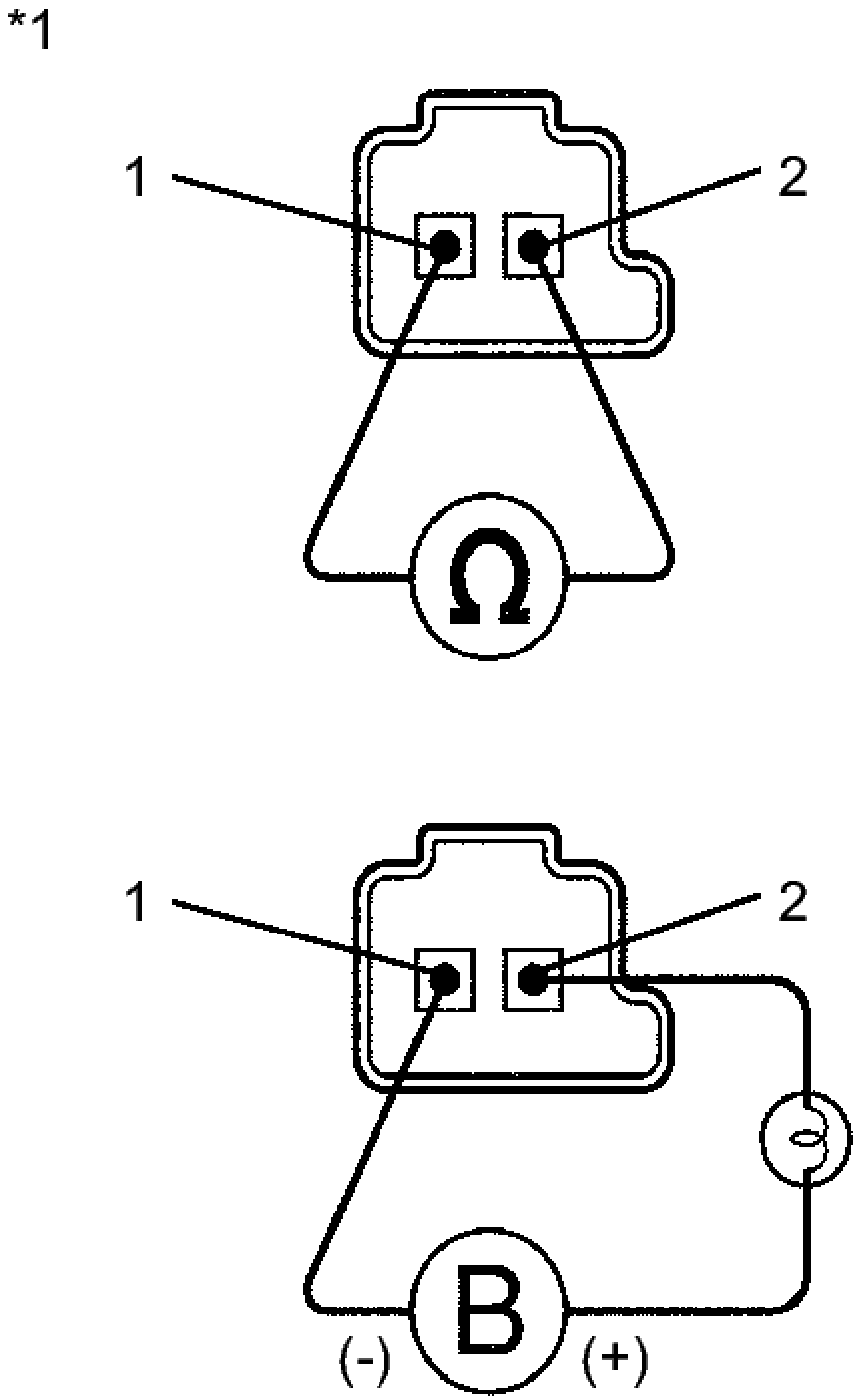

Fig. 43: Checking Shift Solenoid Valve SL3 Resistance
Courtesy of TOYOTA MOTOR SALES, U.S.A., INC.

b. Measure the resistance according to the value(s) in the table below.

Standard Resistance

Tester Connection	Condition	Specified Condition
1 - 2	20°C (68° F)	5.0 to 5.6 ohms

TEXT IN ILLUSTRATION

*1	Shift Solenoid Valve SL3

c. Connect a battery positive (+) lead with a 21 W bulb to terminal 2 and a negative (-) lead to terminal 1 of the solenoid valve connector. Then check that the valve moves and makes an operating sound.

OK

Valve moves and makes an operating sound.

NG --> See step 5

OK --> See step 3

3. **REPLACE TRANSMISSION WIRE. Refer to COMPONENTS**
4. **REPLACE TCM. Refer to COMPONENTS**
5. **REPLACE SHIFT SOLENOID VALVE SL3. Refer to COMPONENTS**

DTC P0989: TRANSMISSION FLUID PRESSURE SENSOR / SWITCH "E" CIRCUIT LOW; DTC P0990: TRANSMISSION FLUID PRESSURE SENSOR / SWITCH "E" CIRCUIT HIGH

DESCRIPTION

ATF pressure switch No. 3 is installed in the lock-up solenoid ATF output passage and is used to detect a malfunction in the lock-up solenoid.

DTC No.	DTC Detection Condition	Trouble Area
P0989	Transmission fluid pressure switch No. 3 is OFF when lock-up occurs in response to a lock-up request (2 trip detection logic).	• ATF temperature sensor assembly (ATF pressure switch No. 3) • Transmission wire
	When both of the following are detected (2 trip detection logic): • Transmission fluid pressure switch No. 3 is ON when lock-up does not	

P0990	occur. - Lock-up does not occur when shift solenoid valve (SLU) is requested to turn off in the lock-up range.	- TCM

MONITOR DESCRIPTION

The TCM illuminates the MIL and stores the DTC when the TCM detects that the ATF pressure switch is OFF with the lock-up solenoid ON or when the TCM detects that the ATF pressure switch is ON with the lock-up solenoid OFF.

MONITOR STRATEGY

Related DTCs	P0989: Transmission fluid pressure switch No. 3 OFF malfunction P0990: Transmission fluid pressure switch No. 3 ON malfunction
Required sensors/Components	Transmission fluid pressure switch No. 3
Frequency of operation	Continuous
Duration	P0989: 1.8 sec. P0990 (a): 1.2 sec. P0990 (b): 0.6 sec.
MIL operation	2 driving cycles
Sequence of operation	None

TYPICAL ENABLING CONDITIONS

ALL:

The monitor will run whenever this DTC is not present. (Not circuit malfunction)	P0712, P0713 (ATF temperature sensor circuit (TFT sensor)) P0115, P0117, P0118 (ECT sensor circuit) P0715, P0717 (Turbine speed sensor circuit) P0791, P0793 (Intermediate shaft speed sensor circuit) P0748 (Shift solenoid valve SL1 circuit) P0778 (Shift solenoid valve SL2 circuit) P0798 (Shift solenoid valve SL3 circuit) P2810 (Shift solenoid valve SL4 circuit) P2759 (Shift solenoid valve SLU circuit) P2769, P2770 (Shift solenoid valve SL circuit) P0327, P0328, P0332, P0333 (KCS sensor circuit) P0120, P0121, P0122, P0123, P0220, P0222, P0223, P0604, P0606, P060A, P060B, P060D, P060E, P0657, P1607, P2102, P2103, P2111, P2112, P2118, P2119, P2135 ((ETCS) Electronic throttle control system)

	U0100 (CAN communication system)
ECT (Engine coolant temperature)	40°C (104°F) or more
Spark advance from Max. retard timing by KCS control	0°CA or more
Transmission range	"D"
TFT (Transmission fluid temperature)	-10°C (14°F) or more
TFT (Transmission fluid temperature) sensor circuit	No circuit malfunction
ECT (Engine coolant temperature) sensor circuit	No circuit malfunction
Turbine speed sensor circuit	No circuit malfunction
Intermediate shaft speed sensor circuit	No circuit malfunction
Shift solenoid valve SL1 circuit	No circuit malfunction
Shift solenoid valve SL2 circuit	No circuit malfunction
Shift solenoid valve SL3 circuit	No circuit malfunction
Shift solenoid valve SL4 circuit	No circuit malfunction
Shift solenoid valve SLU circuit	No circuit malfunction
Shift solenoid valve SL circuit	No circuit malfunction
(KCS) Knock control sensor circuit	No circuit malfunction
(ETCS) Electronic throttle control system	Not system down
CAN communication system	Not system down
Engine	Starting
TCM selected gear	Not 1st
Vehicle speed	15.5 mph (25 km/h) or more
Turbine speed/Output speed (NT/NO) with 1st	3.304 to 7.724
Turbine speed/Output speed (NT/NO) with 2nd	1.901 to 2.340
Turbine speed/Output speed (NT/NO) with 3rd	1.399 to 1.649
Turbine speed/Output speed (NT/NO) with 4th	0.998 to 1.138
Turbine speed/Output speed (NT/NO) with 5th	0.705 to 0.836
Turbine speed/Output speed (NT/NO) with 6th	0.568 to 0.695

P0989:

TCM lock-up command	ON
Engine speed - Turbine speed	Less than 35 RPM
Throttle valve opening angle	7% or more
Vehicle speed	Less than 62.1 mph (100 km/h)
Shift solenoid valve SLU	Not ON malfunction

P0990:

TCM indicated pressure valve of SLU	Less than 4 kPa
TCM lock-up command	OFF
Shift solenoid valve SLU	Not malfunction
Shift solenoid valve SL	Not OFF malfunction

TYPICAL MALFUNCTION THRESHOLDS

P0989:

Transmission fluid pressure switch No. 3	OFF

P0990:

Following conditions are met	(a) and (b)
(a) Engine speed - Turbine speed	35 RPM or more
(b) Transmission fluid pressure switch No. 3	ON

WIRING DIAGRAM

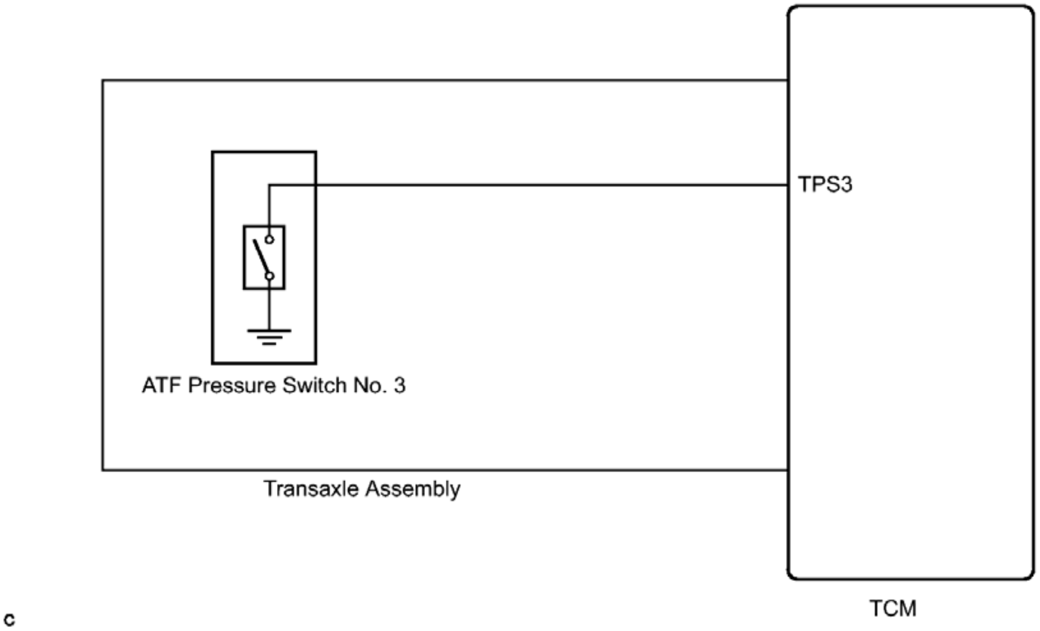

Fig. 44: ATF Pressure Switch No. 3 Circuit Wiring Diagram
Courtesy of TOYOTA MOTOR SALES, U.S.A., INC.

INSPECTION PROCEDURE

NOTE: **Perform the universal trip to clear permanent DTCs. Refer to DTC CHECK / CLEAR .**

PROCEDURE

1. **CHECK OTHER DTC OUTPUT (IN ADDITION TO DTC P0989 OR P0990)**
    a. Connect the Techstream to the DLC3.
    b. Turn the engine switch on (IG).

c. Turn the Techstream on.
d. Enter the following menus: Powertrain / ECT / Trouble Codes.
e. Read the DTCs using the Techstream.

Result

Display (DTC Output)	Proceed to
Only "P0990" is output	A
Only "P0989" is output	B
"P0989 or P0990" and other DTCs are output	C

HINT:

If a solenoid is stuck OFF, DTCs for several solenoids including the malfunctioning solenoid will be detected.

B --> See step 5

C --> See step 6

A: Go to next step

2. **CHECK TRANSMISSION WIRE (SHORT TO GROUND)**
   a. Remove the TCM.

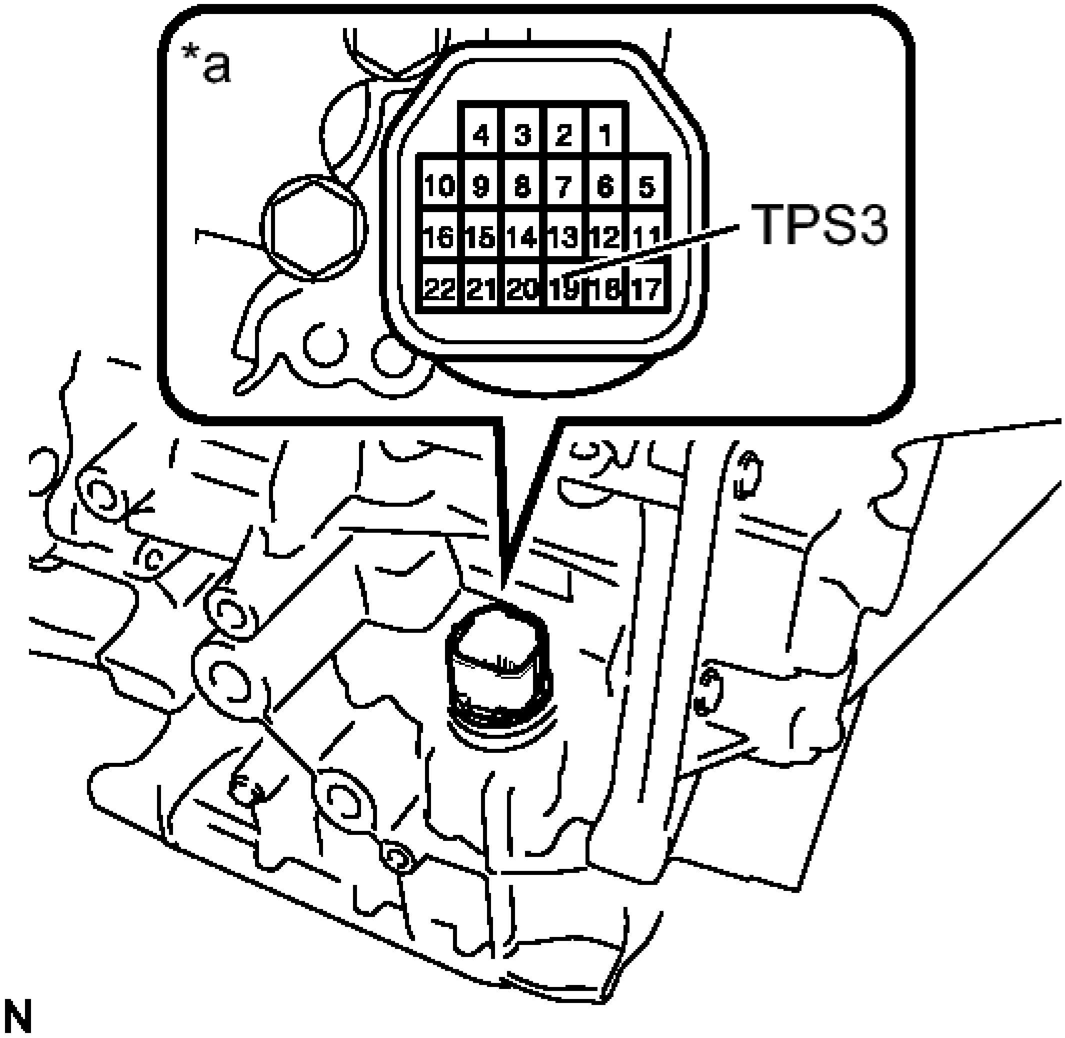
*a
4
3
2
1
10
9
8
7
6
5
16
15
14
13
12
11
22
21
20
19
18
17
TPS3
N

Fig. 45: Checking Transmission Wire (Short)
Courtesy of TOYOTA MOTOR SALES, U.S.A., INC.

b. Measure the resistance according to the value(s) in the table below.

Standard Resistance

Tester Condition	Condition	Specified Condition
19 (TPS3) - Body ground (Valve body assembly) and other	Always	10 kohms or higher

terminals		

TEXT IN ILLUSTRATION

*a	Component without harness connected (Transmission Wire)

NG --> See step 4

OK --> See step 3

3. **REPLACE TCM. Refer to COMPONENTS**
4. **CHECK ATF TEMPERATURE SENSOR ASSEMBLY (ATF PRESSURE SWITCH NO. 3)**
    a. Remove the oil strainer assembly.
    b. Disconnect the connector from the ATF temperature sensor assembly.

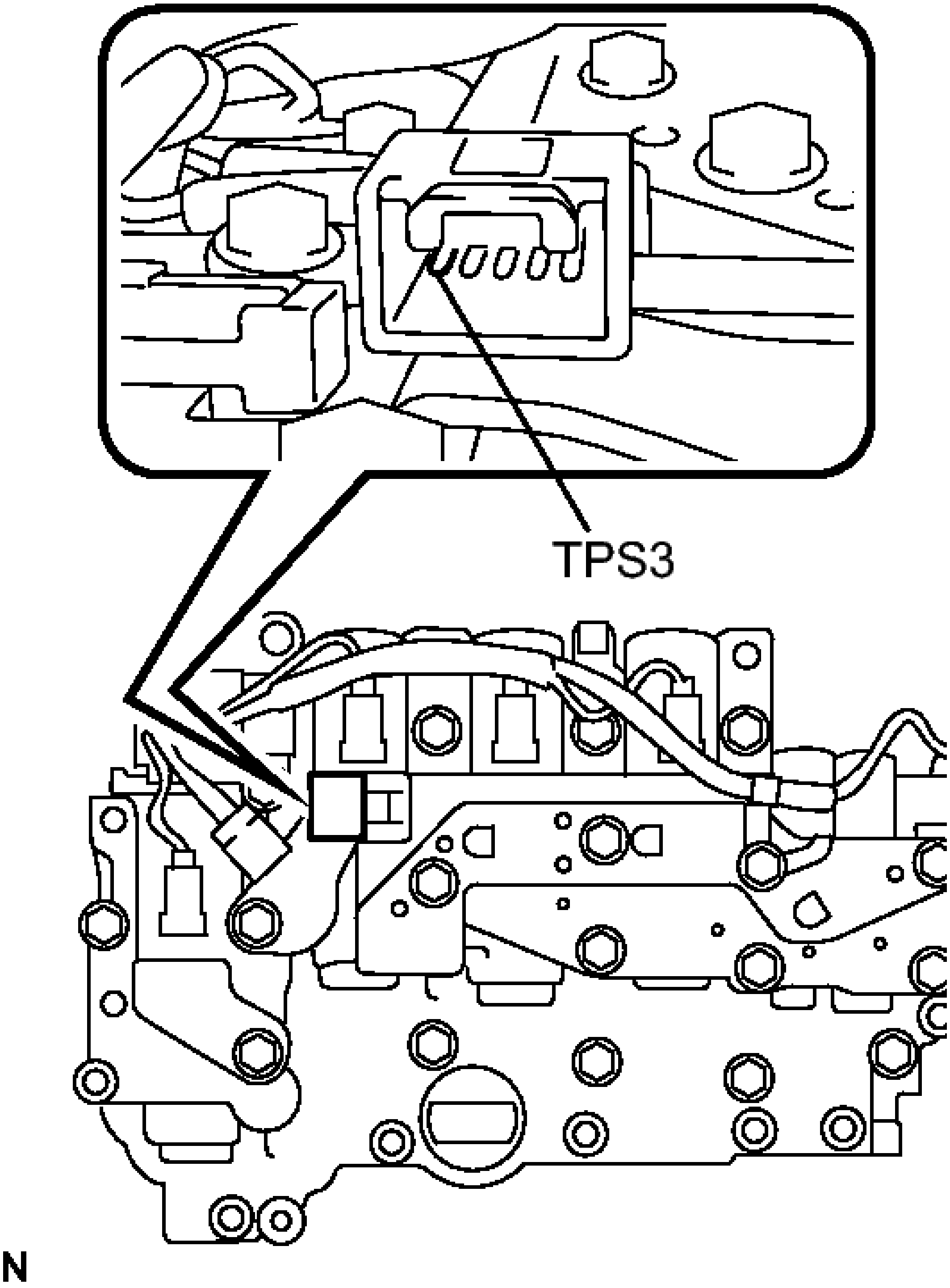

Fig. 46: Checking ATF Temperature Sensor Assembly (ATF Pressure Switch No. 3)
Courtesy of TOYOTA MOTOR SALES, U.S.A., INC.

c. Measure the resistance according to the value(s) in the table below.

Standard Resistance

Tester Condition	**Condition**	**Specified Condition**
1 (TPS3) - Body ground (Valve body assembly) and other terminals	Always	10 kohms or higher

NG --> See step 10

OK --> See step 7

5. **CHECK TRANSMISSION WIRE**
    a. Remove the oil strainer assembly.
    b. Remove the TCM.

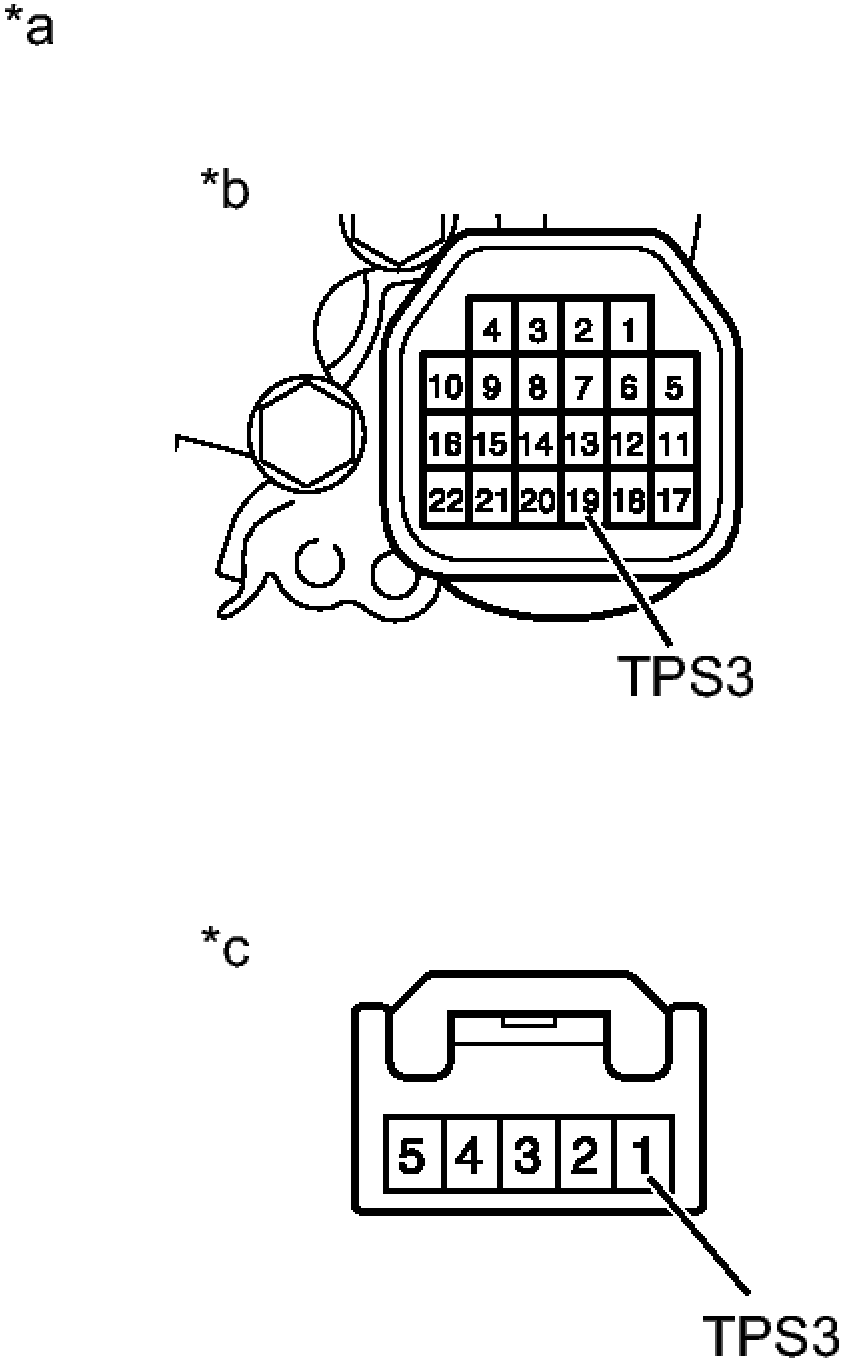
*a
*b
4 3 2 1
10 9 8 7 6 5
16 15 14 13 12 11
22 21 20 19 18 17
TPS3
*c
5 4 3 2 1
TPS3

Fig. 47: Checking Transmission Wire Resistance
Courtesy of TOYOTA MOTOR SALES, U.S.A., INC.

c. Disconnect the connector from the ATF temperature sensor assembly.
d. Measure the resistance according to the value(s) in the table below.

Standard Resistance

Tester Condition	Condition	Specified Condition
19 (TPS3) TCM side - 1 (TPS3) sensor side	Always	Below 1 ohms
1 (TPS3) sensor side - Body ground (Valve body assembly) and other terminals	Always	10 kohms or higher

TEXT IN ILLUSTRATION

*a	Component without harness connected (Transmission Wire))
*b	TCM Side
*c	ATF Temperature Sensor Side

NG --> See step 7

OK: Go to next step

6. **GO TO DTC CHART. Refer to DIAGNOSTIC TROUBLE CODE CHART**
7. **REPLACE TRANSMISSION WIRE. Refer to COMPONENTS**
8. **REPLACE ATF TEMPERATURE SENSOR ASSEMBLY**

   Refer to **COMPONENTS**

   NEXT: Go to next step

9. **CHECK IF DTC OUTPUT RECURS**
   a. Connect the Techstream to the DLC3.

b. Start the engine and turn the Techstream on.
c. Clear the DTCs. Refer to **DTC CHECK / CLEAR** .

HINT:

Write down the currently output DTCs before clearing them.

d. Perform the monitor drive pattern. Refer to **MONITOR DRIVE PATTERN** .
e. Enter the following menus: Powertrain / ECT / Trouble Codes.
f. Read the DTCs using the Techstream.

Result

Display (DTC Output)	Proceed to
Only "P0989" is output	A
No output	B

B --> END

A --> See step 3

10. **REPLACE ATF TEMPERATURE SENSOR ASSEMBLY. Refer to COMPONENTS**

DTC P2714: PRESSURE CONTROL SOLENOID "D" PERFORMANCE (SHIFT SOLENOID VALVE SLT)

SYSTEM DESCRIPTION

The linear solenoid valve (SLT) controls the transmission line pressure for smooth transmission operation based on signals from the throttle position sensor and the vehicle speed sensor. The TCM adjusts the current to SLT solenoid valve to control hydraulic line pressure coming from the primary regulator valve. Appropriate line pressure assures smooth shifting with varying engine outputs.

DTC No.	DTC Detection Condition	Trouble Area
P2714	The TCM detects a malfunction in the shift solenoid valve SLT (ON side) according to the difference in the speed between the turbine and the output shaft, and also by the	• Shift solenoid valve SLT remains open • Shift solenoid valve SL1, SL2, SL3 or SL4 remains open or closed • Valve body is blocked

	transmission fluid pressure. (2-trip detection logic)	- Automatic transaxle (clutch, brake or gear, etc.)

MONITOR DESCRIPTION

The TCM calculates the amount of clutch slip based on the turbine speed, output shaft speed, and gear ratio. If the amount of clutch slip exceeds a specified level, the TCM will set this DTC and illuminate the MIL.

When shift solenoid valve SLT remains on, the line pressure goes down and clutch engagement force decreases.

NOTE: **If driving continues under these conditions, clutches will burn out and the vehicle will no longer be drivable.**

MONITOR STRATEGY

Related DTCs	P2714: Shift solenoid valve SLT/ON malfunction
Required sensors/Components	Shift solenoid valve SLT
Frequency of operation	Continuous
Duration	2 sec.
MIL operation	2 driving cycles
Sequence of operation	None

TYPICAL ENABLING CONDITIONS

ON MALFUNCTION:

The monitor will run whenever this DTC is not present. (Not circuit malfunction)	P0712, P0713 (ATF temperature sensor circuit (TFT sensor)) P0115, P0117, P0118 (ECT sensor circuit) P0715, P0717 (Turbine speed sensor circuit) P0791, P0793 (Intermediate shaft speed sensor circuit) P0748 (Shift solenoid valve SL1 circuit) P0778 (Shift solenoid valve SL2 circuit) P0798 (Shift solenoid valve SL3 circuit) P2810 (Shift solenoid valve SL4 circuit) P2716 (Shift solenoid valve SLT circuit) P0327, P0328, P0332, P0333 (KCS sensor circuit) P0120, P0121, P0122, P0123, P0220, P0222, P0223, P0604, P0606, P060A, P060B, P060D, P060E, P0657, P1607, P2102, P2103, P2111, P2112, P2118, P2119, P2135 ((ETCS) Electronic throttle control system) U0100 (CAN communication system)
Transmission range	"D"

TFT (Transmission fluid temperature)	-10°C (14°F) or more
TFT (Transmission fluid temperature) sensor circuit	No circuit malfunction
ECT (Engine coolant temperature) sensor circuit	No circuit malfunction
Turbine speed sensor circuit	No circuit malfunction
Intermediate shaft speed sensor circuit	No circuit malfunction
Shift solenoid valve SL1 circuit	No circuit malfunction
Shift solenoid valve SL2 circuit	No circuit malfunction
Shift solenoid valve SL3 circuit	No circuit malfunction
Shift solenoid valve SL4 circuit	No circuit malfunction
Shift solenoid valve SLT circuit	No circuit malfunction
(KCS) Knock control sensor circuit	No circuit malfunction
(ETCS) Electronic throttle control system	Not system down
CAN communication system	Not system down
Engine	Starting
Input turbine torque	100 N*m or more
Turbine speed	250 RPM or more
Output speed	250 RPM or more

TYPICAL MALFUNCTION THRESHOLDS

ON MALFUNCTION:

Detection criteria	Threshold
Turbine speed - Output speed x Gear ratio at output speed 1, 000 RPM (Condition varies with output speed)	75 RPM or more

INSPECTION PROCEDURE

NOTE: **Perform the universal trip to clear permanent DTCs. Refer to DTC CHECK / CLEAR .**

PROCEDURE

1. **CHECK OTHER DTCS OUTPUT (IN ADDITION TO DTC P2714)**
   a. Connect the Techstream to the DLC3.
   b. Turn the engine switch on (IG).
   c. Turn the Techstream on.
   d. Enter the following menus: Powertrain / ECT / Trouble Codes.
   e. Read the DTCs using the Techstream.

   Result

Display	

(DTC Output)	Proceed to
Only "P2714" is output	A
"P2714" and other DTCs are output	B

HINT:

If a solenoid is stuck ON, DTCs for several solenoids including the malfunctioning solenoid will be detected.

A --> See step 8

B: Go to next step

2. **PERFORM ACTIVE TEST USING TECHSTREAM (SHIFT SOLENOID VALVE SLT)**

NOTE:

- **Perform the test at the normal operating ATF (Automatic Transmission Fluid) temperature: 50 to 80°C (122 to 176°F)**
- **Be sure to prevent SST hose from interfering with the exhaust pipe.**
- **This check must be conducted after checking and adjusting the engine.**
- **Perform the test with the A/C OFF.**

HINT:

Using the Techstream to perform Active Tests allows relays, VSVs, actuators and other items to be operated without removing any parts. This non-intrusive functional inspection can be very useful because intermittent operation may be discovered before parts or wiring is disturbed. Performing Active Tests early in troubleshooting is one way to save diagnostic time. Data List information can be displayed while performing Active Tests.

a. Turn the engine switch off.
b. Lift the vehicle up.
c. Remove the test plug on the transmission case center right side and connect SST.

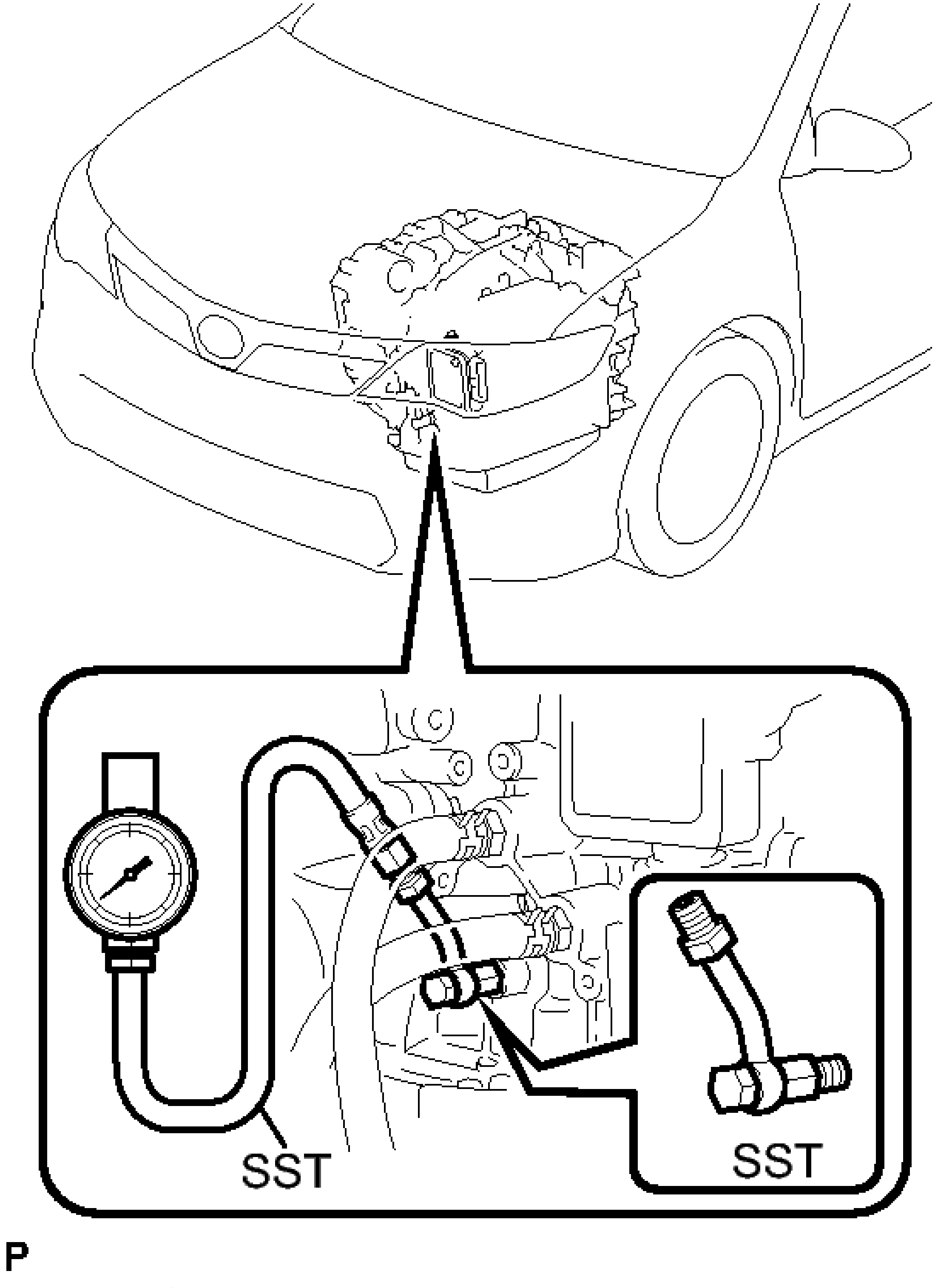

Fig. 48: Identifying SST & Transmission Test Plug
Courtesy of TOYOTA MOTOR SALES, U.S.A., INC.

- **SST: 09992-00095**

  09992-00231

09992-00271

d. Lower the vehicle.
e. Fully apply the parking brake and chock the 4 wheels.
f. Connect the Techstream to the DLC3.
g. Start the engine.
h. Warm up the Automatic Transmission Fluid (ATF).
i. Measure the line pressure when the engine is idling.
j. Turn the Techstream on.
k. Enter the following menus: Powertrain / ECT / Active Test.
l. Follow the instructions on the Techstream and perform the Active Test.
m. Measure the line pressure with SST.

Tester Display	Test Part	Control Range	Diagnostic Note
Activate the Solenoid (SLT)*	Operates shift solenoid SLT to raise the line pressure.	ON/OFF **HINT:** ON: No action (normal operation) OFF: Line pressure up (When the Active Test of "Activate the Solenoid (SLT)" is performed, the TCM commands the SLT solenoid to turn off).	[Vehicle Condition] • Vehicle Stopped • IDL: ON

*: "Activate the Solenoid (SLT)" in the Active Test is performed to check that the line pressure changes by connecting the SST to the automatic transaxle. The same SST is used in the Hydraulic Test. Refer to **HYDRAULIC TEST** as well.

HINT:

The pressure values in Active Test and Hydraulic Test are different from each other.

OK

The line pressure changes as specified when performing the Active Test.

NG --> See step 8

OK: Go to next step

3. **PERFORM ACTIVE TEST USING TECHSTREAM (SHIFTING TEST)**

NOTE: This test should always be performed with at least 2 people.

a. Warm up the engine.
b. Turn the engine switch off.
c. Connect the Techstream to the DLC3.
d. Turn the engine switch on (IG).
e. Turn the Techstream on.
f. Enter the following menus: Powertrain / ECT / Active Test.
g. According to the display on the Techstream, perform the Active Test.

HINT:

Comparing the gear commanded by the Active Test with the actual gear enables confirmation of the problem. Refer to **FAIL-SAFE CHART** .

Tester Display	Test Part	Control Range	Diagnostic Note
Control the Shift Position	Operates the shift solenoid valves to allow gears to be	• Press "-->" button: Upshift occurs • Press "<--" button:	Can be used to check the operation of the shift solenoid valves. Upshifts and downshifts should be performed consecutively. A 10-second interval is required between gear changes. Do not downshift at

	selected manually.	Downshift occurs	high speeds. Doing so will damage the automatic transaxle. [Vehicle Condition] 50 km/h (30 mph) or less

NOTE:

- **This test can be conducted when the vehicle is stopped.**
- **When shifting gears using the Active Test function, do not operate the accelerator pedal for 2 seconds before and after shifting gears.**

HINT:

The gear commanded by the TCM is shown in the Data List / Shift Status display on the Techstream.

h. Check the vehicle speed and the gear when the engine speed is 1000 RPM.

HINT:

Because the torque converter clutch has not engaged, it may be difficult to obtain the speeds specified in 4th, 5th, and 6th gear, however a difference of speed should still be evident following each gear change.

Standard

1st	2nd	3rd	4th	5th	6th
8 to 12 km/h (5 to 7.5 mph)	15 to 19 km/h (9.3 to 11.8 mph)	21 to 25 km/h (13.0 to 15.5 mph)	31 to 35 km/h (19.3 to 21.7 mph)	44 to 48 km/h (27.3 to 29.8 mph)	52 to 56 km/h (32.3 to 34.8 mph)

i. Compare the TCM commanded gear and the actual gear.

Result

Actuator Gear during Malfunction		**TCM Commanded Gear**						**Proceed to**
		1st	**2nd**	**3rd**	**4th**	**5th**	**6th**	
Shift solenoid SL1	Stuck ON	1st	2nd	3rd	4th	4th	4th	A
	Stuck OFF	N*1	N*1	N*1	N*1	5th	6th	
Shift solenoid SL2	Stuck ON	4th	4th	4th	4th	5th	6th	B
	Stuck OFF	1st	2nd	3rd	1st	N*1	N*1	
Shift solenoid SL3	Stuck ON	2nd	2nd	3rd	4th	5th	6th	C
	Stuck OFF	1st	1st	3rd	4th	5th	N*1	
Shift solenoid SL4	Stuck ON*3	3rd	3rd	3rd	4th	5th	5th	D
	Stuck OFF	1st	2nd	1st	4th	N*1	6th	
Shift solenoid SLT	Stuck ON	N*2	N*2	N*2	N*2	N*2	N*2	E
	Stuck OFF*3	1st	2nd	3rd	4th	5th	6th	

HINT:

- *1: Neutral
- *2: If shift solenoid SLT is stuck on, the line pressure will be low. Therefore, the amount of torque that can be transmitted by each gear is lower than the normal limit. When the engine power exceeds this lowered limit, the engine speed will increase freely.
- *3: When shift solenoid SLT is stuck off, gear shifting is normal.

A --> See step 4

B --> See step 5

C --> See step 6

D --> See step 7

E: Go to next step

4. **GO TO DTC CHART (RELATED SHIFT SOLENOID VALVE (SL1) PERFORMANCE DTC P0746). Refer to DTC P0746: Pressure Control Solenoid "A" Performance (Shift Solenoid Valve SL1)**
5. **GO TO DTC CHART (RELATED SHIFT SOLENOID VALVE (SL2) PERFORMANCE DTC P0776). Refer to DTC P0776: Pressure Control Solenoid "B" Performance (Shift Solenoid Valve SL2)**
6. **GO TO DTC CHART (RELATED SHIFT SOLENOID VALVE (SL3) PERFORMANCE DTC P0796). Refer to DTC P0796: Pressure Control Solenoid "C" Performance (Shift Solenoid Valve SL3)**

7. **GO TO DTC CHART (RELATED SHIFT SOLENOID VALVE (SL4) PERFORMANCE DTC P2808). Refer to DTC P2808: Pressure Control Solenoid "G" Performance (Shift Solenoid Valve SL4)**
8. **INSPECT SHIFT SOLENOID VALVE SLT**
    a. Remove shift solenoid valve SLT.

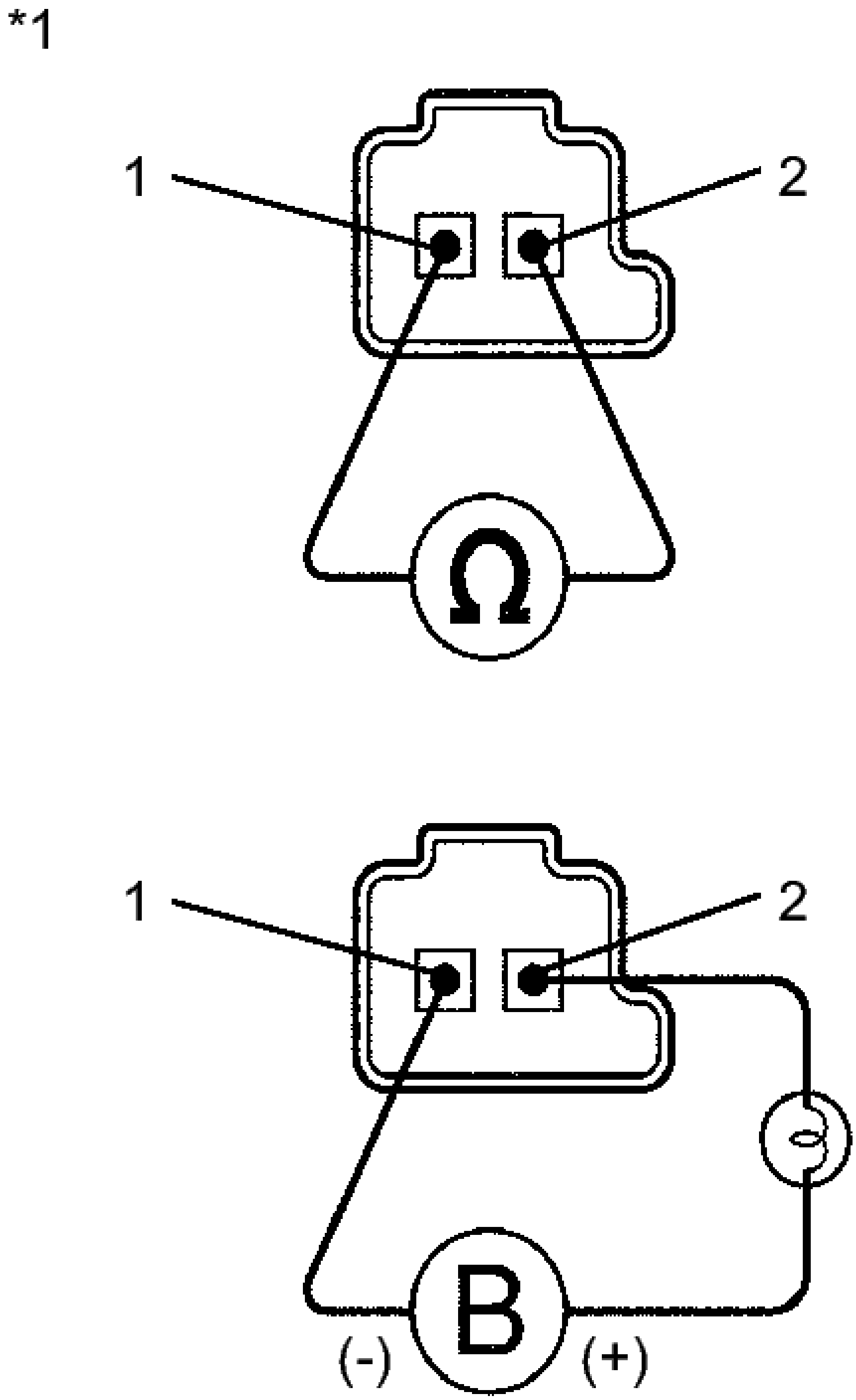

Fig. 49: Checking Shift Solenoid Valve SLT Resistance
Courtesy of TOYOTA MOTOR SALES, U.S.A., INC.

b. Measure the resistance according to the value(s) in the table below.

Standard Resistance

Tester Connection	Condition	Specified Condition
1 - 2	20°C (68° F)	5.0 to 5.6 ohms

TEXT IN ILLUSTRATION

*1	Shift Solenoid Valve SLT

c. Connect a battery positive (+) lead with a 21 W bulb to terminal 2 and a negative (-) lead to terminal 1 of the solenoid valve connector. Then check that the valve moves and makes an operating sound.

   OK

   Valve moves and makes an operating sound.

NG --> See step 11

OK: Go to next step

9. **INSPECT TRANSMISSION VALVE BODY ASSEMBLY**
   a. Check the transmission valve body assembly. Refer to **REMOVAL** .

      OK

      There are no foreign objects on each valve and they operate smoothly.

NG --> See step 12

OK --> See step 10

10. **REPLACE AUTOMATIC TRANSMISSION ASSEMBLY. Refer to COMPONENTS**
11. **REPLACE SHIFT SOLENOID VALVE SLT. Refer to COMPONENTS**
12. **REPLACE TRANSMISSION VALVE BODY ASSEMBLY. Refer to COMPONENTS**

DTC P2716: PRESSURE CONTROL SOLENOID "D" ELECTRICAL (SHIFT SOLENOID VALVE SLT)

DESCRIPTION

Refer to the system description for DTC P2714. Refer to **SYSTEM DESCRIPTION**.

DTC No.	DTC Detection Condition	Trouble Area
P2716	Open or short is detected in shift solenoid valve SLT circuit for 1 second or more while driving (1-trip detection logic).	• Open or short in shift solenoid valve SLT circuit • Shift solenoid valve SLT • TCM

MONITOR DESCRIPTION

When an open or short in the linear solenoid valve (SLT) circuit is detected, the TCM interprets this as a fault. The TCM will turn on the MIL and store the DTC.

MONITOR STRATEGY

Related DTCs	P2716: Shift solenoid valve SLT/Range check
Required sensors/Components	Shift solenoid valve SLT
Frequency of operation	Continuous
Duration	1 sec.
MIL operation	Immediate
Sequence of operation	None

TYPICAL ENABLING CONDITIONS

ALL:

The monitor will run whenever this DTC is not present	None
Solenoid current cut status	Not cut
Engine switch	on (IG)
Starter	OFF

MALFUNCTION (A):

Battery voltage	12 V or more
Target current	1 A

MALFUNCTION (B):

Battery voltage	10 V or more and less than 12 V
Target current	0.75 A

MALFUNCTION (C):

Battery voltage	8 V or more
Target current	1 A

MALFUNCTION (D):

Battery voltage	11 V or more

Target current	1 A or more

MALFUNCTION (E):

Battery voltage	11 V or more
Target current	0.1 A or more
Commanded voltage - Last commanded voltage	Less than 0.000019 V

TYPICAL MALFUNCTION THRESHOLDS

MALFUNCTION (A) AND (B):

Output duty cycle	100% or more

MALFUNCTION (C):

Output duty cycle	0% or less

MALFUNCTION (D):

Output signal monitor	No signal

MALFUNCTION (E):

Commanded voltage - Average of monitor voltage	0.035 V or more

COMPONENT OPERATING RANGE

Output duty cycle	Less than 100%

WIRING DIAGRAM

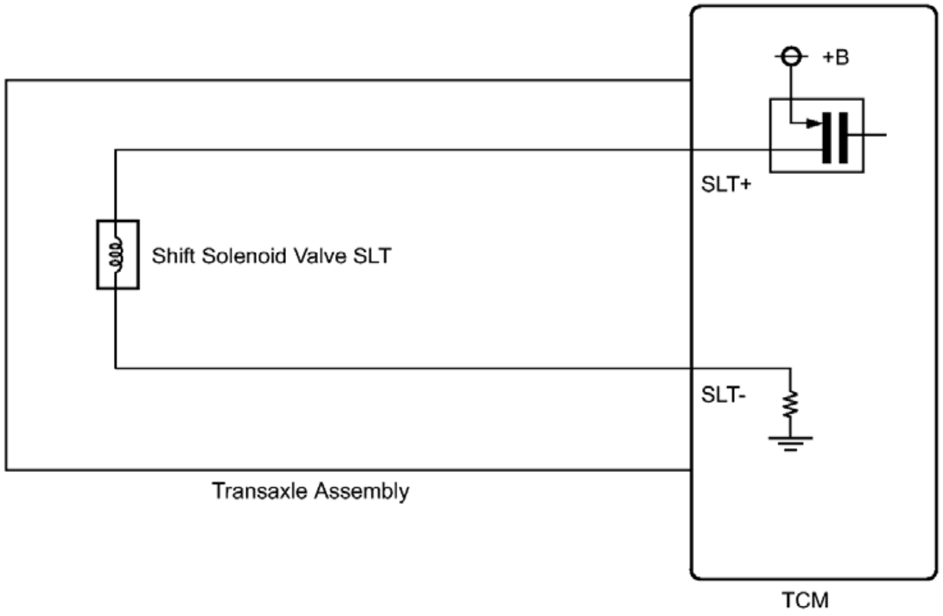
+B
SLT+
Shift Solenoid Valve SLT
SLT-
Transaxle Assembly
TCM
c

Fig. 50: Shift Solenoid Valve SLT Circuit Wiring Diagram
Courtesy of TOYOTA MOTOR SALES, U.S.A., INC.

INSPECTION PROCEDURE

NOTE:	**Perform the universal trip to clear permanent DTCs. Refer to DTC CHECK / CLEAR .**

PROCEDURE

1. **INSPECT TRANSMISSION WIRE (SLT)**
    a. Remove the TCM from the transaxle.

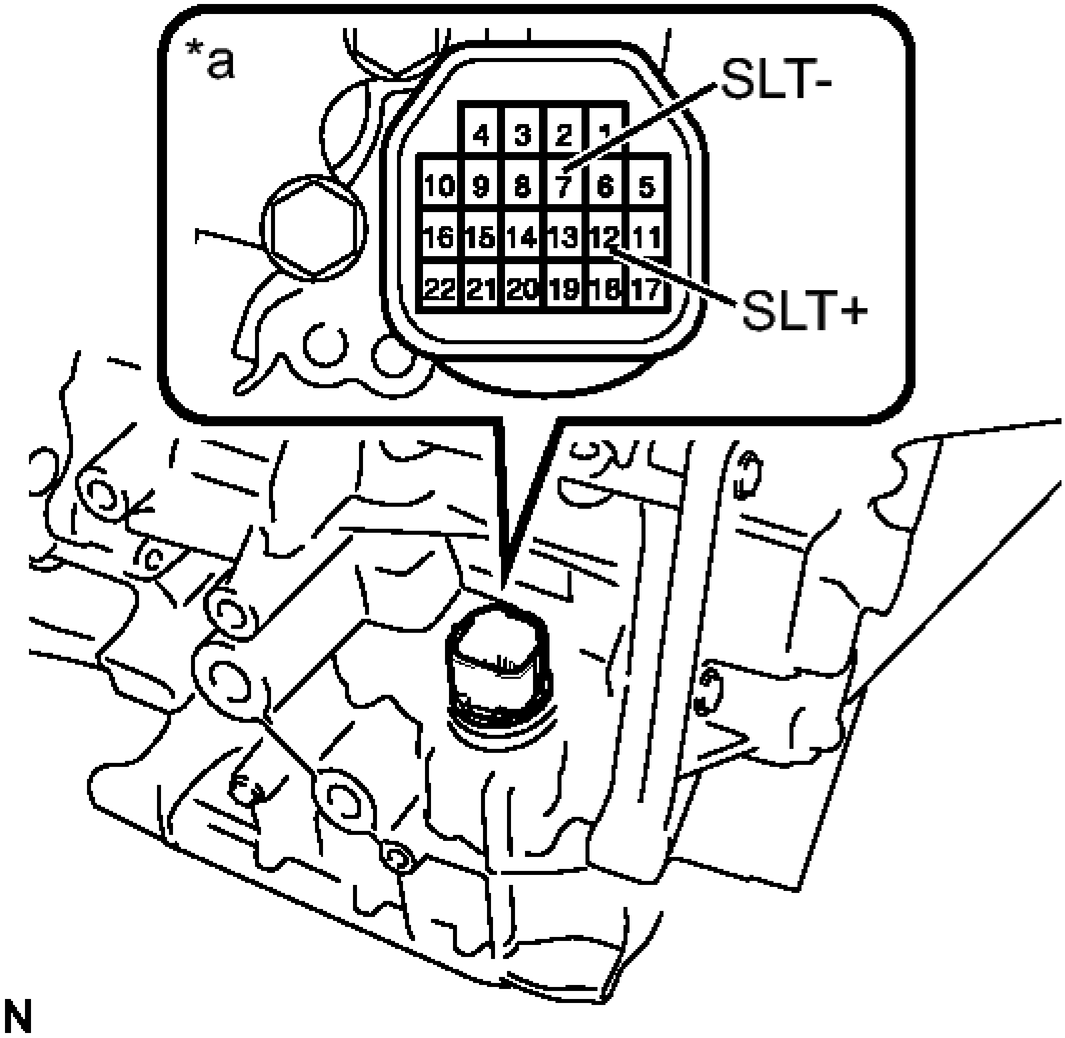
*a
SLT-
SLT+
4 3 2 1
10 9 8 7 6 5
16 15 14 13 12 11
22 21 20 19 18 17
N

Fig. 51: Checking Resistance Of Transmission Wire (SLT)
Courtesy of TOYOTA MOTOR SALES, U.S.A., INC.

b. Measure the resistance according to the value(s) in the table below.

Standard Resistance

Tester Connection	Condition	Specified Condition
12 (SLT+) - 7 (SLT-)	20°C (68°F)	5.0 to 5.6 ohms
12 (SLT+) - Body ground and other terminals	Always	10 kohms or higher

7 (SLT-) - Body ground and other terminals	Always	10 kohms or higher

TEXT IN ILLUSTRATION

*a	Component without harness connected (Transmission Wire)

NG --> See step 3

OK --> See step 2

2. **REPLACE TCM. Refer to COMPONENTS**
3. **INSPECT SHIFT SOLENOID VALVE SLT**
    a. Remove shift solenoid valve SLT.

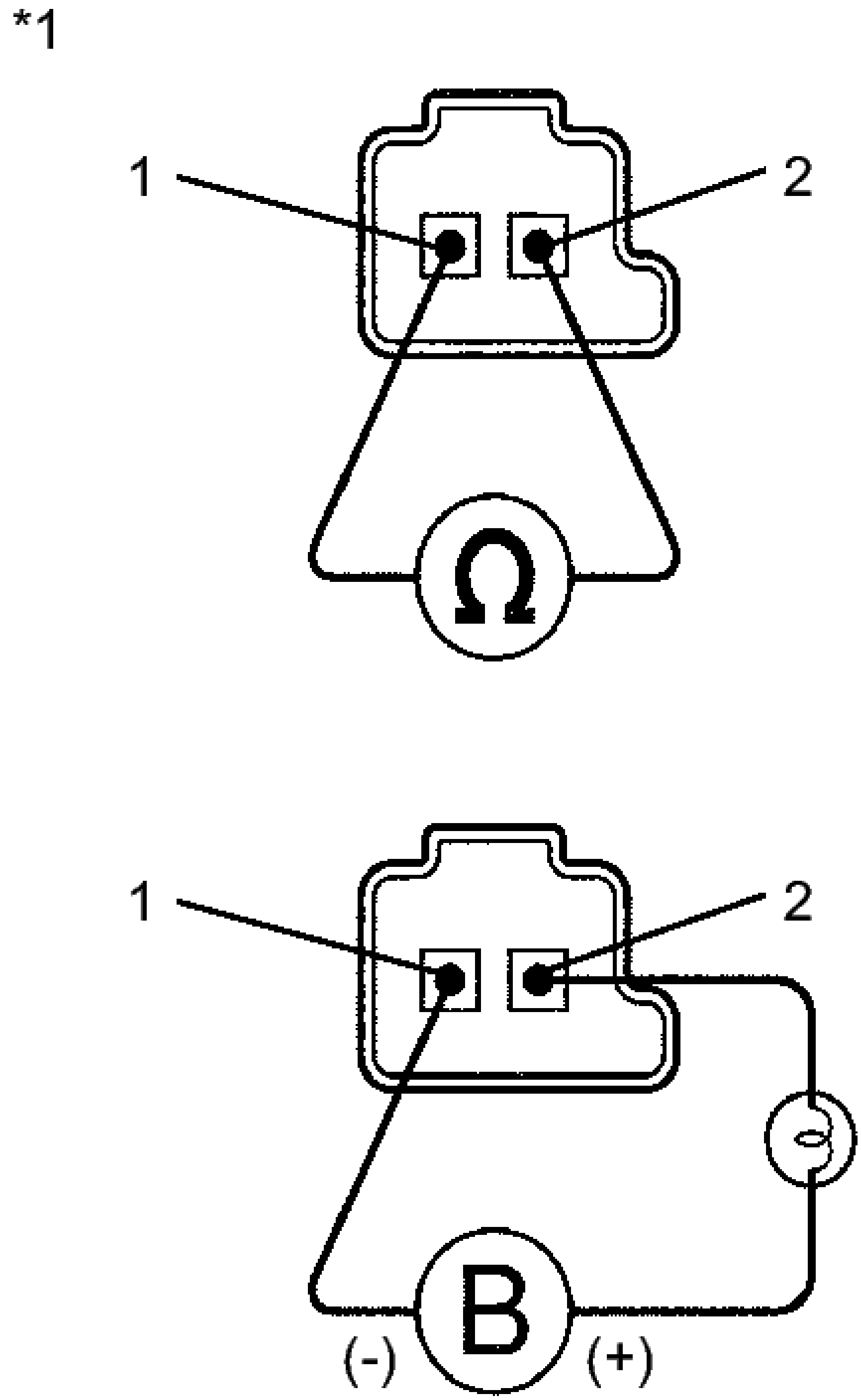

Fig. 52: Checking Shift Solenoid Valve SLT Resistance
Courtesy of TOYOTA MOTOR SALES, U.S.A., INC.

b. Measure the resistance according to the value(s) in the table below.

Standard Resistance

Tester Connection	Condition	Specified Condition
1 - 2	20°C (68° F)	5.0 to 5.6 ohms

TEXT IN ILLUSTRATION

*1	Shift Solenoid Valve SLT

c. Connect a battery positive (+) lead with a 21 W bulb to terminal 2 and a negative (-) lead to terminal 1 of the solenoid valve connector. Then check that the valve moves and makes an operating sound.

   OK

   Valve moves and makes an operating sound.

NG --> See step 5

OK --> See step 4

4. **REPLACE TRANSMISSION WIRE. Refer to COMPONENTS**
5. **REPLACE SHIFT SOLENOID VALVE SLT. Refer to COMPONENTS**

DTC P2757: TORQUE CONVERTER CLUTCH PRESSURE CONTROL SOLENOID PERFORMANCE (SHIFT SOLENOID VALVE SLU)

SYSTEM DESCRIPTION

The TCM uses the signals from the throttle position sensor, air-flow meter, turbine (input) speed sensor, output speed sensor and crankshaft position sensor to monitor the engagement condition of the lock-up clutch.

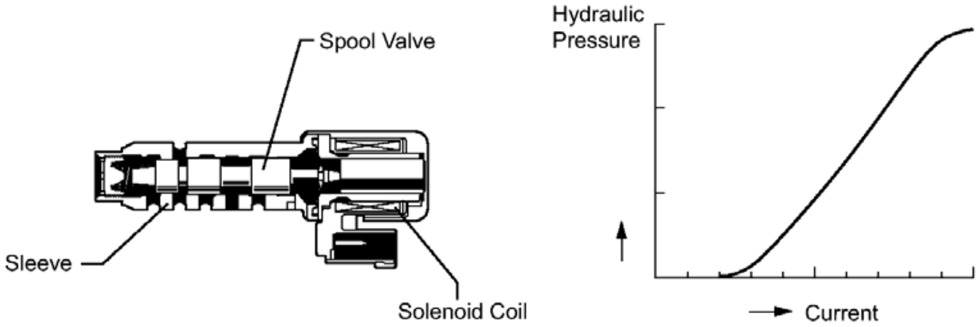

Fig. 53: Identifying Shift Solenoid Valve SLU Components And Hydraulic Line Pressure Graph
Courtesy of TOYOTA MOTOR SALES, U.S.A., INC.

The TCM compares the engagement condition of the lock-up clutch with the lock-up schedule in the TCM memory to detect shift solenoid valve SLU, valve body and torque converter clutch mechanical problems.

DTC No.	DTC Detection Condition	Trouble Area
P2757	When both of the following are detected (2-trip detection logic): • Lock-up does not occur when requested. • Transmission fluid pressure switch No. 3 is OFF. When both of the following are detected (2-trip detection logic): • Transmission fluid pressure switch No. 3 is ON when lock-up does not occur. • Lock-up occurs when shift solenoid valve SLU is requested to turn on in the lock-up range.	• Shift solenoid valve SLU remains open or closed • Valve body is blocked • Torque converter assembly • Automatic transaxle (clutch, brake or gear, etc.) • Line pressure is too low

MONITOR DESCRIPTION

Torque converter lock-up is controlled by the TCM based on the turbine (input) speed sensor NT, output speed sensor NC, engine speed, engine load, engine temperature, vehicle speed, transmission fluid temperature, and gear selection. The TCM determines the lock-up status of the torque converter by comparing the engine speed (NE) to the input turbine speed (NT). The TCM calculates the actual transmission gear by comparing input turbine speed (NT) to output shaft speed (NC). When conditions are appropriate, the TCM requests "lock-up" by applying control voltage to shift solenoid SLU. When SLU is turned on, it applies pressure to the lock-up relay valve and locks the torque converter clutch.

If the TCM detects no lock-up after lock-up has been requested or if it detects lock-up when it is not requested, the TCM interprets this as a fault in shift solenoid valve SLU or lock-up system performance.

The TCM will turn on the MIL and store the DTC.

Example:

When any of the following is met, the system judges it as a malfunction.

- There is a difference in rotation (speed) between the input side (engine speed) and output side (input turbine speed) of the torque converter when the TCM commands lock-up.

  (Engine speed is at least 70 RPM greater than input turbine speed.)

- There is no difference in rotation (speed) between the input side (engine speed) and output side (input turbine speed) of the torque converter when the TCM commands lock-up off.

  (The difference between engine speed and input turbine speed is less than 35 RPM.)

MONITOR STRATEGY

Related DTCs	P2757: Shift solenoid valve SLU OFF malfunction Shift solenoid valve SLU ON malfunction
Required sensors/Components	Shift solenoid valve SLU
Frequency of operation	Continuous
Duration	OFF malfunction (a): 3.5 sec. OFF malfunction (b): 0.05 sec. ON malfunction (a): 1.8 sec. ON malfunction (b): 0.6 sec.
MIL operation	2 driving cycles
Sequence of operation	None

TYPICAL ENABLING CONDITIONS

THE FOLLOWING ITEMS ARE COMMON TO ALL CONDITIONS BELOW.

	P0712, P0713 (ATF temperature sensor circuit (TFT sensor)) P0115, P0117, P0118 (ECT sensor circuit) P0715, P0717 (Turbine speed sensor circuit) P0791, P0793 (Intermediate shaft speed sensor circuit) P0748 (Shift solenoid valve SL1 circuit) P0778 (Shift solenoid valve SL2 circuit)

The monitor will run whenever this DTC is not present. (Not circuit malfunction)	P0798 (Shift solenoid valve SL3 circuit) P2810 (Shift solenoid valve SL4 circuit) P2759 (Shift solenoid valve SLU circuit) P2769, P2770 (Shift solenoid valve SL circuit) P0327, P0328, P0332, P0333 (KCS sensor circuit) P0120, P0121, P0122, P0123, P0220, P0222, P0223, P0604, P0606, P060A, P060B, P060D, P060E, P0657, P1607, P2102, P2103, P2111, P2112, P2118, P2119, P2135 ((ETCS) Electronic throttle control system) U0100 (CAN communication system)
ECT (Engine coolant temperature)	40°C (104°F) or more
Spark advance from Max. retard timing by KCS control	0°CA or more
Transmission range	"D"
TFT (Transmission fluid temperature)	-10°C (14°F) or more
TFT (Transmission fluid temperature) sensor circuit	No circuit malfunction
ECT (Engine coolant temperature) sensor circuit	No circuit malfunction
Turbine speed sensor circuit	No circuit malfunction
Intermediate shaft speed sensor circuit	No circuit malfunction
Shift solenoid valve SL1 circuit	No circuit malfunction
Shift solenoid valve SL2 circuit	No circuit malfunction
Shift solenoid valve SL3 circuit	No circuit malfunction
Shift solenoid valve SL4 circuit	No circuit malfunction
Shift solenoid valve SLU circuit	No circuit malfunction
Shift solenoid valve SL circuit	No circuit malfunction
(KCS) Knock control sensor circuit	No circuit malfunction
(ETCS) Electronic throttle control system	Not system down
CAN communication system	Not system down
Engine	Starting
TCM selected gear	Not 1st
Vehicle speed	15.5 mph (25 km/h) or more
Turbine speed/Output speed (NT/NO) with 1st	3.304 to 7.724
Turbine speed/Output speed (NT/NO) with 2nd	1.901 to 2.340
Turbine speed/Output speed (NT/NO) with 3rd	1.399 to 1.649
Turbine speed/Output speed (NT/NO) with 4th	0.998 to 1.138
Turbine speed/Output speed (NT/NO) with 5th	0.705 to 0.836
Turbine speed/Output speed (NT/NO) with 6th	0.568 to 0.695

OFF MALFUNCTION:

TCM lock-up command	ON
Duration time from lock-up on command	3 sec. or more
Shift solenoid valve SLU	Not ON malfunction

ON MALFUNCTION:

TCM lock-up command	OFF SLU pressure: less than 4 kPa (0.04 kgfcm^2 , 0.6 psi)
Duration time from lock-up on command	0.064 sec. or more
Throttle valve opening angle	7% or more
Vehicle speed	Less than 37.3 mph (60 km/h)
Shift solenoid valve SLU	Not malfunction
Shift solenoid valve SL	Not OFF malfunction

TYPICAL MALFUNCTION THRESHOLDS

OFF MALFUNCTION:

Following conditions are met	(a) and (b)
(a) Engine speed - Turbine speed	70 RPM or more
(b) Transmission fluid pressure switch	OFF

ON MALFUNCTION:

Following conditions are met	(a) and (b)
(a) Engine speed - Turbine speed	Less than 35 RPM
(b) Transmission fluid pressure switch	ON

COMPONENT OPERATING RANGE

Speed sensor (NT)	Input speed is equal to engine speed when lock-up is ON.

INSPECTION PROCEDURE

NOTE: **Perform the universal trip to clear permanent DTCs. Refer to DTC CHECK / CLEAR .**

HINT:

Using the Techstream to perform Active Tests allows relays, VSVs, actuators and other items to be operated without removing any parts. This non-intrusive functional inspection can be very useful because intermittent operation may be discovered before parts or wiring is disturbed. Performing Active Tests early in troubleshooting is one way to save diagnostic time. Data List information can be displayed while performing Active Tests.

1. **ACTIVE TEST**
   a. Warm up the engine.
   b. Turn the engine switch off.
   c. Connect the Techstream to the DLC3.
   d. Turn the engine switch on (IG).

e. Turn the Techstream on.
f. Enter the following menus: Powertrain / ECT / Active Test.
g. According to the display on the Techstream, perform the Active Test.

Tester Display	Test Part	Control Range	Diagnostic Note
Activate the Lock Up	Control the shift solenoid SLU and SL to set the automatic transaxle to the lock-up condition.	ON/OFF	Can be used to check SLU and SL solenoid operation. [Vehicle Condition] • Throttle valve opening angle: Less than 20% • Vehicle speed:60 km/h (37 mph) or more, and 6th gear

HINT:

This test can be conducted when the vehicle speed is 60 km/h (37 mph) or more.

h. Lightly depress the accelerator pedal and check that the engine speed does not change abruptly.

HINT:

- When changing the accelerator pedal opening angle while driving, if the engine speed does not change, lock-up is on.
- Slowly release, but not fully, the accelerator pedal in order to decelerate. (Fully releasing the pedal will close the throttle valve and lock-up may be turned off.)

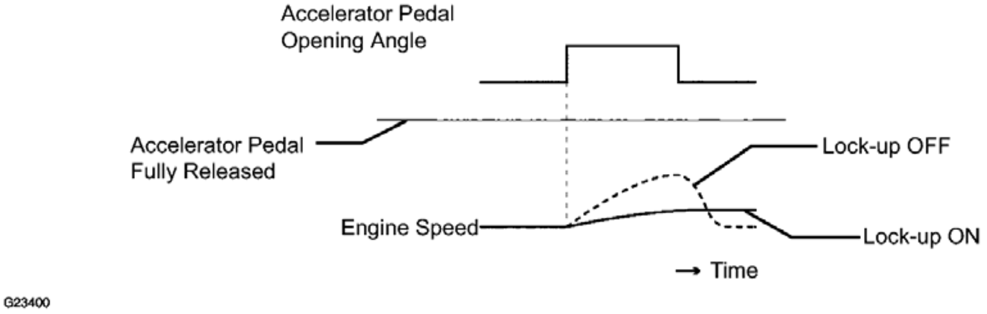

Fig. 54: Accelerator Pedal Opening Angle Graph
Courtesy of TOYOTA MOTOR SALES, U.S.A., INC.

PROCEDURE

1. **CHECK OTHER DTCS OUTPUT (IN ADDITION TO DTC P2757)**
   1. Connect the Techstream to the DLC3.
   2. Turn the engine switch on (IG).
   3. Turn the Techstream on.
   4. Enter the following menus: Powertrain / ECT / Trouble Codes.
   5. Read the DTCs using the Techstream.

   Result

Display (DTC output)	Proceed to
Only "P2757" is output	A
"P2757" and other DTCs are output	B

   HINT:

   If any other codes besides "P2757" are output, perform troubleshooting for those DTCs first.

B --> See step 6

A: Go to next step

2. **INSPECT SHIFT SOLENOID VALVE SLU**
    a. Remove shift solenoid valve SLU.

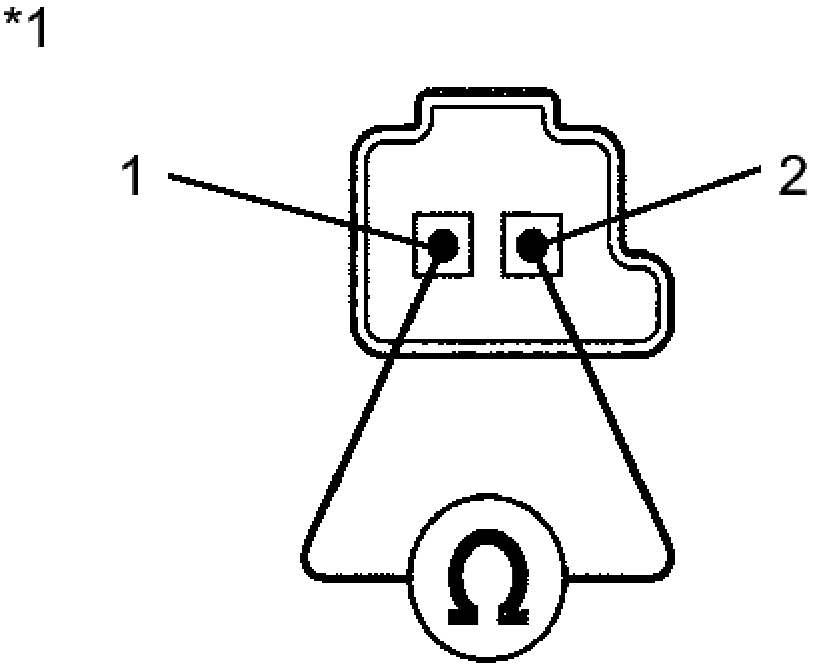

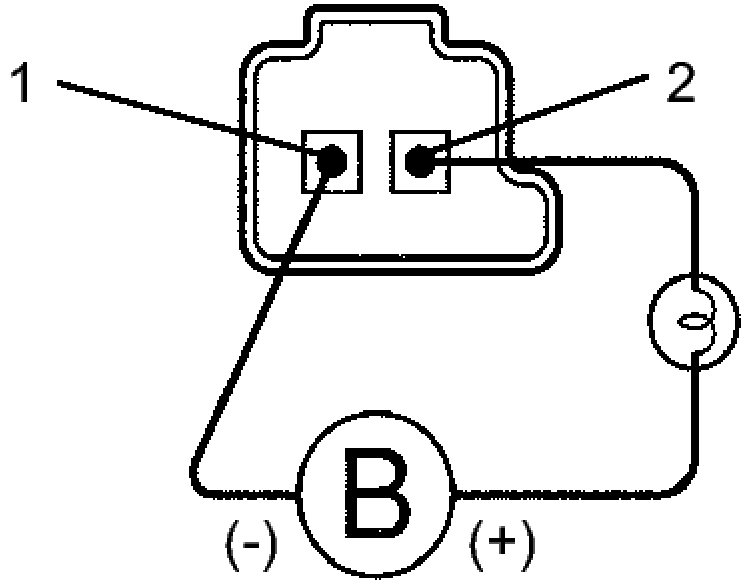

Fig. 55: Checking Shift Solenoid Valve SLU Resistance
Courtesy of TOYOTA MOTOR SALES, U.S.A., INC.

b. Measure the resistance according to the value(s) in the table below.

Standard Resistance

Tester Connection	Condition	Specified Condition
1 - 2	20°C (68° F)	5.0 to 5.6 ohms

TEXT IN ILLUSTRATION

*1	Shift Solenoid Valve SLU

c. Connect a battery positive (+) lead with a 21 W bulb to terminal 2 and a negative (-) lead to terminal 1 of the solenoid valve connector. Then check that the valve moves and makes an operating sound.

OK

Valve moves and makes an operating sound.

NG --> See step 7

OK: Go to next step

3. **INSPECT TRANSMISSION VALVE BODY ASSEMBLY**
   a. Check the transmission valve body assembly. Refer to **REMOVAL** .

   OK

   There are no foreign objects on each valve and they operate smoothly.

NG --> See step 8

OK: Go to next step

4. **INSPECT TORQUE CONVERTER ASSEMBLY**
   a. Check the torque converter assembly. Refer to **INSPECTION** .

   OK

The torque converter clutch operates normally.

NG --> See step 9

OK --> See step 5

5. **REPLACE AUTOMATIC TRANSAXLE ASSEMBLY. Refer to COMPONENTS**
6. **GO TO DTC CHART. Refer to DIAGNOSTIC TROUBLE CODE CHART**
7. **REPLACE SHIFT SOLENOID VALVE SLU. Refer to COMPONENTS**
8. **REPLACE TRANSMISSION VALVE BODY ASSEMBLY. Refer to COMPONENTS**
9. **REPLACE TORQUE CONVERTER ASSEMBLY. Refer to COMPONENTS**

DTC P2759: TORQUE CONVERTER CLUTCH PRESSURE CONTROL SOLENOID CONTROL CIRCUIT ELECTRICAL (SHIFT SOLENOID VALVE SLU)

DESCRIPTION

Refer to the system description for DTC P2757. Refer to **SYSTEM DESCRIPTION**.

DTC No.	DTC Detection Condition	Trouble Area
P2759	Open or short is detected in shift solenoid valve SLU circuit for 1 second or more while driving (1-trip detection logic).	• Open or short in shift solenoid valve SLU circuit • Shift solenoid valve SLU • TCM

MONITOR DESCRIPTION

When an open or short in a shift solenoid valve (SLU) circuit is detected, the TCM determines there is a malfunction. The TCM will turn on the MIL and store this DTC.

MONITOR STRATEGY

Related DTCs	P2759: Shift solenoid valve SLU/Range check
Required sensors/Components	Shift solenoid valve SLU
Frequency of operation	Continuous
Duration	1 sec.
MIL operation	Immediate
Sequence of operation	None

TYPICAL ENABLING CONDITIONS

ALL

The monitor will run whenever the following DTCs are not	None

present	
Engine switch	on (IG)
Starter	OFF

CONDITION (A)

Battery voltage	12 V or more

CONDITION (B)

Battery voltage	10 V or more and less than 12 V
CPU commanded duty	Less than 75%

TYPICAL MALFUNCTION THRESHOLDS

CONDITION (A) AND (B)

Output duty cycle	100% or more

COMPONENT OPERATING RANGE

Output duty cycle	More than 3% and less than 100%

WIRING DIAGRAM

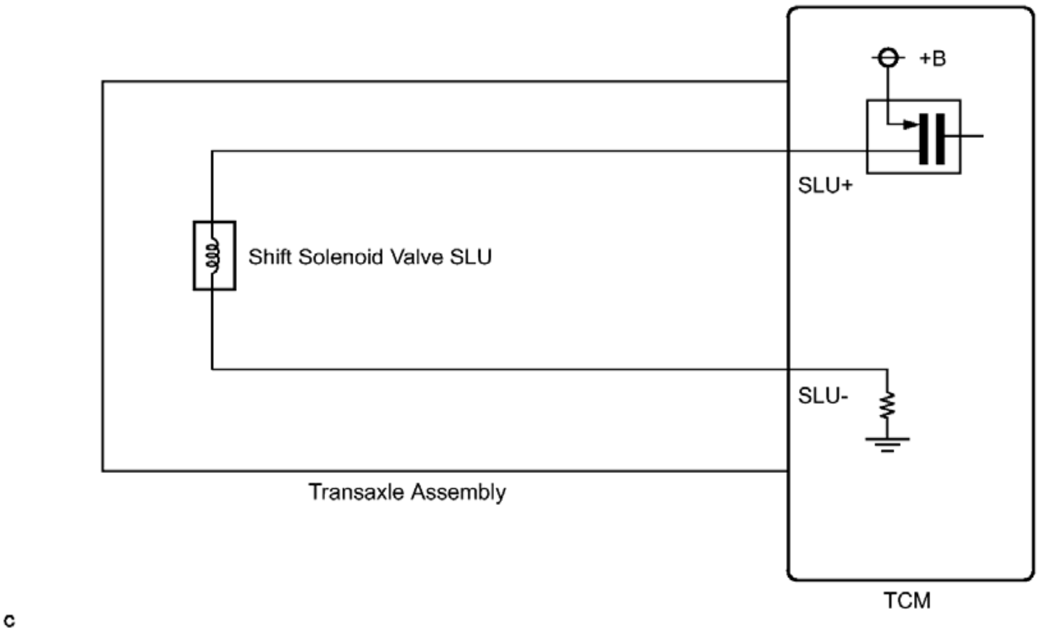
+B
SLU+
Shift Solenoid Valve SLU
SLU-
Transaxle Assembly
TCM
c

Fig. 56: Shift Solenoid Valve SLU Circuit Wiring Diagram

Courtesy of TOYOTA MOTOR SALES, U.S.A., INC.

INSPECTION PROCEDURE

NOTE: **Perform the universal trip to clear permanent DTCs. Refer to DTC CHECK / CLEAR .**

PROCEDURE

1. **INSPECT TRANSMISSION WIRE (SLU)**
   1. Remove the TCM from the transaxle.

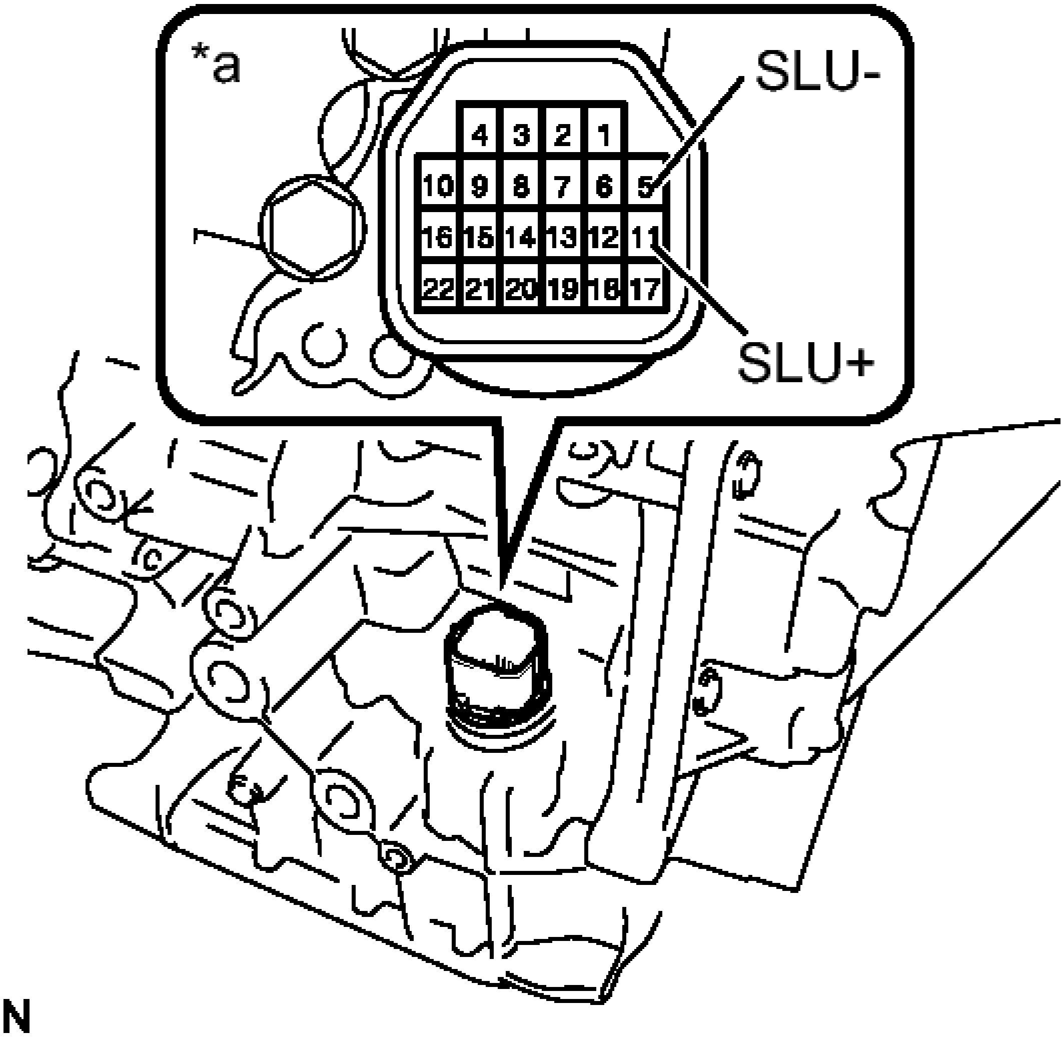
*a
SLU-
4 3 2 1
10 9 8 7 6 5
16 15 14 13 12 11
22 21 20 19 18 17
SLU+
N

Fig. 57: Measuring Resistance Of Transmission Wire (SLU)
Courtesy of TOYOTA MOTOR SALES, U.S.A., INC.

   2. Measure the resistance according to the value(s) in the table below.

Standard Resistance

Tester Connection	Condition	Specified Condition
11 (SLU+) - 5 (SLU-)	20°C (68°F)	5.0 to 5.6 ohms
11 (SLU+) - Body ground and other terminals	Always	10 kohms or higher
5 (SLU-) - Body ground and other terminals	Always	10 kohms or higher

TEXT IN ILLUSTRATION

*a	Component without harness connected (Transmission Wire)

NG --> See step 3

OK --> See step 2

2. **REPLACE TCM. Refer to COMPONENTS**
3. **INSPECT SHIFT SOLENOID VALVE SLU**
    a. Remove shift solenoid valve SLU.

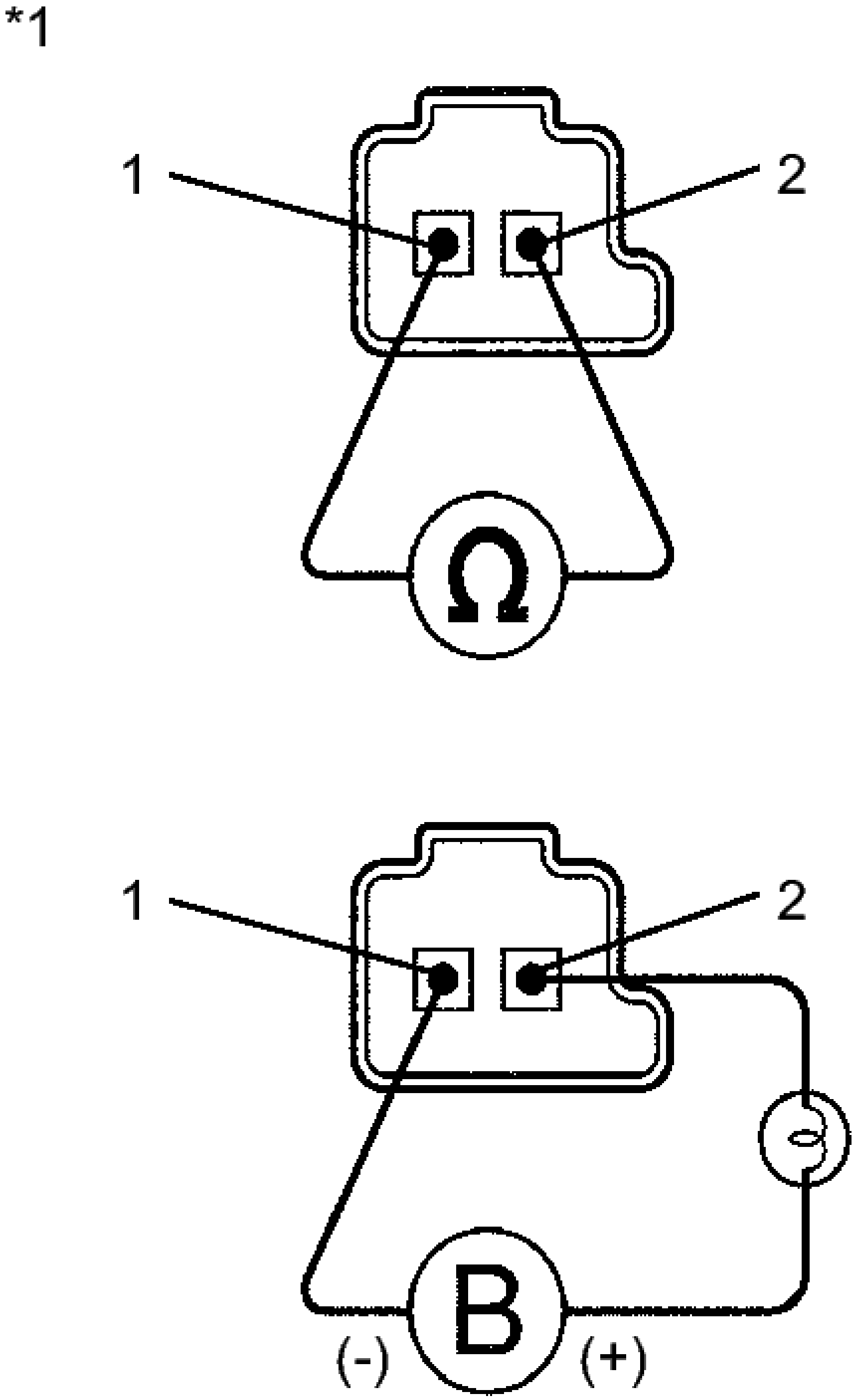

Fig. 58: Checking Shift Solenoid Valve SLU Resistance
Courtesy of TOYOTA MOTOR SALES, U.S.A., INC.

b. Measure the resistance according to the value(s) in the table below.

Standard Resistance

Tester Connection	Condition	Specified Condition
1 - 2	20°C (68° F)	5.0 to 5.6 ohms

TEXT IN ILLUSTRATION

*1	Shift Solenoid Valve SLU

c. Connect a battery positive (+) lead with a 21 W bulb to terminal 2 and a negative (-) lead to terminal 1 of the solenoid valve connector. Then check that the valve moves and makes an operating sound.

   OK

   Valve moves and makes an operating sound.

NG --> See step 5

OK --> See step 4

4. **REPLACE TRANSMISSION WIRE. Refer to COMPONENTS**
5. **REPLACE SHIFT SOLENOID VALVE SLU. Refer to COMPONENTS**

DTC P2769: SHORT IN TORQUE CONVERTER CLUTCH SOLENOID CIRCUIT (SHIFT SOLENOID VALVE SL); DTC P2770: OPEN IN TORQUE CONVERTER CLUTCH SOLENOID CIRCUIT (SHIFT SOLENOID VALVE SL)

DESCRIPTION

Shift solenoid valve SL is turned on and off by signals from the TCM to control the hydraulic pressure acting on the lock-up relay valve, which then controls operation of the lock-up clutch.

DTC No.	DTC Detection Condition	Trouble Area
P2769	TCM detects a short in the shift solenoid valve SL circuit when the shift solenoid valve SL is operated (2 trip detection logic).	• Short in shift solenoid valve SL circuit • Shift solenoid valve SL • TCM
P2770	TCM detects an open in the shift solenoid valve SL circuit when the shift solenoid valve SL is not operated (2 trip detection logic).	• Open in shift solenoid valve SL circuit • Shift solenoid valve SL • TCM

Fail-safe function:

If the TCM detects a malfunction, it turns shift solenoid valve SL off.

MONITOR DESCRIPTION

Based on the signals from the throttle position sensor, the air flow meter and the crankshaft position sensor, the TCM sends a signal to shift solenoid valve SL to regulate the hydraulic pressure and provide smoother torque converter clutch engagement. Shift solenoid valve SL responds to commands from the TCM. The valve controls the lock-up relay valve to perform the torque-converter lock-up function. If the TCM detects an open or short circuit for shift solenoid valve SL, it will illuminate the MIL.

MONITOR STRATEGY

Related DTCs	P2769: Shift solenoid valve SL/Range check (Low resistance) P2770: Shift solenoid valve SL/Range check (High resistance)
Required sensors/Components	Shift solenoid valve SL
Frequency of operation	Continuous
Duration	1 time
MIL operation	2 driving cycles
Sequence of operation	None

TYPICAL ENABLING CONDITIONS

P2769: RANGE CHECK (LOW RESISTANCE):

The monitor will run whenever the following DTCs are not present	None
Solenoid	ON
Time after solenoid OFF to ON	More than 0.008 sec.

P2770: RANGE CHECK (HIGH RESISTANCE):

The monitor will run whenever the following DTCs are not present	None
Solenoid	ON
Time after solenoid ON to OFF	More than 0.008 sec.

TYPICAL MALFUNCTION THRESHOLDS

P2769: RANGE CHECK (LOW RESISTANCE):

Intelligent power MOS diagnosis fail signals detected while the solenoid is operated	Fail at solenoid resistance: 8 ohms or less

P2770: RANGE CHECK (HIGH RESISTANCE):

Intelligent power MOS diagnosis fail signals detected while the solenoid is not operated	Fail at solenoid resistance: 100 kohms or more

COMPONENT OPERATING RANGE

Shift solenoid valve SL	Resistance: 11 to 15 ohms at 20°C (68°F)

WIRING DIAGRAM

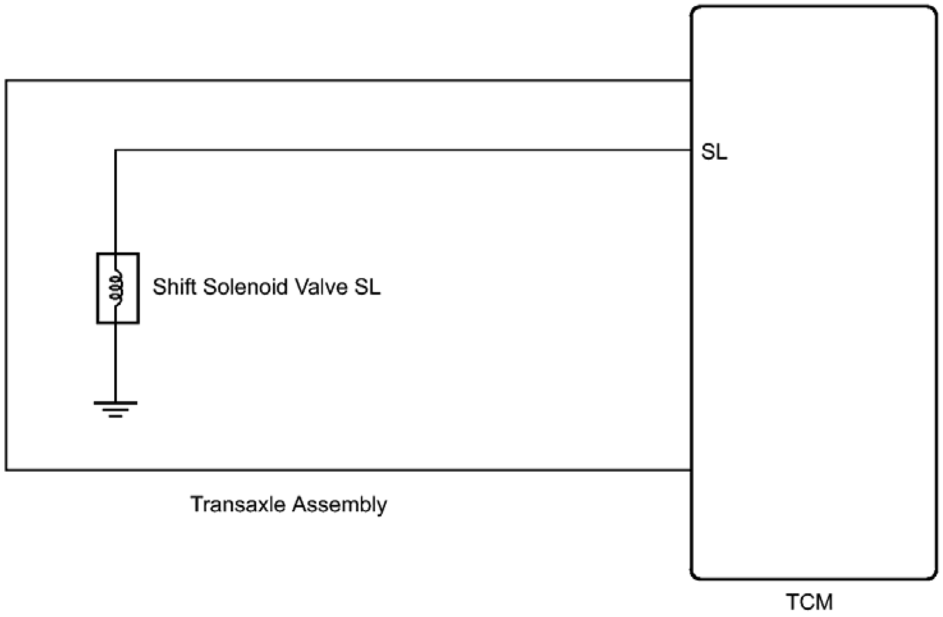

c

Fig. 59: Shift Solenoid Valve SL Circuit Wiring Diagram
Courtesy of TOYOTA MOTOR SALES, U.S.A., INC.

INSPECTION PROCEDURE

NOTE: **Perform the universal trip to clear permanent DTCs. Refer to DTC CHECK / CLEAR .**

PROCEDURE

1. **INSPECT TRANSMISSION WIRE (SHIFT SOLENOID VALVE SL)**
   a. Remove the TCM from the transaxle.

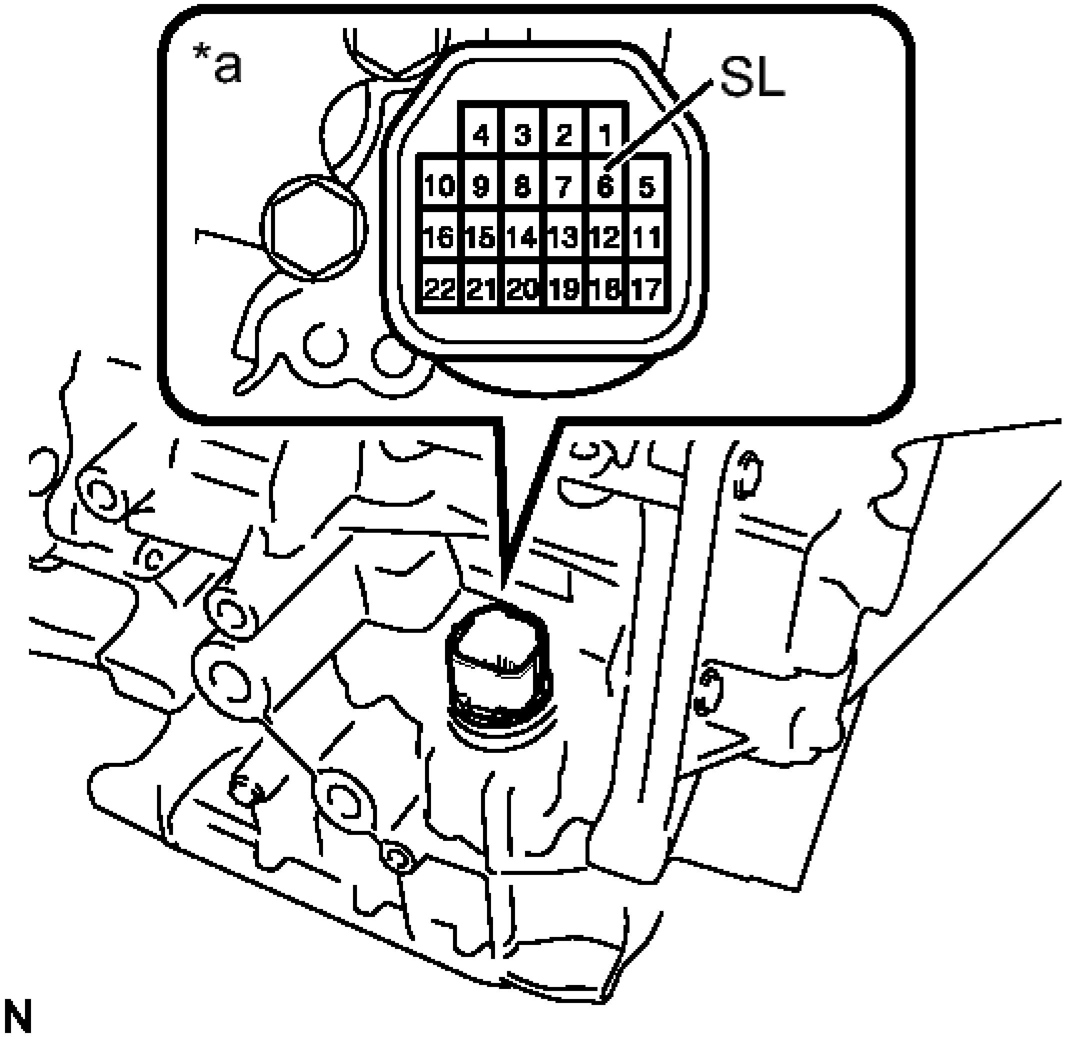
*a
SL
4
3
2
1
10
9
8
7
6
5
16
15
14
13
12
11
22
21
20
19
18
17
N

Fig. 60: Measuring Resistance Of Transmission Wire (Shift Solenoid Valve SL)
Courtesy of TOYOTA MOTOR SALES, U.S.A., INC.

b. Measure the resistance according to the value(s) in the table below.

Standard Resistance

Tester Connection	Condition	Specified Condition
6 (SL) - Body ground	20°C (68°F)	11 to 15 ohms

TEXT IN ILLUSTRATION

	Component

*a	without harness connected (Transmission Wire)

NG --> See step 3

OK --> See step 2

2. **REPLACE TCM. Refer to COMPONENTS**
3. **INSPECT SHIFT SOLENOID VALVE SL**
   a. Remove shift solenoid valve SL.

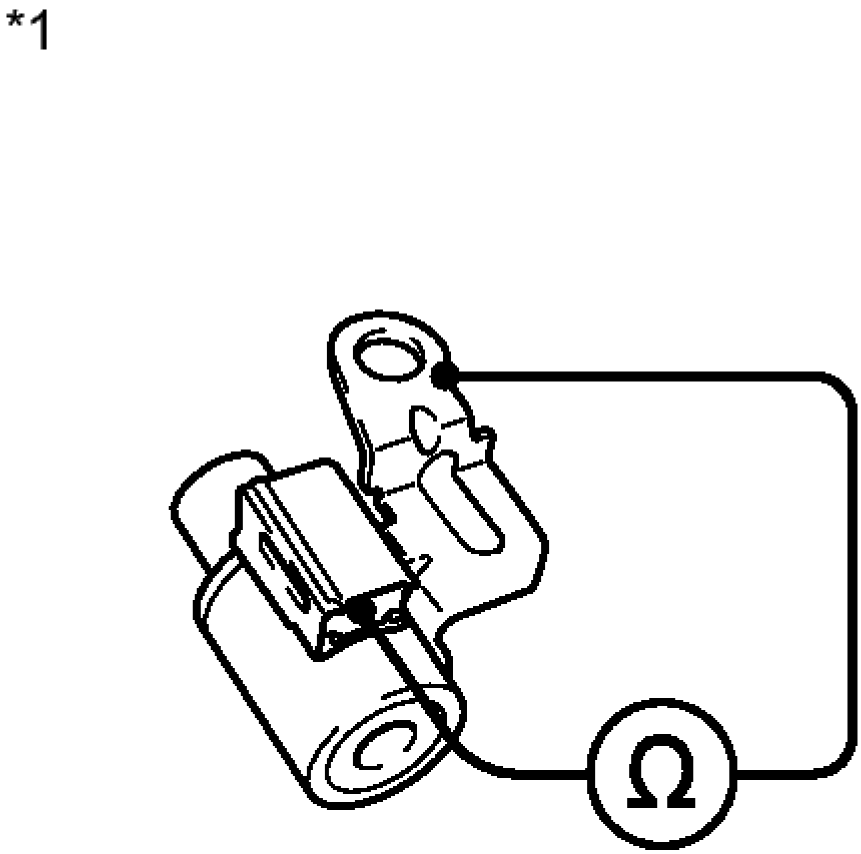

Fig. 61: Checking Shift Solenoid Valve SL Resistance

Courtesy of TOYOTA MOTOR SALES, U.S.A., INC.

b. Measure the resistance according to the value(s) in the table below.

Standard Resistance

Tester Connection	Condition	Specified Condition
Solenoid Connector (SL) - Solenoid Body (SL)	20°C (68° F)	11 to 15 ohms

TEXT IN ILLUSTRATION

*1	Shift Solenoid Valve SL

NG --> See step 5

OK --> See step 4

4. **REPLACE TRANSMISSION WIRE. Refer to COMPONENTS**
5. **REPLACE SHIFT SOLENOID VALVE SL. Refer to COMPONENTS**

DTC P2808: PRESSURE CONTROL SOLENOID "G" PERFORMANCE (SHIFT SOLENOID VALVE SL4)

DESCRIPTION

The TCM uses the vehicle speed signal and signals from the transmission speed sensors (NC, NT) to detect the actual gear (1st, 2nd, 3rd, 4th, 5th or 6th gear).

Then the TCM compares the actual gear with the shift schedule in the TCM memory to detect mechanical problems of the shift solenoid valves and valve body.

DTC No.	DTC Detection Condition	Trouble Area
P2808	The engine revs freely when 3rd or 5th gear is commanded. (2-trip detection logic) When any of the following is detected. In addition, the condition that 4th gear is engaged when 4th gear is commanded occurs twice. (2-trip detection logic)	• Shift solenoid valve SL4 remains open or closed • Valve body is blocked

	- When 1st gear is commanded, 3rd gear is engaged. - When 2nd gear is commanded, 3rd gear is engaged. - When 6th gear is commanded, 5th gear is engaged.	- Automatic transaxle (clutch, brake or gear etc.)

MONITOR DESCRIPTION

The TCM commands gear shifts by turning the shift solenoid valves on and off. According to the input shaft revolution (speed), intermediate (counter) shaft revolution (speed) and output shaft revolution (speed), the TCM detects the actual gear (1st, 2nd, 3rd, 4th, 5th or 6th gear). When the gear commanded by the TCM and the actual gear are not the same, the TCM illuminates the MIL and stores the DTC.

MONITOR STRATEGY

Related DTCs	P2808: Shift solenoid valve SL4/OFF malfunction Shift solenoid valve SL4/ON malfunction
Required sensors/Components	Shift solenoid valve SL4, Speed sensor (NT), Speed sensor (NC), Crankshaft position sensor (NE)
Frequency of operation	Continuous
Duration	OFF malfunction (A): 0.5 sec. OFF malfunction (B): 0.8 sec. ON malfunction: 0.8 sec.
MIL operation	2 driving cycles
Sequence of operation	None

TYPICAL ENABLING CONDITIONS

ALL:

The monitor will run whenever this DTC is not present. (Not circuit malfunction)	P0712, P0713 (ATF temperature sensor circuit (TFT sensor)) P0115, P0117, P0118 (ECT sensor circuit) P0715, P0717 (Turbine speed sensor circuit) P0791, P0793 (Intermediate shaft speed sensor circuit) P0748 (Shift solenoid valve SL1 circuit) P0778 (Shift solenoid valve SL2 circuit) P0798 (Shift solenoid valve SL3 circuit) P2810 (Shift solenoid valve SL4 circuit) P0327, P0328, P0332, P0333 (KCS sensor circuit) P0120, P0121, P0122, P0123, P0220, P0222,

	P0223, P0604, P0606, P060A, P060B, P060D, P060E, P0657, P1607, P2102, P2103, P2111, P2112, P2118, P2119, P2135 ((ETCS) Electronic throttle control system) U0100 (CAN communication system)
Transmission range	"D"
TFT (Transmission fluid temperature)	-10°C (14°F) or more
TFT (Transmission fluid temperature) sensor circuit	No circuit malfunction
ECT (Engine coolant temperature) sensor circuit	No circuit malfunction
Turbine speed sensor circuit	No circuit malfunction
Intermediate shaft speed sensor circuit	No circuit malfunction
Shift solenoid valve SL1 circuit	No circuit malfunction
Shift solenoid valve SL2 circuit	No circuit malfunction
Shift solenoid valve SL3 circuit	No circuit malfunction
Shift solenoid valve SL4 circuit	No circuit malfunction
(KCS) Knock control sensor circuit	No circuit malfunction
(ETCS) Electronic throttle control system	Not system down
CAN communication system	Not system down
Engine	Starting

OFF MALFUNCTION (A):

TCM select gear	3rd or 5th
Throttle valve opening angle	3% or more

OFF MALFUNCTION (B):

TCM select gear	3rd
Throttle valve opening angle	4.5% or more
Vehicle speed	1.2 mph (2 km/h) or more
ECT (Engine coolant temperature)	40°C (104°F) or more
Turbine speed/Output speed (NT/NO) with 1st	3.304 to 7.724
Turbine speed/Output speed (NT/NO) with 2nd	1.901 to 2.340
Turbine speed/Output speed (NT/NO) with 3rd	1.399 to 1.649
Turbine speed/Output speed (NT/NO) with 4th	0.998 to 1.138
Turbine speed/Output speed (NT/NO) with 5th	0.705 to 0.836
Turbine speed/Output speed (NT/NO) with 6th	0.568 to 0.695

ON MALFUNCTION (A):

TCM select gear	1st
Time after transmission to 1st gear	0.1 sec. or more
Vehicle speed	1.2 mph (2 km/h) to 24.9 mph (40 km/h)
ECT (Engine coolant temperature)	40°C (104°F) or more

Turbine speed/Output speed (NT/NO) with 1st	3.304 to 7.724
Turbine speed/Output speed (NT/NO) with 2nd	1.901 to 2.340
Turbine speed/Output speed (NT/NO) with 3rd	1.399 to 1.649
Turbine speed/Output speed (NT/NO) with 4th	0.998 to 1.138
Turbine speed/Output speed (NT/NO) with 5th	0.705 to 0.836
Turbine speed/Output speed (NT/NO) with 6th	0.568 to 0.695

ON MALFUNCTION (B):

TCM select gear	2nd
Throttle valve opening angle	4.5% or more at engine speed 2, 000 RPM (condition varies with engine speed)
Vehicle speed	1.2 mph (2 km/h) or more
ECT (Engine coolant temperature)	40°C (104°F) or more
Turbine speed/Output speed (NT/NO) with 1st	3.304 to 7.724
Turbine speed/Output speed (NT/NO) with 2nd	1.901 to 2.340
Turbine speed/Output speed (NT/NO) with 3rd	1.399 to 1.649
Turbine speed/Output speed (NT/NO) with 4th	0.998 to 1.138
Turbine speed/Output speed (NT/NO) with 5th	0.705 to 0.836
Turbine speed/Output speed (NT/NO) with 6th	0.568 to 0.695

ON MALFUNCTION (C):

TCM select gear	6th
Throttle valve opening angle	4.5% or more at engine speed 2, 000 RPM (condition varies with engine speed)
Vehicle speed	1.2 mph (2 km/h) or more
ECT (Engine coolant temperature)	40°C (104°F) or more
Turbine speed/Output speed (NT/NO) with 1st	3.304 to 7.724
Turbine speed/Output speed (NT/NO) with 2nd	1.901 to 2.340
Turbine speed/Output speed (NT/NO) with 3rd	1.399 to 1.649
Turbine speed/Output speed (NT/NO) with 4th	0.998 to 1.138
Turbine speed/Output speed (NT/NO) with 5th	0.705 to 0.836
Turbine speed/Output speed (NT/NO) with 6th	0.568 to 0.695

ON MALFUNCTION (D):

TCM select gear	4th
Throttle valve opening angle	4.5% or more at engine speed 2, 000 RPM (condition vary with engine speed)
Vehicle speed	1.2 mph (2 km/h) or more
ECT (Engine coolant temperature)	40°C (104°F) or more
Turbine speed/Output speed (NT/NO) with 1st	3.304 to 7.724
Turbine speed/Output speed (NT/NO) with 2nd	1.901 to 2.340
Turbine speed/Output speed (NT/NO) with 3rd	1.399 to 1.649

Turbine speed/Output speed (NT/NO) with 4th	0.998 to 1.138
Turbine speed/Output speed (NT/NO) with 5th	0.705 to 0.836
Turbine speed/Output speed (NT/NO) with 6th	0.568 to 0.695

TYPICAL MALFUNCTION THRESHOLDS

OFF MALFUNCTION (A):

Turbine speed - Output speed x Gear ratio	1, 000 RPM or more

OFF MALFUNCTION (B):

Turbine speed / Output speed	3.304 to 7.724

ON MALFUNCTION (A) AND (B):

Turbine speed / Output speed	1.399 to 1.649

ON MALFUNCTION (C):

Turbine speed / Output speed	0.705 to 0.836

ON MALFUNCTION (D):

Turbine speed / Output speed	0.998 to 1.138

INSPECTION PROCEDURE

NOTE: **Perform the universal trip to clear permanent DTCs. Refer to DTC CHECK / CLEAR .**

PROCEDURE

1. **CHECK OTHER DTCS OUTPUT (IN ADDITION TO DTC P2808)**
   a. Connect the Techstream to the DLC3.
   b. Turn the engine switch on (IG).
   c. Turn the Techstream on.
   d. Enter the following menus: Powertrain / ECT / Trouble Codes.
   e. Read the DTCs using the Techstream.

   Result

Display (DTC output)	Proceed to
Only "P2808" is	A

output	
"P2808" and other DTCs are output	B

HINT:

If a solenoid is stuck OFF, DTCs for several solenoids including the malfunctioning solenoid will be detected.

A --> See step 3

B: Go to next step

2. **PERFORM ACTIVE TEST USING TECHSTREAM**

NOTE: This test should always be performed with at least 2 people.

a. Warm up the engine.
b. Turn the engine switch off.
c. Connect the Techstream to the DLC3.
d. Turn the engine switch on (IG).
e. Turn the Techstream on.
f. Enter the following menus: Powertrain / ECT / Active Test.
g. According to the display on the Techstream, perform the Active Test.

HINT:

Comparing the gear commanded by the Active Test with the actual gear enables confirmation of the problem. Refer to **FAIL-SAFE CHART** .

Tester Display	Test Details	Control Range	Diagnostic Note
			Can be used to check the operation of the shift solenoid valves. Upshifts and downshifts should be

Control the Shift Position	Operates the shift solenoid valves to allow gears to be selected manually.	- Press "-->" button: Upshift occurs - Press "<--" button: Downshift occurs	performed consecutively. A 10-second interval is required between gear changes. Do not downshift at high speeds. Doing so will damage the automatic transaxle. [Vehicle Condition] 50 km/h (31 mph) or less

NOTE:

- **This test can be conducted when the vehicle is stopped.**
- **When shifting gears using the Active Test function, do not operate the accelerator pedal for 2 seconds before and after shifting gears.**

HINT:

The gear commanded by the TCM is shown in the Data List / Shift Status display on the Techstream.

h. Check the vehicle speed and the gear when the engine speed is 1000 RPM.

HINT:

Because the torque converter clutch has not engaged, it may be difficult to obtain the speeds specified in 4th, 5th, and 6th gear, however a difference of speed should still be evident following each gear change.

Standard

1st	2nd	3rd	4th	5th	6th
8 to 12 km/h (5 to 7.5 mph)	15 to 19 km/h (9.3 to 11.8	21 to 25 km/h (13.0 to 15.5	31 to 35 km/h (19.3 to 21.7	44 to 48 km/h (27.3 to 29.8	52 to 56 km/h (32.3 to 34.8

	mph)	mph)	mph)	mph)	mph)

i. Compare the TCM commanded gear and the actual gear.

Result

Actuator Gear during Malfunction		**TCM Commanded Gear**						**Proceed to**
		1st	**2nd**	**3rd**	**4th**	**5th**	**6th**	
Shift solenoid SL1	Stuck ON	1st	2nd	3rd	4th	4th	4th	A
	Stuck OFF	N*1	N*1	N*1	N*1	5th	6th	
Shift solenoid SL2	Stuck ON	4th	4th	4th	4th	5th	6th	B
	Stuck OFF	1st	2nd	3rd	1st	N*1	N*1	
Shift solenoid SL3	Stuck ON	2nd	2nd	3rd	4th	5th	6th	C
	Stuck OFF	1st	1st	3rd	4th	5th	N*1	
Shift solenoid SL4	Stuck ON*3	3rd	3rd	3rd	4th	5th	5th	D
	Stuck OFF	1st	2nd	1st	4th	N*1	6th	
Shift solenoid SLT	Stuck ON	N*2	N*2	N*2	N*2	N*2	N*2	E
	Stuck OFF*3	1st	2nd	3rd	4th	5th	6th	

HINT:

- *1: Neutral
- *2: If shift solenoid SLT is stuck on, the line pressure will be low. Therefore, the amount of torque that can be transmitted by each gear is lower than the normal limit. When the engine power exceeds this lowered limit, the engine speed will increase freely.
- *3: When shift solenoid SLT is stuck off, gear shifting is normal.

A --> See step 6

B --> See step 7

C --> See step 8

E --> See step 9

D: Go to next step

3. **INSPECT SHIFT SOLENOID VALVE SL4**
    a. Remove shift solenoid valve SL4.

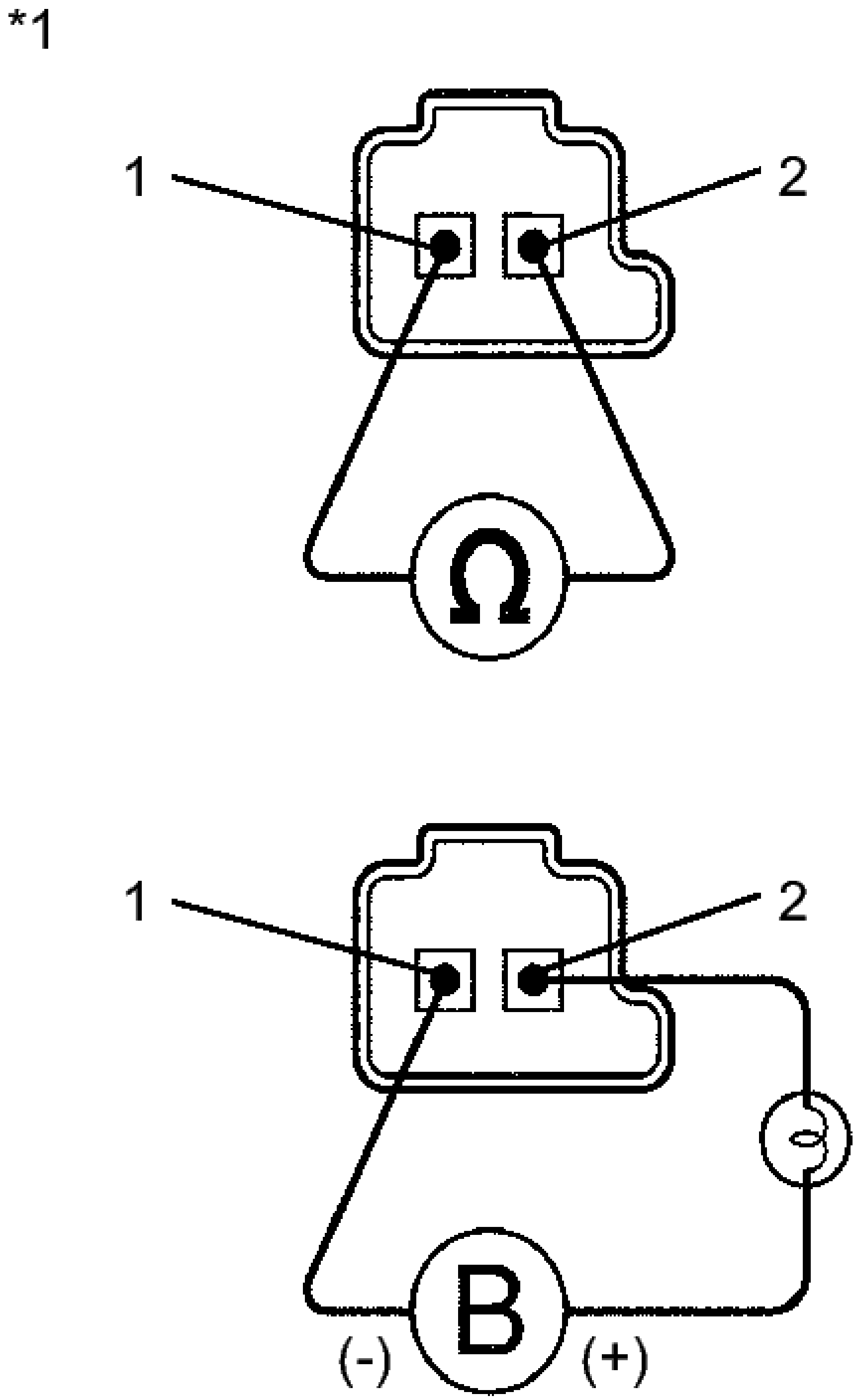

Fig. 62: Checking Shift Solenoid Valve SL4 Resistance
Courtesy of TOYOTA MOTOR SALES, U.S.A., INC.

b. Measure the resistance according to the value(s) in the table below.

Standard Resistance

Tester Connection	Condition	Specified Condition
1 - 2	20°C (68° F)	5.0 to 5.6 ohms

TEXT IN ILLUSTRATION

*1	Shift Solenoid Valve SL4

c. Connect a battery positive (+) lead with a 21 W bulb to terminal 2 and a negative (-) lead to terminal 1 of the solenoid valve connector. Then check that the valve moves and makes an operating sound.

   OK

   Valve moves and makes an operating sound.

NG --> See step 10

OK: Go to next step

4. **INSPECT TRANSMISSION VALVE BODY ASSEMBLY**
   a. Check the transmission valve body assembly. Refer to **REMOVAL** .

      OK

      There are no foreign objects on each valve and they operate smoothly.

NG --> See step 11

OK --> See step 5

5. **REPLACE AUTOMATIC TRANSAXLE ASSEMBLY. Refer to COMPONENTS**
6. **GO TO DTC CHART (RELATED SHIFT SOLENOID VALVE (SL1) PERFORMANCE DTC P0746). Refer to DTC P0746: Pressure Control Solenoid "A" Performance (Shift Solenoid Valve SL1)**
7. **GO TO DTC CHART (RELATED SHIFT SOLENOID VALVE (SL2) PERFORMANCE DTC P0776). Refer to DTC P0776: Pressure Control Solenoid "B" Performance (Shift Solenoid Valve SL2)**
8. **GO TO DTC CHART (RELATED SHIFT SOLENOID VALVE (SL3) PERFORMANCE DTC P0796). Refer to DTC P0796: Pressure Control Solenoid "C" Performance (Shift Solenoid Valve SL3)**

9. **GO TO DTC CHART (RELATED SHIFT SOLENOID VALVE (SLT) PERFORMANCE DTC P2714). Refer to DTC P2714: Pressure Control Solenoid "D" Performance (Shift Solenoid Valve SLT)**
10. **REPLACE SHIFT SOLENOID VALVE SL4. Refer to COMPONENTS**
11. **REPAIR OR REPLACE TRANSMISSION VALVE BODY ASSEMBLY. Refer to COMPONENTS**

DTC P2810: PRESSURE CONTROL SOLENOID "G" ELECTRICAL (SHIFT SOLENOID VALVE SL4)

DESCRIPTION

Changing from 1st to 6th is performed by the TCM turning shift solenoid valves SL1, SL2, SL3, SL4 and SL on and off. If an open or short circuit occurs in any of the shift solenoid valves, the TCM controls the remaining normal shift solenoid valves to allow the vehicle to be operated. Refer to **FAIL-SAFE CHART**

DTC No.	DTC Detection Condition	Trouble Area
P2810	The TCM checks for an open or short in the shift solenoid valve SL4 circuit while driving and shifting gears. (1-trip detection logic) • Output signal duty equals to 100%. (NOTE: SL4 output signal duty is less than 100% under normal condition.)	• Open or short in shift solenoid valve SL4 circuit • Shift solenoid valve SL4 • TCM

MONITOR DESCRIPTION

The TCM commands gear shifts by turning the shift solenoid valves on or off. When there is an open or short circuit in any shift solenoid valve circuit, the TCM detects the problem and illuminates the MIL and stores the DTC. And the TCM performs the fail-safe function and turns the other normal shift solenoid valves on or off (In case of an open or short circuit, the TCM stops sending current to the circuit.)

Refer to **FAIL-SAFE CHART** .

MONITOR STRATEGY

Related DTCs	P2810: Shift solenoid valve SL4/Range check
Required sensors/Components	Shift solenoid valve SL4
Frequency of operation	Continuous
Duration	1 sec.
MIL operation	Immediate
Sequence of operation	None

TYPICAL ENABLING CONDITIONS

ALL

The monitor will run whenever the following DTCs are not present	None
Engine switch	on (IG)
Starter	OFF

CONDITION (A)

Battery voltage	12 V or more

CONDITION (B)

Battery voltage	10 V or more and less than 12 V
CPU commanded duty	Less than 75%

TYPICAL MALFUNCTION THRESHOLDS

CONDITION (A) AND (B)

Output duty cycle	100% or more

COMPONENT OPERATING RANGE

Output duty cycle	More than 3% and less than 100%

WIRING DIAGRAM

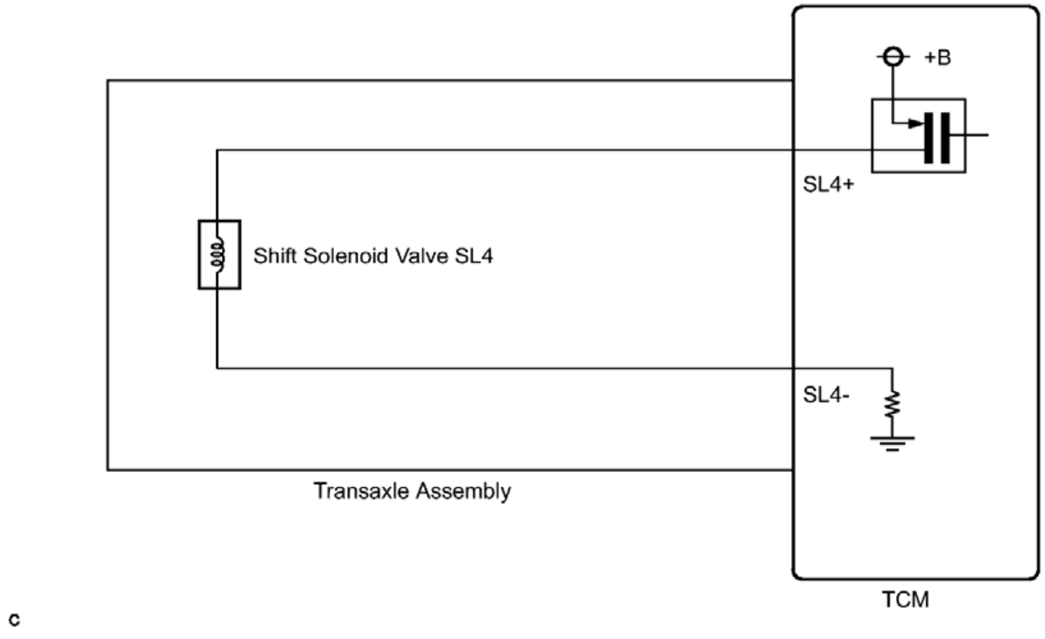
+B
SL4+
Shift Solenoid Valve SL4
SL4-
Transaxle Assembly
TCM
C

Fig. 63: Shift Solenoid Valve SL4 Circuit Wiring Diagram
Courtesy of TOYOTA MOTOR SALES, U.S.A., INC.

INSPECTION PROCEDURE

NOTE: **Perform the universal trip to clear permanent DTCs. Refer to DTC CHECK / CLEAR .**

PROCEDURE

1. **INSPECT TRANSMISSION WIRE (SL4)**
   a. Remove the TCM from the transaxle.

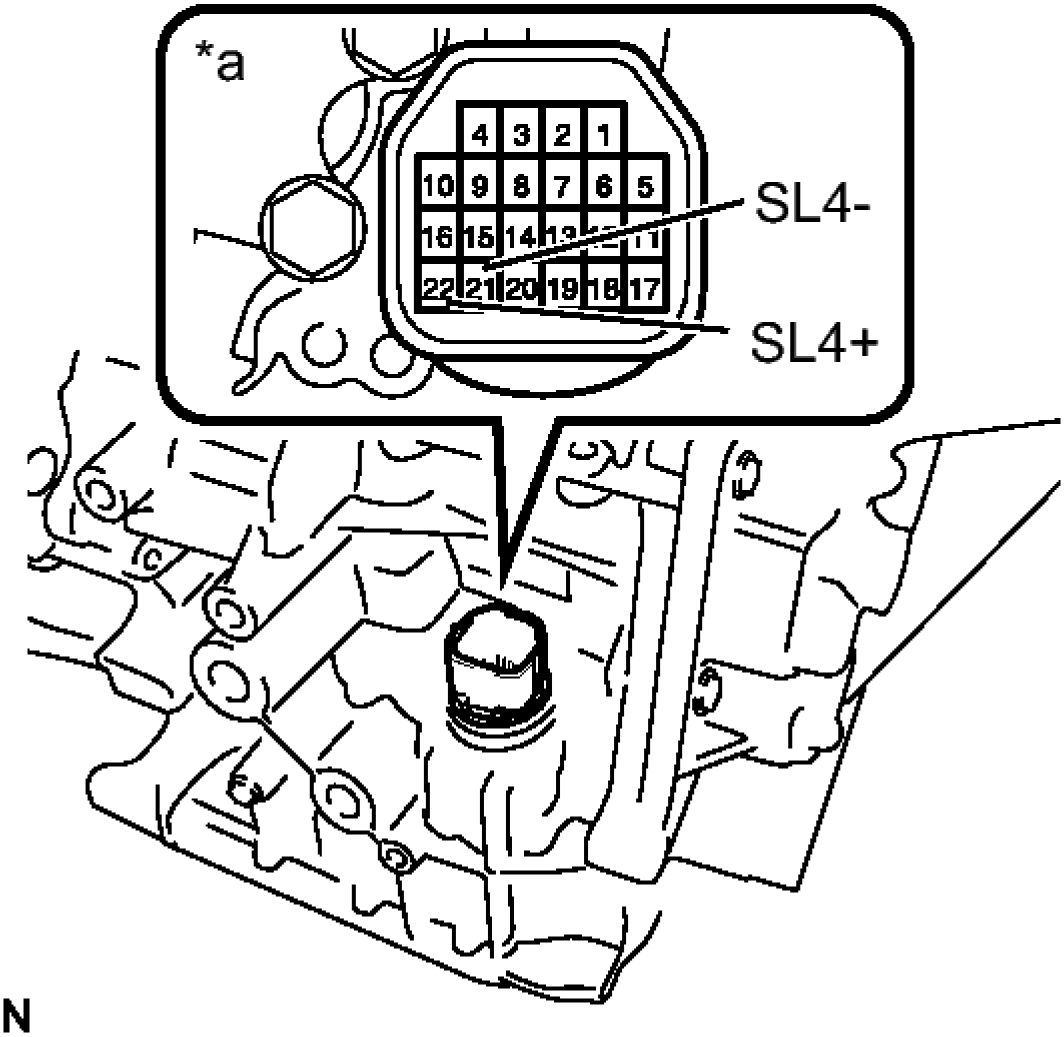
*a
4
3
2
1
10
9
8
7
6
5
16
15
14
13
12
11
22
21
20
19
18
17
SL4-
SL4+
N

Fig. 64: Measuring Resistance Of Transmission Wire (SL4)
Courtesy of TOYOTA MOTOR SALES, U.S.A., INC.

b. Measure the resistance according to the value(s) in the table below.

Standard Resistance

Tester Connection	Condition	Specified Condition
22 (SL4+) - 21 (SL4-)	20°C (68°F)	5.0 to 5.6 ohms
22 (SL4+) - Body ground and other terminals	Always	10 kohms or higher
21 (SL4-) - Body ground and other terminals	Always	10 kohms or higher

TEXT IN ILLUSTRATION

*a	Component without harness connected (Transmission Wire)

NG --> See step 3

OK --> See step 2

2. **REPLACE TCM. Refer to COMPONENTS**
3. **INSPECT SHIFT SOLENOID VALVE SL4**
    a. Remove shift solenoid valve SL4.

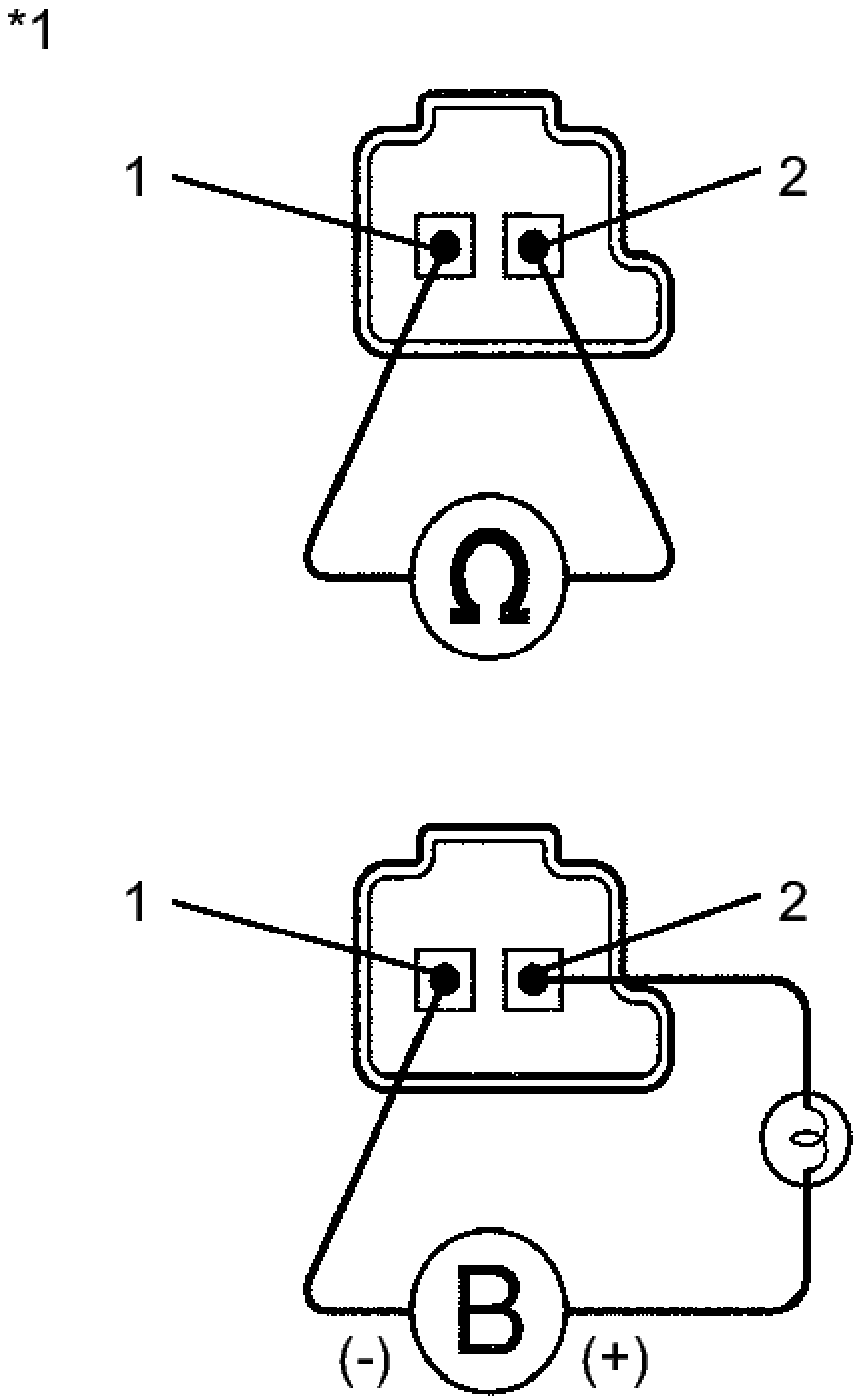

Fig. 65: Checking Shift Solenoid Valve SL4 Resistance
Courtesy of TOYOTA MOTOR SALES, U.S.A., INC.

b. Measure the resistance according to the value(s) in the table below.

Standard Resistance

Tester Connection	Condition	Specified Condition
1 - 2	20°C (68° F)	5.0 to 5.6 ohms

TEXT IN ILLUSTRATION

*1	Shift Solenoid Valve SL4

c. Connect a battery positive (+) lead with a 21 W bulb to terminal 2 and a negative (-) lead to terminal 1 of the solenoid valve connector. Then check that the valve moves and makes an operating sound.

OK

Valve moves and makes an operating sound.

NG --> See step 5

OK --> See step 4

4. **REPLACE TRANSMISSION WIRE. Refer to COMPONENTS**
5. **REPLACE SHIFT SOLENOID VALVE SL4. Refer to COMPONENTS**

DTC U0100: LOST COMMUNICATION WITH ECM / PCM "A"

DESCRIPTION

The engine control unit communicates with the TCM using the Controller Area Network (CAN).

If there is a problem in this communication, the TCM sets a DTC.

DTC No.	DTC Detection Condition	Trouble Area
U0100	Following conditions are met for 1.25 seconds (1 trip detection logic): • Engine switch on (IG) • Battery voltage is 10.5 V or more • No communication between the engine control ECU (ECM) and TCM	• Harness and connector • ECM • TCM

MONITOR STRATEGY

Related DTCs	U0100: Verify communication
Required Sensors/Components (Main)	TCM
Required Sensors/Components (Related)	-
Frequency of Operation	Continuous
Duration	1.25 seconds
MIL Operation	Immediate
Sequence of Operation	None

TYPICAL ENABLING CONDITIONS

Monitor runs whenever following DTCs not present	None
Battery Voltage	10.5 V or more
Engine switch	on (IG)
Starter	OFF

TYPICAL MALFUNCTION THRESHOLDS

Communication between TCM and ECM	No communication

WIRING DIAGRAM

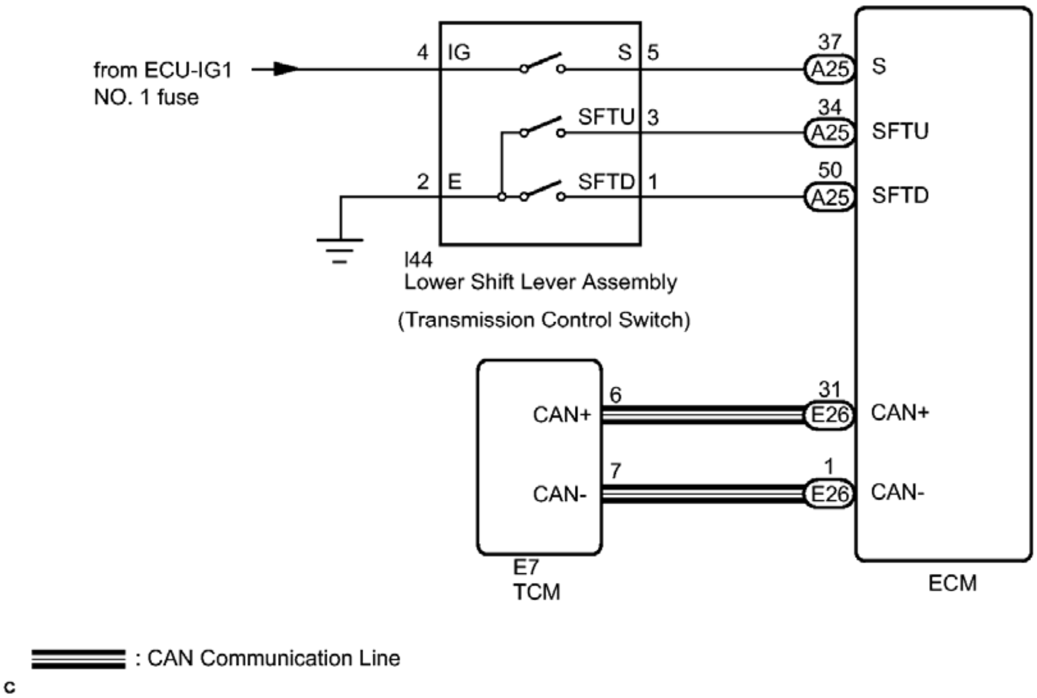
from ECU-IG1
NO. 1 fuse
4
IG
S
5
SFTU
3
2
E
SFTD
1
I44
Lower Shift Lever Assembly
(Transmission Control Switch)
37
A25
S
34
A25
SFTU
50
A25
SFTD
6
CAN+
7
CAN-
31
E26
CAN+
1
E26
CAN-
E7
TCM
ECM
: CAN Communication Line
c

Fig. 66: Transmission Control Switch Circuit Wiring Diagram
Courtesy of TOYOTA MOTOR SALES, U.S.A., INC.

INSPECTION PROCEDURE

NOTE: Perform the universal trip to clear permanent DTCs. Refer to DTC CHECK / CLEAR .

HINT:

- Refer to inspection procedure for CAN communication system.
- If the CAN communication malfunctions, the TCM cannot receive the current data from the ECM. In this case, the freeze frame data output from the TCM has not been updated, so the data will not be useful for the inspection. However, reading the Data List as the first step in troubleshooting is effective to find malfunctions.
- The malfunction area can be checked using the Bus Check function on the Techstream. Refer to **DIAGNOSIS SYSTEM** .

PROCEDURE

1. **CHECK ECU TERMINAL VOLTAGE (+B AND E1 TERMINALS)**
    a. Disconnect the TCM connector.

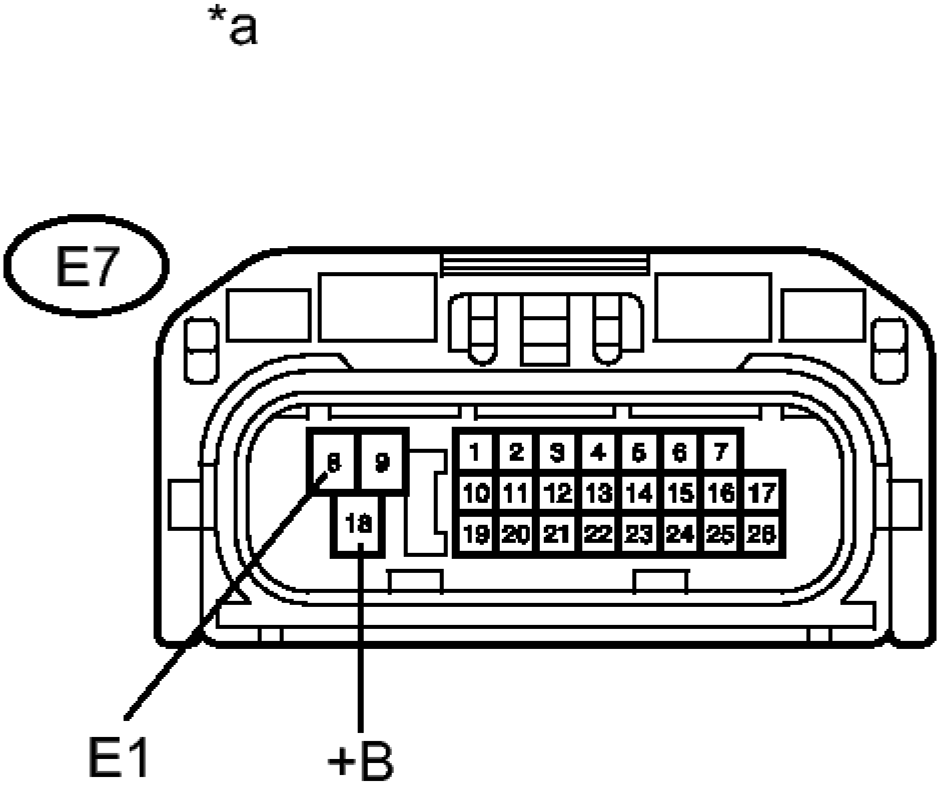
*a
E7
1
2
3
4
5
6
7
8
9
10
11
12
13
14
15
16
17
18
19
20
21
22
23
24
25
26
E1
+B

Fig. 67: Checking ECU Terminal Voltage (+B And E1 Terminals)
Courtesy of TOYOTA MOTOR SALES, U.S.A., INC.

b. Turn the engine switch on (IG).
c. Measure the voltage according to the value(s) in the table below.

Standard Voltage

Tester Connection	Switch Condition	Specified Condition
E7-18 (+B) - E7-8 (E1)	Engine switch on (IG)	9 to 14 V

d. Turn the engine switch off.

e. Measure the resistance according to the value(s) in the table below.

Standard Resistance

Tester Connection	Condition	Specified Condition
E7-8 (E1) - Body ground	Always	Below 1 ohms

TEXT IN ILLUSTRATION

*a	Front view of wire harness connector (to TCM)

NG --> REPAIR OR REPLACE HARNESS OR CONNECTOR

OK: Go to next step

2. **CHECK HARNESS AND CONNECTOR (TCM - ECM)**
   a. Disconnect the TCM connector.
   b. Disconnect the ECM connector.
   c. Measure the resistance according to the value(s) in the table below.

Standard Resistance

Tester Connection	Condition	Specified Condition
E7-6 (CAN+) - E26-31 (CAN+)	Always	Below 1 ohms
E7-7 (CAN-) - E26-1 (CAN-)	Always	Below 1 ohms
E7-6 (CAN+) or E26-31 (CAN+) - Body ground and	Always	10 kohms or higher

other terminals		
E7-7 (CAN-) or E26-1 (CAN-) - Body ground and other terminals	Always	10 kohms or higher

NG --> REPAIR OR REPLACE HARNESS OR CONNECTOR

OK: Go to next step

3. **CHECK IF DTC OUTPUT RECURS**
   a. Connect the Techstream to the DLC3.
   b. Clear the DTCs.
   c. Replace the TCM.

      HINT:

      Replace the TCM with a TCM from a normally functioning vehicle of the same model.

   d. Start the engine.
   e. Read the DTCs.

      Result

Display (DTC Output)	Proceed to
U0100	A
No DTC	B

B --> See step 5

A --> See step 4

4. **REPLACE ECM. Refer to COMPONENTS**
5. **REPLACE TCM. Refer to COMPONENTS**

CIRCUIT TESTS

Transmission Control Switch Circuit

DESCRIPTION

When the shift lever is in S and it is moved toward "-" or "+", it is possible to select different shift ranges (1st through 6th ranges).

Moving the shift lever toward "+" increases the shift range by one, and moving the shift lever toward "-" decreases the shift range by one.

WIRING DIAGRAM

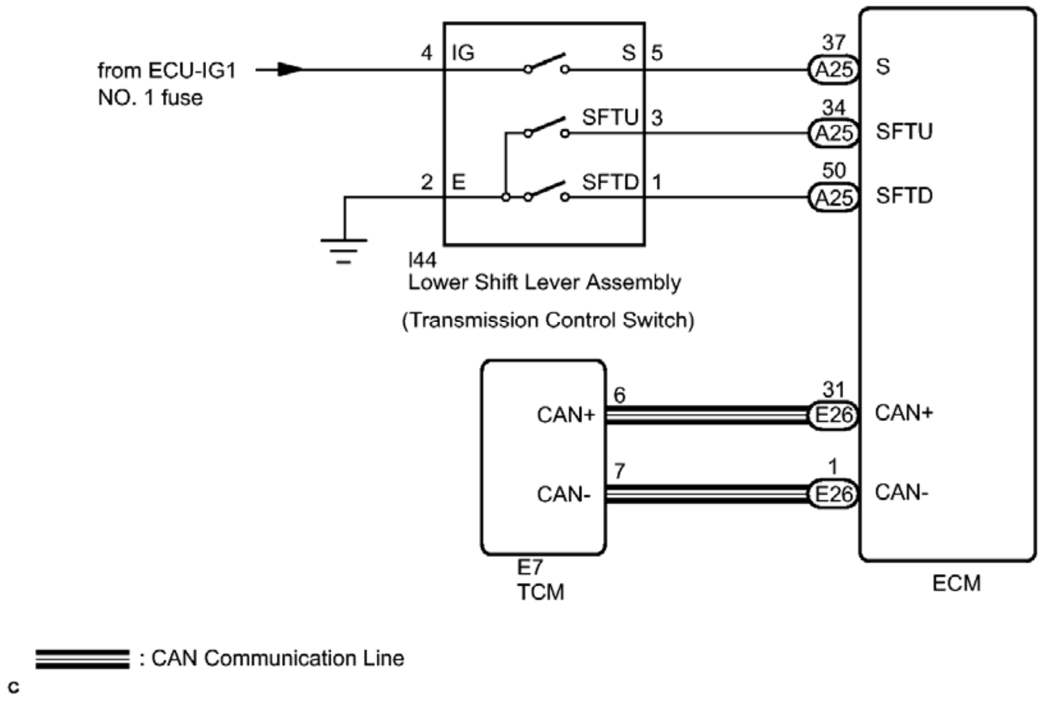
from ECU-IG1
NO. 1 fuse
4 IG
S 5
SFTU 3
2 E
SFTD 1
I44
Lower Shift Lever Assembly
(Transmission Control Switch)
37 A25 S
34 A25 SFTU
50 A25 SFTD
6 CAN+
7 CAN-
31 E26 CAN+
1 E26 CAN-
E7
TCM
ECM
: CAN Communication Line
c

Fig. 68: Transmission Control Switch Circuit Wiring Diagram
Courtesy of TOYOTA MOTOR SALES, U.S.A., INC.

INSPECTION PROCEDURE

NOTE: **Inspect the fuses for circuits related to this system before performing the following inspection procedure.**

HINT:

- Refer to inspection procedure for CAN communication system.
- If the CAN communication malfunctions, the TCM cannot receive the current data from the ECM. In this case, the freeze frame data output from the TCM has not been updated, so the data will not be useful for the inspection. However, reading the Data List as the first step in troubleshooting is effective to find

malfunctions.

- The malfunction area can be checked using the Bus Check function on the Techstream. Refer to **HOW TO PROCEED WITH TROUBLESHOOTING** .

PROCEDURE

1. **CHECK HARNESS AND CONNECTOR (BATTERY - TRANSMISSION CONTROL SWITCH)**
   a. Disconnect the transmission control switch connector.

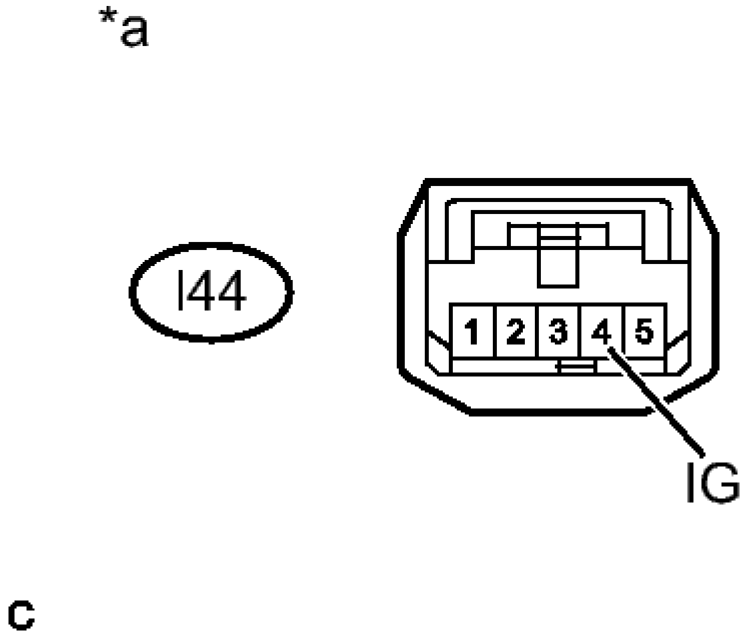

Fig. 69: Checking Harness And Connector (Battery - Transmission Control Switch)
Courtesy of TOYOTA MOTOR SALES, U.S.A., INC.

   b. Measure the voltage according to the value(s) in the table below.

Standard Voltage

Tester Condition	Condition	Specified Condition
l44-4 (IG) - Body ground	Engine switch on (IG)	11 to 14 V
	Engine switch off	Below 1 V

TEXT IN ILLUSTRATION

	Front view

*a	of wire harness connector (to Transmission Control Switch)

NG --> CHECK POWER SOURCE CIRCUIT

OK: Go to next step

2. **CHECK HARNESS AND CONNECTOR (TRANSMISSION CONTROL SWITCH - BODY GROUND)**
   a. Measure the resistance according to the value(s) in the table below.

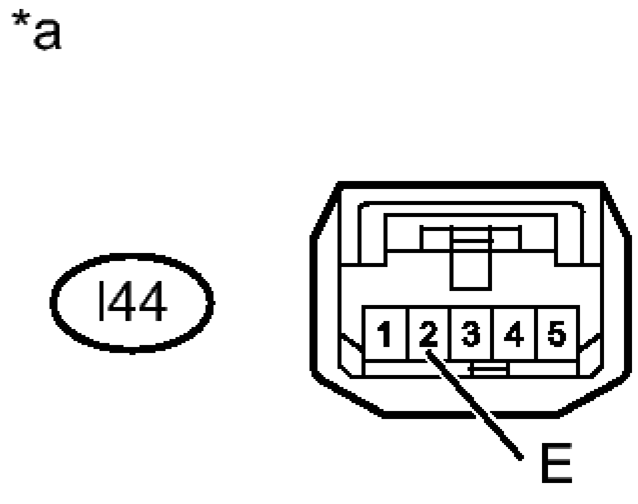

Fig. 70: Checking Harness And Connector (Transmission Control Switch - Body Ground)
Courtesy of TOYOTA MOTOR SALES, U.S.A., INC.

Standard Resistance

Tester Connection	Condition	Specified Condition
l44-2 (E) - Body ground	Always	Below 1 ohms

TEXT IN ILLUSTRATION

*a	Front view of wire harness connector (to Transmission Control Switch)

NG --> REPAIR OR REPLACE HARNESS OR CONNECTOR

OK: Go to next step

3. **INSPECT LOWER SHIFT LEVER ASSEMBLY (TRANSMISSION CONTROL SWITCH)**
   a. Measure the resistance between each terminal of the transmission control switch when the shift lever is moved to each position.

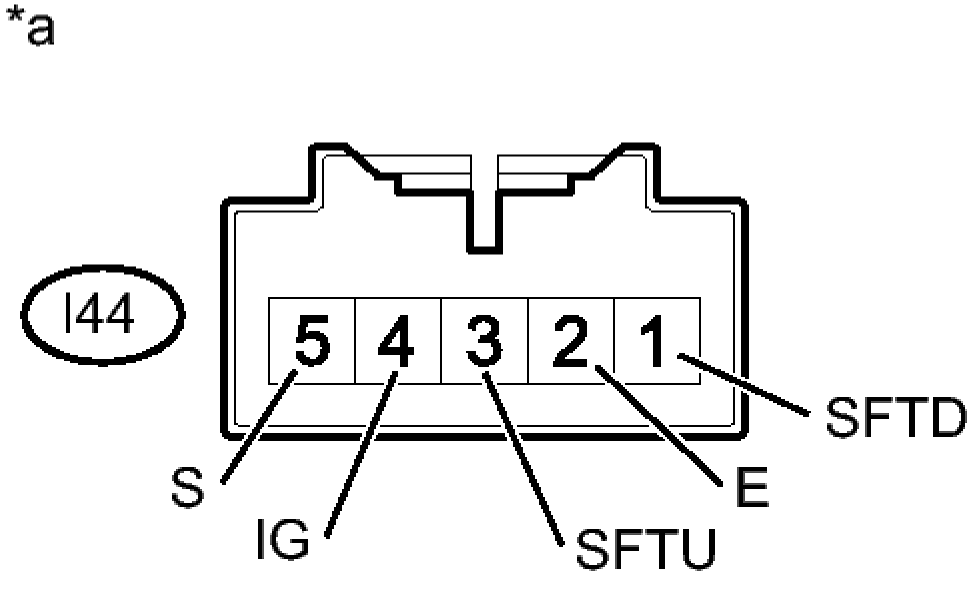

Fig. 71: Measuring Resistance In Lower Shift Lever Assembly (Transmission Control Switch)
Courtesy of TOYOTA MOTOR SALES, U.S.A., INC.

Standard Resistance

Tester Connection	Condition	Specified Condition
	Shift lever	Below 1

l44-4 (IG) - l44-5 (S)	in S, "+" or "-"	ohms
	Shift lever not in S, "+" or "-"	10 kohms or higher
l44-3 (SFTU) - l44-2 (E)	Shift lever held in "+" (Up-shift)	Below 1 ohms
	Shift lever not held in "+"	10 kohms or higher
l44-1 (SFTD) - l44-2 (E)	Shift lever held in "-" (Down-shift)	Below 1 ohms
	Shift lever not held in "-"	10 kohms or higher

TEXT IN ILLUSTRATION

*a	Component without harness connected (Transmission Control Switch)

NG --> See step 6

OK: Go to next step

4. **CHECK HARNESS AND CONNECTOR (TRANSMISSION CONTROL SWITCH - ECM)**
    a. Connect the transmission control switch connector.
    b. Disconnect the ECM connector.

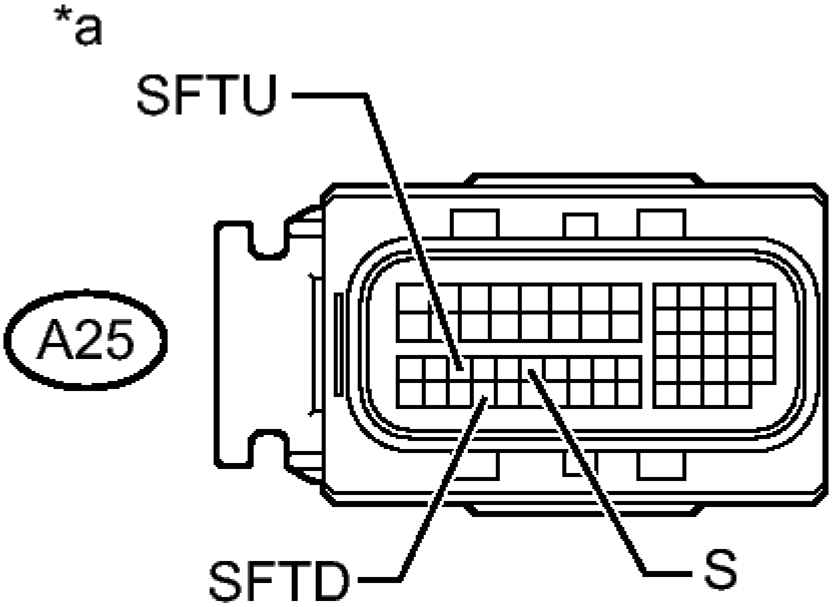

Fig. 72: Checking Harness And Connector (Transmission Control Switch - ECM)
Courtesy of TOYOTA MOTOR SALES, U.S.A., INC.

c. Turn the engine switch on (IG).
d. Measure the voltage according to the value(s) in the table below.

Standard Voltage

Tester Connection	Condition	Specified Condition
A25-37 (S) - Body ground	- Engine switch on (IG) - Shift lever in S, "+" or "-"	11 to 14 V
A25-37 (S) - Body ground	- Engine switch on (IG) - Shift lever not in	Below 1 V

	S, "+" or "-"	

e. Turn the engine switch off.

f. Measure the resistance according to the value(s) in the table below.

Standard Resistance

Tester Connection	Condition	Specified Condition
A25-34 (SFTU) - Body ground	Shift lever held in "+" (Up-shift)	Below 1 ohms
	Shift lever not held in "+"	10 kohms or higher
A25-50 (SFTD) - Body ground	Shift lever held in "-" (Down-shift)	Below 1 ohms
	Shift lever not held in "-"	10 kohms or higher

TEXT IN ILLUSTRATION

*a	Front view of wire harness connector (to ECM)

NG --> REPAIR OR REPLACE HARNESS OR CONNECTOR

OK --> See step 5

5. **PROCEED TO NEXT SUSPECTED AREA SHOWN IN PROBLEM SYMPTOMS TABLE. Refer to PROBLEM SYMPTOMS TABLE**
6. **REPLACE LOWER SHIFT LEVER ASSEMBLY (TRANSMISSION CONTROL SWITCH). Refer to COMPONENTS**

Shift Paddle Switch Circuit

DESCRIPTION

Moving the shift lever to S enables gear selection. The driver can select the gear optionally by shifting the paddle to "+" or "-".

WIRING DIAGRAM

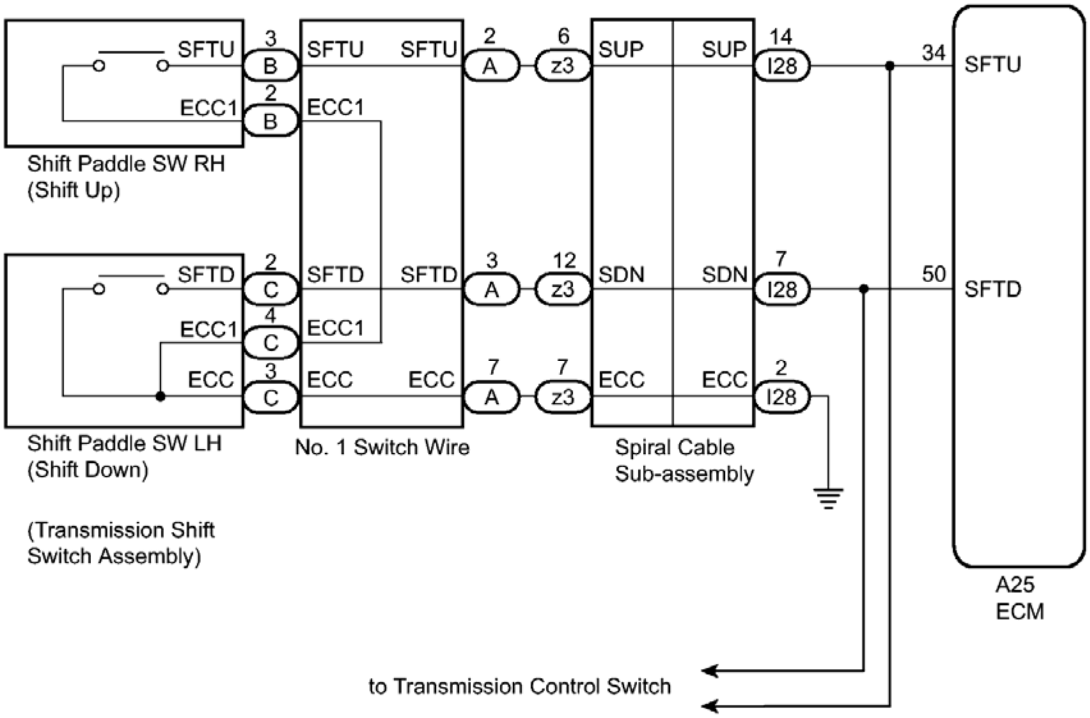
SFTU
3
B
ECC1
2
B
Shift Paddle SW RH
(Shift Up)
SFTD
2
C
ECC1
4
C
ECC
3
C
Shift Paddle SW LH
(Shift Down)
(Transmission Shift
Switch Assembly)
SFTU
SFTU
ECC1
SFTD
SFTD
ECC1
ECC
ECC
No. 1 Switch Wire
2
A
6
z3
3
A
12
z3
7
A
7
z3
SUP
SUP
SDN
SDN
ECC
ECC
Spiral Cable
Sub-assembly
14
I28
7
I28
2
I28
34
SFTU
50
SFTD
A25
ECM
to Transmission Control Switch

Fig. 73: Shift Paddle Switch Circuit Wiring Diagram
Courtesy of TOYOTA MOTOR SALES, U.S.A., INC.

INSPECTION PROCEDURE

PROCEDURE

1. **CHECK HARNESS AND CONNECTOR (SHIFT PADDLE SWITCH CIRCUIT)**
    a. Disconnect the ECM connector.

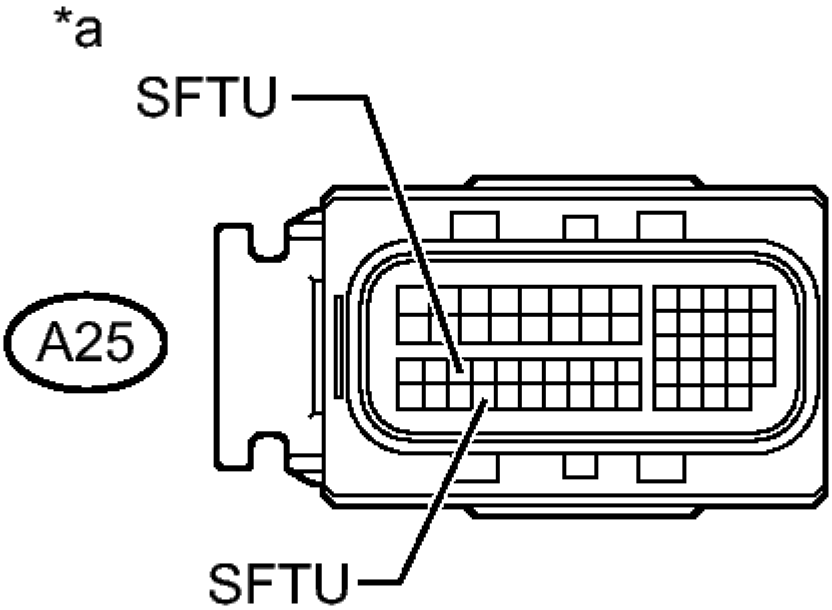

Fig. 74: Checking Harness And Connector (Shift Paddle Switch Circuit)
Courtesy of TOYOTA MOTOR SALES, U.S.A., INC.

b. Measure the resistance according to the value(s) in the table below.

Standard Resistance

Tester Connection	**Switch Condition**	**Specified Condition**
A25- 50 (SFTD) - Body ground	Pull "-" continuously (Down-shift)	Below 1 ohms
	Release	10 kohms or higher
A25-34 (SFTU) - Body ground	Pull "+" continuously (Up-shift)	Below 1 ohms
	Release	10 kohms or higher

TEXT IN ILLUSTRATION

*a	Front view of wire harness

	connector (to ECM)

NG --> See step 3

OK --> See step 2

2. **GO TO TRANSMISSION CONTROL SWITCH CIRCUIT. Refer to Transmission Control Switch Circuit**
3. **CHECK HARNESS AND CONNECTOR (SPIRAL CABLE - BODY GROUND)**
   a. Disconnect the negative (-) terminal cable from the battery.
   b. Wait for at least 90 seconds.
   c. Remove the steering wheel assembly.
   d. Remove the steering column cover.
   e. Disconnect the spiral cable connector.

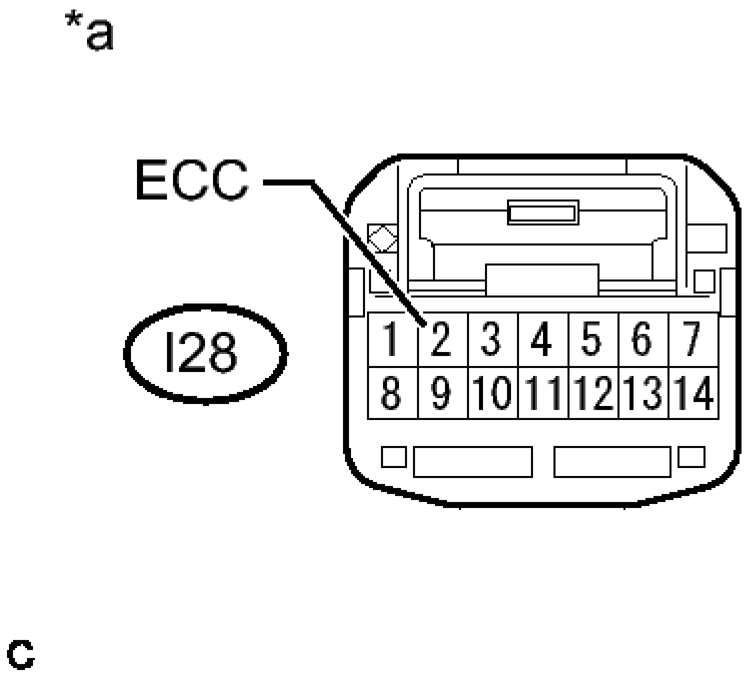

Fig. 75: Checking Harness And Connector (Spiral Cable - Body Ground)
Courtesy of TOYOTA MOTOR SALES, U.S.A., INC.

   f. Measure the resistance according to the value(s) in the table below.

Standard Resistance

Tester Connection	Condition	Specified Condition

I28-2 (ECC) - Body ground	Always	Below 1 ohms

TEXT IN ILLUSTRATION

*a	Front view of wire harness connector (to Spiral Cable Sub-assembly)

NG --> REPAIR OR REPLACE HARNESS OR CONNECTOR

OK: Go to next step

4. **CHECK HARNESS AND CONNECTOR (SPIRAL CABLE - ECM)**
   a. Disconnect the ECM connector.
   b. Measure the resistance according to the value(s) in the table below.

Standard Resistance

Tester Connection	Switch Condition	Specified Condition
A25-50 (SFTD) - I28-7 (SDN)	Always	Below 1 ohms
A25-50 (SFTD) or I28-7 (SDN) - Body ground	Always	10 kohms or higher
A25-34 (SFTU) - I28-14 (SUP)	Always	Below 1 ohms
A25-34 (SFTU) or I28-14 (SUP) -	Always	10 kohms or higher

Body ground		

NG --> REPAIR OR REPLACE HARNESS OR CONNECTOR

OK: Go to next step

5. **CHECK HARNESS AND CONNECTOR (SPIRAL CABLE - SHIFT PADDLE SWITCH)**
    a. Remove the horn button assembly.

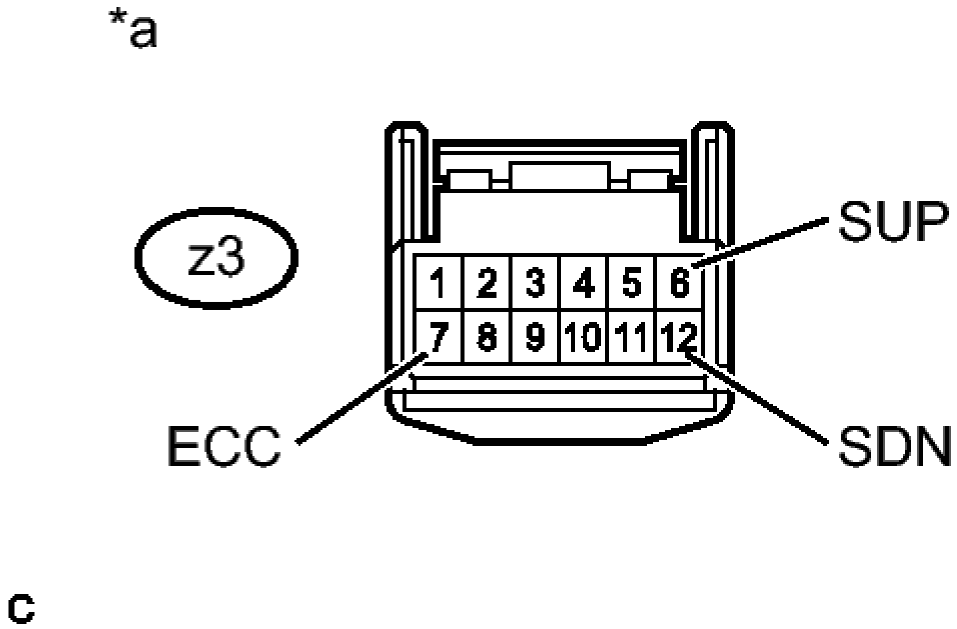

Fig. 76: Checking Harness And Connector (Spiral Cable - Shift Paddle Switch)
Courtesy of TOYOTA MOTOR SALES, U.S.A., INC.

   b. Disconnect the steering pad switch connector from the spiral cable sub-assembly.
   c. Measure the resistance according to the value(s) in the table below when the shift paddle switch is moved to each position.

Standard Resistance

Tester Connection	Switch Condition	Specified Condition
z3-6 (SUP) - z3-7 (ECC)	Pull "+" continuously (Up-shift)	Below 1 ohms
	Release	10 kohms or higher

z3-12 (SDN) - z3-7 (ECC)	Pull "-" continuously (Down-shift)	Below 1 ohms
	Release	10 kohms or higher

TEXT IN ILLUSTRATION

*a	Front view of wire harness connector (to Spiral Cable Sub-assembly)

NG --> See step 8

OK: Go to next step

6. **INSPECT SPIRAL CABLE SUB-ASSEMBLY**
    a. Disconnect the steering pad switch connector from the spiral cable sub-assembly.

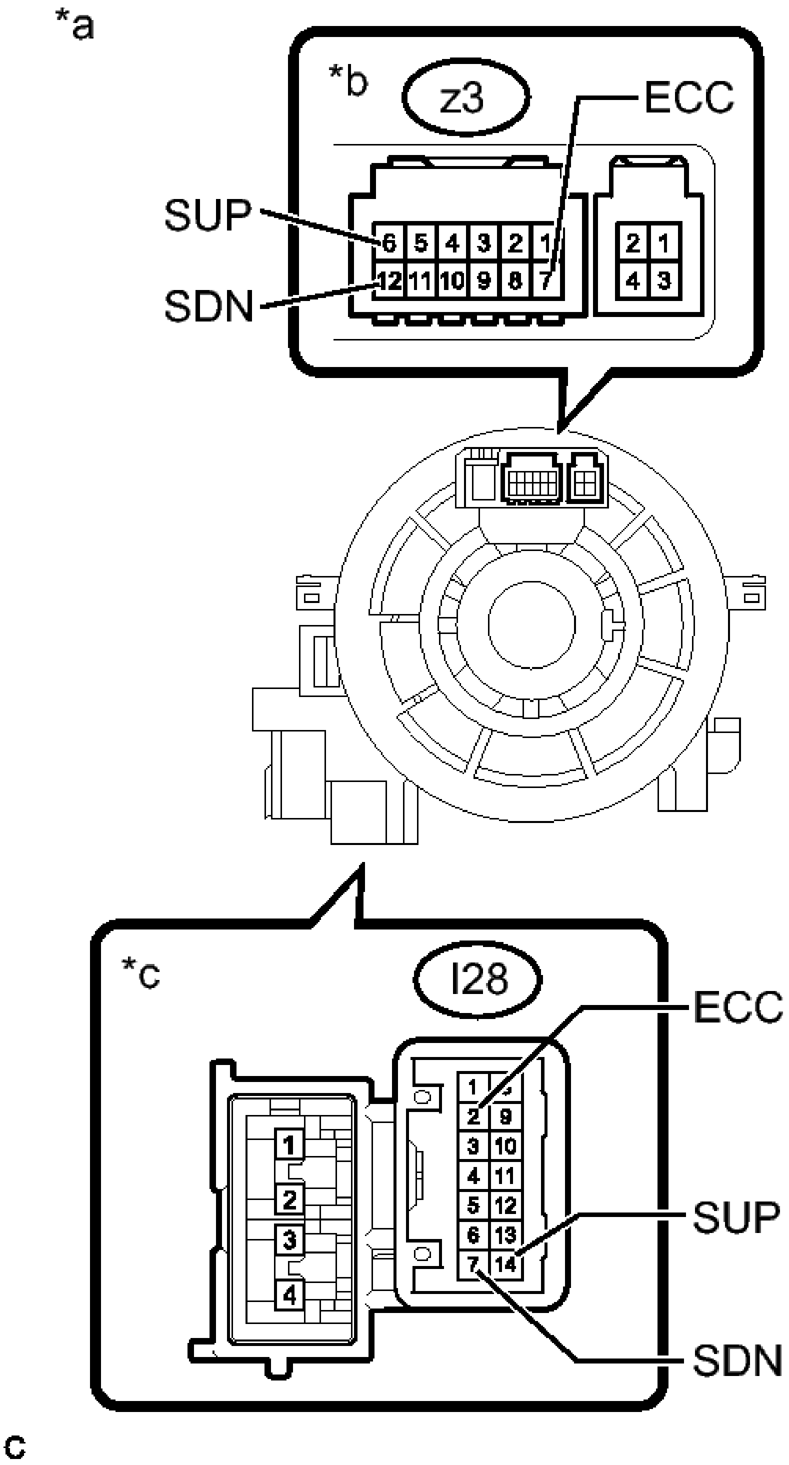
*a
*b
z3
ECC
SUP
SDN
6 5 4 3 2 1
12 11 10 9 8 7
2 1
4 3
*c
I28
ECC
SUP
SDN
1 2 3 4
1 8
2 9
3 10
4 11
5 12
6 13
7 14
c

Fig. 77: Measuring Resistance Of Spiral Cable Sub-Assembly
Courtesy of TOYOTA MOTOR SALES, U.S.A., INC.

b. Measure the resistance according to the value(s) in the table below.

Standard Resistance

Tester Connection	Condition	Specified Condition
z3-7 (ECC) - I28-2 (ECC)	Always	Below 3 ohms
z3-6 (SUP) - I28-14 (SUP)	Always	Below 3 ohms
z3-12 (SDN) - I28-7 (SDN)	Always	Below 3 ohms
z3-7 (ECC) or I28-2 (ECC) - All other terminals	Always	10 kohms or higher
z3-6 (SUP) or I28-14 (SUP) - All other terminals	Always	10 kohms or higher
z3-12 (SDN) or I28-7 (SDN) - All other terminals	Always	10 kohms or higher

TEXT IN ILLUSTRATION

*a	Component without harness connected (Spiral Cable Sub-assembly)
*b	Steering Pad Switch Side
*c	Vehicle Side

NG --> See step 10

OK --> See step 7

7. **CHECK FOR INTERMITTENT PROBLEMS. Refer to ELECTRONIC CIRCUIT INSPECTION PROCEDURE**
8. **INSPECT TRANSMISSION SHIFT SWITCH ASSEMBLY (SHIFT PADDLE SWITCH)**
    a. Disconnect the connector from the transmission shift switch LH and RH.

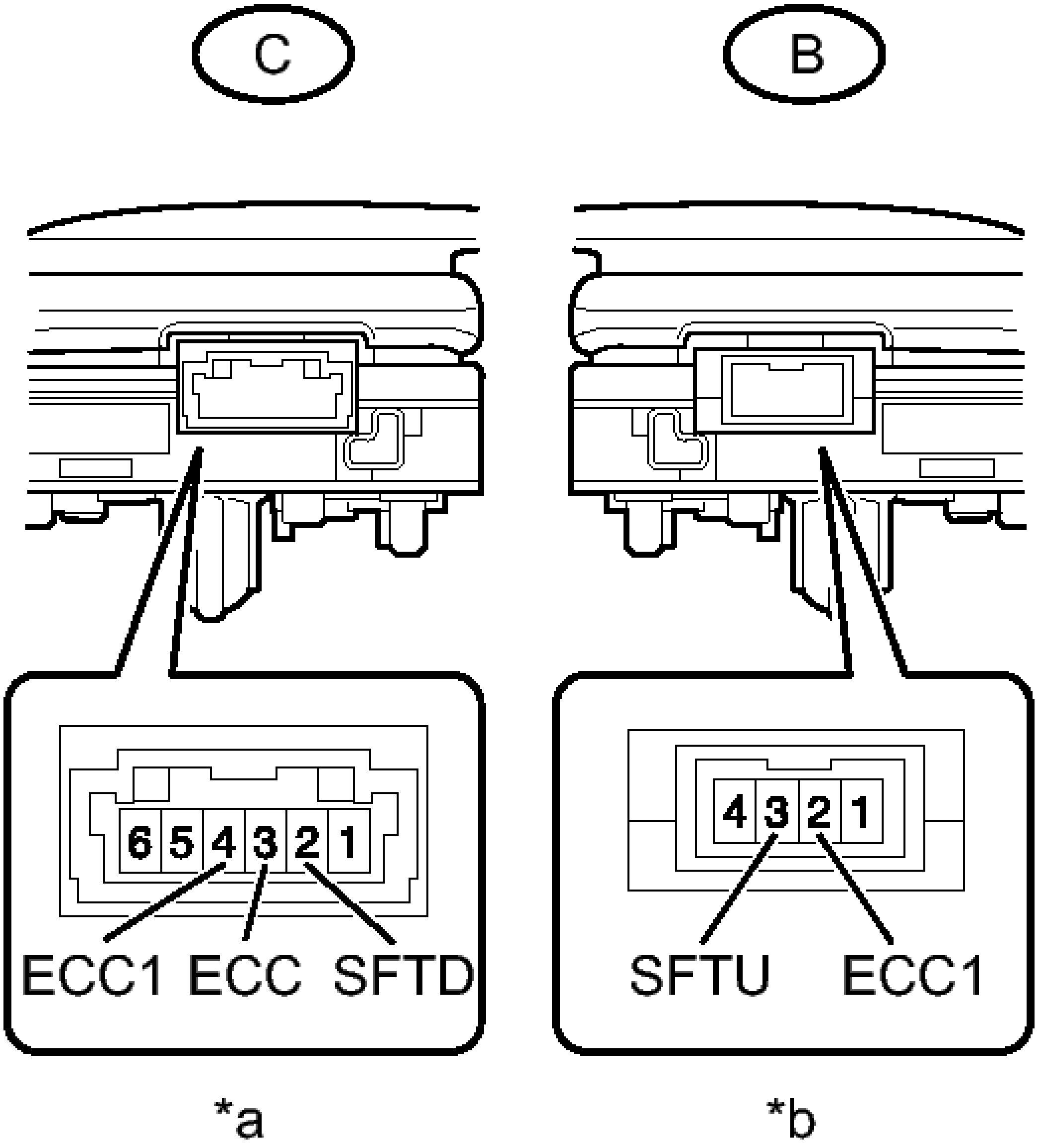
C
B
6 5 4 3 2 1
ECC1 ECC SFTD
4 3 2 1
SFTU ECC1
*a
*b

T

Fig. 78: Measuring Resistance Of Transmission Shift Switch Assembly (Shift Paddle Switch)
Courtesy of TOYOTA MOTOR SALES, U.S.A., INC.

b. Measure the resistance according to the value(s) in the table below.

Standard Resistance

TRANSMISSION SHIFT SWITCH LH:

Tester Connection	Switch Condition	Specified Condition
C-3 (ECC) - C-2 (SFTD)	Pull "-" continuously (Down-shift)	Below 1 ohms
	Release	10 kohms or higher
C-4 (ECC1) - C-2 (SFTD)	Pull "-" continuously (Down-shift)	Below 1 ohms
	Release	10 kohms or higher

TRANSMISSION SHIFT SWITCH RH:

Tester Connection	Switch Condition	Specified Condition
B-3 (SFTU) - B-2 (ECC1)	Pull "+" continuously (Up-shift)	Below 1 ohms
	Release	10 kohms or higher

TEXT IN ILLUSTRATION

*a	Component without harness connected (Shift paddle switch LH)
*b	Component without harness connected (Shift paddle switch RH)

NG --> See step 11

OK: Go to next step

9. **INSPECT NO. 1 SWITCH WIRE**

   a. Connect the transmission shift switch LH and RH connector.
   b. Disconnect the No. 1 switch wire from steering pad switch connector.

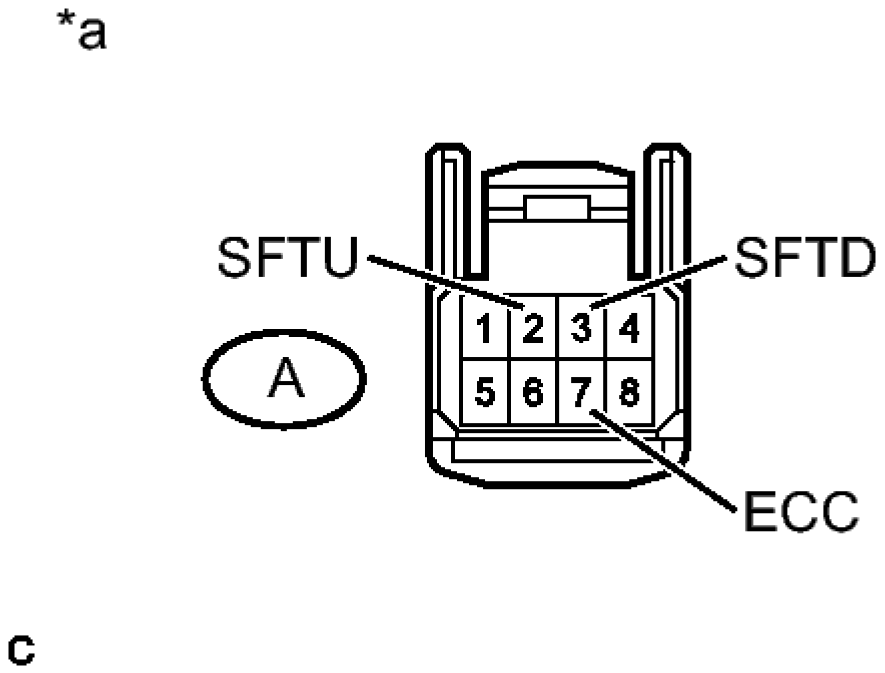

Fig. 79: Checking No. 1 Switch Wire Resistance
Courtesy of TOYOTA MOTOR SALES, U.S.A., INC.

   c. Measure the resistance according to the value(s) in the table below.

Standard Resistance

Tester Connection	Switch Condition	Specified Condition
A-3 (SFTD) - A-7 (ECC)	Pull "-" continuously (Down-shift)	Below 1 ohms
	Release	10 kohms or higher
A-2 (SFTU) - A-7 (ECC)	Pull "+" continuously (Down-shift)	Below 1 ohms
	Release	10 kohms or higher

TEXT IN ILLUSTRATION

*a	Front view of wire harness connector (to Steering Pad Switch Connector)

NG --> See step 12

OK --> REPAIR OR REPLACE HARNESS OR CONNECTOR (NO. 1 SWITCH WIRE - SPIRAL CABLE SUB-ASSEMBLY)

10. **REPLACE SPIRAL CABLE SUB-ASSEMBLY. Refer to COMPONENTS**
11. **REPLACE TRANSMISSION SHIFT SWITCH ASSEMBLY (SHIFT PADDLE SWITCH). Refer to COMPONENTS**
12. **REPLACE NO. 1 SWITCH WIRE. Refer to COMPONENTS**

ECU Power Source Circuit

DESCRIPTION

When the engine switch is turned to ON, voltage from the ECM's MREL terminal is applied to the EFI MAIN relay. This causes the contacts of the EFI MAIN relay to close, which supplies power to terminal +B of the TCM.

WIRING DIAGRAM

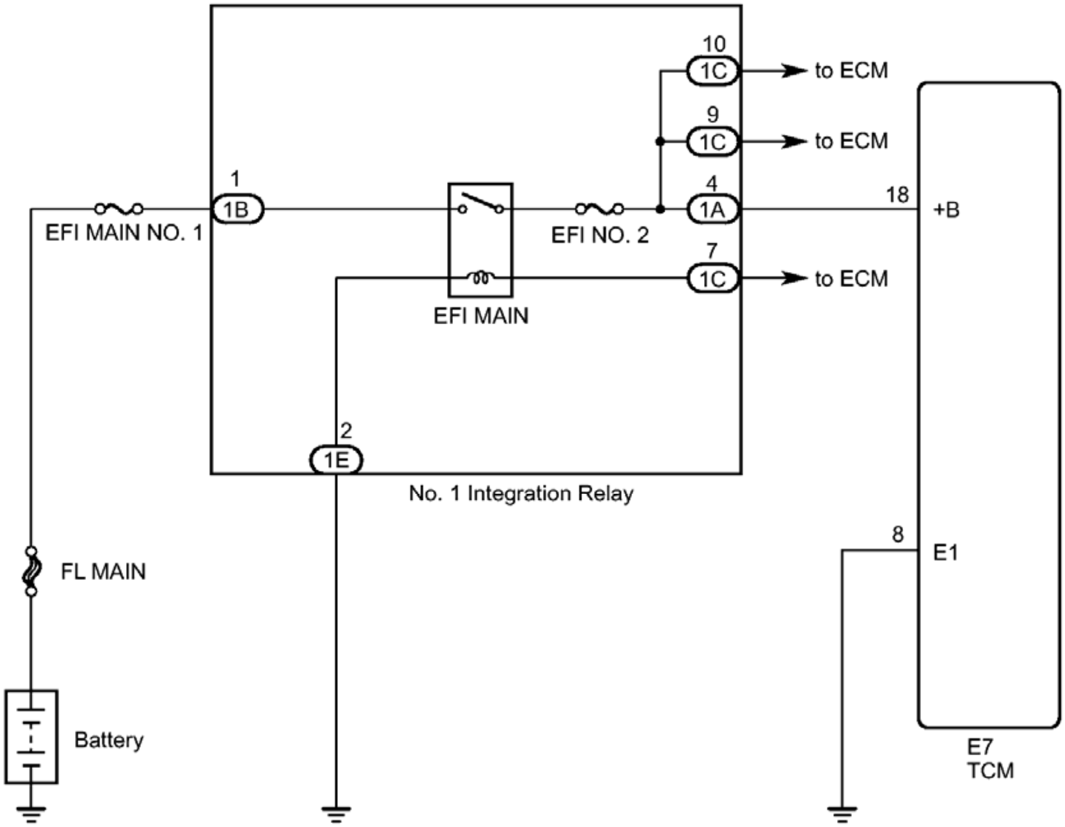
10
1C
to ECM
9
1C
to ECM
1
1B
EFI MAIN NO. 1
EFI NO. 2
4
1A
18
+B
7
1C
to ECM
EFI MAIN
2
1E
No. 1 Integration Relay
8
E1
FL MAIN
Battery
E7
TCM

Fig. 80: ECU Power Source Circuit Wiring Diagram
Courtesy of TOYOTA MOTOR SALES, U.S.A., INC.

INSPECTION PROCEDURE

NOTE: **Inspect the fuses for circuits related to this system before performing the following inspection procedure.**

PROCEDURE

1. **CHECK HARNESS AND CONNECTOR (TCM - BODY GROUND)**
   a. Disconnect the TCM connector.

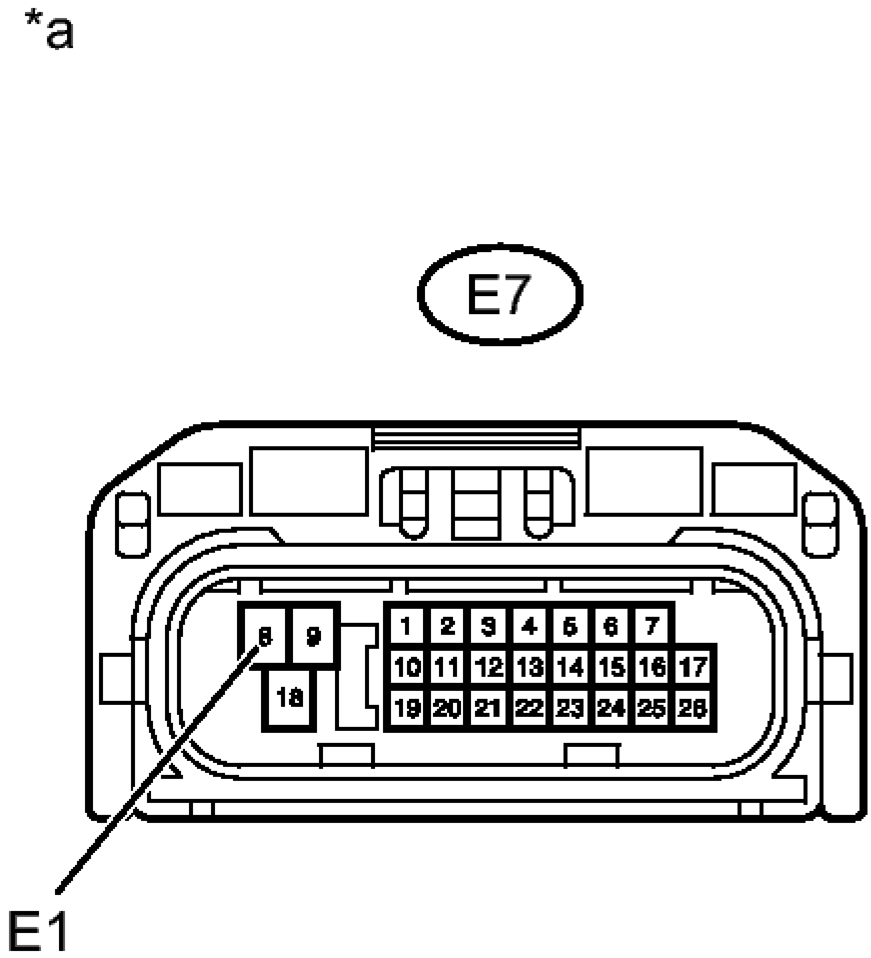
*a
E7
8
9
18
1
2
3
4
5
6
7
10
11
12
13
14
15
16
17
19
20
21
22
23
24
25
26
E1

Fig. 81: Checking Harness And Connector (TCM - Body Ground)
Courtesy of TOYOTA MOTOR SALES, U.S.A., INC.

b. Measure the resistance according to the value(s) in the table below.

Standard Resistance

Tester Connection	Condition	Specified Condition
E7-8 (E1) - Body ground	Always	Below 1 ohms

TEXT IN ILLUSTRATION

	Front

*a	view of wire harness connector (to TCM)

NG --> REPAIR OR REPLACE HARNESS OR CONNECTOR

OK: Go to next step

2. **INSPECT ECU TERMINAL VOLTAGE (+B TERMINAL)**
    a. Disconnect the TCM connector.

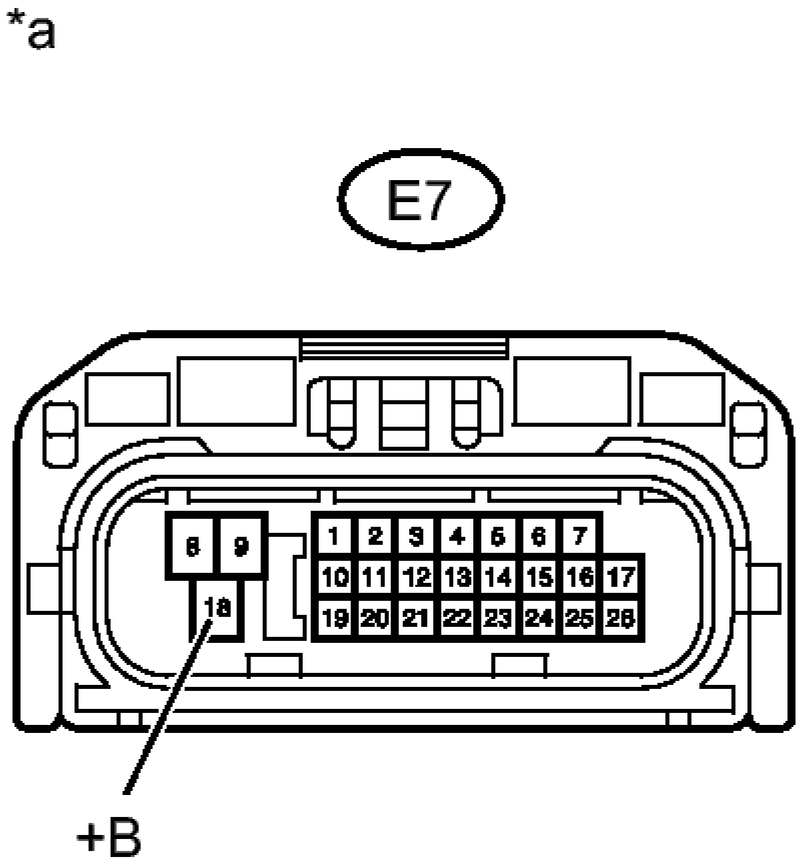
*a
E7
8
9
18
1
2
3
4
5
6
7
10
11
12
13
14
15
16
17
19
20
21
22
23
24
25
26
+B

Fig. 82: Checking ECU Terminal Voltage (+B Terminal)
Courtesy of TOYOTA MOTOR SALES, U.S.A., INC.

b. Turn the engine switch on (IG).
c. Measure the voltage according to the value(s) in the table below.

Standard Voltage

Tester Connection	Switch Condition	Specified Condition
E7-18 (+B) - Body ground	Engine switch on (IG)	11 to 14 V

TEXT IN ILLUSTRATION

*a	Front view of wire harness connector (to TCM)

NG --> See step 3

OK --> See step 4

3. **CHECK HARNESS AND CONNECTOR (TCM - INTEGRATION RELAY)**
   a. Remove the integration relay from the engine room relay block and junction block assembly.
   b. Disconnect the integration relay connector.
   c. Disconnect the TCM connector.
   d. Measure the resistance according to the value(s) in the table below.

Standard Resistance (Check for Open)

Tester Connection	Condition	Specified Condition
E7-18 (+B) - 1A-4 (+B)	Always	Below 1 ohms

Standard Resistance (Check for Short)

Tester Connection	Condition	Specified Condition
E7-18 (+B) or 1A-4 (+B) - Body	Always	10 kohms or higher

ground		

NG --> REPAIR OR REPLACE HARNESS OR CONNECTOR

OK --> See step 5

4. **PROCEED TO NEXT SUSPECTED AREA SHOWN IN PROBLEM SYMPTOMS TABLE. Refer to PROBLEM SYMPTOMS TABLE**
5. **GO TO ECM POWER SOURCE CIRCUIT (ENGINE CONTROL SYSTEM / SFI SYSTEM). Refer to ECM Power Source Circuit**

2012-2017 TRANSMISSION

Automatic Transmission (U660E) (Service Information) - Camry

AUTOMATIC TRANSAXLE FLUID

REPLACEMENT

REPLACEMENT

1. **REPLACE AUTOMATIC TRANSAXLE FLUID**
    a. Lift the vehicle. [*1]

    NOTE: Set the vehicle on a lift so that the vehicle is kept level when it is lifted up (make sure that the tilt angle from the front to rear of the vehicle is within +/- 1°).

    b. Remove the front wheel opening extension pad LH, engine under cover LH and front fender apron seal LH.
    c. Remove the refill plug and gasket from the automatic transaxle. [*2]

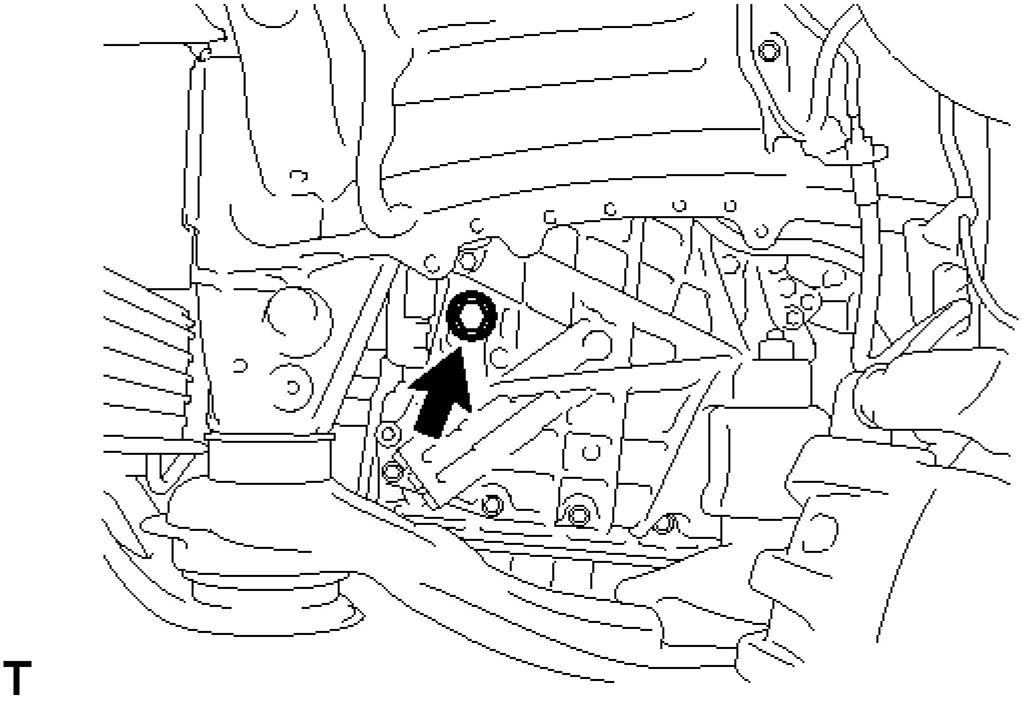

Fig. 1: Identifying Refill Plug
Courtesy of TOYOTA MOTOR SALES, U.S.A., INC.

    d. Using a 6 mm hexagon socket wrench, remove the overflow plug and gasket from the automatic transaxle. [*3]

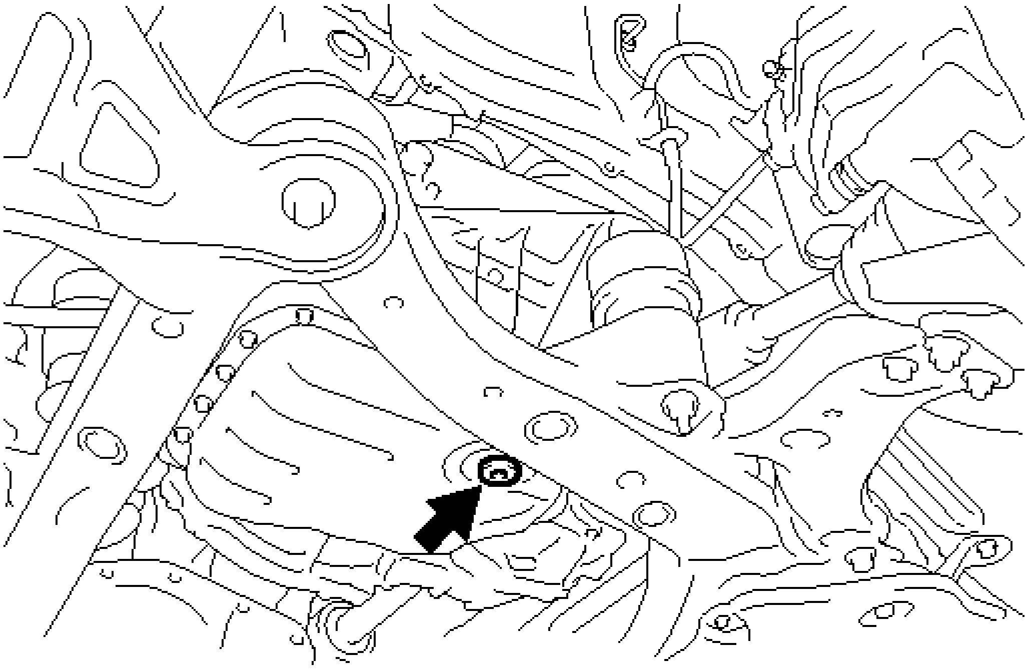

Fig. 2: Identifying Overflow Plug
Courtesy of TOYOTA MOTOR SALES, U.S.A., INC.

e. Using a 6 mm hexagon socket wrench, remove the No. 1 transmission oil filler tube from the oil pan and drain the automatic transaxle fluid. [*4]

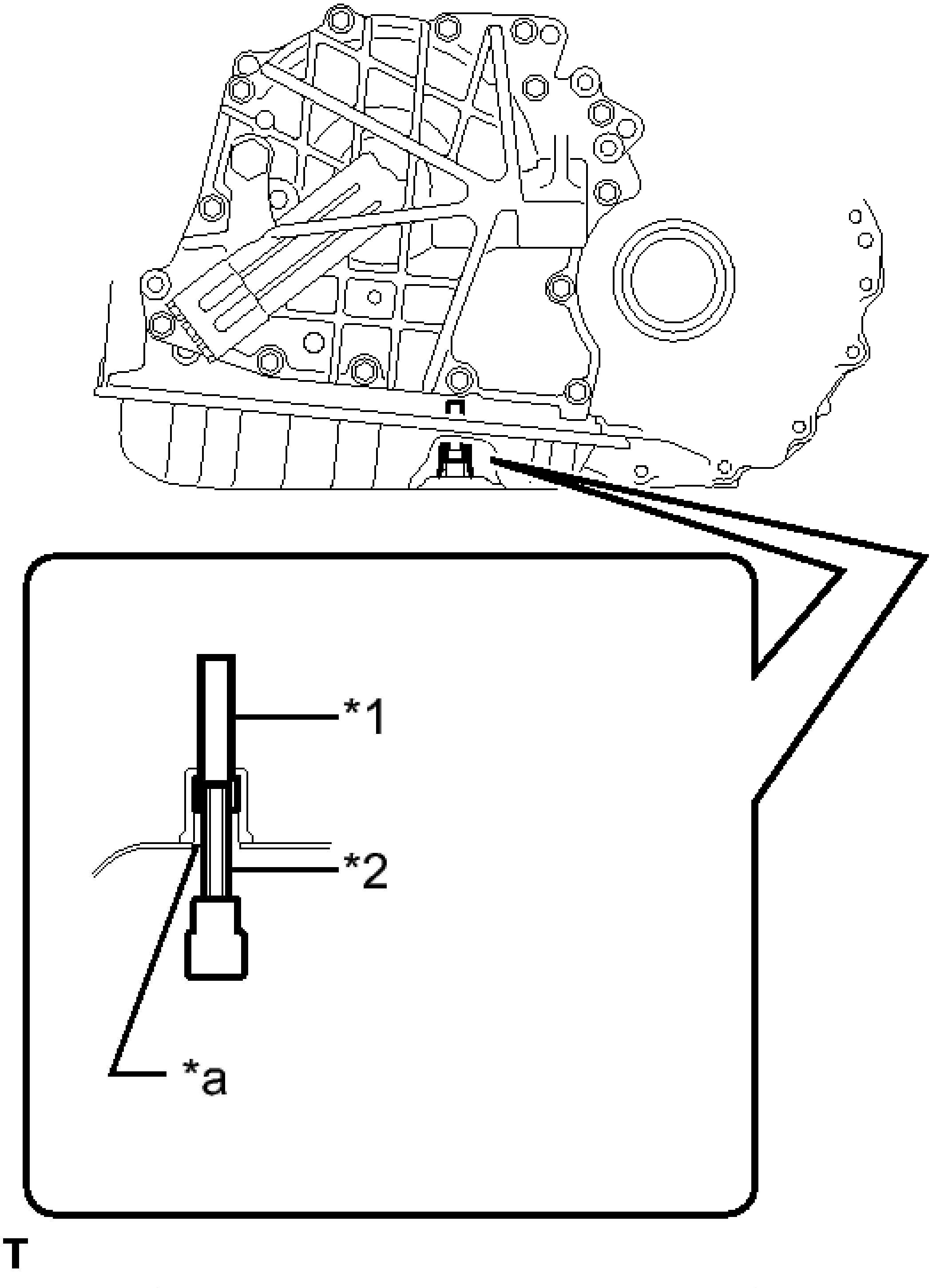

Fig. 3: Identifying No. Transmission Oil Filler Tube And Overflow Plug Hole
Courtesy of TOYOTA MOTOR SALES, U.S.A., INC.

TEXT IN ILLUSTRATION

	No. 1

*1	Transmission Oil Filler Tube
*2	Hexagon Socket Wrench
*a	Overflow Plug Hole

f. Measure the amount of fluid that you drained. [*5]

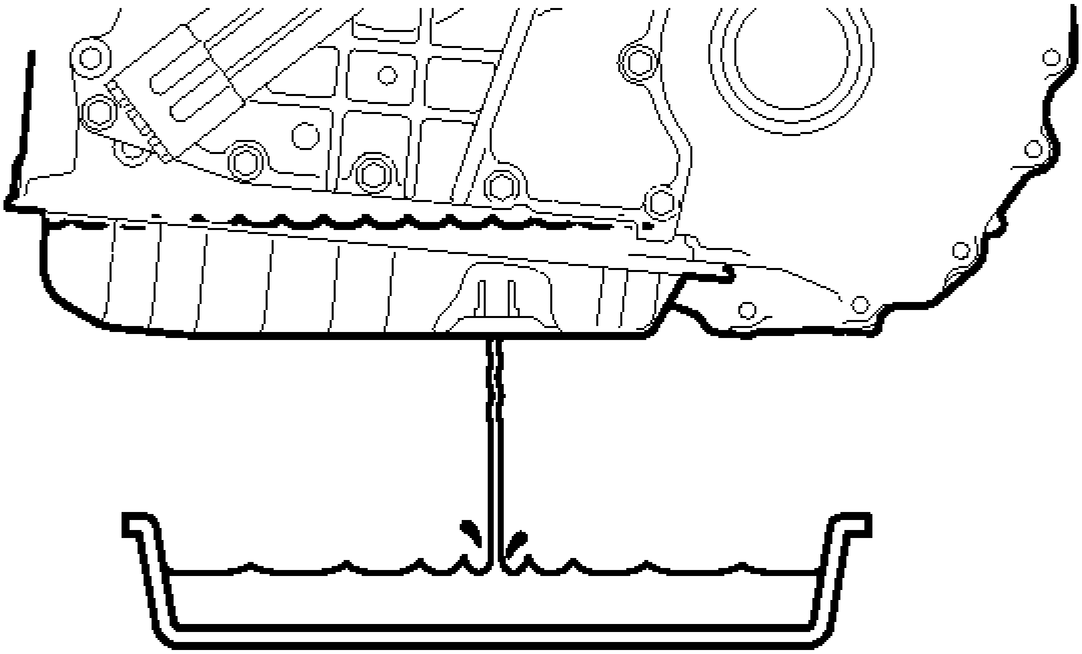

Fig. 4: Measuring Fluid
Courtesy of TOYOTA MOTOR SALES, U.S.A., INC.

HINT:

Add the same amount of fluid in step [*8].

g. Using a 6 mm hexagon socket wrench, install the No. 1 transmission oil filler tube to the oil pan. [*6]

Torque: 1.7 N*m (17 kgf*cm, 15 in.*lbf)

h. Temporarily install the gasket and the overflow plug. [*7]

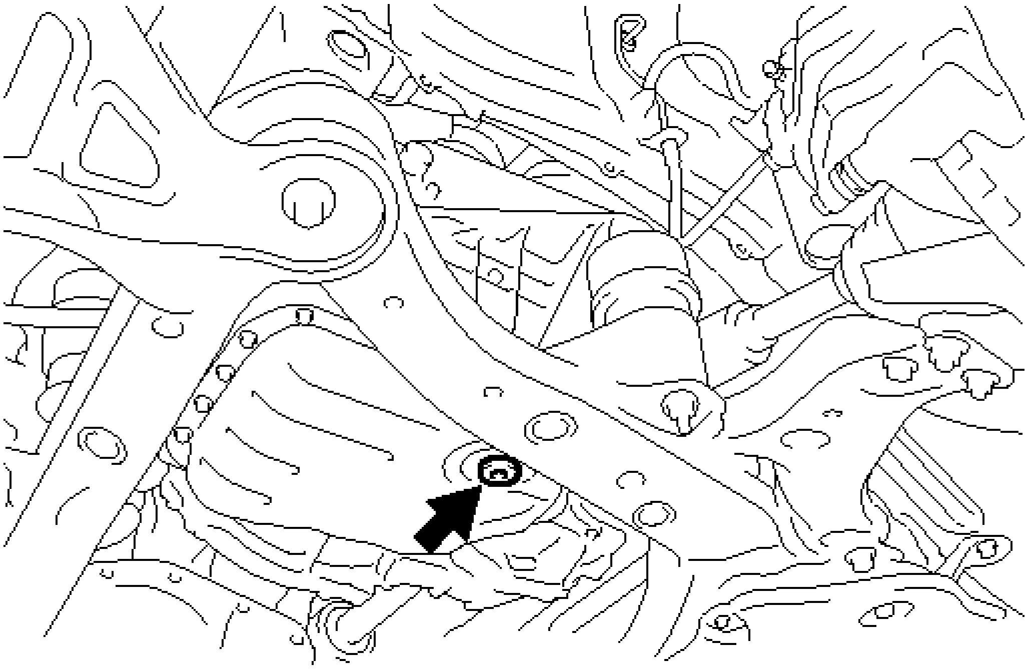

Fig. 5: Identifying Overflow Plug
Courtesy of TOYOTA MOTOR SALES, U.S.A., INC.

HINT:

Reuse the old gasket. The plug will be removed again to adjust the fluid level.

i. Add fluid to the refill hole using the same amount of fluid drained in step [*5]. [*8]

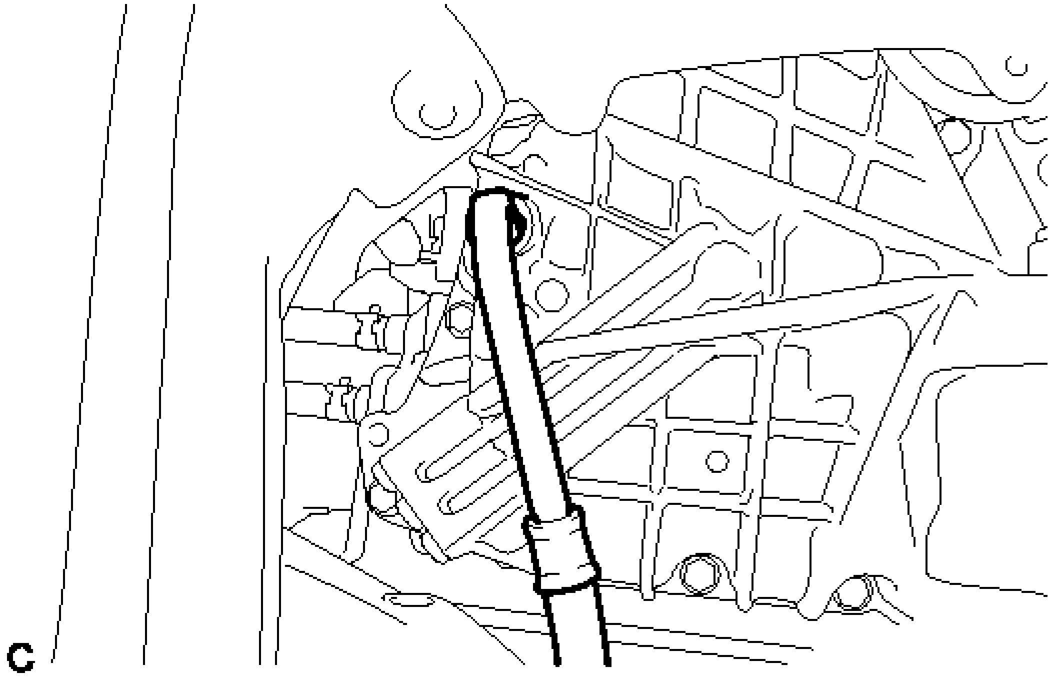

Fig. 6: Refilling Fluid
Courtesy of TOYOTA MOTOR SALES, U.S.A., INC.

NOTE: Use Toyota Genuine ATF WS.

j. Temporarily install the gasket and refill plug to avoid fluid spillage. [*9]

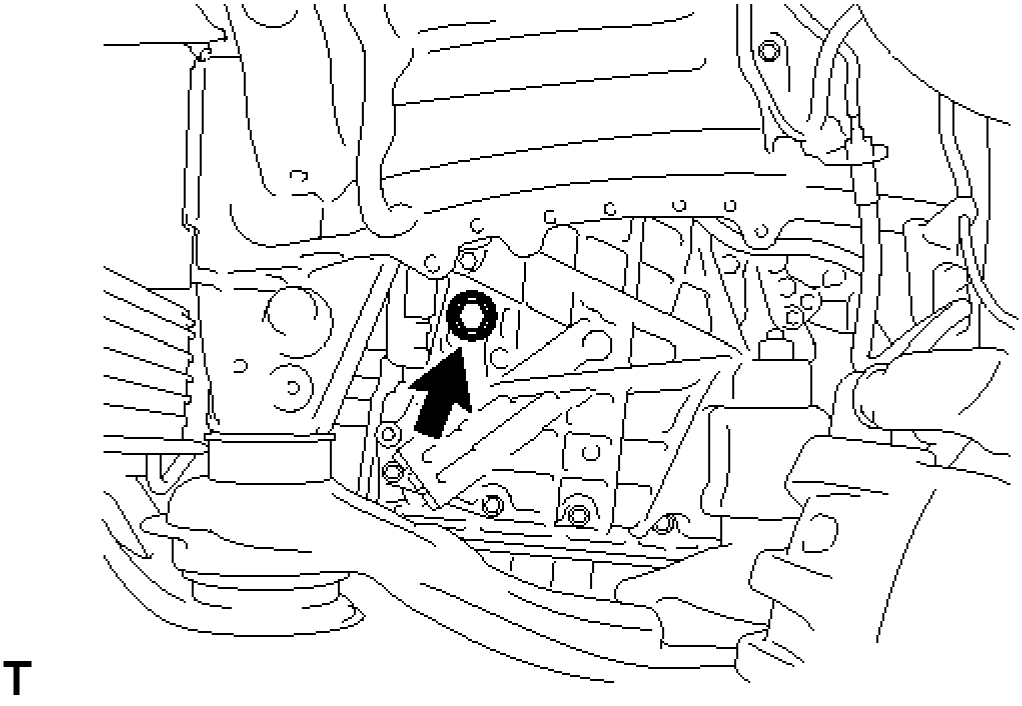

Fig. 7: Identifying Refill Plug
Courtesy of TOYOTA MOTOR SALES, U.S.A., INC.

HINT:

Reuse the old gasket. The plug will be removed again to adjust the fluid level.

k. Lower the vehicle. [*10]
l. Start the engine. [*11]
m. Slowly move the shift lever from P to D, and then back to P. [*12]
n. Allow the engine to idle for 30 seconds to warm it up. [*13]
o. Turn the engine switch off. [*14]
p. Repeat steps [*1] to [*14].
q. Repeat steps [*1] to [*10].

2. **ADJUST FLUID TEMPERATURE** See step 6
3. **ADJUST FLUID LEVEL** See step 7
4. **REBUILD WORK** See step 8

ADJUSTMENT

ADJUSTMENT

1. **PRECAUTIONS AND WORK DESCRIPTION**

a. The U660E automatic transaxle does not have an oil filler tube and oil level gauge. When adding fluid, add fluid through the refill hole on the transaxle case. The fluid level can be adjusted by draining excess fluid (allowing excess fluid to overflow) through the No. 1 transmission oil filler tube of the oil pan.

HINT:

"Overflow" indicates the condition under which fluid comes out of the overflow plug hole.

b. Before adjusting the fluid level, add the specified amount of fluid when the engine is cold and warm up the engine to circulate the fluid in the transaxle. Ensure that the fluid temperature is as specified and the engine is idling.

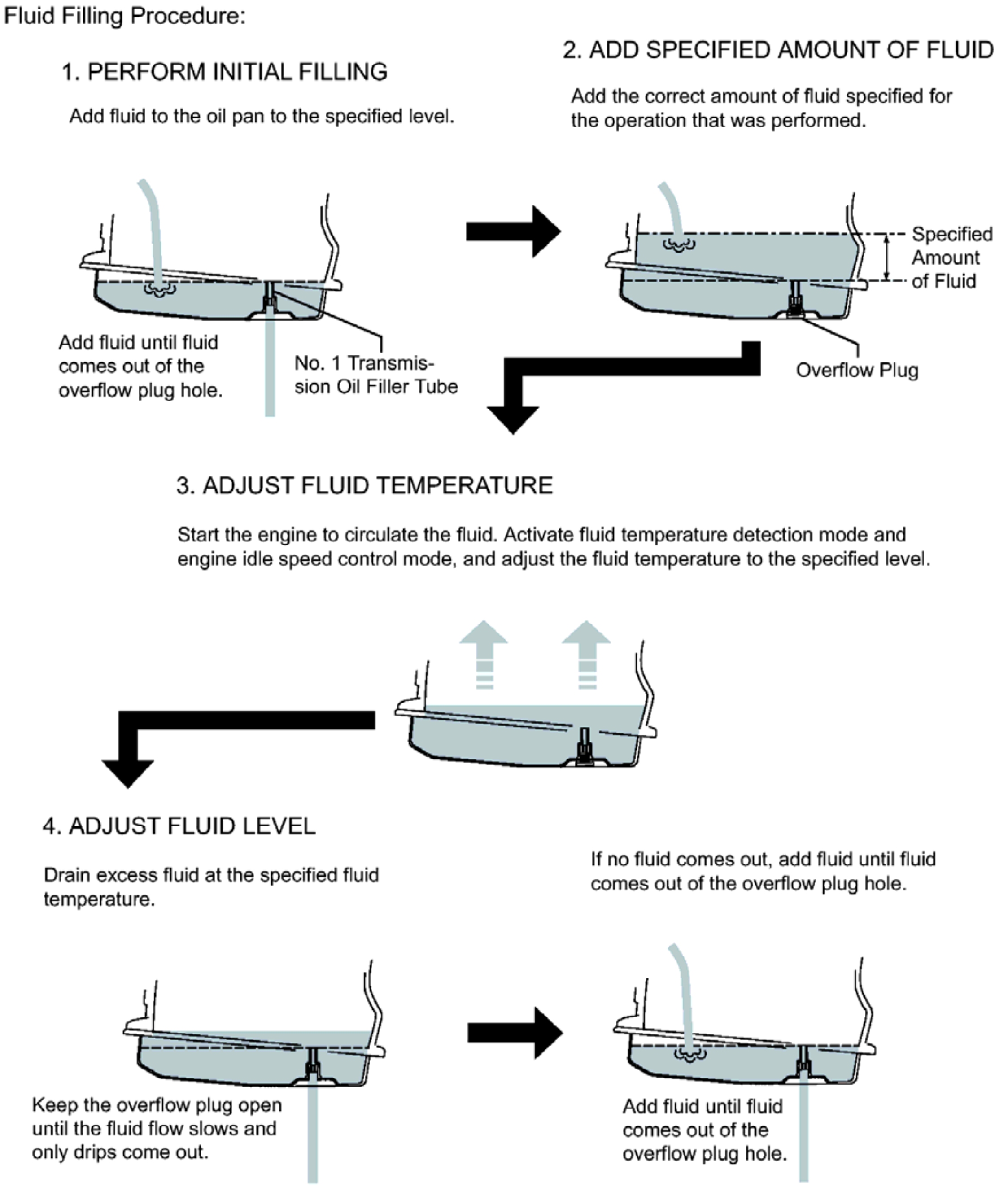

Fluid Filling Procedure:

1. PERFORM INITIAL FILLING

Add fluid to the oil pan to the specified level.

2. ADD SPECIFIED AMOUNT OF FLUID

Add the correct amount of fluid specified for the operation that was performed.

3. ADJUST FLUID TEMPERATURE

Start the engine to circulate the fluid. Activate fluid temperature detection mode and engine idle speed control mode, and adjust the fluid temperature to the specified level.

4. ADJUST FLUID LEVEL

Drain excess fluid at the specified fluid temperature.

If no fluid comes out, add fluid until fluid comes out of the overflow plug hole.

Add fluid until fluid comes out of the overflow plug hole.
No. 1 Transmission Oil Filler Tube
Specified Amount of Fluid
Overflow Plug
Keep the overflow plug open until the fluid flow slows and only drips come out.
Add fluid until fluid comes out of the overflow plug hole.

Fig. 8: Fluid Filling Procedure Chart
Courtesy of TOYOTA MOTOR SALES, U.S.A., INC.

c. The U660E automatic transaxle requires Toyota Genuine ATF WS.
d. The adjustment should be performed according to the procedures and notes.

2. **WORK FLOW**

a. The adjustment should be performed according to the procedure referenced in the work flow below.

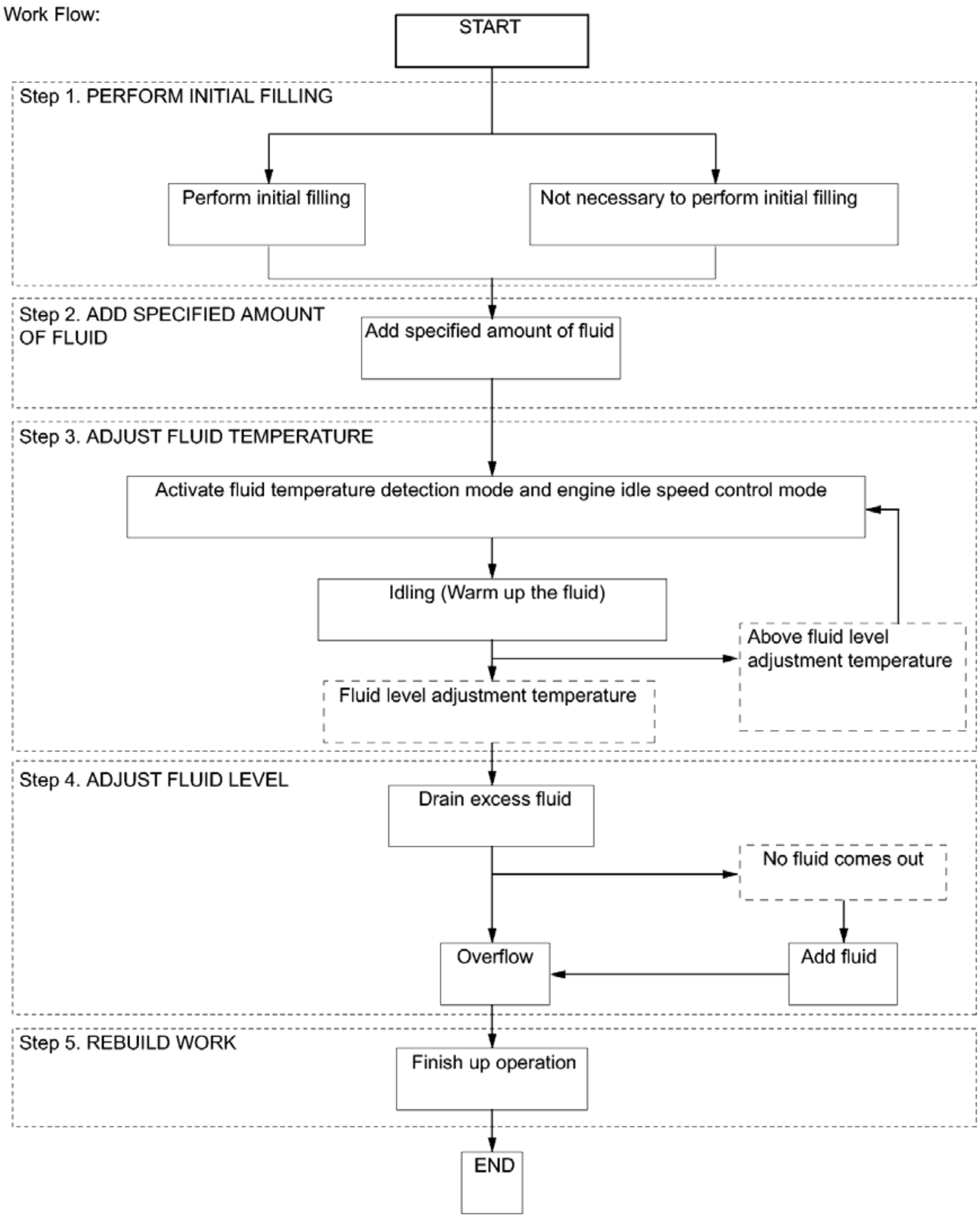
Work Flow:
START
Step 1. PERFORM INITIAL FILLING
Perform initial filling
Not necessary to perform initial filling
Step 2. ADD SPECIFIED AMOUNT OF FLUID
Add specified amount of fluid
Step 3. ADJUST FLUID TEMPERATURE
Activate fluid temperature detection mode and engine idle speed control mode
Idling (Warm up the fluid)
Above fluid level adjustment temperature
Fluid level adjustment temperature
Step 4. ADJUST FLUID LEVEL
Drain excess fluid
No fluid comes out
Overflow
Add fluid
Step 5. REBUILD WORK
Finish up operation
END

Fig. 9: Fluid Filling Workflow Chart
Courtesy of TOYOTA MOTOR SALES, U.S.A., INC.

3. **PREPARATION WORK**
   a. Lift the vehicle.

NOTE: Set the vehicle on a lift so that the vehicle is kept level when it is lifted up.

b. Remove the 2 bolts, clip and front fender apron seal LH.

4. **PERFORM INITIAL FILLING**

NOTE: If the transaxle is hot (ATF temperature is high), wait until the fluid temperature becomes the same as the ambient temperature before starting the following procedure. (Recommended ATF temperature: around 20°C [68°F])

a. Remove the refill plug and gasket from the automatic transaxle.

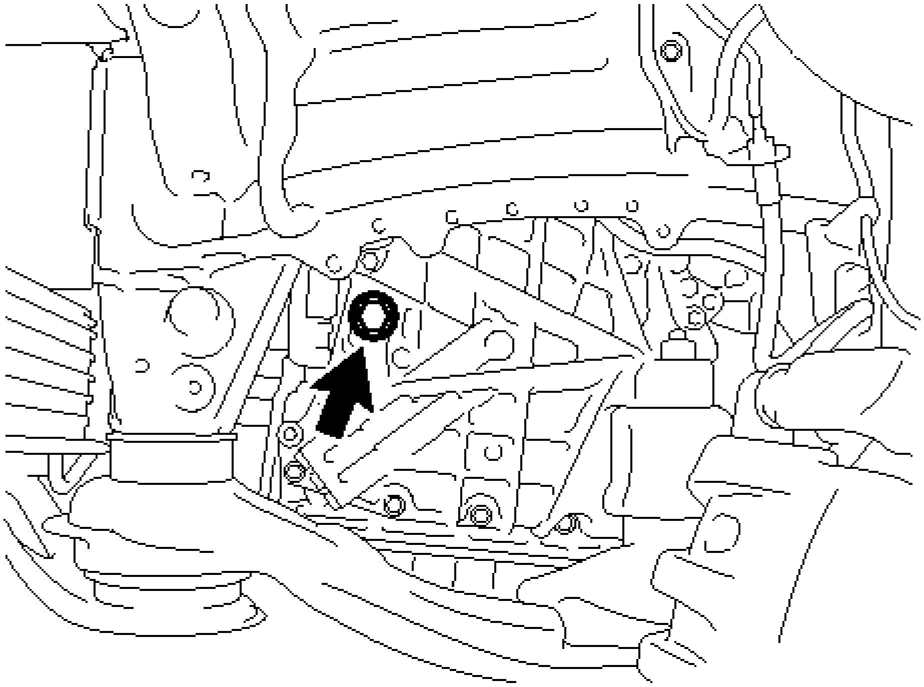

Fig. 10: Identifying Refill Plug
Courtesy of TOYOTA MOTOR SALES, U.S.A., INC.

NOTE: After performing any of the following operations, it is not necessary to perform the initial filling procedure. Proceed to the Add Specified Amount of Fluid procedure in step 5.

Operations that do not require initial filling
• Disconnection of the oil cooler tube or oil cooler hose

• Repair of fluid leak due to a loose case plug, or a faulty plug gasket or O-ring • Installation of a new transaxle with torque converter (filled fluid parts)

b. Using a 6 mm hexagon socket wrench, remove the overflow plug and gasket from the automatic transaxle.

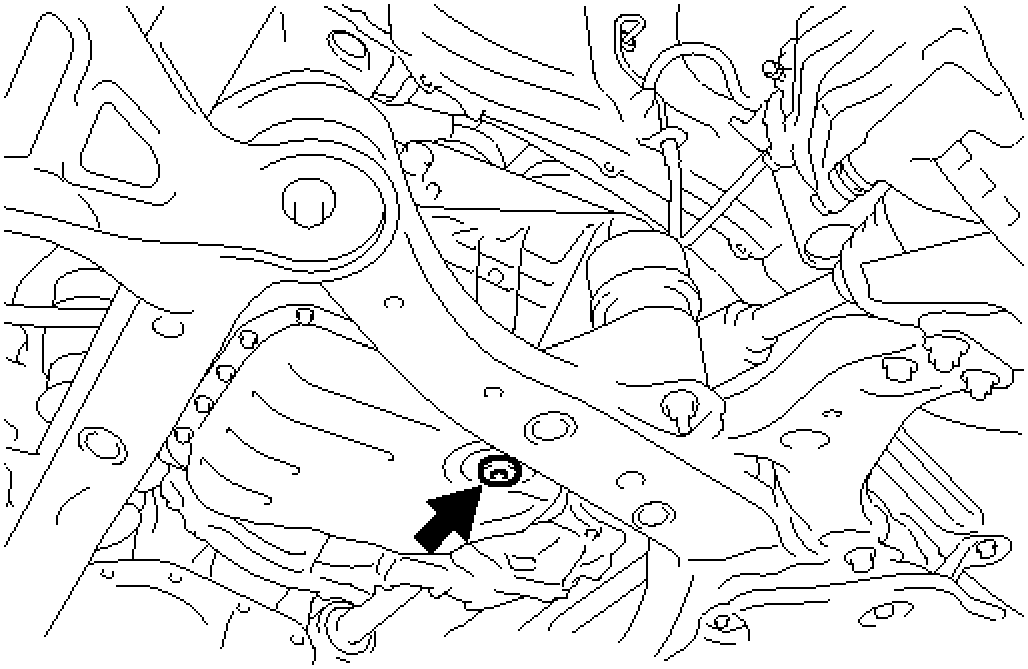

Fig. 11: Identifying Overflow Plug
Courtesy of TOYOTA MOTOR SALES, U.S.A., INC.

NOTE:

- **If ATF comes out after removing the overflow plug, wait until the fluid flow slows and only drips come out.**
- **If ATF comes out, it is not necessary to perform the initial filling procedure. After checking the tightening torque of the No. 1 transmission oil filler tube, temporarily tighten the overflow**

plug.

c. Using a 6 mm hexagon socket wrench, check that the No. 1 transmission oil filler tube is tightened to the specified torque.

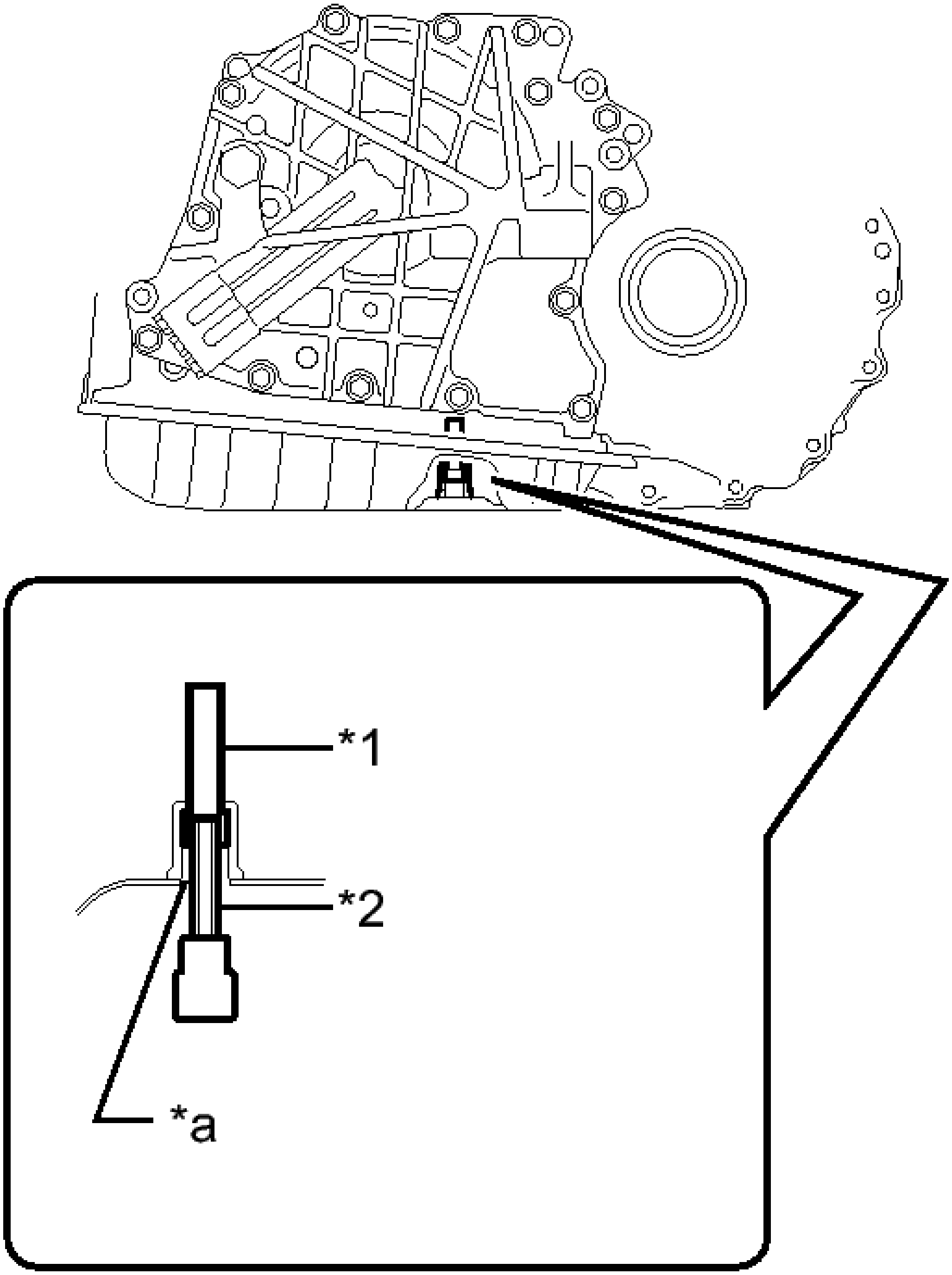

T

Fig. 12: Identifying No. Transmission Oil Filler Tube And Overflow Plug Hole
Courtesy of TOYOTA MOTOR SALES, U.S.A., INC.

TEXT IN ILLUSTRATION

*1	No. 1 Transmission Oil Filler Tube
*2	Hexagon Socket Wrench
*a	Overflow Plug Hole

Torque: 1.7 N*m (17 kgf*cm, 15 in.*lbf)

NOTE: **If the No. 1 transmission oil filler tube is not tightened to the specified torque, the amount of fluid cannot be precisely adjusted.**

HINT:

To check the torque of the No. 1 transmission oil filler tube, insert the hexagon socket wrench into the overflow plug hole.

d. Perform initial filling.
   1. Fill the transaxle through the refill hole until fluid begins to trickle out of the overflow plug hole.

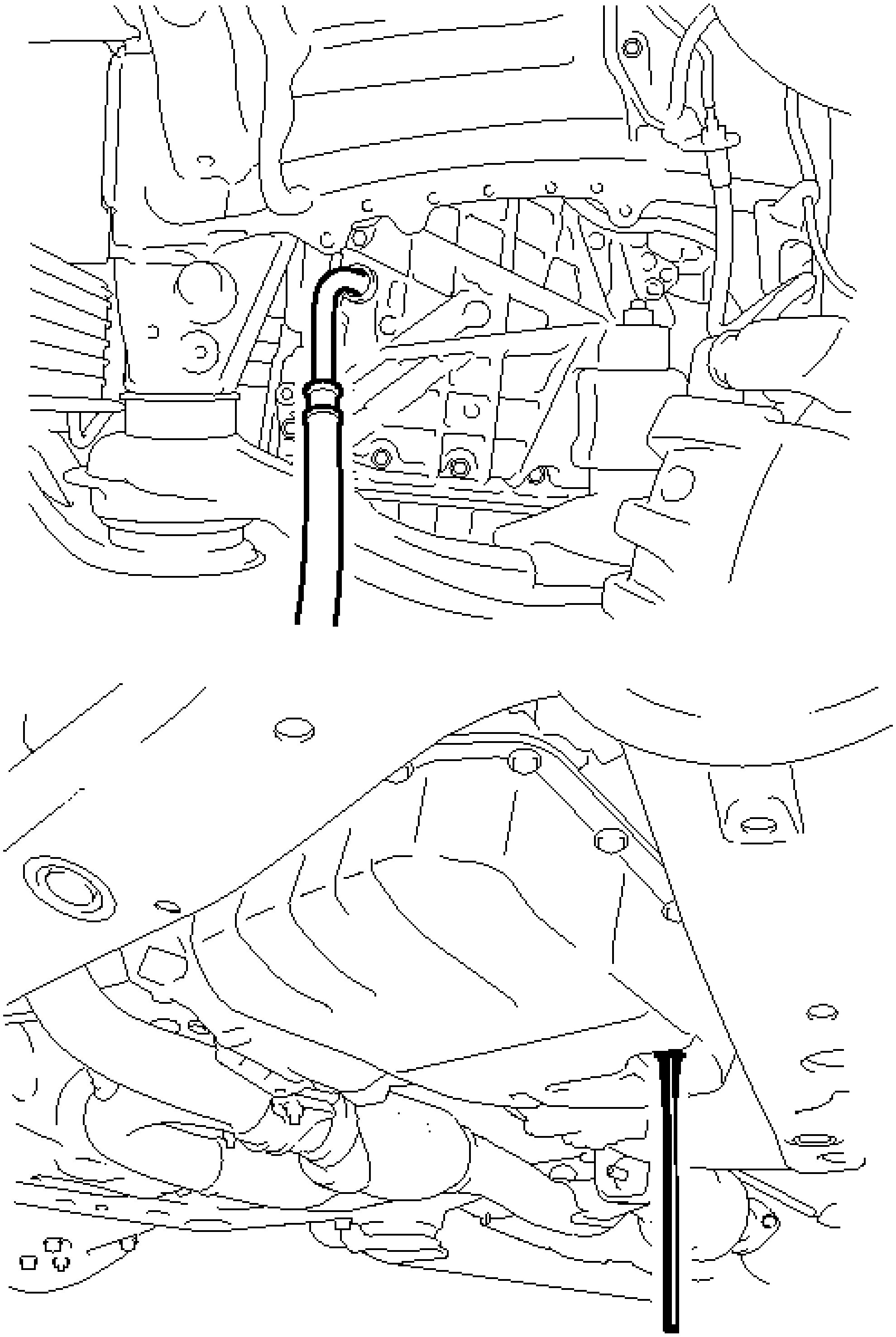

Fig. 13: Filling Transaxle Fluid
Courtesy of TOYOTA MOTOR SALES, U.S.A., INC.

NOTE: Use Toyota Genuine ATF WS.

e. Wait until the fluid flow slows and only drips come out.

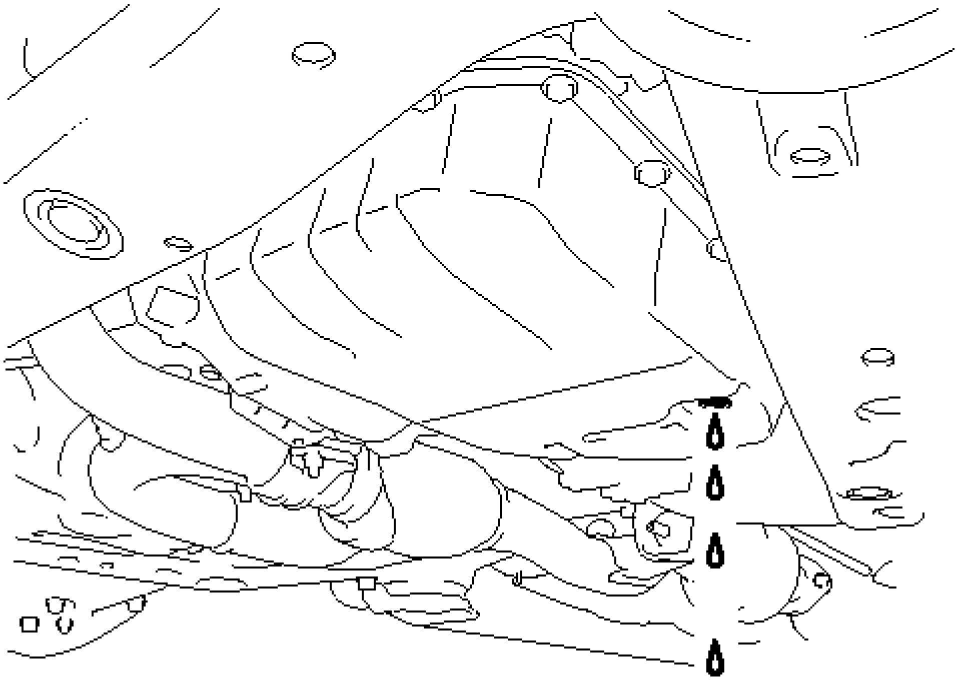

Fig. 14: Identifying Fluid Drips
Courtesy of TOYOTA MOTOR SALES, U.S.A., INC.

f. Temporarily install the overflow plug.

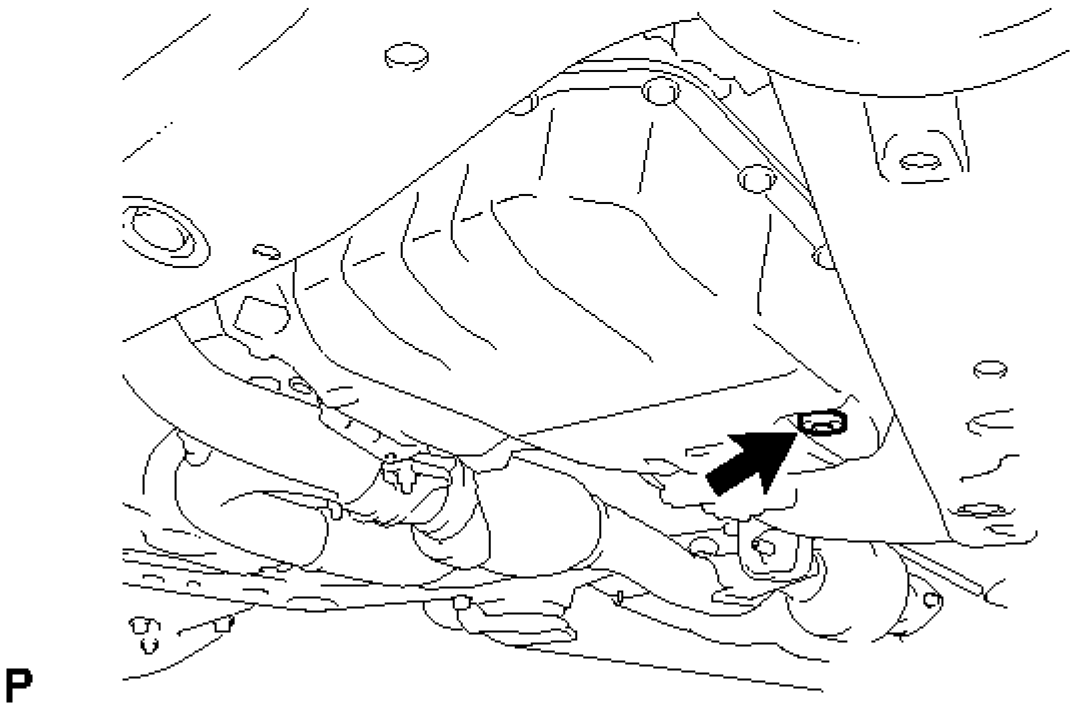

Fig. 15: Identifying Overflow Plug
Courtesy of TOYOTA MOTOR SALES, U.S.A., INC.

HINT:

Reuse the old gasket as the plug will be removed again to adjust the fluid level.

5. **ADD SPECIFIED AMOUNT OF FLUID**
    a. Fill the transaxle with the correct amount of fluid as listed in the table below.

NOTE: Refill amount differs depending on the operation that was performed.

Standard Capacity

Performed Repair	Fill Amount
• Disconnection of the oil cooler tube or oil cooler hose • Repair of fluid leak due to a loose case plug, or a faulty plug gasket or O-ring • Installation of a new transaxle with torque converter (filled fluid parts)	0.5 liters (0.5 US qts, 0.4 lmp. qts)
• Removal and installation of the drive shaft • Removal and installation of the transaxle case oil seal • Removal and installation of the oil pan	2.8 liters (3.0 US qts, 2.5 lmp. qts)

Removal and installation of the valve body	3.2 liters (3.4 US qts, 2.8 lmp. qts)
Removal and installation of the transaxle (not including removal of the torque converter)	3.4 liters (3.6 US qts, 3.0 lmp. qts)
Removal and installation of the torque converter (torque converter reused)	4.8 liters (5.1 US qts, 4.2 lmp. qts)
Installation of a new torque converter	5.3 liters (5.6 US qts, 4.7 lmp. qts)

b. Temporarily install the refill plug to avoid fluid spillage.

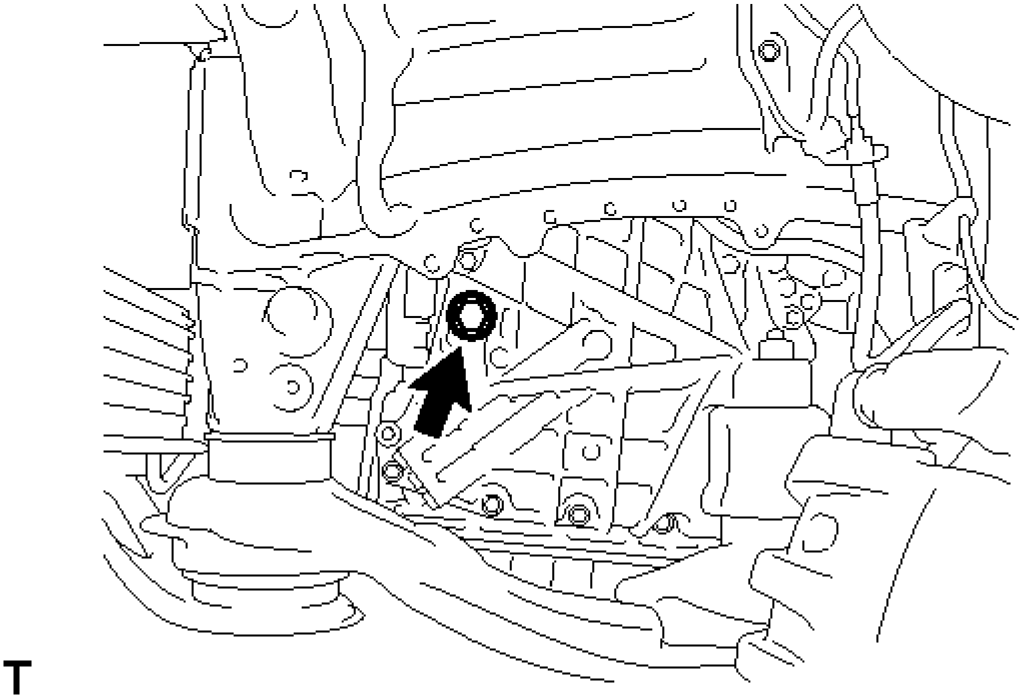

Fig. 16: Identifying Refill Plug
Courtesy of TOYOTA MOTOR SALES, U.S.A., INC.

HINT:

Reuse the old gasket as the plug will be removed again to adjust the fluid level.

c. Lower the vehicle.

6. **ADJUST FLUID TEMPERATURE**
   a. When using the Techstream:

HINT:

The actual ATF temperature can be checked on the Data List using the Techstream.

1. Connect the Techstream to the DLC3 with the engine switch off.
2. Turn the engine switch on (IG) and turn the Techstream on.

NOTE: **To reduce load, make sure that all electrical systems, such as the air conditioning, lighting system, electric fan and audio system are off.**

3. Enter the following menus: Powertrain / ECT / Active Test / Connect the TC and TE1.
4. Select the Active Test menu: Connect the TC and TE1 / ON.
5. Select the Data List item: A/T Oil Temperature 1.
6. Check the ATF temperature.

NOTE:

- **If the fluid temperature is below 45°C (113°F), proceed to the next step. (Recommended ATF temperature: 40°C [104° F] or less)**
- **If the fluid temperature is 45°C (113°F) or more, turn the engine switch off and wait until the fluid temperature drops below 45°C (113°F).**

7. Depress and hold the brake pedal.
8. Start the engine.
9. Slowly move the shift lever from P to D, and then back to P.

HINT:

Slowly move the shift lever to circulate the fluid through each part of the transaxle.

10. While observing the D shift indicator on the combination meter, move the shift lever back and forth between N and D at an interval of less than 1.5 seconds for 6 seconds or more.

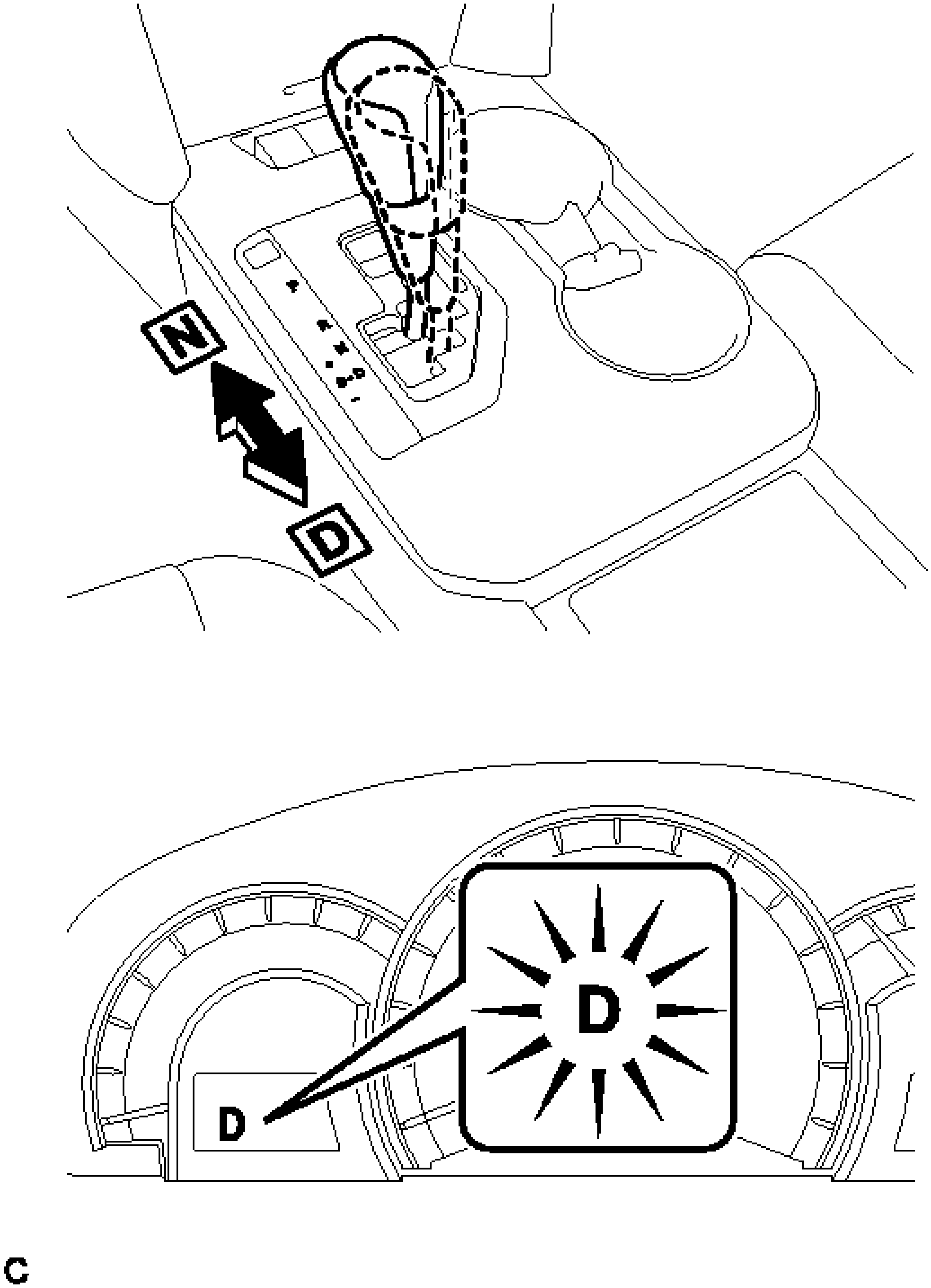

Fig. 17: Shifting Lever N And D
Courtesy of TOYOTA MOTOR SALES, U.S.A., INC.

NOTE: Do not pause for more than 1.5 seconds.

HINT:

Performing this operation will cause the vehicle to enter fluid temperature detection mode.

11. Check that the D shift indicator comes on for 2 seconds.

    HINT:

    - When fluid temperature detection mode is activated, the D shift indicator on the combination meter comes on for 2 seconds.
    - If the D shift indicator does not come on for 2 seconds, return to the first step and perform the procedure again.
12. Move the shift lever from N to P.
13. Release the brake pedal.
14. Select the Active Test item: Connect the TC and TE1 / OFF.

    NOTE: **Be sure that terminals TC and TE1 are not connected. If the terminals are connected, the fluid level cannot be precisely adjusted due to fluctuations in engine speed.**

    HINT:

    - Disconnecting terminals TC and TE1 activates engine idle speed control mode.
    - In engine idle speed control mode, engine idle speed control starts when the fluid temperature becomes 35°C (95°F) or more and the engine speed is maintained at approximately 800 rpm.
    - Even after terminals TC and TE1 are disconnected, fluid temperature detection mode is active until the engine switch is turned off.
15. Warm up the engine with the engine idling until the fluid temperature reaches the fluid level adjustment temperature (40 to 45°C [104 to 113°F]).

Below Fluid Level Adjustment Temperature	Fluid Level Adjustment Temperature	Above Fluid Level Adjustment Temperature
40°C or less (104°F or less)	40 to 45°C (104 to 113°F)	45°C or more (113°F or more)

NOTE:

- **If the fluid temperature is within the fluid level adjustment temperature range, immediately proceed to the Adjust Fluid Level procedure in step 7.**
- **If the fluid temperature is 45°C (113°F) or more, stop the**

engine and wait until the fluid temperature drops to 40°C (104°F) or less. Then perform the Adjust Fluid Temperature procedure again from the beginning.

HINT:

In fluid temperature detection mode, the D shift indicator comes on, goes off, or blinks depending on the fluid temperature.

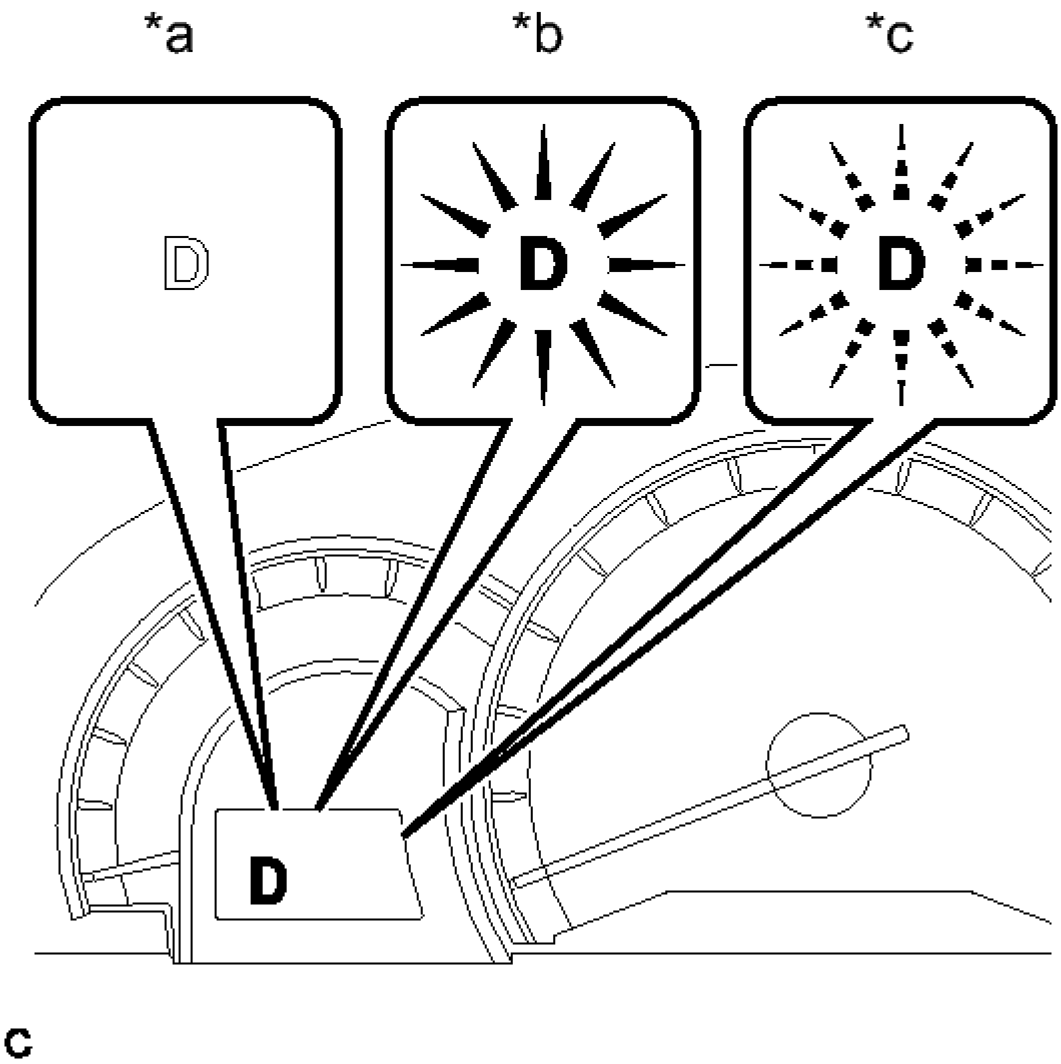

Fig. 18: D Shift Indicator Light
Courtesy of TOYOTA MOTOR SALES, U.S.A., INC.

TEXT IN ILLUSTRATION

*a	Turned Off

*b	Turned On
*c	Blinking

D SHIFT INDICATOR

Below Fluid Level Adjustment Temperature (40°C or less) (104°F or less)	Fluid Level Adjustment Temperature (40 to 45°C) (104 to 113° F)	Above Fluid Level Adjustment Temperature (45°C or more) (113°F or more)
OFF	ON	Blinks

b. When not using the Techstream:

1. Using SST, connect terminals 13 (TC) and 4 (CG) of the DLC3 with the engine switch off.

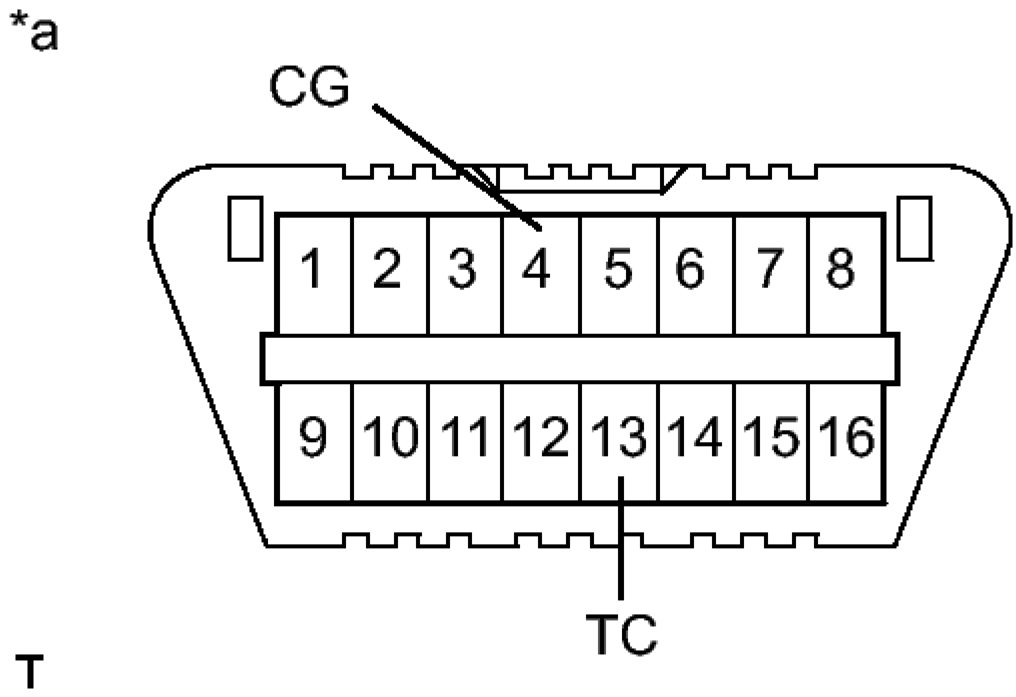

Fig. 19: Identifying DLC3 Connector Terminal Identification
Courtesy of TOYOTA MOTOR SALES, U.S.A., INC.

TEXT IN ILLUSTRATION

*a	DLC3

- **SST: 09843-18040**

2. Depress and hold the brake pedal.

3. Start the engine.

   NOTE: To reduce load, make sure that all electrical systems, such as the air conditioning, lighting system, electric fan and audio system, are off.

   HINT:

   The indicator lights on the combination meter blink to indicate the DTC output when terminals TC and CG are connected.

4. Slowly move the shift lever from P to D, and then back to P.

   HINT:

   Slowly move the shift lever to circulate the fluid through each part of the transaxle.

5. While observing the D shift indicator on the combination meter, move the shift lever back and forth between N and D at an interval of less than 1.5 seconds for 6 seconds or more.

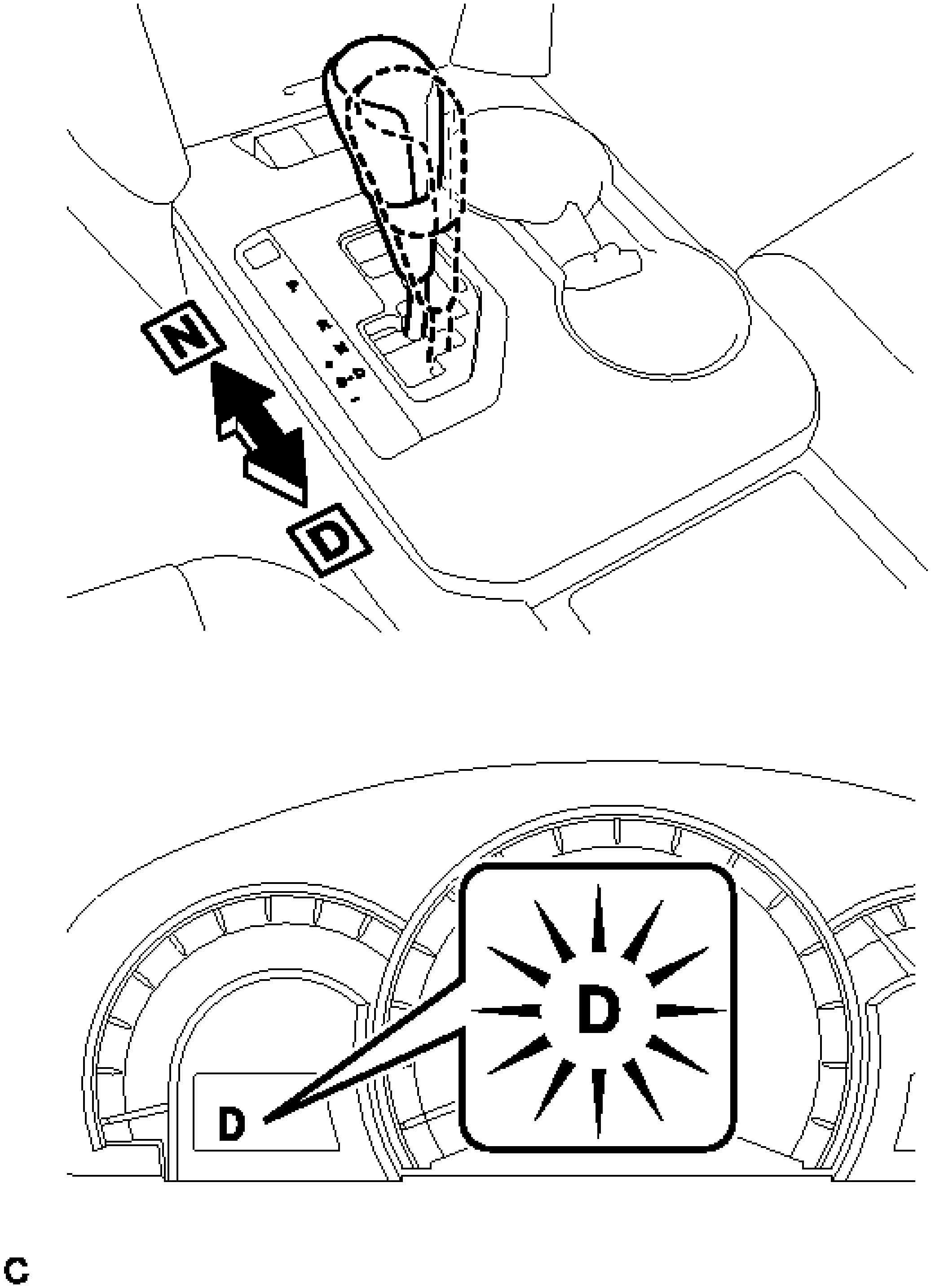

Fig. 20: Shifting Lever N And D
Courtesy of TOYOTA MOTOR SALES, U.S.A., INC.

NOTE: Do not pause for more than 1.5 seconds.

HINT:

Performing this operation will cause the vehicle to enter fluid temperature detection mode.

6. Check that the D shift indicator comes on for 2 seconds.

   HINT:

   - When fluid temperature detection mode is activated, the D shift indicator on the combination meter comes on for 2 seconds.
   - If the D shift indicator does not come on for 2 seconds, return to the first step and perform the procedure again.
7. Move the shift lever from N to P.
8. Release the brake pedal.
9. Remove SST from terminals 13 (TC) and 4 (CG).

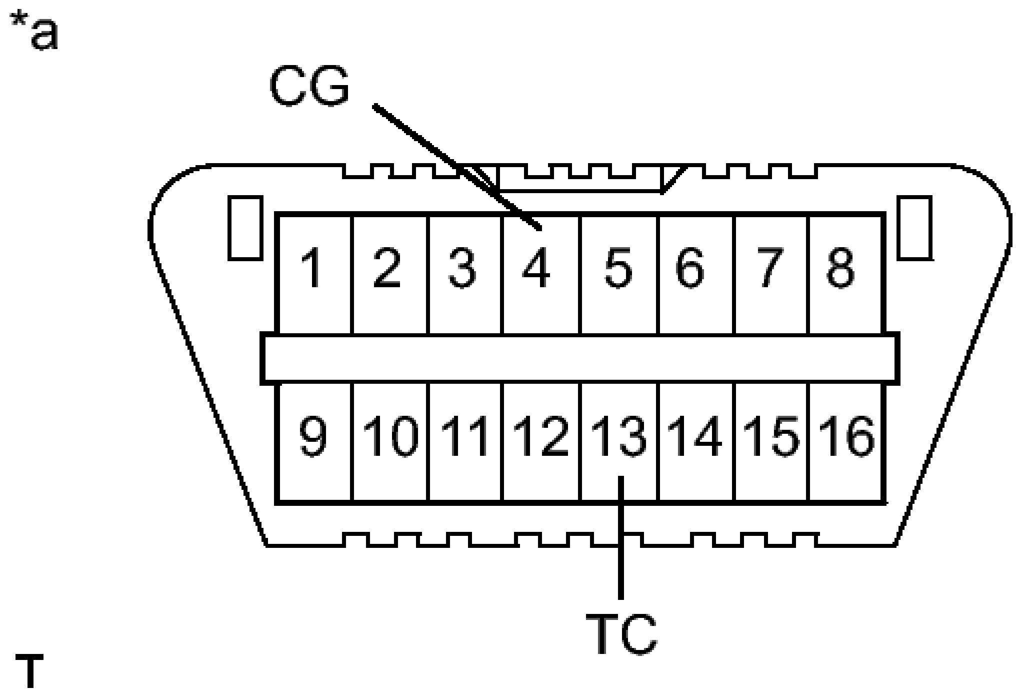

Fig. 21: Identifying DLC3 Connector Terminal Identification
Courtesy of TOYOTA MOTOR SALES, U.S.A., INC.

TEXT IN ILLUSTRATION

*a	DLC3

- **SST: 09843-18040**

NOTE: **Be sure that terminals TC and CG are not connected. If the terminals are connected, the fluid level cannot be precisely**

adjusted due to fluctuations in engine speed.

HINT:

- Disconnecting terminals TC and CG activates the engine idle control mode.
- In engine idle speed control mode, engine idle speed control starts when the fluid temperature becomes 35°C (95°F) or more and the engine speed is maintained at approximately 800 rpm.
- Even after terminals TC and CG are disconnected, fluid temperature detection mode is active until the engine switch is turned off.

10. Allow the engine to idle until the D shift indicator comes on again.

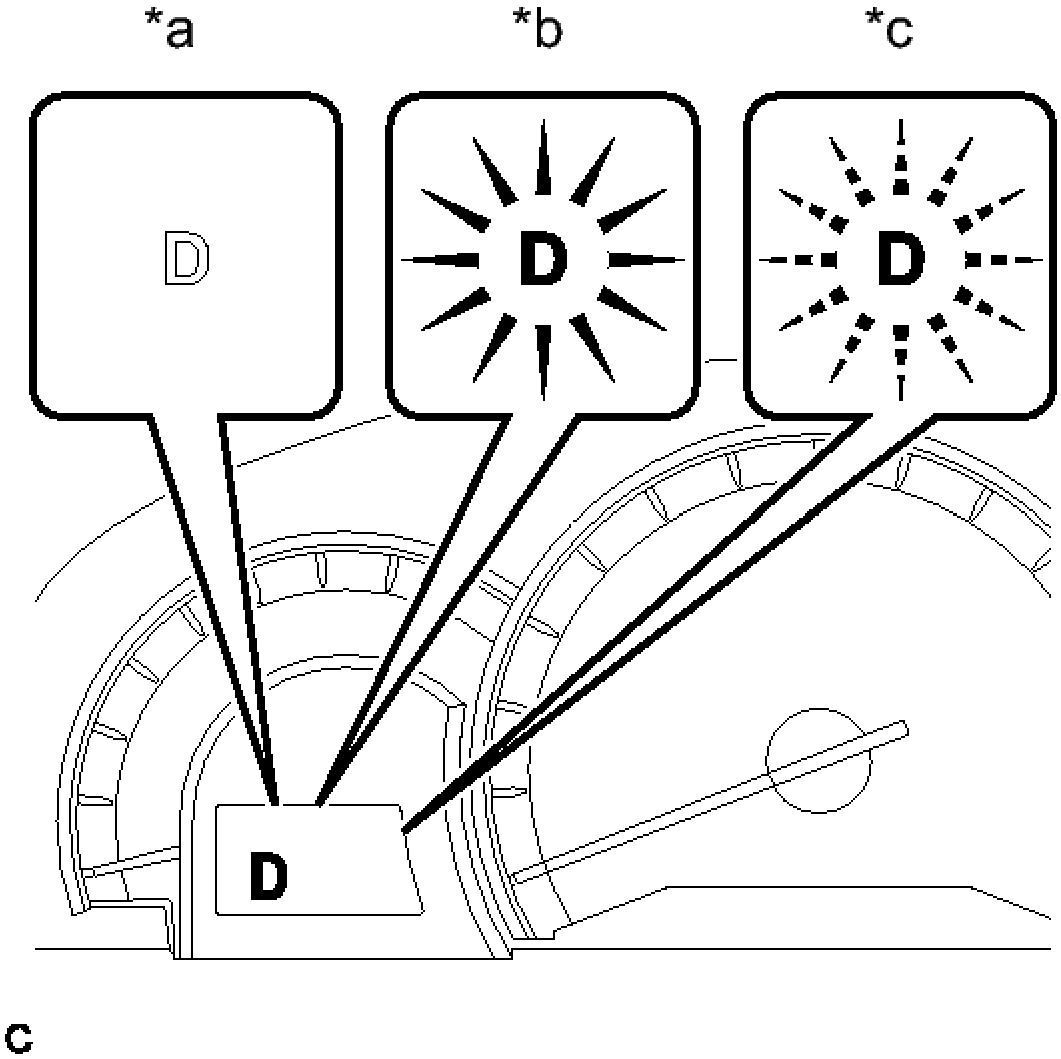

Fig. 22: D Shift Indicator Light
Courtesy of TOYOTA MOTOR SALES, U.S.A., INC.

TEXT IN ILLUSTRATION

*a	Turned Off
*b	Turned On
*c	Blinking

D SHIFT INDICATOR

Below Fluid Level Adjustment Temperature (40°C or less) (104°F or less)	Fluid Level Adjustment Temperature (40 to 45°C) (104 to 113°F)	Above Fluid Level Adjustment Temperature (45°C or more) (113°F or more)
OFF	ON	Blinks

NOTE:

- **If the D shift indicator is on, immediately proceed to the Adjust Fluid Level procedure in step 7.**
- **If the D shift indicator blinks, stop the engine and wait until the fluid temperature drops to 40°C (104°F) or less (the indicator goes off). Then perform the Adjust Fluid Temperature procedure again from the beginning.**

HINT:

- In fluid temperature detection mode, the D shift indicator comes on, goes off, or blinks depending on the fluid temperature.
- Fluid filling procedure should be performed when the D shift indicator is on (the fluid temperature is within the fluid level adjustment temperature range).

7. **ADJUST FLUID LEVEL**

WARNING: **Use caution while the engine is idling and the radiator fan is operating.**

a. Lift the vehicle.

NOTE: **Set the vehicle on a lift so that the vehicle is kept level when it is lifted up.**

b. Adjust the fluid level.

1. Using a 6 mm hexagon socket wrench, remove the overflow plug and gasket.

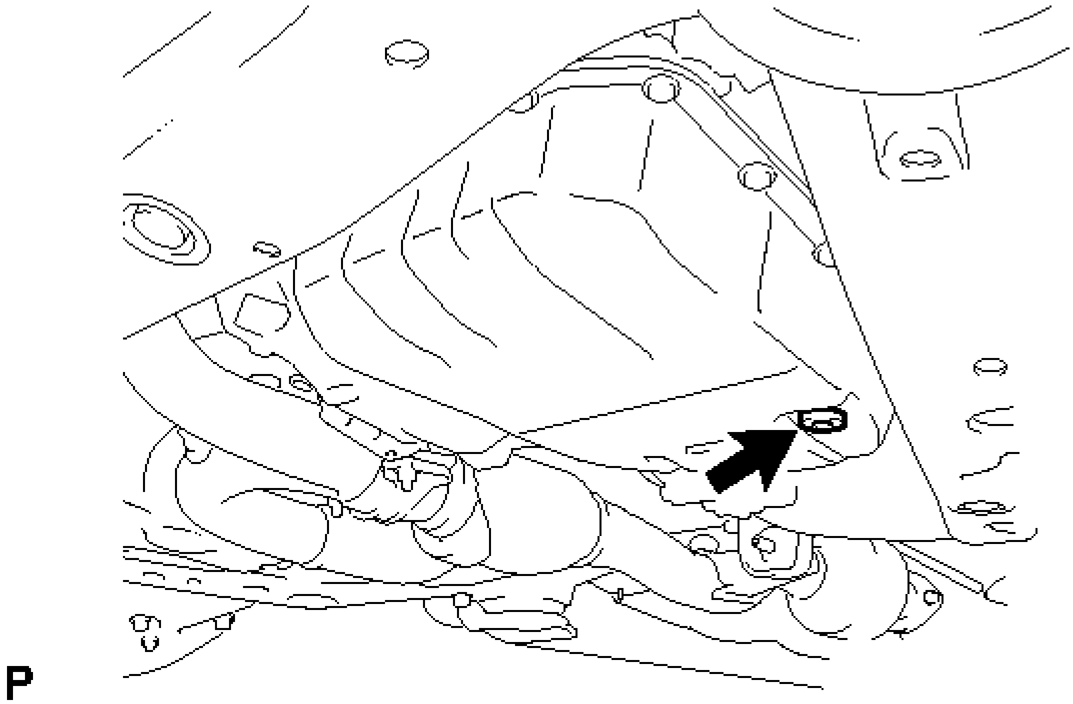

Fig. 23: Identifying Overflow Plug
Courtesy of TOYOTA MOTOR SALES, U.S.A., INC.

WARNING: **Be careful as the fluid coming out of the overflow plug hole is hot.**

2. Check the amount of fluid that comes out of the overflow plug hole.

NOTE: **If only a small amount of fluid (approximately 1 cc) comes out of the overflow plug hole, then only fluid remaining in the No. 1 transmission oil filler tube has come out. This condition is not considered as overflow, so it is necessary to add fluid.**

3. If the amount of fluid that comes out of the overflow plug hole is large, wait until the fluid flow slows and only drips come out.

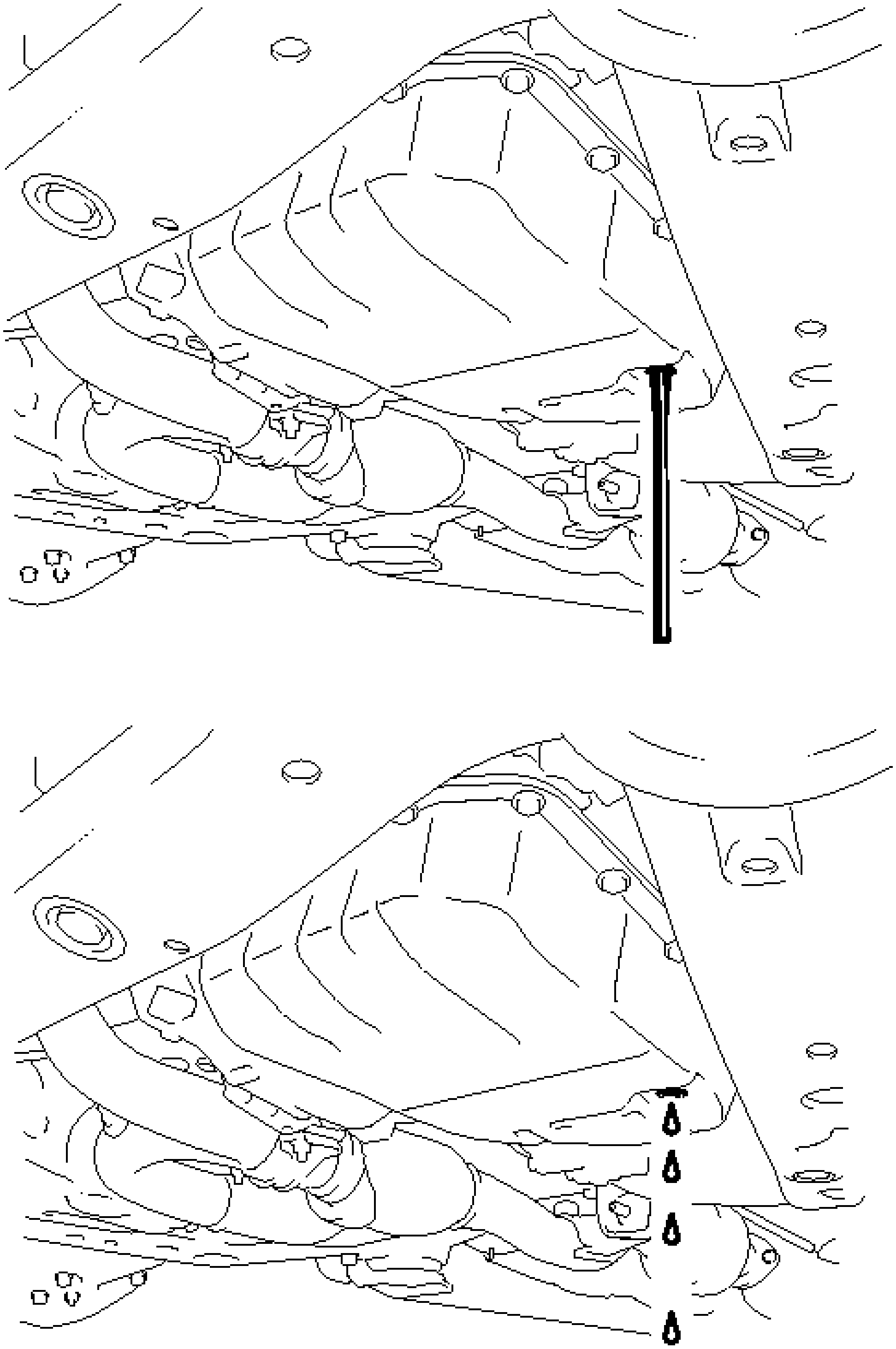

Fig. 24: Identifying Fluid Flow Drips
Courtesy of TOYOTA MOTOR SALES, U.S.A., INC.

4. If no fluid comes out of the overflow plug hole, remove the refill plug and gasket. Then add transaxle fluid through the refill hole until fluid comes out of the overflow plug hole. Wait

until the fluid flow slows and only drips come out.

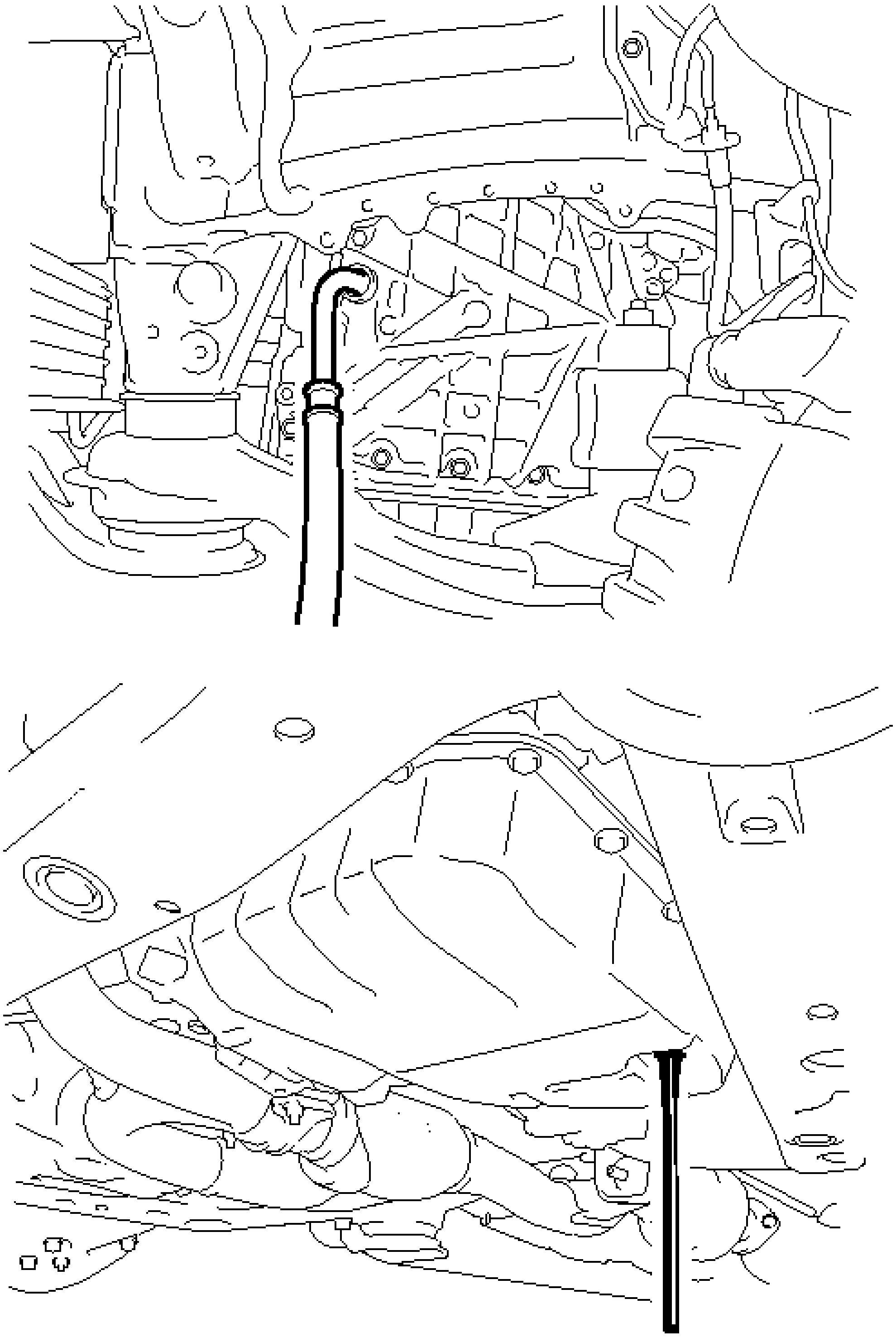

Fig. 25: Filling Transaxle Fluid
Courtesy of TOYOTA MOTOR SALES, U.S.A., INC.

NOTE: Use Toyota Genuine ATF WS.

5. Check that the fluid flow has slowed and only drips come out.

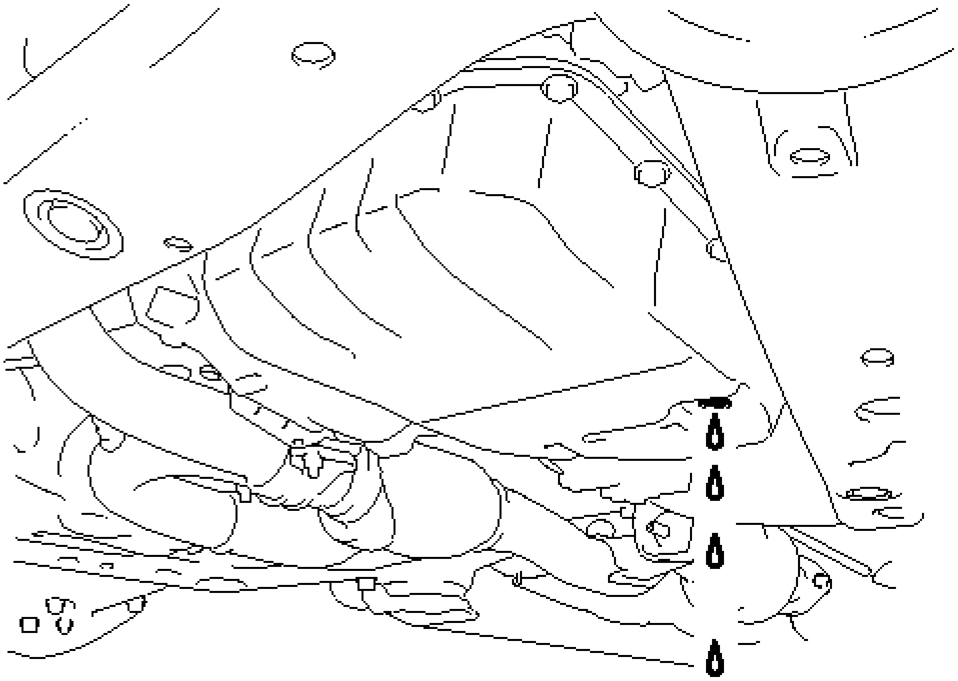

Fig. 26: Identifying Fluid Drips
Courtesy of TOYOTA MOTOR SALES, U.S.A., INC.

HINT:

The fluid flow will not completely stop because the fluid continues to expand as its temperature increases.

c. Install the overflow plug with a new gasket.

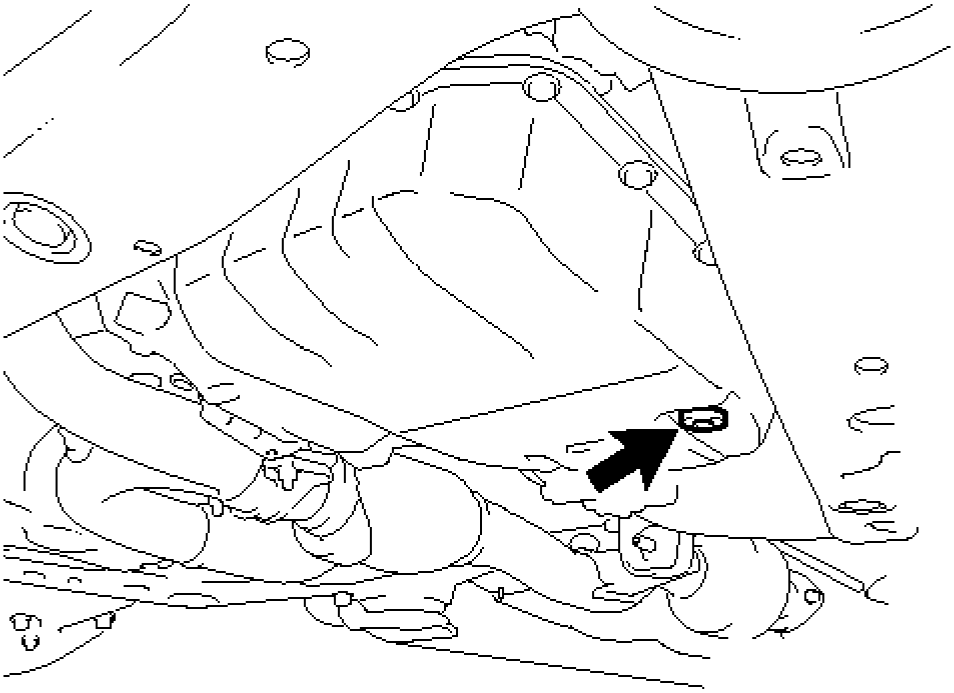

Fig. 27: Identifying Overflow Plug
Courtesy of TOYOTA MOTOR SALES, U.S.A., INC.

Torque: 40 N*m (408 kgf*cm, 30 ft.*lbf)

d. Install the refill plug with a new gasket.

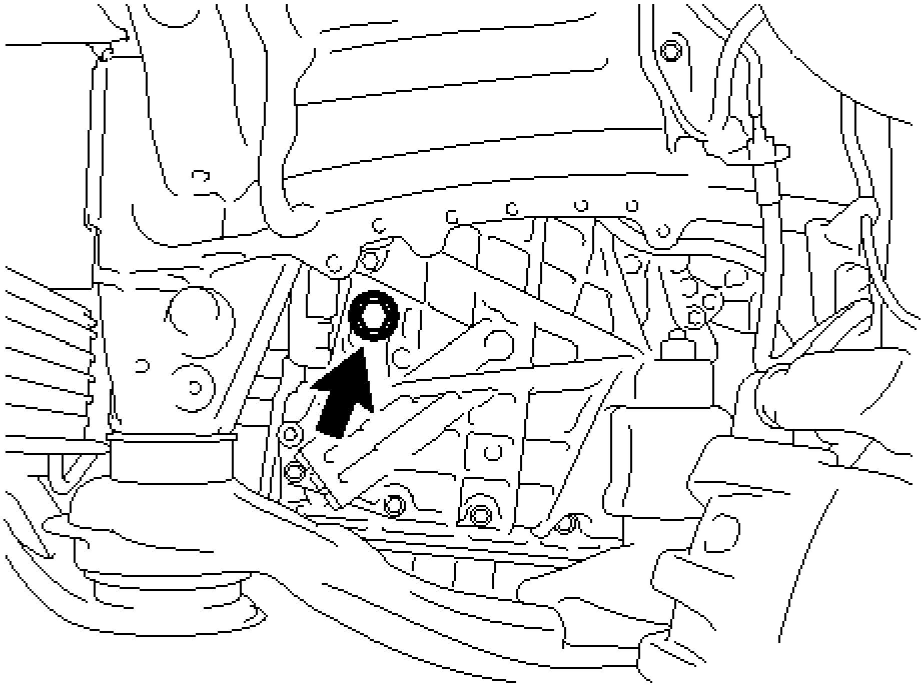

Fig. 28: Identifying Refill Plug
Courtesy of TOYOTA MOTOR SALES, U.S.A., INC.

Torque: 49 N*m (500 kgf*cm, 36 ft.*lbf)

e. Lower the vehicle.
f. Turn the engine switch off.

HINT:

Turning the engine switch off exits fluid temperature detection mode.

g. Remove the Techstream from the DLC3 (when using the Techstream).

8. **REBUILD WORK**
    a. Lift the vehicle.
    b. Clean each part.
    c. Check for fluid leaks.
    d. Install the front wheel opening extension pad LH, engine under covers LH and front fender apron seal LH.
    e. Lower the vehicle.

SPEED SENSOR

COMPONENTS

ILLUSTRATION

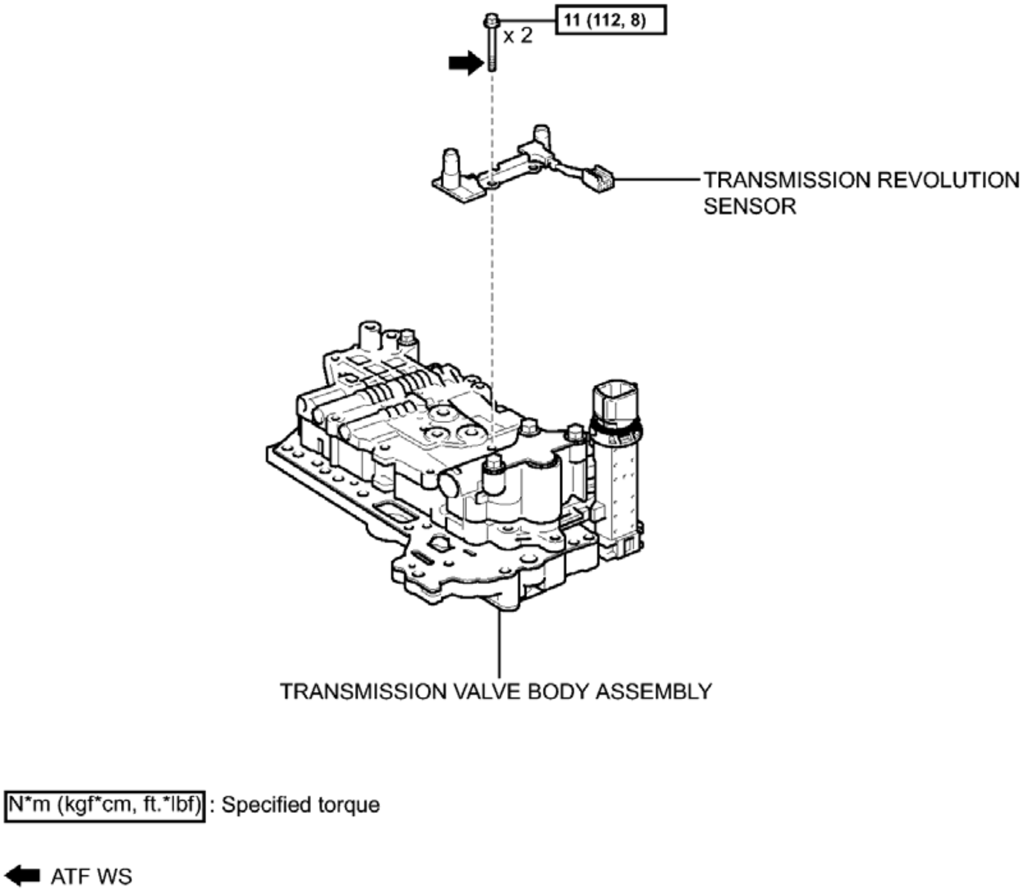
11 (112, 8)
x 2
TRANSMISSION REVOLUTION SENSOR
TRANSMISSION VALVE BODY ASSEMBLY
N*m (kgf*cm, ft.*lbf) : Specified torque
ATF WS

Fig. 29: Identifying Speed Sensor Replacement Components With Torque Specifications
Courtesy of TOYOTA MOTOR SALES, U.S.A., INC.

REMOVAL

REMOVAL

1. **REMOVE TRANSMISSION VALVE BODY ASSEMBLY**

   Refer to **REMOVAL**

2. **REMOVE TRANSMISSION REVOLUTION SENSOR**
   a. Disconnect the connector.
   b. Remove the 2 bolts and transmission revolution sensor from the transmission valve body assembly.

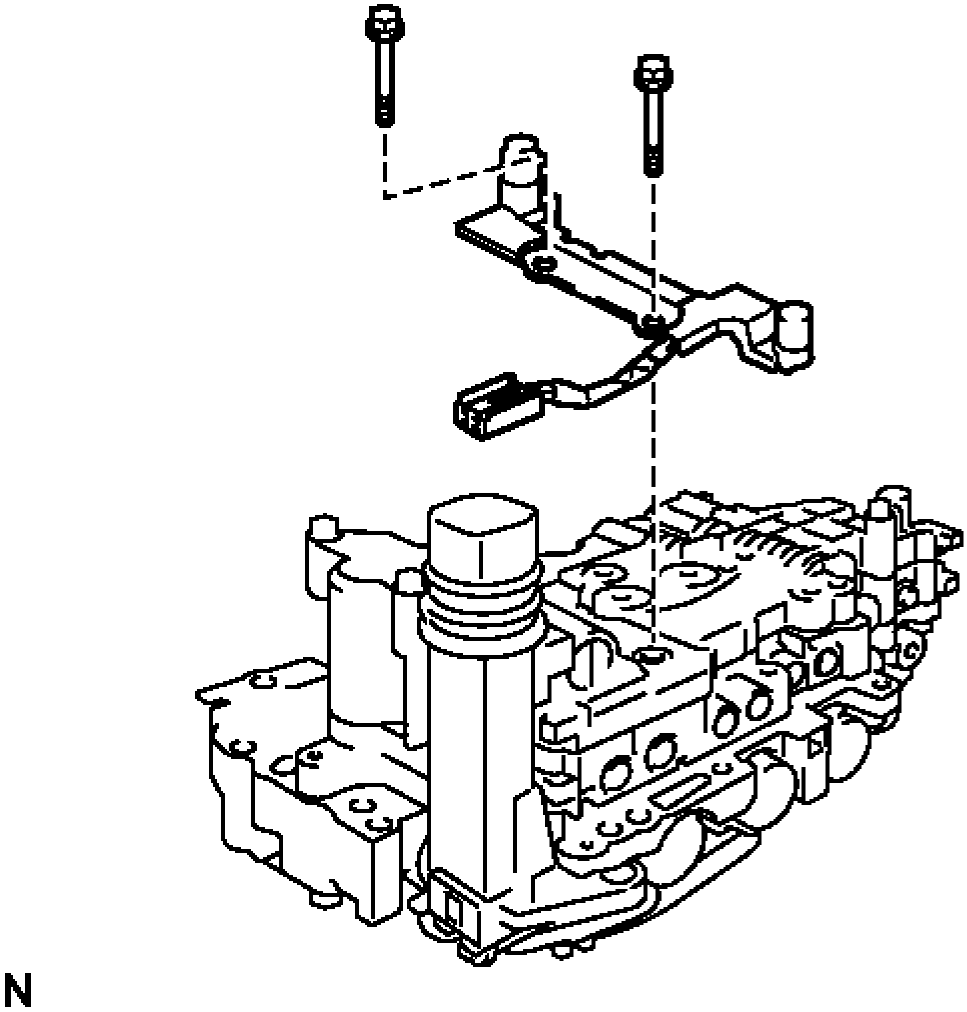

Fig. 30: Identifying Bolts And Speed Sensor
Courtesy of TOYOTA MOTOR SALES, U.S.A., INC.

INSTALLATION

INSTALLATION

1. **INSTALL TRANSMISSION REVOLUTION SENSOR**
    a. Coat the 2 bolts with ATF.

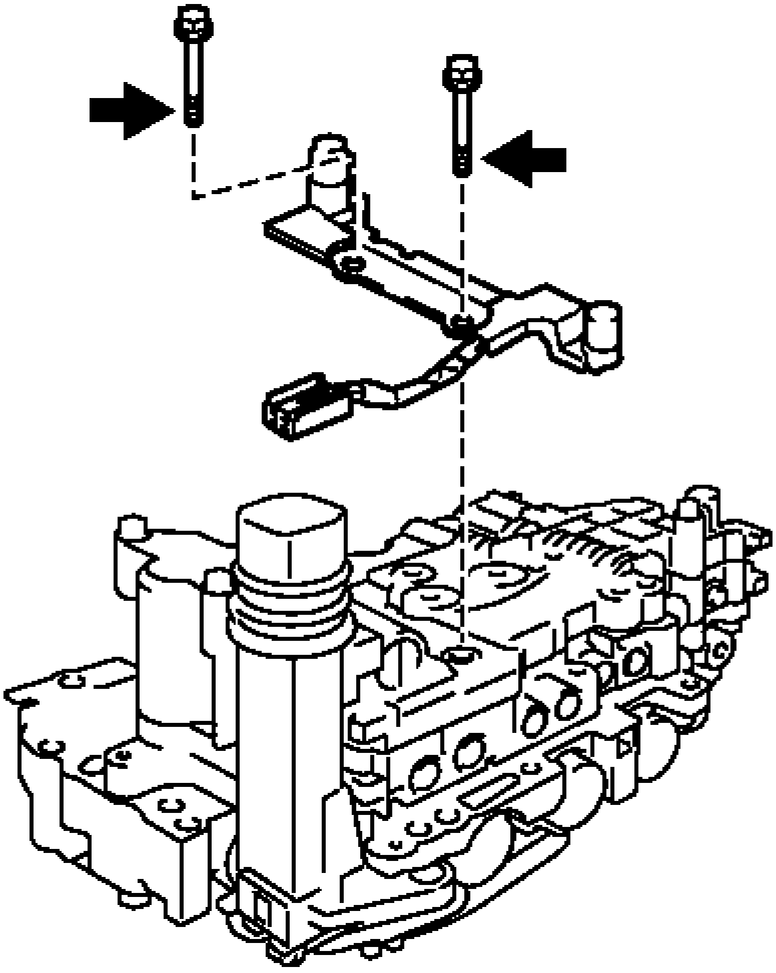

Fig. 31: Identifying Bolts And Speed Sensor
Courtesy of TOYOTA MOTOR SALES, U.S.A., INC.

b. Install the transmission revolution sensor to the transmission valve body assembly with the 2 bolts.

Torque: 11 N*m (112 kgf*cm, 8 ft.*lbf)

c. Connect the connector.

2. **INSTALL TRANSMISSION VALVE BODY ASSEMBLY**

   Refer to **INSTALLATION**

ATF TEMPERATURE SENSOR

COMPONENTS

ILLUSTRATION

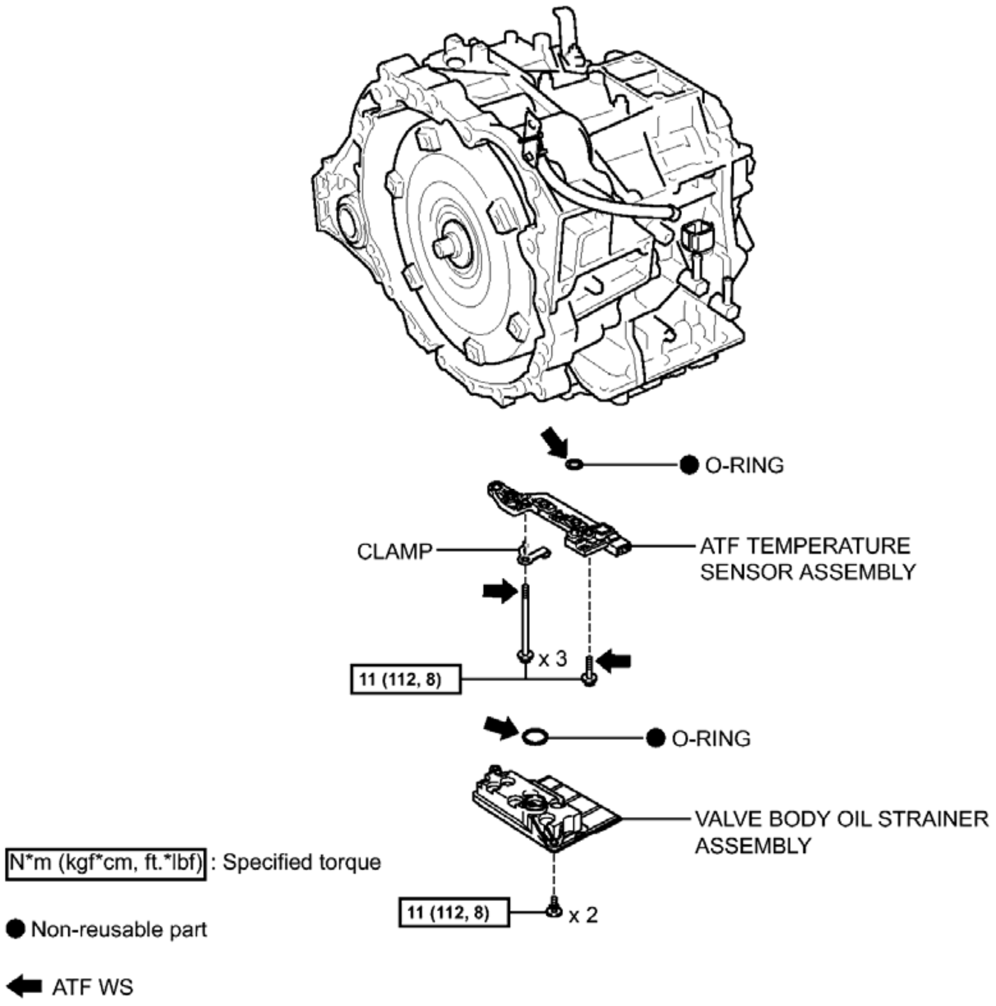
O-RING
CLAMP
ATF TEMPERATURE SENSOR ASSEMBLY
x 3
11 (112, 8)
O-RING
VALVE BODY OIL STRAINER ASSEMBLY
N*m (kgf*cm, ft.*lbf) : Specified torque
11 (112, 8)
x 2
● Non-reusable part
ATF WS

Fig. 32: Identifying ATF Temperature Sensor Replacement Components With Torque Specifications
Courtesy of TOYOTA MOTOR SALES, U.S.A., INC.

REMOVAL

REMOVAL

1. **REMOVE VALVE BODY OIL STRAINER ASSEMBLY**

   See step 4

2. **REMOVE ATF TEMPERATURE SENSOR ASSEMBLY**
   a. Disconnect the connector.

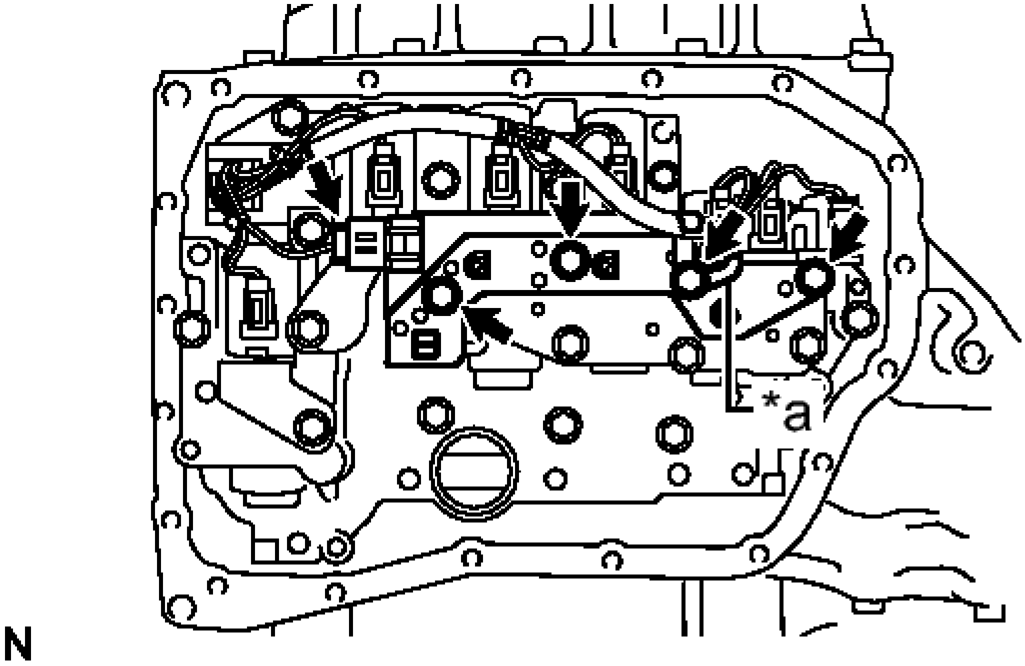

Fig. 33: Identifying Connector, Bolts And Clamp
Courtesy of TOYOTA MOTOR SALES, U.S.A., INC.

b. Remove the 4 bolts, ATF temperature sensor assembly and clamp from the valve body.

TEXT IN ILLUSTRATION

*a	Clamp

c. Remove the O-ring from the ATF temperature sensor assembly.

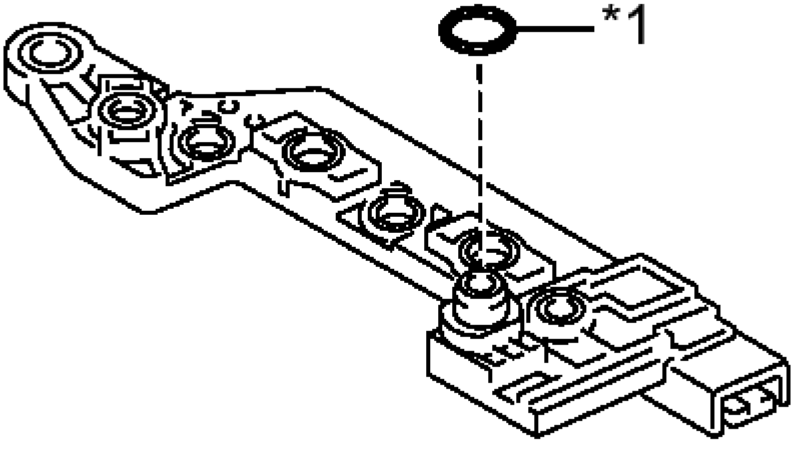

Fig. 34: Identifying ATF Temperature Sensor Assembly O-Ring
Courtesy of TOYOTA MOTOR SALES, U.S.A., INC.

TEXT IN ILLUSTRATION

*1	O-ring

INSPECTION

INSPECTION

1. **INSPECT ATF TEMPERATURE SENSOR ASSEMBLY**
    a. Measure the resistance according to the value(s) in the table below.

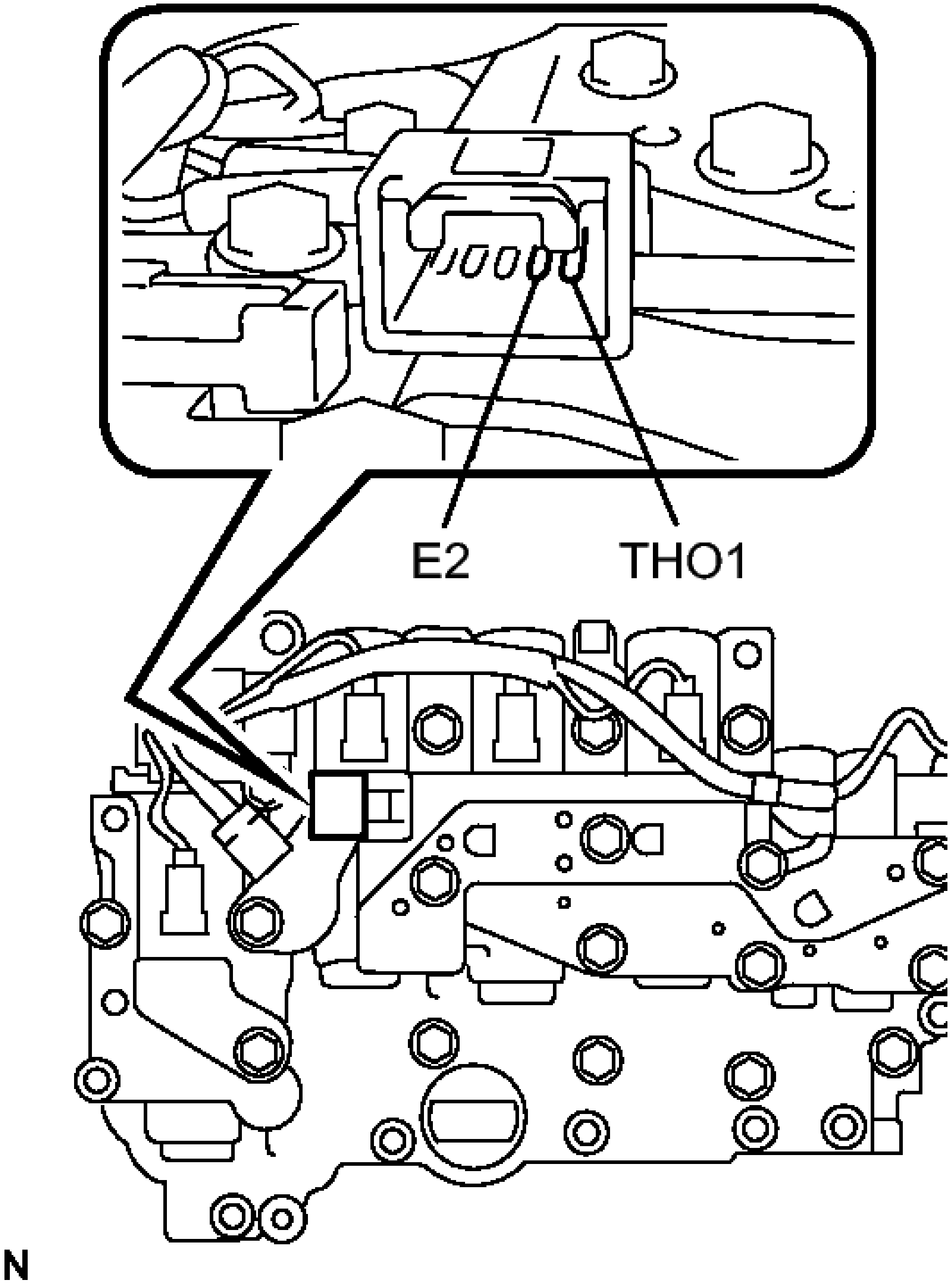

Fig. 35: Identifying Terminal E2 And THO1 Of ATF Temperature Sensor
Courtesy of TOYOTA MOTOR SALES, U.S.A., INC.

Standard Resistance

Tester Connection	Condition	Specified Condition
THO1 - E2	10°C (50° F)	5 to 8 kohms
THO1 - E2	25°C (77° F)	2.5 to 4.5 kohms
THO1 - E2	110°C (230°F)	0.22 to 0.28 kohms
THO1 - Body ground	Always	10 kohms or higher

If the resistance is out of the specified range with the ATF temperature shown in the preceding table, replace the ATF temperature sensor assembly. Otherwise, the driveability of the vehicle may decrease.

INSTALLATION

INSTALLATION

1. **INSTALL ATF TEMPERATURE SENSOR ASSEMBLY**
    a. Coat a new O-ring with ATF and install it to the ATF temperature sensor assembly.
    b. Coat the 4 bolts with ATF.
    c. Install the ATF temperature sensor assembly and clamp to the valve body with the 4 bolts.

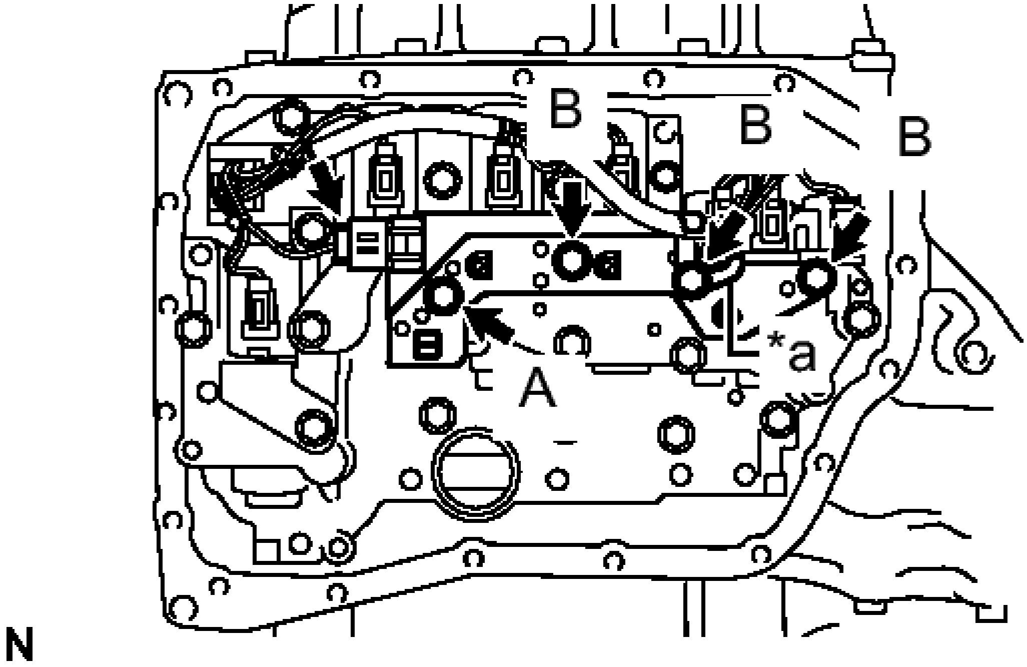

Fig. 36: Identifying Connector, Bolts And Clamp
Courtesy of TOYOTA MOTOR SALES, U.S.A., INC.

TEXT IN ILLUSTRATION

*a	Clamp

Torque: 11 N*m (112 kgf*cm, 8 ft.*lbf)

Bolt length	
Bolt A	25 mm (0.984 in.)
Bolt B	85 mm (3.35 in.)

d. Connect the connector.

2. **INSTALL VALVE BODY OIL STRAINER ASSEMBLY**

   See step 3

TRANSMISSION WIRE

COMPONENTS

ILLUSTRATION

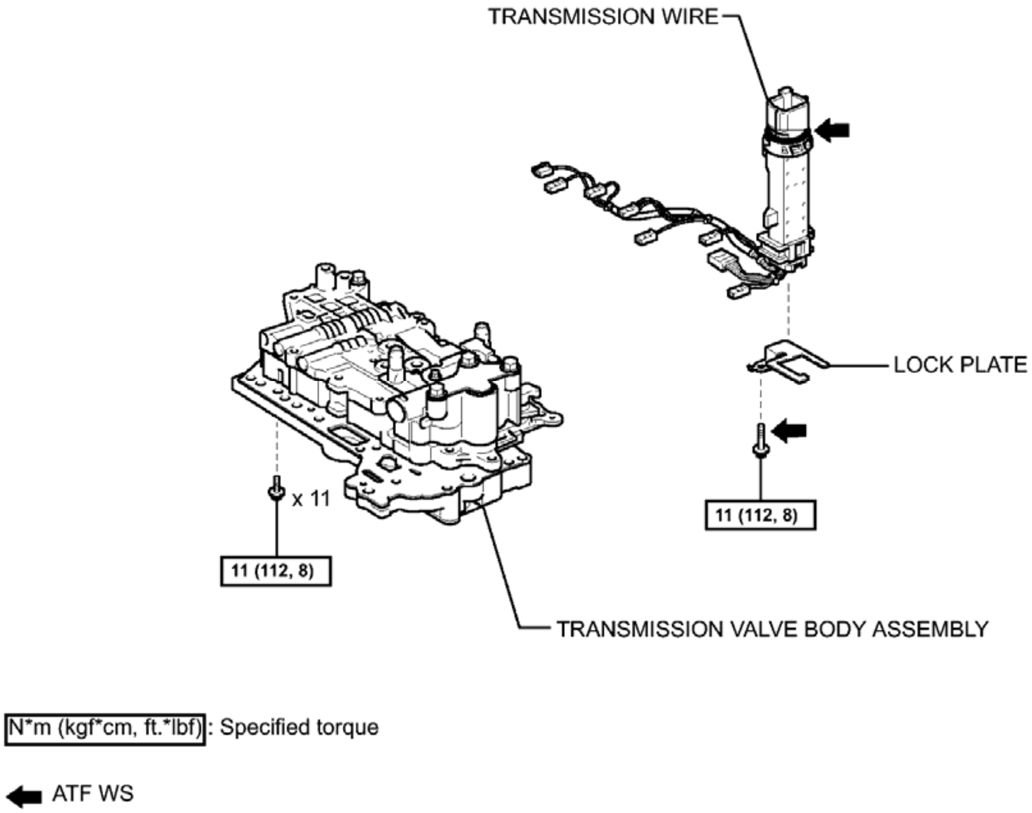
TRANSMISSION WIRE
LOCK PLATE
x 11
11 (112, 8)
11 (112, 8)
TRANSMISSION VALVE BODY ASSEMBLY
N*m (kgf*cm, ft.*lbf) : Specified torque
ATF WS

Fig. 37: Identifying Transmission Wire Replacement Components With Torque Specifications
Courtesy of TOYOTA MOTOR SALES, U.S.A., INC.

REMOVAL

REMOVAL

1. **REMOVE TRANSMISSION VALVE BODY ASSEMBLY**

   Refer to **REMOVAL**

2. **REMOVE TRANSMISSION WIRE**
   a. Disconnect the 9 connectors.

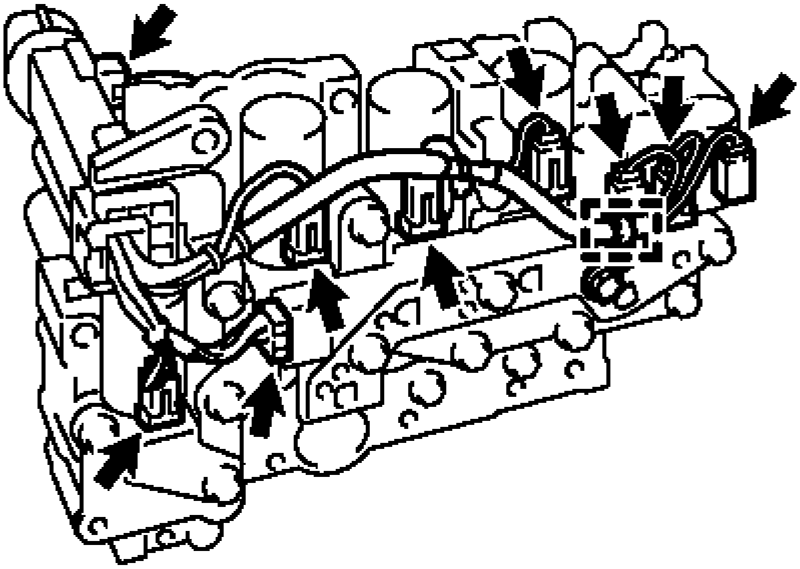

Fig. 38: Locating Transmission Wire Connectors
Courtesy of TOYOTA MOTOR SALES, U.S.A., INC.

b. Remove the transmission wire from the clamp.
c. Remove the bolt, lock plate and transmission wire from the valve body.

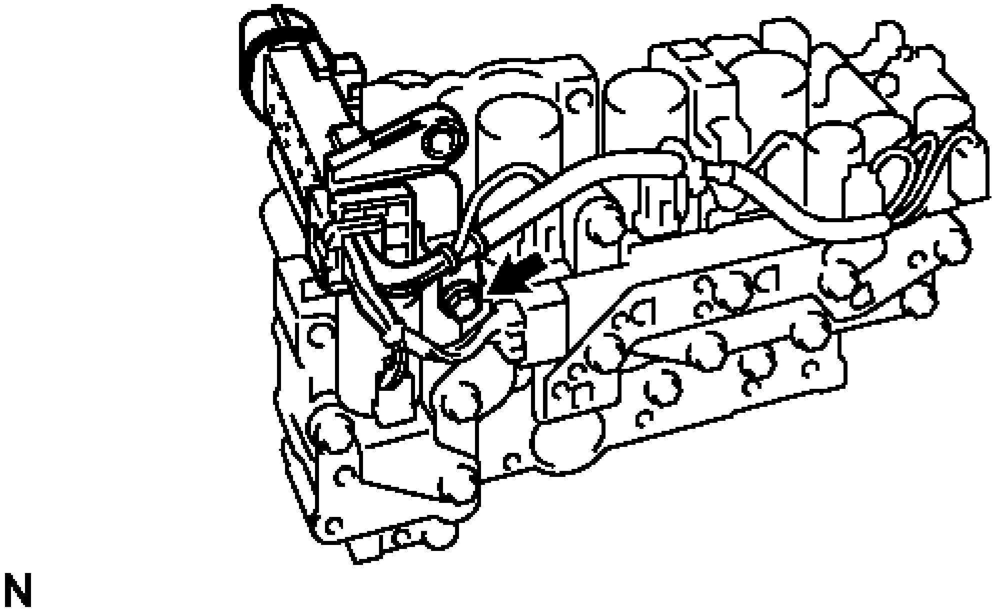

Fig. 39: Locating Transmission Wire Bolt

Courtesy of TOYOTA MOTOR SALES, U.S.A., INC.

INSTALLATION

INSTALLATION

1. **INSTALL TRANSMISSION WIRE**
    a. Coat the O-ring with ATF.

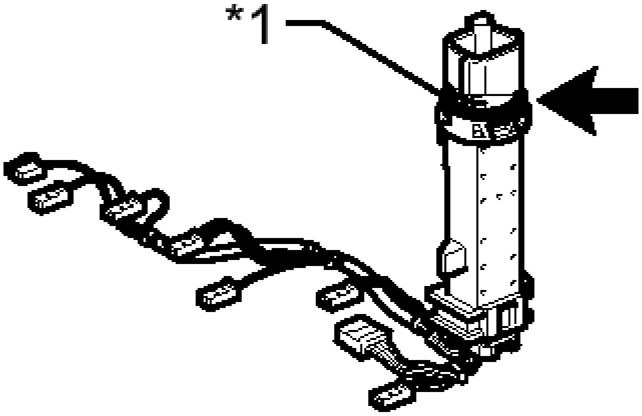

Fig. 40: Identifying O-Ring
Courtesy of TOYOTA MOTOR SALES, U.S.A., INC.

TEXT IN ILLUSTRATION

*1	O-ring

    b. Coat the bolt with ATF.
    c. Install the transmission wire and lock plate to the valve body with the bolt.

Torque: 11 N*m (112 kgf*cm, 8 ft.*lbf)

    d. Install the transmission wire to the clamp.
    e. Connect the 9 connectors.

2. **INSTALL TRANSMISSION VALVE BODY ASSEMBLY**

Refer to **INSTALLATION**

VALVE BODY ASSEMBLY

COMPONENTS

ILLUSTRATION

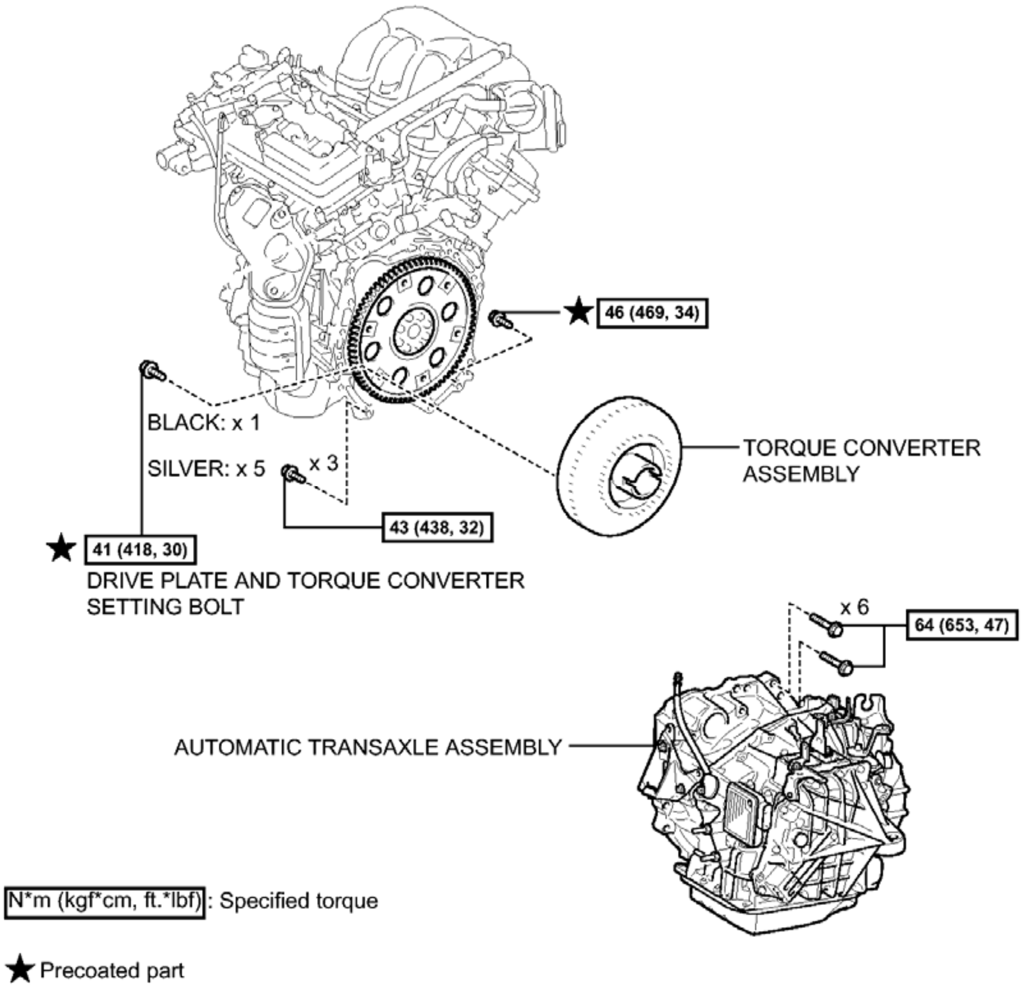
46 (469, 34)
BLACK: x 1
SILVER: x 5
x 3
TORQUE CONVERTER ASSEMBLY
43 (438, 32)
41 (418, 30)
DRIVE PLATE AND TORQUE CONVERTER SETTING BOLT
x 6
64 (653, 47)
AUTOMATIC TRANSAXLE ASSEMBLY
N*m (kgf*cm, ft.*lbf) : Specified torque
★ Precoated part

Fig. 41: Identifying Valve Body Assembly Replacement Components With Torque Specifications (1 Of 3)
Courtesy of TOYOTA MOTOR SALES, U.S.A., INC.

ILLUSTRATION

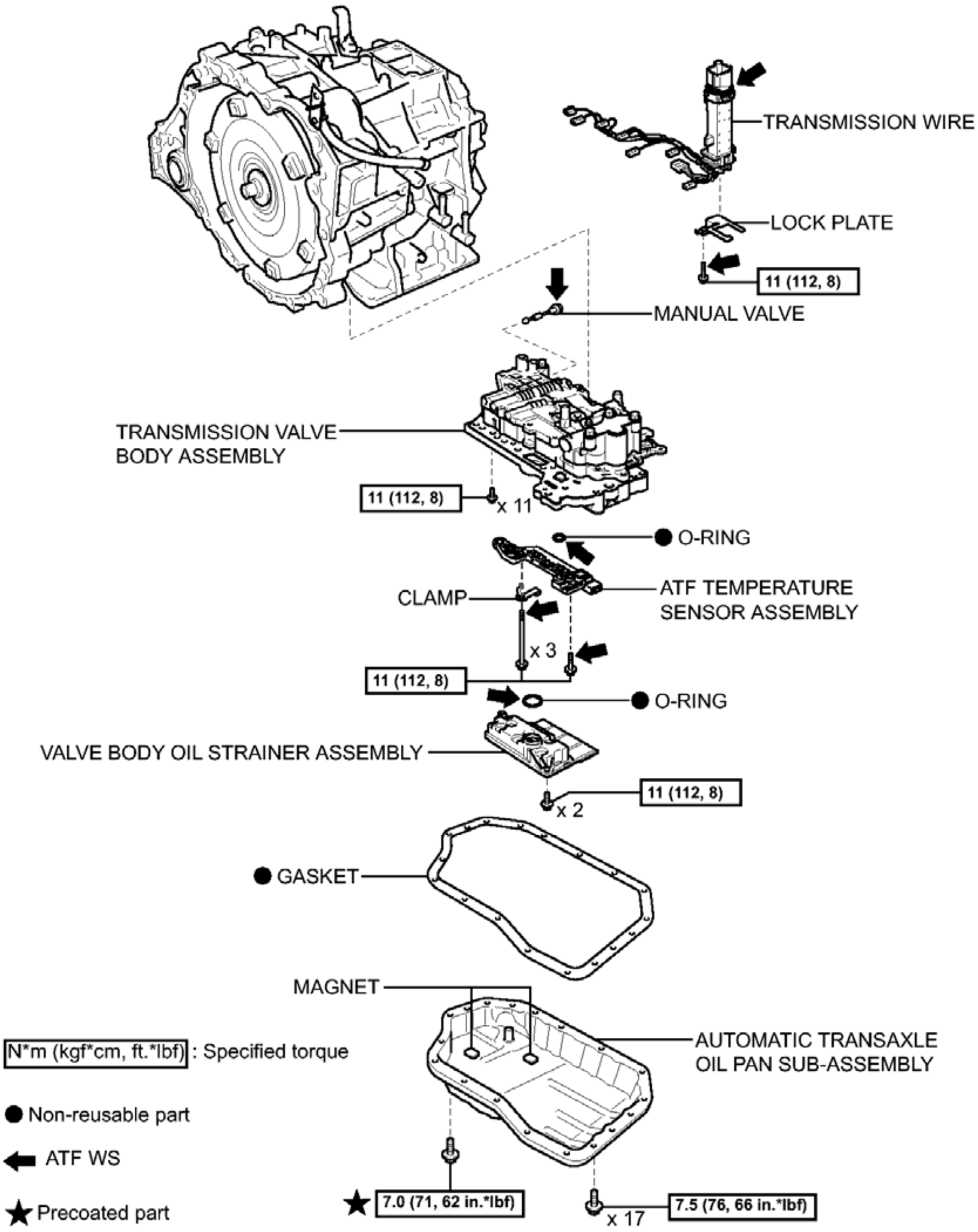
TRANSMISSION WIRE
LOCK PLATE
11 (112, 8)
MANUAL VALVE
TRANSMISSION VALVE BODY ASSEMBLY
11 (112, 8)
x 11
● O-RING
ATF TEMPERATURE SENSOR ASSEMBLY
CLAMP
x 3
11 (112, 8)
● O-RING
VALVE BODY OIL STRAINER ASSEMBLY
11 (112, 8)
x 2
● GASKET
MAGNET
AUTOMATIC TRANSAXLE OIL PAN SUB-ASSEMBLY
N*m (kgf*cm, ft.*lbf) : Specified torque
● Non-reusable part
ATF WS
★ Precoated part
★ 7.0 (71, 62 in.*lbf)
7.5 (76, 66 in.*lbf)
x 17

Fig. 42: Identifying Valve Body Assembly Replacement Components With Torque Specifications (2 Of 3)
Courtesy of TOYOTA MOTOR SALES, U.S.A., INC.

ILLUSTRATION

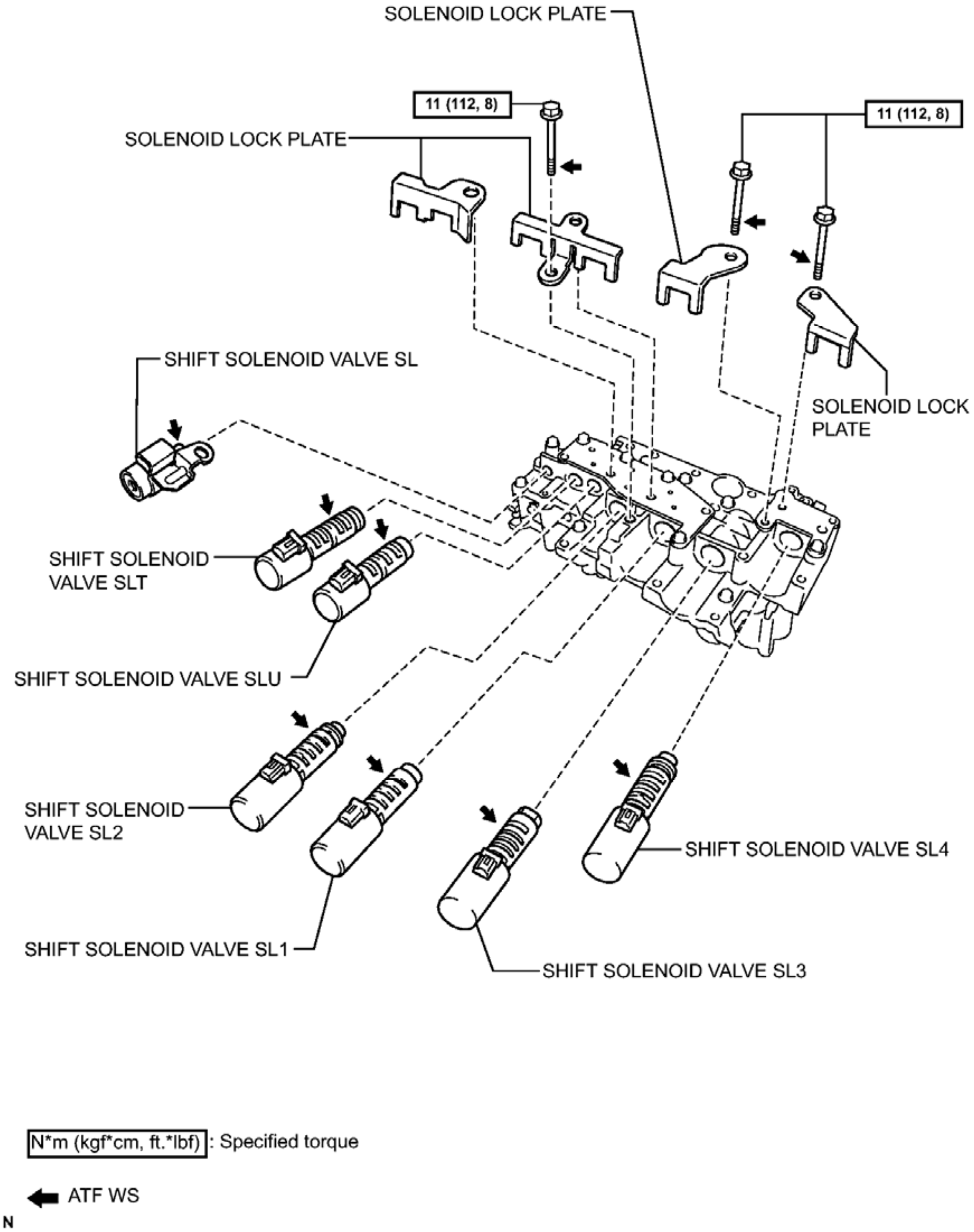
SOLENOID LOCK PLATE
11 (112, 8)
SOLENOID LOCK PLATE
11 (112, 8)
SHIFT SOLENOID VALVE SL
SOLENOID LOCK PLATE
SHIFT SOLENOID VALVE SLT
SHIFT SOLENOID VALVE SLU
SHIFT SOLENOID VALVE SL2
SHIFT SOLENOID VALVE SL4
SHIFT SOLENOID VALVE SL1
SHIFT SOLENOID VALVE SL3
N*m (kgf*cm, ft.*lbf) : Specified torque
ATF WS
N

Fig. 43: Identifying Valve Body Assembly Replacement Components With Torque Specifications (3 Of 3)
Courtesy of TOYOTA MOTOR SALES, U.S.A., INC.

REMOVAL

REMOVAL

1. **REMOVE AUTOMATIC TRANSAXLE ASSEMBLY**

   Refer to **REMOVAL**

2. **REMOVE TORQUE CONVERTER ASSEMBLY** See step 11
3. **REMOVE AUTOMATIC TRANSAXLE OIL PAN SUB-ASSEMBLY**
   a. Remove the 18 bolts and oil pan from the transaxle.

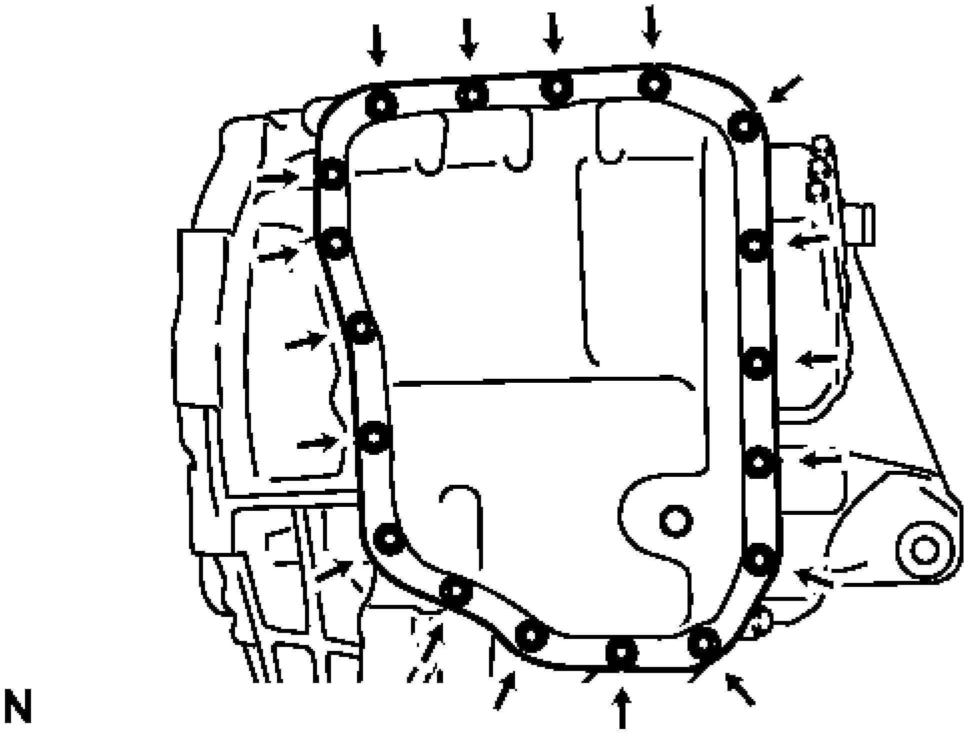

Fig. 44: Identifying Oil Pan Bolts
Courtesy of TOYOTA MOTOR SALES, U.S.A., INC.

NOTE: **Some fluid will remain in the oil pan. Remove all the pan bolts, and carefully remove the oil pan sub-assembly.**

   b. Remove the gasket from the oil pan.
   c. Remove the 2 magnets from the oil pan.

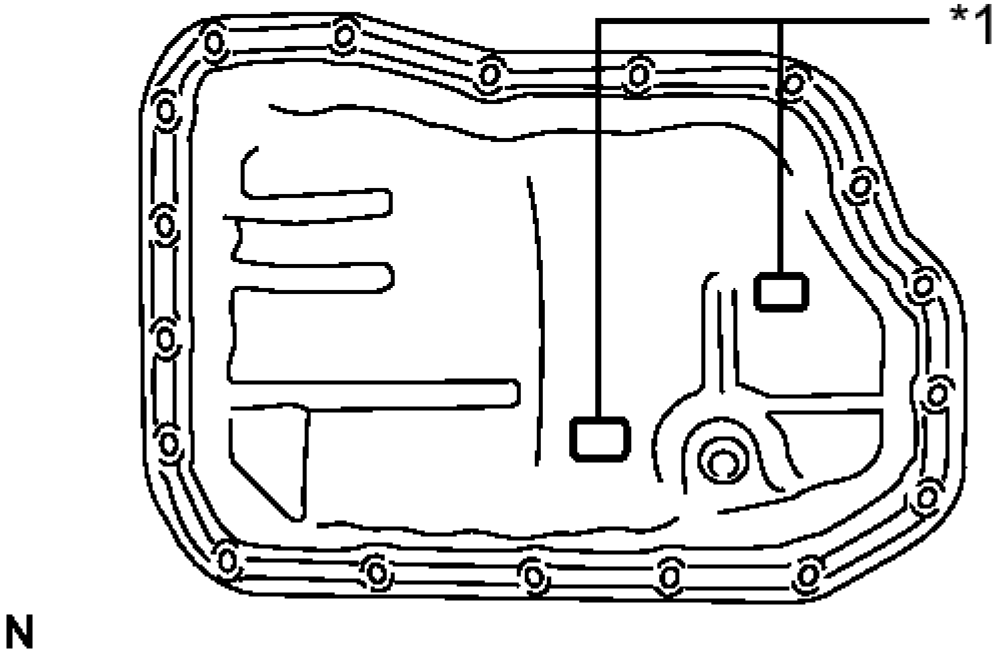

Fig. 45: Identifying Oil Pan Magnet
Courtesy of TOYOTA MOTOR SALES, U.S.A., INC.

TEXT IN ILLUSTRATION

*1	Magnet

d. Examine particles in the oil pan.

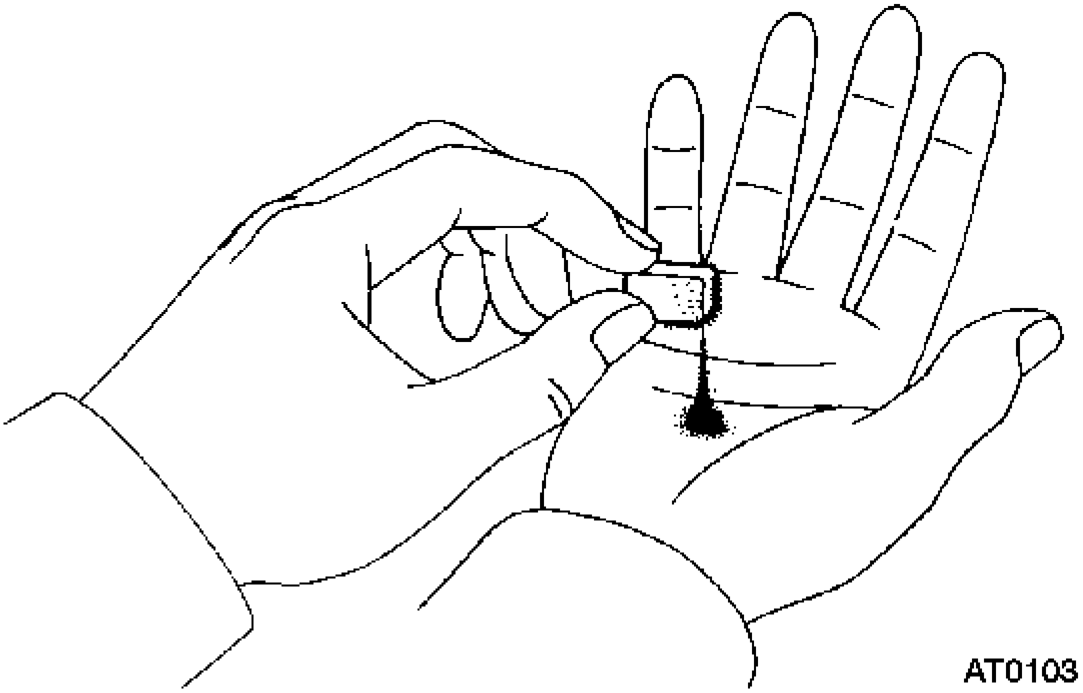

Fig. 46: Inspecting For Chips And Steel Particles In Pan
Courtesy of TOYOTA MOTOR SALES, U.S.A., INC.

1. Collect any steel chips with the removed magnets. Look carefully at the chips and particles in the oil pan and on the magnets to see the type of wear which might be found in the transaxle.

   Result

   Steel (magnetic)

   Bearing, gear and plate wear

   Brass (non-magnetic)

   Bushing wear

4. **REMOVE VALVE BODY OIL STRAINER ASSEMBLY**
   a. Remove the 2 bolts and oil strainer from the valve body.

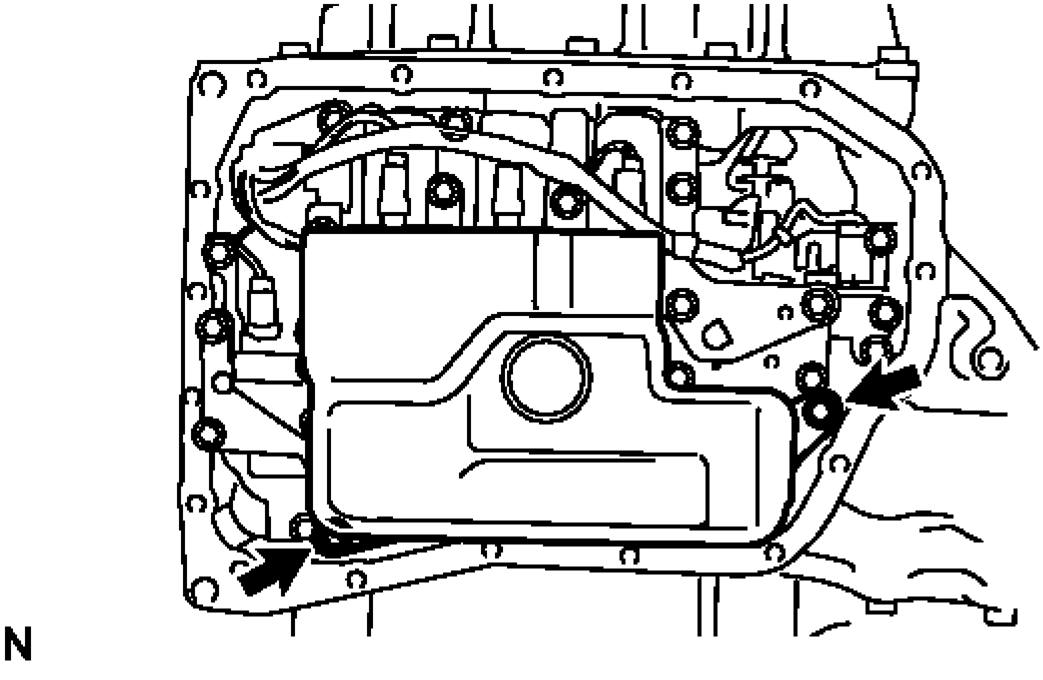

Fig. 47: Identifying Oil Strainer Bolts
Courtesy of TOYOTA MOTOR SALES, U.S.A., INC.

   b. Remove the O-ring from the oil strainer.

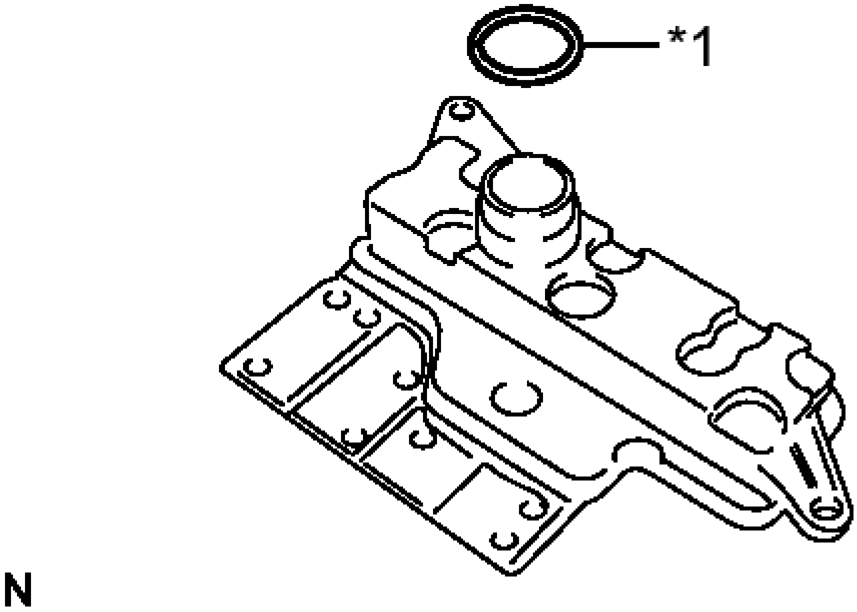

Fig. 48: Identifying O-Ring
Courtesy of TOYOTA MOTOR SALES, U.S.A., INC.

TEXT IN ILLUSTRATION

*1	O-ring

5. **REMOVE TRANSMISSION VALVE BODY ASSEMBLY**
    a. Remove the 11 bolts and valve body from the transaxle.

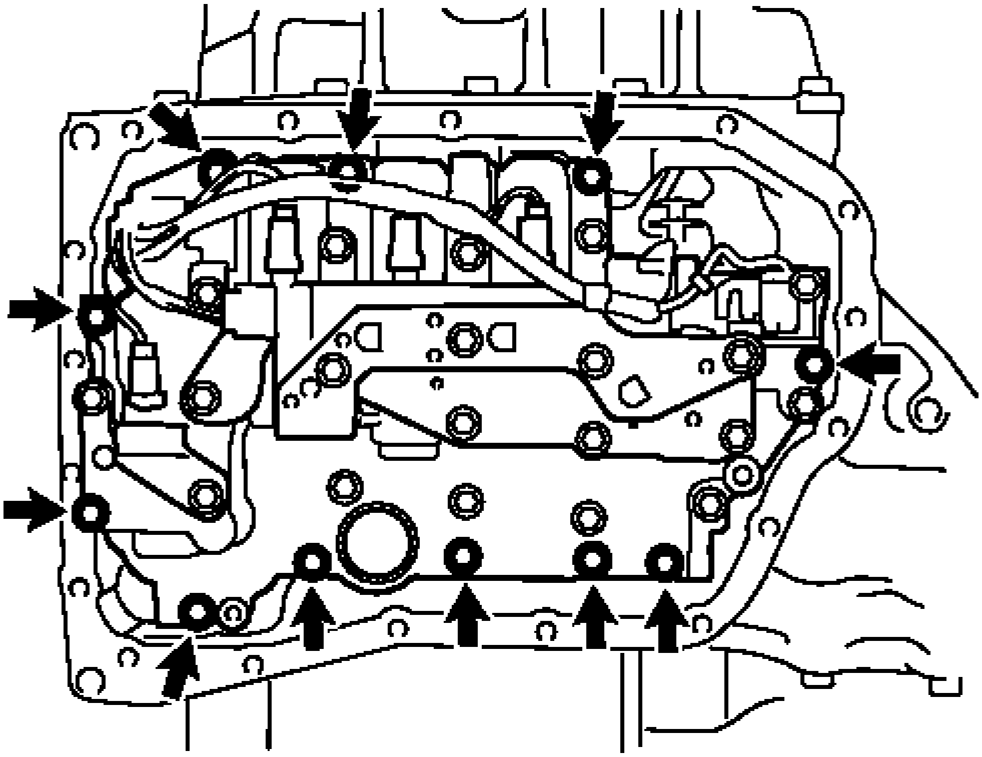

Fig. 49: Identifying Transmission Valve Body Assembly Bolts
Courtesy of TOYOTA MOTOR SALES, U.S.A., INC.

NOTE: **When removing the transmission valve body assembly, be careful not to allow the transmission revolution sensor and the transaxle case to interfere with each other.**

6. **REMOVE MANUAL VALVE**
   a. Remove the manual valve from the valve body.

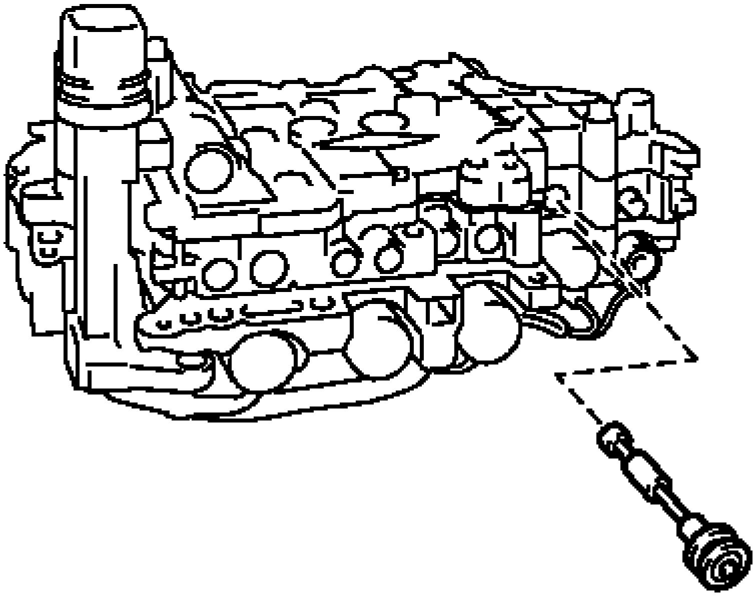

Fig. 50: Identifying Manual Valve
Courtesy of TOYOTA MOTOR SALES, U.S.A., INC.

DISASSEMBLY

DISASSEMBLY

1. **REMOVE TRANSMISSION WIRE** See step 2
2. **REMOVE ATF TEMPERATURE SENSOR ASSEMBLY**
    a. Remove the 4 bolts, ATF temperature sensor assembly and clamp from the valve body assembly.

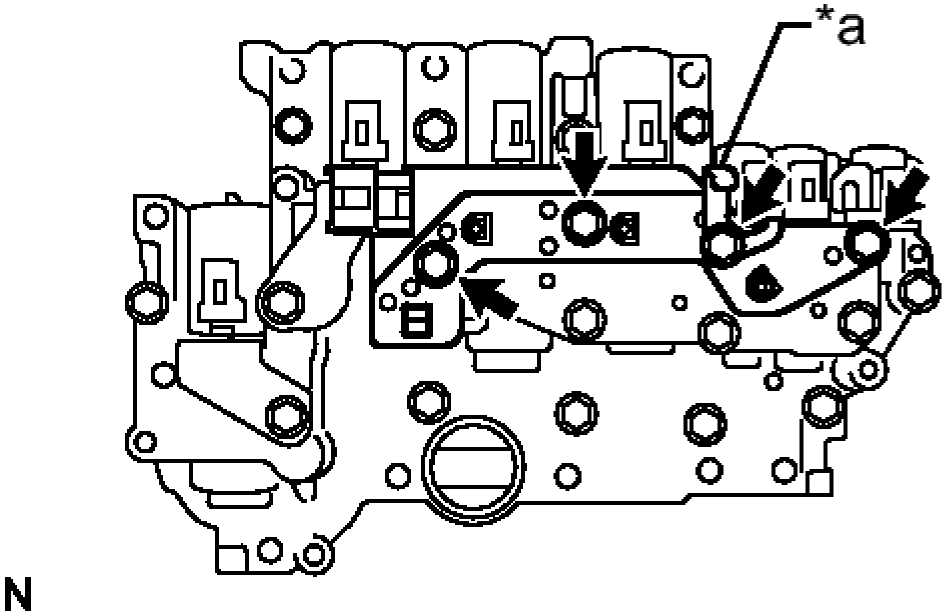

Fig. 51: Identifying Clamp
Courtesy of TOYOTA MOTOR SALES, U.S.A., INC.

TEXT IN ILLUSTRATION

*a	Clamp

b. Remove the O-ring from the ATF temperature sensor assembly.

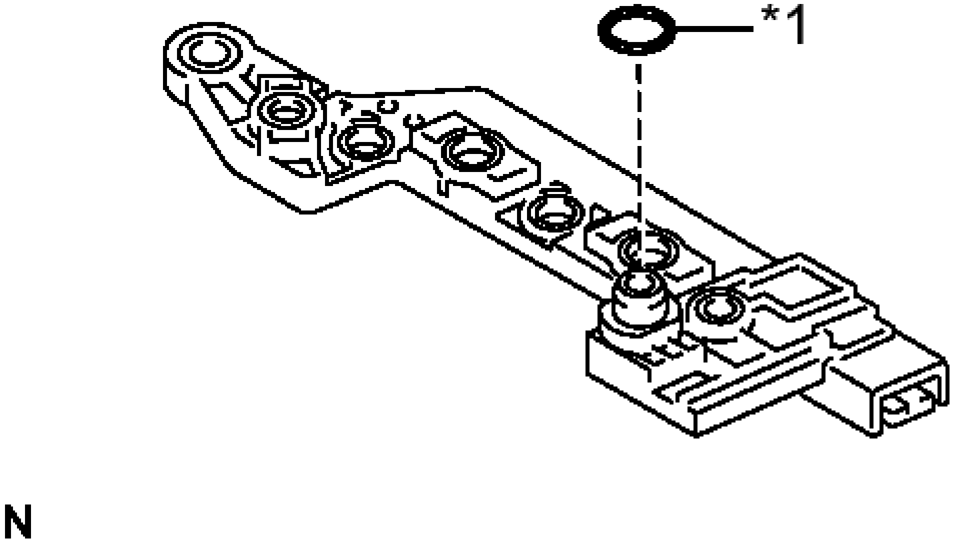

Fig. 52: Identifying ATF Temperature Sensor Assembly O-Ring
Courtesy of TOYOTA MOTOR SALES, U.S.A., INC.

TEXT IN ILLUSTRATION

*1	O-ring

3. **REMOVE SHIFT SOLENOID VALVE SL**
    a. Remove the shift solenoid valve SL from the valve body assembly.

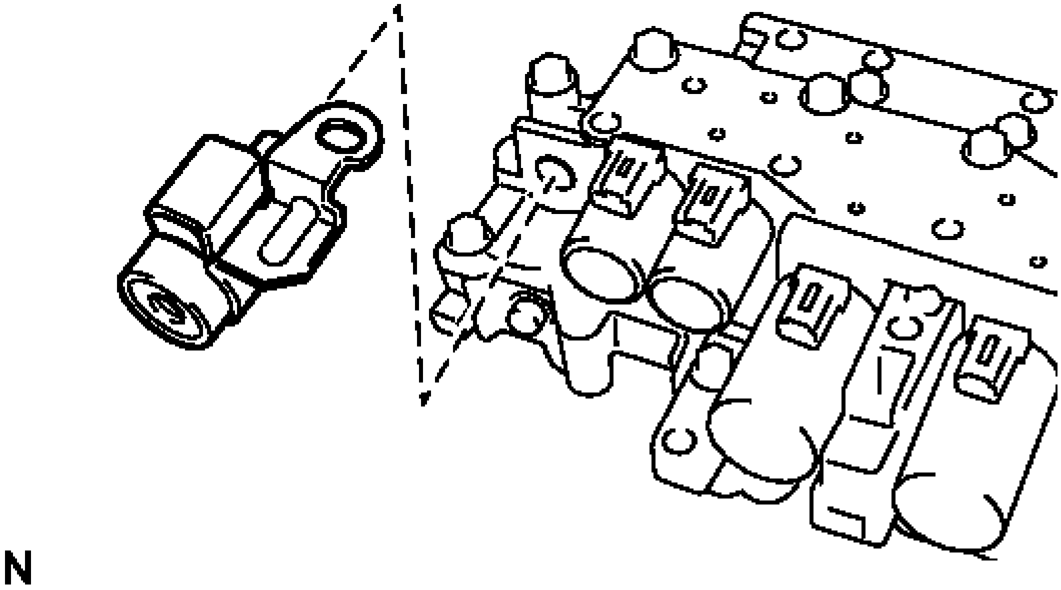

Fig. 53: Identifying Shift Solenoid Valve SL
Courtesy of TOYOTA MOTOR SALES, U.S.A., INC.

4. **REMOVE SHIFT SOLENOID VALVE SLT**
   a. Remove the lock plate and shift solenoid valve SLT from the valve body assembly.

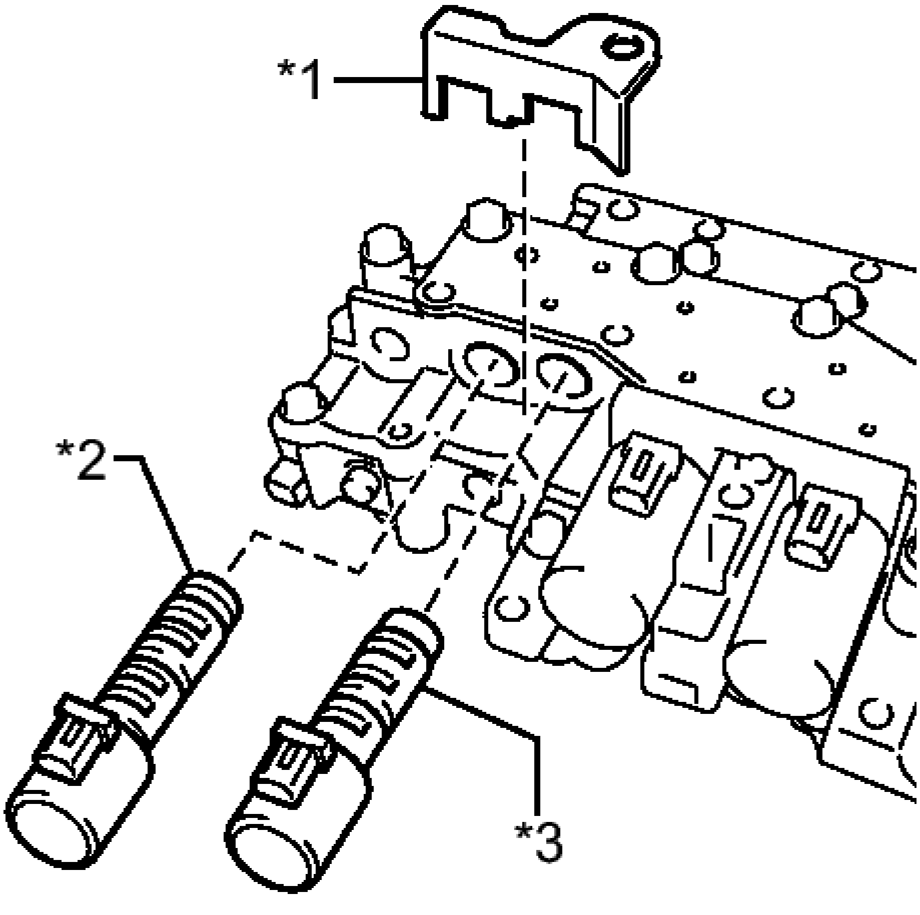

Fig. 54: Identifying Lock Plate, Shift Solenoid Valve SLT And Shift Solenoid Valve SLU
Courtesy of TOYOTA MOTOR SALES, U.S.A., INC.

TEXT IN ILLUSTRATION

*1	Lock Plate
*2	Solenoid Valve SLT
*3	Solenoid Valve SLU

5. **REMOVE SHIFT SOLENOID VALVE SLU**
    a. Remove the shift solenoid valve SLU from the valve body assembly.

6. **REMOVE SHIFT SOLENOID VALVE SL2**

   a. Remove the bolt, lock plate and shift solenoid valve SL2 from the valve body assembly.

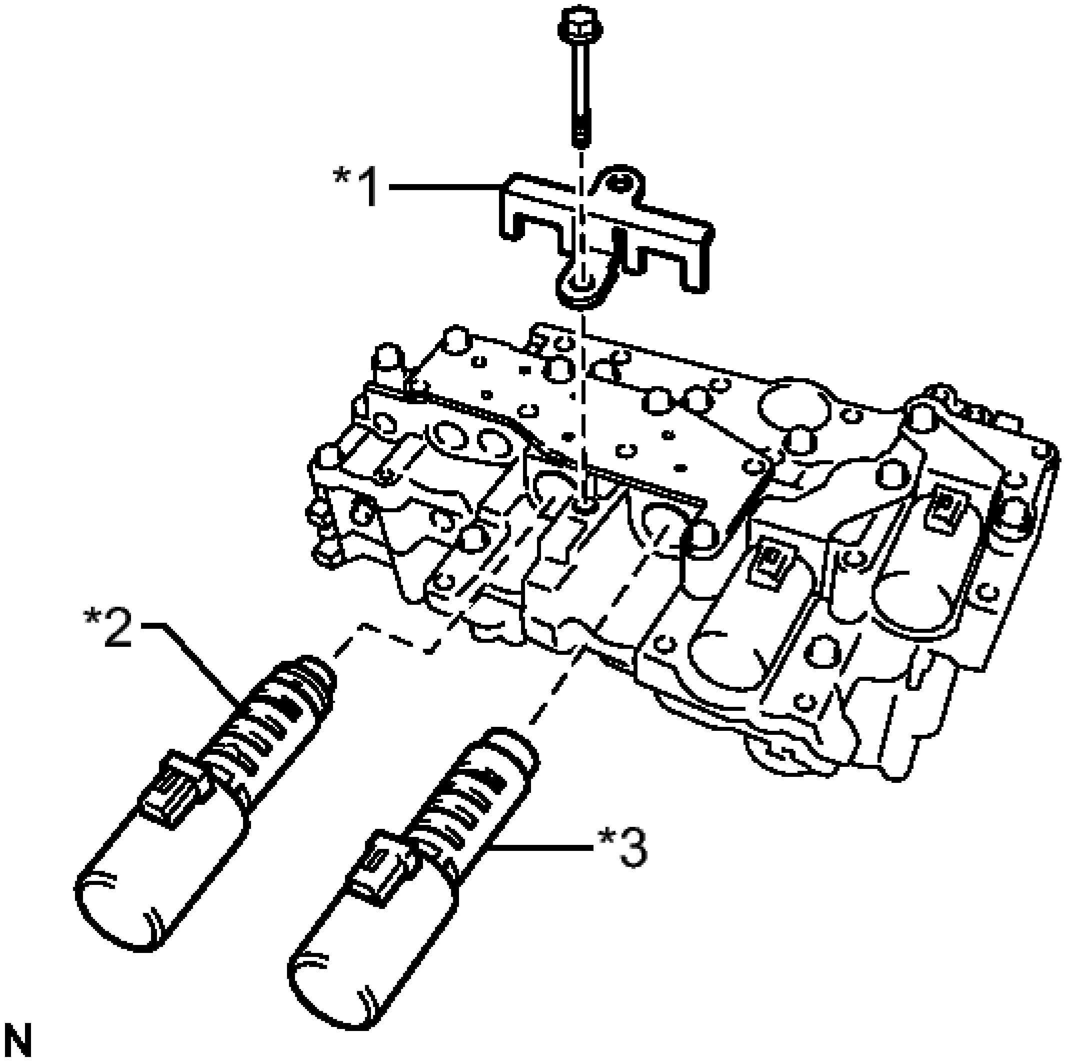

Fig. 55: Identifying Lock Plate, Shift Solenoid Valve SL2 And Shift Solenoid Valve SL1 With Bolt
Courtesy of TOYOTA MOTOR SALES, U.S.A., INC.

TEXT IN ILLUSTRATION

*1	Lock Plate
*2	Solenoid Valve SL2
*3	Solenoid Valve

	SL1

7. **REMOVE SHIFT SOLENOID VALVE SL1**
    a. Remove the shift solenoid valve SL1 from the valve body assembly.
8. **REMOVE SHIFT SOLENOID VALVE SL3**
    a. Remove the bolt, lock plate and shift solenoid valve SL3 from the valve body assembly.

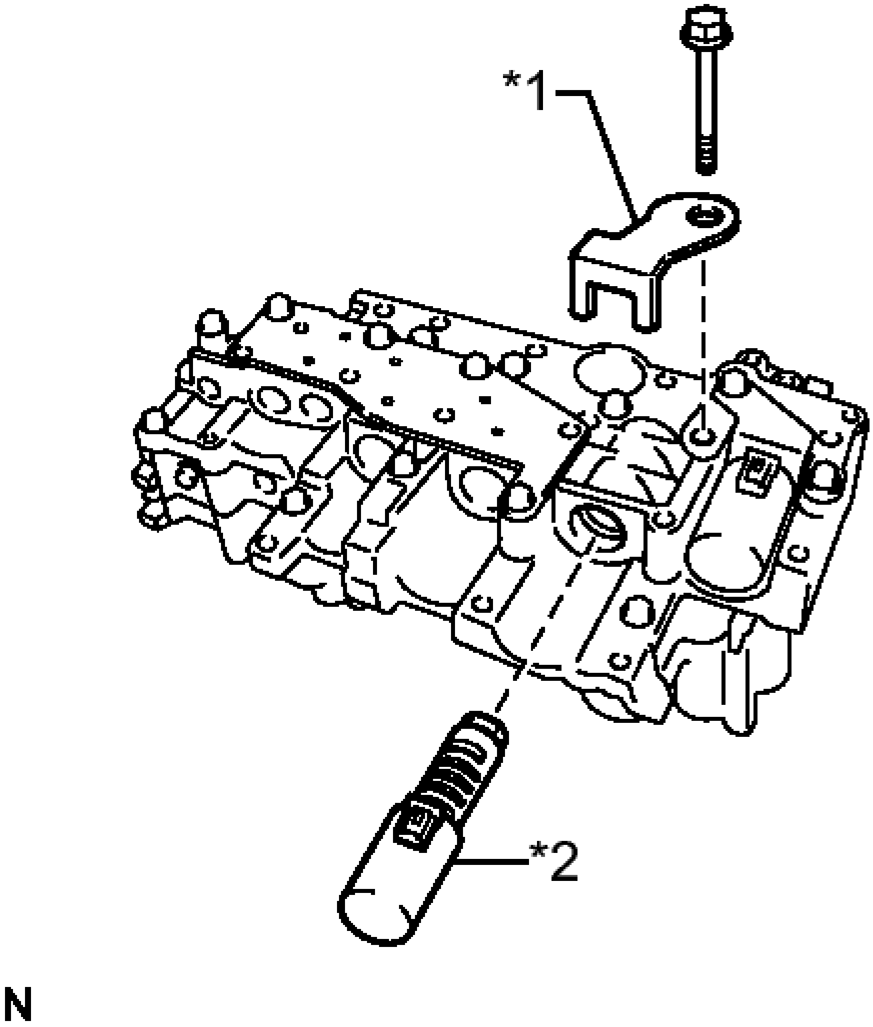

Fig. 56: Identifying Lock Plate And Shift Solenoid Valve SL3 With Bolt
Courtesy of TOYOTA MOTOR SALES, U.S.A., INC.

TEXT IN ILLUSTRATION

*1	Lock Plate
*2	Solenoid Valve

	SL3

9. **REMOVE SHIFT SOLENOID VALVE SL4**
    a. Remove the bolt, lock plate and shift solenoid valve SL4 from the valve body assembly.

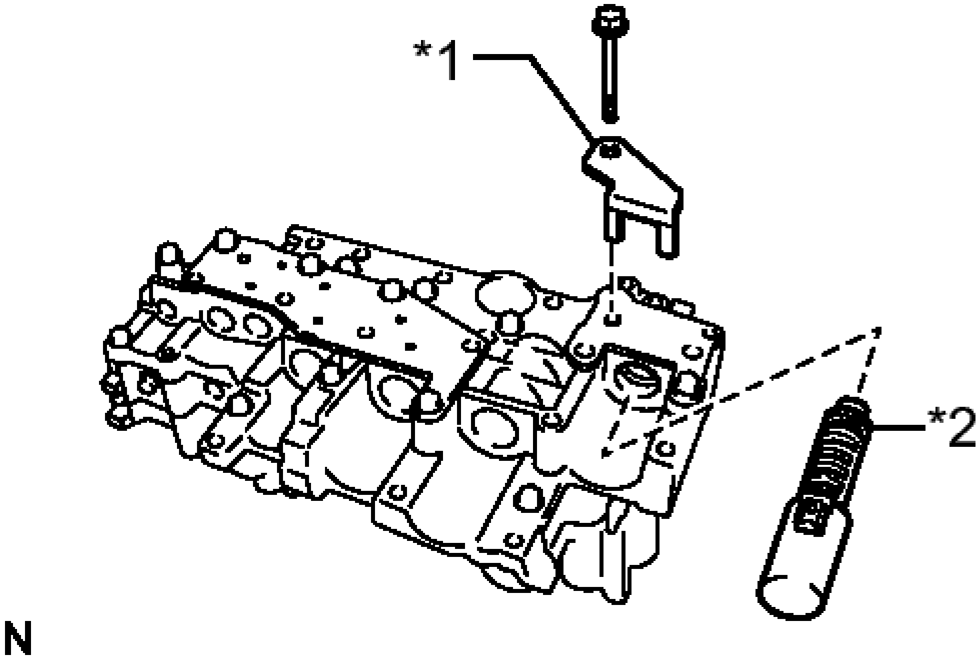

Fig. 57: Identifying Lock Plate And Shift Solenoid Valve SL4 With Bolt
Courtesy of TOYOTA MOTOR SALES, U.S.A., INC.

TEXT IN ILLUSTRATION

*1	Lock Plate
*2	Solenoid Valve SL4

INSPECTION

INSPECTION

1. **INSPECT SHIFT SOLENOID VALVE SL**
    a. Measure the resistance according to the value(s) in the table below.

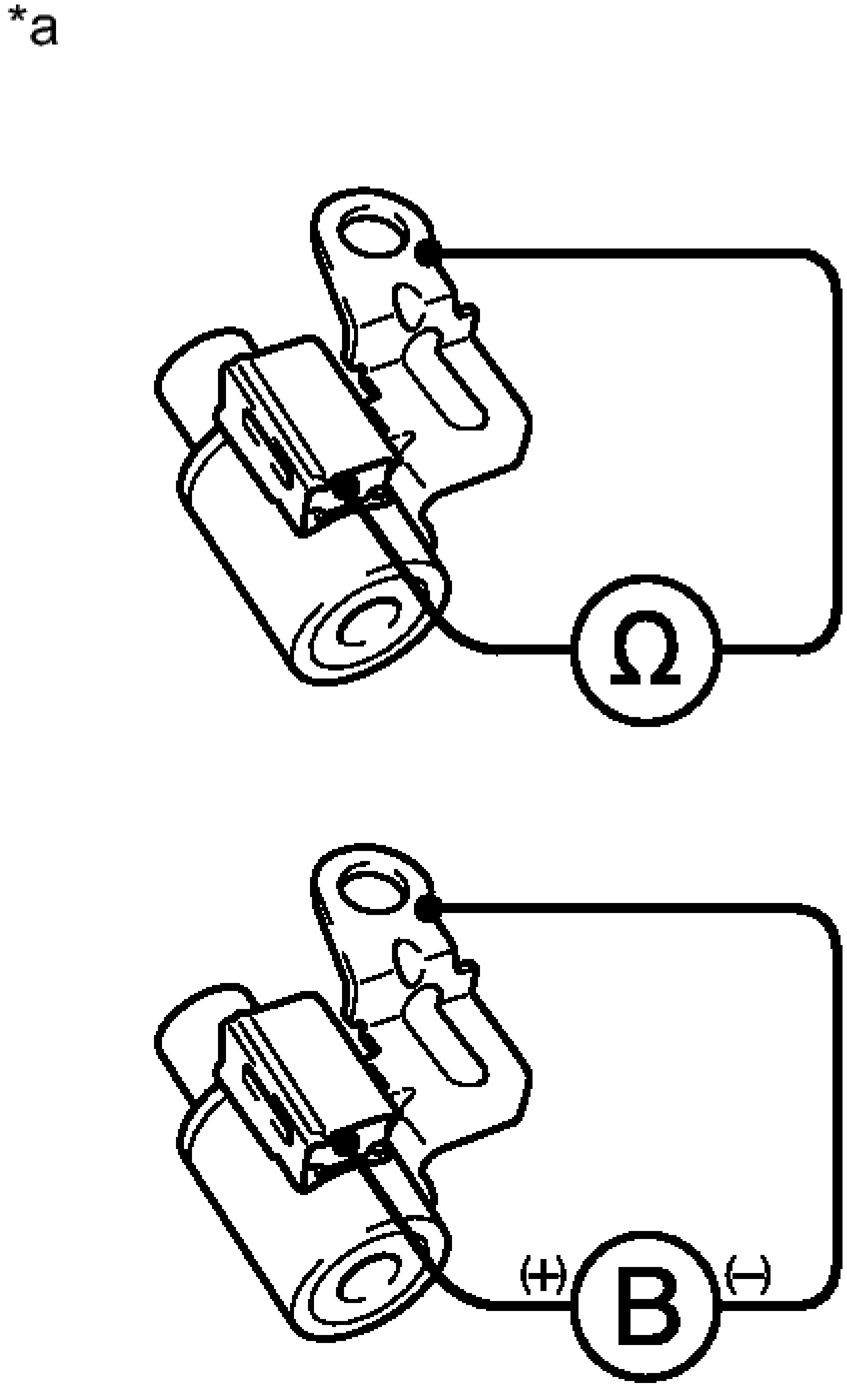

Fig. 58: Measuring Resistance
Courtesy of TOYOTA MOTOR SALES, U.S.A., INC.

Standard Resistance

Tester Connection	**Condition**	**Specified Condition**
Solenoid Connector (SL) - Solenoid Body (SL)	20°C (68° F)	11 to 15 ohms

TEXT IN ILLUSTRATION

*a	Shift Solenoid Valve SL

If the value is not as specified, replace the shift solenoid valve.

b. Connect a positive (+) lead from the battery to the terminal of the solenoid connector, and a negative (-) lead to the solenoid body, and check the operation of the valve.

NOTE: **When using battery voltage during the inspection, do not bring the positive (+) and negative (-) tester probes too close to each other as a short circuit may occur.**

OK

The valve moves and makes an operating sound.

If the operation cannot be done as specified, replace the shift solenoid valve.

2. **INSPECT SHIFT SOLENOID VALVE (SLT, SLU, SL1, SL2, SL3, SL4)**
   a. Measure the resistance according to the value(s) in the table below.

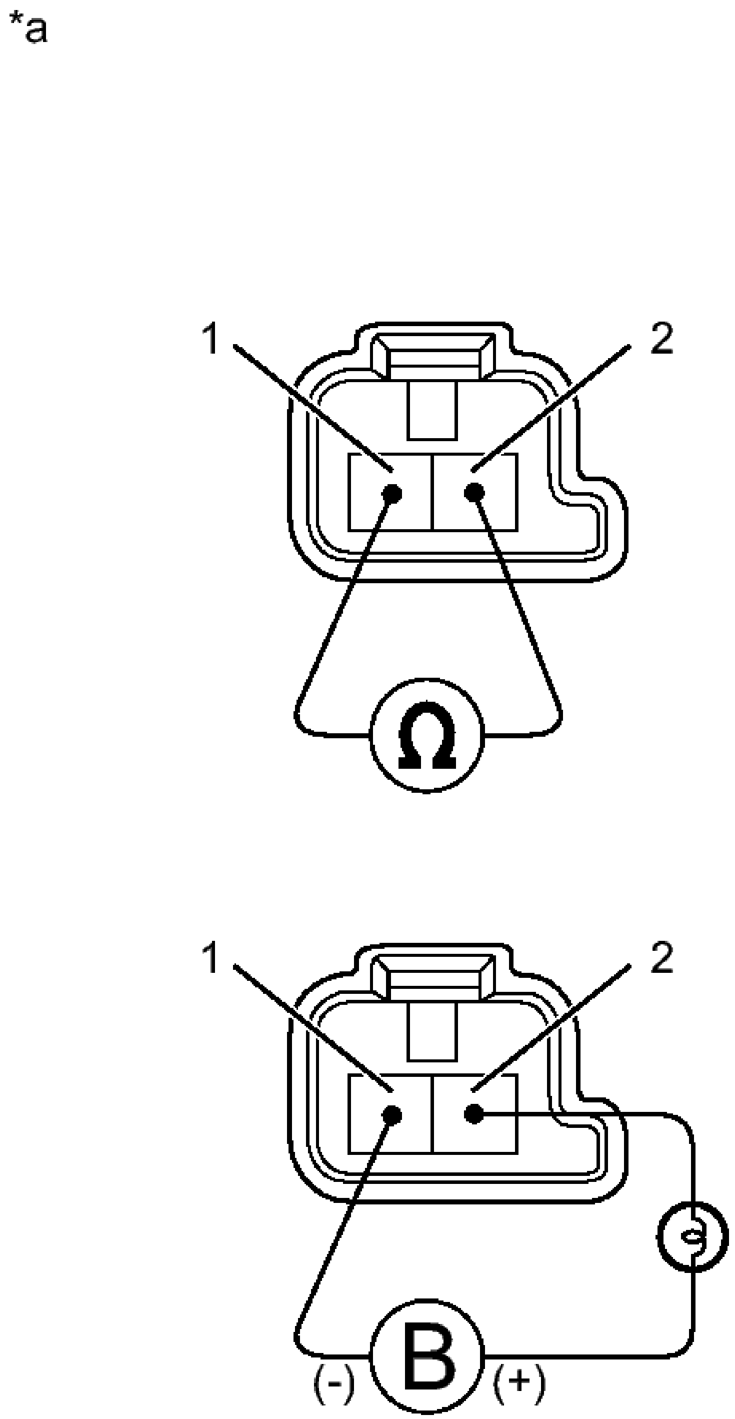

Fig. 59: Inspecting Shift Solenoid Valve SL2
Courtesy of TOYOTA MOTOR SALES, U.S.A., INC.

Standard Resistance

Tester Connection	Condition	Specified Condition
1 - 2	20°C (68° F)	5.0 to 5.6 ohms

TEXT IN ILLUSTRATION

*a	Component without harness connected (Shift Solenoid Valve SLT, SLU, SL1, SL2, SL3, SL4)

If the value is not as specified, replace the shift solenoid valve.

b. Connect a positive (+) lead from the battery with a 21 W bulb to terminal 2 and a negative (-) lead to terminal 1 of the solenoid valve connector, and check the operation of the valve.

NOTE: **When using battery voltage during the inspection, do not bring the positive (+) and negative (-) tester probes too close to each other as a short circuit may occur.**

OK

The valve moves and makes an operating sound.

If the operation cannot be done as specified, replace the shift solenoid valve.

REASSEMBLY

REASSEMBLY

1. **INSTALL SHIFT SOLENOID VALVE SL4**
   a. Coat the shift solenoid valve SL4 and bolt with ATF.

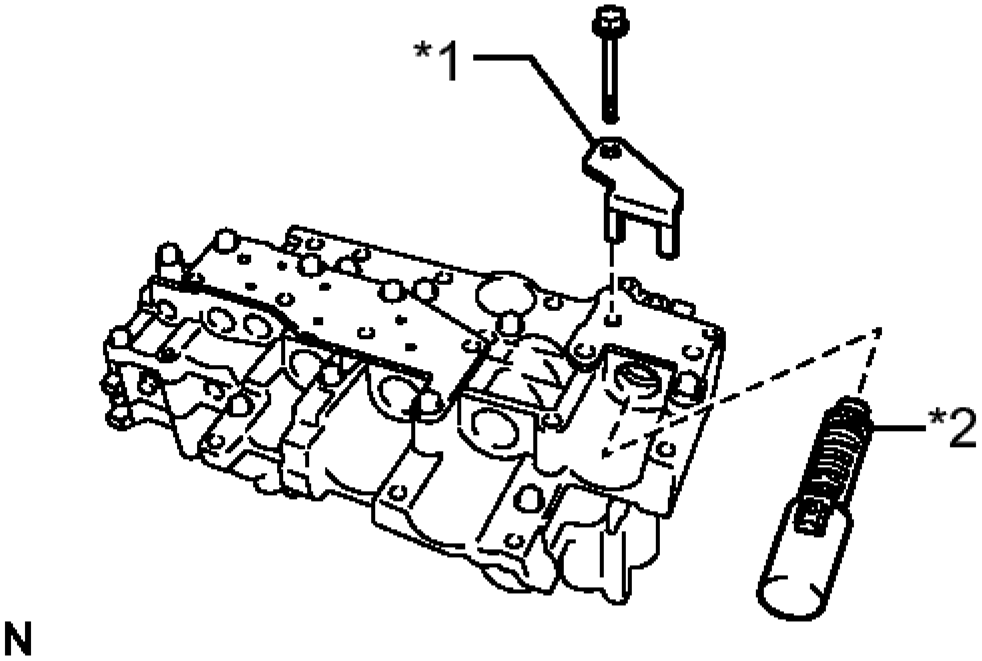

Fig. 60: Identifying Lock Plate And Shift Solenoid Valve SL4 With Bolt
Courtesy of TOYOTA MOTOR SALES, U.S.A., INC.

TEXT IN ILLUSTRATION

*1	Lock Plate
*2	Solenoid Valve SL4

b. Install the shift solenoid valve SL4 and lock plate to the valve body assembly with the bolt.

Torque: 11 N*m (112 kgf*cm, 8 ft.*lbf)

2. **INSTALL SHIFT SOLENOID VALVE SL3**
   a. Coat the shift solenoid valve SL3 and bolt with ATF.

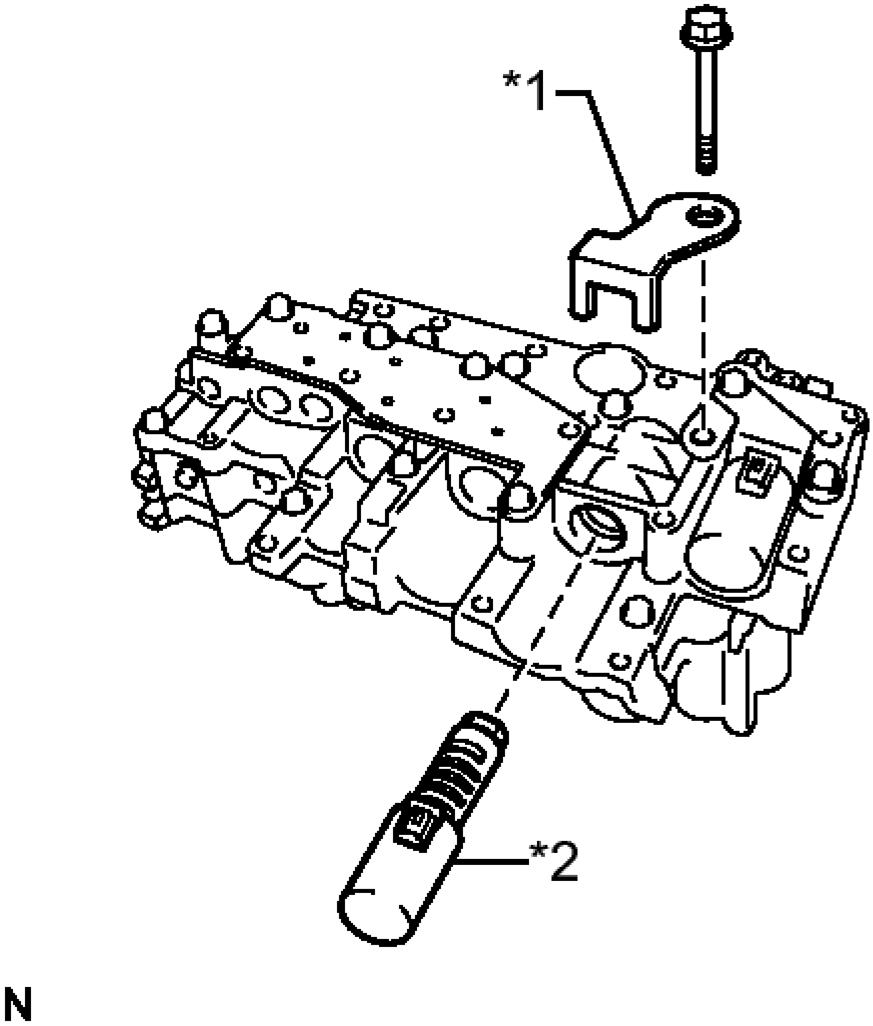

Fig. 61: Identifying Lock Plate And Shift Solenoid Valve SL3 With Bolt
Courtesy of TOYOTA MOTOR SALES, U.S.A., INC.

TEXT IN ILLUSTRATION

*1	Lock Plate
*2	Solenoid Valve SL3

b. Install the shift solenoid valve SL3 and lock plate to the valve body assembly with the bolt.

Torque: 11 N*m (112 kgf*cm, 8 ft.*lbf)

3. **INSTALL SHIFT SOLENOID VALVE SL1**
   a. Coat the shift solenoid valve SL1 with ATF.

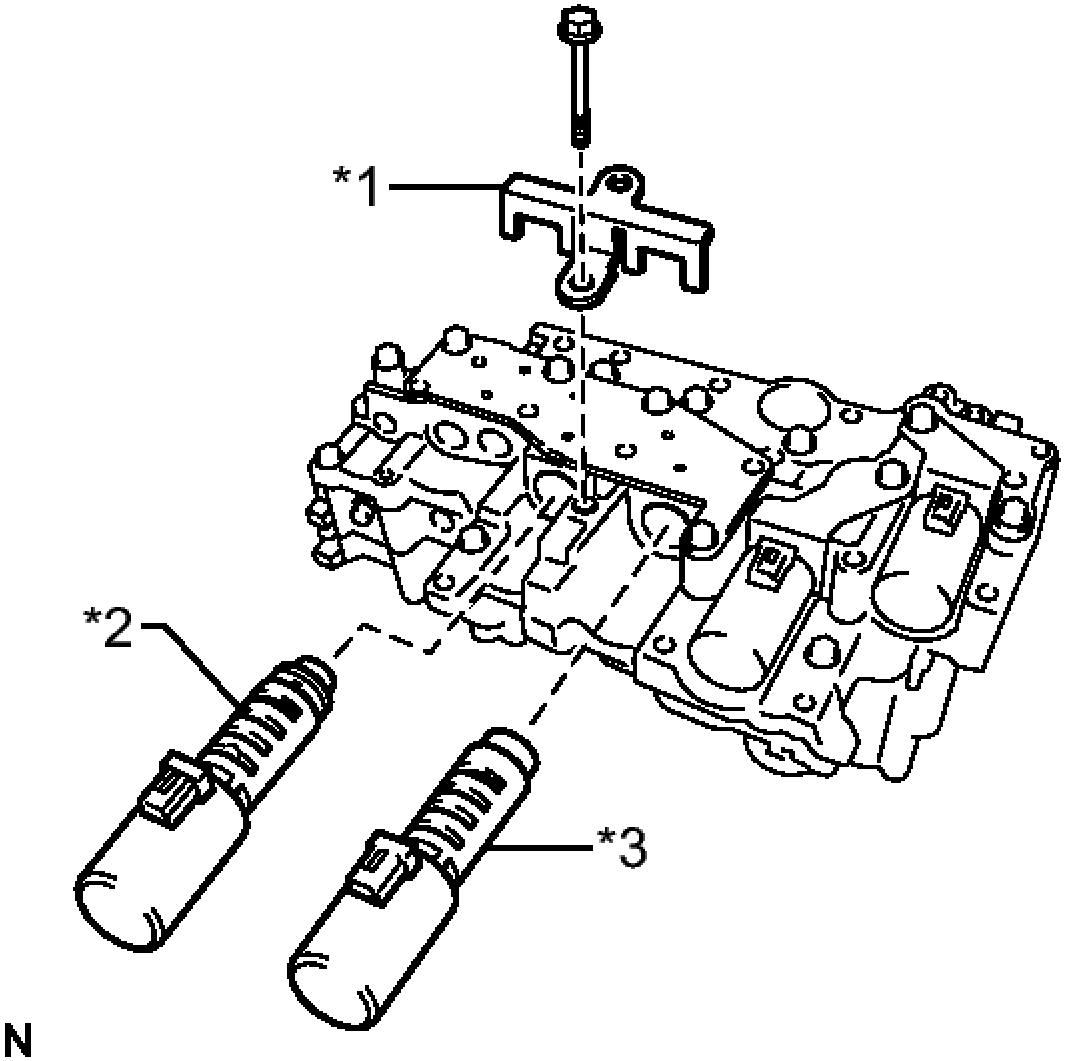

Fig. 62: Identifying Lock Plate, Shift Solenoid Valve SL2 And Shift Solenoid Valve SL1 With Bolt
Courtesy of TOYOTA MOTOR SALES, U.S.A., INC.

TEXT IN ILLUSTRATION

*1	Lock Plate
*2	Solenoid Valve SL2
*3	Solenoid Valve SL1

b. Install the shift solenoid valve SL1 to the valve body assembly.

4. **INSTALL SHIFT SOLENOID VALVE SL2**
    a. Coat the shift solenoid valve SL2 and bolt with ATF.
    b. Install the shift solenoid valve SL2 and lock plate to the valve body assembly with the bolt.

    Torque: 11 N*m (112 kgf*cm, 8 ft.*lbf)

5. **INSTALL SHIFT SOLENOID VALVE SLU**
    a. Coat the shift solenoid valve SLU with ATF.

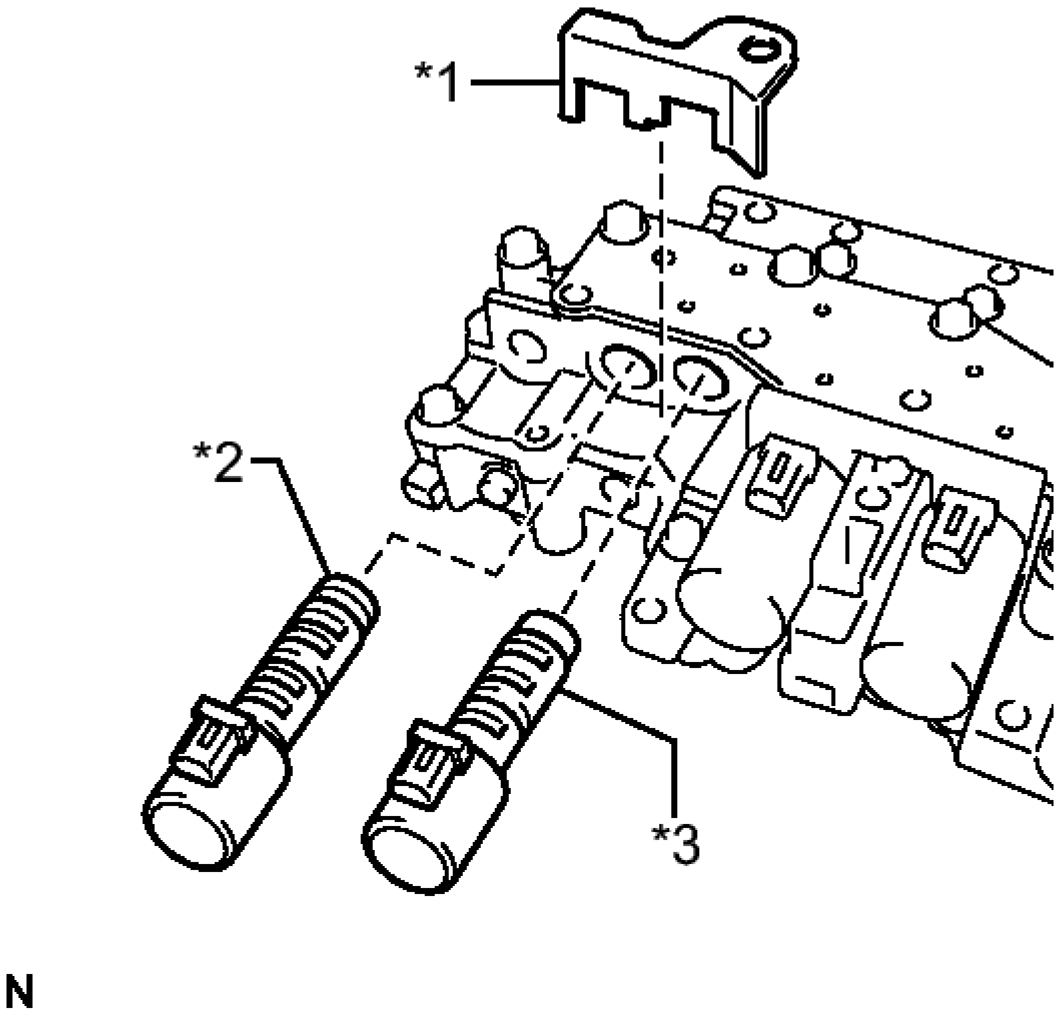

Fig. 63: Identifying Lock Plate, Shift Solenoid Valve SLT And Shift Solenoid Valve SLU
Courtesy of TOYOTA MOTOR SALES, U.S.A., INC.

TEXT IN ILLUSTRATION

*1	Lock Plate

*2	Solenoid Valve SLT
*3	Solenoid Valve SLU

b. Install the shift solenoid valve SLU to the valve body assembly.

6. **INSTALL SHIFT SOLENOID VALVE SLT**
   a. Coat the shift solenoid valve SLT with ATF.
   b. Install the shift solenoid valve SLT and lock plate to the valve body assembly.
7. **INSTALL SHIFT SOLENOID VALVE SL**
   a. Coat the shift solenoid valve SL with ATF.

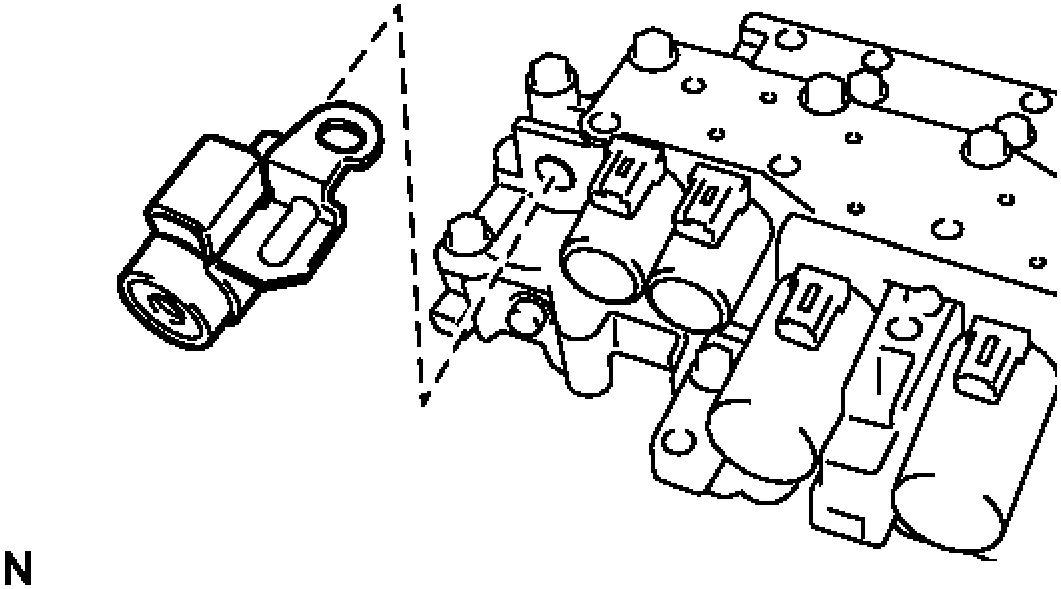

Fig. 64: Identifying Shift Solenoid Valve SL
Courtesy of TOYOTA MOTOR SALES, U.S.A., INC.

   b. Install the shift solenoid valve SL to the valve body assembly.
8. **INSTALL ATF TEMPERATURE SENSOR ASSEMBLY**
   a. Coat a new O-ring with ATF and install it to the ATF temperature sensor assembly.

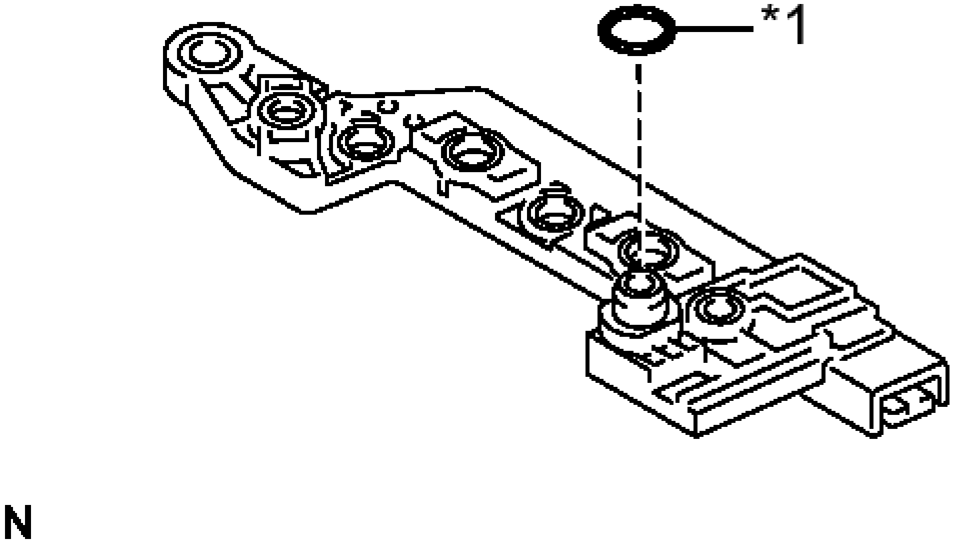

Fig. 65: Identifying ATF Temperature Sensor Assembly O-Ring
Courtesy of TOYOTA MOTOR SALES, U.S.A., INC.

TEXT IN ILLUSTRATION

*1	O-ring

b. Coat the 4 bolts with ATF.

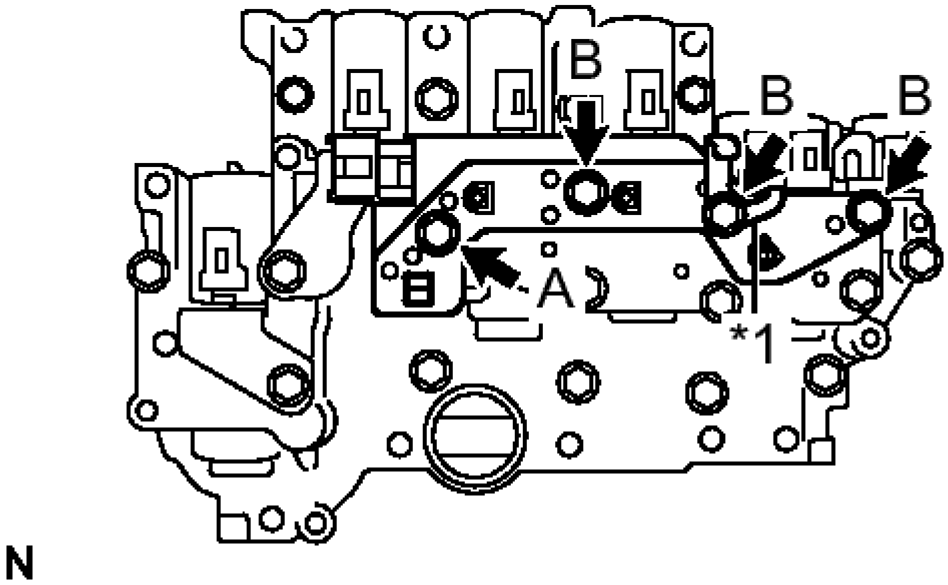

Fig. 66: Identifying ATF Temperature Sensor Assembly Bolts
Courtesy of TOYOTA MOTOR SALES, U.S.A., INC.

TEXT IN ILLUSTRATION

*1	Clamp

c. Install the ATF temperature sensor assembly and clamp to the valve body assembly with the 4 bolts.

   Torque: 11 N*m (112 kgf*cm, 8 ft.*lbf)

   Bolt length

   Bolt A

   25 mm (0.984 in.)

   Bolt B

   85 mm (3.35 in.)

9. **INSTALL TRANSMISSION WIRE** See step 1

INSTALLATION

INSTALLATION

1. **INSTALL MANUAL VALVE**
    1. Coat the manual valve with ATF and install it to the valve body.
2. **INSTALL TRANSMISSION VALVE BODY ASSEMBLY**
    1. Coat the O-ring of the transmission wire with ATF.
    2. Confirm that the manual valve lever is positioned as shown in the illustration and install the valve body assembly to the transaxle case with the 11 bolts.

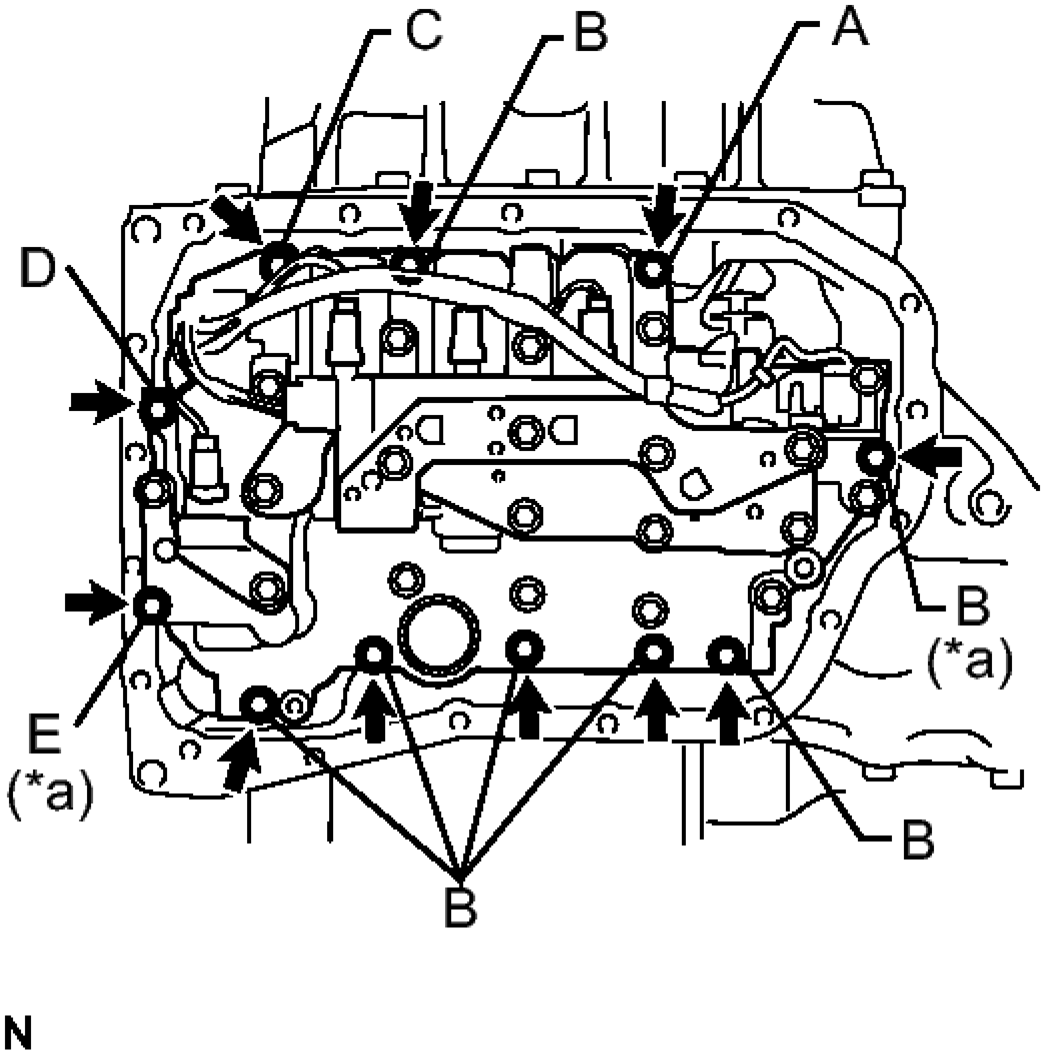

Fig. 67: Identifying Transaxle Case Bolts
Courtesy of TOYOTA MOTOR SALES, U.S.A., INC.

TEXT IN ILLUSTRATION

*a	Positioning Bolt

Torque: 11 N*m (112 kgf*cm, 8 ft.*lbf)

Bolt length

Bolt A

25 mm (0.984 in.)

Bolt B

30 mm (1.18 in.)

Bolt C

35 mm (1.38 in.)

Bolt D

45 mm (1.77 in.)

Bolt E

55 mm (2.17 in.)

NOTE:

- **When installing the transmission valve body assembly, be careful not to allow the transmission revolution sensor and transaxle case to interfere with each other.**
- **Be sure to insert the pin of the manual valve lever into the groove on the end of the manual valve.**
- **First, temporarily tighten the bolts marked (*a) in the illustration because they are positioning bolts.**

3. **INSTALL VALVE BODY OIL STRAINER ASSEMBLY**
   a. Coat a new O-ring with ATF and install it to the oil strainer.

   NOTE: **Ensure that the O-ring is not twisted or pinched.**

   b. Install the oil strainer to the valve body with the 2 bolts.

   Torque: 11 N*m (112 kgf*cm, 8 ft.*lbf)

4. **INSTALL AUTOMATIC TRANSAXLE OIL PAN SUB-ASSEMBLY**
   a. Install the 2 magnets onto the automatic transaxle oil pan as shown in the illustration.

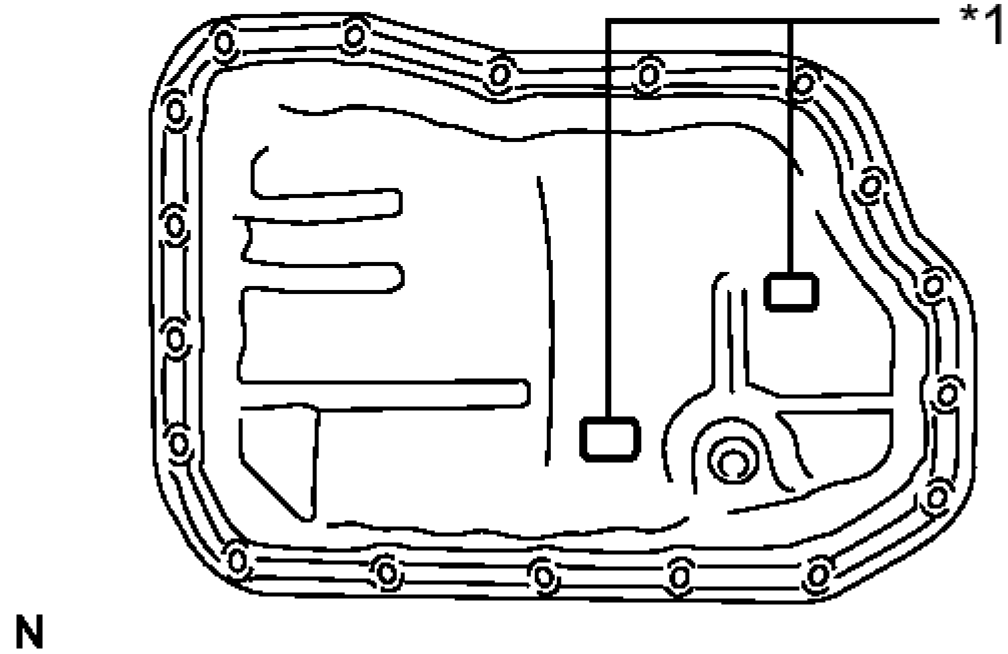

Fig. 68: Identifying Oil Pan Magnet
Courtesy of TOYOTA MOTOR SALES, U.S.A., INC.

TEXT IN ILLUSTRATION

*1	Magnet

b. Install a new gasket to the oil pan.
c. Install the oil pan to the automatic transaxle with the 17 bolts.

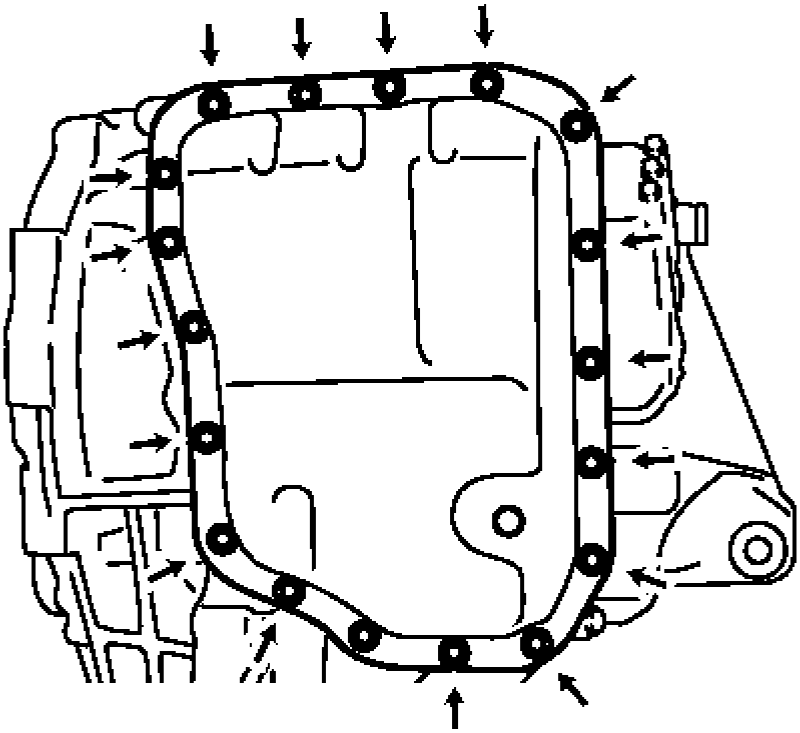

Fig. 69: Identifying Automatic Transaxle Bolts
Courtesy of TOYOTA MOTOR SALES, U.S.A., INC.

Torque: 7.5 N*m (76 kgf*cm, 66 in.*lbf)

d. Clean and degrease the bolt and the installation hole in the automatic transaxle.

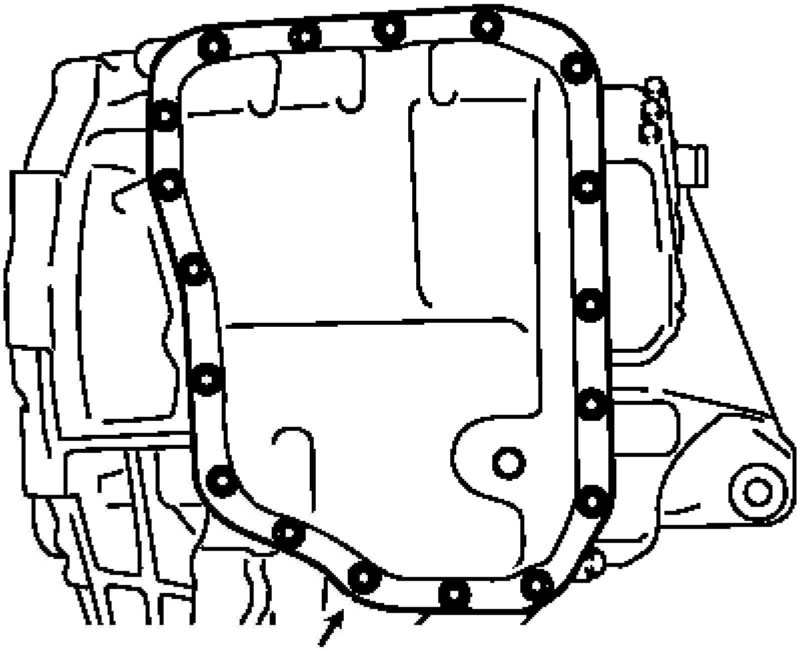

Fig. 70: Identifying Automatic Transaxle Bolts
Courtesy of TOYOTA MOTOR SALES, U.S.A., INC.

e. Apply adhesive to the bolt.

   Adhesive

   Toyota Genuine Adhesive 1344, Three Bond 1344 or equivalent

f. Install the bolt.

   Torque: 7.0 N*m (71 kgf*cm, 62 in.*lbf)

NOTE:	- **In order to ensure proper sealing of the transmission oil pan bolts, apply adhesive to the bolts and install them within 10 minutes of adhesive application.** - **Completely remove any oil or grease from the contact surface of the transaxle case and oil pan sub-assembly with the gasket before installation.**

5. **INSTALL TORQUE CONVERTER ASSEMBLY** See step 1
6. **INSTALL AUTOMATIC TRANSAXLE ASSEMBLY**

   Refer to **INSTALLATION**

PARK / NEUTRAL POSITION SWITCH

COMPONENTS

ILLUSTRATION

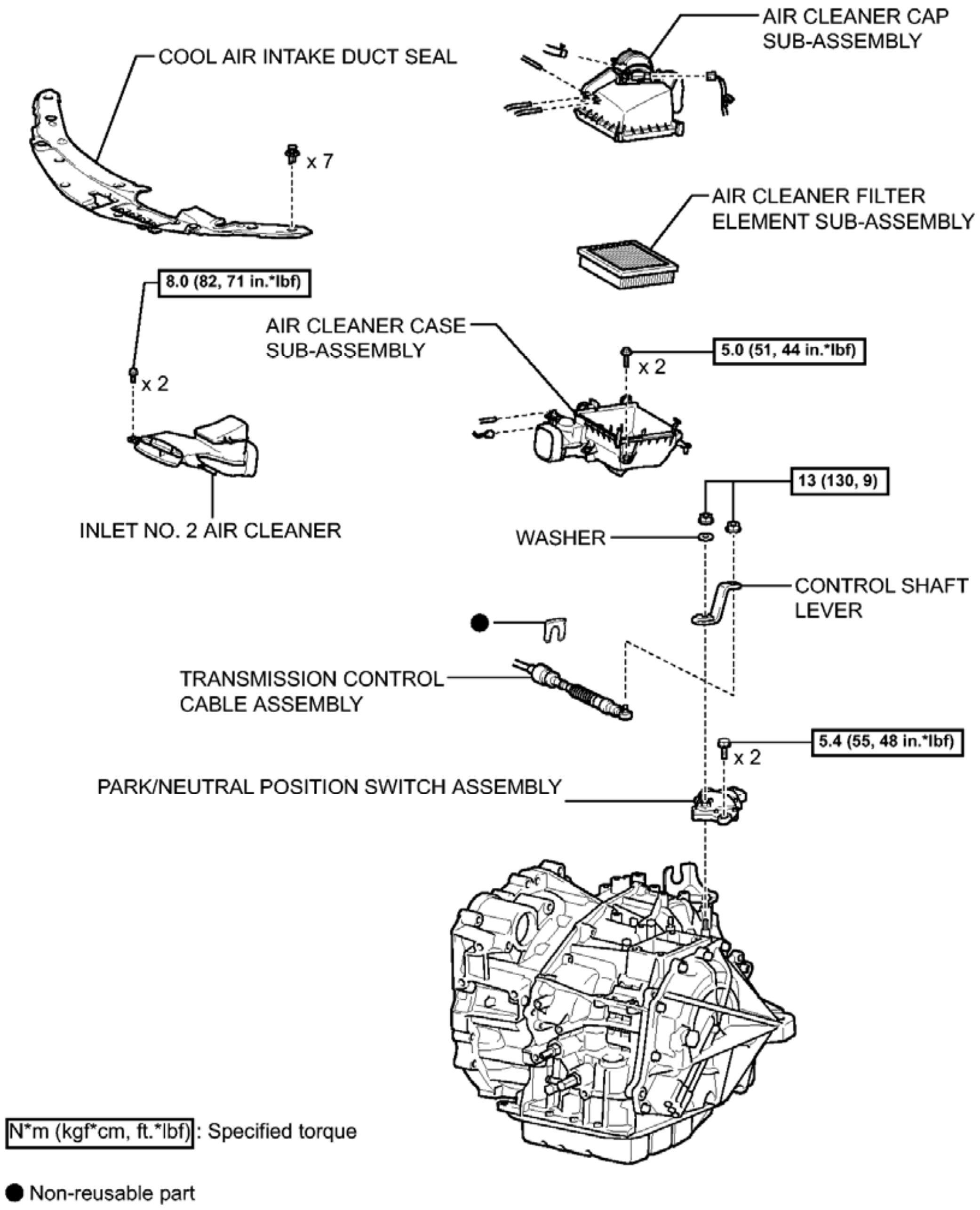
AIR CLEANER CAP SUB-ASSEMBLY
COOL AIR INTAKE DUCT SEAL
x 7
AIR CLEANER FILTER ELEMENT SUB-ASSEMBLY
8.0 (82, 71 in.*lbf)
AIR CLEANER CASE SUB-ASSEMBLY
x 2
5.0 (51, 44 in.*lbf)
x 2
13 (130, 9)
INLET NO. 2 AIR CLEANER
WASHER
CONTROL SHAFT LEVER
TRANSMISSION CONTROL CABLE ASSEMBLY
5.4 (55, 48 in.*lbf)
x 2
PARK/NEUTRAL POSITION SWITCH ASSEMBLY
N*m (kgf*cm, ft.*lbf) : Specified torque
● Non-reusable part

Fig. 71: Identifying Park / Neutral Position Switch Replacement Components With Torque Specifications
Courtesy of TOYOTA MOTOR SALES, U.S.A., INC.

ON-VEHICLE INSPECTION

ON-VEHICLE INSPECTION

1. **INSPECT PARK/NEUTRAL POSITION SWITCH ASSEMBLY OPERATION**
    a. Apply the parking brake.
    b. Turn the engine switch on (IG).
    c. Depress the brake pedal and check that the engine starts when the shift lever is in N or P, but does not start in any other position.
    d. Check that the back-up light comes on when the shift lever is moved to R, but the light does not operate in any other position. If the operation cannot be done as specified, check the park/neutral position switch for continuity.

REMOVAL

REMOVAL

1. **REMOVE COOL AIR INTAKE DUCT SEAL** . Refer to **REMOVAL - Step 1**
2. **REMOVE INLET NO. 2 AIR CLEANER** . Refer to **REMOVAL - Step 18**
3. **REMOVE AIR CLEANER CAP SUB-ASSEMBLY** . Refer to **REMOVAL - Step 7**
4. **REMOVE AIR CLEANER FILTER ELEMENT SUB-ASSEMBLY**
5. **REMOVE AIR CLEANER CASE SUB-ASSEMBLY** . Refer to **REMOVAL - Step 21**
6. **SEPARATE TRANSMISSION CONTROL CABLE ASSEMBLY**
    a. Move the shift lever to N.
    b. Disconnect the wire harness clamp.

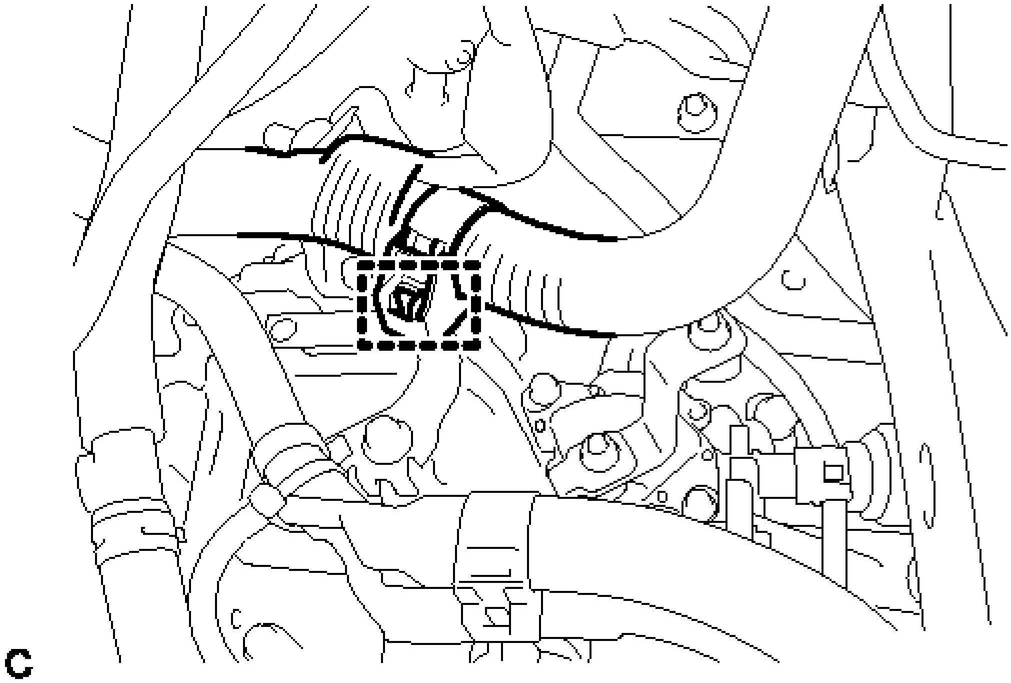

Fig. 72: Identifying Wire Harness Clamp
Courtesy of TOYOTA MOTOR SALES, U.S.A., INC.

c. Remove the nut from the control shaft lever.

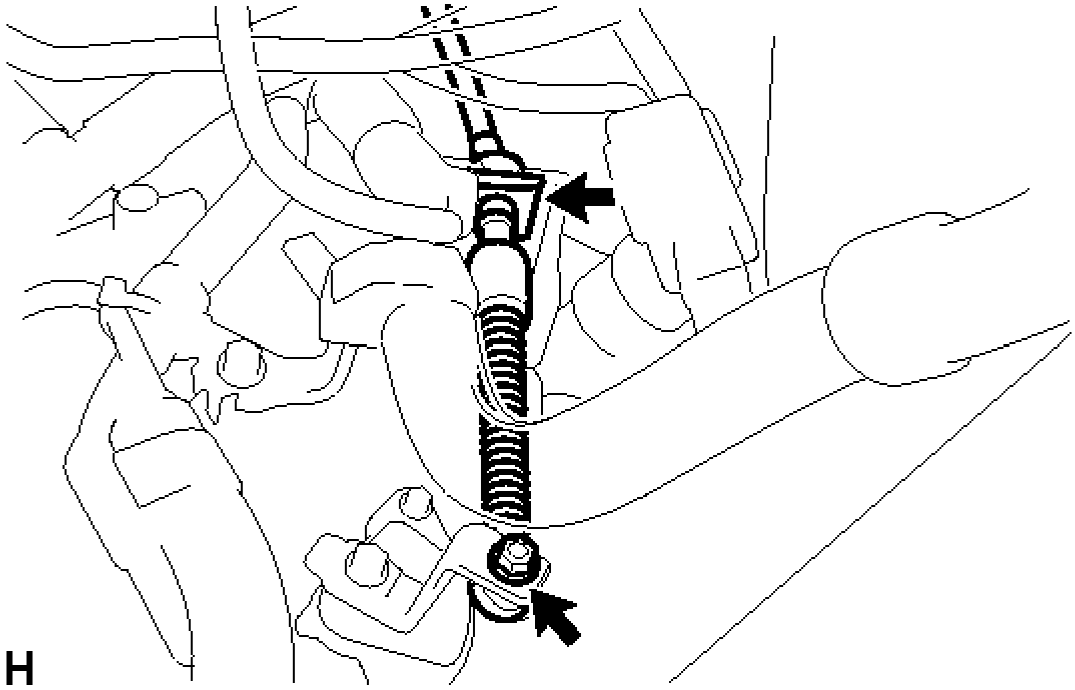

Fig. 73: Identifying Nut And Clip
Courtesy of TOYOTA MOTOR SALES, U.S.A., INC.

    d. Remove the clip and disconnect the transmission control cable from the control cable bracket.

7. **REMOVE PARK/NEUTRAL POSITION SWITCH ASSEMBLY**
    a. Disconnect the connector from the park/neutral position switch.
    b. Remove the nut, washer and control shaft lever from the control shaft.

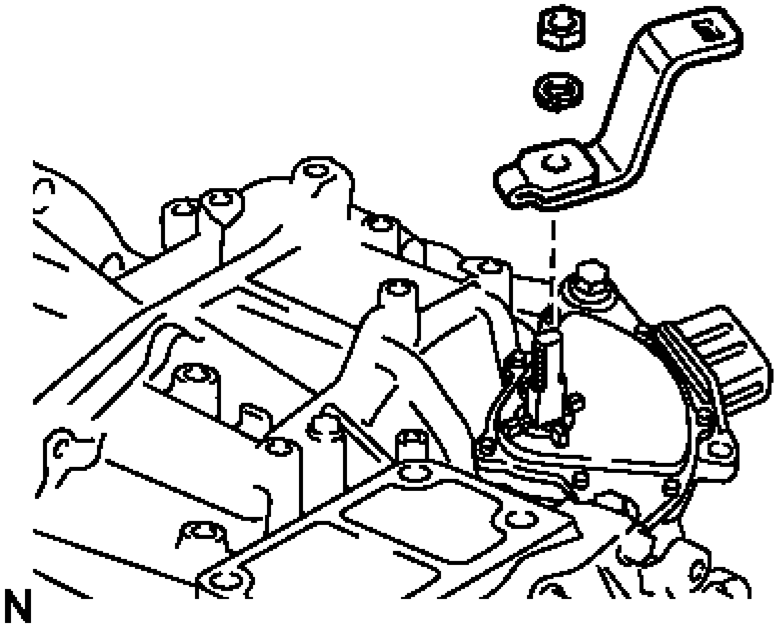

Fig. 74: Identifying Nut, Washer And Control Shaft Lever
Courtesy of TOYOTA MOTOR SALES, U.S.A., INC.

    c. Remove the 2 bolts and park/neutral position switch from the control shaft.

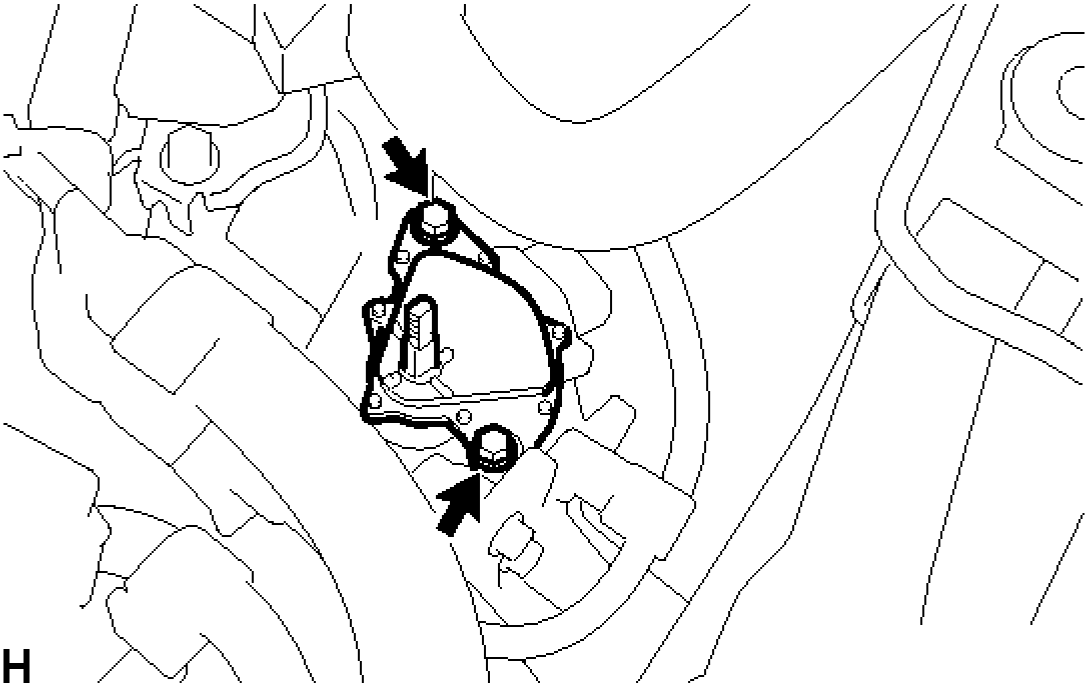

Fig. 75: Identifying Park/Neutral Position Switch Bolts
Courtesy of TOYOTA MOTOR SALES, U.S.A., INC.

NOTE: **Before removing the park/neutral position switch, remove any dirt or rust on the installation portion of the control shaft. Be sure to remove the switch straight along the shaft while being careful not to deform the plate spring that supports the shaft. If the plate spring is deformed, the park/neutral position switch cannot be reinstalled correctly.**

INSPECTION

INSPECTION

1. **INSPECT PARK/NEUTRAL POSITION SWITCH ASSEMBLY**
    a. Measure the resistance according to the value(s) in the table below when the shift lever is moved to each position.

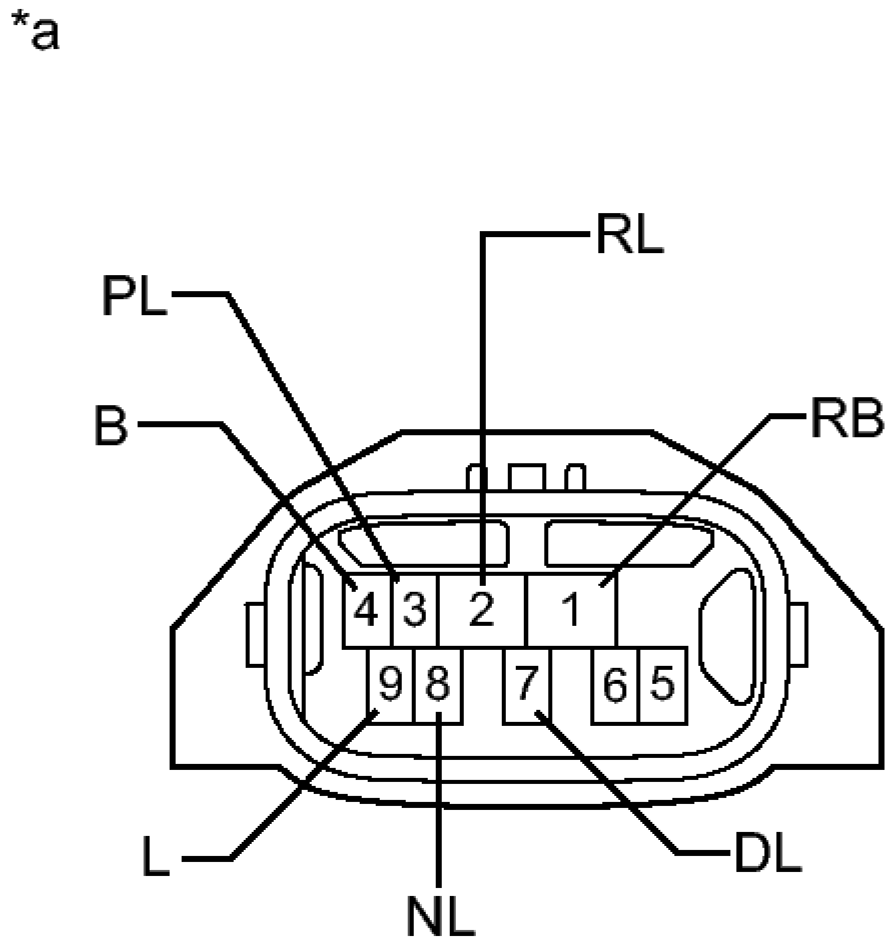

Fig. 76: Measuring Resistance Between Shift Lever Position
Courtesy of TOYOTA MOTOR SALES, U.S.A., INC.

Standard Resistance

Tester Connection	Shift Lever Position	Specified Condition
1 (RB) - 3 (PL) 4 (B) - 9 (L)	P	Below 1 ohms
	Except P	10 kohms or higher
1 (RB) - 2 (RL)	R	Below 1 ohms
	Except	10 kohms

	R	or higher
1 (RB) - 8 (NL) 4 (B) - 9 (L)	N	Below 1 ohms
	Except N	10 kohms or higher
1 (RB) - 7 (DL)	D, S, "+" or "-"	Below 1 ohms
	Except D, S, "+" and "-"	10 kohms or higher

TEXT IN ILLUSTRATION

*a	Component without harness connected (Park/Neutral Position Switch)

If the result is not as specified, replace the park/neutral position switch assembly.

ADJUSTMENT

ADJUSTMENT

1. **ADJUST PARK/NEUTRAL POSITION SWITCH ASSEMBLY**
   a. Remove the control shaft lever. Refer to **REMOVAL**.
   b. Loosen the 2 bolts of the park/neutral position switch.

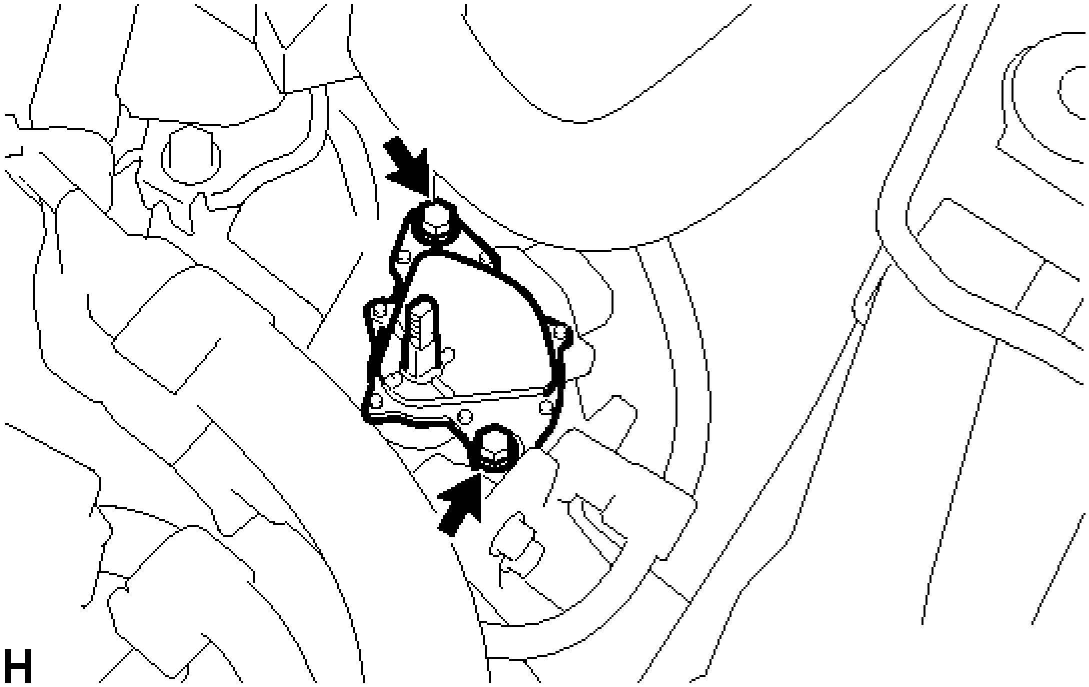

Fig. 77: Identifying Park/Neutral Position Switch Bolts
Courtesy of TOYOTA MOTOR SALES, U.S.A., INC.

c. Align the protrusions of the park/neutral position switch.

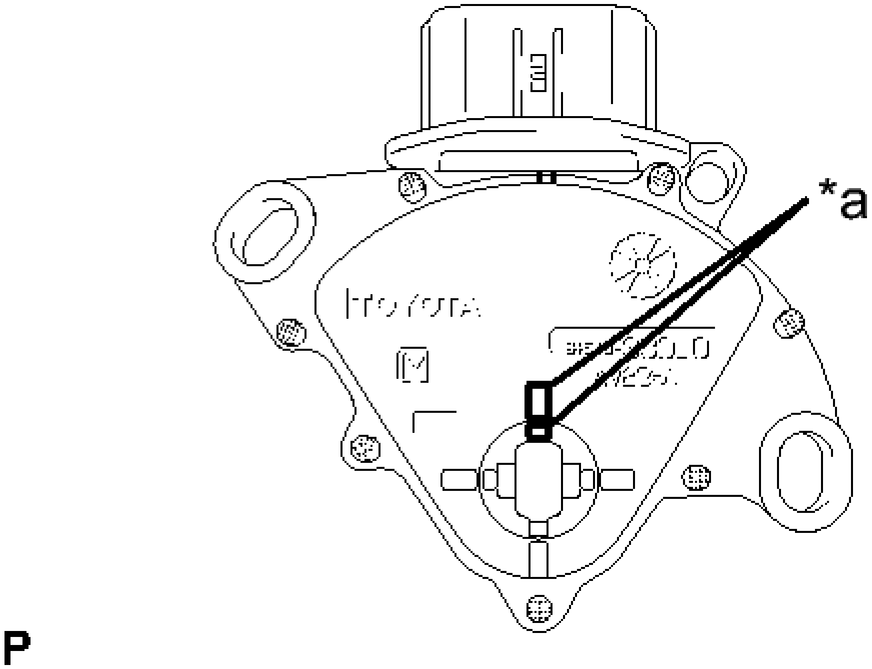

Fig. 78: Aligning Park/Neutral Position Switch Protrusion
Courtesy of TOYOTA MOTOR SALES, U.S.A., INC.

TEXT IN ILLUSTRATION

*a	Protrusion

d. Hold the park/neutral position switch in position and tighten the 2 bolts.

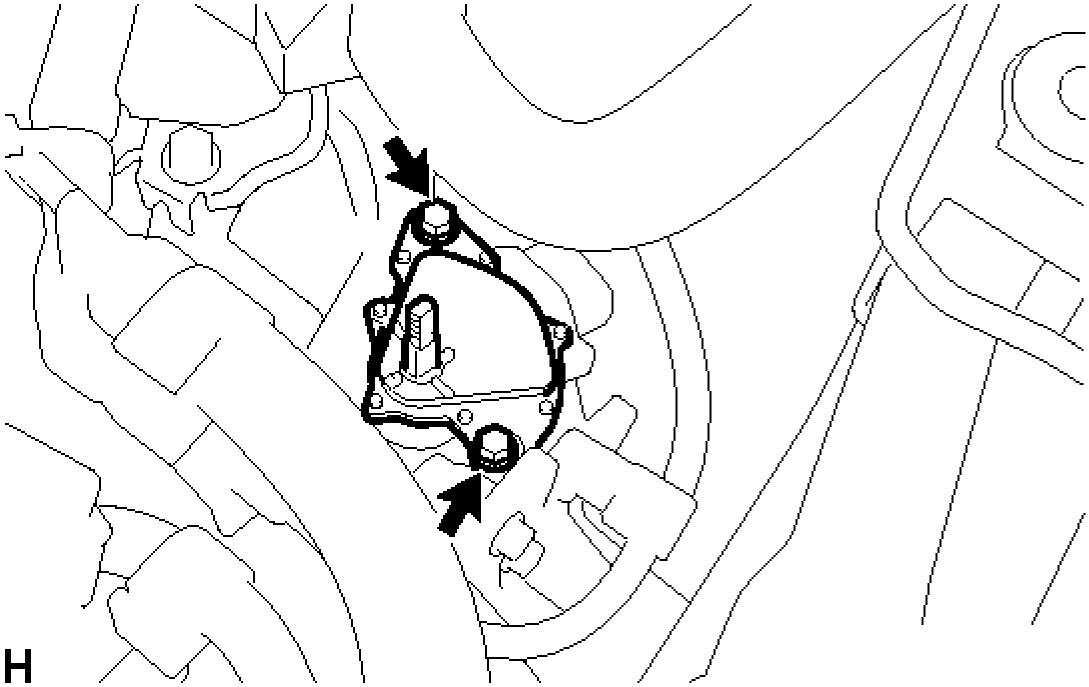

Fig. 79: Identifying Park/Neutral Position Switch Bolts
Courtesy of TOYOTA MOTOR SALES, U.S.A., INC.

Torque: 5.4 N*m (55 kgf*cm, 48 in.*lbf)

NOTE: **After installing the park/neutral position switch, confirm that the 2 protrusions on the switch are aligned.**

e. Install the control shaft lever. Refer to **INSTALLATION**.

f. After the adjustment, perform the switch operation check See step 1.

INSTALLATION

INSTALLATION

1. **INSTALL PARK/NEUTRAL POSITION SWITCH ASSEMBLY**
   a. Move the shift lever to N.
   b. Align the protrusions of the park/neutral position switch.

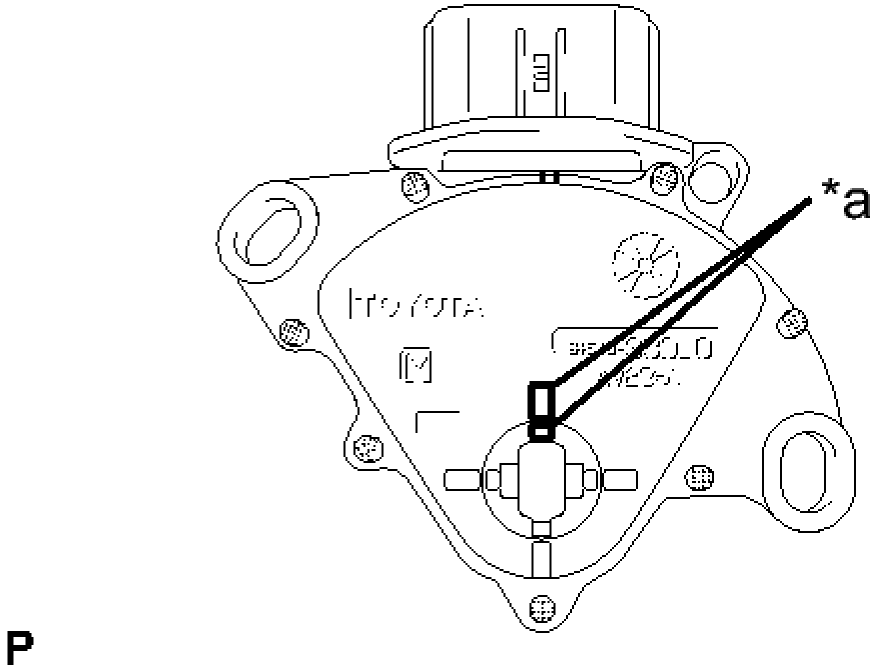

Fig. 80: Aligning Park/Neutral Position Switch Protrusion
Courtesy of TOYOTA MOTOR SALES, U.S.A., INC.

TEXT IN ILLUSTRATION

*a	Protrusion

c. Install the park/neutral position switch to the control shaft with the 2 bolts.

Torque: 5.4 N*m (55 kgf*cm, 48 in.*lbf)

NOTE:

- **Before installing the park/neutral position switch, remove any dirt or rust on the installation portion of the control shaft. Be sure to install the switch straight along the shaft while being careful not to deform the plate spring that supports the shaft. If the plate spring is deformed, the park/neutral position switch cannot be reinstalled correctly.**
- **After installing the park/neutral position switch, confirm that the 2 protrusions on the switch are aligned.**

d. Install the control shaft lever to the control shaft with the nut and washer.

Torque: 13 N*m (130 kgf*cm, 9 ft.*lbf)

e. Connect the connector to the park/neutral position switch.

2. **CONNECT TRANSMISSION CONTROL CABLE ASSEMBLY**

a. Connect the transmission control cable assembly to the transmission control cable bracket with a new clip.

b. Connect the transmission control cable assembly to the control shaft lever with the nut.

Torque: 13 N*m (130 kgf*cm, 9 ft.*lbf)

NOTE: **Before connecting the transmission control cable assembly, check that the park/neutral position switch and the shift lever are in neutral.**

3. **INSTALL AIR CLEANER CASE SUB-ASSEMBLY** . Refer to **INSTALLATION - Step 56**
4. **INSTALL AIR CLEANER FILTER ELEMENT SUB-ASSEMBLY**
5. **INSTALL AIR CLEANER CAP SUB-ASSEMBLY** . Refer to **INSTALLATION - Step 2**
6. **INSTALL INLET NO. 2 AIR CLEANER** . Refer to **INSTALLATION - Step 59**
7. **INSTALL COOL AIR INTAKE DUCT SEAL** . Refer to **INSTALLATION - Step 4**
8. **INSPECT PARK/NEUTRAL POSITION SWITCH ASSEMBLY OPERATION** See step 1
9. **INSPECT SHIFT LEVER POSITION** See step 1
10. **ADJUST SHIFT LEVER POSITION** See step 2

OIL COOLER

COMPONENTS

ILLUSTRATION

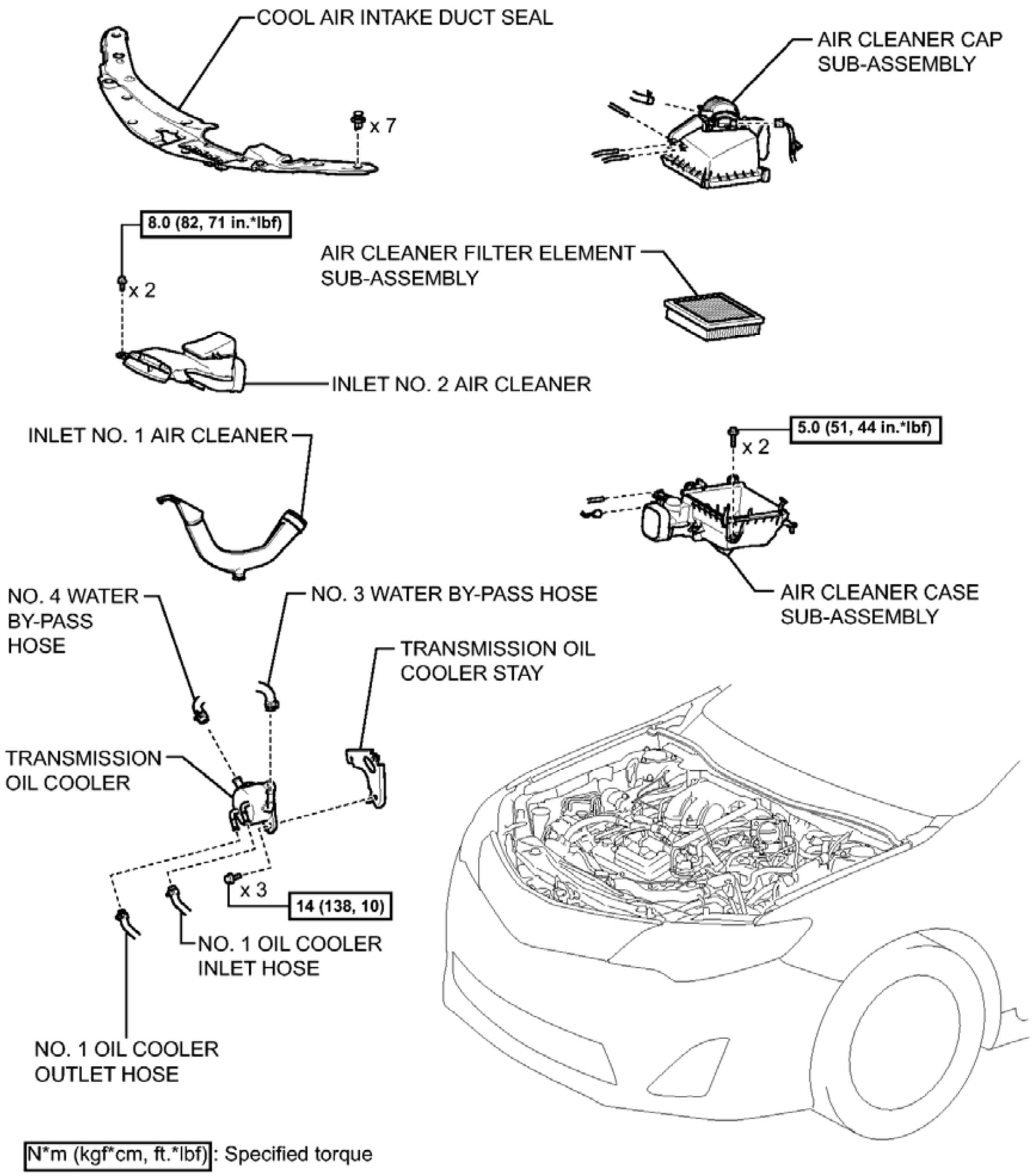
COOL AIR INTAKE DUCT SEAL
x 7
AIR CLEANER CAP SUB-ASSEMBLY
8.0 (82, 71 in.*lbf)
x 2
AIR CLEANER FILTER ELEMENT SUB-ASSEMBLY
INLET NO. 2 AIR CLEANER
INLET NO. 1 AIR CLEANER
5.0 (51, 44 in.*lbf)
x 2
AIR CLEANER CASE SUB-ASSEMBLY
NO. 4 WATER BY-PASS HOSE
NO. 3 WATER BY-PASS HOSE
TRANSMISSION OIL COOLER STAY
TRANSMISSION OIL COOLER
x 3
14 (138, 10)
NO. 1 OIL COOLER INLET HOSE
NO. 1 OIL COOLER OUTLET HOSE
N*m (kgf*cm, ft.*lbf): Specified torque

Fig. 81: Identifying Oil Cooler Replacement Components With Torque Specifications
Courtesy of TOYOTA MOTOR SALES, U.S.A., INC.

REMOVAL

REMOVAL

1. **DRAIN AUTOMATIC TRANSAXLE FLUID** See step 1

2. **DRAIN ENGINE COOLANT** . Refer to **REPLACEMENT - Step 1**
3. **REMOVE COOL AIR INTAKE DUCT SEAL** . Refer to **REMOVAL - Step 1**
4. **REMOVE INLET NO. 2 AIR CLEANER** . Refer to **REMOVAL - Step 18**
5. **REMOVE AIR CLEANER CAP SUB-ASSEMBLY** . Refer to **REMOVAL - Step 7**
6. **REMOVE AIR CLEANER FILTER ELEMENT SUB-ASSEMBLY**
7. **REMOVE AIR CLEANER CASE SUB-ASSEMBLY** . Refer to **REMOVAL - Step 21**
8. **REMOVE INLET NO. 1 AIR CLEANER** . Refer to **REMOVAL - Step 23**
9. **REMOVE TRANSMISSION OIL COOLER**
   1. Disconnect the No. 3 water by-pass hose, No. 4 water by-pass hose, No. 1 oil cooler outlet hose and No. 1 oil cooler inlet hose from the transmission oil cooler.

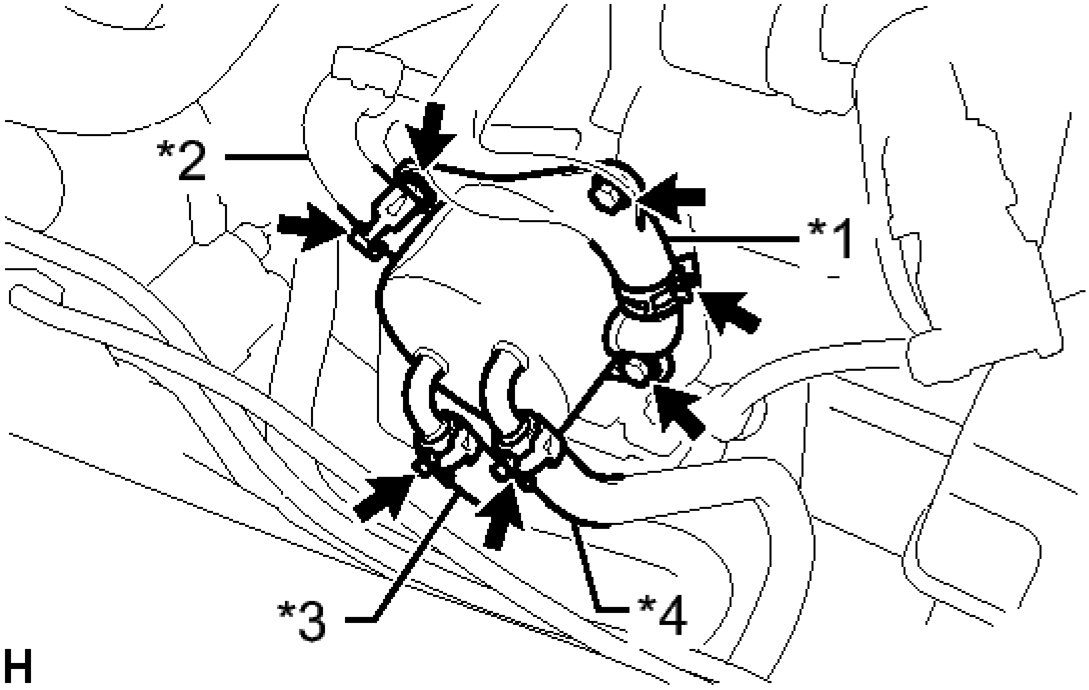

Fig. 82: Identifying No. 3 Water By-Pass Hose, No. 4 Water By-Pass Hose, No. 1 Oil Cooler Outlet Hose And No. 1 Oil Cooler Inlet Hose
Courtesy of TOYOTA MOTOR SALES, U.S.A., INC.

TEXT IN ILLUSTRATION

*1	No. 3 Water By-pass Hose
*2	No. 4 Water By-pass

	Hose
*3	No. 1 Oil Cooler Outlet Hose
*4	No. 1 Oil Cooler Inlet Hose

b. Remove the 3 bolts, transmission oil cooler and transmission oil cooler stay from the front engine mounting bracket.

INSTALLATION

INSTALLATION

1. **INSTALL TRANSMISSION OIL COOLER**
    a. Install the transmission oil cooler and transmission oil cooler stay to the front engine mounting bracket with the 3 bolts.

    Torque: 14 N*m (138 kgf*cm, 10 ft.*lbf)

    b. Connect the No. 3 water by-pass hose, No. 4 water by-pass hose, No. 1 oil cooler outlet hose and No. 1 oil cooler inlet hose to the transmission oil cooler.
2. **INSTALL INLET NO. 1 AIR CLEANER** . Refer to **INSTALLATION - Step 54**
3. **INSTALL AIR CLEANER CASE SUB-ASSEMBLY** . Refer to **INSTALLATION - Step 56**
4. **INSTALL AIR CLEANER FILTER ELEMENT SUB-ASSEMBLY**
5. **INSTALL AIR CLEANER CAP SUB-ASSEMBLY** . Refer to **INSTALLATION - Step 2**
6. **INSTALL INLET NO. 2 AIR CLEANER** . Refer to **INSTALLATION - Step 59**
7. **INSTALL COOL AIR INTAKE DUCT SEAL** . Refer to **INSTALLATION - Step 4**
8. **ADD ENGINE COOLANT** . Refer to **REPLACEMENT - Step 2**
9. **ADD AUTOMATIC TRANSAXLE FLUID**

    See step 11

10. **INSPECT FOR COOLANT LEAK** . Refer to **ON-VEHICLE INSPECTION - Step 1**

SHIFT LEVER

COMPONENTS

ILLUSTRATION

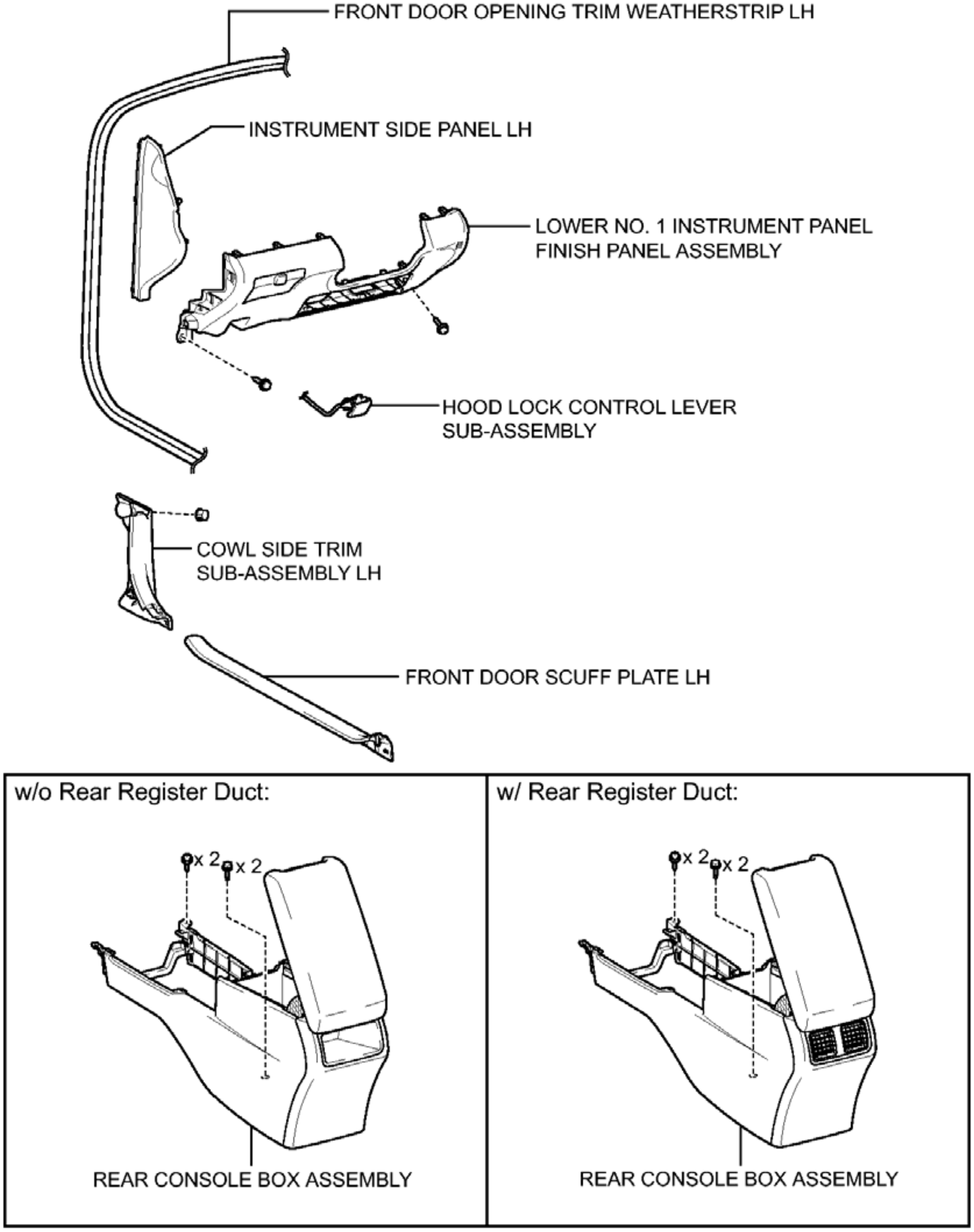
FRONT DOOR OPENING TRIM WEATHERSTRIP LH
INSTRUMENT SIDE PANEL LH
LOWER NO. 1 INSTRUMENT PANEL FINISH PANEL ASSEMBLY
HOOD LOCK CONTROL LEVER SUB-ASSEMBLY
COWL SIDE TRIM SUB-ASSEMBLY LH
FRONT DOOR SCUFF PLATE LH
w/o Rear Register Duct:
x 2
x 2
REAR CONSOLE BOX ASSEMBLY
w/ Rear Register Duct:
x 2
x 2
REAR CONSOLE BOX ASSEMBLY

Fig. 83: Identifying Shift Lever Replacement Components With Torque Specifications (1 Of 4)
Courtesy of TOYOTA MOTOR SALES, U.S.A., INC.

ILLUSTRATION

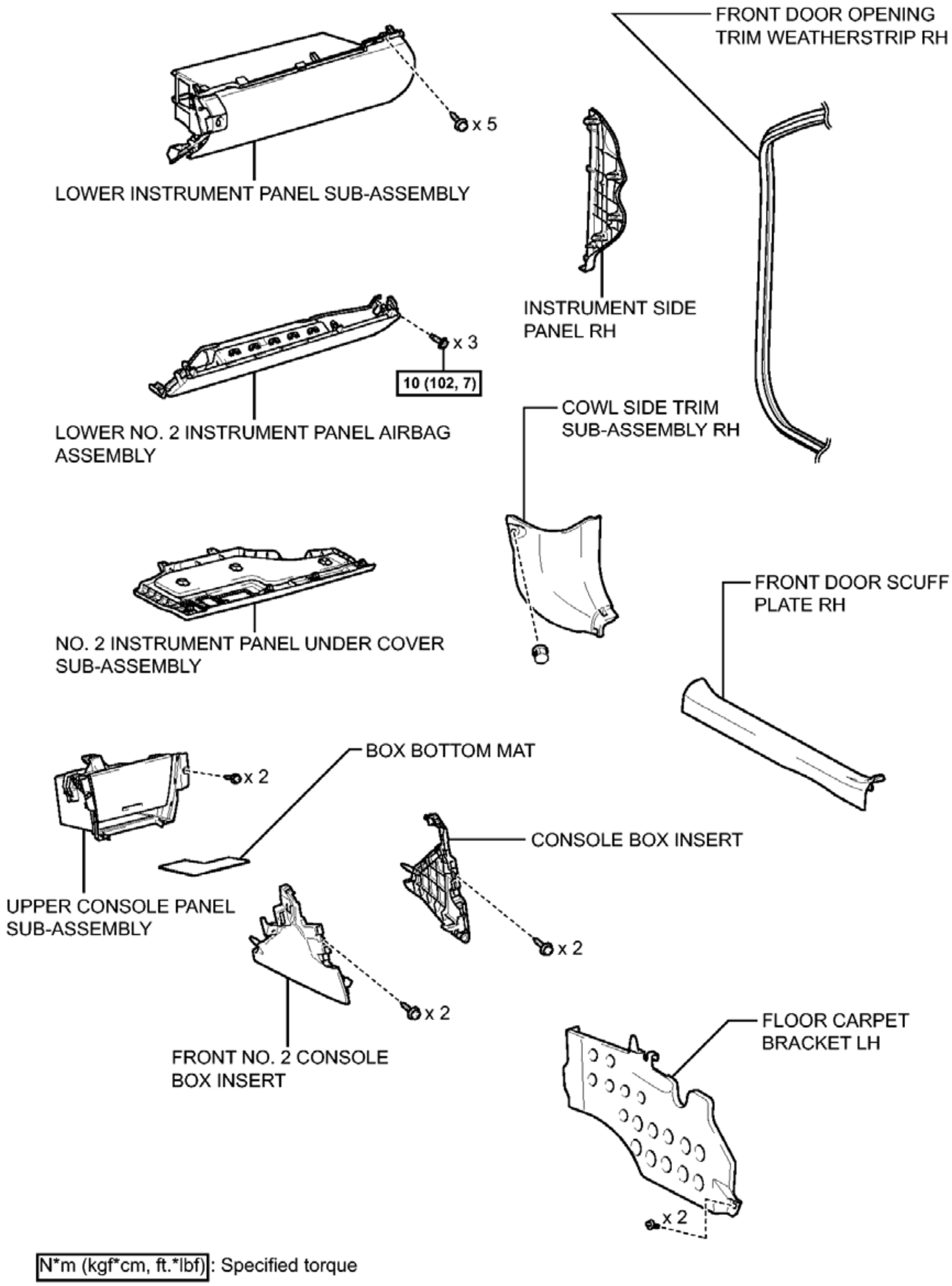
FRONT DOOR OPENING TRIM WEATHERSTRIP RH
x 5
LOWER INSTRUMENT PANEL SUB-ASSEMBLY
INSTRUMENT SIDE PANEL RH
x 3
10 (102, 7)
LOWER NO. 2 INSTRUMENT PANEL AIRBAG ASSEMBLY
COWL SIDE TRIM SUB-ASSEMBLY RH
FRONT DOOR SCUFF PLATE RH
NO. 2 INSTRUMENT PANEL UNDER COVER SUB-ASSEMBLY
BOX BOTTOM MAT
x 2
CONSOLE BOX INSERT
UPPER CONSOLE PANEL SUB-ASSEMBLY
x 2
x 2
FRONT NO. 2 CONSOLE BOX INSERT
FLOOR CARPET BRACKET LH
x 2
N*m (kgf*cm, ft.*lbf): Specified torque

Fig. 84: Identifying Shift Lever Replacement Components With Torque Specifications (2 Of 4)
Courtesy of TOYOTA MOTOR SALES, U.S.A., INC.

ILLUSTRATION

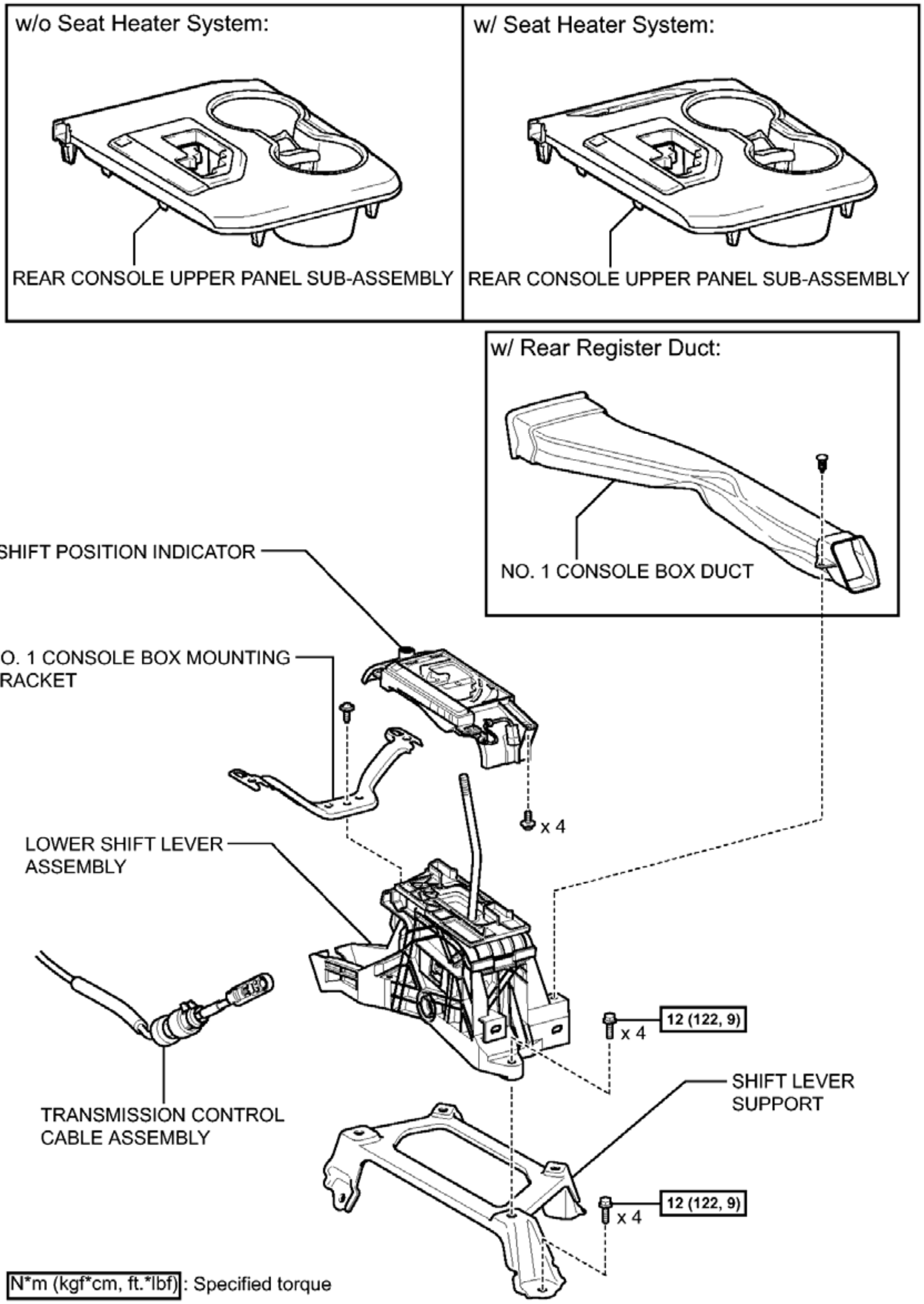
w/o Seat Heater System:
REAR CONSOLE UPPER PANEL SUB-ASSEMBLY
w/ Seat Heater System:
REAR CONSOLE UPPER PANEL SUB-ASSEMBLY
w/ Rear Register Duct:
NO. 1 CONSOLE BOX DUCT
SHIFT POSITION INDICATOR
NO. 1 CONSOLE BOX MOUNTING BRACKET
x 4
LOWER SHIFT LEVER ASSEMBLY
TRANSMISSION CONTROL CABLE ASSEMBLY
x 4
12 (122, 9)
SHIFT LEVER SUPPORT
x 4
12 (122, 9)
N*m (kgf*cm, ft.*lbf) : Specified torque

Fig. 85: Identifying Shift Lever Replacement Components With Torque Specifications (3 Of 4)
Courtesy of TOYOTA MOTOR SALES, U.S.A., INC.

ILLUSTRATION

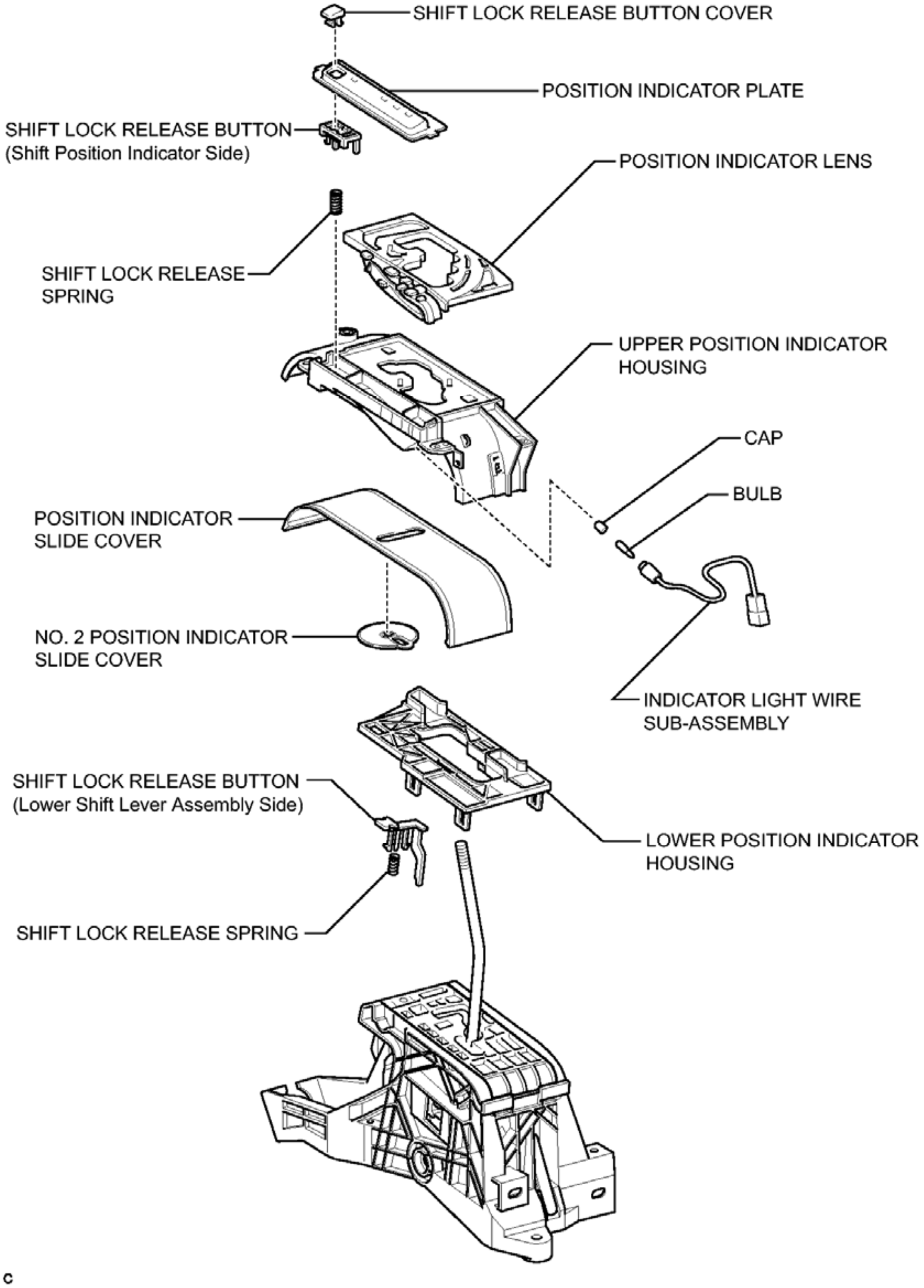
SHIFT LOCK RELEASE BUTTON COVER
POSITION INDICATOR PLATE
SHIFT LOCK RELEASE BUTTON
(Shift Position Indicator Side)
POSITION INDICATOR LENS
SHIFT LOCK RELEASE
SPRING
UPPER POSITION INDICATOR
HOUSING
CAP
BULB
POSITION INDICATOR
SLIDE COVER
NO. 2 POSITION INDICATOR
SLIDE COVER
INDICATOR LIGHT WIRE
SUB-ASSEMBLY
SHIFT LOCK RELEASE BUTTON
(Lower Shift Lever Assembly Side)
LOWER POSITION INDICATOR
HOUSING
SHIFT LOCK RELEASE SPRING
C

Fig. 86: Identifying Shift Lever Replacement Components With Torque Specifications (4 Of 4)
Courtesy of TOYOTA MOTOR SALES, U.S.A., INC.

ON-VEHICLE INSPECTION

ON-VEHICLE INSPECTION

1. **INSPECT SHIFT LOCK OPERATION**
   1. Move the shift lever to P.
   2. Turn the engine switch off.
   3. Check that the shift lever cannot be moved from P to any other position.
   4. Turn the engine switch on (IG), depress the brake pedal, and check that the shift lever can be moved from P to any other position.

      If the operation cannot be done as specified, inspect the lower shift lever assembly.
2. **INSPECT SHIFT LOCK RELEASE BUTTON OPERATION**
   1. Turn the engine switch off.
   2. Using a screwdriver, remove the shift lock release cover.
   3. When moving the shift lever with the shift lock release button pressed, check that the shift lever can be moved from P to any other position.

      If the operation cannot be done as specified, inspect the lower shift lever assembly.

REMOVAL

REMOVAL

1. **PRECAUTION**

WARNING: Be sure to read Precaution thoroughly before servicing.

- **for Built-in Type Yaw Rate Sensor: Refer to PRECAUTION**
- **for Separate Type Yaw Rate Sensor: Refer to PRECAUTION**

NOTE: After turning the engine switch off, waiting time may be required before disconnecting the cable from the negative (-) battery terminal. Therefore, make sure to read the disconnecting the cable from the negative (-) battery terminal notices before proceeding with work. Refer to PRECAUTION .

2. **DISCONNECT CABLE FROM NEGATIVE BATTERY TERMINAL**

WARNING: Wait at least 90 seconds after disconnecting the cable from the negative (-) battery terminal to disable the SRS system.

NOTE: When disconnecting the cable, some systems need to be initialized after the cable is reconnected. Refer to INITIALIZATION .

3. **REMOVE REAR CONSOLE BOX ASSEMBLY**

Refer to **REMOVAL**

4. **REMOVE FRONT DOOR SCUFF PLATE LH** . Refer to **REMOVAL - Step 3**
5. **REMOVE COWL SIDE TRIM SUB-ASSEMBLY LH** . Refer to **REMOVAL - Step 4**
6. **DISCONNECT FRONT DOOR OPENING TRIM WEATHERSTRIP LH** . Refer to **REMOVAL - Step 5**
7. **REMOVE INSTRUMENT SIDE PANEL LH** . Refer to **REMOVAL - Step 6**
8. **DISCONNECT HOOD LOCK CONTROL LEVER SUB-ASSEMBLY** . Refer to **REMOVAL - Step 12**
9. **REMOVE LOWER NO. 1 INSTRUMENT PANEL FINISH PANEL ASSEMBLY** . Refer to **REMOVAL - Step 13**
10. **REMOVE FRONT DOOR SCUFF PLATE RH** . Refer to **REMOVAL - Step 32**
11. **REMOVE COWL SIDE TRIM SUB-ASSEMBLY RH** . Refer to **REMOVAL - Step 33**
12. **DISCONNECT FRONT DOOR OPENING TRIM WEATHERSTRIP RH** . Refer to **REMOVAL - Step 34**
13. **REMOVE INSTRUMENT SIDE PANEL RH** . Refer to **REMOVAL - Step 35**
14. **REMOVE NO. 2 INSTRUMENT PANEL UNDER COVER SUB-ASSEMBLY** . Refer to **REMOVAL - Step 36**
15. **REMOVE LOWER NO. 2 INSTRUMENT PANEL AIRBAG ASSEMBLY** . Refer to **REMOVAL - Step 8**
16. **REMOVE LOWER INSTRUMENT PANEL SUB-ASSEMBLY** . Refer to **REMOVAL - Step 38**
17. **REMOVE BOX BOTTOM MAT** . Refer to **REMOVAL - Step 25**
18. **REMOVE UPPER CONSOLE PANEL SUB-ASSEMBLY** . Refer to **REMOVAL - Step 26**
19. **REMOVE FRONT NO. 2 CONSOLE BOX INSERT** . Refer to **REMOVAL - Step 48**
20. **REMOVE CONSOLE BOX INSERT** . Refer to **REMOVAL - Step 49**
21. **REMOVE FLOOR CARPET BRACKET LH** . Refer to **REMOVAL - Step 31**
22. **REMOVE NO. 1 CONSOLE BOX MOUNTING BRACKET**
    a. Remove the screw and No. 1 console box mounting bracket from the lower shift lever assembly.

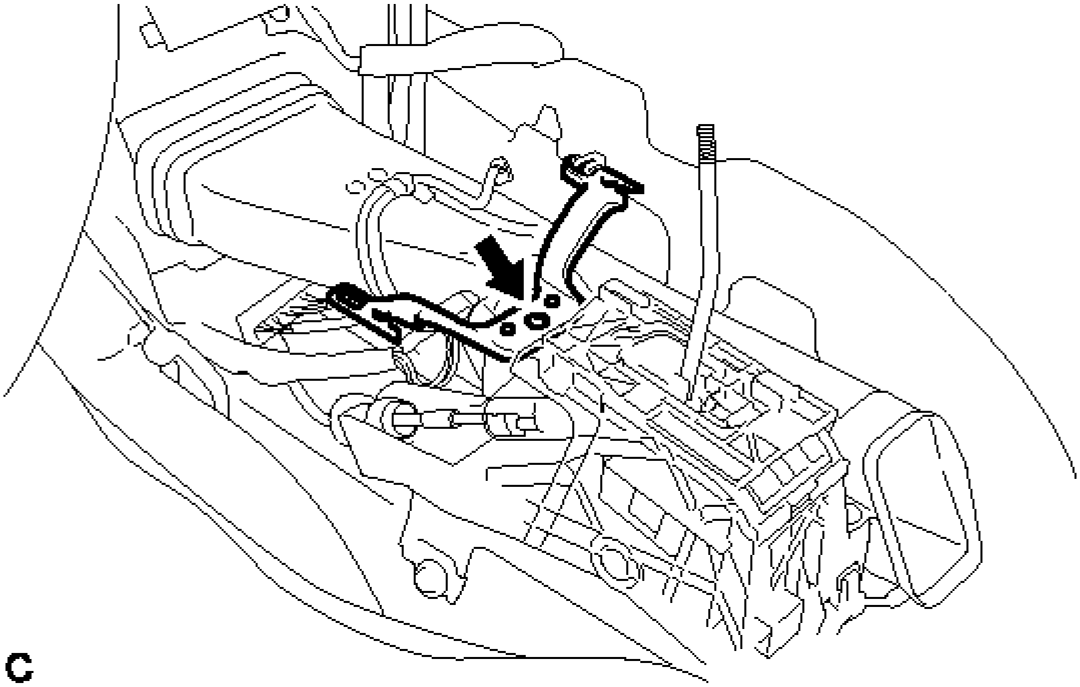

Fig. 87: Identifying No. 1 Console Box Mounting Bracket Screw
Courtesy of TOYOTA MOTOR SALES, U.S.A., INC.

23. **REMOVE NO. 1 CONSOLE BOX DUCT (w/ Rear Register Duct)**
    a. Remove the clip and No. 1 console box duct.

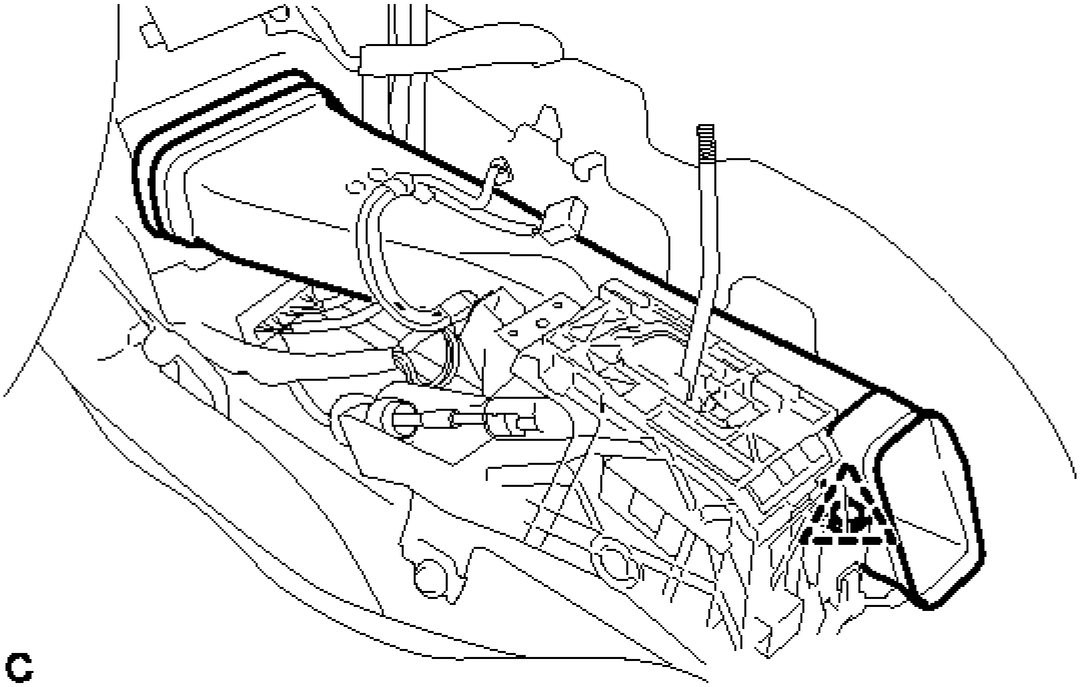

Fig. 88: Identifying No. 1 Console Box Duct Clip

Courtesy of TOYOTA MOTOR SALES, U.S.A., INC.

24. REMOVE LOWER SHIFT LEVER ASSEMBLY

a. Move the shift lever to N.

b. Disconnect the end of the transmission control cable assembly from the lower shift lever assembly.

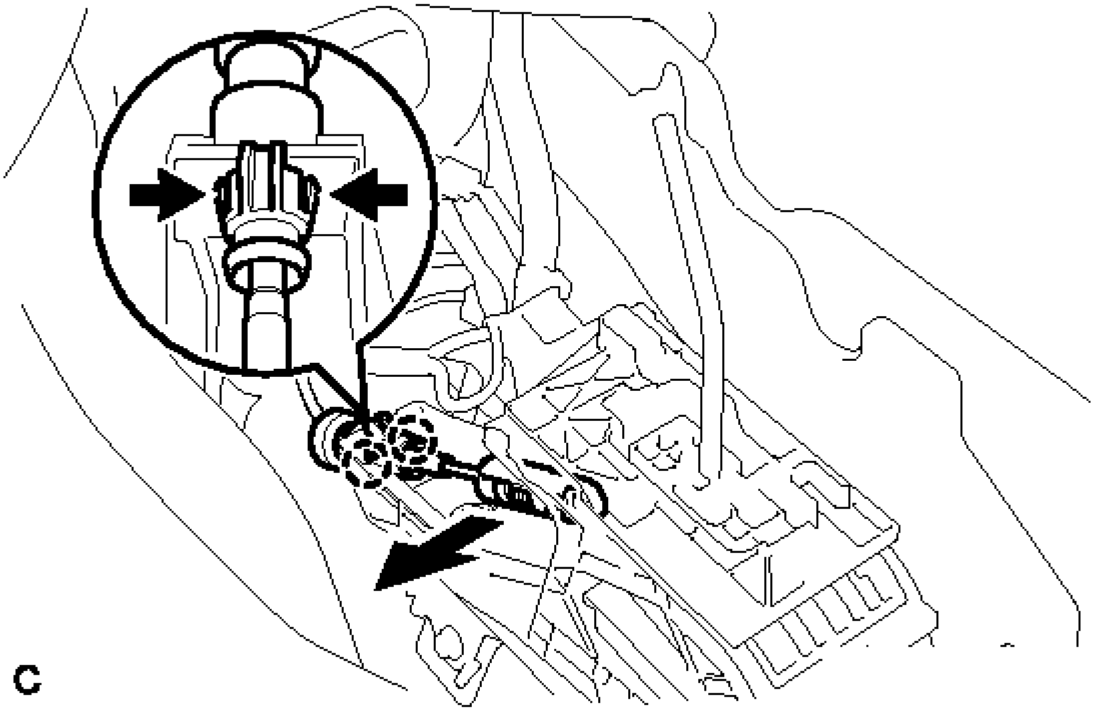

Fig. 89: Identifying Transmission Control Cable Assembly End
Courtesy of TOYOTA MOTOR SALES, U.S.A., INC.

c. Disengage the 2 claws and disconnect the transmission control cable assembly from the lower shift lever assembly.

d. Disconnect the 3 clamps and 2 connectors.

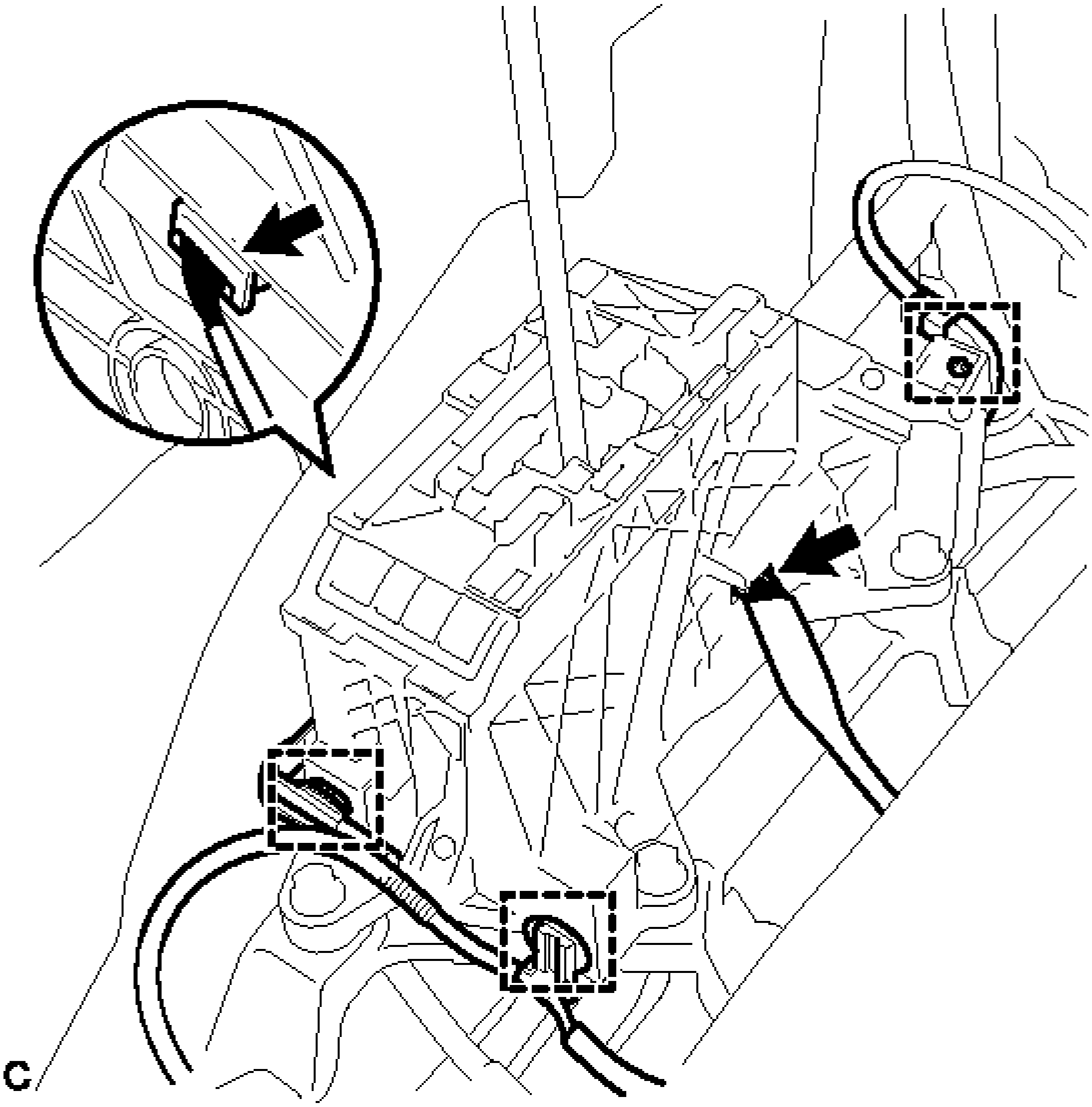

Fig. 90: Identifying Clamps And Connectors
Courtesy of TOYOTA MOTOR SALES, U.S.A., INC.

e. Remove the 4 bolts and lower shift lever assembly.

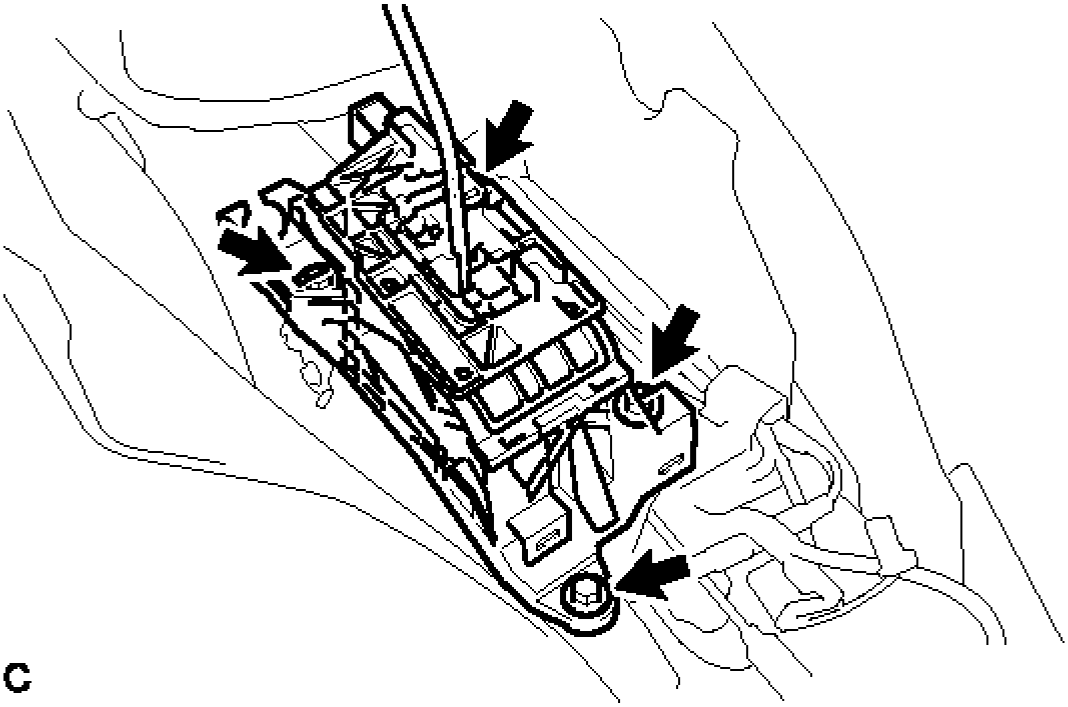

Fig. 91: Identifying Lower Shift Lever Assembly Bolts
Courtesy of TOYOTA MOTOR SALES, U.S.A., INC.

25. **REMOVE SHIFT LEVER SUPPORT**
    a. Remove the 4 bolts and shift lever support.

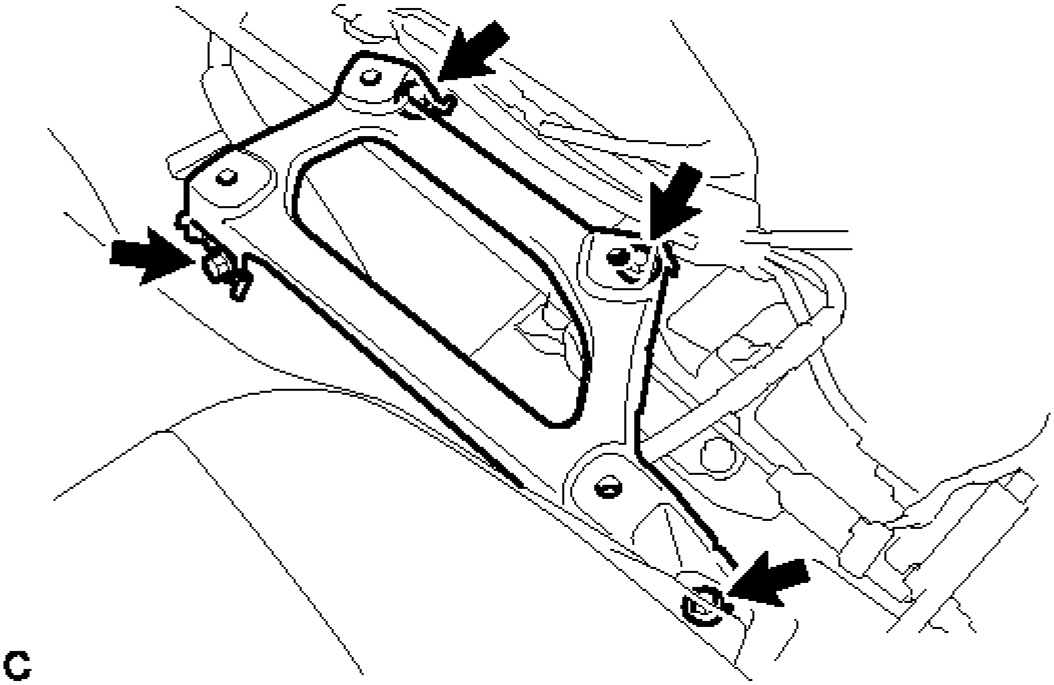

Fig. 92: Identifying Shift Lever Support Bolts

Courtesy of TOYOTA MOTOR SALES, U.S.A., INC.

DISASSEMBLY

DISASSEMBLY

1. **REMOVE LOWER POSITION INDICATOR HOUSING**
    a. Disengage the 5 claws and remove the lower position indicator housing.

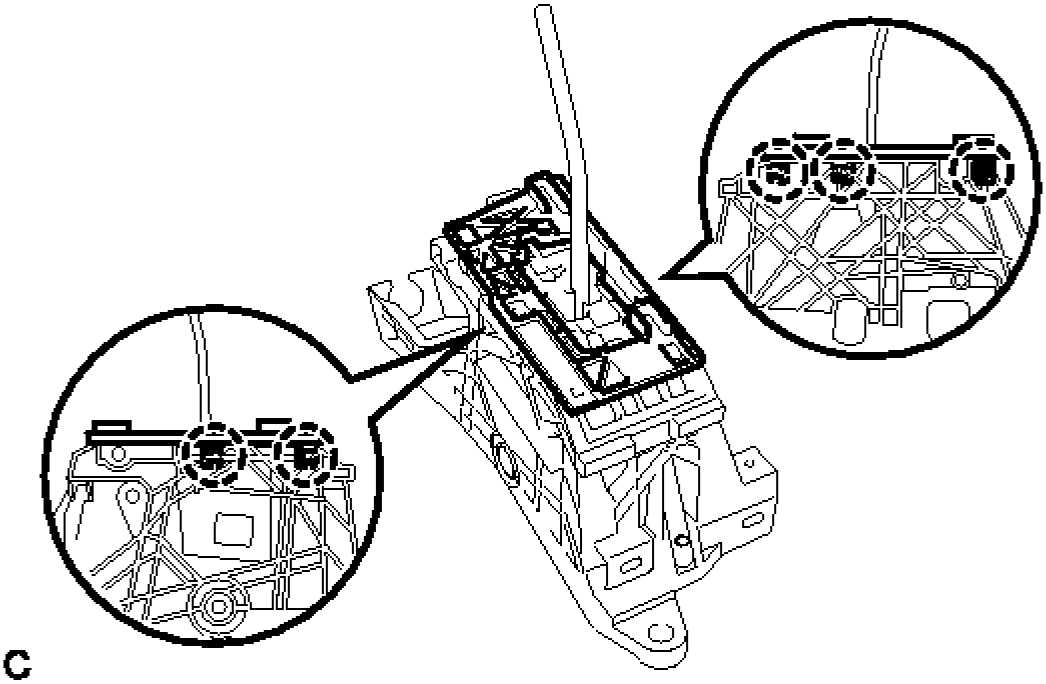

Fig. 93: Identifying Lower Position Indicator Housing Claws
Courtesy of TOYOTA MOTOR SALES, U.S.A., INC.

2. **REMOVE SHIFT LOCK RELEASE BUTTON (Lower Shift Lever Assembly Side)**
    a. Disengage the 2 claws and remove the shift lock release button and shift lock release spring.

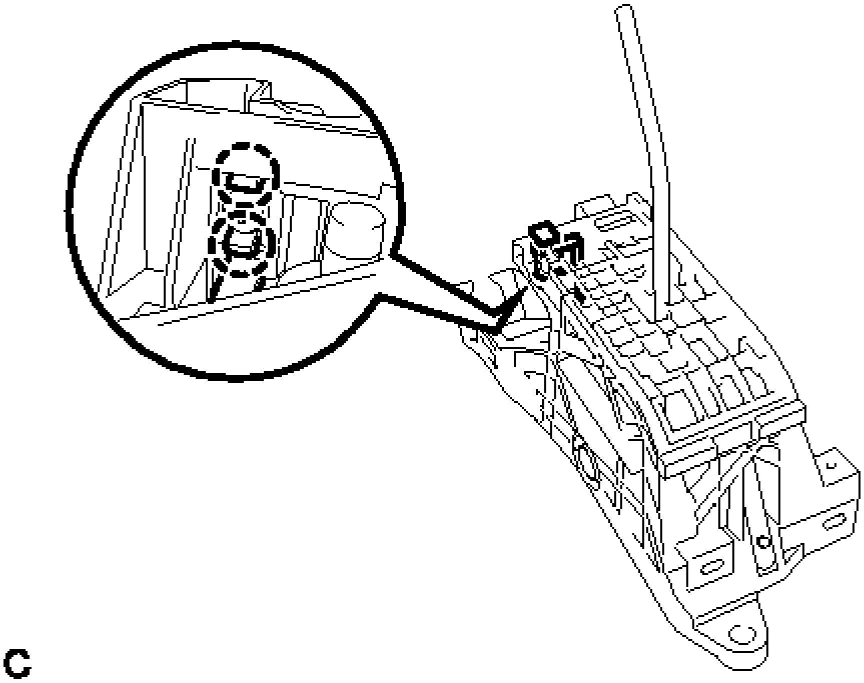

Fig. 94: Identifying Shift Lock Release Button Claws
Courtesy of TOYOTA MOTOR SALES, U.S.A., INC.

3. **REMOVE SHIFT POSITION INDICATOR**
    a. Remove the 4 screws and shift position indicator.

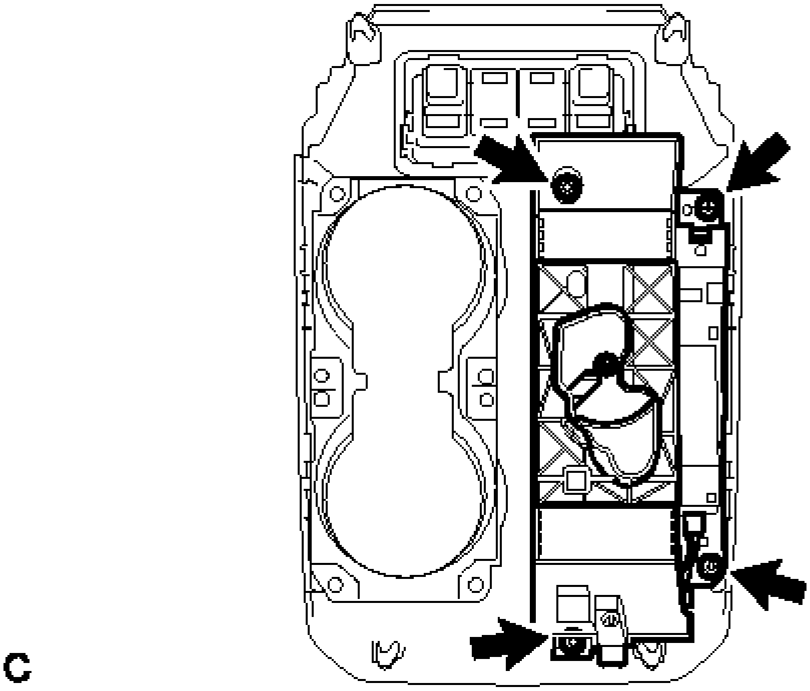

Fig. 95: Identifying Shift Position Indicator Screws

Courtesy of TOYOTA MOTOR SALES, U.S.A., INC.

4. **REMOVE SHIFT LOCK RELEASE BUTTON COVER**
   a. Disengage the 2 claws and remove the shift lock release button cover.

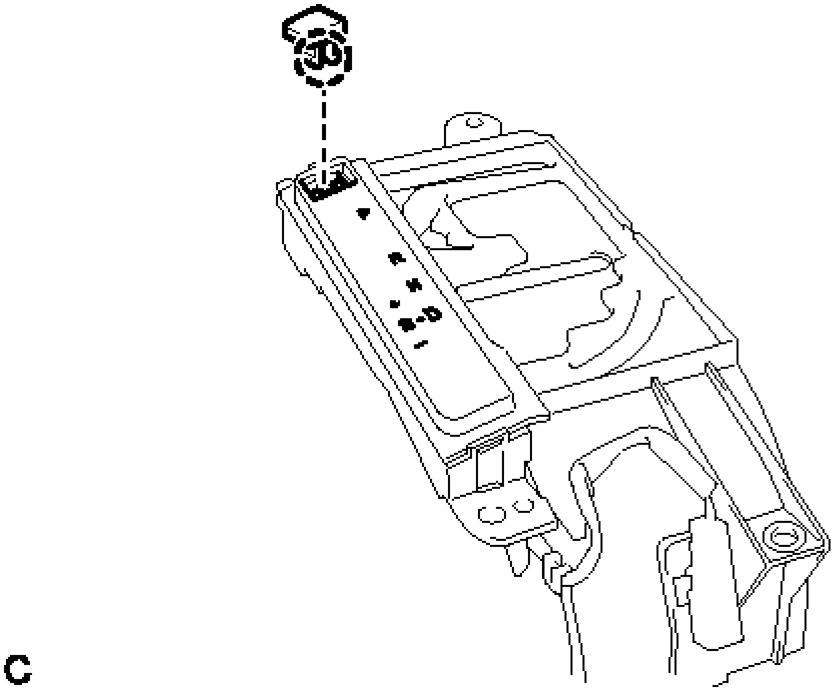

Fig. 96: Identifying Shift Lock Release Button Cover Claws
Courtesy of TOYOTA MOTOR SALES, U.S.A., INC.

5. **REMOVE SHIFT LOCK RELEASE BUTTON (Shift Position Indicator Side)**
   a. Disengage the 2 claws and remove the position indicator plate.

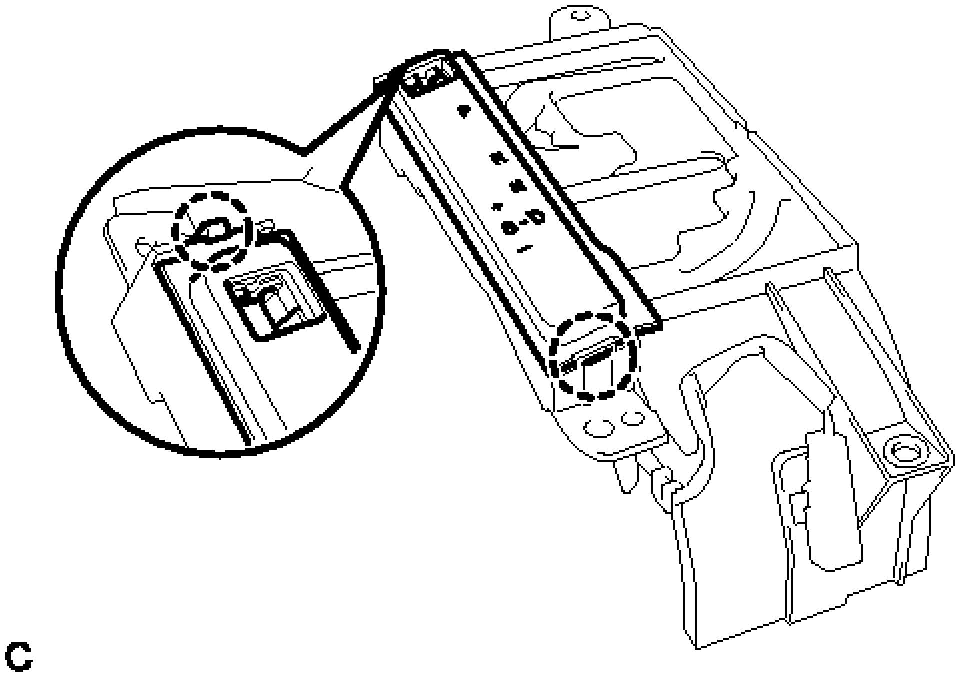

Fig. 97: Identifying Position Indicator Plate Claws
Courtesy of TOYOTA MOTOR SALES, U.S.A., INC.

b. Disengage the claw and remove the shift lock release button and shift lock release spring.

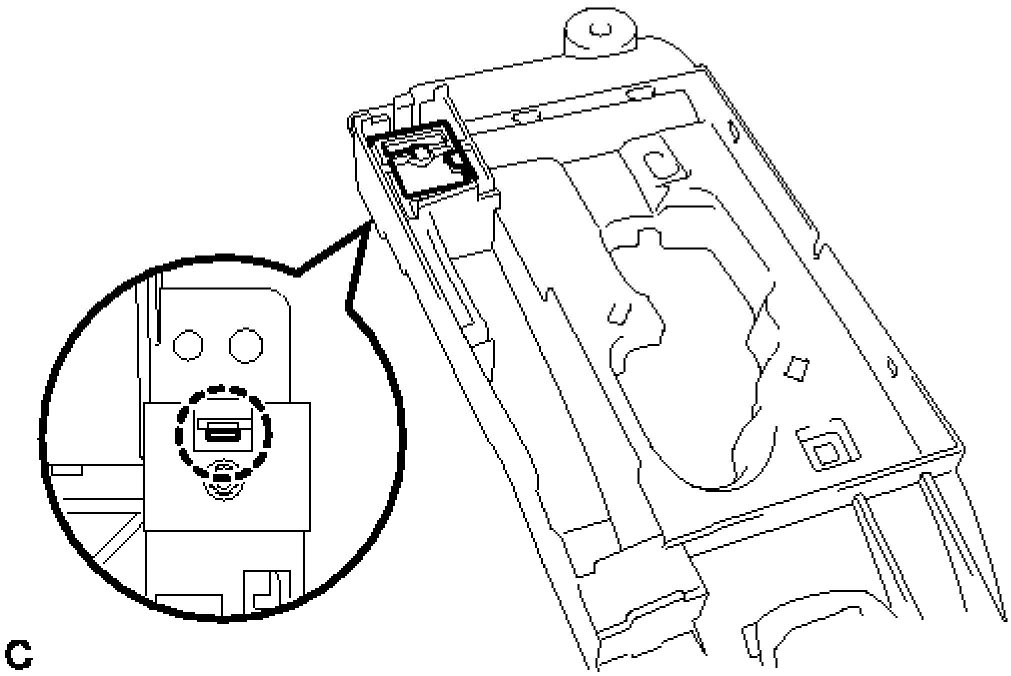

Fig. 98: Identifying Shift Lock Release Button Claw
Courtesy of TOYOTA MOTOR SALES, U.S.A., INC.

6. **REMOVE INDICATOR LIGHT WIRE SUB-ASSEMBLY**
   a. Separate the bulb socket, 2 guides and clamp, and remove the indicator light wire sub-assembly from the upper position indicator housing.

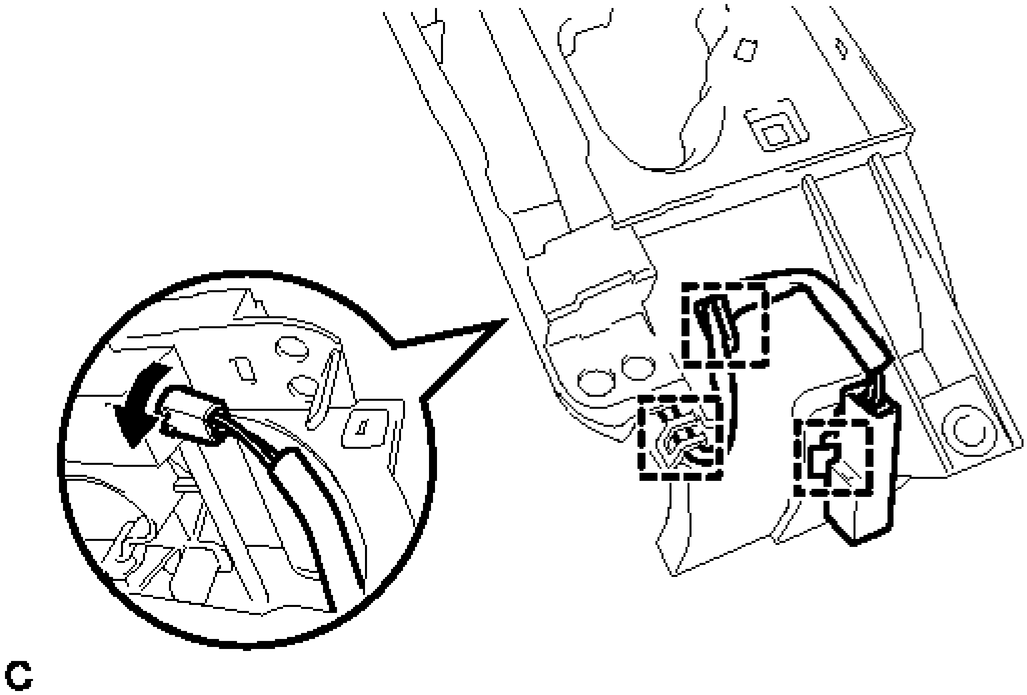

Fig. 99: Identifying Indicator Light Wire Sub-Assembly Bulb Socket, Guides And Clamp
Courtesy of TOYOTA MOTOR SALES, U.S.A., INC.

   b. Remove the bulb from the indicator light wire sub-assembly.
   c. Remove the cap from the bulb.

7. **REMOVE POSITION INDICATOR SLIDE COVER**
   a. Remove the position indicator slide cover from the upper position indicator housing.

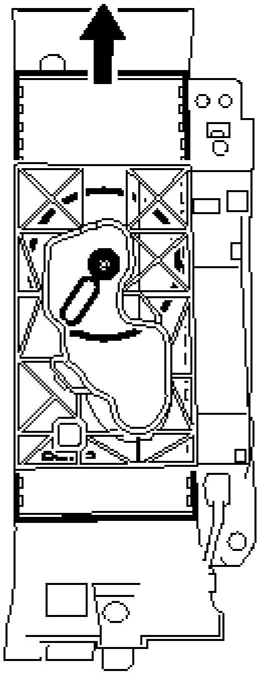

Fig. 100: Removing Position Indicator Slide Cover
Courtesy of TOYOTA MOTOR SALES, U.S.A., INC.

8. **REMOVE NO. 2 POSITION INDICATOR SLIDE COVER**
    a. Remove the No. 2 position indicator slide cover from the position indicator slide cover.

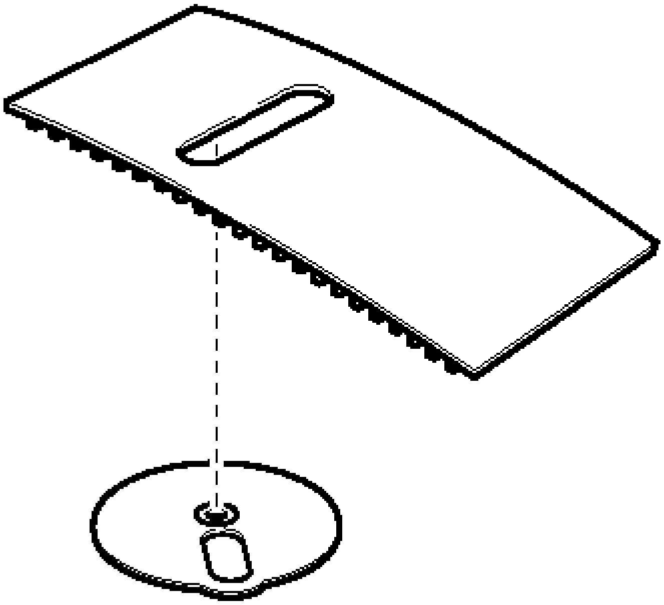

Fig. 101: Identifying No. 2 Position Indicator Slide Cover

Courtesy of TOYOTA MOTOR SALES, U.S.A., INC.

9. **REMOVE UPPER POSITION INDICATOR HOUSING**
    a. Disengage the 4 claws and remove the position indicator lens.

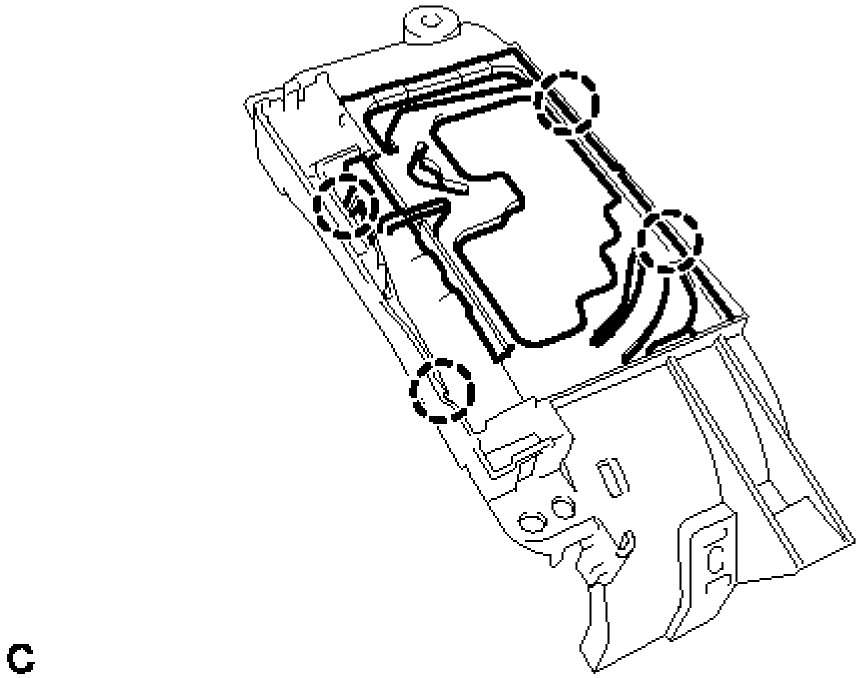

Fig. 102: Identifying Position Indicator Claws
Courtesy of TOYOTA MOTOR SALES, U.S.A., INC.

INSPECTION

INSPECTION

1. **INSPECT LOWER SHIFT LEVER ASSEMBLY**
    a. Measure the voltage according to the value(s) in the table below.

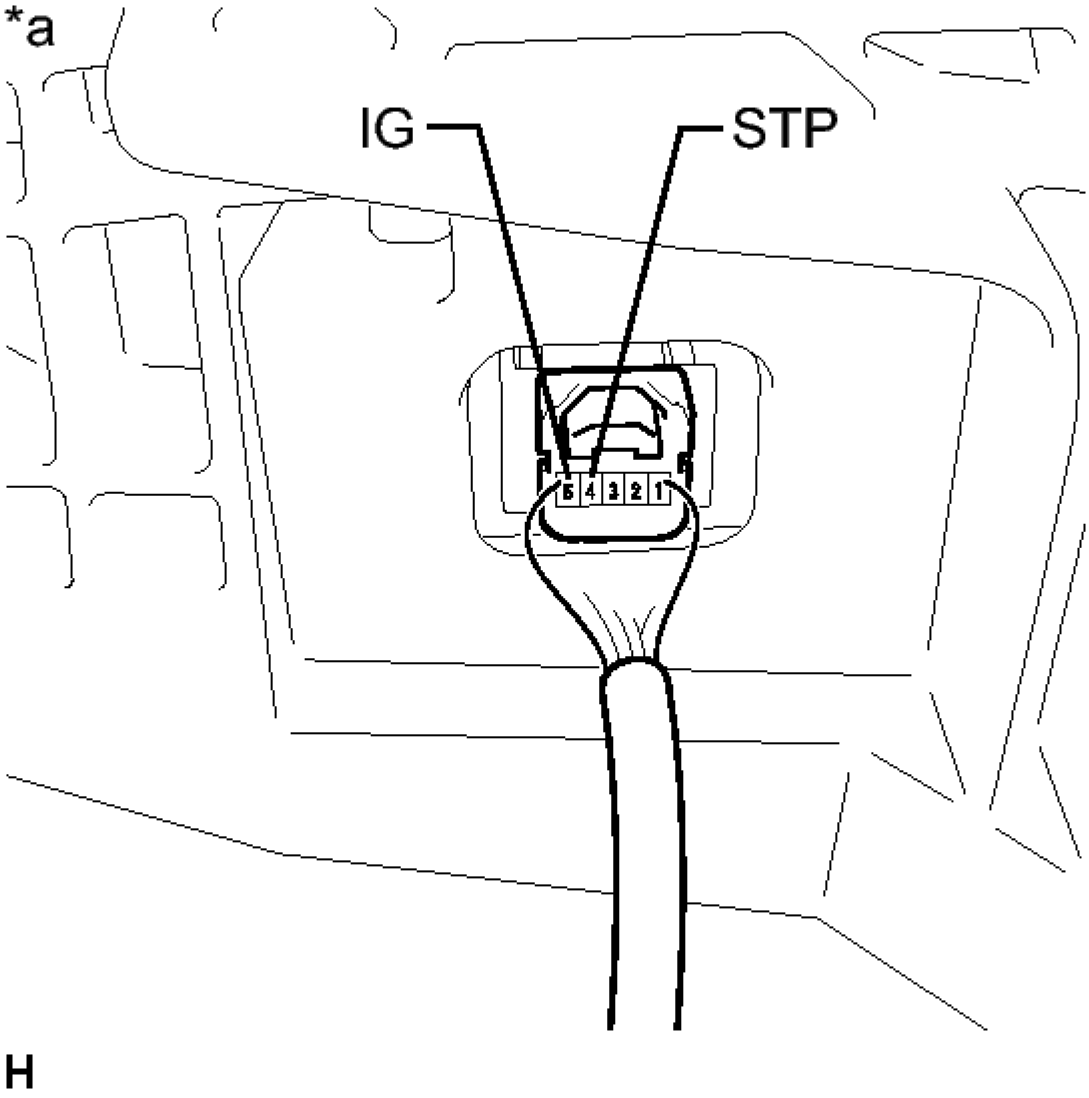

Fig. 103: Identifying Lower Shift Lower Assembly Connector Terminal Identification
Courtesy of TOYOTA MOTOR SALES, U.S.A., INC.

Standard Voltage

Tester Connection	Condition	Specified Condition
5 (IG) - Body ground	Engine switch on (IG)	11 to 14 V
	Engine switch off	Below 1 V
4 (STP) - Body	Brake pedal depressed	11 to 14 V

ground	Brake pedal released	Below 1 V

TEXT IN ILLUSTRATION

*a	Component with harness connected (Shift Lock Control ECU)

HINT:

Do not disconnect the shift lock control unit assembly connector.

b. Measure the resistance according to the value(s) in the table below.

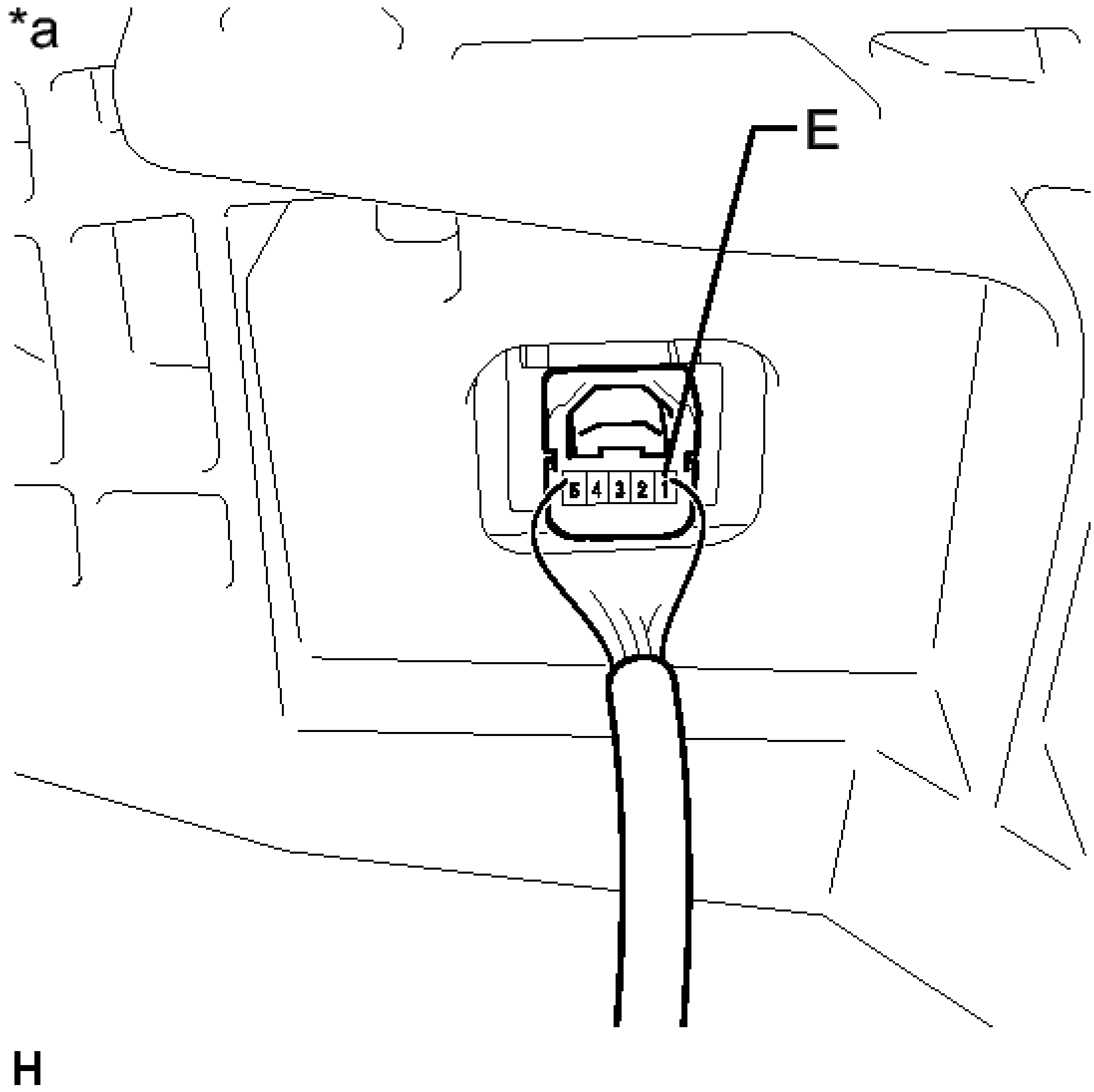

Fig. 104: Identifying Shift Lock Control Unit Assembly Connector Terminal Identification
Courtesy of TOYOTA MOTOR SALES, U.S.A., INC.

Standard Resistance

Tester Connection	Condition	Specified Condition
1 (E) - Body ground	Always	Below 1 ohms

TEXT IN ILLUSTRATION

*a	Component with harness connected

	(Shift Lock Control ECU)

HINT:

Do not disconnect the shift lock control unit assembly connector.

c. Inspect shift lock solenoid
   1. Disconnect the shift lock solenoid connector.

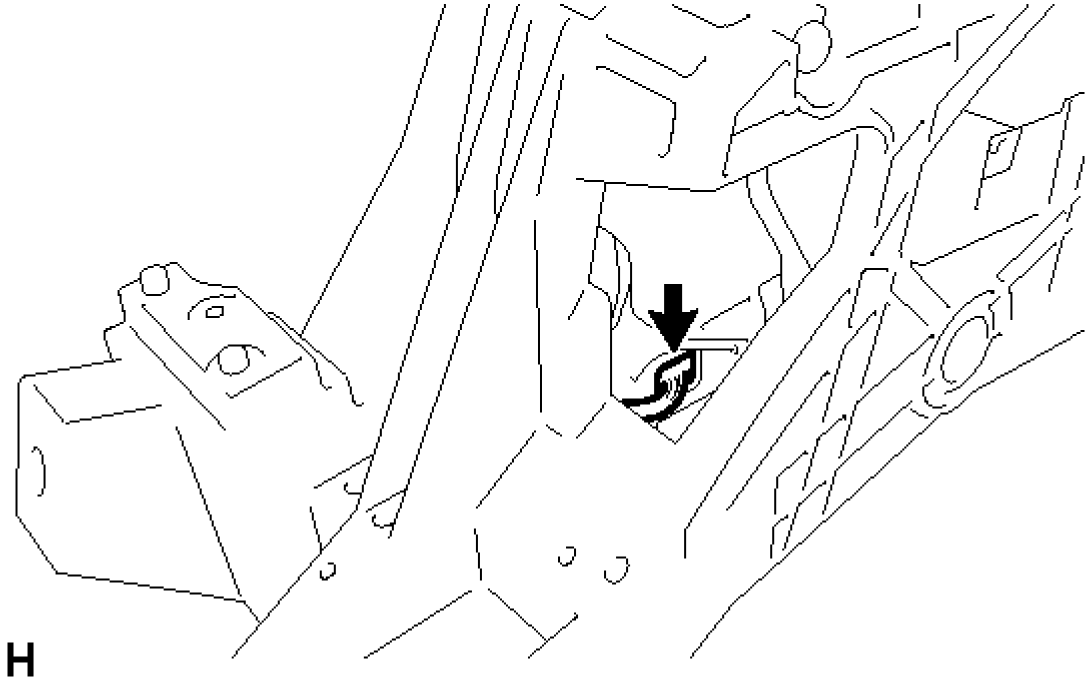

Fig. 105: Identifying Shift Lock Solenoid Connector
Courtesy of TOYOTA MOTOR SALES, U.S.A., INC.

   2. Measure the resistance according to the value(s) in the table below when the shift lever is moved to each position.

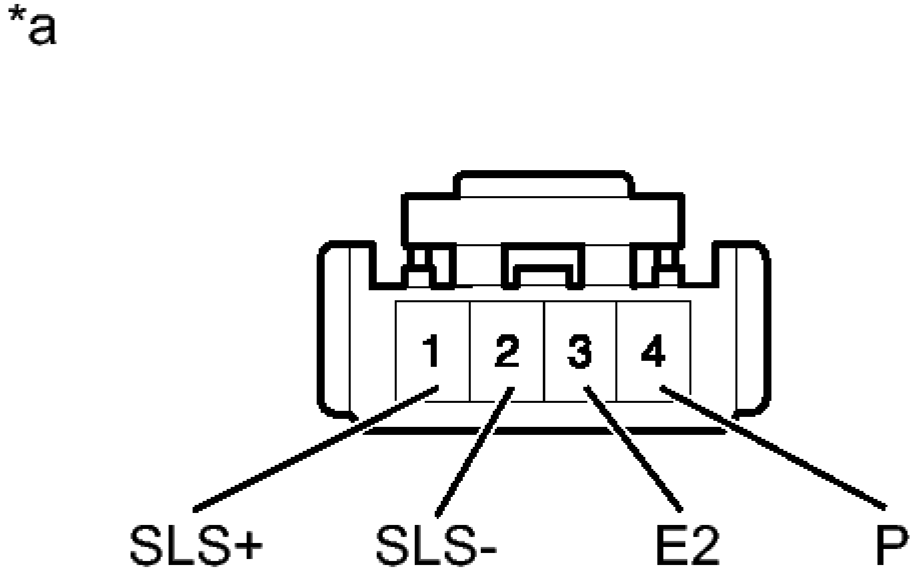

Fig. 106: Identifying Shift Lock Solenoid Connector Terminal Identification
Courtesy of TOYOTA MOTOR SALES, U.S.A., INC.

Standard Resistance

Tester Connection	Shift Lever Position	Specified Condition
4 (P) - 3 (E2)	P	10 kohms or higher
4 (P) - 3 (E2)	Other than P	Below 1 ohms

TEXT IN ILLUSTRATION

*a	Front view of wire harness connector (to Shift Lock Solenoid)

- If the result is not as specified, replace the shift lock control unit assembly.
- If the shift lock does not operate when the power source of the shift lock control unit assembly is normal and the resistance between the body ground and the shift lock

solenoid is as specified, replace the shift lock control unit assembly.

3. Measure the resistance according to the value(s) in the table below.

   Standard Resistance

Tester Connection	Condition	Specified Condition
1 (SLS+) - 2 (SLS-)	Always	112 ohms

   - If the result is not as specified, replace the shift lock control unit assembly.
   - If the shift lock does not operate when the power source of the shift lock control unit assembly is normal and the resistance between the body ground and the shift lock solenoid is as specified, replace the shift lock control unit assembly.

2. **INSPECT TRANSMISSION CONTROL SWITCH**
   a. Measure the resistance between each terminal of the shift lock control unit assembly when the shift lever is moved to each position.

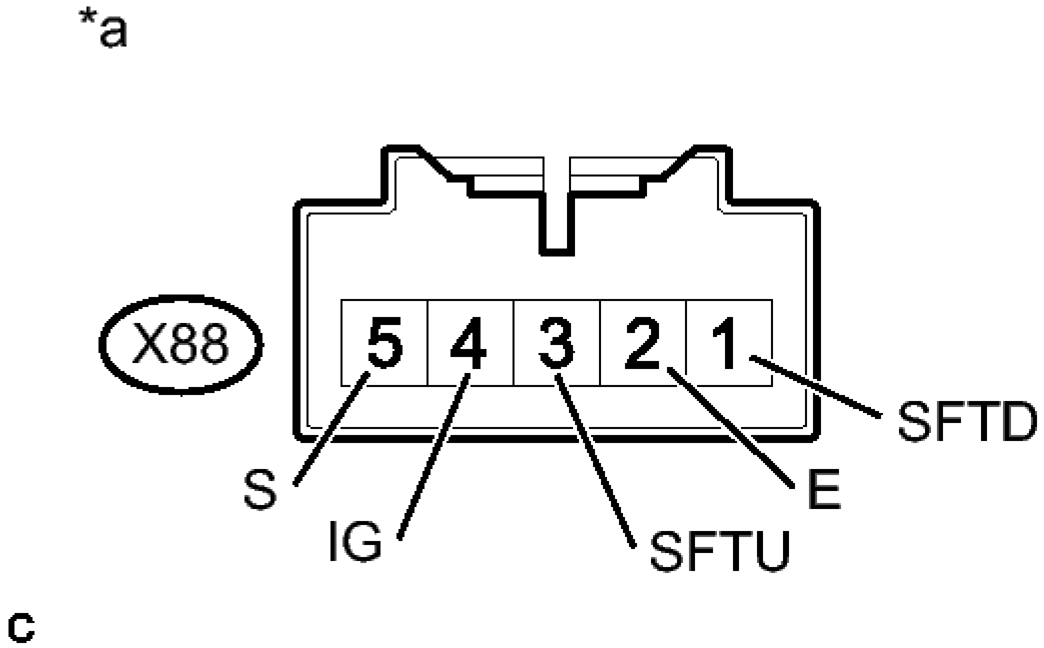

Fig. 107: Identifying Shift Lock Control Unit Assembly Connector Terminal Identification
Courtesy of TOYOTA MOTOR SALES, U.S.A., INC.

Standard Resistance

Tester Connection	Condition	Specified Condition

4 (IG) - 5 (S)	Shift lever in S, "+" or "-"	Below 1 ohms
	Shift lever not in S, "+" or "-"	10 kohms or higher
3 (SFTU) - 2 (E)	Shift lever held in "+" (Up-shift)	Below 1 ohms
	Shift lever not held in "+"	10 kohms or higher
1 (SFTD) - 2 (E)	Shift lever held in "-" (Down-shift)	Below 1 ohms
	Shift lever not held in "-"	10 kohms or higher

TEXT IN ILLUSTRATION

*a	Component without harness connected (Transmission Control Switch)

If the resistance value is not as specified, replace the shift lock control unit assembly.

REASSEMBLY

REASSEMBLY

1. **INSTALL UPPER POSITION INDICATOR HOUSING**
    a. Engage the 4 claws to install the position indicator lens.

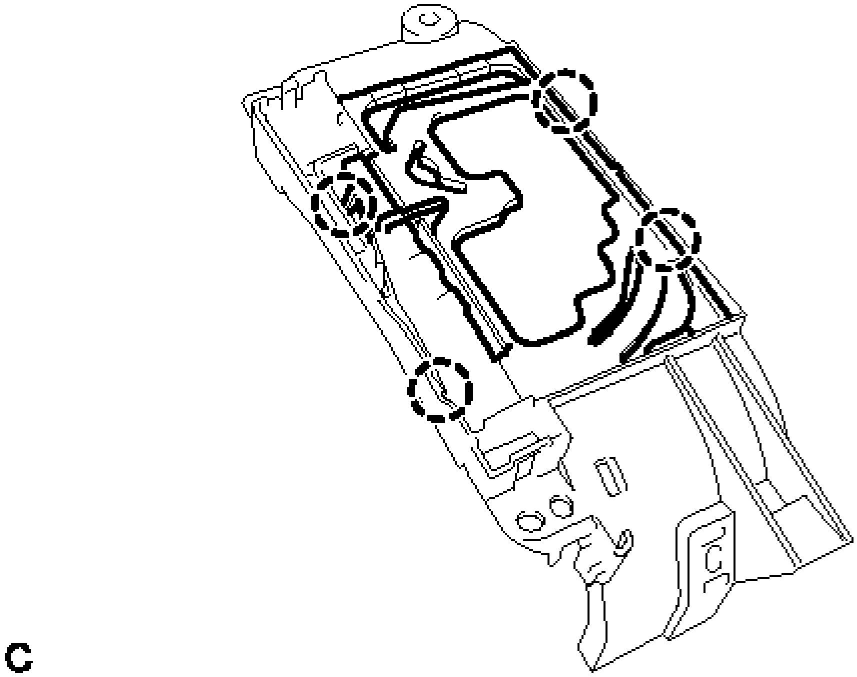

Fig. 108: Identifying Position Indicator Claws
Courtesy of TOYOTA MOTOR SALES, U.S.A., INC.

2. **INSTALL NO. 2 POSITION INDICATOR SLIDE COVER**
   a. Install the No. 2 position indicator slide cover to the position indicator slide cover.

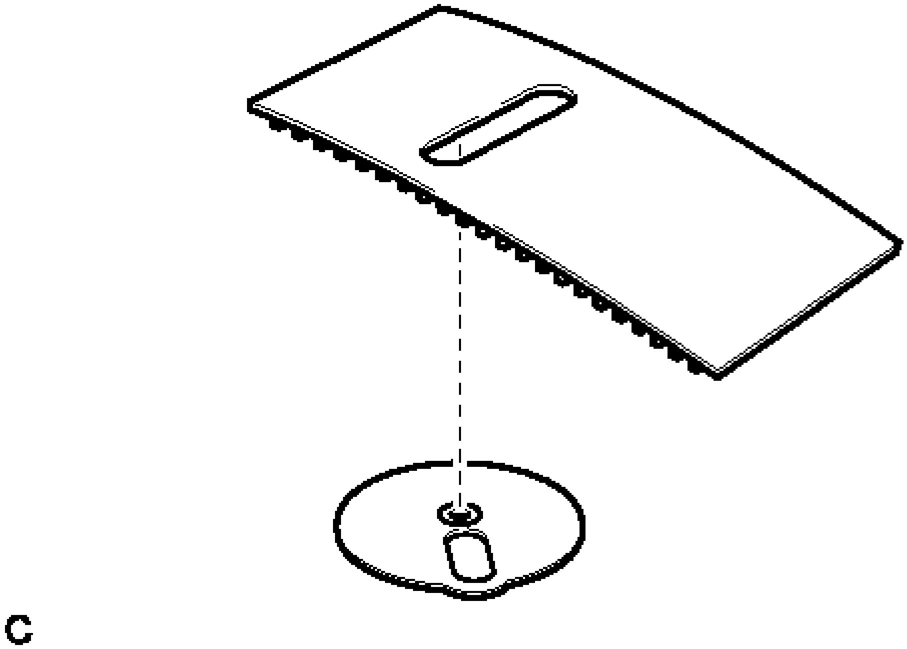

Fig. 109: Identifying No. 2 Position Indicator Slide Cover

Courtesy of TOYOTA MOTOR SALES, U.S.A., INC.

3. **INSTALL POSITION INDICATOR SLIDE COVER**
    a. Install the position indicator slide cover to the upper position indicator housing.

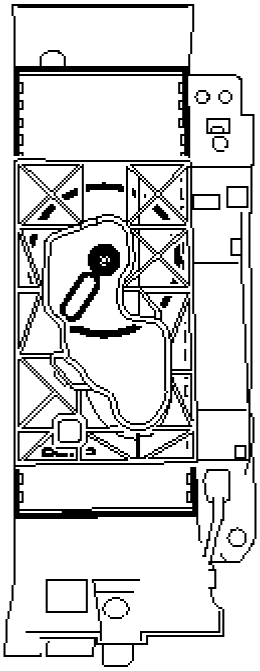

Fig. 110: Identifying Position Indicator Slide Cover
Courtesy of TOYOTA MOTOR SALES, U.S.A., INC.

4. **INSTALL INDICATOR LIGHT WIRE SUB-ASSEMBLY**
    a. Install the cap to the bulb.
    b. Install the bulb to the indicator light wire sub-assembly.
    c. Connect the 2 guides, clamp and bulb socket to install the indicator light wire sub-assembly to the upper position indicator housing.

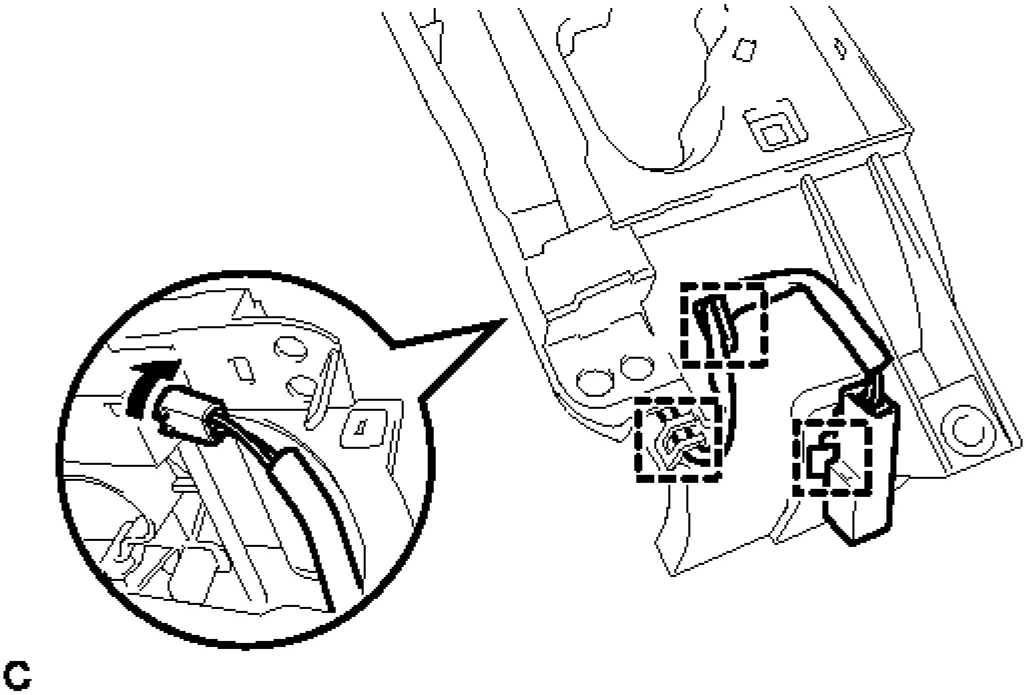

Fig. 111: Identifying Indicator Light Wire Sub-Assembly Guides, Clamp And Bulb Socket
Courtesy of TOYOTA MOTOR SALES, U.S.A., INC.

5. **INSTALL SHIFT LOCK RELEASE BUTTON (Shift Position Indicator Side)**
   a. Engage the claw to install the shift lock release button with the shift lock release spring.

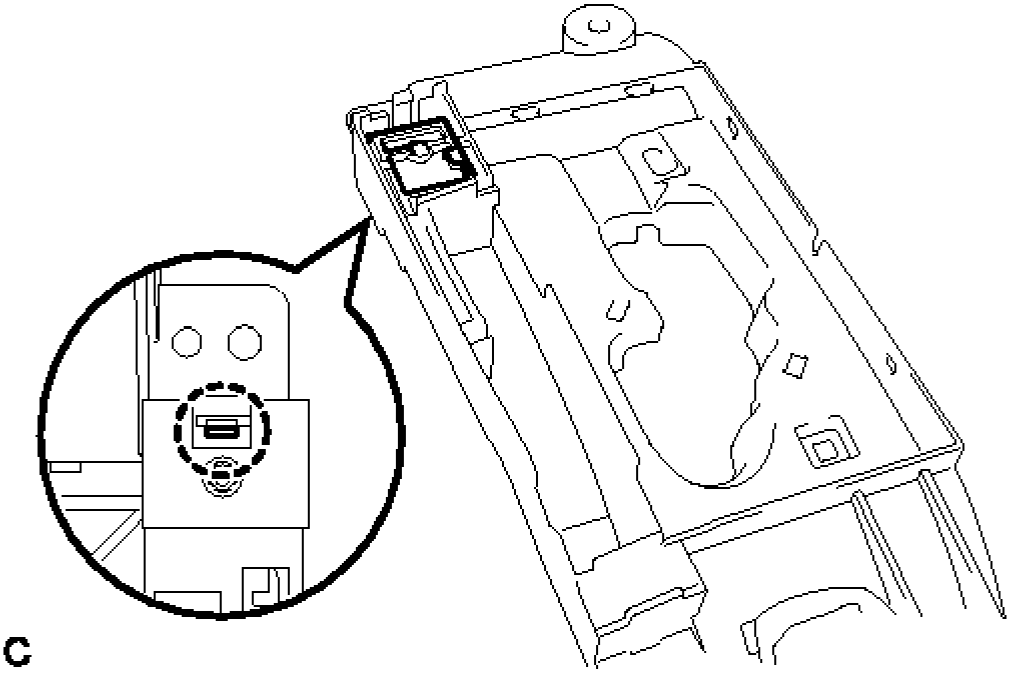

Fig. 112: Identifying Shift Lock Release Button Claw

Courtesy of TOYOTA MOTOR SALES, U.S.A., INC.

b. Engage the 2 claws to install the position indicator plate.

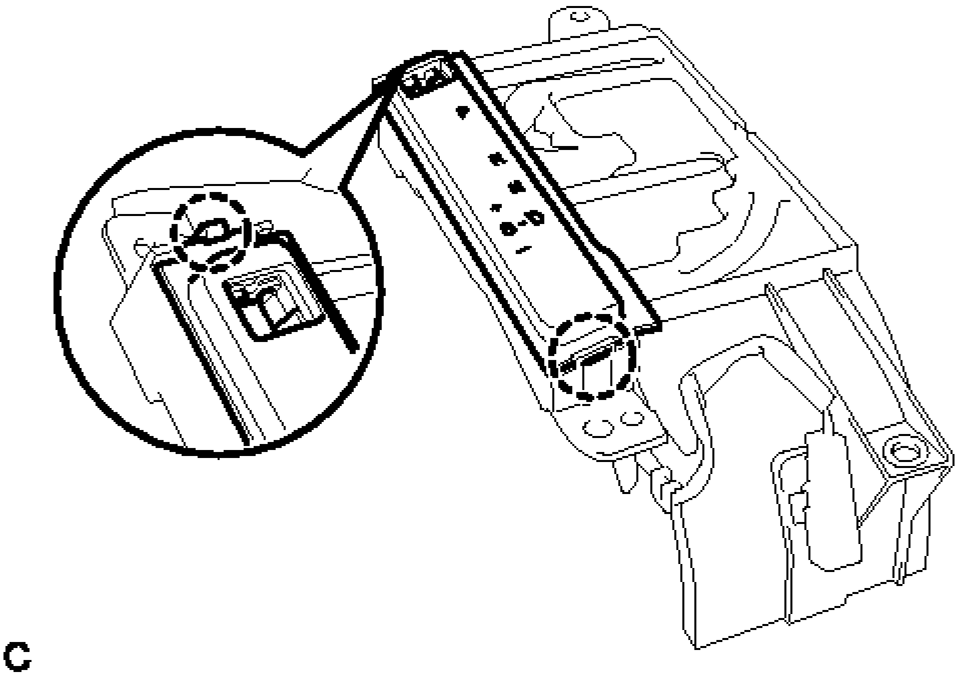

Fig. 113: Identifying Position Indicator Plate Claws
Courtesy of TOYOTA MOTOR SALES, U.S.A., INC.

6. **INSTALL SHIFT LOCK RELEASE BUTTON COVER**
    a. Engage the 2 claws to install the shift lock release button cover.

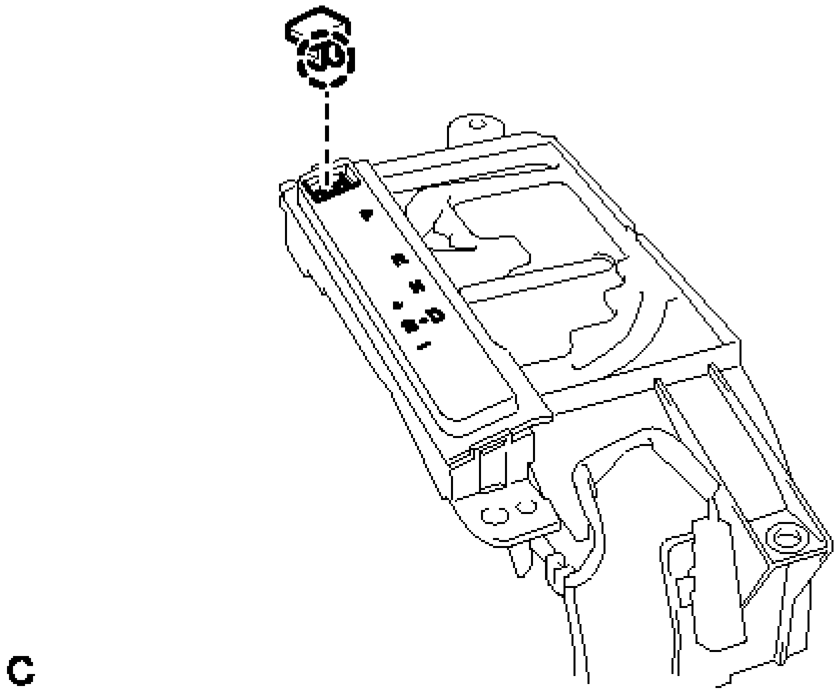

Fig. 114: Identifying Shift Lock Release Button Cover Claws
Courtesy of TOYOTA MOTOR SALES, U.S.A., INC.

7. **INSTALL SHIFT POSITION INDICATOR**
   a. Install the shift position indicator with the 4 screws in the sequence shown in the illustration.

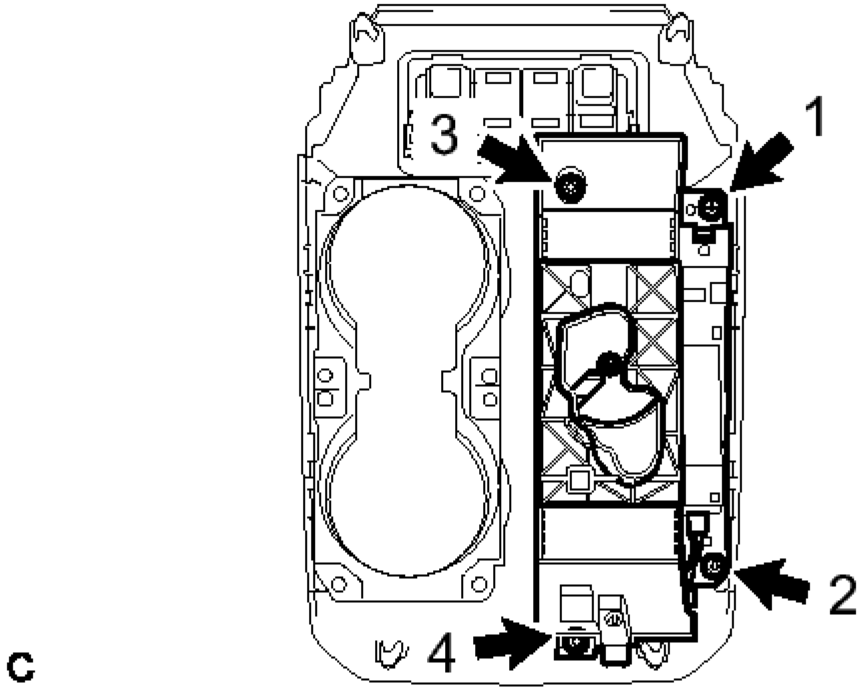

Fig. 115: Identifying Shift Position Indicator Screws

Courtesy of TOYOTA MOTOR SALES, U.S.A., INC.

8. **INSTALL SHIFT LOCK RELEASE BUTTON (Lower Shift Lever Assembly Side)**
    a. Engage the 2 claws to install the shift lock release button with the shift lock release spring.

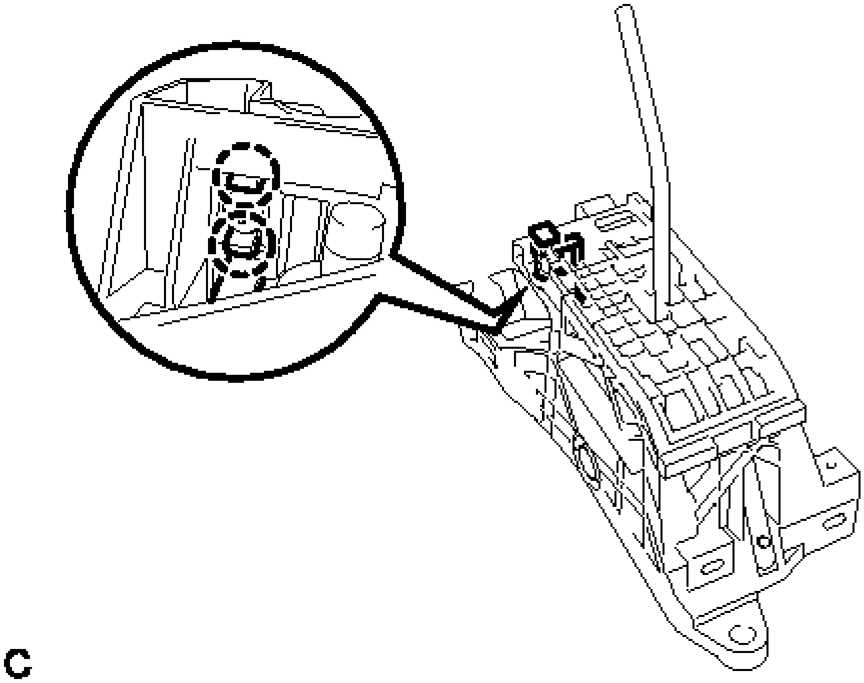

Fig. 116: Identifying Shift Lock Release Button Claws
Courtesy of TOYOTA MOTOR SALES, U.S.A., INC.

9. **INSTALL LOWER POSITION INDICATOR HOUSING**
    a. Engage the 5 claws to install the lower position indicator housing.

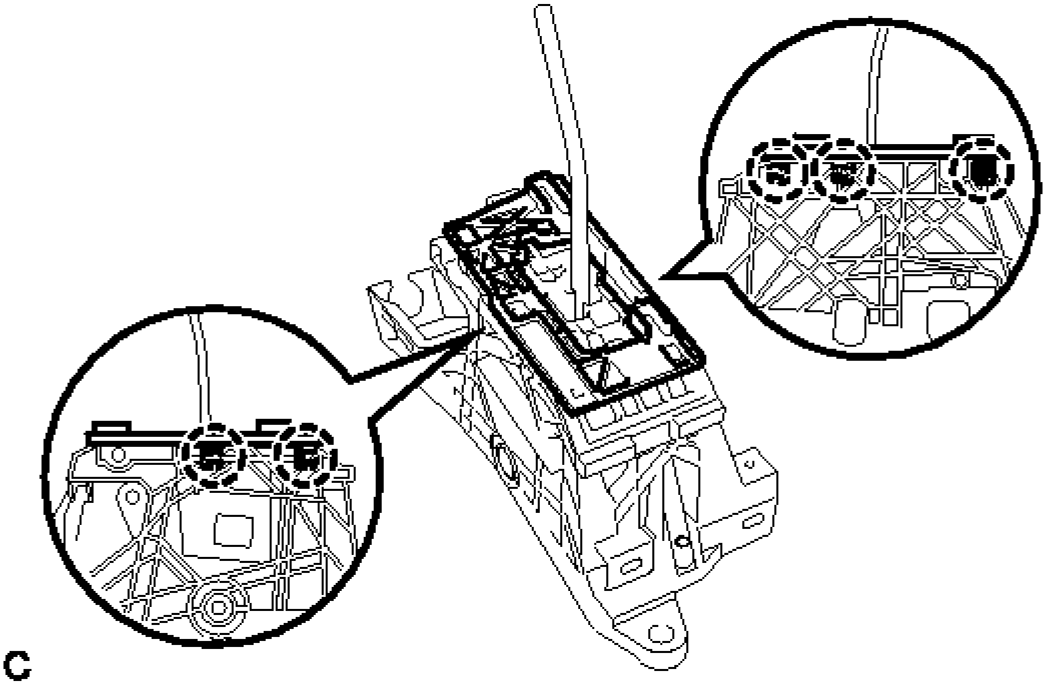

Fig. 117: Identifying Lower Position Indicator Housing Claws
Courtesy of TOYOTA MOTOR SALES, U.S.A., INC.

INSTALLATION

INSTALLATION

1. **INSTALL SHIFT LEVER SUPPORT**
    a. Install the shift lever support with the 4 bolts in the sequence shown in the illustration.

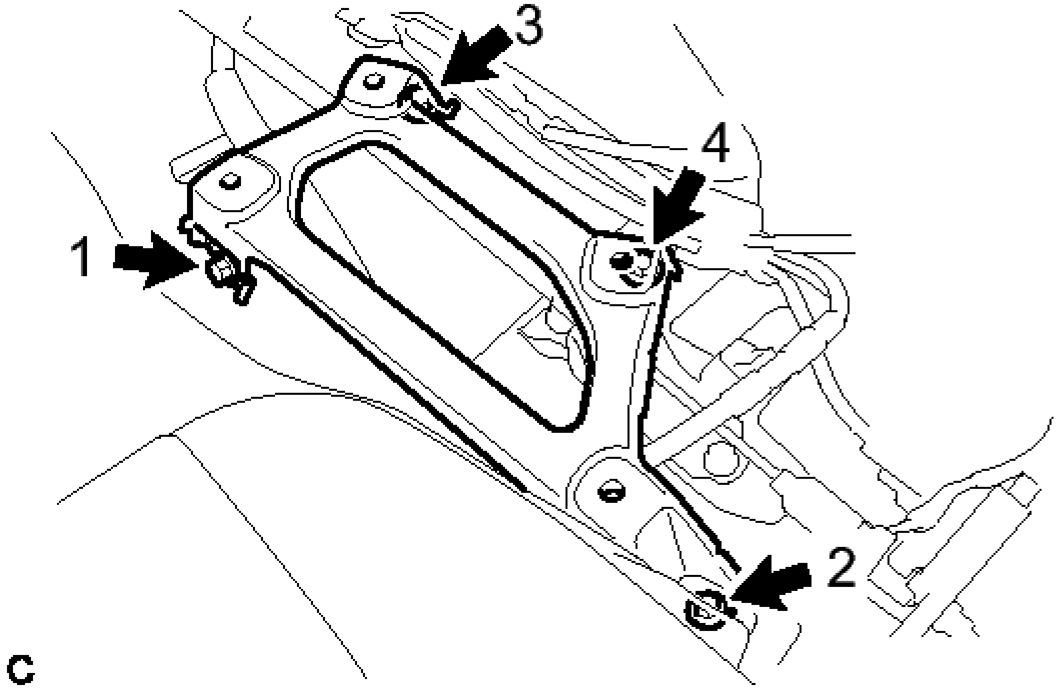

Fig. 118: Identifying Shift Lever Support Bolts
Courtesy of TOYOTA MOTOR SALES, U.S.A., INC.

Torque: 12 N*m (122 kgf*cm, 9 ft.*lbf)

2. **INSTALL LOWER SHIFT LEVER ASSEMBLY**

NOTE: **Check that the park/neutral position switch and the shift lever are in neutral.**

a. Install the lower shift lever assembly with the 4 bolts in the sequence shown in the illustration.

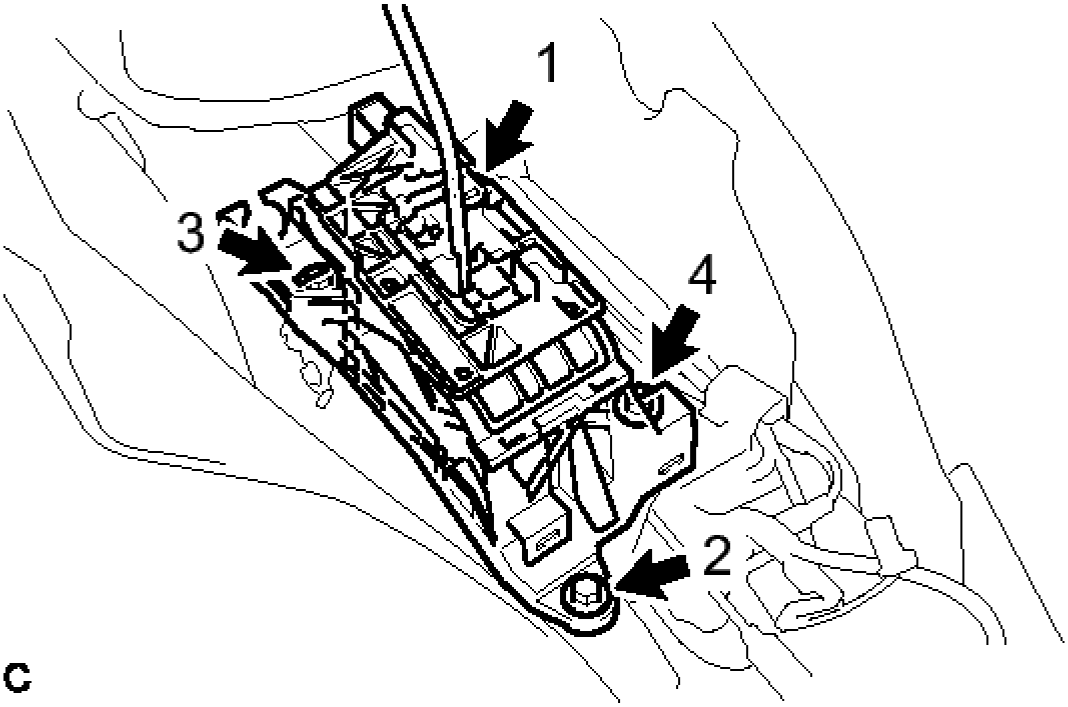

Fig. 119: Identifying Lower Shift Lever Assembly Bolts
Courtesy of TOYOTA MOTOR SALES, U.S.A., INC.

Torque: 12 N*m (122 kgf*cm, 9 ft.*lbf)

b. Connect the 3 clamps and 2 connectors.
c. Slide the slider of the transmission control cable in the direction indicated by the arrow and pull the lock piece outward.

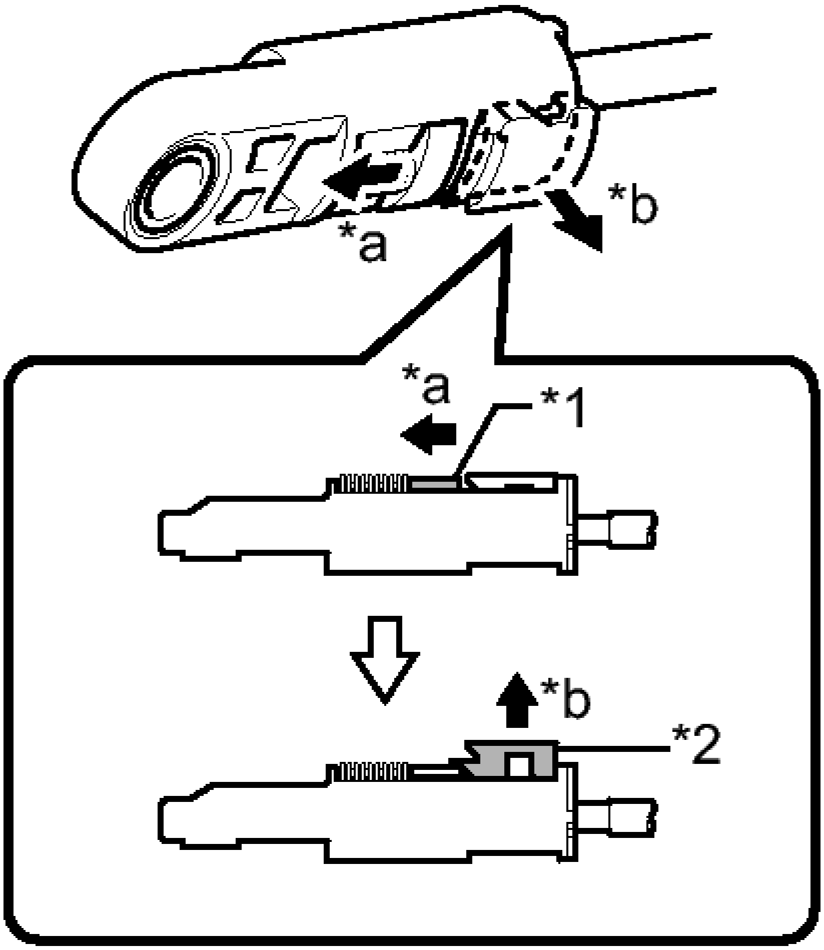

Fig. 120: Identifying Transmission Control Cable Assembly Slider
Courtesy of TOYOTA MOTOR SALES, U.S.A., INC.

TEXT IN ILLUSTRATION

*1	Slider
*2	Lock Piece
*a	Slide
*b	Pull

d. Install the end of the transmission control cable to the lower shift lever assembly.

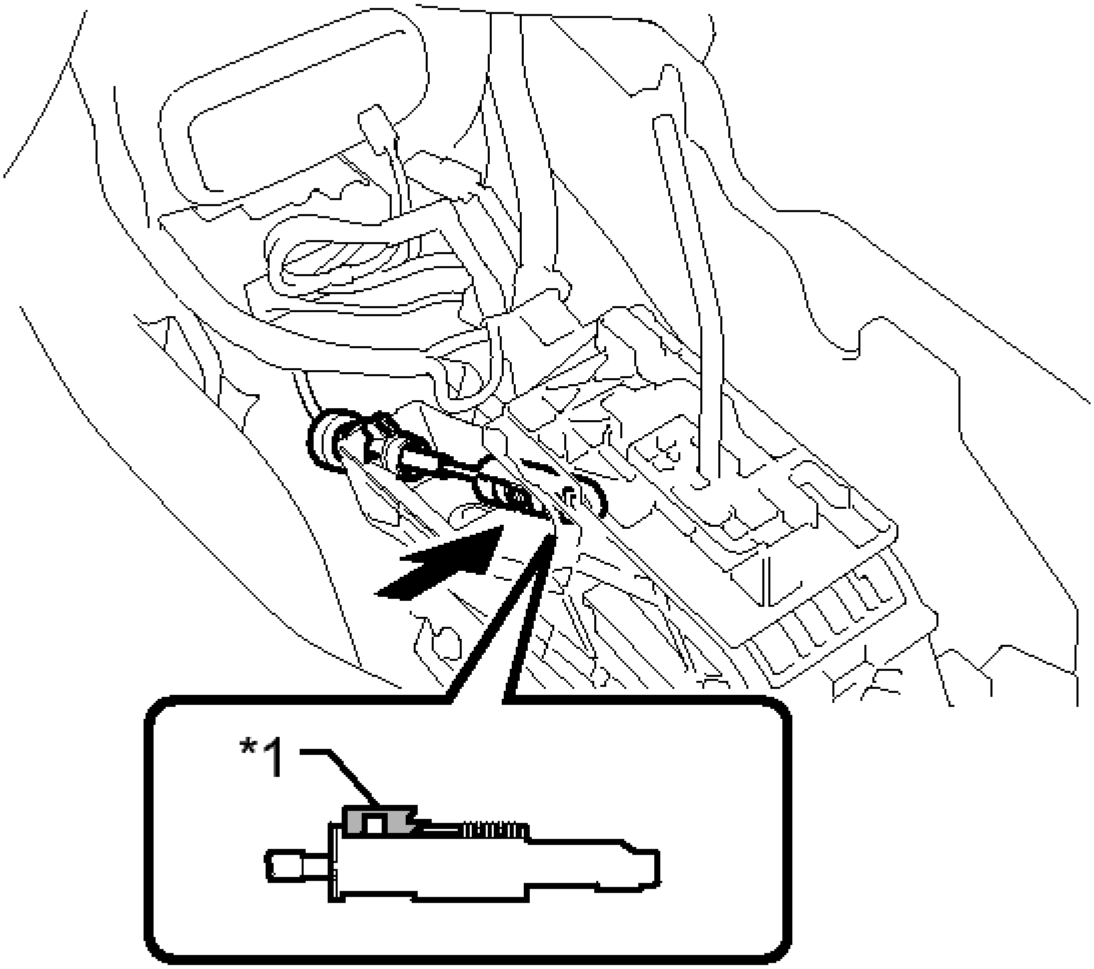

Fig. 121: Installing End Of Transmission Control Cable Assembly
Courtesy of TOYOTA MOTOR SALES, U.S.A., INC.

TEXT IN ILLUSTRATION

*1	Lock Piece

NOTE:

- **Check that the lock piece is pulled up.**
- **Install the cable end all the way to the base of the pin.**

e. Push the lock piece into the adjuster case.

NOTE:

- **Check that the park/neutral position switch and the shift lever are in neutral.**

- **Securely push in the lock piece until the slider lock is engaged.**

3. **INSTALL NO. 1 CONSOLE BOX DUCT (w/ Rear Register Duct)**
    a. Install the No. 1 console box duct with the clip.
4. **INSTALL NO. 1 CONSOLE BOX MOUNTING BRACKET**
    a. Install the No. 1 console box mounting bracket to the lower shift lever assembly with the screw.
5. **INSTALL FLOOR CARPET BRACKET LH** . Refer to **INSTALLATION - Step 10**
6. **INSTALL CONSOLE BOX INSERT** . Refer to **INSTALLATION - Step 4**
7. **INSTALL FRONT NO. 2 CONSOLE BOX INSERT** . Refer to **INSTALLATION - Step 5**
8. **INSTALL UPPER CONSOLE PANEL SUB-ASSEMBLY** . Refer to **INSTALLATION - Step 27**
9. **INSTALL BOX BOTTOM MAT** . Refer to **INSTALLATION - Step 28**
10. **INSTALL LOWER INSTRUMENT PANEL SUB-ASSEMBLY** . Refer to **INSTALLATION - Step 15**
11. **INSTALL LOWER NO. 2 INSTRUMENT PANEL AIRBAG ASSEMBLY** . Refer to **INSTALLATION - Step 1**
12. **INSTALL NO. 2 INSTRUMENT PANEL UNDER COVER SUB-ASSEMBLY** . Refer to **INSTALLATION - Step 17**
13. **INSTALL INSTRUMENT SIDE PANEL RH** . Refer to **INSTALLATION - Step 18**
14. **INSTALL FRONT DOOR OPENING TRIM WEATHERSTRIP RH** . Refer to **INSTALLATION - Step 46**
15. **INSTALL COWL SIDE TRIM SUB-ASSEMBLY RH** . Refer to **INSTALLATION - Step 20**
16. **INSTALL FRONT DOOR SCUFF PLATE RH** . Refer to **INSTALLATION - Step 21**
17. **INSTALL LOWER NO. 1 INSTRUMENT PANEL FINISH PANEL ASSEMBLY** . Refer to **INSTALLATION - Step 40**
18. **CONNECT HOOD LOCK CONTROL LEVER SUB-ASSEMBLY** . Refer to **INSTALLATION - Step 41**
19. **INSTALL INSTRUMENT SIDE PANEL LH** . Refer to **INSTALLATION - Step 47**
20. **INSTALL FRONT DOOR OPENING TRIM WEATHERSTRIP LH** . Refer to **INSTALLATION - Step 42**
21. **INSTALL COWL SIDE TRIM SUB-ASSEMBLY LH** . Refer to **INSTALLATION - Step 43**
22. **INSTALL FRONT DOOR SCUFF PLATE LH** . Refer to **INSTALLATION - Step 44**
23. **INSTALL REAR CONSOLE BOX ASSEMBLY**

    Refer to **INSTALLATION**

24. **CONNECT CABLE TO NEGATIVE BATTERY TERMINAL**

    NOTE: **When disconnecting the cable, some systems need to be initialized after the cable is reconnected. Refer to INITIALIZATION**

25. **INSPECT SHIFT LEVER POSITION** See step 1

26. **INSPECT PERFORM DIAGNOSTIC SYSTEM CHECK**
    - for Built-in Type Yaw Rate Sensor. Refer to **DTC CHECK / CLEAR**
    - for Separate Type Yaw Rate Sensor: Refer to **DTC CHECK / CLEAR**
27. **INSPECT SRS WARNING LIGHT**
    - for Built-in Type Yaw Rate Sensor: Refer to **DIAGNOSIS SYSTEM**
    - for Separate Type Yaw Rate Sensor: Refer to **DIAGNOSIS SYSTEM**

SHIFT PADDLE SWITCH

COMPONENTS

ILLUSTRATION

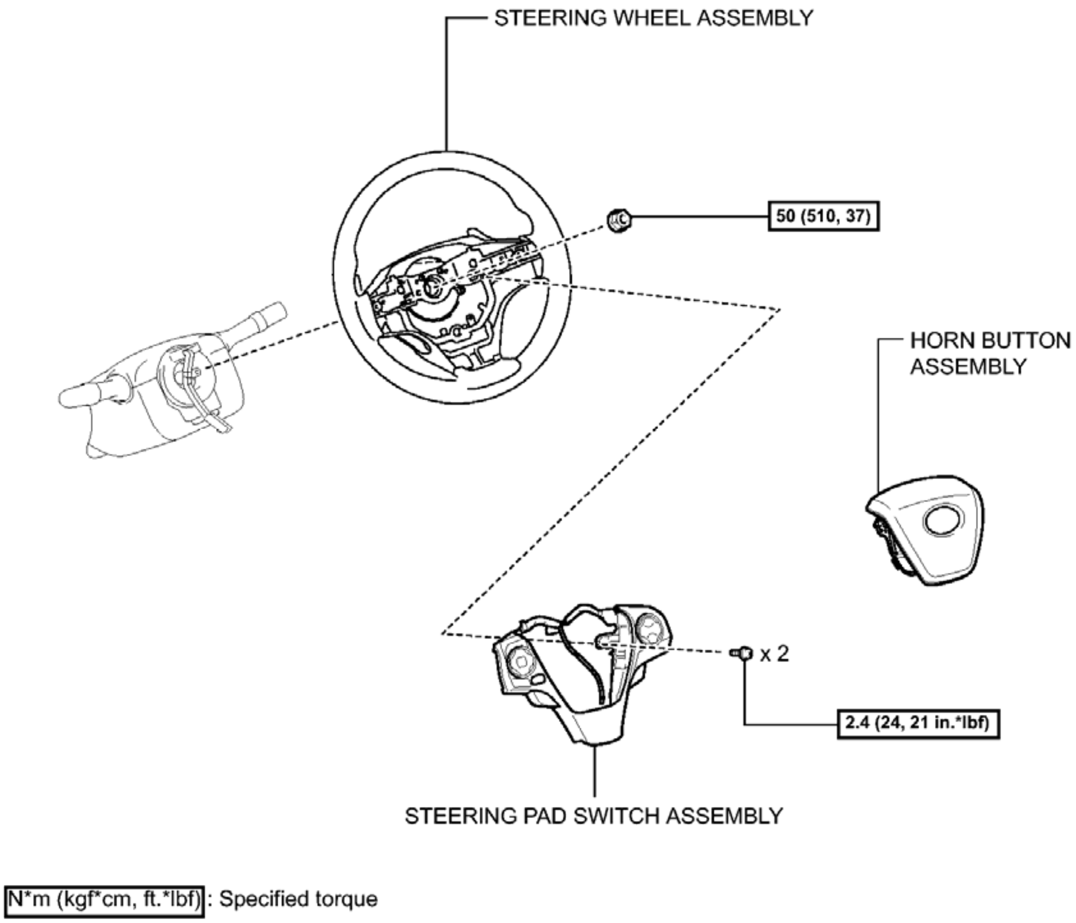
STEERING WHEEL ASSEMBLY
50 (510, 37)
HORN BUTTON ASSEMBLY
x 2
2.4 (24, 21 in.*lbf)
STEERING PAD SWITCH ASSEMBLY
N*m (kgf*cm, ft.*lbf) : Specified torque

Fig. 122: Identifying Shift Paddle Switch Replacement Components With Torque Specifications (1 Of 2)
Courtesy of TOYOTA MOTOR SALES, U.S.A., INC.

ILLUSTRATION

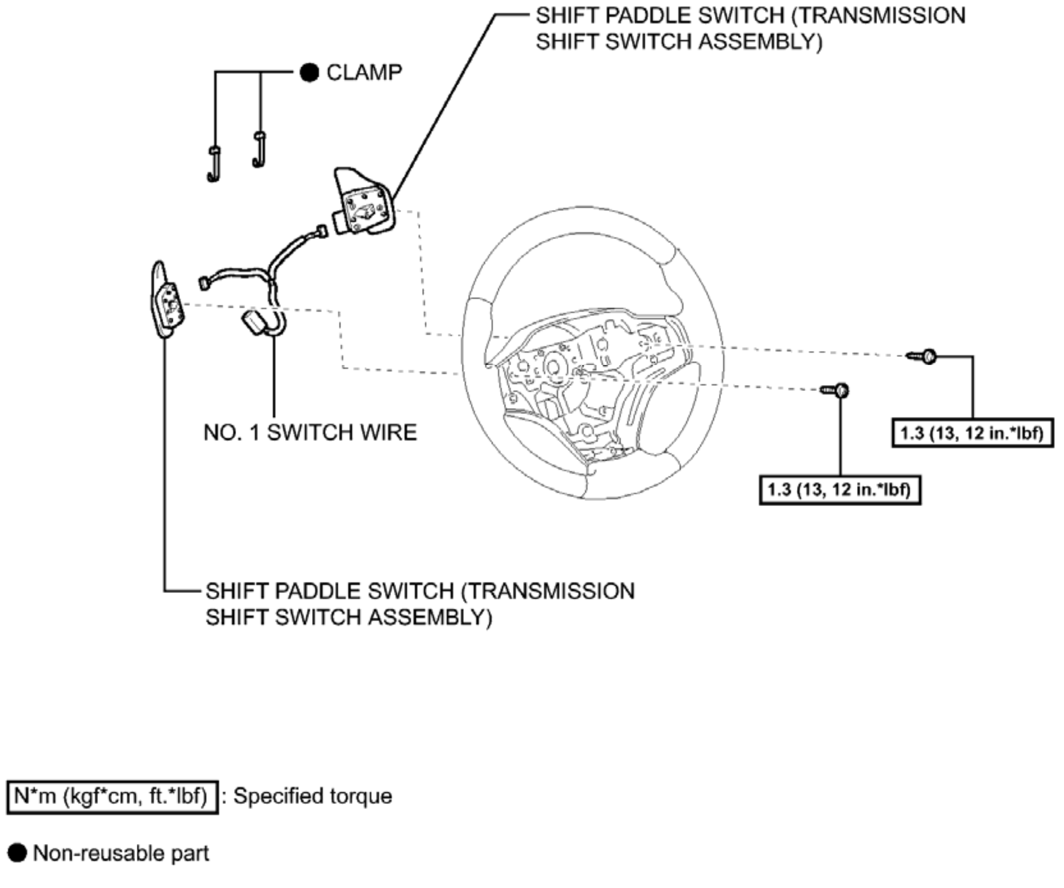
SHIFT PADDLE SWITCH (TRANSMISSION SHIFT SWITCH ASSEMBLY)
● CLAMP
NO. 1 SWITCH WIRE
1.3 (13, 12 in.*lbf)
1.3 (13, 12 in.*lbf)
SHIFT PADDLE SWITCH (TRANSMISSION SHIFT SWITCH ASSEMBLY)
N*m (kgf*cm, ft.*lbf) : Specified torque
● Non-reusable part
c

Fig. 123: Identifying Shift Paddle Switch Replacement Components With Torque Specifications (2 Of 2)
Courtesy of TOYOTA MOTOR SALES, U.S.A., INC.

REMOVAL

REMOVAL

NOTE:

- **Do not replace the spiral cable with the battery connected and the engine switch on.**
- **Do not rotate the spiral cable without the steering wheel with the battery connected and the engine switch on.**
- **Ensure that the steering wheel is installed and aligned straight when inspecting the steering sensor.**
- **Do not remove the steering sensor from the spiral cable.**

1. **ALIGN FRONT WHEELS FACING STRAIGHT AHEAD**
2. **REMOVE HORN BUTTON ASSEMBLY**

   Refer to **REMOVAL**

3. **REMOVE STEERING WHEEL ASSEMBLY** . Refer to **REMOVAL - Step 3**
4. **REMOVE STEERING PAD SWITCH ASSEMBLY** . Refer to **REMOVAL - Step 2**
5. **REMOVE SHIFT PADDLE SWITCH (TRANSMISSION SHIFT SWITCH ASSEMBLY)**

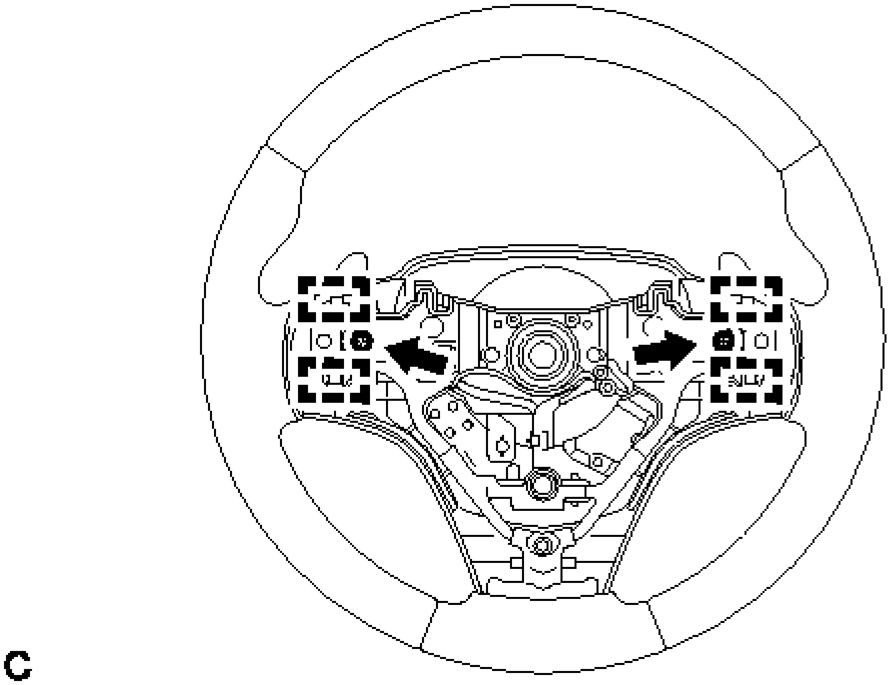

Fig. 124: Identifying Shift Paddle Switches, Pins And Screws
Courtesy of TOYOTA MOTOR SALES, U.S.A., INC.

   a. Remove the 2 screws.
   b. Disengage the 4 pins and remove the 2 shift paddle switches (transmission shift switch assembly).

6. **REMOVE NO. 1 SWITCH WIRE**
   a. Disengage the 5 guides to remove the shift paddle switch with No. 1 switch wire from the steering wheel assembly.

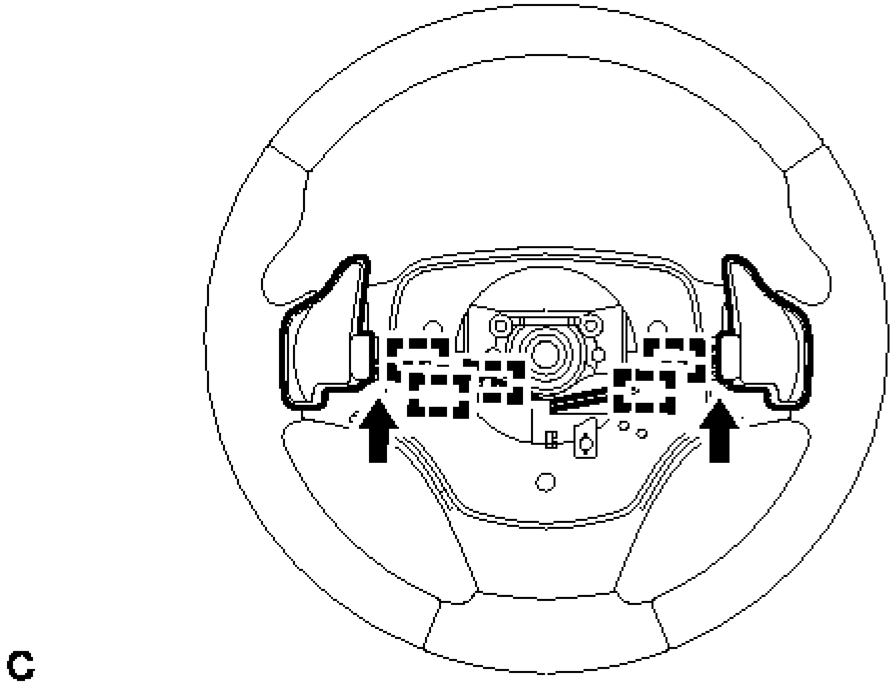

Fig. 125: Identifying No. 1 Switch Wire Guides
Courtesy of TOYOTA MOTOR SALES, U.S.A., INC.

b. Remove the 2 clamps.

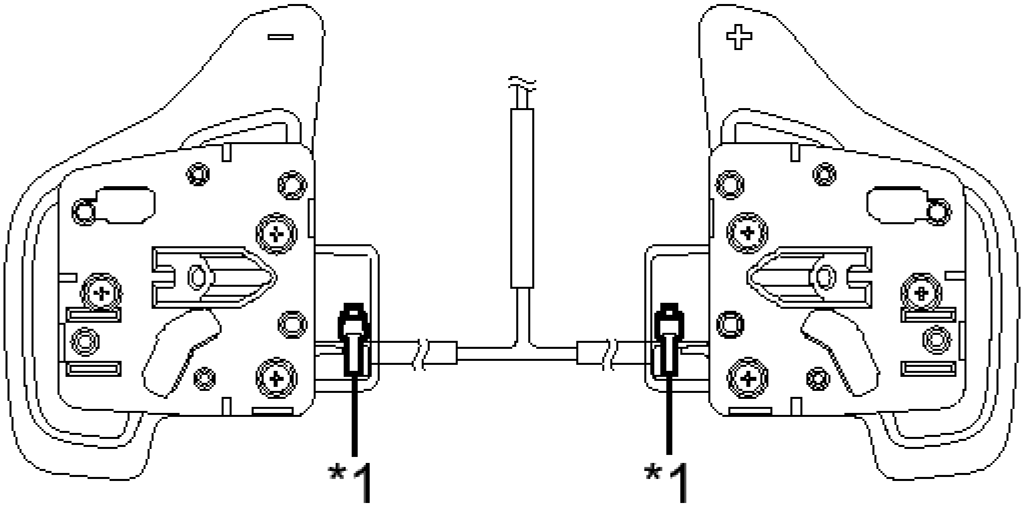

Fig. 126: Identifying No. 1 Switch Wire Clamps
Courtesy of TOYOTA MOTOR SALES, U.S.A., INC.

TEXT IN ILLUSTRATION

*1	Clamp

c. Disconnect the 2 connectors to remove the 2 shift paddle switches (transmission shift switch assembly) from the No. 1 switch wire.

INSPECTION

INSPECTION

1. **INSPECT SHIFT PADDLE SWITCH (TRANSMISSION SHIFT SWITCH ASSEMBLY)**
    a. Measure the resistance between each terminal when the shift paddle switch is moved to each position.

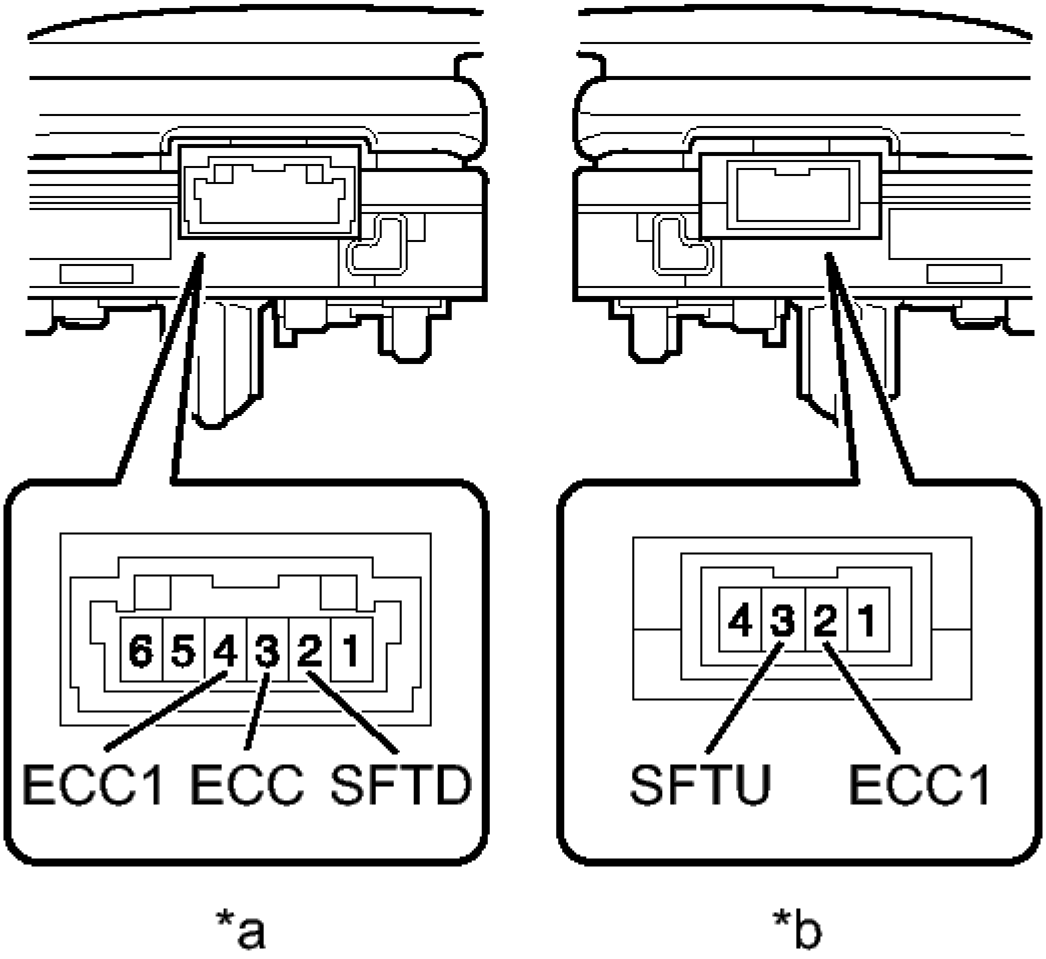
6
5
4
3
2
1
ECC1
ECC
SFTD
4
3
2
1
SFTU
ECC1
*a
*b

T

Fig. 127: Identifying Shift Paddle Switch Connector Terminal Identification
Courtesy of TOYOTA MOTOR SALES, U.S.A., INC.

TEXT IN ILLUSTRATION

	Component

*a	without harness connected (transmission shift switch LH)
*b	Component without harness connected (transmission shift switch RH)

Standard Resistance

TRANSMISSION SHIFT SWITCH LH:

Tester Connection	Switch Condition	Specified Condition
3 (ECC) - 2 (SFTD)	Pull "-" continuously (Down-shift)	Below 1 ohms
	Release	10 kohms or higher
4 (ECC1) - 2 (SFTD)	Pull "-" continuously (Down-shift)	Below 1 ohms
	Release	10 kohms or higher

TRANSMISSION SHIFT SWITCH RH:

Tester Connection	Switch Condition	Specified Condition
3 (SFTU) - 2 (ECC1)	Pull "+" continuously (Up-shift)	Below 1 ohms
	Release	10 kohms or higher

If the resistance values are not as specified, replace the shift paddle switch (transmission shift switch assembly).

INSTALLATION

INSTALLATION

NOTE:

- **Do not replace the spiral cable with the battery connected and the engine switch on (IG).**
- **Do not rotate the spiral cable without the steering wheel with the battery connected and the engine switch on (IG).**
- **Ensure that the steering wheel is installed and aligned straight when inspecting the steering sensor.**
- **Do not remove the steering sensor from the spiral cable.**

1. **CONNECT NO. 1 SWITCH WIRE**
   a. Connect the 2 No. 1 switch wire connectors to the 2 shift paddle switches (transmission shift switch assembly).
   b. Install new 2 clamps as shown in the illustration.

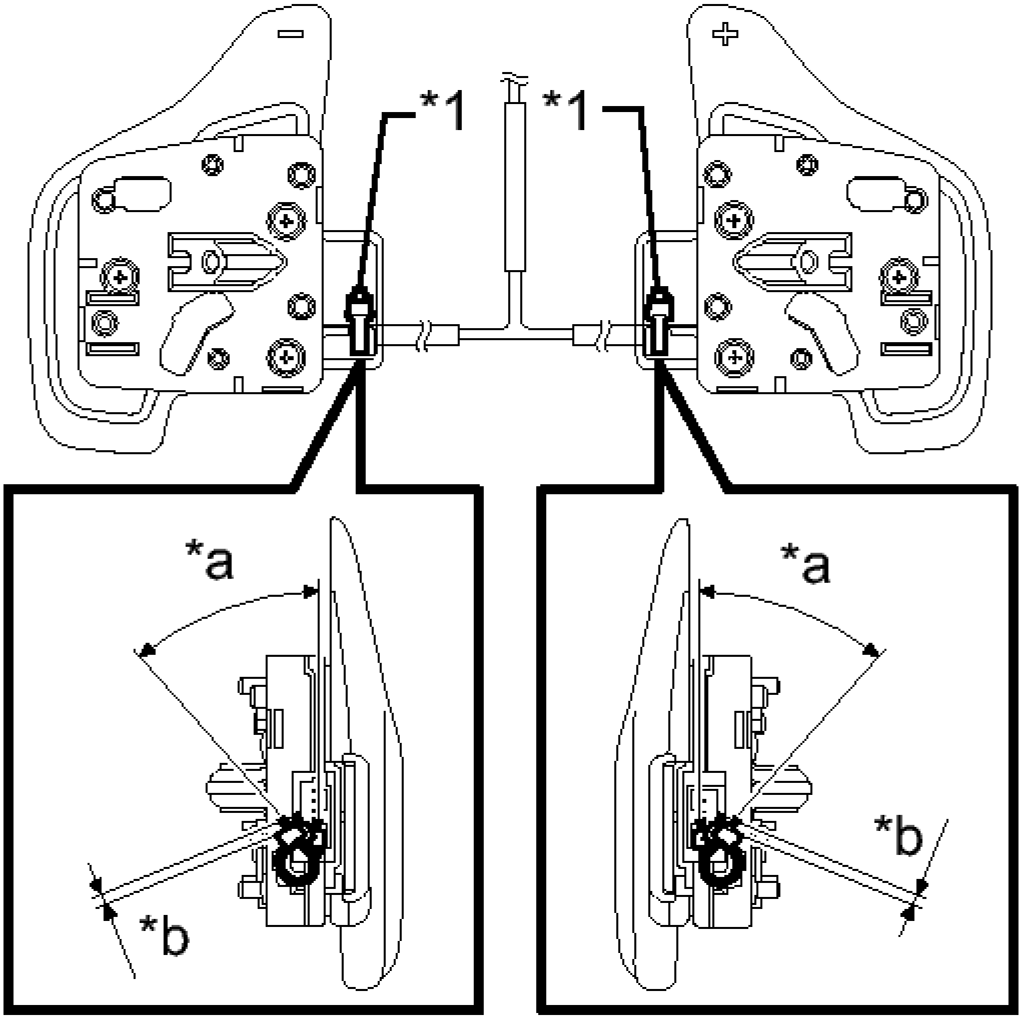

C

Fig. 128: Identifying Clamps
Courtesy of TOYOTA MOTOR SALES, U.S.A., INC.

TEXT IN ILLUSTRATION

*1	Clamp
*a	0 to 40°
*b	1 to 3 mm

c. Engage the 5 guides to install the No. 1 switch wire.

2. **INSTALL SHIFT PADDLE SWITCH (TRANSMISSION SHIFT SWITCH ASSEMBLY)**
    a. Engage the 4 pins and install the 2 shift paddle switches (transmission shift switch assembly) with the 2 screws.

    Torque: 1.3 N*m (13 kgf*cm, 12 in.*lbf)

    NOTE: Make sure that the brackets are securely installed.

3. **INSTALL STEERING PAD SWITCH ASSEMBLY** . Refer to **INSTALLATION - Step 1**
4. **ALIGN FRONT WHEELS FACING STRAIGHT AHEAD**
5. **INSPECT AND ADJUST SPIRAL CABLE WITH STEERING ANGLE SENSOR** . Refer to **INSTALLATION - Step 7**
6. **INSTALL STEERING WHEEL ASSEMBLY** . Refer to **INSTALLATION - Step 11**
7. **CHECK STEERING WHEEL CENTER POINT**
8. **INSTALL HORN BUTTON ASSEMBLY**

    Refer to **INSTALLATION**

TRANSMISSION CONTROL CABLE

COMPONENTS

ILLUSTRATION

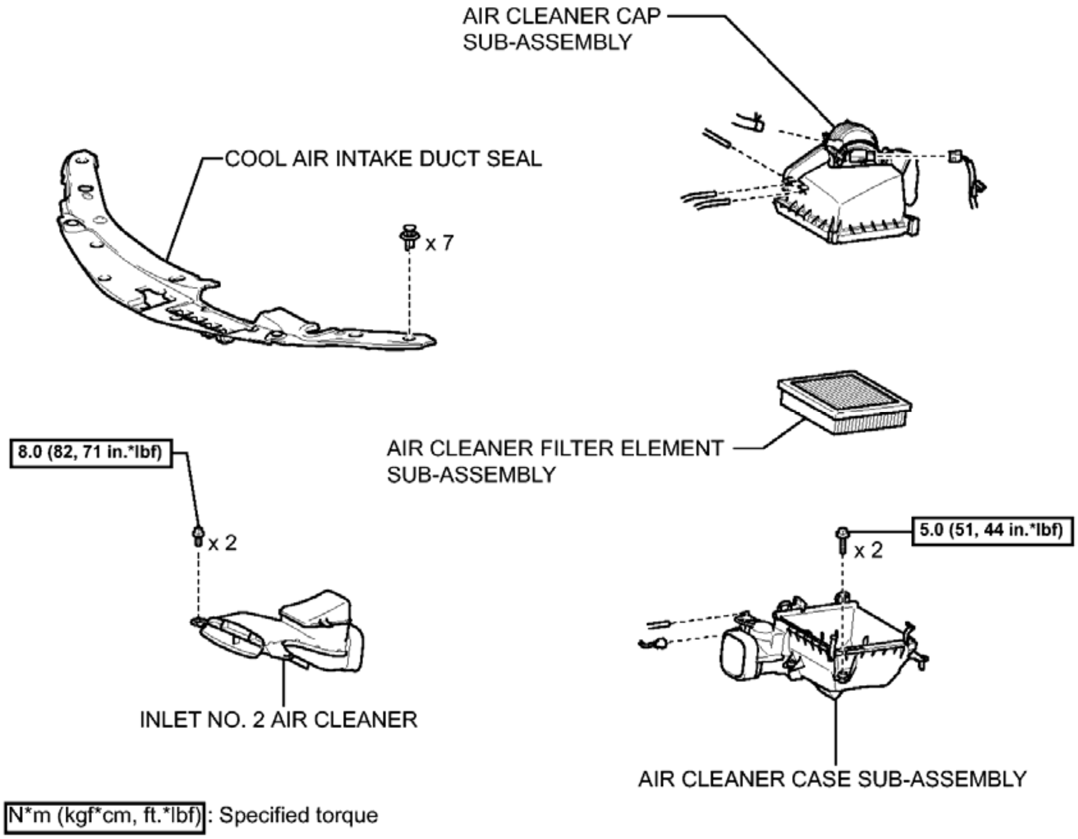
AIR CLEANER CAP SUB-ASSEMBLY
COOL AIR INTAKE DUCT SEAL
x 7
AIR CLEANER FILTER ELEMENT SUB-ASSEMBLY
8.0 (82, 71 in.*lbf)
x 2
5.0 (51, 44 in.*lbf)
x 2
INLET NO. 2 AIR CLEANER
AIR CLEANER CASE SUB-ASSEMBLY
N*m (kgf*cm, ft.*lbf): Specified torque

Fig. 129: Identifying Transmission Control Cable Replacement Components With Torque Specifications (1 Of 2)
Courtesy of TOYOTA MOTOR SALES, U.S.A., INC.

ILLUSTRATION

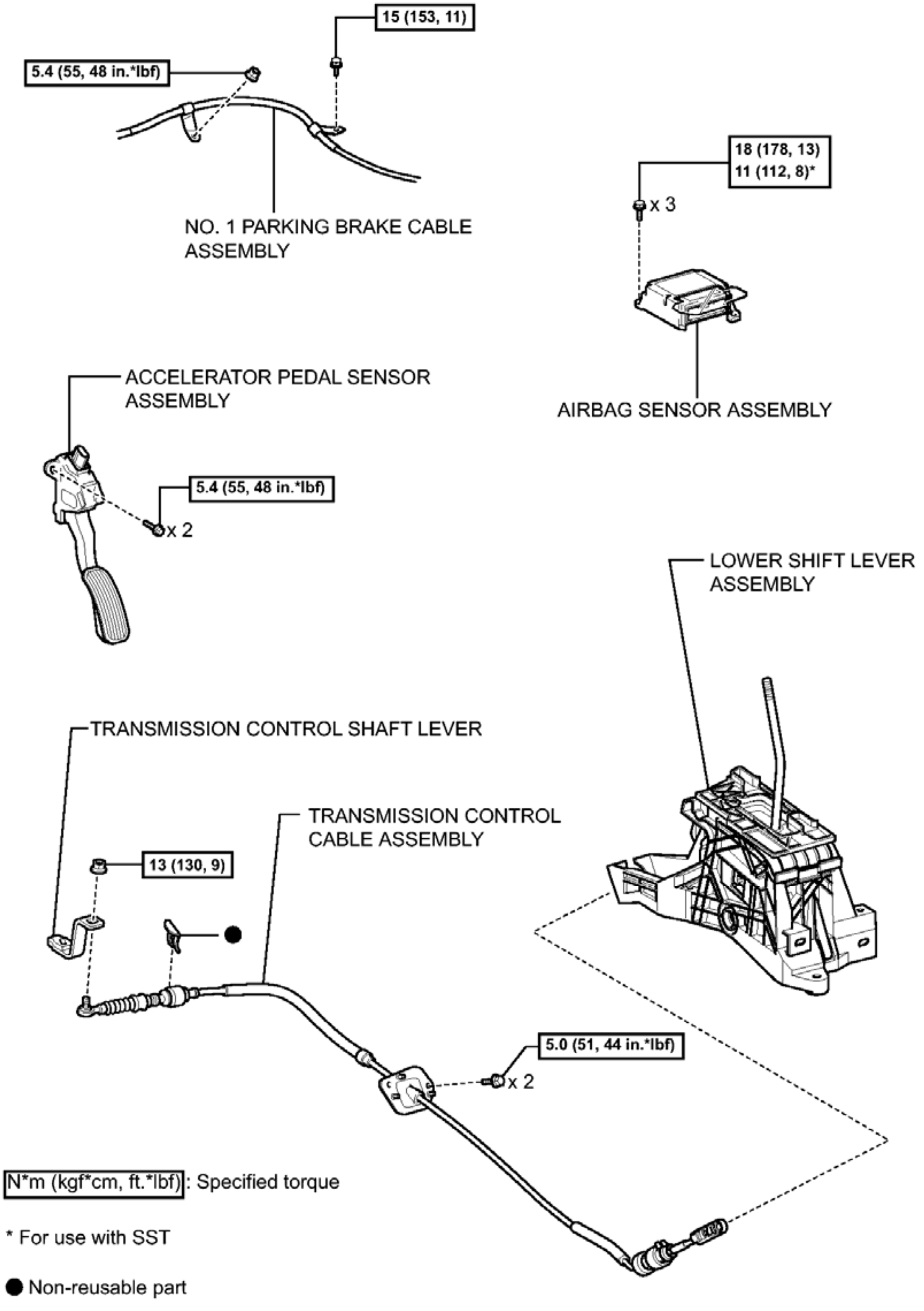
15 (153, 11)
5.4 (55, 48 in.*lbf)
NO. 1 PARKING BRAKE CABLE ASSEMBLY
18 (178, 13)
11 (112, 8)*
x 3
AIRBAG SENSOR ASSEMBLY
ACCELERATOR PEDAL SENSOR ASSEMBLY
5.4 (55, 48 in.*lbf)
x 2
LOWER SHIFT LEVER ASSEMBLY
TRANSMISSION CONTROL SHAFT LEVER
TRANSMISSION CONTROL CABLE ASSEMBLY
13 (130, 9)
●
5.0 (51, 44 in.*lbf)
x 2
N*m (kgf*cm, ft.*lbf) : Specified torque
* For use with SST
● Non-reusable part

Fig. 130: Identifying Transmission Control Cable Replacement Components With Torque Specifications (2 Of 2)
Courtesy of TOYOTA MOTOR SALES, U.S.A., INC.

REMOVAL

REMOVAL

1. **REMOVE COOL AIR INTAKE DUCT SEAL** . Refer to **REMOVAL - Step 1**
2. **REMOVE INLET NO. 2 AIR CLEANER** . Refer to **REMOVAL - Step 18**
3. **REMOVE AIR CLEANER CAP SUB-ASSEMBLY** . Refer to **REMOVAL - Step 7**
4. **REMOVE AIR CLEANER FILTER ELEMENT SUB-ASSEMBLY**
5. **REMOVE AIR CLEANER CASE SUB-ASSEMBLY** . Refer to **REMOVAL - Step 21**
6. **REMOVE AIRBAG SENSOR ASSEMBLY**

   Refer to **REMOVAL**

7. **REMOVE ACCELERATOR PEDAL SENSOR ASSEMBLY** . Refer to **REMOVAL - Step 1**
8. **DISCONNECT NO. 1 PARKING BRAKE CABLE ASSEMBLY**
   a. Turn back the floor carpet.
   b. Remove the bolt and nut, and disconnect the No. 1 parking brake cable assembly.

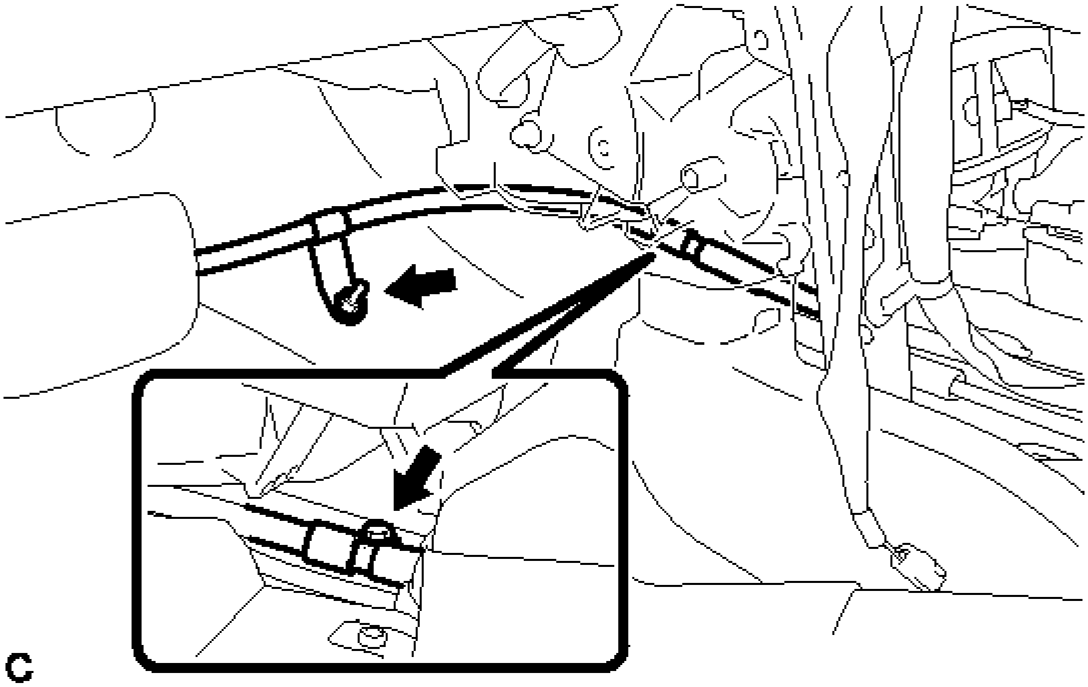

Fig. 131: Identifying No. 1 Parking Brake Cable Assembly Bolt And Nut
Courtesy of TOYOTA MOTOR SALES, U.S.A., INC.

9. **REMOVE TRANSMISSION CONTROL CABLE ASSEMBLY**
   a. Move the shift lever to N.
   b. Disconnect the end of the transmission control cable assembly from the lower shift lever assembly.

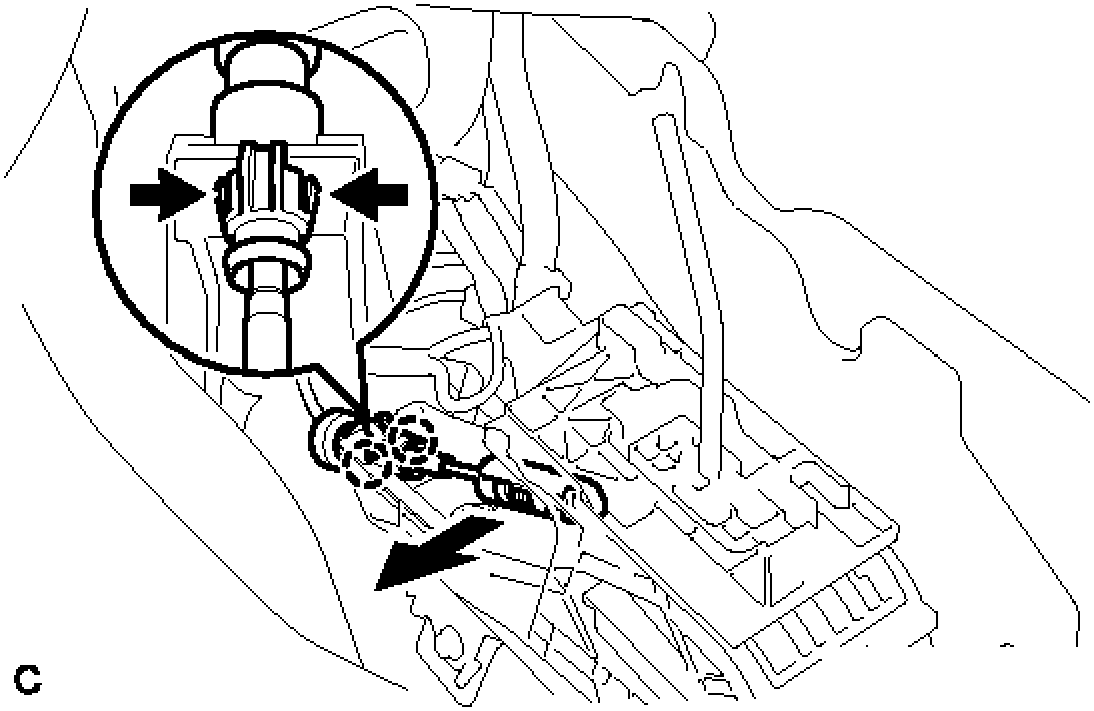

Fig. 132: Identifying Transmission Control Cable Assembly End
Courtesy of TOYOTA MOTOR SALES, U.S.A., INC.

c. Disengage the 2 claws and disconnect the transmission control cable assembly from the lower shift lever assembly.
d. Disconnect the wire harness clamp.

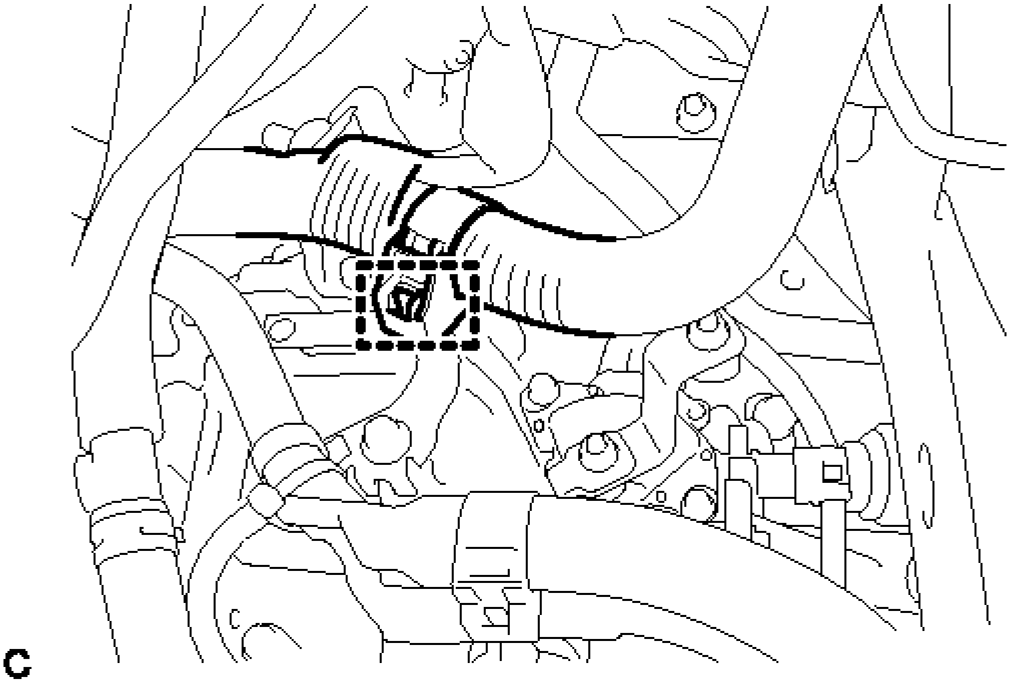

Fig. 133: Identifying Wire Harness Clamp
Courtesy of TOYOTA MOTOR SALES, U.S.A., INC.

e. Remove the nut and clip, and disconnect the transmission control cable assembly.

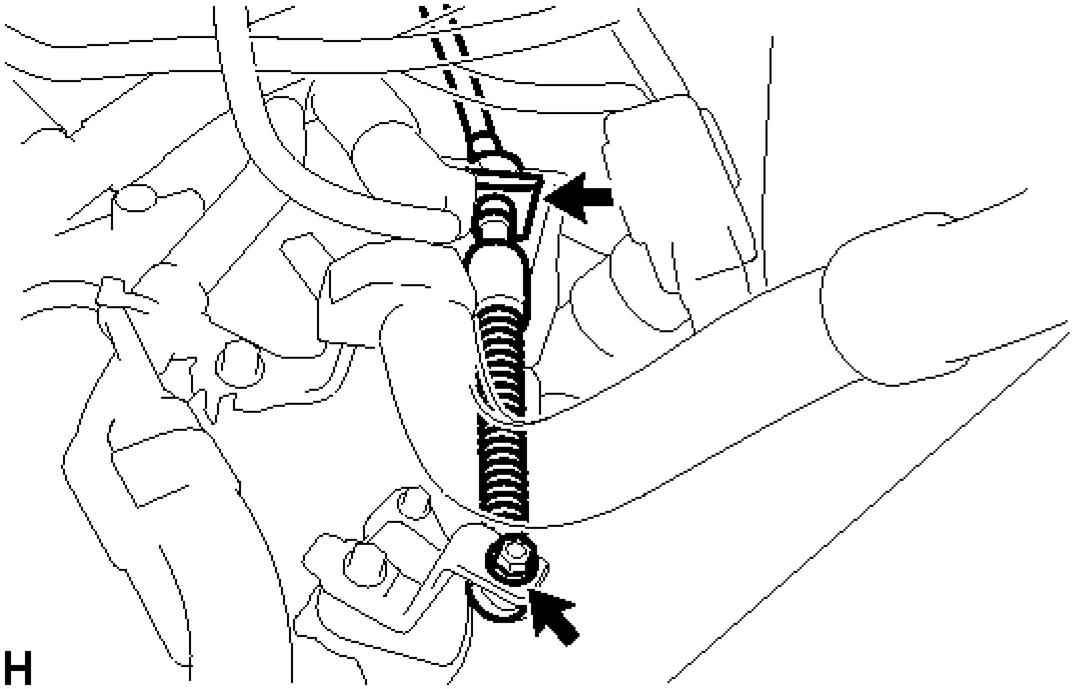

Fig. 134: Identifying Nut And Clip
Courtesy of TOYOTA MOTOR SALES, U.S.A., INC.

f. Turn back the dash panel insulator.

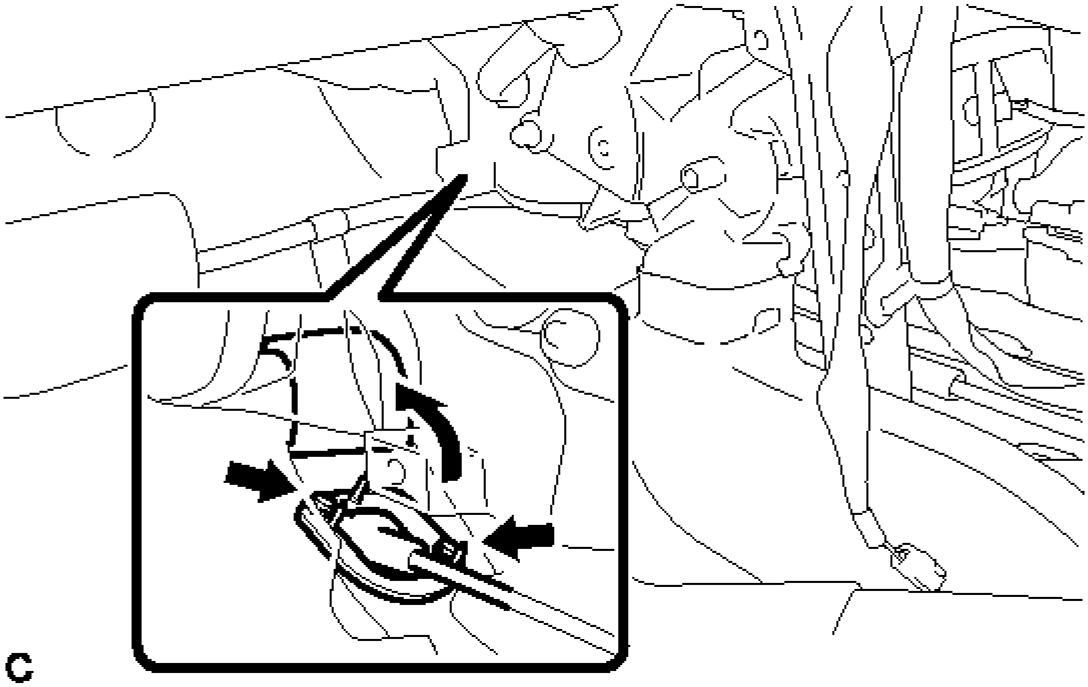

Fig. 135: Turning Dash Panel Insulator
Courtesy of TOYOTA MOTOR SALES, U.S.A., INC.

g. Remove the 2 bolts and pull out the transmission control cable assembly from the body.

ADJUSTMENT

ADJUSTMENT

1. **INSPECT SHIFT LEVER POSITION**
    a. When the shift lever is moved from P to R with the engine switch on (IG) and brake pedal depressed, make sure that the shift lever moves smoothly and correctly into position.
    b. Start the engine and make sure that the vehicle moves forward when the shift lever is moved from N to D and moves rearward when the shift lever is moved to R.
2. **ADJUST SHIFT LEVER POSITION**
    a. Move the shift lever to N.
    b. Remove the console box. Refer to **REMOVAL** .
    c. Disconnect the end of the transmission control cable assembly from the lower shift lever assembly

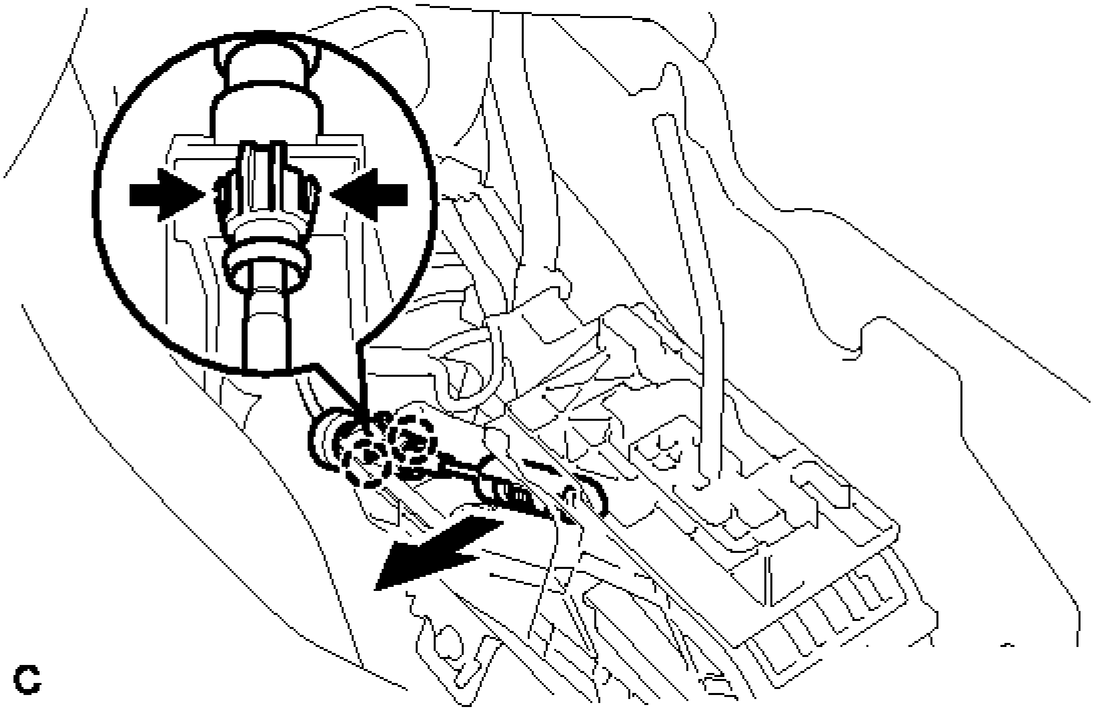

Fig. 136: Identifying Transmission Control Cable Assembly End
Courtesy of TOYOTA MOTOR SALES, U.S.A., INC.

d. Slide the slider of the transmission control cable in the direction indicated by the arrow and pull the lock piece outward.

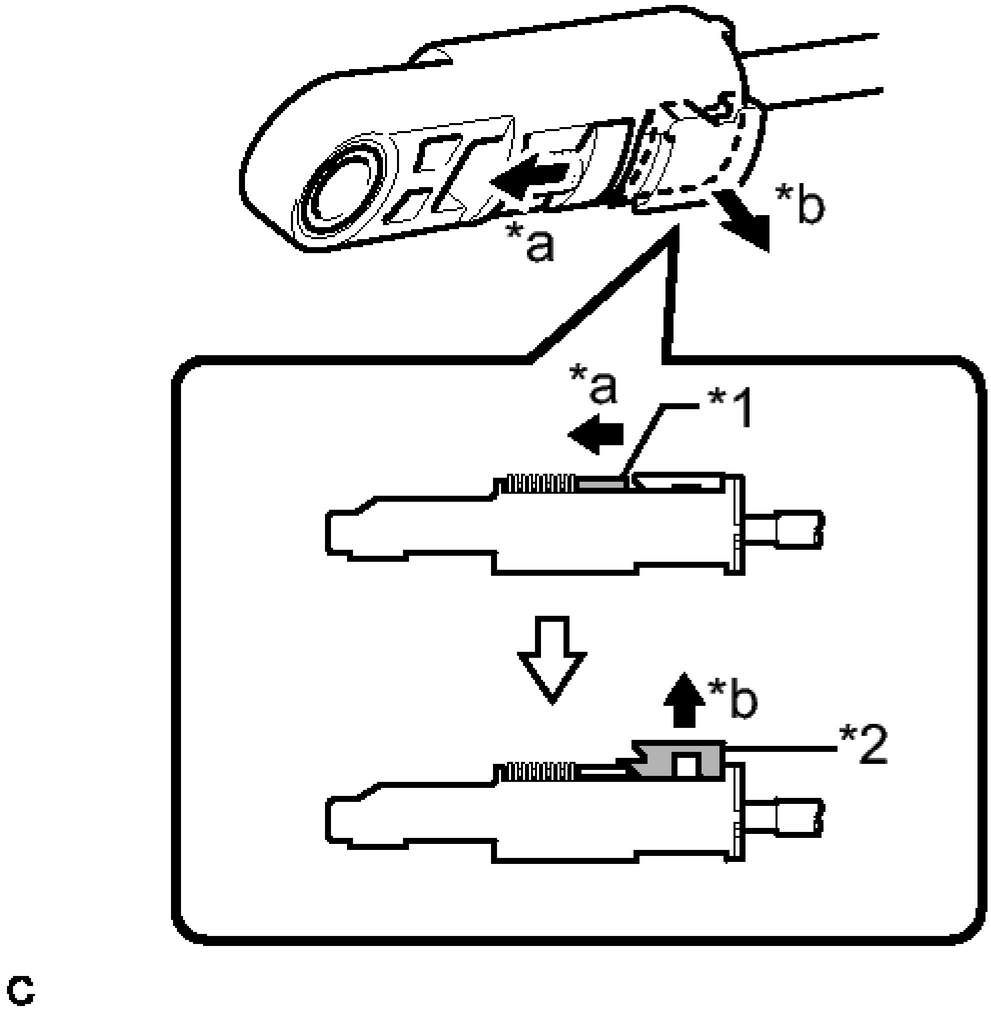

Fig. 137: Identifying Transmission Control Cable Assembly Slider
Courtesy of TOYOTA MOTOR SALES, U.S.A., INC.

TEXT IN ILLUSTRATION

*1	Slider
*2	Lock Piece
*a	Slide
*b	Pull

e. Install the end of the transmission control cable to the shift lever assembly.

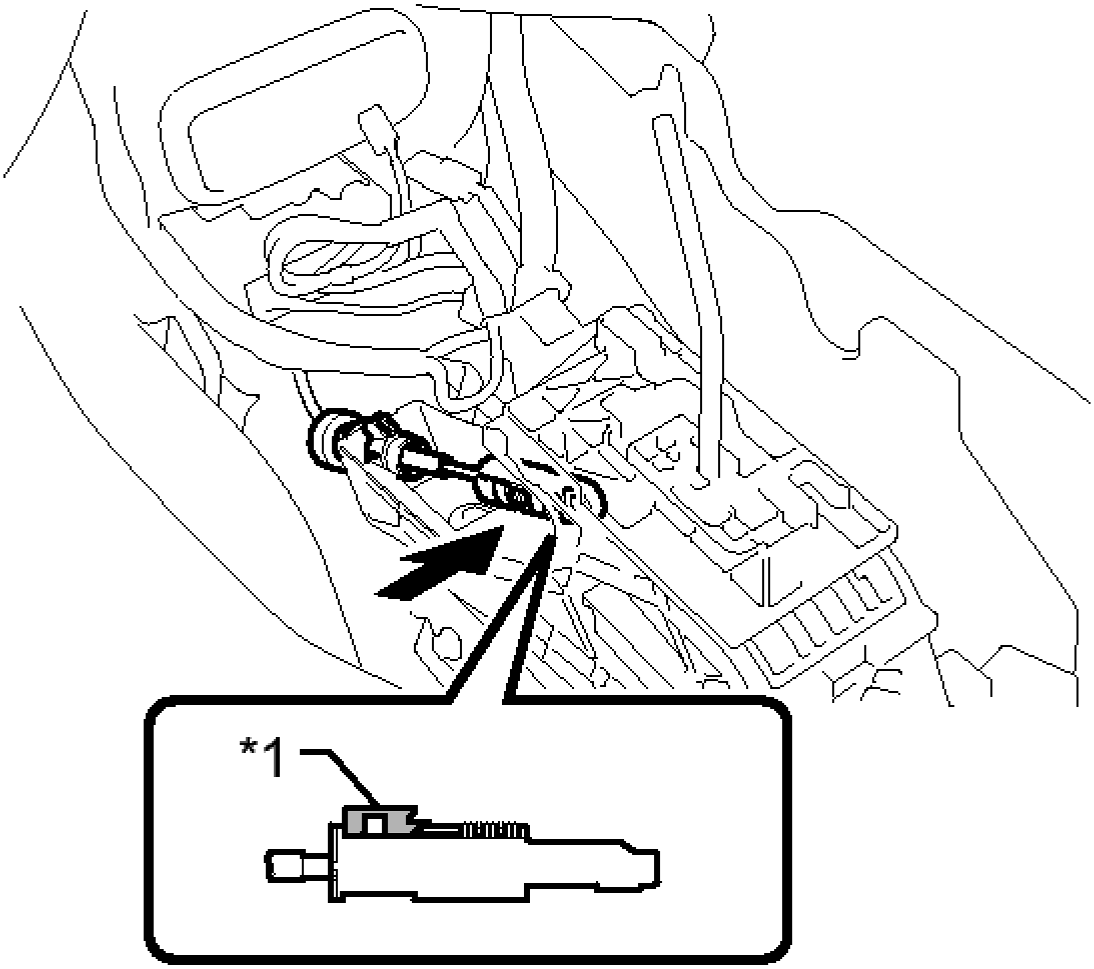

Fig. 138: Installing End Of Transmission Control Cable Assembly
Courtesy of TOYOTA MOTOR SALES, U.S.A., INC.

TEXT IN ILLUSTRATION

*1	Lock Piece

NOTE:

- **Check that the lock piece is pulled up.**
- **Install the cable end all the way to the base of the pin.**

f. Push the lock piece into the adjuster case.

NOTE:

- **Check that the park/neutral position switch and the shift lever are in neutral.**

- **Securely push in the lock piece until the slider lock is engaged.**

g. After adjusting the shift lever position, check the operation and function of the shift lever. If there is a problem, adjust the position again.
h. Install the console box. Refer to **INSTALLATION** .

INSTALLATION

INSTALLATION

1. **INSTALL TRANSMISSION CONTROL CABLE ASSEMBLY**

NOTE: **Before installing the transmission control cable assembly, check that the park/neutral position switch and the shift lever are in neutral.**

a. Pass the transmission control cable assembly from the cabin to the engine compartment.
b. Install the transmission control cable assembly with the 2 bolts.

Torque: 5.0 N*m (51 kgf*cm, 44 in.*lbf)

c. Install the dash panel insulator to the original position.
d. Connect the transmission control cable assembly to the transmission control cable bracket with a new clip.
e. Connect the transmission control cable assembly to the control shaft lever with the nut.

Torque: 13 N*m (130 kgf*cm, 9 ft.*lbf)

NOTE: **Before connecting the transmission control cable assembly, check that the park/neutral position switch and the shift lever are in neutral.**

f. Connect the wire harness clamp.
g. Engage the 2 claws to connect the transmission control cable assembly.
h. Slide the slider of the transmission control cable in the direction indicated by the arrow and pull the lock piece outward.

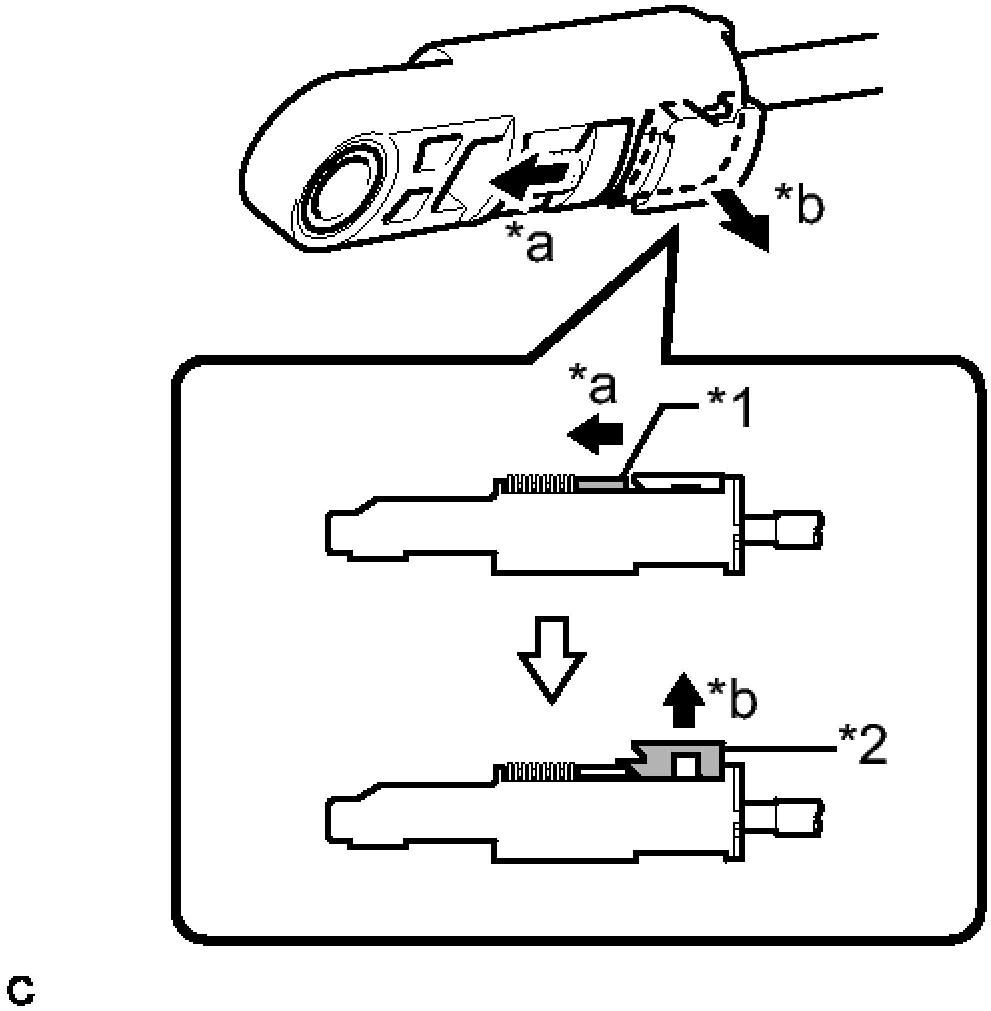

Fig. 139: Identifying Transmission Control Cable Assembly Slider
Courtesy of TOYOTA MOTOR SALES, U.S.A., INC.

TEXT IN ILLUSTRATION

*1	Slider
*2	Lock Piece
*a	Slide
*b	Pull

i. Install the end of transmission control cable to the lower shift lever assembly.

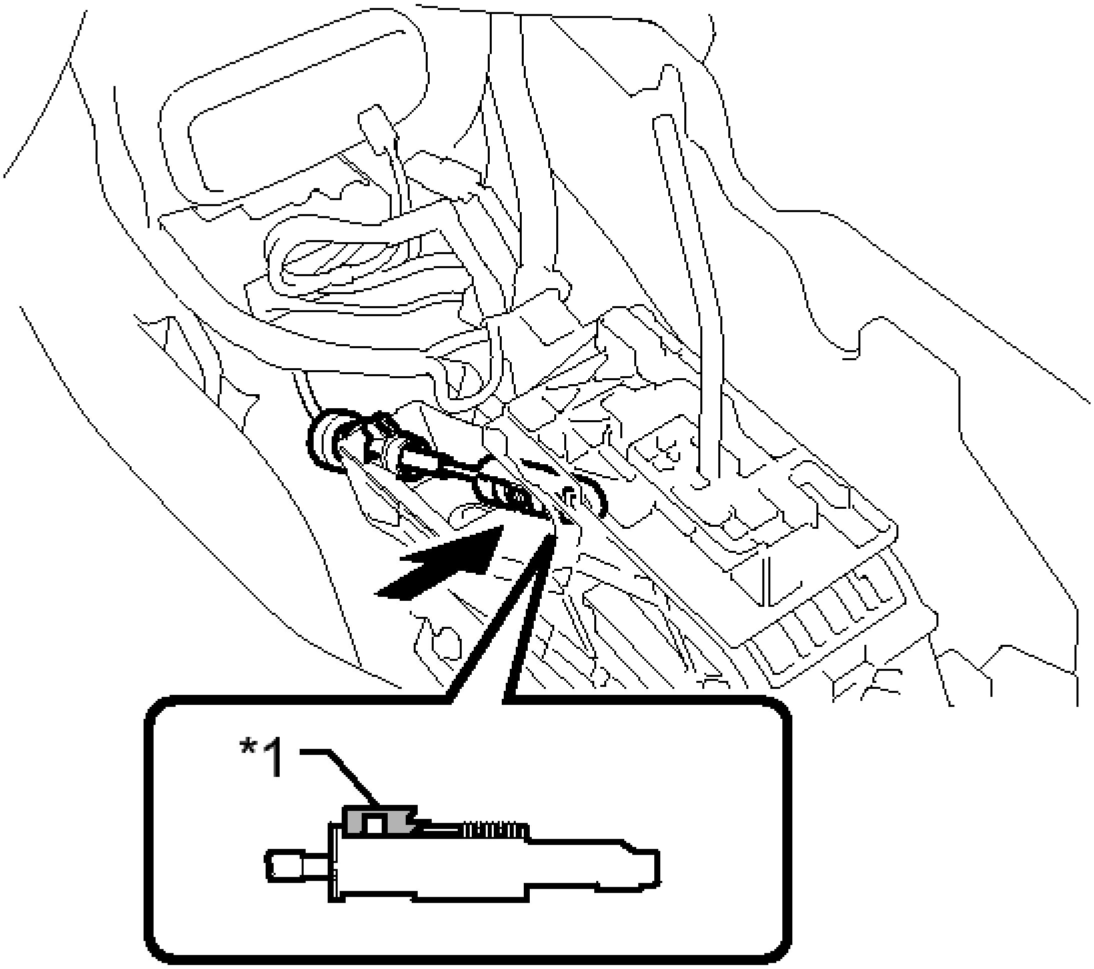

Fig. 140: Installing End Of Transmission Control Cable Assembly
Courtesy of TOYOTA MOTOR SALES, U.S.A., INC.

TEXT IN ILLUSTRATION

*1	Lock Piece

NOTE:

- **Check that the lock piece is pulled up.**
- **Install the cable end all the way to the base of the pin.**

j. Push the lock piece into the adjuster case.

NOTE:

- **Check that the park/neutral position switch and the shift lever are in neutral.**

- **Securely push in the lock piece until the slider lock is engaged.**

2. **CONNECT NO. 1 PARKING BRAKE CABLE ASSEMBLY**
   a. Install the No. 1 parking brake cable assembly with the bolt and nut.

      Bolt

      Torque: 15 N*m (153 kgf*cm, 11 ft.*lbf)

      Nut

      Torque: 5.4 N*m (55 kgf*cm, 48 in.*lbf)

3. **INSTALL ACCELERATOR PEDAL SENSOR ASSEMBLY** . Refer to **INSTALLATION - Step 1**
4. **INSTALL AIRBAG SENSOR ASSEMBLY**

   Refer to **INSTALLATION**

5. **INSTALL AIR CLEANER CASE SUB-ASSEMBLY** . Refer to **INSTALLATION - Step 56**
6. **INSTALL AIR CLEANER FILTER ELEMENT SUB-ASSEMBLY**
7. **INSTALL AIR CLEANER CAP SUB-ASSEMBLY** . Refer to **INSTALLATION - Step 2**
8. **INSTALL INLET NO. 2 AIR CLEANER** . Refer to **INSTALLATION - Step 59**
9. **INSTALL COOL AIR INTAKE DUCT SEAL** . Refer to **INSTALLATION - Step 4**
10. **INSPECT SHIFT LEVER POSITION** See step 1

DIFFERENTIAL OIL SEAL

COMPONENTS

ILLUSTRATION

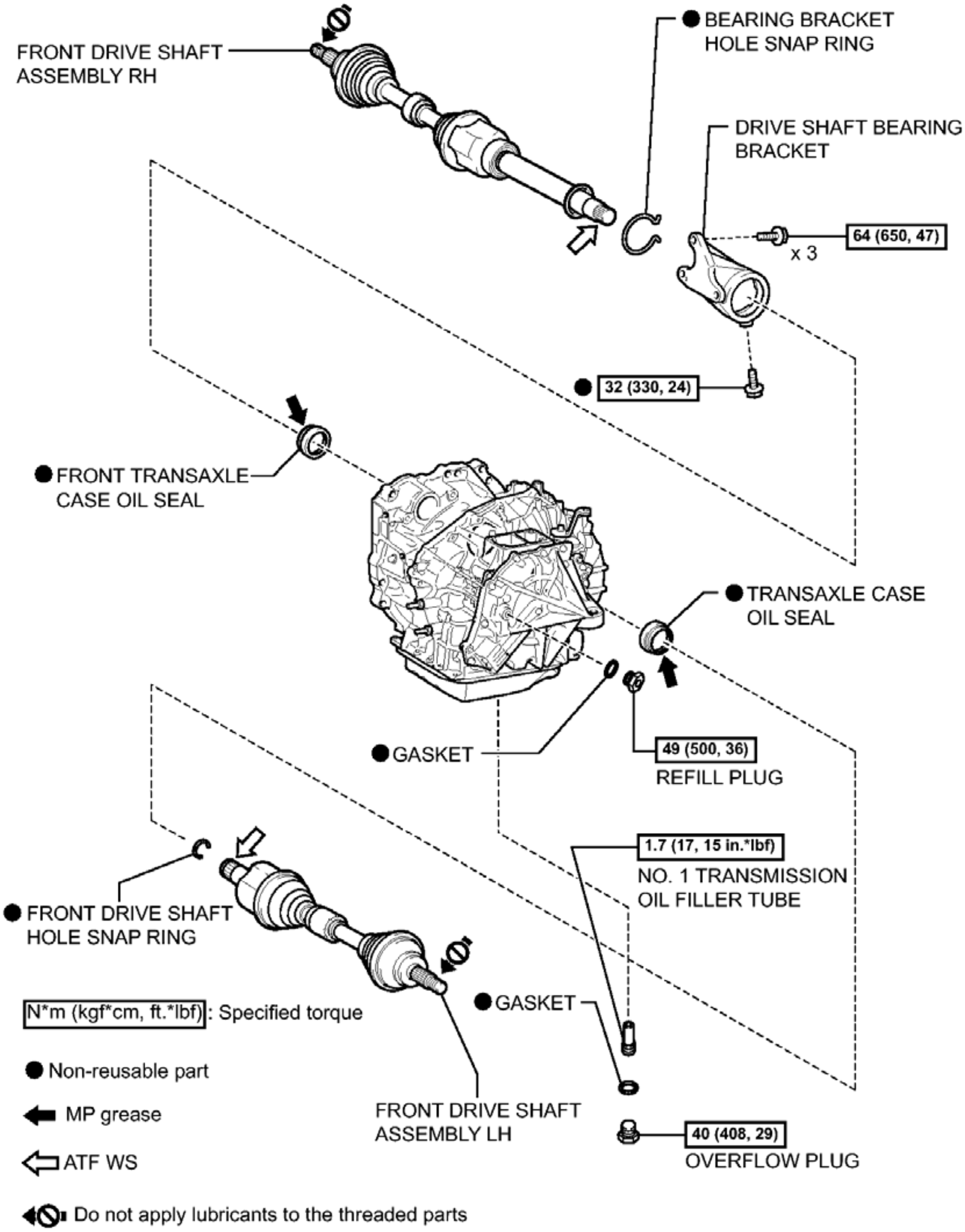
FRONT DRIVE SHAFT ASSEMBLY RH
● BEARING BRACKET HOLE SNAP RING
DRIVE SHAFT BEARING BRACKET
64 (650, 47)
x 3
● 32 (330, 24)
● FRONT TRANSAXLE CASE OIL SEAL
● TRANSAXLE CASE OIL SEAL
● GASKET
49 (500, 36)
REFILL PLUG
1.7 (17, 15 in.*lbf)
NO. 1 TRANSMISSION OIL FILLER TUBE
● FRONT DRIVE SHAFT HOLE SNAP RING
● GASKET
N*m (kgf*cm, ft.*lbf): Specified torque
● Non-reusable part
MP grease
ATF WS
Do not apply lubricants to the threaded parts
FRONT DRIVE SHAFT ASSEMBLY LH
40 (408, 29)
OVERFLOW PLUG

Fig. 141: Identifying Differential Oil Seal Replacement Components With Torque Specifications
Courtesy of TOYOTA MOTOR SALES, U.S.A., INC.

REPLACEMENT

REPLACEMENT

1. **DRAIN AUTOMATIC TRANSAXLE FLUID**

a. Remove the front wheel opening extension pad LH, engine under cover LH and front fender apron seal LH.
b. Remove the refill plug and gasket from the automatic transaxle.

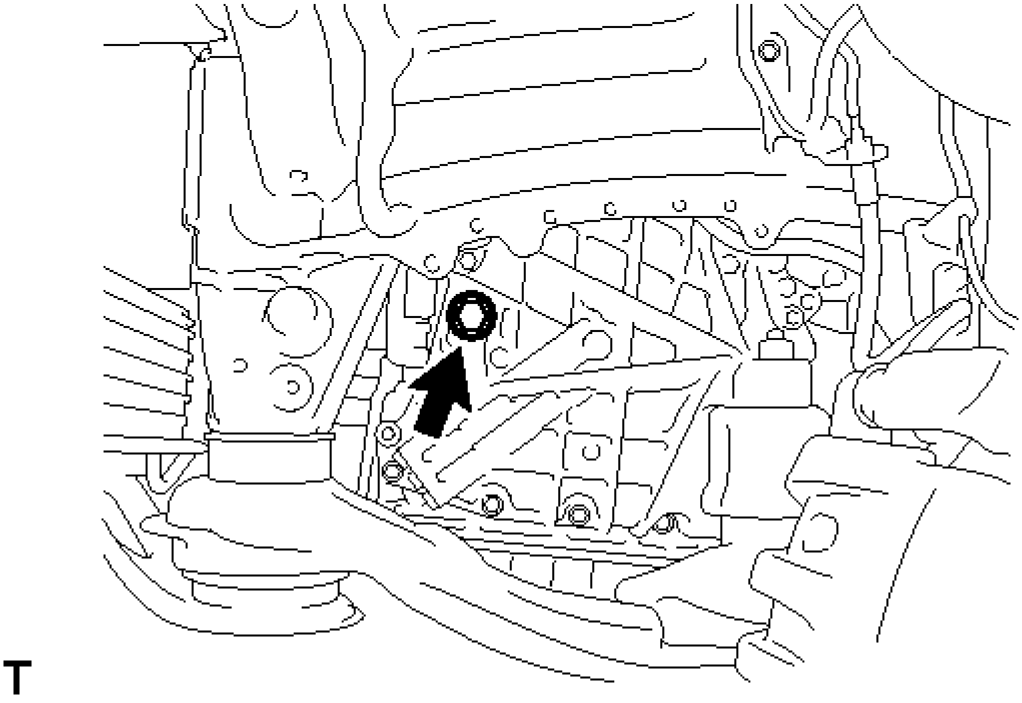

Fig. 142: Identifying Refill Plug
Courtesy of TOYOTA MOTOR SALES, U.S.A., INC.

c. Using a 6 mm hexagon socket wrench, remove the overflow plug and gasket from the automatic transaxle.

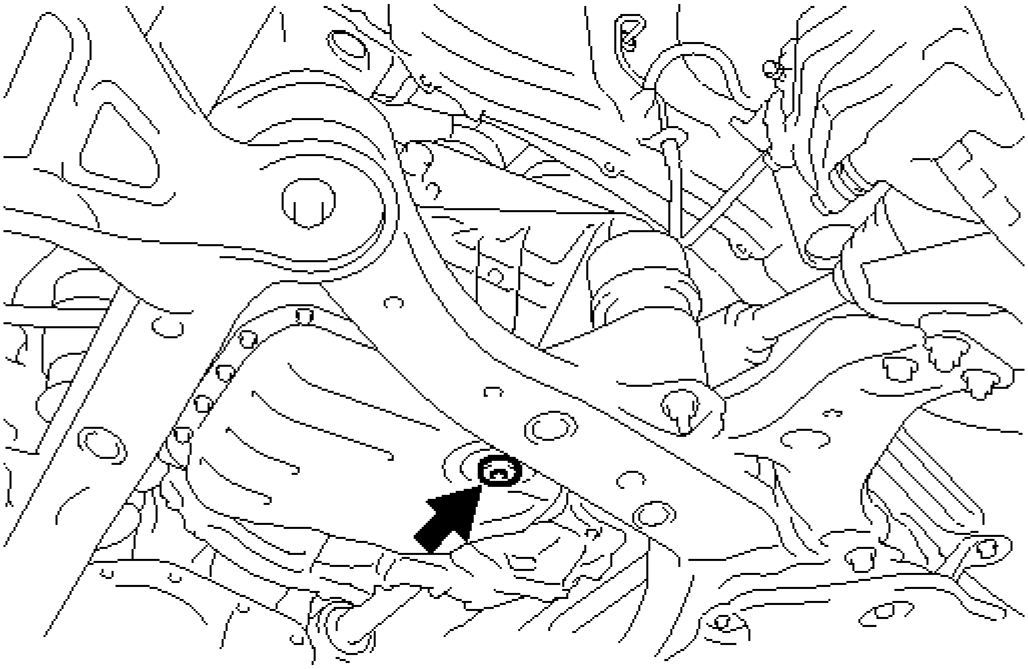

Fig. 143: Identifying Overflow Plug
Courtesy of TOYOTA MOTOR SALES, U.S.A., INC.

d. Using a 6 mm hexagon socket wrench, remove the No. 1 transmission oil filler tube from the automatic transaxle.

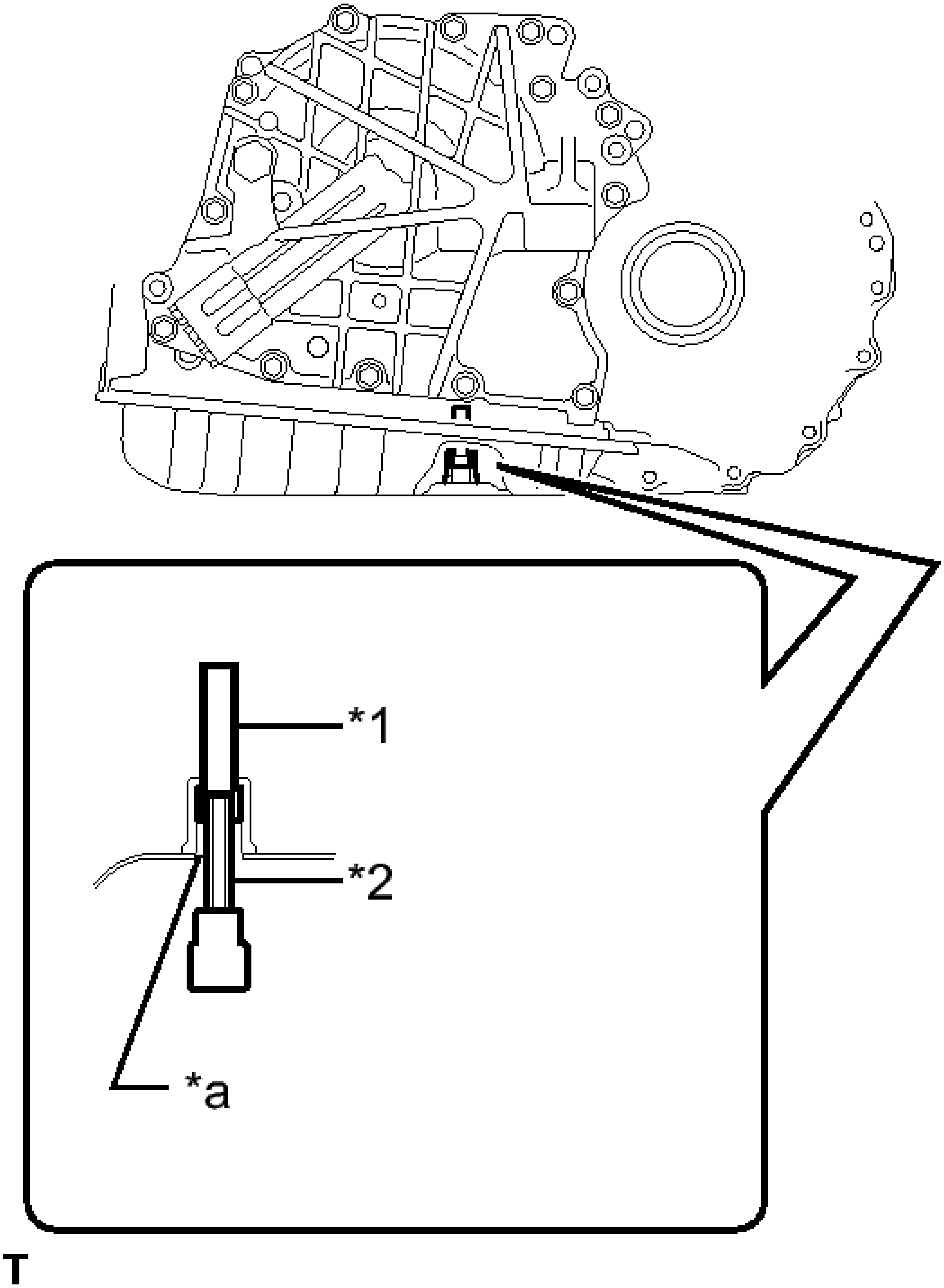

Fig. 144: Identifying No. Transmission Oil Filler Tube And Overflow Plug Hole
Courtesy of TOYOTA MOTOR SALES, U.S.A., INC.

TEXT IN ILLUSTRATION

	No. 1

*1	Transmission Oil Filler Tube
*2	Hexagon Socket Wrench
*a	Overflow Plug Hole

e. Drain automatic transaxle fluid from the automatic transaxle.

f. Using a 6 mm hexagon socket wrench, install the No. 1 transmission oil filler tube to the automatic transaxle.

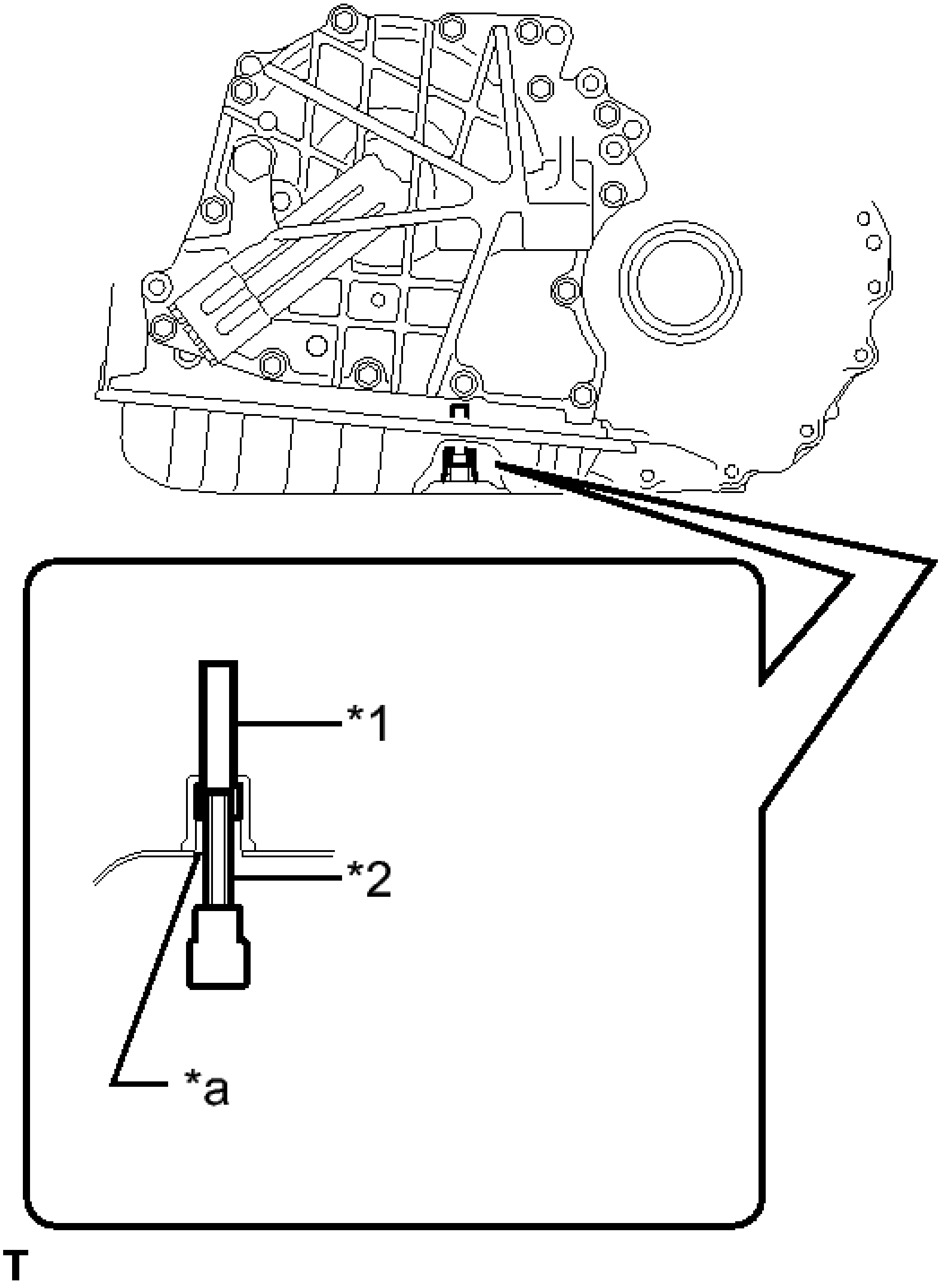

Fig. 145: Identifying No. Transmission Oil Filler Tube And Overflow Plug Hole
Courtesy of TOYOTA MOTOR SALES, U.S.A., INC.

TEXT IN ILLUSTRATION

	No. 1

*1	Transmission Oil Filler Tube
*2	Hexagon Socket Wrench
*a	Overflow Plug Hole

Torque: 1.7 N*m (17 kgf*cm, 15 in.*lbf)

g. Using a 6 mm hexagon socket wrench, install a new gasket and the overflow plug to the automatic transaxle.

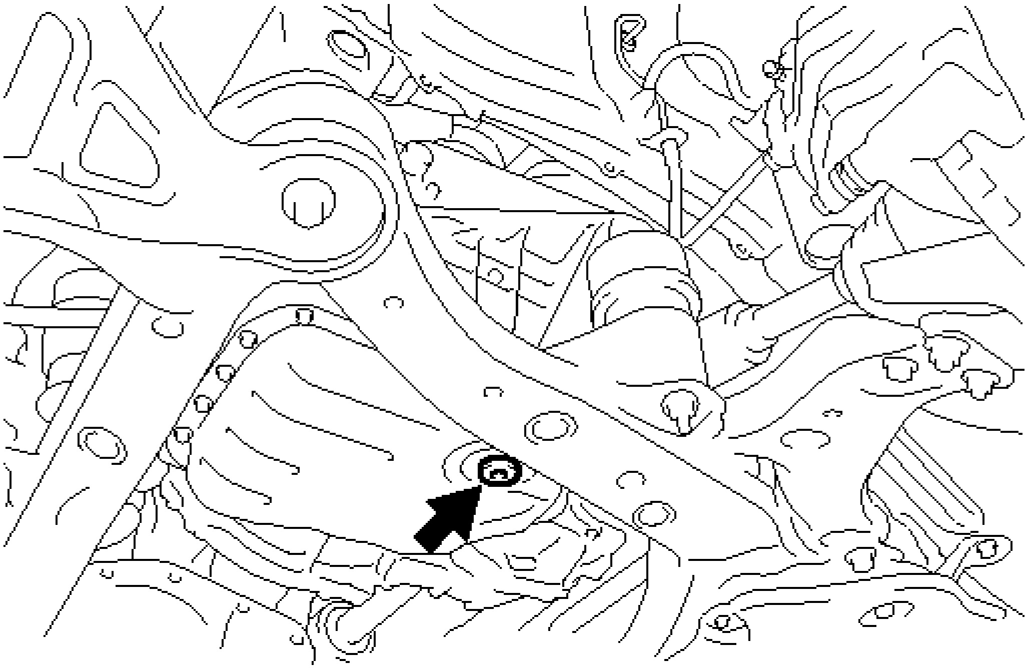

Fig. 146: Identifying Overflow Plug
Courtesy of TOYOTA MOTOR SALES, U.S.A., INC.

Torque: 40 N*m (408 kgf*cm, 30 ft.*lbf)

h. Temporarily install the gasket and refill plug to the automatic transaxle.

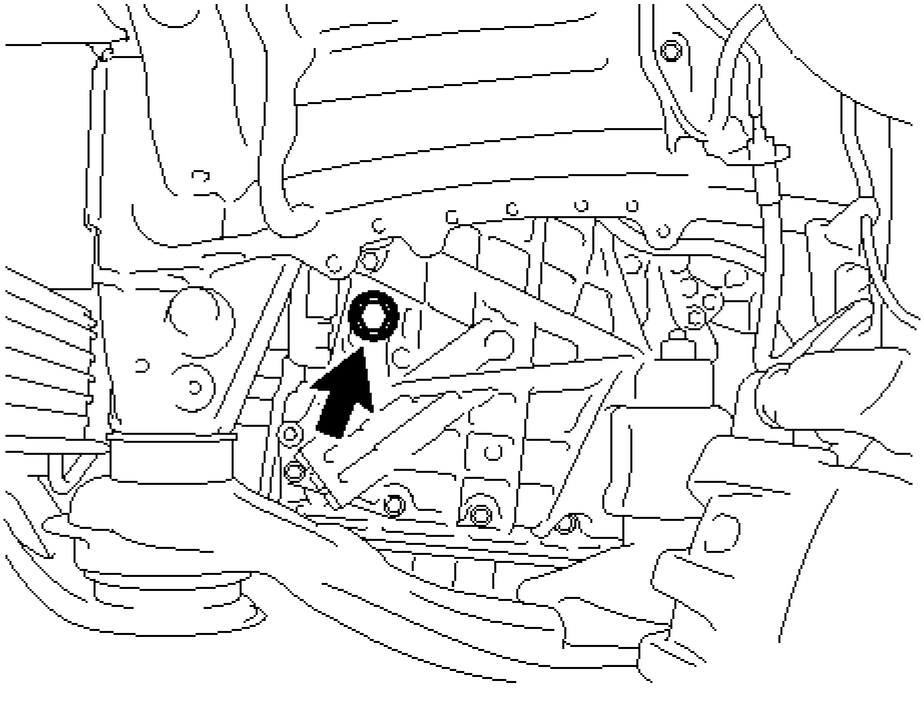

Fig. 147: Identifying Refill Plug
Courtesy of TOYOTA MOTOR SALES, U.S.A., INC.

2. **REMOVE FRONT DRIVE SHAFT ASSEMBLY**

   Refer to **REMOVAL**

3. **REMOVE DRIVE SHAFT BEARING BRACKET** . Refer to **REMOVAL - Step 76**
4. **REMOVE TRANSAXLE CASE OIL SEAL**
   1. Using SST, tap out the transaxle case oil seal.

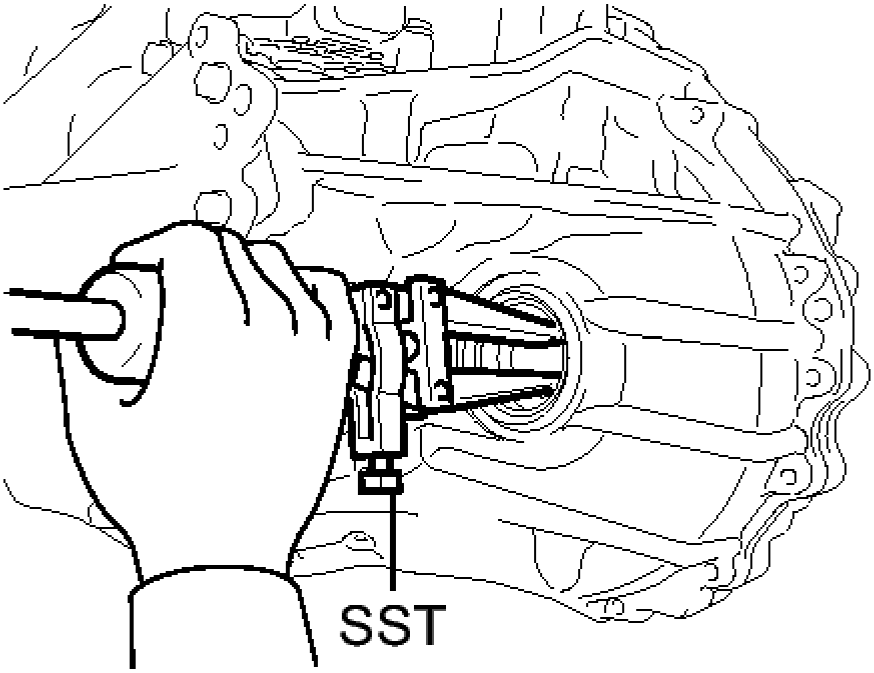

Fig. 148: Removing Transaxle Case Oil Seal
Courtesy of TOYOTA MOTOR SALES, U.S.A., INC.

- **SST: 09308-00010**

5. **REMOVE FRONT TRANSAXLE CASE OIL SEAL**
    a. Using SST, tap out the front transaxle case oil seal.

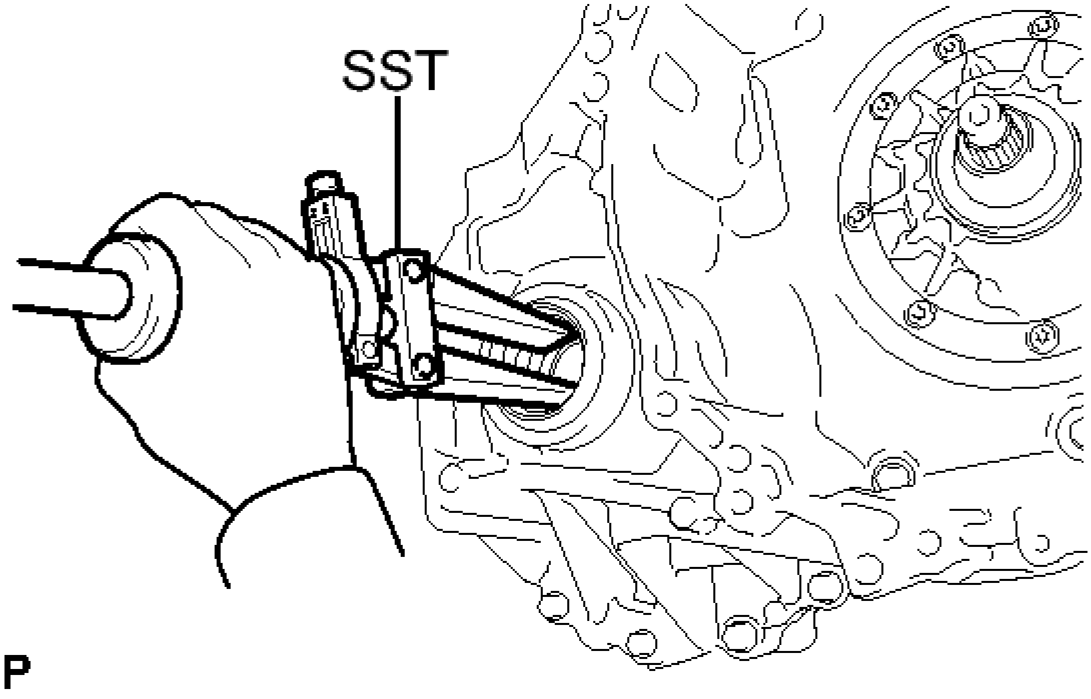

Fig. 149: Tapping Out Front Transaxle Case Oil Seal
Courtesy of TOYOTA MOTOR SALES, U.S.A., INC.

- **SST: 09308-00010**

6. **INSTALL TRANSAXLE CASE OIL SEAL**
   a. Using SST and a hammer, tap in a new transaxle case oil seal.

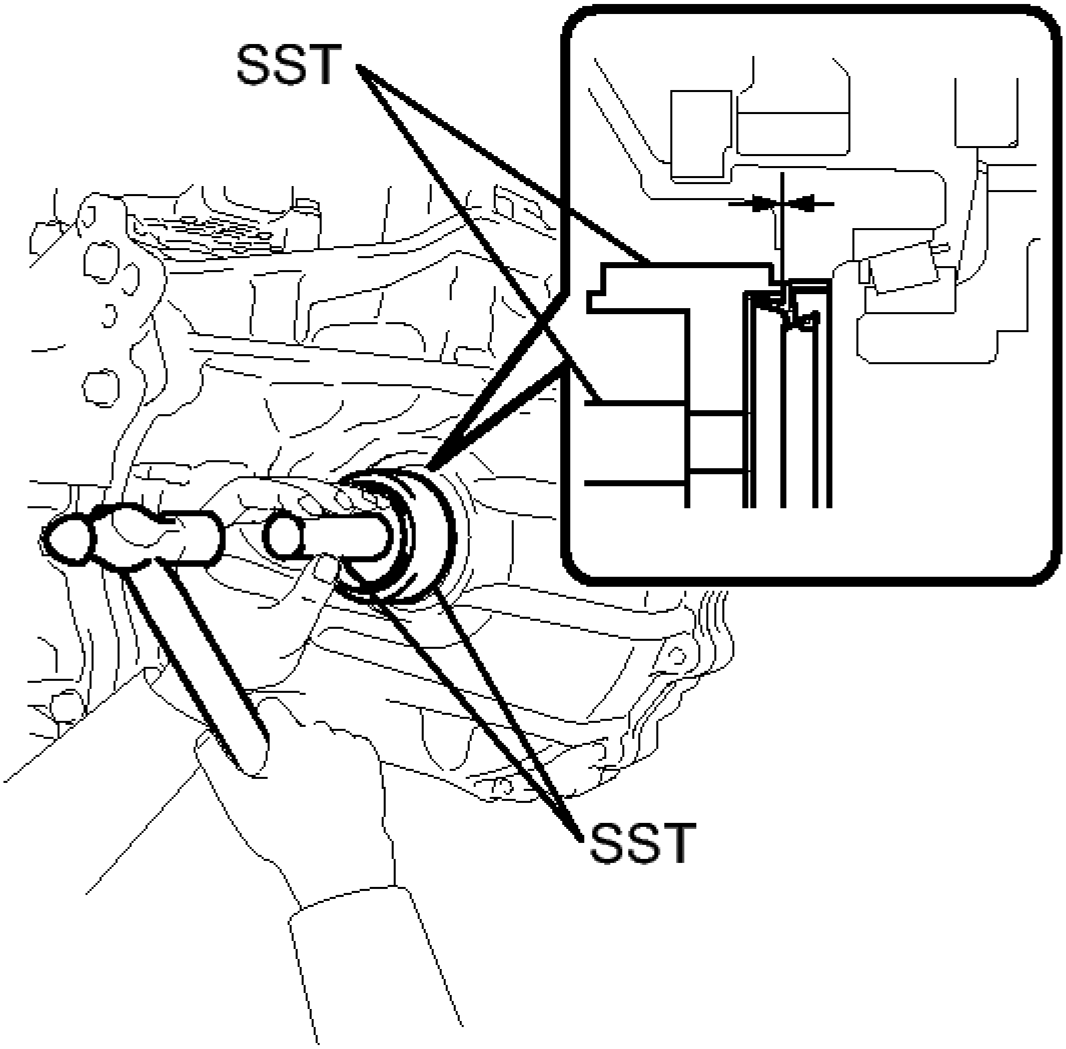

Fig. 150: Installing Transaxle Case Oil Seal
Courtesy of TOYOTA MOTOR SALES, U.S.A., INC.

- **SST: 09316-10010**
- **SST: 09950-70010**
  09951-07100

Oil seal driven in depth

-0.5 to 0.5 mm (-0.0197 to 0.0197 in.)

NOTE: **Check that the oil seal is installed in the correct direction.**

b. Coat the lip of the transaxle case oil seal with MP grease.

7. **INSTALL FRONT TRANSAXLE CASE OIL SEAL**
   a. Using SST and a hammer, tap in a new front transaxle case oil seal.

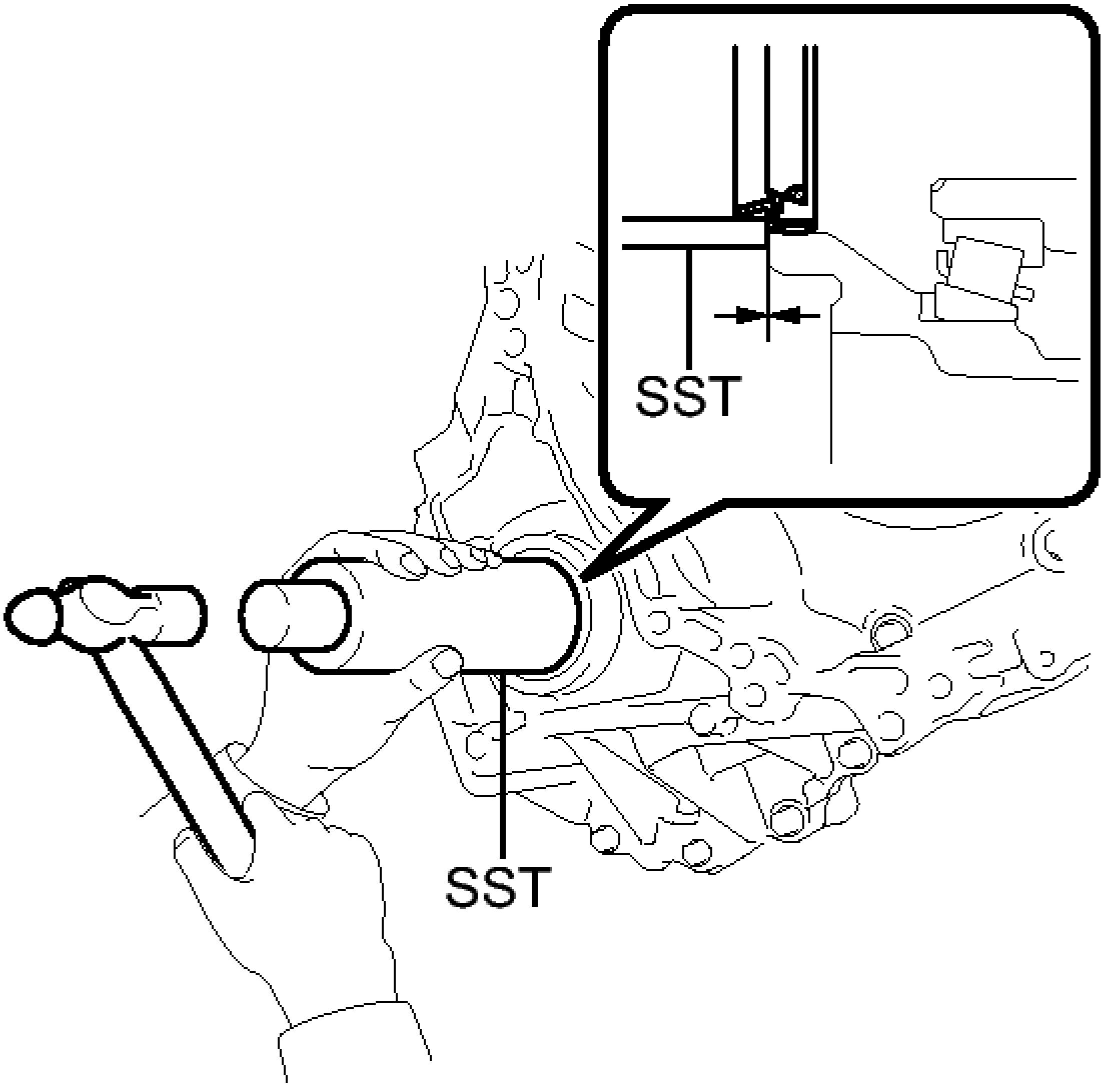

Fig. 151: Tapping Front Transaxle Case Oil Seal
Courtesy of TOYOTA MOTOR SALES, U.S.A., INC.

- **SST: 09316-60011**
  09316-00011

Oil seal driven in depth

-0.5 to 0.5 mm (-0.0197 to 0.0197 in.)

NOTE: Check that the oil seal is installed in the correct direction.

b. Coat the lip of the front transaxle case oil seal with MP grease.

8. **INSTALL DRIVE SHAFT BEARING BRACKET** . Refer to **INSTALLATION - Step 3**
9. **INSTALL FRONT DRIVE SHAFT HOLE SNAP RING LH** . Refer to **REASSEMBLY - Step 13**
10. **INSTALL FRONT DRIVE SHAFT ASSEMBLY**

    Refer to **INSTALLATION**

11. **ADD AUTOMATIC TRANSAXLE FLUID**

    See step 5

AUTOMATIC TRANSAXLE ASSEMBLY

COMPONENTS

ILLUSTRATION

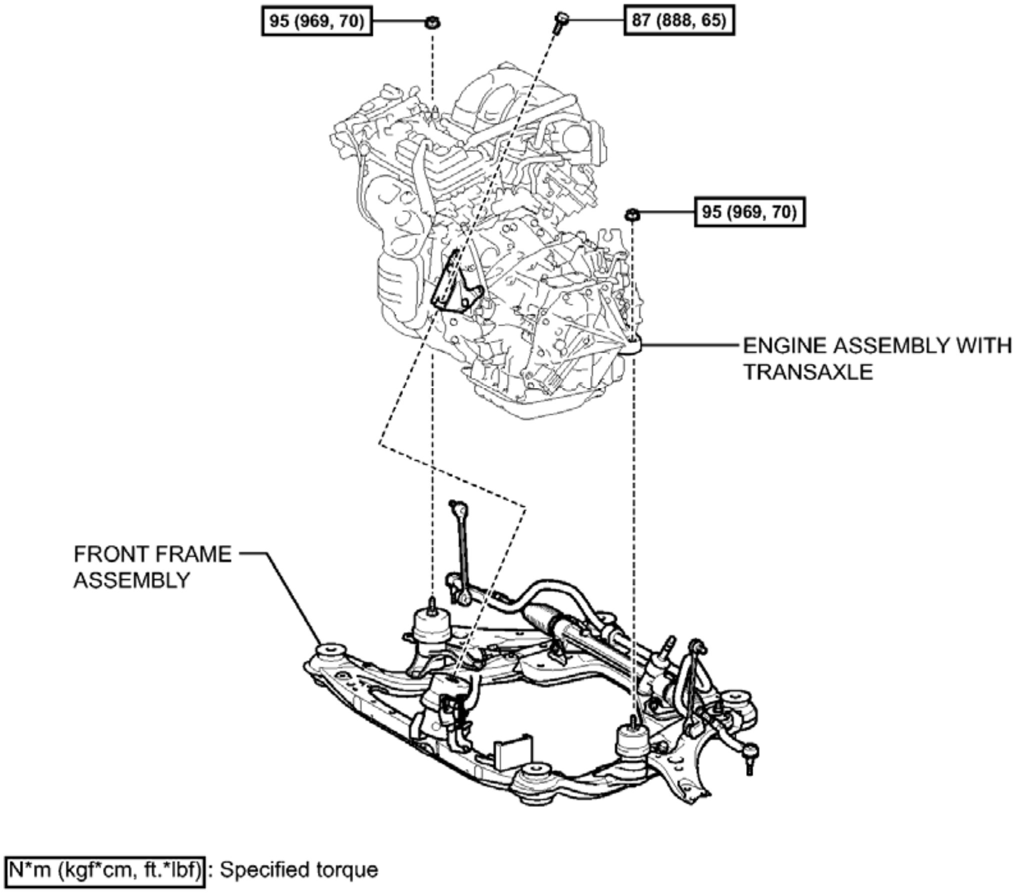
95 (969, 70)
87 (888, 65)
95 (969, 70)
ENGINE ASSEMBLY WITH TRANSAXLE
FRONT FRAME ASSEMBLY
N*m (kgf*cm, ft.*lbf): Specified torque

Fig. 152: Identifying Automatic Transaxle Assembly Replacement Components With Torque Specifications (1 Of 3)

Courtesy of TOYOTA MOTOR SALES, U.S.A., INC.

ILLUSTRATION

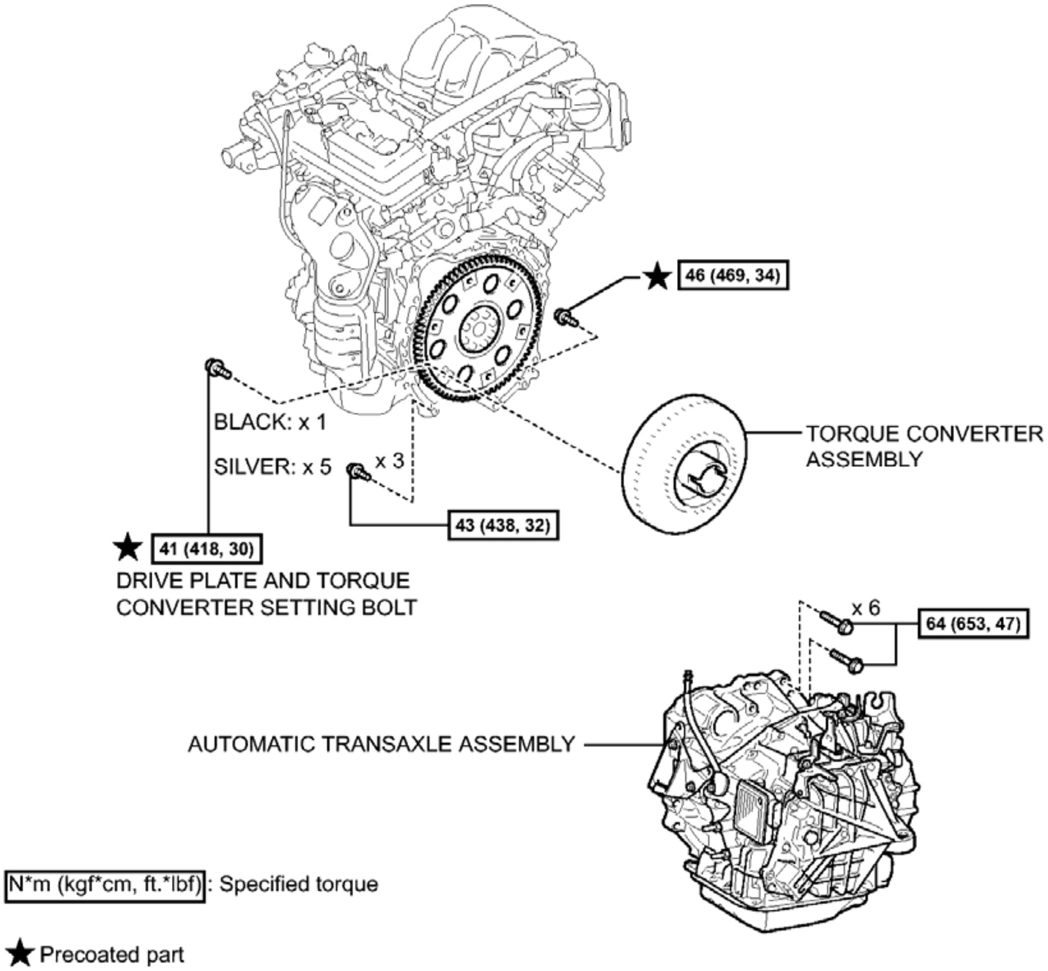
★ 46 (469, 34)
TORQUE CONVERTER ASSEMBLY
BLACK: x 1
SILVER: x 5
x 3
43 (438, 32)
★ 41 (418, 30)
DRIVE PLATE AND TORQUE CONVERTER SETTING BOLT
x 6
64 (653, 47)
AUTOMATIC TRANSAXLE ASSEMBLY
N*m (kgf*cm, ft.*lbf): Specified torque
★ Precoated part

Fig. 153: Identifying Automatic Transaxle Assembly Replacement Components With Torque Specifications (2 Of 3)
Courtesy of TOYOTA MOTOR SALES, U.S.A., INC.

ILLUSTRATION

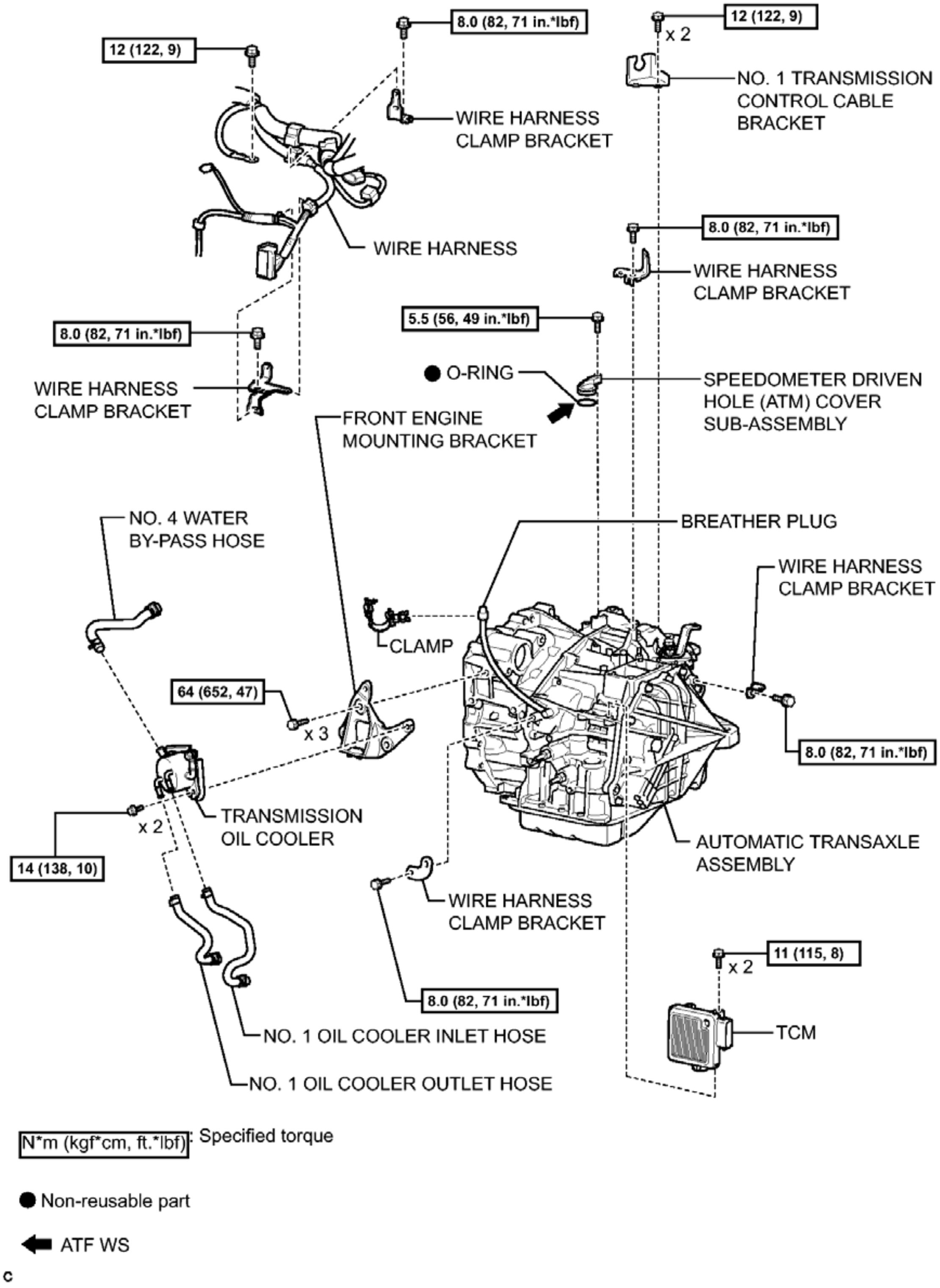
12 (122, 9)
8.0 (82, 71 in.*lbf)
12 (122, 9)
x 2
NO. 1 TRANSMISSION CONTROL CABLE BRACKET
WIRE HARNESS CLAMP BRACKET
WIRE HARNESS
8.0 (82, 71 in.*lbf)
WIRE HARNESS CLAMP BRACKET
5.5 (56, 49 in.*lbf)
8.0 (82, 71 in.*lbf)
WIRE HARNESS CLAMP BRACKET
● O-RING
SPEEDOMETER DRIVEN HOLE (ATM) COVER SUB-ASSEMBLY
FRONT ENGINE MOUNTING BRACKET
NO. 4 WATER BY-PASS HOSE
BREATHER PLUG
WIRE HARNESS CLAMP BRACKET
CLAMP
64 (652, 47)
x 3
8.0 (82, 71 in.*lbf)
x 2
TRANSMISSION OIL COOLER
14 (138, 10)
AUTOMATIC TRANSAXLE ASSEMBLY
WIRE HARNESS CLAMP BRACKET
11 (115, 8)
x 2
8.0 (82, 71 in.*lbf)
TCM
NO. 1 OIL COOLER INLET HOSE
NO. 1 OIL COOLER OUTLET HOSE
N*m (kgf*cm, ft.*lbf): Specified torque
● Non-reusable part
ATF WS
c

Fig. 154: Identifying Automatic Transaxle Assembly Replacement Components With Torque Specifications (3 Of 3)

Courtesy of TOYOTA MOTOR SALES, U.S.A., INC.

REMOVAL

REMOVAL

NOTE: **If automatic transmission parts are replaced, refer to Parts Replacement Compensation Table to determine if any additional operations are necessary. Refer to PRECAUTION .**

1. **REMOVE ENGINE ASSEMBLY WITH TRANSAXLE**

   Refer to **REMOVAL**

2. **REMOVE FRONT FRAME ASSEMBLY** . Refer to **REMOVAL - Step 69**
3. **REMOVE TCM** See step 10
4. **REMOVE TRANSMISSION OIL COOLER**
   a. Disconnect the breather plug and remove the clamp.

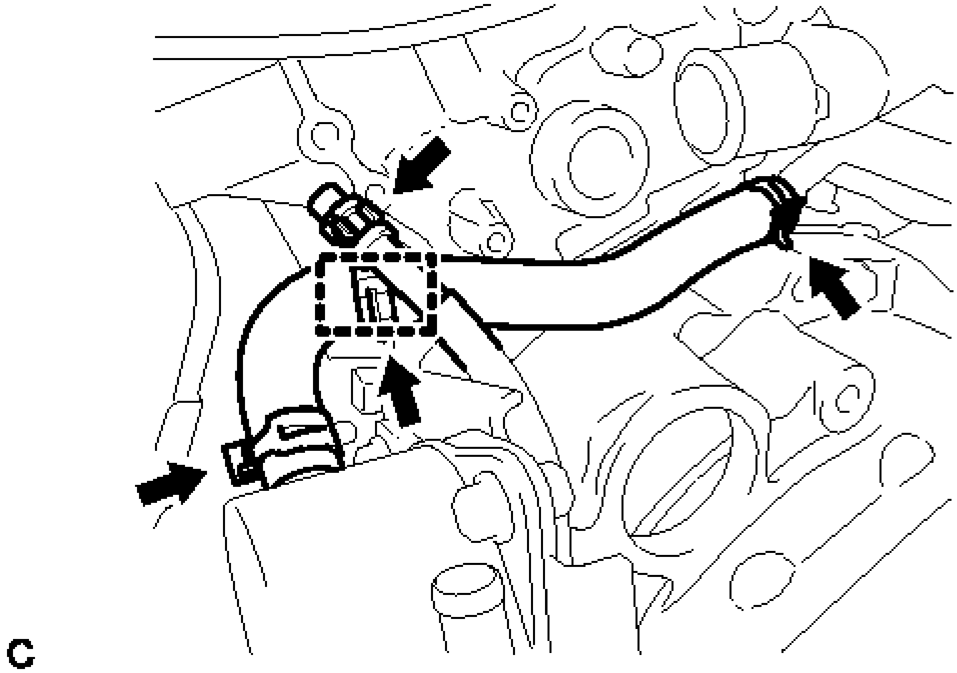

Fig. 155: Identifying Breather Plug And Clamp
Courtesy of TOYOTA MOTOR SALES, U.S.A., INC.

   b. Remove the No. 4 water by-pass hose.
   c. Remove the No. 1 oil cooler outlet hose and No. 1 oil cooler inlet hose.

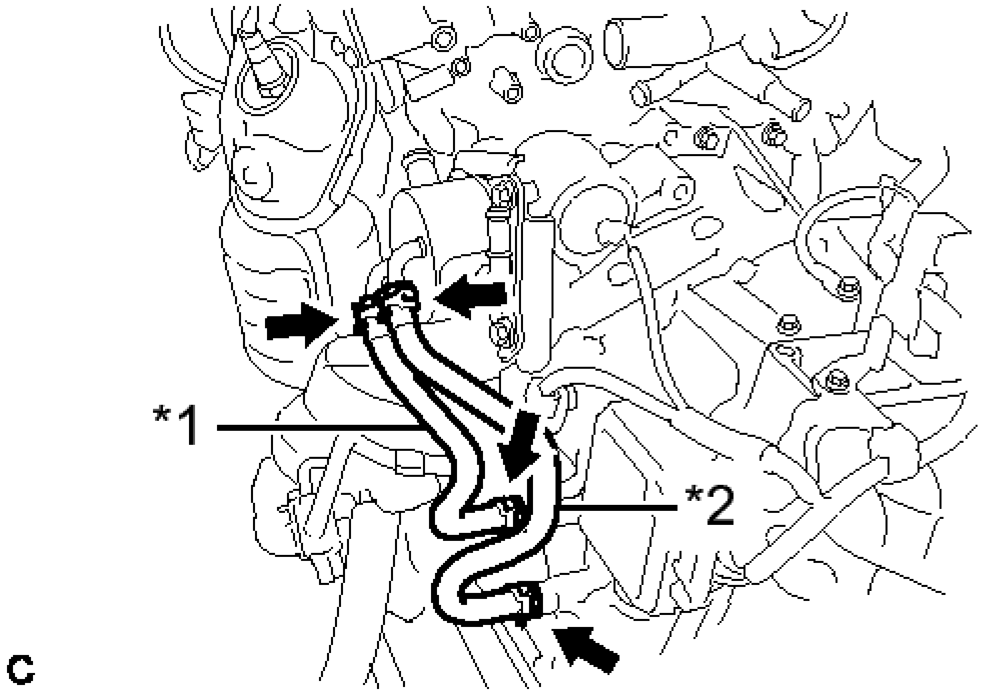

Fig. 156: Identifying No. 1 Oil Cooler Outlet And Inlet Hose

Courtesy of TOYOTA MOTOR SALES, U.S.A., INC.

TEXT IN ILLUSTRATION

*1	No. 1 Oil Cooler Outlet Hose
*2	No. 1 Oil Cooler Inlet Hose

d. Remove the 2 bolts and transmission oil cooler with the transmission oil cooler stay from the automatic transaxle assembly.

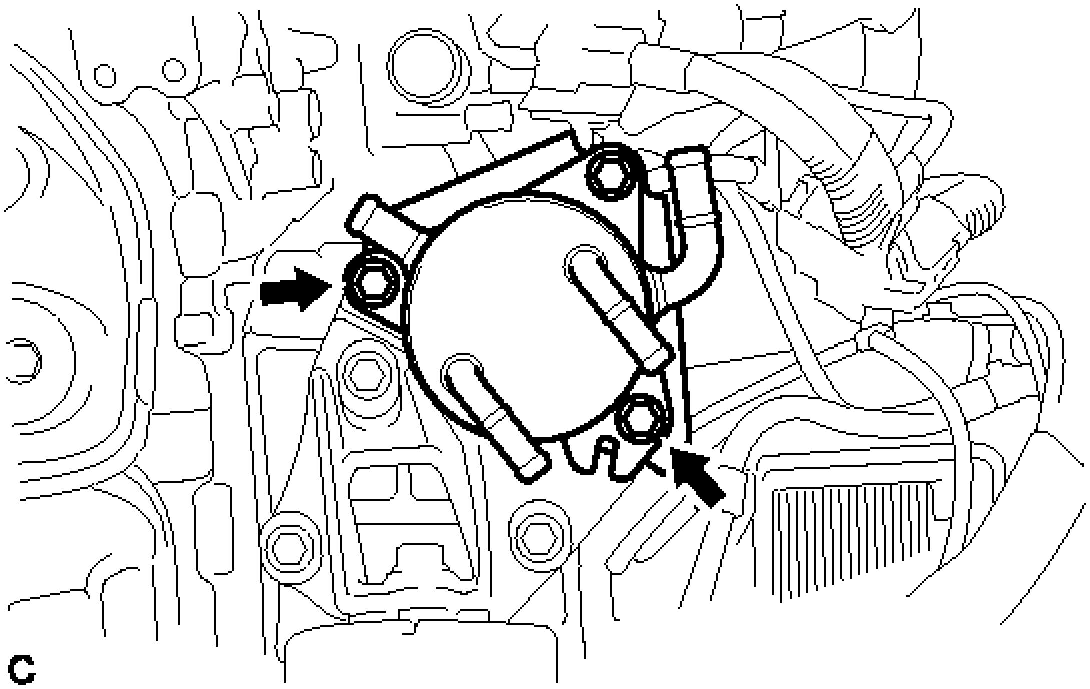

Fig. 157: Identifying Transmission Oil Cooler Bolts
Courtesy of TOYOTA MOTOR SALES, U.S.A., INC.

5. **SEPARATE WIRE HARNESS**
   a. Remove the bolt and disconnect the connector and 7 clamps from the automatic transaxle assembly.

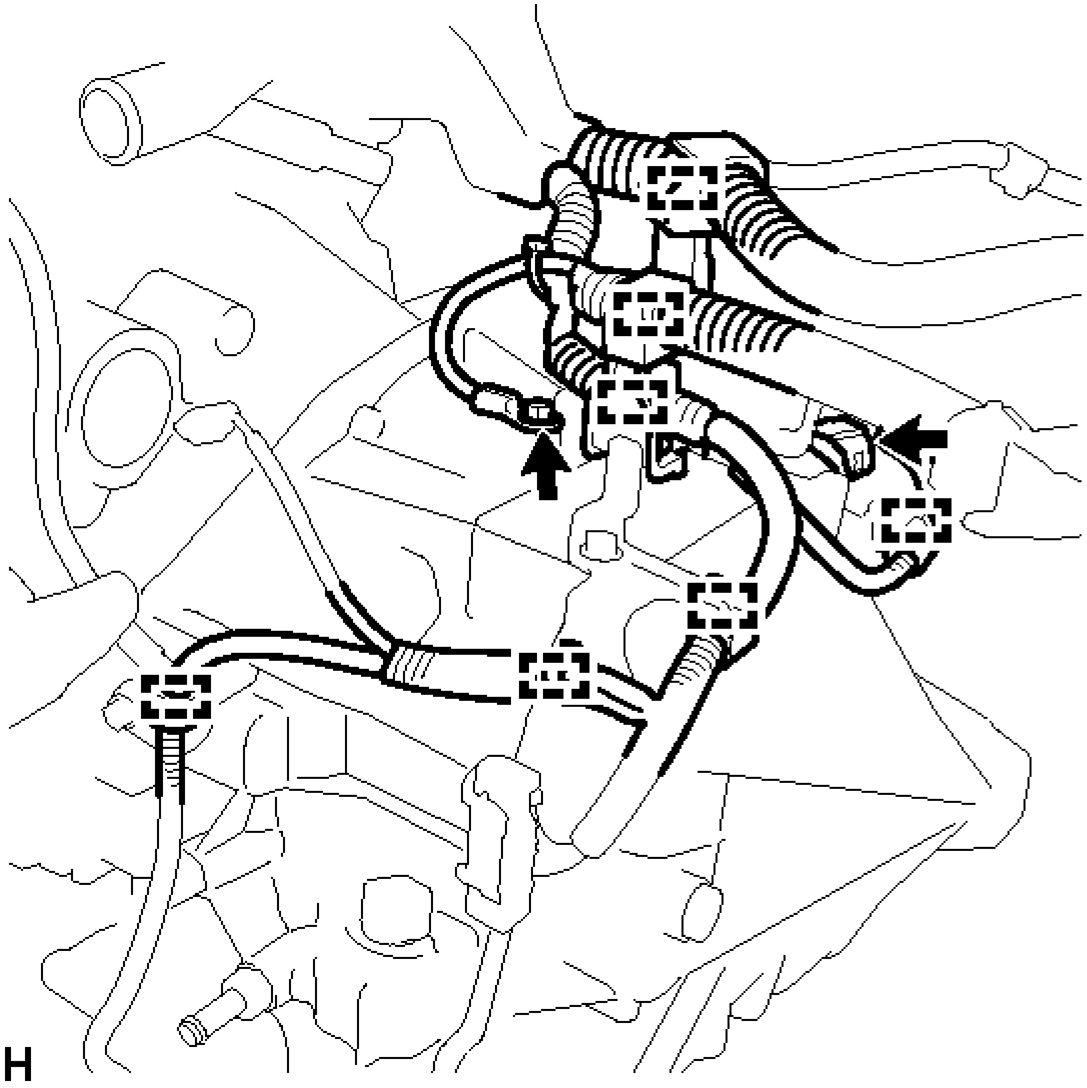

Fig. 158: Identifying Automatic Transaxle Assembly Bolt, Connector And Clamps
Courtesy of TOYOTA MOTOR SALES, U.S.A., INC.

6. **REMOVE AUTOMATIC TRANSAXLE ASSEMBLY**
   a. Using the transmission jack attachment, set the automatic transaxle assembly on a transmission jack.

NOTE:

- **Secure the automatic transaxle assembly to the transmission jack using a suitable adapter, such as a rope or attachment.**
- **To prevent the oil pan from deforming, do not place any attachments onto the oil pan of the automatic transaxle assembly.**
- **Hold the engine assembly with a suitable adapter, such as a rope, during the operation.**

b. Remove the 11 bolts and transaxle.

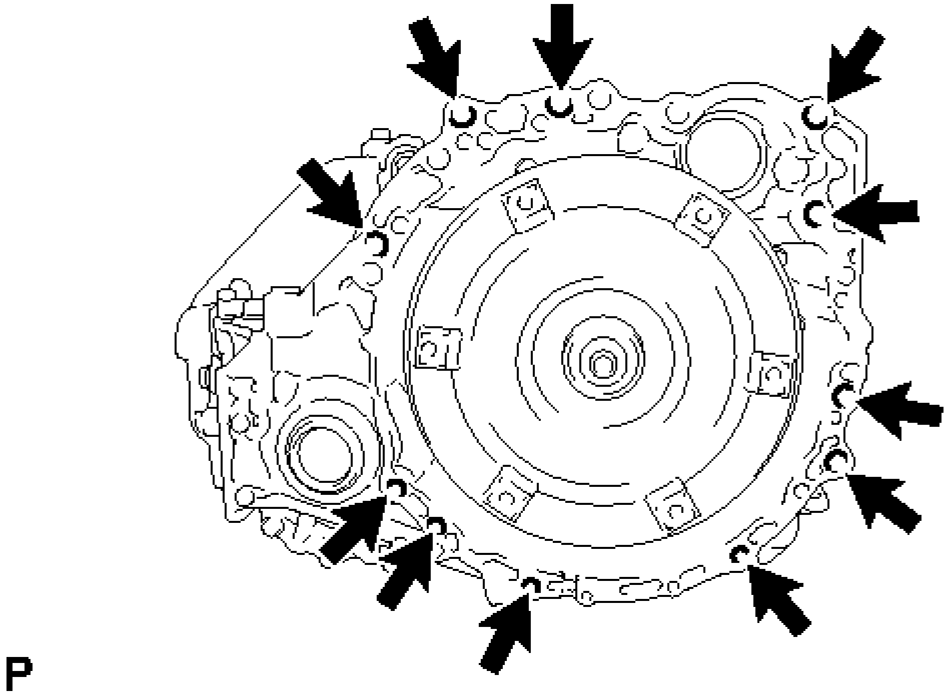

Fig. 159: Locating Automatic Transaxle Bolts
Courtesy of TOYOTA MOTOR SALES, U.S.A., INC.

NOTE: **To prevent damage to the knock pins, do not pry between the transaxle and engine.**

7. **REMOVE FRONT ENGINE MOUNTING BRACKET**
    a. Remove the 3 bolts and front engine mounting bracket.

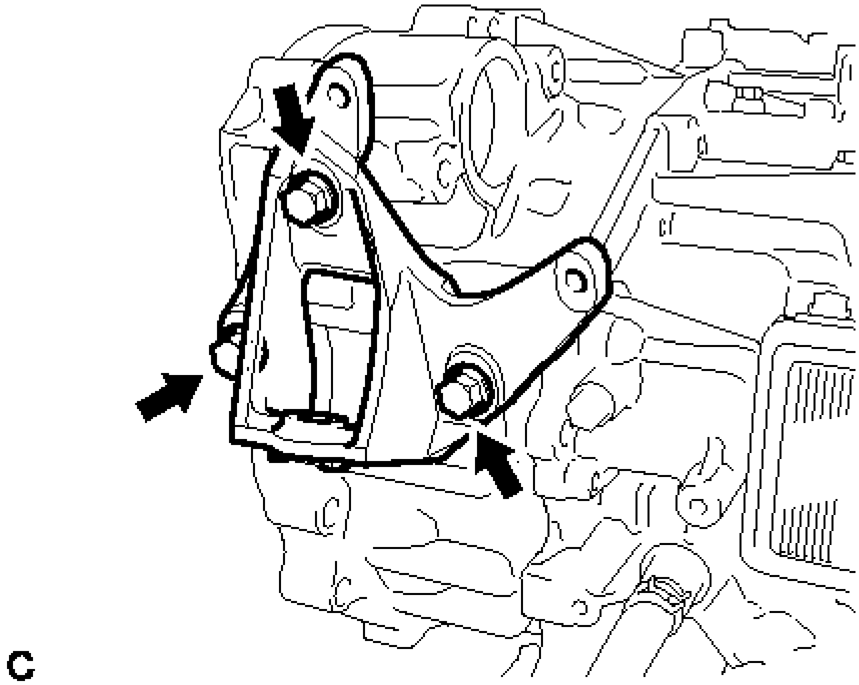

Fig. 160: Identifying Front Engine Mounting Bracket Bolts
Courtesy of TOYOTA MOTOR SALES, U.S.A., INC.

8. **REMOVE WIRE HARNESS CLAMP BRACKET**
   a. Remove the 5 bolts and 5 clamp brackets.

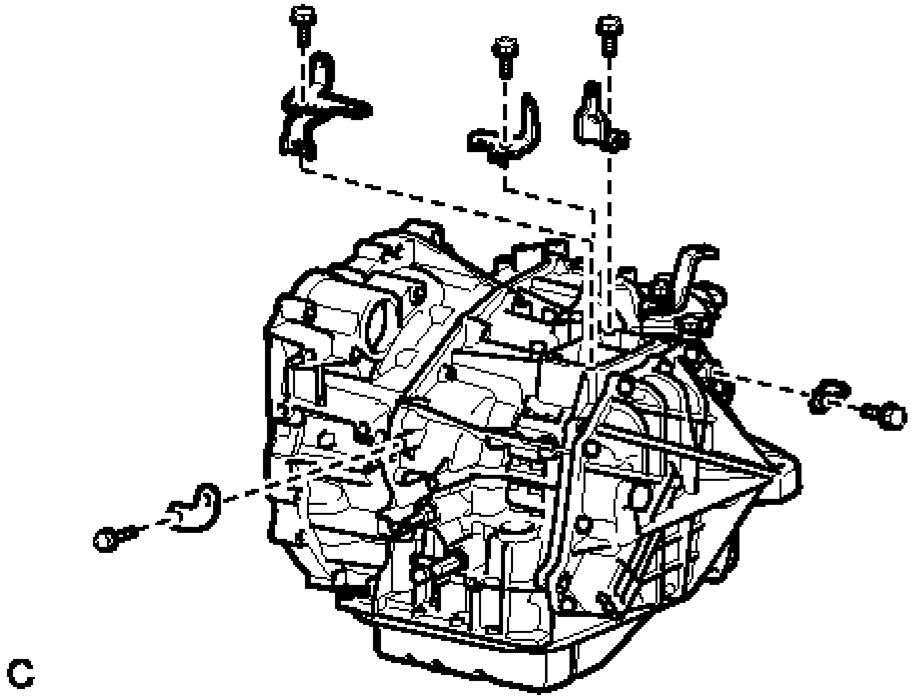

Fig. 161: Identifying Wire Harness Clamp Brackets And Bolts

Courtesy of TOYOTA MOTOR SALES, U.S.A., INC.

9. **REMOVE NO. 1 TRANSMISSION CONTROL CABLE BRACKET**
    a. Remove the 2 bolts and No. 1 transmission control cable bracket from the automatic transaxle assembly.

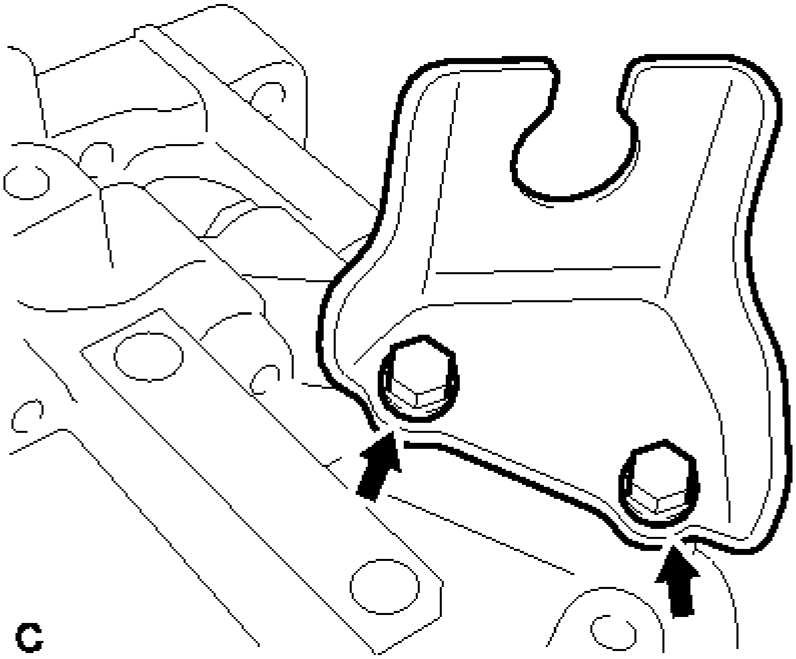

Fig. 162: Identifying No. 1 Transmission Control Cable Bracket Bolts
Courtesy of TOYOTA MOTOR SALES, U.S.A., INC.

10. **REMOVE SPEEDOMETER DRIVEN HOLE (ATM) COVER SUB-ASSEMBLY**
    a. Remove the bolt and speedometer driven hole (ATM) cover sub-assembly from the automatic transaxle assembly.

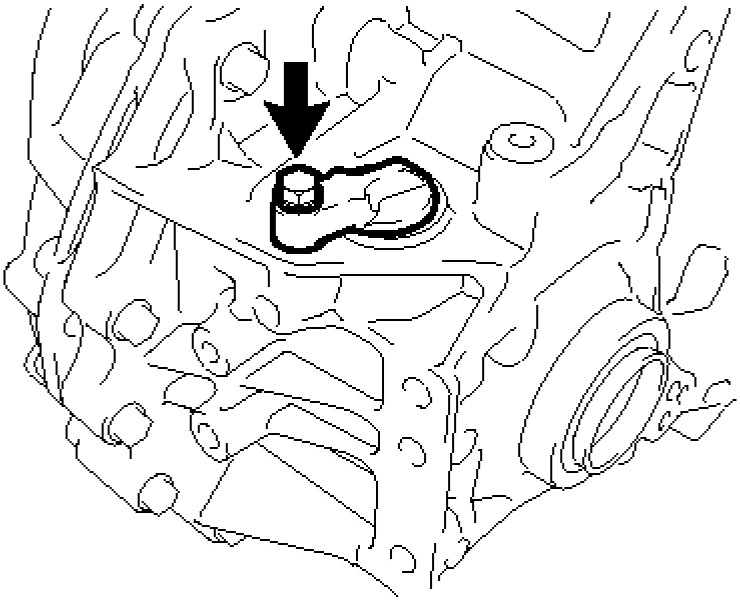

Fig. 163: Identifying Speedometer Driven Hole (ATM) Cover Sub-Assembly Bolt
Courtesy of TOYOTA MOTOR SALES, U.S.A., INC.

b. Remove the O-ring from the speedometer driven hole (ATM) cover sub-assembly.

11. **REMOVE TORQUE CONVERTER ASSEMBLY**

a. Remove the torque converter assembly from the automatic transaxle assembly.

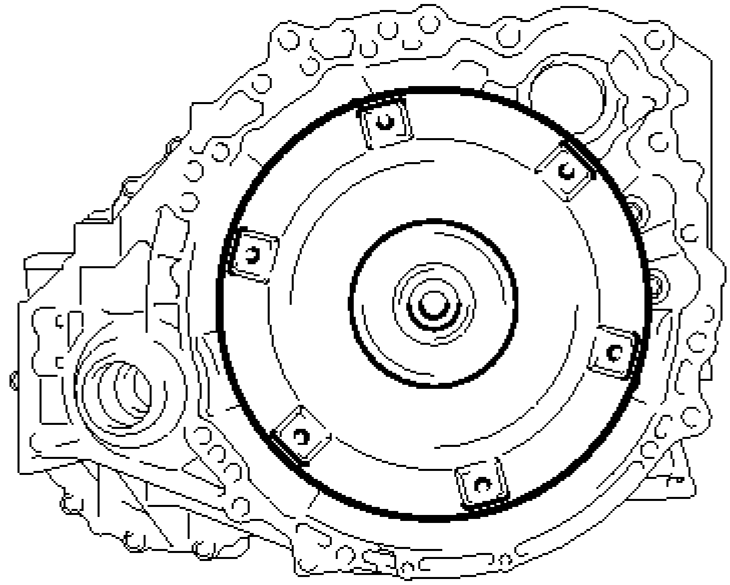

Fig. 164: Identifying Torque Converter Clutch Assembly
Courtesy of TOYOTA MOTOR SALES, U.S.A., INC.

12. **INSPECT TORQUE CONVERTER ASSEMBLY** See step 1

INSTALLATION

INSTALLATION

1. **INSTALL TORQUE CONVERTER ASSEMBLY**
    a. Engage the splines of the input shaft and turbine runner.

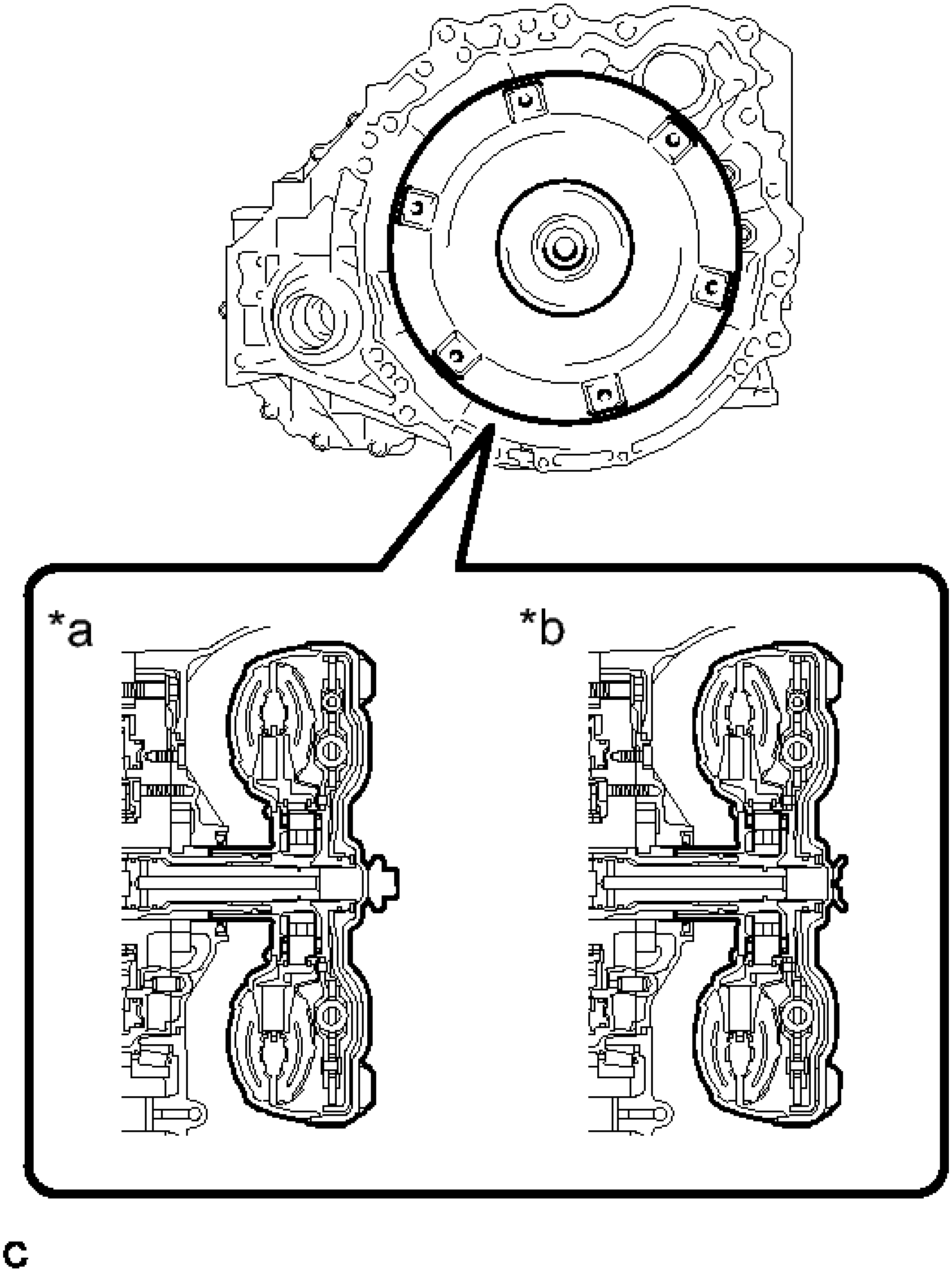

Fig. 165: Identifying Transaxle Serial Number
Courtesy of TOYOTA MOTOR SALES, U.S.A., INC.

TEXT IN ILLUSTRATION

	Transaxle

*a	serial number 2##########
*b	Transaxle serial number 3##########

b. Engage the splines of the stator shaft and the stator while turning the torque converter assembly.

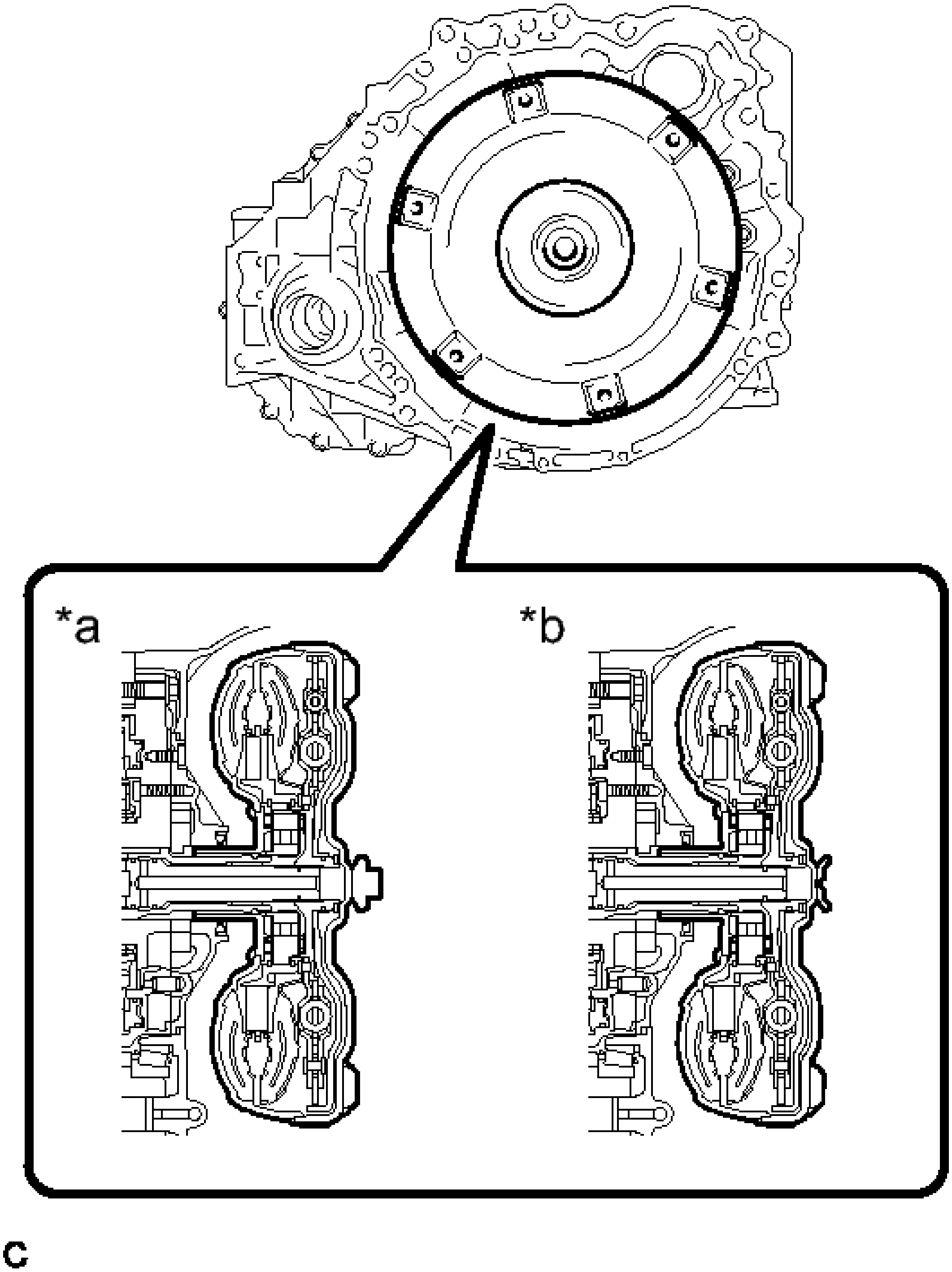

Fig. 166: Identifying Transaxle Serial Number
Courtesy of TOYOTA MOTOR SALES, U.S.A., INC.

TEXT IN ILLUSTRATION

	Transaxle

*a	serial number 2##########
*b	Transaxle serial number 3##########

HINT:

If the stator shaft splines are difficult to engage with the stator splines, move the torque converter back approximately 10 mm (0.393 in.) and engage the splines while rotating the torque converter.

c. Turn the torque converter assembly to insert the key of the oil pump drive gear into the groove of the torque converter assembly.

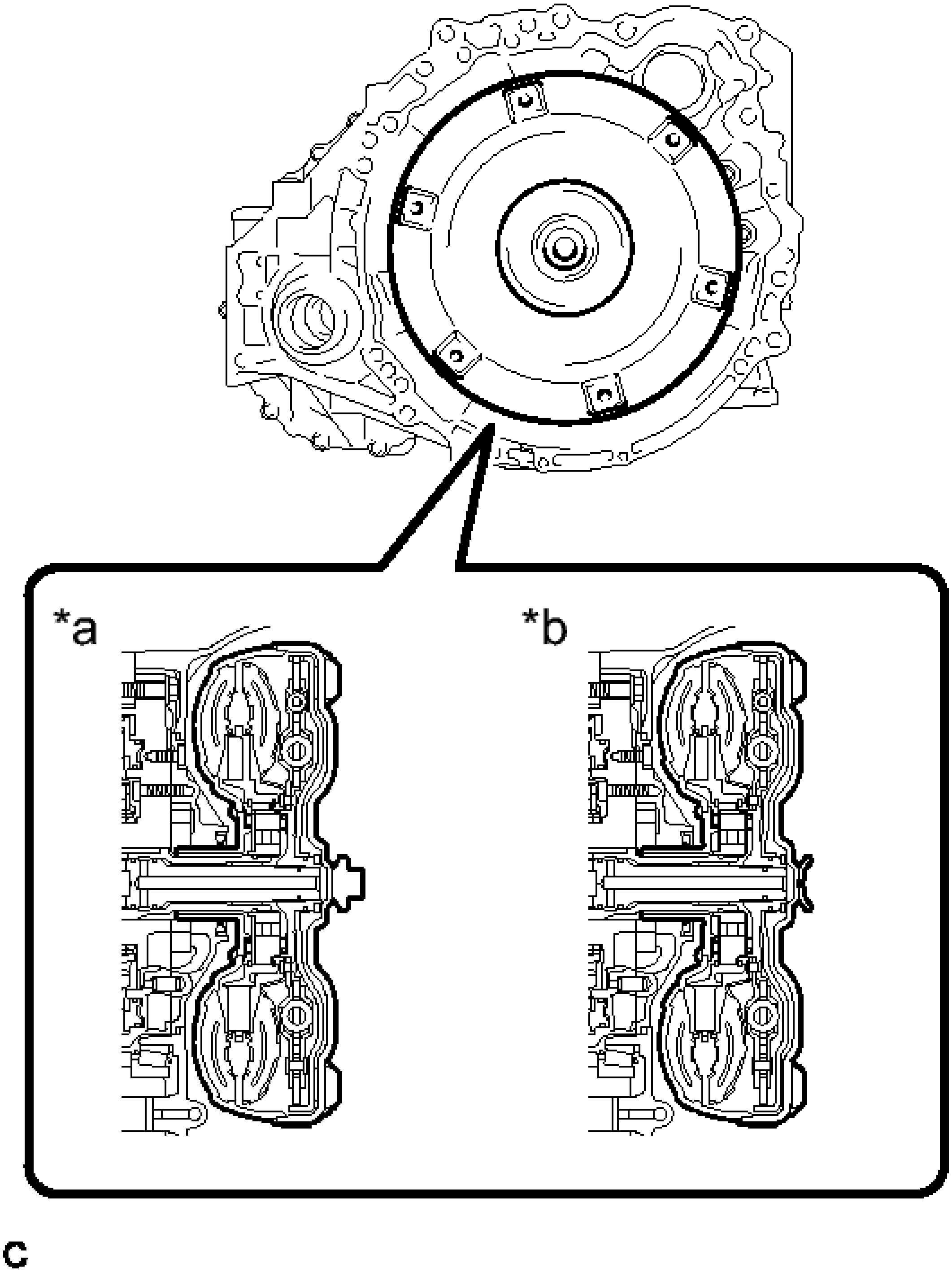

Fig. 167: Identifying Transaxle Serial Number
Courtesy of TOYOTA MOTOR SALES, U.S.A., INC.

TEXT IN ILLUSTRATION

	Transaxle

*a	serial number 2##########
*b	Transaxle serial number 3##########

d. Clean the torque converter set bolt holes.

e. Using a vernier caliper and straightedge, measure dimension A between the transaxle contact surface of the engine and the torque converter contact surface of the drive plate.

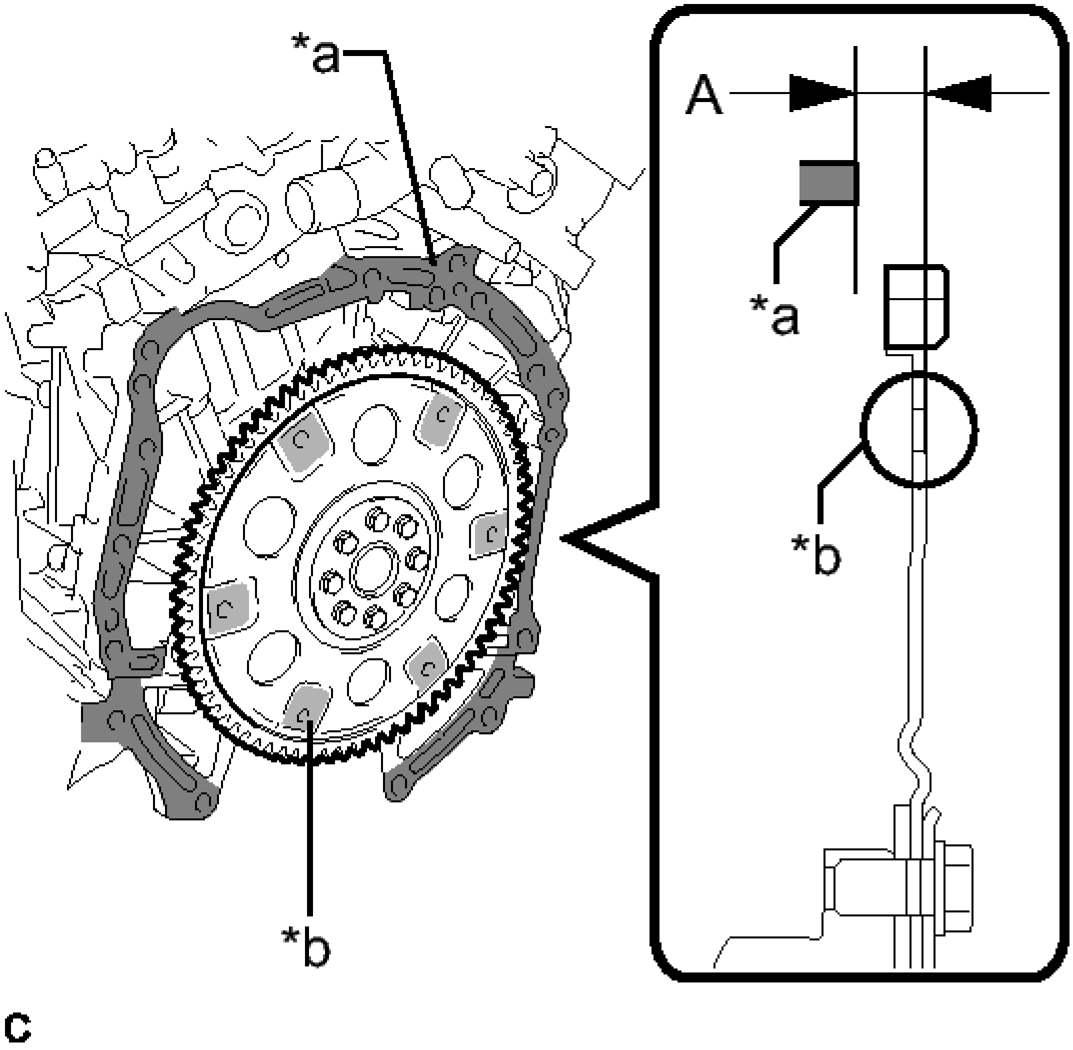

Fig. 168: Measuring Dimension A Between Transaxle Contact Surface
Courtesy of TOYOTA MOTOR SALES, U.S.A., INC.

TEXT IN ILLUSTRATION

*a	Engine

	Surface
*b	Drive Plate Surface

NOTE: Make sure to deduct the thickness of the straightedge.

f. Using a vernier caliper and straightedge, measure dimension B shown in the illustration and check that dimension B is more than dimension A, which was measured in the previous step.

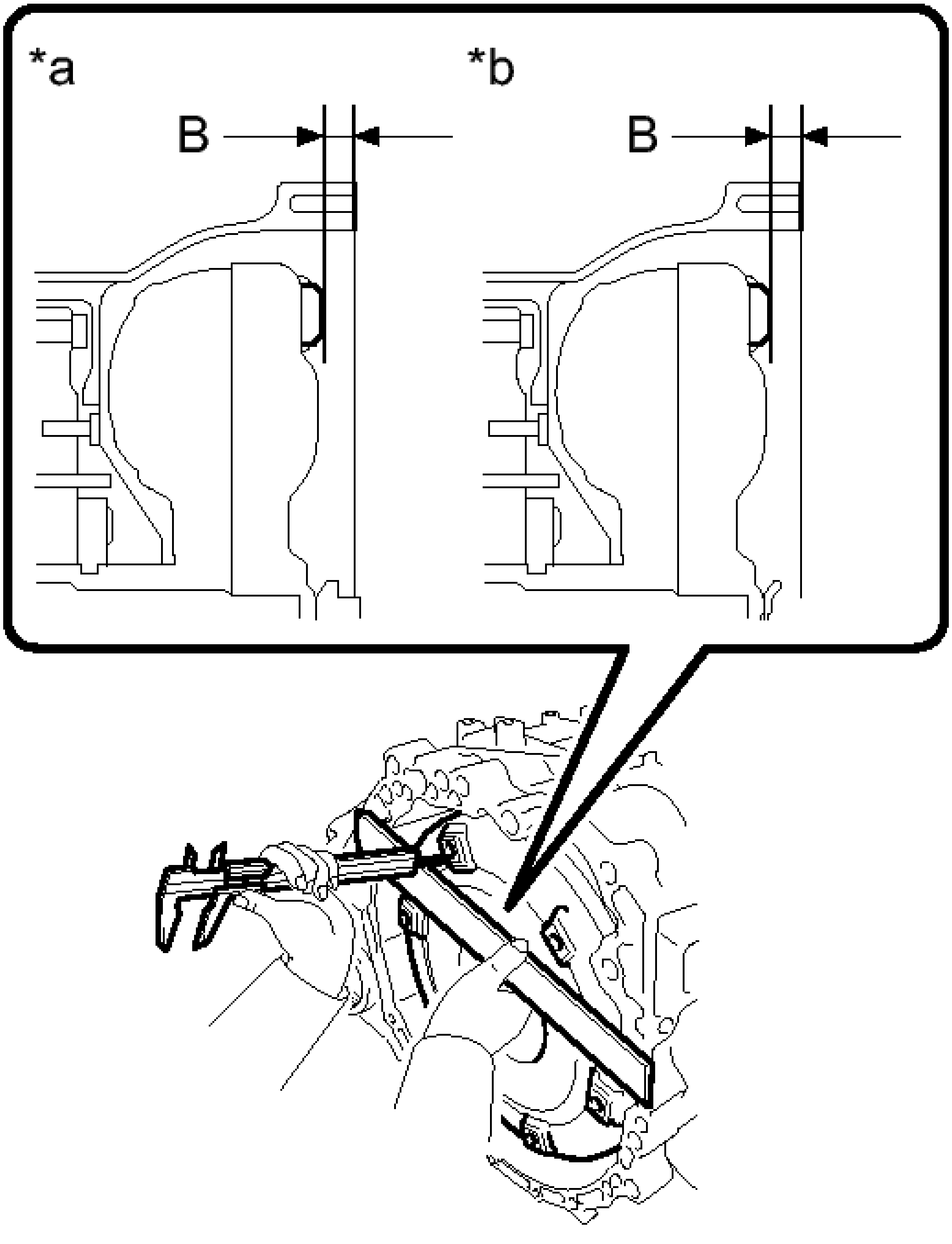

Fig. 169: Measuring Dimension B
Courtesy of TOYOTA MOTOR SALES, U.S.A., INC.

TEXT IN ILLUSTRATION

	Transaxle

*a	serial number 2##########
*b	Transaxle serial number 3##########

Standard

A + 1 mm (0.0394 in.) or more

NOTE:

- **Make sure to deduct the thickness of the straightedge.**
- **If the transaxle is installed to the engine with the torque converter not sufficiently inserted, the torque converter may be damaged.**

2. **INSTALL SPEEDOMETER DRIVEN HOLE (ATM) COVER SUB-ASSEMBLY**
    a. Apply ATF to a new O-ring and install it to the speedometer driven hole (ATM) cover sub-assembly.
    b. Install the speedometer driven hole (ATM) cover sub-assembly to the automatic transaxle assembly with the bolt.

    Torque: 5.5 N*m (56 kgf*cm, 49 in.*lbf)

3. **INSTALL NO. 1 TRANSMISSION CONTROL CABLE BRACKET**
    a. Install the No. 1 transmission control cable bracket to the automatic transaxle assembly with the 2 bolts.

    Torque: 12 N*m (122 kgf*cm, 9 ft.*lbf)

4. **INSTALL WIRE HARNESS CLAMP BRACKET**
    a. Install the 5 wire harness clamp brackets to the automatic transaxle assembly with the 5 bolts.

    Torque: 8.0 N*m (82 kgf*cm, 71 in.*lbf)

5. **INSTALL FRONT ENGINE MOUNTING BRACKET**
    a. Install the front engine mounting bracket with the 3 bolts.

    Torque: 64 N*m (652 kgf*cm, 47 ft.*lbf)

6. **INSTALL AUTOMATIC TRANSAXLE ASSEMBLY**
    a. Apply clutch spline grease to the surface of the crankshaft that contacts the torque converter centerpiece.

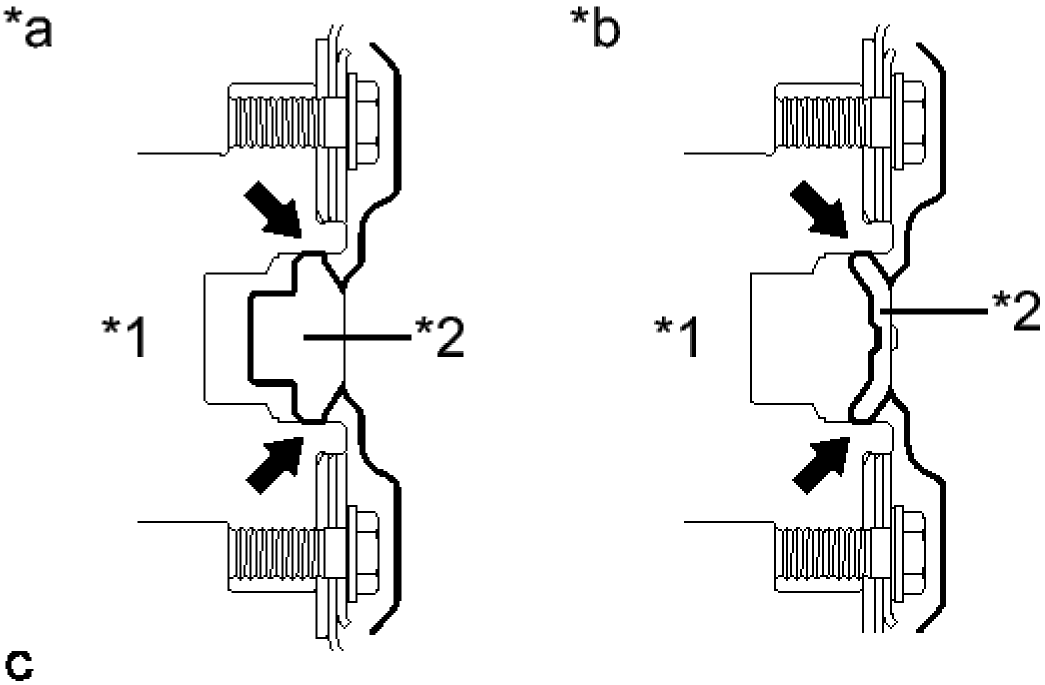

Fig. 170: Identifying Crankshaft, Torque Converter Centerpiece And Transaxle Serial Numbers
Courtesy of TOYOTA MOTOR SALES, U.S.A., INC.

TEXT IN ILLUSTRATION

*1	Crankshaft
*2	Torque Converter Centerpiece
*a	Transaxle serial number 2#########
*b	Transaxle serial number 3#########

Clutch spline grease

Toyota Genuine Clutch Spline Grease or equivalent

Maximum grease amount

Approximately 1 g (0.0353 oz.)

b. While keeping the engine and automatic transaxle assembly horizontal, align the knock pins with the holes in the automatic transaxle assembly and install the 10 bolts shown in the illustration.

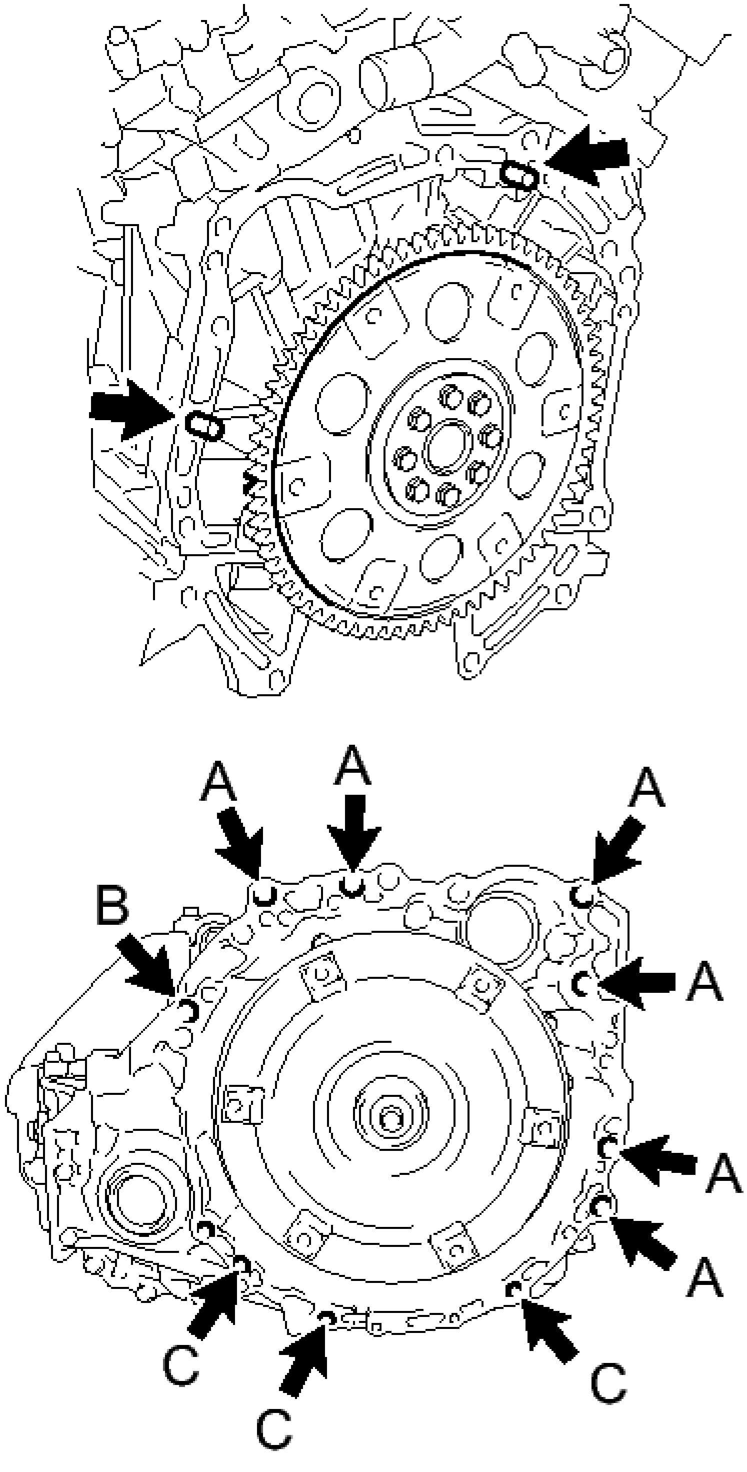
A
A
A
B
A
A
A
C
C
C

Fig. 171: Identifying Automatic Transaxle Assembly Bolts
Courtesy of TOYOTA MOTOR SALES, U.S.A., INC.

Bolt A

Torque: 64 N*m (653 kgf*cm, 47 ft.*lbf)

Bolt B

Torque: 64 N*m (653 kgf*cm, 47 ft.*lbf)

Bolt C

Torque: 43 N*m (438 kgf*cm, 32 ft.*lbf)

NOTE:

- **Confirm that the 2 knock pins are installed to the transaxle contact surface of the engine cylinder block before installing the transaxle.**
- **Do not forcibly pry on the automatic transaxle assembly.**
- **Check that the torque converter rotates.**

HINT:

Bolt length:

- Bolt A: 55 mm (2.17 in.)
- Bolt B: 50 mm (1.97 in.)
- Bolt C: 33 mm (1.30 in.)

c. Clean and degrease the bolt and the installation hole in the automatic transaxle.
d. Apply a few drops of adhesive to 2 or 3 threads at the tip of each of the bolt.

Adhesive

Toyota Genuine Adhesive 1344, Three Bond 1344 or equivalent

e. Install the bolt.

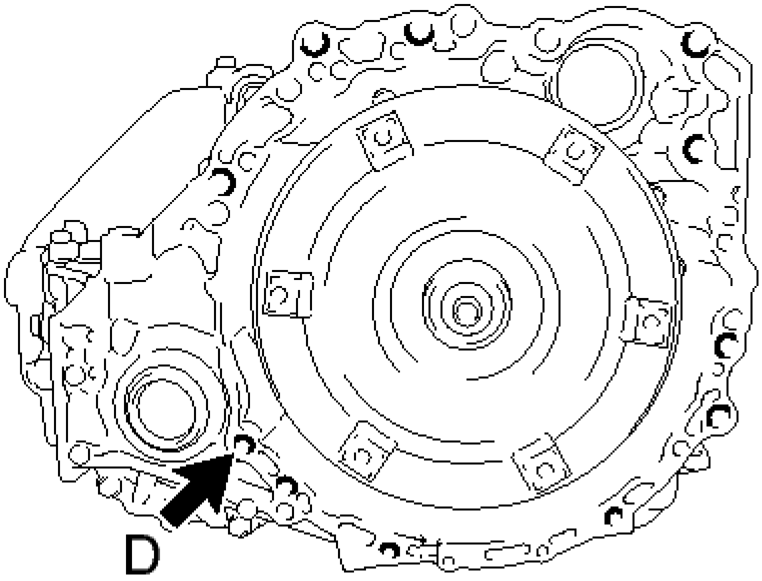

Fig. 172: Identifying Bolt D
Courtesy of TOYOTA MOTOR SALES, U.S.A., INC.

Bolt D

Torque: 46 N*m (469 kgf*cm, 34 ft.*lbf)

HINT:

Bolt length:

Bolt D: 41 mm (1.61 in.)

7. **INSTALL WIRE HARNESS**
   1. Connect the 7 clamps and connector.
   2. Install the wire harnesses with the bolt.

      Torque: 12 N*m (122 kgf*cm, 9 ft.*lbf)

8. **INSTALL TRANSMISSION OIL COOLER**
   1. Install the transmission oil cooler with the transmission oil cooler stay to the automatic transaxle assembly with the 2 bolts.

      Torque: 14 N*m (138 kgf*cm, 10 ft.*lbf)

   2. Install the No. 1 oil cooler outlet hose and No. 1 oil cooler inlet hose.
   3. Install the No. 4 water by-pass hose.

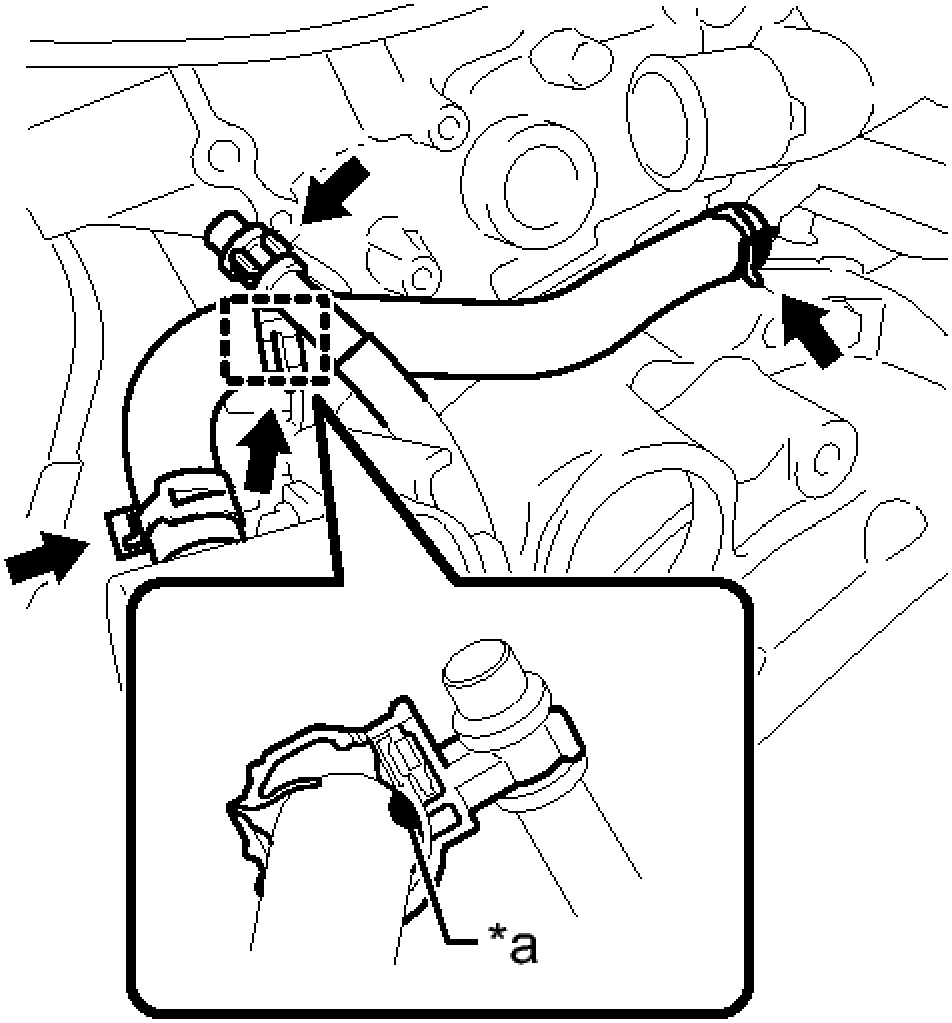

Fig. 173: Identifying No. 4 Water By-Pass Hose, No. 1 Oil Cooler Outlet And Inlet Hose
Courtesy of TOYOTA MOTOR SALES, U.S.A., INC.

TEXT IN ILLUSTRATION

*a	Paint

NOTE:

- **Install the clamp so that the neck of the clamp is aligned with the paint.**
- **Ensure that the paint is completely covered by the clamp.**

d. Install the clamp and connect the breather plug.

9. **INSTALL TCM** See step 1
10. **INSTALL FRONT FRAME ASSEMBLY** . Refer to **INSTALLATION - Step 10**
11. **INSTALL ENGINE ASSEMBLY WITH TRANSAXLE**

Refer to **INSTALLATION**

12. **CHECK AUTOMATIC TRANSAXLE SYSTEM**

NOTE: **If automatic transmission parts have been replaced, refer to Parts Replacement Compensation Table to determine if any additional operations are necessary. Refer to PRECAUTION .**

AUTOMATIC TRANSAXLE UNIT

COMPONENTS

ILLUSTRATION

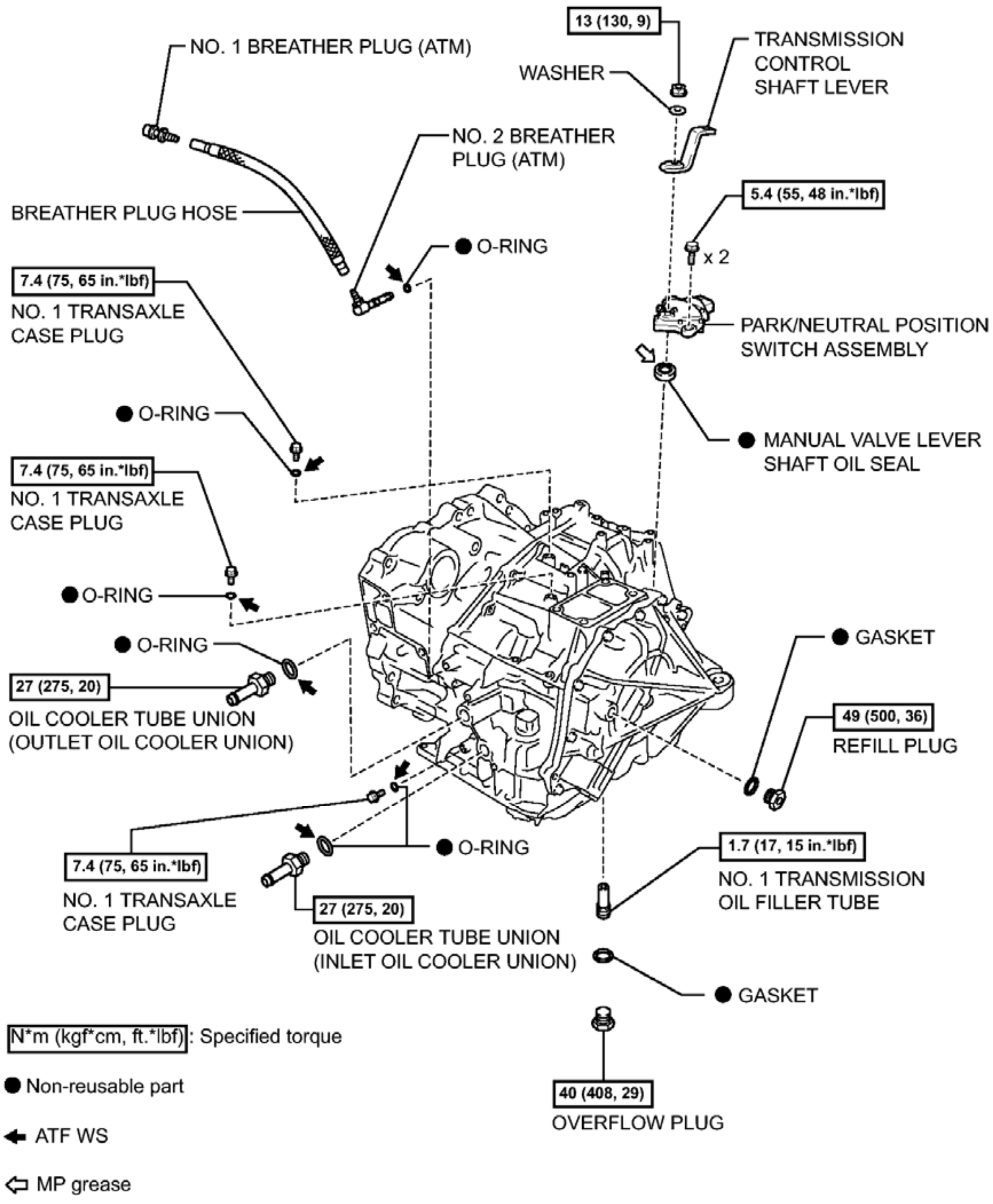
13 (130, 9)
TRANSMISSION CONTROL SHAFT LEVER
WASHER
NO. 1 BREATHER PLUG (ATM)
NO. 2 BREATHER PLUG (ATM)
BREATHER PLUG HOSE
5.4 (55, 48 in.*lbf)
x 2
● O-RING
7.4 (75, 65 in.*lbf)
NO. 1 TRANSAXLE CASE PLUG
PARK/NEUTRAL POSITION SWITCH ASSEMBLY
● O-RING
● MANUAL VALVE LEVER SHAFT OIL SEAL
7.4 (75, 65 in.*lbf)
NO. 1 TRANSAXLE CASE PLUG
● O-RING
● O-RING
● GASKET
27 (275, 20)
OIL COOLER TUBE UNION (OUTLET OIL COOLER UNION)
49 (500, 36)
REFILL PLUG
● O-RING
1.7 (17, 15 in.*lbf)
7.4 (75, 65 in.*lbf)
NO. 1 TRANSMISSION OIL FILLER TUBE
NO. 1 TRANSAXLE CASE PLUG
27 (275, 20)
OIL COOLER TUBE UNION (INLET OIL COOLER UNION)
● GASKET
N*m (kgf*cm, ft.*lbf): Specified torque
● Non-reusable part
40 (408, 29)
OVERFLOW PLUG
ATF WS
MP grease

Fig. 174: Identifying Automatic Transaxle Unit Replacement Components With Torque Specifications (1 Of 8)
Courtesy of TOYOTA MOTOR SALES, U.S.A., INC.

ILLUSTRATION

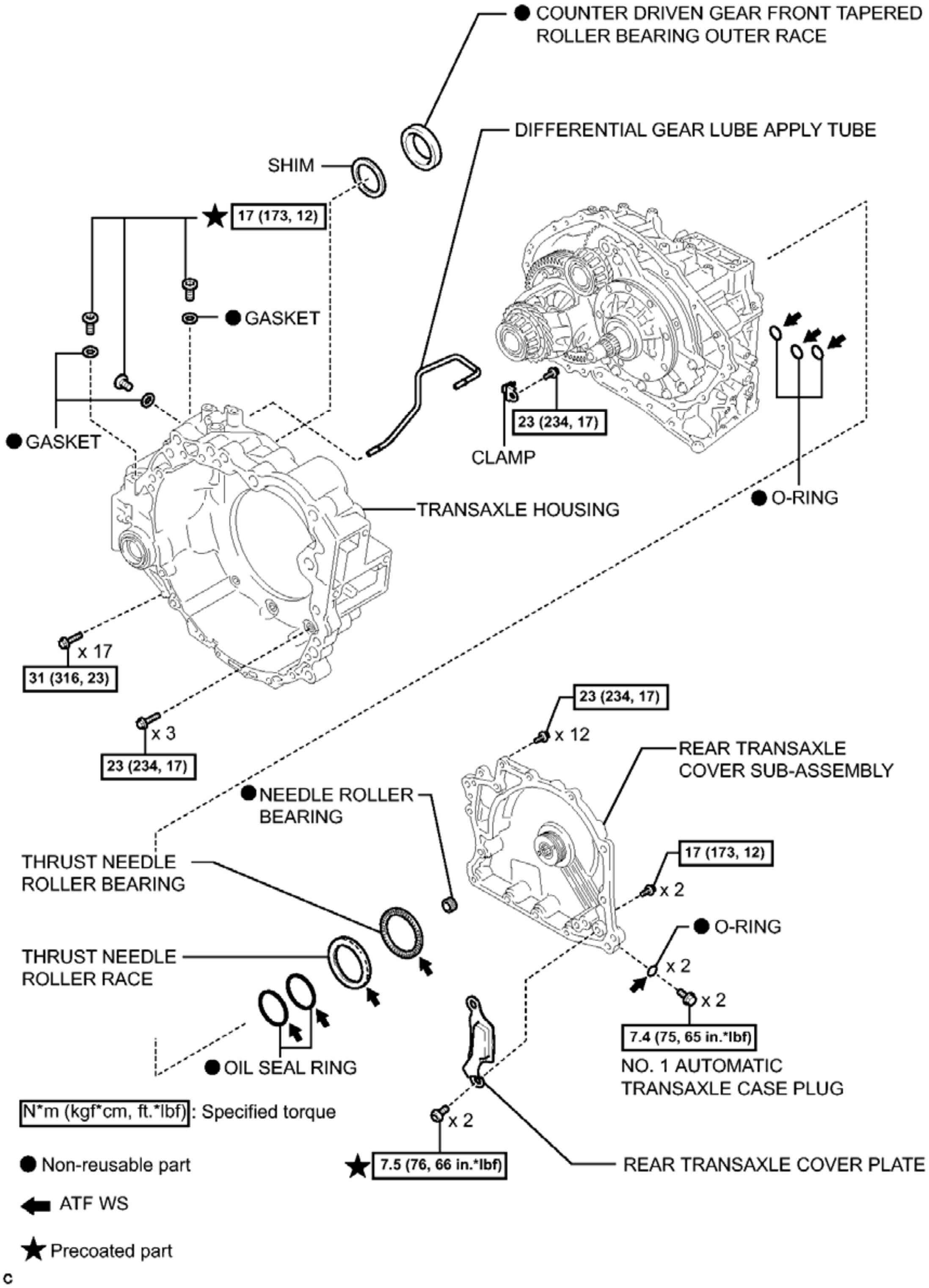
● COUNTER DRIVEN GEAR FRONT TAPERED ROLLER BEARING OUTER RACE
DIFFERENTIAL GEAR LUBE APPLY TUBE
SHIM
★ 17 (173, 12)
● GASKET
● GASKET
23 (234, 17)
CLAMP
TRANSAXLE HOUSING
● O-RING
x 17
31 (316, 23)
x 3
23 (234, 17)
23 (234, 17)
x 12
REAR TRANSAXLE COVER SUB-ASSEMBLY
● NEEDLE ROLLER BEARING
THRUST NEEDLE ROLLER BEARING
17 (173, 12)
x 2
● O-RING
x 2
x 2
THRUST NEEDLE ROLLER RACE
7.4 (75, 65 in.*lbf)
NO. 1 AUTOMATIC TRANSAXLE CASE PLUG
● OIL SEAL RING
N*m (kgf*cm, ft.*lbf): Specified torque
x 2
● Non-reusable part
★ 7.5 (76, 66 in.*lbf)
REAR TRANSAXLE COVER PLATE
⬅ ATF WS
★ Precoated part
c

Fig. 175: Identifying Automatic Transaxle Unit Replacement Components With Torque Specifications (2 Of 8)
Courtesy of TOYOTA MOTOR SALES, U.S.A., INC.

ILLUSTRATION

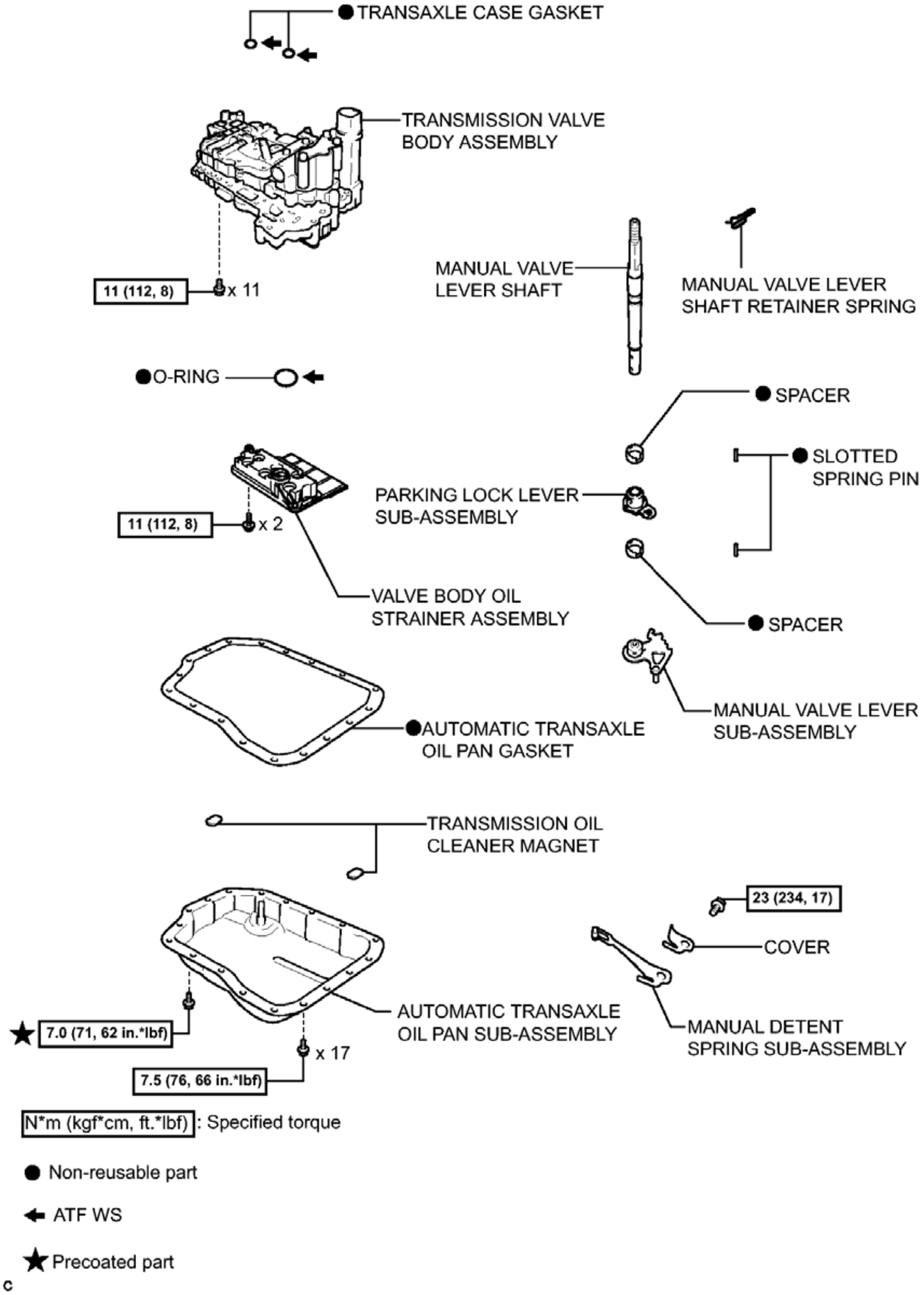
TRANSAXLE CASE GASKET
TRANSMISSION VALVE BODY ASSEMBLY
11 (112, 8)
x 11
MANUAL VALVE LEVER SHAFT
MANUAL VALVE LEVER SHAFT RETAINER SPRING
O-RING
SPACER
SLOTTED SPRING PIN
PARKING LOCK LEVER SUB-ASSEMBLY
11 (112, 8)
x 2
VALVE BODY OIL STRAINER ASSEMBLY
SPACER
MANUAL VALVE LEVER SUB-ASSEMBLY
AUTOMATIC TRANSAXLE OIL PAN GASKET
TRANSMISSION OIL CLEANER MAGNET
23 (234, 17)
COVER
AUTOMATIC TRANSAXLE OIL PAN SUB-ASSEMBLY
MANUAL DETENT SPRING SUB-ASSEMBLY
7.0 (71, 62 in.*lbf)
x 17
7.5 (76, 66 in.*lbf)
N*m (kgf*cm, ft.*lbf) : Specified torque
● Non-reusable part
ATF WS
★ Precoated part
c

Fig. 176: Identifying Automatic Transaxle Unit Replacement Components With Torque Specifications (3 Of 8)

Courtesy of TOYOTA MOTOR SALES, U.S.A., INC.

ILLUSTRATION

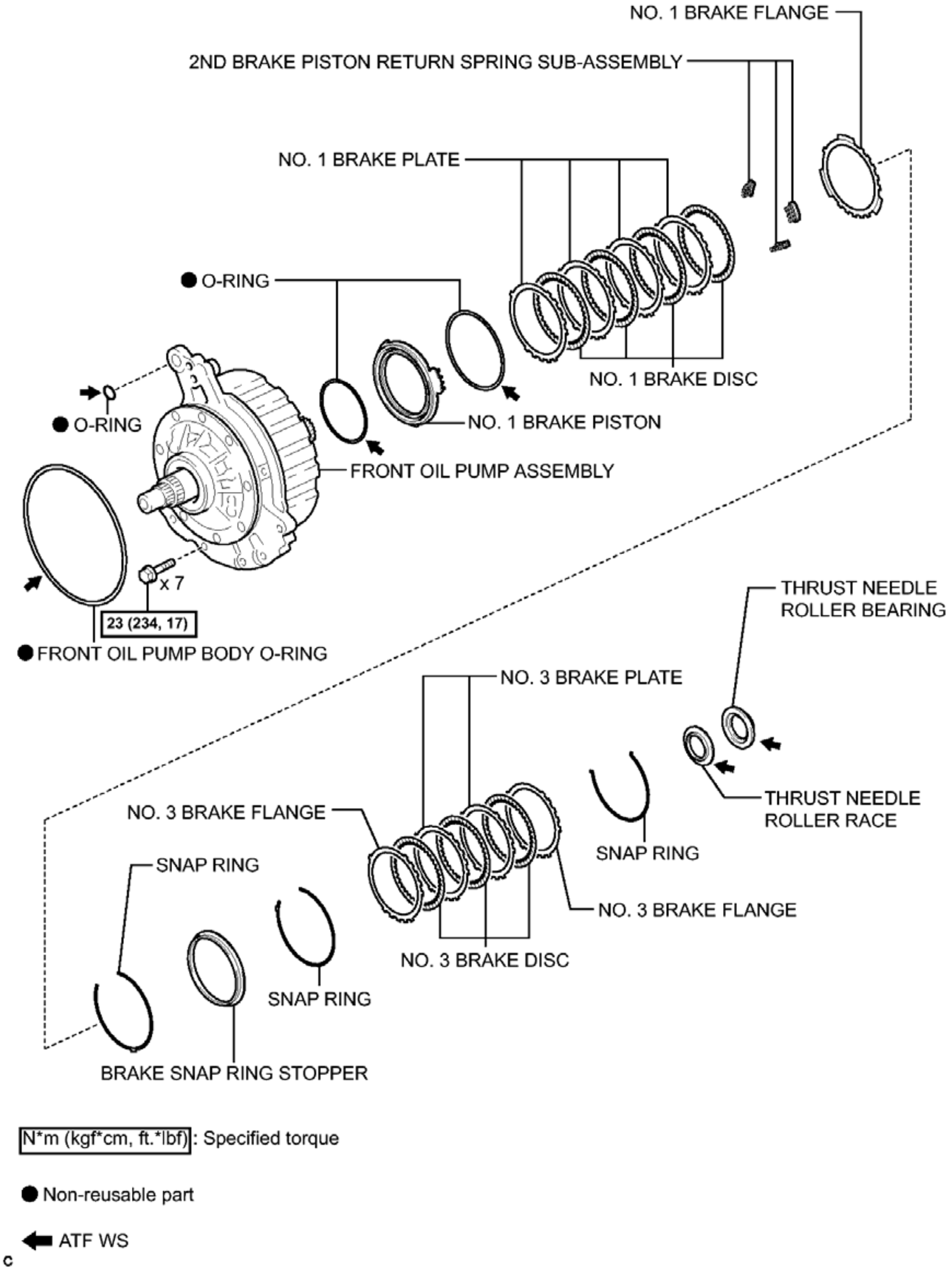
NO. 1 BRAKE FLANGE
2ND BRAKE PISTON RETURN SPRING SUB-ASSEMBLY
NO. 1 BRAKE PLATE
● O-RING
NO. 1 BRAKE DISC
● O-RING
NO. 1 BRAKE PISTON
FRONT OIL PUMP ASSEMBLY
x 7
23 (234, 17)
● FRONT OIL PUMP BODY O-RING
THRUST NEEDLE ROLLER BEARING
NO. 3 BRAKE PLATE
THRUST NEEDLE ROLLER RACE
SNAP RING
NO. 3 BRAKE FLANGE
SNAP RING
NO. 3 BRAKE FLANGE
NO. 3 BRAKE DISC
SNAP RING
BRAKE SNAP RING STOPPER
N*m (kgf*cm, ft.*lbf): Specified torque
● Non-reusable part
ATF WS
C

Fig. 177: Identifying Automatic Transaxle Unit Replacement Components With Torque Specifications (4 Of 8)
Courtesy of TOYOTA MOTOR SALES, U.S.A., INC.

ILLUSTRATION

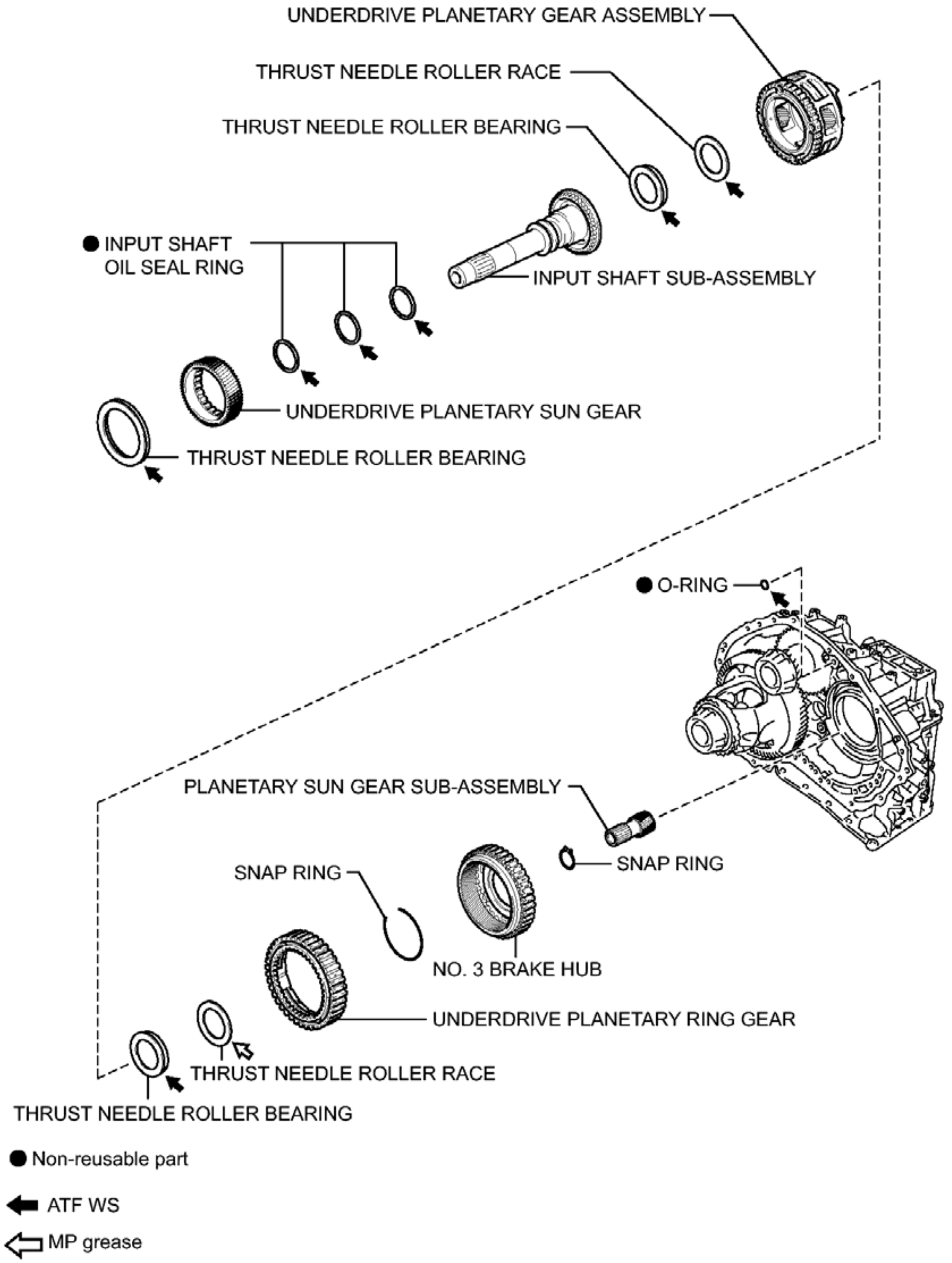
UNDERDRIVE PLANETARY GEAR ASSEMBLY
THRUST NEEDLE ROLLER RACE
THRUST NEEDLE ROLLER BEARING
● INPUT SHAFT OIL SEAL RING
INPUT SHAFT SUB-ASSEMBLY
UNDERDRIVE PLANETARY SUN GEAR
THRUST NEEDLE ROLLER BEARING
● O-RING
PLANETARY SUN GEAR SUB-ASSEMBLY
SNAP RING
SNAP RING
NO. 3 BRAKE HUB
UNDERDRIVE PLANETARY RING GEAR
THRUST NEEDLE ROLLER RACE
THRUST NEEDLE ROLLER BEARING
● Non-reusable part
⬅ ATF WS
⇦ MP grease

Fig. 178: Identifying Automatic Transaxle Unit Replacement Components With Torque Specifications (5 Of 8)
Courtesy of TOYOTA MOTOR SALES, U.S.A., INC.

ILLUSTRATION

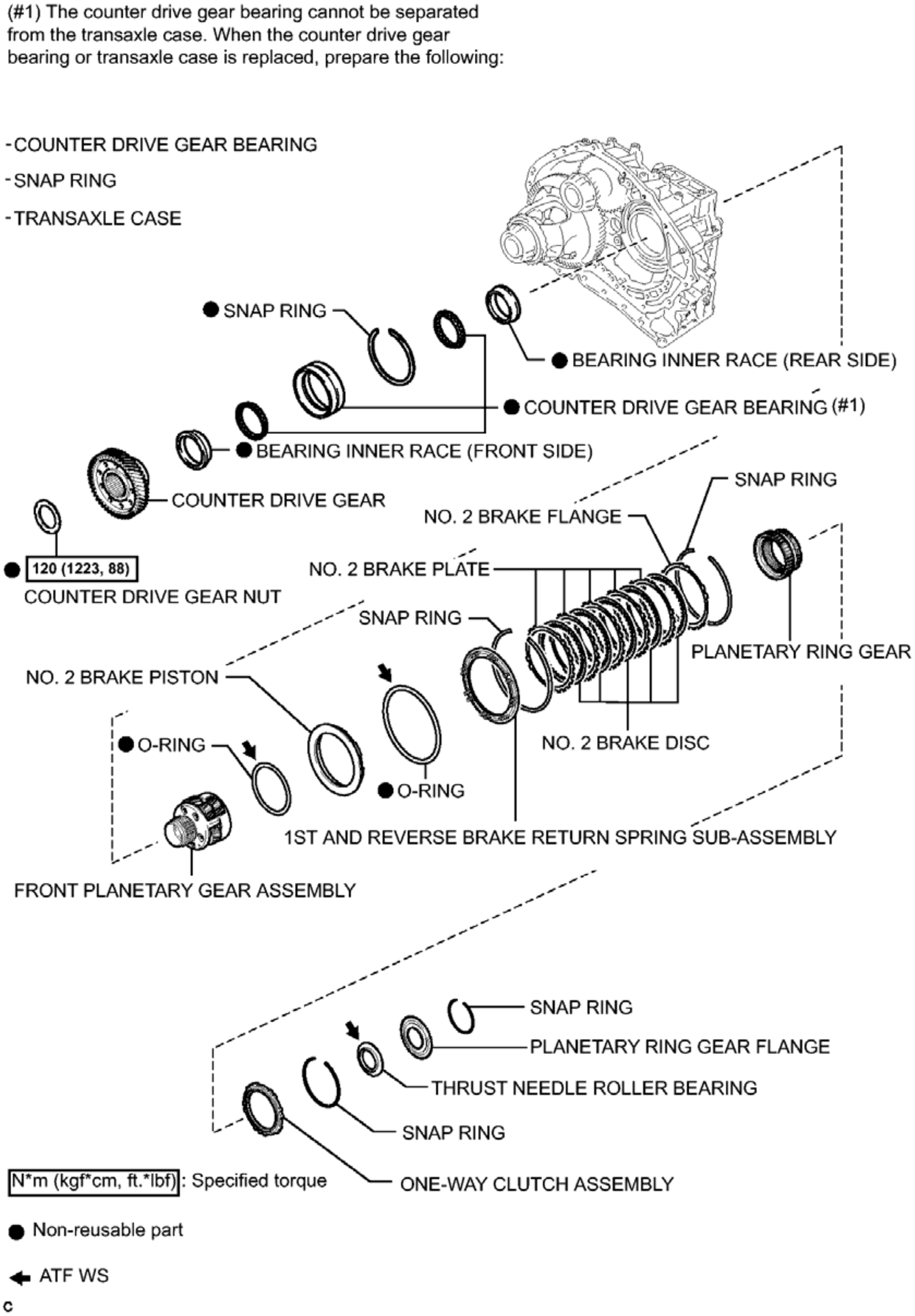

(#1) The counter drive gear bearing cannot be separated from the transaxle case. When the counter drive gear bearing or transaxle case is replaced, prepare the following:

- COUNTER DRIVE GEAR BEARING
- SNAP RING
- TRANSAXLE CASE

● SNAP RING
● BEARING INNER RACE (REAR SIDE)
● COUNTER DRIVE GEAR BEARING (#1)
● BEARING INNER RACE (FRONT SIDE)
COUNTER DRIVE GEAR
● 120 (1223, 88)
COUNTER DRIVE GEAR NUT
SNAP RING
NO. 2 BRAKE FLANGE
NO. 2 BRAKE PLATE
SNAP RING
PLANETARY RING GEAR
NO. 2 BRAKE PISTON
● O-RING
● O-RING
NO. 2 BRAKE DISC
1ST AND REVERSE BRAKE RETURN SPRING SUB-ASSEMBLY
FRONT PLANETARY GEAR ASSEMBLY
SNAP RING
PLANETARY RING GEAR FLANGE
THRUST NEEDLE ROLLER BEARING
SNAP RING
ONE-WAY CLUTCH ASSEMBLY
c

N*m (kgf*cm, ft.*lbf): Specified torque

● Non-reusable part

← ATF WS

Fig. 179: Identifying Automatic Transaxle Unit Replacement Components With Torque Specifications (6 Of 8)

Courtesy of TOYOTA MOTOR SALES, U.S.A., INC.

ILLUSTRATION

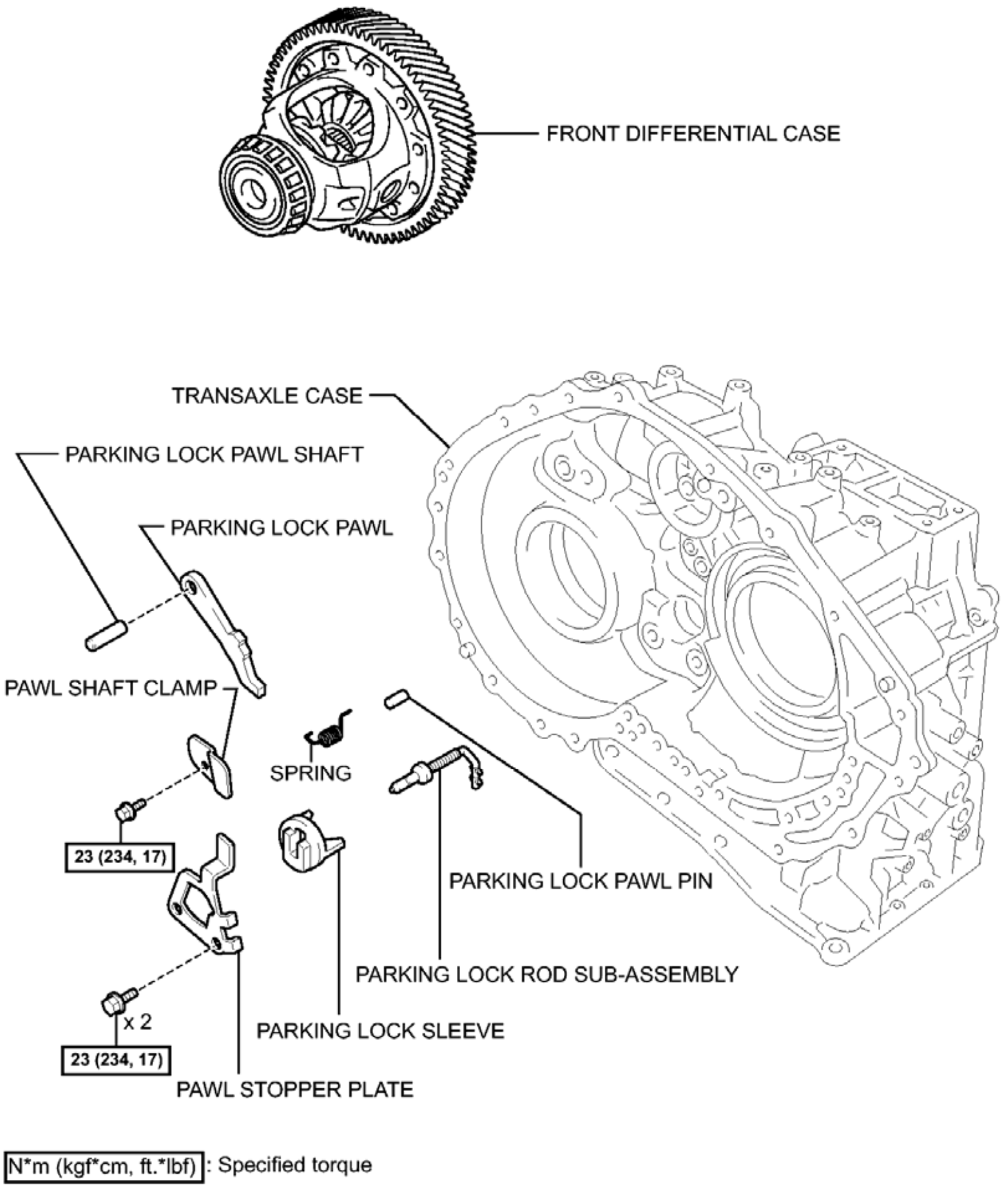
FRONT DIFFERENTIAL CASE
TRANSAXLE CASE
PARKING LOCK PAWL SHAFT
PARKING LOCK PAWL
PAWL SHAFT CLAMP
SPRING
23 (234, 17)
PARKING LOCK PAWL PIN
PARKING LOCK ROD SUB-ASSEMBLY
x 2
PARKING LOCK SLEEVE
23 (234, 17)
PAWL STOPPER PLATE
N*m (kgf*cm, ft.*lbf) : Specified torque

Fig. 180: Identifying Automatic Transaxle Unit Replacement Components With Torque Specifications (7 Of 8)
Courtesy of TOYOTA MOTOR SALES, U.S.A., INC.

ILLUSTRATION

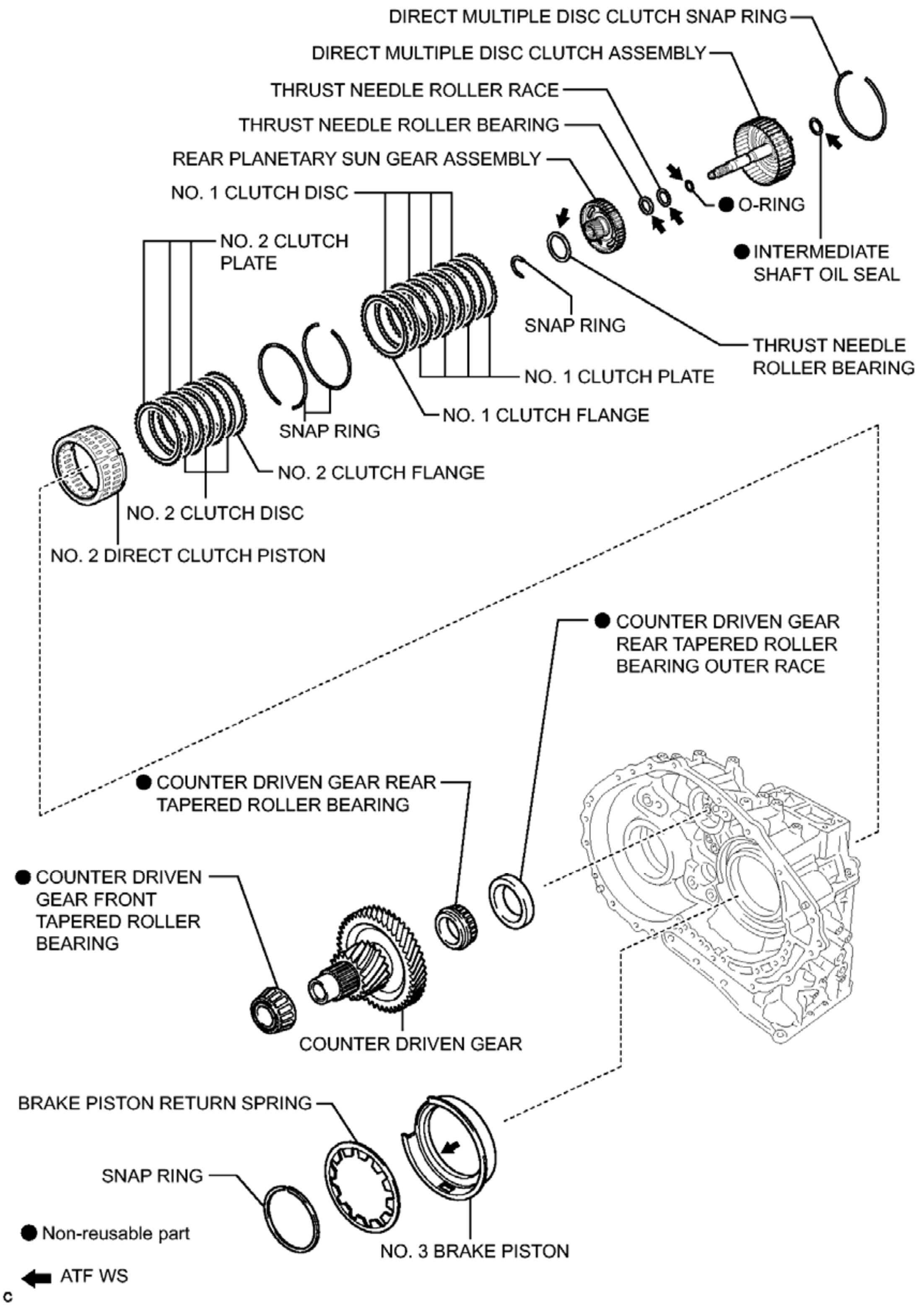
DIRECT MULTIPLE DISC CLUTCH SNAP RING
DIRECT MULTIPLE DISC CLUTCH ASSEMBLY
THRUST NEEDLE ROLLER RACE
THRUST NEEDLE ROLLER BEARING
REAR PLANETARY SUN GEAR ASSEMBLY
NO. 1 CLUTCH DISC
● O-RING
NO. 2 CLUTCH PLATE
● INTERMEDIATE SHAFT OIL SEAL
SNAP RING
THRUST NEEDLE ROLLER BEARING
NO. 1 CLUTCH PLATE
NO. 1 CLUTCH FLANGE
SNAP RING
NO. 2 CLUTCH FLANGE
NO. 2 CLUTCH DISC
NO. 2 DIRECT CLUTCH PISTON
● COUNTER DRIVEN GEAR REAR TAPERED ROLLER BEARING OUTER RACE
● COUNTER DRIVEN GEAR REAR TAPERED ROLLER BEARING
● COUNTER DRIVEN GEAR FRONT TAPERED ROLLER BEARING
COUNTER DRIVEN GEAR
BRAKE PISTON RETURN SPRING
SNAP RING
NO. 3 BRAKE PISTON
● Non-reusable part
ATF WS
c

Fig. 181: Identifying Automatic Transaxle Unit Replacement Components With Torque Specifications (8 Of 8)

Courtesy of TOYOTA MOTOR SALES, U.S.A., INC.

DISASSEMBLY

DISASSEMBLY

1. **REMOVE BREATHER PLUG HOSE**
    a. Using a screwdriver, remove the breather plug hose from the transaxle case.

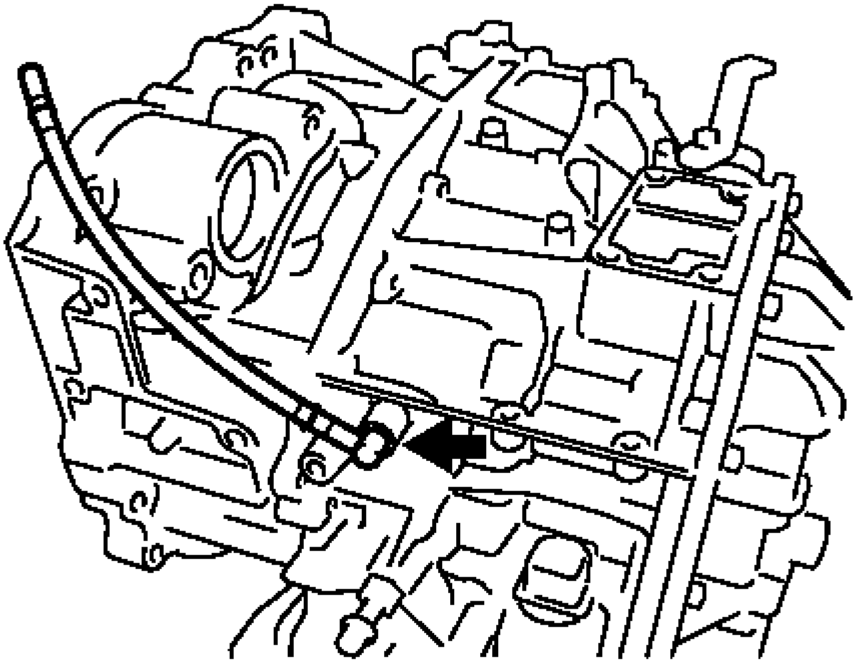

Fig. 182: Locating Breather Plug Hose
Courtesy of TOYOTA MOTOR SALES, U.S.A., INC.

    b. Using a screwdriver, remove the No. 1 breather plug (ATM) and No. 2 breather plug (ATM) from the breather plug hose.

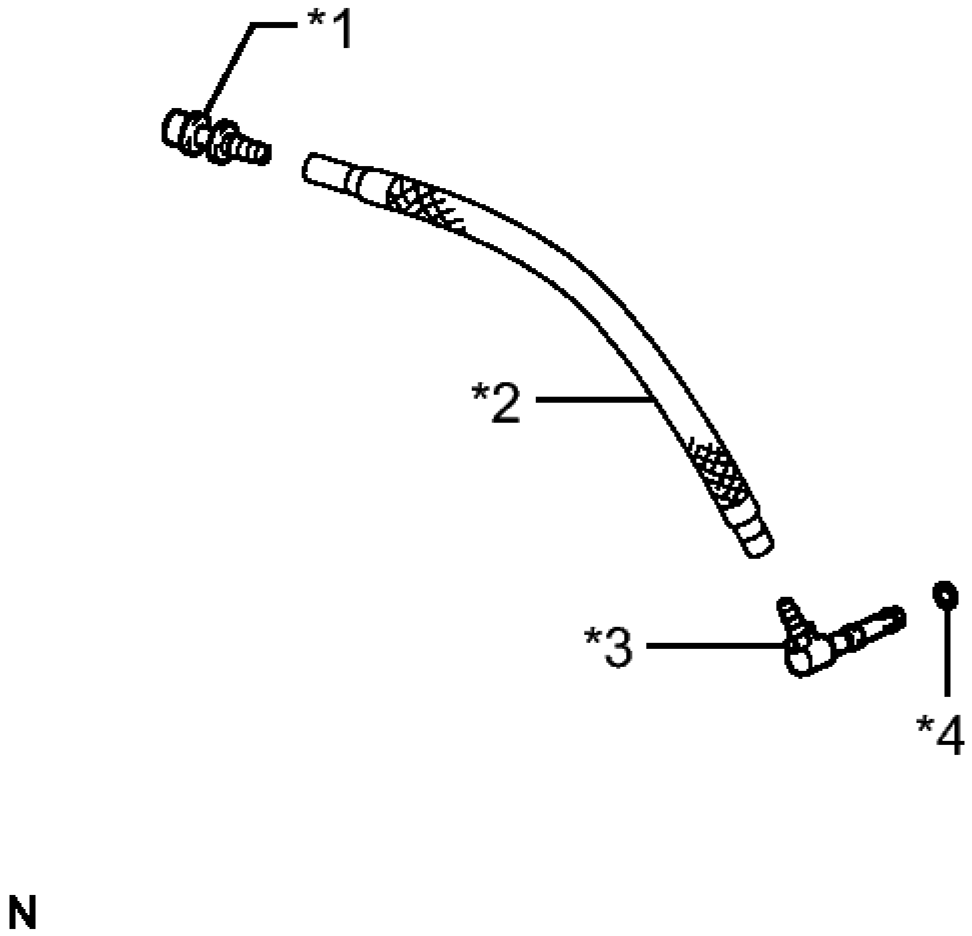

Fig. 183: Identifying Breather Plug Hose Components
Courtesy of TOYOTA MOTOR SALES, U.S.A., INC.

TEXT IN ILLUSTRATION

*1	No. 1 Breather Plug (ATM)
*2	Breather Plug Hose
*3	No. 2 Breather Plug (ATM)
*4	O-ring

c. Using a screwdriver, remove the O-ring from the No. 2 breather plug (ATM).

2. **REMOVE PARK/NEUTRAL POSITION SWITCH ASSEMBLY**

a. Remove the nut, washer and control shaft lever from the control shaft.

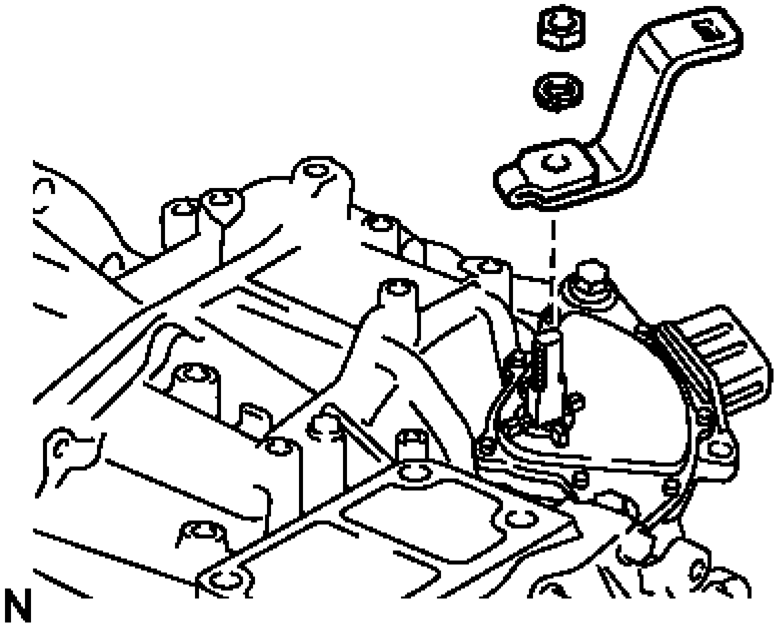

Fig. 184: Identifying Nut, Washer And Control Shaft Lever
Courtesy of TOYOTA MOTOR SALES, U.S.A., INC.

b. Remove the 2 bolts and park/neutral position switch assembly from the transaxle case.

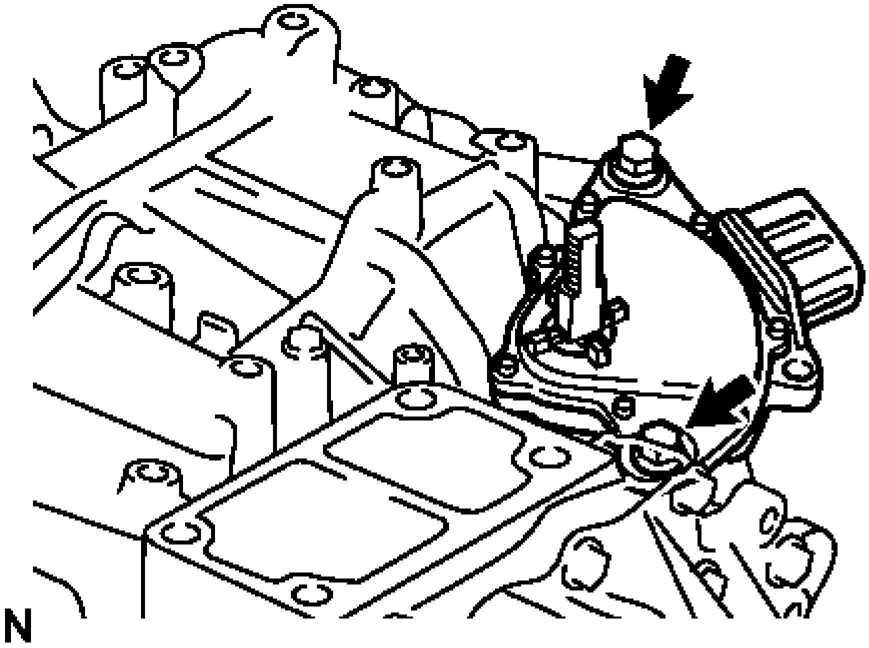

Fig. 185: Locating Park/Neutral Position Switch Assembly Bolts
Courtesy of TOYOTA MOTOR SALES, U.S.A., INC.

NOTE: **Before removing the park/neutral position switch, remove any dirt or rust on the installation portion of the control shaft. Be sure to remove the switch straight along the shaft while being careful not to deform the plate spring that supports the shaft. If the plate spring is deformed, the park/neutral position switch cannot be reinstalled correctly.**

3. **REMOVE OIL COOLER TUBE UNION (OUTLET OIL COOLER UNION)**
    a. Remove the oil cooler tube union (outlet oil cooler union) from the transaxle case.

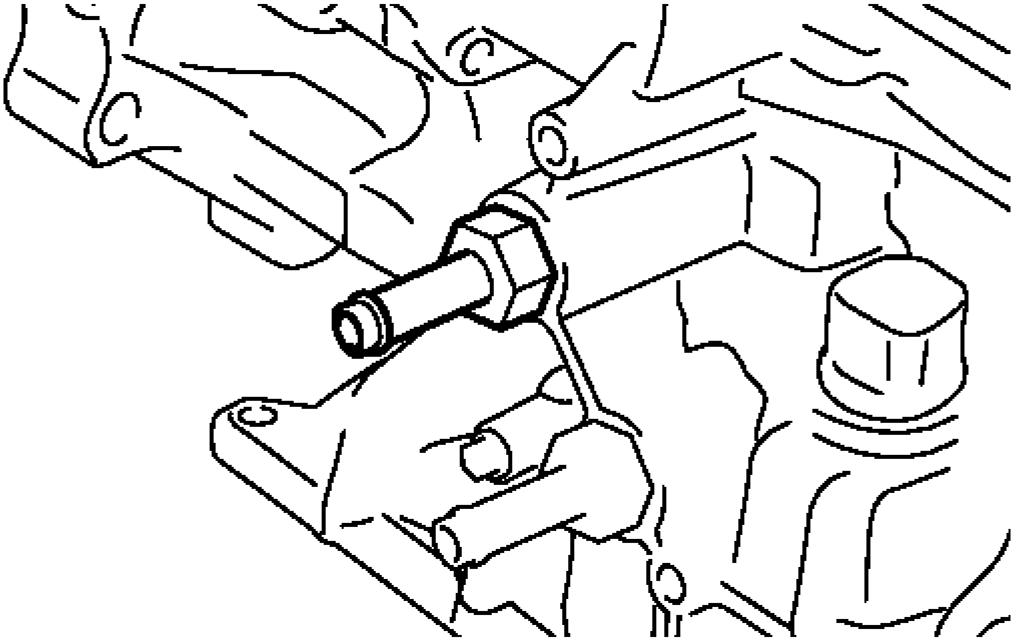

Fig. 186: Identifying Oil Cooler Tube Union (Outlet Oil Cooler Union)
Courtesy of TOYOTA MOTOR SALES, U.S.A., INC.

b. Remove the O-ring from the oil cooler tube union (outlet oil cooler union).

4. **REMOVE OIL COOLER TUBE UNION (INLET OIL COOLER UNION)**
   a. Remove the oil cooler tube union (inlet oil cooler union) from the transaxle case.

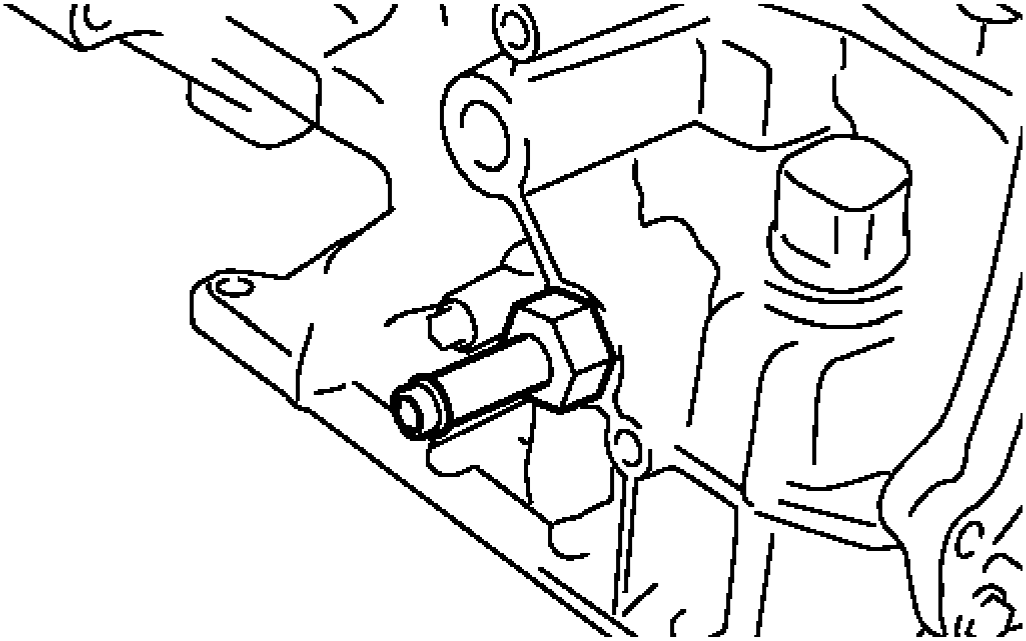

Fig. 187: Identifying Oil Cooler Tube Union (Inlet Oil Cooler Union)
Courtesy of TOYOTA MOTOR SALES, U.S.A., INC.

b. Remove the O-ring from the oil cooler tube union (inlet oil cooler union).

5. **REMOVE NO. 1 TRANSAXLE CASE PLUG**
   a. Remove the 3 No. 1 transaxle case plugs from the transaxle case.

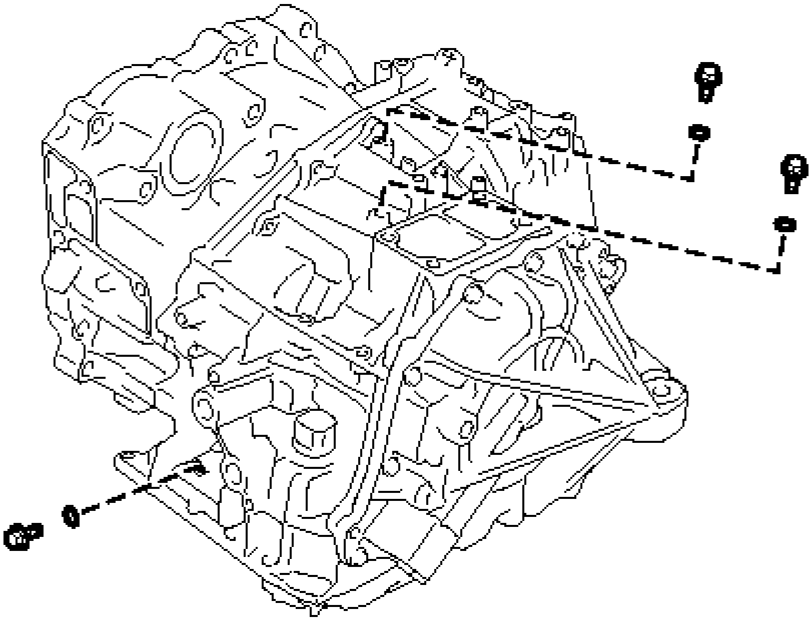

Fig. 188: Identifying 3 No. 1 Transaxle Case Plugs Of Transaxle Case
Courtesy of TOYOTA MOTOR SALES, U.S.A., INC.

   b. Using a screwdriver, remove the 3 O-rings from the 3 No. 1 transaxle case plugs.
   c. Using a hexagon socket wrench (6 mm), remove the 3 hexagon bolts from the transaxle housing.

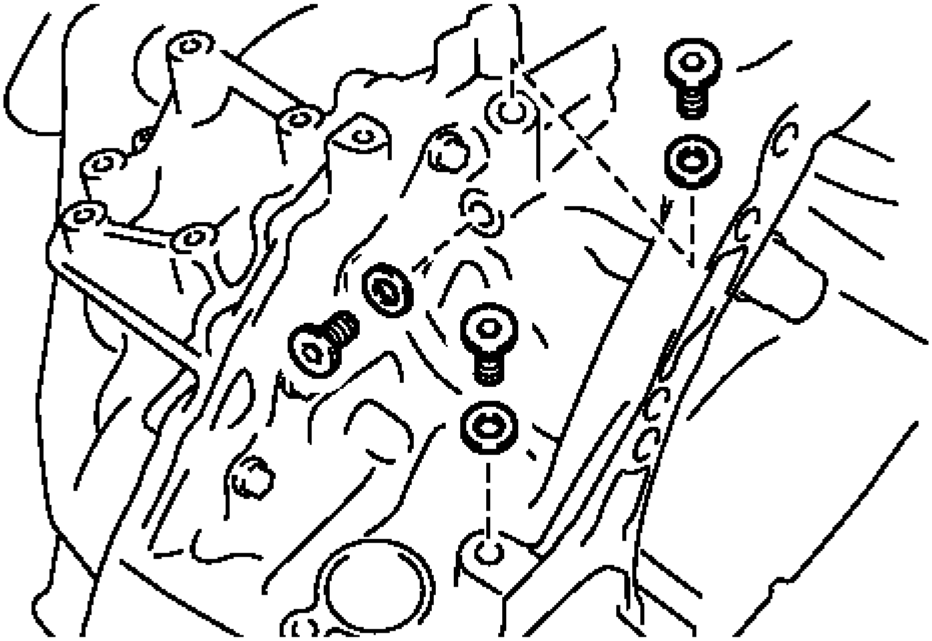

Fig. 189: Identifying Gaskets And Hexagon Bolts
Courtesy of TOYOTA MOTOR SALES, U.S.A., INC.

d. Remove the gasket from each of the 3 hexagon bolts.

6. **SUPPORT AUTOMATIC TRANSAXLE ASSEMBLY**
   a. Support the transaxle assembly on wooden blocks.

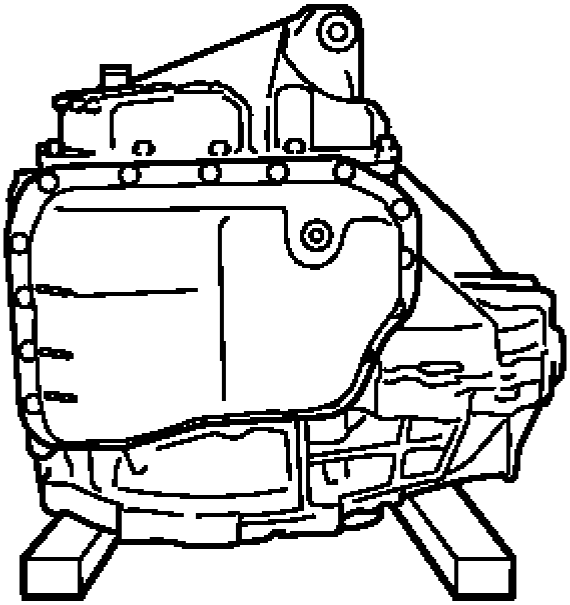

Fig. 190: Securing Transaxle Assembly On Wooden Blocks
Courtesy of TOYOTA MOTOR SALES, U.S.A., INC.

7. **REMOVE AUTOMATIC TRANSAXLE OIL PAN SUB-ASSEMBLY**
   a. Using a hexagon socket wrench (6 mm), remove the overflow plug from the automatic transaxle oil pan sub-assembly.

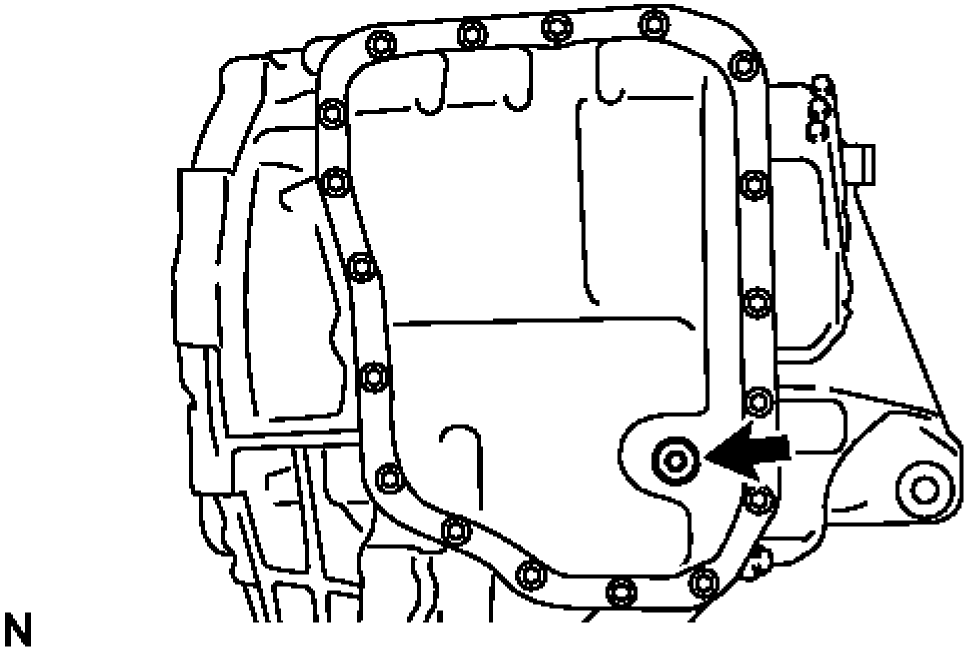

Fig. 191: Identifying Overflow Plug
Courtesy of TOYOTA MOTOR SALES, U.S.A., INC.

   b. Remove the gasket from the overflow plug.
   c. Using a hexagon socket wrench (6 mm), remove the No. 1 transmission oil filler tube from the automatic transaxle assembly.

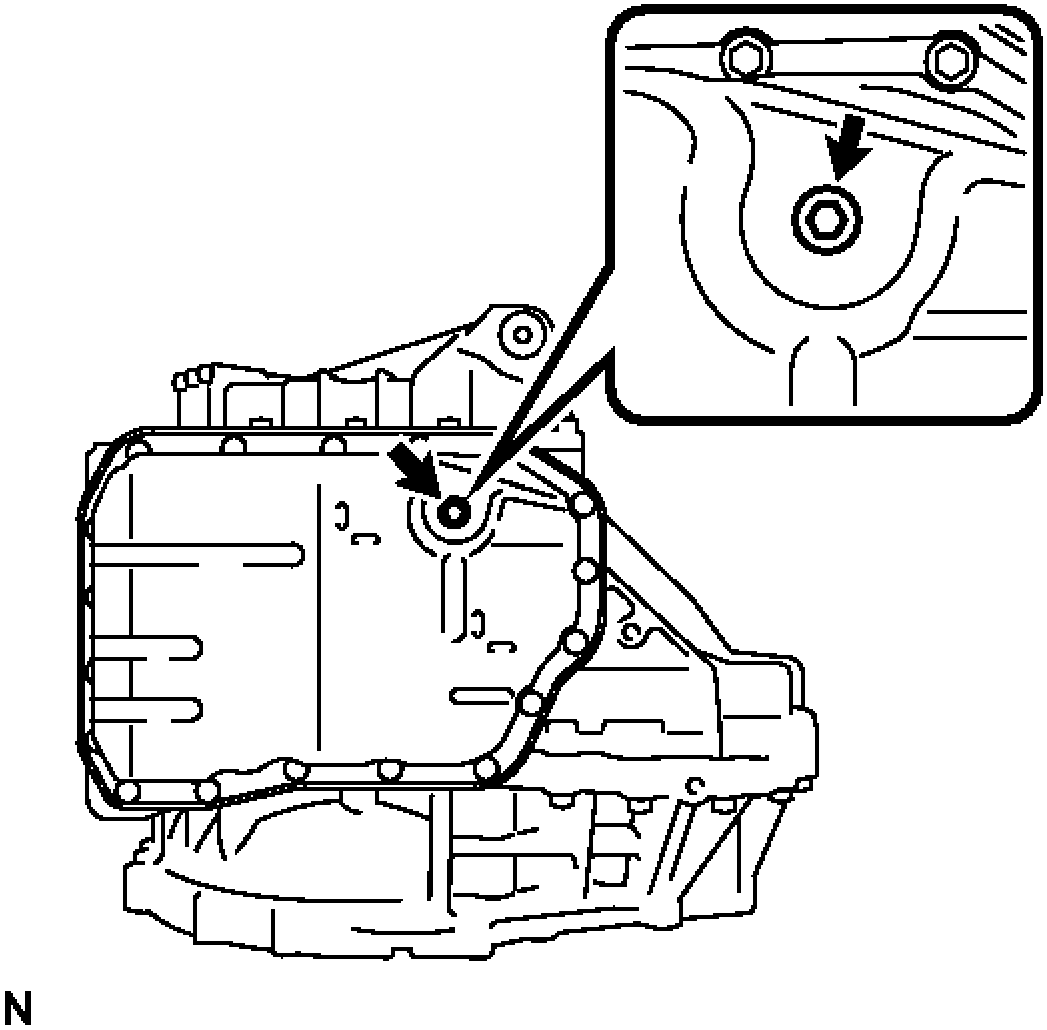

Fig. 192: Locating No. 1 Oil Filler Tube
Courtesy of TOYOTA MOTOR SALES, U.S.A., INC.

d. Remove the 18 bolts, automatic transaxle oil pan sub-assembly and automatic transaxle oil pan gasket from the automatic transaxle assembly.

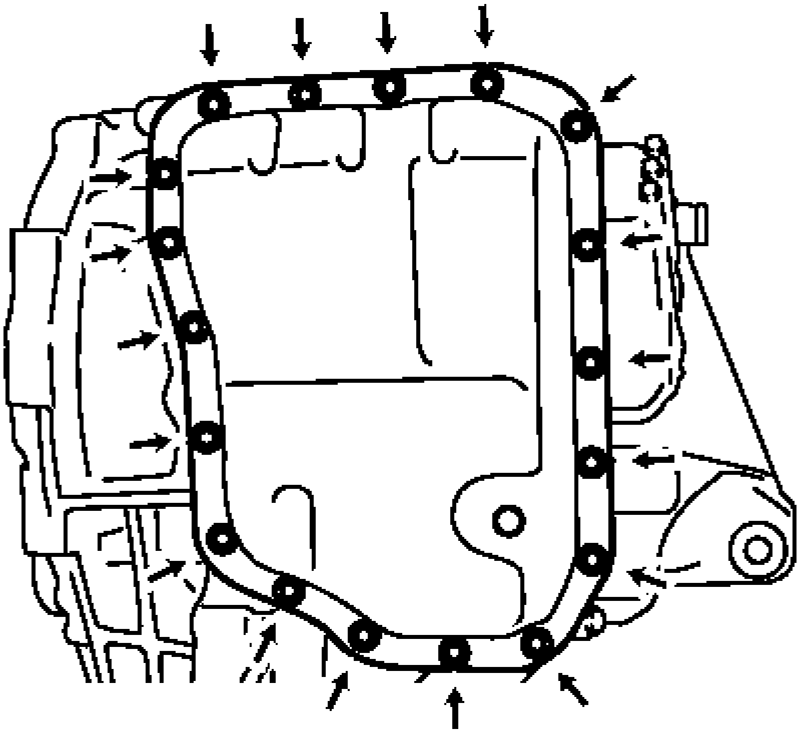

Fig. 193: Identifying Oil Pan Bolts
Courtesy of TOYOTA MOTOR SALES, U.S.A., INC.

e. Remove the 2 transmission oil cleaner magnets from the automatic transsaxle oil pan sub-assembly.

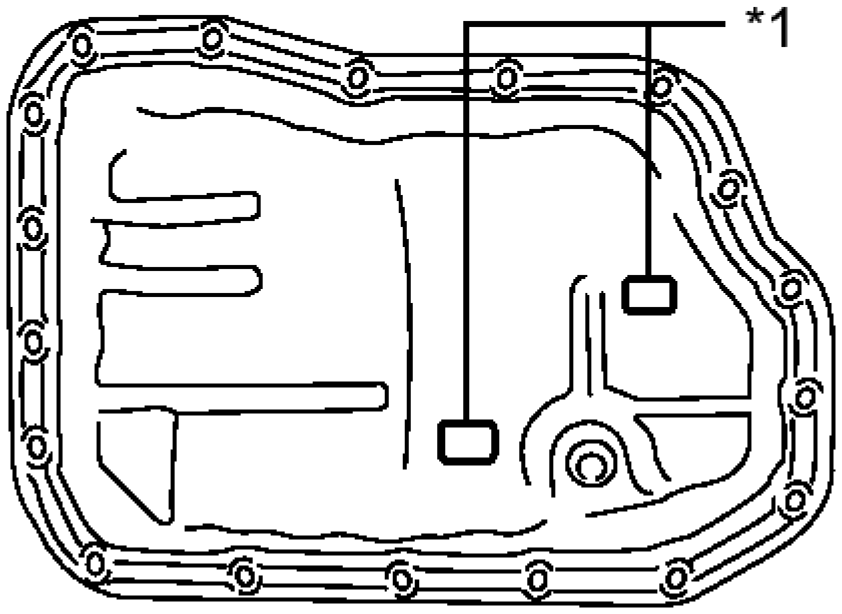

Fig. 194: Identifying Oil Pan Magnet

Courtesy of TOYOTA MOTOR SALES, U.S.A., INC.

TEXT IN ILLUSTRATION

*1	Magnet

8. **INSPECT TRANSMISSION OIL CLEANER MAGNET** See step 1
9. **REMOVE VALVE BODY OIL STRAINER ASSEMBLY**
   a. Remove the 2 bolts and oil strainer assembly from the valve body assembly.

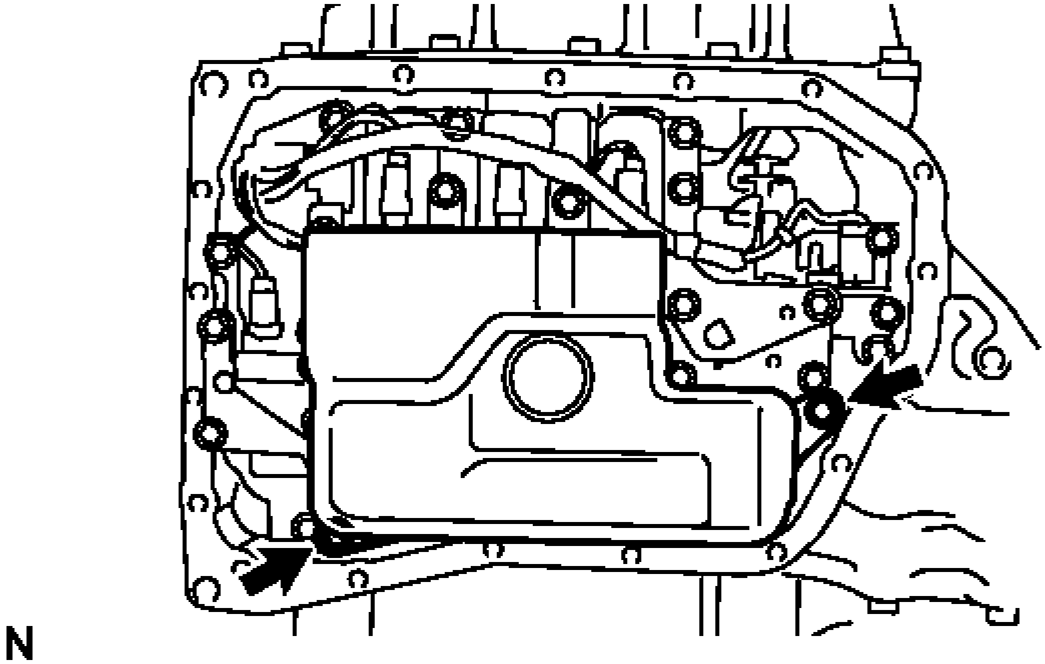

Fig. 195: Identifying Oil Strainer Bolts
Courtesy of TOYOTA MOTOR SALES, U.S.A., INC.

   b. Remove the O-ring from the oil strainer assembly.

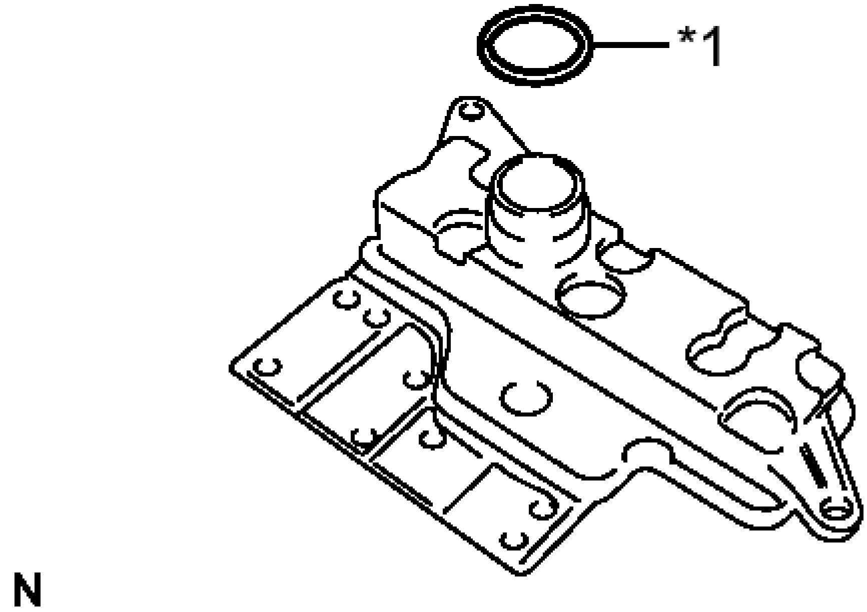

Fig. 196: Identifying Oil Strainer Assembly O-Ring
Courtesy of TOYOTA MOTOR SALES, U.S.A., INC.

TEXT IN ILLUSTRATION

*1	O-ring

10. **REMOVE TRANSMISSION VALVE BODY ASSEMBLY**
    a. Remove the 11 bolts and valve body assembly from the transaxle case.

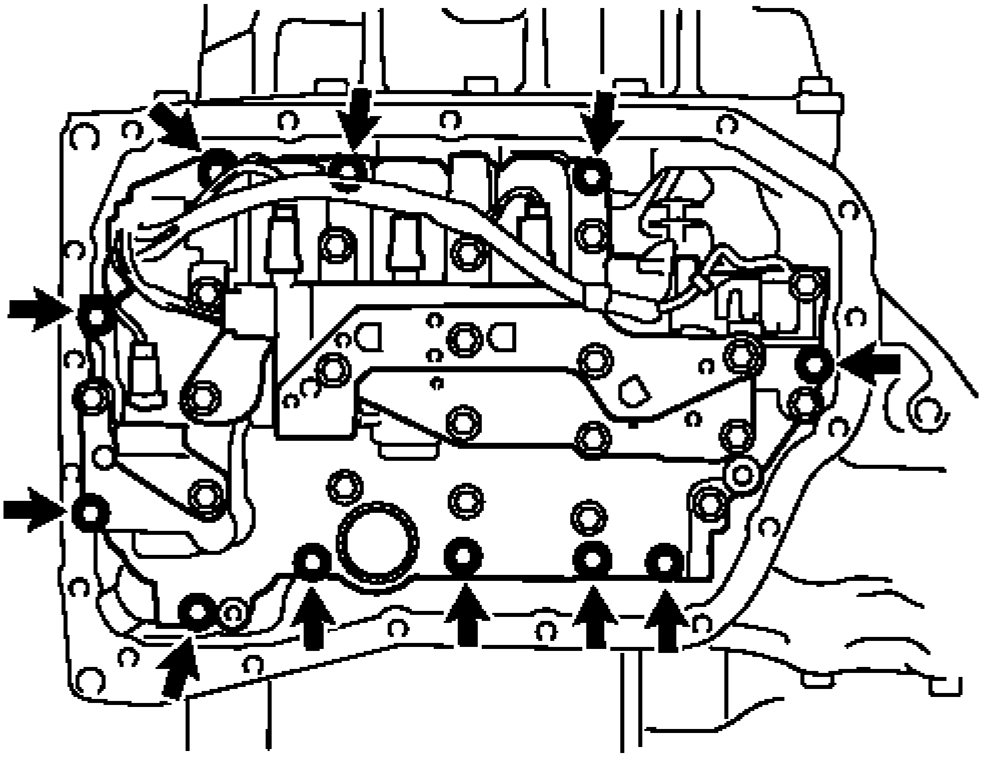

Fig. 197: Identifying Transmission Valve Body Assembly Bolts
Courtesy of TOYOTA MOTOR SALES, U.S.A., INC.

NOTE: **When removing the transmission valve body assembly, be careful not to allow the transmission revolution sensor and the transaxle case to interfere with each other.**

11. **REMOVE TRANSAXLE CASE GASKET**
    a. Remove the 2 gaskets from the transaxle case.

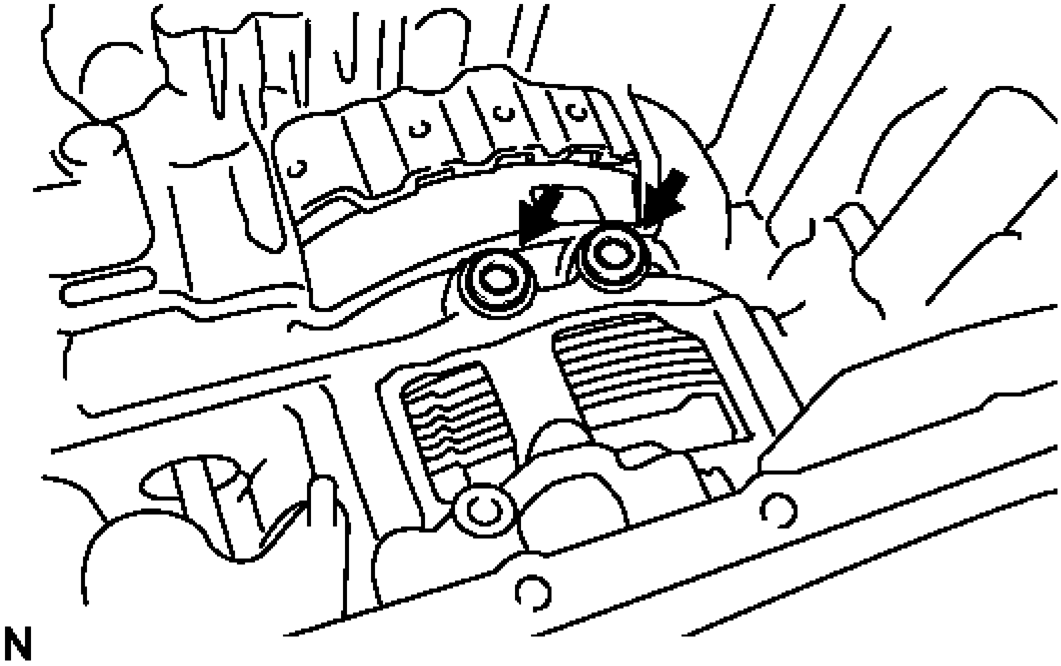

Fig. 198: Locating Transaxle Case Gasket
Courtesy of TOYOTA MOTOR SALES, U.S.A., INC.

12. **INSPECT INPUT SHAFT SUB-ASSEMBLY** See step 2
13. **REMOVE REAR TRANSAXLE COVER SUB-ASSEMBLY**
    a. Remove the refill plug from the rear transaxle cover sub-assembly.

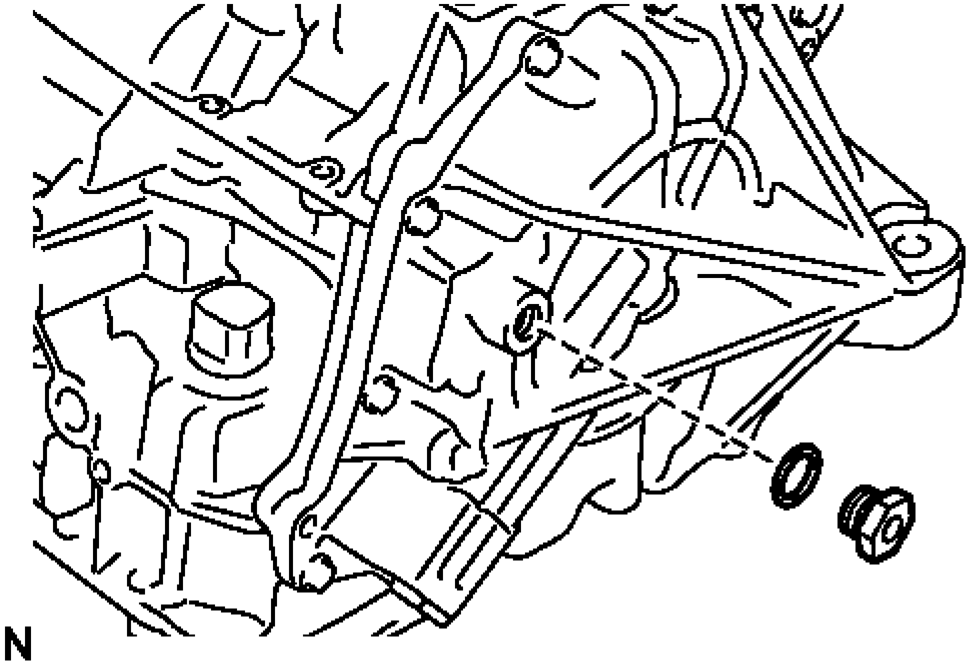

Fig. 199: Identifying Gasket And Refill Plug
Courtesy of TOYOTA MOTOR SALES, U.S.A., INC.

b. Remove the gasket from the refill plug.
c. Remove the 2 No. 1 automatic transaxle case plugs from the rear transaxle cover sub-assembly.

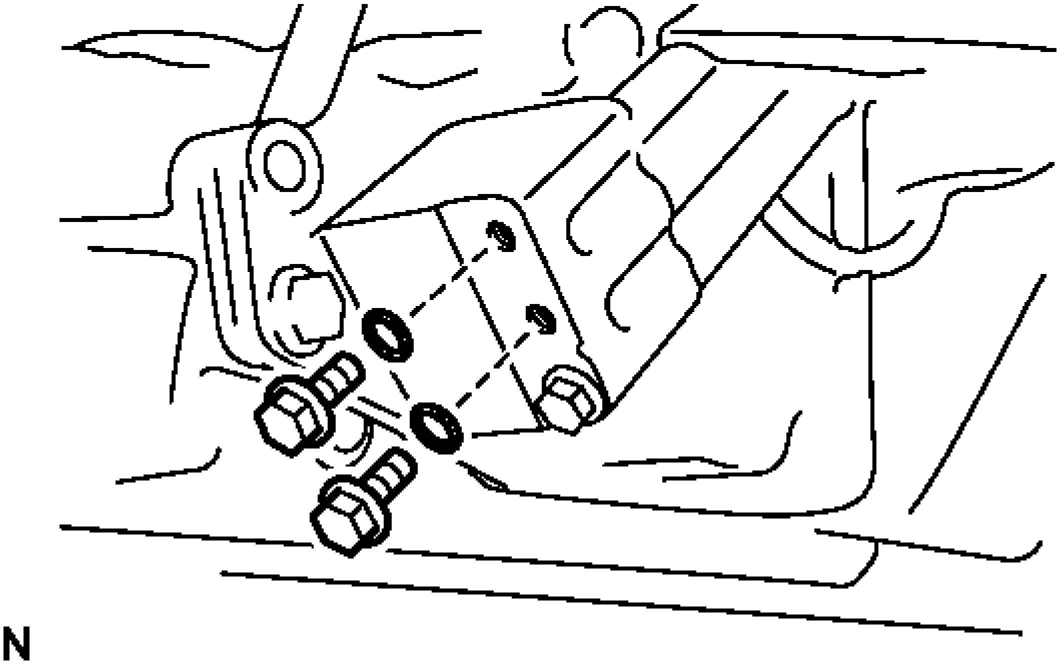

Fig. 200: Identifying No. 1 Automatic Transaxle Case Plugs
Courtesy of TOYOTA MOTOR SALES, U.S.A., INC.

d. Using a screwdriver, remove the 2 O-rings from the 2 No. 1 automatic transaxle case plugs.
e. Remove the 14 bolts from the rear transaxle cover sub-assembly.

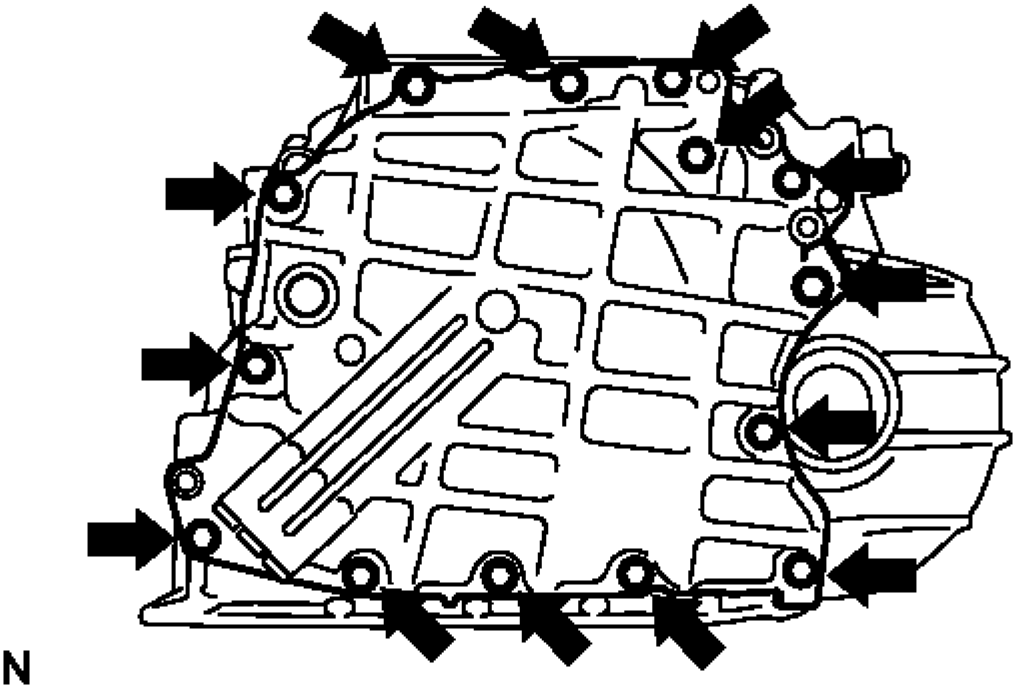

Fig. 201: Identifying Rear Transaxle Cover Sub-Assembly Bolts
Courtesy of TOYOTA MOTOR SALES, U.S.A., INC.

f. Using a brass bar and a hammer, tap on the circumference of the rear transaxle cover sub-assembly to remove the rear transaxle cover sub-assembly from the transaxle case.

g. Using a screwdriver, remove the 3 O-rings from the transaxle case.

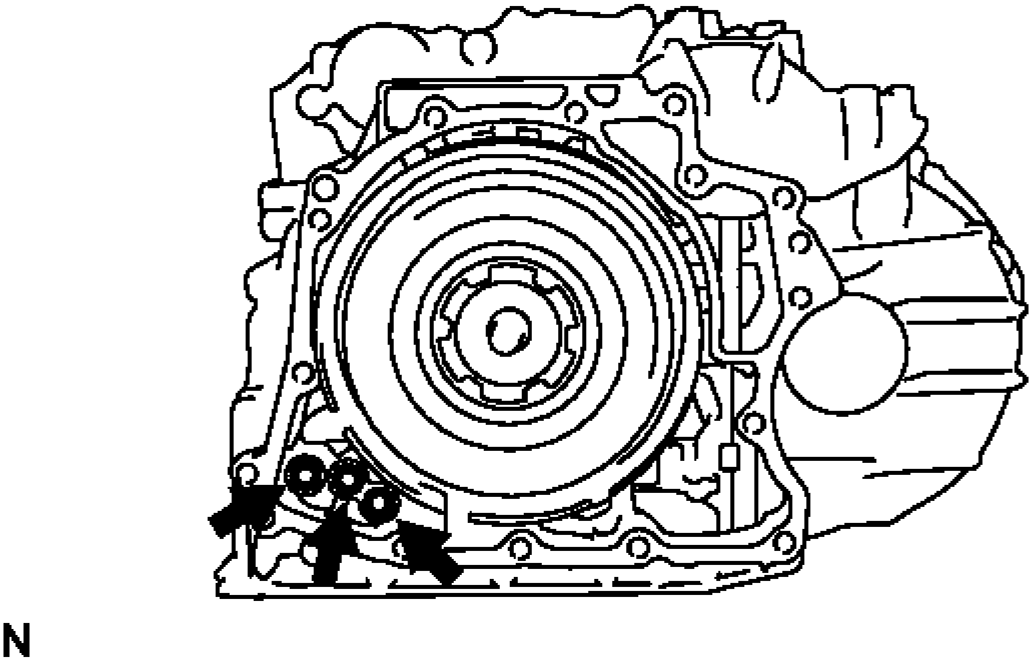

Fig. 202: Locating Transaxle Case Bolts
Courtesy of TOYOTA MOTOR SALES, U.S.A., INC.

h. Using a screwdriver, remove the 2 oil seal rings from the rear transaxle cover sub-assembly.

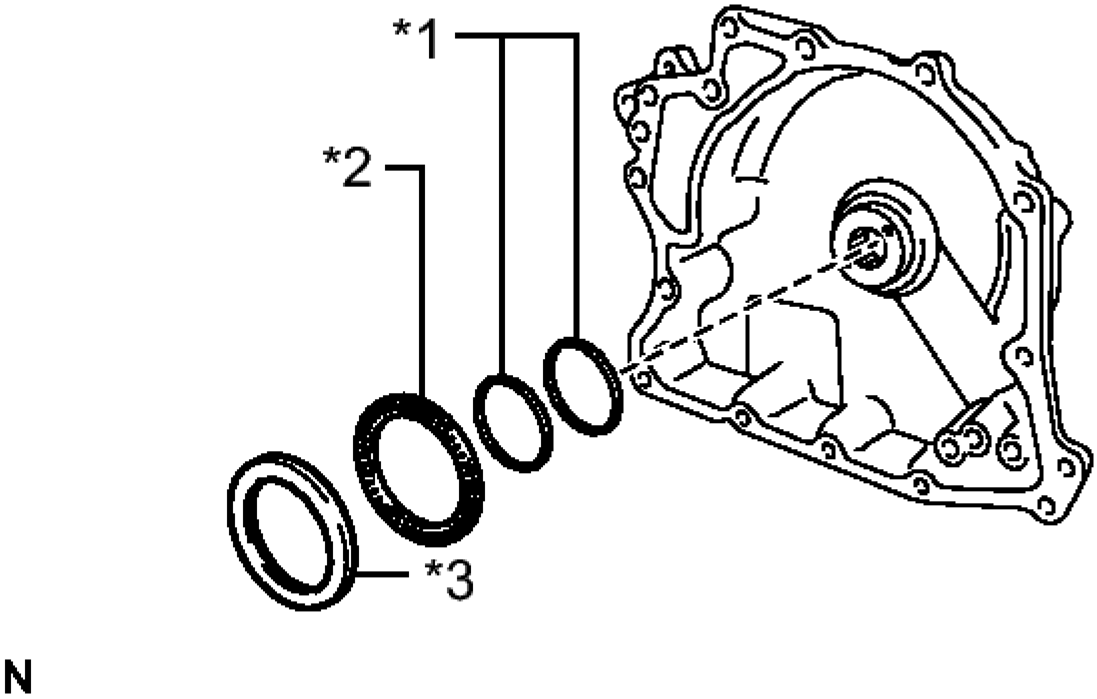

Fig. 203: Identifying Oil Seal Ring, Thrust Needle Roller Bearing And Thrust Needle Roller Race
Courtesy of TOYOTA MOTOR SALES, U.S.A., INC.

TEXT IN ILLUSTRATION

*1	Oil Seal Ring
*2	Thrust Needle Roller Bearing
*3	Thrust Needle Roller Race

i. Remove the thrust needle roller bearing and thrust needle roller race from the rear transaxle cover sub-assembly.

j. Using a "TORX" socket wrench (T30), remove the 2 "TORX" screws and rear transaxle cover plate from the rear transaxle cover sub-assembly.

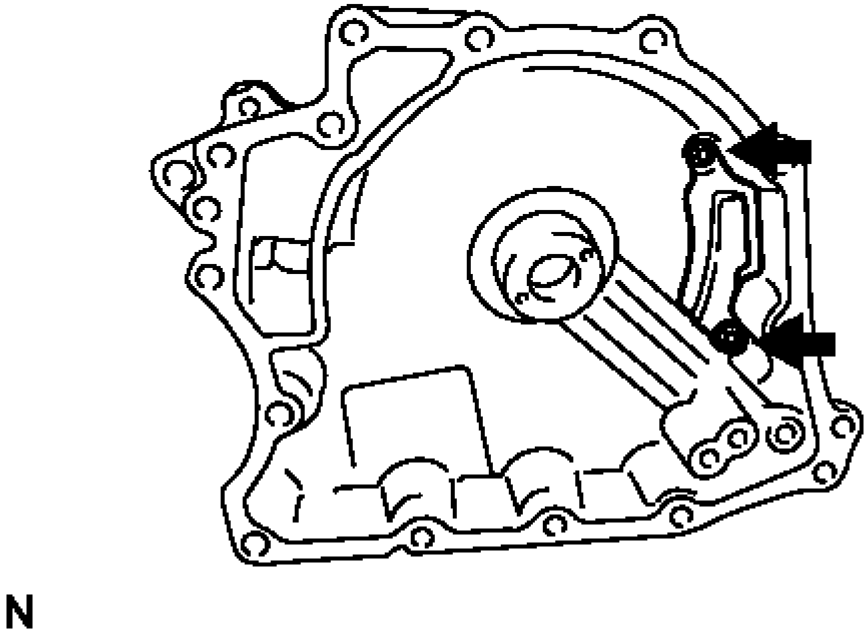

Fig. 204: Locating Rear Transaxle Cover Plate Screws
Courtesy of TOYOTA MOTOR SALES, U.S.A., INC.

k. Using SST, remove the needle roller bearing from the rear transaxle cover sub-assembly.

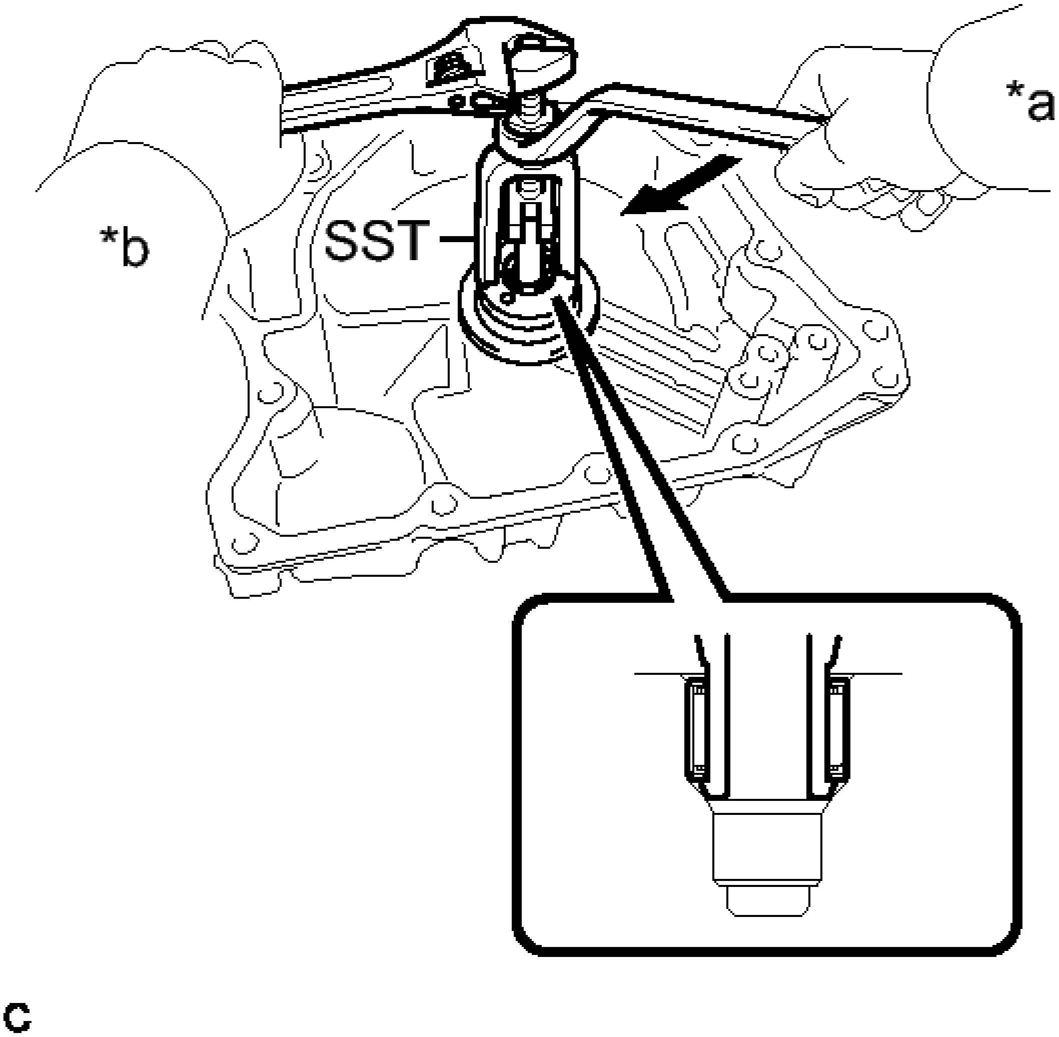

Fig. 205: Removing Needle Roller Bearing
Courtesy of TOYOTA MOTOR SALES, U.S.A., INC.

TEXT IN ILLUSTRATION

*a	Turn
*b	Hold

- **SST: 09319-60020**

14. **REMOVE DIRECT MULTIPLE DISC CLUTCH ASSEMBLY**
    a. Remove the direct multiple disc clutch assembly from the transaxle case.

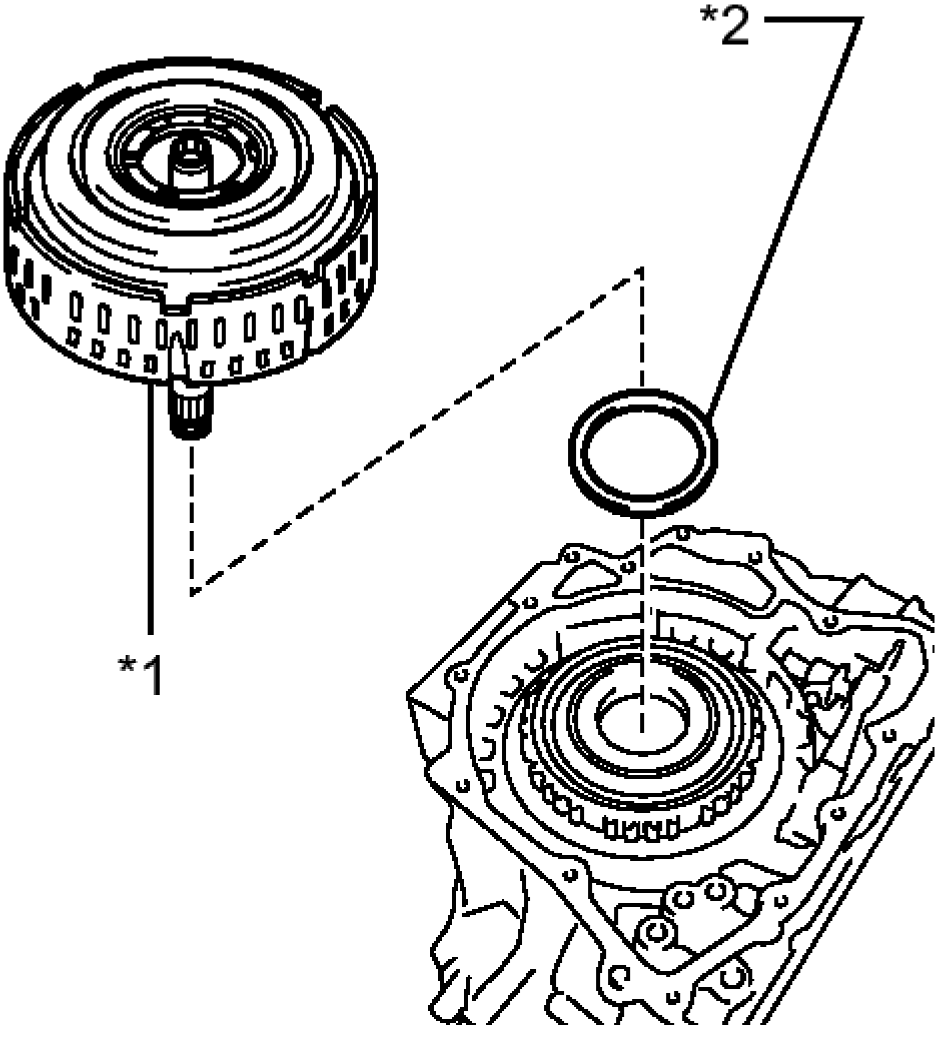

Fig. 206: Identifying Direct Multiple Disc Clutch Assembly
Courtesy of TOYOTA MOTOR SALES, U.S.A., INC.

TEXT IN ILLUSTRATION

*1	Direct Multiple Disc Clutch Assembly
*2	Thrust Needle Roller Bearing

b. Remove the thrust needle roller bearing from the direct multiple disc clutch assembly.

15. **REMOVE DIRECT MULTIPLE DISC CLUTCH SNAP RING**

a. Using a screwdriver, remove the snap ring from the direct multiple disc clutch assembly.

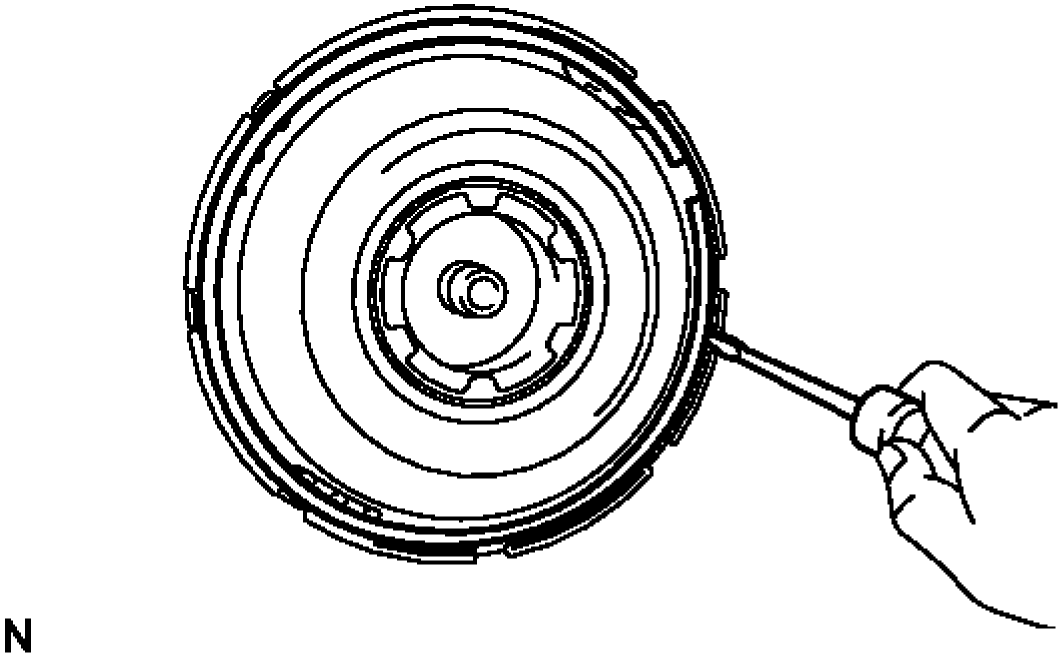

Fig. 207: Removing Snap Ring From Direct Multiple Disc Clutch Assembly
Courtesy of TOYOTA MOTOR SALES, U.S.A., INC.

b. Remove the No. 2 direct clutch piston from the direct multiple disc clutch assembly.

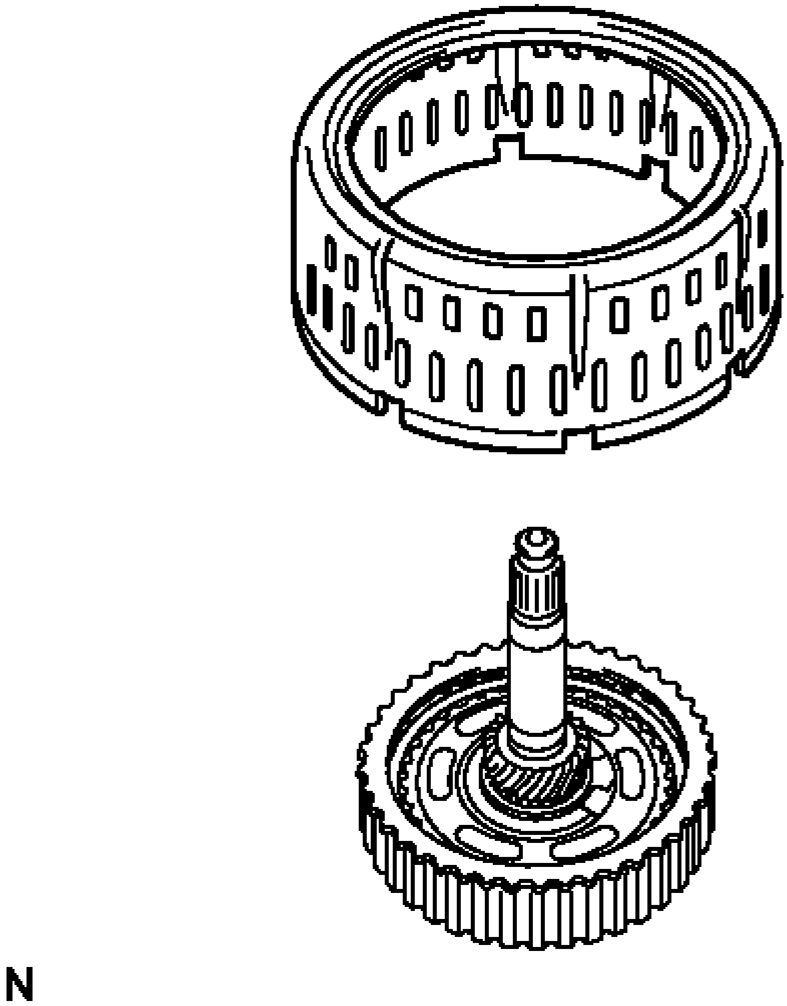

Fig. 208: Identifying No. 2 Direct Clutch Piston And Direct Multiple Disc Clutch Assembly
Courtesy of TOYOTA MOTOR SALES, U.S.A., INC.

c. Using a screwdriver, remove the intermediate shaft oil seal from the direct multiple disc clutch assembly.

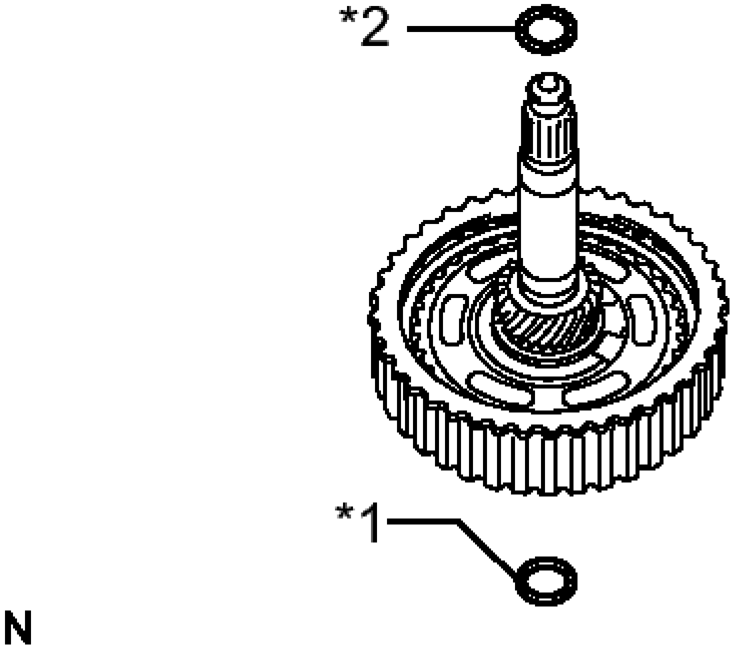

Fig. 209: Identifying Intermediate Shaft Oil Seal
Courtesy of TOYOTA MOTOR SALES, U.S.A., INC.

TEXT IN ILLUSTRATION

*1	Intermediate Shaft Oil Seal
*2	O-ring

d. Using a screwdriver, remove the O-ring from the direct multiple disc clutch assembly.

16. **REMOVE NO. 2 CLUTCH DISC**

a. Remove the clutch flange, 3 clutch discs and 3 clutch plates from the direct multiple disc clutch assembly.

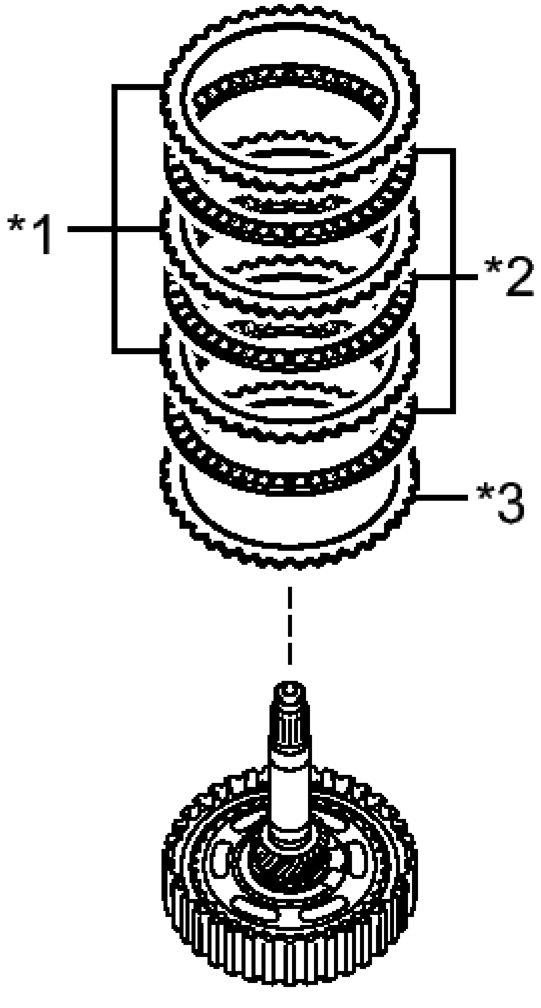

Fig. 210: Identifying Clutch Flange, Clutch Discs And Clutch Plates
Courtesy of TOYOTA MOTOR SALES, U.S.A., INC.

TEXT IN ILLUSTRATION

*1	Clutch Plate
*2	Clutch Disc
*3	Clutch Flange

17. **INSPECT NO. 2 CLUTCH DISC** See step 3
18. **REMOVE REAR PLANETARY SUN GEAR ASSEMBLY**
    a. Using a snap ring expander, remove the snap ring from the direct multiple disc clutch assembly.

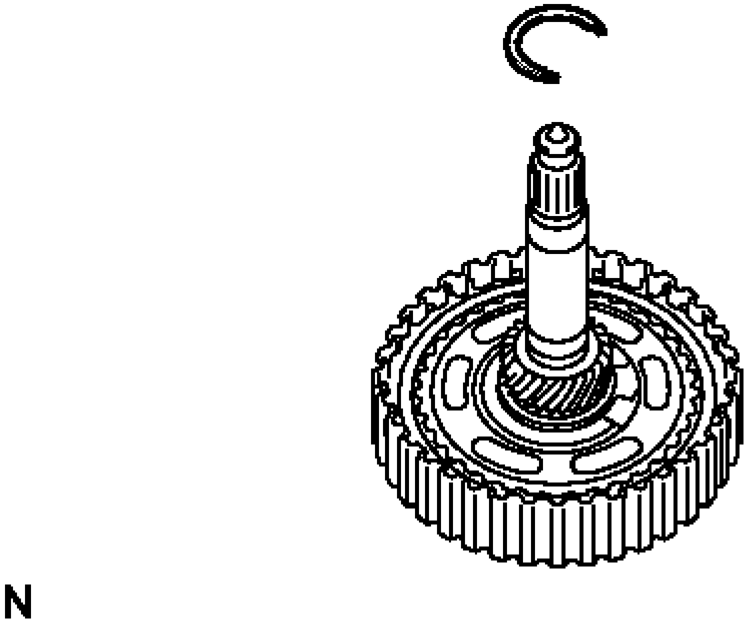

Fig. 211: Identifying Snap Ring
Courtesy of TOYOTA MOTOR SALES, U.S.A., INC.

b. Remove the rear planetary sun gear assembly from the direct multiple disc clutch assembly.

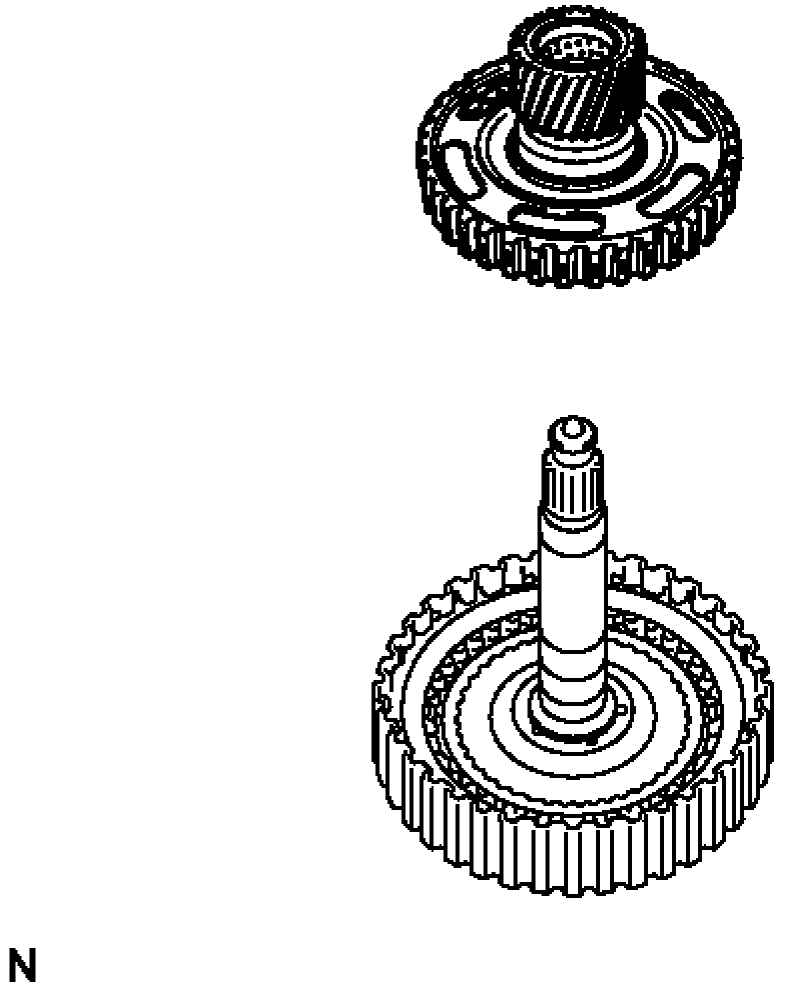

Fig. 212: Identifying Rear Planetary Sun Gear And Direct Multiple Disc Clutch Assembly
Courtesy of TOYOTA MOTOR SALES, U.S.A., INC.

c. Remove the thrust needle roller bearing and thrust needle roller race from the direct multiple disc clutch assembly.

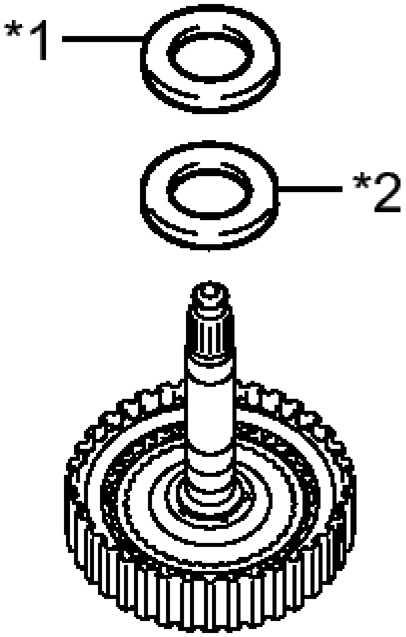

Fig. 213: Identifying Thrust Needle Roller Bearing And Thrust Needle Roller Race
Courtesy of TOYOTA MOTOR SALES, U.S.A., INC.

TEXT IN ILLUSTRATION

*1	Thrust Needle Roller Bearing
*2	Thrust Needle Roller Race

19. **INSPECT REAR PLANETARY SUN GEAR ASSEMBLY** See step 8
20. **REMOVE NO. 1 CLUTCH DISC**
    a. Using 2 screwdrivers, remove the 2 snap rings from the direct multiple disc clutch assembly.

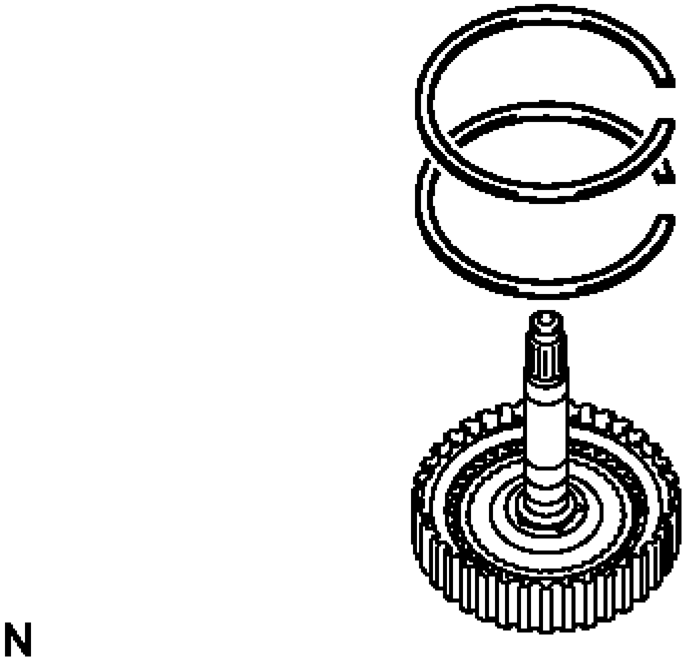

Fig. 214: Identifying Snap Rings
Courtesy of TOYOTA MOTOR SALES, U.S.A., INC.

b. Remove the clutch flange, 4 clutch discs and 4 clutch plates from the direct multiple disc clutch assembly.

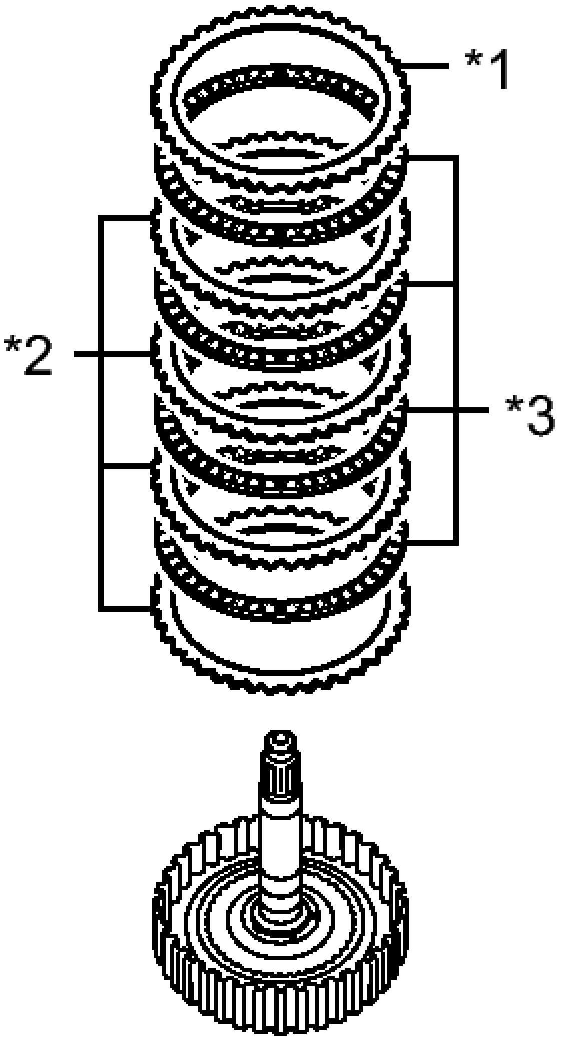

Fig. 215: Identifying Clutch Flange, Clutch Discs And Clutch Plates
Courtesy of TOYOTA MOTOR SALES, U.S.A., INC.

TEXT IN ILLUSTRATION

*1	Clutch Flange
*2	Clutch Plate
*3	Clutch Disc

21. **INSPECT NO. 1 CLUTCH DISC** See step 5
22. **REMOVE TRANSAXLE HOUSING**
    a. Remove the 20 bolts from the transaxle housing.

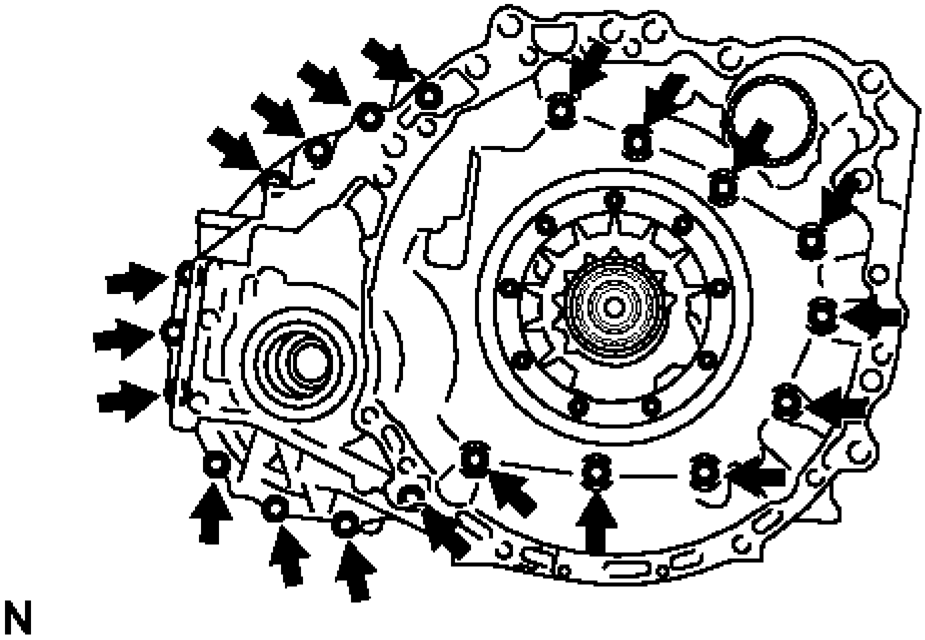

Fig. 216: Locating Transaxle Housing Bolts
Courtesy of TOYOTA MOTOR SALES, U.S.A., INC.

b. Using a brass bar and a hammer, tap on the circumference of the transaxle housing to remove the transaxle housing from the transaxle case.

23. **REMOVE COUNTER DRIVEN GEAR FRONT TAPERED ROLLER BEARING OUTER RACE**

a. Using SST, remove the counter driven gear front tapered roller bearing outer race and shim from the transaxle housing.

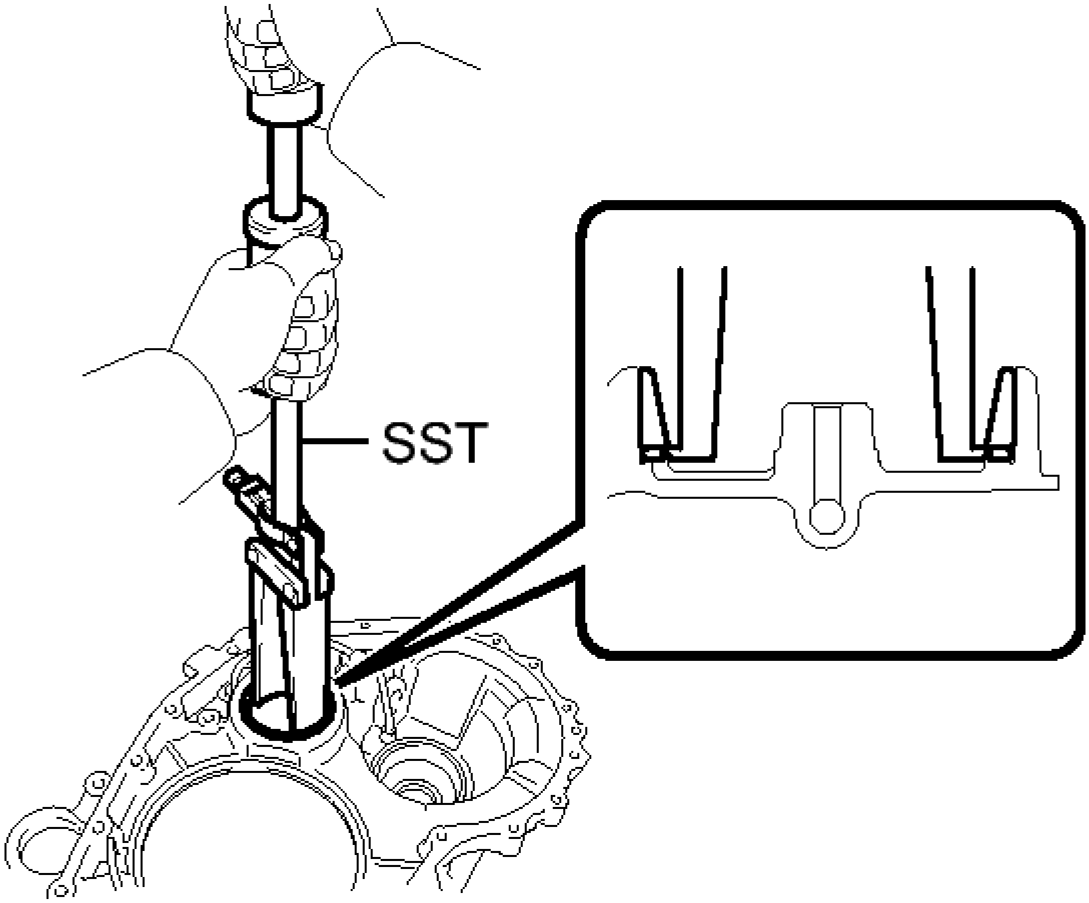

Fig. 217: Identifying Counter Driven Gear Front Tapered Roller Bearing Outer Race
Courtesy of TOYOTA MOTOR SALES, U.S.A., INC.

- **SST: 09308-00010**

24. **REMOVE DIFFERENTIAL GEAR LUBE APPLY TUBE**
    a. Remove the bolt, clamp and differential gear lube apply tube from the transaxle housing.

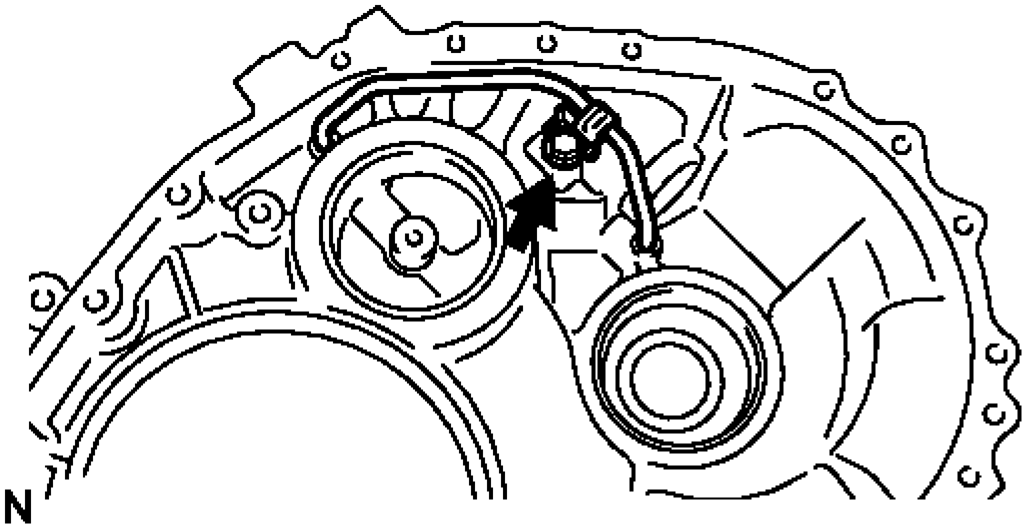

Fig. 218: Locating Differential Gear Lube Apply Tube Clamp And Bolt
Courtesy of TOYOTA MOTOR SALES, U.S.A., INC.

25. **REMOVE FRONT OIL PUMP ASSEMBLY**
    a. Remove the 7 bolts and front oil pump from the transaxle case.

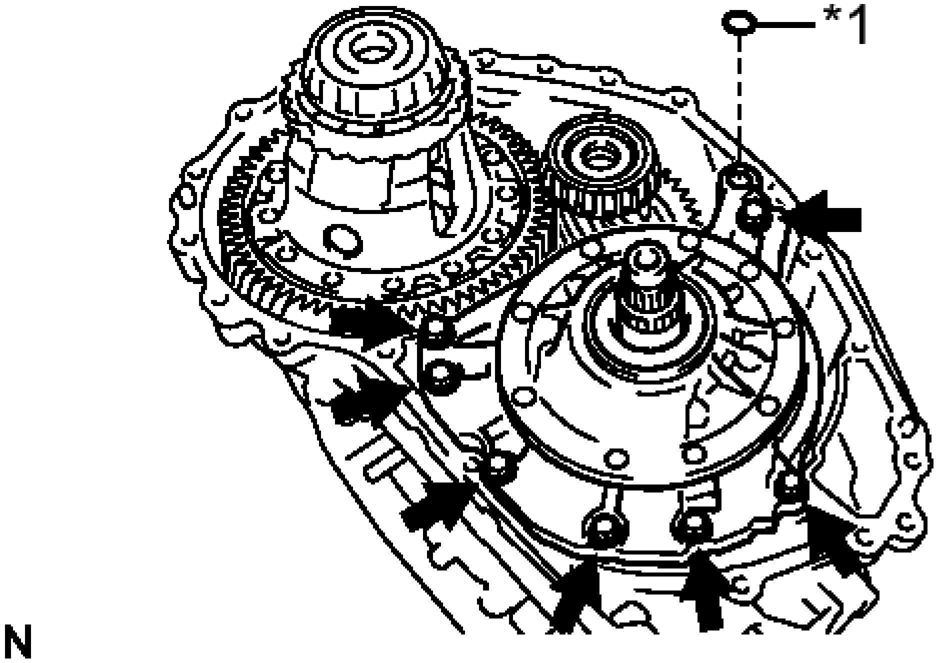

Fig. 219: Identifying Front Oil Pump And Gear Body Sub-Assembly Bolts And O-Ring

Courtesy of TOYOTA MOTOR SALES, U.S.A., INC.

b. Remove the O-ring from the front oil pump assembly.

TEXT IN ILLUSTRATION

*1	O-ring

c. Remove the thrust needle roller bearing and thrust needle roller race from the carrier lock nut.

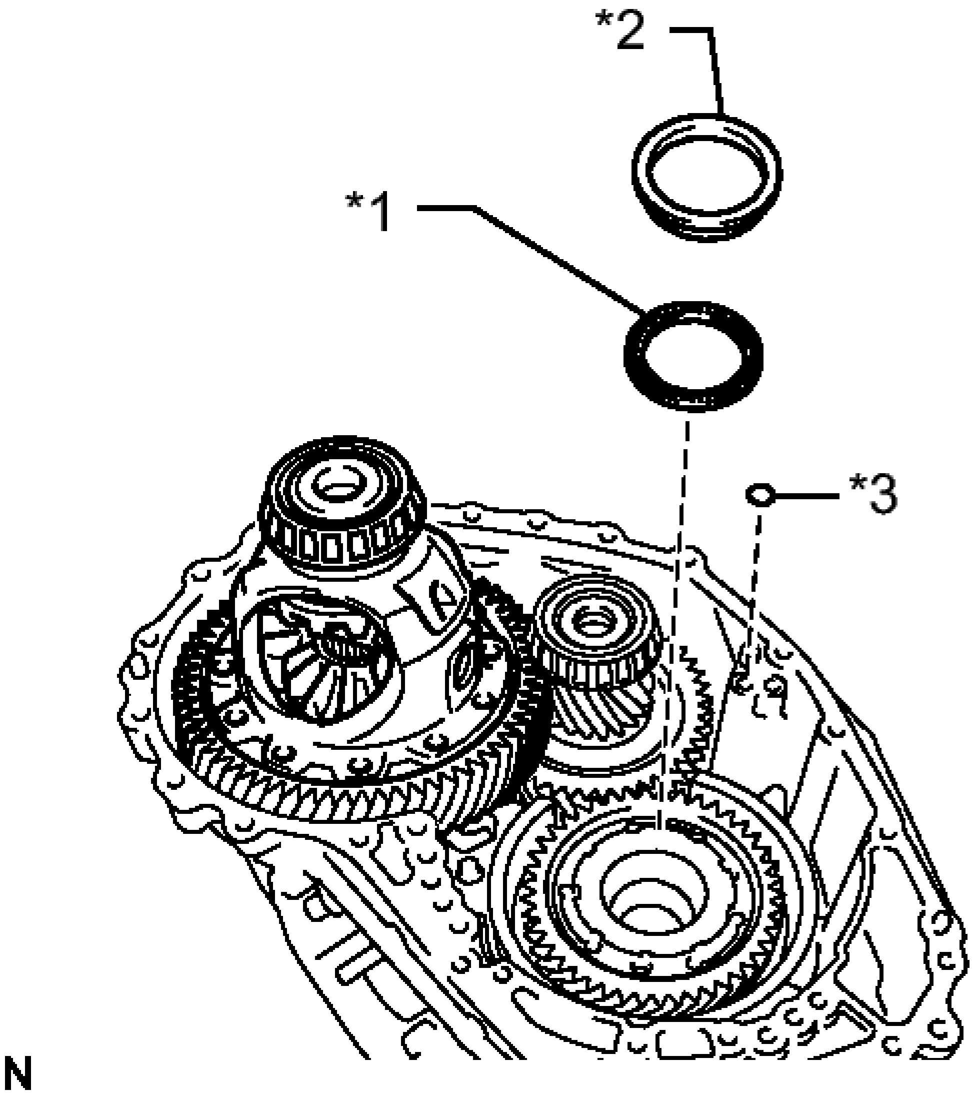

Fig. 220: Identifying Thrust Needle Roller Bearing, Thrust Needle Roller Race And O-Ring
Courtesy of TOYOTA MOTOR SALES, U.S.A., INC.

d. Remove the O-ring from the transaxle case.

TEXT IN ILLUSTRATION

*1	Thrust Needle Roller Bearing
*2	Thrust Needle Roller Race
*3	O-ring

26. **REMOVE FRONT OIL PUMP BODY O-RING**
    a. Remove the O-ring from the front oil pump body sub-assembly.

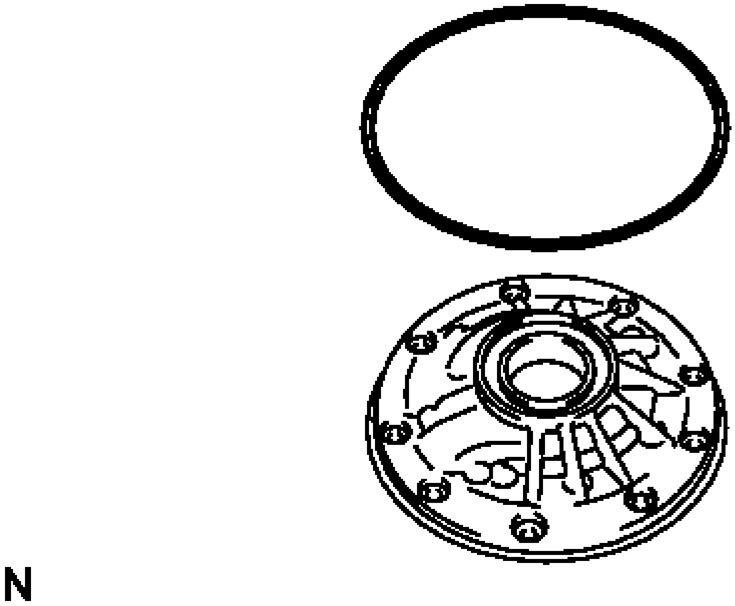

Fig. 221: Identifying O-Ring And Oil Pump Body
Courtesy of TOYOTA MOTOR SALES, U.S.A., INC.

27. **REMOVE NO. 3 BRAKE DISC**
    a. Using a screwdriver, remove the snap ring from the oil pump assembly.

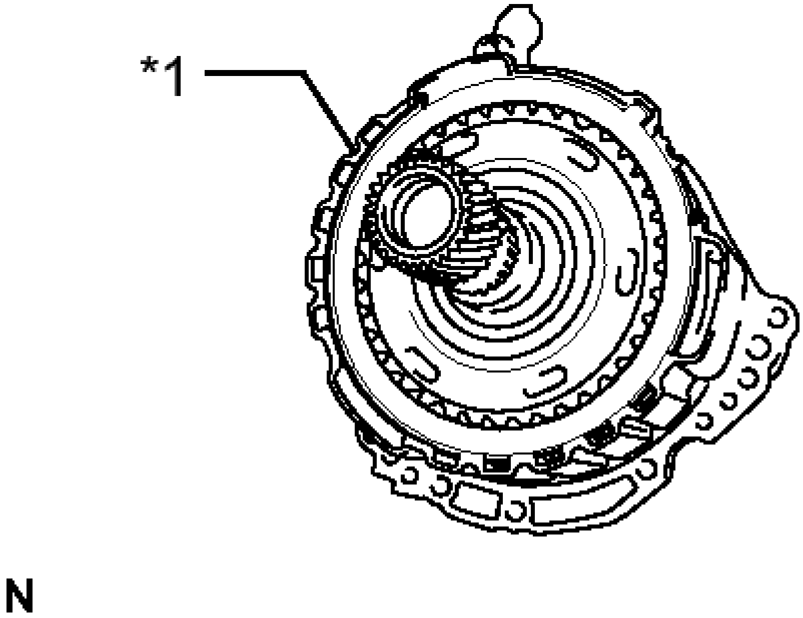

Fig. 222: Identifying No. 3 Brake Disc Snap Ring

Courtesy of TOYOTA MOTOR SALES, U.S.A., INC.

TEXT IN ILLUSTRATION

*1	Snap Ring

b. Remove the 2 No. 3 brake flanges, 3 No. 3 brake discs and 2 No. 3 brake plates from the oil pump assembly.

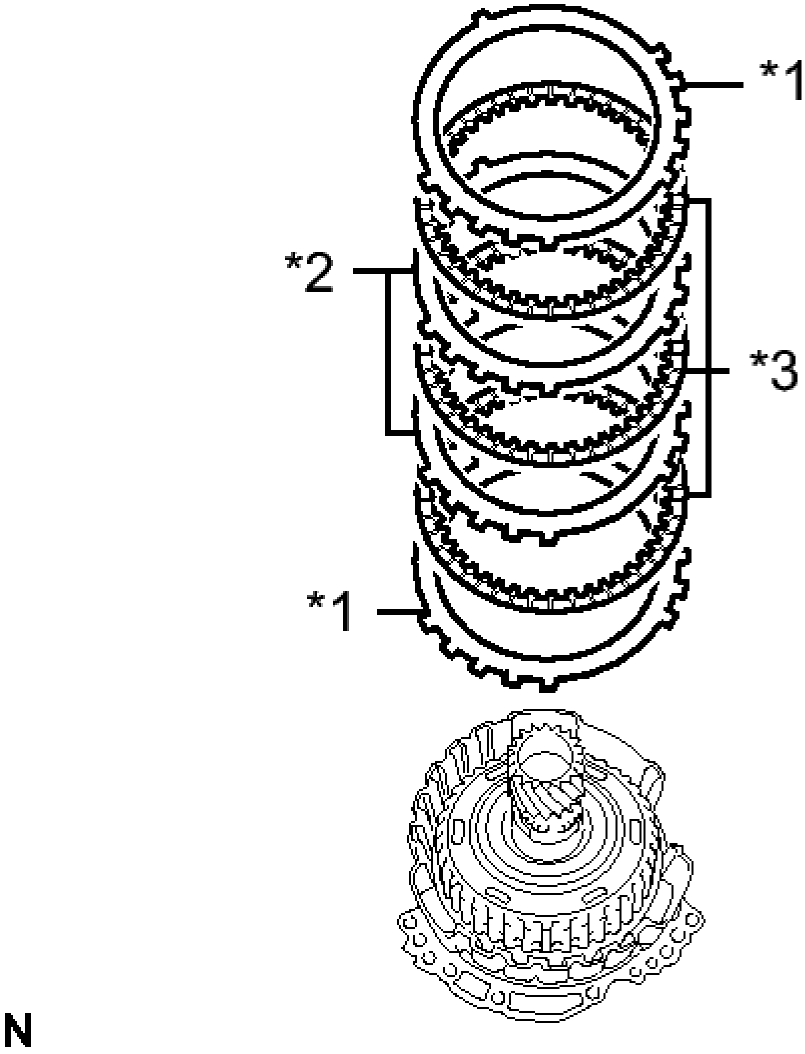

Fig. 223: Identifying Brake Flanges, Brake Discs And Brake Plates
Courtesy of TOYOTA MOTOR SALES, U.S.A., INC.

TEXT IN ILLUSTRATION

*1	No. 3 Brake Flange
*2	No. 3 Brake Plate
*3	No. 3 Brake Disc

28. **INSPECT NO. 3 BRAKE DISC** See step 6

29. **REMOVE UNDERDRIVE PLANETARY GEAR ASSEMBLY**

a. Remove the underdrive planetary gear assembly from the front oil pump assembly.

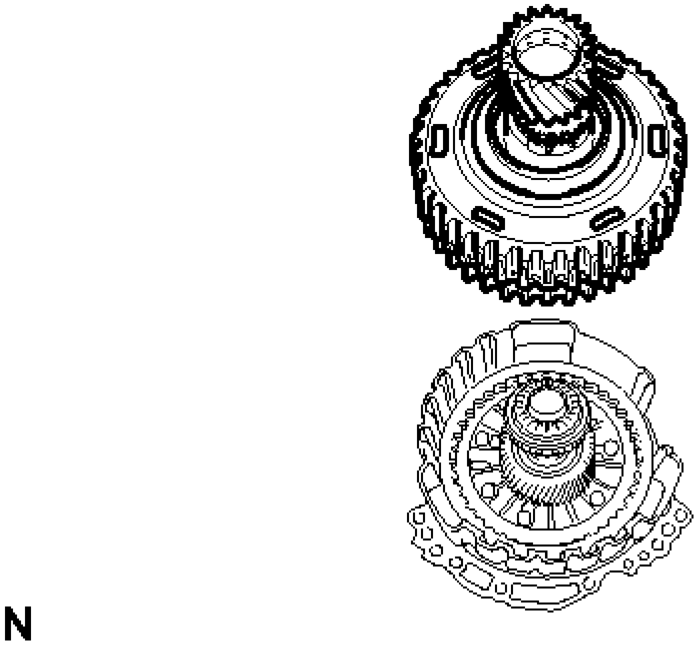

Fig. 224: Identifying Underdrive Planetary Gear Assembly
Courtesy of TOYOTA MOTOR SALES, U.S.A., INC.

30. **REMOVE NO. 3 BRAKE HUB**

a. Remove the No. 3 brake hub from the underdrive planetary gear assembly.

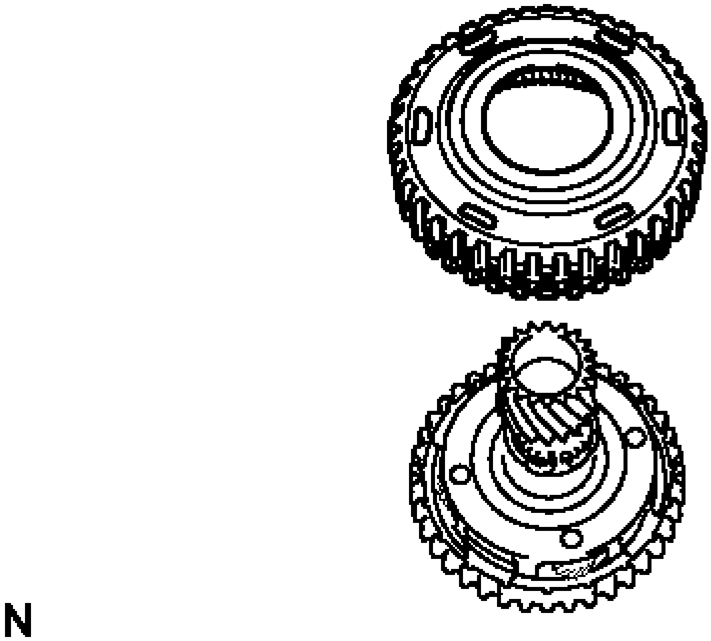

Fig. 225: Identifying No. 3 Brake Hub And Underdrive Planetary Gear Assembly
Courtesy of TOYOTA MOTOR SALES, U.S.A., INC.

b. Remove the thrust needle roller bearing and thrust needle roller race from the underdrive planetary gear assembly.

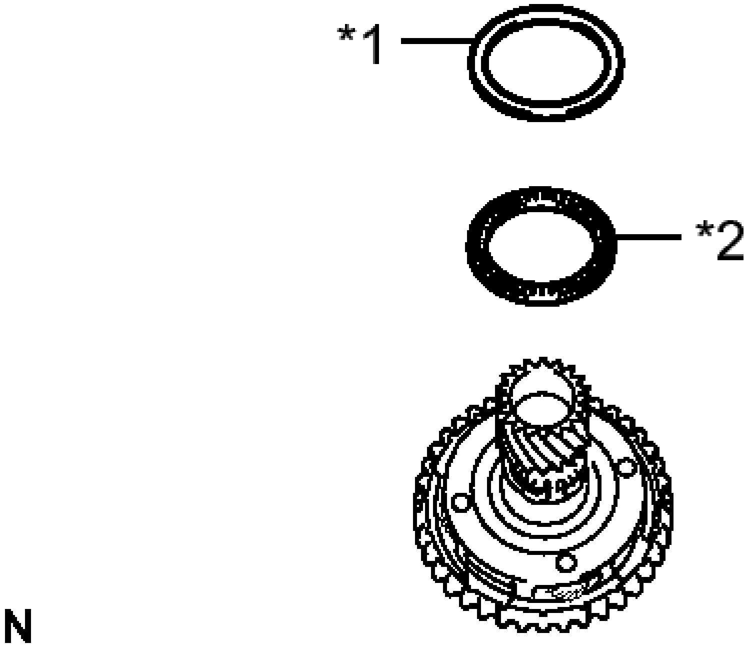

Fig. 226: Identifying Thrust Needle Roller Bearing And Thrust Needle Roller Race

Courtesy of TOYOTA MOTOR SALES, U.S.A., INC.

TEXT IN ILLUSTRATION

*1	Thrust Needle Roller Race
*2	Thrust Needle Roller Bearing

31. **REMOVE UNDERDRIVE PLANETARY RING GEAR**
    a. Using needle-nose pliers, remove the snap ring from the underdrive planetary ring gear.

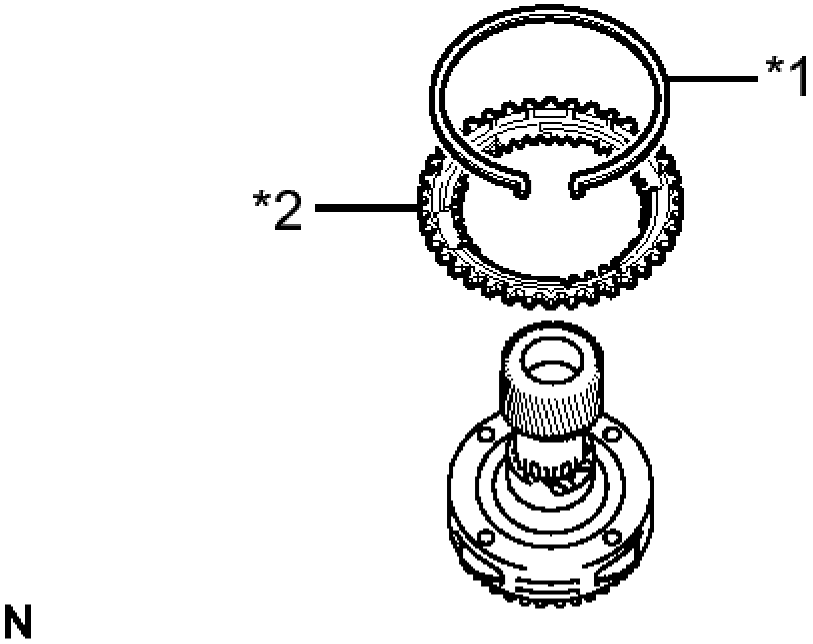

Fig. 227: Identifying Underdrive Planetary Ring Gear
Courtesy of TOYOTA MOTOR SALES, U.S.A., INC.

TEXT IN ILLUSTRATION

*1	Snap Ring
*2	Underdrive Planetary Ring Gear

    b. Remove the underdrive planetary ring gear from the underdrive planetary gear assembly.

32. **REMOVE PLANETARY SUN GEAR SUB-ASSEMBLY**

a. While expanding the snap ring with snap ring pliers, remove the planetary sun gear from the underdrive planetary gear assembly.

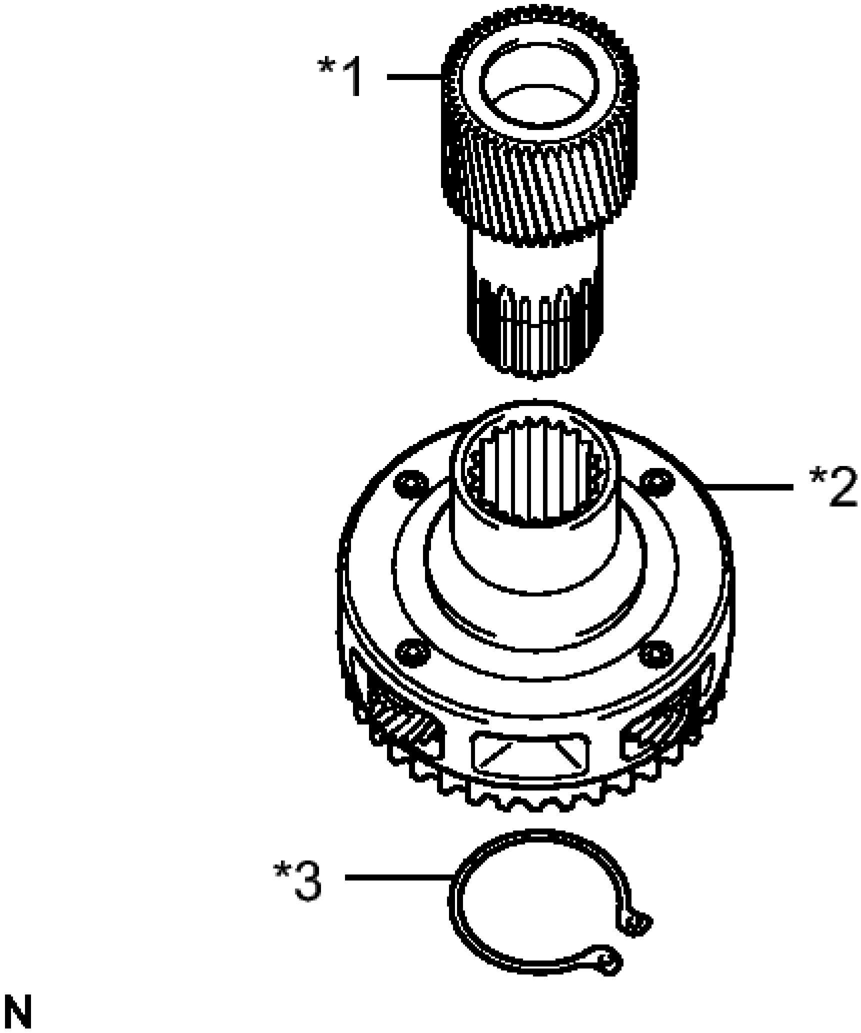

Fig. 228: Identifying Front Planetary Sun Gear, Underdrive Planetary Gear Assembly And Snap Ring
Courtesy of TOYOTA MOTOR SALES, U.S.A., INC.

TEXT IN ILLUSTRATION

*1	Planetary Sun Gear Sub-assembly
*2	Underdrive Planetary Gear Assembly

*3	Snap Ring

b. Remove the snap ring from the underdrive planetary gear assembly.

33. **INSPECT UNDERDRIVE PLANETARY GEAR ASSEMBLY** See step 7
34. **INSPECT PLANETARY SUN GEAR SUB-ASSEMBLY** See step 4
35. **REMOVE INPUT SHAFT SUB-ASSEMBLY**

a. Remove the input shaft sub-assembly from the front oil pump assembly.

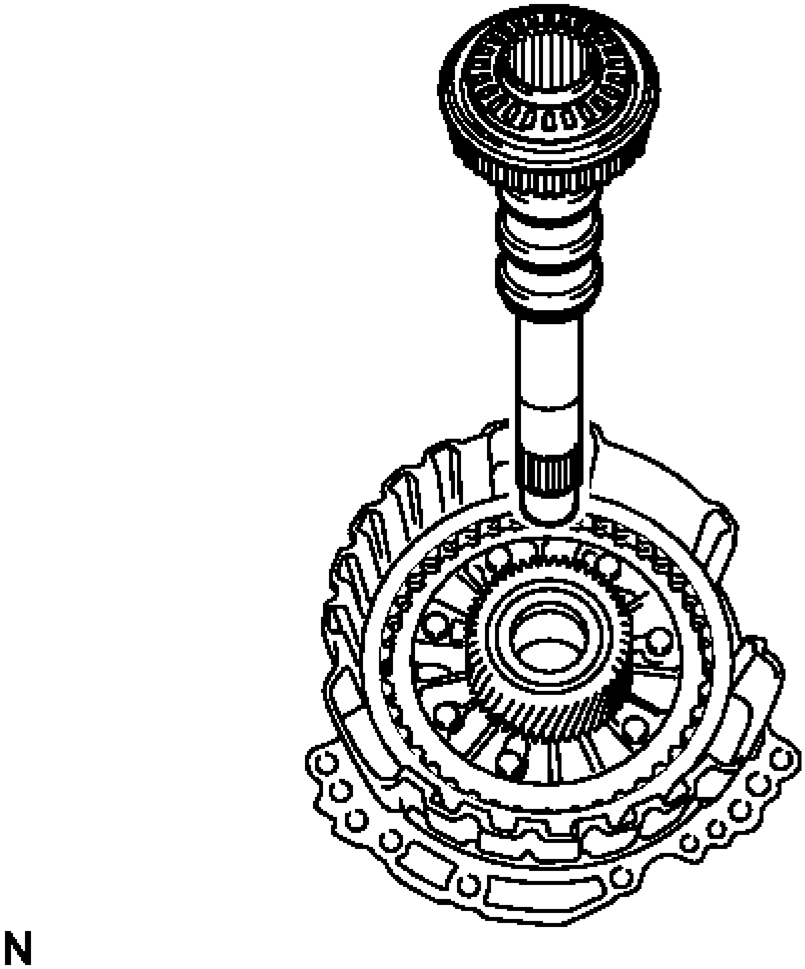

Fig. 229: Identifying Input Shaft And Oil Pump Assembly
Courtesy of TOYOTA MOTOR SALES, U.S.A., INC.

b. Remove the thrust needle roller bearing and thrust needle roller race from the input shaft.

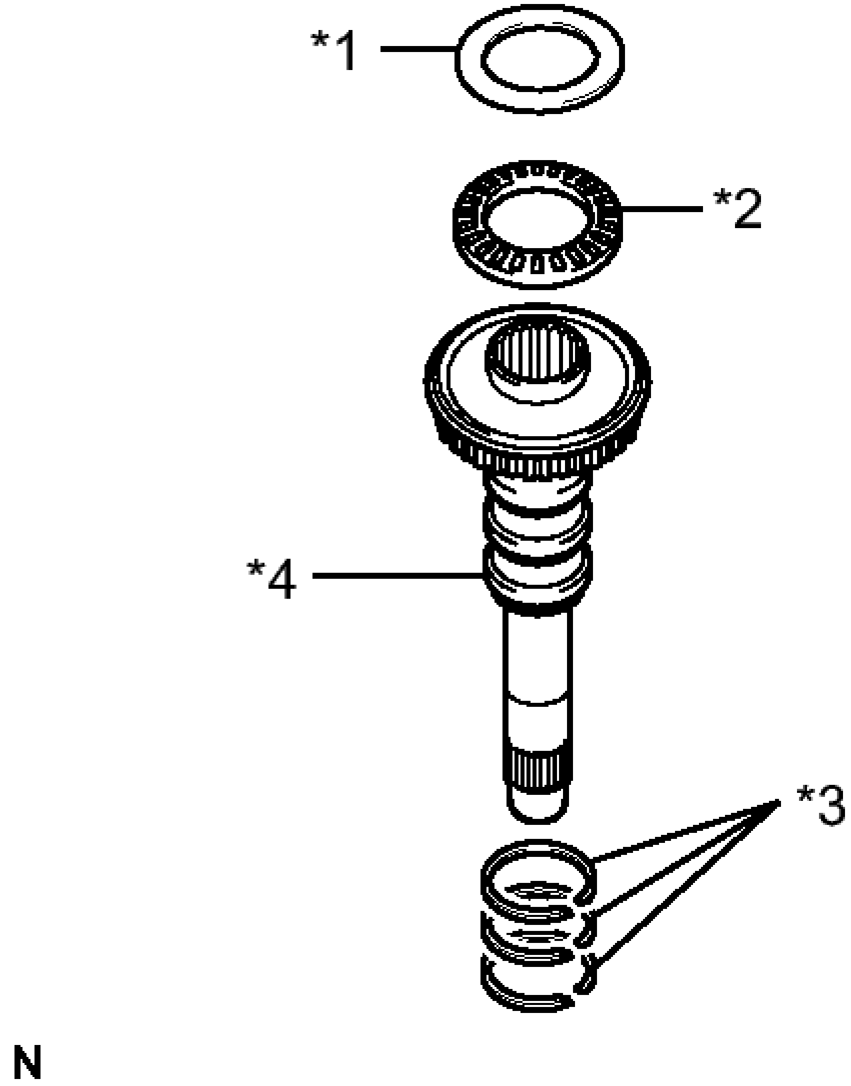

Fig. 230: Identifying Input Shaft Oil Seal Rings And Input Shaft
Courtesy of TOYOTA MOTOR SALES, U.S.A., INC.

TEXT IN ILLUSTRATION

*1	Thrust Needle Roller Race
*2	Thrust Needle Roller Bearing
*3	Input Shaft Oil Seal

	Ring
*4	Input Shaft

c. Using a screwdriver, remove the 3 input shaft oil seal rings from the input shaft.

36. **REMOVE UNDERDRIVE PLANETARY SUN GEAR**

a. Remove the underdrive planetary sun gear from the oil pump assembly.

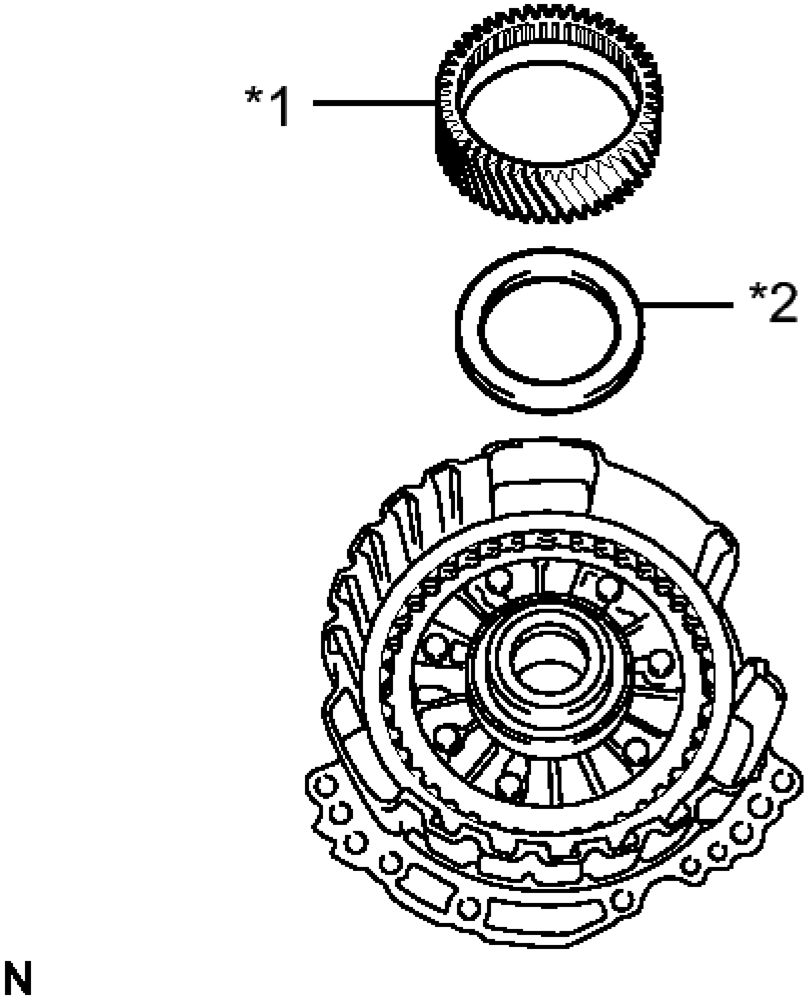

Fig. 231: Identifying Thrust Needle Roller Bearing And Underdrive Planetary Sun Gear
Courtesy of TOYOTA MOTOR SALES, U.S.A., INC.

TEXT IN ILLUSTRATION

*1	Underdrive Planetary Sun Gear

*2	Thrust Needle Roller Bearing

b. Remove the thrust needle roller bearing from the oil pump assembly.

37. **REMOVE NO. 1 BRAKE DISC**

a. Using a screwdriver, remove the 2 snap rings and brake snap ring stopper from the oil pump assembly.

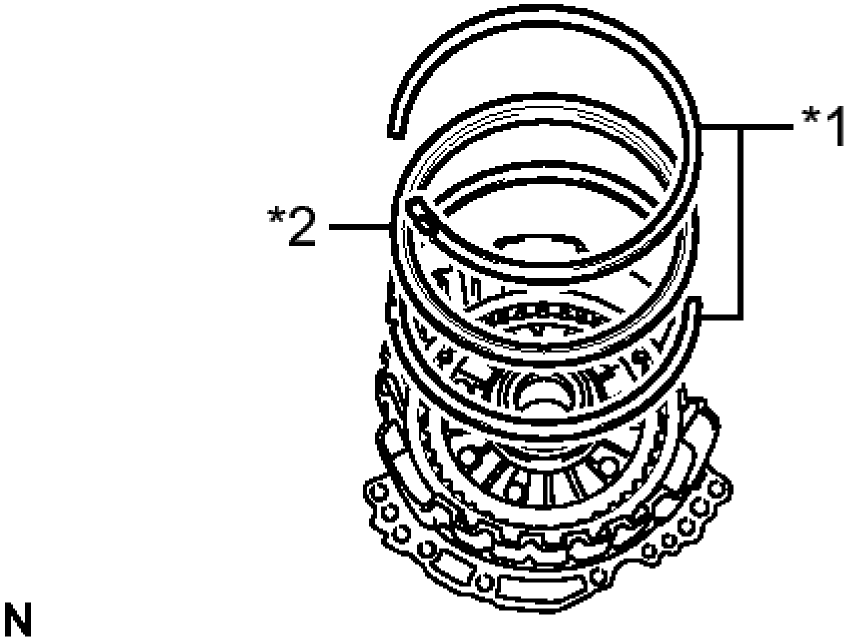

Fig. 232: Identifying Snap Rings And Brake Snap Ring Stopper
Courtesy of TOYOTA MOTOR SALES, U.S.A., INC.

TEXT IN ILLUSTRATION

*1	Snap Ring
*2	Brake Snap Ring Stopper

b. Remove the No. 1 brake flange, 4 No. 1 brake discs and 4 No. 1 brake plates from the oil pump assembly.

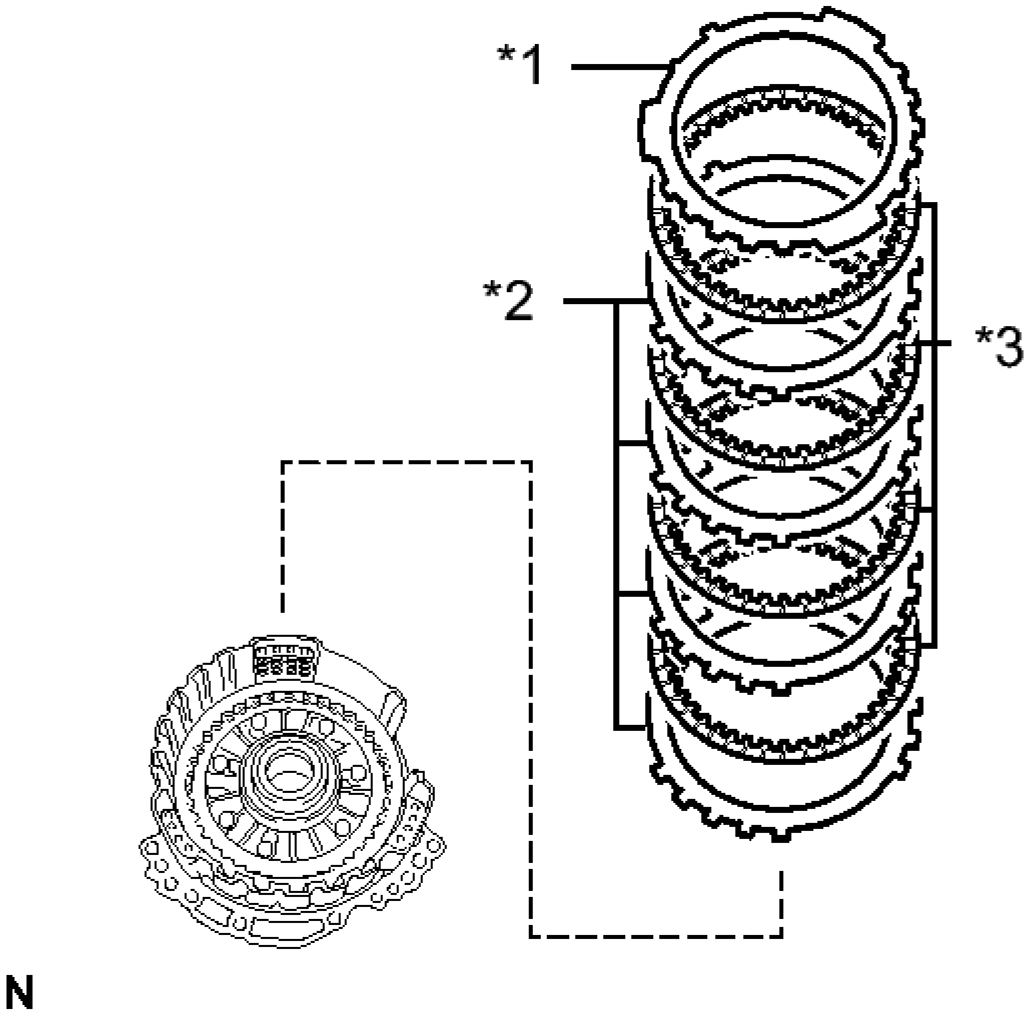

Fig. 233: Identifying Brake Flange, Brake Discs And Brake Plates
Courtesy of TOYOTA MOTOR SALES, U.S.A., INC.

TEXT IN ILLUSTRATION

*1	No. 1 Brake Flange
*2	No. 1 Brake Plate
*3	No. 1 Brake Disc

38. **INSPECT NO. 1 BRAKE DISC** See step 9

39. **REMOVE 2ND BRAKE PISTON RETURN SPRING SUB-ASSEMBLY**
    a. Remove the 3 2nd brake piston return springs from the oil pump assembly.

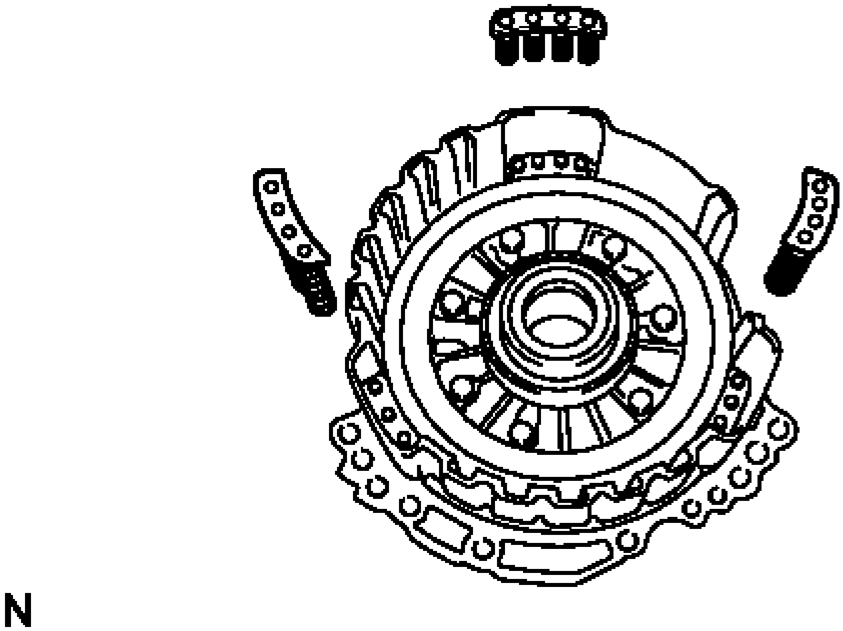

Fig. 234: Identifying 2nd Brake Piston Return Springs
Courtesy of TOYOTA MOTOR SALES, U.S.A., INC.

40. **INSPECT 2ND BRAKE PISTON RETURN SPRING SUB-ASSEMBLY** See step 10
41. **REMOVE NO. 1 BRAKE PISTON**
    a. Holding the oil pump assembly by hand, apply compressed air (392 kPa, 4.0 kgf/cm^2 , 57 psi) to the oil pump assembly to remove the No. 1 brake piston.

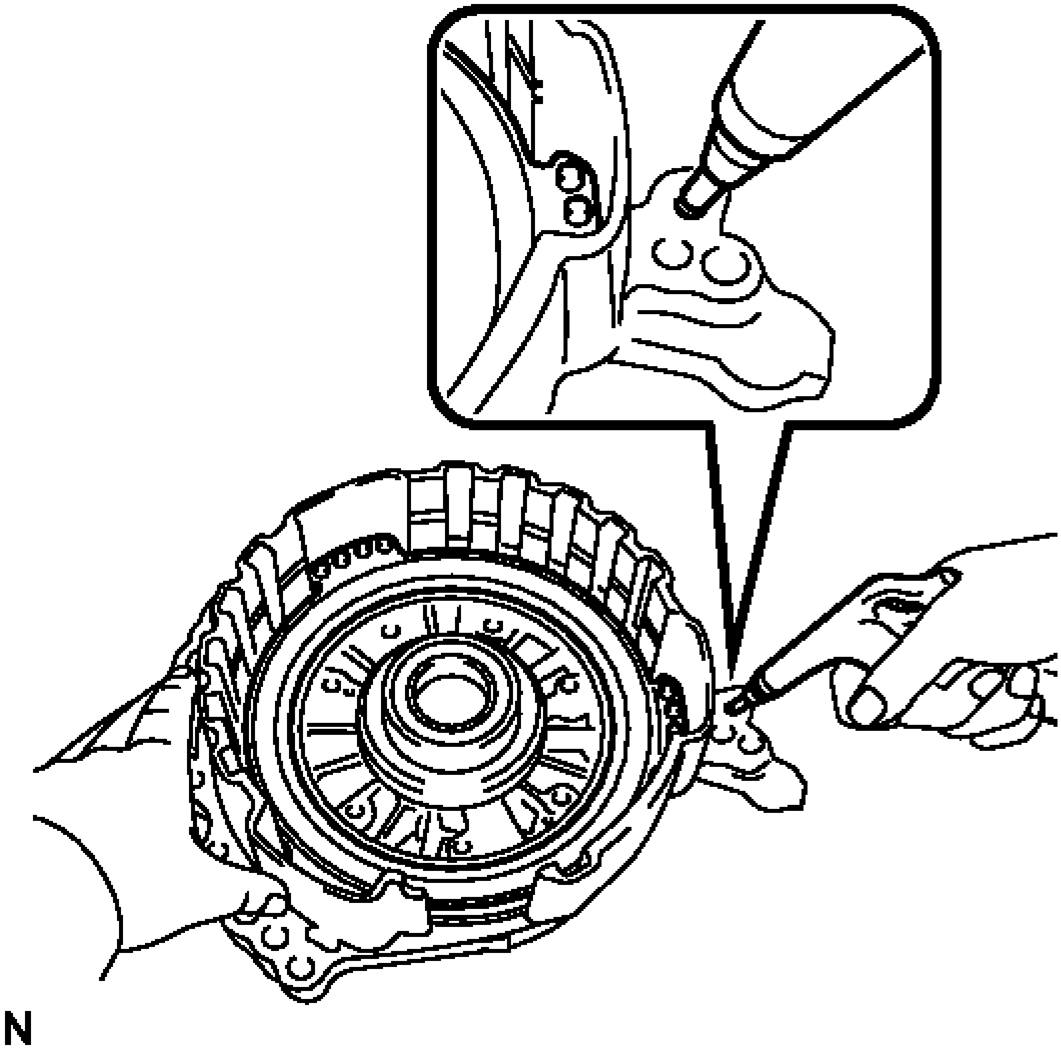

Fig. 235: Applying Compressed Air To Oil Pump Assembly
Courtesy of TOYOTA MOTOR SALES, U.S.A., INC.

b. Using a screwdriver, remove the 2 O-rings from the No. 1 brake piston.

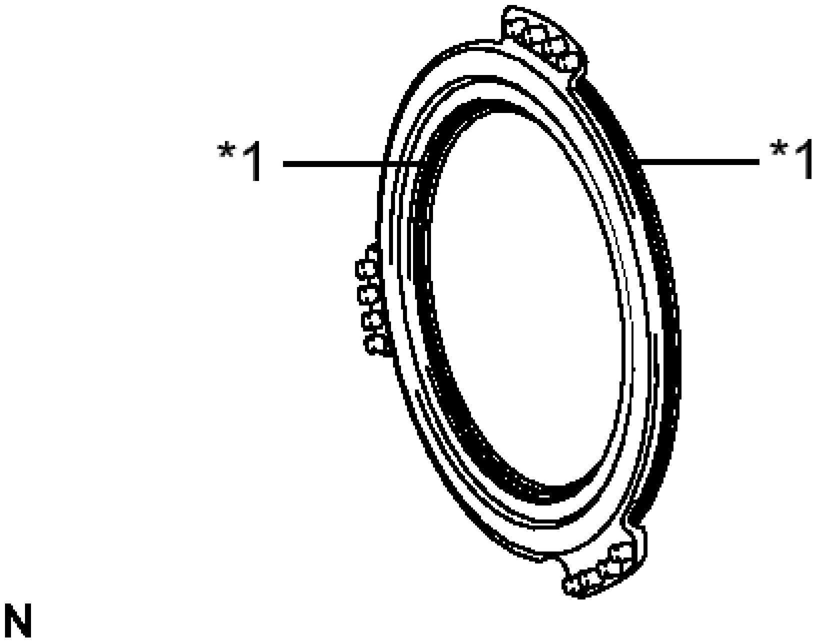

Fig. 236: Identifying O-Ring
Courtesy of TOYOTA MOTOR SALES, U.S.A., INC.

TEXT IN ILLUSTRATION

*1	O-ring

42. **REMOVE FRONT DIFFERENTIAL CASE**
    a. Remove the front differential case from the transaxle case.

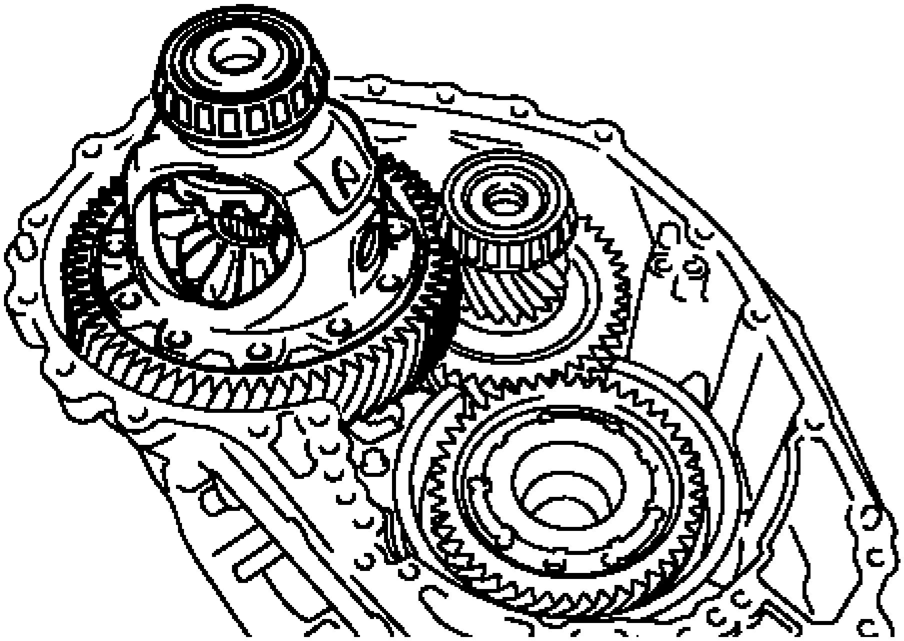

Fig. 237: Identifying Differential Case Sub-Assembly
Courtesy of TOYOTA MOTOR SALES, U.S.A., INC.

43. **REMOVE COUNTER DRIVE GEAR NUT**
    a. Using SST and a hammer, unstake the counter drive gear nut.

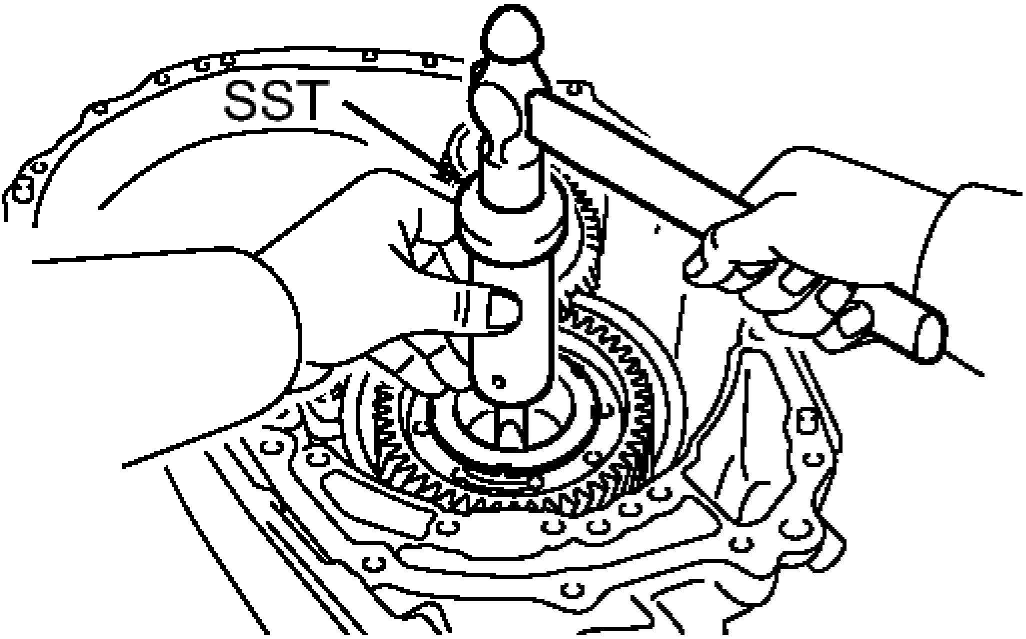

Fig. 238: Staking Planetary Gear Assembly

Courtesy of TOYOTA MOTOR SALES, U.S.A., INC.

- **SST: 09930-00010**

b. Turn the manual valve lever 2 notches counterclockwise to set it to the P position as shown in the illustration.

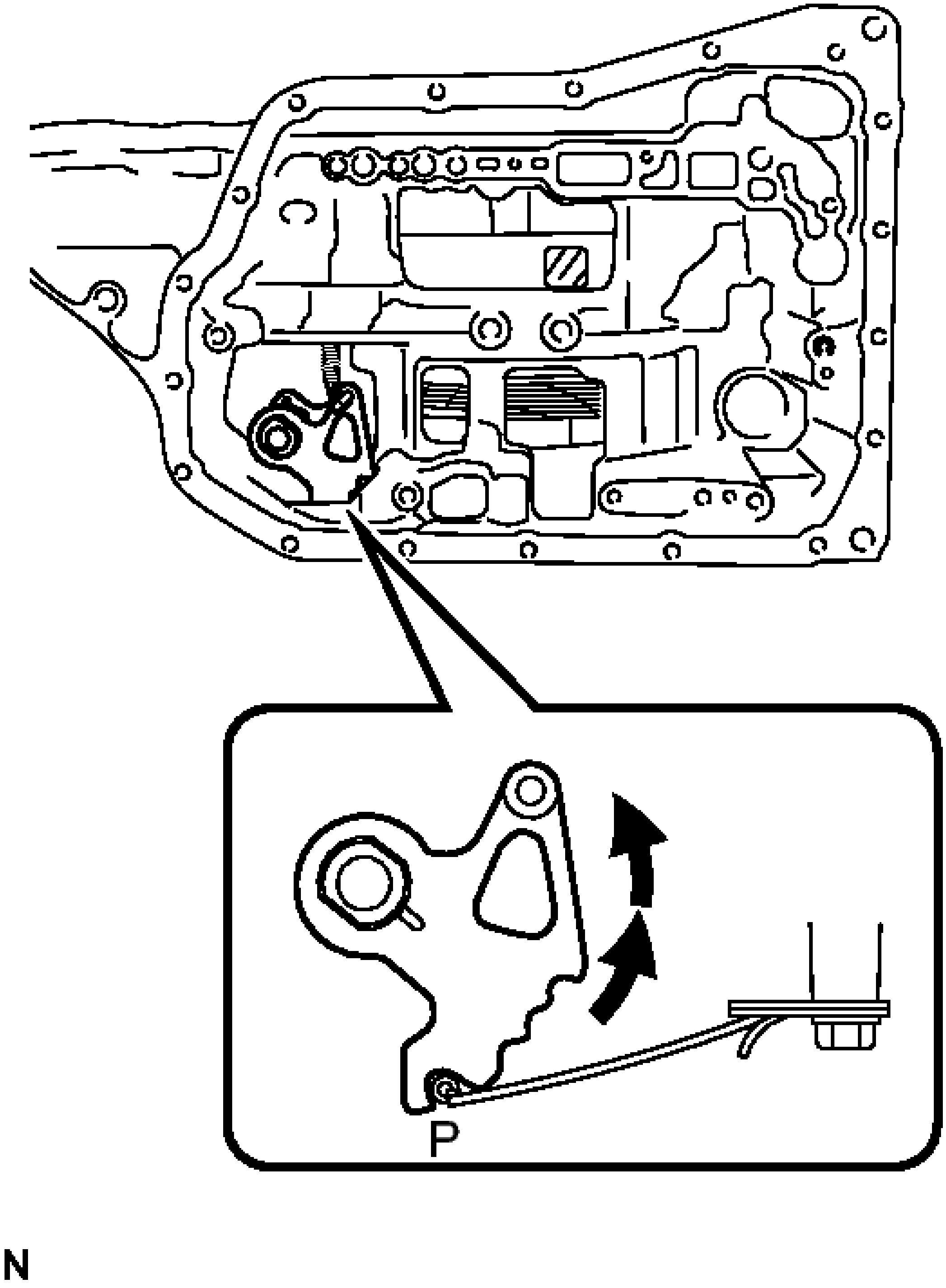

Fig. 239: Turning Manual Valve Lever Notches Counterclockwise
Courtesy of TOYOTA MOTOR SALES, U.S.A., INC.

c. Using SST, remove the counter drive gear nut from the planetary gear assembly.

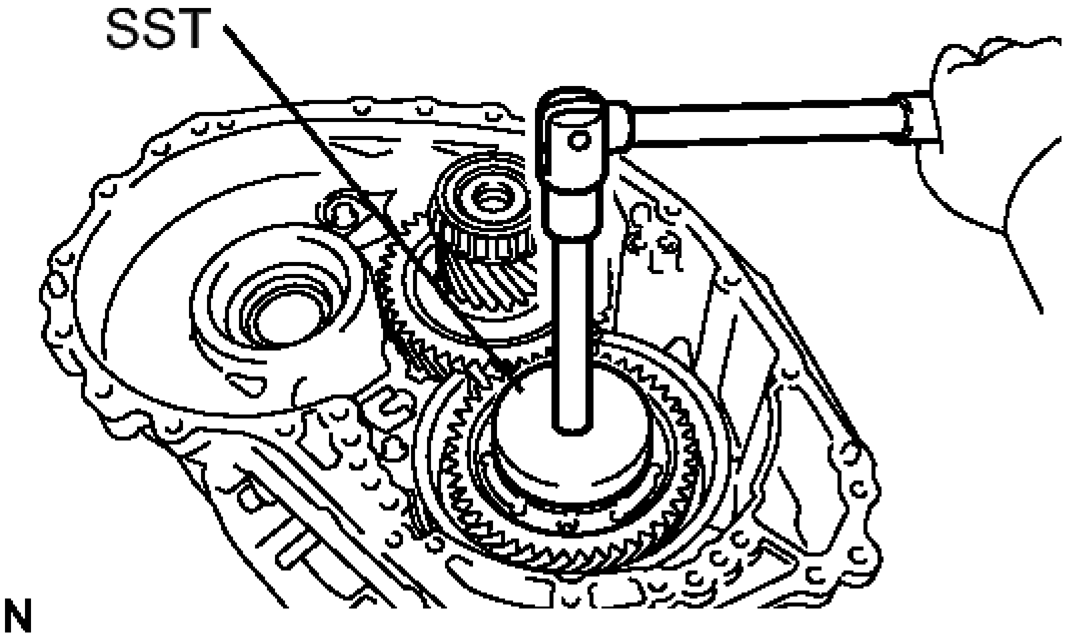

Fig. 240: Removing Nut From Planetary Gear Assembly
Courtesy of TOYOTA MOTOR SALES, U.S.A., INC.

- **SST: 09387-00130**

44. **REMOVE COUNTER DRIVEN GEAR**
    a. Turn the manual valve lever 2 notches clockwise to set it to the N position as shown in the illustration.

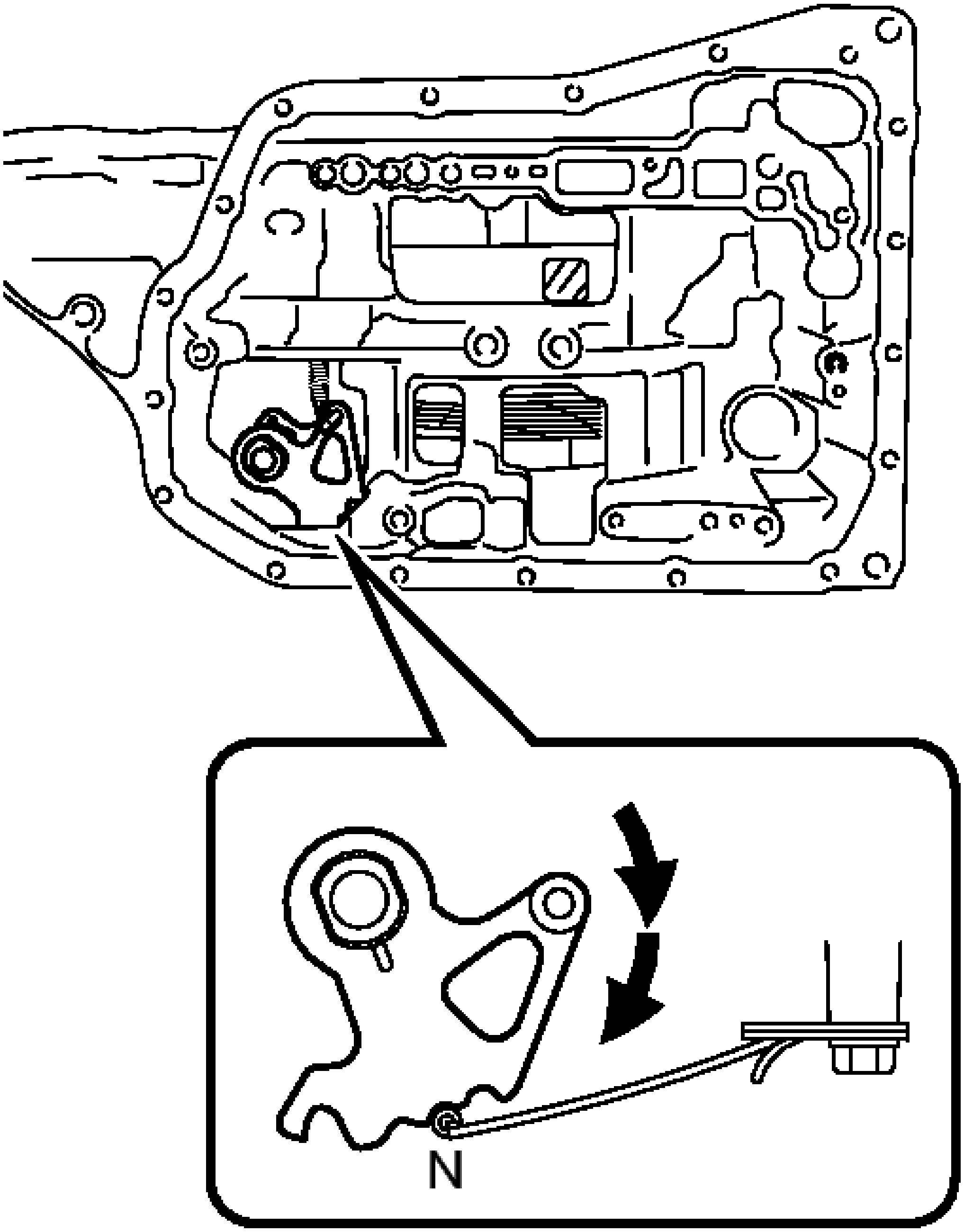

N

Fig. 241: Turning Manual Valve Lever Notches Clockwise
Courtesy of TOYOTA MOTOR SALES, U.S.A., INC.

b. Remove the counter driven gear from the transaxle case.

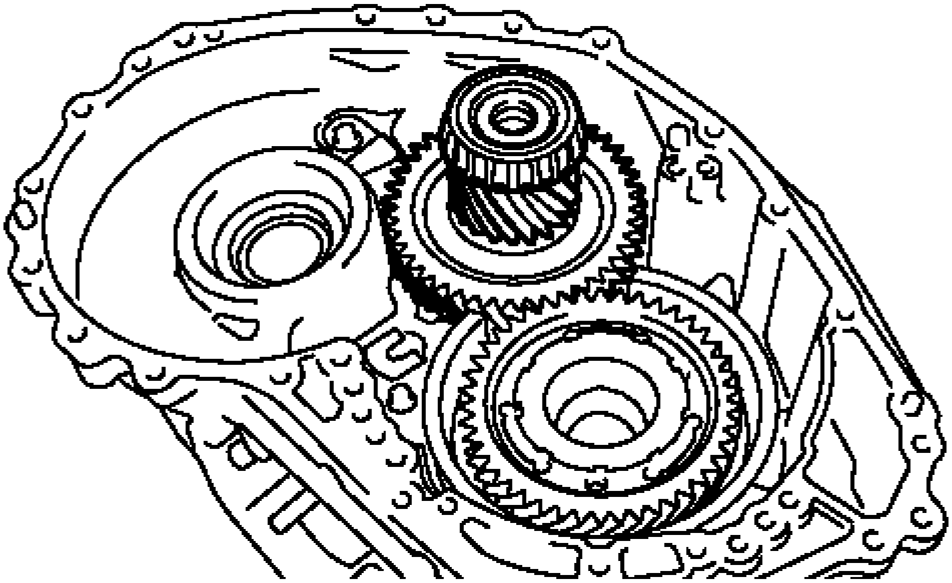

Fig. 242: Identifying Counter Driven Gear Sub-Assembly
Courtesy of TOYOTA MOTOR SALES, U.S.A., INC.

45. **REMOVE COUNTER DRIVEN GEAR FRONT TAPERED ROLLER BEARING**
    a. Using SST, remove the counter driven gear front tapered roller bearing from the counter driven gear.

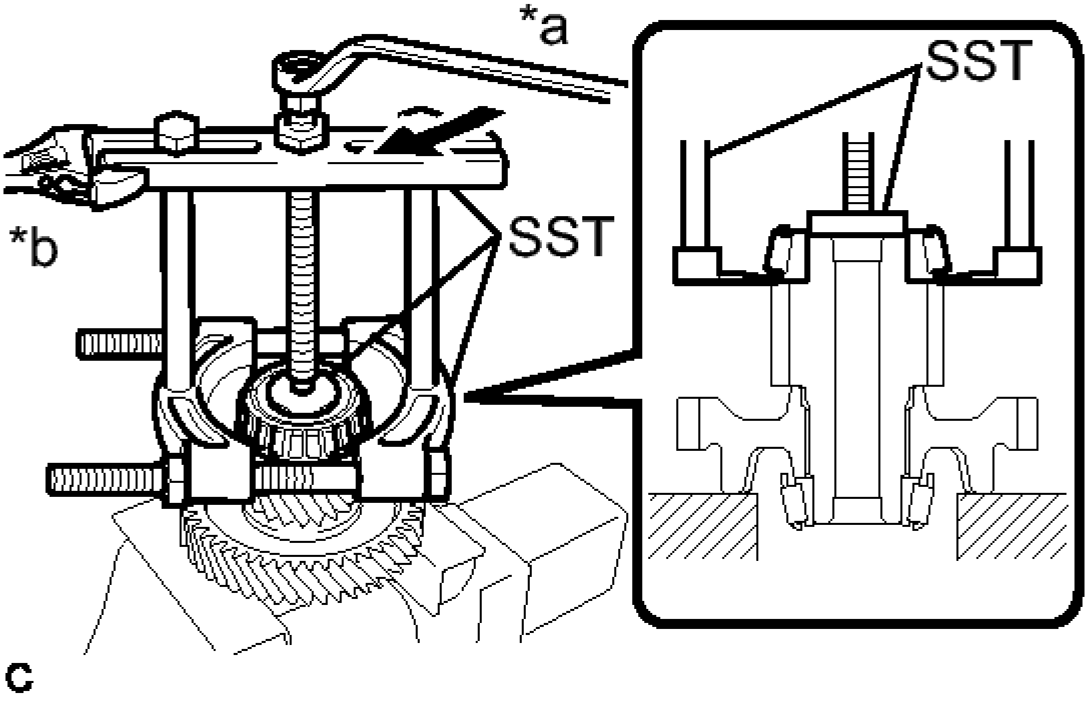

Fig. 243: Identifying Counter Driven Gear Front Tapered Roller Bearing
Courtesy of TOYOTA MOTOR SALES, U.S.A., INC.

TEXT IN ILLUSTRATION

*a	Turn
*b	Hold

- **SST: 09950-00020**
- **SST: 09950-00030**
- **SST: 09950-60010**
  09951-00400

46. **REMOVE COUNTER DRIVEN GEAR REAR TAPERED ROLLER BEARING**
    a. Using SST, remove the counter driven gear rear tapered roller bearing and differential drive pinion from the counter driven gear.

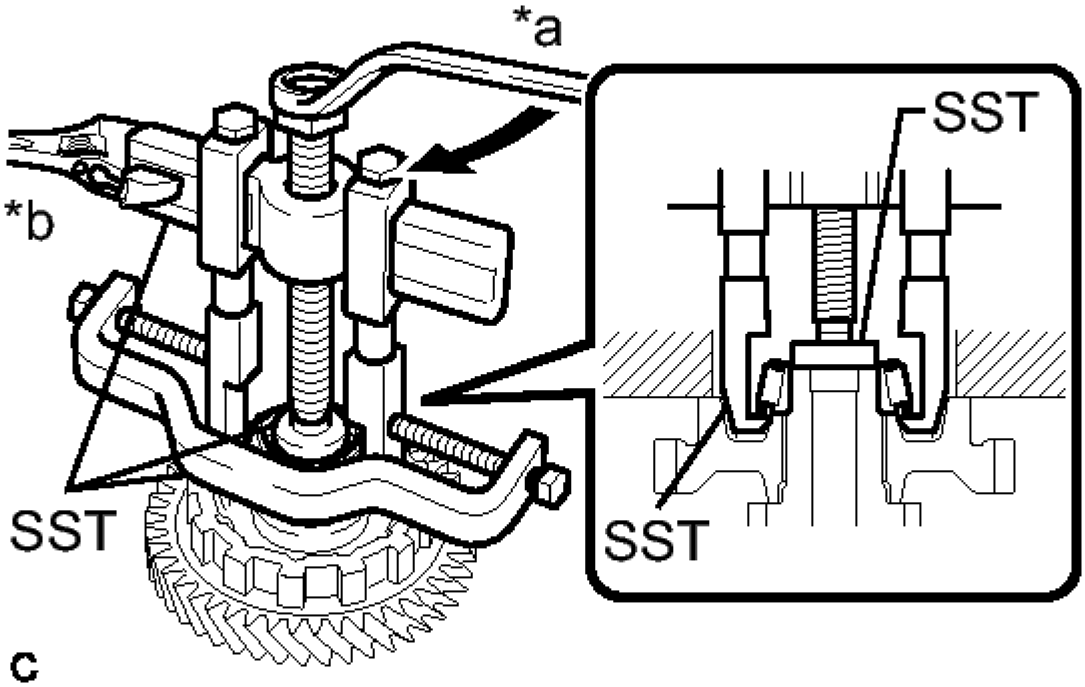

Fig. 244: Identifying Counter Driven Gear Rear Tapered Roller Bearing
Courtesy of TOYOTA MOTOR SALES, U.S.A., INC.

TEXT IN ILLUSTRATION

*a	Turn
*b	Hold

- **SST: 09950-40011**
  09951-04010
  09952-04010

09953-04020
09954-04010
09955-04071
09957-04010
09958-04011

- **SST: 09950-60010**
  09951-00320

47. **REMOVE PAWL SHAFT CLAMP**
    a. Remove the bolt and pawl shaft clamp from the transaxle case.

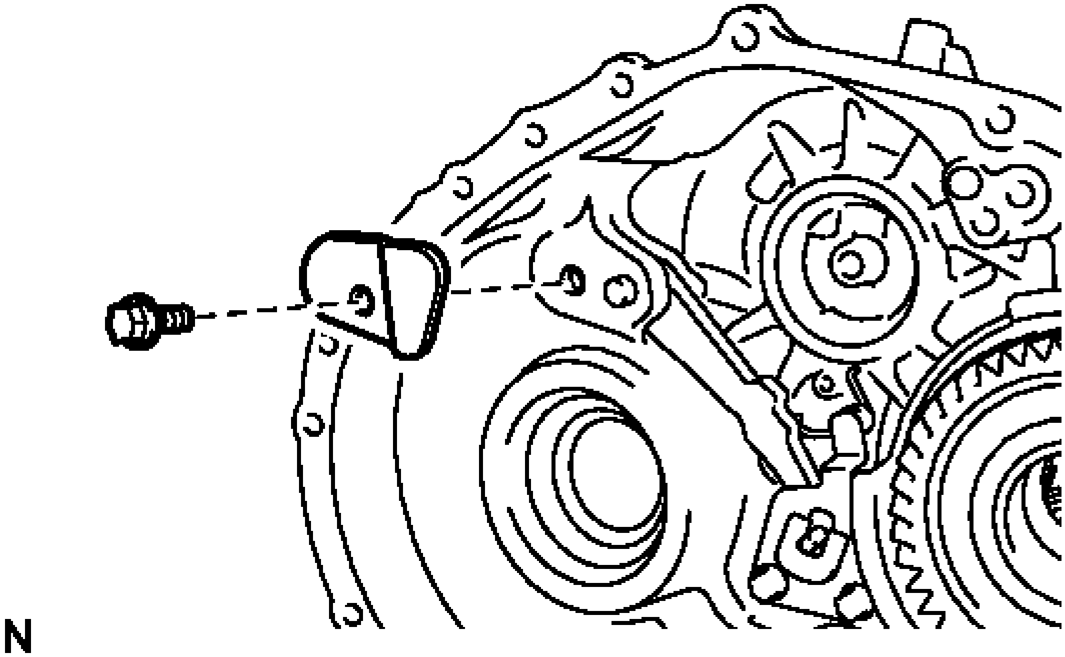

Fig. 245: Identifying Bolt And Pawl Shaft Clamp
Courtesy of TOYOTA MOTOR SALES, U.S.A., INC.

48. **REMOVE PAWL STOPPER PLATE**
    a. Remove the 2 bolts and pawl stopper plate from the transaxle case.

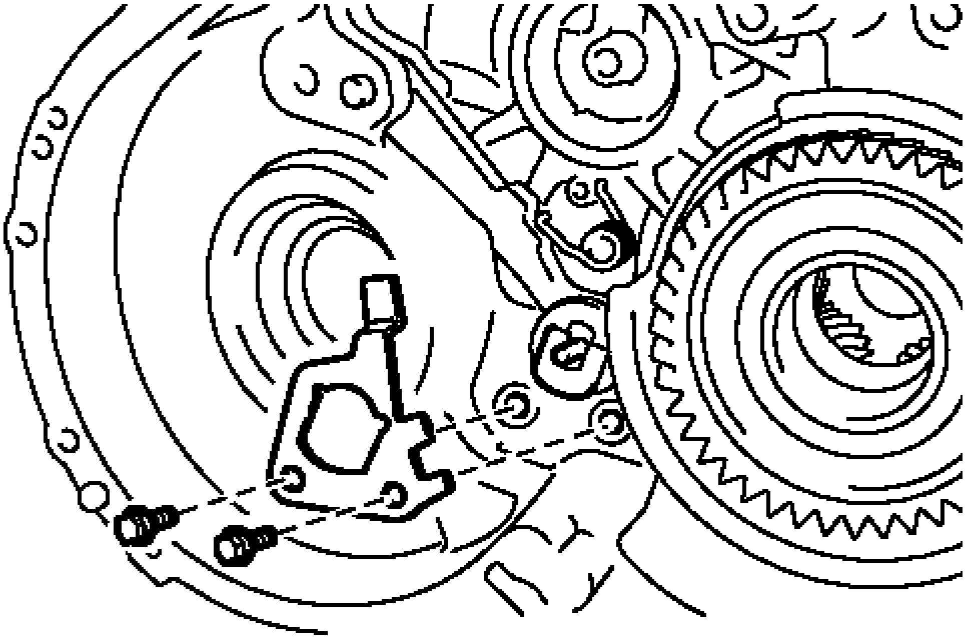

Fig. 246: Identifying Bolts And Pawl Stopper Plate
Courtesy of TOYOTA MOTOR SALES, U.S.A., INC.

49. **REMOVE PARKING LOCK SLEEVE**
    a. Remove the parking lock sleeve from the transaxle case.

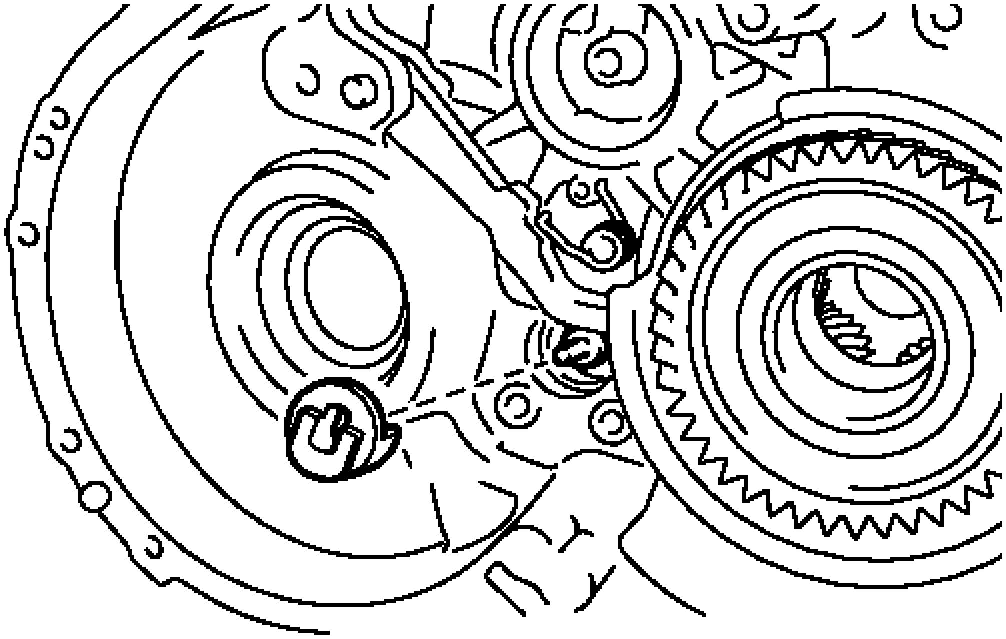

Fig. 247: Identifying Parking Lock Sleeve

Courtesy of TOYOTA MOTOR SALES, U.S.A., INC.

50. REMOVE PARKING LOCK PAWL

a. Remove the spring, parking lock pawl pin, parking lock pawl shaft and parking lock pawl from the transaxle case.

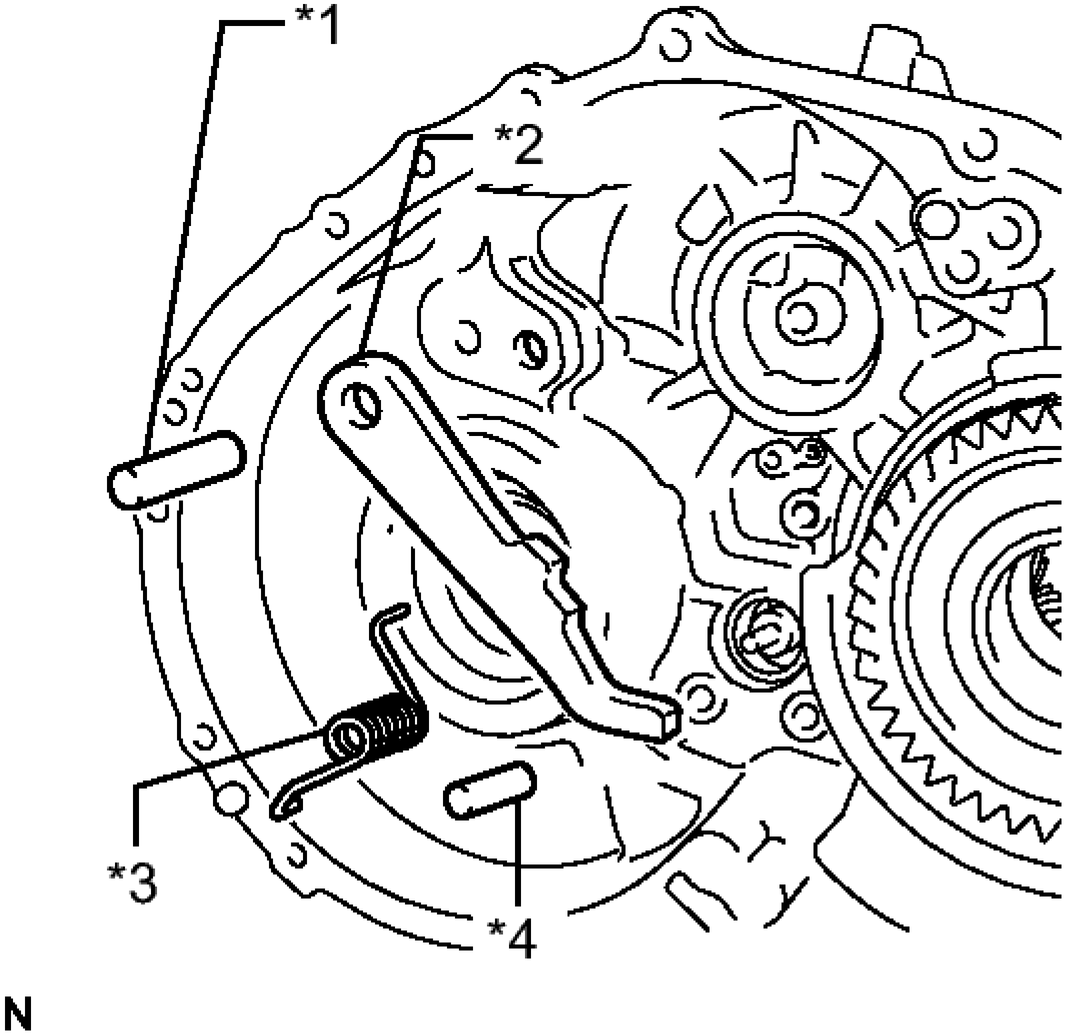

Fig. 248: Identifying Spring, Parking Lock Pawl Pin, Parking Lock Pawl Shaft And Parking Lock Pawl
Courtesy of TOYOTA MOTOR SALES, U.S.A., INC.

TEXT IN ILLUSTRATION

*1	Parking Lock Pawl Shaft
	Parking

*2	Lock Pawl
*3	Spring
*4	Parking Lock Pawl Pin

51. **REMOVE COUNTER DRIVEN GEAR REAR TAPERED ROLLER BEARING OUTER RACE**
    a. Using SST, remove the counter driven gear rear tapered roller bearing outer race from the transaxle case.

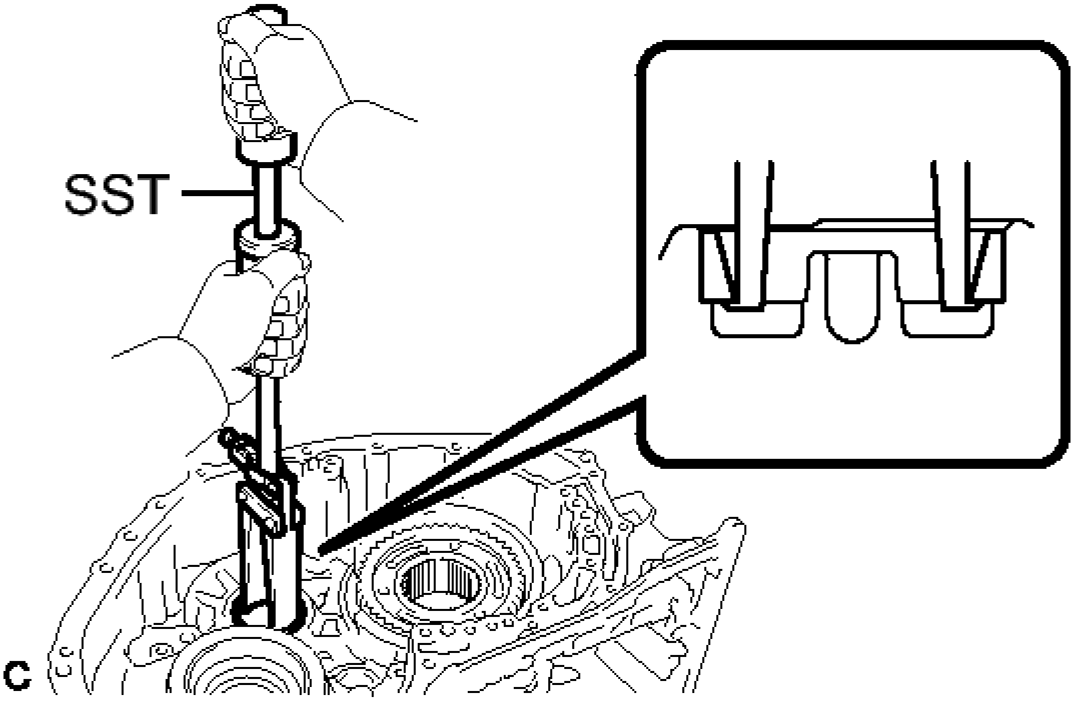

Fig. 249: Removing Counter Driven Gear Rear Tapered Roller Bearing Outer Race
Courtesy of TOYOTA MOTOR SALES, U.S.A., INC.

- **SST: 09308-00010**

52. **REMOVE ONE-WAY CLUTCH ASSEMBLY**
    a. Using a screwdriver, remove the snap ring from the transaxle case.

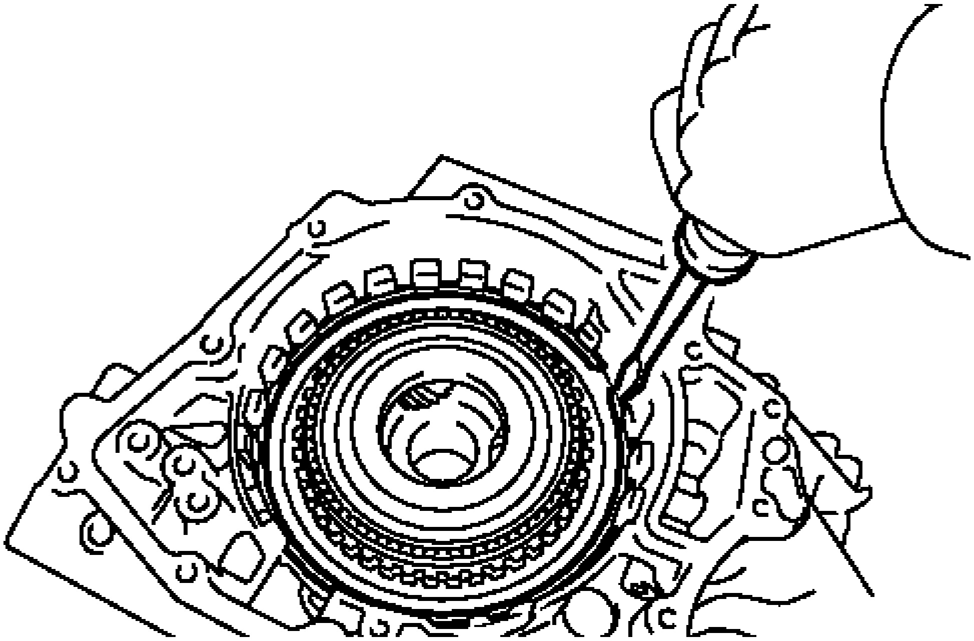

Fig. 250: Removing Snap Ring From Transaxle Case
Courtesy of TOYOTA MOTOR SALES, U.S.A., INC.

b. Remove the one-way clutch assembly with the planetary ring gear from the transaxle case.

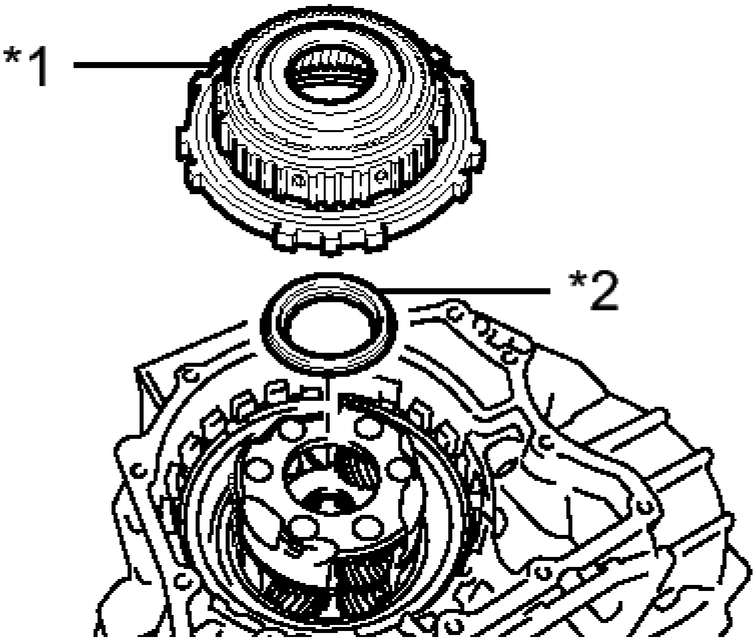

Fig. 251: Identifying One-Way Clutch Assembly And Thrust Needle Roller Bearing
Courtesy of TOYOTA MOTOR SALES, U.S.A., INC.

TEXT IN ILLUSTRATION

*1	One-way Clutch Assembly
*2	Thrust Needle Roller Bearing

c. Remove the thrust needle roller bearing from the planetary gear assembly.

53. **INSPECT ONE-WAY CLUTCH ASSEMBLY** See step 11

54. **REMOVE PLANETARY RING GEAR**

    a. Remove the planetary ring gear from the one-way clutch assembly.

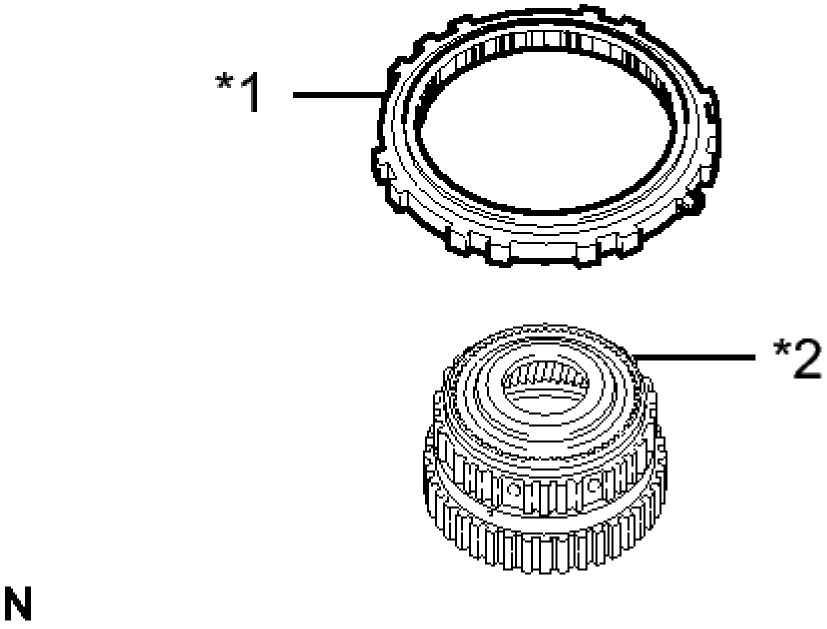

Fig. 252: Identifying Planetary Ring Gear And One-Way Clutch Assembly
Courtesy of TOYOTA MOTOR SALES, U.S.A., INC.

TEXT IN ILLUSTRATION

*1	One-way Clutch Assembly
*2	Planetary Ring Gear

55. **REMOVE PLANETARY RING GEAR FLANGE**

a. Using a screwdriver, remove the snap ring from the planetary ring gear.

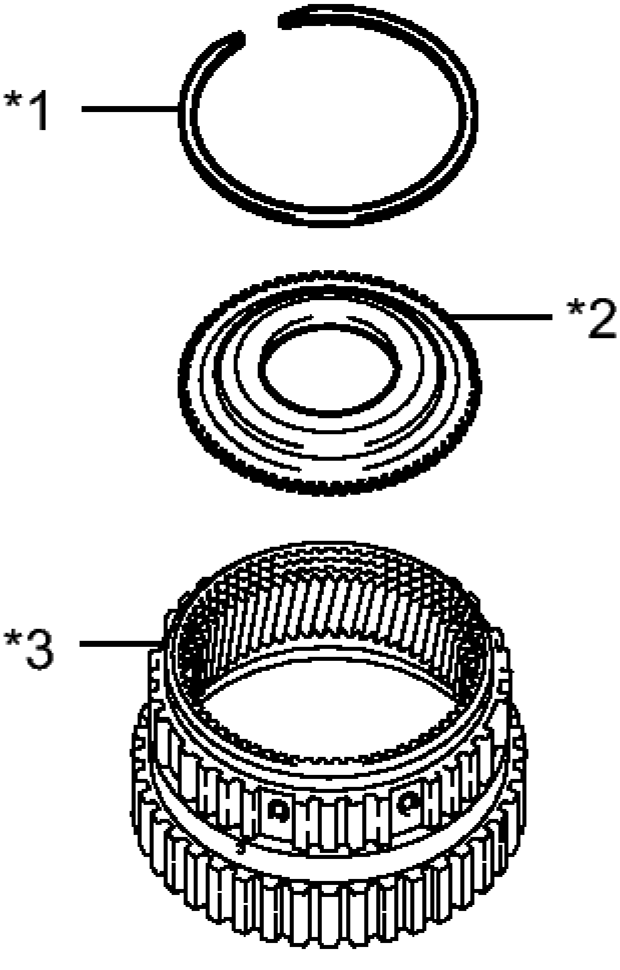

Fig. 253: Identifying Planetary Ring Gear Flange
Courtesy of TOYOTA MOTOR SALES, U.S.A., INC.

TEXT IN ILLUSTRATION

*1	Snap Ring
*2	Planetary Ring Gear Flange
*3	Planetary Ring Gear

b. Remove the planetary ring gear flange from the planetary ring gear.

56. **REMOVE NO. 2 BRAKE DISC**

a. Using a screwdriver, remove the snap ring from the transaxle case.

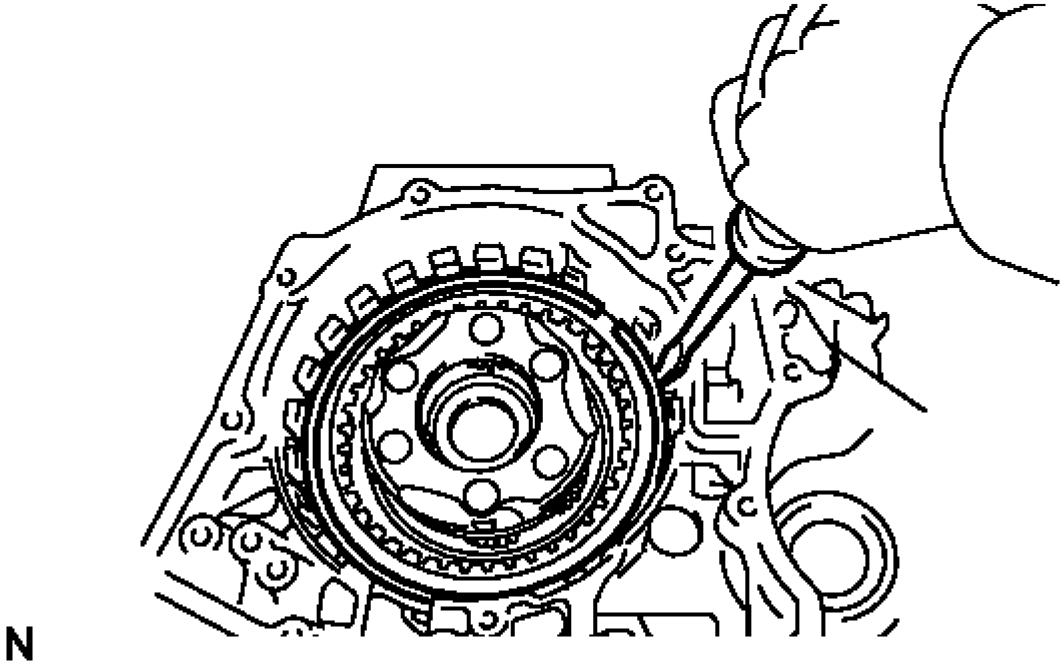

Fig. 254: Removing Snap Ring From Transaxle Case
Courtesy of TOYOTA MOTOR SALES, U.S.A., INC.

b. Remove the brake flange, 5 brake discs and 5 brake plates from the transaxle case.

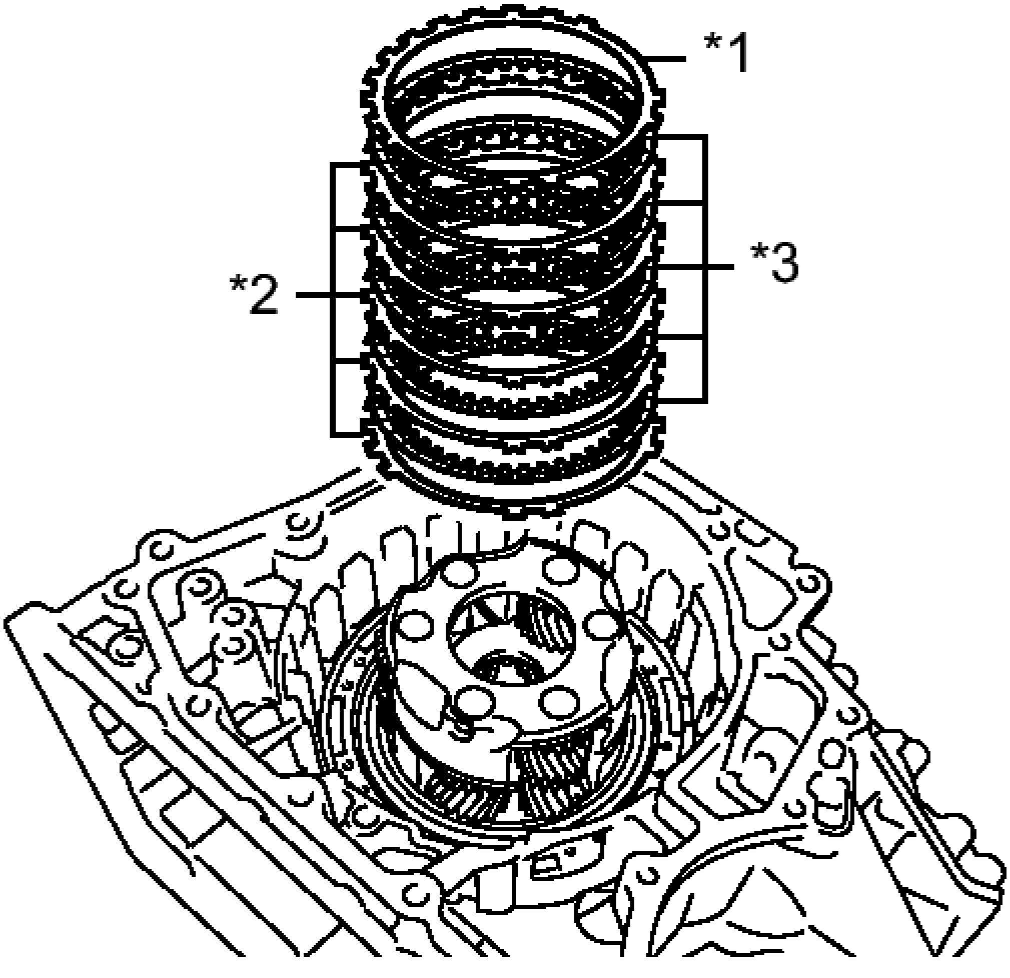

Fig. 255: Identifying Brake Flange, Brake Discs And Brake Plates
Courtesy of TOYOTA MOTOR SALES, U.S.A., INC.

TEXT IN ILLUSTRATION

*1	Brake Flange
*2	Brake Plate
*3	Brake Disc

57. **INSPECT NO. 2 BRAKE DISC** See step 13
58. **REMOVE 1ST AND REVERSE BRAKE RETURN SPRING SUB-ASSEMBLY**
    a. Using a screwdriver, remove the snap ring from the transaxle case.

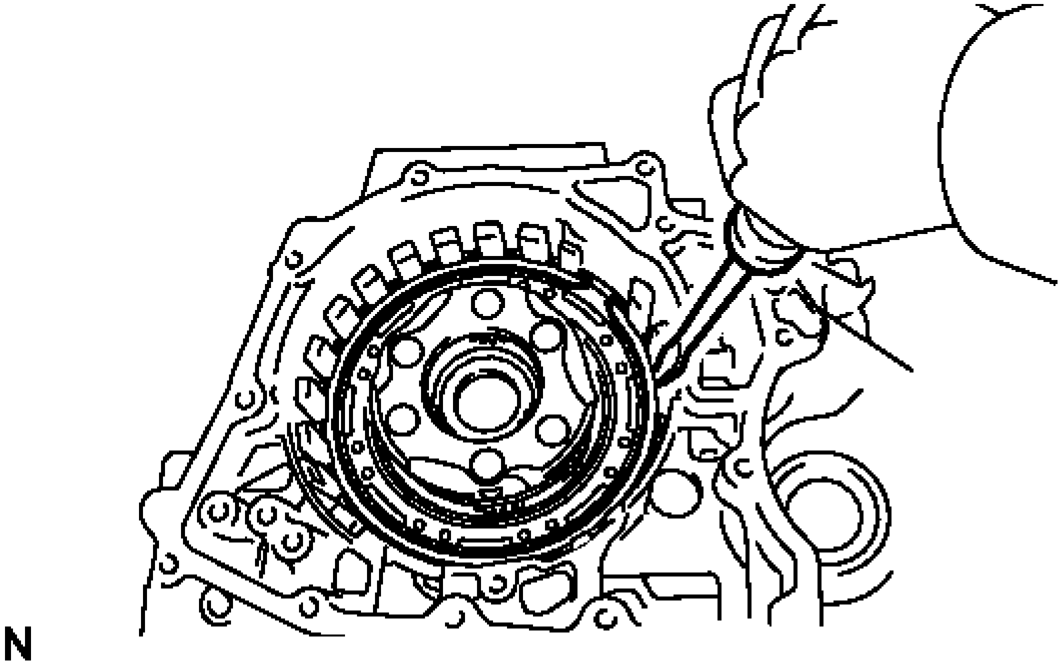

Fig. 256: Removing Snap Ring From Transaxle Case
Courtesy of TOYOTA MOTOR SALES, U.S.A., INC.

b. Remove the 1st and reverse brake return spring from the transaxle case.

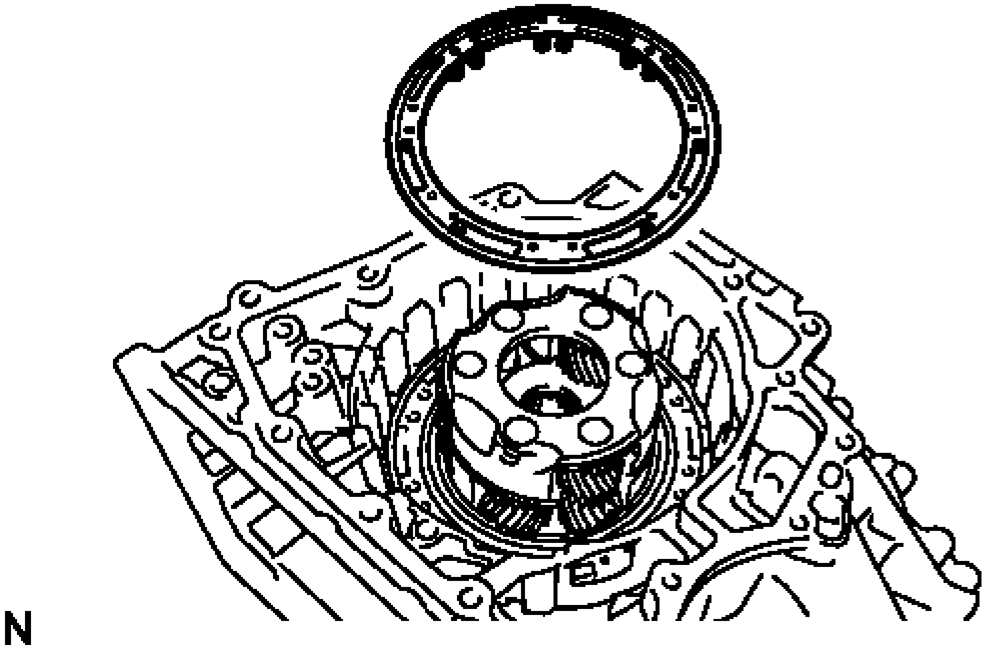

Fig. 257: Identifying 1st And Reverse Brake Return Spring
Courtesy of TOYOTA MOTOR SALES, U.S.A., INC.

59. **INSPECT 1ST AND REVERSE BRAKE RETURN SPRING SUB-ASSEMBLY** See step 14

60. **REMOVE NO. 2 BRAKE PISTON**

   a. Apply compressed air (392 kPa, 4.0 kgf/cm^2 , 57 psi) to the ATF hole to remove the No. 2 brake piston from the transaxle case.

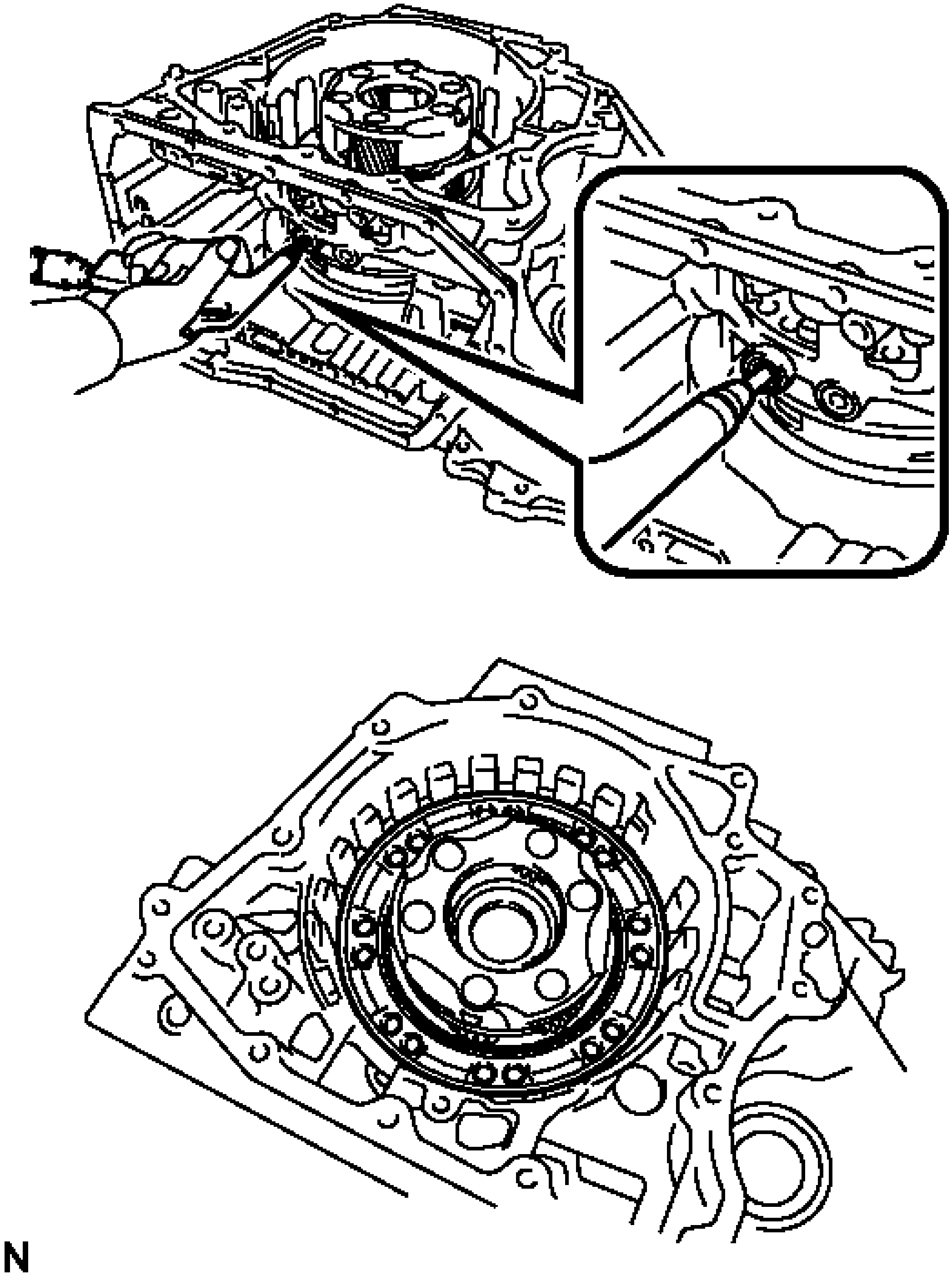

Fig. 258: Applying Compressed Air To ATF Hole
Courtesy of TOYOTA MOTOR SALES, U.S.A., INC.

b. Using a screwdriver, remove the 2 O-rings from the No. 2 brake piston.

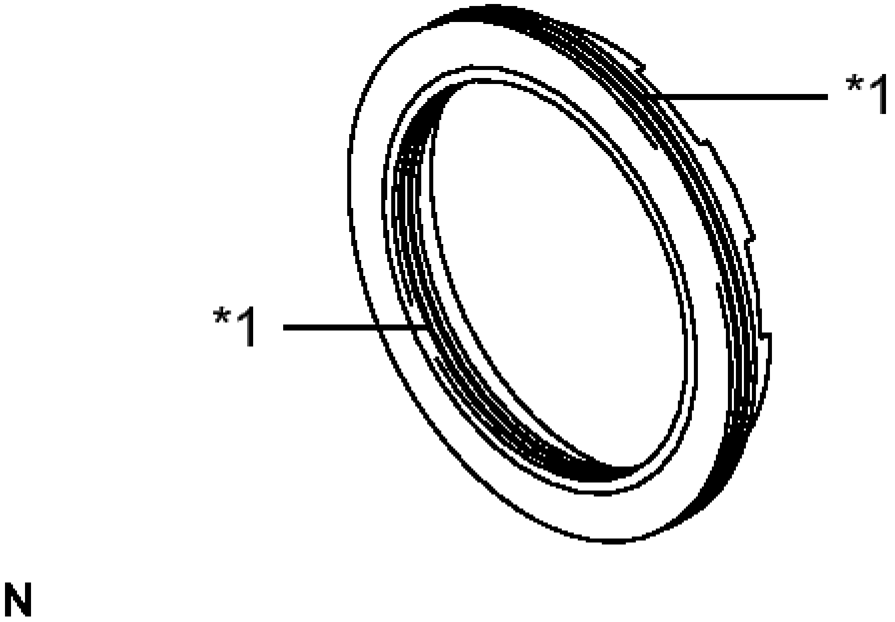

Fig. 259: Identifying No. 2 Brake Piston O-Ring
Courtesy of TOYOTA MOTOR SALES, U.S.A., INC.

TEXT IN ILLUSTRATION

*1	O-ring

61. **REMOVE FRONT PLANETARY GEAR ASSEMBLY**
    a. Using SST and a press, remove the planetary gear assembly from the transaxle case.

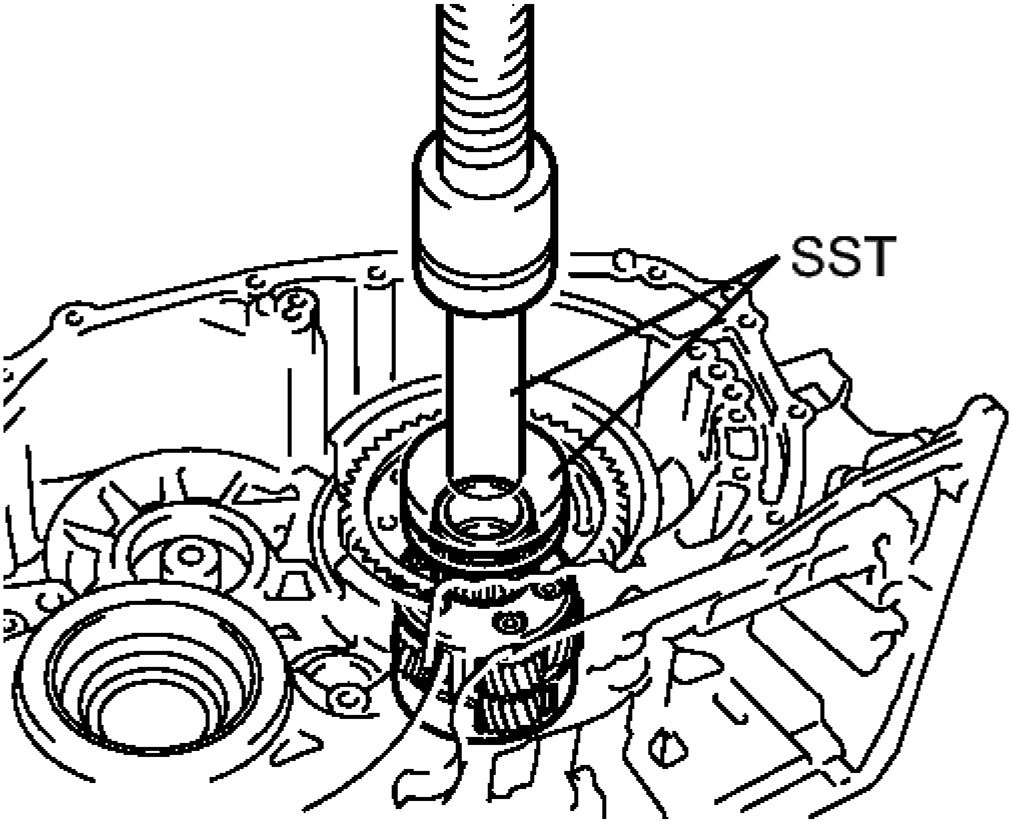

Fig. 260: Identifying Front Planetary Gear Assembly
Courtesy of TOYOTA MOTOR SALES, U.S.A., INC.

- **SST: 09950-60010**

  09951-00580
- **SST: 09950-70010**

  09951-07100

62. **REMOVE COUNTER DRIVE GEAR**

NOTE: Perform this procedure only when the counter drive gear bearing or transaxle case is replaced.

a. Using SST and a press, remove the counter drive gear and bearing inner race (rear side) from the transaxle case.

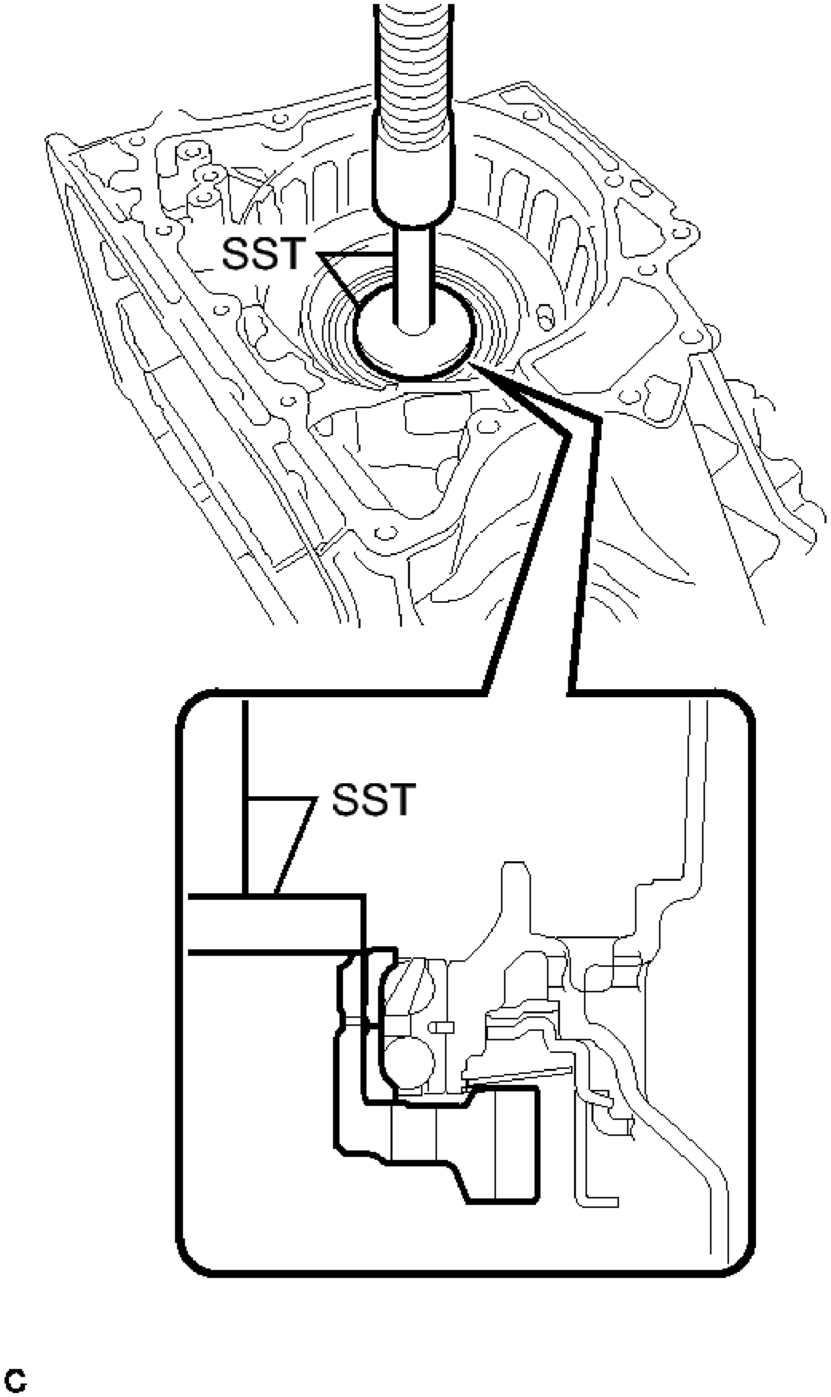

Fig. 261: Identifying Counter Drive Gear
Courtesy of TOYOTA MOTOR SALES, U.S.A., INC.

- **SST: 09950-60020**

  09951-00710

  - **SST: 09950-70010**
    09951-07100

b. As shown in the illustration, tighten the 3 bolts evenly and leave a clearance of approximately 20.0 mm (0.787 in.) between the counter drive gear and bearing inner race (front side).

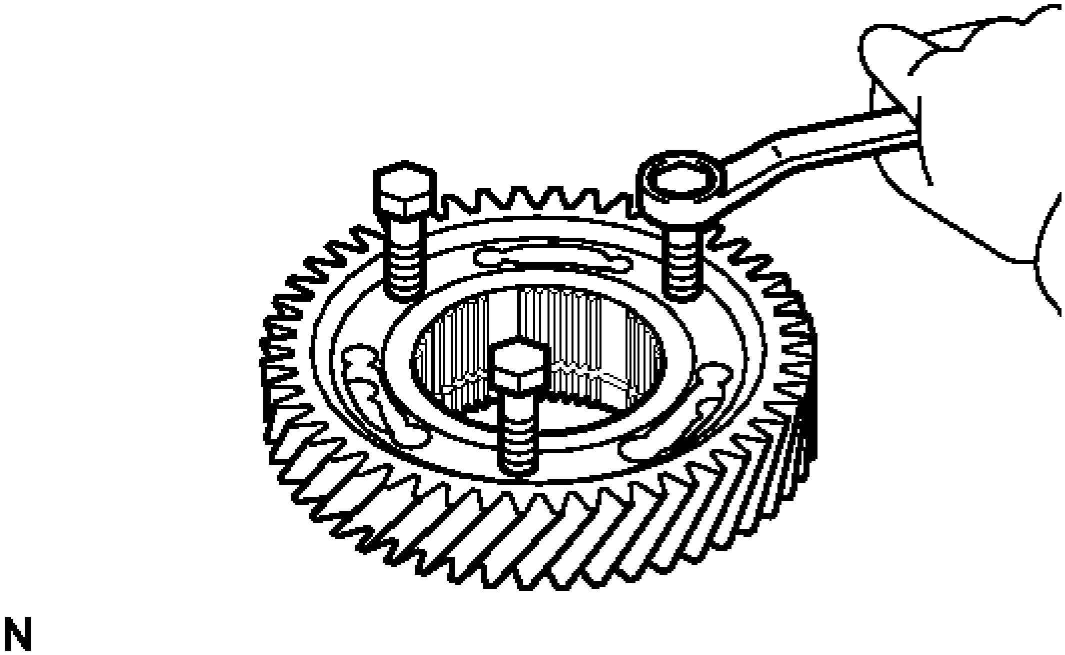

Fig. 262: Tightening Bolts
Courtesy of TOYOTA MOTOR SALES, U.S.A., INC.

c. Using SST, remove the bearing inner race (front side) from the counter drive gear.

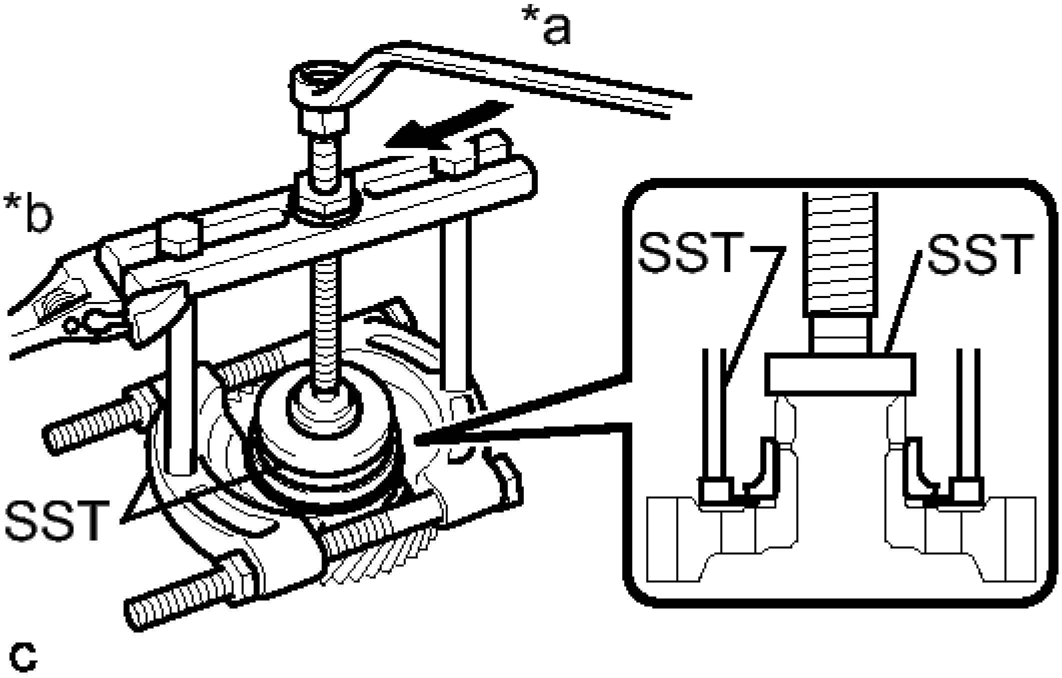

Fig. 263: Identifying Bearing Inner Race (Front Side)
Courtesy of TOYOTA MOTOR SALES, U.S.A., INC.

TEXT IN ILLUSTRATION

*a	Turn
*b	Hold

- **SST: 09950-00020**
- **SST: 09950-00030**
- **SST: 09950-60020**
  09951-00710

63. **REMOVE NO. 3 BRAKE PISTON**
    a. Using a screwdriver, remove the snap ring from the transaxle case.

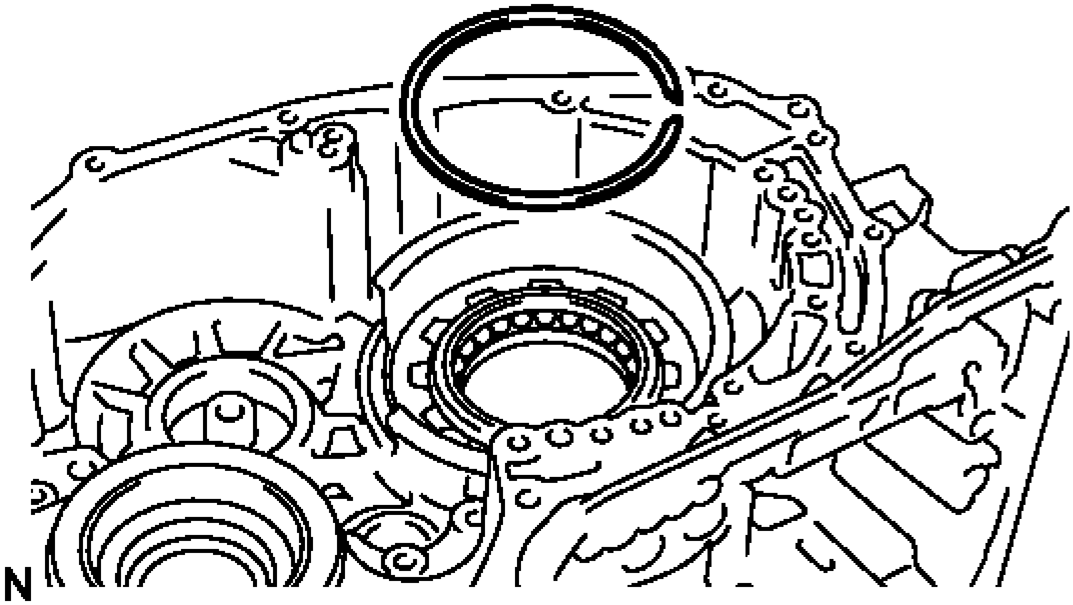

Fig. 264: Identifying Snap Ring
Courtesy of TOYOTA MOTOR SALES, U.S.A., INC.

b. Remove the brake piston return spring from the transaxle case.

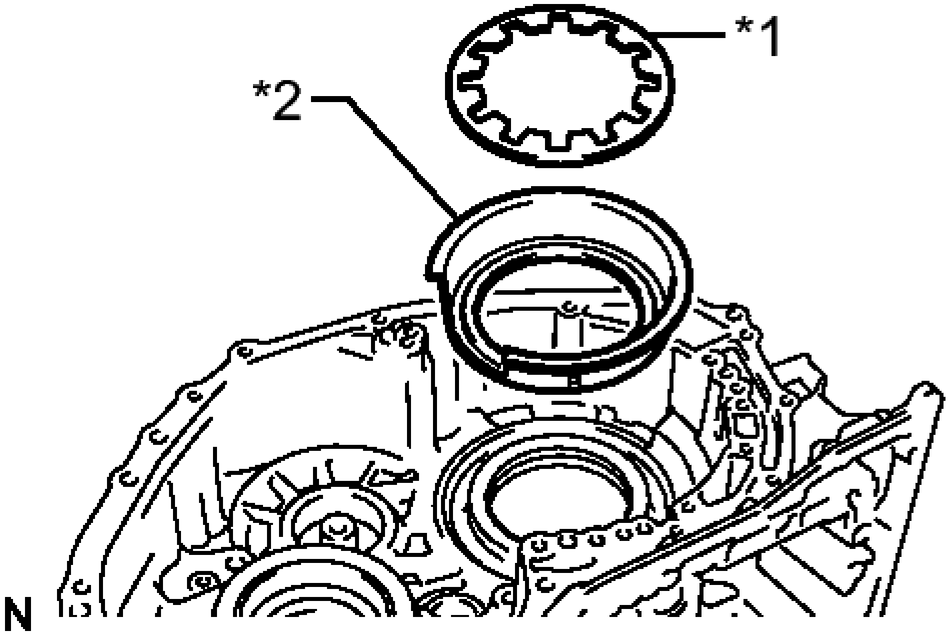

Fig. 265: Identifying Brake Piston Return Spring And No. 3 Brake Piston
Courtesy of TOYOTA MOTOR SALES, U.S.A., INC.

TEXT IN ILLUSTRATION

*1	Brake Piston Return Spring
*2	No. 3 Brake Piston

c. Remove the No. 3 brake piston from the transaxle case.

64. REMOVE MANUAL DETENT SPRING SUB-ASSEMBLY

a. Remove the bolt, cover and manual detent spring sub-assembly from the transaxle case.

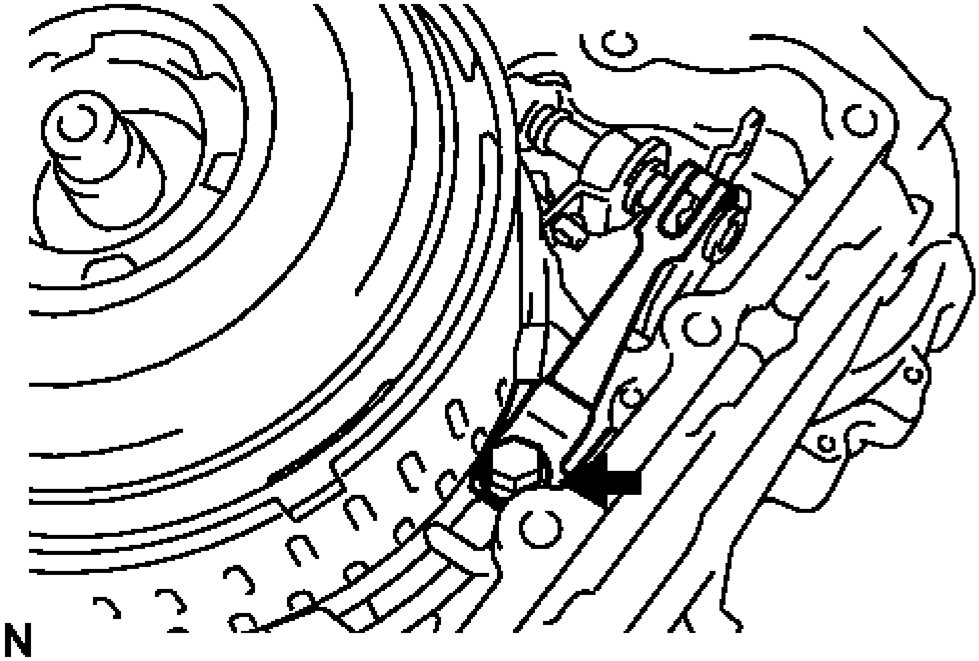

Fig. 266: Locating Manual Detent Spring Sub-Assembly Bolt
Courtesy of TOYOTA MOTOR SALES, U.S.A., INC.

65. REMOVE PARKING LOCK ROD SUB-ASSEMBLY

a. Remove the parking lock rod sub-assembly from the parking lock lever sub-assembly.

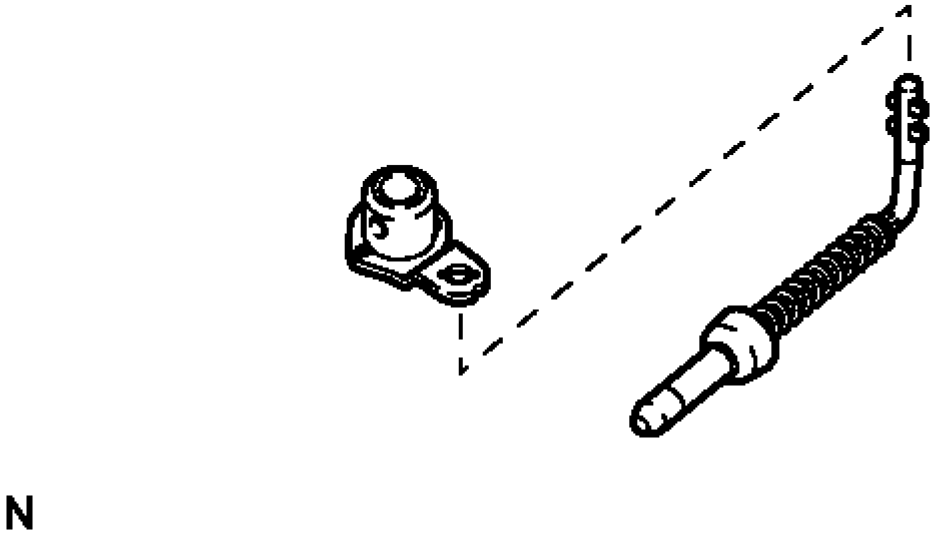

Fig. 267: Identifying Parking Lock Rod Sub-Assembly
Courtesy of TOYOTA MOTOR SALES, U.S.A., INC.

HINT:

Align the slot with the notches on the parking lock lever sub-assembly to remove the parking lock rod sub-assembly.

66. **REMOVE MANUAL VALVE LEVER SHAFT**
    a. Using needle-nose pliers, remove the manual valve lever shaft retainer spring from the transaxle case.

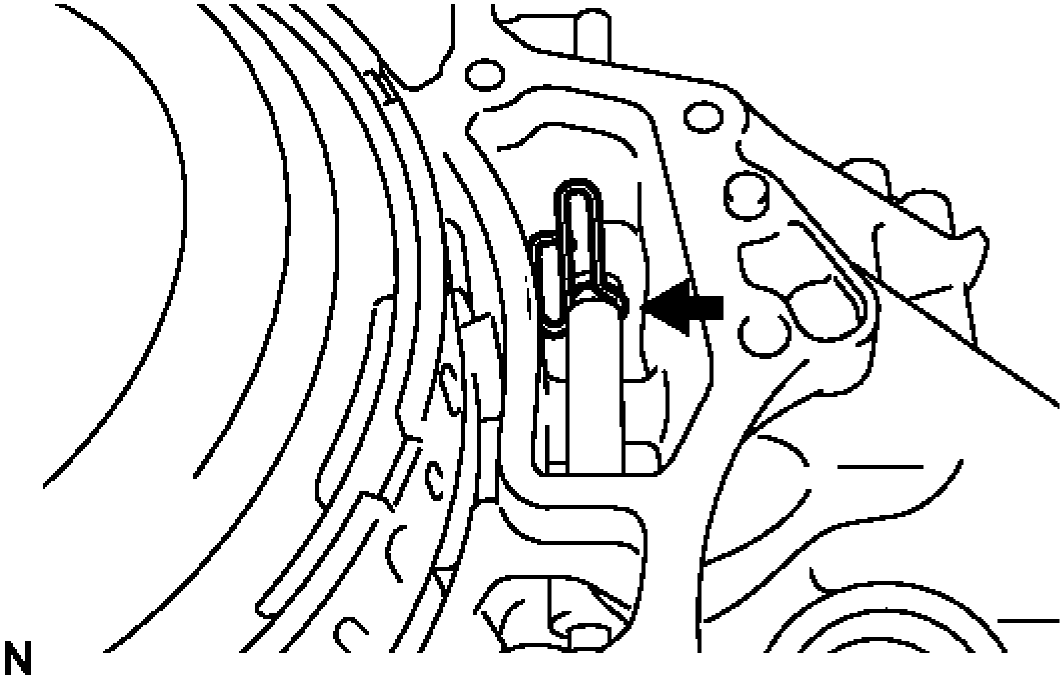

Fig. 268: Locating Manual Valve Lever Shaft
Courtesy of TOYOTA MOTOR SALES, U.S.A., INC.

b. Using a screwdriver, slide the spacer of the manual valve lever sub-assembly.

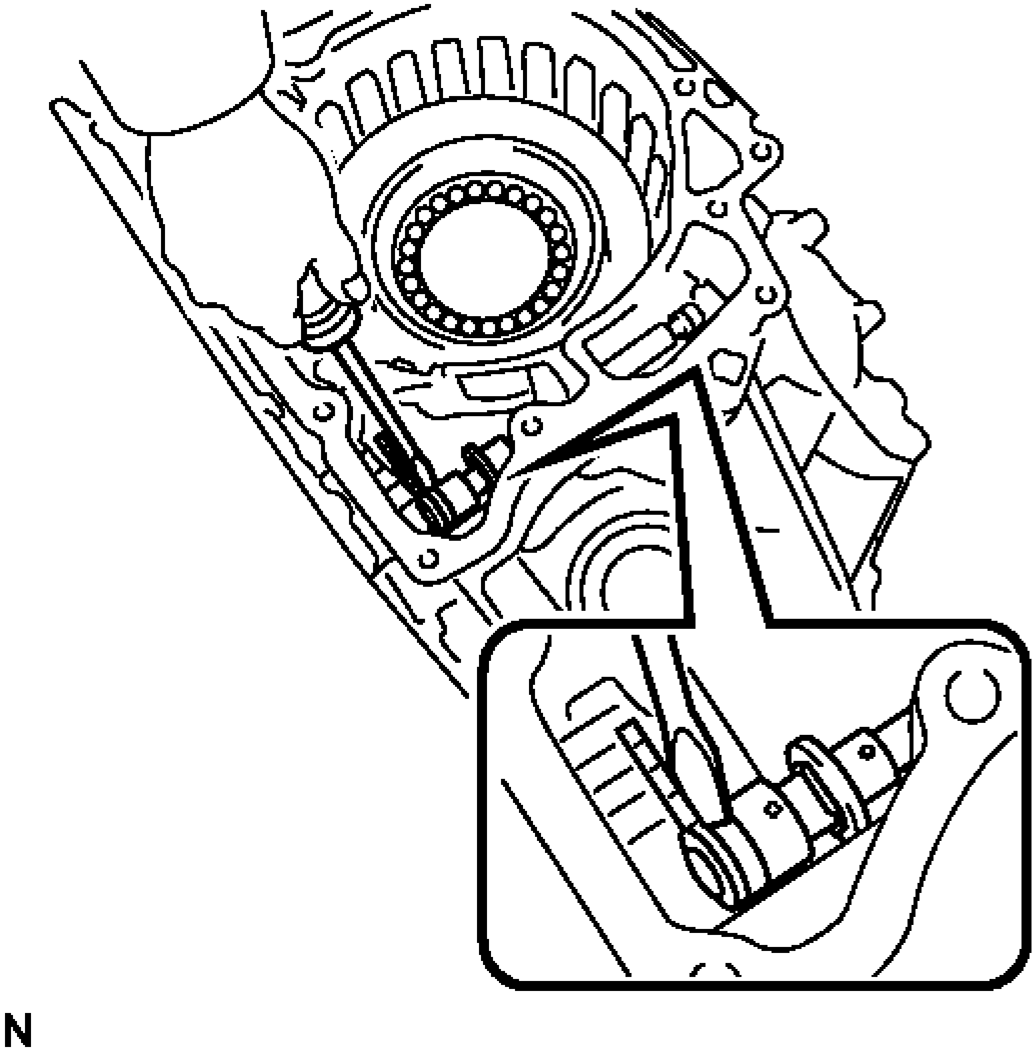

Fig. 269: Sliding Spacer Of Manual Valve Lever Sub-Assembly
Courtesy of TOYOTA MOTOR SALES, U.S.A., INC.

c. Using a pin punch (3 mm) and hammer, drive out the slotted spring pin from the manual valve lever sub-assembly.

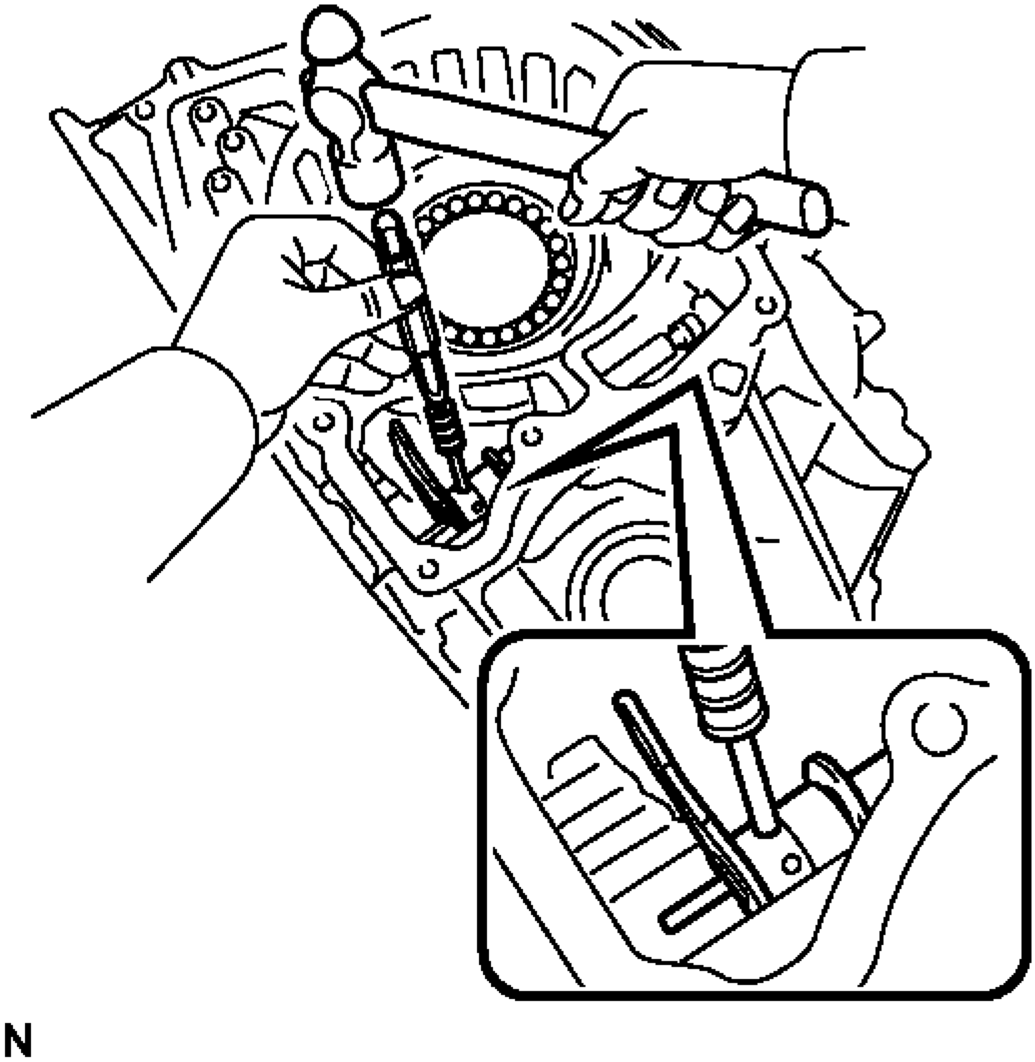

Fig. 270: Driving Out Slotted Spring Pin From Manual Valve Lever Sub-Assembly
Courtesy of TOYOTA MOTOR SALES, U.S.A., INC.

HINT:

To prevent the pin from falling into the case, drive the pin until it has cleared the manual valve lever shaft.

d. Using a screwdriver, slide the spacer of the parking lock lever sub-assembly.

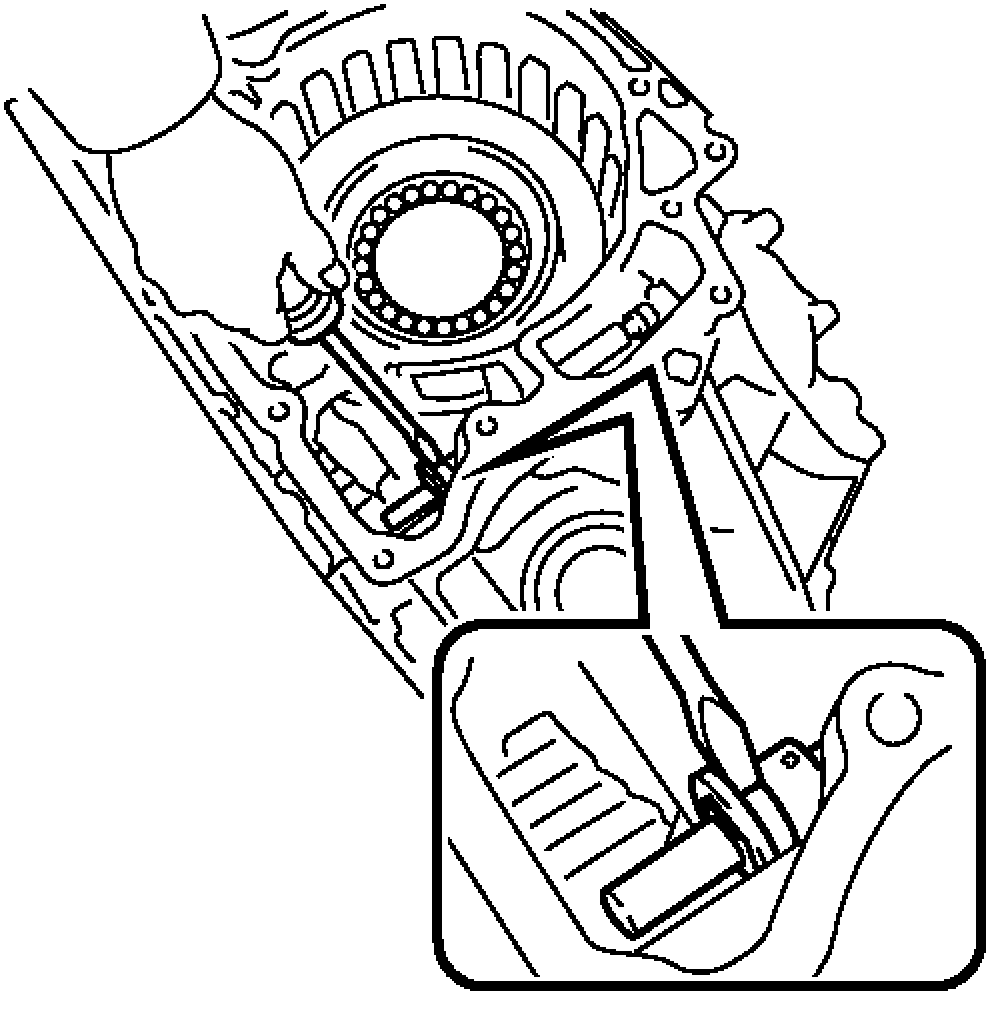

Fig. 271: Sliding Spacer Of Parking Lock Lever Sub-Assembly
Courtesy of TOYOTA MOTOR SALES, U.S.A., INC.

e. Using a pin punch (3 mm) and hammer, drive out the slotted spring pin from the parking lock lever sub-assembly.

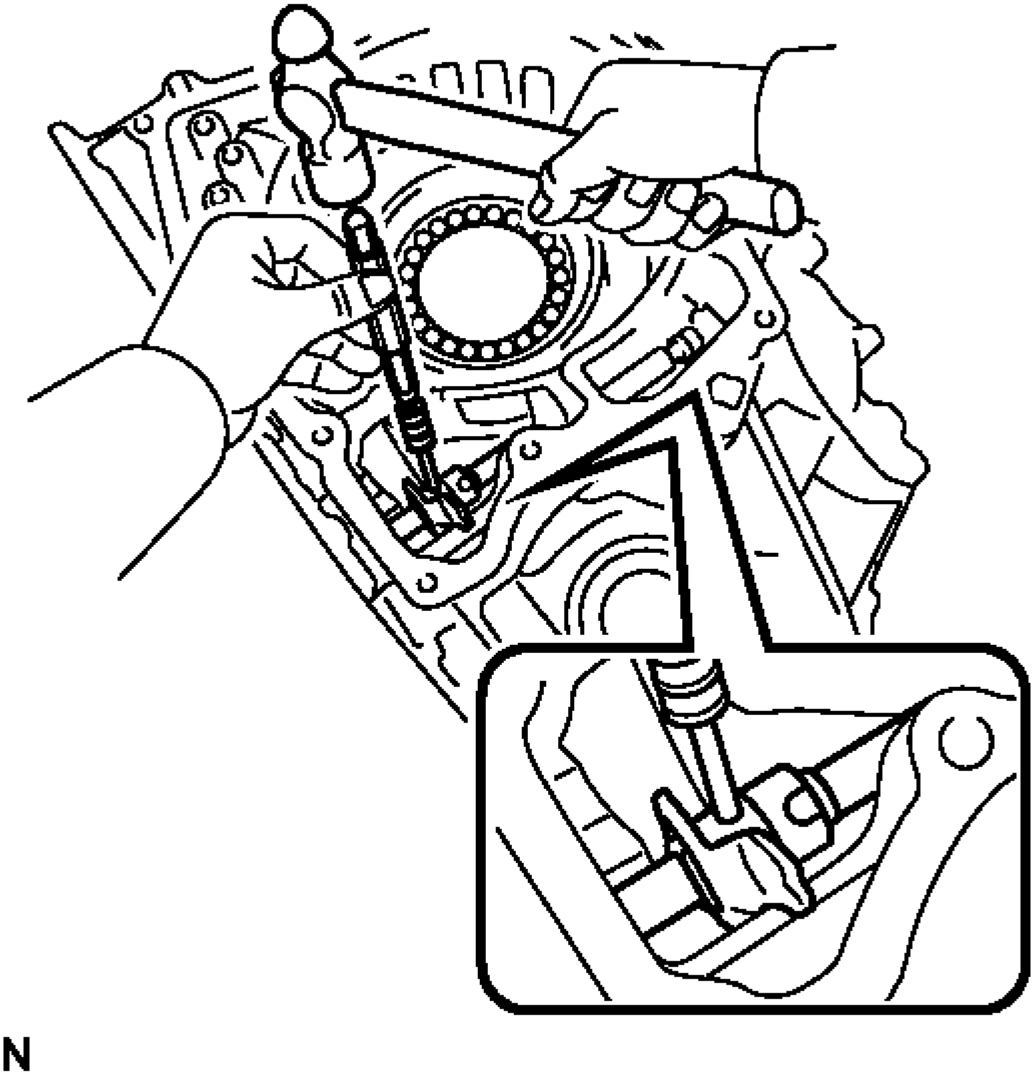

Fig. 272: Driving Out Slotted Spring Pin From Parking Lock Lever Sub-Assembly
Courtesy of TOYOTA MOTOR SALES, U.S.A., INC.

HINT:

To prevent the pin from falling into the case, drive the pin until it has cleared the manual valve lever shaft.

f. Remove the manual valve lever shaft, manual valve lever sub-assembly, parking lock lever sub-assembly and 2 spacers from the transaxle case.

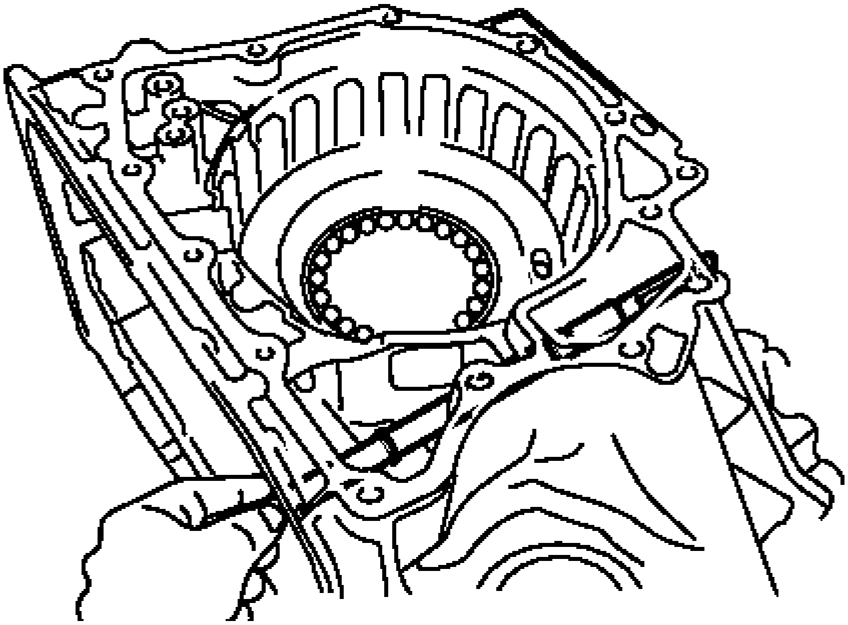

Fig. 273: Installing Manual Valve Lever Shaft, Manual Valve Lever Sub-Assembly And Parking Lock Lever Sub-Assembly
Courtesy of TOYOTA MOTOR SALES, U.S.A., INC.

67. **REMOVE MANUAL VALVE LEVER SHAFT OIL SEAL**
    a. Using a screwdriver, remove the manual valve lever shaft oil seal from the transaxle case.

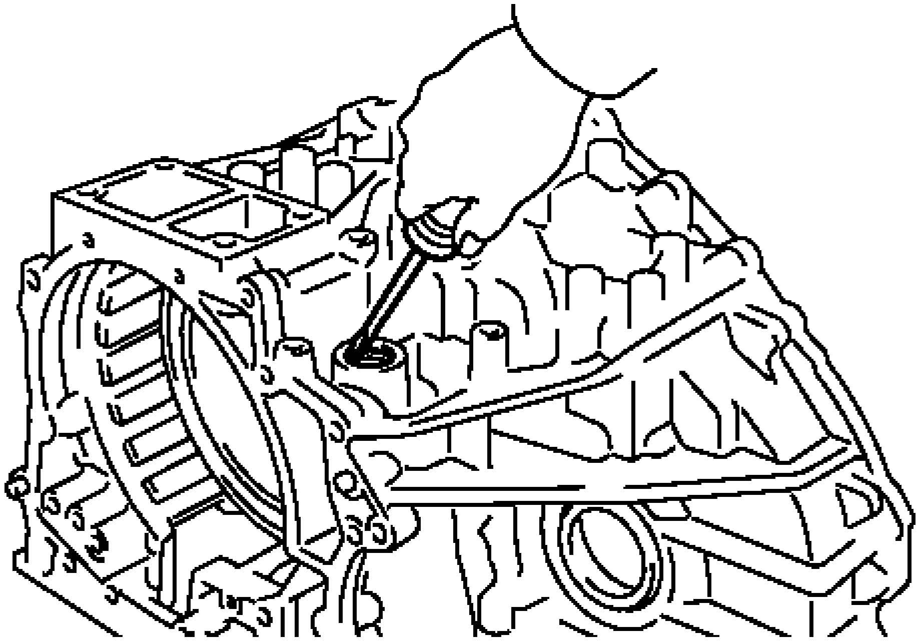

Fig. 274: Removing Manual Valve Lever Shaft Oil Seal From Transaxle Case
Courtesy of TOYOTA MOTOR SALES, U.S.A., INC.

INSPECTION

INSPECTION

1. **INSPECT TRANSMISSION OIL CLEANER MAGNET**
    a. Use the removed magnets to collect any steel chips. Examine the chips and particles in the pan and on the magnets to determine what type of wear has occurred in the transaxle:

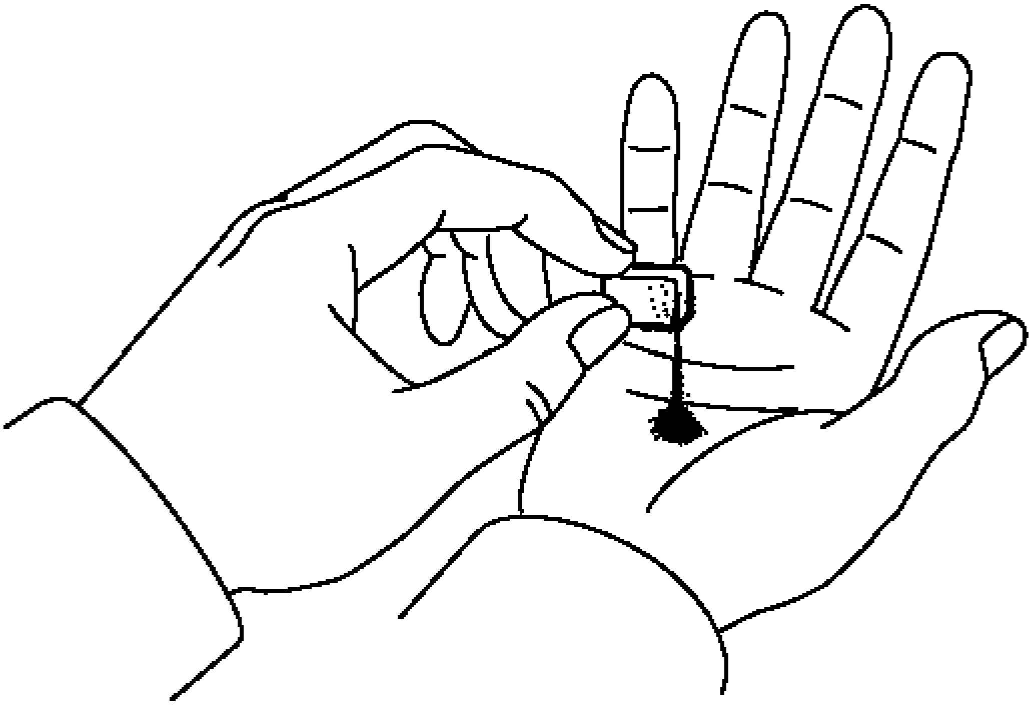

Fig. 275: Inspecting Transmission Oil Cleaner Magnet
Courtesy of TOYOTA MOTOR SALES, U.S.A., INC.

Result	
Steel (magnetic)	Bearing, gear and plate wear
Brass (non-magnetic)	Bushing wear

2. **INSPECT INPUT SHAFT SUB-ASSEMBLY**
    a. Using a dial indicator, measure the input shaft end play.

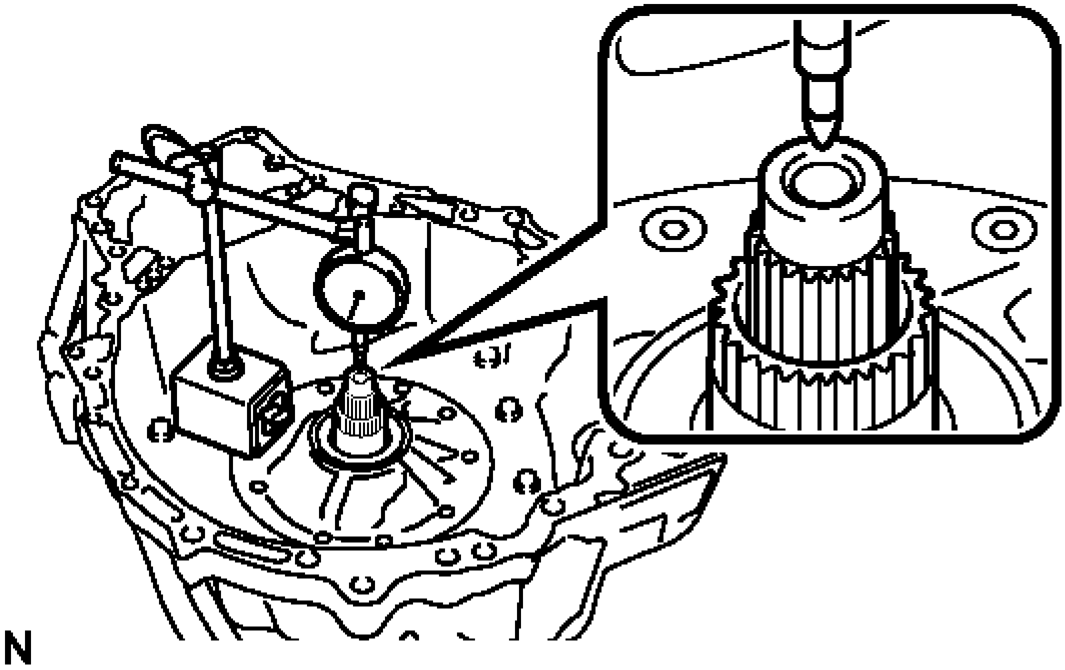

Fig. 276: Measuring Input Shaft End Play
Courtesy of TOYOTA MOTOR SALES, U.S.A., INC.

End play

0.012 to 1.250 mm (0.000473 to 0.0492 in.)

3. **INSPECT NO. 2 CLUTCH DISC**
   a. Check if the contact surfaces of the discs, plates and flange are worn or burnt.

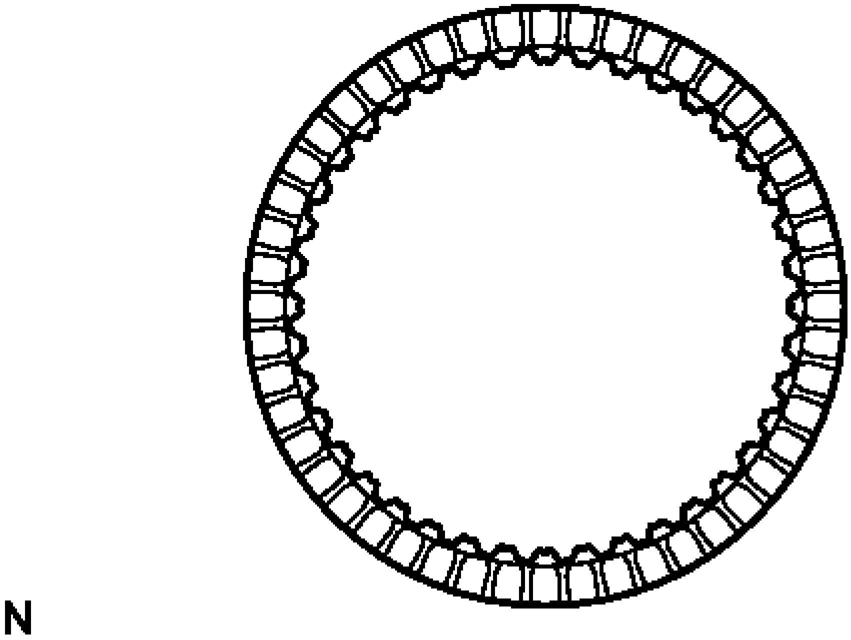

Fig. 277: Identifying No. 2 Clutch Disc
Courtesy of TOYOTA MOTOR SALES, U.S.A., INC.

NOTE:

- **If the lining of any disc is peeled off or discolored, or even if part of the groove is damaged, replace all discs.**
- **Before assembling new discs, soak them in ATF for at least 15 minutes.**

If necessary, replace them.

4. **INSPECT PLANETARY SUN GEAR SUB-ASSEMBLY**
    a. Using a dial indicator, measure the inside diameter of the bushings of the planetary sun gear.

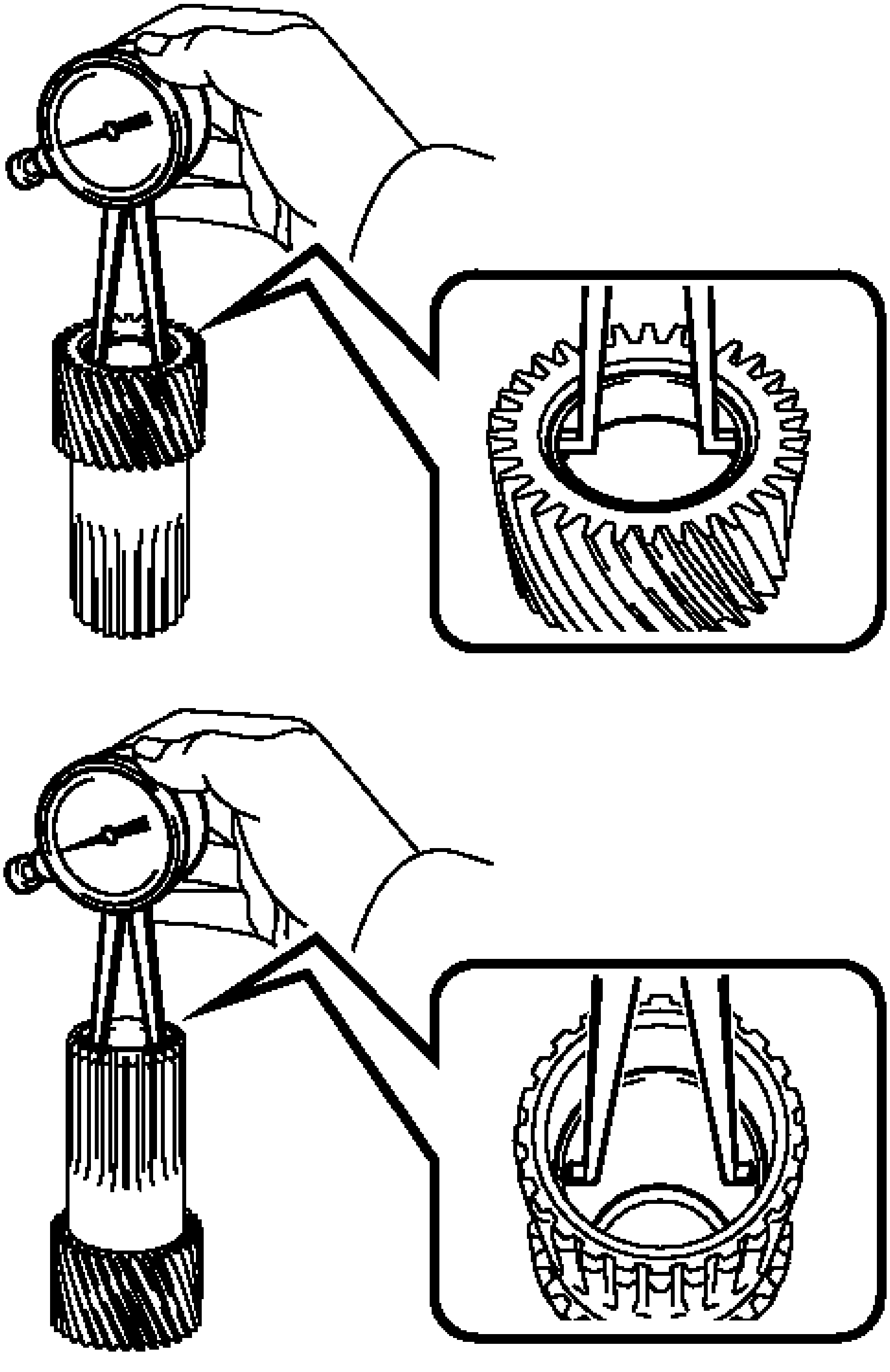

Fig. 278: Measuring Inside Diameter Of Bushings Of Planetary Sun Gear
Courtesy of TOYOTA MOTOR SALES, U.S.A., INC.

Standard inside diameter

25.525 to 25.546 mm (1.0049 to 1.0057 in.)

Maximum inside diameter

25.546 mm (1.0057 in.)

If the inside diameter is greater than the maximum, replace the planetary sun gear.

5. **INSPECT NO. 1 CLUTCH DISC**
   a. Check if the contact surfaces of the discs, plates and flange are worn or burnt.

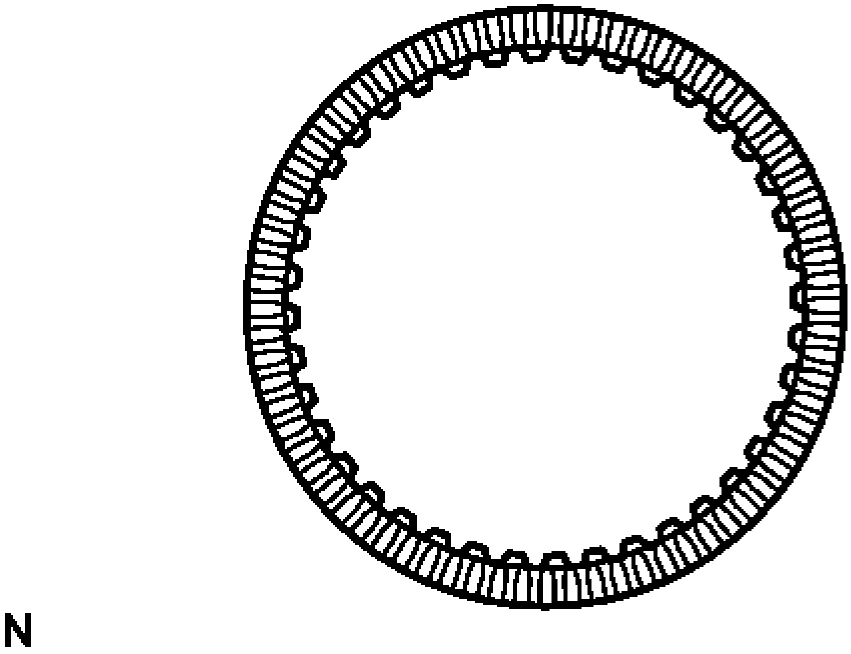

Fig. 279: Identifying No. 1 Clutch Disc
Courtesy of TOYOTA MOTOR SALES, U.S.A., INC.

NOTE:

- **If the lining of any disc is peeled off or discolored, or even if part of the groove is damaged, replace all discs.**
- **Before assembling new discs, soak them in ATF for at least 15 minutes.**

If necessary, replace them.

6. **INSPECT NO. 3 BRAKE DISC**
   a. Check if the contact surfaces of the discs, plates and flanges are worn or burnt.

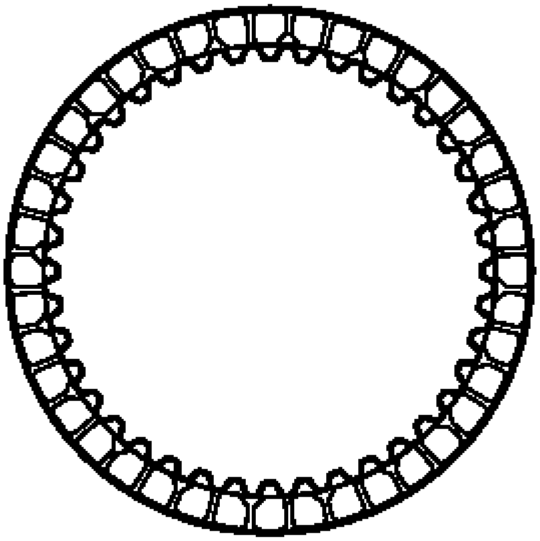

Fig. 280: Identifying No. 3 Brake Disc
Courtesy of TOYOTA MOTOR SALES, U.S.A., INC.

NOTE:

- **If the lining of any disc is peeled off or discolored, or even if part of the groove is damaged, replace all discs.**
- **Before assembling new discs, soak them in ATF for at least 15 minutes.**

If necessary, replace them.

7. **INSPECT UNDERDRIVE PLANETARY GEAR ASSEMBLY**
    a. Using a feeler gauge, measure the clearance between the underdrive planetary gear and the pinion gear at 4 points.

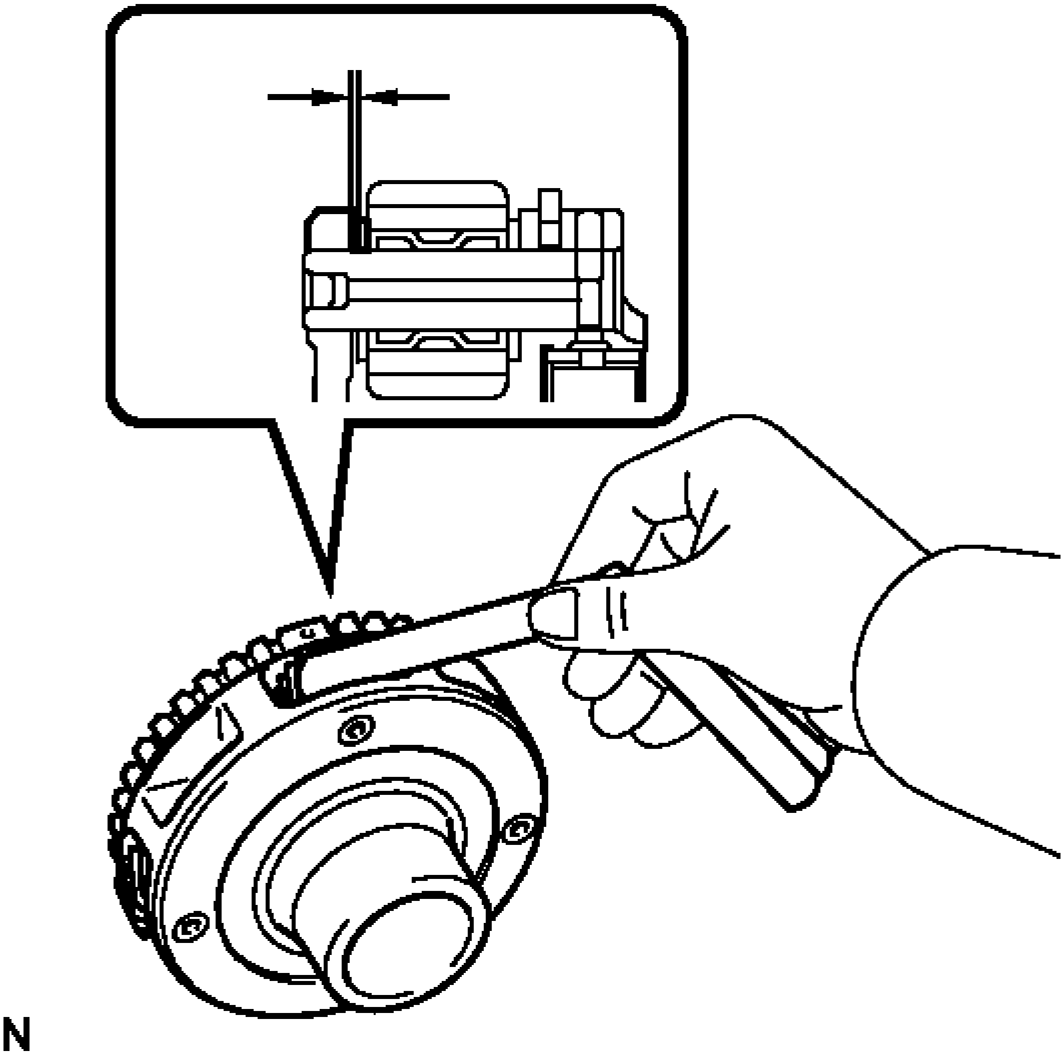

Fig. 281: Measuring Clearance Between Underdrive Planetary Gear And Pinion Gear
Courtesy of TOYOTA MOTOR SALES, U.S.A., INC.

Standard clearance

0.18 to 0.54 mm (0.00709 to 0.0213 in.)

If the clearance is greater than the standard clearance, replace the underdrive planetary gear.

8. **INSPECT REAR PLANETARY SUN GEAR ASSEMBLY**
   a. Using a dial indicator, measure the inside diameter of the bushing of the rear planetary sun gear sub-assembly.

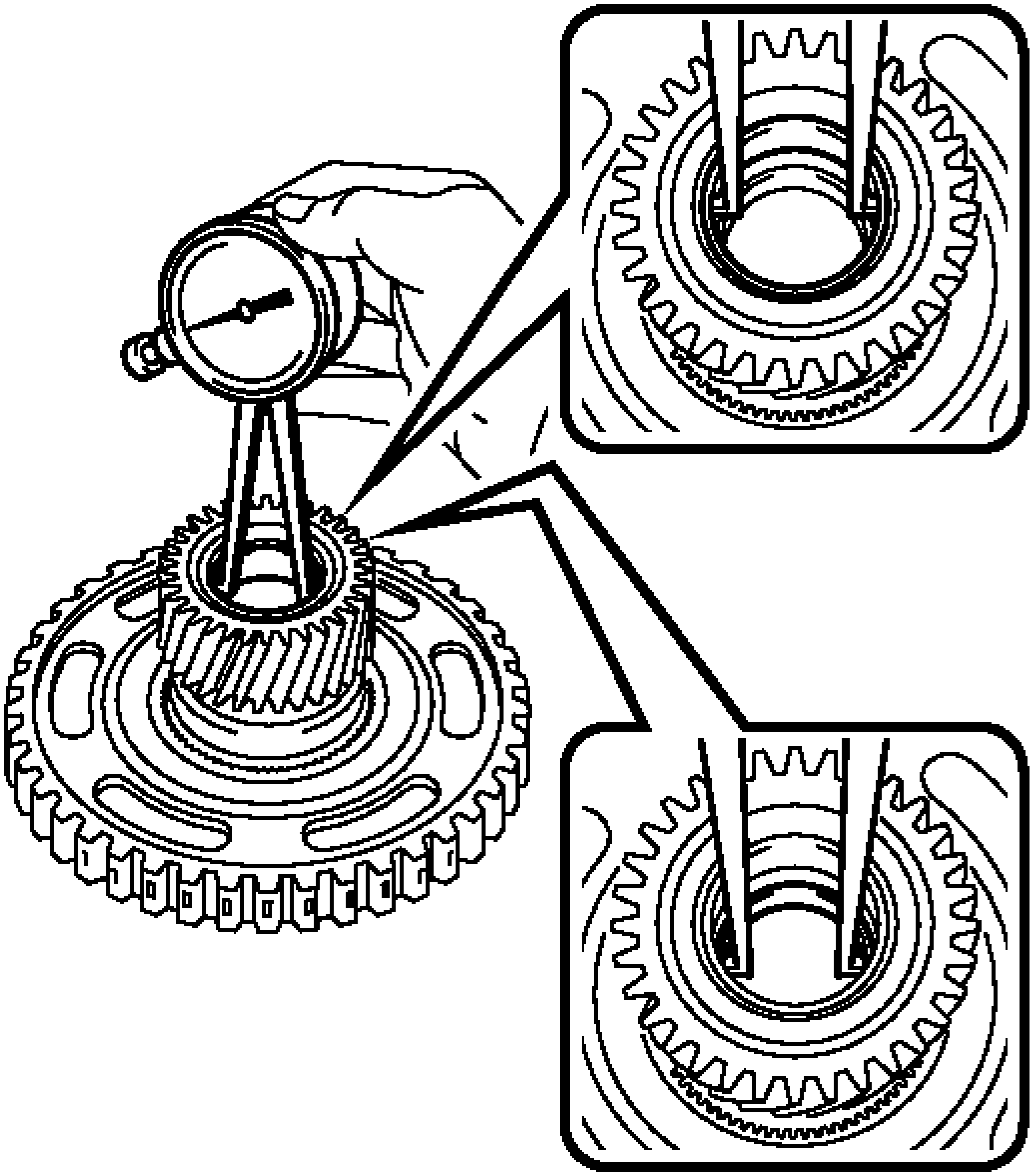

Fig. 282: Measuring Inside Diameter Of Bushing Of Rear Planetary Sun Gear Sub-Assembly
Courtesy of TOYOTA MOTOR SALES, U.S.A., INC.

Standard inside diameter

25.580 to 25.601 mm (1.0071 to 1.0079 in.)

Maximum inside diameter

25.601 mm (1.0079 in.)

If the inside diameter is greater than the maximum, replace the rear planetary sun gear assembly.

9. **INSPECT NO. 1 BRAKE DISC**
   a. Check if the contact surfaces of the discs, plates and flange are worn or burnt.

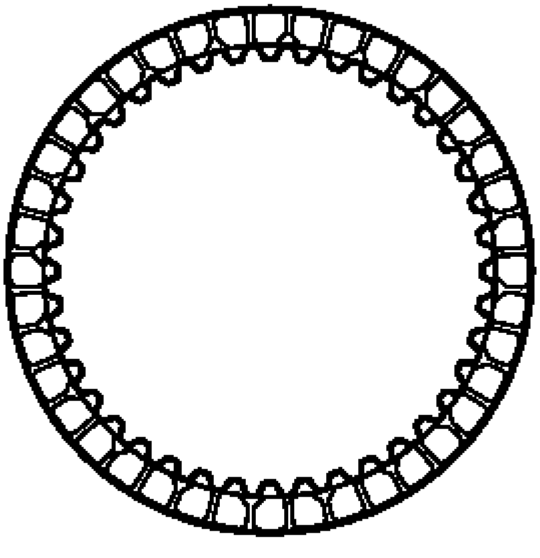

Fig. 283: Identifying No. 3 Brake Disc
Courtesy of TOYOTA MOTOR SALES, U.S.A., INC.

NOTE:

- **If the lining of any disc is peeled off or discolored, or even if part of the groove is damaged, replace all discs.**
- **Before assembling new discs, soak them in ATF for at least 15 minutes.**

If necessary, replace them.

10. **INSPECT 2ND BRAKE PISTON RETURN SPRING SUB-ASSEMBLY**
    a. Using a vernier caliper, measure the free length of the 3 2nd brake piston return springs including the spring seats.

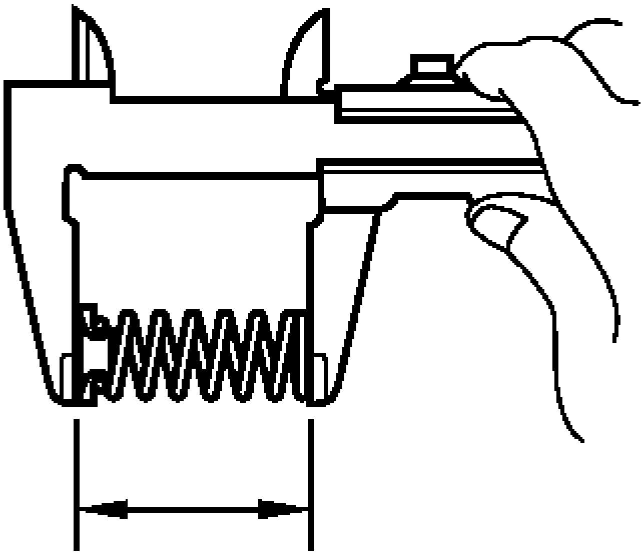

Fig. 284: Measuring Free Length Of 2nd Brake Piston Return Springs
Courtesy of TOYOTA MOTOR SALES, U.S.A., INC.

Standard free length

23.85 mm (0.939 in.)

If the free length is shorter than the standard free length, replace the 2nd brake piston return spring.

11. **INSPECT ONE-WAY CLUTCH ASSEMBLY**
    a. Temporarily install the one-way clutch assembly to the planetary ring gear.

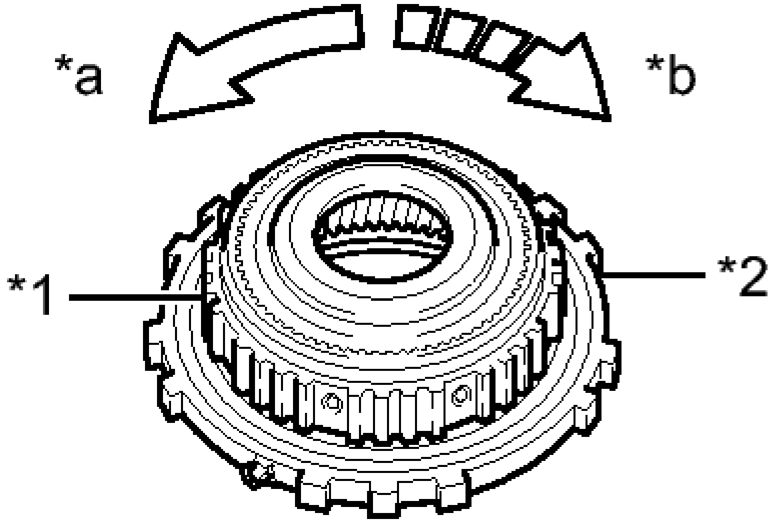

Fig. 285: Identifying One-Way Clutch Assembly
Courtesy of TOYOTA MOTOR SALES, U.S.A., INC.

TEXT IN ILLUSTRATION

*1	Planetary Ring Gear
*2	One-way Clutch Assembly
*a	Free
*b	Lock

b. Make sure that the one-way clutch assembly turns freely counterclockwise and locks when turned clockwise.

   If the one-way clutch assembly does not operate normally, replace it.

12. **INSPECT PLANETARY GEAR ASSEMBLY**
    a. Using a feeler gauge, measure the clearance between the planetary gear case and each pinion gear at points A and B.

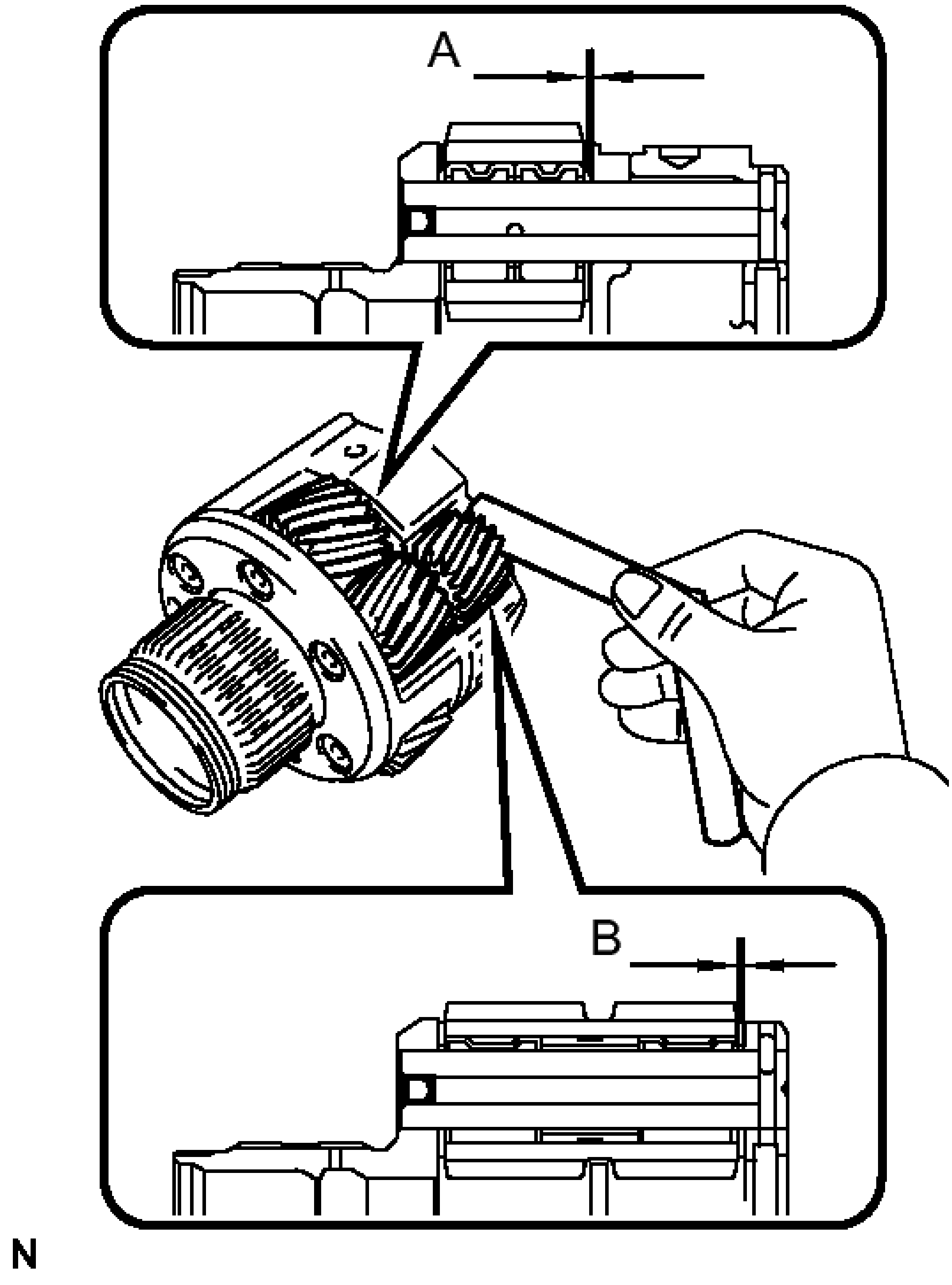

Fig. 286: Measuring Clearance Between Planetary Gear Case And Pinion Gear
Courtesy of TOYOTA MOTOR SALES, U.S.A., INC.

Standard Clearance

Point A

0.23 to 0.59 mm (0.00906 to 0.0232 in.)

Point B

0.16 to 0.66 mm (0.00630 to 0.0259 in.)

If the clearance is greater than the standard clearance, replace the planetary gear assembly.

13. **INSPECT NO. 2 BRAKE DISC**
    a. Check if the contact surfaces of the discs, plates and flange are worn or burnt.

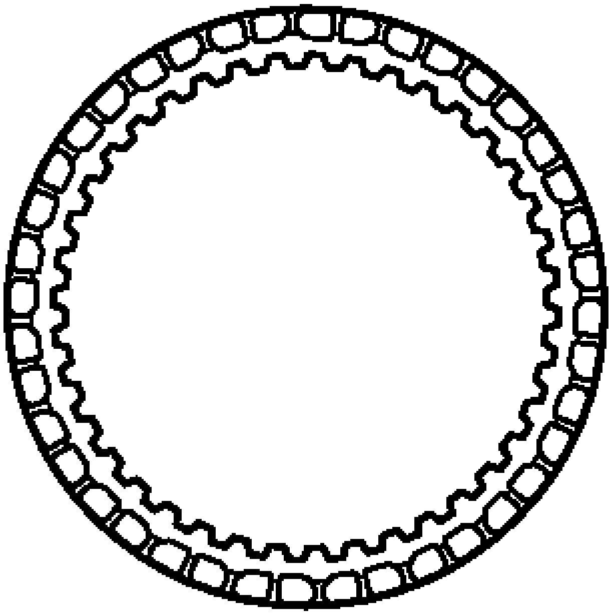

Fig. 287: Identifying No. 2 Brake Disc
Courtesy of TOYOTA MOTOR SALES, U.S.A., INC.

NOTE:

- **If the lining of any disc is peeled off or discolored, or even if part of the groove is damaged, replace all discs.**
- **Before assembling new discs, soak them in ATF for at least 15 minutes.**

If necessary, replace them.

14. **INSPECT 1ST AND REVERSE BRAKE RETURN SPRING SUB-ASSEMBLY**

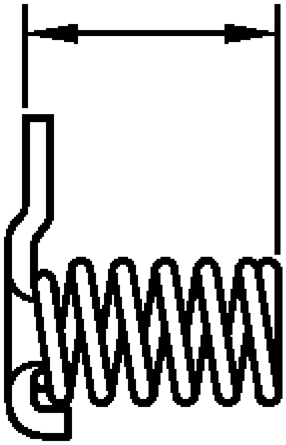

N

Fig. 288: Measuring Free Length
Courtesy of TOYOTA MOTOR SALES, U.S.A., INC.

a. Using a vernier caliper, measure the free length of the 1st and reverse brake return spring together with the spring seat.

   Standard free length

   15.79 mm (0.621 in.)

   If the free length is shorter than the standard free length, replace the 1st and reverse brake return spring.

15. **INSPECT CLEARANCE OF NO. 2 BRAKE**

   a. Using a dial indicator, measure the clearance of the No. 2 brake while applying compressed air (200 kPa, 2.0 kgf/cm^2 , 29 psi).

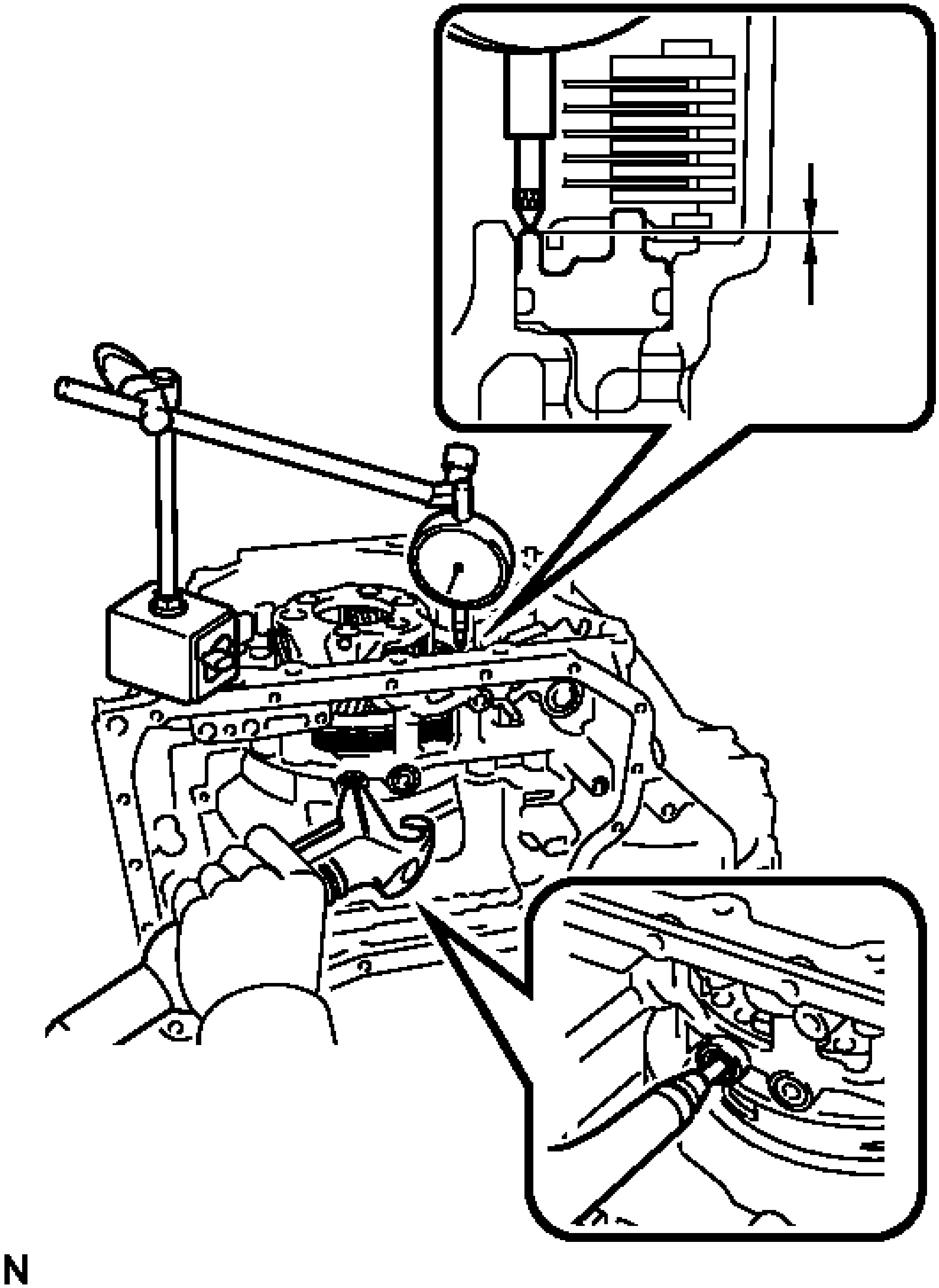

Fig. 289: Measuring Clearance Of No. 2 Brake
Courtesy of TOYOTA MOTOR SALES, U.S.A., INC.

Standard clearance

0.884 to 1.196 mm (0.0348 to 0.0471 in.)

HINT:

Measure the clearance at 3 points where the brake piston diameter is approximately 140 mm (5.51 in.) and calculate the average.

If the clearance is not as specified, select an appropriate No. 2 brake flange so that the clearance will be within the specified range.

HINT:

There are 5 flanges of different thicknesses.

NO. 2 BRAKE FLANGE THICKNESS: MM (IN.)

Mark	Thickness
40	4.0 (0.157)
41	4.1 (0.161)
42	4.2 (0.165)
43	4.3 (0.169)
44	4.4 (0.173)

16. **INSPECT CLEARANCE OF NO. 1 BRAKE**
    a. Using a dial indicator, measure the clearance of the No. 1 brake while applying compressed air (200 kPa, 2.0 kgf/cm^2 , 29 psi).

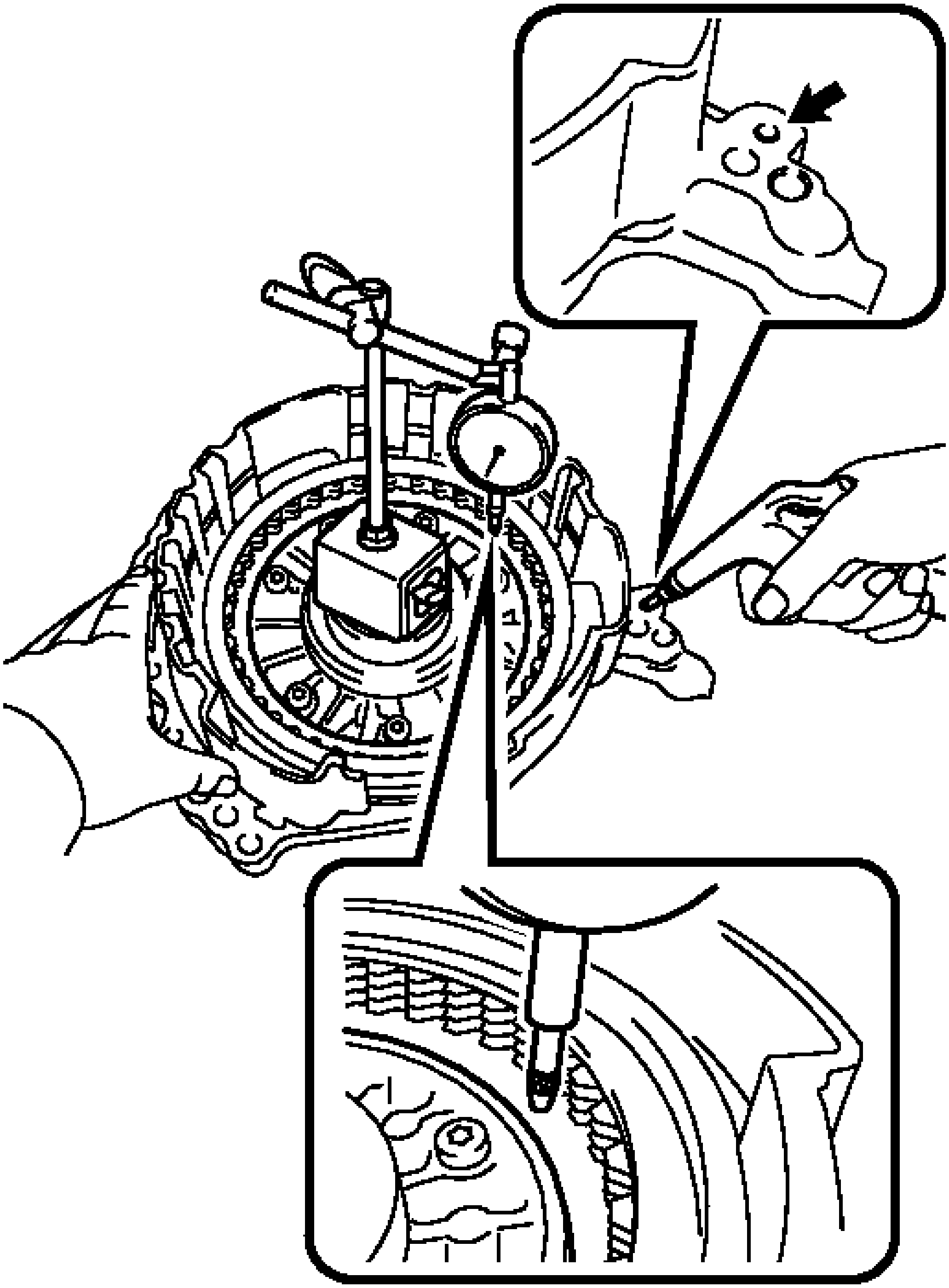

Fig. 290: Measuring Clearance Of No. 1 Brake
Courtesy of TOYOTA MOTOR SALES, U.S.A., INC.

Standard clearance

0.807 to 0.974 mm (0.0318 to 0.0383 in.)

HINT:

Measure the clearance at 3 points where the brake piston diameter is approximately 140 mm (5.51 in.) and calculate the average.

If the clearance is not as specified, select an appropriate No. 1 brake flange so that the clearance will be within the specified range.

HINT:

There are 6 flanges of different thicknesses.

NO. 1 BRAKE FLANGE THICKNESS: MM (IN.)

Mark	Thickness
30	3.0 (0.118)
31	3.1 (0.122)
32	3.2 (0.126)
33	3.3 (0.130)
34	3.4 (0.134)
35	3.5 (0.138)

17. **INSPECT CLEARANCE OF NO. 3 BRAKE**
    a. Using a vernier caliper and a straightedge, measure the distance shown in the illustration (Dimension A) while a load of 500 N (51 kgf, 112.4 lbf) is being applied to the flange.

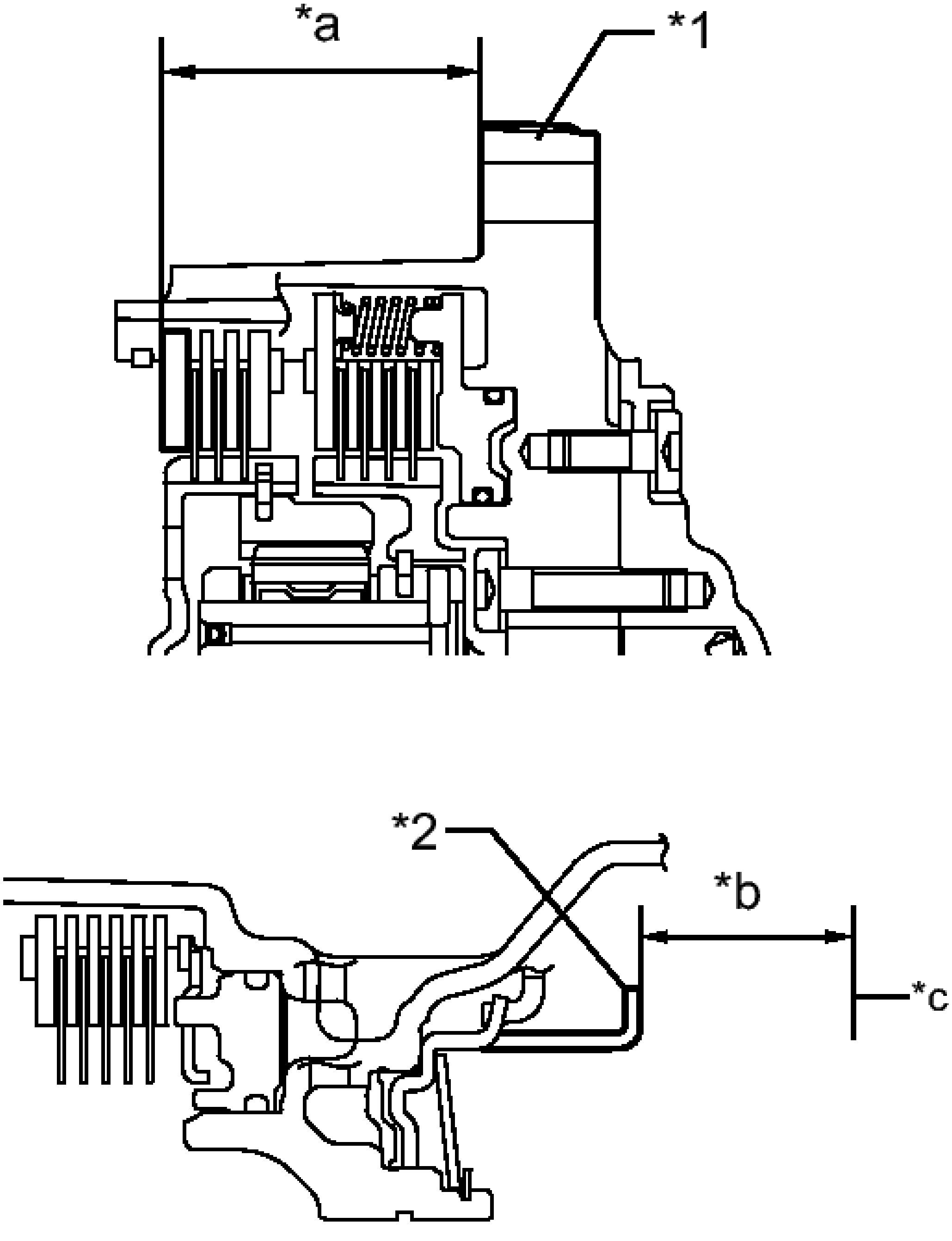

Fig. 291: Measuring Distance In Dimension A
Courtesy of TOYOTA MOTOR SALES, U.S.A., INC.

TEXT IN ILLUSTRATION

	Front Oil

*1	Pump Assembly
*2	No. 3 Brake Piston
*a	Dimension A
*b	Dimension B
*c	Contact surface of front oil pump assembly

HINT:

Measure dimension A at 3 points where the flange diameter is approximately 166 mm (6.54 in.) and calculate the average.

b. Using a vernier caliper and a straightedge, measure the distance shown in the illustration (Dimension B).

HINT:

Measure dimension B at 3 points where the No. 3 brake diameter is approximately 166 mm (6.54 in.) and calculate the average.

c. Calculate the clearance value using the following formula:

Clearance = Dimension B - Dimension A

Standard clearance

0.599 to 0.761 mm (0.0236 to 0.0300 in.)

If the clearance is not as specified, select an appropriate brake flange so that the clearance will be within the specified range.

HINT:

There are 6 flanges of different thicknesses.

NO. 3 BRAKE FLANGE THICKNESS: MM (IN.)

Mark	Thickness
38	3.80

	(0.150)
39	3.90 (0.154)
40	4.00 (0.157)
41	4.10 (0.161)
42	4.20 (0.165)
43	4.30 (0.169)

18. INSPECT CLEARANCE OF NO. 1 CLUTCH DISC

NOTE: **There are two different types of rear multiple disc clutch assembly. Refer to the illustration and visually inspect the rear multiple disc clutch assembly to determine if it is transaxle serial number 2########## or transaxle serial number 3##########.**

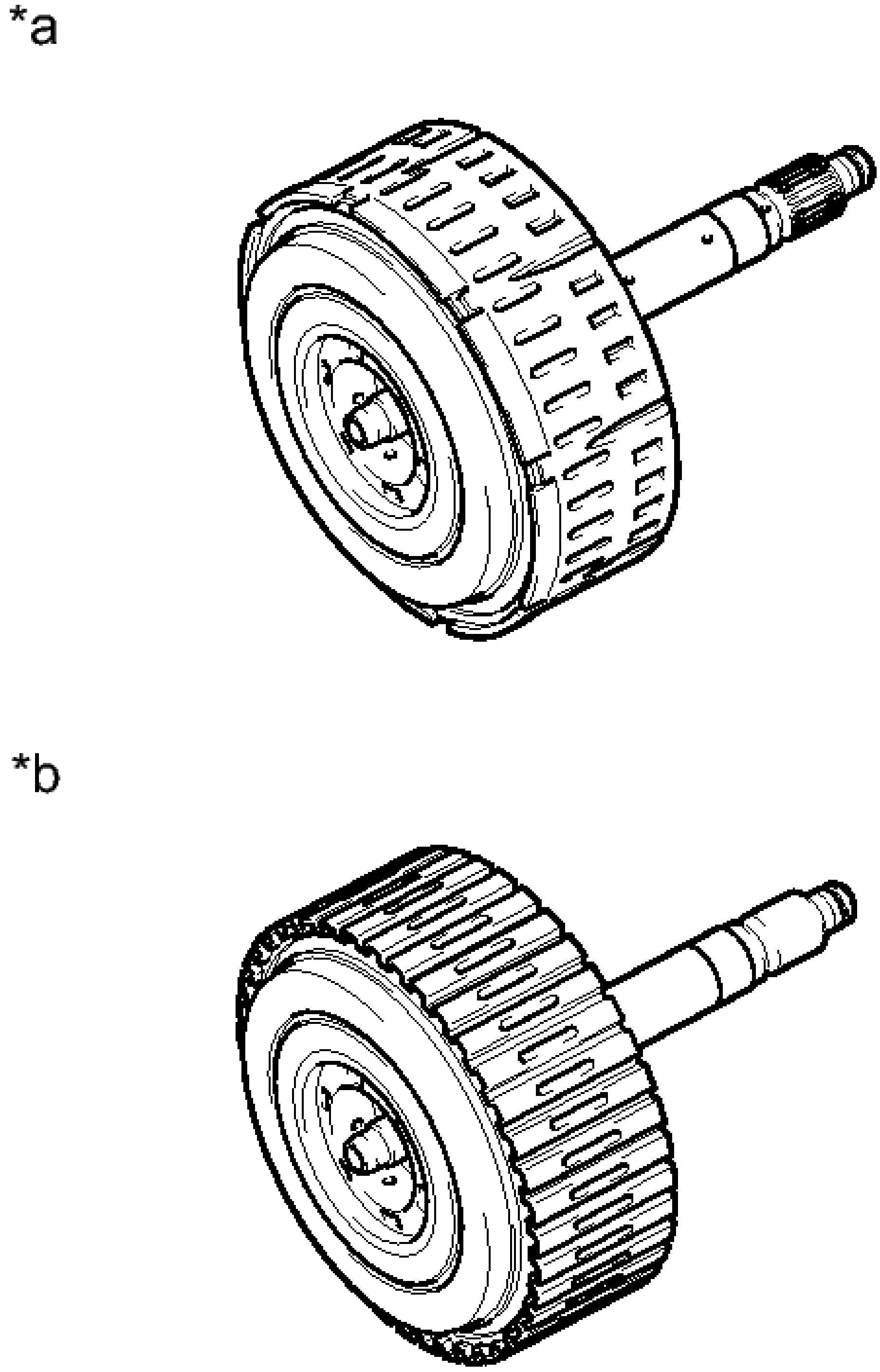

Fig. 292: Identifying Rear Multiple Disc Clutch Assembly
Courtesy of TOYOTA MOTOR SALES, U.S.A., INC.

TEXT IN ILLUSTRATION

	Transaxle

*a	serial number 2##########
*b	Transaxle serial number 3##########

a. Install the direct multiple disc clutch assembly onto the rear transaxle cover sub-assembly.

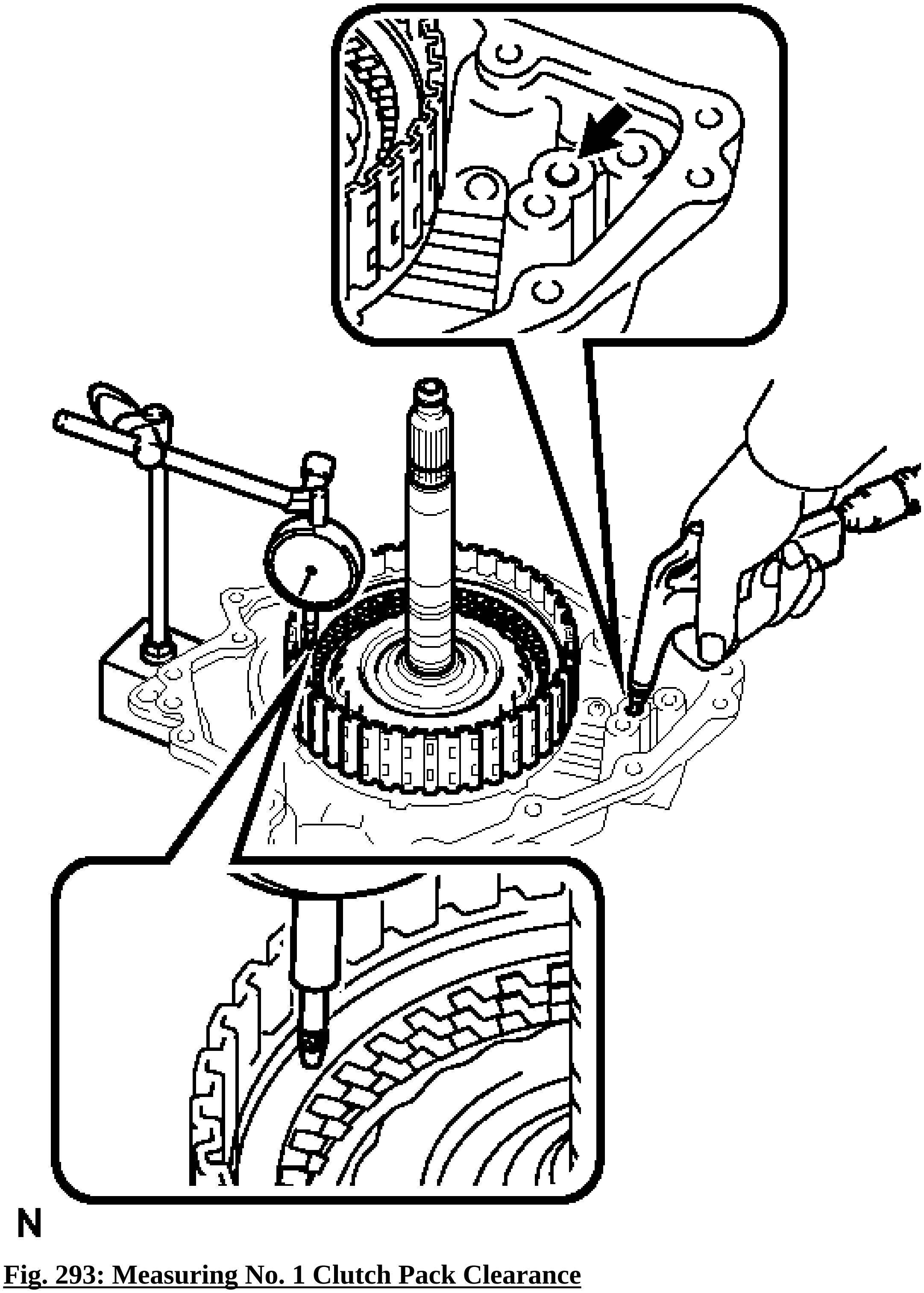

Fig. 293: Measuring No. 1 Clutch Pack Clearance
Courtesy of TOYOTA MOTOR SALES, U.S.A., INC.

b. Using a dial indicator, measure the No. 1 clutch pack clearance while applying and releasing compressed air (200 kPa, 2.0 kgf/cm^2 , 29 psi).

HINT:

Measure the clearance at 3 points where the flange diameter is approximately 152 mm (5.98 in.) and calculate the average.

Pack clearance

0.606 to 0.774 mm (0.0238 to 0.0305 in.)

If the pack clearance is not as specified, select an appropriate No. 1 clutch flange so that the pack clearance will be within the specified range.

HINT:

There are 7 flanges of different thicknesses.

NO. 1 CLUTCH FLANGE THICKNESS: MM (IN.)

Mark	**Thickness**
30	3.0 (0.118)
31	3.1 (0.122)
32	3.2 (0.126)
33	3.3 (0.130)
34	3.4 (0.134)
35	3.5 (0.138)
36*	3.6 (0.142)*

HINT:

*Transaxle serial number 3########## only

19. **INSPECT CLEARANCE OF NO. 2 CLUTCH DISC**
    a. Install the direct multiple disc clutch assembly onto the rear transaxle cover sub-assembly.

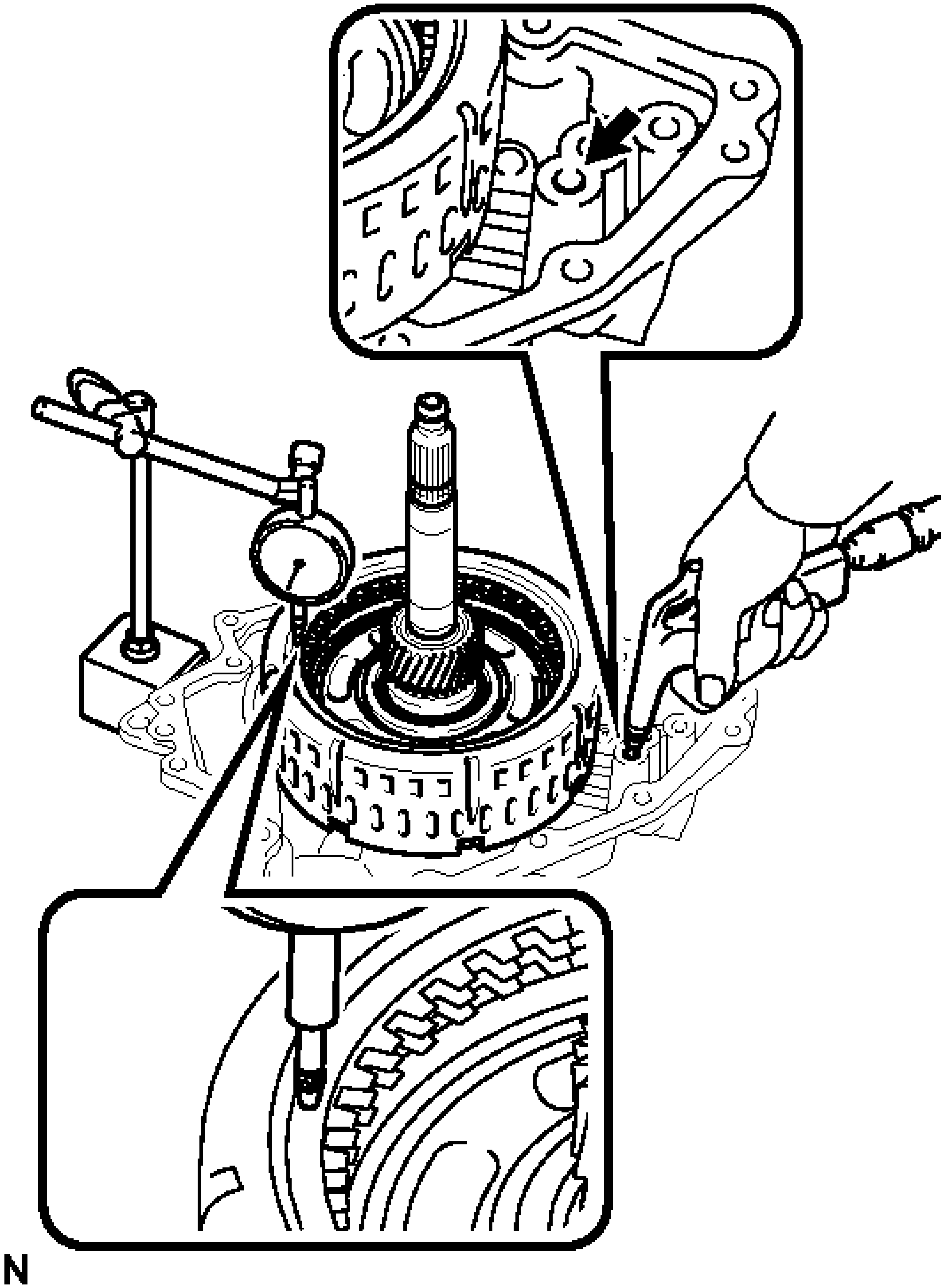

Fig. 294: Measuring No. 2 Clutch Pack Clearance
Courtesy of TOYOTA MOTOR SALES, U.S.A., INC.

b. Using a dial indicator, measure the No. 2 clutch pack clearance while applying and releasing compressed air (200 kPa, 2.0 kgf/cm^2 , 29 psi).

HINT:

Measure the clearance at 3 points where the diameter of the No. 2 direct multiple clutch piston is approximately 152 mm (5.98 in.) and calculate the average.

Pack clearance

0.544 to 0.744 mm (0.0214 to 0.0293 in.)

If the pack clearance is not as specified, select an appropriate No. 2 clutch flange so that the pack clearance will be within the specified range.

HINT:

There are 7 flanges of different thicknesses.

NO. 2 CLUTCH FLANGE THICKNESS: MM (IN.)

Mark	Thickness
30	3.0 (0.118)
31	3.1 (0.122)
32	3.2 (0.126)
33	3.3 (0.130)
34	3.4 (0.134)
35	3.5 (0.138)
36*	3.6 (0.142)*

HINT:

*Transaxle serial number 3########## only

REASSEMBLY

REASSEMBLY

1. **BEARING POSITION**
    a. Check bearing position and installation direction.

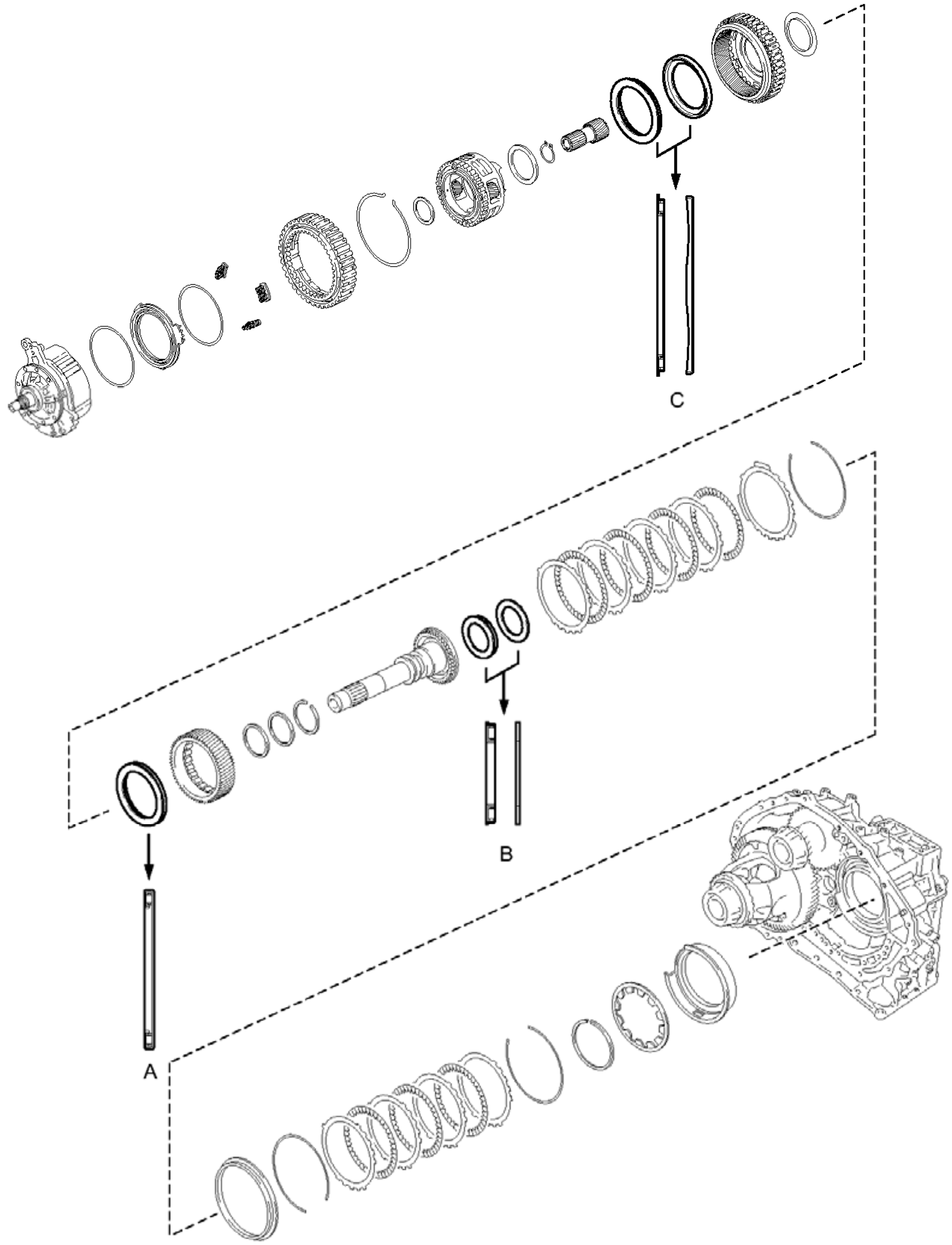

Fig. 295: Identifying Bearing Position (1 Of 2)
Courtesy of TOYOTA MOTOR SALES, U.S.A., INC.

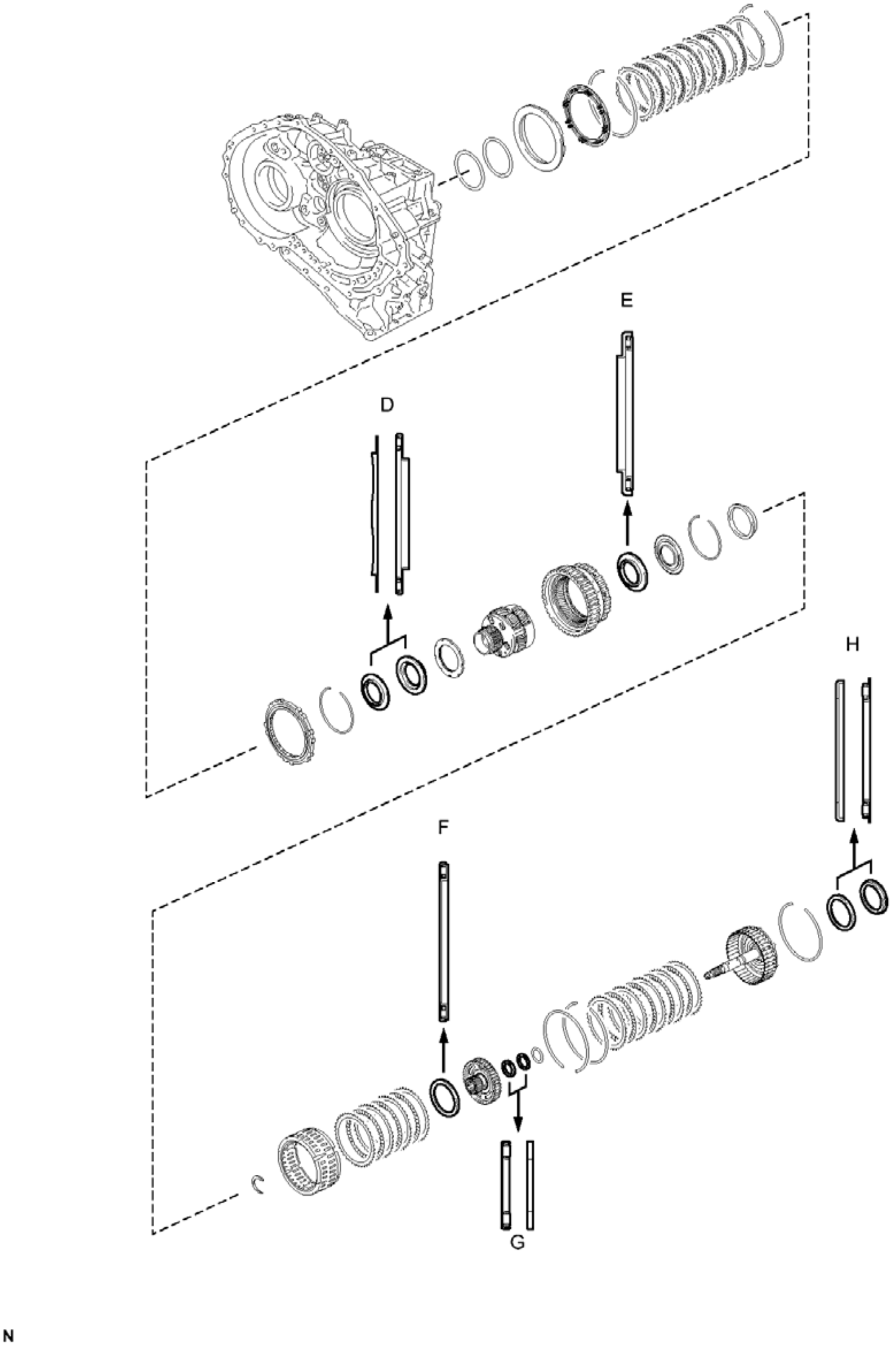

Fig. 296: Identifying Bearing Position (2 Of 2)
Courtesy of TOYOTA MOTOR SALES, U.S.A., INC.

	Front	Thrust	Rear

Mark	Race Diameter Inside / Outside mm (in.)	Bearing Diameter Inside / Outside mm (in.)	Race Diameter Inside / Outside mm (in.)
A	-	57.7 (2.27) / 75.2 (2.96)	-
B	-	29.1 (1.15) / 48.6 (1.91)	30.7 (1.21) / 48.3 (1.90)
C	65.9 (2.59) / 80.3 (3.16)	62.6 (2.47) / 82.4 (3.24)	-
D	59.4 (2.34) / 77 (3.03)	53.1 (2.09) / 79 (3.11)	-
E	-	56.1 (2.21) / 80.9 (3.19)	-
F	-	61.2 (2.41) / 79 (3.11)	-
G	-	28 (1.10) / 47.1 (1.85)	26.1 (1.03) / 44 (1.73)
H	52.2 (2.06) / 70.4 (2.77)	48.9 (1.93) / 72.0 (2.84)	-

2. **INSTALL MANUAL VALVE LEVER SHAFT OIL SEAL**
   a. Coat the lip of a new manual valve lever shaft oil seal with MP grease.

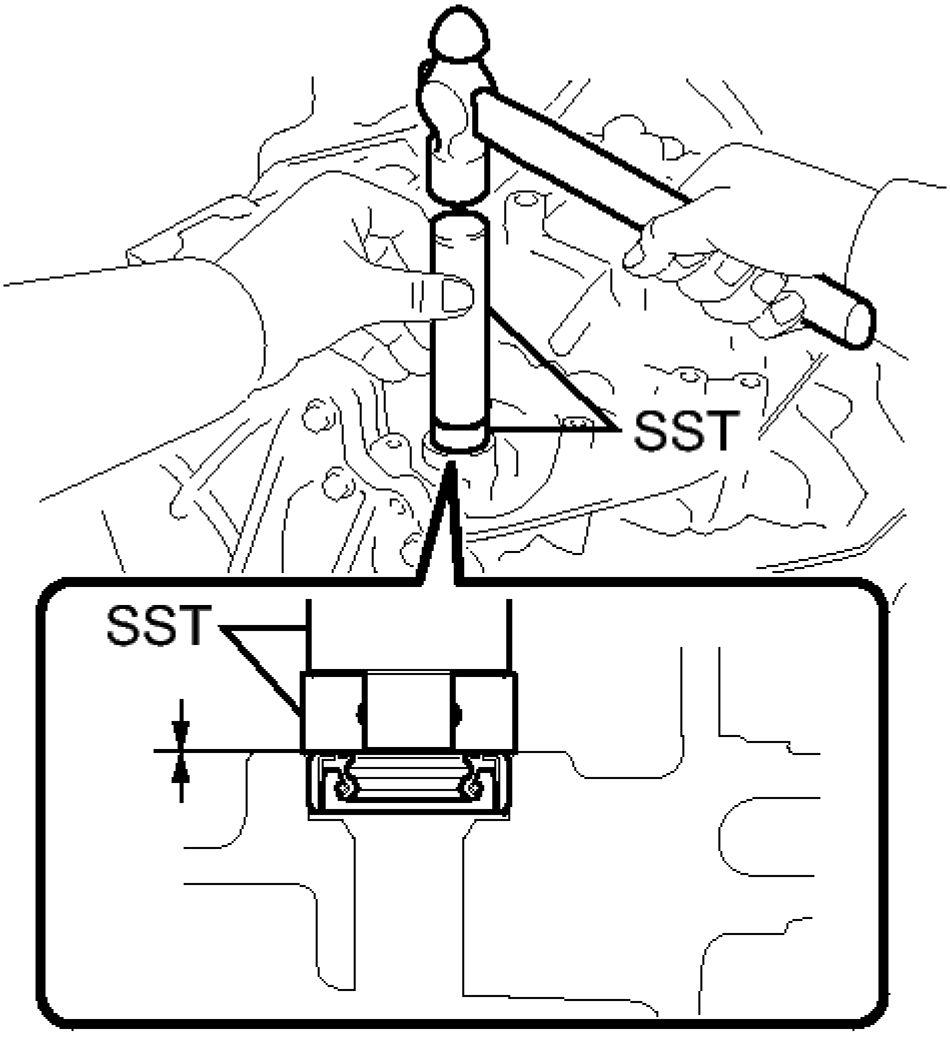

Fig. 297: Installing Manual Valve Lever Shaft Oil Seal
Courtesy of TOYOTA MOTOR SALES, U.S.A., INC.

b. Using SST and a hammer, install the manual valve lever shaft oil seal to the transaxle case.
   - **SST: 09950-60010**
     09951-00230
   - **SST: 09950-70010**
     09951-07100

Oil seal driven in depth

-0.5 to 0.5 mm (-0.0197 to 0.0197 in.)

3. **INSTALL MANUAL VALVE LEVER SHAFT**
   a. Install a new spacer to the parking lock lever sub-assembly.

b. Install the parking lock lever sub-assembly to the manual valve lever shaft.
c. Install a new spacer to the manual valve lever sub-assembly.
d. Install the manual valve lever sub-assembly to the manual valve lever shaft.
e. Install the manual valve lever shaft to the transaxle case.

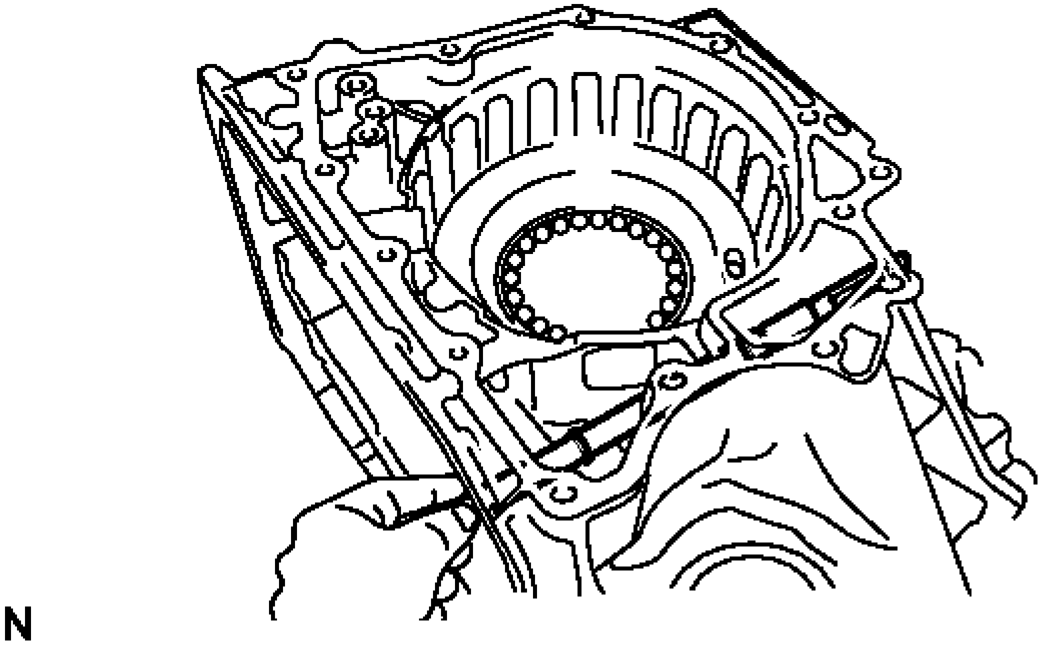

Fig. 298: Installing Manual Valve Lever Shaft, Manual Valve Lever Sub-Assembly And Parking Lock Lever Sub-Assembly
Courtesy of TOYOTA MOTOR SALES, U.S.A., INC.

NOTE: **Do not damage the manual valve lever shaft oil seal while installing the manual valve lever shaft to the transaxle case.**

f. Using a pin punch (3 mm) and hammer, install a new slotted spring pin into the parking lock lever sub-assembly.

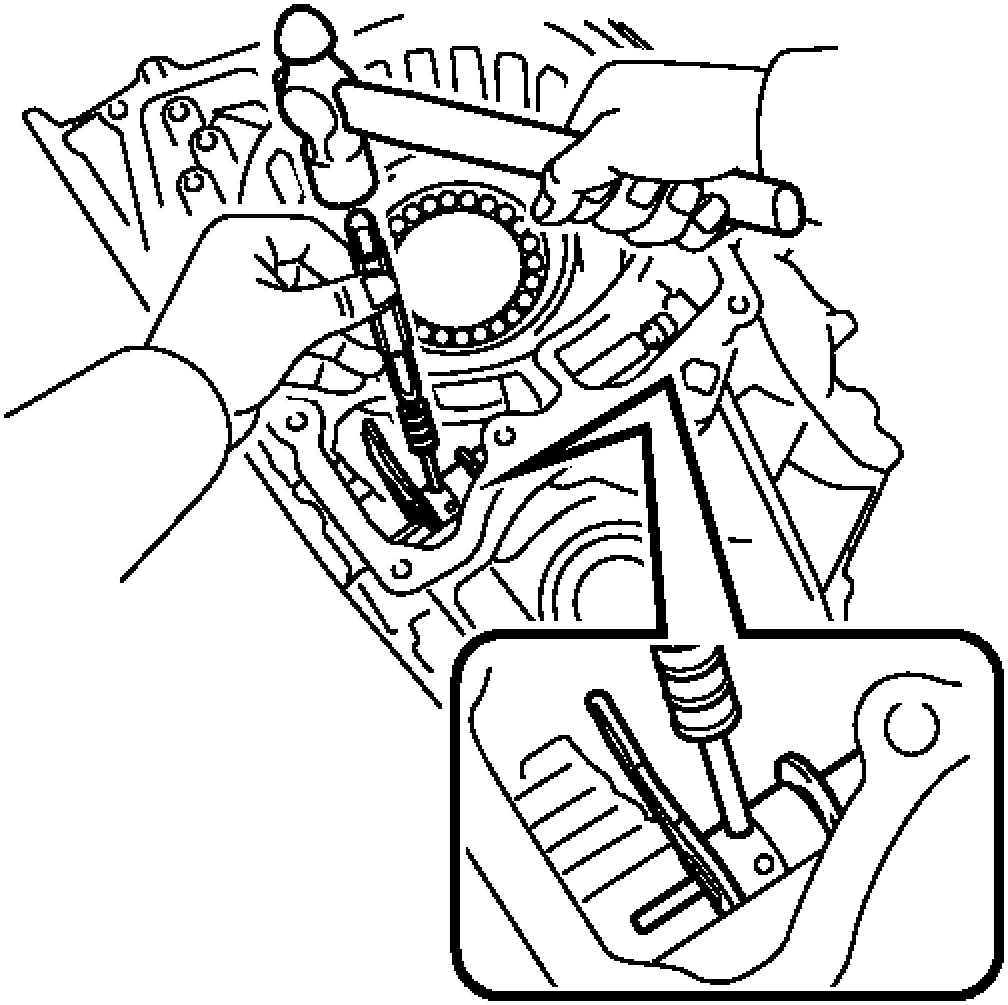

Fig. 299: Driving Out Slotted Spring Pin From Manual Valve Lever Sub-Assembly
Courtesy of TOYOTA MOTOR SALES, U.S.A., INC.

g. Turn the spacer and the lever shaft to align the smaller hole of the spacer with the staking position mark on the lever shaft.

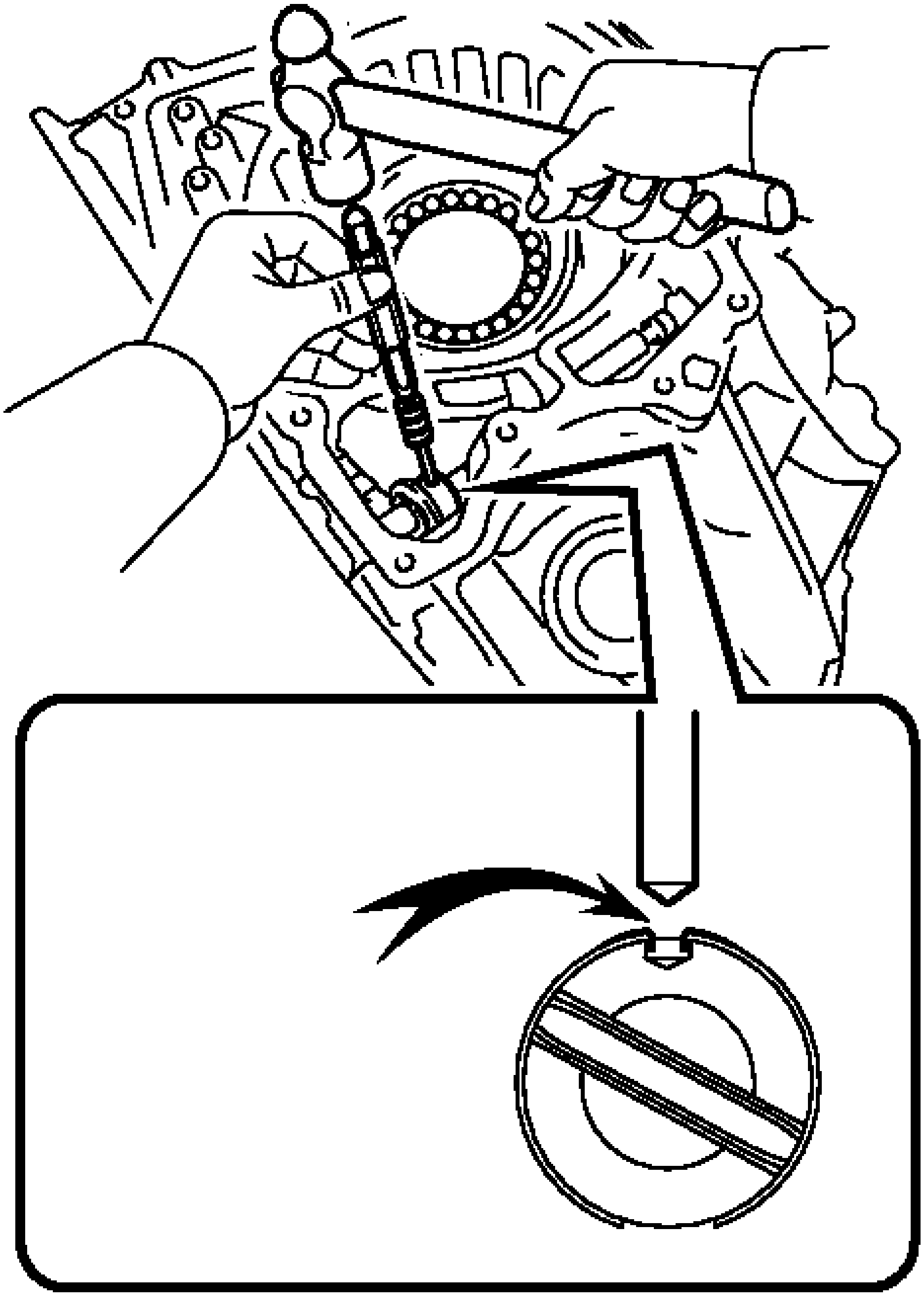

Fig. 300: Staking Spacer Through Small Hole
Courtesy of TOYOTA MOTOR SALES, U.S.A., INC.

h. Using a pin punch, stake the spacer through the small hole.
i. Check that the spacer does not turn.

j. Using a pin punch (3 mm) and hammer, install a new slotted spring pin into the manual valve lever sub-assembly.

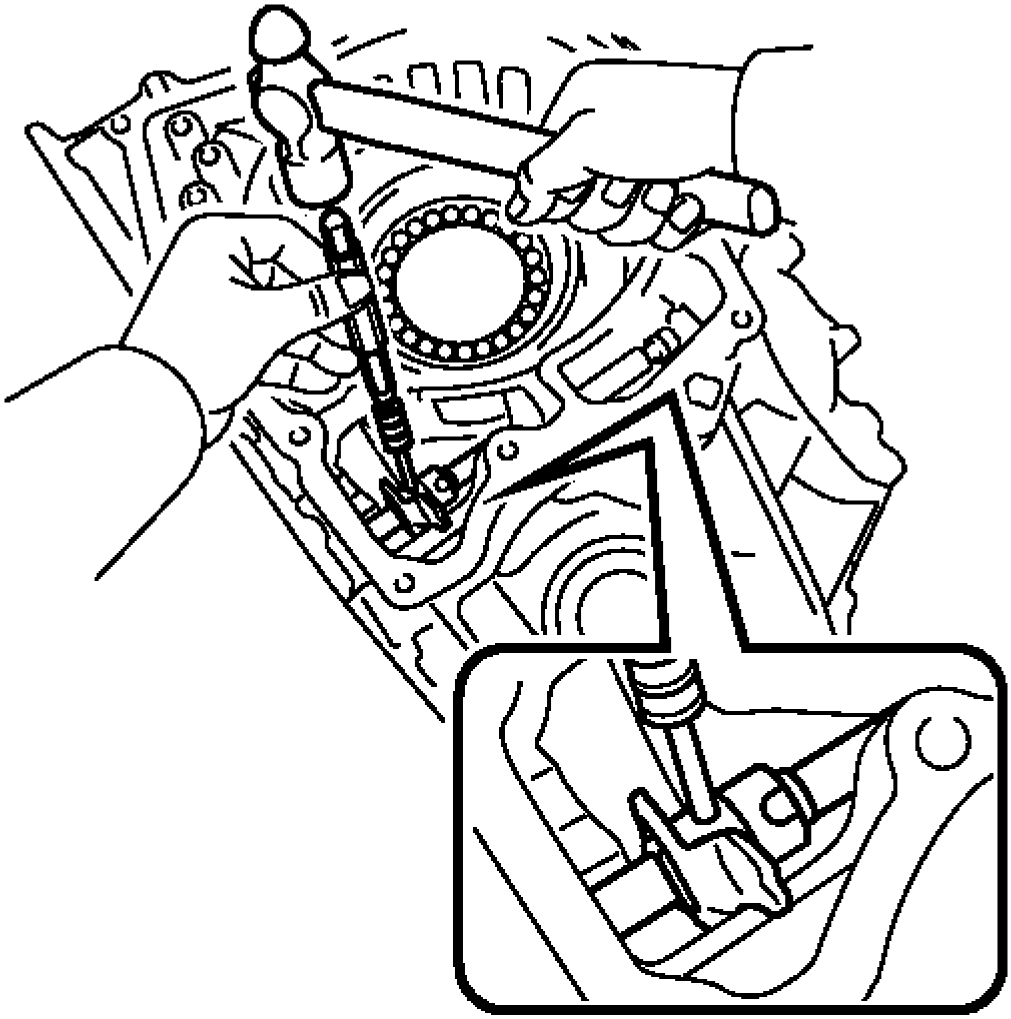

Fig. 301: Driving Out Slotted Spring Pin From Parking Lock Lever Sub-Assembly
Courtesy of TOYOTA MOTOR SALES, U.S.A., INC.

k. Turn the spacer and the lever shaft to align the smaller hole of the spacer with the staking position mark on the lever shaft.

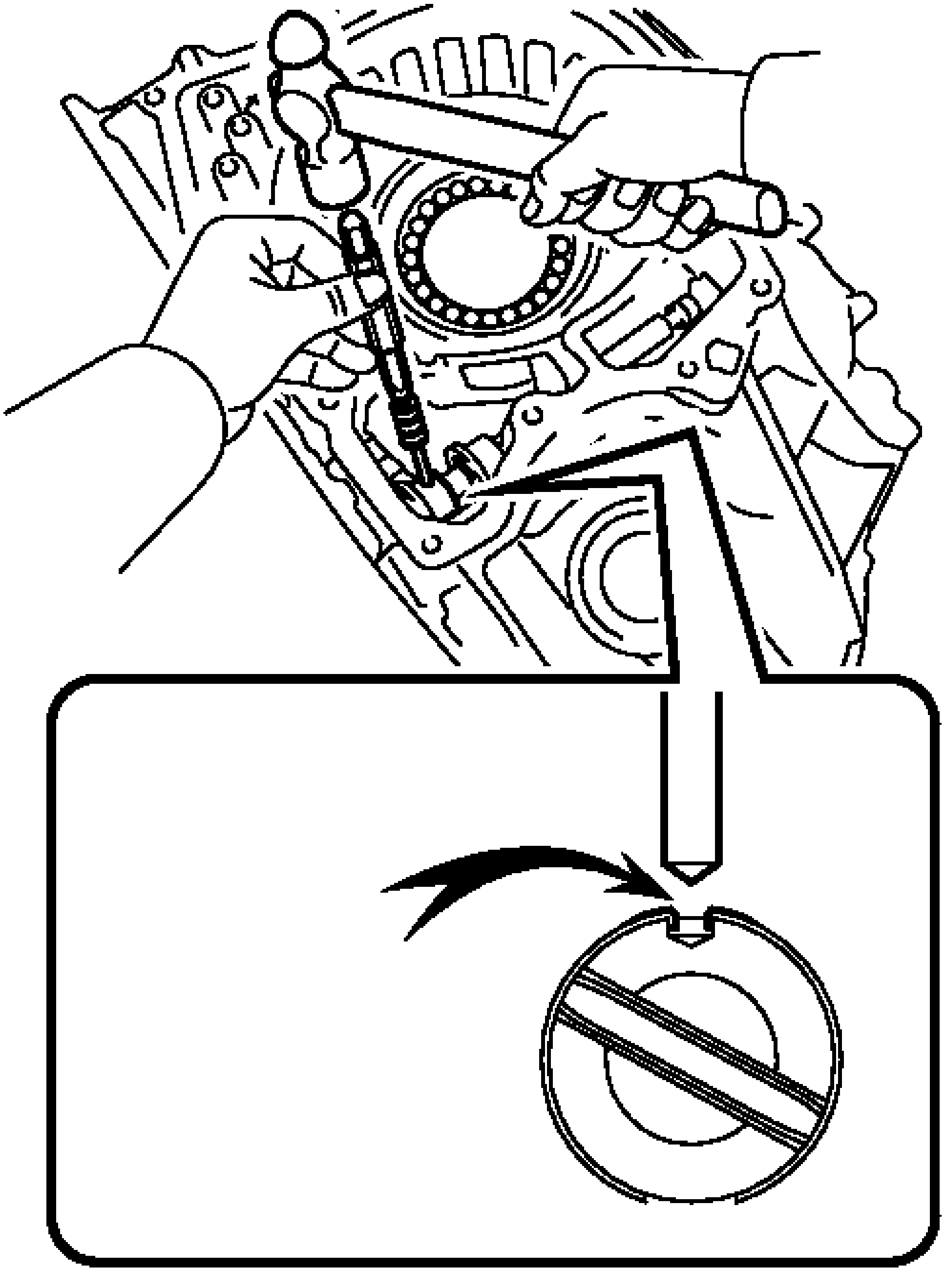

Fig. 302: Staking Spacer Through Small Hole
Courtesy of TOYOTA MOTOR SALES, U.S.A., INC.

l. Using a pin punch, stake the spacer through the small hole.
m. Check that the spacer does not turn.

n. Using needle-nose pliers, install the manual valve shaft retainer spring to the transaxle case.

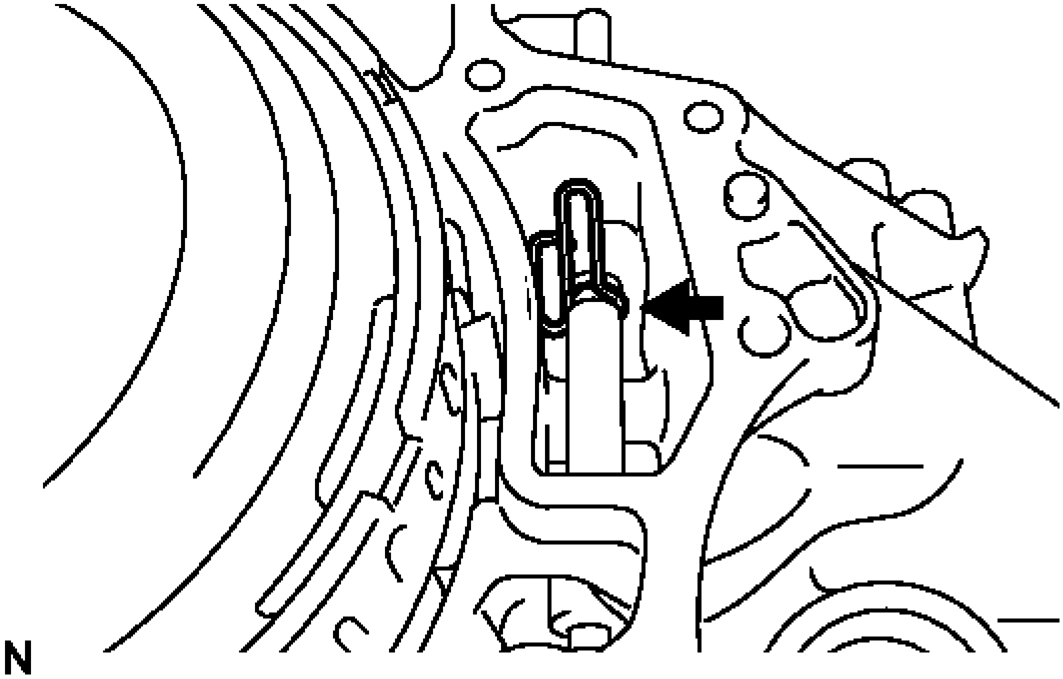

Fig. 303: Locating Manual Valve Lever Shaft
Courtesy of TOYOTA MOTOR SALES, U.S.A., INC.

4. **INSTALL PARKING LOCK ROD SUB-ASSEMBLY**
    a. Align the slot with the notches on the parking lock lever sub-assembly and install the parking lock rod sub-assembly.

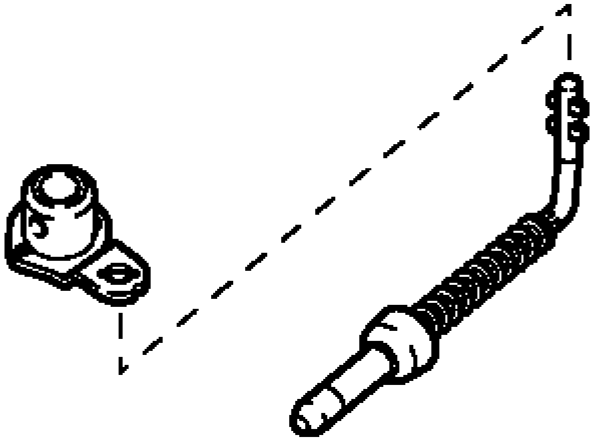

Fig. 304: Identifying Parking Lock Rod Sub-Assembly
Courtesy of TOYOTA MOTOR SALES, U.S.A., INC.

5. **INSTALL MANUAL DETENT SPRING SUB-ASSEMBLY**
   a. Install the manual detent spring sub-assembly and cover to the transaxle case with the bolt.

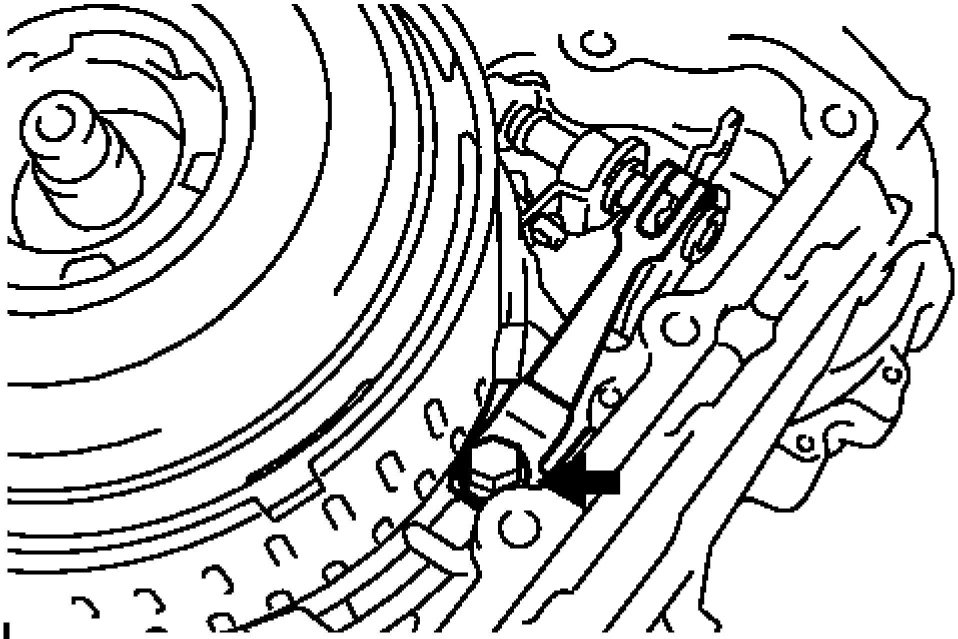

Fig. 305: Locating Manual Detent Spring Sub-Assembly Bolt

Courtesy of TOYOTA MOTOR SALES, U.S.A., INC.

Torque: 23 N*m (234 kgf*cm, 17 ft.*lbf)

NOTE: **Make sure to install the manual detent spring first and then the cover.**

6. **INSTALL NO. 3 BRAKE PISTON**
    a. Coat the contact surface of the transaxle case with ATF.

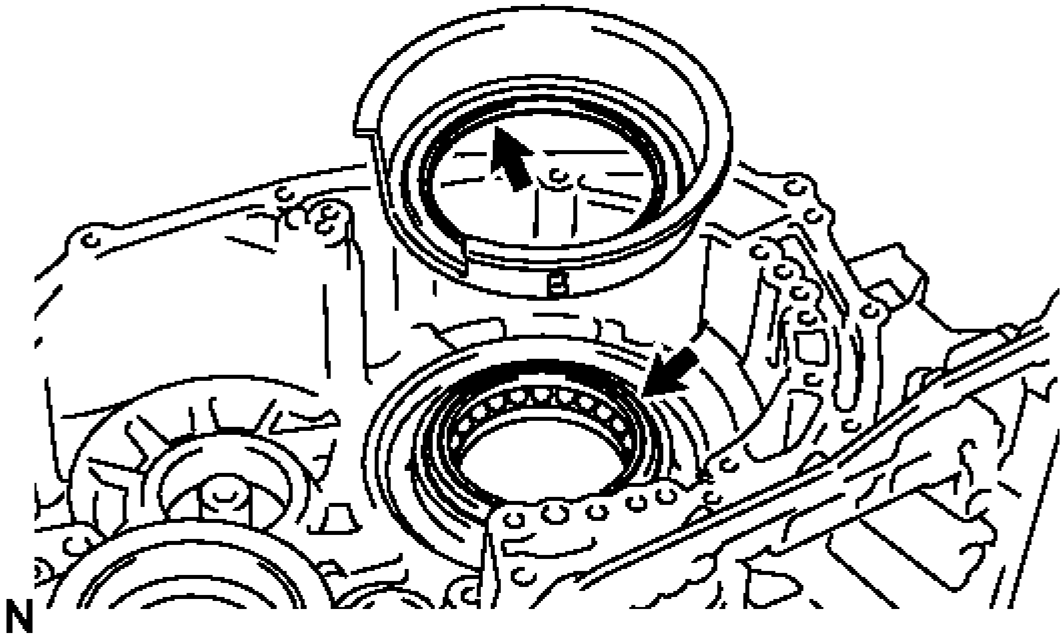

Fig. 306: Locating Lip Seal Of No. 3 Brake Piston
Courtesy of TOYOTA MOTOR SALES, U.S.A., INC.

    b. Coat the lip of the No. 3 brake piston with ATF.
    c. Temporarily install the pawl stopper plate to the transaxle case with the 2 bolts.

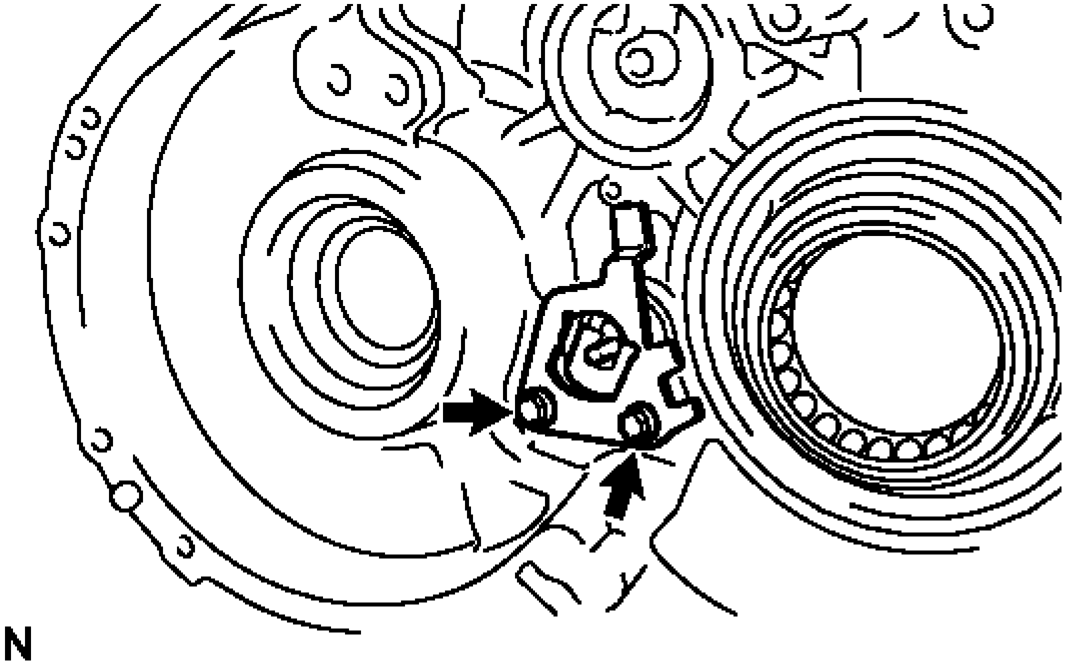

Fig. 307: Locating Pawl Stopper Plate Bolts
Courtesy of TOYOTA MOTOR SALES, U.S.A., INC.

d. Press the No. 3 brake piston into the transaxle case.

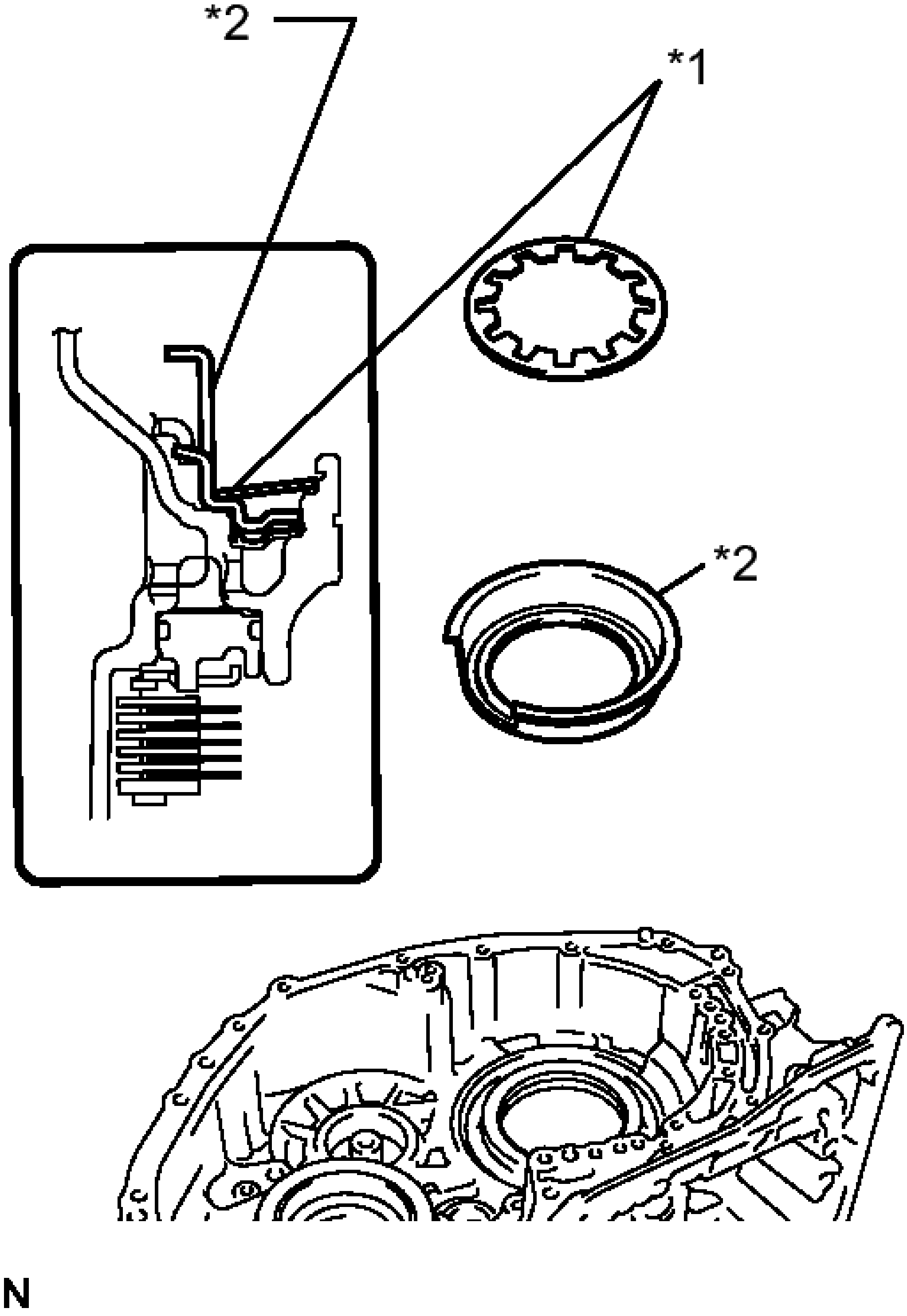

Fig. 308: Identifying Brake Piston Return Spring And No. 3 Brake Piston
Courtesy of TOYOTA MOTOR SALES, U.S.A., INC.

TEXT IN ILLUSTRATION

	Brake

*1	Piston Return Spring
*2	No. 3 Brake Piston

NOTE:

- **Make sure that the lip of the No. 3 brake piston is not twisted and does not get caught in the transaxle case.**
- **After installation, make sure that the protrusions on the No. 3 brake piston and the grooves on the pawl stopper plate are aligned.**

HINT:

Use the installation surface of the return spring to press the piston into the transaxle case.

e. Install the return spring to the transaxle case.
f. Remove the 2 bolts and pawl stopper plate from the transaxle case.

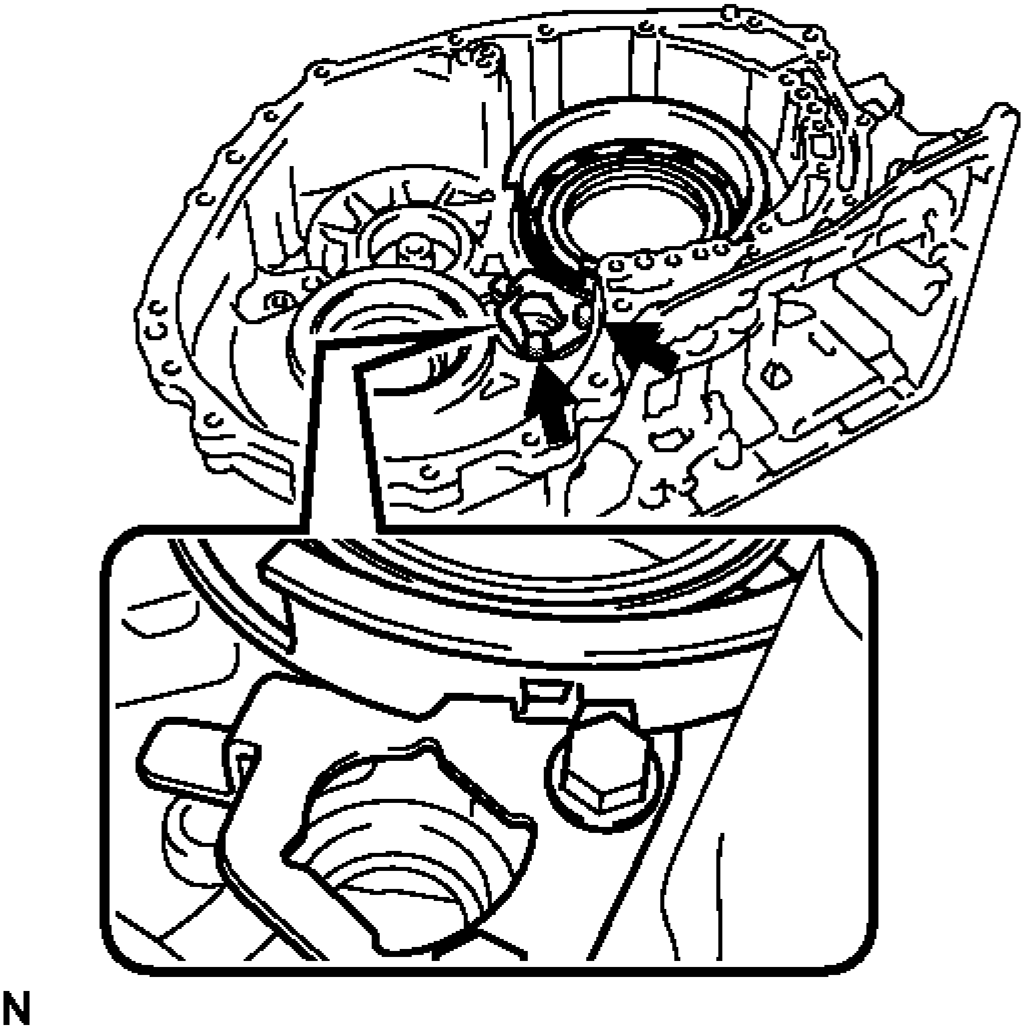

Fig. 309: Locating Pawl Stopper Plate Bolts
Courtesy of TOYOTA MOTOR SALES, U.S.A., INC.

g. Place SST on the brake piston return spring and compress the brake piston return spring using a press.

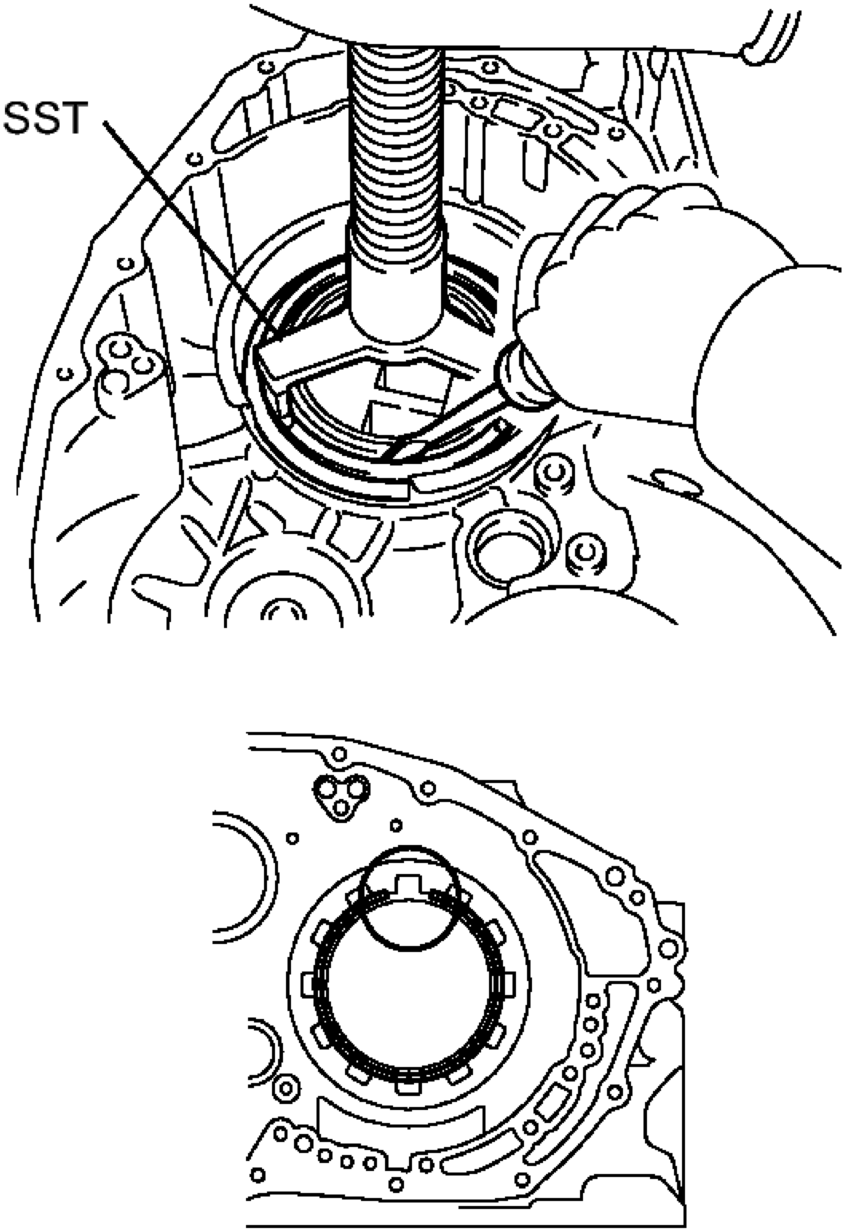

Fig. 310: Installing Snap Ring To Transaxle Case
Courtesy of TOYOTA MOTOR SALES, U.S.A., INC.

- **SST: 09387-00070**

NOTE: **Stop the press when the brake piston return spring is flush with the snap ring groove. This prevents the brake piston return spring from being deformed.**

h. Using a screwdriver, install the snap ring to the transaxle case as shown in the illustration.

NOTE:

- **Confirm that the snap ring is correctly located in the groove of the transaxle case.**
- **Be sure to align the opening of the snap ring with one of the protrusions on the brake piston return spring as shown in the illustration.**

7. INSTALL COUNTER DRIVE GEAR

NOTE: **Perform this procedure only when the counter drive gear bearing or transaxle case is replaced.**

a. Using SST and a press, install a new counter drive gear bearing and snap ring to the transaxle case.

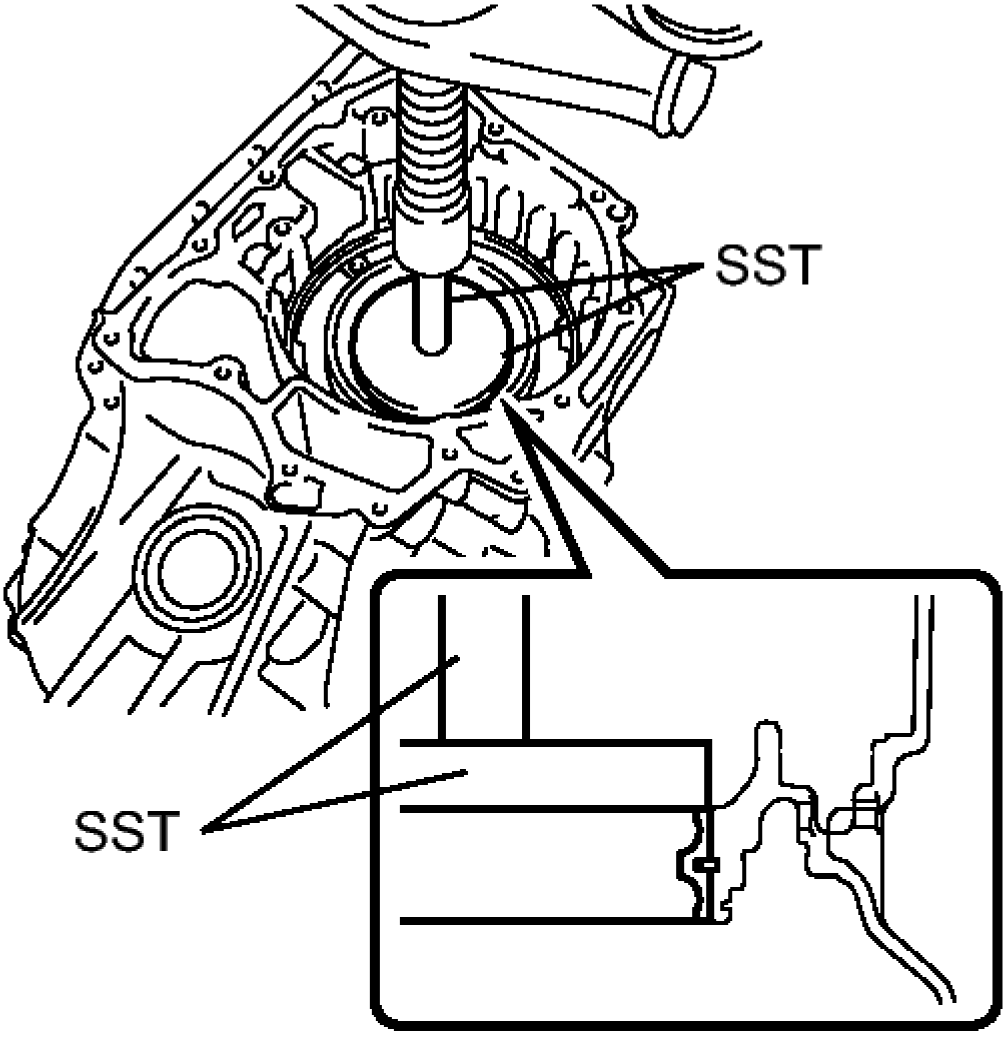

Fig. 311: Identifying Counter Drive Gear Bearing And Snap Ring
Courtesy of TOYOTA MOTOR SALES, U.S.A., INC.

- **SST: 09950-60020**
  09951-01030
- **SST: 09950-70010**
  09951-07100

b. Using SST, install a new bearing inner race (rear side) and counter drive gear to the transaxle case.

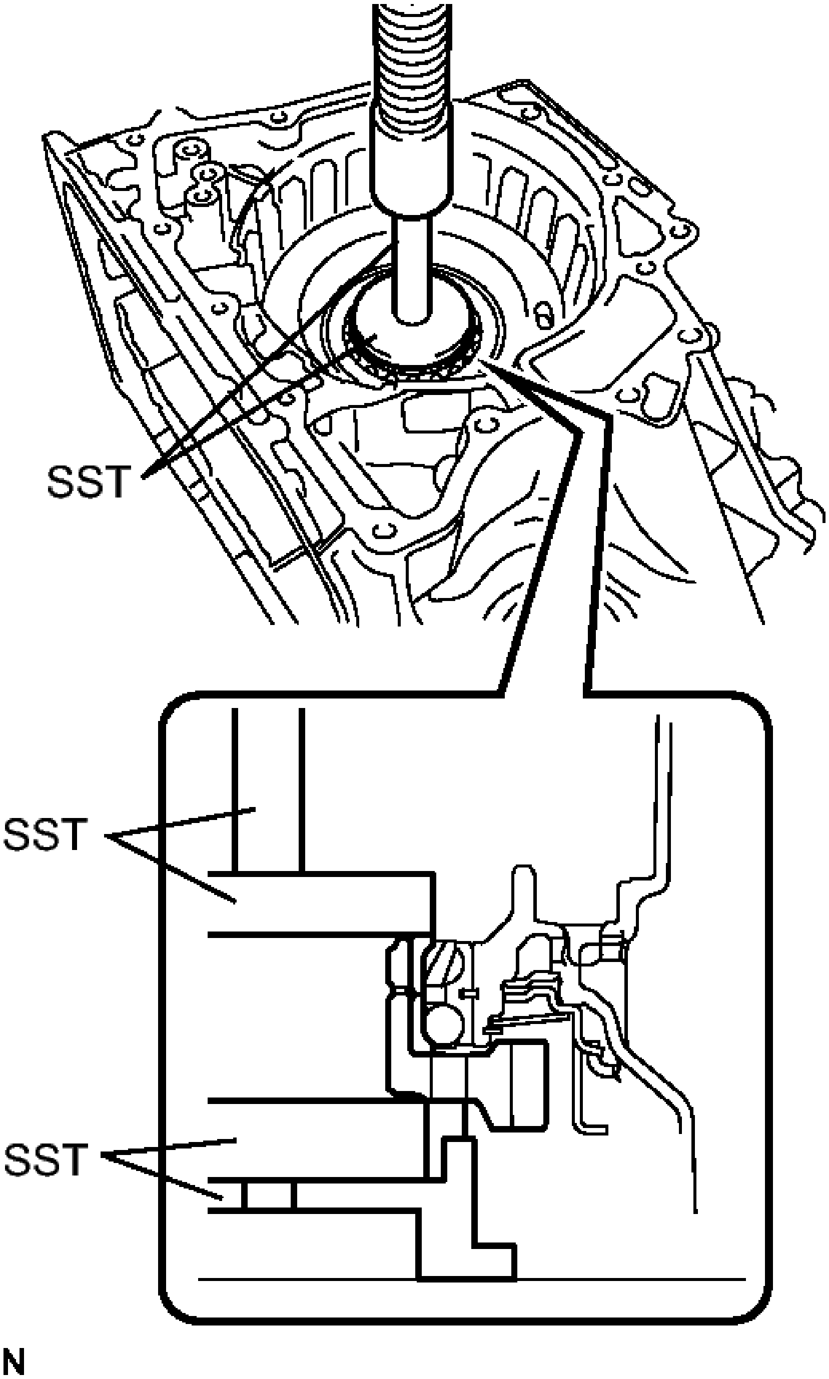

Fig. 312: Identifying Bearing Inner Race (Rear Side) And Counter Drive Gear
Courtesy of TOYOTA MOTOR SALES, U.S.A., INC.

- **SST: 09223-15030**
- **SST: 09527-1701109950-60020**

09951-00810

- **SST: 09950-70010**

  09951-07100

NOTE: **There should not be any clearance between the bearing inner race (front side) and counter drive gear.**

8. **INSTALL FRONT PLANETARY GEAR ASSEMBLY**
   a. Using SST and a press, press the planetary gear assembly onto the transaxle case.

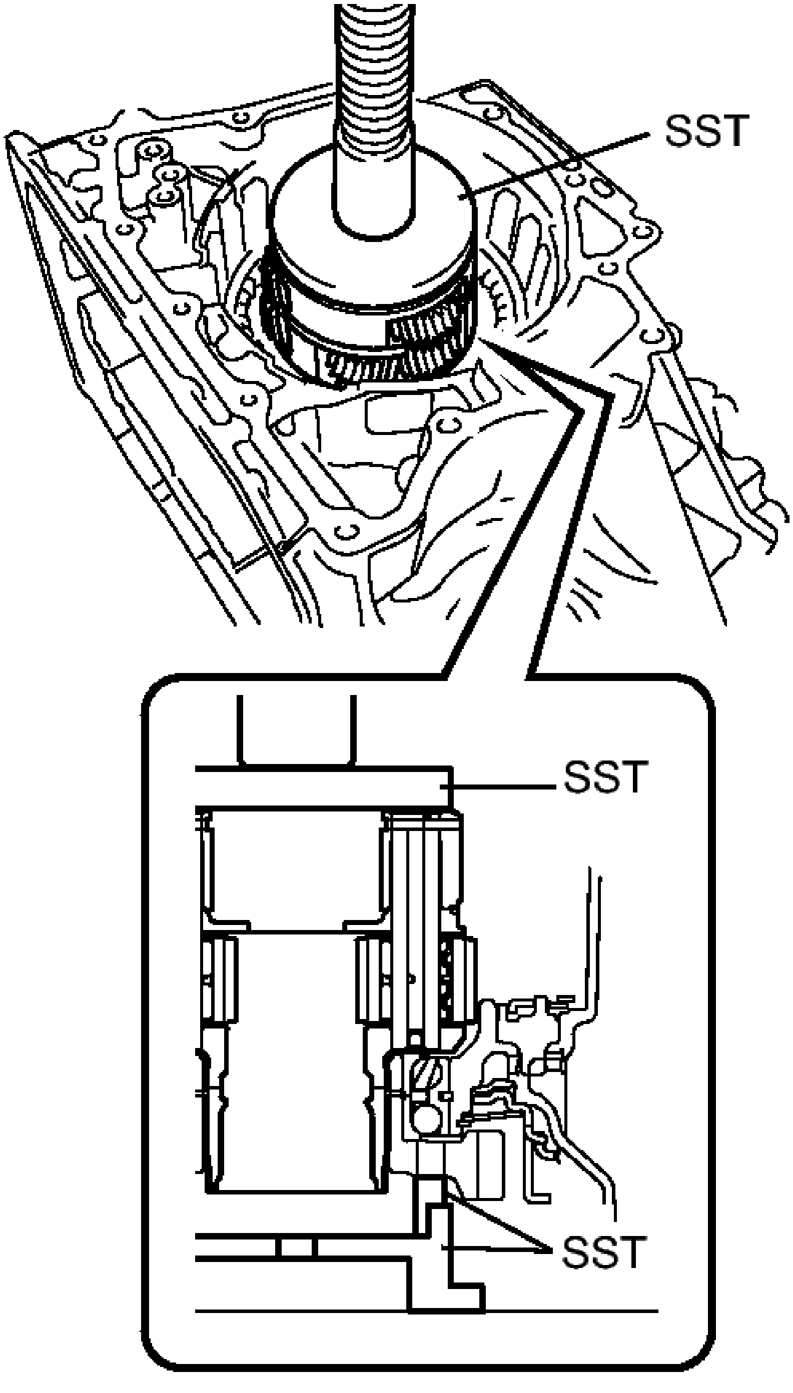

Fig. 313: Identifying Planetary Gear Assembly To Transaxle Case
Courtesy of TOYOTA MOTOR SALES, U.S.A., INC.

- **SST: 09223-15030**
- **SST: 09527-17011**

- **SST: 09951-01100**

9. **INSTALL NO. 2 BRAKE PISTON**
    a. Coat 2 new O-rings with ATF and install them to the No. 2 brake piston.

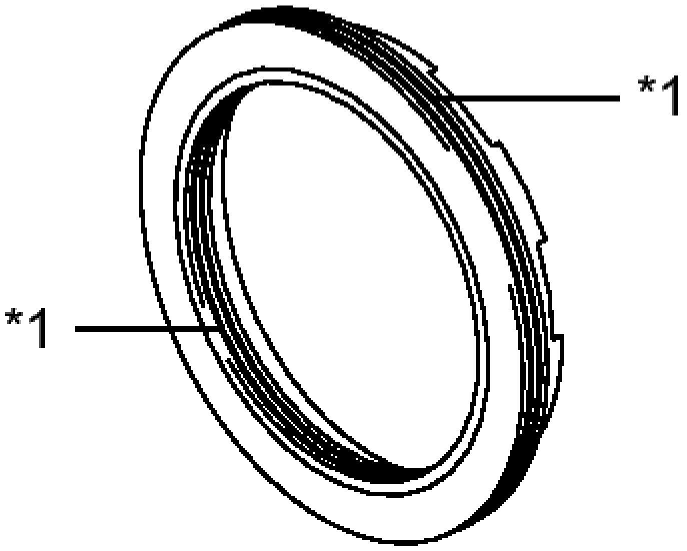

Fig. 314: Identifying No. 2 Brake Piston O-Ring
Courtesy of TOYOTA MOTOR SALES, U.S.A., INC.

TEXT IN ILLUSTRATION

*1	O-ring

NOTE: **Ensure that the 2 O-rings are not twisted.**

b. Install the No. 2 brake piston to the transaxle case.

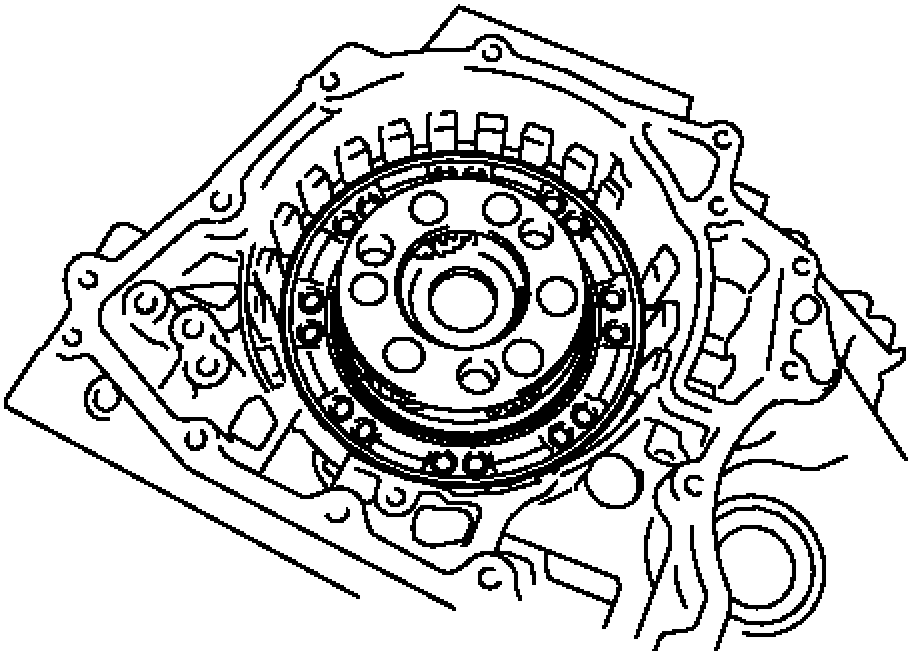

Fig. 315: Identifying No. 2 Brake Piston
Courtesy of TOYOTA MOTOR SALES, U.S.A., INC.

NOTE: Be careful not to damage the O-rings.

10. **INSTALL 1ST AND REVERSE BRAKE RETURN SPRING SUB-ASSEMBLY**
    1. Install the 1st and reverse brake return spring to the transaxle case.
    2. Place SST on the 1st and reverse brake return spring and compress the 1st and reverse brake return spring using a press.

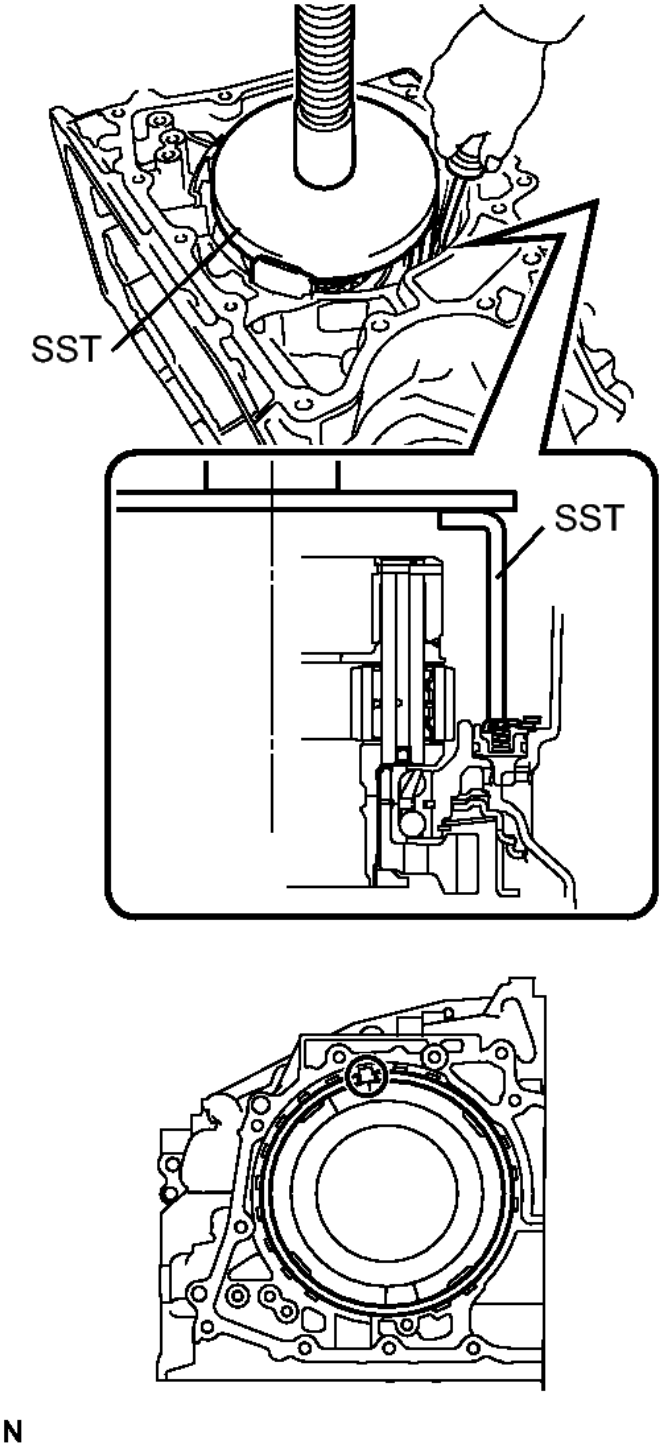

Fig. 316: Installing 1st And Reverse Brake Return Spring To Transaxle Case
Courtesy of TOYOTA MOTOR SALES, U.S.A., INC.

- **SST: 09387-00060**

NOTE: **Stop the press when the 1st and reverse brake return spring is flush with the snap ring groove. This prevents the 1st and reverse brake return spring from being deformed.**

c. Using a screwdriver, install the snap ring to the transaxle case as shown in the illustration.

NOTE:

- **Confirm that the snap ring is correctly located in the groove of the transaxle case.**
- **Be sure to align the opening of the snap ring with one of the protrusions on the transaxle case as shown in the illustration.**

11. **INSTALL NO. 2 BRAKE DISC**

a. Install the 5 brake discs, 5 brake plates and brake flange to the transaxle case.

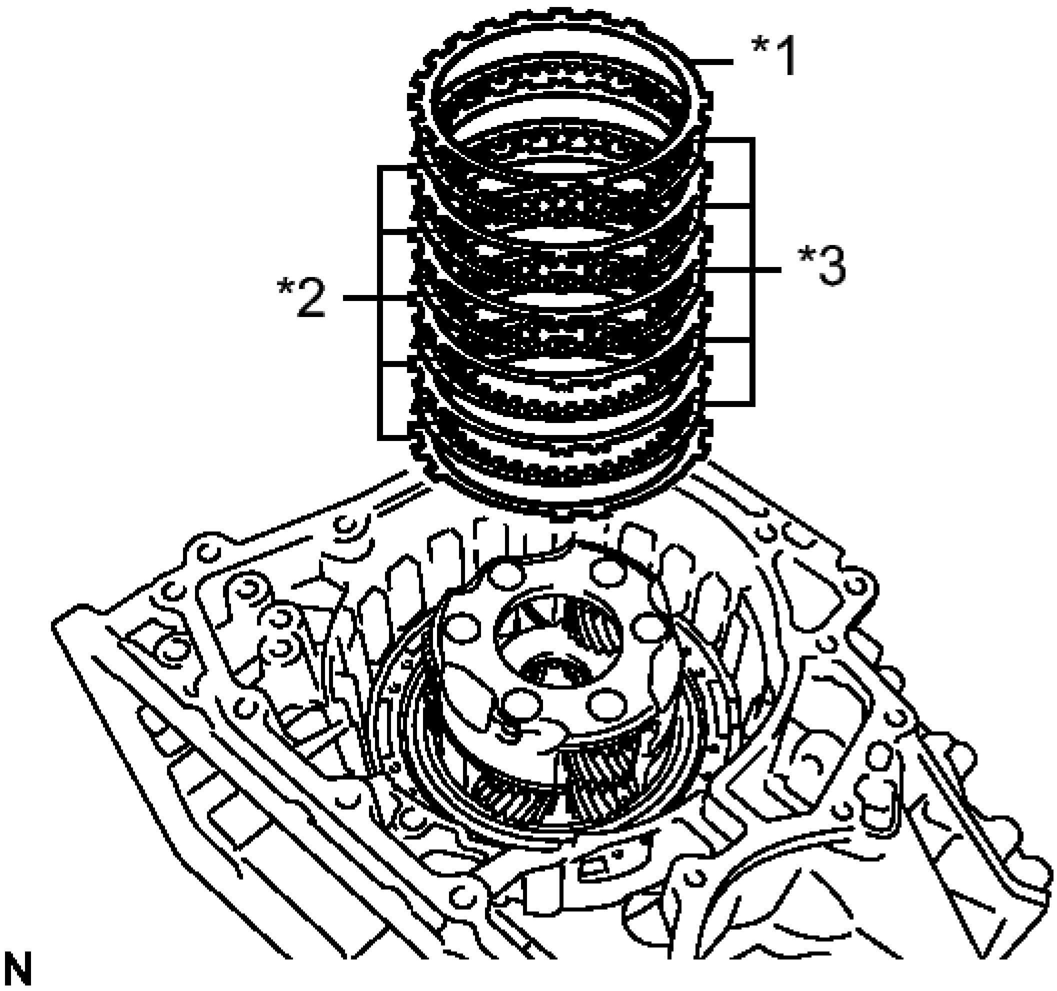

Fig. 317: Identifying Brake Flange, Brake Discs And Brake Plates

Courtesy of TOYOTA MOTOR SALES, U.S.A., INC.

TEXT IN ILLUSTRATION

*1	Brake Flange
*2	Brake Plate
*3	Brake Disc

NOTE: **Make sure that the discs, plates and flange are installed in the correct order.**

b. Using a screwdriver, install the snap ring to the transaxle case.

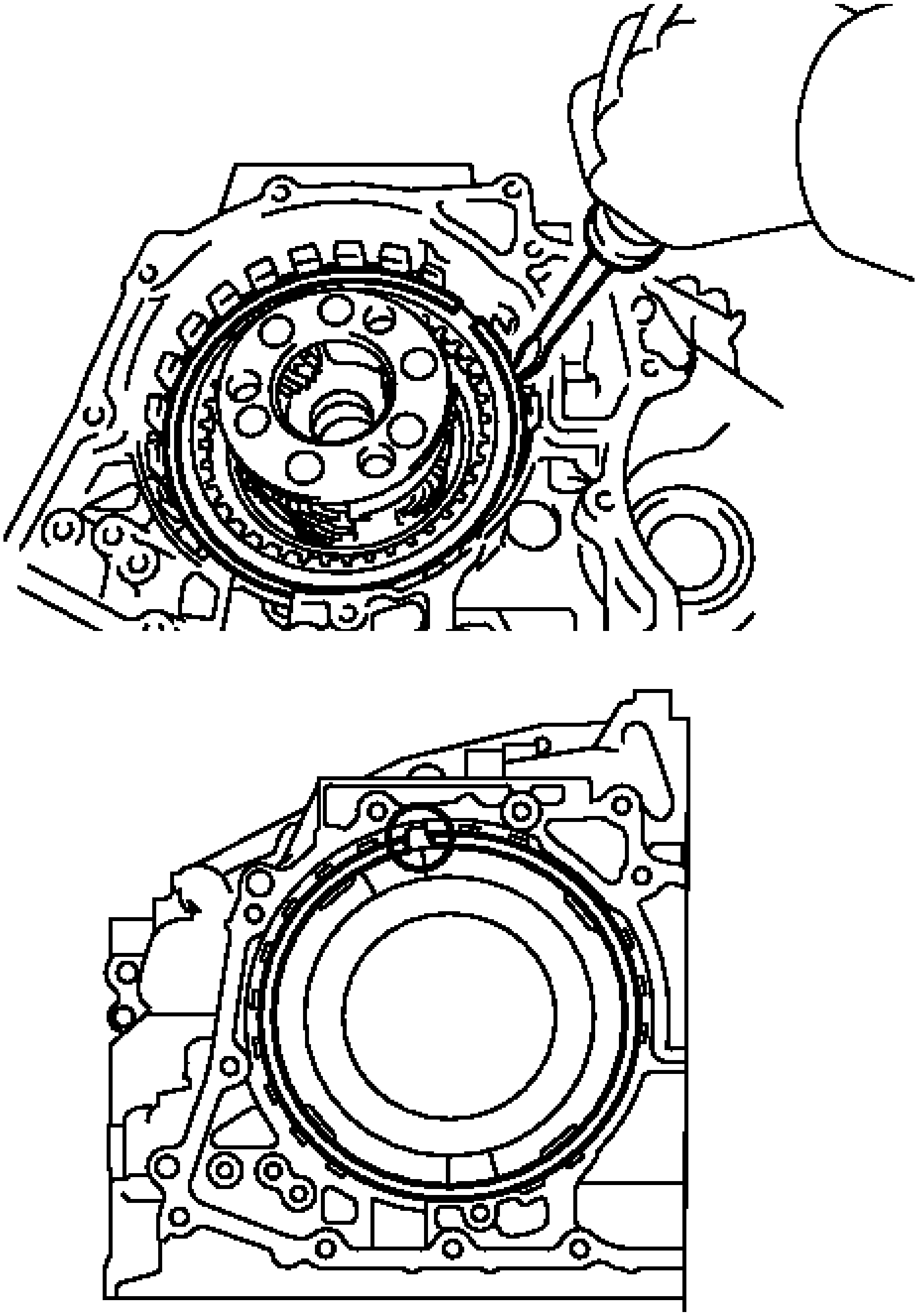

Fig. 318: Installing Snap Ring To Transaxle Case
Courtesy of TOYOTA MOTOR SALES, U.S.A., INC.

NOTE:

- **Confirm that the snap ring is correctly located in the groove of the transaxle case.**

- **Be sure to align the opening of the snap ring with one of the protrusions on the transaxle case as shown in the illustration.**

12. **INSPECT CLEARANCE OF NO. 2 BRAKE** See step 15
13. **INSTALL PLANETARY RING GEAR FLANGE**
    a. Install the planetary ring gear flange to the planetary ring gear.

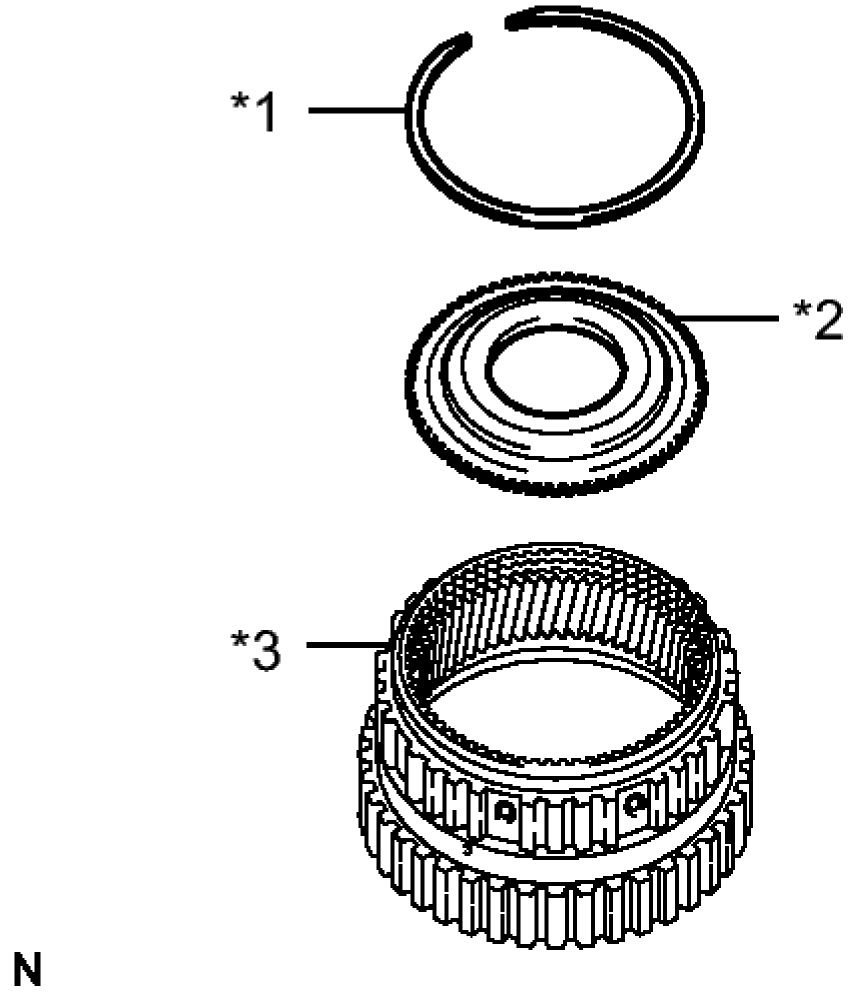

Fig. 319: Identifying Planetary Ring Gear Flange
Courtesy of TOYOTA MOTOR SALES, U.S.A., INC.

TEXT IN ILLUSTRATION

*1	Snap Ring
	Planetary Ring

*2	Gear Flange
*3	Planetary Ring Gear

b. Using a screwdriver, install the snap ring to the planetary ring gear.

NOTE: **Confirm that the snap ring is correctly located in the groove of the planetary ring gear.**

14. **INSTALL PLANETARY RING GEAR**

a. Install the planetary ring gear to the one-way clutch assembly.

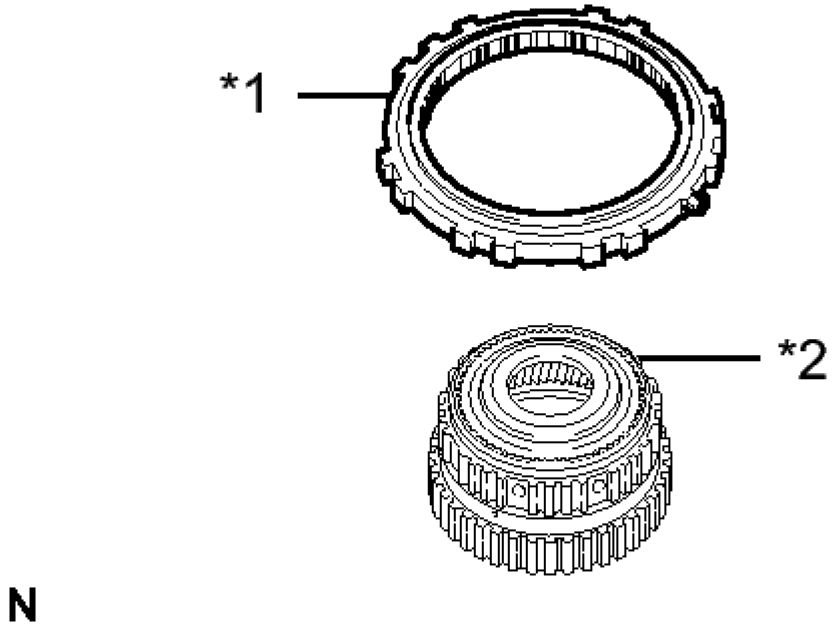

Fig. 320: Identifying Planetary Ring Gear And One-Way Clutch Assembly
Courtesy of TOYOTA MOTOR SALES, U.S.A., INC.

TEXT IN ILLUSTRATION

*1	One-way Clutch Assembly
*2	Planetary Ring Gear

NOTE: **Make sure that the one-way clutch assembly is positioned in the**

correct direction as shown in the illustration.

15. **INSTALL ONE-WAY CLUTCH ASSEMBLY**
    a. Coat the thrust needle roller bearing with ATF, and install it onto the planetary gear assembly.

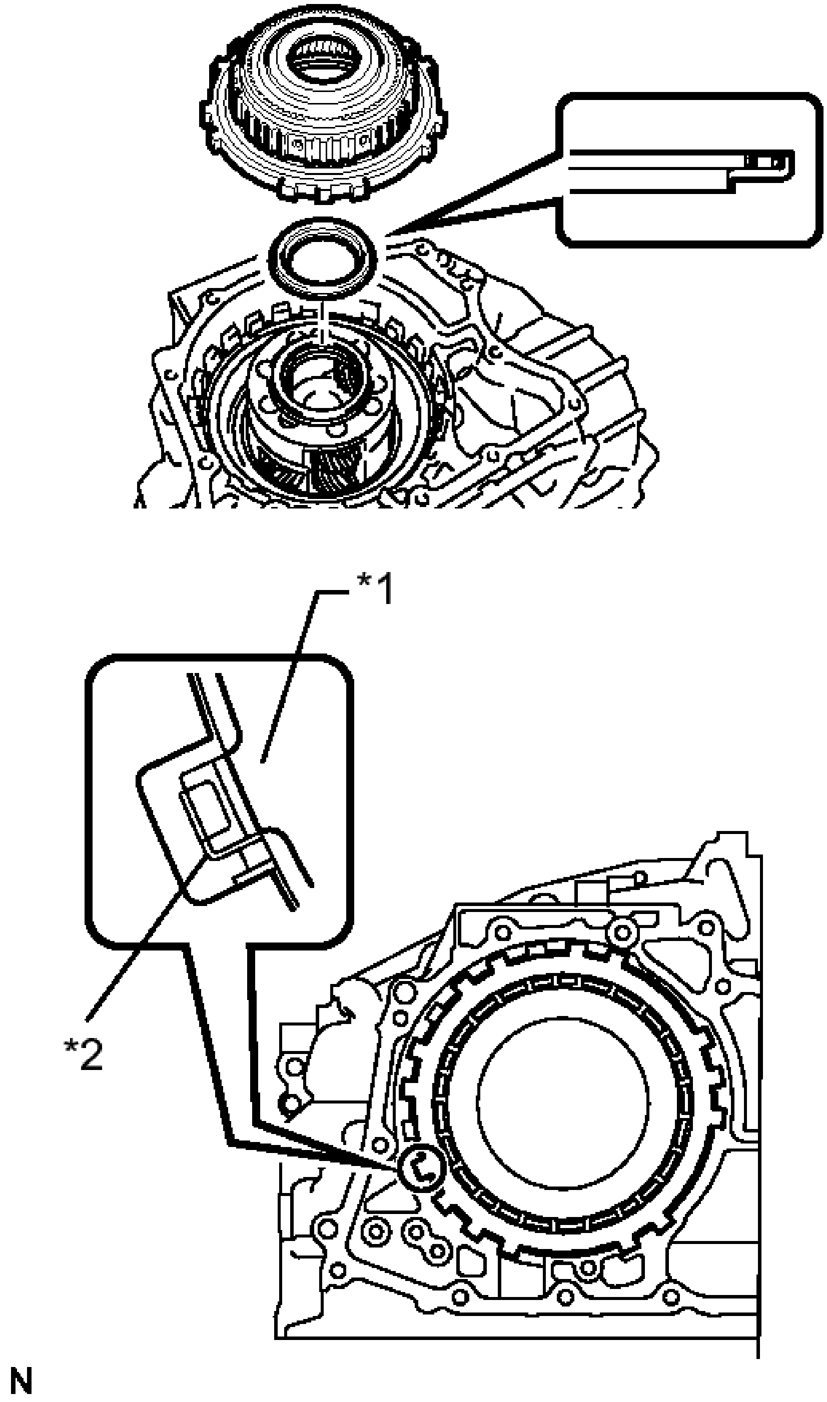

Fig. 321: Identifying One-Way Clutch Assembly, Thrust Needle Roller Bearing
Courtesy of TOYOTA MOTOR SALES, U.S.A., INC.

TEXT IN ILLUSTRATION

*1	One-way Clutch Assembly
*2	Thrust Needle Roller Bearing

BEARING DIAMETER: MM (IN.)

-	Inside	Outside
Bearing	56.1 (2.21)	80.9 (3.19)

NOTE: **Be sure to install the thrust needle roller bearing properly so that the temper colored side of the race will be visible.**

b. Install the one-way clutch assembly to the transaxle case.

NOTE: **Make sure that there is no clearance between the retainer and the claw on the one-way clutch assembly. If there is any clearance, the spring of the retainer will be deformed.**

c. Using a screwdriver, install the snap ring to the transaxle case.

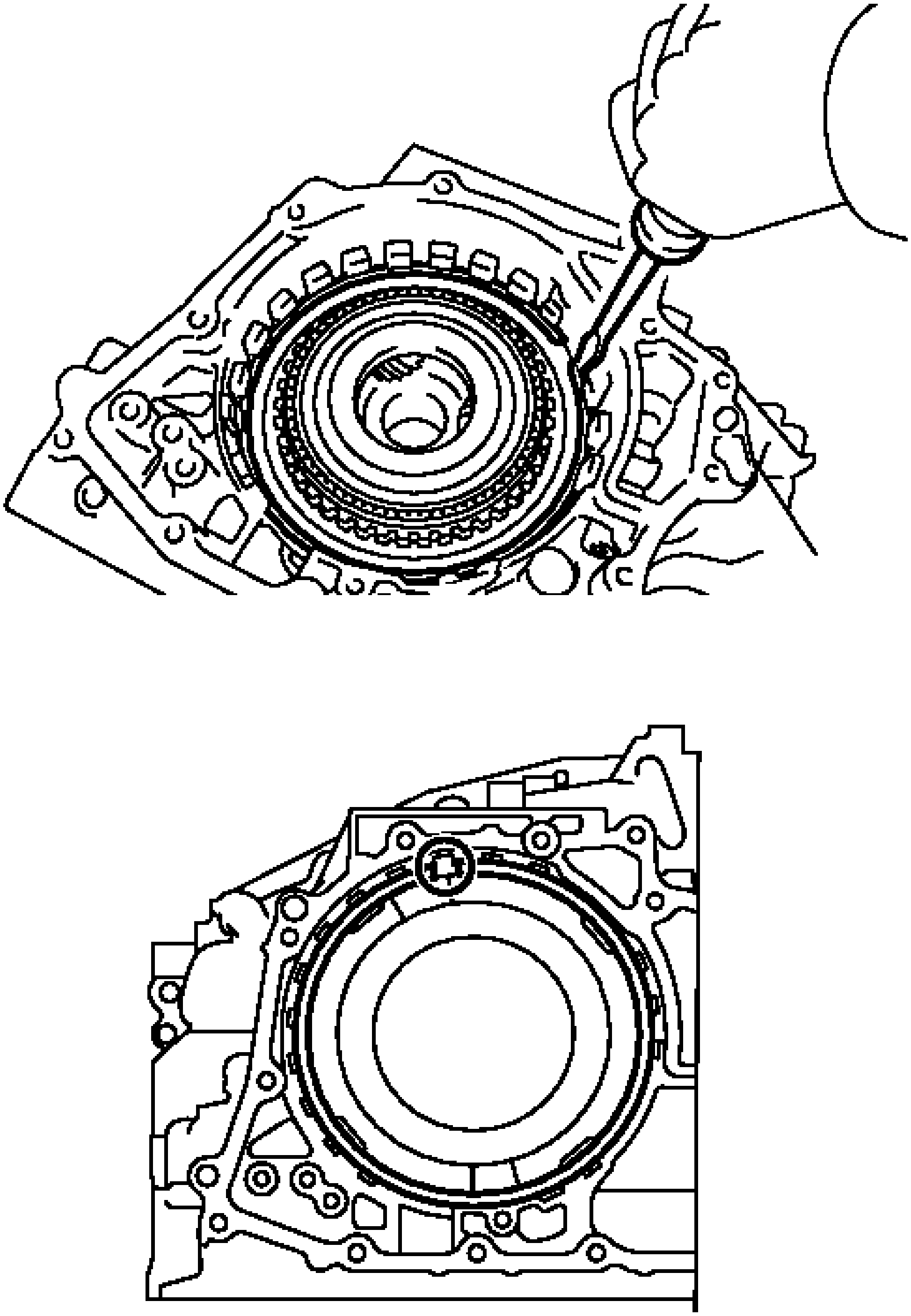

Fig. 322: Installing Snap Ring To Transaxle Case
Courtesy of TOYOTA MOTOR SALES, U.S.A., INC.

NOTE:

- **Confirm that the snap ring is correctly located in the groove of the transaxle case.**

- **Be sure to align the opening of the snap ring with one of the protrusions on the transaxle case as shown in the illustration.**

16. **INSTALL COUNTER DRIVEN GEAR REAR TAPERED ROLLER BEARING OUTER RACE**
    a. Using SST and a hammer, install a new counter driven gear rear tapered roller bearing outer race to the transaxle case.

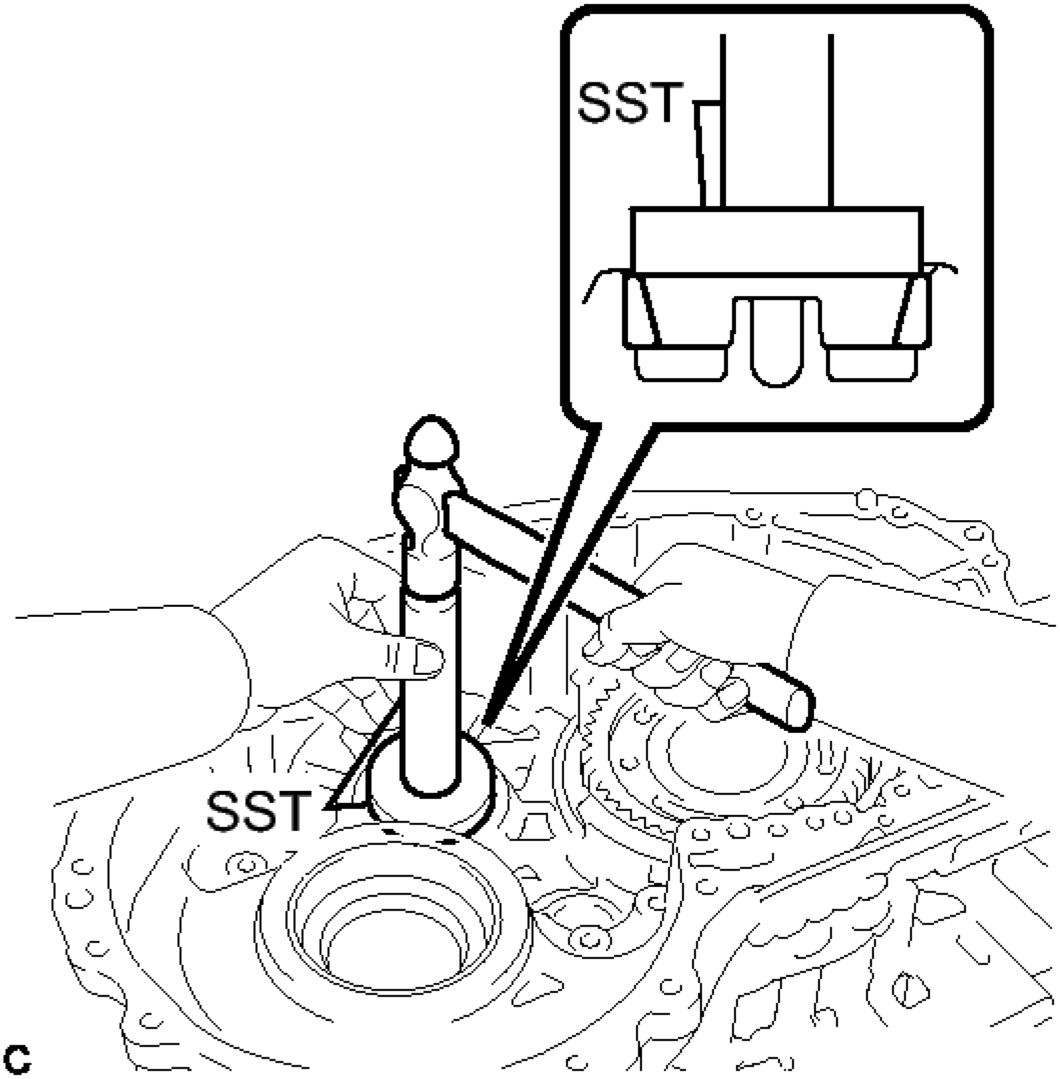

Fig. 323: Installing Counter Driven Gear Rear Tapered Roller Bearing Outer Race
Courtesy of TOYOTA MOTOR SALES, U.S.A., INC.

- **SST: 09950-60010**
  09951-00650
- **SST: 09950-70010**
  09951-07100

NOTE: **Be sure to install the counter driven gear rear tapered roller bearing outer race so that there is no clearance between the bearing outer race and the transaxle case. If there is any clearance, the turning torque of the counter drive gear cannot be measured correctly.**

17. **INSTALL PARKING LOCK PAWL**
    a. Install the parking lock pawl to the transaxle case with the parking lock pawl shaft.

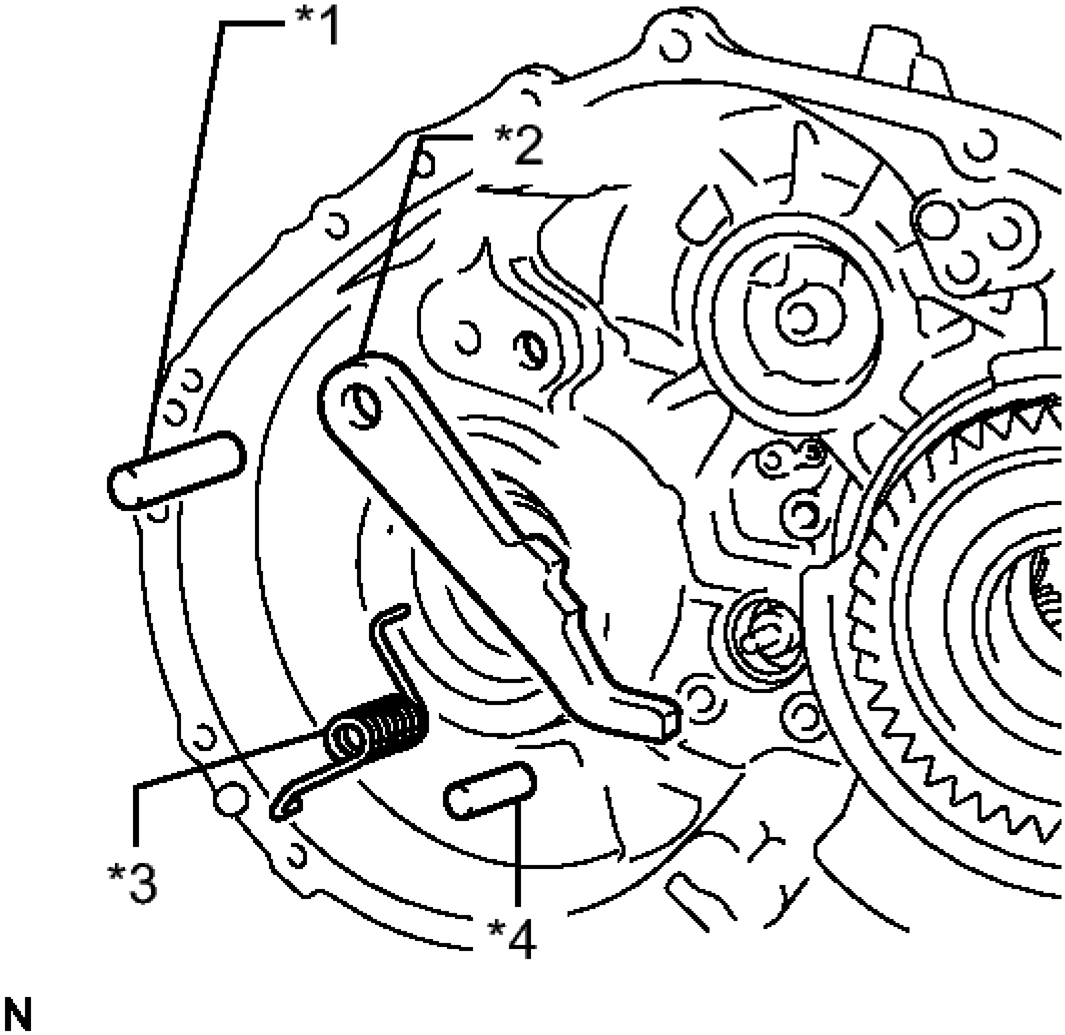

Fig. 324: Identifying Spring, Parking Lock Pawl Pin, Parking Lock Pawl Shaft And Parking Lock Pawl
Courtesy of TOYOTA MOTOR SALES, U.S.A., INC.

TEXT IN ILLUSTRATION

*1	Parking Lock

	Pawl Shaft
*2	Parking Lock Pawl
*3	Spring
*4	Parking Lock Pawl Pin

b. Install the parking lock pawl pin to the transaxle case.
c. Install the spring to the parking lock pawl.

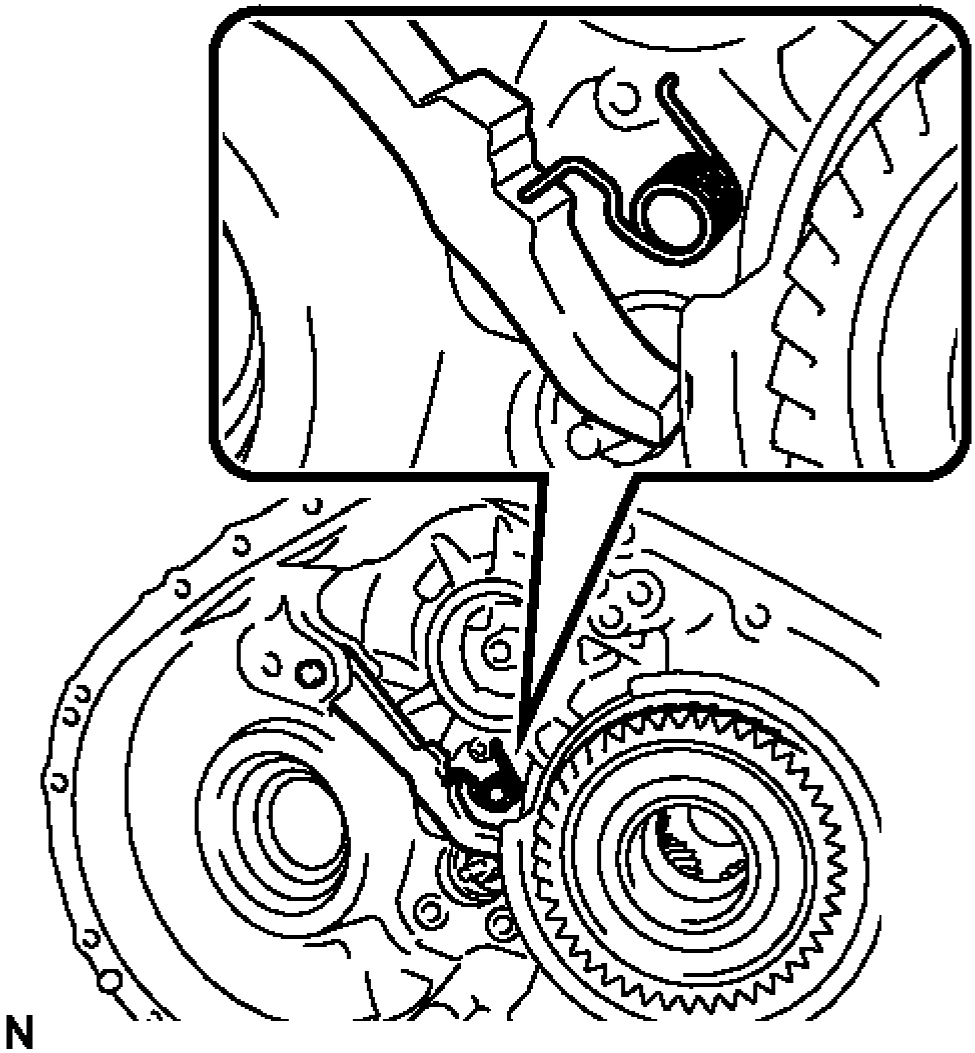

Fig. 325: Identifying Torsion Spring

Courtesy of TOYOTA MOTOR SALES, U.S.A., INC.

NOTE: **Make sure that one end of the spring is set in the hole of the transaxle case and the other end is positioned on the parking lock pawl as shown in the illustration.**

18. **INSTALL PARKING LOCK SLEEVE**
    a. Install the parking lock sleeve to the transaxle case.

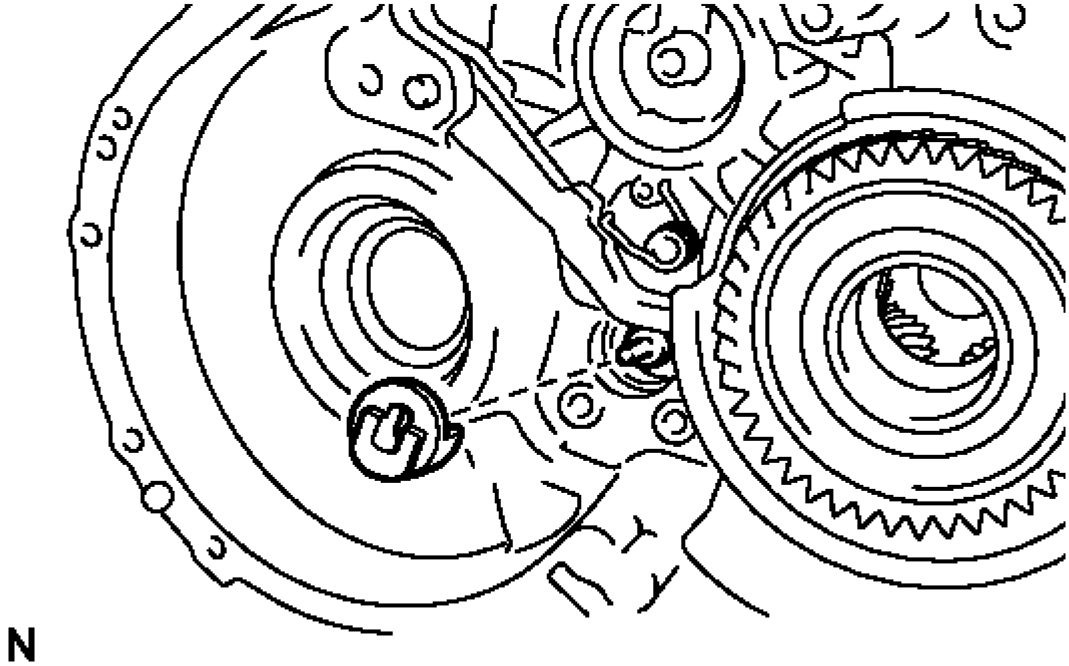

Fig. 326: Identifying Parking Lock Sleeve
Courtesy of TOYOTA MOTOR SALES, U.S.A., INC.

19. **INSTALL PAWL STOPPER PLATE**
    a. Install the pawl stopper plate to the transaxle case with the 2 bolts.

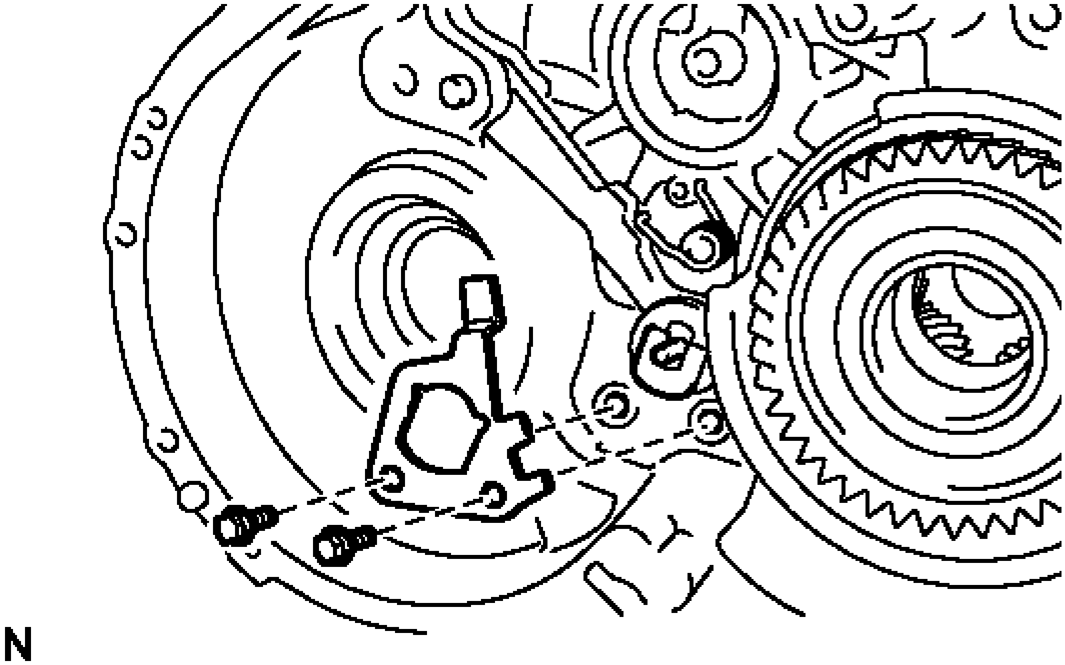

Fig. 327: Identifying Bolts And Pawl Stopper Plate
Courtesy of TOYOTA MOTOR SALES, U.S.A., INC.

Torque: 23 N*m (234 kgf*cm, 17 ft.*lbf)

20. **INSTALL PAWL SHAFT CLAMP**
    1. Install the pawl shaft clamp to the transaxle case with the bolt.

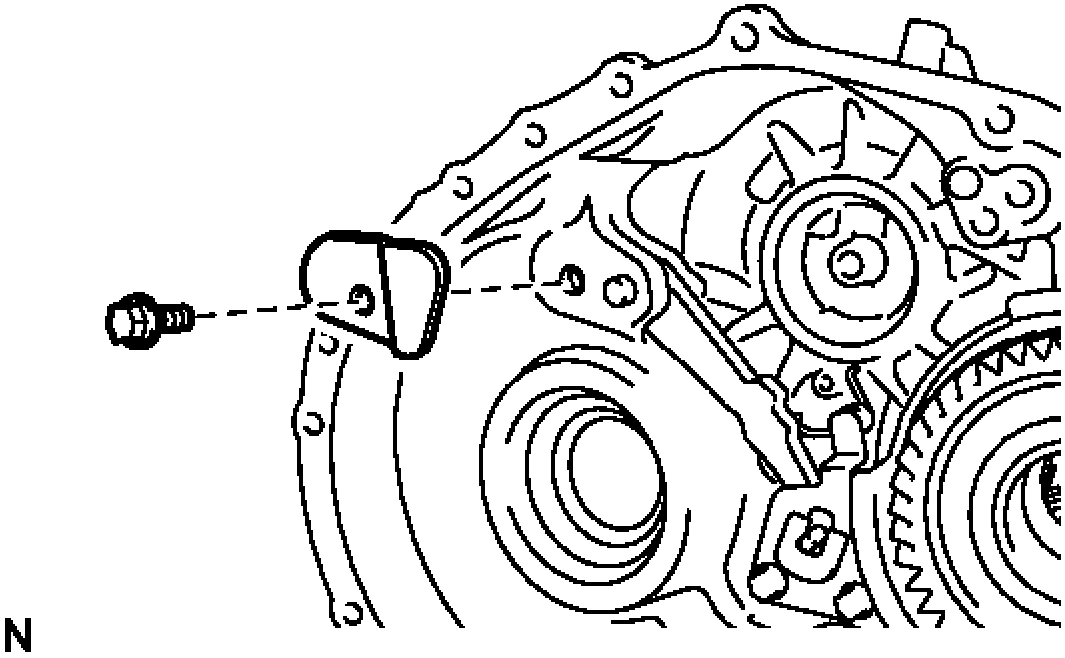

Fig. 328: Identifying Bolt And Pawl Shaft Clamp
Courtesy of TOYOTA MOTOR SALES, U.S.A., INC.

Torque: 23 N*m (234 kgf*cm, 17 ft.*lbf)

21. **INSTALL COUNTER DRIVEN GEAR REAR TAPERED ROLLER BEARING**
    a. Using SST and a press, install a new counter driven gear rear tapered roller bearing to the counter driven gear sub-assembly.

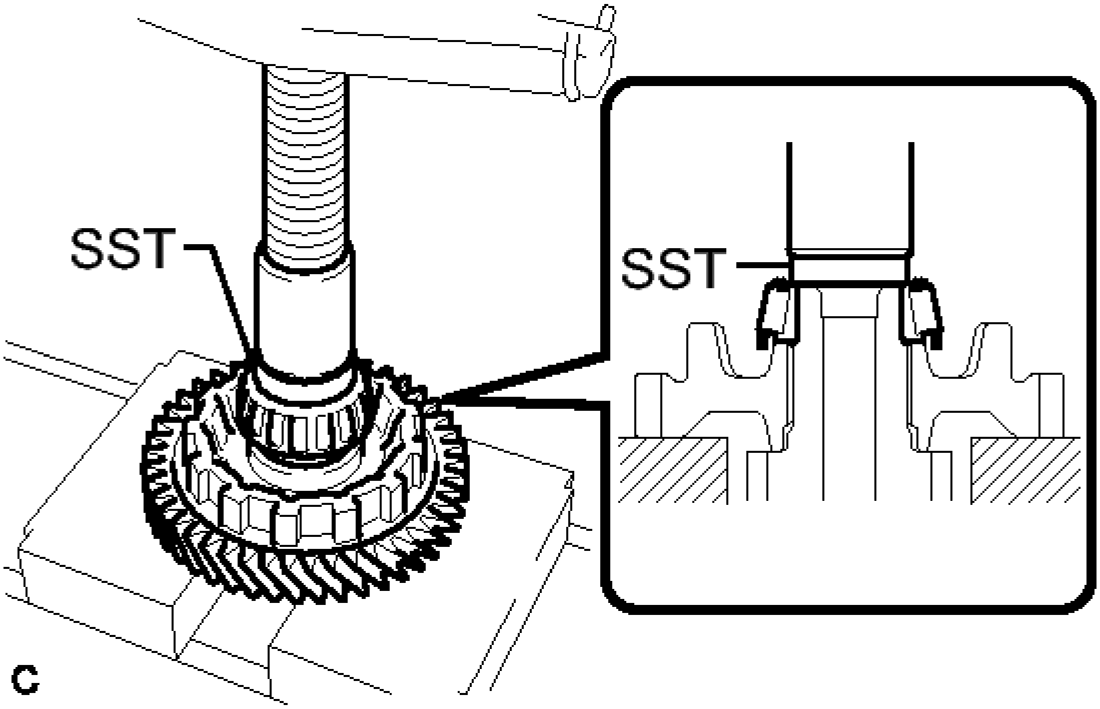

Fig. 329: Identifying Counter Driven Gear Rear Tapered Roller Bearing
Courtesy of TOYOTA MOTOR SALES, U.S.A., INC.

- **SST: 09950-60010**
  09951-00420

NOTE: **Be sure to install the counter driven gear rear tapered roller bearing and the differential drive pinion so that there is no clearance between each of them and the counter driven gear.**

22. **INSTALL COUNTER DRIVEN GEAR FRONT TAPERED ROLLER BEARING**
    a. Using SST and a press, install a new counter driven gear front tapered roller bearing to the counter driven gear sub-assembly.

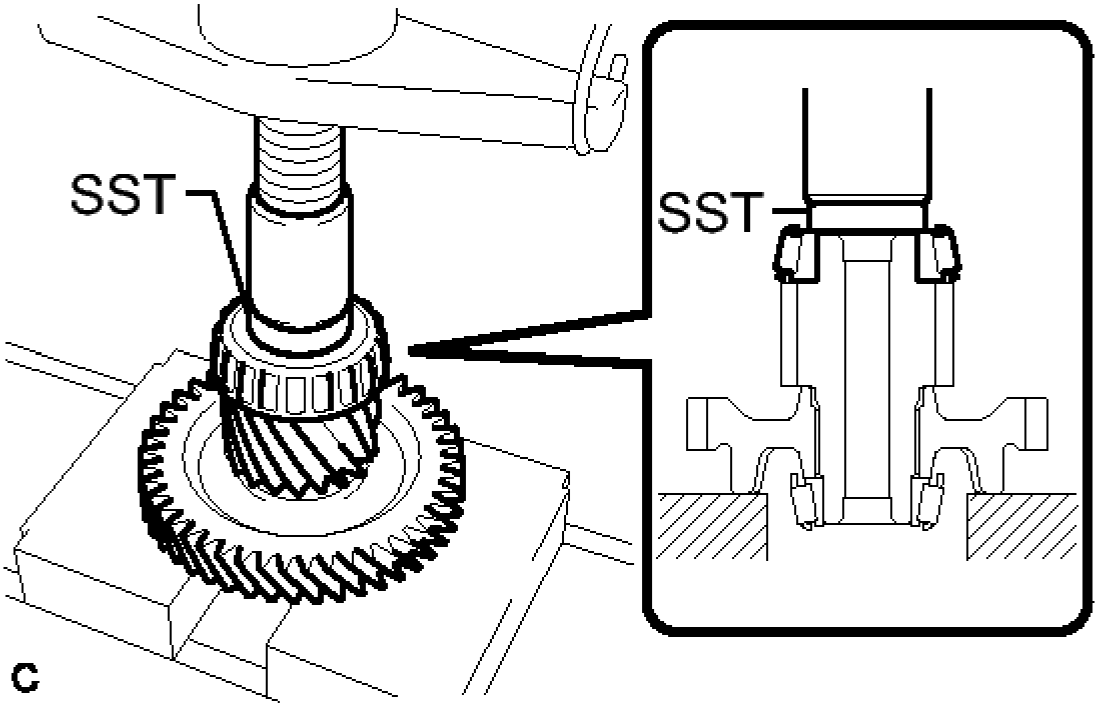

Fig. 330: Identifying Counter Driven Gear Front Tapered Roller Bearing
Courtesy of TOYOTA MOTOR SALES, U.S.A., INC.

- **SST: 09950-60010**
  09951-00530

NOTE: **Be sure to install the counter driven gear front tapered roller bearing so that there is no clearance between the bearing and the counter driven gear. If there is any clearance, the turning torque of the counter drive gear cannot be measured correctly.**

23. **INSTALL COUNTER DRIVEN GEAR**
    a. Install the counter driven gear sub-assembly to the transaxle case.

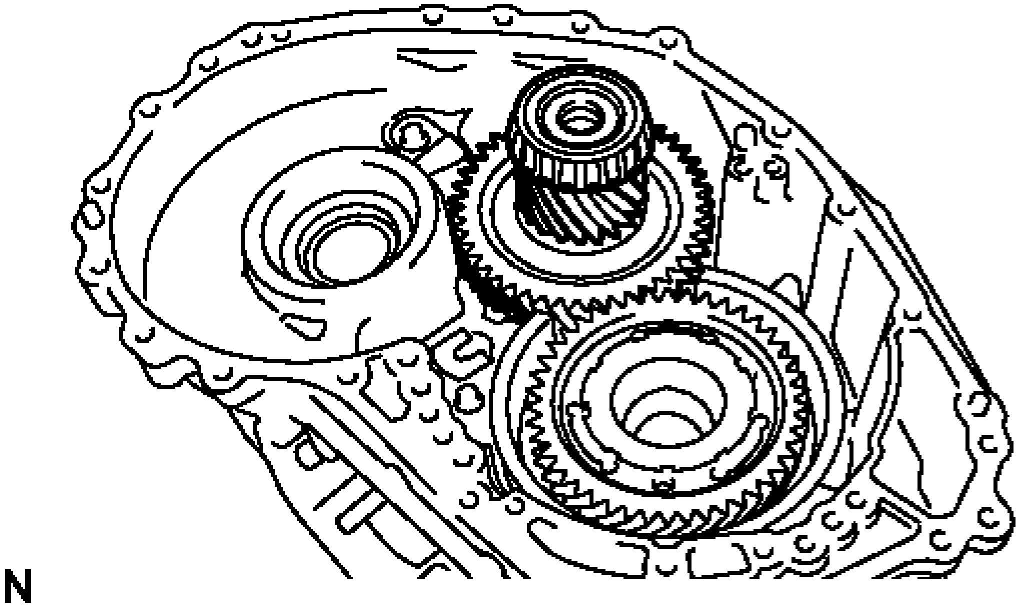

Fig. 331: Identifying Counter Driven Gear Sub-Assembly
Courtesy of TOYOTA MOTOR SALES, U.S.A., INC.

24. **INSTALL COUNTER DRIVE GEAR NUT**
    a. Turn the manual valve lever 2 notches counterclockwise to set it to the P position as shown in the illustration.

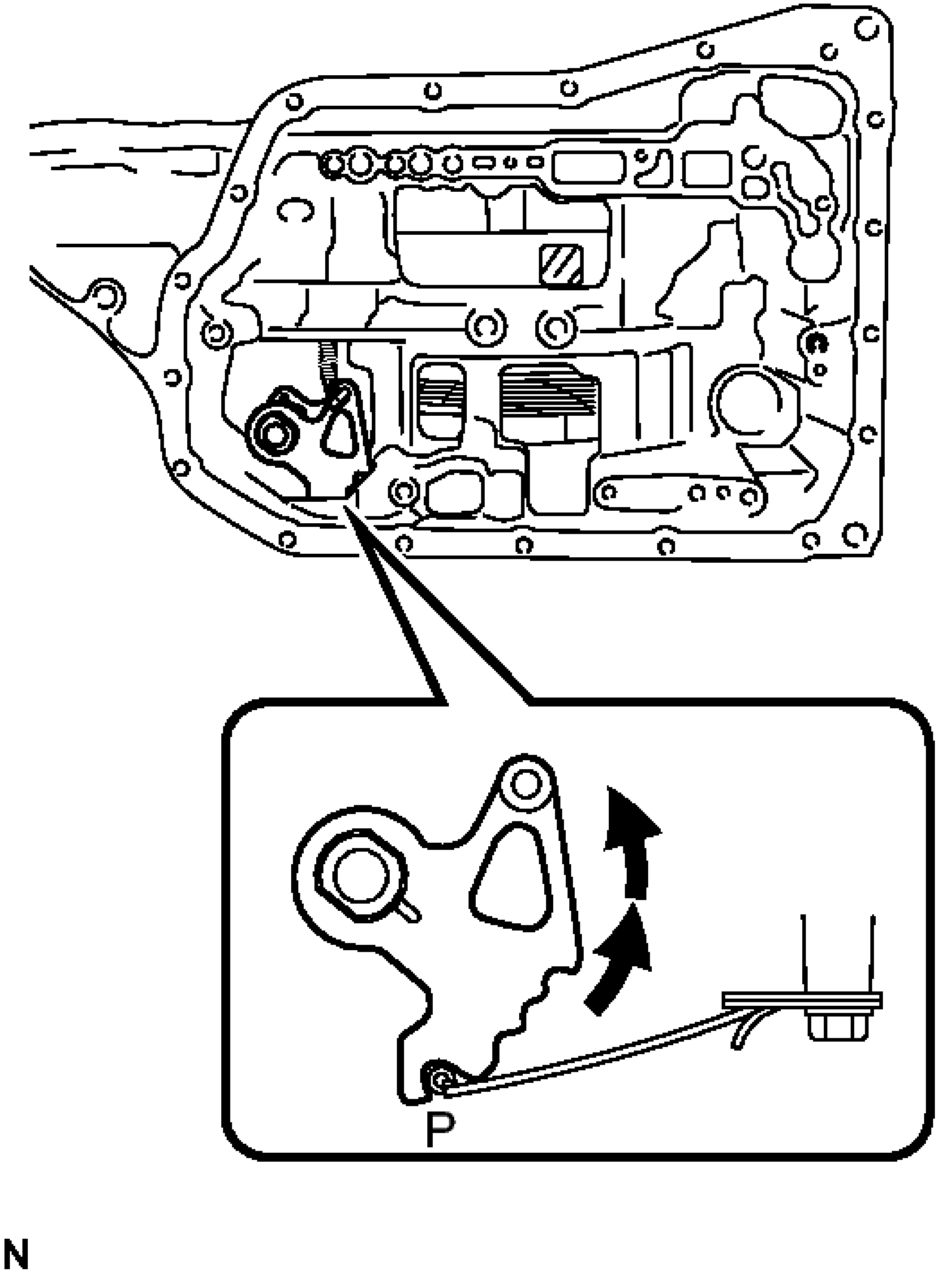

Fig. 332: Turning Manual Valve Lever Notches Counterclockwise
Courtesy of TOYOTA MOTOR SALES, U.S.A., INC.

b. Using SST, install a new counter drive gear nut.

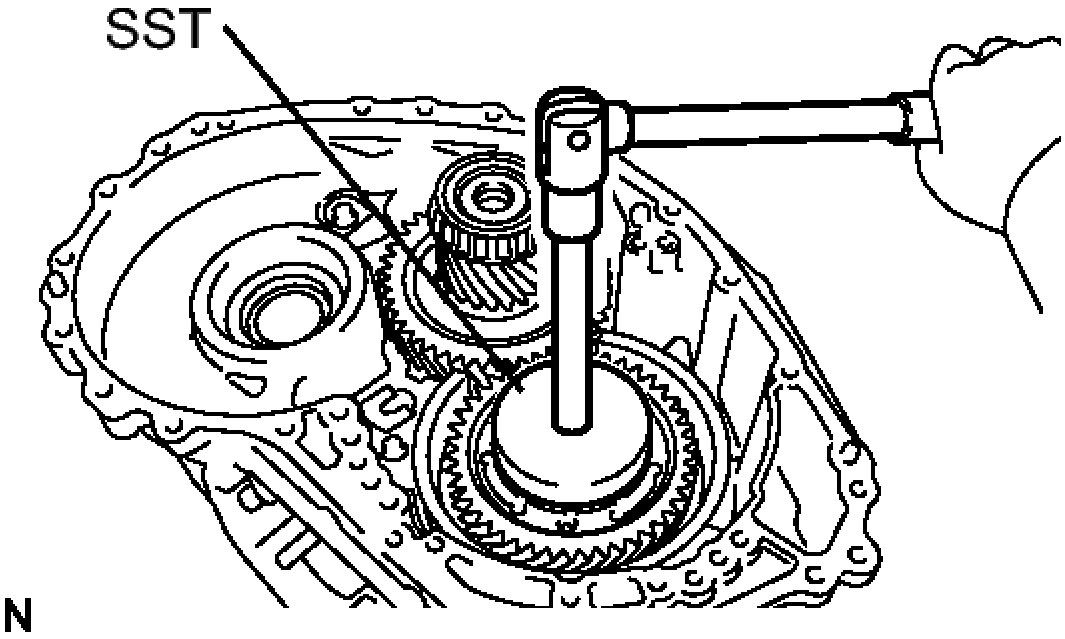

Fig. 333: Removing Nut From Planetary Gear Assembly
Courtesy of TOYOTA MOTOR SALES, U.S.A., INC.

- **SST: 09387-00130**

Torque: 120 N*m (1223 kgf*cm, 88 ft.*lbf)

c. Turn the manual valve lever 2 notches clockwise to set it to the N position as shown in the illustration.

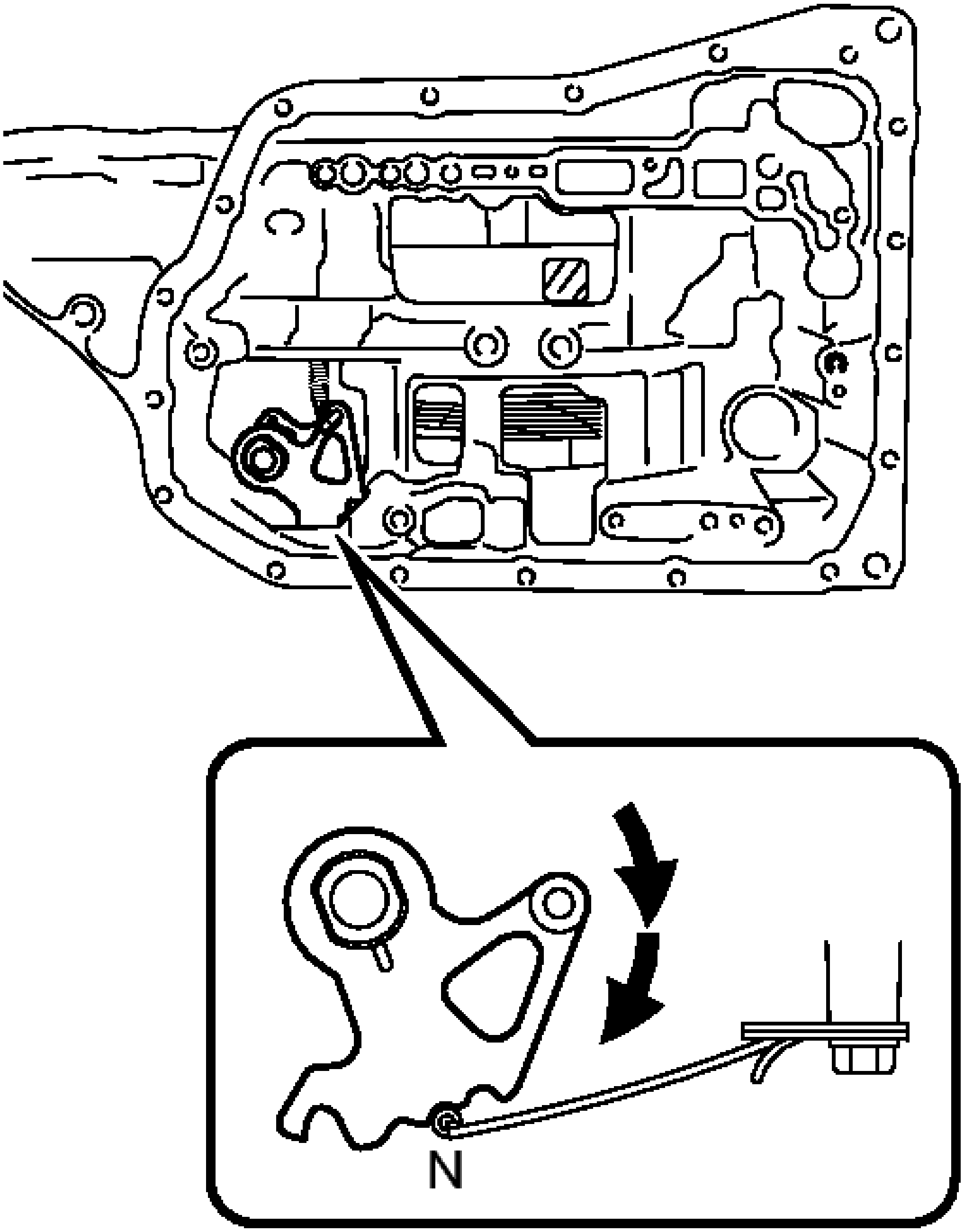

N

Fig. 334: Turning Manual Valve Lever Notches Clockwise
Courtesy of TOYOTA MOTOR SALES, U.S.A., INC.

d. Using SST and a torque wrench, measure the turning torque of the bearing while rotating SST at 60 rpm.

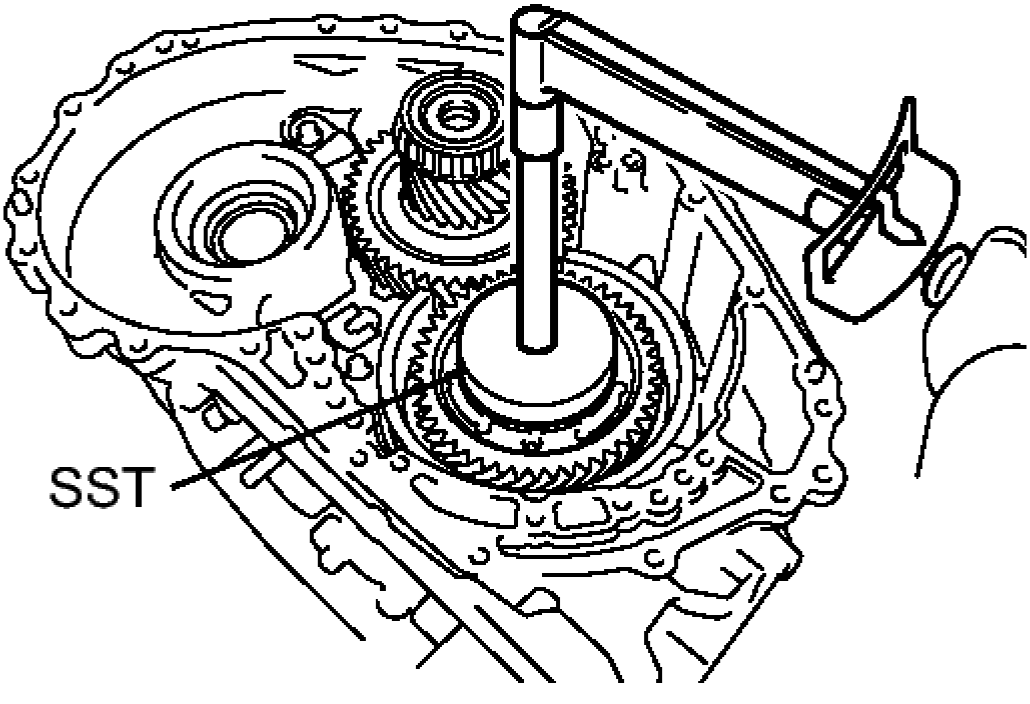

Fig. 335: Measuring Turning Torque Of Bearing
Courtesy of TOYOTA MOTOR SALES, U.S.A., INC.

- **SST: 09387-00130**

Turning torque

0.1 to 0.2 N*m (1 to 2 kgf*cm, 0.9 to 1.9 in.*lbf)

If the measured value is not within the specified range, gradually tighten the nut until the turning toque falls within the specified range.

Maximum torque

180 N*m (1835 kgf*cm, 132 ft.*lbf)

e. Using SST and a hammer, stake the planetary gear assembly.

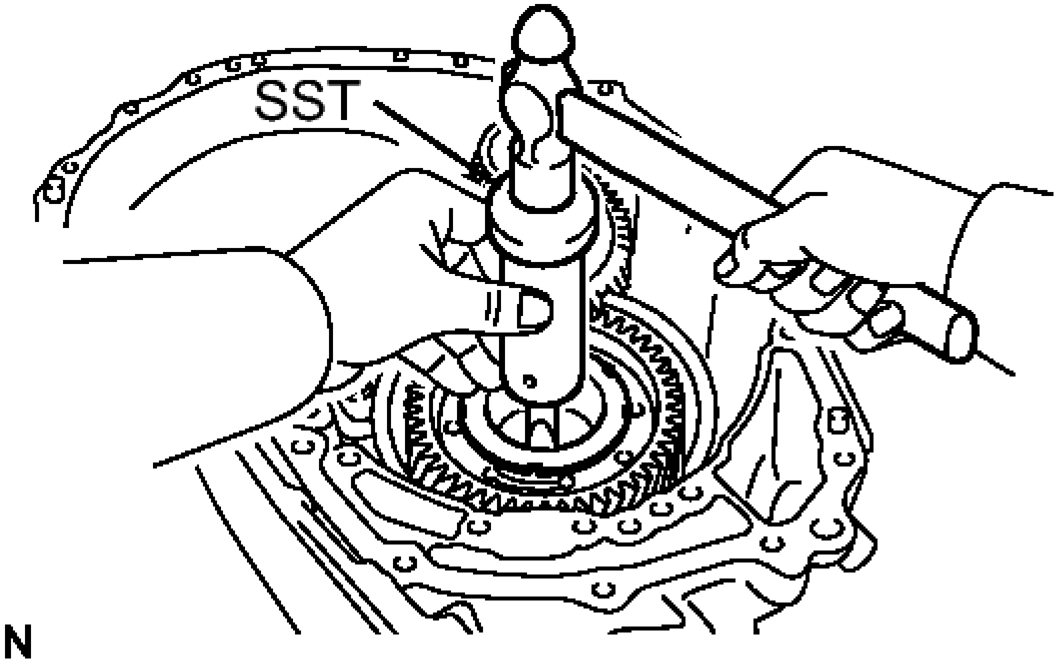

Fig. 336: Staking Planetary Gear Assembly
Courtesy of TOYOTA MOTOR SALES, U.S.A., INC.

- **SST: 09930-00010**

25. **INSPECT DIFFERENTIAL SIDE GEAR BACKLASH** See step 1
26. **INSTALL FRONT DIFFERENTIAL CASE**
    a. Install the front differential case to the transaxle case.

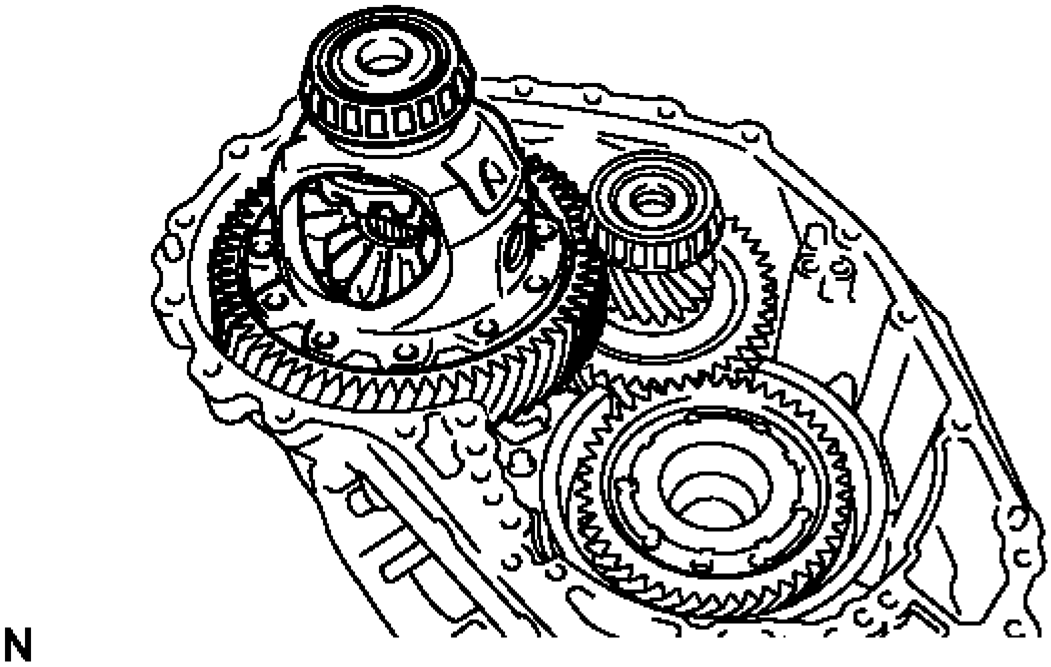

Fig. 337: Identifying Differential Case Sub-Assembly
Courtesy of TOYOTA MOTOR SALES, U.S.A., INC.

27. **INSTALL NO. 1 BRAKE PISTON**
    a. Coat 2 new O-rings with ATF and install them to the No. 1 brake piston.

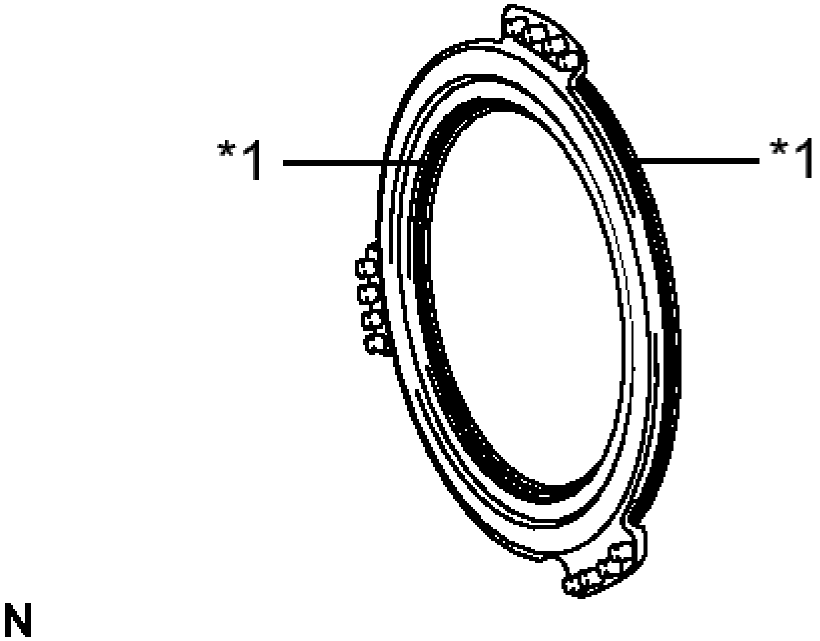

Fig. 338: Identifying O-Ring

Courtesy of TOYOTA MOTOR SALES, U.S.A., INC.

TEXT IN ILLUSTRATION

*1	O-ring

NOTE: **Ensure that the O-rings are not twisted.**

b. Install the No. 1 brake piston to the oil pump assembly.

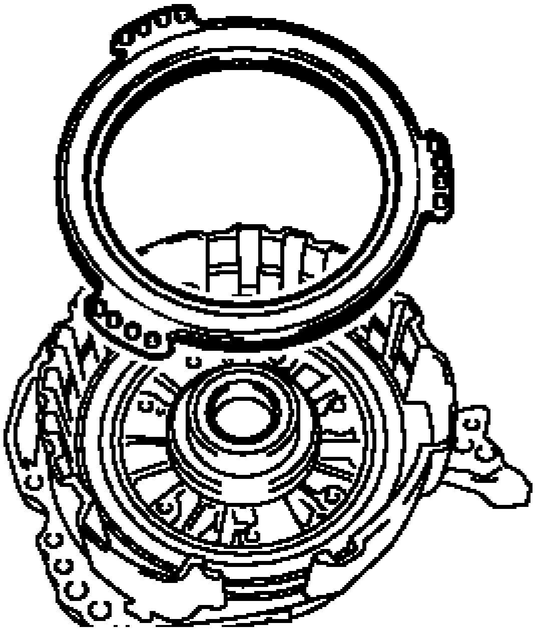

Fig. 339: Identifying No. 1 Brake Piston
Courtesy of TOYOTA MOTOR SALES, U.S.A., INC.

NOTE: **Be careful not to damage the O-rings.**

28. INSTALL 2ND BRAKE PISTON RETURN SPRING SUB-ASSEMBLY

a. Install the 3 2nd brake piston return springs to the oil pump assembly.

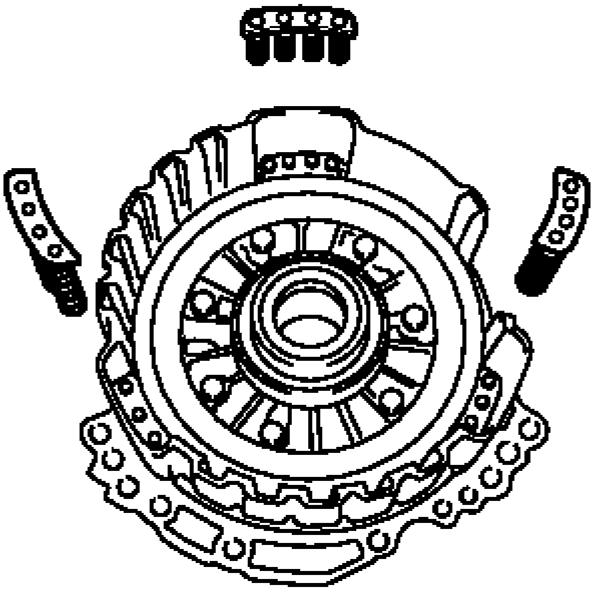

Fig. 340: Identifying 2nd Brake Piston Return Springs
Courtesy of TOYOTA MOTOR SALES, U.S.A., INC.

NOTE: **Make sure that the 3 2nd brake piston return springs are installed onto the protrusions on the oil pump assembly.**

29. **INSTALL NO. 1 BRAKE DISC**
    a. Install the 4 No. 1 brake discs, 4 No. 1 brake plates and No. 1 brake flange to the oil pump assembly.

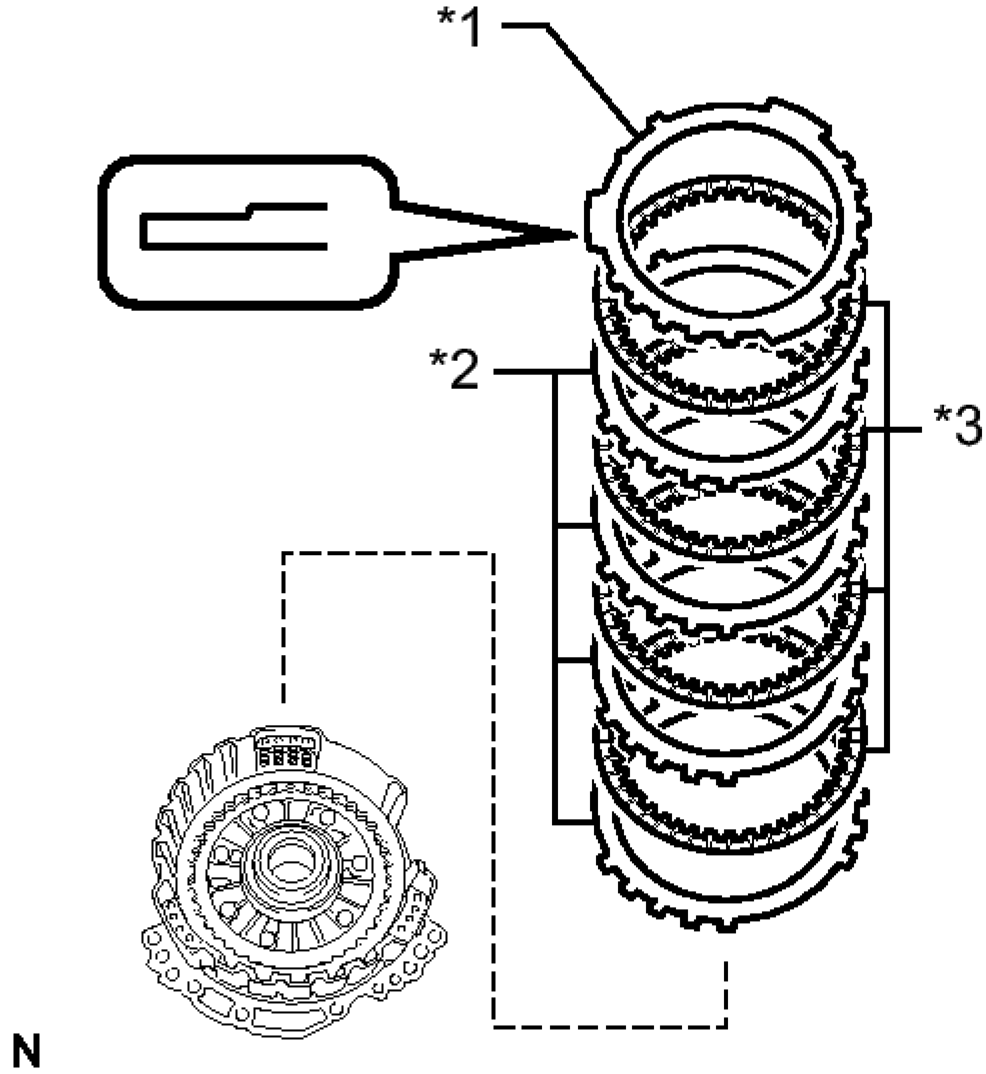

Fig. 341: Identifying Brake Discs, Brake Plates And Brake Flange
Courtesy of TOYOTA MOTOR SALES, U.S.A., INC.

TEXT IN ILLUSTRATION

*1	No. 1 Brake Flange
*2	No. 1 Brake Plate
*3	No. 1 Brake Disc

NOTE:

- **Make sure that the discs, plates, and flange are installed in the**

correct order.

- **Be sure to install the flange in the correct direction.**

b. Place SST on the flange and compress the flange using a press.

- **SST: 09387-00070**
- **SST: 09495-65040**

NOTE: **Stop the press when the brake piston return spring is flush with the snap ring groove. This prevents the brake piston return spring from being deformed.**

c. Using a screwdriver, install the snap ring to the oil pump assembly as shown in the illustration (#1).

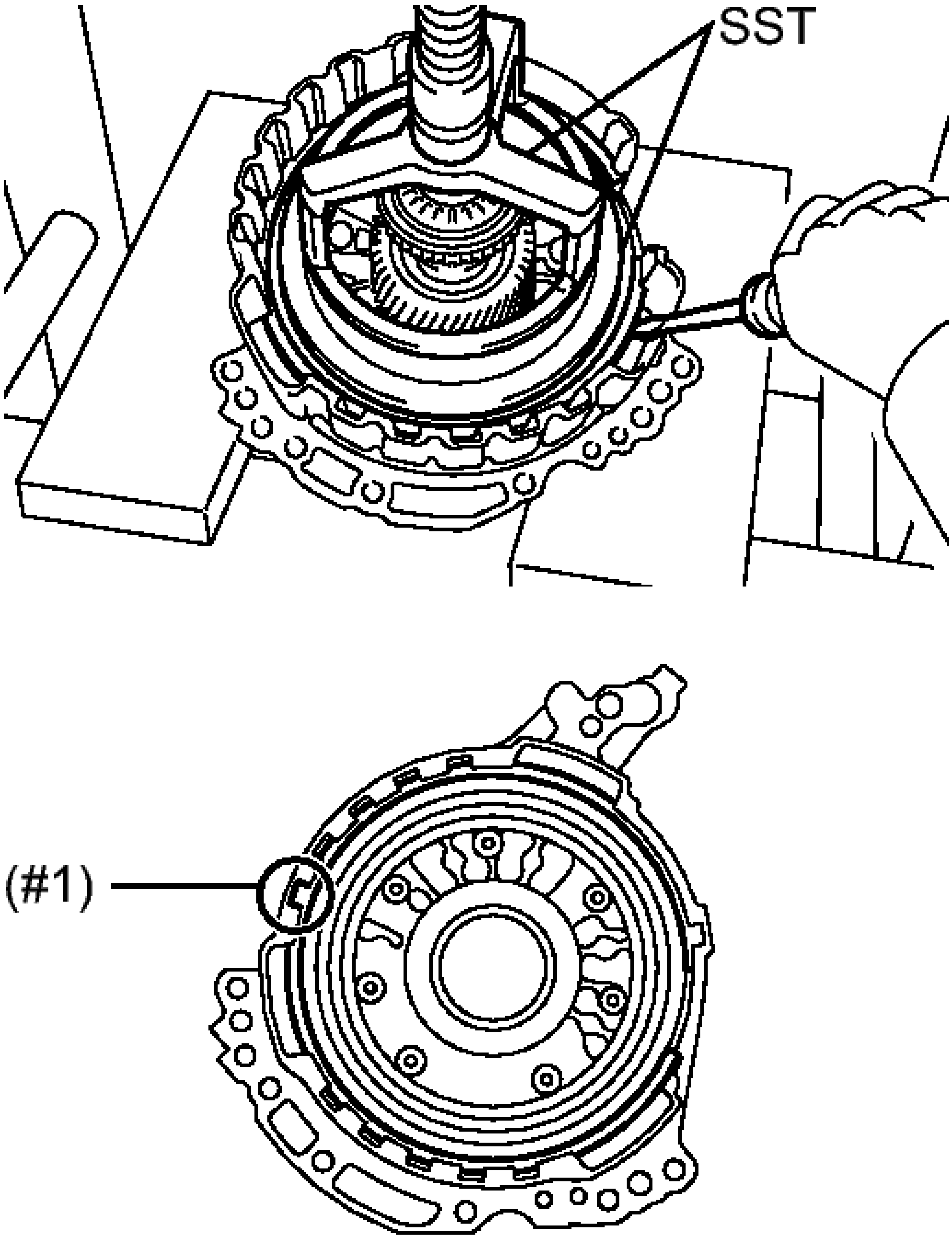

Fig. 342: Installing Snap Ring To Oil Pump Assembly
Courtesy of TOYOTA MOTOR SALES, U.S.A., INC.

NOTE:

- **Confirm that the snap ring is correctly located in the groove of the oil pump.**

- **Make sure to align the protruding part of the snap ring with the indented part (#1) of the front oil pump assembly shown in the illustration to install the snap ring.**

d. Install the brake snap ring stopper to the oil pump assembly.

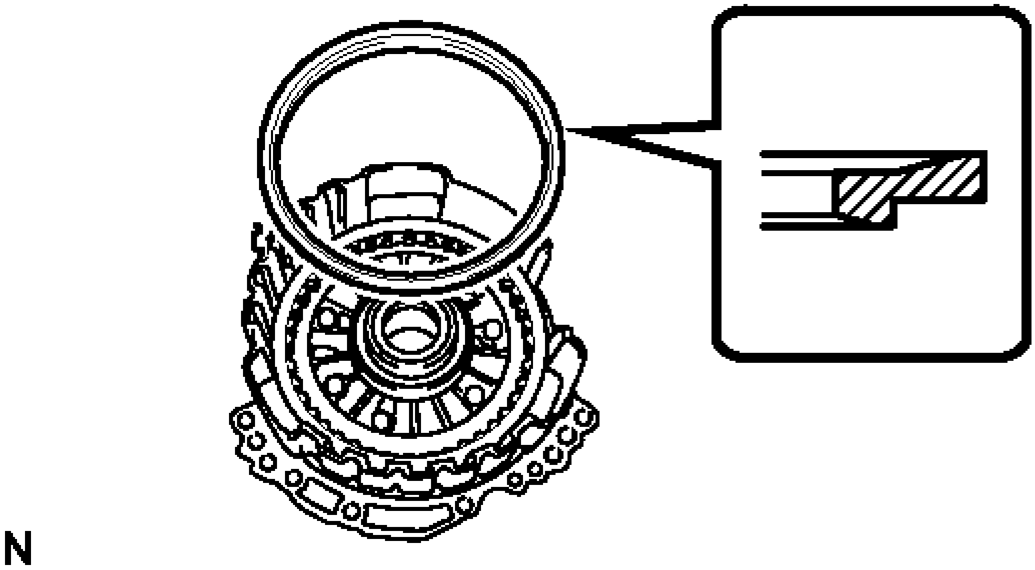

Fig. 343: Identifying Brake Snap Ring Stopper
Courtesy of TOYOTA MOTOR SALES, U.S.A., INC.

NOTE: **Be sure to install the brake snap ring stopper in the correct direction.**

e. Using a screwdriver, install the snap ring to the oil pump assembly as shown in the illustration (#2).

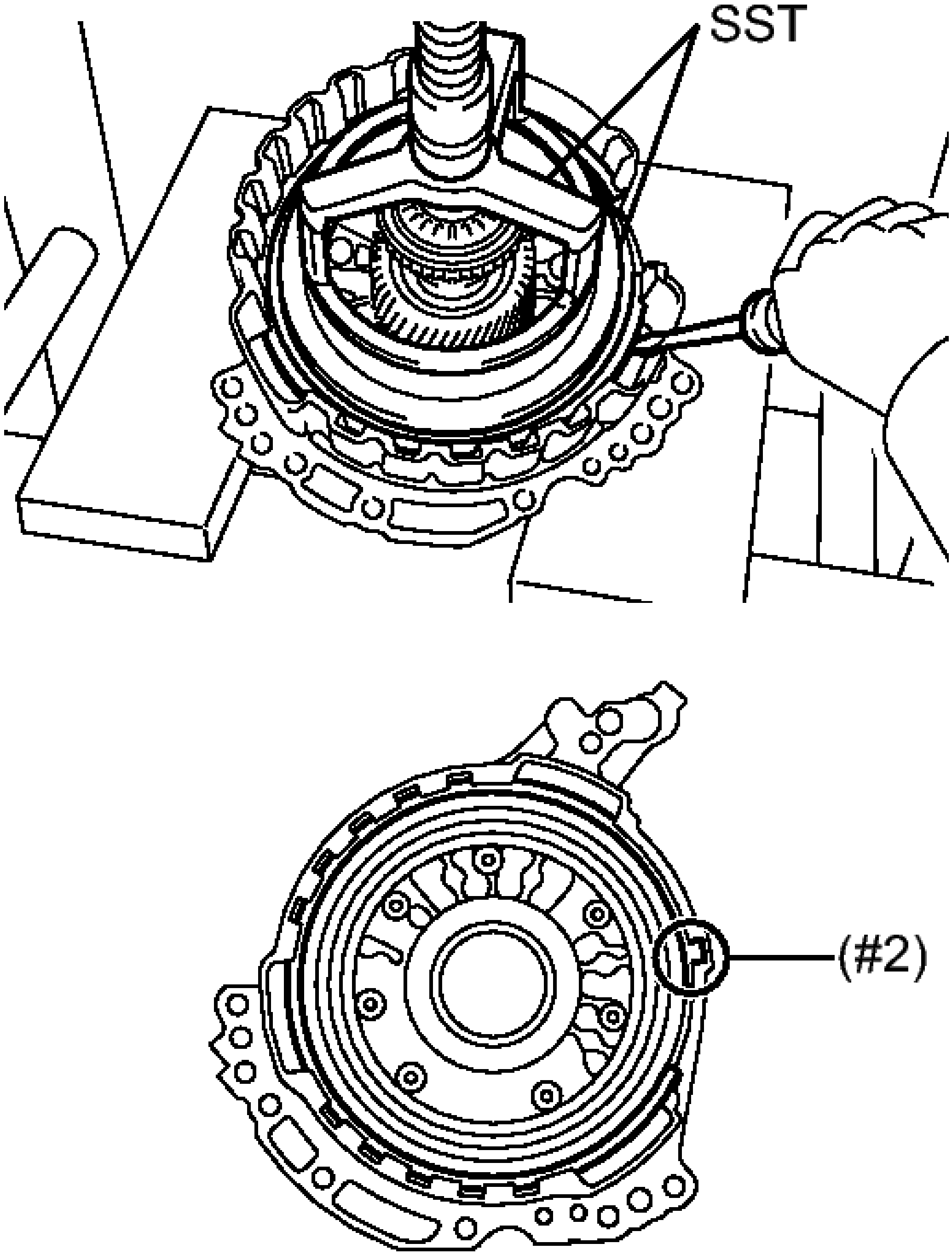

Fig. 344: Installing Snap Ring To Oil Pump Assembly
Courtesy of TOYOTA MOTOR SALES, U.S.A., INC.

NOTE:

- **Confirm that the snap ring is correctly located in the groove of the oil pump.**

- **Make sure to align the protruding part of the snap ring with the indented part (#2) of the front oil pump assembly shown in the illustration to install the snap ring.**

f. Check that the brake snap ring stopper can be turned by hand.

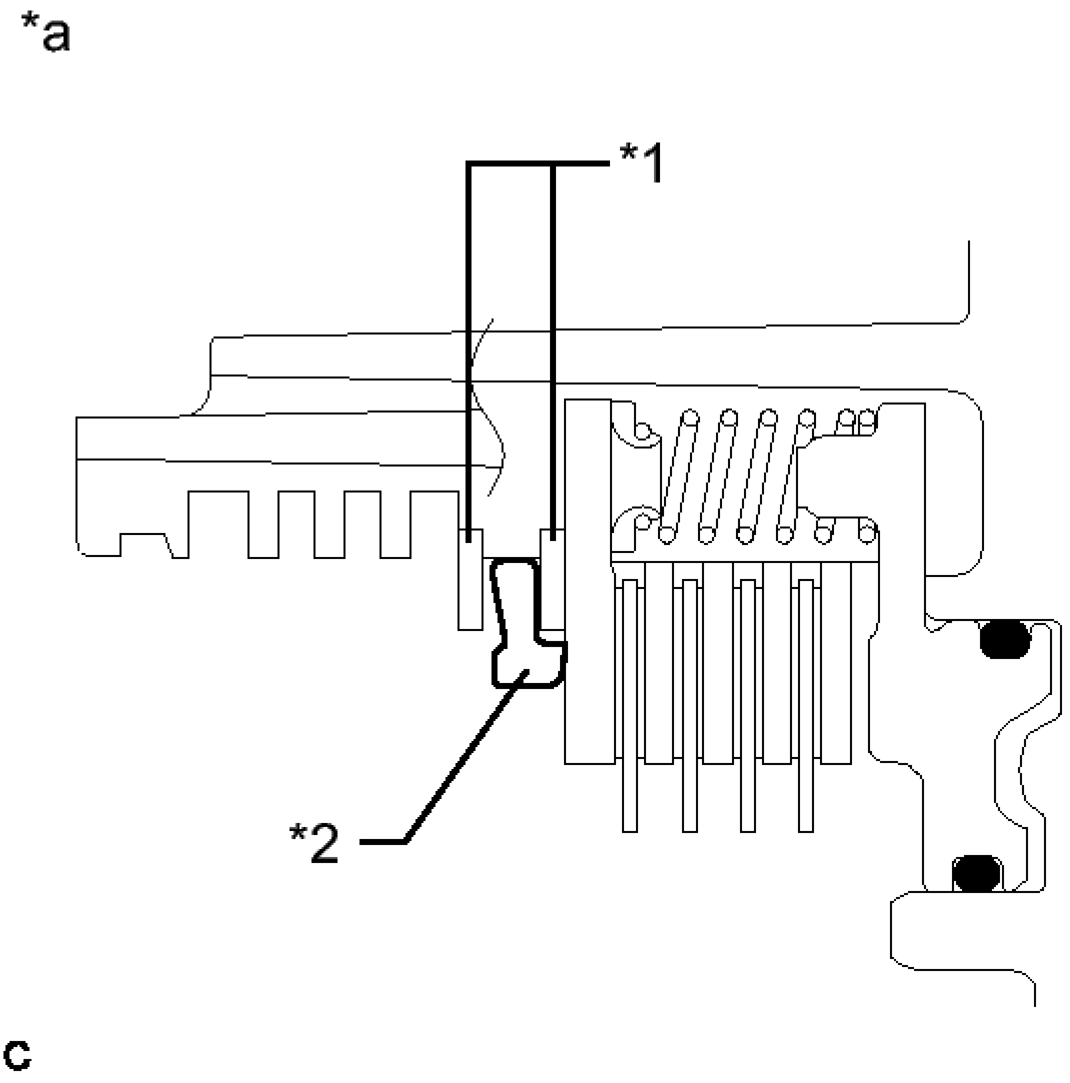

Fig. 345: Identifying Brake Snap Ring Stopper
Courtesy of TOYOTA MOTOR SALES, U.S.A., INC.

TEXT IN ILLUSTRATION

*1	Snap Ring
*2	Brake Snap Ring

	Stopper
*a	Correctly installed

NOTE: **If the brake snap ring stopper cannot be turned by hand, the brake snap ring stopper may have been installed upside down, or the snap ring may not have been completely located in the groove on the oil pump. Remove and reinstall the snap ring and the brake snap ring stopper.**

30. **INSPECT CLEARANCE OF NO. 1 BRAKE** See step 16
31. **INSTALL UNDERDRIVE PLANETARY SUN GEAR**
    a. Coat the thrust needle roller bearing with ATF, and install it to the oil pump assembly.

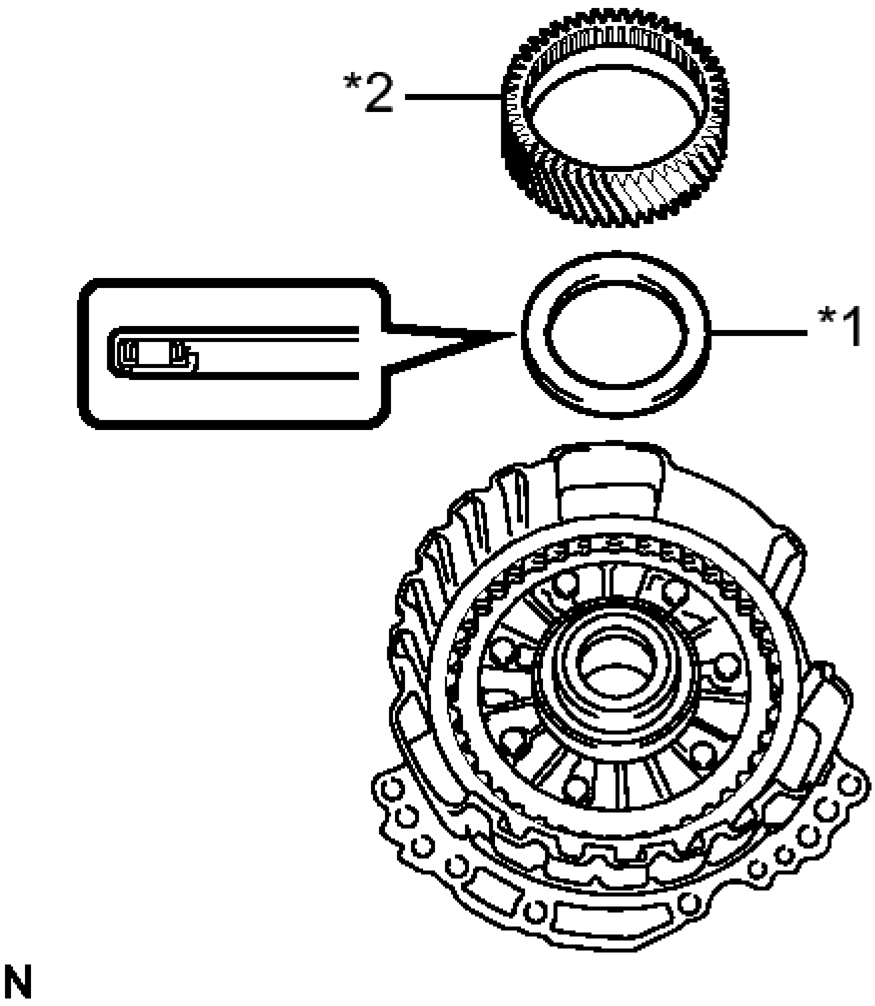

Fig. 346: Identifying Thrust Needle Roller Bearing

Courtesy of TOYOTA MOTOR SALES, U.S.A., INC.

TEXT IN ILLUSTRATION

*1	Thrust Needle Roller Bearing
*2	Underdrive Planetary Sun Gear

BEARING DIAMETER: MM (IN.)

-	Inside	Outside
Bearing	57.7 (2.27)	75.2 (2.96)

NOTE: **Be sure to install the thrust needle roller bearing properly so that the temper colored side of the race will be visible.**

b. Install the underdrive planetary sun gear to the oil pump assembly.

32. **INSTALL INPUT SHAFT SUB-ASSEMBLY**

a. Coat 3 new input shaft oil seal rings with ATF and install them to the input shaft.

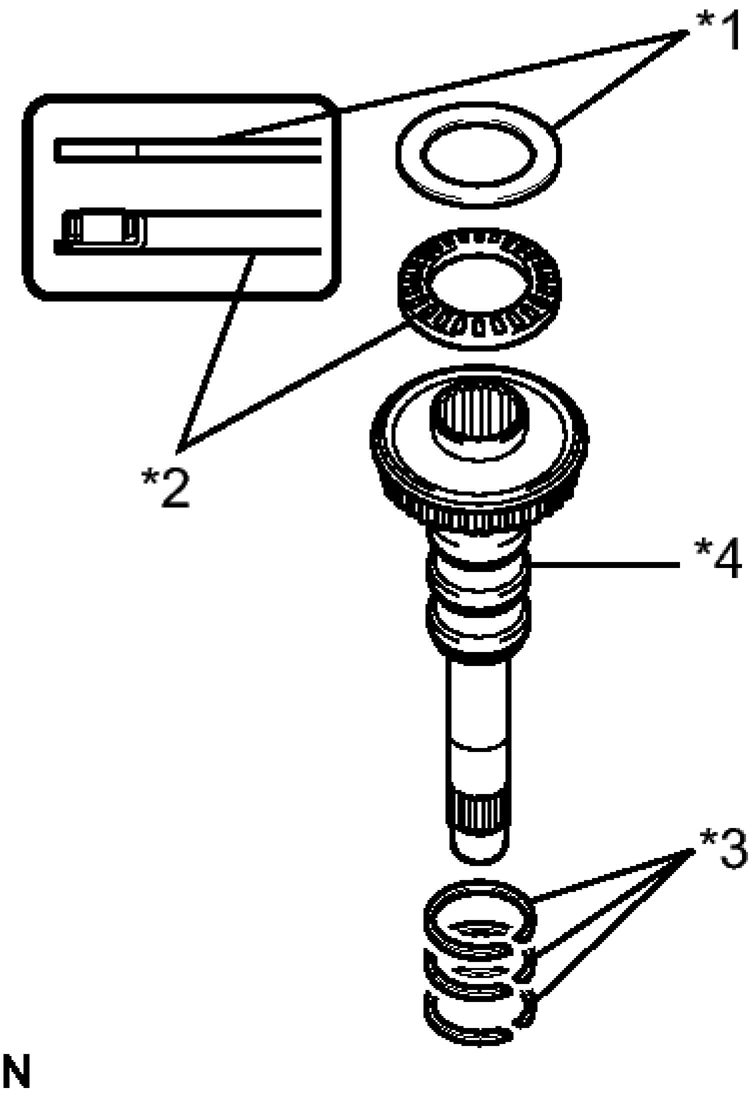

Fig. 347: Identifying Input Shaft Oil Seal Ring And Underdrive Planetary Sun Gear
Courtesy of TOYOTA MOTOR SALES, U.S.A., INC.

TEXT IN ILLUSTRATION

*1	Thrust Needle Roller Race
*2	Thrust Needle Roller Bearing
*3	Input Shaft Oil Seal

	Ring
*4	Input Shaft

NOTE: **Do not expand the gap of the oil seal ring excessively.**

b. Coat the thrust needle roller bearing and thrust needle roller race with ATF, and install them on the oil pump assembly.

BEARING AND RACE DIAMETER: MM (IN.)

-	Inside	Outside
Bearing	29.1 (1.15)	48.6 (1.91)
Race	30.7 (1.21)	48.3 (1.90)

NOTE: **Be sure to install the thrust needle roller bearing in the correct direction.**

c. Install the input shaft to the oil pump assembly.

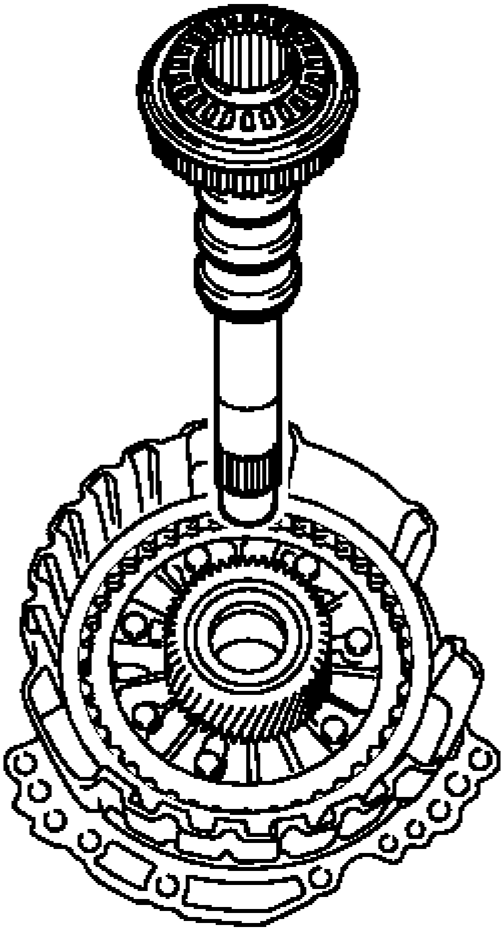

Fig. 348: Identifying Input Shaft And Oil Pump Assembly
Courtesy of TOYOTA MOTOR SALES, U.S.A., INC.

33. **INSTALL PLANETARY SUN GEAR SUB-ASSEMBLY**
    a. Using a snap ring expander, install the snap ring to the underdrive planetary gear assembly.

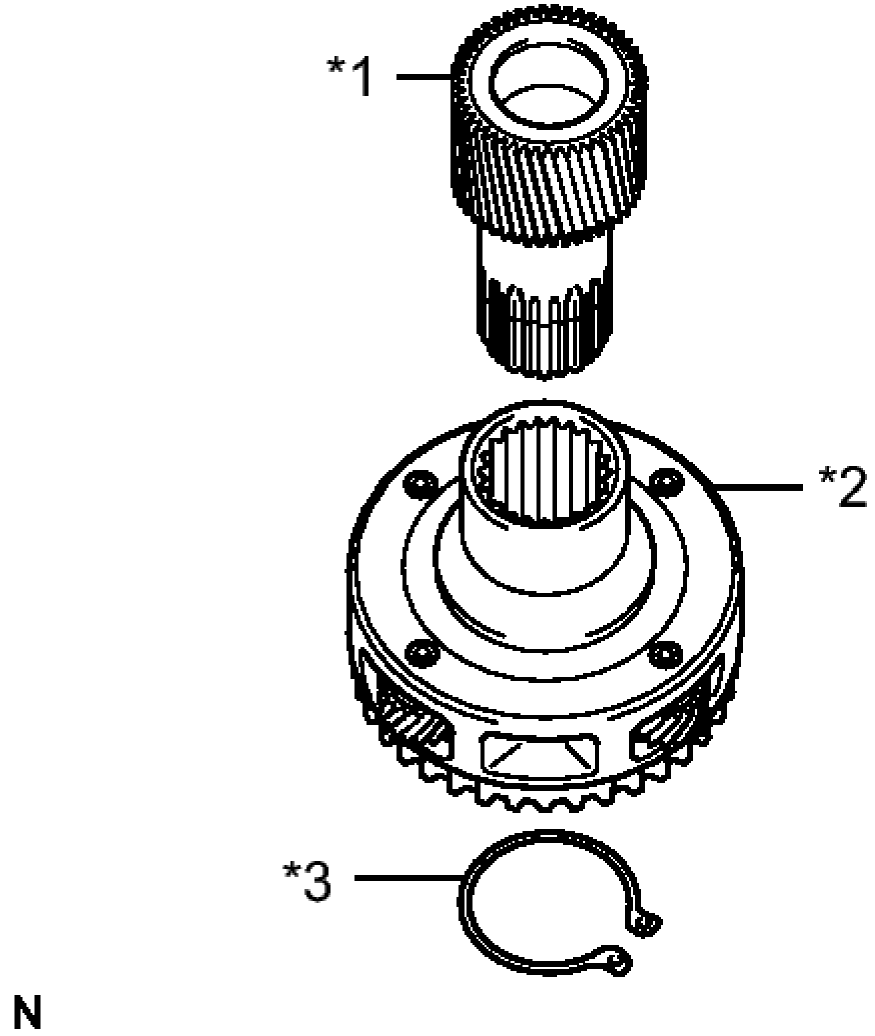

Fig. 349: Identifying Front Planetary Sun Gear, Underdrive Planetary Gear Assembly And Snap Ring
Courtesy of TOYOTA MOTOR SALES, U.S.A., INC.

TEXT IN ILLUSTRATION

*1	Planetary Sun Gear Sub-assembly
*2	Underdrive Planetary Gear Assembly
*3	Snap Ring

b. Using a snap ring expander, install the planetary sun gear sub-assembly to the underdrive planetary gear assembly with the snap ring expanded.

34. **INSTALL UNDERDRIVE PLANETARY RING GEAR**

a. Install the underdrive planetary ring gear to the underdrive planetary gear assembly.

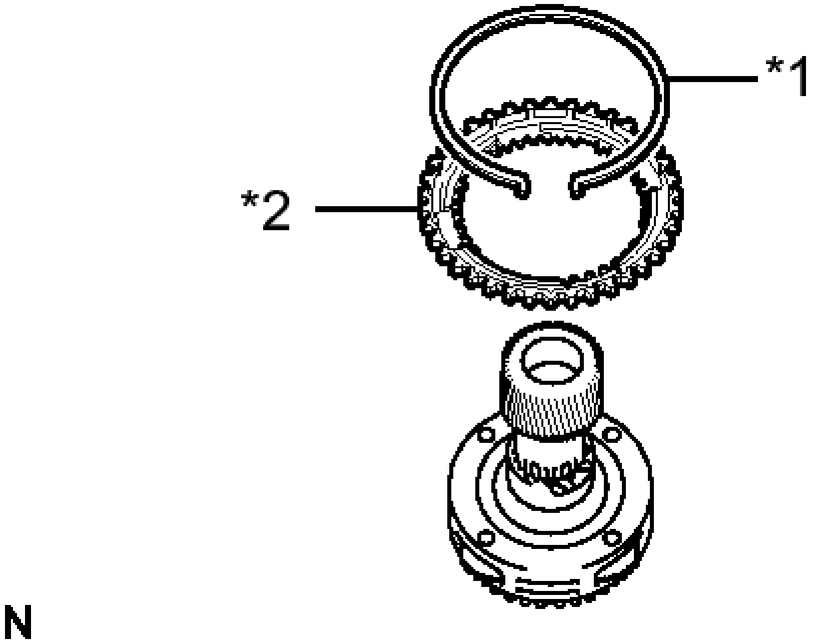

Fig. 350: Identifying Underdrive Planetary Ring Gear
Courtesy of TOYOTA MOTOR SALES, U.S.A., INC.

TEXT IN ILLUSTRATION

*1	Snap Ring
*2	Underdrive Planetary Ring Gear

b. Using needle-nose pliers, install the snap ring to the underdrive planetary ring gear.

NOTE: **Confirm that the snap ring is correctly located in the groove of the underdrive planetary ring gear.**

35. **INSTALL NO. 3 BRAKE HUB**

a. Coat the thrust needle roller bearing with ATF and install it on the underdrive planetary gear assembly.

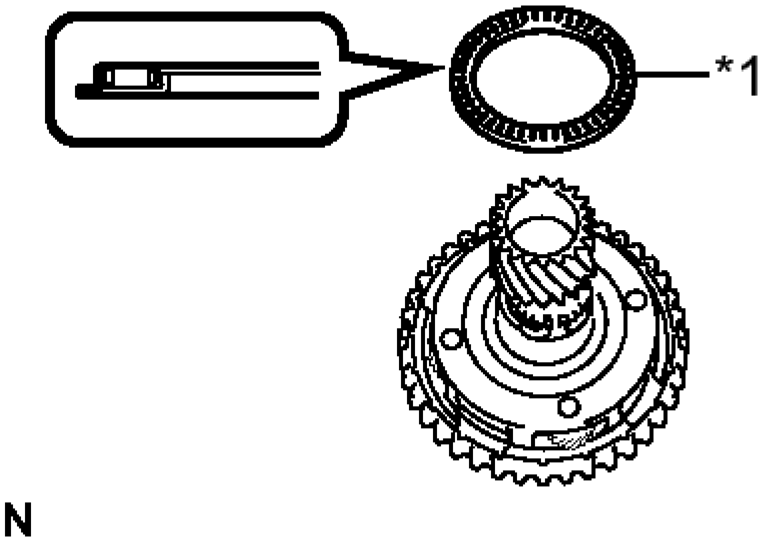

Fig. 351: Identifying No. 3 Brake Hub
Courtesy of TOYOTA MOTOR SALES, U.S.A., INC.

TEXT IN ILLUSTRATION

*1	Thrust Needle Roller Bearing

BEARING AND RACE DIAMETER: MM (IN.)

-	Inside	Outside
Bearing	62.6 (2.46)	82.9 (3.26)
Race	65.9 (2.59)	80.3 (3.16)

NOTE: Be sure to install the thrust needle roller bearing properly so that the temper colored side of the race will be visible.

b. Coat the thrust needle roller race with MP grease and install it to the No. 3 brake hub.

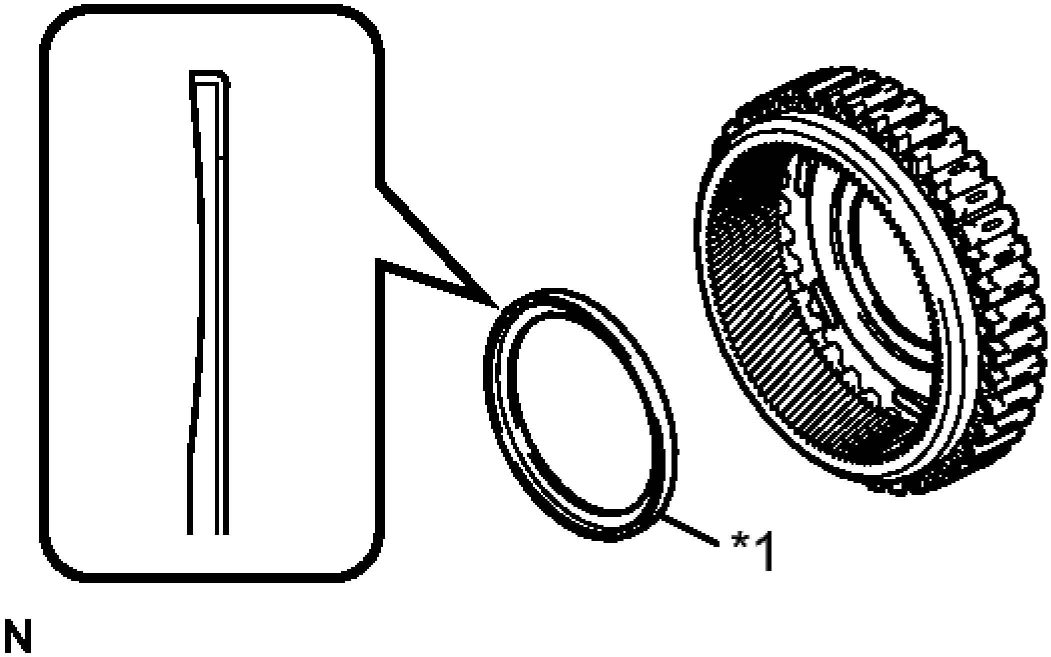

Fig. 352: Identifying Thrust Needle Roller Race
Courtesy of TOYOTA MOTOR SALES, U.S.A., INC.

TEXT IN ILLUSTRATION

*1	Thrust Needle Roller Race

c. Install the No. 3 brake hub to the underdrive planetary gear assembly.

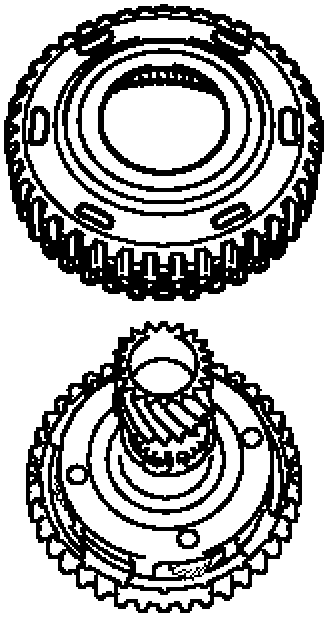

Fig. 353: Identifying No. 3 Brake Hub And Underdrive Planetary Gear Assembly
Courtesy of TOYOTA MOTOR SALES, U.S.A., INC.

36. **INSTALL UNDERDRIVE PLANETARY GEAR ASSEMBLY**
    a. Install the underdrive planetary gear assembly to the oil pump assembly.

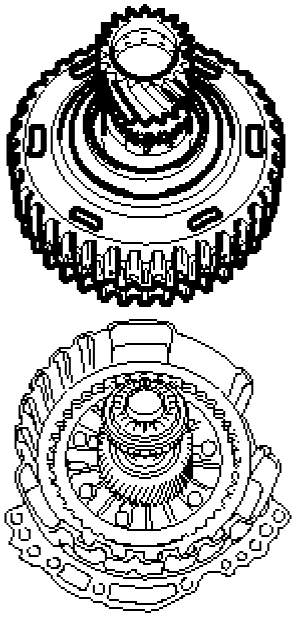

Fig. 354: Identifying Underdrive Planetary Gear Assembly

Courtesy of TOYOTA MOTOR SALES, U.S.A., INC.

37. **INSTALL NO. 3 BRAKE DISC**
    1. Install the 2 No. 3 brake flanges, 3 No. 3 brake discs and 2 No. 3 brake plates to the oil pump assembly.

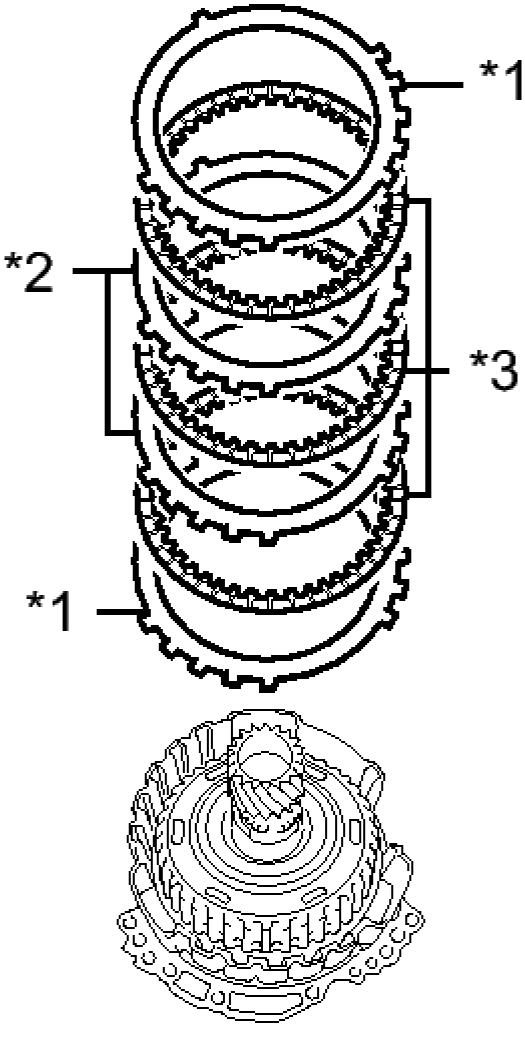

Fig. 355: Identifying Brake Flanges, Brake Discs And Brake Plates
Courtesy of TOYOTA MOTOR SALES, U.S.A., INC.

TEXT IN ILLUSTRATION

*1	No. 3 Brake Flange
*2	No. 3 Brake Plate

*3	No. 3 Brake Disc

NOTE: **Make sure that the discs, plates and flanges are installed in the correct order.**

b. Using a screwdriver, install the snap ring to the oil pump assembly.

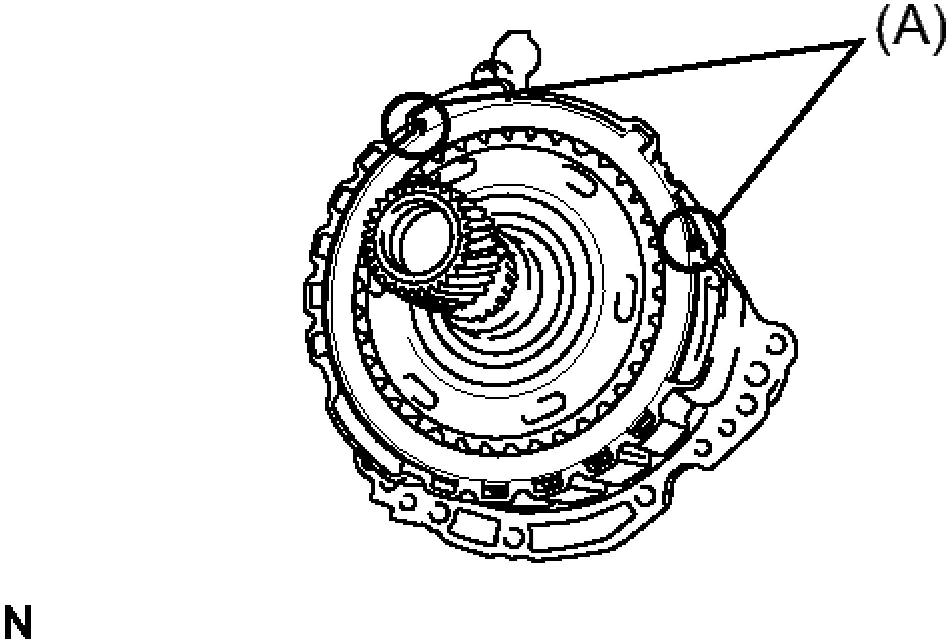

Fig. 356: Identifying Snap Ring To Oil Pump Assembly
Courtesy of TOYOTA MOTOR SALES, U.S.A., INC.

NOTE:

- **Confirm that the snap ring is correctly located in the groove of the oil pump.**
- **Make sure that the snap ring ends are positioned as shown in the illustration (A).**

38. **INSPECT CLEARANCE OF NO. 3 BRAKE** See step 17
39. **INSTALL FRONT OIL PUMP ASSEMBLY**
    a. Coat a new O-ring with ATF and install it to the transaxle case.

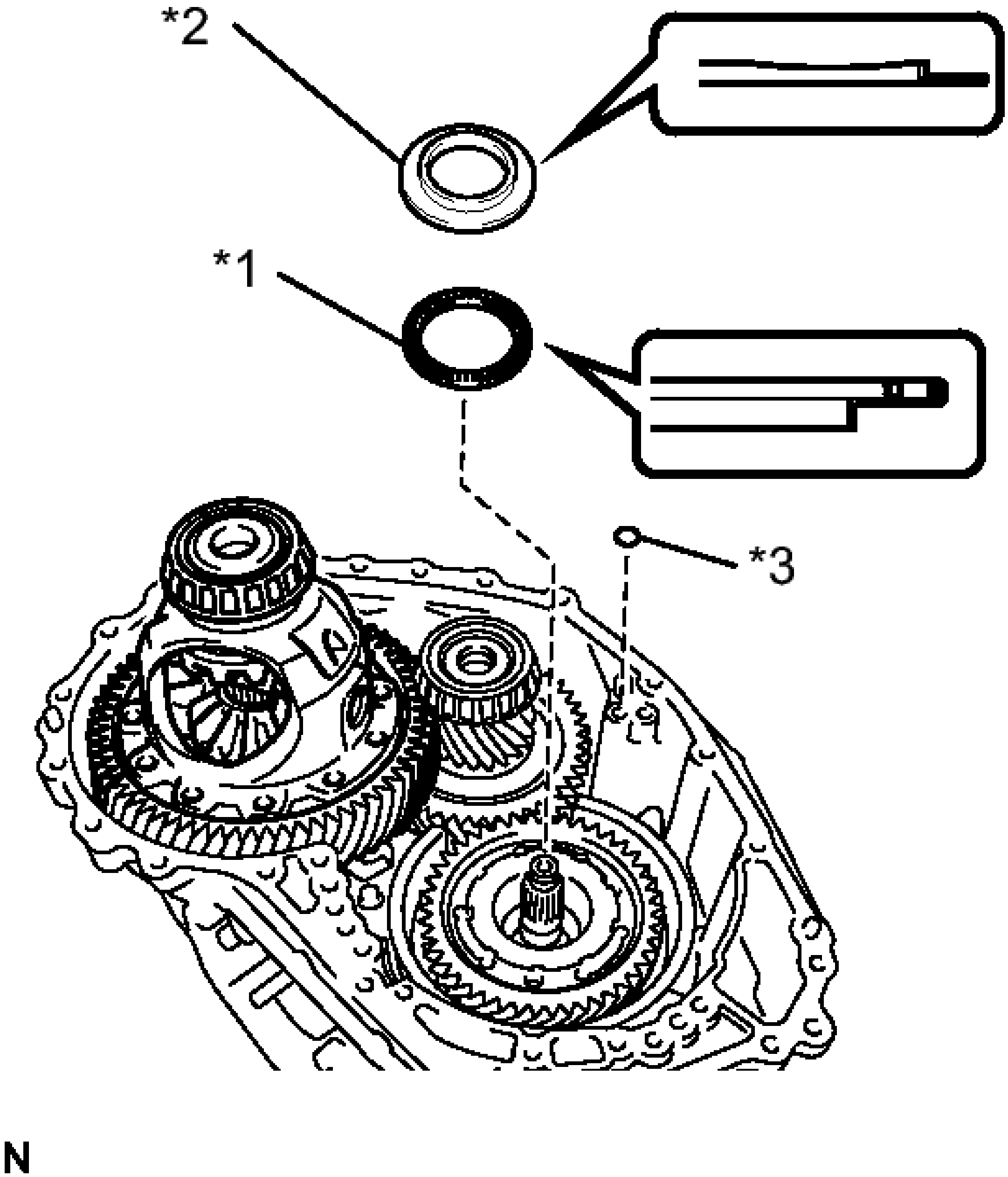

Fig. 357: Identifying Thrust Needle Roller Bearing, Race & O-Ring
Courtesy of TOYOTA MOTOR SALES, U.S.A., INC.

TEXT IN ILLUSTRATION

	Thrust

*1	Needle Roller Bearing
*2	Thrust Needle Roller Race
*3	O-ring

b. Coat the thrust needle roller bearing and thrust needle roller race with ATF and install them on the underdrive planetary gear assembly.

BEARING AND RACE DIAMETER: MM (IN.)

-	Inside	Outside
Bearing	53.1 (2.09)	79 (3.11)
Race	59.4 (2.34)	77 (3.03)

NOTE: Be sure to install the thrust needle roller bearing properly so that the temper colored side of the race will be visible.

c. Coat a new O-ring with ATF and install it to the oil pump.

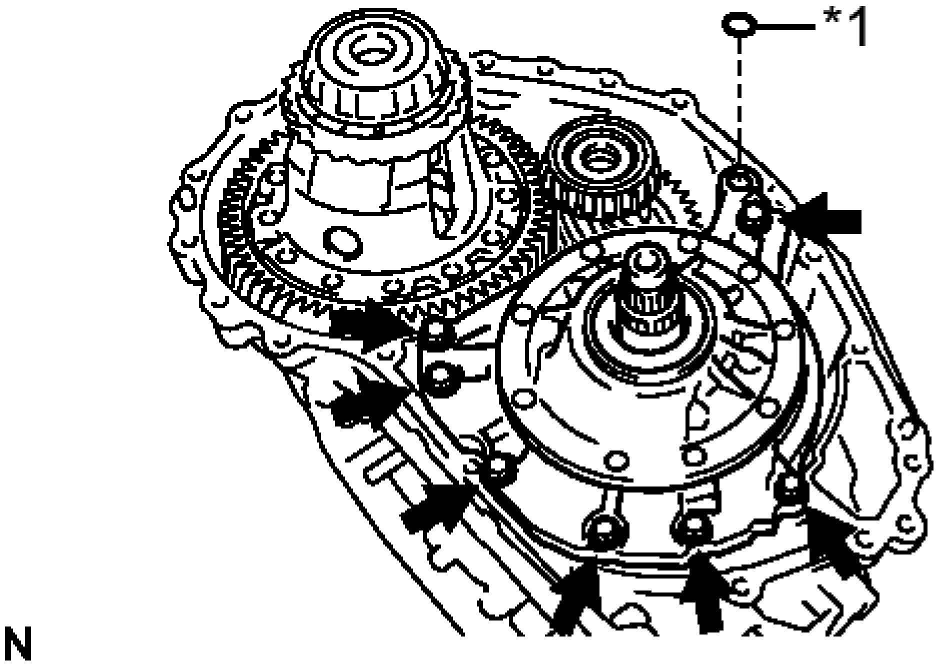

Fig. 358: Identifying Front Oil Pump And Gear Body Sub-Assembly Bolts And O-Ring
Courtesy of TOYOTA MOTOR SALES, U.S.A., INC.

TEXT IN ILLUSTRATION

*1	O-ring

d. Install the oil pump assembly to the transaxle case with the 7 bolts.

Torque: 23 N*m (234 kgf*cm, 17 ft.*lbf)

40. **INSTALL FRONT OIL PUMP BODY O-RING**

a. Coat a new O-ring with ATF and install it to the front oil pump body sub-assembly.

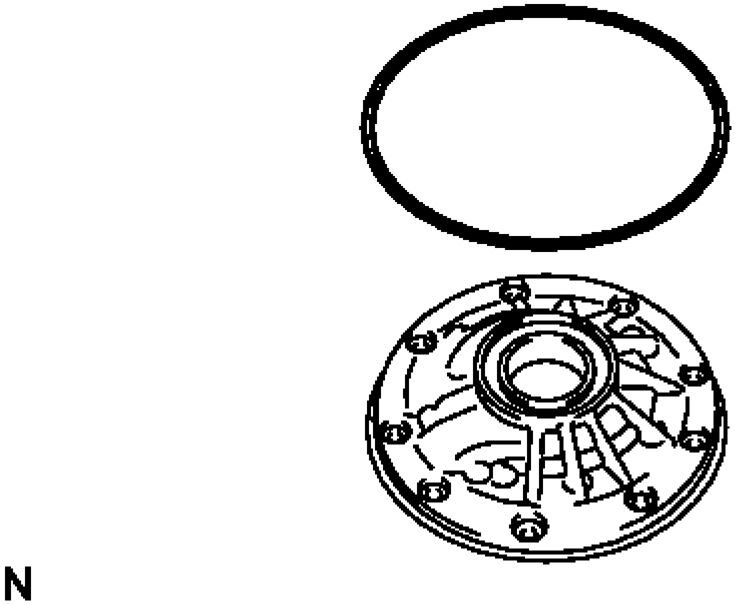

Fig. 359: Identifying O-Ring And Oil Pump Body
Courtesy of TOYOTA MOTOR SALES, U.S.A., INC.

41. **INSTALL DIFFERENTIAL GEAR LUBE APPLY TUBE**

a. Install the differential gear lube apply tube to the transaxle housing.

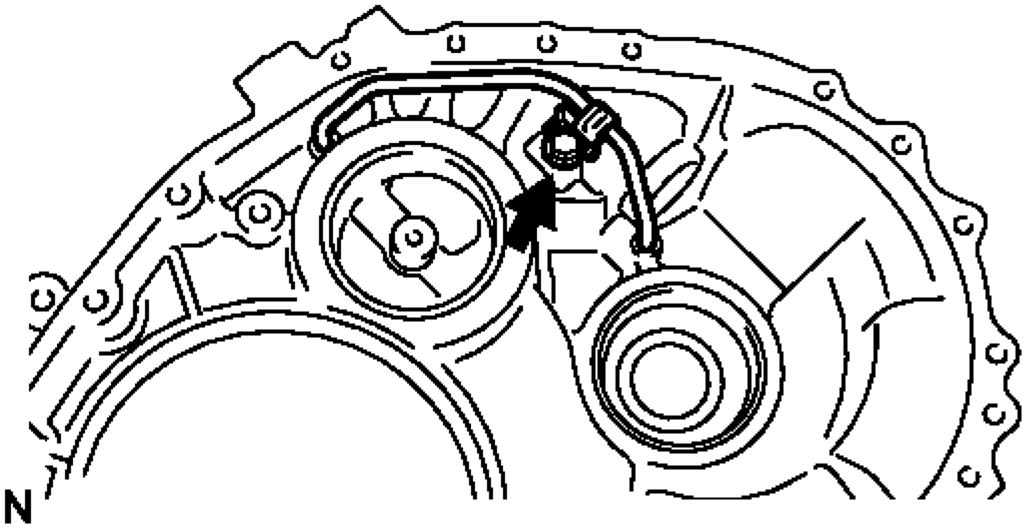

Fig. 360: Locating Differential Gear Lube Apply Tube Clamp And Bolt
Courtesy of TOYOTA MOTOR SALES, U.S.A., INC.

NOTE: **Insert the differential gear lube apply tube into the transaxle case until it makes contact with the stopper.**

b. Install the apply tube clamp to the differential gear lube apply tube with the bolt.

Torque: 23 N*m (234 kgf*cm, 17 ft.*lbf)

NOTE: **There should be clearance between the differential lube apply tube and apply tube clamp.**

42. **INSTALL COUNTER DRIVEN GEAR FRONT TAPERED ROLLER BEARING OUTER RACE**

a. Install the shim to the transaxle housing.

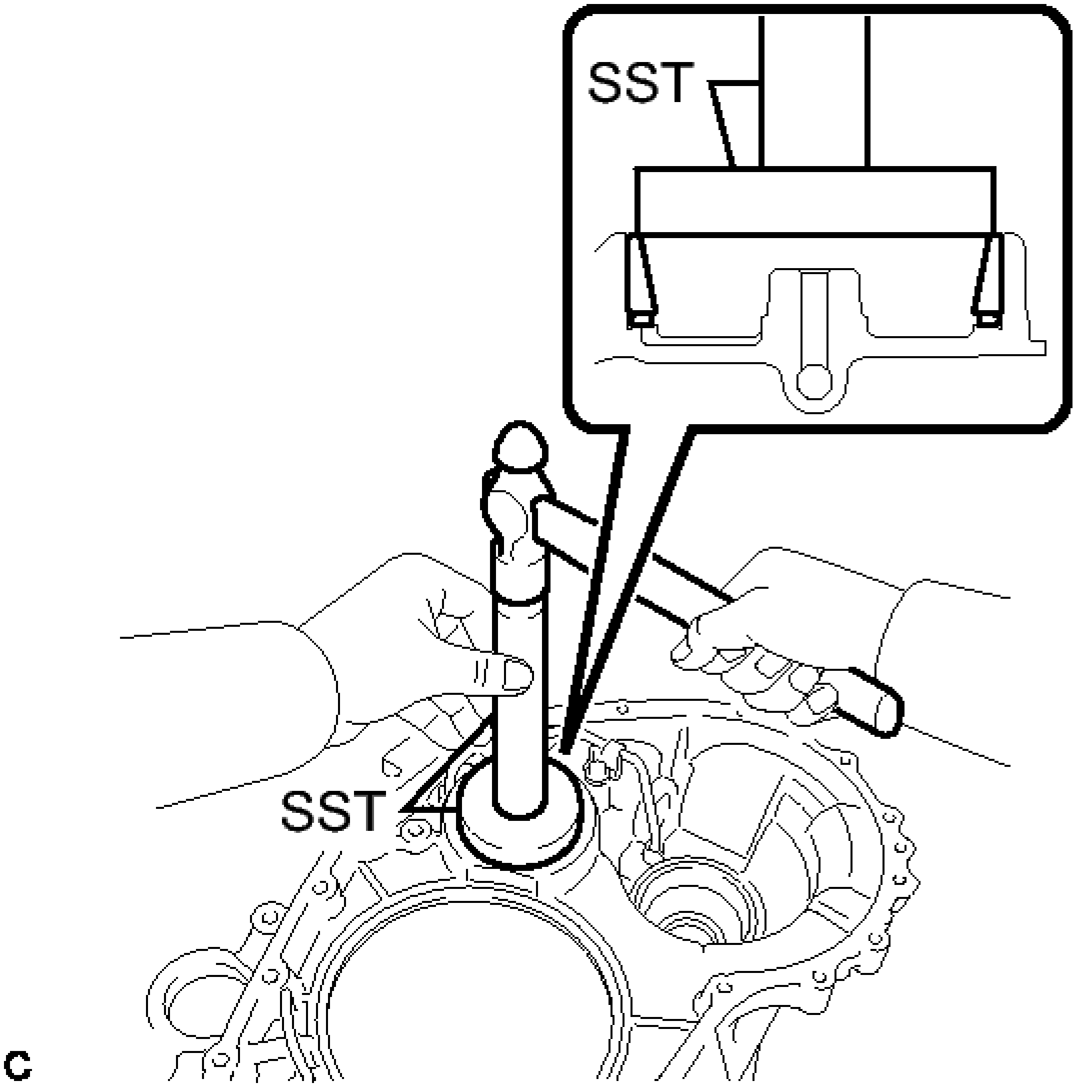

Fig. 361: Installing Counter Driven Gear Front Tapered Roller Bearing Outer Race
Courtesy of TOYOTA MOTOR SALES, U.S.A., INC.

b. Using SST, install a new counter driven gear front tapered roller bearing outer race to the transaxle housing.
    - **SST: 09950-60020**
      09951-00810
    - **SST: 09950-70010**
      09951-07100

NOTE: **Be sure to install the counter driven gear front tapered roller bearing outer race so that there is no clearance between the shim and the transaxle housing.**

43. **INSTALL TRANSAXLE HOUSING**

a. Remove any packing material from the contact surfaces between the transaxle housing and case.

NOTE: **Make sure that there is no ATF on the contact surfaces.**

b. Apply FIPG to the transaxle case.

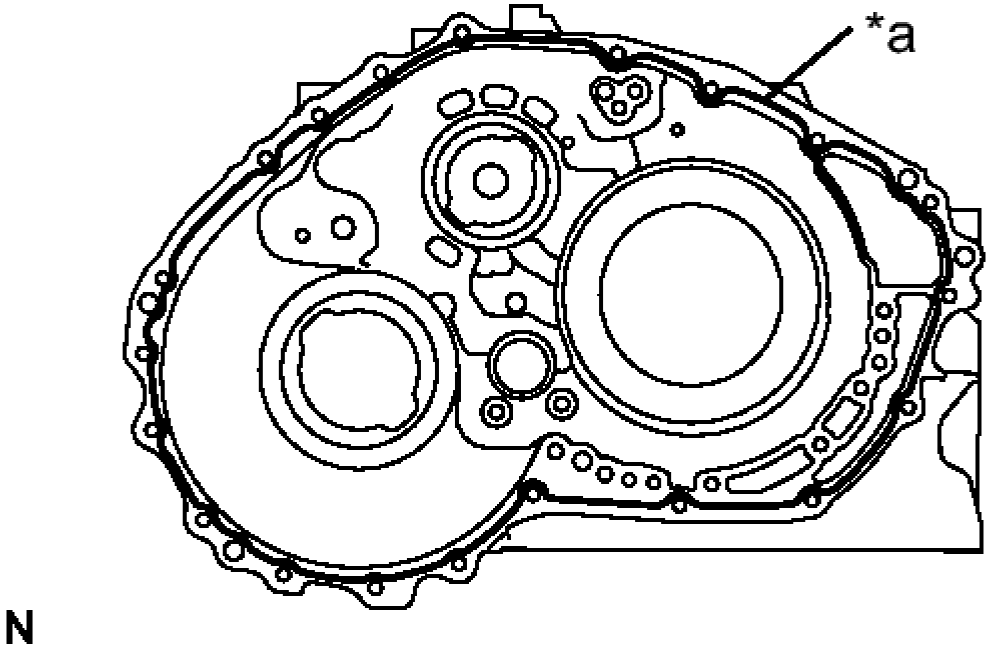

Fig. 362: Identifying FIPG
Courtesy of TOYOTA MOTOR SALES, U.S.A., INC.

TEXT IN ILLUSTRATION

*a	FIPG

FIPG

Toyota Genuine Seal Packing 1281, Three Bond 1281 or equivalent

NOTE: **Apply FIPG in a continuous line (width 1.2 mm (0.0472 in.)) along the sealing surface.**

c. Install the transaxle housing to the transaxle case with the 20 bolts.

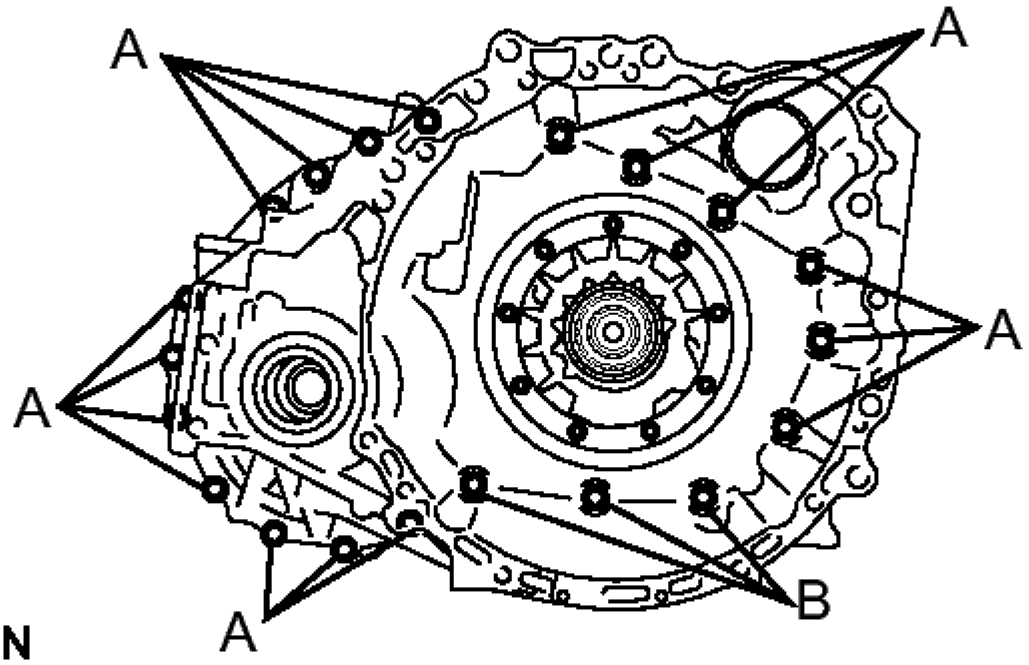

Fig. 363: Identifying Transaxle Case Bolts
Courtesy of TOYOTA MOTOR SALES, U.S.A., INC.

Bolt A

Torque: 31 N*m (316 kgf*cm, 23 ft.*lbf)

Bolt B

Torque: 23 N*m (234 kgf*cm, 17 ft.*lbf)

44. **ADJUST COUNTER DRIVEN GEAR PRELOAD**
    a. Using SST and a torque wrench, measure the turning torque of the counter driven gear while rotating SST at 10 rpm.

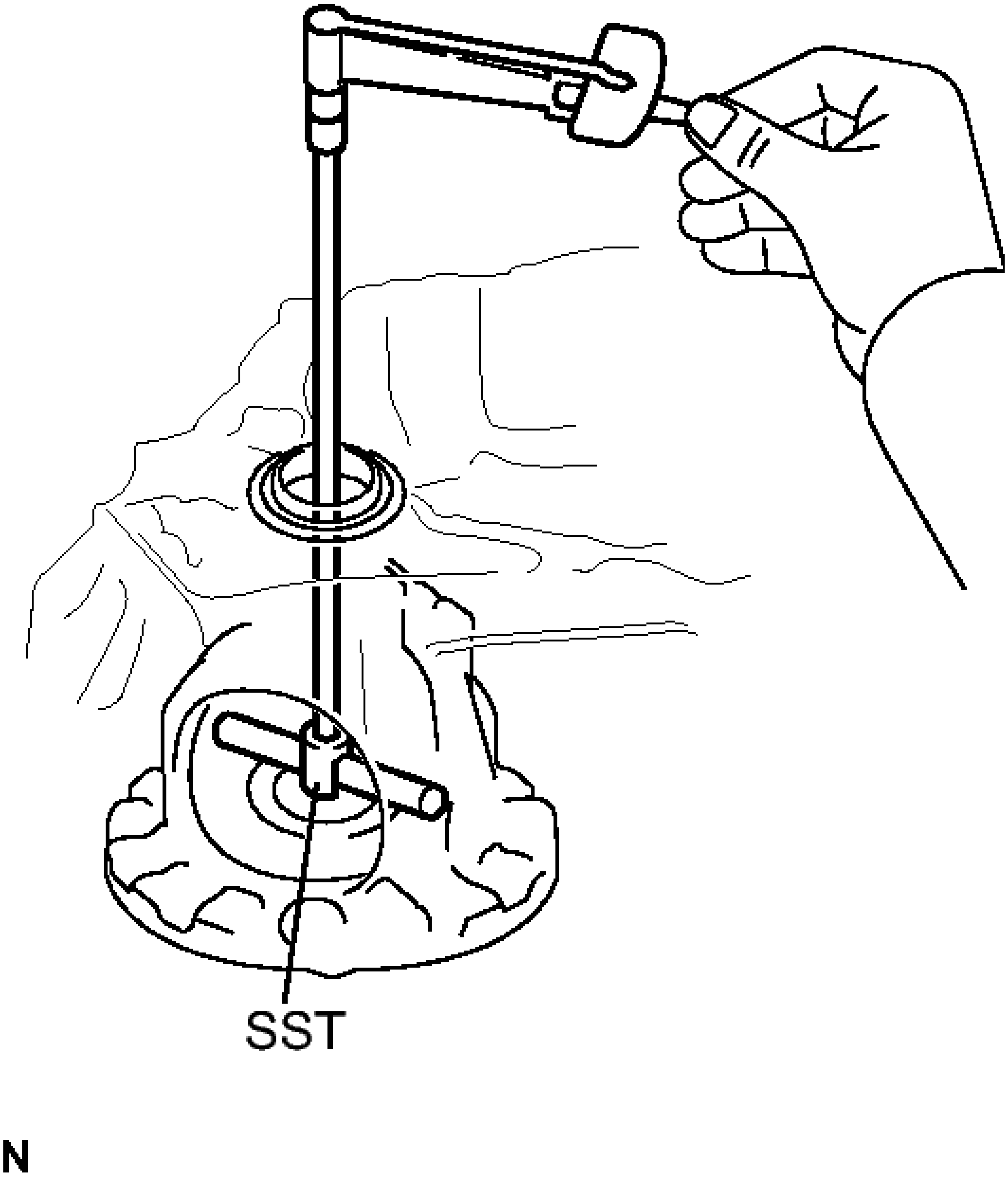

Fig. 364: Measuring Turning Torque Of Counter Driven Gear
Courtesy of TOYOTA MOTOR SALES, U.S.A., INC.

- **SST: 09564-33010**

Turning torque

Differential side bearing preload 3.3 to 6.0 N*m (34 to 61 kgf*cm, 29 to 53 in.*lbf)

If the turning torque is not within the specified range, refer to the table below to select a shim of the counter driven gear front tapered roller bearing outer race so that the turning torque is within the specified range.

SHIM THICKNESS: MM (IN.)

Thickness	Thickness	Thickness	Thickness
2.000 (0.0787)	2.275 (0.0896)	2.525 (0.0994)	2.775 (0.109)
2.025 (0.0797)	2.300 (0.0906)	2.550 (0.100)	2.800 (0.110)
2.050 (0.0807)	2.325 (0.0915)	2.575 (0.101)	2.825 (0.111)
2.075 (0.0817)	2.350 (0.0925)	2.600 (0.102)	2.850 (0.112)
2.100 (0.0827)	2.375 (0.0935)	2.625 (0.103)	2.875 (0.113)
2.125 (0.0837)	2.400 (0.0945)	2.650 (0.104)	2.900 (0.114)
2.150 (0.0846)	2.425 (0.0955)	2.675 (0.105)	2.925 (0.115)
2.175 (0.0856)	2.450 (0.0965)	2.700 (0.106)	2.950 (0.116)
2.200 (0.0866)	2.475 (0.0974)	2.725 (0.107)	2.975 (0.117)
2.225 (0.0876)	2.500 (0.0984)	2.750 (0.108)	3.000 (0.118)
2.250 (0.0886)	-	-	-

45. **INSTALL NO. 1 CLUTCH DISC**

a. Install the clutch flange, 4 clutch discs and 4 clutch plates to the direct multiple disc clutch assembly.

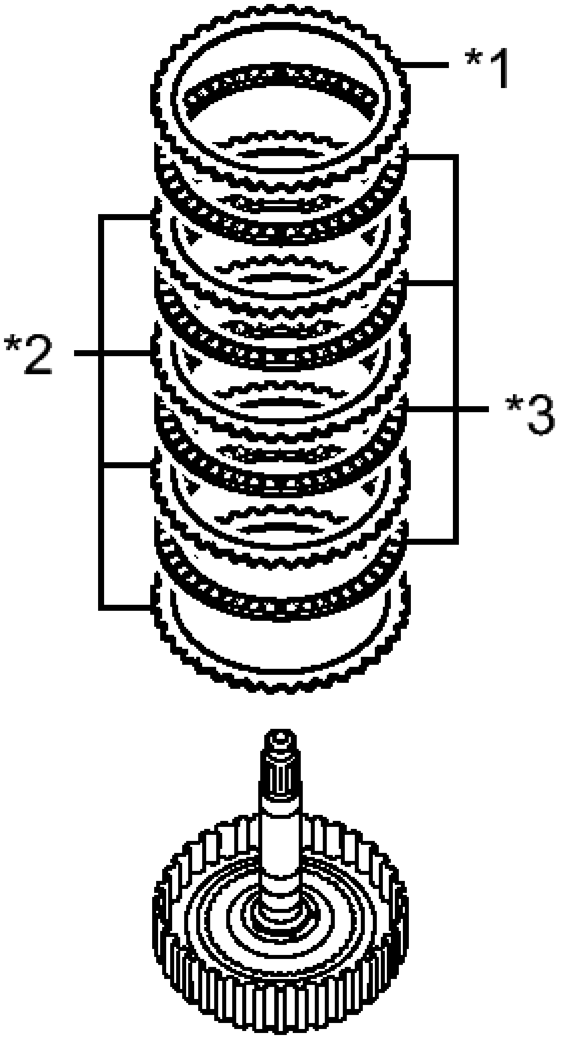

Fig. 365: Identifying Clutch Flange, Clutch Discs And Clutch Plates
Courtesy of TOYOTA MOTOR SALES, U.S.A., INC.

TEXT IN ILLUSTRATION

*1	Clutch Flange
*2	Clutch Plate
*3	Clutch Disc

NOTE: **Make sure that the flange, discs and plates are installed in the correct order.**

b. Using a screwdriver, install the 2 snap rings to the direct multiple disc clutch assembly.

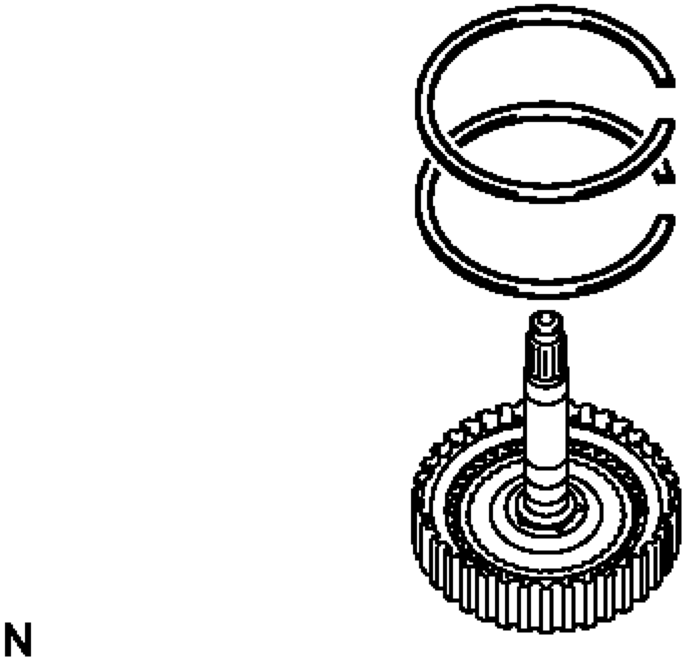

Fig. 366: Identifying Snap Rings
Courtesy of TOYOTA MOTOR SALES, U.S.A., INC.

NOTE: **Confirm that the snap rings are correctly located in the groove of the direct multiple disc clutch assembly.**

46. **INSPECT CLEARANCE OF NO. 1 CLUTCH DISC** See step 18
47. **INSTALL REAR PLANETARY SUN GEAR ASSEMBLY**
    a. Coat the thrust needle roller bearing and thrust needle roller race with ATF, and install them to the direct multiple disc clutch assembly.

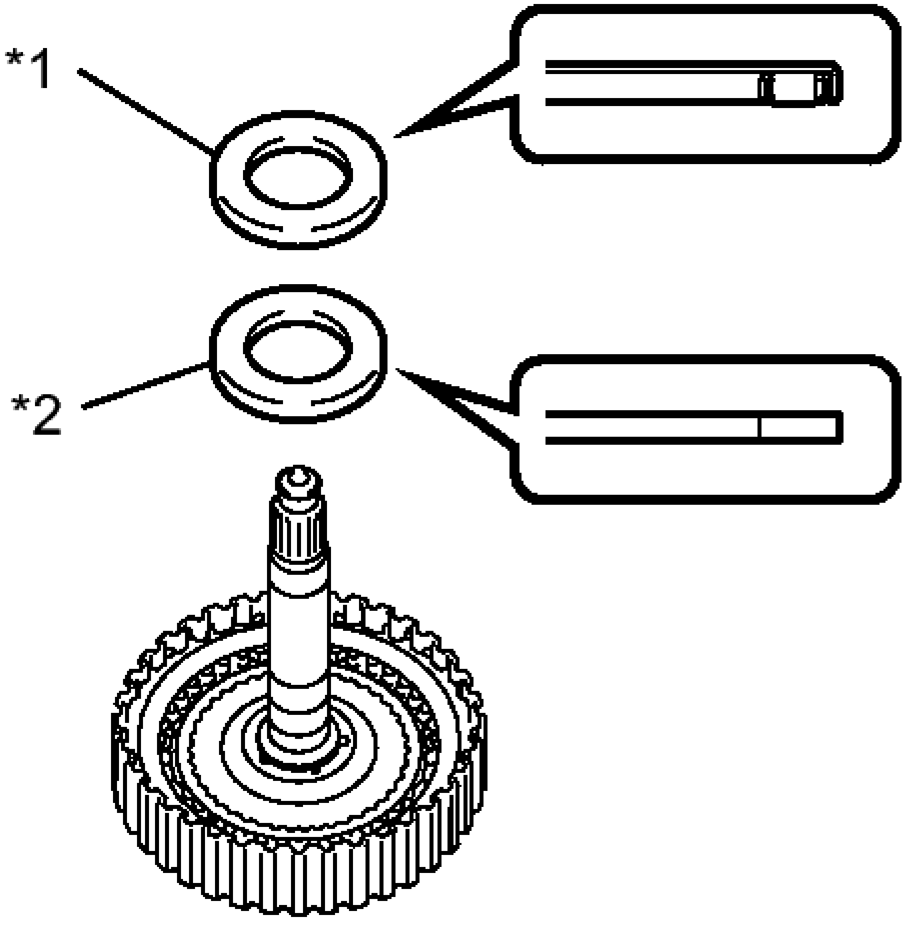

Fig. 367: Identifying Thrust Needle Roller Bearing And Thrust Needle Roller Race
Courtesy of TOYOTA MOTOR SALES, U.S.A., INC.

TEXT IN ILLUSTRATION

*1	Thrust Needle Roller Bearing
*2	Thrust Needle Roller Race

BEARING AND RACE DIAMETER: MM (IN.)

-	Inside	Outside

Bearing	28 (1.10)	47.1 (1.85)
Race	26.1 (1.03)	44 (1.73)

NOTE: **Install the thrust needle roller bearing properly so that the temper colored side of the race will be visible.**

b. Install the rear planetary sun gear assembly to the direct multiple disc clutch assembly.

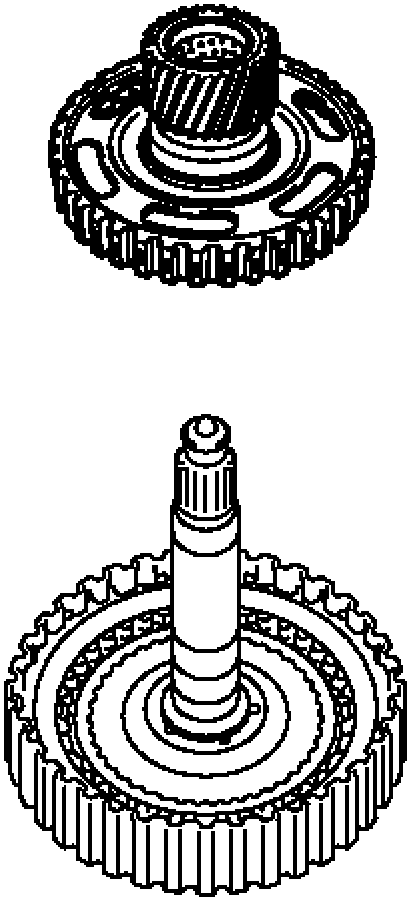

Fig. 368: Identifying Rear Planetary Sun Gear And Direct Multiple Disc Clutch Assembly
Courtesy of TOYOTA MOTOR SALES, U.S.A., INC.

c. Using a snap ring expander, install the snap ring to the direct multiple disc clutch assembly.

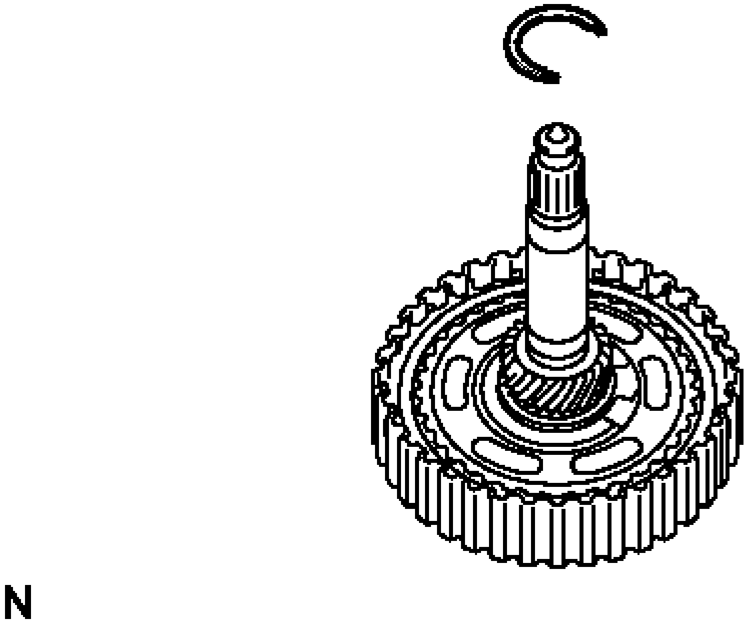

Fig. 369: Identifying Snap Ring
Courtesy of TOYOTA MOTOR SALES, U.S.A., INC.

48. **INSTALL NO. 2 CLUTCH DISC**
    a. Install the clutch flange, 3 clutch discs and 3 clutch plates to the direct multiple disc clutch assembly.

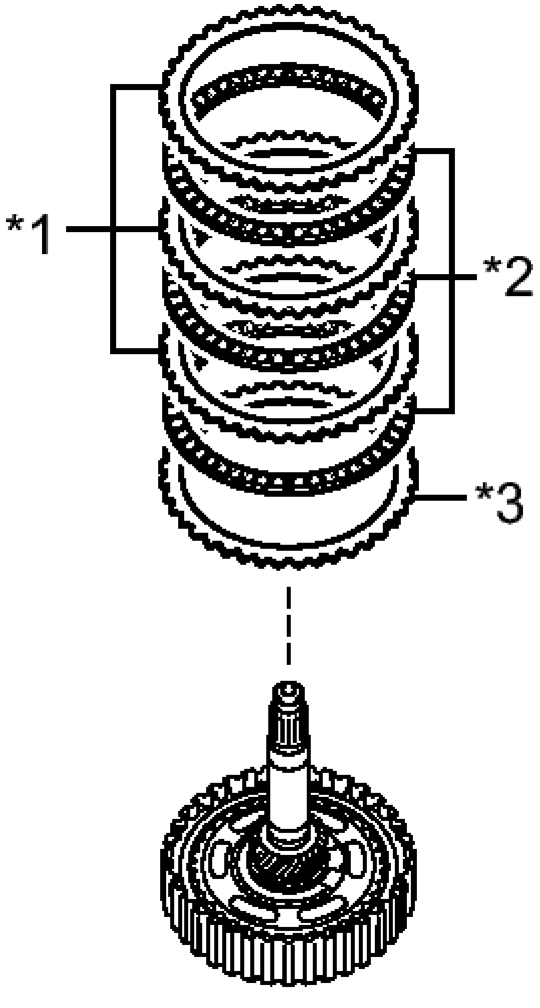

Fig. 370: Identifying Clutch Flange, Clutch Discs And Clutch Plates
Courtesy of TOYOTA MOTOR SALES, U.S.A., INC.

TEXT IN ILLUSTRATION

*1	Clutch Plate
*2	Clutch Disc
*3	Clutch Flange

NOTE: **Make sure that the flange, discs and plates are installed in the correct order.**

49. **INSTALL DIRECT MULTIPLE DISC CLUTCH SNAP RING**

a. Coat a new O-ring with ATF and install it to the direct multiple disc clutch assembly.

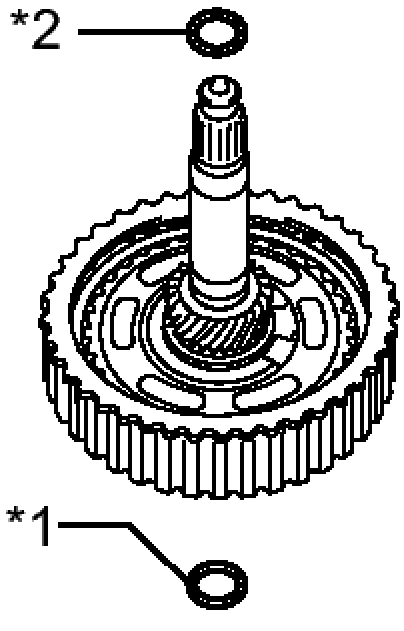

Fig. 371: Identifying Intermediate Shaft Oil Seal
Courtesy of TOYOTA MOTOR SALES, U.S.A., INC.

TEXT IN ILLUSTRATION

*1	Intermediate Shaft Oil Seal
*2	O-ring

b. Coat a new intermediate shaft oil seal with ATF and install it to the direct multiple disc clutch assembly.

c. Install the No. 2 direct clutch piston to the direct multiple disc clutch assembly.

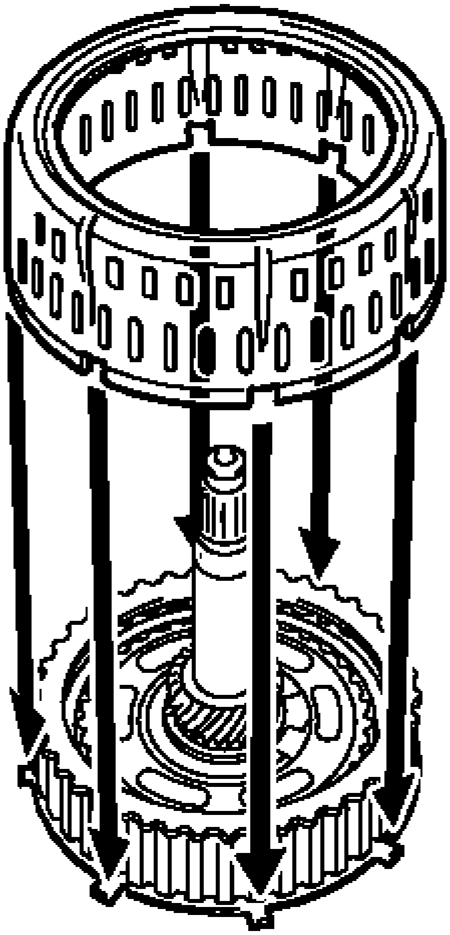

N

Fig. 372: Installing No. 2 Direct Clutch Piston To Direct Multiple Disc Clutch Assembly
Courtesy of TOYOTA MOTOR SALES, U.S.A., INC.

NOTE: **Be sure to engage the claws on the direct multiple disc clutch assembly in the grooves on the No. 2 direct clutch piston.**

d. Using a screwdriver, install the snap ring to the direct multiple disc clutch assembly.

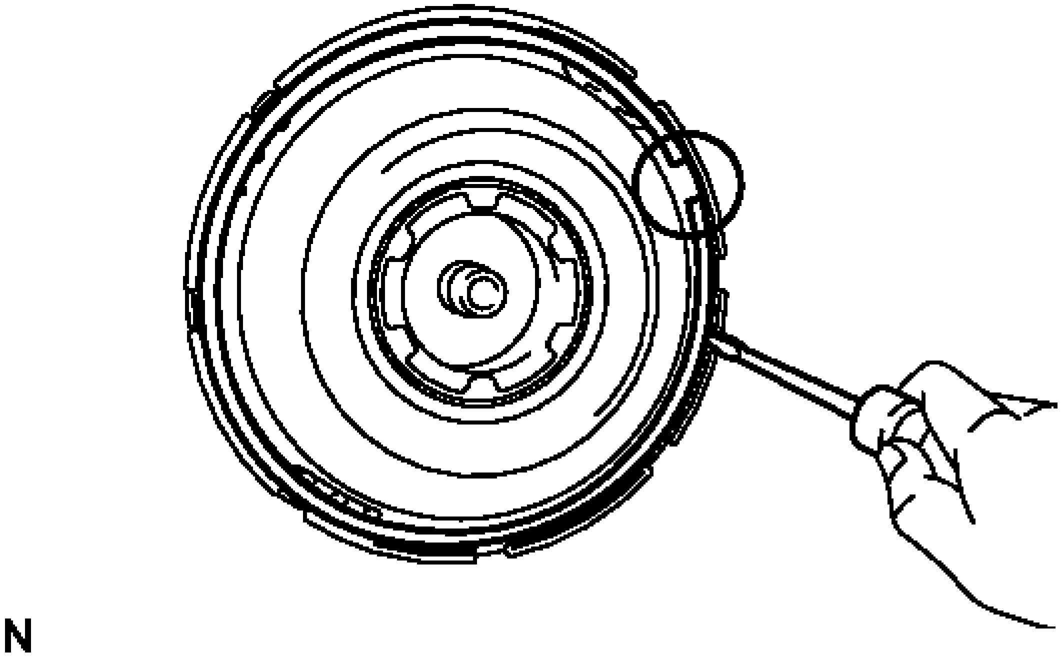

Fig. 373: Installing Snap Ring To Direct Multiple Disc Clutch Assembly
Courtesy of TOYOTA MOTOR SALES, U.S.A., INC.

NOTE:

- **Position the opening of the snap ring as shown in the illustration.**
- **Confirm that the snap ring is correctly located in the groove of the direct multiple disc clutch assembly.**

50. **INSPECT CLEARANCE OF NO. 2 CLUTCH DISC** See step 19
51. **INSTALL DIRECT MULTIPLE DISC CLUTCH ASSEMBLY**
    a. Coat the thrust needle roller bearing with ATF and install it on the transaxle case.

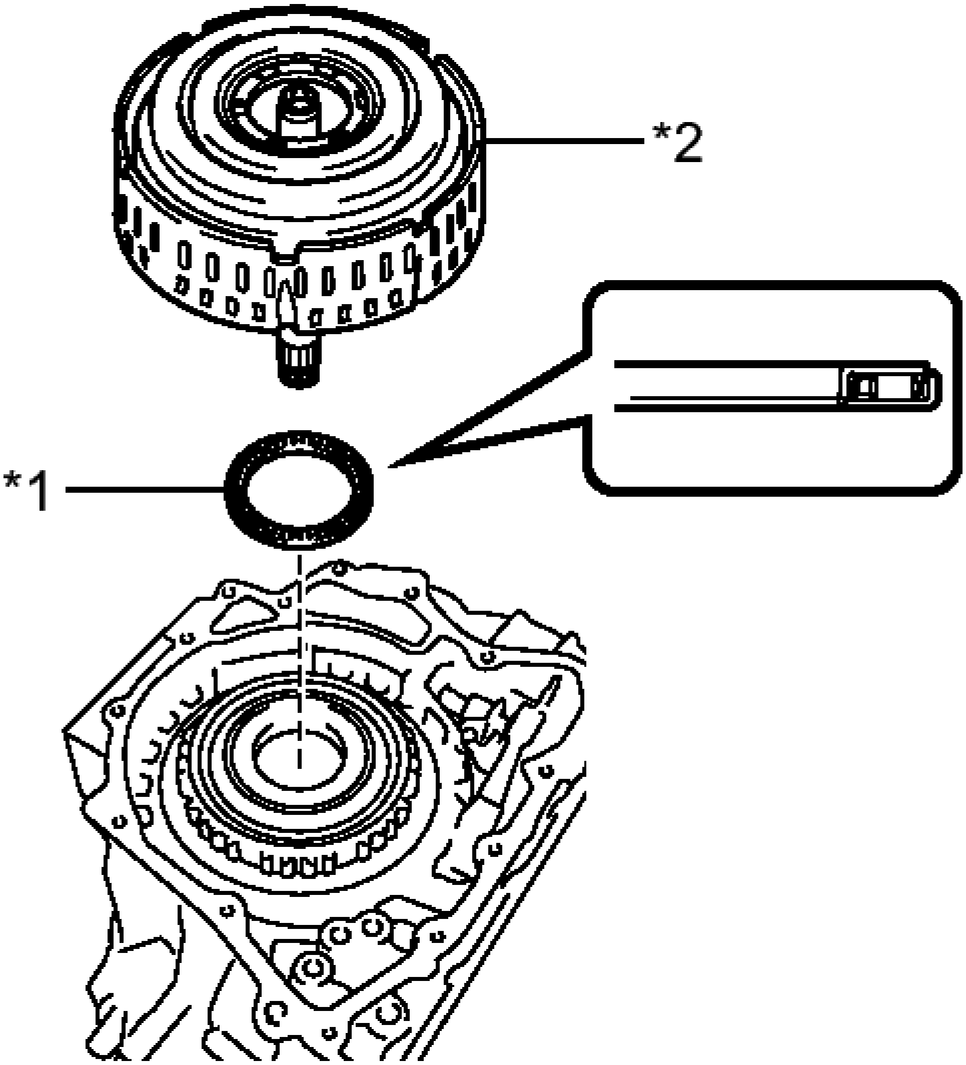

N

Fig. 374: Identifying Thrust Needle Roller Bearing
Courtesy of TOYOTA MOTOR SALES, U.S.A., INC.

TEXT IN ILLUSTRATION

	Thrust

*1	Needle Roller Bearing
*2	Direct Multiple Disc Clutch Assembly

BEARING DIAMETER: MM (IN.)

-	Inside	Outside
Bearing	61.2 (2.41)	79 (3.11)

b. Install the direct multiple disc clutch assembly to the transaxle case.

c. Clean the contact surfaces of the transaxle case and rear transaxle cover sub-assembly.

d. As shown in the illustration, place a straightedge on the multiple direct clutch drum and measure the distance between the transaxle case and the straightedge using a vernier caliper (Dimension A).

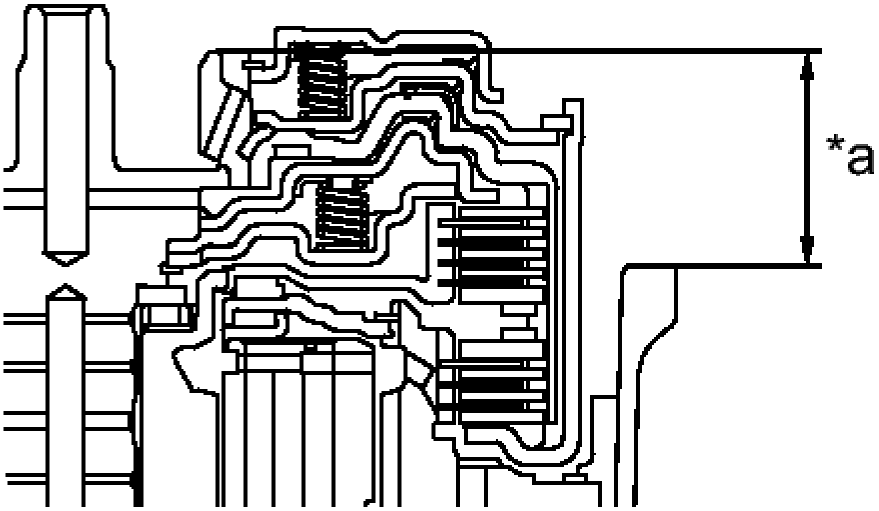

Fig. 375: Measuring Dimension A
Courtesy of TOYOTA MOTOR SALES, U.S.A., INC.

TEXT IN ILLUSTRATION

*a	Dimension A

e. Using a vernier caliper and a straightedge, measure the distance shown in the illustration (Dimension B).

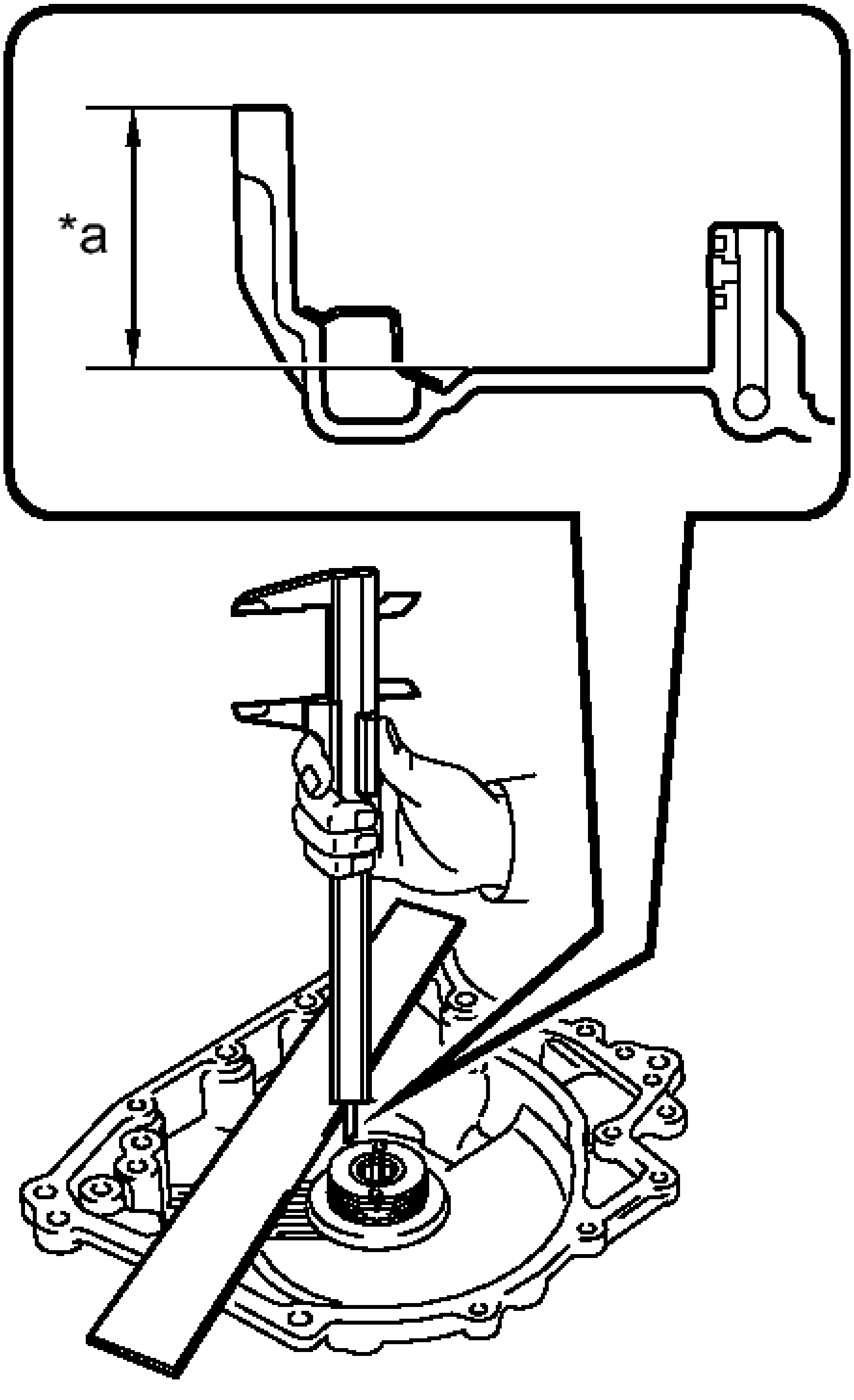

Fig. 376: Measuring Distance In Dimension B

Courtesy of TOYOTA MOTOR SALES, U.S.A., INC.

TEXT IN ILLUSTRATION

*a	Dimension B

f. Calculate the end play value using the following formula:

End play = Dimension B - Dimension A - Thrust needle roller bearing thickness

End play

0.007 to 1.113 mm (0.000275 to 0.0438 in.)

52. INSTALL REAR TRANSAXLE COVER SUB-ASSEMBLY

a. Using SST and a hammer, install a new needle roller bearing into the rear transaxle cover sub-assembly.

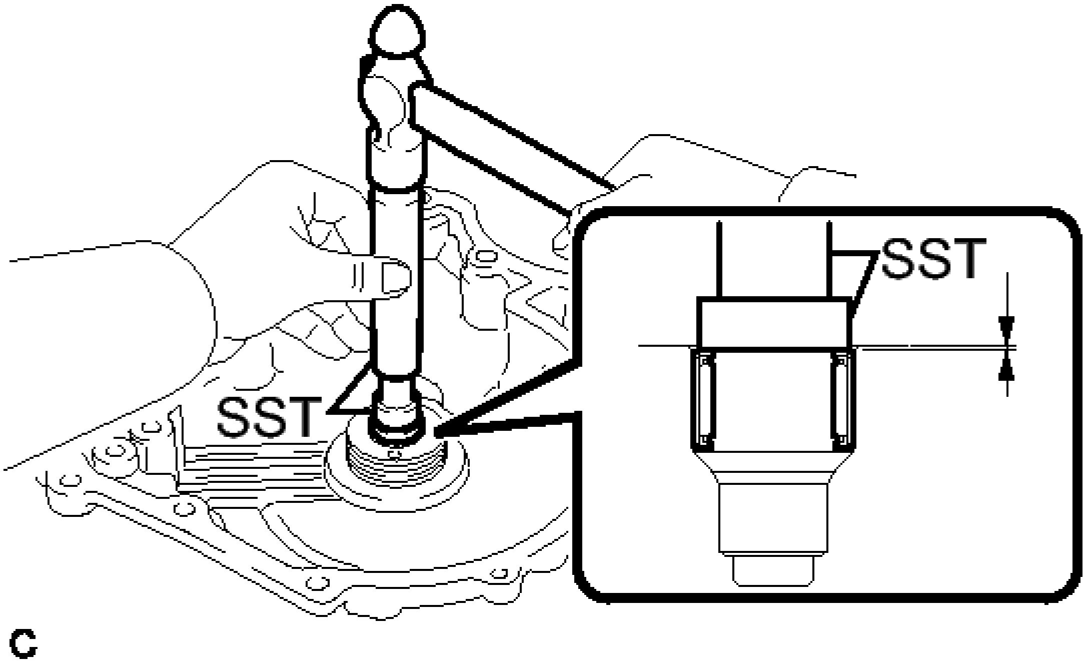

Fig. 377: Installing Needle Roller Bearing Into Rear Transaxle Cover Sub-Assembly
Courtesy of TOYOTA MOTOR SALES, U.S.A., INC.

- **SST: 09950-60010**
  09951-00220
- **SST: 09950-70010**
  09951-07100

Installation depth

21.5 to 21.9 mm (0.846 to 0862 in.)

b. Apply adhesive to the 2 "TORX" screws.

Adhesive

Toyota Genuine Adhesive 1324, Three Bond 1324 or equivalent

c. Using a "TORX" socket wrench (T30), install the rear transaxle cover plate to the rear transaxle cover sub-assembly with the 2 "TORX" screws.

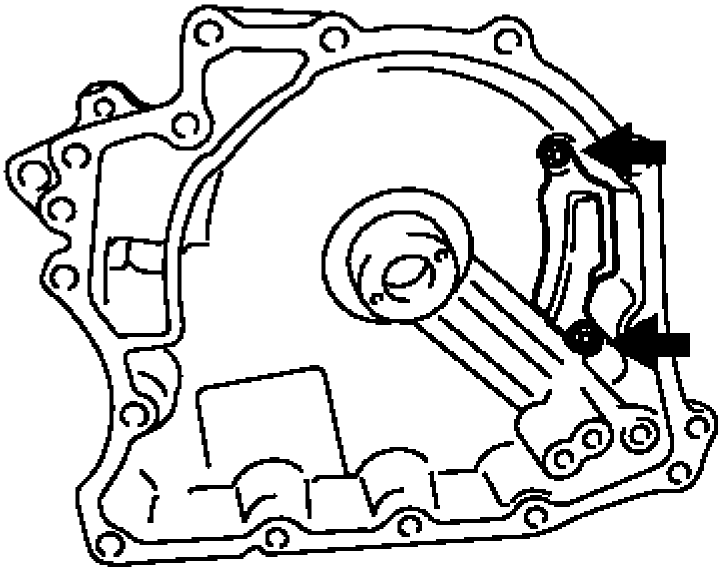

Fig. 378: Locating Rear Transaxle Cover Plate Screws
Courtesy of TOYOTA MOTOR SALES, U.S.A., INC.

Torque: 7.5 N*m (76 kgf*cm, 66 in.*lbf)

d. Coat the thrust needle roller bearing and thrust needle roller race with ATF and install them on the transaxle case.

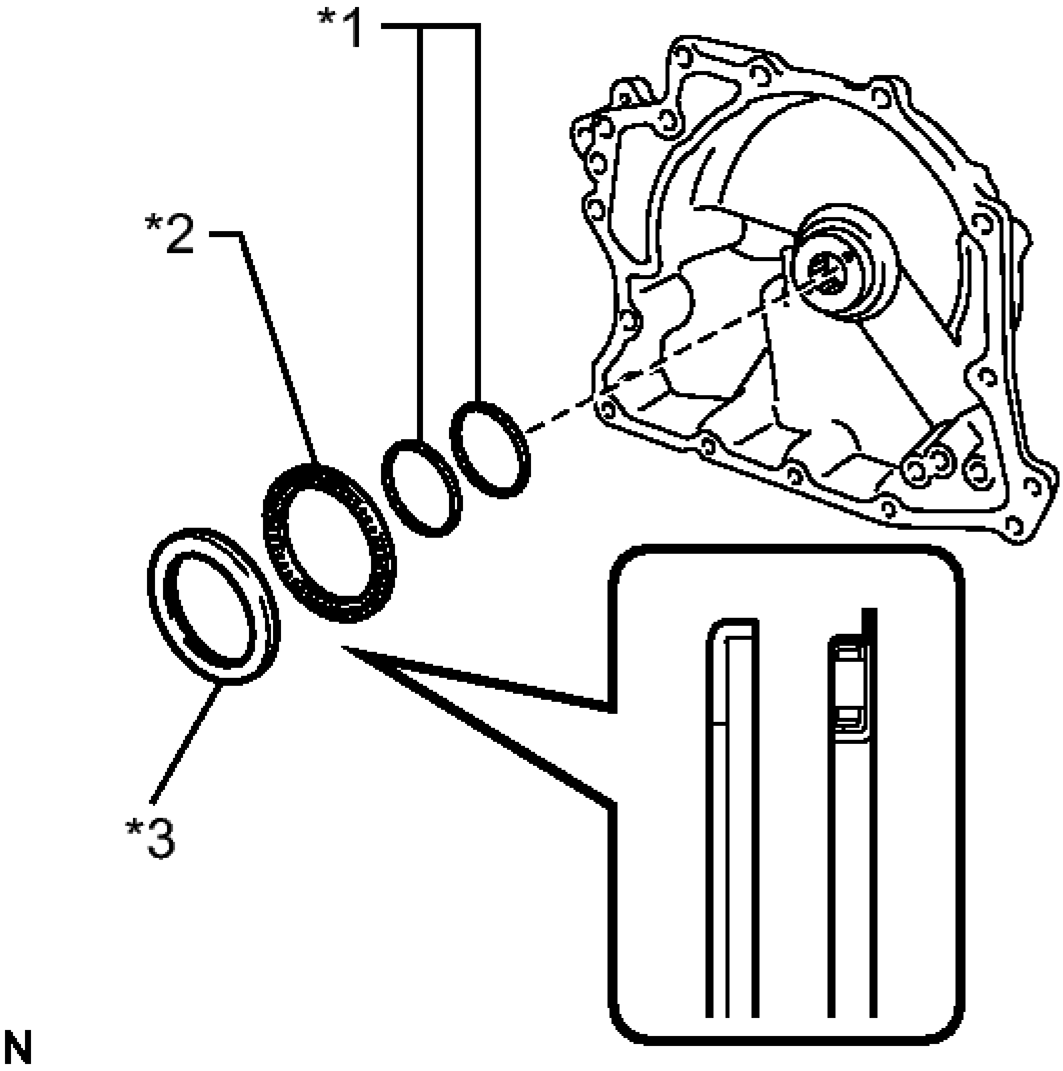

Fig. 379: Identifying Thrust Needle Roller Bearing And Thrust Needle Roller Race
Courtesy of TOYOTA MOTOR SALES, U.S.A., INC.

TEXT IN ILLUSTRATION

*1	Oil Seal Ring
*2	Thrust Needle Roller Bearing
*3	Thrust Needle Roller Race

BEARING AND RACE DIAMETER: MM (IN.)

-	Inside	Outside
Bearing	48.9 (1.93)	72.0 (2.84)
Race	52.2 (2.06)	70.4 (2.77)

e. Coat 2 new oil seal rings with ATF and install them to the rear transaxle cover sub-assembly.

f. Coat 3 new O-rings with ATF and install them to the transaxle case.

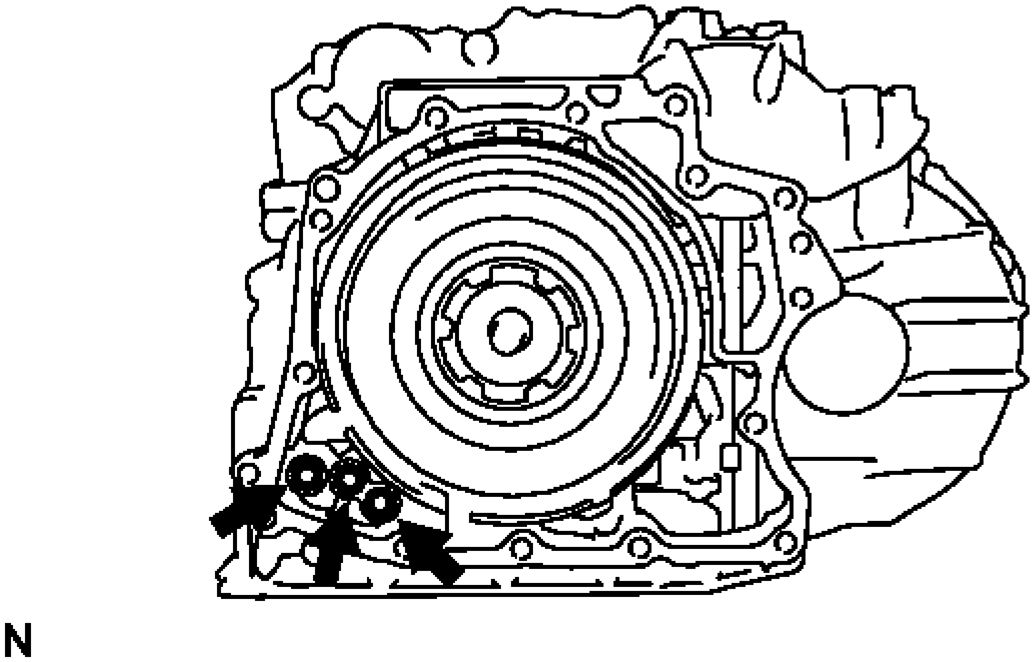

Fig. 380: Locating Transaxle Case Bolts
Courtesy of TOYOTA MOTOR SALES, U.S.A., INC.

NOTE: Ensure that the O-rings are not twisted.

g. Remove packing material from the contact surfaces between the rear transaxle cover sub-assembly and transaxle case.

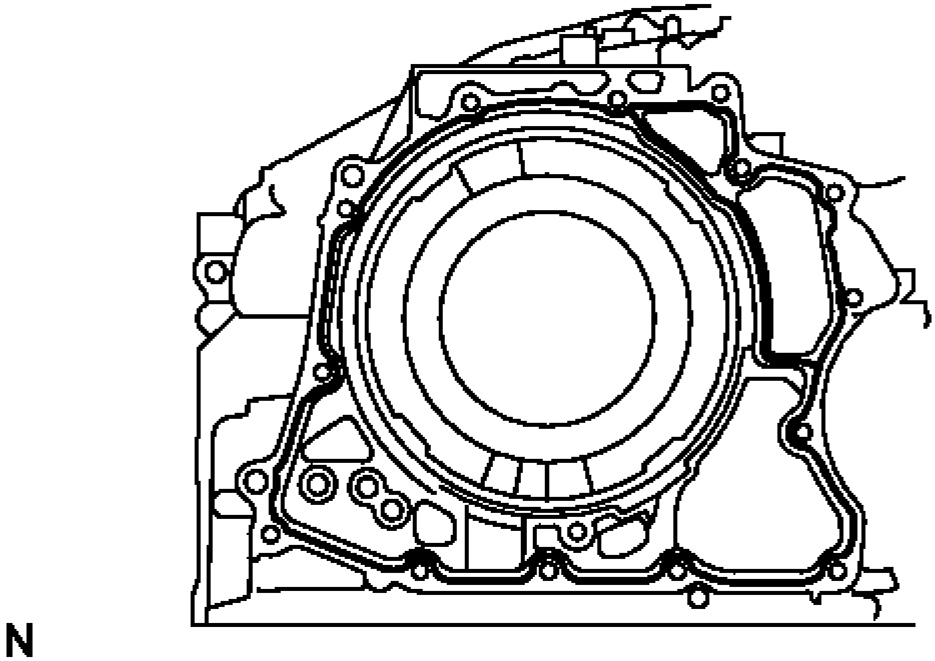

Fig. 381: Identifying Packing Material
Courtesy of TOYOTA MOTOR SALES, U.S.A., INC.

NOTE: Make sure that there is no ATF on the contact surfaces.

FIPG

Toyota Genuine Seal Packing 1281, Three Bond 1281 or equivalent

h. Install the rear transaxle cover sub-assembly to the transaxle case with the 14 bolts.

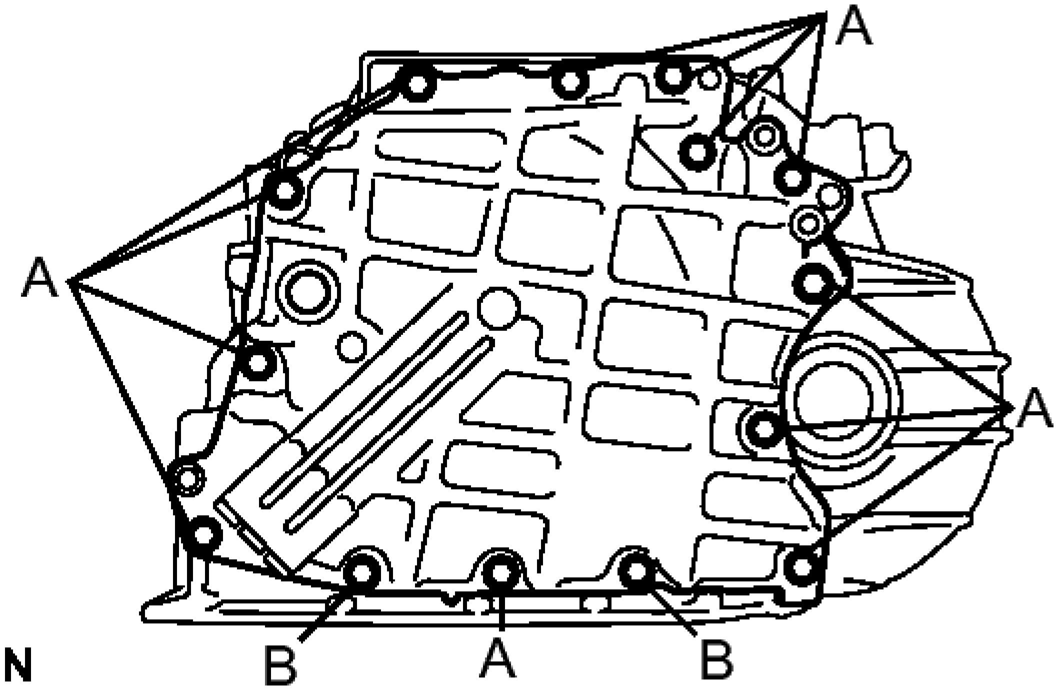

Fig. 382: Locating Rear Transaxle Cover Bolts
Courtesy of TOYOTA MOTOR SALES, U.S.A., INC.

Bolt A

Torque: 23 N*m (234 kgf*cm, 17 ft.*lbf)

Bolt B

Torque: 17 N*m (173 kgf*cm, 12 ft.*lbf)

i. Install a new gasket to the refill plug.

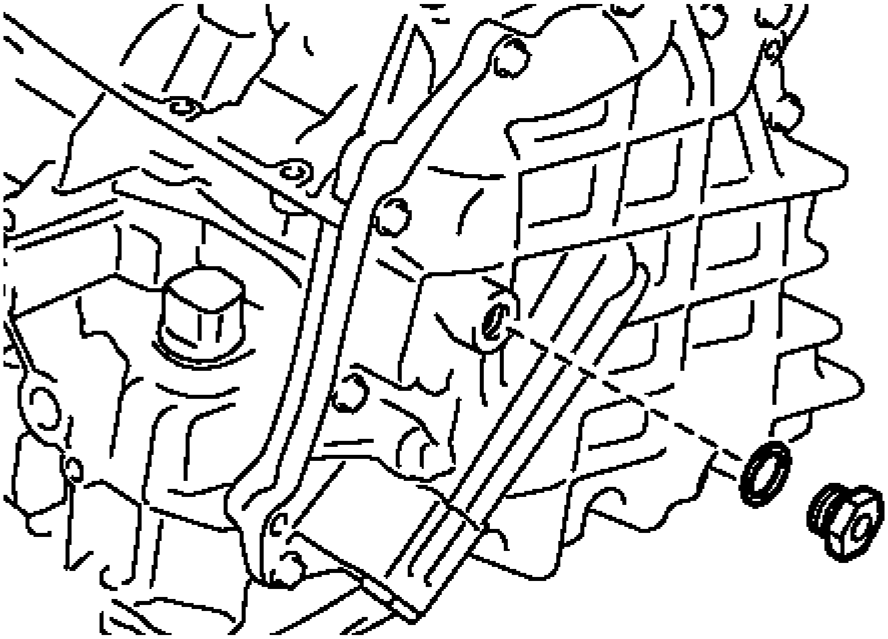

Fig. 383: Identifying Refill Plug
Courtesy of TOYOTA MOTOR SALES, U.S.A., INC.

j. Install the refill plug to the rear transaxle cover sub-assembly.

   Torque: 49 N*m (500 kgf*cm, 36 ft.*lbf)

k. Coat 2 new O-rings with ATF and install them to the 2 No. 1 automatic transaxle case plugs.

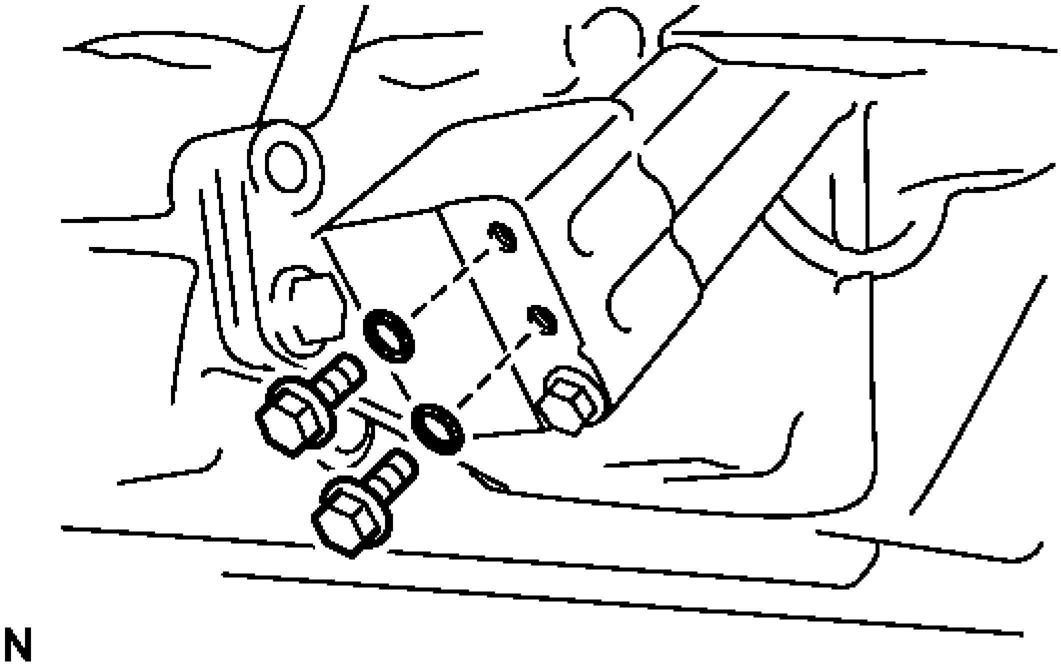

Fig. 384: Identifying No. 1 Automatic Transaxle Case Plugs
Courtesy of TOYOTA MOTOR SALES, U.S.A., INC.

l. Install the 2 No. 1 automatic transaxle case plugs to the rear transaxle cover sub-assembly.

   Torque: 7.4 N*m (75 kgf*cm, 65 in.*lbf)

53. **INSPECT INPUT SHAFT END PLAY** See step 2
54. **INSTALL TRANSAXLE CASE GASKET**
    a. Coat 2 new gaskets with ATF and install them to the transaxle case.

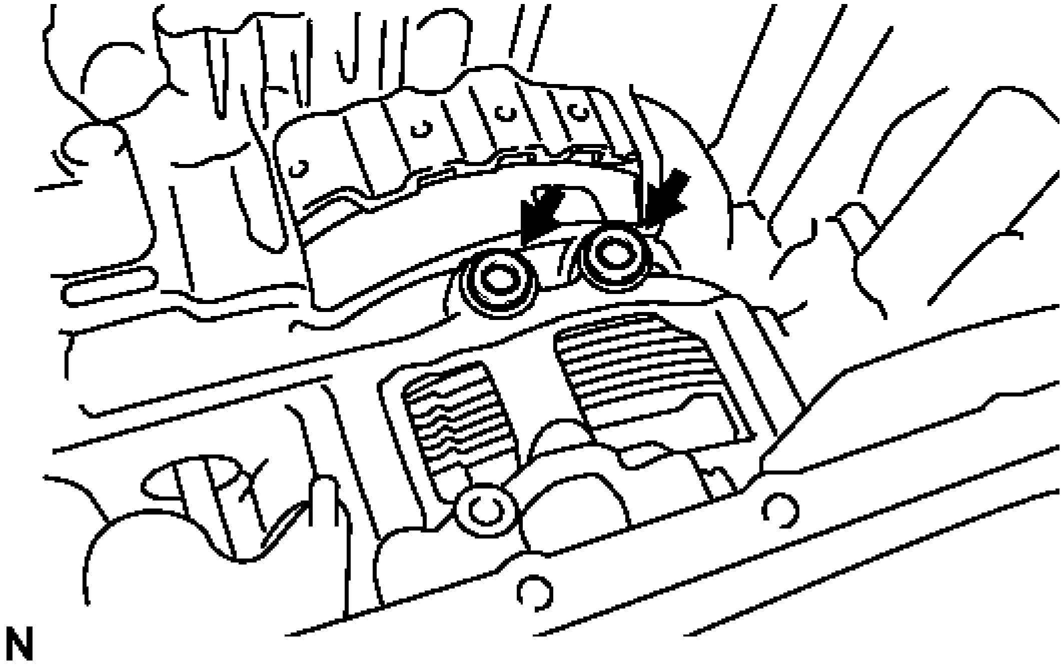

Fig. 385: Locating Transaxle Case Gasket
Courtesy of TOYOTA MOTOR SALES, U.S.A., INC.

55. **INSTALL TRANSMISSION VALVE BODY ASSEMBLY**
    a. Install the valve body assembly to the transaxle case with the 11 bolts.

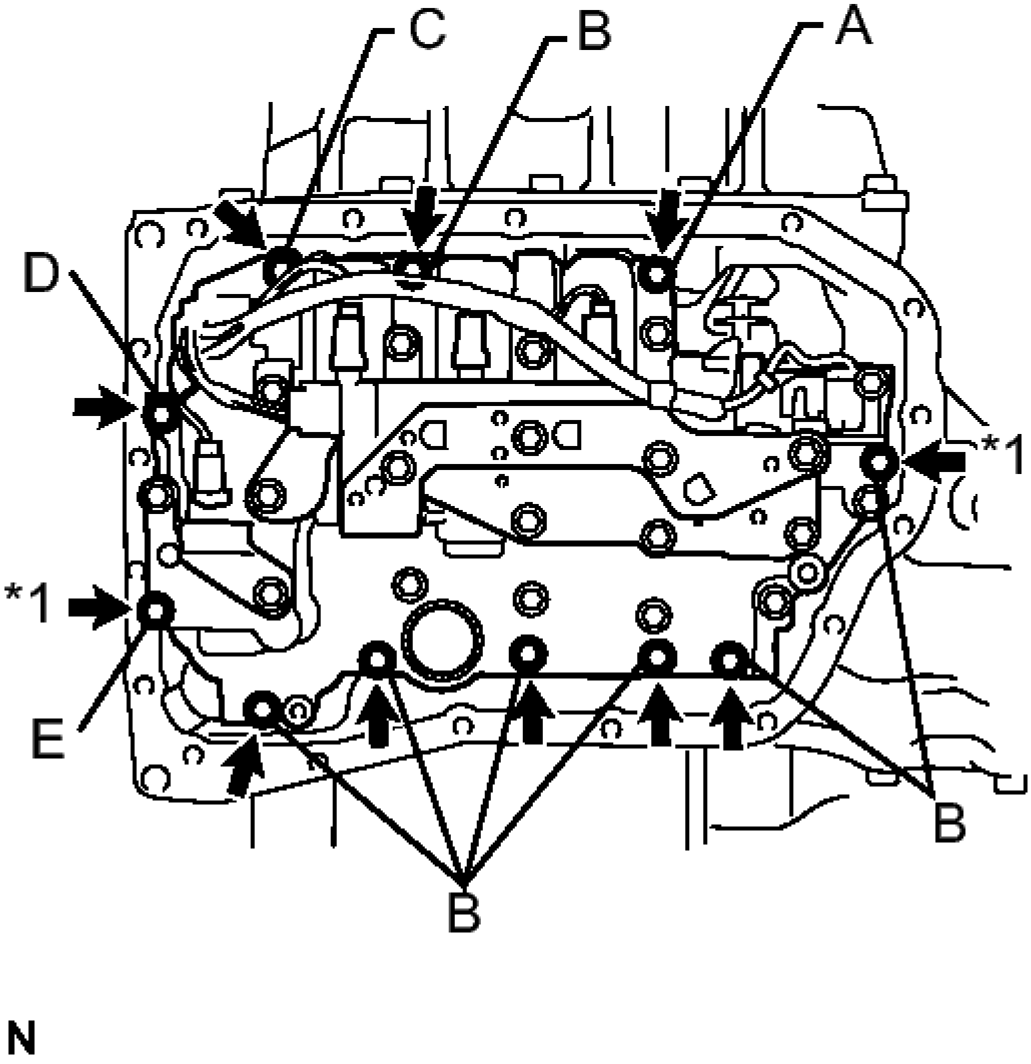

Fig. 386: Locating Transaxle Case Bolts
Courtesy of TOYOTA MOTOR SALES, U.S.A., INC.

Torque: 11 N*m (112 kgf*cm, 8 ft.*lbf)

-	**Bolt Length**
Bolt A	25 mm (0.984 in.)
Bolt B	30 mm (1.18 in.)
Bolt C	35 mm (1.38 in.)

Bolt D	45 mm (1.77 in.)
Bolt E	55 mm (2.17 in.)

NOTE:

- **When installing the transmission valve body assembly, be careful not to allow the transmission revolution sensor and transaxle case to interfere with each other.**
- **Be sure to insert the pin of the manual valve lever into the groove on the end of the manual valve.**
- **First, temporarily tighten the bolts marked by *1 in the illustration because they are positioning bolts.**

56. **INSTALL VALVE BODY OIL STRAINER ASSEMBLY**
    a. Coat a new O-ring with ATF and install it to the oil strainer assembly.

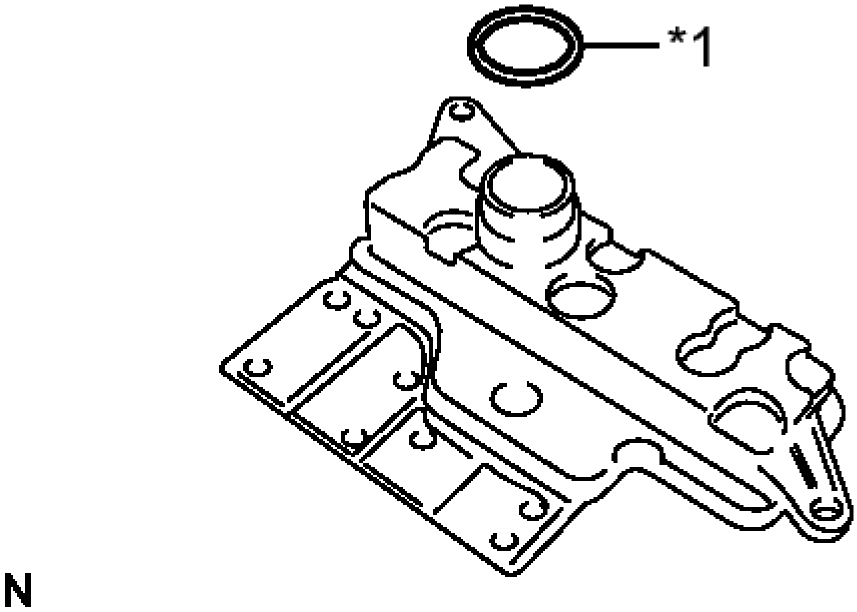

Fig. 387: Identifying O-Ring
Courtesy of TOYOTA MOTOR SALES, U.S.A., INC.

TEXT IN ILLUSTRATION

*1	O-ring

NOTE: Ensure that the O-ring is not twisted or pinched.

b. Install the oil strainer assembly to the valve body assembly with the 2 bolts.

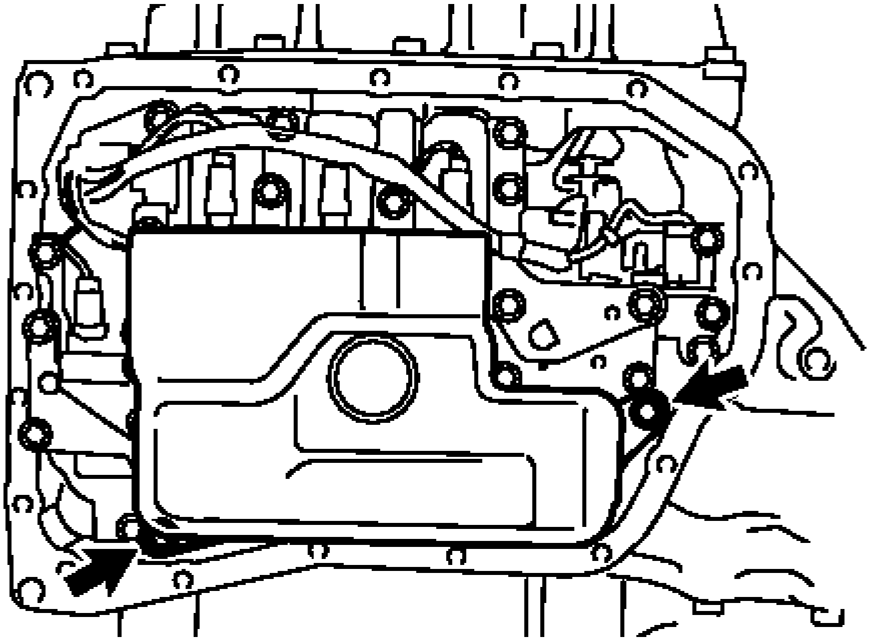

Fig. 388: Identifying Oil Strainer Bolts
Courtesy of TOYOTA MOTOR SALES, U.S.A., INC.

Torque: 11 N*m (112 kgf*cm, 8 ft.*lbf)

57. **INSTALL AUTOMATIC TRANSAXLE OIL PAN SUB-ASSEMBLY**
    a. Install the 2 magnets in the automatic transaxle oil pan sub-assembly.

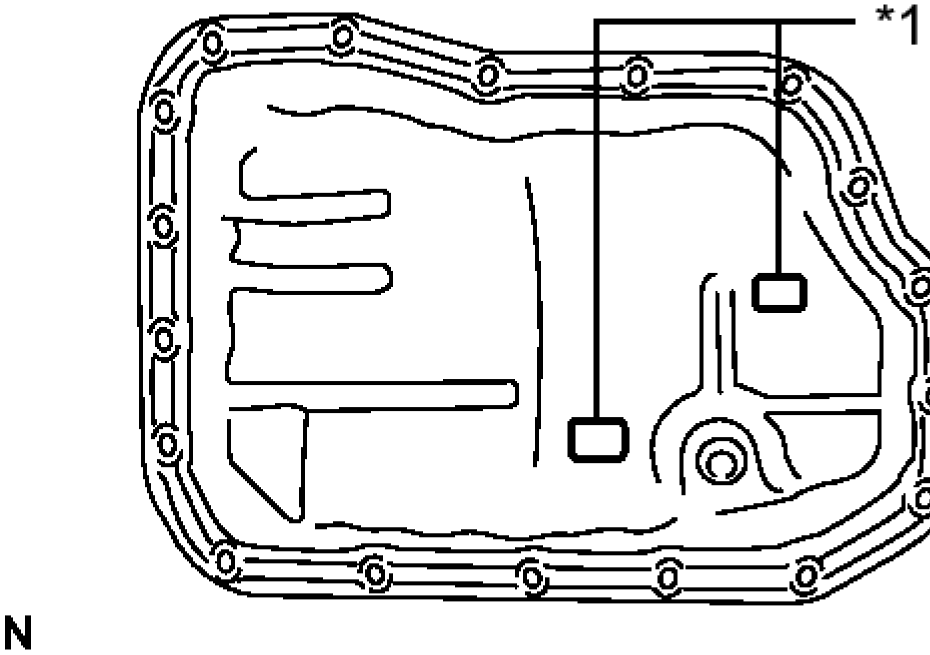

Fig. 389: Identifying Oil Pan Magnet

Courtesy of TOYOTA MOTOR SALES, U.S.A., INC.

TEXT IN ILLUSTRATION

*1	Magnet

b. Install a new gasket to the oil pan.
c. Install the oil pan to the automatic transaxle with the 17 bolts.

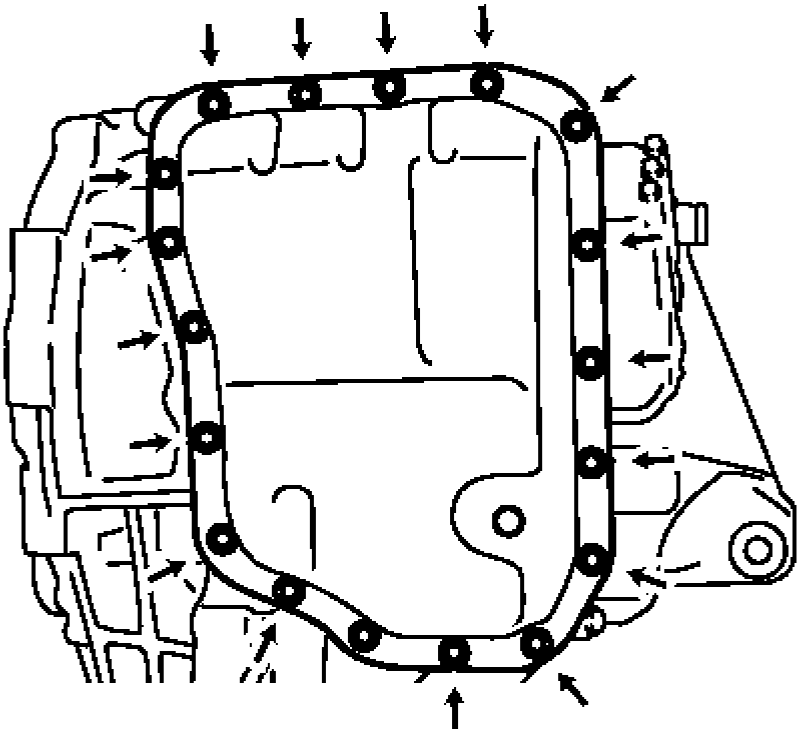

Fig. 390: Identifying Automatic Transaxle Bolts
Courtesy of TOYOTA MOTOR SALES, U.S.A., INC.

Torque: 7.5 N*m (76 kgf*cm, 66 in.*lbf)

d. Clean and degrease the bolt and the installation hole in the automatic transaxle.

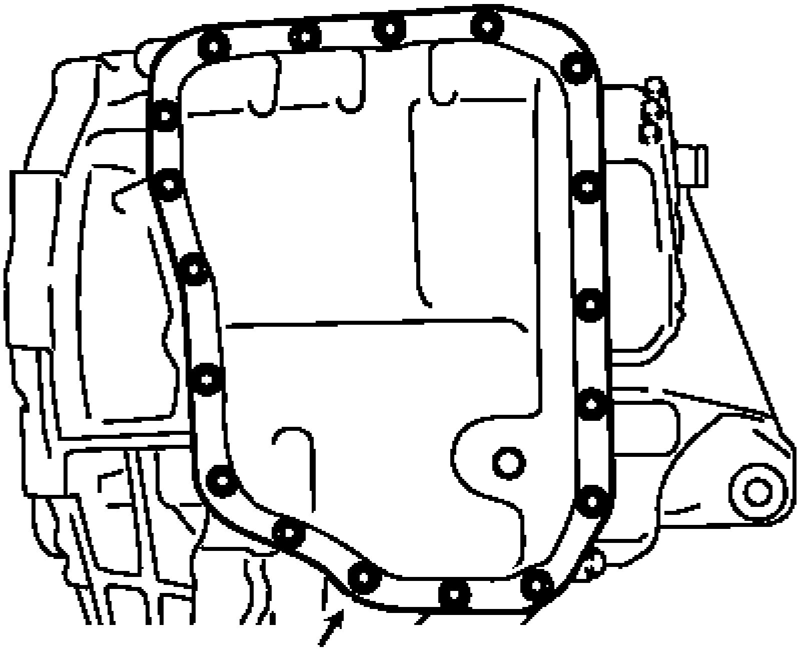

Fig. 391: Identifying Automatic Transaxle Bolts
Courtesy of TOYOTA MOTOR SALES, U.S.A., INC.

e. Apply adhesive to the bolt.

   Adhesive

   Toyota Genuine Adhesive 1344, Three Bond 1344 or equivalent

f. Install the bolt.

   Torque: 7.0 N*m (71 kgf*cm, 62 in.*lbf)

NOTE:

- **In order to ensure proper sealing of the transmission oil pan bolts, apply adhesive to the bolts and install them within 10 minutes of adhesive application.**
- **Completely remove any oil or grease from the contact surface of the transaxle case and oil pan sub-assembly with the gasket before installation.**

g. Using a hexagon socket wrench (6 mm), install the No. 1 oil filler tube to the automatic transaxle assembly.

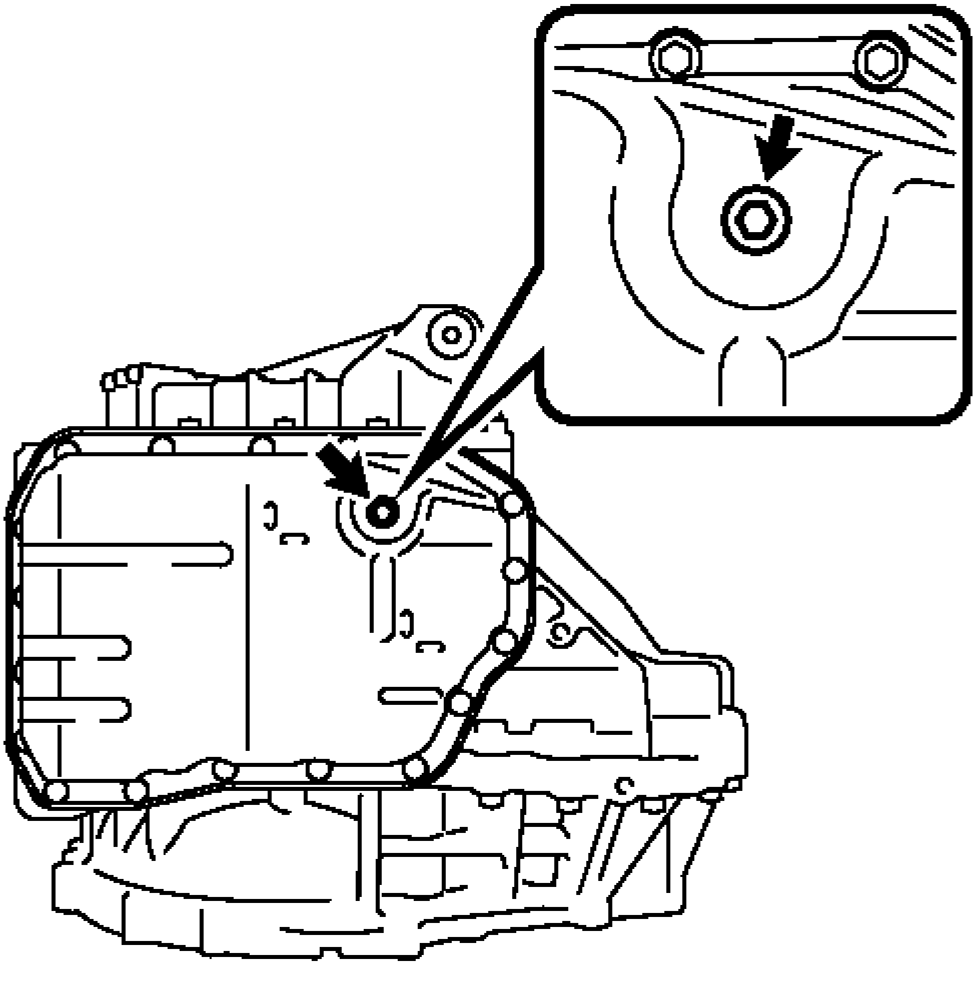

Fig. 392: Locating No. 1 Oil Filler Tube
Courtesy of TOYOTA MOTOR SALES, U.S.A., INC.

Torque: 1.7 N*m (17 kgf*cm, 15 in.*lbf)

h. Using a hexagon socket wrench (6 mm), install the overflow plug and a new gasket to the oil pan sub-assembly.

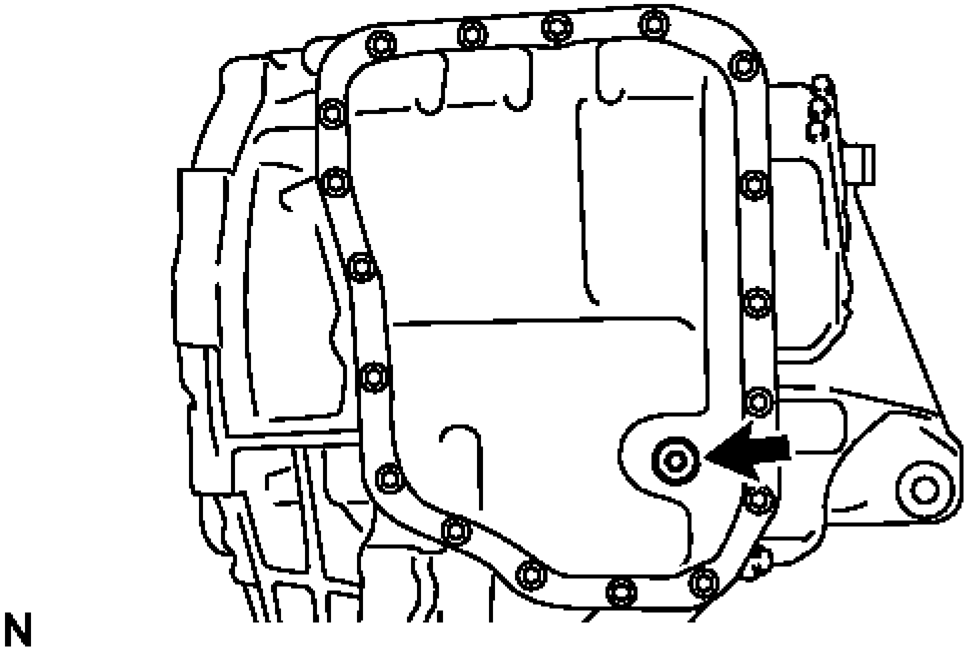

Fig. 393: Identifying Overflow Plug
Courtesy of TOYOTA MOTOR SALES, U.S.A., INC.

Torque: 40 N*m (408 kgf*cm, 30 ft.*lbf)

58. **INSTALL NO. 1 TRANSAXLE CASE PLUG**
    1. Install 3 new gaskets to the 3 hexagon bolts.
    2. Apply adhesive to the 3 hexagon bolts.

       Adhesive

       Toyota Genuine Seal Packing 1344, Three Bond 1344 or equivalent

       NOTE: **In order to ensure proper sealing of the hexagon bolts, apply adhesive to the bolts and install them within 10 minutes of adhesive application.**

    3. Using a hexagon socket wrench (6 mm), install the 3 hexagon bolts to the transaxle housing with the gaskets.

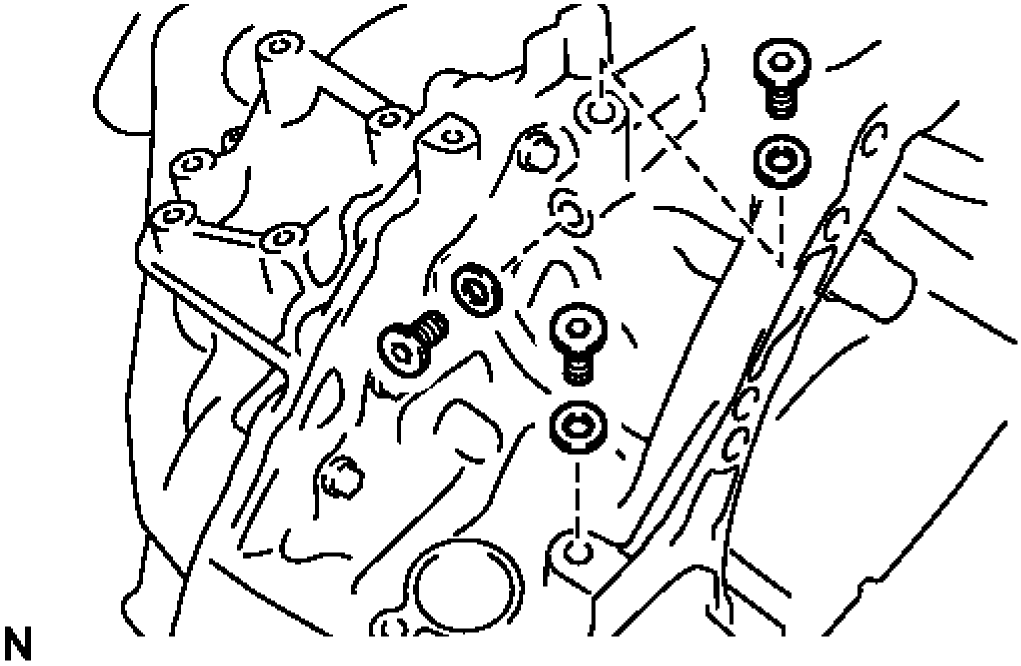

Fig. 394: Identifying Gaskets And Hexagon Bolts
Courtesy of TOYOTA MOTOR SALES, U.S.A., INC.

Torque: 17 N*m (173 kgf*cm, 12 ft.*lbf)

d. Coat 3 new O-rings with ATF and install them to the 3 No. 1 transaxle case plugs.

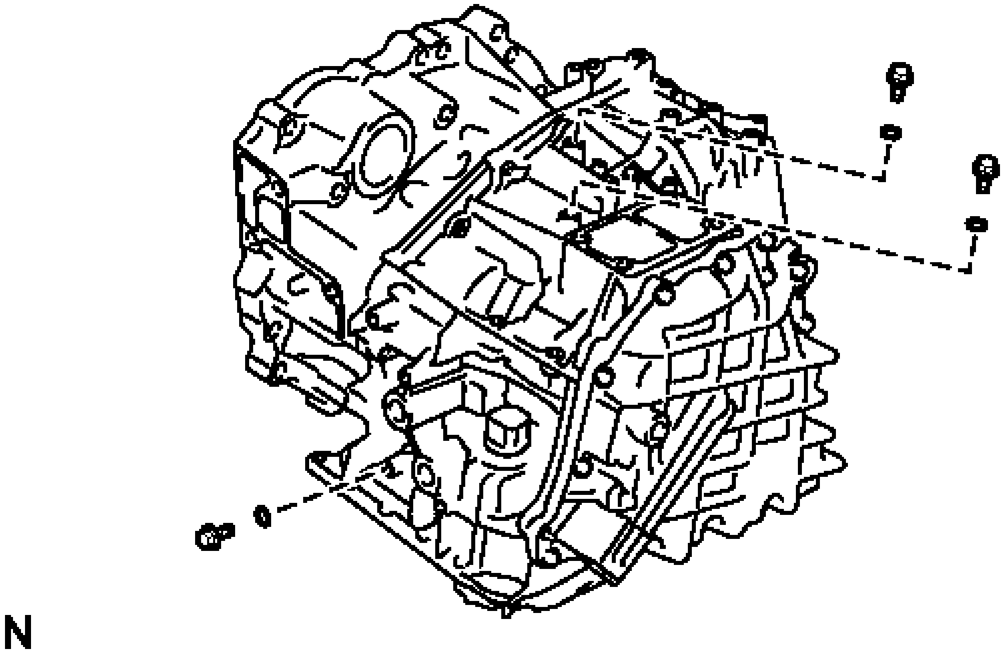

Fig. 395: Identifying No. 1 Transaxle Case Plugs
Courtesy of TOYOTA MOTOR SALES, U.S.A., INC.

e. Install the 3 No. 1 transaxle case plugs to the transaxle case.

Torque: 7.4 N*m (75 kgf*cm, 65 in.*lbf)

59. **INSTALL OIL COOLER TUBE UNION (INLET OIL COOLER UNION)**

a. Coat a new O-ring with ATF and install it to the oil cooler tube union (inlet oil cooler union).

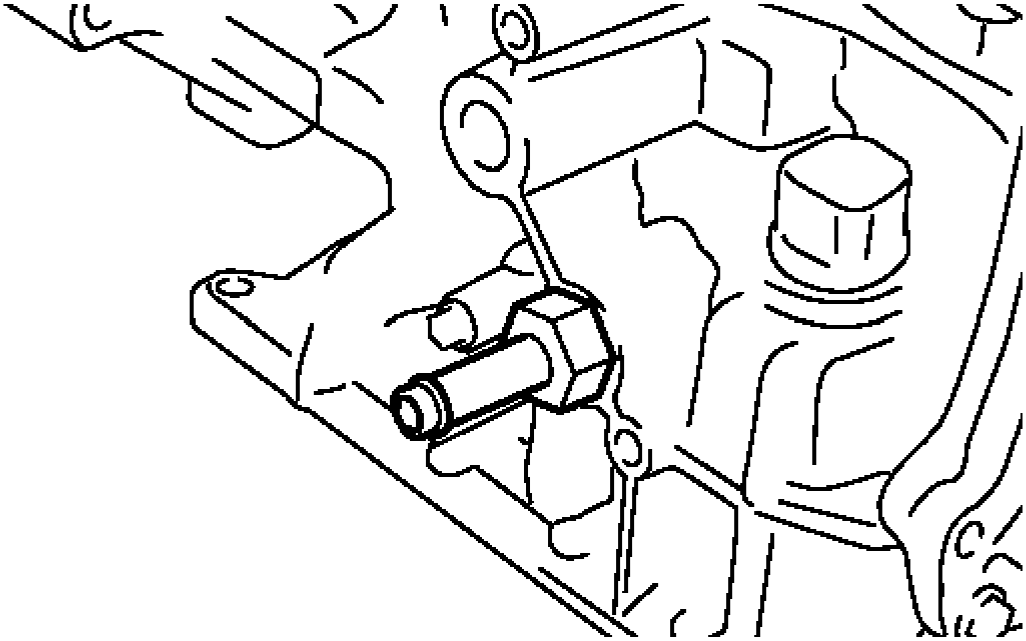

Fig. 396: Identifying Oil Cooler Tube Union (Inlet Oil Cooler Union)
Courtesy of TOYOTA MOTOR SALES, U.S.A., INC.

b. Install the oil cooler tube union (inlet oil cooler union) to the transaxle case.

Torque: 27 N*m (275 kgf*cm, 20 ft.*lbf)

60. **INSTALL OIL COOLER TUBE UNION (OUTLET OIL COOLER UNION)**

a. Coat a new O-ring with ATF and install it to the oil cooler tube union (outlet oil cooler union).

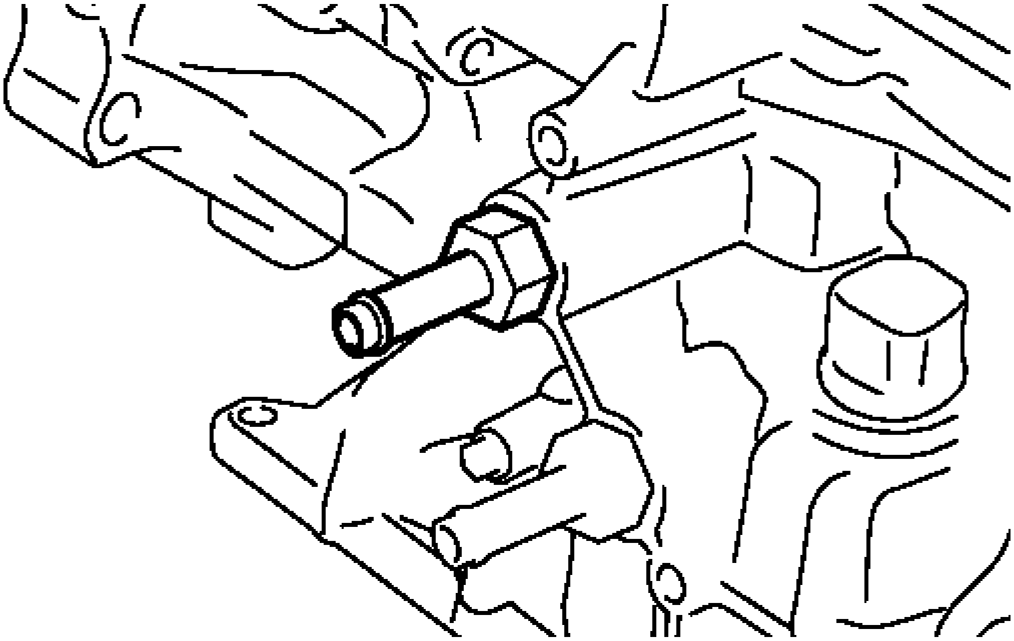

Fig. 397: Identifying Oil Cooler Tube Union (Outlet Oil Cooler Union)
Courtesy of TOYOTA MOTOR SALES, U.S.A., INC.

b. Install the oil cooler tube union (outlet oil cooler union) to the transaxle case.

   Torque: 27 N*m (275 kgf*cm, 20 ft.*lbf)

61. **INSTALL PARK/NEUTRAL POSITION SWITCH ASSEMBLY**
   a. Align the protrusions of the park/neutral position switch.

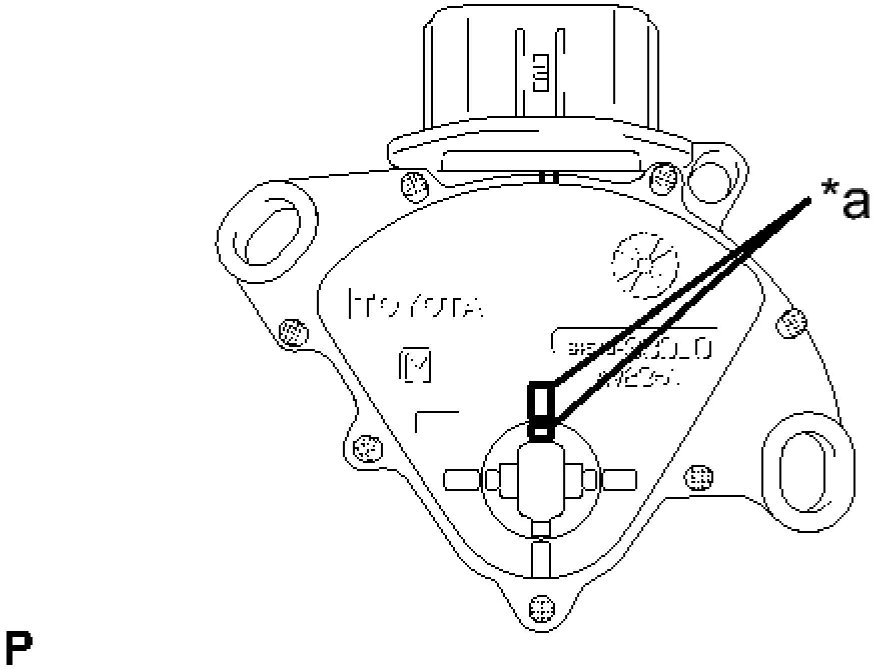

Fig. 398: Aligning Park/Neutral Position Switch Protrusion
Courtesy of TOYOTA MOTOR SALES, U.S.A., INC.

TEXT IN ILLUSTRATION

*a	Protrusion

b. Install the park/neutral position switch to the control shaft with the 2 bolts.

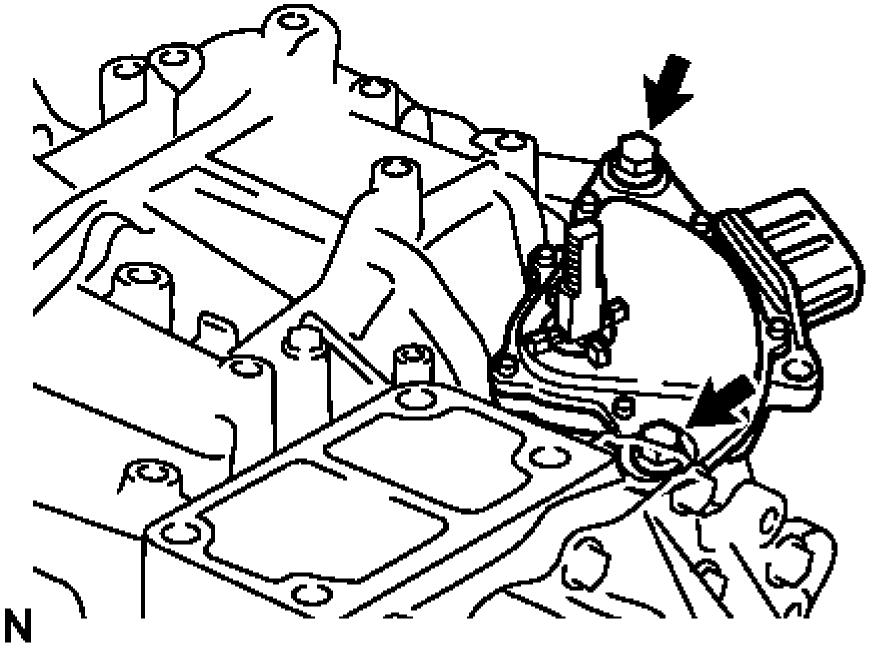

Fig. 399: Locating Park/Neutral Position Switch Assembly Bolts
Courtesy of TOYOTA MOTOR SALES, U.S.A., INC.

Torque: 5.4 N*m (55 kgf*cm, 48 in.*lbf)

NOTE:	**Before installing the park/neutral position switch, remove any dirt or rust on the control shaft. Be sure to install the switch straight along the shaft while being careful not to deform the plate spring that supports the shaft. If the plate spring is deformed, the park/neutral position switch cannot be reinstalled correctly.** **After installing the park/neutral position switch, confirm that the 2 protrusions on the switch are aligned.**

c. Install the control shaft lever to the control shaft with the washer and nut.

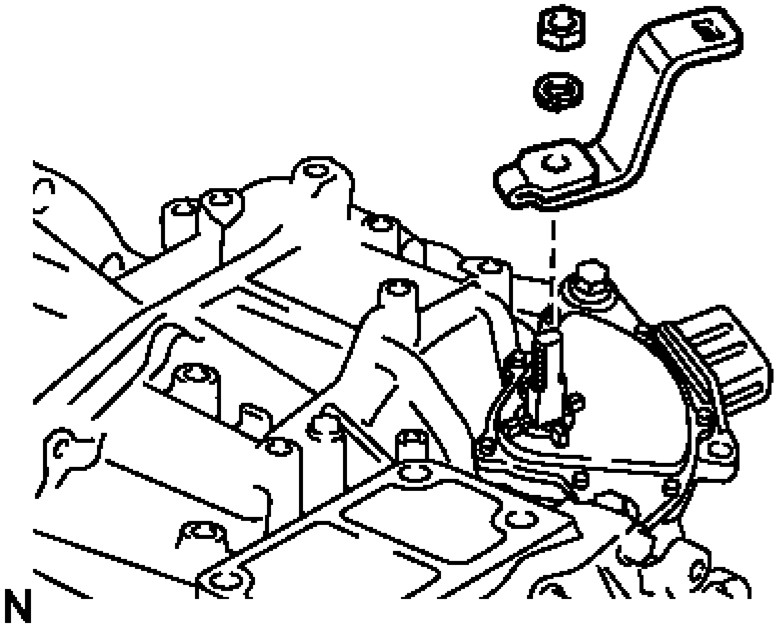

Fig. 400: Identifying Nut, Washer And Control Shaft Lever
Courtesy of TOYOTA MOTOR SALES, U.S.A., INC.

Torque: 13 N*m (130 kgf*cm, 9 ft.*lbf)

62. **INSTALL BREATHER PLUG HOSE**
    1. Coat a new O-ring with ATF and install it to the No. 2 breather plug (ATM).

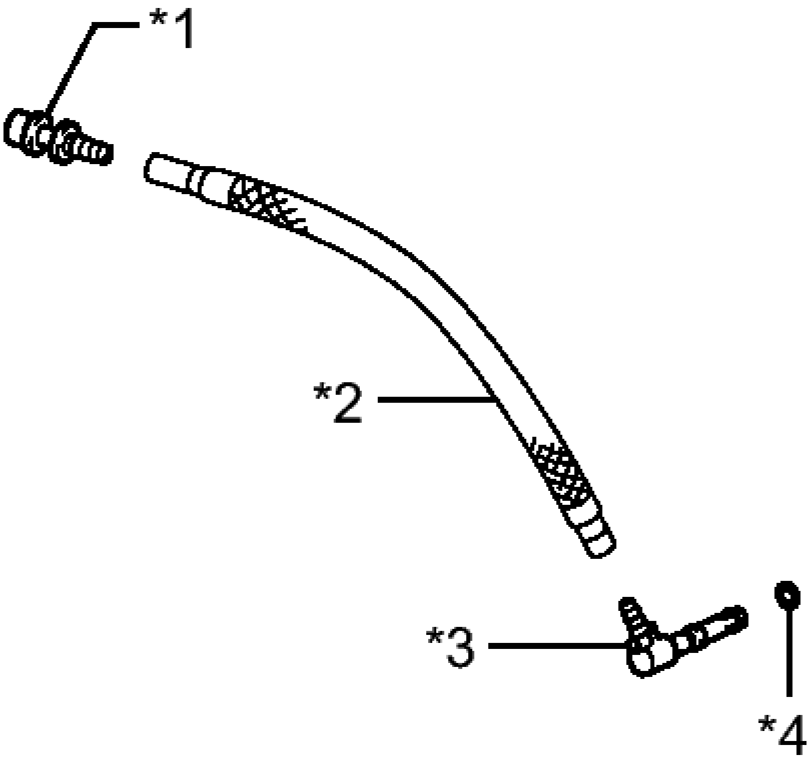

Fig. 401: Identifying Breather Plug Hose Components
Courtesy of TOYOTA MOTOR SALES, U.S.A., INC.

TEXT IN ILLUSTRATION

*1	No. 1 Breather Plug (ATM)
*2	Breather Plug Hose
*3	No. 2 Breather Plug (ATM)
*4	O-ring

b. Install the No. 1 breather plug (ATM) and No. 2 breather plug (ATM) to the breather plug hose.
c. Install the breather plug hose to the transaxle case.

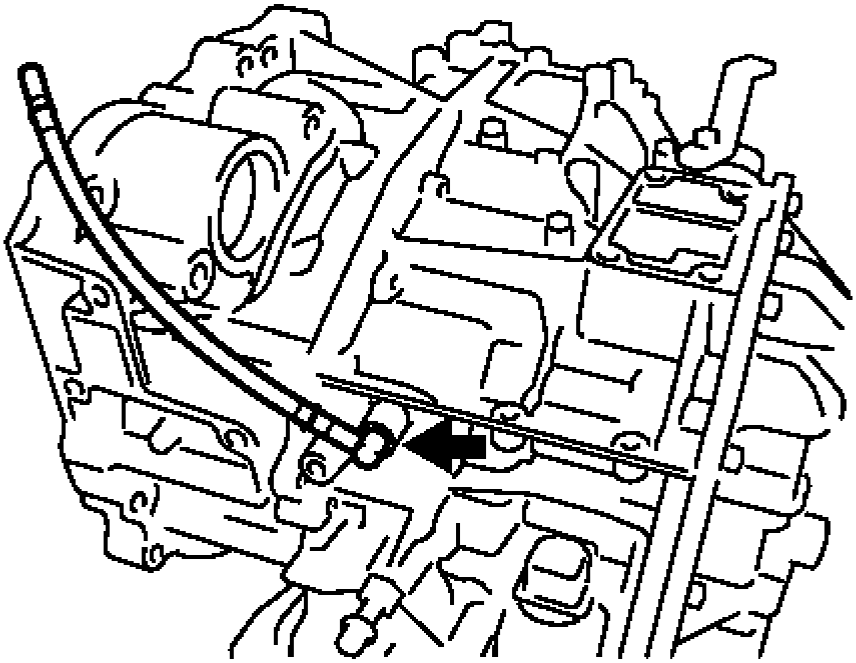

Fig. 402: Locating Breather Plug Hose
Courtesy of TOYOTA MOTOR SALES, U.S.A., INC.

TORQUE CONVERTER AND DRIVE PLATE

INSPECTION

INSPECTION

1. **INSPECT TORQUE CONVERTER ASSEMBLY**
   a. Inspect the one-way clutch.
      1. Press on the splines of the stator with a finger and rotate the stator. Check that the stator rotates smoothly when turned clockwise and rotates with difficulty when turned counterclockwise.

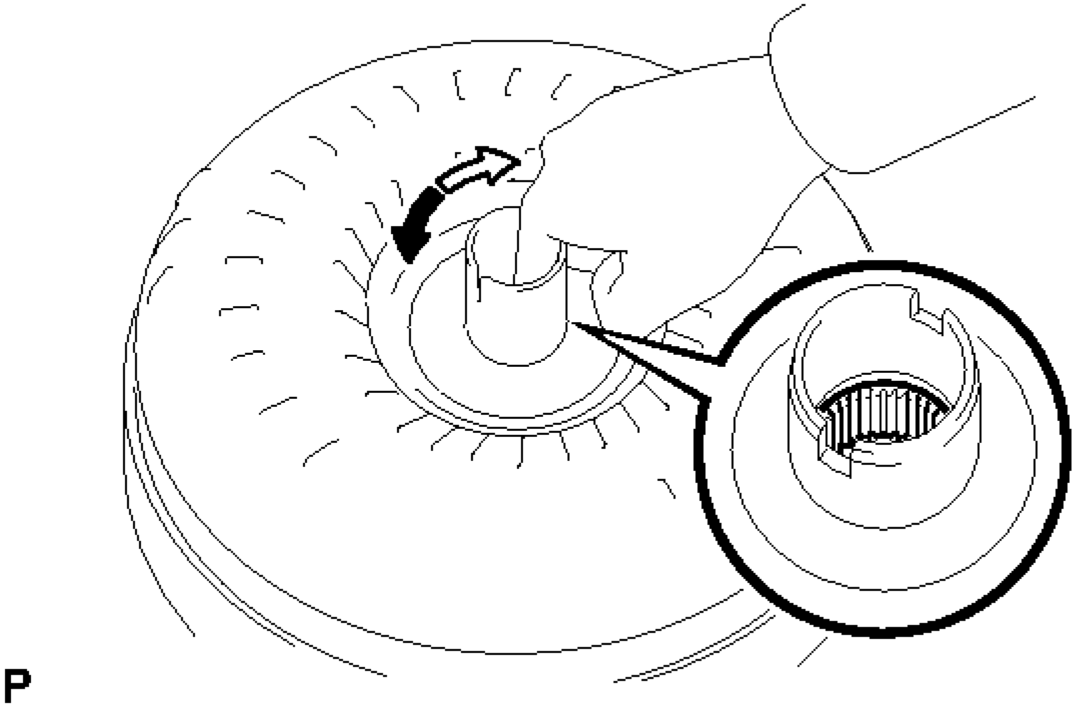

Fig. 403: Pressing Splines With Finger And Rotate Stator
Courtesy of TOYOTA MOTOR SALES, U.S.A., INC.

If necessary, clean the torque converter and recheck the one-way clutch.

Replace the torque converter if the one-way clutch still fails the inspection.

TEXT IN ILLUSTRATION

	Difficult
	Smooth

b. Inspect the torque converter assembly.

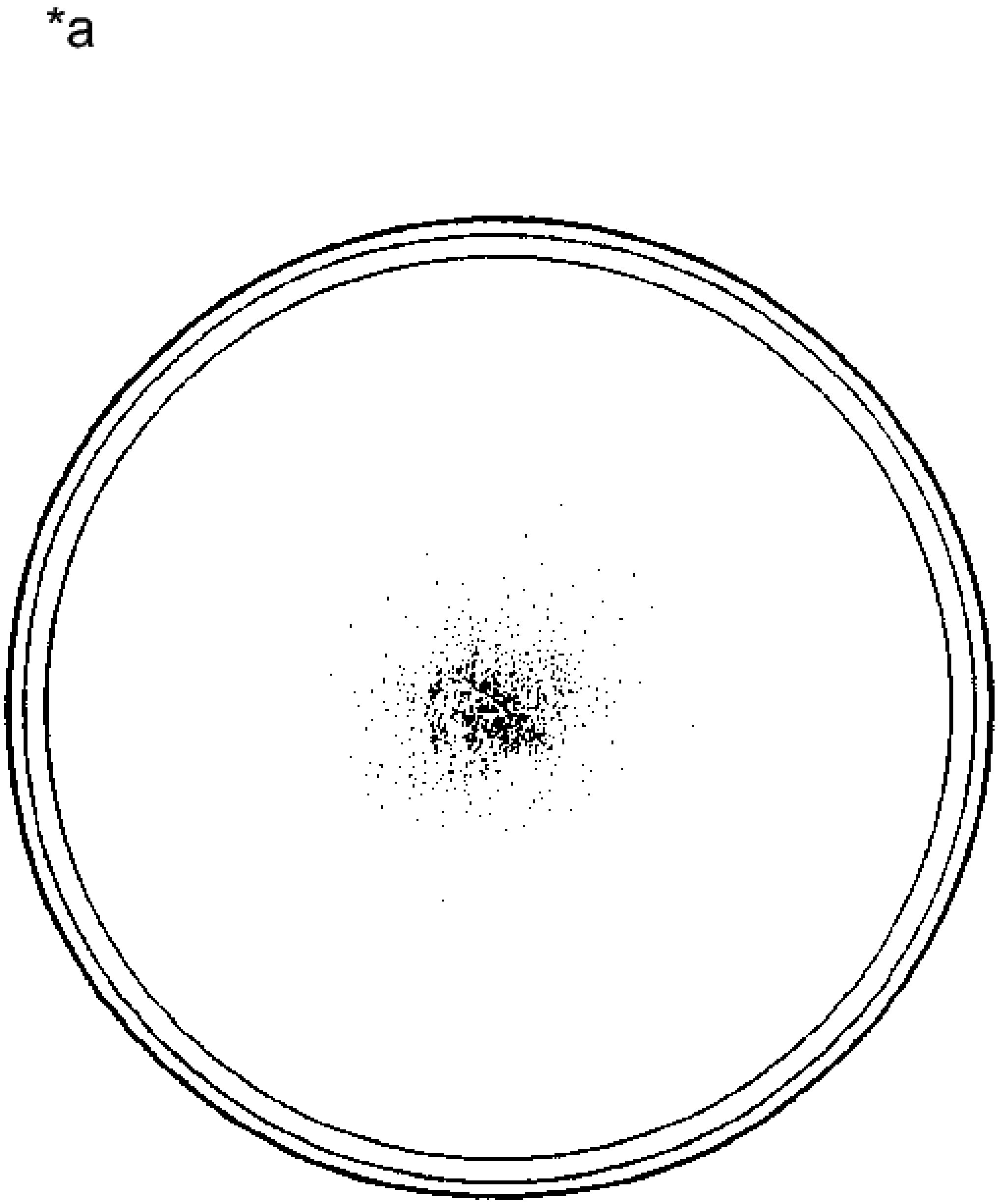

Fig. 404: Identifying Condition Of Torque Converter Clutch Assembly
Courtesy of TOYOTA MOTOR SALES, U.S.A., INC.

If any of the following problems are present, replace the torque converter assembly.

TEXT IN ILLUSTRATION

*a	Sample showing maximum allowable amount of powder in ATF

- A metallic sound is emitted from the torque converter assembly during the stall test or when the shift lever is moved to N.
- The one-way clutch turns smoothly or locks in both directions.
- The amount of powder in the ATF is more than the sample shown in the illustration (refer to the sample).

HINT:

The sample shows approximately 0.025 liters (0.026 US qts, 0.022 Imp. qts) of ATF that was removed from a torque converter.

c. Replace the ATF in the torque converter.

HINT:

If the ATF is discolored or has a foul odor, stir the ATF in the torque converter before replacing the ATF.

d. Clean and check the oil cooler and oil pipe line.

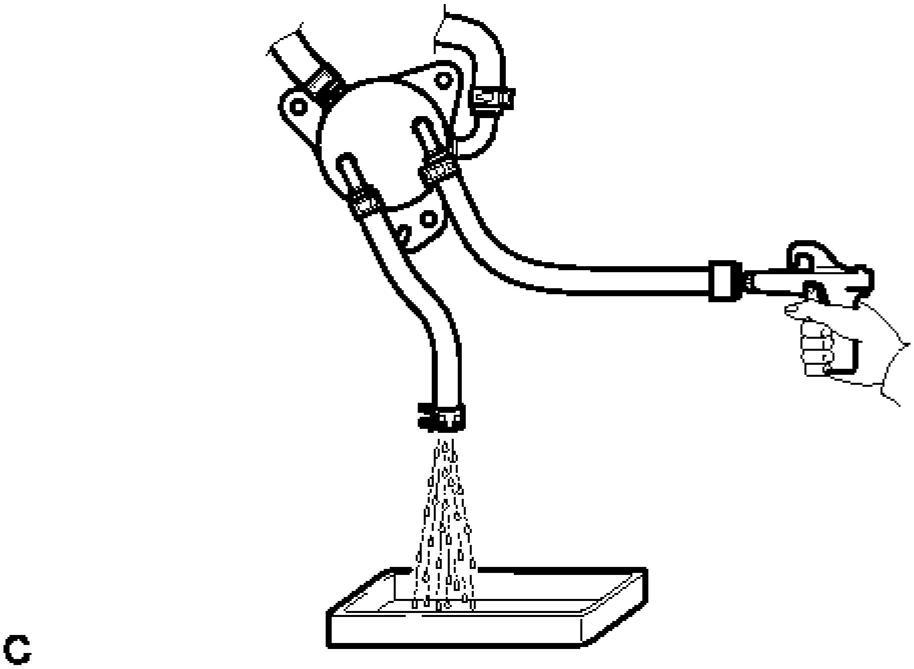

Fig. 405: Cleaning And Checking Oil Cooler And Oil Pipe Line
Courtesy of TOYOTA MOTOR SALES, U.S.A., INC.

HINT:

- If the torque converter is inspected or the ATF is replaced, it is necessary to clean the oil cooler and oil pipe line.
- Apply compressed air of 196 kPa (2.0 kgf/ cm^2 , 28 psi) into the inlet hose.
- If a large amount of powder is found in the ATF, add new ATF using a bucket pump and clean the oil cooler and oil pipe line again.
- If the ATF is cloudy, inspect the oil cooler.

e. Prevent deformation of the torque converter and damage to the oil pump gear.

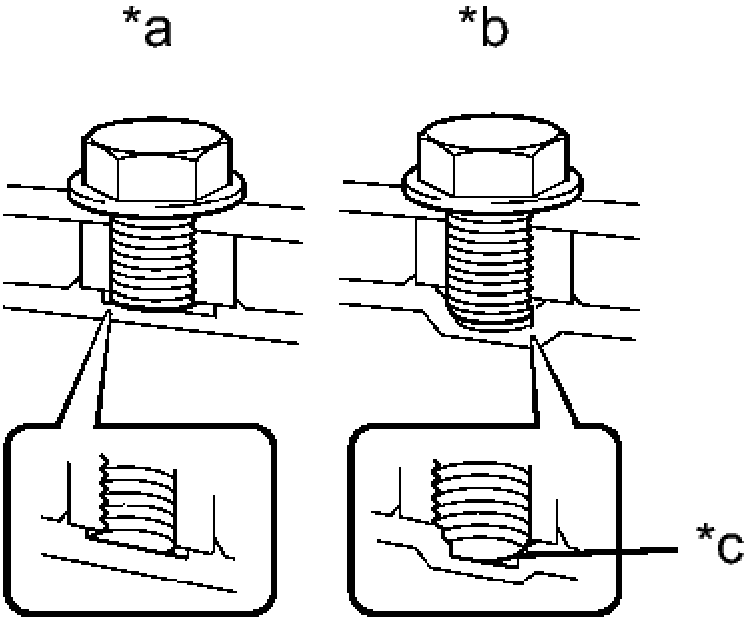

Fig. 406: Identifying Bolts Are Same Length
Courtesy of TOYOTA MOTOR SALES, U.S.A., INC.

NOTE: **Make sure that all of the bolts are the same length and that the specified bolts are used.**

TEXT IN ILLUSTRATION

*a	CORRECT
*b	INCORRECT
*c	Bottom is damaged

HINT:

If there is any damage to the tip of a bolt for the torque converter or to the bottom of a bolt hole, replace the bolt and torque converter.

2. **INSPECT DRIVE PLATE**
   a. Check the drive plate for damage.

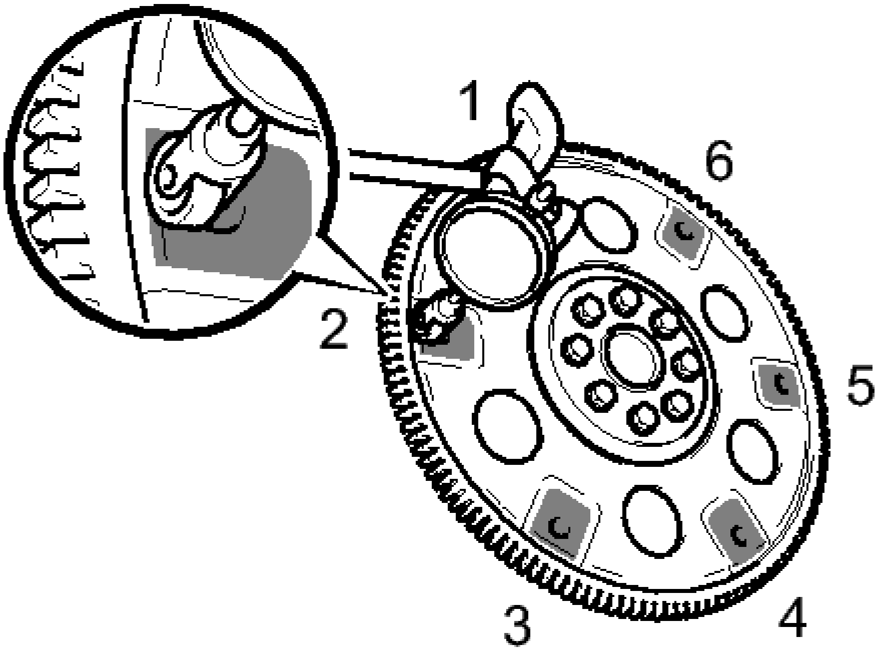

Fig. 407: Identifying Drive Plate For Damage
Courtesy of TOYOTA MOTOR SALES, U.S.A., INC.

TEXT IN ILLUSTRATION

	Measurement Point

b. Set up a dial indicator and measure the runout at the 6 areas on the drive plate surface that contact the torque converter.

Maximum runout

0.30 mm (0.0118 in.)

HINT:

- If the runout is more than the maximum or the drive plate is damaged, replace the drive plate.
- If installing a new drive plate, confirm that the spacers are oriented properly before tightening the bolts. Refer to **INSTALLATION** .

TCM

COMPONENTS

ILLUSTRATION

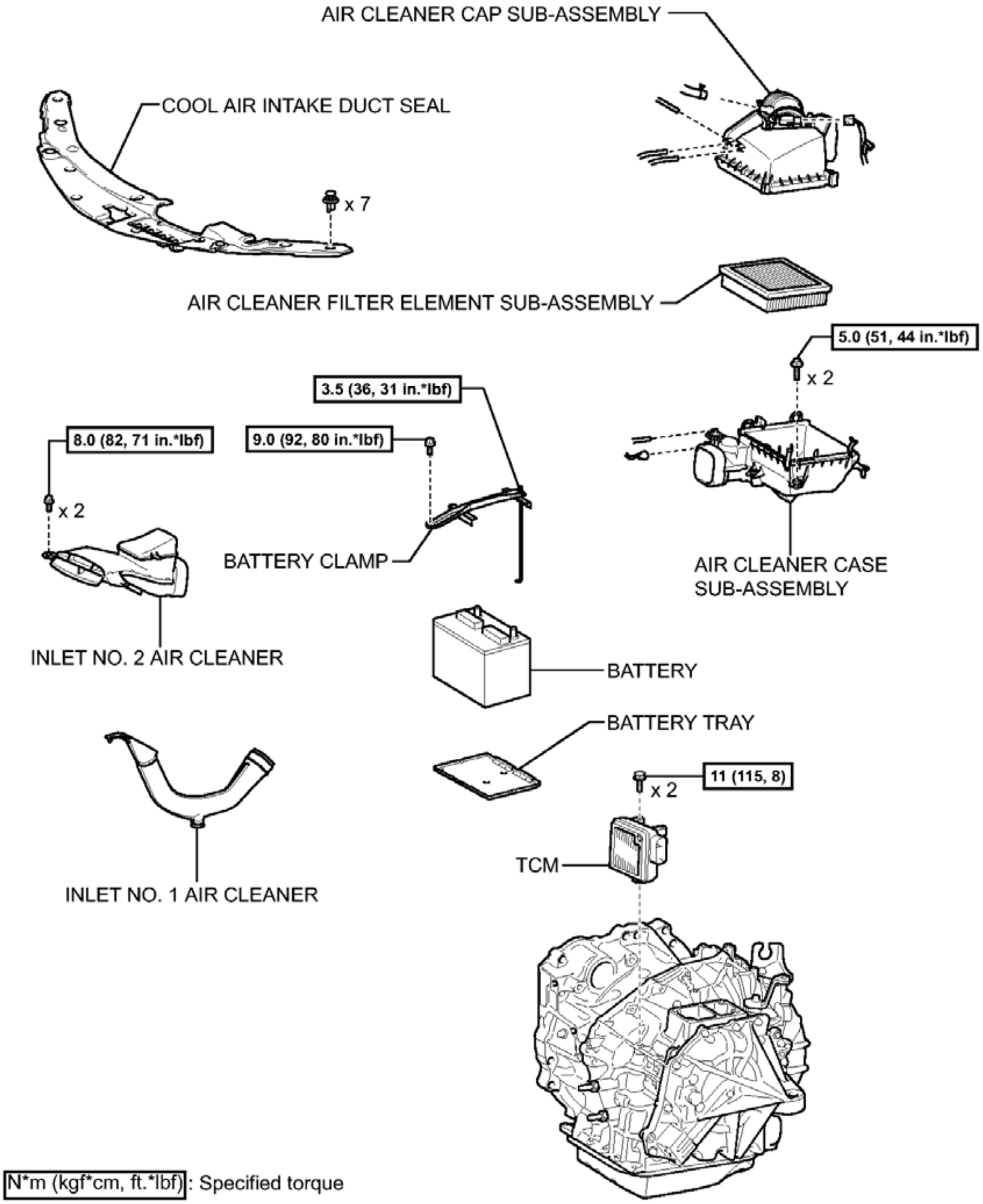
AIR CLEANER CAP SUB-ASSEMBLY
COOL AIR INTAKE DUCT SEAL
x 7
AIR CLEANER FILTER ELEMENT SUB-ASSEMBLY
5.0 (51, 44 in.*lbf)
x 2
3.5 (36, 31 in.*lbf)
8.0 (82, 71 in.*lbf)
9.0 (92, 80 in.*lbf)
x 2
BATTERY CLAMP
AIR CLEANER CASE SUB-ASSEMBLY
INLET NO. 2 AIR CLEANER
BATTERY
BATTERY TRAY
11 (115, 8)
x 2
TCM
INLET NO. 1 AIR CLEANER
N*m (kgf*cm, ft.*lbf): Specified torque

Fig. 408: Identifying TCM Replacement Components With Torque Specifications
Courtesy of TOYOTA MOTOR SALES, U.S.A., INC.

REMOVAL

REMOVAL

NOTE: **If automatic transmission parts are replaced, refer to Parts Replacement**

Compensation Table to determine if any additional operations are necessary. Refer to PRECAUTION .

1. **DISCONNECT CABLE FROM NEGATIVE BATTERY TERMINAL**

   NOTE: When disconnecting the cable, some systems need to be initialized after the cable is reconnected. Refer to INITIALIZATION .

2. **REMOVE COOL AIR INTAKE DUCT SEAL** . Refer to **REMOVAL - Step 1**
3. **REMOVE INLET NO. 2 AIR CLEANER** . Refer to **REMOVAL - Step 18**
4. **REMOVE AIR CLEANER CAP SUB-ASSEMBLY** . Refer to **REMOVAL - Step 7**
5. **REMOVE AIR CLEANER FILTER ELEMENT SUB-ASSEMBLY**
6. **REMOVE AIR CLEANER CASE SUB-ASSEMBLY** . Refer to **REMOVAL - Step 21**
7. **REMOVE BATTERY** . Refer to **REMOVAL - Step 22**
8. **REMOVE BATTERY TRAY**
9. **REMOVE INLET NO. 1 AIR CLEANER** . Refer to **REMOVAL - Step 23**
10. **REMOVE TCM**
    a. Turn the lock lever and disconnect the connector from the TCM.

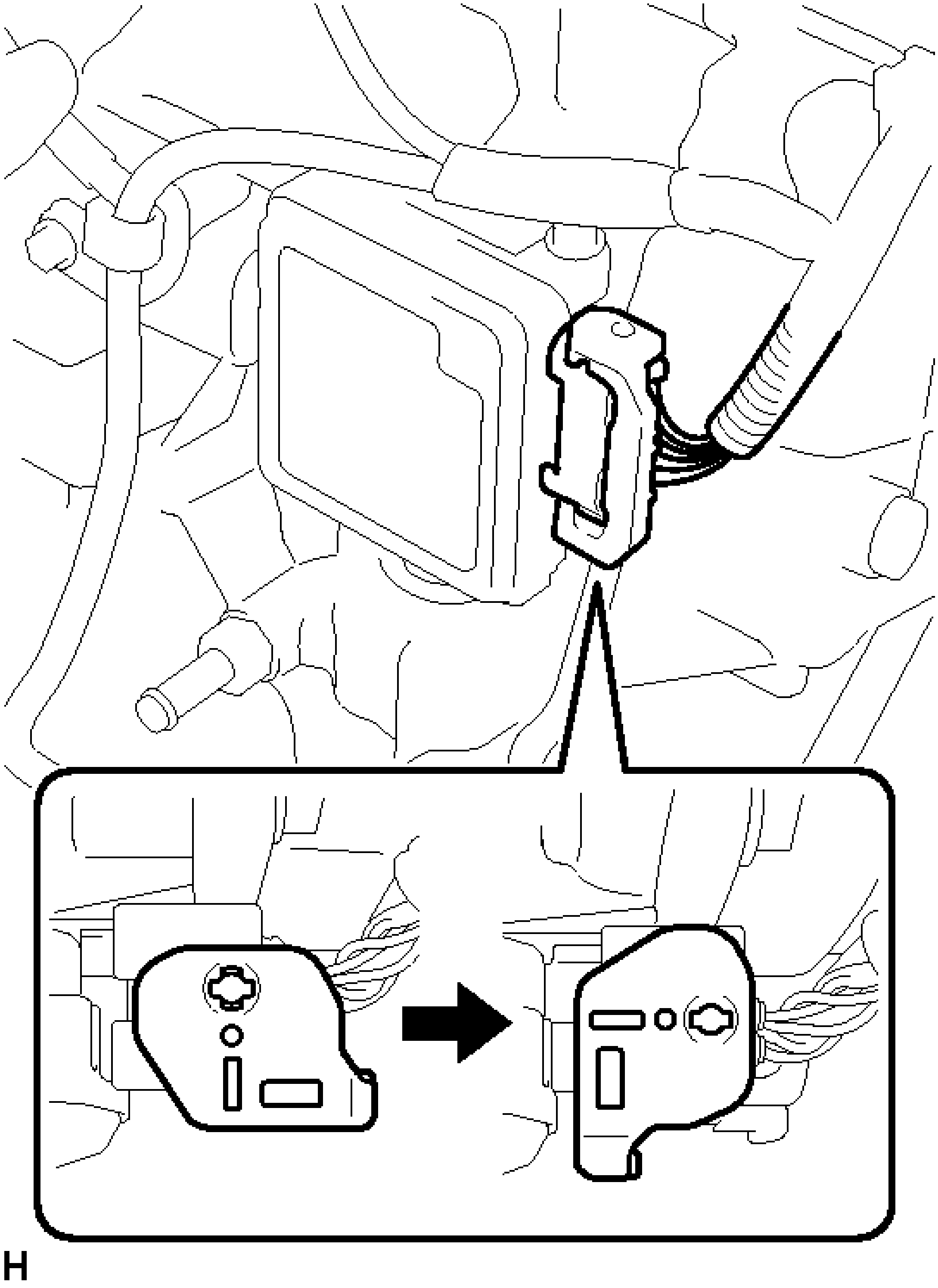

Fig. 409: Identifying TCM Connector
Courtesy of TOYOTA MOTOR SALES, U.S.A., INC.

b. Remove the 2 bolts and TCM from the automatic transaxle assembly.

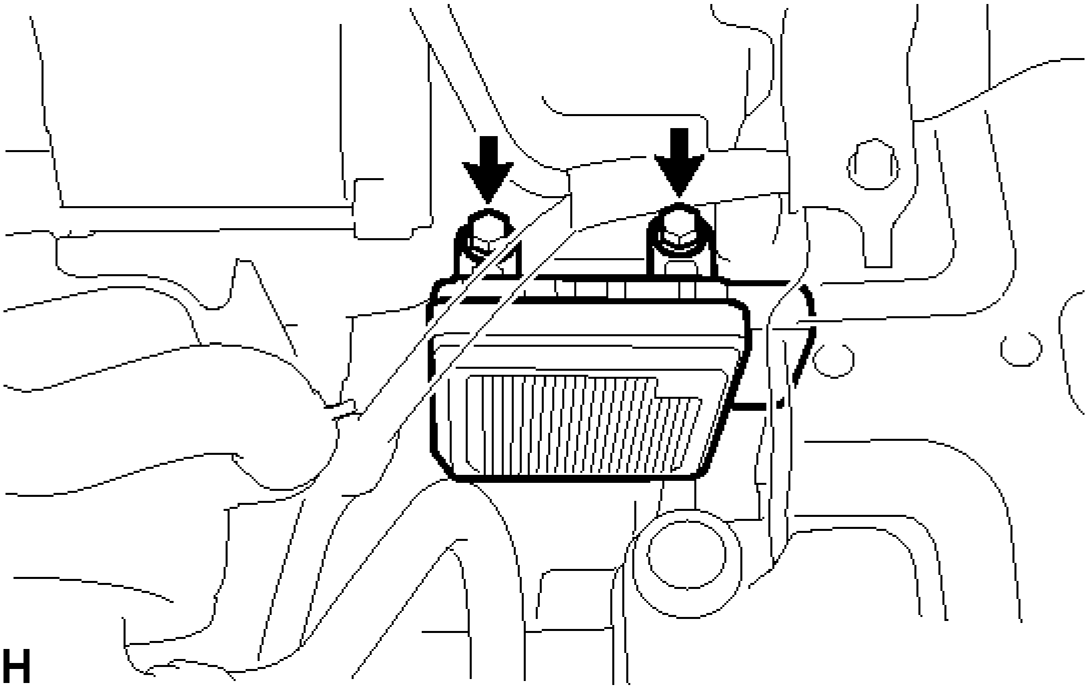

Fig. 410: Identifying TCM Bolts
Courtesy of TOYOTA MOTOR SALES, U.S.A., INC.

INSTALLATION

INSTALLATION

1. **INSTALL TCM**
    a. Install the TCM to the automatic transaxle assembly.
    b. Install and tighten the 2 bolts in the order shown in the illustration.

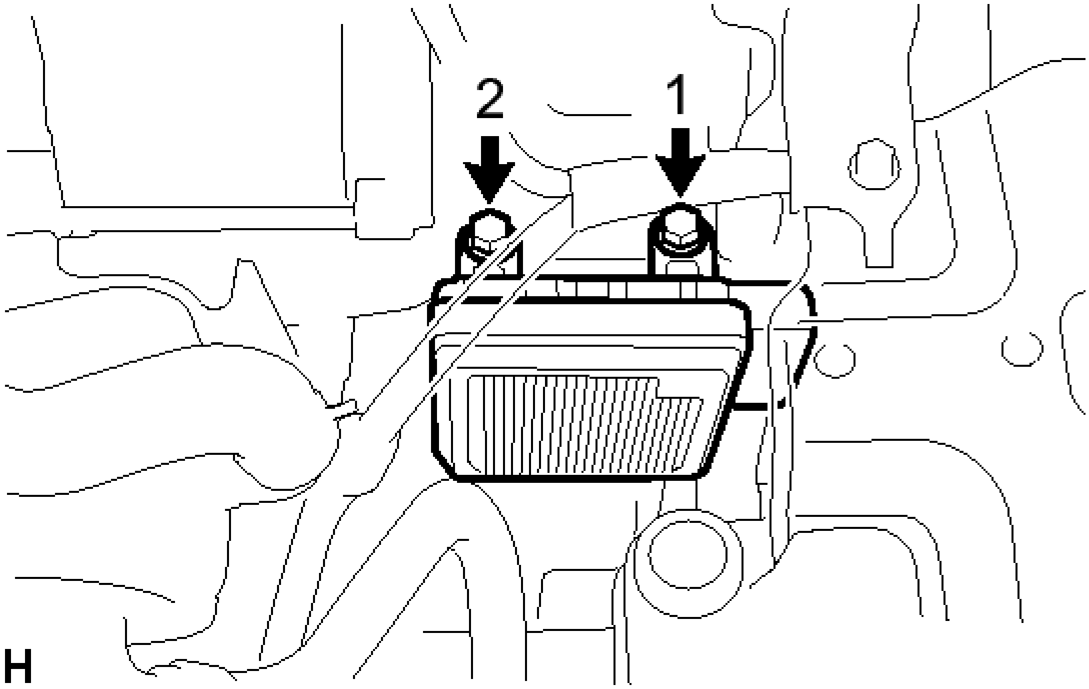

Fig. 411: Tightening TCM Bolts In Sequence
Courtesy of TOYOTA MOTOR SALES, U.S.A., INC.

Torque: 11 N*m (115 kgf*cm, 8 ft.*lbf)

c. Connect the connector to the TCM.

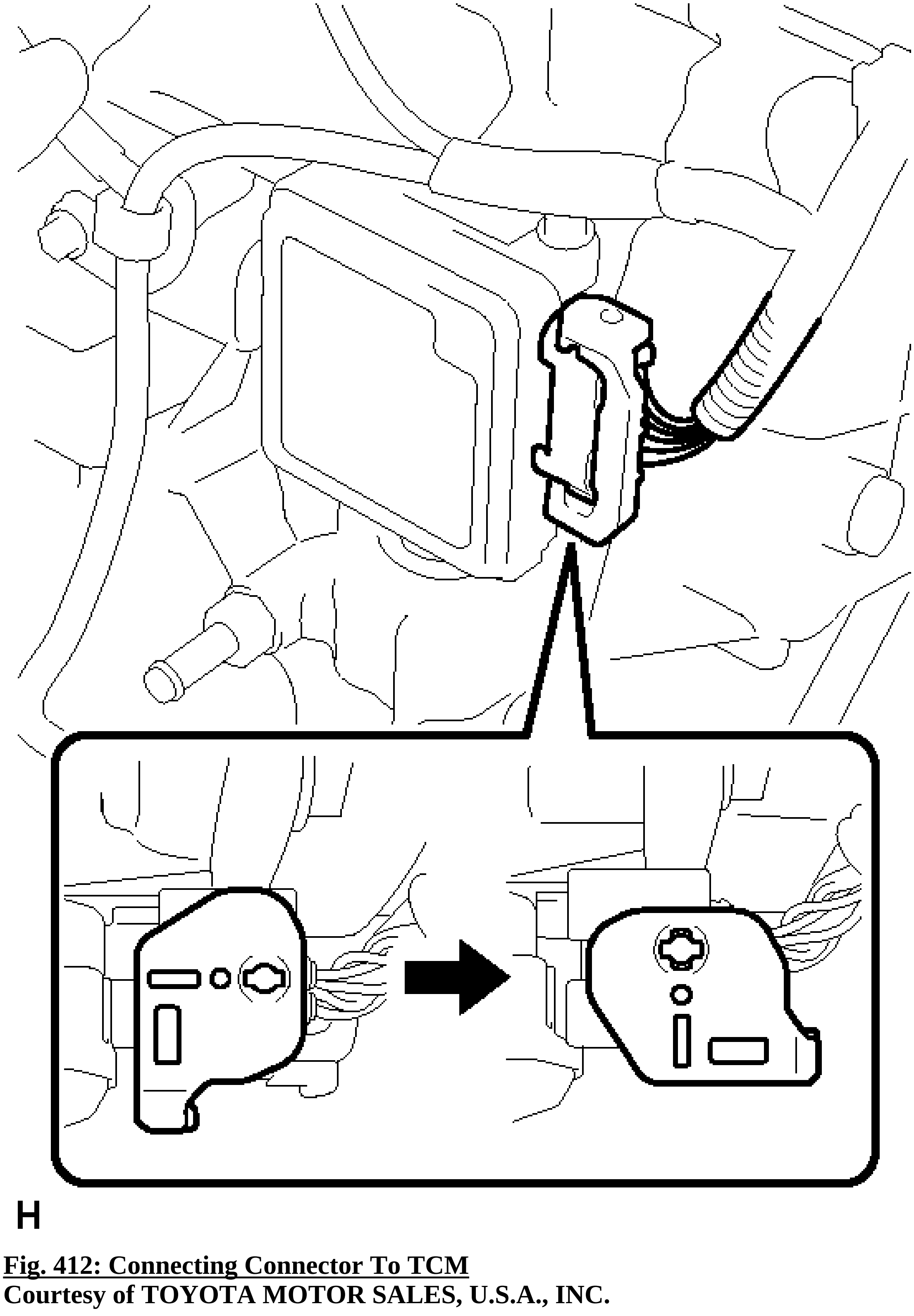

Fig. 412: Connecting Connector To TCM
Courtesy of TOYOTA MOTOR SALES, U.S.A., INC.

d. Turn the lock lever and secure the connector with the lock lever.

2. **INSTALL INLET NO. 1 AIR CLEANER** . Refer to **INSTALLATION - Step 54**

3. **INSTALL BATTERY TRAY**
4. **INSTALL BATTERY** . Refer to **INSTALLATION - Step 55**
5. **INSTALL AIR CLEANER CASE SUB-ASSEMBLY** . Refer to **INSTALLATION - Step 56**
6. **INSTALL AIR CLEANER FILTER ELEMENT SUB-ASSEMBLY**
7. **INSTALL AIR CLEANER CAP SUB-ASSEMBLY** . Refer to **INSTALLATION - Step 2**
8. **INSTALL INLET NO. 2 AIR CLEANER** . Refer to **INSTALLATION - Step 59**
9. **INSTALL COOL AIR INTAKE DUCT SEAL** . Refer to **INSTALLATION - Step 4**
10. **CONNECT CABLE TO NEGATIVE BATTERY TERMINAL**

NOTE: **When disconnecting the cable, some systems need to be initialized after the cable is reconnected. Refer to INITIALIZATION .**

11. **CHECK AUTOMATIC TRANSAXLE SYSTEM**

NOTE: **If automatic transmission parts have been replaced, refer to Parts Replacement Compensation Table to determine if any additional operations are necessary. Refer to PRECAUTION .**

OIL PUMP

COMPONENTS

ILLUSTRATION

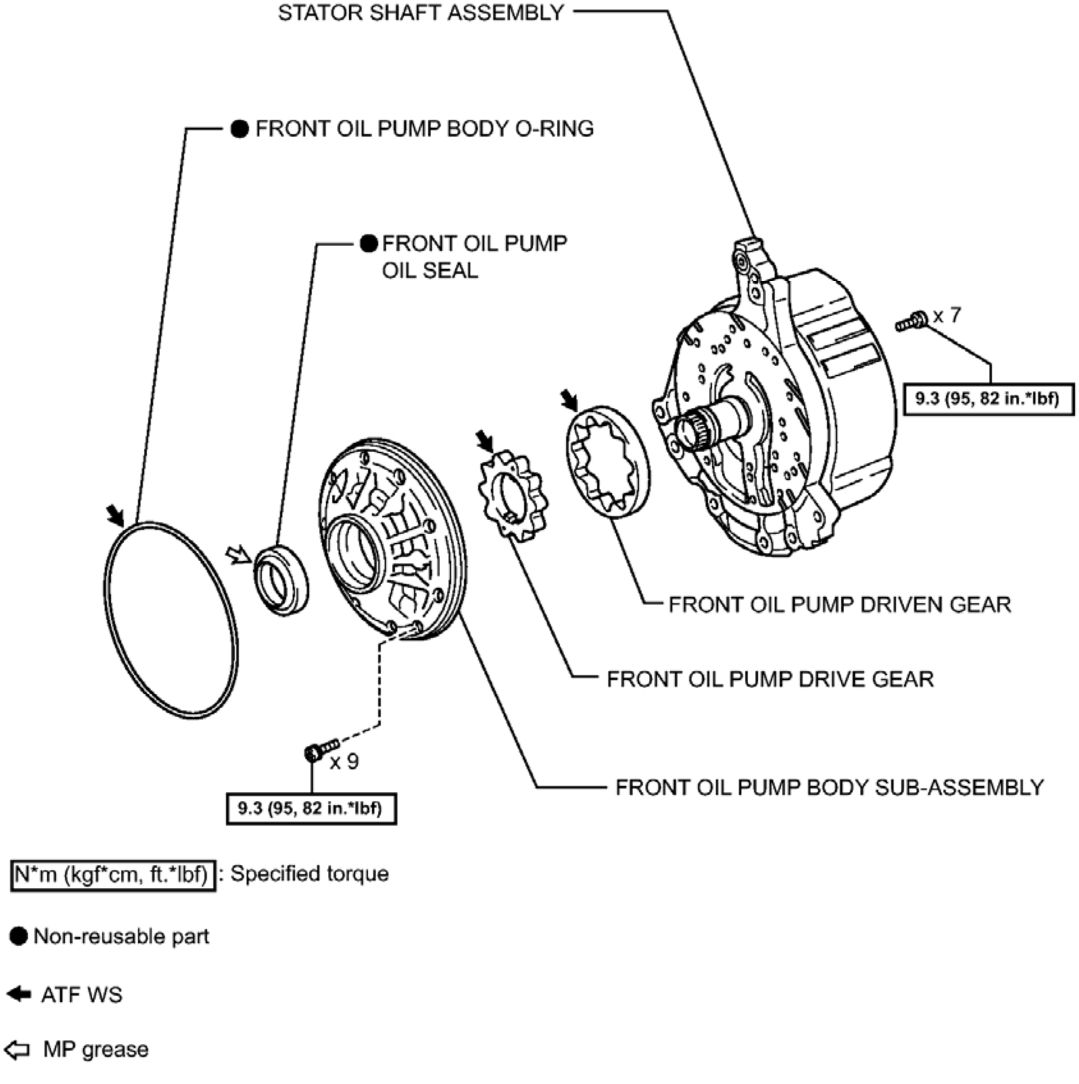
STATOR SHAFT ASSEMBLY
● FRONT OIL PUMP BODY O-RING
● FRONT OIL PUMP OIL SEAL
x 7
9.3 (95, 82 in.*lbf)
FRONT OIL PUMP DRIVEN GEAR
FRONT OIL PUMP DRIVE GEAR
x 9
9.3 (95, 82 in.*lbf)
FRONT OIL PUMP BODY SUB-ASSEMBLY
N*m (kgf*cm, ft.*lbf) : Specified torque
● Non-reusable part
ATF WS
MP grease
N

Fig. 413: Identifying Oil Pump Replacement Components With Torque Specifications
Courtesy of TOYOTA MOTOR SALES, U.S.A., INC.

DISASSEMBLY

DISASSEMBLY

1. **INSPECT FRONT OIL PUMP BODY SUB-ASSEMBLY** See step 1
2. **REMOVE STATOR SHAFT ASSEMBLY**
    a. Using a "TORX" socket wrench (T30), remove the 16 bolts and stator shaft assembly from the front oil pump body sub-assembly.

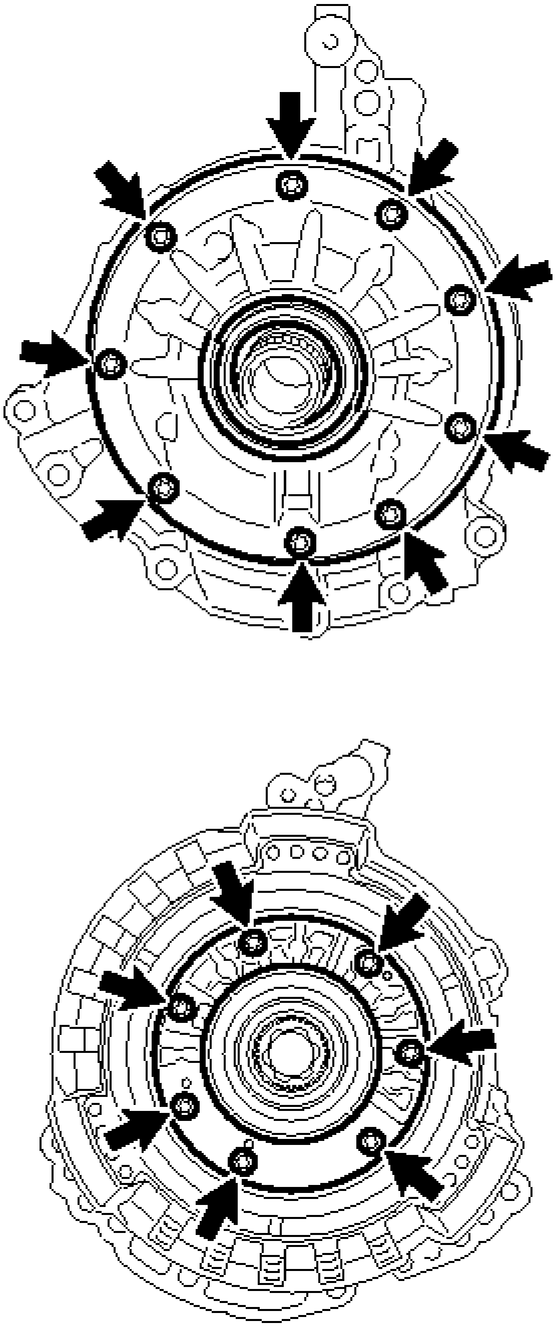

Fig. 414: Locating Stator Shaft Assembly Bolts
Courtesy of TOYOTA MOTOR SALES, U.S.A., INC.

NOTE: Keep the gears in the order they were removed.

3. **INSPECT CLEARANCE OF FRONT OIL PUMP AND GEAR BODY SUB-ASSEMBLY** See step 2
4. **REMOVE FRONT OIL PUMP BODY O-RING**
    a. Remove the O-ring from the front oil pump body sub-assembly.

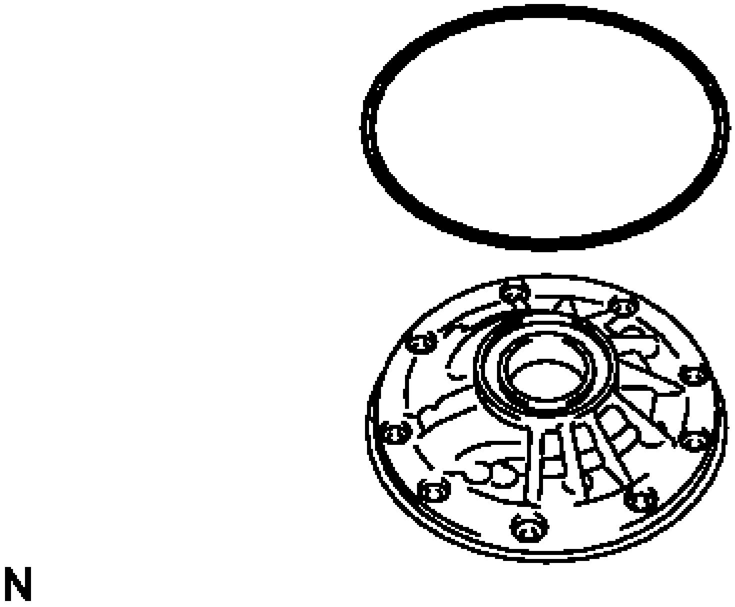

Fig. 415: Identifying O-Ring And Oil Pump Body
Courtesy of TOYOTA MOTOR SALES, U.S.A., INC.

5. **REMOVE FRONT OIL PUMP DRIVE GEAR**
    a. Remove the front oil pump drive gear from the front oil pump body sub-assembly.

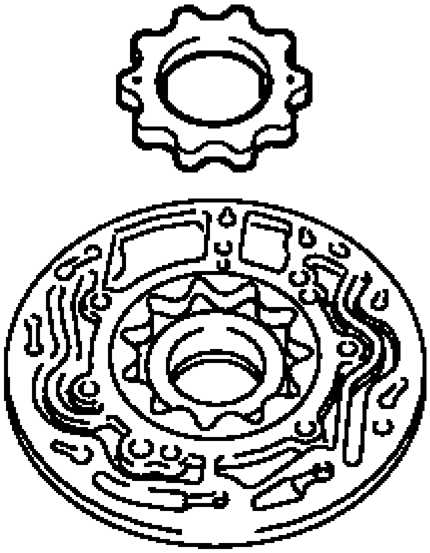

Fig. 416: Identifying Front Oil Pump Drive Gear
Courtesy of TOYOTA MOTOR SALES, U.S.A., INC.

6. **REMOVE FRONT OIL PUMP DRIVEN GEAR**
   a. Remove the front oil pump driven gear from the front oil pump body sub-assembly.

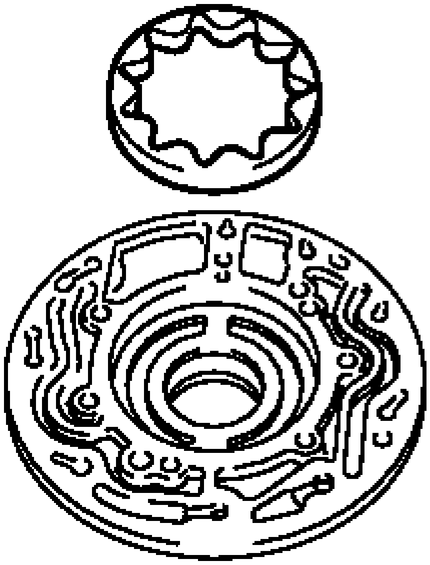

Fig. 417: Identifying Front Oil Pump Driven Gear

Courtesy of TOYOTA MOTOR SALES, U.S.A., INC.

7. **REMOVE FRONT OIL PUMP OIL SEAL**
    a. Secure the front oil pump body sub-assembly in a vise between aluminum plates.

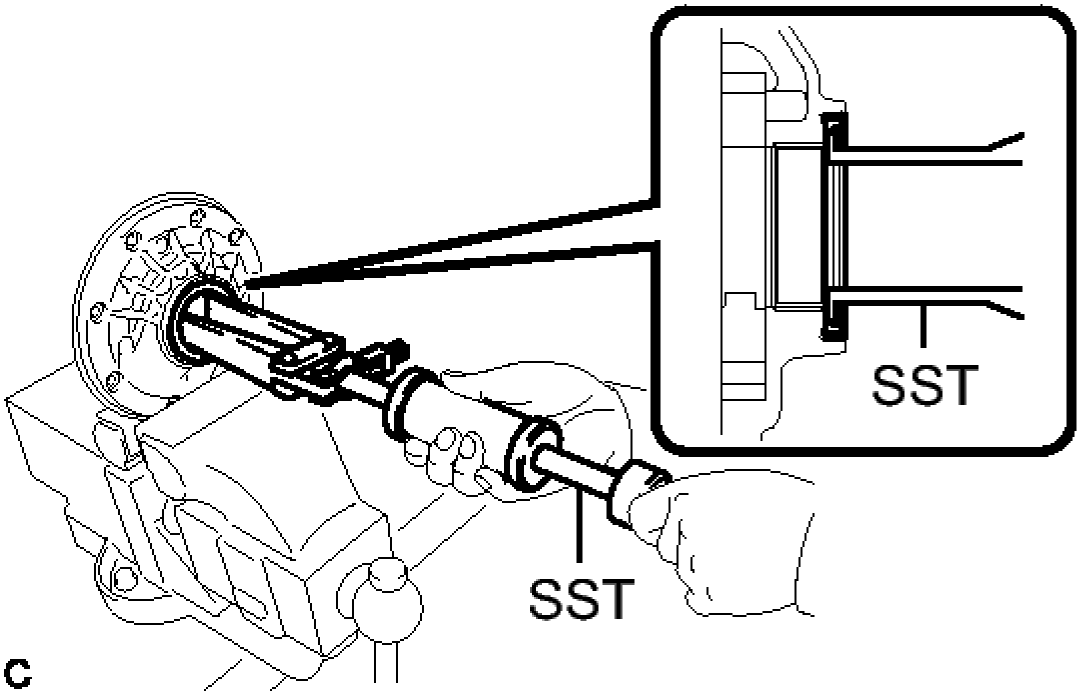

Fig. 418: Removing Front Oil Pump Oil Seal
Courtesy of TOYOTA MOTOR SALES, U.S.A., INC.

NOTE: **Do not overtighten the vise.**

    b. Using SST, remove the front oil pump oil seal from the front oil pump body sub-assembly.
        - **SST: 09308-00010**

INSPECTION

INSPECTION

1. **INSPECT FRONT OIL PUMP BODY SUB-ASSEMBLY**
    a. Turn the drive gear with 2 screwdrivers and make sure that it rotates smoothly.

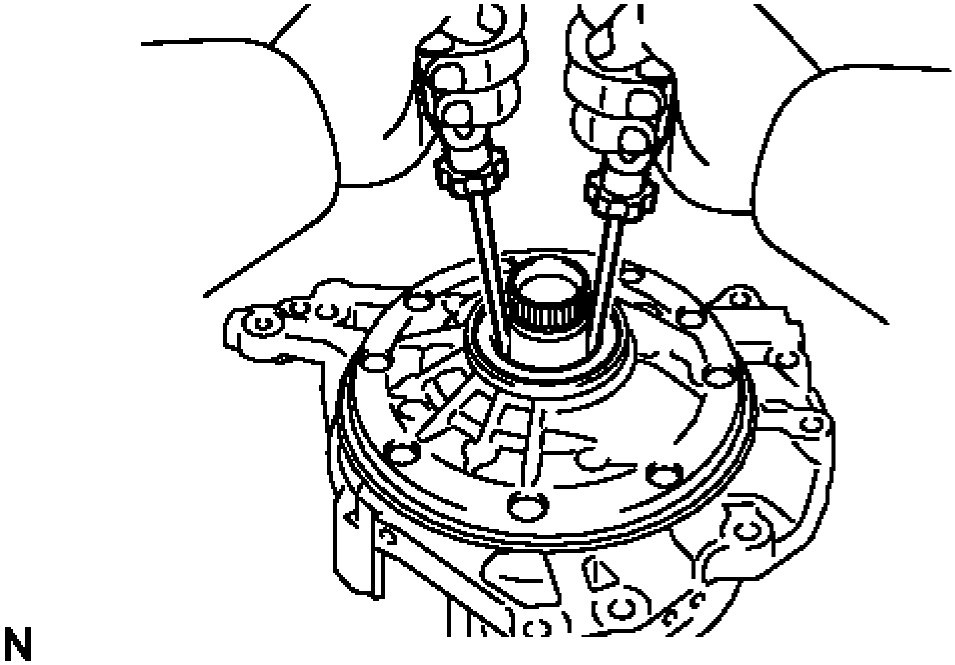

Fig. 419: Turning Drive Gear With Screwdrivers
Courtesy of TOYOTA MOTOR SALES, U.S.A., INC.

NOTE: Be careful not to damage the oil seal lip.

2. **INSPECT CLEARANCE OF FRONT OIL PUMP AND GEAR BODY SUB-ASSEMBLY**
    a. Push the driven gear to one side of the body.

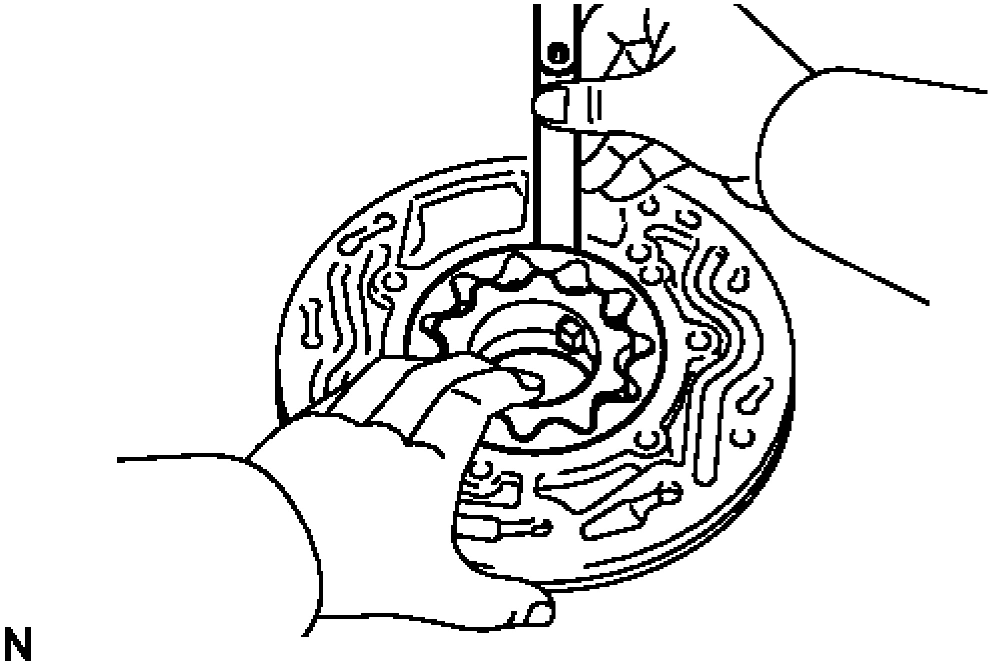

Fig. 420: Inspecting Clearance Of Front Oil Pump And Gear Body Sub-Assembly
Courtesy of TOYOTA MOTOR SALES, U.S.A., INC.

b. Using a feeler gauge, measure the clearance.

Standard clearance

0.08 to 0.15 mm (0.00315 to 0.00591 in.)

Maximum clearance

0.15 mm (0.00591 in.)

If the clearance is greater than the maximum, replace the oil pump body sub-assembly.

c. Using a straightedge and feeler gauge, measure the side clearance of both gears.

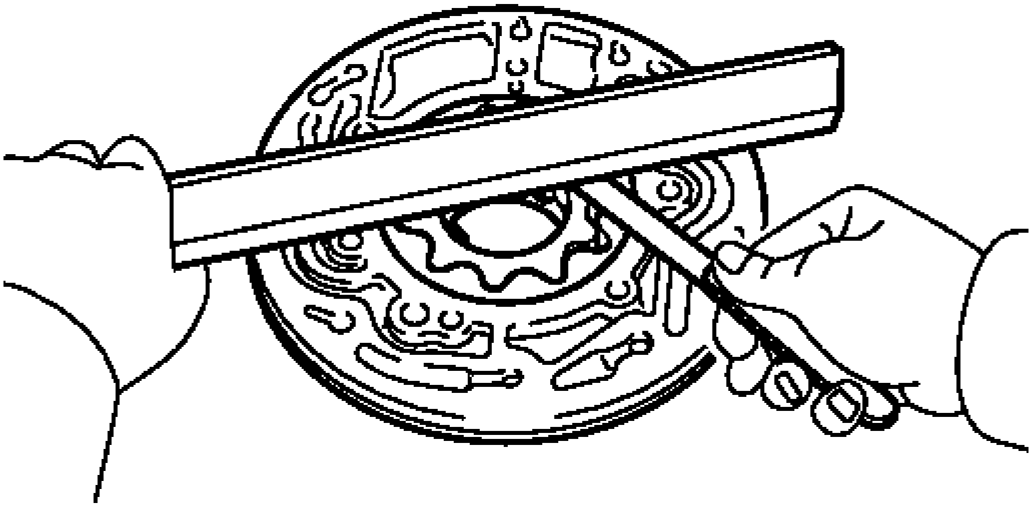

Fig. 421: Measuring Side Clearance Of Both Gears
Courtesy of TOYOTA MOTOR SALES, U.S.A., INC.

Standard side clearance

0.025 to 0.04 mm (0.000984 to 0.00157 in.)

Maximum side clearance

0.04 mm (0.00157 in.)

DRIVE GEAR THICKNESS

Mark	Thickness
1	11.547 to 11.555 mm (0.4546 to 0.4549 in.)
2	11.555 to 11.563 mm (0.4549 to 0.4552 in.)
	11.564 to 11.571

3	mm (0.4553 to 0.4556 in.)
4	11.572 to 11.579 mm (0.4556 to 0.4559 in.)
5	11.580 to 11.587 mm (0.4559 to 0.4562 in.)

DRIVEN GEAR THICKNESS

Mark	Thickness
1	11.547 to 11.555 mm (0.4546 to 0.4549 in.)
2	11.555 to 11.563 mm (0.4549 to 0.4552 in.)
3	11.564 to 11.571 mm (0.4553 to 0.4556 in.)
4	11.572 to 11.579 mm (0.4556 to 0.4559 in.)
5	11.580 to 11.587 mm

	(0.4559 to 0.4562 in.)

3. **INSPECT FRONT OIL PUMP BODY SUB-ASSEMBLY**
    a. Using a dial indicator, measure the inside diameter of the oil pump body bushing.

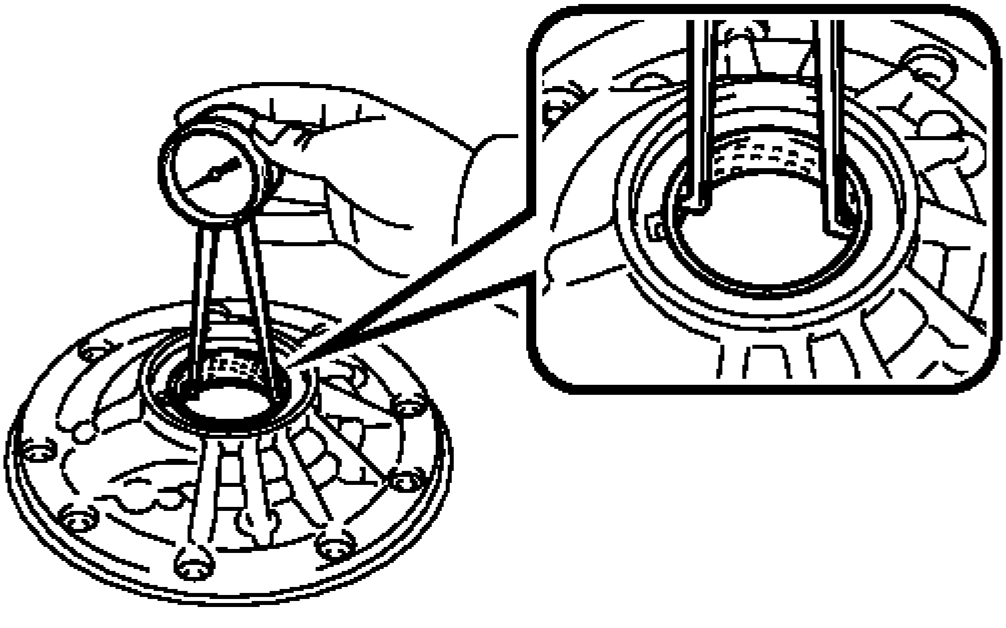

Fig. 422: Measuring Inside Diameter Of Oil Pump Body Bushing
Courtesy of TOYOTA MOTOR SALES, U.S.A., INC.

Standard inside diameter

43.113 to 43.138 mm (1.6974 to 1.6983 in.)

Maximum inside diameter

43.188 mm (1.7003 in.)

If the inside diameter is greater than the maximum, replace the front oil pump body sub-assembly.

4. **INSPECT STATOR SHAFT ASSEMBLY**
    a. Using a dial indicator, measure the inside diameter of the oil pump body bushing.

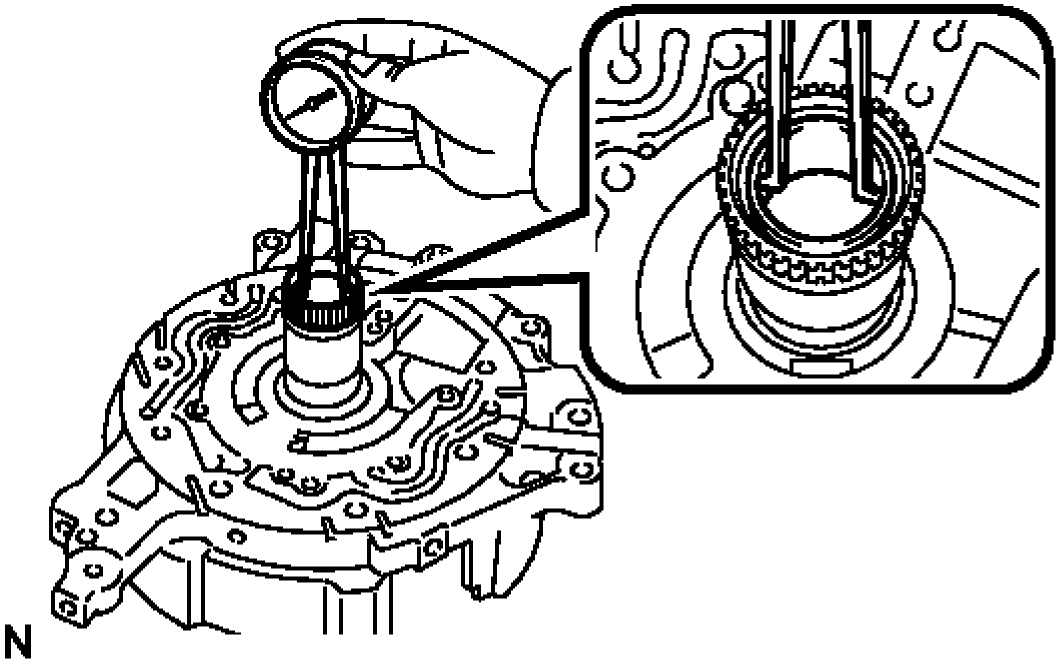

Fig. 423: Measuring Inside Diameter Of Oil Pump Body Bushing
Courtesy of TOYOTA MOTOR SALES, U.S.A., INC.

Standard inside diameter

22.500 to 22.526 mm (0.8858 to 0.8868 in.)

Maximum inside diameter

22.570 mm (0.8886 in.)

If the inside diameter is greater than the maximum, replace the stator shaft assembly.

REASSEMBLY

REASSEMBLY

1. **INSTALL FRONT OIL PUMP OIL SEAL**
    a. Using SST and a hammer, install a new front oil pump oil seal to the front oil pump body sub-assembly.

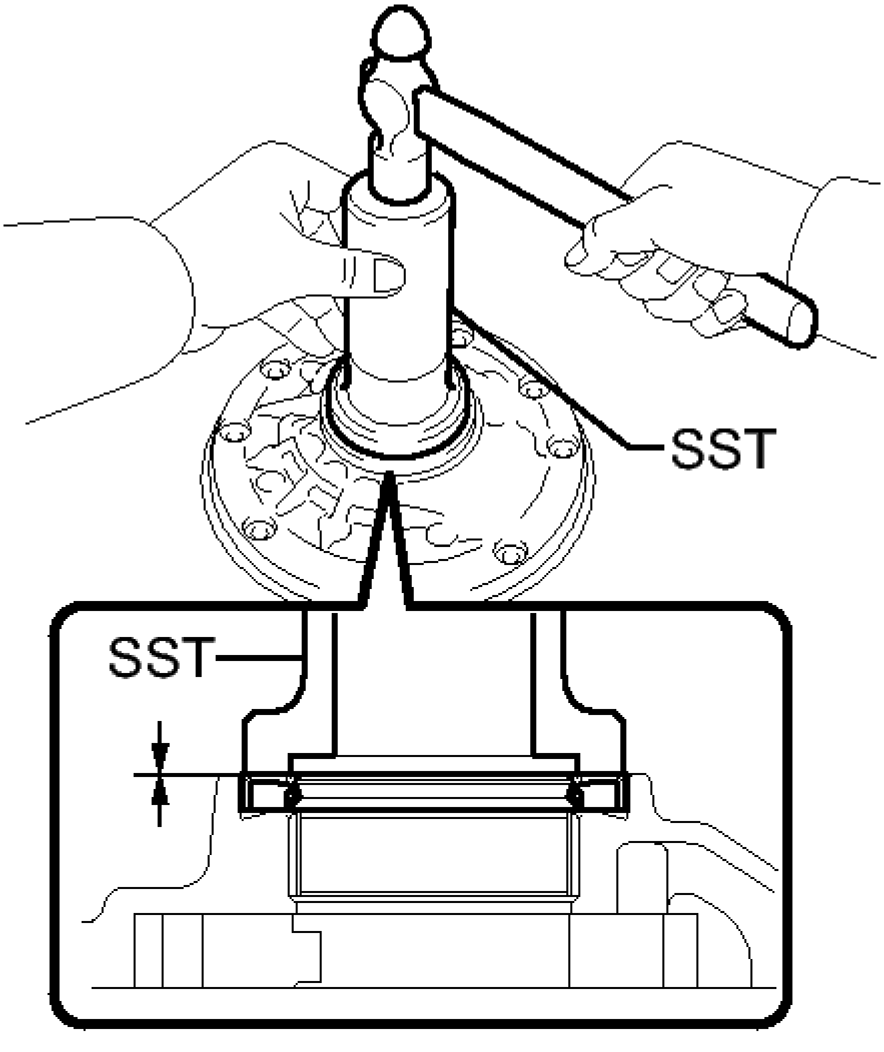

Fig. 424: Installing Front Oil Pump Oil Seal
Courtesy of TOYOTA MOTOR SALES, U.S.A., INC.

- **SST: 09350-32014**
  09351-32140

Oil seal driven in depth

-0.25 to 0.25 mm (-0.00984 to 0.00984 in.)

b. Coat the lip of the front oil pump oil seal with MP grease.

2. **INSTALL FRONT OIL PUMP BODY O-RING**
   a. Coat a new O-ring with ATF and install it to the front oil pump body sub-assembly.

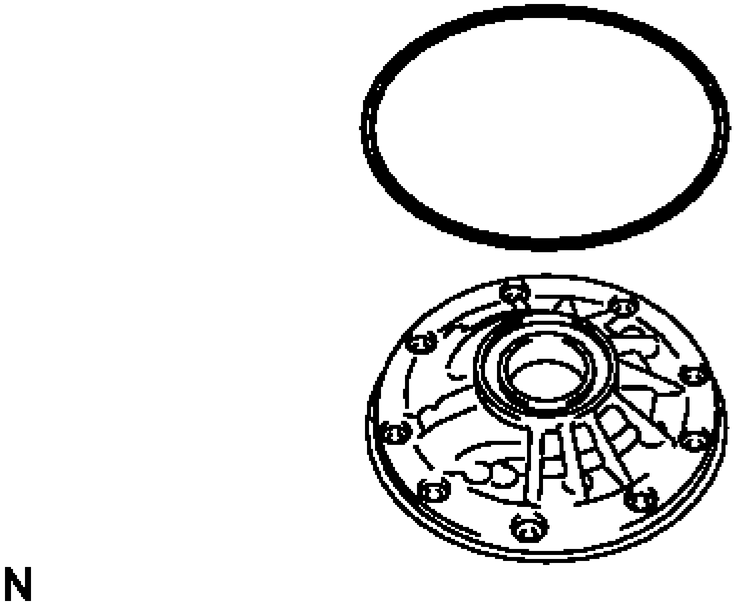

Fig. 425: Identifying O-Ring And Oil Pump Body
Courtesy of TOYOTA MOTOR SALES, U.S.A., INC.

NOTE: Ensure that the O-ring is not twisted.

3. **INSTALL FRONT OIL PUMP DRIVEN GEAR**
    a. Coat the front oil pump driven gear with ATF and install it to the front oil pump body sub-assembly with the marked side facing up.

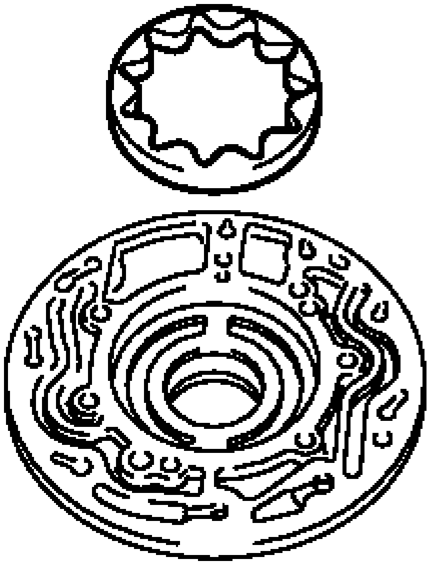

Fig. 426: Identifying Front Oil Pump Driven Gear
Courtesy of TOYOTA MOTOR SALES, U.S.A., INC.

4. **INSTALL FRONT OIL PUMP DRIVE GEAR**
    a. Coat the front oil pump drive gear with ATF, and install it to the front oil pump body sub-assembly with the marked side facing up.

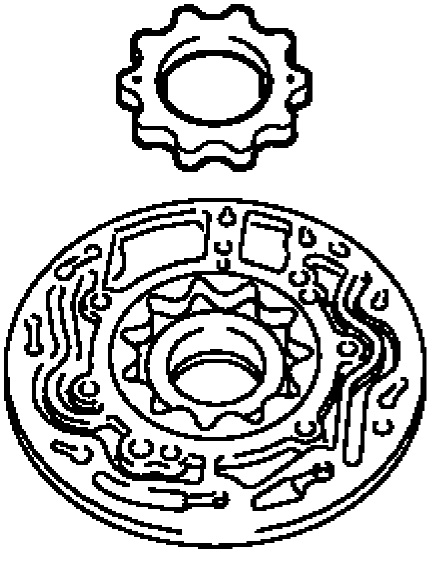

Fig. 427: Identifying Front Oil Pump Drive Gear
Courtesy of TOYOTA MOTOR SALES, U.S.A., INC.

5. **INSTALL STATOR SHAFT ASSEMBLY**
    a. Align each knock pin of the stator shaft assembly with the holes in the front oil pump body sub-assembly and install the stator shaft assembly to the front oil pump body sub-assembly.

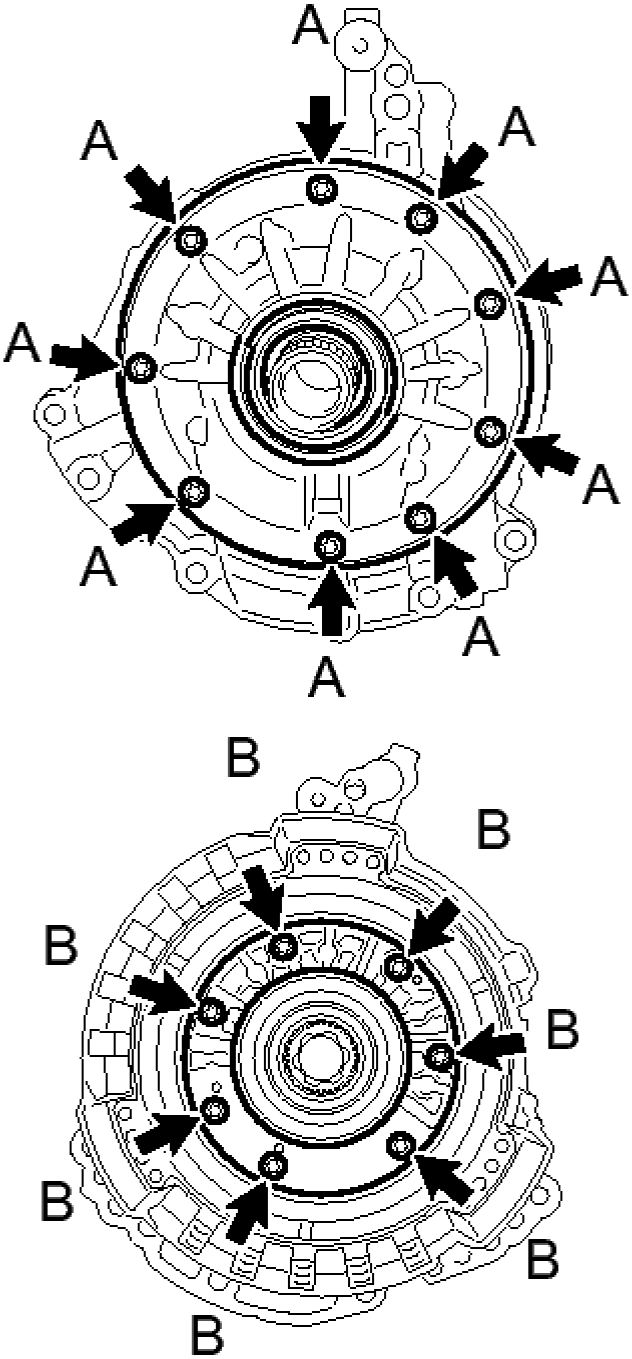
A
A
A
A
A
A
A
A
A
B
B
B
B
B
B
B
B
N

Fig. 428: Locating Stator Shaft Assembly Bolts
Courtesy of TOYOTA MOTOR SALES, U.S.A., INC.

b. Using a "TORX" socket wrench (T30), install the 16 bolts.

Torque: 9.3 N*m (95 kgf*cm, 82 in.*lbf)

Bolt Length

Bolt A

14 mm (0.551 in.)

Bolt B

26 mm (1.02 in.)

6. **INSPECT FRONT OIL PUMP BODY SUB-ASSEMBLY** See step 1

DIFFERENTIAL CASE

COMPONENTS

ILLUSTRATION

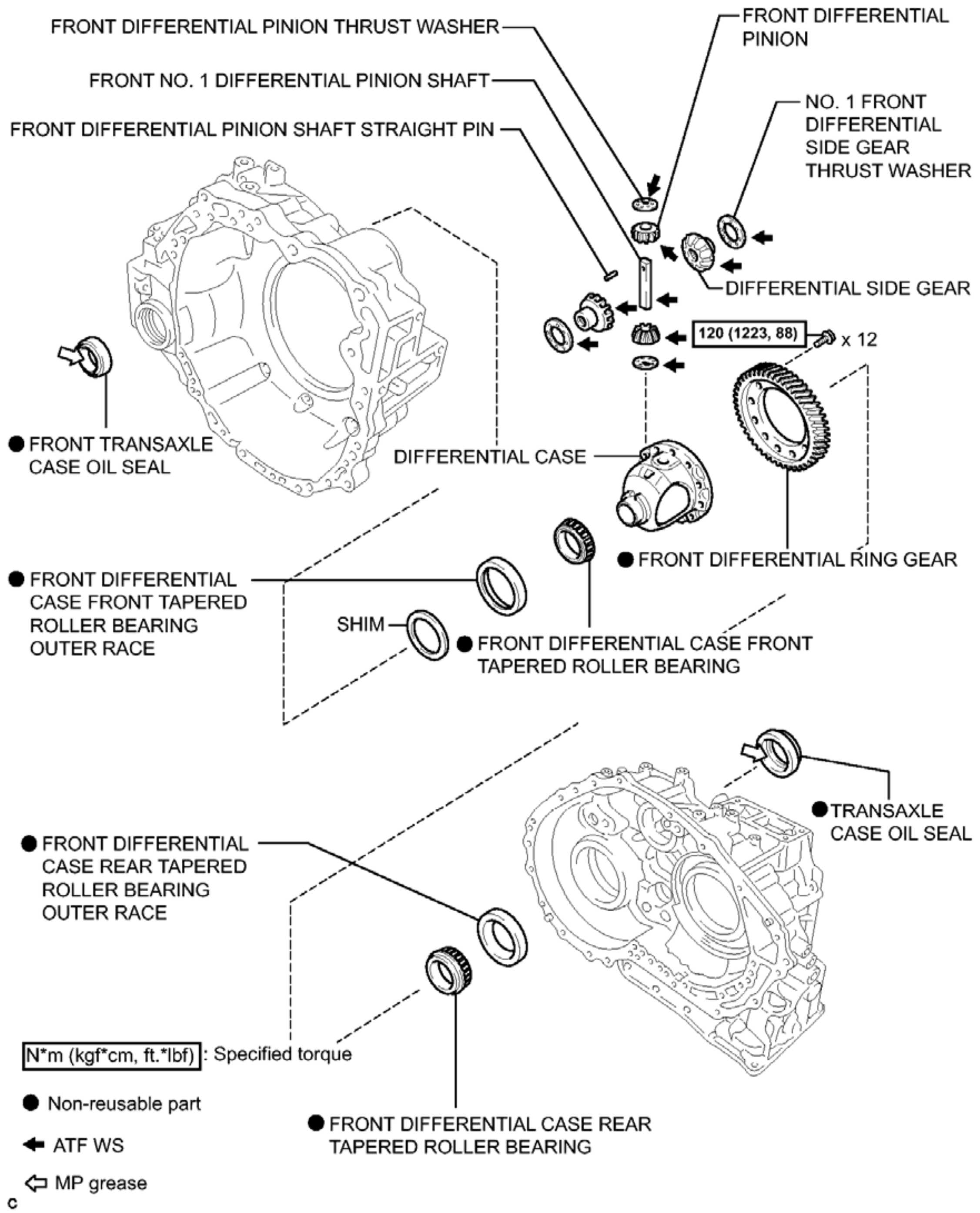
FRONT DIFFERENTIAL PINION THRUST WASHER
FRONT DIFFERENTIAL PINION
FRONT NO. 1 DIFFERENTIAL PINION SHAFT
FRONT DIFFERENTIAL PINION SHAFT STRAIGHT PIN
NO. 1 FRONT DIFFERENTIAL SIDE GEAR THRUST WASHER
DIFFERENTIAL SIDE GEAR
120 (1223, 88)
x 12
● FRONT TRANSAXLE CASE OIL SEAL
DIFFERENTIAL CASE
● FRONT DIFFERENTIAL RING GEAR
● FRONT DIFFERENTIAL CASE FRONT TAPERED ROLLER BEARING OUTER RACE
SHIM
● FRONT DIFFERENTIAL CASE FRONT TAPERED ROLLER BEARING
● TRANSAXLE CASE OIL SEAL
● FRONT DIFFERENTIAL CASE REAR TAPERED ROLLER BEARING OUTER RACE
N*m (kgf*cm, ft.*lbf) : Specified torque
● Non-reusable part
● FRONT DIFFERENTIAL CASE REAR TAPERED ROLLER BEARING
🡸 ATF WS
⇦ MP grease
c

Fig. 429: Identifying Differential Case Replacement Components With Torque Specifications
Courtesy of TOYOTA MOTOR SALES, U.S.A., INC.

DISASSEMBLY

DISASSEMBLY

1. **REMOVE FRONT DIFFERENTIAL RING GEAR**

a. Put matchmarks on the front differential ring gear and differential case.

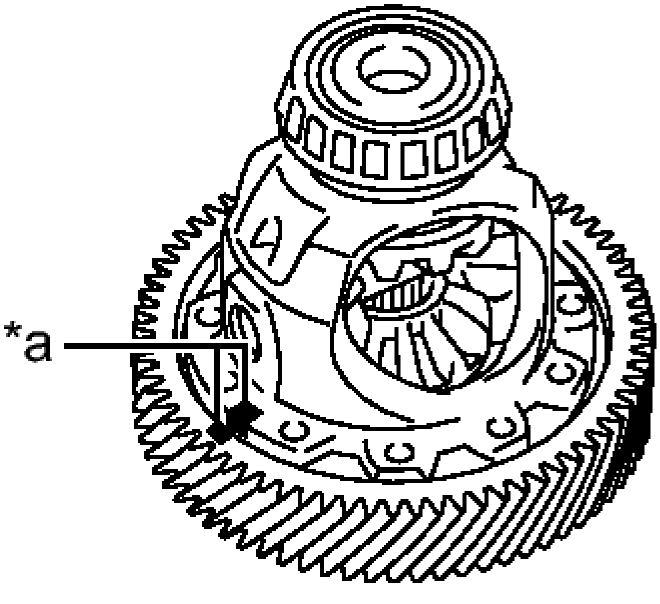

Fig. 430: Identifying Matchmarks On Front Differential Ring Gear And Differential Case
Courtesy of TOYOTA MOTOR SALES, U.S.A., INC.

TEXT IN ILLUSTRATION

*a	Matchmark

b. Remove the 12 bolts.

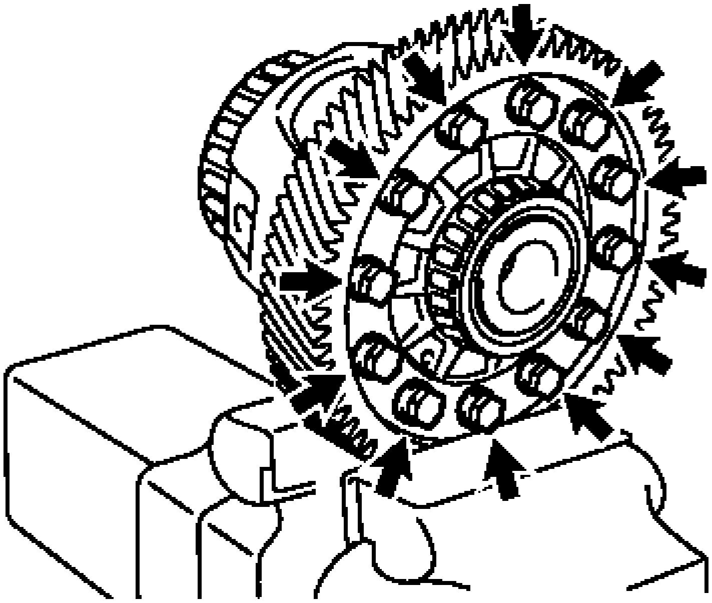

Fig. 431: Locating Bolts
Courtesy of TOYOTA MOTOR SALES, U.S.A., INC.

c. Using a plastic hammer, tap on the front differential ring gear to remove it from the differential case.

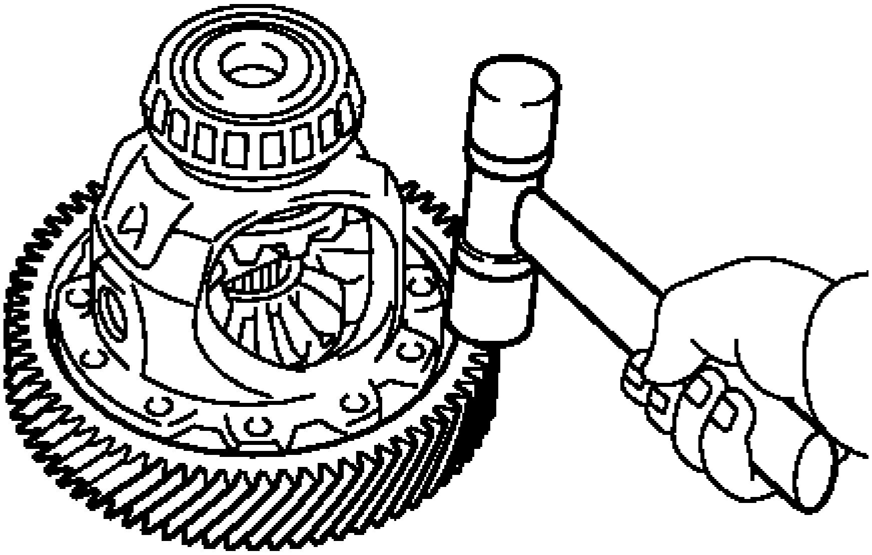

Fig. 432: Tapping On Front Differential Ring Gear

Courtesy of TOYOTA MOTOR SALES, U.S.A., INC.

2. **REMOVE FRONT DIFFERENTIAL CASE FRONT TAPERED ROLLER BEARING**
    a. Using SST, remove the front differential case front tapered roller bearing from the differential case.

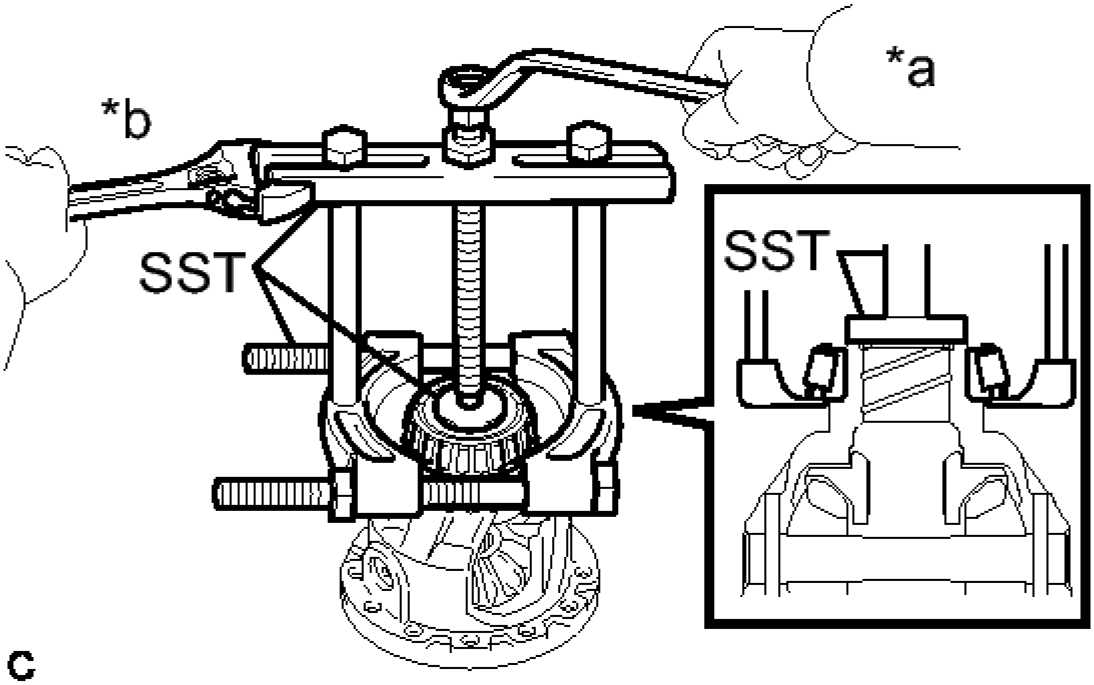

Fig. 433: Removing Front Differential Case Front Tapered Roller Bearing
Courtesy of TOYOTA MOTOR SALES, U.S.A., INC.

TEXT IN ILLUSTRATION

*a	Turn
*b	Hold

- **SST: 09950-00020**
- **SST: 09950-00030**
- **SST: 09950-60010**
  09951-00480

    b. Using SST, remove the front differential case front tapered roller bearing outer race and shim from the transaxle housing.

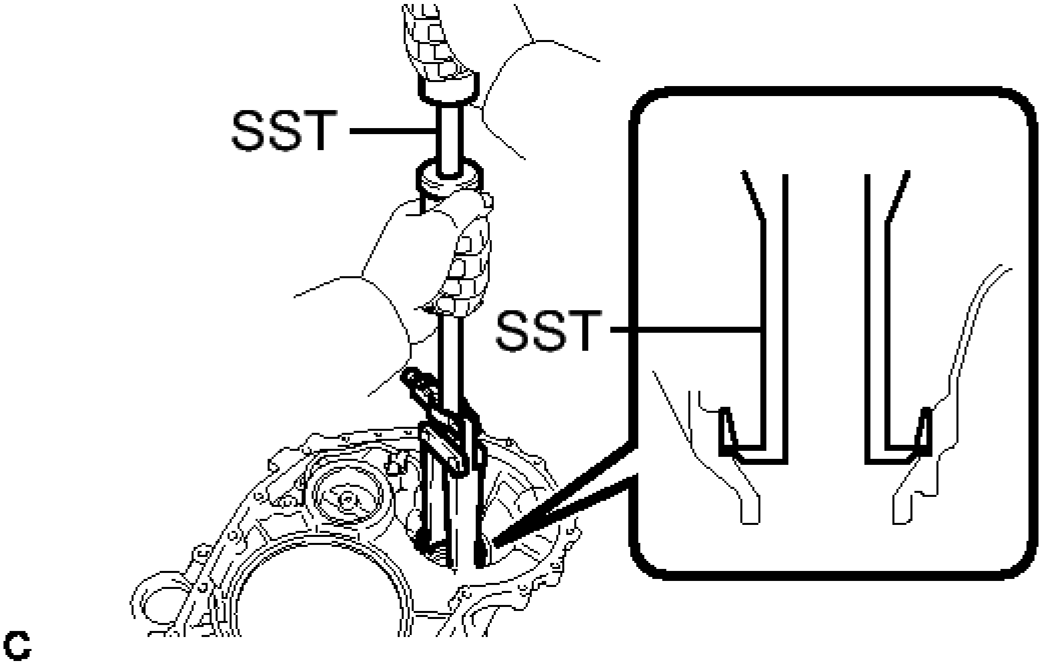

Fig. 434: Removing Front Differential Case Front Tapered Roller Bearing Outer Race And Shim From Transaxle Housing
Courtesy of TOYOTA MOTOR SALES, U.S.A., INC.

- **SST: 09308-00010**

3. **REMOVE FRONT DIFFERENTIAL CASE REAR TAPERED ROLLER BEARING**
    a. Using SST, remove the front differential case rear tapered roller bearing from the differential case.

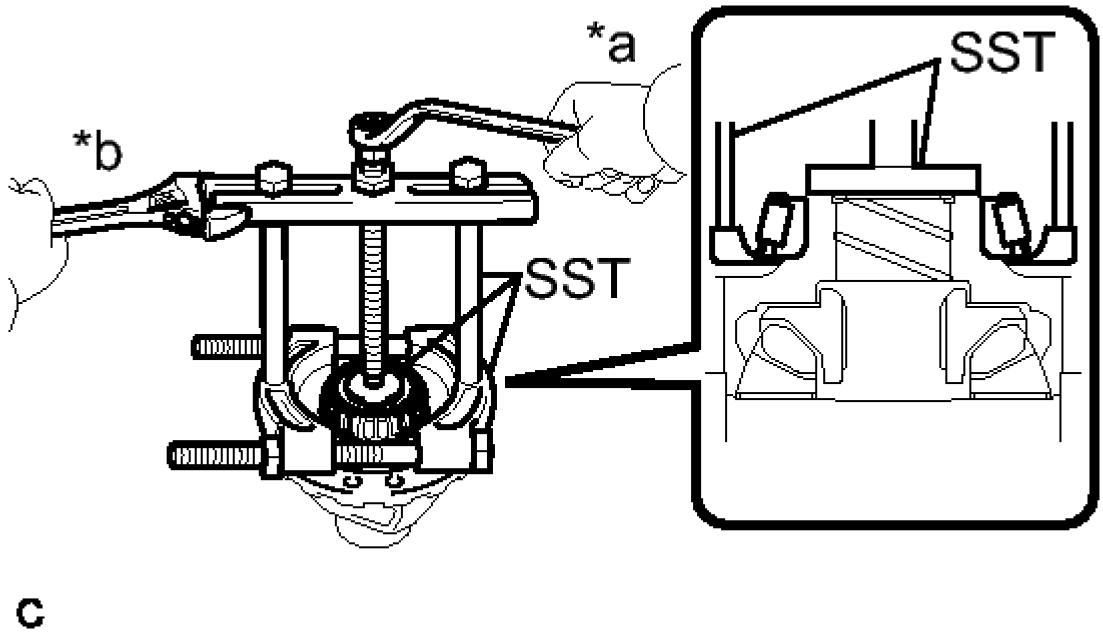

Fig. 435: Removing Front Differential Case Rear Tapered Roller Bearing
Courtesy of TOYOTA MOTOR SALES, U.S.A., INC.

TEXT IN ILLUSTRATION

*a	Turn
*b	Hold

- **SST: 09950-00020**
- **SST: 09950-00030**
- **SST: 09950-60010**

  09951-00480

b. Using SST, remove the front differential case rear tapered roller bearing outer race from the transaxle case.

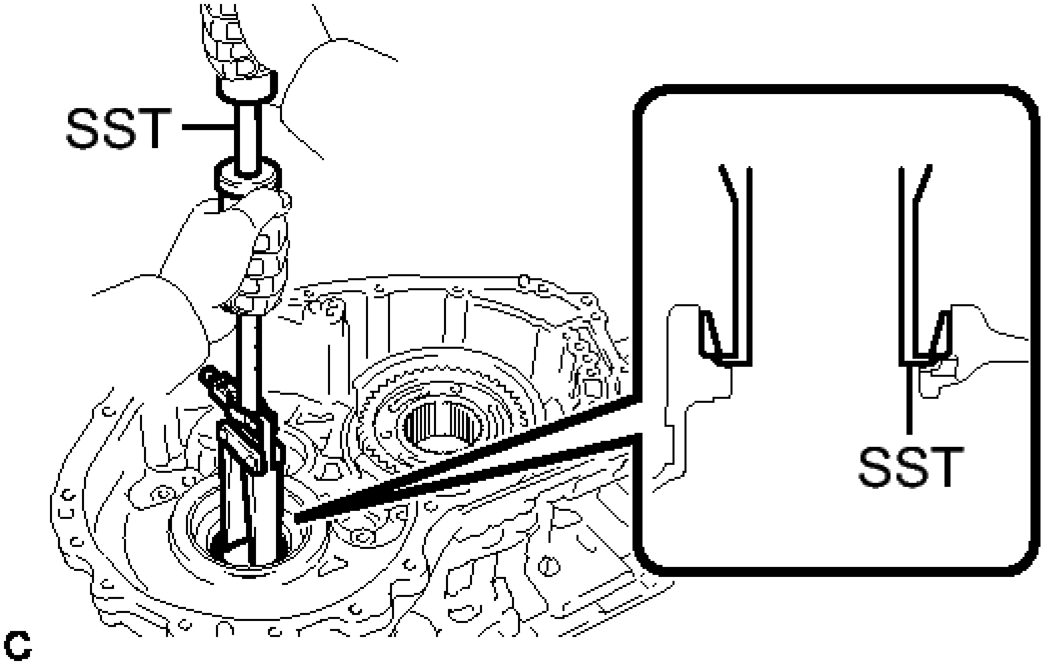

Fig. 436: Removing Front Differential Case Rear Tapered Roller Bearing Outer Race
Courtesy of TOYOTA MOTOR SALES, U.S.A., INC.

- **SST: 09308-00010**

4. **REMOVE FRONT DIFFERENTIAL PINION SHAFT STRAIGHT PIN**
   a. Using a pin punch (3 mm) and hammer, remove the straight pin.

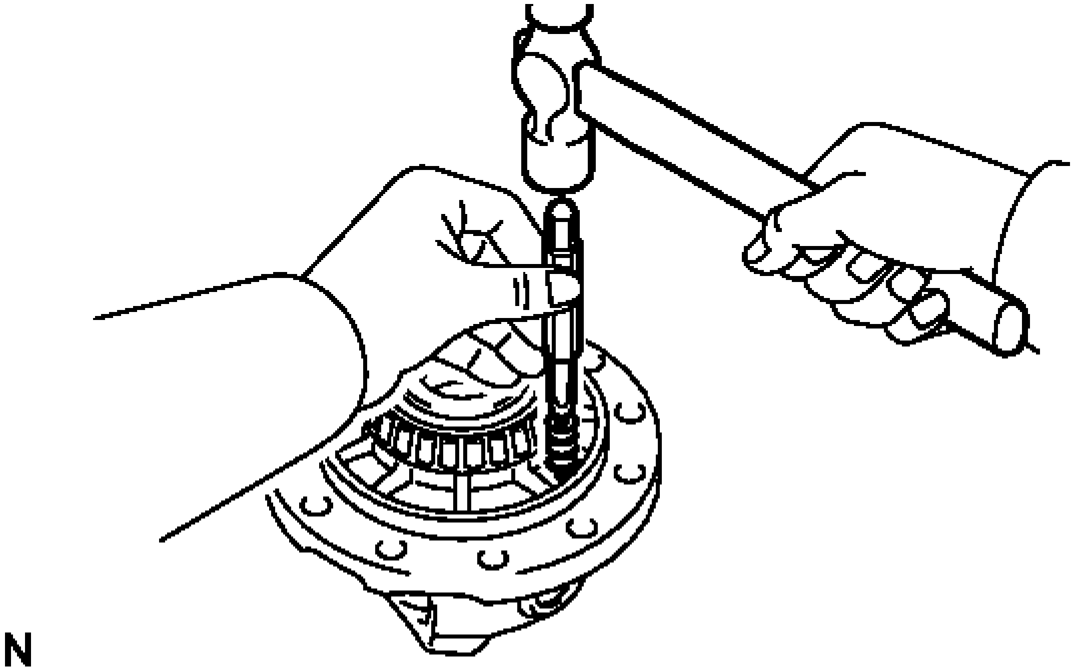

Fig. 437: Removing Straight Pin
Courtesy of TOYOTA MOTOR SALES, U.S.A., INC.

HINT:

Before removing the straight pin, unstake it with a pin punch.

5. **REMOVE FRONT NO. 1 DIFFERENTIAL PINION SHAFT**
   a. Remove the front No. 1 differential pinion shaft from the differential case.

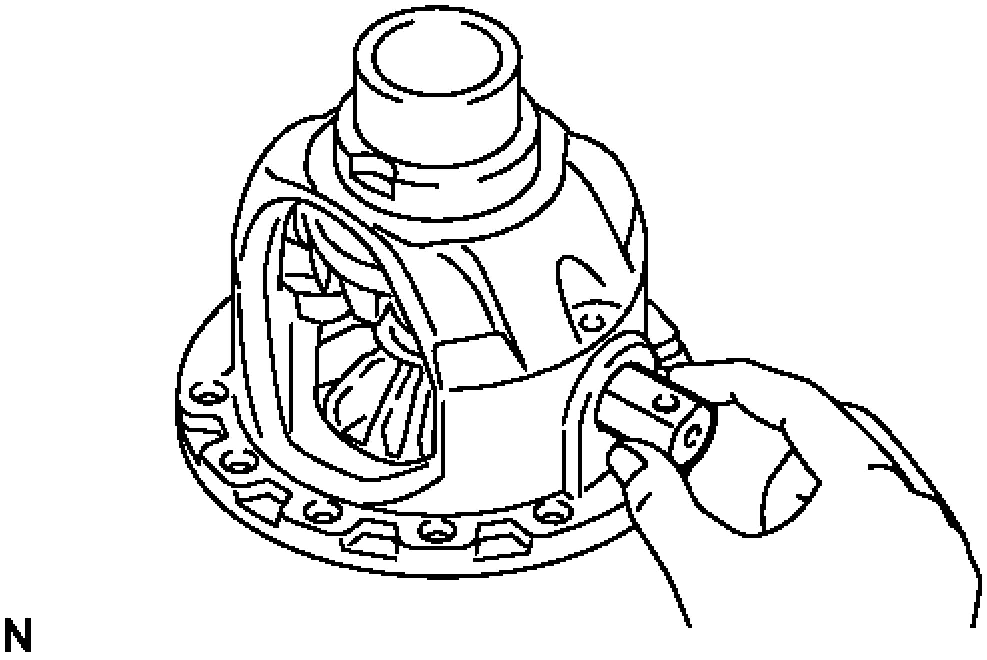

Fig. 438: Removing Front No. 1 Differential Pinion Shaft
Courtesy of TOYOTA MOTOR SALES, U.S.A., INC.

6. **REMOVE DIFFERENTIAL SIDE GEAR**
   a. Remove the 2 front differential pinions, 2 front differential pinion thrust washers, 2 differential side gears and 2 No. 1 front differential side gear thrust washers from the differential case.

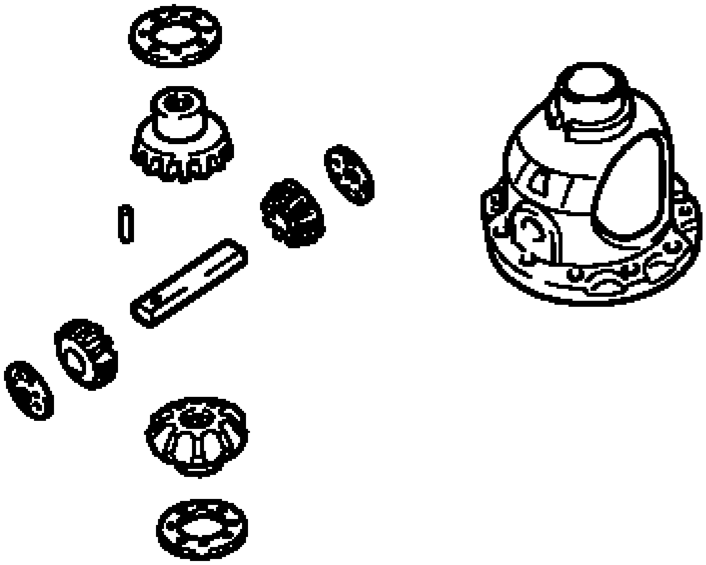

Fig. 439: Identifying Differential Side Gear
Courtesy of TOYOTA MOTOR SALES, U.S.A., INC.

7. **REMOVE FRONT TRANSAXLE CASE OIL SEAL**
   a. Using SST, remove the front transaxle case oil seal from the transaxle housing.

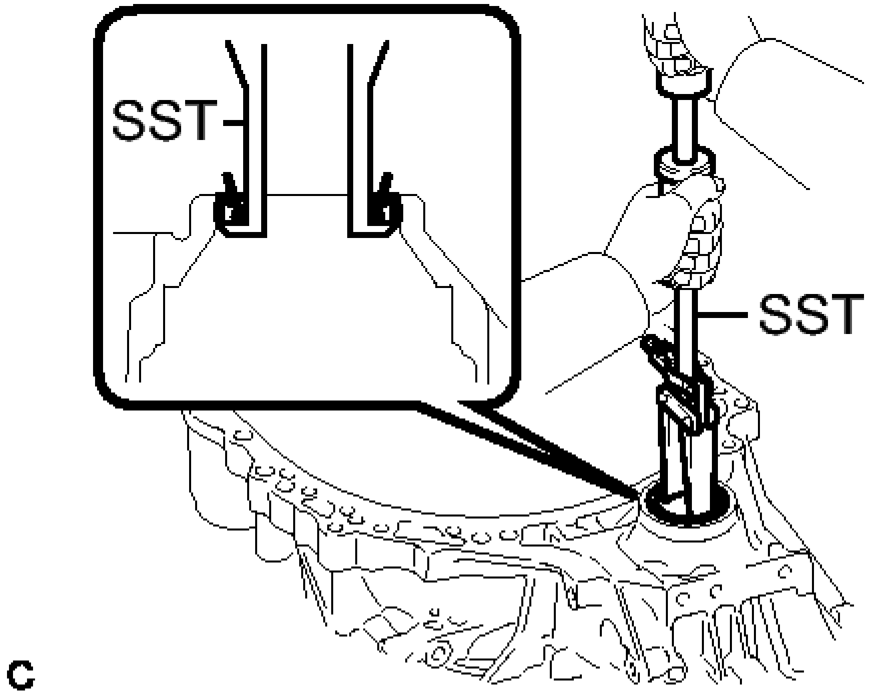

Fig. 440: Removing Front Transaxle Case Oil Seal From Transaxle Housing

Courtesy of TOYOTA MOTOR SALES, U.S.A., INC.

- **SST: 09308-00010**

8. **REMOVE TRANSAXLE CASE OIL SEAL**
   a. Using SST, remove the transaxle case oil seal from the transaxle case.

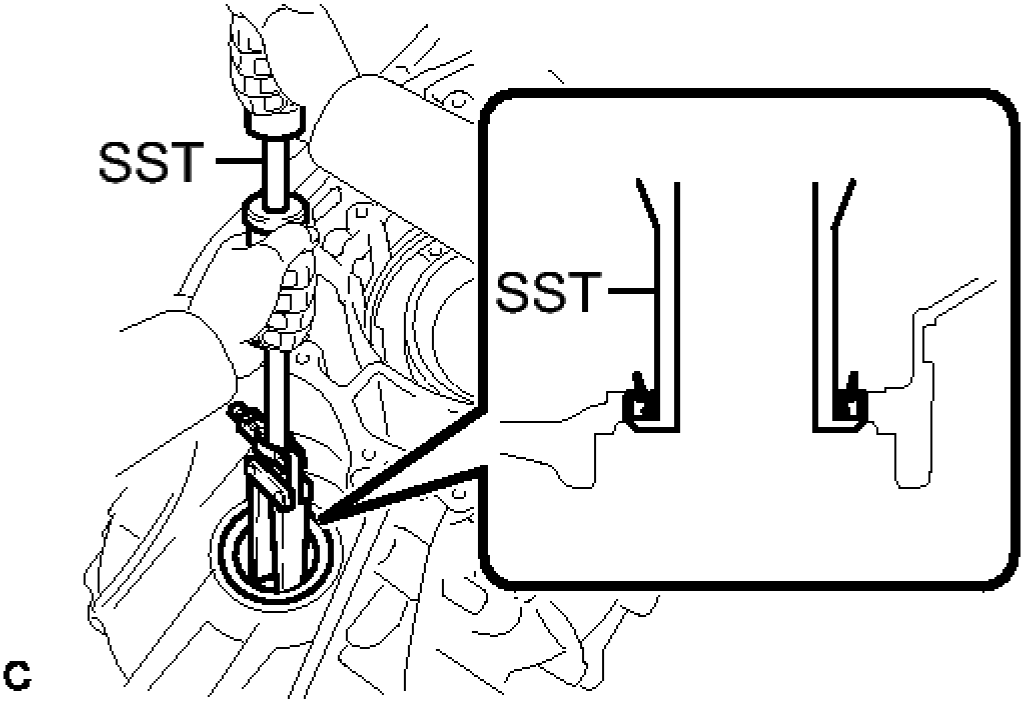

Fig. 441: Removing Transaxle Case Oil Seal From Transaxle Case
Courtesy of TOYOTA MOTOR SALES, U.S.A., INC.

- **SST: 09308-00010**

INSPECTION

INSPECTION

1. **INSPECT DIFFERENTIAL SIDE GEAR BACKLASH**
   a. Hold the differential case in a vise between aluminum plates.

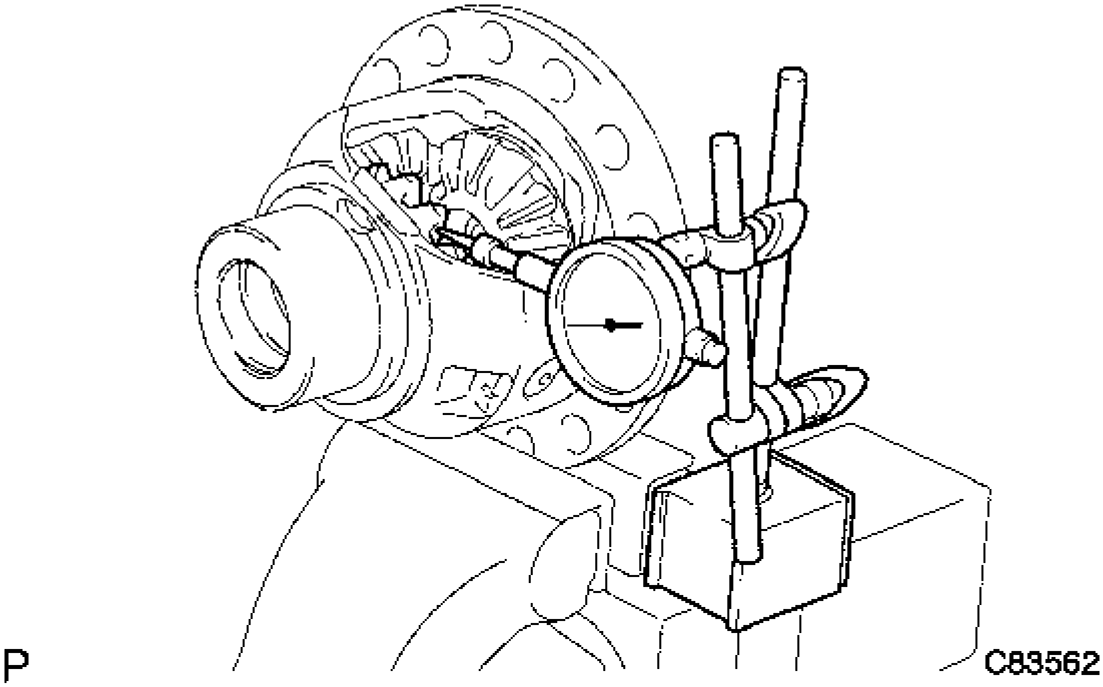

Fig. 442: Measuring Front Differential Side Gear Backlash
Courtesy of TOYOTA MOTOR SALES, U.S.A., INC.

NOTE: Do not overtighten the vise.

b. Place a dial indicator at a right angle to one of the side gear teeth.
c. Hold the pinion gear in the differential case and measure the backlash of the side gear.

Standard backlash

0.05 to 0.15 mm (0.00197 to 0.00591 in.)

THRUST WASHER THICKNESS

Thickness	Thickness
1.50 mm (0.0591 in.)	1.75 mm (0.0689 in.)
1.55 mm (0.0610 in.)	1.80 mm (0.0709 in.)
1.60 mm (0.0630 in.)	1.85 mm (0.0728 in.)
1.65 mm (0.0650 in.)	1.90 mm (0.0748 in.)

1.70 mm (0.0669 in.)	-

If the backlash is not within the standard range, select another side gear thrust washer.

REASSEMBLY

REASSEMBLY

1. **INSTALL DIFFERENTIAL SIDE GEAR**
    a. Coat the 2 differential side gears, 2 No. 1 front differential side gear thrust washers, 2 front differential pinions and 2 front differential pinion thrust washers with ATF and install them to the differential case.

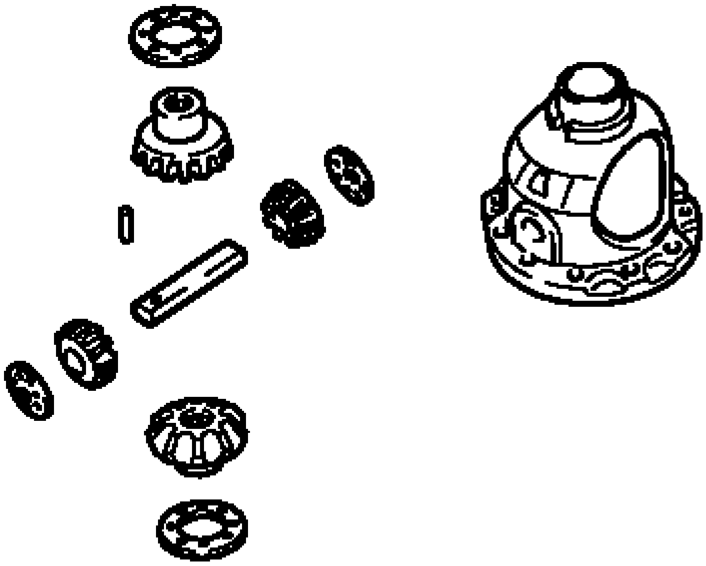

Fig. 443: Identifying Differential Side Gear
Courtesy of TOYOTA MOTOR SALES, U.S.A., INC.

2. **INSTALL FRONT NO. 1 DIFFERENTIAL PINION SHAFT**
    a. Coat the front No. 1 differential pinion shaft with ATF, and install it to the differential case.

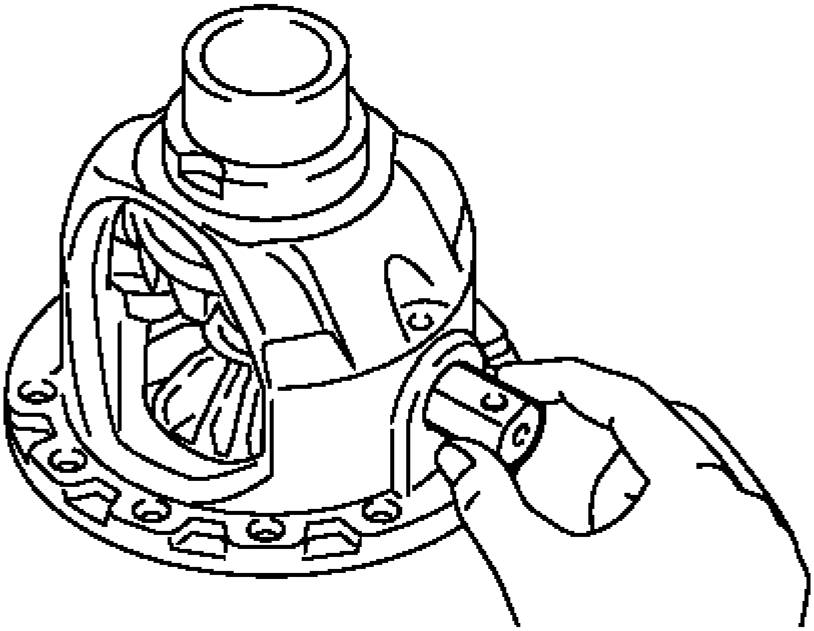

Fig. 444: Removing Front No. 1 Differential Pinion Shaft
Courtesy of TOYOTA MOTOR SALES, U.S.A., INC.

3. **INSPECT DIFFERENTIAL SIDE GEAR BACKLASH** See step 1
4. **INSTALL FRONT DIFFERENTIAL PINION SHAFT STRAIGHT PIN**
    a. Using a pin punch (3 mm) and hammer, install the front differential pinion shaft straight pin.

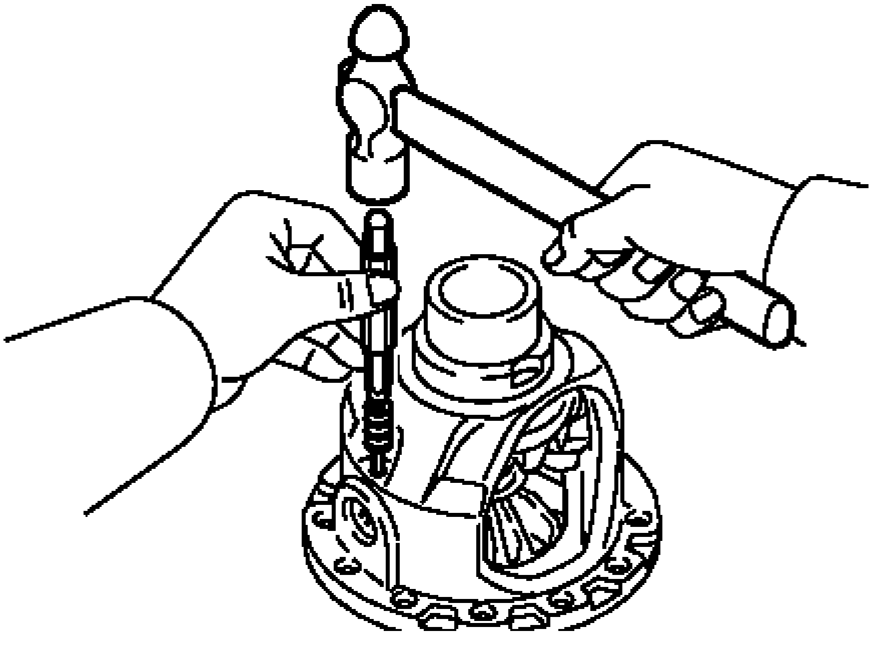

Fig. 445: Installing Pinion Shaft Straight Pin
Courtesy of TOYOTA MOTOR SALES, U.S.A., INC.

NOTE: Align the holes, and install the pinion shaft straight pin.

b. Using a chisel and hammer, stake the differential case.

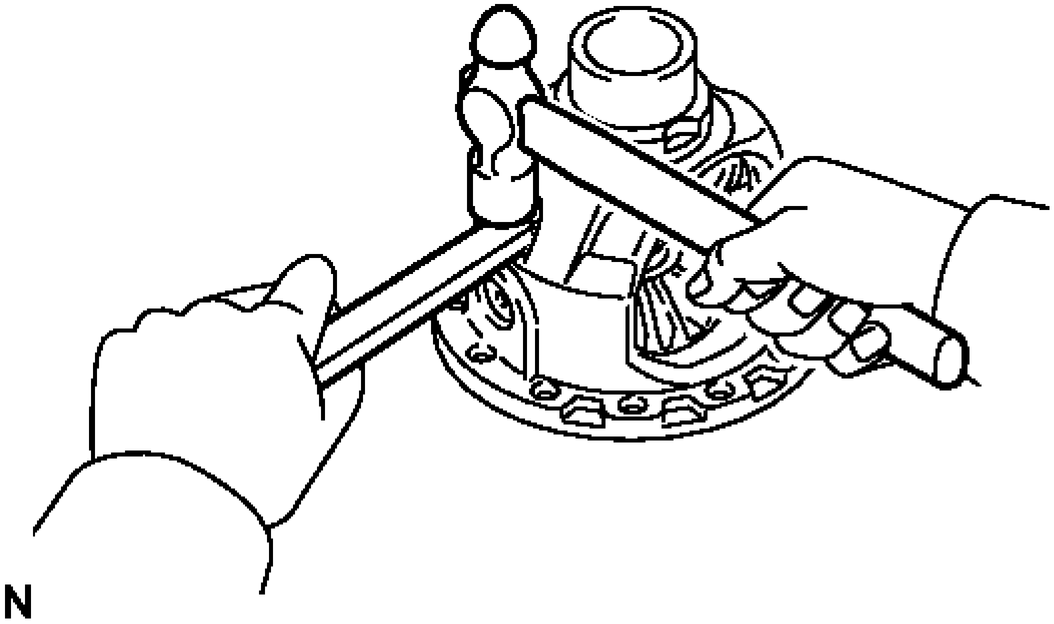

Fig. 446: Staking Differential Case
Courtesy of TOYOTA MOTOR SALES, U.S.A., INC.

NOTE: Stake the differential case after adjusting the backlash.

5. **INSTALL FRONT DIFFERENTIAL CASE REAR TAPERED ROLLER BEARING**
   a. Using SST and a press, install a new front differential case rear tapered roller bearing to the differential case.

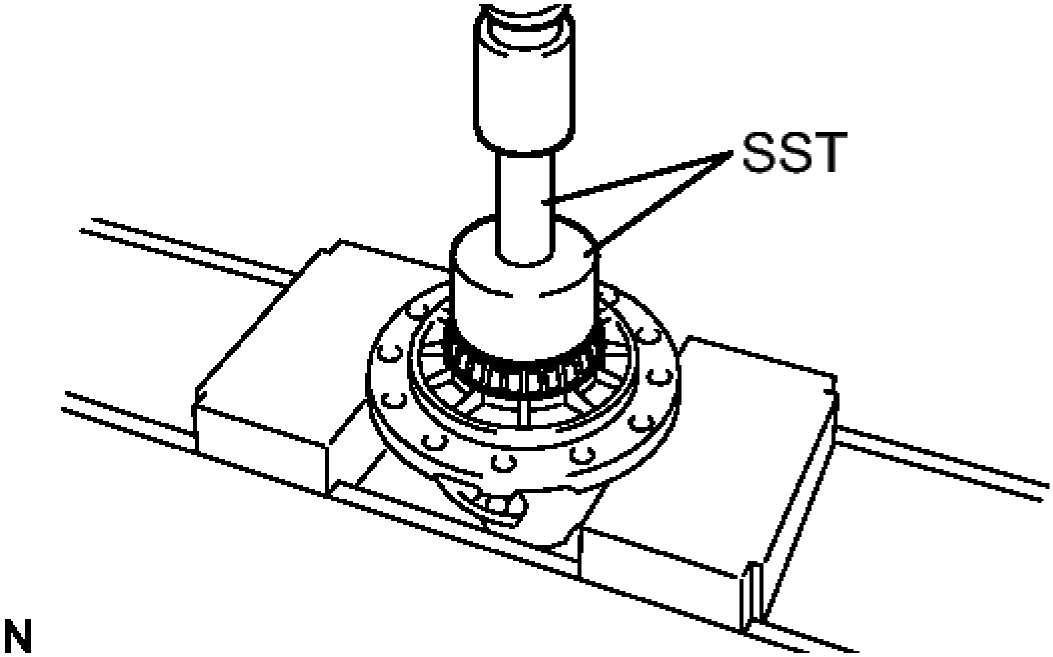

Fig. 447: Identifying Front Differential Case Rear Tapered Roller Bearing
Courtesy of TOYOTA MOTOR SALES, U.S.A., INC.

- **SST: 09726-36010**
- **SST: 09950-70010**
  09951-07100

NOTE: **Do not damage the bearing cage during bearing inner race installation.**

b. Using SST and a hammer, install a new front differential case rear tapered roller bearing outer race to the transaxle case.

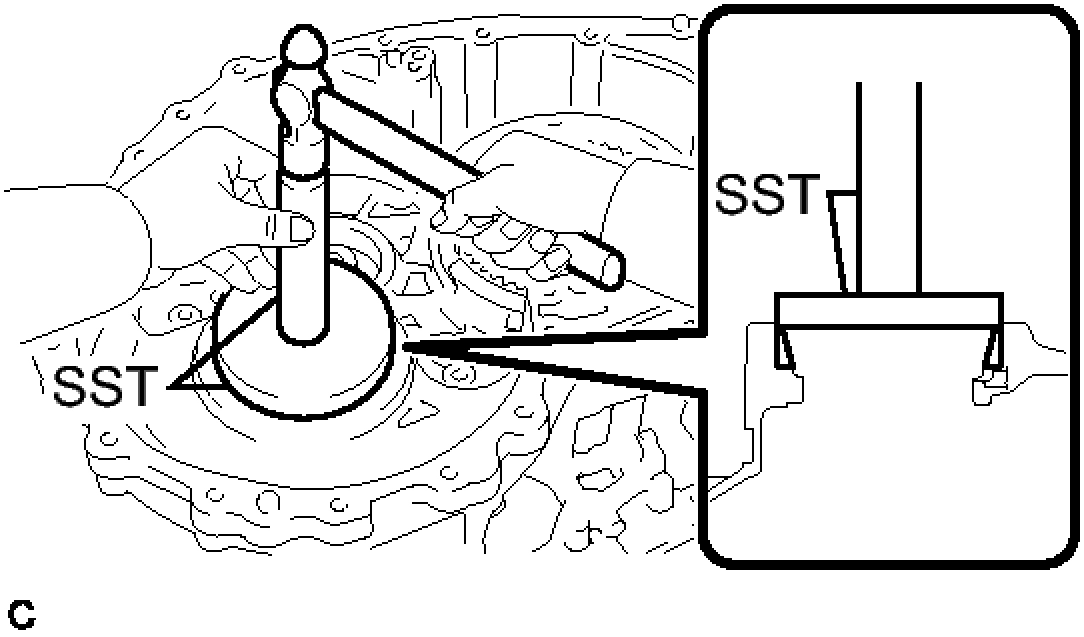

Fig. 448: Installing Front Differential Case Rear Tapered Roller Bearing Outer Race To Transaxle Case
Courtesy of TOYOTA MOTOR SALES, U.S.A., INC.

- **SST: 09950-60020**
  09951-00890
- **SST: 09950-70010**
  09951-07150

NOTE: **Ensure that there is no clearance between the bearing and transaxle case.**

6. **INSTALL FRONT DIFFERENTIAL CASE FRONT TAPERED ROLLER BEARING**
   a. Using SST and a press, install a new front differential case front tapered roller bearing to the differential case.

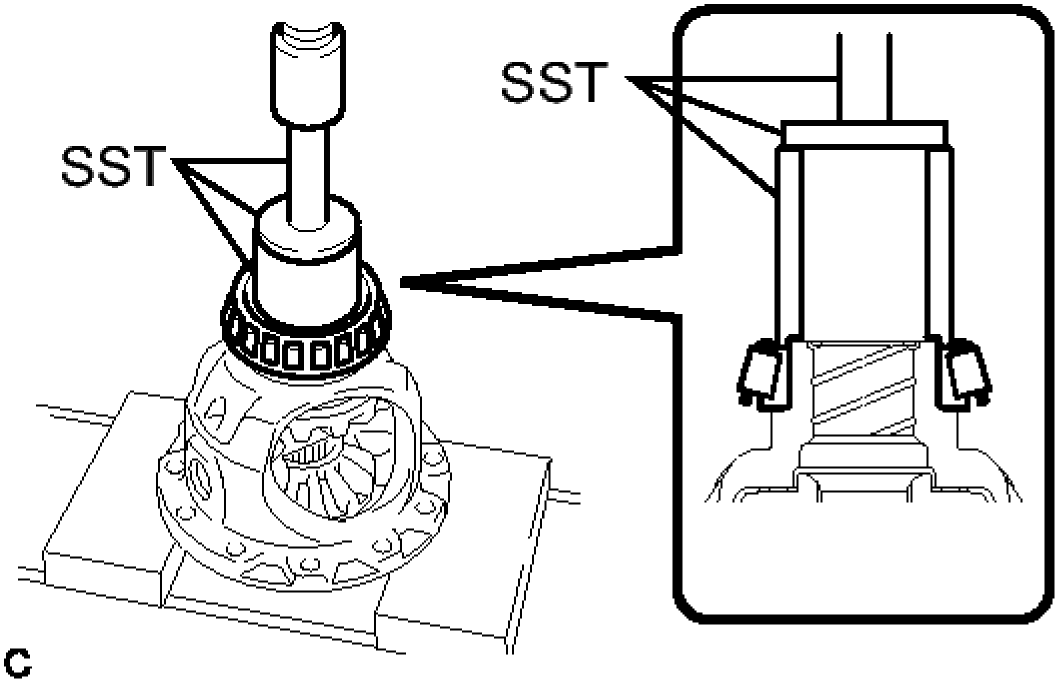

Fig. 449: Identifying Front Differential Case Front Tapered Roller Bearing
Courtesy of TOYOTA MOTOR SALES, U.S.A., INC.

- **SST: 09710-30012**
  09710-04081
- **SST: 09950-60010**
  09951-00480
- **SST: 09950-70010**
  09951-07100

NOTE: **Do not damage the bearing cage during bearing inner race installation.**

b. Install the shim to the transaxle housing.

c. Using SST and a hammer, install a new front differential case front tapered roller bearing outer race to the transaxle housing.

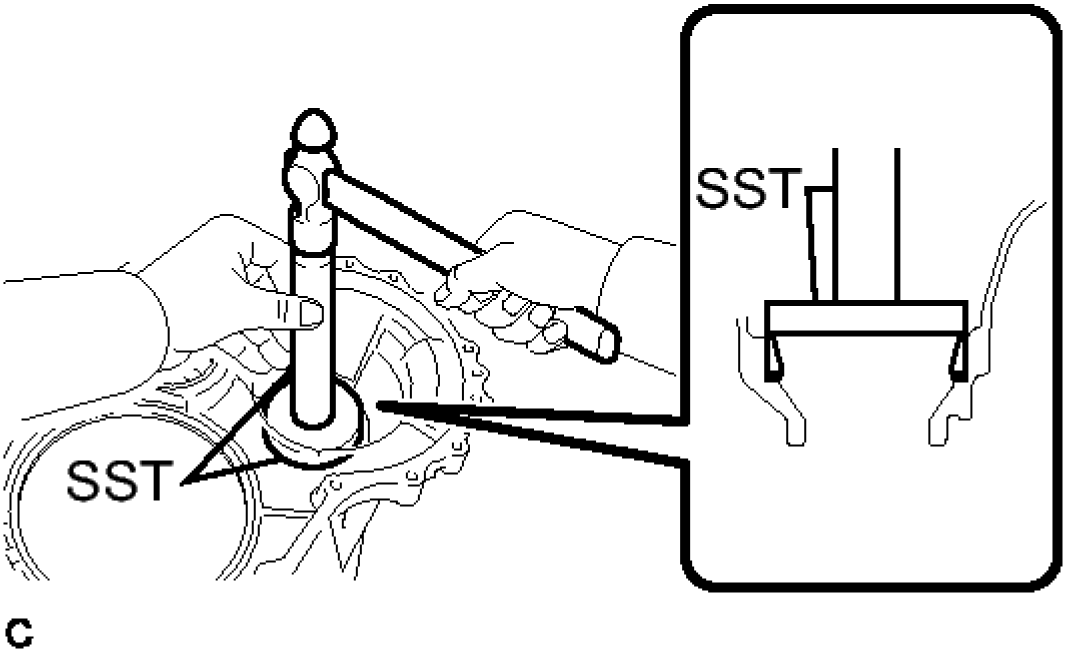

Fig. 450: Installing Front Differential Case Front Tapered Roller Bearing Outer Race To Transaxle Housing
Courtesy of TOYOTA MOTOR SALES, U.S.A., INC.

- **SST: 09950-60020**
  09951-00890
- **SST: 09950-70010**
  09951-07150

NOTE: **Ensure that there is no clearance between the bearing and transaxle housing.**

7. **ADJUST DIFFERENTIAL SIDE BEARING PRELOAD**
   a. Install the differential assembly to the transaxle case.

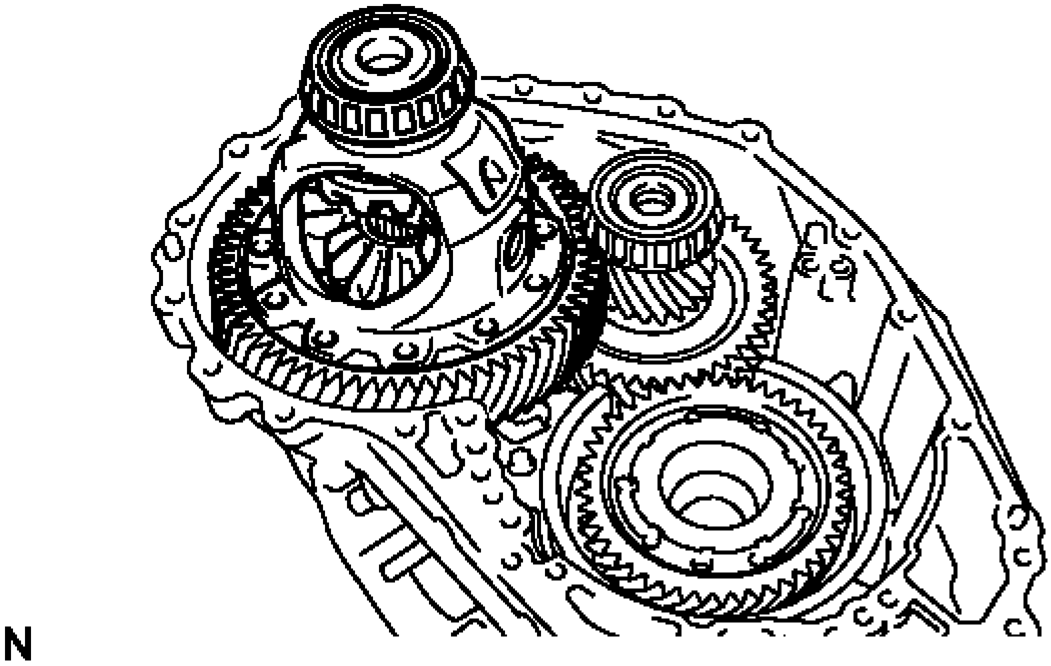

Fig. 451: Identifying Differential Case Sub-Assembly
Courtesy of TOYOTA MOTOR SALES, U.S.A., INC.

b. Clean the contact surfaces of the transaxle case and transaxle housing.
c. Install the transaxle housing to the transaxle case with the 20 bolts.

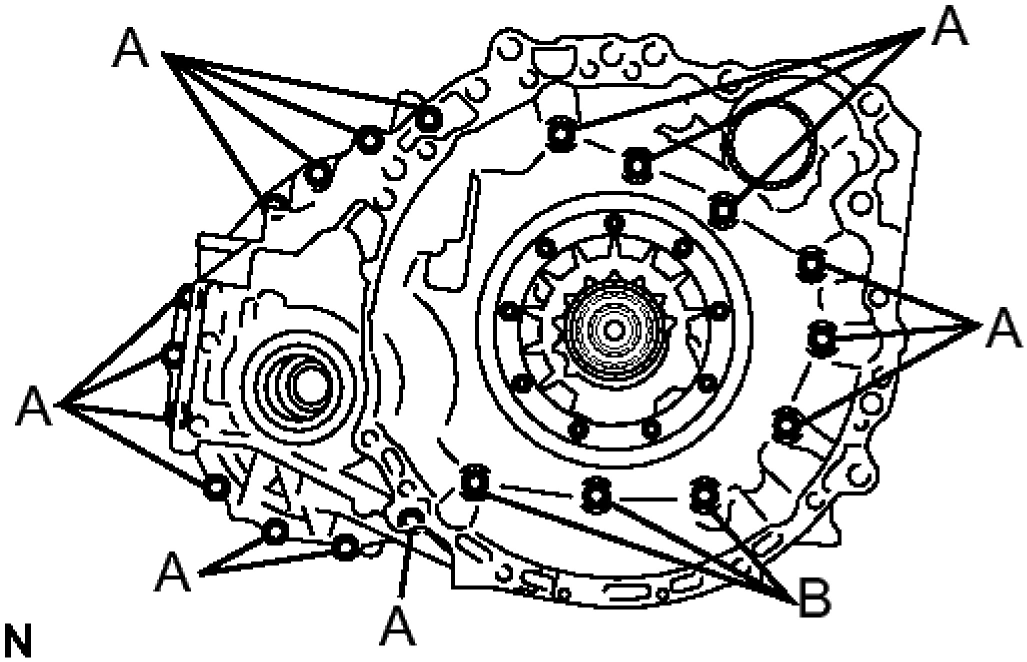

Fig. 452: Identifying Transaxle Case Bolts

Courtesy of TOYOTA MOTOR SALES, U.S.A., INC.

Bolt A

Torque: 31 N*m (316 kgf*cm, 23 ft.*lbf)

Bolt B

Torque: 23 N*m (234 kgf*cm, 17 ft.*lbf)

d. Using SST, turn the differential assembly right and left 2 or 3 times to settle the bearings.

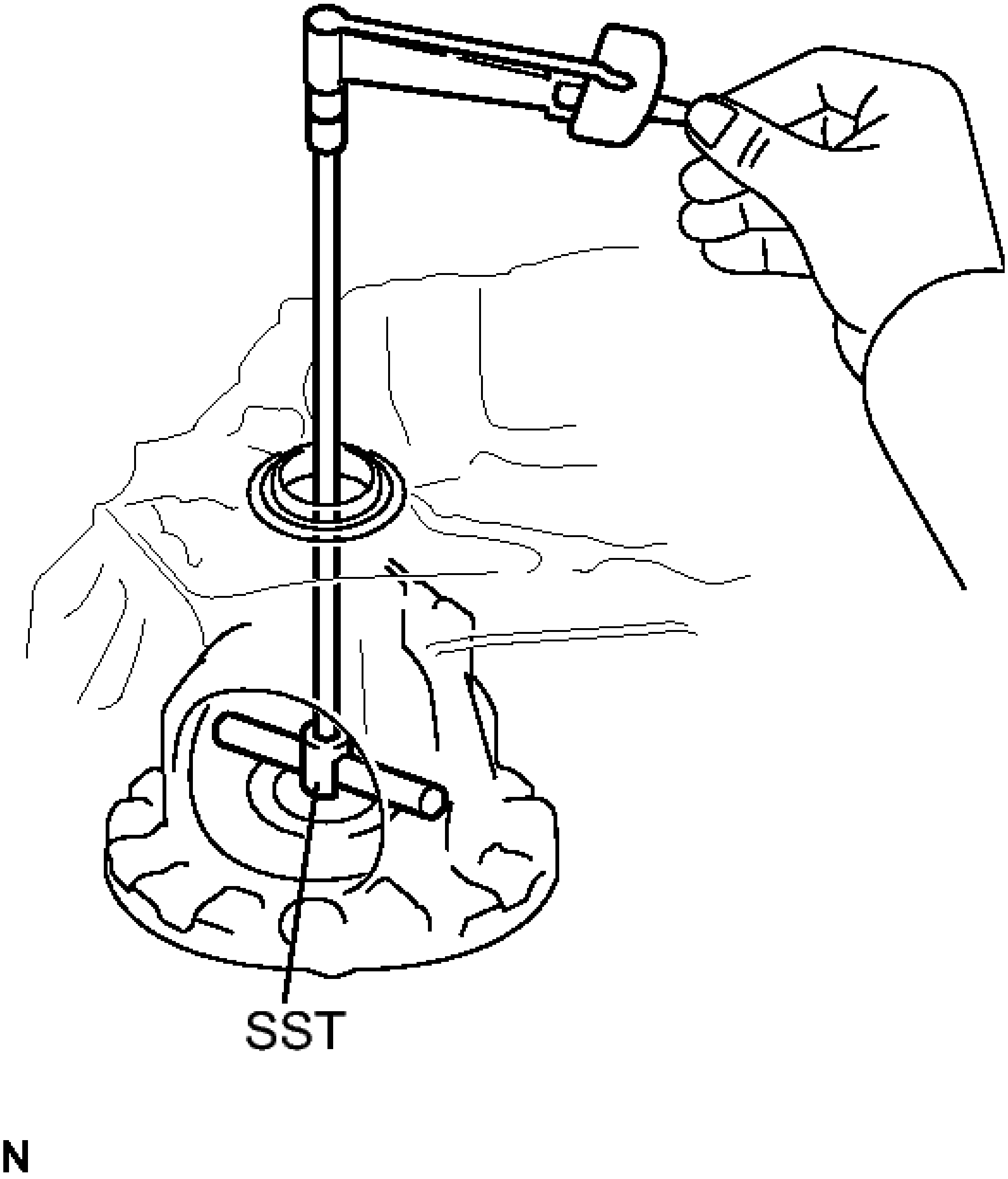

Fig. 453: Measuring Turning Torque Of Counter Driven Gear
Courtesy of TOYOTA MOTOR SALES, U.S.A., INC.

- **SST: 09564-33010**

e. Using SST and a torque wrench, measure the turning torque of the differential side bearing while rotating SST at 10 rpm.

- **SST: 09564-33010**

Turning torque

1.1 to 1.9 N*m (11 to 19 kgf*cm, 10 to 17 in.*lbf)

If the turning torque is not within the specified range, refer to the table below to select a shim so that the turning torque is within the specified range.

SHIM THICKNESS: MM (IN.)

Thickness	Thickness	Thickness	Thickness
2.000 (0.0787)	2.225 (0.0876)	2.450 (0.0965)	2.675 (0.105)
2.025 (0.0797)	2.250 (0.0886)	2.475 (0.0974)	2.700 (0.106)
2.050 (0.0807)	2.275 (0.0896)	2.500 (0.0984)	2.725 (0.107)
2.075 (0.0817)	2.300 (0.0906)	2.525 (0.0994)	2.750 (0.108)
2.100 (0.0827)	2.325 (0.0915)	2.550 (0.100)	2.775 (0.109)
2.125 (0.0837)	2.350 (0.0925)	2.575 (0.101)	2.800 (0.110)
2.150 (0.0846)	2.375 (0.0935)	2.600 (0.102)	2.825 (0.111)
2.175 (0.0856)	2.400 (0.0945)	2.625 (0.103)	2.850 (0.112)
2.200 (0.0866)	2.425 (0.0955)	2.650 (0.104)	2.875 (0.113)

f. Remove the 20 bolts and transaxle housing from the transaxle case.

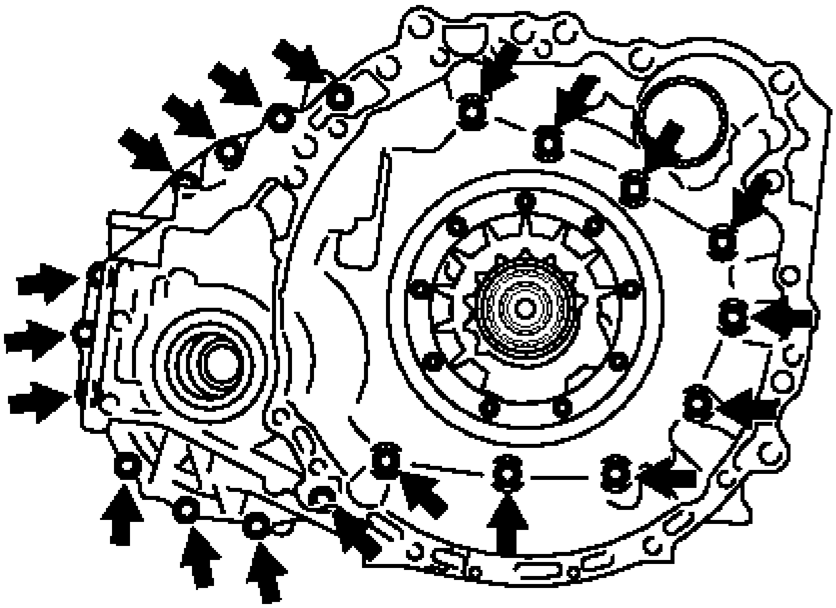

Fig. 454: Locating Transaxle Housing Bolts
Courtesy of TOYOTA MOTOR SALES, U.S.A., INC.

g. Remove the differential assembly from the transaxle case.

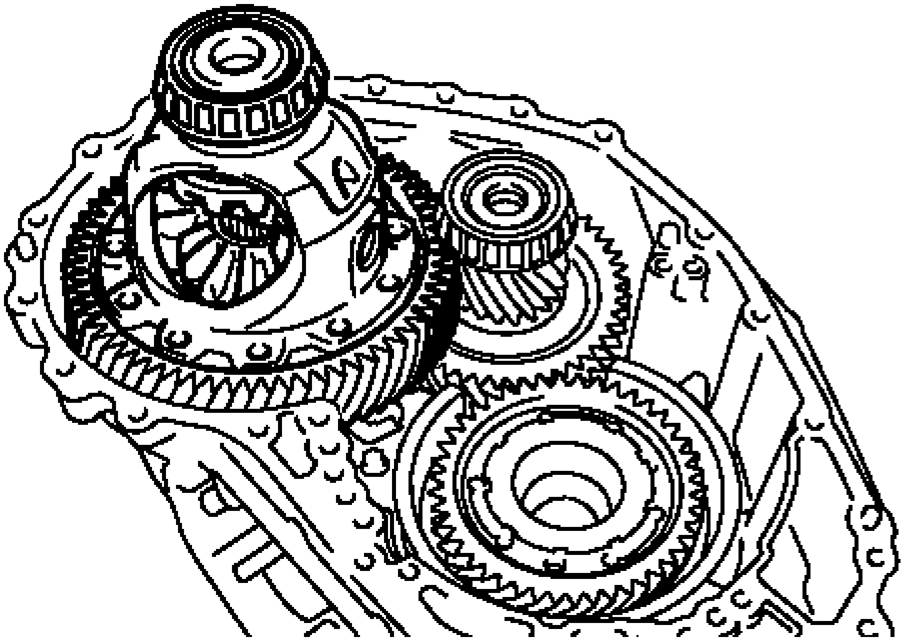

Fig. 455: Identifying Differential Case Sub-Assembly
Courtesy of TOYOTA MOTOR SALES, U.S.A., INC.

8. **INSTALL FRONT DIFFERENTIAL RING GEAR**

   a. Using ATF and a heater, heat the front differential ring gear to 90 to 110°C (194 to 230°F).

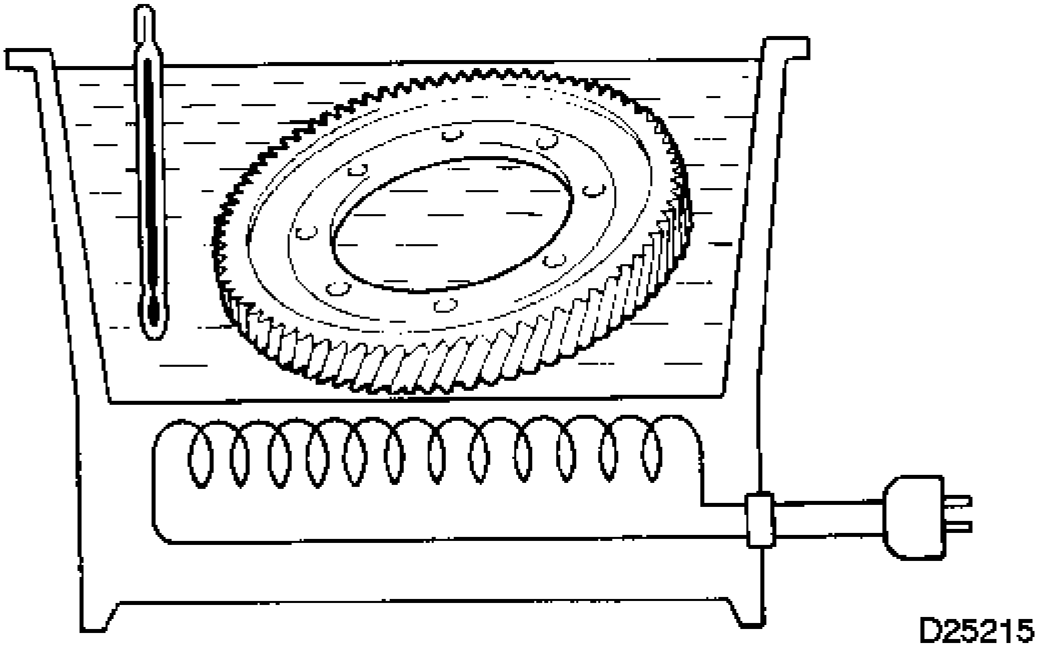

Fig. 456: Heating Front Differential Ring Gear
Courtesy of TOYOTA MOTOR SALES, U.S.A., INC.

NOTE: Do not heat the ring gear to more than 110°C (230°F).

   b. Clean the contact surface of the front differential case.
   c. Align the matchmarks, and install the front differential ring gear case quickly.

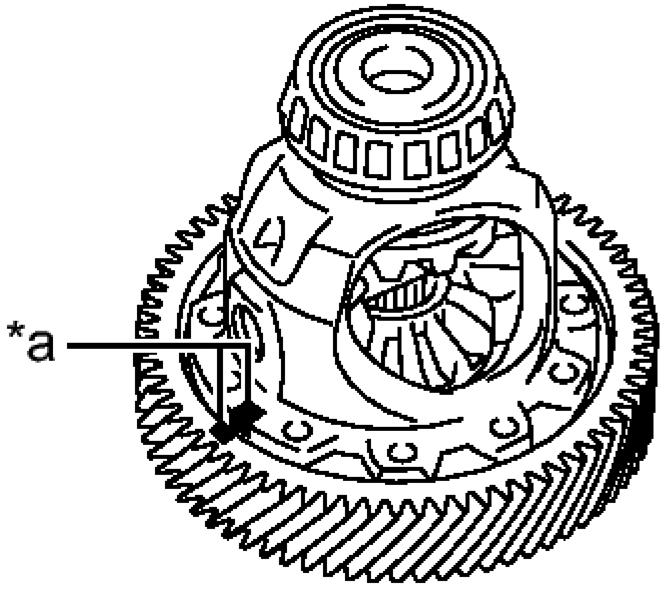

Fig. 457: Identifying Matchmarks On Front Differential Ring Gear And Differential Case
Courtesy of TOYOTA MOTOR SALES, U.S.A., INC.

TEXT IN ILLUSTRATION

*a	Matchmark

NOTE: **Do not install the bolts while the ring gear is hot.**

d. Install and tighten the 12 bolts.

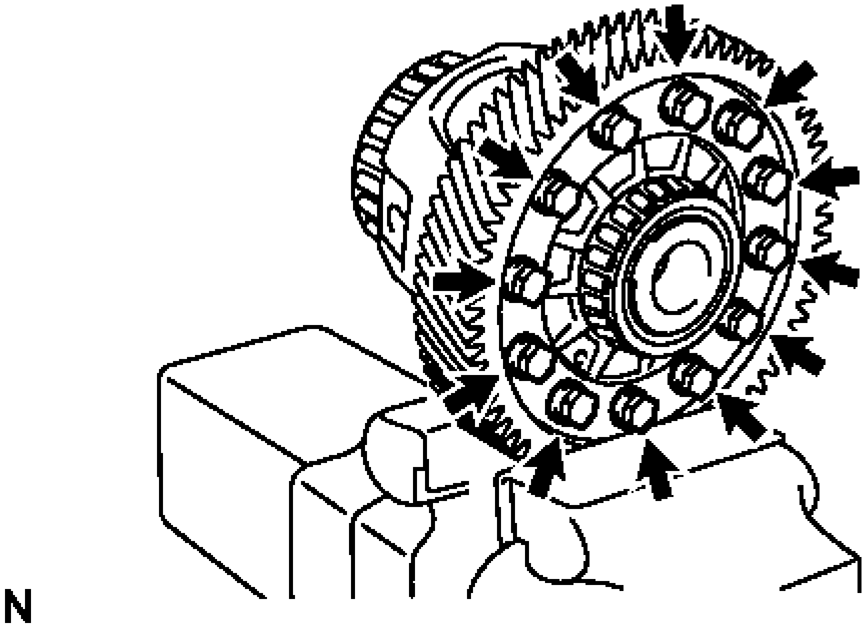

Fig. 458: Locating Bolts
Courtesy of TOYOTA MOTOR SALES, U.S.A., INC.

Torque: 120 N*m (1223 kgf*cm, 88 ft.*lbf)

NOTE: **Tighten the bolts a little at a time in a diagonal sequence.**

9. **INSTALL TRANSAXLE CASE OIL SEAL**
   a. Coat the lip of a new oil seal with MP grease.
   b. Using SST and a hammer, install the transaxle case oil seal.

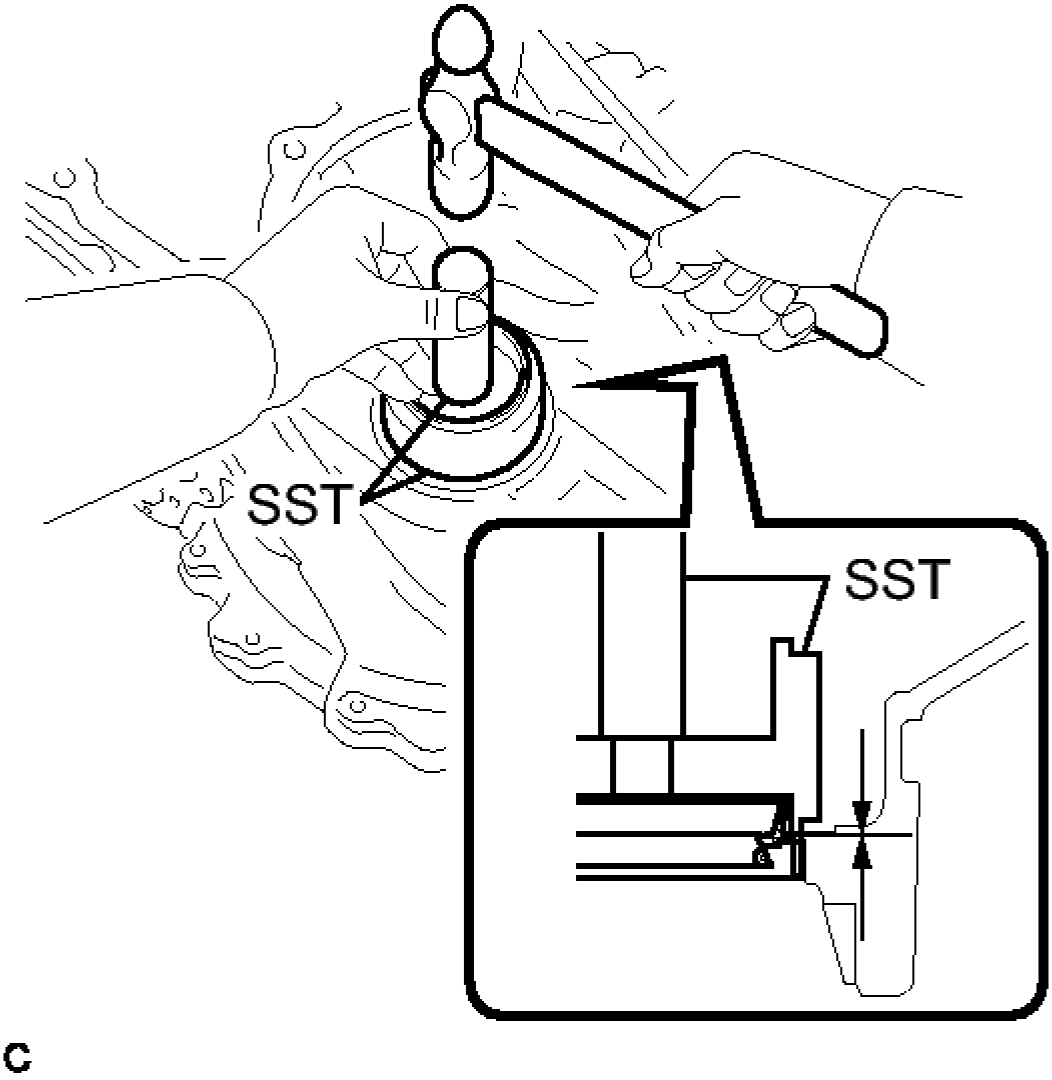

Fig. 459: Installing Transaxle Case Oil Seal
Courtesy of TOYOTA MOTOR SALES, U.S.A., INC.

- **SST: 09316-10010**
- **SST: 09950-70010**
  09951-07100

Oil seal driven in depth

-0.5 to 0.5 mm (-0.0197 to 0.0197 in.)

NOTE: Check that the oil seal is installed in the correct direction.

10. **INSTALL FRONT TRANSAXLE CASE OIL SEAL**
    a. Coat the lip of a new oil seal with MP grease.

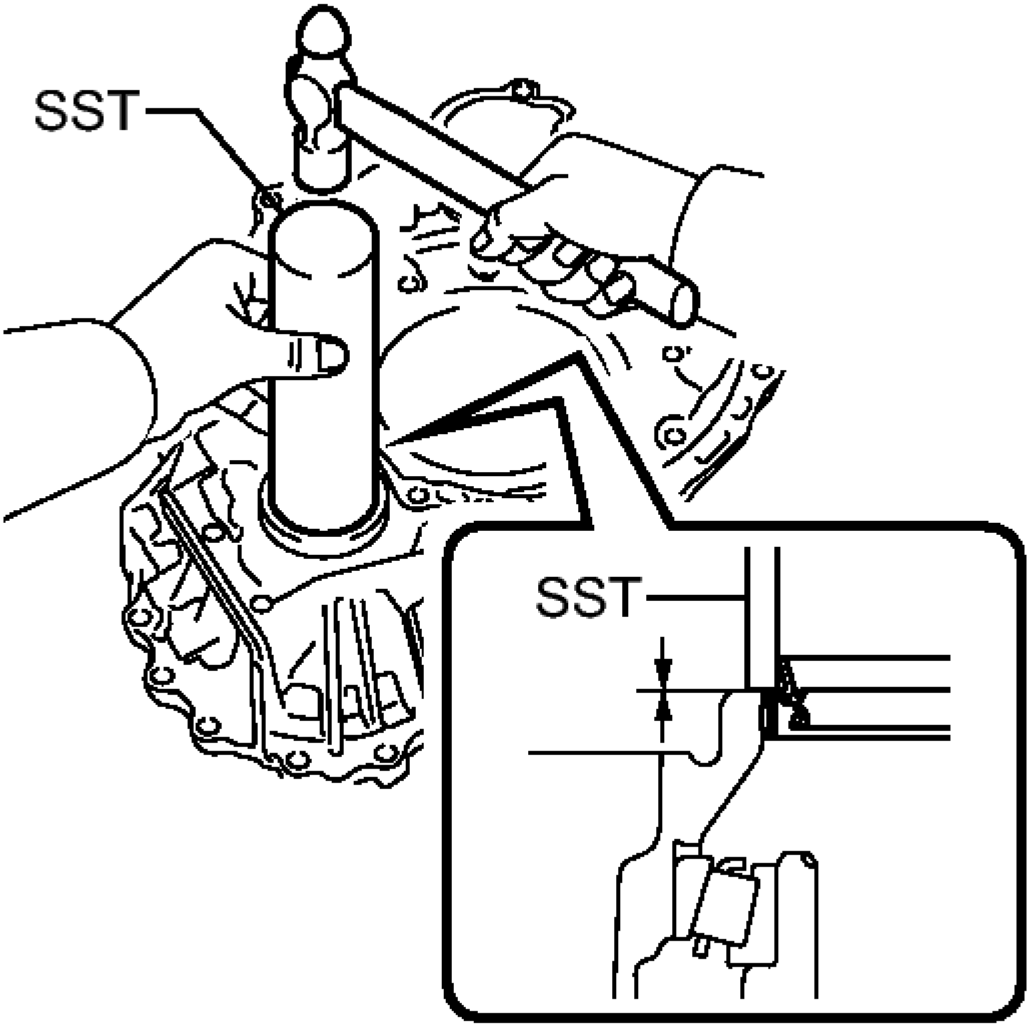

Fig. 460: Installing Front Transaxle Case Oil Seal
Courtesy of TOYOTA MOTOR SALES, U.S.A., INC.

b. Using SST and a hammer, install the front transaxle case oil seal.
    - **SST: 09308-14010**

Oil seal driven in depth

-0.5 to 0.5 mm (-0.0197 to 0.0197 in.)

NOTE: Check that the oil seal is installed in the correct direction.

2012-2017 TRANSMISSION

Automatic Transmission (Diagnostic Codes & Circuit Tests) (U760E) - Camry

AUTOMATIC TRANSAXLE SYSTEM

DTC P0705: TRANSMISSION RANGE SENSOR CIRCUIT MALFUNCTION (PRNDL INPUT)

DESCRIPTION

The park/neutral position switch assembly detects the shift lever position and sends signals to the ECM.

DTC No.	DTC Detection Condition	Trouble Area
P0705	One of the following conditions (A) through (C) is met (2-trip detection logic) (A) Either of the following conditions 1, 2 or 3 is met: 1. Any 2 or more signals of the following are ON simultaneously: • P input signal is ON. • R input signal is ON. • D input signal is ON. 2. Any 2 or more signals of the following are ON simultaneously: • N input signal is ON. • R input signal is ON. • D input signal is ON. 3. Any 2 or more signals of the following are ON simultaneously: • NSW input signal is ON. • R input signal is ON. • D input signal is ON. (B) All switches are OFF simultaneously for P, N, NSW, R and D.	• Open or short in park/neutral position switch assembly circuit • Park/neutral position switch assembly • ECM

	(C) When any of following conditions is met for 2.0 sec. or more in the S position: • P input signal is ON. • N input signal is ON. • NSW input signal is ON. • R input signal is ON.	

MONITOR DESCRIPTION

These DTCs indicate a problem with the park/neutral position switch assembly and the wire harness in the park/neutral position switch assembly circuit.

The park/neutral position switch assembly detects the shift lever position and sends signals to the ECM.

For safety, the park/neutral position switch assembly detects the shift lever position so that the engine can be started only when the shift lever is in P or N.

The park/neutral position switch assembly sends a signal to the ECM according to the shift lever position (P, N, NSW, R or D). The ECM determines that there is a problem with the switch or related parts if it receives more than 1 position signal simultaneously. The ECM will turn on the MIL and store the DTC.

MONITOR STRATEGY

Related DTCs	P0705: Park/neutral position switch/Verify switch input
Required sensors/Components	Park/neutral position switch assembly
Frequency of operation	Continuous
Duration	Condition (A) and (C): 2 sec. Condition (B): 60 sec.
MIL operation	2 driving cycles
Sequence of operation	None

TYPICAL ENABLING CONDITIONS

The monitor will run whenever the following DTCs are not present	None
Ignition switch	ON
Battery voltage	10.5 V or more

TYPICAL MALFUNCTION THRESHOLDS

One of the following conditions is met: Condition (A), (B) or (C)

Condition (A)

Any two of the following conditions are met:	Conditions 1, 2 and 3
1. One of the following condition is met:	Conditions (a), (b) or (c)
(a). P position switch	ON
(b). N position switch	ON
(c). Park neutral position switch (NSW)	ON
2. R position switch	ON
3. D position switch	ON

Condition (B)

When all conditions below are met:

P position switch	OFF
N position switch	OFF
Park neutral position switch (NSW)	OFF
R	

position switch	OFF
D position switch	OFF

Condition (C)

When shift lever is in S position, one of the following conditions is met:

P position switch	ON
N position switch	ON
Park neutral position switch (NSW)	ON
R position switch	ON

COMPONENT OPERATING RANGE

Park/neutral position switch assembly	The park/neutral position switch sends only one signal to the ECM

WIRING DIAGRAM

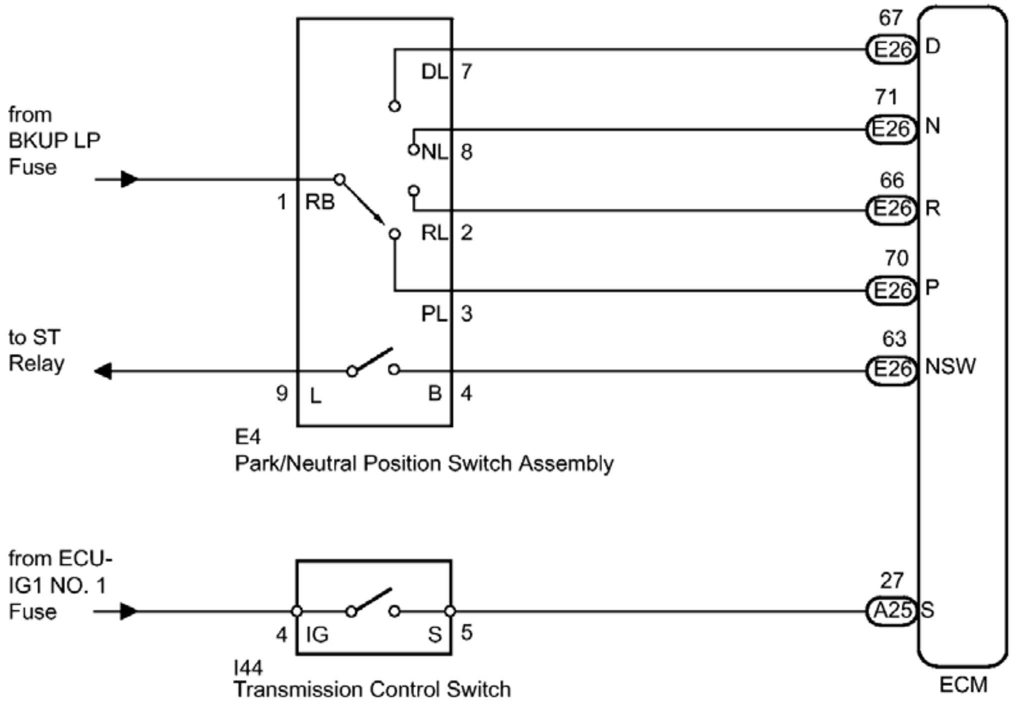
67
E26
D
71
E26
N
66
E26
R
70
E26
P
63
E26
NSW
DL 7
NL 8
RL 2
PL 3
from
BKUP LP
Fuse
1 RB
to ST
Relay
9 L
B 4
E4
Park/Neutral Position Switch Assembly
from ECU-
IG1 NO. 1
Fuse
4 IG
S 5
I44
Transmission Control Switch
27
A25
S
ECM

Fig. 1: Park/Neutral Position Switch Circuit Wiring Diagram
Courtesy of TOYOTA MOTOR SALES, U.S.A., INC.

INSPECTION PROCEDURE

NOTE: **Perform the universal trip to clear permanent DTCs. Refer to DTC CHECK / CLEAR .**

HINT:

Using the Techstream to read the Data List allows the values or states of switches, sensors, actuators and other items to be read without removing any parts. This non-intrusive inspection can be very useful because intermittent conditions or signals may be discovered before parts or wiring is disturbed. Reading the Data List information early in troubleshooting is one way to save diagnostic time.

NOTE: **In the table below, the values listed under "Normal Condition" are reference values. Do not depend solely on these reference values when deciding whether a part is faulty or not.**

1. Warm up the engine.
2. Turn the ignition switch off.

3. Connect the Techstream to the DLC3.
4. Turn the ignition switch to ON.
5. Turn the Techstream on.
6. Enter the following menus: Powertrain / Engine and ECT / Data List.
7. According to the display on the Techstream, read the Data List.

Tester Display	Measurement Item / Range	Normal Condition	Diagnostic Note
Neutral Position SW Signal	PNP switch status / ON or OFF	• ON: Shift lever is in P or N • OFF: Shift lever is not in P or N	When the shift lever position displayed on the Techstream differs from the actual position, adjustment of the PNP switch or the shift cable may be incorrect.
Shift SW Status (P Range)	PNP switch status / ON or OFF	• ON: Shift lever is in P • OFF: Shift lever is not in P	When the shift lever position displayed on the Techstream differs from the actual position, adjustment of the PNP switch or the shift cable may be incorrect.
		• ON:	When the shift lever position displayed

Shift SW Status (R Range)	PNP switch status / ON or OFF	Shift lever is in R • OFF: Shift lever is not in R	on the Techstream differs from the actual position, adjustment of the PNP switch or the shift cable may be incorrect.
Shift SW Status (N Range)	PNP switch status / ON or OFF	• ON: Shift lever is in N • OFF: Shift lever is not in N	When the shift lever position displayed on the Techstream differs from the actual position, adjustment of the PNP switch or the shift cable may be incorrect.
Shift SW Status (D Range)	PNP switch status / ON or OFF	• ON: Shift lever is in D or S • OFF: Shift lever is not in D or S	When the shift lever position displayed on the Techstream differs from the actual position, adjustment of the PNP switch or the shift cable may be incorrect.

Sports Mode Selection SW	Sport mode select switch status/ ON or OFF	• ON: Shift lever is in S, "+" or "-" • OFF: Shift lever is not in S, "+" or "-"	-

PROCEDURE

1. **CHECK HARNESS AND CONNECTOR (BATTERY - PARK/NEUTRAL POSITION SWITCH)**
   a. Disconnect the park/neutral position switch assembly connector.

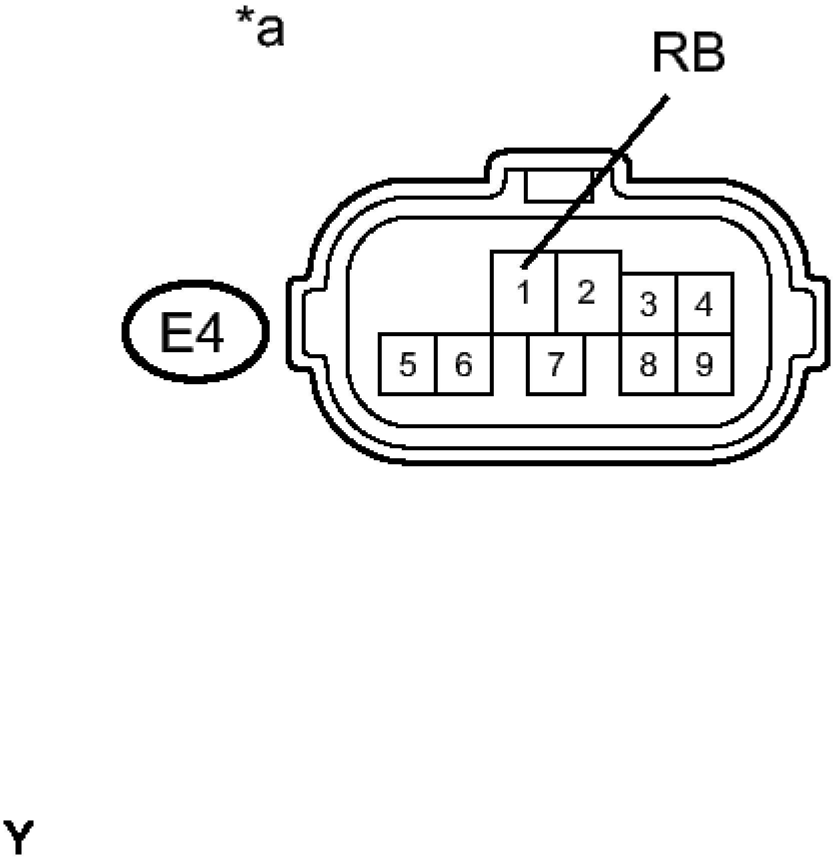

Fig. 2: Checking Harness And Connector (Battery - Park/Neutral Position Switch)
Courtesy of TOYOTA MOTOR SALES, U.S.A., INC.

b. Turn the ignition switch to ON.
c. Measure the voltage according to the value(s) in the table below.

Standard Voltage

Tester Connection	Switch Condition	Specified Condition
E4-1 (RB) - Body ground	Ignition switch ON	11 to 14 V

TEXT IN ILLUSTRATION

*a	Front view of wire harness connector (to Park/Neutral Position Switch Assembly)

NG --> REPAIR OR REPLACE HARNESS OR CONNECTOR

OK: Go to next step

2. **CHECK HARNESS AND CONNECTOR (OUTPUT SIGNAL)**
    a. Turn the ignition switch to ON.

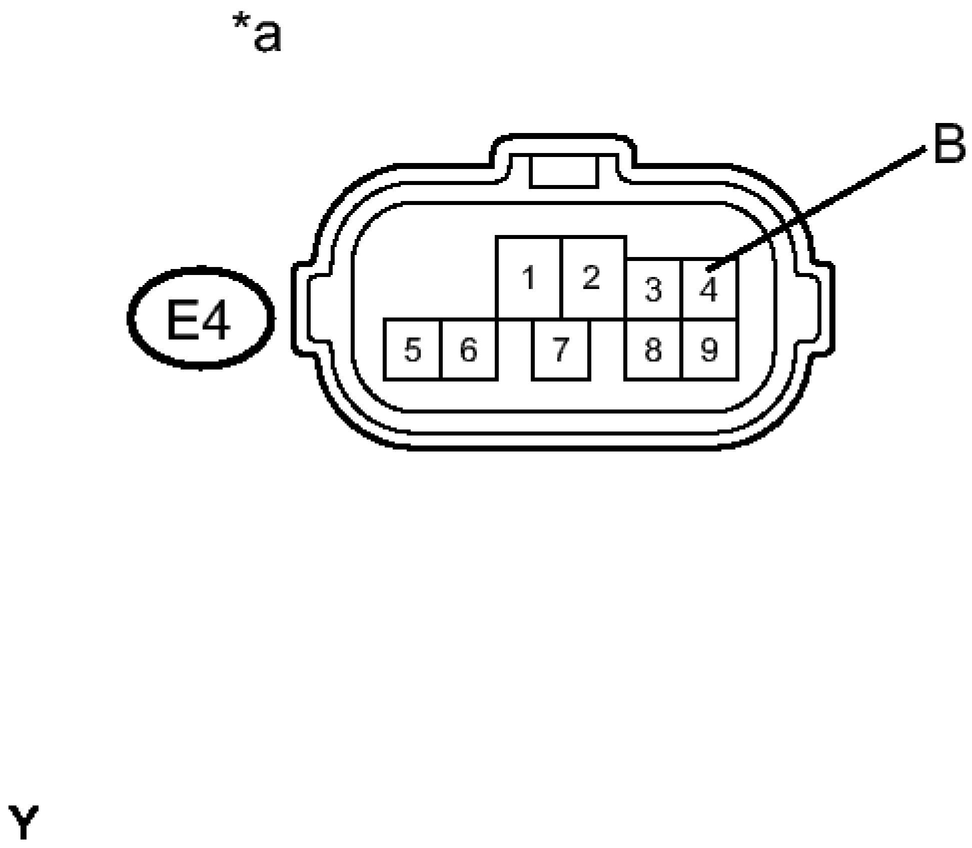

Fig. 3: Checking Voltage Of Harness And Connector (Output Signal)
Courtesy of TOYOTA MOTOR SALES, U.S.A., INC.

b. Measure the voltage according to the value(s) in the table below.

Standard Voltage

Tester Connection	Switch Condition	Specified Condition
E4-4 (B) - Body ground	Ignition switch ON	11 to 14 V

TEXT IN ILLUSTRATION

	Front view

*a	of wire harness connector (to Park/Neutral Position Switch Assembly)

NG --> See step 7

OK: Go to next step

3. **INSPECT PARK/NEUTRAL POSITION SWITCH ASSEMBLY**
   a. Disconnect the park/neutral position switch assembly connector.

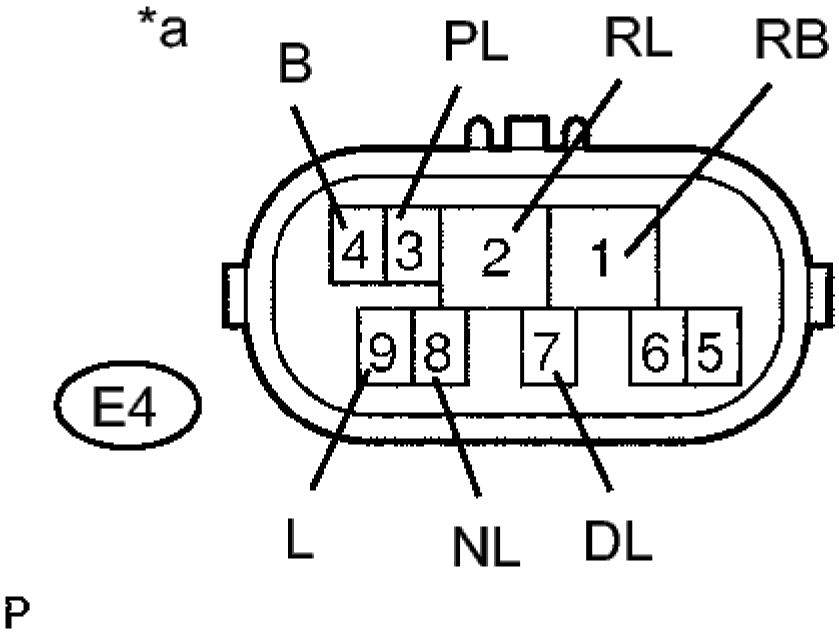
*a
B
PL
RL
RB
4
3
2
1
9
8
7
6
5
E4
L
NL
DL
P

Fig. 4: Measuring Resistance Of Park/Neutral Position Switch Assembly
Courtesy of TOYOTA MOTOR SALES, U.S.A., INC.

b. Measure the resistance according to the value(s) in the table below when the shift lever is moved to each position.

Standard Resistance

Tester Connection	Shift Lever Position	Specified Condition
E4-4 (B) - E4-9 (L)	P or N	Below 1 ohms
	Except P and N	10 kohms or higher
E4-1 (RB) - E4-3 (PL)	P	Below 1 ohms
	Except P	10 kohms or higher
E4-1 (RB) - E4-8 (NL)	N	Below 1 ohms
	Except N	10 kohms or higher
E4-1 (RB) - E4-2 (RL)	R	Below 1 ohms
	Except R	10 kohms or higher
E4-1 (RB) - E4-7 (DL)	D, S, "+" or "-"	Below 1 ohms
	Except D, S, "+" and "-"	10 kohms or higher

TEXT IN ILLUSTRATION

*a	Component without harness connected (Park/Neutral Position Switch Assembly)

NG --> See step 9

OK: Go to next step

4. **INSPECT LOWER SHIFT LEVER ASSEMBLY (TRANSMISSION CONTROL SWITCH)**
   a. Connect the park/neutral position switch assembly connector.

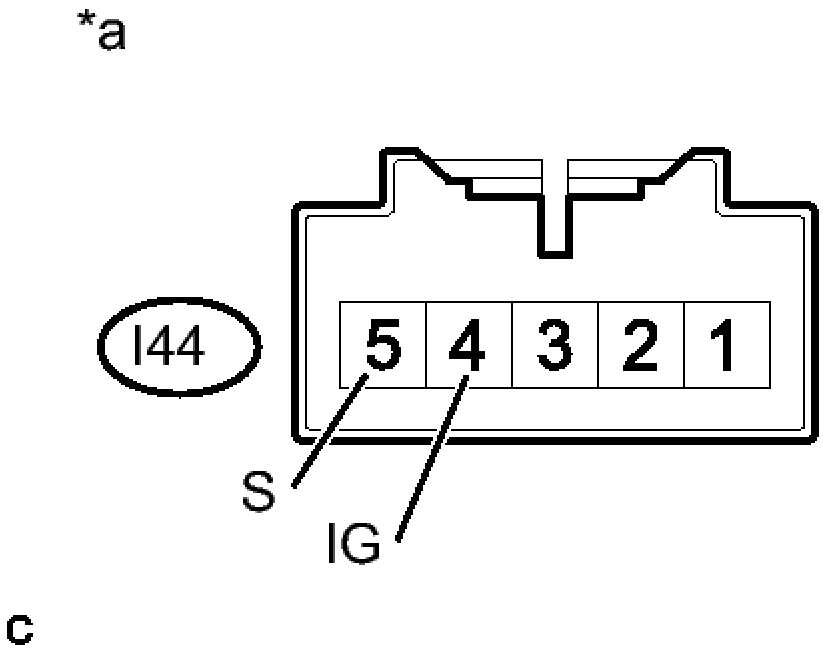

Fig. 5: Checking Resistance In Lower Shift Lever Assembly (Transmission Control Switch)
Courtesy of TOYOTA MOTOR SALES, U.S.A., INC.

   b. Disconnect the transmission control switch connector of floor shift lever assembly.
   c. Measure resistance according to the value(s) in the table below when the shift lever is moved to each position.

Standard Resistance

Tester Connection	Shift Position	Specified Condition
I44-4 (IG) - I44-5 (S)	S, "+" and "-"	Below 1 ohms
	Except S, "+" and "-"	10 kohms or higher

TEXT IN ILLUSTRATION

	Component without harness

*a	connected (Transmission Control Switch)

NG --> See step 10

OK: Go to next step

5. **CHECK HARNESS AND CONNECTOR (BATTERY - ECM)**
   a. Connect the transmission control switch connector.

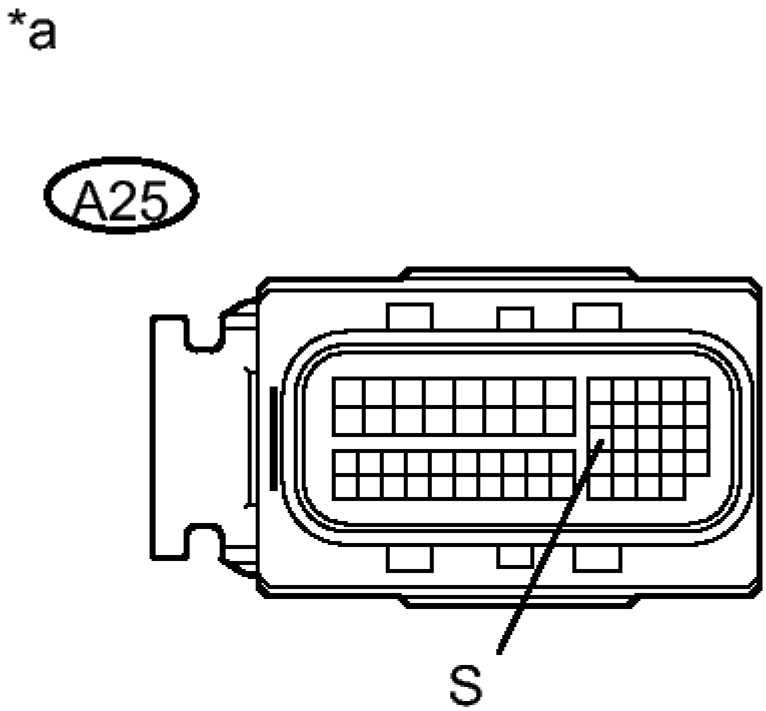

Fig. 6: Checking Harness And Connector (Battery - ECM)
Courtesy of TOYOTA MOTOR SALES, U.S.A., INC.

   b. Disconnect the ECM connectors.

c. Turn the ignition switch to ON, and measure the voltage according to the value(s) in the table below when the shift lever is moved to each position.

   Standard Voltage

Tester Connection	**Shift Lever Position**	**Specified Condition**
A25-27 (S) - Body ground	S, "+" or "-"	11 to 14 V
	Except S, "+" and "-"	Below 1 V

   TEXT IN ILLUSTRATION

*a	Front view of wire harness connector (to ECM)

NG --> REPAIR OR REPLACE HARNESS OR CONNECTOR

OK: Go to next step

6. **CHECK HARNESS AND CONNECTOR (PARK/NEUTRAL POSITION SWITCH - ECM)**
   a. Disconnect the ECM connectors.

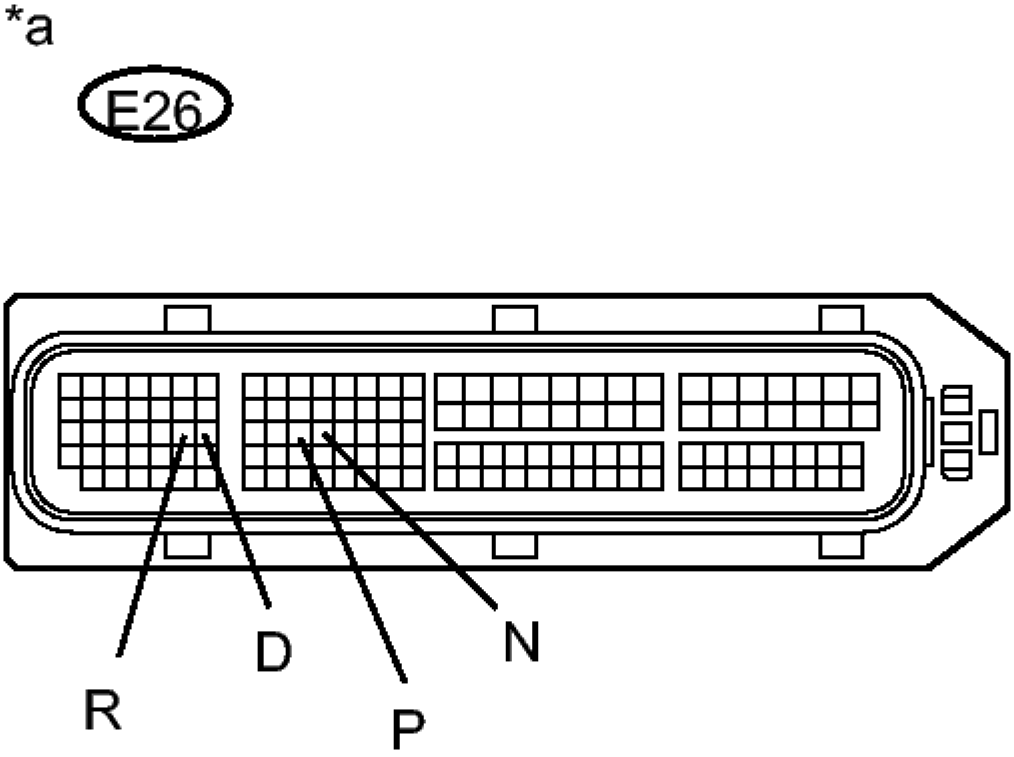

Fig. 7: Checking Harness And Connector (Park/Neutral Position Switch - ECM)
Courtesy of TOYOTA MOTOR SALES, U.S.A., INC.

b. Turn the ignition switch to ON, and measure the voltage according to the value(s) in the table below when the shift lever is moved to each position.

Standard Voltage

Tester Connection	Shift Lever Position	Specified Condition
E26-70 (P) - Body ground	P	11 to 14 V
	Except P	Below 1 V
E26-71 (N)	N	11 to 14 V

- Body ground	Except N	Below 1 V
E26-66 (R) - Body ground	R	11 to 14 V*
	Except R	Below 1 V
E26-67 (D) - Body ground	D, S, "+" or "-"	11 to 14 V
	Except D, S, "+" and "-"	Below 1 V

HINT:

*: The voltage will drop slightly due to lighting up of the back up light.

TEXT IN ILLUSTRATION

*a	Front view of wire harness connector (to ECM)

NG --> REPAIR OR REPLACE HARNESS OR CONNECTOR

OK --> See step 8

7. **CHECK HARNESS AND CONNECTOR (PARK/NEUTRAL POSITION SWITCH - ECM)**
    a. Turn the ignition switch off.
    b. Disconnect the ECM connector.
    c. Disconnect the park/neutral position switch assembly connector.
    d. Measure the resistance according to the value(s) in the table below.

Standard Resistance (Check for Open)

Tester Connection	Condition	Specified Condition
E4-4 (B) - E26-63 (NSW)	Always	Below 1 ohms

Standard Resistance (Check for Short)

Tester Connection	Condition	Specified Condition
E4-4 (B) or E26-63 (NSW) - Body ground and other terminals	Always	10 kohms or higher

NG --> REPAIR OR REPLACE HARNESS OR CONNECTOR

OK --> See step 8

8. **REPLACE ECM. Refer to COMPONENTS**
9. **REPLACE PARK/NEUTRAL POSITION SWITCH ASSEMBLY. Refer to COMPONENTS**
10. **REPLACE LOWER SHIFT LEVER ASSEMBLY. Refer to COMPONENTS**

DTC P0711: TRANSMISSION FLUID TEMPERATURE SENSOR "A" PERFORMANCE

DESCRIPTION

The Automatic Transmission Fluid (ATF) temperature sensor converts the fluid temperature into a resistance value for use by the ECM.

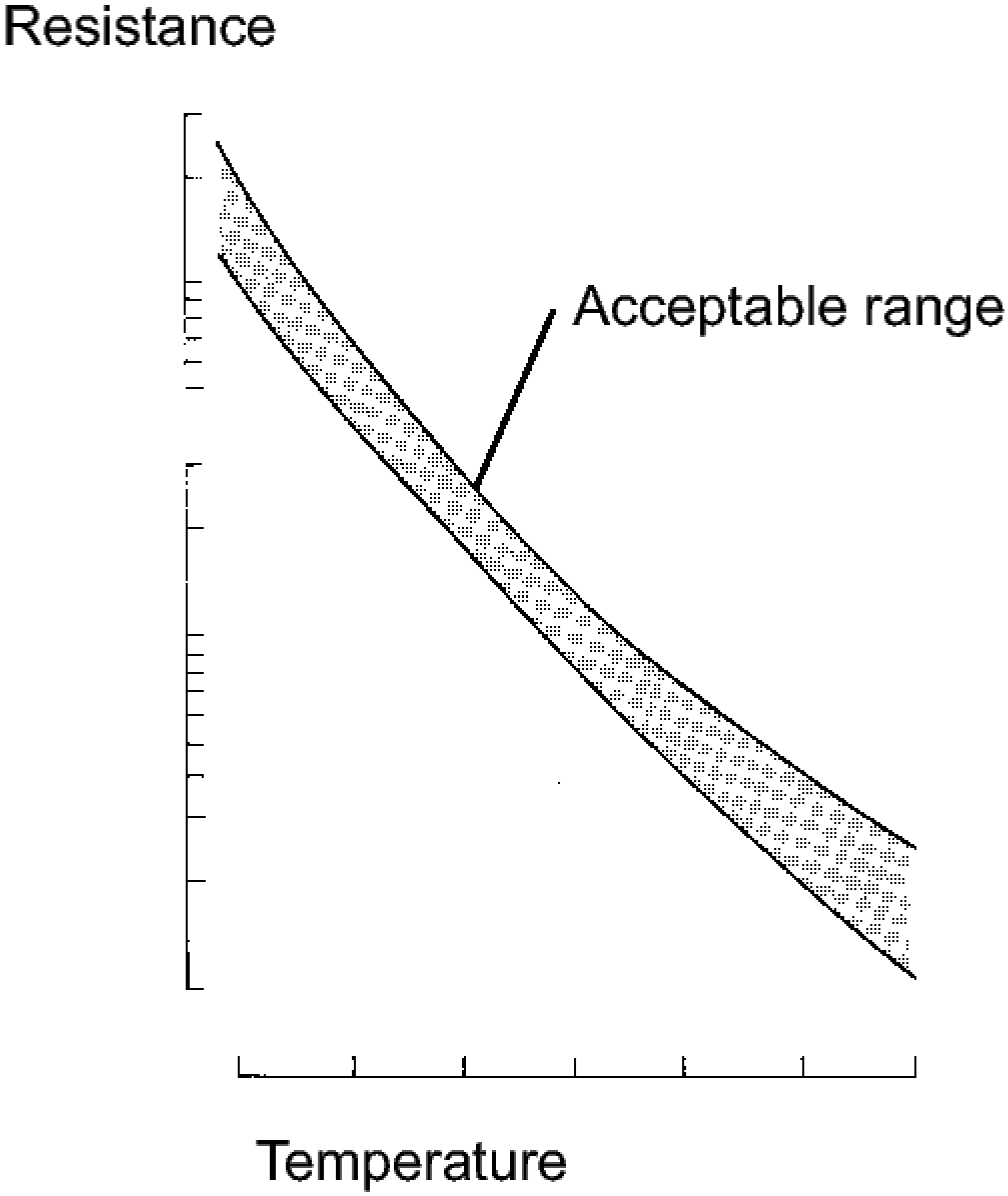

Fig. 8: Temperature And Resistance Graph
Courtesy of TOYOTA MOTOR SALES, U.S.A., INC.

The ECM applies a voltage to the temperature sensor through terminal THO1 of the ECM.

The sensor resistance changes with the transmission fluid temperature. As the temperature becomes higher, the

sensor resistance decreases.

One terminal of the sensor is grounded so that the sensor resistance decreases and the voltage goes down as the temperature becomes higher.

The ECM calculates the fluid temperature based on the voltage signal.

DTC No.	DTC Detection Condition	Trouble Area
P0711	One of the following conditions (A), (B) or (C) is met: (A) (a), (b) and (c) are detected: (2-trip detection logic) • (a) Intake air and engine coolant temperatures are more than 15°C (59°F) at engine start • (b) Soak time is more than 5 hours • (c) After normal driving for over 10 min. and 5 km (3.1 mile) or more, ATF temperature is less than 20°C (68°F) (B) Both (a) and (b) are detected: (2-trip detection logic) • (a) Intake air and engine coolant temperatures are more than -10°C (14°F) at engine start • (b) After normal driving for over 18 min. and 20 sec. and 8 km (5 mile) or more, ATF temperature is less than 20°C (68°F) (C) Both (a) and (b) are detected: (2-trip detection logic) • (a) Engine coolant temperature is less than 35°C (95°F) at engine start • (b) ATF temperature is 110°C (230°F) or more when engine coolant temperature reaches 60°C (140°F)	ATF temperature sensor

MONITOR DESCRIPTION

This DTC indicates that there is a problem with output signals from the automatic transmission fluid (ATF) temperature sensor and that the sensor itself is defective. The ATF temperature sensor converts the ATF temperature into an electrical resistance value. Based on the resistance, the ECM determines the ATF temperature and detects an open or short in the ATF temperature circuit or a fault of the ATF temperature sensor.

After running the vehicle for a certain period, the ATF temperature should increase. If the ATF temperature is below 20°C (68°F) after running the vehicle for a certain period, the ECM interprets this as a fault turns on the MIL, and stores the DTC.

MONITOR STRATEGY

Related DTCs	P0711: ATF temperature sensor
Required sensors/Components	ATF temperature sensor (TFT sensor)
Frequency of operation	Continuous
Duration	Condition A, B, C and D: 3 sec. Condition E: Continuous
MIL operation	2 driving cycles
Sequence of operation	None

TYPICAL ENABLING CONDITIONS

ALL:

The monitor will run whenever this DTC is not present. (Not circuit malfunction)	P0712, P0713 (ATF temperature sensor circuit (TFT sensor)) P0115, P0117, P0118 (ECT sensor circuit) P0112, P0113 (IAT sensor circuit) P0715, P0717 (Turbine speed sensor circuit) P0791, P0793 (Intermediate shaft speed sensor circuit) P0748 (Shift solenoid valve SL1 circuit) P0778 (Shift solenoid valve SL2 circuit) P0798 (Shift solenoid valve SL3 circuit) P2810 (Shift solenoid valve SL4 circuit) P0327, P0328, (KCS sensor circuit) P0120, P0121, P0122, P0123, P0220, P0222, P0223, P0604, P0606, P060A, P060B, P060D, P060E, P0657, P1607, P2102, P2103, P2111, P2112, P2118, P2119, P2135 ((ETCS) Electronic throttle control system) U0100 (CAN communication system) P2610 (Soak timer circuit)
TFT (Transmission fluid temperature) sensor circuit	No circuit malfunction
ECT (Engine coolant temperature) sensor circuit	No circuit malfunction
IAT (Intake air temperature) sensor circuit	No circuit malfunction
Turbine speed sensor circuit	No circuit malfunction
Intermediate shaft speed sensor	No circuit malfunction

Shift solenoid valve SL1 circuit	No circuit malfunction
Shift solenoid valve SL2 circuit	No circuit malfunction
Shift solenoid valve SL3 circuit	No circuit malfunction
Shift solenoid valve SL4 circuit	No circuit malfunction
(KCS) Knock control sensor circuit	No circuit malfunction
Soak timer circuit	No circuit malfunction
(ETCS) Electronic throttle control system	Not system down
CAN communication system	Not system down
Engine	Starting
Time after engine start	12 sec. or more
ECT (Engine coolant temperature)	-15°C (5°F) or more

CONDITION A:

Time after engine start except for continuing shift position "N" or "P" *2	10 min. or more
Driving distance after engine start *3	5 km (3.1 miles) or more
IAT *4	15°C (59°F) or more
ECT (12 sec. after engine start)	15°C (59°F) or more
Soak time	5 hours or more
Accumulated driving time *1	110 sec. or more

CONDITION B:

Time after engine start except for continuing shift position "N" or "P" *2	18 min. and 20 sec. or more
Driving distance after engine start *3	8 km (5 miles) or more
IAT *4	-10°C (14°F) or more
ECT (12 sec. after engine start)	-10°C (14°F) or more
Accumulated driving time *1	200 sec. or more

CONDITION C:

Time after engine start except for continuing shift position "N" or "P" *2	30 min. or more
Driving distance after engine start *3	15 km (9.3 miles) or more
IAT *4	-15°C (5°F) or more
ECT (12 sec. after engine start)	-15°C (5°F) or more
Accumulated driving time *1	400 sec. or more

CONDITION D:

Time after engine start except for continuing shift position "N" or "P" *2	40 min. or more
Driving distance after engine start *3	20 km (12.4 miles) or more
Accumulated driving time *1	550 sec. or more

CONDITION E:

Time after ECT reaches 60°C (140°F)	10 sec. or more
TFT (12 sec. after engine start)	110°C (230°F) or more
ECT (12 sec. after engine start)	35°C (95°F) or less

HINT:

*1: Following conditions are met

Engine speed - Turbine speed	10 RPM or more
Output speed	400 RPM or more
Throttle valve opening angle	3% or more
Shift position	Not "N" or "P"
Engine	Starting
However, accumulated driving time is cleared	
When following condition met	
Duration time from shift position "N" or "P"	600 sec. or more

*2: Time after engine start except for continuing

Shift position "N" or "P" is cleared	
When following condition met	
Duration time from shift position "N" or "P"	600 sec. or more

*3: Driving distance is cleared when following condition met

Duration time from shift position "N" or "P"	600 sec. or more

*4: Minimum select of following IAT

IAT (12 sec. after engine start)	
When following condition met	
IAT at duration time from shift position "N" or "P"	600 sec. or more

TYPICAL MALFUNCTION THRESHOLDS

CONDITION A, B, C AND D:

TFT	Less than 20°C (68°F)

CONDITION E:

TFT	110°C (230°F) or more

COMPONENT OPERATING RANGE

TFT	Atmospheric temperature - approx. 130°C (266°F)

WIRING DIAGRAM

Refer to the wiring diagram for DTC P0712. Refer to **WIRING DIAGRAM**.

INSPECTION PROCEDURE

NOTE:

- **Perform the universal trip to clear permanent DTCs. Refer to DTC CHECK / CLEAR .**
- **If DTCs P0711 and P2610 are output simultaneously, confirm that the ATF temperature is as specified in "Normal Condition" using the Techstream first. When the ATF temperature is as specified in "Normal Condition", perform troubleshooting for DTC P2610. Refer to DIAGNOSTIC TROUBLE CODE CHART .**
- **In the table below, the value listed under "Normal Condition" are reference values.**

HINT:

Using the Techstream to read the Data List allows the values or states of switches, sensors, actuators and other items to be read without removing any parts. This non-intrusive inspection can be very useful because intermittent conditions or signals may be discovered before parts or wiring is disturbed. Reading the Data List information early in troubleshooting is one way to save diagnostic time.

1. Warm up the engine.
2. Turn the ignition switch off.
3. Connect the Techstream to the DLC3.
4. Turn the ignition switch to ON.
5. Turn the Techstream on.
6. Enter the following menus: Powertrain / Engine and ECT / Data List.
7. According to the display on the Techstream, read the Data List.

ECM

Tester Display	Measurement Item/Range	Normal Condition	Diagnostic Note
A/T Oil Temperature 1	ATF temperature sensor value/ Min.: -40°C (-40°F) Max.: 215°C	• After stall speed test: Approximately 80°C (176°F) • Equal to ambient temperature	If value is -40°C (-40°F) or 150°C (302°F), ATF temperature sensor circuit is

	(419°F)	when cold soak	open or short circuited

HINT:

When DTC P0712 is output and the Techstream indicates 150°C (302°F) or more, there is a short circuit.

When DTC P0713 is output and the Techstream indicates -40°C (-40°F), there is an open circuit.

Measure the resistance between terminal THO1 (OT) and body ground.

Temperature Displayed	Malfunction
-40°C (-40°F)	Open circuit
150°C (302°F) or more	Short circuit

HINT:

If a circuit related to the ATF temperature sensor becomes open, P0713 is immediately set (in 0.5 seconds). When P0713 is set, P0711 cannot be detected.

It is not necessary to inspect the circuit when P0711 is set.

PROCEDURE

1. **CHECK OTHER DTCS OUTPUT (IN ADDITION TO DTC P0711)**
    a. Connect the Techstream to the DLC3.
    b. Turn the ignition switch to ON.
    c. Turn the Techstream on.
    d. Enter the following menus: Powertrain / Engine and ECT / Trouble Codes.
    e. Read the DTCs using the Techstream.

    Result

Display (DTC Output)	Proceed to
Only P0711 is output	A
P0711 and	

other DTC	B

HINT:

If any other codes besides P0711 are output, perform troubleshooting for those DTCs first.

B --> See step 3

A: Go to next step

2. **CHECK TRANSMISSION FLUID LEVEL**
    a. Check the transmission fluid level. Refer to **ADJUSTMENT** .

    OK

    Automatic transmission fluid level is correct.

NG --> ADJUST FLUID LEVEL

OK --> See step 4

3. **GO TO DTC CHART. Refer to DIAGNOSTIC TROUBLE CODE CHART**
4. **REPLACE TRANSMISSION WIRE (ATF TEMPERATURE SENSOR). Refer to COMPONENTS**

DTC P0712: TRANSMISSION FLUID TEMPERATURE SENSOR "A" CIRCUIT LOW INPUT; DTC P0713: TRANSMISSION FLUID TEMPERATURE SENSOR "A" CIRCUIT HIGH INPUT

DESCRIPTION

The Automatic Transmission Fluid (ATF) temperature sensor converts the fluid temperature into a resistance value for use by the ECM.

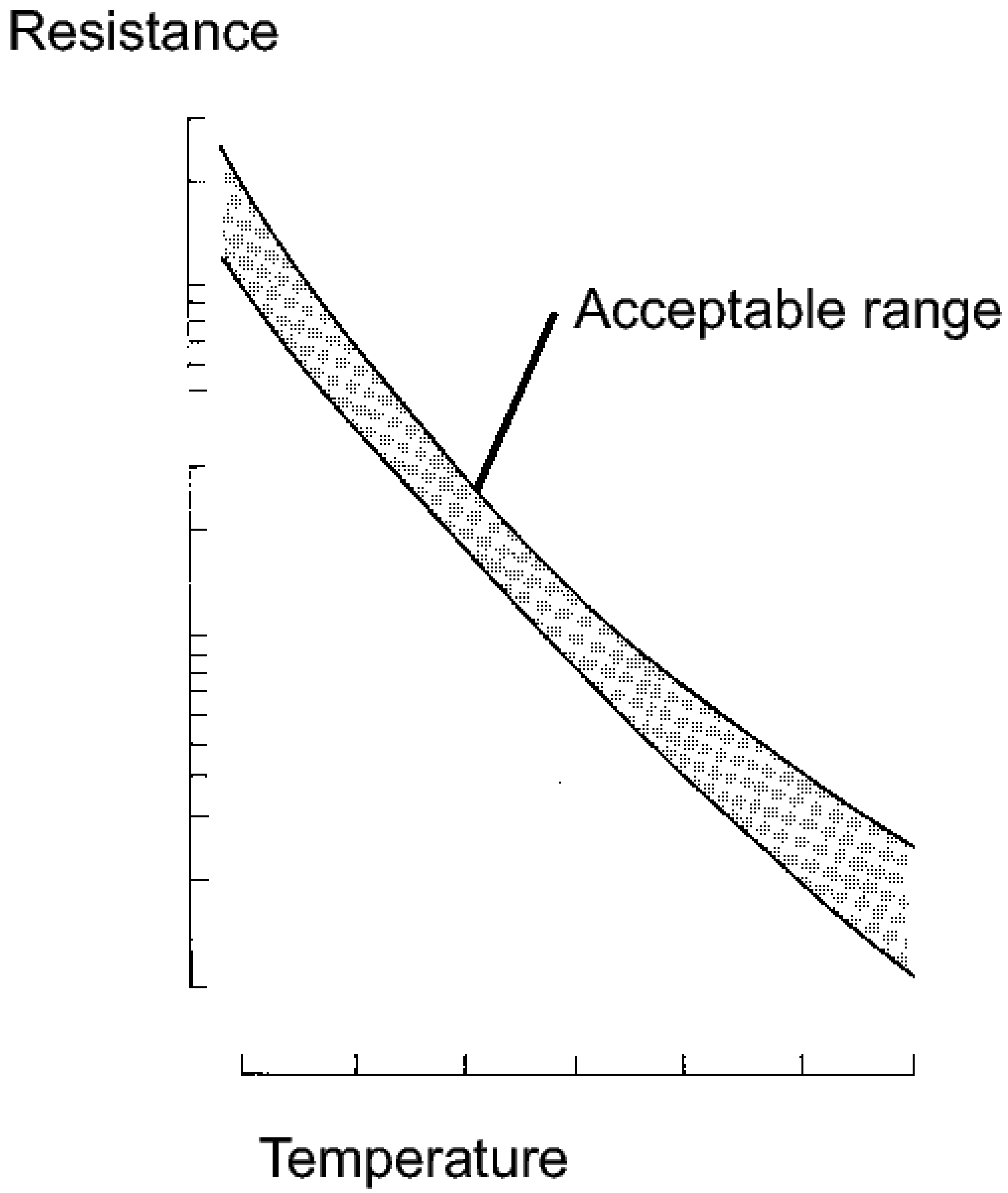

Fig. 9: Temperature And Resistance Graph
Courtesy of TOYOTA MOTOR SALES, U.S.A., INC.

The ECM applies a voltage to the temperature sensor through terminal THO1 of the ECM.

The sensor resistance changes with the transmission fluid temperature. As the temperature becomes higher, the

sensor resistance decreases.

One terminal of the sensor is grounded so that the sensor resistance decreases and the voltage goes down as the temperature becomes higher.

The ECM calculates the fluid temperature based on the voltage signal.

DTC No.	DTC Detection Condition	Trouble Area
P0712	ATF temperature sensor resistance is less than 79 ohms for 0.5 sec. or more (1-trip detection logic)	• Short in ATF temperature sensor circuit • Transmission wire (ATF temperature sensor) • Wiring harness connector • ECM
P0713	ATF temperature sensor resistance is more than 156 kohms for 0.5 seconds or more. Either of the following conditions is met (1 trip detection logic):	• Open in ATF temperature sensor circuit • Transmission wire (ATF temperature sensor) • Wiring harness connector • ECM
	Condition (A): 314 seconds or more have elapsed after the engine start when engine coolant temperature or intake air temperature is -29.375°C (-20.875°F) or less.	
	Condition (B): 10 seconds or more have elapsed after the engine start when engine coolant temperature and intake air temperature are more than -29.375°C (- 20.875°F).	

MONITOR DESCRIPTION

These DTCs indicate an open or short in the automatic transmission fluid (ATF) temperature sensor circuit. The automatic transmission fluid (ATF) temperature sensor converts ATF temperature into an electrical resistance value. Based on the resistance, the ECM determines the ATF temperature, and the ECM detects an open or short in the ATF temperature circuit. If the resistance value of the ATF temperature is less than 79 ohms*1 or more than 156 kohms*2, the ECM interprets this as a fault in the ATF sensor or wiring. The ECM will turn on the MIL and store the DTC.

*1: 150°C (302°F) or more is indicated regardless of the actual ATF temperature.

*2: -40°C (-40°F) is indicated regardless of the actual ATF temperature.

HINT:

The ATF temperature can be checked on the Techstream display.

MONITOR STRATEGY

Related DTCs	P0712: ATF temperature sensor/Range check (Low resistance) P0713: ATF temperature sensor/Range check (High resistance)
Required sensors/Components	ATF temperature sensor (TFT sensor)
Frequency of operation	Continuous
Duration	0.5 sec.
MIL operation	Immediate
Sequence of operation	None

TYPICAL ENABLING CONDITIONS

P0712: RANGE CHECK (LOW RESISTANCE)

The monitor will run whenever these DTCs are not present.	None
Battery voltage	8 V or more
Ignition switch	ON

P0713: Range check (High resistance)

One of the following conditions is met: Condition (A) or (B)

CONDITION (A)

Engine coolant temperature (ECT) or intake air temperature (IAT) at engine start	-29.375°C (-20.875°F) or less
Time after	314 seconds

engine start	or more
ECT sensor circuit fail (P0115, P0117, P0118)	Not detected
IAT sensor circuit fail (P0097, P0098, P0110, P0112, P0113)	Not detected

CONDITION (B)

Engine coolant temperature (ECT) or intake air temperature (IAT) at engine start	More than -29.375° C (-20.875° F)
Time after engine start	10 seconds or more
ECT sensor circuit fail (P0115, P0117, P0118)	Not detected
IAT sensor circuit fail (P0112, P0113)	Not detected

TYPICAL MALFUNCTION THRESHOLDS

P0712: RANGE CHECK (LOW RESISTANCE)

ATF (TFT) sensor resistance	Less than 79 ohms

P0713: RANGE CHECK (HIGH RESISTANCE)

ATF (TFT) sensor resistance	More than 156 kohms

COMPONENT OPERATING RANGE

ATF (TFT) sensor resistance	79 to 156 kohms

WIRING DIAGRAM

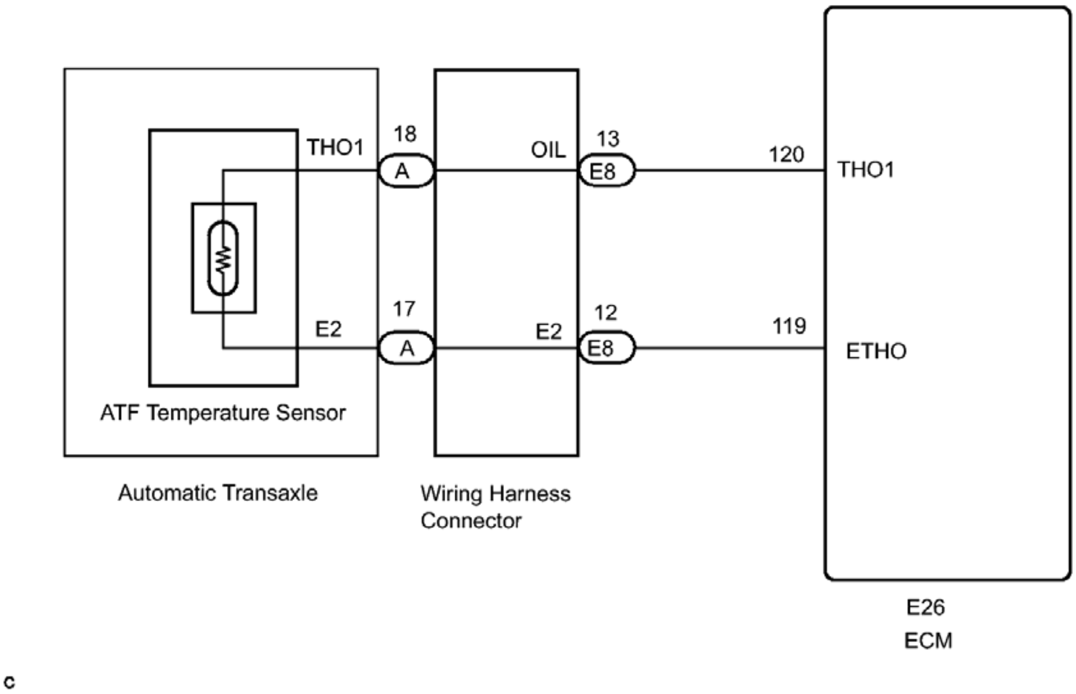
THO1
18
A
OIL
13
E8
120
THO1
E2
17
A
E2
12
E8
119
ETHO
ATF Temperature Sensor
Automatic Transaxle
Wiring Harness
Connector
E26
ECM
c

Fig. 10: ATF Temperature Sensor Circuit Wiring Diagram
Courtesy of TOYOTA MOTOR SALES, U.S.A., INC.

INSPECTION PROCEDURE

NOTE: **Perform the universal trip to clear permanent DTCs. Refer to DTC CHECK / CLEAR .**

HINT:

Using the Techstream to read the Data List allows the values or states of switches, sensors, actuators and other items to be read without removing any parts. This non-intrusive inspection can be very useful because intermittent conditions or signals may be discovered before parts or wiring is disturbed. Reading the Data List information early in troubleshooting is one way to save diagnostic time.

NOTE: **In the table below, the values listed under "Normal Condition" are reference values. Do not depend solely on these reference values when deciding whether a part is faulty or not.**

1. Warm up the engine.
2. Turn the ignition switch off.

3. Connect the Techstream to the DLC3.
4. Turn the ignition switch to ON.
5. Turn the Techstream on.
6. Enter the following menus: Powertrain / Engine and ECT / Data List.
7. According to the display on the Techstream, read the Data List.

ECM

Tester Display	Measurement Item/Range	Normal Condition	Diagnostic Note
A/T Oil Temperature 1	ATF temperature sensor value/ Min.: -40°C (-40°F) Max.: 215°C (419°F)	• After stall speed test: Approximately 80°C (176°F) • While engine is cold: Equal to ambient temperature	If value is -40°C (-40°F) or 150°C (302°F), ATF temperature sensor circuit is open or short circuited

HINT:

When DTC P0712 is output and the Techstream indicates 150°C (302°F) or more, there is a short circuit.

When DTC P0713 is output and the Techstream indicates -40°C (-40°F), there is an open circuit.

Measure the resistance between terminal THO1 (OT) and body ground.

Temperature Displayed	Malfunction
-40°C (-40°F)	Open circuit
150°C (302°F) or more	Short circuit

HINT:

If the circuit related to the ATF temperature sensor becomes open, P0713 is immediately set (in 0.5 seconds). When P0713 is set, P0711 cannot be detected.

It is not necessary to inspect the circuit when P0711 is set.

PROCEDURE

1. **CHECK HARNESS AND CONNECTOR (ATF TEMPERATURE SENSOR CIRCUIT)**

a. Disconnect the ECM connector.

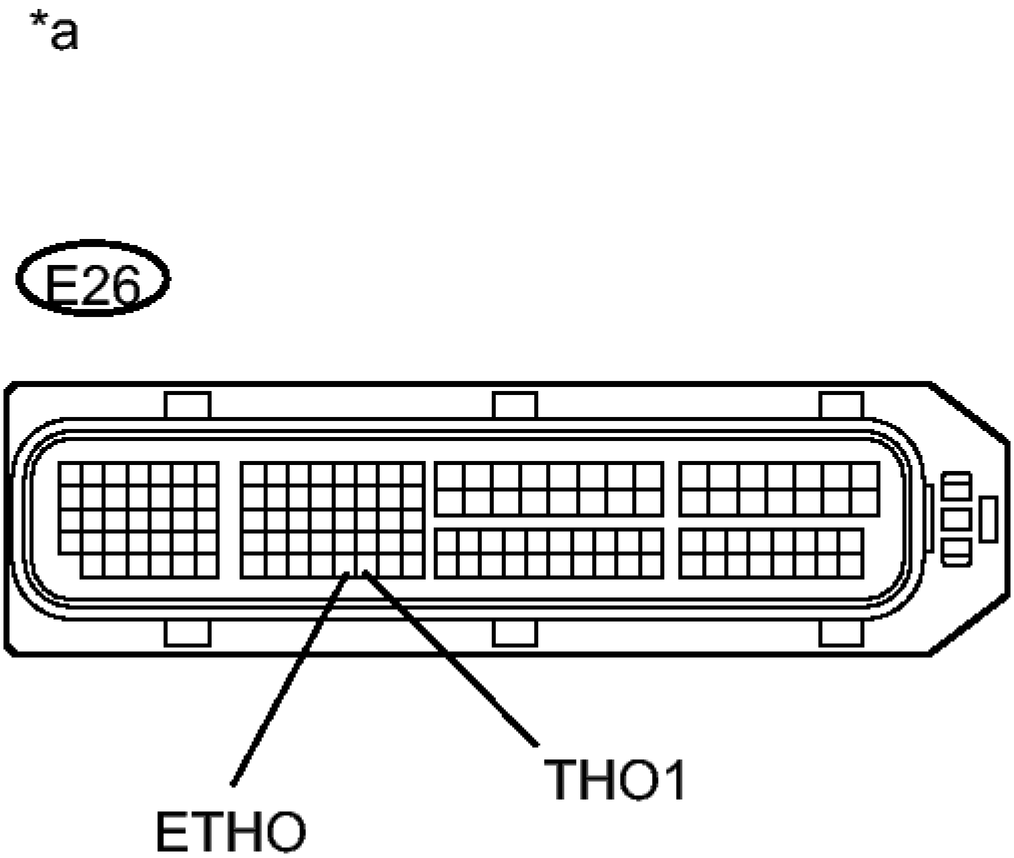

Fig. 11: Checking Harness And Connector (ATF Temperature Sensor Circuit)
Courtesy of TOYOTA MOTOR SALES, U.S.A., INC.

b. Measure the resistance according to the value(s) in the table below.

Standard Resistance

Tester Connection	Condition	Specified Condition
E26-120 (THO1) - E26-119 (ETHO)	Always	79 ohms to 156 kohms

E26-120 (THO1) - Body ground and other terminals	Always	10 kohms or higher
E26-119 (ETHO) - Body ground and other terminals	Always	10 kohms or higher

TEXT IN ILLUSTRATION

*a	Front view of wire harness connector (to ECM)

NG --> See step 2

OK --> See step 5

2. **CHECK HARNESS AND CONNECTOR (ECM - WIRING HARNESS CONNECTOR)**
    a. Disconnect the harness connector from the wiring harness connector.
    b. Measure the resistance according to the value(s) in the table below.

Standard Resistance

Tester Condition	Condition	Specified Condition
E26-120 (THO1) - E8-13 (OIL)	Always	Below 1 ohms
E26-119 (ETHO) - E8-12 (E2)	Always	Below 1 ohms
E26-120 (THO1) or E8-13 (OIL) - Body	Always	10 kohms or higher

ground and other terminals		
E26-119 (ETHO) or E8-12 (E2) - Body ground and other terminals	Always	10 kohms or higher

NG --> REPAIR OR REPLACE HARNESS OR CONNECTOR

OK: Go to next step

3. **INSPECT TRANSMISSION WIRE (ATF TEMPERATURE SENSOR)**
   a. Remove the wiring harness connector from the transaxle.

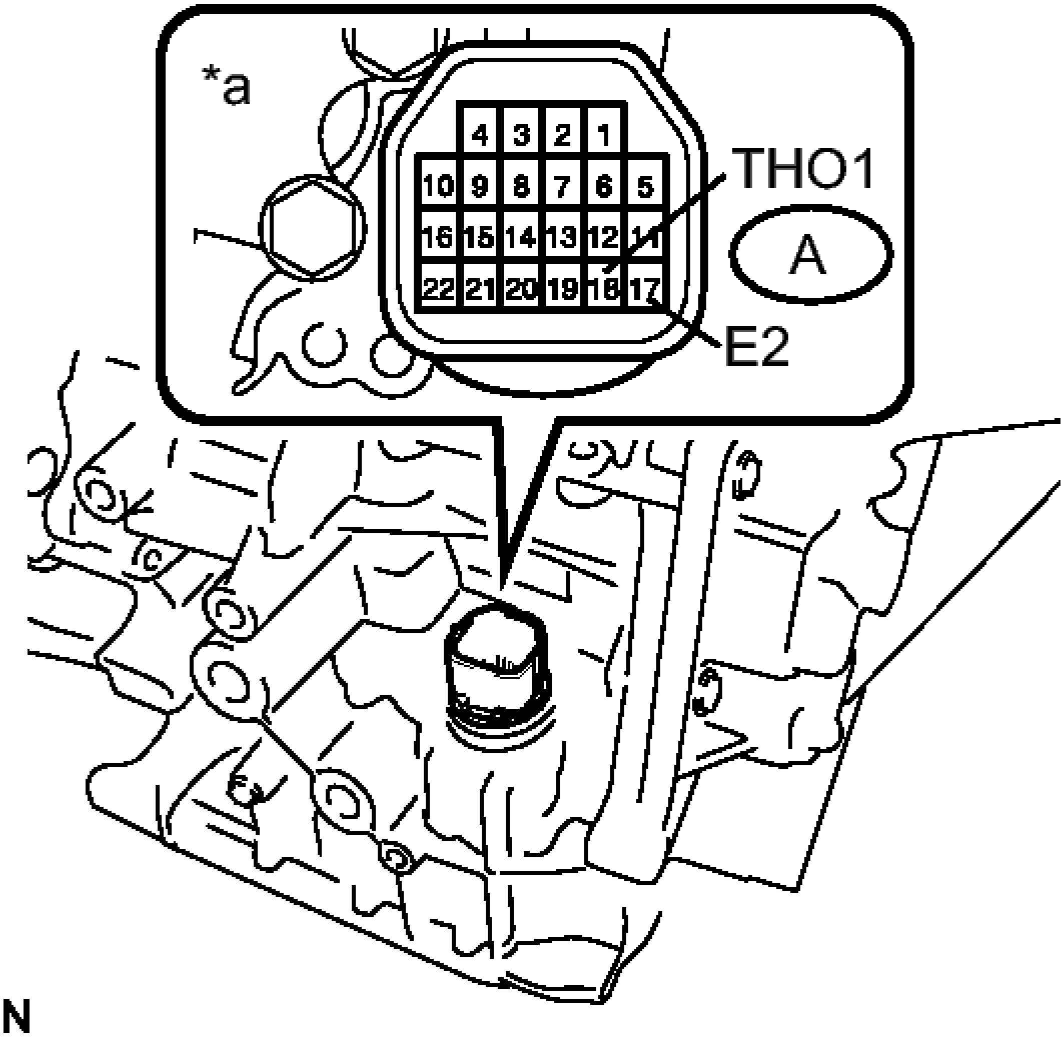
*a
4 3 2 1
10 9 8 7 6 5
16 15 14 13 12 11
22 21 20 19 18 17
THO1
A
E2
N

Fig. 12: Measuring Resistance Of Transmission Wire (ATF Temperature Sensor)
Courtesy of TOYOTA MOTOR SALES, U.S.A., INC.

b. Measure the resistance according to the value(s) in the table below.

Standard Resistance

Tester Connection	Condition	Specified Condition
A-17 (E2) - A-18 (THO1)	Always	79 ohms to 156 kohms
A-17 (E2) - Body ground and other	Always	10 kohms or higher

terminals		
A-18 (THO1) - Body ground and other terminals	Always	10 kohms or higher

HINT:

If the resistance is out of the specified range with the ATF temperature shown in the table below, the driveability of the vehicle may decrease.

ATF Temperature	Specified Condition
10°C (50°F)	5 to 8 kohms
25°C (77°F)	2.5 to 4.5 kohms
110°C (230°F)	0.22 to 0.28 kohms

TEXT IN ILLUSTRATION

*a	Component without harness connected (Transmission Wire)

NG --> See step 4

OK --> See step 6

4. **REPLACE TRANSMISSION WIRE (ATF TEMPERATURE SENSOR). Refer to COMPONENTS**
5. **REPLACE ECM. Refer to COMPONENTS**
6. **REPLACE WIRING HARNESS CONNECTOR. Refer to COMPONENTS**

DTC P0715: INPUT / TURBINE SPEED SENSOR CIRCUIT MALFUNCTION; DTC P0717: INPUT SPEED SENSOR CIRCUIT NO SIGNAL

DESCRIPTION

This sensor detects the rotation speed of the turbine which shows the input revolution (speed) of the transaxle. By comparing the input turbine speed signal (NT) with the counter gear speed sensor signal (NC), the ECM detects the shift timing of the gears and appropriately controls the engine torque and hydraulic pressure according to various conditions, thus, providing smooth gear shifts.

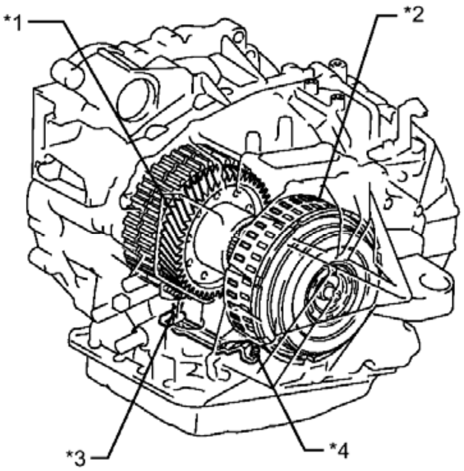

N

Fig. 13: Identifying Counter Gear, Clutch Drum, Input Speed Sensor And Output Speed Sensor
Courtesy of TOYOTA MOTOR SALES, U.S.A., INC.

TEXT IN ILLUSTRATION

*1	Counter Gear	*2	Clutch Drum
*3	Output Speed Sensor NC	*4	Input Speed Sensor NT

DTC No.	DTC Detection Condition	Trouble Area
P0715	When the speed sensor input voltage is either more than 1.9 V or less than 0.1 V for 4.5 seconds or more.(1-trip detection logic)	• Transmission revolution sensor (speed sensor NT) • Transmission wire • Wiring harness connector • ECM
P0717	ECM detects conditions (a), (b) and (c) continuously for 5 sec. or more: (1-trip detection logic) (a) Vehicle speed: 50 km/h (31 mph) or more (b) Park/neutral position switch (R) is OFF (c) Speed sensor (NT): less than 300 RPM	

MONITOR DESCRIPTION

The NT terminal of the ECM detects a revolution signal from the speed sensor (NT) (input RPM). The ECM calculates gear shifts comparing the speed sensor (NT) with the speed sensor (NC).

While the vehicle is operating in 2nd, 3rd, 4th or 5th gear with the shift lever in D, if the input shaft revolution (speed) is less than 300 rpm*1 although the output shaft revolution (speed) is more than 1000 rpm*2, the ECM interprets this as a fault, illuminates the MIL and stores the DTC.

*1: Pulse is not output or is irregularly output.

*2: The vehicle speed is 50 km/h (31 mph) or more.

MONITOR STRATEGY

Related DTCs	P0715: Speed sensor (NT)/Range check P0717: Speed sensor (NT)/Verify pulse input
Required sensors/Components	Speed sensor (NT), Speed sensor (NC)
Frequency of operation	Continuous
Duration	P0715: 4.5 sec. P0717: 5 sec.
MIL operation	Immediate
Sequence of operation	None

TYPICAL ENABLING CONDITIONS

P0715:

Battery voltage	8 V or more
Ignition switch	ON
Starter	OFF

P0717:

The monitor will run whenever this DTC is not present.	P0500 (VSS) P0748, P0778, P0798 (Shift solenoid valve (range))
Shift change	Shift change is completed before starting next shift change operation
ECM selected gear	2nd, 3rd, 4th, 5th or 6th
Output shaft RPM	1, 000 RPM or more
R switch	OFF
NSW switch	OFF
Engine	Running
Battery voltage	8 V or more
Ignition switch	ON

Starter	OFF
Transmission range switch circuit	Not malfunction
Turbine speed sensor range check	Not malfunction

TYPICAL MALFUNCTION THRESHOLDS

P0715:

Sensor voltage	Less than 0.1 V or more than 1.9 V

P0717:

Sensor signal RPM	Less than 300 RPM

COMPONENT OPERATING RANGE

Speed sensor (NT)	Turbine speed is equal to engine speed with lock-up ON

WIRING DIAGRAM

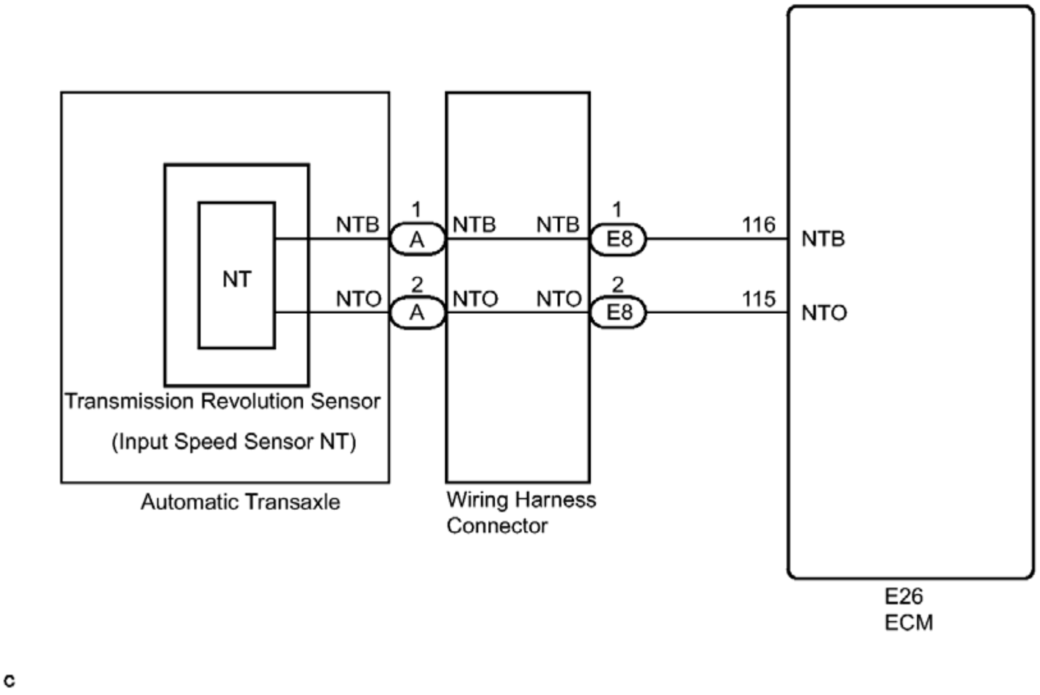
NT
NTB
NTO
1
A
2
A
NTB
NTO
NTB
NTO
1
E8
2
E8
116
115
NTB
NTO
Transmission Revolution Sensor
(Input Speed Sensor NT)
Automatic Transaxle
Wiring Harness Connector
E26
ECM
c

Fig. 14: Input Speed Sensor Circuit Wiring Diagram
Courtesy of TOYOTA MOTOR SALES, U.S.A., INC.

INSPECTION PROCEDURE

NOTE: **Perform the universal trip to clear permanent DTCs. Refer to DTC CHECK / CLEAR .**

HINT:

Using the Techstream to read the Data List allows the values or states of switches, sensors, actuators and other items to be read without removing any parts. This non-intrusive inspection can be very useful because intermittent conditions or signals may be discovered before parts or wiring is disturbed. Reading the Data List information early in troubleshooting is one way to save diagnostic time.

NOTE: **In the table below, the values listed under "Normal Condition" are reference values. Do not depend solely on these reference values when deciding whether a part is faulty or not.**

1. Warm up the engine.
2. Turn the ignition switch off.
3. Connect the Techstream to the DLC3.
4. Turn the ignition switch to ON.
5. Turn the Techstream on.
6. Enter the following menus: Powertrain / Engine and ECT / Data List.
7. According to the display on the Techstream, read the Data List.

ENGINE AND ECT

Tester Display	Measurement Item/Range	Normal Condition	Diagnostic Note
SPD (NT)	Input shaft speed/ Min.: 0 RPM Max.: 12750 RPM	Lock-up is • ON (after warming up engine): Input turbine speed (NT) is equal to engine speed • OFF (idling with shift lever in N): Input turbine speed	Data is displayed in increments of 50 RPM

			(NT) is nearly equal to engine speed	

HINT:

- SPD (NT) is always 0 while driving: Open or short in the sensor or circuit.
- SPD (NT) is always more than 0 and less than 300 RPM while driving the vehicle at 50 km/h (31 mph) or more: Sensor trouble, improper installation, or intermittent connection trouble of the circuit.

PROCEDURE

1. **INSPECT TRANSMISSION REVOLUTION SENSOR (SPEED SENSOR INSTALLATION)**
    1. Remove the valve body assembly.
    2. Make sure that the connector is properly connected, and check the speed sensor installation. Refer to **INSTALLATION** .

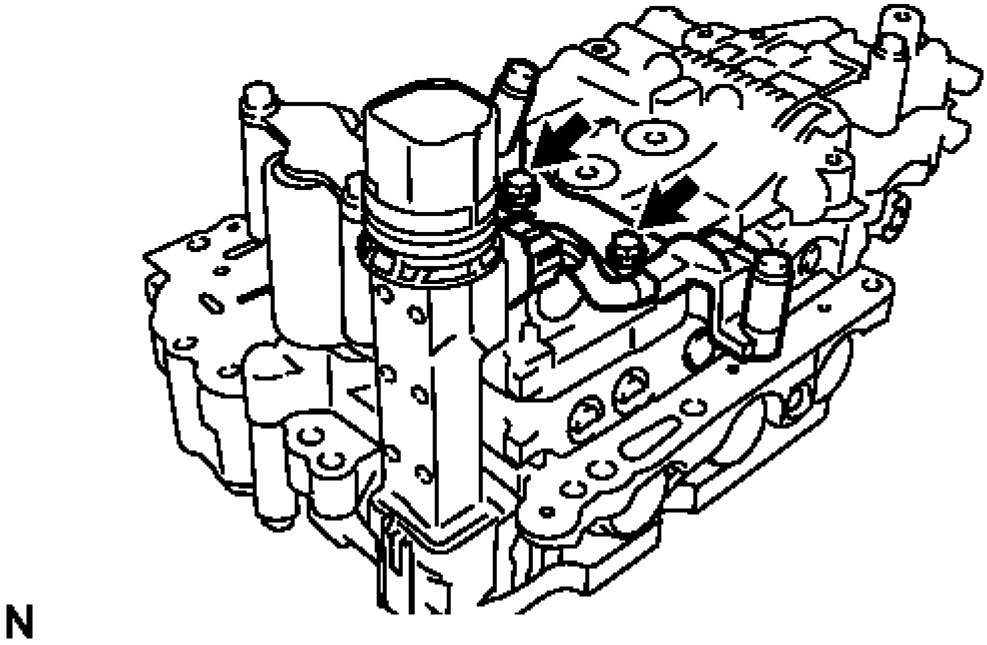

Fig. 15: Inspecting Transmission Revolution Sensor (Speed Sensor Installation)
Courtesy of TOYOTA MOTOR SALES, U.S.A., INC.

OK

The installation bolt is tightened properly and there is no clearance between the sensor and transaxle case.

NG --> See step 8

OK: Go to next step

2. **INSPECT TRANSMISSION WIRE**
    a. Disconnect the speed sensor connector from the transmission wire.

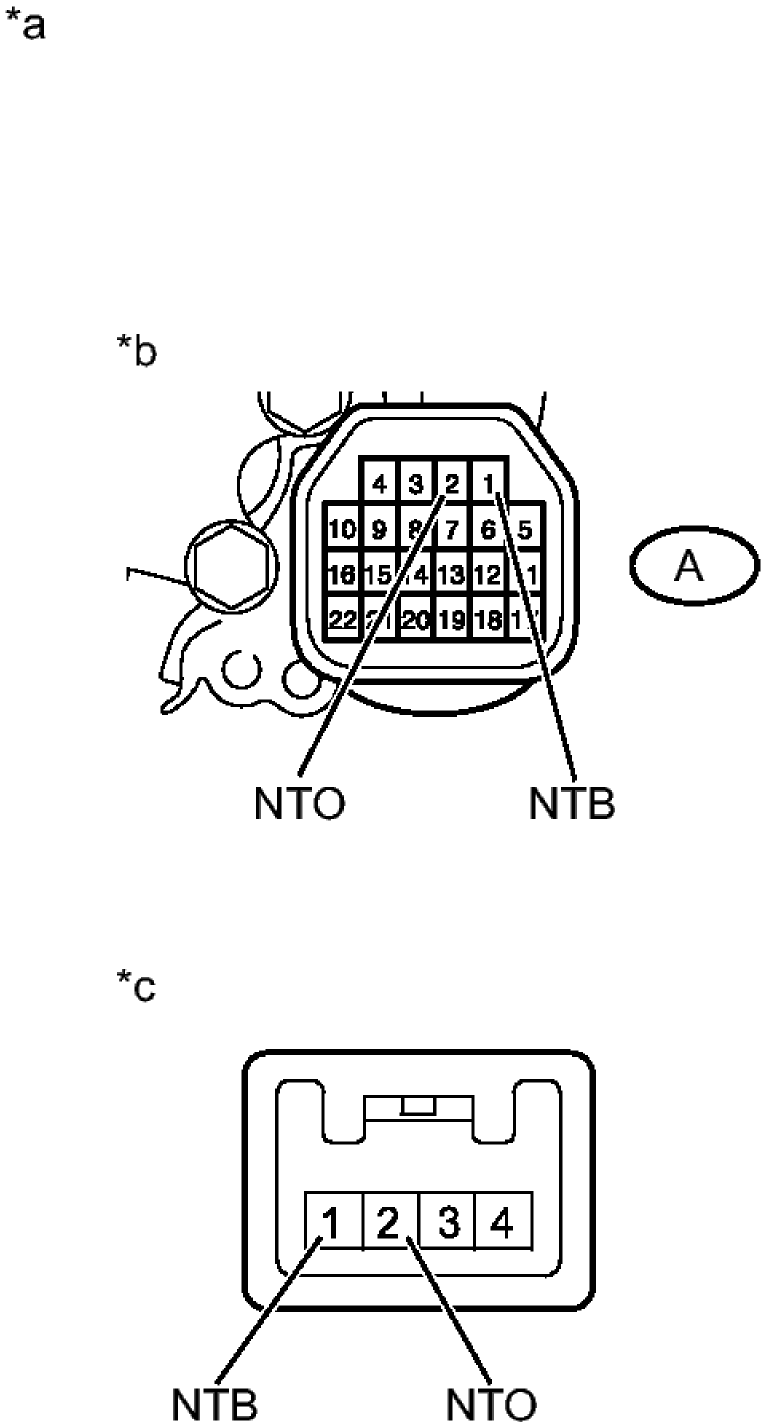
*a
*b
4
3
2
1
10
9
8
7
6
5
16
15
14
13
12
11
22
21
20
19
18
17
A
NTO
NTB
*c
1
2
3
4
NTB
NTO

Fig. 16: Measuring Resistance Of Transmission Wire
Courtesy of TOYOTA MOTOR SALES, U.S.A., INC.

b. Measure the resistance according to the value(s) in the table below.

Standard Resistance

Tester Condition	Condition	Specified Condition
1 (NTB) sensor side - A-1 (NTB) wiring harness connector side	Always	Below 1 ohms
2 (NTO) sensor side - A-2 (NTO) wiring harness connector side	Always	Below 1 ohms
1 (NTB) sensor side - Body ground and other terminals	Always	10 kohms or higher
2 (NTO) sensor side - Body ground and other terminals	Always	10 kohms or higher

TEXT IN ILLUSTRATION

*a	Component without harness connected (Transmission Wire)
*b	Wiring Harness Connector Side

*c	Sensor Side

NG --> See step 9

OK: Go to next step

3. **CHECK HARNESS AND CONNECTOR (ECM - WIRING HARNESS CONNECTOR)**
   a. Disconnect the ECM connector.
   b. Measure the resistance according to the value(s) in the table below.

   Standard Resistance

Tester Condition	**Condition**	**Specified Condition**
E8-1 (NTB) - E26-116 (NTB)	Always	Below 1 ohms
E8-2 (NTO) - E26-115 (NTO)	Always	Below 1 ohms
E8-1 (NTB) or E26-116 (NTB) - Body ground and other terminals	Always	10 kohms or higher
E8-2 (NTO) or E26-115 (NTO) - Body ground and other terminals	Always	10 kohms or higher

NG --> REPAIR OR REPLACE HARNESS OR CONNECTOR

OK: Go to next step

4. **INSPECT WIRING HARNESS CONNECTOR**
   a. Remove the wiring harness connector.

b. Measure the resistance according to the value(s) in the table below.

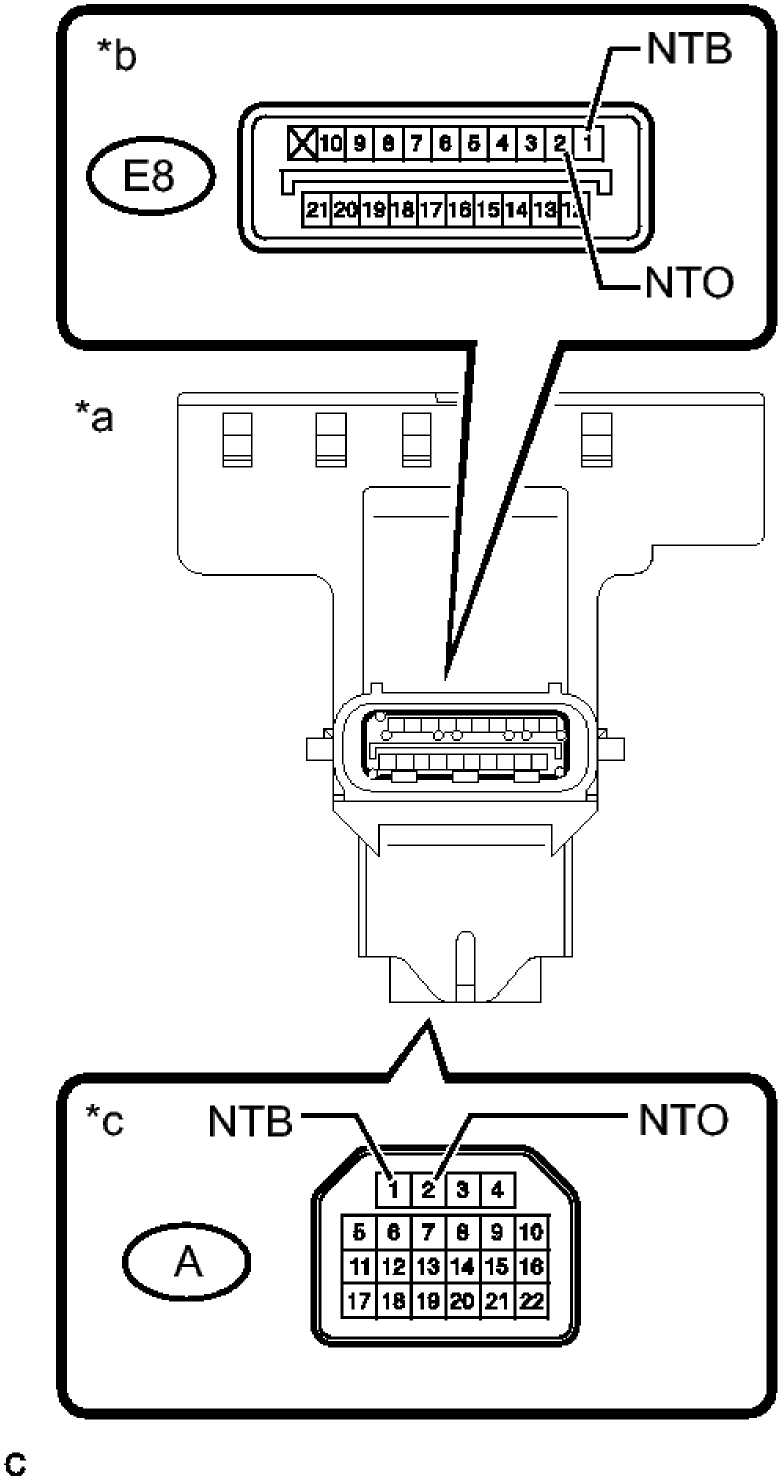
*b
NTB
E8
10 9 8 7 6 5 4 3 2 1
21 20 19 18 17 16 15 14 13 12
NTO
*a
*c
NTB
NTO
A
1 2 3 4
5 6 7 8 9 10
11 12 13 14 15 16
17 18 19 20 21 22
c

Fig. 17: Checking Resistance Of Wiring Harness Connector
Courtesy of TOYOTA MOTOR SALES, U.S.A., INC.

Standard Resistance

Tester Condition	Condition	Specified Condition
E8-1 (NTB) - A-1 (NTB)	Always	Below 1 ohms
E8-2 (NTO) - A-2 (NTO)	Always	Below 1 ohms
E8-1 (NTB) - All other terminals	Always	10 kohms or higher
E8-2 (NTO) - All other terminals	Always	10 kohms or higher

TEXT IN ILLUSTRATION

*a	Component without harness connected (Wiring Harness Connector)
*b	ECM Side
*c	Transmission Wire Side

NG --> See step 10

OK: Go to next step

5. **REPLACE TRANSMISSION REVOLUTION SENSOR**

Refer to **COMPONENTS**

NEXT: Go to next step

6. **CHECK IF DTC OUTPUT RECURS (SEE IF DTC P0715 AND/OR P0717 OUTPUT AGAIN)**
   a. Connect the Techstream to the DLC3.
   b. Start the engine and turn the Techstream on.

c. Clear the DTCs. Refer to **DTC CHECK / CLEAR** .

   HINT:

   Write down the currently output DTCs before clearing them.

d. Perform the monitor drive pattern. Refer to **MONITOR DRIVE PATTERN** .
e. Enter the following menus: Powertrain / Engine and ECT / Trouble Codes.
f. Read the DTCs using the Techstream.

   Result

Display (DTC Output)	Proceed to
Only "P0715 or P0717" is output	A
No output	B

B --> END

A --> See step 7

7. **REPLACE ECM. Refer to COMPONENTS**
8. **REPAIR OR REPLACE TRANSMISSION REVOLUTION SENSOR. Refer to COMPONENTS**
9. **REPLACE TRANSMISSION WIRE. Refer to COMPONENTS**
10. **REPLACE WIRING HARNESS CONNECTOR. Refer to COMPONENTS**

DTC P0741: TORQUE CONVERTER CLUTCH SOLENOID PERFORMANCE (SHIFT SOLENOID VALVE SL)

SYSTEM DESCRIPTION

The ECM uses signals from the throttle position sensor, air-flow meter, turbine (input) speed sensor, intermediate (counter gear) speed sensor and crankshaft position sensor to help determine the engagement timing of the lock-up clutch. The ECM monitors the engagement of the clutch using the turbine (input) speed sensor, intermediate (counter gear) speed sensor and crankshaft position sensor.

Then the ECM compares the engagement condition of the lock-up clutch with the lock-up schedule in the ECM memory to detect shift solenoid valve SL, valve body and torque converter mechanical problems.

DTC No.	DTC Detection Condition	Trouble Area
P0741	Lock-up does not occur when requested. (2-trip detection logic):	• Shift solenoid valve SL remains closed • Valve body is blocked • Torque converter assembly • Automatic transaxle (clutch, brake or gear etc.) • Line pressure is too low

MONITOR DESCRIPTION

Torque converter lock-up is controlled by the ECM based on the speed sensor (NT), speed sensor (NC), engine speed, engine load, engine temperature, vehicle speed, transmission fluid temperature, and gear selection. The ECM determines the lock-up status of the torque converter by comparing the engine speed (NE) to the input turbine RPM (NT). The ECM calculates the actual transmission gear by comparing the input turbine RPM (NT) to the counter gear RPM (NC). When conditions are appropriate, the ECM requests "lock-up" by applying control voltage to shift solenoid SL. When SL is turned on, it applies pressure to the lock-up relay valve and locks the torque converter.

If the ECM detects no lock-up after lock-up has been requested or if it detects lock-up when it is not requested, the ECM interprets this as a fault in shift solenoid valve SL or lock-up system performance. The ECM will turn on the MIL and store the DTC.

HINT:

Example:

When any of the following is met, the system judges it as a malfunction.

- There is a difference in rotation (speed) between the input side (engine speed) and output side (input turbine speed) of the torque converter when the ECM commands lock-up.

  (Engine speed is at least 70 RPM greater than the input turbine speed.)

MONITOR STRATEGY

Related DTCs	P0741: Shift solenoid valve SL OFF malfunction
Required sensors/Components	Shift solenoid valve SL, Speed sensor (NT), Speed sensor (NC), Crankshaft position sensor (NE), Throttle position sensor (VPA1), Mass air flow sensor (MAF), Transmission temperature sensor (THO1), Engine coolant temperature sensor (ECT)
Frequency of operation	Continuous

Duration	OFF malfunction 3.5 sec.
MIL operation	2 driving cycles
Sequence of operation	None

TYPICAL ENABLING CONDITIONS

ALL:

The monitor will run whenever this DTC is not present. (Not circuit malfunction)	P0712, P0713 (ATF temperature sensor circuit (TFT sensor)) P0115, P0117, P0118 (ECT sensor circuit) P0715, P0717 (Turbine speed sensor circuit) P0791, P0793 (Intermediate shaft speed sensor circuit) P0748 (Shift solenoid valve SL1 circuit) P0778 (Shift solenoid valve SL2 circuit) P0798 (Shift solenoid valve SL3 circuit) P2810 (Shift solenoid valve SL4 circuit) P2759 (Shift solenoid valve SLU circuit) P2769, P2770 (Shift solenoid valve SL circuit) P0327, P0328, (KCS sensor circuit) P0120, P0121, P0122, P0123, P0220, P0222, P0223, P0604, P0606, P060A, P060B, P060D, P060E, P0657, P1607, P2102, P2103, P2111, P2112, P2118, P2119, P2135 ((ETCS) Electronic throttle control system) U0100 (CAN communication system)
ECT (Engine coolant temperature)	40°C (104°F) or more
Spark advance from Max. retard timing by KCS control	0°CA or more
Transmission range	"D"
TFT (Transmission fluid temperature)	-10°C (14°F) or more
TFT (Transmission fluid temperature) sensor circuit	No circuit malfunction
ECT (Engine coolant temperature) sensor circuit	No circuit malfunction
Turbine speed sensor circuit	No circuit malfunction
Intermediate shaft speed sensor circuit	No circuit malfunction
Shift solenoid valve SL1 circuit	No circuit malfunction
Shift solenoid valve SL2 circuit	No circuit malfunction
Shift solenoid valve SL3 circuit	No circuit malfunction
Shift solenoid valve SL4 circuit	No circuit malfunction
Shift solenoid valve SLU circuit	No circuit malfunction
Shift solenoid valve SL circuit	No circuit malfunction
(KCS) Knock control sensor circuit	No circuit malfunction
(ETCS) Electronic throttle control system	Not system down

CAN communication system	Not system down
Engine	Starting
ECM selected gear	Not 1st
Vehicle speed	15.5 mph (25 km/h) or more
Turbine speed/Output speed (NT/NO) with 1st	3.232 to 7.556
Turbine speed/Output speed (NT/NO) with 2nd	1.860 to 2.289
Turbine speed/Output speed (NT/NO) with 3rd	1.369 to 1.613
Turbine speed/Output speed (NT/NO) with 4th	0.976 to 1.113
Turbine speed/Output speed (NT/NO) with 5th	0.690 to 0.818
Turbine speed/Output speed (NT/NO) with 6th	0.556 to 0.680

TYPICAL MALFUNCTION THRESHOLDS

OFF MALFUNCTION:

Engine Speed - Turbine speed	70 RPM or more

INSPECTION PROCEDURE

NOTE: **Perform the universal trip to clear permanent DTCs. Refer to DTC CHECK / CLEAR .**

HINT:

Using the Techstream to perform Active Tests allows relays, VSVs, actuators and other items to be operated without removing any parts. This non-intrusive functional inspection can be very useful because intermittent operation may be discovered before parts or wiring is disturbed. Performing Active Tests early in troubleshooting is one way to save diagnostic time. Data List information can be displayed while performing Active Tests.

1. **PERFORM ACTIVE TEST**
    a. Warm up the engine.
    b. Turn the ignition switch off.
    c. Connect the Techstream to the DLC3.
    d. Turn the ignition switch to ON.
    e. Turn the Techstream on.
    f. Enter the following menus: Powertrain / Engine and ECT / Active Test.
    g. According to the display on the Techstream, perform the Active Test.

Tester Display	Test Part	Control Range	Diagnostic Note
			Can be used to check SLU and SL

Activate the Lock Up	Controls the shift solenoid SLU and SL to set the automatic transaxle to the lock-up condition.	ON/OFF	solenoid operation. [Vehicle Condition] • Throttle valve opening angle: Less than 20% • Vehicle speed:60 km/h (37 mph) or more, and 6th gear

HINT:

This test can be conducted when the vehicle speed is 60 km/h (37 mph) or more.

h. Lightly depress the accelerator pedal and check that the engine speed does not change abruptly.

HINT:

- When changing the accelerator pedal opening angle while driving, if the engine speed does not change, lock-up is on.
- Slowly release, but not fully, the accelerator pedal in order to decelerate. (Fully releasing the pedal will close the throttle valve and lock-up may be turned off.)

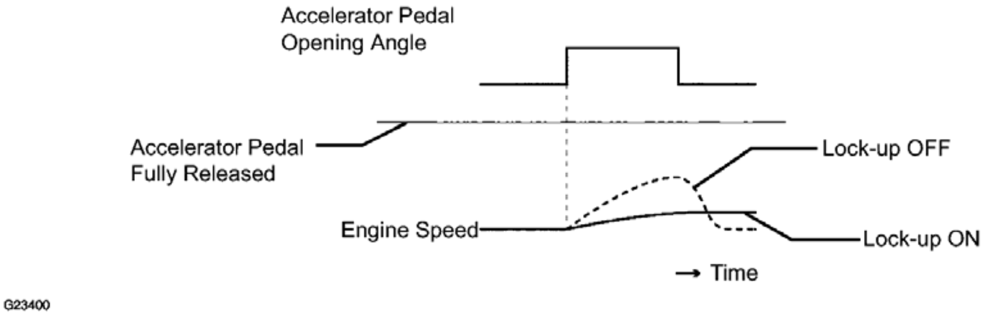

Fig. 18: Accelerator Pedal Opening Angle Graph

Courtesy of TOYOTA MOTOR SALES, U.S.A., INC.

PROCEDURE

1. **CHECK OTHER DTCS OUTPUT (IN ADDITION TO DTC P0741)**
    1. Connect the Techstream to the DLC3.
    2. Turn the ignition switch to ON.
    3. Turn the Techstream on.
    4. Enter the following menus: Powertrain / Engine and ECT / Trouble Codes.
    5. Read the DTCs using the Techstream.

Result

Display (DTC Output)	Proceed to
Only "P0741" is output	A
"P0741" and other DTCs	B

HINT:

If any other codes besides "P0741" are output, perform the troubleshooting for those DTCs first.

B --> See step 8

A: Go to next step

2. **CHECK TRANSMISSION WIRE**
    1. Remove the wiring harness connector from the transaxle.

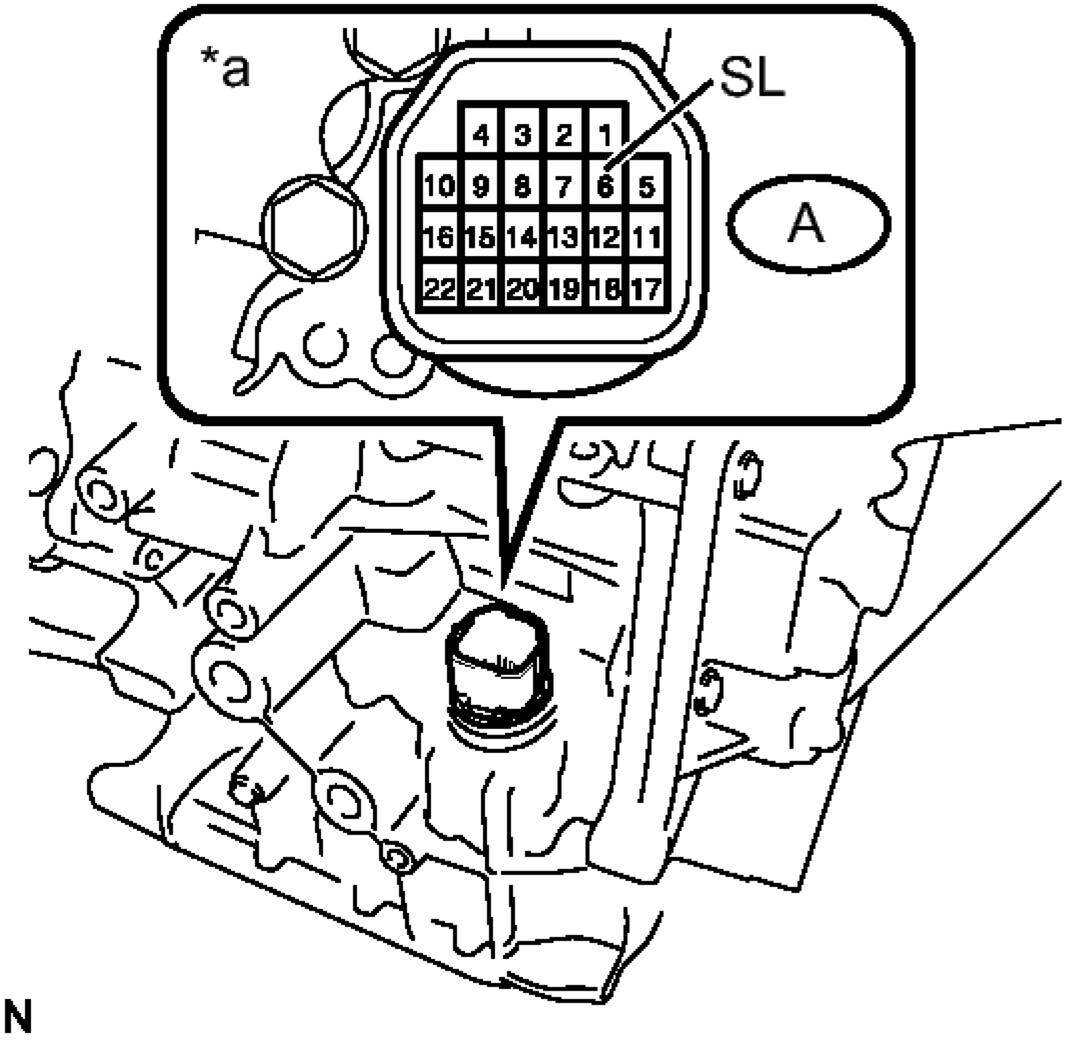
*a
SL
4 3 2 1
10 9 8 7 6 5
16 15 14 13 12 11
22 21 20 19 18 17
A
N

Fig. 19: Checking Transmission Wire Resistance
Courtesy of TOYOTA MOTOR SALES, U.S.A., INC.

b. Measure the resistance according to the value(s) in the table below.

Standard Resistance

Tester Connection	Condition	Specified Condition
A-6 (SL) - Body ground	20°C (68°F)	11 to 15 ohms

TEXT IN ILLUSTRATION

	Component

*a	without harness connected (Transmission Wire)

NG --> See step 6

OK: Go to next step

3. **INSPECT SHIFT SOLENOID VALVE SL (OPERATION)**
    a. Remove shift solenoid valve SL.

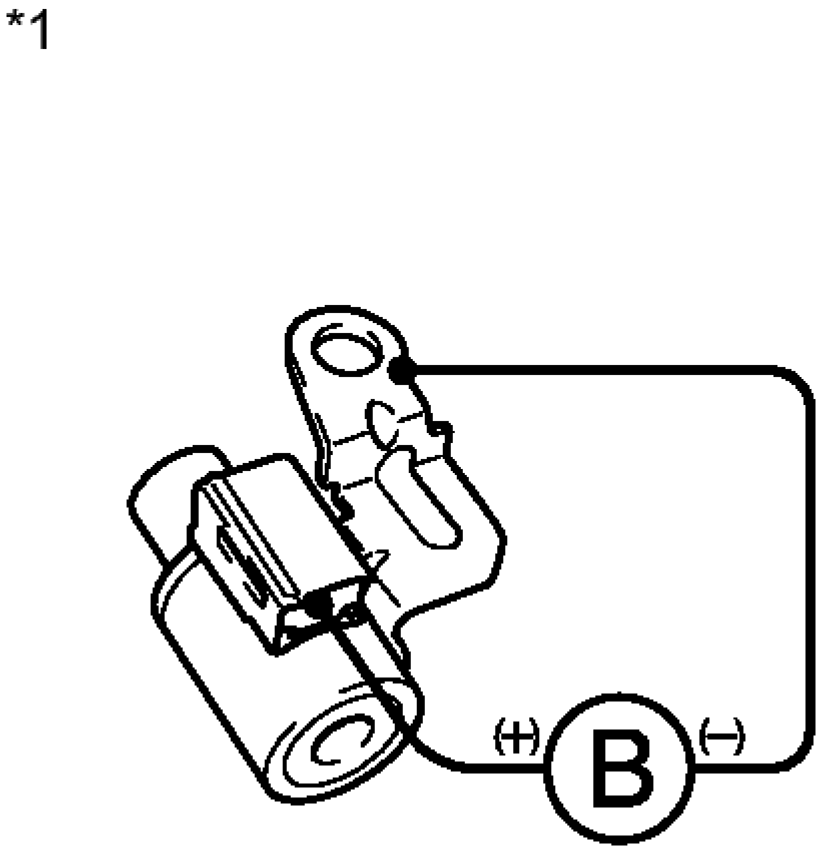

Fig. 20: Checking Shift Solenoid Valve SL (Operation)
Courtesy of TOYOTA MOTOR SALES, U.S.A., INC.

b. Connect a battery positive (+) lead to the terminal of the solenoid valve connector, and a negative (-) lead to the solenoid body. Then check that the valve moves and makes an operating sound.

OK

Valve moves and makes an operating sound.

TEXT IN ILLUSTRATION

*1	Shift Solenoid Valve SL

NG --> See step 9

OK: Go to next step

4. **INSPECT TRANSMISSION VALVE BODY ASSEMBLY**
   a. Check the transmission valve body assembly. Refer to **COMPONENTS** .

   OK

   There are no foreign objects on each valve and they operate smoothly.

NG --> See step 12

OK: Go to next step

5. **INSPECT TORQUE CONVERTER ASSEMBLY**
   a. Check the torque converter assembly. Refer to **INSPECTION** .

   OK

   The torque converter operates normally.

NG --> See step 11

OK --> See step 7

6. **INSPECT SHIFT SOLENOID VALVE SL (RESISTANCE)**
   a. Remove shift solenoid valve SL.

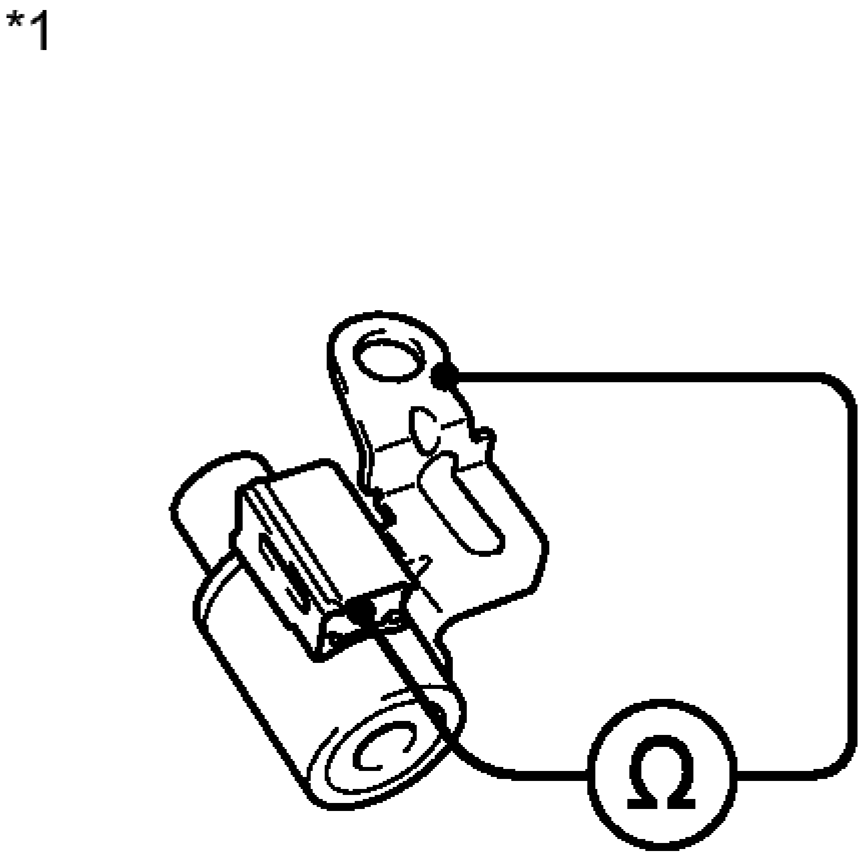

Fig. 21: Measuring Resistance Of Shift Solenoid Valve SL
Courtesy of TOYOTA MOTOR SALES, U.S.A., INC.

b. Measure the resistance according to the value(s) in the table below.

Standard Resistance

Tester Connection	Condition	Specified Condition
Solenoid Connector (SL) - Solenoid Body (SL)	20°C (68° F)	11 to 15 ohms

TEXT IN ILLUSTRATION

*1	Shift Solenoid Valve SL

NG --> See step 9

OK --> See step 10

7. **REPAIR OR REPLACE AUTOMATIC TRANSAXLE ASSEMBLY. Refer to COMPONENTS**
8. **GO TO DTC CHART. Refer to DIAGNOSTIC TROUBLE CODE CHART**
9. **REPLACE SHIFT SOLENOID VALVE SL. Refer to COMPONENTS**
10. **REPLACE TRANSMISSION WIRE. Refer to COMPONENTS**
11. **REPLACE TORQUE CONVERTER ASSEMBLY. Refer to COMPONENTS**
12. **REPAIR OR REPLACE TRANSMISSION VALVE BODY ASSEMBLY. Refer to COMPONENTS**

DTC P0746: PRESSURE CONTROL SOLENOID "A" PERFORMANCE (SHIFT SOLENOID VALVE SL1)

SYSTEM DESCRIPTION

The ECM uses the vehicle speed signal and signals from the transmission speed sensors (NC, NT) to detect the actual gear (1st, 2nd, 3rd, 4th, 5th or 6th gear).

Then the ECM compares the actual gear with the shift schedule in the ECM memory to detect mechanical problems of the shift solenoid valves and valve body.

DTC No.	DTC Detection Condition	Trouble Area
P0746	The engine revs freely when 1st, 2nd, 3rd, or 4th gear is commanded (2-trip detection logic). When either of the following is detected twice (2-trip detection logic): • When 5th gear is commanded, 4th gear is engaged. • When 6th gear is commanded, 4th gear is engaged	• Shift solenoid valve SL1 remains open or closed • Valve body is blocked • Automatic transaxle (clutch, brake or gear etc.)

MONITOR DESCRIPTION

The ECM commands gear shifts by turning the shift solenoid valves on and off. According to the input shaft revolution (speed), intermediate (counter) shaft revolution (speed) and output shaft revolution (speed), the ECM detects the actual gear (1st, 2nd, 3rd, 4th, 5th or 6th gear). When the gear commanded by the ECM and the actual gear are not the same, the ECM illuminates the MIL and stores the DTC.

MONITOR STRATEGY

Related DTCs	P0746: Shift solenoid valve SL1 OFF malfunction Shift solenoid valve SL1 ON malfunction
Required sensors/Components	Shift solenoid valve SL1, Speed sensor (NT), Speed sensor (NC), Crankshaft position sensor (NE)
Frequency of operation	Continuous
Duration	ON malfunction: 0.8 sec. OFF malfunction: 0.5 sec.
MIL operation	2 driving cycles
Sequence of operation	None

TYPICAL ENABLING CONDITIONS

ALL:

The monitor will run whenever this DTC is not present. (Not circuit malfunction)	P0712, P0713 (ATF temperature sensor circuit (TFT sensor)) P0115, P0117, P0118 (ECT sensor circuit) P0715, P0717 (Turbine speed sensor circuit) P0791, P0793 (Intermediate shaft speed sensor circuit) P0748 (Shift solenoid valve SL1 circuit) P0778 (Shift solenoid valve SL2 circuit) P0798 (Shift solenoid valve SL3 circuit) P2810 (Shift solenoid valve SL4 circuit) P0327, P0328, (KCS sensor circuit) P0120, P0121, P0122, P0123, P0220, P0222, P0223, P0604, P0606, P060A, P060B, P060D, P060E, P0657, P1607, P2102, P2103, P2111, P2112, P2118, P2119, P2135 ((ETCS) Electronic throttle control system) U0100 (CAN communication system)
Transmission range	"D"
TFT (Transmission fluid temperature)	-10°C (14°F) or more
TFT (Transmission fluid temperature) sensor circuit	No circuit malfunction
ECT (Engine coolant temperature) sensor circuit	No circuit malfunction
Turbine speed sensor circuit	No circuit malfunction
Intermediate shaft speed sensor circuit	No circuit malfunction
Shift solenoid valve SL1 circuit	No circuit malfunction
Shift solenoid valve SL2 circuit	No circuit malfunction
Shift solenoid valve SL3 circuit	No circuit malfunction

Shift solenoid valve SL4 circuit	No circuit malfunction
(KCS) Knock control sensor circuit	No circuit malfunction
(ETCS) Electronic throttle control system	Not system down
CAN communication system	Not system down
Engine	Starting

OFF MALFUNCTION:

ECM selected gear	1st, 2nd, 3rd or 4th
ECM indicated pressure value of SL1	1, 200 kPa
Throttle valve opening angle	3% or more

ON MALFUNCTION:

ECM selected gear	5th or 6th
Vehicle speed	1.2 mph (2 km/h) or more
ETC (Engine coolant temperature)	40°C (104°F) or more
Throttle valve opening angle	6.5% or more at engine speed 2, 000 RPM (Varies with engine speed)

TYPICAL MALFUNCTION THRESHOLDS

Either of the following conditions is met:

OFF MALFUNCTION:

Turbine speed - Output speed x Gear ratio	1, 000 RPM or more

ON MALFUNCTION:

Input (turbine) speed/Intermediate shaft speed when output speed less than 1, 000 RPM	0.976 to 1.113

INSPECTION PROCEDURE

NOTE: **Perform the universal trip to clear permanent DTCs. Refer to DTC CHECK / CLEAR .**

PROCEDURE

1. **CHECK OTHER DTCS OUTPUT (IN ADDITION TO DTC P0746)**
    1. Connect the Techstream to the DLC3.
    2. Turn the ignition switch to ON.
    3. Turn the Techstream on.
    4. Enter the following menus: Powertrain / Engine and ECT / Trouble Codes.
    5. Read the DTCs using the Techstream.

    Result

Display (DTC Output)	Proceed to
Only "P0746" is output	A
"P0746" and other DTCs	B

    HINT:

    If a solenoid is stuck OFF, DTCs for several solenoids including the malfunctioning solenoid will be detected.

    A --> See step 3

    B: Go to next step

2. **PERFORM ACTIVE TEST USING TECHSTREAM**

    NOTE: **This test should always be performed with at least 2 people.**

    1. Warm up the engine.
    2. Turn the ignition switch off.
    3. Connect the Techstream to the DLC3.
    4. Turn the ignition switch to ON.
    5. Turn the Techstream on.
    6. Enter the following menus: Powertrain / Engine and ECT / Active Test.
    7. According to the display on the Techstream, perform the Active Test.

    HINT:

Comparing the gear commanded by the Active Test with the actual gear enables confirmation of the problem. Refer to **FAIL-SAFE CHART** .

Tester Display	Test Part	Control Range	Diagnostic Note
Control the Shift Position	Operates the shift solenoid valves to allow gears to selected manually.	• Press "-->" button: Upshift occurs • Press "<--" button: Downshift occurs	Can be used to check the operation of the shift solenoid valves. Upshifts and downshifts should be performed consecutively. A 10-second interval is required between gear changes. Do not downshift at high speeds. Doing so will damage the automatic transaxle. [Vehicle Condition] 50 km/h (30 mph) or less

NOTE:

- **This test can be conducted when the vehicle is stopped.**
- **When shifting gears using the Active Test function, do not operate the accelerator pedal for 2 seconds before and after shifting gears.**

HINT:

The gear commanded by the ECM is shown in the Data List / Shift Status display on the Techstream.

h. Check the vehicle speed and the gear when the engine speed is 1000 rpm.

HINT:

Because the torque converter has not engaged, it may be difficult to obtain the speeds specified in 4th, 5th, and 6th gear, however a difference of speed should still be evident following each gear change.

Standard

1st	2nd	3rd	4th	5th	6th
8 to 12 km/h (5 to 7.5 mph)	15 to 19 km/h (9.3 to 11.8 mph)	21 to 25 km/h (13.0 to 15.5 mph)	31 to 35 km/h (19.3 to 21.7 mph)	44 to 48 km/h (27.3 to 29.8 mph)	52 to 56 km/h (32.3 to 34.8 mph)

i. Compare the ECM commanded gear and the actual gear.

Result

Actuator Gear during Malfunction		ECM Commanded Gear						Proceed to
		1st	2nd	3rd	4th	5th	6th	
Shift solenoid SL1	Stuck ON	1st	2nd	3rd	4th	4th	4th	A
	Stuck OFF	N*1	N*1	N*1	N*1	5th	6th	
Shift solenoid SL2	Stuck ON	4th	4th	4th	4th	5th	6th	B
	Stuck OFF	1st	2nd	3rd	1st	N*1	N*1	
Shift solenoid SL3	Stuck ON	2nd	2nd	3rd	4th	5th	6th	C
	Stuck OFF	1st	1st	3rd	4th	5th	N*1	
Shift solenoid SL4	Stuck ON*3	3rd	3rd	3rd	4th	5th	5th	D
	Stuck OFF	1st	2nd	1st	4th	N*1	6th	
Shift solenoid SLT	Stuck ON	N*2	N*2	N*2	N*2	N*2	N*2	E
	Stuck OFF*3	1st	2nd	3rd	4th	5th	6th	

HINT:

- *1: Neutral
- *2: If shift solenoid SLT is stuck on, the line pressure will be low. Therefore, the amount of

torque that can be transmitted by each gear is lower than the normal limit. When the engine power exceeds this lowered limit, the engine speed will increase freely.

- *3: When shift solenoid SLT is stuck off, gear shifting is normal.

B --> See step 8

C --> See step 9

D --> See step 10

E --> See step 11

A: Go to next step

3. **INSPECT SHIFT SOLENOID VALVE SL1**
    a. Remove shift solenoid valve SL1.

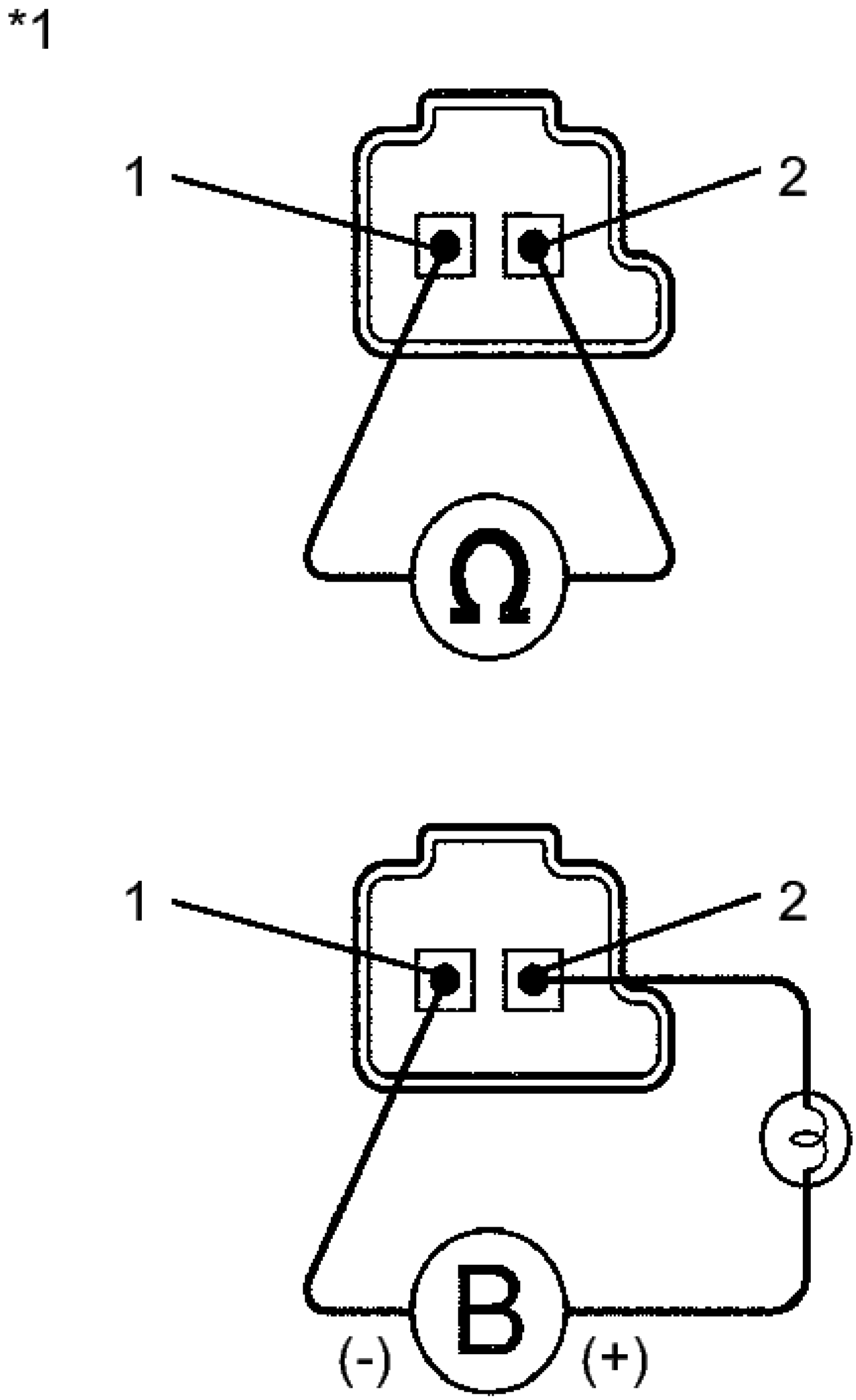

Fig. 22: Checking Resistance In Shift Solenoid Valve SL1
Courtesy of TOYOTA MOTOR SALES, U.S.A., INC.

b. Measure the resistance according to the value(s) in the table below.

Standard Resistance

Tester Connection	**Condition**	**Specified Condition**
1 - 2	20°C (68° F)	5.0 to 5.6 ohms

c. Connect a battery positive (+) lead with a 21 W bulb to terminal 2 and a negative (-) lead to terminal 1 of the solenoid valve connector. Then check that the valve moves and makes an operating sound.

OK

Valve moves and makes an operating sound.

TEXT IN ILLUSTRATION

*1	Shift Solenoid Valve SL1

NG --> See step 6

OK: Go to next step

4. **INSPECT TRANSMISSION VALVE BODY ASSEMBLY**
   a. Check the transmission valve body assembly. Refer to **REMOVAL** .

   OK

   There are no foreign objects on each valve and they operate smoothly.

NG --> See step 7

OK --> See step 5

5. **REPAIR OR REPLACE AUTOMATIC TRANSAXLE ASSEMBLY. Refer to COMPONENTS**
6. **REPLACE SHIFT SOLENOID VALVE SL1. Refer to COMPONENTS**
7. **REPAIR OR REPLACE TRANSMISSION VALVE BODY ASSEMBLY. Refer to COMPONENTS**
8. **GO TO DTC CHART (RELATED SHIFT SOLENOID VALVE (SL2) PERFORMANCE DTC P0776). Refer to DTC P0776: Pressure Control Solenoid "B" Performance (Shift Solenoid Valve SL2)**
9. **GO TO DTC CHART (RELATED SHIFT SOLENOID VALVE (SL3) PERFORMANCE DTC P0796). Refer to DTC P0796: Pressure Control Solenoid "C" Performance (Shift Solenoid Valve**

SL3)

10. **GO TO DTC CHART (RELATED SHIFT SOLENOID VALVE (SL4) PERFORMANCE DTC P2808). Refer to DTC P2808: Pressure Control Solenoid "G" Performance (Shift Solenoid Valve SL4)**
11. **GO TO DTC CHART (RELATED SHIFT SOLENOID VALVE (SLT) PERFORMANCE DTC P2714). Refer to DTC P2714: Pressure Control Solenoid "D" Performance (Shift Solenoid Valve SLT)**

DTC P0748: PRESSURE CONTROL SOLENOID "A" ELECTRICAL (SHIFT SOLENOID VALVE SL1)

DESCRIPTION

Changing from 1st to 6th is performed by the ECM turning shift solenoid valves SL1, SL2, SL3, SL4 and SL on and off. If an open or short circuit occurs in any of the shift solenoid valves, the ECM controls the remaining normal shift solenoid valves to allow the vehicle to be operated. Refer to **FAIL-SAFE CHART** .

DTC No.	DTC Detection Condition	Trouble Area
P0748	The ECM checks for an open or short in the shift solenoid valve SL1 circuit while driving and shifting between 4th and 5th gears. (1-trip detection logic) • Output signal duty equals 100%. (NOTE: SL1 output signal duty is less than 100% under normal condition.)	• Open or short in shift solenoid valve SL1 circuit • Shift solenoid valve SL1 • Wiring harness connector • ECM

MONITOR DESCRIPTION

This DTC indicates an open or short in the shift solenoid valve SL1 circuit. The ECM commands gear shifts by turning the shift solenoid valves on or off. When there is an open or short circuit in any shift solenoid valve circuit, the ECM detects the problem and illuminates the MIL and stores the DTC. The ECM also performs the fail-safe function and turns the other normal shift solenoid valves on or off. (In case of an open or short circuit, the ECM stops sending current to the circuit.)

While driving and shifting between 4th and 5th gears, if the ECM detects an open or short in the shift solenoid valve SL1 circuit, the ECM determines there is a malfunction. Refer to **FAIL-SAFE CHART** .

MONITOR STRATEGY

Related DTCs	P0748: Shift solenoid valve SL1/Range check
Required sensors/Components	Shift solenoid valve SL1
Frequency of operation	Continuous
Duration	1 sec.

MIL operation	Immediate
Sequence of operation	None

TYPICAL ENABLING CONDITIONS

ALL

The monitor will run whenever the following DTCs are not present	None
Ignition switch	ON
Starter	OFF

CONDITION (A)

Battery voltage	12 V or more

CONDITION (B)

Battery voltage	10 V or more and less than 12 V
Target current	Less than 0.75 A

CONDITION (C)

Battery voltage	8 V or more
Target current	0.6 A or more

TYPICAL MALFUNCTION THRESHOLDS

When one of the following conditions is met: Condition (A), (B) or (C)

CONDITION (A) AND (B)

Output duty cycle	100% or more

CONDITION (C)

Output duty cycle	0% or less

COMPONENT OPERATING RANGE

Output duty cycle	More than 0% and less than 100%

WIRING DIAGRAM

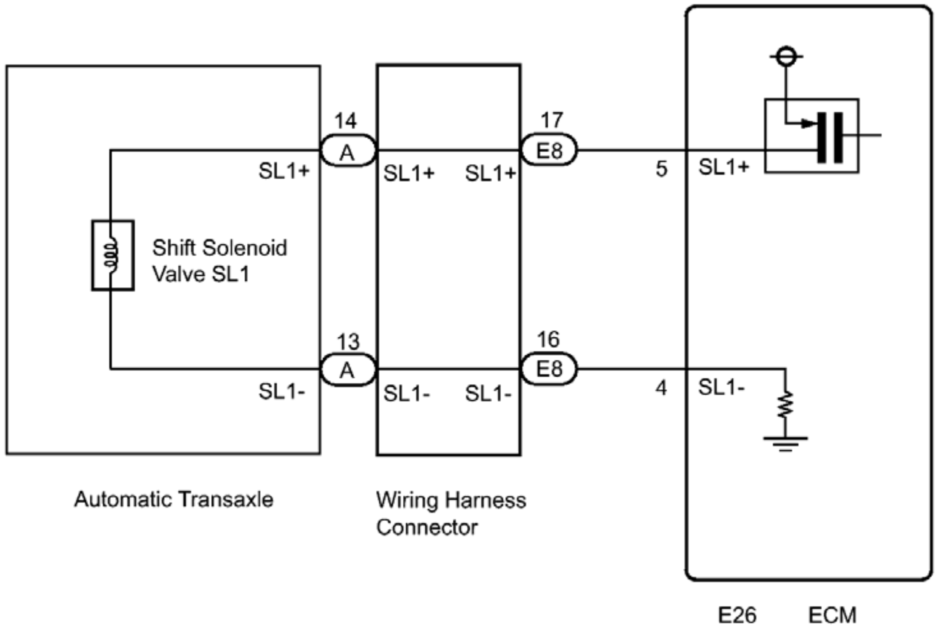
14
A
17
E8
SL1+
SL1+
SL1+
5
SL1+
Shift Solenoid
Valve SL1
13
A
16
E8
SL1-
SL1-
SL1-
4
SL1-
Automatic Transaxle
Wiring Harness
Connector
E26
ECM

c

Fig. 23: Shift Solenoid Valve SL1 Circuit Wiring Diagram
Courtesy of TOYOTA MOTOR SALES, U.S.A., INC.

INSPECTION PROCEDURE

NOTE: **Perform the universal trip to clear permanent DTCs. Refer to DTC CHECK / CLEAR .**

HINT:

The following table shows normal operation of the shift solenoid valve SL1 when the shift lever is in D:

ECM commanded gear	1st	2nd	3rd	4th	5th	6th
Shift solenoid valve SL1	ON	ON	ON	ON	OFF	OFF

PROCEDURE

1. **CHECK HARNESS AND CONNECTOR (SHIFT SOLENOID VALVE SL1 CIRCUIT)**
    a. Disconnect the ECM connector.

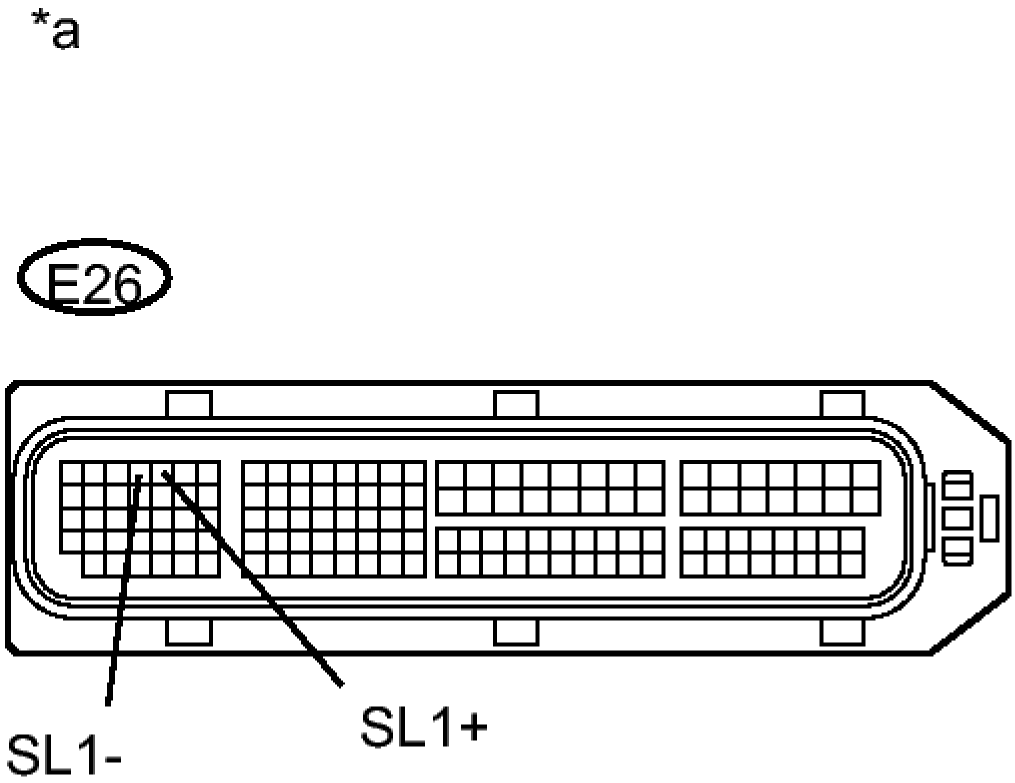

Fig. 24: Checking Harness And Connector (Shift Solenoid Valve SL1 Circuit)
Courtesy of TOYOTA MOTOR SALES, U.S.A., INC.

b. Measure the resistance according to the value(s) in the table below.

Standard Resistance

Tester Connection	Condition	Specified Condition
E26-5 (SL1+) - E26-4 (SL1-)	20°C (68°F)	5.0 to 5.6 ohms
E26-5 (SL1+) - Body		10 kohms

ground and other terminals	Always	or higher
E26-4 (SL1-) - Body ground and other terminals	Always	10 kohms or higher

TEXT IN ILLUSTRATION

*a	Front view of wire harness connector (to ECM)

NG --> See step 2

OK --> See step 5

2. **CHECK HARNESS AND CONNECTOR (ECM - WIRING HARNESS CONNECTOR)**
   a. Disconnect the harness connector from the wiring harness connector.
   b. Measure the resistance according to the value(s) in the table below.

Standard Resistance

Tester Condition	Condition	Specified Condition
E26-5 (SL1+) - E8-17 (SL1+)	Always	Below 1 ohms
E26-4 (SL1-) - E8-16 (SL1-)	Always	Below 1 ohms
E26-5 (SL1+) or E8-17 (SL1+) - Body ground and other terminals	Always	10 kohms or higher

E26-4 (SL1-) or E8-16 (SL1-) - Body ground and other terminals	Always	10 kohms or higher

NG --> REPAIR OR REPLACE HARNESS OR CONNECTOR

OK: Go to next step

3. **INSPECT TRANSMISSION WIRE (SL1)**
   a. Remove the wiring harness connector from the transaxle.

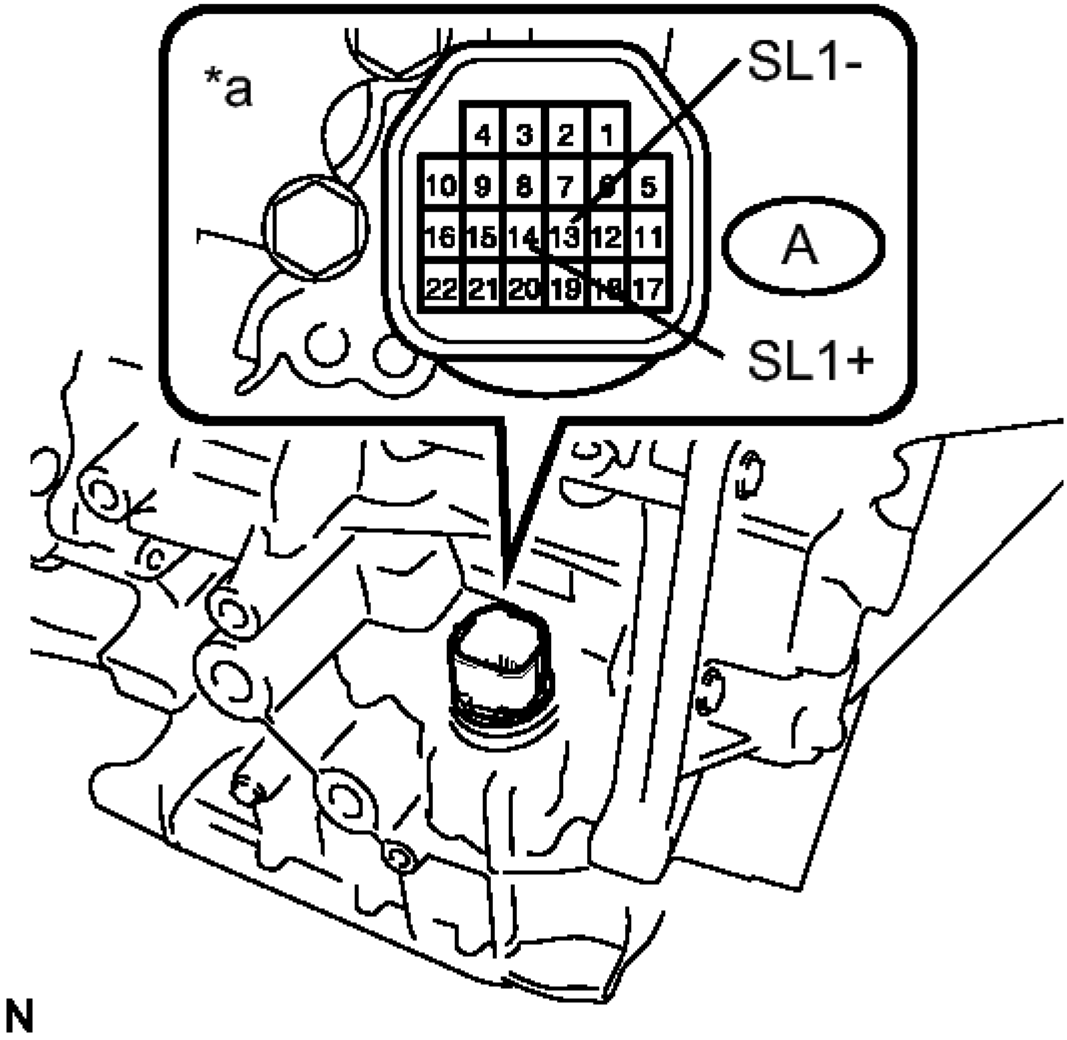
*a
SL1-
4 3 2 1
10 9 8 7 6 5
16 15 14 13 12 11
22 21 20 19 18 17
A
SL1+
N

Fig. 25: Checking Transmission Wire (SL1)
Courtesy of TOYOTA MOTOR SALES, U.S.A., INC.

b. Measure the resistance according to the value(s) in the table below.

Standard Resistance

Tester Connection	Condition	Specified Condition
A-14 (SL1+) - A-13 (SL1-)	20°C (68°F)	5.0 to 5.6 ohms
A-14 (SL1+) - Body ground and other terminals	Always	10 kohms or higher
A-13 (SL1-) - Body ground and other terminals	Always	10 kohms or higher

TEXT IN ILLUSTRATION

*a	Component without harness connected (Transmission Wire)

NG --> See step 4

OK --> See step 8

4. **INSPECT SHIFT SOLENOID VALVE SL1**
   a. Remove shift solenoid valve SL1.

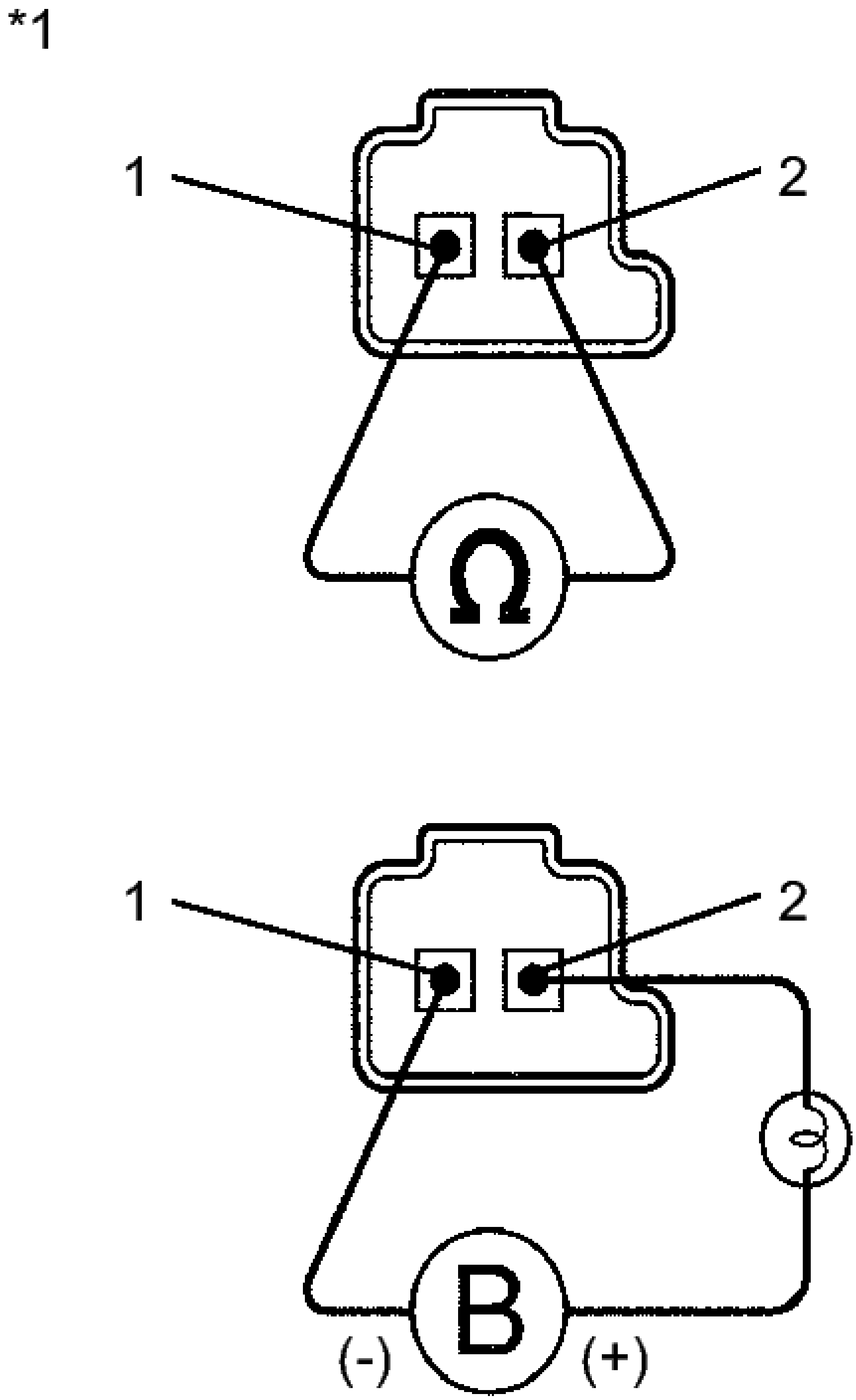

Fig. 26: Checking Resistance In Shift Solenoid Valve SL1
Courtesy of TOYOTA MOTOR SALES, U.S.A., INC.

b. Measure the resistance according to the value(s) in the table below.

Standard Resistance

Tester Connection	Condition	Specified Condition
1 - 2	20°C (68° F)	5.0 to 5.6 ohms

c. Connect a battery positive (+) lead with a 21 W bulb to terminal 2 and a negative (-) lead to terminal 1 of the solenoid valve connector. Then check that the valve moves and makes an operating sound.

OK

Valve moves and makes an operating sound.

TEXT IN ILLUSTRATION

*1	Shift Solenoid Valve SL1

NG --> See step 6

OK --> See step 7

5. **REPLACE ECM. Refer to COMPONENTS**
6. **REPLACE SHIFT SOLENOID VALVE SL1. Refer to COMPONENTS**
7. **REPLACE TRANSMISSION WIRE. Refer to COMPONENTS**
8. **REPLACE WIRING HARNESS CONNECTOR. Refer to COMPONENTS**

DTC P0776: PRESSURE CONTROL SOLENOID "B" PERFORMANCE (SHIFT SOLENOID VALVE SL2)

SYSTEM DESCRIPTION

The ECM uses the vehicle speed signal and signals from the transmission speed sensors (NC, NT) to detect the actual gear (1st, 2nd, 3rd, 4th, 5th or 6th gear).

Then the ECM compares the actual gear with the shift schedule in the ECM memory to detect mechanical problems of the shift solenoid valves and valve body.

DTC No.	DTC Detection Condition	Trouble Area
	The engine revs freely when 4th, 5th, or 6th gear is commanded (2-trip detection logic). When any of the following is detected twice	

P0776	(2-trip detection logic): • When 1st gear is commanded, 4th gear is engaged. • When 2nd gear is commanded, 4th gear is engaged. • When 3rd gear is commanded, 4th gear is engaged.	• Shift solenoid valve SL2 remains open or closed • Valve body is blocked • Automatic transaxle (clutch, brake or gear etc.)

MONITOR DESCRIPTION

The ECM commands gear shifts by turning the shift solenoid valves on and off. According to the input shaft revolution (speed), intermediate (counter) shaft revolution (speed) and output shaft revolution (speed), the ECM detects the actual gear (1st, 2nd, 3rd, 4th, 5th or 6th gear). When the gear commanded by the ECM and the actual gear are not the same, the ECM illuminates the MIL and stores the DTC.

MONITOR STRATEGY

Related DTCs	P0776: Shift solenoid valve SL2/OFF malfunction Shift solenoid valve SL2/ON malfunction
Required sensors/Components	Shift solenoid valve SL2, Speed sensor (NT), Speed sensor (NC), Crankshaft position sensor (NE)
Frequency of operation	Continuous
Duration	OFF malfunction 0.5 sec. ON malfunction 0.8 sec.
MIL operation	2 driving cycles
Sequence of operation	None

TYPICAL ENABLING CONDITIONS

ALL:

The monitor will run whenever this DTC is not present.	P0712, P0713 (ATF temperature sensor circuit (TFT sensor)) P0115, P0117, P0118 (ECT sensor circuit) P0715, P0717 (Turbine speed sensor circuit) P0791, P0793 (Intermediate shaft speed sensor circuit) P0748 (Shift solenoid valve SL1 circuit) P0778 (Shift solenoid valve SL2 circuit) P0798 (Shift solenoid valve SL3 circuit)

(Not circuit malfunction)	P2810 (Shift solenoid valve SL4 circuit) P0327, P0328, (KCS sensor circuit) P0120, P0121, P0122, P0123, P0220, P0222, P0223, P0604, P0606, P060A, P060B, P060D, P060E, P0657, P1607, P2102, P2103, P2111, P2112, P2118, P2119, P2135 ((ETCS) Electronic throttle control system) U0100 (CAN communication system)
Transmission range	"D"
TFT (Transmission fluid temperature)	-10°C (14°F) or more
TFT (Transmission fluid temperature) sensor circuit	No circuit malfunction
ECT (Engine coolant temperature) sensor circuit	No circuit malfunction
Turbine speed sensor circuit	No circuit malfunction
Intermediate shaft speed sensor circuit	No circuit malfunction
Shift solenoid valve SL1 circuit	No circuit malfunction
Shift solenoid valve SL2 circuit	No circuit malfunction
Shift solenoid valve SL3 circuit	No circuit malfunction
Shift solenoid valve SL4 circuit	No circuit malfunction
(KCS) Knock control sensor circuit	No circuit malfunction
(ETCS) Electronic throttle control system	Not system down
CAN communication system	Not system down
Engine	Starting

OFF MALFUNCTION:

ECM selected gear	4th, 5th or 6th
ECM indicated pressure value of SL2	1, 200 kPa
Throttle valve opening angle	3% or more

ON MALFUNCTION (A):

ECM selected gear	1st
Vehicle speed	1.2 mph (2 km/h) to 24.9 mph (40 km/h)
ECT (Engine coolant temperature)	40°C (104°F) or more
Engine speed - Turbine speed	50 RPM or more

ON MALFUNCTION (B):

ECM selected gear	2nd
Throttle valve opening angle	6.5% or more at engine speed 2, 000 RPM (Varies with engine speed)
Vehicle speed	1.2 mph (2 km/h) or more
ECT (Engine coolant temperature)	40°C (104°F) or more

ON MALFUNCTION (C):

ECM selected gear	3rd
Throttle valve opening angle	6.5% or more at engine speed 2, 000 RPM (Varies with engine speed)
Vehicle speed	1.2 mph (2 km/h) or more
ECT (Engine coolant temperature)	40°C (104°F) or more

TYPICAL MALFUNCTION THRESHOLDS

OFF MALFUNCTION:

Input (turbine) speed-Intermediate shaft speed x Gear ratio	1, 000 RPM or more

ON MALFUNCTION:

Input (turbine) speed/Intermediate shaft speed when output speed less than 1, 000 RPM	0.976 to 1.113

INSPECTION PROCEDURE

NOTE: **Perform the universal trip to clear permanent DTCs. Refer to DTC CHECK / CLEAR .**

PROCEDURE

1. **CHECK OTHER DTCS OUTPUT (IN ADDITION TO DTC P0776)**
   a. Connect the Techstream to the DLC3.
   b. Turn the ignition switch to ON.
   c. Turn the Techstream on.
   d. Enter the following menus: Powertrain / Engine and ECT / Trouble Codes.
   e. Read the DTCs using the Techstream.

   Result

Display (DTC Output)	Proceed to
Only "P0776" is output	A
"P0776" and other DTCs	B

are output	

HINT:

If a solenoid is stuck OFF, DTCs for several solenoids including the malfunctioning solenoid will be detected.

A --> See step 3

B: Go to next step

2. **PERFORM ACTIVE TEST USING TECHSTREAM**

NOTE: This test should always be performed with at least 2 people.

a. Warm up the engine.
b. Turn the ignition switch off.
c. Connect the Techstream to the DLC3.
d. Turn the ignition switch to ON.
e. Turn the Techstream on.
f. Enter the following menus: Powertrain / Engine and ECT / Active Test.
g. According to the display on the Techstream, perform the Active Test.

HINT:

Comparing the gear commanded by the Active Test with the actual gear enables confirmation of the problem. Refer to **FAIL-SAFE CHART** .

Tester Display	Test Details	Control Range	Diagnostic Note
Control the	Operates the shift solenoid valves to	• Press "-->" button: Upshift occurs	Can be used to check the operation of the shift solenoid valves. Upshifts and downshifts should be performed consecutively. A 10-second interval is required

Shift Position	allow gears to selected manually.	- Press "<--" button: Downshift occurs	between gear changes. Do not downshift at high speeds. Doing so will damage the automatic transaxle. [Vehicle Condition] 50 km/h (31 mph) or less

NOTE:

- **This test can be conducted when the vehicle is stopped.**
- **When shifting gears using the Active Test function, do not operate the accelerator pedal for 2 seconds before and after shifting gears.**

HINT:

The gear commanded by the ECM is shown in the Data List / Shift Status display on the Techstream.

h. Check the vehicle speed and the gear when the engine speed is 1000 rpm.

HINT:

Because the torque converter clutch has not engaged, it may be difficult to obtain the speeds specified in 4th, 5th, and 6th gear, however a difference of speed should still be evident following each gear change.

Standard

1st	2nd	3rd	4th	5th	6th
8 to 12 km/h (5 to 7.5 mph)	15 to 19 km/h (9.3 to 11.8 mph)	21 to 25 km/h (13.0 to 15.5 mph)	31 to 35 km/h (19.3 to 21.7 mph)	44 to 48 km/h (27.3 to 29.8 mph)	52 to 56 km/h (32.3 to 34.8 mph)

i. Compare the ECM commanded gear and the actual gear.

Result

Actuator Gear during Malfunction		ECM Commanded Gear						Proceed to
		1st	**2nd**	**3rd**	**4th**	**5th**	**6th**	
Shift solenoid SL1	Stuck ON	1st	2nd	3rd	4th	4th	4th	A
	Stuck OFF	N*1	N*1	N*1	N*1	5th	6th	
Shift solenoid SL2	Stuck ON	4th	4th	4th	4th	5th	6th	B
	Stuck OFF	1st	2nd	3rd	1st	N*1	N*1	
Shift solenoid SL3	Stuck ON	2nd	2nd	3rd	4th	5th	6th	C
	Stuck OFF	1st	1st	3rd	4th	5th	N*1	
Shift solenoid SL4	Stuck ON*3	3rd	3rd	3rd	4th	5th	5th	D
	Stuck OFF	1st	2nd	1st	4th	N*1	6th	
Shift solenoid SLT	Stuck ON	N*2	N*2	N*2	N*2	N*2	N*2	E
	Stuck OFF*3	1st	2nd	3rd	4th	5th	6th	

HINT:

- *1: Neutral
- *2: If shift solenoid SLT is stuck on, the line pressure will be low. Therefore, the amount of torque that can be transmitted by each gear is lower than the normal limit. When the engine power exceeds this lowered limit, the engine speed will increase freely.
- *3: When shift solenoid SLT is stuck off, gear shifting is normal.

A --> See step 8

C --> See step 9

D --> See step 10

E --> See step 11

B: Go to next step

3. **INSPECT SHIFT SOLENOID VALVE SL2**
    a. Remove shift solenoid valve SL2.

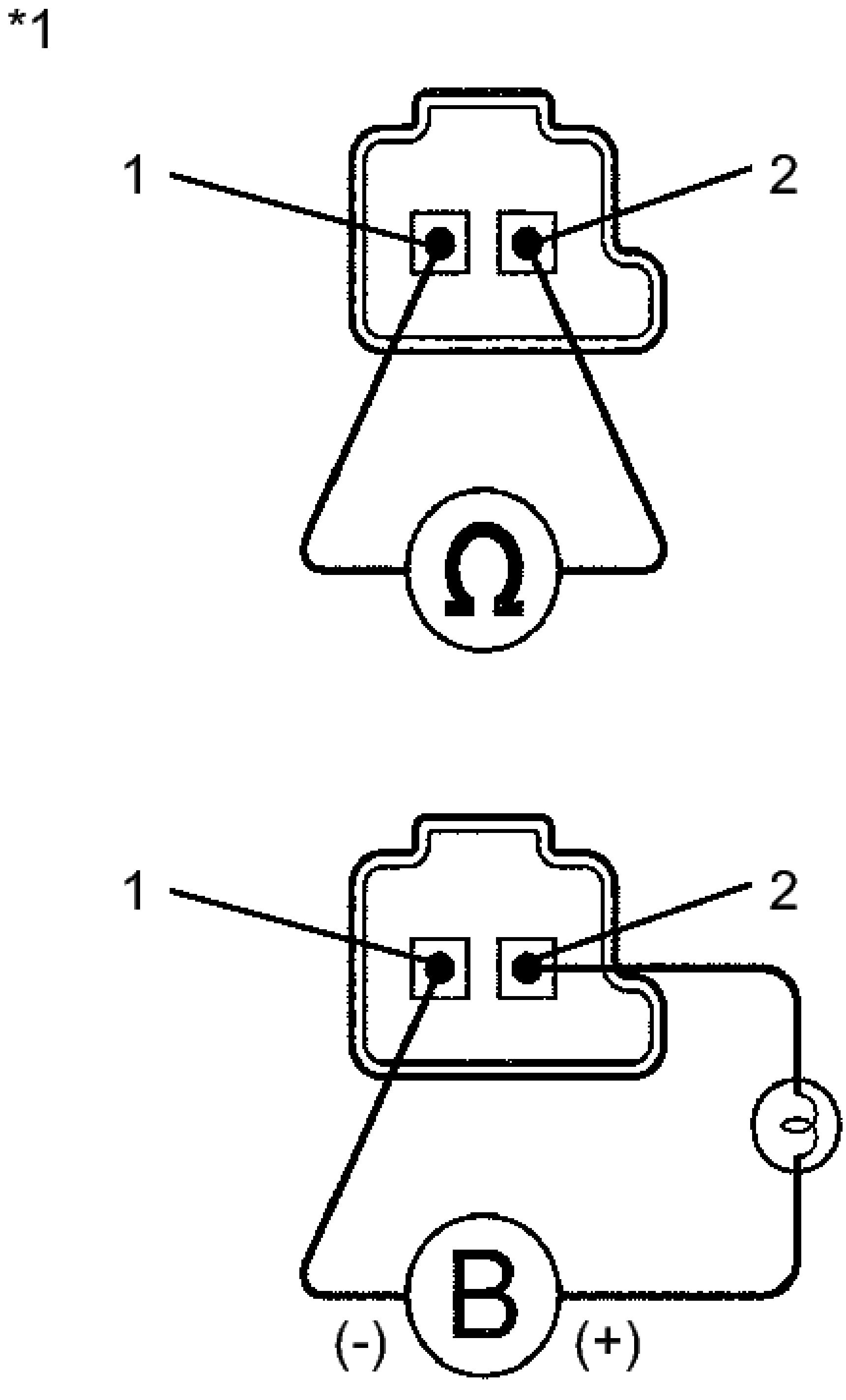

Fig. 27: Checking Resistance In Shift Solenoid Valve SL2
Courtesy of TOYOTA MOTOR SALES, U.S.A., INC.

b. Measure the resistance according to the value(s) in the table below.

Standard Resistance

Tester Connection	Condition	Specified Condition
1 - 2	20°C (68° F)	5.0 to 5.6 ohms

c. Connect a battery positive (+) lead with a 21 W bulb to terminal 2 and a negative (-) lead to terminal 1 of the solenoid valve connector. Then check that the valve moves and makes an operating sound.

OK

Valve moves and makes an operating sound.

TEXT IN ILLUSTRATION

*1	Shift Solenoid Valve SL2

NG --> See step 6

OK: Go to next step

4. **INSPECT TRANSMISSION VALVE BODY ASSEMBLY**
   a. Check the transmission valve body assembly. Refer to **REMOVAL** .

      OK

      There are no foreign objects on each valve and they operate smoothly.

NG --> See step 7

OK --> See step 5

5. **REPLACE AUTOMATIC TRANSAXLE ASSEMBLY. Refer to COMPONENTS**
6. **REPLACE SHIFT SOLENOID VALVE SL2. Refer to COMPONENTS**
7. **REPAIR OR REPLACE TRANSMISSION VALVE BODY ASSEMBLY. Refer to COMPONENTS**
8. **GO TO DTC CHART (RELATED SHIFT SOLENOID VALVE (SL1) PERFORMANCE DTC P0746). Refer to DTC P0746: Pressure Control Solenoid "A" Performance (Shift Solenoid Valve SL1)**
9. **GO TO DTC CHART (RELATED SHIFT SOLENOID VALVE (SL3) PERFORMANCE DTC P0796). Refer to DTC P0796: Pressure Control Solenoid "C" Performance (Shift Solenoid Valve**

SL3)

10. **GO TO DTC CHART (RELATED SHIFT SOLENOID VALVE (SL4) PERFORMANCE DTC P2808). Refer to DTC P2808: Pressure Control Solenoid "G" Performance (Shift Solenoid Valve SL4)**
11. **GO TO DTC CHART (RELATED SHIFT SOLENOID VALVE (SLT) PERFORMANCE DTC P2714). Refer to DTC P2714: Pressure Control Solenoid "D" Performance (Shift Solenoid Valve SLT)**

DTC P0778: PRESSURE CONTROL SOLENOID "B" ELECTRICAL (SHIFT SOLENOID VALVE SL2)

DESCRIPTION

Changing from 1st to 6th is performed by the ECM turning shift solenoid valves SL1, SL2, SL3, SL4 and SL on and off. If an open or short circuit occurs in any of the shift solenoid valves, the ECM controls the remaining normal shift solenoid valves to allow the vehicle to be operated. Refer to **FAIL-SAFE CHART** .

DTC No.	DTC Detection Condition	Trouble Area
P0778	The ECM checks for an open or short in the shift solenoid valve SL2 circuit while driving and shifting gears. (1-trip detection logic) • Output signal duty equals to 100%. (NOTE: SL2 output signal duty is less than 100% under normal condition.)	• Open or short in shift solenoid valve SL2 circuit • Shift solenoid valve SL2 • Wiring harness connector • ECM

MONITOR DESCRIPTION

This DTC indicates an open or short in the shift solenoid valve SL2 circuit. The ECM commands gear shifts by turning the shift solenoid valves on or off. When there is an open or short circuit in any of the shift solenoid valve circuits, the ECM detects the problem and illuminates the MIL and stores the DTC. The ECM also performs the fail-safe function and turns the other normal shift solenoid valves on or off. (In case of an open or short circuit, the ECM stops sending current to the circuit.)

While driving and shifting gears, if the ECM detects an open or short in the shift solenoid valve SL2 circuit, the ECM determines there is a malfunction. Refer to **FAIL-SAFE CHART** .

MONITOR STRATEGY

Related DTCs	P0778: Shift solenoid valve SL2/Range check
Required sensors/Components	Shift solenoid valve SL2
Frequency of operation	Continuous
Duration	1 sec.

MIL operation	Immediate
Sequence of operation	None

TYPICAL ENABLING CONDITIONS

ALL

The monitor will run whenever the following DTCs are not present	None
Ignition switch	ON
Starter	OFF

CONDITION (A)

Battery voltage	12 V or more

CONDITION (B)

Battery voltage	10 V or more and less than 12 V
Target current	Less than 0.75 A

CONDITION (C)

Battery voltage	8 V or more
Target current	0.6 A or more

TYPICAL MALFUNCTION THRESHOLDS

When one of the following conditions is met: Condition (A), (B) or (C)

CONDITION (A) AND (B)

Output duty cycle	100% or more

CONDITION (C)

Output duty cycle	0% or less

COMPONENT OPERATING RANGE

Output duty cycle	More than 0% and less than 100%

WIRING DIAGRAM

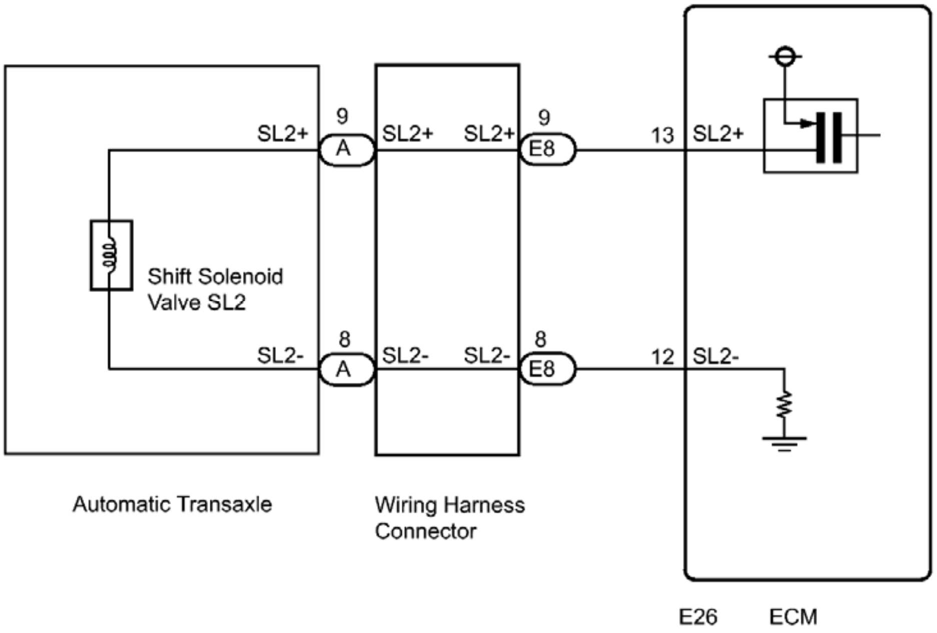
9
A
SL2+
SL2+
SL2+
9
E8
13
SL2+
Shift Solenoid
Valve SL2
8
A
SL2-
SL2-
SL2-
8
E8
12
SL2-
Automatic Transaxle
Wiring Harness
Connector
E26
ECM
c

Fig. 28: Shift Solenoid Valve SL2 Circuit Wiring Diagram
Courtesy of TOYOTA MOTOR SALES, U.S.A., INC.

INSPECTION PROCEDURE

NOTE: **Perform the universal trip to clear permanent DTCs. Refer to DTC CHECK / CLEAR .**

HINT:

The following table shows normal operation of the shift solenoid valve SL2 when the shift lever is in D:

ECM commanded gear	1st	2nd	3rd	4th	5th	6th
Shift solenoid valve SL2	OFF	OFF	OFF	ON	ON	ON

PROCEDURE

1. **CHECK HARNESS AND CONNECTOR (SHIFT SOLENOID VALVE SL2 CIRCUIT)**
    a. Disconnect the ECM connector.

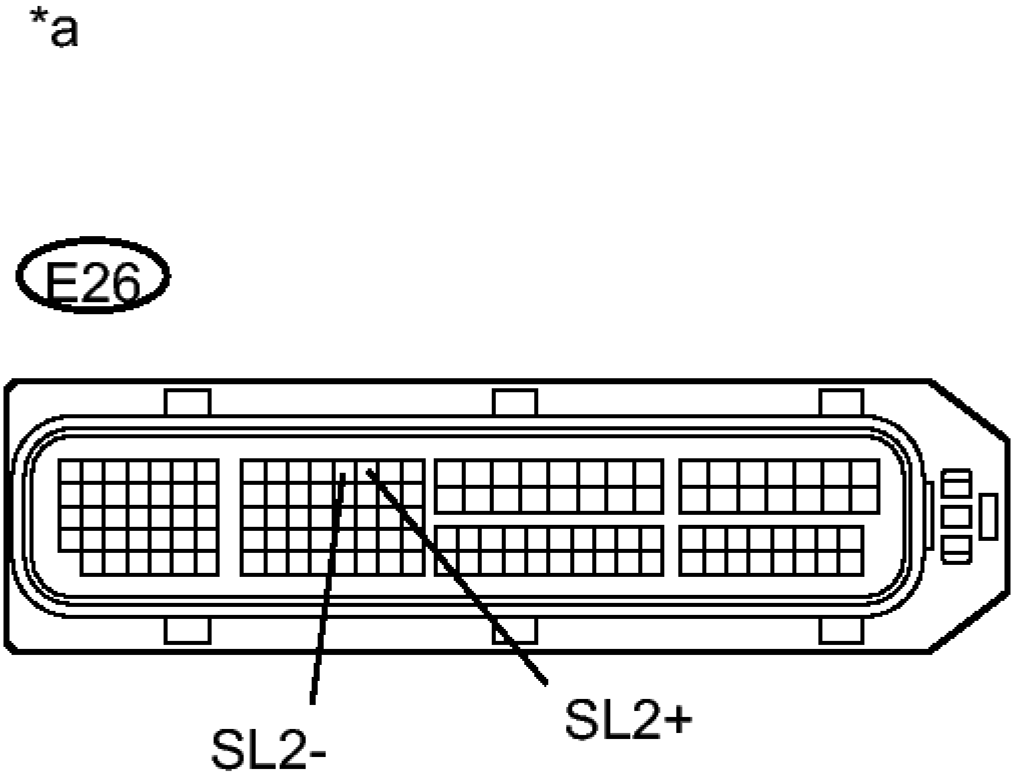

Fig. 29: Checking Harness And Connector (Shift Solenoid Valve SL2 Circuit)
Courtesy of TOYOTA MOTOR SALES, U.S.A., INC.

b. Measure the resistance according to the value(s) in the table below.

Standard Resistance

Tester Connection	Condition	Specified Condition
E26-13 (SL2+) - E26-12 (SL2-)	20°C (68° F)	5.0 to 5.6 ohms
E26-13 (SL2+) - Body		10 kohms

ground and other terminals	Always	or higher
E26-12 (SL2-) - Body ground and other terminals	Always	10 kohms or higher

TEXT IN ILLUSTRATION

*a	Front view of wire harness connector (to ECM)

NG --> See step 2

OK --> See step 5

2. **CHECK HARNESS AND CONNECTOR (ECM - WIRING HARNESS CONNECTOR)**
    a. Disconnect the harness connector from the wiring harness connector.
    b. Measure the resistance according to the value(s) in the table below.

Standard Resistance

Tester Condition	Condition	Specified Condition
E26-13 (SL2+) - E8-9 (SL2+)	Always	Below 1 ohms
E26-12 (SL2-) - E8-8 (SL2-)	Always	Below 1 ohms
E26-13 (SL2+) or E8-9 (SL2+) - Body ground and other terminals	Always	10 kohms or higher

E26-12 (SL2-) or E8-8 (SL2-) - Body ground and other terminals	Always	10 kohms or higher

NG --> REPAIR OR REPLACE HARNESS OR CONNECTOR

OK: Go to next step

3. **INSPECT TRANSMISSION WIRE (SL2)**
   a. Remove the wiring harness connector from the transaxle.

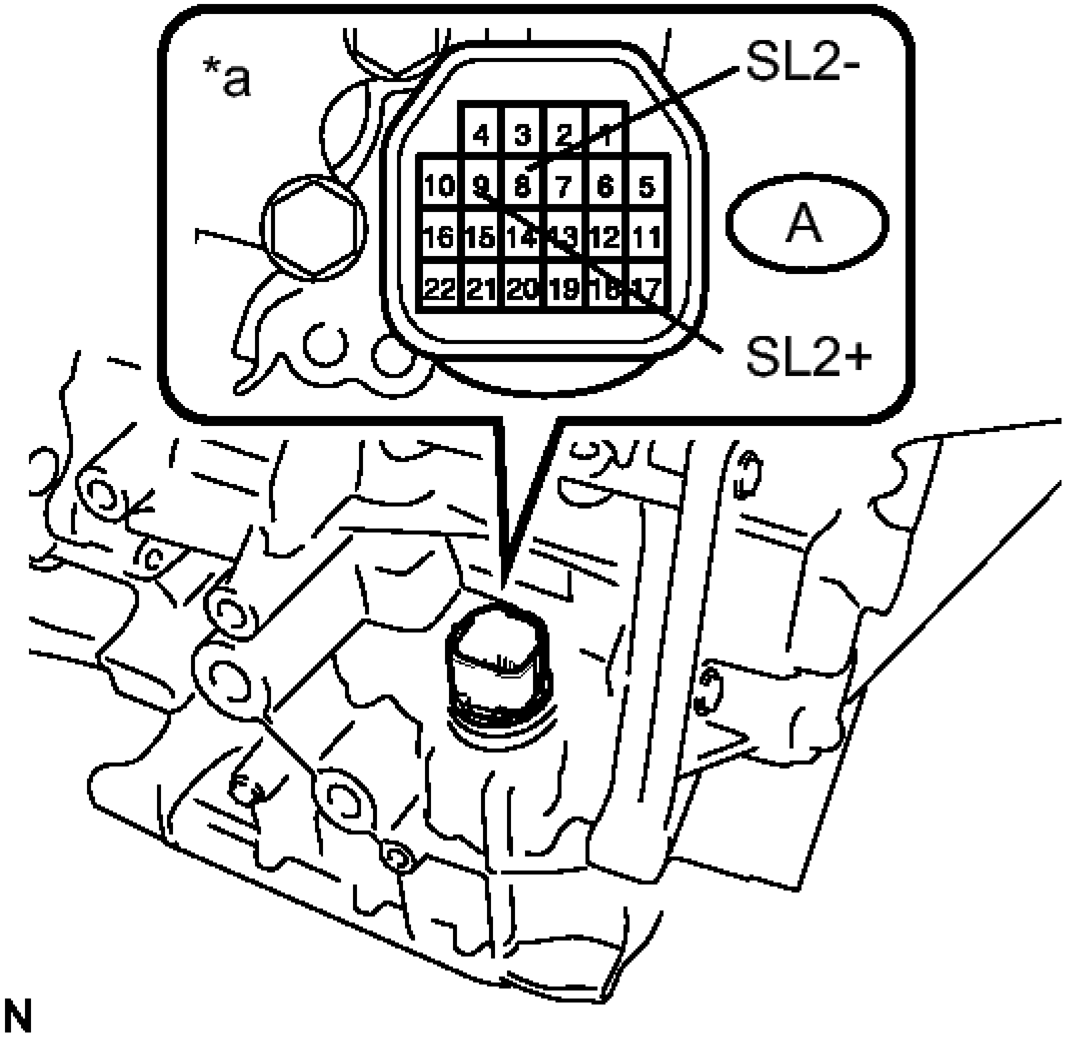
*a
SL2-
SL2+
A
4 3 2 1
10 9 8 7 6 5
16 15 14 13 12 11
22 21 20 19 18 17
N

Fig. 30: Checking Transmission Wire (SL2)
Courtesy of TOYOTA MOTOR SALES, U.S.A., INC.

b. Measure the resistance according to the value(s) in the table below.

Standard Resistance

Tester Connection	Condition	Specified Condition
A-9 (SL2+) - A-8 (SL2-)	20°C (68°F)	5.0 to 5.6 ohms
A-9 (SL2+) - Body ground and other terminals	Always	10 kohms or higher
A-8 (SL2-) - Body ground and other terminals	Always	10 kohms or higher

TEXT IN ILLUSTRATION

*a	Component without harness connected (Transmission Wire)

NG --> See step 4

OK --> See step 8

4. **INSPECT SHIFT SOLENOID VALVE SL2**
    a. Remove shift solenoid valve SL2.

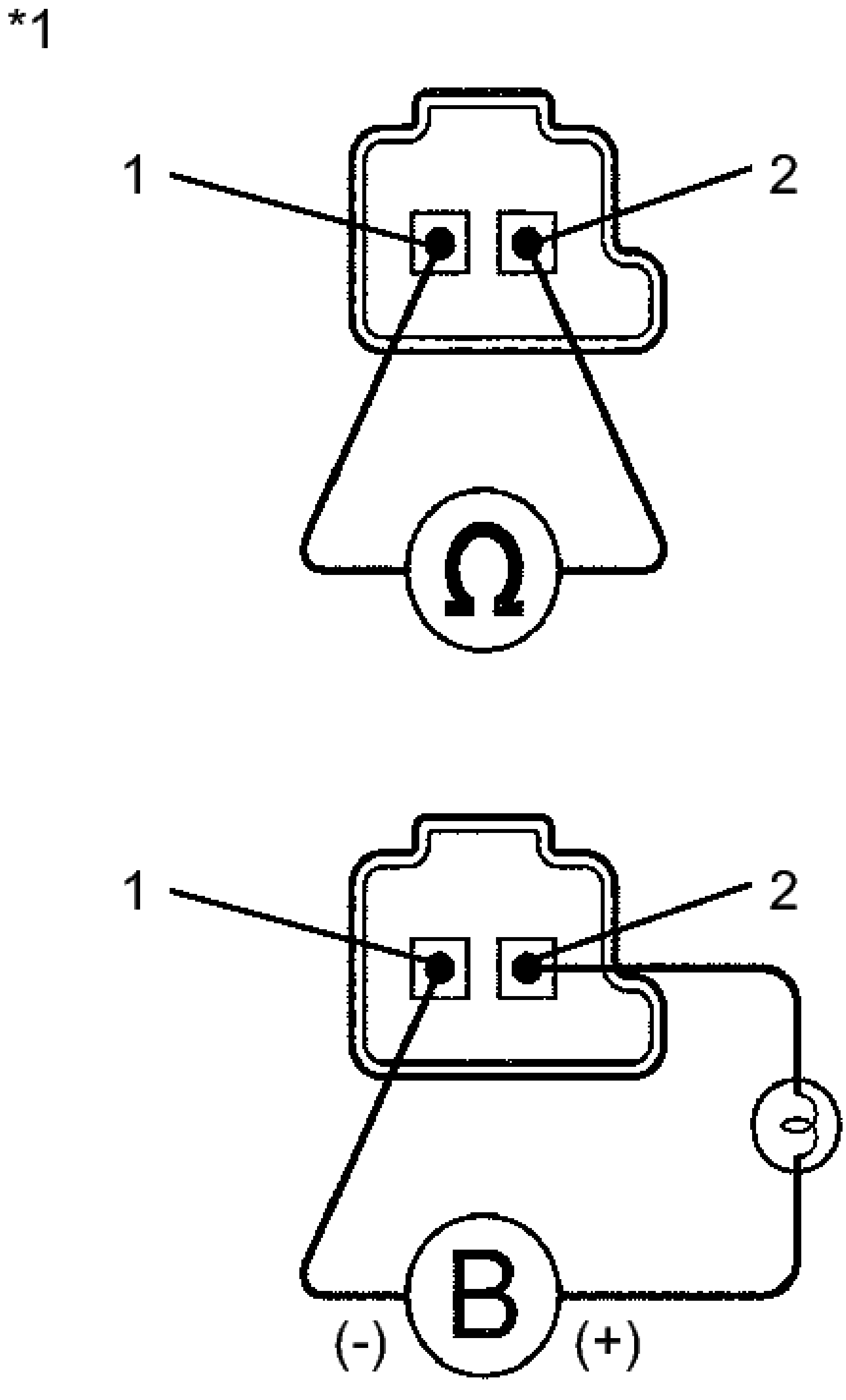

Fig. 31: Checking Resistance In Shift Solenoid Valve SL2
Courtesy of TOYOTA MOTOR SALES, U.S.A., INC.

b. Measure the resistance according to the value(s) in the table below.

Standard Resistance

Tester Connection	**Condition**	**Specified Condition**
1 - 2	20°C (68° F)	5.0 to 5.6 ohms

c. Connect a battery positive (+) lead with a 21 W bulb to terminal 2 and a negative (-) lead to terminal 1 of the solenoid valve connector. Then check that the valve moves and makes an operating sound.

OK

Valve moves and makes an operating sound.

TEXT IN ILLUSTRATION

*1	Shift Solenoid Valve SL2

NG --> See step 6

OK --> See step 7

5. **REPLACE ECM. Refer to COMPONENTS**
6. **REPLACE SHIFT SOLENOID VALVE SL2. Refer to COMPONENTS**
7. **REPLACE TRANSMISSION WIRE. Refer to COMPONENTS**
8. **REPLACE WIRING HARNESS CONNECTOR. Refer to COMPONENTS**

DTC P0791: INTERMEDIATE SHAFT SPEED SENSOR "A" CIRCUIT; DTC P0793: INTERMEDIATE SHAFT SPEED SENSOR "A"

DESCRIPTION

This sensor detects the rotation speed of the counter gear which shows the output speed of transaxle. By comparing the input turbine speed signal (NT) with the counter gear speed sensor signal (NC), the ECM detects the shift timing of the gears and appropriately controls the engine torque and hydraulic pressure according to various conditions, thus, providing smooth gear shifts.

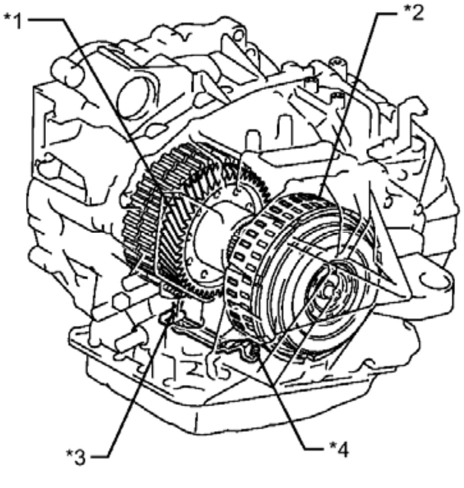

Fig. 32: Identifying Counter Gear, Clutch Drum, Input Speed Sensor And Output Speed Sensor
Courtesy of TOYOTA MOTOR SALES, U.S.A., INC.

TEXT IN ILLUSTRATION

*1	Counter Gear	*2	Clutch Drum
*3	Output Speed Sensor NC	*4	Input Speed Sensor NT

DTC No.	DTC Detection Condition	Trouble Area
P0791	When the speed sensor input voltage is either more than 1.9 V or less than 0.1 V for 2 seconds or more. (1-trip detection logic)	• Transmission revolution sensor (speed sensor NC) • Transmission wire • Wiring harness connector • ECM
P0793	When the vehicle speed is 25 km/h (15.5 mph) or higher, the counter gear speed is less than 300 RPM for 2 seconds or more. (1-trip detection logic)	

MONITOR DESCRIPTION

The NT terminal of the ECM detects a revolution signal from the speed sensor (NT) (input RPM). The ECM calculates a gear shifts by comparing the speed sensor (NT) with the speed sensor (NC).

While the vehicle is operating in 2nd, 3rd, 4th or 5th gear with the shift lever in D, if the input shaft revolution is less than 300 rpm*1 although the output shaft revolution is more than 1000 rpm*2, the ECM interprets this as a fault, illuminates the MIL and stores the DTC.

*1: Pulse is not output or is irregularly output.

*2: The vehicle speed is 50 km/h (31 mph) or more.

MONITOR STRATEGY

Related DTCs	P0791: Speed sensor (NC)/Range check P0793: Speed sensor (NC)/Verify pulse input
Required sensors/Components	Speed sensor (NT), Speed sensor (NC)
Frequency of operation	Continuous
Duration	2 sec.
MIL operation	Immediate
Sequence of operation	None

TYPICAL ENABLING CONDITIONS

The monitor will run whenever this DTC is not present.	P0500 (VSS) P0748, P0778, P0798 (Shift solenoid valve (range))
Vehicle speed	15.5 mph (25 km/h) or more
Battery voltage	8 V or more
Ignition switch	ON
Starter	OFF

TYPICAL MALFUNCTION THRESHOLDS

P0791:

Sensor voltage	Less than 0.1 V or more than 1.9 V

P0793:

Sensor signal RPM	Less than 300 RPM

WIRING DIAGRAM

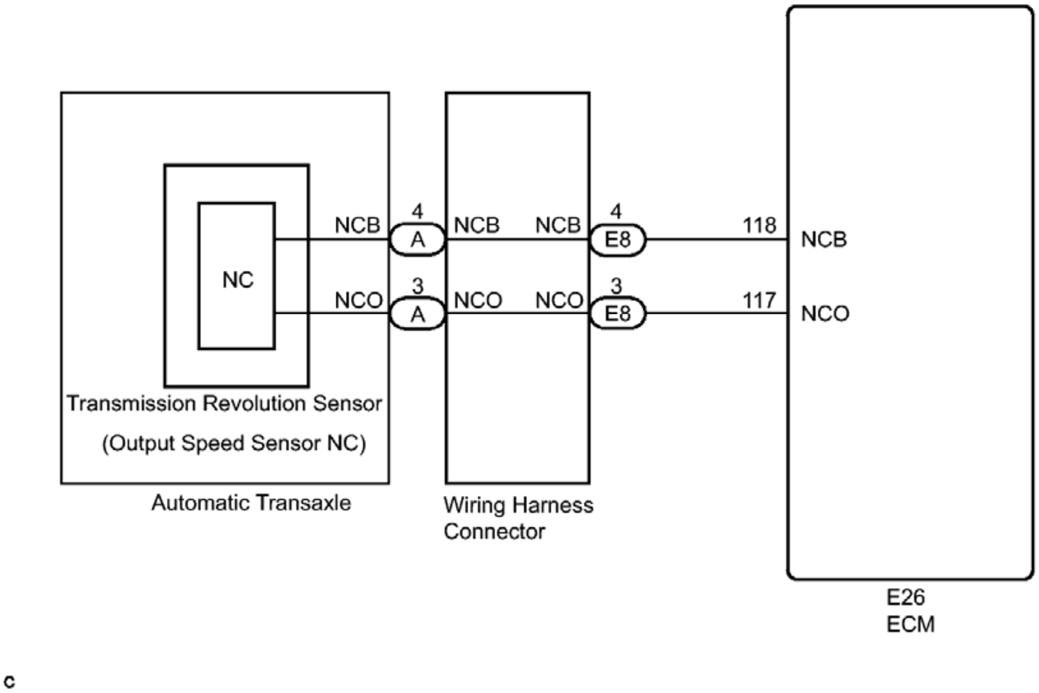
NC
NCB
NCO
4
A
3
A
NCB
NCO
NCB
NCO
4
E8
3
E8
118
117
NCB
NCO
Transmission Revolution Sensor
(Output Speed Sensor NC)
Automatic Transaxle
Wiring Harness
Connector
E26
ECM
c

Fig. 33: Output Speed Sensor Circuit Wiring Diagram
Courtesy of TOYOTA MOTOR SALES, U.S.A., INC.

INSPECTION PROCEDURE

NOTE: **Perform the universal trip to clear permanent DTCs. Refer to DTC CHECK / CLEAR .**

1. **DATA LIST**

   HINT:

   Using the Techstream to read the Data List allows the values or states of switches, sensors, actuators and other items to be read without removing any parts. This non-intrusive inspection can be very useful because intermittent conditions or signals may be discovered before parts or wiring is disturbed. Reading the Data List information early in troubleshooting is one way to save diagnostic time.

   NOTE: **In the table below, the values listed under "Normal Condition" are reference values. Do not depend solely on these reference values when deciding whether a part is faulty or not.**

   a. Warm up the engine.
   b. Turn the ignition switch off.
   c. Connect the Techstream to the DLC3.
   d. Turn the ignition switch to ON.

e. Turn the Techstream on.
f. Enter the following menus: Powertrain / Engine and ECT / Data List.
g. According to the display on the Techstream, read the Data List.

ENGINE AND ECT

Tester Display	Measurement Item/Range	Normal Condition	Diagnostic Note
SPD (NC)	Counter Gear Speed/ Min.: 0 RPM Max.: 12750 RPM	-	Data is displayed in increments of 50 RPM

HINT:

- SPD (NC) is always 0 while driving: Open or short in the sensor or circuit.
- SPD (NC) is always more than 0 and less than 300 RPM while driving the vehicle at 50 km/h (31 mph) or more: Sensor trouble, improper installation, or intermittent connection trouble of the circuit.

PROCEDURE

1. **INSPECT TRANSMISSION REVOLUTION SENSOR (SPEED SENSOR INSTALLATION)**
   a. Remove the valve body assembly.
   b. Make sure that the connector is properly connected, and check the speed sensor installation. Refer to **INSTALLATION** .

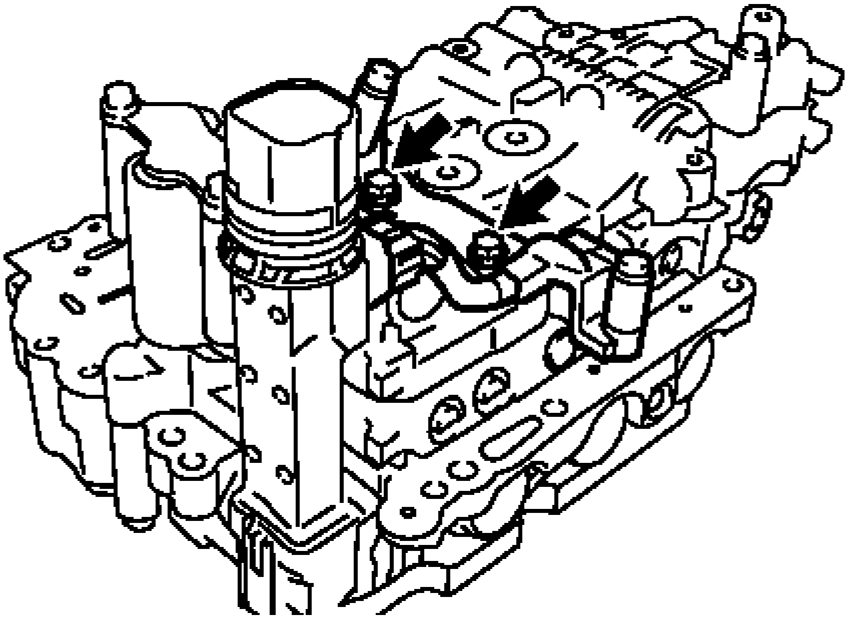

N

Fig. 34: Inspecting Transmission Revolution Sensor (Speed Sensor Installation)
Courtesy of TOYOTA MOTOR SALES, U.S.A., INC.

OK

The installation bolts are tightened properly and there is no clearance between the sensor and transaxle case.

NG --> See step 8

OK: Go to next step

2. **INSPECT TRANSMISSION WIRE**
   a. Disconnect the speed sensor connector from the transmission wire.

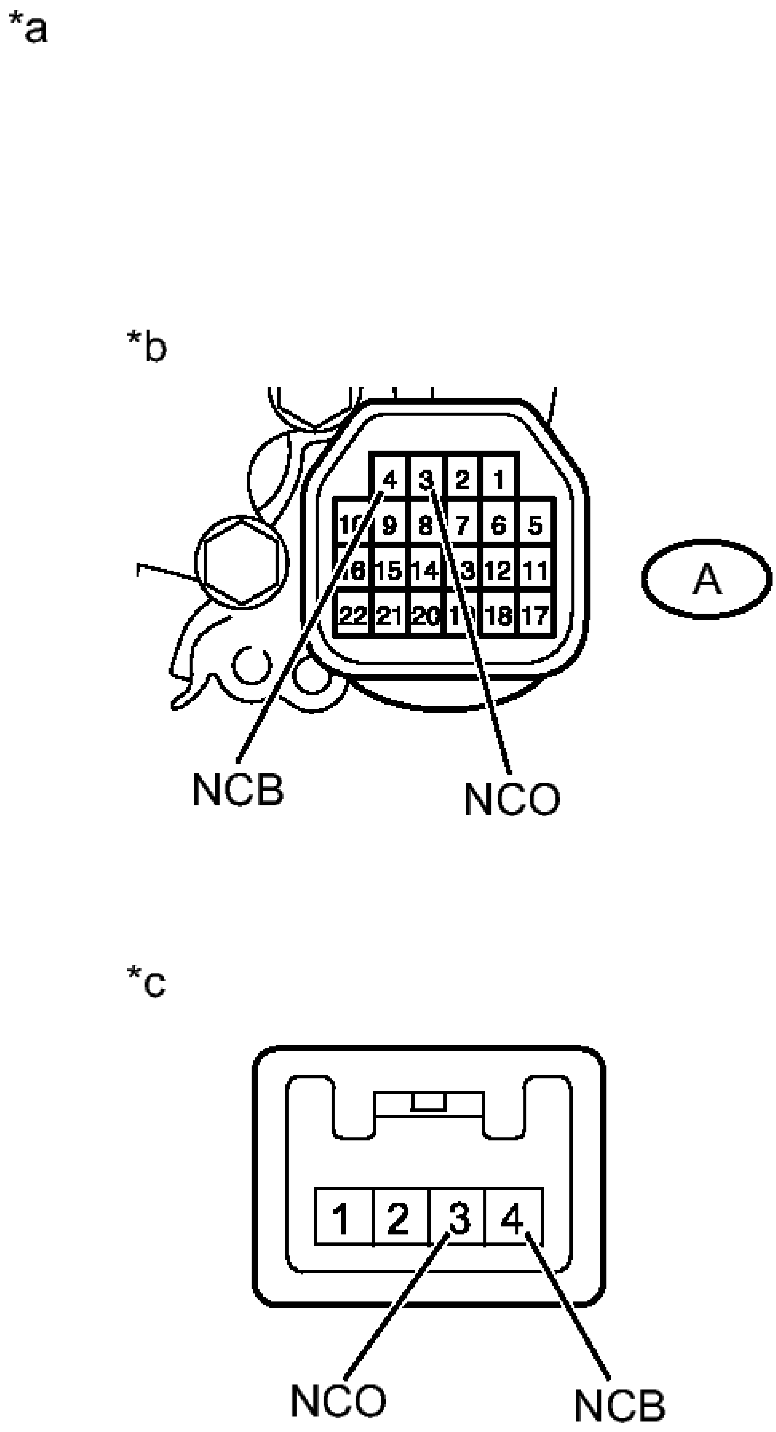
*a
*b
4
3
2
1
10
9
8
7
6
5
16
15
14
13
12
11
22
21
20
19
18
17
A
NCB
NCO
*c
1
2
3
4
NCO
NCB

Fig. 35: Measuring Resistance Of Transmission Wire
Courtesy of TOYOTA MOTOR SALES, U.S.A., INC.

b. Measure the resistance according to the value(s) in the table below.

Standard Resistance

Tester Condition	Condition	Specified Condition
3 (NCO) sensor side - A-3 (NCO) wiring harness connector side	Always	Below 1 ohms
4 (NCB) sensor side - A-4 (NCB) wiring harness connector side	Always	Below 1 ohms
3 (NCO) sensor side - Body ground and other terminals	Always	10 kohms or higher
4 (NCB) sensor side - Body ground and other terminals	Always	10 kohms or higher

TEXT IN ILLUSTRATION

*a	Component without harness connected (Transmission Wire)
*b	Wiring Harness Connector Side

*c	Sensor Side

NG --> See step 9

OK: Go to next step

3. **CHECK HARNESS AND CONNECTOR (ECM - WIRING HARNESS CONNECTOR)**
    a. Disconnect the ECM connector.
    b. Measure the resistance according to the value(s) in the table below.

Standard Resistance

Tester Condition	Condition	Specified Condition
E26-118 (NCB) - E8-4 (NCB)	Always	Below 1 ohms
E26-117 (NCO) - E8-3 (NCO)	Always	Below 1 ohms
E26-118 (NCB) or E8-4 (NCB)- Body ground and other terminals	Always	10 kohms or higher
E26-117 (NCO) or E8-3 (NCO) - Body ground and other terminals	Always	10 kohms or higher

NG --> REPAIR OR REPLACE HARNESS OR CONNECTOR

OK: Go to next step

4. **INSPECT WIRING HARNESS CONNECTOR**
    a. Remove the wiring harness connector.

b. Measure the resistance according to the value(s) in the table below.

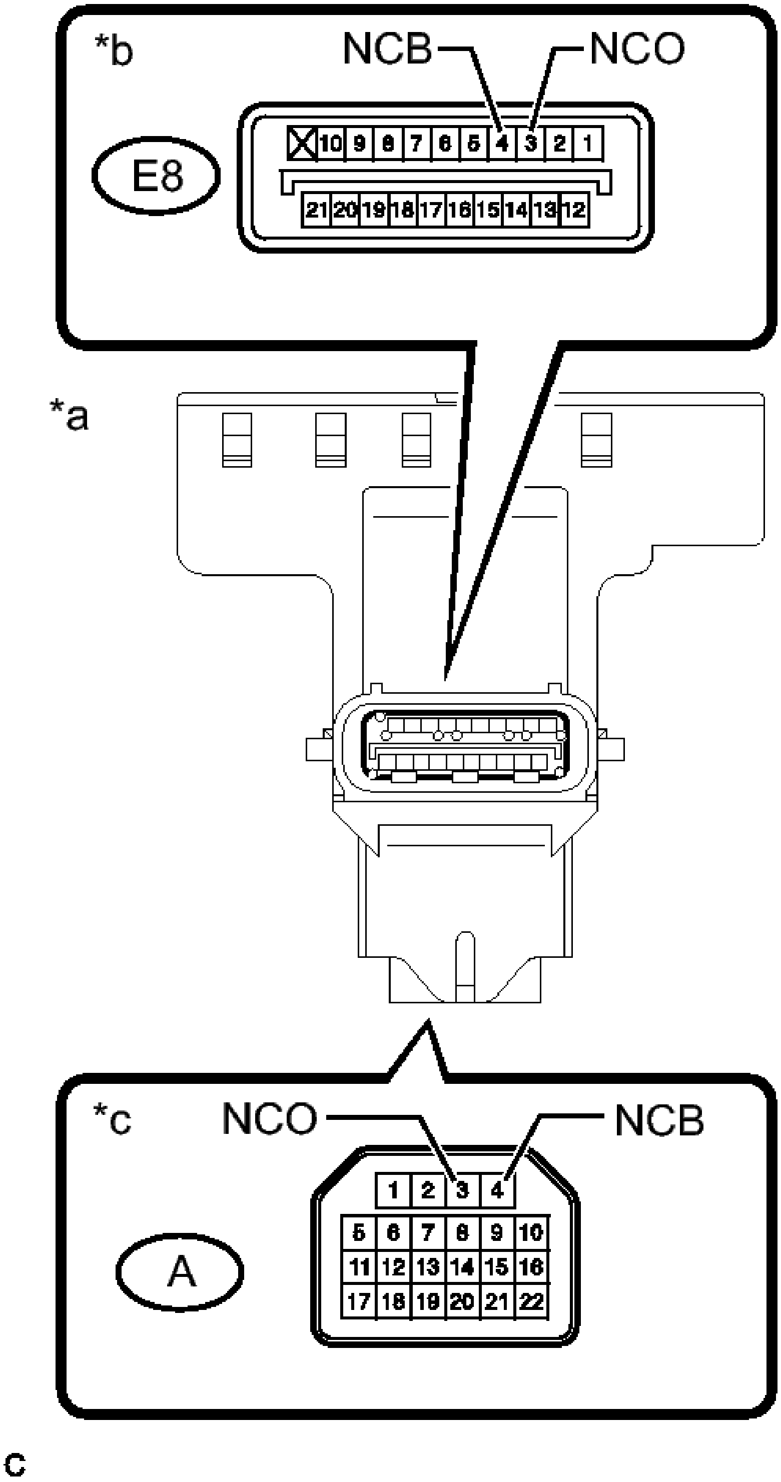
*b
NCB
NCO
E8
10 9 8 7 6 5 4 3 2 1
21 20 19 18 17 16 15 14 13 12
*a
*c
NCO
NCB
A
1 2 3 4
5 6 7 8 9 10
11 12 13 14 15 16
17 18 19 20 21 22
C

Fig. 36: Measuring Resistance In Wiring Harness Connector
Courtesy of TOYOTA MOTOR SALES, U.S.A., INC.

Standard Resistance

Tester Condition	**Condition**	**Specified Condition**
E8-3 (NCO) - A-3 (NCO)	Always	Below 1 ohms
E8-4 (NCB) - A-4 (NCB)	Always	Below 1 ohms
E8-3 (NCO) - All other terminals	Always	10 kohms or higher
E8-4 (NCB) - All other terminals	Always	10 kohms or higher

TEXT IN ILLUSTRATION

*a	Component without harness connected (Transmission Wire)
*b	ECM Side
*c	Transmission Wire Side

NG --> See step 10

OK: Go to next step

5. **REPLACE TRANSMISSION REVOLUTION SENSOR**

   Refer to **REMOVAL**

   NEXT: Go to next step

6. **CHECK IF DTC OUTPUT RECURS (SEE IF DTC P0791 AND/OR P0793 IS OUTPUT AGAIN)**
   a. Connect the Techstream to the DLC3.
   b. Start the engine and turn the Techstream on.

c. Clear the DTCs. Refer to **DTC CHECK / CLEAR** .

HINT:

Write down the currently output DTCs before clearing them.

d. Perform the monitor drive pattern. Refer to **MONITOR DRIVE PATTERN** .
e. Enter the following menus: / Engine and ECT / Trouble Codes.
f. Read the DTCs using the Techstream.

Result

Display (DTC Output)	Proceed to
Only "P0791 or P0793" is output	A
No output	B

B --> END

A --> See step 7

7. **REPLACE ECM. Refer to COMPONENTS**
8. **REPAIR OR REPLACE TRANSMISSION REVOLUTION SENSOR. Refer to COMPONENTS**
9. **REPLACE TRANSMISSION WIRE. Refer to COMPONENTS**
10. **REPLACE WIRING HARNESS CONNECTOR. Refer to COMPONENTS**

DTC P0796: PRESSURE CONTROL SOLENOID "C" PERFORMANCE (SHIFT SOLENOID VALVE SL3)

SYSTEM DESCRIPTION

The ECM uses the vehicle speed signal and signals from the transmission speed sensors (NC, NT) to detect the actual gear (1st, 2nd, 3rd, 4th, 5th or 6th gear).

Then the ECM compares the actual gear with the shift schedule in the ECM memory to detect mechanical problems of the shift solenoid valves and valve body.

DTC No.	DTC Detection Condition	Trouble Area

P0796	The engine revs freely when 2nd or 6th gear is commanded (2-trip detection logic). When the following is detected twice (2-trip detection logic): • When 1st gear is commanded, 2nd gear is engaged.	• Shift solenoid valve SL3 remains open or closed. • Valve body is blocked. • Automatic transaxle (clutch, brake or gear etc.)

MONITOR DESCRIPTION

The ECM commands gear shifts by turning the shift solenoid valves on and off. According to the input shaft revolution (speed), intermediate (counter) shaft revolution (speed) and output shaft revolution (speed), the ECM detects the actual gear (1st, 2nd, 3rd, 4th, 5th or 6th gear). When the gear commanded by the ECM and the actual gear are not the same, the ECM illuminates the MIL and stores the DTC.

MONITOR STRATEGY

Related DTCs	P0796: Shift solenoid valve SL3/OFF malfunction Shift solenoid valve SL3/ON malfunction
Required sensors/Components	Shift solenoid valve SL3, Speed sensor (NT), Speed sensor (NC), Crankshaft position sensor (NE)
Frequency of operation	Continuous
Duration	OFF malfunction (A) and (B) 0.5 sec. OFF malfunction (C) and (D) 0.8 sec. ON malfunction 0.8 sec.
MIL operation	2 driving cycles
Sequence of operation	None

TYPICAL ENABLING CONDITIONS

ALL:

The monitor will run whenever this DTC is not	P0712, P0713 (ATF temperature sensor circuit (TFT sensor)) P0115, P0117, P0118 (ECT sensor circuit) P0715, P0717 (Turbine speed sensor circuit) P0791, P0793 (Intermediate shaft speed sensor circuit) P0748 (Shift solenoid valve SL1 circuit) P0778 (Shift solenoid valve SL2 circuit)

present. (Not circuit malfunction)	P0798 (Shift solenoid valve SL3 circuit) P2810 (Shift solenoid valve SL4 circuit) P0327, P0328, (KCS sensor circuit) P0120, P0121, P0122, P0123, P0220, P0222, P0223, P0604, P0606, P060A, P060B, P060D, P060E, P0657, P1607, P2102, P2103, P2111, P2112, P2118, P2119, P2135 ((ETCS) Electronic throttle control system) U0100 (CAN communication system)
Transmission range	"D"
TFT (Transmission fluid temperature)	-10°C (14°F) or more
TFT (Transmission fluid temperature) sensor circuit	No circuit malfunction
ECT (Engine coolant temperature) sensor circuit	No circuit malfunction
Turbine speed sensor circuit	No circuit malfunction
Intermediate shaft speed sensor circuit	No circuit malfunction
Shift solenoid valve SL1 circuit	No circuit malfunction
Shift solenoid valve SL2 circuit	No circuit malfunction
Shift solenoid valve SL3 circuit	No circuit malfunction
Shift solenoid valve SL4 circuit	No circuit malfunction
(KCS) Knock control sensor circuit	No circuit malfunction
(ETCS) Electronic throttle control system	Not system down
CAN communication system	Not system down
Engine	Starting

OFF MALFUNCTION (A):

ECM selected gear	2nd
Throttle valve opening angle	3% or more
ECM indicated pressure value of SL1	1, 200 kPa
ECM indicated pressure value of SL2	0 kPa
ECM indicated pressure value of SL3	1, 200 kPa

OFF MALFUNCTION (B):

ECM selected gear	6th
Throttle valve opening angle	3% or more
ECM indicated pressure value of SL1	0 kPa
ECM indicated pressure value of SL2	1, 200 kPa
ECM indicated pressure value of SL3	1, 200 kPa

OFF MALFUNCTION (C):

ECM selected gear	2nd
Throttle valve opening angle:	
(When condition "D" is not detected)	6.5% or more at engine speed 2, 000 RPM (condition varies with engine speed)

(When condition "D" is detected)	2.0% or more at engine speed 750 RPM (condition varies with output speed)
ECT (engine coolant temperature)	40°C (104°F) or more

OFF MALFUNCTION (D):

Throttle valve opening angle	2.0% or more at engine speed 750 RPM (condition varies with output speed)

ON MALFUNCTION:

ECM selected gear	1st
Vehicle speed	1.2 mph (2 km/h) or more
Engine speed - Turbine speed	50 RPM or more
ECT (engine coolant temperature)	40°C (104°F) or more

TYPICAL MALFUNCTION THRESHOLDS

Either of the following conditions is met: OFF malfunction (A) or (B) or ((C) and (D)), or ON malfunctions

2 detections are necessary per driving cycle:

1st detection; temporary flag ON

2nd detection; pending fault code ON

OFF MALFUNCTION (A):

Turbine speed - Output speed x 2nd gear ratio	1, 000 RPM or more

OFF MALFUNCTION (B):

Turbine speed - Output speed x 6th gear ratio	1, 000 RPM or more

OFF MALFUNCTION (C):

Input (turbine) speed/Intermediate shaft speed	3.232 to 7.556

OFF MALFUNCTION (D):

Input (turbine) speed/Intermediate shaft speed	3.232 to 7.556

ON MALFUNCTION:

Input (turbine) speed/Intermediate shaft speed	1.860 to 2.289

INSPECTION PROCEDURE

NOTE: **Perform the universal trip to clear permanent DTCs. Refer to DTC CHECK / CLEAR .**

PROCEDURE

1. **CHECK OTHER DTCS OUTPUT (IN ADDITION TO DTC P0796)**
    a. Connect the Techstream to the DLC3.
    b. Turn the ignition switch to ON.
    c. Turn the Techstream on.
    d. Enter the following menus: Powertrain / Engine and ECT / Trouble Codes.
    e. Read the DTCs using the Techstream.

    Result

Display (DTC Output)	**Proceed to**
Only "P0796" is output	A
"P0796" and other DTCs are output	B

    HINT:

    If a solenoid is stuck off, DTCs for several solenoids including the malfunctioning solenoid will be detected.

A --> See step 3

B: Go to next step

2. **PERFORM ACTIVE TEST USING TECHSTREAM**

NOTE: This test should always be performed with at least 2 people.

    a. Warm up the engine.
    b. Turn the ignition switch off.
    c. Connect the Techstream to the DLC3.
    d. Turn the ignition switch to ON.
    e. Turn the Techstream on.
    f. Enter the following menus: Powertrain / Engine and ECT / Active Test.
    g. According to the display on the Techstream, perform the Active Test.

HINT:

Comparing the gear commanded by the Active Test with the actual gear enables confirmation of the problem. Refer to **FAIL-SAFE CHART** .

Tester Display	Test Details	Control Range	Diagnostic Note
Control the Shift Position	Operates the shift solenoid valves to allow gears to selected manually.	• Press "-->" button: Upshift occurs • Press "<--" button: Downshift occurs	Can be used to check the operation of the shift solenoid valves. Upshifts and downshifts should be performed consecutively. A 10-second interval is required between gear changes. Do not downshift at high speeds. Doing so will damage the automatic transaxle. [Vehicle Condition] 50 km/h (30 mph) or less

NOTE:

- **This test can be conducted when the vehicle is stopped.**
- **When shifting gears using the Active Test function, do not operate the accelerator pedal for 2 seconds before and after shifting gears.**

HINT:

The gear commanded by the ECM is shown in the Data List / Shift Status display on the Techstream.

h. Check the vehicle speed and the gear when the engine speed is 1000 rpm.

HINT:

Because the torque converter clutch has not engaged, it may be difficult to obtain the speeds specified in 4th, 5th, and 6th gear, however a difference of speed should still be evident following each gear change.

Standard

1st	2nd	3rd	4th	5th	6th
8 to 12 km/h (5 to 7.5 mph)	15 to 19 km/h (9.3 to 11.8 mph)	21 to 25 km/h (13.0 to 15.5 mph)	31 to 35 km/h (19.3 to 21.7 mph)	44 to 48 km/h (27.3 to 29.8 mph)	52 to 56 km/h (32.3 to 34.8 mph)

i. Compare the ECM commanded gear and the actual gear.

Result

Actuator Gear during Malfunction		ECM Commanded Gear						Proceed to
		1st	2nd	3rd	4th	5th	6th	
Shift solenoid SL1	Stuck ON	1st	2nd	3rd	4th	4th	4th	A
	Stuck OFF	N*1	N*1	N*1	N*1	5th	6th	
Shift solenoid SL2	Stuck ON	4th	4th	4th	4th	5th	6th	B
	Stuck OFF	1st	2nd	3rd	1st	N*1	N*1	
Shift solenoid SL3	Stuck ON	2nd	2nd	3rd	4th	5th	6th	C
	Stuck OFF	1st	1st	3rd	4th	5th	N*1	
Shift solenoid SL4	Stuck ON*3	3rd	3rd	3rd	4th	5th	5th	D
	Stuck OFF	1st	2nd	1st	4th	N*1	6th	
Shift solenoid SLT	Stuck ON	N*2	N*2	N*2	N*2	N*2	N*2	E
	Stuck OFF*3	1st	2nd	3rd	4th	5th	6th	

HINT:

- *1: Neutral
- *2: If shift solenoid SLT is stuck on, the line pressure will be low. Therefore, the amount of torque that can be transmitted by each gear is lower than the normal limit. When the engine power exceeds this lowered limit, the engine speed will increase freely.

- *3: When shift solenoid SLT is stuck off, gear shifting is normal.

A --> See step 8

B --> See step 9

D --> See step 10

E --> See step 11

C: Go to next step

3. **INSPECT SHIFT SOLENOID VALVE SL3**
    a. Remove shift solenoid valve SL3.

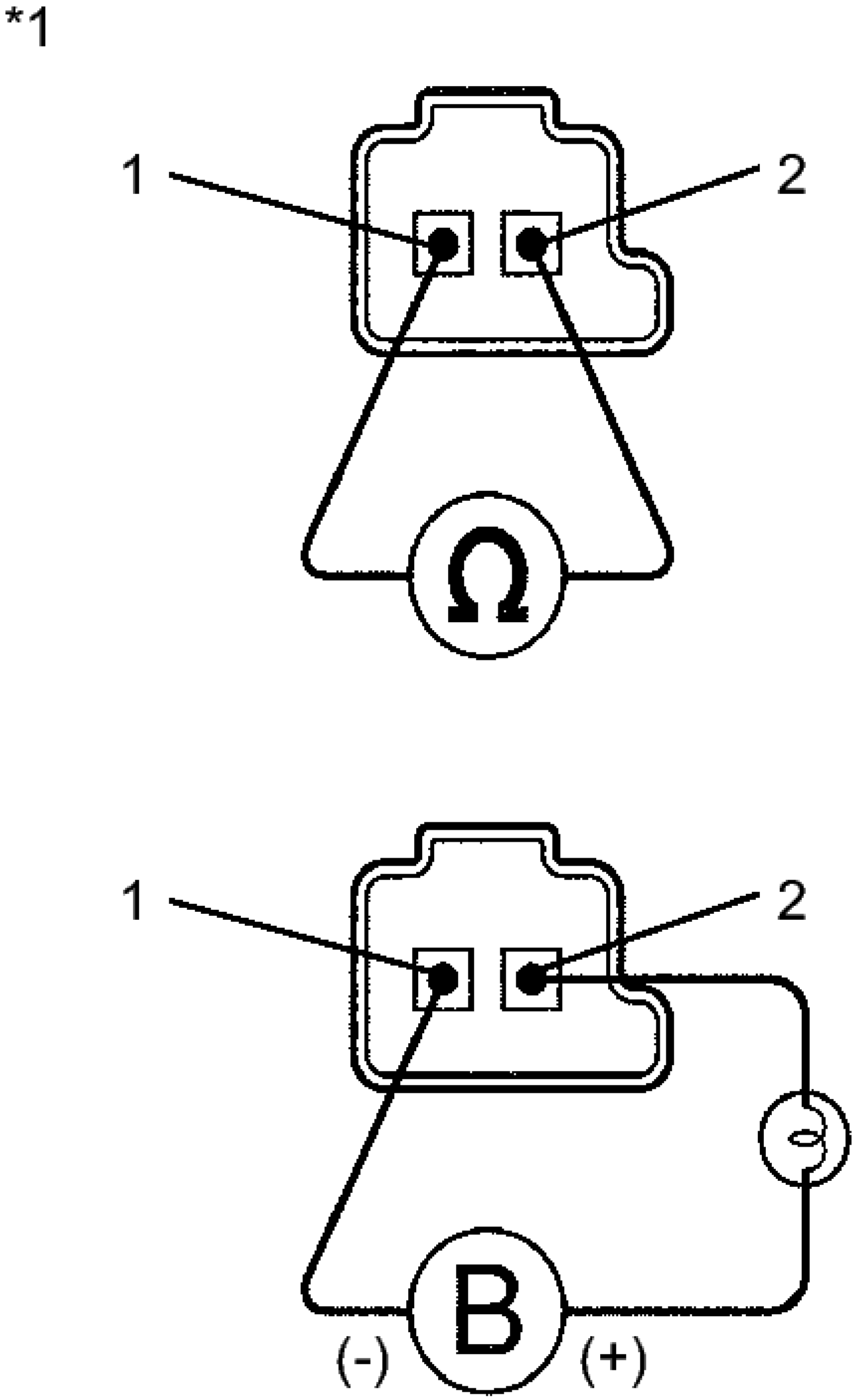

Fig. 37: Checking Resistance In Shift Solenoid Valve SL3
Courtesy of TOYOTA MOTOR SALES, U.S.A., INC.

b. Measure the resistance according to the value(s) in the table below.

Standard Resistance

Tester Connection	**Condition**	**Specified Condition**
1 - 2	20°C (68° F)	5.0 to 5.6 ohms

c. Connect a battery positive (+) lead with a 21 W bulb to terminal 2 and a negative (-) lead to terminal 1 of the solenoid valve connector. Then check that the valve moves and makes an operating sound.

OK

Valve moves and makes an operating sound.

TEXT IN ILLUSTRATION

*1	Shift Solenoid Valve SL3

NG --> See step 6

OK: Go to next step

4. **INSPECT TRANSMISSION VALVE BODY ASSEMBLY**
   a. Check the transmission valve body assembly. Refer to **REMOVAL** .

   OK

   There are no foreign objects on each valve and they operate smoothly.

NG --> See step 7

OK --> See step 5

5. **REPLACE AUTOMATIC TRANSAXLE ASSEMBLY. Refer to COMPONENTS**
6. **REPLACE SHIFT SOLENOID VALVE SL3. Refer to COMPONENTS**
7. **REPAIR OR REPLACE TRANSMISSION VALVE BODY ASSEMBLY. Refer to COMPONENTS**
8. **GO TO DTC CHART (RELATED SHIFT SOLENOID VALVE (SL1) PERFORMANCE DTC P0746). Refer to DTC P0746: Pressure Control Solenoid "A" Performance (Shift Solenoid Valve SL1)**
9. **GO TO DTC CHART (RELATED SHIFT SOLENOID VALVE (SL2) PERFORMANCE DTC P0776). Refer to DTC P0776: Pressure Control Solenoid "B" Performance (Shift Solenoid Valve**

SL2)

10. **GO TO DTC CHART (RELATED SHIFT SOLENOID VALVE (SL4) PERFORMANCE DTC P2808). Refer to DTC P2808: Pressure Control Solenoid "G" Performance (Shift Solenoid Valve SL4)**
11. **GO TO DTC CHART (RELATED SHIFT SOLENOID VALVE (SLT) PERFORMANCE DTC P2714). Refer to DTC P2714: Pressure Control Solenoid "D" Performance (Shift Solenoid Valve SLT)**

DTC P0798: PRESSURE CONTROL SOLENOID "C" ELECTRICAL (SHIFT SOLENOID VALVE SL3)

DESCRIPTION

Changing from 1st to 6th is performed by the ECM turning shift solenoid valves SL1, SL2, SL3, SL4 and SL on and off. If an open or short circuit occurs in any of the shift solenoid valves, the ECM controls the remaining normal shift solenoid valves to allow the vehicle to be operated. Refer to **FAIL-SAFE CHART** .

DTC No.	DTC Detection Condition	Trouble Area
P0798	The ECM checks for an open or short in the shift solenoid valve SL3 circuit while driving and shifting gears. (1-trip detection logic) • Output signal duty equals to 100%. (NOTE: SL3 output signal duty is less than 100% under normal condition.)	• Open or short in shift solenoid valve SL3 circuit • Shift solenoid valve SL3 • Wiring harness connector • ECM

MONITOR DESCRIPTION

The ECM commands gear shifts by turning the shift solenoid valves on or off. When there is an open or short circuit in any shift solenoid valve circuit, the ECM detects the problem and illuminates the MIL and stores the DTC. And the ECM performs the fail-safe function and turns the other normal shift solenoid valves on or off (In case of an open or short circuit, the ECM stops sending current to the circuit.)

Refer to **FAIL-SAFE CHART** .

MONITOR STRATEGY

Related DTCs	P0798: Shift solenoid valve SL3/Range check
Required sensors/Components	Shift solenoid valve SL3
Frequency of operation	Continuous
Duration	1 sec.
MIL operation	Immediate
Sequence of operation	None

TYPICAL ENABLING CONDITIONS

ALL

The monitor will run whenever the following DTCs are not present	None
Ignition switch	ON
Starter	OFF

CONDITION (A)

Battery voltage	12 V or more

CONDITION (B)

Battery voltage	10 V or more and less than 12 V
Target current	Less than 0.75 A

CONDITION (C)

Battery voltage	8 V or more
Target current	0.6 A or more

TYPICAL MALFUNCTION THRESHOLDS

When one of the following conditions is met: Condition (A), (B) or (C)

CONDITION (A) AND (B)

Output duty cycle	100% or more

CONDITION (C)

Output duty cycle	0% or less

COMPONENT OPERATING RANGE

Output duty cycle	More than 0% and less than 100%

WIRING DIAGRAM

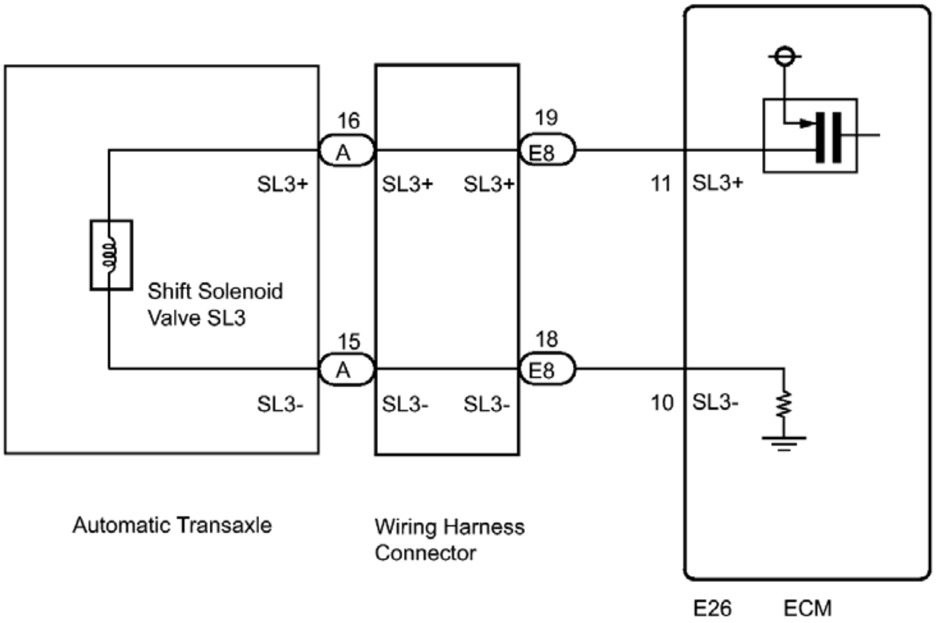
16
A
19
E8
SL3+
SL3+
SL3+
11
SL3+
Shift Solenoid
Valve SL3
15
A
18
E8
SL3-
SL3-
SL3-
10
SL3-
Automatic Transaxle
Wiring Harness
Connector
E26
ECM

c

Fig. 38: Shift Solenoid Valve SL3 Circuit Wiring Diagram
Courtesy of TOYOTA MOTOR SALES, U.S.A., INC.

INSPECTION PROCEDURE

NOTE:	**Perform the universal trip to clear permanent DTCs. Refer to DTC CHECK / CLEAR .**

PROCEDURE

1. **CHECK HARNESS AND CONNECTOR (SHIFT SOLENOID VALVE SL3 CIRCUIT)**
    a. Disconnect the ECM connector.

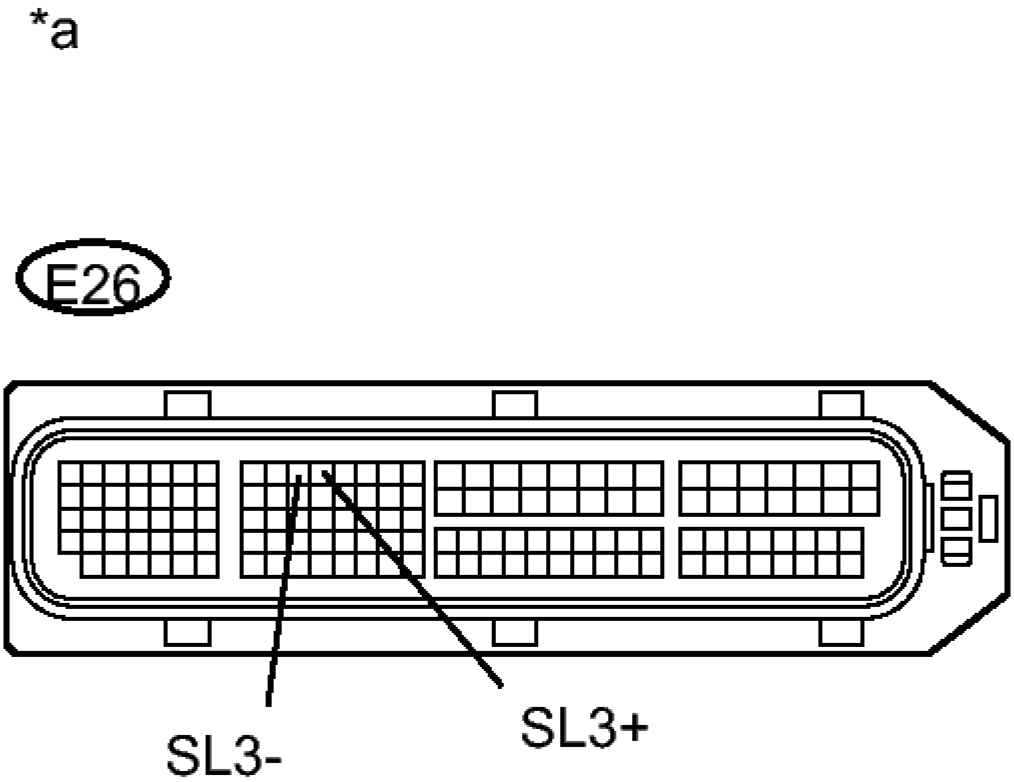

Fig. 39: Checking Harness And Connector (Shift Solenoid Valve SL3 Circuit)
Courtesy of TOYOTA MOTOR SALES, U.S.A., INC.

b. Measure the resistance according to the value(s) in the table below.

Standard Resistance

Tester Connection	Condition	Specified Condition
E26-11 (SL3+) - E26-10 (SL3-)	20°C (68°F)	5.0 to 5.6 ohms
E26-11 (SL3+) - Body		10 kohms

ground and other terminals	Always	or higher
E26-10 (SL3-) - Body ground and other terminals	Always	10 kohms or higher

TEXT IN ILLUSTRATION

*a	Front view of wire harness connector (to ECM)

NG --> See step 2

OK --> See step 5

2. **CHECK HARNESS AND CONNECTOR (ECM - WIRING HARNESS CONNECTOR)**
    a. Disconnect the harness connector from the wiring harness connector.
    b. Measure the resistance according to the value(s) in the table below.

Standard Resistance

Tester Condition	Condition	Specified Condition
E26-11 (SL3+) - E8-19 (SL3+)	Always	Below 1 ohms
E26-10 (SL3-) - E8-18 (SL3-)	Always	Below 1 ohms
E26-11 (SL3+) or E8-19 (SL3+) - Body ground and other terminals	Always	10 kohms or higher

E26-10 (SL3-) or E8-18 (SL3-) - Body ground and other terminals	Always	10 kohms or higher

NG --> REPAIR OR REPLACE HARNESS OR CONNECTOR

OK: Go to next step

3. **INSPECT TRANSMISSION WIRE (SL3)**
   a. Remove the wiring harness connector from the transaxle.

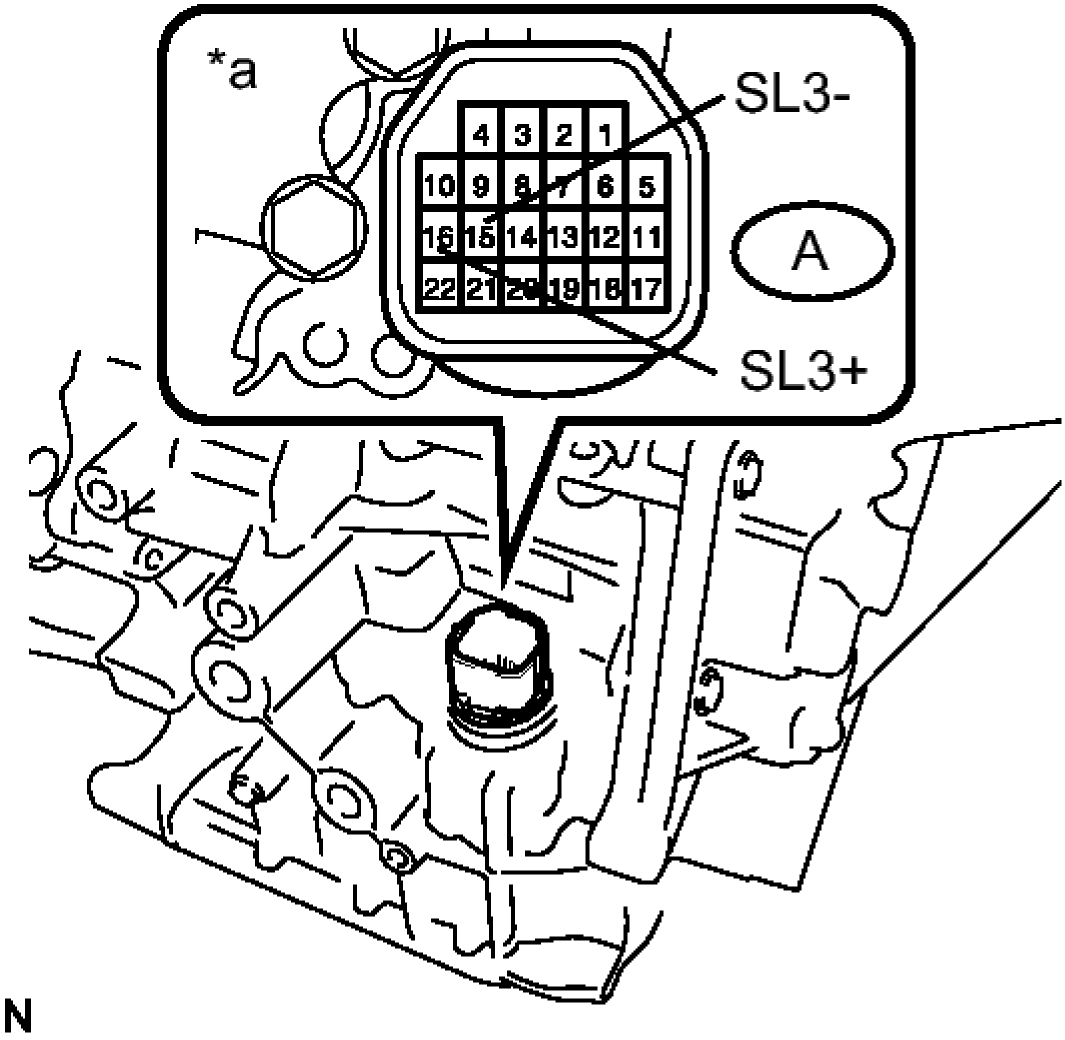
*a
4 3 2 1
10 9 8 7 6 5
16 15 14 13 12 11
22 21 20 19 18 17
SL3-
SL3+
A
N

Fig. 40: Checking Resistance In Transmission Wire (SL3)
Courtesy of TOYOTA MOTOR SALES, U.S.A., INC.

b. Measure the resistance according to the value(s) in the table below.

Standard Resistance

Tester Connection	Condition	Specified Condition
A-16 (SL3+) - A-15 (SL3-)	20°C (68°F)	5.0 to 5.6 ohms
A-16 (SL3+) - Body ground	Always	10 kohms or higher
A-15 (SL3-) - Body ground	Always	10 kohms or higher

TEXT IN ILLUSTRATION

*a	Component without harness connected (Transmission Wire)

NG --> See step 4

OK --> See step 8

4. **INSPECT SHIFT SOLENOID VALVE SL3**
   a. Remove shift solenoid valve SL3.

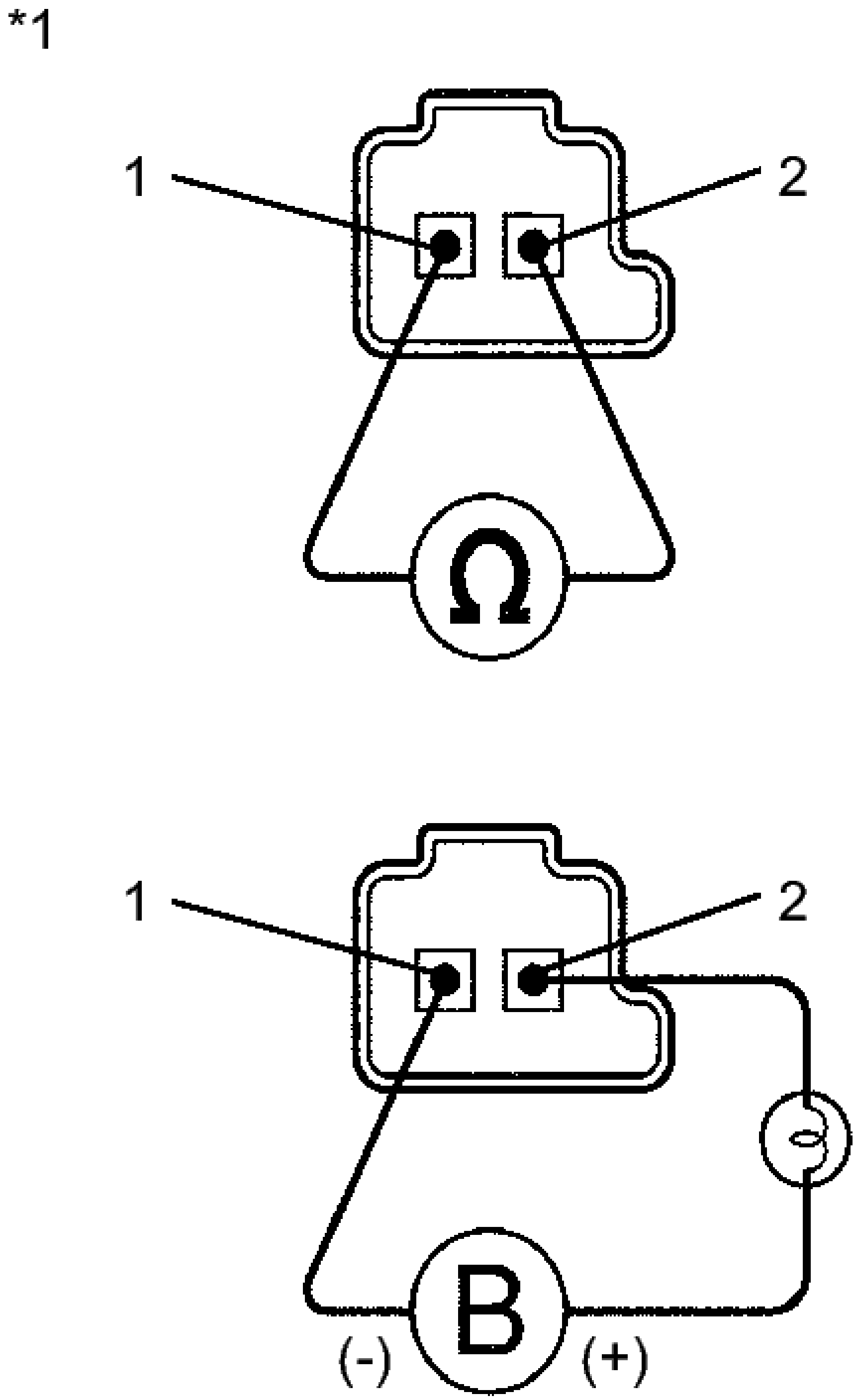

Fig. 41: Checking Resistance In Shift Solenoid Valve SL3
Courtesy of TOYOTA MOTOR SALES, U.S.A., INC.

b. Measure the resistance according to the value(s) in the table below.

Standard Resistance

Tester Connection	Condition	Specified Condition
1 - 2	20°C (68° F)	5.0 to 5.6 ohms

c. Connect a battery positive (+) lead with a 21 W bulb to terminal 2 and a negative (-) lead to terminal 1 of the solenoid valve connector. Then check that the valve moves and makes an operating sound.

OK

Valve moves and makes an operating sound.

TEXT IN ILLUSTRATION

*1	Shift Solenoid Valve SL3

NG --> See step 6

OK --> See step 7

5. **REPLACE ECM. Refer to COMPONENTS**
6. **REPLACE SHIFT SOLENOID VALVE SL3. Refer to COMPONENTS**
7. **REPLACE TRANSMISSION WIRE. Refer to COMPONENTS**
8. **REPLACE WIRING HARNESS CONNECTOR. Refer to COMPONENTS**

DTC P2714: PRESSURE CONTROL SOLENOID "D" PERFORMANCE (SHIFT SOLENOID VALVE SLT)

SYSTEM DESCRIPTION

The linear solenoid valve (SLT) controls the transmission line pressure for smooth transmission operation based on signals from the throttle position sensor and the vehicle speed sensor. The ECM adjusts the current to SLT solenoid valve to control hydraulic line pressure coming from the primary regulator valve. Appropriate line pressure assures smooth shifting with varying engine outputs.

DTC No.	DTC Detection Condition	Trouble Area
P2714	The ECM detects a malfunction in the shift solenoid valve SLT (ON side) according to the difference in the speed between the turbine and	• Shift solenoid valve SLT remains open • Shift solenoid valve SL1, SL2, SL3 or SL4 remains open or closed • Valve body is blocked

	the output shaft, and also by the transmission fluid pressure. (2-trip detection logic)	- Automatic transaxle (clutch, brake or gear, etc.)

MONITOR DESCRIPTION

The ECM calculates the amount of clutch slip based on the turbine speed, output shaft speed, and gear ratio. If the amount of clutch slip exceeds a specified level, the ECM will set this DTC and illuminate the MIL.

When shift solenoid valve SLT remains on, the line pressure goes down and clutch engagement force decreases.

NOTE: **If driving continues under these conditions, clutches will burn out and the vehicle will no longer be drivable.**

MONITOR STRATEGY

Related DTCs	P2714: Shift solenoid valve SLT/ON malfunction
Required sensors/Components	Shift solenoid valve SLT
Frequency of operation	Continuous
Duration	2 sec.
MIL operation	2 driving cycles
Sequence of operation	None

TYPICAL ENABLING CONDITIONS

ON MALFUNCTION:

The monitor will run whenever this DTC is not present. (Not circuit malfunction)	P0712, P0713 (ATF temperature sensor circuit (TFT sensor)) P0115, P0117, P0118 (ECT sensor circuit) P0715, P0717 (Turbine speed sensor circuit) P0791, P0793 (Intermediate shaft speed sensor circuit) P0748 (Shift solenoid valve SL1 circuit) P0778 (Shift solenoid valve SL2 circuit) P0798 (Shift solenoid valve SL3 circuit) P2810 (Shift solenoid valve SL4 circuit) P2716 (Shift solenoid valve SLT circuit) P0327, P0328, (KCS sensor circuit) P0120, P0121, P0122, P0123, P0220, P0222, P0223, P0604, P0606, P060A, P060B, P060D, P060E, P0657, P1607, P2102, P2103, P2111, P2112, P2118, P2119, P2135 ((ETCS) Electronic throttle control system) U0100 (CAN communication system)
Transmission range	"D"

TFT (Transmission fluid temperature)	-10°C (14°F) or more
TFT (Transmission fluid temperature) sensor circuit	No circuit malfunction
ECT (Engine coolant temperature) sensor circuit	No circuit malfunction
Turbine speed sensor circuit	No circuit malfunction
Intermediate shaft speed sensor circuit	No circuit malfunction
Shift solenoid valve SL1 circuit	No circuit malfunction
Shift solenoid valve SL2 circuit	No circuit malfunction
Shift solenoid valve SL3 circuit	No circuit malfunction
Shift solenoid valve SL4 circuit	No circuit malfunction
Shift solenoid valve SLT circuit	No circuit malfunction
(KCS) Knock control sensor circuit	No circuit malfunction
(ETCS) Electronic throttle control system	Not system down
CAN communication system	Not system down
Engine	Starting
Input turbine torque	100 N*m or more
Turbine speed	250 RPM or more
Output speed	250 RPM or more

TYPICAL MALFUNCTION THRESHOLDS

ON MALFUNCTION:

Detection criteria	Threshold
Turbine speed - Output speed x Gear ratio at output speed 1, 000 RPM (Condition varies with output speed)	75 RPM or more

INSPECTION PROCEDURE

NOTE: **Perform the universal trip to clear permanent DTCs. Refer to DTC CHECK / CLEAR .**

PROCEDURE

1. **CHECK OTHER DTCS OUTPUT (IN ADDITION TO DTC P2714)**
    a. Connect the Techstream to the DLC3.
    b. Turn the ignition switch to ON.
    c. Turn the Techstream on.
    d. Enter the following menus: Powertrain / Engine and ECT / Trouble Codes.
    e. Read the DTCs using the Techstream.

    Result

Display	

(DTC Output)	Proceed to
Only "P2714" is output	A
"P2714" and other DTCs are output	B

HINT:

If a solenoid is stuck ON, DTCs for several solenoids including the malfunctioning solenoid will be detected.

A --> See step 8

B: Go to next step

2. **PERFORM ACTIVE TEST USING TECHSTREAM (SHIFT SOLENOID VALVE SLT)**

NOTE:

- **Perform the test at the normal operating ATF (Automatic Transmission Fluid) temperature: 50 to 80°C (122 to 176°F)**
- **Be sure to prevent SST hose from interfering with the exhaust pipe.**
- **This check must be conducted after checking and adjusting the engine.**
- **Perform the test with the A/C OFF.**

HINT:

Using the Techstream to perform Active Tests allows relays, VSVs, actuators and other items to be operated without removing any parts. This non-intrusive functional inspection can be very useful because intermittent operation may be discovered before parts or wiring is disturbed. Performing Active Tests early in troubleshooting is one way to save diagnostic time. Data List information can be displayed while performing Active Tests.

a. Turn the ignition switch off.
b. Lift the vehicle up.
c. Remove the test plug on the transmission case center right side and connect SST.

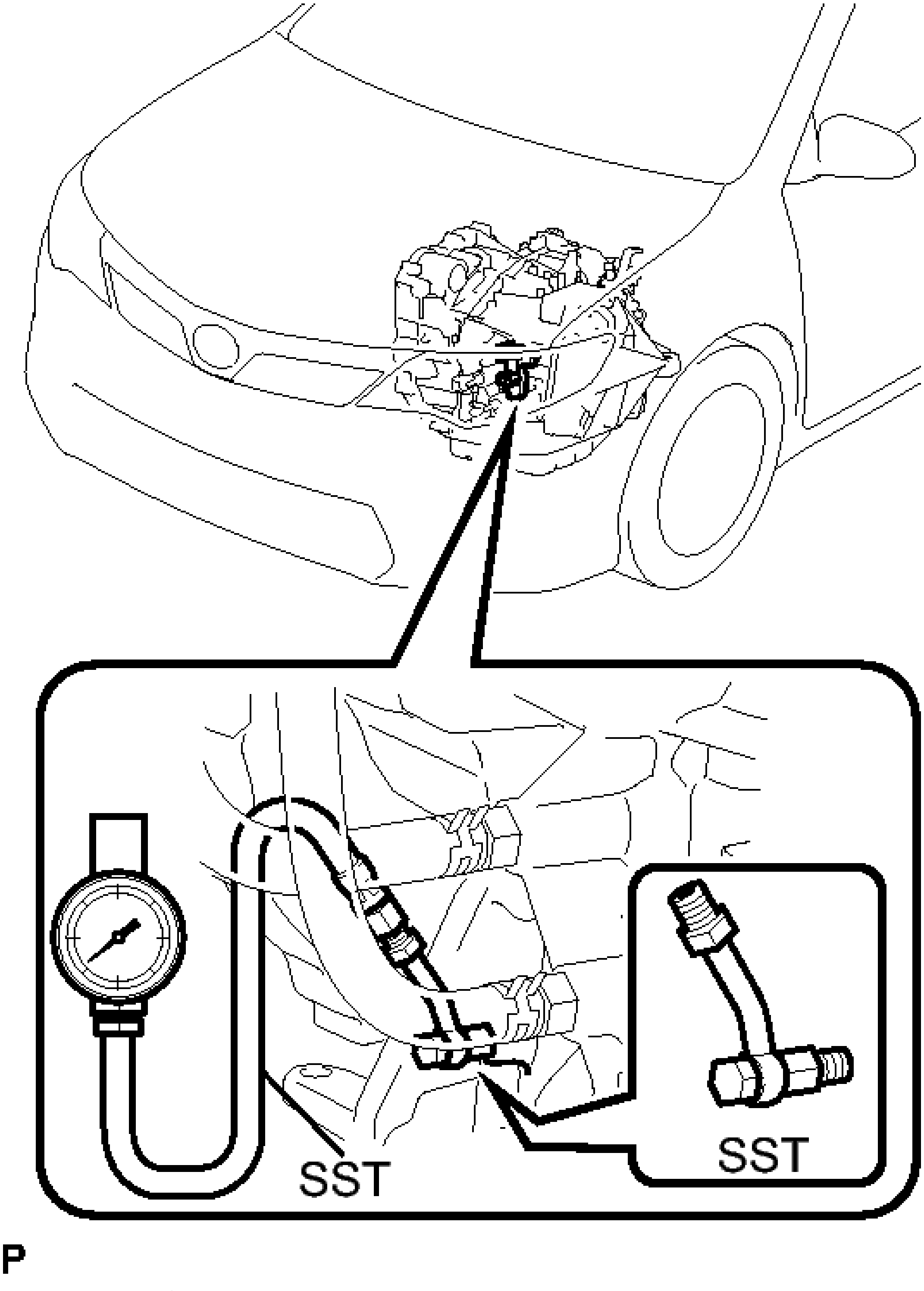

Fig. 42: Identifying SST & Transmission Test Plug
Courtesy of TOYOTA MOTOR SALES, U.S.A., INC.

- **SST: 09992-00095**
  09992-00231

09992-00271

d. Lower the vehicle.
e. Fully apply the parking brake and chock the 4 wheels.
f. Connect the Techstream to the DLC3.
g. Start the engine.
h. Warm up the Automatic Transmission Fluid (ATF).
i. Measure the line pressure when the engine is idling.
j. Turn the Techstream on.
k. Enter the following menus: Powertrain / Engine and ECT / Active Test.
l. Follow the instructions on the Techstream and perform the Active Test.
m. Measure the line pressure with SST.

Tester Display	Test Part	Control Range	Diagnostic Note
Activate the Solenoid (SLT)*	Operates shift solenoid SLT to raise the line pressure.	ON/OFF **HINT:** ON: No action (normal operation) OFF: Line pressure up (When the Active Test of "Activate the Solenoid (SLT)" is performed, the ECM commands the SLT solenoid to turn off).	[Vehicle Condition] • Vehicle Stopped • IDL: ON

*: "Activate the Solenoid (SLT)" in the Active Test is performed to check that the line pressure changes by connecting the SST to the automatic transaxle. The same SST is used in the Hydraulic Test. Refer to **HYDRAULIC TEST** as well.

HINT:

The pressure values in Active Test and Hydraulic Test are different from each other.

OK

The line pressure changes as specified when performing the Active Test.

NG --> See step 8

OK: Go to next step

3. **PERFORM ACTIVE TEST USING TECHSTREAM (SHIFTING TEST)**

NOTE: This test should always be performed with at least 2 people.

a. Warm up the engine.
b. Turn the ignition switch off.
c. Connect the Techstream to the DLC3.
d. Turn the ignition switch to ON.
e. Turn the Techstream on.
f. Enter the following menus: Powertrain / Engine and ECT / Active Test.
g. According to the display on the Techstream, perform the Active Test.

HINT:

Comparing the gear commanded by the Active Test with the actual gear enables confirmation of the problem. Refer to **FAIL-SAFE CHART** .

Tester Display	Test Part	Control Range	Diagnostic Note
Control the Shift Position	Operates the shift solenoid valves to allow gears to selected	• Press "-->" button: Upshift occurs • Press "<--" button:	Can be used to check the operation of the shift solenoid valves. Upshifts and downshifts should be performed consecutively. A 10-second interval is required between gear changes. Do not downshift at

	manually.	Downshift occurs	high speeds. Doing so will damage the automatic transaxle. [Vehicle Condition] 50 km/h (30 mph) or less

NOTE:

- **This test can be conducted when the vehicle is stopped.**
- **When shifting gears using the Active Test function, do not operate the accelerator pedal for 2 seconds before and after shifting gears.**

HINT:

The gear commanded by the ECM is shown in the Data List / Shift Status display on the Techstream.

h. Check the vehicle speed and the gear when the engine speed is 1000 rpm.

HINT:

Because the torque converter has not engaged, it may be difficult to obtain the speeds specified in 4th, 5th, and 6th gear, however a difference of speed should still be evident following each gear change.

Standard

1st	2nd	3rd	4th	5th	6th
8 to 12 km/h (5 to 7.5 mph)	15 to 19 km/h (9.3 to 11.8 mph)	21 to 25 km/h (13.0 to 15.5 mph)	31 to 35 km/h (19.3 to 21.7 mph)	44 to 48 km/h (27.3 to 29.8 mph)	52 to 56 km/h (32.3 to 34.8 mph)

i. Compare the ECM commanded gear and the actual gear.

Result

Actuator Gear during Malfunction		**ECM Commanded Gear**						**Proceed to**
		1st	**2nd**	**3rd**	**4th**	**5th**	**6th**	
Shift solenoid SL1	Stuck ON	1st	2nd	3rd	4th	4th	4th	A
	Stuck OFF	N*1	N*1	N*1	N*1	5th	6th	
Shift solenoid SL2	Stuck ON	4th	4th	4th	4th	5th	6th	B
	Stuck OFF	1st	2nd	3rd	1st	N*1	N*1	
Shift solenoid SL3	Stuck ON	2nd	2nd	3rd	4th	5th	6th	C
	Stuck OFF	1st	1st	3rd	4th	5th	N*1	
Shift solenoid SL4	Stuck ON*3	3rd	3rd	3rd	4th	5th	5th	D
	Stuck OFF	1st	2nd	1st	4th	N*1	6th	
Shift solenoid SLT	Stuck ON	N*2	N*2	N*2	N*2	N*2	N*2	E
	Stuck OFF*3	1st	2nd	3rd	4th	5th	6th	

HINT:

- *1: Neutral
- *2: If shift solenoid SLT is stuck on, the line pressure will be low. Therefore, the amount of torque that can be transmitted by each gear is lower than the normal limit. When the engine power exceeds this lowered limit, the engine speed will increase freely.
- *3: When shift solenoid SLT is stuck off, gear shifting is normal.

A --> See step 4

B --> See step 5

C --> See step 6

D --> See step 7

E: Go to next step

4. **GO TO DTC CHART (RELATED SHIFT SOLENOID VALVE (SL1) PERFORMANCE DTC P0746). Refer to DTC P0746: Pressure Control Solenoid "A" Performance (Shift Solenoid Valve SL1)**
5. **GO TO DTC CHART (RELATED SHIFT SOLENOID VALVE (SL2) PERFORMANCE DTC P0776). Refer to DTC P0776: Pressure Control Solenoid "B" Performance (Shift Solenoid Valve SL2)**
6. **GO TO DTC CHART (RELATED SHIFT SOLENOID VALVE (SL3) PERFORMANCE DTC P0796). Refer to DTC P0796: Pressure Control Solenoid "C" Performance (Shift Solenoid Valve SL3)**

7. **GO TO DTC CHART (RELATED SHIFT SOLENOID VALVE (SL4) PERFORMANCE DTC P2808). Refer to DTC P2808: Pressure Control Solenoid "G" Performance (Shift Solenoid Valve SL4)**
8. **INSPECT SHIFT SOLENOID VALVE SLT**
    a. Remove shift solenoid valve SLT.

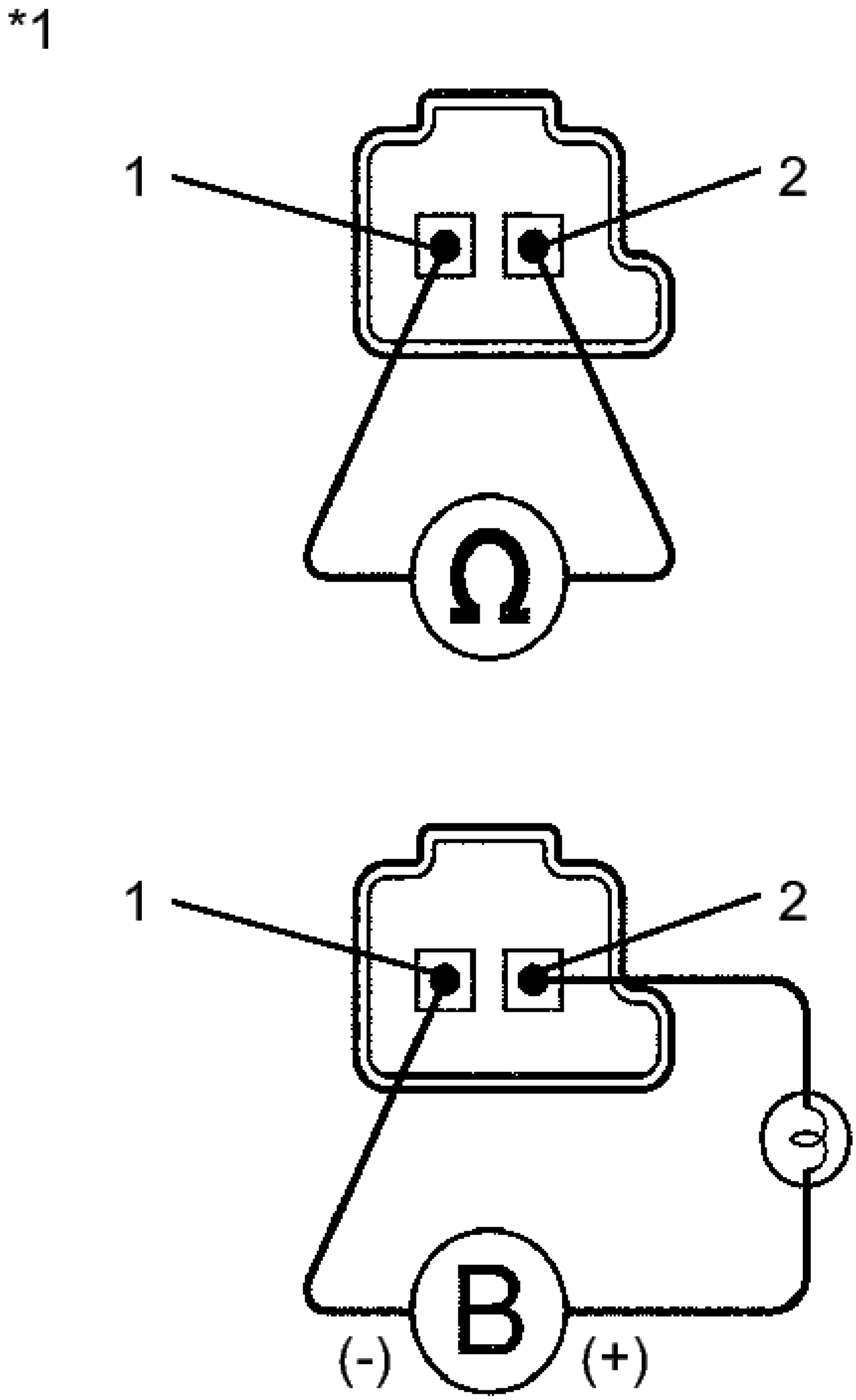

Fig. 43: Checking Resistance In Shift Solenoid Valve SLT
Courtesy of TOYOTA MOTOR SALES, U.S.A., INC.

b. Measure the resistance according to the value(s) in the table below.

Standard Resistance

Tester Connection	Condition	Specified Condition
1 - 2	20°C (68° F)	5.0 to 5.6 ohms

c. Connect a battery positive (+) lead with a 21 W bulb to terminal 2 and a negative (-) lead to terminal 1 of the solenoid valve connector. Then check that the valve moves and makes an operating sound.

   OK

   Valve moves and makes an operating sound.

   TEXT IN ILLUSTRATION

*1	Shift Solenoid Valve SLT

NG --> See step 11

OK: Go to next step

9. **INSPECT TRANSMISSION VALVE BODY ASSEMBLY**
   a. Check the transmission valve body assembly. Refer to **REMOVAL** .

      OK

      There are no foreign objects on each valve and they operate smoothly.

NG --> See step 12

OK --> See step 10

10. **REPLACE AUTOMATIC TRANSMISSION ASSEMBLY. Refer to COMPONENTS**
11. **REPLACE SHIFT SOLENOID VALVE SLT. Refer to COMPONENTS**
12. **REPLACE TRANSMISSION VALVE BODY ASSEMBLY. Refer to COMPONENTS**

DTC P2716: PRESSURE CONTROL SOLENOID "D" ELECTRICAL (SHIFT SOLENOID VALVE SLT)

DESCRIPTION

Refer to the system description for DTC P2714. Refer to **SYSTEM DESCRIPTION**.

DTC No.	DTC Detection Condition	Trouble Area
P2716	Open or short is detected in shift solenoid valve SLT circuit for 1 second or more while driving (1-trip detection logic).	• Open or short in shift solenoid valve SLT circuit • Shift solenoid valve SLT • Wiring harness connector • ECM

MONITOR DESCRIPTION

When an open or short in the linear solenoid valve (SLT) circuit is detected, the ECM interprets this as a fault. The ECM will turn on the MIL and store the DTC.

MONITOR STRATEGY

Related DTCs	P2716: Shift solenoid valve SLT/Range check
Required sensors/Components	Shift solenoid valve SLT
Frequency of operation	Continuous
Duration	1 sec.
MIL operation	Immediate
Sequence of operation	None

TYPICAL ENABLING CONDITIONS

ALL:

The monitor will run whenever this DTC is not present	None
Solenoid current cut status	Not cut
Ignition switch	ON
Starter	OFF

MALFUNCTION (A):

Battery voltage	12 V or more
Target current	1 A

MALFUNCTION (B):

Battery voltage	10 V or more and less than 12 V
Target current	0.75 A

MALFUNCTION (C):

Battery voltage	8 V or more
Target current	1 A

MALFUNCTION (D):

Battery voltage	11 V or more
Target current	1 A or more

MALFUNCTION (E):

Battery voltage	11 V or more
Target current	0.1 A or more
Commanded voltage - Last commanded voltage	Less than 0.000019 V

TYPICAL MALFUNCTION THRESHOLDS

MALFUNCTION (A) AND (B):

Output duty cycle	100% or more

MALFUNCTION (C):

Output duty cycle	0% or less

MALFUNCTION (D):

Output signal monitor	No signal

MALFUNCTION (E):

Commanded voltage - Average of monitor voltage	0.035 V or more

COMPONENT OPERATING RANGE

Output duty cycle	Less than 100%

WIRING DIAGRAM

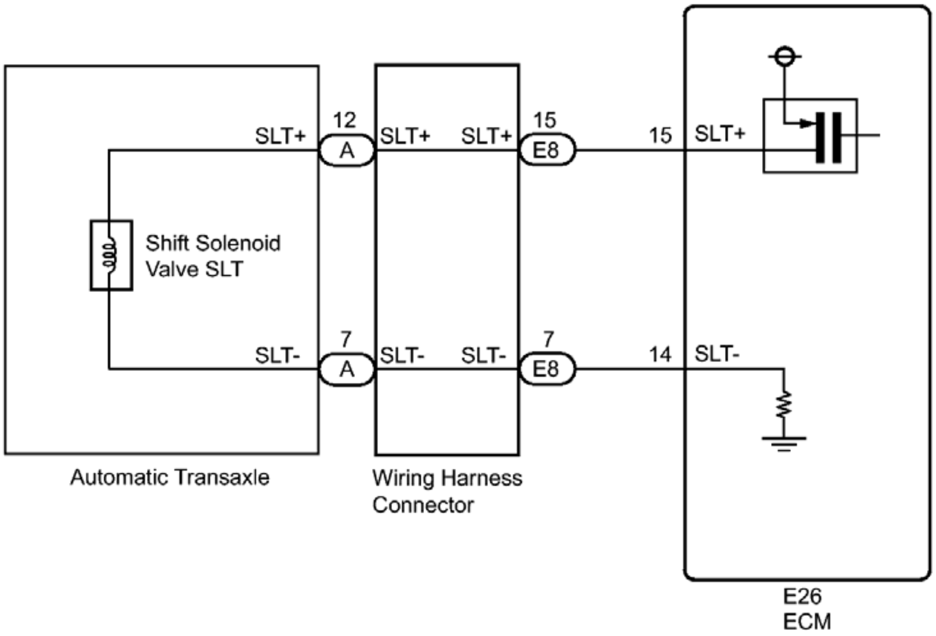
SLT+
12
A
SLT+
SLT+
15
E8
15
SLT+
Shift Solenoid Valve SLT
SLT-
7
A
SLT-
SLT-
7
E8
14
SLT-
Automatic Transaxle
Wiring Harness Connector
E26
ECM

c

Fig. 44: Shift Solenoid Valve SLT Circuit Wiring Diagram
Courtesy of TOYOTA MOTOR SALES, U.S.A., INC.

INSPECTION PROCEDURE

NOTE: **Perform the universal trip to clear permanent DTCs. Refer to DTC CHECK / CLEAR .**

PROCEDURE

1. **CHECK HARNESS AND CONNECTOR (SHIFT SOLENOID VALVE SLT CIRCUIT)**
    a. Disconnect the ECM connector.

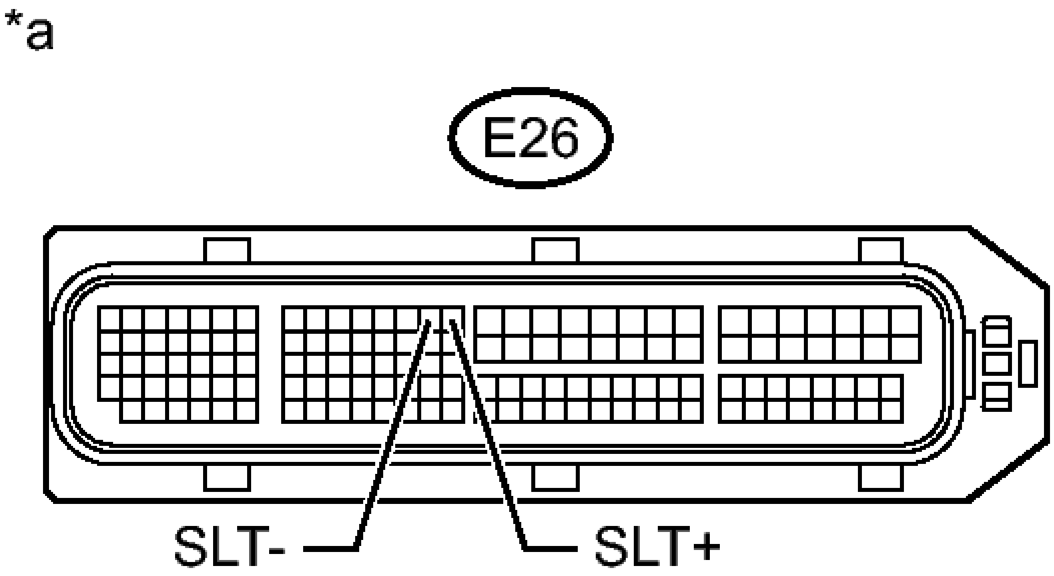

Fig. 45: Checking Harness And Connector (Shift Solenoid Valve SLT Circuit)
Courtesy of TOYOTA MOTOR SALES, U.S.A., INC.

b. Measure the resistance according to the value(s) in the table below.

Standard Resistance

Tester Condition	Condition	Specified Condition
E26-15 (SLT+) - E26-14 (SLT-)	20°C (68°F)	5.0 to 5.6 ohms
E26-15 (SLT+) - Body ground and other terminals	Always	10 kohms or higher
E26-14 (SLT-) - Body ground and other terminals	Always	10 kohms or higher

TEXT IN ILLUSTRATION

*a	Front view of wire harness connector (to ECM)

NG --> See step 3

OK --> See step 2

2. **REPLACE ECM. Refer to COMPONENTS**
3. **CHECK HARNESS AND CONNECTOR (ECM - WIRING HARNESS CONNECTOR)**
   a. Disconnect the harness connector from the wiring harness connector.
   b. Measure the resistance according to the value(s) in the table below.

Standard Resistance

Tester Condition	Condition	Specified Condition
E26-15 (SLT+) - E8-15 (SLT+)	Always	Below 1 ohms
E26-14 (SLT-) - E8-7 (SLT-)	Always	Below 1 ohms
E26-15 (SLT+) or E8-15 (SLT+) - Body ground and other terminals	Always	10 kohms or higher
E26-14 (SLT-) or E8-7 (SLT-) - Body ground and other terminals	Always	10 kohms or higher

NG --> REPAIR OR REPLACE HARNESS OR CONNECTOR

OK: Go to next step

4. **INSPECT TRANSMISSION WIRE (SLT)**
   a. Remove the wiring harness connector from the transaxle.

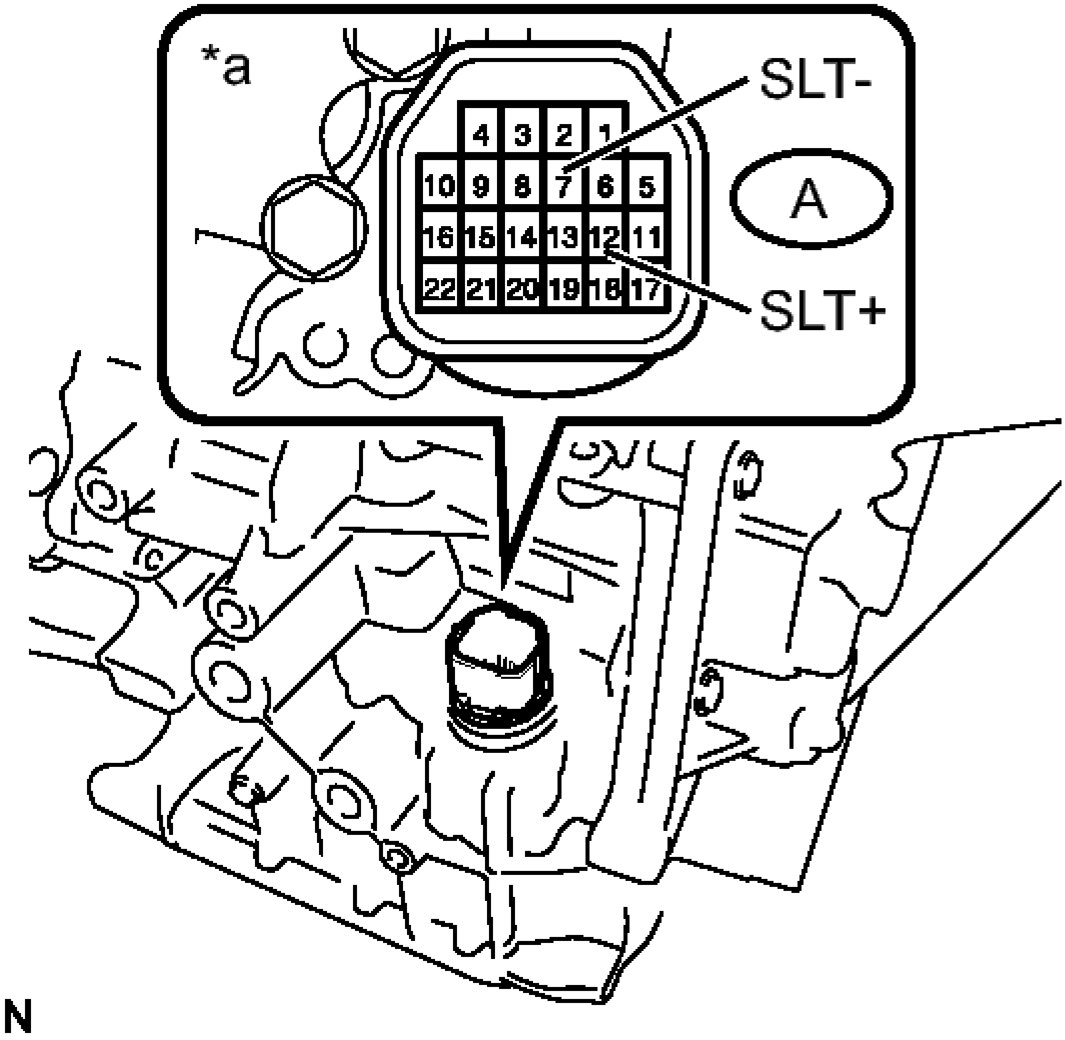
*a
SLT-
A
SLT+
4 3 2 1
10 9 8 7 6 5
16 15 14 13 12 11
22 21 20 19 18 17
N

Fig. 46: Checking Resistance Of Transmission Wire (SLT)
Courtesy of TOYOTA MOTOR SALES, U.S.A., INC.

   b. Measure the resistance according to the value(s) in the table below.

Standard Resistance

Tester Connection	Condition	Specified Condition
A-12	20°C (68°	5.0 to 5.6

(SLT+) - A-7 (SLT-)	F)	ohms
A-12 (SLT+) - Body ground and other terminals	Always	10 kohms or higher
A-7 (SLT-) - Body ground and other terminals	Always	10 kohms or higher

TEXT IN ILLUSTRATION

*a	Component without harness connected (Transmission Wire)

NG --> See step 6

OK --> See step 5

5. **REPLACE WIRING HARNESS CONNECTOR. Refer to COMPONENTS**
6. **INSPECT SHIFT SOLENOID VALVE SLT**
   a. Remove shift solenoid valve SLT.

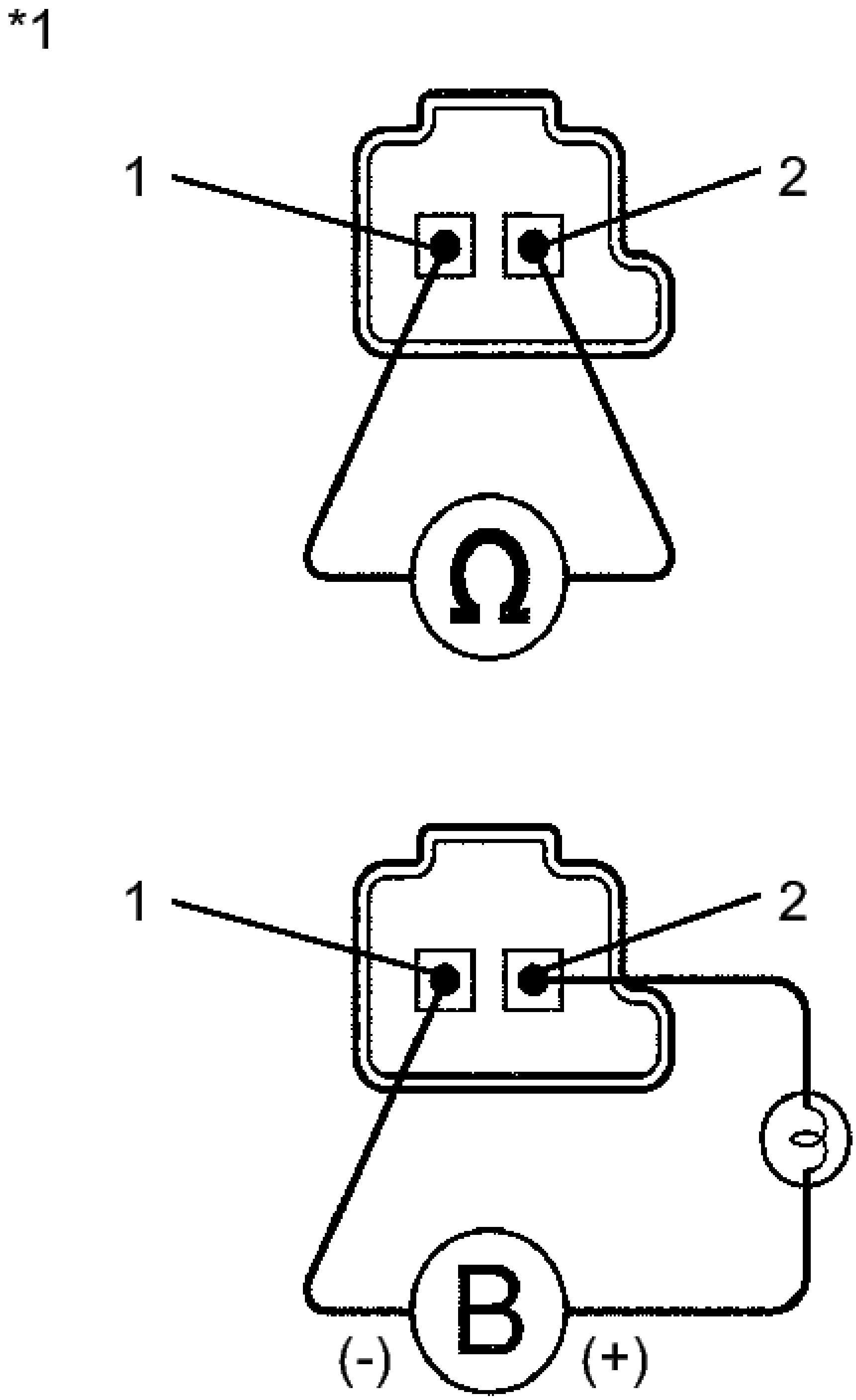

Fig. 47: Checking Resistance In Shift Solenoid Valve SLT
Courtesy of TOYOTA MOTOR SALES, U.S.A., INC.

b. Measure the resistance according to the value(s) in the table below.

Standard Resistance

Tester Connection	**Condition**	**Specified Condition**
1 - 2	20°C (68° F)	5.0 to 5.6 ohms

c. Connect a battery positive (+) lead with a 21 W bulb to terminal 2 and a negative (-) lead to terminal 1 of the solenoid valve connector. Then check that the valve moves and makes an operating sound.

OK

Valve moves and makes an operating sound.

TEXT IN ILLUSTRATION

*1	Shift Solenoid Valve SLT

NG --> See step 8

OK --> See step 7

7. **REPLACE TRANSMISSION WIRE. Refer to COMPONENTS**
8. **REPLACE SHIFT SOLENOID VALVE SLT. Refer to COMPONENTS**

DTC P2757: TORQUE CONVERTER CLUTCH PRESSURE CONTROL SOLENOID PERFORMANCE (SHIFT SOLENOID VALVE SLU)

SYSTEM DESCRIPTION

The ECM uses the signals from the throttle position sensor, air-flow meter, turbine (input) speed sensor, output speed sensor and crankshaft position sensor to monitor the engagement condition of the lock-up clutch.

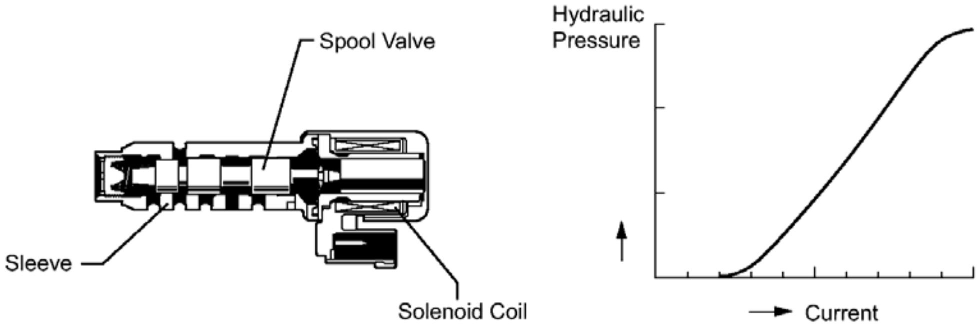

Fig. 48: Identifying Shift Solenoid Valve SLU Components And Hydraulic Line Pressure Graph
Courtesy of TOYOTA MOTOR SALES, U.S.A., INC.

The ECM compares the engagement condition of the lock-up clutch with the lock-up schedule in the ECM memory to detect shift solenoid valve SLU, valve body and torque converter clutch mechanical problems.

DTC No.	DTC Detection Condition	Trouble Area
P2757	• Lock-up does not occur when requested. • Lock-up occurs when shift solenoid valve SLU is requested to turn on in the lock-up range. (2-trip detection logic)	• Shift solenoid valve SLU remains open or closed • Valve body is blocked • Torque converter assembly • Automatic transaxle (clutch, brake or gear, etc.) • Line pressure is too low

MONITOR DESCRIPTION

Torque converter lock-up is controlled by the ECM based on the turbine (input) speed sensor NT, output speed sensor NC, engine speed, engine load, engine temperature, vehicle speed, transmission fluid temperature, and gear selection. The ECM determines the lock-up status of the torque converter by comparing the engine speed (NE) to the input turbine speed (NT). The ECM calculates the actual transmission gear by comparing input turbine speed (NT) to output shaft speed (NC). When conditions are appropriate, the ECM requests "lock-up" by applying control voltage to shift solenoid SLU. When SLU is turned on, it applies pressure to the lock-up relay valve and locks the torque converter clutch.

If the ECM detects no lock-up after lock-up has been requested or if it detects lock-up when it is not requested, the ECM interprets this as a fault in shift solenoid valve SLU or lock-up system performance.

The ECM will turn on the MIL and store the DTC.

Example:

When any of the following is met, the system judges it as a malfunction.

- There is a difference in rotation (speed) between the input side (engine speed) and output side (input turbine speed) of the torque converter when the ECM commands lock-up.

  (Engine speed is at least 70 RPM greater than input turbine speed.)

MONITOR STRATEGY

Related DTCs	P2757: Shift solenoid valve SLU OFF malfunction
Required sensors/Components	Shift solenoid valve SLU
Frequency of operation	Continuous
Duration	OFF malfunction (a): 3.5 sec. OFF malfunction (b): 0.05 sec.
MIL operation	2 driving cycles
Sequence of operation	None

TYPICAL ENABLING CONDITIONS

THE FOLLOWING ITEMS ARE COMMON TO ALL CONDITIONS BELOW.

The monitor will run whenever this DTC is not present. (Not circuit malfunction)	P0712, P0713 (ATF temperature sensor circuit (TFT sensor)) P0115, P0117, P0118 (ECT sensor circuit) P0715, P0717 (Turbine speed sensor circuit) P0791, P0793 (Intermediate shaft speed sensor circuit) P0748 (Shift solenoid valve SL1 circuit) P0778 (Shift solenoid valve SL2 circuit) P0798 (Shift solenoid valve SL3 circuit) P2810 (Shift solenoid valve SL4 circuit) P2759 (Shift solenoid valve SLU circuit) P2769, P2770 (Shift solenoid valve SL circuit) P0327, P0328, (KCS sensor circuit) P0120, P0121, P0122, P0123, P0220, P0222, P0223, P0604, P0606, P060A, P060B, P060D, P060E, P0657, P1607, P2102, P2103, P2111, P2112, P2118, P2119, P2135 ((ETCS) Electronic throttle control system) U0100 (CAN communication system)
ECT (Engine coolant temperature)	40°C (104°F) or more
Spark advance from Max. retard timing by KCS control	0°CA or more
Transmission range	"D"
TFT (Transmission fluid temperature)	-10°C (14°F) or more
TFT (Transmission fluid temperature) sensor circuit	No circuit malfunction

ECT (Engine coolant temperature) sensor circuit	No circuit malfunction
Turbine speed sensor circuit	No circuit malfunction
Intermediate shaft speed sensor circuit	No circuit malfunction
Shift solenoid valve SL1 circuit	No circuit malfunction
Shift solenoid valve SL2 circuit	No circuit malfunction
Shift solenoid valve SL3 circuit	No circuit malfunction
Shift solenoid valve SL4 circuit	No circuit malfunction
Shift solenoid valve SLU circuit	No circuit malfunction
Shift solenoid valve SL circuit	No circuit malfunction
(KCS) Knock control sensor circuit	No circuit malfunction
(ETCS) Electronic throttle control system	Not system down
CAN communication system	Not system down
Engine	Starting
ECM selected gear	Not 1st
Vehicle speed	15.5 mph (25 km/h) or more
Turbine speed/Output speed (NT/NO) with 1st	3.232 to 7.556
Turbine speed/Output speed (NT/NO) with 2nd	1.860 to 2.289
Turbine speed/Output speed (NT/NO) with 3rd	1.369 to 1.613
Turbine speed/Output speed (NT/NO) with 4th	0.976 to 1.113
Turbine speed/Output speed (NT/NO) with 5th	0.690 to 0.818
Turbine speed/Output speed (NT/NO) with 6th	0.556 to 0.680

OFF MALFUNCTION:

ECM lock-up command	ON
Duration time from lock-up on command	3 sec. or more

TYPICAL MALFUNCTION THRESHOLDS

OFF MALFUNCTION:

Following conditions are met	(a) and (b)
(a) Engine speed - Turbine speed	70 RPM or more
(b) Transmission fluid pressure switch	OFF

COMPONENT OPERATING RANGE

Speed sensor (NT)	Input speed is equal to engine speed when lock-up is ON.

INSPECTION PROCEDURE

NOTE: **Perform the universal trip to clear permanent DTCs. Refer to DTC CHECK / CLEAR .**

HINT:

Using the Techstream to perform Active Tests allows relays, VSVs, actuators and other items to be operated without removing any parts. This non-intrusive functional inspection can be very useful because intermittent operation may be discovered before parts or wiring is disturbed. Performing Active Tests early in troubleshooting is one way to save diagnostic time. Data List information can be displayed while performing Active Tests.

1. **ACTIVE TEST**
    a. Warm up the engine.
    b. Turn the ignition switch off.
    c. Connect the Techstream to the DLC3.
    d. Turn the ignition switch to ON.
    e. Turn the Techstream on.
    f. Enter the following menus: Powertrain / Engine and ECT / Active Test.
    g. According to the display on the Techstream, perform the Active Test.

Tester Display	Test Part	Control Range	Diagnostic Note
Activate the Lock Up	Controls the shift solenoid SLU and SL to set the automatic transaxle to the lock-up condition.	ON/OFF	Can be used to check SLU and SL solenoid operation. [Vehicle Condition] • Throttle valve opening angle: Less than 20% • Vehicle speed:60 km/h (37 mph) or more, and 6th gear

HINT:

This test can be conducted when the vehicle speed is 60 km/h (37 mph) or more.

h. Lightly depress the accelerator pedal and check that the engine speed does not change abruptly.

HINT:

- When changing the accelerator pedal opening angle while driving, if the engine speed does not change, lock-up is on.
- Slowly release, but not fully, the accelerator pedal in order to decelerate. (Fully releasing the pedal will close the throttle valve and lock-up may be turned off.)

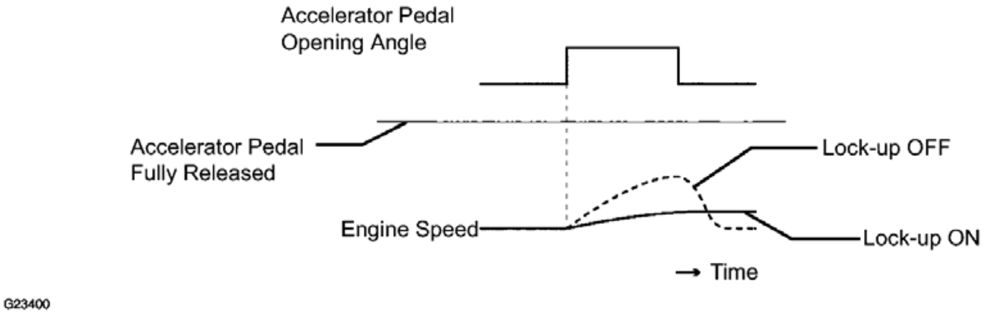

Fig. 49: Accelerator Pedal Opening Angle Graph
Courtesy of TOYOTA MOTOR SALES, U.S.A., INC.

PROCEDURE

1. **CHECK OTHER DTCS OUTPUT (IN ADDITION TO DTC P2757)**
   a. Connect the Techstream to the DLC3.
   b. Turn the ignition switch to ON.
   c. Turn the Techstream on.
   d. Enter the following menus: Powertrain / Engine and ECT / Trouble Codes.
   e. Read the DTCs using the Techstream.

Result

Display (DTC output)	Proceed to
Only "P2757" is output	A
"P2757" and	

other DTCs are output	B

HINT:

If any other codes besides "P2757" are output, perform troubleshooting for those DTCs first.

B --> See step 6

A: Go to next step

2. **INSPECT SHIFT SOLENOID VALVE SLU**
   a. Remove shift solenoid valve SLU.

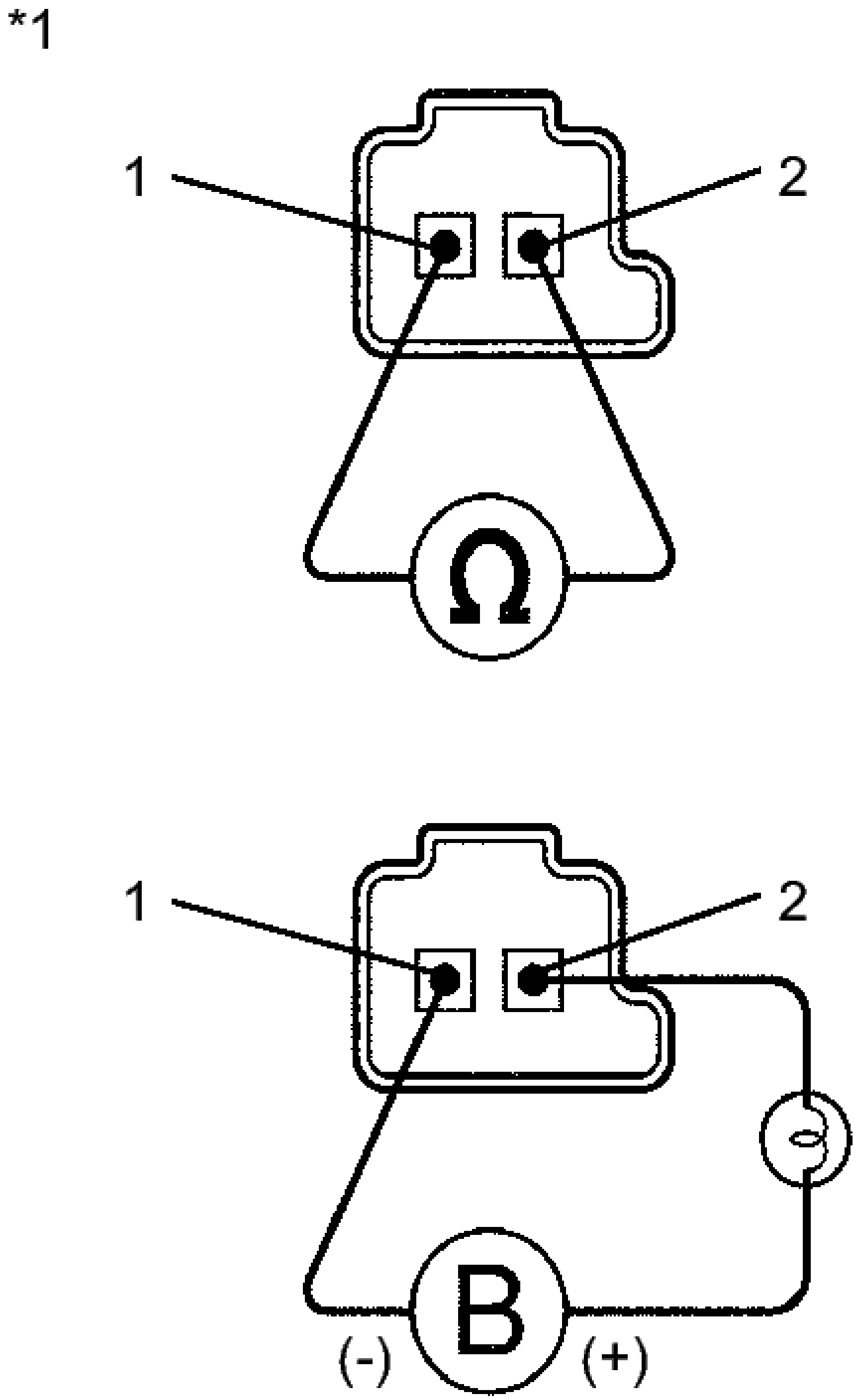

Fig. 50: Checking Resistance In Shift Solenoid Valve SLU
Courtesy of TOYOTA MOTOR SALES, U.S.A., INC.

b. Measure the resistance according to the value(s) in the table below.

Standard Resistance

Tester Connection	Condition	Specified Condition
1 - 2	20°C (68° F)	5.0 to 5.6 ohms

c. Connect a battery positive (+) lead with a 21 W bulb to terminal 2 and a negative (-) lead to terminal 1 of the solenoid valve connector. Then check that the valve moves and makes an operating sound.

OK

Valve moves and makes an operating sound.

TEXT IN ILLUSTRATION

*1	Shift Solenoid Valve SLU

NG --> See step 7

OK: Go to next step

3. **INSPECT TRANSMISSION VALVE BODY ASSEMBLY**
   a. Check the transmission valve body assembly. Refer to **REMOVAL** .

   OK

   There are no foreign objects on each valve and they operate smoothly.

NG --> See step 8

OK: Go to next step

4. **INSPECT TORQUE CONVERTER ASSEMBLY**
   a. Check the torque converter assembly. Refer to **INSPECTION** .

   OK

   The torque converter assembly operates normally.

NG --> See step 9

OK --> See step 5

5. **REPLACE AUTOMATIC TRANSAXLE ASSEMBLY. Refer to COMPONENTS**
6. **GO TO DTC CHART. Refer to DIAGNOSTIC TROUBLE CODE CHART**
7. **REPLACE SHIFT SOLENOID VALVE SLU. Refer to COMPONENTS**
8. **REPLACE TRANSMISSION VALVE BODY ASSEMBLY. Refer to COMPONENTS**
9. **REPLACE TORQUE CONVERTER ASSEMBLY. Refer to COMPONENTS**

DTC P2759: TORQUE CONVERTER CLUTCH PRESSURE CONTROL SOLENOID CONTROL CIRCUIT ELECTRICAL (SHIFT SOLENOID VALVE SLU)

DESCRIPTION

Refer to the system description for DTC P2757. Refer to **SYSTEM DESCRIPTION**.

DTC No.	DTC Detection Condition	Trouble Area
P2759	Open or short is detected in shift solenoid valve SLU circuit for 1 second or more while driving (1-trip detection logic).	• Open or short in shift solenoid valve SLU circuit • Shift solenoid valve SLU • Wiring Harness Connector • ECM

MONITOR DESCRIPTION

When an open or short in a shift solenoid valve (SLU) circuit is detected, the ECM determines there is a malfunction. The ECM will turn on the MIL and store this DTC.

MONITOR STRATEGY

Related DTCs	P2759: Shift solenoid valve SLU/Range check
Required sensors/Components	Shift solenoid valve SLU
Frequency of operation	Continuous
Duration	1 sec.
MIL operation	Immediate
Sequence of operation	None

TYPICAL ENABLING CONDITIONS

ALL

The monitor will run whenever the following DTCs are not present	None
Ignition switch	ON
Starter	OFF

CONDITION (A)

Battery voltage	12 V or more

CONDITION (B)

Battery voltage	10 V or more and less than 12 V
CPU commanded duty	Less than 75%

TYPICAL MALFUNCTION THRESHOLDS

CONDITION (A) AND (B)

Output duty cycle	100% or more

COMPONENT OPERATING RANGE

Output duty cycle	More than 3% and less than 100%

WIRING DIAGRAM

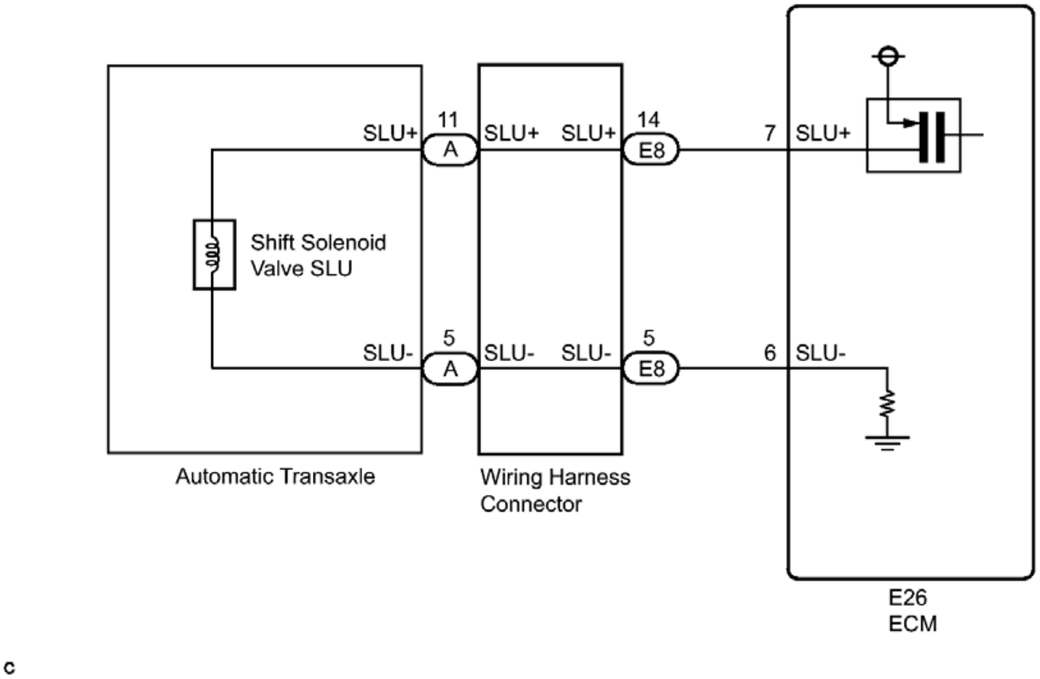
SLU+
11
A
SLU+
SLU+
14
E8
7
SLU+
Shift Solenoid
Valve SLU
SLU-
5
A
SLU-
SLU-
5
E8
6
SLU-
Automatic Transaxle
Wiring Harness
Connector
E26
ECM
c

Fig. 51: Shift Solenoid Valve SLU Circuit Wiring Diagram
Courtesy of TOYOTA MOTOR SALES, U.S.A., INC.

INSPECTION PROCEDURE

NOTE: **Perform the universal trip to clear permanent DTCs. Refer to DTC CHECK /**

CLEAR .

PROCEDURE

1. **CHECK HARNESS AND CONNECTOR (SHIFT SOLENOID VALVE SLU CIRCUIT)**
    a. Disconnect the ECM connector.

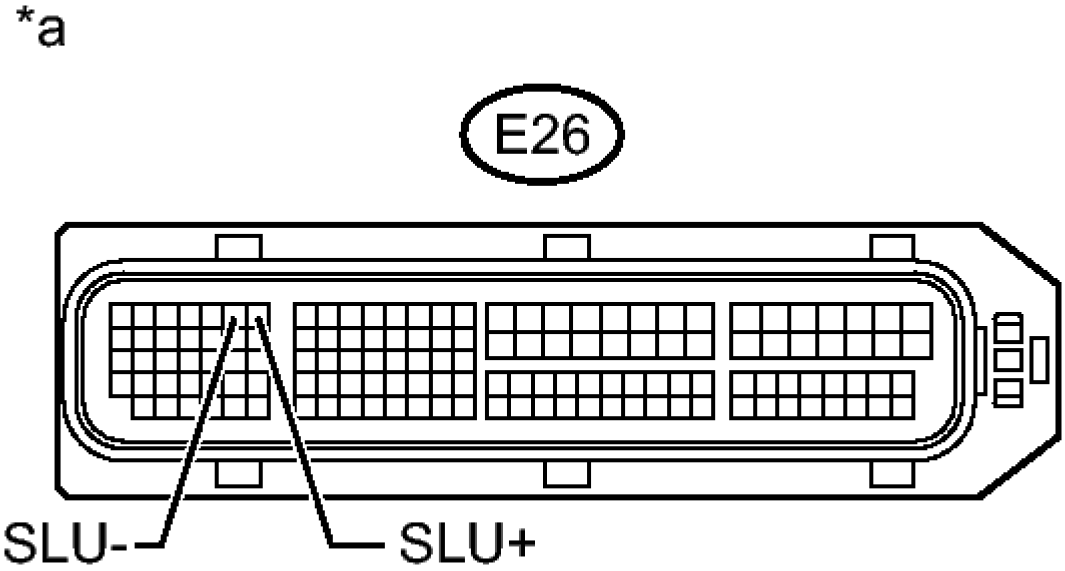

Fig. 52: Checking Harness And Connector (Shift Solenoid Valve SLU Circuit)
Courtesy of TOYOTA MOTOR SALES, U.S.A., INC.

b. Measure the resistance according to the value(s) in the table below.

Standard Resistance

Tester Condition	Condition	Specified Condition
E26-7 (SLU+) - E26-6 (SLU-)	20°C (68°F)	5.0 to 5.6 ohms
E26-7 (SLU+) - Body ground and other terminals	Always	10 kohms or higher

E26-6 (SLU-) - Body ground and other terminals	Always	10 kohms or higher

TEXT IN ILLUSTRATION

*a	Front view of wire harness connector (to ECM)

NG --> See step 3

OK --> See step 2

2. **REPLACE ECM. Refer to COMPONENTS**
3. **CHECK HARNESS AND CONNECTOR (ECM - WIRING HARNESS CONNECTOR)**
    a. Disconnect the harness connector from the wiring harness connector.
    b. Measure the resistance according to the value(s) in the table below.

Standard Resistance

Tester Condition	Condition	Specified Condition
E26-7 (SLU+) - E8-14 (SLU+)	Always	Below 1 ohms
E26-6 (SLU-) - E8-5 (SLU-)	Always	Below 1 ohms
E26-7 (SLU+) or E8-14 (SLU+) - Body ground and other terminals	Always	10 kohms or higher
E26-6		

(SLU-) or E8-5 (SLU-) - Body ground and other terminals	Always	10 kohms or higher

NG --> REPAIR OR REPLACE HARNESS OR CONNECTOR

OK: Go to next step

4. **INSPECT TRANSMISSION WIRE (SLU)**
    a. Remove the wiring harness connector from the automatic transaxle.

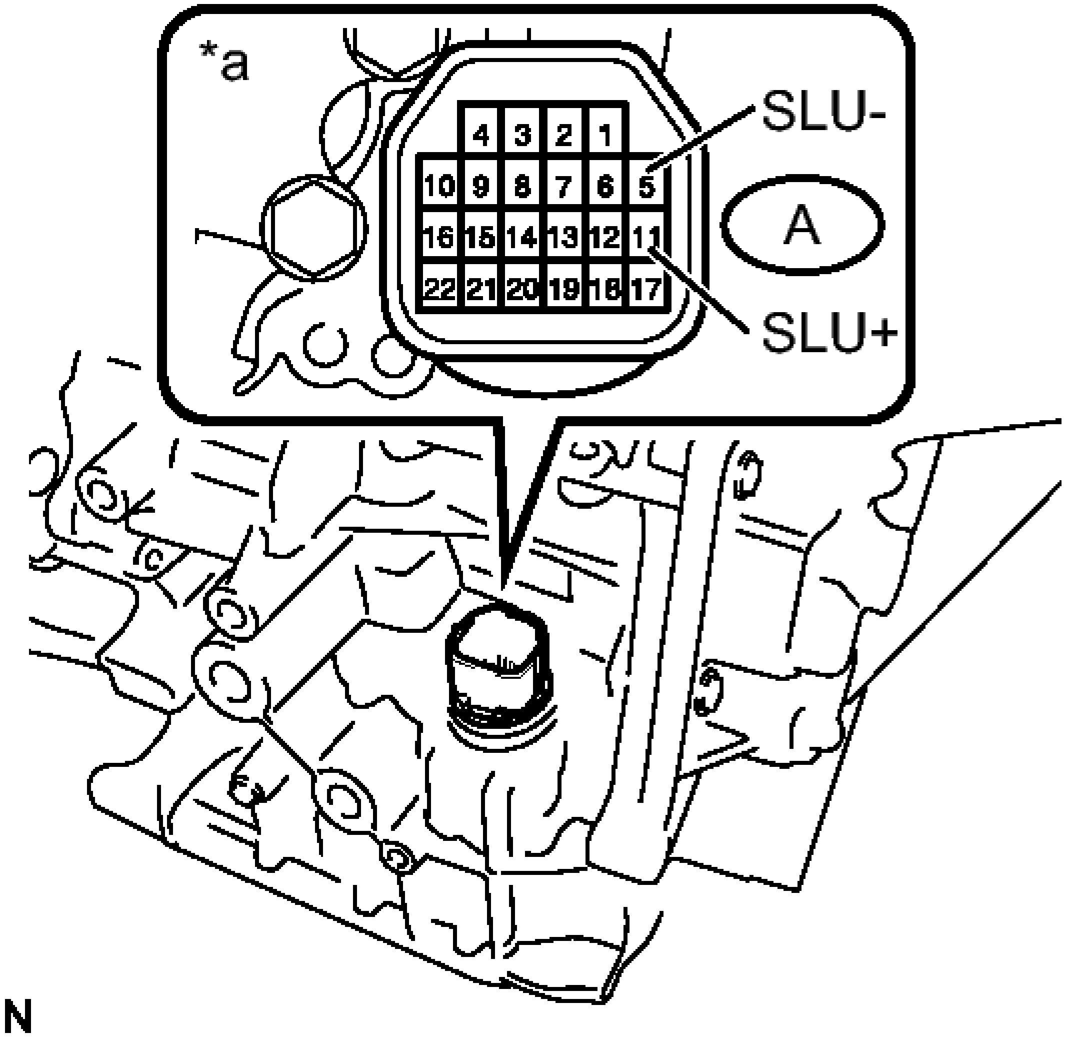
*a
4 3 2 1
10 9 8 7 6 5
16 15 14 13 12 11
22 21 20 19 18 17
SLU-
A
SLU+
N

Fig. 53: Checking Transmission Wire (SLU)

Courtesy of TOYOTA MOTOR SALES, U.S.A., INC.

b. Measure the resistance according to the value(s) in the table below.

Standard Resistance

Tester Connection	**Condition**	**Specified Condition**
A-11 (SLU+) - A-5 (SLU-)	20°C (68°F)	5.0 to 5.6 ohms
A-11 (SLU+) - Body ground and other terminals	Always	10 kohms or higher
A-5 (SLU-) - Body ground and other terminals	Always	10 kohms or higher

TEXT IN ILLUSTRATION

*a	Component without harness connected (Transmission Wire)

NG --> See step 6

OK --> See step 5

5. **REPLACE WIRING HARNESS CONNECTOR. Refer to COMPONENTS**
6. **INSPECT SHIFT SOLENOID VALVE SLU**
    a. Remove shift solenoid valve SLU.

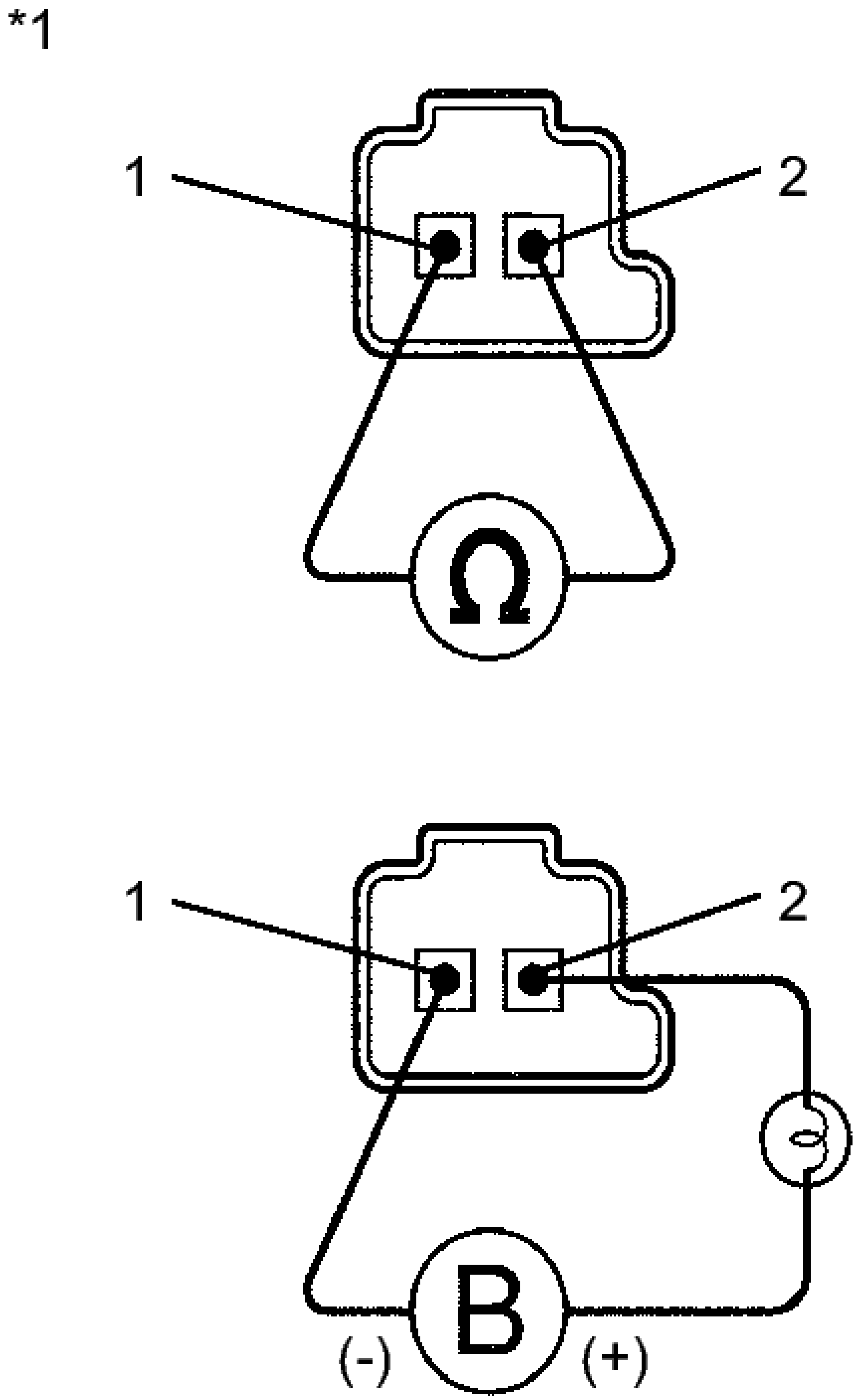

Fig. 54: Checking Resistance In Shift Solenoid Valve SLU
Courtesy of TOYOTA MOTOR SALES, U.S.A., INC.

b. Measure the resistance according to the value(s) in the table below.

Standard Resistance

Tester Connection	Condition	Specified Condition
1 - 2	20°C (68° F)	5.0 to 5.6 ohms

c. Connect a battery positive (+) lead with a 21 W bulb to terminal 2 and a negative (-) lead to terminal 1 of the solenoid valve connector. Then check that the valve moves and makes an operating sound.

OK

Valve moves and makes an operating sound.

TEXT IN ILLUSTRATION

*1	Shift Solenoid Valve SLU

NG --> See step 8

OK --> See step 7

7. **REPLACE TRANSMISSION WIRE. Refer to COMPONENTS**
8. **REPLACE SHIFT SOLENOID VALVE SLU. Refer to COMPONENTS**

DTC P2769: SHORT IN TORQUE CONVERTER CLUTCH SOLENOID CIRCUIT (SHIFT SOLENOID VALVE SL); DTC P2770: OPEN IN TORQUE CONVERTER CLUTCH SOLENOID CIRCUIT (SHIFT SOLENOID VALVE SL)

DESCRIPTION

Shift solenoid valve SL is turned on and off by signals from the ECM to control the hydraulic pressure acting on the lock-up relay valve, which then controls operation of the lock-up clutch.

DTC No.	DTC Detection Condition	Trouble Area
P2769	ECM detects a short in the shift solenoid valve SL circuit when the shift solenoid valve SL is operated (2 trip detection logic).	• Short in shift solenoid valve SL circuit • Shift solenoid valve SL • Wiring Harness Connector • ECM
P2770	ECM detects an open in the shift solenoid valve SL circuit when	• Open in shift solenoid valve SL circuit • Shift solenoid valve SL

	the shift solenoid valve SL is not operated (2 trip detection logic).	• Wiring Harness Connector • ECM

Fail-safe function:

If the ECM detects a malfunction, it turns shift solenoid valve SL off.

MONITOR DESCRIPTION

Based on the signals from the throttle position sensor, the air flow meter and the crankshaft position sensor, the ECM sends a signal to shift solenoid valve SL to regulate the hydraulic pressure and provide smoother torque converter clutch engagement. Shift solenoid valve SL responds to commands from the ECM. The valve controls the lock-up relay valve to perform the torque-converter lock-up function. If the ECM detects an open or short circuit for shift solenoid valve SL, it will illuminate the MIL.

MONITOR STRATEGY

Related DTCs	P2769: Shift solenoid valve SL/Range check (Low resistance) P2770: Shift solenoid valve SL/Range check (High resistance)
Required sensors/Components	Shift solenoid valve SL
Frequency of operation	Continuous
Duration	1 time
MIL operation	2 driving cycles
Sequence of operation	None

TYPICAL ENABLING CONDITIONS

P2769: RANGE CHECK (LOW RESISTANCE):

The monitor will run whenever the following DTCs are not present	None
Solenoid	ON
Time after solenoid OFF to ON	More than 0.008 sec.

P2770: RANGE CHECK (HIGH RESISTANCE):

The monitor will run whenever the following DTCs are not present	None
Solenoid	ON
Time after solenoid ON to OFF	More than 0.008 sec.

TYPICAL MALFUNCTION THRESHOLDS

P2769: RANGE CHECK (LOW RESISTANCE):

Intelligent power MOS diagnosis fail signals detected while the solenoid is operated	Fail at solenoid resistance: 8 ohms or less

P2770: RANGE CHECK (HIGH RESISTANCE):

Intelligent power MOS diagnosis fail signals detected while the solenoid is not operated	Fail at solenoid resistance: 100 kohms or more

COMPONENT OPERATING RANGE

Shift solenoid valve SL	Resistance: 11 to 15 ohms at 20°C (68°F)

WIRING DIAGRAM

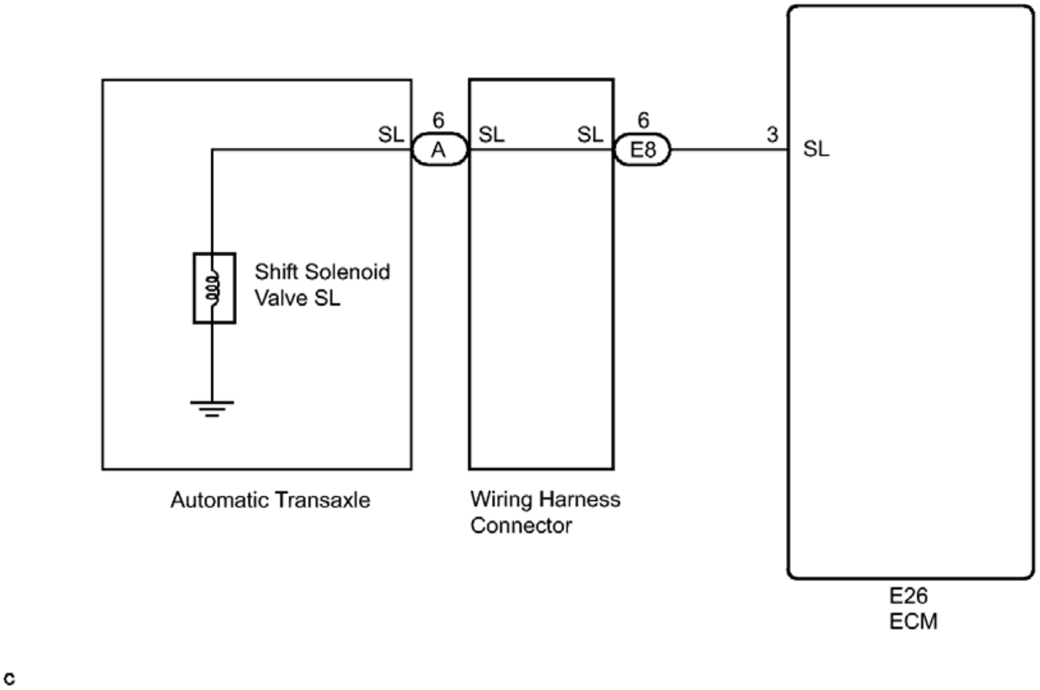
SL
6
A
SL
SL
6
E8
3
SL
Shift Solenoid
Valve SL
Automatic Transaxle
Wiring Harness
Connector
E26
ECM
c

Fig. 55: Shift Solenoid Valve SL Circuit Wiring Diagram
Courtesy of TOYOTA MOTOR SALES, U.S.A., INC.

INSPECTION PROCEDURE

NOTE: **Perform the universal trip to clear permanent DTCs. Refer to DTC CHECK / CLEAR .**

PROCEDURE

1. **CHECK HARNESS AND CONNECTOR (SHIFT SOLENOID VALVE SL CIRCUIT)**
    a. Disconnect the ECM connector.

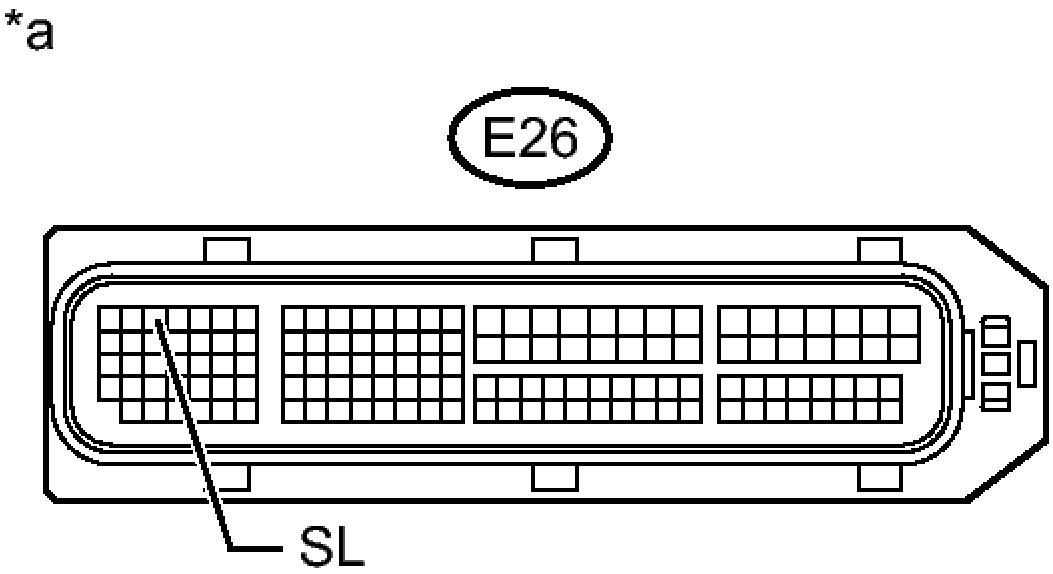

Fig. 56: Checking Harness And Connector (Shift Solenoid Valve SL Circuit)
Courtesy of TOYOTA MOTOR SALES, U.S.A., INC.

b. Measure the resistance according to the value(s) in the table below.

Standard Resistance

Tester Condition	Condition	Specified Condition
E26-3 (SL) - Body ground	20°C (68°F)	11 to 15 ohms

TEXT IN ILLUSTRATION

*a	Front view of wire harness connector (to ECM)

NG --> See step 3

OK --> See step 2

2. **REPLACE ECM. Refer to COMPONENTS**

3. **CHECK HARNESS AND CONNECTOR (ECM - WIRING HARNESS CONNECTOR)**
    a. Disconnect the harness connector from the wiring harness connector.
    b. Measure the resistance according to the value(s) in the table below.

    Standard Resistance

Tester Condition	Condition	Specified Condition
E26-3 (SL) - E8-6 (SL)	Always	Below 1 ohms
E26-3 (SL) - Body ground and other terminals	Always	10 kohms or higher
E8-6 (SL) - Body ground and other terminals	Always	10 kohms or higher

    NG --> REPAIR OR REPLACE HARNESS OR CONNECTOR

    OK: Go to next step

4. **INSPECT TRANSMISSION WIRE (SHIFT SOLENOID VALVE SL)**
    a. Remove the wiring harness connector from the transaxle.

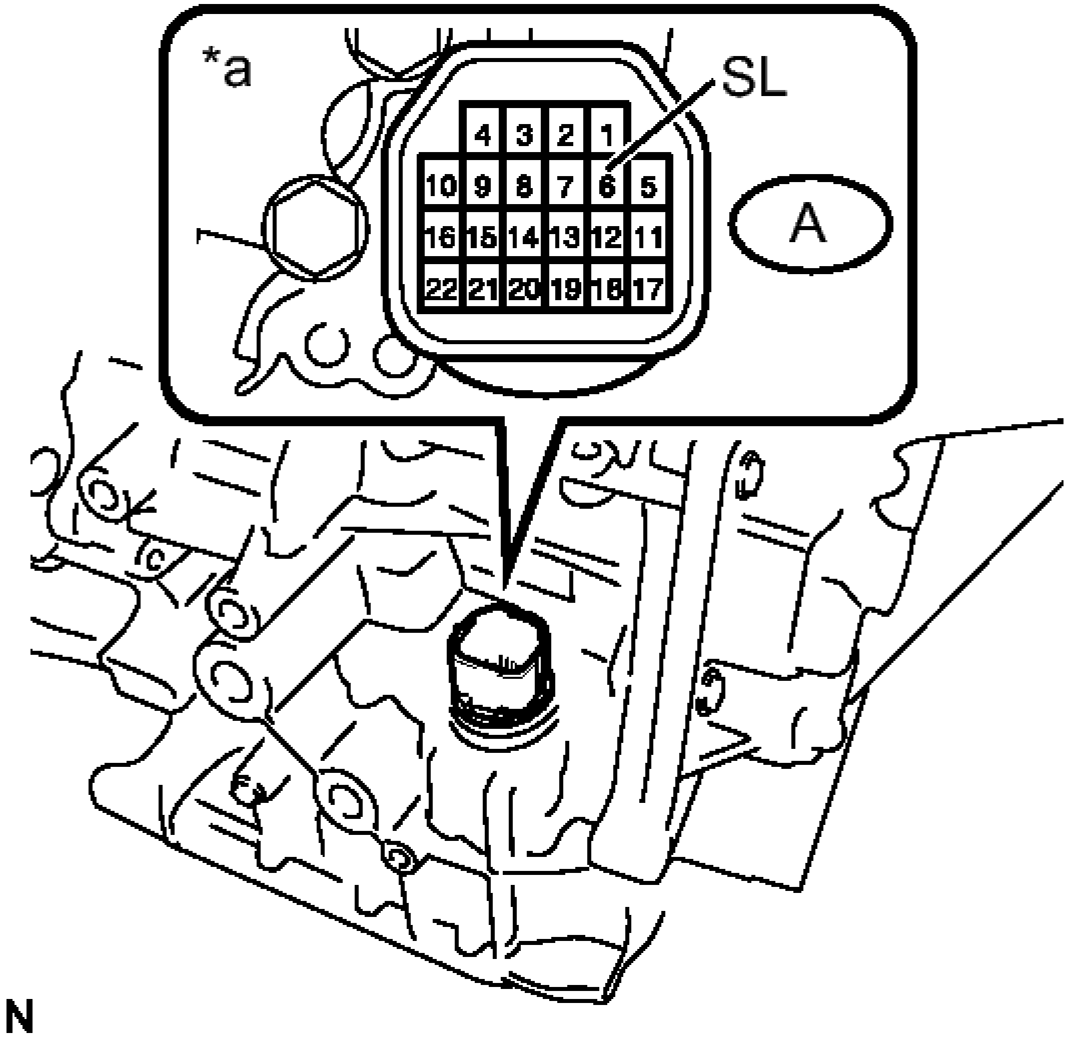
*a
SL
4 3 2 1
10 9 8 7 6 5
16 15 14 13 12 11
22 21 20 19 18 17
A
N

Fig. 57: Checking Transmission Wire (Shift Solenoid Valve SL)
Courtesy of TOYOTA MOTOR SALES, U.S.A., INC.

b. Measure the resistance according to the value(s) in the table below.

Standard Resistance

Tester Connection	Condition	Specified Condition
A-6 (SL) - Body ground	20°C (68°F)	11 to 15 ohms

TEXT IN ILLUSTRATION

	Component

*a	without harness connected (Transmission Wire)

NG --> See step 6

OK --> See step 5

5. **REPLACE WIRING HARNESS CONNECTOR. Refer to COMPONENTS**
6. **INSPECT SHIFT SOLENOID VALVE SL**
    a. Remove shift solenoid valve SL.

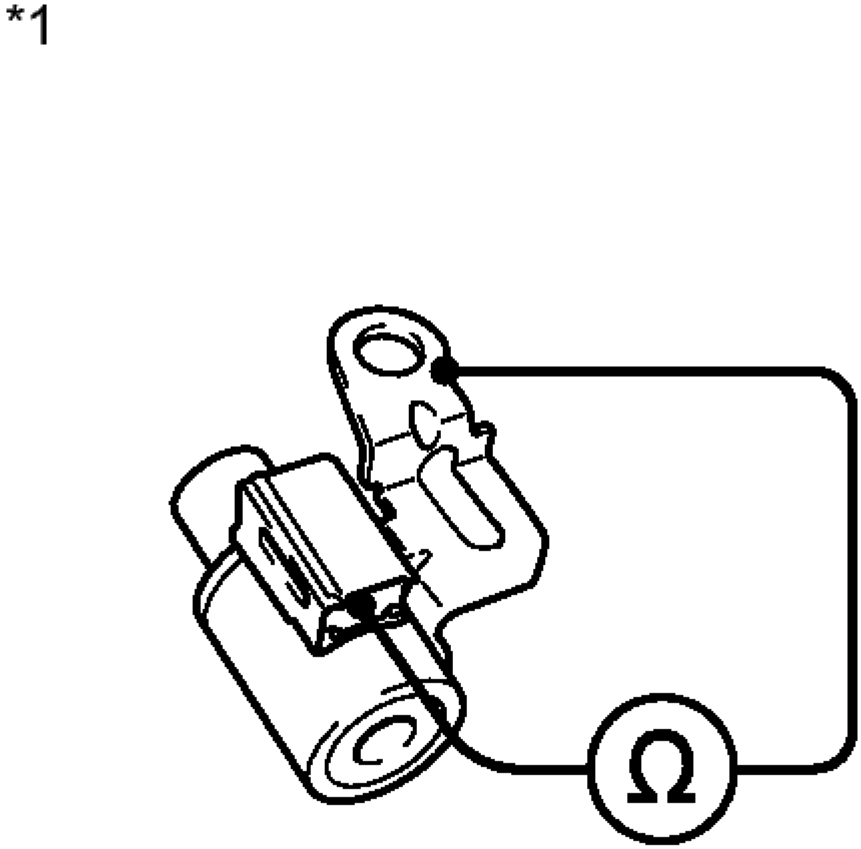

Fig. 58: Measuring Resistance Of Shift Solenoid Valve SL

Courtesy of TOYOTA MOTOR SALES, U.S.A., INC.

b. Measure the resistance according to the value(s) in the table below.

Standard Resistance

Tester Connection	Condition	Specified Condition
Solenoid Connector (SL) - Solenoid Body (SL)	20°C (68° F)	11 to 15 ohms

TEXT IN ILLUSTRATION

*1	Shift Solenoid Valve SL

NG --> See step 8

OK --> See step 7

7. **REPLACE TRANSMISSION WIRE. Refer to COMPONENTS**
8. **REPLACE SHIFT SOLENOID VALVE SL. Refer to COMPONENTS**

DTC P2808: PRESSURE CONTROL SOLENOID "G" PERFORMANCE (SHIFT SOLENOID VALVE SL4)

DESCRIPTION

The ECM uses the vehicle speed signal and signals from the transmission speed sensors (NC, NT) to detect the actual gear (1st, 2nd, 3rd, 4th, 5th or 6th gear).

Then the ECM compares the actual gear with the shift schedule in the ECM memory to detect mechanical problems of the shift solenoid valves and valve body.

DTC No.	DTC Detection Condition	Trouble Area
P2808	The engine revs freely when 3rd or 5th gear is commanded. (2-trip detection logic) When any of the following is detected. In addition, the condition that 4th gear is engaged when 4th gear is commanded occurs twice. (2-trip detection logic)	• Shift solenoid valve SL4 remains open or closed • Valve body is blocked

	• When 1st gear is commanded, 3rd gear is engaged. • When 2nd gear is commanded, 3rd gear is engaged. • When 6th gear is commanded, 5th gear is engaged.	• Automatic transaxle (clutch, brake or gear etc.)

MONITOR DESCRIPTION

The ECM commands gear shifts by turning the shift solenoid valves on and off. According to the input shaft revolution (speed), intermediate (counter) shaft revolution (speed) and output shaft revolution (speed), the ECM detects the actual gear (1st, 2nd, 3rd, 4th, 5th or 6th gear). When the gear commanded by the ECM and the actual gear are not the same, the ECM illuminates the MIL and stores the DTC.

MONITOR STRATEGY

Related DTCs	P2808: Shift solenoid valve SL4/OFF malfunction Shift solenoid valve SL4/ON malfunction
Required sensors/Components	Shift solenoid valve SL4, Speed sensor (NT), Speed sensor (NC), Crankshaft position sensor (NE)
Frequency of operation	Continuous
Duration	OFF malfunction (A): 0.5 sec. OFF malfunction (B): 0.8 sec. ON malfunction: 0.8 sec.
MIL operation	2 driving cycles
Sequence of operation	None

TYPICAL ENABLING CONDITIONS

ALL:

The monitor will run whenever this DTC is not present. (Not circuit malfunction)	P0712, P0713 (ATF temperature sensor circuit (TFT sensor)) P0115, P0117, P0118 (ECT sensor circuit) P0715, P0717 (Turbine speed sensor circuit) P0791, P0793 (Intermediate shaft speed sensor circuit) P0748 (Shift solenoid valve SL1 circuit) P0778 (Shift solenoid valve SL2 circuit) P0798 (Shift solenoid valve SL3 circuit) P2810 (Shift solenoid valve SL4 circuit) P0327, P0328, (KCS sensor circuit) P0120, P0121, P0122, P0123, P0220, P0222,

	P0223, P0604, P0606, P060A, P060B, P060D, P060E, P0657, P1607, P2102, P2103, P2111, P2112, P2118, P2119, P2135 ((ETCS) Electronic throttle control system) U0100 (CAN communication system)
Transmission range	"D"
TFT (Transmission fluid temperature)	-10°C (14°F) or more
TFT (Transmission fluid temperature) sensor circuit	No circuit malfunction
ECT (Engine coolant temperature) sensor circuit	No circuit malfunction
Turbine speed sensor circuit	No circuit malfunction
Intermediate shaft speed sensor circuit	No circuit malfunction
Shift solenoid valve SL1 circuit	No circuit malfunction
Shift solenoid valve SL2 circuit	No circuit malfunction
Shift solenoid valve SL3 circuit	No circuit malfunction
Shift solenoid valve SL4 circuit	No circuit malfunction
(KCS) Knock control sensor circuit	No circuit malfunction
(ETCS) Electronic throttle control system	Not system down
CAN communication system	Not system down
Engine	Starting

OFF MALFUNCTION (A):

ECM select gear	3rd or 5th
Throttle valve opening angle	3% or more

OFF MALFUNCTION (B):

ECM select gear	3rd
Throttle valve opening angle	6.5% or more
Vehicle speed	1.2 mph (2 km/h) or more
ECT (Engine coolant temperature)	40°C (104°F) or more
Turbine speed/Output speed (NT/NO) with 1st	3.232 to 7.556
Turbine speed/Output speed (NT/NO) with 2nd	1.860 to 2.289
Turbine speed/Output speed (NT/NO) with 3rd	1.369 to 1.613
Turbine speed/Output speed (NT/NO) with 4th	0.976 to 1.113
Turbine speed/Output speed (NT/NO) with 5th	0.690 to 0.818
Turbine speed/Output speed (NT/NO) with 6th	0.556 to 0.680

ON MALFUNCTION (A):

ECM select gear	1st
Time after transmission to 1st gear	0.1 sec. or more
Vehicle speed	1.2 mph (2 km/h) to 24.9 mph (40 km/h)
ECT (Engine coolant temperature)	40°C (104°F) or more

Turbine speed/Output speed (NT/NO) with 1st	3.232 to 7.556
Turbine speed/Output speed (NT/NO) with 2nd	1.860 to 2.289
Turbine speed/Output speed (NT/NO) with 3rd	1.369 to 1.613
Turbine speed/Output speed (NT/NO) with 4th	0.976 to 1.113
Turbine speed/Output speed (NT/NO) with 5th	0.690 to 0.818
Turbine speed/Output speed (NT/NO) with 6th	0.556 to 0.680

ON MALFUNCTION (B):

ECM select gear	2nd
Throttle valve opening angle	6.5% or more at engine speed 2, 000 RPM (condition varies with engine speed)
Vehicle speed	1.2 mph (2 km/h) or more
ECT (Engine coolant temperature)	40°C (104°F) or more
Turbine speed/Output speed (NT/NO) with 1st	3.232 to 7.556
Turbine speed/Output speed (NT/NO) with 2nd	1.860 to 2.289
Turbine speed/Output speed (NT/NO) with 3rd	1.369 to 1.613
Turbine speed/Output speed (NT/NO) with 4th	0.976 to 1.113
Turbine speed/Output speed (NT/NO) with 5th	0.690 to 0.818
Turbine speed/Output speed (NT/NO) with 6th	0.556 to 0.680

ON MALFUNCTION (C):

ECM select gear	6th
Throttle valve opening angle	6.5% or more at engine speed 2, 000 RPM (condition varies with engine speed)
Vehicle speed	1.2 mph (2 km/h) or more
ECT (Engine coolant temperature)	40°C (104°F) or more
Turbine speed/Output speed (NT/NO) with 1st	3.232 to 7.556
Turbine speed/Output speed (NT/NO) with 2nd	1.860 to 2.289
Turbine speed/Output speed (NT/NO) with 3rd	1.369 to 1.613
Turbine speed/Output speed (NT/NO) with 4th	0.976 to 1.113
Turbine speed/Output speed (NT/NO) with 5th	0.690 to 0.818
Turbine speed/Output speed (NT/NO) with 6th	0.556 to 0.680

ON MALFUNCTION (D):

ECM select gear	4th
Throttle valve opening angle	6.5% or more at engine speed 2, 000 RPM (condition vary with engine speed)
Vehicle speed	1.2 mph (2 km/h) or more
ECT (Engine coolant temperature)	40°C (104°F) or more
Turbine speed/Output speed (NT/NO) with 1st	3.232 to 7.556
Turbine speed/Output speed (NT/NO) with 2nd	1.860 to 2.289
Turbine speed/Output speed (NT/NO) with 3rd	1.369 to 1.613

Turbine speed/Output speed (NT/NO) with 4th	0.976 to 1.113
Turbine speed/Output speed (NT/NO) with 5th	0.690 to 0.818
Turbine speed/Output speed (NT/NO) with 6th	0.556 to 0.680

TYPICAL MALFUNCTION THRESHOLDS

OFF MALFUNCTION (A):

Turbine speed - Output speed x Gear ratio	1, 000 RPM or more

OFF MALFUNCTION (B):

Turbine speed / Output speed	3.232 to 7.556

ON MALFUNCTION (A) AND (B):

Turbine speed / Output speed	1.369 to 1.613

ON MALFUNCTION (C):

Turbine speed / Output speed	0.690 to 0.818

ON MALFUNCTION (D):

Turbine speed / Output speed	0.976 to 1.113

INSPECTION PROCEDURE

NOTE: **Perform the universal trip to clear permanent DTCs. Refer to DTC CHECK / CLEAR .**

PROCEDURE

1. **CHECK OTHER DTCS OUTPUT (IN ADDITION TO DTC P2808)**
    a. Connect the Techstream to the DLC3.
    b. Turn the ignition switch to ON.
    c. Turn the Techstream on.
    d. Enter the following menus: Powertrain / Engine and ECT / Trouble Codes.
    e. Read the DTCs using the Techstream.

    Result

Display (DTC output)	Proceed to
Only "P2808" is	A

output	
"P2808" and other DTCs are output	B

HINT:

If a solenoid is stuck OFF, DTCs for several solenoids including the malfunctioning solenoid will be detected.

A --> See step 3

B: Go to next step

2. **PERFORM ACTIVE TEST USING TECHSTREAM**

NOTE: This test should always be performed with at least 2 people.

a. Warm up the engine.
b. Turn the ignition switch off.
c. Connect the Techstream to the DLC3.
d. Turn the ignition switch to ON.
e. Turn the Techstream on.
f. Enter the following menus: Powertrain / Engine and ECT / Active Test.
g. According to the display on the Techstream, perform the Active Test.

HINT:

Comparing the gear commanded by the Active Test with the actual gear enables confirmation of the problem. Refer to **FAIL-SAFE CHART** .

Tester Display	Test Details	Control Range	Diagnostic Note
			Can be used to check the operation of the shift solenoid valves. Upshifts and downshifts should be

Control the Shift Position	Operates the shift solenoid valves to allow gears to selected manually.	- Press "-->" button: Upshift occurs - Press "<--" button: Downshift occurs	performed consecutively. A 10-second interval is required between gear changes. Do not downshift at high speeds. Doing so will damage the automatic transaxle. [Vehicle Condition] 50 km/h (31 mph) or less

NOTE:

- **This test can be conducted when the vehicle is stopped.**
- **When shifting gears using the Active Test function, do not operate the accelerator pedal for 2 seconds before and after shifting gears.**

HINT:

The gear commanded by the ECM is shown in the Data List / Shift Status display on the Techstream.

h. Check the vehicle speed and the gear when the engine speed is 1000 rpm.

HINT:

Because the torque converter clutch has not engaged, it may be difficult to obtain the speeds specified in 4th, 5th, and 6th gear, however a difference of speed should still be evident following each gear change.

Standard

1st	2nd	3rd	4th	5th	6th
8 to 12 km/h (5 to 7.5 mph)	15 to 19 km/h (9.3 to 11.8	21 to 25 km/h (13.0 to 15.5	31 to 35 km/h (19.3 to 21.7	44 to 48 km/h (27.3 to 29.8	52 to 56 km/h (32.3 to 34.8

	mph)	mph)	mph)	mph)	mph)

i. Compare the ECM commanded gear and the actual gear.

Result

Actuator Gear during Malfunction		**ECM Commanded Gear**						**Proceed to**
		1st	**2nd**	**3rd**	**4th**	**5th**	**6th**	
Shift solenoid SL1	Stuck ON	1st	2nd	3rd	4th	4th	4th	A
	Stuck OFF	N*1	N*1	N*1	N*1	5th	6th	
Shift solenoid SL2	Stuck ON	4th	4th	4th	4th	5th	6th	B
	Stuck OFF	1st	2nd	3rd	1st	N*1	N*1	
Shift solenoid SL3	Stuck ON	2nd	2nd	3rd	4th	5th	6th	C
	Stuck OFF	1st	1st	3rd	4th	5th	N*1	
Shift solenoid SL4	Stuck ON*3	3rd	3rd	3rd	4th	5th	5th	D
	Stuck OFF	1st	2nd	1st	4th	N*1	6th	
Shift solenoid SLT	Stuck ON	N*2	N*2	N*2	N*2	N*2	N*2	E
	Stuck OFF*3	1st	2nd	3rd	4th	5th	6th	

HINT:

- *1: Neutral
- *2: If shift solenoid SLT is stuck on, the line pressure will be low. Therefore, the amount of torque that can be transmitted by each gear is lower than the normal limit. When the engine power exceeds this lowered limit, the engine speed will increase freely.
- *3: When shift solenoid SLT is stuck off, gear shifting is normal.

A --> See step 6

B --> See step 7

C --> See step 8

E --> See step 9

D: Go to next step

3. **INSPECT SHIFT SOLENOID VALVE SL4**
    a. Remove shift solenoid valve SL4.

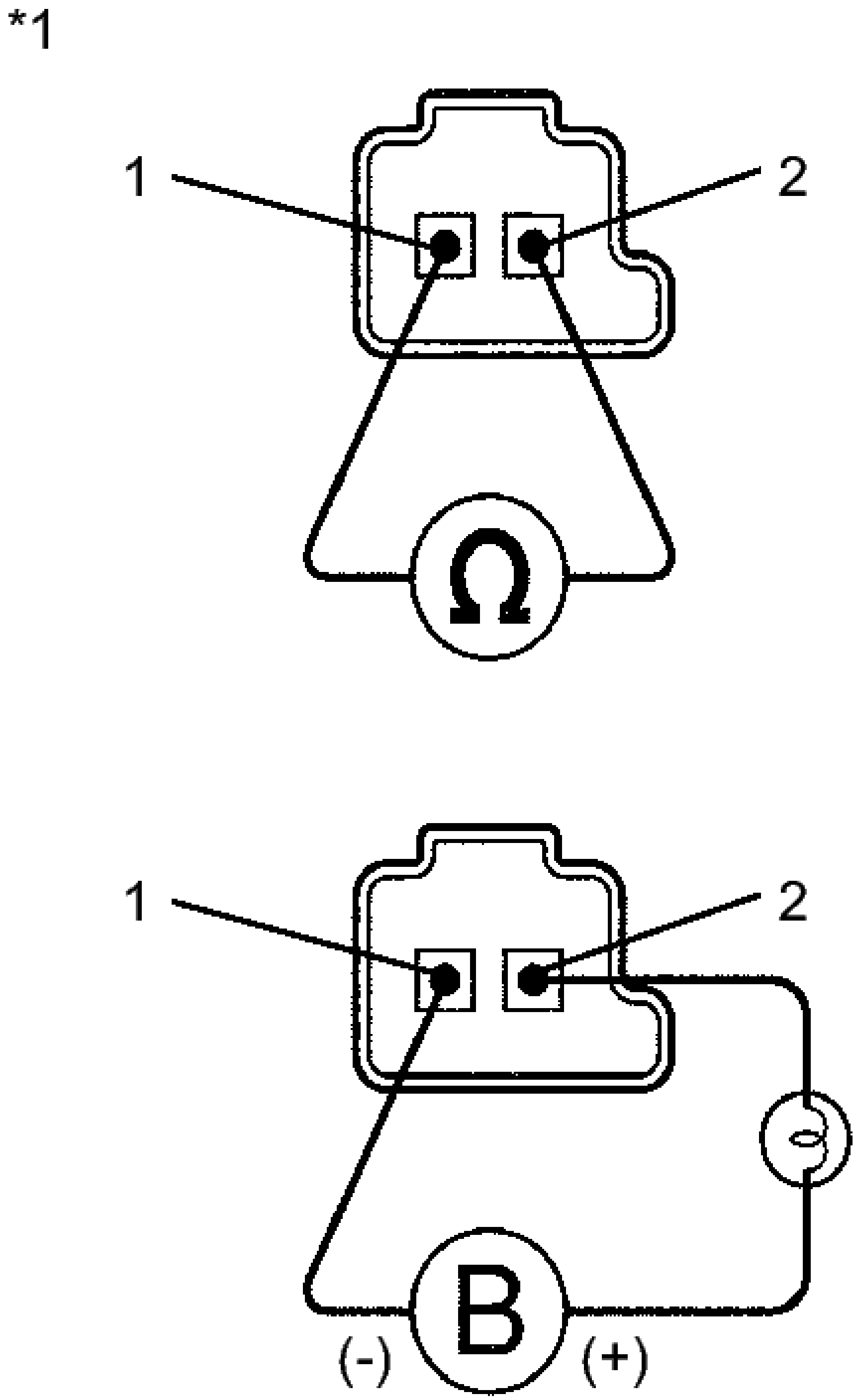

Fig. 59: Checking Resistance In Shift Solenoid Valve SL4
Courtesy of TOYOTA MOTOR SALES, U.S.A., INC.

b. Measure the resistance according to the value(s) in the table below.

Standard Resistance

Tester Connection	Condition	Specified Condition
1 - 2	20°C (68° F)	5.0 to 5.6 ohms

c. Connect a battery positive (+) lead with a 21 W bulb to terminal 2 and a negative (-) lead to terminal 1 of the solenoid valve connector. Then check that the valve moves and makes an operating sound.

   OK

   Valve moves and makes an operating sound.

   TEXT IN ILLUSTRATION

*1	Shift Solenoid Valve SL4

NG --> See step 10

OK: Go to next step

4. **INSPECT TRANSMISSION VALVE BODY ASSEMBLY**
   a. Check the transmission valve body assembly. Refer to **REMOVAL** .

      OK

      There are no foreign objects on each valve and they operate smoothly.

   NG --> See step 11

   OK --> See step 5

5. **REPLACE AUTOMATIC TRANSAXLE ASSEMBLY. Refer to COMPONENTS**
6. **GO TO DTC CHART (RELATED SHIFT SOLENOID VALVE (SL1) PERFORMANCE DTC P0746). Refer to DTC P0746: Pressure Control Solenoid "A" Performance (Shift Solenoid Valve SL1)**
7. **GO TO DTC CHART (RELATED SHIFT SOLENOID VALVE (SL2) PERFORMANCE DTC P0776). Refer to DTC P0776: Pressure Control Solenoid "B" Performance (Shift Solenoid Valve SL2)**
8. **GO TO DTC CHART (RELATED SHIFT SOLENOID VALVE (SL3) PERFORMANCE DTC P0796). Refer to DTC P0796: Pressure Control Solenoid "C" Performance (Shift Solenoid Valve SL3)**

9. **GO TO DTC CHART (RELATED SHIFT SOLENOID VALVE (SLT) PERFORMANCE DTC P2714). Refer to DTC P2714: Pressure Control Solenoid "D" Performance (Shift Solenoid Valve SLT)**
10. **REPLACE SHIFT SOLENOID VALVE SL4. Refer to COMPONENTS**
11. **REPAIR OR REPLACE TRANSMISSION VALVE BODY ASSEMBLY. Refer to COMPONENTS**

DTC P2810: PRESSURE CONTROL SOLENOID "G" ELECTRICAL (SHIFT SOLENOID VALVE SL4)

DESCRIPTION

Changing from 1st to 6th is performed by the ECM turning shift solenoid valves SL1, SL2, SL3, SL4 and SL on and off. If an open or short circuit occurs in any of the shift solenoid valves, the ECM controls the remaining normal shift solenoid valves to allow the vehicle to be operated. Refer to **FAIL-SAFE CHART**

DTC No.	DTC Detection Condition	Trouble Area
P2810	The ECM checks for an open or short in the shift solenoid valve SL4 circuit while driving and shifting gears. (1-trip detection logic) • Output signal duty equals to 100%. (NOTE: SL4 output signal duty is less than 100% under normal condition.)	• Open or short in shift solenoid valve SL4 circuit • Shift solenoid valve SL4 • Wiring Harness Connector • ECM

MONITOR DESCRIPTION

The ECM commands gear shifts by turning the shift solenoid valves on or off. When there is an open or short circuit in any shift solenoid valve circuit, the ECM detects the problem and illuminates the MIL and stores the DTC. And the ECM performs the fail-safe function and turns the other normal shift solenoid valves on or off (In case of an open or short circuit, the ECM stops sending current to the circuit.)

Refer to **FAIL-SAFE CHART** .

MONITOR STRATEGY

Related DTCs	P2810: Shift solenoid valve SL4/Range check
Required sensors/Components	Shift solenoid valve SL4
Frequency of operation	Continuous
Duration	1 sec.
MIL operation	Immediate
Sequence of operation	None

TYPICAL ENABLING CONDITIONS

ALL

The monitor will run whenever the following DTCs are not present	None
Ignition switch	ON
Starter	OFF

CONDITION (A)

Battery voltage	12 V or more

CONDITION (B)

Battery voltage	10 V or more and less than 12 V
Target current	Less than 0.75 A

CONDITION (C)

Battery voltage	8 V or more
Target current	0.6 A or more

TYPICAL MALFUNCTION THRESHOLDS

When one of the following conditions is met: Condition (A), (B) or (C)

CONDITION (A) AND (B)

Output duty cycle	100% or more

CONDITION (C)

Output duty cycle	0% or less

COMPONENT OPERATING RANGE

Output duty cycle	More than 3% and less than 100%

WIRING DIAGRAM

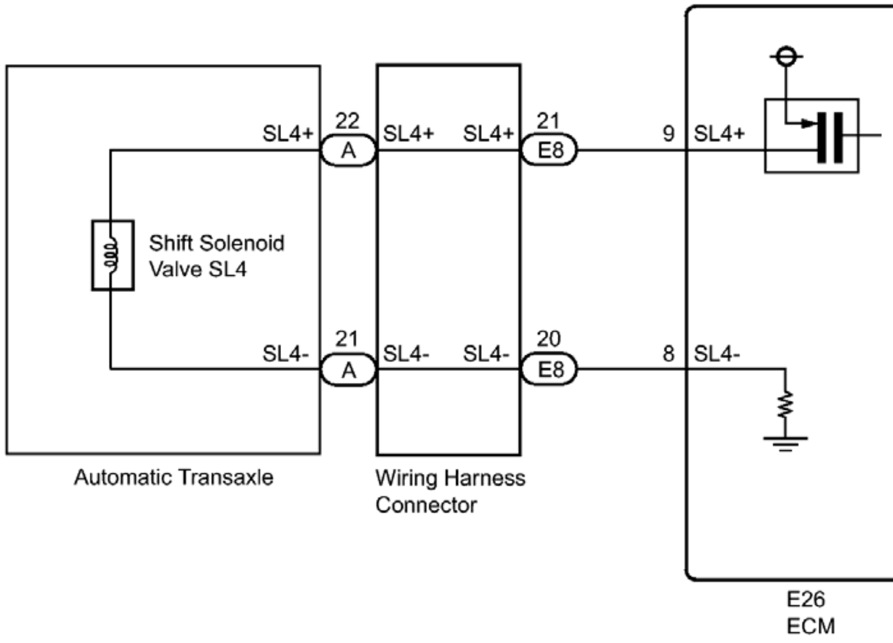
SL4+
22
A
SL4+
SL4+
21
E8
9
SL4+
Shift Solenoid Valve SL4
SL4-
21
A
SL4-
SL4-
20
E8
8
SL4-
Automatic Transaxle
Wiring Harness Connector
E26
ECM
c

Fig. 60: Shift Solenoid Valve SL4 Circuit Wiring Diagram
Courtesy of TOYOTA MOTOR SALES, U.S.A., INC.

INSPECTION PROCEDURE

NOTE: **Perform the universal trip to clear permanent DTCs. Refer to DTC CHECK / CLEAR .**

PROCEDURE

1. **CHECK HARNESS AND CONNECTOR (SHIFT SOLENOID VALVE SL4 CIRCUIT)**
    a. Disconnect the ECM connector.

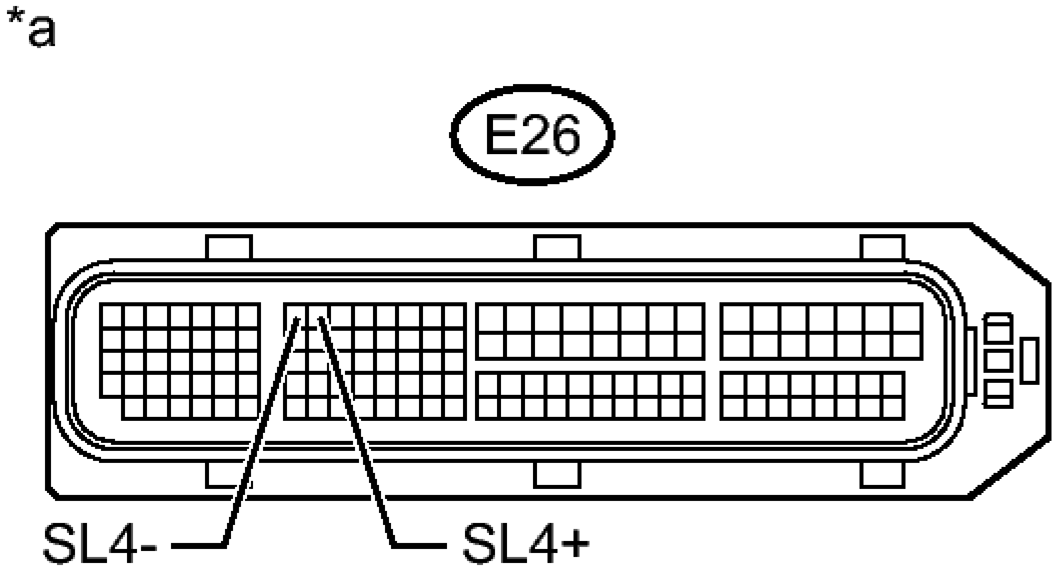

Fig. 61: Checking Harness And Connector (Shift Solenoid Valve SL4 Circuit)
Courtesy of TOYOTA MOTOR SALES, U.S.A., INC.

b. Measure the resistance according to the value(s) in the table below.

Standard Resistance

Tester Condition	Condition	Specified Condition
E26-9 (SL4+) - E26-8 (SL4-)	20°C (68°F)	5.0 to 5.6 ohms
E26-9 (SL4+) - Body ground and other terminals	Always	10 kohms or higher
E26-8 (SL4-) - Body ground and other terminals	Always	10 kohms or higher

TEXT IN ILLUSTRATION

*a	Front view of wire harness connector (to ECM)

NG --> See step 3

OK --> See step 2

2. **REPLACE ECM. Refer to COMPONENTS**
3. **CHECK HARNESS AND CONNECTOR (ECM - WIRING HARNESS CONNECTOR)**
   a. Disconnect the harness connector from the wiring harness connector.
   b. Measure the resistance according to the value(s) in the table below.

Standard Resistance

Tester Condition	Condition	Specified Condition
E26-9 (SL4+) - E8-21 (SL4+)	Always	Below 1 ohms
E26-8 (SL4-) - E8-20 (SL4-)	Always	Below 1 ohms
E26-9 (SL4+) or E8-21 (SL4+) - Body ground and other terminals	Always	10 kohms or higher
E26-8 (SL4-) or E8-20 (SL4-) - Body ground and other terminals	Always	10 kohms or higher

NG --> REPAIR OR REPLACE HARNESS OR CONNECTOR

OK: Go to next step

4. **INSPECT TRANSMISSION WIRE (SL4)**
    a. Remove the wiring harness connector from the automatic transaxle.

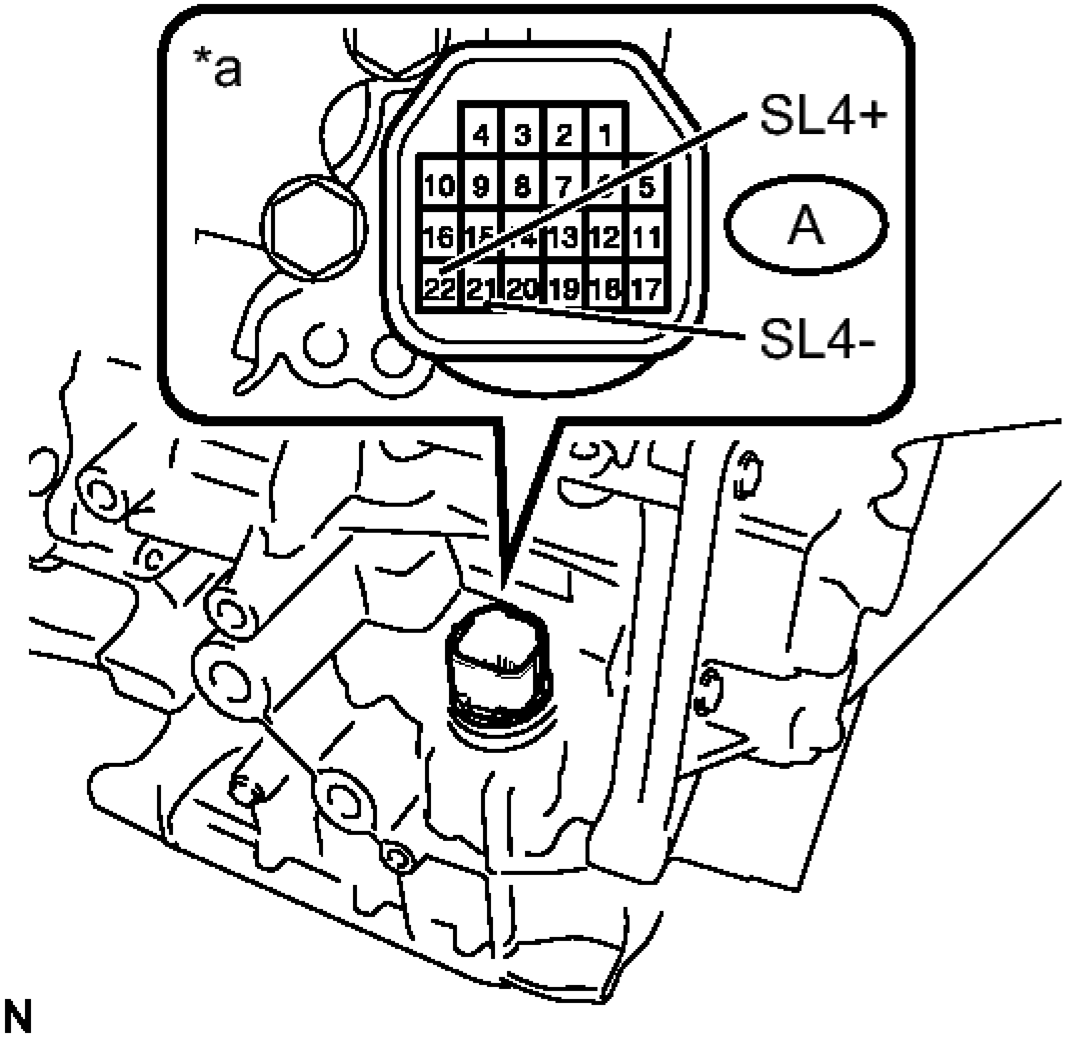
*a
4 3 2 1
10 9 8 7 6 5
16 15 14 13 12 11
22 21 20 19 18 17
SL4+
A
SL4-
N

Fig. 62: Checking Transmission Wire (SL4)
Courtesy of TOYOTA MOTOR SALES, U.S.A., INC.

b. Measure the resistance according to the value(s) in the table below.

Standard Resistance

Tester Connection	Condition	Specified Condition
A-22	20°C (68°	5.0 to 5.6

(SL4+) - A-21 (SL4-)	F)	ohms
A-22 (SL4+) - Body ground and other terminals	Always	10 kohms or higher
A-21 (SL4-) - Body ground and other terminals	Always	10 kohms or higher

TEXT IN ILLUSTRATION

*a	Component without harness connected (Transmission Wire)

NG --> See step 6

OK --> See step 5

5. **REPLACE WIRING HARNESS CONNECTOR. Refer to COMPONENTS**
6. **INSPECT SHIFT SOLENOID VALVE SL4**
   a. Remove shift solenoid valve SL4.

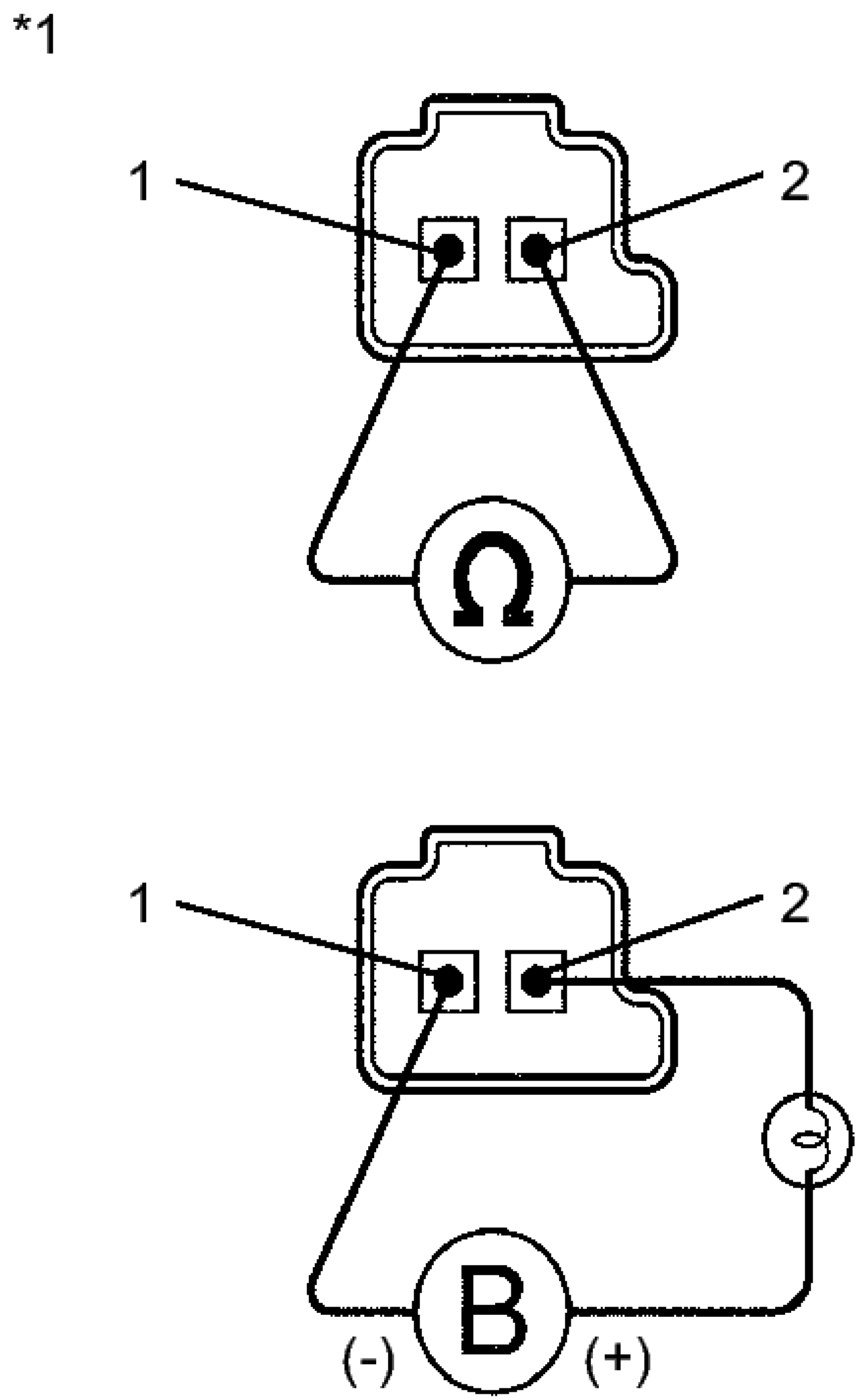

Fig. 63: Checking Resistance In Shift Solenoid Valve SL4
Courtesy of TOYOTA MOTOR SALES, U.S.A., INC.

b. Measure the resistance according to the value(s) in the table below.

Standard Resistance

Tester Connection	Condition	Specified Condition
1 - 2	20°C (68° F)	5.0 to 5.6 ohms

c. Connect a battery positive (+) lead with a 21 W bulb to terminal 2 and a negative (-) lead to terminal 1 of the solenoid valve connector. Then check that the valve moves and makes an operating sound.

OK

Valve moves and makes an operating sound.

TEXT IN ILLUSTRATION

*1	Shift Solenoid Valve SL4

NG --> See step 8

OK --> See step 7

7. **REPLACE TRANSMISSION WIRE. Refer to COMPONENTS**
8. **REPLACE SHIFT SOLENOID VALVE SL4. Refer to COMPONENTS**

DTC U0100: LOST COMMUNICATION WITH ECM / PCM "A"

DESCRIPTION

The engine control unit and the transmission control unit are located inside the ECM. The engine control unit intercommunicates with the transmission control ECU with the Controller Area Network (CAN).

If there is a problem in this intercommunication, the ECM sets a DTC.

DTC No.	DTC Detection Condition	Trouble Area
U0100	Following conditions are met for 1.25 seconds (1 trip detection logic): a. Ignition switch ON b. Battery voltage is 10.5 V or more c. No intercommunication between engine control ECU and transmission control ECU	ECM

MONITOR STRATEGY

Related DTCs	U0100: Verify communication
Required Sensors/Components (Main)	ECM
Required Sensors/Components (Related)	-
Frequency of Operation	Continuous
Duration	1.25 seconds
MIL Operation	Immediate
Sequence of Operation	None

TYPICAL ENABLING CONDITIONS

Monitor runs whenever following DTCs not present	None
Battery Voltage	10.5 V or more
Ignition Switch	ON
Starter	OFF

TYPICAL MALFUNCTION THRESHOLDS

Communication between engine control ECU and transmission control ECU	No communication

INSPECTION PROCEDURE

NOTE: **Perform the universal trip to clear permanent DTCs. Refer to DTC CHECK / CLEAR .**

PROCEDURE

1. **CHECK OTHER DTC OUTPUT (IN ADDITION TO DTC U0100)**
    a. Connect the Techstream to the DLC3.
    b. Turn the ignition switch to ON.
    c. Enter the following menus: Powertrain / Engine and ECT / Trouble Codes.
    d. Check if DTCs are output.

    Result

Display (DTC Output)	Proceed to
U0100	A
U0100 and other	B

DTCs	

B --> See step 3

A --> See step 2

2. **REPLACE ECM. Refer to COMPONENTS**
3. **GO TO DTC CHART. Refer to DIAGNOSTIC TROUBLE CODE CHART**

CIRCUIT TESTS

Transmission Control Switch Circuit

DESCRIPTION

When the shift lever is in S and it is moved toward "-" or "+", it is possible to select different shift ranges (1st through 6th ranges).

Moving the shift lever toward "+" increases the shift range by one, and moving the shift lever toward "-" decreases the shift range by one.

WIRING DIAGRAM

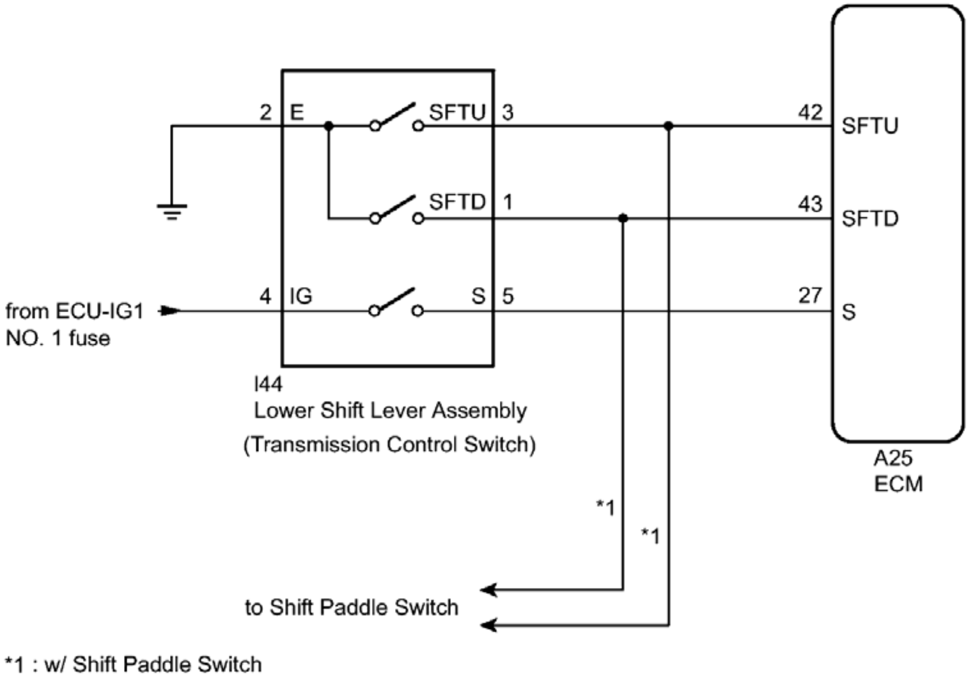
2
E
SFTU
3
42
SFTU
SFTD
1
43
SFTD
4
IG
S
5
27
S
from ECU-IG1
NO. 1 fuse
I44
Lower Shift Lever Assembly
(Transmission Control Switch)
A25
ECM
*1
*1
to Shift Paddle Switch
*1 : w/ Shift Paddle Switch

Fig. 64: Transmission Control Switch Circuit Wiring Diagram
Courtesy of TOYOTA MOTOR SALES, U.S.A., INC.

INSPECTION PROCEDURE

NOTE: **Inspect the fuses for circuits related to this system before performing the following inspection procedure.**

PROCEDURE

1. **READ VALUE USING TECHSTREAM (SPORT SHIFT SWITCH STATUS)**
   1. Connect the Techstream to the DLC3.
   2. Turn the ignition switch to ON.
   3. Turn the Techstream on.
   4. Enter the following menus: Powertrain / Engine and ECT / Data List.
   5. In accordance with the display on the Techstream, read the Data List.

Tester Display	Measurement Item/Range	Normal Condition	Diagnostic Note
Sports Shift Up SW	Sport shift up switch status/ ON or OFF	• ON: Continuously shift to "+" (up-shift) • OFF: Release "+" (up-shift)	-
Sports Shift Down SW	Sport shift down switch status/ ON or OFF	• ON: Continuously shift to "-" (down-shift) • OFF: Release "-" (down-shift)	-

Result

Result	Proceed to
Data display is not within Normal Condition	A

range	
Data display is within Normal Condition range	B

B --> See step 8

A: Go to next step

2. **CHECK HARNESS AND CONNECTOR (BATTERY - TRANSMISSION CONTROL SWITCH)**
    a. Disconnect the transmission control switch connector from lower shift lever assembly.

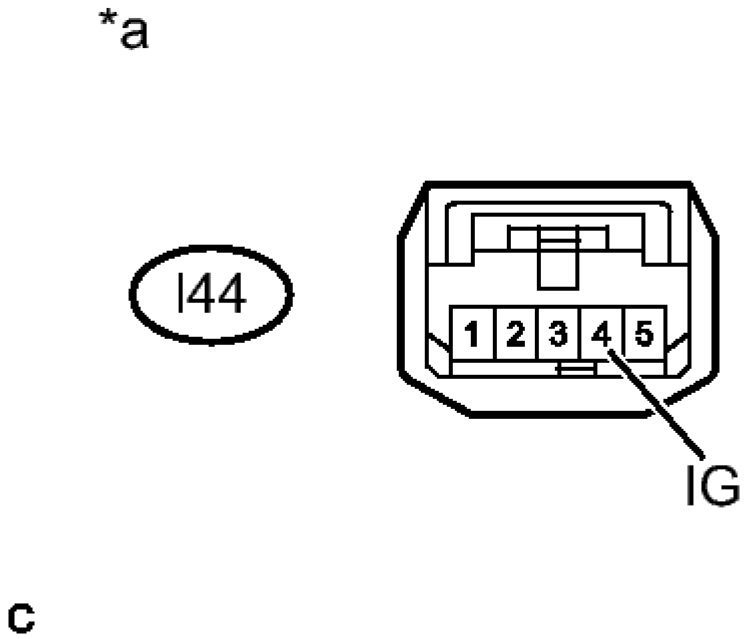

Fig. 65: Checking Harness And Connector (Battery - Transmission Control Switch)
Courtesy of TOYOTA MOTOR SALES, U.S.A., INC.

    b. Measure the voltage according to the value(s) in the table below.

Standard Voltage

Tester Condition	**Condition**	**Specified Condition**
l44-4 (IG)	Ignition switch	11 to 14 V

- Body ground	ON	
	Ignition switch off	Below 1 V

TEXT IN ILLUSTRATION

*a	Front view of wire harness connector (to Transmission Control Switch)

NG --> CHECK POWER SOURCE CIRCUIT

OK: Go to next step

3. **CHECK HARNESS AND CONNECTOR (TRANSMISSION CONTROL SWITCH - BODY GROUND)**
   a. Measure the resistance according to the value(s) in the table below.

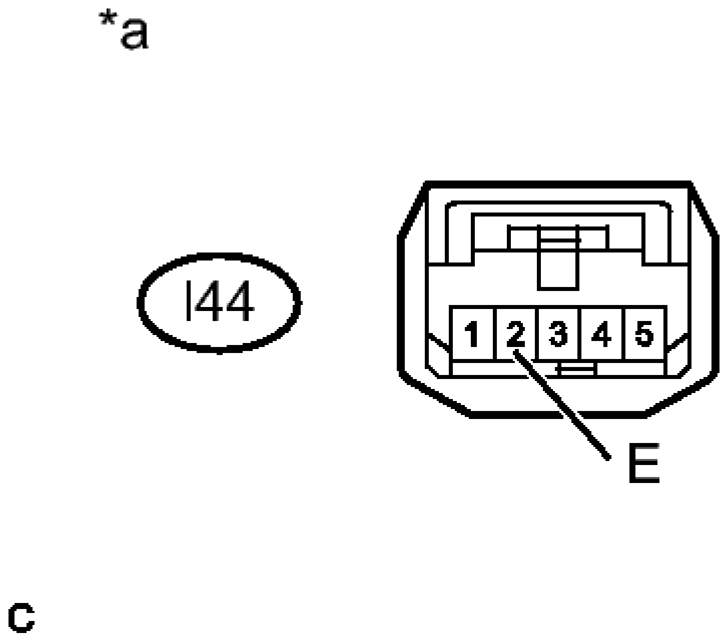

Fig. 66: Checking Harness And Connector (Transmission Control Switch - Body Ground)
Courtesy of TOYOTA MOTOR SALES, U.S.A., INC.

Standard Resistance

Tester Connection	Condition	Specified Condition
l44-2 (E) - Body ground	Always	Below 1 ohms

TEXT IN ILLUSTRATION

*a	Front view of wire harness connector (to Transmission Control Switch)

NG --> REPAIR OR REPLACE HARNESS OR CONNECTOR

OK: Go to next step

4. **INSPECT LOWER SHIFT LEVER ASSEMBLY (TRANSMISSION CONTROL SWITCH)**
    a. Measure the resistance between each terminal of the transmission control switch when the shift lever is moved to each position.

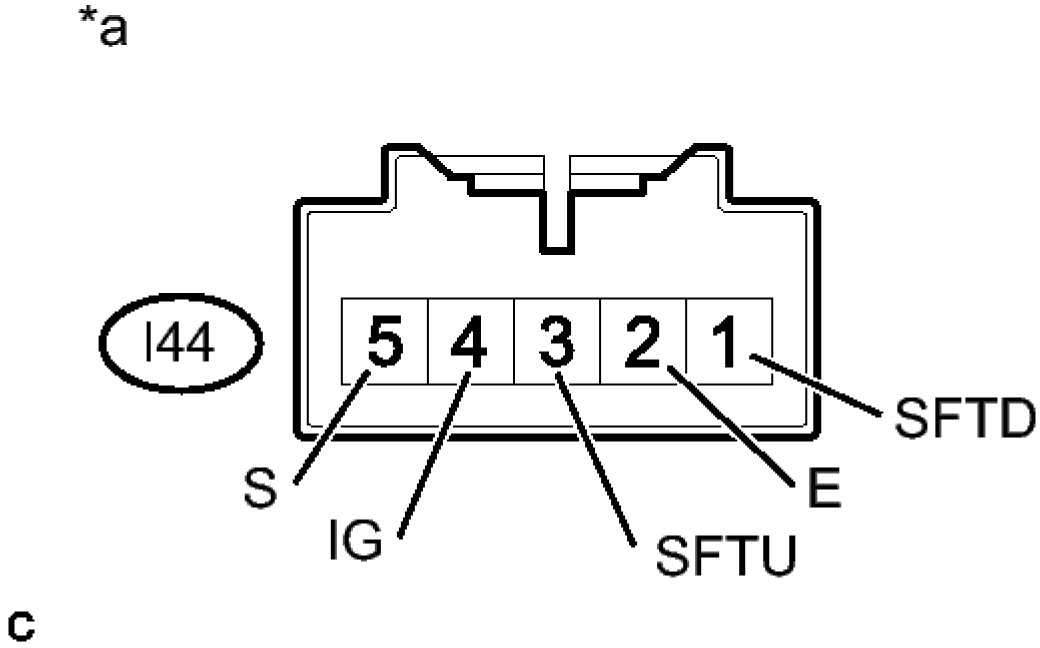

Fig. 67: Checking Lower Shift Lever Assembly (Transmission Control Switch)
Courtesy of TOYOTA MOTOR SALES, U.S.A., INC.

Standard Resistance

Tester Connection	Condition	Specified Condition
l44-4 (IG) - l44-5 (S)	Shift lever in S, "+" or "-"	Below 1 ohms
	Shift lever not in S, "+" or "-"	10 kohms or higher
l44-3 (SFTU) - l44-2 (E)	Shift lever held in "+" (Up-shift)	Below 1 ohms
	Shift lever not held in "+"	10 kohms or higher
l44-1 (SFTD) - l44-2 (E)	Shift lever held in "-" (Down-shift)	Below 1 ohms
	Shift lever not held in "-"	10 kohms or higher

TEXT IN ILLUSTRATION

*a	Component without harness connected (Transmission Control Switch)

NG --> See step 7

OK: Go to next step

5. **CHECK HARNESS AND CONNECTOR (TRANSMISSION CONTROL SWITCH - ECM)**
    a. Connect the transmission control switch connector.
    b. Disconnect the ECM connector.

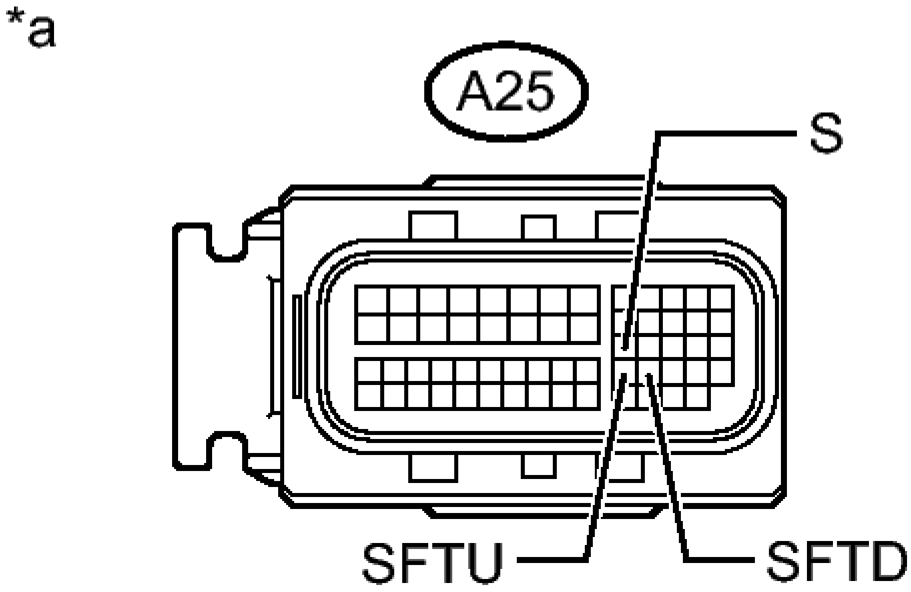

Fig. 68: Checking Harness And Connector (Transmission Control Switch - ECM)
Courtesy of TOYOTA MOTOR SALES, U.S.A., INC.

c. Turn the ignition switch to ON.

d. Measure the voltage according to the value(s) in the table below.

Standard Voltage

Tester Connection	Condition	Specified Condition
A25-27 (S) - Body ground	- Ignition switch ON - Shift lever in S, "+" or "-"	11 to 14 V
A25-27 (S) - Body ground	- Ignition switch ON - Shift lever not in S, "+" or "-"	Below 1 V

e. Turn the ignition switch off.
f. Measure the resistance according to the value(s) in the table below.

Standard Resistance

Tester Connection	Condition	Specified Condition
A25-42 (SFTU) - Body ground	Shift lever held in "+" (Up-shift)	Below 1 ohms
	Shift lever not held in "+"	10 kohms or higher
A25-43 (SFTD) - Body ground	Shift lever held in "-" (Down-shift)	Below 1 ohms
	Shift lever not held in "-"	10 kohms or higher

TEXT IN ILLUSTRATION

*a	Front view of wire harness connector (to ECM)

NG --> REPAIR OR REPLACE HARNESS OR CONNECTOR

OK --> See step 6

6. **REPLACE ECM. Refer to COMPONENTS**
7. **REPLACE LOWER SHIFT LEVER ASSEMBLY (TRANSMISSION CONTROL SWITCH). Refer to COMPONENTS**
8. **CHECK FOR INTERMITTENT PROBLEMS. Refer to ELECTRONIC CIRCUIT INSPECTION PROCEDURE**

Shift Paddle Switch Circuit

DESCRIPTION

Moving the shift lever to S enables gear selection. The driver can select the gear optionally by shifting the paddle to "+" or "-".

WIRING DIAGRAM

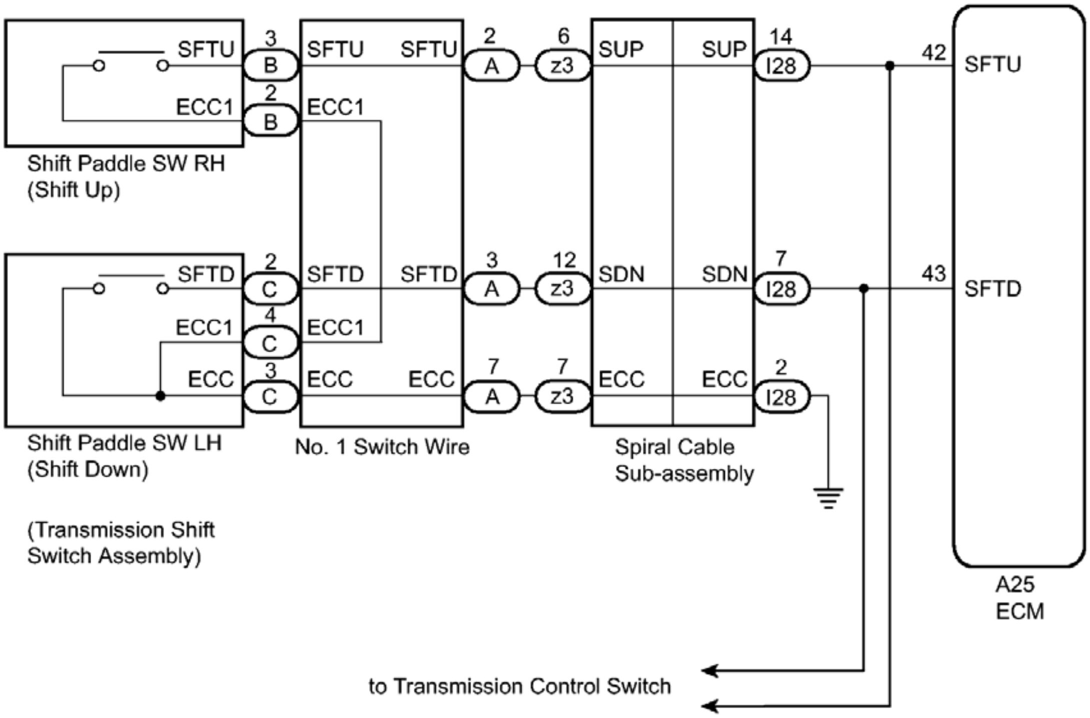
SFTU
3
B
ECC1
2
B
Shift Paddle SW RH
(Shift Up)
SFTU
SFTU
ECC1
2
A
6
z3
SUP
SUP
14
I28
42
SFTU
SFTD
2
C
ECC1
4
C
ECC
3
C
SFTD
SFTD
ECC1
ECC
ECC
3
A
12
z3
7
A
7
z3
SDN
SDN
ECC
ECC
7
I28
2
I28
43
SFTD
Shift Paddle SW LH
(Shift Down)
(Transmission Shift
Switch Assembly)
No. 1 Switch Wire
Spiral Cable
Sub-assembly
A25
ECM
to Transmission Control Switch

Fig. 69: Shift Paddle Switch Circuit Wiring Diagram
Courtesy of TOYOTA MOTOR SALES, U.S.A., INC.

INSPECTION PROCEDURE

PROCEDURE

1. **READ VALUE USING TECHSTREAM (SPORT SHIFT SWITCH STATUS)**
    a. Connect the Techstream to the DLC3.
    b. Turn the ignition switch to ON.
    c. Turn the Techstream on.
    d. Enter the following menus: Powertrain / Engine and ECT / Data List.
    e. In accordance with the display on the Techstream, read the Data List.

Tester Display	Measurement Item/Range	Normal Condition	Diagnostic Note
Sports Shift Up SW	Sport shift up switch status/ ON or OFF	• ON: Continuously pull to "+" (up-shift) • OFF:	-

		Release "+" (up-shift)	
Sports Shift Down SW	Sport shift down switch status/ ON or OFF	• ON: Continuously pull to "-" (down-shift) • OFF: Release "-" (down-shift)	-

Result

Result	Proceed to
Data display is not within Normal Condition range	A
Data display is within Normal Condition range	B

B --> See step 8

A: Go to next step

2. **CHECK HARNESS AND CONNECTOR (SHIFT PADDLE SWITCH CIRCUIT)**
    a. Disconnect the ECM connector.

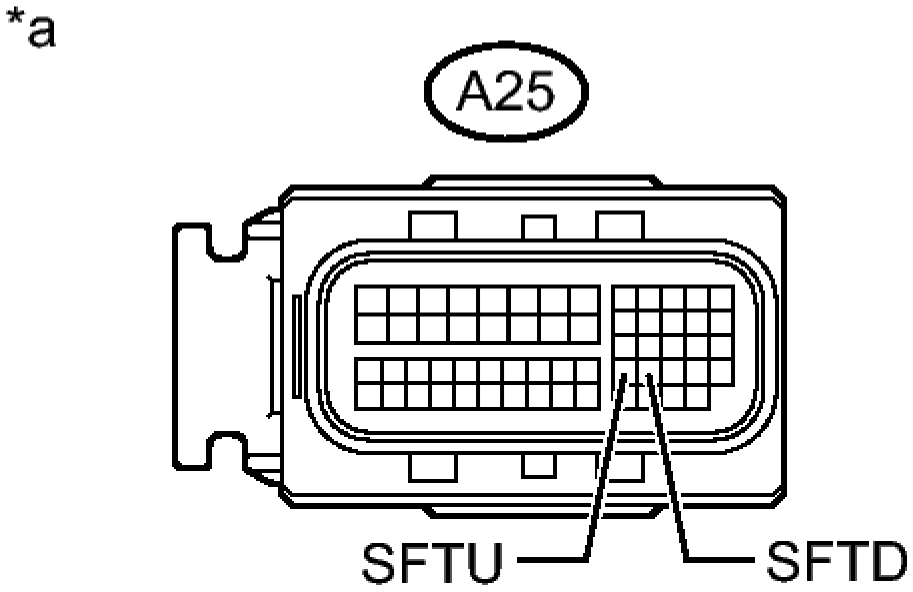

Fig. 70: Checking Harness And Connector (Shift Paddle Switch Circuit)
Courtesy of TOYOTA MOTOR SALES, U.S.A., INC.

b. Measure the resistance according to the value(s) in the table below.

Standard Resistance

Tester Connection	Switch Condition	Specified Condition
A25- 43 (SFTD) - Body ground	Pull "-" continuously (Down-shift)	Below 1 ohms
	Release	10 kohms or higher
A25-42 (SFTU) - Body ground	Pull "+" continuously (Up-shift)	Below 1 ohms
	Release	10 kohms or higher

TEXT IN ILLUSTRATION

*a	Front view of wire harness

	connector (to ECM)

NG --> See step 4

OK --> See step 3

3. **GO TO TRANSMISSION CONTROL SWITCH CIRCUIT. Refer to Transmission Control Switch Circuit**
4. **CHECK HARNESS AND CONNECTOR (SPIRAL CABLE - BODY GROUND)**
    - a. Disconnect the negative (-) terminal cable from the battery.
    - b. Wait for at least 90 seconds.
    - c. Remove the steering wheel assembly.
    - d. Remove the steering column cover.
    - e. Disconnect the spiral cable connector.

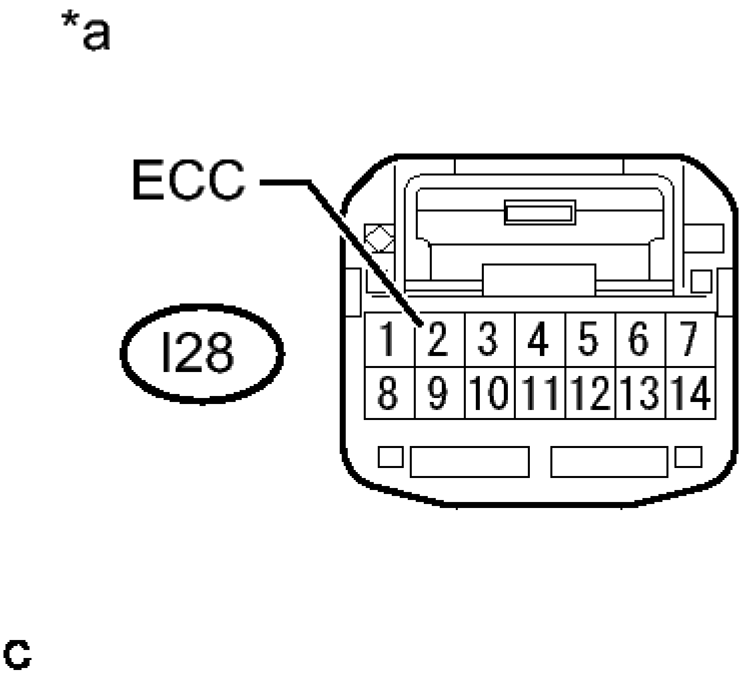

Fig. 71: Checking Harness And Connector (Spiral Cable - Body Ground)
Courtesy of TOYOTA MOTOR SALES, U.S.A., INC.

- f. Measure the resistance according to the value(s) in the table below.

Standard Resistance

Tester Connection	Condition	Specified Condition

I28-2 (ECC) - Body ground	Always	Below 1 ohms

TEXT IN ILLUSTRATION

*a	Front view of wire harness connector (to Spiral Cable Sub-assembly)

NG --> REPAIR OR REPLACE HARNESS OR CONNECTOR

OK: Go to next step

5. **CHECK HARNESS AND CONNECTOR (SPIRAL CABLE - ECM)**
    a. Disconnect the ECM connector.
    b. Measure the resistance according to the value(s) in the table below.

Standard Resistance

Tester Connection	Switch Condition	Specified Condition
A25-43 (SFTD) - I28-7 (SDN)	Always	Below 1 ohms
A25-43 (SFTD) or I28-7 (SDN) - Body ground	Always	10 kohms or higher
A25-42 (SFTU) - I28-14 (SUP)	Always	Below 1 ohms
A25-42 (SFTU) or I28-14 (SUP) -	Always	10 kohms or higher

Body ground		

NG --> REPAIR OR REPLACE HARNESS OR CONNECTOR

OK: Go to next step

6. **CHECK HARNESS AND CONNECTOR (SPIRAL CABLE - SHIFT PADDLE SWITCH)**
    1. Remove the horn button assembly.
    2. Disconnect the steering pad switch connector from the spiral cable sub-assembly.
    3. Measure the resistance according to the value(s) in the table below when the shift paddle switch is moved to each position.

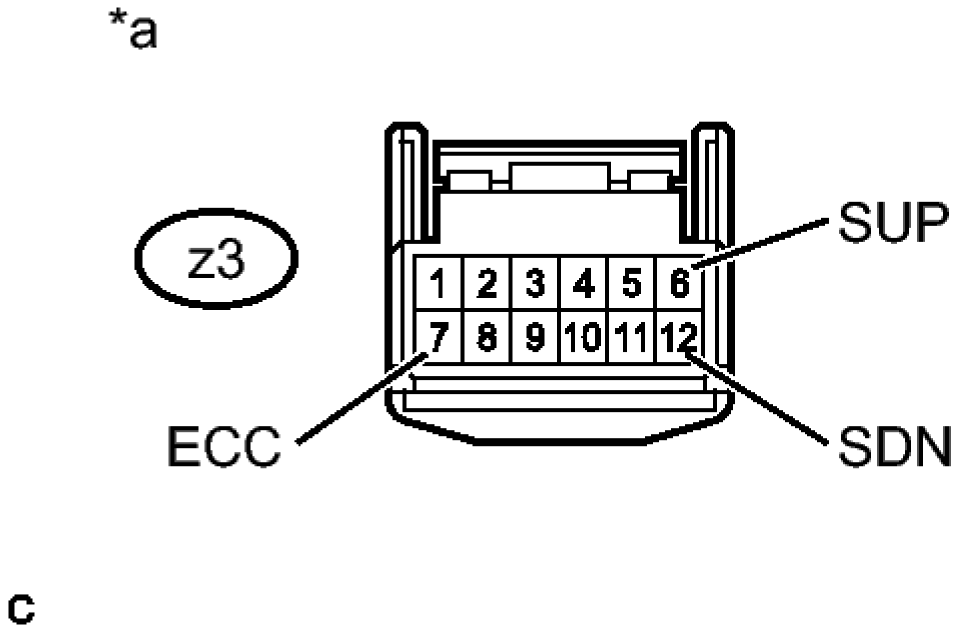

Fig. 72: Checking Harness And Connector (Spiral Cable - Shift Paddle Switch)
Courtesy of TOYOTA MOTOR SALES, U.S.A., INC.

Standard Resistance

Tester Connection	Switch Condition	Specified Condition
z3-6 (SUP) - z3-7 (ECC)	Pull "+" continuously (Up-shift)	Below 1 ohms
	Release	10 kohms or higher
	Pull "-"	

z3-12 (SDN) - z3-7 (ECC)	continuously (Down-shift)	Below 1 ohms
	Release	10 kohms or higher

TEXT IN ILLUSTRATION

*a	Front view of wire harness connector (to Spiral Cable Sub-assembly)

NG --> See step 9

OK: Go to next step

7. **INSPECT SPIRAL CABLE SUB-ASSEMBLY**
    a. Disconnect the steering pad switch connector from the spiral cable sub-assembly.

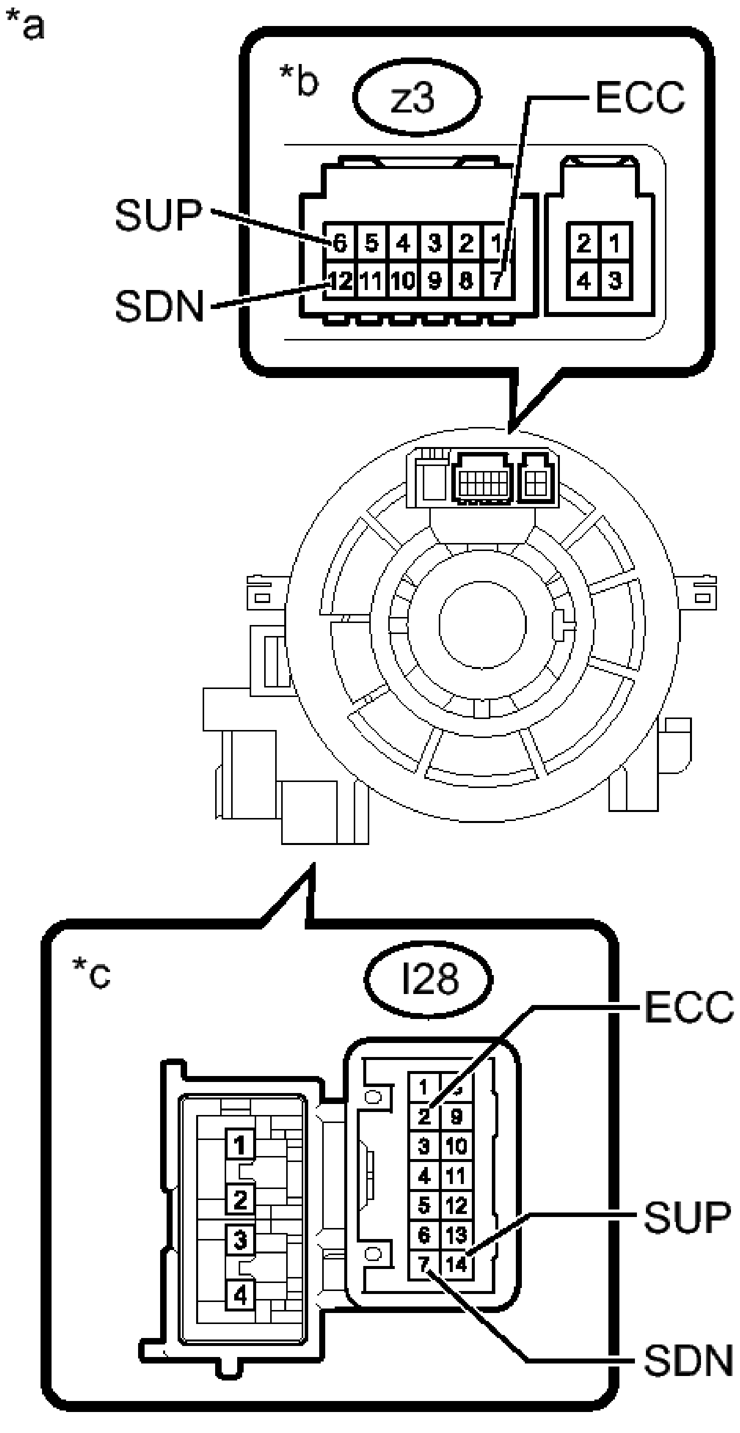
*a
*b
z3
ECC
SUP
SDN
6 5 4 3 2 1
12 11 10 9 8 7
2 1
4 3
*c
I28
ECC
SUP
SDN
1 2 3 4
1 8
2 9
3 10
4 11
5 12
6 13
7 14
C

Fig. 73: Measuring Resistance In Spiral Cable Sub-Assembly
Courtesy of TOYOTA MOTOR SALES, U.S.A., INC.

b. Measure the resistance according to the value(s) in the table below.

Standard Resistance

Tester Connection	Condition	Specified Condition
z3-7 (ECC) - I28-2 (ECC)	Always	Below 3 ohms
z3-6 (SUP) - I28-14 (SUP)	Always	Below 3 ohms
z3-12 (SDN) - I28-7 (SDN)	Always	Below 3 ohms
z3-7 (ECC) or I28-2 (ECC) - All other terminals	Always	10 kohms or higher
z3-6 (SUP) or I28-14 (SUP) - All other terminals	Always	10 kohms or higher
z3-12 (SDN) or I28-7 (SDN) - All other terminals	Always	10 kohms or higher

TEXT IN ILLUSTRATION

*a	Component without harness connected (Spiral Cable Sub-assembly)
*b	Steering Pad Switch Side
*c	Vehicle Side

NG --> See step 11

OK --> See step 8

8. **CHECK FOR INTERMITTENT PROBLEMS. Refer to ELECTRONIC CIRCUIT INSPECTION PROCEDURE**
9. **INSPECT TRANSMISSION SHIFT SWITCH ASSEMBLY (SHIFT PADDLE SWITCH)**
    a. Disconnect the connector from the transmission shift switch LH and RH.

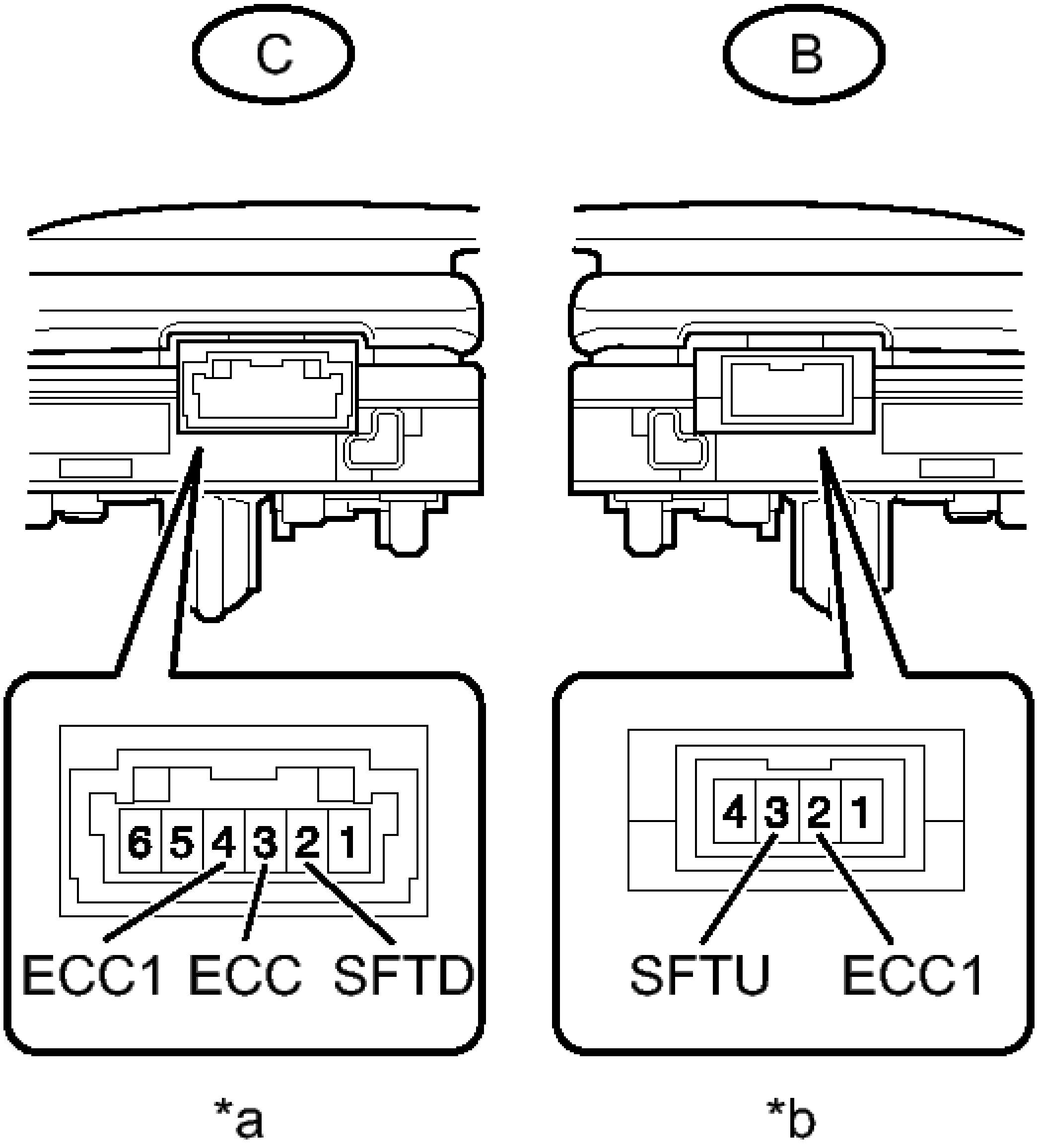
C
B
6 5 4 3 2 1
ECC1
ECC
SFTD
4 3 2 1
SFTU
ECC1
*a
*b

T

Fig. 74: Measuring Resistance In Transmission Shift Switch Assembly (Shift Paddle Switch)
Courtesy of TOYOTA MOTOR SALES, U.S.A., INC.

b. Measure the resistance according to the value(s) in the table below.

Standard Resistance

TRANSMISSION SHIFT SWITCH LH:

Tester Connection	Switch Condition	Specified Condition
C-3 (ECC) - C-2 (SFTD)	Pull "-" continuously (Down-shift)	Below 1 ohms
	Release	10 kohms or higher
C-4 (ECC1) - C-2 (SFTD)	Pull "-" continuously (Down-shift)	Below 1 ohms
	Release	10 kohms or higher

TRANSMISSION SHIFT SWITCH RH:

Tester Connection	Switch Condition	Specified Condition
B-3 (SFTU) - B-2 (ECC1)	Pull "+" continuously (Up-shift)	Below 1 ohms
	Release	10 kohms or higher

TEXT IN ILLUSTRATION

*a	Component without harness connected (Shift paddle switch LH)
*b	Component without harness connected (Shift paddle switch RH)

NG --> See step 12

OK: Go to next step

10. **INSPECT NO. 1 SWITCH WIRE**

a. Connect the transmission shift switch LH and RH connector.

b. Disconnect the No. 1 switch wire from steering pad switch connector.

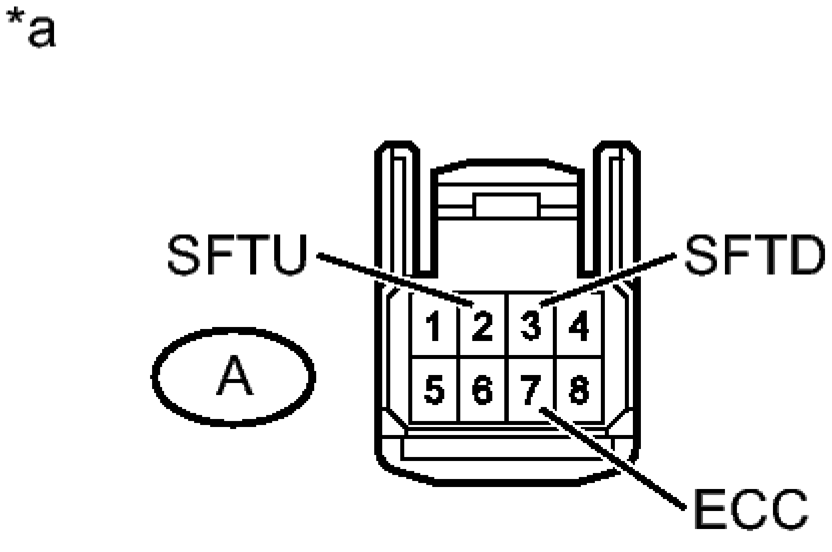

Fig. 75: Checking No. 1 Switch Wire
Courtesy of TOYOTA MOTOR SALES, U.S.A., INC.

c. Measure the resistance according to the value(s) in the table below.

Standard Resistance

Tester Connection	Switch Condition	Specified Condition
A-3 (SFTD) - A-7 (ECC)	Pull "-" continuously (Down-shift)	Below 1 ohms
	Release	10 kohms or higher
A-2 (SFTU) - A-7 (ECC)	Pull "+" continuously (Down-shift)	Below 1 ohms
	Release	10 kohms or higher

TEXT IN ILLUSTRATION

*a	Front view of wire harness connector (to Steering Pad Switch Connector)

NG --> See step 13

OK --> REPAIR OR REPLACE HARNESS OR CONNECTOR (NO. 1 SWITCH WIRE - SPIRAL CABLE SUB-ASSEMBLY)

11. **REPLACE SPIRAL CABLE SUB-ASSEMBLY. Refer to** COMPONENTS
12. **REPLACE TRANSMISSION SHIFT SWITCH ASSEMBLY (SHIFT PADDLE SWITCH). Refer to** COMPONENTS
13. **REPLACE NO. 1 SWITCH WIRE. Refer to** COMPONENTS

AUTOMATIC TRANSAXLE FLUID

REPLACEMENT

REPLACEMENT

1. **REPLACE AUTOMATIC TRANSAXLE FLUID**
   a. Lift the vehicle. [*1]

      NOTE: Set the vehicle on a lift so that the vehicle is kept level when it is lifted up (make sure the tilt angle from the front to rear of the vehicle is within +/- 1°).

   b. Remove the front wheel opening extension pad LH, engine under cover LH and front fender apron seal LH.
   c. Remove the refill plug and gasket from the automatic transaxle assembly. [*2]

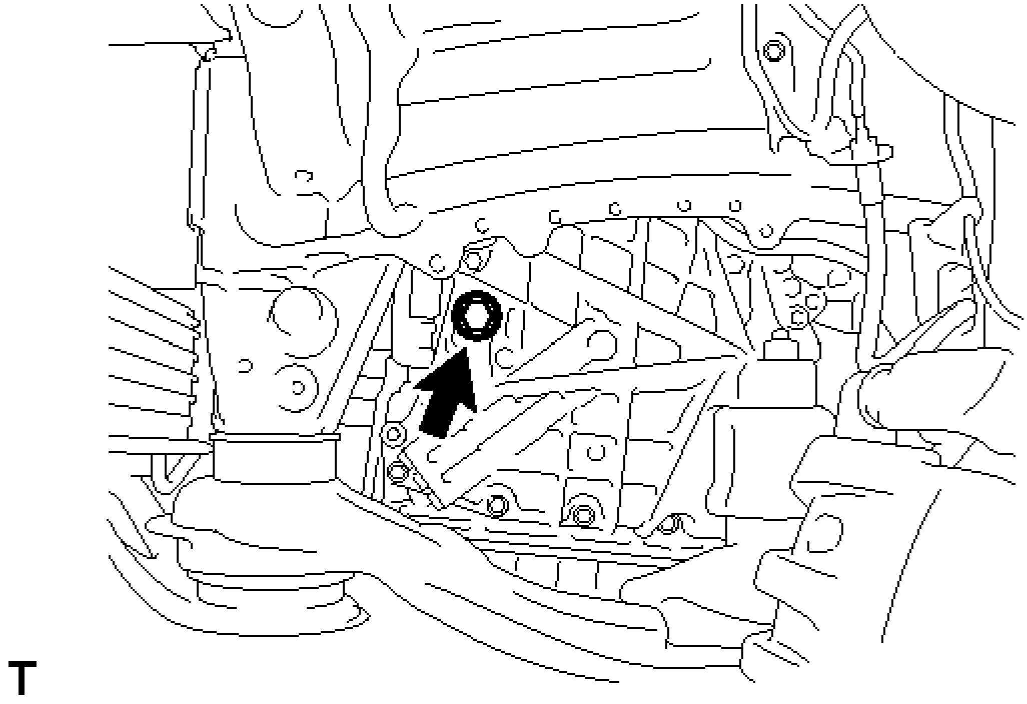

Fig. 1: Locating Refill Plug
Courtesy of TOYOTA MOTOR SALES, U.S.A., INC.

   d. Using a 6 mm hexagon socket wrench, remove the overflow plug and gasket from the automatic transaxle assembly. [*3]

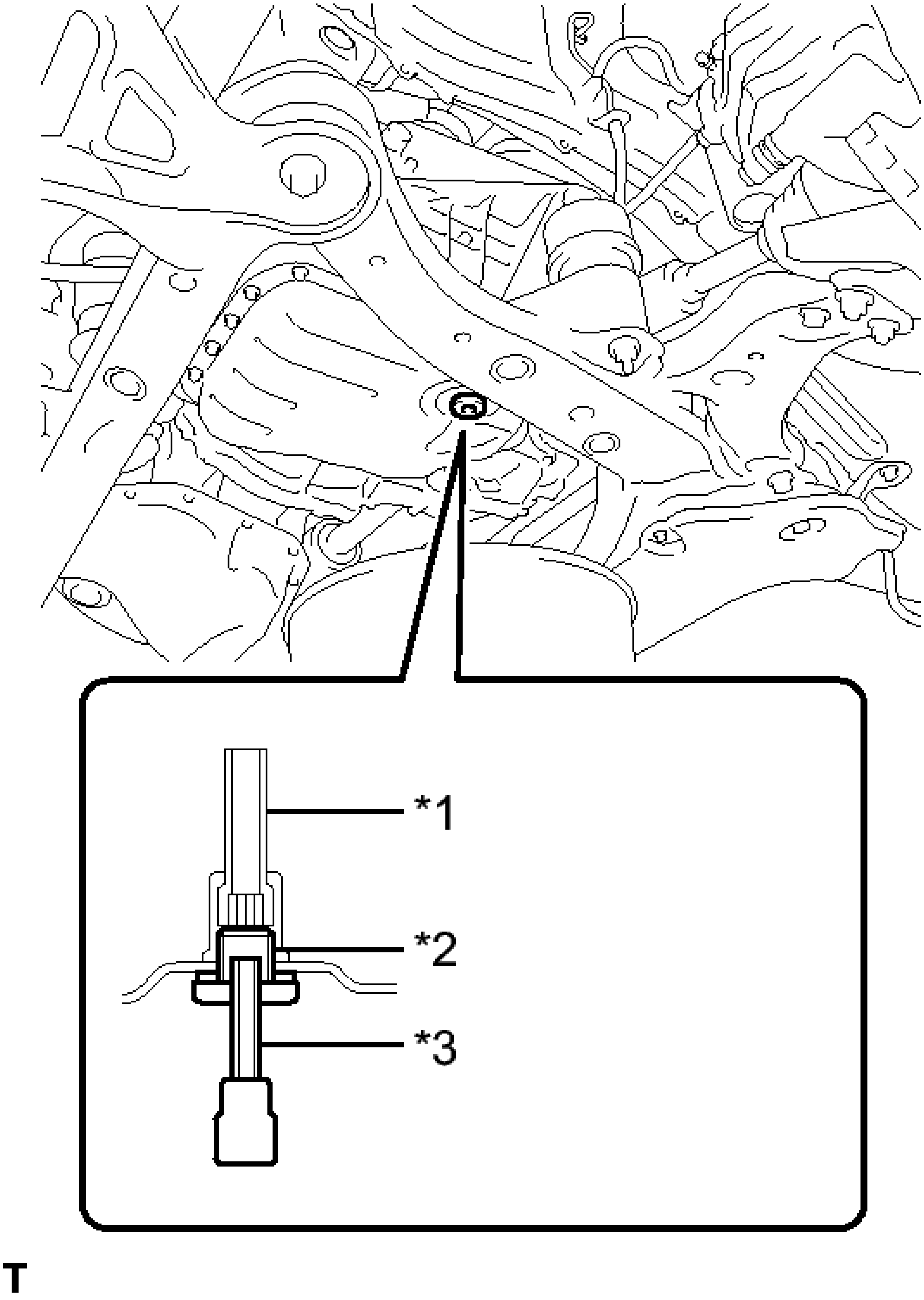

Fig. 2: Identifying No. 1 Transmission Oil Filler Tube, Overflow Plug And Hexagon Socket Wrench
Courtesy of TOYOTA MOTOR SALES, U.S.A., INC.

TEXT IN ILLUSTRATION

*1	No. 1 Transmission Oil Filler Tube
*2	Overflow Plug
*3	Hexagon Socket Wrench

e. Using a 6 mm hexagon socket wrench, remove the No. 1 transmission oil filler tube from the transaxle oil pan sub-assembly and drain the automatic transaxle fluid. [*4]

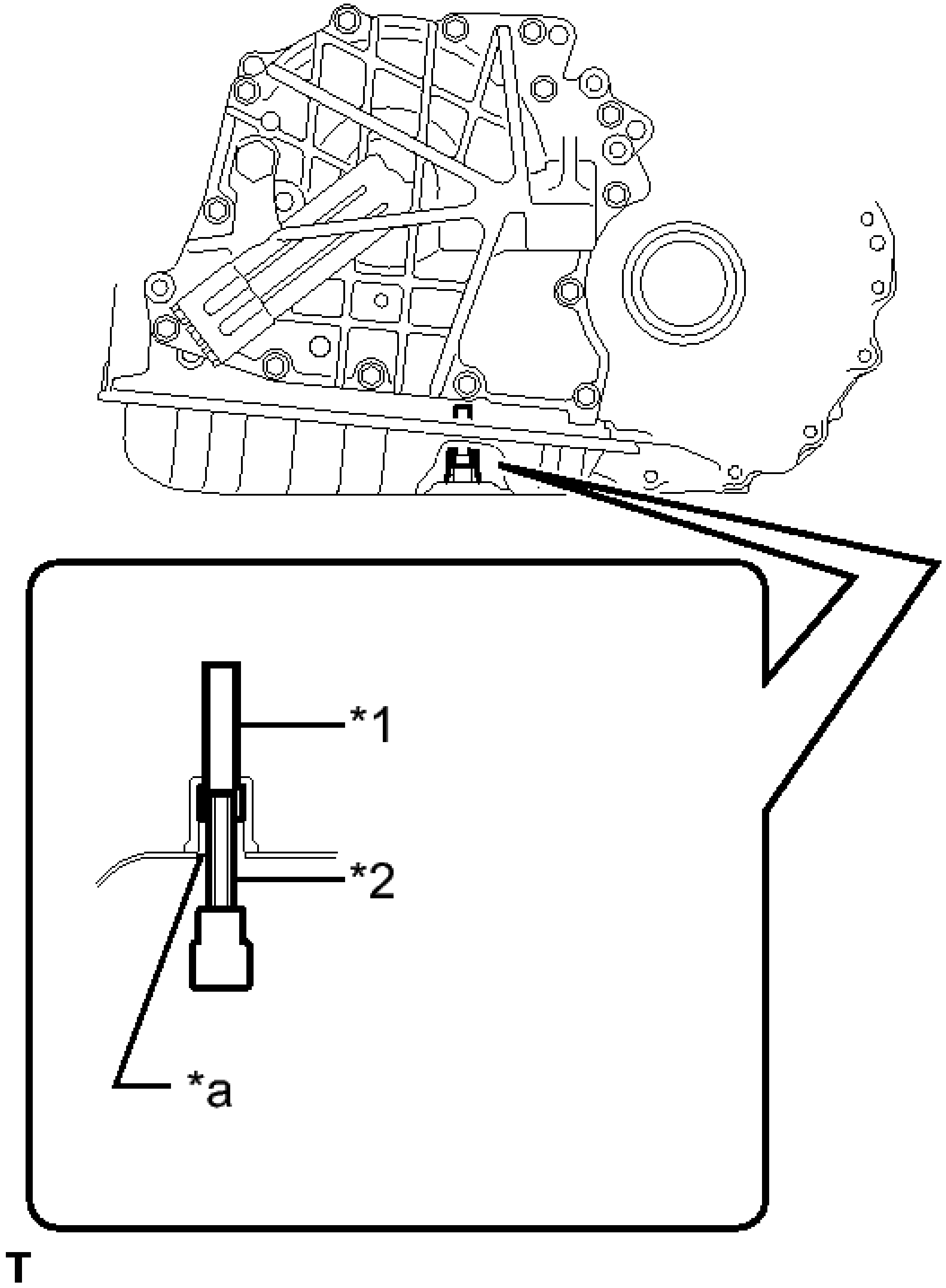

Fig. 3: Identifying No. 1 Transmission Oil Filler Tube, Hexagon Socket Wrench And Overflow Plug Hole
Courtesy of TOYOTA MOTOR SALES, U.S.A., INC.

TEXT IN ILLUSTRATION

*1	No. 1 Transmission Oil Filler Tube
*2	Hexagon Socket Wrench
*a	Overflow Plug Hole

f. Measure the amount of fluid drained. [*5]

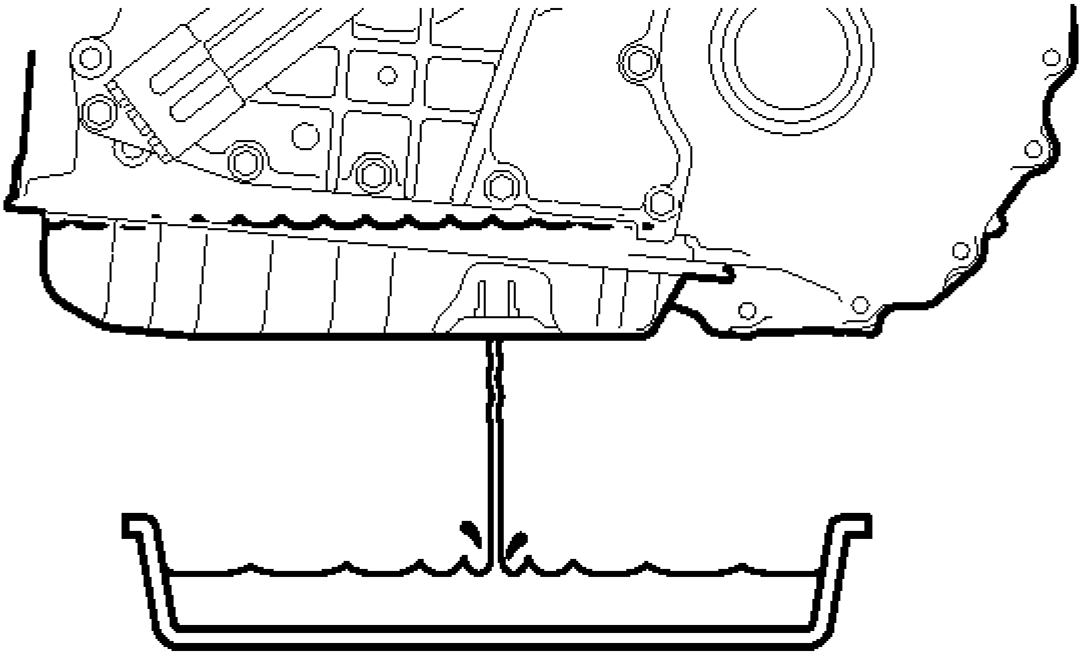

Fig. 4: Measuring Fluid
Courtesy of TOYOTA MOTOR SALES, U.S.A., INC.

HINT:

Add the same amount of fluid in step [*8].

g. Using a 6 mm hexagon socket wrench, install the No. 1 transmission oil filler tube to the transaxle oil pan sub-assembly. [*6]

Torque: 0.8 N*m (8 kgf*cm, 7 in.*lbf)

h. Temporarily install the gasket and the overflow plug. [*7]

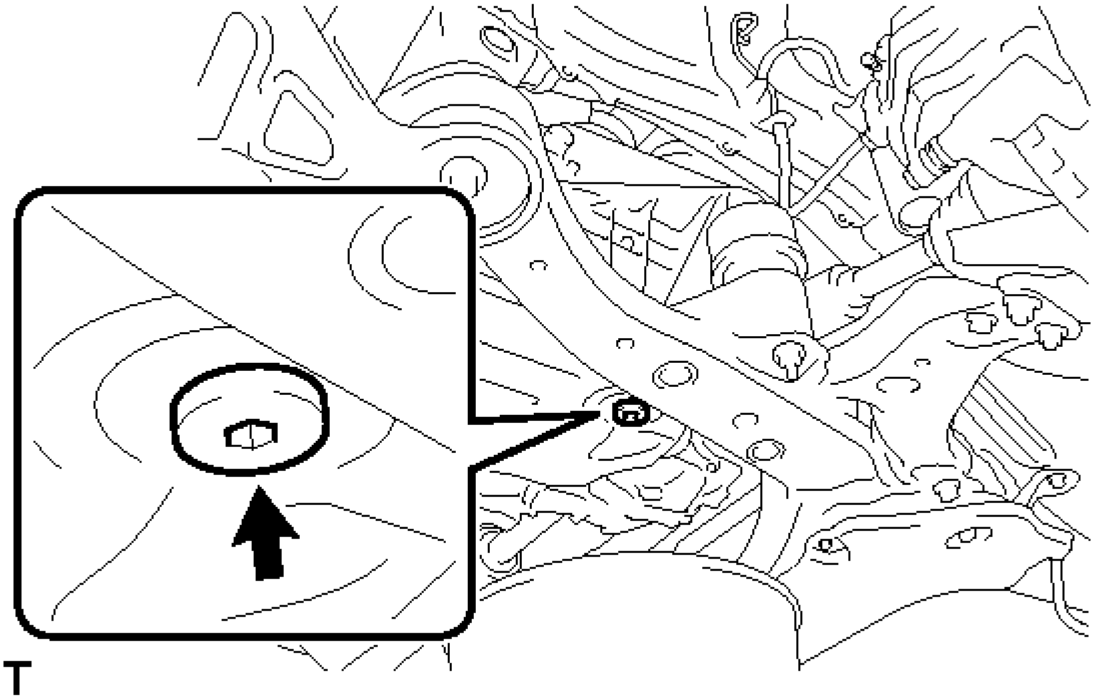

Fig. 5: Locating Overflow Plug
Courtesy of TOYOTA MOTOR SALES, U.S.A., INC.

HINT:

Reuse the old gasket as the plug will be removed again to adjust the fluid level.

i. Add fluid to the refill hole using the same amount of fluid drained in step [*5]. [*8]

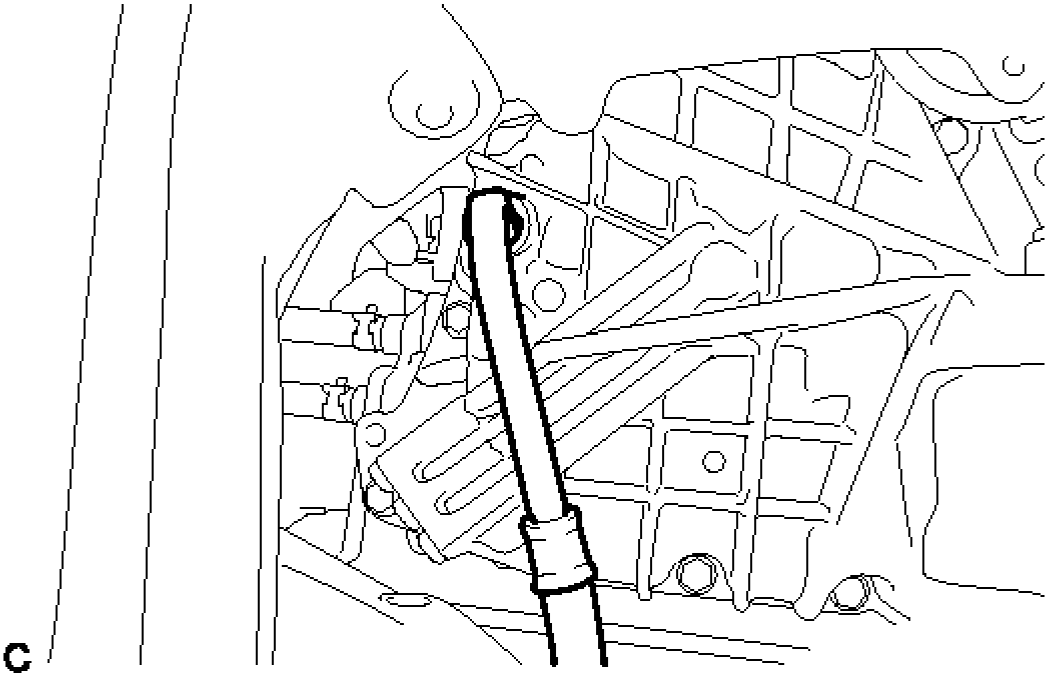

Fig. 6: Refilling Fluid
Courtesy of TOYOTA MOTOR SALES, U.S.A., INC.

NOTE: **Use Toyota Genuine ATF WS.**

j. Temporarily install the gasket and refill plug to avoid fluid spillage. [*9]

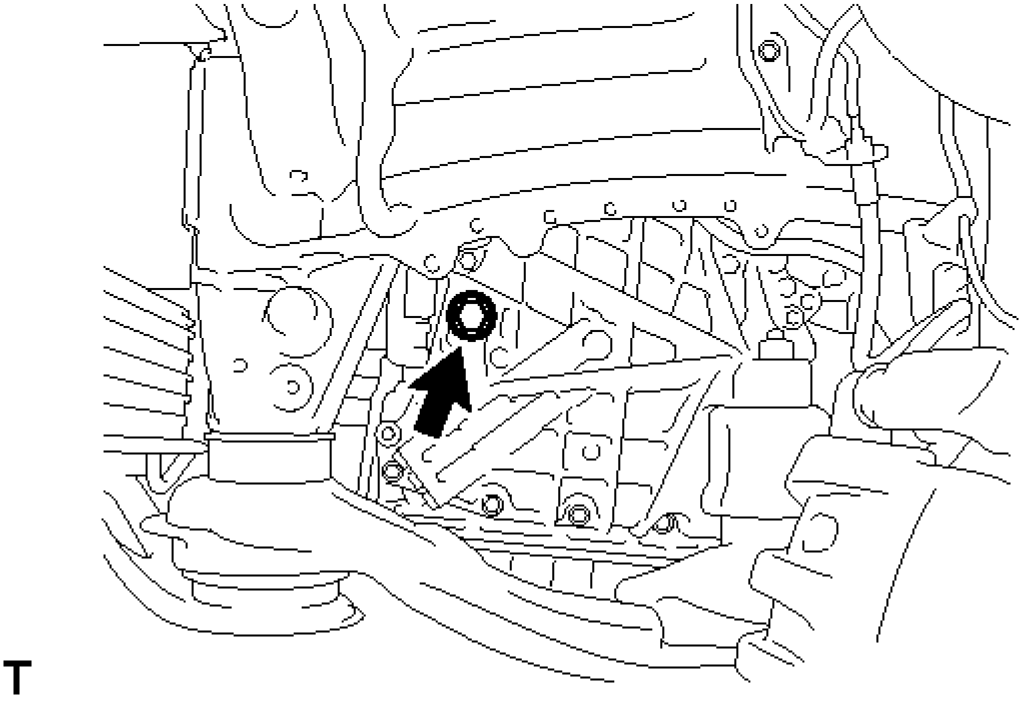

Fig. 7: Locating Refill Plug
Courtesy of TOYOTA MOTOR SALES, U.S.A., INC.

HINT:

Reuse the old gasket as the plug will be removed again to adjust the fluid level.

k. Lower the vehicle. [*10]
l. Start the engine. [*11]
m. Slowly move the shift lever from P to D, then back to P (keep the shift lever in each position for approximately 3 seconds). [*12]

HINT:

Slowly move the shift lever to circulate the fluid through each part of the automatic transaxle assembly.

n. Allow the engine to idle for 30 seconds to warm it up. [*13]
o. Turn the ignition switch off. [*14]
p. Repeat steps [*1] to [*14].
q. Repeat steps [*1] to [*10].

2. **ADJUST FLUID TEMPERATURE (for Using the Techstream)** See step 4
3. **ADJUST FLUID TEMPERATURE (for not Using the Techstream)** See step 5
4. **ADJUST FLUID LEVEL** See step 6
5. **REBUILD WORK** See step 7

ADJUSTMENT

ADJUSTMENT

NOTE: Precautions and work description

- **The U760E automatic transaxle does not have an oil filler tube and oil dipstick. When adding fluid, add fluid through the refill hole on the transaxle case. The fluid level can be adjusted by draining excess fluid (allowing excess fluid to overflow) through the No. 1 transmission oil filler tube of the oil pan.**
- **Before adjusting the fluid level, add the specified amount of fluid when the engine is cold and warm up the engine to circulate the fluid in the transaxle. Ensure that the fluid temperature is as specified and the engine is idling.**
- **The U760E automatic transaxle requires Toyota Genuine ATF WS.**
- **The adjustment should be performed according to the procedures and notes.**

HINT:

"Overflow" indicates the condition under which fluid comes out of the overflow plug hole.

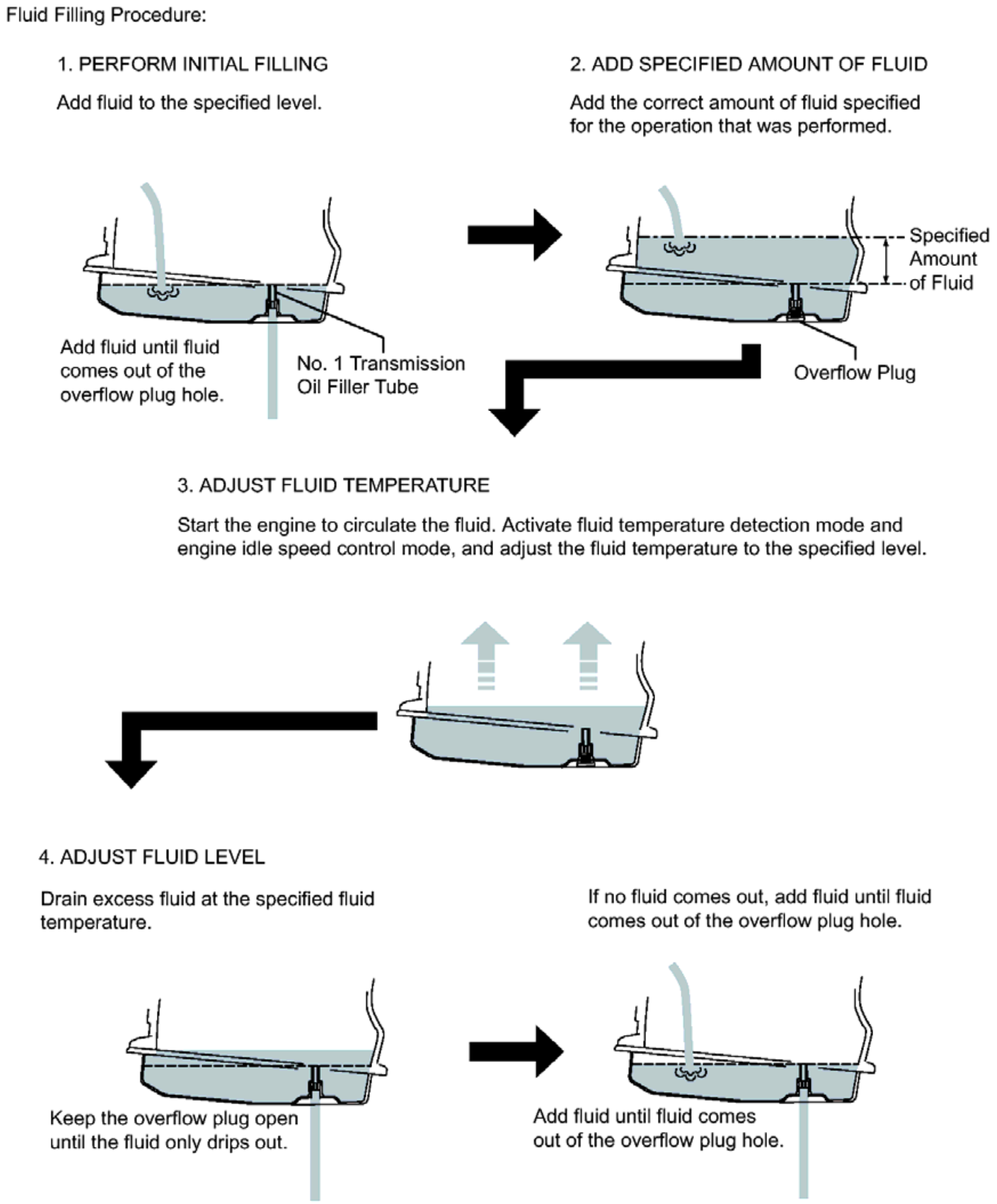

Fluid Filling Procedure:

1. PERFORM INITIAL FILLING

Add fluid to the specified level.

Add fluid until fluid comes out of the overflow plug hole.

2. ADD SPECIFIED AMOUNT OF FLUID

Add the correct amount of fluid specified for the operation that was performed.

3. ADJUST FLUID TEMPERATURE

Start the engine to circulate the fluid. Activate fluid temperature detection mode and engine idle speed control mode, and adjust the fluid temperature to the specified level.

4. ADJUST FLUID LEVEL

Drain excess fluid at the specified fluid temperature.

Keep the overflow plug open until the fluid only drips out.

If no fluid comes out, add fluid until fluid comes out of the overflow plug hole.

Add fluid until fluid comes out of the overflow plug hole.

Fig. 8: Filling Fluid Procedure Chart
Courtesy of TOYOTA MOTOR SALES, U.S.A., INC.

HINT:

The adjustment should be performed according to the procedures referenced in the work flow below.

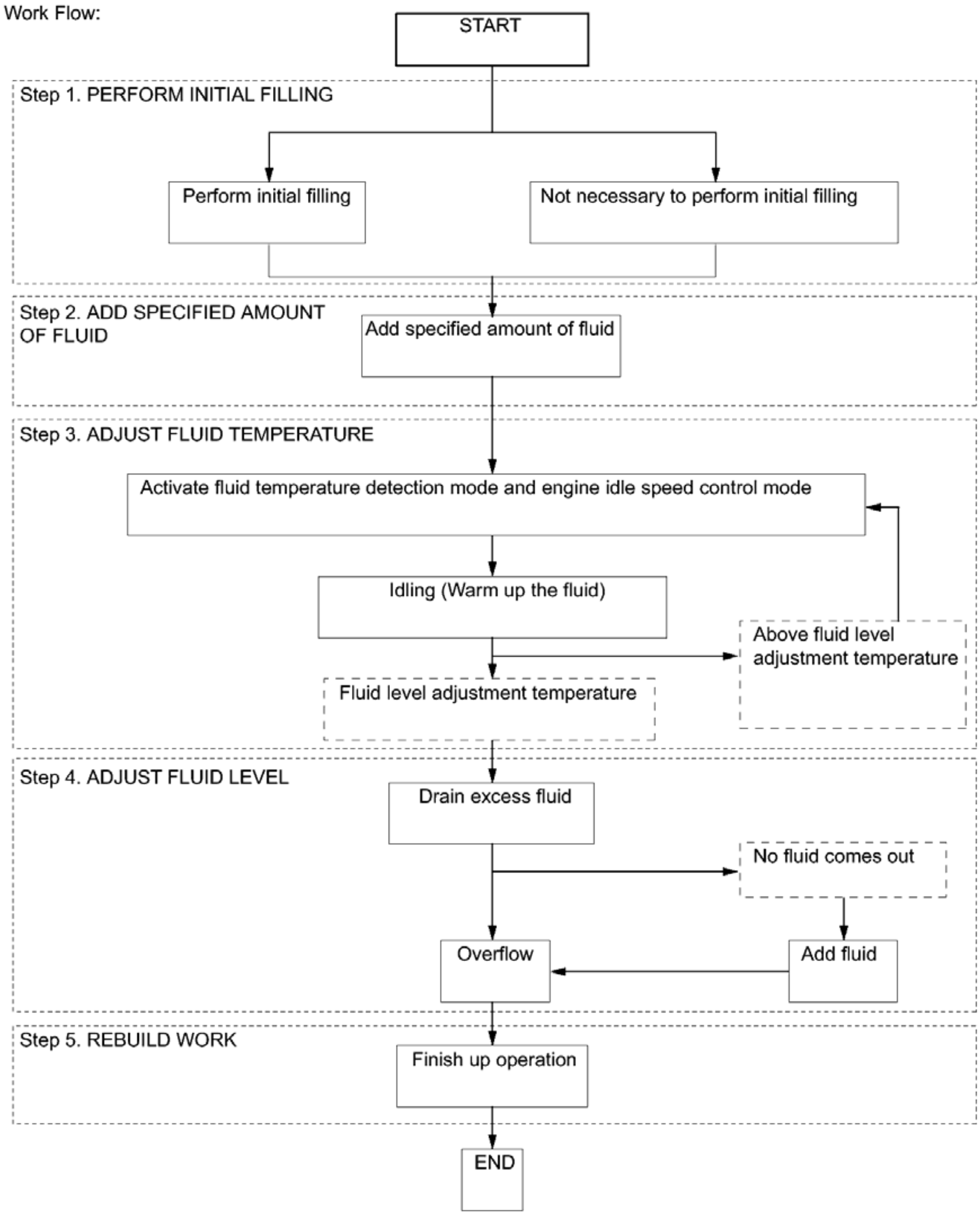
Work Flow:
START
Step 1. PERFORM INITIAL FILLING
Perform initial filling
Not necessary to perform initial filling
Step 2. ADD SPECIFIED AMOUNT OF FLUID
Add specified amount of fluid
Step 3. ADJUST FLUID TEMPERATURE
Activate fluid temperature detection mode and engine idle speed control mode
Idling (Warm up the fluid)
Above fluid level adjustment temperature
Fluid level adjustment temperature
Step 4. ADJUST FLUID LEVEL
Drain excess fluid
No fluid comes out
Overflow
Add fluid
Step 5. REBUILD WORK
Finish up operation
END

Fig. 9: Filling Fluid Workflow Chart
Courtesy of TOYOTA MOTOR SALES, U.S.A., INC.

ADJUSTMENT

1. **PREPARATION WORK**

NOTE: **If the transaxle is hot (ATF temperature is high), wait until the fluid temperature becomes the same as the ambient temperature before starting the following procedure. [Recommended ATF temperature: around 20°C (68°F)]**

a. Lift the vehicle.

NOTE: **Set the vehicle on a lift so that the vehicle is kept level when it is lifted up.**

b. Remove the front wheel opening extension pad LH, engine under covers LH and front fender apron seal LH.

2. **PERFORM INITIAL FILLING**

NOTE: **After performing either of the following operations, it is not necessary to perform the initial filling procedure. Proceed to the "Add Specified Amount of Fluid" procedure in step 3.**

Operations that do not require initial filling
• Oil cooler tube or oil cooler hose removal/installation • Repair of oil seeping or oozing

a. Remove the refill plug and gasket from the automatic transaxle assembly.

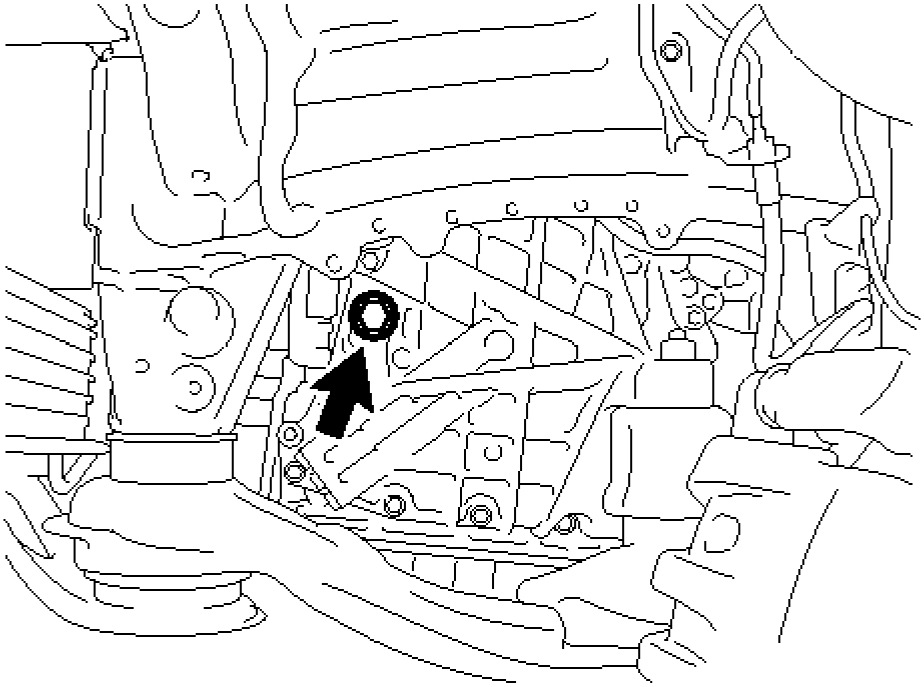

Fig. 10: Locating Refill Plug
Courtesy of TOYOTA MOTOR SALES, U.S.A., INC.

b. Using a 6 mm hexagon socket wrench, remove the overflow plug and gasket from the automatic transaxle assembly.

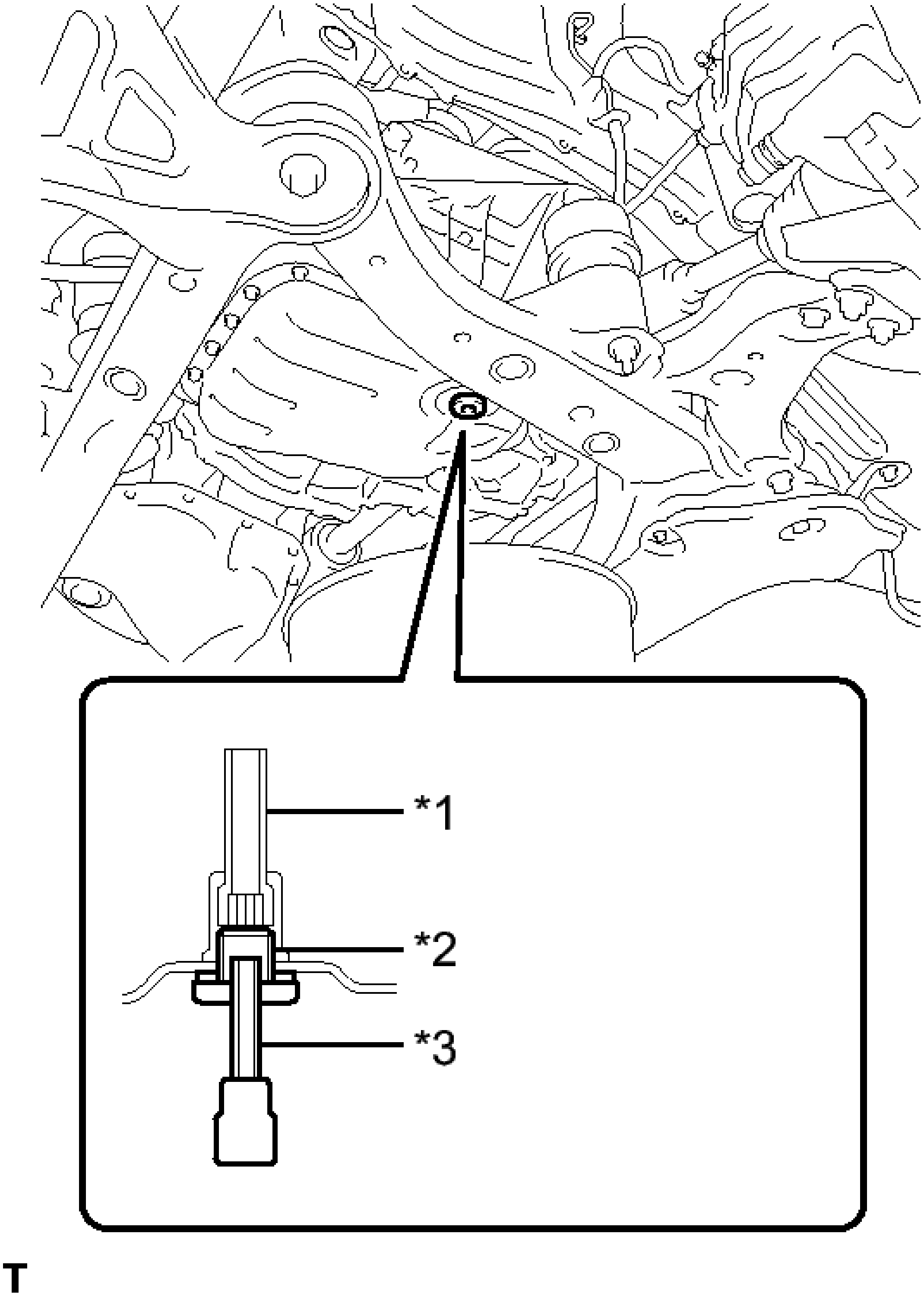

Fig. 11: Identifying No. 1 Transmission Oil Filler Tube, Overflow Plug And Hexagon Socket Wrench

Courtesy of TOYOTA MOTOR SALES, U.S.A., INC.

TEXT IN ILLUSTRATION

*1	No. 1 Transmission Oil Filler Tube
*2	Overflow Plug
*3	Hexagon Socket Wrench

NOTE:

- **If ATF comes out after removing the overflow plug, wait until the fluid flow slows and only drips come out.**
- **If ATF comes out, it is not necessary to perform the initial filling procedure. After checking the tightening torque of the No. 1 transmission oil filler tube, temporarily tighten the overflow plug.**

c. Using a 6 mm hexagon socket wrench, check that the No. 1 transmission oil filler tube is tightened to the specified torque.

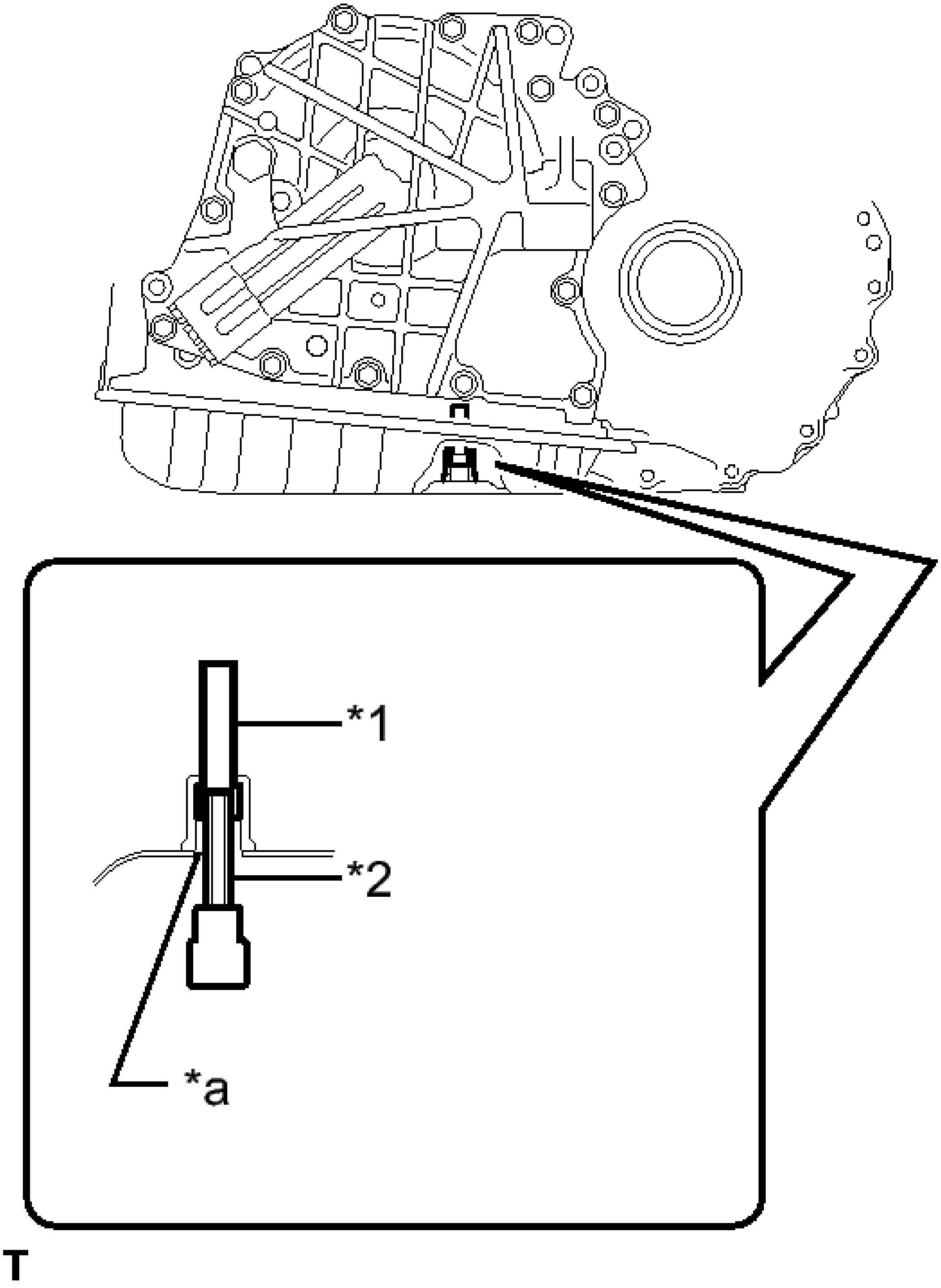

Fig. 12: Identifying No. 1 Transmission Oil Filler Tube, Hexagon Socket Wrench And Overflow Plug Hole
Courtesy of TOYOTA MOTOR SALES, U.S.A., INC.

TEXT IN ILLUSTRATION

*1	No. 1 Transmission Oil Filler Tube
*2	Hexagon Socket Wrench
*a	Overflow Plug Hole

Torque: 0.8 N*m (8 kgf*cm, 7 in.*lbf)

NOTE: **If the No. 1 transmission oil filler tube is not tightened to the specified torque, the amount of fluid cannot be precisely adjusted.**

HINT:

To check the torque of the No. 1 transmission oil filler tube, insert the 6 mm hexagon socket wrench into the overflow plug hole.

d. Perform initial filling.
   1. Fill the transaxle through the refill hole until fluid begins to trickle out of the overflow plug hole.

      NOTE: **Use Toyota Genuine ATF WS.**

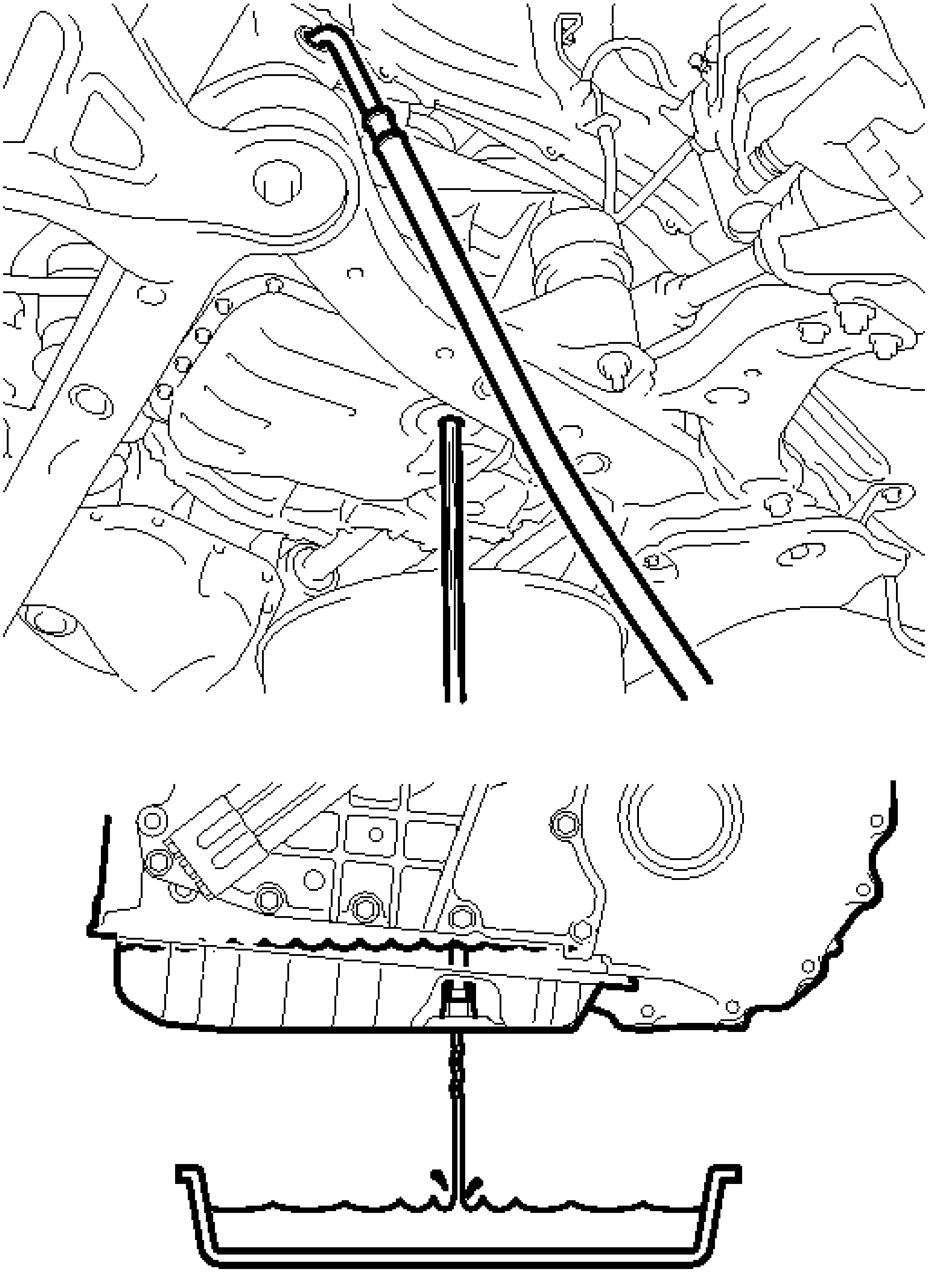

Fig. 13: Filling Transmission Oil
Courtesy of TOYOTA MOTOR SALES, U.S.A., INC.

e. Wait until the fluid flow slows and only drips come out.

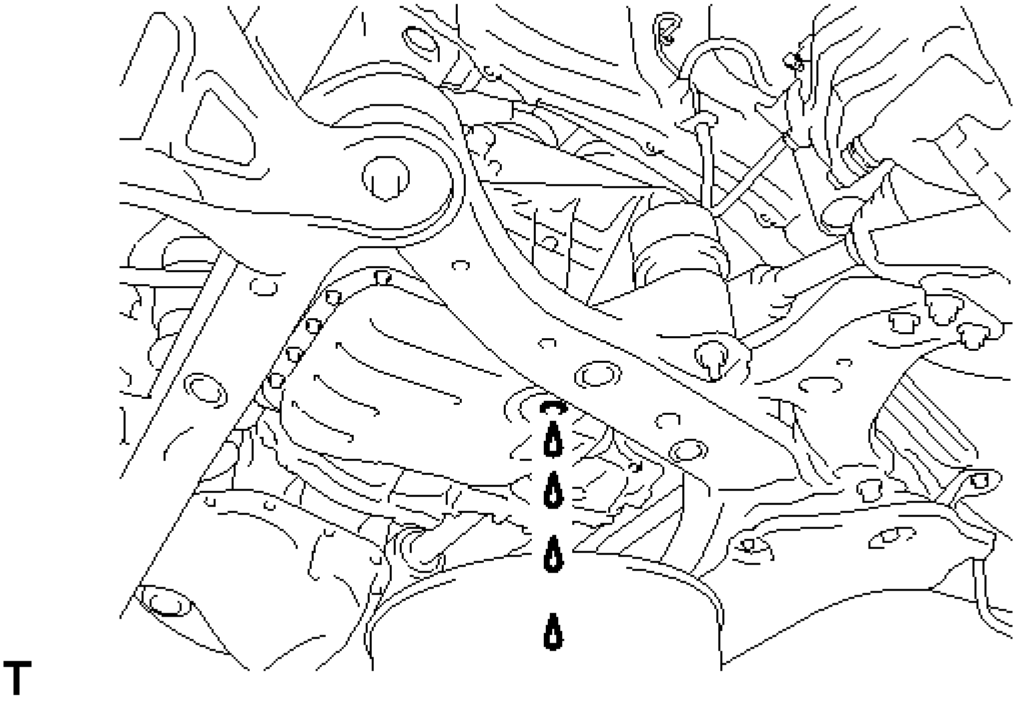

Fig. 14: Identifying Transmission Fluid Flow
Courtesy of TOYOTA MOTOR SALES, U.S.A., INC.

f. Using a 6 mm hexagon socket wrench, temporarily install the gasket and the overflow plug.

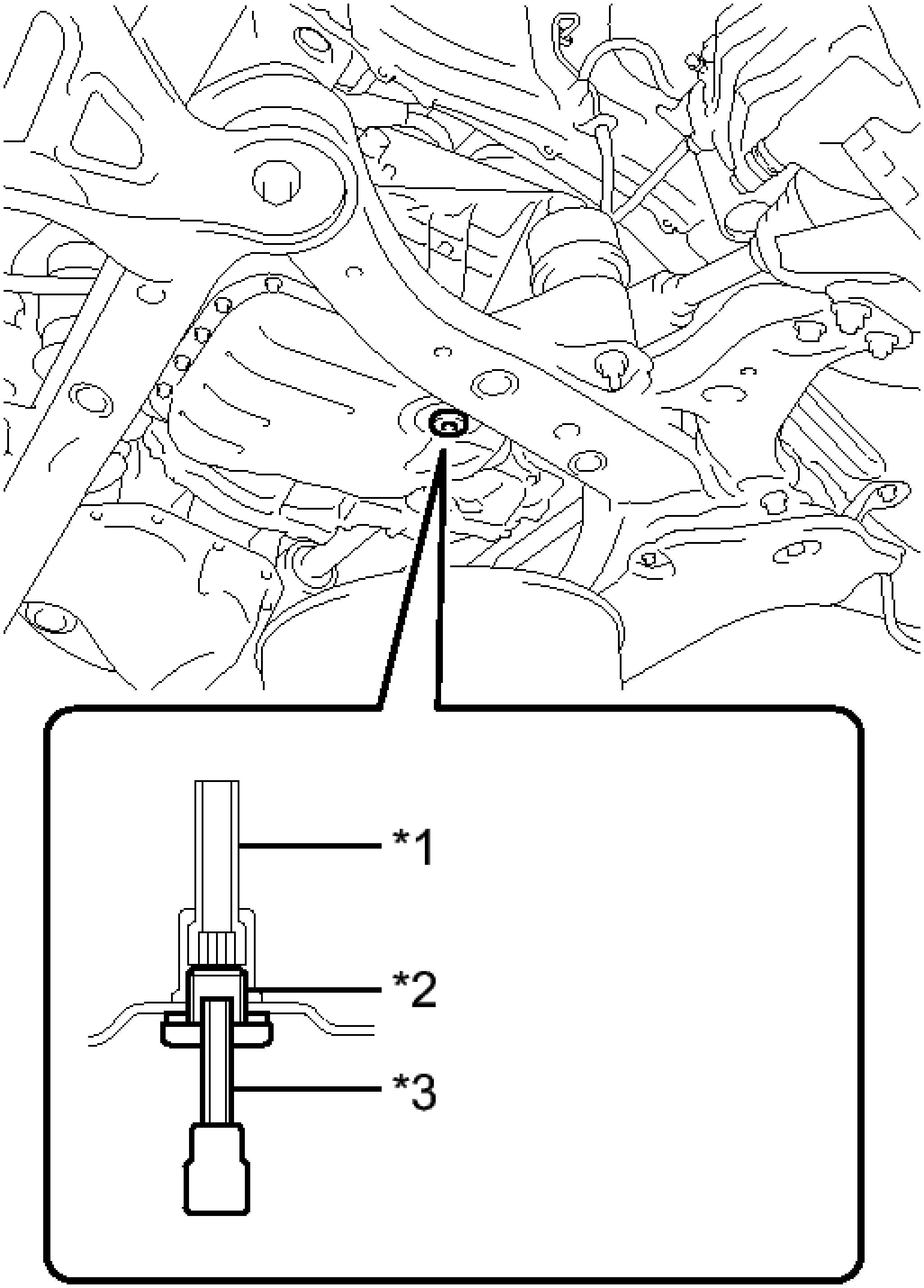

Fig. 15: Identifying No. 1 Transmission Oil Filler Tube, Overflow Plug And Hexagon Socket Wrench

Courtesy of TOYOTA MOTOR SALES, U.S.A., INC.

TEXT IN ILLUSTRATION

*1	No. 1 Transmission Oil Filler Tube
*2	Overflow Plug
*3	Hexagon Socket Wrench

HINT:

Reuse the old gasket. The overflow plug will be removed again to adjust the fluid level.

3. **ADD SPECIFIED AMOUNT OF FLUID**
   a. Fill the transaxle with the correct amount of fluid as listed in the table below.

NOTE: **Refill amount differs depending on the operation that was performed.**

Reference Capacity

Related Procedure	**Fill Volume**
Transaxle replacement (with a new torque converter)	5.1 liters (5.4 US qts, 4.5 Imp. qts)
Transaxle replacement (when reusing the torque converter)	3.5 liters (3.7 US qts, 3.1 Imp. qts)
Torque converter removal/installation	3.4 liters (3.6 US qts, 3.0 Imp. qts)
Transmission valve body removal/installation	3.2 liters (3.4 US qts, 2.8 Imp.

	qts)
Oil pan removal/installation	2.7 liters (2.9 US qts, 2.4 Imp. qts)
Drive shaft removal/installation	2.7 liters (2.9 US qts, 2.4 Imp. qts)
Transaxle case oil seal removal/installation	2.7 liters (2.9 US qts, 2.4 Imp. qts)
Oil cooler tube or oil cooler hose removal/installation	0.5 liters (0.5 US qts, 0.4 Imp. qts)
Repair of oil seeping or oozing	0.5 liters (0.5 US qts, 0.4 Imp. qts)

b. Temporarily install the refill plug to avoid fluid spillage.

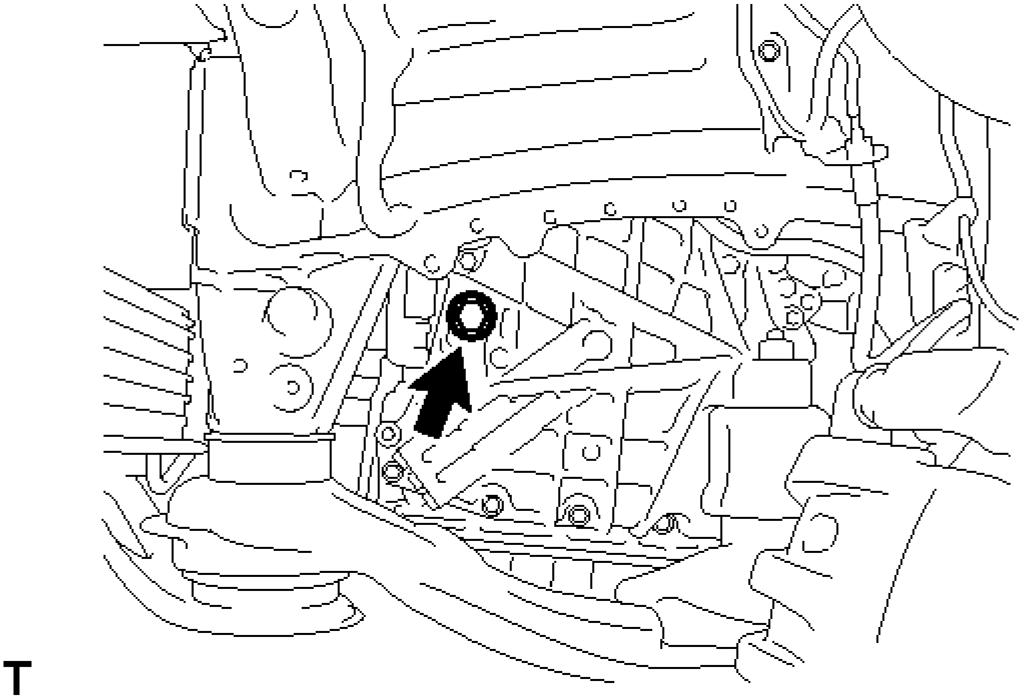

Fig. 16: Locating Refill Plug
Courtesy of TOYOTA MOTOR SALES, U.S.A., INC.

HINT:

Reuse the old gasket. The refill plug will be removed again to adjust the fluid level.

c. Lower the vehicle.

4. **ADJUST FLUID TEMPERATURE (for Using the Techstream)**

HINT:

The actual ATF temperature can be checked on the Data List using the Techstream.

a. Connect the Techstream to the DLC3 with the ignition switch off.
b. Turn the ignition switch to ON and turn the Techstream on.

NOTE: **To reduce load, make sure that all electrical systems, such as the air conditioning, lighting system, electric fan and audio system, are off.**

c. Enter the following menus: Powertrain / Engine / Active Test / Connect the TC and TE1
d. Select the Data List menu: A/T Oil Temperature 1
e. Select the Active Test menu: Connect the TC and TE1 / ON
f. Check the ATF temperature.

NOTE:

- **If the fluid temperature is below 45°C (113°F), proceed to the next step. [Recommended ATF temperature: 35°C (95°F) or less]**
- **If the fluid temperature is 45°C (113°F) or more, turn the ignition switch off and wait until the fluid temperature drops below 45°C (113°F).**

g. Depress and hold the brake pedal.
h. Start the engine.
i. Slowly move the shift lever from P to D, then back to P (keep the shift lever in each position for approximately 3 seconds).

HINT:

Slowly move the shift lever to circulate the fluid through each part of the automatic transaxle assembly.

j. While observing the D shift indicator on the combination meter, move the shift lever back and forth between N and D at an interval of less than 1.5 seconds for 6 seconds or more.

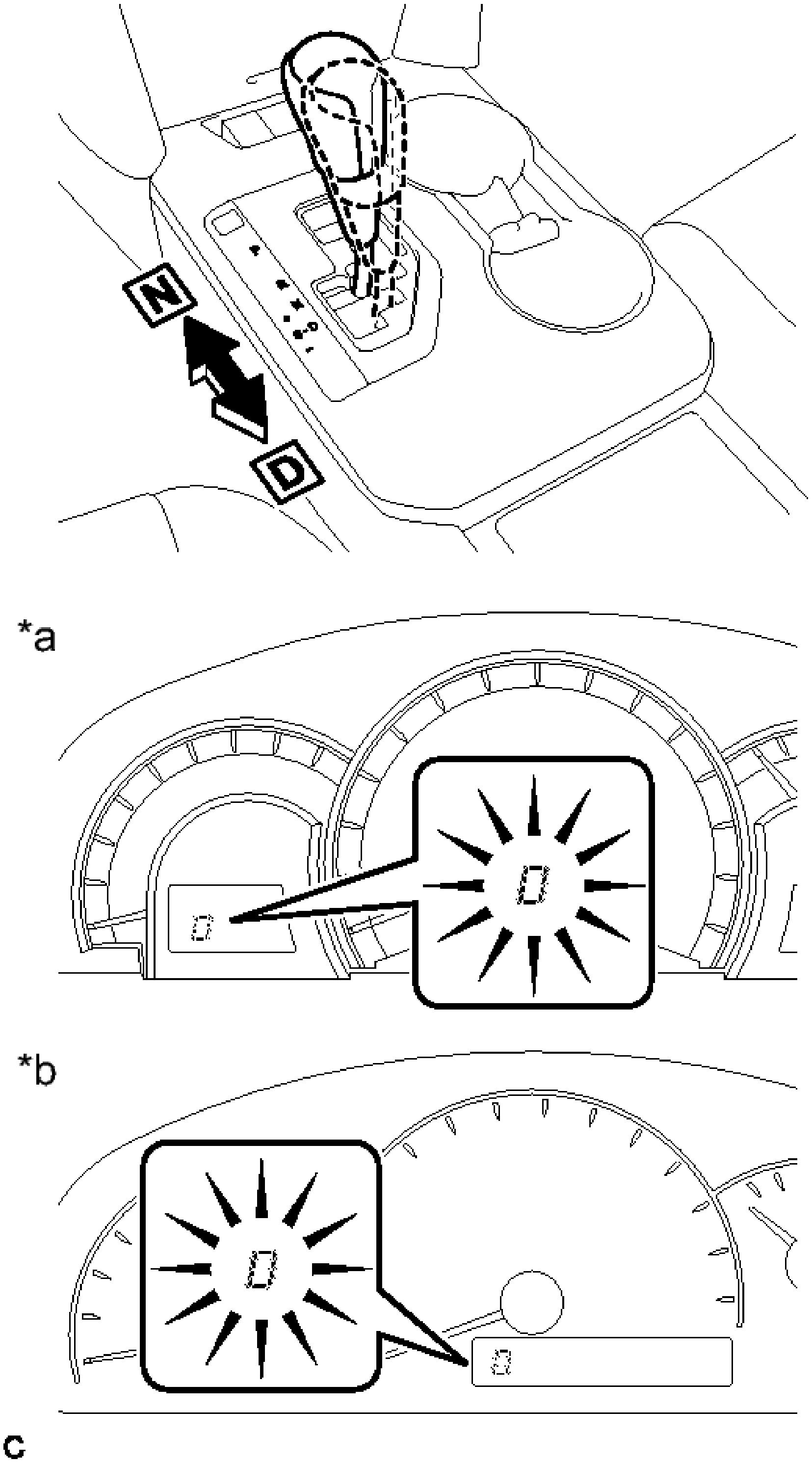

Fig. 17: Shifting Lever N And D
Courtesy of TOYOTA MOTOR SALES, U.S.A., INC.

TEXT IN ILLUSTRATION

*a	Optitron and Analog Type
*b	Analog Type

NOTE: **Do not pause for more than 1.5 seconds.**

HINT:

Performing this operation will cause the vehicle to enter fluid temperature detection mode.

k. Check that the D shift indicator comes on for 2 seconds.

HINT:

- When fluid temperature detection mode is activated, the D shift indicator on the combination meter comes on for 2 seconds.
- If the D shift indicator does not come on for 2 seconds, return to the first step and perform the procedure again.

l. Move the shift lever from N to P.

m. Release the brake pedal.

n. Select the Active Test menu: Connect the TC and TE1 / OFF

NOTE: **Be sure that terminals TC and TE1 are off. If the terminals are on, the fluid level cannot be precisely adjusted due to fluctuations in engine speed.**

HINT:

- Disconnecting terminals TC and TE1 activates engine idle speed control mode.
- In engine idle speed control mode, engine idle speed control starts when the fluid temperature becomes 35°C (95°F) or more and the engine speed is maintained at approximately 800 rpm.
- Even after terminals TC and TE1 are disconnected, fluid temperature detection mode is active until the ignition switch is turned off.

o. Warm up the engine with the engine idling until the fluid temperature reaches the fluid level adjustment temperature [35 to 45°C (95 to 113°F)].

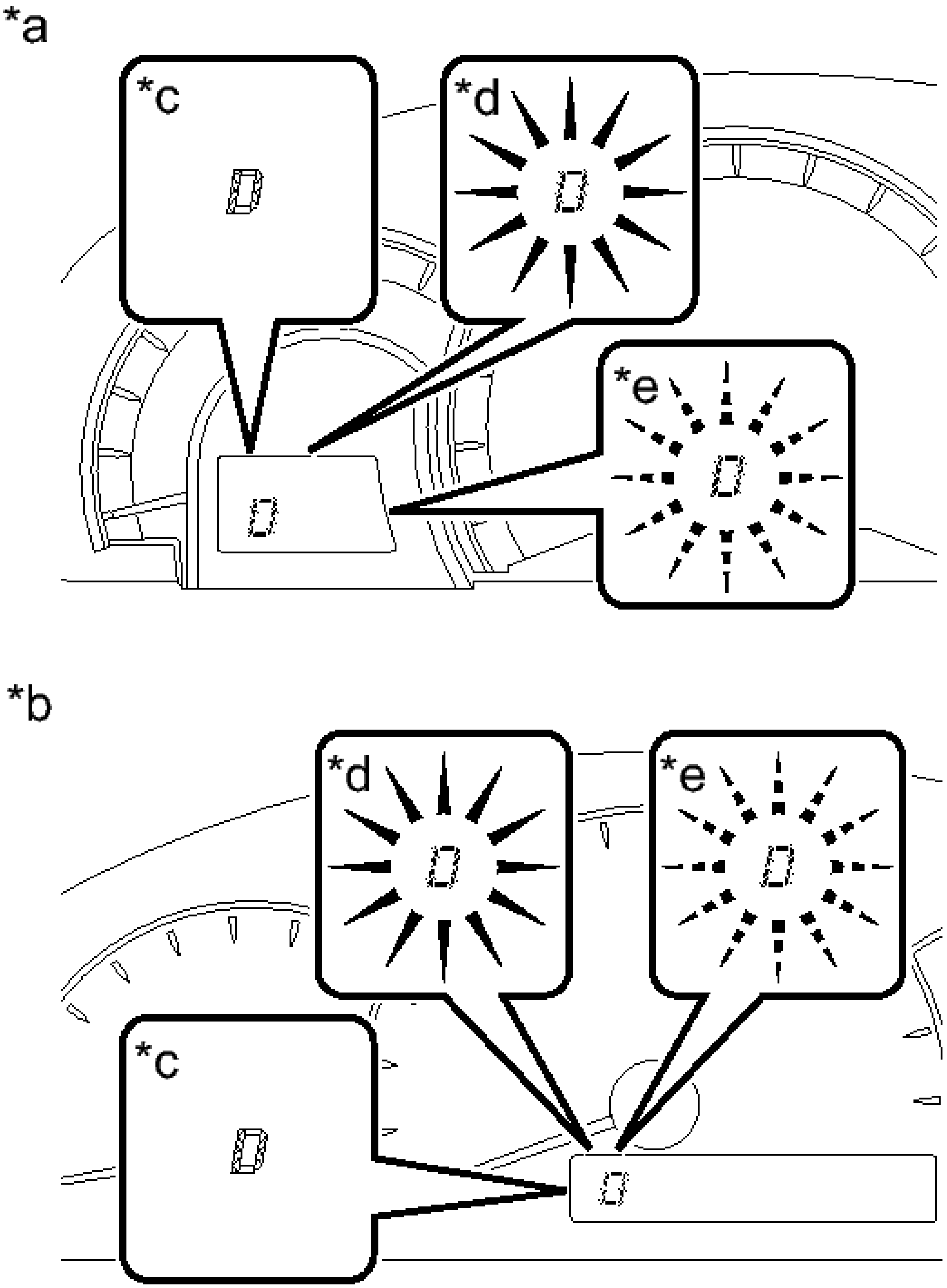

c

Fig. 18: Identifying Shift D Indicator Light
Courtesy of TOYOTA MOTOR SALES, U.S.A., INC.

Below Fluid Level	Fluid Level	Above Fluid Level

Adjustment Temperature	**Adjustment Temperature**	**Adjustment Temperature**
35°C or less (95°F or less)	35 to 45°C (95 to 113°F)	45°C or more (113°F or more)
Shift Indicator (D) Turned off	Shift Indicator (D) Turned on	Shift Indicator (D) Blinking

TEXT IN ILLUSTRATION

*a	Optitron and Analog Type
*b	Analog Type
*c	Turned Off
*d	Turned On
*e	Blinking

NOTE:

- **If the fluid temperature is within the fluid level adjustment temperature range, immediately proceed to the "Adjust Fluid Level" procedure in step 6.**
- **If the fluid temperature is 45°C (113°F) or more, stop the engine and wait until the fluid temperature drops to 35°C (95°F) or less. Then perform the "Adjust Fluid Temperature" procedure in step 2 or 3 again from the beginning.**

HINT:

In fluid temperature detection mode, the D shift indicator comes on, goes off, or blinks depending on the fluid temperature.

5. **ADJUST FLUID TEMPERATURE (for not Using the Techstream)**
    a. Using SST, connect terminals 13 (TC) and 4 (CG) of the DLC3 with the ignition switch off.

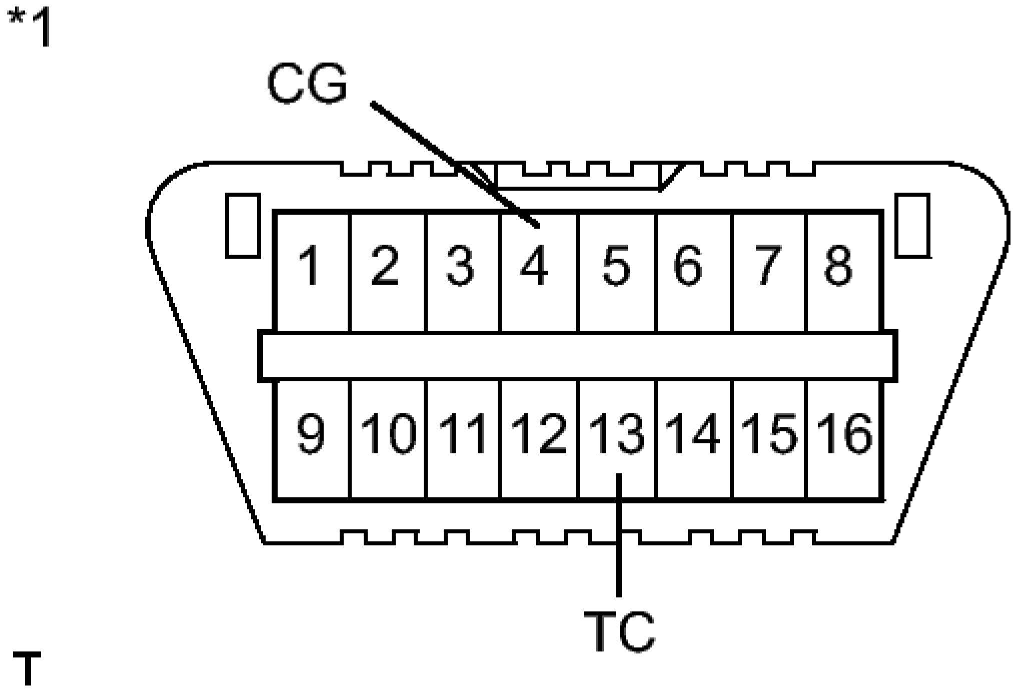

Fig. 19: Identifying DLC3 Connector Terminal
Courtesy of TOYOTA MOTOR SALES, U.S.A., INC.

TEXT IN ILLUSTRATION

*1	DLC3

- **SST: 09843-18040**

b. Depress and hold the brake pedal.

c. Start the engine.

NOTE: **To reduce load, make sure that all electrical systems, such as the air conditioning, lighting system, electric fan and audio system, are off.**

HINT:

The indicator lights on the combination meter blink to indicate the DTC output when terminals TC and CG are connected.

d. Slowly move the shift lever from P to D, then back to P.

HINT:

Slowly move the shift lever to circulate the fluid through each part of the automatic transaxle assembly.

e. While observing the D shift indicator on the combination meter, move the shift lever back and forth between N and D at an interval of less than 1.5 seconds for 6 seconds or more.

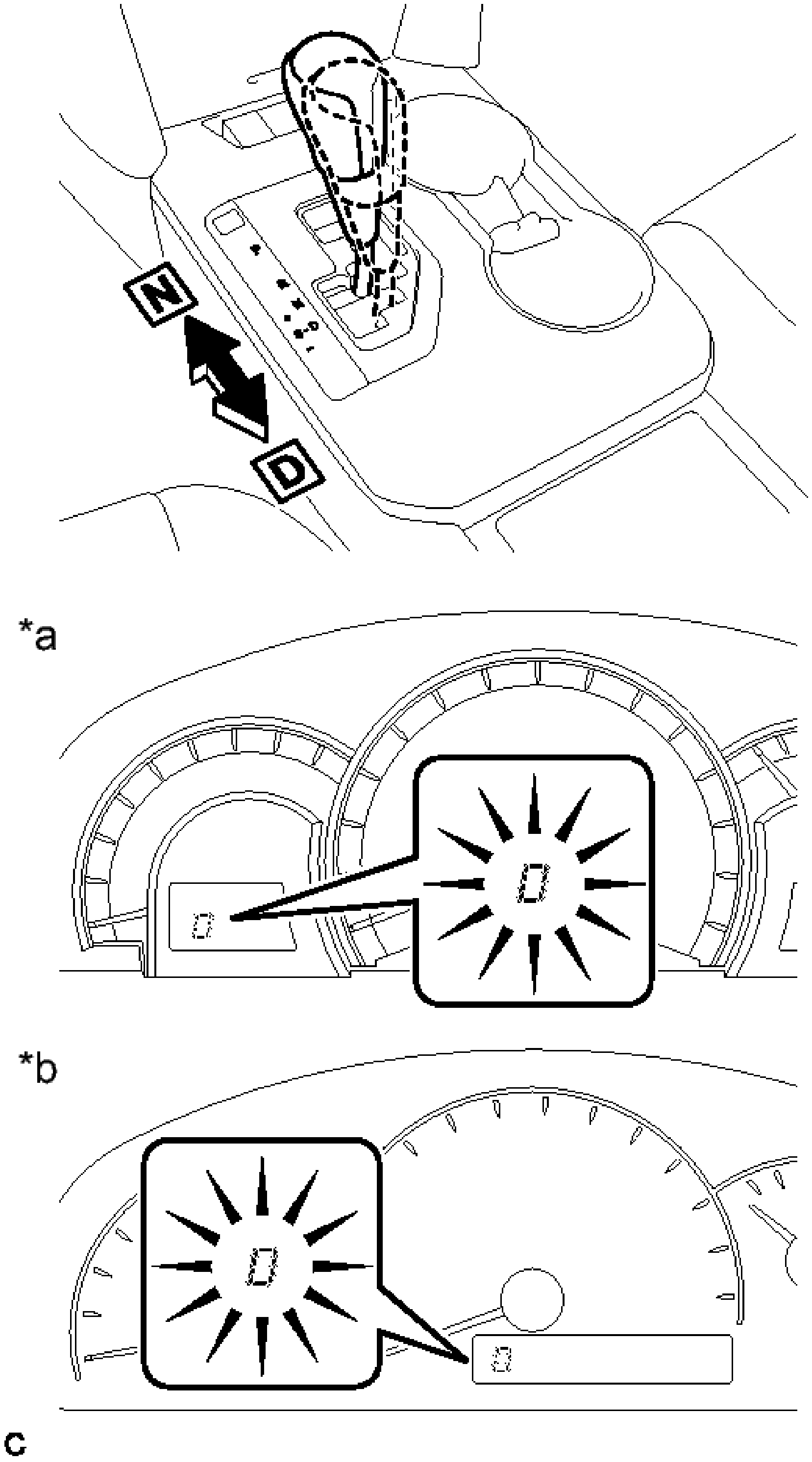

Fig. 20: Shifting Lever N And D
Courtesy of TOYOTA MOTOR SALES, U.S.A., INC.

TEXT IN ILLUSTRATION

*a	Optitron and Analog Type
*b	Analog Type

NOTE: **Do not pause for more than 1.5 seconds.**

HINT:

Performing this operation will cause the vehicle to enter fluid temperature detection mode.

f. Check that the D shift indicator comes on for 2 seconds.

HINT:

- When fluid temperature detection mode is activated, the D shift indicator on the combination meter comes on for 2 seconds.
- If the D shift indicator does not come on for 2 seconds, return to the first step and perform the procedure again.

g. Move the shift lever from N to P.
h. Release the brake pedal.
i. Remove SST from terminals 13 (TC) and 4 (CG).

NOTE: **Be sure that terminals TC and CG are not connected. If the terminals are connected, the fluid level cannot be precisely adjusted due to fluctuations in engine speed.**

HINT:

- Disconnecting terminals TC and CG activates engine idle speed control mode.
- In engine idle speed control mode, engine idle speed control starts when the fluid temperature becomes 35°C (95°F) or more and the engine speed is maintained at approximately 800 rpm.
- Even after terminals TC and CG are disconnected, fluid temperature detection mode is active until the ignition switch is turned off.

j. Allow the engine to idle until the D shift indicator comes on again.

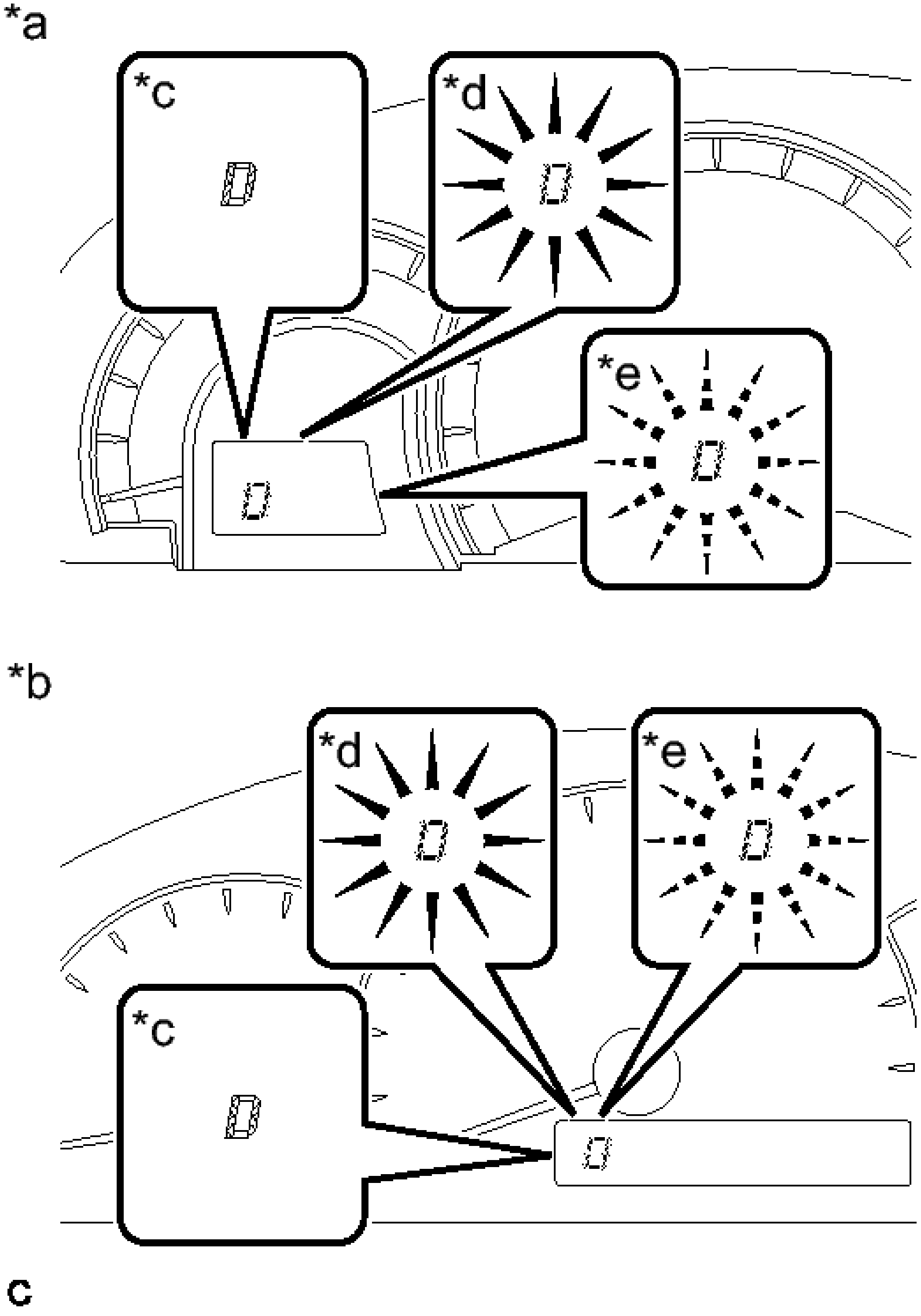

Fig. 21: Identifying Shift D Indicator Light
Courtesy of TOYOTA MOTOR SALES, U.S.A., INC.

Below Fluid Level	Fluid Level	Above Fluid Level

Adjustment Temperature	Adjustment Temperature	Adjustment Temperature
35°C or less (95°F or less)	35 to 45°C (95 to 113°F)	45°C or more (113°F or more)
Shift Indicator (D) Turned off	Shift Indicator (D) Turned on	Shift Indicator (D) Blinking

TEXT IN ILLUSTRATION

*a	Optitron and Analog Type
*b	Analog Type
*c	Turned Off
*d	Turned On
*e	Blinking

NOTE:

- **If the D shift indicator is on, immediately proceed to the "Adjust Fluid Level" procedure in step 6.**
- **If the D shift indicator blinks, stop the engine and wait until the fluid temperature drops to 35°C (95°F) or less (the indicator goes off). Then perform the "Adjust Fluid Temperature" procedure again from the beginning.**

HINT:

- In fluid temperature detection mode, the D shift indicator comes on, goes off, or blinks depending on the fluid temperature.
- Fluid filling procedure should be performed when the D shift indicator is on (the fluid temperature is within the fluid level adjustment temperature range).

6. ADJUST FLUID LEVEL

WARNING: **Use caution while the engine is idling and the radiator fan is operating.**

a. Lift the vehicle.

NOTE: **Set the vehicle on a lift so that the vehicle is kept level when it is lifted up.**

b. Using a 6 mm hexagon socket wrench, remove the overflow plug and gasket.

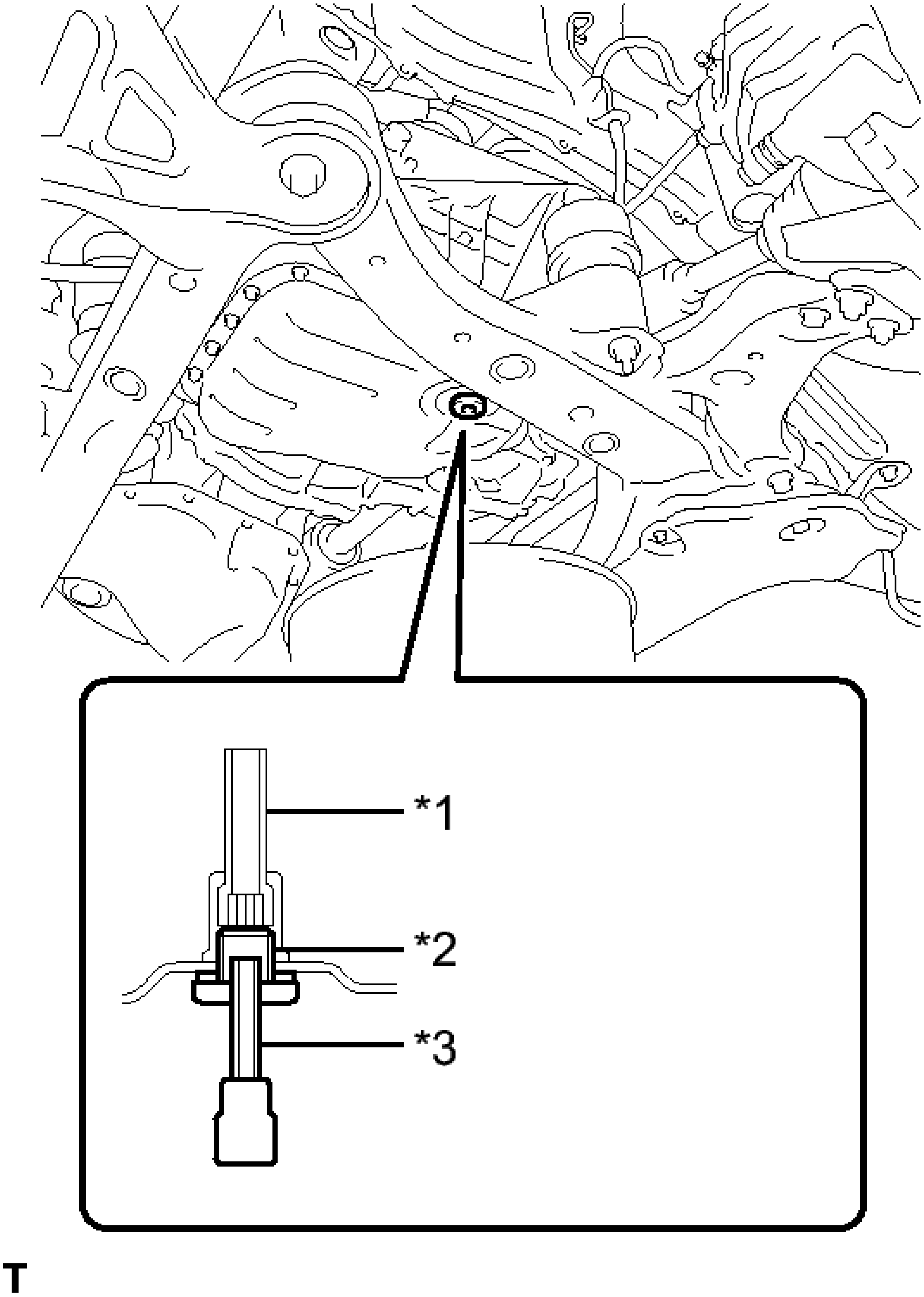

Fig. 22: Identifying No. 1 Transmission Oil Filler Tube, Overflow Plug And Hexagon Socket Wrench
Courtesy of TOYOTA MOTOR SALES, U.S.A., INC.

TEXT IN ILLUSTRATION

*1	No. 1 Transmission Oil Filler Tube
*2	Overflow Plug
*3	Hexagon Socket Wrench

WARNING: Be careful as the fluid coming out of the overflow plug hole is hot.

c. Check the amount of fluid that comes out of the overflow plug hole.

NOTE: If only a small amount of fluid (approximately 1 cc) comes out of the overflow plug hole, then only fluid remaining in the No. 1 transmission oil filler tube has come out. This condition is not considered as overflow, so it is necessary to add fluid.

d. If the fluid overflows

1. Remove the refill plug and gasket.

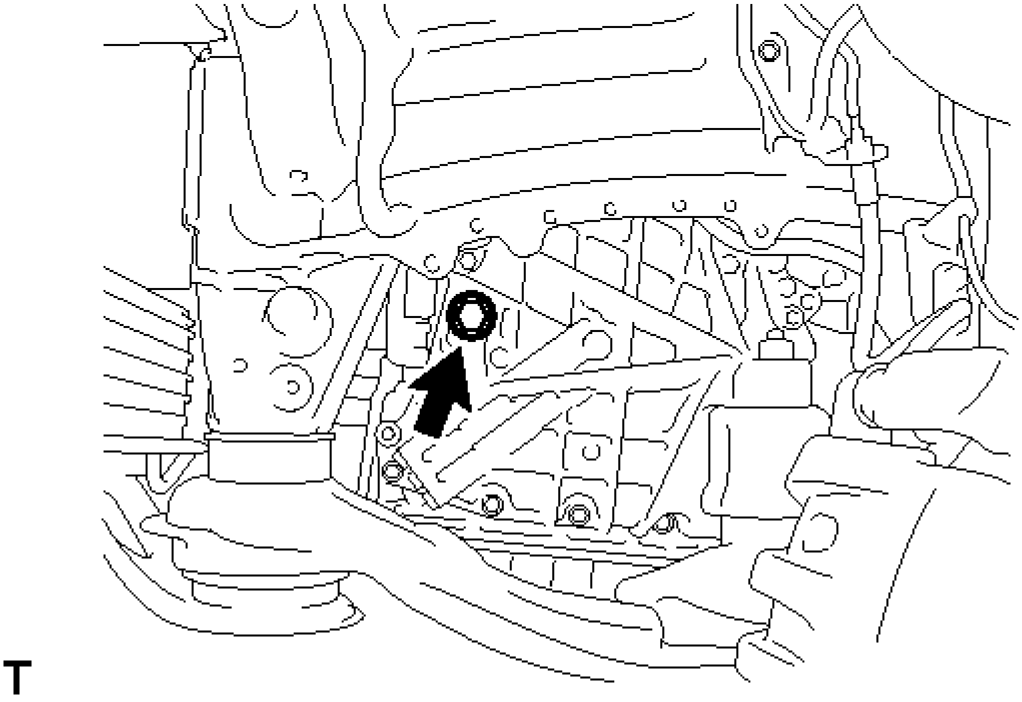

Fig. 23: Locating Refill Plug
Courtesy of TOYOTA MOTOR SALES, U.S.A., INC.

2. Wait until the fluid flow slows and only drips come out.

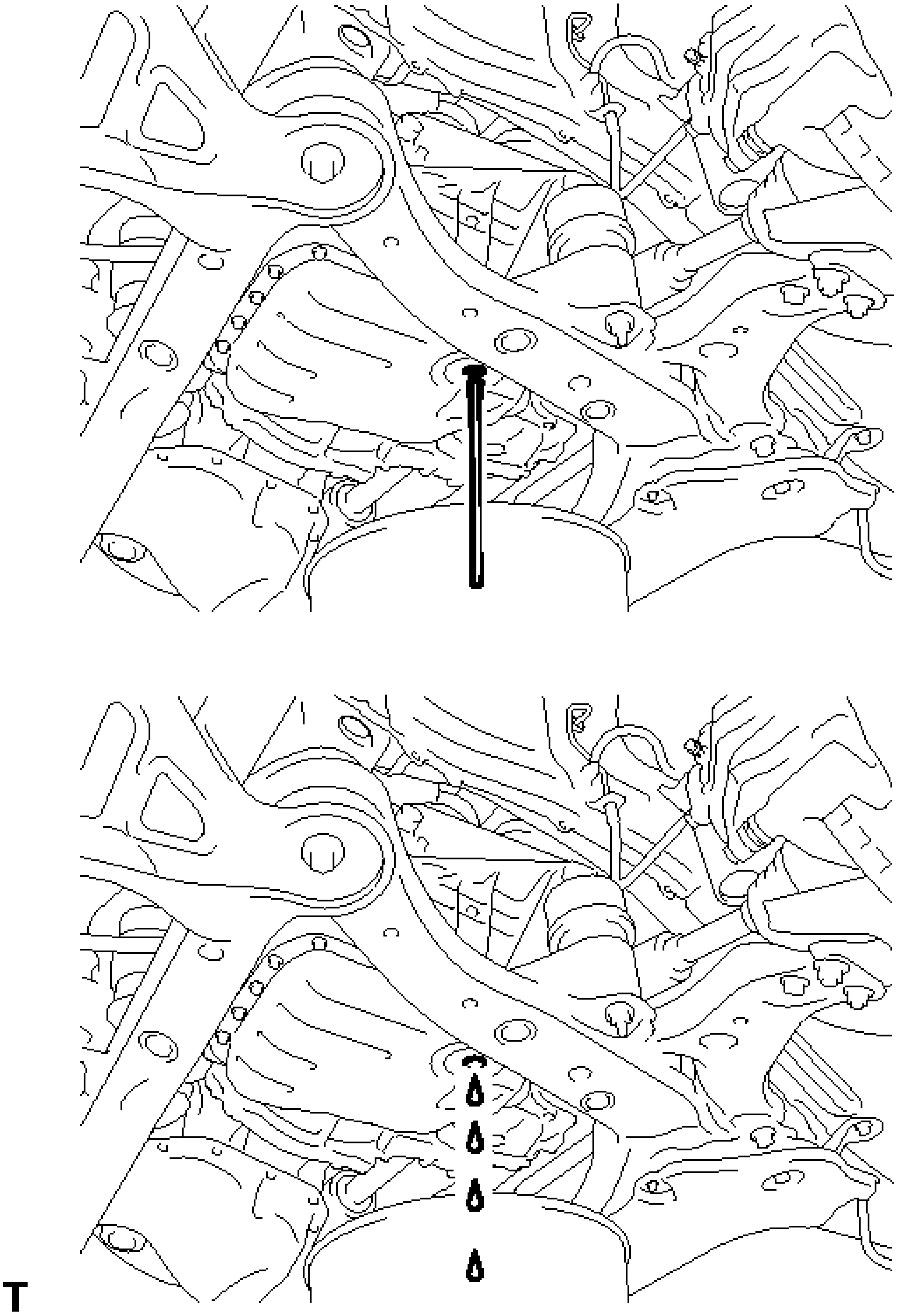

Fig. 24: Checking Fluid Flow
Courtesy of TOYOTA MOTOR SALES, U.S.A., INC.

e. If the fluid does not overflow

   1. Remove the refill plug and gasket.

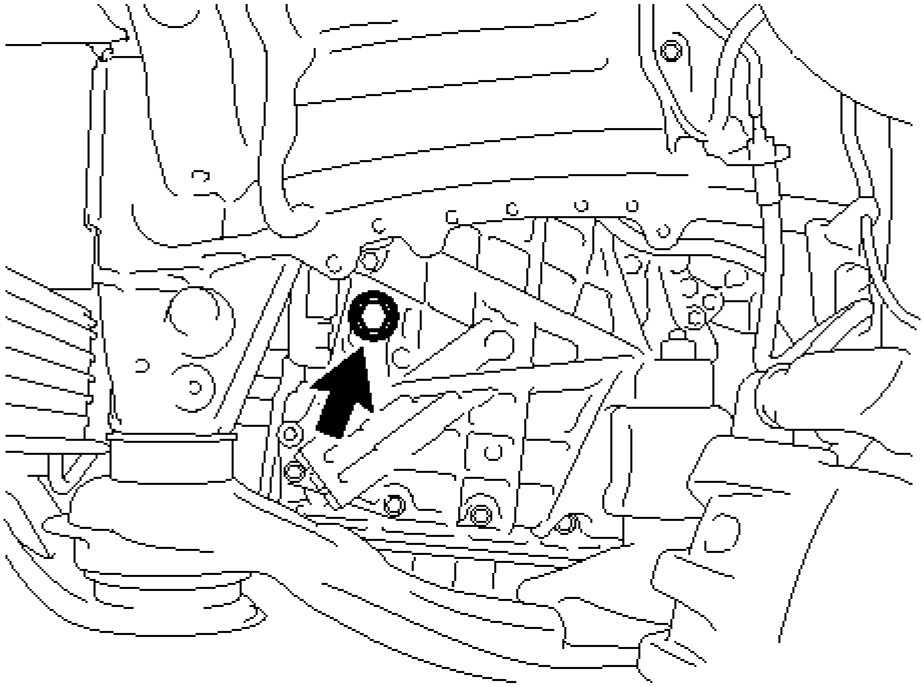

T

Fig. 25: Locating Refill Plug
Courtesy of TOYOTA MOTOR SALES, U.S.A., INC.

   2. Add transaxle fluid through the refill hole until fluid comes out of the overflow plug hole.

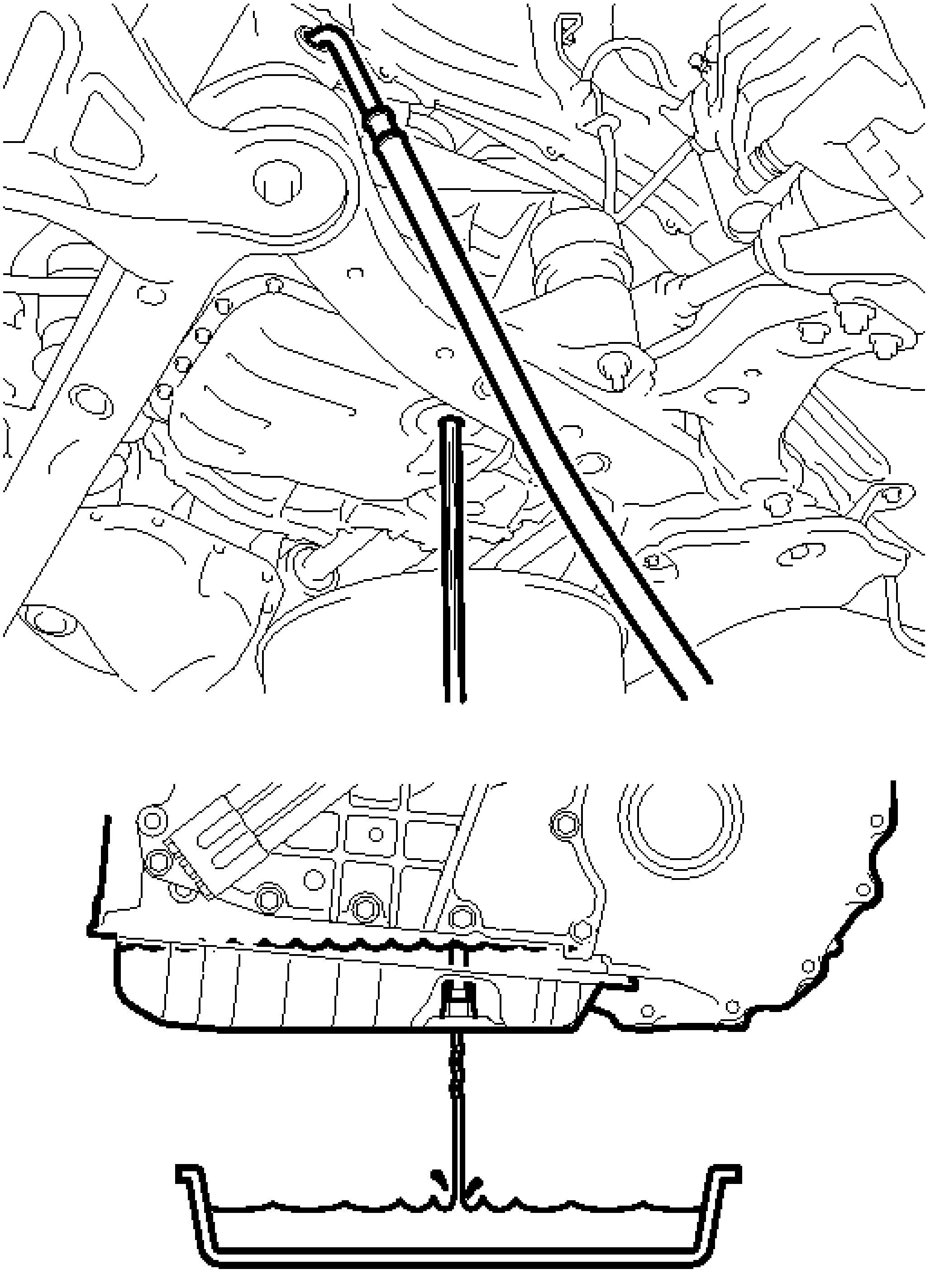

Fig. 26: Filling Transmission Oil
Courtesy of TOYOTA MOTOR SALES, U.S.A., INC.

3. Wait until the fluid flow slows and only drips come out.

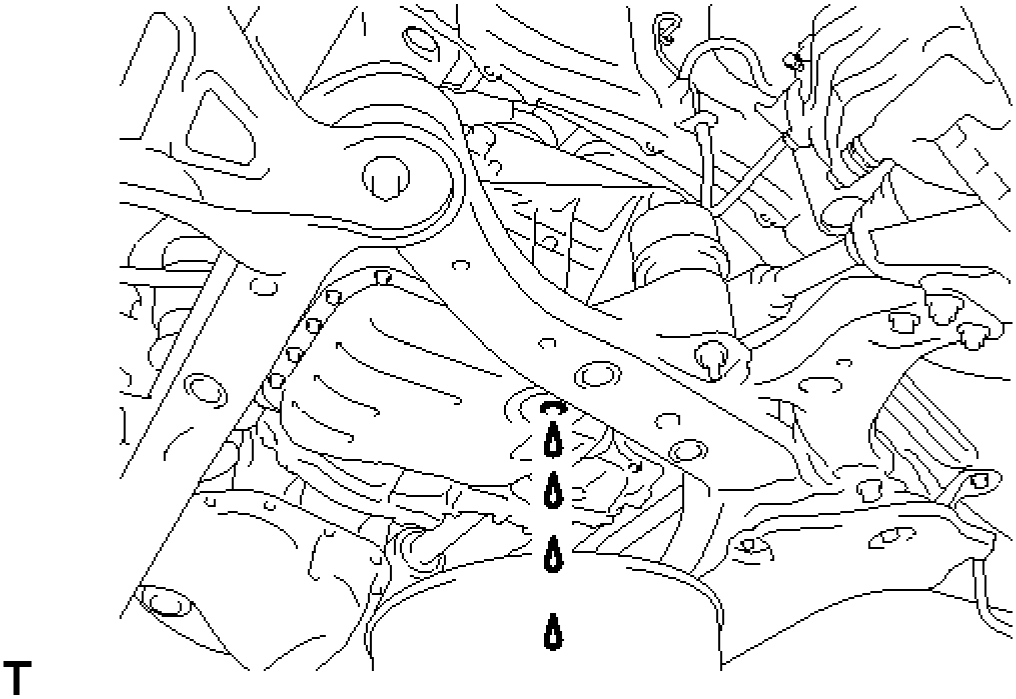

Fig. 27: Identifying Transmission Fluid Flow
Courtesy of TOYOTA MOTOR SALES, U.S.A., INC.

f. Install the overflow plug with a new gasket.

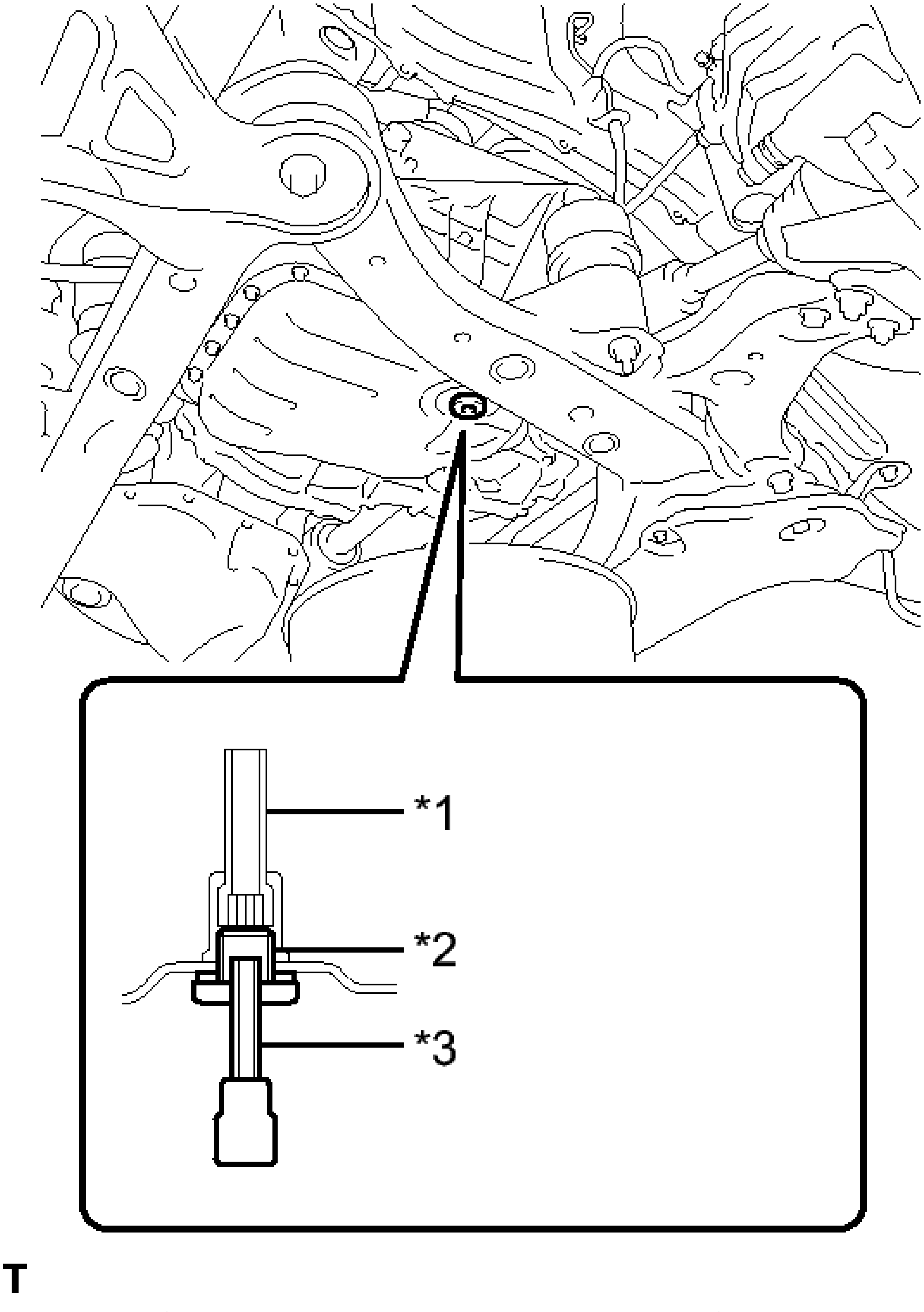

Fig. 28: Identifying No. 1 Transmission Oil Filler Tube, Overflow Plug And Hexagon Socket Wrench

Courtesy of TOYOTA MOTOR SALES, U.S.A., INC.

TEXT IN ILLUSTRATION

*1	No. 1 Transmission Oil Filler Tube
*2	Overflow Plug
*3	Hexagon Socket Wrench

Torque: 40 N*m (408 kgf*cm, 29 ft.*lbf)

g. Install the refill plug with a new gasket.

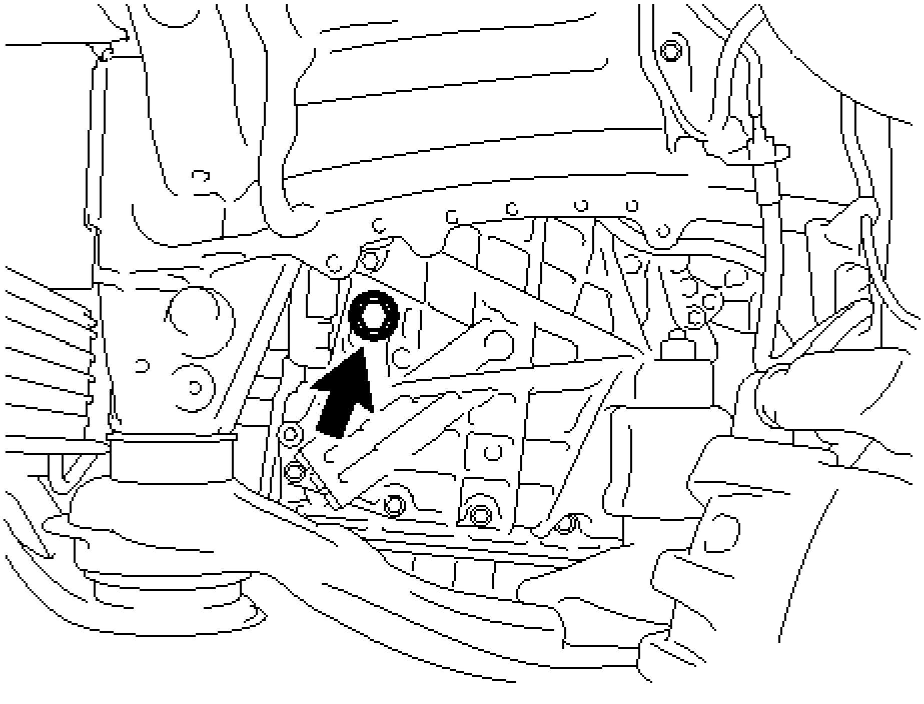

Fig. 29: Locating Refill Plug
Courtesy of TOYOTA MOTOR SALES, U.S.A., INC.

Torque: 49 N*m (500 kgf*cm, 36 ft.*lbf)

h. Lower the vehicle.
i. Turn the ignition switch off.

HINT:

Turning the ignition switch off exits fluid temperature detection mode.

j. Remove the Techstream from the DLC3 (when using the Techstream).

7. **REBUILD WORK**
    a. Lift the vehicle.
    b. Clean each part.
    c. Check for fluid leaks.
    d. Install the front wheel opening extension pad LH, engine under covers LH and front fender apron seal LH.
    e. Lower the vehicle.

SPEED SENSOR

COMPONENTS

ILLUSTRATION

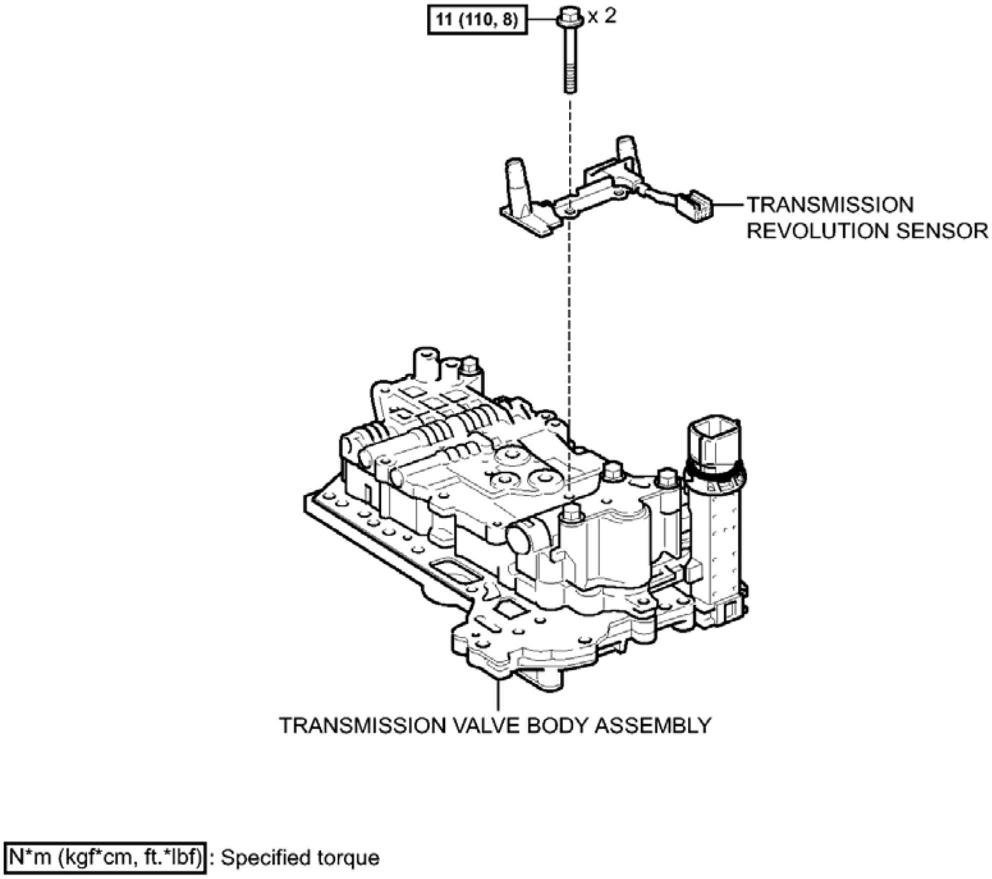
11 (110, 8)
x 2
TRANSMISSION REVOLUTION SENSOR
TRANSMISSION VALVE BODY ASSEMBLY
N*m (kgf*cm, ft.*lbf) : Specified torque

Fig. 30: Identifying Speed Sensor Replacement Components With Torque Specifications
Courtesy of TOYOTA MOTOR SALES, U.S.A., INC.

REMOVAL

REMOVAL

1. **REMOVE TRANSMISSION VALVE BODY ASSEMBLY**

   Refer to **REMOVAL**

2. **REMOVE TRANSMISSION REVOLUTION SENSOR**
   a. Disconnect the connector of the transmission revolution sensor.

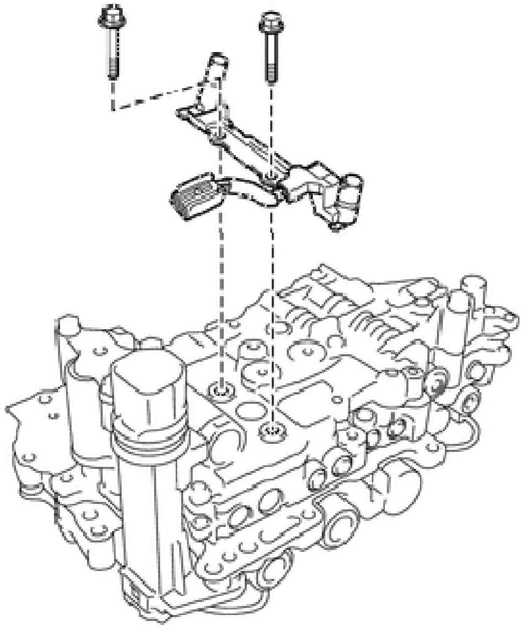

Fig. 31: Identifying Speed Sensor And Bolt
Courtesy of TOYOTA MOTOR SALES, U.S.A., INC.

   b. Remove the 2 bolts and transmission revolution sensor from the transmission valve body assembly.

INSTALLATION

INSTALLATION

1. **INSTALL TRANSMISSION REVOLUTION SENSOR**
   a. Temporarily install the transmission revolution sensor onto the transmission valve body assembly with the 2 bolts.

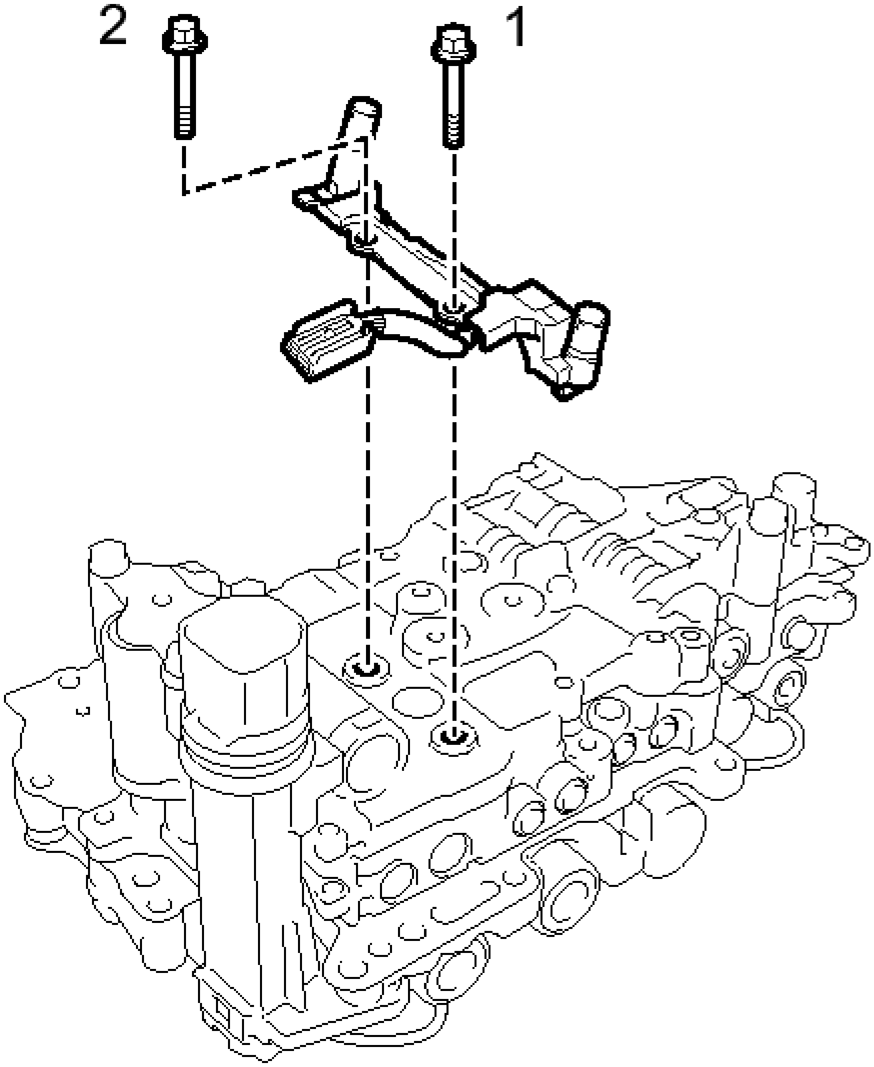

T

Fig. 32: Identifying Transmission Revolution Sensor, Bolts & Tightening Sequence
Courtesy of TOYOTA MOTOR SALES, U.S.A., INC.

NOTE: **Do not use a transmission revolution sensor that has been dropped.**

b. Tighten the 2 bolts in the order shown in the illustration.

Torque: 11 N*m (110 kgf*cm, 8 ft.*lbf)

c. Connect the connector of the transmission revolution sensor.

2. **INSTALL TRANSMISSION VALVE BODY ASSEMBLY**

Refer to **INSTALLATION**

TRANSMISSION WIRE

COMPONENTS

ILLUSTRATION

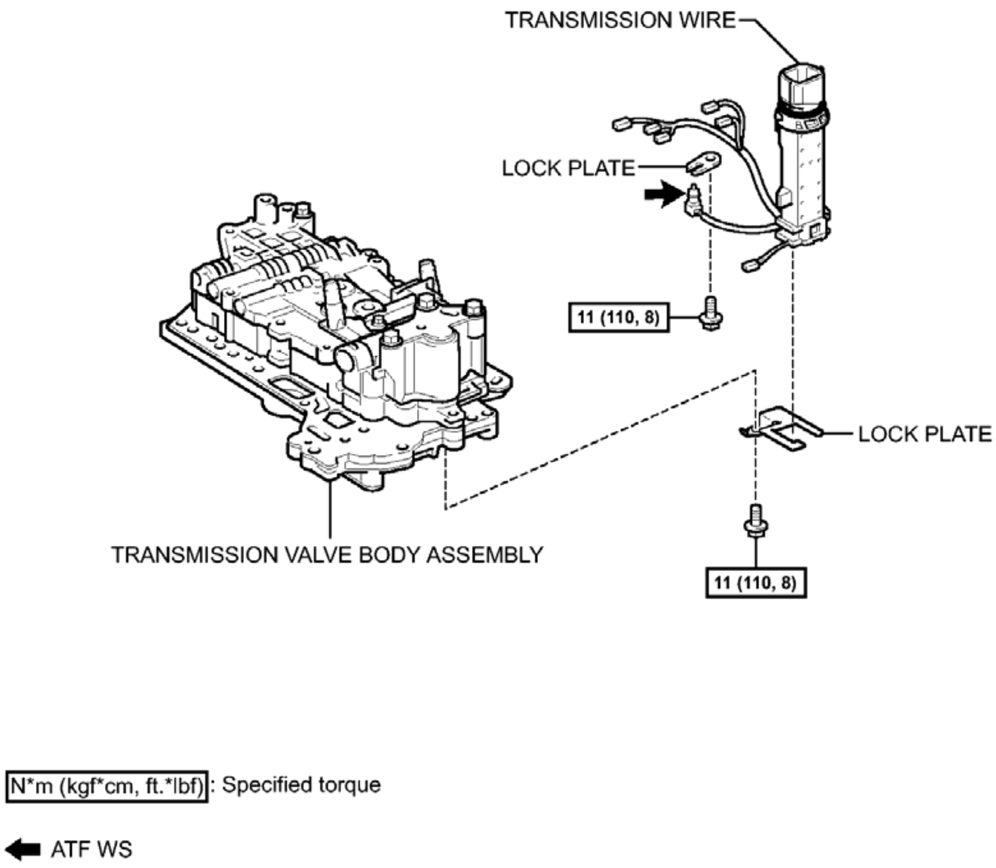
TRANSMISSION WIRE
LOCK PLATE
11 (110, 8)
LOCK PLATE
TRANSMISSION VALVE BODY ASSEMBLY
11 (110, 8)
N*m (kgf*cm, ft.*lbf): Specified torque
ATF WS

Fig. 33: Identifying Transmission Wire Replacement Components With Torque Specifications
Courtesy of TOYOTA MOTOR SALES, U.S.A., INC.

REMOVAL

REMOVAL

1. **REMOVE TRANSMISSION VALVE BODY ASSEMBLY**

   Refer to **REMOVAL**

2. **REMOVE TRANSMISSION WIRE**
   a. Disconnect the connector of the transmission revolution sensor.

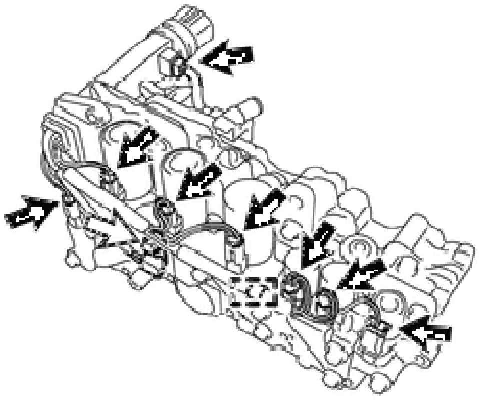

Fig. 34: Locating Transmission Wire Connectors, Clamp, Bolt & Lock Plate
Courtesy of TOYOTA MOTOR SALES, U.S.A., INC.

b. Disconnect the 7 connectors of the shift solenoid valve.
c. Disengage the clamp and disconnect the transmission wire.
d. Remove the bolt and lock plate and disconnect the temperature sensor from the transmission valve body assembly.
e. Remove the bolt and lock plate and remove the transmission wire from the transmission valve body assembly.

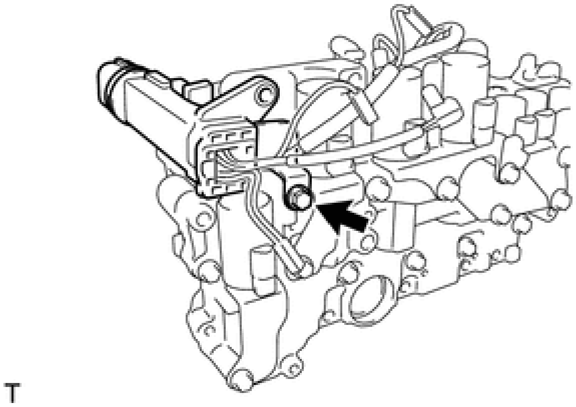

Fig. 35: Locating Bolt On Transmission Valve Body Assembly
Courtesy of TOYOTA MOTOR SALES, U.S.A., INC.

INSTALLATION

INSTALLATION

1. **INSTALL TRANSMISSION WIRE**
    a. Install the transmission wire onto the transmission valve body assembly with the bolt and lock plate.

    Torque: 11 N*m (110 kgf*cm, 8 ft.*lbf)

b. Coat the temperature sensor with ATF.
c. Connect the temperature sensor onto the transmission valve body assembly with the bolt and lock plate.

   Torque: 11 N*m (110 kgf*cm, 8 ft.*lbf)

d. Engage the clamp and connect the transmission wire.
e. Connect the 7 connectors of the shift solenoid valve.
f. Connect the connector of the transmission revolution sensor.

2. **INSTALL TRANSMISSION VALVE BODY ASSEMBLY**

   Refer to **INSTALLATION**

VALVE BODY ASSEMBLY

COMPONENTS

ILLUSTRATION

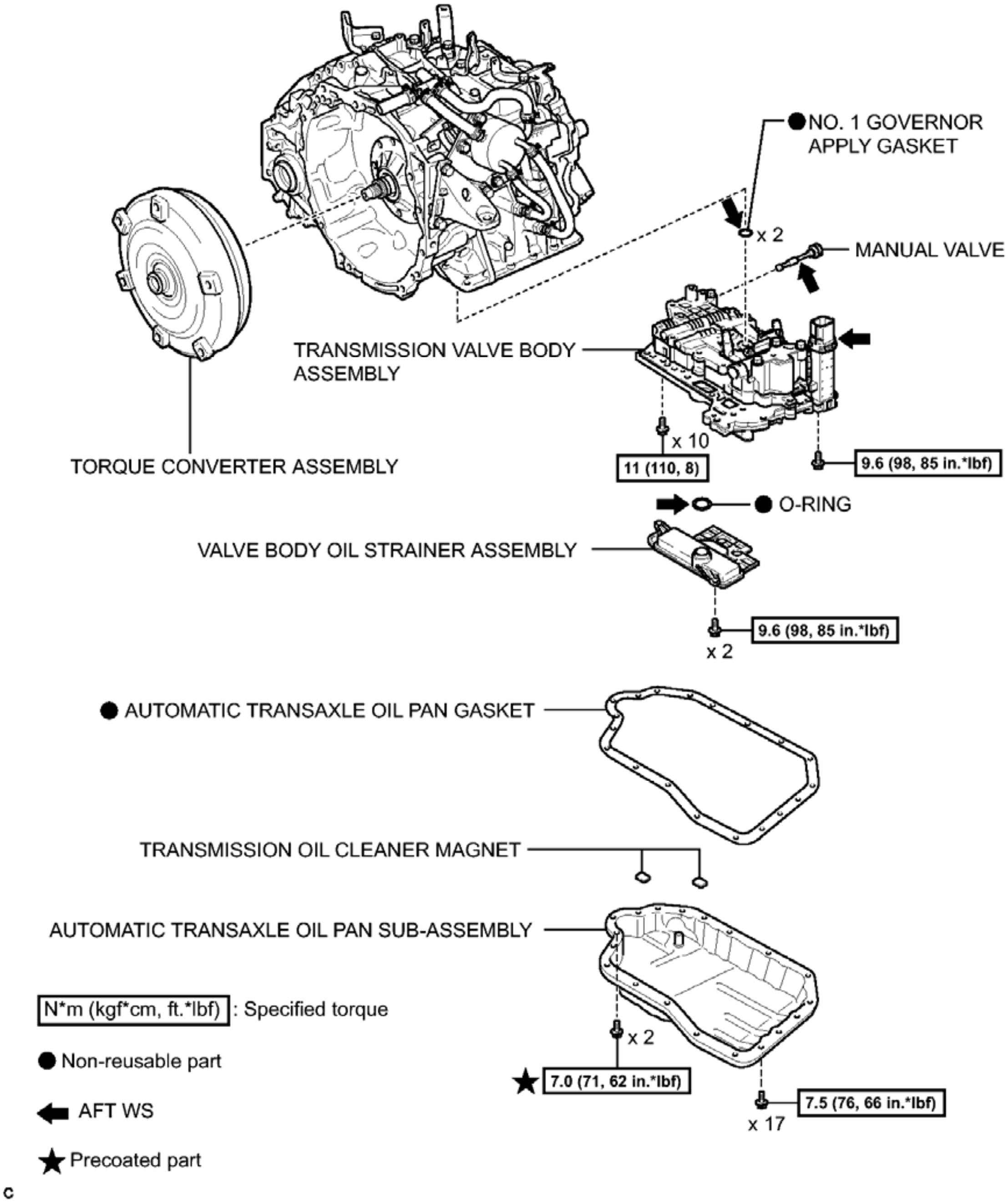
● NO. 1 GOVERNOR APPLY GASKET
x 2
MANUAL VALVE
TRANSMISSION VALVE BODY ASSEMBLY
TORQUE CONVERTER ASSEMBLY
x 10
11 (110, 8)
9.6 (98, 85 in.*lbf)
● O-RING
VALVE BODY OIL STRAINER ASSEMBLY
9.6 (98, 85 in.*lbf)
x 2
● AUTOMATIC TRANSAXLE OIL PAN GASKET
TRANSMISSION OIL CLEANER MAGNET
AUTOMATIC TRANSAXLE OIL PAN SUB-ASSEMBLY
N*m (kgf*cm, ft.*lbf) : Specified torque
x 2
● Non-reusable part
★ 7.0 (71, 62 in.*lbf)
7.5 (76, 66 in.*lbf)
x 17
AFT WS
★ Precoated part
c

Fig. 36: Identifying Valve Body Assembly Replacement Components With Torque Specifications (1 Of 3)
Courtesy of TOYOTA MOTOR SALES, U.S.A., INC.

ILLUSTRATION

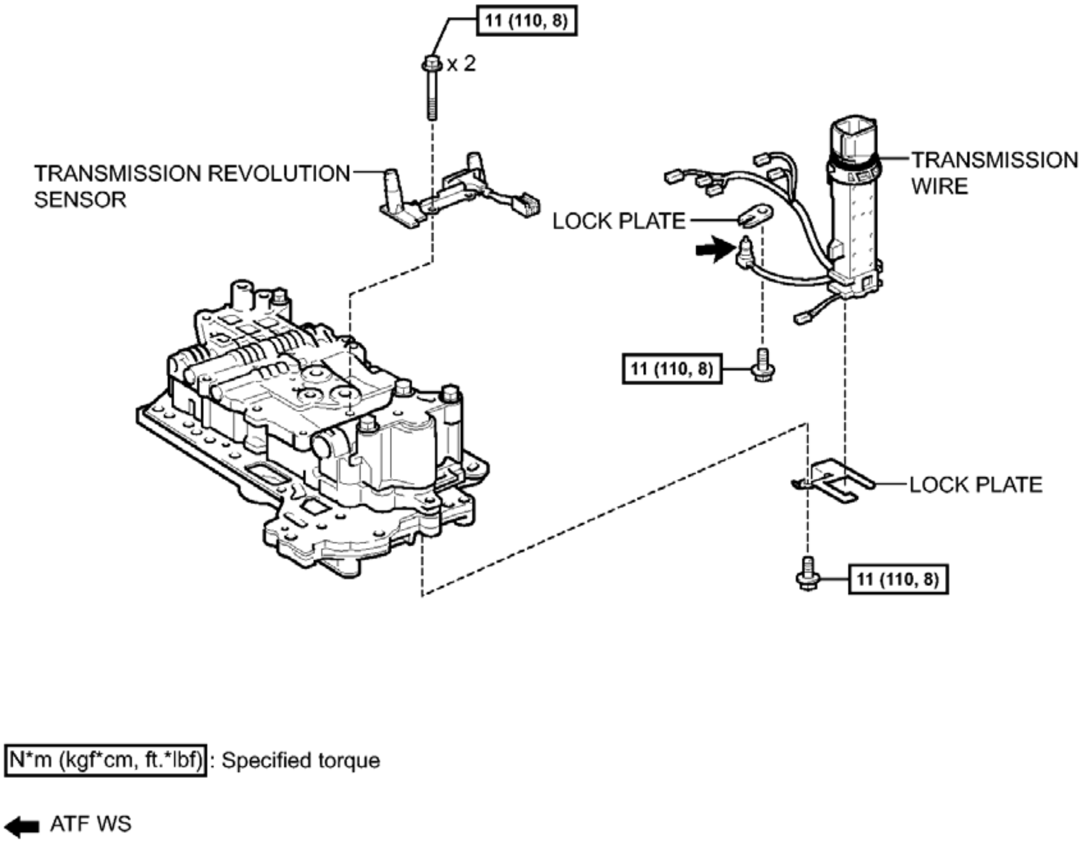
11 (110, 8)
x 2
TRANSMISSION REVOLUTION SENSOR
TRANSMISSION WIRE
LOCK PLATE
11 (110, 8)
LOCK PLATE
11 (110, 8)
N*m (kgf*cm, ft.*lbf) : Specified torque
ATF WS

Fig. 37: Identifying Valve Body Assembly Replacement Components With Torque Specifications (2 Of 3)
Courtesy of TOYOTA MOTOR SALES, U.S.A., INC.

ILLUSTRATION

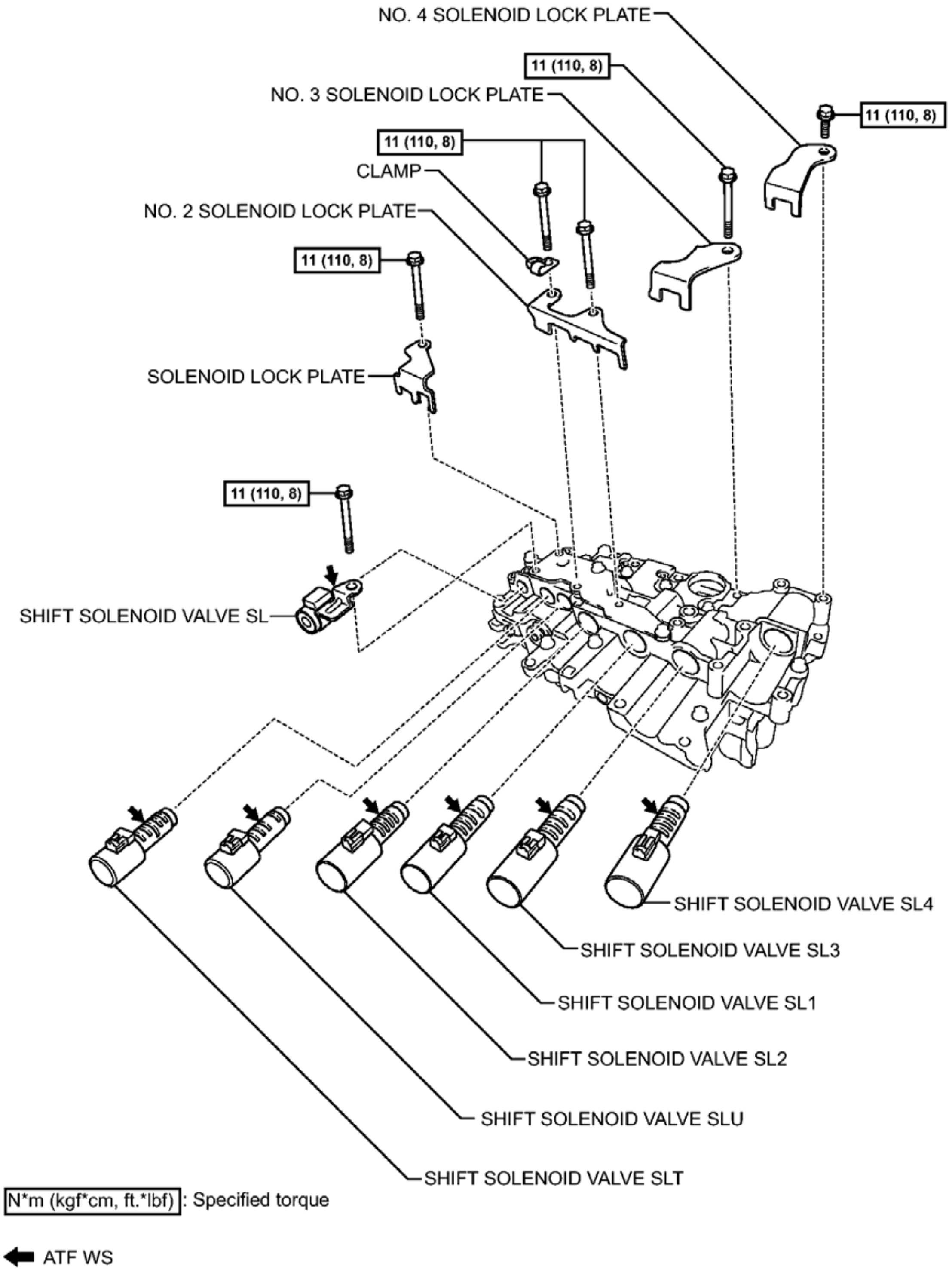
NO. 4 SOLENOID LOCK PLATE
11 (110, 8)
NO. 3 SOLENOID LOCK PLATE
11 (110, 8)
11 (110, 8)
CLAMP
NO. 2 SOLENOID LOCK PLATE
11 (110, 8)
SOLENOID LOCK PLATE
11 (110, 8)
SHIFT SOLENOID VALVE SL
SHIFT SOLENOID VALVE SL4
SHIFT SOLENOID VALVE SL3
SHIFT SOLENOID VALVE SL1
SHIFT SOLENOID VALVE SL2
SHIFT SOLENOID VALVE SLU
SHIFT SOLENOID VALVE SLT
N*m (kgf*cm, ft.*lbf) : Specified torque
ATF WS

Fig. 38: Identifying Valve Body Assembly Replacement Components With Torque Specifications (3 Of 3)
Courtesy of TOYOTA MOTOR SALES, U.S.A., INC.

REMOVAL

REMOVAL

1. **REMOVE AUTOMATIC TRANSAXLE ASSEMBLY**

   Refer to **REMOVAL**

2. **REMOVE TORQUE CONVERTER ASSEMBLY** See step 14
3. **REMOVE AUTOMATIC TRANSAXLE OIL PAN SUB-ASSEMBLY**
   a. Remove the 19 bolts and automatic transaxle oil pan sub-assembly from the transaxle case sub-assembly.

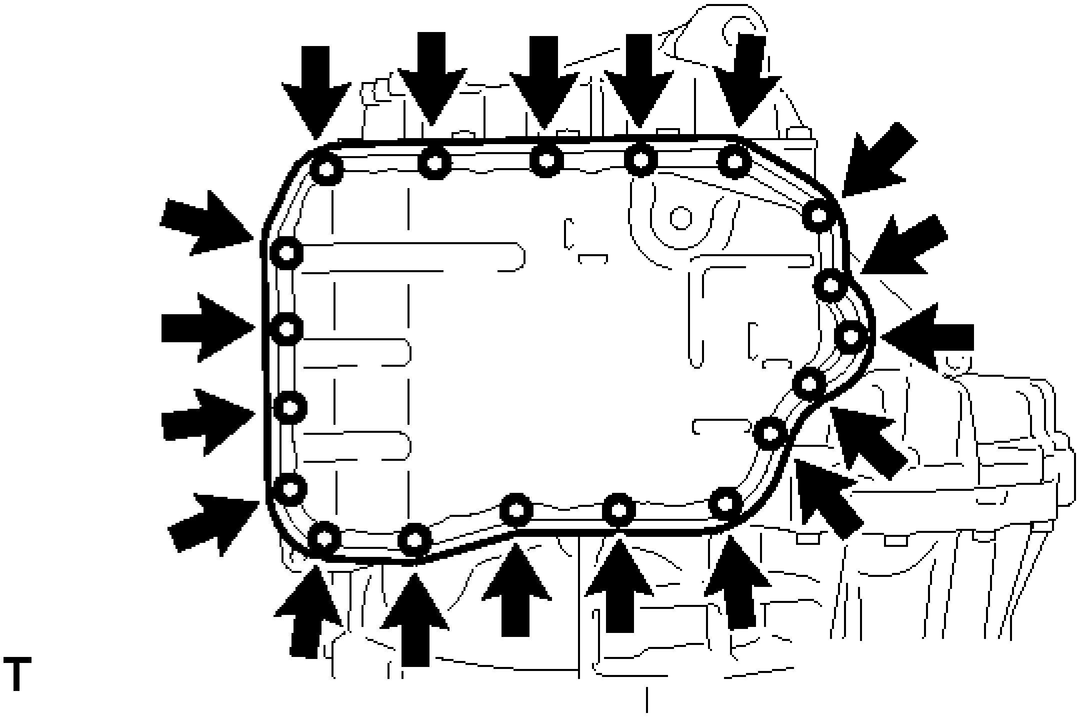

Fig. 39: Locating Automatic Transaxle Oil Pan Bolts
Courtesy of TOYOTA MOTOR SALES, U.S.A., INC.

NOTE: **Some fluid will remain in the automatic transaxle oil pan sub-assembly. Remove all the bolts, and carefully remove the automatic transaxle oil pan sub-assembly.**

4. **REMOVE AUTOMATIC TRANSAXLE OIL PAN GASKET**
   a. Remove the automatic transaxle oil pan gasket.
5. **REMOVE TRANSMISSION OIL CLEANER MAGNET**
   a. Remove the 2 transmission oil cleaner magnets from the automatic transaxle oil pan sub-assembly.

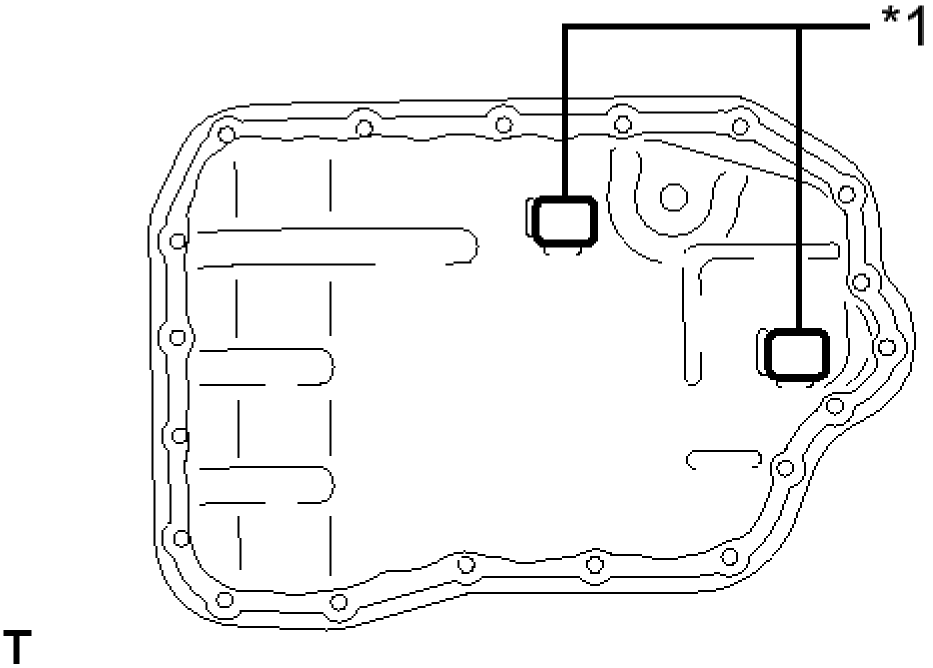

Fig. 40: Identifying Transmission Oil Cleaner Magnets
Courtesy of TOYOTA MOTOR SALES, U.S.A., INC.

TEXT IN ILLUSTRATION

*1	Transmission Oil Cleaner Magnet

b. Examine particles in the automatic transaxle oil pan sub-assembly.

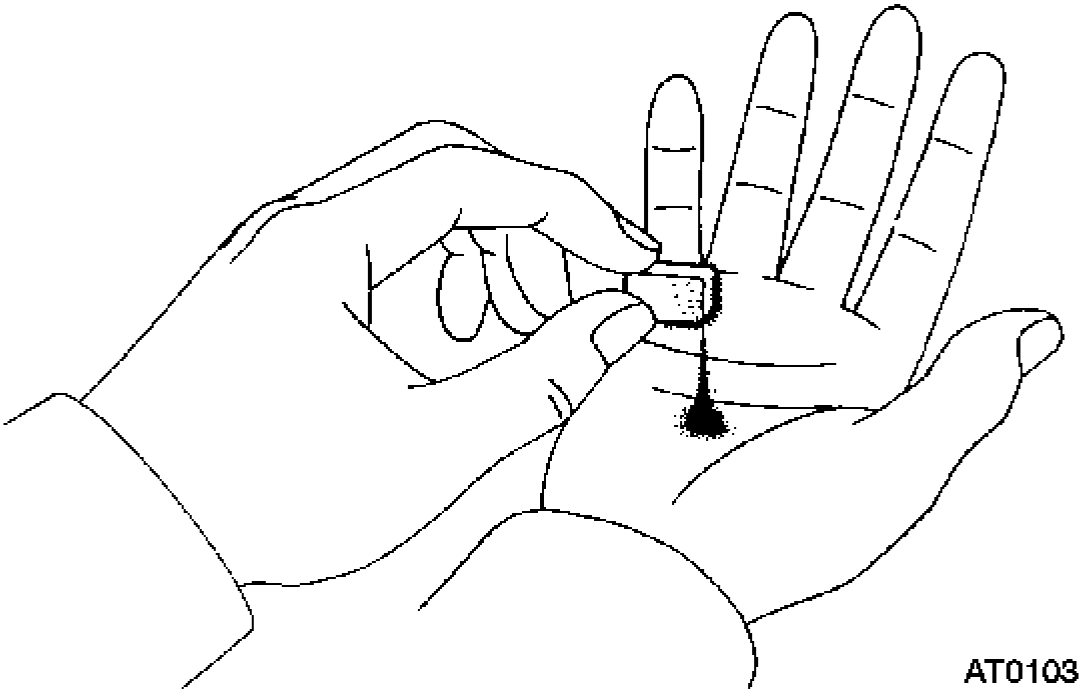

Fig. 41: Inspecting For Chips And Steel Particles In Pan
Courtesy of TOYOTA MOTOR SALES, U.S.A., INC.

1. Collect any steel chips with the removed magnets. Look carefully at the chips and particles in the automatic transaxle oil pan sub-assembly and on the transmission oil cleaner magnets to see the type of wear which might be found in the automatic transaxle assembly.

RESULT

Steel (magnetic)	Brass (non-magnetic)
Bearing, gear and plate wear	Bushing wear

6. **REMOVE VALVE BODY OIL STRAINER ASSEMBLY**
    a. Remove the 2 bolts and valve body oil strainer assembly from the transmission valve body assembly.

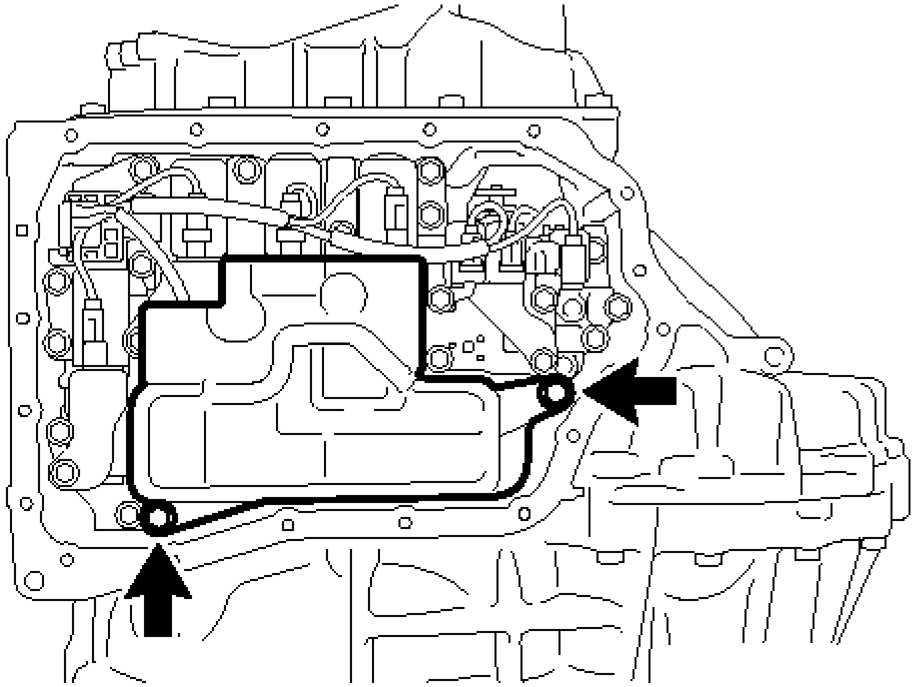

T

Fig. 42: Locating Oil Strainer Bolts
Courtesy of TOYOTA MOTOR SALES, U.S.A., INC.

b. Remove the O-ring from the valve body oil strainer assembly.

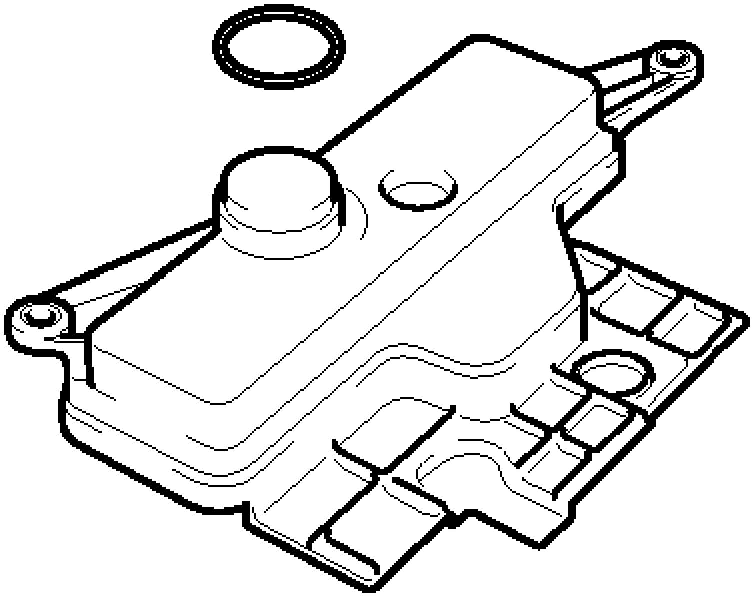

T

Fig. 43: Locating Valve Body Oil Strainer & O-Ring
Courtesy of TOYOTA MOTOR SALES, U.S.A., INC.

7. **REMOVE TRANSMISSION VALVE BODY ASSEMBLY**
   a. Remove the 11 bolts and transmission valve body assembly from the transaxle case sub-assembly.

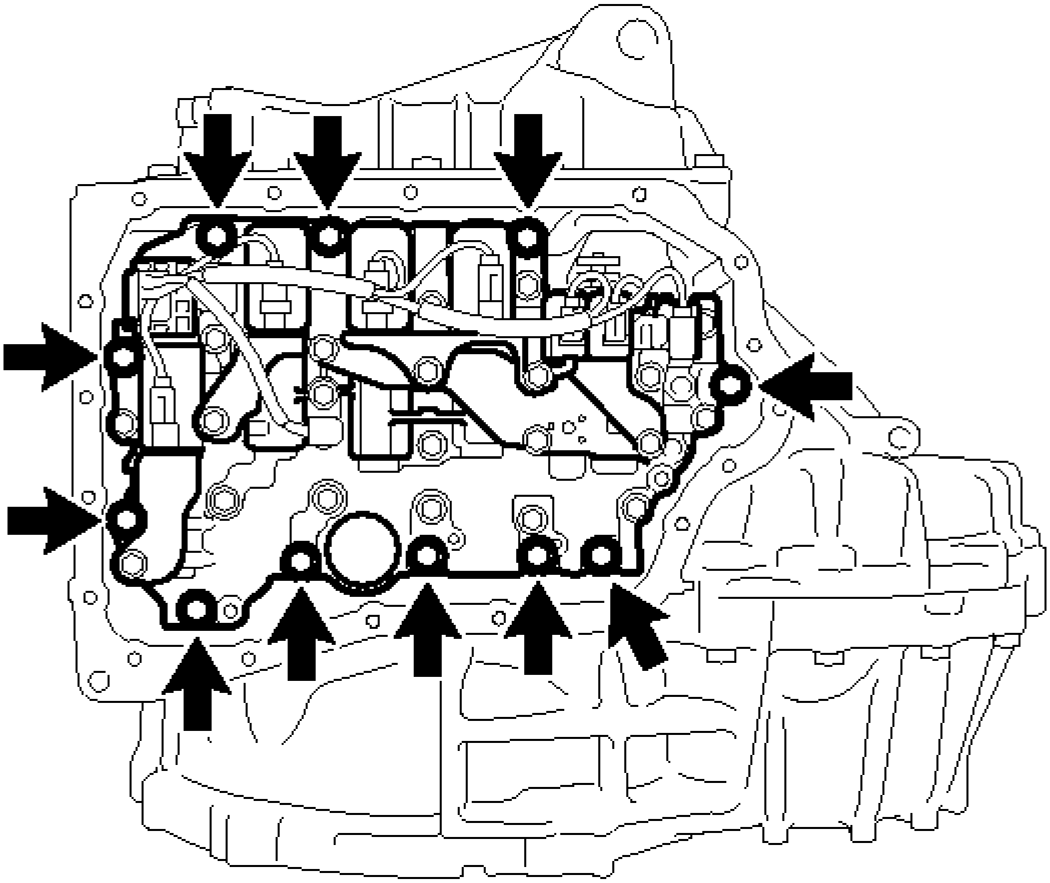

T

Fig. 44: Locating Transaxle Bolt
Courtesy of TOYOTA MOTOR SALES, U.S.A., INC.

NOTE: **When removing the transmission valve body assembly, be careful not to allow the transmission revolution sensor and the transaxle case sub-assembly to interfere with each other.**

8. **REMOVE NO. 1 GOVERNOR APPLY GASKET**
   a. Remove the 2 No. 1 governor apply gaskets from the transaxle case sub-assembly.

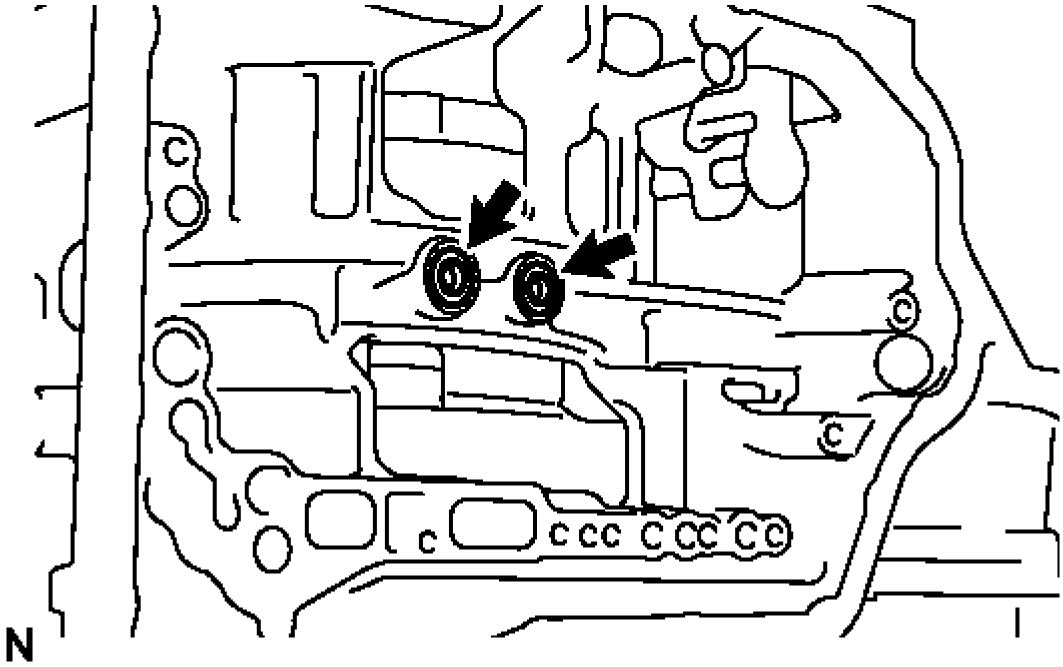

Fig. 45: Locating Transaxle Case Gasket
Courtesy of TOYOTA MOTOR SALES, U.S.A., INC.

9. **REMOVE MANUAL VALVE**
    a. Remove the manual valve from the transmission valve body assembly.

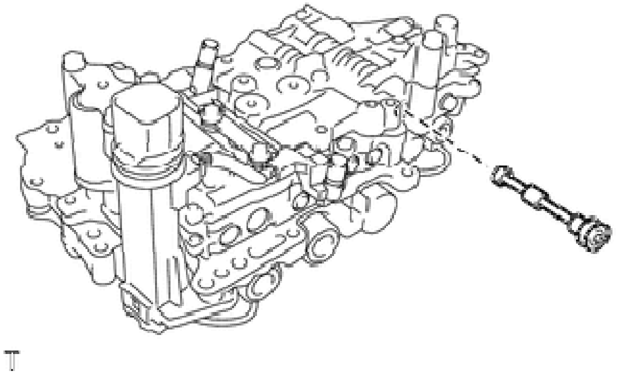

Fig. 46: Identifying Manual Valve
Courtesy of TOYOTA MOTOR SALES, U.S.A., INC.

DISASSEMBLY

DISASSEMBLY

1. **REMOVE TRANSMISSION REVOLUTION SENSOR** See step 2
2. **REMOVE TRANSMISSION WIRE** See step 2

3. **REMOVE SHIFT SOLENOID VALVE SL**
   a. Remove the bolt and shift solenoid valve SL from the transmission valve body assembly.

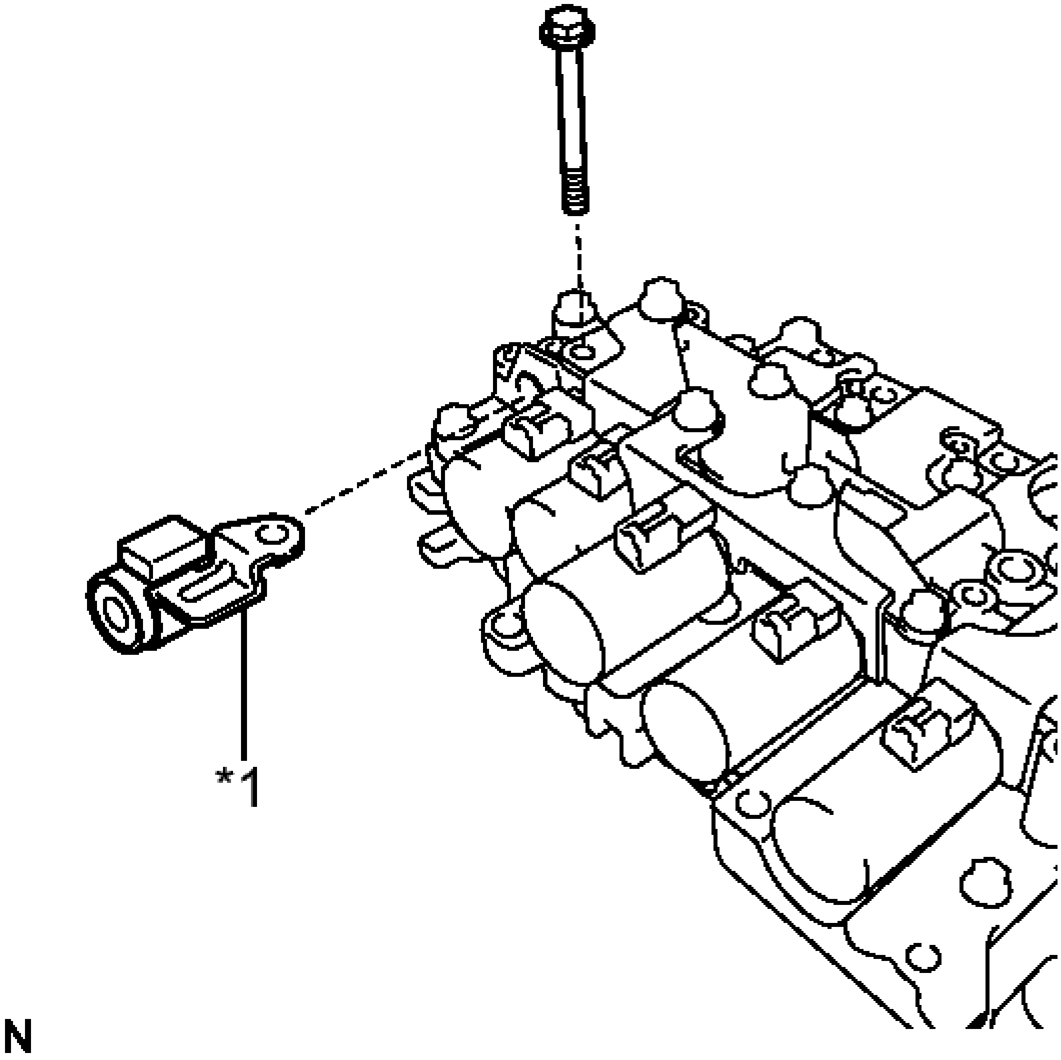

Fig. 47: Shift Solenoid Valve SL
Courtesy of TOYOTA MOTOR SALES, U.S.A., INC.

TEXT IN ILLUSTRATION

*1	Solenoid Valve SL

4. **REMOVE SHIFT SOLENOID VALVE SL2**
   a. Remove the 2 bolts, clamp, No. 2 solenoid lock plate and shift solenoid valve SL2 from the transmission valve body assembly.

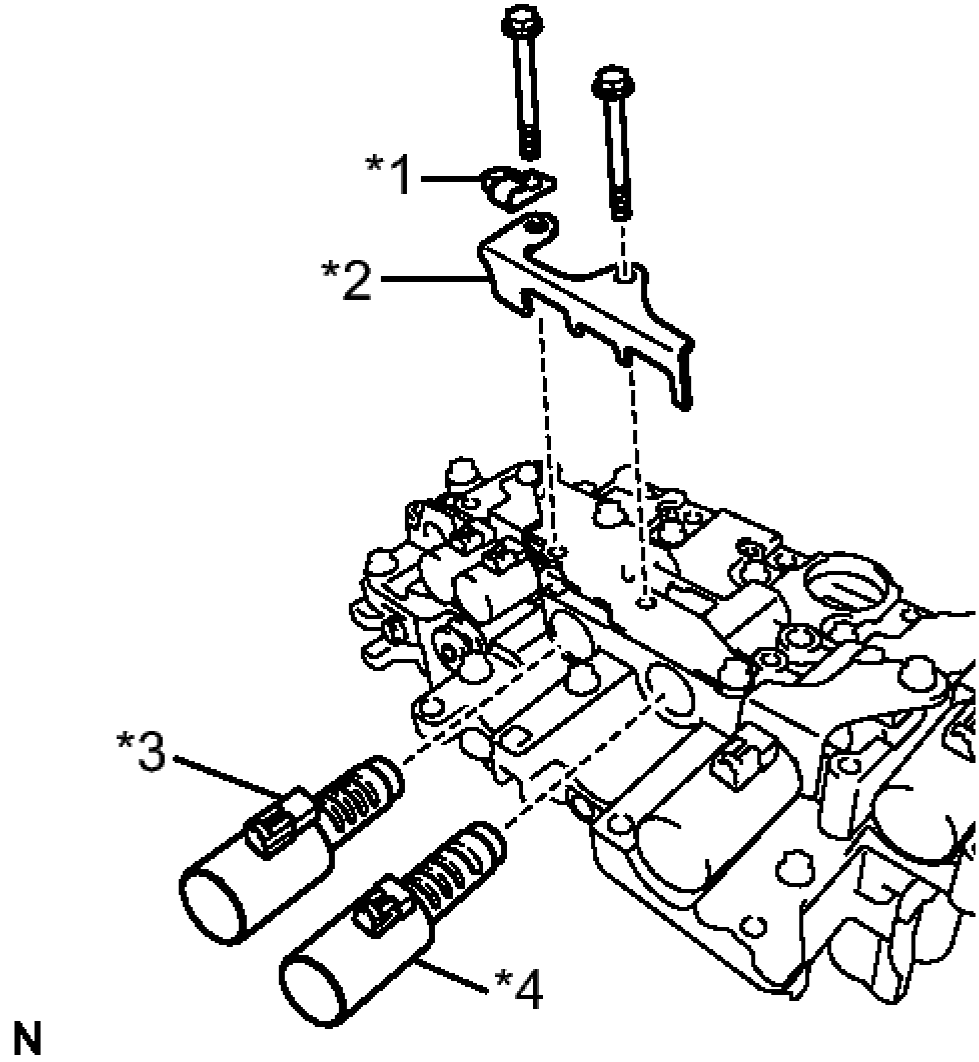

Fig. 48: Shift Solenoid Valves SL1 And Lock Plate
Courtesy of TOYOTA MOTOR SALES, U.S.A., INC.

TEXT IN ILLUSTRATION

*1	Clamp
*2	No. 2 Solenoid Lock Plate
*3	Solenoid Valve SL2
*4	Solenoid Valve SL1

5. **REMOVE SHIFT SOLENOID VALVE SL1**
    a. Remove the shift solenoid valve SL1 from the transmission valve body assembly.
6. **REMOVE SHIFT SOLENOID VALVE SLT**
    a. Remove the bolt, lock plate and shift solenoid valve SLT from the transmission valve body assembly.

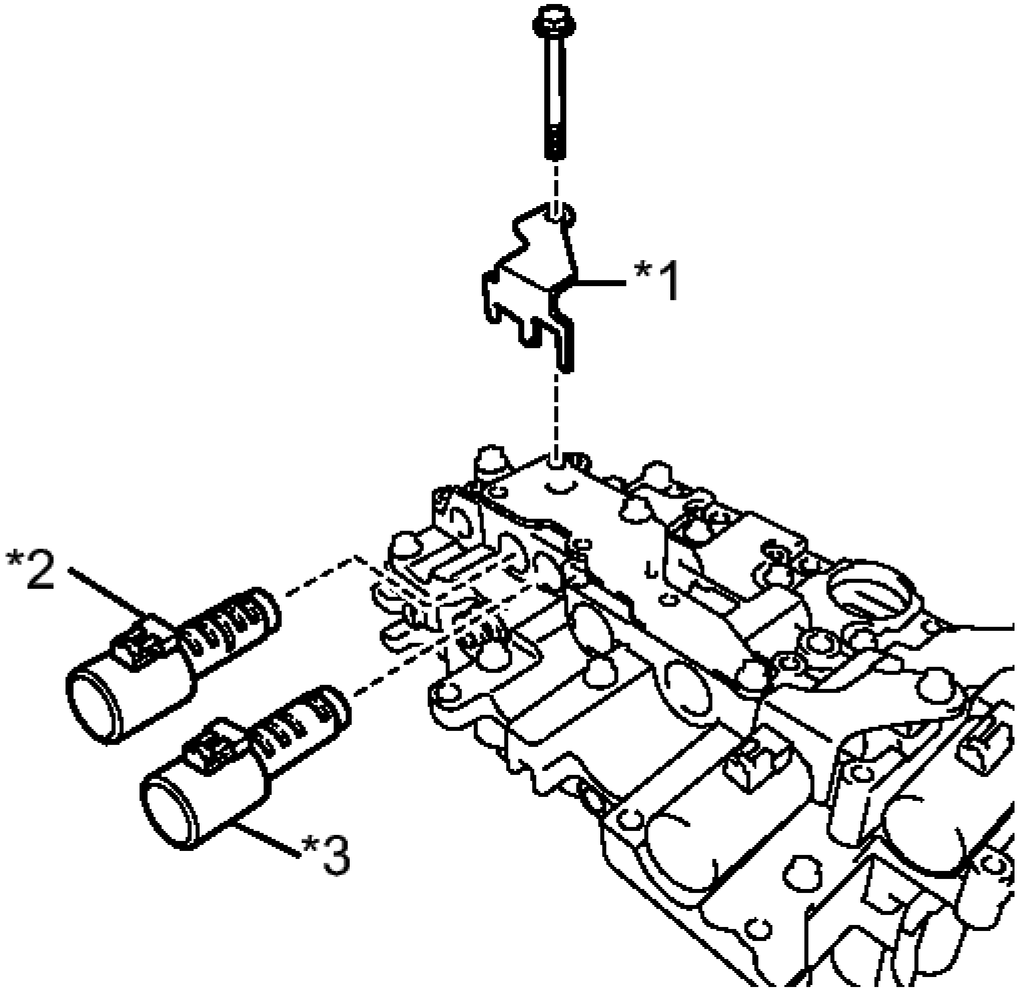

Fig. 49: Shift Solenoid Valves SLU And Lock Plate
Courtesy of TOYOTA MOTOR SALES, U.S.A., INC.

TEXT IN ILLUSTRATION

*1	Lock Plate
*2	Solenoid Valve SLT

*3	Solenoid Valve SLU

7. **REMOVE SHIFT SOLENOID VALVE SLU**
   1. Remove the shift solenoid valve SLU from the transmission valve body assembly.
8. **REMOVE SHIFT SOLENOID VALVE SL3**
   1. Remove the bolt, No. 3 solenoid lock plate and shift solenoid valve SL3 from the transmission valve body assembly.

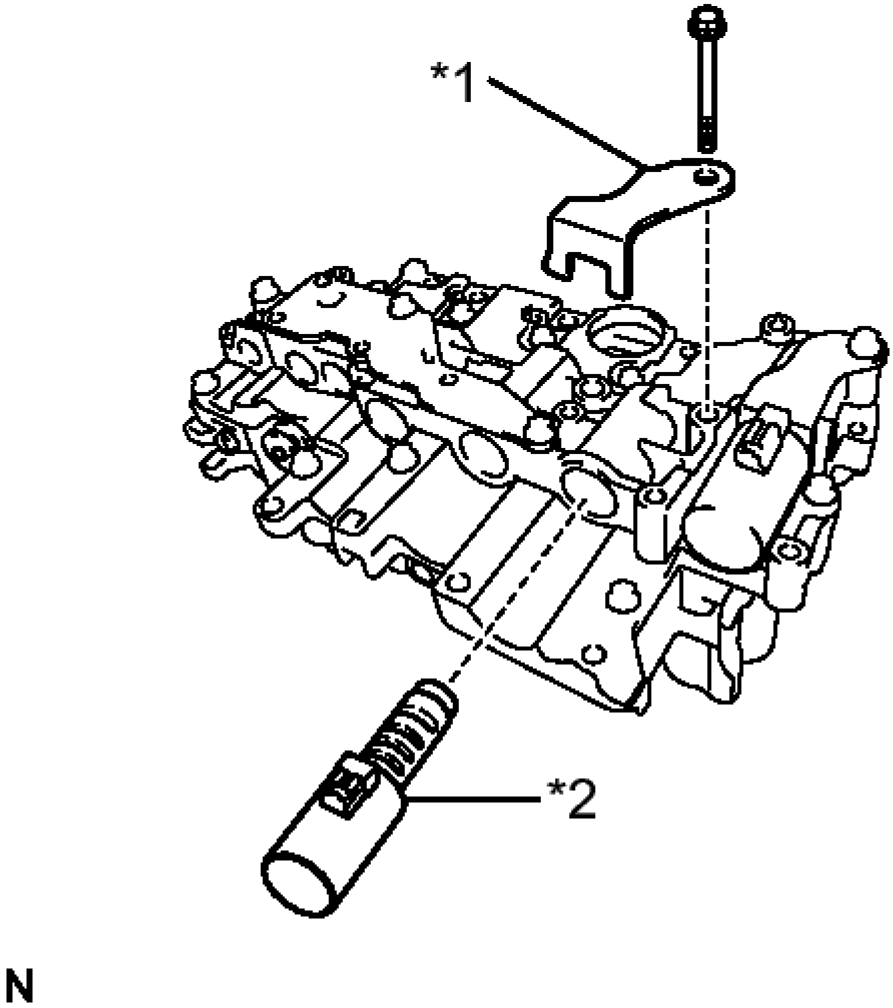

Fig. 50: Shift Solenoid Valve SL3 And Lock Plate
Courtesy of TOYOTA MOTOR SALES, U.S.A., INC.

TEXT IN ILLUSTRATION

	No. 3

*1	Solenoid Lock Plate
*2	Solenoid Valve SL3

9. **REMOVE SHIFT SOLENOID VALVE SL4**
    1. Remove the bolt, No. 4 solenoid lock plate and shift solenoid valve SL4 from the transmission valve body assembly.

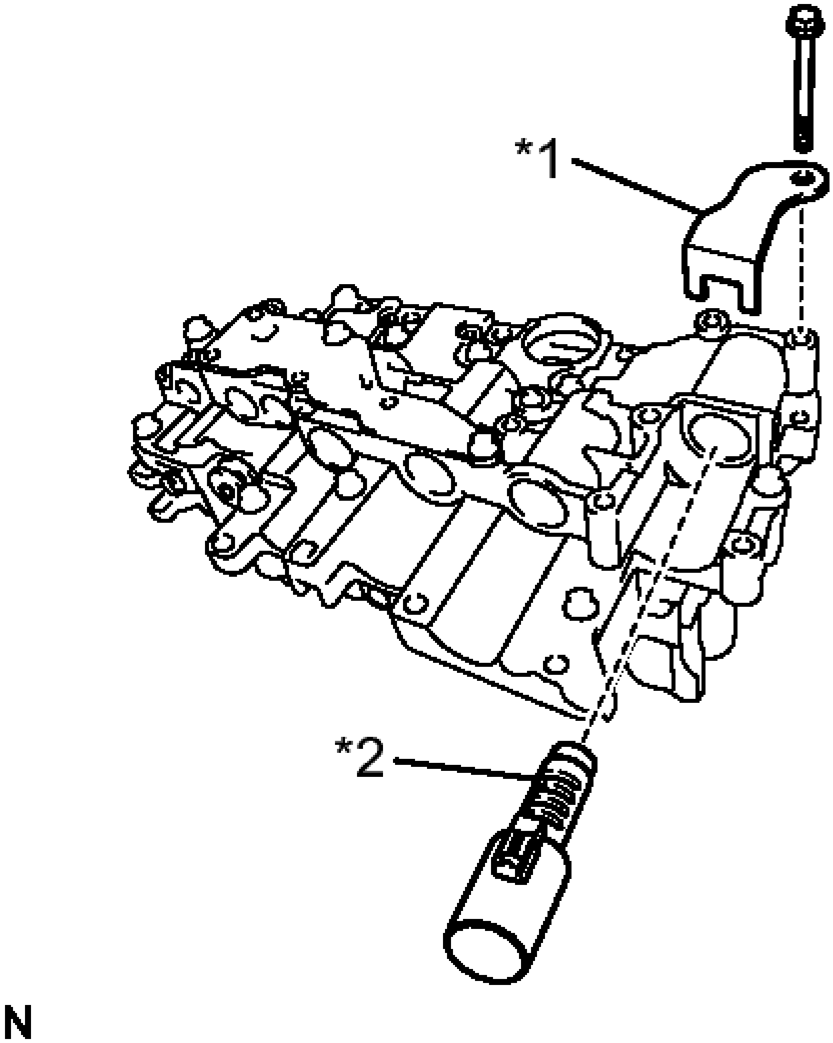

Fig. 51: Shift Solenoid Valve SL4 And Lock Plate
Courtesy of TOYOTA MOTOR SALES, U.S.A., INC.

TEXT IN ILLUSTRATION

*1	No. 4 Solenoid Lock Plate
*2	Solenoid Valve SL4

INSPECTION

INSPECTION

1. **INSPECT SHIFT SOLENOID VALVE SL**
    a. Measure the resistance according to the value(s) in the table below.

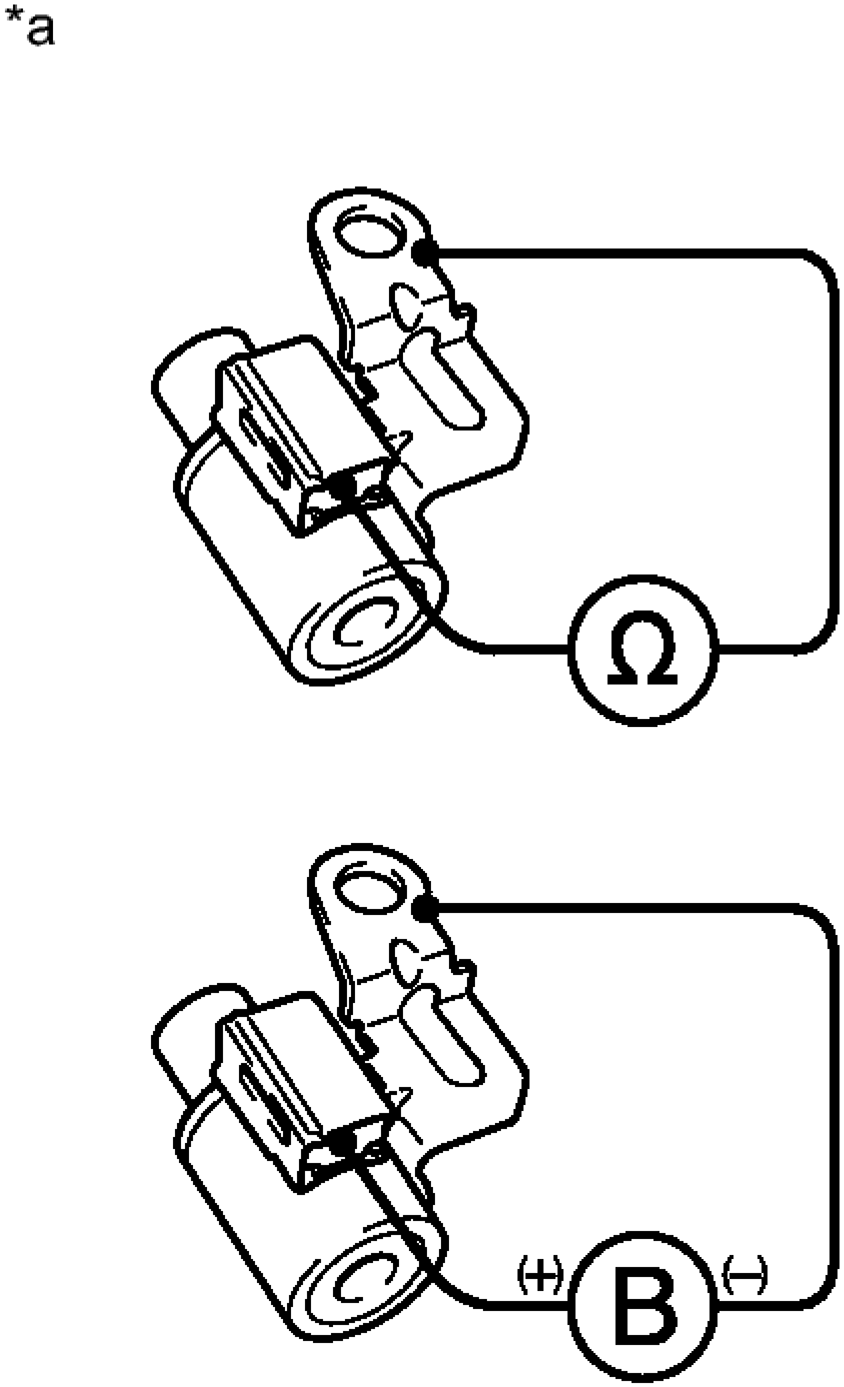

Fig. 52: Inspecting Shift Solenoid Valve SL
Courtesy of TOYOTA MOTOR SALES, U.S.A., INC.

TEXT IN ILLUSTRATION

	Component

*a	without harness connected (Shift Solenoid Valve SL)

Standard Resistance

Tester Connection	Condition	Specified Condition
Solenoid Connector - Solenoid Body	20°C (68°F)	11 to 15 ohms

If the result is not as specified, replace the shift solenoid valve SL.

b. Connect a battery positive (+) lead to the terminal of the solenoid valve connector, and a negative (-) lead to the solenoid body. Then check that the valve moves and makes an operating sound.

NOTE: **When using battery voltage during the inspection, do not bring the positive (+) and negative (-) tester probes too close to each other as a short circuit may occur.**

OK

Valve moves and makes an operating sound.

If the result is not as specified, replace the shift solenoid valve SL.

2. **INSPECT SHIFT SOLENOID VALVE SLT**
    a. Measure the resistance according to the value(s) in the table below.

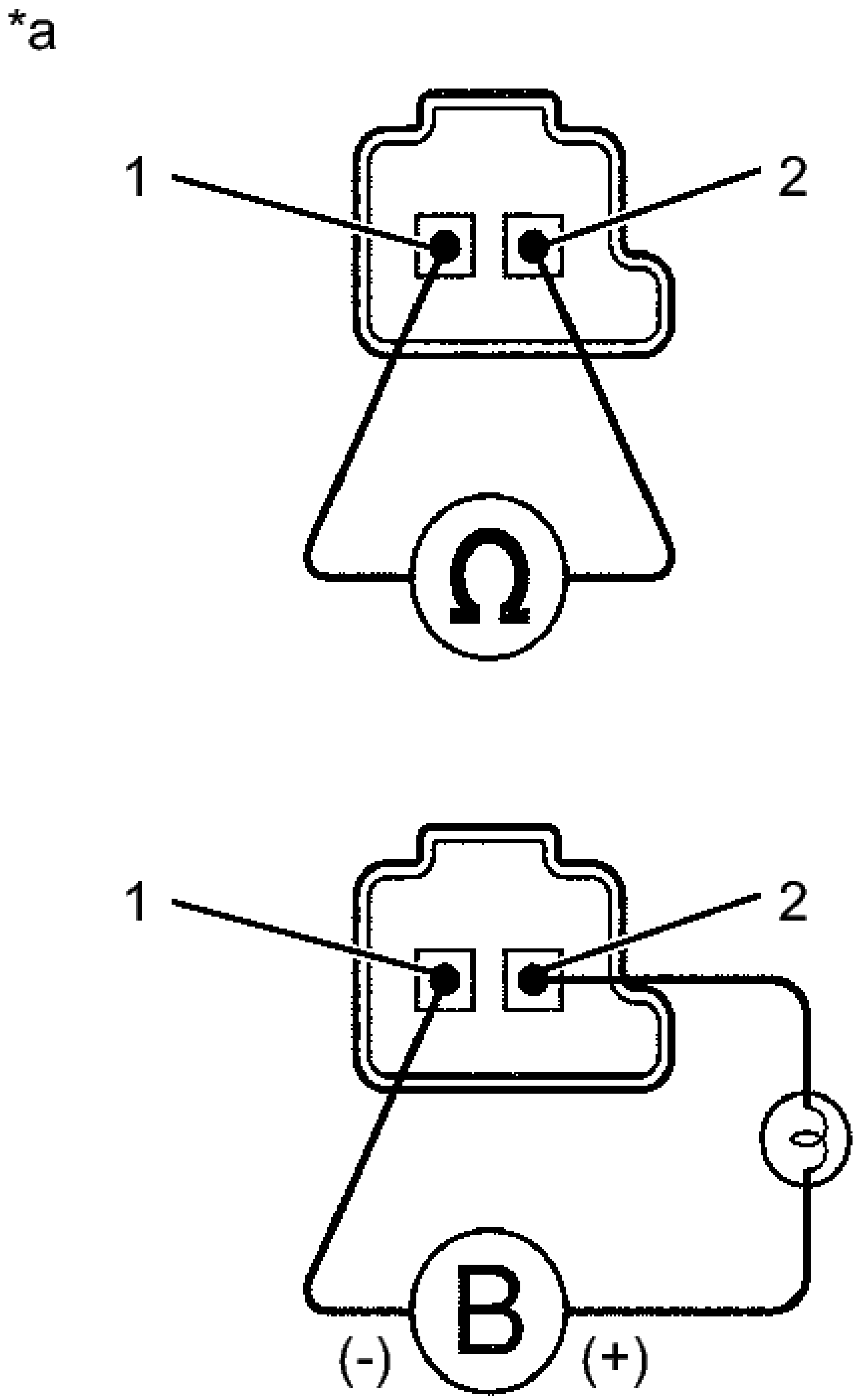

Fig. 53: Inspecting Shift Solenoid Valve SLT
Courtesy of TOYOTA MOTOR SALES, U.S.A., INC.

TEXT IN ILLUSTRATION

	Component

*a	without harness connected (Shift Solenoid Valve SLT)

Standard Resistance

Tester Connection	Condition	Specified Condition
1 - 2	20°C (68° F)	5.0 to 5.6 ohms

If the result is not as specified, replace the shift solenoid valve SLT.

b. Connect a battery positive (+) lead with a 21 W bulb to terminal 2 and a negative (-) lead to terminal 1 of the solenoid valve connector. Then check that the valve moves and makes an operating sound.

NOTE: **When using battery voltage during the inspection, do not bring the positive (+) and negative (-) tester probes too close to each other as a short circuit may occur.**

OK

Valve moves and makes an operating sound.

If the result is not as specified, replace the shift solenoid valve SLT.

3. **INSPECT SHIFT SOLENOID VALVE SLU**

HINT:

Refer to Inspect Shift Solenoid Valve SLT in step 2.

4. **INSPECT SHIFT SOLENOID VALVE SL1**

HINT:

Refer to Inspect Shift Solenoid Valve SLT in step 2.

5. **INSPECT SHIFT SOLENOID VALVE SL2**

HINT:

Refer to Inspect Shift Solenoid Valve SLT in step 2.

6. **INSPECT SHIFT SOLENOID VALVE SL3**

   HINT:

   Refer to Inspect Shift Solenoid Valve SLT in step 2.

7. **INSPECT SHIFT SOLENOID VALVE SL4**

   HINT:

   Refer to Inspect Shift Solenoid Valve SLT in step 2.

REASSEMBLY

REASSEMBLY

1. **INSTALL SHIFT SOLENOID VALVE SL4**
   a. Coat the shift solenoid valve SL4 with ATF.

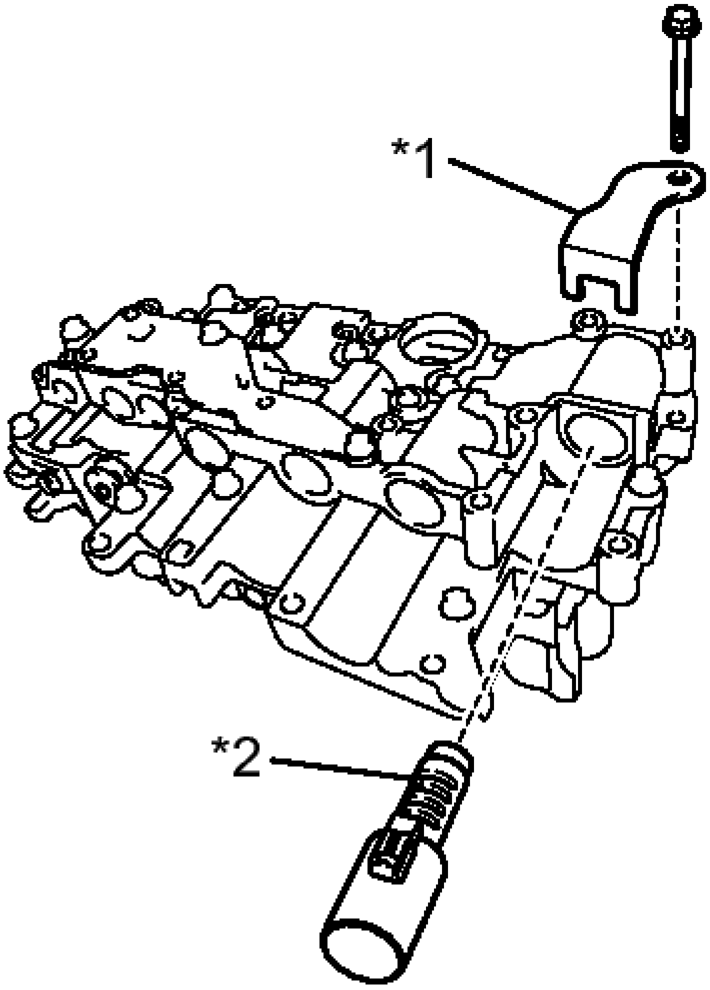

Fig. 54: Shift Solenoid Valve SL4 And Lock Plate
Courtesy of TOYOTA MOTOR SALES, U.S.A., INC.

b. Install the shift solenoid valve SL4 onto the transmission valve body assembly with the bolt and No. 4 solenoid lock plate.

TEXT IN ILLUSTRATION

*1	No. 4 Solenoid Lock Plate
*2	Solenoid Valve SL4

Torque: 11 N*m (110 kgf*cm, 8 ft.*lbf)

2. **INSTALL SHIFT SOLENOID VALVE SL3**
    a. Coat the shift solenoid valve SL3 with ATF.

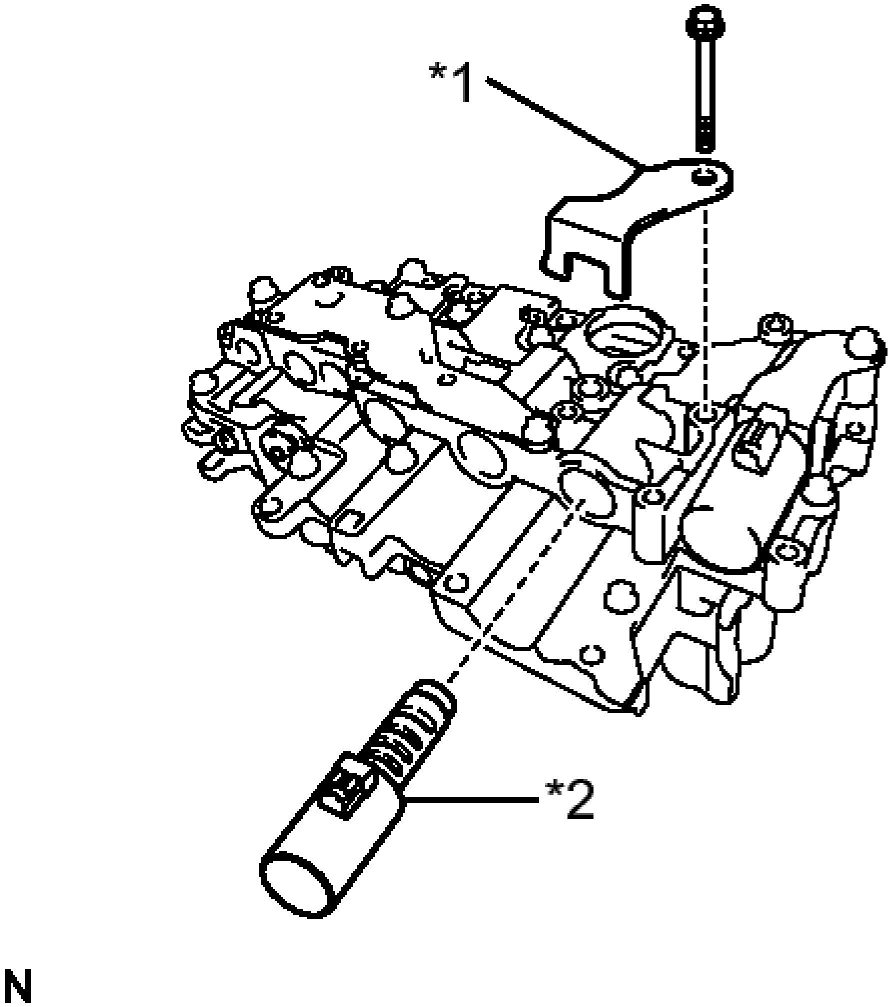

Fig. 55: Shift Solenoid Valve SL3 And Lock Plate
Courtesy of TOYOTA MOTOR SALES, U.S.A., INC.

    b. Install the shift solenoid valve SL3 onto the transmission valve body assembly with the bolt and No. 3 solenoid lock plate.

TEXT IN ILLUSTRATION

*1	No. 3 Solenoid Lock Plate
	Solenoid

*2	Valve SL3

Torque: 11 N*m (110 kgf*cm, 8 ft.*lbf)

3. **INSTALL SHIFT SOLENOID VALVE SLU**
   a. Coat the shift solenoid valve SLU with ATF.

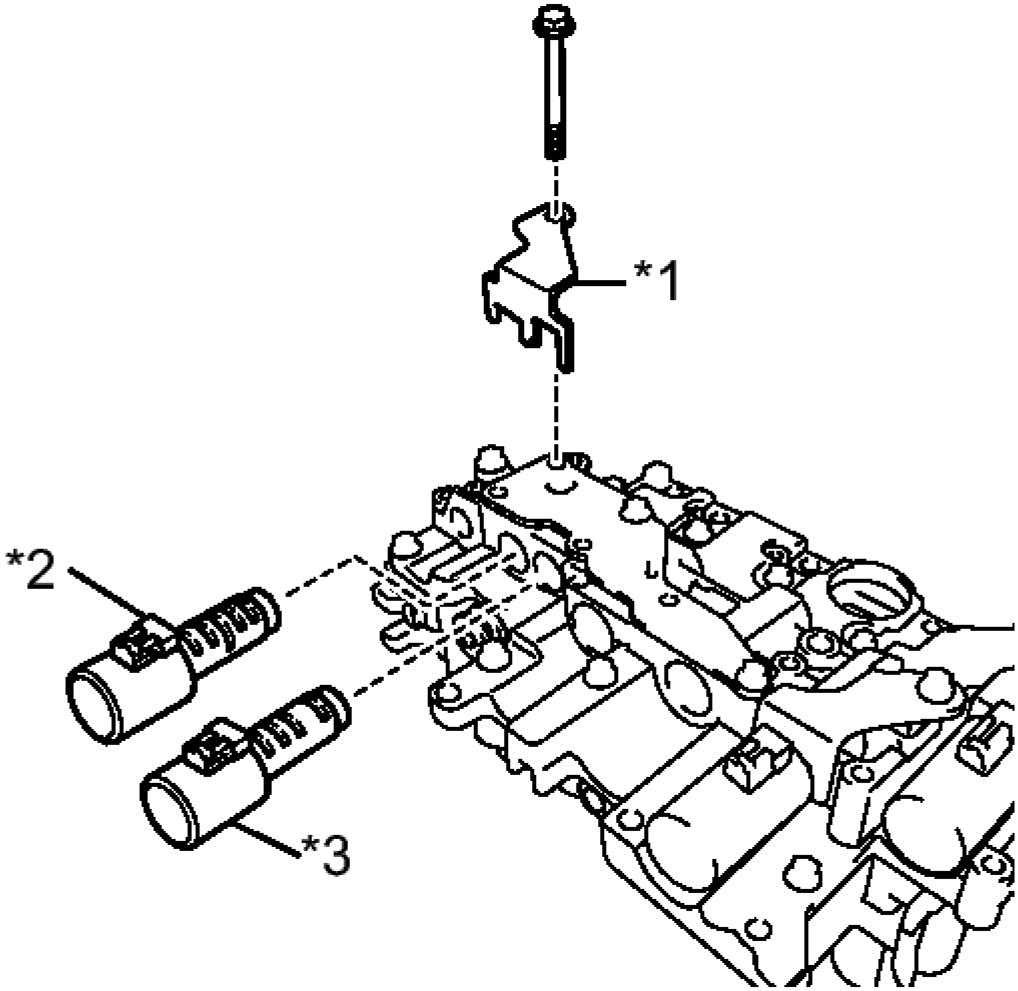

Fig. 56: Shift Solenoid Valves SLU And Lock Plate
Courtesy of TOYOTA MOTOR SALES, U.S.A., INC.

   b. Install the shift solenoid valve SLU onto the transmission valve body assembly.

TEXT IN ILLUSTRATION

*1	Lock

	Plate
*2	Solenoid Valve SLT
*3	Solenoid Valve SLU

4. **INSTALL SHIFT SOLENOID VALVE SLT**
    1. Coat the shift solenoid valve SLT with ATF.
    2. Install the shift solenoid valve SLT onto the transmission valve body assembly with the bolt and lock plate.

       Torque: 11 N*m (110 kgf*cm, 8 ft.*lbf)

5. **INSTALL SHIFT SOLENOID VALVE SL1**
    1. Coat the shift solenoid valve SL1 with ATF.

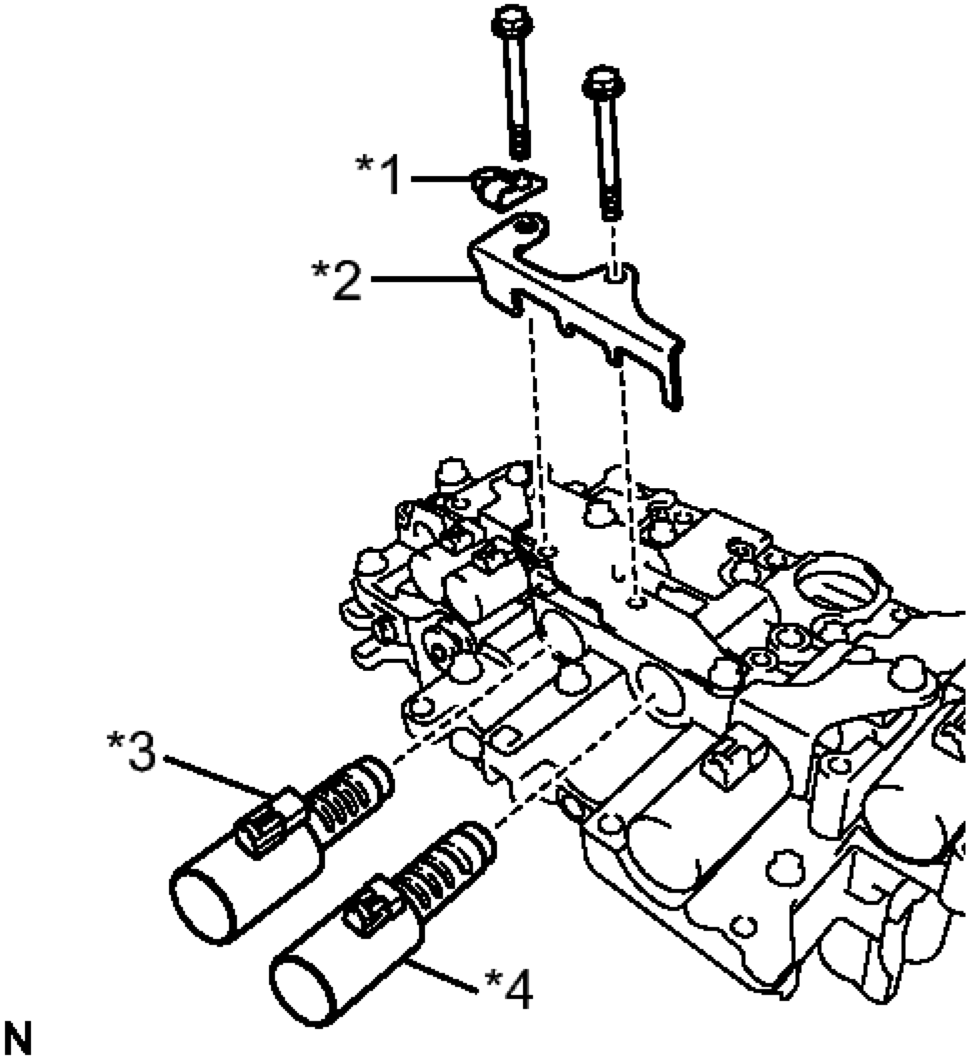

Fig. 57: Shift Solenoid Valves SL1 And Lock Plate
Courtesy of TOYOTA MOTOR SALES, U.S.A., INC.

b. Install the shift solenoid valve SL1 onto the transmission valve body assembly.

TEXT IN ILLUSTRATION

*1	No. 2 Solenoid Lock Plate
*2	Clamp
*3	Solenoid Valve SL2
*4	Solenoid Valve

	SL1

6. **INSTALL SHIFT SOLENOID VALVE SL2**
   a. Coat the shift solenoid valve SL2 with ATF.
   b. Install the shift solenoid valve SL2 onto the transmission valve body assembly with the 2 bolts, clamp and No. 2 solenoid lock plate.

   Torque: 11 N*m (110 kgf*cm, 8 ft.*lbf)

7. **INSTALL SHIFT SOLENOID VALVE SL**
   a. Coat the shift solenoid valve SL with ATF.

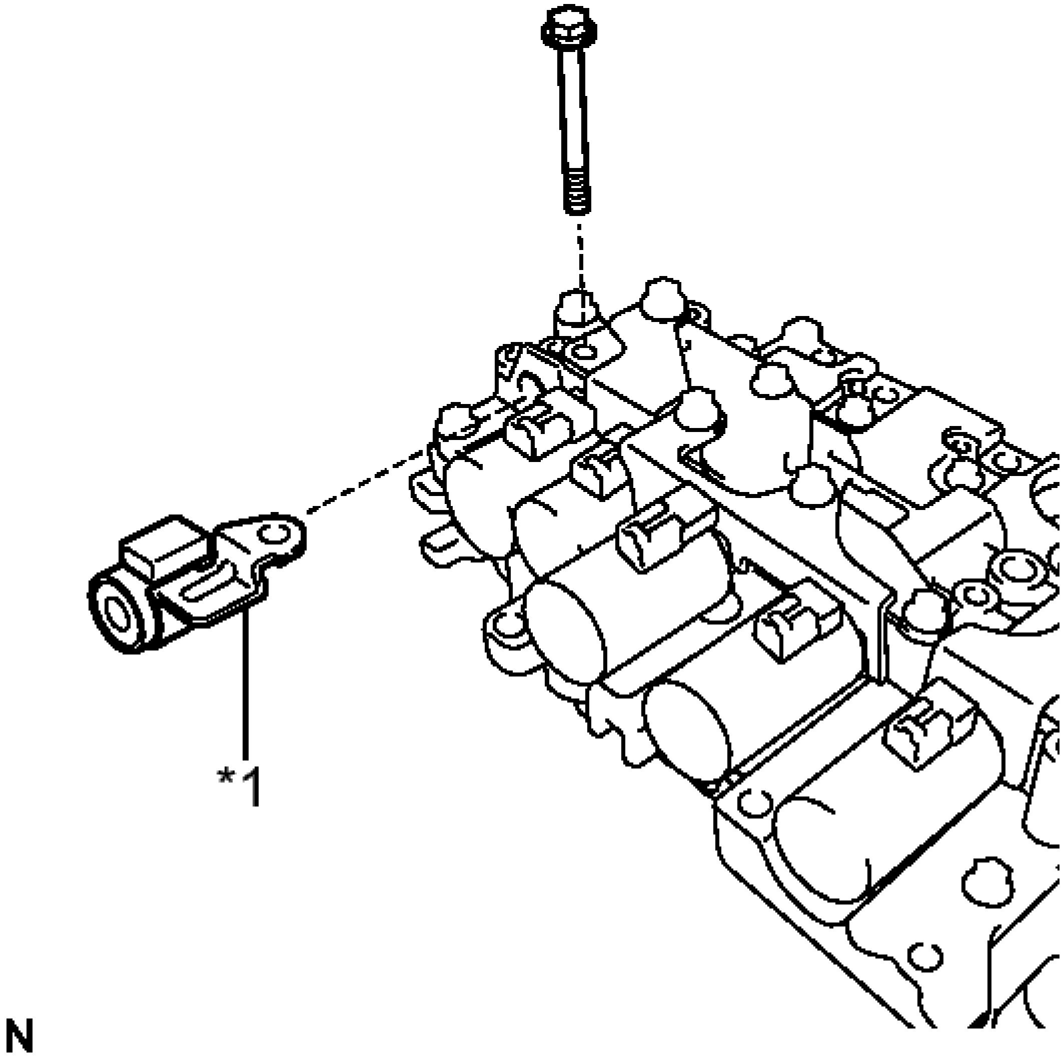

Fig. 58: Shift Solenoid Valve SL
Courtesy of TOYOTA MOTOR SALES, U.S.A., INC.

TEXT IN ILLUSTRATION

*1	Solenoid Valve SL

- b. Install the shift solenoid valve SL onto the transmission valve body assembly with the bolt.

  Torque: 11 N*m (110 kgf*cm, 8 ft.*lbf)

8. **INSTALL TRANSMISSION WIRE** See step 1
9. **INSTALL TRANSMISSION REVOLUTION SENSOR** See step 1

INSTALLATION

INSTALLATION

1. **INSTALL MANUAL VALVE**
   - a. Coat the manual valve with ATF.
   - b. Install the manual valve into the transmission valve body assembly.
2. **INSTALL NO. 1 GOVERNOR APPLY GASKET**
   - a. Coat 2 new No. 1 governor apply gaskets with ATF.
   - b. Install the 2 No. 1 governor apply gaskets onto the transaxle case sub-assembly.
3. **INSTALL TRANSMISSION VALVE BODY ASSEMBLY**
   - a. Coat the O-ring of the transmission wire with ATF.

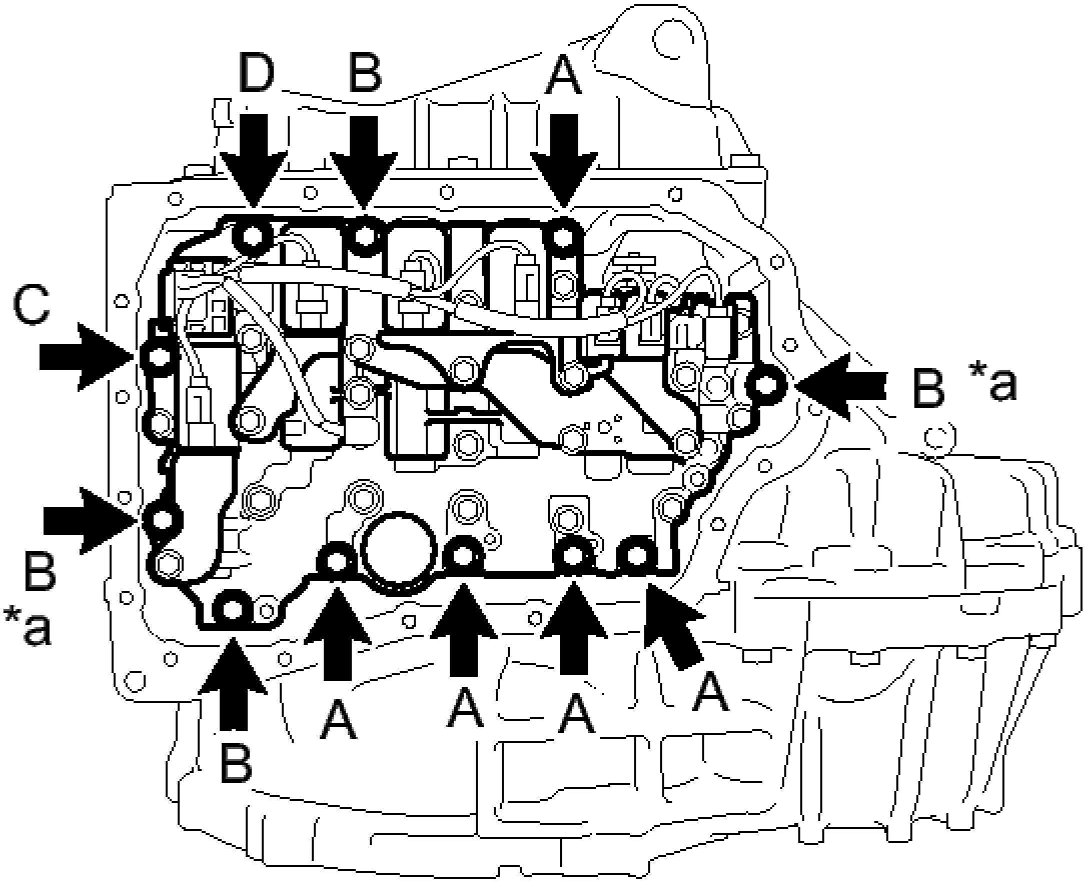

T

Fig. 59: Identifying Transmission Wire O-Ring
Courtesy of TOYOTA MOTOR SALES, U.S.A., INC.

b. Insert the pin of the manual valve lever into the groove on the end of the manual valve and install the transmission valve body assembly onto the automatic transaxle assembly with the 11 bolts.

TEXT IN ILLUSTRATION

*a	Positioning Bolt

BOLT LENGTH

Bolt	**Length [mm (in.)]**
A	25 (0.984)

B	30 (1.18)
C and D	35 (1.38)

Bolt A, B, C

Torque: 11 N*m (110 kgf*cm, 8 ft.*lbf)

Bolt D

Torque: 9.6 N*m (98 kgf*cm, 85 in.*lbf)

NOTE:

- **When installing the transmission valve body assembly, be careful not to allow the transmission revolution sensor and automatic transaxle assembly to interfere with each other.**
- **First, temporarily tighten the bolts marked *a in the illustration because they are positioning bolts.**

4. **INSTALL VALVE BODY OIL STRAINER ASSEMBLY**
   a. Coat a new O-ring with ATF.
   b. Install the O-ring onto the valve body oil strainer assembly.

NOTE: **Ensure that the O-ring is not twisted.**

   c. Install the valve body oil strainer assembly onto the transmission valve body assembly with the 2 bolts.

Torque: 9.6 N*m (98 kgf*cm, 85 in.*lbf)

5. **INSTALL TRANSMISSION OIL CLEANER MAGNET**
   a. Install the 2 transmission oil cleaner magnets onto the automatic transaxle oil pan sub-assembly as shown in the illustration.

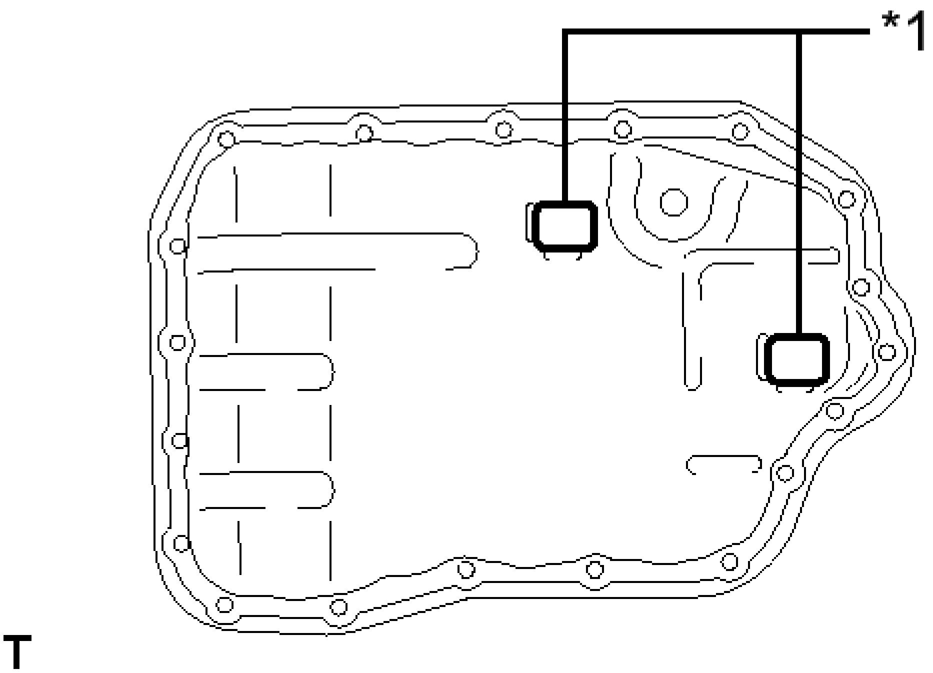

Fig. 60: Identifying Transmission Oil Cleaner Magnets
Courtesy of TOYOTA MOTOR SALES, U.S.A., INC.

TEXT IN ILLUSTRATION

*1	Transmission Oil Cleaner Magnet

6. **INSTALL AUTOMATIC TRANSAXLE OIL PAN GASKET**
    a. Install a new automatic transaxle oil pan gasket onto the automatic transaxle oil pan sub-assembly.
7. **INSTALL AUTOMATIC TRANSAXLE OIL PAN SUB-ASSEMBLY**
    a. Install the automatic transaxle oil pan sub-assembly with the automatic transaxle oil pan gasket onto the automatic transaxle assembly with the 17 bolts.

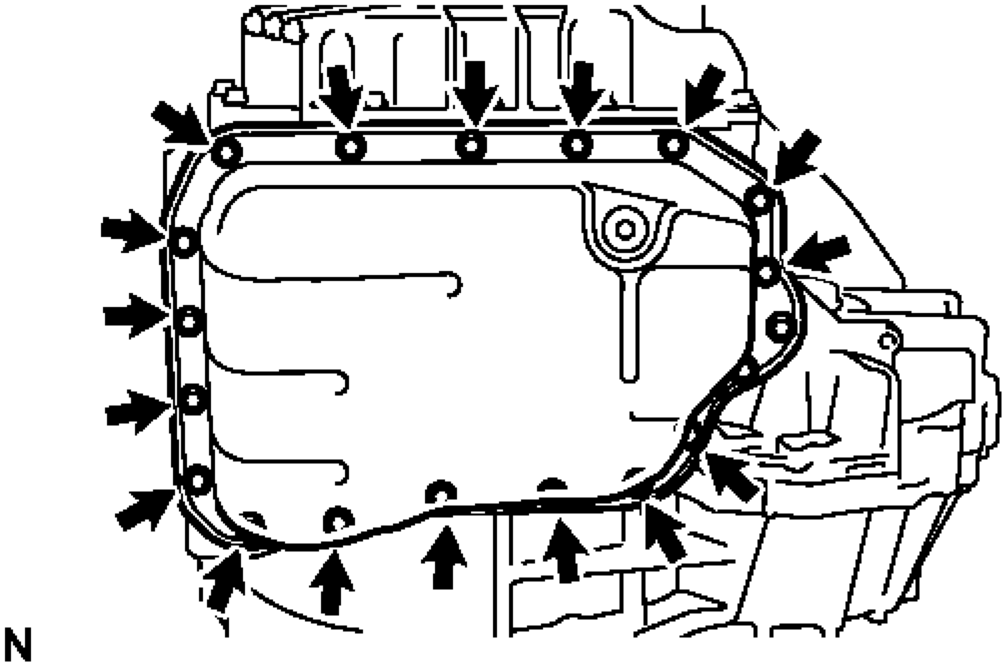

Fig. 61: Locating Automatic Transaxle With Bolts
Courtesy of TOYOTA MOTOR SALES, U.S.A., INC.

Torque: 7.5 N*m (76 kgf*cm, 66 in.*lbf)

NOTE: **Completely remove any oil or grease from the contact surface of the automatic transaxle assembly and automatic transaxle oil pan sub-assembly with the automatic transaxle oil pan gasket before installation.**

b. Clean and degrease the 2 bolts and the installation hole in the automatic transaxle assembly.

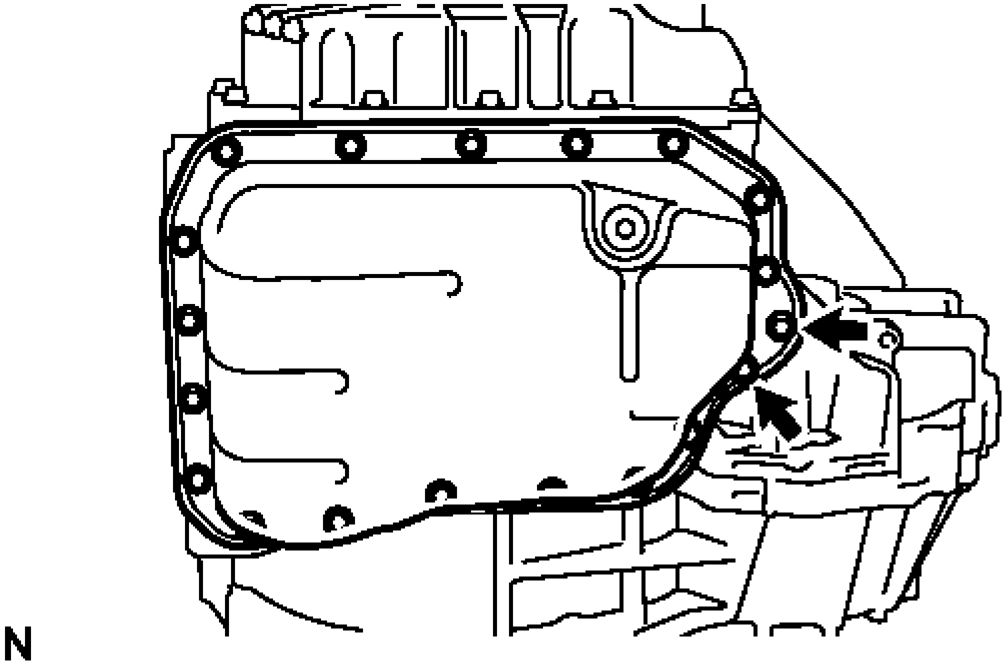

Fig. 62: Locating Automatic Transaxle Bolt
Courtesy of TOYOTA MOTOR SALES, U.S.A., INC.

c. Apply adhesive to 2 or 3 threads on the ends of the bolt.

Adhesive

Toyota Genuine Adhesive 1344, Three Bond 1344 or equivalent

d. Install the 2 bolts.

Torque: 7.0 N*m (71 kgf*cm, 62 in.*lbf)

8. **INSTALL TORQUE CONVERTER ASSEMBLY** See step 2
9. **INSTALL AUTOMATIC TRANSAXLE ASSEMBLY**

   Refer to **INSTALLATION**

PARK / NEUTRAL POSITION SWITCH

COMPONENTS

ILLUSTRATION

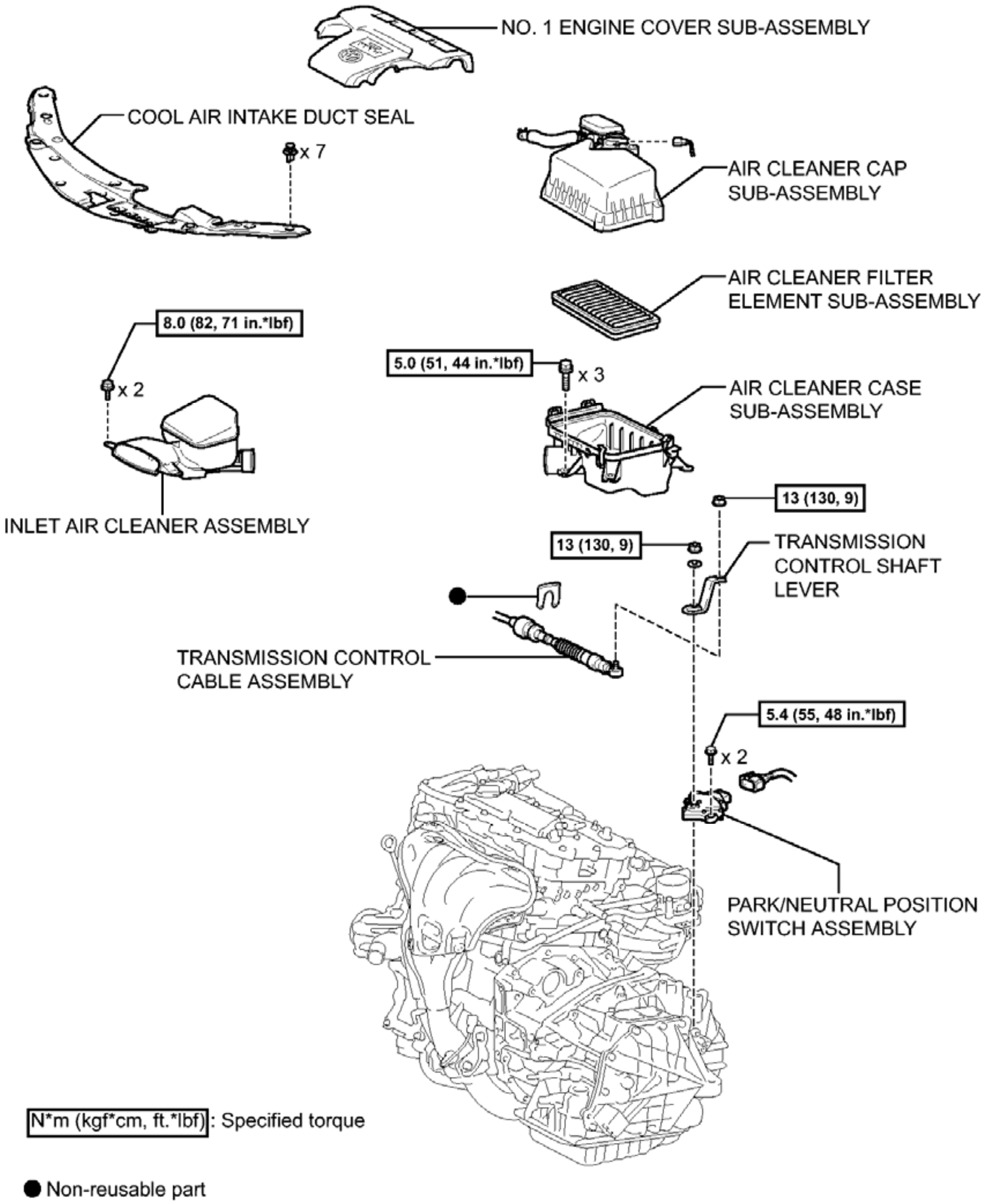
NO. 1 ENGINE COVER SUB-ASSEMBLY
COOL AIR INTAKE DUCT SEAL
x 7
AIR CLEANER CAP SUB-ASSEMBLY
AIR CLEANER FILTER ELEMENT SUB-ASSEMBLY
8.0 (82, 71 in.*lbf)
x 2
5.0 (51, 44 in.*lbf)
x 3
AIR CLEANER CASE SUB-ASSEMBLY
INLET AIR CLEANER ASSEMBLY
13 (130, 9)
13 (130, 9)
TRANSMISSION CONTROL SHAFT LEVER
TRANSMISSION CONTROL CABLE ASSEMBLY
5.4 (55, 48 in.*lbf)
x 2
PARK/NEUTRAL POSITION SWITCH ASSEMBLY
N*m (kgf*cm, ft.*lbf): Specified torque
● Non-reusable part

Fig. 63: Identifying Park / Neutral Position Switch Replacement Components With Torque Specifications
Courtesy of TOYOTA MOTOR SALES, U.S.A., INC.

ON-VEHICLE INSPECTION

ON-VEHICLE INSPECTION

1. **INSPECT PARK/NEUTRAL POSITION SWITCH ASSEMBLY OPERATION**

a. Apply the parking brake.
b. Turn the ignition switch to ON.
c. Depress the brake pedal and check that the engine starts when the shift lever is in N or P, but does not start in any other position.
d. Check that the back-up light comes on when the shift lever is moved to R, but the light does not operate in any other position. If the operation cannot be done as specified, check the park/neutral position switch assembly for continuity.

REMOVAL

REMOVAL

1. **REMOVE NO. 1 ENGINE COVER SUB-ASSEMBLY** . Refer to **REMOVAL - Step 18**
2. **REMOVE COOL AIR INTAKE DUCT SEAL** . Refer to **REMOVAL - Step 1**
3. **REMOVE INLET AIR CLEANER ASSEMBLY** . Refer to **REMOVAL - Step 19**
4. **REMOVE AIR CLEANER CAP SUB-ASSEMBLY** . Refer to **REMOVAL - Step 7**
5. **REMOVE AIR CLEANER FILTER ELEMENT SUB-ASSEMBLY**
6. **REMOVE AIR CLEANER CASE SUB-ASSEMBLY** . Refer to **REMOVAL - Step 22**
7. **REMOVE PARK/NEUTRAL POSITION SWITCH ASSEMBLY**
   a. Disconnect the wire harness clamp.

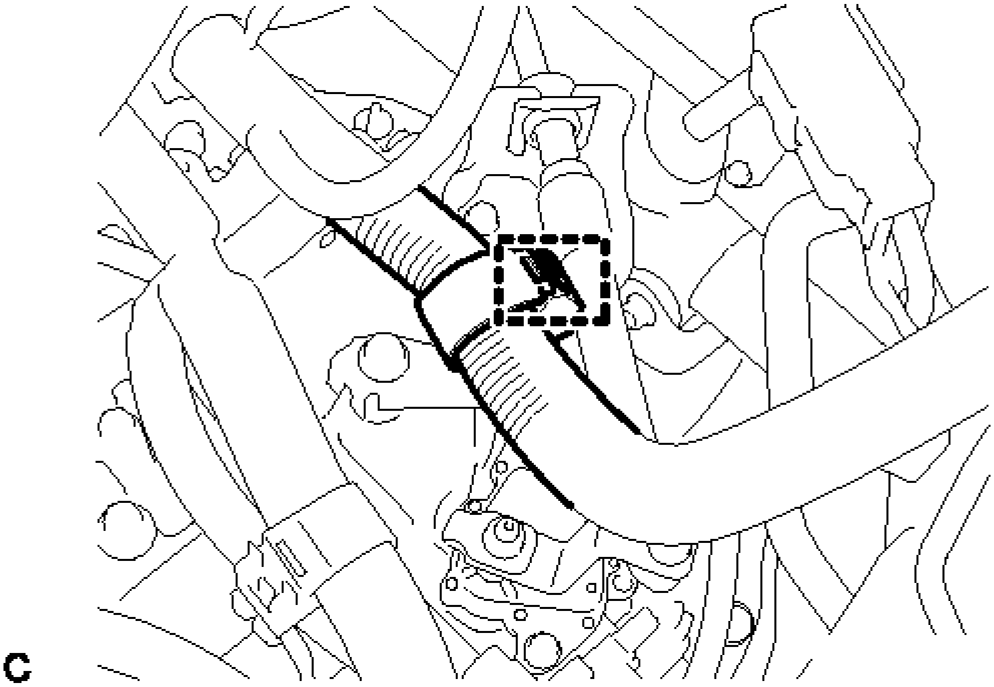

Fig. 64: Identifying Wire Harness Clamp
Courtesy of TOYOTA MOTOR SALES, U.S.A., INC.

   b. Remove the clip from the transmission cable bracket.

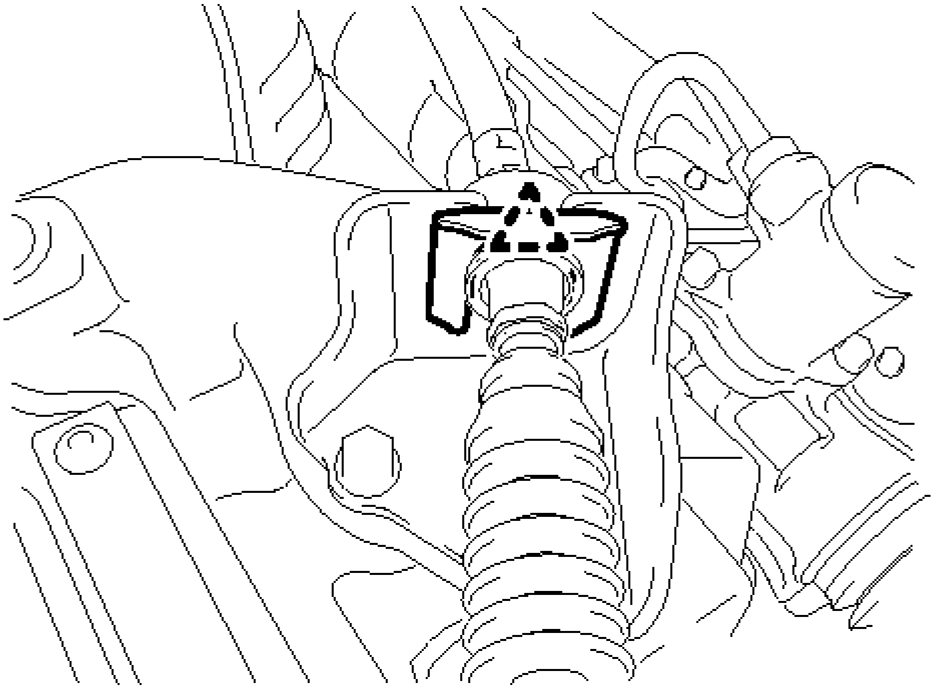

Fig. 65: Identifying Transmission Cable Bracket Clip
Courtesy of TOYOTA MOTOR SALES, U.S.A., INC.

c. Remove the nut and transmission control cable from the transmission control shaft lever.

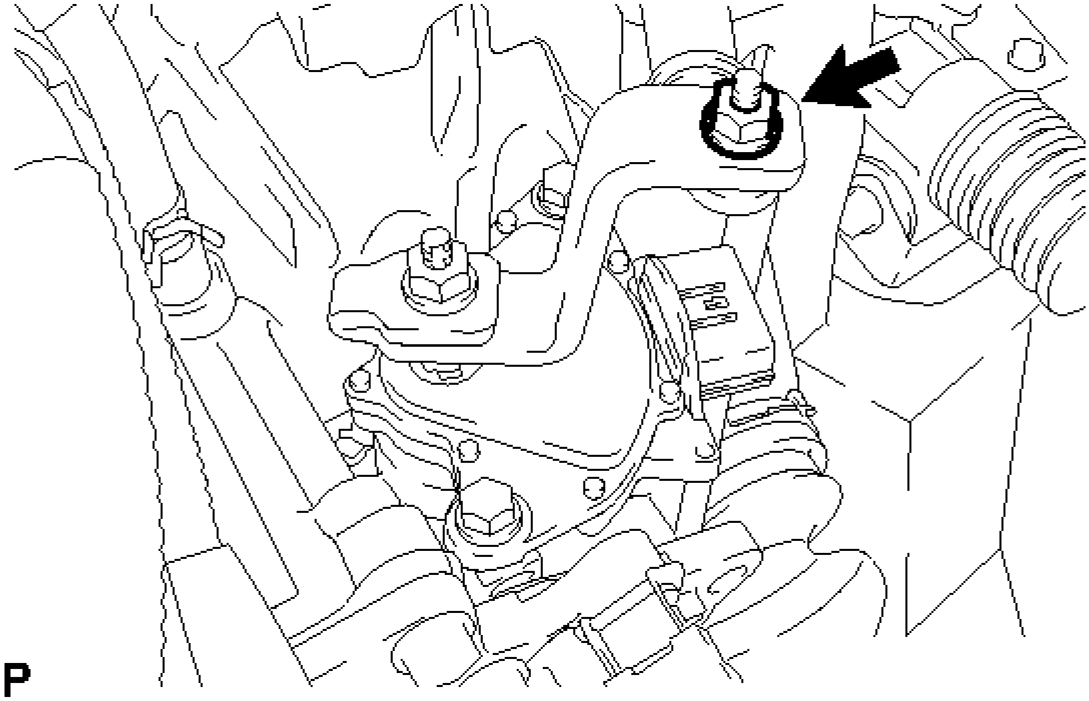

Fig. 66: Locating Transmission Control Cable Nut
Courtesy of TOYOTA MOTOR SALES, U.S.A., INC.

d. Disconnect the connector from the park/neutral position switch assembly.
e. Remove the nut, washer and transmission control shaft lever from the manual valve lever shaft sub-assembly.

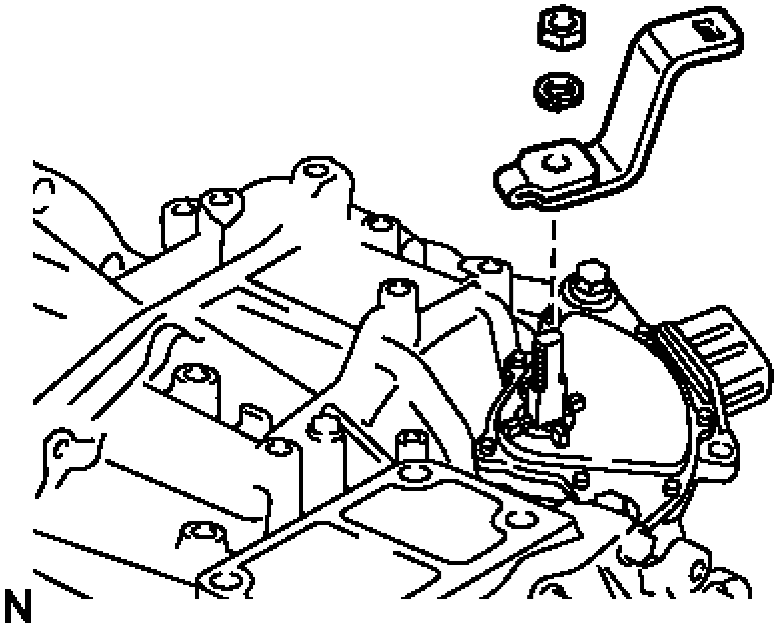

Fig. 67: Identifying Nut, Washer And Control Shaft Lever
Courtesy of TOYOTA MOTOR SALES, U.S.A., INC.

f. Remove the 2 bolts and park/neutral position switch assembly from the manual valve lever shaft sub-assembly.

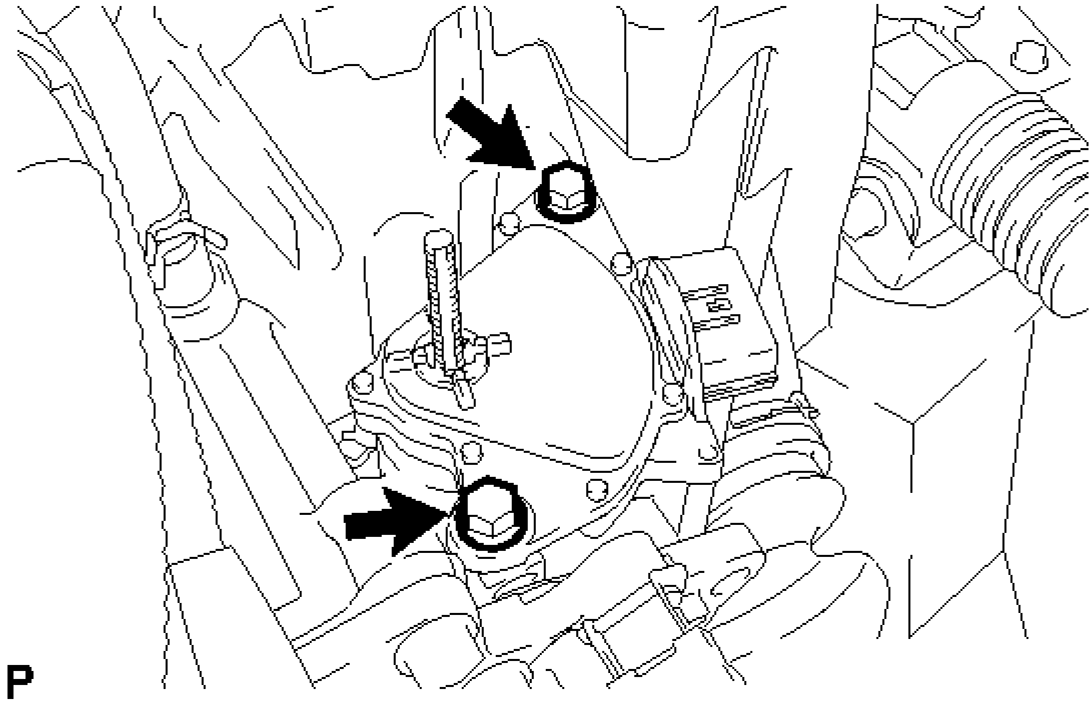

Fig. 68: Locating Park/Neutral Position Switch Bolts
Courtesy of TOYOTA MOTOR SALES, U.S.A., INC.

NOTE: **Before removing the park/neutral position switch assembly, remove any dirt or rust on the installation portion of the manual valve lever shaft sub-assembly. Be sure to remove the switch straight along the shaft while being careful not to deform the plate spring that supports the shaft. If the plate spring is deformed, the park/neutral switch cannot be reinstalled correctly.**

INSPECTION

INSPECTION

1. **INSPECT PARK/NEUTRAL POSITION SWITCH ASSEMBLY**
   a. Measure the resistance according to the value(s) in the table below when the shift lever is moved to each position.

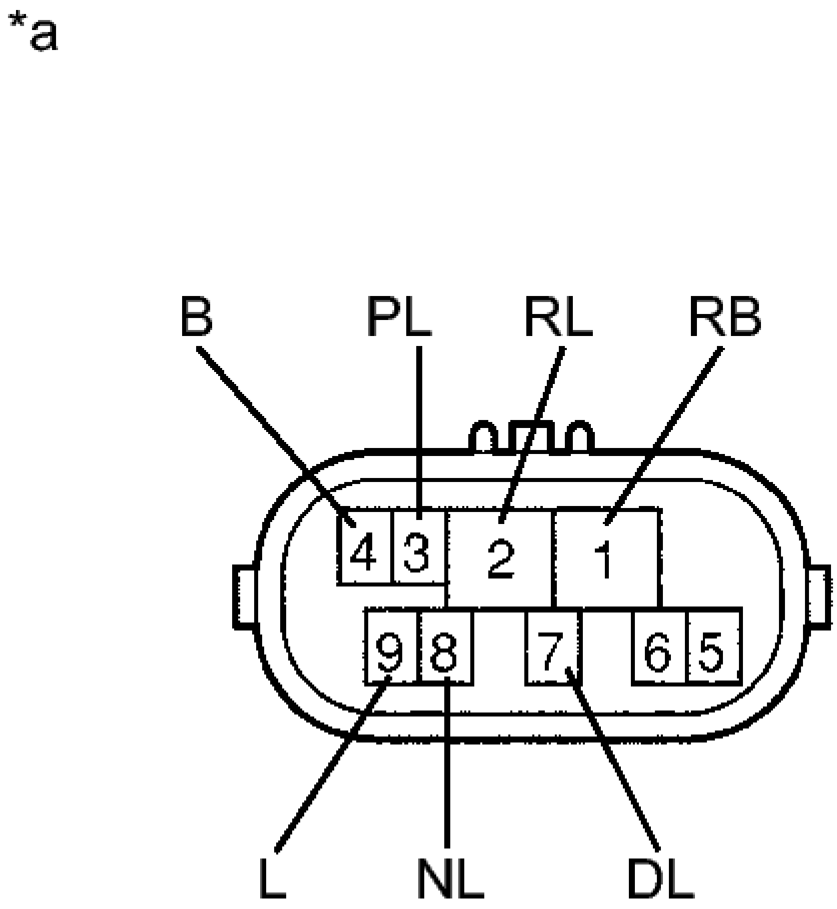

Fig. 69: Identifying Park/Neutral Position Switch Assembly Connector Terminal Identification
Courtesy of TOYOTA MOTOR SALES, U.S.A., INC.

Standard Resistance

Tester Connection	Shift Lever Position	Specified Condition
4 (B) - 9 (L)	P or N	Below 1 ohms
	Except P and N	10 kohms or higher
1 (RB) - 3 (PL)	P	Below 1 ohms

	Except P	10 kohms or higher
1 (RB) - 8 (NL)	N	Below 1 ohms
	Except N	10 kohms or higher
1 (RB) - 2 (RL)	R	Below 1 ohms
	Except R	10 kohms or higher
1 (RB) - 7 (DL)	D, S, "+" or "-"	Below 1 ohms
	Except D, S, "+" and "-"	10 kohms or higher

TEXT IN ILLUSTRATION

*a	Component without harness connected (Park/Neutral Position Switch Assembly)

If the result is not as specified, replace the park/neutral position switch assembly.

ADJUSTMENT

ADJUSTMENT

1. **ADJUST PARK/NEUTRAL POSITION SWITCH ASSEMBLY**
    a. Remove the transmission control shaft lever.

    HINT:

    Refer to **REMOVAL**

    b. Loosen the 2 bolts of the park/neutral position switch assembly.

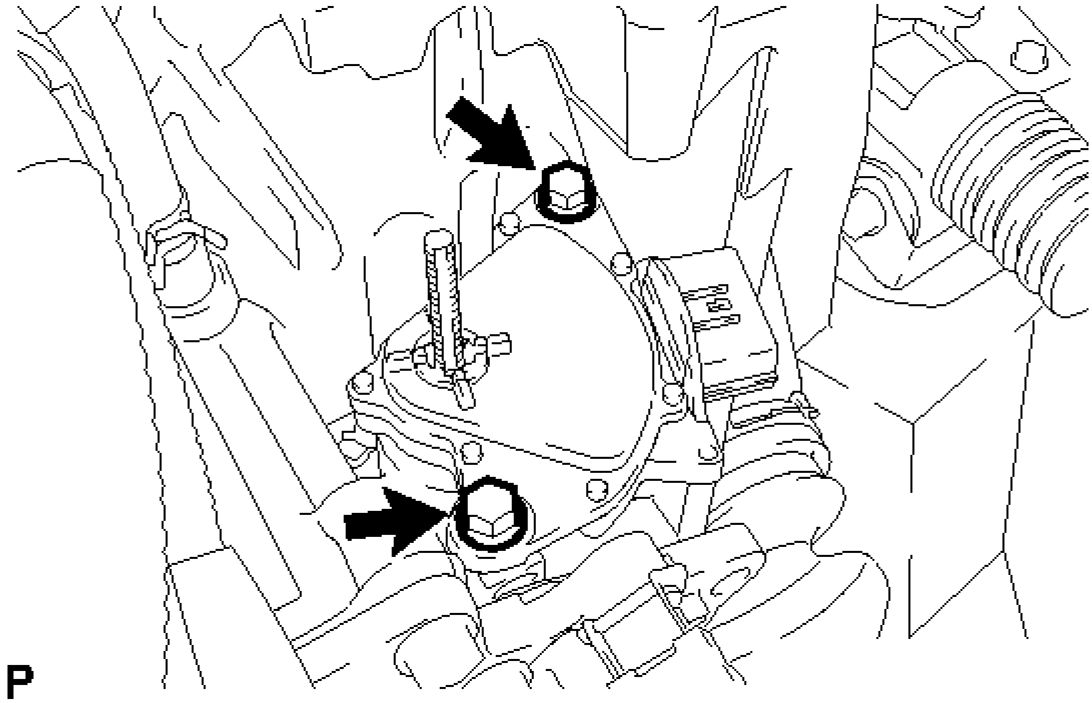

Fig. 70: Locating Park/Neutral Position Switch Bolts
Courtesy of TOYOTA MOTOR SALES, U.S.A., INC.

c. Align the protrusions of the park/neutral position switch assembly.

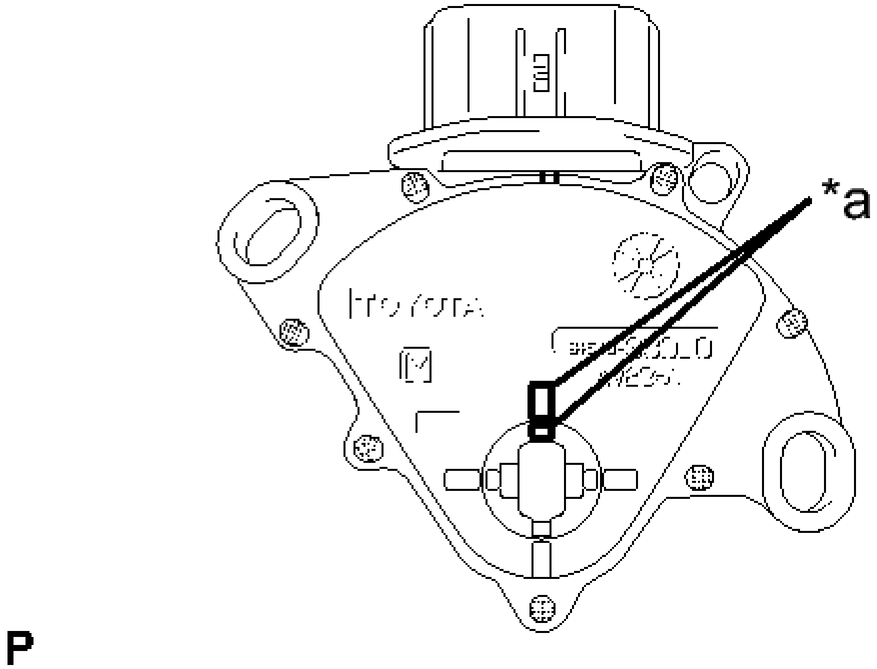

Fig. 71: Aligning Park/Neutral Position Switch Assembly Protrusions
Courtesy of TOYOTA MOTOR SALES, U.S.A., INC.

TEXT IN ILLUSTRATION

*a	Protrusion

d. Hold the park/neutral position switch assembly in position and tighten the 2 bolts.

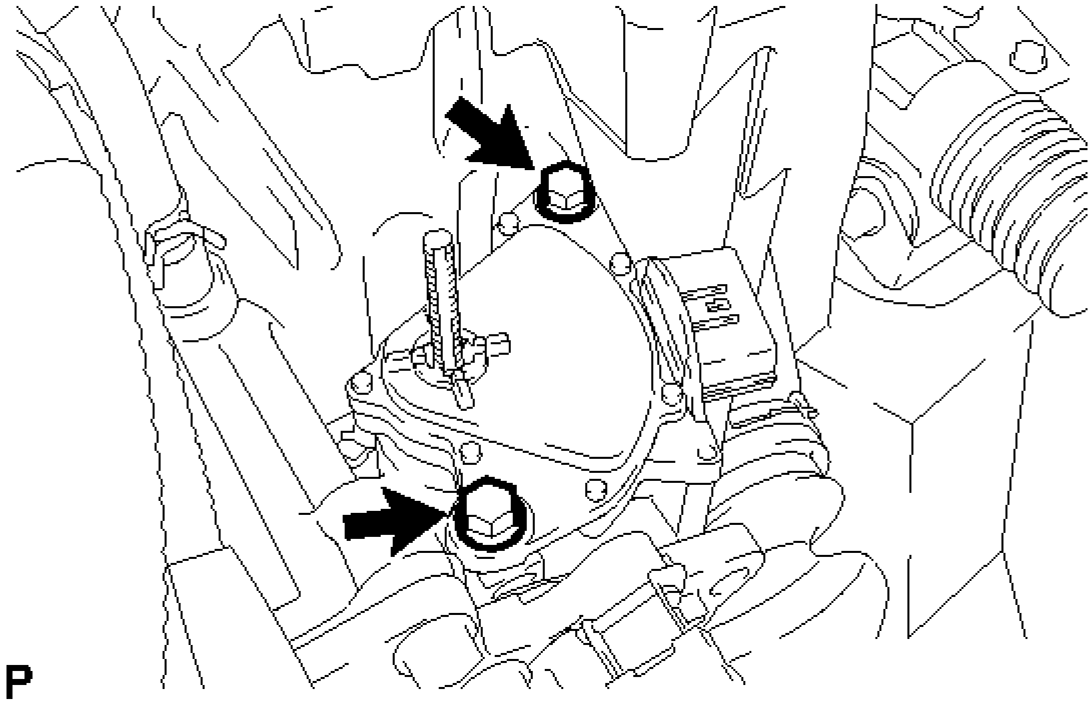

Fig. 72: Locating Park/Neutral Position Switch Bolts
Courtesy of TOYOTA MOTOR SALES, U.S.A., INC.

Torque: 5.4 N*m (55 kgf*cm, 48 in.*lbf)

NOTE: **After installing the park/neutral position switch assembly, confirm that the 2 protrusions on the switch are aligned.**

e. Install the transmission control shaft lever.

HINT:

Refer to **INSTALLATION**

f. After the adjustment, perform the switch operation check See step 1.

INSTALLATION

INSTALLATION

1. **INSTALL PARK/NEUTRAL POSITION SWITCH ASSEMBLY**

a. Move the shift lever to N.
b. Align the protrusions of the park/neutral position switch assembly.

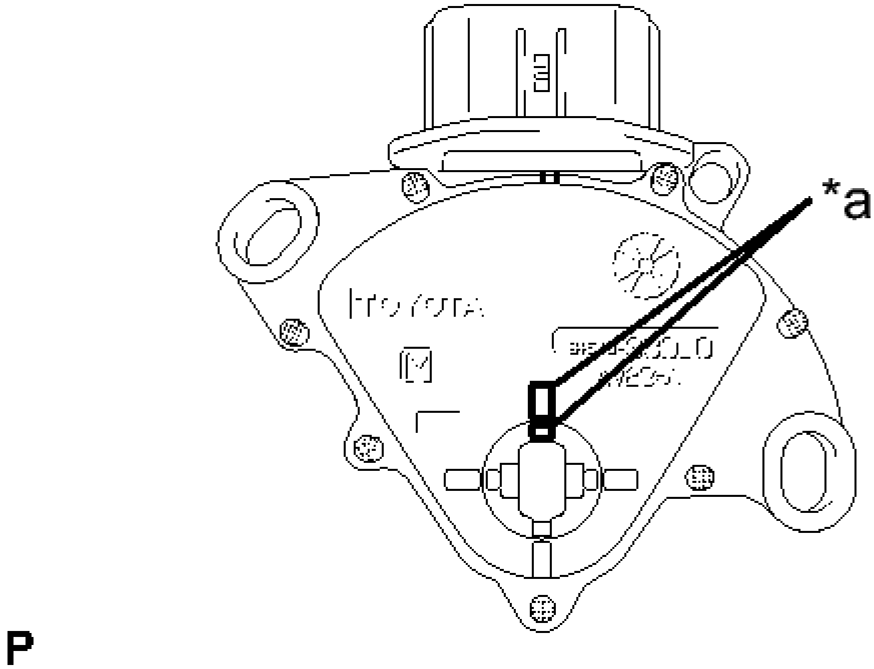

Fig. 73: Identifying Park/Neutral Position Switch Assembly Protrusions
Courtesy of TOYOTA MOTOR SALES, U.S.A., INC.

TEXT IN ILLUSTRATION

*a	Protrusion

c. Install the park/neutral position switch assembly to the manual valve lever shaft sub-assembly with the 2 bolts.

Torque: 5.4 N*m (55 kgf*cm, 48 in.*lbf)

NOTE:

- **Before installing the park/neutral position switch assembly, remove any dirt or rust on the installation portion of the manual valve lever shaft sub-assembly. Be sure to install the switch straight along the shaft while being careful not to deform the plate spring that supports the shaft. If the plate spring is deformed, the park/neutral position switch assembly cannot be reinstalled correctly.**
- **After installing the park/neutral position switch assembly, confirm that the 2 protrusions on the switch are aligned.**

d. Install the transmission control shaft lever to the manual valve lever shaft sub-assembly with the nut and washer.

Torque: 13 N*m (130 kgf*cm, 9 ft.*lbf)

- e. Connect the connector to the park/neutral position switch assembly.
- f. Connect the transmission control cable to the transmission control cable bracket with a new clip.
- g. Connect the transmission control cable to the transmission control shaft lever with the nut.

Torque: 13 N*m (130 kgf*cm, 9 ft.*lbf)

- h. Connect the wire harness clamp.

2. **INSTALL AIR CLEANER CASE SUB-ASSEMBLY** . Refer to **INSTALLATION - Step 50**
3. **INSTALL AIR CLEANER FILTER ELEMENT SUB-ASSEMBLY**
4. **INSTALL AIR CLEANER CAP SUB-ASSEMBLY** . Refer to **INSTALLATION - Step 2**
5. **INSTALL INLET AIR CLEANER ASSEMBLY** . Refer to **INSTALLATION - Step 53**
6. **INSTALL COOL AIR INTAKE DUCT SEAL** . Refer to **INSTALLATION - Step 4**
7. **INSPECT PARK/NEUTRAL POSITION SWITCH ASSEMBLY OPERATION** See step 1
8. **INSTALL NO. 1 ENGINE COVER SUB-ASSEMBLY** . Refer to **INSTALLATION - Step 68**
9. **INSPECT SHIFT LEVER POSITION** See step 1
10. **ADJUST SHIFT LEVER POSITION** See step 2

OIL COOLER

COMPONENTS

ILLUSTRATION

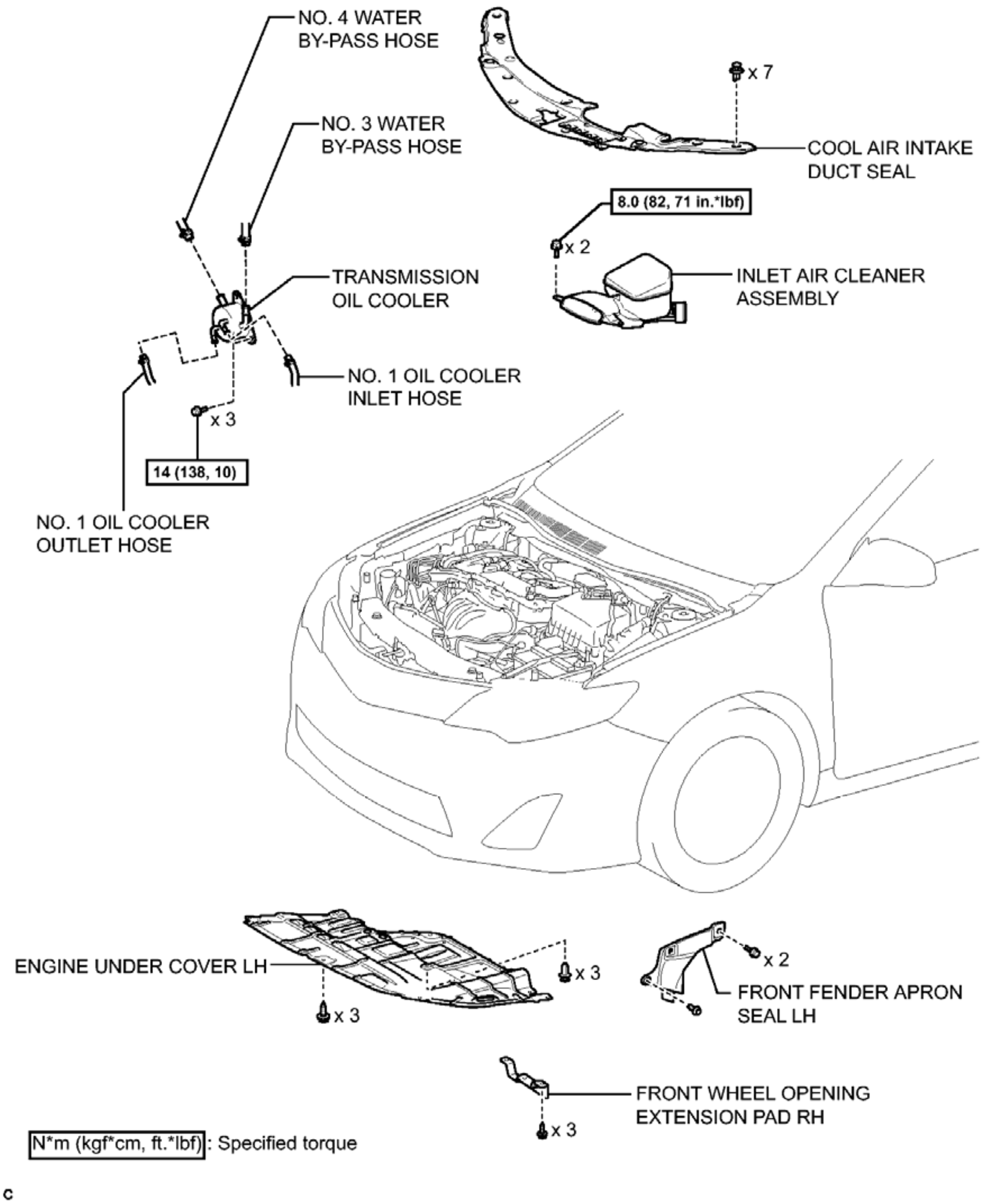
NO. 4 WATER
BY-PASS HOSE
x 7
NO. 3 WATER
BY-PASS HOSE
COOL AIR INTAKE
DUCT SEAL
8.0 (82, 71 in.*lbf)
x 2
TRANSMISSION
OIL COOLER
INLET AIR CLEANER
ASSEMBLY
NO. 1 OIL COOLER
INLET HOSE
x 3
14 (138, 10)
NO. 1 OIL COOLER
OUTLET HOSE
ENGINE UNDER COVER LH
x 3
x 2
FRONT FENDER APRON
SEAL LH
x 3
FRONT WHEEL OPENING
EXTENSION PAD RH
x 3
N*m (kgf*cm, ft.*lbf): Specified torque
c

Fig. 74: Identifying Oil Cooler Replacement Components With Torque Specifications
Courtesy of TOYOTA MOTOR SALES, U.S.A., INC.

REMOVAL

REMOVAL

1. **DRAIN AUTOMATIC TRANSAXLE FLUID** See step 1

2. **DRAIN ENGINE COOLANT** . Refer to **REPLACEMENT - Step 1**
3. **REMOVE COOL AIR INTAKE DUCT SEAL** . Refer to **REMOVAL - Step 1**
4. **REMOVE INLET AIR CLEANER ASSEMBLY** . Refer to **REMOVAL - Step 19**
5. **REMOVE TRANSMISSION OIL COOLER**
    a. Disconnect the No. 3 water by-pass hose, No. 4 water by-pass hose, No. 1 oil cooler outlet hose and No. 1 oil cooler inlet hose from the transmission oil cooler.

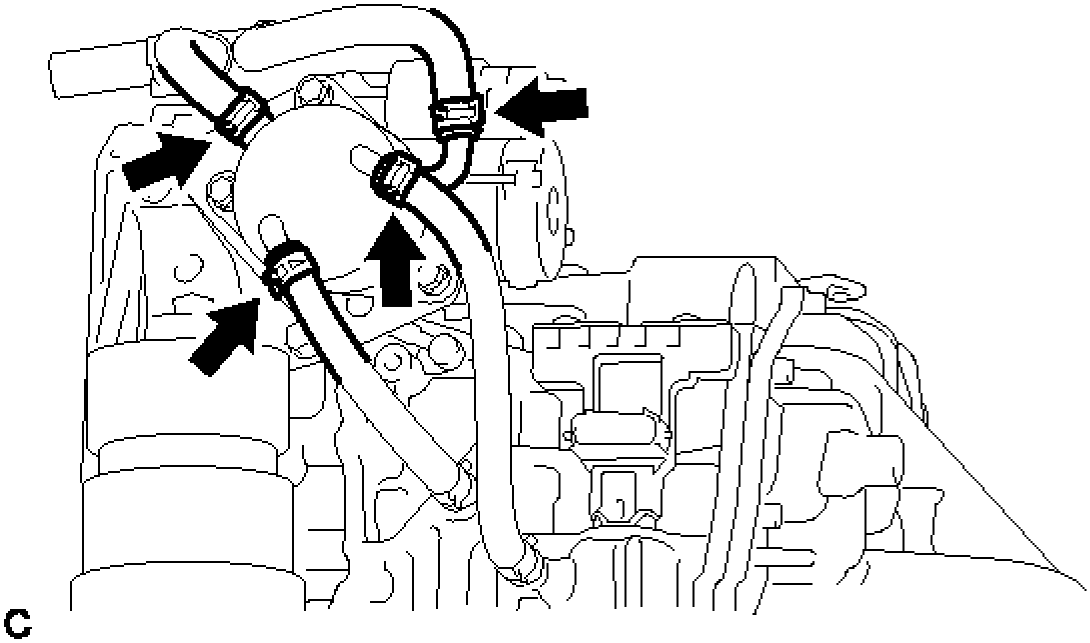

Fig. 75: Identifying No. 3 Water By-Pass Hose, No. 4 Water By-Pass Hose, No. 1 Oil Cooler Outlet And Inner Hose
Courtesy of TOYOTA MOTOR SALES, U.S.A., INC.

    b. Remove the 3 bolts and transmission oil cooler from the front engine mounting bracket.

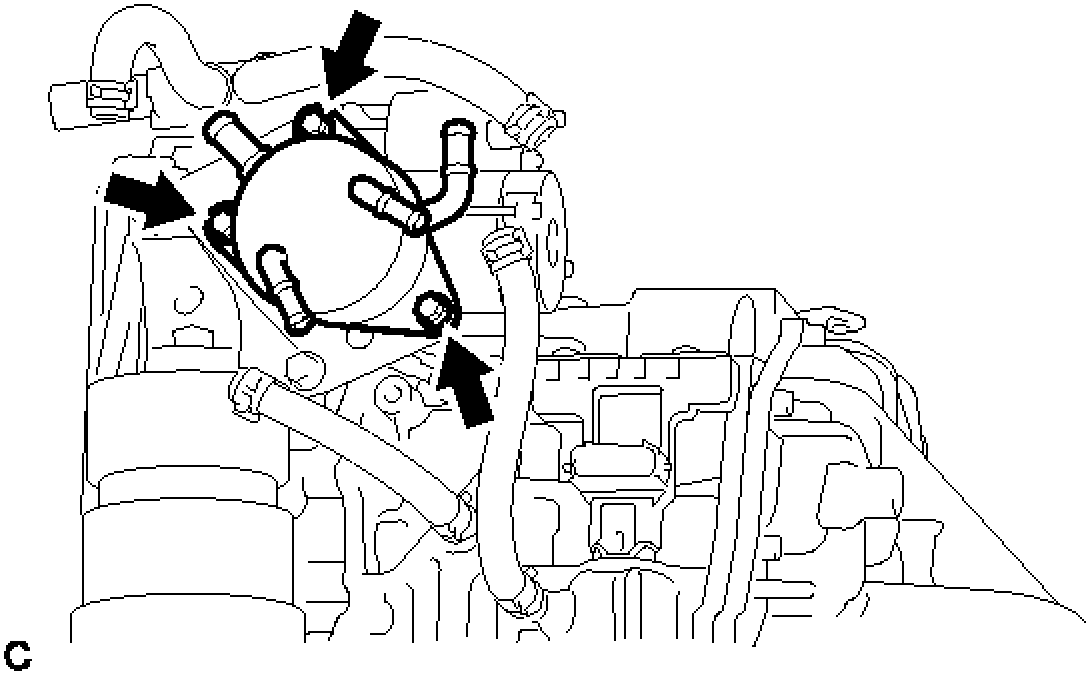

Fig. 76: Identifying Transmission Oil Cooler Bolts
Courtesy of TOYOTA MOTOR SALES, U.S.A., INC.

INSTALLATION

INSTALLATION

1. **INSTALL TRANSMISSION OIL COOLER**
    a. Install the transmission oil cooler to the front engine mounting bracket with the 3 bolts.

       Torque: 14 N*m (138 kgf*cm, 10 ft.*lbf)

    b. Connect the No. 3 water by-pass hose, No. 4 water by-pass hose, No. 1 oil cooler outlet hose and No. 1 oil cooler inlet hose to the transmission oil cooler.
2. **INSTALL INLET AIR CLEANER ASSEMBLY** . Refer to **INSTALLATION - Step 53**
3. **INSTALL COOL AIR INTAKE DUCT SEAL** . Refer to **INSTALLATION - Step 4**
4. **ADD ENGINE COOLANT** . Refer to **REPLACEMENT - Step 2**
5. **ADD AUTOMATIC TRANSAXLE FLUID**

   Refer to **ADJUSTMENT**

6. **INSPECT FOR COOLANT LEAK** . Refer to **ON-VEHICLE INSPECTION - Step 1**

SHIFT LEVER

COMPONENTS

ILLUSTRATION

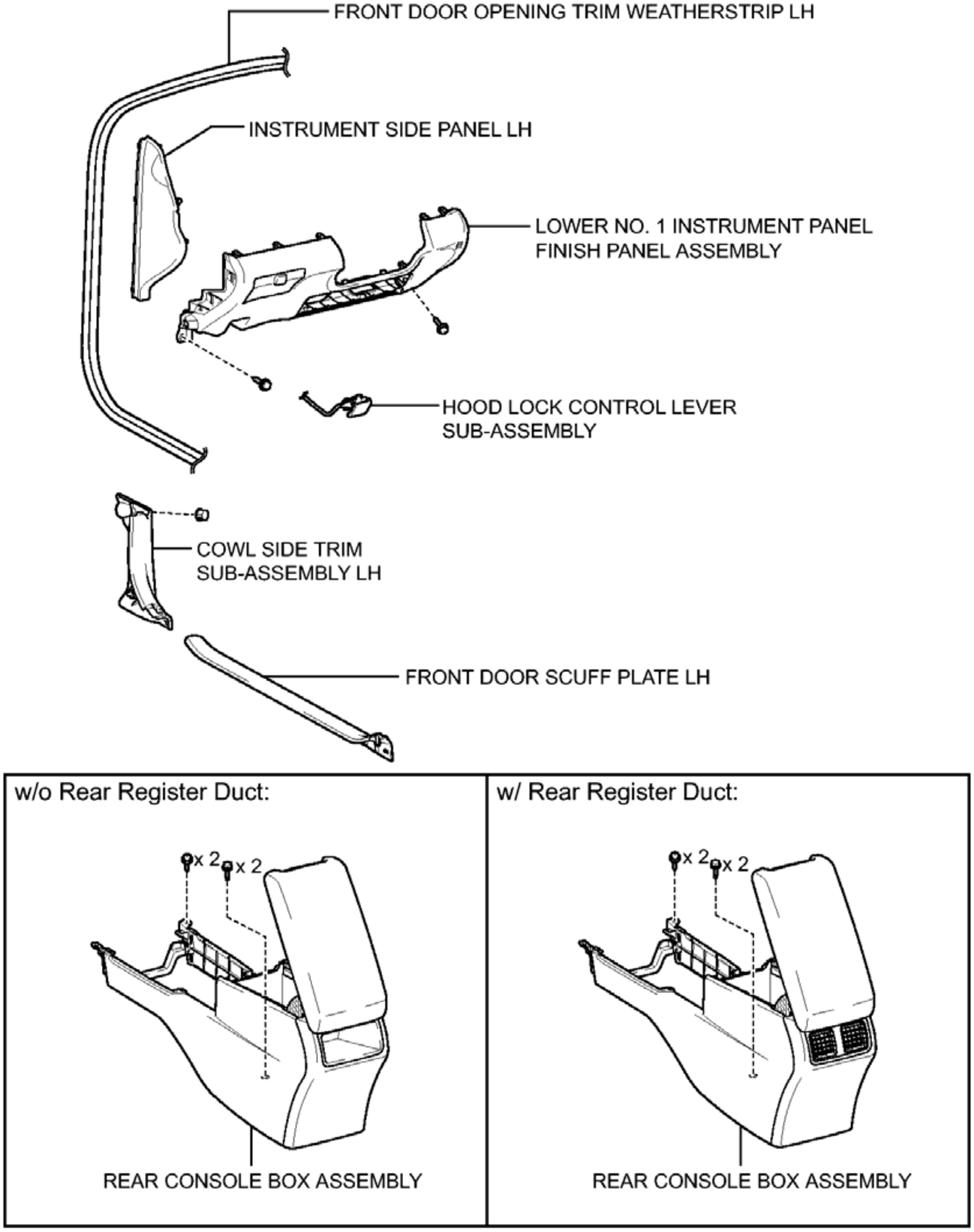
FRONT DOOR OPENING TRIM WEATHERSTRIP LH
INSTRUMENT SIDE PANEL LH
LOWER NO. 1 INSTRUMENT PANEL FINISH PANEL ASSEMBLY
HOOD LOCK CONTROL LEVER SUB-ASSEMBLY
COWL SIDE TRIM SUB-ASSEMBLY LH
FRONT DOOR SCUFF PLATE LH
w/o Rear Register Duct:
x 2
x 2
REAR CONSOLE BOX ASSEMBLY
w/ Rear Register Duct:
x 2
x 2
REAR CONSOLE BOX ASSEMBLY

Fig. 77: Identifying Shift Lever Replacement Components With Torque Specifications (1 Of 4)
Courtesy of TOYOTA MOTOR SALES, U.S.A., INC.

ILLUSTRATION

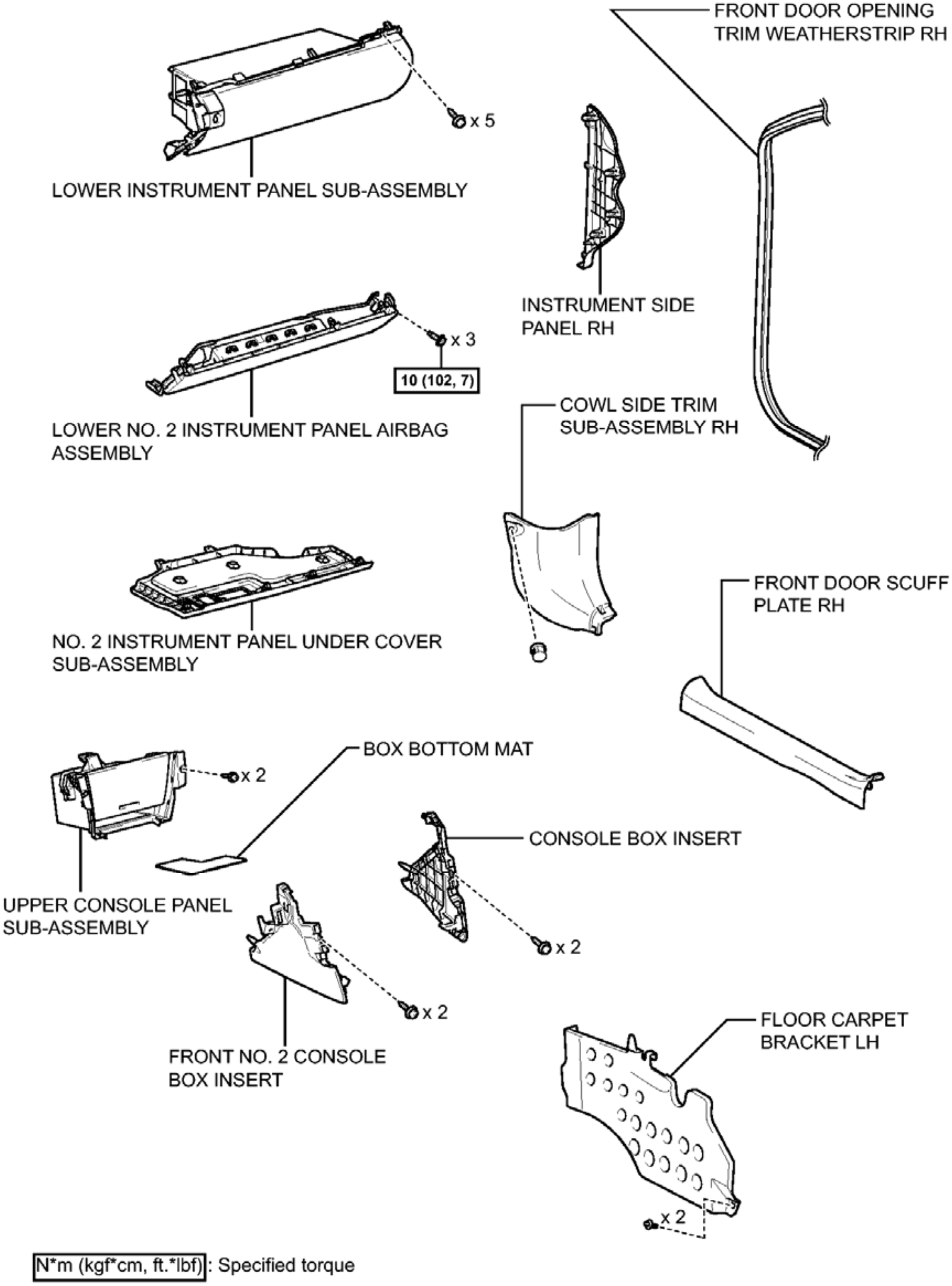
FRONT DOOR OPENING TRIM WEATHERSTRIP RH
x 5
LOWER INSTRUMENT PANEL SUB-ASSEMBLY
INSTRUMENT SIDE PANEL RH
x 3
10 (102, 7)
LOWER NO. 2 INSTRUMENT PANEL AIRBAG ASSEMBLY
COWL SIDE TRIM SUB-ASSEMBLY RH
FRONT DOOR SCUFF PLATE RH
NO. 2 INSTRUMENT PANEL UNDER COVER SUB-ASSEMBLY
BOX BOTTOM MAT
x 2
CONSOLE BOX INSERT
UPPER CONSOLE PANEL SUB-ASSEMBLY
x 2
x 2
FRONT NO. 2 CONSOLE BOX INSERT
FLOOR CARPET BRACKET LH
x 2
N*m (kgf*cm, ft.*lbf) : Specified torque

Fig. 78: Identifying Shift Lever Replacement Components With Torque Specifications (2 Of 4)
Courtesy of TOYOTA MOTOR SALES, U.S.A., INC.

ILLUSTRATION

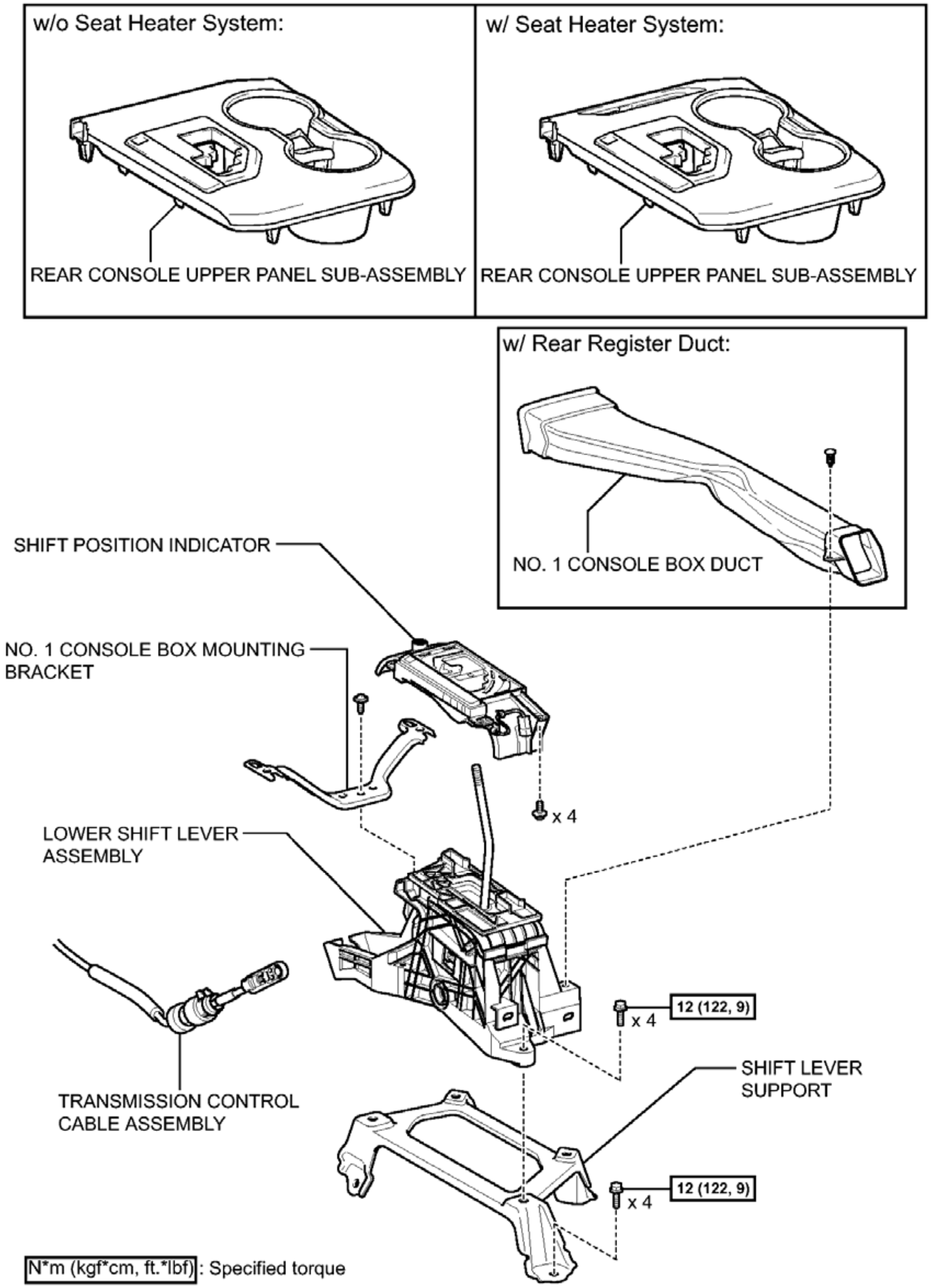
w/o Seat Heater System:
REAR CONSOLE UPPER PANEL SUB-ASSEMBLY
w/ Seat Heater System:
REAR CONSOLE UPPER PANEL SUB-ASSEMBLY
w/ Rear Register Duct:
NO. 1 CONSOLE BOX DUCT
SHIFT POSITION INDICATOR
NO. 1 CONSOLE BOX MOUNTING BRACKET
x 4
LOWER SHIFT LEVER ASSEMBLY
x 4
12 (122, 9)
SHIFT LEVER SUPPORT
TRANSMISSION CONTROL CABLE ASSEMBLY
x 4
12 (122, 9)
N*m (kgf*cm, ft.*lbf) : Specified torque

Fig. 79: Identifying Shift Lever Replacement Components With Torque Specifications (3 Of 4)
Courtesy of TOYOTA MOTOR SALES, U.S.A., INC.

ILLUSTRATION

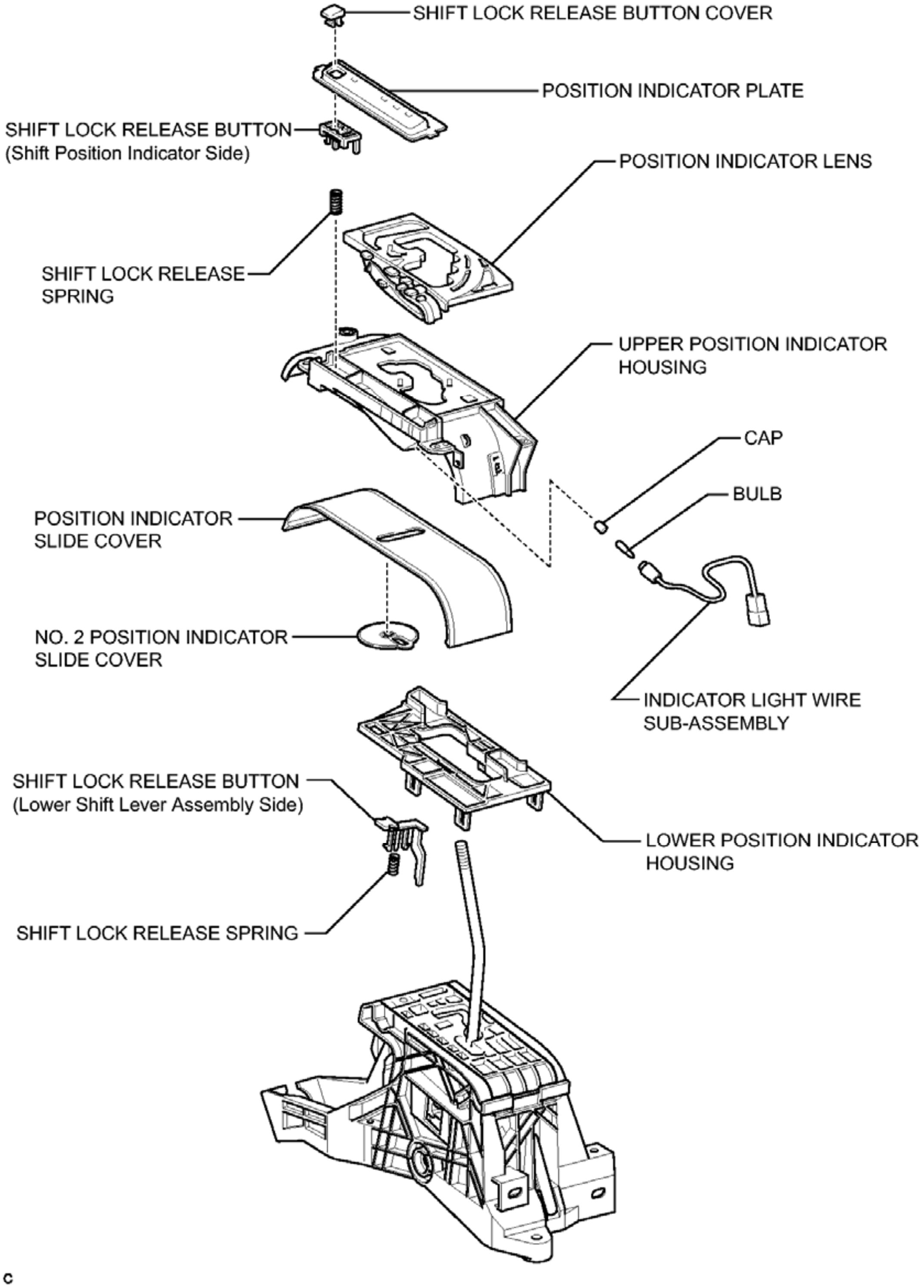
SHIFT LOCK RELEASE BUTTON COVER
POSITION INDICATOR PLATE
SHIFT LOCK RELEASE BUTTON
(Shift Position Indicator Side)
POSITION INDICATOR LENS
SHIFT LOCK RELEASE
SPRING
UPPER POSITION INDICATOR
HOUSING
CAP
BULB
POSITION INDICATOR
SLIDE COVER
NO. 2 POSITION INDICATOR
SLIDE COVER
INDICATOR LIGHT WIRE
SUB-ASSEMBLY
SHIFT LOCK RELEASE BUTTON
(Lower Shift Lever Assembly Side)
LOWER POSITION INDICATOR
HOUSING
SHIFT LOCK RELEASE SPRING
C

Fig. 80: Identifying Shift Lever Replacement Components With Torque Specifications (4 Of 4)
Courtesy of TOYOTA MOTOR SALES, U.S.A., INC.

ON-VEHICLE INSPECTION

ON-VEHICLE INSPECTION

1. **INSPECT SHIFT LEVER POSITION**
    a. When shifting from P to R with the ignition switch ON and the brake pedal depressed, make sure that the shift lever moves smoothly and correctly into P.
    b. Start the engine and make sure that the vehicle moves forward when the shift lever is moved from N to D and moves rearward when the shift lever is moved to R.

       If the operation cannot be done as specified, inspect the park/neutral position switch assembly and inspect the shift lock control unit.

2. **INSPECT SHIFT LOCK OPERATION**
    a. Move the shift lever to P.
    b. Turn the ignition switch off.
    c. Check that the shift lever cannot be moved from P to any other position.
    d. Turn the ignition switch to ON, depress the brake pedal, and check that the shift lever can be moved from P to any other position.

       If the operation cannot be done as specified, inspect the shift lock control unit.

3. **INSPECT SHIFT LOCK RELEASE BUTTON OPERATION**
    a. Turn the ignition switch off.
    b. Using a screwdriver, remove the shift lock release button cover.
    c. When moving the shift lever with the shift lock release button pressed, check that the shift lever can be moved from P to any other position.

       If the operation cannot be done as specified, inspect the shift lock control unit.

4. **INSPECT KEY INTERLOCK OPERATION (w/o Smart Key System)**
    a. Turn the ignition switch to ON.
    b. Depress the brake pedal and move the shift lever to any position other than P.
    c. Check that the ignition key cannot be turned to LOCK.
    d. Move the shift lever to P, turn the ignition key to LOCK and check that the ignition key can be removed.

       If the operation cannot be done as specified, inspect the shift lock control unit.

REMOVAL

REMOVAL

1. **PRECAUTION**

WARNING: Be sure to read Precaution thoroughly before servicing.

- **for Built-in Type Yaw Rate Sensor: Refer to PRECAUTION**
- **for Separate Type Yaw Rate Sensor: Refer to PRECAUTION**

NOTE: **After turning the ignition switch off, waiting time may be required before disconnecting the cable from the negative (-) battery terminal. Therefore, make sure to read the disconnecting the cable from the negative (-) battery terminal notices before proceeding with work. Refer to PRECAUTION .**

2. **DISCONNECT CABLE FROM NEGATIVE BATTERY TERMINAL**

   WARNING: **Wait at least 90 seconds after disconnecting the cable from the negative (-) battery terminal to disable the SRS system.**

   NOTE: **When disconnecting the cable, some systems need to be initialized after the cable is reconnected. Refer to INITIALIZATION .**

3. **REMOVE REAR CONSOLE BOX ASSEMBLY**

   Refer to **REMOVAL**

4. **REMOVE FRONT DOOR SCUFF PLATE LH** . Refer to **REMOVAL - Step 3**
5. **REMOVE COWL SIDE TRIM SUB-ASSEMBLY LH** . Refer to **REMOVAL - Step 4**
6. **DISCONNECT FRONT DOOR OPENING TRIM WEATHERSTRIP LH** . Refer to **REMOVAL - Step 5**
7. **REMOVE INSTRUMENT SIDE PANEL LH** . Refer to **REMOVAL - Step 6**
8. **DISCONNECT HOOD LOCK CONTROL LEVER SUB-ASSEMBLY** . Refer to **REMOVAL - Step 12**
9. **REMOVE LOWER NO. 1 INSTRUMENT PANEL FINISH PANEL ASSEMBLY** . Refer to **REMOVAL - Step 13**
10. **REMOVE FRONT DOOR SCUFF PLATE RH** . Refer to **REMOVAL - Step 7**
11. **REMOVE COWL SIDE TRIM SUB-ASSEMBLY RH** . Refer to **REMOVAL - Step 8**
12. **DISCONNECT FRONT DOOR OPENING TRIM WEATHERSTRIP RH** . Refer to **REMOVAL - Step 34**
13. **REMOVE INSTRUMENT SIDE PANEL RH** . Refer to **REMOVAL - Step 35**
14. **REMOVE NO. 2 INSTRUMENT PANEL UNDER COVER SUB-ASSEMBLY** . Refer to **REMOVAL - Step 36**
15. **REMOVE LOWER NO. 2 INSTRUMENT PANEL AIRBAG ASSEMBLY** . Refer to **REMOVAL - Step 8**
16. **REMOVE LOWER INSTRUMENT PANEL SUB-ASSEMBLY** . Refer to **REMOVAL - Step 38**
17. **REMOVE BOX BOTTOM MAT** . Refer to **REMOVAL - Step 25**
18. **REMOVE UPPER CONSOLE PANEL SUB-ASSEMBLY** . Refer to **REMOVAL - Step 26**

19. **REMOVE FRONT NO. 2 CONSOLE BOX INSERT** . Refer to **REMOVAL - Step 48**
20. **REMOVE CONSOLE BOX INSERT** . Refer to **REMOVAL - Step 49**
21. **REMOVE FLOOR CARPET BRACKET LH** . Refer to **REMOVAL - Step 31**
22. **REMOVE NO. 1 CONSOLE BOX MOUNTING BRACKET**
    a. Remove the screw and No. 1 console box mounting bracket from the lower shift lever assembly.

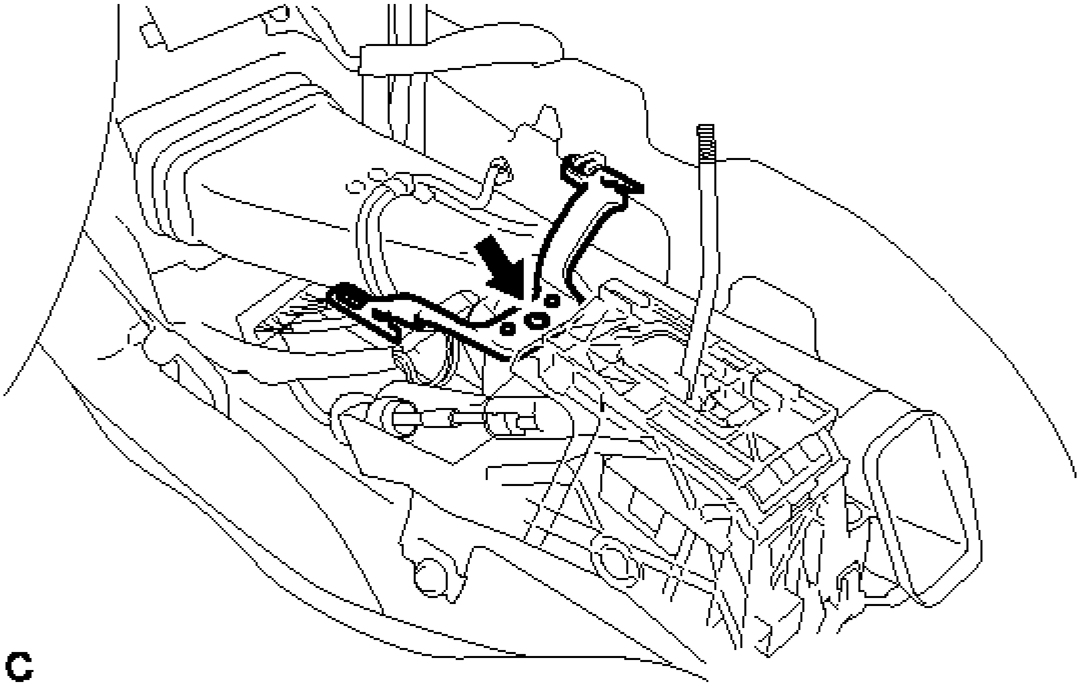

Fig. 81: Identifying No. 1 Console Box Mounting Bracket Screw
Courtesy of TOYOTA MOTOR SALES, U.S.A., INC.

23. **REMOVE NO. 1 CONSOLE BOX DUCT (w/ Rear Register Duct)**
    a. Remove the clip and No. 1 console box duct.

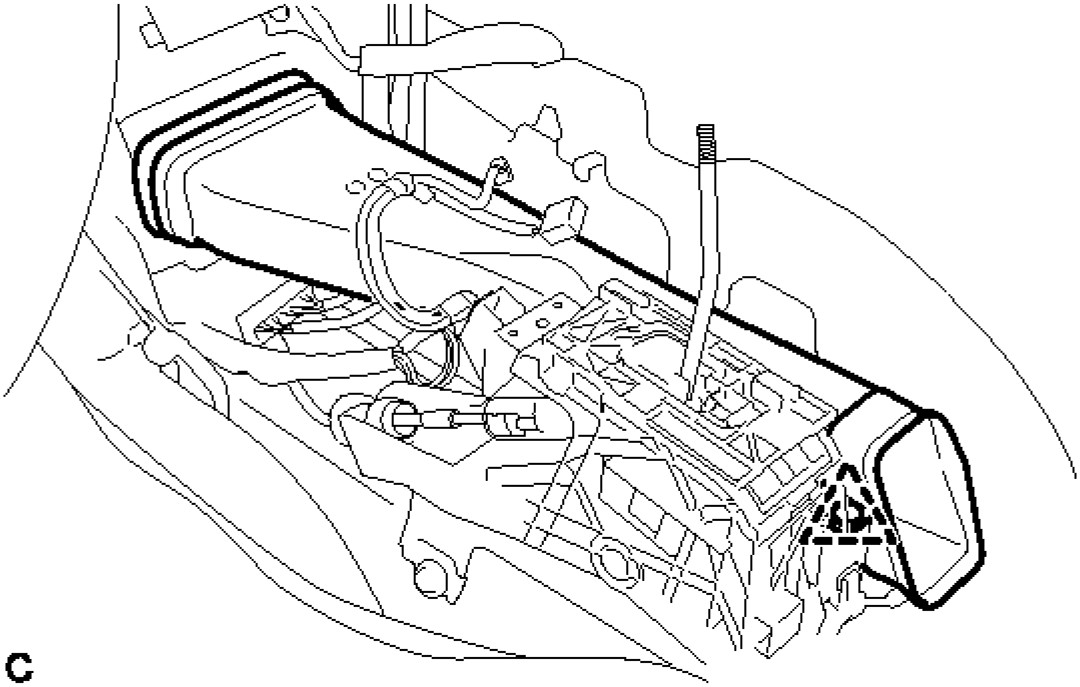

Fig. 82: Identifying No. 1 Console Box Duct Clip
Courtesy of TOYOTA MOTOR SALES, U.S.A., INC.

24. **REMOVE LOWER SHIFT LEVER ASSEMBLY**
    a. Move the shift lever to N.
    b. Disconnect the end of transmission control cable assembly from the lower shift lever assembly.

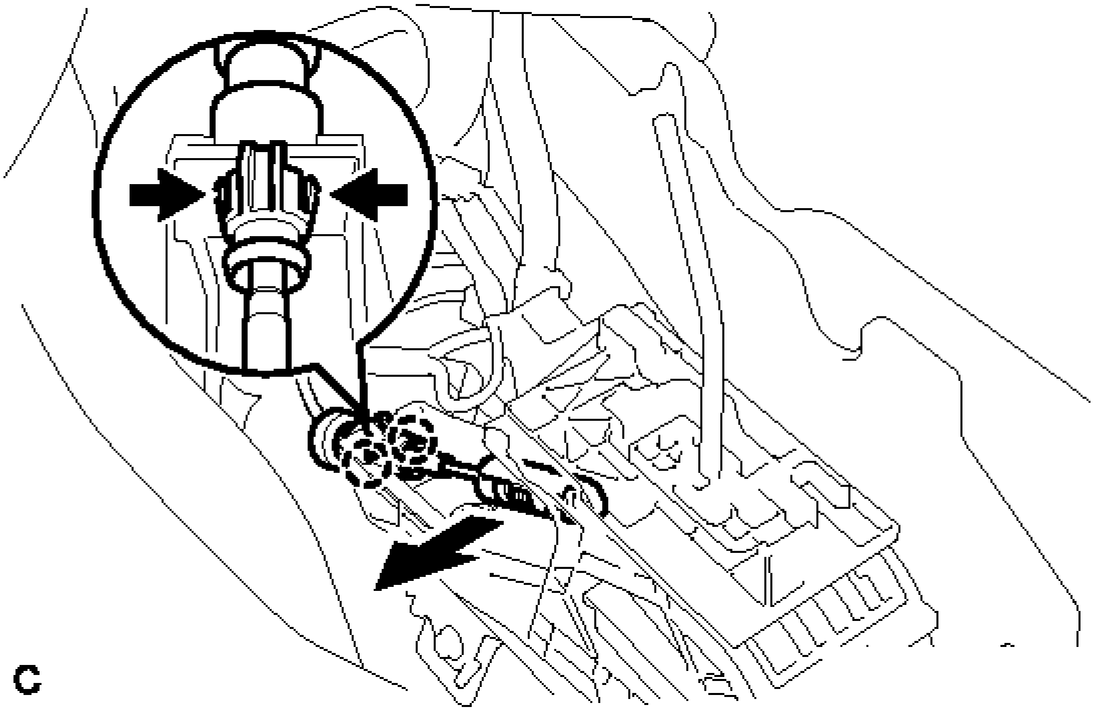

Fig. 83: Identifying Transmission Control Cable Assembly End
Courtesy of TOYOTA MOTOR SALES, U.S.A., INC.

c. Disengage the 2 claws and disconnect the transmission control cable assembly from the lower shift lever assembly.
d. Disconnect the 3 clamps and 2 connectors.

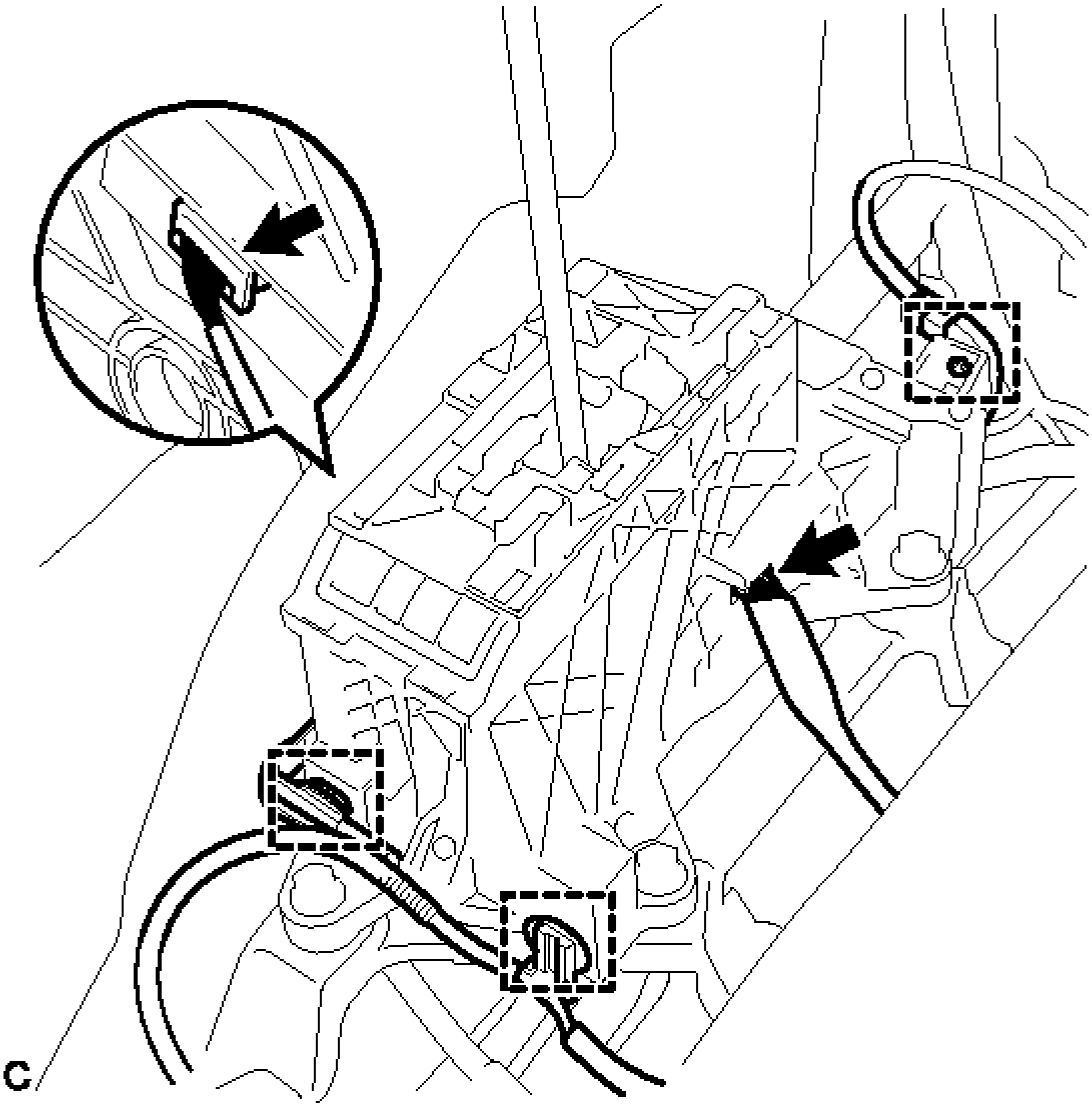

Fig. 84: Identifying Clamps And Connectors
Courtesy of TOYOTA MOTOR SALES, U.S.A., INC.

e. Remove the 4 bolts and lower shift lever assembly.

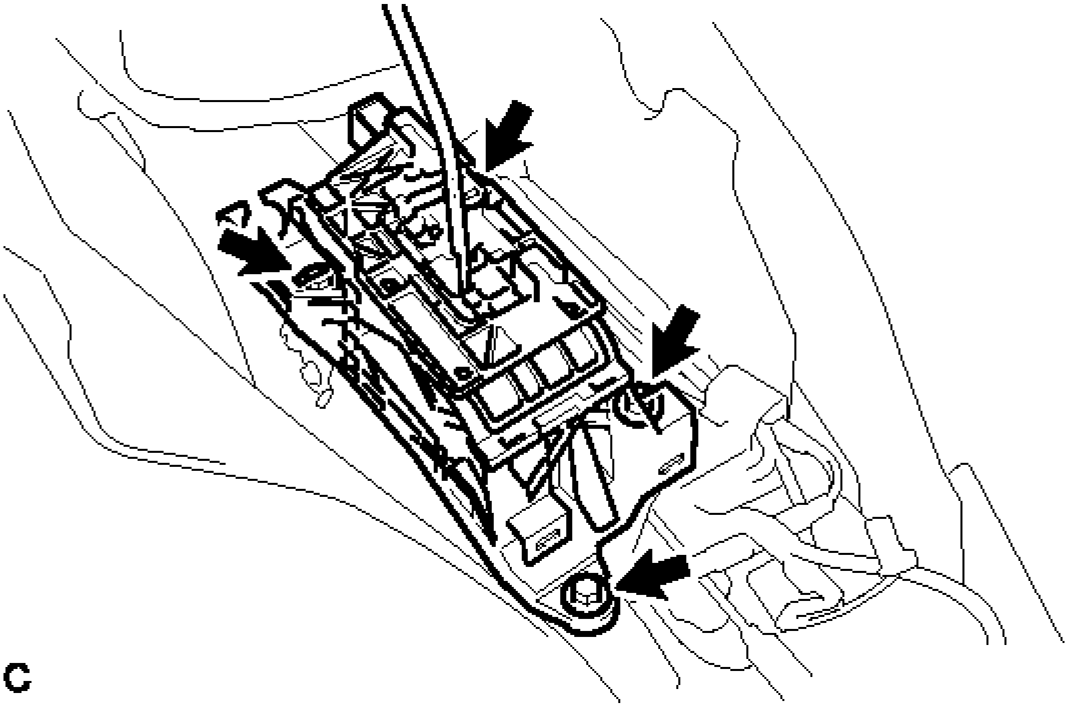

Fig. 85: Identifying Lower Shift Lever Assembly Bolts
Courtesy of TOYOTA MOTOR SALES, U.S.A., INC.

25. **REMOVE SHIFT LEVER SUPPORT**
    a. Remove the 4 bolts and shift lever support.

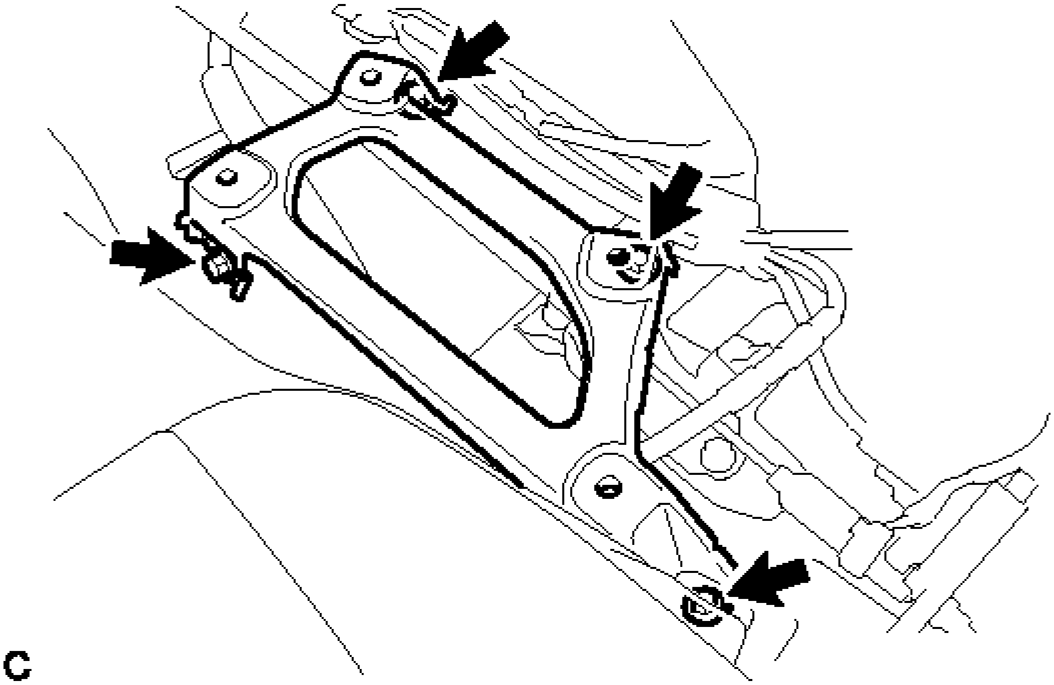

Fig. 86: Identifying Shift Lever Support Bolts

Courtesy of TOYOTA MOTOR SALES, U.S.A., INC.

DISASSEMBLY

DISASSEMBLY

1. **REMOVE LOWER POSITION INDICATOR HOUSING**
   a. Disengage the 5 claws to remove the lower position indicator housing.

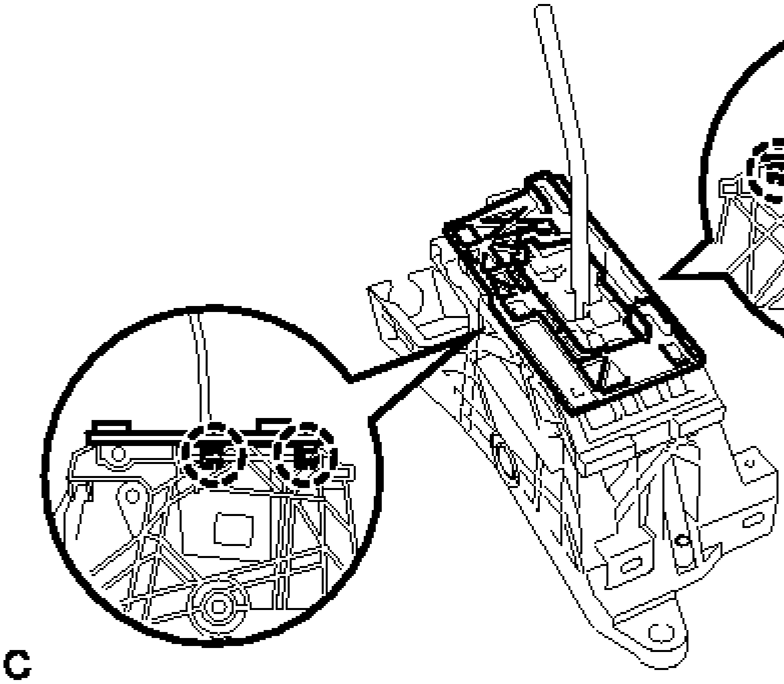

Fig. 87: Identifying Lower Position Indicator Housing Claws
Courtesy of TOYOTA MOTOR SALES, U.S.A., INC.

2. **REMOVE SHIFT LOCK RELEASE BUTTON (Lower Shift Lever Assembly Side)**
   a. Disengage the 2 claws to remove the shift lock release button and shift lock release spring.

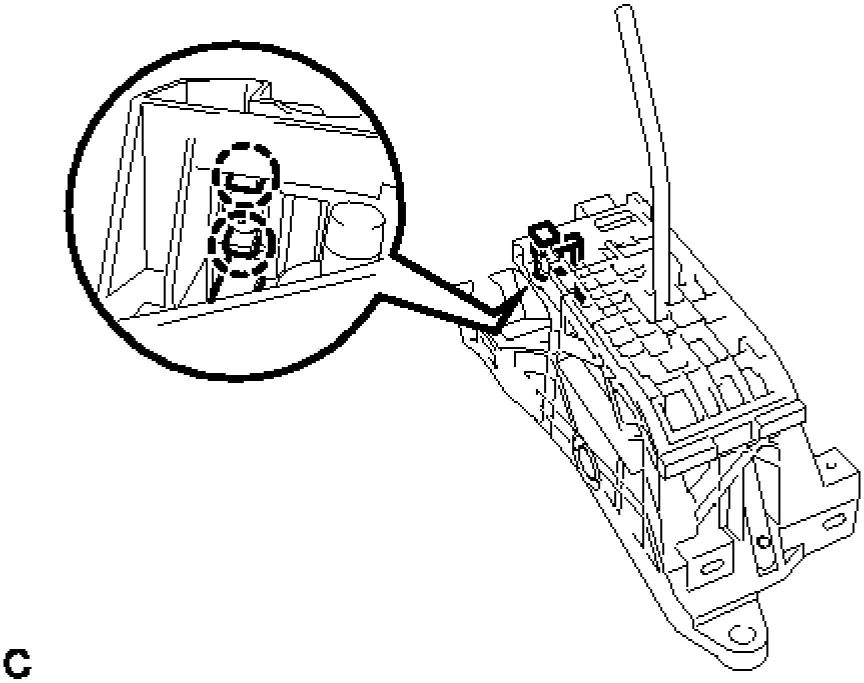

Fig. 88: Identifying Shift Lock Release Button Claws And Shift Lock Release Spring Claws
Courtesy of TOYOTA MOTOR SALES, U.S.A., INC.

3. **REMOVE SHIFT POSITION INDICATOR**
   a. Remove the 4 screws and shift position indicator.

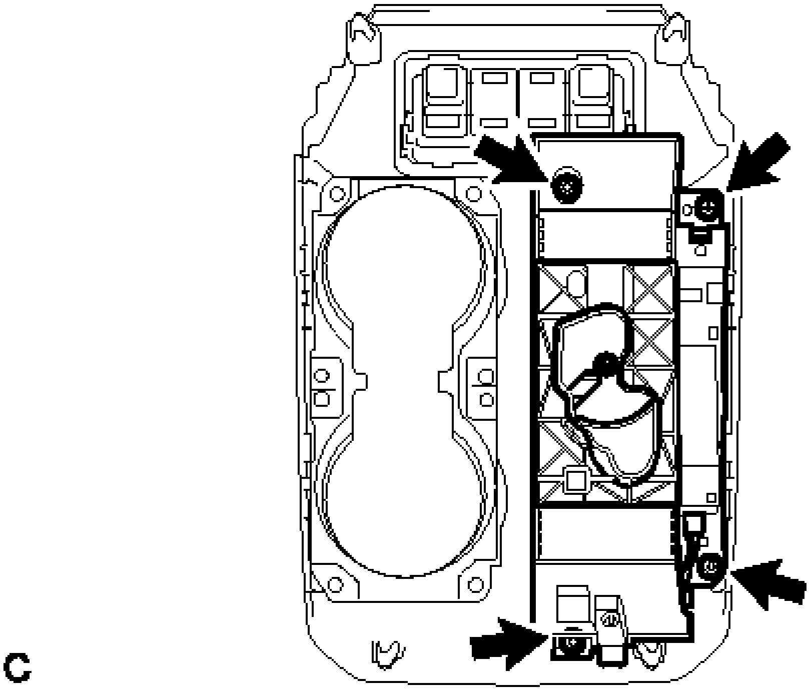

Fig. 89: Identifying Shift Position Indicator Screws

Courtesy of TOYOTA MOTOR SALES, U.S.A., INC.

4. **REMOVE SHIFT LOCK RELEASE BUTTON COVER**
    a. Disengage the 2 claws to remove the shift lock release button cover.

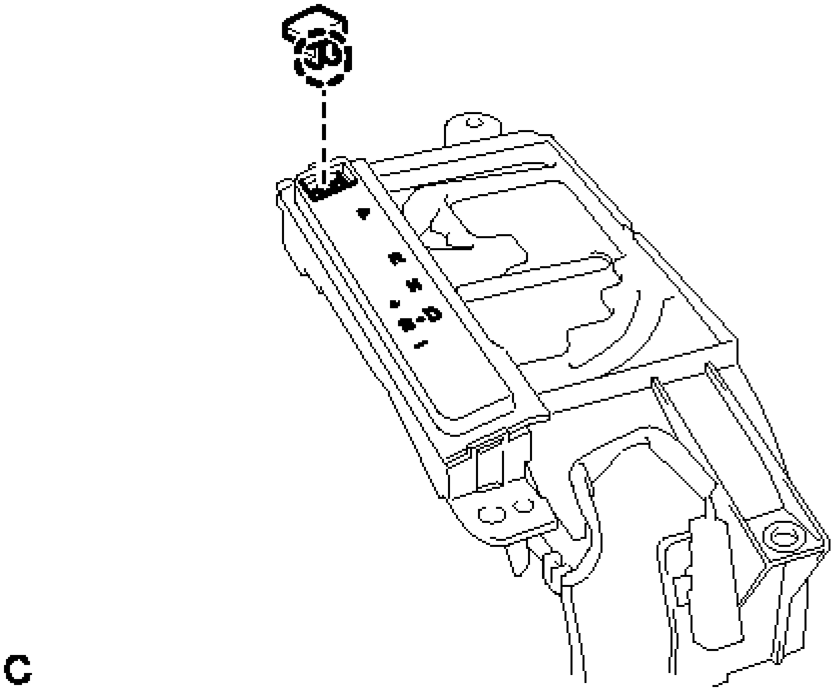

Fig. 90: Identifying Shift Lock Release Button Cover Claws
Courtesy of TOYOTA MOTOR SALES, U.S.A., INC.

5. **REMOVE SHIFT LOCK RELEASE BUTTON (Shift Position Indicator Side)**
    a. Disengage the 2 claws to remove the position indicator plate.

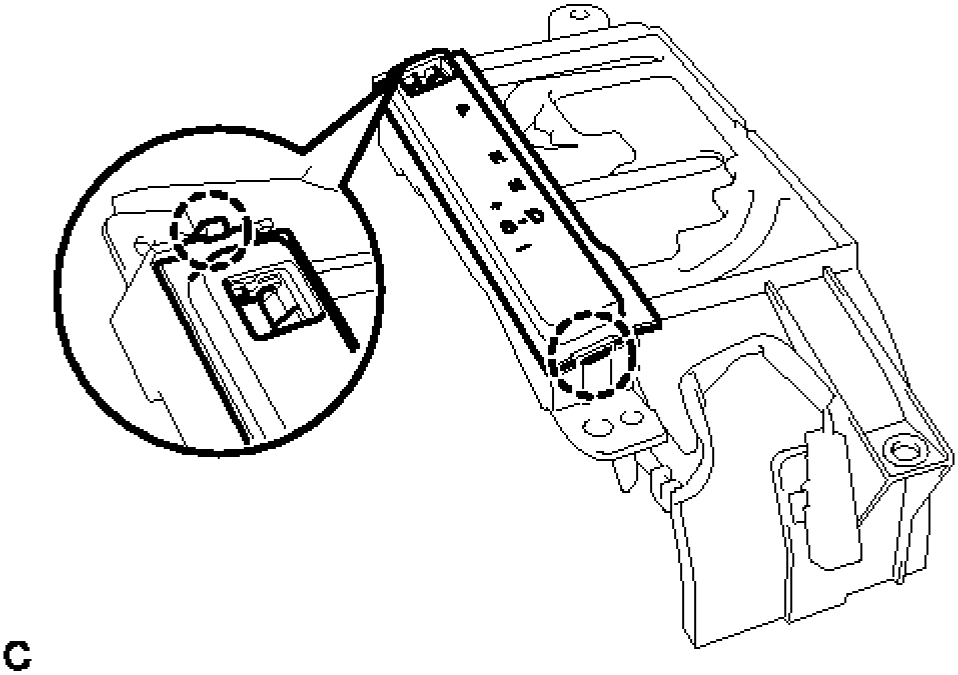

Fig. 91: Identifying Position Indicator Plate Claws
Courtesy of TOYOTA MOTOR SALES, U.S.A., INC.

b. Disengage the claw to remove the shift lock release button and shift lock release spring.

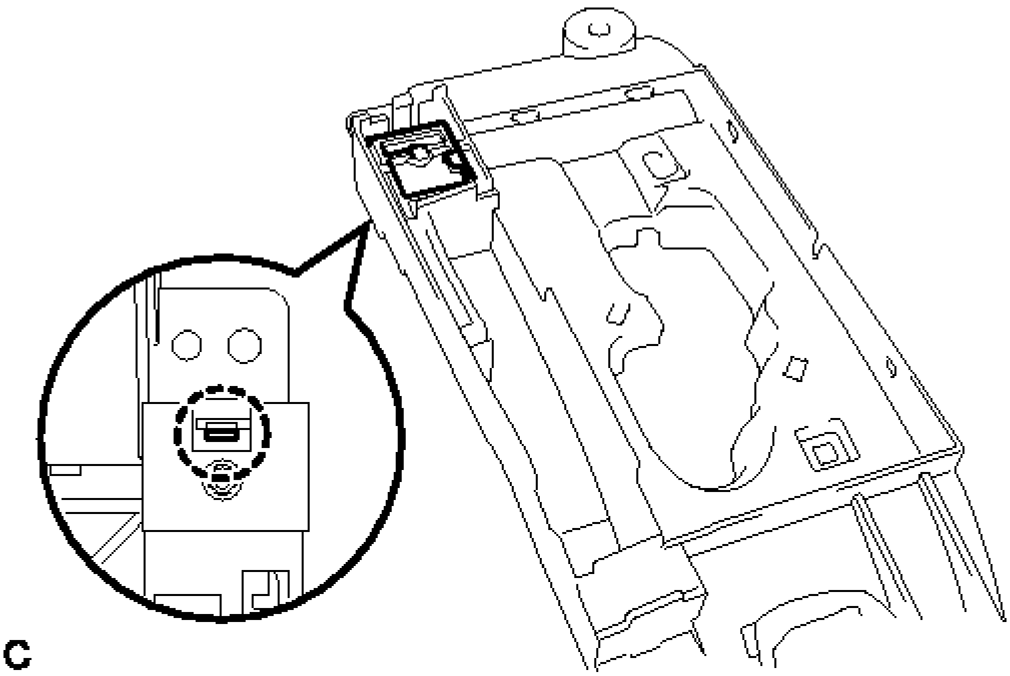

Fig. 92: Identifying Shift Lock Release Button Claw And Shift Lock Release Spring Claw
Courtesy of TOYOTA MOTOR SALES, U.S.A., INC.

6. **REMOVE INDICATOR LIGHT WIRE SUB-ASSEMBLY**
    a. Separate the bulb socket, 2 guides and clamp, and remove the indicator light wire sub-assembly from the upper position indicator housing.

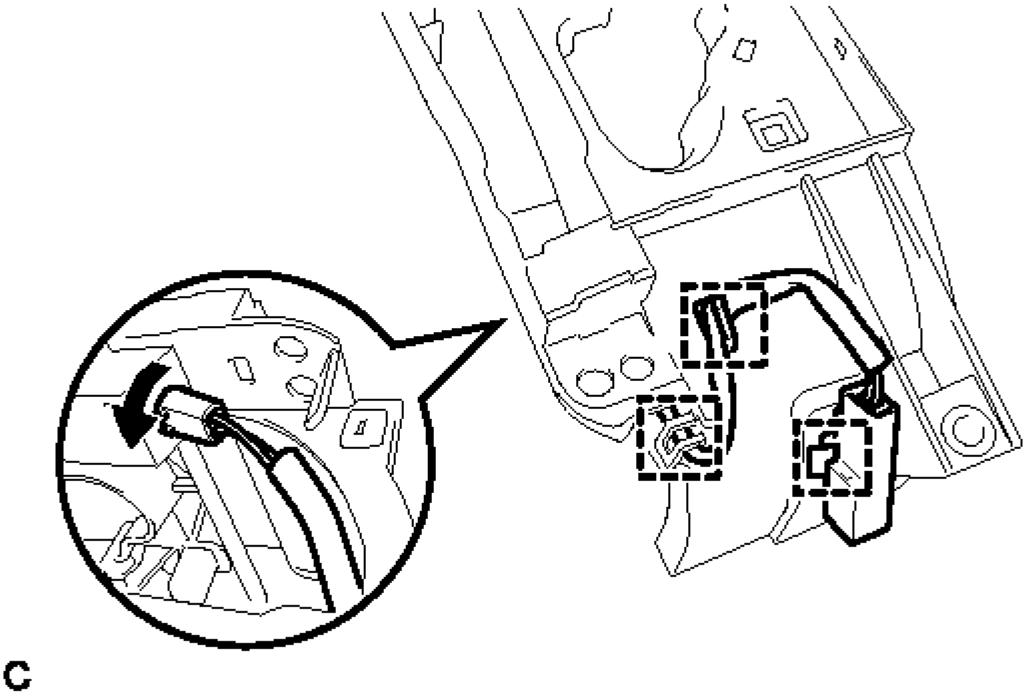

Fig. 93: Identifying Indicator Light Wire Sub-Assembly
Courtesy of TOYOTA MOTOR SALES, U.S.A., INC.

    b. Remove the bulb from the indicator light wire sub-assembly.
    c. Remove the cap from the bulb.

7. **REMOVE POSITION INDICATOR SLIDE COVER**
    a. Remove the position indicator slide cover from the upper position indicator housing.

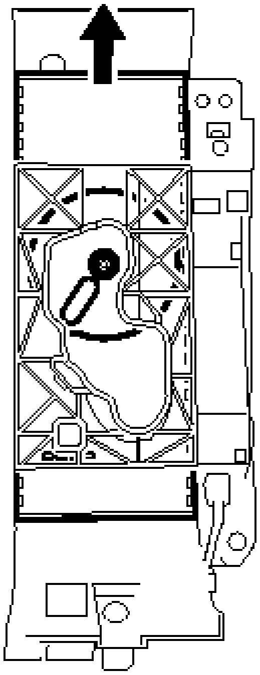

Fig. 94: Removing Position Indicator Slide Cover
Courtesy of TOYOTA MOTOR SALES, U.S.A., INC.

8. **REMOVE NO. 2 POSITION INDICATOR SLIDE COVER**
    a. Remove the No. 2 position indicator slide cover from the position indicator slide cover.

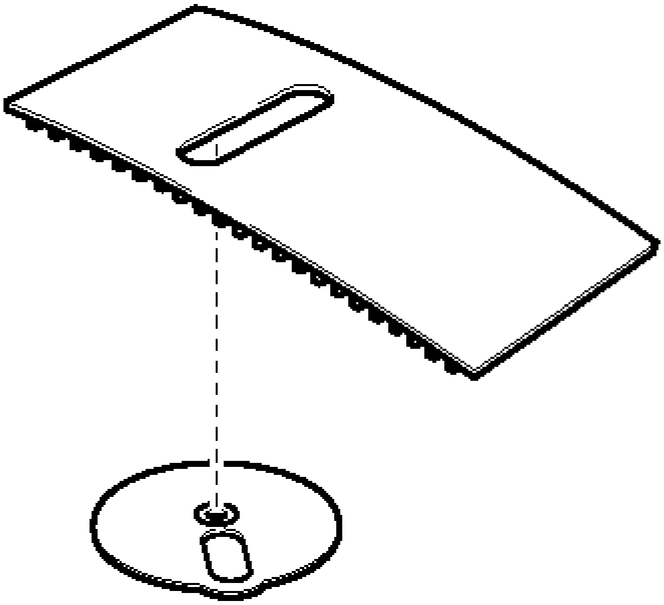

Fig. 95: Identifying No. 2 Position Indicator Slide Cover

Courtesy of TOYOTA MOTOR SALES, U.S.A., INC.

9. **REMOVE UPPER POSITION INDICATOR HOUSING**
    a. Disengage the 4 claws to remove the position indicator lens.

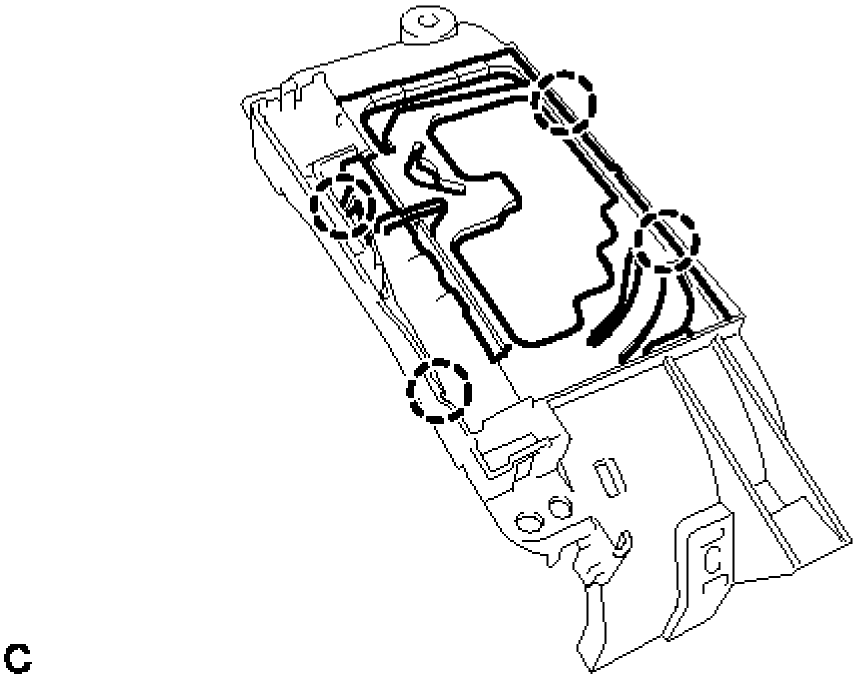

Fig. 96: Identifying Position Indicator Lens Claws
Courtesy of TOYOTA MOTOR SALES, U.S.A., INC.

INSPECTION

INSPECTION

1. **INSPECT LOWER SHIFT LEVER ASSEMBLY (w/o Smart Key System)**
    a. Measure the voltage according to the value(s) in the table below.

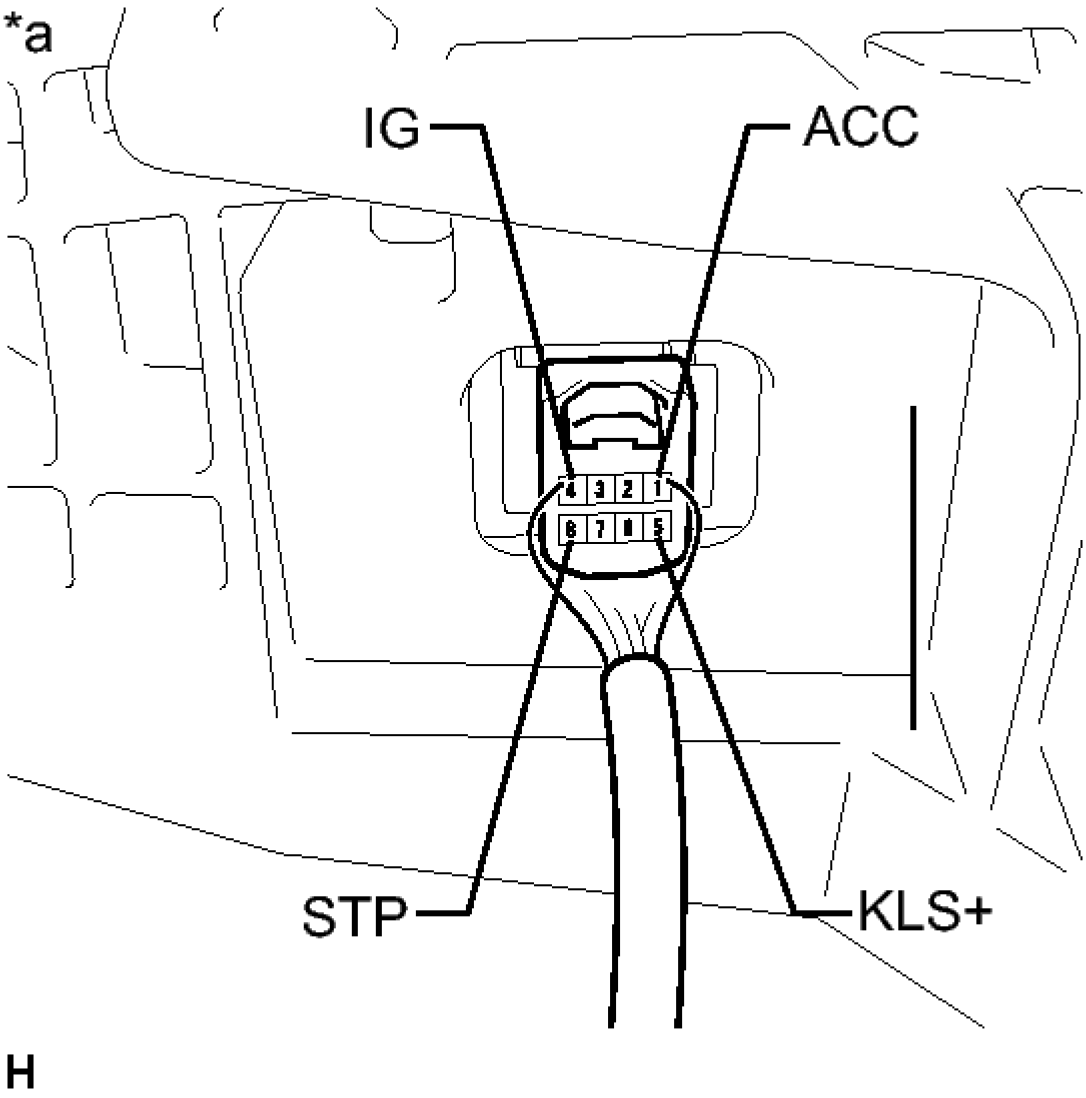

Fig. 97: Identifying Lower Shift Lever Assembly Connector Terminal Identification (W/O Smart Key System)
Courtesy of TOYOTA MOTOR SALES, U.S.A., INC.

Standard Voltage

Tester Connection	Condition	Specified Condition
1 (ACC) - Body ground	Ignition switch ON	11 to 14 V
	Ignition switch ACC	11 to 14 V
	Ignition switch off	Below 1 V

8 (STP) - Body ground	Brake pedal depressed	11 to 14 V
	Brake pedal released	Below 1 V
5 (KLS+) - Body ground	Ignition switch ACC and shift lever in P	Below 1 V
	Ignition switch ACC and shift lever except in P (Within approx. 1 second)	7.5 to 11 V
	Ignition switch ACC and shift lever in P (After approx. 1 second)	6.0 to 9.5 V
4 (IG) - Body ground	Ignition switch ON	11 to 14 V
	Ignition switch off	Below 1 V

TEXT IN ILLUSTRATION

*a	Component with harness connected (Shift Lock Control ECU)

HINT:

Do not disconnect the lower shift lever assembly connector.

b. Measure the resistance according to the value(s) in the table below.

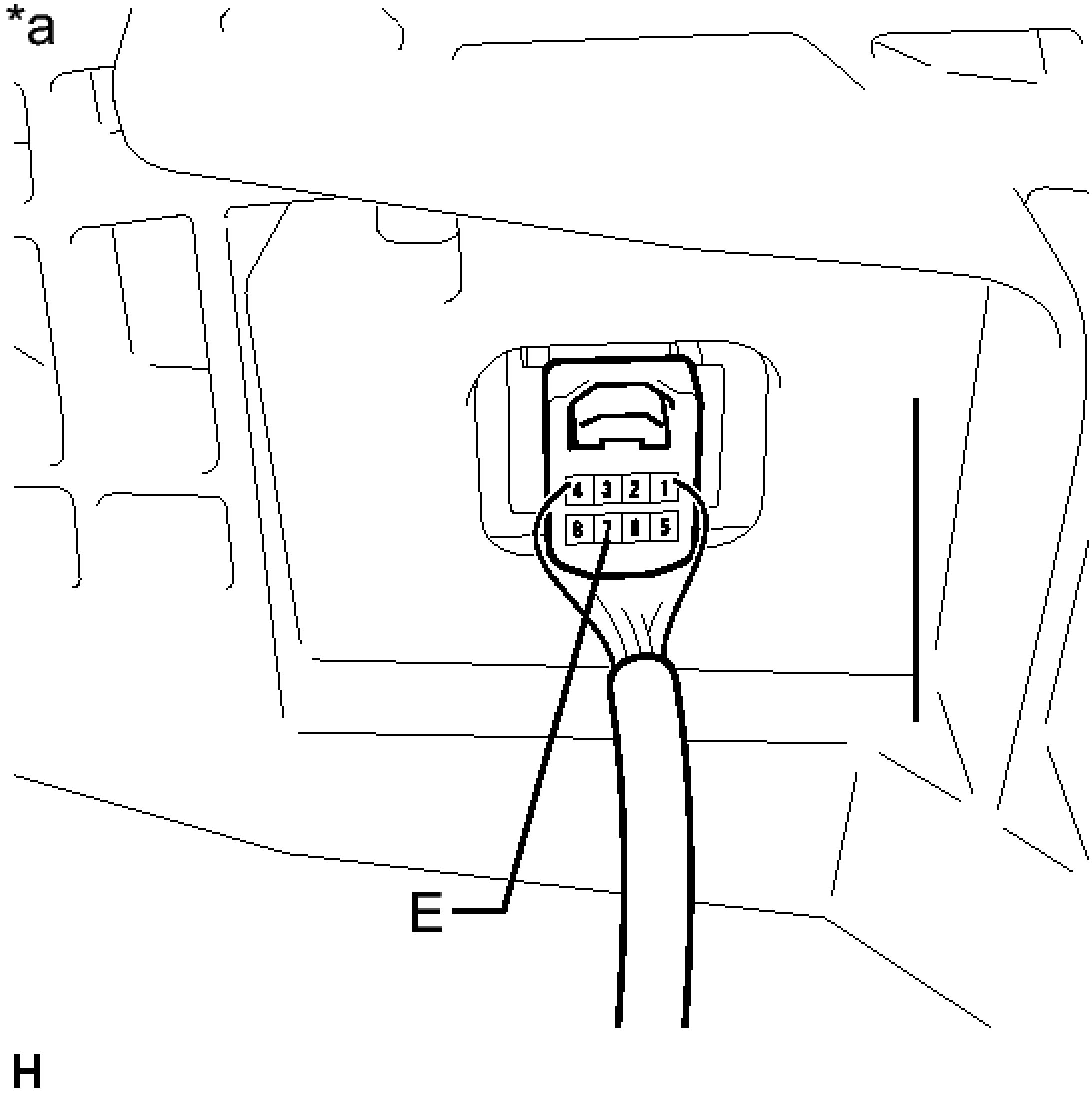

Fig. 98: Identifying Lower Shift Lever Assembly Connector Terminal Identification
Courtesy of TOYOTA MOTOR SALES, U.S.A., INC.

Standard Resistance

Tester Connection	Condition	Specified Value
7 (E) - Body ground	Always	Below 1 ohms

TEXT IN ILLUSTRATION

*a	Component with harness connected

	(Shift Lock Control ECU)

HINT:

Do not disconnect the lower shift lever assembly connector.

c. Inspect shift lock solenoid
   1. Disconnect the shift lock solenoid connector.

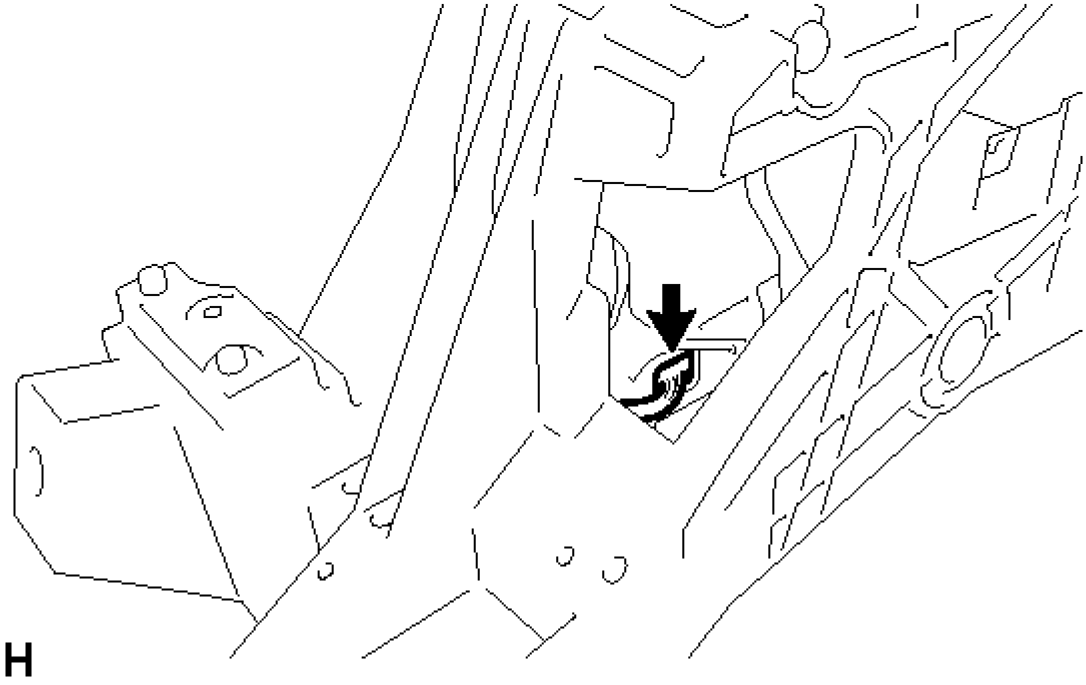

Fig. 99: Identifying Shift Lock Solenoid Connector
Courtesy of TOYOTA MOTOR SALES, U.S.A., INC.

   2. Measure the resistance according to the value(s) in the table below when the shift lever is moved to each position.

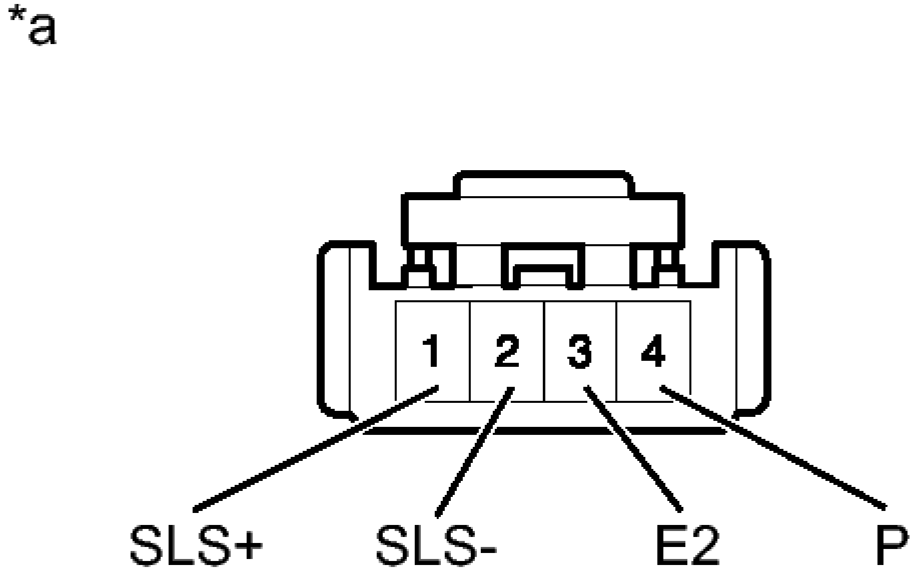

Fig. 100: Identifying Shift Lock Solenoid Connector Terminal Identification
Courtesy of TOYOTA MOTOR SALES, U.S.A., INC.

Standard Resistance

Tester Connection	Shift Lever Position	Specified Condition
4 (P) - 3 (E2)	P	10 kohms or higher
	Other than P	Below 1 ohms

TEXT IN ILLUSTRATION

*a	Front view of wire harness connector (to Shift Lock Solenoid)

- If the result is not as specified, replace the lower shift lever assembly.
- If the shift lock does not operate when the power source of the lower shift lever assembly is normal and the resistance between the body ground and the shift lock

solenoid is as specified, replace the lower shift lever assembly.

3. Measure the resistance according to the value(s) in the table below.

   Standard Resistance

Tester Connection	Condition	Specified Condition
1 (SLS+) - 2 (SLS-)	Always	112 ohms

   - If the result is not as specified, replace the lower shift lever assembly.
   - If the shift lock does not operate when the power source of the lower shift lever assembly is normal and the resistance between the body ground and the shift lock solenoid is as specified, replace the lower shift lever assembly.

2. **INSPECT LOWER SHIFT LEVER ASSEMBLY (w/ Smart Key System)**
   1. Measure the voltage according to the value(s) in the table below.

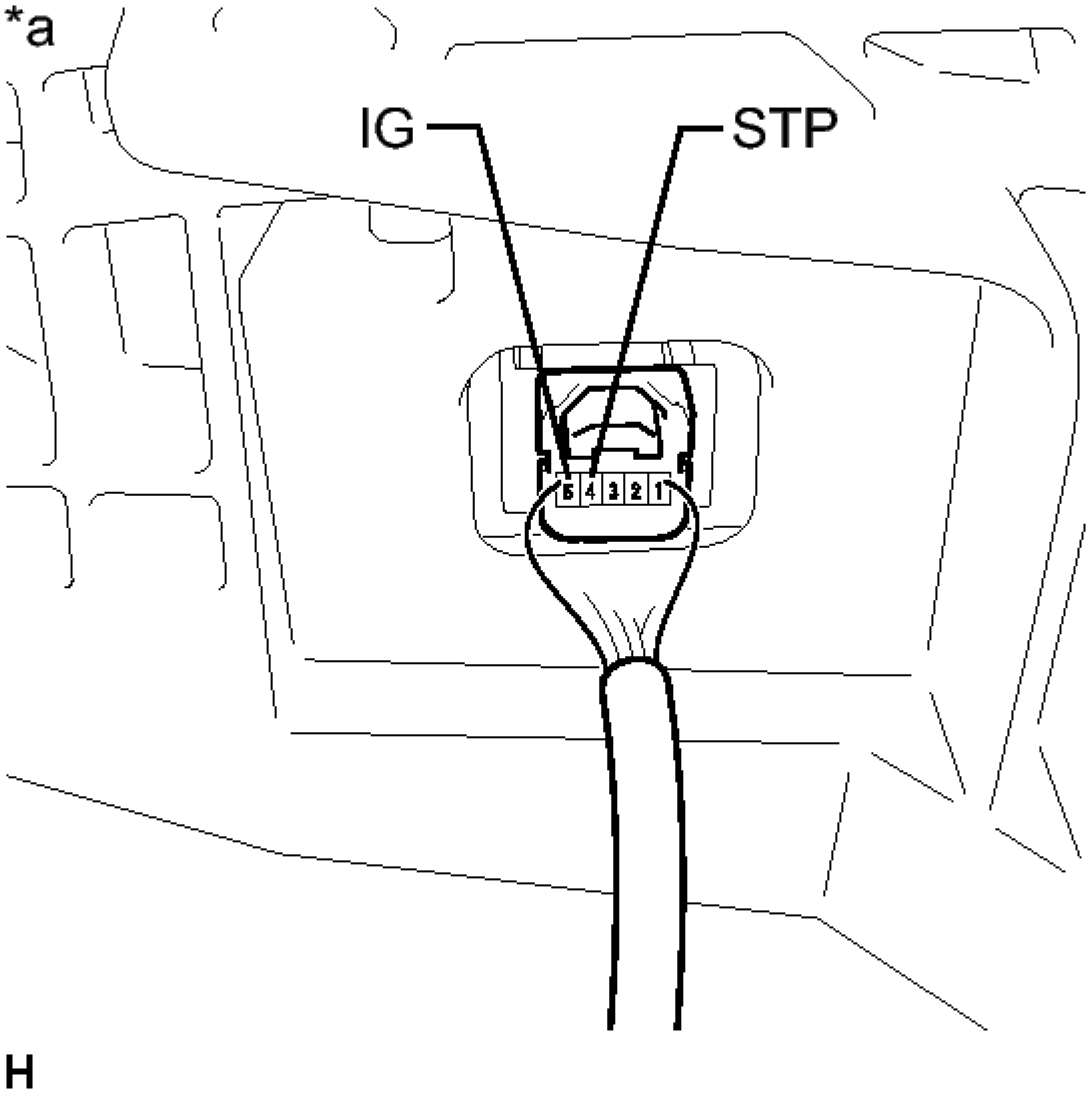

Fig. 101: Identifying Lower Shift Lever Assembly Connector Terminal Identification (W/Smart Key System)
Courtesy of TOYOTA MOTOR SALES, U.S.A., INC.

Standard Voltage

Tester Connection	Condition	Specified Condition
5 (IG) - Body ground	Engine switch on (IG)	11 to 14 V
	Engine switch off	Below 1 V
4 (STP) -	Brake pedal depressed	11 to 14 V

Body ground	Brake pedal released	Below 1 V

TEXT IN ILLUSTRATION

*a	Component with harness connected (Shift Lock Control ECU)

HINT:

Do not disconnect the lower shift lever assembly connector.

b. Measure the resistance according to the value(s) in the table below.

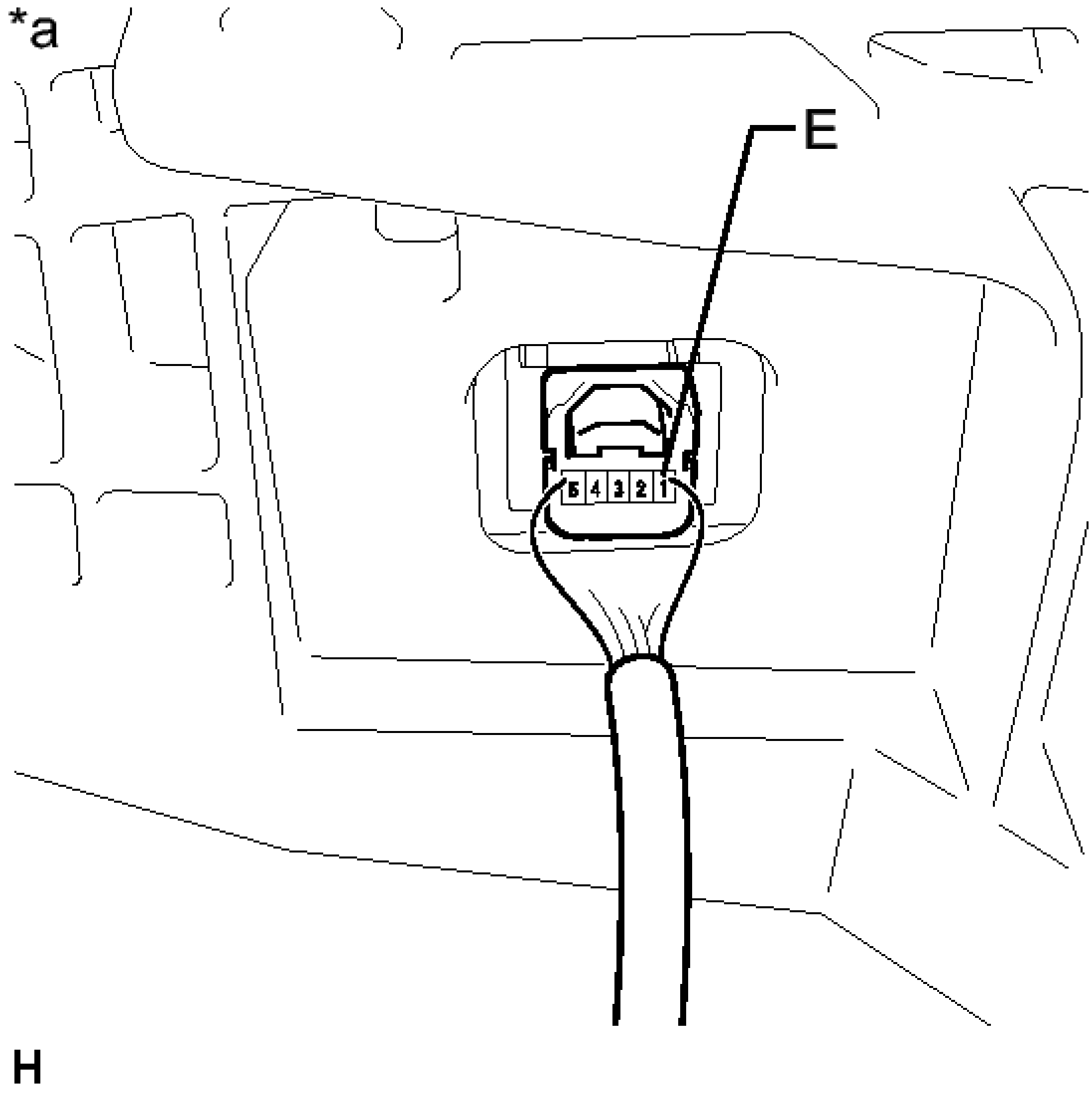

Fig. 102: Identification Lower Shift Lever Assembly Connector Terminal Identification
Courtesy of TOYOTA MOTOR SALES, U.S.A., INC.

Standard Resistance

Tester Connection	Condition	Specified Condition
1 (E) - Body ground	Always	Below 1 ohms

TEXT IN ILLUSTRATION

*a	Component with harness connected

	(Shift Lock Control ECU)

HINT:

Do not disconnect the lower shift lever assembly connector.

c. Inspect shift lock solenoid
   1. Disconnect the shift lock solenoid connector.

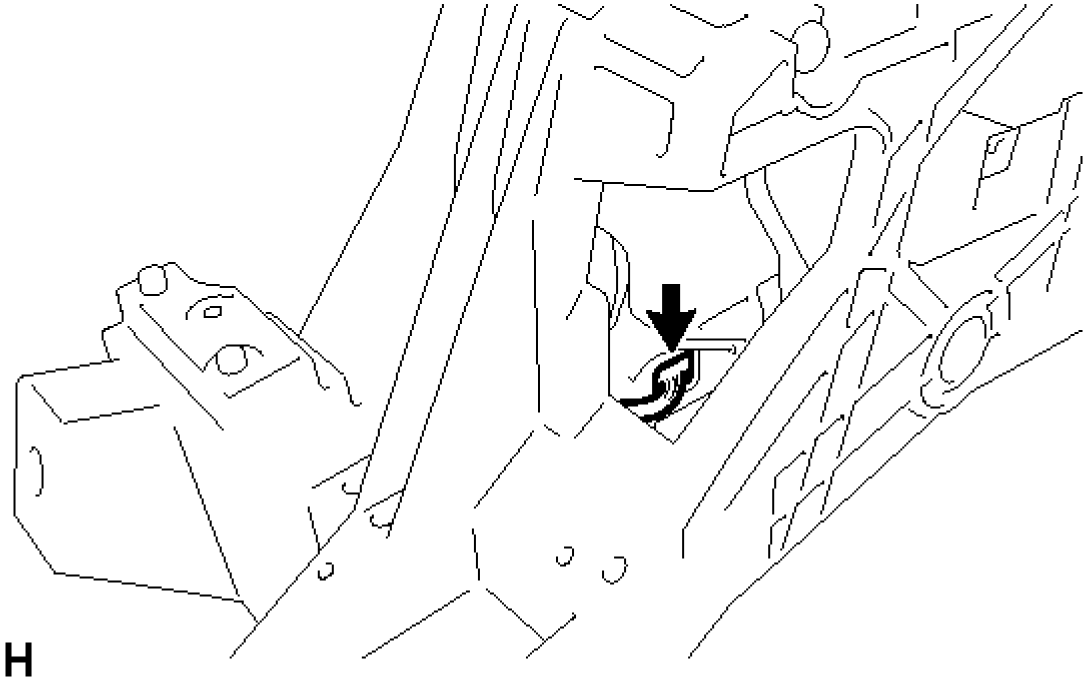

Fig. 103: Identifying Shift Lock Solenoid Connector
Courtesy of TOYOTA MOTOR SALES, U.S.A., INC.

   2. Measure the resistance according to the value(s) in the table below when the shift lever is moved to each position.

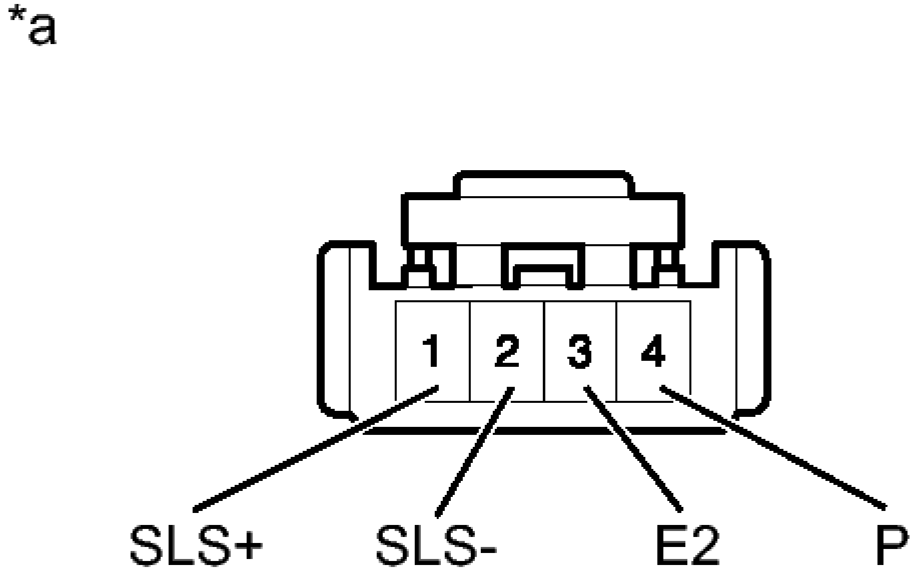

Fig. 104: Identifying Shift Lock Solenoid Connector Terminal Identification
Courtesy of TOYOTA MOTOR SALES, U.S.A., INC.

Standard Resistance

Tester Connection	Shift Lever Position	Specified Condition
4 (P) - 3 (E2)	P	10 kohms or higher
	Other than P	Below 1 ohms

TEXT IN ILLUSTRATION

*a	Front view of wire harness connector (to Shift Lock Solenoid)

- If the result is not as specified, replace the lower shift lever assembly.
- If the shift lock does not operate when the power source of the lower shift lever assembly is normal and the resistance between the body ground and the shift lock

solenoid is as specified, replace the lower shift lever assembly.

3. Measure the resistance according to the value(s) in the table below.

   Standard Resistance

Tester Connection	Condition	Specified Condition
1 (SLS+) - 2 (SLS-)	Always	112 ohms

- If the result is not as specified, replace the lower shift lever assembly.
- If the shift lock does not operate when the power source of the lower shift lever assembly is normal and the resistance between the body ground and the shift lock solenoid is as specified, replace the lower shift lever assembly.

3. **INSPECT TRANSMISSION CONTROL SWITCH**
   a. Measure the resistance between each terminal of the shift lock control unit assembly when the shift lever is moved to each position.

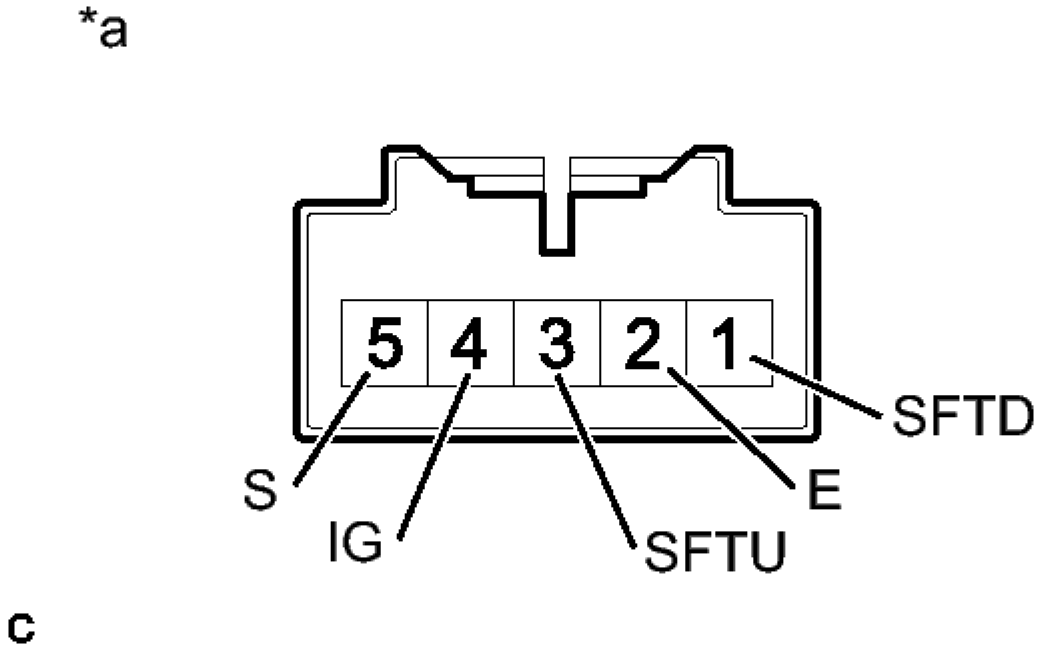

Fig. 105: Identifying Transmission Control Switch Connector Terminal Identification
Courtesy of TOYOTA MOTOR SALES, U.S.A., INC.

Standard Resistance

Tester Connection	Condition	Specified Condition

4 (IG) - 5 (S)	Shift lever in S, "+" or "-"	Below 1 ohms
	Shift lever not in S, "+" or "-"	10 kohms or higher
3 (SFTU) - 2 (E)	Shift lever held in "+" (Up-shift)	Below 1 ohms
	Shift lever not held in "+"	10 kohms or higher
1 (SFTD) - 2 (E)	Shift lever held in "-" (Down-shift)	Below 1 ohms
	Shift lever not held in "-"	10 kohms or higher

TEXT IN ILLUSTRATION

*a	Component without harness connected (Transmission Control Switch)

If the resistance value is not as specified, replace the lower shift lever assembly.

REASSEMBLY

REASSEMBLY

1. **INSTALL UPPER POSITION INDICATOR HOUSING**
    a. Engage the 4 claws to install the position indicator lens.

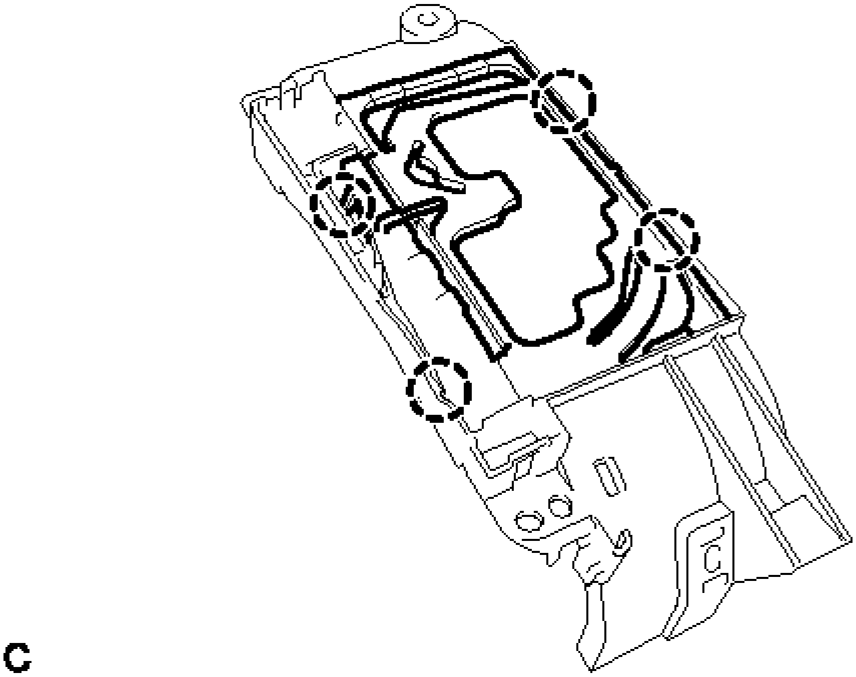

Fig. 106: Identifying Position Indicator Lens Claws
Courtesy of TOYOTA MOTOR SALES, U.S.A., INC.

2. **INSTALL NO. 2 POSITION INDICATOR SLIDE COVER**
    a. Install the No. 2 position indicator slide cover to the position indicator slide cover.

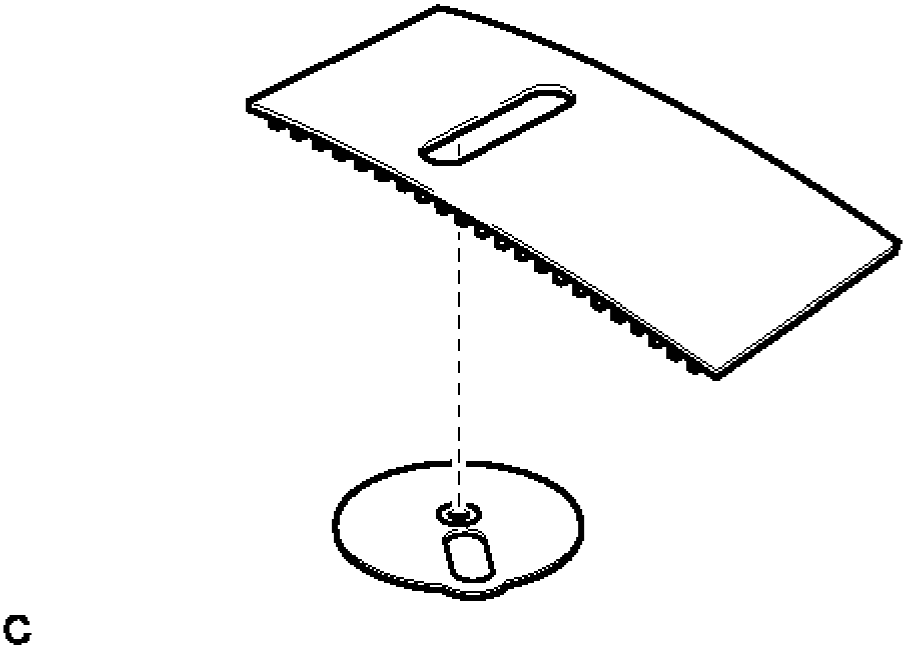

Fig. 107: Identifying No. 2 Position Indicator Slide Cover

Courtesy of TOYOTA MOTOR SALES, U.S.A., INC.

3. **INSTALL POSITION INDICATOR SLIDE COVER**
   a. Install the position indicator slide cover to the upper position indicator housing.

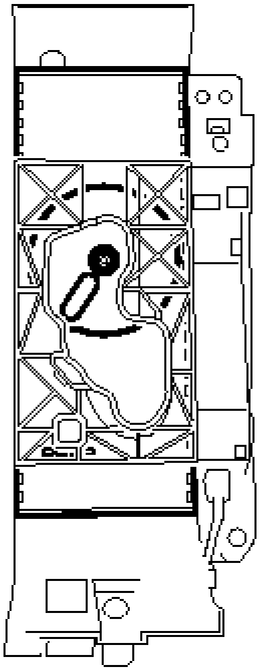

Fig. 108: Identifying Position Indicator Slide Cover
Courtesy of TOYOTA MOTOR SALES, U.S.A., INC.

4. **INSTALL INDICATOR LIGHT WIRE SUB-ASSEMBLY**
   a. Install the cap to the bulb.
   b. Install the bulb to the indicator light wire sub-assembly.
   c. Connect the 2 guides, clamp and bulb socket to install the indicator light wire sub-assembly to the upper position indicator housing.

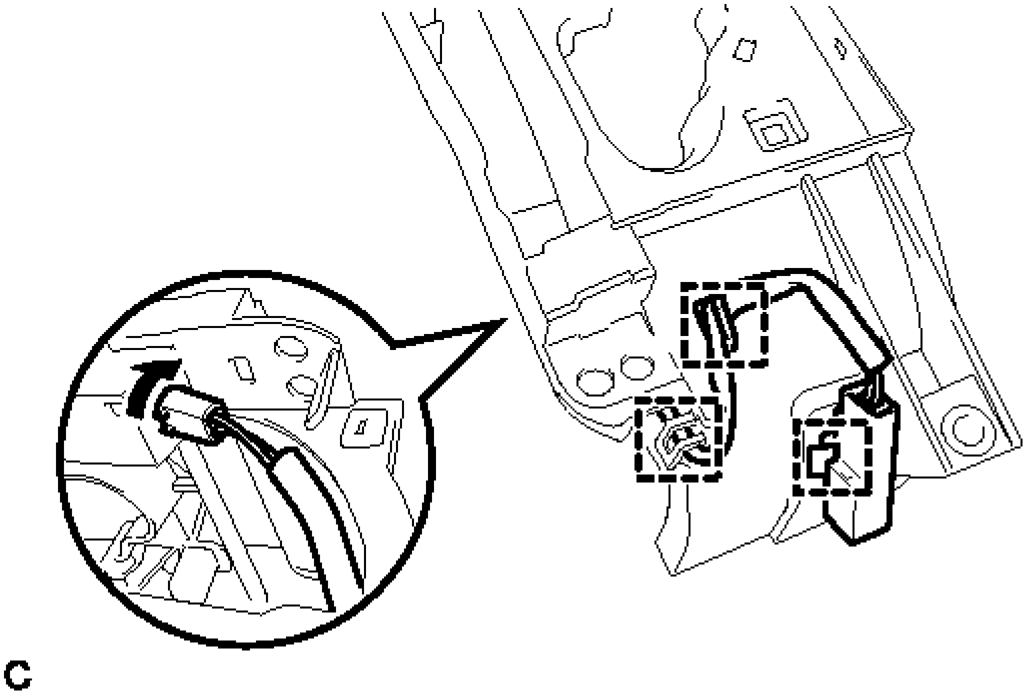

Fig. 109: Identifying Indicator Light Wiring Sub-Assembly Guides, Clamp And Bulb Socket
Courtesy of TOYOTA MOTOR SALES, U.S.A., INC.

5. **INSTALL SHIFT LOCK RELEASE BUTTON (Shift Position Indicator Side)**
   a. Engage the claw to install the shift lock release button with the shift lock release spring.

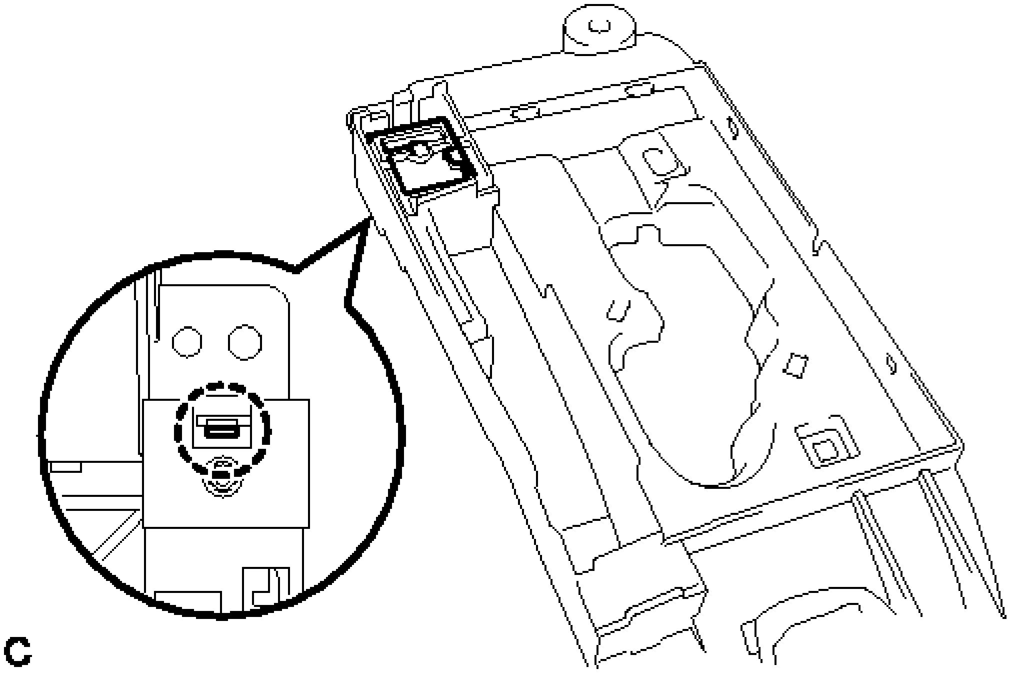

Fig. 110: Identifying Shift Lock Release Button Claw And Shift Lock Release Spring Claw

Courtesy of TOYOTA MOTOR SALES, U.S.A., INC.

b. Engage the 2 claws to install the position indicator plate.

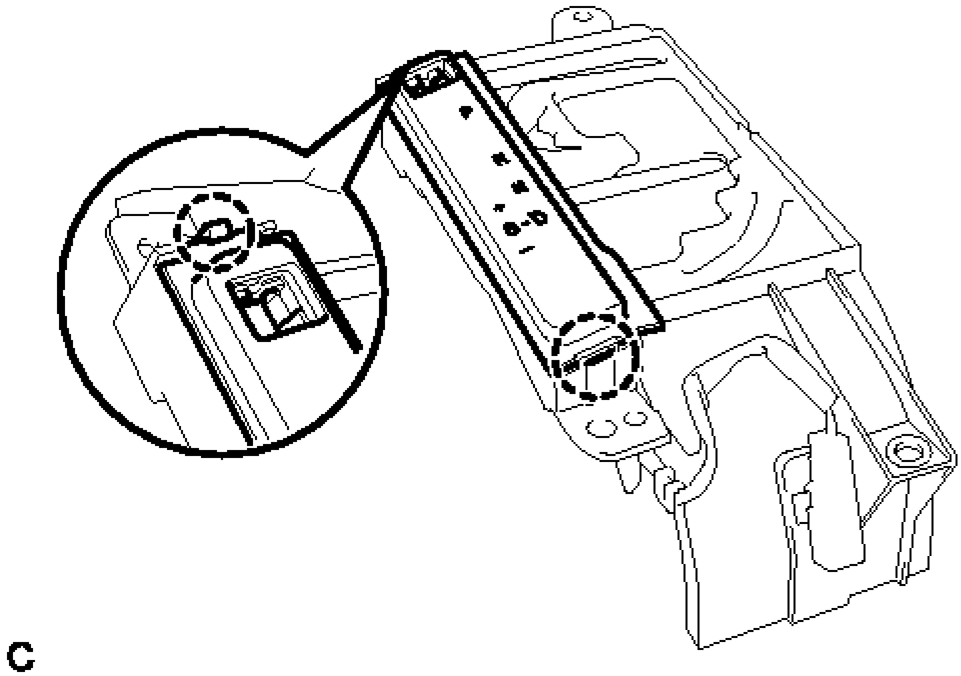

Fig. 111: Identifying Position Indicator Plate Claws
Courtesy of TOYOTA MOTOR SALES, U.S.A., INC.

6. INSTALL SHIFT LOCK RELEASE BUTTON COVER

a. Engage the 2 claws to install the shift lock release button cover.

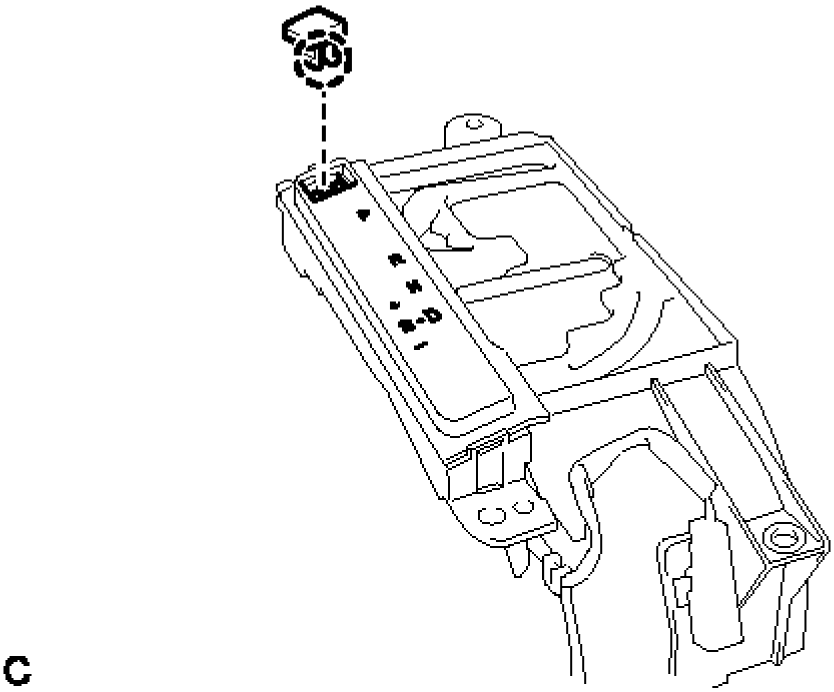

Fig. 112: Identifying Shift Lock Release Button Cover Claws
Courtesy of TOYOTA MOTOR SALES, U.S.A., INC.

7. **INSTALL SHIFT POSITION INDICATOR**
   a. Install the shift position indicator with the 4 screws in the sequence shown in the illustration.

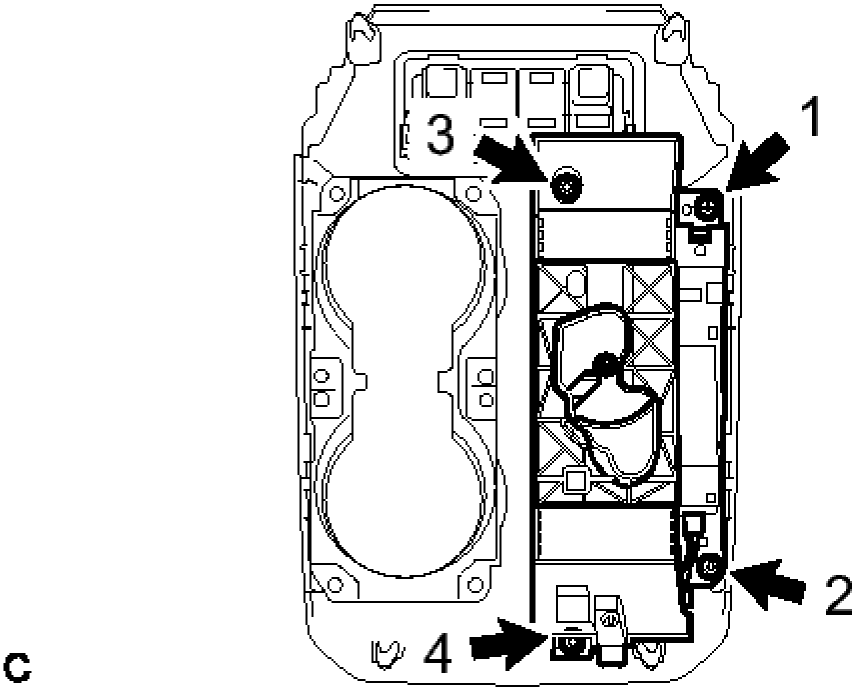

Fig. 113: Tightening Shift Position Indicator Screws In Sequence

Courtesy of TOYOTA MOTOR SALES, U.S.A., INC.

8. **INSTALL SHIFT LOCK RELEASE BUTTON (Lower Shift Lever Assembly Side)**
   a. Engage the 2 claws to install the shift lock release button with the shift lock release spring.

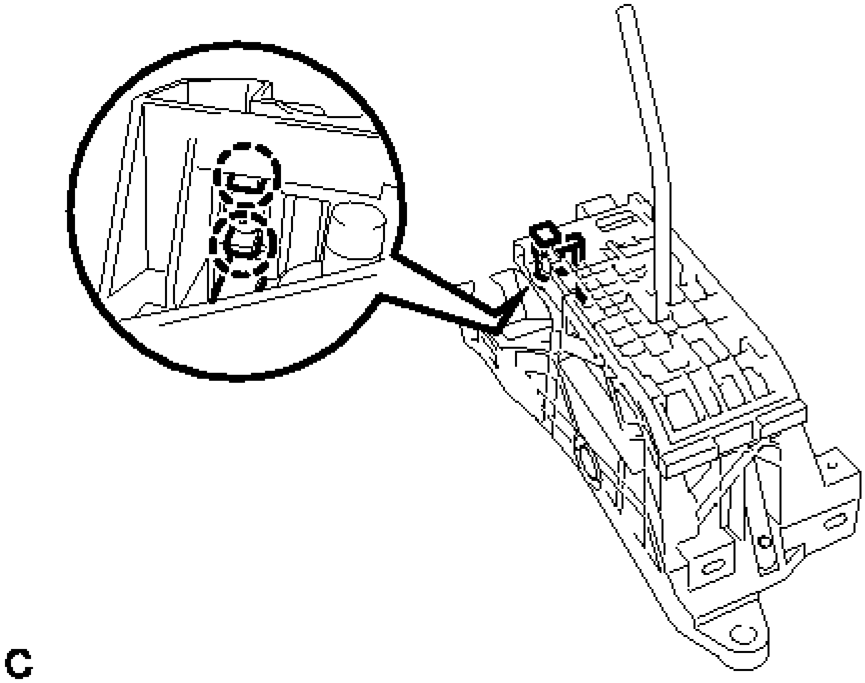

Fig. 114: Identifying Shift Lock Release Button Claws And Shift Lock Release Spring Claws
Courtesy of TOYOTA MOTOR SALES, U.S.A., INC.

9. **INSTALL LOWER POSITION INDICATOR HOUSING**
   a. Engage the 5 claws to install the lower position indicator housing.

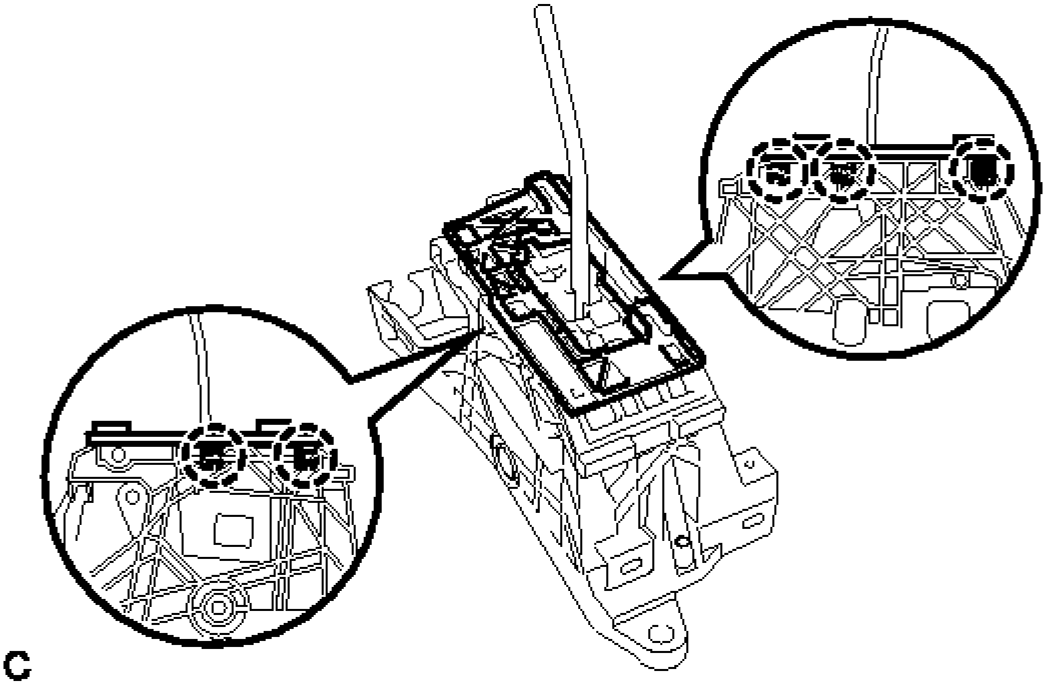

Fig. 115: Identifying Lower Position Indicator Housing Claws
Courtesy of TOYOTA MOTOR SALES, U.S.A., INC.

INSTALLATION

INSTALLATION

1. **INSTALL SHIFT LEVER SUPPORT**
    a. Install the shift lever support with the 4 bolts in the sequence shown in the illustration.

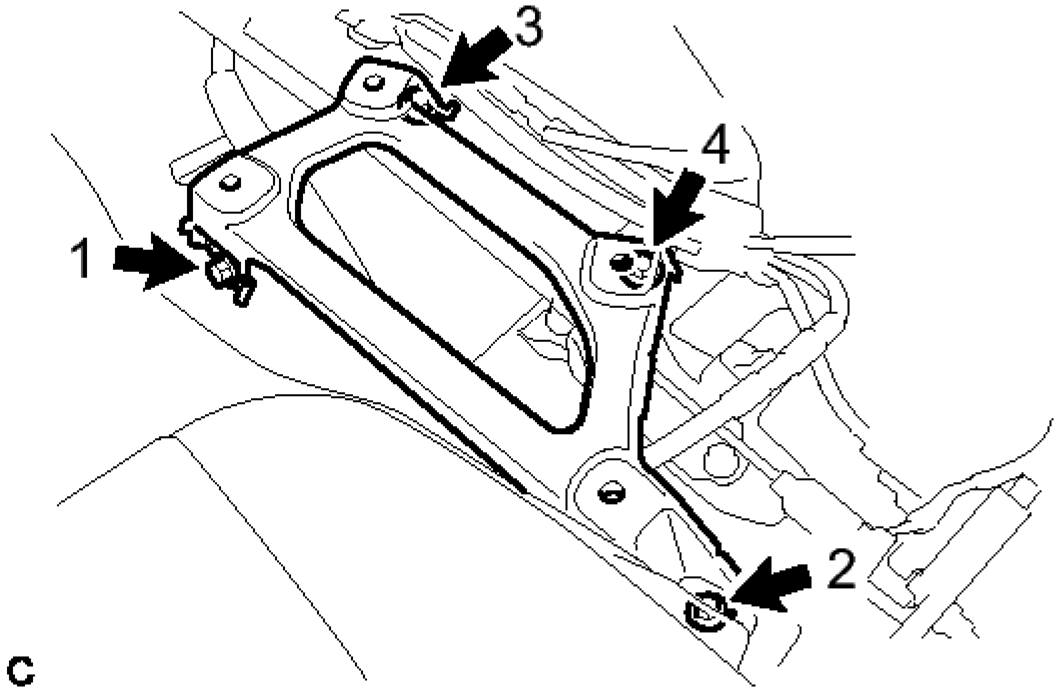

Fig. 116: Tightening Shift Lever Support Bolts In Sequence
Courtesy of TOYOTA MOTOR SALES, U.S.A., INC.

Torque: 12 N*m (122 kgf*cm, 9 ft.*lbf)

2. **INSTALL LOWER SHIFT LEVER ASSEMBLY**

NOTE: **Check that the park/neutral position switch and the shift lever are in neutral.**

a. Install the lower shift lever assembly with the 4 bolts in the sequence shown in the illustration.

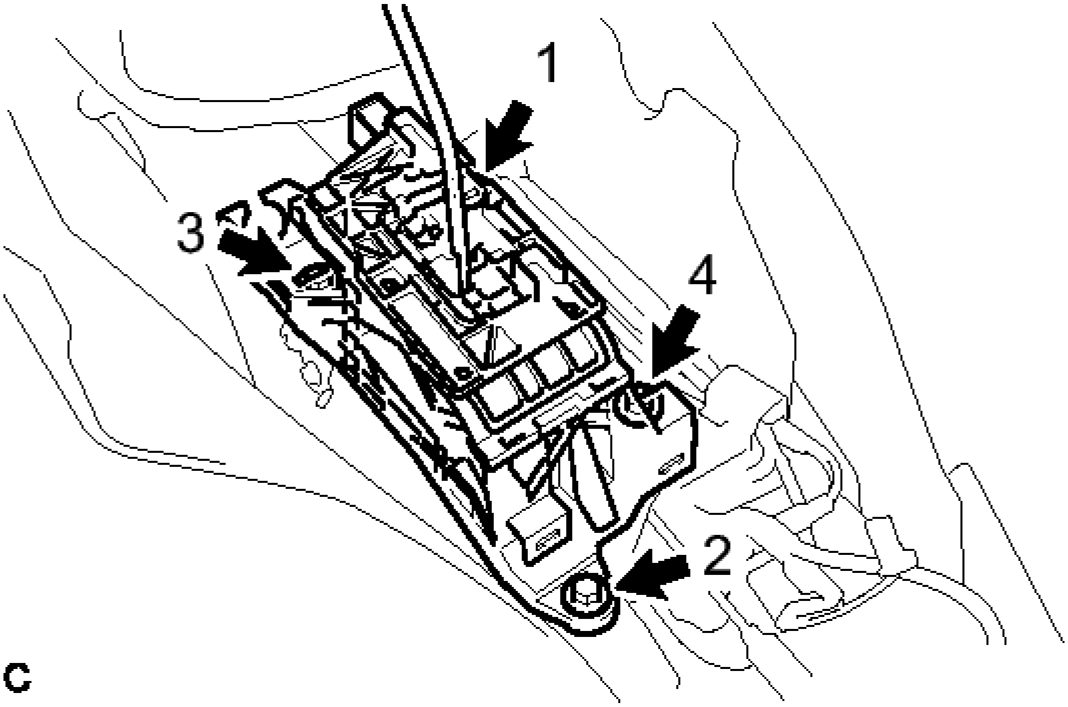

Fig. 117: Tightening Lower Shift Lever Assembly Bolts In Sequence
Courtesy of TOYOTA MOTOR SALES, U.S.A., INC.

Torque: 12 N*m (122 kgf*cm, 9 ft.*lbf)

b. Connect the 3 clamps and 2 connectors.
c. Slide the slider of the transmission control cable in the direction indicated by the arrow and pull the lock piece outward.

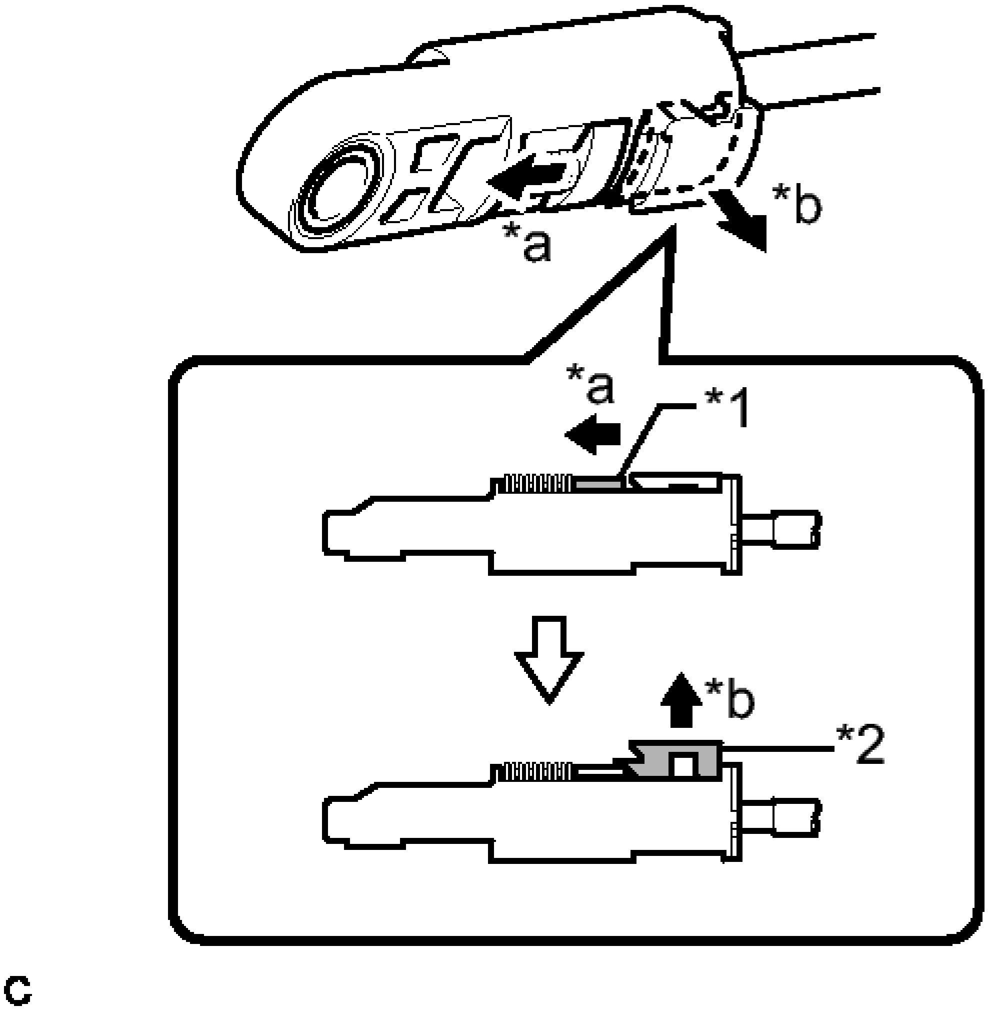

Fig. 118: Identifying Transmission Control Cable Assembly Slider
Courtesy of TOYOTA MOTOR SALES, U.S.A., INC.

TEXT IN ILLUSTRATION

*1	Slider
*2	Lock Piece
*a	Slide
*b	Pull

d. Install the transmission control cable end to the lower shift lever assembly.

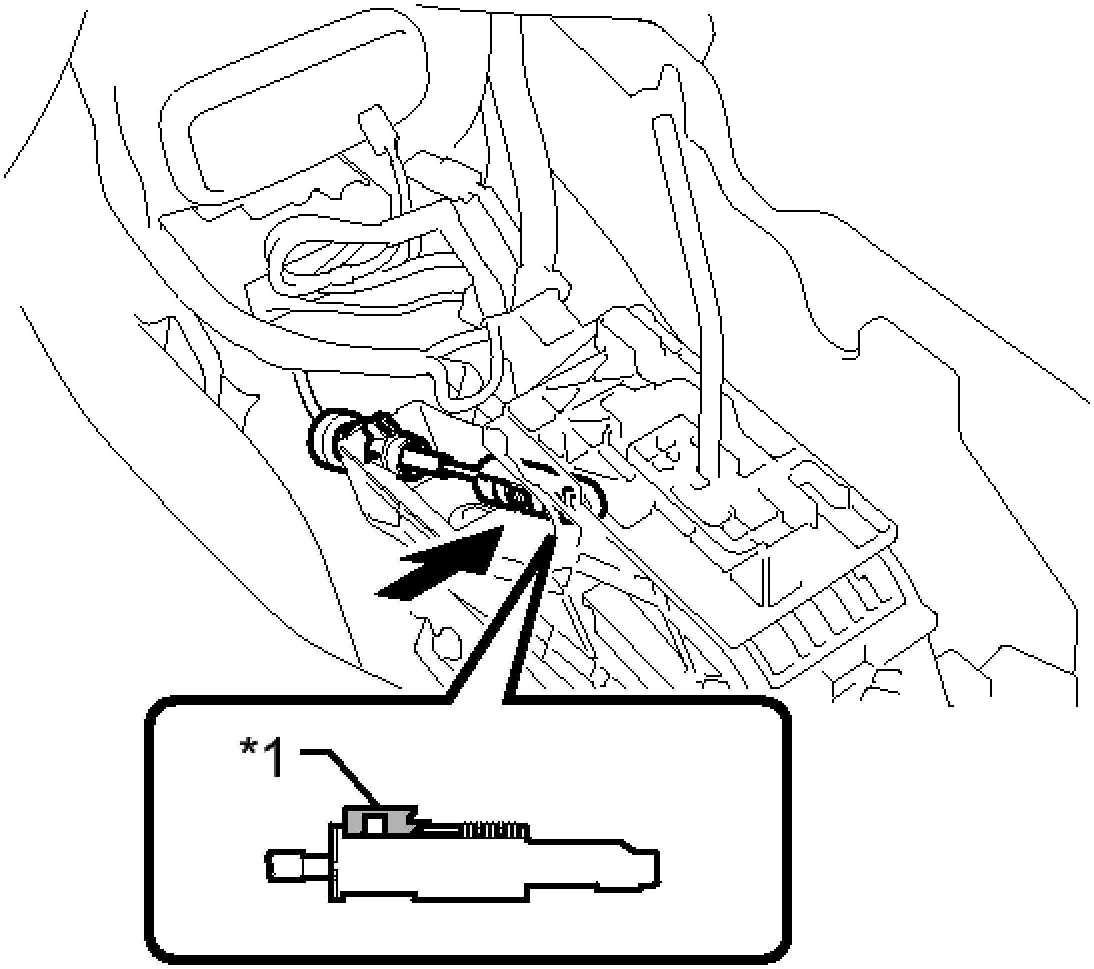

Fig. 119: Installing End Of Transmission Control Cable Assembly
Courtesy of TOYOTA MOTOR SALES, U.S.A., INC.

TEXT IN ILLUSTRATION

*1	Lock Piece

NOTE:

- **Check that the lock piece is pulled up.**
- **Install the cable end all the way to the base of the pin.**

e. Push the lock piece into the adjuster case.

NOTE:

- **Check that the park/neutral position switch and the shift lever are in neutral.**

- **Securely push in the lock piece until the slider lock is engaged.**

3. **INSTALL NO. 1 CONSOLE BOX DUCT (w/ Rear Register Duct)**
    a. Install the clip and No. 1 console box duct.
4. **INSTALL NO. 1 CONSOLE BOX MOUNTING BRACKET**
    a. Install the No. 1 console box mounting bracket to the lower shift lever assembly with the screw.
5. **INSTALL FLOOR CARPET BRACKET LH** . Refer to **INSTALLATION - Step 10**
6. **INSTALL CONSOLE BOX INSERT** . Refer to **INSTALLATION - Step 4**
7. **INSTALL FRONT NO. 2 CONSOLE BOX INSERT** . Refer to **INSTALLATION - Step 5**
8. **INSTALL UPPER CONSOLE PANEL SUB-ASSEMBLY** . Refer to **INSTALLATION - Step 27**
9. **INSTALL BOX BOTTOM MAT** . Refer to **INSTALLATION - Step 28**
10. **INSTALL LOWER INSTRUMENT PANEL SUB-ASSEMBLY** . Refer to **INSTALLATION - Step 15**
11. **INSTALL LOWER NO. 2 INSTRUMENT PANEL AIRBAG ASSEMBLY** . Refer to **INSTALLATION - Step 1**
12. **INSTALL NO. 2 INSTRUMENT PANEL UNDER COVER SUB-ASSEMBLY** . Refer to **INSTALLATION - Step 17**
13. **INSTALL INSTRUMENT SIDE PANEL RH** . Refer to **INSTALLATION - Step 18**
14. **INSTALL FRONT DOOR OPENING TRIM WEATHERSTRIP RH** . Refer to **INSTALLATION - Step 46**
15. **INSTALL COWL SIDE TRIM SUB-ASSEMBLY RH** . Refer to **INSTALLATION - Step 47**
16. **INSTALL FRONT DOOR SCUFF PLATE RH** . Refer to **INSTALLATION - Step 48**
17. **INSTALL LOWER NO. 1 INSTRUMENT PANEL FINISH PANEL ASSEMBLY** . Refer to **INSTALLATION - Step 40**
18. **CONNECT HOOD LOCK CONTROL LEVER SUB-ASSEMBLY** . Refer to **INSTALLATION - Step 41**
19. **INSTALL INSTRUMENT SIDE PANEL LH** . Refer to **INSTALLATION - Step 47**
20. **INSTALL FRONT DOOR OPENING TRIM WEATHERSTRIP LH** . Refer to **INSTALLATION - Step 42**
21. **INSTALL COWL SIDE TRIM SUB-ASSEMBLY LH** . Refer to **INSTALLATION - Step 43**
22. **INSTALL FRONT DOOR SCUFF PLATE LH** . Refer to **INSTALLATION - Step 44**
23. **INSTALL CONSOLE BOX ASSEMBLY**

    Refer to **INSTALLATION**

24. **CONNECT CABLE TO NEGATIVE BATTERY TERMINAL**

    NOTE: When disconnecting the cable, some systems need to be initialized after the cable is reconnected. Refer to INITIALIZATION .

25. **INSPECT SHIFT LEVER POSITION** . Refer to **ADJUSTMENT - Step 1**

26. **PERFORM DIAGNOSTIC SYSTEM CHECK**
    - for Built-in Type Yaw Rate Sensor: Refer to **DTC CHECK / CLEAR**
    - for Separate Type Yaw Rate Sensor: Refer to **DTC CHECK / CLEAR**
27. **INSPECT SRS WARNING LIGHT**
    - for Built-in Type Yaw Rate Sensor: Refer to **DIAGNOSIS SYSTEM**
    - for Separate Type Yaw Rate Sensor: Refer to **DIAGNOSIS SYSTEM**

SHIFT PADDLE SWITCH

COMPONENTS

ILLUSTRATION

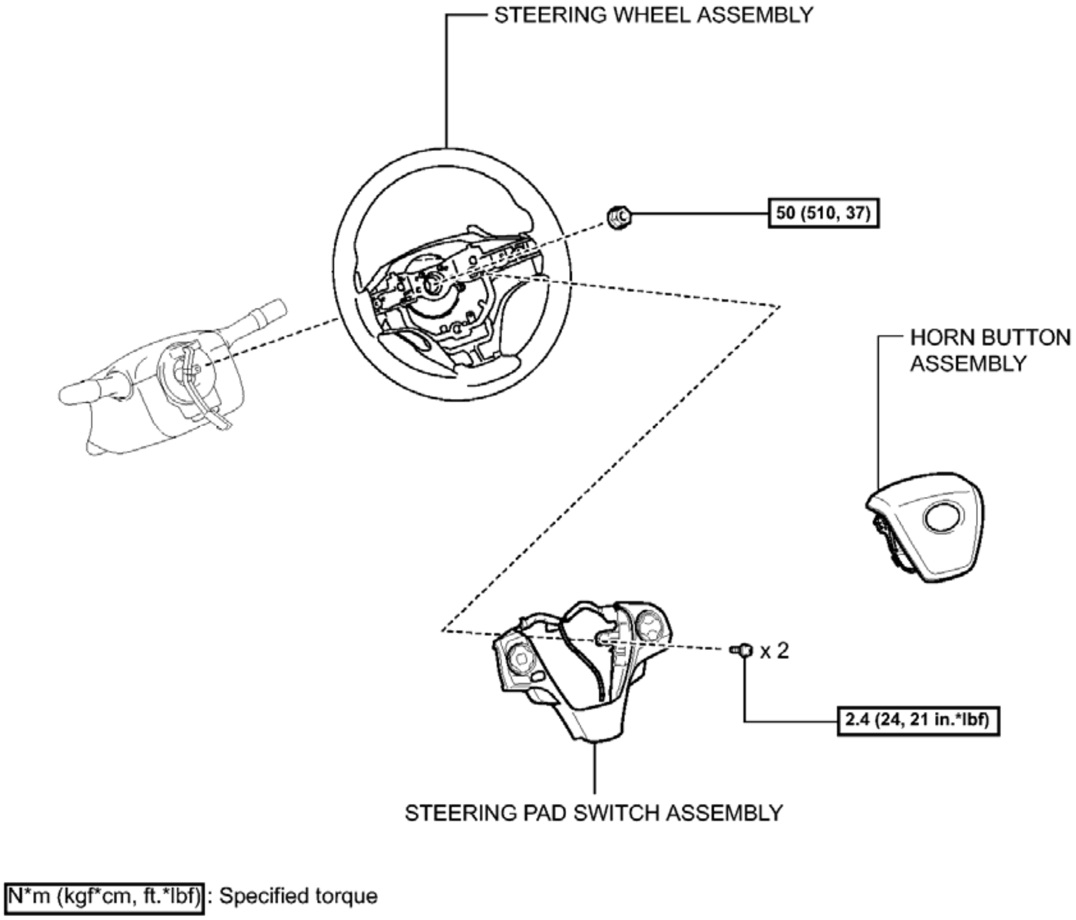
STEERING WHEEL ASSEMBLY
50 (510, 37)
HORN BUTTON ASSEMBLY
x 2
2.4 (24, 21 in.*lbf)
STEERING PAD SWITCH ASSEMBLY
N*m (kgf*cm, ft.*lbf) : Specified torque

Fig. 120: Identifying Shift Paddle Switch Replacement Components With Torque Specifications (2 Of 2)
Courtesy of TOYOTA MOTOR SALES, U.S.A., INC.

ILLUSTRATION

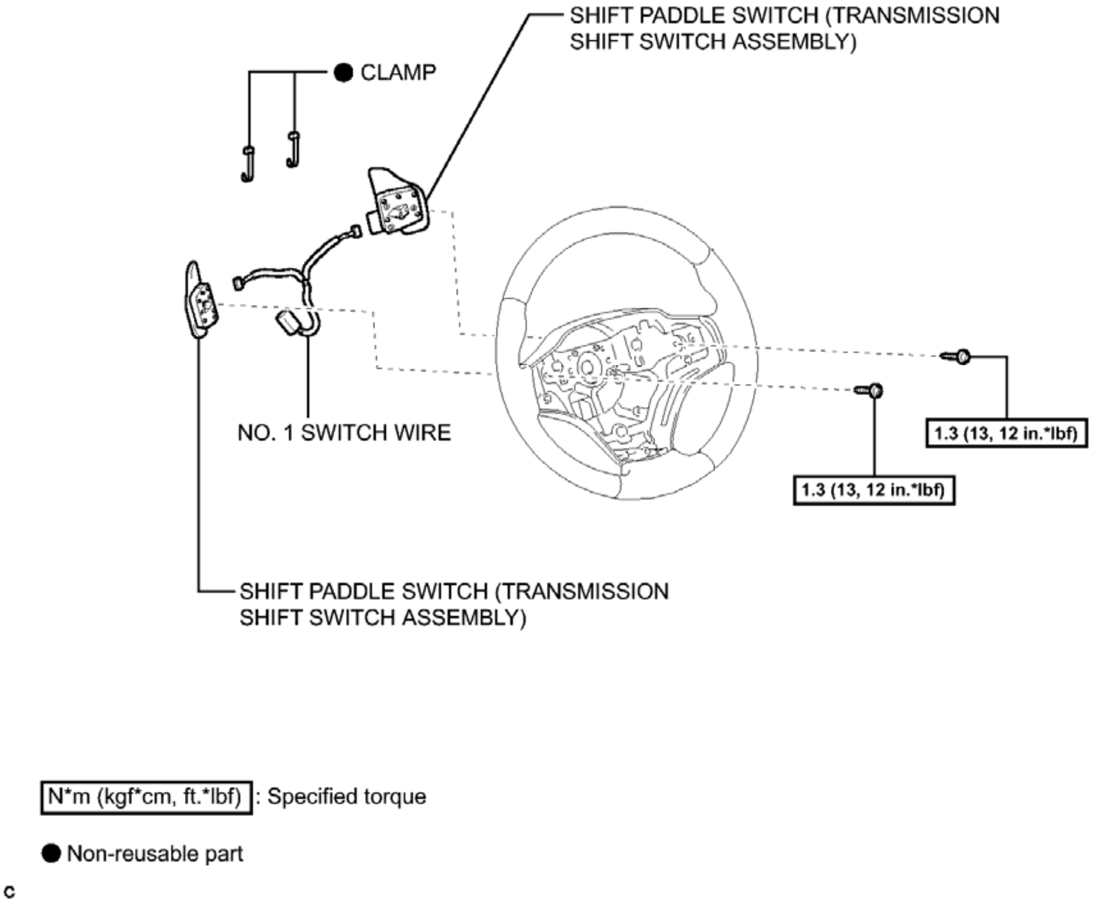
SHIFT PADDLE SWITCH (TRANSMISSION SHIFT SWITCH ASSEMBLY)
● CLAMP
NO. 1 SWITCH WIRE
1.3 (13, 12 in.*lbf)
1.3 (13, 12 in.*lbf)
SHIFT PADDLE SWITCH (TRANSMISSION SHIFT SWITCH ASSEMBLY)
N*m (kgf*cm, ft.*lbf) : Specified torque
● Non-reusable part
c

Fig. 121: Identifying Shift Paddle Switch Replacement Components With Torque Specifications (2 Of 2)
Courtesy of TOYOTA MOTOR SALES, U.S.A., INC.

REMOVAL

REMOVAL

NOTE:

- **Do not replace the spiral cable with the battery connected and the ignition switch on.**
- **Do not rotate the spiral cable without the steering wheel with the battery connected and the ignition switch on.**
- **Ensure that the steering wheel is installed and aligned straight when inspecting the steering sensor.**
- **Do not remove the steering sensor from the spiral cable.**

1. **ALIGN FRONT WHEELS FACING STRAIGHT AHEAD**
2. **REMOVE HORN BUTTON ASSEMBLY**

   Refer to **REMOVAL**

3. **REMOVE STEERING WHEEL ASSEMBLY** . Refer to **REMOVAL - Step 3**
4. **REMOVE STEERING PAD SWITCH ASSEMBLY** . Refer to **REMOVAL - Step 2**
5. **REMOVE SHIFT PADDLE SWITCH (TRANSMISSION SHIFT SWITCH ASSEMBLY)**

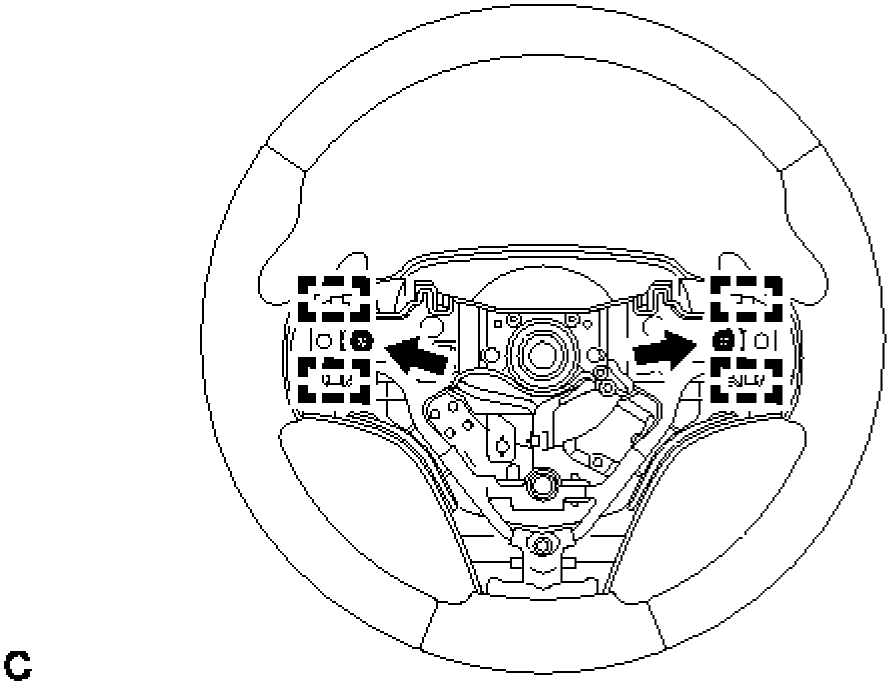

Fig. 122: Identifying Shift Paddle Switch Screws And Pins (Transmission Shift Switch Assembly)
Courtesy of TOYOTA MOTOR SALES, U.S.A., INC.

   a. Remove the 2 screws.
   b. Disengage the 4 pins and remove the 2 shift paddle switches (transmission shift switch assembly).

6. **REMOVE NO. 1 SWITCH WIRE**
   a. Disengage the 5 guides to remove the shift paddle switch (transmission shift switch assembly) with No. 1 switch wire from the steering wheel assembly.

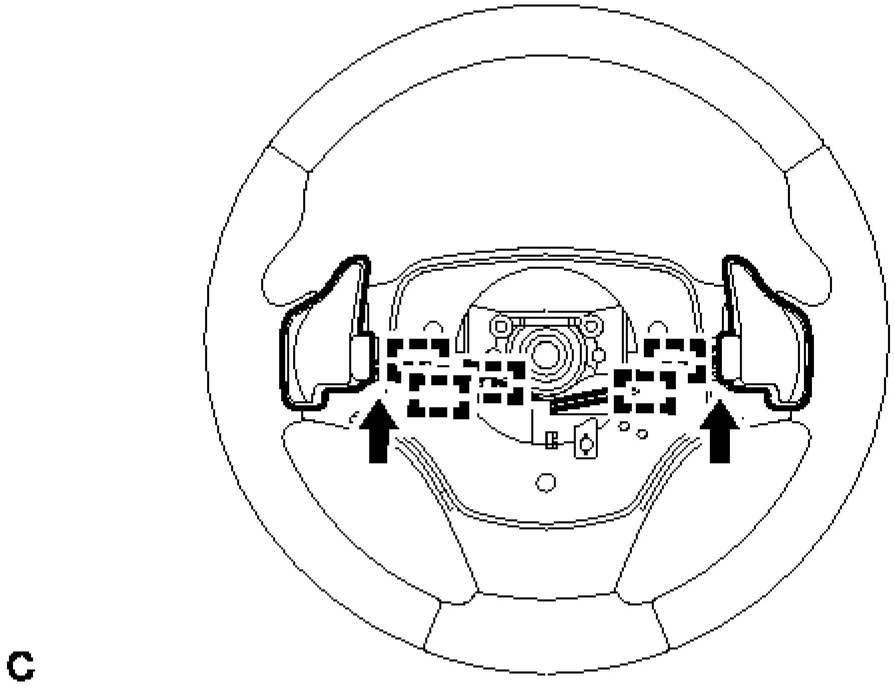

Fig. 123: Identifying No. 1 Switch Wire Guides
Courtesy of TOYOTA MOTOR SALES, U.S.A., INC.

b. Remove the 2 clamps.

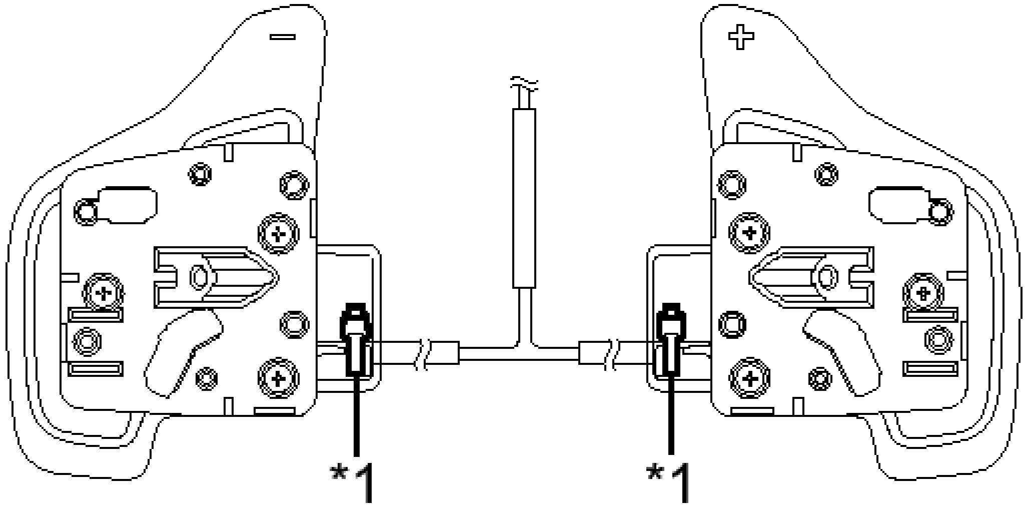

Fig. 124: Identifying No. 1 Switch Wire Clamps
Courtesy of TOYOTA MOTOR SALES, U.S.A., INC.

TEXT IN ILLUSTRATION

*1	Clamp

c. Disconnect the 2 connectors to remove the 2 shift paddle switches (transmission shift switch assembly) from the No. 1 switch wire.

INSPECTION

INSPECTION

1. INSPECT SHIFT PADDLE SWITCH (TRANSMISSION SHIFT SWITCH ASSEMBLY)

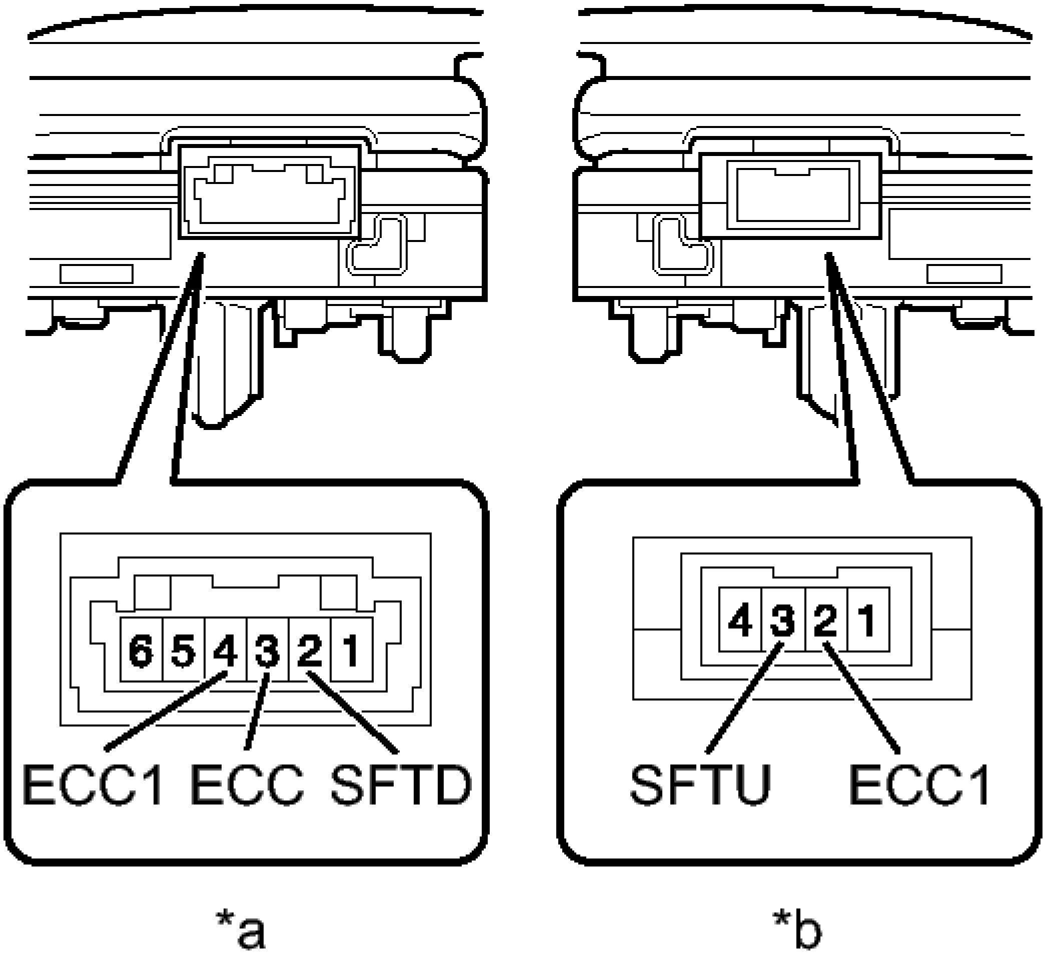
6 5 4 3 2 1
ECC1
ECC
SFTD
4 3 2 1
SFTU
ECC1
*a
*b

T

Fig. 125: Identifying Shift Paddle Switch Connector Terminal Identification (Transmission Shift Switch Assembly)
Courtesy of TOYOTA MOTOR SALES, U.S.A., INC.

a. Measure the resistance between each terminal when the shift paddle switch (transmission shift switch assembly) is moved to each position.

Standard Resistance

TRANSMISSION SHIFT SWITCH LH:

Tester Connection	Switch Condition	Specified Condition
3 (ECC) - 2 (SFTD)	Pull "-" continuously (Down-shift)	Below 1 ohms
	Release	10 kohms or higher
4 (ECC1) - 2 (SFTD)	Pull "-" continuously (Down-shift)	Below 1 ohms
	Release	10 kohms or higher

TRANSMISSION SHIFT SWITCH RH:

Tester Connection	Switch Condition	Specified Condition
3 (SFTU) - 2 (ECC1)	Pull "+" continuously (Up-shift)	Below 1 ohms
	Release	10 kohms or higher

TEXT IN ILLUSTRATION

*a	Component without harness connected (transmission shift switch LH)
*b	Component without harness connected (transmission shift switch RH)

If the resistance value are not as specified, replace the shift paddle switch (transmission shift switch assembly).

INSTALLATION

INSTALLATION

NOTE:

- **Do not replace the spiral cable with the battery connected and the ignition switch to ON.**
- **Do not rotate the spiral cable without the steering wheel with the battery connected and the ignition switch to ON.**
- **Ensure that the steering wheel is installed and aligned straight when inspecting the steering sensor.**
- **Do not remove the steering sensor from the spiral cable.**

1. **CONNECT NO. 1 SWITCH WIRE**
   a. Connect the 2 No. 1 switch wire connectors to the 2 shift paddle switches (transmission shift switch assembly).
   b. Install new 2 clamps as shown in the illustration.

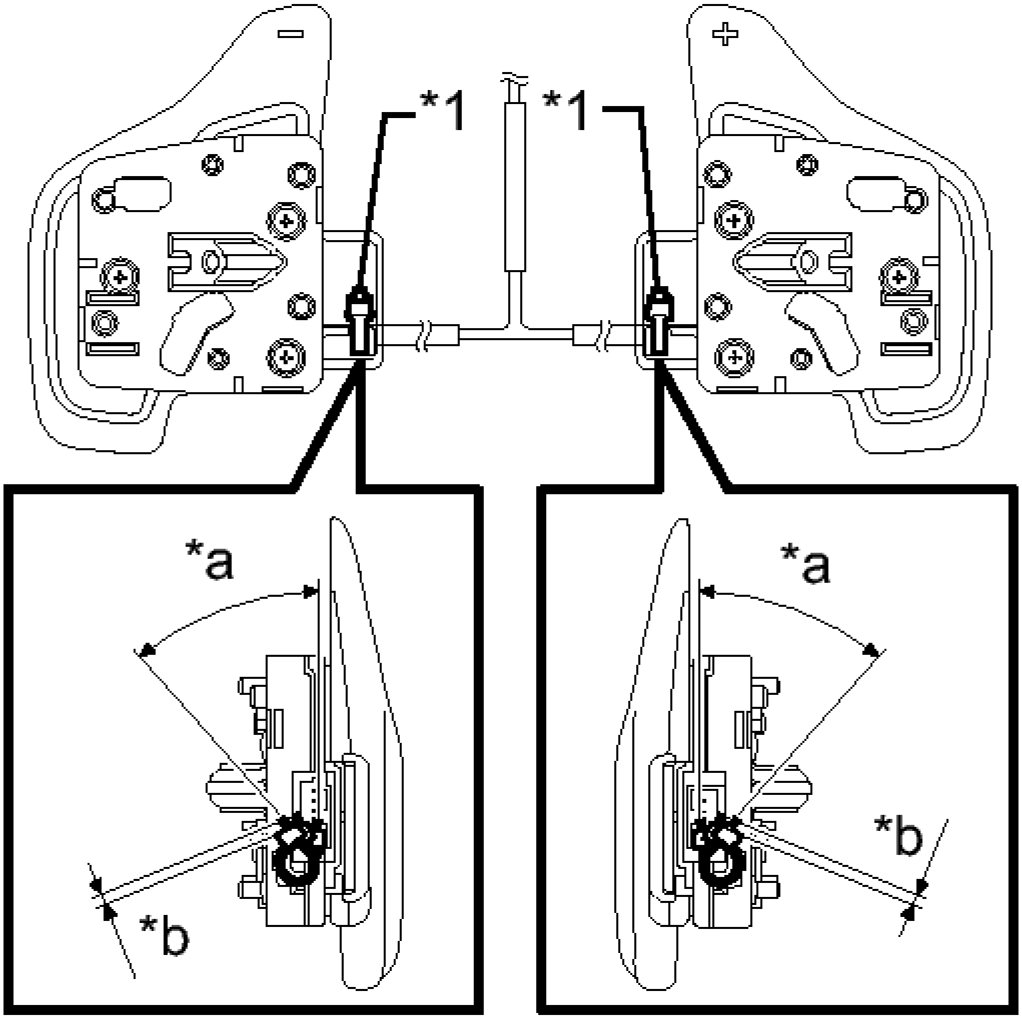

Fig. 126: Identifying No. 1 Switch Wire Clamps
Courtesy of TOYOTA MOTOR SALES, U.S.A., INC.

TEXT IN ILLUSTRATION

*1	Clamp
*a	0 to 40°
*b	1 to 3 mm

c. Engage the 5 guides to install the No. 1 switch wire.

2. **INSTALL SHIFT PADDLE SWITCH (TRANSMISSION SHIFT SWITCH ASSEMBLY)**

   a. Engage the 4 pins and install the 2 shift paddle switches (transmission shift switch assembly) with the 2 screws.

Torque: 1.3 N*m (13 kgf*cm, 12 in.*lbf)

NOTE: Make sure that the brackets are securely installed.

3. **INSTALL STEERING PAD SWITCH ASSEMBLY** . Refer to **INSTALLATION - Step 1**
4. **ALIGN FRONT WHEELS FACING STRAIGHT AHEAD**
5. **INSPECT AND ADJUST SPIRAL CABLE WITH SENSOR SUB-ASSEMBLY** . Refer to **INSTALLATION - Step 7**
6. **INSTALL STEERING WHEEL ASSEMBLY** . Refer to **INSTALLATION - Step 11**
7. **CHECK STEERING WHEEL CENTER POINT**
8. **INSTALL HORN BUTTON ASSEMBLY**

   Refer to **INSTALLATION**

TRANSMISSION CONTROL CABLE

COMPONENTS

ILLUSTRATION

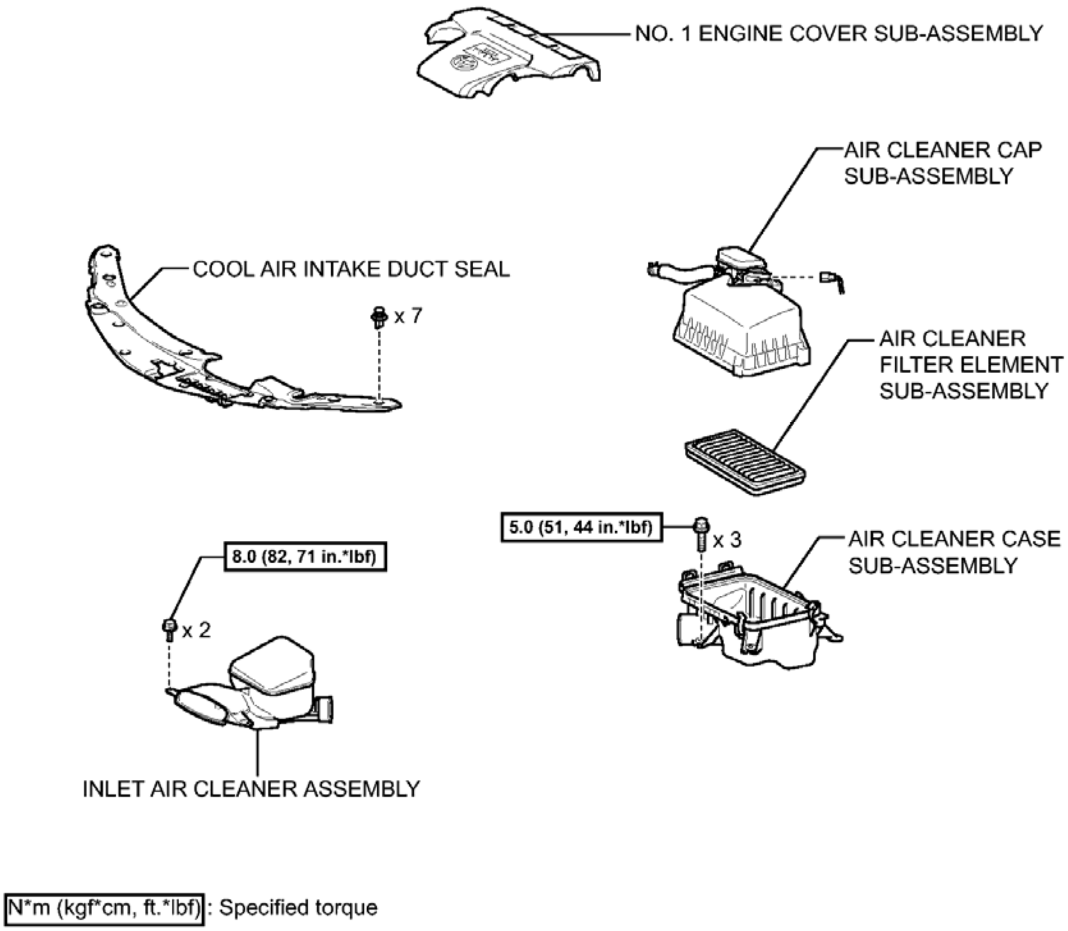
NO. 1 ENGINE COVER SUB-ASSEMBLY
AIR CLEANER CAP SUB-ASSEMBLY
COOL AIR INTAKE DUCT SEAL
x 7
AIR CLEANER FILTER ELEMENT SUB-ASSEMBLY
5.0 (51, 44 in.*lbf)
x 3
AIR CLEANER CASE SUB-ASSEMBLY
8.0 (82, 71 in.*lbf)
x 2
INLET AIR CLEANER ASSEMBLY
N*m (kgf*cm, ft.*lbf) : Specified torque

Fig. 127: Identifying Transmission Control Cable Replacement Components With Torque Specifications (1 Of 2)
Courtesy of TOYOTA MOTOR SALES, U.S.A., INC.

ILLUSTRATION

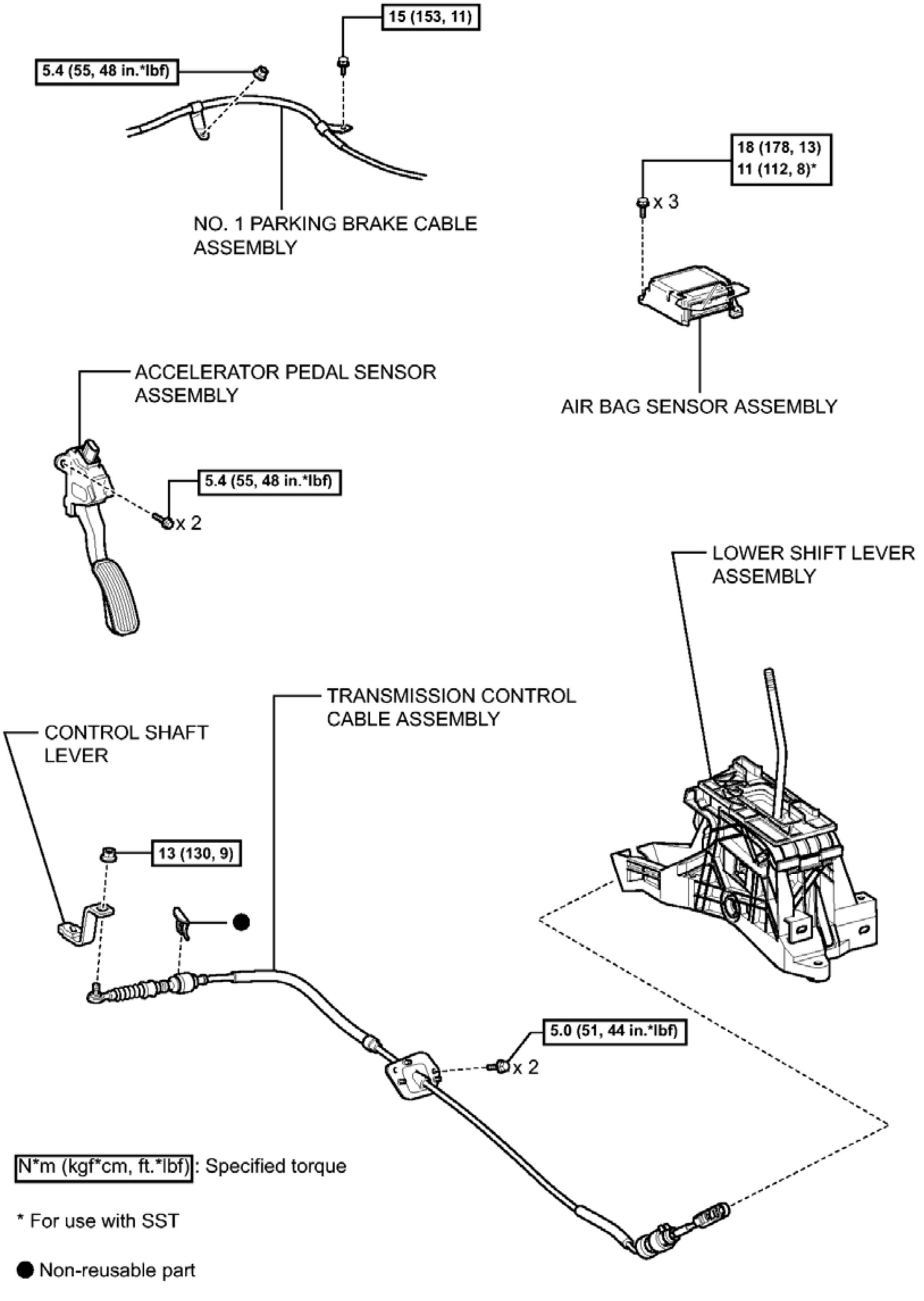
15 (153, 11)
5.4 (55, 48 in.*lbf)
NO. 1 PARKING BRAKE CABLE ASSEMBLY
18 (178, 13)
11 (112, 8)*
x 3
AIR BAG SENSOR ASSEMBLY
ACCELERATOR PEDAL SENSOR ASSEMBLY
5.4 (55, 48 in.*lbf)
x 2
LOWER SHIFT LEVER ASSEMBLY
TRANSMISSION CONTROL CABLE ASSEMBLY
CONTROL SHAFT LEVER
13 (130, 9)
●
5.0 (51, 44 in.*lbf)
x 2
N*m (kgf*cm, ft.*lbf): Specified torque
* For use with SST
● Non-reusable part

Fig. 128: Identifying Transmission Control Cable Replacement Components With Torque Specifications (2 Of 2)
Courtesy of TOYOTA MOTOR SALES, U.S.A., INC.

REMOVAL

REMOVAL

1. **REMOVE NO. 1 ENGINE COVER SUB-ASSEMBLY** . Refer to **REMOVAL - Step 18**
2. **REMOVE COOL AIR INTAKE DUCT SEAL** . Refer to **REMOVAL - Step 1**
3. **REMOVE INLET AIR CLEANER ASSEMBLY** . Refer to **REMOVAL - Step 19**
4. **REMOVE AIR CLEANER CAP SUB-ASSEMBLY** . Refer to **REMOVAL - Step 7**
5. **REMOVE AIR CLEANER FILTER ELEMENT SUB-ASSEMBLY**
6. **REMOVE AIR CLEANER CASE SUB-ASSEMBLY** . Refer to **REMOVAL - Step 22**
7. **REMOVE AIR BAG SENSOR ASSEMBLY**

   Refer to **REMOVAL**

8. **REMOVE ACCELERATOR PEDAL SENSOR ASSEMBLY**

   Refer to **REMOVAL**

9. **DISCONNECT NO. 1 PARKING BRAKE CABLE ASSEMBLY**
   a. Turn back the floor carpet.
   b. Remove the bolt and nut, and disconnect the No. 1 parking brake cable assembly.

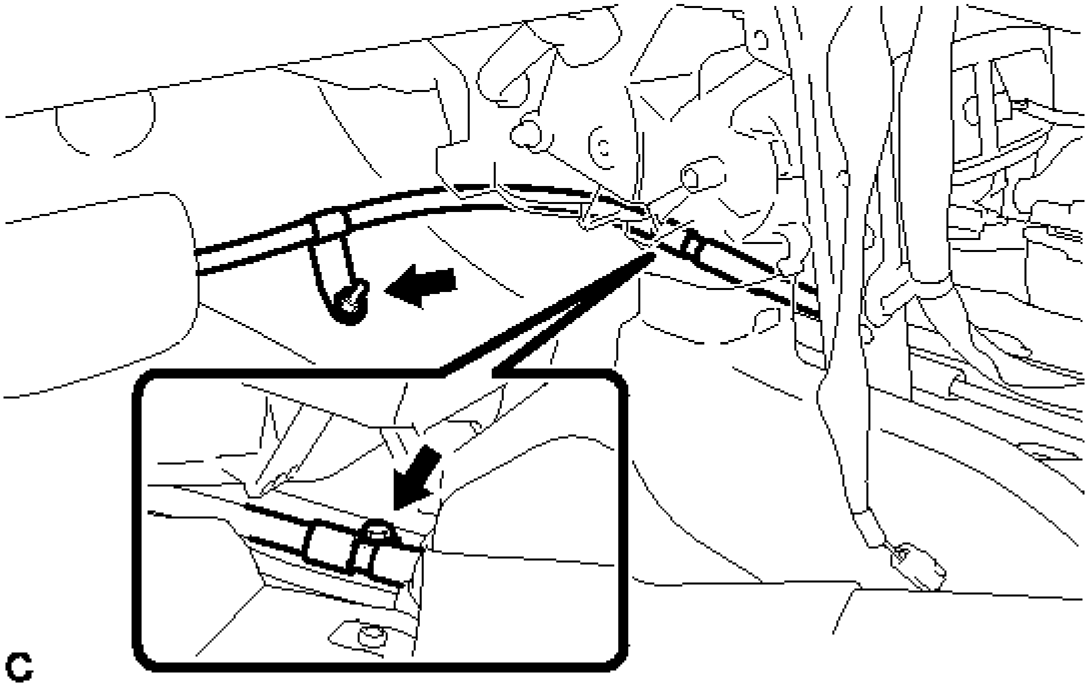

Fig. 129: Identifying No. 1 Parking Brake Cable Assembly Bolt And Nut
Courtesy of TOYOTA MOTOR SALES, U.S.A., INC.

10. **REMOVE TRANSMISSION CONTROL CABLE ASSEMBLY**

   a. Move the shift lever to N.
   b. Disconnect the end of the transmission control cable assembly from the lower shift lever assembly.

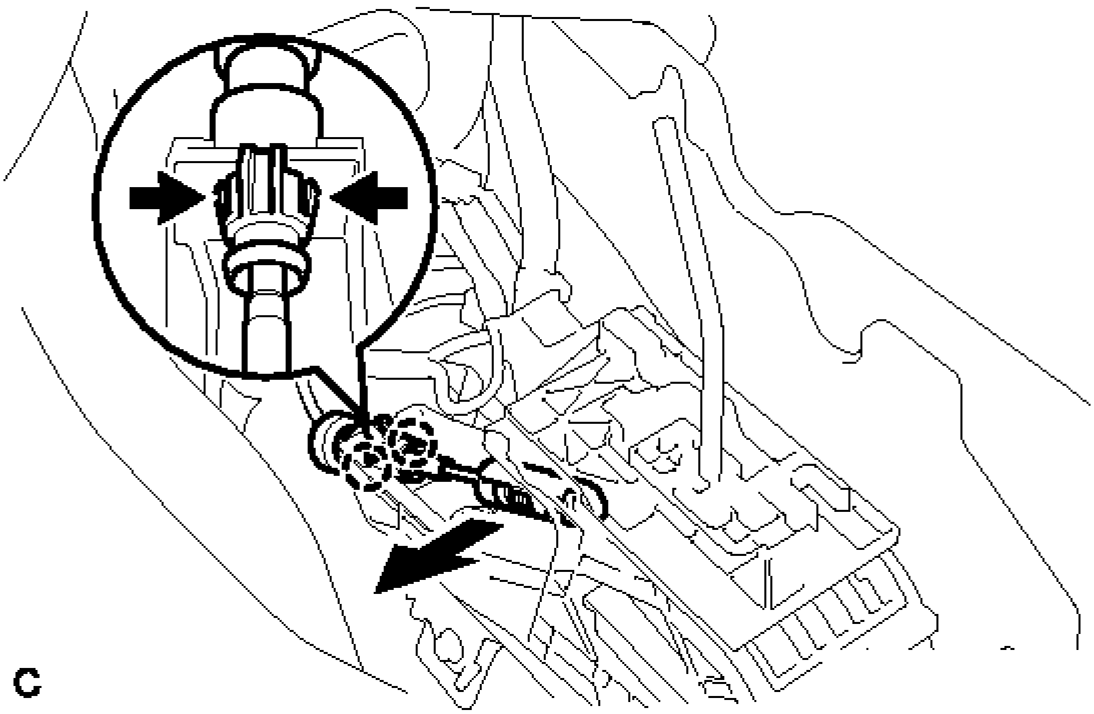

Fig. 130: Identifying Transmission Control Cable Assembly End
Courtesy of TOYOTA MOTOR SALES, U.S.A., INC.

   c. Disengage the 2 claws and disconnect the transmission control cable assembly from the lower shift lever assembly.
   d. Disconnect the wire harness clamp.

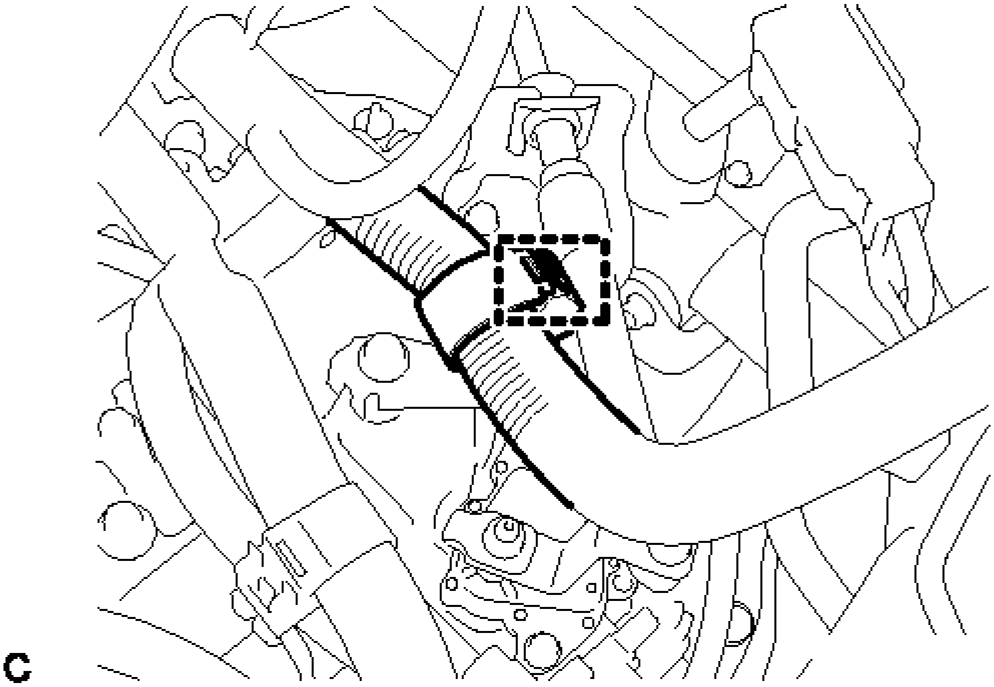

Fig. 131: Identifying Wire Harness Clamp
Courtesy of TOYOTA MOTOR SALES, U.S.A., INC.

e. Remove the nut and clip, and disconnect the transmission control cable assembly.

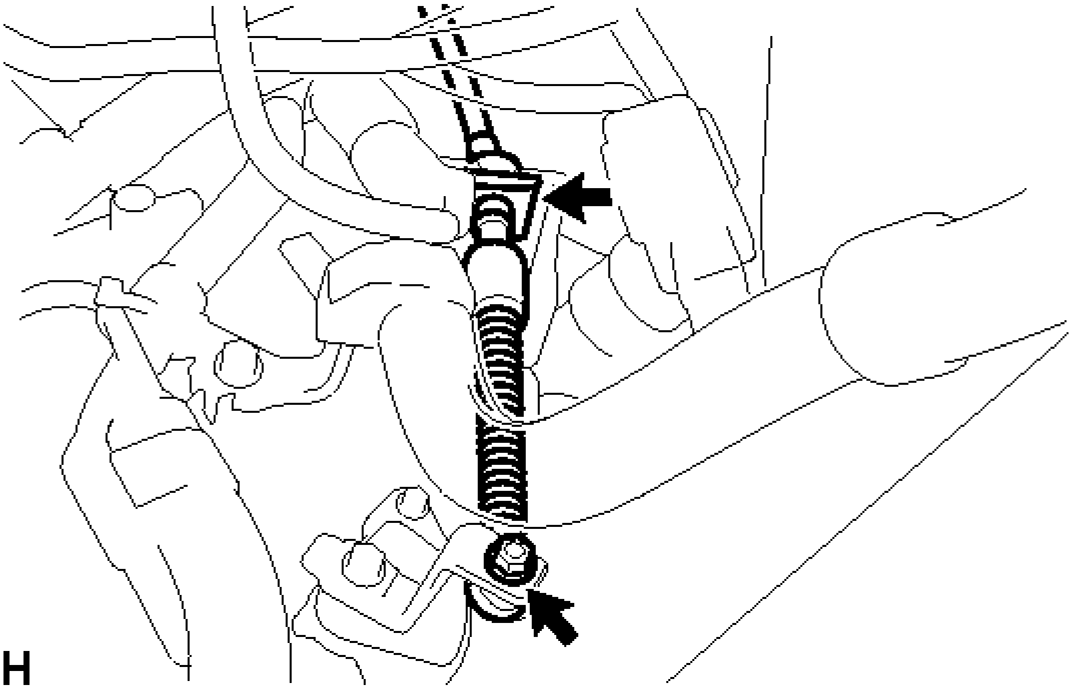

Fig. 132: Identifying Transmission Control Cable Assembly Nut And Clip
Courtesy of TOYOTA MOTOR SALES, U.S.A., INC.

f. Turn back the dash panel insulator.

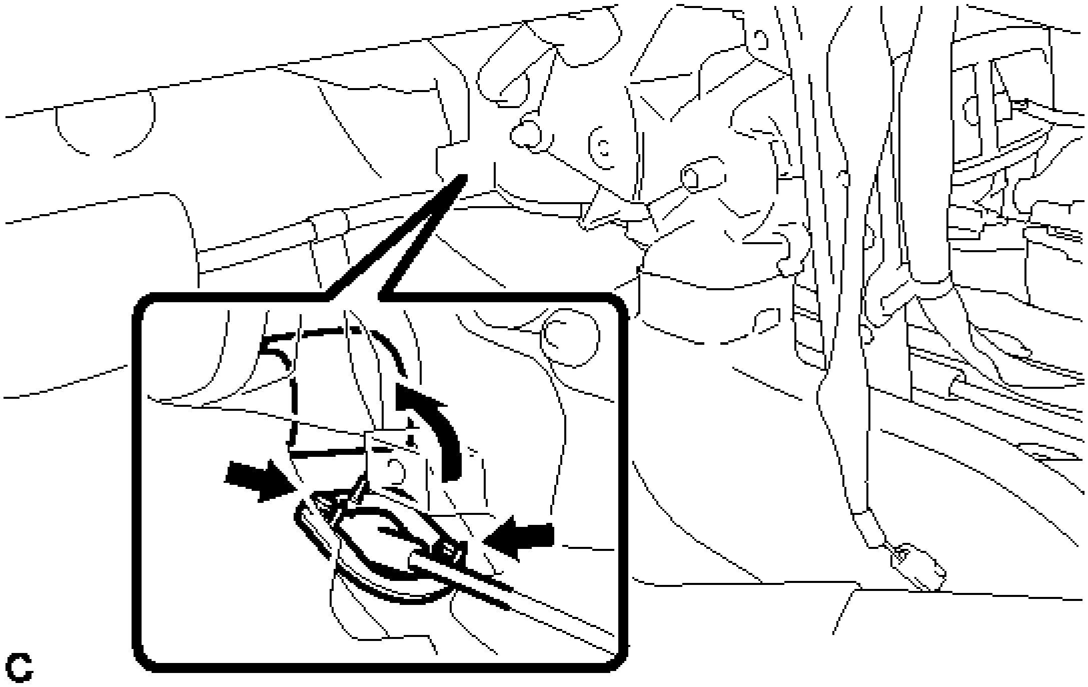

Fig. 133: Turning Back Dash Panel Insulator
Courtesy of TOYOTA MOTOR SALES, U.S.A., INC.

g. Remove the 2 bolts and pull out the transmission control cable assembly from the body.

ADJUSTMENT

ADJUSTMENT

1. **INSPECT SHIFT LEVER POSITION**
   a. When the shift lever is moved from P to R with the ignition switch ON and brake pedal depressed, make sure that the shift lever moves smoothly and correctly into the position.
   b. Start the engine and make sure that the vehicle moves forward when the shift lever is moved from N to D and moves rearward when the shift lever is moved to R.
2. **ADJUST SHIFT LEVER POSITION**
   a. Move the shift lever to N.
   b. Remove the rear console box assembly. Refer to **REMOVAL** .
   c. Disconnect the end of transmission control cable assembly from the lower shift lever assembly

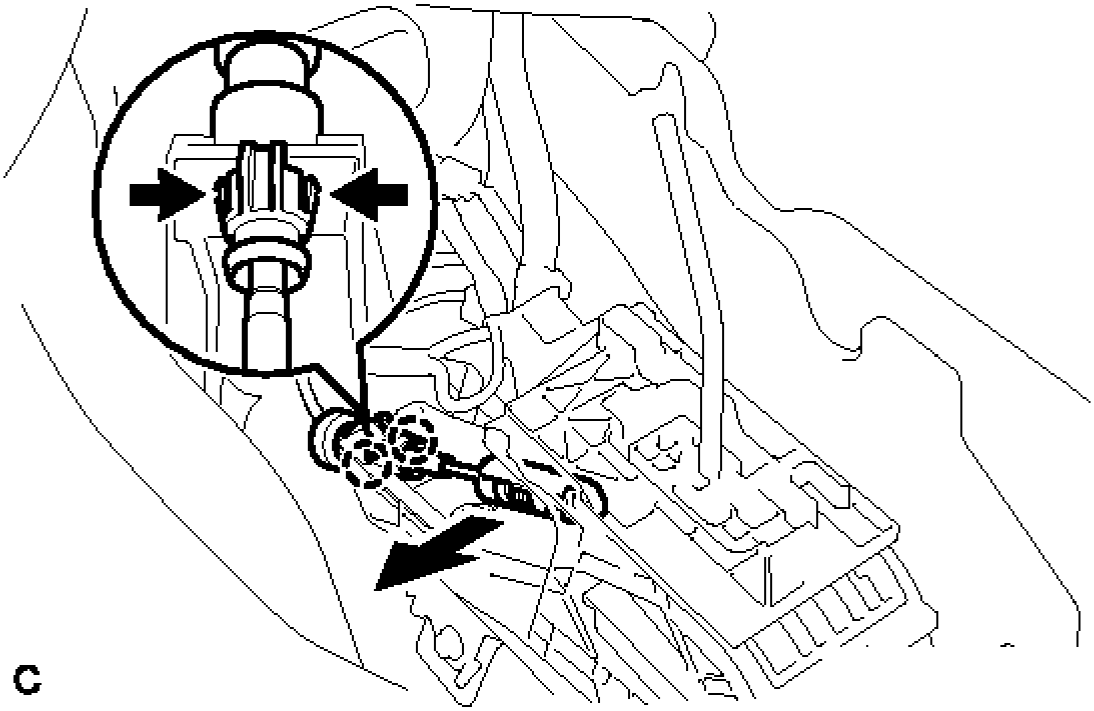

Fig. 134: Identifying Transmission Control Cable Assembly End
Courtesy of TOYOTA MOTOR SALES, U.S.A., INC.

d. Slide the slider of the transmission control cable in the direction indicated by the arrow and pull the lock piece outward.

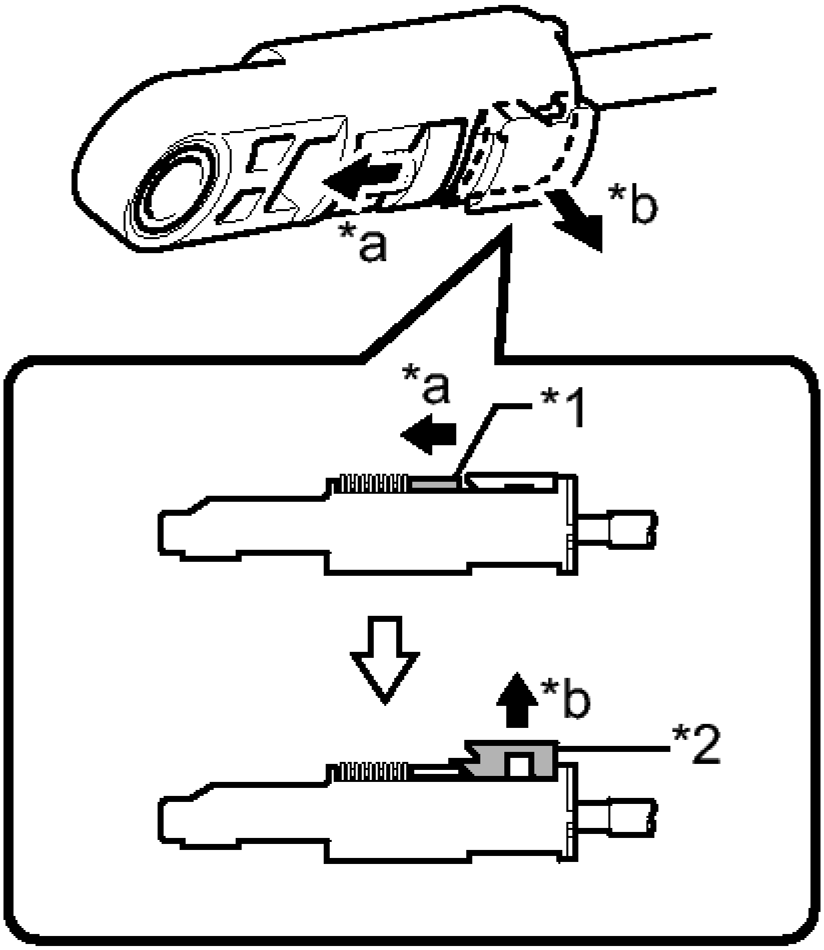

Fig. 135: Identifying Transmission Control Cable Assembly Slider
Courtesy of TOYOTA MOTOR SALES, U.S.A., INC.

TEXT IN ILLUSTRATION

*1	Slider
*2	Lock Piece
*a	Slide
*b	Pull

e. Install the transmission control cable end to the shift lever assembly.

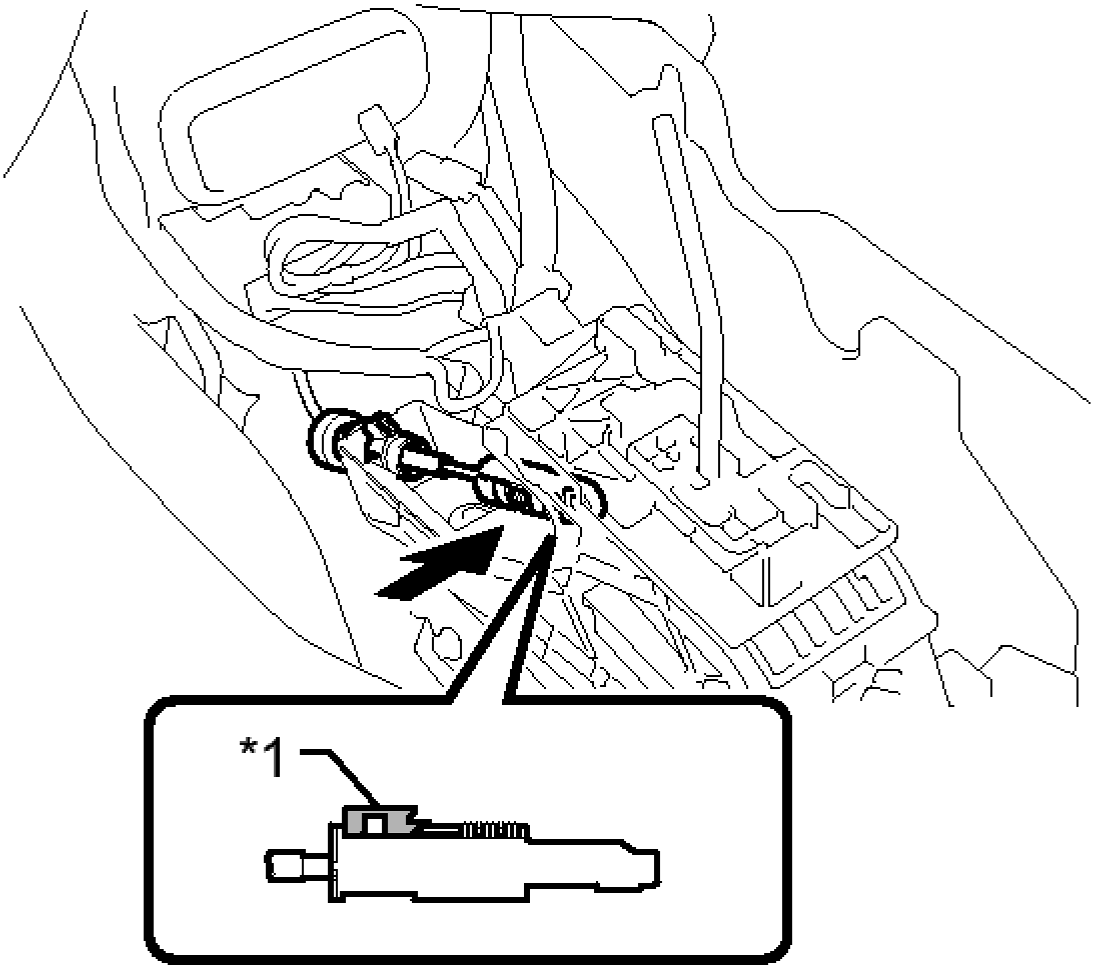

Fig. 136: Installing End Of Transmission Control Cable Assembly
Courtesy of TOYOTA MOTOR SALES, U.S.A., INC.

TEXT IN ILLUSTRATION

*1	Lock Piece

NOTE:

- **Check that the lock piece is pulled up.**
- **Install the cable end all the way to the base of the pin.**

f. Push the lock piece into the adjuster case.

NOTE:

- **Check that the park/neutral position switch and the shift lever are in neutral.**

- **Securely push in the lock piece until the slider lock is engaged.**

g. After adjusting the shift lever position, check the operation and function of the shift lever. If there is a problem, adjust the position again.
h. Install the rear console box assembly. Refer to **INSTALLATION** .

INSTALLATION

INSTALLATION

1. **INSTALL TRANSMISSION CONTROL CABLE ASSEMBLY**

NOTE: Before installing the transmission control cable assembly, check that the park/neutral position switch and the shift lever are in neutral.

a. Pass the transmission control cable assembly from the cabin to the engine compartment.
b. Install the transmission control cable assembly with the 2 bolts.

Torque: 5.0 N*m (51 kgf*cm, 44 in.*lbf)

c. Install the dash panel insulator to the original position.
d. Connect the transmission control cable assembly to the transmission control cable bracket with a new clip.
e. Connect the transmission control cable assembly to the control shaft lever with the nut.

Torque: 13 N*m (130 kgf*cm, 9 ft.*lbf)

NOTE: Before connecting the transmission control cable assembly, check that the park/neutral position switch and the shift lever are in neutral.

f. Connect the wire harness clamp.
g. Engage the 2 claws to connect the transmission control cable assembly.
h. Slide the slider of the transmission control cable in the direction indicated by the arrow and pull the lock piece outward.

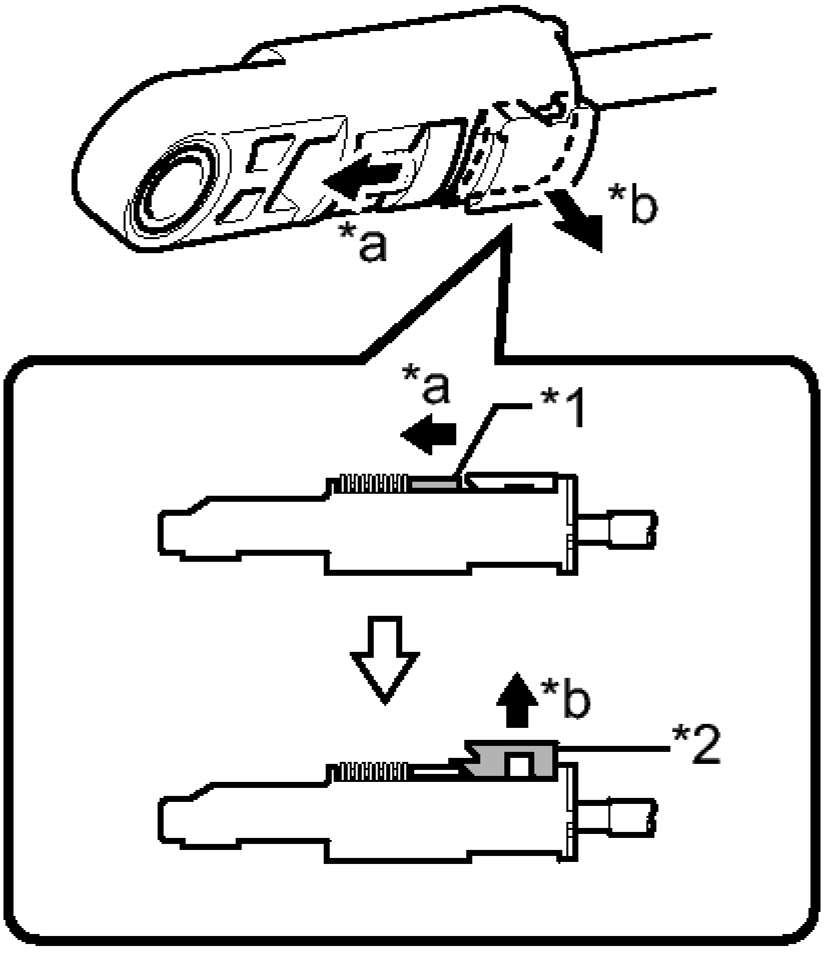

Fig. 137: Identifying Transmission Control Cable Assembly Slider
Courtesy of TOYOTA MOTOR SALES, U.S.A., INC.

TEXT IN ILLUSTRATION

*1	Slider
*2	Lock Piece
*a	Slide
*b	Pull

i. Install the transmission control cable end to the lower shift lever assembly.

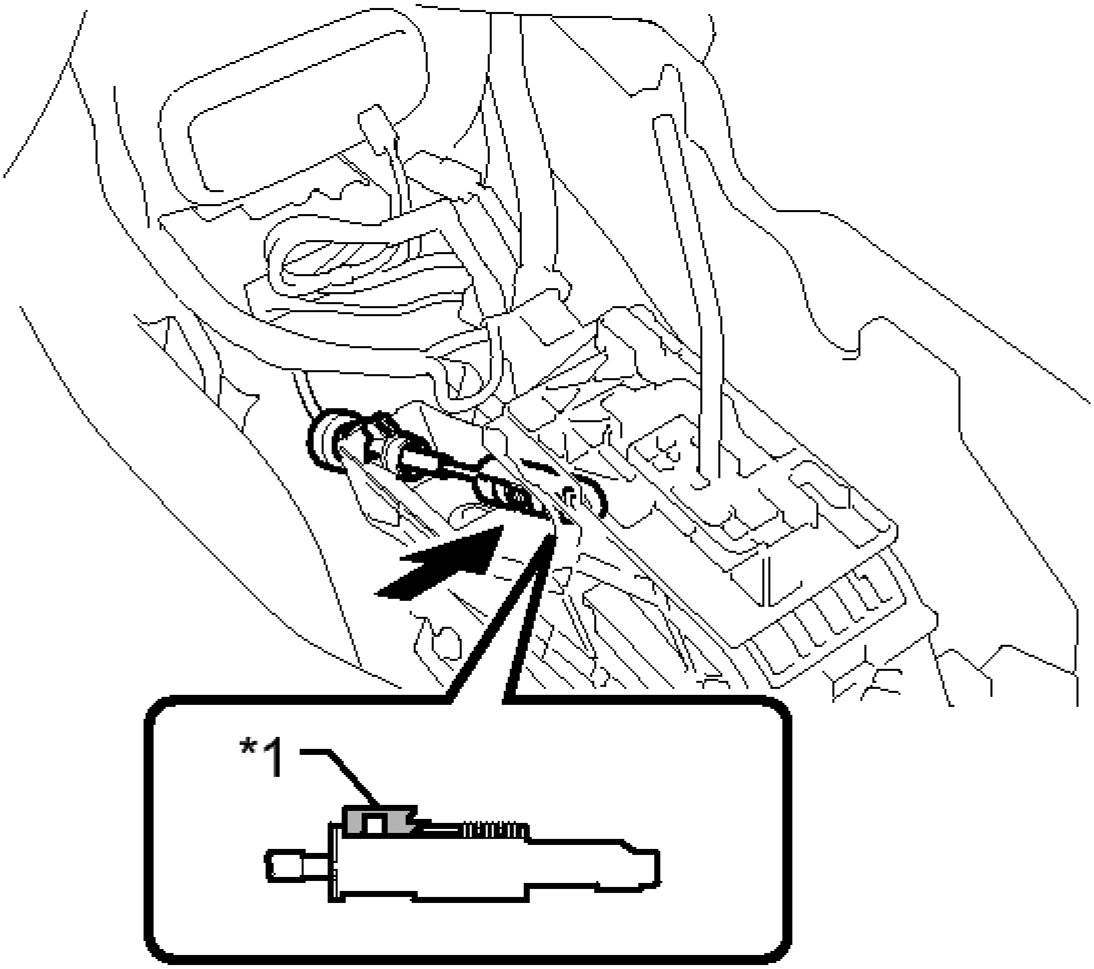

Fig. 138: Installing End Of Transmission Control Cable Assembly
Courtesy of TOYOTA MOTOR SALES, U.S.A., INC.

TEXT IN ILLUSTRATION

*1	Lock Piece

NOTE:

- **Check that the lock piece is pulled up.**
- **Install the cable end all the way to the base of the pin.**

j. Push the lock piece into the adjuster case.

NOTE:

- **Check that the park/neutral position switch and the shift lever are in neutral.**

- **Securely push in the lock piece until the slider lock is engaged.**

2. **CONNECT NO. 1 PARKING BRAKE CABLE ASSEMBLY**
    a. Install the No. 1 parking brake cable assembly with the bolt and nut.

    Bolt

    Torque: 15 N*m (153 kgf*cm, 11 ft.*lbf)

    Nut

    Torque: 5.4 N*m (55 kgf*cm, 48 in.*lbf)

    b. Install the floor carpet to the original position.
3. **INSTALL ACCELERATOR PEDAL SENSOR ASSEMBLY**

    Refer to **INSTALLATION**

4. **INSTALL AIR BAG SENSOR ASSEMBLY**

    Refer to **INSTALLATION**

5. **INSTALL AIR CLEANER CASE SUB-ASSEMBLY** . Refer to **INSTALLATION - Step 50**
6. **INSTALL AIR CLEANER FILTER ELEMENT SUB-ASSEMBLY**
7. **INSTALL AIR CLEANER CAP SUB-ASSEMBLY** . Refer to **INSTALLATION - Step 2**
8. **INSTALL INLET AIR CLEANER ASSEMBLY** . Refer to **INSTALLATION - Step 53**
9. **INSTALL COOL AIR INTAKE DUCT SEAL** . Refer to **INSTALLATION - Step 4**
10. **INSTALL NO. 1 ENGINE COVER SUB-ASSEMBLY** . Refer to **INSTALLATION - Step 68**
11. **INSPECT SHIFT LEVER POSITION** See step 1

DIFFERENTIAL OIL SEAL

COMPONENTS

ILLUSTRATION

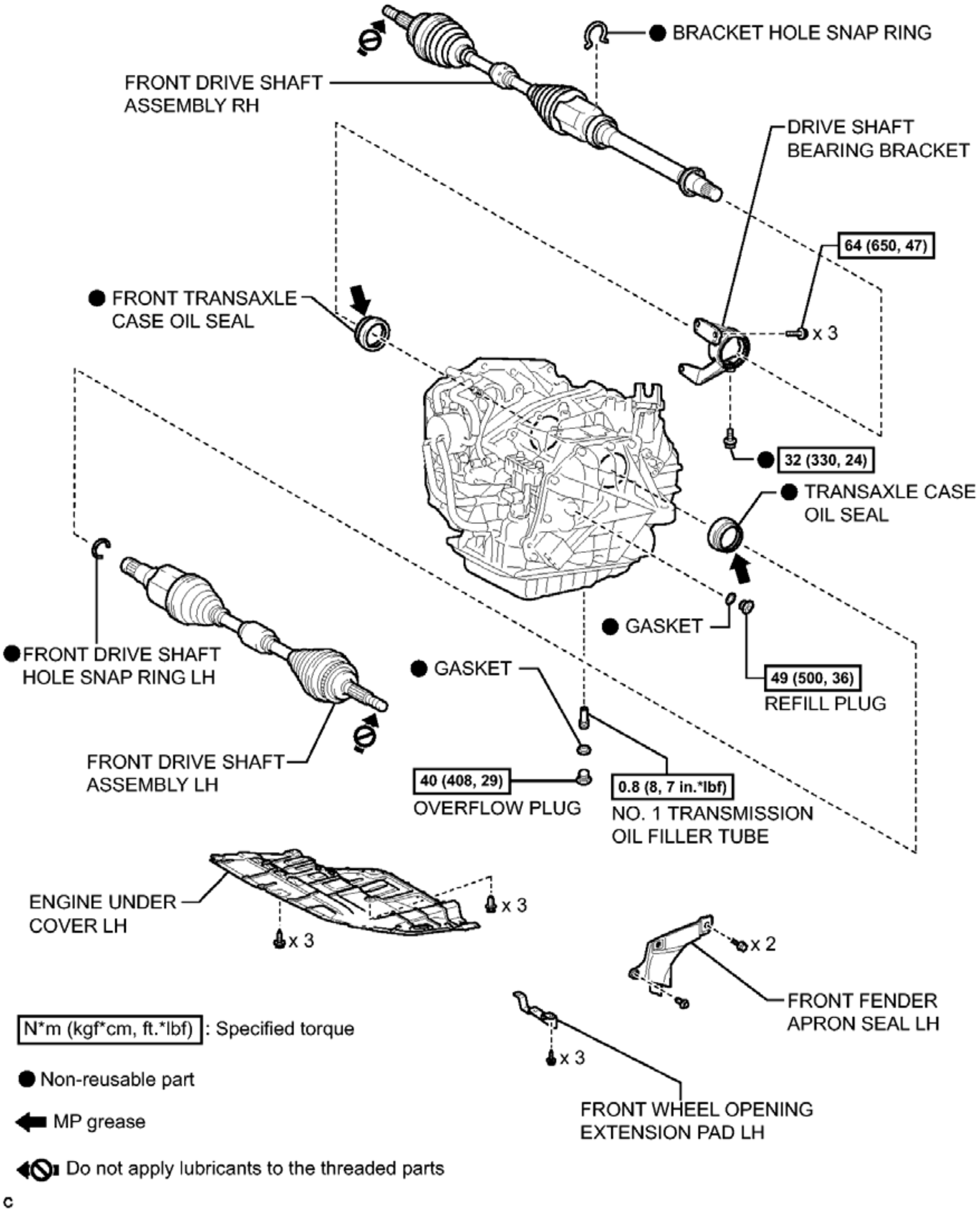
● BRACKET HOLE SNAP RING
FRONT DRIVE SHAFT ASSEMBLY RH
DRIVE SHAFT BEARING BRACKET
64 (650, 47)
● FRONT TRANSAXLE CASE OIL SEAL
x 3
● 32 (330, 24)
● TRANSAXLE CASE OIL SEAL
● GASKET
●FRONT DRIVE SHAFT HOLE SNAP RING LH
● GASKET
49 (500, 36)
REFILL PLUG
FRONT DRIVE SHAFT ASSEMBLY LH
40 (408, 29)
OVERFLOW PLUG
0.8 (8, 7 in.*lbf)
NO. 1 TRANSMISSION OIL FILLER TUBE
ENGINE UNDER COVER LH
x 3
x 3
x 2
FRONT FENDER APRON SEAL LH
x 3
FRONT WHEEL OPENING EXTENSION PAD LH
N*m (kgf*cm, ft.*lbf) : Specified torque
● Non-reusable part
MP grease
Do not apply lubricants to the threaded parts
c

Fig. 139: Identifying Differential Oil Seal Replacement Components With Torque Specifications
Courtesy of TOYOTA MOTOR SALES, U.S.A., INC.

REPLACEMENT

REPLACEMENT

1. **DRAIN AUTOMATIC TRANSAXLE FLUID**

a. Remove the front wheel opening extension pad LH, engine under cover LH and front fender apron seal LH.
b. Remove the refill plug and gasket from the automatic transaxle assembly.

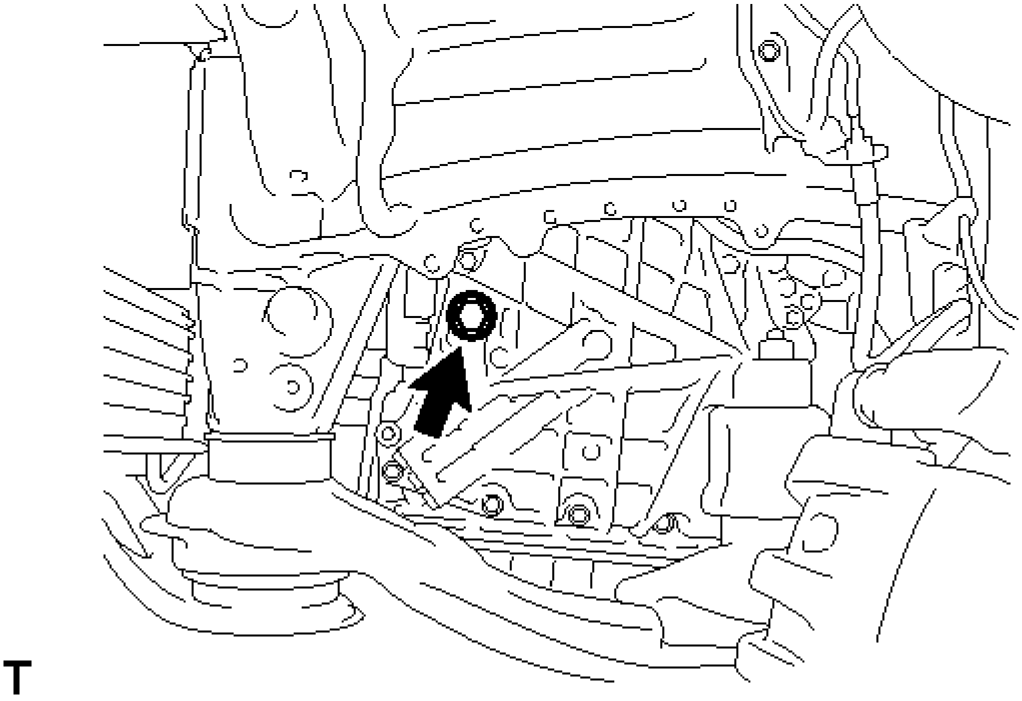

Fig. 140: Locating Refill Plug
Courtesy of TOYOTA MOTOR SALES, U.S.A., INC.

c. Using a 6 mm hexagon socket wrench, remove the overflow plug and gasket from the automatic transaxle assembly.

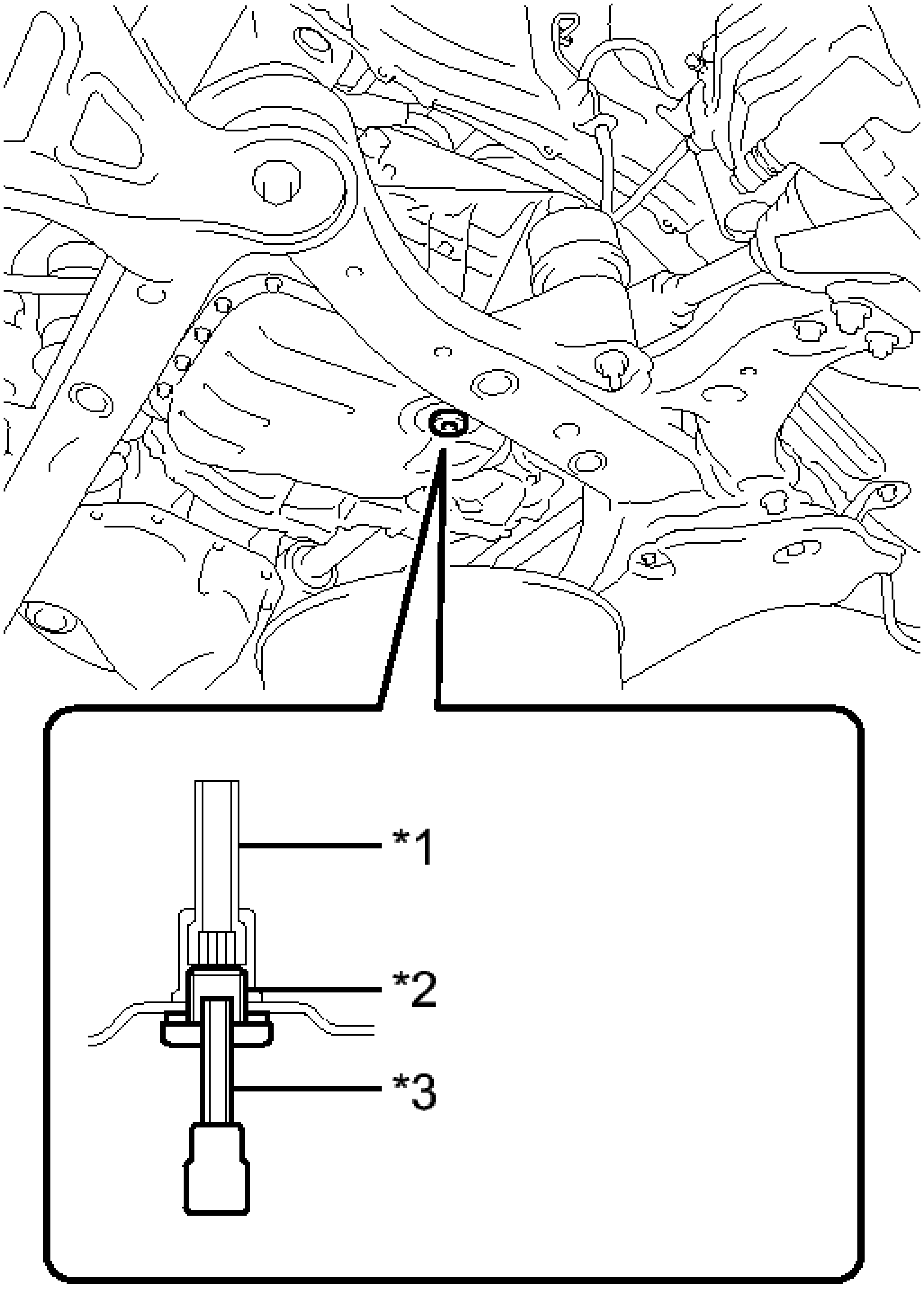

Fig. 141: Identifying No. 1 Transmission Oil Filler Tube, Overflow Plug And Hexagon Socket Wrench
Courtesy of TOYOTA MOTOR SALES, U.S.A., INC.

TEXT IN ILLUSTRATION

*1	No. 1 Transmission Oil Filler Tube
*2	Overflow Plug
*3	Hexagon Socket Wrench

d. Using a 6 mm hexagon socket wrench, remove the No. 1 transmission oil filler tube from the automatic transaxle assembly.

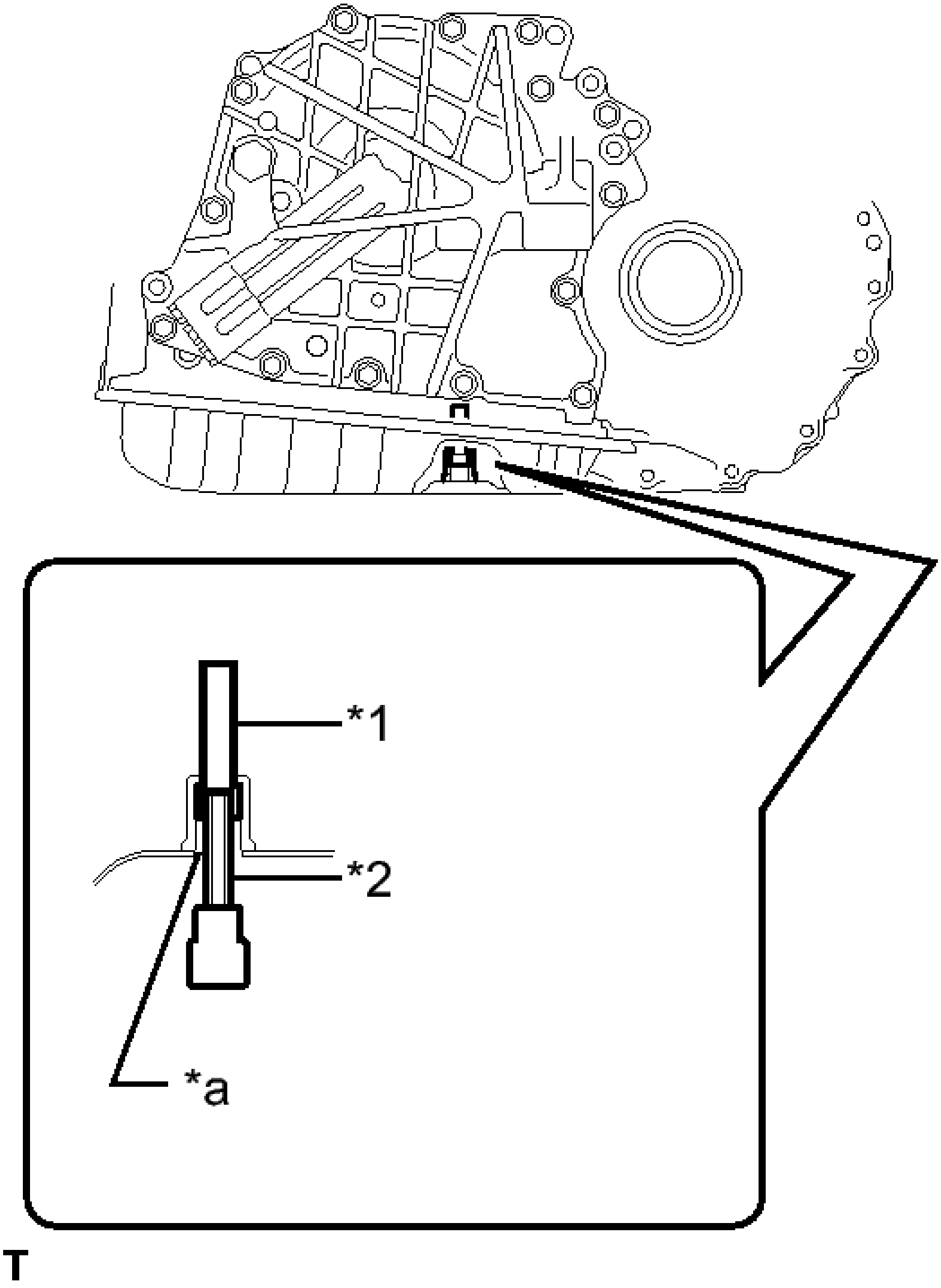

Fig. 142: Identifying No. 1 Transmission Oil Filler Tube, Hexagon Socket Wrench And Overflow Plug Hole
Courtesy of TOYOTA MOTOR SALES, U.S.A., INC.

TEXT IN ILLUSTRATION

*1	No. 1 Transmission Oil Filler Tube
*2	Hexagon Socket Wrench
*a	Overflow Plug Hole

e. Drain automatic transaxle fluid from the automatic transaxle assembly.

f. Using a 6 mm hexagon socket wrench, install the No. 1 transmission oil filler tube to the automatic transaxle assembly.

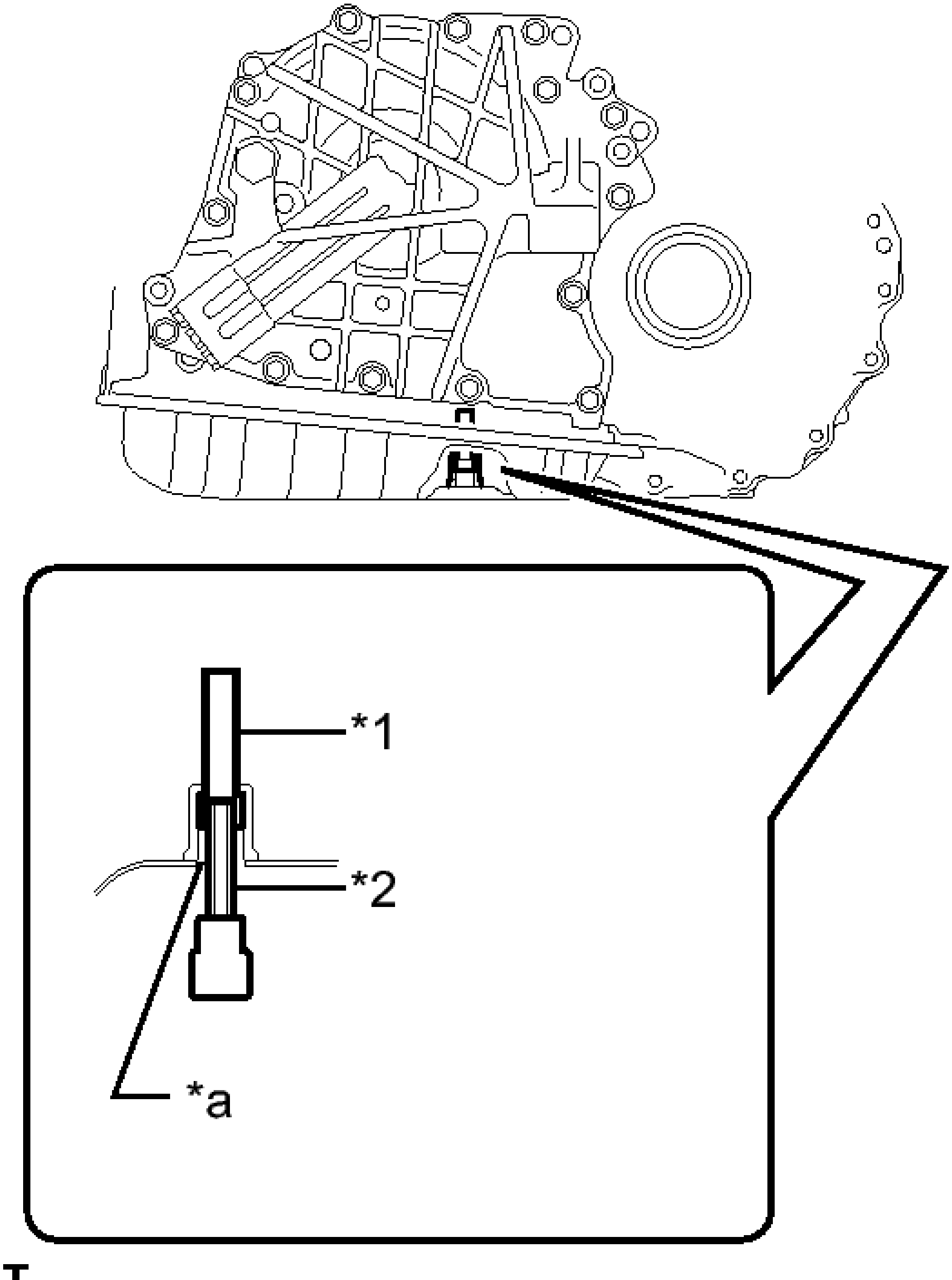

Fig. 143: Identifying No. 1 Transmission Oil Filler Tube, Hexagon Socket Wrench And Overflow Plug Hole
Courtesy of TOYOTA MOTOR SALES, U.S.A., INC.

Torque: 0.8 N*m (8 kgf*cm, 7 in.*lbf)

TEXT IN ILLUSTRATION

*1	No. 1 Transmission Oil Filler Tube
*2	Hexagon Socket Wrench
*a	Overflow Plug Hole

g. Using a 6 mm hexagon socket wrench, install a new gasket and the overflow plug to the automatic transaxle assembly.

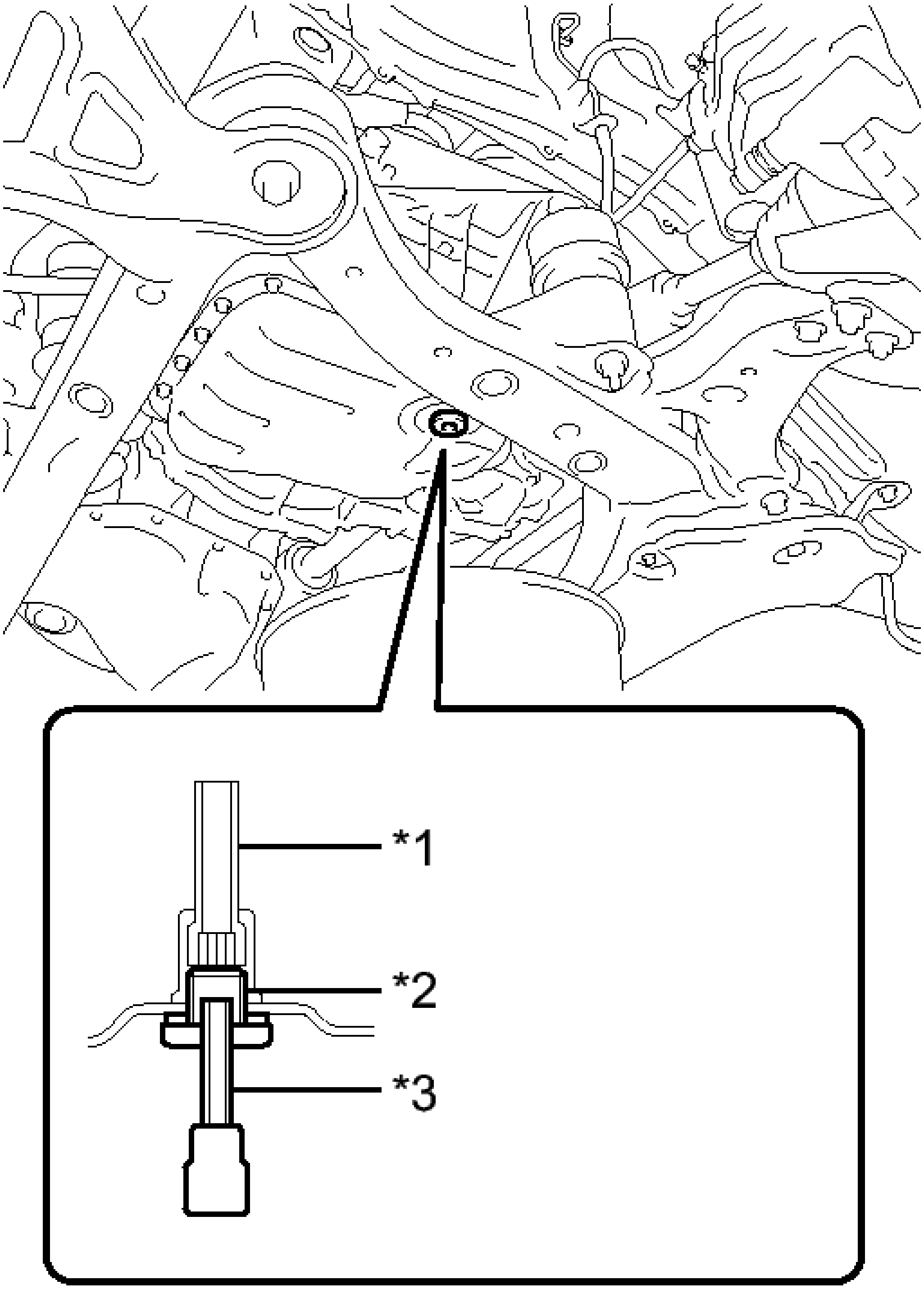

T

Fig. 144: Identifying No. 1 Transmission Oil Filler Tube, Overflow Plug And Hexagon Socket Wrench
Courtesy of TOYOTA MOTOR SALES, U.S.A., INC.

Torque: 40 N*m (408 kgf*cm, 29 ft.*lbf)

TEXT IN ILLUSTRATION

*1	No. 1 Transmission Oil Filler Tube
*2	Overflow Plug
*3	Hexagon Socket Wrench

h. Install a new gasket and the refill plug to the automatic transaxle assembly.

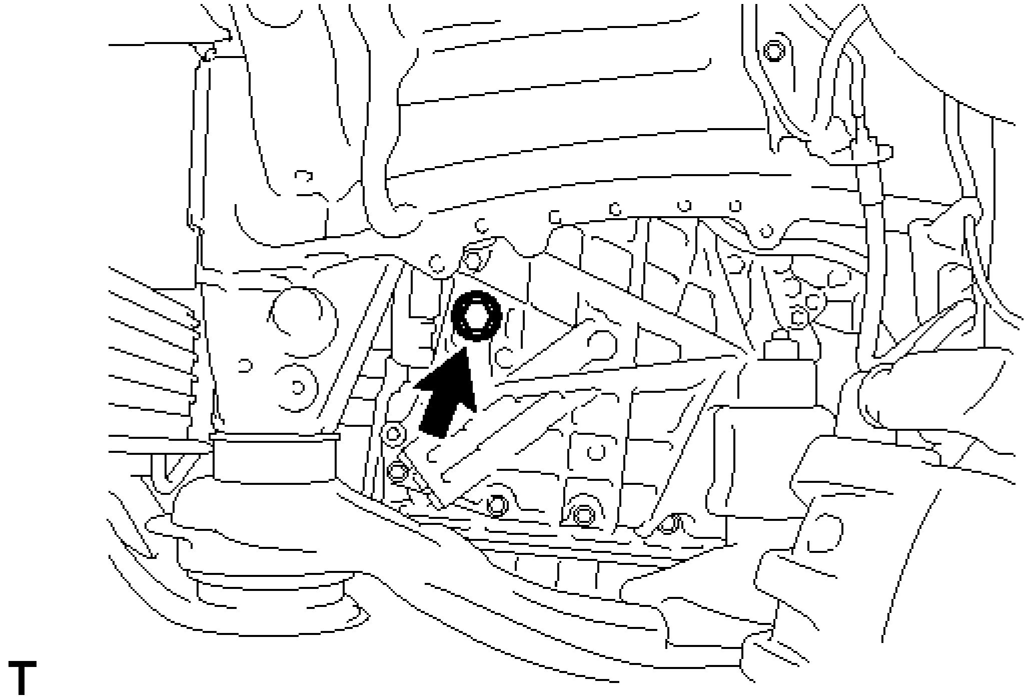

Fig. 145: Locating Refill Plug
Courtesy of TOYOTA MOTOR SALES, U.S.A., INC.

Torque: 49 N*m (500 kgf*cm, 36 ft.*lbf)

2. **REMOVE FRONT DRIVE SHAFT ASSEMBLY**

   Refer to **REMOVAL**

3. **REMOVE TRANSAXLE CASE OIL SEAL**
   a. Using SST, tap out the transaxle case oil seal.

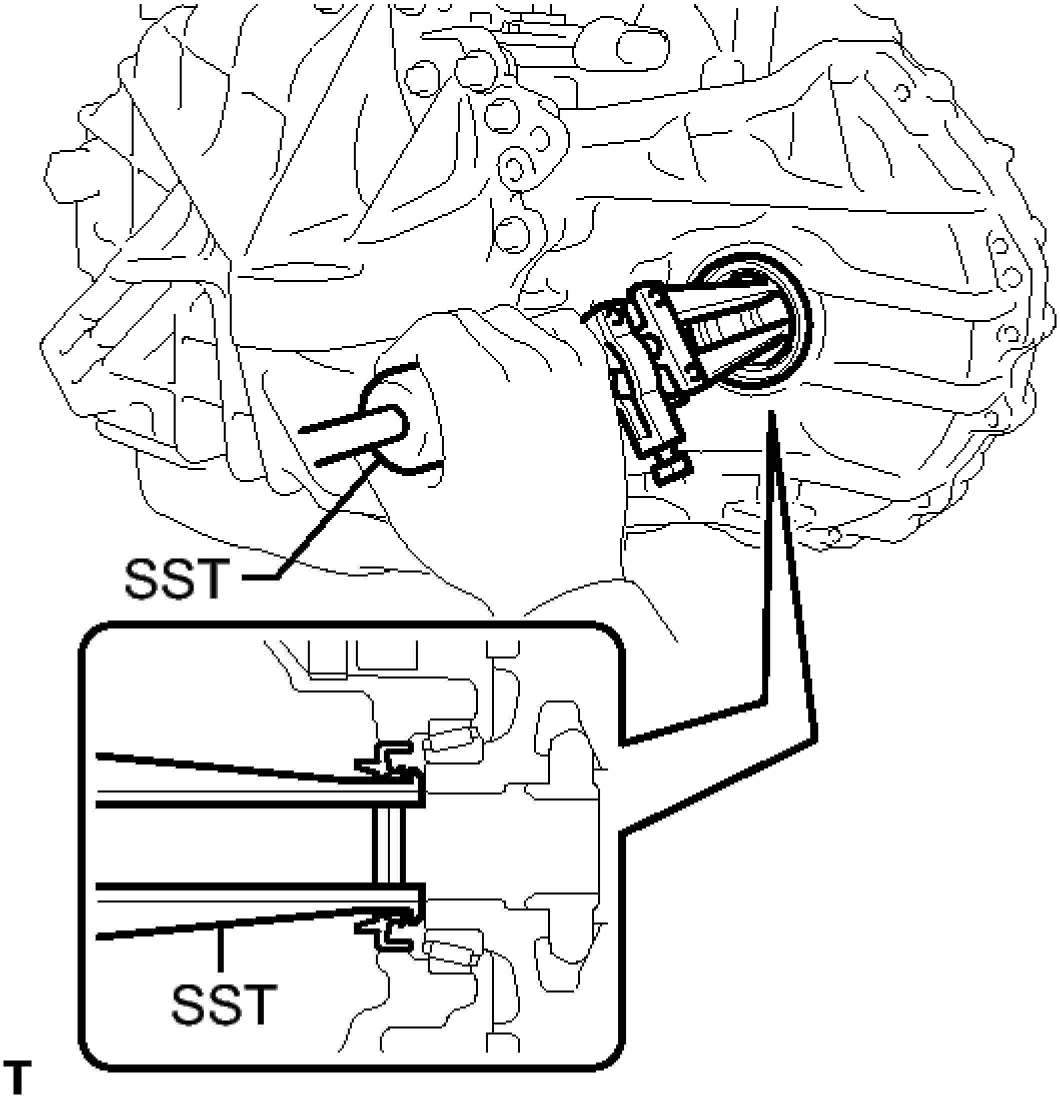

Fig. 146: Removing Transaxle Case Oil Seal
Courtesy of TOYOTA MOTOR SALES, U.S.A., INC.

- **SST: 09308-00010**

4. **REMOVE DRIVE SHAFT BEARING BRACKET** . Refer to **REMOVAL - Step 69**
5. **REMOVE FRONT TRANSAXLE CASE OIL SEAL**
    a. Using SST, tap out the front transaxle case oil seal.

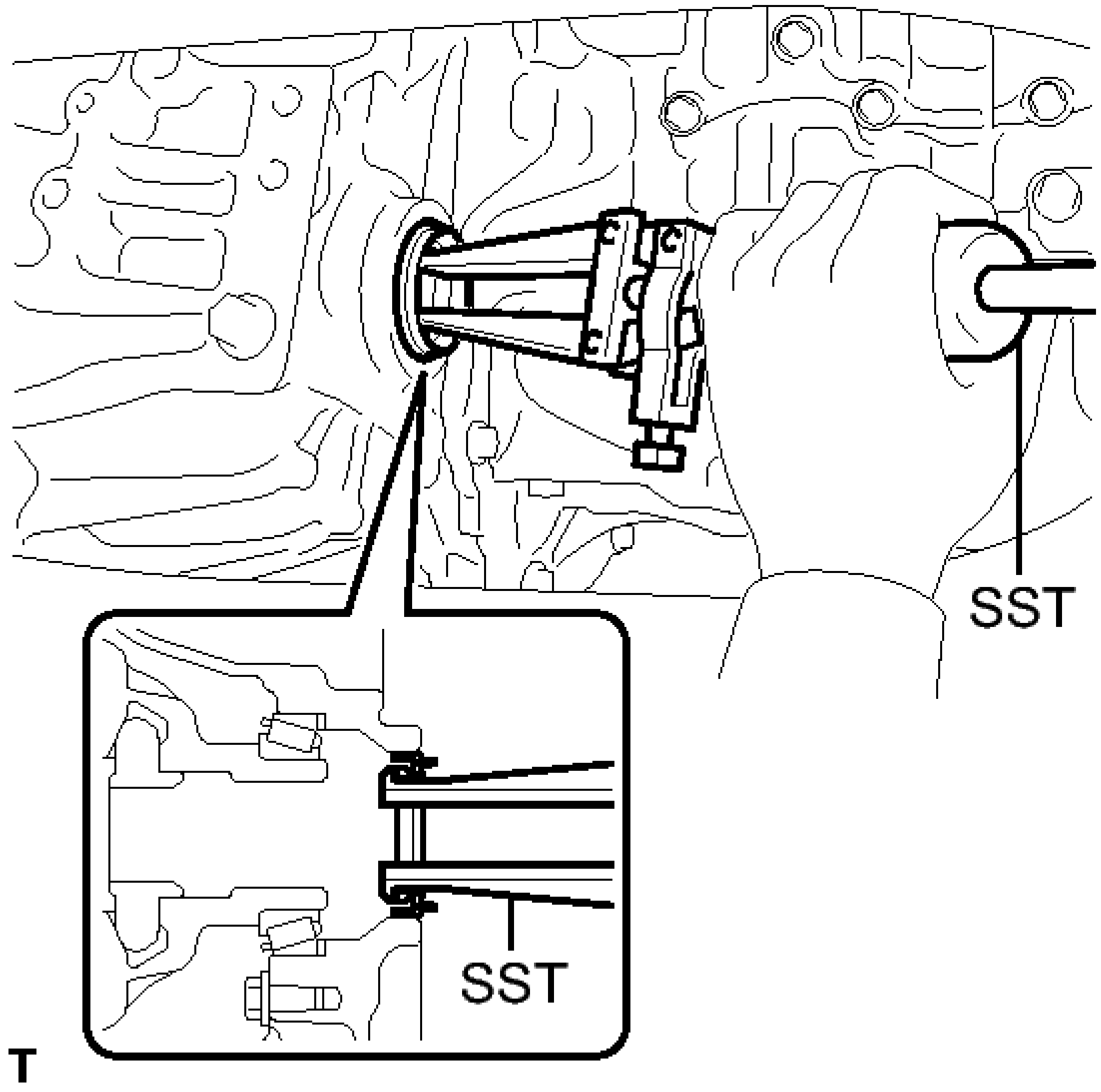

Fig. 147: Removing Front Transaxle Case Oil Seal
Courtesy of TOYOTA MOTOR SALES, U.S.A., INC.

- **SST: 09308-00010**

6. **INSTALL FRONT TRANSAXLE CASE OIL SEAL**
    a. Using SST and a hammer, tap in a new front transaxle case oil seal.

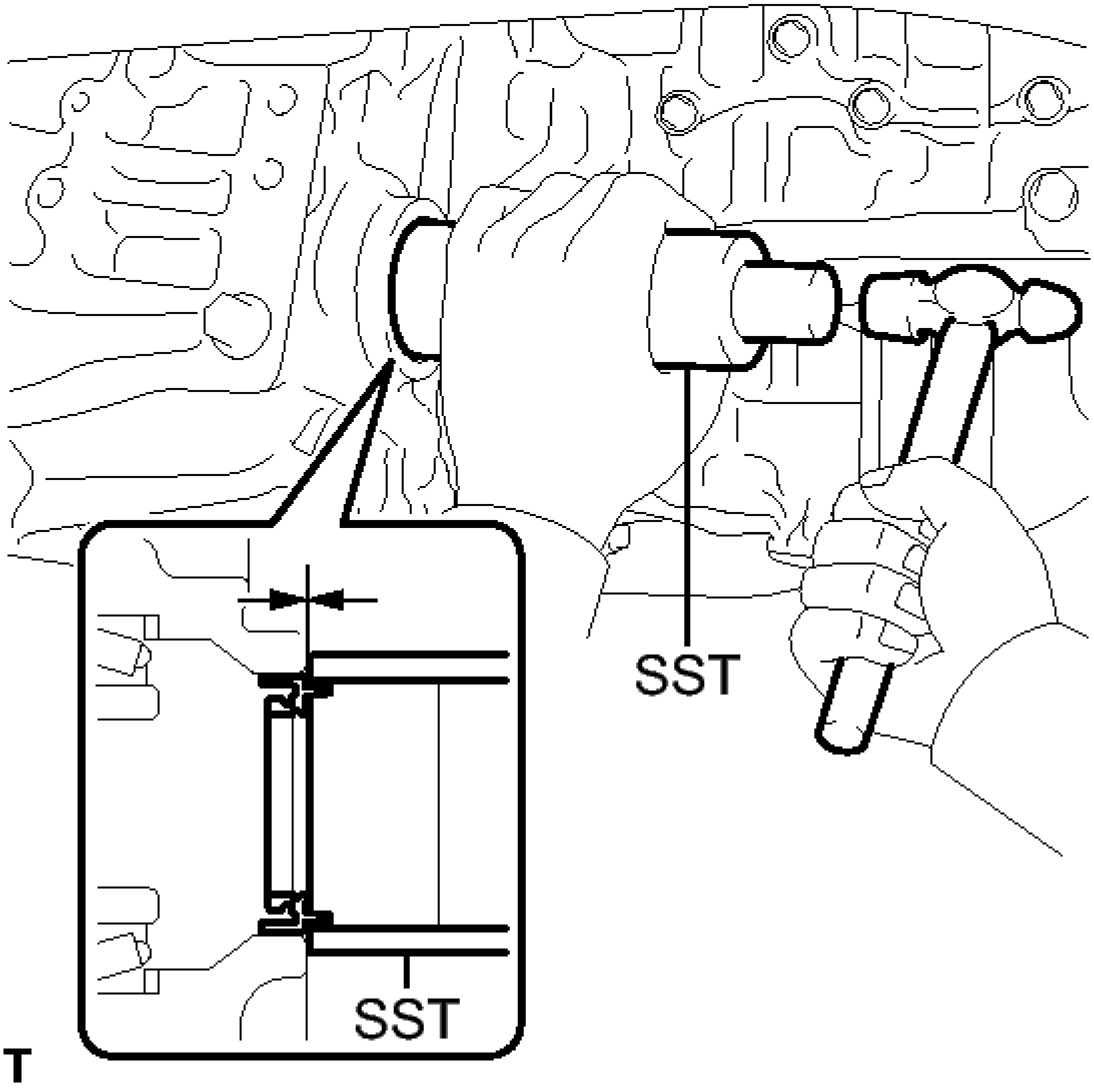

Fig. 148: Tapping Front Transaxle Case Oil Seal
Courtesy of TOYOTA MOTOR SALES, U.S.A., INC.

- **SST: 09316-60011**
  09316-00011

Oil seal driven in depth

-0.5 to 0.5 mm (-0.0197 to 0.0197 in.)

NOTE: **Check that the oil seal is installed in the correct direction.**

b. Coat the lip of the front transaxle case oil seal with MP grease.

7. **INSTALL DRIVE SHAFT BEARING BRACKET** . Refer to **INSTALLATION - Step 5**
8. **INSTALL TRANSAXLE CASE OIL SEAL**

a. Using SST and a hammer, tap in a new transaxle case oil seal.

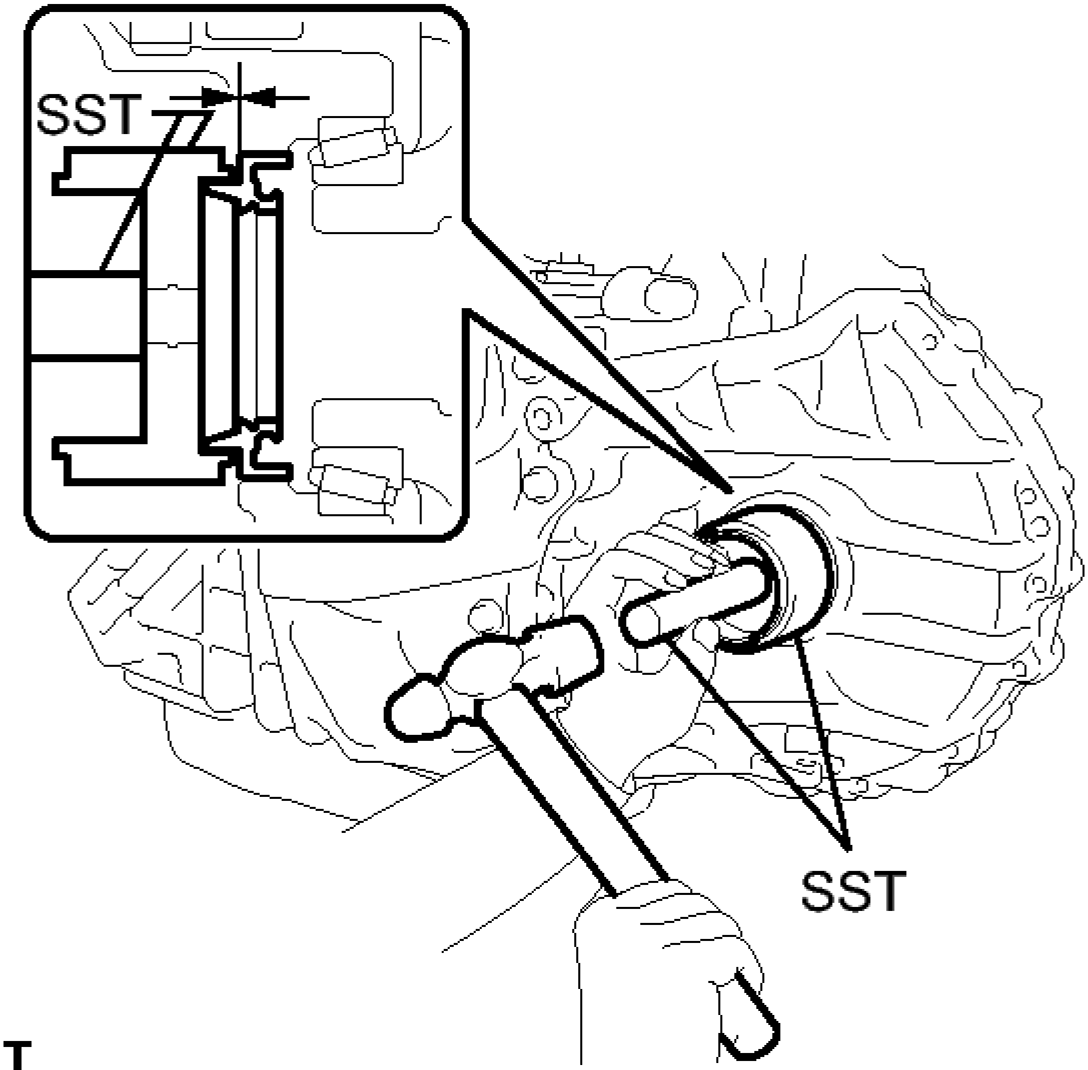

Fig. 149: Installing Transaxle Case Oil Seal
Courtesy of TOYOTA MOTOR SALES, U.S.A., INC.

- **SST: 09316-10010**
- **SST: 09950-70010**

  09951-07150

Oil seal driven in depth

-0.5 to 0.5 mm (-0.0197 to 0.0197 in.)

NOTE: **Check that the oil seal is installed in the correct direction.**

   b. Coat the lip of the transaxle case oil seal with MP grease.

9. **INSTALL FRONT DRIVE SHAFT HOLE SNAP RING LH** . Refer to **REASSEMBLY - Step 13**
10. **INSTALL FRONT DRIVE SHAFT ASSEMBLY**

    Refer to **INSTALLATION**

11. **ADD AUTOMATIC TRANSAXLE FLUID**

    Refer to **ADJUSTMENT**

AUTOMATIC TRANSAXLE ASSEMBLY

COMPONENTS

ILLUSTRATION

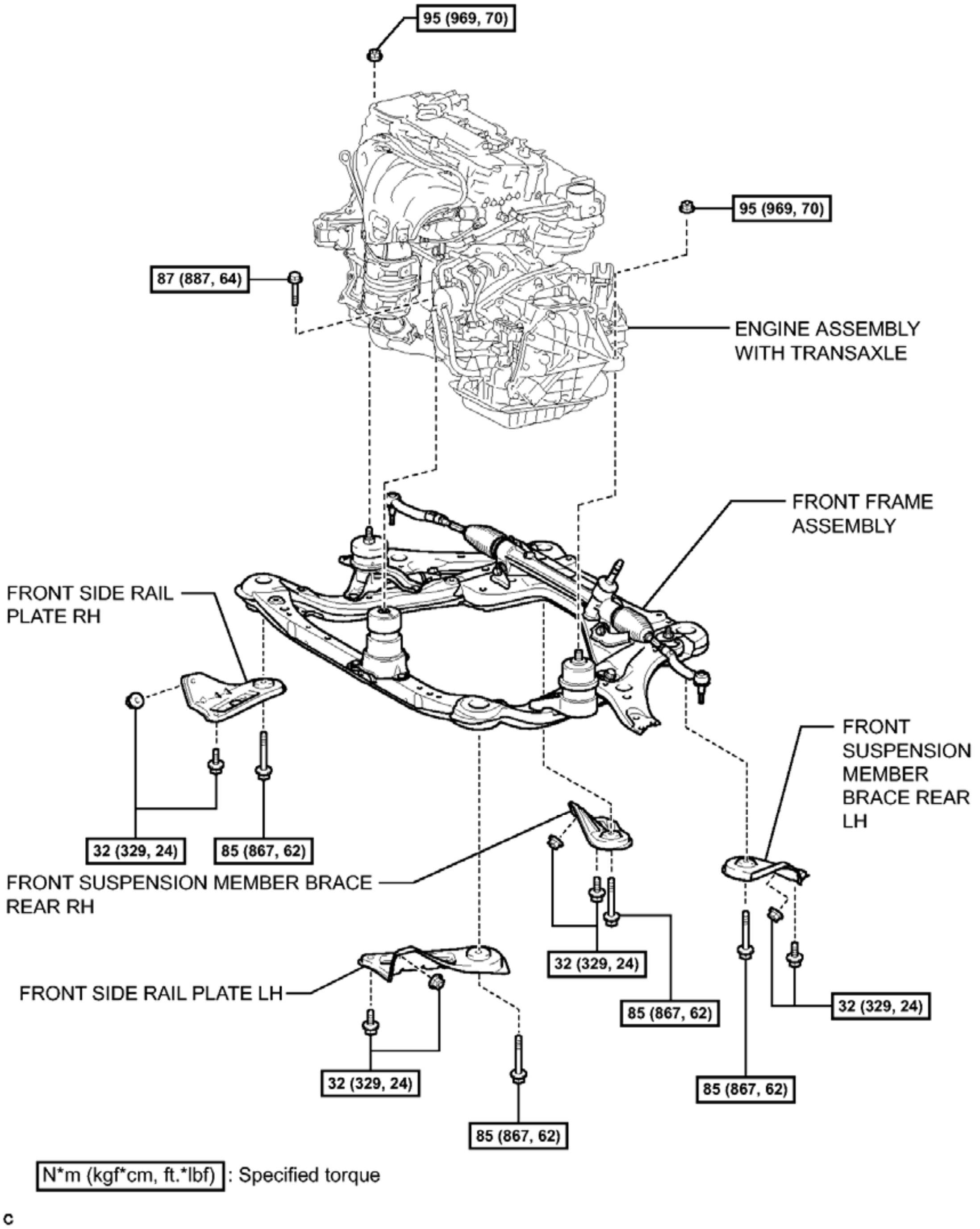
95 (969, 70)
95 (969, 70)
87 (887, 64)
ENGINE ASSEMBLY WITH TRANSAXLE
FRONT FRAME ASSEMBLY
FRONT SIDE RAIL PLATE RH
FRONT SUSPENSION MEMBER BRACE REAR LH
32 (329, 24)
85 (867, 62)
FRONT SUSPENSION MEMBER BRACE REAR RH
32 (329, 24)
FRONT SIDE RAIL PLATE LH
85 (867, 62)
32 (329, 24)
32 (329, 24)
85 (867, 62)
85 (867, 62)
N*m (kgf*cm, ft.*lbf) : Specified torque
c

Fig. 150: Identifying Automatic Transaxle Assembly Replacement Components With Torque Specifications (1 Of 3)

Courtesy of TOYOTA MOTOR SALES, U.S.A., INC.

ILLUSTRATION

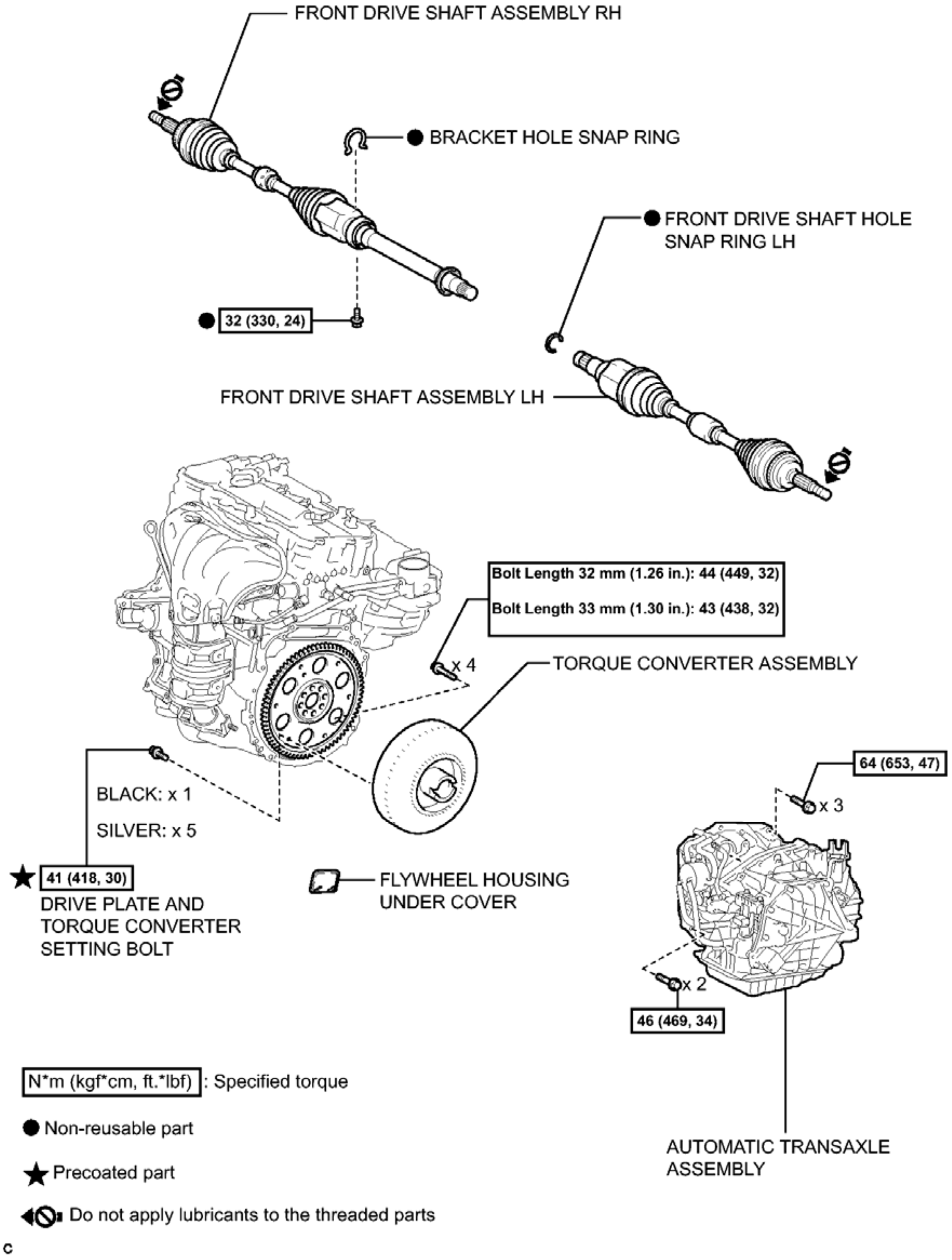
FRONT DRIVE SHAFT ASSEMBLY RH
● BRACKET HOLE SNAP RING
● FRONT DRIVE SHAFT HOLE SNAP RING LH
● 32 (330, 24)
FRONT DRIVE SHAFT ASSEMBLY LH
Bolt Length 32 mm (1.26 in.): 44 (449, 32)
Bolt Length 33 mm (1.30 in.): 43 (438, 32)
x 4
TORQUE CONVERTER ASSEMBLY
BLACK: x 1
SILVER: x 5
★ 41 (418, 30)
DRIVE PLATE AND TORQUE CONVERTER SETTING BOLT
FLYWHEEL HOUSING UNDER COVER
64 (653, 47)
x 3
x 2
46 (469, 34)
AUTOMATIC TRANSAXLE ASSEMBLY
N*m (kgf*cm, ft.*lbf) : Specified torque
● Non-reusable part
★ Precoated part
Do not apply lubricants to the threaded parts
c

Fig. 151: Identifying Automatic Transaxle Assembly Replacement Components With Torque Specifications (2 Of 3)

Courtesy of TOYOTA MOTOR SALES, U.S.A., INC.

ILLUSTRATION

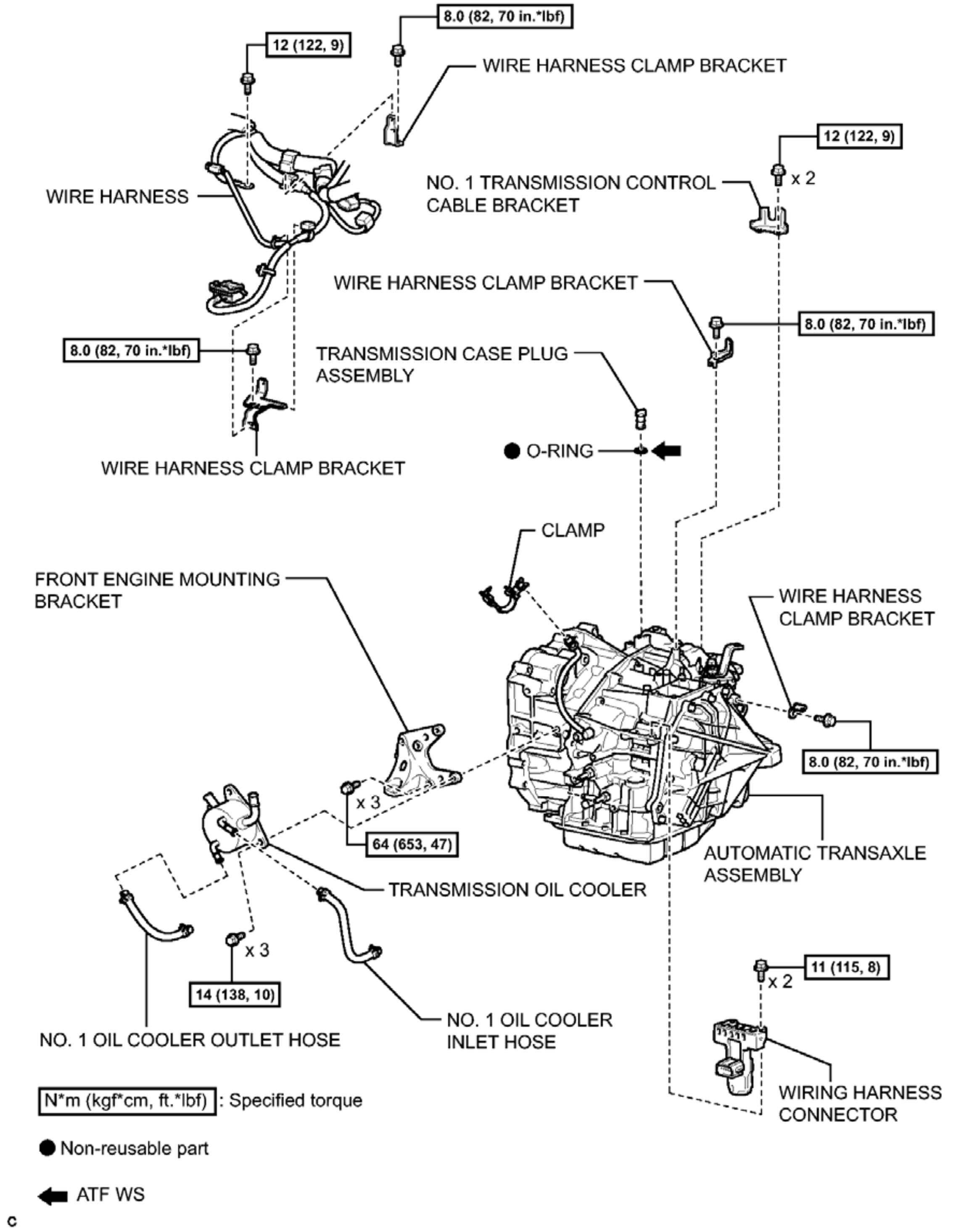
8.0 (82, 70 in.*lbf)
12 (122, 9)
WIRE HARNESS CLAMP BRACKET
12 (122, 9)
x 2
NO. 1 TRANSMISSION CONTROL CABLE BRACKET
WIRE HARNESS
WIRE HARNESS CLAMP BRACKET
8.0 (82, 70 in.*lbf)
TRANSMISSION CASE PLUG ASSEMBLY
8.0 (82, 70 in.*lbf)
WIRE HARNESS CLAMP BRACKET
● O-RING
CLAMP
FRONT ENGINE MOUNTING BRACKET
WIRE HARNESS CLAMP BRACKET
8.0 (82, 70 in.*lbf)
x 3
64 (653, 47)
AUTOMATIC TRANSAXLE ASSEMBLY
TRANSMISSION OIL COOLER
x 3
14 (138, 10)
11 (115, 8)
x 2
NO. 1 OIL COOLER OUTLET HOSE
NO. 1 OIL COOLER INLET HOSE
WIRING HARNESS CONNECTOR
N*m (kgf*cm, ft.*lbf) : Specified torque
● Non-reusable part
ATF WS
c

Fig. 152: Identifying Automatic Transaxle Assembly Replacement Components With Torque Specifications (3 Of 3)

Courtesy of TOYOTA MOTOR SALES, U.S.A., INC.

REMOVAL

REMOVAL

NOTE: **If automatic transmission parts are replaced, refer to the Parts Replacement Compensation Table to determine if any additional operations are necessary. Refer to PRECAUTION .**

1. **REMOVE ENGINE ASSEMBLY WITH TRANSAXLE**

   Refer to **REMOVAL**

2. **REMOVE FRONT DRIVE SHAFT ASSEMBLY LH** . Refer to **REMOVAL - Step 15**
3. **REMOVE FRONT DRIVE SHAFT HOLE SNAP RING LH** . Refer to **REMOVAL - Step 17**
4. **REMOVE FRONT DRIVE SHAFT ASSEMBLY RH** . Refer to **REMOVAL - Step 16**
5. **REMOVE FRONT FRAME ASSEMBLY** . Refer to **REMOVAL - Step 65**
6. **REMOVE WIRING HARNESS CONNECTOR**
   a. Disconnect the wire harness clamp.

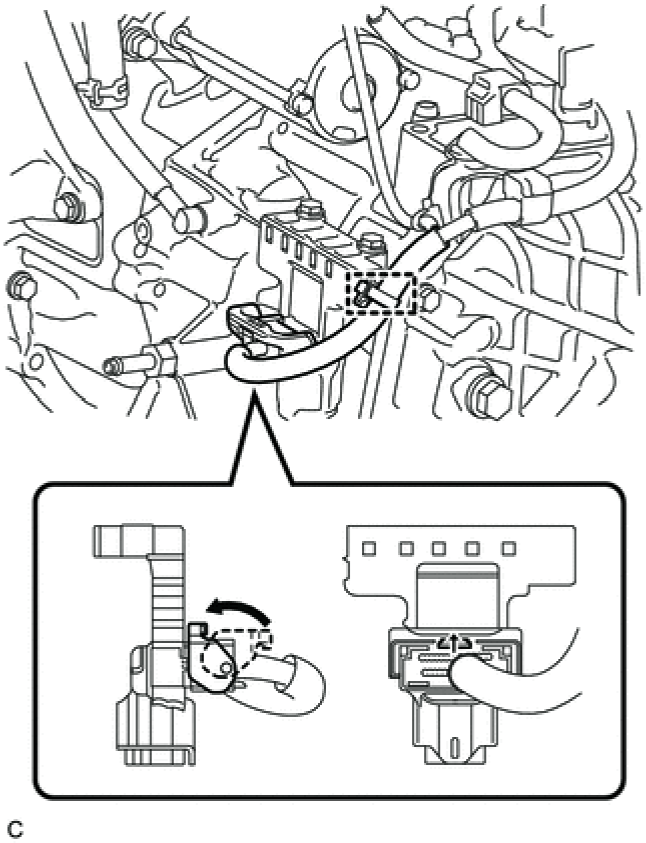

Fig. 153: Identifying Wiring Harness Clamp, Lock Lever And Connector
Courtesy of TOYOTA MOTOR SALES, U.S.A., INC.

b. Turn the lock lever and disconnect the connector from the wiring harness connector.
c. Remove the 2 bolts and wiring harness connector from the automatic transaxle assembly.

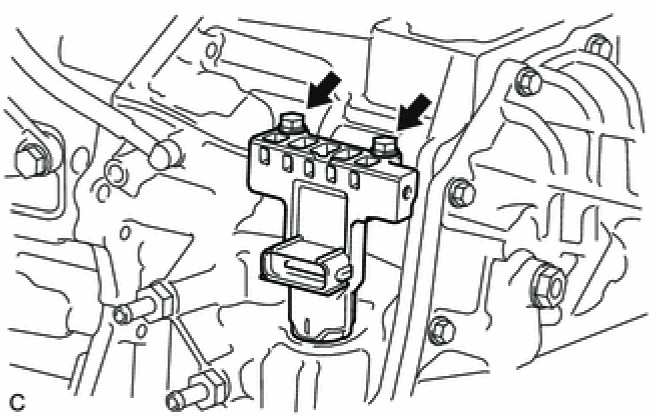

Fig. 154: Identifying Wiring Harness Connector Bolts
Courtesy of TOYOTA MOTOR SALES, U.S.A., INC.

7. **SEPARATE WIRE HARNESS**
   a. Remove the bolt and ground cable.

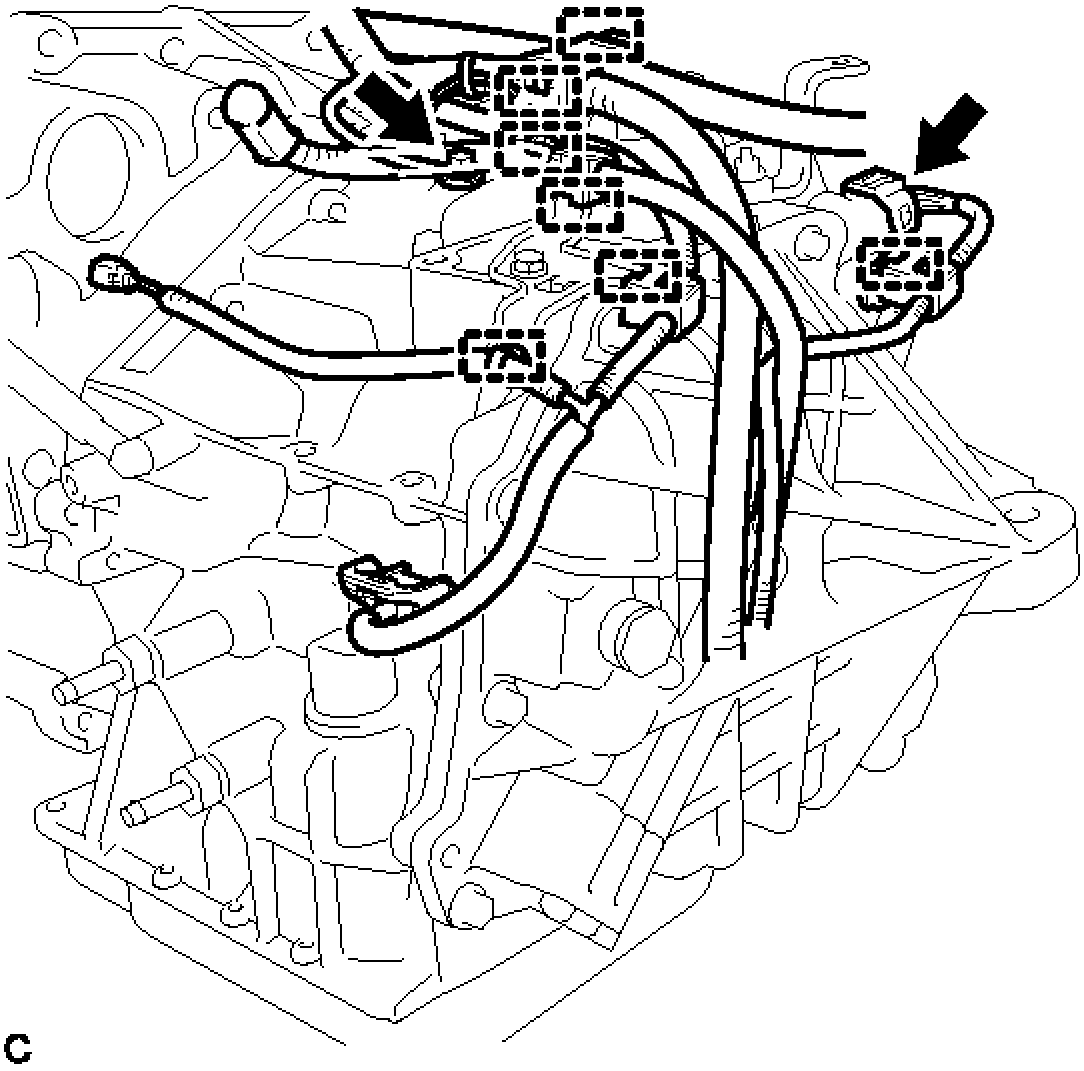

Fig. 155: Identifying Wire Harness Ground Cable
Courtesy of TOYOTA MOTOR SALES, U.S.A., INC.

b. Separate the park/neutral position switch connector and 7 wire harness clamps.

8. **REMOVE AUTOMATIC TRANSAXLE ASSEMBLY**

a. Using the transmission jack attachment, set the automatic transaxle assembly on a transmission jack.

NOTE:

- **Secure the automatic transaxle assembly to the transmission jack using a suitable adapter, such as a rope or attachment.**
- **To prevent the oil pan from deforming, do not place any attachments onto the oil pan of the automatic transaxle assembly.**
- **Hold the engine assembly with a suitable adapter, such as a rope, during the operation.**

b. Remove the 9 bolts and automatic transaxle assembly.

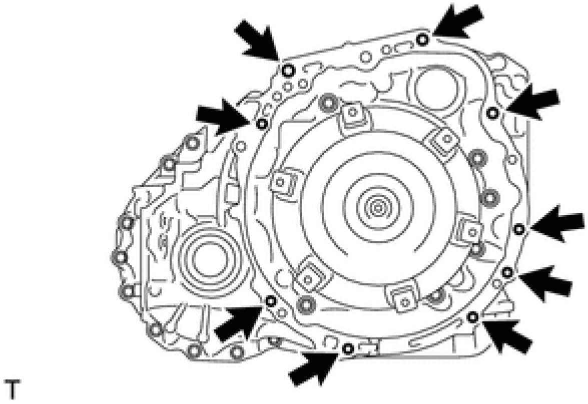

Fig. 156: Locating Transaxle Bolts
Courtesy of TOYOTA MOTOR SALES, U.S.A., INC.

NOTE: To prevent damage to the knock pins, do not pry between the automatic transaxle assembly and engine.

9. **REMOVE TRANSMISSION OIL COOLER**
   a. Remove the No. 1 oil cooler inlet hose and No. 1 oil cooler outlet hose.

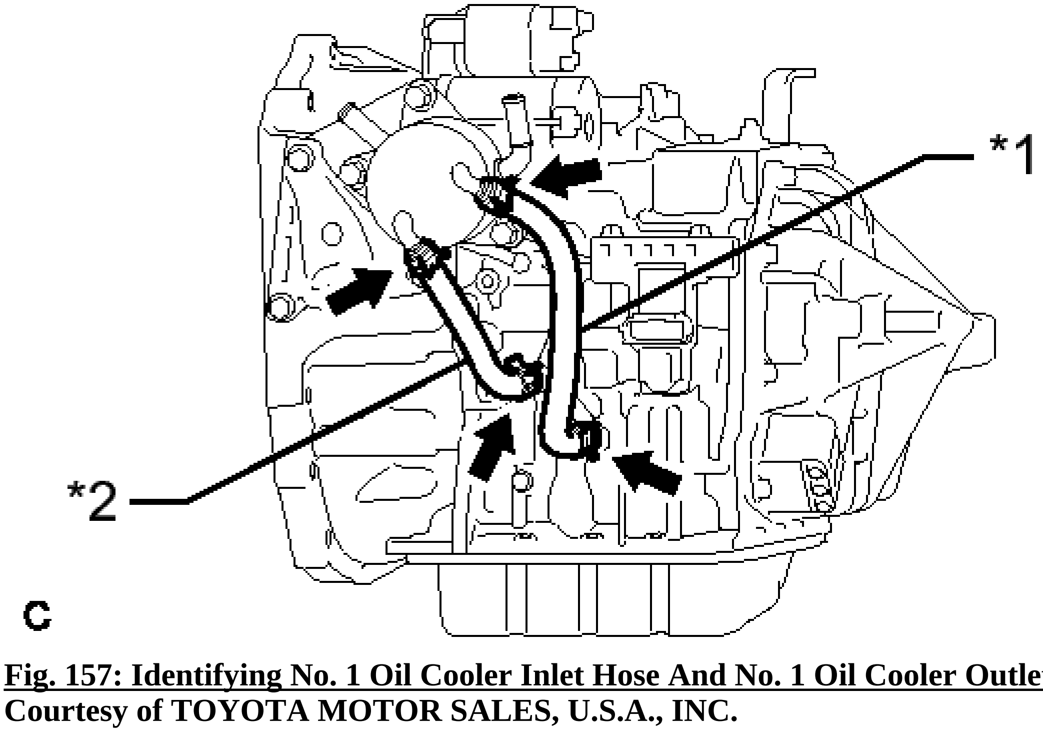

Fig. 157: Identifying No. 1 Oil Cooler Inlet Hose And No. 1 Oil Cooler Outlet Hose
Courtesy of TOYOTA MOTOR SALES, U.S.A., INC.

TEXT IN ILLUSTRATION

*1	No. 1 Oil Cooler Inlet Hose
*2	No. 1 Oil Cooler Outlet Hose

b. Remove the 3 bolts and transmission oil cooler from the front engine mounting bracket.

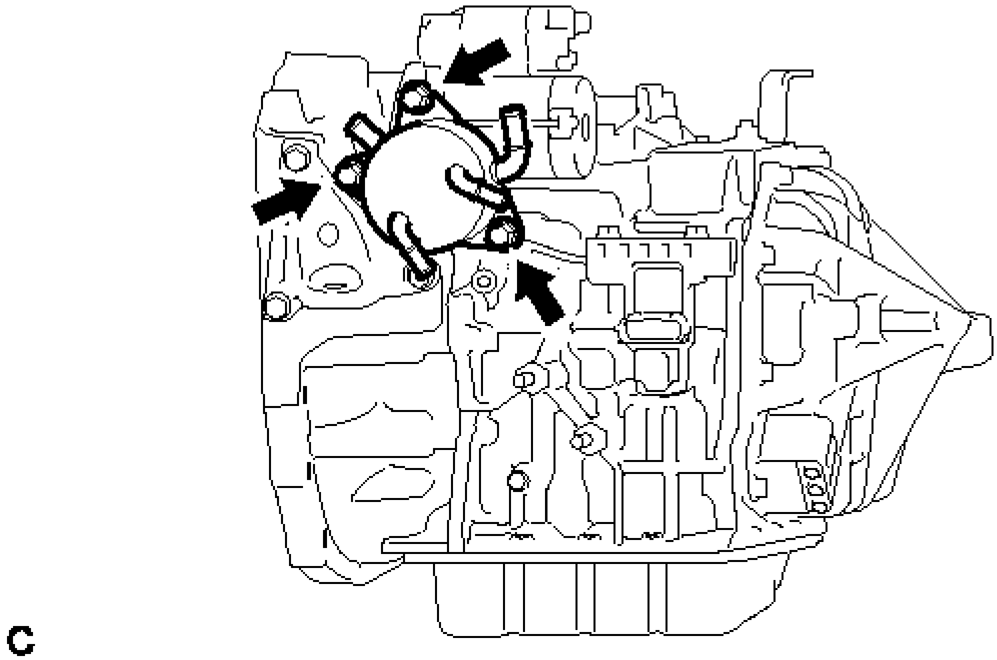

Fig. 158: Identifying Transmission Oil Cooler Bolts
Courtesy of TOYOTA MOTOR SALES, U.S.A., INC.

10. **REMOVE FRONT ENGINE MOUNTING BRACKET**

    a. Remove the 3 bolts and front engine mounting bracket from the automatic transaxle assembly.

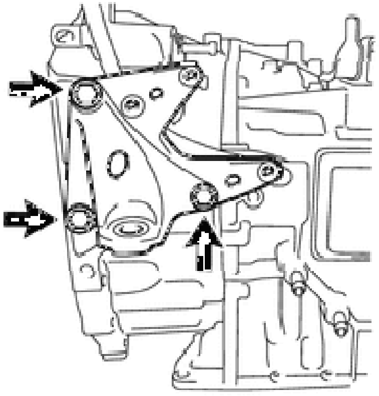

T

Fig. 159: Identifying Front Engine Mounting Bracket Bolts
Courtesy of TOYOTA MOTOR SALES, U.S.A., INC.

11. **REMOVE NO. 1 TRANSMISSION CONTROL CABLE BRACKET**
    a. Remove the 2 bolts and No. 1 transmission control cable bracket from the automatic transaxle assembly.

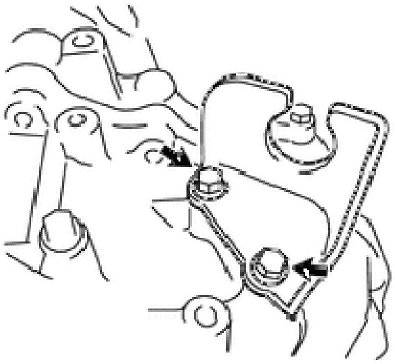

N

Fig. 160: Locating No. 1 Transmission Control Cable Bracket Bolts
Courtesy of TOYOTA MOTOR SALES, U.S.A., INC.

12. **REMOVE WIRE HARNESS CLAMP BRACKET**
    a. Remove the 4 bolts and 4 wire harness clamp brackets from the automatic transaxle assembly.

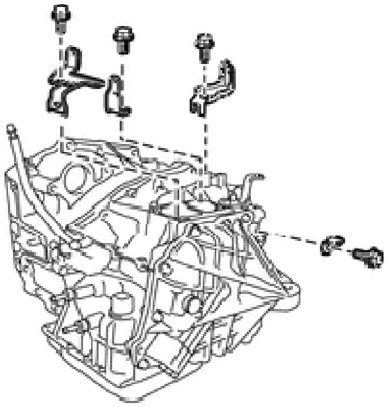

Fig. 161: Identifying Wire Harness Clamp Bracket Bolts
Courtesy of TOYOTA MOTOR SALES, U.S.A., INC.

13. **REMOVE TRANSMISSION CASE PLUG ASSEMBLY**
    a. Remove the transmission case plug assembly from the automatic transaxle assembly.

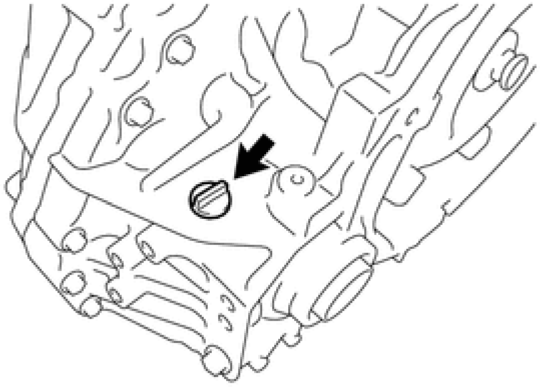

Fig. 162: Locating Transmission Case Plug Assembly
Courtesy of TOYOTA MOTOR SALES, U.S.A., INC.

    b. Remove the O-ring from the transmission case plug assembly.

14. **REMOVE TORQUE CONVERTER ASSEMBLY**
    a. Remove the torque converter assembly from the automatic transaxle assembly.

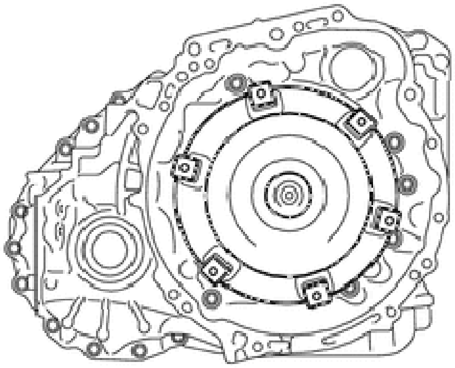

Fig. 163: Identifying Torque Converter Clutch Assembly
Courtesy of TOYOTA MOTOR SALES, U.S.A., INC.

INSTALLATION

INSTALLATION

1. **INSPECT TORQUE CONVERTER ASSEMBLY** See step 1
2. **INSTALL TORQUE CONVERTER ASSEMBLY**
   a. Engage the splines of the input shaft and turbine runner.

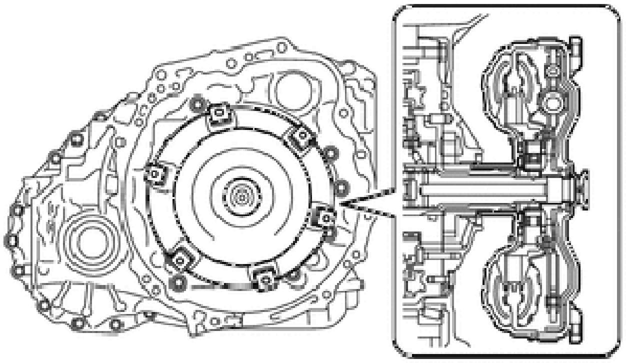

Fig. 164: Identifying Input Shaft And Turbine Runner
Courtesy of TOYOTA MOTOR SALES, U.S.A., INC.

   b. Engage the splines of the stator shaft and the stator while turning the torque converter assembly.

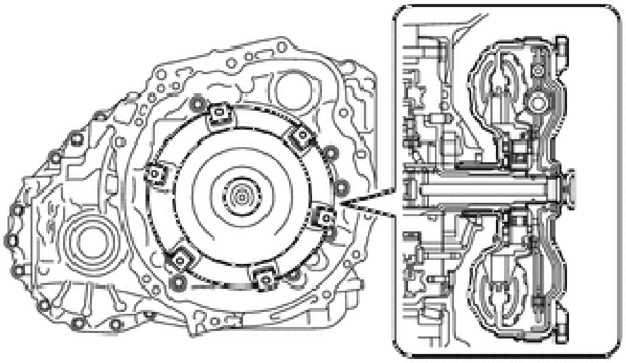

Fig. 165: Identifying Stator Shaft Bolts
Courtesy of TOYOTA MOTOR SALES, U.S.A., INC.

HINT:

If the stator shaft splines are difficult to engage with the stator splines, move the torque converter back approximately 10 mm and engage the splines while rotating the torque converter.

c. Turn the torque converter assembly to insert the key of the oil pump drive gear into the groove of the torque converter assembly.

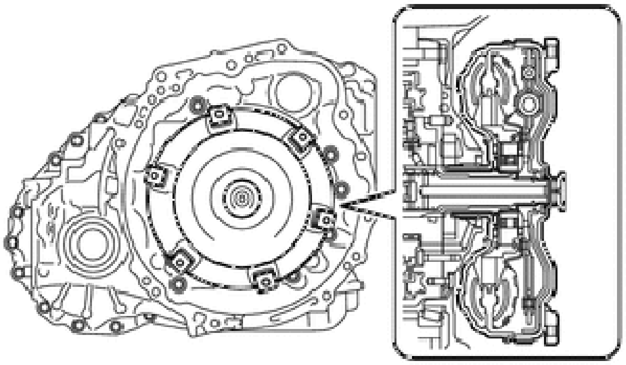

Fig. 166: Identifying Torque Converter Clutch Assembly
Courtesy of TOYOTA MOTOR SALES, U.S.A., INC.

d. Clean the torque converter set bolt holes.

e. Using a vernier caliper and straightedge, measure dimension A between the transaxle contact surface of the engine and the torque converter contact surface of the drive plate.

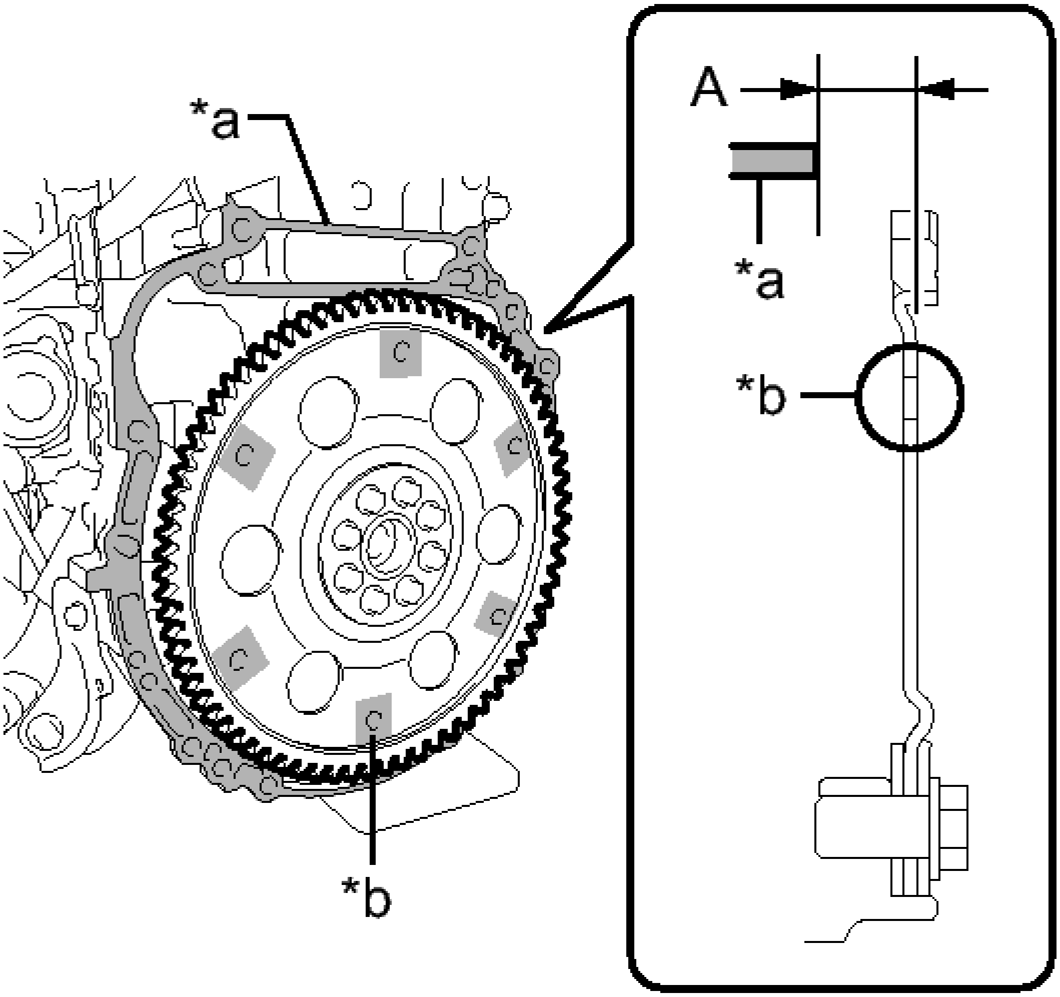

T

Fig. 167: Measuring Dimension A
Courtesy of TOYOTA MOTOR SALES, U.S.A., INC.

TEXT IN ILLUSTRATION

*a	Engine Surface
*b	Drive Plate Surface

NOTE: **Make sure to deduct the thickness of the straightedge.**

f. Using a vernier caliper and straightedge, measure dimension B shown in the illustration and check that dimension B is more than dimension A, which was measured in the previous step.

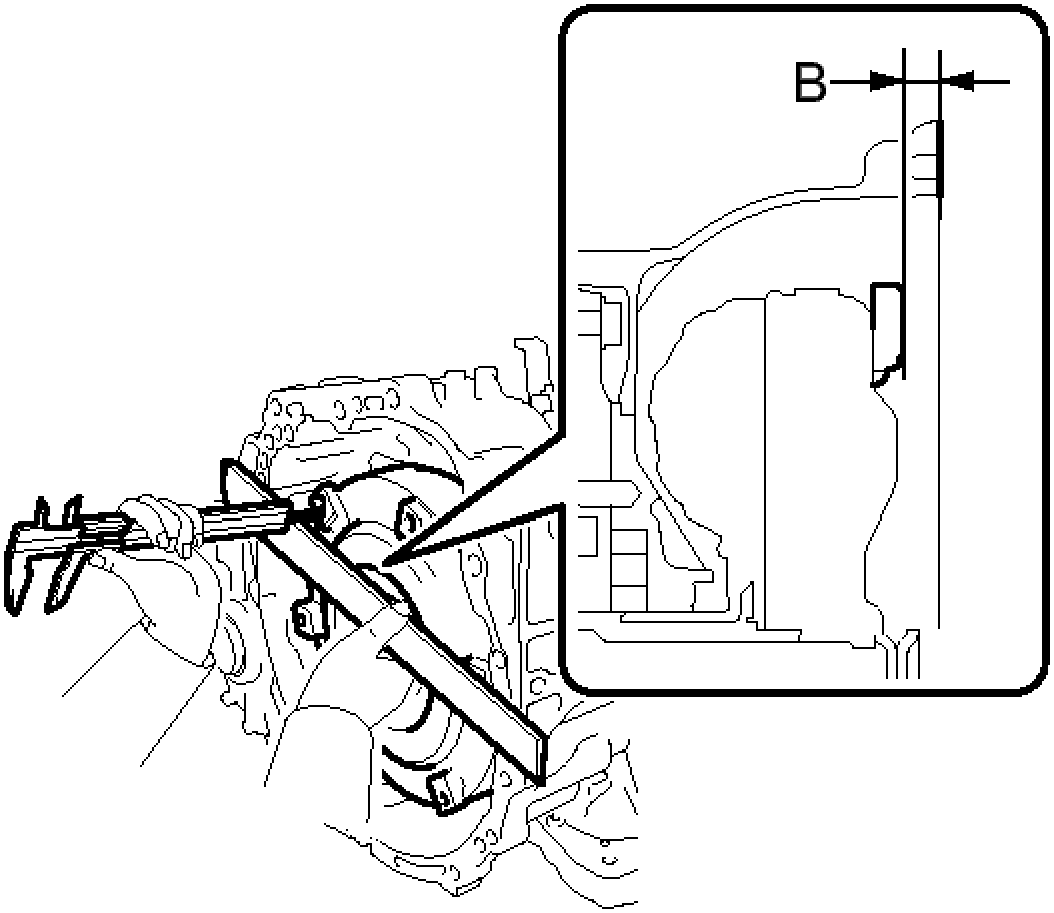

Fig. 168: Identifying Measure Dimension "B"
Courtesy of TOYOTA MOTOR SALES, U.S.A., INC.

Standard

A + 1 mm (0.0394 in.) or more

NOTE:

- **Make sure to deduct the thickness of the straightedge.**
- **If the automatic transaxle assembly is installed to the engine with the torque converter not sufficiently inserted, the torque converter may be damaged.**

3. **INSTALL TRANSMISSION CASE PLUG ASSEMBLY**
    a. Apply ATF to a new O-ring and install it to the transmission case plug assembly.
    b. Install the transmission case plug assembly to the automatic transaxle assembly.

4. **INSTALL WIRE HARNESS CLAMP BRACKET**
    a. Install the 4 wire harness clamp brackets to the automatic transaxle assembly with the 4 bolts.

       Torque: 8.0 N*m (82 kgf*cm, 70 in.*lbf)

5. **INSTALL NO. 1 TRANSMISSION CONTROL CABLE BRACKET**
    a. Install the No. 1 transmission control cable bracket to the automatic transaxle assembly with the 2 bolts.

       Torque: 12 N*m (122 kgf*cm, 9 ft.*lbf)

6. **INSTALL FRONT ENGINE MOUNTING BRACKET**
    a. Install the front engine mounting bracket to the automatic transaxle assembly with the 3 bolts.

       Torque: 64 N*m (653 kgf*cm, 47 ft.*lbf)

7. **INSTALL TRANSMISSION OIL COOLER**
    a. Install the transmission oil cooler to the front engine mounting bracket with the 3 bolts.

       Torque: 14 N*m (138 kgf*cm, 10 ft.*lbf)

    b. Install the No. 1 oil cooler inlet hose and No. 1 oil cooler outlet hose.
8. **INSTALL AUTOMATIC TRANSAXLE ASSEMBLY**
    a. Apply clutch spline grease to the surface of the crankshaft that contacts the torque converter centerpiece.

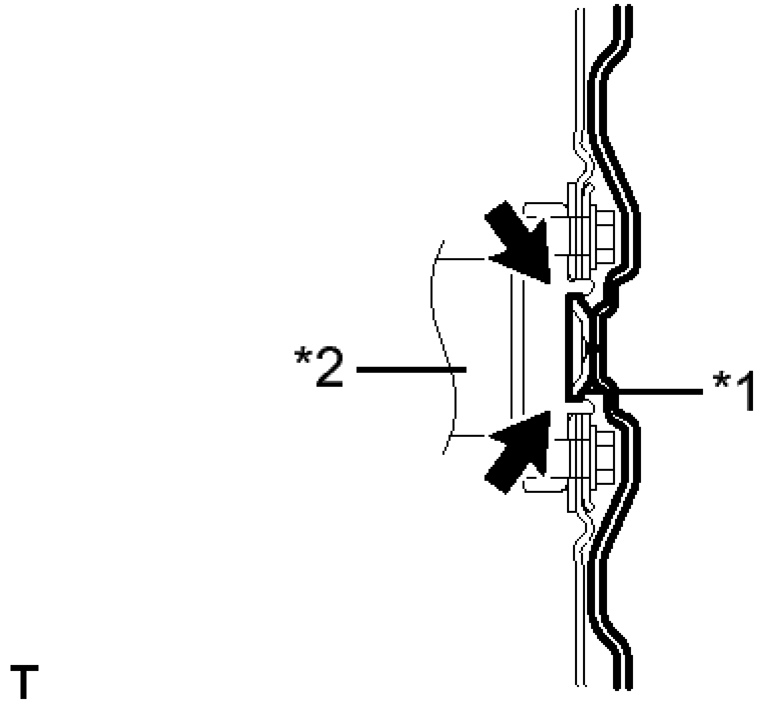

Fig. 169: Identifying Torque Converter Centerpiece And Crankshaft
Courtesy of TOYOTA MOTOR SALES, U.S.A., INC.

Clutch spline grease

Toyota Genuine Clutch Spline Grease or equivalent

Maximum grease amount

Approximately 1 g (0.0353 oz.)

TEXT IN ILLUSTRATION

*1	Torque Converter Centerpiece
*2	Crankshaft

b. While keeping the engine and automatic transaxle assembly horizontal, align the knock pins with the holes in the automatic transaxle assembly and install the 9 bolts shown in the illustration.

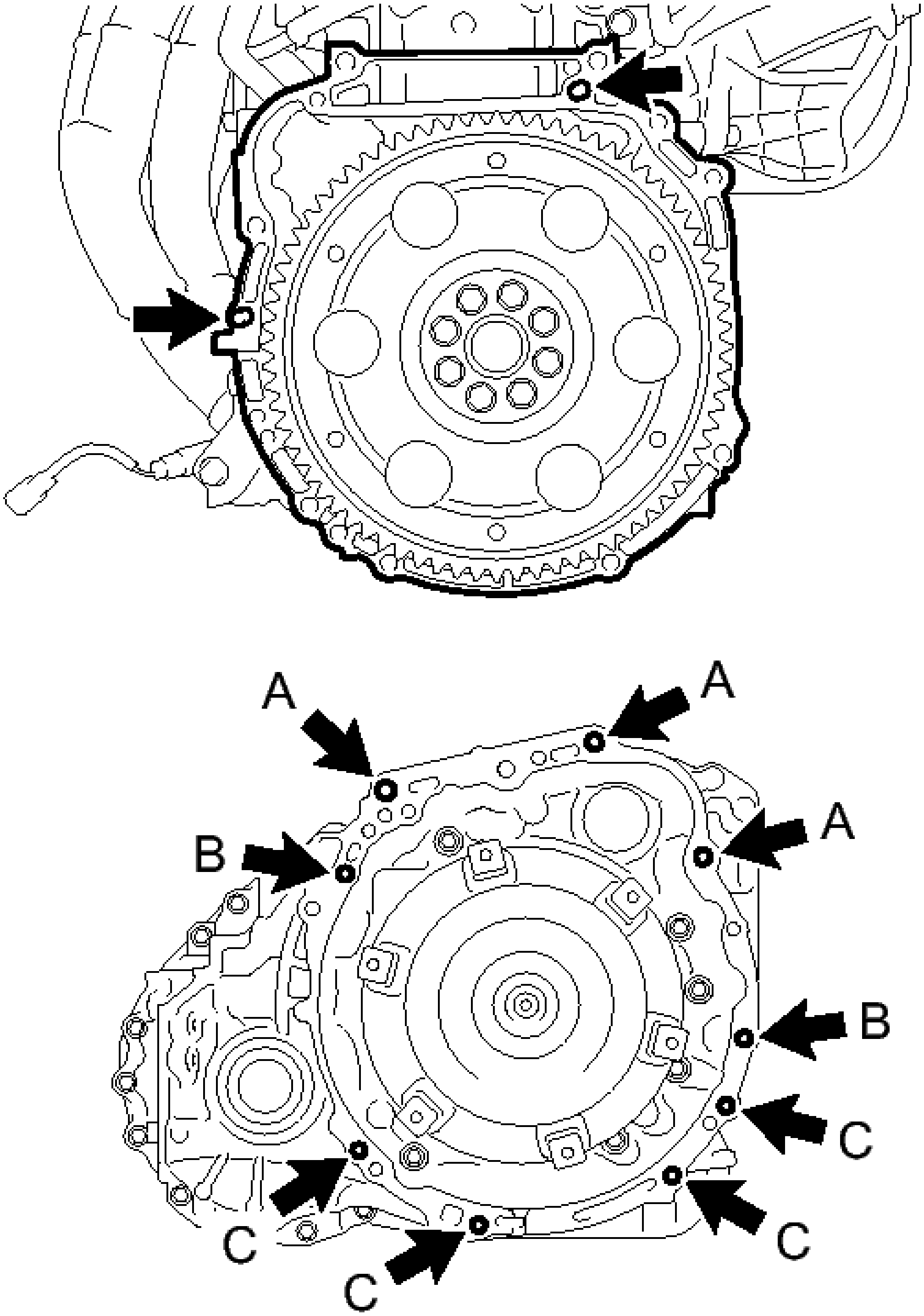

Fig. 170: Identifying Automatic Transaxle Assembly Bolts
Courtesy of TOYOTA MOTOR SALES, U.S.A., INC.

Bolt	Bolt Length	Torque

A	55 mm (2.17 in.)	64 N*m (653 kgf*cm, 47 ft.*lbf)
B	50 mm (1.97 in.)	46 N*m (469 kgf*cm, 34 ft.*lbf)
C	32 mm (1.26 in.)	44 N*m (449 kgf*cm, 32 ft.*lbf)
	33 mm (1.30 in.)	43 N*m (438 kgf*cm, 32 ft.*lbf)

NOTE:

- **Confirm that the 2 knock pins are installed to the transaxle contact surface of the engine cylinder block before installing the automatic transaxle assembly.**
- **Do not forcibly pry on the automatic transaxle assembly.**
- **Check that the torque converter rotates.**

9. **INSTALL WIRE HARNESS**
   a. Connect the 7 wire harness clamps and park/neutral position switch connector.
   b. Install the ground cable with the bolt.

   Torque: 12 N*m (122 kgf*cm, 9 ft.*lbf)

10. **INSTALL WIRING HARNESS CONNECTOR**
    a. Install the wiring harness connector to the automatic transaxle assembly.
    b. Install and tighten the 2 bolts in the order shown in the illustration.

    Torque: 11 N*m (115 kgf*cm, 8 ft.*lbf)

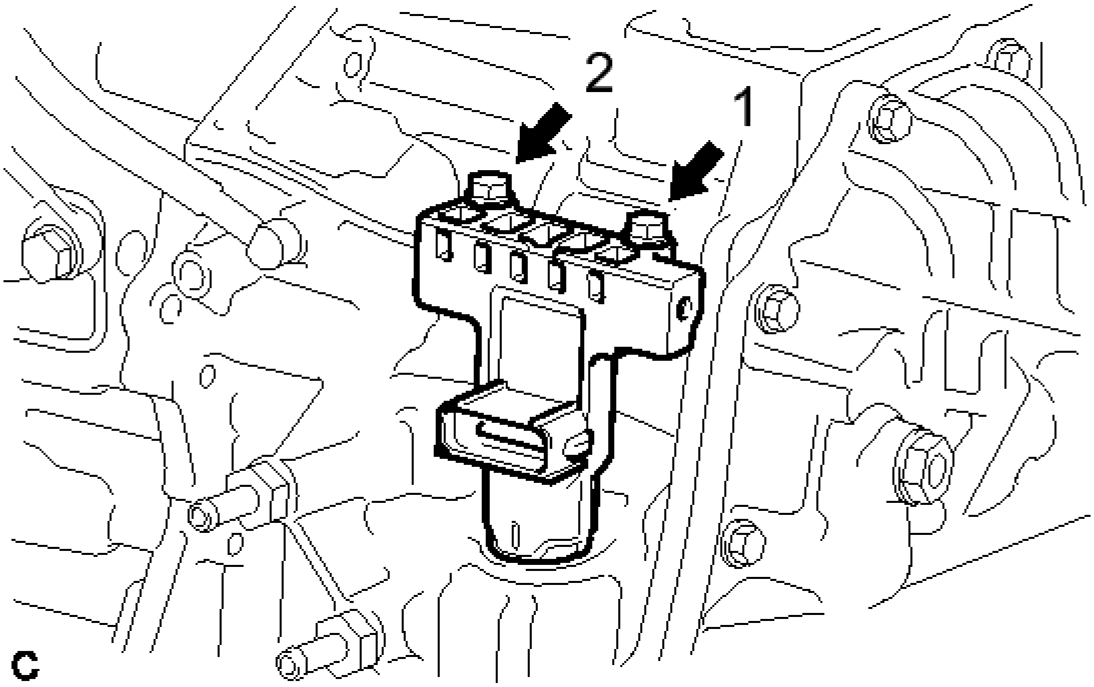

Fig. 171: Tightening Wire Harness Connector Bolts In Sequence
Courtesy of TOYOTA MOTOR SALES, U.S.A., INC.

c. Connect the connector to the wiring harness connector.

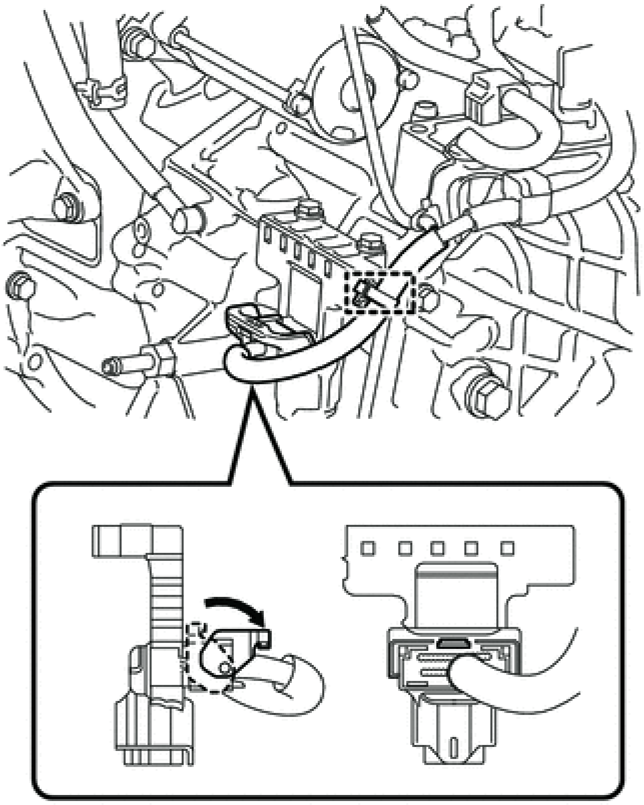

Fig. 172: Identifying Wiring Harness Connector
Courtesy of TOYOTA MOTOR SALES, U.S.A., INC.

d. Turn the lock lever and secure the connector with the lock lever.

11. **INSTALL FRONT FRAME ASSEMBLY** . Refer to **INSTALLATION - Step 9**
12. **INSTALL FRONT DRIVE SHAFT HOLE SNAP RING LH** . Refer to **REASSEMBLY - Step 13**
13. **INSTALL FRONT DRIVE SHAFT ASSEMBLY LH** . Refer to **INSTALLATION - Step 1**
14. **INSTALL FRONT DRIVE SHAFT ASSEMBLY RH** . Refer to **INSTALLATION - Step 2**
15. **INSTALL ENGINE ASSEMBLY WITH TRANSAXLE**

    Refer to **INSTALLATION - Step 17**

16. **CHECK AUTOMATIC TRANSAXLE SYSTEM**

NOTE: **If automatic transmission parts have been replaced, refer to the Parts Replacement Compensation Table to determine if any additional operations are necessary. Refer to PRECAUTION .**

AUTOMATIC TRANSAXLE UNIT

COMPONENTS

ILLUSTRATION

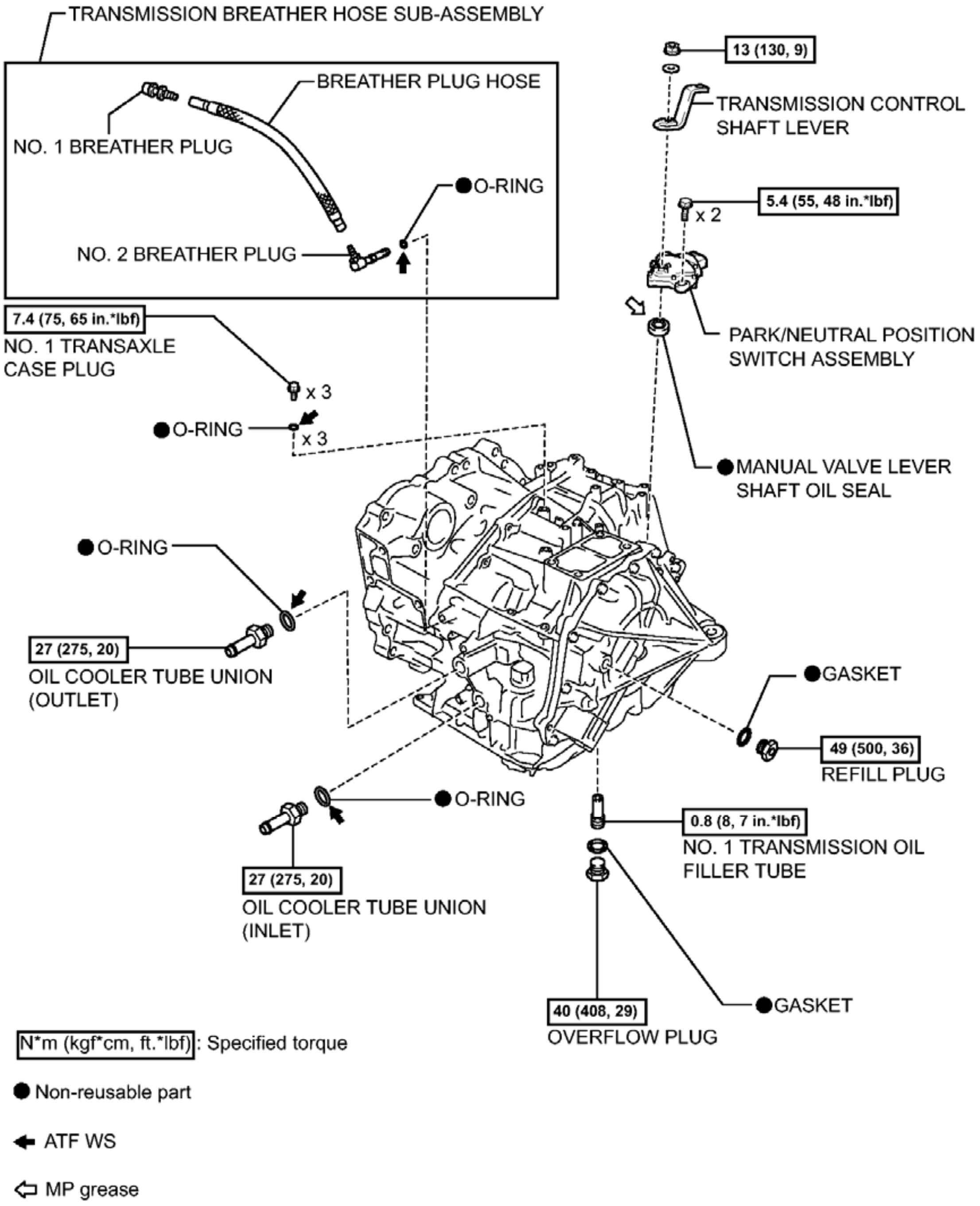

TRANSMISSION BREATHER HOSE SUB-ASSEMBLY
BREATHER PLUG HOSE
NO. 1 BREATHER PLUG
●O-RING
NO. 2 BREATHER PLUG
13 (130, 9)
TRANSMISSION CONTROL SHAFT LEVER
5.4 (55, 48 in.*lbf)
x 2
7.4 (75, 65 in.*lbf)
NO. 1 TRANSAXLE CASE PLUG
x 3
●O-RING
x 3
PARK/NEUTRAL POSITION SWITCH ASSEMBLY
●MANUAL VALVE LEVER SHAFT OIL SEAL
●O-RING
27 (275, 20)
OIL COOLER TUBE UNION (OUTLET)
●GASKET
49 (500, 36)
REFILL PLUG
●O-RING
0.8 (8, 7 in.*lbf)
NO. 1 TRANSMISSION OIL FILLER TUBE
27 (275, 20)
OIL COOLER TUBE UNION (INLET)
●GASKET
40 (408, 29)
OVERFLOW PLUG
N*m (kgf*cm, ft.*lbf): Specified torque
● Non-reusable part
🡐 ATF WS
⇦ MP grease

Fig. 173: Identifying Automatic Transaxle Unit Replacement Components With Torque Specifications (1 Of 7)

Courtesy of TOYOTA MOTOR SALES, U.S.A., INC.

ILLUSTRATION

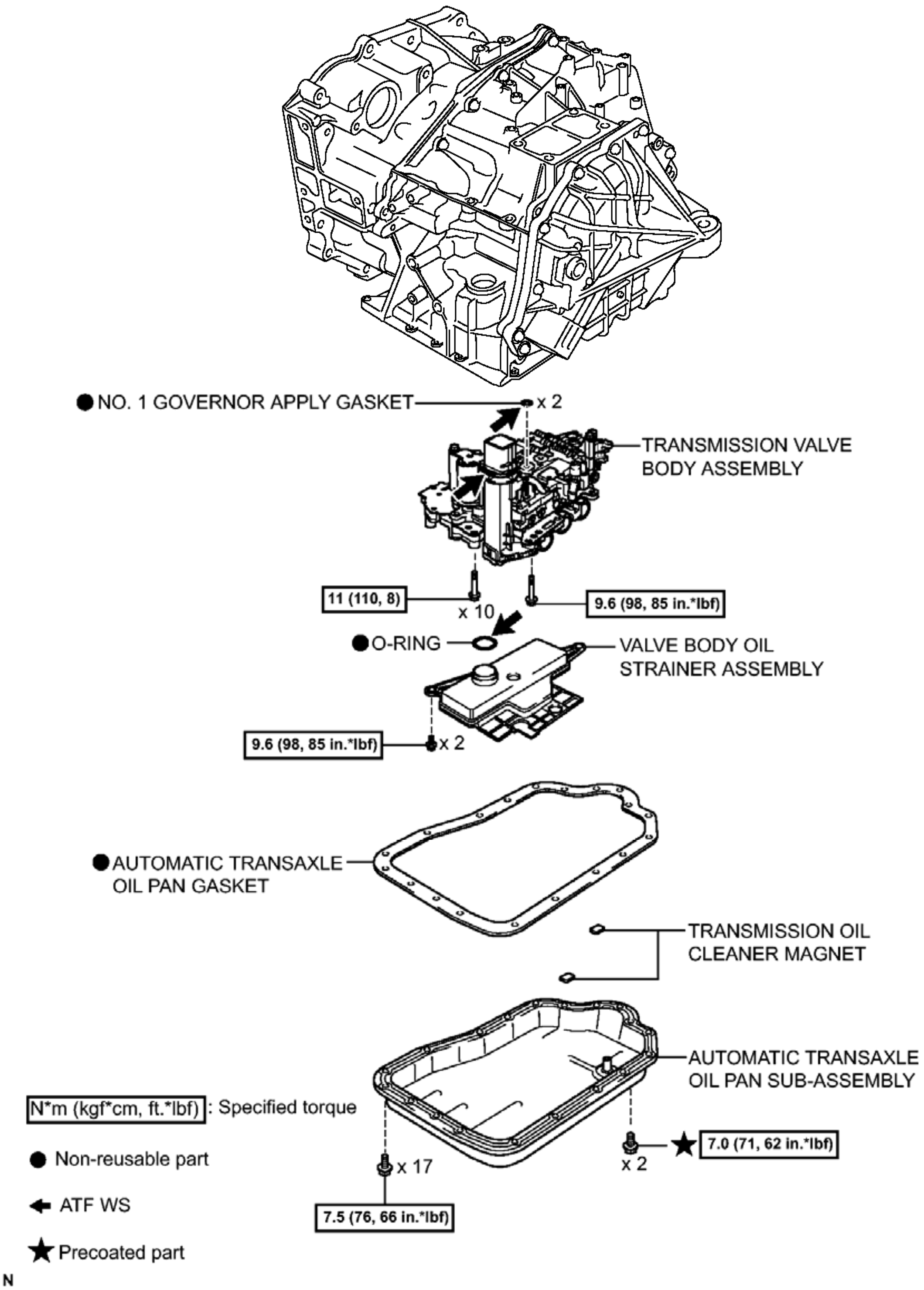

● NO. 1 GOVERNOR APPLY GASKET
x 2
TRANSMISSION VALVE BODY ASSEMBLY
11 (110, 8)
x 10
9.6 (98, 85 in.*lbf)
● O-RING
VALVE BODY OIL STRAINER ASSEMBLY
9.6 (98, 85 in.*lbf)
x 2
● AUTOMATIC TRANSAXLE OIL PAN GASKET
TRANSMISSION OIL CLEANER MAGNET
AUTOMATIC TRANSAXLE OIL PAN SUB-ASSEMBLY
N*m (kgf*cm, ft.*lbf) : Specified torque
★ 7.0 (71, 62 in.*lbf)
x 2
● Non-reusable part
x 17
← ATF WS
7.5 (76, 66 in.*lbf)
★ Precoated part
N

Fig. 174: Identifying Automatic Transaxle Unit Replacement Components With Torque Specifications (2 Of 7)

Courtesy of TOYOTA MOTOR SALES, U.S.A., INC.

ILLUSTRATION

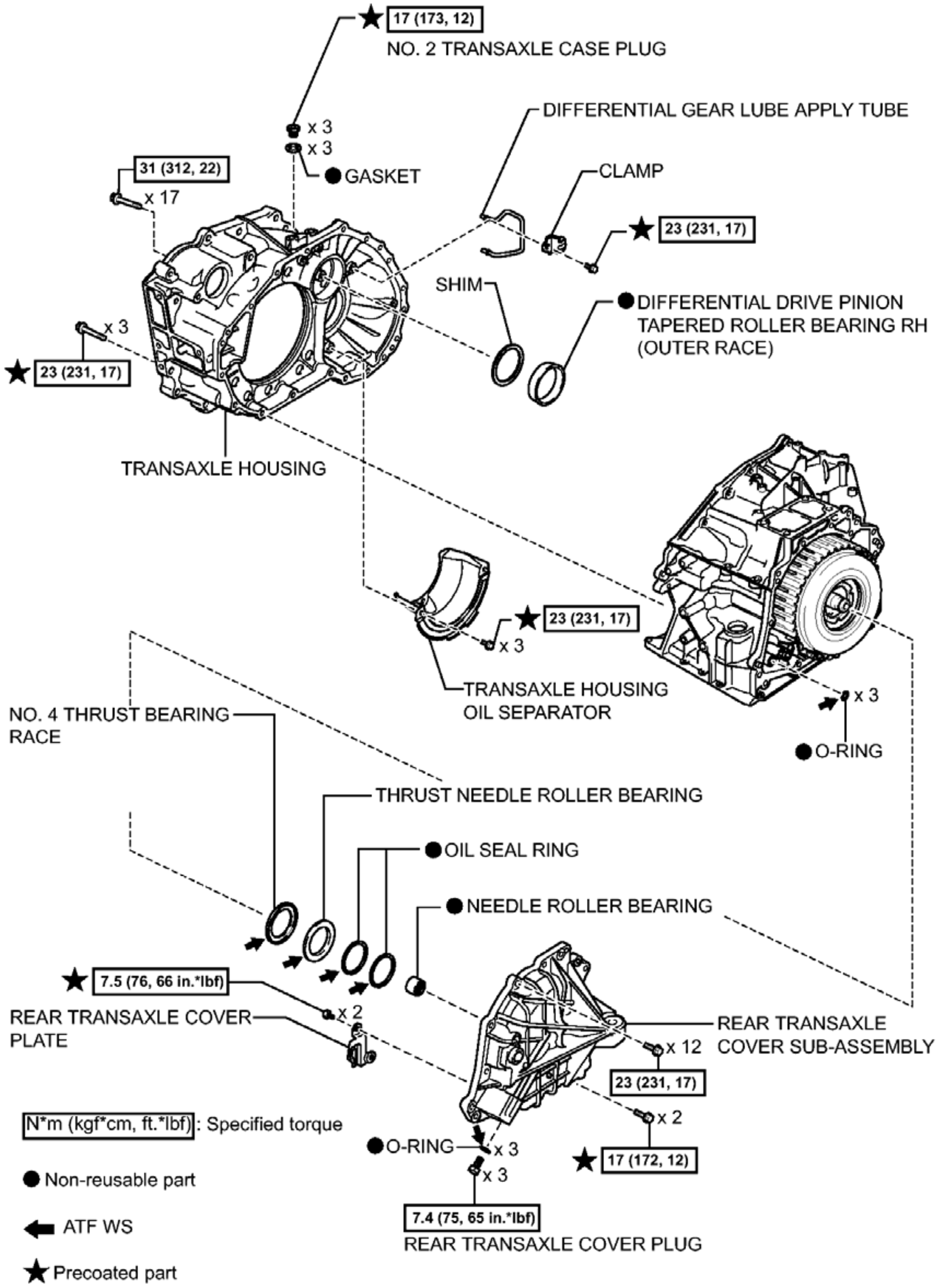
★ 17 (173, 12)
NO. 2 TRANSAXLE CASE PLUG
x 3
x 3
● GASKET
DIFFERENTIAL GEAR LUBE APPLY TUBE
CLAMP
★ 23 (231, 17)
31 (312, 22)
x 17
SHIM
● DIFFERENTIAL DRIVE PINION TAPERED ROLLER BEARING RH (OUTER RACE)
x 3
★ 23 (231, 17)
TRANSAXLE HOUSING
★ 23 (231, 17)
x 3
TRANSAXLE HOUSING OIL SEPARATOR
x 3
● O-RING
NO. 4 THRUST BEARING RACE
THRUST NEEDLE ROLLER BEARING
● OIL SEAL RING
● NEEDLE ROLLER BEARING
★ 7.5 (76, 66 in.*lbf)
x 2
REAR TRANSAXLE COVER PLATE
REAR TRANSAXLE COVER SUB-ASSEMBLY
x 12
23 (231, 17)
x 2
★ 17 (172, 12)
● O-RING
x 3
x 3
7.4 (75, 65 in.*lbf)
REAR TRANSAXLE COVER PLUG
N*m (kgf*cm, ft.*lbf) : Specified torque
● Non-reusable part
⬅ ATF WS
★ Precoated part

Fig. 175: Identifying Automatic Transaxle Unit Replacement Components With Torque Specifications (3 Of 7)

Courtesy of TOYOTA MOTOR SALES, U.S.A., INC.

ILLUSTRATION

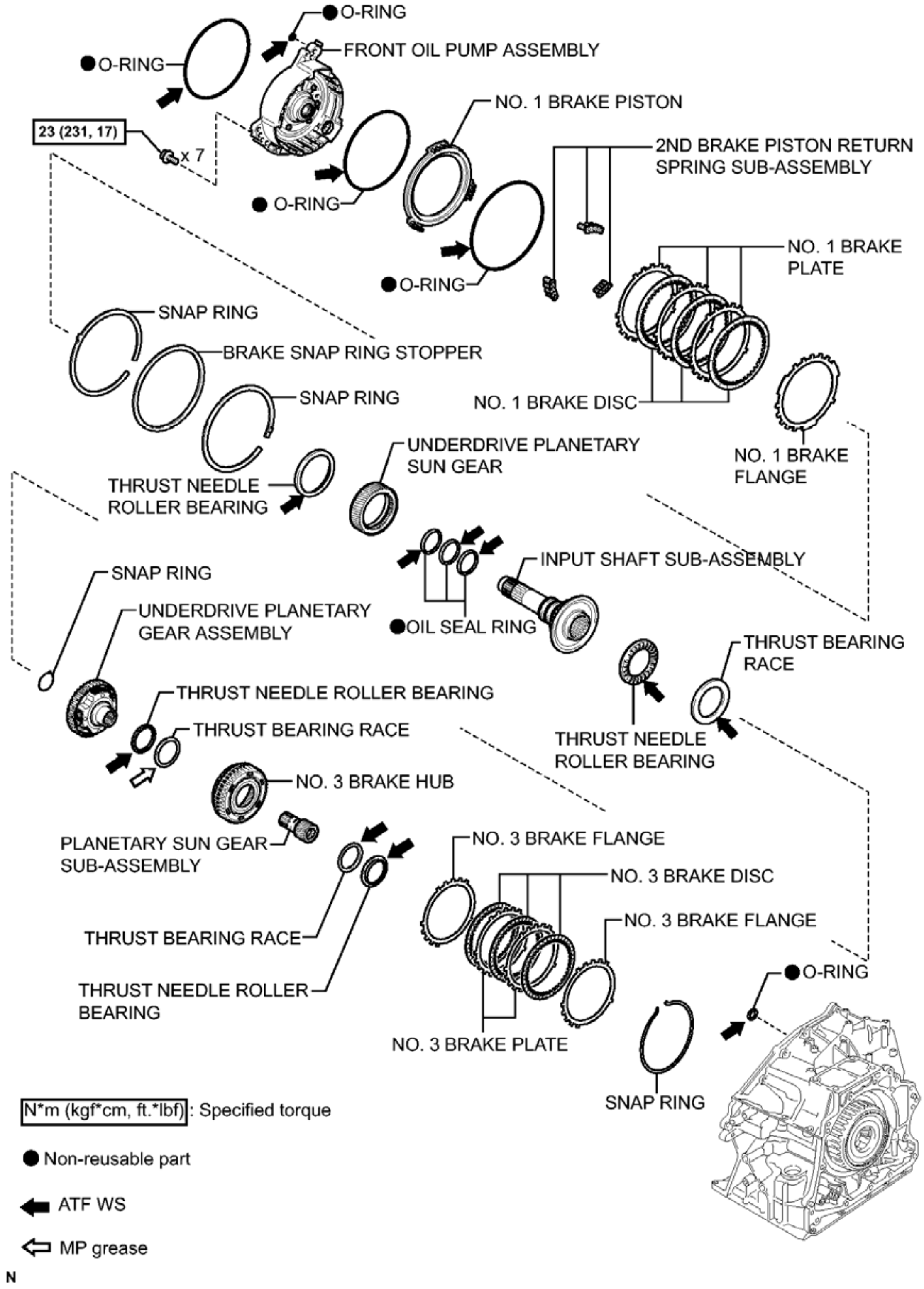
● O-RING
FRONT OIL PUMP ASSEMBLY
● O-RING
23 (231, 17)
x 7
NO. 1 BRAKE PISTON
2ND BRAKE PISTON RETURN SPRING SUB-ASSEMBLY
● O-RING
● O-RING
NO. 1 BRAKE PLATE
SNAP RING
BRAKE SNAP RING STOPPER
SNAP RING
NO. 1 BRAKE DISC
UNDERDRIVE PLANETARY SUN GEAR
NO. 1 BRAKE FLANGE
THRUST NEEDLE ROLLER BEARING
INPUT SHAFT SUB-ASSEMBLY
SNAP RING
UNDERDRIVE PLANETARY GEAR ASSEMBLY
● OIL SEAL RING
THRUST BEARING RACE
THRUST NEEDLE ROLLER BEARING
THRUST BEARING RACE
THRUST NEEDLE ROLLER BEARING
NO. 3 BRAKE HUB
PLANETARY SUN GEAR SUB-ASSEMBLY
NO. 3 BRAKE FLANGE
NO. 3 BRAKE DISC
NO. 3 BRAKE FLANGE
THRUST BEARING RACE
● O-RING
THRUST NEEDLE ROLLER BEARING
NO. 3 BRAKE PLATE
SNAP RING
N*m (kgf*cm, ft.*lbf) : Specified torque
● Non-reusable part
ATF WS
MP grease
N

Fig. 176: Identifying Automatic Transaxle Unit Replacement Components With Torque Specifications (4 Of 7)
Courtesy of TOYOTA MOTOR SALES, U.S.A., INC.

ILLUSTRATION

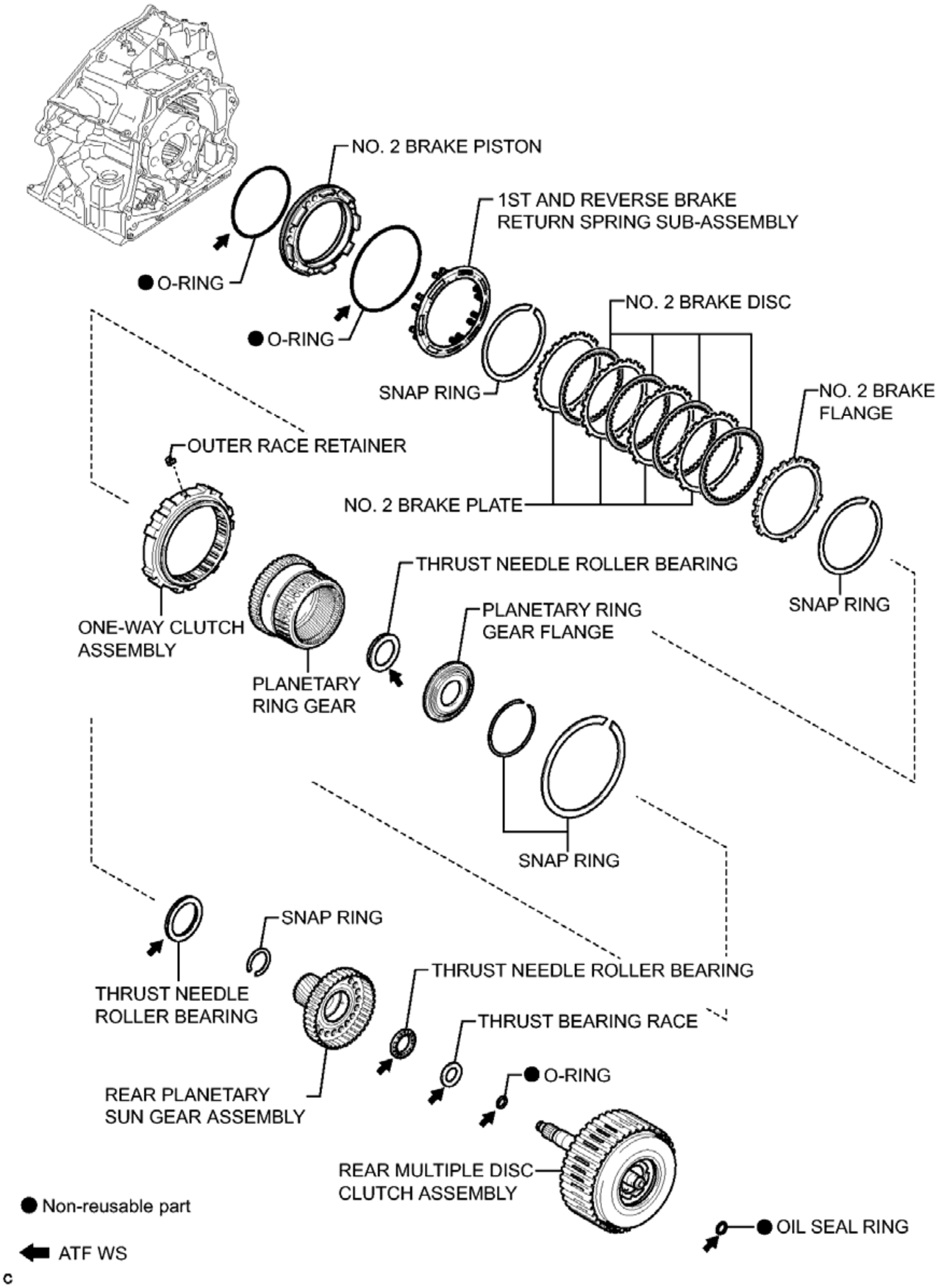
NO. 2 BRAKE PISTON
1ST AND REVERSE BRAKE RETURN SPRING SUB-ASSEMBLY
● O-RING
● O-RING
NO. 2 BRAKE DISC
SNAP RING
NO. 2 BRAKE FLANGE
OUTER RACE RETAINER
NO. 2 BRAKE PLATE
THRUST NEEDLE ROLLER BEARING
SNAP RING
PLANETARY RING GEAR FLANGE
ONE-WAY CLUTCH ASSEMBLY
PLANETARY RING GEAR
SNAP RING
SNAP RING
THRUST NEEDLE ROLLER BEARING
THRUST NEEDLE ROLLER BEARING
THRUST BEARING RACE
● O-RING
REAR PLANETARY SUN GEAR ASSEMBLY
REAR MULTIPLE DISC CLUTCH ASSEMBLY
● Non-reusable part
● OIL SEAL RING
ATF WS
c

Fig. 177: Identifying Automatic Transaxle Unit Replacement Components With Torque Specifications (5 Of 7)

Courtesy of TOYOTA MOTOR SALES, U.S.A., INC.

ILLUSTRATION

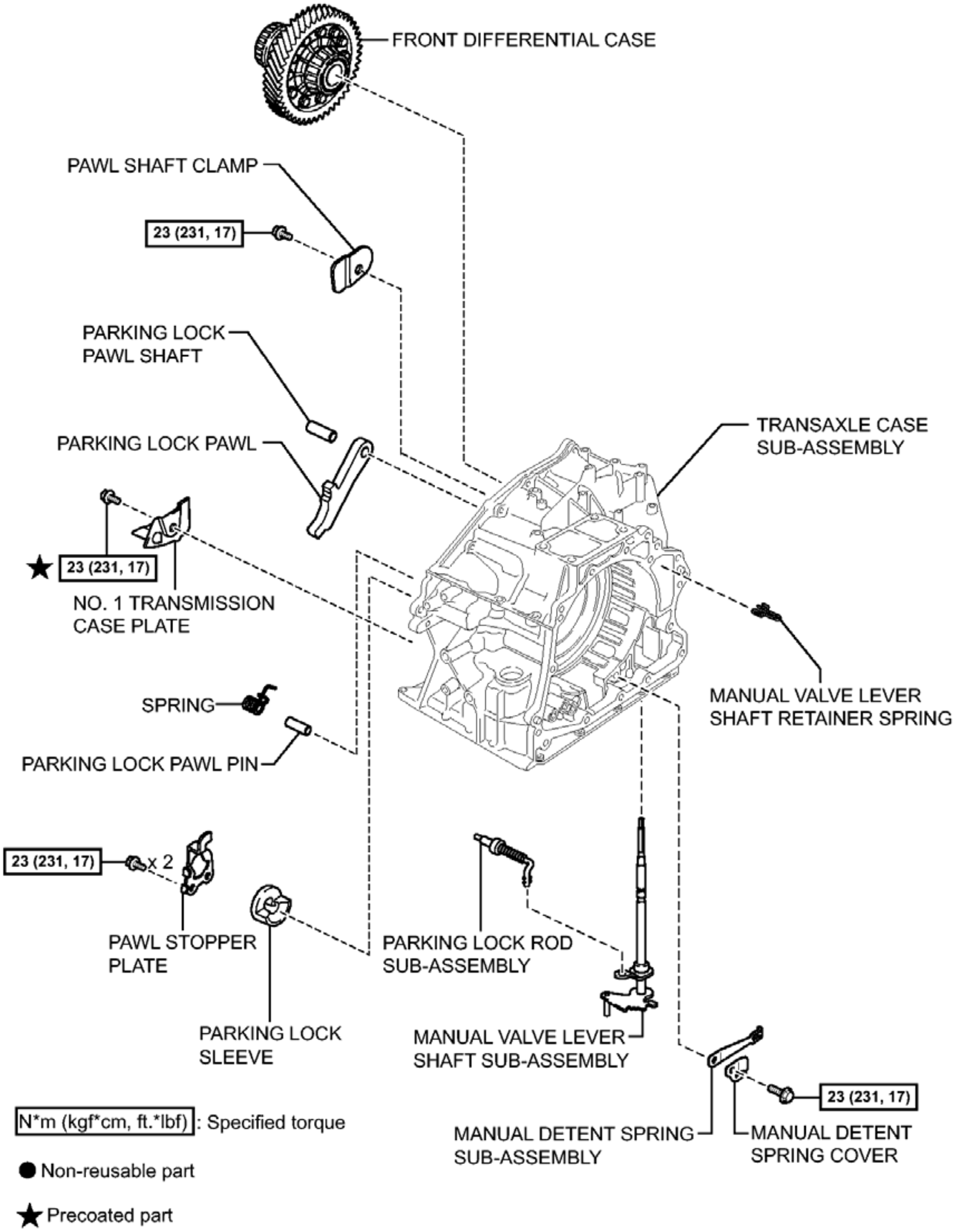
FRONT DIFFERENTIAL CASE
PAWL SHAFT CLAMP
23 (231, 17)
PARKING LOCK PAWL SHAFT
TRANSAXLE CASE SUB-ASSEMBLY
PARKING LOCK PAWL
★ 23 (231, 17)
NO. 1 TRANSMISSION CASE PLATE
MANUAL VALVE LEVER SHAFT RETAINER SPRING
SPRING
PARKING LOCK PAWL PIN
23 (231, 17)
x 2
PAWL STOPPER PLATE
PARKING LOCK ROD SUB-ASSEMBLY
PARKING LOCK SLEEVE
MANUAL VALVE LEVER SHAFT SUB-ASSEMBLY
23 (231, 17)
MANUAL DETENT SPRING SUB-ASSEMBLY
MANUAL DETENT SPRING COVER
N*m (kgf*cm, ft.*lbf) : Specified torque
● Non-reusable part
★ Precoated part

Fig. 178: Identifying Automatic Transaxle Unit Replacement Components With Torque Specifications (6 Of 7)

Courtesy of TOYOTA MOTOR SALES, U.S.A., INC.

ILLUSTRATION

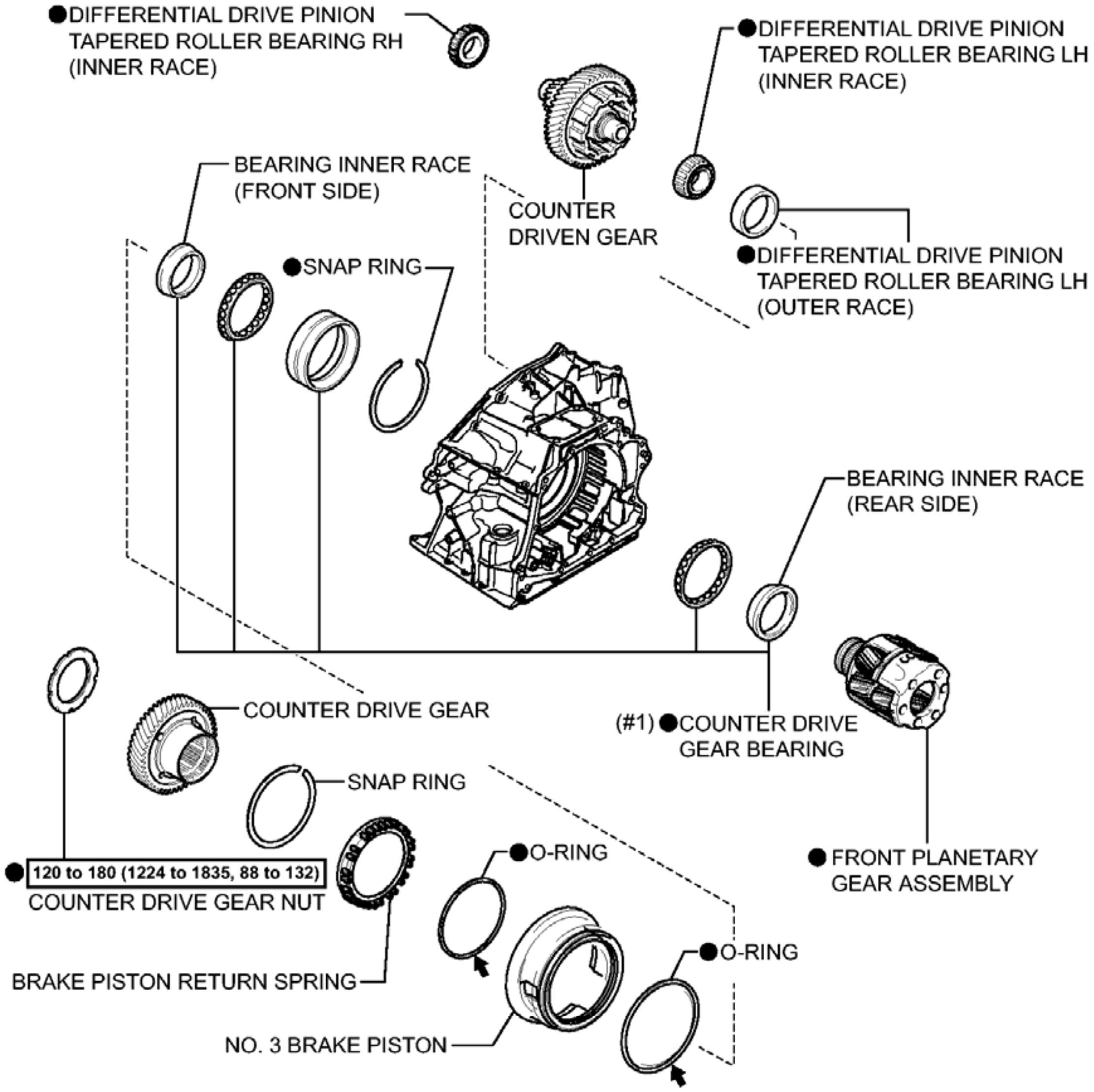
●DIFFERENTIAL DRIVE PINION TAPERED ROLLER BEARING RH (INNER RACE)
●DIFFERENTIAL DRIVE PINION TAPERED ROLLER BEARING LH (INNER RACE)
BEARING INNER RACE (FRONT SIDE)
COUNTER DRIVEN GEAR
●SNAP RING
●DIFFERENTIAL DRIVE PINION TAPERED ROLLER BEARING LH (OUTER RACE)
BEARING INNER RACE (REAR SIDE)
COUNTER DRIVE GEAR
(#1) ●COUNTER DRIVE GEAR BEARING
SNAP RING
●O-RING
● FRONT PLANETARY GEAR ASSEMBLY
● 120 to 180 (1224 to 1835, 88 to 132)
COUNTER DRIVE GEAR NUT
●O-RING
BRAKE PISTON RETURN SPRING
NO. 3 BRAKE PISTON

(#1) The counter drive gear bearing cannot be separated from the transaxle case. When the counter drive gear bearing or transaxle case is replaced, prepare the following:

- COUNTER DRIVE GEAR BEARING
- SNAP RING
- TRANSAXLE CASE

N*m (kgf*cm, ft.*lbf): Specified torque

● Non-reusable part

← ATF WS

N

Fig. 179: Identifying Automatic Transaxle Unit Replacement Components With Torque Specifications (7 Of 7)
Courtesy of TOYOTA MOTOR SALES, U.S.A., INC.

DISASSEMBLY

DISASSEMBLY

1. **REMOVE TRANSMISSION BREATHER HOSE SUB-ASSEMBLY**
   a. Using a screwdriver, remove the transmission breather hose sub-assembly from the transaxle case sub-assembly.

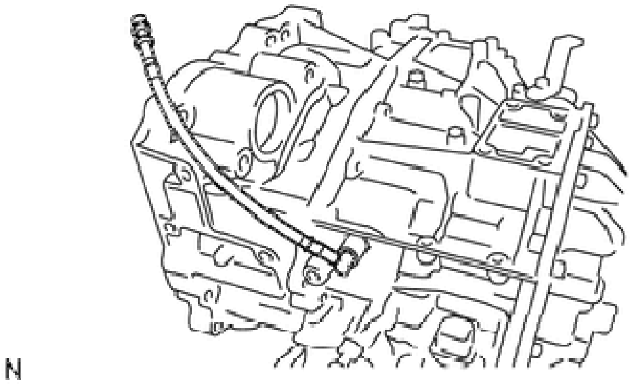

Fig. 180: Identifying Breather Plug Hose
Courtesy of TOYOTA MOTOR SALES, U.S.A., INC.

   b. Using a screwdriver, remove the No. 1 breather plug from the breather plug hose.

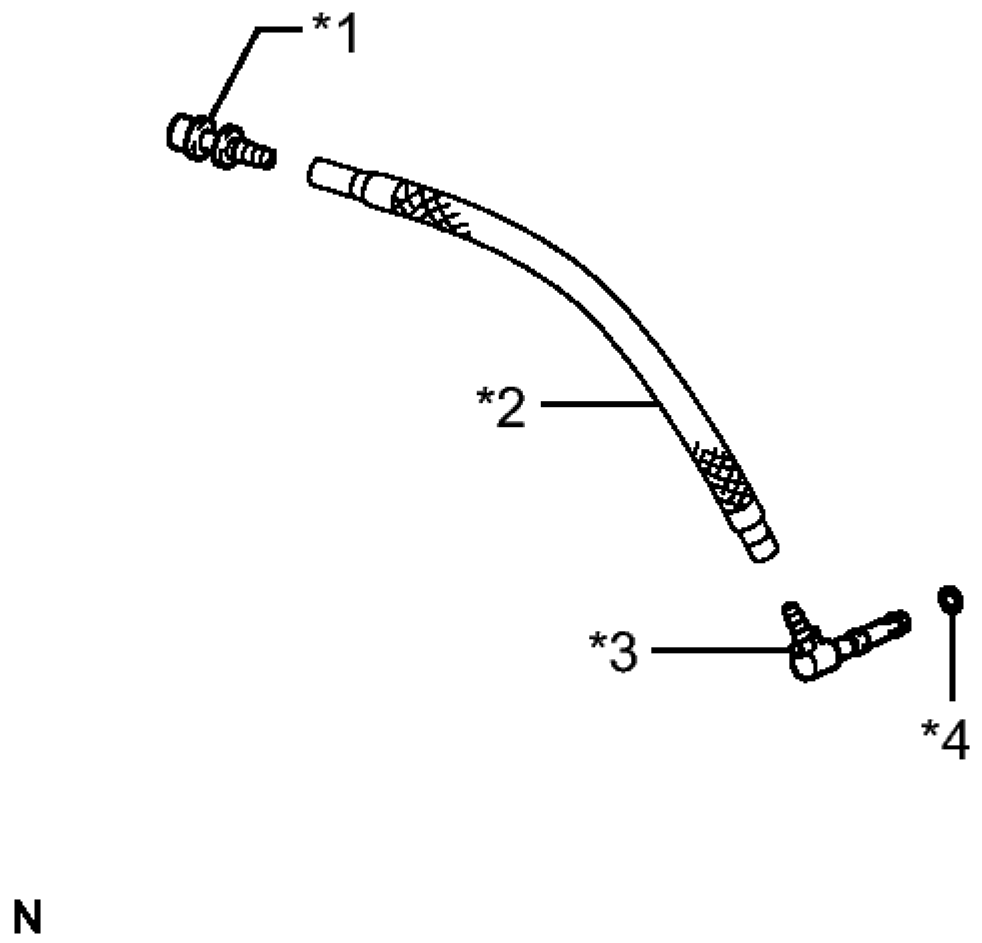

Fig. 181: Identifying Breather Plug Hose Components
Courtesy of TOYOTA MOTOR SALES, U.S.A., INC.

TEXT IN ILLUSTRATION

*1	No. 1 Breather Plug
*2	Breather Plug Hose
*3	No. 2 Breather Plug
*4	O-ring

c. Using a screwdriver, remove the No. 2 breather plug from the breather plug hose.

d. Using a screwdriver, remove the O-ring from the No. 2 breather plug.

2. **REMOVE TRANSMISSION CONTROL SHAFT LEVER**

   a. Remove the nut, washer, and transmission control shaft lever from the manual valve lever shaft sub-assembly.

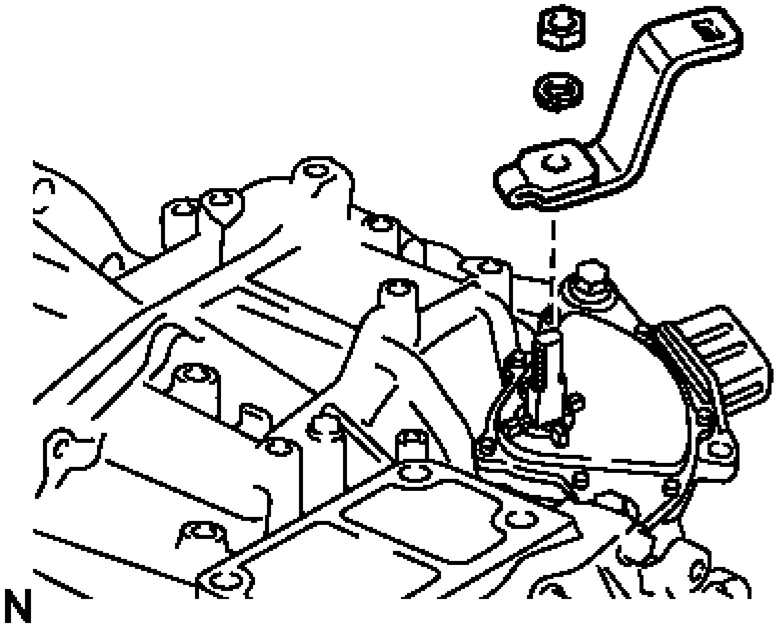

Fig. 182: Identifying Nut, Washer And Control Shaft Lever
Courtesy of TOYOTA MOTOR SALES, U.S.A., INC.

3. **REMOVE PARK/NEUTRAL POSITION SWITCH ASSEMBLY**

   a. Remove the 2 bolts and the park/neutral position switch assembly from the transaxle case sub-assembly.

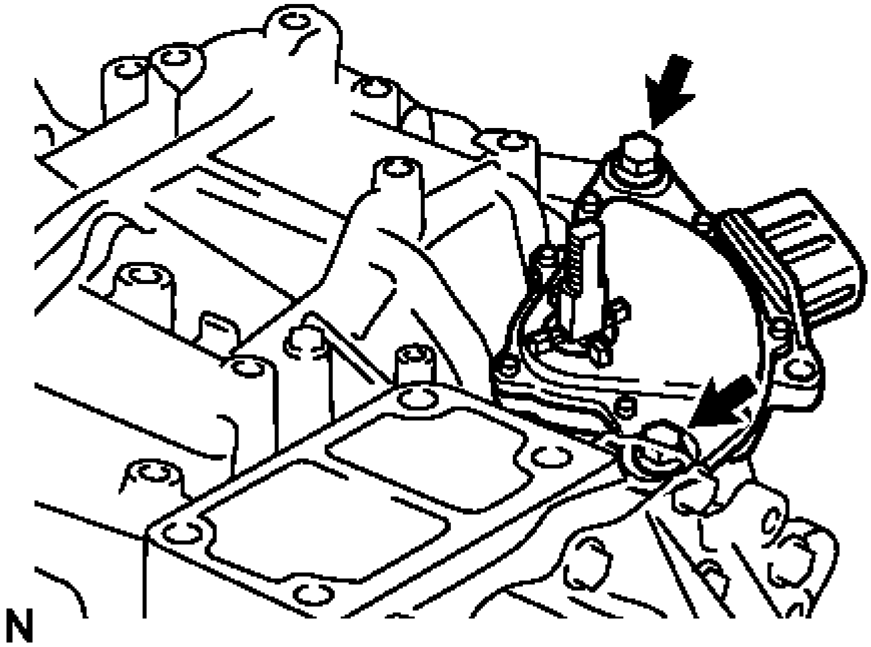

Fig. 183: Locating Park/Neutral Position Switch Assembly Bolts
Courtesy of TOYOTA MOTOR SALES, U.S.A., INC.

NOTE: **Before removing the park/neutral position switch assembly, remove any dirt or rust on the installation portion of the manual valve lever shaft sub-assembly. Be sure to remove the switch straight along the shaft while being careful not to deform the plate spring that supports the shaft. If the plate spring is deformed, the park/neutral position switch assembly cannot be reinstalled correctly.**

4. **REMOVE OIL COOLER TUBE UNION (OUTLET)**
   a. Remove the oil cooler tube union (outlet) from the transaxle case sub-assembly.

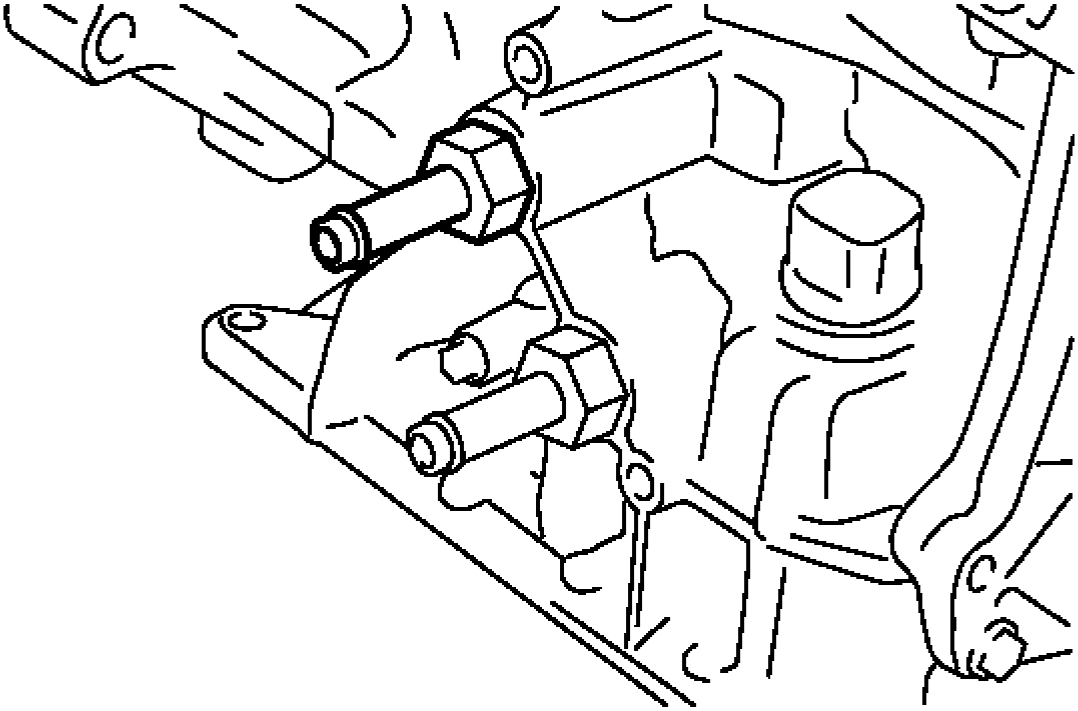

Fig. 184: Identifying Oil Cooler Tube Union O-Ring
Courtesy of TOYOTA MOTOR SALES, U.S.A., INC.

   b. Remove the O-ring from the oil cooler tube union (outlet).

5. **REMOVE OIL COOLER TUBE UNION (INLET)**
   a. Remove the oil cooler tube union (inlet) from the transaxle case sub-assembly.

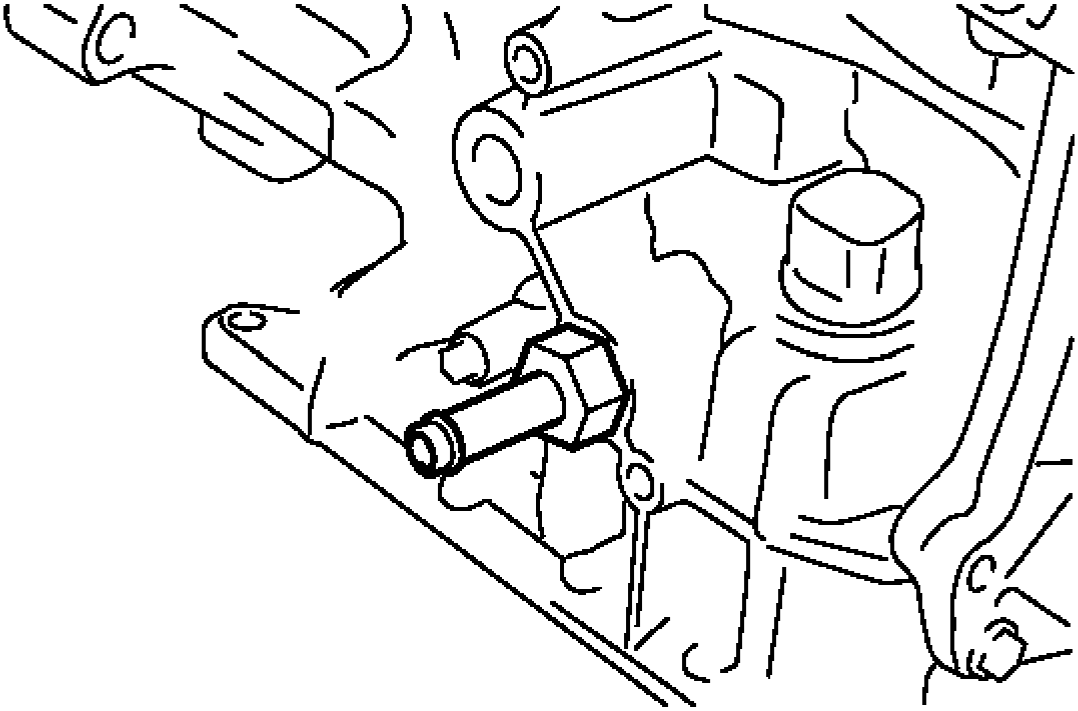

Fig. 185: Remove Oil Cooler Tube Union
Courtesy of TOYOTA MOTOR SALES, U.S.A., INC.

b. Remove the O-ring from the oil cooler tube union (inlet).

6. **REMOVE NO. 1 TRANSAXLE CASE PLUG**

   a. Remove the 3 No. 1 transaxle case plugs from the transaxle case sub-assembly.

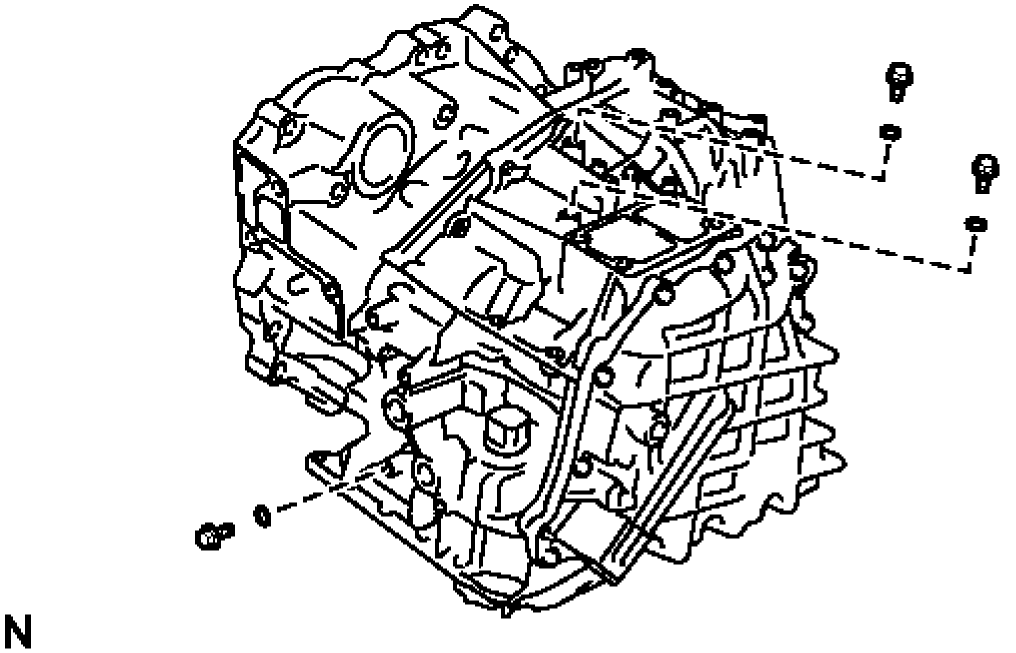

Fig. 186: Identifying No. 1 Transaxle Case Plugs
Courtesy of TOYOTA MOTOR SALES, U.S.A., INC.

   b. Using a screwdriver, remove the 3 O-rings from the 3 No. 1 transaxle case plugs.

7. **REMOVE NO. 2 TRANSAXLE CASE PLUG**

   a. Using a 6 mm hexagon socket wrench, remove the 3 No. 2 transaxle case plugs from the transaxle housing.

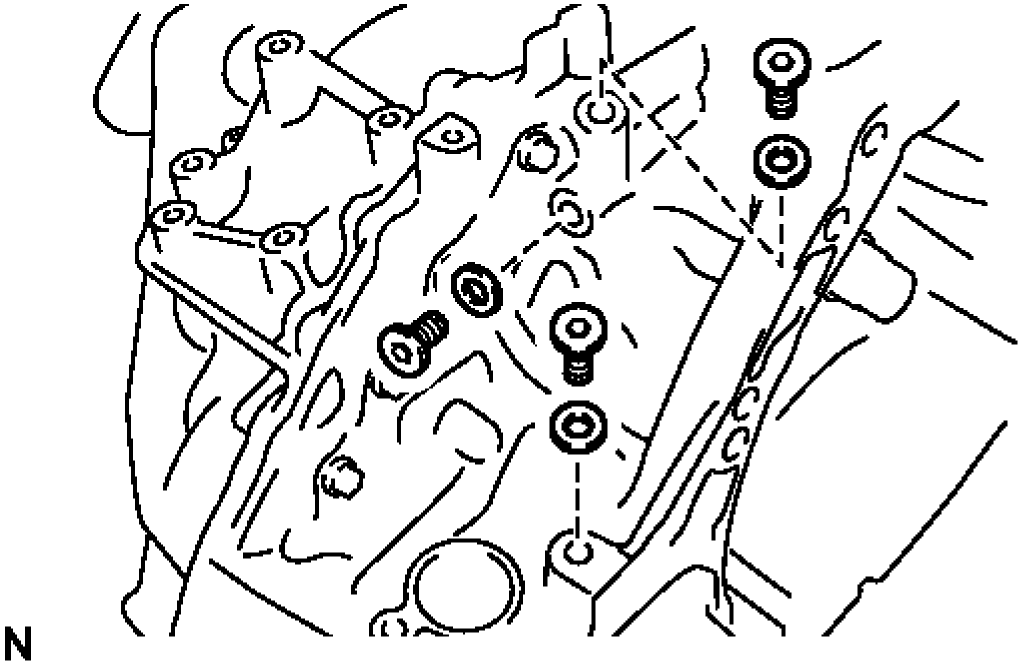

Fig. 187: Identifying Gaskets And Hexagon Bolts
Courtesy of TOYOTA MOTOR SALES, U.S.A., INC.

  b. Remove the 3 gaskets from the 3 No. 2 transaxle case plugs.

8. **SUPPORT AUTOMATIC TRANSAXLE ASSEMBLY**

  a. Support the automatic transaxle assembly on wooden blocks.

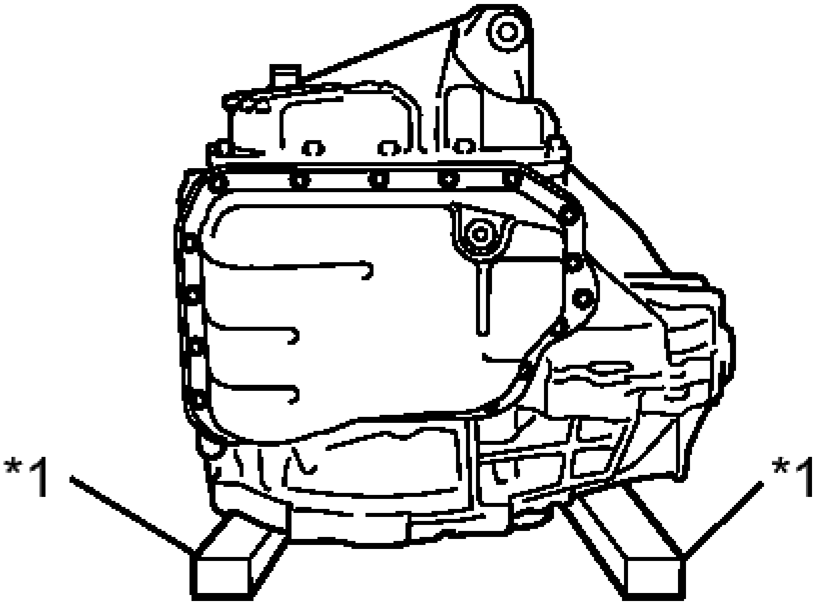

Fig. 188: Supporting Transaxle Assembly On Wooden Blocks
Courtesy of TOYOTA MOTOR SALES, U.S.A., INC.

TEXT IN ILLUSTRATION

*1	Wooden Block

9. **REMOVE OVERFLOW PLUG**
    a. Using a 6 mm hexagon socket wrench, remove the overflow plug from the automatic transaxle oil pan sub-assembly.

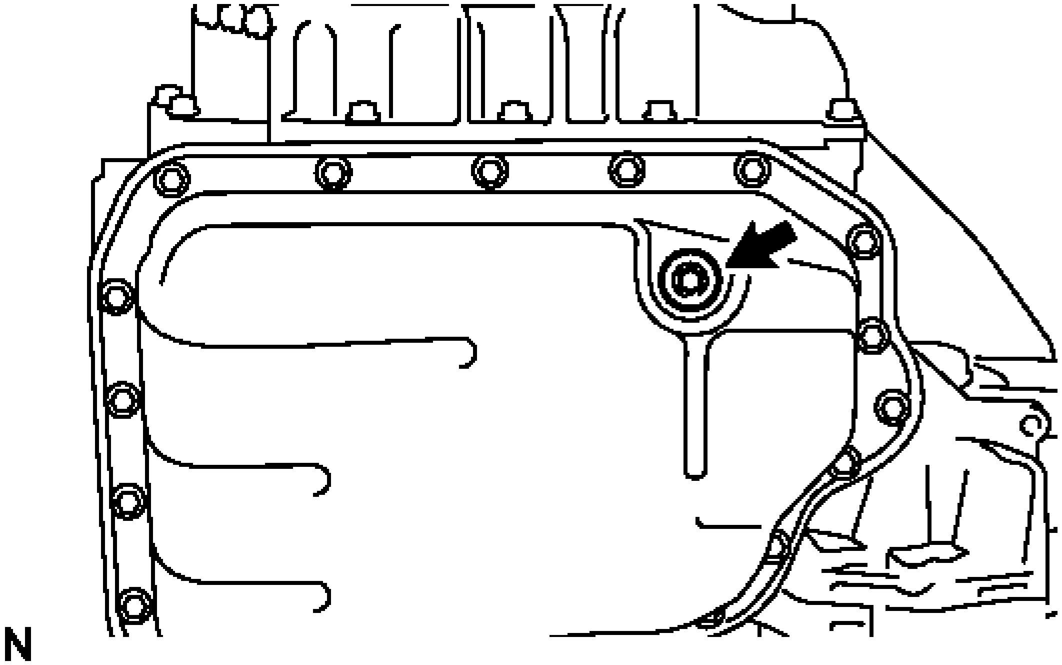

Fig. 189: Locating Automatic Transaxle Oil Pan Sub-Assembly
Courtesy of TOYOTA MOTOR SALES, U.S.A., INC.

    b. Remove the gasket from the overflow plug.

10. **REMOVE NO. 1 TRANSMISSION OIL FILLER TUBE**
    a. Using a 6 mm hexagon socket wrench, remove the No. 1 transmission oil filler tube from the automatic transaxle oil pan sub-assembly.

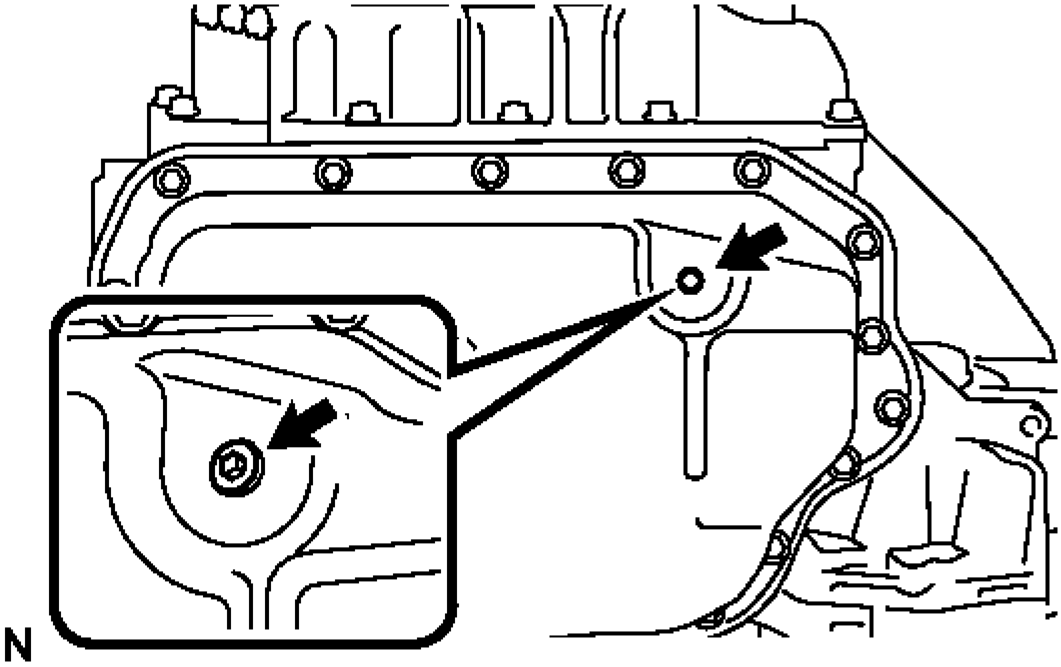

Fig. 190: Locating Automatic Transaxle Assembly
Courtesy of TOYOTA MOTOR SALES, U.S.A., INC.

11. **REMOVE AUTOMATIC TRANSAXLE OIL PAN SUB-ASSEMBLY**
    a. Remove the 19 bolts and automatic transaxle oil pan sub-assembly from the transaxle case sub-assembly.

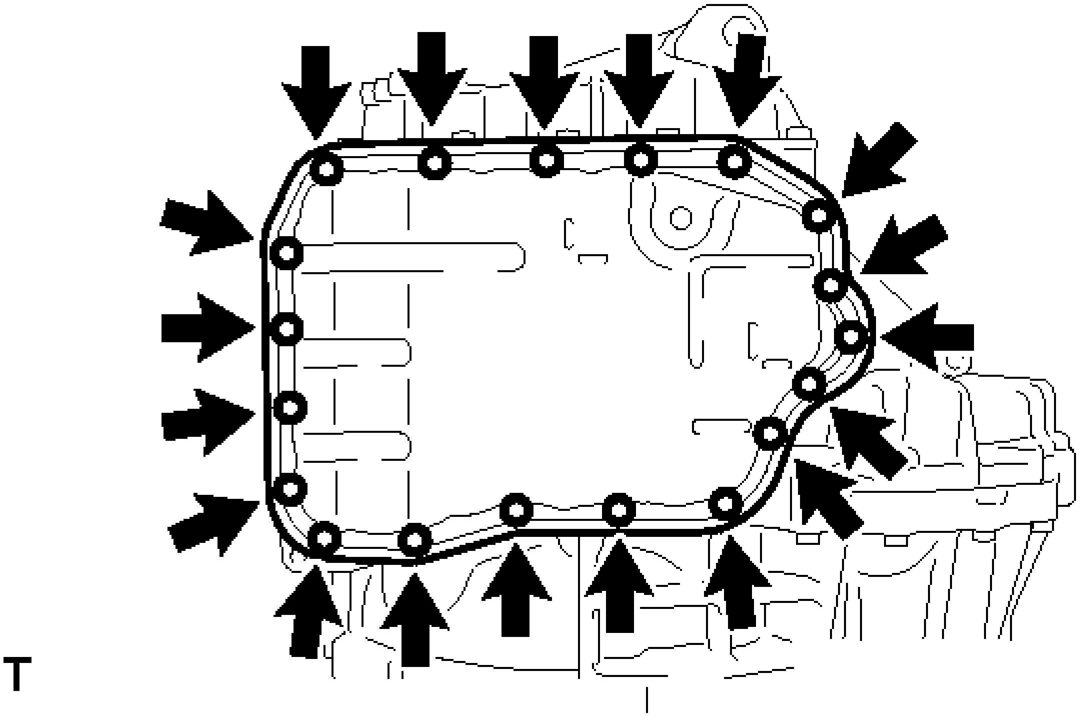

Fig. 191: Locating Automatic Transaxle Oil Pan Bolts
Courtesy of TOYOTA MOTOR SALES, U.S.A., INC.

NOTE: Some fluid will remain in the automatic transaxle oil pan sub-assembly. Remove all the bolts, and carefully remove the automatic transaxle oil pan sub-assembly.

12. **REMOVE AUTOMATIC TRANSAXLE OIL PAN GASKET**
    a. Remove the automatic transaxle oil pan gasket.
13. **REMOVE TRANSMISSION OIL CLEANER MAGNET**
    a. Remove the 2 transmission oil cleaner magnets from the automatic transaxle oil pan sub-assembly.

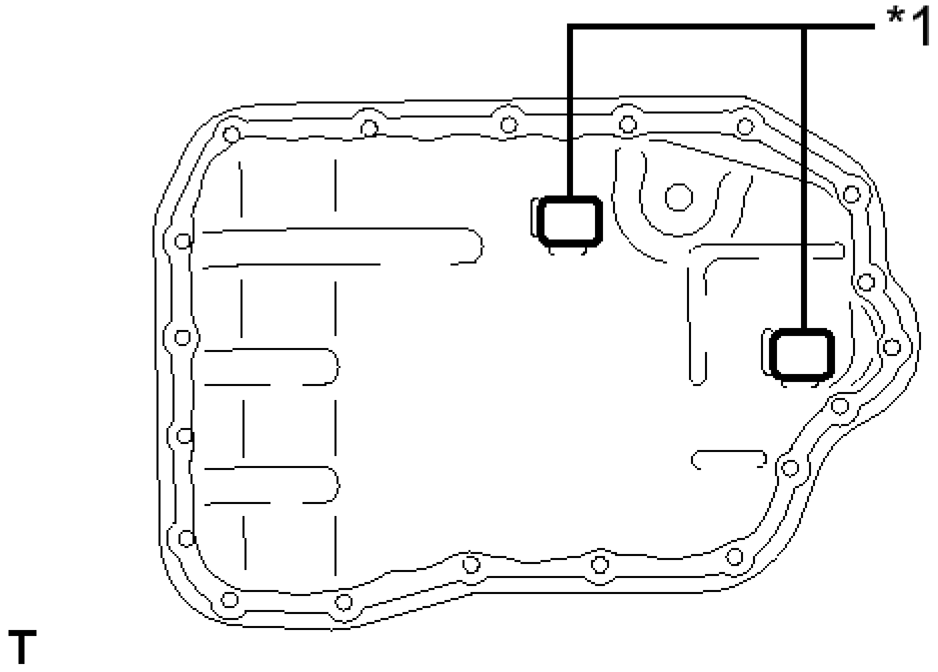

Fig. 192: Identifying Transmission Oil Cleaner Magnets
Courtesy of TOYOTA MOTOR SALES, U.S.A., INC.

TEXT IN ILLUSTRATION

*1	Transmission Oil Cleaner Magnet

14. **INSPECT TRANSMISSION OIL CLEANER MAGNET** See step 1
15. **REMOVE VALVE BODY OIL STRAINER ASSEMBLY**
    a. Remove the 2 bolts and valve body oil strainer assembly from the transmission valve body assembly.

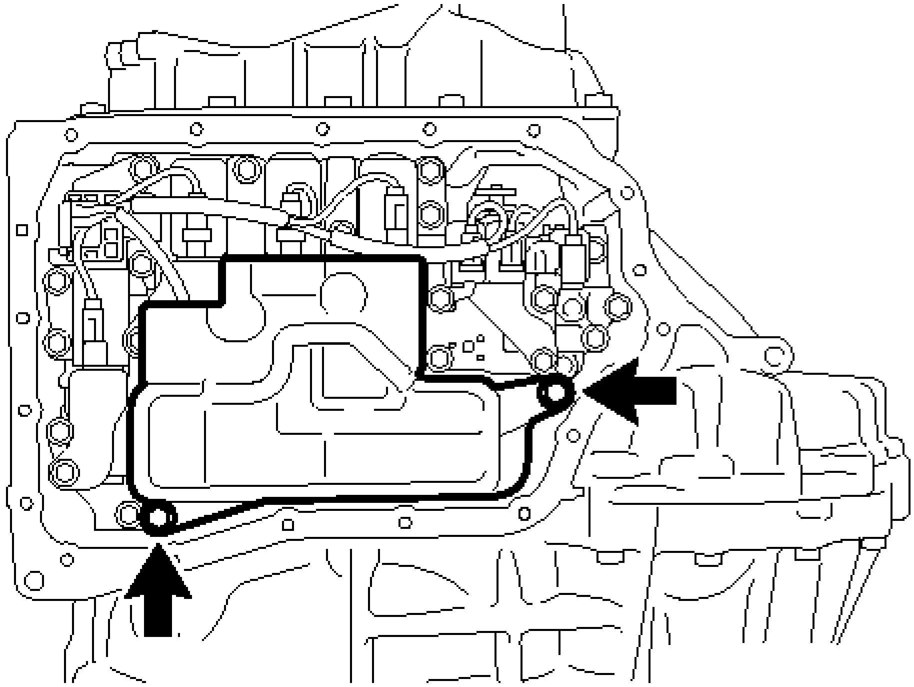

Fig. 193: Locating Oil Strainer Bolts
Courtesy of TOYOTA MOTOR SALES, U.S.A., INC.

b. Remove the O-ring from the valve body oil strainer assembly.

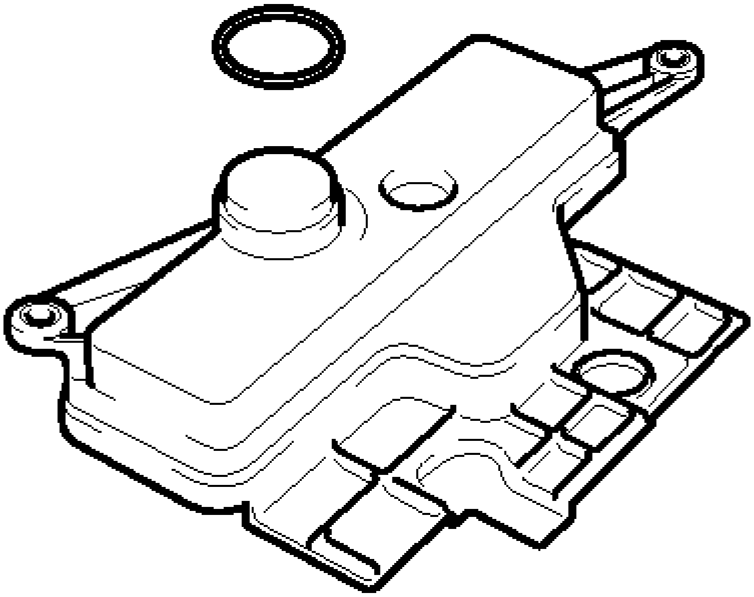

Fig. 194: Locating Valve Body Oil Strainer & O-Ring
Courtesy of TOYOTA MOTOR SALES, U.S.A., INC.

16. **REMOVE TRANSMISSION VALVE BODY ASSEMBLY**

a. Remove the 11 bolts and transmission valve body assembly from the transaxle case sub-assembly.

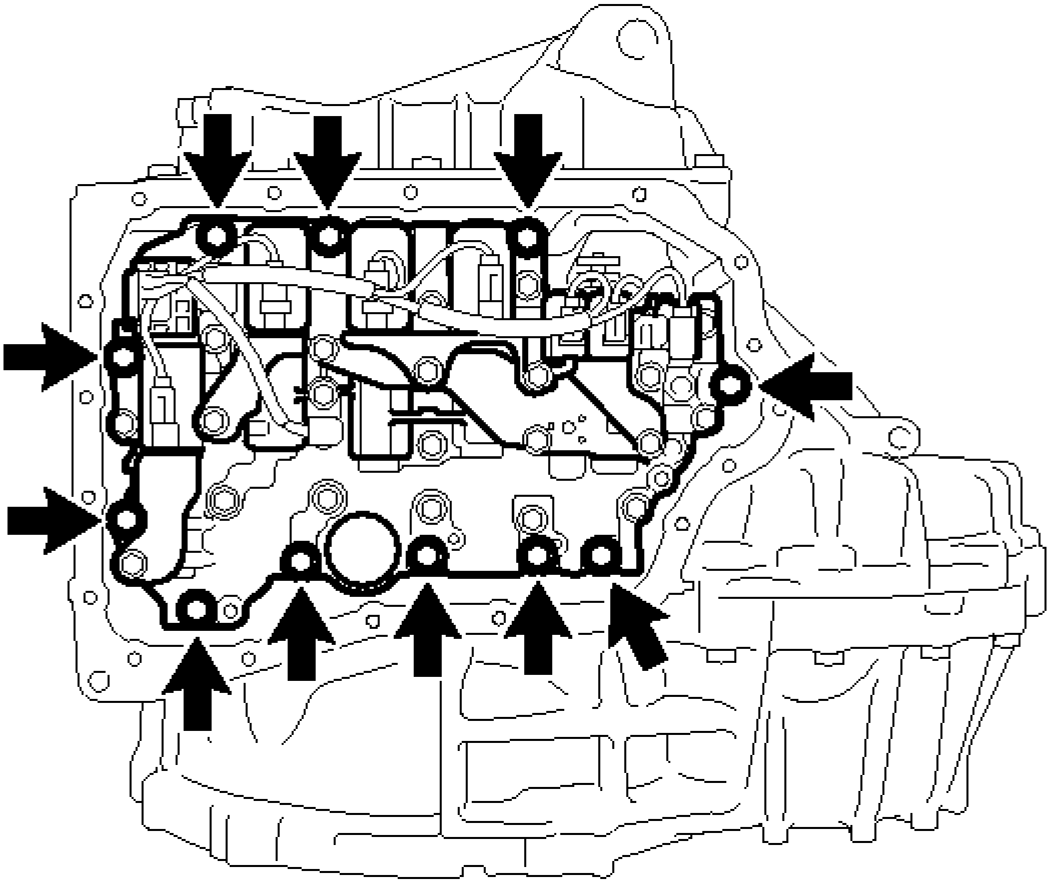

Fig. 195: Locating Transaxle Bolt
Courtesy of TOYOTA MOTOR SALES, U.S.A., INC.

NOTE: When removing the transmission valve body assembly, be careful not to allow the transmission revolution sensor and the transaxle case sub-assembly to interfere with each other.

17. **REMOVE NO. 1 GOVERNOR APPLY GASKET**

a. Remove the 2 No. 1 governor apply gaskets from the transaxle case sub-assembly.

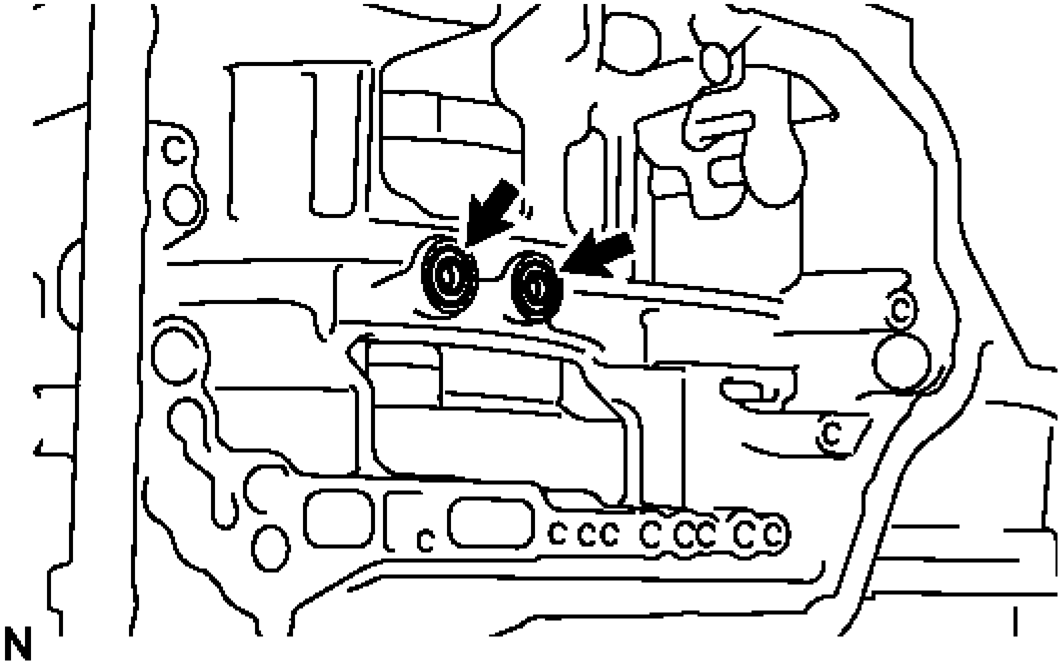

Fig. 196: Locating Transaxle Case Gasket
Courtesy of TOYOTA MOTOR SALES, U.S.A., INC.

18. **INSPECT INPUT SHAFT END PLAY** See step 2
19. **REMOVE REFILL PLUG**
    a. Remove the refill plug from the rear transaxle cover sub-assembly.

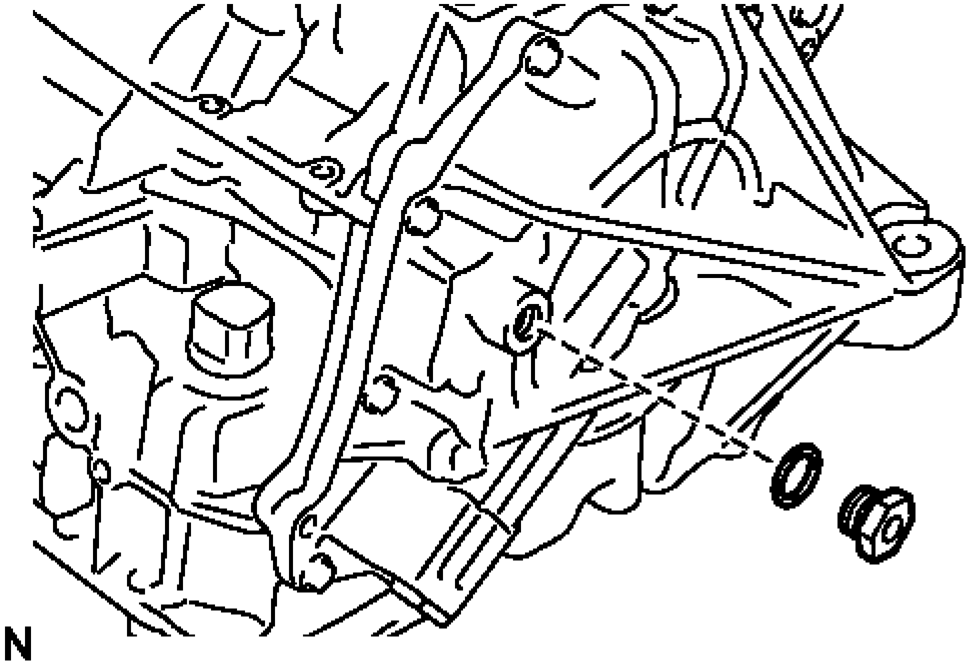

Fig. 197: Identifying Gasket And Refill Plug
Courtesy of TOYOTA MOTOR SALES, U.S.A., INC.

b. Remove the gasket from the refill plug.

20. **REMOVE REAR TRANSAXLE COVER PLUG**

a. Remove the 3 rear transaxle cover plugs from the rear transaxle cover sub-assembly.

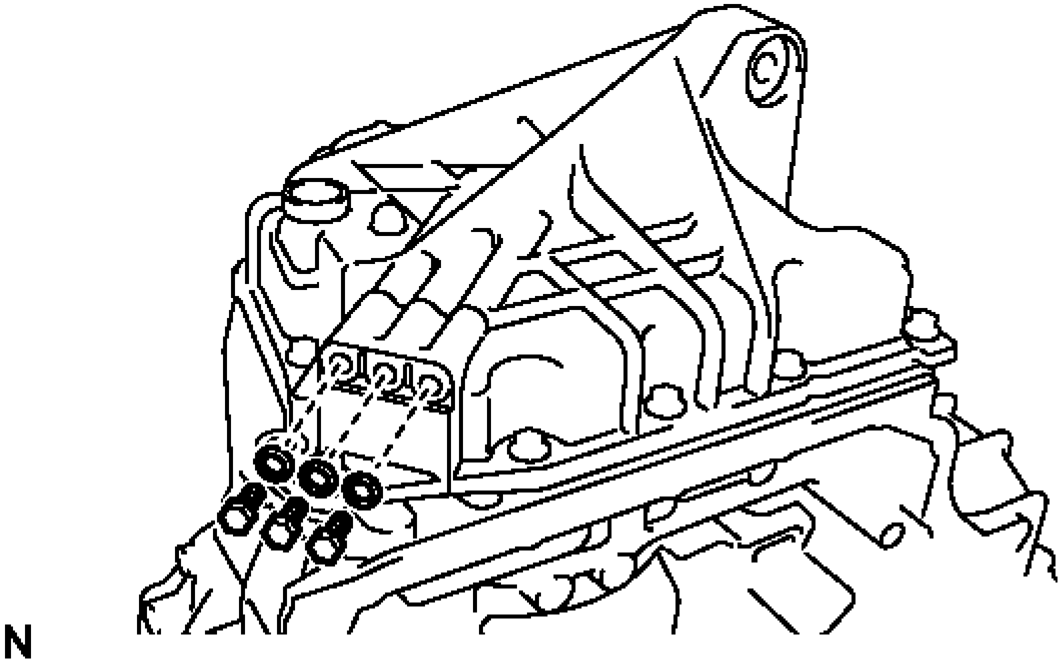

Fig. 198: Identifying No. 1 Automatic Transaxle Case Plugs
Courtesy of TOYOTA MOTOR SALES, U.S.A., INC.

b. Using a screwdriver, remove the 3 O-rings from the 3 rear transaxle cover plugs.

21. **REMOVE REAR TRANSAXLE COVER SUB-ASSEMBLY**

a. Remove the 14 bolts from the rear transaxle cover sub-assembly.

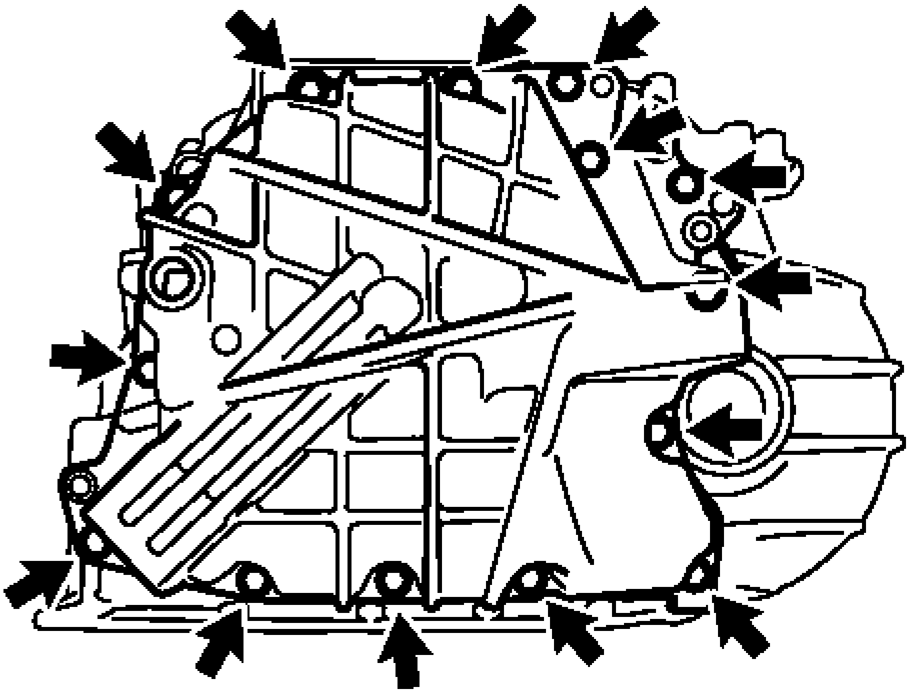

Fig. 199: Locating Rear Transaxle Cover Sub-Assembly Bolts
Courtesy of TOYOTA MOTOR SALES, U.S.A., INC.

b. Using a brass bar and a hammer, tap on the circumference of the rear transaxle cover sub-assembly to remove the rear transaxle cover sub-assembly from the transaxle case sub-assembly.
c. Using a screwdriver, remove the 3 O-rings from the transaxle case sub-assembly.

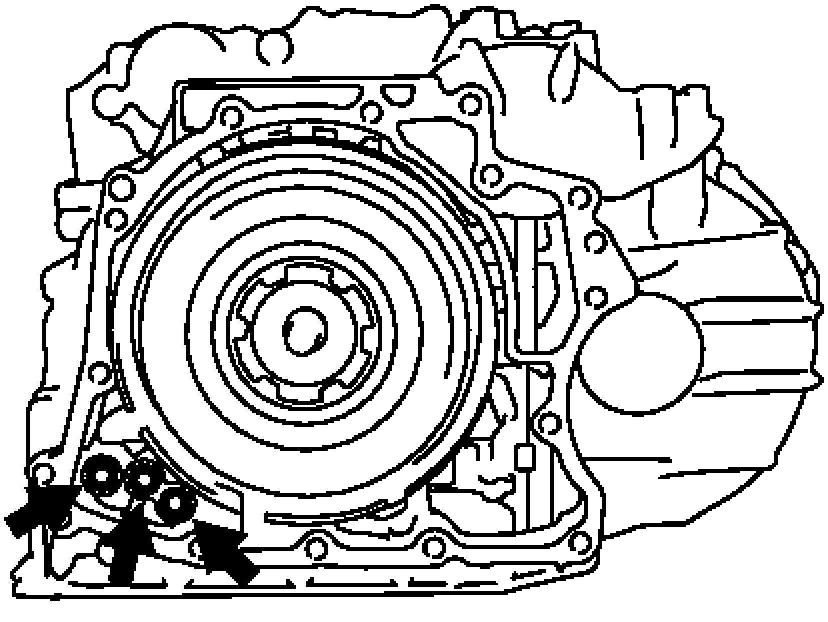

Fig. 200: Locating Transaxle Case Bolts
Courtesy of TOYOTA MOTOR SALES, U.S.A., INC.

d. Using a screwdriver, remove the 2 oil seal rings from the rear transaxle cover sub-assembly.

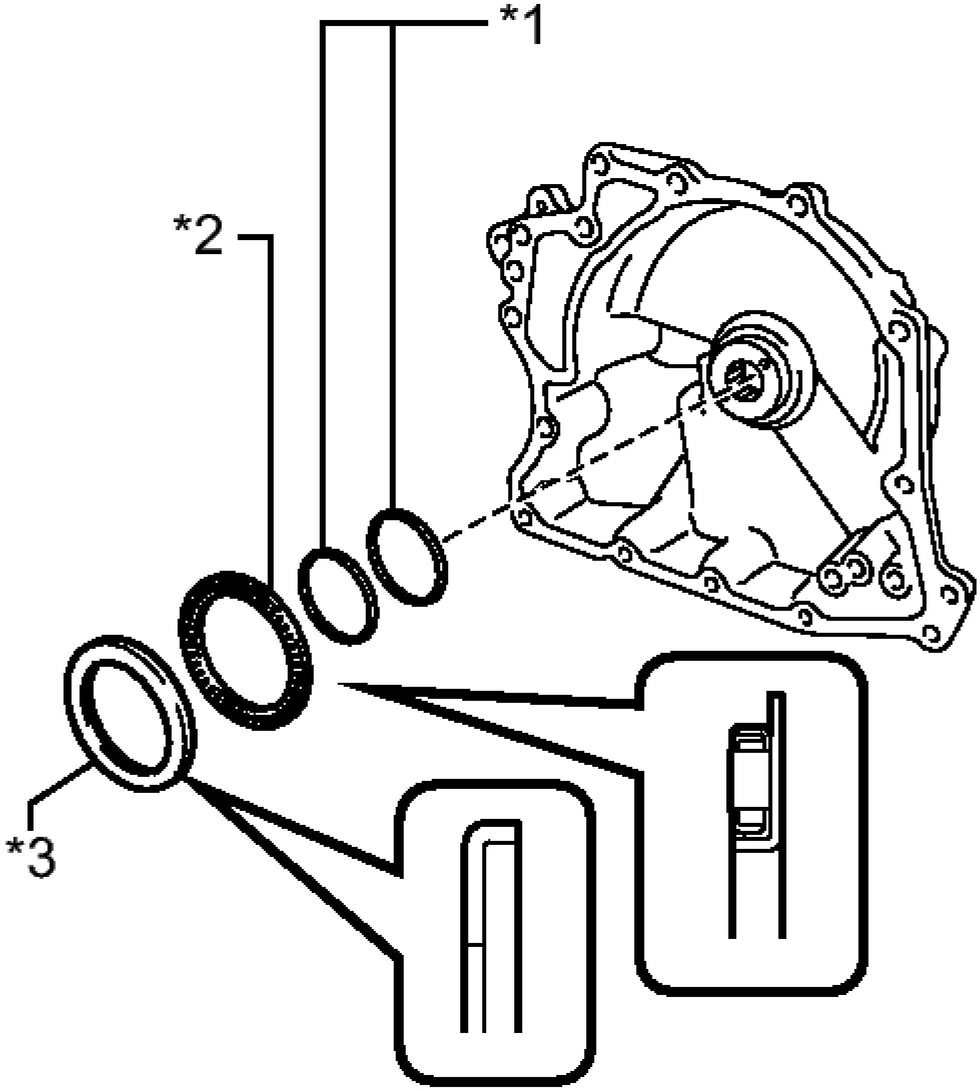

Fig. 201: Identifying Oil Seal Rings On Rear Transaxle Cover Sub-Assembly
Courtesy of TOYOTA MOTOR SALES, U.S.A., INC.

TEXT IN ILLUSTRATION

*1	Oil Seal Ring
*2	Thrust Needle Roller Bearing

*3	No. 4 Thrust Needle Roller Race

e. Remove the thrust needle roller bearing and No. 4 thrust needle roller race from the rear transaxle cover sub-assembly.
f. Using a T30 "TORX" socket wrench, remove the 2 "TORX" screws and rear transaxle cover plate from the rear transaxle cover sub-assembly.

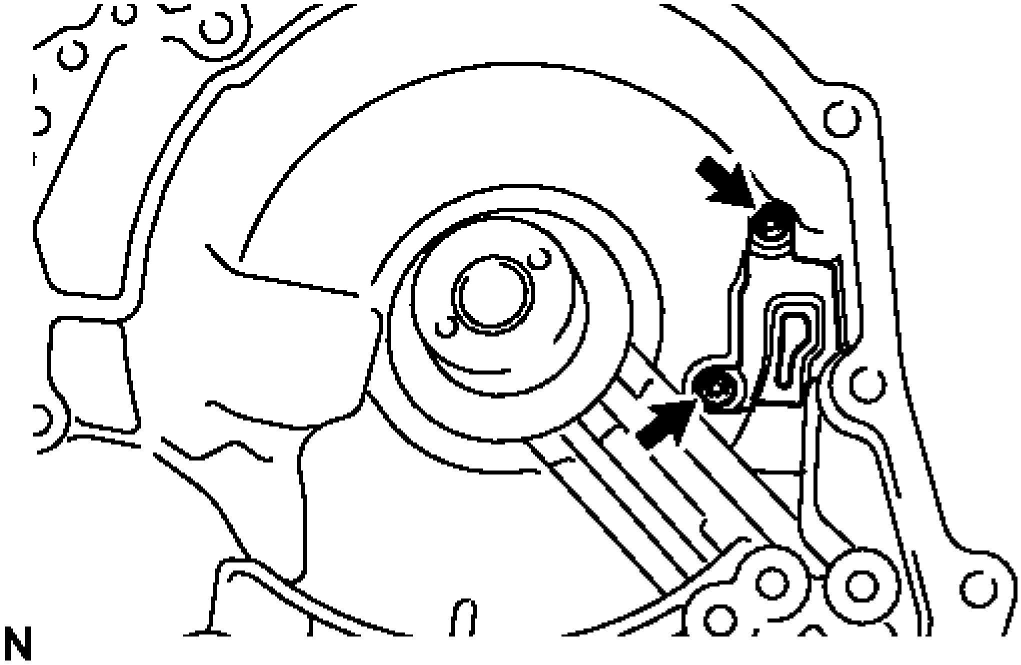

Fig. 202: Locating Rear Transaxle Cover Plate
Courtesy of TOYOTA MOTOR SALES, U.S.A., INC.

g. Using SST, remove the needle roller bearing from the rear transaxle cover sub-assembly.

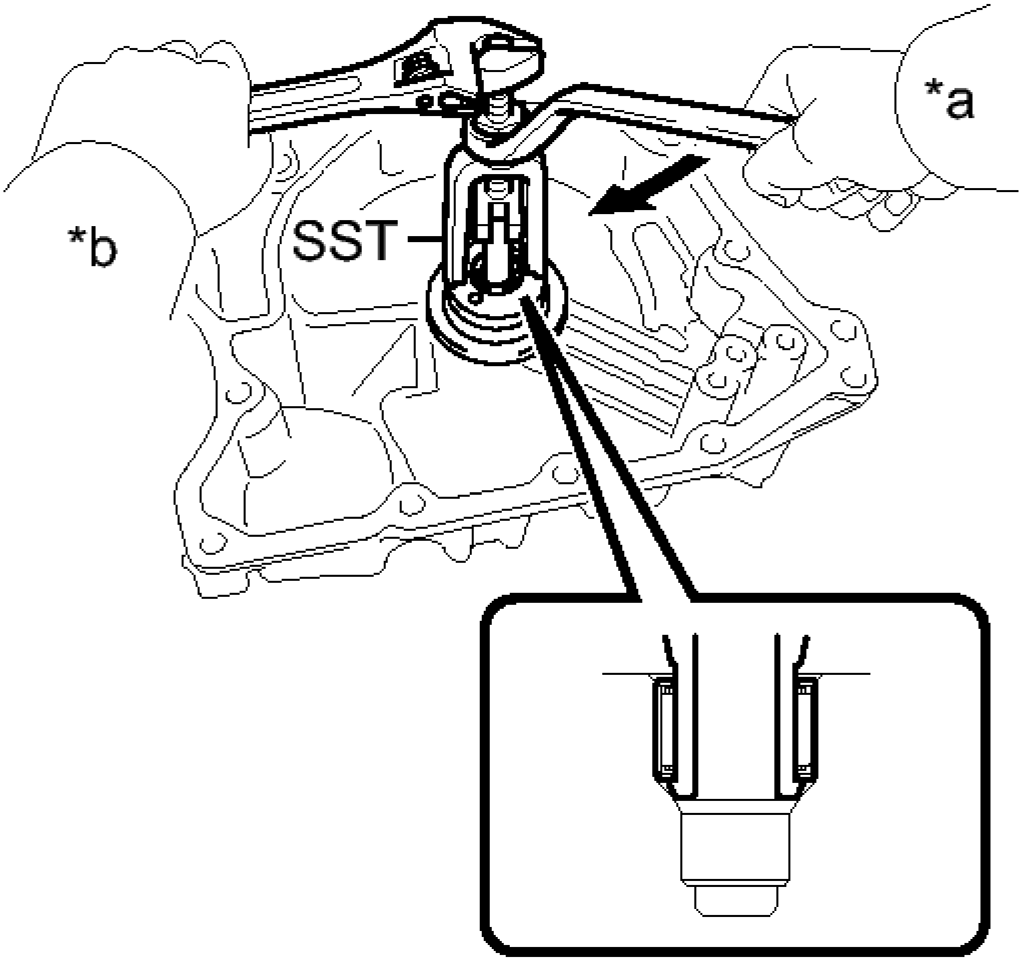

Fig. 203: Removing Needle Roller Bearing At Rear Transaxle Cover Using SST
Courtesy of TOYOTA MOTOR SALES, U.S.A., INC.

TEXT IN ILLUSTRATION

*a	Turn
*b	Hold

- **SST: 09319-60020**

22. **REMOVE REAR MULTIPLE DISC CLUTCH ASSEMBLY**
    a. Remove the rear multiple disc clutch assembly from the transaxle case sub-assembly.

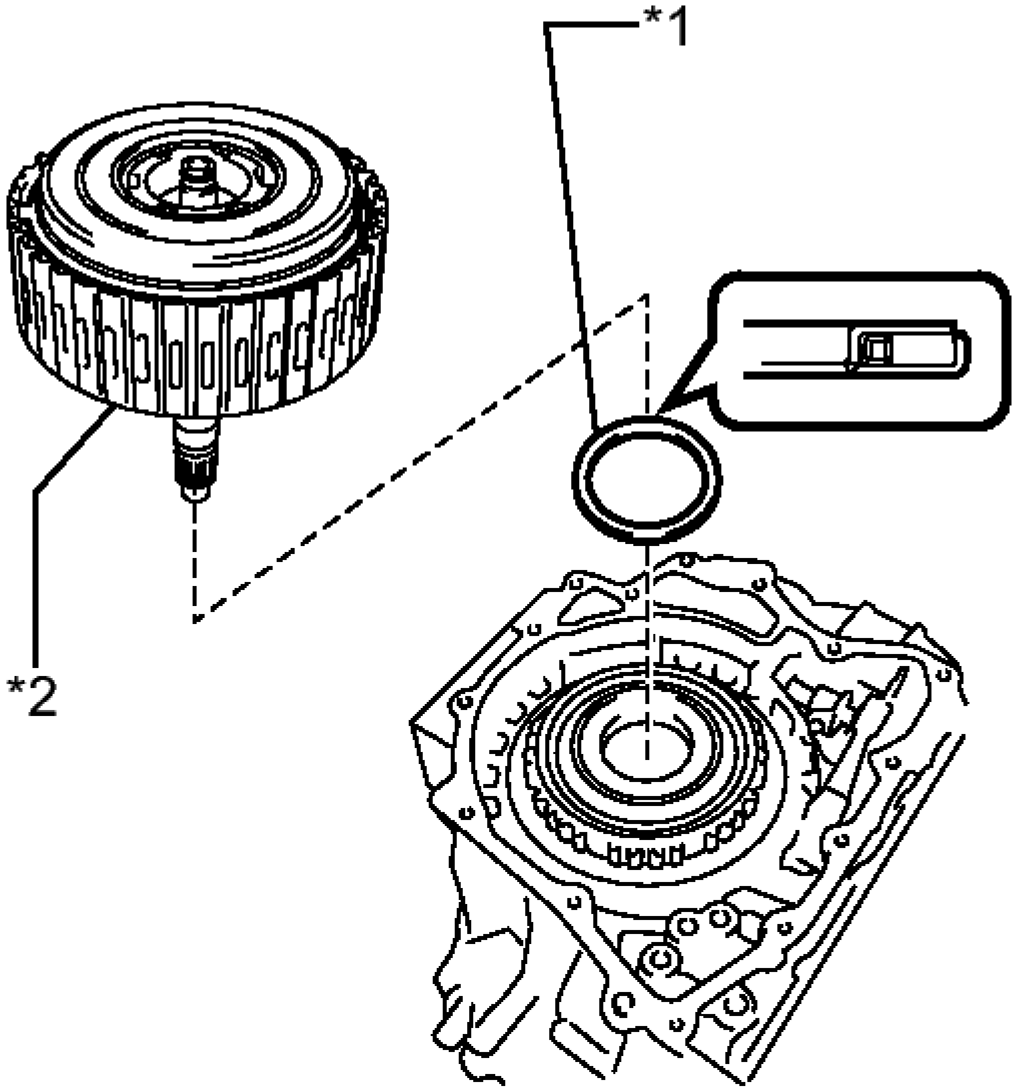

Fig. 204: Identifying Rear No. 2 Planetary Sun Gear Thrust Needle Roller Bearing
Courtesy of TOYOTA MOTOR SALES, U.S.A., INC.

TEXT IN ILLUSTRATION

*1	Thrust Needle Roller Bearing
*2	Rear Multiple Disc Clutch Assembly

b. Remove the thrust needle roller bearing from the transaxle case sub-assembly.
c. Using a screwdriver, remove the O-ring from the rear multiple disc clutch assembly.

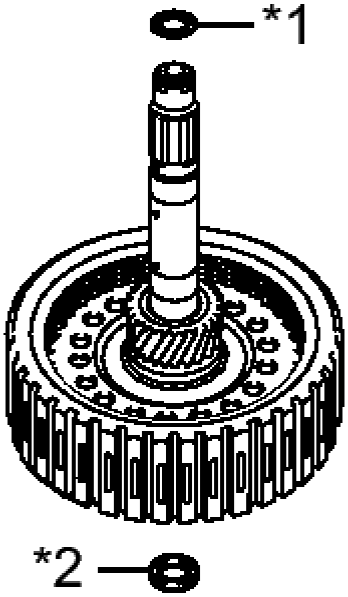

Fig. 205: Identifying Rear Multiple Disc Clutch O-Ring & Oil Seal
Courtesy of TOYOTA MOTOR SALES, U.S.A., INC.

TEXT IN ILLUSTRATION

*1	O-ring
*2	Oil Seal Ring

d. Using a screwdriver, remove the oil seal ring from the rear multiple disc clutch assembly.

23. **REMOVE REAR PLANETARY SUN GEAR ASSEMBLY**

    a. Using 2 screwdrivers and a hammer, tap out the snap ring from the rear multiple disc clutch assembly.

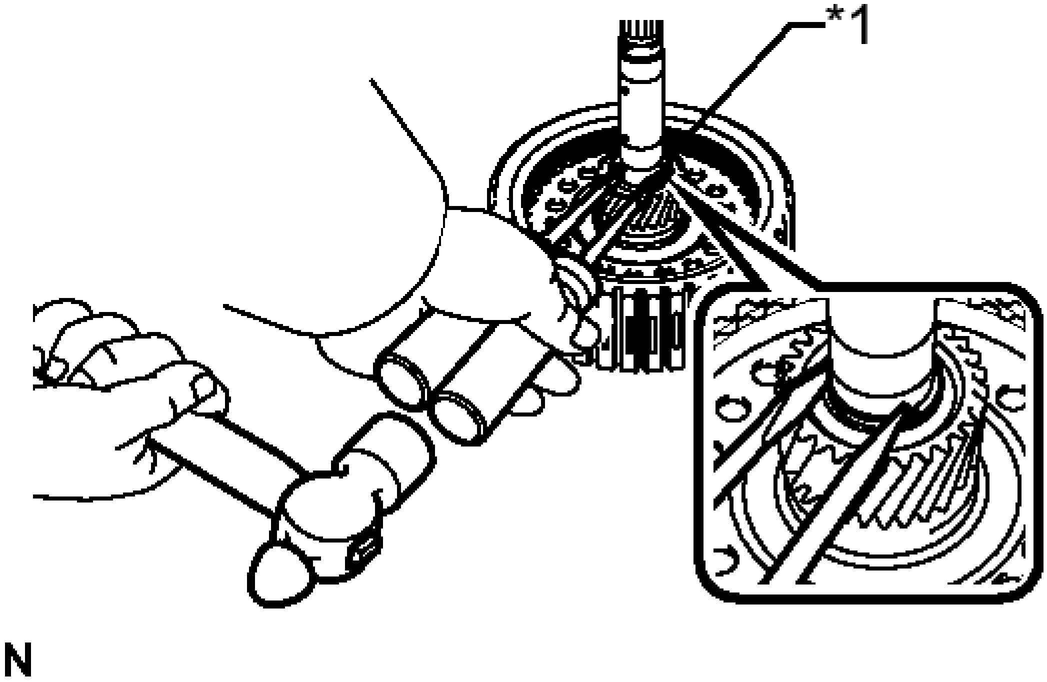

Fig. 206: Removing Rear Planetary Sun Gear Thrust Needle Roller Bearing
Courtesy of TOYOTA MOTOR SALES, U.S.A., INC.

TEXT IN ILLUSTRATION

*1	Snap Ring

HINT:

Use a piece of cloth to keep the snap ring from flying off.

b. Remove the rear planetary sun gear assembly from the rear multiple disc clutch assembly.

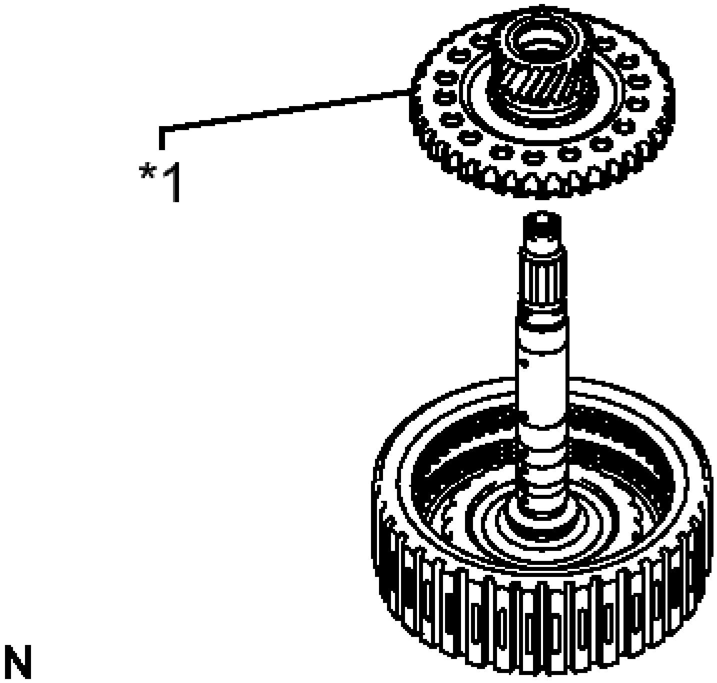

Fig. 207: Identifying Rear Planetary Sun Gear
Courtesy of TOYOTA MOTOR SALES, U.S.A., INC.

TEXT IN ILLUSTRATION

*1	Rear Planetary Sun Gear

c. Remove the thrust needle roller bearing and thrust bearing race from the rear multiple disc clutch assembly.

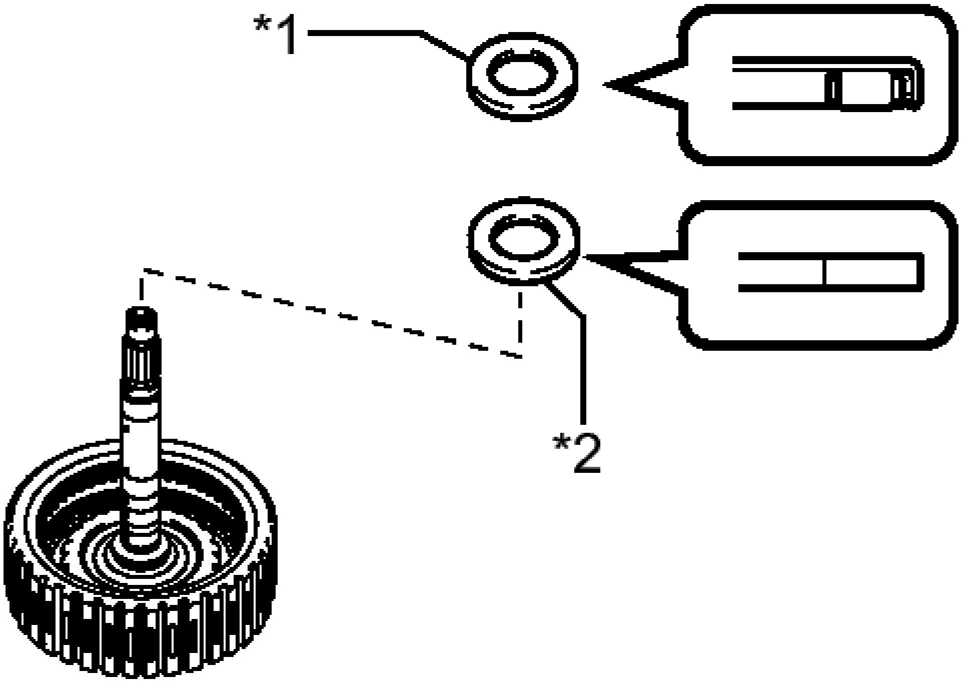

Fig. 208: Identifying Thrust Needle Roller Bearing And Race
Courtesy of TOYOTA MOTOR SALES, U.S.A., INC.

TEXT IN ILLUSTRATION

*1	Thrust Needle Roller Bearing
*2	Thrust Bearing Race

24. **INSPECT REAR PLANETARY SUN GEAR ASSEMBLY** See step 5
25. **REMOVE TRANSAXLE HOUSING**
    a. Remove the 20 bolts from the transaxle housing.

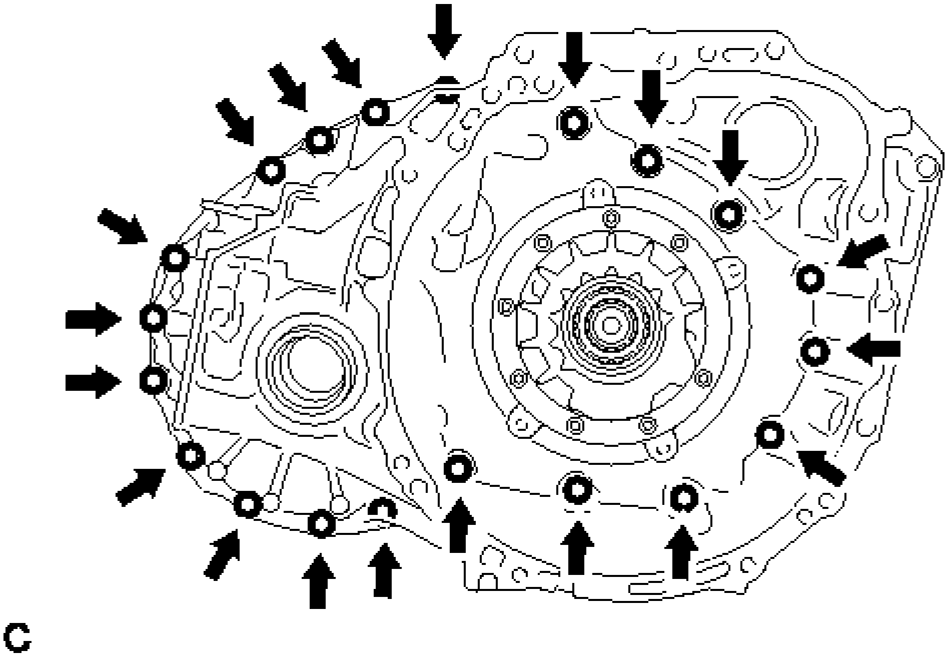

Fig. 209: Locating Transaxle Housing Bolt
Courtesy of TOYOTA MOTOR SALES, U.S.A., INC.

b. Using a brass bar and a hammer, tap on the circumference of the transaxle housing to remove the transaxle housing from the transaxle case sub-assembly.

26. **REMOVE DIFFERENTIAL DRIVE PINION TAPERED ROLLER BEARING RH (OUTER RACE)**

a. Using SST, remove the differential drive pinion tapered roller bearing RH (outer race) and shim from the transaxle housing.

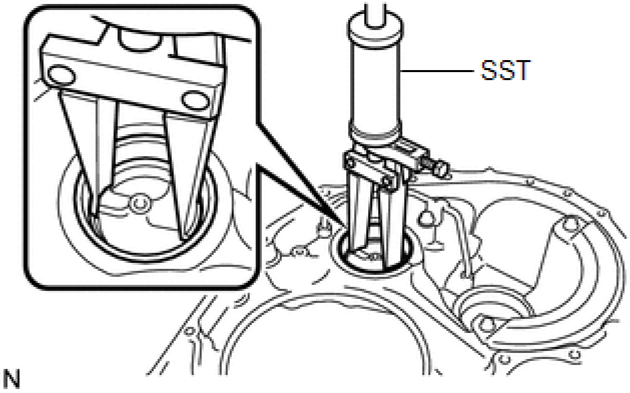

Fig. 210: Removing Counter Driven Gear Front Tapered Roller Bearing Outer Race And Shim Using SST 09308-00010
Courtesy of TOYOTA MOTOR SALES, U.S.A., INC.

- **SST: 09308-00010**

27. **REMOVE DIFFERENTIAL GEAR LUBE APPLY TUBE**

  a. Remove the bolt, clamp, and differential gear lube apply tube from the transaxle housing.

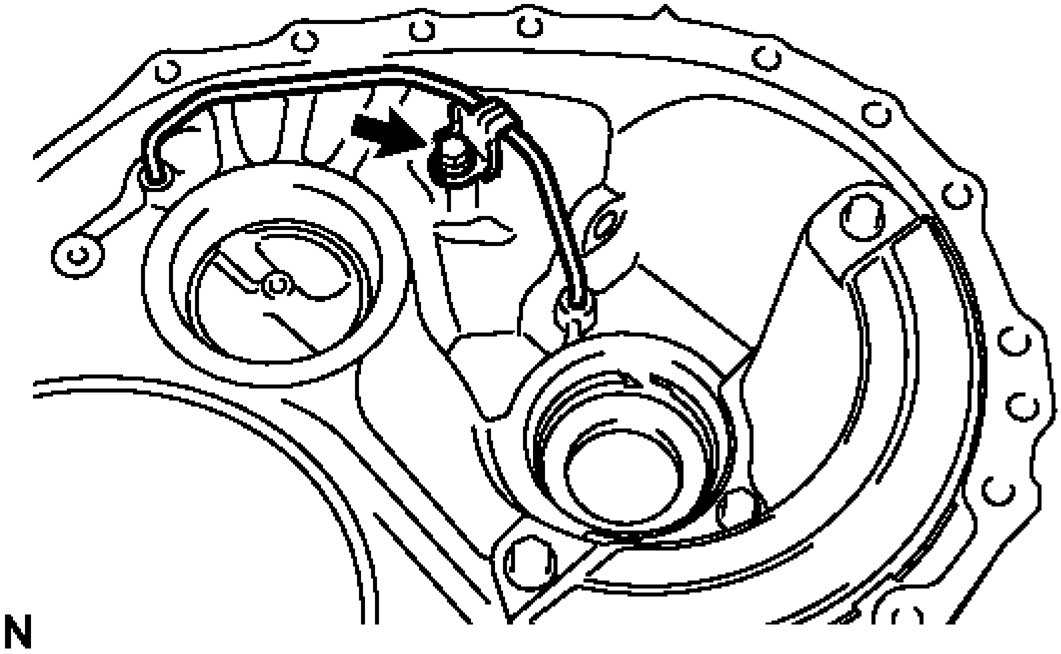

Fig. 211: Locating Differential Gear Lube Apply Tube
Courtesy of TOYOTA MOTOR SALES, U.S.A., INC.

28. **REMOVE TRANSAXLE HOUSING OIL SEPARATOR**

  a. Remove the 3 bolts and transaxle housing oil separator from the transaxle housing.

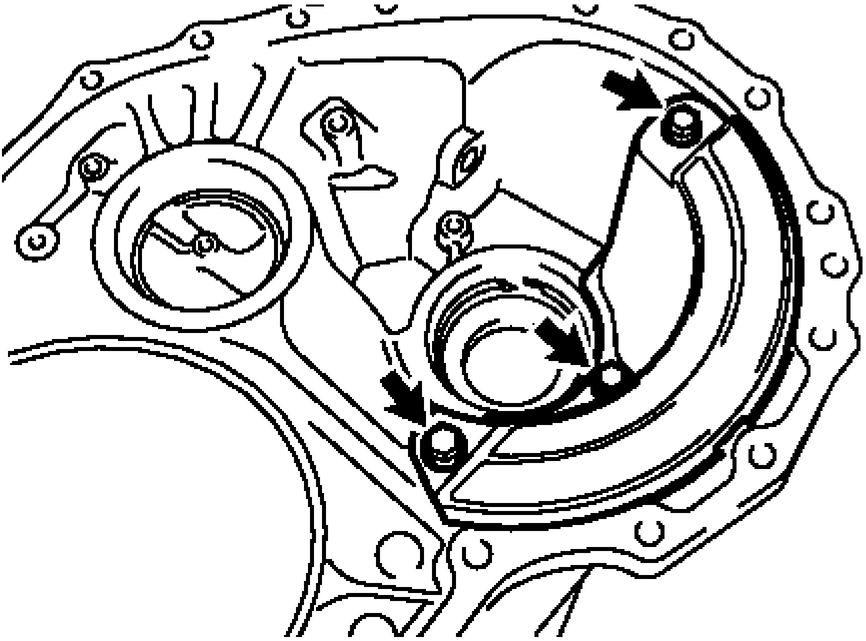

Fig. 212: Locating Transaxle Housing Bolts
Courtesy of TOYOTA MOTOR SALES, U.S.A., INC.

29. **REMOVE FRONT OIL PUMP ASSEMBLY**
    a. Remove the O-ring from the front oil pump assembly.

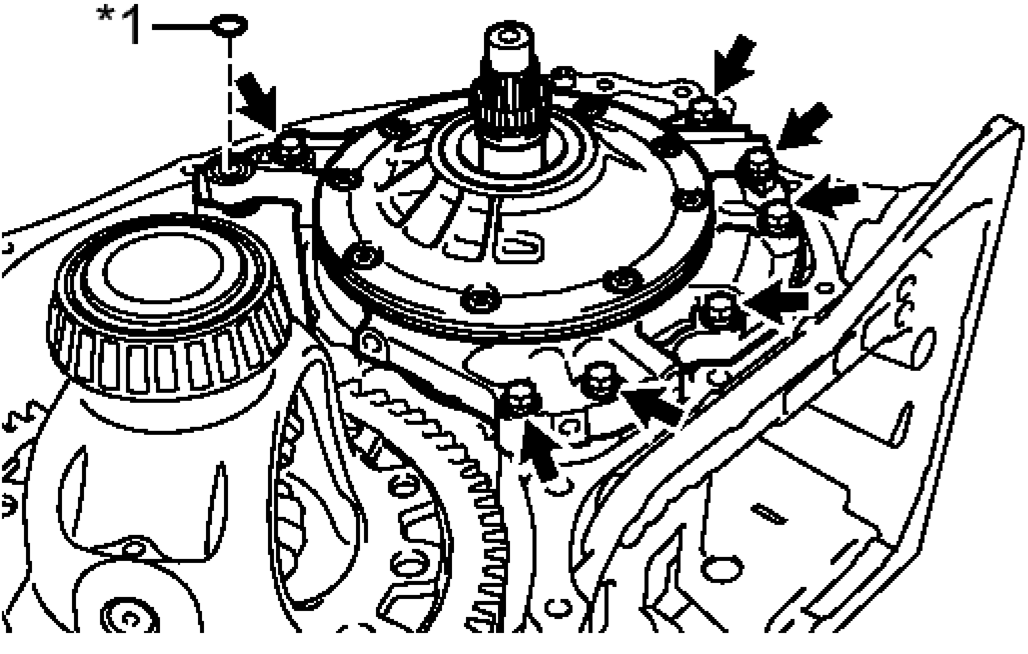

Fig. 213: Locating Transaxle Case Bolt

Courtesy of TOYOTA MOTOR SALES, U.S.A., INC.

TEXT IN ILLUSTRATION

*1	O-ring

b. Remove the 7 bolts and front oil pump assembly from the transaxle case sub-assembly.
c. Remove the O-ring from the front oil pump assembly.

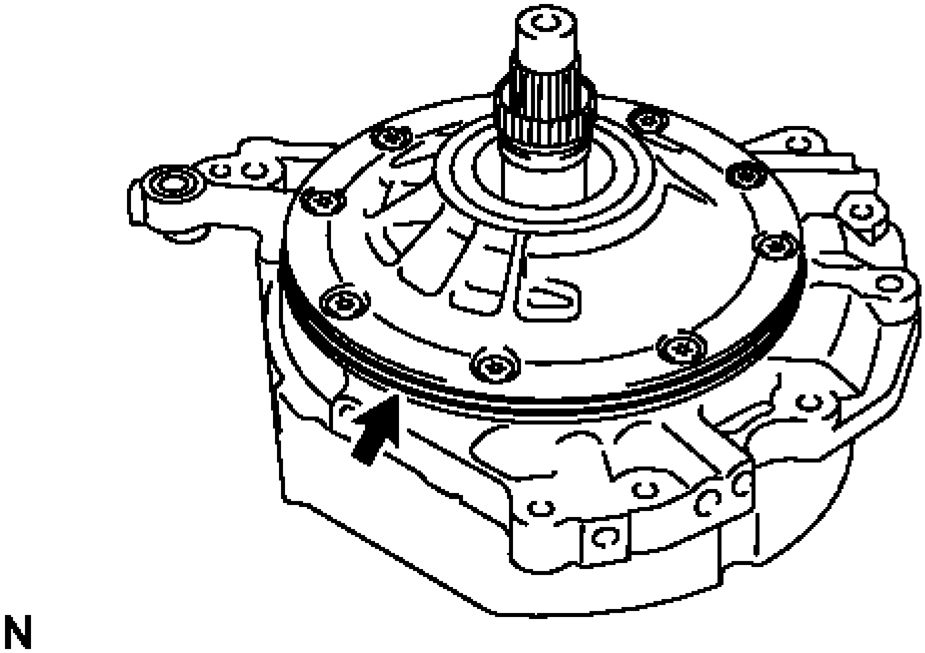

Fig. 214: Locating O-Ring
Courtesy of TOYOTA MOTOR SALES, U.S.A., INC.

d. Remove the thrust needle roller bearing and thrust bearing race from the counter drive gear nut.

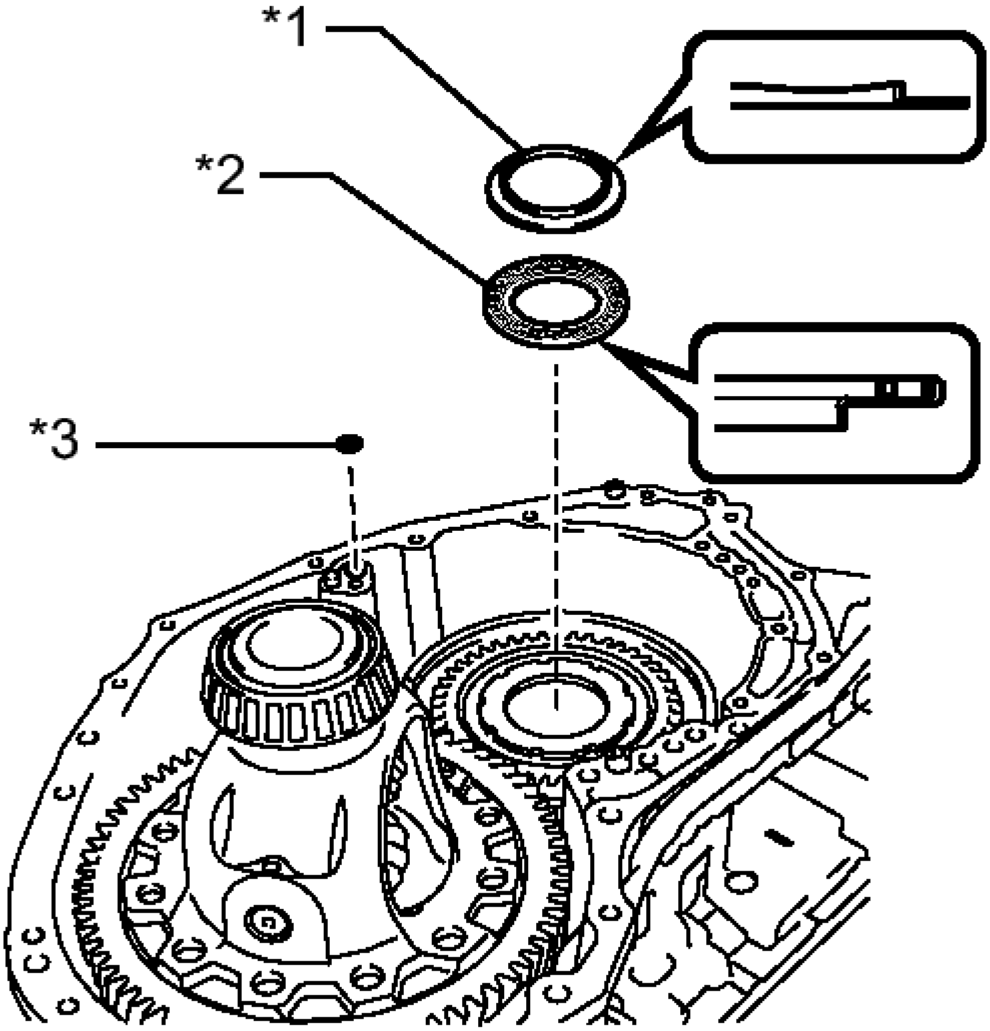

Fig. 215: Identifying Thrust Needle Roller Bearing And Thrust Needle Roller Bearing Race
Courtesy of TOYOTA MOTOR SALES, U.S.A., INC.

TEXT IN ILLUSTRATION

*1	Thrust Bearing Race
*2	Thrust Needle Roller Bearing
*3	O-ring

e. Remove the O-ring from the transaxle case sub-assembly.

30. **REMOVE NO. 3 BRAKE DISC**

a. Using a screwdriver, remove the snap ring from the front oil pump assembly.

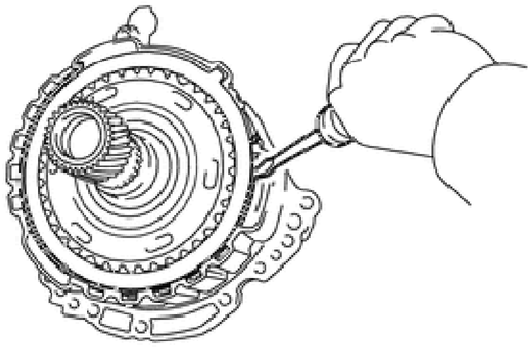

Fig. 216: Removing No. 3 Brake Disc Snap Ring At Front Oil Pump Assembly Using Screwdriver
Courtesy of TOYOTA MOTOR SALES, U.S.A., INC.

b. Remove the 2 brake flanges, 3 brake discs, and 2 brake plates from the front oil pump assembly.

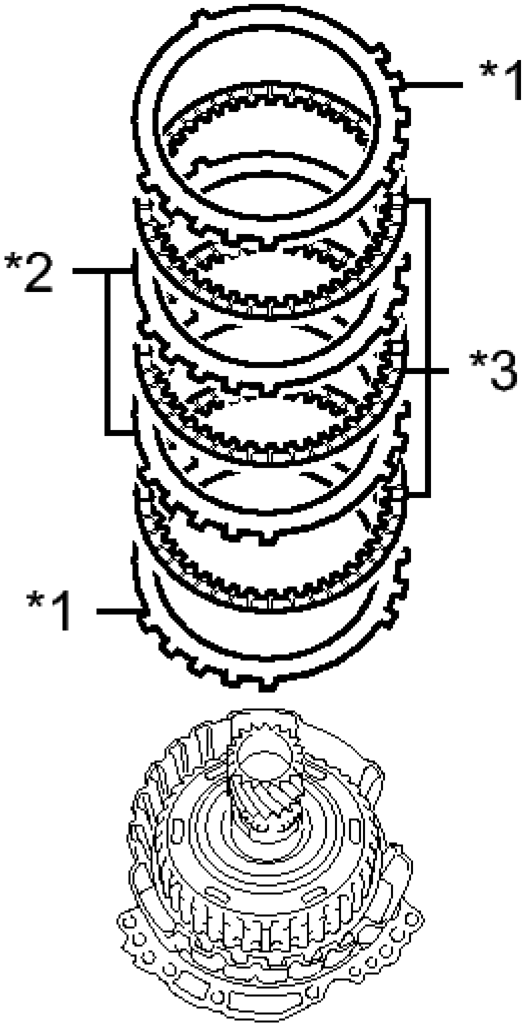

Fig. 217: Identifying Brake Flanges, Brake Discs And Brake Plates
Courtesy of TOYOTA MOTOR SALES, U.S.A., INC.

TEXT IN ILLUSTRATION

*1	Brake Flange
*2	Brake Plate
*3	Brake Disc

31. **INSPECT NO. 3 BRAKE DISC** See step 10
32. **REMOVE UNDERDRIVE PLANETARY GEAR ASSEMBLY**
    a. Remove the underdrive planetary gear assembly from the front oil pump assembly.

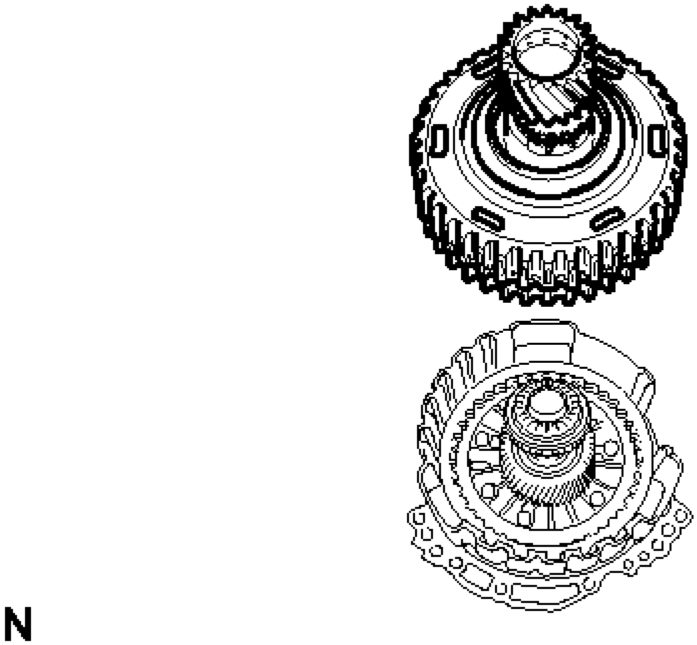

Fig. 218: Identifying Underdrive Planetary Gear Assembly
Courtesy of TOYOTA MOTOR SALES, U.S.A., INC.

33. **REMOVE NO. 3 BRAKE HUB**
    a. Remove the No. 3 brake hub from the underdrive planetary gear assembly.

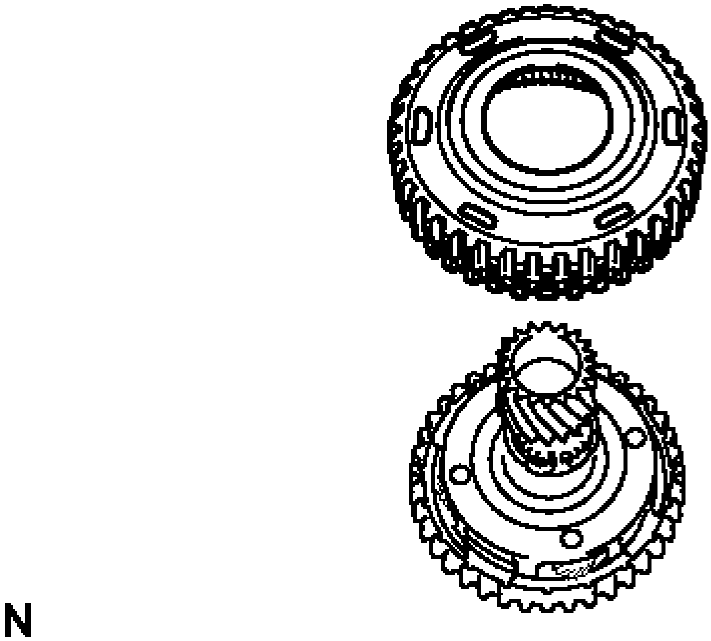

Fig. 219: Identifying No. 3 Brake Hub And Underdrive Planetary Gear Assembly

Courtesy of TOYOTA MOTOR SALES, U.S.A., INC.

b. Remove the thrust needle roller bearing and thrust bearing race from the underdrive planetary gear assembly.

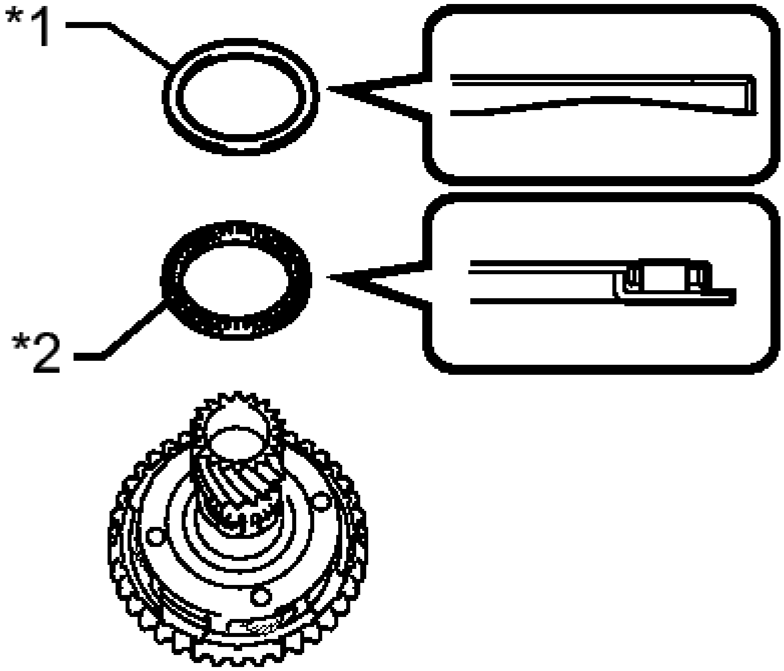

Fig. 220: Identifying Thrust Needle Roller Race And Bearing
Courtesy of TOYOTA MOTOR SALES, U.S.A., INC.

TEXT IN ILLUSTRATION

*1	Thrust Bearing Race
*2	Thrust Needle Roller Bearing

34. **REMOVE PLANETARY SUN GEAR SUB-ASSEMBLY**
    a. While expanding the snap ring with snap ring pliers, remove the planetary sun gear from the underdrive planetary gear assembly.

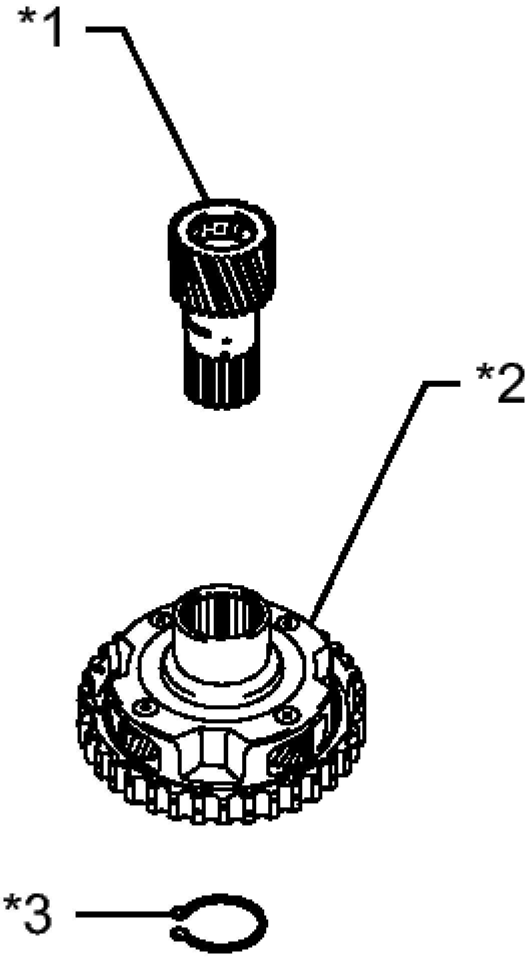

Fig. 221: Identifying Planetary Sun Gear Sub-Assembly
Courtesy of TOYOTA MOTOR SALES, U.S.A., INC.

TEXT IN ILLUSTRATION

*1	Planetary Sun Gear Sub-assembly
*2	Underdrive Planetary Gear Assembly
*3	Snap Ring

b. Remove the snap ring from the underdrive planetary gear assembly.

35. **INSPECT UNDERDRIVE PLANETARY GEAR ASSEMBLY** See step 6
36. **INSPECT PLANETARY SUN GEAR SUB-ASSEMBLY** See step 4
37. **REMOVE INPUT SHAFT SUB-ASSEMBLY**
    a. Remove the input shaft sub-assembly from the front oil pump assembly.

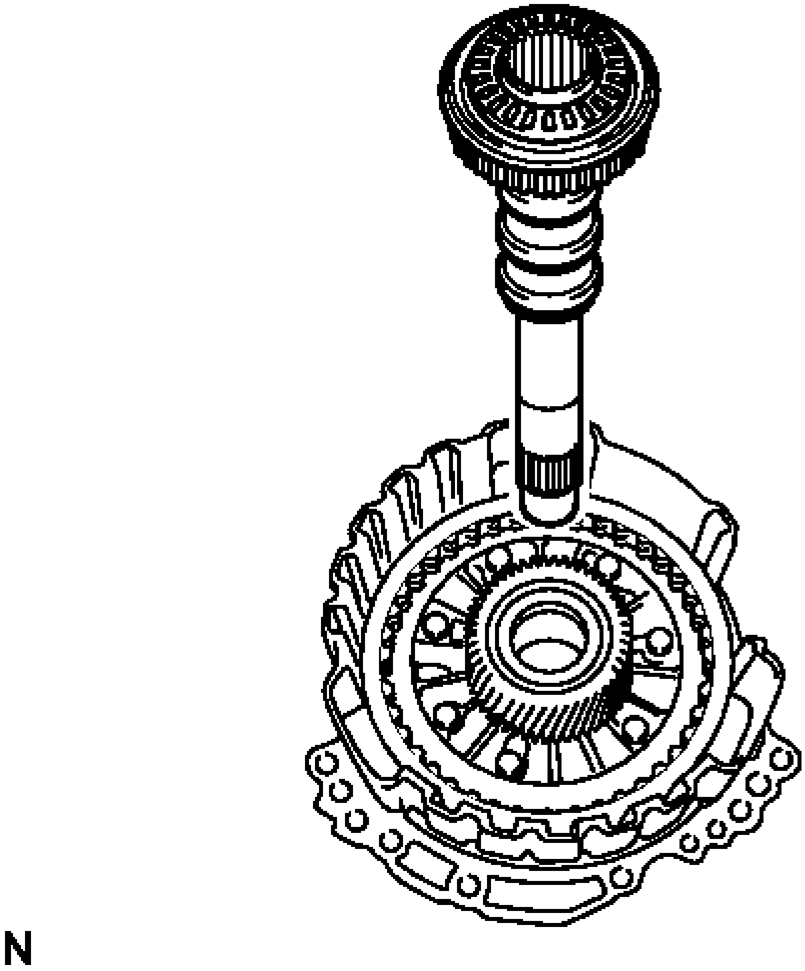

Fig. 222: Identifying Input Shaft And Oil Pump Assembly
Courtesy of TOYOTA MOTOR SALES, U.S.A., INC.

    b. Remove the thrust needle roller bearing and thrust bearing race from the input shaft sub-assembly.

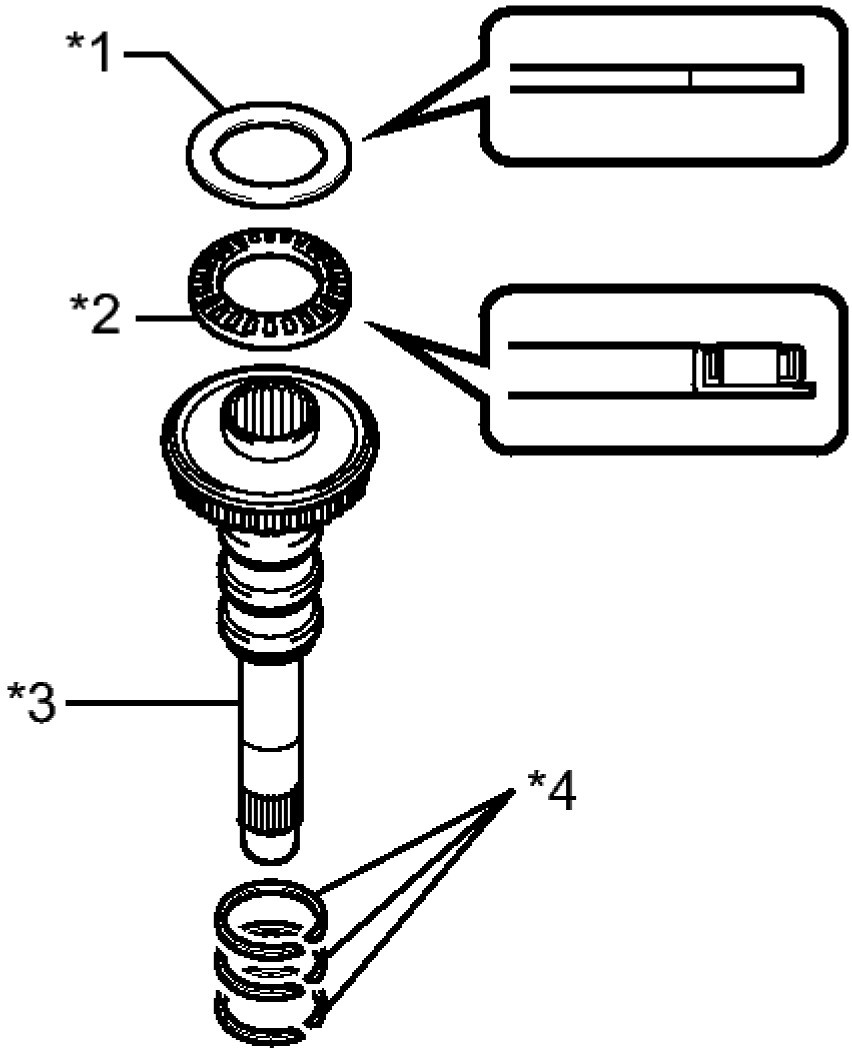

Fig. 223: Identifying Thrust Needle Roller Race And Bearing
Courtesy of TOYOTA MOTOR SALES, U.S.A., INC.

TEXT IN ILLUSTRATION

*1	Thrust Bearing Race
*2	Thrust Needle Roller Bearing
*3	Input Shaft sub-assembly
	Oil Seal

*4	Ring

c. Using a screwdriver, remove the 3 oil seal rings from the input shaft sub-assembly.

38. **REMOVE UNDERDRIVE PLANETARY SUN GEAR**

a. Remove the underdrive planetary sun gear from the front oil pump assembly.

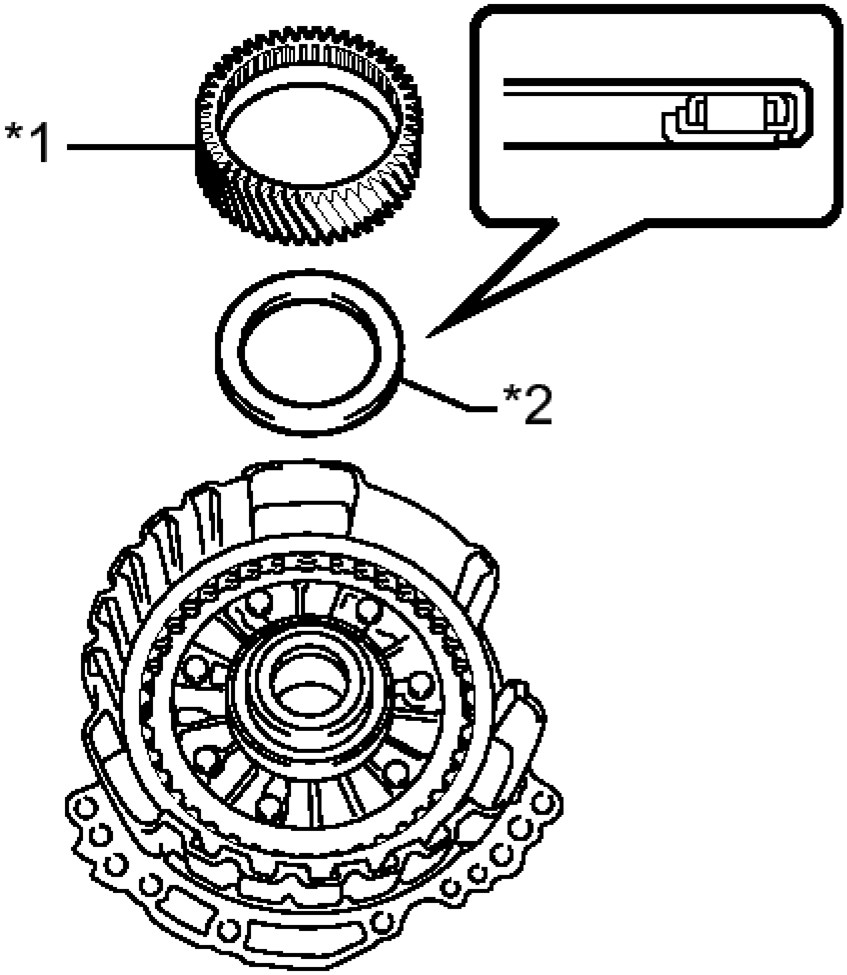

Fig. 224: Identifying Underdrive Planetary Sun Gear And Thrust Needle Roller Bearing
Courtesy of TOYOTA MOTOR SALES, U.S.A., INC.

TEXT IN ILLUSTRATION

*1	Underdrive Planetary Sun Gear
	Thrust Needle

*2	Roller Bearing

b. Remove the thrust needle roller bearing from the front oil pump assembly.

39. **REMOVE NO. 1 BRAKE DISC**

a. Using a screwdriver, remove the 2 snap rings and brake snap ring stopper from the front oil pump assembly.

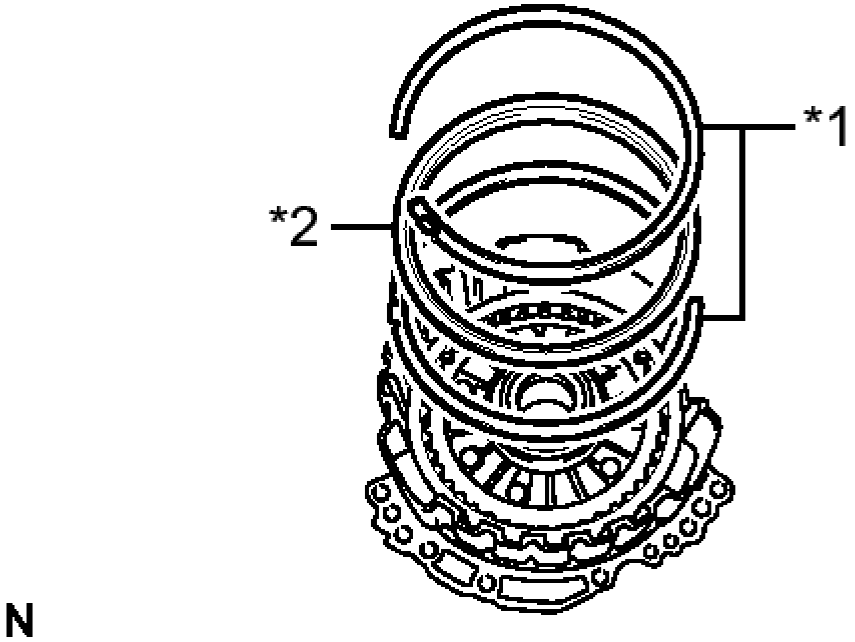

Fig. 225: Identifying Snap Rings And Brake Snap Ring Stopper
Courtesy of TOYOTA MOTOR SALES, U.S.A., INC.

TEXT IN ILLUSTRATION

*1	Snap Ring
*2	Brake Snap Ring Stopper

b. Remove the No. 1 brake flange, 3 No. 1 brake discs, and 3 No. 1 brake plates from the front oil pump assembly.

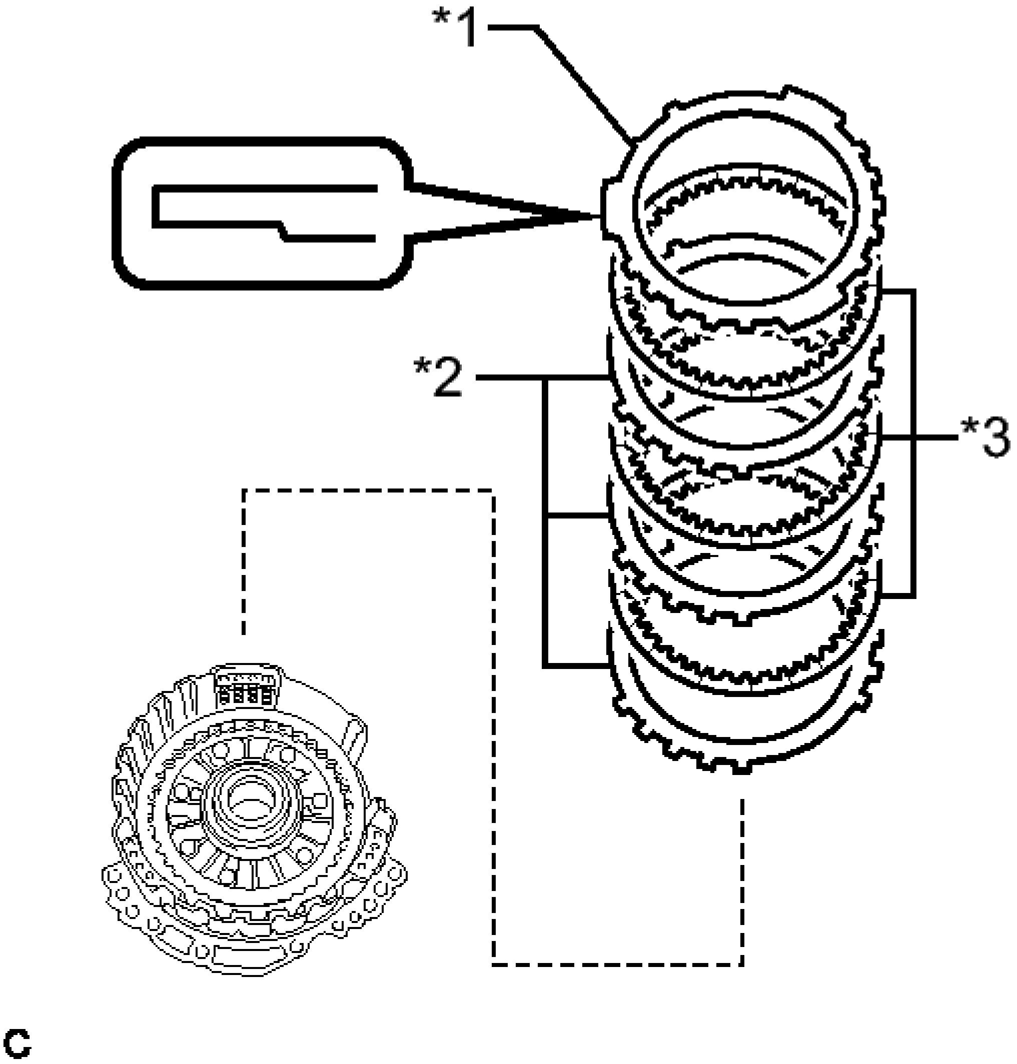

Fig. 226: Identifying Brake Disc, Brake Plate And Flange
Courtesy of TOYOTA MOTOR SALES, U.S.A., INC.

TEXT IN ILLUSTRATION

*1	No. 1 Brake Flange
*2	No. 1 Brake Plate
*3	No. 1 Brake Disc

40. **INSPECT NO. 1 BRAKE DISC** See step 8

41. **REMOVE 2ND BRAKE PISTON RETURN SPRING SUB-ASSEMBLY**

   a. Remove the 3 2nd brake piston return springs from the front oil pump assembly.

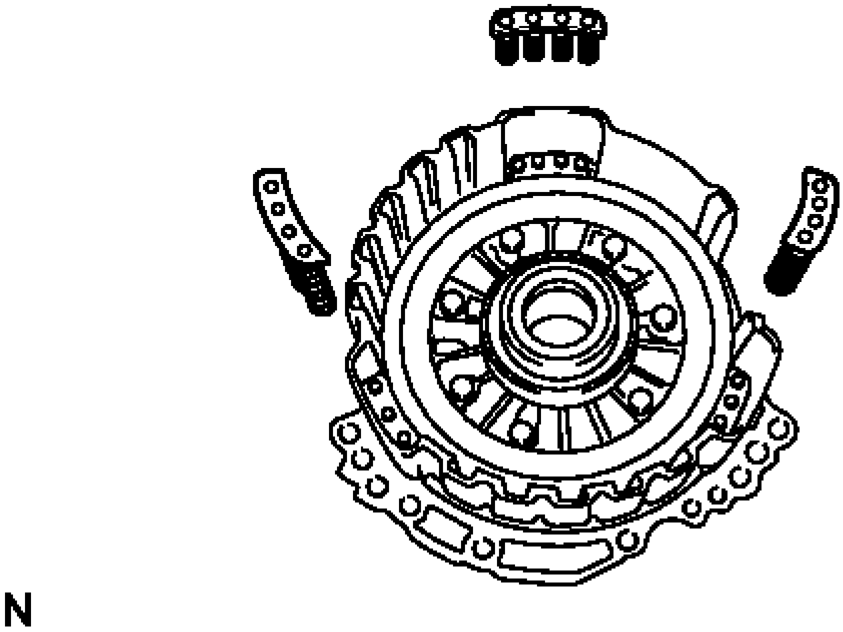

Fig. 227: Identifying 2nd Brake Piston Return Springs
Courtesy of TOYOTA MOTOR SALES, U.S.A., INC.

42. **INSPECT 2ND BRAKE PISTON RETURN SPRING SUB-ASSEMBLY** See step 11

43. **REMOVE NO. 1 BRAKE PISTON**

   a. Holding the front oil pump assembly by hand, apply compressed air (392 kPa, 4.0 kgf/cm^2 , 57 psi) to the front oil pump assembly to remove the No. 1 brake piston.

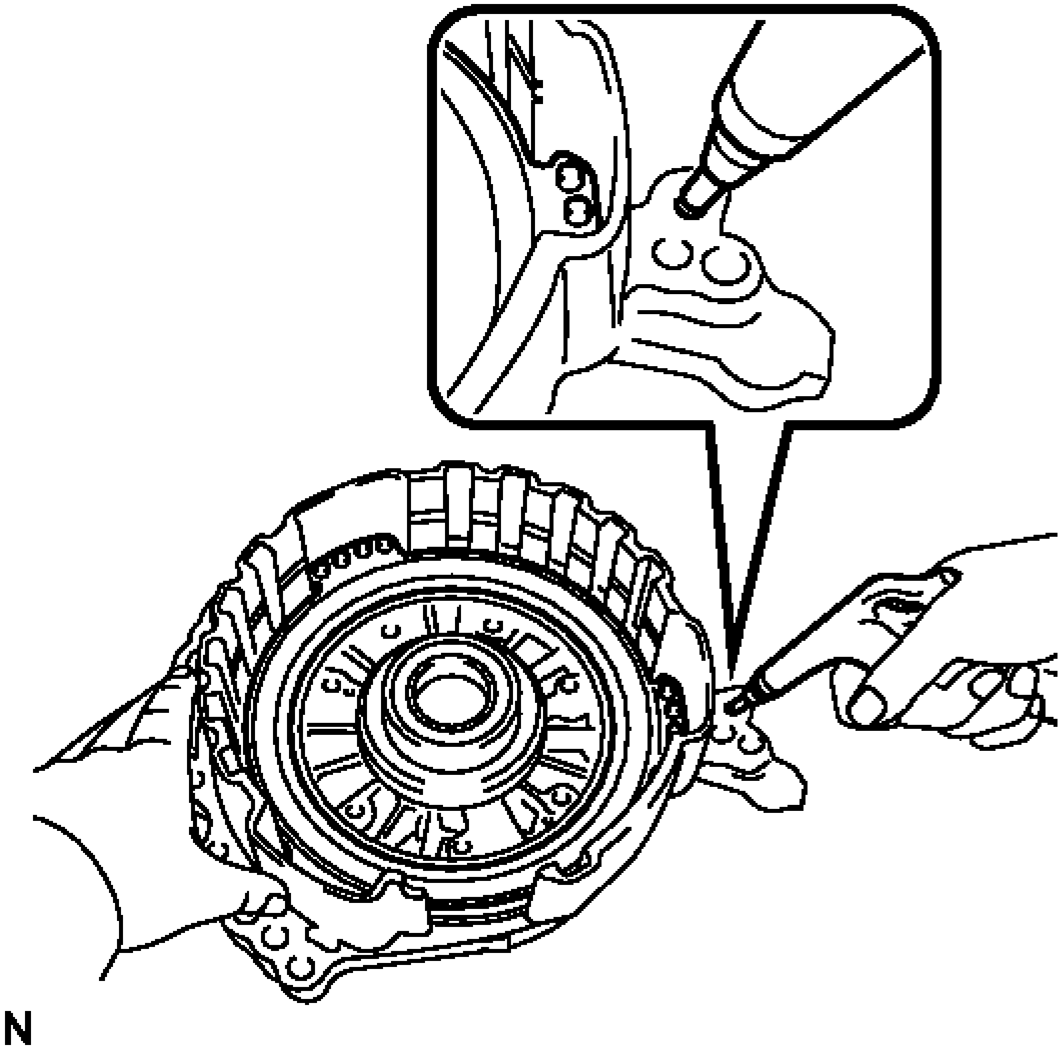

Fig. 228: Applying Compressed Air To Oil Pump Assembly
Courtesy of TOYOTA MOTOR SALES, U.S.A., INC.

b. Using a screwdriver, remove the 2 O-rings from the No. 1 brake piston.

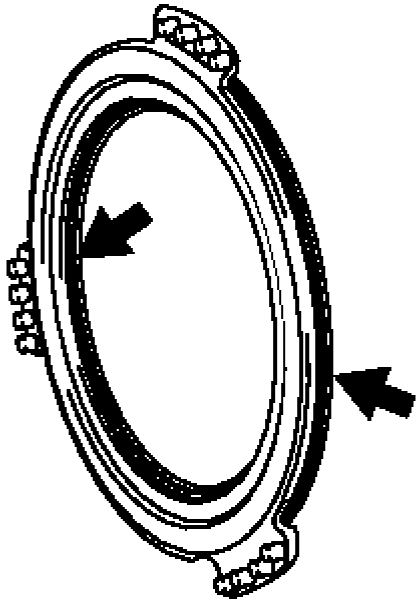

Fig. 229: Locating O-Rings On No. 1 Brake Piston
Courtesy of TOYOTA MOTOR SALES, U.S.A., INC.

44. **REMOVE FRONT DIFFERENTIAL CASE**
    a. Remove the front differential case from the transaxle case sub-assembly.

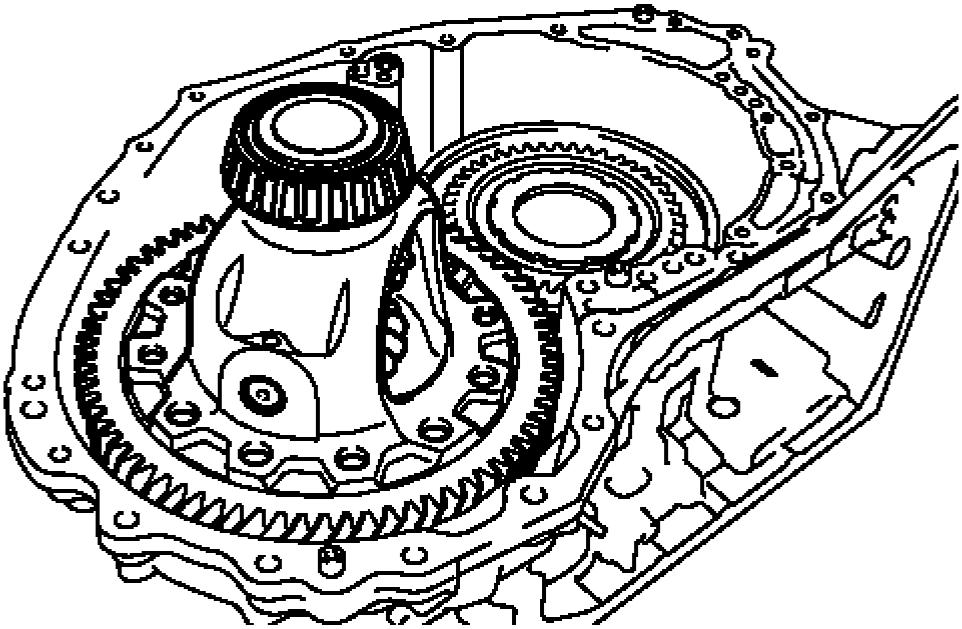

Fig. 230: Identifying Front Differential Case Of Transaxle Case

Courtesy of TOYOTA MOTOR SALES, U.S.A., INC.

45. **REMOVE COUNTER DRIVE GEAR NUT**
   a. Using SST and a hammer, unstake the counter drive gear nut.

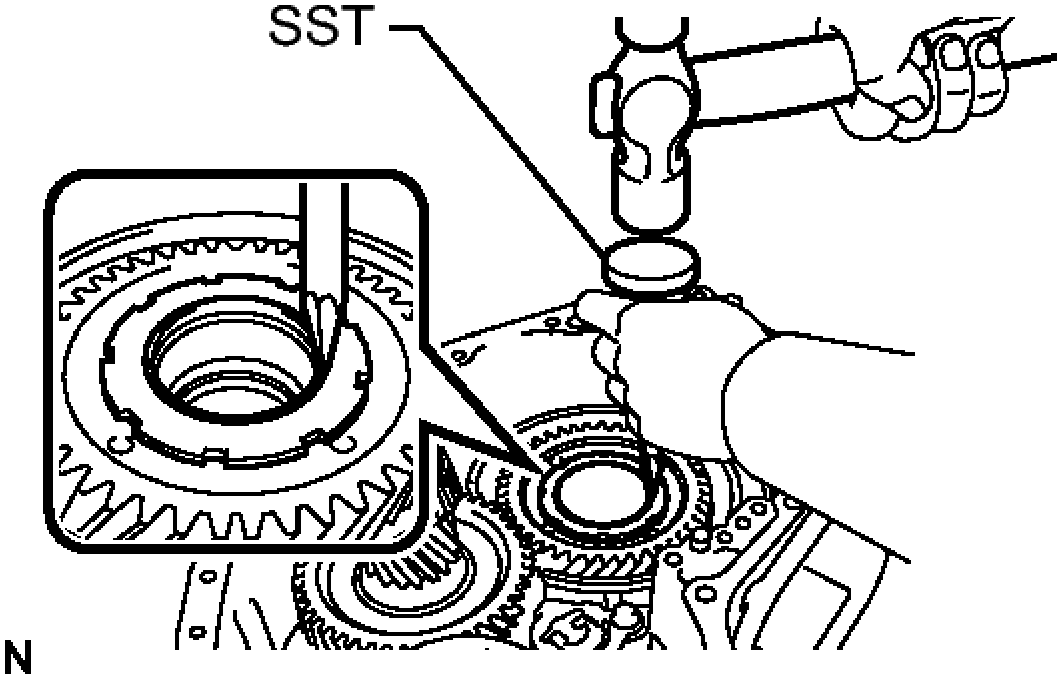

Fig. 231: Removing Counter Drive Gear Nut
Courtesy of TOYOTA MOTOR SALES, U.S.A., INC.

- **SST: 09930-00010**

   b. Turn the manual valve lever shaft counterclockwise to set it to the P position as shown in the illustration.

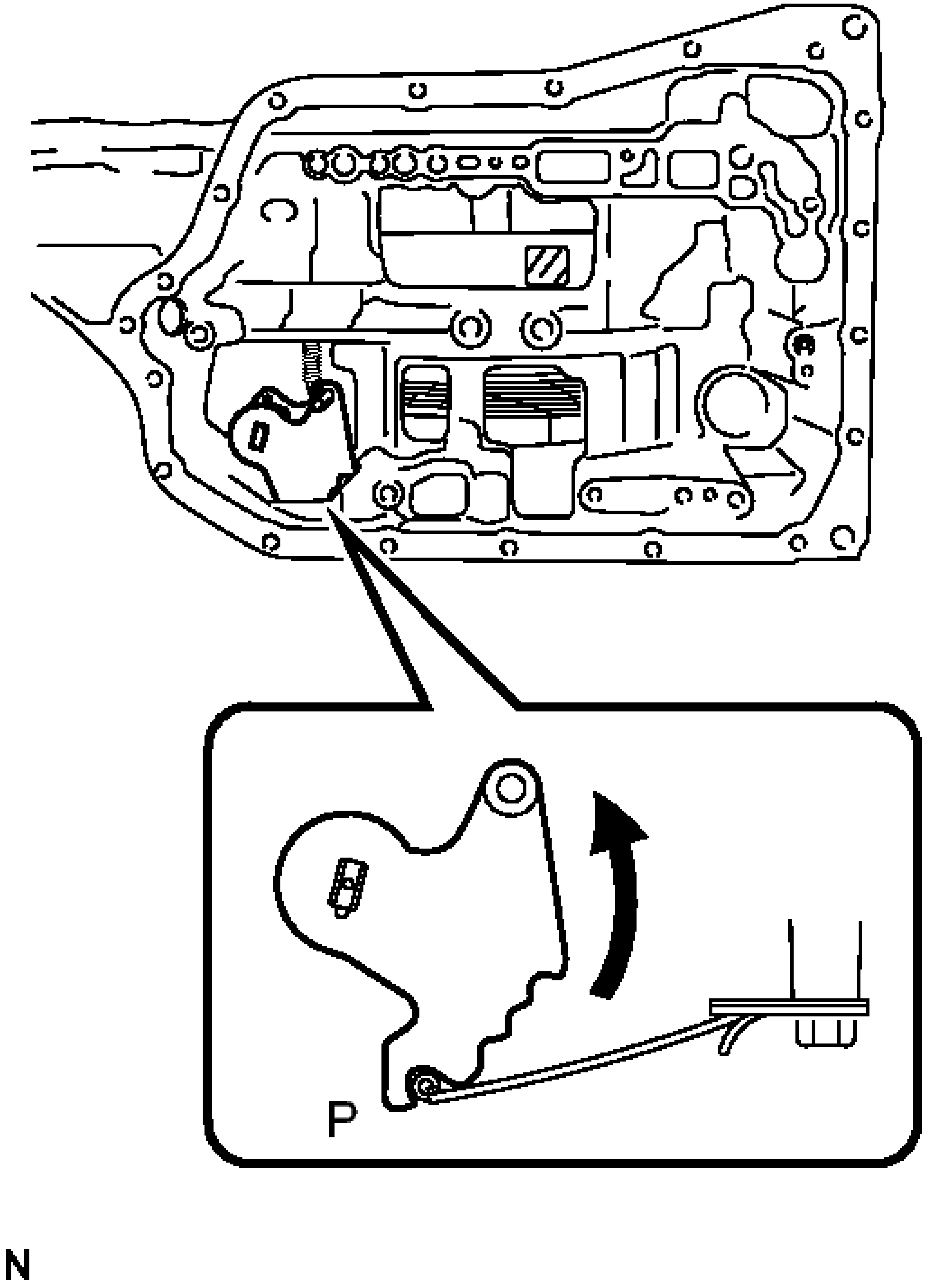

Fig. 232: Turning Manual Valve Lever Shaft
Courtesy of TOYOTA MOTOR SALES, U.S.A., INC.

c. Using SST, remove the counter drive gear nut from the front planetary gear assembly.

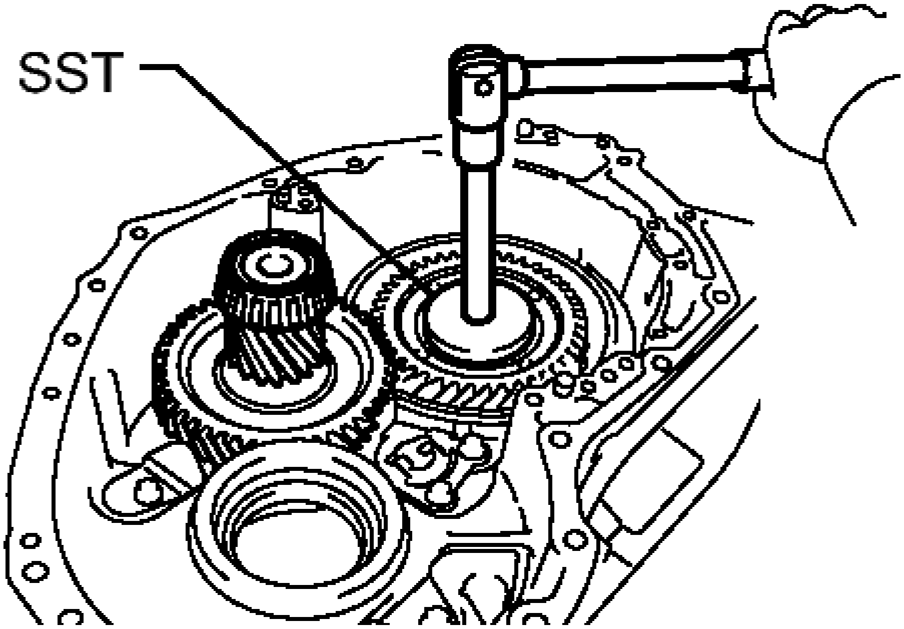

Fig. 233: Installing Counter Drive Gear Nut
Courtesy of TOYOTA MOTOR SALES, U.S.A., INC.

- **SST: 09387-00130**

d. Turn the manual valve lever shaft 2 notches clockwise to set it to the N position as shown in the illustration.

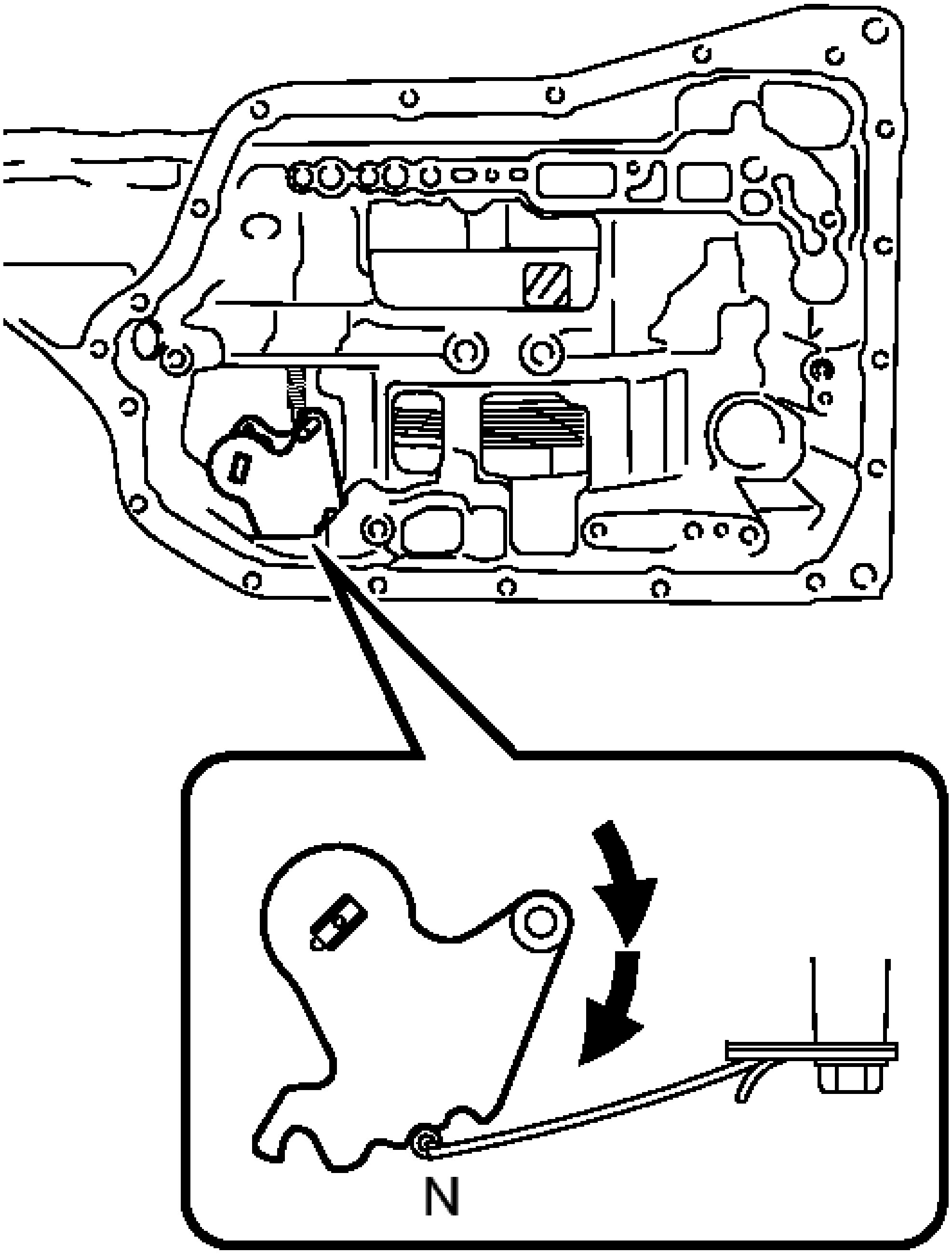

N

Fig. 234: Turning Manual Valve Lever Shaft
Courtesy of TOYOTA MOTOR SALES, U.S.A., INC.

46. **REMOVE COUNTER DRIVEN GEAR**
    a. Remove the counter driven gear from the transaxle case sub-assembly.

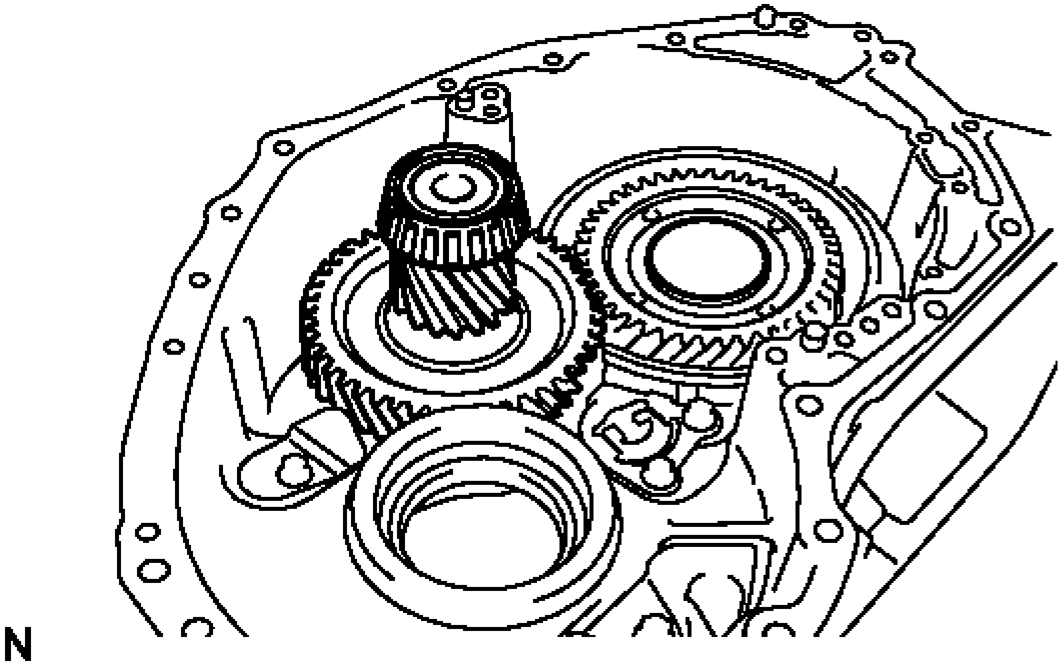

Fig. 235: Identifying Counter Driven Gear
Courtesy of TOYOTA MOTOR SALES, U.S.A., INC.

47. **REMOVE DIFFERENTIAL DRIVE PINION TAPERED ROLLER BEARING RH (INNER RACE)**
    a. Using SST, remove the differential drive pinion tapered roller bearing RH (inner race) from the counter driven gear.

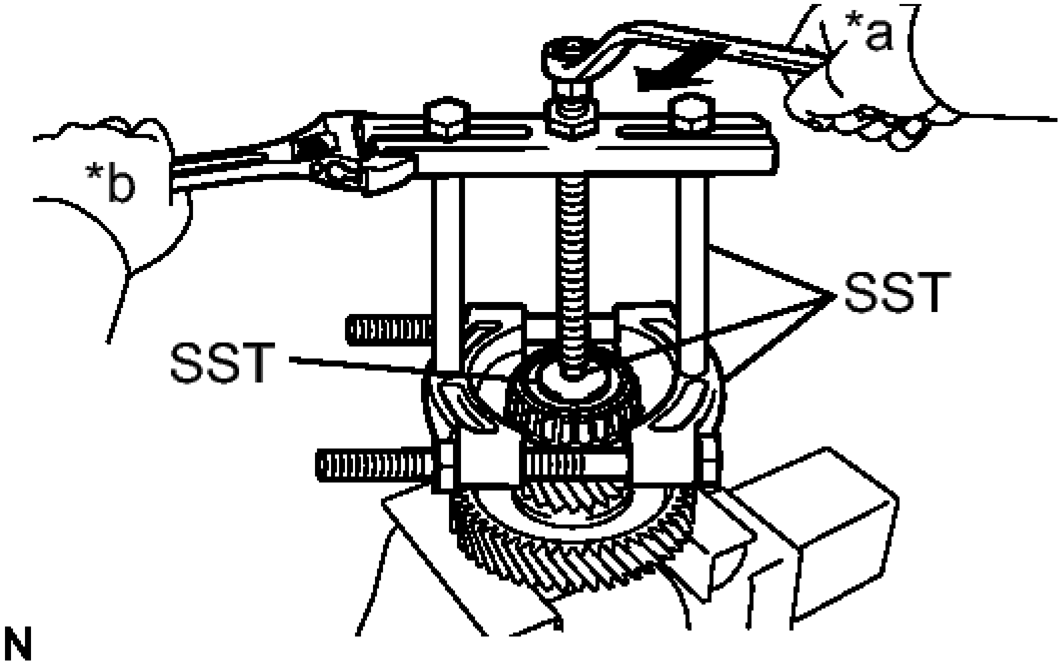

Fig. 236: Removing Differential Drive Pinion Tapered Roller Bearing RH (Inner Race) Using SST
Courtesy of TOYOTA MOTOR SALES, U.S.A., INC.

TEXT IN ILLUSTRATION

*a	Turn
*b	Hold

- **SST: 09950-00020**
- **SST: 09950-00030**
- **SST: 09950-40011**
  09957-04010
- **SST: 09950-60010**
  09951-00320

48. **REMOVE DIFFERENTIAL DRIVE PINION TAPERED ROLLER BEARING LH (INNER RACE)**

    HINT:

    If removing the differential drive pinion tapered roller bearing LH (inner race), replace the counter driven gear with a new one.

49. **REMOVE PAWL SHAFT CLAMP**
    a. Remove the bolt and pawl shaft clamp from the transaxle case sub-assembly.

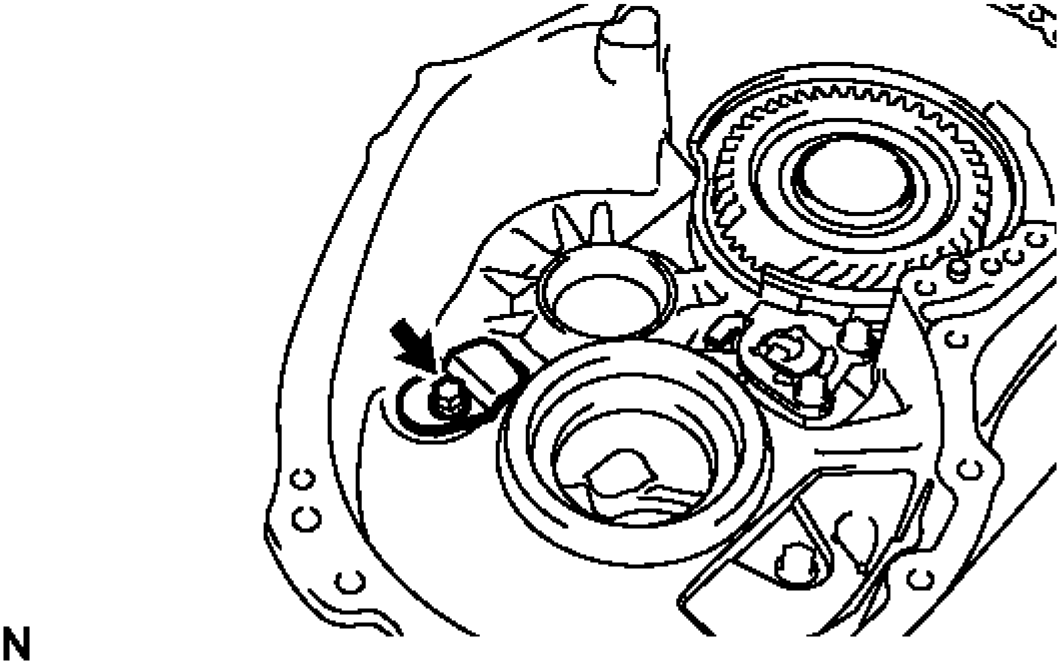

Fig. 237: Locating Pawl Shaft Clamp Bolt
Courtesy of TOYOTA MOTOR SALES, U.S.A., INC.

50. **REMOVE NO. 1 TRANSMISSION CASE PLATE**
    a. Remove the bolt and No. 1 transmission case plate from the transaxle case sub-assembly.

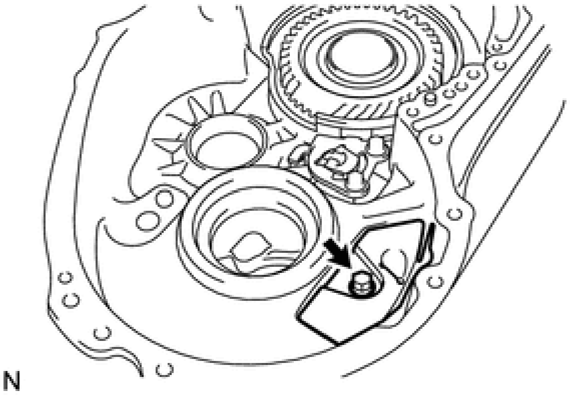

Fig. 238: Locating No. 1 Transmission Case Plate Bolt
Courtesy of TOYOTA MOTOR SALES, U.S.A., INC.

51. **REMOVE PAWL STOPPER PLATE**
    a. Remove the 2 bolts and pawl stopper plate from the transaxle case sub-assembly.

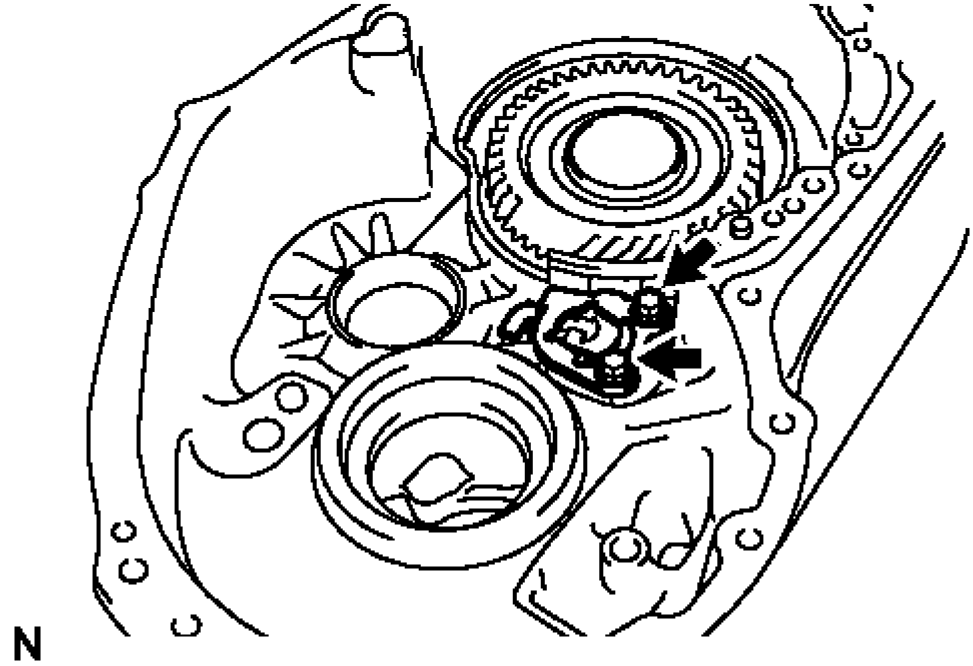

Fig. 239: Locating Pawl Stopper Plate And Bolts
Courtesy of TOYOTA MOTOR SALES, U.S.A., INC.

52. **REMOVE PARKING LOCK SLEEVE**
    a. Remove the parking lock sleeve from the transaxle case sub-assembly.

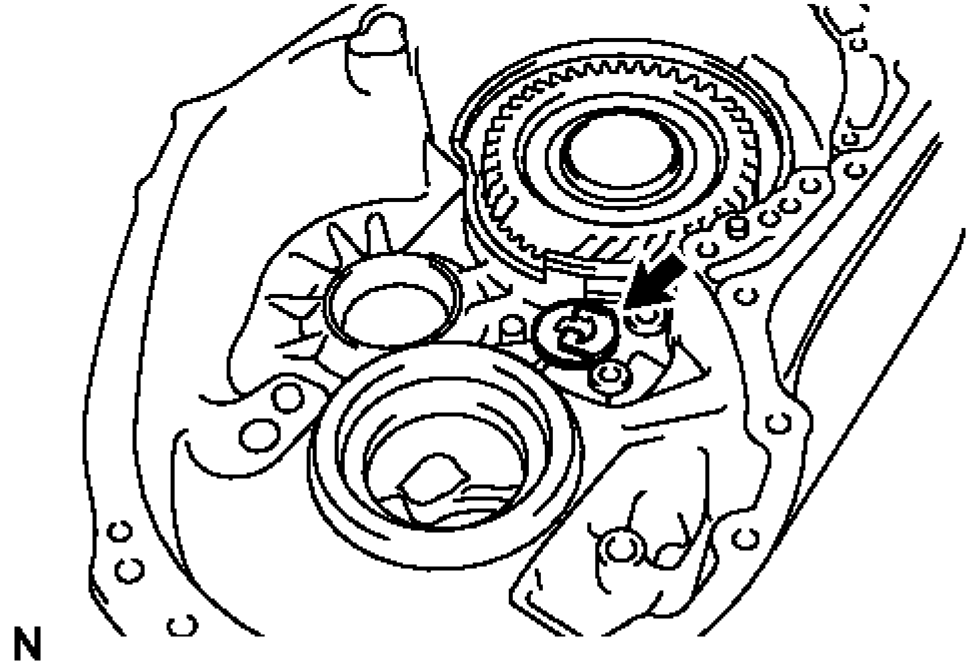

Fig. 240: Locating Parking Lock Sleeve

Courtesy of TOYOTA MOTOR SALES, U.S.A., INC.

53. **REMOVE PARKING LOCK PAWL**
    a. Remove the spring, parking lock pawl pin, parking lock pawl shaft, and parking lock pawl from the transaxle case sub-assembly.

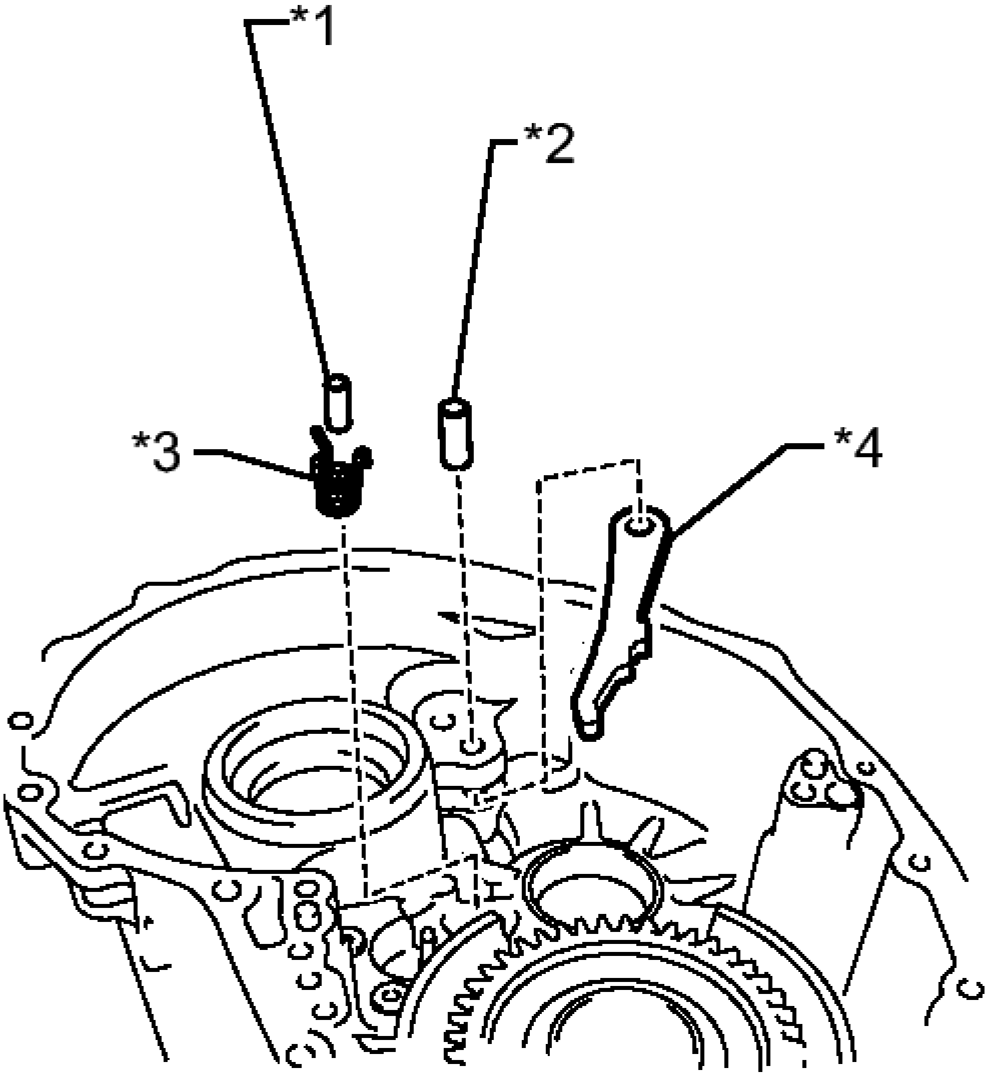

Fig. 241: Identifying Parking Lock Pawl Pin, Shaft And Spring
Courtesy of TOYOTA MOTOR SALES, U.S.A., INC.

TEXT IN ILLUSTRATION

*1	Parking Lock Pawl Pin
	Parking Lock

*2	Pawl Shaft
*3	Spring
*4	Parking Lock Pawl

54. **REMOVE DIFFERENTIAL DRIVE PINION TAPERED ROLLER BEARING LH (OUTER RACE)**
    a. Using SST, remove the differential drive pinion tapered roller bearing LH (outer race) from the transaxle case sub-assembly.

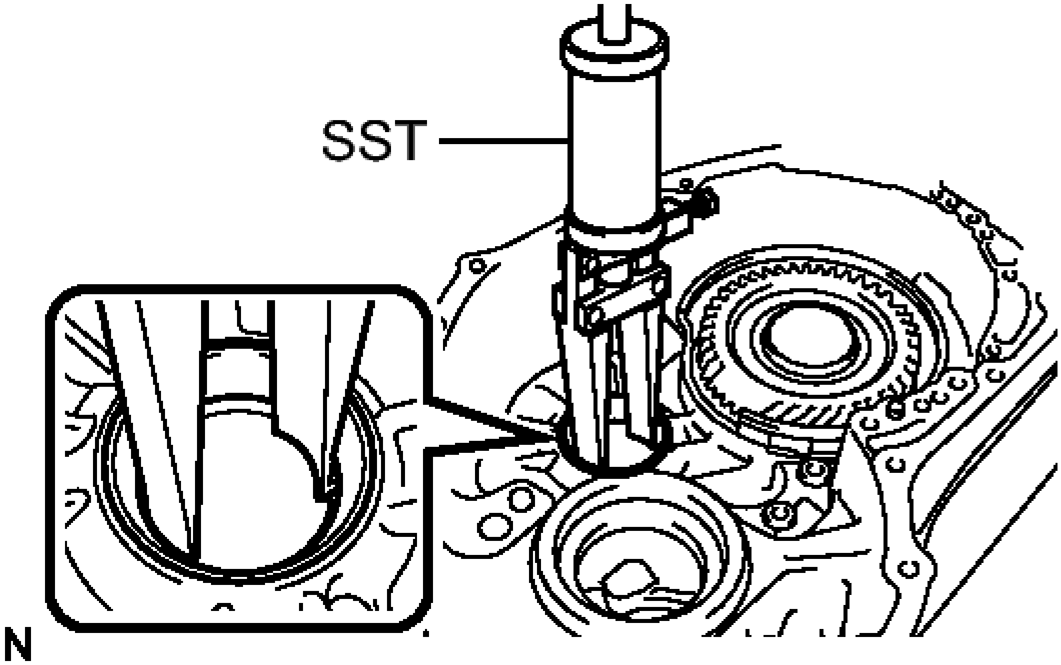

Fig. 242: Removing Counter Driven Gear Rear Tapered Roller Bearing Outer Race
Courtesy of TOYOTA MOTOR SALES, U.S.A., INC.

- **SST: 09308-00010**

55. **REMOVE ONE-WAY CLUTCH ASSEMBLY**
    a. Using a screwdriver, remove the snap ring from the transaxle case sub-assembly.

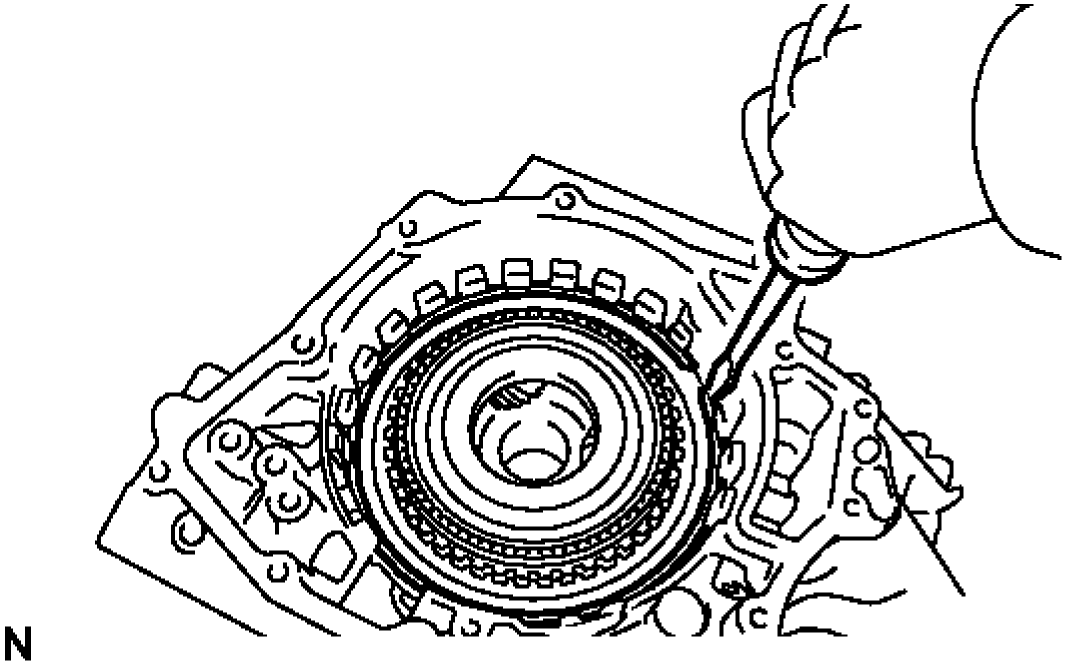

Fig. 243: Removing Snap Ring From Transaxle Case
Courtesy of TOYOTA MOTOR SALES, U.S.A., INC.

b. Remove the one-way clutch assembly with the planetary ring gear from the transaxle case sub-assembly.

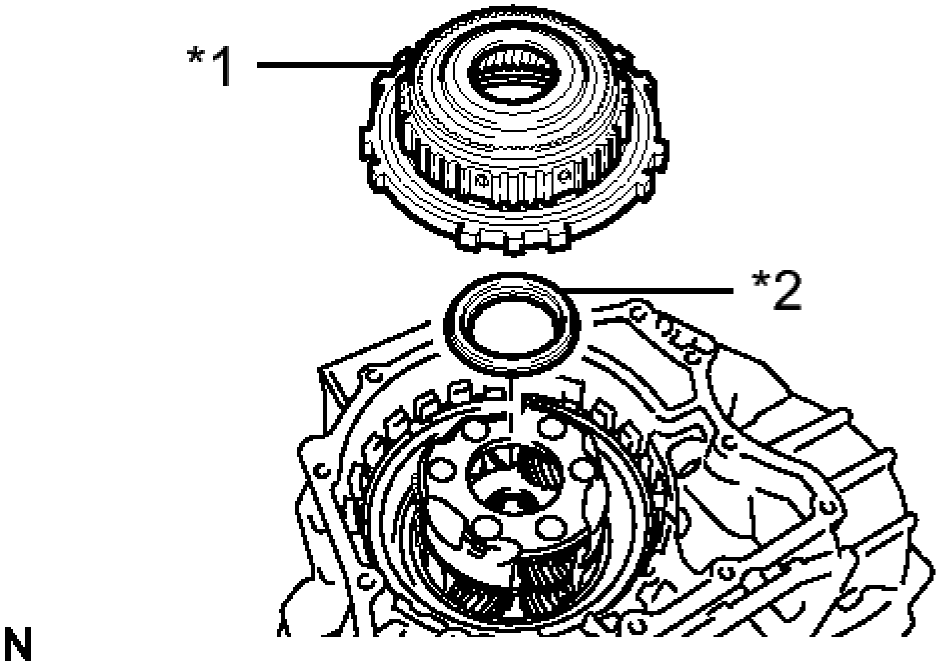

Fig. 244: Identifying One-Way Clutch Assembly And Thrust Needle Roller Bearing

Courtesy of TOYOTA MOTOR SALES, U.S.A., INC.

TEXT IN ILLUSTRATION

*1	One-way Clutch Assembly
*2	Thrust Needle Roller Bearing

c. Remove the thrust needle roller bearing from the front planetary gear assembly.
d. Remove the one-way clutch assembly from the planetary ring gear.

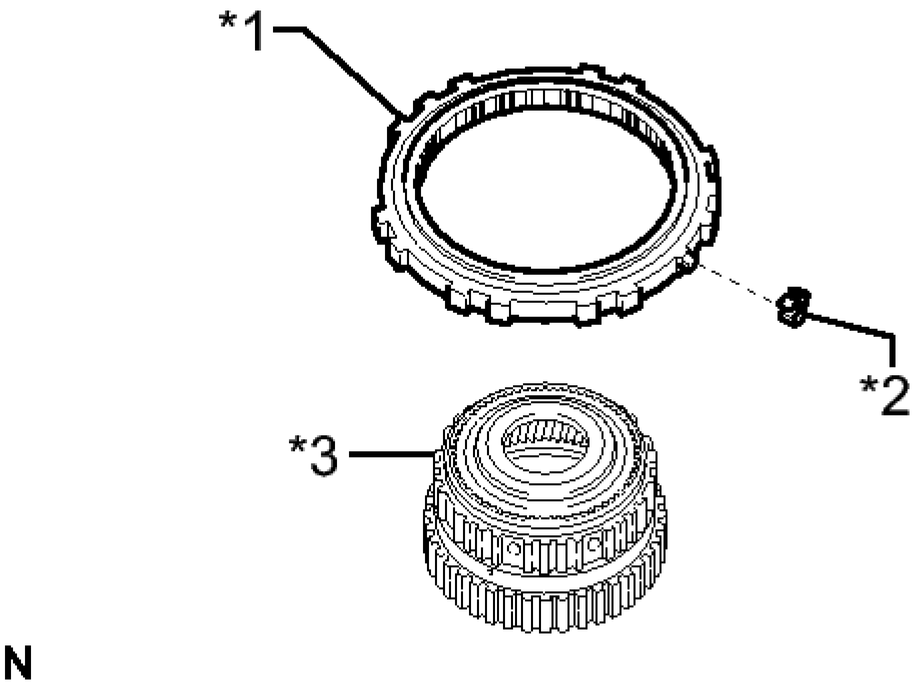

Fig. 245: Identifying One-Way Clutch Assembly, Outer Race Retainer And Planetary Ring Gear
Courtesy of TOYOTA MOTOR SALES, U.S.A., INC.

TEXT IN ILLUSTRATION

*1	One-way Clutch Assembly
*2	Outer Race Retainer
	Planetary

*3	Ring Gear

e. Remove the outer race retainer from the one-way clutch assembly.

56. **INSPECT ONE-WAY CLUTCH ASSEMBLY** See step 7

57. **REMOVE PLANETARY RING GEAR FLANGE**

    a. Using a screwdriver, remove the snap ring from the planetary ring gear.

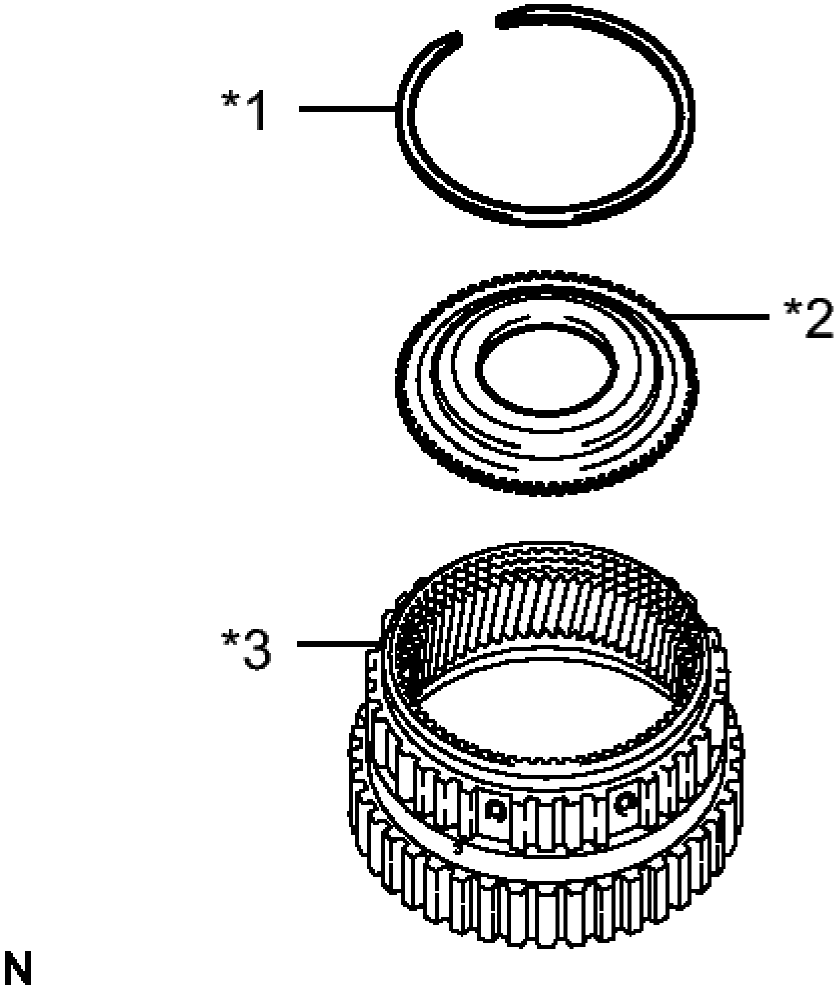

Fig. 246: Identifying Planetary Ring Gear Flange
Courtesy of TOYOTA MOTOR SALES, U.S.A., INC.

TEXT IN ILLUSTRATION

*1	Snap Ring
	Planetary

*2	Ring Gear Flange
*3	Planetary Ring Gear

b. Remove the planetary ring gear flange from the planetary ring gear.

58. **REMOVE NO. 2 BRAKE DISC**

a. Using a screwdriver, remove the snap ring from the transaxle case sub-assembly.

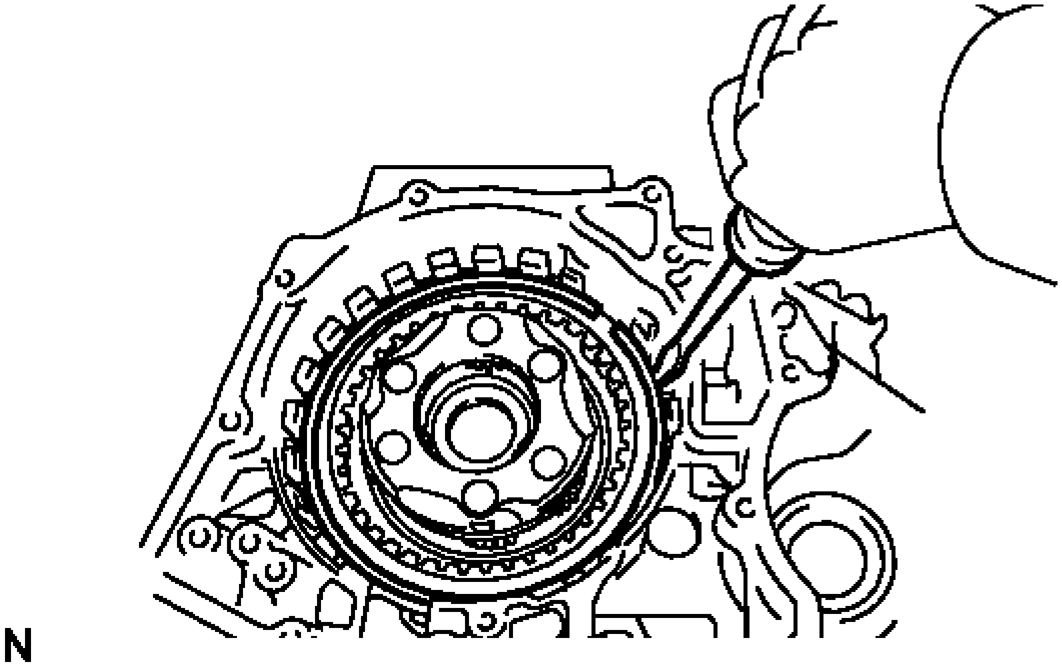

Fig. 247: Removing Snap Ring From Transaxle Case
Courtesy of TOYOTA MOTOR SALES, U.S.A., INC.

b. Remove the No. 2 brake flange, 4 No. 2 brake discs, and 4 No. 2 brake plates from the transaxle case sub-assembly.

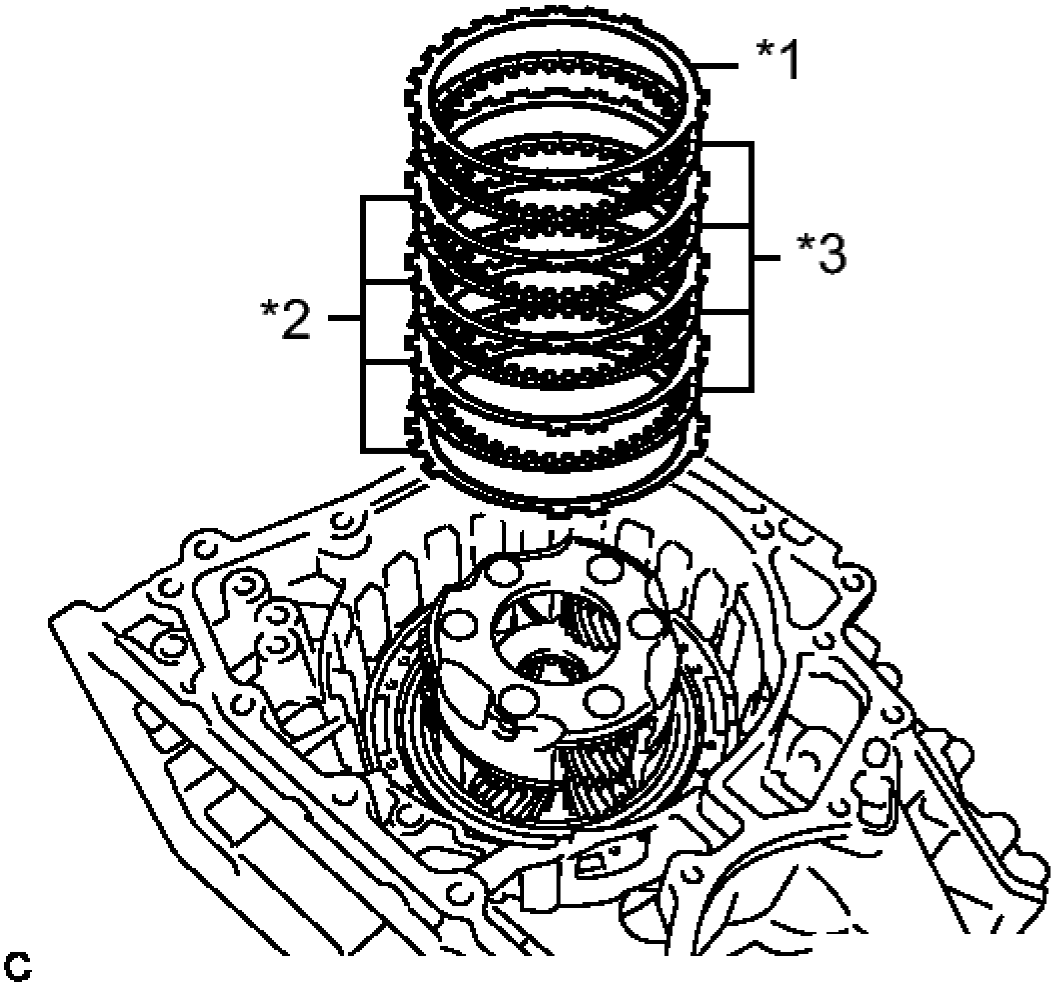

Fig. 248: Identifying No. 2 Brake Flange, No. 2 Brake Plate And No. 2 Brake Disc
Courtesy of TOYOTA MOTOR SALES, U.S.A., INC.

TEXT IN ILLUSTRATION

*1	No. 2 Brake Flange
*2	No. 2 Brake Plate
*3	No. 2 Brake Disc

59. **INSPECT NO. 2 BRAKE DISC** See step 9

60. **REMOVE 1ST AND REVERSE BRAKE RETURN SPRING SUB-ASSEMBLY**

a. Using a screwdriver, remove the snap ring from the transaxle case sub-assembly.

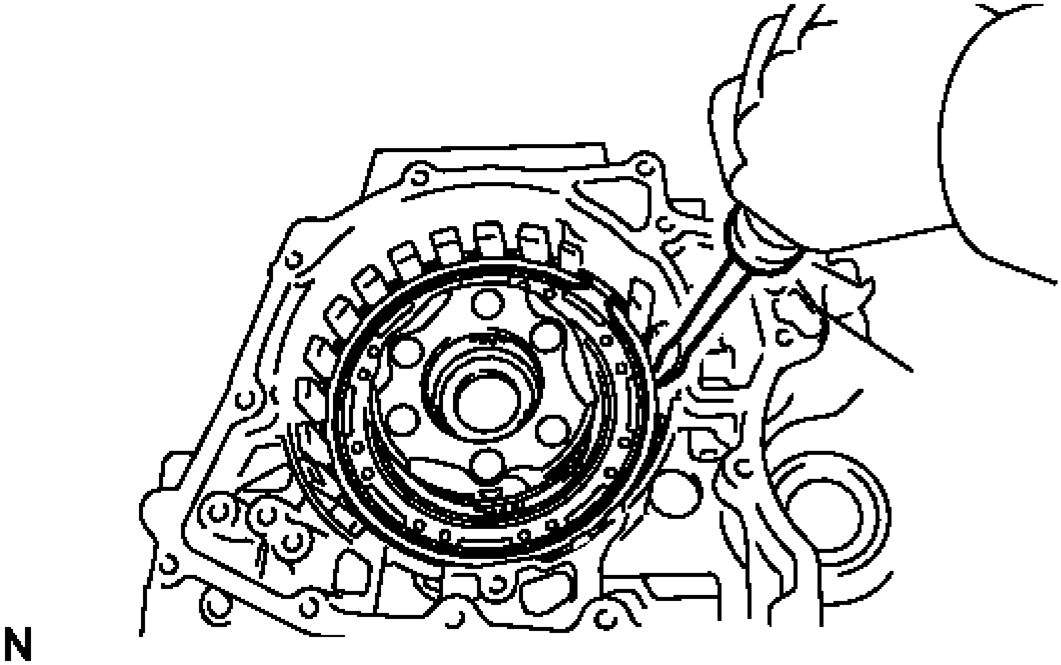

Fig. 249: Removing Snap Ring From Transaxle Case
Courtesy of TOYOTA MOTOR SALES, U.S.A., INC.

b. Remove the 1st and reverse brake return spring sub-assembly from the transaxle case sub-assembly.

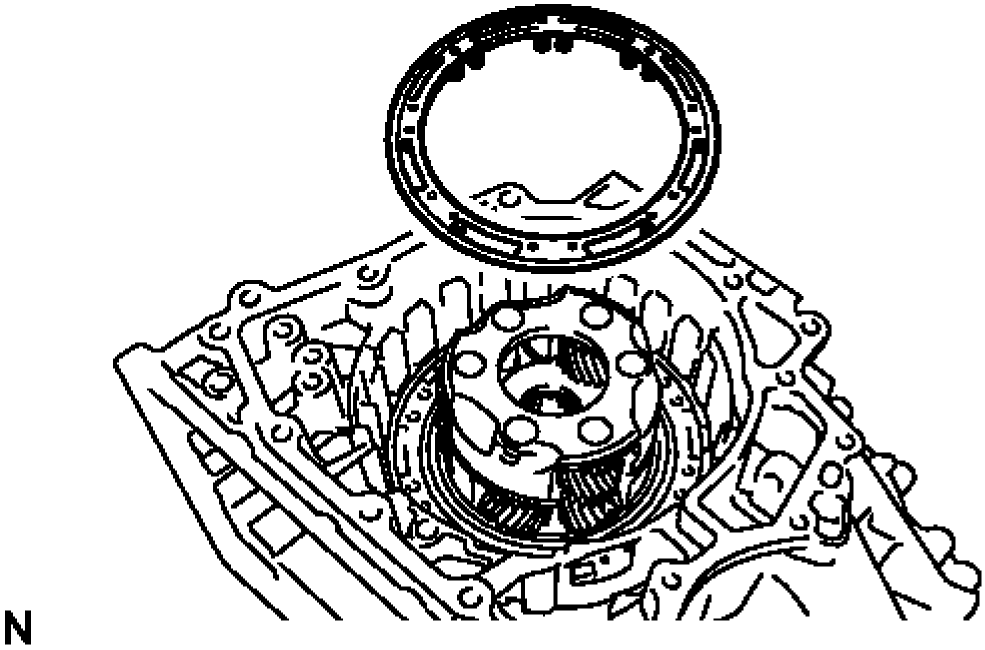

Fig. 250: Identifying 1st And Reverse Brake Return Spring
Courtesy of TOYOTA MOTOR SALES, U.S.A., INC.

61. **INSPECT 1ST AND REVERSE BRAKE RETURN SPRING SUB-ASSEMBLY** See step 12
62. **REMOVE NO. 2 BRAKE PISTON**
    a. Apply compressed air (392 kPa, 4.0 kgf/cm^2 , 57 psi) to the ATF hole to remove the No. 2 brake piston assembly from the transaxle case sub-assembly.

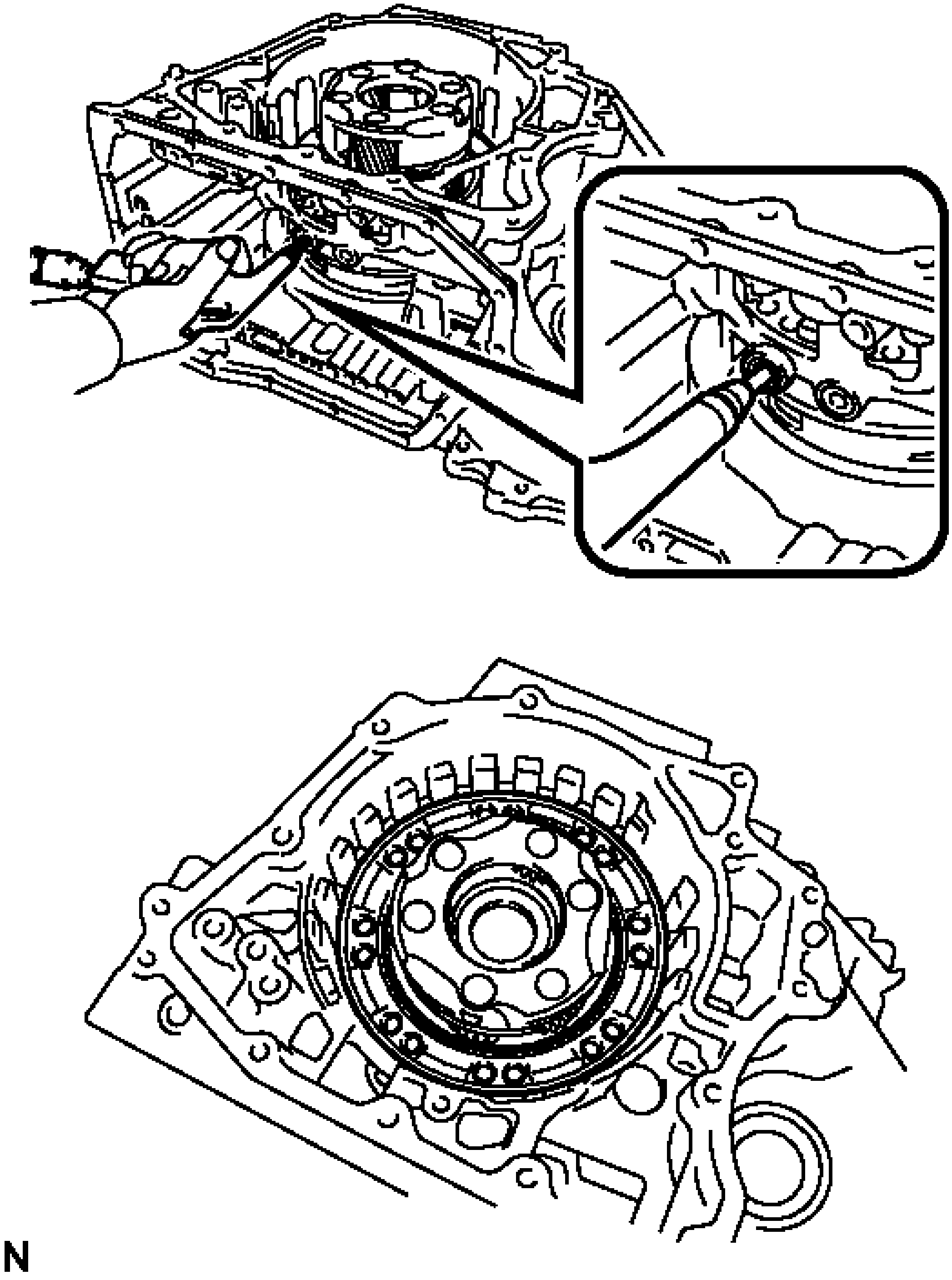

Fig. 251: Applying Compressed Air To ATF Hole
Courtesy of TOYOTA MOTOR SALES, U.S.A., INC.

b. Using a screwdriver, remove the 2 O-rings from the No. 2 brake piston.

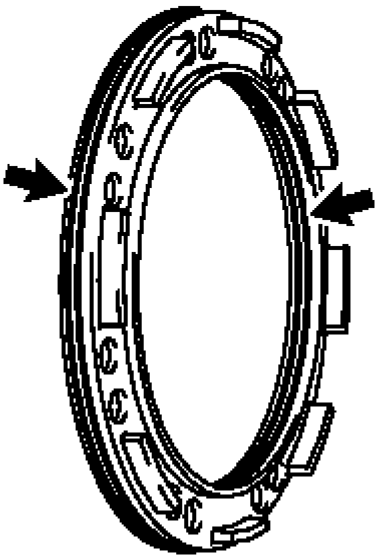

Fig. 252: Locating O-rings
Courtesy of TOYOTA MOTOR SALES, U.S.A., INC.

63. **REMOVE FRONT PLANETARY GEAR ASSEMBLY**
    a. Using SST and a press, remove the planetary gear assembly from the transaxle case sub-assembly.

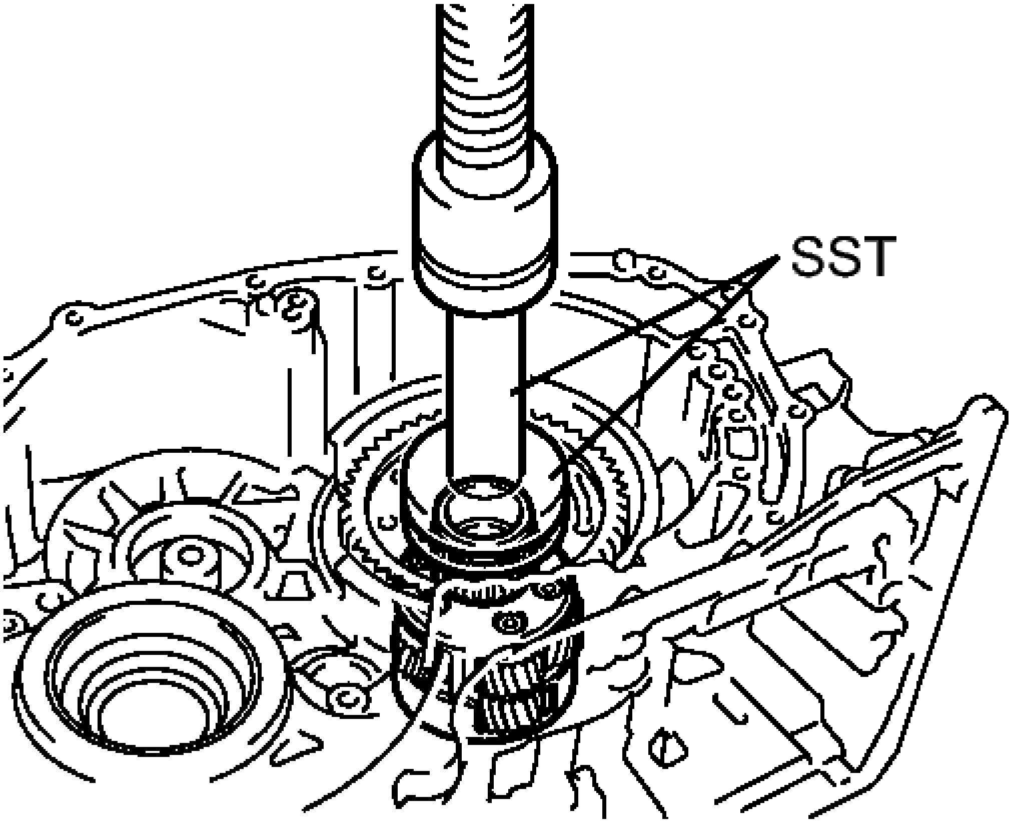

Fig. 253: Removing Planetary Gear Assembly From Transaxle Case
Courtesy of TOYOTA MOTOR SALES, U.S.A., INC.

- **SST: 09950-60010**
  09951-00580
- **SST: 09950-70010**
  09951-07100

64. **REMOVE COUNTER DRIVE GEAR**
    a. Using SST and a press, remove the counter drive gear and bearing inner race (rear side) from the transaxle case sub-assembly.

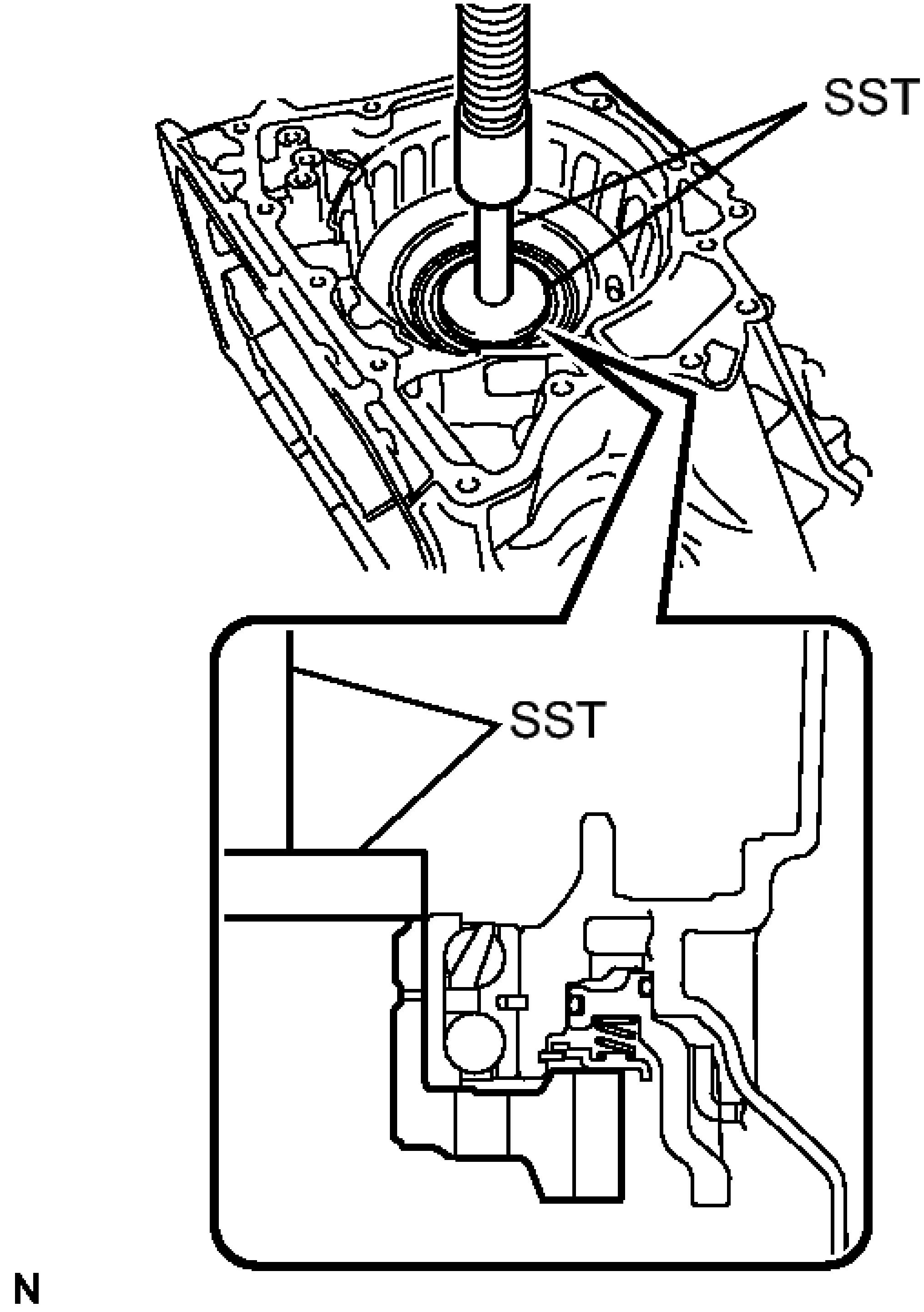

Fig. 254: Removing Counter Drive Gear
Courtesy of TOYOTA MOTOR SALES, U.S.A., INC.

- **SST: 09950-60020**
  09951-00710

- **SST: 09950-70010**
  09951-07100

b. As shown in the illustration, tighten the 2 bolts evenly and leave a clearance of approximately 5.0 mm (0.197 in.) between the counter drive gear and inner race.

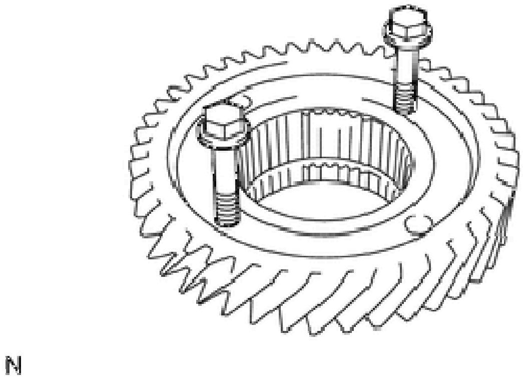

Fig. 255: Identifying Counter Drive Gear
Courtesy of TOYOTA MOTOR SALES, U.S.A., INC.

c. Using SST, remove the bearing inner race (front side) from the counter drive gear.

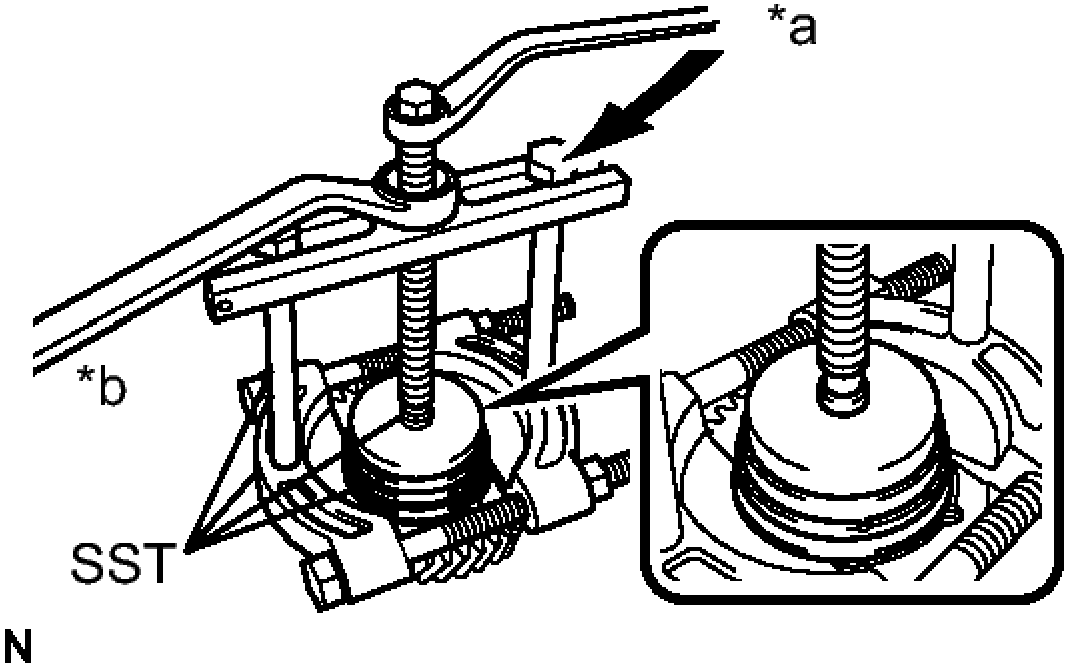

Fig. 256: Removing Bearing Inner Race (Front Side) At Counter Drive Gear Using SST
Courtesy of TOYOTA MOTOR SALES, U.S.A., INC.

TEXT IN ILLUSTRATION

*a	Turn
*b	Hold

- **SST: 09950-00020**
- **SST: 09950-00030**
- **SST: 09950-40011**
  09957-04010
- **SST: 09950-60020**
  09951-00710

65. **REMOVE NO. 3 BRAKE PISTON**

  a. Place SST on the brake piston return spring and compress the brake piston return spring with a press.

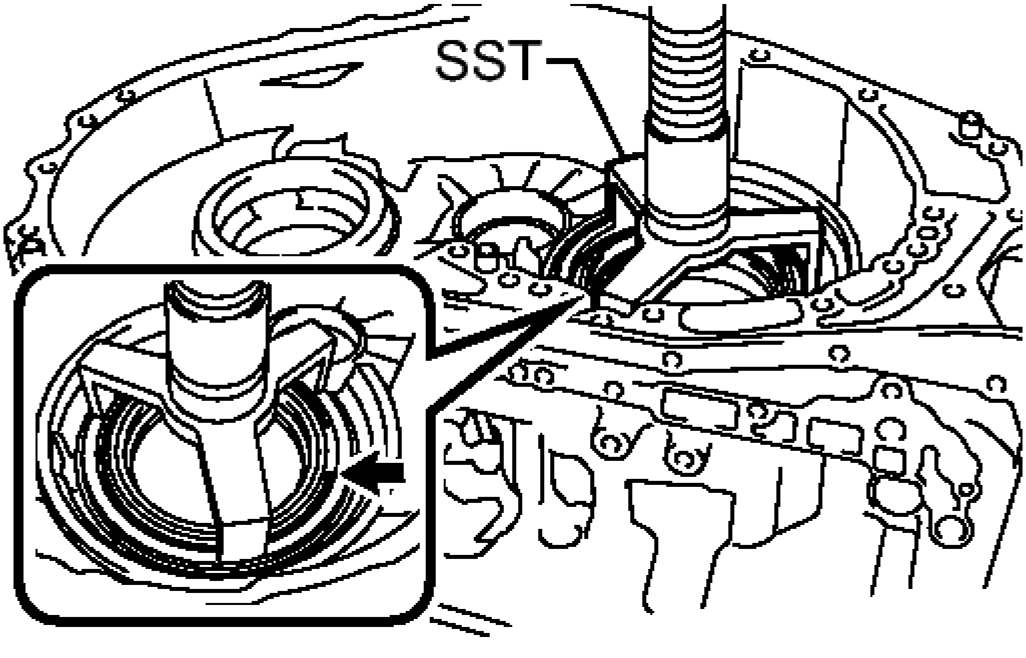

Fig. 257: Compressing Brake Piston Return Spring
Courtesy of TOYOTA MOTOR SALES, U.S.A., INC.

- **SST: 09387-00070**

  b. Using a screwdriver, remove the snap ring from the transaxle case sub-assembly.

  c. Remove the brake piston return spring from the transaxle case sub-assembly.

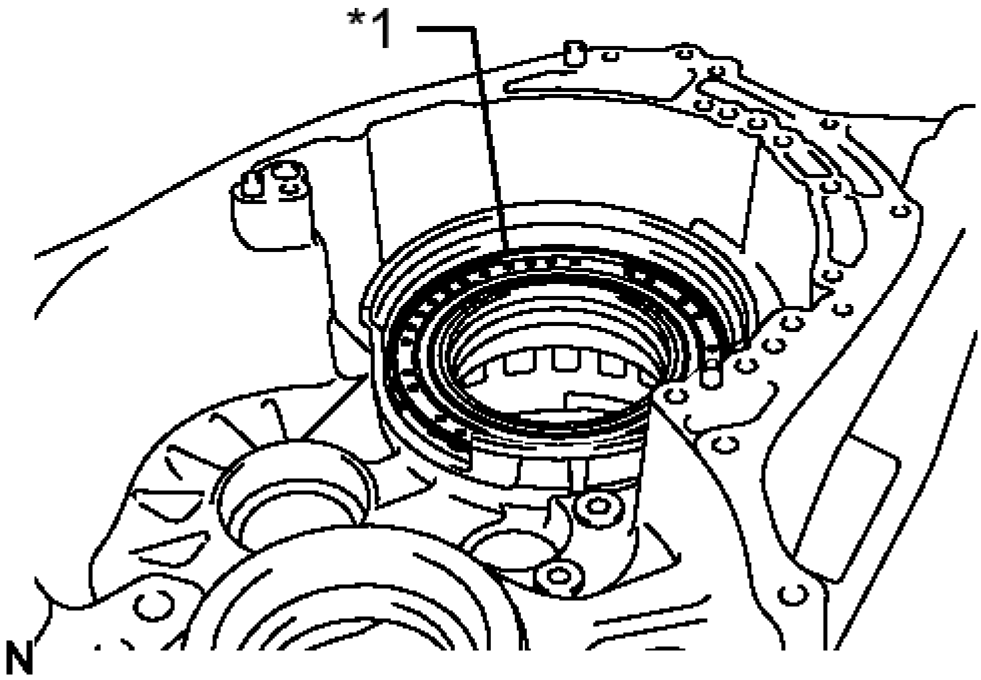

Fig. 258: Identifying Brake Piston Return Spring
Courtesy of TOYOTA MOTOR SALES, U.S.A., INC.

TEXT IN ILLUSTRATION

*1	Brake Piston Return Spring

d. Remove the No. 3 brake piston from the transaxle case sub-assembly.

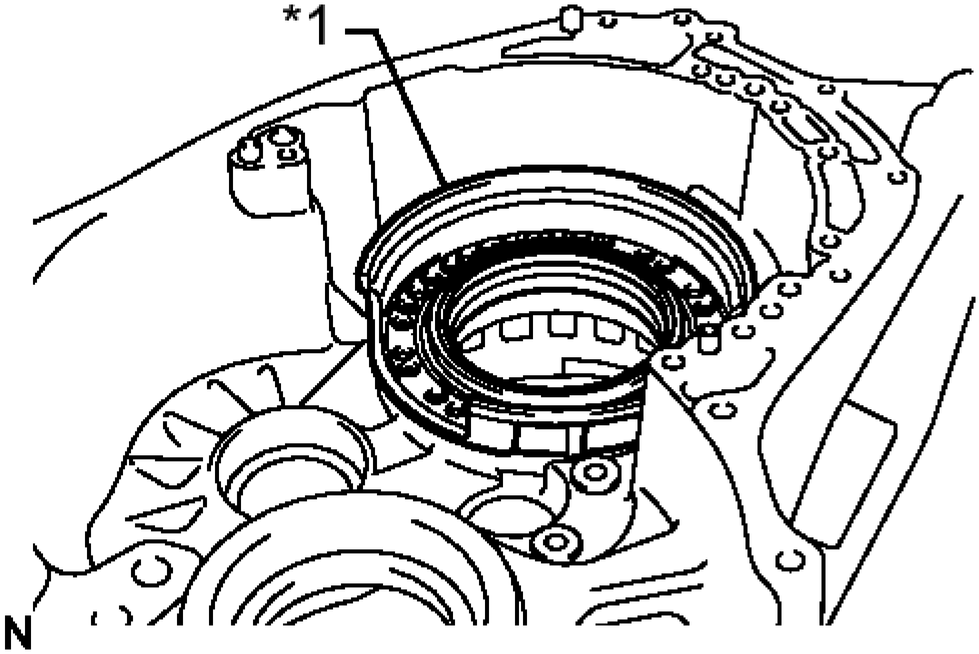

Fig. 259: Identifying No. 3 Brake Piston
Courtesy of TOYOTA MOTOR SALES, U.S.A., INC.

TEXT IN ILLUSTRATION

*1	No. 3 Brake Piston

e. Using a screwdriver, remove the 2 O-rings from the No. 3 brake piston.

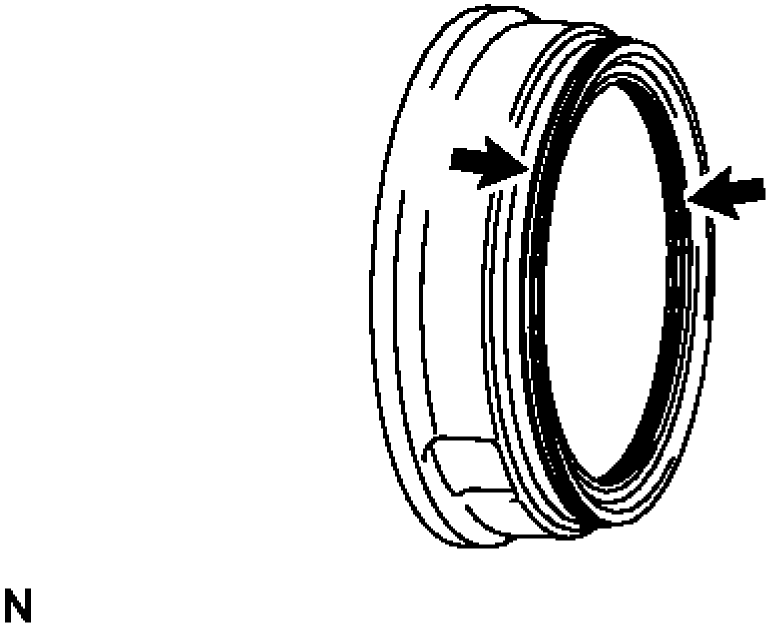

Fig. 260: Locating O-Rings
Courtesy of TOYOTA MOTOR SALES, U.S.A., INC.

66. **INSPECT NO. 3 BRAKE PISTON RETURN SPRING SUB-ASSEMBLY** See step 13
67. **REMOVE MANUAL DETENT SPRING SUB-ASSEMBLY**
    a. Remove the bolt, manual detent spring cover, and manual detent spring sub-assembly from the transaxle case sub-assembly.

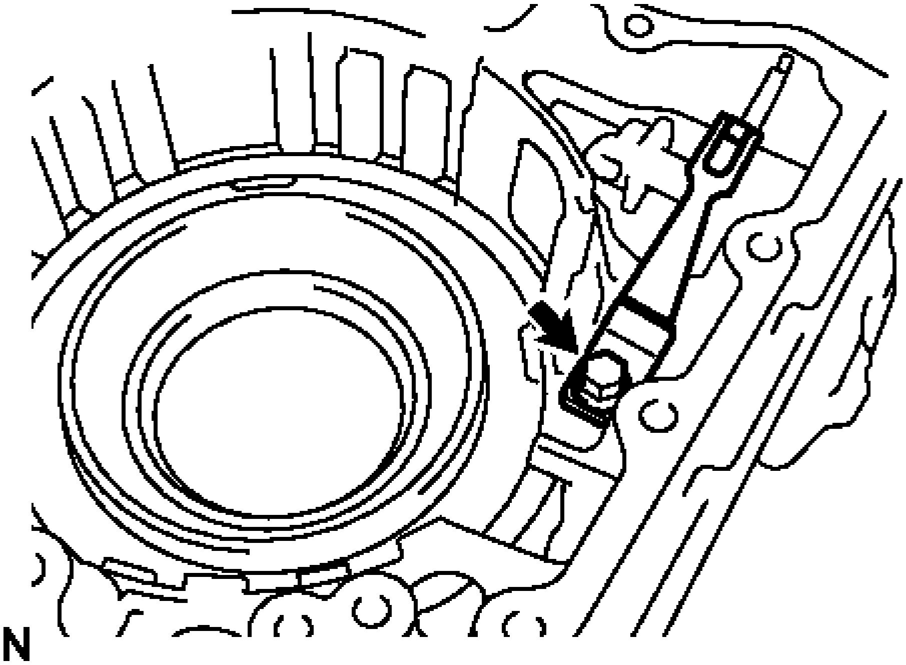

Fig. 261: Locating Manual Detent Spring Sub-Assembly
Courtesy of TOYOTA MOTOR SALES, U.S.A., INC.

68. **REMOVE PARKING LOCK ROD SUB-ASSEMBLY**
    a. Remove the parking lock rod sub-assembly from the manual valve lever shaft.

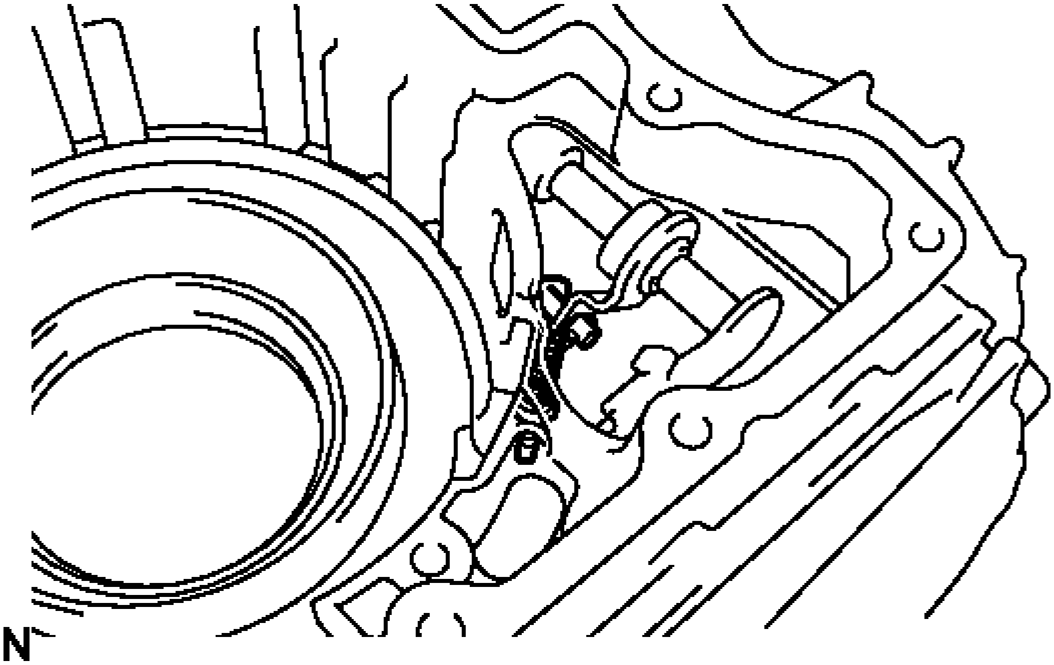

Fig. 262: Identifying Parking Lock Rod Sub-Assembly

Courtesy of TOYOTA MOTOR SALES, U.S.A., INC.

HINT:

Align the slot with the notches on the manual valve lever shaft to remove the parking lock rod sub-assembly.

69. REMOVE MANUAL VALVE LEVER SHAFT SUB-ASSEMBLY

a. Using needle-nose pliers, remove the manual valve lever shaft retainer spring from the transaxle case sub-assembly.

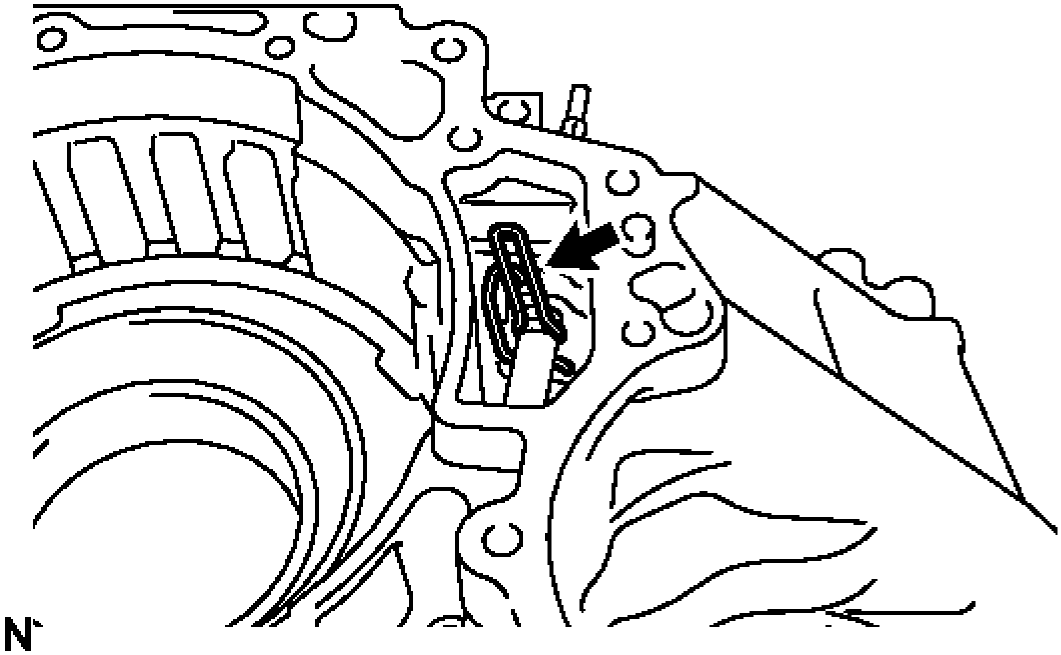

Fig. 263: Locating Manual Valve Lever Shaft Retainer Spring
Courtesy of TOYOTA MOTOR SALES, U.S.A., INC.

b. Remove the manual valve lever shaft sub-assembly from the transaxle case sub-assembly.

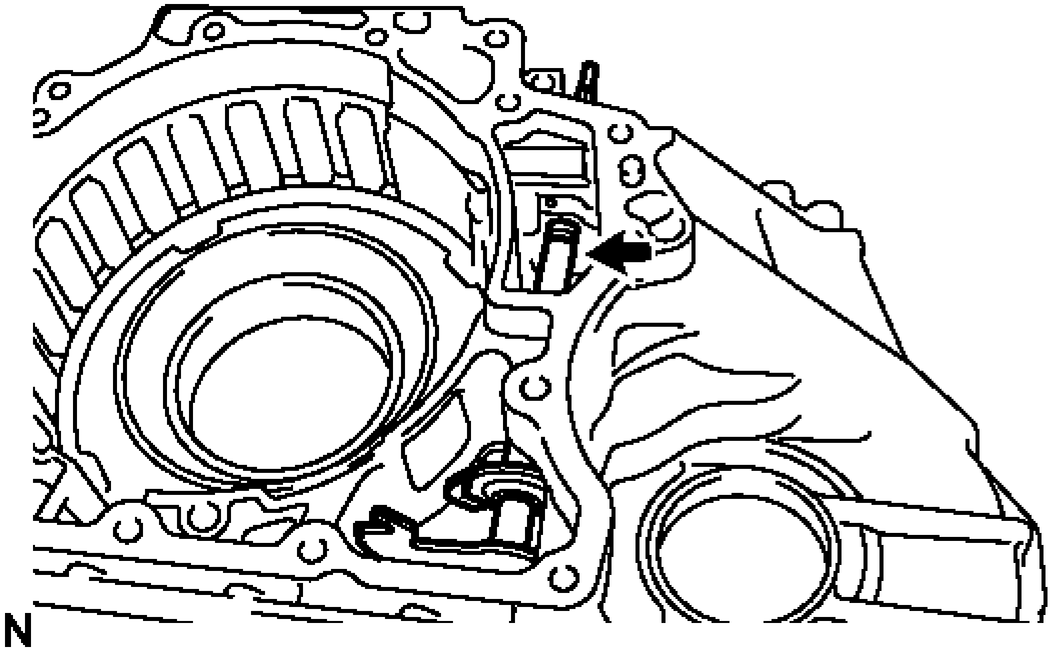

Fig. 264: Locating Manual Valve Lever Shaft Sub-Assembly
Courtesy of TOYOTA MOTOR SALES, U.S.A., INC.

70. **REMOVE MANUAL VALVE LEVER SHAFT OIL SEAL**
    a. Using a screwdriver, remove the manual valve lever shaft oil seal from the transaxle case sub-assembly.

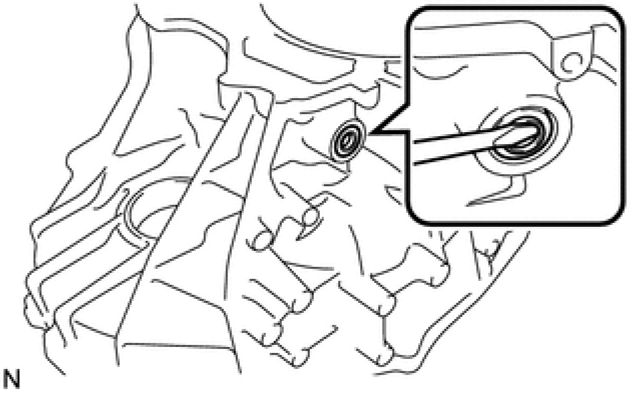

Fig. 265: Removing Manual Valve Lever Shaft Oil Seal
Courtesy of TOYOTA MOTOR SALES, U.S.A., INC.

INSPECTION

INSPECTION

1. **INSPECT TRANSMISSION OIL CLEANER MAGNET**

a. Examine particles in the automatic transaxle oil pan sub-assembly.

    1. Collect any steel chips with the removed magnets. Look carefully at the chips and particles in the automatic transaxle oil pan sub-assembly and on the transmission oil cleaner magnets to see the type of wear which might be found in the automatic transaxle assembly.

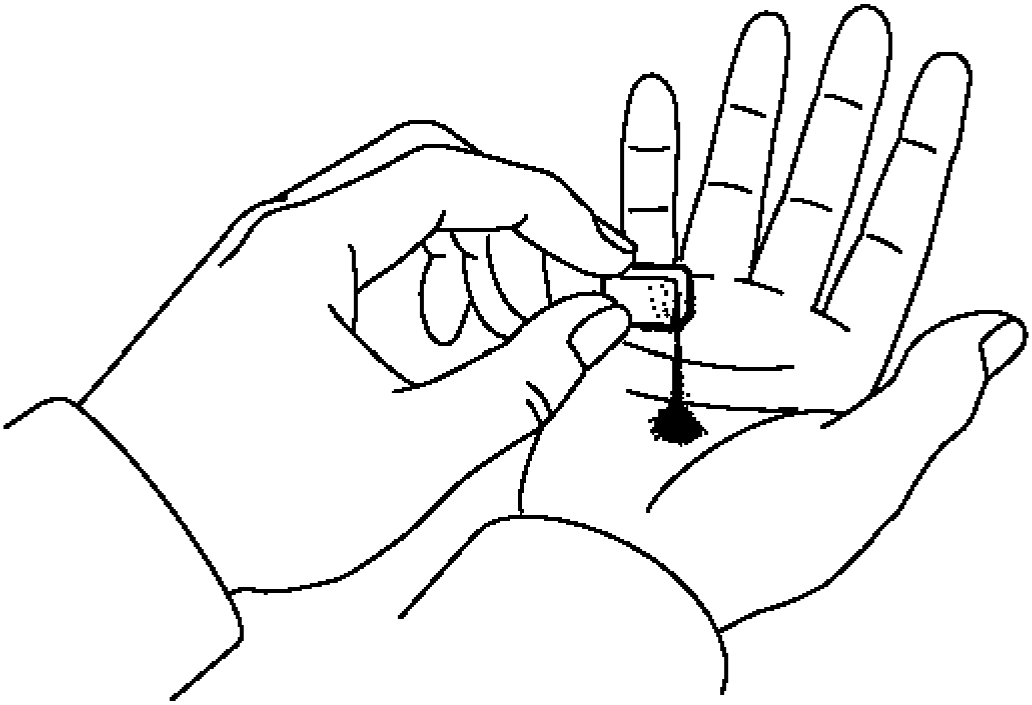

Fig. 266: Inspecting Transmission Oil Cleaner Magnet
Courtesy of TOYOTA MOTOR SALES, U.S.A., INC.

Result

Steel (magnetic)	Brass (non-magnetic)
Bearing, gear and plate wear	Bushing wear

2. **INSPECT INPUT SHAFT END PLAY**

    a. Using a dial indicator, measure the input shaft end play.

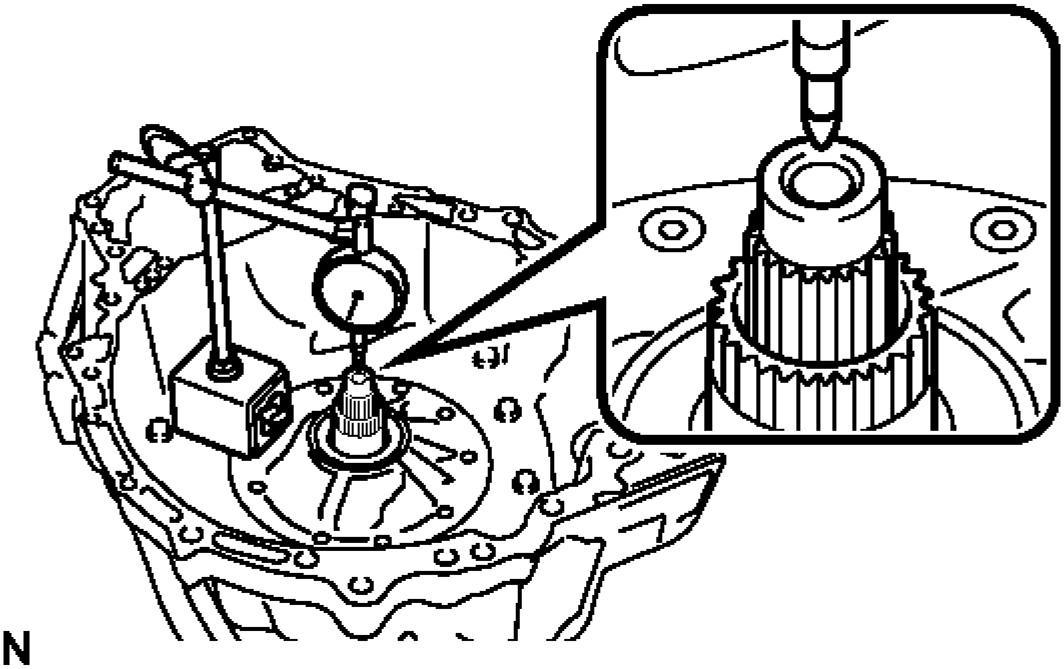

Fig. 267: Measuring Input Shaft End Play
Courtesy of TOYOTA MOTOR SALES, U.S.A., INC.

Standard end play

0.020 to 1.242 mm (0.000788 to 0.0488 in.)

3. **INSPECT INTERMEDIATE SHAFT END PLAY**
   a. Clean the contact surfaces of the transaxle case sub-assembly and rear transaxle cover sub-assembly.

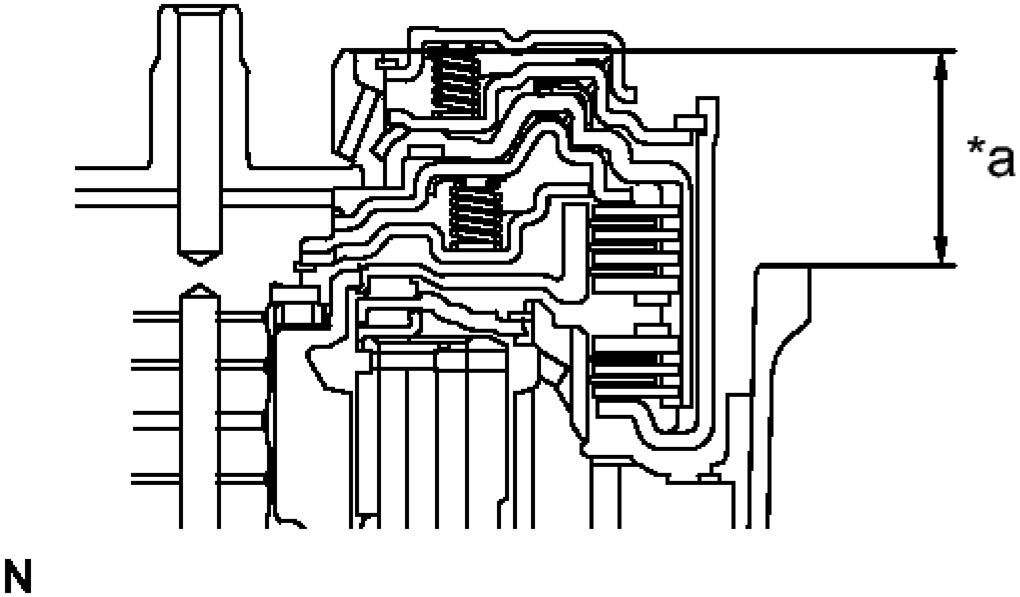

Fig. 268: Identifying Clamp, Lock Plate, Shift Solenoid Valve SL1 And Shift Solenoid Valve SL2
Courtesy of TOYOTA MOTOR SALES, U.S.A., INC.

b. As shown in the illustration, place a straightedge on the multiple direct clutch drum and measure the distance between the transaxle case sub-assembly and the straightedge using a vernier caliper (Dimension A).

TEXT IN ILLUSTRATION

*a	Dimension A

c. Using a vernier caliper and a straightedge, measure the distance shown in the illustration (Dimension B).

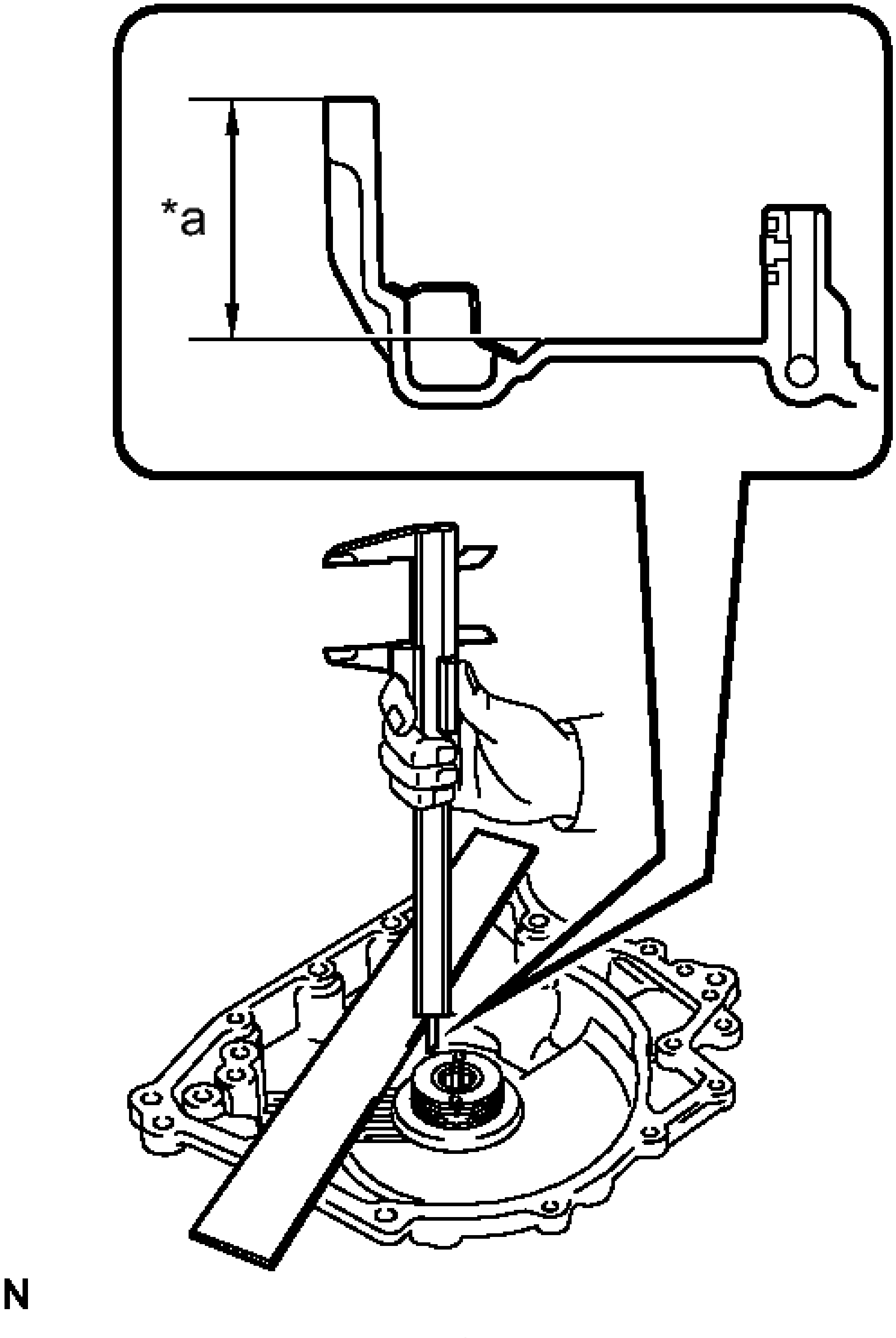

Fig. 269: Measuring Intermediate Shaft End Play Using A Vernier Caliper & Straightedge
Courtesy of TOYOTA MOTOR SALES, U.S.A., INC.

TEXT IN ILLUSTRATION

	Dimension

*a	B

d. Calculate the end play value using the following formula:

End play = Dimension B - Dimension A - Thrust needle roller bearing thickness

Standard end play

0.022 to 1.099 mm (0.000867 to 0.0432 in.)

4. **INSPECT PLANETARY SUN GEAR SUB-ASSEMBLY**
   a. Using a caliper gauge, measure the inside diameter of the bushings of the planetary sun gear.

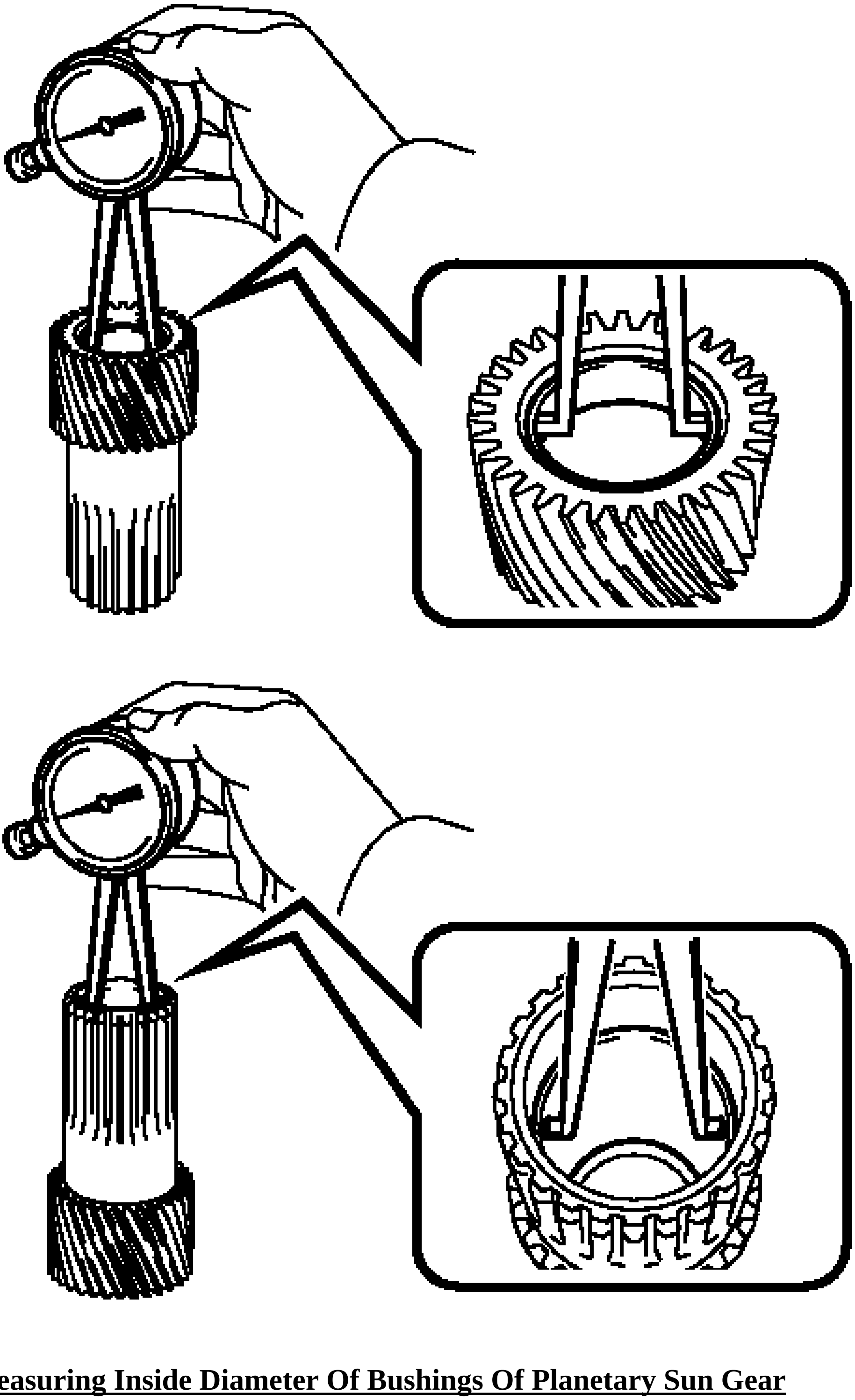

Fig. 270: Measuring Inside Diameter Of Bushings Of Planetary Sun Gear
Courtesy of TOYOTA MOTOR SALES, U.S.A., INC.

Standard inside diameter

25.525 to 25.546 mm (1.00492 to 1.00575 in.)

Maximum inside diameter

25.546 mm (1.00575 in.)

If the inside diameter is greater than the maximum, replace the planetary sun gear.

5. **INSPECT REAR PLANETARY SUN GEAR ASSEMBLY**
   a. Using a caliper gauge, measure the inside diameter of the bushing of the rear planetary sun gear sub-assembly.

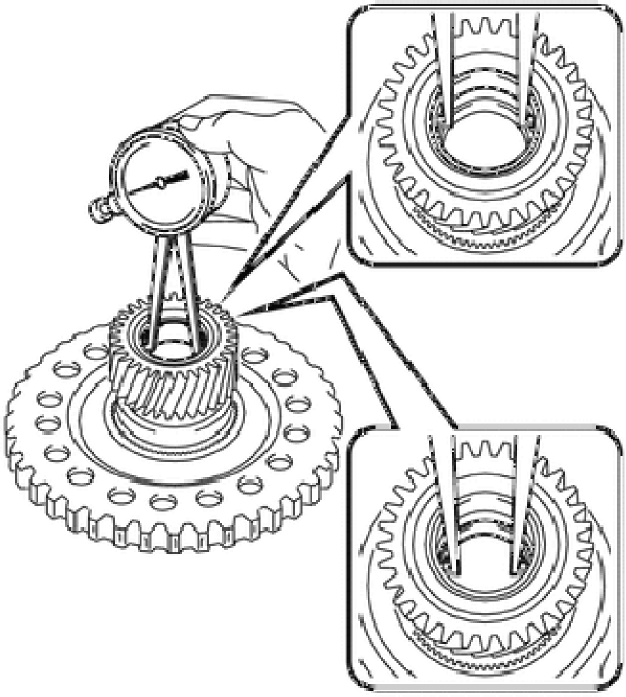

Fig. 271: Measuring Inside Diameter Of Bushing Of Rear Planetary Sun Gear Sub-Assembly
Courtesy of TOYOTA MOTOR SALES, U.S.A., INC.

Standard inside diameter

25.580 to 25.601 mm (1.00708 to 1.00791 in.)

Maximum inside diameter

25.601 mm (1.00791 in.)

If the inside diameter is greater than the maximum, replace the automatic transaxle assembly.

6. **INSPECT UNDERDRIVE PLANETARY GEAR ASSEMBLY**
    a. Using a feeler gauge, measure the clearance between the underdrive planetary gear and the pinion gear at 4 points.

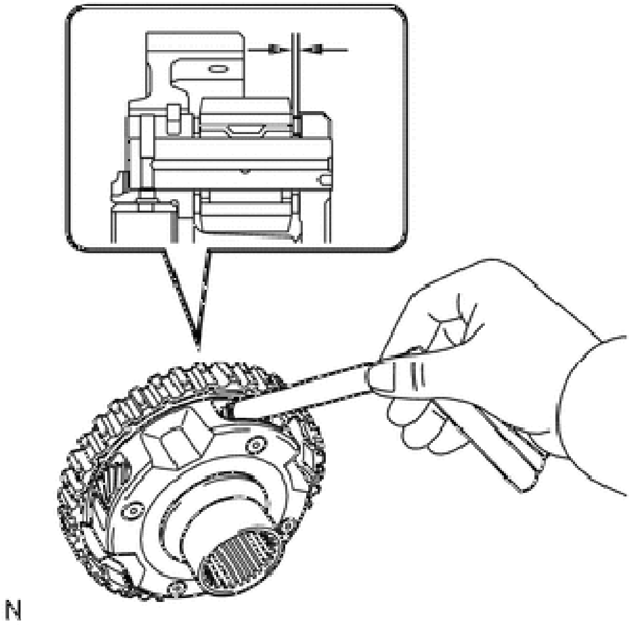

Fig. 272: Measuring Clearance Between Underdrive Planetary Gear And Pinion Gear
Courtesy of TOYOTA MOTOR SALES, U.S.A., INC.

Standard clearance

0.18 to 0.54 mm (0.00709 to 0.0213 in.)

If the clearance is greater than the standard clearance, replace the automatic transaxle assembly.

7. **INSPECT ONE-WAY CLUTCH ASSEMBLY**
    a. Temporarily install the one-way clutch assembly to the planetary ring gear.

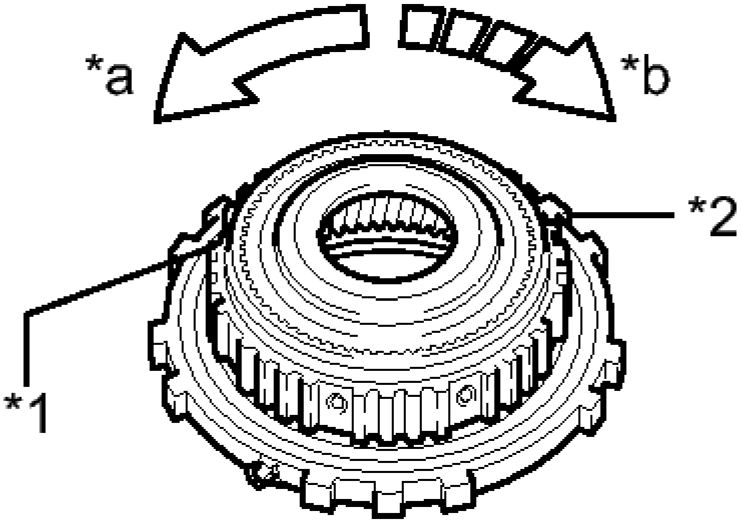

Fig. 273: Inspecting One-Way Clutch Assembly
Courtesy of TOYOTA MOTOR SALES, U.S.A., INC.

TEXT IN ILLUSTRATION

*1	Planetary Ring Gear
*2	One-way Clutch Assembly
*a	Free
*b	Lock

b. Make sure that the one-way clutch assembly turns freely counterclockwise and locks when turned clockwise.

   If the one-way clutch assembly does not operate normally, replace it.

8. **INSPECT NO. 1 BRAKE DISC**
   a. Check if the contact surfaces of the discs, plates and flange are worn or burnt.

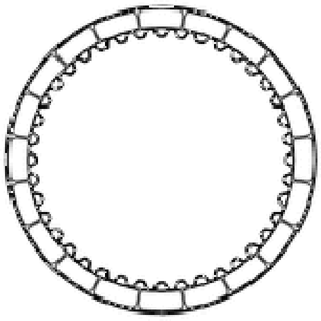

Fig. 274: Identifying No. 1 Brake Disc
Courtesy of TOYOTA MOTOR SALES, U.S.A., INC.

NOTE:

- **If the lining of any disc is peeled off or discolored, or even if part of the groove is damaged, replace all discs.**
- **Before assembling new discs, soak them in ATF for at least 15 minutes.**

If necessary, replace them.

9. **INSPECT NO. 2 BRAKE DISC**
   a. Check if the contact surfaces of the discs, plates and flange are worn or burnt.

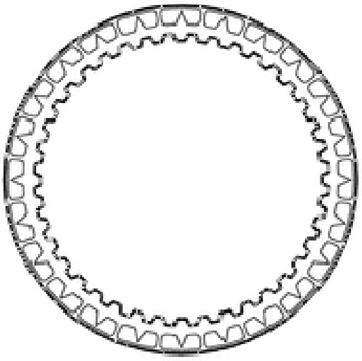

Fig. 275: Identifying No. 2 Brake Disc
Courtesy of TOYOTA MOTOR SALES, U.S.A., INC.

NOTE:

- **If the lining of any disc is peeled off or discolored, or even if part of the groove is damaged, replace all discs.**
- **Before assembling new discs, soak them in ATF for at least 15 minutes.**

If necessary, replace them.

10. **INSPECT NO. 3 BRAKE DISC**

   a. Check if the contact surfaces of the discs, plates and flanges are worn or burnt.

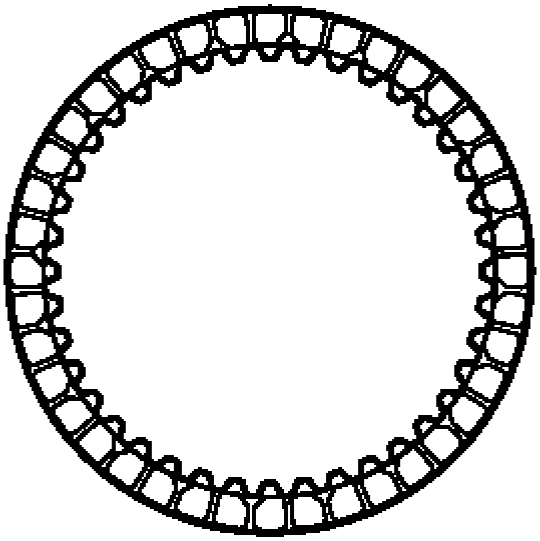

Fig. 276: Identifying No. 3 Brake Disc
Courtesy of TOYOTA MOTOR SALES, U.S.A., INC.

NOTE:

- **If the lining of any disc is peeled off or discolored, or even if part of the groove is damaged, replace all discs.**
- **Before assembling new discs, soak them in ATF for at least 15 minutes.**

If necessary, replace them.

11. **INSPECT 2ND BRAKE PISTON RETURN SPRING SUB-ASSEMBLY**

   a. Using a vernier caliper, measure the free length of the 3 2nd brake piston return springs including the spring seats.

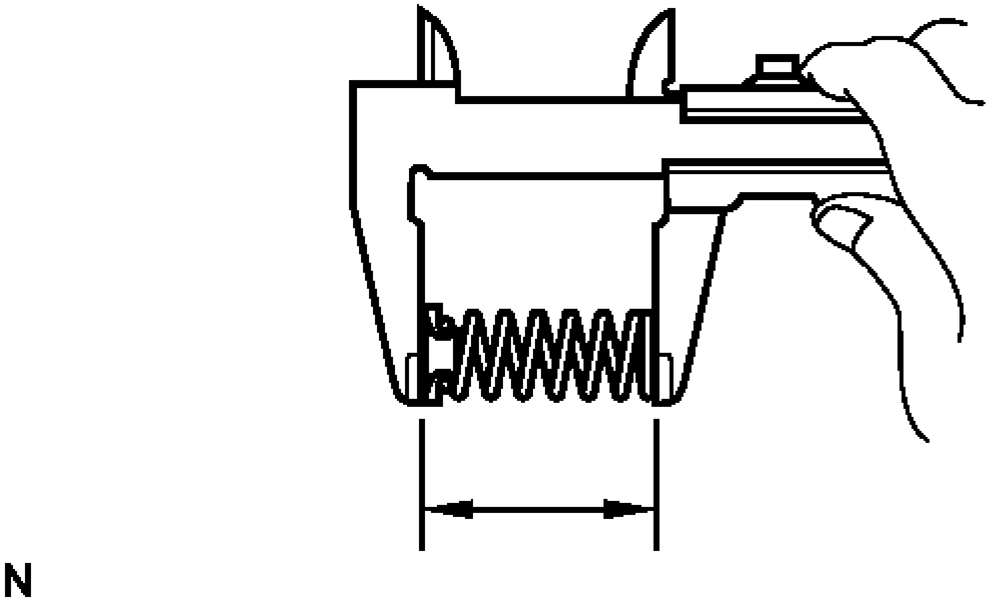

Fig. 277: Measuring Free Length Of 2nd Brake Piston Return Springs
Courtesy of TOYOTA MOTOR SALES, U.S.A., INC.

Standard free length

23.26 mm (0.916 in.)

If the free length is shorter than the standard free length, replace the 2nd brake piston return spring.

12. **INSPECT 1ST AND REVERSE BRAKE RETURN SPRING SUB-ASSEMBLY**
    a. Using a vernier caliper, measure the free length of the 1st and reverse brake return spring together with the spring seat.

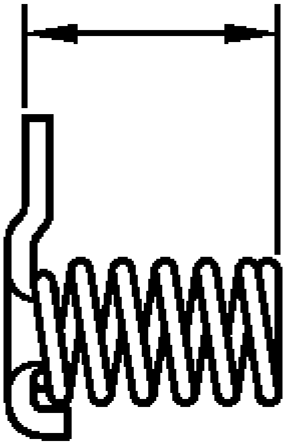

Fig. 278: Identifying Free Length Of 1st And Reverse Brake Return Spring
Courtesy of TOYOTA MOTOR SALES, U.S.A., INC.

Standard free length

15.79 mm (0.622 in.)

If the free length is shorter than the standard free length, replace the 1st and reverse brake return spring.

13. **INSPECT NO. 3 BRAKE PISTON RETURN SPRING SUB-ASSEMBLY**
    1. Using a vernier caliper, measure the free length of the No. 3 brake piston return spring together with the spring seat.

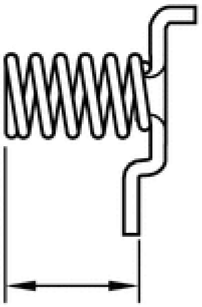

Fig. 279: Identifying Free Length Of No. 3 Brake Piston Return Spring

Courtesy of TOYOTA MOTOR SALES, U.S.A., INC.

Standard free length

9.15 mm (0.360 in.)

If the free length is shorter than the standard free length, replace the No. 3 brake piston return spring.

14. **INSPECT CLEARANCE OF NO. 1 BRAKE**
    a. Using a dial indicator, measure the clearance of the No. 1 brake while applying compressed air (200 kPa, 2.0 kgf/cm^2 , 29 psi).

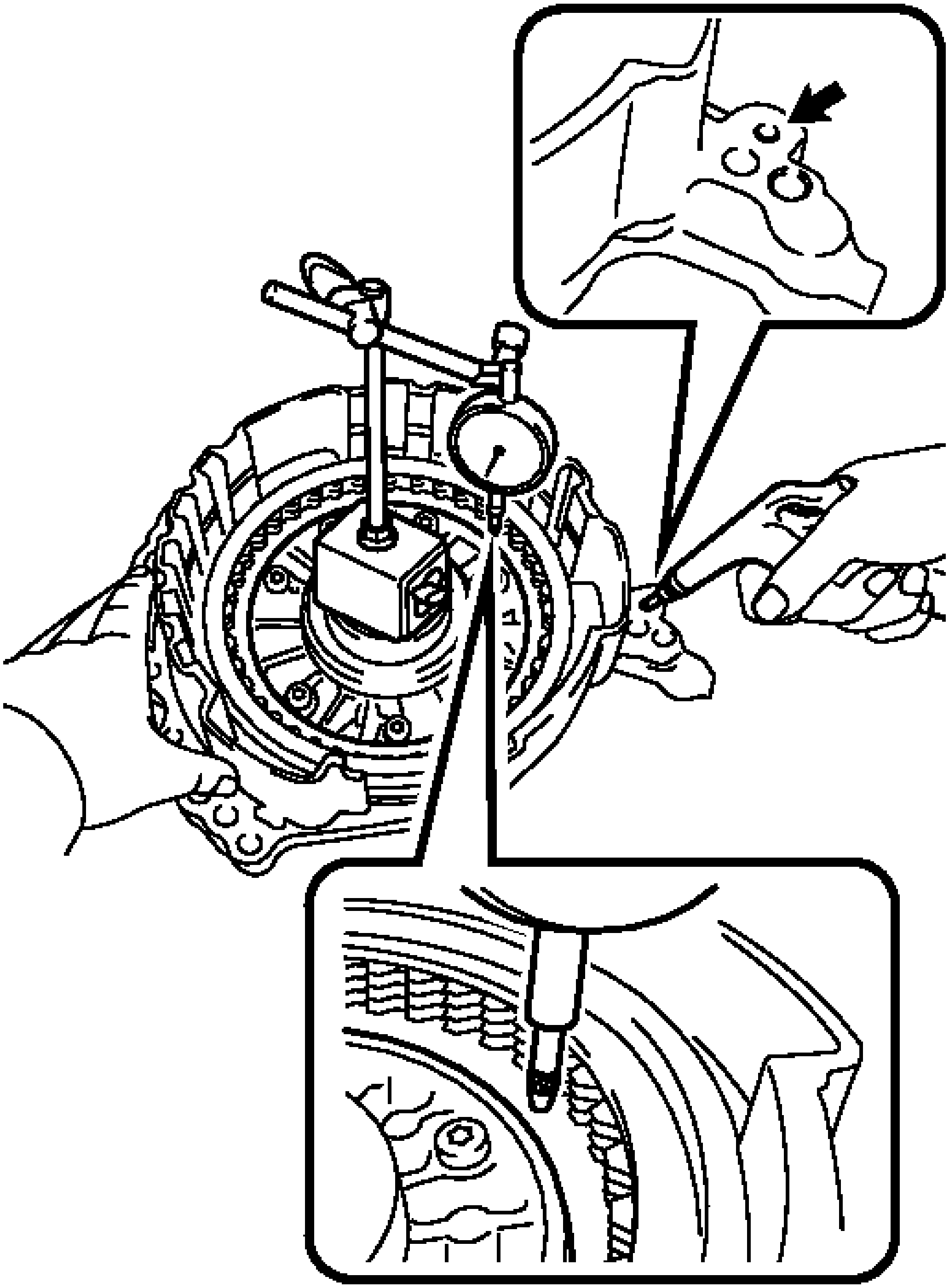

Fig. 280: Measuring Clearance Of No. 1 Brake
Courtesy of TOYOTA MOTOR SALES, U.S.A., INC.

Standard clearance

0.601 to 0.819 mm (0.0237 to 0.0322 in.)

HINT:

Measure the clearance at 3 points where the brake piston diameter is approximately 140 mm (5.51 in.) and calculate the average.

If the clearance is not as specified, select an appropriate No. 1 brake flange so that the clearance will be within the specified range.

NO. 1 BRAKE FLANGE THICKNESS

Mark	**Thickness [mm (in.)]**
30	3.0 (0.118)
31	3.1 (0.122)
32	3.2 (0.126)
33	3.3 (0.130)
34	3.4 (0.134)
35	3.5 (0.138)

15. **INSPECT CLEARANCE OF NO. 2 BRAKE**
    a. Using a dial indicator, measure the clearance of the No. 2 brake while applying compressed air (200 kPa, 2.0 kgf/cm^2 , 29 psi).

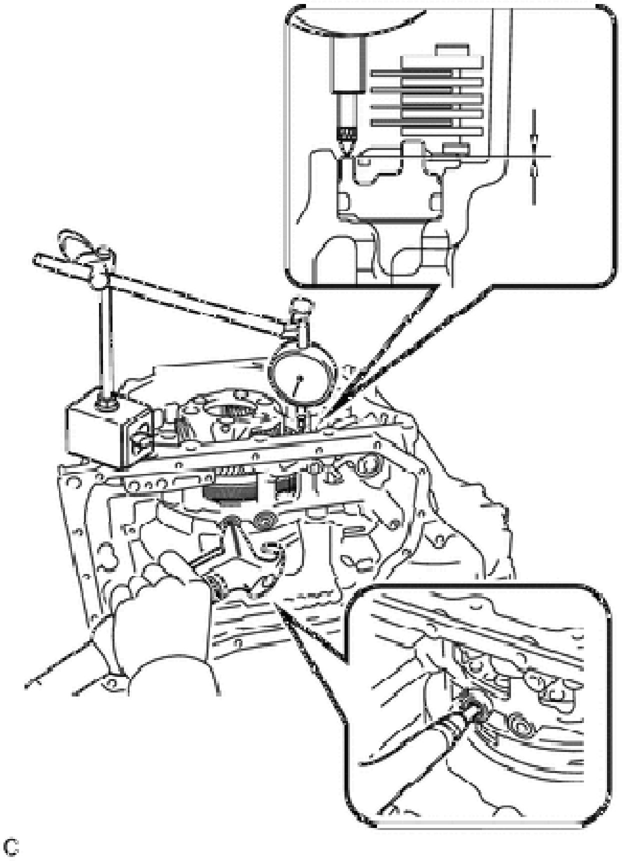

Fig. 281: Apply Compressed To Clearance Of No. 2 Brake
Courtesy of TOYOTA MOTOR SALES, U.S.A., INC.

Standard clearance

0.707 to 0.974 mm (0.0278 to 0.0383 in.)

HINT:

Measure the clearance at 3 points where the brake piston diameter is approximately 140 mm (5.51 in.) and calculate the average.

If the clearance is not as specified, select an appropriate No. 2 brake flange so that the clearance will be within the specified range.

NO. 2 BRAKE FLANGE THICKNESS

Mark	Thickness [mm (in.)]
40	4.0 (0.157)
	4.1

41	(0.161)
42	4.2 (0.165)
43	4.3 (0.169)
44	4.4 (0.173)

16. **INSPECT CLEARANCE OF NO. 3 BRAKE**
    a. Using a vernier caliper and a straightedge, measure the distance shown in the illustration (Dimension A) while a load of 500 N (51 kgf, 112.4 lbf) is being applied to the flange.

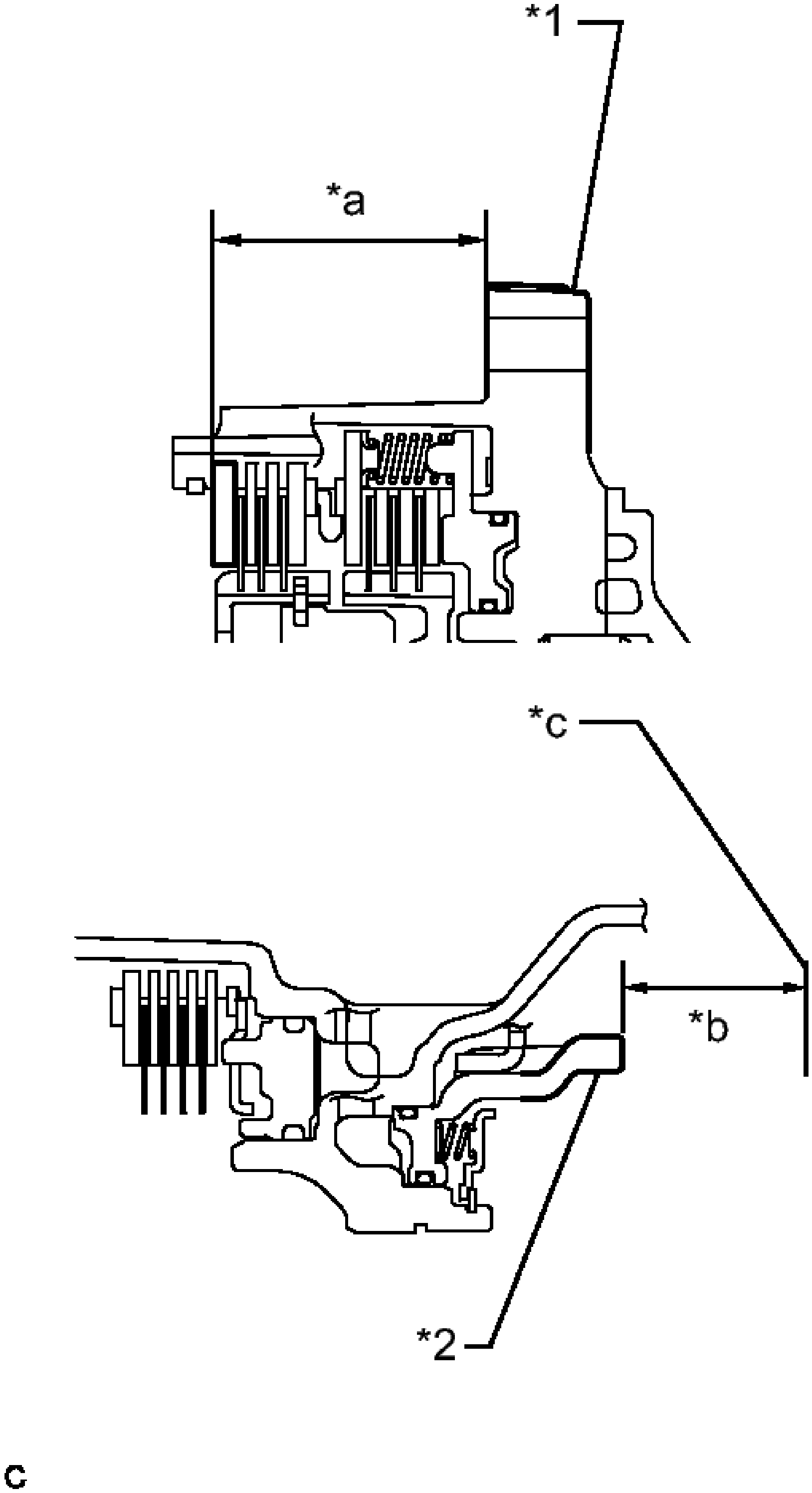

Fig. 282: Measuring Distance Dimension A
Courtesy of TOYOTA MOTOR SALES, U.S.A., INC.

TEXT IN ILLUSTRATION

*1	Front Oil Pump Assembly
*2	No. 3 Brake
*a	Dimension A
*b	Dimension B
*c	Contact Surface of Front Oil Pump Assembly

HINT:

Measure dimension A at 3 points where the flange diameter is approximately 166 mm (6.54 in.) and calculate the average.

b. Using a vernier caliper and a straightedge, measure the distance shown in the illustration (Dimension B).

HINT:

Measure dimension B at 3 points where the No. 3 brake diameter is approximately 166 mm (6.54 in.) and calculate the average.

c. Calculate the clearance value using the following formula:

Clearance = Dimension B - Dimension A - Flange Thickness

Standard clearance

0.599 to 0.799 mm (0.0236 to 0.0315 in.)

If the clearance is not as specified, select an appropriate brake flange so that the clearance will be within the specified range.

NO. 3 BRAKE FLANGE THICKNESS

Mark	Thickness [mm (in.)]
38	3.80 (0.150)
	3.90

39	(0.154)
40	4.00 (0.157)
41	4.10 (0.161)
42	4.20 (0.165)
43	4.30 (0.169)

17. **INSPECT CLEARANCE OF NO. 1 CLUTCH**
    a. Install the direct multiple disc clutch assembly onto the rear transaxle cover sub-assembly.

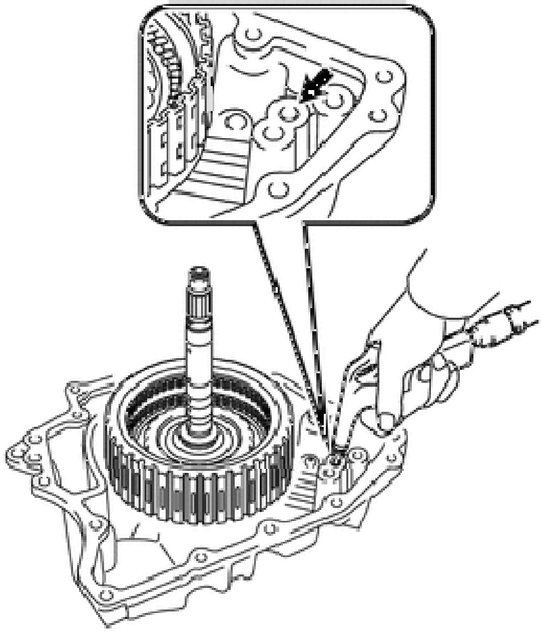

Fig. 283: Applying Compressed Air To Oil Hole
Courtesy of TOYOTA MOTOR SALES, U.S.A., INC.

    b. Check that the piston moves when compressed air (200 kPa, 2.0 kgf/cm^2 , 29 psi) is applied to the oil hole.
    c. Using a feeler gauge, measure the No. 1 clutch pack clearance.

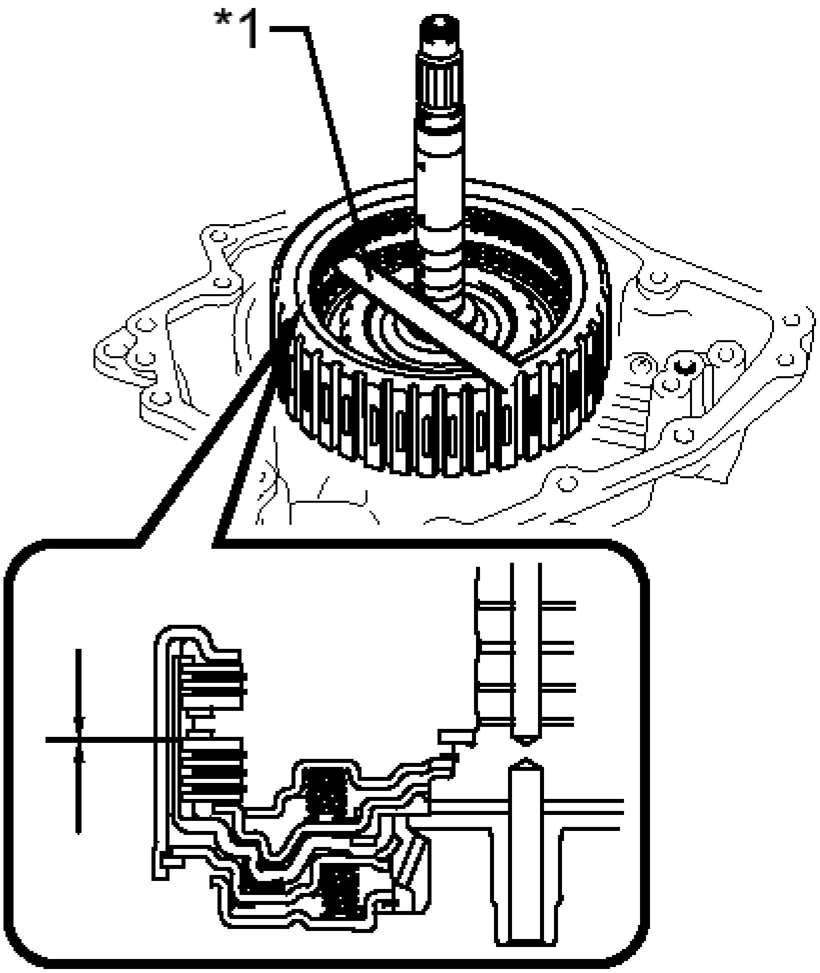

Fig. 284: Measuring No. 1 Clutch Pack Clearance
Courtesy of TOYOTA MOTOR SALES, U.S.A., INC.

TEXT IN ILLUSTRATION

*1	Feeler Gauge

HINT:

Measure the clearance at 3 points where the flange diameter is approximately 152 mm (5.98 in.) and calculate the average.

Standard pack clearance

0.601 to 0.819 mm (0.0237 to 0.0322 in.)

If the pack clearance is not as specified, replace the rear multiple disc clutch assembly.

18. **INSPECT CLEARANCE OF NO. 2 CLUTCH**
    a. Install the direct multiple disc clutch assembly onto the rear transaxle cover sub-assembly.

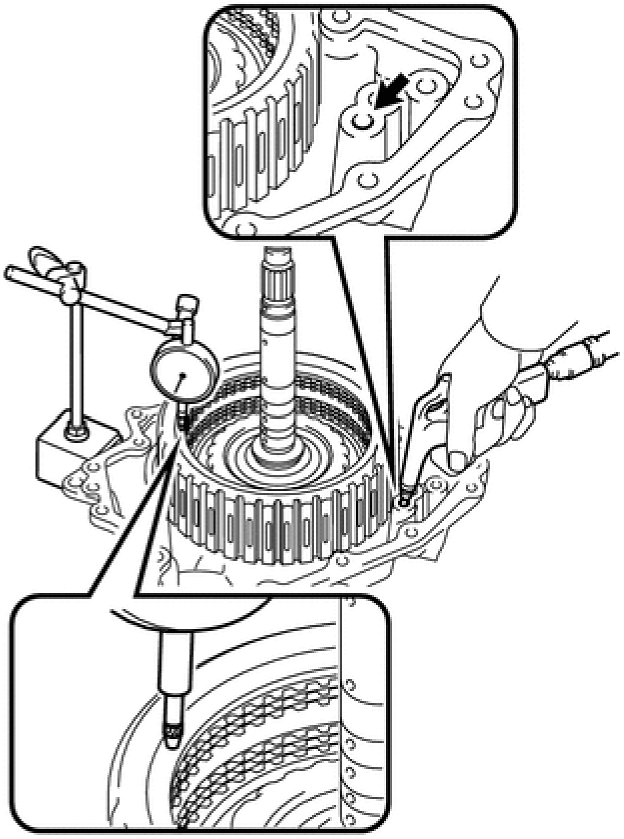

Fig. 285: Inspecting Clearance Of No. 2 Clutch Disc
Courtesy of TOYOTA MOTOR SALES, U.S.A., INC.

    b. Using a dial indicator, measure the No. 2 clutch pack clearance while applying and releasing compressed air (200 kPa, 2.0 kgf/cm^2 , 29 psi).

HINT:

Measure the clearance at 3 points where the diameter of the No. 2 direct multiple clutch piston is approximately 152 mm (5.98 in.) and calculate the average.

Standard pack clearance

0.394 to 0.605 mm (0.0155 to 0.0238 in.)

If the pack clearance is not as specified, replace the rear multiple disc clutch assembly.

REASSEMBLY

REASSEMBLY

HINT:

Check bearing position and installation direction.

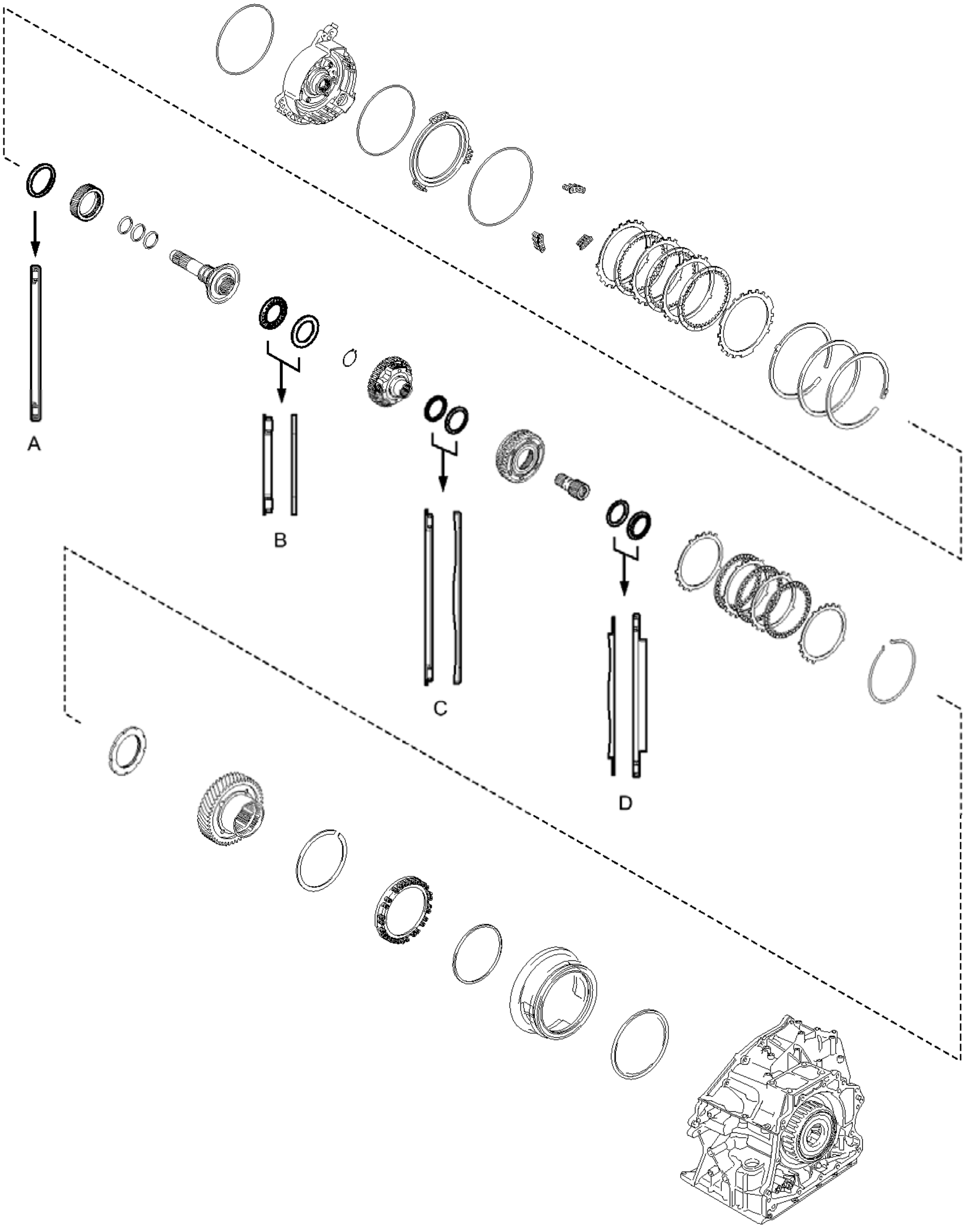

Fig. 286: Exploded View Of Bearing Components (1 Of 2)

Courtesy of TOYOTA MOTOR SALES, U.S.A., INC.

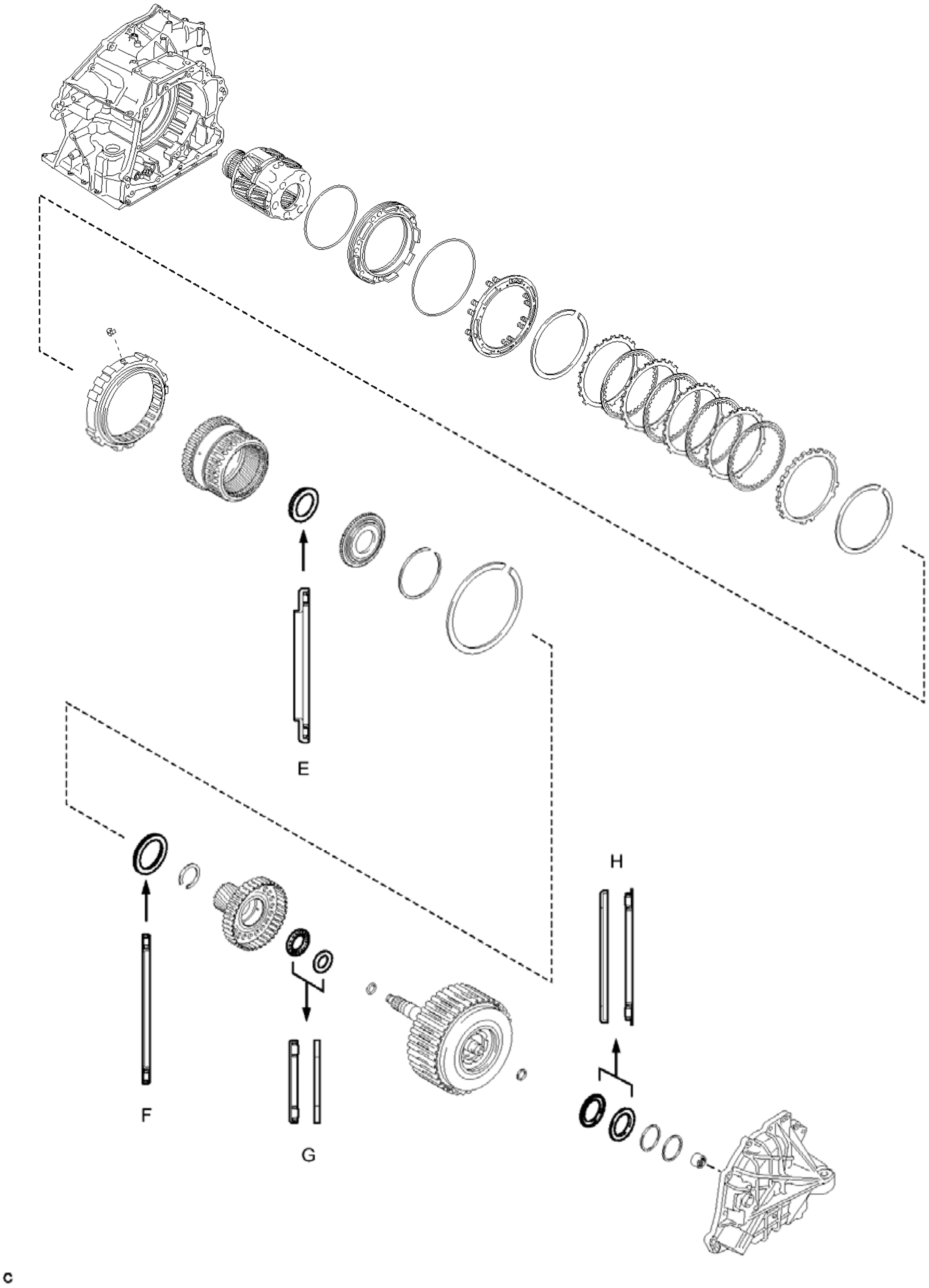

Fig. 287: Exploded View Of Bearing Components (2 Of 2)
Courtesy of TOYOTA MOTOR SALES, U.S.A., INC.

Mark	Front Race Diameter Inside / Outside [mm (in.)]	Thrust Bearing Diameter Inside / Outside [mm (in.)]	Rear Race Diameter Inside / Outside [mm (in.)]
A	-	57.7 (2.27) / 75.2 (2.96)	-
B	-	29.1 (1.15) / 48.6 (1.91)	30.7 (1.21) / 48.3 (1.90)
C	-	62.6 (2.46) / 82.4 (3.24)	65.9 (2.59) / 82.3 (3.24)
D	59.4 (2.34) / 76 (2.99)	53.46 (2.10) / 79 (3.11)	-
E	-	56.1 (2.21) / 81.1 (3.19)	-
F	-	61.2 (2.41) / 79 (3.11)	-
G	-	28 (1.10) / 47.1 (1.85)	26.1 (1.03) / 44 (1.73)
H	52.2 (2.06) / 70.4 (2.77)	48.9 (1.93) / 72.0 (2.83)	-

1. **INSTALL COUNTER DRIVE GEAR BEARING**

   HINT:

   Perform this procedure only when the counter drive gear bearing or transaxle case sub-assembly is replaced.

   a. Using SST and a press, install a new counter drive gear bearing and snap ring to the transaxle case sub-assembly.

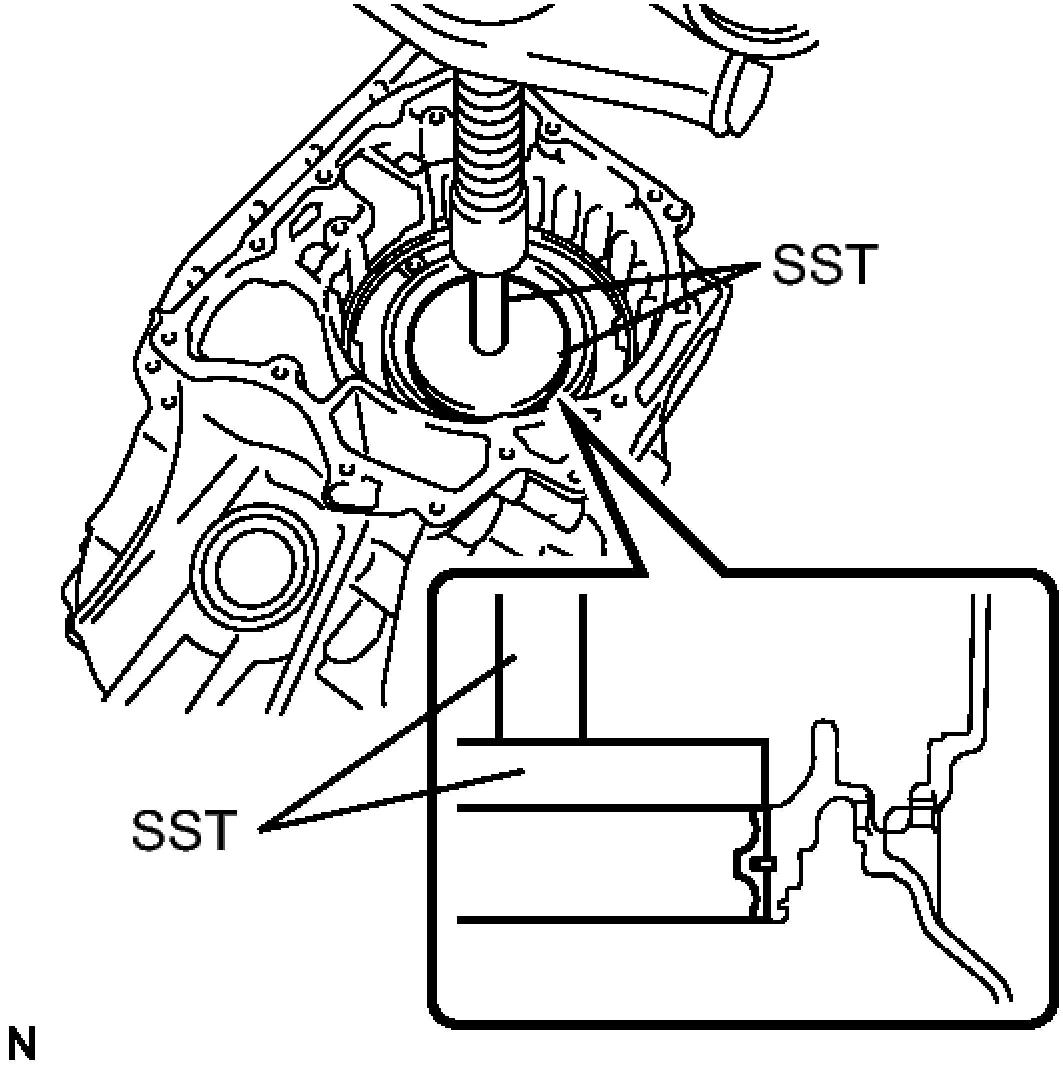

Fig. 288: Installing Counter Drive Gear Bearing And Snap Ring To Transaxle Case
Courtesy of TOYOTA MOTOR SALES, U.S.A., INC.

- **SST: 09950-60020**
  09951-01030
- **SST: 09950-70010**
  09951-07100

2. **INSTALL MANUAL VALVE LEVER SHAFT OIL SEAL**
   a. Coat the lip of a new manual valve lever shaft oil seal with a small amount of MP grease.

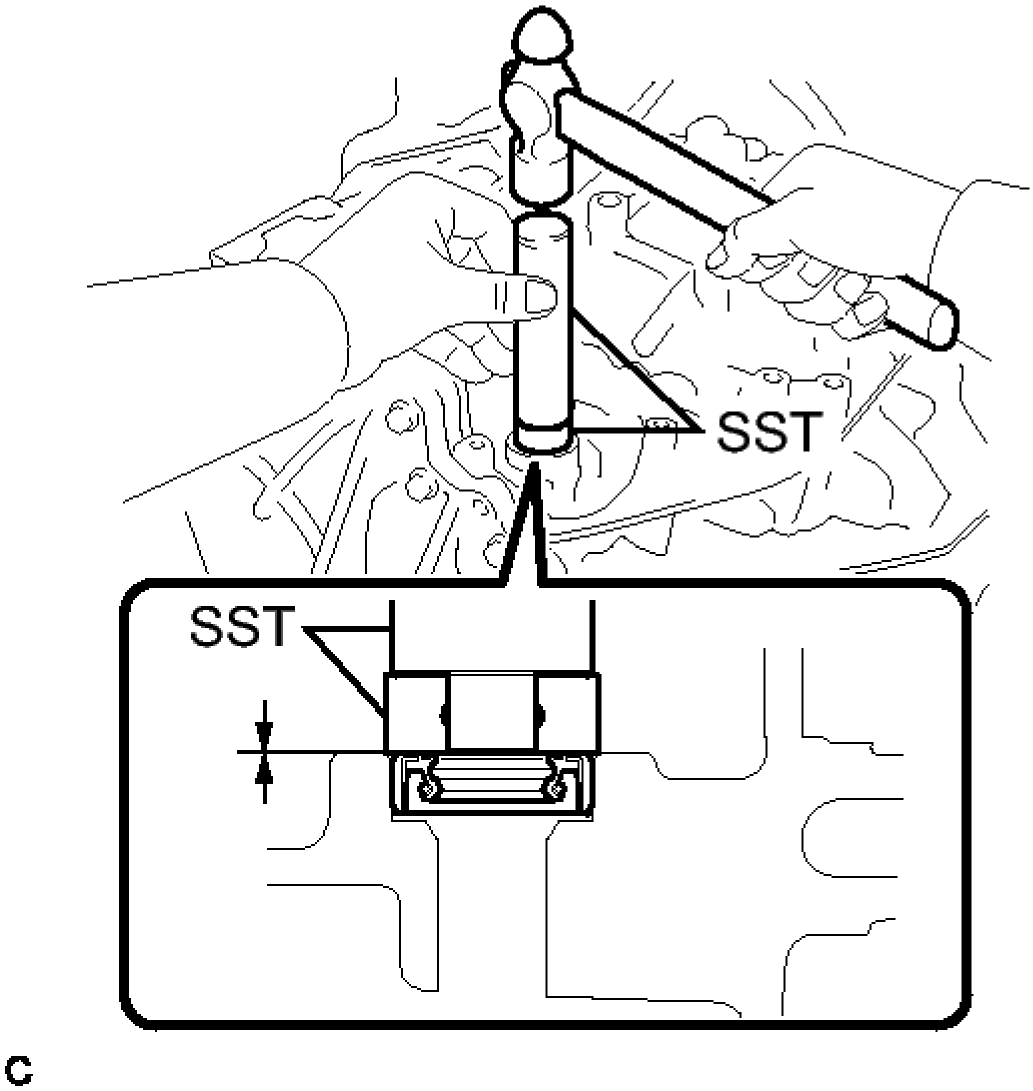

Fig. 289: Installing Manual Valve Lever Shaft Oil Seal
Courtesy of TOYOTA MOTOR SALES, U.S.A., INC.

b. Using SST and a hammer, tap in the manual valve lever shaft oil seal.
   - **SST: 09950-60010**
     09951-00230
   - **SST: 09950-70010**
     09951-07100

Oil seal tap in depth

-0.5 to 0.5 mm (-0.0197 to 0.0197 in.)

NOTE: Check that the oil seal is installed in the correct direction.

3. **INSTALL MANUAL VALVE LEVER SHAFT SUB-ASSEMBLY**
   a. Install the manual valve lever shaft sub-assembly to the transaxle case sub-assembly.

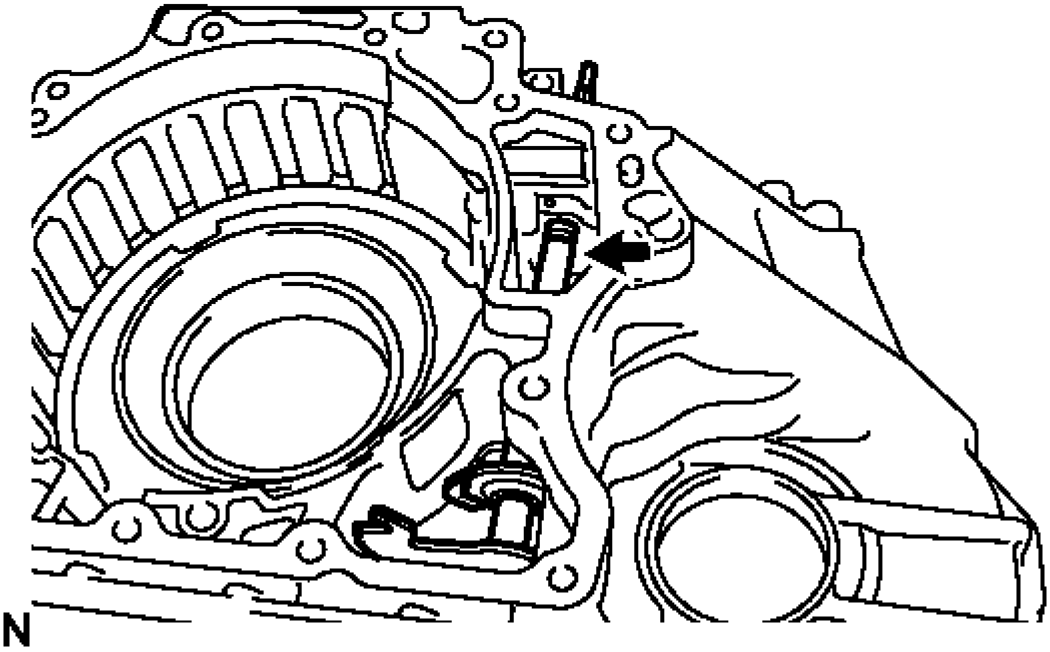

Fig. 290: Locating Manual Valve Lever Shaft Sub-Assembly
Courtesy of TOYOTA MOTOR SALES, U.S.A., INC.

NOTE: **Do not damage the manual valve lever shaft oil seal while installing the manual valve lever shaft sub-assembly to the transaxle case sub-assembly.**

   b. Using needle-nose pliers, install the manual valve shaft retainer spring to the transaxle case sub-assembly.

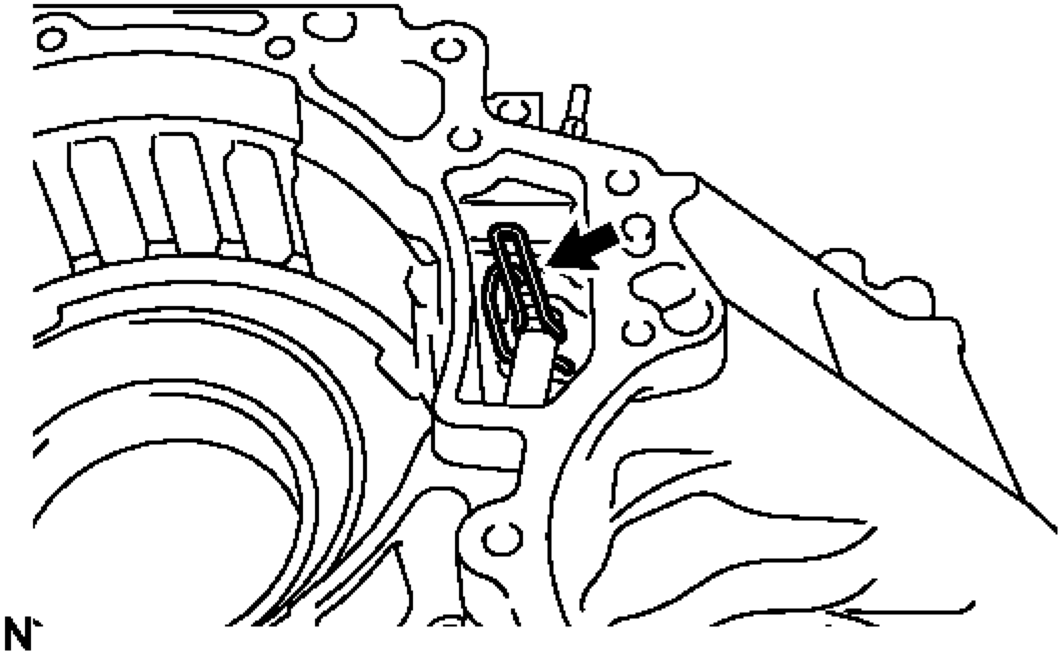

Fig. 291: Locating Manual Valve Lever Shaft Retainer Spring
Courtesy of TOYOTA MOTOR SALES, U.S.A., INC.

4. **INSTALL PARKING LOCK ROD SUB-ASSEMBLY**
    a. Align the slot with the notches on the manual valve lever shaft sub-assembly and install the parking lock rod sub-assembly.

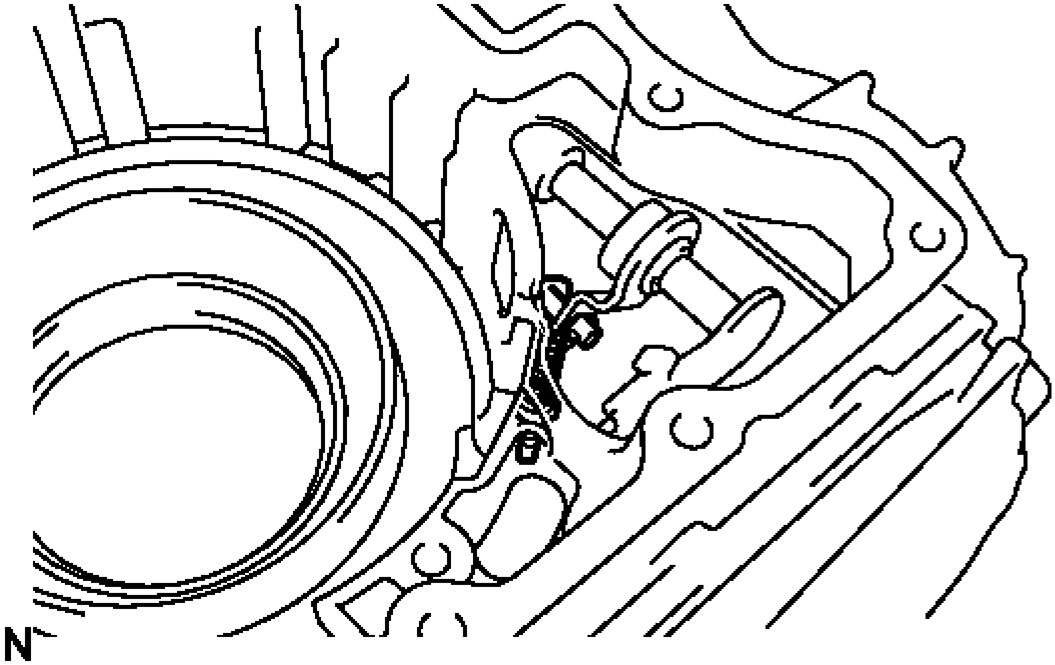

Fig. 292: Identifying Parking Lock Rod Sub-Assembly
Courtesy of TOYOTA MOTOR SALES, U.S.A., INC.

5. **INSTALL MANUAL DETENT SPRING SUB-ASSEMBLY**
    a. Install the manual detent spring sub-assembly and manual detent spring cover to the transaxle case sub-assembly with the bolt.

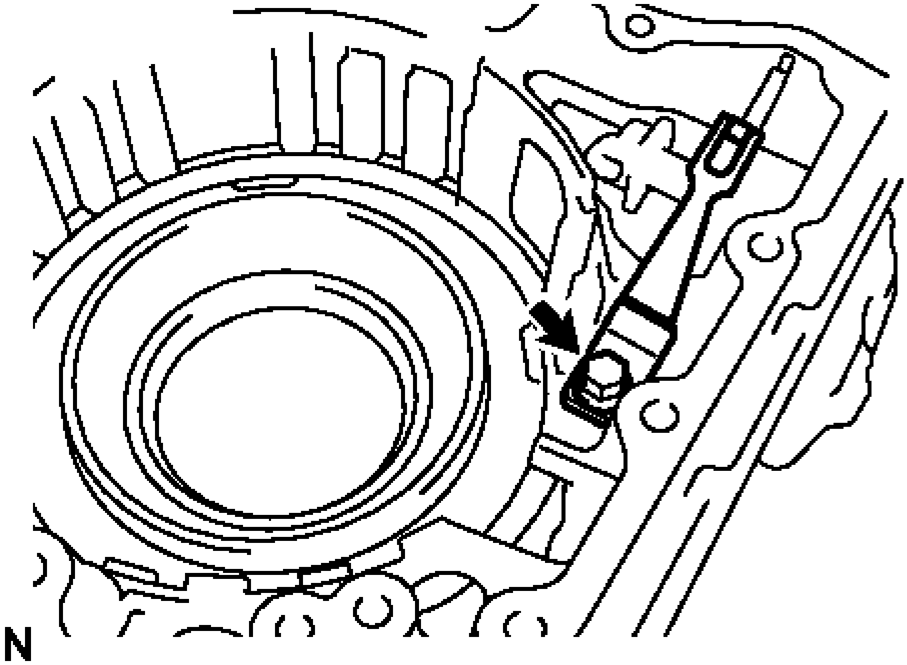

Fig. 293: Locating Manual Detent Spring Sub-Assembly
Courtesy of TOYOTA MOTOR SALES, U.S.A., INC.

Torque: 23 N*m (231 kgf*cm, 17 ft.*lbf)

NOTE: **Make sure to install the manual detent spring sub-assembly first and then the manual detent spring cover.**

6. **INSTALL NO. 3 BRAKE PISTON**
    a. Coat 2 new O-rings with ATF and install them to the No. 3 brake piston.

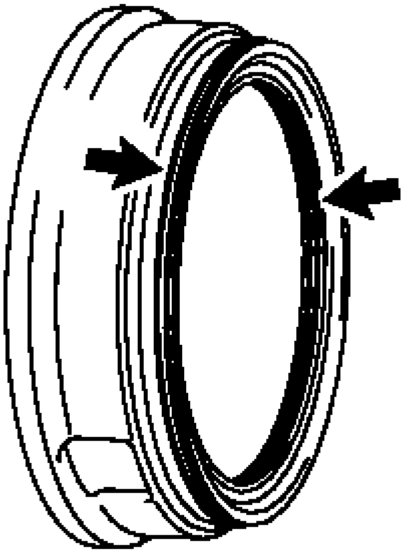

Fig. 294: Locating O-Rings
Courtesy of TOYOTA MOTOR SALES, U.S.A., INC.

NOTE: Ensure that the 2 O-rings are not twisted.

b. Temporarily install the No. 3 brake piston to the transaxle case sub-assembly.

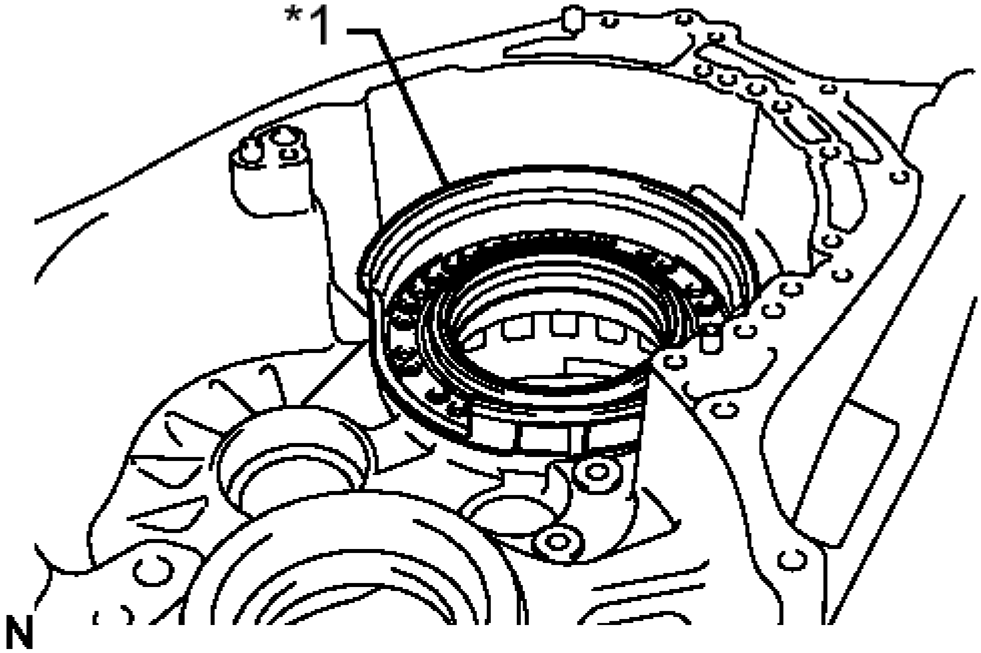

Fig. 295: Identifying No. 3 Brake Piston
Courtesy of TOYOTA MOTOR SALES, U.S.A., INC.

TEXT IN ILLUSTRATION

*1	No. 3 Brake Piston

c. Temporarily install the pawl stopper plate to the transaxle case sub-assembly with the 2 bolts.

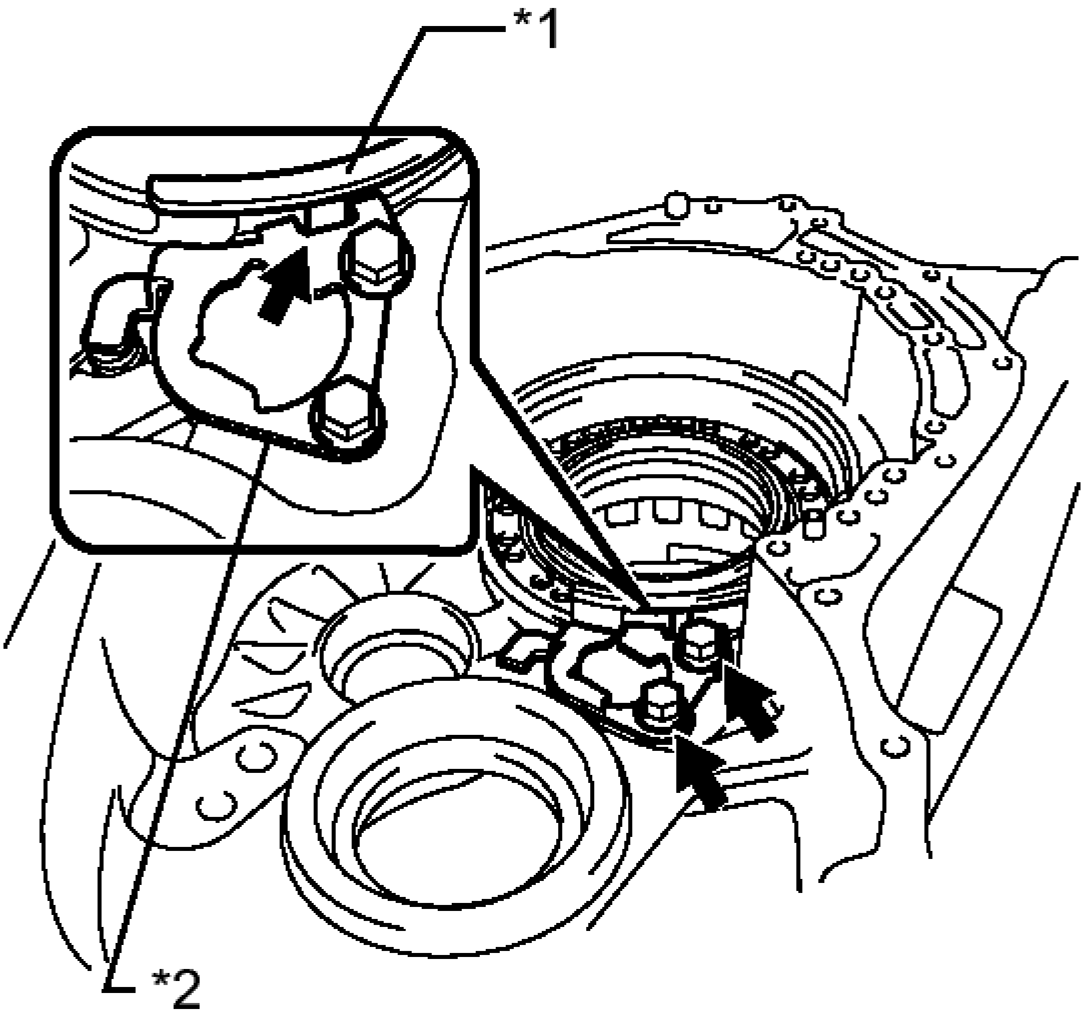

Fig. 296: Installing Pawl Stopper Plate To Transaxle Case
Courtesy of TOYOTA MOTOR SALES, U.S.A., INC.

TEXT IN ILLUSTRATION

*1	No. 3 Brake

	Piston
*2	Pawl Stopper Plate

NOTE: **After installing, make sure that the protrusions on the No. 3 brake piston and the grooves on the pawl stopper plate are aligned.**

d. Press the No. 3 brake piston into the transaxle case sub-assembly.

NOTE: **Make sure that the lip of the No. 3 brake piston is not twisted and does not get caught in the transaxle case sub-assembly.**

HINT:

Use the installation surface of the return spring to press the piston into the transaxle case sub-assembly.

e. Remove the 2 bolts and pawl stopper plate from the transaxle case sub-assembly.

f. Install the brake piston return spring to the transaxle case sub-assembly.

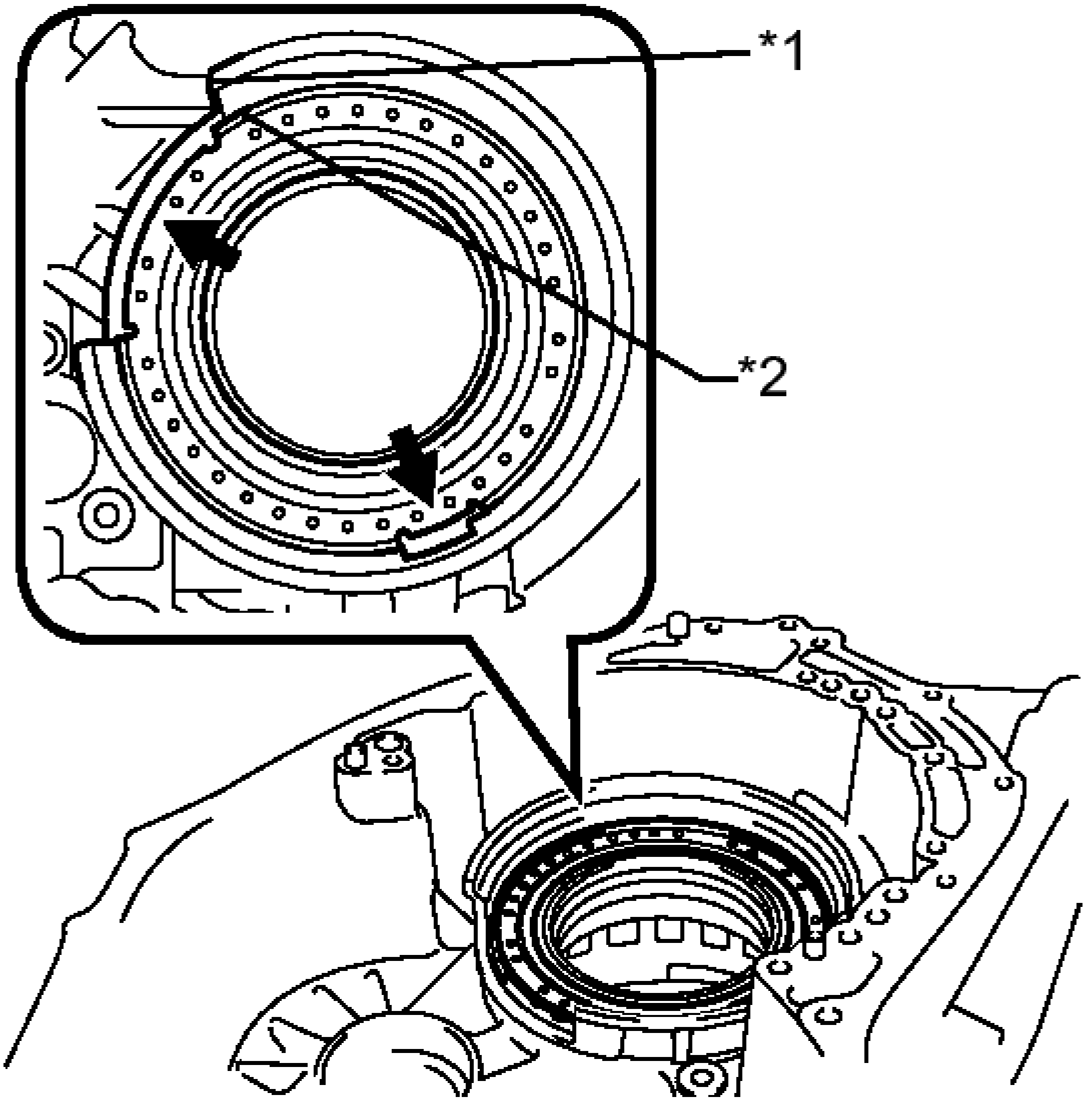

Fig. 297: Identifying Brake Piston Return Spring
Courtesy of TOYOTA MOTOR SALES, U.S.A., INC.

TEXT IN ILLUSTRATION

*1	No. 3 Brake Piston
*2	Brake Piston Return Spring

NOTE: **Install the brake piston return spring as shown in the illustration.**

g. Place SST on the brake piston return spring and compress the brake piston return spring with a press.

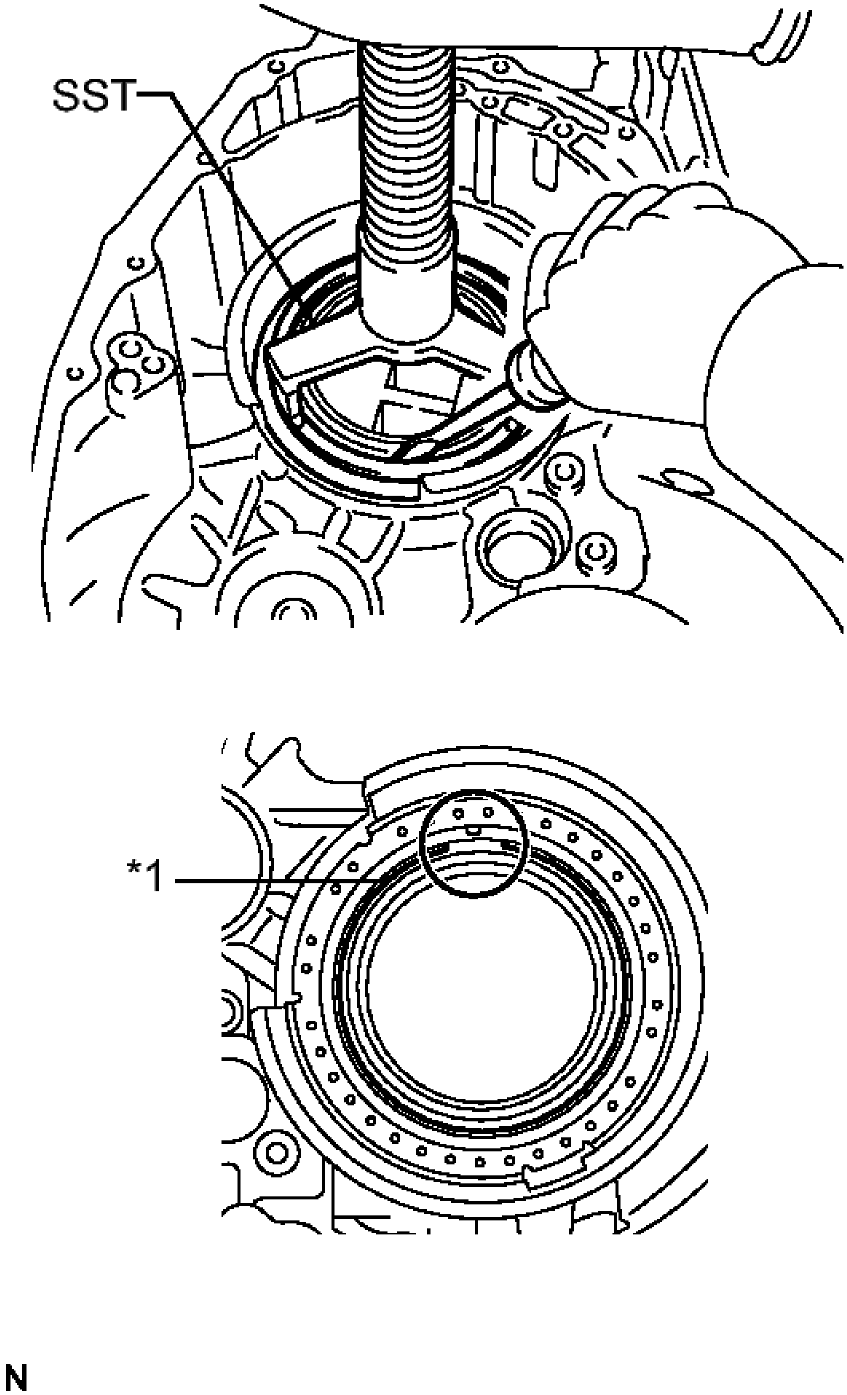

Fig. 298: Installing Brake Piston Return Spring Using SST & Screwdriver
Courtesy of TOYOTA MOTOR SALES, U.S.A., INC.

TEXT IN ILLUSTRATION

*1	Snap Ring

- **SST: 09387-00070**

NOTE: **Stop the press when the brake piston return spring is flush with the snap ring groove. This prevents the brake piston return spring from being deformed.**

h. Using a screwdriver, install the snap ring to the transaxle case sub-assembly as shown in the illustration.

NOTE:

- **Confirm that the snap ring is correctly located in the groove of the transaxle case sub-assembly.**
- **Be sure to align the opening of the snap ring with one of the protrusions on the brake piston return spring as shown in the illustration.**

7. **INSTALL COUNTER DRIVE GEAR**

a. Using SST and a press, install a new counter drive gear bearing inner race (front side) to the counter drive gear.

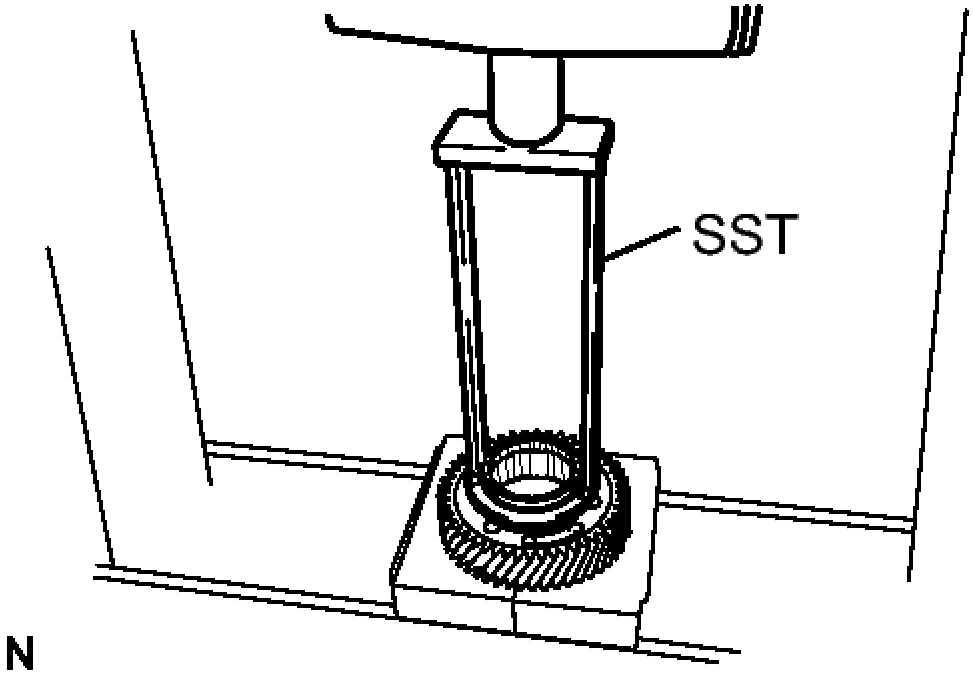

Fig. 299: Installing Bearing Inner Race To Counter Drive Gear
Courtesy of TOYOTA MOTOR SALES, U.S.A., INC.

- **SST: 09387-00020**

b. Using SST, install a new counter drive gear bearing inner race (rear side) and counter drive gear to the transaxle case sub-assembly.

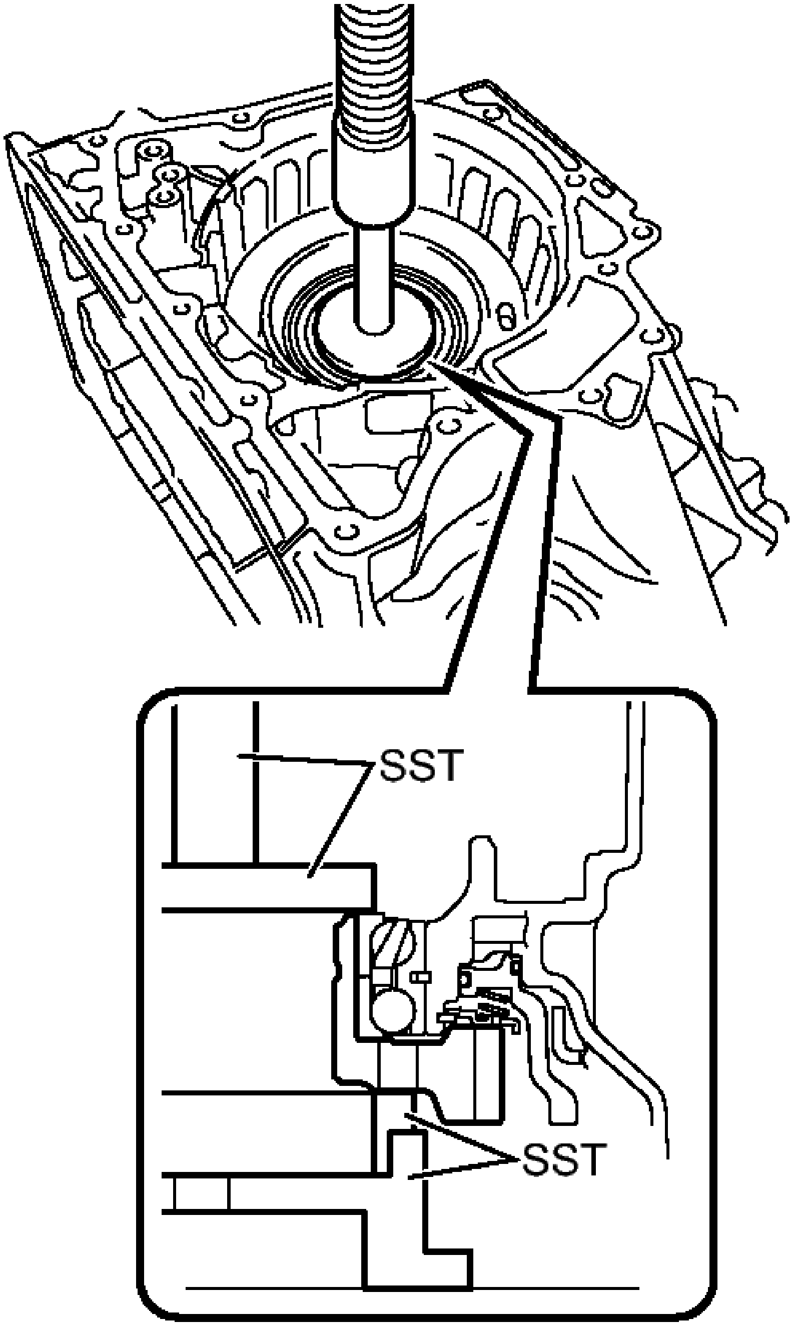

Fig. 300: Installing New Counter Drive Gear Bearing Inner Race (Rear Side) & Counter Drive Gear Using SST

Courtesy of TOYOTA MOTOR SALES, U.S.A., INC.

- **SST: 09223-15030**
- **SST: 09527-17011**
- **SST: 09950-60020**
  09951-00810
- **SST: 09950-70010**
  09951-07100

NOTE: There should not be any clearance between the counter drive gear bearing inner race (front side) and counter drive gear.

8. **INSTALL FRONT PLANETARY GEAR ASSEMBLY**
   a. Using SST and a press, press in a new front planetary gear assembly to the transaxle case sub-assembly.

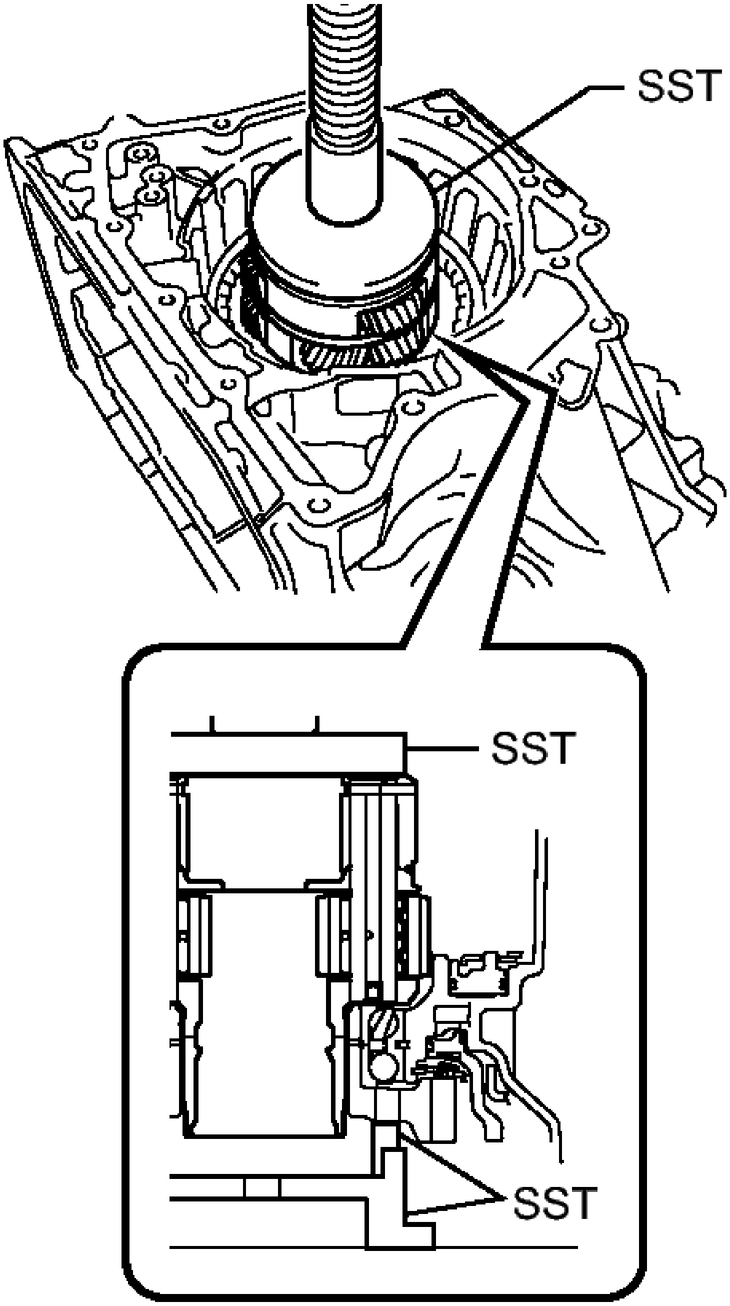

N

Fig. 301: Installing Front Planetary Gear Assembly
Courtesy of TOYOTA MOTOR SALES, U.S.A., INC.

- **SST: 09223-15030**
- **SST: 09527-17011**

- **SST: 09951-01100**

9. INSTALL NO. 2 BRAKE PISTON

a. Coat 2 new O-rings with ATF and install them to the No. 2 brake piston.

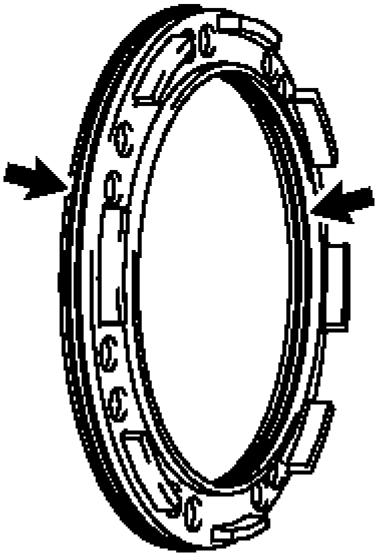

Fig. 302: Locating O-rings
Courtesy of TOYOTA MOTOR SALES, U.S.A., INC.

NOTE: Ensure that the 2 O-rings are not twisted.

b. Install the No. 2 brake piston to the transaxle case sub-assembly.

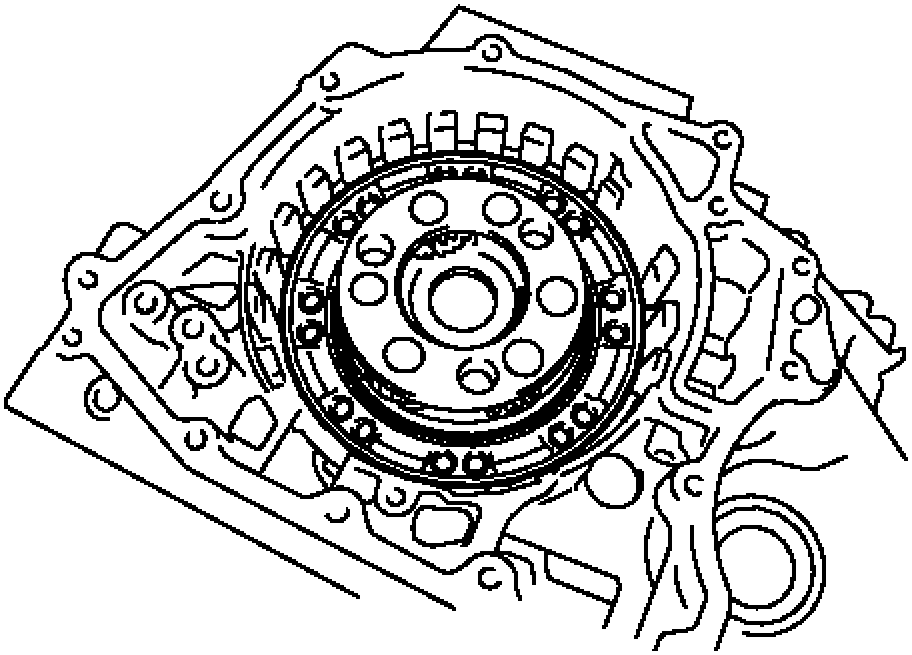

Fig. 303: Identifying No. 2 Brake Piston
Courtesy of TOYOTA MOTOR SALES, U.S.A., INC.

NOTE: Be careful not to damage the O-rings.

10. **INSTALL 1ST AND REVERSE BRAKE RETURN SPRING SUB-ASSEMBLY**
    a. Install the 1st and reverse brake return spring to the transaxle case sub-assembly.

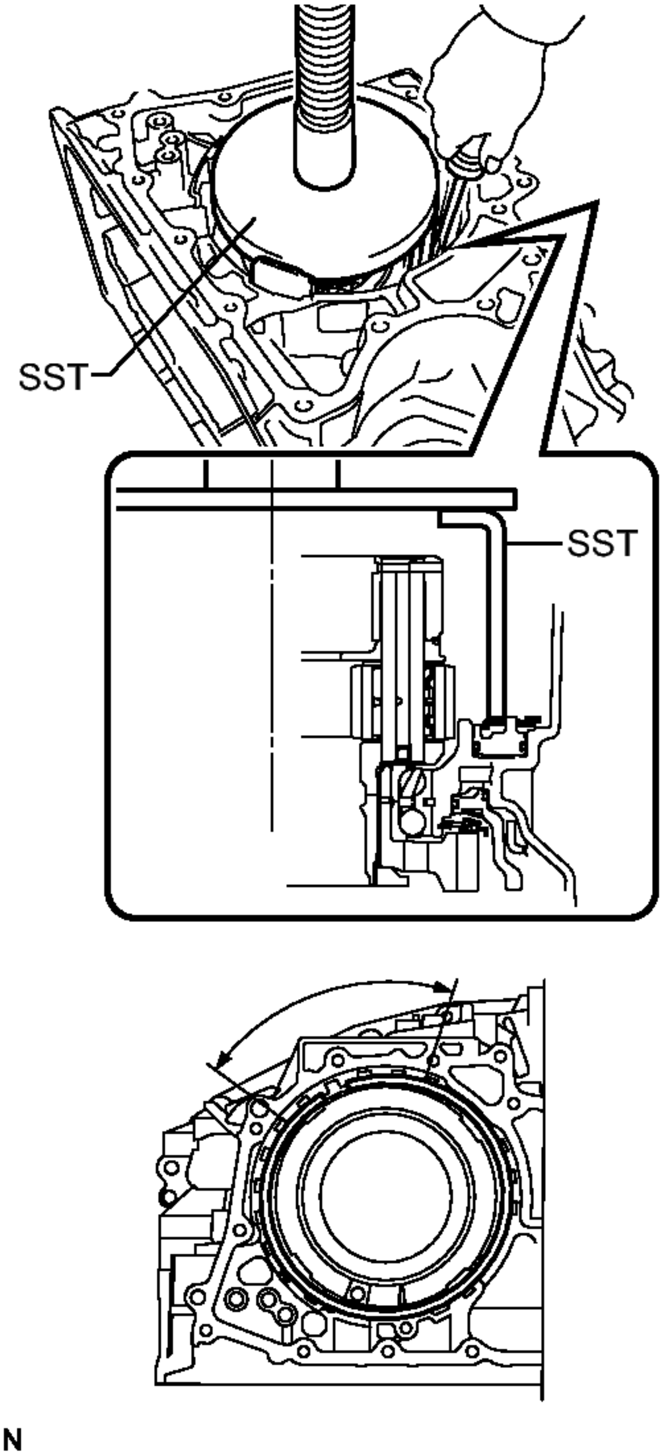

Fig. 304: Compressing 1st And Reverse Brake Return Spring
Courtesy of TOYOTA MOTOR SALES, U.S.A., INC.

b. Place SST on the 1st and reverse brake return spring and compress the 1st and reverse brake return spring with a press.

- **SST: 09387-00060**

NOTE: **Stop the press when the 1st and reverse brake return spring is flush with the snap ring groove. This prevents the 1st and reverse brake return spring from being deformed.**

c. Using a screwdriver, install the snap ring to the transaxle case sub-assembly as shown in the illustration.

NOTE:

- **Confirm that the snap ring is correctly located in the groove of the transaxle case sub-assembly.**
- **Be sure to align the opening of the snap ring with one of the protrusions on the transaxle case sub-assembly as shown in the illustration.**

11. INSTALL NO. 2 BRAKE DISC

a. Install the 4 No. 2 brake discs, 4 No. 2 brake plates, and No. 2 brake flange to the transaxle case sub-assembly.

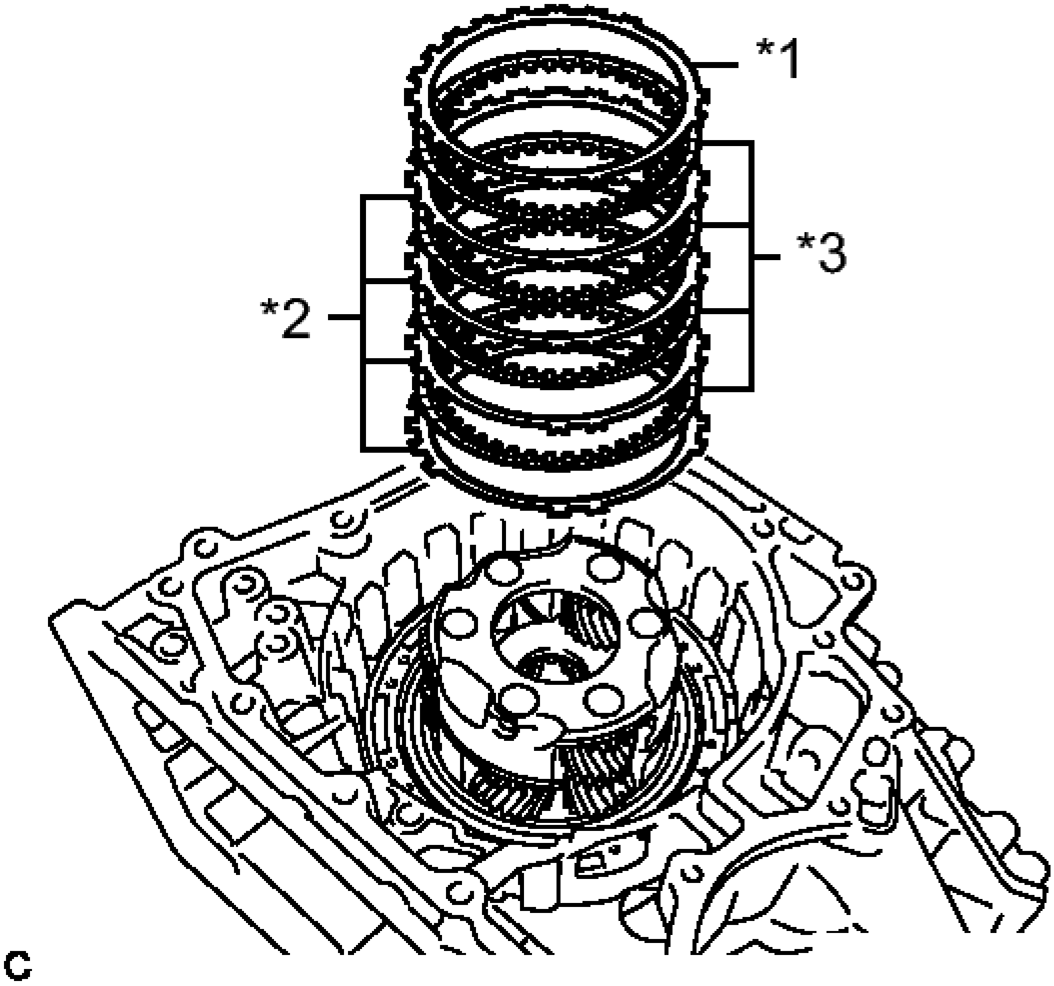

Fig. 305: Identifying No. 2 Brake Disc, No. 2 Brake Flange And No. 2 Brake Plate
Courtesy of TOYOTA MOTOR SALES, U.S.A., INC.

TEXT IN ILLUSTRATION

*1	No. 2 Brake Flange
*2	No. 2 Brake Plate
*3	No. 2 Brake Disc

NOTE: Make sure that the discs, plates, and flange are installed in the

correct order.

b. Using a screwdriver, install the snap ring to the transaxle case sub-assembly.

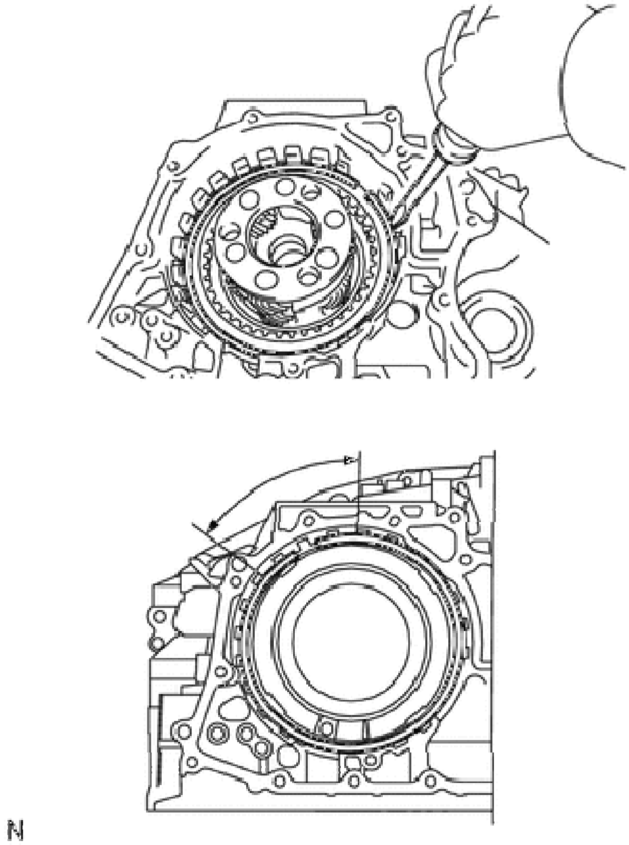

Fig. 306: Installing Snap Ring To Transaxle Case
Courtesy of TOYOTA MOTOR SALES, U.S.A., INC.

NOTE:

- **Confirm that the snap ring is correctly located in the groove of the transaxle case sub-assembly.**
- **Be sure to align the opening of the snap ring with one of the protrusions on the transaxle case sub-assembly as shown in the illustration.**

12. **INSPECT CLEARANCE OF NO. 2 BRAKE** See step 15
13. **INSTALL PLANETARY RING GEAR FLANGE**
    a. Install the planetary ring gear flange to the planetary ring gear.

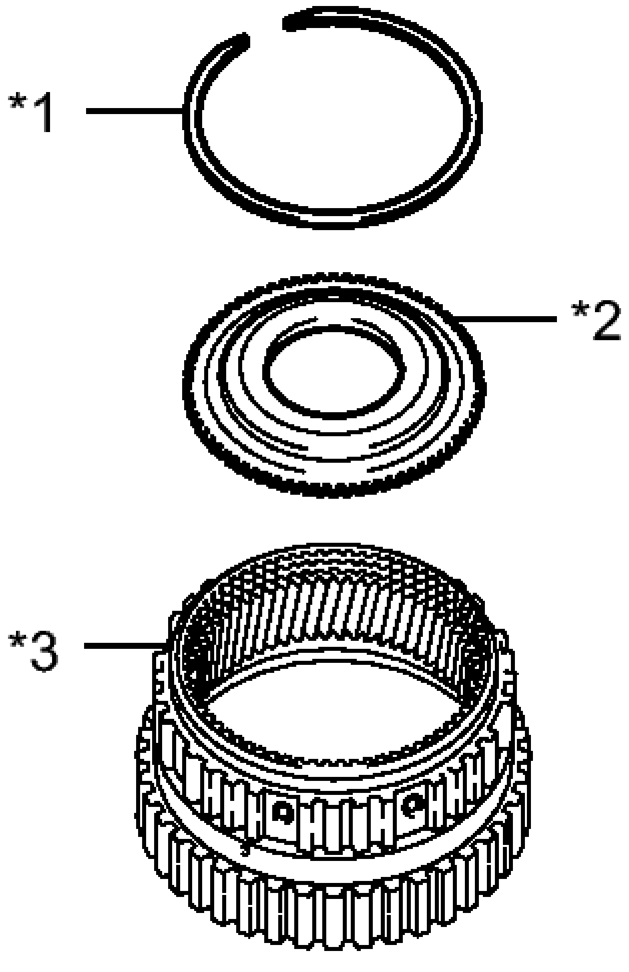

Fig. 307: Identifying Planetary Ring Gear Flange
Courtesy of TOYOTA MOTOR SALES, U.S.A., INC.

TEXT IN ILLUSTRATION

*1	Snap Ring
*2	Planetary Ring Gear Flange
*3	Planetary Ring Gear

b. Using a screwdriver, install the snap ring to the planetary ring gear.

NOTE: **Confirm that the snap ring is correctly located in the groove of the planetary ring gear.**

14. **INSTALL ONE-WAY CLUTCH ASSEMBLY**
    a. Install the outer race retainer to the one-way clutch assembly.

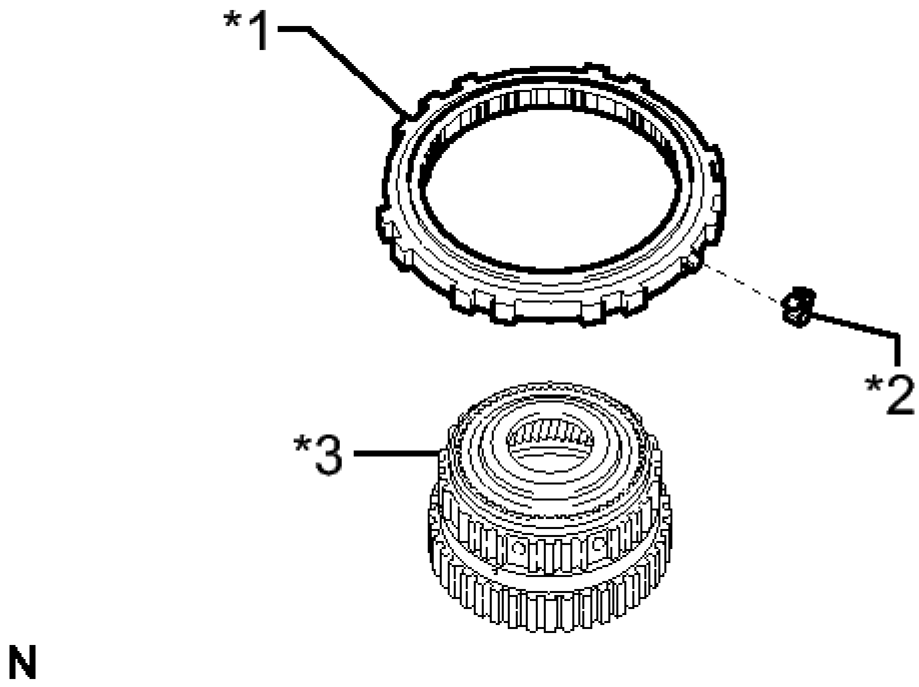

Fig. 308: Identifying One-Way Clutch Assembly, Outer Race Retainer And Planetary Ring Gear
Courtesy of TOYOTA MOTOR SALES, U.S.A., INC.

TEXT IN ILLUSTRATION

*1	One-way Clutch Assembly
*2	Outer Race Retainer
*3	Planetary Ring Gear

b. Install the one-way clutch assembly to the planetary ring gear.

NOTE: **Make sure that the one-way clutch assembly is positioned in the correct direction as shown in the illustration.**

c. Coat the thrust needle roller bearing with ATF, and install it onto the front planetary gear assembly.

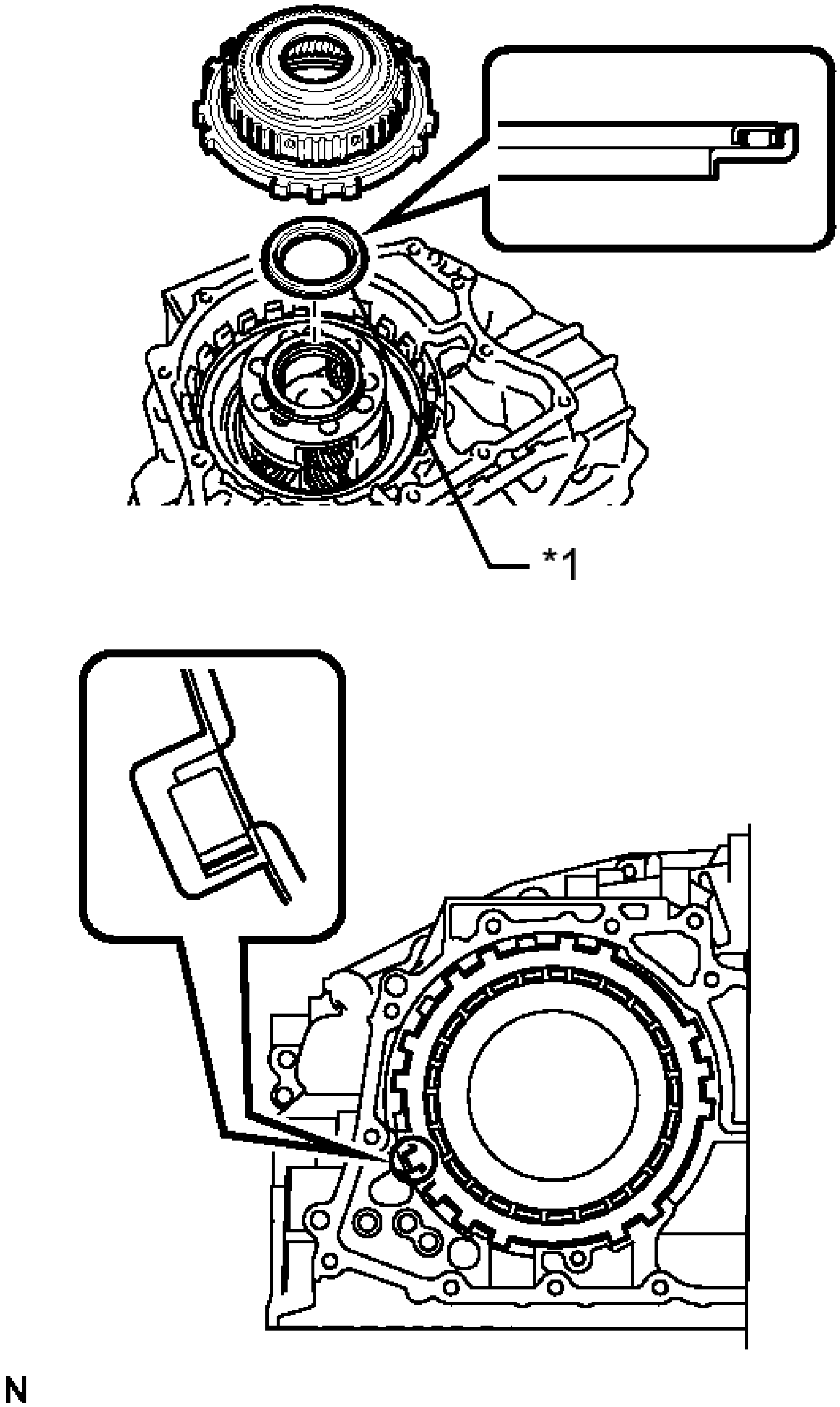

Fig. 309: Identifying Thrust Needle Roller Bearing
Courtesy of TOYOTA MOTOR SALES, U.S.A., INC.

TEXT IN ILLUSTRATION

*1	Thrust Needle Roller Bearing

BEARING DIAMETER

-	Inside [mm (in.)]	Outside [mm (in.)]
Bearing	56.1 (2.21)	81.1 (3.19)

NOTE: **Be sure to install the thrust needle roller bearing properly so that the temper colored side of the race will be visible.**

d. Install the one-way clutch assembly with the planetary ring gear to the transaxle case sub-assembly.

NOTE: **Make sure that there is no clearance between the retainer and the claw on the one-way clutch assembly. If there is any clearance, the spring of the retainer will be deformed.**

e. Using a screwdriver, install the snap ring to the transaxle case sub-assembly.

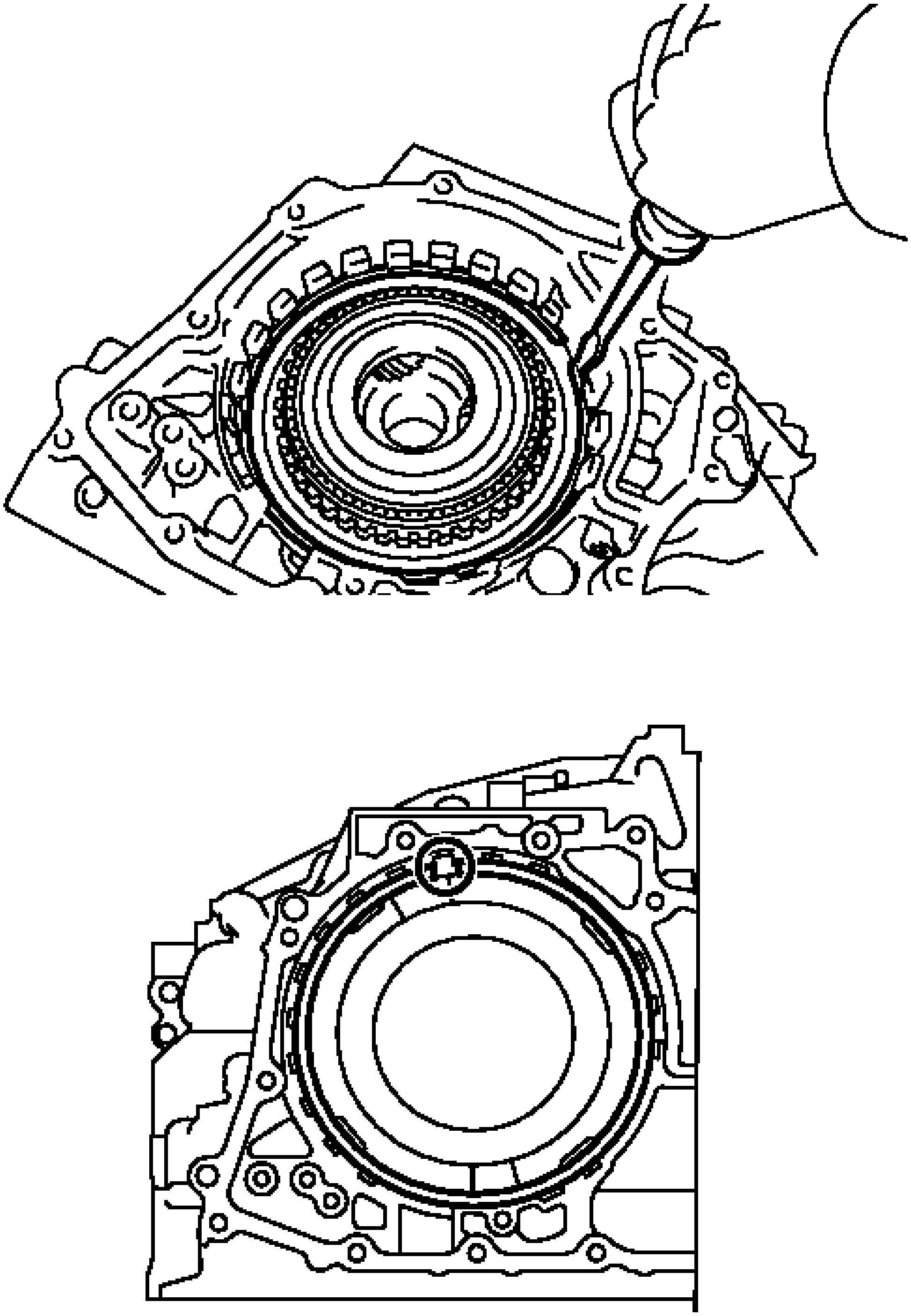

Fig. 310: Installing Snap Ring To Transaxle Case
Courtesy of TOYOTA MOTOR SALES, U.S.A., INC.

NOTE:

- **Confirm that the snap ring is correctly located in the groove of the transaxle case sub-assembly.**

- **Be sure to align the opening of the snap ring with one of the protrusions on the transaxle case sub-assembly as shown in the illustration.**

15. **INSTALL DIFFERENTIAL DRIVE PINION TAPERED ROLLER BEARING LH (OUTER RACE)**
    a. Using SST and a hammer, install a new differential drive pinion tapered roller bearing LH (outer race) to the transaxle case sub-assembly.

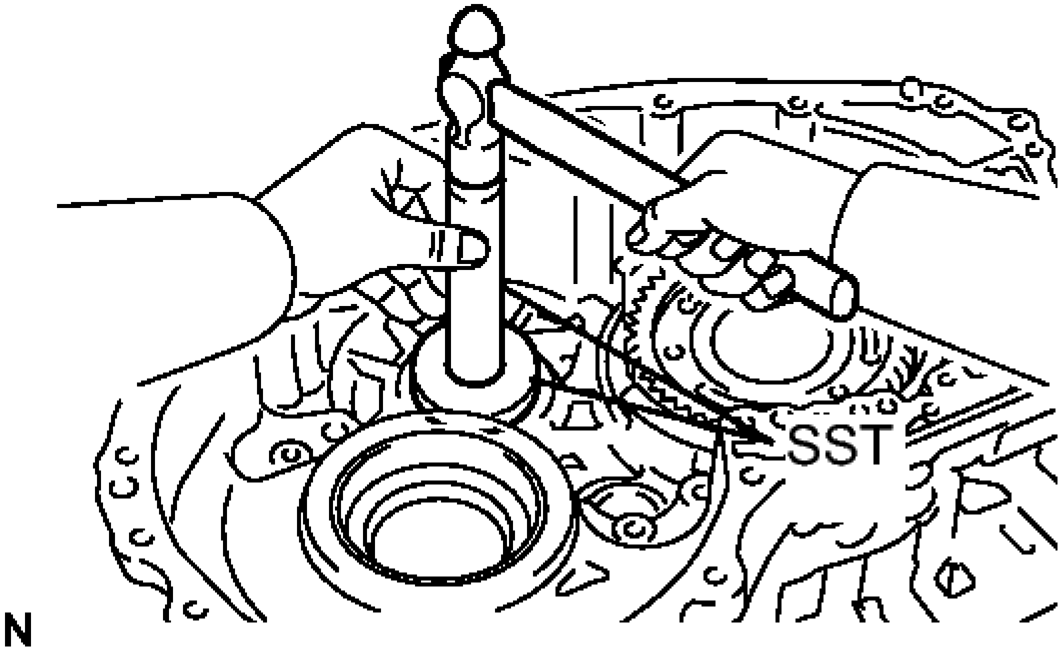

Fig. 311: Installing Counter Driven Gear Rear Tapered Roller Bearing Outer Race
Courtesy of TOYOTA MOTOR SALES, U.S.A., INC.

- **SST: 09950-60010**
  09951-00630
- **SST: 09950-70010**
  09951-07100

NOTE: **Be sure to install the differential drive pinion tapered roller bearing so that there is no clearance between the bearing outer race and the transaxle case sub-assembly. If there is any clearance, the turning torque of the counter drive gear cannot be measured correctly.**

16. **INSTALL PARKING LOCK PAWL**
    a. Install the parking lock pawl to the transaxle case sub-assembly with the parking lock pawl shaft.

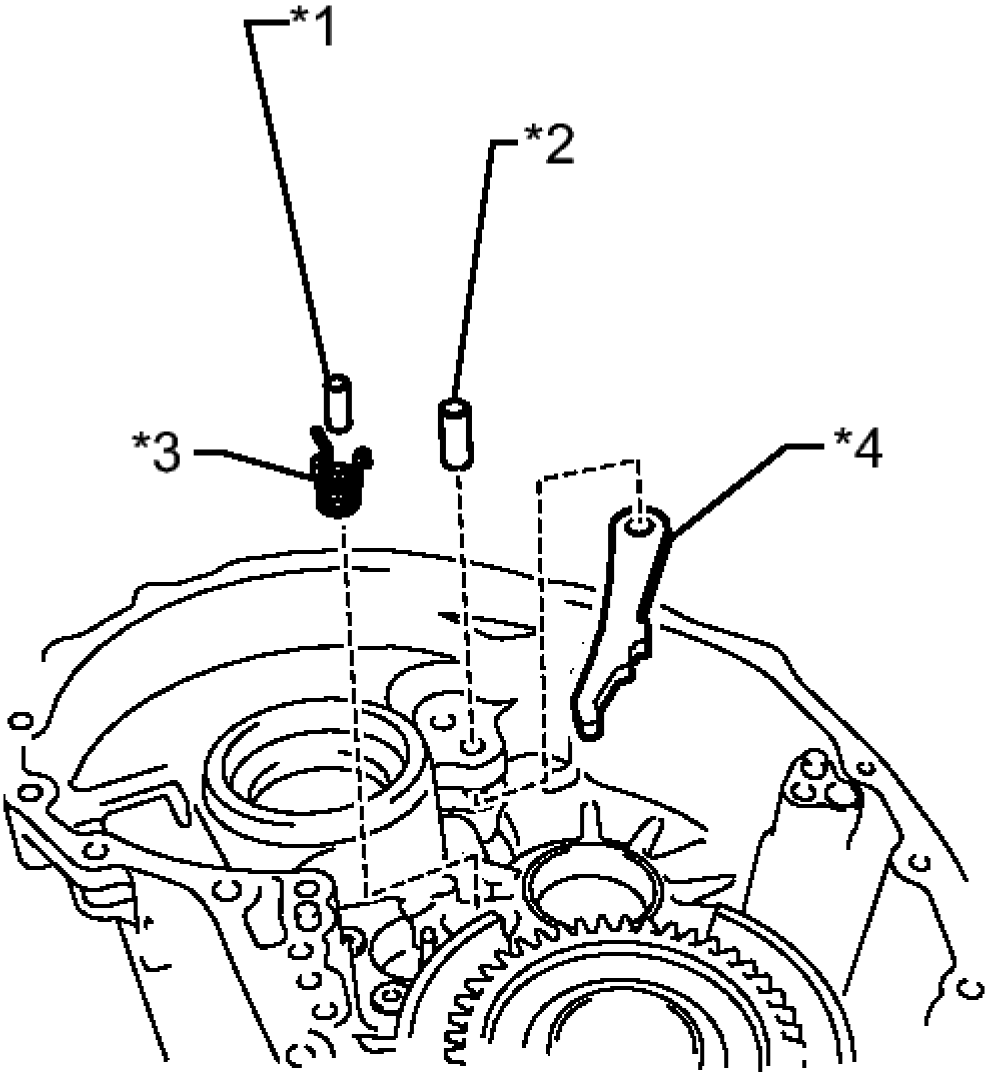

Fig. 312: Identifying Parking Lock Pawl Pin, Shaft And Spring
Courtesy of TOYOTA MOTOR SALES, U.S.A., INC.

TEXT IN ILLUSTRATION

*1	Parking Lock Pawl Pin
*2	Parking Lock Pawl Shaft
*3	Spring
*4	Parking Lock Pawl

b. Install the parking lock pawl pin to the transaxle case sub-assembly.

c. Install the torsion spring to the parking lock pawl.

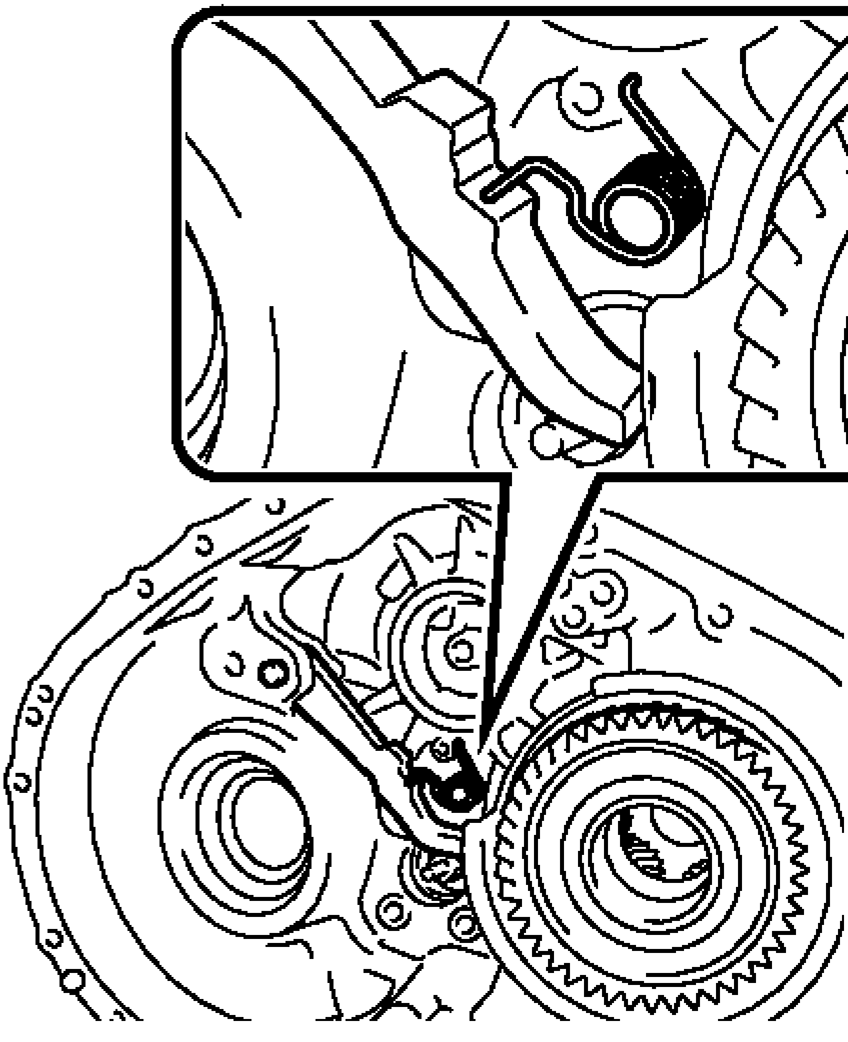

Fig. 313: Identifying Torsion Spring
Courtesy of TOYOTA MOTOR SALES, U.S.A., INC.

NOTE: **Make sure that one end of the spring is secured in the hole of the transaxle case sub-assembly and the other end is positioned on the parking lock pawl as shown in the illustration.**

17. **INSTALL PARKING LOCK SLEEVE**

a. Install the parking lock sleeve to the transaxle case sub-assembly.

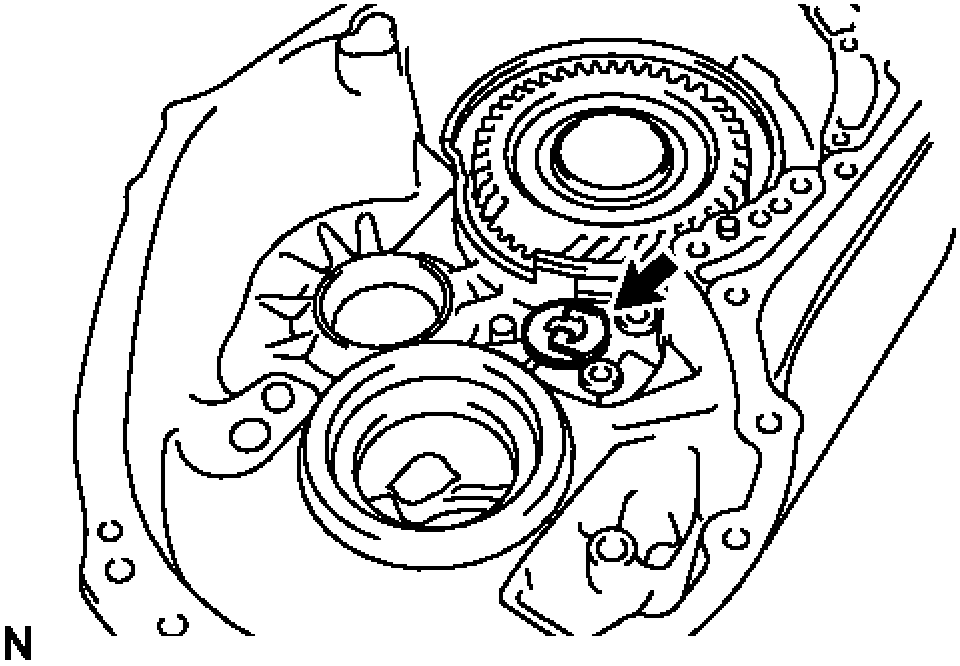

Fig. 314: Locating Parking Lock Sleeve
Courtesy of TOYOTA MOTOR SALES, U.S.A., INC.

18. **INSTALL PAWL STOPPER PLATE**
    a. Install the pawl stopper plate to the transaxle case sub-assembly with the 2 bolts.

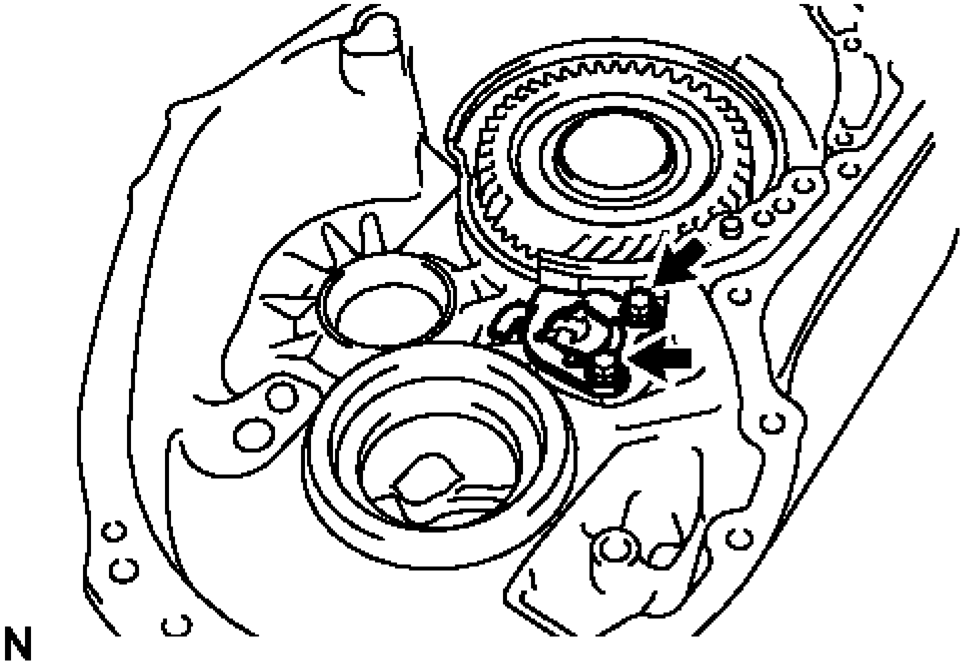

Fig. 315: Locating Pawl Stopper Plate And Bolts

Courtesy of TOYOTA MOTOR SALES, U.S.A., INC.

Torque: 23 N*m (231 kgf*cm, 17 ft.*lbf)

19. **INSTALL NO. 1 TRANSMISSION CASE PLATE**
    a. Clean and degrease the bolt and the installation hole in the transaxle case sub-assembly.

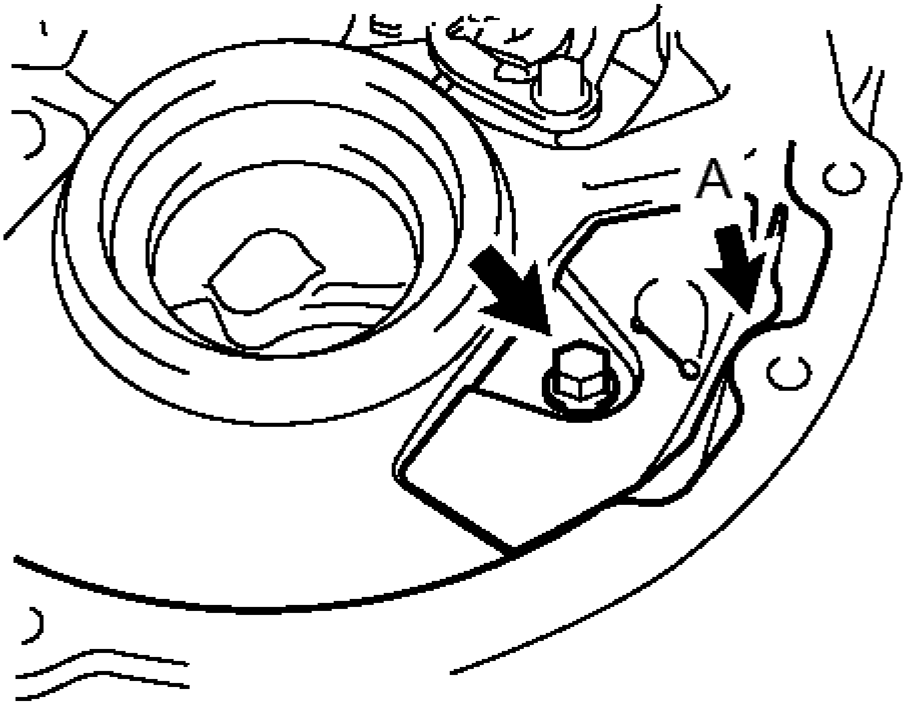

Fig. 316: Locating No. 1 Transmission Case Plate
Courtesy of TOYOTA MOTOR SALES, U.S.A., INC.

b. Apply adhesive to 2 or 3 threads on the ends of the bolt.

Adhesive

Toyota Genuine Adhesive 1324, Three Bond 1324 or equivalent

c. Install the No. 1 transmission case plate to the transaxle case sub-assembly with the bolt.

Torque: 23 N*m (231 kgf*cm, 17 ft.*lbf)

HINT:

Tighten the bolt while part A of the No. 1 transmission case plate contacts the transaxle case sub-assembly as shown in the illustration.

20. **INSTALL PAWL SHAFT CLAMP**
    a. Install the pawl shaft clamp to the transaxle case sub-assembly with the bolt.

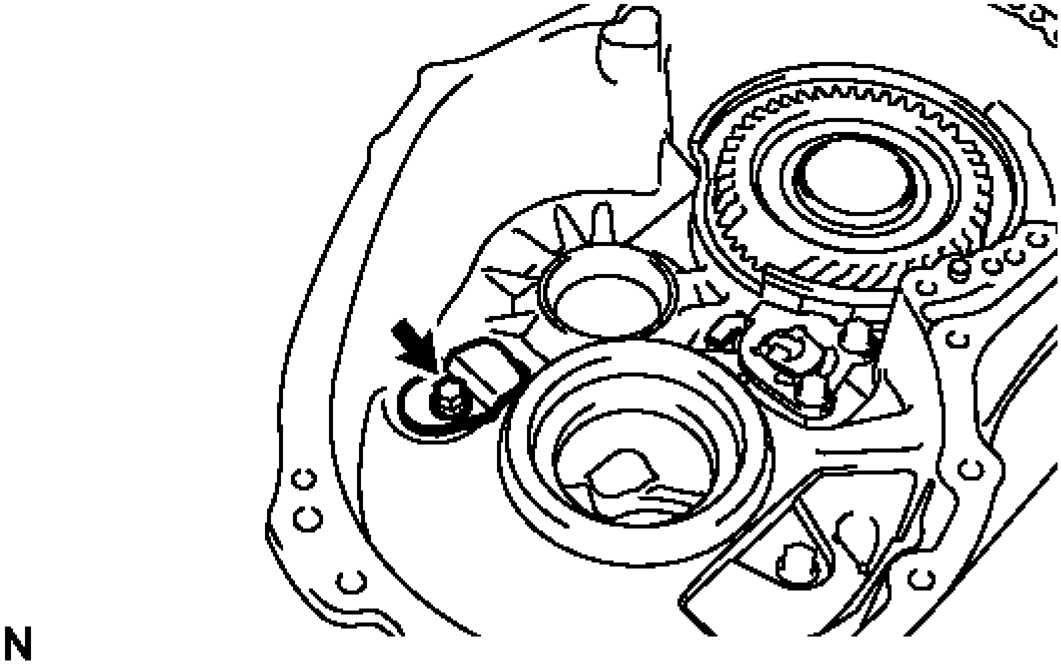

Fig. 317: Locating Pawl Shaft Clamp Bolt
Courtesy of TOYOTA MOTOR SALES, U.S.A., INC.

Torque: 23 N*m (231 kgf*cm, 17 ft.*lbf)

21. **INSTALL DIFFERENTIAL DRIVE PINION TAPERED ROLLER BEARING RH (INNER RACE)**
    a. Using SST and a press, install a new differential drive pinion tapered roller bearing RH (inner race) to the counter driven gear sub-assembly.

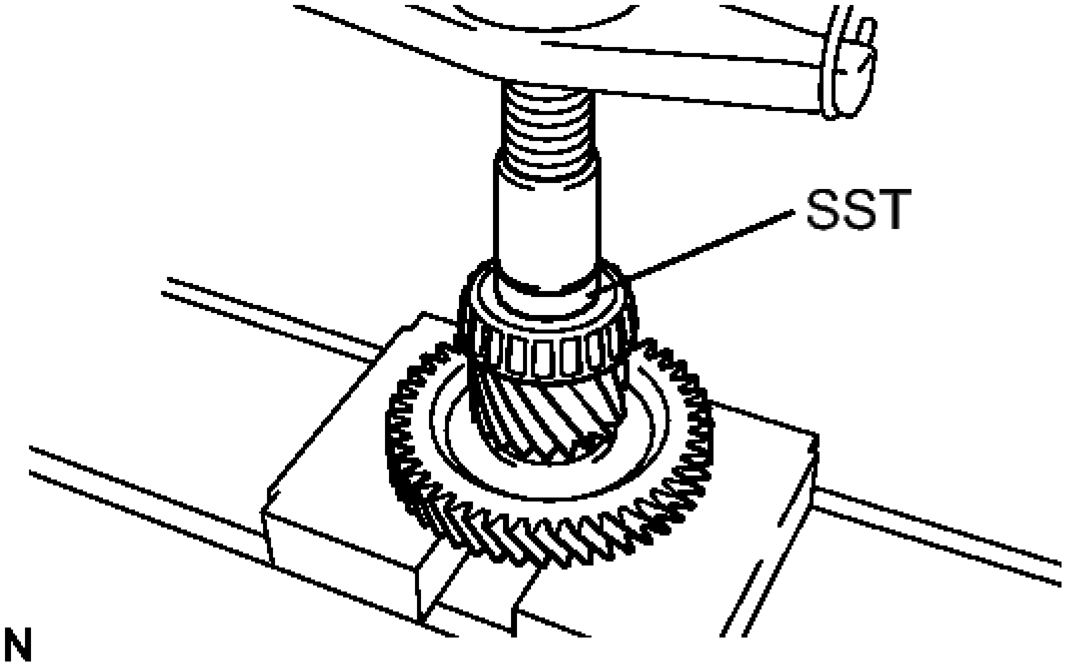

Fig. 318: Installing Counter Driven Gear Front Tapered Roller Bearing
Courtesy of TOYOTA MOTOR SALES, U.S.A., INC.

- **SST: 09950-60010**
  09951-00490

NOTE: **Be sure to install the differential drive pinion tapered roller bearing so that there is no clearance between the bearing and the counter driven gear. If there is any clearance, the turning torque of the counter drive gear cannot be measured correctly.**

22. **INSTALL DIFFERENTIAL DRIVE PINION TAPERED ROLLER BEARING LH (INNER RACE)**
    a. Using SST and a press, install a new differential drive pinion tapered roller bearing LH (inner race) to the counter driven gear sub-assembly.

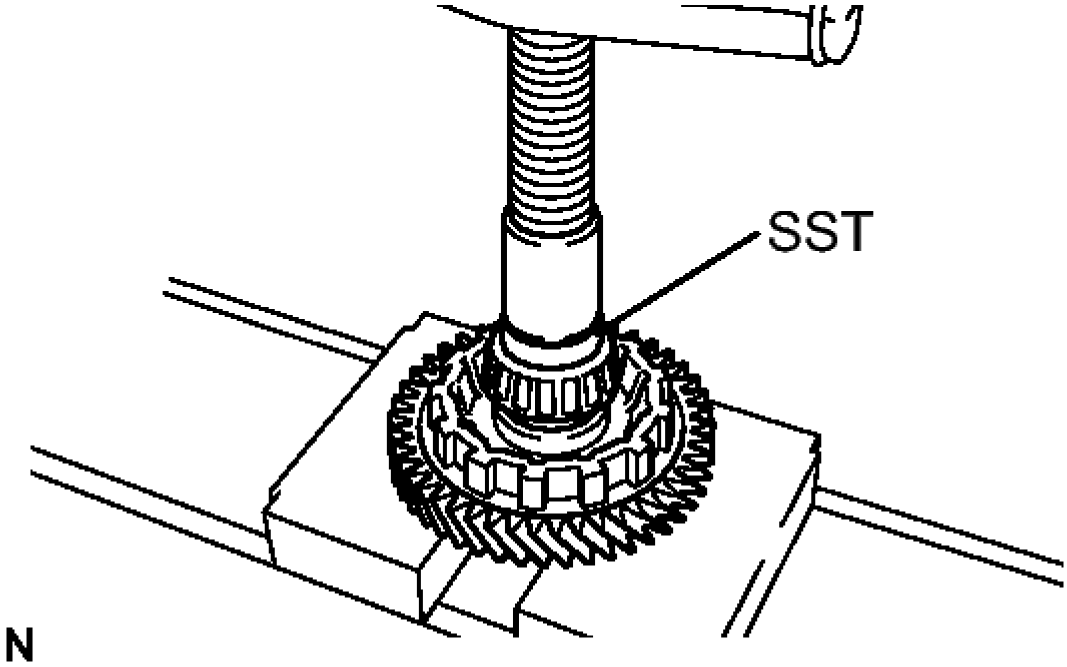

Fig. 319: Installing Counter Driven Gear Rear Tapered Roller Bearing
Courtesy of TOYOTA MOTOR SALES, U.S.A., INC.

- **SST: 09950-60010**

  09951-00400

NOTE: **Be sure to install the differential drive pinion tapered roller bearing so that there is no clearance between the bearing and the counter driven gear. If there is any clearance, the turning torque of the counter drive gear cannot be measured correctly.**

23. **INSTALL COUNTER DRIVEN GEAR**
    a. Install the counter driven gear to the transaxle case sub-assembly.

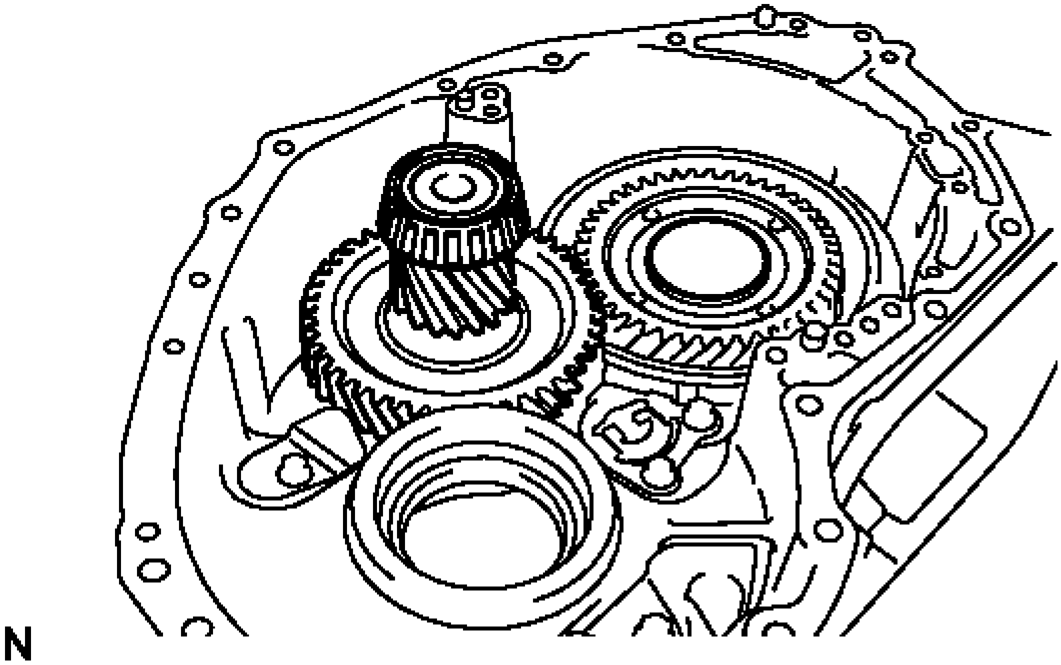

Fig. 320: Identifying Counter Driven Gear
Courtesy of TOYOTA MOTOR SALES, U.S.A., INC.

24. **INSTALL COUNTER DRIVE GEAR NUT**
    a. Turn the manual valve lever shaft counterclockwise to set it to the P position as shown in the illustration.

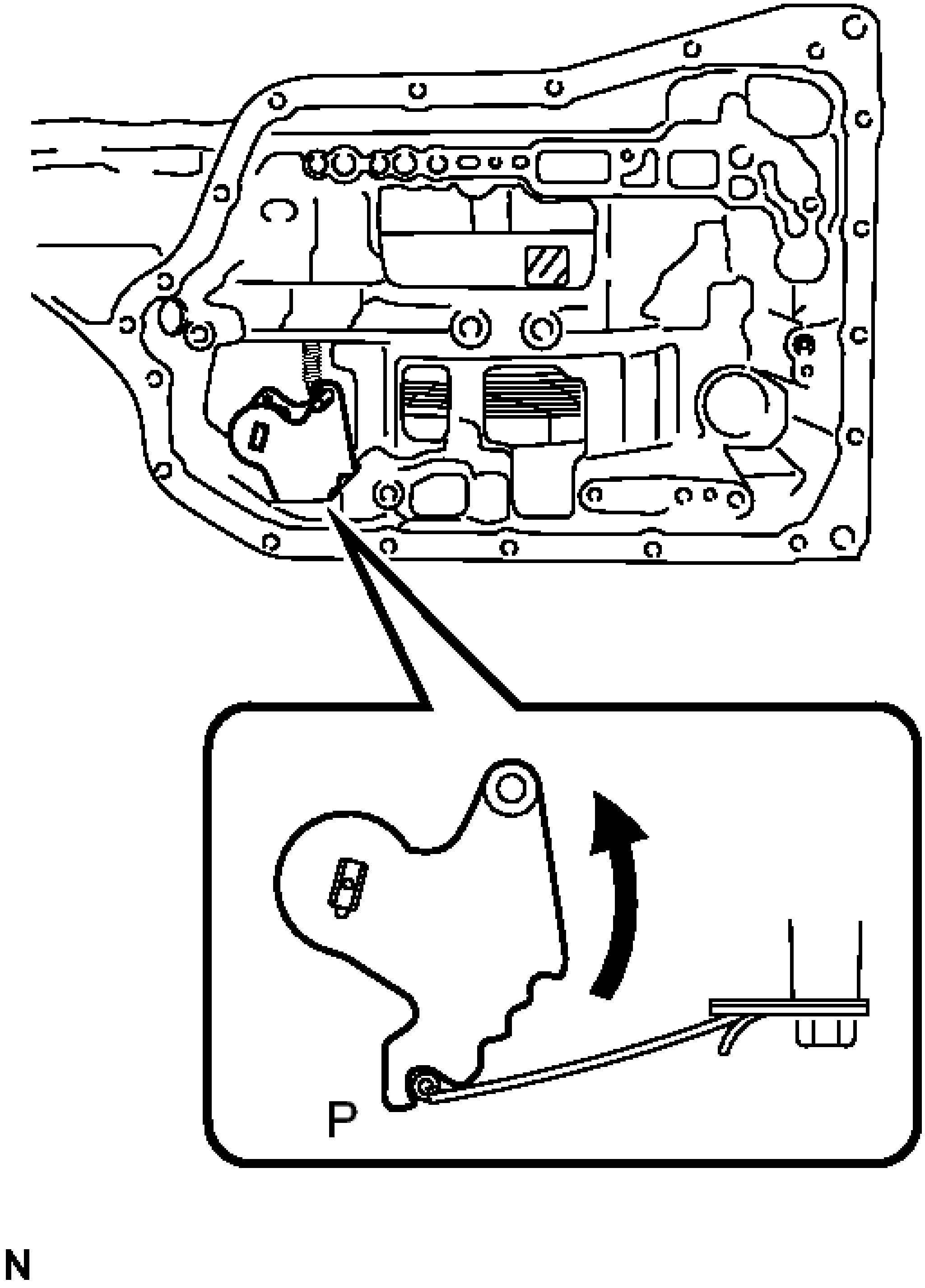

Fig. 321: Turning Manual Valve Lever Shaft
Courtesy of TOYOTA MOTOR SALES, U.S.A., INC.

b. Using SST, install a new counter drive gear nut.

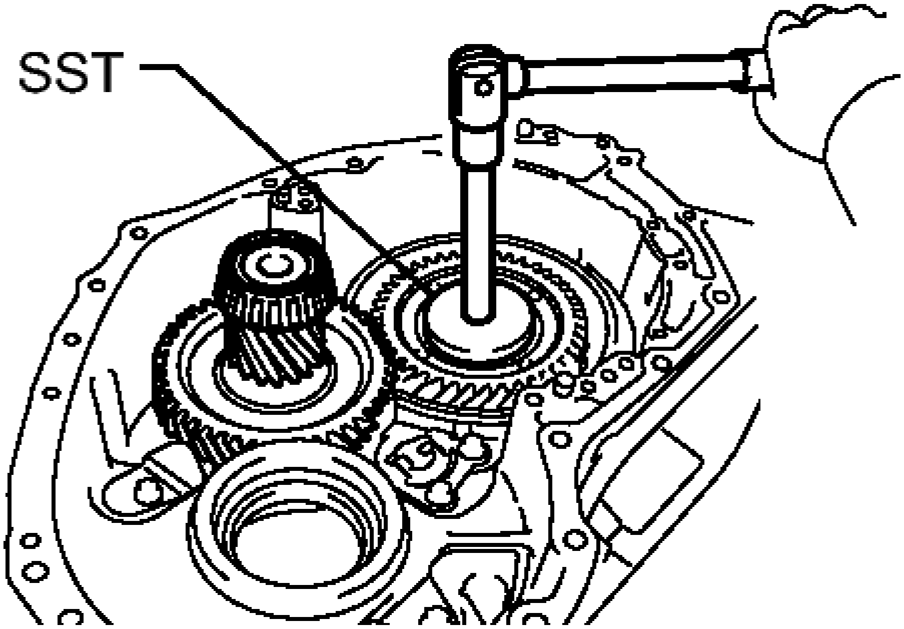

Fig. 322: Installing Counter Drive Gear Nut
Courtesy of TOYOTA MOTOR SALES, U.S.A., INC.

- **SST: 09387-00130**

Torque: 120 N*m (1224 kgf*cm, 88 ft.*lbf)

c. Turn the manual valve lever shaft 2 notches clockwise to set it to the N position as shown in the illustration.

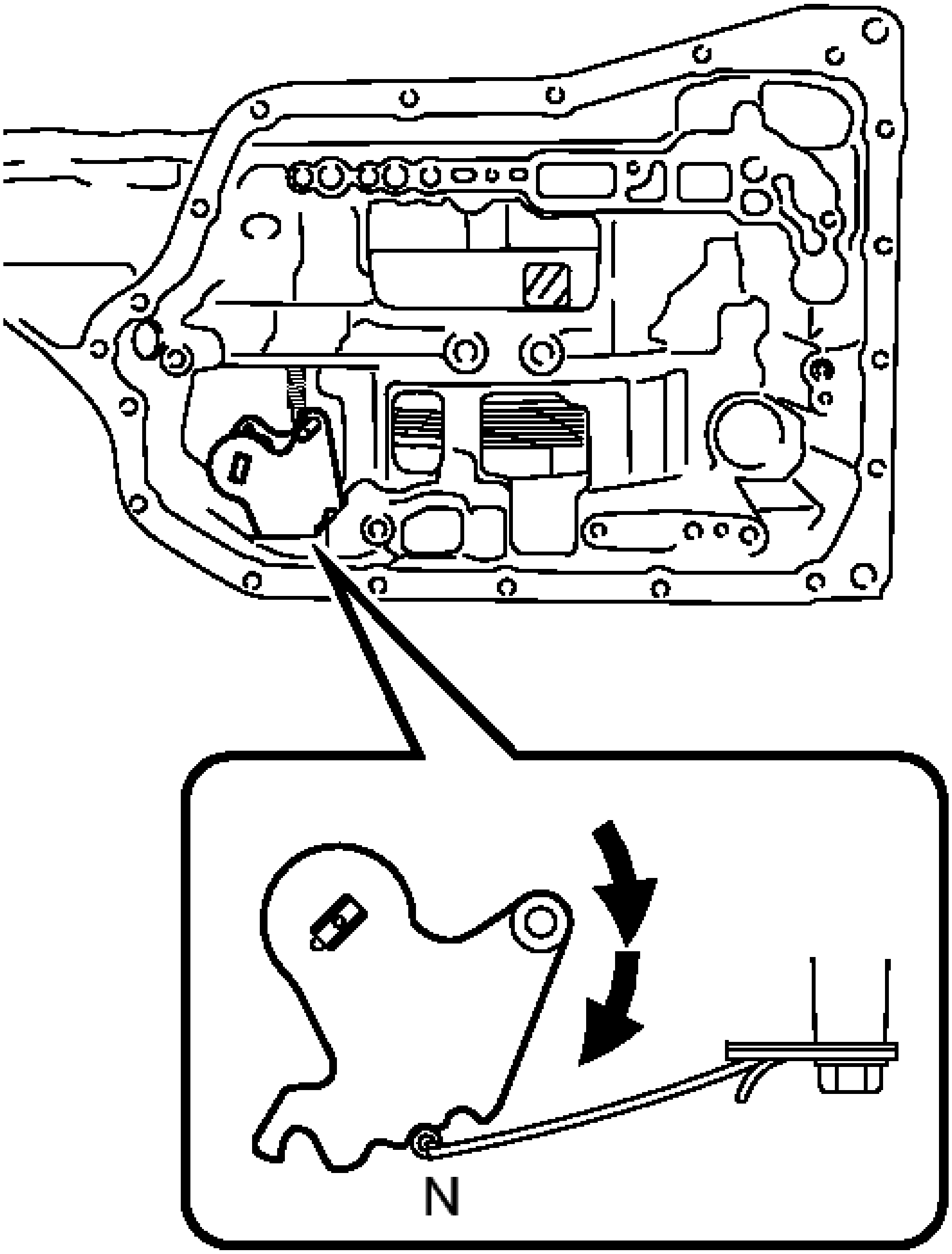

N

Fig. 323: Turning Manual Valve Lever Shaft
Courtesy of TOYOTA MOTOR SALES, U.S.A., INC.

d. Using SST and a torque wrench, measure the turning torque of the bearing while rotating SST at 60 rpm.

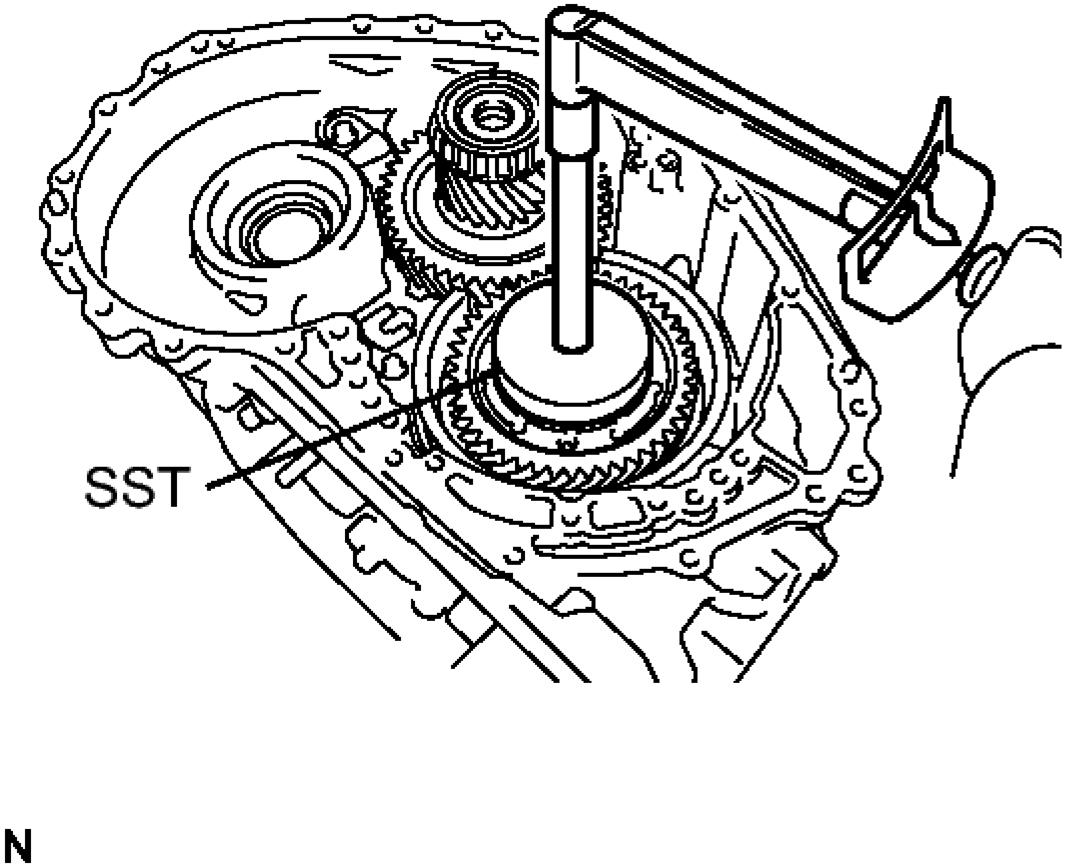

Fig. 324: Measuring Turning Torque Of Bearing
Courtesy of TOYOTA MOTOR SALES, U.S.A., INC.

- **SST: 09387-00130**

Turning torque

0.1 to 0.8 N*m (1 to 8 kgf*cm, 1 to 7 in.*lbf)

If the measured value is not within the specified range, gradually tighten the nut until the turning torque falls within the specified range.

Maximum torque

180 N*m (1835 kgf*cm, 132 ft.*lbf)

e. Using SST and a hammer, stake the counter drive gear nut.

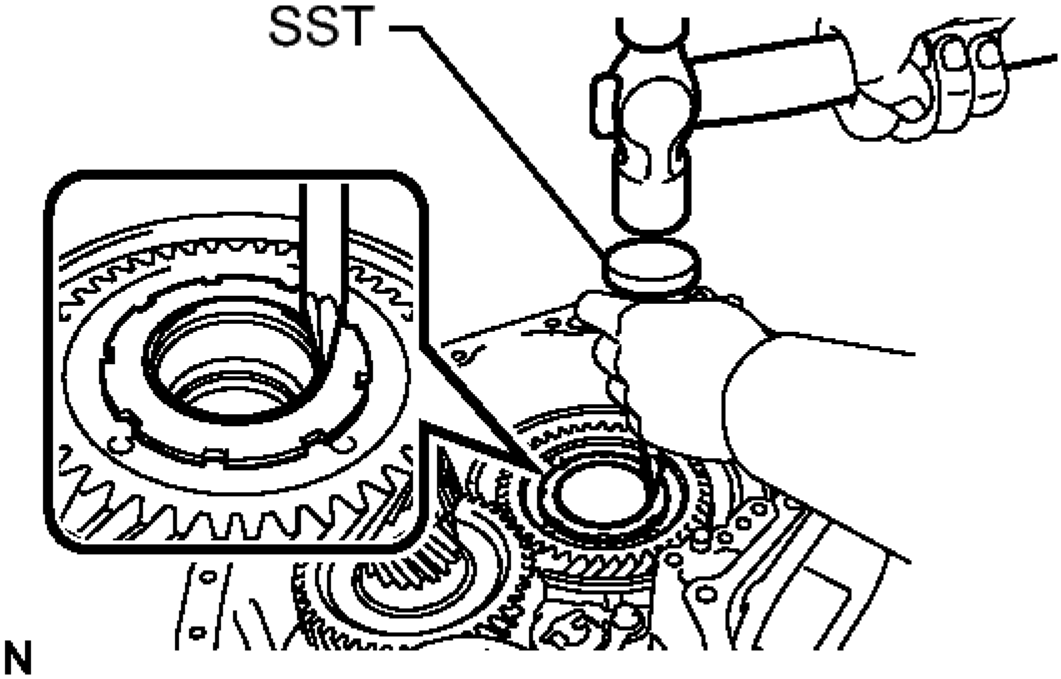

Fig. 325: Removing Counter Drive Gear Nut
Courtesy of TOYOTA MOTOR SALES, U.S.A., INC.

- **SST: 09930-00010**

25. **INSTALL FRONT DIFFERENTIAL CASE**
    a. Install the front differential case to the transaxle case sub-assembly.

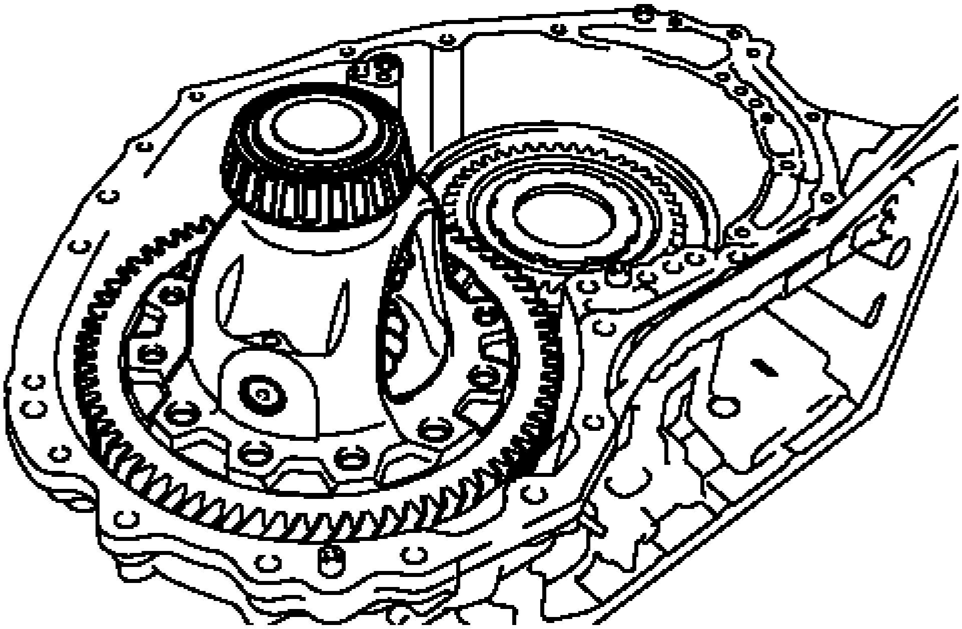

Fig. 326: Identifying Front Differential Case Of Transaxle Case
Courtesy of TOYOTA MOTOR SALES, U.S.A., INC.

26. **INSTALL NO. 1 BRAKE PISTON**
    a. Coat 2 new O-rings with ATF and install them to the No. 1 brake piston.

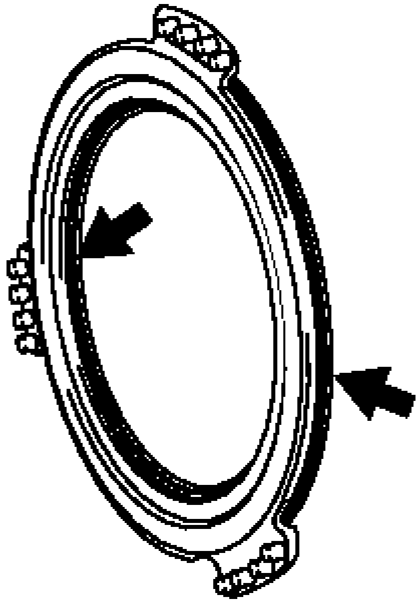

Fig. 327: Locating O-Rings On No. 1 Brake Piston

Courtesy of TOYOTA MOTOR SALES, U.S.A., INC.

NOTE: Ensure that the 2 O-rings are not twisted.

b. Install the No. 1 brake piston to the front oil pump assembly.

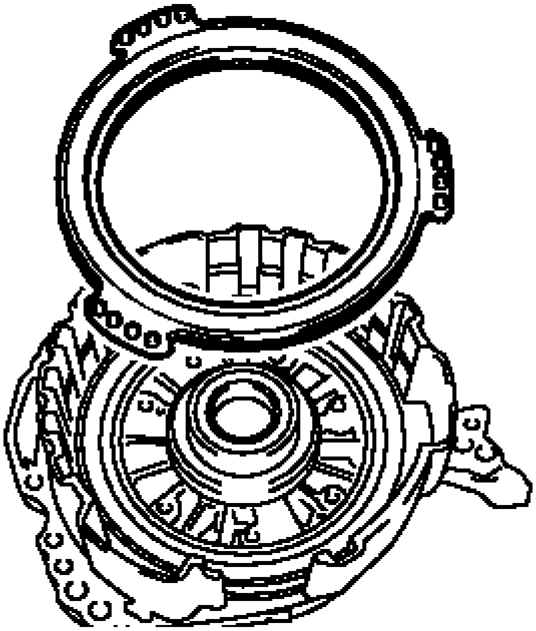

Fig. 328: Identifying No. 1 Brake Piston
Courtesy of TOYOTA MOTOR SALES, U.S.A., INC.

NOTE: Be careful not to damage the O-rings.

27. **INSTALL 2ND BRAKE PISTON RETURN SPRING SUB-ASSEMBLY**
    a. Install the 3 2nd brake piston return springs to the front oil pump assembly.

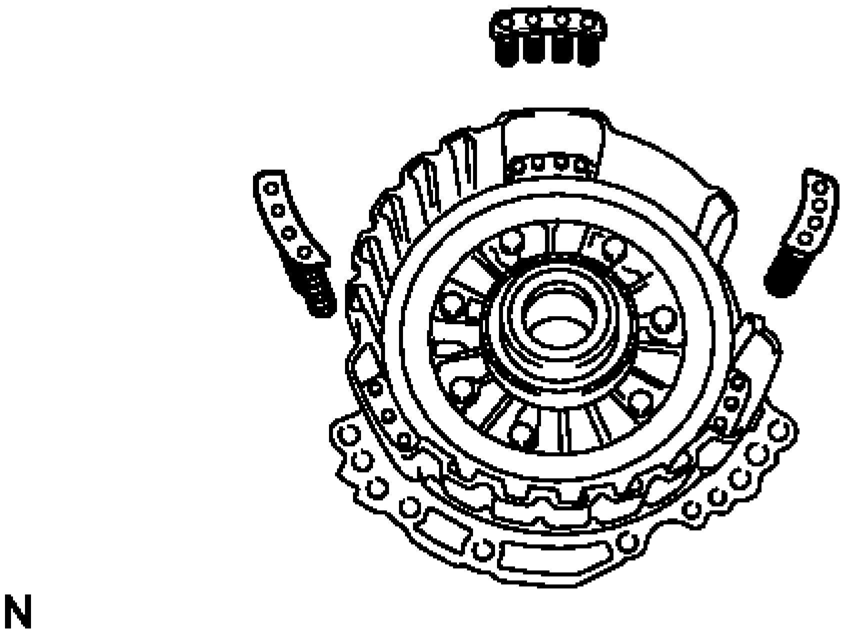

Fig. 329: Identifying 2nd Brake Piston Return Springs
Courtesy of TOYOTA MOTOR SALES, U.S.A., INC.

NOTE: **Make sure that the 3 2nd brake piston return springs are installed onto the protrusions on the front oil pump assembly.**

28. **INSTALL NO. 1 BRAKE DISC**
    a. Install the 3 No. 1 brake discs, 3 No. 1 brake plates, and No. 1 brake flange to the front oil pump assembly.

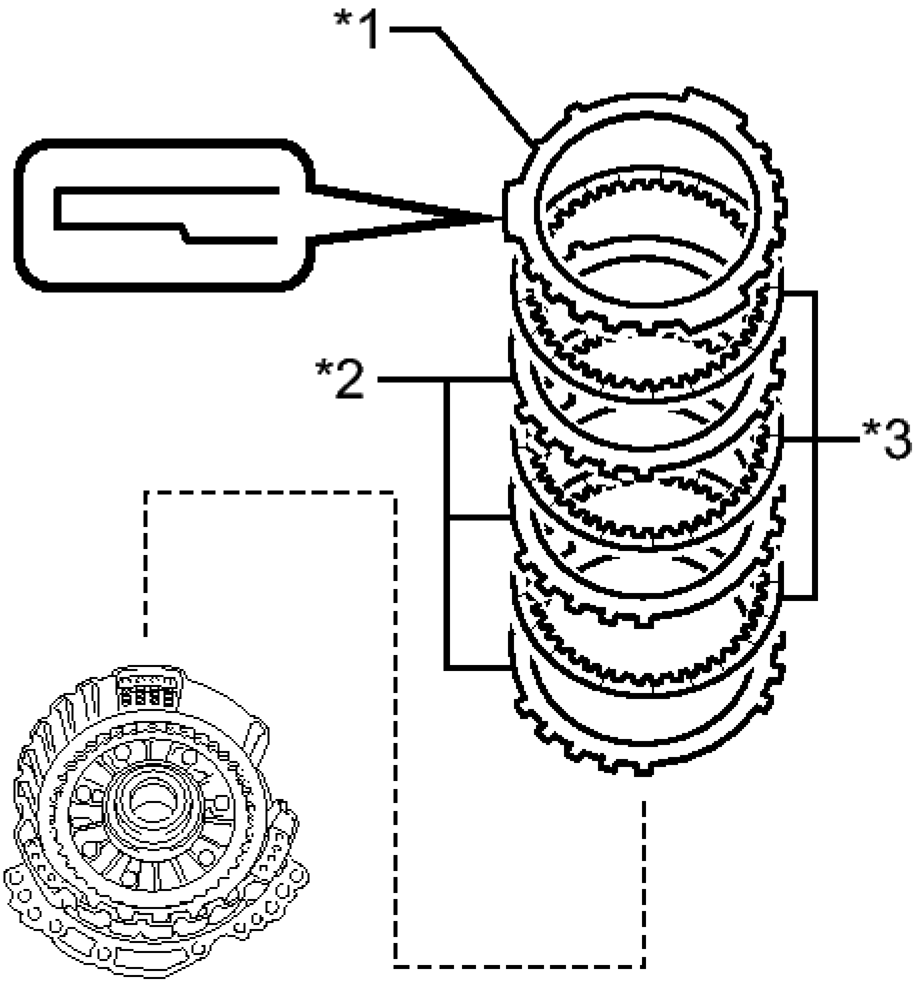

Fig. 330: Identifying Brake Disc, Brake Plate And Flange
Courtesy of TOYOTA MOTOR SALES, U.S.A., INC.

TEXT IN ILLUSTRATION

*1	No. 1 Brake Flange
*2	No. 1 Brake Plate
*3	No. 1 Brake Disc

NOTE:

- **Make sure that the discs, plates, and flange are installed in the**

correct order.

- **Be sure to install the flange in the correct direction.**

b. Place SST on the flange and compress the flange with a press.

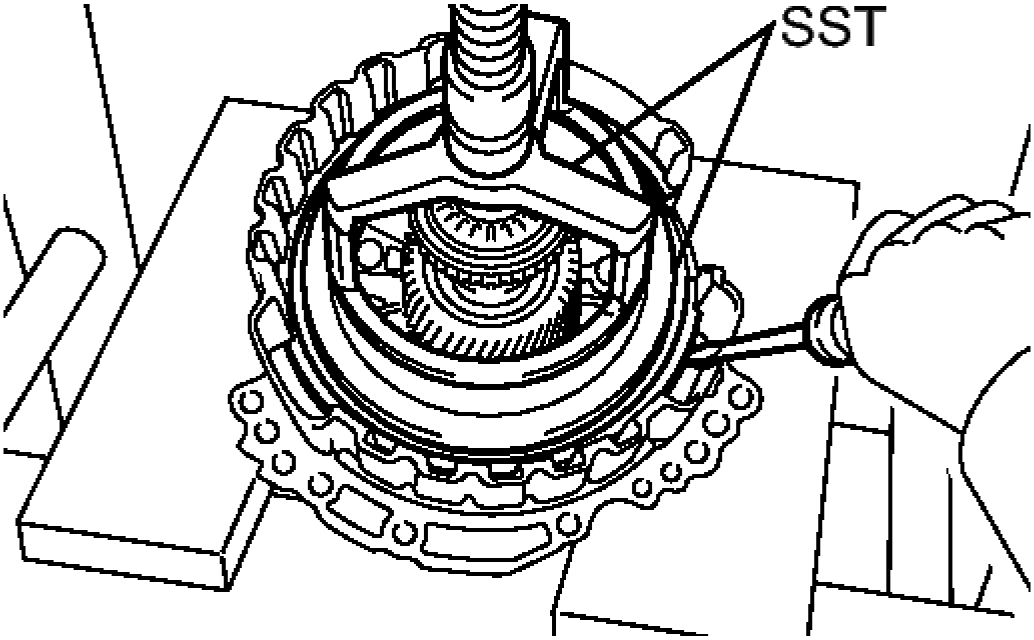

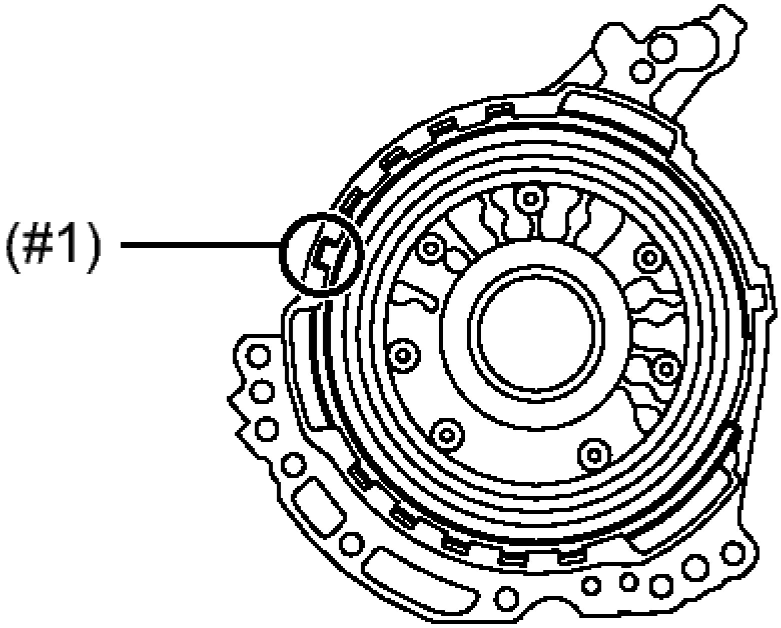

Fig. 331: Installing Snap Ring To Oil Pump Assembly
Courtesy of TOYOTA MOTOR SALES, U.S.A., INC.

- **SST: 09387-00070**
- **SST: 09495-65040**

NOTE: **Stop the press when the brake piston return spring is flush with the snap ring groove. This prevents the brake piston return spring from being deformed.**

c. Using a screwdriver, install the snap ring to the front oil pump assembly as shown in the illustration.

NOTE:

- **Confirm that the snap ring is correctly located in the groove of the oil pump.**
- **Make sure to align the protruding part of the snap ring with the indented part (#1) of the front oil pump and gear body assembly shown in the illustration to install the snap ring.**

d. Install the brake snap ring stopper to the front oil pump assembly.

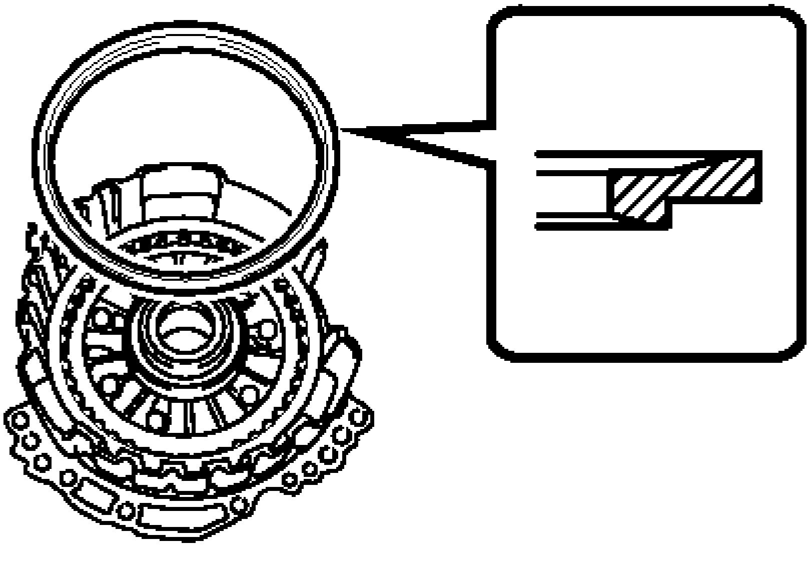

Fig. 332: Identifying Brake Snap Ring Stopper
Courtesy of TOYOTA MOTOR SALES, U.S.A., INC.

NOTE: **Be sure to install the brake snap ring stopper in the correct direction.**

e. Using a screwdriver, install the snap ring to the front oil pump assembly as shown in the illustration.

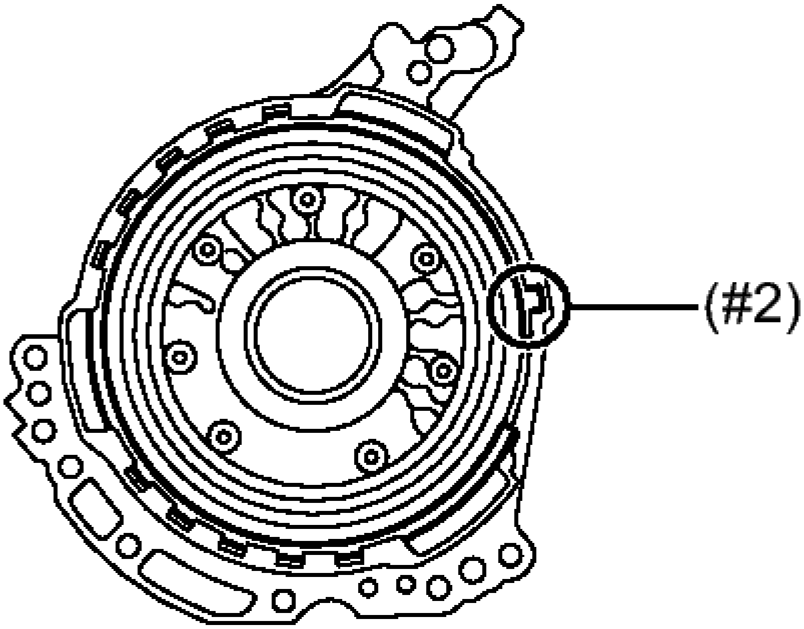

Fig. 333: Identifying Groove Of Oil Pump
Courtesy of TOYOTA MOTOR SALES, U.S.A., INC.

NOTE:

- **Confirm that the snap ring is correctly located in the groove of the oil pump.**
- **Make sure to align the protruding part of the snap ring with the indented part (#2) of the front oil pump assembly shown in the illustration to install the snap ring.**

f. Check that the brake snap ring stopper can be turned by hand.

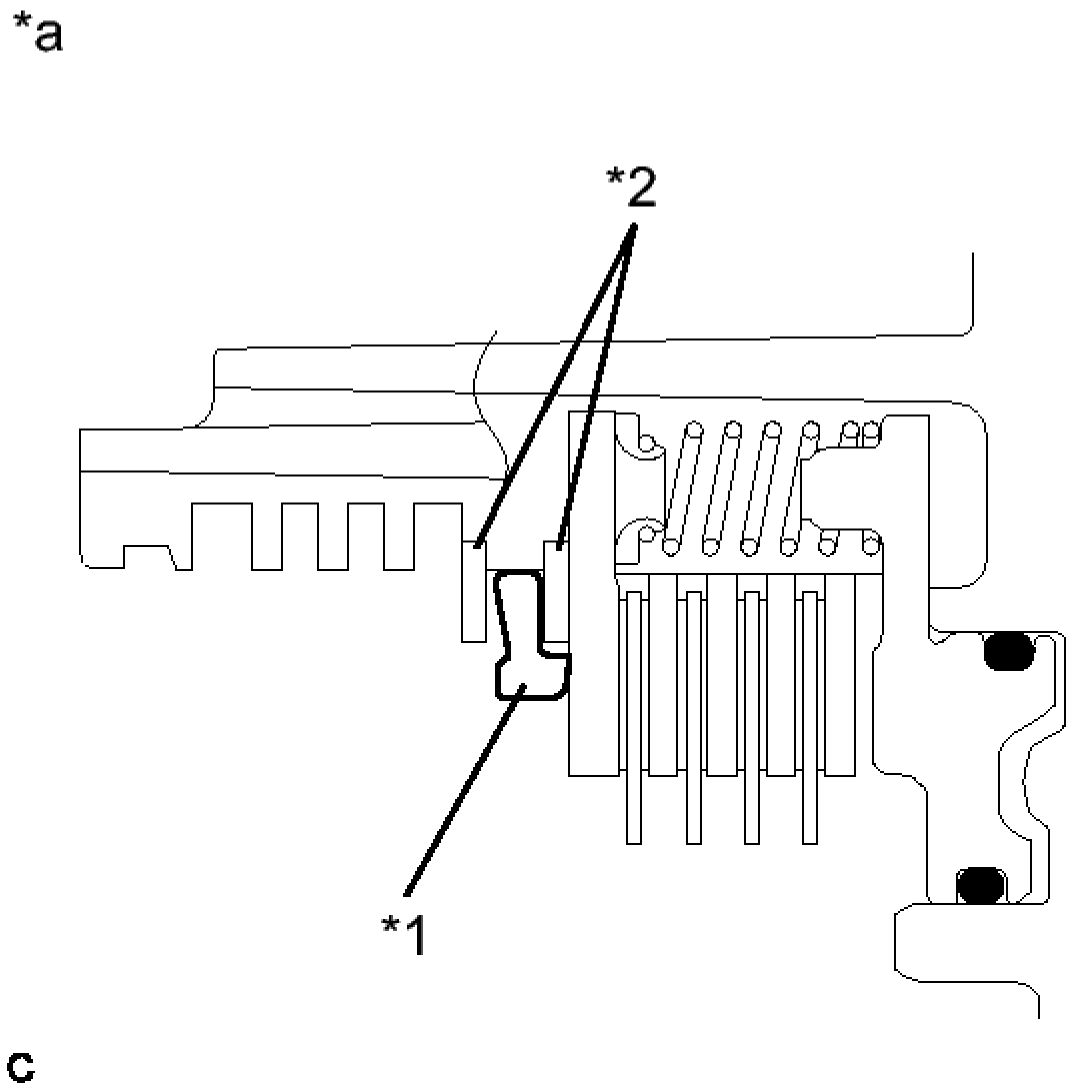

Fig. 334: Snap Ring Stopper And Snap Ring
Courtesy of TOYOTA MOTOR SALES, U.S.A., INC.

TEXT IN ILLUSTRATION

*1	Brake Snap Ring Stopper
*2	Snap Ring
*a	Correctly Installed

NOTE: **If the brake snap ring stopper cannot be turned by hand, the brake snap ring stopper may have been installed upside down, or the snap**

ring may not have been completely located in the groove on the oil pump. Remove and reinstall the snap ring and the brake snap ring stopper.

29. **INSPECT CLEARANCE OF NO. 1 BRAKE** See step 14
30. **INSTALL UNDERDRIVE PLANETARY SUN GEAR**
    a. Coat the thrust needle roller bearing with ATF, and install it to the front oil pump assembly.

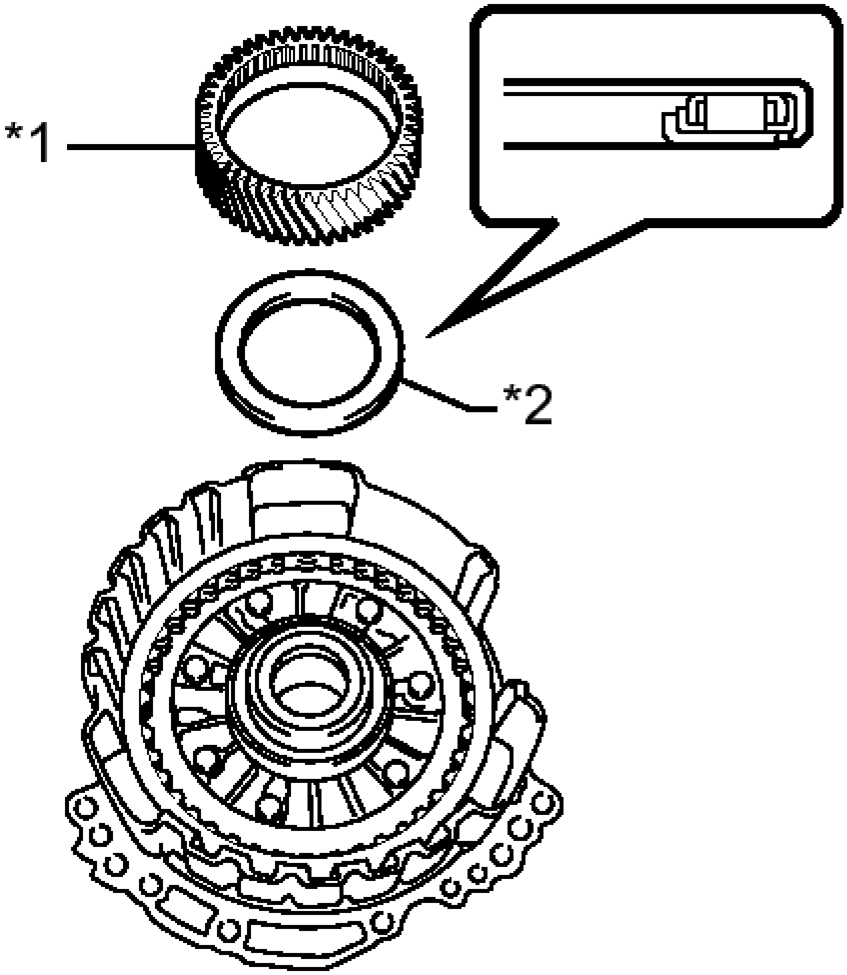

Fig. 335: Identifying Underdrive Planetary Sun Gear And Thrust Needle Roller Bearing
Courtesy of TOYOTA MOTOR SALES, U.S.A., INC.

TEXT IN ILLUSTRATION

*1	Underdrive Planetary Sun Gear

*2	Thrust Needle Roller Bearing

BEARING DIAMETER

-	Inside [mm (in.)]	Outside [mm (in.)]
Bearing	57.7 (2.27)	75.2 (2.96)

NOTE: **Be sure to install the thrust needle roller bearing properly so that the temper colored side of the race will be visible.**

b. Install the underdrive planetary sun gear to the front oil pump assembly.

31. **INSTALL INPUT SHAFT SUB-ASSEMBLY**

  a. Coat 3 new oil seal rings with ATF and install them to the input shaft sub-assembly.

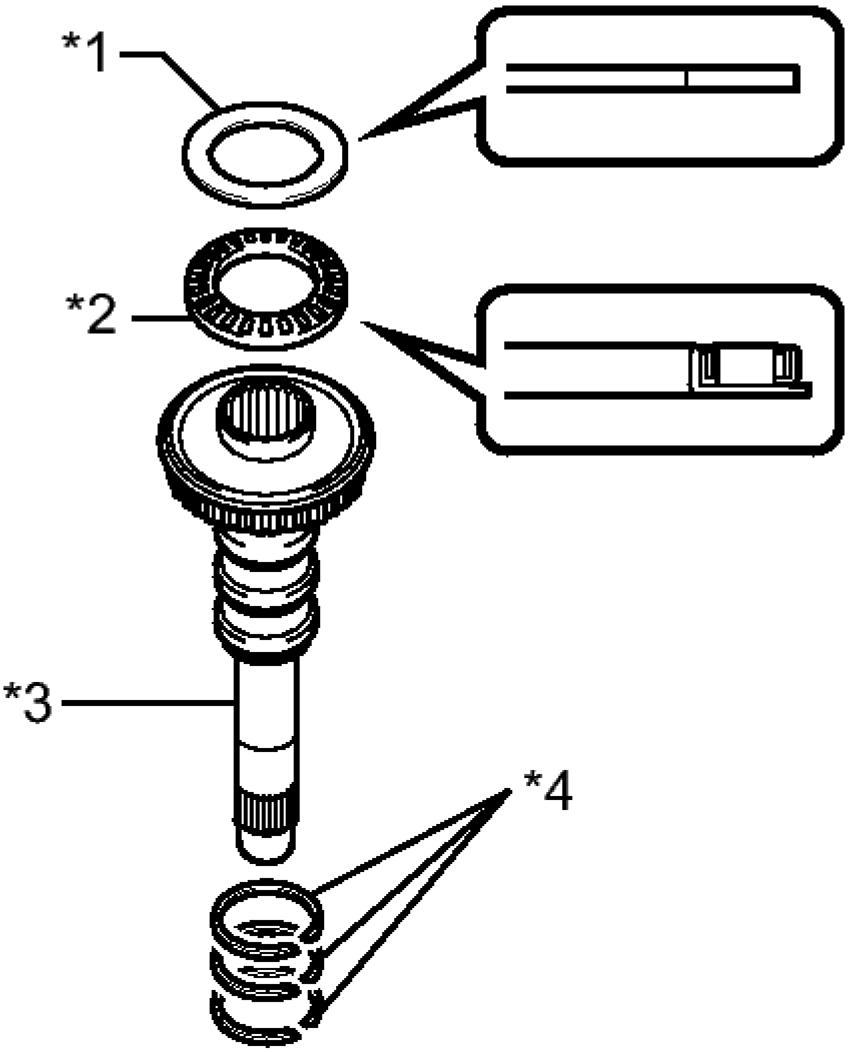

Fig. 336: Identifying Thrust Needle Roller Race And Bearing
Courtesy of TOYOTA MOTOR SALES, U.S.A., INC.

TEXT IN ILLUSTRATION

*1	Thrust Bearing Race
*2	Thrust Needle Roller Bearing
*3	Input Shaft
*4	Oil Seal Ring

NOTE: **Do not expand the gap of the oil seal ring too much.**

b. Coat the thrust needle roller bearing and thrust bearing race with ATF, and install them on the input shaft sub-assembly.

BEARING AND RACE DIAMETER

-	Inside [mm (in.)]	Outside [mm (in.)]
Bearing	29.1 (1.15)	48.6 (1.91)
Race	30.7 (1.21)	48.3 (1.90)

NOTE: **Be sure to install the thrust needle roller bearing in the correct direction.**

c. Install the input shaft to the front oil pump assembly.

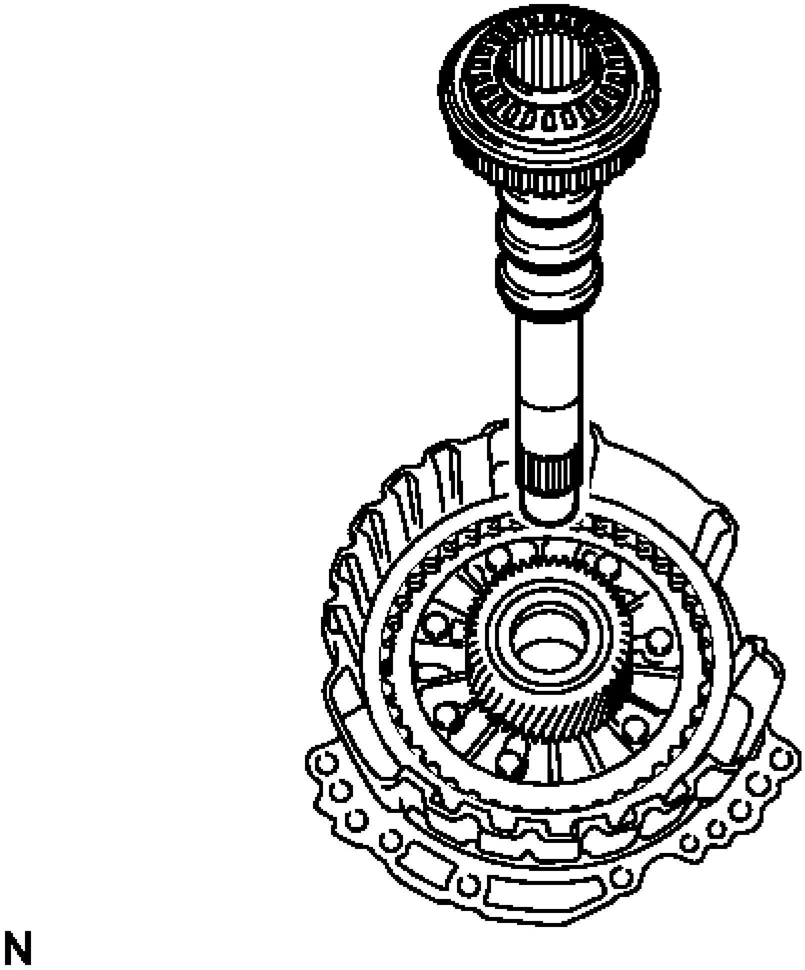

Fig. 337: Identifying Input Shaft And Oil Pump Assembly
Courtesy of TOYOTA MOTOR SALES, U.S.A., INC.

32. **INSTALL PLANETARY SUN GEAR SUB-ASSEMBLY**
    a. Using a snap ring expander, install the snap ring to the underdrive planetary gear assembly.

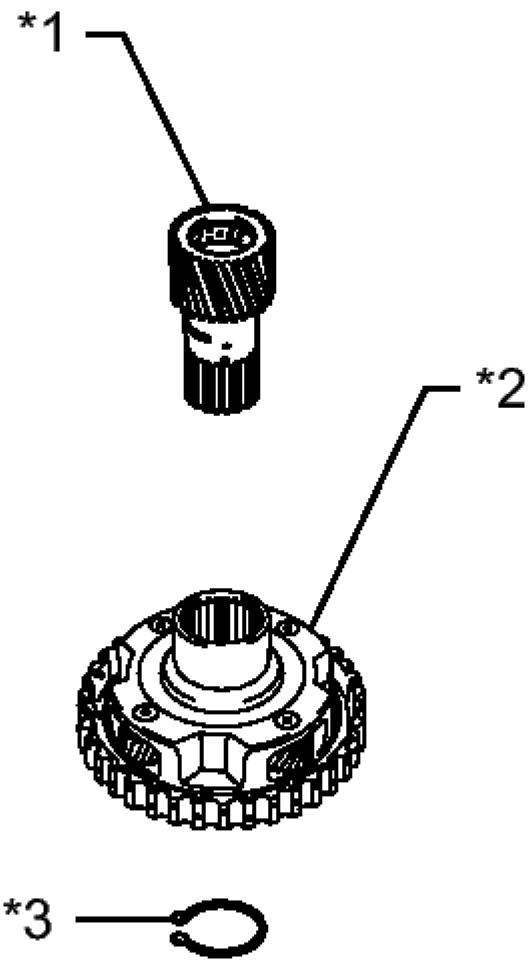

Fig. 338: Identifying Planetary Sun Gear Sub-Assembly
Courtesy of TOYOTA MOTOR SALES, U.S.A., INC.

TEXT IN ILLUSTRATION

*1	Planetary Sun Gear Sub-assembly
*2	Underdrive Planetary Gear Assembly
*3	Snap Ring

b. Using a snap ring expander, install the planetary sun gear sub-assembly to the underdrive planetary gear assembly with the snap ring expanded.

33. **INSTALL NO. 3 BRAKE HUB**

a. Coat the thrust needle roller bearing with ATF and install it on the underdrive planetary gear assembly.

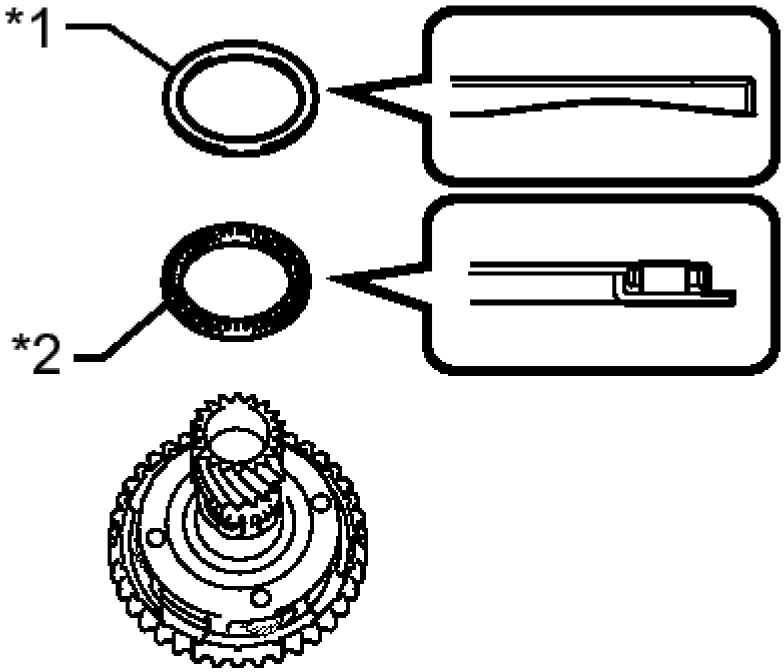

Fig. 339: Identifying Thrust Needle Roller Race And Bearing
Courtesy of TOYOTA MOTOR SALES, U.S.A., INC.

TEXT IN ILLUSTRATION

*1	Thrust Bearing Race
*2	Thrust Needle Roller Bearing

BEARING AND RACE DIAMETER

-	**Inside [mm (in.)]**	**Outside [mm (in.)]**
Bearing	62.6 (2.47)	82.4 (3.24)
Race	65.9 (2.59)	82.3 (3.24)

NOTE: **Be sure to install the thrust needle roller bearing properly so that the**

temper colored side of the race will be visible.

b. Coat the thrust bearing race with MP grease and install it to the No. 3 brake hub.
c. Install the No. 3 brake hub to the underdrive planetary gear assembly.

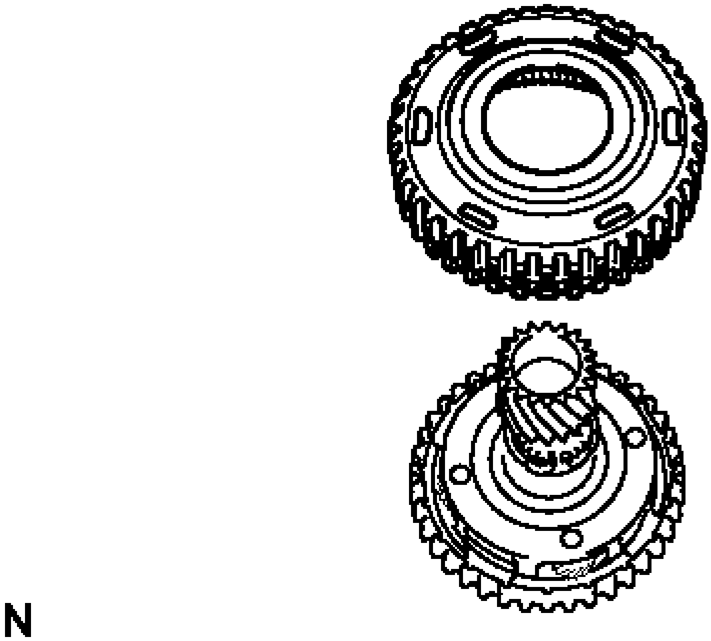

Fig. 340: Identifying No. 3 Brake Hub And Underdrive Planetary Gear Assembly
Courtesy of TOYOTA MOTOR SALES, U.S.A., INC.

34. **INSTALL UNDERDRIVE PLANETARY GEAR ASSEMBLY**
    a. Install the underdrive planetary gear assembly to the front oil pump assembly.

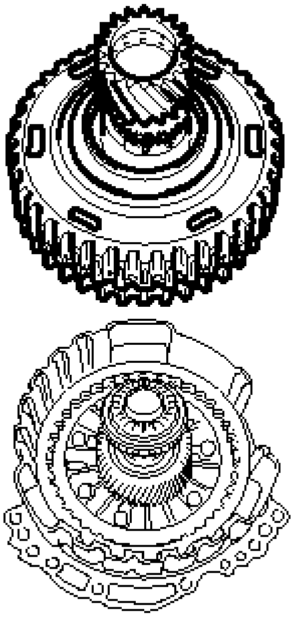

Fig. 341: Identifying Underdrive Planetary Gear Assembly
Courtesy of TOYOTA MOTOR SALES, U.S.A., INC.

35. **INSTALL NO. 3 BRAKE DISC**
    a. Install the 2 No. 3 brake flanges, 3 No. 3 brake discs, and 2 No. 3 brake plates to the front oil pump assembly.

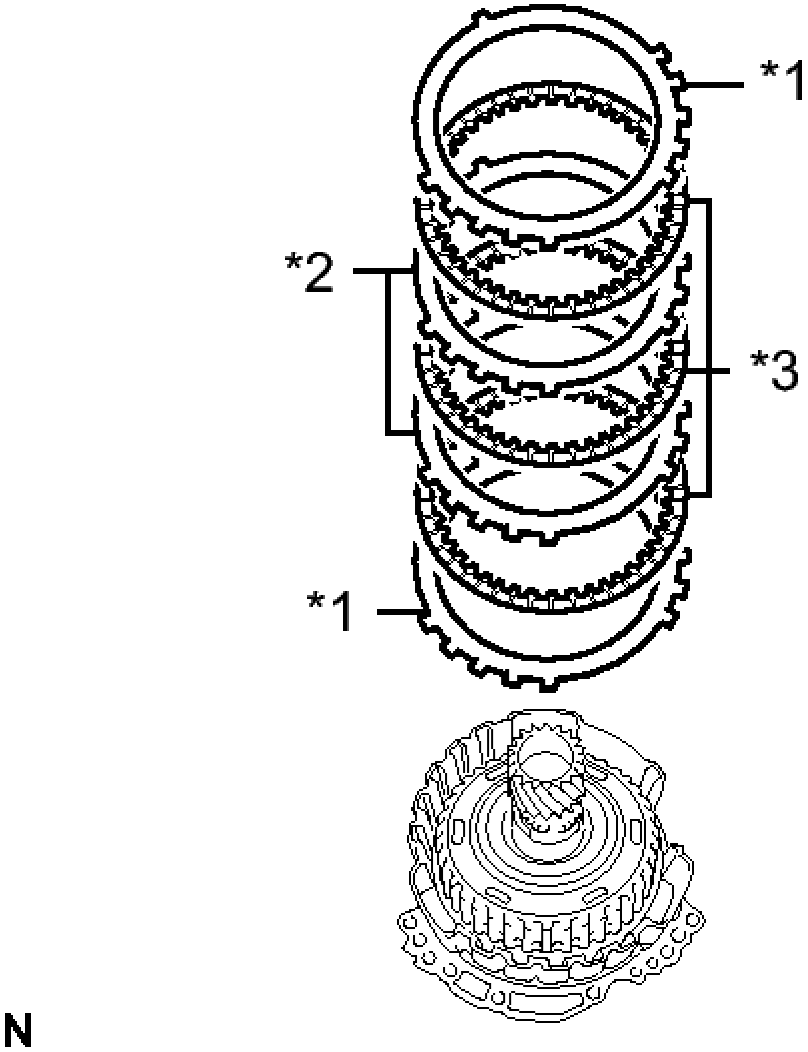

Fig. 342: Identifying Brake Flanges, Brake Discs And Brake Plates
Courtesy of TOYOTA MOTOR SALES, U.S.A., INC.

TEXT IN ILLUSTRATION

*1	No. 3 Brake Flange
*2	No. 3 Brake Plate
*3	No. 3 Brake Disc

NOTE: **Make sure that the discs, plates, and flanges are installed in the**

correct order.

b. Using a screwdriver, install the snap ring to the front oil pump assembly.

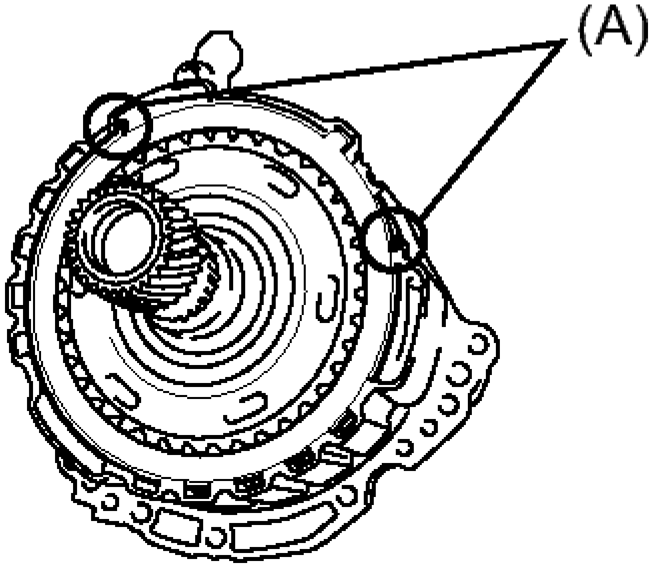

N

Fig. 343: Identifying Snap Ring To Oil Pump Assembly
Courtesy of TOYOTA MOTOR SALES, U.S.A., INC.

NOTE:

- **Confirm that the snap ring is correctly located in the groove of the oil pump.**
- **Make sure that the snap ring ends are positioned as shown in the illustration (A).**

36. **INSPECT CLEARANCE OF NO. 3 BRAKE** See step 16
37. **INSTALL FRONT OIL PUMP ASSEMBLY**
    a. Coat a new O-ring with ATF and install it to the transaxle case sub-assembly.

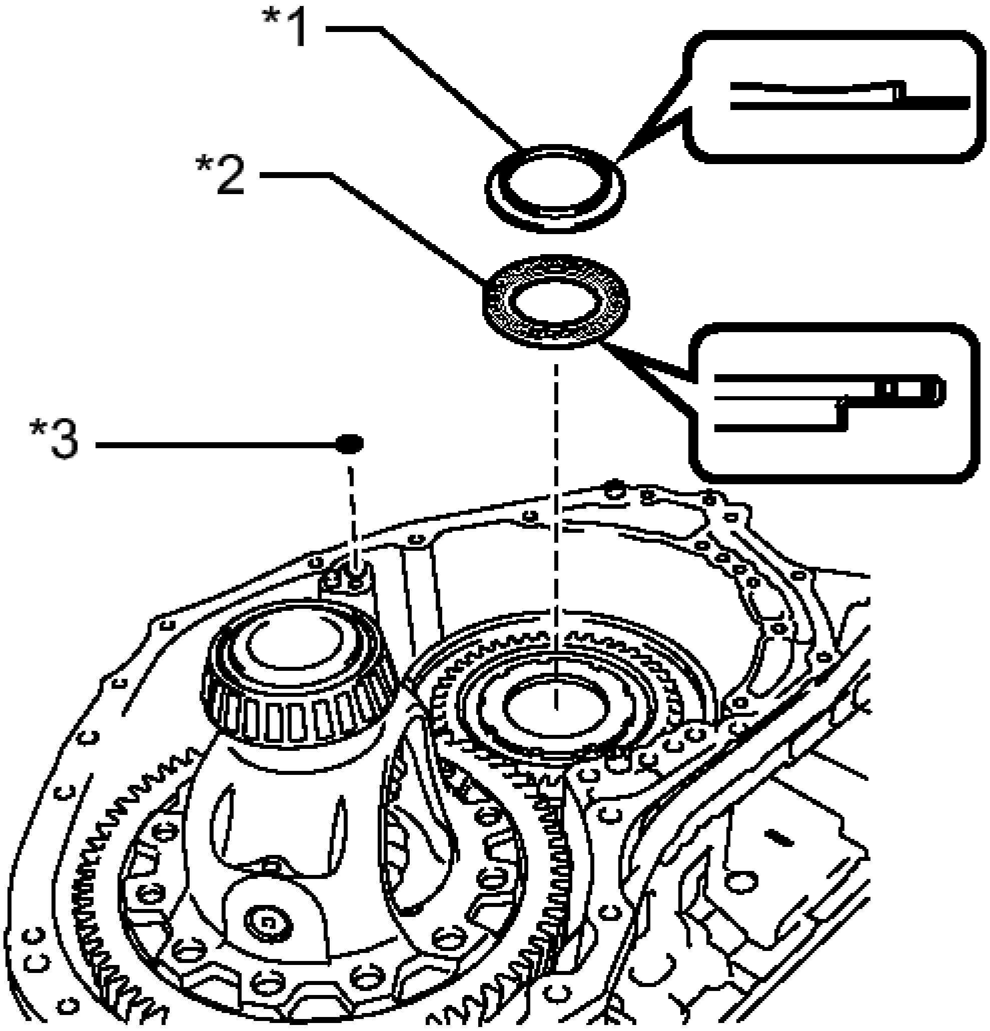

Fig. 344: Identifying Thrust Needle Roller Bearing And Thrust Needle Roller Bearing Race
Courtesy of TOYOTA MOTOR SALES, U.S.A., INC.

TEXT IN ILLUSTRATION

*1	Thrust Bearing Race
*2	Thrust Needle Roller Bearing
*3	O-ring

b. Coat the thrust needle roller bearing and thrust bearing race with ATF and install them on the counter drive gear nut.

BEARING AND RACE DIAMETER

-	Inside [mm (in.)]	Outside [mm (in.)]
Bearing	53.46 (2.10)	79 (3.11)
Race	59.4 (2.34)	76 (2.99)

NOTE: **Be sure to install the thrust needle roller bearing properly so that the temper colored side of the race will be visible.**

c. Coat a new O-ring with ATF and install it to the front oil pump assembly.

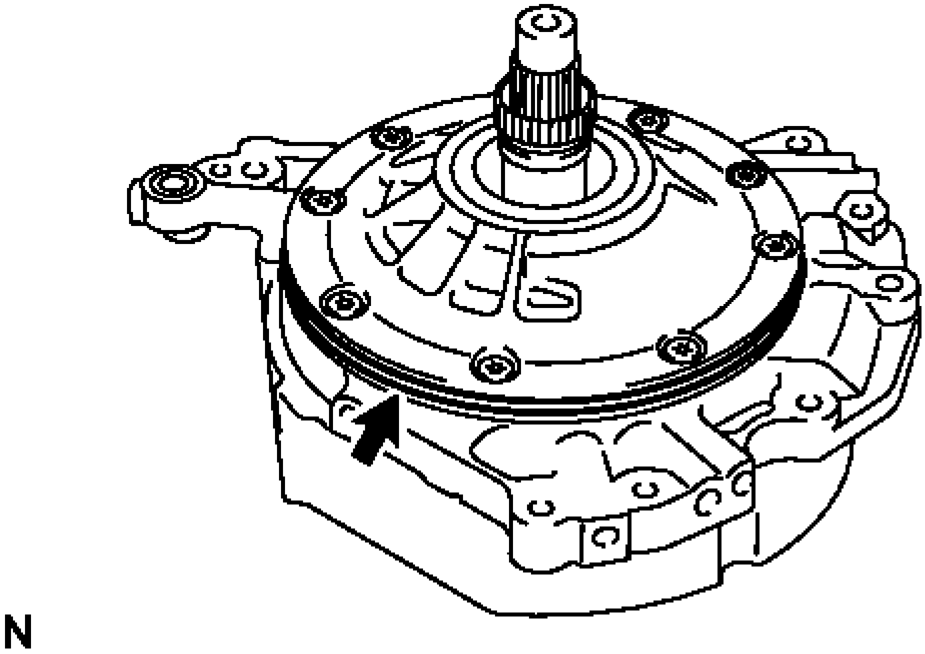

Fig. 345: Locating O-Ring
Courtesy of TOYOTA MOTOR SALES, U.S.A., INC.

d. Install the front oil pump assembly to the transaxle case sub-assembly with the 7 bolts.

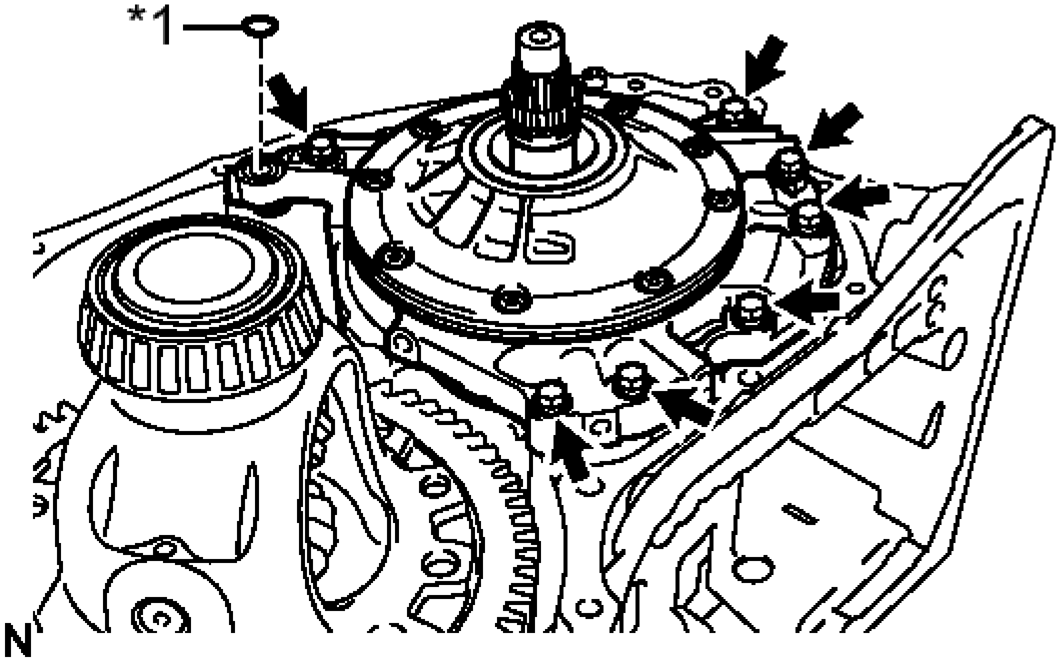

Fig. 346: Locating Transaxle Case Bolt
Courtesy of TOYOTA MOTOR SALES, U.S.A., INC.

TEXT IN ILLUSTRATION

*1	O-ring

Torque: 23 N*m (231 kgf*cm, 17 ft.*lbf)

e. Coat a new O-ring with ATF and install it to the front oil pump assembly.

38. **INSTALL TRANSAXLE HOUSING OIL SEPARATOR**

a. Clean and degrease the 3 bolts and the installation holes in the transaxle housing.

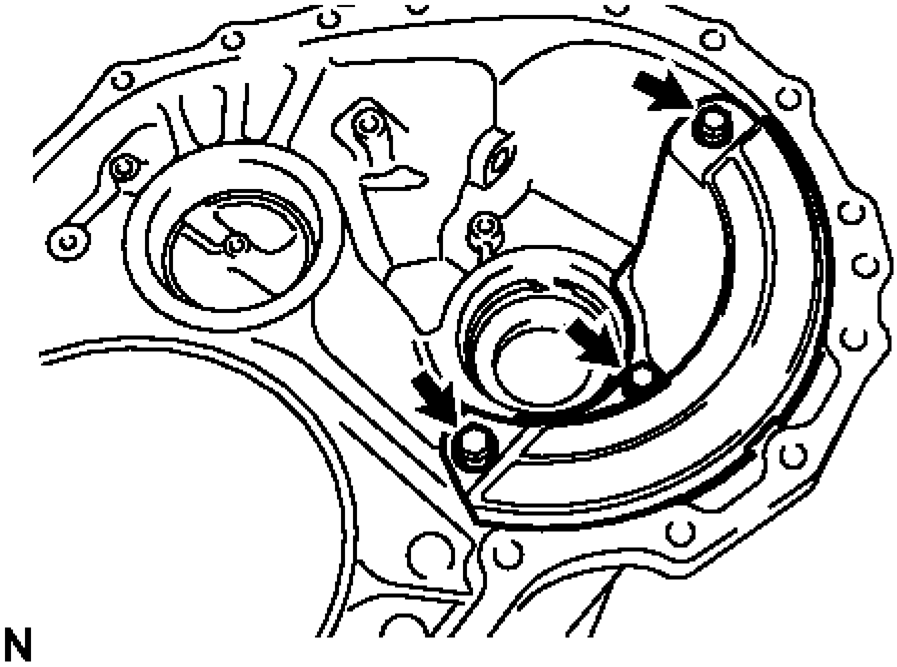

Fig. 347: Locating Transaxle Housing Bolts
Courtesy of TOYOTA MOTOR SALES, U.S.A., INC.

b. Apply adhesive to 2 or 3 threads on the ends of the 3 bolts.

Adhesive

Toyota Genuine Adhesive 1324, Three Bond 1324 or equivalent

c. Install the transaxle housing oil separator to the transaxle housing with the 3 bolts.

Torque: 23 N*m (231 kgf*cm, 17 ft.*lbf)

39. **INSTALL DIFFERENTIAL GEAR LUBE APPLY TUBE**

a. Install the differential gear lube apply tube to the transaxle housing.

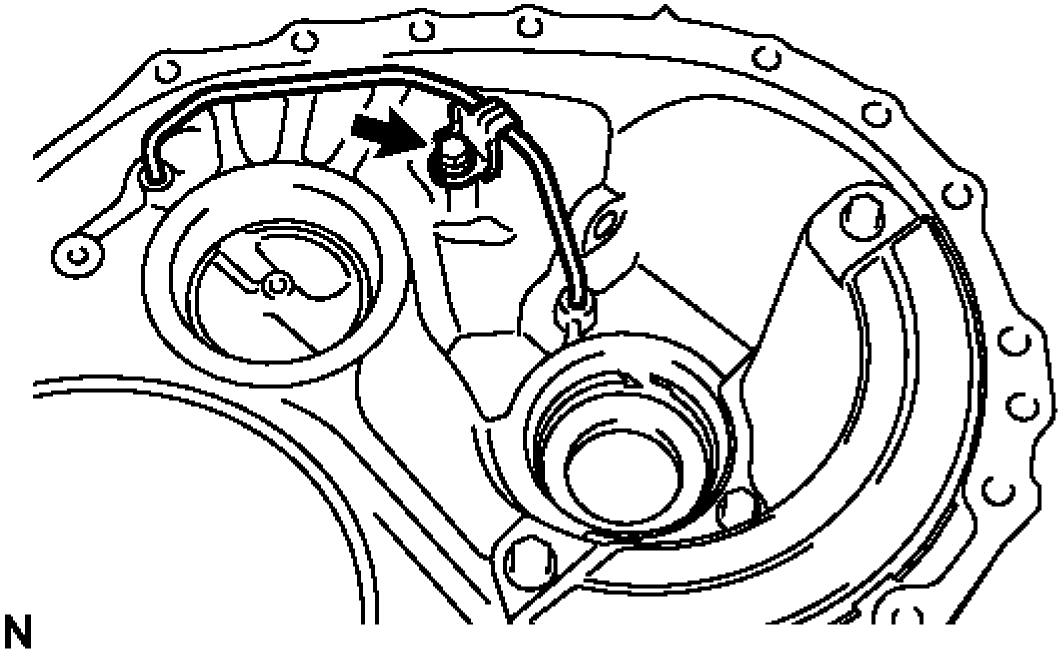

Fig. 348: Locating Differential Gear Lube Apply Tube
Courtesy of TOYOTA MOTOR SALES, U.S.A., INC.

NOTE: **Insert the differential gear lube apply tube into the transaxle housing until it makes contact with the stopper.**

b. Clean and degrease the bolt and the installation hole in the transaxle housing.
c. Apply adhesive to 2 or 3 threads on the ends of the bolt.

Adhesive

Toyota Genuine Adhesive 1324, Three Bond 1324 or equivalent

d. Install the apply tube clamp to the differential gear lube apply tube with the bolt.

Torque: 23 N*m (231 kgf*cm, 17 ft.*lbf)

NOTE: **There should be clearance between the differential lube apply tube and apply tube clamp.**

40. INSTALL DIFFERENTIAL DRIVE PINION TAPERED ROLLER BEARING RH (OUTER RACE)

a. Install the shim to the transaxle housing.

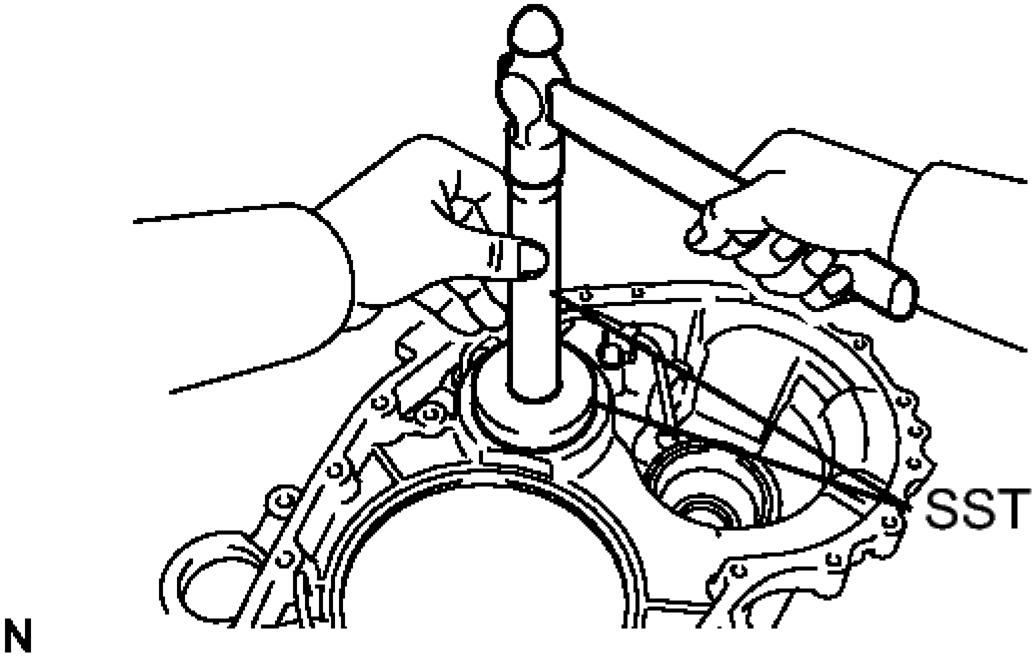

Fig. 349: Installing Counter Driven Gear Front Tapered Roller Bearing Outer Race
Courtesy of TOYOTA MOTOR SALES, U.S.A., INC.

b. Using SST, install a new differential drive pinion tapered roller bearing RH (outer race) to the transaxle housing.

- **SST: 09950-60020**
  09951-00710
- **SST: 09950-70010**
  09951-07100

NOTE: Be sure to install the differential drive pinion tapered roller bearing so that there is no clearance between the bearing outer race, shim and the transaxle housing. If there is any clearance, the turning torque of the counter drive gear cannot be measured correctly.

41. **ADJUST COUNTER DRIVEN GEAR PRELOAD**

a. Remove packing material from the contact surfaces between the transaxle housing and transaxle case sub-assembly.

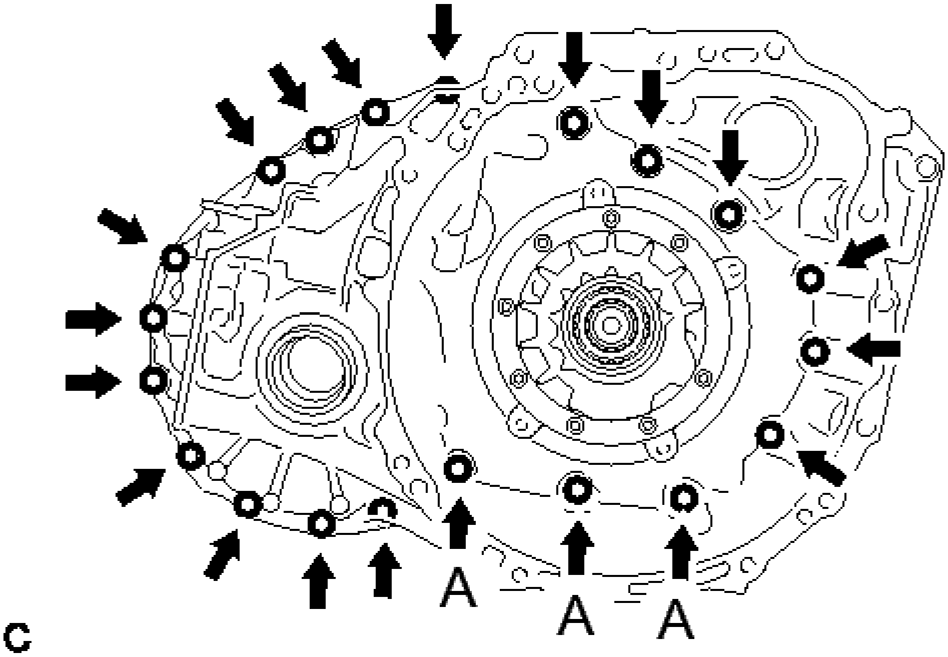

Fig. 350: Transaxle Housing Bolts
Courtesy of TOYOTA MOTOR SALES, U.S.A., INC.

b. Install the transaxle housing to the transaxle case sub-assembly with the 20 bolts.

 Bolt A

 Torque: 23 N*m (231 kgf*cm, 17 ft.*lbf)

 except Bolt A

 Torque: 31 N*m (312 kgf*cm, 22 ft.*lbf)

c. Using SST and a torque wrench, measure the turning torque of the counter driven gear while rotating SST at 10 rpm.

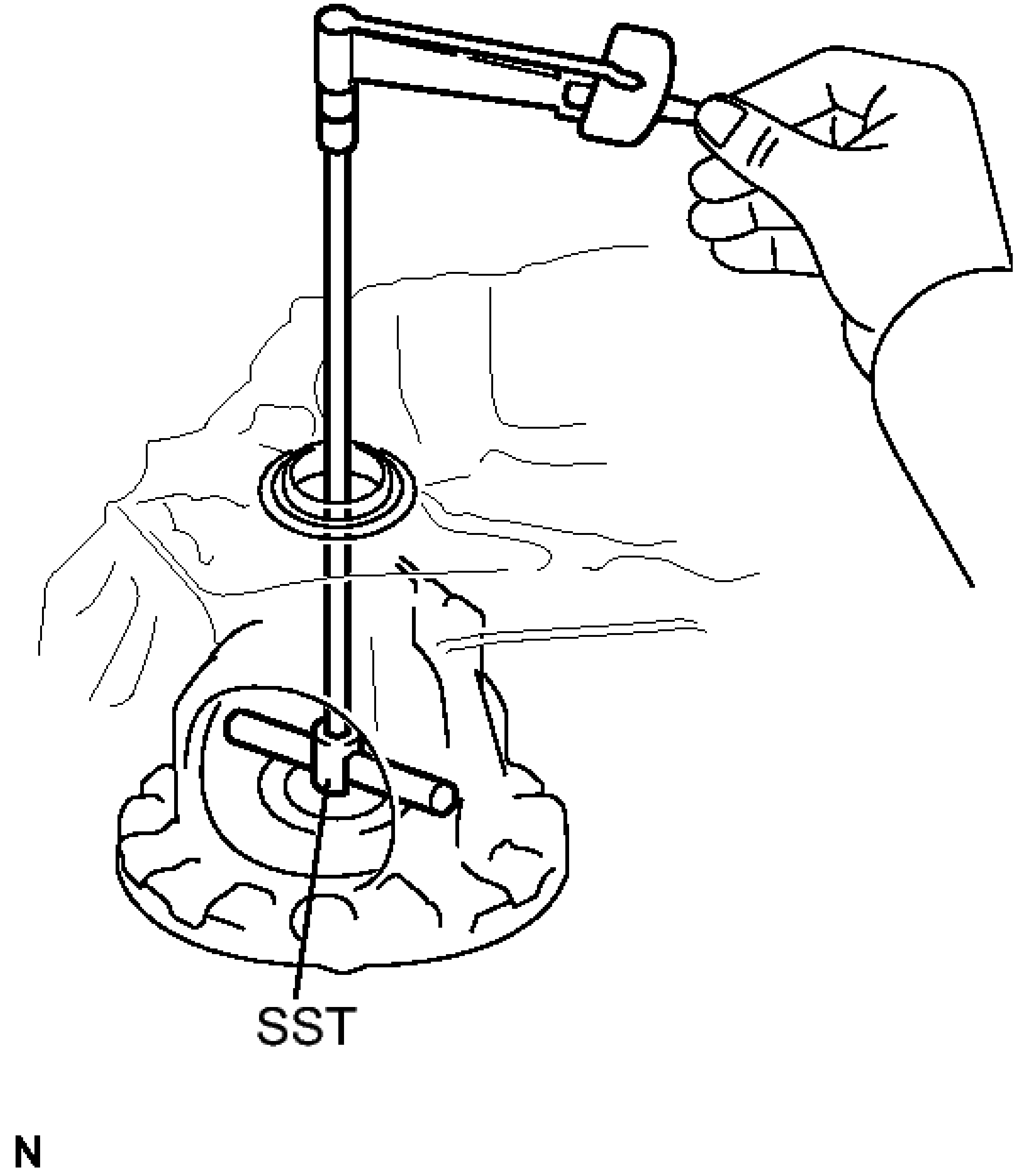

Fig. 351: Measuring Turning Torque Of Counter Driven Gear
Courtesy of TOYOTA MOTOR SALES, U.S.A., INC.

- **SST: 09564-33010**

Turning torque

Differential side bearing preload + 2.68 to 5.85 N*m (27.33 to 59.65 kgf*cm, 23.73 to 51.77 in.*lbf)

If the turning torque is not within the specified range, refer to the table below to select a shim of the counter driven gear front tapered roller bearing (outer race) so that the turning torque is within the specified range.

SHIM THICKNESS

Thickness	Thickness	Thickness	Thickness
2.000 (0.0787)	2.275 (0.0896)	2.550 (0.100)	2.825 (0.111)
2.025 (0.0797)	2.300 (0.0906)	2.575 (0.101)	2.850 (0.112)
2.050 (0.0807)	2.325 (0.0915)	2.600 (0.102)	2.875 (0.113)
2.075 (0.0817)	2.350 (0.0925)	2.625 (0.103)	2.900 (0.114)
2.100 (0.0827)	2.375 (0.0935)	2.650 (0.104)	2.925 (0.115)
2.125 (0.0837)	2.400 (0.0945)	2.675 (0.105)	2.950 (0.116)
2.150 (0.0846)	2.425 (0.0955)	2.700 (0.106)	2.975 (0.117)
2.175 (0.0856)	2.450 (0.0965)	2.725 (0.107)	3.000 (0.118)
2.200 (0.0866)	2.475 (0.0974)	2.750 (0.108)	-
2.225 (0.0876)	2.500 (0.0984)	2.775 (0.109)	-
2.250 (0.0886)	2.525 (0.0994)	2.800 (0.110)	-

d. Remove the 20 bolts and the transaxle housing.

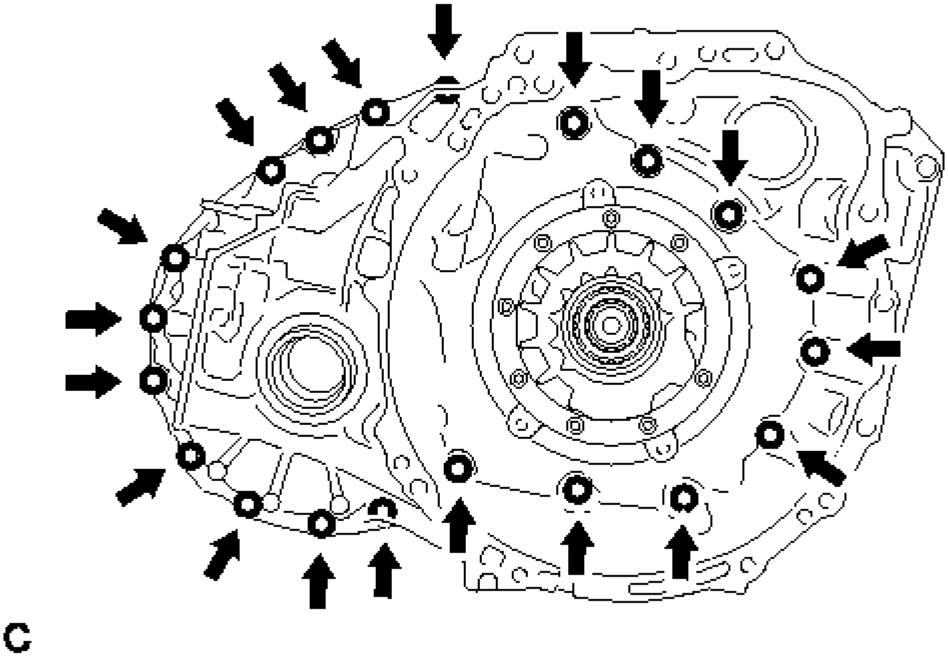

Fig. 352: Locating Transaxle Housing Bolts
Courtesy of TOYOTA MOTOR SALES, U.S.A., INC.

42. **INSTALL TRANSAXLE HOUSING**
    a. Clean and degrease the contact surfaces between the transaxle housing and transaxle case sub-assembly.

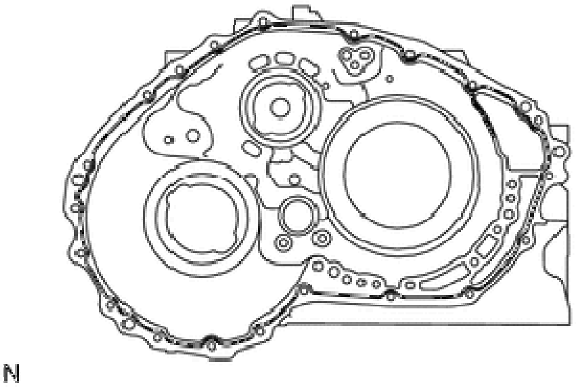

Fig. 353: Applying FIPG To Transaxle Case
Courtesy of TOYOTA MOTOR SALES, U.S.A., INC.

NOTE: Make sure that there is no ATF on the contact surfaces.

b. Apply FIPG to the transaxle case sub-assembly.

FIPG

Toyota Genuine Seal Packing 1281, Three Bond 1281 or equivalent

NOTE:

- **Apply FIPG in a continuous line (width 1.2 mm (0.0472 in.)) along the sealing surface.**
- **After applying FIPG, install the transaxle housing to the transaxle case sub-assembly within 3 minutes and tighten the bolts within 20 minutes.**

c. Install the transaxle housing to the transaxle case sub-assembly with the 17 bolts.

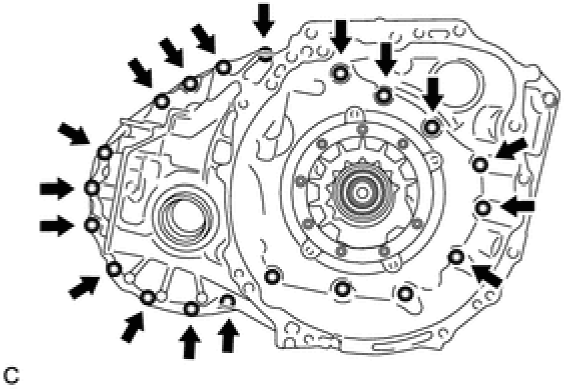

Fig. 354: Locating Transaxle Case With Bolts
Courtesy of TOYOTA MOTOR SALES, U.S.A., INC.

Torque: 31 N*m (312 kgf*cm, 22 ft.*lbf)

d. Clean and degrease the 3 bolts and the installation holes in the automatic transaxle assembly.

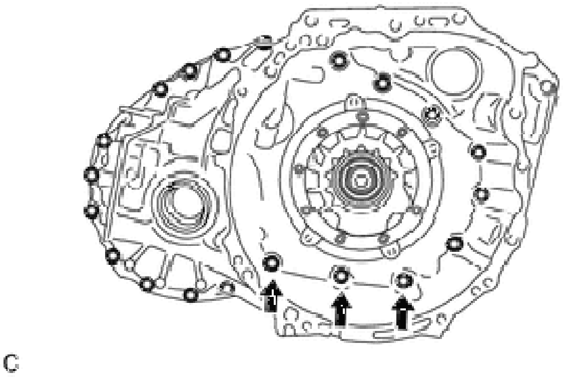

Fig. 355: Identifying Transaxle Housing To Transaxle Case
Courtesy of TOYOTA MOTOR SALES, U.S.A., INC.

e. Apply adhesive to 2 or 3 threads on the ends of the 3 bolts.

Adhesive

Toyota Genuine Adhesive 1324, Three Bond 1324 or equivalent

f. Install the 3 bolts.

Torque: 23 N*m (231 kgf*cm, 17 ft.*lbf)

43. **INSPECT CLEARANCE OF NO. 1 CLUTCH** See step 17
44. **INSTALL REAR PLANETARY SUN GEAR ASSEMBLY**

a. Coat the thrust needle roller bearing and thrust bearing race with ATF, and install them to the direct multiple disc clutch assembly.

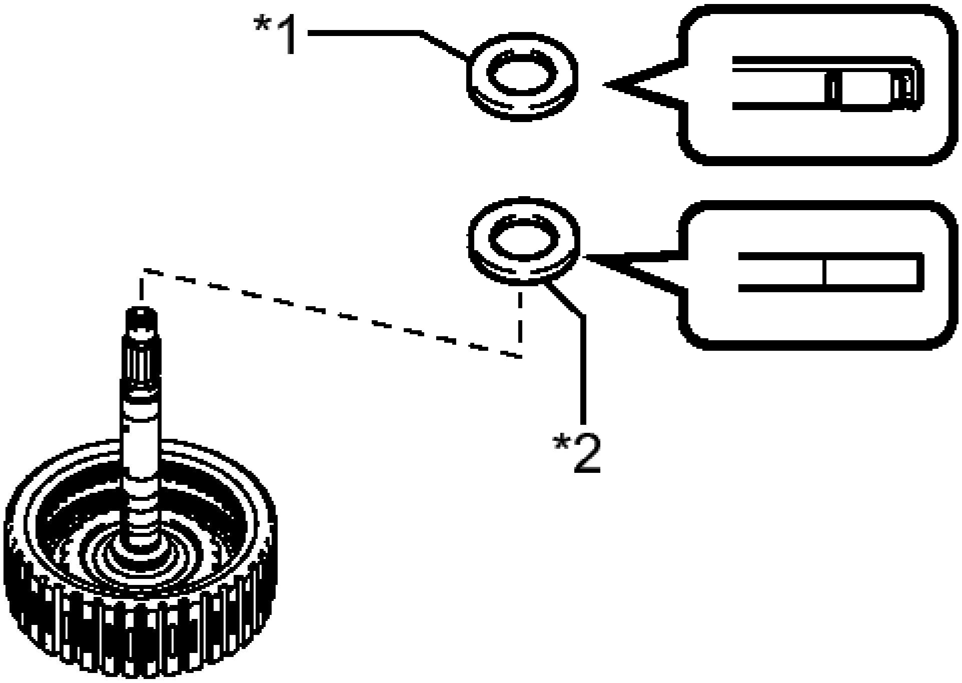

Fig. 356: Identifying Thrust Needle Roller Bearing And Race
Courtesy of TOYOTA MOTOR SALES, U.S.A., INC.

TEXT IN ILLUSTRATION

*1	Thrust Needle Roller Bearing
*2	Thrust Bearing Race

BEARING AND RACE DIAMETER

-	**Inside [mm**	**Outside [mm**

	(in.)]	(in.)]
Bearing	28 (1.10)	47.1 (1.85)
Race	26.1 (1.03)	44 (1.73)

NOTE: Install the rear planetary sun gear thrust needle roller bearing properly so that the temper colored side of the race will be visible.

b. Install the rear planetary sun gear assembly to the direct multiple disc clutch assembly.

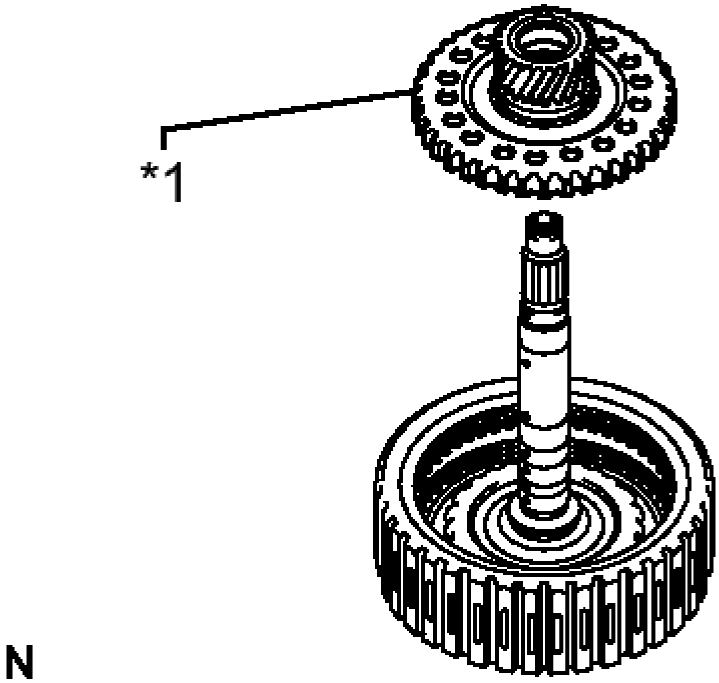

Fig. 357: Identifying Rear Planetary Sun Gear
Courtesy of TOYOTA MOTOR SALES, U.S.A., INC.

TEXT IN ILLUSTRATION

*1	Rear Planetary Sun Gear

c. Using a snap ring expander, install the snap ring to the direct multiple disc clutch assembly.

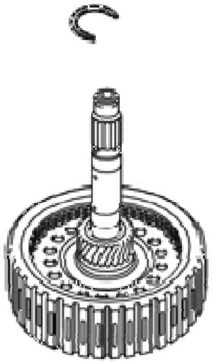

Fig. 358: Identifying Snap Ring
Courtesy of TOYOTA MOTOR SALES, U.S.A., INC.

d. Coat a new O-ring with ATF and install it to the direct multiple disc clutch assembly.

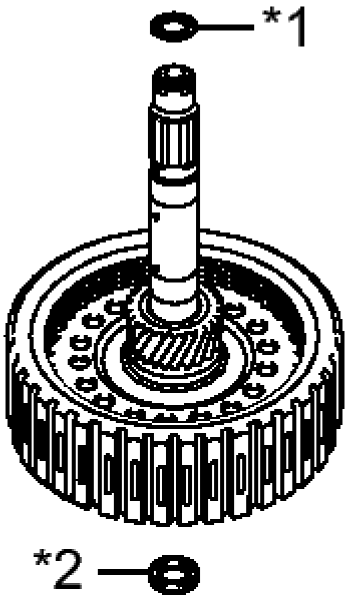

Fig. 359: Identifying Rear Multiple Disc Clutch O-Ring & Oil Seal
Courtesy of TOYOTA MOTOR SALES, U.S.A., INC.

TEXT IN ILLUSTRATION

*1	O-ring
*2	Oil Seal Ring

NOTE: Ensure that the O-ring is not twisted.

e. Coat a new oil seal ring with ATF and install it to the intermediate shaft.

45. **INSPECT CLEARANCE OF NO. 2 CLUTCH** See step 18
46. **INSTALL REAR MULTIPLE DISC CLUTCH ASSEMBLY**

a. Coat the rear thrust needle roller bearing with ATF and install it on the transaxle case sub-assembly.

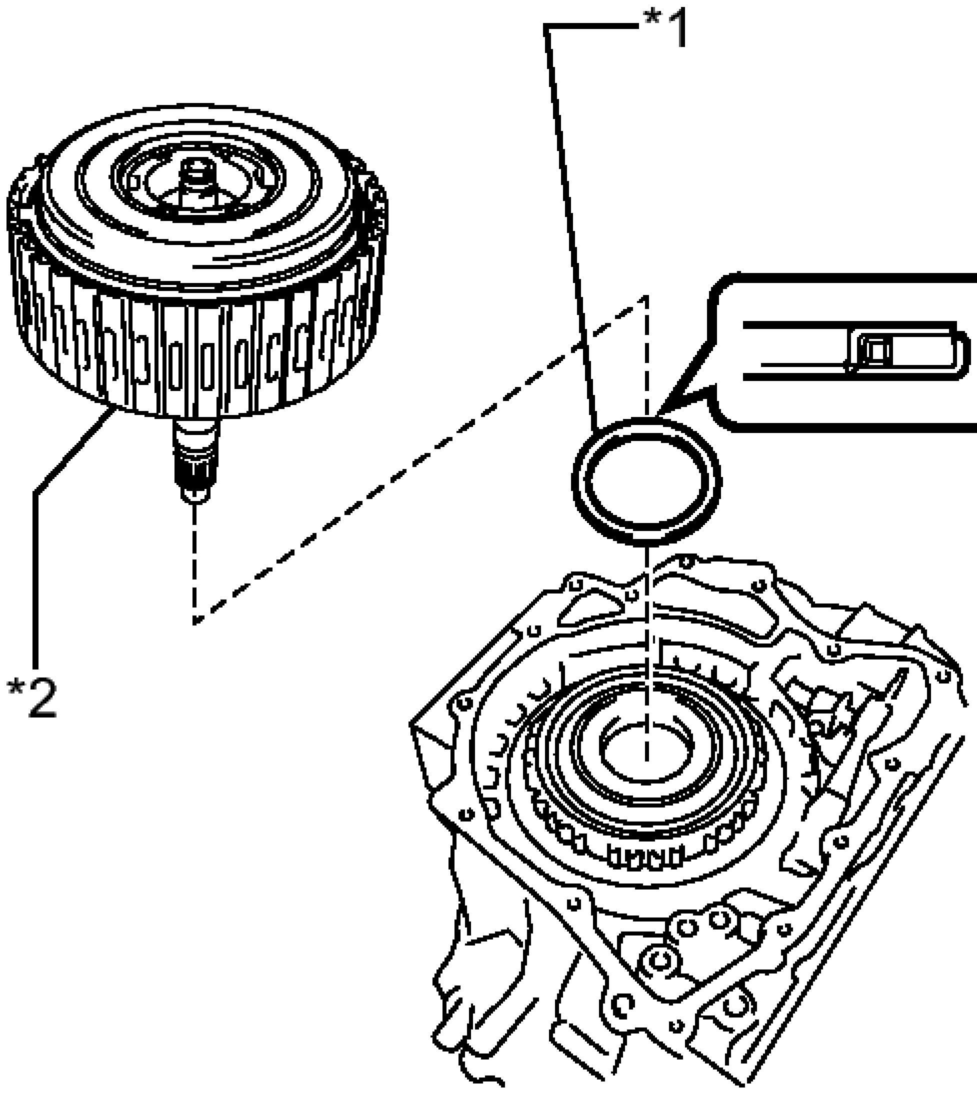

Fig. 360: Identifying Rear No. 2 Planetary Sun Gear Thrust Needle Roller Bearing
Courtesy of TOYOTA MOTOR SALES, U.S.A., INC.

TEXT IN ILLUSTRATION

*1	Thrust Needle Roller

	Bearing
*2	Rear Multiple Disc Clutch Assembly

BEARING DIAMETER

-	Inside [mm (in.)]	Outside [mm (in.)]
Bearing	61.2 (2.41)	79 (3.11)

b. Install the direct multiple disc clutch assembly to the transaxle case sub-assembly.

47. **INSPECT INTERMEDIATE SHAFT END PLAY** See step 3

48. **INSTALL REAR TRANSAXLE COVER SUB-ASSEMBLY**

    a. Using SST and a hammer, install a new needle roller bearing into the rear transaxle cover sub-assembly.

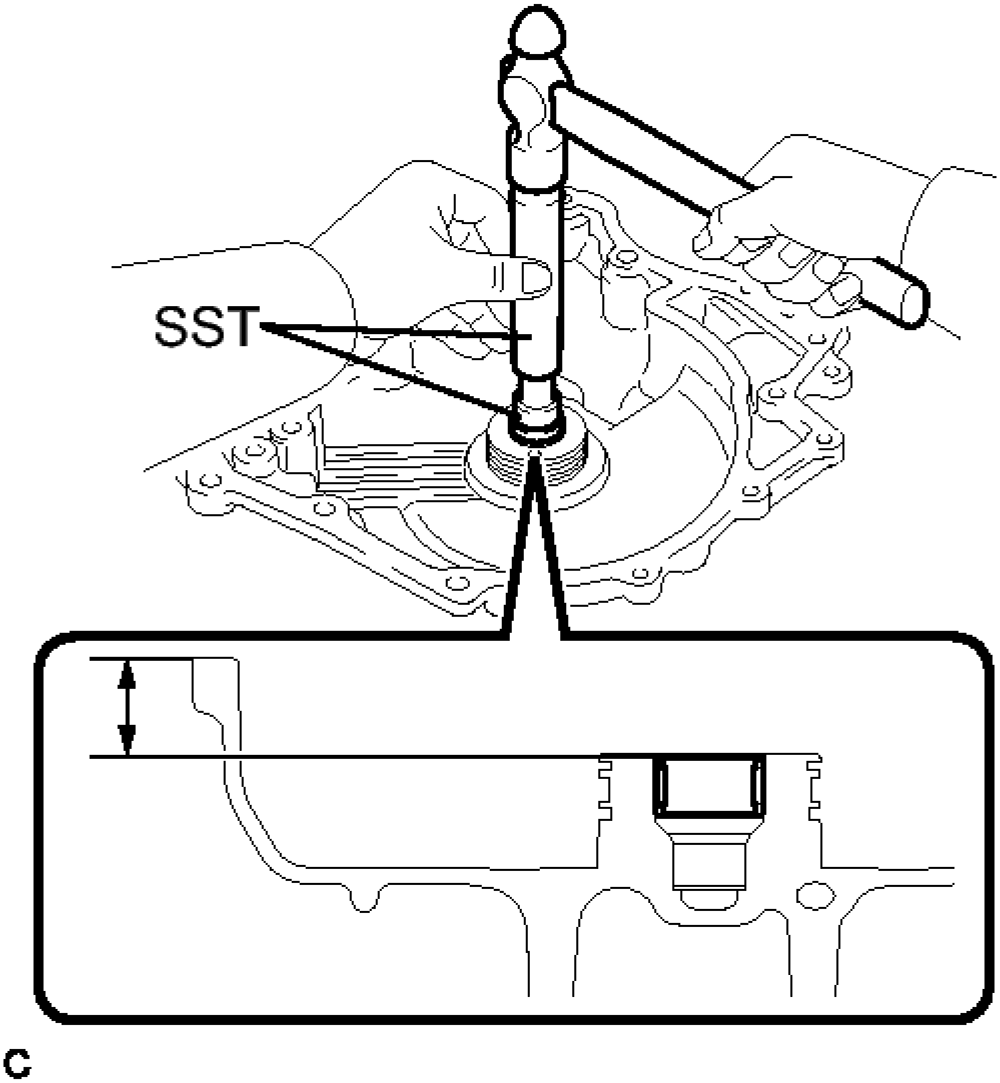

Fig. 361: Installing Needle Roller Bearing Into Rear Transaxle Cover Sub-Assembly
Courtesy of TOYOTA MOTOR SALES, U.S.A., INC.

- **SST: 09950-60010**
  09951-00220
- **SST: 09950-70010**
  09951-07100

Installation depth

21.5 to 21.9 mm (0.846 to 0.862 in.)

b. Clean and degrease the 2 "TORX" screws and the installation holes in the rear transaxle cover sub-assembly.

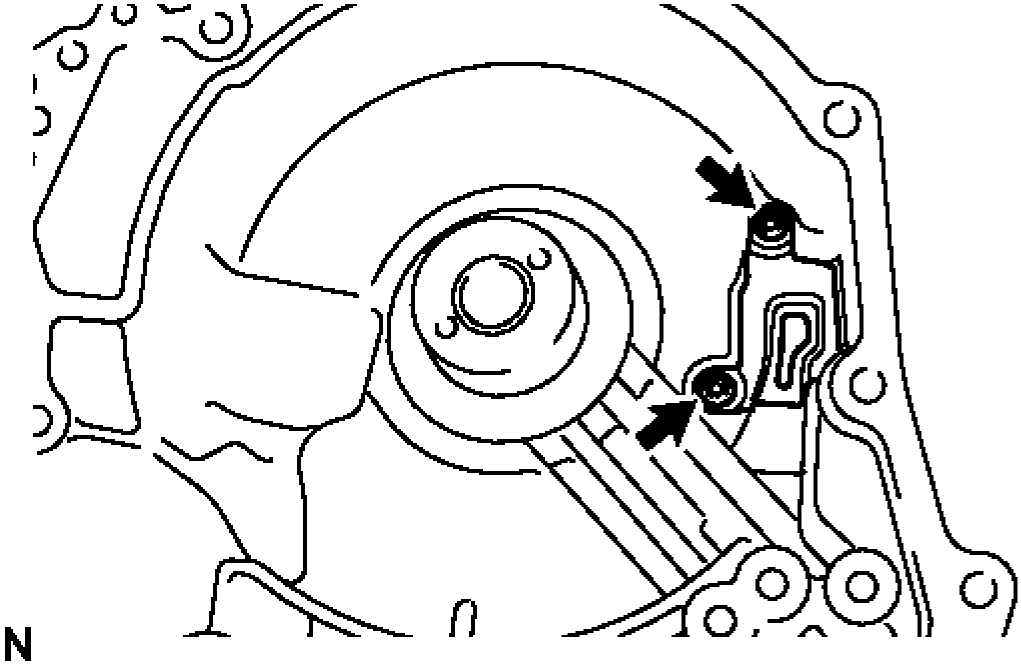

Fig. 362: Locating Rear Transaxle Cover Plate
Courtesy of TOYOTA MOTOR SALES, U.S.A., INC.

c. Apply adhesive to 2 or 3 threads on the ends of the 2 "TORX" screws.

Adhesive

Toyota Genuine Adhesive 1324, Three Bond 1324 or equivalent

d. Using a T30 "TORX" socket wrench, install the rear transaxle cover plate to the rear transaxle cover sub-assembly with the 2 "TORX" screws.

Torque: 7.5 N*m (76 kgf*cm, 66 in.*lbf)

e. Coat the thrust needle roller bearing and thrust bearing race with ATF and install them on the rear transaxle cover sub-assembly.

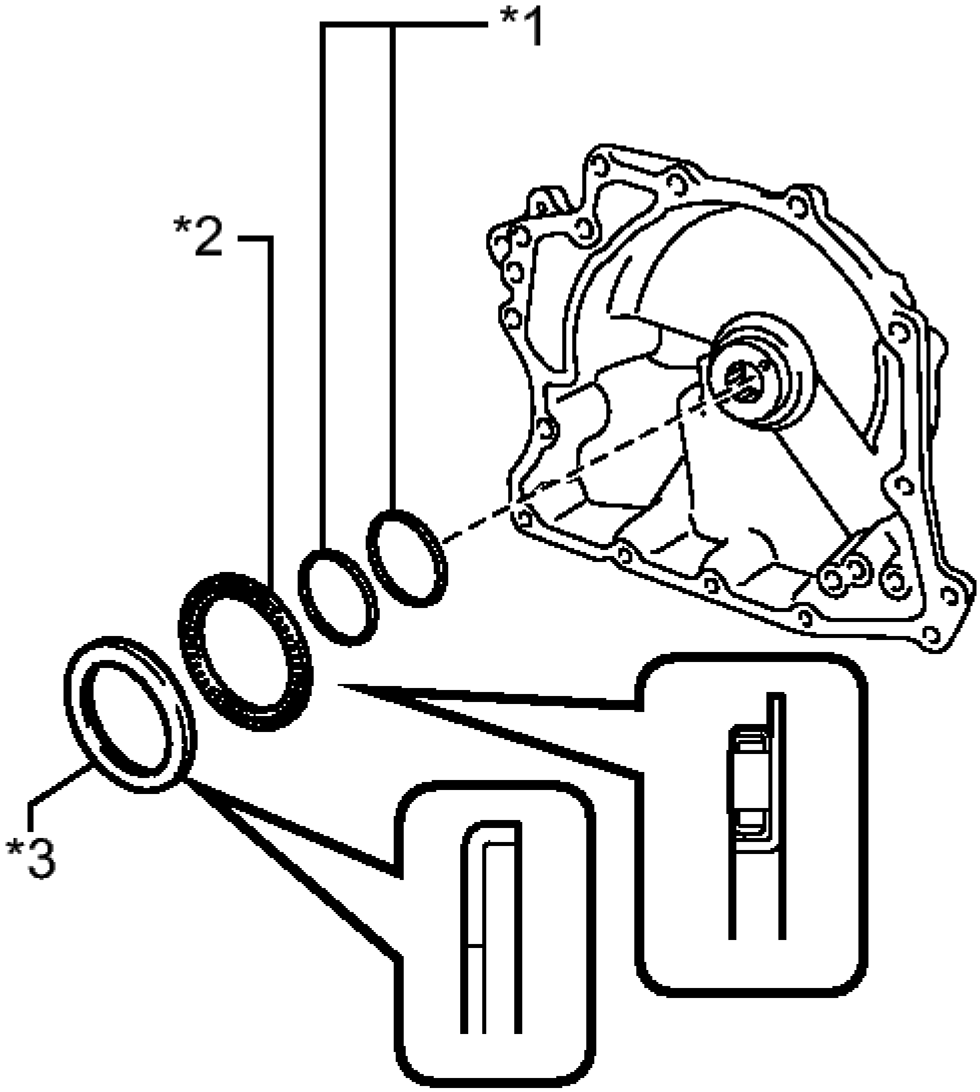

Fig. 363: Identifying Oil Seal Rings On Rear Transaxle Cover Sub-Assembly
Courtesy of TOYOTA MOTOR SALES, U.S.A., INC.

TEXT IN ILLUSTRATION

*1	Oil Seal Ring
*2	Thrust Needle Roller Bearing
*3	Thrust Bearing Race

BEARING AND RACE DIAMETER

-	Inside [mm (in.)]	Outside [mm (in.)]
Bearing	48.9 (1.93)	72.0 (2.83)
Race	52.2 (2.06)	70.4 (2.77)

f. Coat 2 new oil seal rings with ATF and install them to the rear transaxle cover sub-assembly.

g. Coat 3 new O-rings with ATF and install them to the transaxle case sub-assembly.

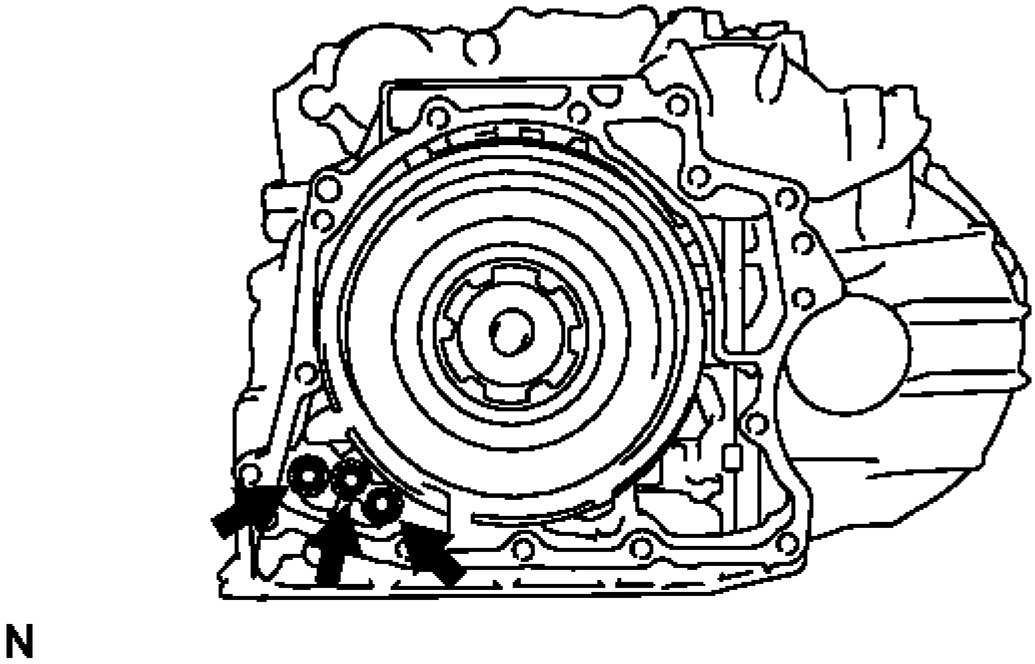

Fig. 364: Locating Transaxle Case Bolts
Courtesy of TOYOTA MOTOR SALES, U.S.A., INC.

h. Remove packing material from the contact surfaces between the rear transaxle cover sub-assembly and transaxle case sub-assembly.

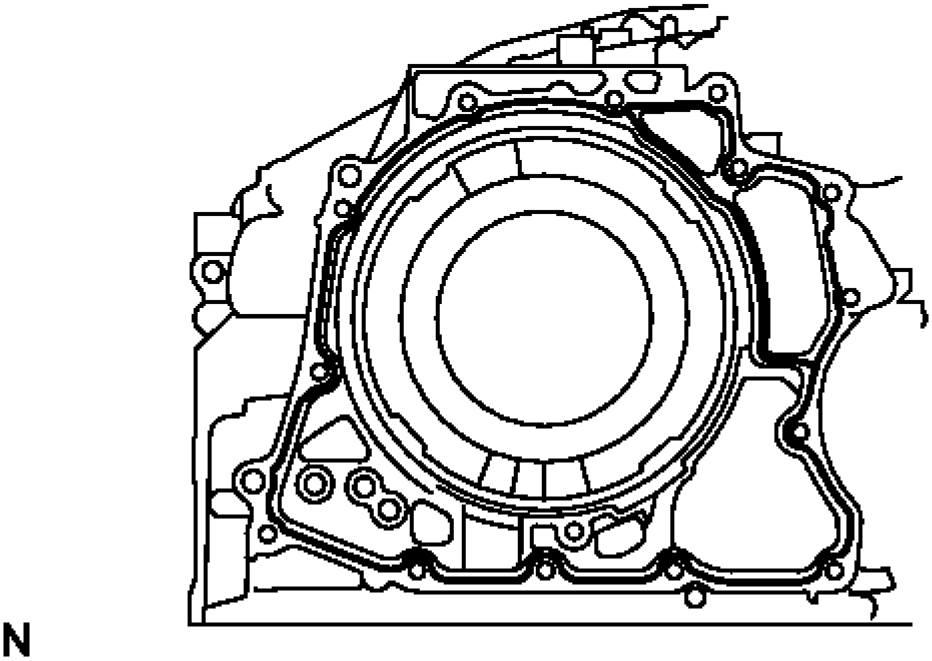

Fig. 365: Identifying Packing Material
Courtesy of TOYOTA MOTOR SALES, U.S.A., INC.

NOTE: **Make sure that there is no ATF on the contact surfaces.**

i. Apply FIPG to the transaxle case sub-assembly.

FIPG

Toyota Genuine Seal Packing 1281, Three Bond 1281 or equivalent.

NOTE:

- **Apply FIPG in a continuous line (width 1.2 mm (0.0472 in.)) along the sealing surface.**
- **After applying FIPG, install the rear transaxle cover sub-assembly to the transaxle case sub-assembly within 3 minutes and tighten the bolts within 20 minutes.**

j. Install the rear transaxle cover sub-assembly to the transaxle case sub-assembly with the 12 bolts.

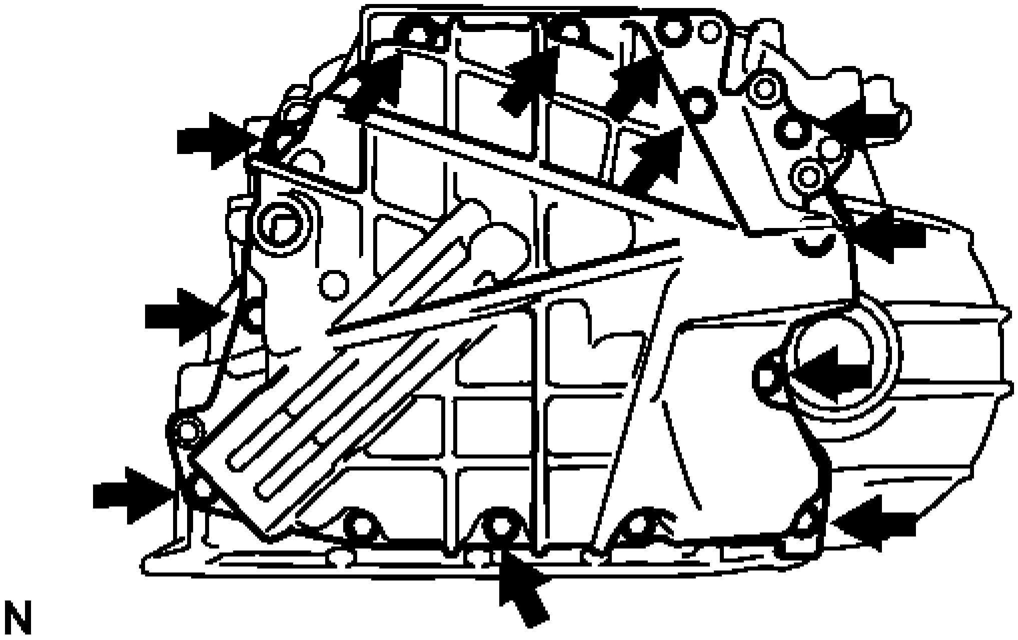

Fig. 366: Identifying Transaxle Case Bolts
Courtesy of TOYOTA MOTOR SALES, U.S.A., INC.

Torque: 23 N*m (231 kgf*cm, 17 ft.*lbf)

k. Clean and degrease the 2 bolts and the installation holes in the transaxle case sub-assembly.

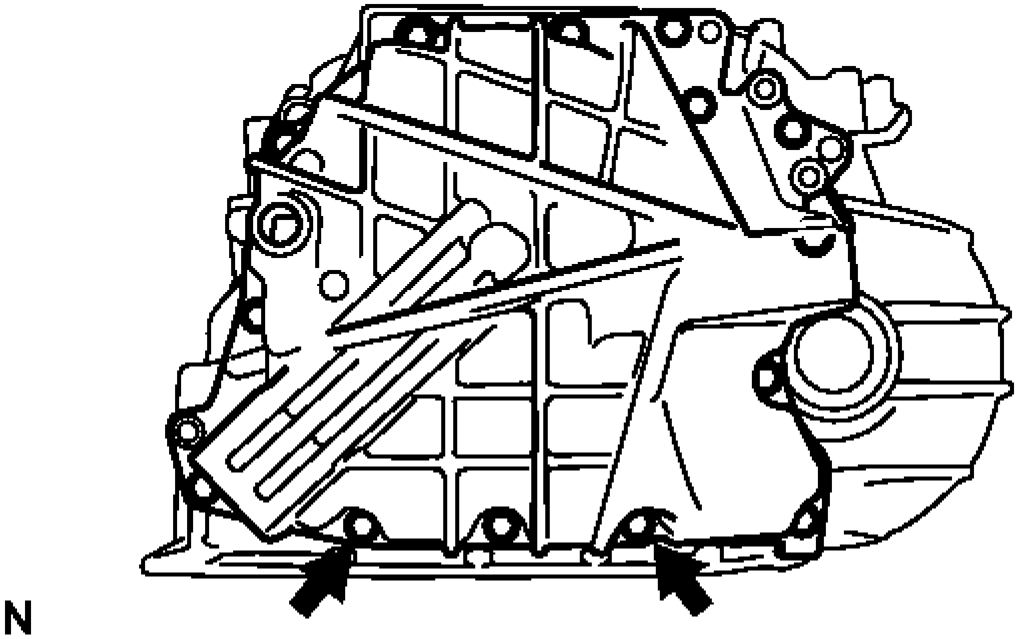

Fig. 367: Locating Bolts For Installing Rear Transaxle Cover Sub-Assembly To Transaxle Case
Courtesy of TOYOTA MOTOR SALES, U.S.A., INC.

l. Apply adhesive to 2 or 3 threads on the ends of the 2 bolts.

Adhesive

Toyota Genuine Adhesive 1324, Three Bond 1324 or equivalent

m. Install the 2 bolts.

Torque: 17 N*m (172 kgf*cm, 12 ft.*lbf)

49. **INSTALL REAR TRANSAXLE COVER PLUG**

a. Coat 3 new O-rings with ATF and install them to the 3 rear transaxle cover plugs.

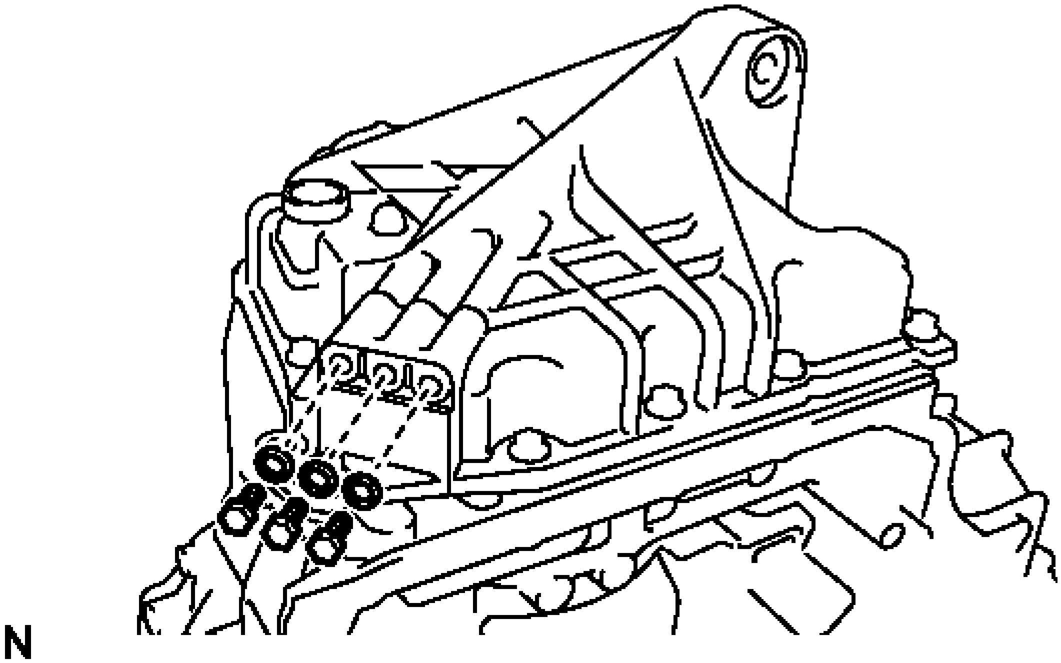

Fig. 368: Identifying No. 1 Automatic Transaxle Case Plugs
Courtesy of TOYOTA MOTOR SALES, U.S.A., INC.

NOTE: Ensure that the 3 O-rings are not twisted.

b. Install the 3 rear transaxle cover plugs to the rear transaxle cover sub-assembly.

Torque: 7.4 N*m (75 kgf*cm, 65 in.*lbf)

50. **INSTALL REFILL PLUG**

a. Install a new gasket to the refill plug.

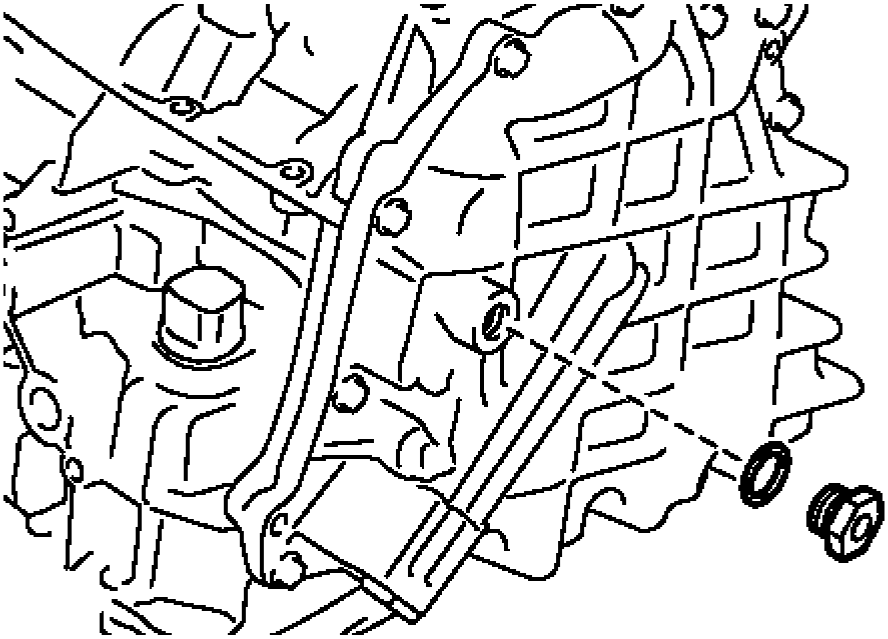

Fig. 369: Identifying Refill Plug
Courtesy of TOYOTA MOTOR SALES, U.S.A., INC.

b. Install the refill plug to the rear transaxle cover sub-assembly.

Torque: 49 N*m (500 kgf*cm, 36 ft.*lbf)

51. **INSPECT INPUT SHAFT END PLAY** See step 2
52. **INSTALL NO. 1 GOVERNOR APPLY GASKET**
    a. Coat 2 new No. 1 governor apply gaskets with ATF.

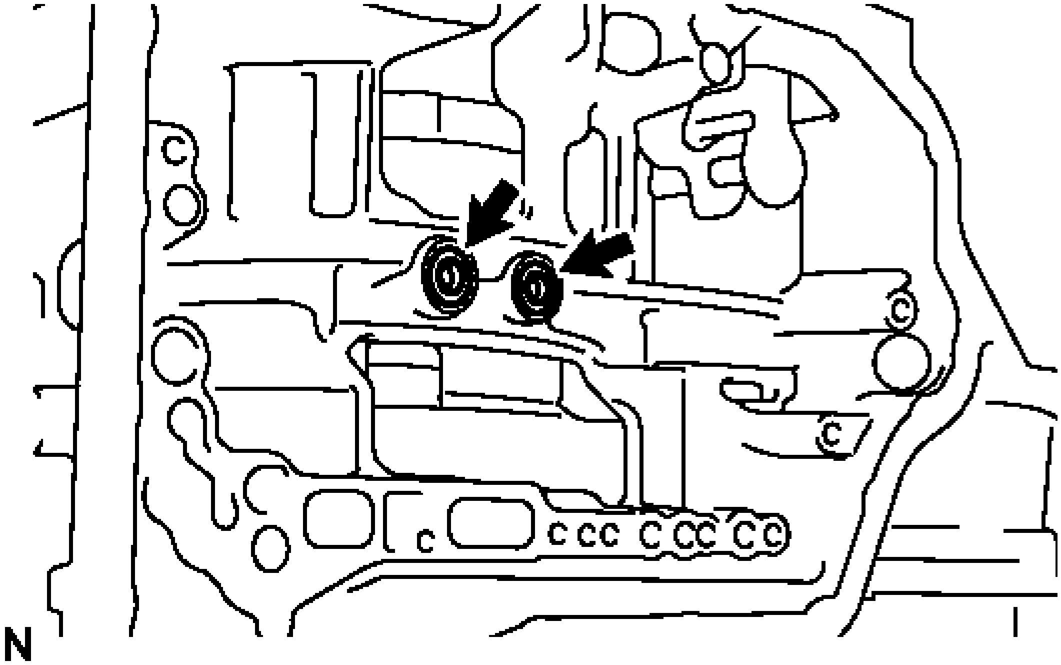

Fig. 370: Locating Transaxle Case Gasket
Courtesy of TOYOTA MOTOR SALES, U.S.A., INC.

b. Install the 2 No. 1 governor apply gaskets onto the transaxle case sub-assembly.

53. **INSTALL TRANSMISSION VALVE BODY ASSEMBLY**
    a. Coat the O-ring of the transmission wire with ATF.

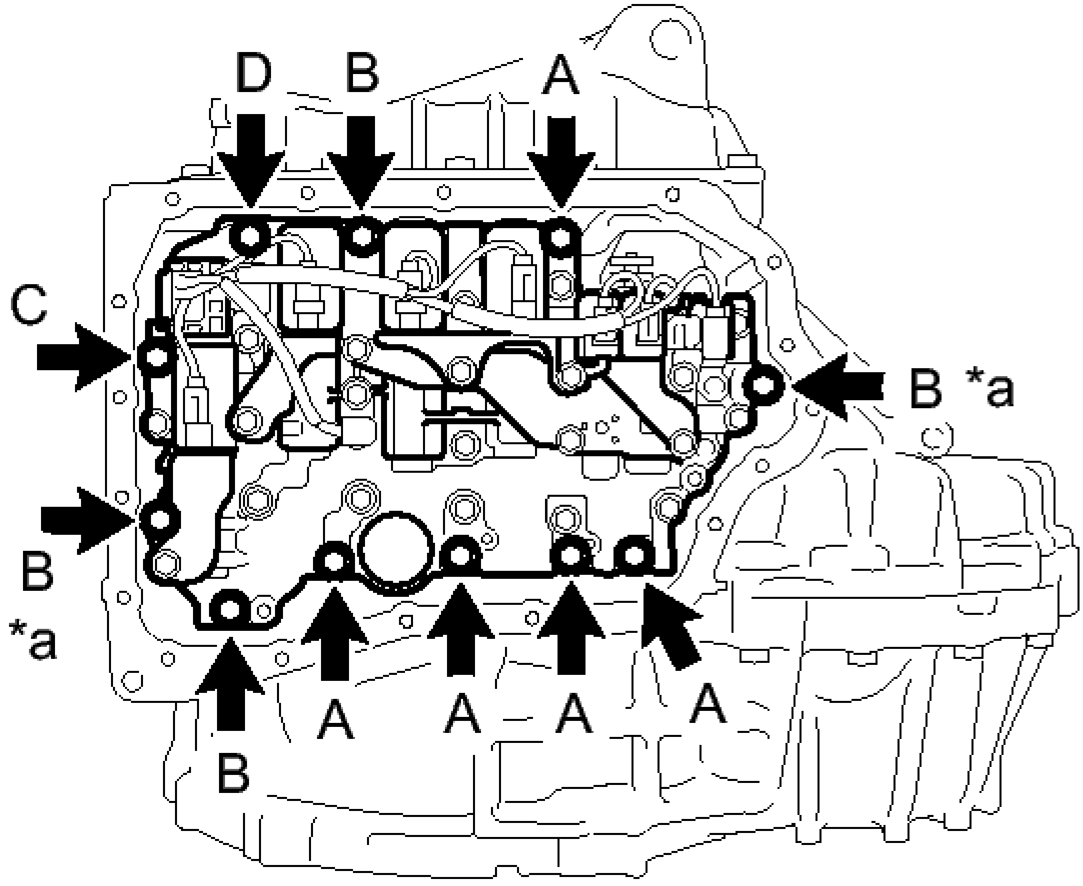

T

Fig. 371: Identifying Transmission Valve Body Assembly Positioning Bolt
Courtesy of TOYOTA MOTOR SALES, U.S.A., INC.

b. Insert the pin of the manual valve lever into the groove on the end of the manual valve and install the transmission valve body assembly onto the automatic transaxle assembly with the 11 bolts.

TEXT IN ILLUSTRATION

*a	Positioning Bolt

BOLT LENGTH

Bolt	Length [mm (in.)]
A	25 (0.984)

B	30 (1.18)
C and D	35 (1.38)

Bolt A, B, C

Torque: 11 N*m (110 kgf*cm, 8 ft.*lbf)

Bolt D

Torque: 9.6 N*m (98 kgf*cm, 85 in.*lbf)

NOTE:

- **When installing the transmission valve body assembly, be careful not to allow the transmission revolution sensor and automatic transaxle assembly to interfere with each other.**
- **First, temporarily tighten the bolts marked (*a) in the illustration because they are positioning bolts.**

54. **INSTALL VALVE BODY OIL STRAINER ASSEMBLY**
    a. Coat a new O-ring with ATF.

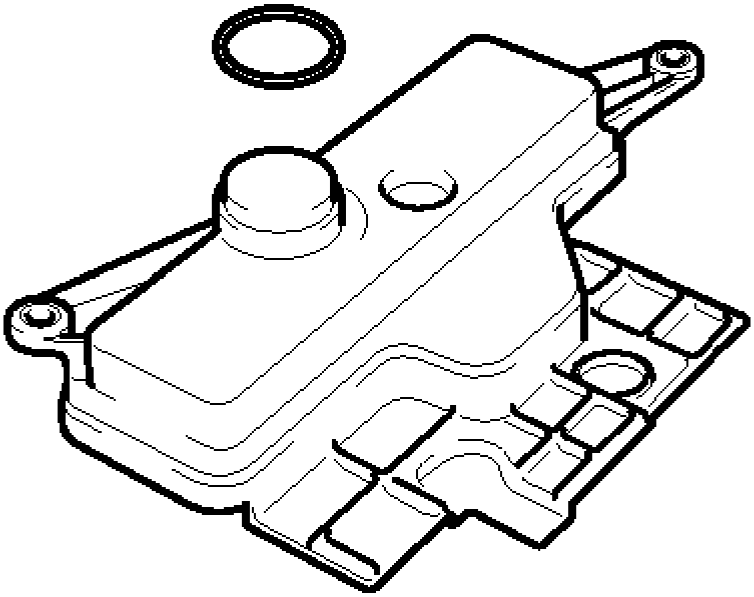

Fig. 372: Locating Valve Body Oil Strainer & O-Ring
Courtesy of TOYOTA MOTOR SALES, U.S.A., INC.

b. Install the O-ring onto the valve body oil strainer assembly.

NOTE: Ensure that the O-ring is not twisted.

c. Install the valve body oil strainer assembly onto the transmission valve body assembly with the 2 bolts.

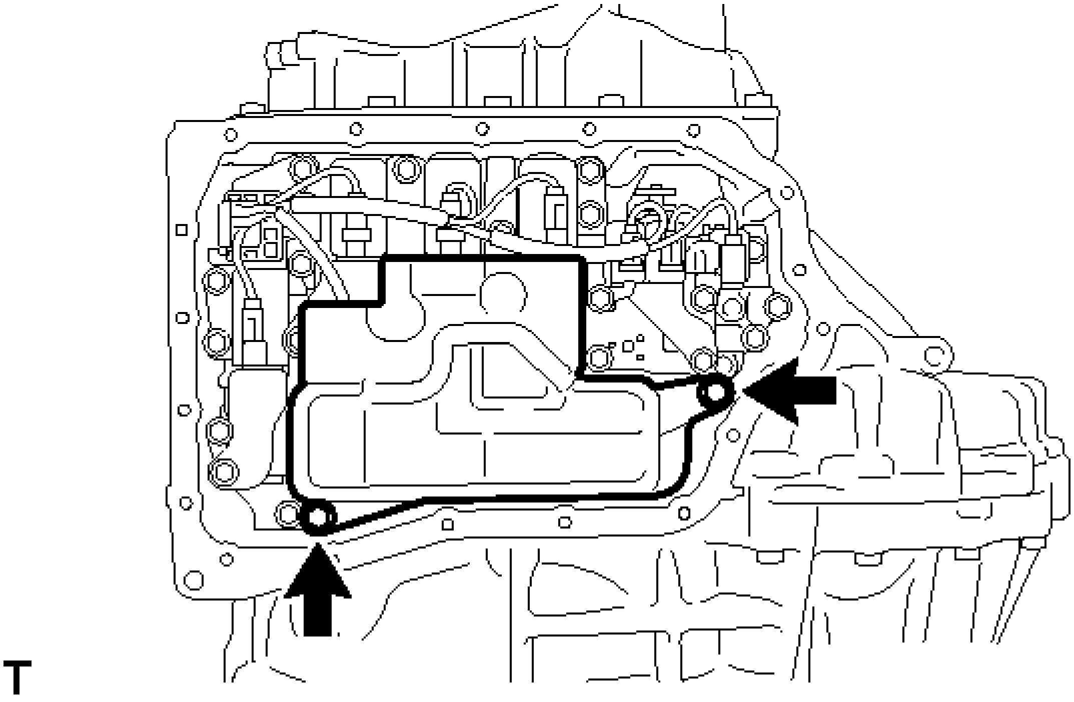

Fig. 373: Locating Oil Strainer Bolts
Courtesy of TOYOTA MOTOR SALES, U.S.A., INC.

Torque: 9.6 N*m (98 kgf*cm, 85 in.*lbf)

55. INSTALL TRANSMISSION OIL CLEANER MAGNET

a. Install the 2 transmission oil cleaner magnets onto the automatic transaxle oil pan sub-assembly as shown in the illustration.

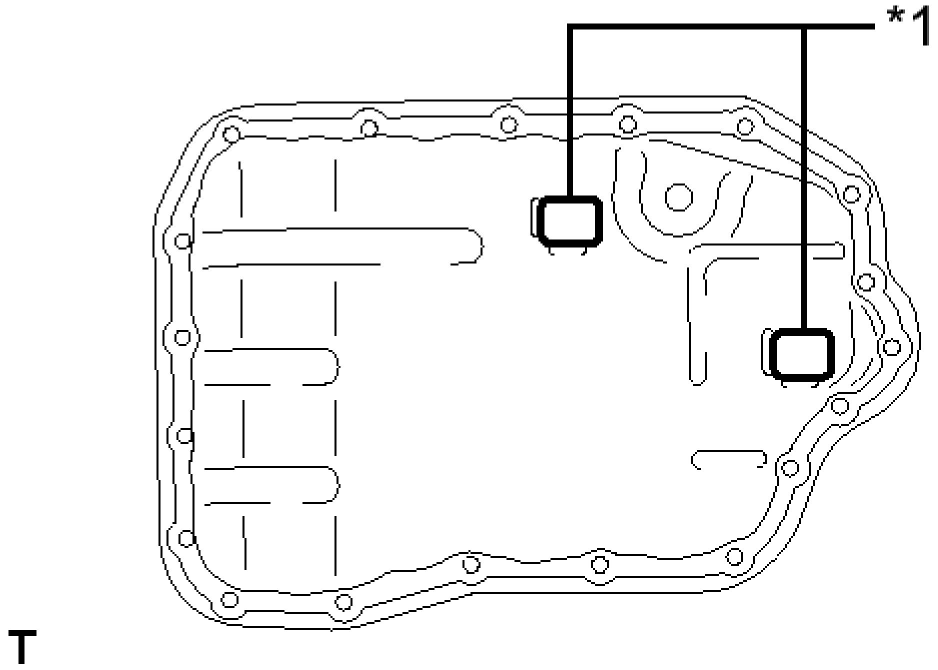

Fig. 374: Identifying Transmission Oil Cleaner Magnets
Courtesy of TOYOTA MOTOR SALES, U.S.A., INC.

TEXT IN ILLUSTRATION

*1	Transmission Oil Cleaner Magnet

56. **INSTALL AUTOMATIC TRANSAXLE OIL PAN GASKET**
    a. Install a new automatic transaxle oil pan gasket onto the automatic transaxle oil pan sub-assembly.
57. **INSTALL AUTOMATIC TRANSAXLE OIL PAN SUB-ASSEMBLY**
    a. Install the automatic transaxle oil pan sub-assembly with the automatic transaxle oil pan gasket onto the automatic transaxle assembly with the 17 bolts.

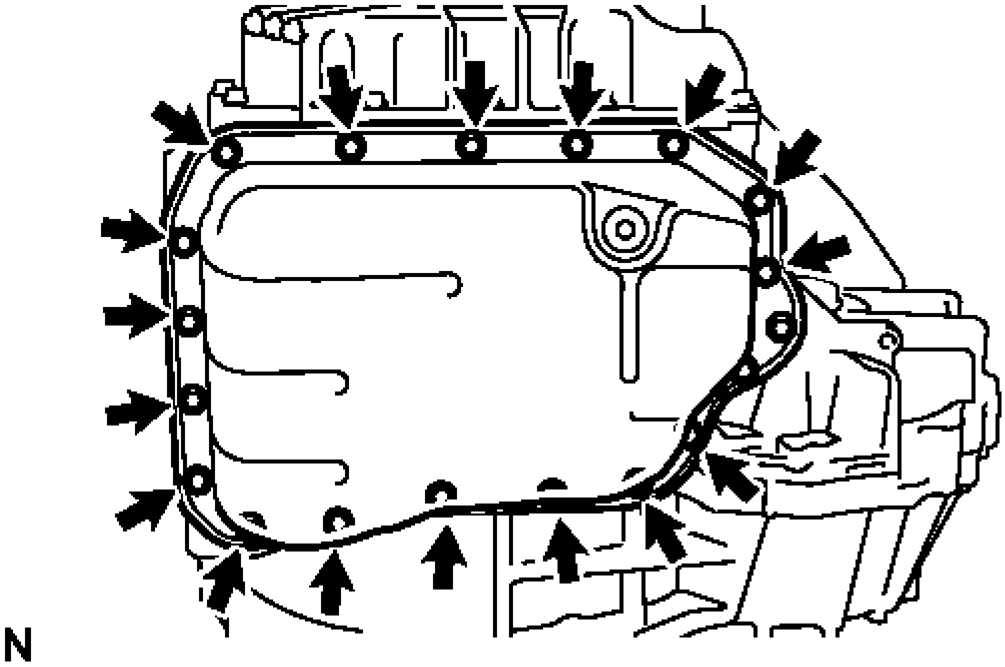

Fig. 375: Locating Automatic Transaxle With Bolts
Courtesy of TOYOTA MOTOR SALES, U.S.A., INC.

Torque: 7.5 N*m (76 kgf*cm, 66 in.*lbf)

NOTE: **Completely remove any oil or grease from the contact surfaces of the transaxle case sub-assembly and oil pan sub-assembly with the gasket before installation.**

b. Clean and degrease the 2 bolts and the installation holes in the transaxle case sub-assembly.

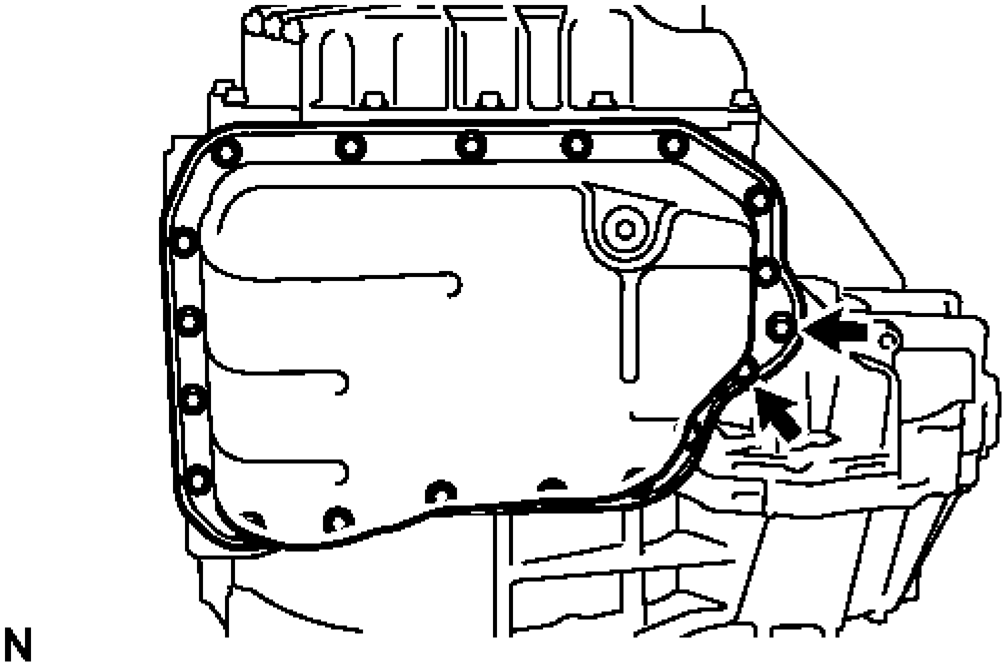

Fig. 376: Locating Automatic Transaxle Bolt
Courtesy of TOYOTA MOTOR SALES, U.S.A., INC.

c. Apply adhesive to 2 or 3 threads on the ends of the bolt.

   Adhesive

   Toyota Genuine Adhesive 1324, Three Bond 1324 or equivalent

d. Install the 2 bolts.

   Torque: 7.0 N*m (71 kgf*cm, 62 in.*lbf)

58. **INSTALL NO. 1 TRANSMISSION OIL FILLER TUBE**
    a. Using a 6 mm hexagon socket wrench, install the No. 1 transmission oil filler tube to the automatic transaxle oil pan sub-assembly.

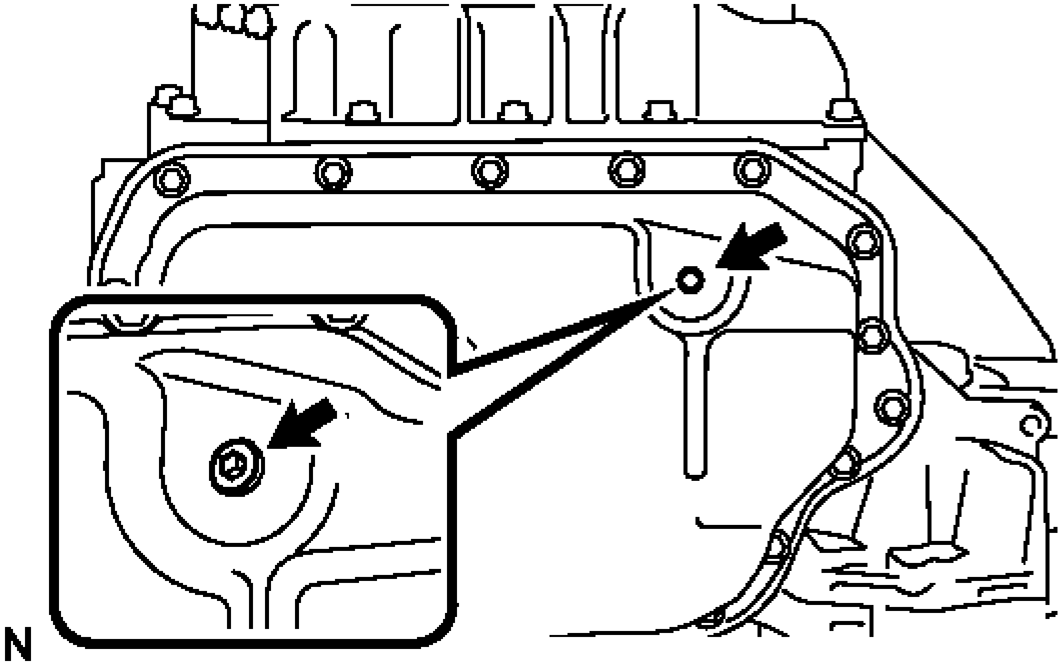

Fig. 377: Locating Automatic Transaxle Assembly
Courtesy of TOYOTA MOTOR SALES, U.S.A., INC.

Torque: 0.8 N*m (8 kgf*cm, 7 in.*lbf)

59. **INSTALL OVERFLOW PLUG**
    1. Using a 6 mm hexagon socket wrench, install the overflow plug and a new gasket to the automatic transaxle oil pan sub-assembly.

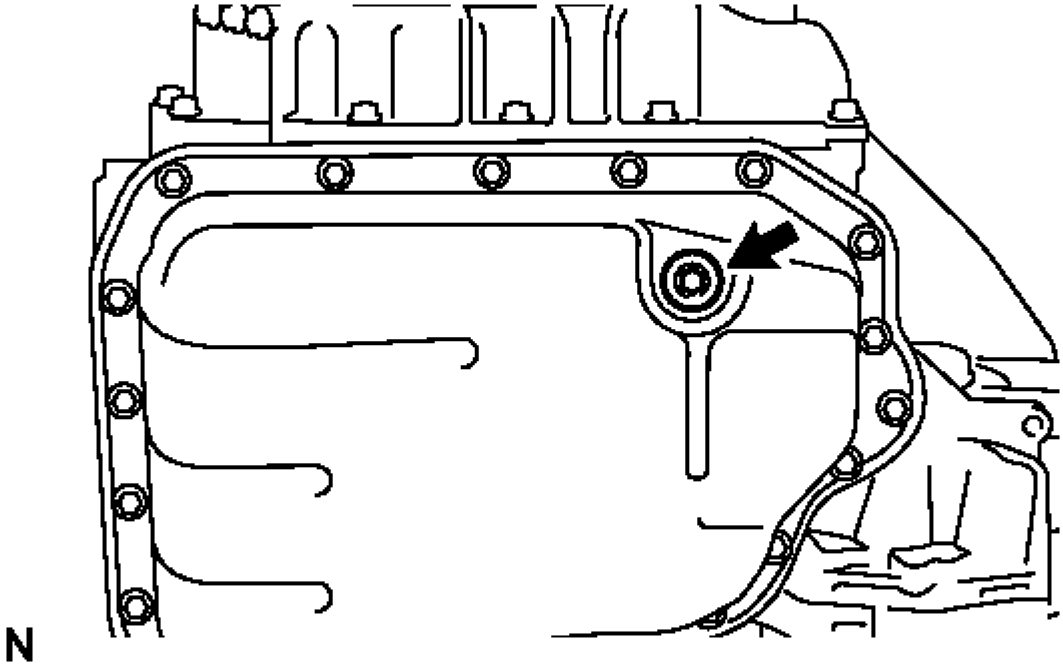

Fig. 378: Locating Automatic Transaxle Oil Pan Sub-Assembly
Courtesy of TOYOTA MOTOR SALES, U.S.A., INC.

Torque: 40 N*m (408 kgf*cm, 29 ft.*lbf)

60. **INSTALL NO. 2 TRANSAXLE CASE PLUG**
    a. Clean and degrease the 3 No. 2 transaxle case plugs and the installation holes in the transaxle housing.

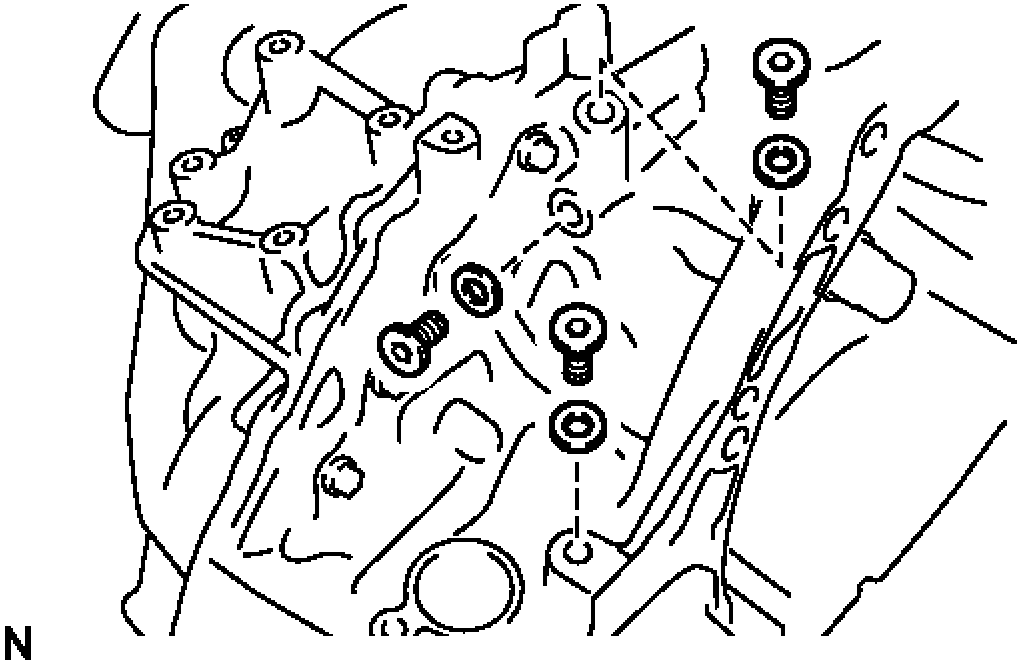

Fig. 379: Identifying Gaskets And Hexagon Bolts
Courtesy of TOYOTA MOTOR SALES, U.S.A., INC.

b. Apply adhesive to 2 or 3 threads on the ends of the 3 No. 2 transaxle case plugs.

Adhesive

Toyota Genuine Adhesive 1324, Three Bond 1324 or equivalent

c. Install the 3 new gaskets to the 3 No. 2 transaxle case plugs.
d. Using a 6 mm hexagon socket wrench, install the 3 No. 2 transaxle case plugs to the transaxle housing with the gaskets.

Torque: 17 N*m (173 kgf*cm, 12 ft.*lbf)

61. **INSTALL NO. 1 TRANSAXLE CASE PLUG**
    a. Coat 3 new O-rings with ATF and install them to the 3 No. 1 transaxle case plugs.

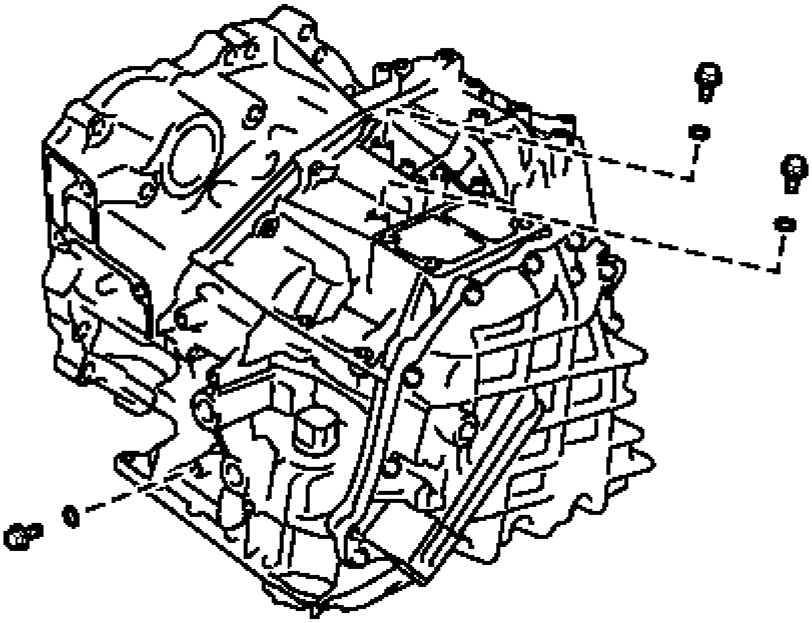

Fig. 380: Identifying No. 1 Transaxle Case Plugs
Courtesy of TOYOTA MOTOR SALES, U.S.A., INC.

NOTE: Ensure that the 2 O-rings are not twisted.

b. Install the 3 No. 1 transaxle case plugs to the transaxle case sub-assembly.

Torque: 7.4 N*m (75 kgf*cm, 65 in.*lbf)

62. **INSTALL OIL COOLER TUBE UNION (INLET)**
    a. Coat a new O-ring with ATF and install it to the oil cooler tube union (inlet).

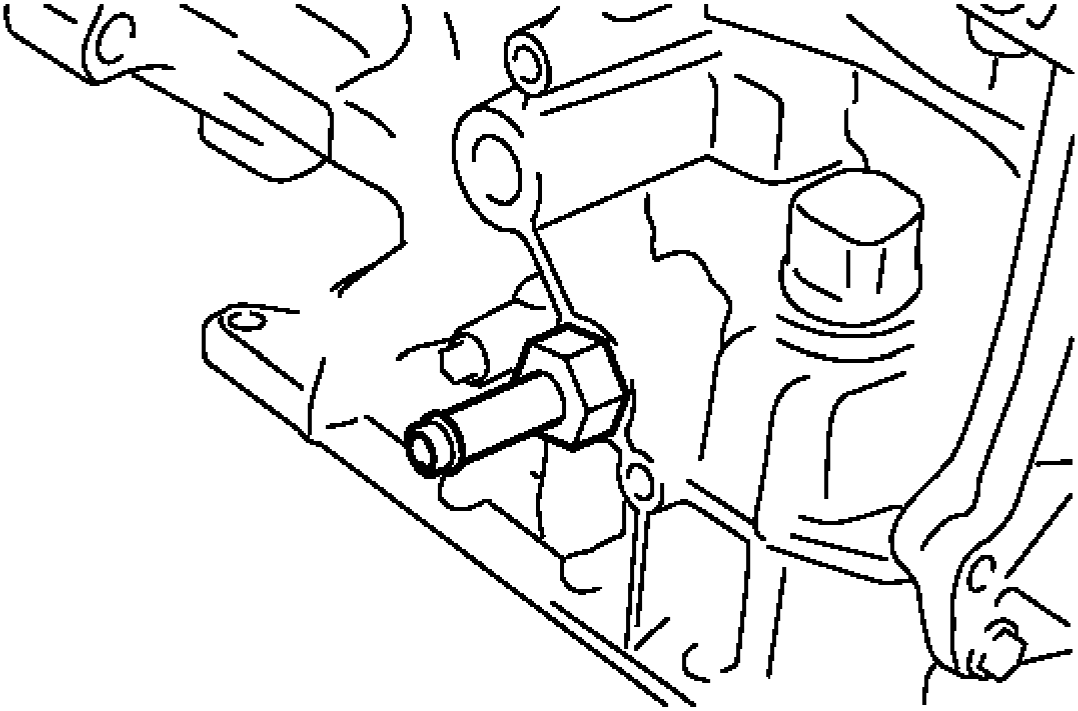

Fig. 381: Remove Oil Cooler Tube Union
Courtesy of TOYOTA MOTOR SALES, U.S.A., INC.

NOTE: **Ensure that the O-ring is not twisted.**

b. Install the oil cooler tube union (inlet) to the transaxle case sub-assembly as shown in the illustration.

Torque: 27 N*m (275 kgf*cm, 20 ft.*lbf)

63. **INSTALL OIL COOLER TUBE UNION (OUTLET)**

a. Coat a new O-ring with ATF and install it to the oil cooler tube union (outlet).

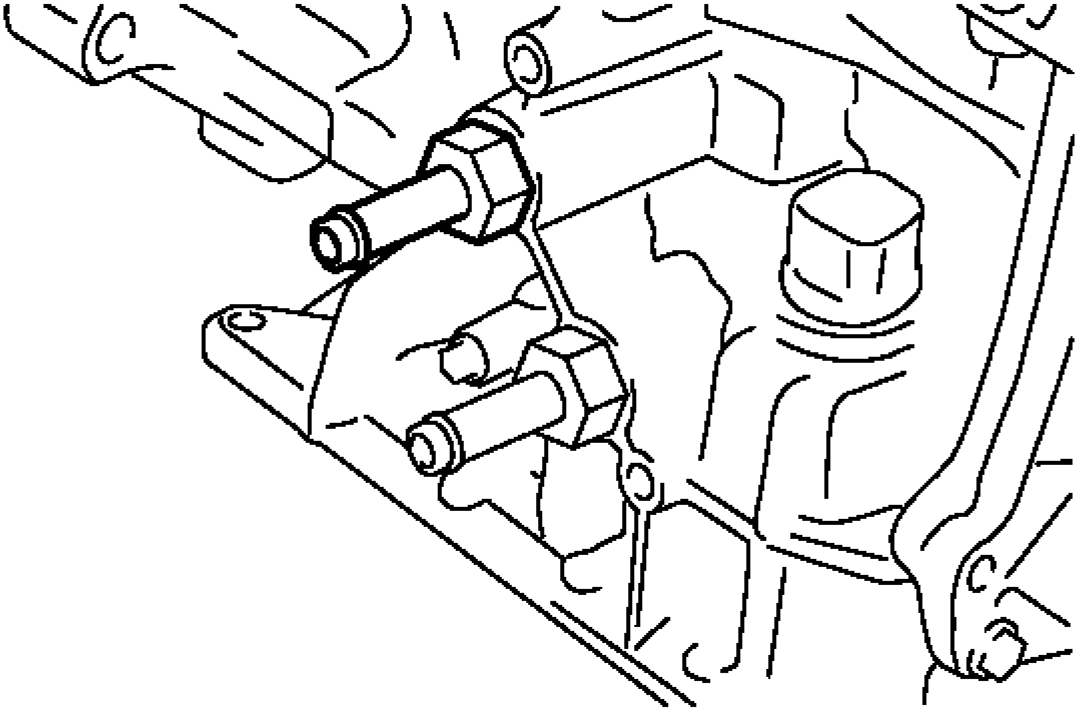

Fig. 382: Identifying Oil Cooler Tube Union O-Ring
Courtesy of TOYOTA MOTOR SALES, U.S.A., INC.

NOTE: Ensure that the O-ring is not twisted.

b. Install the oil cooler tube union (outlet) to the transaxle case sub-assembly.

Torque: 27 N*m (275 kgf*cm, 20 ft.*lbf)

64. **INSTALL PARK/NEUTRAL POSITION SWITCH ASSEMBLY**

a. Temporarily install the park/neutral position switch assembly to the transaxle case sub-assembly with the 2 bolts.

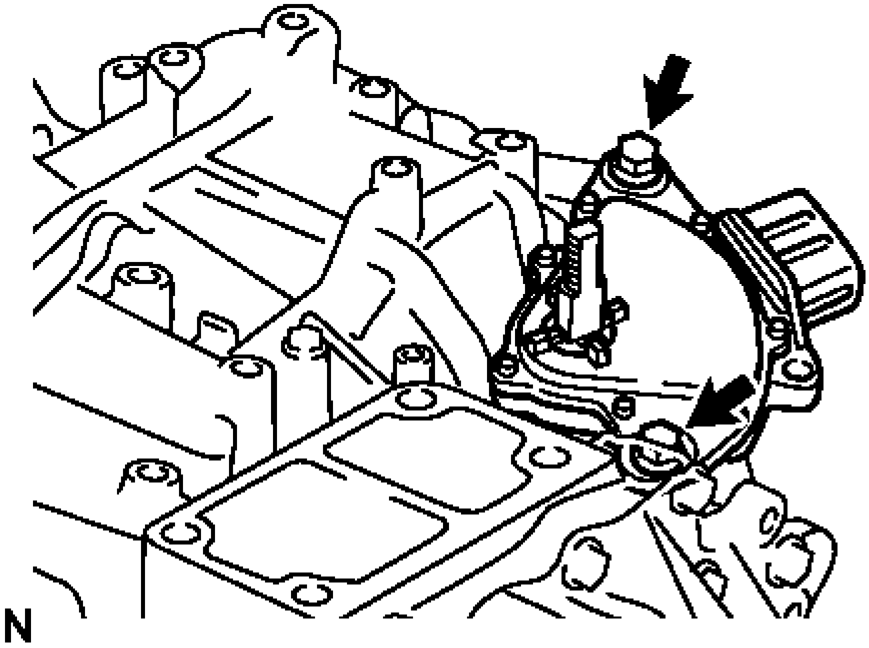

Fig. 383: Locating Park/Neutral Position Switch Assembly Bolts
Courtesy of TOYOTA MOTOR SALES, U.S.A., INC.

NOTE: **Before installing the park/neutral position switch assembly, remove any dirt or rust on the manual valve lever shaft sub-assembly. Be sure to install the switch straight along the shaft while being careful not to deform the plate spring that supports the shaft. If the plate spring is deformed, the park/neutral position switch assembly cannot be reinstalled correctly.**

b. Align the protrusions of the park/neutral position switch assembly as shown in the illustration.

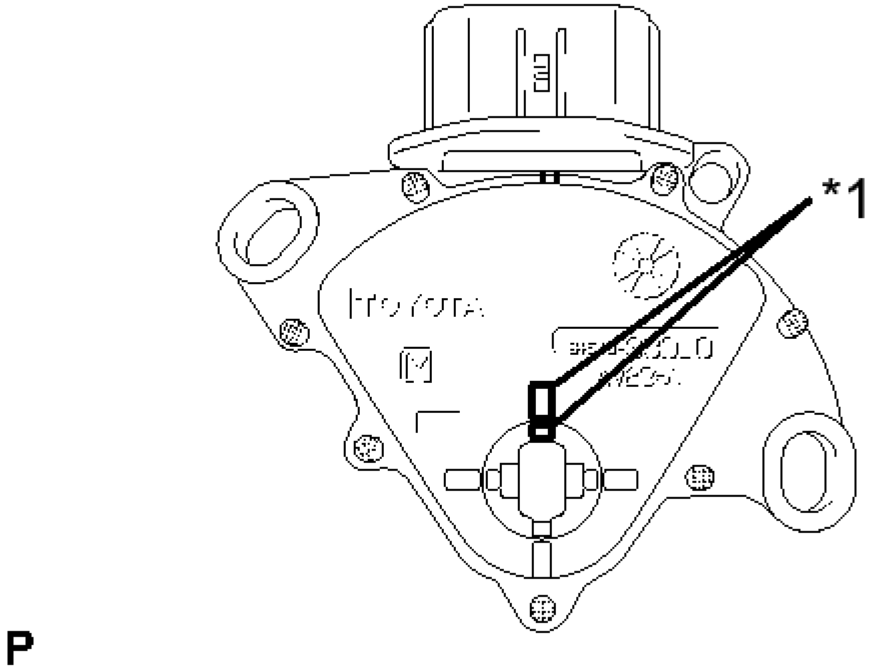

Fig. 384: Aligning Protrusions Of Park/Neutral Position Switch
Courtesy of TOYOTA MOTOR SALES, U.S.A., INC.

TEXT IN ILLUSTRATION

*1	Protrusion

c. Tighten the 2 bolts

Torque: 5.4 N*m (55 kgf*cm, 48 in.*lbf)

NOTE: **After installing the park/neutral position switch assembly, confirm that the 2 protrusions on the switch are aligned.**

65. **INSTALL TRANSMISSION CONTROL SHAFT LEVER**

a. Install the transmission control shaft lever to the manual valve lever shaft sub-assembly with the washer and nut.

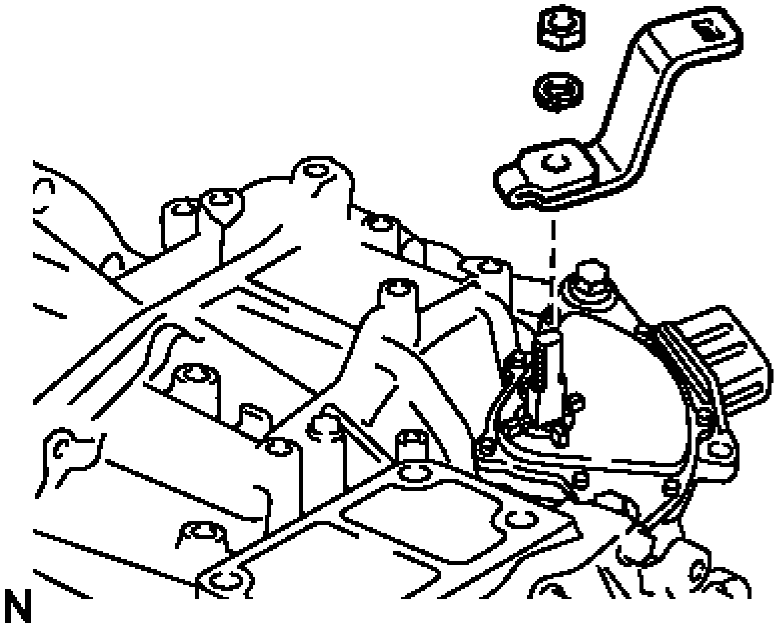

Fig. 385: Identifying Nut, Washer And Control Shaft Lever
Courtesy of TOYOTA MOTOR SALES, U.S.A., INC.

Torque: 13 N*m (130 kgf*cm, 9 ft.*lbf)

66. **INSTALL TRANSMISSION BREATHER HOSE SUB-ASSEMBLY**
    a. Coat a new O-ring with ATF and install it to the No. 2 breather plug.

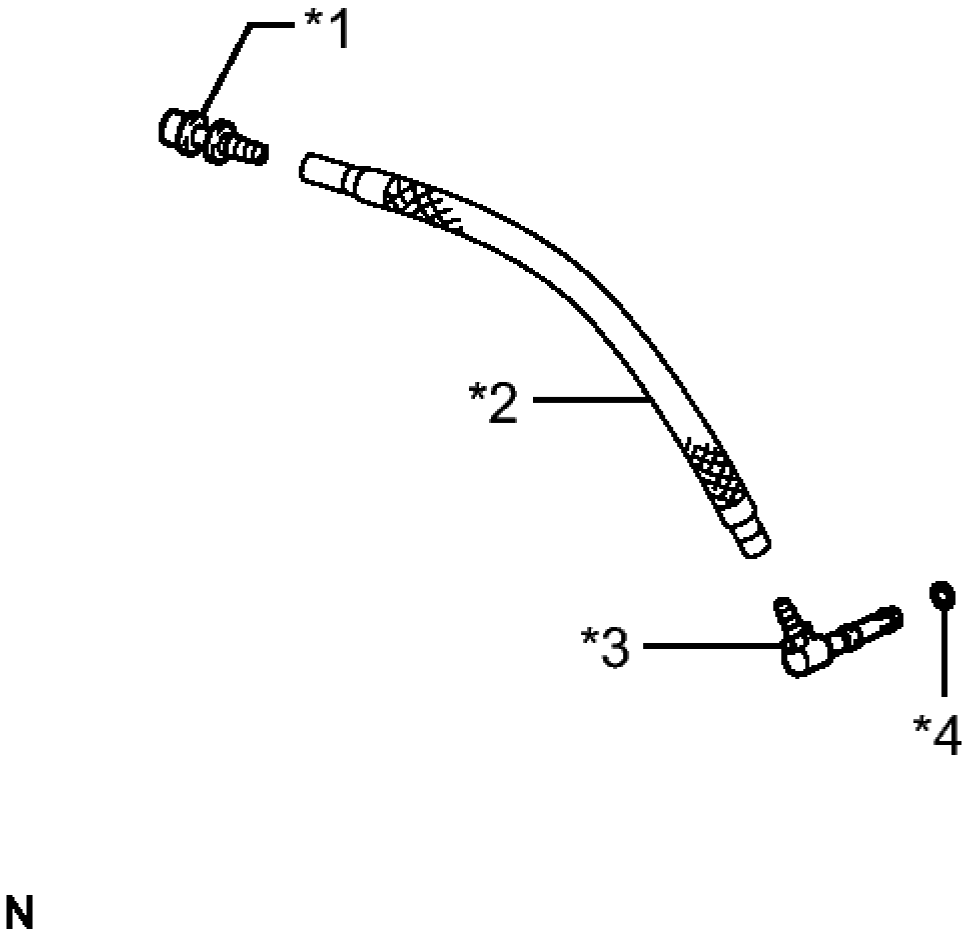

Fig. 386: Identifying Breather Plug Hose Components
Courtesy of TOYOTA MOTOR SALES, U.S.A., INC.

TEXT IN ILLUSTRATION

*1	No. 1 Breather Plug
*2	Breather Plug Hose
*3	No. 2 Breather Plug
*4	O-ring

NOTE: **Ensure that the O-ring is not twisted.**

b. Install the No. 2 breather plug to the breather plug hose.
c. Install the No. 1 breather plug to the breather plug hose.
d. Install the transmission breather plug hose sub-assembly to the transaxle case sub-assembly.

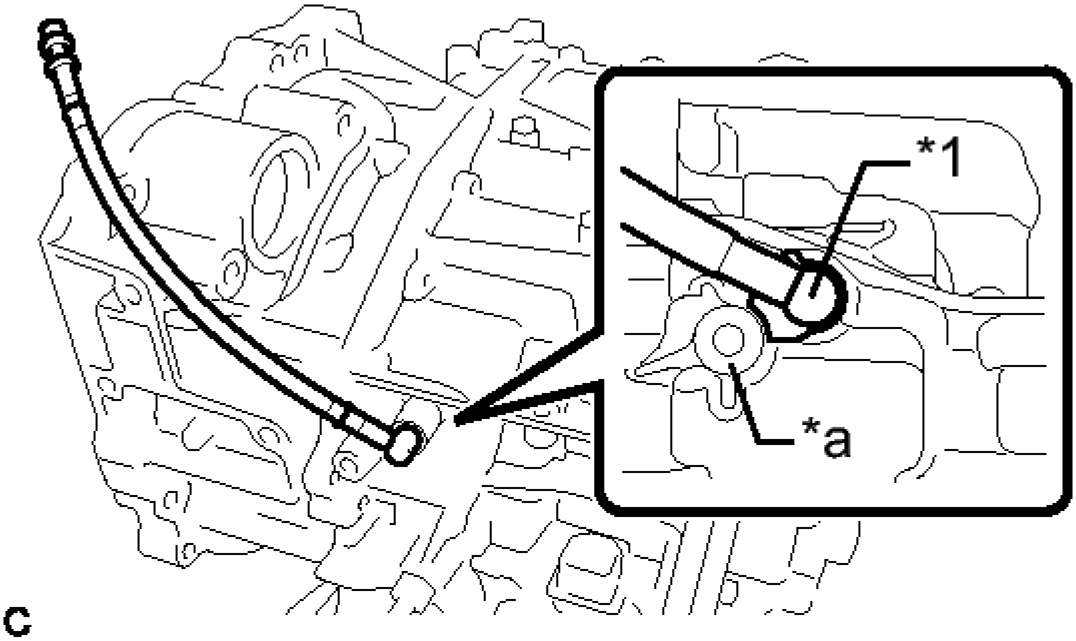

Fig. 387: Identifying Breather Plug And Boss
Courtesy of TOYOTA MOTOR SALES, U.S.A., INC.

TEXT IN ILLUSTRATION

*1	No. 2 Breather Plug
*a	Boss

NOTE: **Ensure that the stopper on the No. 2 breather plug is in contact with the side of the boss on the transaxle case sub-assembly.**

TORQUE CONVERTER AND DRIVE PLATE

INSPECTION

INSPECTION

1. **INSPECT TORQUE CONVERTER ASSEMBLY**

a. Inspect the one-way clutch.

   1. Press on the splines of the stator with a finger and rotate the stator. Check that the stator rotates smoothly when turned clockwise and rotates with difficulty when turned counterclockwise.

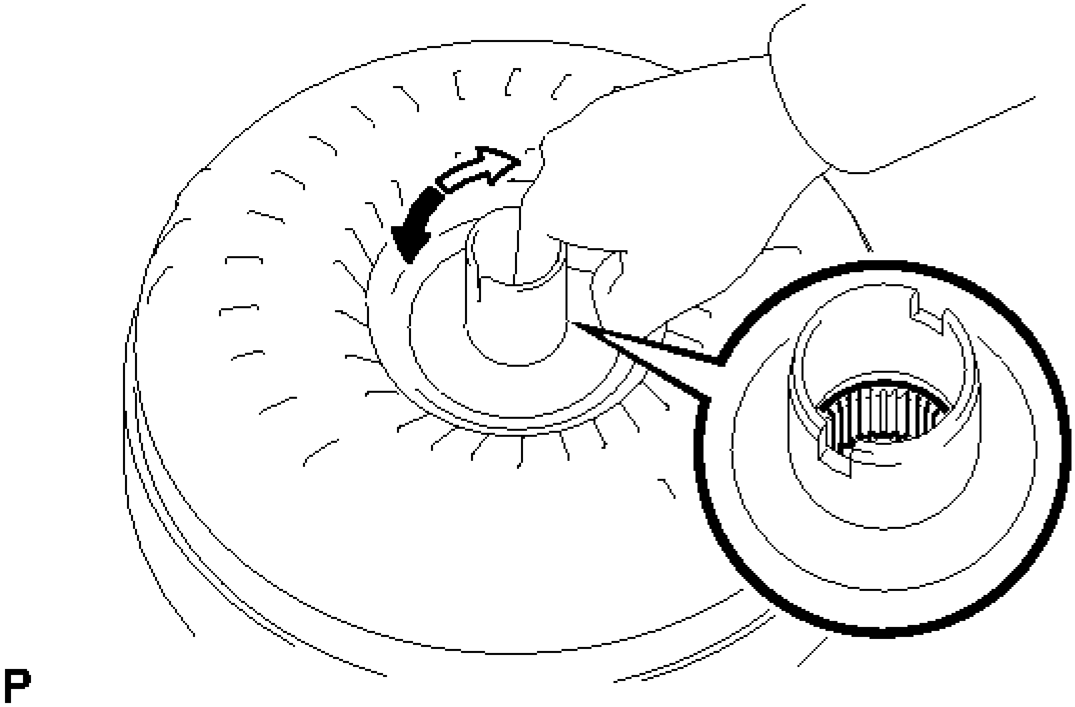

Fig. 388: Pressing Stator Splines With Finger And Rotate Stator
Courtesy of TOYOTA MOTOR SALES, U.S.A., INC.

If necessary, clean the torque converter and recheck the one-way clutch.

Replace the torque converter if the one-way clutch still fails the inspection.

TEXT IN ILLUSTRATION

	Difficult
	Smooth

b. Inspect the torque converter assembly.

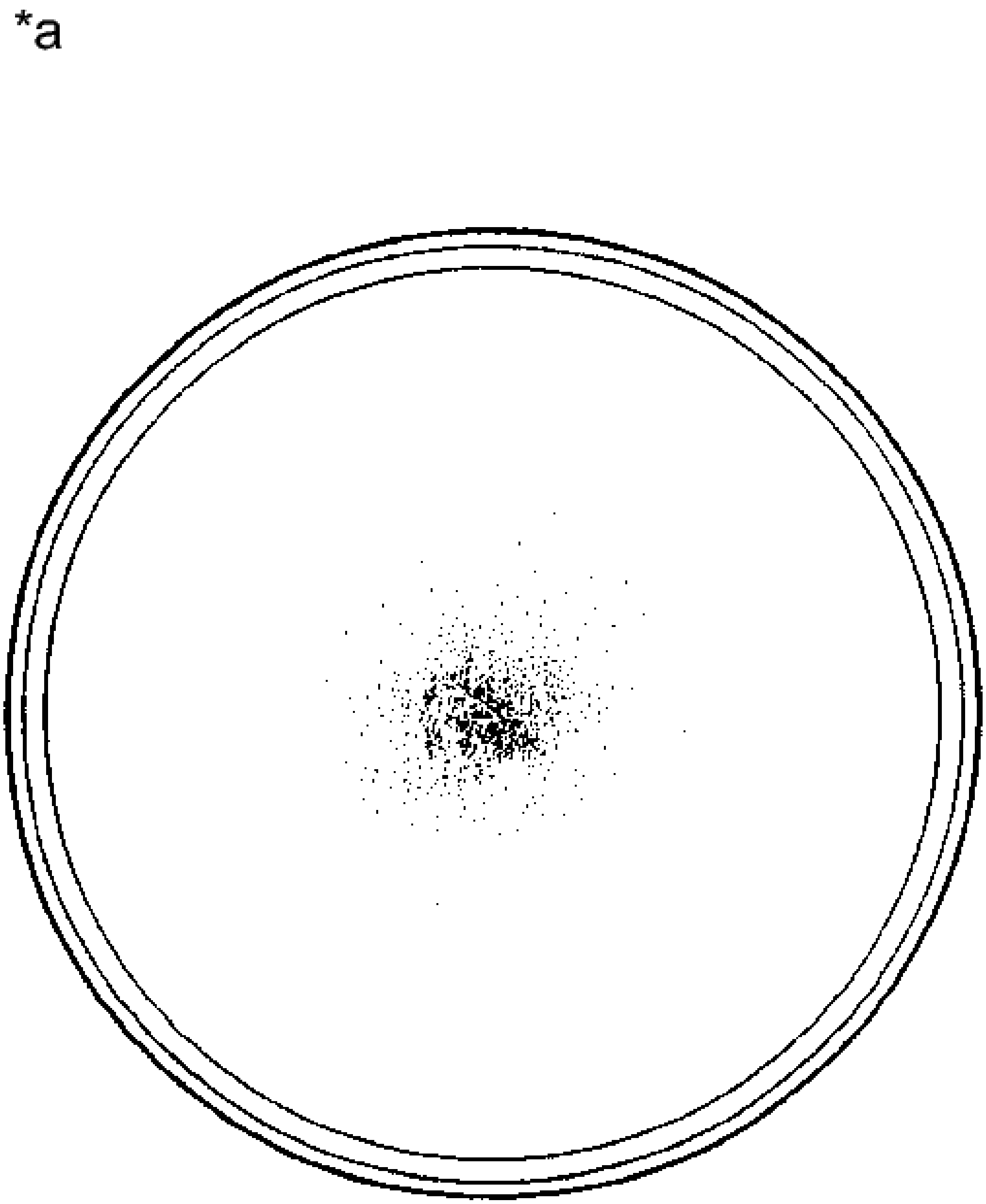

Fig. 389: Identifying Powder In ATF
Courtesy of TOYOTA MOTOR SALES, U.S.A., INC.

If any of the following problems are present, replace the torque converter assembly.

TEXT IN ILLUSTRATION

*a	Sample showing maximum allowable amount of powder in ATF

- A metallic sound is emitted from the torque converter assembly during the stall test or when the shift lever is moved to N.
- The one-way clutch turns smoothly or locks in both directions.
- The amount of powder in the ATF is more than the sample shown in the illustration (refer to the sample).

HINT:

The sample shows approximately 0.025 liters (0.026 US qts, 0.022 Imp. qts) of ATF that was removed from a torque converter.

c. Replace the ATF in the torque converter.

HINT:

If the ATF is discolored or has a foul odor, stir the ATF in the torque converter before replacing the ATF.

d. Clean and check the oil cooler and oil pipe line.

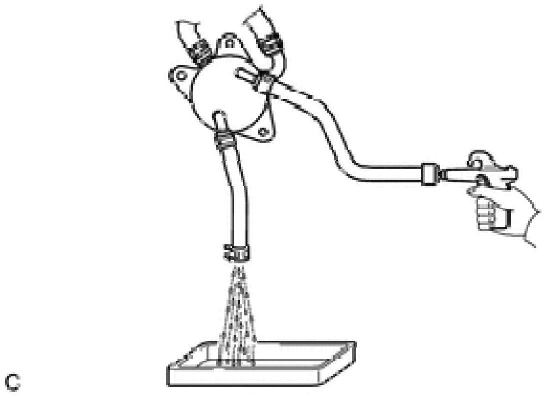

Fig. 390: Cleaning And Checking Oil Cooler And Oil Pipe Line
Courtesy of TOYOTA MOTOR SALES, U.S.A., INC.

HINT:

- If the torque converter is inspected or the ATF is replaced, it is necessary to clean the oil cooler and oil pipe line.

- Apply compressed air of 196 kPa (2.0 kgf/ cm^2 , 28 psi) into the inlet hose.
- If a large amount of powder is found in the ATF, add new ATF using a bucket pump and clean the oil cooler and oil pipe line again.
- If the ATF is cloudy, inspect the oil cooler.

e. Prevent deformation of the torque converter and damage to the oil pump gear.

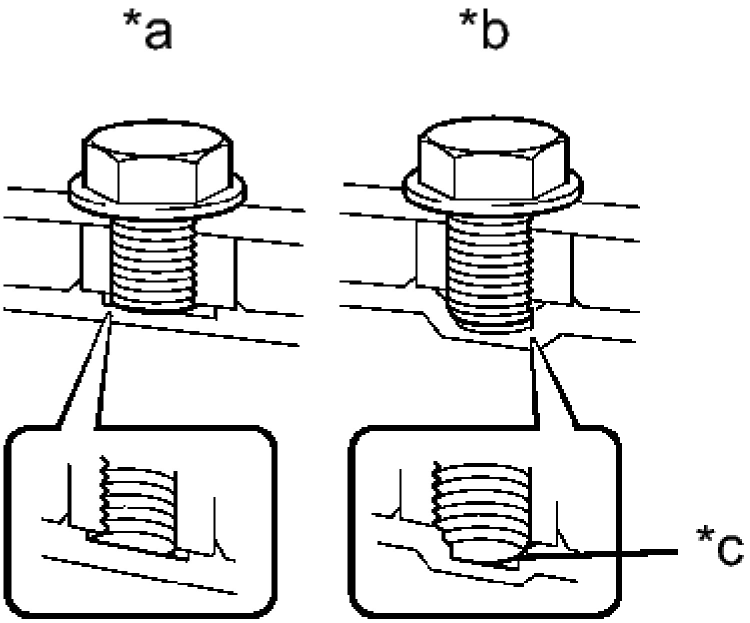

Fig. 391: Identifying Bolts Are Same Length
Courtesy of TOYOTA MOTOR SALES, U.S.A., INC.

NOTE: **Make sure that all of the bolts are the same length and that the specified bolts are used.**

TEXT IN ILLUSTRATION

*a	Correct
*b	Incorrect
*c	Bottom is damaged

HINT:

If there is any damage to the tip of a bolt for the torque converter or to the bottom of a bolt hole, replace the bolt and torque converter.

2. **INSPECT DRIVE PLATE**

a. Check the drive plate for damage.
b. Set up a dial indicator and measure the runout at the 6 areas on the drive plate surface that contact the torque converter.

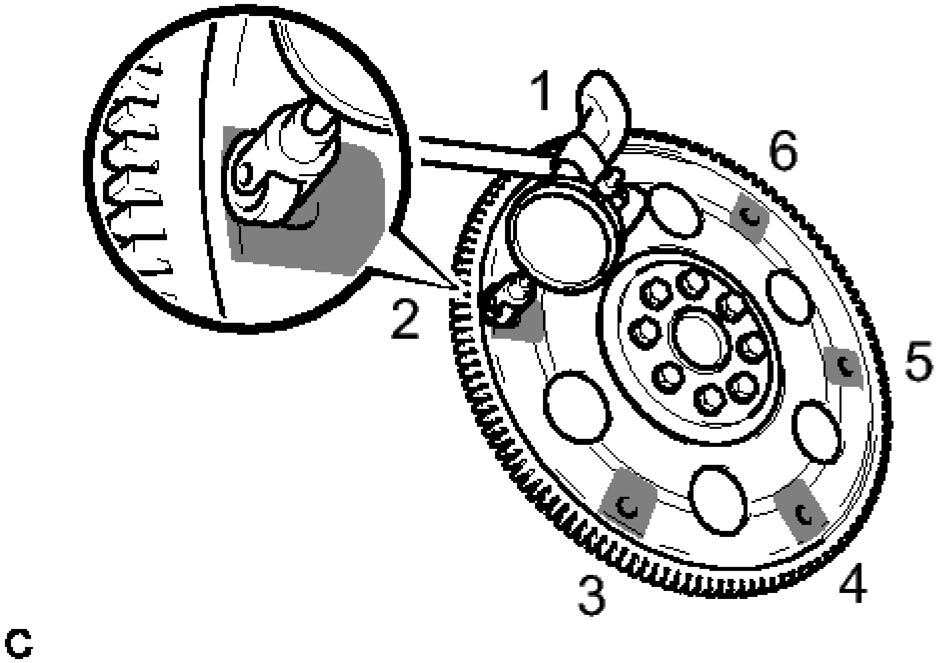

Fig. 392: Inspecting Drive Plate
Courtesy of TOYOTA MOTOR SALES, U.S.A., INC.

TEXT IN ILLUSTRATION

▨	Measuring Point

Maximum runout

0.30 mm (0.0118 in.)

- If the runout is more than the maximum or the drive plate is damaged, replace the drive plate.
- If installing a new drive plate, confirm that the spacers are oriented properly before tightening the bolts. Refer to **INSTALLATION** .

OIL PUMP

COMPONENTS

ILLUSTRATION

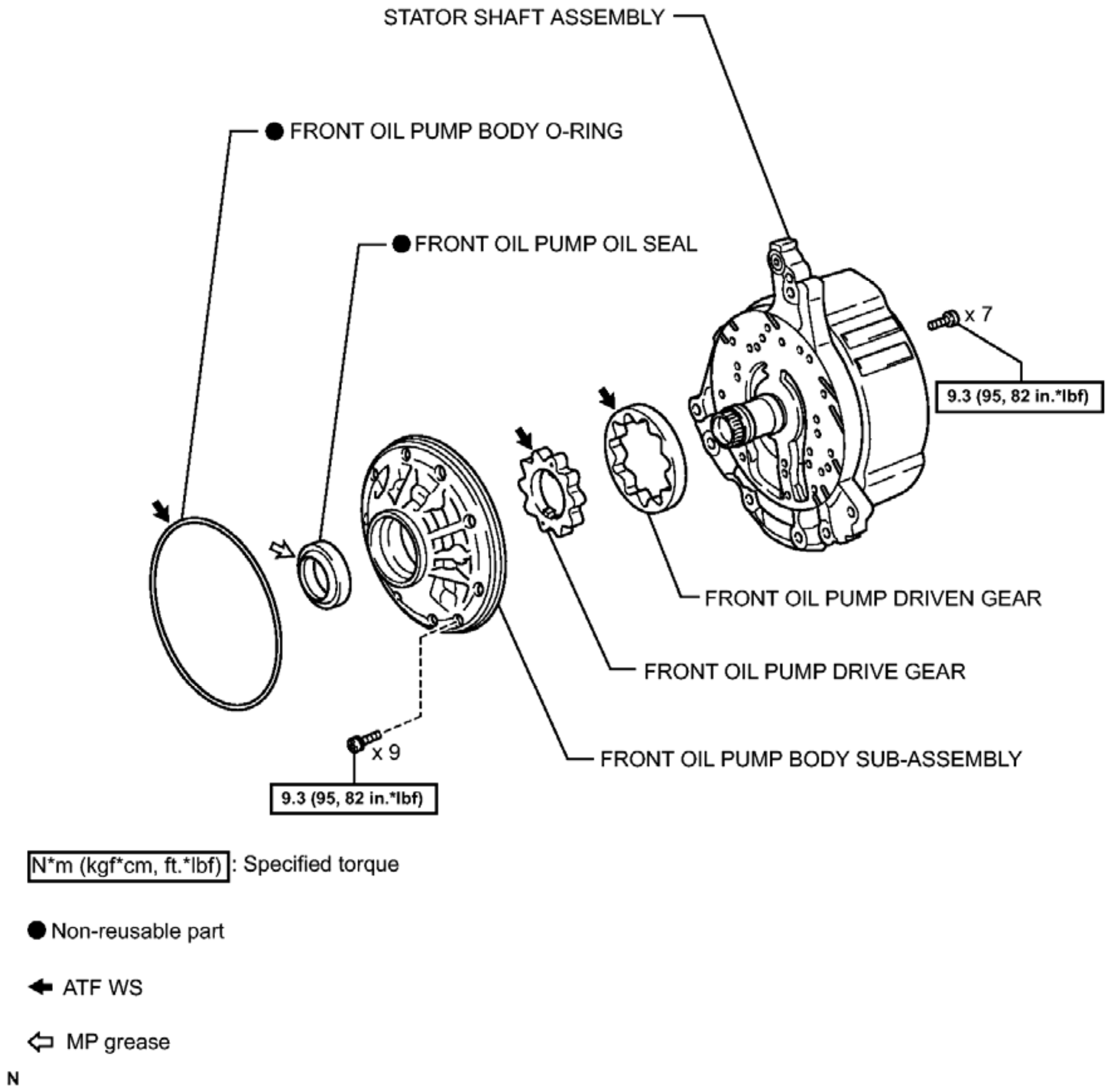
STATOR SHAFT ASSEMBLY
● FRONT OIL PUMP BODY O-RING
● FRONT OIL PUMP OIL SEAL
x 7
9.3 (95, 82 in.*lbf)
FRONT OIL PUMP DRIVEN GEAR
FRONT OIL PUMP DRIVE GEAR
x 9
9.3 (95, 82 in.*lbf)
FRONT OIL PUMP BODY SUB-ASSEMBLY
N*m (kgf*cm, ft.*lbf) : Specified torque
● Non-reusable part
ATF WS
MP grease
N

Fig. 393: Identifying Oil Pump Replacement Components With Torque Specifications
Courtesy of TOYOTA MOTOR SALES, U.S.A., INC.

DISASSEMBLY

DISASSEMBLY

1. **INSPECT FRONT OIL PUMP ASSEMBLY** See step 1
2. **REMOVE STATOR SHAFT ASSEMBLY**
    a. Using a T30 "TORX" socket wrench, remove the 16 "TORX" bolts and stator shaft assembly from the front oil pump and gear body sub-assembly.

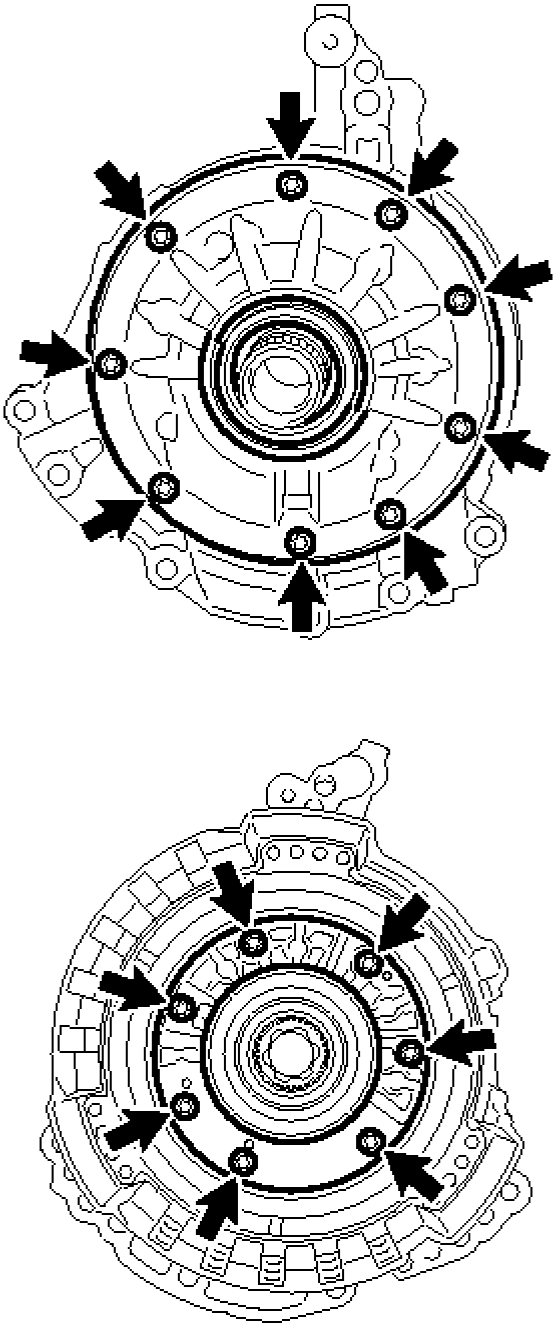

Fig. 394: Locating Stator Shaft Assembly Bolts
Courtesy of TOYOTA MOTOR SALES, U.S.A., INC.

NOTE: Keep the gears in the order of installation.

3. **INSPECT CLEARANCE OF FRONT OIL PUMP AND GEAR BODY SUB-ASSEMBLY** See step 2
4. **REMOVE FRONT OIL PUMP DRIVE GEAR**
    a. Remove the front oil pump drive gear from the front oil pump body sub-assembly.

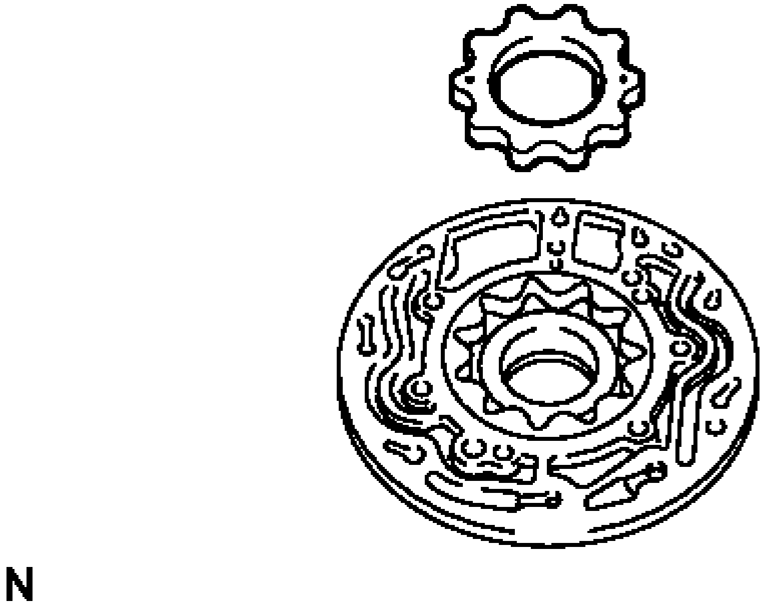

Fig. 395: Identifying Front Oil Pump Drive Gear
Courtesy of TOYOTA MOTOR SALES, U.S.A., INC.

5. **REMOVE FRONT OIL PUMP DRIVEN GEAR**
    a. Remove the front oil pump driven gear from the front oil pump body sub-assembly.

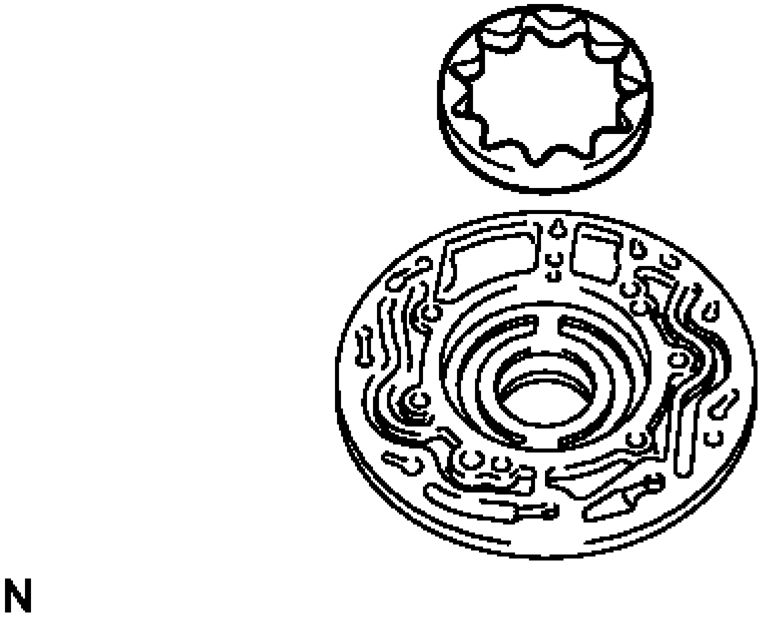

Fig. 396: Identifying Front Oil Pump Driven Gear
Courtesy of TOYOTA MOTOR SALES, U.S.A., INC.

6. **REMOVE FRONT OIL PUMP BODY O-RING**
   a. Remove the front pump body O-ring from the front oil pump body sub-assembly.

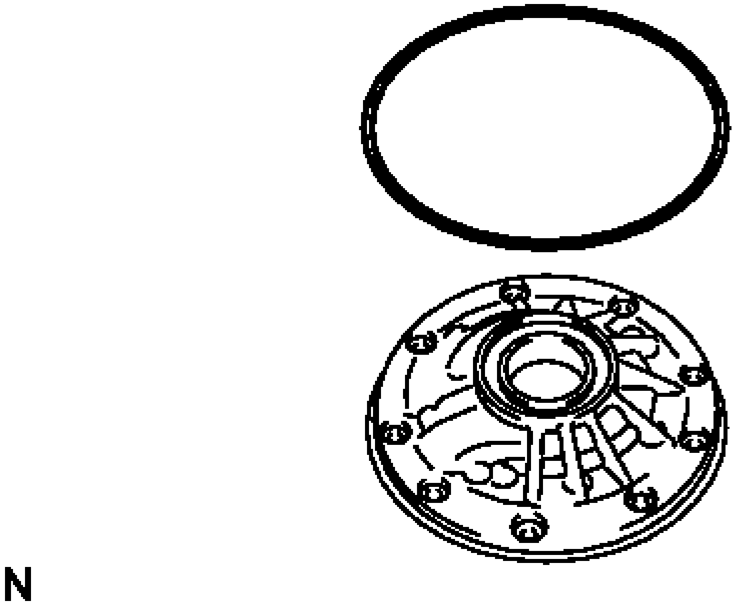

Fig. 397: Identifying O-Ring And Oil Pump Body

Courtesy of TOYOTA MOTOR SALES, U.S.A., INC.

7. **REMOVE FRONT OIL PUMP OIL SEAL**
    a. Fix the front oil pump body sub-assembly in a vise between aluminum plates.

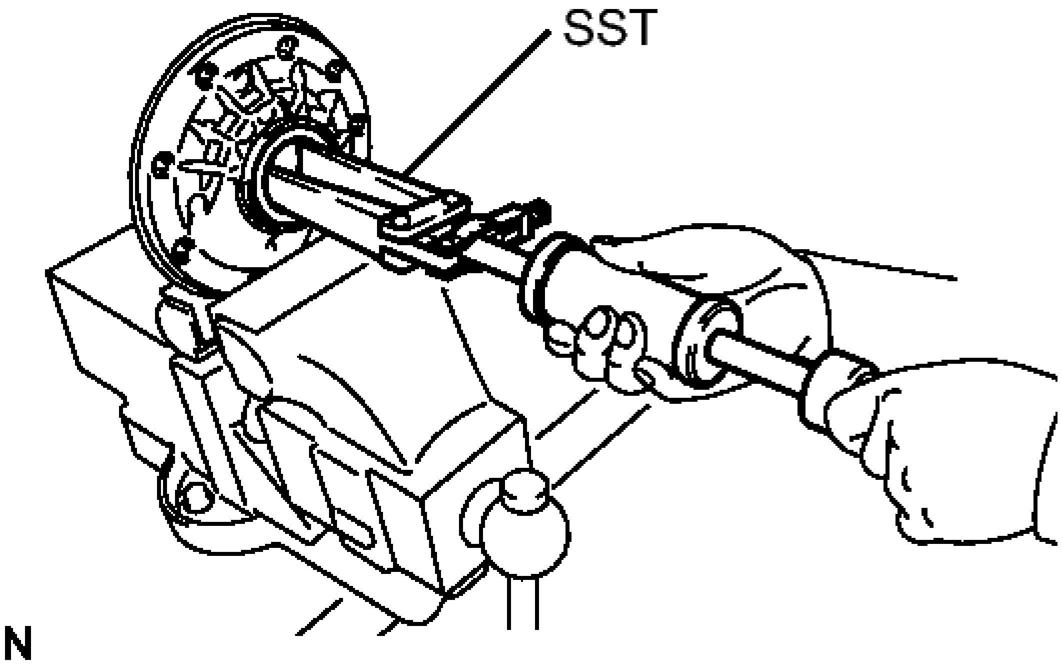

Fig. 398: Removing Front Oil Pump Oil Seal
Courtesy of TOYOTA MOTOR SALES, U.S.A., INC.

NOTE: **Do not overtighten the vise.**

    b. Using SST, remove the front oil pump oil seal from the front oil pump body sub-assembly.
        - **SST: 09308-00010**

INSPECTION

INSPECTION

1. **INSPECT FRONT OIL PUMP ASSEMBLY**
    a. Turn the drive gear with 2 screwdrivers and make sure that it rotates smoothly.

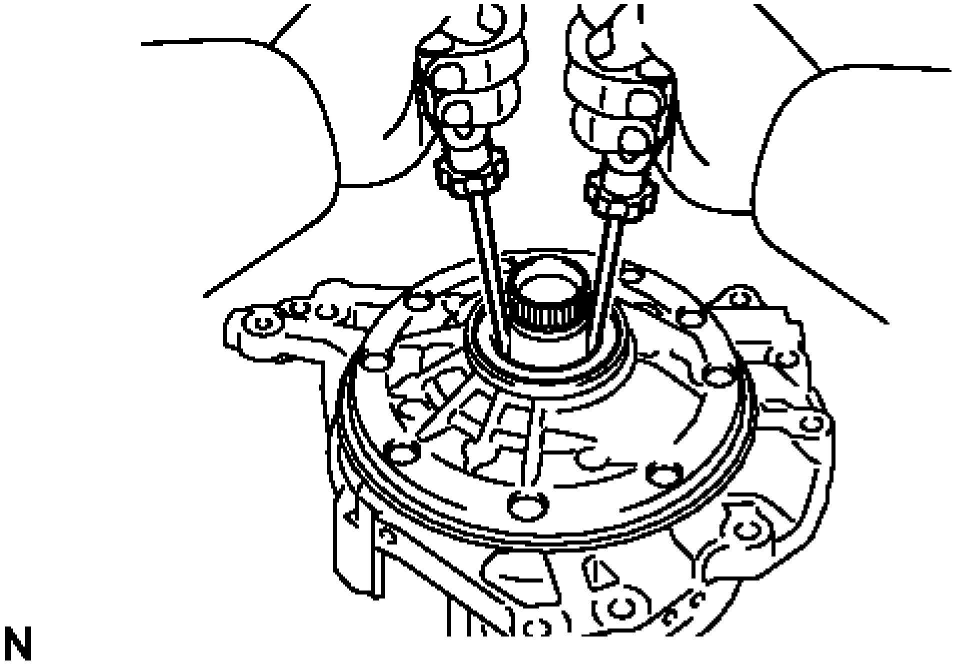

Fig. 399: Turning Drive Gear With Screwdrivers
Courtesy of TOYOTA MOTOR SALES, U.S.A., INC.

NOTE: Be careful not to damage the oil seal lip.

2. **INSPECT CLEARANCE OF FRONT OIL PUMP AND GEAR BODY SUB-ASSEMBLY**
    a. Inspect the body clearance.
        1. Push the driven gear to one side of the body.

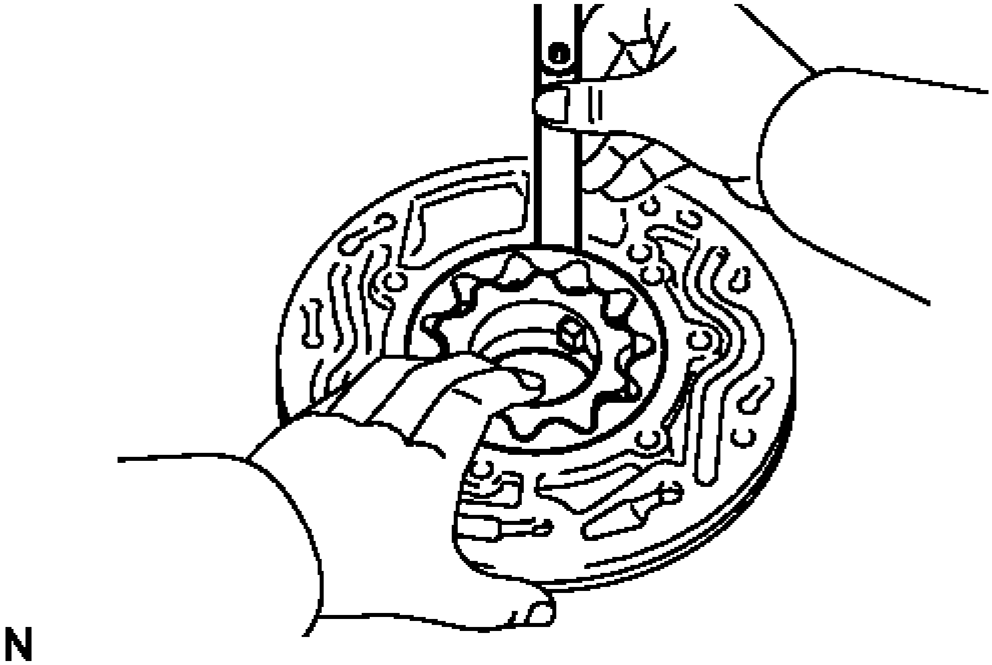

Fig. 400: Inspecting Clearance Of Front Oil Pump And Gear Body Sub-Assembly
Courtesy of TOYOTA MOTOR SALES, U.S.A., INC.

2. Using a feeler gauge, measure the body clearance.

   Standard clearance

   0.075 to 0.145 mm (0.00296 to 0.00570 in.)

   Maximum clearance

   0.145 mm (0.00570 in.)

   If the clearance is more than the maximum, replace the drive gear, driven gear or front oil pump and gear body sub-assembly.

b. Inspect the side clearance.
   1. Using a straightedge and feeler gauge, measure the side clearance of both gears.

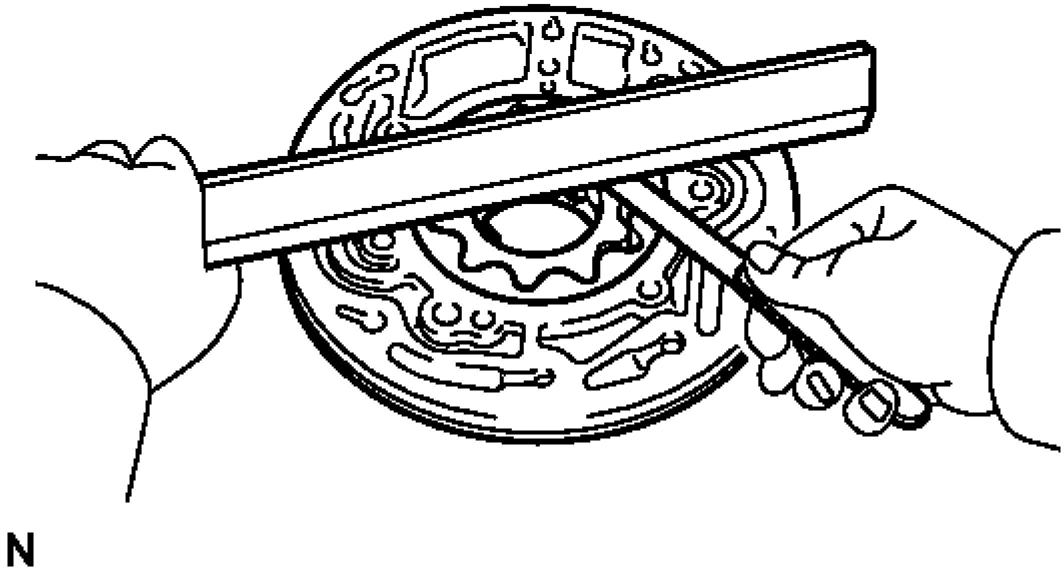

Fig. 401: Measuring Side Clearance Of Both Gears
Courtesy of TOYOTA MOTOR SALES, U.S.A., INC.

Standard side clearance

0.025 to 0.040 mm (0.000985 to 0.00157 in.)

Maximum side clearance

0.04 mm (0.00157 in.)

If the clearance is more than the maximum, replace the drive gear, driven gear or front oil pump and gear body sub-assembly.

HINT:

There are 5 different thicknesses for the drive and driven gears.

DRIVE GEAR THICKNESS

Mark	**Thickness [mm (in.)]**
1	11.547 to 11.555 (0.45461 to 0.45492)

2	11.555 to 11.563 (0.45493 to 0.45523)
3	11.564 to 11.571 (0.45528 to 0.45555)
4	11.572 to 11.579 (0.45559 to 0.45586)
5	11.580 to 11.587 (0.45591 to 0.45618)

DRIVEN GEAR THICKNESS

Mark	Thickness [mm (in.)]
1	11.547 to 11.555 (0.45461 to 0.45492)
2	11.555 to 11.563 (0.45493 to 0.45523)
3	11.564 to 11.571 (0.45528 to 0.45555)
4	11.572 to 11.579 (0.45559 to 0.45586)
	11.580 to

5	11.587 (0.45591 to 0.45618)

3. **INSPECT FRONT OIL PUMP BODY SUB-ASSEMBLY**
    a. Using a caliper gauge, measure the inside diameter of the front oil pump body bushing.

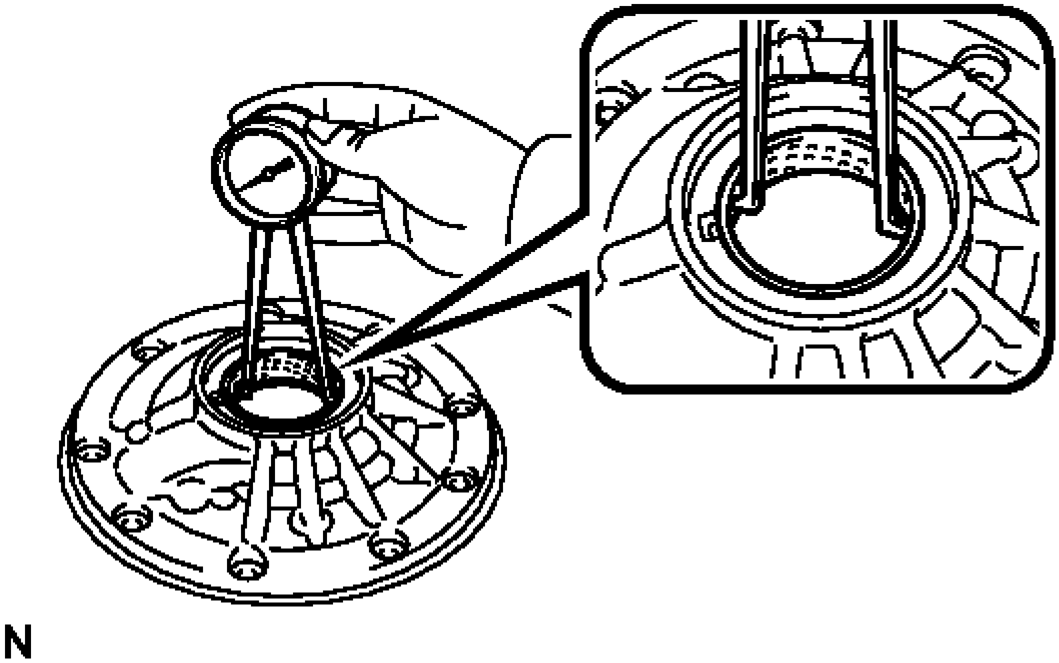

Fig. 402: Measuring Inside Diameter Of Oil Pump Body Bushing
Courtesy of TOYOTA MOTOR SALES, U.S.A., INC.

Standard inside diameter

43.135 to 43.160 mm (1.6983 to 1.6992 in.)

Maximum inside diameter

43.160 mm (1.6992 in.)

If the inside diameter is more than the maximum, replace the front oil pump and gear body sub-assembly.

4. **INSPECT STATOR SHAFT ASSEMBLY**
    a. Using a caliper gauge, measure the inside diameter of the stator shaft bushing.

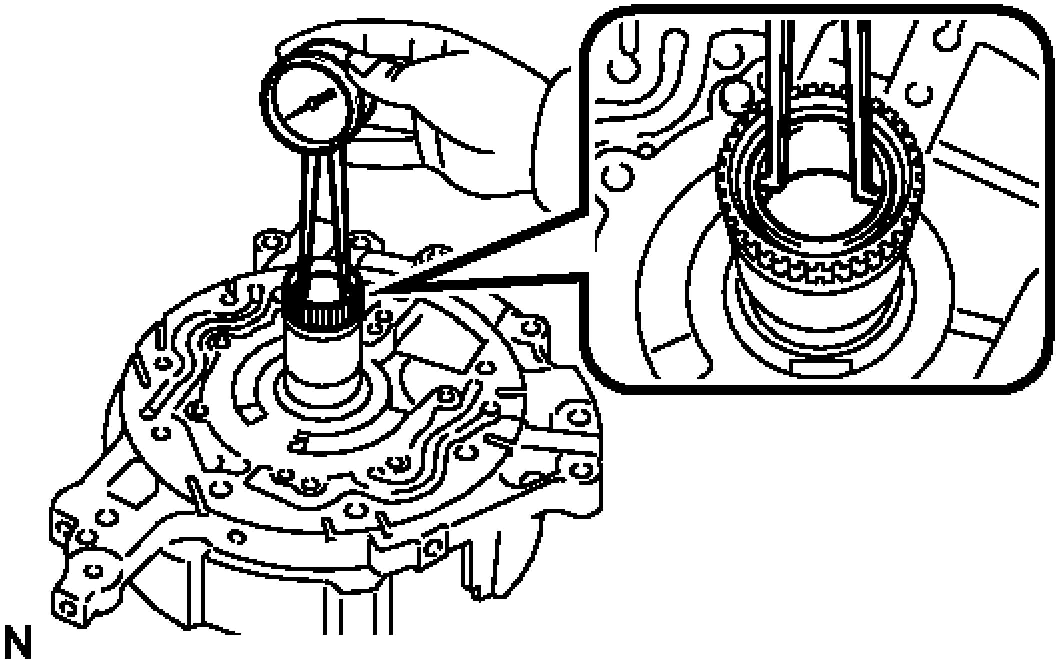

Fig. 403: Measuring Inside Diameter Of Oil Pump Body Bushing
Courtesy of TOYOTA MOTOR SALES, U.S.A., INC.

Standard inside diameter

22.500 to 22.526 mm (0.88583 to 0.88684 in.)

Maximum inside diameter

22.570 mm (0.88858 in.)

If the inside diameter is more than the maximum, replace the stator shaft assembly.

REASSEMBLY

REASSEMBLY

1. **INSTALL FRONT OIL PUMP OIL SEAL**
    a. Coat the lip of a new front oil pump oil seal with a small amount of MP grease.

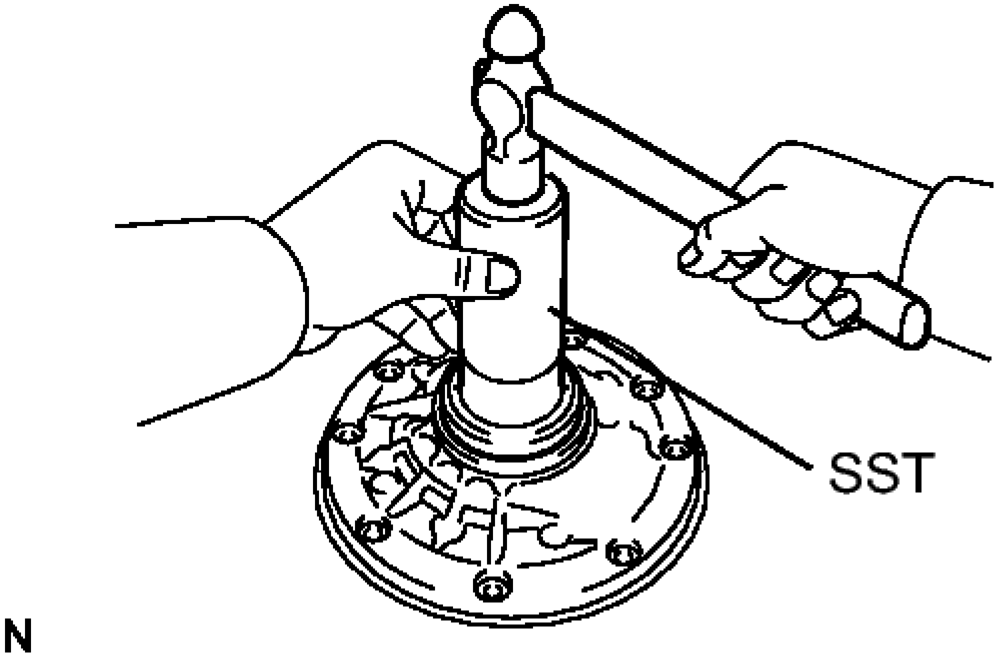

Fig. 404: Installing Oil Seal To Oil Pump Body
Courtesy of TOYOTA MOTOR SALES, U.S.A., INC.

b. Using SST and a hammer, install the front oil pump oil seal to the front oil pump body sub-assembly.
    - **SST: 09350-32014**
      09351-32140

NOTE: **The seal end should be level with the outer edge of the front oil pump body sub-assembly.**

2. **INSTALL FRONT OIL PUMP BODY O-RING**
    a. Coat a new front oil pump body O-ring with ATF and install it to the front oil pump body sub-assembly.

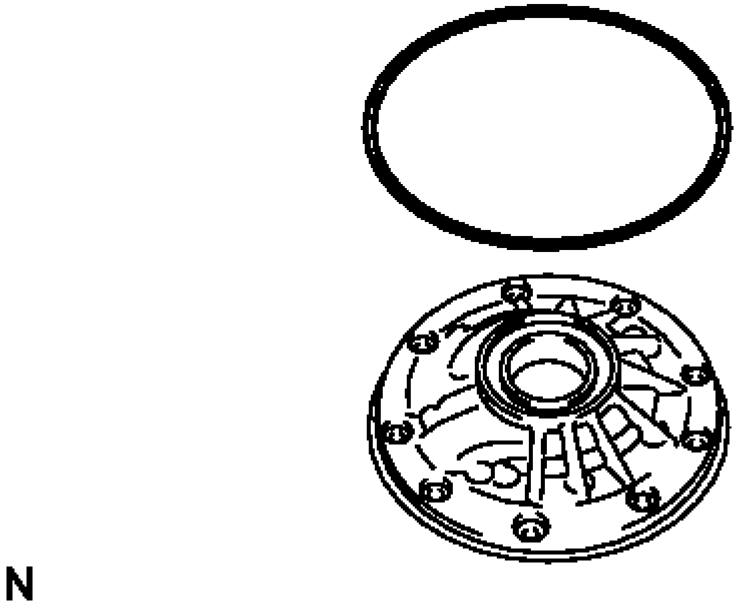

Fig. 405: Identifying O-Ring And Oil Pump Body
Courtesy of TOYOTA MOTOR SALES, U.S.A., INC.

NOTE: Ensure that the O-ring is not twisted.

3. **INSTALL FRONT OIL PUMP DRIVEN GEAR**
   a. Coat the front oil pump driven gear with ATF and install it to the front oil pump body sub-assembly with the marked side up.

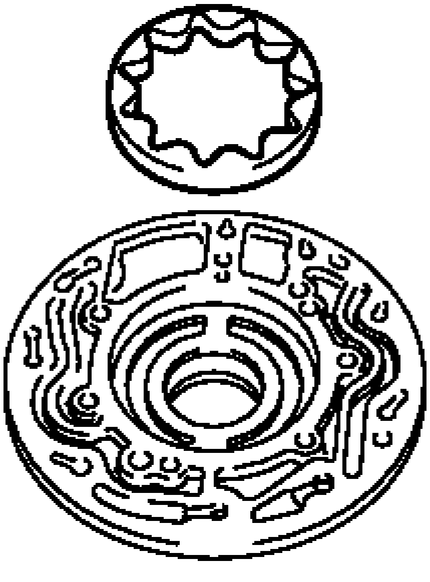

Fig. 406: Identifying Front Oil Pump Driven Gear
Courtesy of TOYOTA MOTOR SALES, U.S.A., INC.

4. **INSTALL FRONT OIL PUMP DRIVE GEAR**
    a. Coat the front oil pump drive gear with ATF, and install it to the front oil pump body sub-assembly with the marked side up.

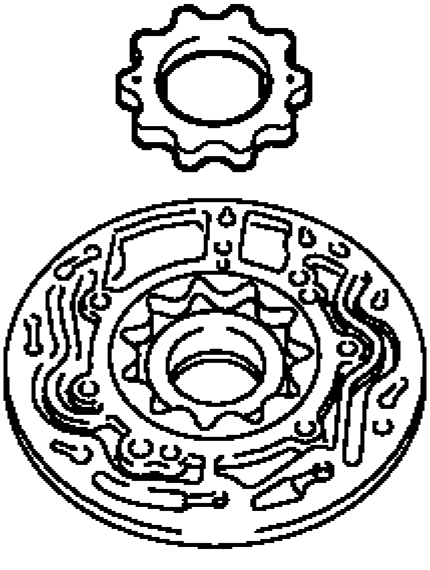

Fig. 407: Identifying Front Oil Pump Drive Gear
Courtesy of TOYOTA MOTOR SALES, U.S.A., INC.

5. **INSTALL STATOR SHAFT ASSEMBLY**
   a. Align each knock pin of the stator shaft assembly with the holes in the front oil pump body sub-assembly and install the stator shaft assembly to the front oil pump body sub-assembly with the 16 "TORX" bolts.

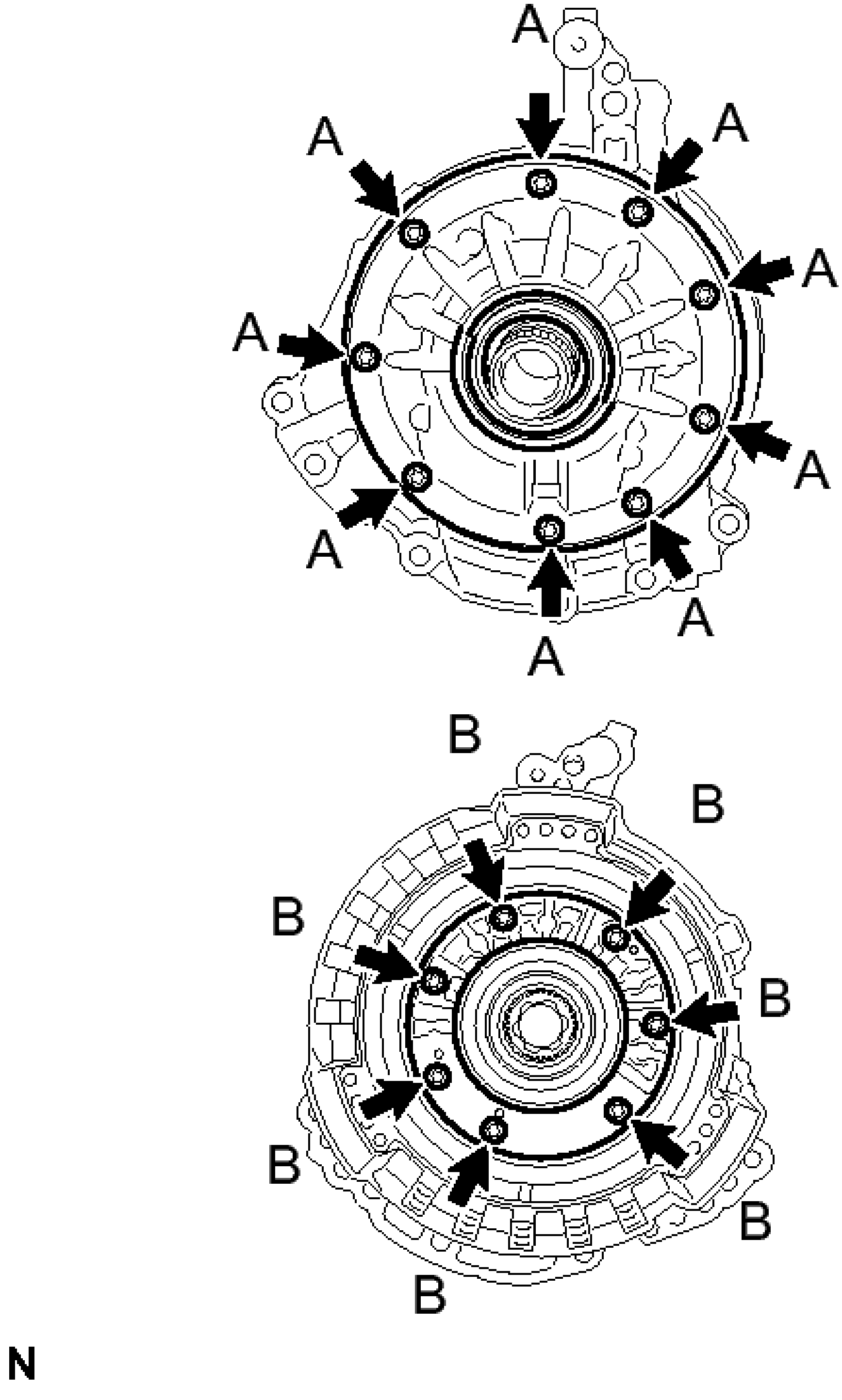
A
A
A
A
A
A
A
A
A
B
B
B
B
B
B
B
N

Fig. 408: Locating Stator Shaft Assembly Bolts
Courtesy of TOYOTA MOTOR SALES, U.S.A., INC.

BOLT LENGTH

	Length

Bolt	**[mm (in.)]**
A	14 (0.551)
B	26 (1.02)

b. Using a T30 "TORX" socket wrench, tighten the 16 "TORX" bolts.

Torque: 9.3 N*m (95 kgf*cm, 82 in.*lbf)

6. **INSPECT FRONT OIL PUMP ASSEMBLY** See step 1

DIFFERENTIAL CASE

COMPONENTS

ILLUSTRATION

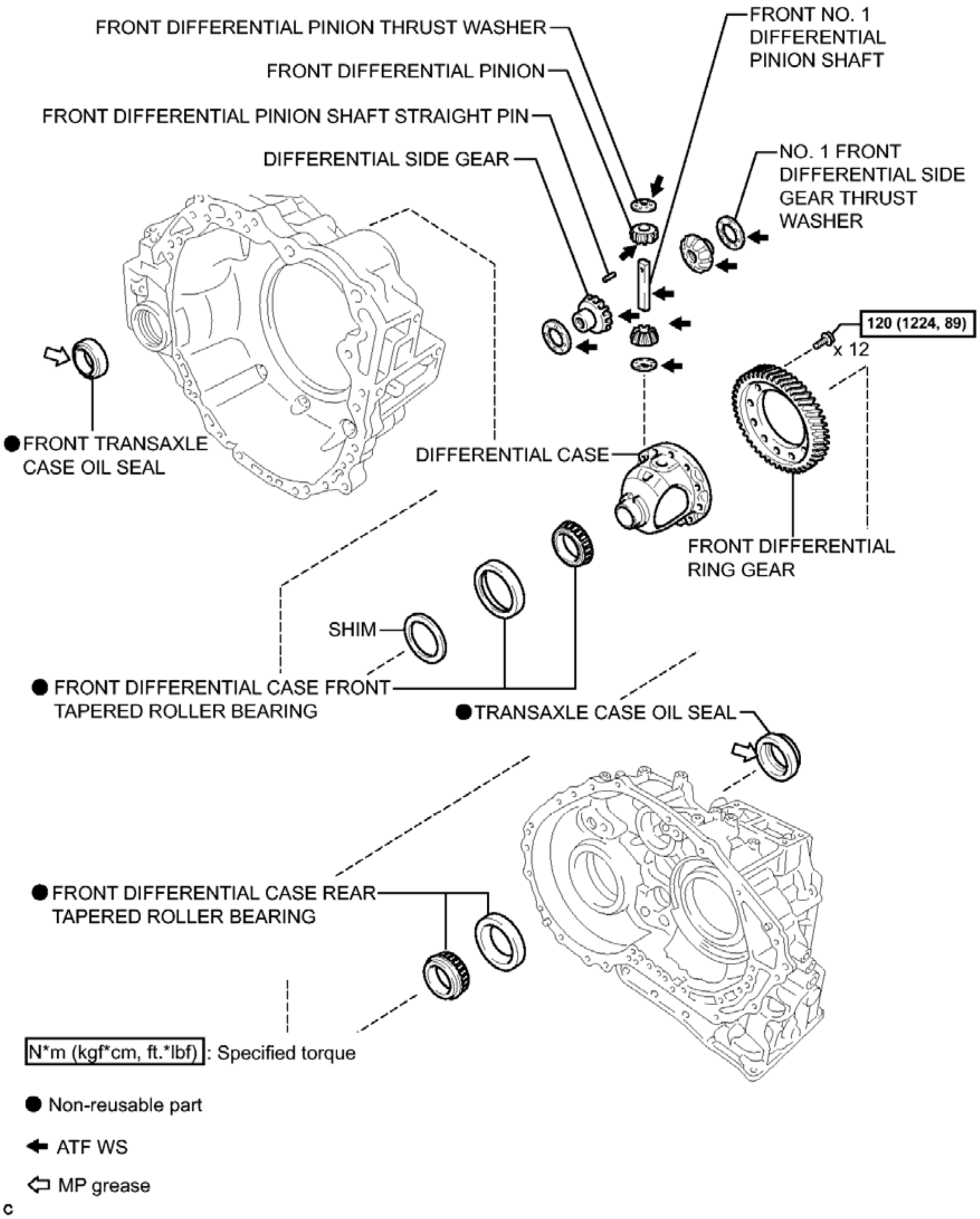
FRONT DIFFERENTIAL PINION THRUST WASHER
FRONT DIFFERENTIAL PINION
FRONT DIFFERENTIAL PINION SHAFT STRAIGHT PIN
DIFFERENTIAL SIDE GEAR
FRONT NO. 1 DIFFERENTIAL PINION SHAFT
NO. 1 FRONT DIFFERENTIAL SIDE GEAR THRUST WASHER
120 (1224, 89)
x 12
● FRONT TRANSAXLE CASE OIL SEAL
DIFFERENTIAL CASE
FRONT DIFFERENTIAL RING GEAR
SHIM
● FRONT DIFFERENTIAL CASE FRONT TAPERED ROLLER BEARING
● TRANSAXLE CASE OIL SEAL
● FRONT DIFFERENTIAL CASE REAR TAPERED ROLLER BEARING
N*m (kgf*cm, ft.*lbf) : Specified torque
● Non-reusable part
ATF WS
MP grease
c

Fig. 409: Identifying Differential Case Replacement Components With Torque Specifications
Courtesy of TOYOTA MOTOR SALES, U.S.A., INC.

DISASSEMBLY

DISASSEMBLY

1. **REMOVE FRONT DIFFERENTIAL RING GEAR**

a. Put matchmarks on the front differential ring gear and front differential case.

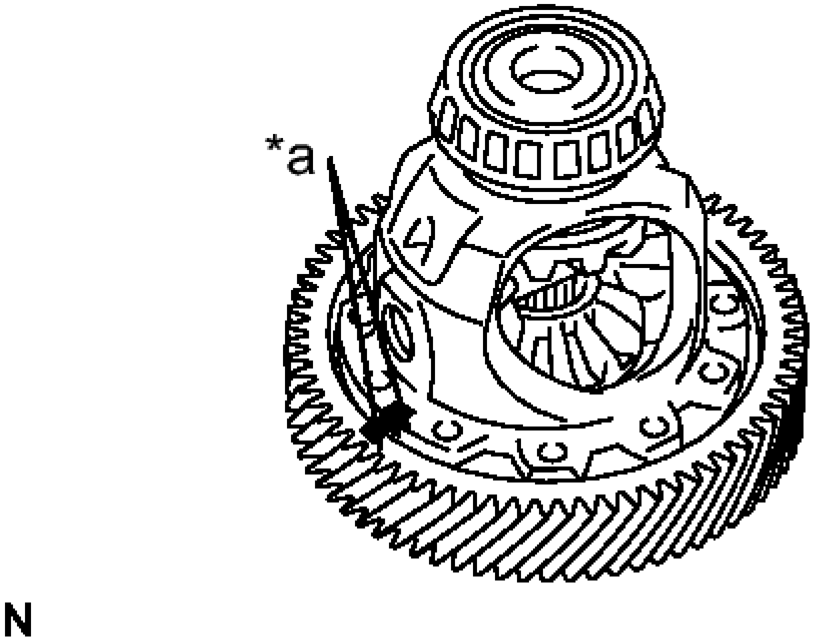

Fig. 410: Identifying Front Differential Ring Gear & Front Differential Case Matchmarks
Courtesy of TOYOTA MOTOR SALES, U.S.A., INC.

TEXT IN ILLUSTRATION

*a	Matchmark

b. Remove the 12 bolts.

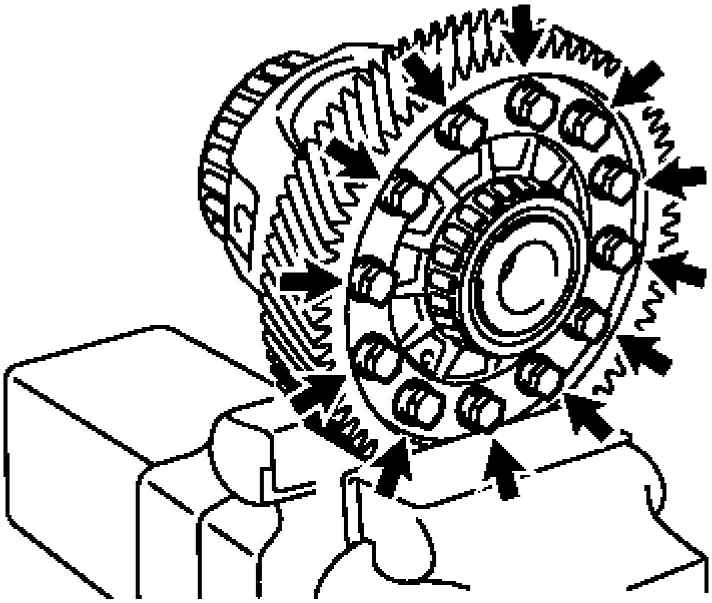

Fig. 411: Locating Bolts
Courtesy of TOYOTA MOTOR SALES, U.S.A., INC.

c. Using a plastic hammer, tap on the front differential ring gear to remove it from the front differential case.

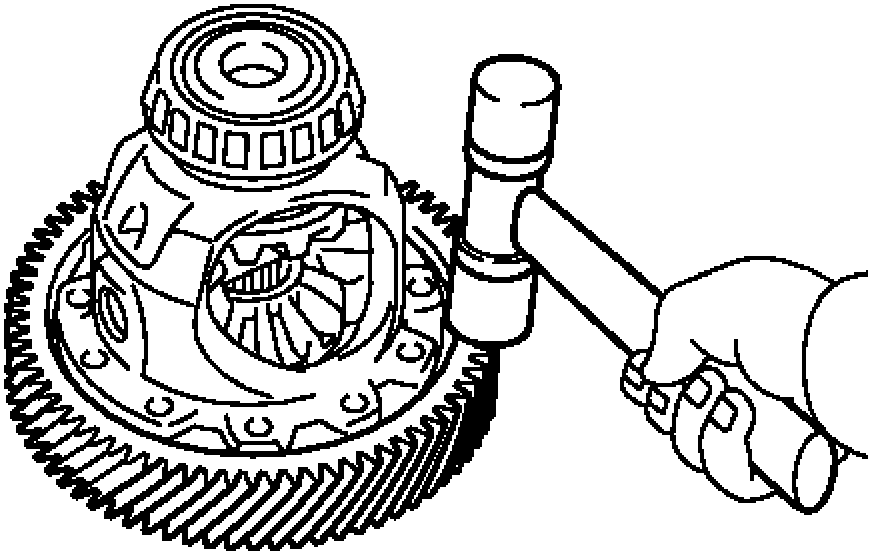

Fig. 412: Tapping On Front Differential Ring Gear

Courtesy of TOYOTA MOTOR SALES, U.S.A., INC.

2. **REMOVE FRONT DIFFERENTIAL CASE FRONT TAPERED ROLLER BEARING**
   a. Using SST, remove the front differential case front tapered roller bearing from the front differential case.

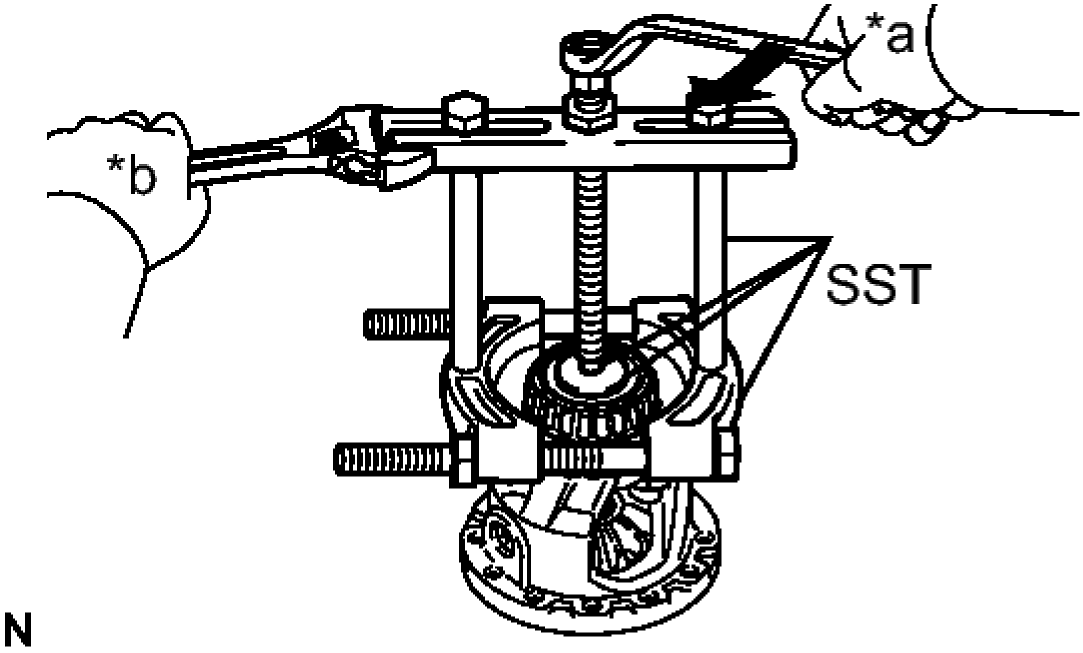

Fig. 413: Removing Front Differential Case Front Tapered Roller Bearing Using SST
Courtesy of TOYOTA MOTOR SALES, U.S.A., INC.

TEXT IN ILLUSTRATION

*a	Turn
*b	Hold

- **SST: 09950-00020**
- **SST: 09950-00030**
- **SST: 09950-40011**
  09957-04010
- **SST: 09950-60010**
  09951-00480

   b. Using SST, remove the front differential case front tapered roller bearing (outer race) and shim from the transaxle housing.

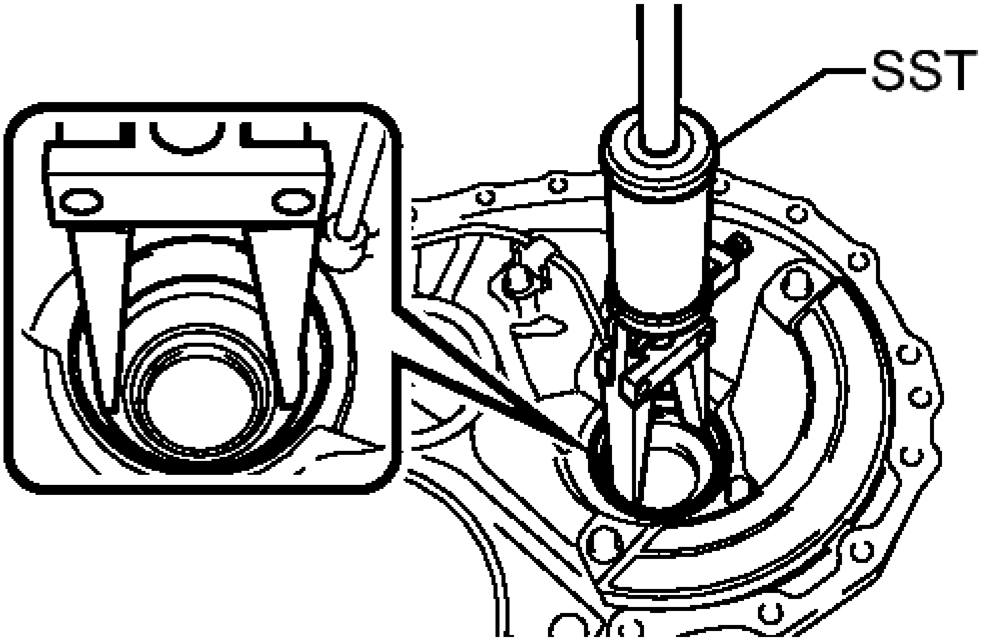

Fig. 414: Removing Front Differential Case Front Tapered Roller Bearing Outer Race
Courtesy of TOYOTA MOTOR SALES, U.S.A., INC.

- **SST: 09308-00010**

3. **REMOVE FRONT DIFFERENTIAL CASE REAR TAPERED ROLLER BEARING**
    a. Using SST, remove the front differential case rear tapered roller bearing from the front differential case.

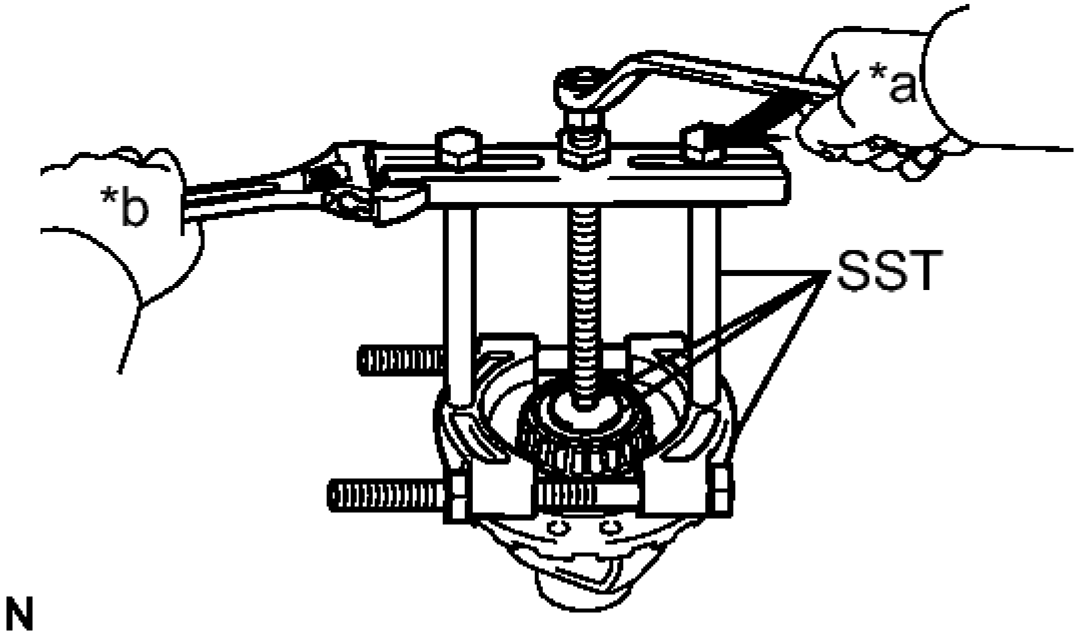

Fig. 415: Removing Front Differential Case Rear Tapered Roller Bearing Using SST
Courtesy of TOYOTA MOTOR SALES, U.S.A., INC.

TEXT IN ILLUSTRATION

*a	Turn
*b	Hold

- **SST: 09950-00020**
- **SST: 09950-00030**
- **SST: 09950-40011**
  09957-04010
- **SST: 09950-60010**
  09951-00480

b. Using SST, remove the front differential case rear tapered roller bearing (outer race) from the transaxle case sub-assembly.

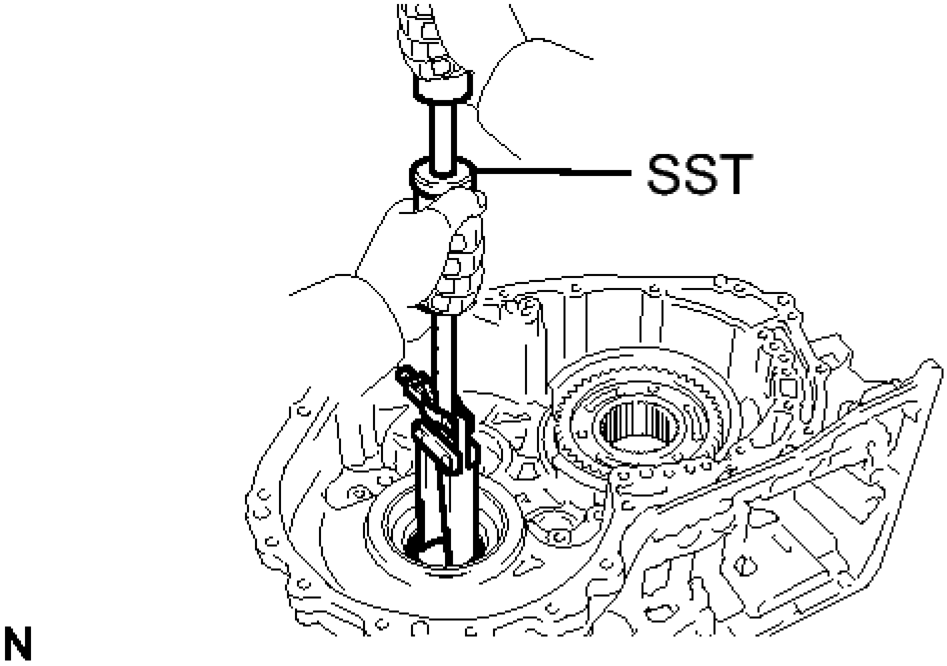

Fig. 416: Removing Front Differential Case Rear Tapered Roller Bearing Outer Race
Courtesy of TOYOTA MOTOR SALES, U.S.A., INC.

- **SST: 09308-00010**

4. **REMOVE FRONT DIFFERENTIAL PINION SHAFT STRAIGHT PIN**
    a. Using SST and a hammer, loosen the staked part of the differential case.

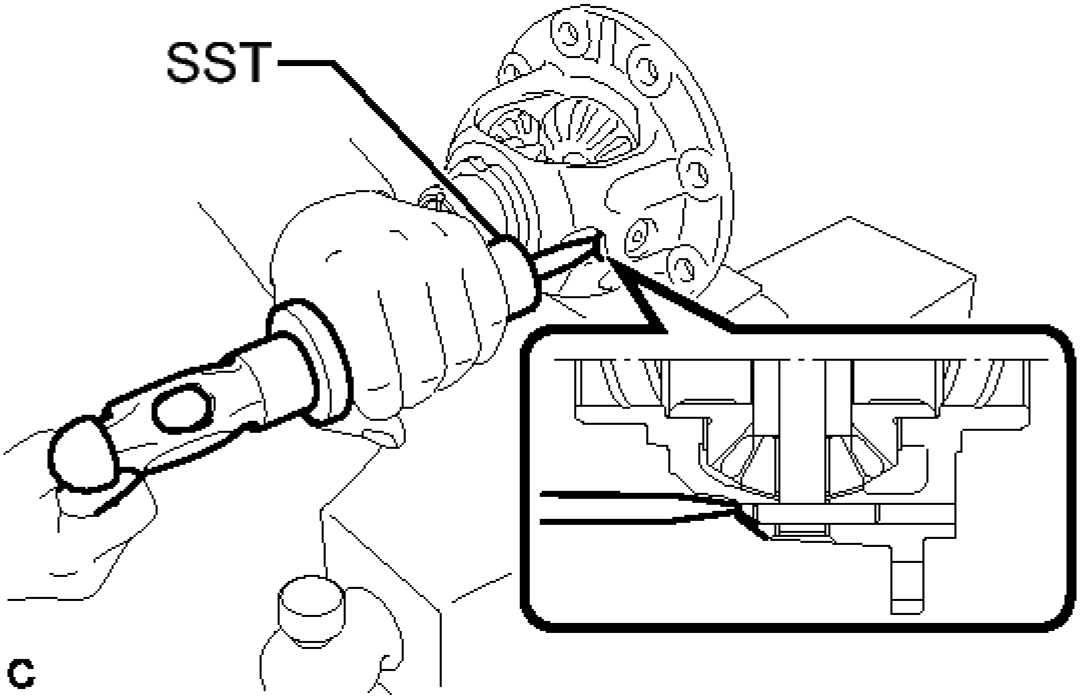

Fig. 417: Loosening Staked Part Of Front Differential Case
Courtesy of TOYOTA MOTOR SALES, U.S.A., INC.

- **SST: 09930-00010**

b. Using a 5 mm pin punch and hammer, remove the front differential pinion shaft straight pin from the differential case.

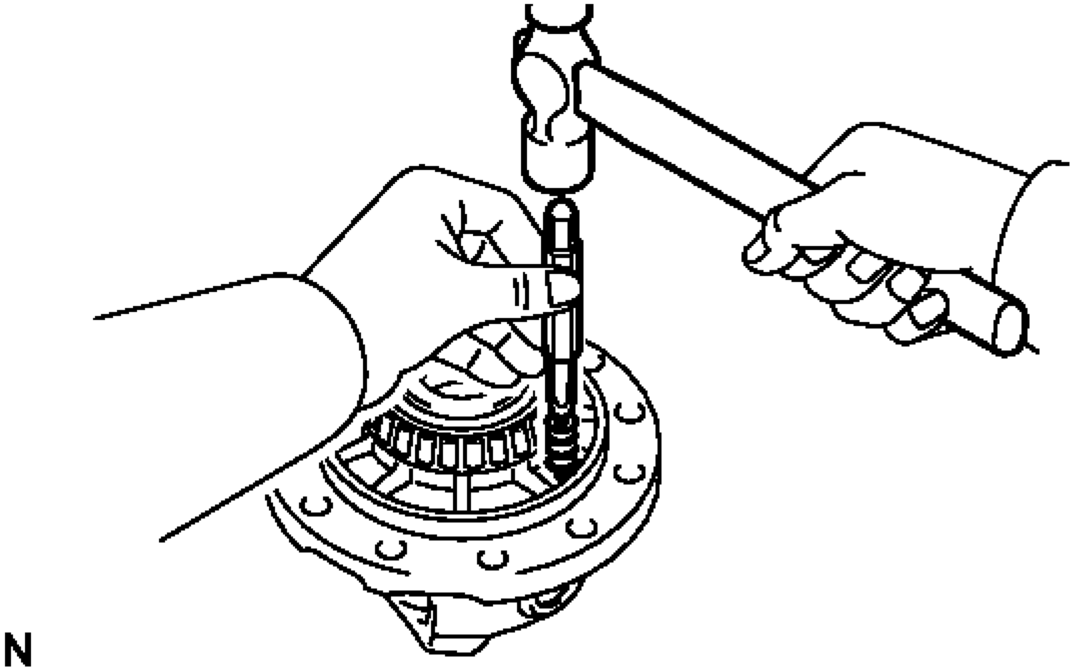

Fig. 418: Removing Straight Pin
Courtesy of TOYOTA MOTOR SALES, U.S.A., INC.

NOTE: **Before removing the front differential pinion shaft straight pin, unstake it with a pin punch.**

5. **REMOVE FRONT NO. 1 DIFFERENTIAL PINION SHAFT**

a. Remove the front No. 1 differential pinion shaft from the differential case.

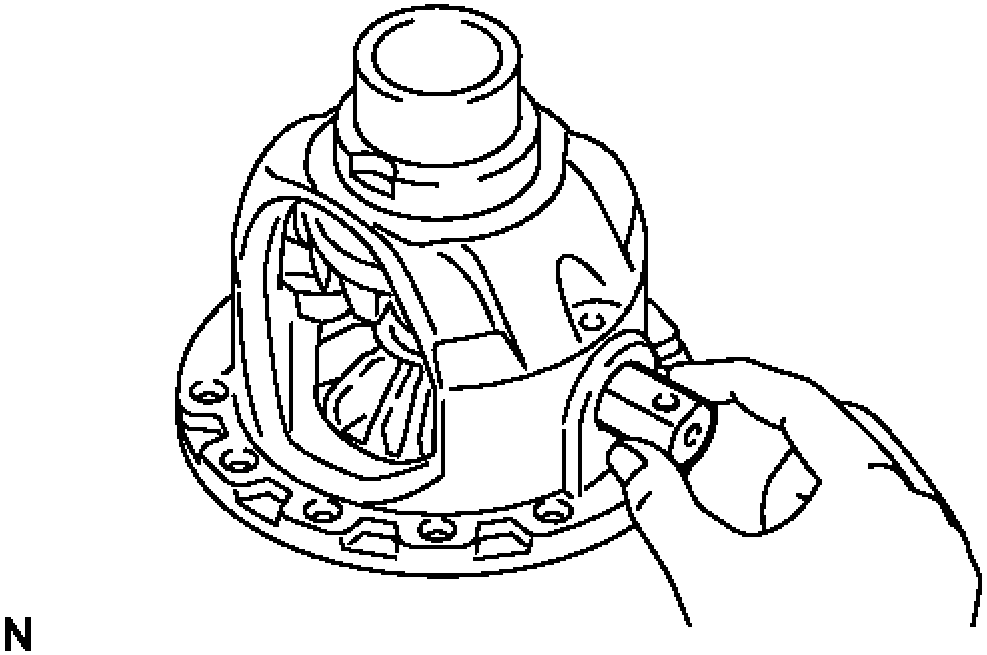

Fig. 419: Removing Front No. 1 Differential Pinion Shaft
Courtesy of TOYOTA MOTOR SALES, U.S.A., INC.

6. **REMOVE DIFFERENTIAL SIDE GEAR**
    a. Remove the 2 front differential pinions, 2 front differential pinion thrust washers, 2 front differential side gears, and 2 No. 1 front differential side gear thrust washers from the differential case.

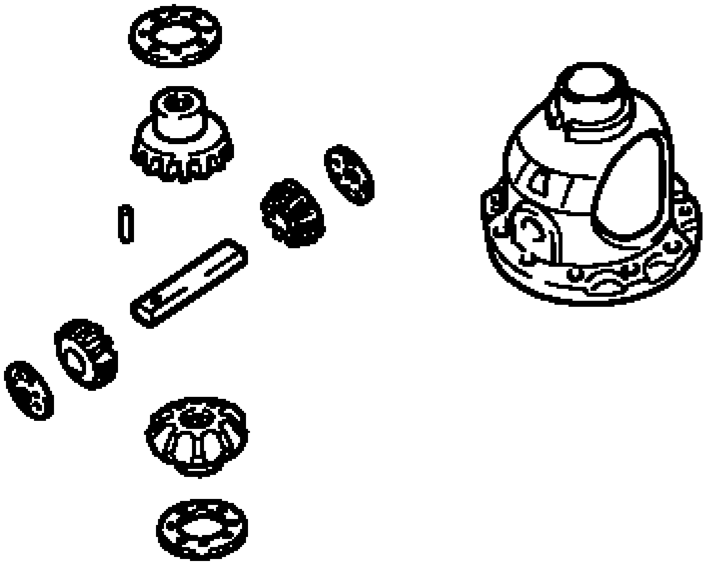

Fig. 420: Identifying Differential Side Gear
Courtesy of TOYOTA MOTOR SALES, U.S.A., INC.

7. **REMOVE FRONT TRANSAXLE CASE OIL SEAL**
   a. Using SST and a hammer, remove the front transaxle case oil seal from the transaxle housing.

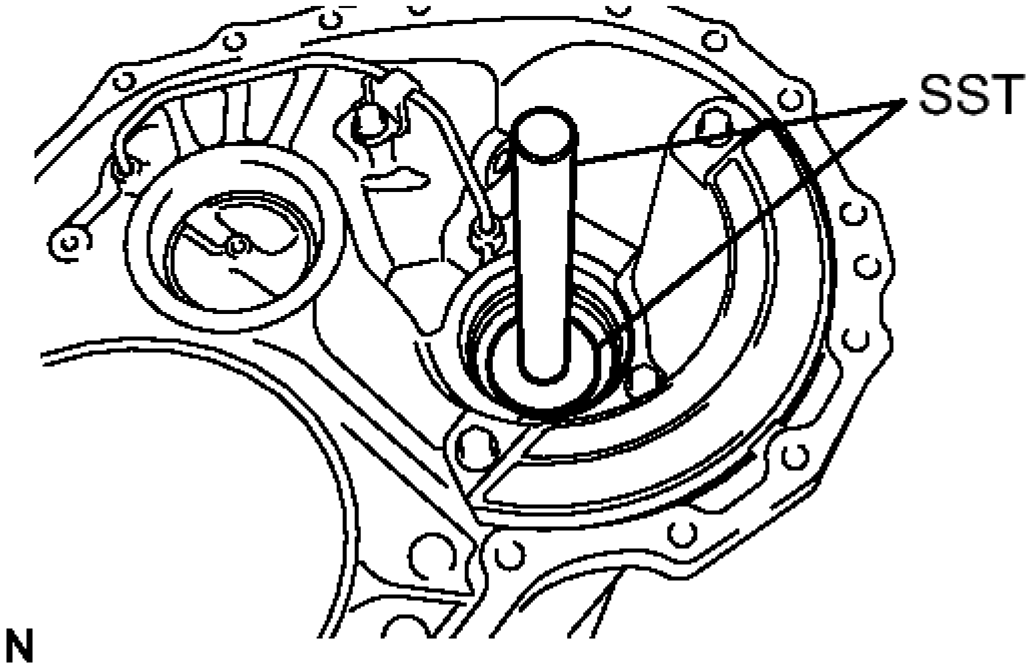

Fig. 421: Removing Front Transaxle Case Oil Seal

Courtesy of TOYOTA MOTOR SALES, U.S.A., INC.

- **SST: 09950-60010**
  09951-00550
- **SST: 09950-70010**
  09951-07200

8. **REMOVE TRANSAXLE CASE OIL SEAL**
   a. Using SST and a hammer, remove the transaxle case oil seal from the transaxle case sub-assembly.

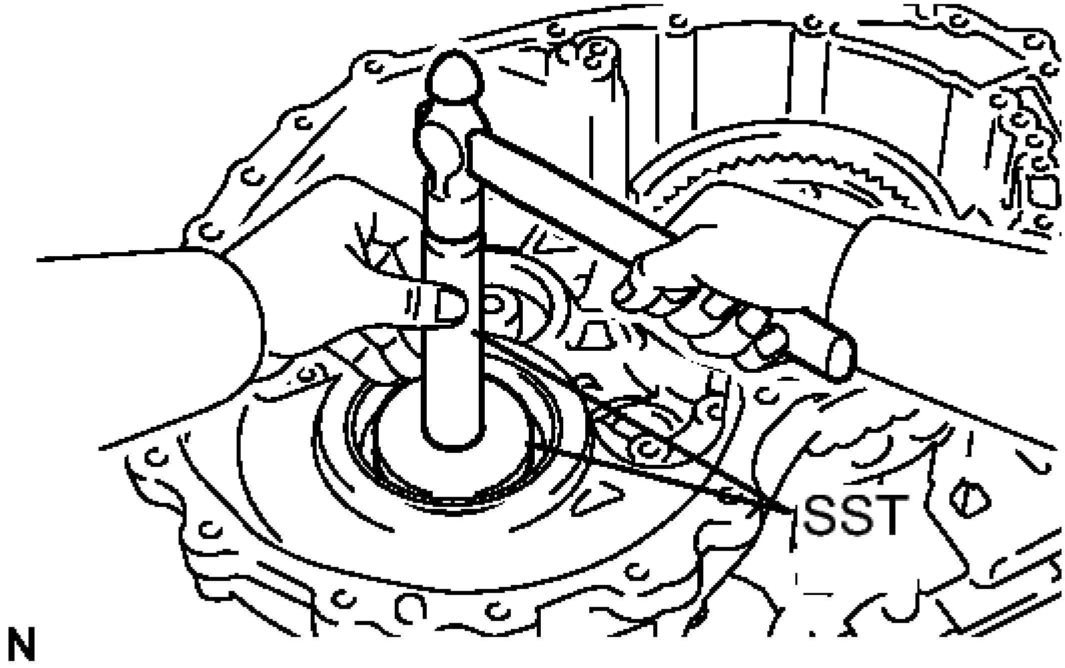

Fig. 422: Removing Transaxle Case Oil Seal From Transaxle Case
Courtesy of TOYOTA MOTOR SALES, U.S.A., INC.

- **SST: 09950-60010**
  09951-00650
- **SST: 09950-70010**
  09951-07100

INSPECTION

INSPECTION

1. **INSPECT DIFFERENTIAL SIDE GEAR BACKLASH**
   a. Hold the differential case in a vise between aluminum plates.

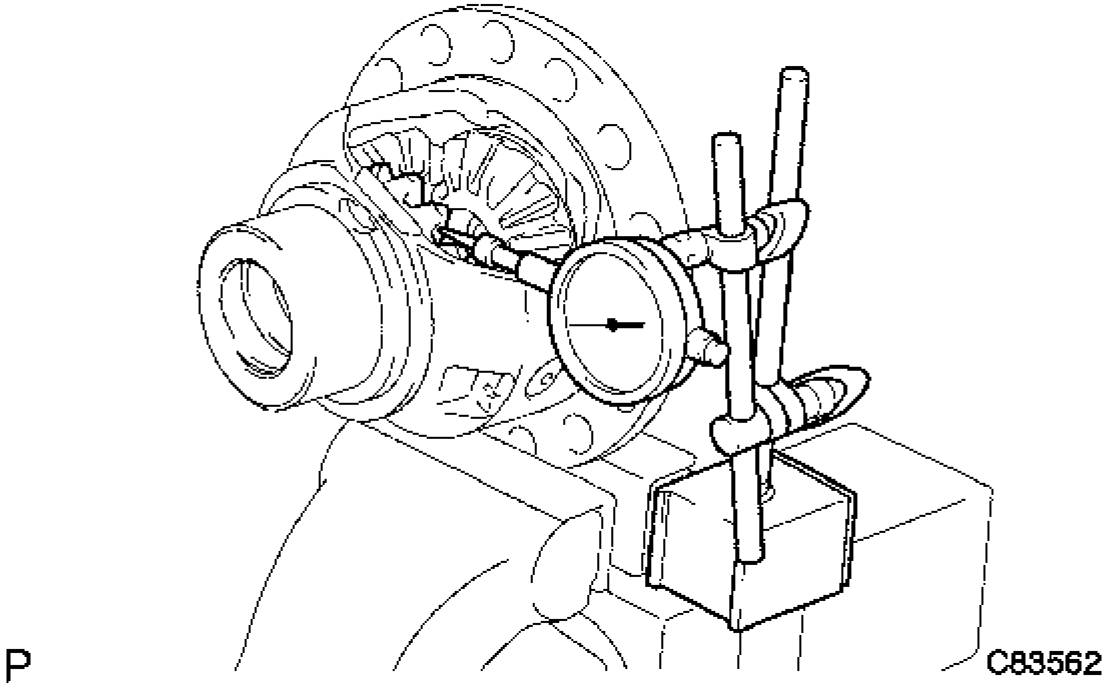

Fig. 423: Measuring Front Differential Side Gear Backlash
Courtesy of TOYOTA MOTOR SALES, U.S.A., INC.

NOTE: Do not overtighten the vise.

b. Place a dial indicator on the tip of the side gear tooth at a right angle.
c. Hold the pinion gear in the differential case and measure the backlash of the side gear.

Standard backlash

0.05 to 0.2 mm (0.00197 to 0.00787 in.)

THRUST WASHER THICKNESS

Thickness [mm (in.)]
1.00 (0.0394)
1.10 (0.0433)
1.20 (0.0472)
1.30 (0.0512)

If the backlash is greater than the standard range, select another side gear thrust washer.

REASSEMBLY

REASSEMBLY

1. **INSTALL DIFFERENTIAL SIDE GEAR**
    a. Coat the 2 front differential side gears, 2 No. 1 front differential side gear thrust washers, 2 front differential pinions and 2 front differential pinion thrust washers with ATF and install them to the differential case.

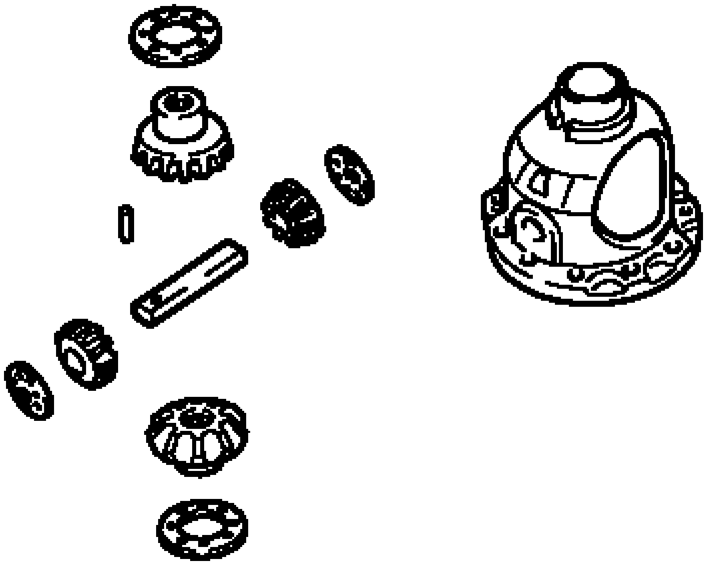

Fig. 424: Identifying Differential Side Gear
Courtesy of TOYOTA MOTOR SALES, U.S.A., INC.

2. **INSTALL FRONT NO. 1 DIFFERENTIAL PINION SHAFT**
    a. Coat the front No. 1 differential pinion shaft with ATF, and install it to the differential case.

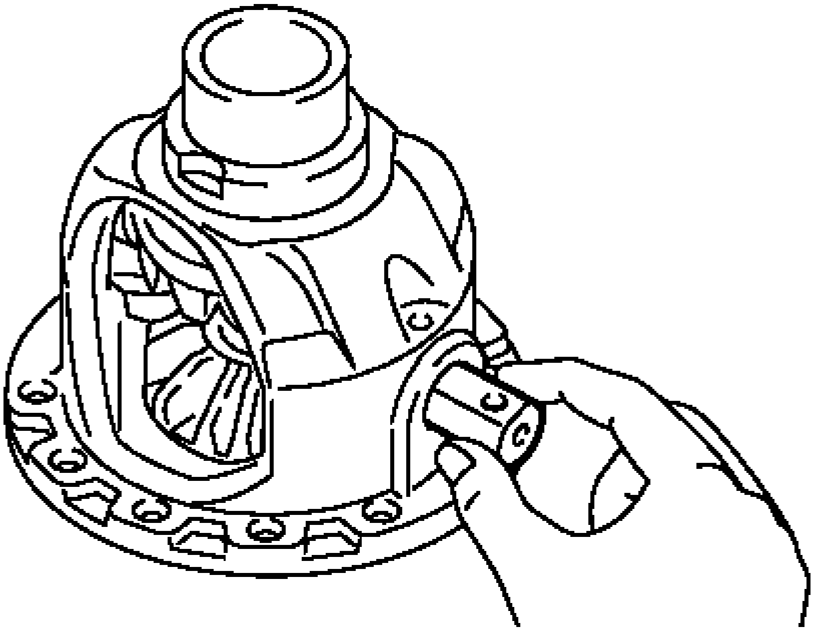

Fig. 425: Removing Front No. 1 Differential Pinion Shaft
Courtesy of TOYOTA MOTOR SALES, U.S.A., INC.

3. **INSPECT DIFFERENTIAL SIDE GEAR BACKLASH** See step 1
4. **INSTALL FRONT DIFFERENTIAL PINION SHAFT STRAIGHT PIN**
   a. Using a 5 mm pin punch and hammer, install the front differential pinion shaft straight pin.

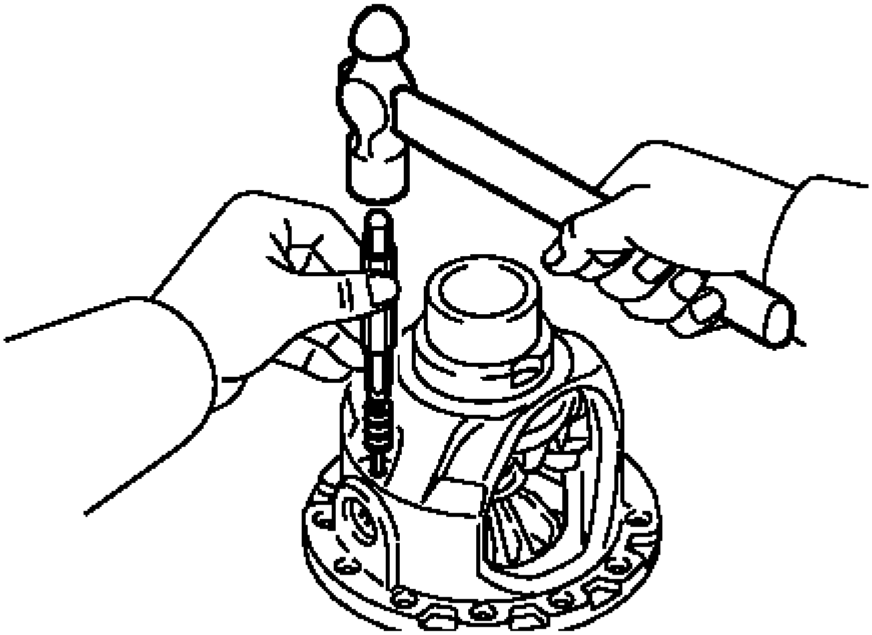

Fig. 426: Installing Pinion Shaft Straight Pin
Courtesy of TOYOTA MOTOR SALES, U.S.A., INC.

NOTE: Align the holes, and install the front differential pinion shaft straight pin.

b. Using a chisel and hammer, stake the differential case.

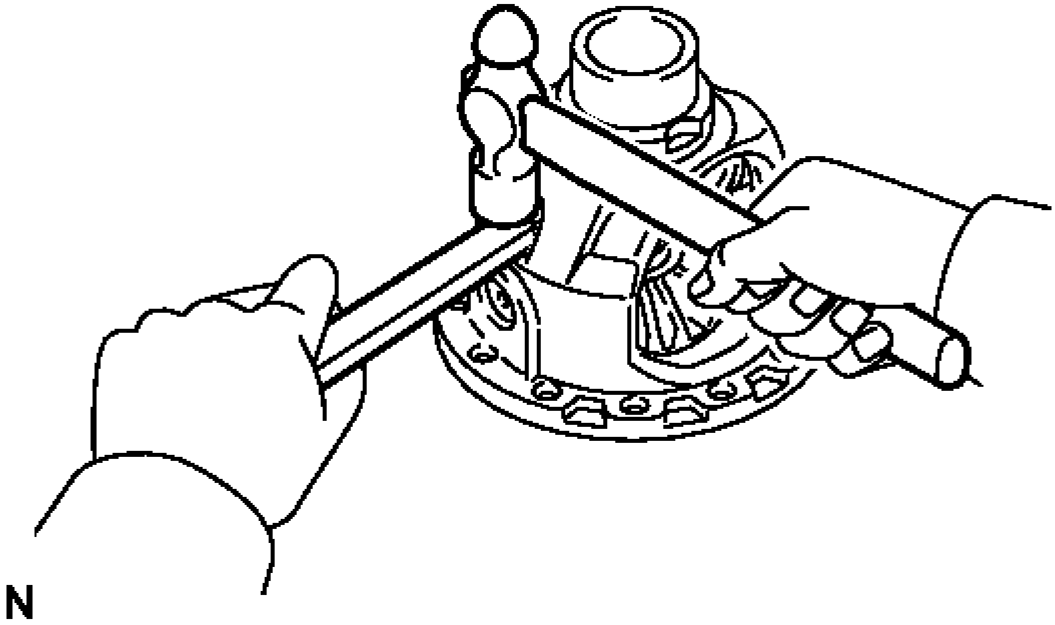

Fig. 427: Staking Differential Case
Courtesy of TOYOTA MOTOR SALES, U.S.A., INC.

NOTE: Stake the differential case after adjusting the backlash.

5. **INSTALL FRONT DIFFERENTIAL CASE REAR TAPERED ROLLER BEARING**
   a. Using SST and a press, install a new front differential case rear tapered roller bearing to the front differential case.

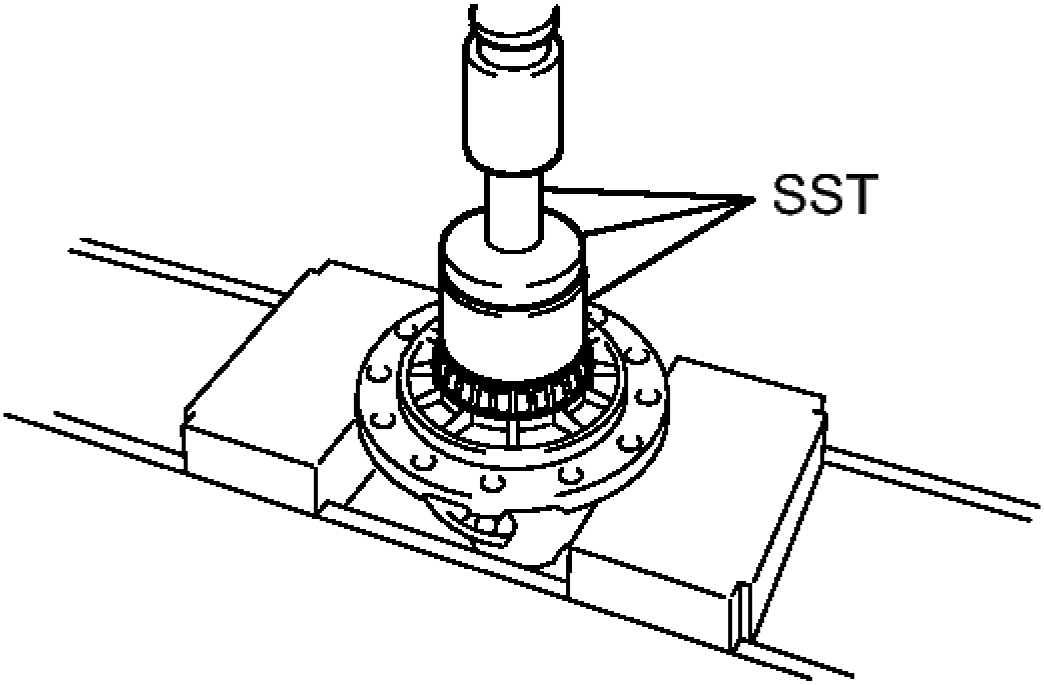

Fig. 428: Installing Front Differential Case Rear Tapered Roller Bearing
Courtesy of TOYOTA MOTOR SALES, U.S.A., INC.

- **SST: 09710-30012**
  09710-04081
- **SST: 09950-60010**
  09951-00480
- **SST: 09950-70010**
  09951-07100

NOTE: **Do not damage the bearing cage during bearing inner race installation.**

b. Using SST and a hammer, install a new front differential case rear tapered roller bearing (outer race) to the transaxle case sub-assembly.

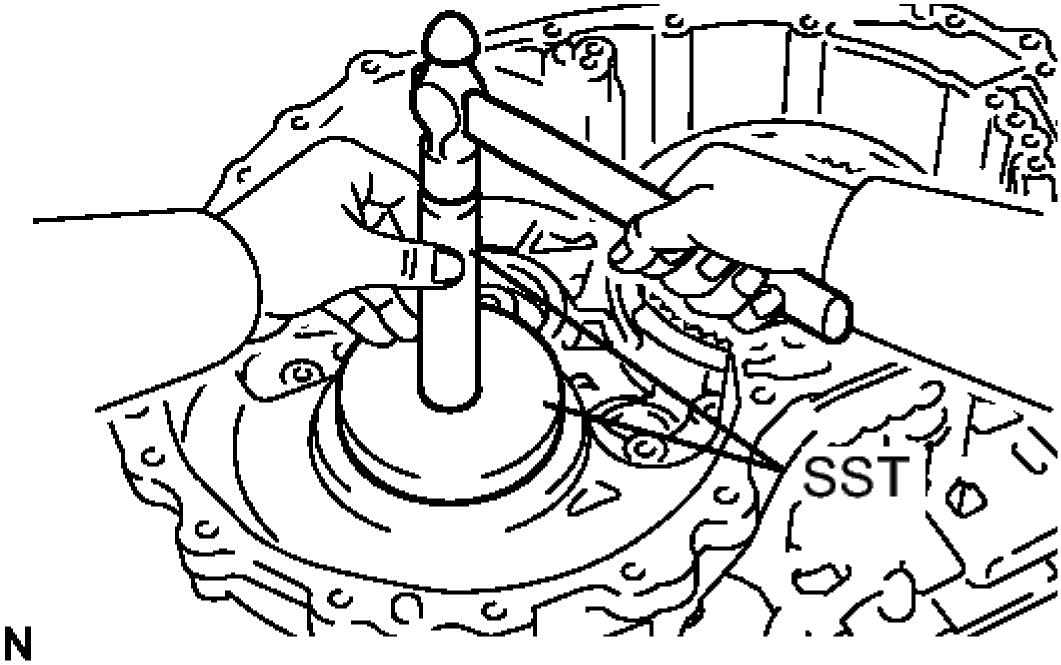

Fig. 429: Installing Front Differential Case Rear Tapered Roller Bearing Outer Race
Courtesy of TOYOTA MOTOR SALES, U.S.A., INC.

- **SST: 09950-60020**
  09951-00810
- **SST: 09950-70010**
  09951-07150

NOTE: Ensure that there is no clearance between the bearing and transaxle case sub-assembly.

6. **INSTALL FRONT DIFFERENTIAL CASE FRONT TAPERED ROLLER BEARING**
   a. Using SST and a press, install a new front differential case front tapered roller bearing to the front differential case.

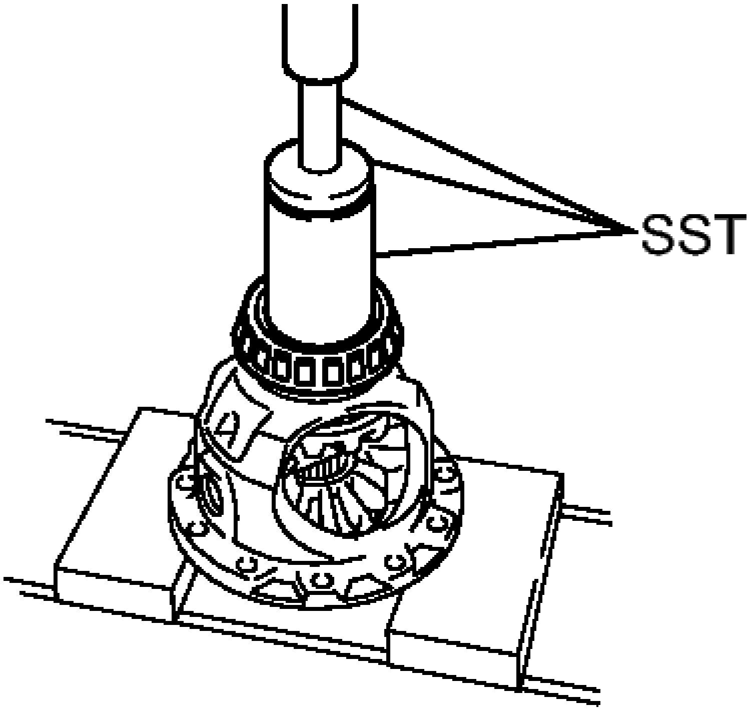

Fig. 430: Installing Front Differential Case Front Tapered Roller Bearing Using SST
Courtesy of TOYOTA MOTOR SALES, U.S.A., INC.

- **SST: 09523-36010**
- **SST: 09950-60010**
  09951-00540
- **SST: 09950-70010**
  09951-07100

NOTE: Do not damage the bearing cage during bearing inner race installation.

b. Install the shim to the transaxle housing.

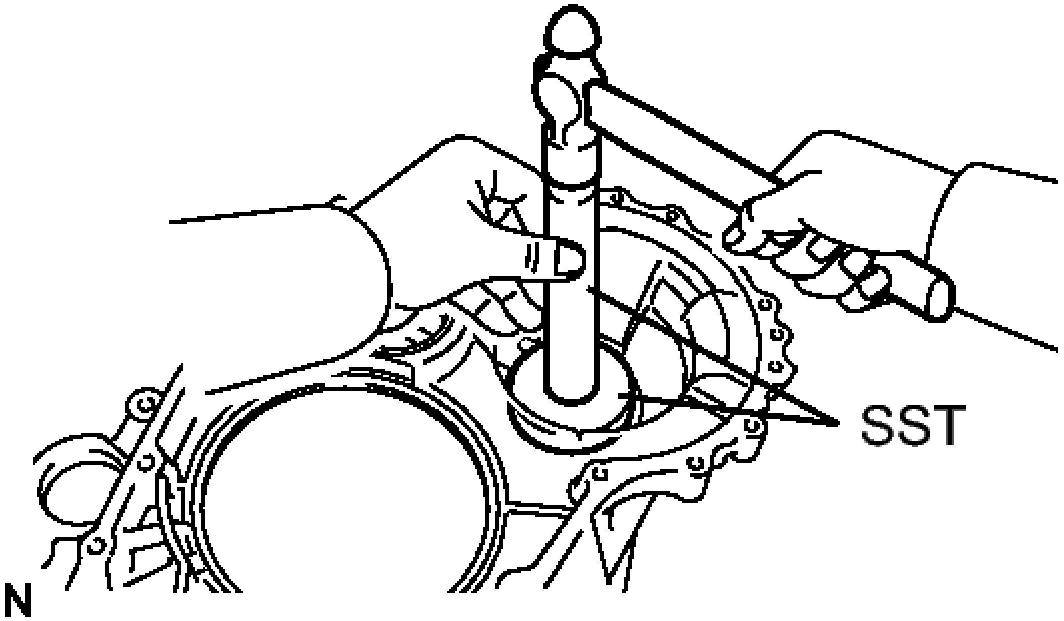

Fig. 431: Installing Front Differential Case Front Tapered Roller Bearing Outer Race Using SST
Courtesy of TOYOTA MOTOR SALES, U.S.A., INC.

c. Using SST and a hammer, install a new front differential case front tapered roller bearing (outer race) to the transaxle housing.
  - **SST: 09950-60020**
    09951-00790
  - **SST: 09950-70010**
    09951-07150

NOTE: **Ensure that there is no clearance between the bearing and transaxle housing.**

7. **ADJUST DIFFERENTIAL SIDE BEARING PRELOAD**
   a. Remove packing material from the contact surfaces between the transaxle housing and case.
   b. Install the differential assembly to the transaxle case sub-assembly.

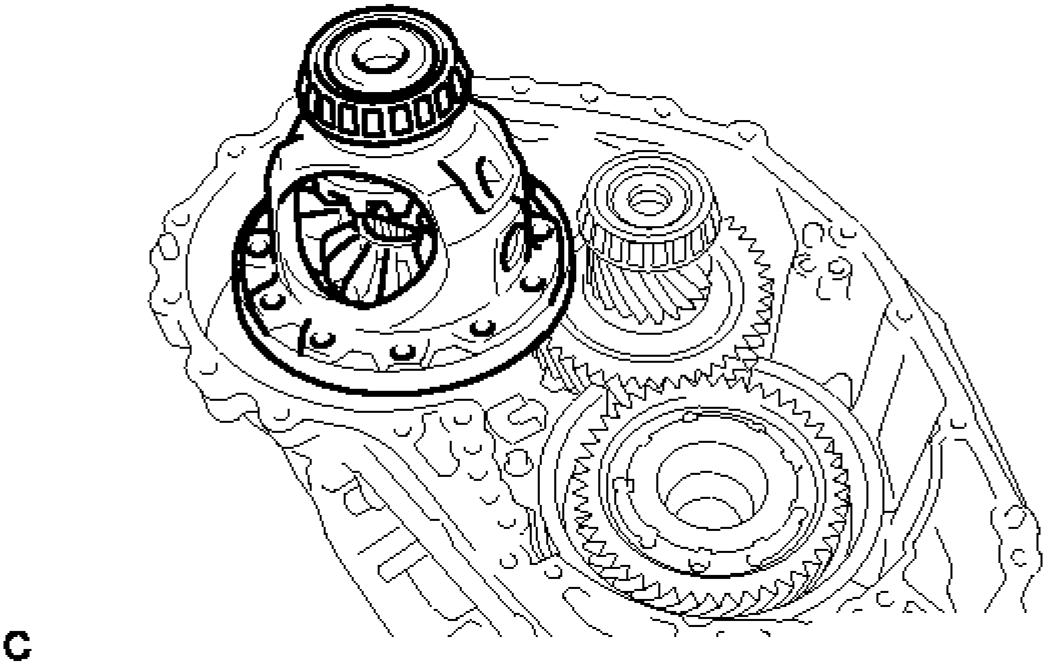

Fig. 432: Identifying Differential Assembly To Transaxle Case
Courtesy of TOYOTA MOTOR SALES, U.S.A., INC.

c. Install the transaxle housing to the transaxle case sub-assembly with the 20 bolts.

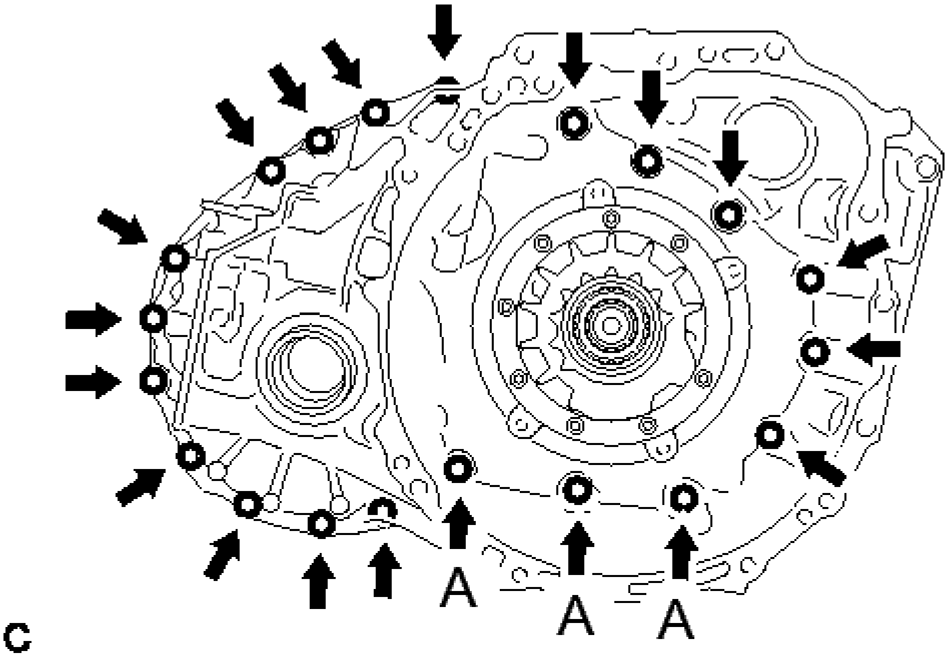

Fig. 433: Transaxle Housing Bolts
Courtesy of TOYOTA MOTOR SALES, U.S.A., INC.

Bolt A

Torque: 23 N*m (231 kgf*cm, 17 ft.*lbf)

except Bolt A

Torque: 31 N*m (312 kgf*cm, 22 ft.*lbf)

d. Using SST and a torque wrench, measure the turning torque of the differential side bearing while rotating SST at 10 rpm.

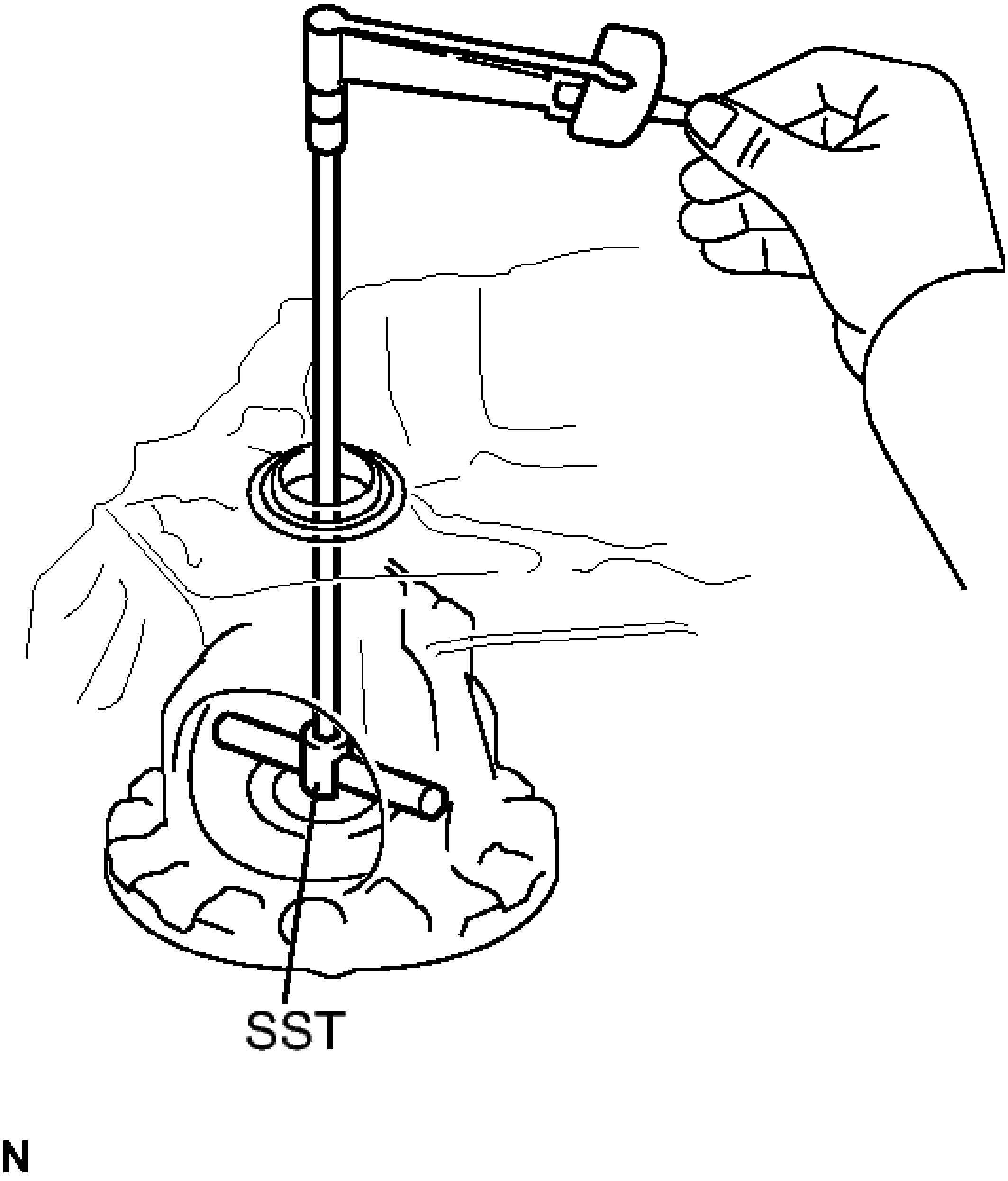

Fig. 434: Measuring Turning Torque Of Counter Driven Gear
Courtesy of TOYOTA MOTOR SALES, U.S.A., INC.

- **SST: 09564-33010**

Turning torque

0.89 to 1.31 N*m (9.08 to 13.35 kgf*cm, 7.88 to 11.59 in.*lbf)

If the turning torque is not within the specified range, refer to the table below to select a shim so that the turning torque is within the specified range.

SHIM THICKNESS: MM (IN.)

Thickness	Thickness	Thickness	Thickness
2.000 (0.0787)	2.225 (0.0876)	2.450 (0.0965)	2.675 (0.105)
2.025 (0.0797)	2.250 (0.0886)	2.475 (0.0974)	2.700 (0.106)
2.050 (0.0807)	2.275 (0.0896)	2.500 (0.0984)	2.725 (0.107)
2.075 (0.0817)	2.300 (0.0906)	2.525 (0.0994)	2.750 (0.108)
2.100 (0.0827)	2.325 (0.0915)	2.550 (0.100)	2.775 (0.109)
2.125 (0.0837)	2.350 (0.0925)	2.575 (0.101)	2.800 (0.110)
2.150 (0.0846)	2.375 (0.0935)	2.600 (0.102)	2.825 (0.111)
2.175 (0.0856)	2.400 (0.0945)	2.625 (0.103)	2.850 (0.112)
2.200 (0.0866)	2.425 (0.0955)	2.650 (0.104)	2.875 (0.113)

e. Remove the 20 bolts and the transaxle housing from the transaxle case sub-assembly.

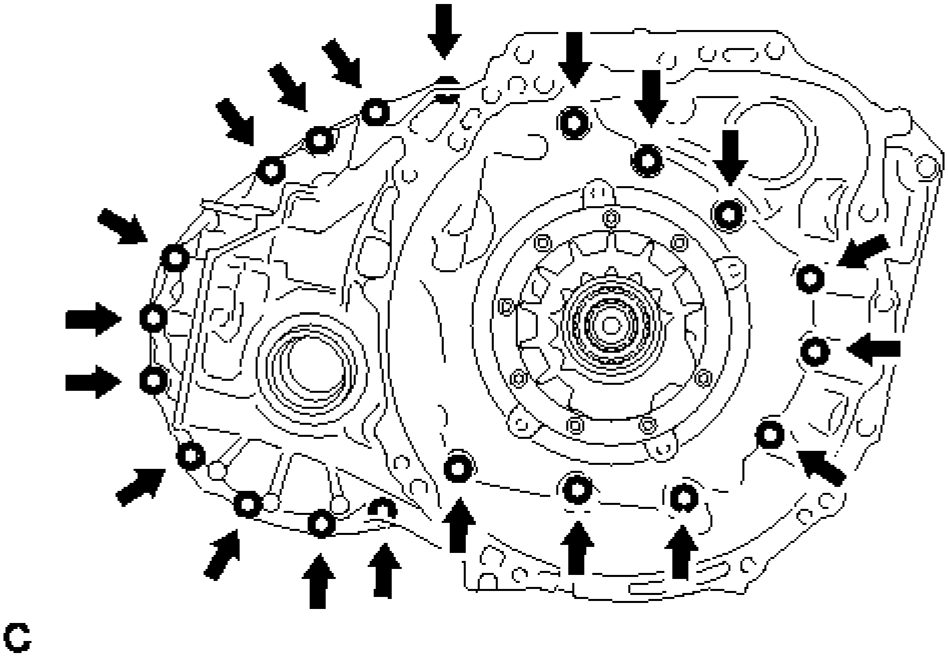

Fig. 435: Locating Transaxle Housing Bolt
Courtesy of TOYOTA MOTOR SALES, U.S.A., INC.

f. Remove the front differential case from the transaxle case sub-assembly.

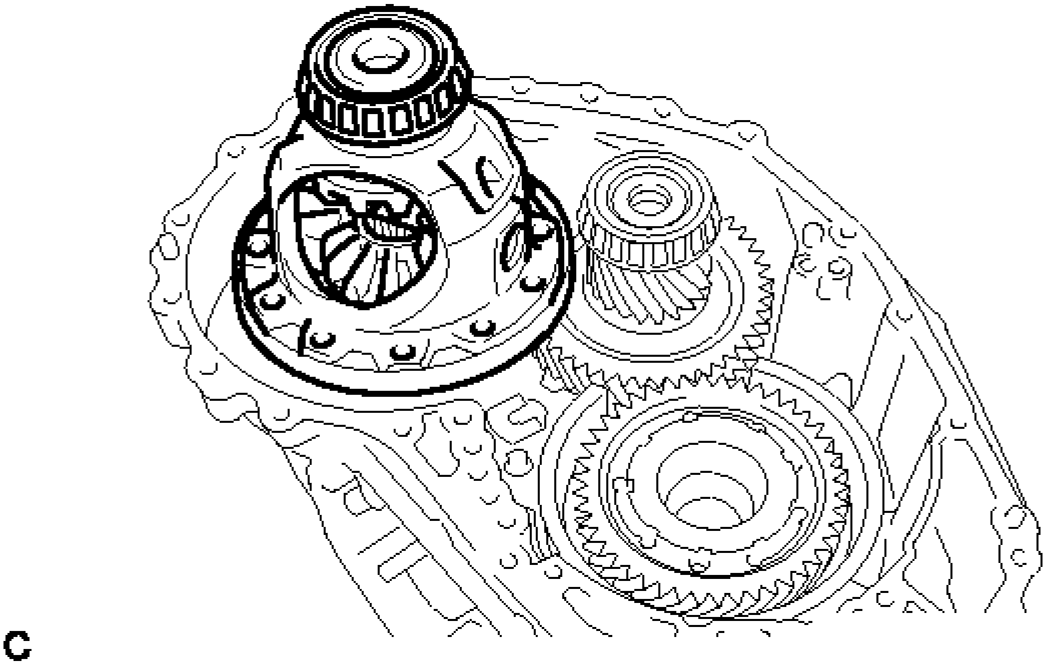

Fig. 436: Identifying Differential Assembly To Transaxle Case
Courtesy of TOYOTA MOTOR SALES, U.S.A., INC.

8. **INSTALL FRONT DIFFERENTIAL RING GEAR**

a. Using ATF and a heater, heat the front differential ring gear to 90 to 110°C (194 to 230°F).

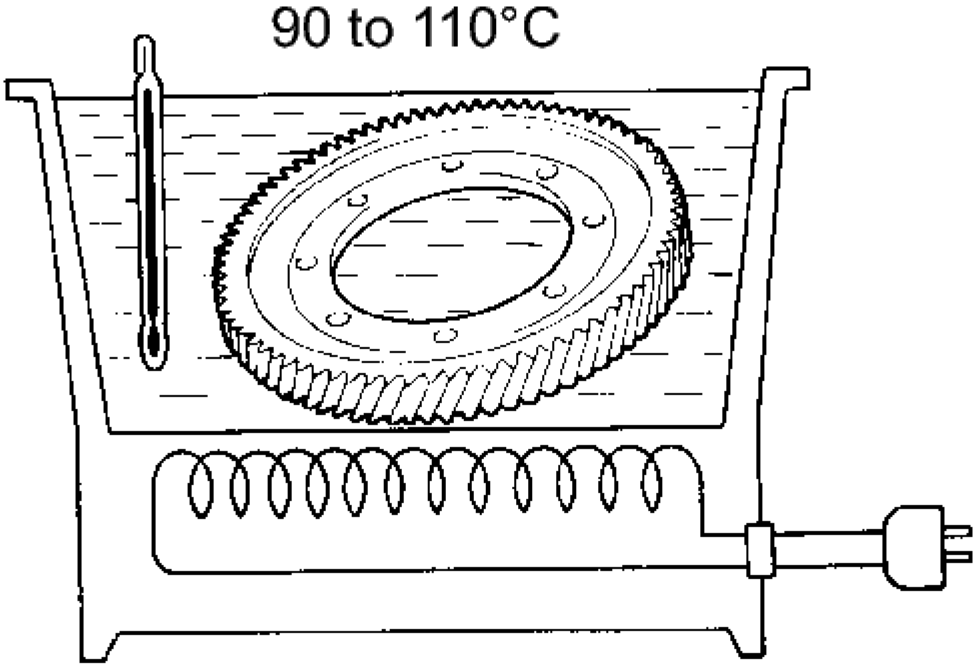

Fig. 437: Heating Front Differential Ring Gear
Courtesy of TOYOTA MOTOR SALES, U.S.A., INC.

NOTE: Do not heat the ring gear to more than 110°C (230°F).

b. Clean the contact surface of the front differential case.

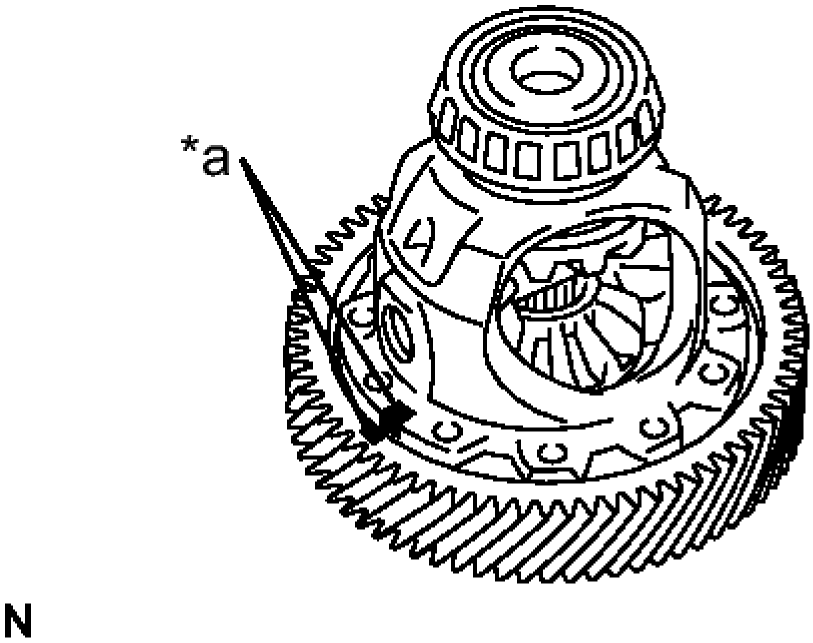

Fig. 438: Aligning Matchmarks
Courtesy of TOYOTA MOTOR SALES, U.S.A., INC.

c. Align the matchmarks, set the front differential ring gear to the front differential case.

TEXT IN ILLUSTRATION

*a	Matchmark

d. Install the 12 bolts.

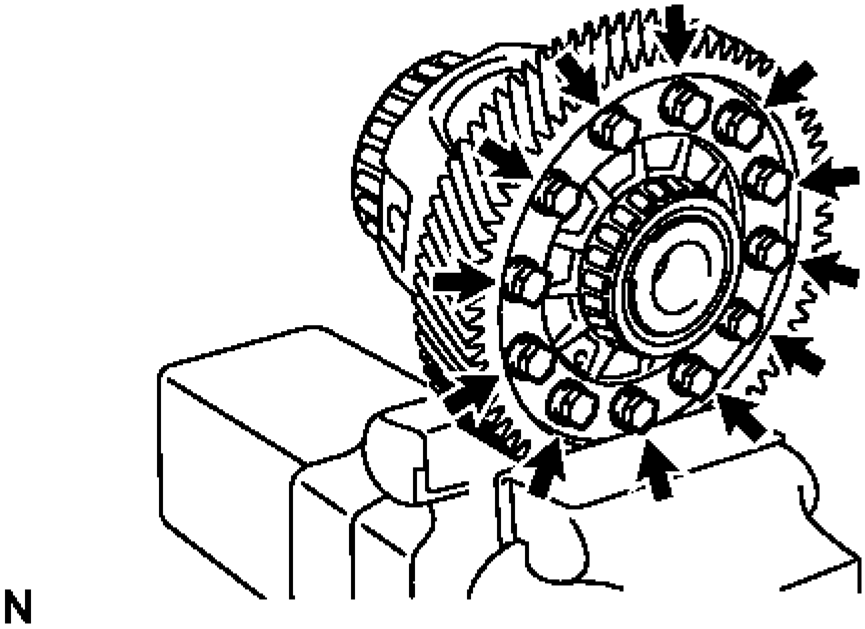

Fig. 439: Locating Bolts
Courtesy of TOYOTA MOTOR SALES, U.S.A., INC.

Torque: 120 N*m (1224 kgf*cm, 88 ft.*lbf)

NOTE:

- **Tighten the bolts after the front differential ring gear has cooled down sufficiently.**
- **Tighten the bolts evenly in a diagonal pattern using several steps.**

9. **INSTALL TRANSAXLE CASE OIL SEAL**
   a. Coat the lip of a new transaxle case oil seal with a small amount of MP grease.

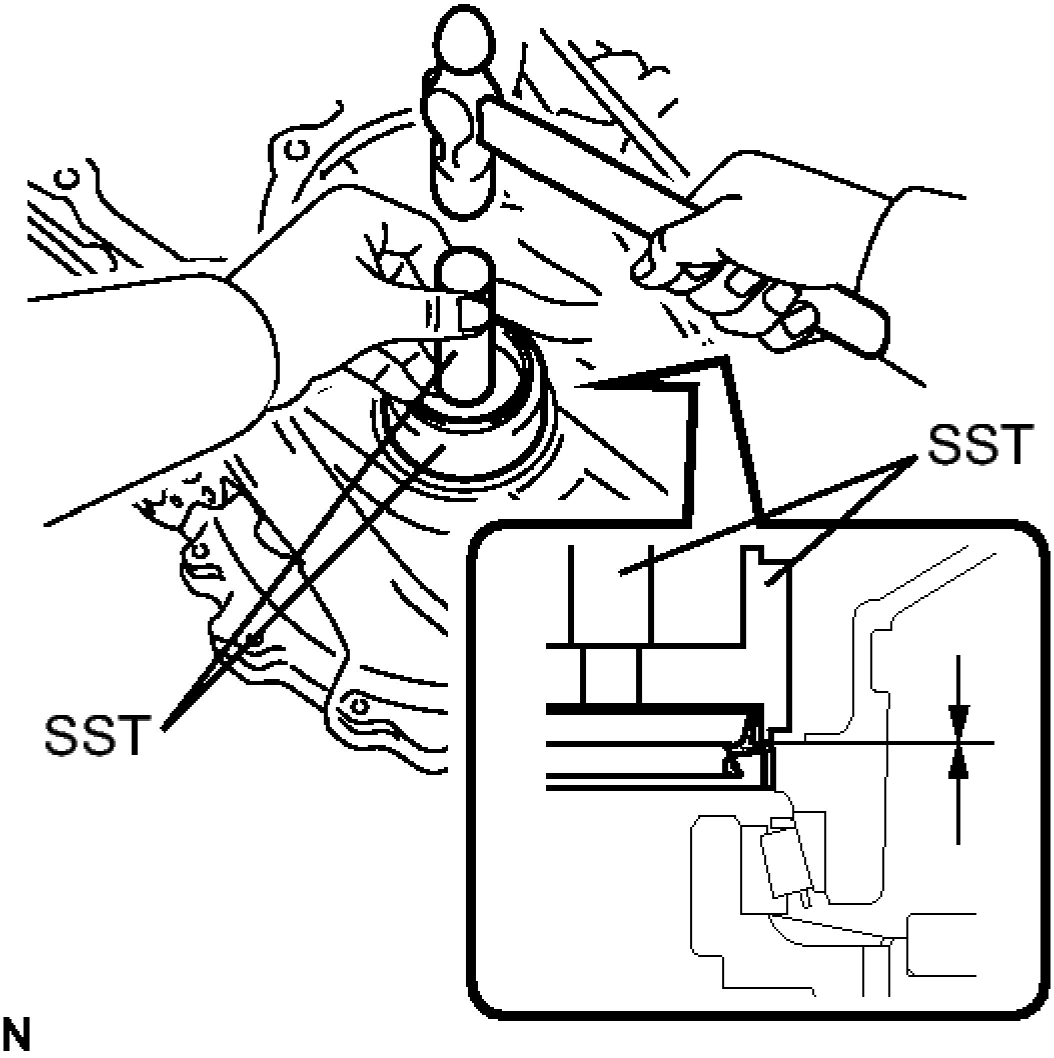

Fig. 440: Installing New Transaxle Case Oil Seal Using SST & Hammer
Courtesy of TOYOTA MOTOR SALES, U.S.A., INC.

b. Using SST and a hammer, tap in the transaxle case oil seal.
   - **SST: 09316-10010**
   - **SST: 09950-70010**
     09951-07100

Oil seal tap in depth

-0.5 to 0.5 mm (-0.0197 to 0.0197 in.)

NOTE: Check that the oil seal is installed in the correct direction.

10. **INSTALL FRONT TRANSAXLE CASE OIL SEAL**

a. Coat the lip of a new front transaxle case oil seal with a small amount of MP grease.

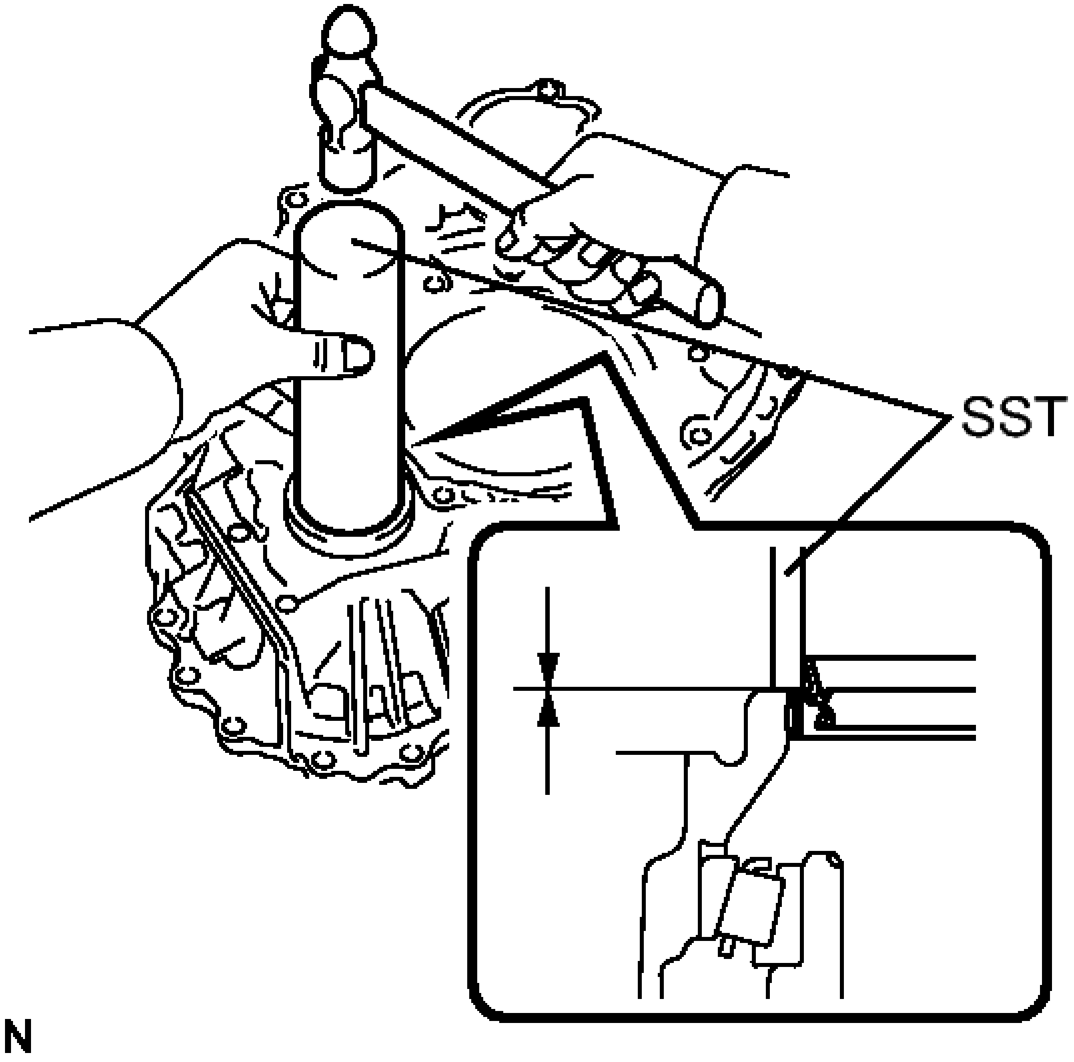

Fig. 441: Installing Oil Seal
Courtesy of TOYOTA MOTOR SALES, U.S.A., INC.

b. Using SST and a hammer, tap in the front transaxle case oil seal.
    - **SST: 09308-14010**

Oil seal tap in depth

-0.5 to 0.5 mm (-0.0197 to 0.0197 in.)

NOTE: Check that the oil seal is installed in the correct direction.

GENERAL INFORMATION

Trouble Shooting - Basic Procedures

* PLEASE READ THIS FIRST *

NOTE: **This is GENERAL information. This article is not intended to be specific to any unique situation or individual vehicle configuration. The purpose of this Trouble Shooting information is to provide a list of common causes to problem symptoms. For model-specific Trouble Shooting, refer to SUBJECT, DIAGNOSTIC, or TESTING articles available in the section(s) you are accessing.**

ACCESSORIES & ELECTRICAL

CHARGING SYSTEM TROUBLE SHOOTING

NOTE: **This is GENERAL information. This article is not intended to be specific to any unique situation or individual vehicle configuration. The purpose of this Trouble Shooting information is to provide a list of common causes to problem symptoms. For model-specific Trouble Shooting, refer to SUBJECT, DIAGNOSTIC, or TESTING articles available in the section(s) you are accessing.**

NOTE: **This is GENERAL information. This article is not intended to be specific to any unique situation or individual vehicle configuration. The purpose of this Trouble Shooting information is to provide a list of common causes to problem symptoms. For model-specific Trouble Shooting, refer to SUBJECT, DIAGNOSTIC, or TESTING articles available in the section(s) you are accessing.**

BASIC CHARGING SYSTEM TROUBLE SHOOTING CHART

CONDITION & POSSIBLE CAUSE	CORRECTION
Vehicle Will Not Start	
Dead battery	Check battery cells, alternator belt tension and alternator output
Loose or corroded battery connections	Check all charging system connections
Ignition circuit or switch malfunction	Check and replace as necessary
Alternator Light Stays On With Engine Running	
Loose or worn alternator drive belt	Check alternator drive tension and condition, See Belt Adjustment in TUNE-UP article in the TUNE-UP section
Loose alternator wiring connections	Check all charging system connections

Short in alternator light wiring	See Indicator Warning Lights in STANDARD INSTRUMENTS in the ACCESSORIES & EQUIPMENT section
Defective alternator stator or diodes	See Bench Tests in ALTERNATOR article
Defective regulator	See Regulator Check in ALTERNATOR article
Alternator Light Stays Off With Ignition Switch ON	
Blown fuse	See WIRING DIAGRAMS
Defective alternator	See Testing in ALTERNATOR article
Defective indicator light bulb or socket	See Indicator Warning Lights in STANDARD INSTRUMENTS in the ACCESSORIES & EQUIPMENT section
Alternator Light Stays OFF With Ignition Switch ON	
Short in alternator wiring	See On-Vehicle Tests in ALTERNATOR article
Defective rectifier bridge	See Bench Tests in ALTERNATOR article
Lights or Fuses Burn Out Frequently	
Defective alternator wiring	See On-Vehicle Tests in ALTERNATOR article
Defective regulator	See Regulator Check in ALTERNATOR article
Defective battery	Check and replace as necessary
Ammeter Gauge Shows Discharge	
Loose or worn drive belt	Check alternator drive belt tension and condition. See Belt Adjustment in TUNE-UP article in the TUNE-UP section
Defective wiring	Check all wires and wire connections
Defective alternator or regulator	See Bench Tests and On-Vehicle Tests in ALTERNATOR article
Defective ammeter, or improper ammeter wiring connection	See Testing in STANDARD INSTRUMENTS in the ACCESSORIES & EQUIPMENT section
Noisy Alternator	
Loose drive pulley	Tighten drive pulley attaching nut

Loose mounting bolts	Tighten all alternator mounting bolts
Worn or dirty bearings	See Bearing Replacement ALTERNATOR article
Defective diodes or stator	See Bench Test in ALTERNATOR article
Battery Does Stay Charged	
Loose or worn drive belt	Check alternator drive belt tension and condition. See Belt Adjustment in appropriate TUNE-UP article in the TUNE-UP section
Loose or corroded battery connections	Check all charging system connections
Loose alternator connections	Check all charging system connections
Defective alternator or battery	See On-Vehicle Tests and Bench Tests in ALTERNATOR article
Add-on electrical accessories exceeding alternator capacity	Install larger alternator
Battery Overcharged-Uses Too Much Water	
Defective battery	Check alternator output and repair as necessary
Defective alternator	See On-Vehicle Test and Bench Tests in ALTERNATOR article
Excessive alternator voltage	Check alternator output and repair as necessary

IGNITION SYSTEM TROUBLE SHOOTING

NOTE: **This is GENERAL information. This article is not intended to be specific to any unique situation or individual vehicle configuration. The purpose of this Trouble Shooting information is to provide a list of common causes to problem symptoms. For model-specific Trouble Shooting, refer to SUBJECT, DIAGNOSTIC, or TESTING articles available in the section(s) you are accessing.**

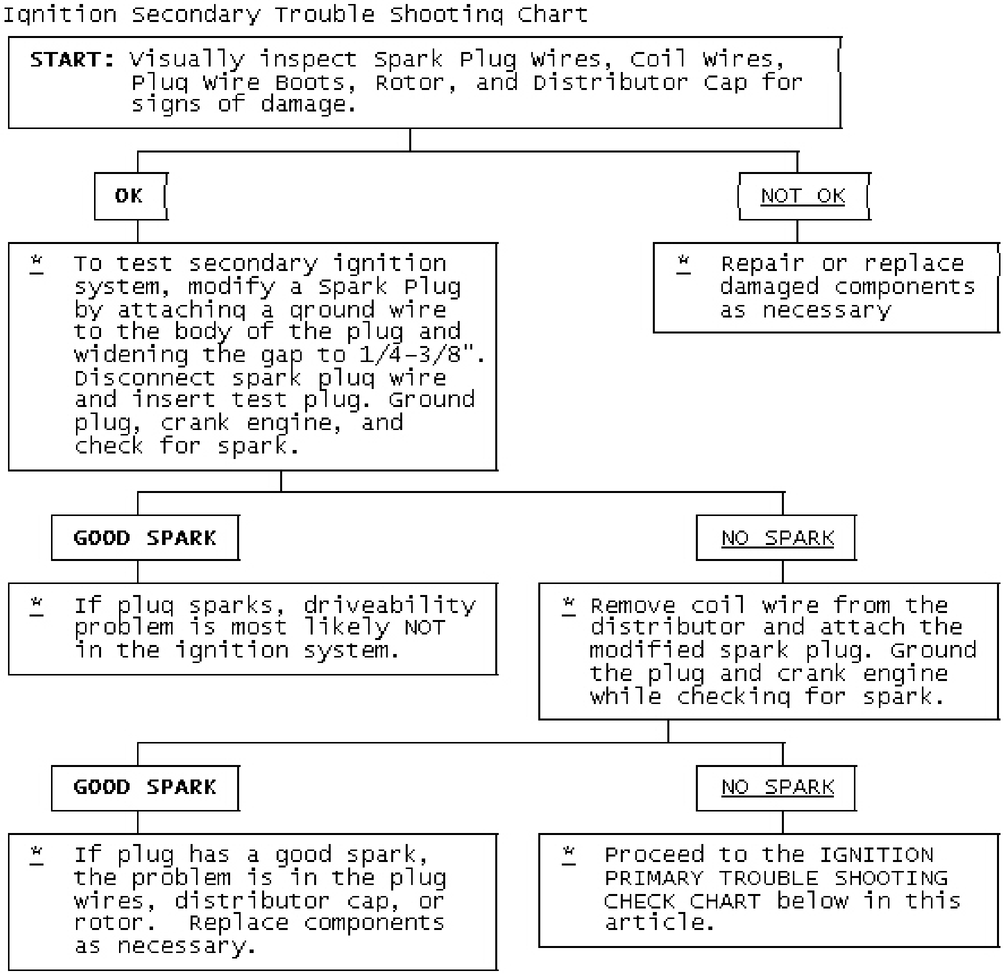

Ignition Secondary Trouble Shooting Chart

START: Visually inspect Spark Plug Wires, Coil Wires, Plug Wire Boots, Rotor, and Distributor Cap for signs of damage.

OK

* To test secondary ignition system, modify a Spark Plug by attaching a ground wire to the body of the plug and widening the gap to 1/4-3/8". Disconnect spark plug wire and insert test plug. Ground plug, crank engine, and check for spark.

NOT OK

* Repair or replace damaged components as necessary

GOOD SPARK

* If plug sparks, driveability problem is most likely NOT in the ignition system.

NO SPARK

* Remove coil wire from the distributor and attach the modified spark plug. Ground the plug and crank engine while checking for spark.

GOOD SPARK

* If plug has a good spark, the problem is in the plug wires, distributor cap, or rotor. Replace components as necessary.

NO SPARK

* Proceed to the IGNITION PRIMARY TROUBLE SHOOTING CHECK CHART below in this article.

Fig. 1: Ignition Secondary Trouble Shooting Chart

Ignition Primary Trouble Shooting Chart

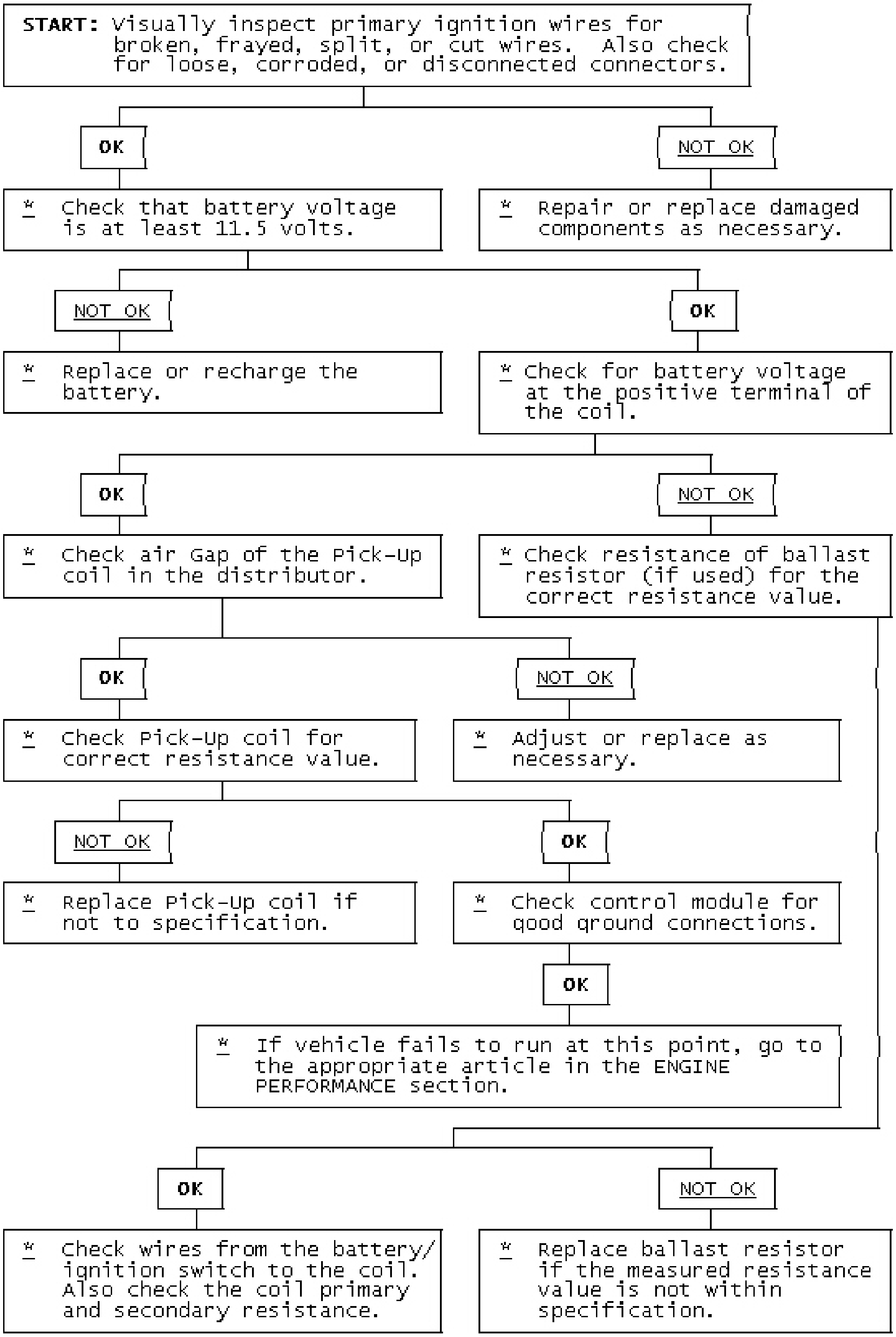

START: Visually inspect primary ignition wires for broken, frayed, split, or cut wires. Also check for loose, corroded, or disconnected connectors.

* Check that battery voltage is at least 11.5 volts.

* Repair or replace damaged components as necessary.

* Replace or recharge the battery.

* Check for battery voltage at the positive terminal of the coil.

* Check air Gap of the Pick-Up coil in the distributor.

* Check resistance of ballast resistor (if used) for the correct resistance value.

* Check Pick-Up coil for correct resistance value.

* Adjust or replace as necessary.

* Replace Pick-Up coil if not to specification.

* Check control module for good ground connections.

* If vehicle fails to run at this point, go to the appropriate article in the ENGINE PERFORMANCE section.

* Check wires from the battery/ ignition switch to the coil. Also check the coil primary and secondary resistance.

* Replace ballast resistor if the measured resistance value is not within specification.

Fig. 2: Ignition Primary Trouble Shooting Chart

STARTER TROUBLE SHOOTING

NOTE: This is GENERAL information. This article is not intended to be specific to any unique situation or individual vehicle configuration. The purpose of this Trouble Shooting information is to provide a list of common causes to problem symptoms. For model-specific Trouble Shooting, refer to SUBJECT, DIAGNOSTIC, or TESTING articles available in the section(s) you are accessing.

BASIC STARTER TROUBLE SHOOTING CHART

CONDITION & POSSIBLE CAUSE	CORRECTION
Starter Fails to Operate	
Dead battery or bad connections between starter and battery	Check battery charge and all wires and connections to starter
Ignition switch faulty or misadjusted	Adjust or replace ignition switch
Open circuit between starter switch ignition terminal on starter relay	Check and repair wires and connections as necessary
Starter relay or starter defective	See Testing in STARTER article
Open solenoid pull-in wire	Testing in STARTER article
Starter Does Not Operate and Headlights Dim	
Weak battery or dead cell	Charge or replace battery as necessary
Loose or corroded battery connections	Check that battery connections are clean and tight
Internal ground in starter windings	See Testing in STARTER article
Grounded starter fields	See Testing in STARTERS
Armature rubbing on pole	See STARTER article shoes
Starter Turns but Engine Does Not Rotate	
Starter clutch slipping	See STARTER article
Broken clutch housing	See STARTER article
Pinion shaft rusted or dry	See STARTER article
Engine basic timing incorrect	See Ignition Timing in TUNE-UP article
Broken teeth on engine flywheel	Replace flywheel and check for starter pinion gear damage
Starter Will Not Crank Engine	
Faulty overrunning clutch	See STARTER article
Broken clutch housing	See STARTER article
Broken flywheel teeth	Replace flywheel and check

	for starter pinion gear damage
Armature shaft sheared or reduction gear teeth stripped	See STARTER article
Weak battery	Charge or replace battery as necessary
Faulty solenoid	See On-Vehicle Tests in STARTER article
Poor grounds	Check all ground connections for tight and clean connections
Ignition switch faulty or misadjusted	Adjust or replace ignition switch as necessary
Starter Cranks Engine Slowly	
Battery weak or defective	Charge or replace battery as necessary
Engine overheated	See ENGINE COOLING SYSTEM article
Engine oil too heavy	Check that proper viscosity oil is used
Poor battery-to-starter connections	Check that all between battery and starter are clean and tight
Current draw too low or too high	See Bench Tests in STARTER article
Bent armature, loose pole shoes screws or worn bearing	See STARTER article
Burned solenoid contacts	Replace solenoid
Faulty starter	Replace starter
Starter Engages Engine Only Momentarily	
Engine timing too far advanced	See Ignition Timing in TUNE-UP article
Overrunning clutch not engaging properly	Replace overrunning clutch. See STARTER article
Broken starter clutch	See STARTER article
Broken teeth on engine flywheel	Replace flywheel and check starter pinion gear for damage
Weak drive assembly thrust spring	See STARTER article
Weak hold-in coil	See Bench Tests in STARTER article
Starter Drive Will Not Engage	
Defective point assembly	See Testing in STARTER article
Poor point assembly ground	See Testing in STARTER article
Defective pull-in coil	Replace starter solenoid
Starter Relay Does Not Close	
Dead battery	Charge or replace battery as

	necessary
Faulty wiring	Check all wiring and connections leading to relay
Neutral safety switch faulty	Replace neutral safety switch
Starter relay faulty	Replace starter relay
Starter Drive Will Not Disengage	
Starter motor loose on mountings	Tighten starter attach bolts
Worn drive end bushing	See STARTER article
Damaged engine flywheel teeth	Replace flywheel and starter pinion gear for damage
Drive yolk return spring broken or missing	Replace return spring
Faulty ignition switch	Replace ignition switch
Insufficient clearance between winding leads to solenoid terminal and main contact in solenoid	Replace starter solenoid
Starter clutch not disengaging	Replace starter clutch
Ignition starter switch	Replace ignition switch contacts sticking
Starter Relay Operates but Solenoid Does Not	
Faulty solenoid switch, switch connections or relay	Check all wiring between relay and solenoid or replace relay or solenoid as necessary
Broken lead or loose soldered connections	Repair wire or wire connections as necessary
Solenoid Plunger Vibrates When Switch is Engaged	
Weak battery	Charge or replace battery as necessary
Solenoid contacts corroded	Clean contacts or replace solenoid
Faulty wiring	Check all wiring leading to solenoid
Broken connections inside switch cover	Repair connections or replace solenoid
Open hold-in wire	solenoid
Low Current Draw	
Worn brushes or weak brush springs	Replace brushes or brush springs as necessary
High Pitched Whine During Cranking Before Engine Fires but Engine Fires and Cranks Normally	
Distance too great between starter pinion and flywheel	Align starter or check that correct starter and flywheel are being used
High Pitched Whine After Engine Fires With Key released. Engine Fires and Cranks Normally	
Distance too small between starter pinion and flywheel	Flywheel runout contributes to the intermittent nature

AIR CONDITIONING & HEAT

AIR CONDITIONING TROUBLE SHOOTING

WARNING: This is GENERAL information. This article is not intended to be specific to any unique situation or individual vehicle configuration. The purpose of this Trouble Shooting information is to provide a list of common causes to problem symptoms. For model-specific Trouble Shooting, refer to SUBJECT, DIAGNOSTIC, or TESTING articles available in the section(s) you are accessing.

BASIC AIR CONDITIONING TROUBLE SHOOTING CHART

CONDITION	POSSIBLE CAUSE
Compressor Not Working	Compressor clutch circuit open.
.....	Compressor clutch coil inoperative.
.....	Poor clutch ground connection.
.....	Fan belts loose.
.....	Thermostatic switch inoperative.
.....	Thermostatic switch not adjusted.
.....	Ambient temperature switch open.
.....	Superheat fuse blown.
Excessive Noise or Vibration	Missing or loose mounting bolts.
.....	Bad idler pulley bearings.
.....	Fan belts not tightened correctly.
.....	Compressor clutch contacting body.
.....	Excessive system pressure.
.....	Compressor oil level low.
.....	Damaged clutch bearings.
.....	Damaged reed valves.
.....	Damaged compressor.
Insufficient or No Cooling; Compressor Working	Expansion valve inoperative.
.....	Heater control valve stuck open.
.....	Low system pressure.
.....	Blocked condenser fins.
.....	Blocked evaporator fins.
.....	Vacuum system leak.
.....	Vacuum motors inoperative.
.....	Control cables improperly adjusted.
.....	Restricted air inlet.
.....	Mode doors binding.
.....	Blower motor inoperative.

.....	Temperature above system capacity.

HEATER SYSTEM TROUBLE SHOOTING

NOTE: This is GENERAL information. This article is not intended to be specific to any unique situation or individual vehicle configuration. The purpose of this Trouble Shooting information is to provide a list of common causes to problem symptoms. For model-specific Trouble Shooting, refer to DIAGNOSTIC, or TESTING articles available in the section(s) you are accessing.

BASIC HEATER SYSTEM TROUBLE SHOOTING CHART

CONDITION	POSSIBLE CAUSE
Insufficient, Erratic, or No Heat	Low Coolant Level
.....	Incorrect thermostat.
.....	Restricted coolant flow through core.
.....	Heater hoses plugged.
.....	Misadjusted control cable.
.....	Sticking heater control valve.
.....	Vacuum hose leaking.
.....	Vacuum hose blocked.
.....	Vacuum motors inoperative.
.....	Blocked air inlet.
.....	Inoperative heater blower motor.
.....	Oil residue on heater core fins.
.....	Dirt on heater core fins.
Too Much Heat	Improperly adjusted cables.
.....	Sticking heater control valve.
.....	No vacuum to heater control valve.
.....	Temperature door stuck open.
Air Flow Changes During Acceleration	Vacuum system leak.
.....	Bad check valve or reservoir.
Air From Defroster At All Times	Vacuum system leak.
.....	Improperly adjusted control cables.
.....	Inoperative vacuum motor.
Blower Does Not Operate Correctly	Blown fuse.
.....	Blower motor windings open.
.....	Resistors burned out.
.....	Motor ground connection loose.
.....	Wiring harness connections loose.
.....	Blower motor switch inoperative.
.....	Blower relay inoperative.

.....	Fan binding or foreign object in housing.
.....	Fan blades broken or bent.

BRAKES

BRAKE SYSTEM TROUBLE SHOOTING

NOTE: This is GENERAL information. This article is not intended to be specific to any unique situation or individual vehicle configuration. The purpose of this Trouble Shooting information is to provide a list of common causes to problem symptoms. For model-specific Trouble Shooting, refer to SUBJECT, DIAGNOSTIC, or TESTING articles available in the section(s) you are accessing.

BRAKE SYSTEM TROUBLE SHOOTING CHART

CONDITION & POSSIBLE CAUSE	CORRECTION
Brakes Pull Left or Right	
Incorrect tire pressure	Inflate tires to proper pressure
Front end out of alignment	See WHEEL ALIGNMENT
Mismatched tires	Check tires sizes
Restricted brake lines or hoses	Check hose routing
Loose or malfunctioning caliper	See DISC BRAKES or BRAKE SYSTEM
Bent shoe or oily linings	See DRUM BRAKES or BRAKE SYSTEM
Malfunctioning rear brakes	See DRUM, DISC BRAKES or BRAKE SYSTEM
Loose suspension parts	See SUSPENSION
Noises Without Brakes Applied	
Front linings worn out	Replace linings
Dust or oil on drums or rotors	See DRUM, DISC BRAKES or BRAKE SYSTEM
Noises With Brakes Applied	
Insulator on outboard shoe damaged	See DISC BRAKES or BRAKE SYSTEM
Incorrect pads or linings	Replace pads or linings
Brake Rough, Chatters or Pulsates	
Excessive lateral runout	Check rotor runout
Parallelism not to specifications	Reface or replace rotor
Wheel bearings not adjusted	See SUSPENSION
Rear drums out-of-round	Reface or replace drums
Disc pad reversed, steel against rotor	Remove and reinstall pad
Excessive Pedal Effort	
Malfunctioning power unit	See POWER BRAKES or

	BRAKE SYSTEM
Partial system failure	Check fluid and pipes
Worn disc pad or lining	Replace pad or lining
Caliper piston stuck or sluggish	See DISC BRAKES or BRAKE SYSTEM
Master cylinder piston stuck	See MASTER CYLINDERS or BRAKE SYSTEM
Brake fade due to incorrect pads for linings	Replace pads or linings
Linings or pads glazed	Replace pads or linings
Worn drums	Reface or replace drums
Excessive Pedal Travel	
Partial brake system failure	Check fluid and pipes
Insufficient fluid in master cylinder	See MASTER CYLINDERS or BRAKE SYSTEM
Air trapped in system	See BRAKE BLEEDING or BRAKE SYSTEM
Rear brakes not adjusted	See Adjustments in DRUM BRAKES or BRAKE SYSTEM
Bent shoe or lining	See DRUM BRAKES or BRAKE SYSTEM
Plugged master cylinder cap	See MASTER CYLINDERS or BRAKE SYSTEM
Improper brake fluid	Replace brake fluid
Pedal Travel Decreasing	
Compensating port plugged	See MASTER CYLINDERS or BRAKE SYSTEM
Swollen cup in master cylinder	See MASTER CYLINDERS or BRAKE SYSTEM
Master cylinder piston not returning	See MASTER CYLINDERS or BRAKE SYSTEM
Weak shoe retracting springs	See DRUM BRAKES BRAKE SYSTEM
Wheel cylinder piston sticking	See DRUM BRAKES or BRAKE SYSTEM
Dragging Brakes	
Master cylinder pistons not returning	See MASTER CYLINDERS BRAKE SYSTEM
Restricted brake lines or hoses	Check line routing
Incorrect parking brake adjustment	See DRUM BRAKES BRAKE SYSTEM
Parking Brake cables frozen	See DRUM BRAKES BRAKE SYSTEM

Incorrect installation of inboard disc pad	Remove and replace correctly
Power booster output rod too long	See POWER BRAKE UNITS BRAKE SYSTEM
Brake pedal not returning freely	See DISC, DRUM BRAKES BRAKE SYSTEM
Brakes Grab or Uneven Braking Action	
Malfunction of combination valve	See CONTROL VALVE or BRAKE SYSTEM
Malfunction of power brake unit	See POWER BRAKE UNITS or BRAKE SYSTEM
Binding brake pedal	See DISC, DRUM BRAKES or BRAKE SYSTEM
Pulsation or Roughness	
Uneven pad wear caused by caliper	See DISC BRAKES or BRAKE SYSTEM
Uneven rotor wear	See DISC BRAKES or BRAKE SYSTEM
Drums out-of-round	Reface or replace drums

ENGINE MECHANICAL

COOLING SYSTEM TROUBLE SHOOTING

NOTE: This is GENERAL information. This article is not intended to be specific to any unique situation or individual vehicle configuration. The purpose of this Trouble Shooting information is to provide a list of common causes to problem symptoms. For model-specific Trouble Shooting, refer to SUBJECT, DIAGNOSTIC, or TESTING articles available in the section(s) you are accessing.

COOLING SYSTEM TROUBLE SHOOTING

CONDITION & POSSIBLE CAUSE	**CORRECTION**
Overheating	
Coolant Leak	Fill/Pressure Test System
A/C Condenser Fins Clogged	Remove/Clean Condenser
Radiator Fins Clogged	Remove/Clean Radiator
Thermostat Stuck Closed	Replace Thermostat
Clogged Cooling System Passages	Clean/Flush Cooling System
Water Pump Malfunction	Replace Water Pump
Fan Clutch Malfunction	Replace Fan Clutch
Retarded Ignition Timing	Reset Ignition Timing
Cooling Fan Malfunction	Test Cooling Fan/Circuit
Cooling Fan Motor Malfunction	Test Fan Motor
Cooling Fan Relay Malfunction	Test Fan Relay

Faulty Radiator Cap	Replace Radiator Cap
Broken/Slipping Fan Belt	Replace Fan Belt
Restricted Exhaust	Repair Exhaust System
Corrosion	
Impurities In Coolant	Clean/Flush System
Coolant Leakage	
Damaged hose	Replace Hose
Leaky Water Pump	Replace Water Pump
Damaged Radiator Seam	Replace/Repair Radiator
Leaky Thermostat Cover	Replace Thermostat Cover
Cylinder Head Problem	Check Head/Head Gasket
Leaky Freeze Plugs	Replace Freeze Plugs
Recovery System Inoperative	
Loose and/or Defective Radiator Cap	Replace Radiator Cap
Overflow Tube Clogged and/or Leaking	Repair Tube
Recovery Bottle Vent Restricted	Clean Vent
No Heater Core Flow	
Collapsed Heater Hose	Replace Heater Hose
Plugged Heater Core	Clean/Replace Heater Core
Faulty Heater Valve	Replace Heater Valve

GASOLINE ENGINE - MECHANICAL TROUBLE SHOOTING

NOTE: This is GENERAL information. This article is not intended to be specific to any unique situation or individual vehicle configuration. The purpose of this Trouble Shooting information is to provide a list of common causes to problem symptoms. For model-specific Trouble Shooting, refer to SUBJECT, DIAGNOSTIC, or TESTING articles available in the section(s) you are accessing.

BASIC GASOLINE ENGINE - MECHANICAL TROUBLE SHOOTING CHART

CONDITION & POSSIBLE CAUSE	CORRECTION
Engine Lopes At Idle	
Intake manifold-to-head leaks	Replace manifold gasket, See ENGINES
Blown head gasket	Replace head gasket, See ENGINES
Worn timing gears, chain or sprocket	Replace gears, chain or sprocket
Worn camshaft lobes	Replace camshaft, See ENGINES
Overheated engine	Check cooling system, See COOLING
Blocked crankcase vent valve	Remove restriction

Leaking EGR valve	Repair leak and/or replace valve
Faulty fuel pump	Replace fuel pump
Engine Has Low Power	
Leaking fuel pump	Repair leak and/or replace fuel pump
Excessive piston-to-bore clearance	Install larger pistons, See ENGINES
Sticking valves or weak valve springs	Check valve train components, See ENGINES
Incorrect valve timing	Reset valve timing, See ENGINES
Worn camshaft lobes	Replace camshaft, See ENGINES
Blown head gasket	Replace head gasket. See ENGINES.
Clutch slipping	Adjust pedal and/or replace components, See ENGINES
Engine overheating	Check cooling system, See COOLING
Auto. Trans. pressure regulator valve faulty	Replace pressure regulator valve
Auto. Trans. fluid level too low	Add fluid as necessary
Improper vacuum diverter valve operation	Replace vacuum diverter valve
Vacuum leaks	Inspect vacuum system and repair as required
Leaking piston rings	Replace piston rings, See ENGINES
Faulty High Speed Operation	
Low fuel pump volume	Replace fuel pump
Leaking valves or worn	Replace valves and/or springs, See ENGINES
Incorrect valve timing	Reset valve timing,See ENGINES
Intake manifold restricted	Remove restriction
Worn distributor shaft	Replace distributor
Faulty Acceleration	
Improper fuel pump stroke	Remove pump and reset pump stroke
Incorrect ignition timing	Reset ignition timing, See TUNE-UP
Leaking valves	Replace valves, See ENGINES

Worn fuel pump diaphragm or piston	Replace diaphragm or piston
Intake Backfire	
Improper ignition timing	Reset ignition timing, See TUNE-UP
Faulty accelerator pump discharge	Replace accelerator pump
Improper choke operation	Check choke and adjust as required
Defective EGR valve	Replace EGR valve
Fuel mixture too lean	Reset air/fuel mixture, See TUNE-UP
Choke valve initial clearance too large	Reset choke valve initial clearance
Exhaust Backfire	
Vacuum leak	Inspect and repair vacuum system
Faulty vacuum diverter valve	Replace vacuum diverter valve
Faulty choke operation	Check choke and adjust as required
Exhaust system leak	repair exhaust system leak
Engine Detonation	
Ignition timing too far advanced	Reset ignition timing, See TUNE-UP
Faulty ignition system	Check ignition timing, See TUNE-UP
Spark plugs loose or faulty	Retighten or replace plugs
Fuel delivery system clogged	Inspect lines, pump and filter for clog
EGR valve inoperative	Replace EGR valve
PCV system inoperative	Inspect and/or replace hoses or valve
Vacuum leaks	Check vacuum system and repair leaks
Excessive combustion chamber deposits	Remove built-up deposits
Leaking, sticking or broken valves	Inspect and/or replace valves
External Oil Leakage	
Fuel pump improperly seated or worn gasket	Remove pump, replace gasket and seat properly
Oil pan gasket broken or pan bent	Straighten pan and replace gasket
Timing chain cover gasket broken	Replace timing chain cover gasket
Rear main oil seal worn	Replace rear main oil seal

Oil pan drain plug not seated properly	Remove and reinstall drain plug
Camshaft bearing drain hole blocked	Remove restriction
Oil pressure sending switch leaking	Remove and reinstall sending switch
Excessive Oil Consumption	
Worn valve stems or guides	Replace stems or guides, See ENGINES
Valve "O" ring seals damaged	Replace "O" ring seals, See ENGINES
Plugged oil drain back holes	Remove restrictions
Improper PCV valve operation	Replace PCV valve
Engine oil level too high	Remove excess oil
Engine oil too thin	Replace thicker oil
Valve stem oil deflectors damaged	Replace oil deflectors
Incorrect piston rings	Replace piston rings, See ENGINES
Piston ring gaps not staggered	Reinstall piston rings, See ENGINES
Insufficient piston ring tension	Replace rings, See ENGINES
Piston ring grooves or oil return	slots clogged Replace piston rings, See ENGINES
Piston rings sticking in grooves	Replace piston rings, See ENGINES
Piston ring grooves excessively worn	Replace piston and rings, See ENGINES
Compression rings installed upside down	Replace compression rings correctly, See ENGINES
Worn or scored cylinder walls	Rebore cylinders or replace block
Mismatched oil ring expander and rail	Replace oil ring expander and rail, See ENGINES
Intake gasket dowels too long	Replace intake gasket dowels
Excessive main or connecting rod bearing clearance	Replace main or connecting rod bearings, See ENGINES
No Oil Pressure	
Low oil level	Add oil to proper level
Oil pressure sender or gauge broken	Replace sender or gauge
Oil pump malfunction	Remove and overhaul oil pump, See ENGINES
Oil pressure relief valve sticking	Remove and reinstall valve
Oil pump passages blocked	Overhaul oil pump, See ENGINES

Oil pickup screen or tube blocked	Remove restriction
Loose oil inlet tube	Tighten oil inlet tube
Loose camshaft bearings	Replace camshaft bearings, See ENGINES
Internal leakage at oil passages	Replace block or cylinder head
Low Oil Pressure	
Low engine oil level	Add oil to proper level
Engine oil too thin	Remove and replace with thicker oil
Excessive oil pump clearance	Reduce oil pump clearance, See ENGINES
Oil pickup tube or screen blocked	Remove restrictions
Main, rod or cam bearing clearance excessive	Replace bearing to reduce clearance, See ENGINES
High Oil Pressure	
Improper grade of oil	Replace with proper oil
Oil pressure relief valve stuck closed	Eliminate binding
Oil pressure sender or gauge faulty	Replace sender or gauge
Noisy Main Bearings	
Inadequate oil supply	Check oil delivery to main bearings
Excessive main bearing clearance	Replace main bearings, See ENGINES
Excessive crankshaft end play	Replace crankshaft, See ENGINES
Loose flywheel or torque converter	Tighten attaching bolts
Loose or damaged vibration damper	Tighten or replace vibration damper
Crankshaft journals out-of-round	Re-grind crankshaft journals
Excessive belt tension	Loosen belt tension
Noisy Connecting Rods	
Excessive bearing clearance or missing bearing	Replace bearing, See ENGINES
Crankshaft rod journal out-of-round	Re-grind crankshaft journal
Misaligned connecting rod or cap	Remove rod or cap and realign
Incorrectly tightened rod bolts	Remove and re-tighten rod bolts
Noisy Pistons and Rings	
Excessive piston-to-bore clearance	Install larger pistons, See ENGINES
Bore tapered or out-of-round	Rebore block

Piston ring broken	Replace piston rings, See ENGINES
Piston pin loose or seized	Replace piston pin, See ENGINES
Connecting rods misaligned	Realign connecting rods
Ring side clearance too loose or tight	Replace with larger or smaller rings
Carbon build-up on piston	Remove carbon
Noisy Valve Train	
Worn or bent push rods	Replace push rods, See ENGINES
Worn rocker arms or bridged pivots	Replace push rods, See ENGINES
Dirt or chips in valve lifters	Remove lifters and remove dirt/chips
Excessive valve lifter leak-down	Replace valve lifters, See ENGINES
Valve lifter face worn	Replace valve lifters, See ENGINES
Broken or cocked valve springs	Replace or reposition springs
Too much valve stem-to-guide clearance	Replace valve guides, See ENGINES
Valve bent	Replace valve, See ENGINES
Loose rocker arms	Retighten rocker arms, See ENGINES
Excessive valve seat run-out	Reface valve seats, See ENGINES
Missing valve lock	Install new valve lock
Excessively worn camshaft lobes	Replace camshaft, See ENGINES
Plugged valve lifter oil holes	Eliminate restriction or replace lifter
Faulty valve lifter check ball	Replace lifter check ball, See ENGINES
Rocker arm nut installed upside down	Remove and reinstall correctly
Valve lifter incorrect for engine	Remove and replace valve lifters
Faulty push rod seat or lifter plunger	Replace plunger or push rod
Noisy Valves	
Improper valve lash	Re-adjust valve lash, See ENGINES
Worn or dirty valve lifters	Clean and/or replace lifters
Worn valve guides	Replace valve guides, See ENGINES

Excessive valve seat or face run-out	Reface seats or valve face
Worn camshaft lobes	Replace camshaft, See ENGINES
Loose rocker arm studs	Re-tighten rocker arm studs, See ENGINES
Bent push rods	Replace push rods, See ENGINES
Broken valve springs	Replace valve springs, See ENGINES
Burned,Sticking or Broken Valves	
Weak valve springs or warped valves	Replace valves and/or springs, See ENGINES
Improper lifter clearance	Re-adjust clearance or replace lifters
Worn guides or improper guide clearance	Replace valve guides, See ENGINES
Out-of-round valve seats or improper seat width	Re-grind valve seats
Gum deposits on valve stems, seats or guide	Remove deposits
Improper spark timing	Re-adjust spark timing
Broken Pistons/Rings	
Undersize pistons	Replace with larger pistons, See ENGINES
Wrong piston rings	Replace with correct rings, See ENGINES
Out-of-round cylinder bore	Re-bore cylinder bore
Improper connecting rod alignment	Remove and realign connecting rods
Excessively worn ring grooves	Replace pistons, See ENGINES
Improperly assembled piston pins	Re-assemble pin-to-piston, See ENGINES
Insufficient ring gap clearance	Install new rings, See ENGINES
Engine overheating	Check cooling system
Incorrect ignition timing	Re-adjust ignition timing, See TUNE-UP
Excessive Exhaust Noise	
Leaks at manifold to head, or to pipe	Replace manifold or pipe gasket
Exhaust manifold cracked or broken	Replace exhaust manifold, See ENGINES

ENGINE PERFORMANCE

CARBURETOR TROUBLE SHOOTING:

NOTE: **This is GENERAL information. This article is not intended to be specific to any unique situation or individual vehicle configuration. The purpose of this Trouble Shooting information is to provide a list of common causes to problem symptoms. For model-specific Trouble Shooting, refer to SUBJECT, DIAGNOSTIC, or TESTING articles available in the section(s) you are accessing.**

BASIC COLD START SYMPTOMS TROUBLE SHOOTING CHART

CONDITION & POSSIBLE CAUSE	CORRECTION
Engine Won't Start	
Choke not closing	Check choke operation, see FUEL SYSTEMS
Choke linkage bent	Check linkage, see FUEL SYSTEM
Engine Starts, Then Dies	
Choke vacuum kick setting too wide	Check setting and adjust see, FUEL SYSTEMS
Fast idle RPM too low	Reset RPM to specification, see TUNE-UP
Fast idle cam index incorrect	Reset fast idle cam index, see FUEL SYSTEMS
Vacuum leak	Inspect vacuum system for leaks
Low fuel pump outlet	Repair or replace pump, see FUEL SYSTEMS
Low carburetor fuel level	Check float setting see FUEL SYSTEM
Engine Quits Under Load	
Choke vacuum kick setting incorrect	Reset vacuum kick setting,see FUEL SYSTEMS
Fast idle cam index incorrect	Reset fast idle cam index, see FUEL SYSTEM
Incorrect hot fast idle speed RPM	Reset fast idle RPM, see TUNE-UP
Engine Starts, Runs Up, Then Idles, Slowly With Black Smoke	
Choke vacuum kick set too narrow	Reset vacuum kick, see FUEL SYSTEMS
Fast idle cam index incorrect	Reset fast idle cam index, see FUEL SYSTEMS
Hot fast idle RPM too low	Reset fast idle RPM, see TUNE-UP

BASIC HOT START SYMPTOMS TROUBLE SHOOTING CHART

CONDITION & POSSIBLE CAUSE	CORRECTION
Engine Won't Start	
Engine flooded	Allow fuel to evaporate

BASIC COLD ENGINE DRIVEABILITY SYMPTOMS TROUBLE SHOOTING CHART

CONDITION & POSSIBLE CAUSE	CORRECTION
Engine Stalls in Gear	
Choke vacuum kick setting incorrect	Reset choke vacuum kick, see FUEL SYSTEMS
Fast idle RPM incorrect	Reset fast idle RPM, see TUNE-UP
Fast idle cam index incorrect	Reset fast idle cam see FUEL SYSTEMS
Acceleration Sag or Stall	
Defective choke control switch	Replace choke control switch
Choke vacuum kick setting incorrect	Reset choke vacuum kick see, FUEL SYSTEMS
Float level incorrect (too low)	Adjust float level, FUEL SYSTEMS
Accelerator pump defective	Repair or replace pump see FUEL SYSTEMS
Secondary throttles not closed	Inspect lockout adjustment, see FUEL SYSTEMS
Sag or Stall After Warmup	
Defective choke control switch	Replace choke control switch, see FUEL SYSTEMS
Defective accelerator pump	Replace pump, see FUEL SYSTEMS
Float level incorrect (too low)	Adjust float level, see FUEL SYSTEMS
Backfiring & Black Smoke	
Plugged heat crossover system	Remove restriction

BASIC WARM ENGINE DRIVEABILITY SYMPTOMS TROUBLE SHOOTING CHART

CONDITION & POSSIBLE CAUSE	CORRECTION
Hesitation With Small Amount of Gas Pedal Movement	
Vacuum leak	Inspect vacuum lines
Accelerator pump weak or inoperable	Replace pump, see FUEL SYSTEMS
Float level setting too low	Reset float level, see,FUEL SYSTEMS
Metering rods sticking or binding	Inspect and/or replace rods, see FUEL SYSTEMS

Carburetor idle or transfer system plugged	Inspect system and remove restriction
Frozen or binding heated air inlet	Inspect heated air door for binding
Hesitation With Heavy Gas Pedal Movement	
Defective accelerator pump	Replace pump, see FUEL SYSTEMS
Metering rod carrier sticking or binding	Remove restriction
Large vacuum leak	Inspect vacuum system and repair leak
Float level setting too low	Reset float level, see FUEL SYSTEMS
Defective fuel pump, lines or filter	Inspect pump, lines and filter
Air door setting incorrect	Adjust air door setting, see FUEL

DIESEL ENGINE TROUBLE SHOOTING

NOTE: This is GENERAL information. This article is not intended to be specific to any unique situation or individual vehicle configuration. The purpose of this Trouble Shooting information is to provide a list of common causes to problem symptoms. For model-specific Trouble Shooting, refer to SUBJECT, DIAGNOSTIC, or TESTING articles available in the section(s) you are accessing.

NOTE: Diesel engines mechanical diagnosis is the same as gasoline engines for items such as noisy valves, bearings, pistons, etc. The following trouble shooting covers only items pertaining to diesel engines.

BASIC DIESEL ENGINE TROUBLE SHOOTING CHART

CONDITION & POSSIBLE CAUSE	CORRECTION
Engine Won't Crank	
Bad battery connections or dead batteries	Check connections and/or replace batteries
Bad starter connections or bad starter	Check connections and/or replace starter
Engine Cranks Slowly, Won't Start	
Bad battery connections or dead batteries	Check connections and/or replace batteries
Engine oil too heavy	Replace engine oil
Engine Cranks Normally, But Will Not Start	
Glow plugs not functioning	Check glow plug system, see FUEL SYSTEMS
Glow plug control not functioning	Check controller, see FUEL SYSTEMS

Fuel not injected into cylinders	Check fuel injectors, see FUEL SYSTEMS
No fuel to injection pump	Check fuel delivery system
Fuel filter blocked	Replace fuel filter
Fuel tank filter blocked	Replace fuel tank filter
Fuel pump not operating	Check pump operation and/or replace pump
Fuel return system blocked	Inspect system and remove restriction
No voltage to fuel solenoid	Check solenoid and connections
Incorrect or contaminated fuel	Replace fuel
Incorrect injection pump timing	Re-adjust pump timing, see FUEL SYSTEMS
Low compression	Check valves, pistons, rings, see ENGINES
Injection pump malfunction	Inspect and/or replace injection pump
Engine Starts, Won't Idle	
Incorrect slow idle adjustment	Reset idle adjustment, see TUNE-UP
Fast idle solenoid malfunctioning	Check solenoid and connections
Fuel return system blocked	Check system and remove restrictions
Glow plugs go off too soon	See glow plug diagnosis in FUEL SYSTEMS
Injection pump timing incorrect	Reset pump timing, see FUEL SYSTEMS
No fuel to injection pump	Check fuel delivery system
Incorrect or contaminated fuel	Replace fuel
Low compression	Check valves, piston, rings, see ENGINES
Injection pump malfunction	Replace injection pump, see FUEL SYSTEMS
Fuel solenoid closes in RUN position	Check solenoid and connections
Engines Starts/Idles Rough W/out Smoke or Noise	
Incorrect slow idle adjustment	Reset slow idle, see TUNE-UP
Injection line fuel leaks	Check lines and connections
Fuel return system blocked	Check lines and connections
Air in fuel system	Bleed air from system
Incorrect or contaminated fuel	Replace fuel

Injector nozzle malfunction	Check nozzles, see FUEL SYSTEMS
Engines Starts and Idles Rough W/out Smoke or Noise, But Clears After Warm-Up	
Injection pump timing incorrect	Reset pump timing, see FUEL SYSTEMS
Engine not fully broken in	Put more miles on engine
Air in system	Bleed air from system
Injector nozzle malfunction	Check nozzles, see FUEL SYSTEMS
Engine Idles Correctly, Misfires Above Idle	
Blocked fuel filter	Replace fuel filter
Injection pump timing incorrect	Reset pump timing, see FUEL SYSTEMS
Incorrect or contaminated fuel	Replace fuel
Engine Won't Return To Idle	
Fast idle adjustment incorrect	Reset fast idle, see TUNE-UP
Internal injection pump malfunction	Replace injection pump, see FUEL SYSTEMS
External linkage binding	Check linkage and remove binding
Fuel Leaks On Ground	
Loose or broken fuel line	Check lines and connections
Internal injection pump seal leak	Replace injection pump, see FUEL SYSTEMS
Cylinder Knocking Noise	
Injector nozzles sticking open	Test injectors, see FUEL SYSTEMS
Very low nozzle opening pressure	Test injectors and/or replace
Loss of Engine Power	
Restricted air intake	Remove restriction
EGR valve malfunction	Replace EGR valve
Blocked or damaged exhaust system	Remove restriction and/or replace components
Blocked fuel tank filter	Replace filter
Restricted fuel filter	Remove restriction and/or replace filter
Block vent in gas cap	Remove restriction and/or replace cap
Tank-to-injection pump fuel supply blocked	Check fuel lines and connections
Blocked fuel return system	Remove restriction
Incorrect or contaminated fuel	Replace fuel
Blocked injector nozzles	Check nozzle for blockage, see

	FUEL SYSTEMS
Low compression	Check valves, rings, pistons, see ENGINES
Loud Engine Noise With Black Smoke	
Basic timing incorrect	Reset timing, see FUEL SYSTEMS
EGR valve malfunction	Replace EGR valve
Internal injection pump malfunction	Replace injection pump, see FUEL SYSTEMS
Incorrect injector pump housing pressure	Check pressure, see FUEL SYSTEMS
Engine Overheating	
Cooling system leaks	Check cooling system and repair leaks
Belt slipping or damaged	Check tension and/or replace belt
Thermostat stuck closed	Remove and replace thermostat, see ENGINE COOLING
Head gasket leaking	Replace head gasket
Oil Light on at Idle	
Low oil pump pressure	Check oil pump operation, see ENGINES
Oil cooler or line restricted	Remove restriction and/or replace cooler
Engine Won't Shut Off	
Injector pump fuel solenoid does not return fuel valve to OFF position	Remove and check solenoid and replace if needed

VACUUM PUMP DIAGNOSIS

CONDITION & POSSIBLE CAUSE	CORRECTION
Excessive Noise	
Loose pump-to-drive assembly screws	Tighten screws
Loose tube on pump assembly	Tighten tube
Valves not functioning properly	Replace valves
Oil Leakage	
Loose end plug	Tighten end plug
Bad seal crimp	Remove and re-crimp seal

FUEL INJECTION TROUBLE SHOOTING

NOTE: **This is GENERAL information. This article is not intended to be specific to any unique situation or individual vehicle configuration. The purpose of this Trouble**

Shooting information is to provide a list of common causes to problem symptoms. For model-specific Trouble Shooting, refer to SUBJECT, DIAGNOSTIC, or TESTING articles available in the section(s) you are accessing.

BASIC FUEL INJECTION TROUBLE SHOOTING CHART

CONDITION & POSSIBLE CAUSE	CORRECTION
Engine Won't Start (Cranks Normally)	
Cold start valve inoperative	Test valve and circuit
Poor connection;vacuum or wiring	Check vacuum and electrical connections
Contaminated fuel	Test fuel for water or alcohol
Defective fuel pump relay or circuit	Test relay and wiring
Battery too low	Charge and test battery
Low fuel pressure	Test pressure regulator and fuel pump, check for restricted lines and filters
No distributor reference pulses	Repair ignition system as necessary
Open coolant temperature sensor circuit	Test sensor and wiring
Shorted W.O.T. switch in T.P.S.	Disconnect W.O.T. switch, engine should start
Defective ECM	Replace ECM
Fuel tank residual pressure valve leaks	Test for fuel pressure drop after shut down
Hard Starting	
Disconnected hot air tube to air cleaner	Reconnect tube and test control valve
Defective Idle Air Control (IAC) valve	Test valve operation and circuit
Shorted, open or misadjusted T.P.S.	Test and adjust or replace T.P.S.
EGR valve open	Test EGR valve and control circuit
Poor Oxygen sensor signal	Test for shorted or circuit
Incorrect mixture from PCV system	Test PCV for flow, check sealing of oil filter cap
Poor High Speed Operation	
Low fuel pump volume	Faulty pump or restricted fuel lines or filters
Poor MAP sensor signal	Test MAP sensor, vacuum hose and wiring
Poor Oxygen sensor signal	Test for shorted or open sensor or circuit

Open coolant temperature sensor circuit	Test sensor and wiring
Faulty ignition operation	Check wires for cracks or poor con- nections, test secondary voltage with oscilloscope
Contaminated fuel	Test fuel for water or alcohol
Intermittent ECM ground	Test ECM ground connection for resistance
Restricted air cleaner	Replace air cleaner
Restricted exhaust system	Test for exhaust manifold back pressure
Poor MAF sensor signal	Check leakage between sensor and manifold
Poor VSS signal	If tester for ALCL hook-up is available check that VSS reading matches speedometer
Ping or Knock on Acceleration	
Poor Knock sensor signal	Test for shorted or open sensor or circuit
Poor Baro sensor signal	Test for shorted or open sensor or circuit
Improper ignition timing	See VEHICLE EMISSION CONTROL LABEL (where applicable)
Check for engine overheating problems	Low coolant, loose belts or electric cooling fan inoperative

NOTE: For additional electronic fuel injection trouble shooting information, see the appropriate article in the ENGINE PERFORMANCE section (not all vehicles have Computer Engine Control articles). Information is provided there for diagnosing fuel system problems on vehicles with electronic fuel injection.

IGNITION SYSTEM TROUBLE SHOOTING

NOTE: This is GENERAL information. This article is not intended to be specific to any unique situation or individual vehicle configuration. The purpose of this Trouble Shooting information is to provide a list of common causes to problem symptoms. For model-specific Trouble Shooting, refer to SUBJECT, DIAGNOSTIC, or TESTING articles available in the section(s) you are accessing.

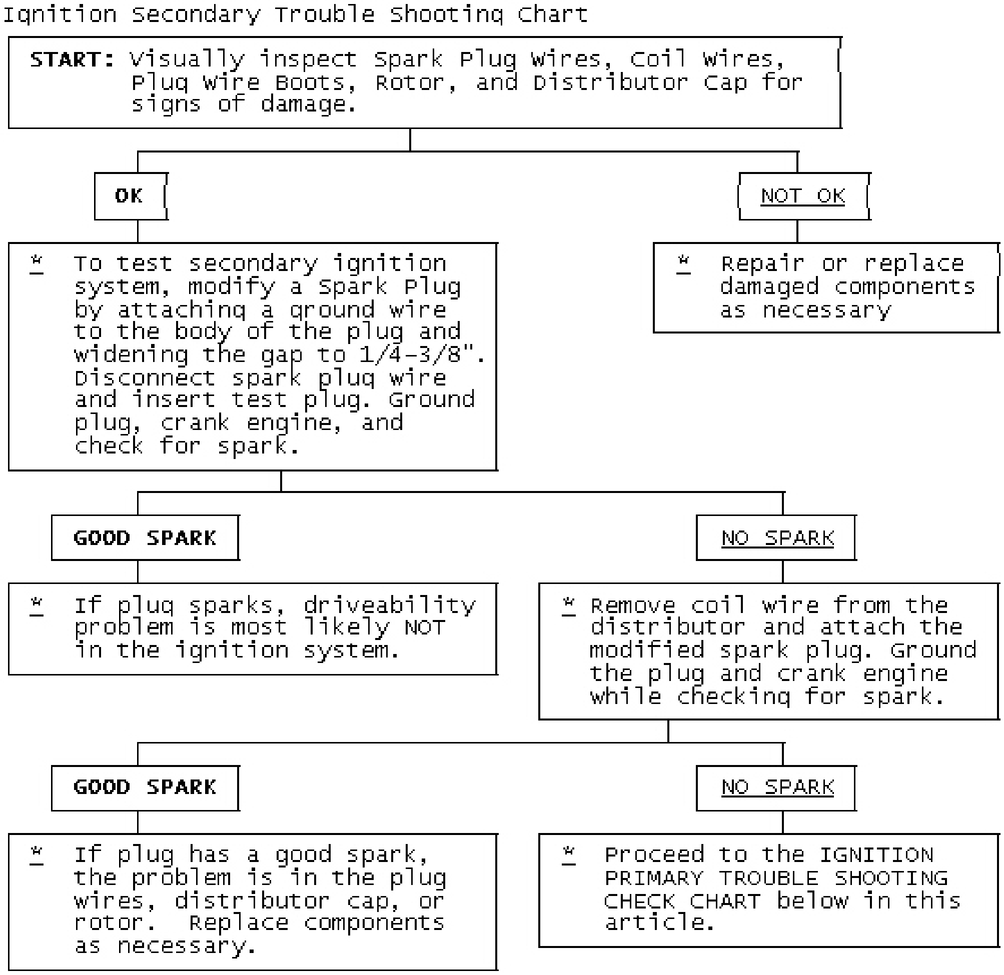

START: Visually inspect Spark Plug Wires, Coil Wires, Plug Wire Boots, Rotor, and Distributor Cap for signs of damage.

* To test secondary ignition system, modify a Spark Plug by attaching a ground wire to the body of the plug and widening the gap to 1/4-3/8". Disconnect spark plug wire and insert test plug. Ground plug, crank engine, and check for spark.

* Repair or replace damaged components as necessary

* If plug sparks, driveability problem is most likely NOT in the ignition system.

* Remove coil wire from the distributor and attach the modified spark plug. Ground the plug and crank engine while checking for spark.

* If plug has a good spark, the problem is in the plug wires, distributor cap, or rotor. Replace components as necessary.

* Proceed to the IGNITION PRIMARY TROUBLE SHOOTING CHECK CHART below in this article.

Fig. 3: Ignition Secondary Trouble Shooting Chart

Ignition Primary Trouble Shooting Chart

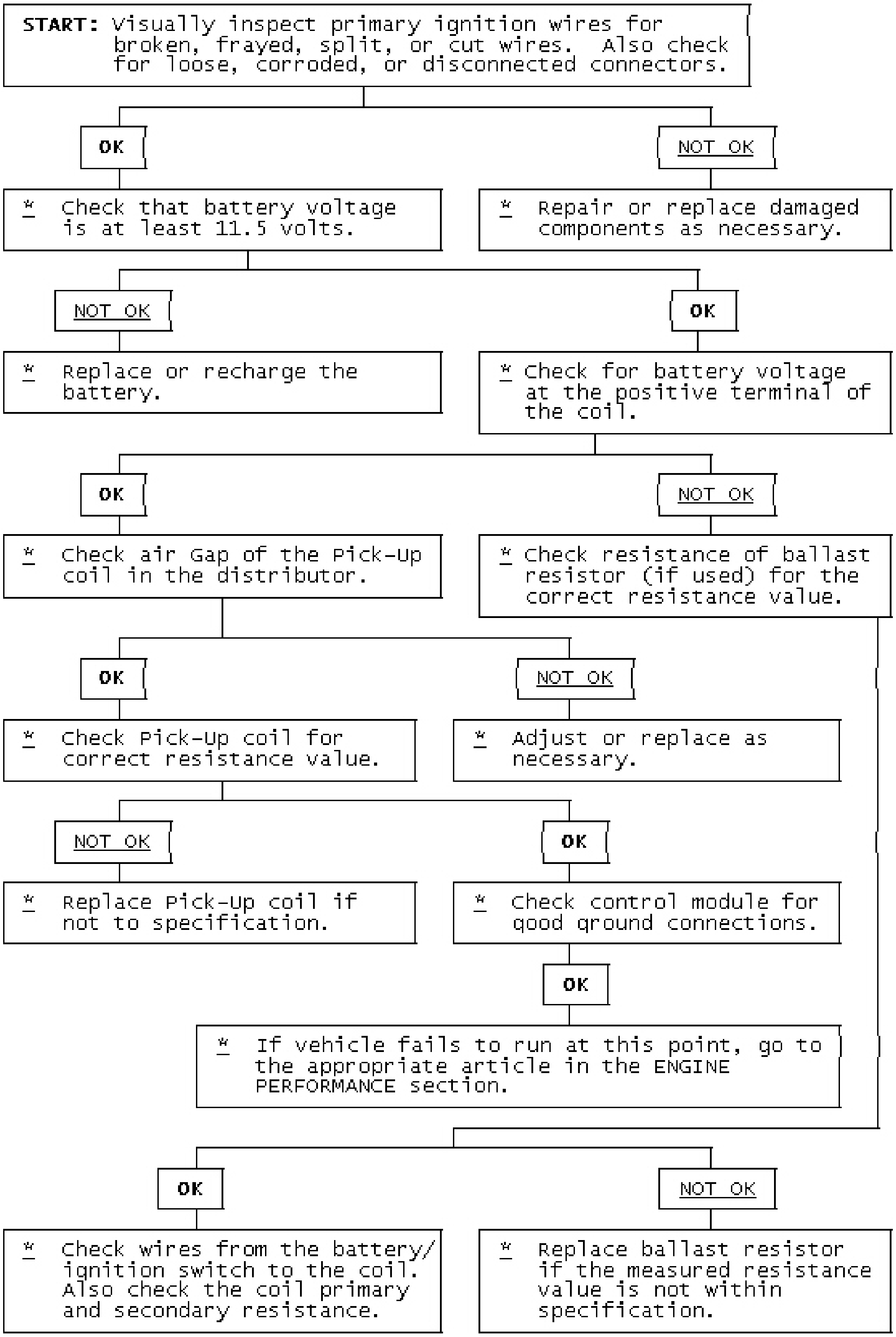

START: Visually inspect primary ignition wires for broken, frayed, split, or cut wires. Also check for loose, corroded, or disconnected connectors.

* Check that battery voltage is at least 11.5 volts.

* Repair or replace damaged components as necessary.

* Replace or recharge the battery.

* Check for battery voltage at the positive terminal of the coil.

* Check air Gap of the Pick-Up coil in the distributor.

* Check resistance of ballast resistor (if used) for the correct resistance value.

* Check Pick-Up coil for correct resistance value.

* Adjust or replace as necessary.

* Replace Pick-Up coil if not to specification.

* Check control module for good ground connections.

* If vehicle fails to run at this point, go to the appropriate article in the ENGINE PERFORMANCE section.

* Check wires from the battery/ ignition switch to the coil. Also check the coil primary and secondary resistance.

* Replace ballast resistor if the measured resistance value is not within specification.

Fig. 4: Ignition Primary Trouble Shooting Chart

STARTER TROUBLE SHOOTING

NOTE: **This is GENERAL information. This article is not intended to be specific to any unique situation or individual vehicle configuration. The purpose of this Trouble Shooting information is to provide a list of common causes to problem symptoms. For model-specific Trouble Shooting, refer to SUBJECT, DIAGNOSTIC, or TESTING articles available in the section(s) you are accessing.**

BASIC STARTER TROUBLE SHOOTING CHART

CONDITION & POSSIBLE CAUSE	CORRECTION
Starter Fails to Operate	
Dead battery or bad connections between starter and battery	Check battery charge and all wires and connections to starter
Ignition switch faulty or misadjusted	Adjust or replace ignition switch
Open circuit between starter switch ignition terminal on starter relay	Check and repair wires and connections as necessary
Starter relay or starter defective	See Testing in STARTER article
Open solenoid pull-in wire	See Testing in STARTER article
Starter Does Not Operate and Headlights Dim	
Weak battery or dead cell	Charge or replace battery as necessary
Loose or corroded battery connections	Check that battery connections are clean and tight
Internal ground in starter windings	See Testing in STARTER article
Grounded starter fields	See Testing in STARTERS
Armature rubbing on pole shoes	See STARTER article
Starter Turns but Engine Does Not Rotate	
Starter clutch slipping	See STARTER article
Broken clutch housing	See STARTER article
Pinion shaft rusted or dry	See STARTER article
Engine basic timing incorrect	See Ignition Timing in TUNE-UP article
Broken teeth on engine flywheel	Replace flywheel and check for starter pinion gear damage
Starter Will Not Crank Engine	

Faulty overrunning clutch	See STARTER article
Broken clutch housing	See STARTER article
Broken flywheel teeth	Replace flywheel and check for starter pinion gear damage
Armature shaft sheared or reduction gear teeth stripped	See STARTER article
Weak battery	Charge or replace battery as necessary
Faulty solenoid	See On-Vehicle Tests in STARTER article
Poor grounds	Check all ground connections for tight and clean connections
Ignition switch faulty or misadjusted	Adjust or replace ignition switch as necessary
Starter Cranks Engine Slowly	
Battery weak or defective	Charge or replace battery as necessary
Engine overheated	See ENGINE COOLING SYSTEM article
Engine oil too heavy	Check that proper viscosity oil is used
Poor battery-to-starter connections	Check that all between battery and starter are clean and tight
Current draw too low or too high	See Bench Tests in STARTER article
Bent armature, loose pole shoes screws or worn bearings	See STARTER article
Burned solenoid contacts	Replace solenoid
Faulty starter	Replace starter
Starter Engages Engine Only Momentarily	
Engine timing too far advanced	See Ignition Timing in TUNE-UP article
Overrunning clutch not engaging properly	Replace overrunning clutch. See STARTER article
Broken starter clutch	See STARTER article
Broken teeth on engine flywheel	Replace flywheel and check starter pinion gear for damage
Weak drive assembly thrust spring	See STARTER article
Weak hold-in coil	See Bench Tests in STARTER article
Starter Drive Will Not Engage	
Defective point assembly	See Testing in STARTER

	article
Poor point assembly ground	See Testing in STARTER article
Defective pull-in coil	Replace starter solenoid
Starter Relay Does Not Close	
Dead battery	Charge or replace battery as necessary
Faulty wiring	Check all wiring and connections leading to relay
Neutral safety switch faulty	Replace neutral safety switch
Starter relay faulty	Replace starter relay
Starter Drive Will Not Disengage	
Starter motor loose on mountings	Tighten starter attach bolts
Worn drive end bushing	See STARTER article
Damaged engine flywheel teeth	Replace flywheel and starter pinion gear for damage
Drive yolk return spring broken or missing	Replace return spring
Faulty ignition switch	Replace ignition switch
Insufficient clearance between winding leads to solenoid terminal and main contact in solenoid	Replace starter solenoid
Starter clutch not disengaging	Replace starter clutch
Ignition starter switch contacts sticking	Replace ignition switch
Starter Relay Operates but Solenoid Does Not	
Faulty solenoid switch, switch connections or relay	Check all wiring between relay and solenoid or replace relay or solenoid as necessary
Broken lead or loose soldered connections	Repair wire or wire connections as necessary
Solenoid Plunger Vibrates When Switch is Engaged	
Weak battery	Charge or replace battery as necessary
Solenoid contacts corroded	Clean contacts or replace solenoid
Faulty wiring	Check all wiring leading to solenoid
Broken connections inside switch cover	Repair connections or replace solenoid
Open hold-in wire	Replace solenoid
Low Current Draw	
Worn brushes or weak	Replace brushes or brush springs as necessary
High Pitched Whine During Cranking Before Engine Fires but Engine Fires and Cranks Normally	
Distance too great between starter pinion and flywheel	Align starter or check that

	correct starter and flywheel are being used
High Pitched Whine After Engine Fires With Key released. Engine Fires and Cranks Normally	
Distance too small between starter pinion and flywheel	Flywheel runout contributes to the intermittent nature

TUNE-UP TROUBLE SHOOTING - GAS ENGINE VEHICLES

NOTE: This is GENERAL information. This article is not intended to be specific to any unique situation or individual vehicle configuration. The purpose of this Trouble Shooting information is to provide a list of common causes to problem symptoms. For model-specific Trouble Shooting, refer to SUBJECT, DIAGNOSTIC, or TESTING articles available in the section(s) you are accessing.

BASIC SPARK PLUG TROUBLE SHOOTING CHARTS

CONDITION & POSSIBLE CAUSE	CORRECTION
Normal Spark Plug Condition	
Light Tan or Gray deposits	No Action
Electrode not burned or fouled	No Action
Gap tolerance not changed	No Action
Cold Fouling or Carbon Deposits	
Overrich air/fuel mixture	Adjust air/fuel mixture, see ENGINE PERFORMANCE section
Faulty choke	Replace choke assembly, see ENGINE PERFORMANCE section
Clogged air filter	Clean and/or replace air filter
Incorrect idle speed or dirty carburetor	Reset idle speed and/ or clean carburetor
Faulty ignition wires	Replace ignition wiring
Prolonged operation at idle	Shut engine off during long idle
Sticking valves or worn valve guide seals	Check valve train
Wet Fouling or Oil Deposits	
Worn rings and pistons	Install new rings and pistons
Excessive cylinder wear	Rebore or replace block
Excessive valve guide clearance	Worn or loose bearing
Gap Bridged	
Deposits in combustion chamber becoming fused to electrode	Clean combustion chamber of deposits
Blistered Electrode	
Engine overheating	Check cooling system

Wrong type of fuel	Replace with correct fuel
Loose spark plugs	Retighten spark plugs
Over-advanced ignition timing	Reset ignition timing see ENGINE PERFORMANCE
Pre-Ignition or Melted Electrodes	
Incorrect type of fuel	Replace with correct fuel
Incorrect ignition timing	Reset ignition timing see ENGINE PERFORMANCE
Burned valves	Replace valves
Engine Overheating	Check cooling system
Wrong type of spark plug, too hot	Replace with correct spark plug, see ENGINE PERFORMANCE
Chipped Insulators	
Severe detonation	Check for over-advanced timing or combustion
Improper gapping procedure	Re-gap spark plugs
Rust Colored Deposits	
Additives in unleaded fuel	Try different fuel brand
Water In Combustion Chamber	
Blown head gasket or cracked head	Repair or replace head or head gasket

NOTE: **Before diagnosing an electronic ignition system, ensure that all wiring is connected properly between distributor, wiring connector and spark plugs. Ignition problem will show up either as: Engine Will Not Start or Engine Runs Rough.**

BASIC ELECTRONIC IGNITION TROUBLE SHOOTING CHARTS

CONDITION & POSSIBLE CAUSE	CORRECTION
Engine Won't Start	
Open circuit between distributor and bulkhead connector	Repair circuit
Open circuit between bulkhead connector and ignition switch	Repair circuit
Open circuit between ignition switch and starter solenoid	Repair circuit
Engine Runs Rough	
Fuel lines leaking or clogged	Tighten fitting, remove restriction
Initial timing incorrect	Reset ignition timing see ENGINE PERFORMANCE
Centrifugal advance malfunction	Repair distributor advance
Defective spark plugs or wiring	Replace plugs or plug wiring
Component Failure	
Spark arc-over on cap, rotor or coil	Replace cap, rotor or or coil

Defective pick-up coil	Replace pick-up coil
Defective ignition coil	Replace ignition coil
Defective vacuum unit	Replace vacuum unit
Defective control module	Replace control module

BASIC ELECTRONIC IGNITION TROUBLE SHOOTING CHARTS - USING OSCILLOSCOPE PATTERNS

CONDITION & POSSIBLE CAUSE	CORRECTION
Firing Voltage Lines are the Same, but Abnormally High	
Retarded ignition timing	Reset ignition timing, see ENGINE PERFORMANCE section
Fuel mixture too lean	Readjust carburetor, see ENGINE PERFORMANCE
High resistance in coil wire	Replace coil wire
Corrosion in coil tower terminal	Clean and/or replace coil
Corrosion in distributor coil terminal	Clean and/or replace distributor cap
Firing Voltage Lines are the Same but Abnormally Low	
Fuel mixture too rich	Readjust carburetor, see ENGINE PERFORMANCE
Breaks in coil wire causing arcing	Replace coil wire
Cracked coil tower causing arcing	Replace coil
Low coil output	Replace coil
Low engine compression	Determine cause and repair
One or More, But Not All Firing Voltage Lines are Higher Than Others	
Carburetor idle mixture not balanced	Readjust carburetor, see ENGINE PERFORMANCE
EGR valve stuck open	Clean and/or replace valve
High resistance in spark plug wires	Replace spark plug wires
Cracked or broken spark plug insulator	Replace spark plugs
Intake vacuum leak	Repair leak
Defective spark plugs	Replace spark plugs
Corroded spark plug terminals	Replace spark plugs
One or More, But Not All Firing Voltage Lines Are Lower Than Others	
Curb idle mixture not balanced	Readjust carburetor, see ENGINE PERFORMANCE
Breaks in plug wires	Replace plug wires causing arcing
Cracked coil tower causing arcing	Replace coil
Low compression	Determine cause and repair
Defective spark plugs	Replace spark plugs

Corroded spark plugs	Replace spark plugs
Cylinders Not Firing	
Cracked distributor cap terminals	Replace distributor cap
Shorted spark plug wire	Determine cause and repair
Mechanical problem in engine	Determine cause and repair
Defective spark plugs	Replace spark plugs
Spark plugs fouled	Replace spark plugs

BASIC DRIVEABILITY PROBLEMS TROUBLE SHOOTING

CONDITION & POSSIBLE CAUSE	CORRECTION
Hard Starting	
Binding carburetor linkage	Eliminate binding
Binding choke linkage	Eliminate binding
Binding choke piston	Eliminate binding
Restricted choke vacuum	Check vacuum lines for blockage
Worn or dirty needle valve and seat	Clean carburetor, see ENGINE PERFORMANCE
Float sticking	Readjust or replace float see the ENGINE PERFORMANCE section
Incorrect choke adjustment	Reset choke adjustment see ENGINE PERFORMANCE
Defective coil	Replace coil
Improper spark plug gap	Regap spark plugs
Incorrect ignition timing	Reset ignition timing see ENGINE PERFORMANCE
Detonation	
Over-advanced ignition timing	Reset ignition timing see ENGINE PERFORMANCE
Defective spark plugs	Replace spark plugs
Fuel lines clogged	Clean fuel lines
EGR system malfunction	Check and repair EGR system
PCV system malfunction	Repair PCV system
Vacuum leaks	Check and repair vacuum system
Loose fan belts	Tighten or replace fan belts, see ENGINE PERFORMANCE
Restricted airflow	Remove restriction
Vacuum advance malfunction	Check distributor operation
Dieseling	
Binding carburetor linkage	Eliminate binding

Binding throttle linkage	Eliminate blinding
Binding choke linkage or fast idle cam	Eliminate binding
Defective idle solenoid	Replace idle solenoid see ENGINE PERFORMANCE
Improper base idle speed	Reset idle speed, see see ENGINE PERFORMANCE
Incorrect ignition timing	Reset ignition timing see ENGINE PERFORMANCE
Incorrect idle mixture setting	Reset idle mixture, see ENGINE PERFORMANCE
Faulty Acceleration	
Incorrect ignition timing	Reset ignition timing see ENGINE PERFORMANCE
Engine cold and choke too lean	Adjust choke and allow engine to warm-up
Defective spark plugs	Replace spark plugs
Defective coil	Replace coil
Faulty Low Speed Operation	
Clogged idle transfer slots	Clean idle transfer slots, see FUEL
Restricted idle air bleeds and passages	Disassemble and clean carburetor, see FUEL
Clogged air cleaner	Replace air filter
Defective spark plugs	Replace spark plugs
Defective ignition wires	Replace ignition wire see ENGINE PERFORMANCE
Defective distributor cap	Replace distributor cap
Faulty High Speed Operation	
Incorrect ignition timing	Reset ignition timing see ENGINE PERFORMANCE
Defective distributor centrifugal advance	Replace advance mechanism
Defective distributor vacuum advance	Replace advance unit
Incorrect spark plugs or plug gap	Check gap and/or replace spark plugs
Faulty choke operation	Check choke and repair as required
Clogged vacuum passages	Remove restrictions
Improper size or clogged main jet	Check jet size and clean, see FUEL
Restricted air cleaner	Check filter and replace as necessary
Defective distributor cap, rotor or coil	Replace cap, rotor or coil
Misfire at All Speeds	

Defective spark plugs	Replace spark plugs
Defective spark plug wires	Replace spark plug wires
Defective distributor cap, rotor, or coil	Replace cap, rotor, or coil
Cracked or broken vacuum hoses	Replace vacuum hoses
Vacuum leaks	Repair vacuum leaks
Fuel lines clogged	Remove restriction
Hesitation	
Cracked or broken vacuum	Replace vacuum hoses hoses
Vacuum leaks	Repair Vacuum leaks
Binding carburetor linkage	Eliminate binding
Binding throttle linkage	Eliminate binding
Binding choke linkage or fast idle cam	Eliminate binding
Improper float setting	Readjust float setting, see FUEL
Cracked or broken ignition wires	Replace ignition wires
Rough Idle, Missing or Stalling	
Incorrect curb idle or fast idle speed	Reset idle speed, see see ENGINE PERFORMANCE
Incorrect basic timing	Reset ignition timing see ENGINE PERFORMANCE
Improper idle mixture adjustment	Reset idle mixture, see ENGINE PERFORMANCE
Improper feedback system operation	Check feedback system see ENGINE PERFORMANCE
Incorrect spark plug gap	Reset spark plug gap, see ENGINE PERFORMANCE
Moisture in ignition components	Dry components
Loose or broken ignition wires	Replace ignition wires
Damaged distributor cap or or rotor	Replace distributor cap or rotor
Faulty ignition coil	Replace ignition coil
Fuel filter clogged or worn	Replace fuel filter
Damaged idle mixture screw	Replace idle mixture screw, see FUEL
Improper fast idle cam adjustment	Reset fast idle cam adjustment, see TUNE- see ENGINE PERFORMANCE
Improper EGR valve operation	Replace EGR valve
Faulty PCV valve air flow	Replace PCV valve
Choke binding or improper choke setting	Reset choke or eliminate binding
Vacuum leak	Repair vacuum leak
Improper float bowl fuel level	Reset float adjustment, see

	FUEL
Clogged air bleed or idle passages	Clean carburetor passages, see FUEL
Clogged or worn air cleaner filter	Replace air filter
Faulty choke vacuum diaphragm	Replace diaphragm, see ENGINE PERFORMANCE
Exhaust manifold heat valve inoperative	Replace heat valve
Improper distributor spark advance	Check distributor operation
Leaking valves or valve components	Check and repair valvetrain
Improper carburetor mounting	Remove and remount carburetor
Excessive play in distributor shaft	Replace distributor
Loose or corroded wiring connections	Repair or replace as required
Engine Surges	
Improper PCV valve airflow	Replace PCV valve
Vacuum leaks	Repair vacuum leaks
Clogged air bleeds	Remove restriction
EGR valve malfunction	Replace EGR valve
Restricted air cleaner filter	Replace air filter
Cracked or broken vacuum hoses	Replace vacuum hoses
Cracked or broken ignition wires	Replace ignition wires
Vacuum advance malfunction	Check unit and replace as necessary
Defective or fouled spark plugs	Replace spark plugs
Ping or Spark Knock	
Incorrect ignition timing	Reset ignition timing see ENGINE PERFORMANCE
Distributor centrifugal or vacuum advance malfunction	Check operation and replace as necessary
Carburetor setting too lean	Readjust mixture setting, see ENGINE PERFORMANCE
Vacuum leak	Eliminate vacuum leak
EGR valve malfunction	Replace EGR valve
Poor Gasoline Mileage	
Cracked or broken vacuum	Replace vacuum hoses hoses
Vacuum leaks	Repair vacuum leaks
Defective ignition wires	Replace wires
Incorrect choke setting	Readjust setting, see ENGINE PERFORMANCE
Defective vacuum advance	Replace vacuum advance
Defective spark plugs	Replace spark plugs
Binding carburetor power piston	Eliminate binding

Dirt in carburetor jets	Clean and/or replace jets
Incorrect float adjustment	Readjust float setting, see FUEL
Defective power valve	Replace power valve, see ENGINE PERFORMANCE
Incorrect idle speed	Readjust idle speed
Engine Stalls	
Improper float level	Readjust float level
Leaking needle valve and seat	Replace needle valve and seat
Vacuum leaks	Eliminate vacuum leaks

VACUUM PUMP - DIESEL TROUBLE SHOOTING

NOTE: This is GENERAL information. This article is not intended to be specific to any unique situation or individual vehicle configuration. The purpose of this Trouble Shooting information is to provide a list of common causes to problem symptoms. For model-specific Trouble Shooting, refer to SUBJECT, DIAGNOSTIC, or TESTING articles available in the section(s) you are accessing.

NOTE: Diesel engines mechanical diagnosis is the same as gasoline engines for items such as noisy valves, bearings, pistons, etc. The following trouble shooting covers only items pertaining to diesel engines.

VACUUM PUMP (DIESEL) TROUBLE SHOOTING CHART

CONDITION & POSSIBLE CAUSE	CORRECTION
Excessive Noise	
Loose pump-to-drive assembly screws	Tighten screws
Loose tube on pump assembly	Tighten tube
Valves not functioning properly	Replace valves
Oil Leakage	
Loose end plug	Tighten end plug
Bad seal crimp	Remove and re-crimp seal

MANUAL TRANSMISSION

MANUAL TRANSMISSION TROUBLE SHOOTING

NOTE: This is GENERAL information. This article is not intended to be specific to any unique situation or individual vehicle configuration. The purpose of this Trouble Shooting information is to provide a list of common causes to problem symptoms. For model-specific Trouble Shooting, refer to SUBJECT, DIAGNOSTIC, or TESTING articles available in the section(s) you are accessing.

MANUAL TRANSMISSION/TRANSAXLE TROUBLE SHOOTING

Condition	Possible Cause
Noisy In Forward Gears	Low gear oil level, Loose bell housing bolts, Worn bearings or gears
Clunk On Deceleration (FWD Only)	Loose engine mounts, Worn inboard CV joints, Worn differential pinion shaft, Side gear hub counterbore in case worn oversize
Gear Clash When Shifting Forward Gears	Clutch Out Of Adjustment, Shift linkage damaged or out of adjustment, Gears or synchronizers damaged, Low gear oil level
Transmission Noisy When Moving (RWD Only) Quiet In Neutral With Clutch Engaged	Worn rear outputshaft bearing
Gear Rattle	Worn bearings, Wrong gear oil, Low gear oil, Worn gears
Steady Ticking At Idle (Increases With RPM)	Broken tooth on gear
Gear Clash When Shifting Forward Gears	Worn or broken synchronizers
Loud Whine In Reverse	Normal condition (1)
Noise When Stepping On Clutch	Bad release bearing, Worn pilot bearing
Ticking Or Screeching As Clutch Is Engaged	Faulty release bearing, Uneven pressure plate fingers
Click Or Snap When Clutch Is Engaged	Worn clutch fork, Worn or broken front bearing retainer
Transmission Shifts Hard	Clutch not releasing, Shift mechanism binding, Clutch installed backwards
Will Not Shift Into One Gear, Shifts Into All Others	Bent shift fork, Worn detent balls
Locked Into Gear, Cannot Shift	Clutch adjustment, Worn detent balls
Transmission Jumps Out Of Gear	Pilot bearing worn, Bent shift fork, Worn gear teeth or face, Excessive gear train end play, Worn synchronizers, Missing detent ball spring, Shift mechanism worn or out of adjustment, Engine or transmission mount bolts loose or out of adjustment, Transmission not aligned
Shift Lever Rattle	Worn shift lever or detents, Worn shift forks, Worn synchronizers sleeve
Shift Lever Hops Under Acceleration	Worn engine or transmission mounts
(1) Most units use spur cut gears in reverse and are noisy	

POWERTRAIN

CLUTCH TROUBLE SHOOTING

NOTE: This is GENERAL information. This article is not intended to be specific to any unique situation or individual vehicle configuration. The purpose of this Trouble

Shooting information is to provide a list of common causes to problem symptoms. For model-specific Trouble Shooting, refer to SUBJECT, DIAGNOSTIC, or TESTING articles available in the section(s) you are accessing.

BASIC CLUTCH TROUBLE SHOOTING CHART

CONDITION & POSSIBLE CAUSE	CORRECTION
Chattering or Grabbing	
Incorrect clutch adjustment	Adjust clutch
Oil, grease or glaze on facings	Disassemble and clean or replace
Loose "U" joint flange	See DRIVE AXLES article
Worn input shaft spline	Replace input shaft
Binding pressure plate	Replace pressure plate
Binding release lever	See CLUTCH article
Binding clutch disc hub	Replace clutch disc
Unequal pressure plate contact	Replace worn/misaligned components
Loose/bent clutch disc	Replace clutch disc
Incorrect transmission alignment	Realign transmission
Worn pressure plate, disc or flywheel	Replace damaged components
Broken or weak pressure springs	Replace pressure plate
Sticking clutch pedal	Lubricate clutch pedal & linkage
Incorrect clutch disc facing	Replace clutch disc
Engine loose in chassis	Tighten all mounting bolts
Failure to Release	
Oil or grease on clutch facings	Clean or replace clutch clutch disc
Incorrect release lever or pedal adjustment	See CLUTCH article
Worn or broken clutch facings	Replace clutch disc
Bent clutch disc or pressure plate	Replace damaged components
Clutch disc hub binding on input shaft	Clean or replace clutch disc and/or input shaft
Binding pilot bearing	Replace pilot bearing
Sticking release bearing sleeve	Replace release bearing and/or sleeve
Binding clutch cable	See CLUTCH article
Defective clutch master	Replace master cylinder
Defective clutch slave	Replace slave cylinder
Air in hydraulic system	Bleed hydraulic system
Rattling	
Weak or broken release lever spring	Replace spring and check alignment
Damaged pressure plate	Replace pressure plate

Broken clutch return spring	Replace return spring
Worn splines on clutch disc or input shaft	Replace clutch disc and/or input shaft
Worn clutch release bearing	Replace release bearing
Dry or worn pilot bearing	Lubricate or replace pilot bearing
Unequal release lever contact	Align or replace release lever
Incorrect pedal free play	Adjust free play
Warped or damaged clutch disc	Replace damaged components
Slipping	
Pressure springs worn or	Release pressure plate
Oily, greasy or worn facings	Clean or replace clutch disc
Incorrect clutch alignment	Realign clutch assembly
Warped clutch disc or pressure plate	Replace damaged components
Binding release levers or clutch pedal	Lubricate and/or replace release components
Squeaking	
Worn or damaged release	Replace release bearing
Dry or worn pilot or release bearing	Lubricate or replace assembly
Pilot bearing turning in crankshaft	Replace pilot bearing and/or crankshaft
Worn input shaft bearing	Replace bearing and seal
Incorrect transmission alignment	Realign transmission
Dry release fork between pivot	Lubricate release fork and pivot
Heavy and/or Stiff Pedal	
Sticking release bearing sleeve	Replace release bearing and/or sleeve
Dry or binding clutch pedal hub	Lubricate and align components
Floor mat interference with pedal	Lay mat flat in proper area
Dry or binding ball/fork pivots	Lubricate and align components
Faulty clutch cable	Replace clutch cable
Noisy Clutch Pedal	
Faulty interlock switch	Replace interlock switch
Self-adjuster ratchet noise	Lubricate or replace self-adjuster
Speed control interlock switch	Lubricate or replace interlock switch
Clutch Pedal Sticks Down	
Binding clutch cable	See CLUTCH article
Springs weak in pressure plate	Replace pressure plate
Binding in clutch linkage	Lubricate and free linkage
Noisy	
Dry release bearing	Lubricate or replace release bearing

Dry or worn pilot bearing	Lubricate or replace bearing
Worn input shaft bearing	Replace bearing
Transmission Click	
Weak springs in pressure	Replace pressure plate plate
Release fork loose on ball stud	Replace release fork and/or ball stud
Oil on clutch disc damper	Replace clutch disc
Broken spring in slave cylinder	Replace slave cylinder

DRIVE AXLE - NOISE DIAGNOSIS

Unrelated Noises

Some driveline trouble symptoms are also common to the engine, transmission, wheel bearings, tires, and other parts of the vehicle. Ensure cause of trouble actually is in the drive axle before adjusting, repairing, or replacing any of its parts.

Non-Drive Axle Noises

A few conditions can sound just like drive axle noise and have to be considered in pre-diagnosis. The 4 most common noises are exhaust, tires, CV/universal joints and wheel trim rings.

In certain conditions, the pitch of the exhaust gases may e gear whine. At other times, it may be mistaken for a wheel bearing rumble.

Tires, especially radial and snow, can have a high-pitched tread whine or roar, similar to gear noise. Also, some non-standard tires with an unusual tread construction may emit a roar or whine.

Defective CV/universal joints may cause clicking noises or excessive driveline play that can be improperly diagnosed as drive axle problems.

Trim and moldings also can cause a whistling or whining noise. Ensure none of these components are causing the noise before disassembling the drive axle.

Gear Noise

A "howling" or "whining" noise from the ring and pinion gear can be caused by an improper gear pattern, gear damage, or improper bearing preload. It can occur at various speeds and driving conditions, or it can be continuous.

Before disassembling axle to diagnose and correct gear ke sure that tires, exhaust, and vehicle trim have been checked as possible causes.

Chuckle

This is a particular rattling noise that sounds like a stick against the spokes of a spinning bicycle wheel. It occurs while decelerating from 40 MPH and usually can be heard until vehicle comes to a complete stop. The frequency varies with the speed of the vehicle.

A chuckle that occurs on the driving phase is usually caused ive clearance due to differential gear wear, or by a damaged tooth on the coast side of the pinion or ring gear. Even a very small tooth nick or a ridge on the edge of a gear tooth is enough the cause the noise.

This condition can be corrected simply by cleaning the gear tooth nick or ridge with a small grinding wheel. If either gear is damaged or scored badly, the gear set must be replaced. If metal has broken loose, the carrier and housing must be cleaned to remove particles that could cause damage.

Knock

This is very similar to a chuckle, though it may be louder, and occur on acceleration or deceleration. Knock can be caused by a gear tooth that is damaged on the drive side of the ring and pinion gears. Ring gear bolts that are hitting the carrier casting can cause knock. Knock can also be due to excessive end play in the axle shafts.

Clunk

Clunk is a metallic noise heard when an automatic transmission is engaged in Reverse or Drive, or when throttle is applied or released. It is caused by backlash somewhere in the driveline, but not necessarily in the axle. To determine whether driveline clunk is caused by the axle, check the total axle backlash as follows:

1. Raise vehicle on a frame or twinpost hoist so that drive wheels are free. Clamp a bar between axle companion flange and a part of the frame or body so that flange cannot move.
2. On conventional drive axles, lock the left wheel to keep it from turning. On all models, turn the right wheel slowly until it is felt to be in Drive condition. Hold a chalk marker on side of tire about 12" from center of wheel. Turn wheel in the opposite direction until it is again felt to be in Drive condition.
3. Measure the length of the chalk mark, which is the total axle backlash. If backlash is one inch or less, drive axle is not the source of clunk noise.

Bearing Whine

Bearing whine is a high-pitched sound similar to a whistle. It is usually caused by malfunctioning pinion bearings. Pinion bearings operate at drive shaft speed. Roller wheel bearings may whine in a similar manner if they run completely dry of lubricant. Bearing noise will occur at all driving speeds. This distinguishes it from gear whine, which usually comes and goes as speed changes.

Bearing Rumble

Bearing rumble sounds like marbles being tumbled. It is usually caused by a malfunctioning wheel bearing. The lower pitch is because the wheel bearing turns at only about 1/3 of drive shaft speed.

Chatter On Turns

This is a condition where the entire front or rear of vehicle vibrates when vehicle is moving. The vibration is plainly felt as well as heard. Extra differential thrust washers installed during axle repair can cause a condition of partial lock-up that creates this chatter.

Axle Shaft Noise

Axle shaft noise is similar to gear noise and pinion bearing whine. Axle shaft bearing noise will normally distinguish itself from gear noise by occurring in all driving modes (Drive, cruise, coast and float), and will persist with transmission in Neutral while vehicle is moving at problem speed.

If vehicle displays this noise condition, remove suspect parts, replace wheel seals and install a new set of bearings. Re-evaluate vehicle for noise before removing any internal components.

Vibration

Vibration is a high-frequency trembling, shaking or grinding condition (felt or heard) that may be constant or variable in level and can occur during the total operating speed range of the vehicle.

The types of vibrations that can be felt in the vehicle can d into 3 main groups:

- Vibrations of various unbalanced rotating parts of the vehicle.
- Resonance vibrations of the body and frame structures caused by rotating of unbalanced parts.
- Tip-in moans of resonance vibrations from stressed engine or exhaust system mounts or driveline flexing modes.

DRIVE AXLE - RWD TROUBLE SHOOTING

NOTE: **This is GENERAL information. This article is not intended to be specific to any unique situation or individual vehicle configuration. The purpose of this Trouble Shooting information is to provide a list of common causes to problem symptoms. For model-specific Trouble Shooting, refer to SUBJECT, DIAGNOSTIC, or TESTING articles available in the section(s) you are accessing. For definitions of listed noises or sounds, see DRIVE AXLE - NOISE DIAGNOSIS under POWERTRAIN.**

DRIVE AXLE (RWD) TROUBLE SHOOTING

CONDITION & POSSIBLE CAUSE	CORRECTION
Knocking or Clunking	
Differential Side Gear Clearance	Check Clearance
Worn Pinion Shaft	Replace Pinion Shaft
Axle Shaft End Play	Check End Play
Missing Gear Teeth	Check Differential/Replace Gear
Wrong Axle Backlash	Check Backlash
Misaligned Driveline	Realign Driveline
Clinking During Engagement	
Side Gear Clearance	Check Clearance
Ring and Pinion Backlash	Check Backlash
Worn/Loose Pinion Shaft	Replace Shaft/Bearing

Bad "U" Joint	Replace "U" Joint
Sticking Slip Yoke	Lube Slip Yoke
Broken Rear Axle Mount	Replace Mount
Loose Drive Shaft Flange	Check Flange
Click/Chatter On Turns	
Differential Side Gear Clearance	Check Clearance
Wrong Turn On Plates (1)	Replace Clutch Plates
Wrong Differential Lubricant (1)	Change Lubricant
Knock Or Click	
Flat Spot on Rear Wheel Bearing	Replace Wheel Bearing
Low Vibration At All Speeds	
Faulty Wheel Bearing	Replace Wheel Bearing
Faulty "U" Joint	Replace "U" Joint
Faulty Drive Shaft	Balance Drive Shaft
Faulty Companion Flange	Replace Flange
Faulty Slip Yoke Flange	Replace Flange
(1) Limited slip differential only.	

FWD AXLE SHAFTS & CV JOINTS TROUBLE SHOOTING

NOTE: **This is GENERAL information. This article is not intended to be specific to any unique situation or individual vehicle configuration. The purpose of this Trouble Shooting information is to provide a list of common causes to problem symptoms. For model-specific Trouble Shooting, refer to SUBJECT, DIAGNOSTIC, or TESTING articles available in the section(s) you are accessing.**

BASIC FWD AXLE SHAFTS & CV JOINTS TROUBLE SHOOTING CHART

CONDITION	POSSIBLE CAUSE
Grease Leaks	CV boot torn or cracked
Clicking Noise on Cornering	Damaged outer CV
Clunk Noise on Acceleration	Damaged inner CV
Vibration or Shudder on Acceleration	Sticking, damaged or worn CV Misalignment or spring height

STEERING & SUSPENSION

MANUAL STEERING GEAR TROUBLE SHOOTING

NOTE: **This is GENERAL information. This article is not intended to be specific to any unique situation or individual vehicle configuration. The purpose of this Trouble Shooting information is to provide a list of common causes to problem symptoms. For model-specific Trouble Shooting, refer to SUBJECT,**

DIAGNOSTIC, or TESTING articles available in the section(s) you are accessing.

BASIC MANUAL STEERING GEAR TROUBLE SHOOTING CHART

CONDITION & POSSIBLE CAUSE	CORRECTION
Rattle or Chucking Noise in Rack and Pinion	
Rack and pinion mounting bracket loose	Tighten all mounting bolts
Lack of/or incorrect lubricant	Correct as necessary
Steering gear mounting bolts loose	Tighten all mounting bolts
Excessive Play	
Front wheel bearing improperly adjusted	See FRONT SUSPENSION article
Loose or worn steering linkage	See STEERING LINKAGE article
Loose or worn steering gear shift	See MANUAL STEERING GEAR article
Steering arm loose on gear shaft	See MANUAL STEERING GEAR article
Steering gear housing bolts loose	Tighten all mounting bolts
Steering gear adjustment too loose	See MANUAL STEERING GEAR article
Steering arms loose on knuckles	Tighten and check steering linkage
Rack and pinion mounting loose	Tighten all mounting bolts
Rack and pinion out of adjustment	See adjustment in STEERING article
Tie rod end loose	Tighten and check steering linkage
Excessive Pitman shaft-to-ball nut lash	Repair as necessary
Poor Returnability	
Lack of lubricant in ball joint or linkage	Lubricate and service systems
Binding in linkage or ball joints	See STEERING LINKAGE and SUSPENSION article
Improper front end alignment	See WHEEL ALIGNMENT article
Improper tire pressure	Inflate to proper pressure
Tie rod binding	Inflate to proper pressure
Shaft seal rubbing shaft	See STEERING COLUMN article
Excessive Vertical Motion	
Improper tire pressure	Inflate to proper pressure
Tires, wheels or rotors out of balance	Balance tires then check wheels and rotors
Worn or faulty shock absorbers	Check and replace if necessary

Loose tie rod ends or steering	Tighten or replace if necessary
Loose or worn wheel bearings	See SUSPENSION article
Steering Pulls to One Side	
Improper tire pressure	Inflate to proper pressure
Front tires are different sizes	Rotate or replace if necessary
Wheel bearings not adjusted properly	See FRONT SUSPENSION article
Bent or broken suspension components	See FRONT SUSPENSION article
Improper wheel alignment	See WHEEL ALIGNMENT article
Brakes dragging	See BRAKES article
Instability	
Low or uneven tire pressure	Inflate to proper pressure
Loose or worn wheel bearings	See FRONT SUSPENSION article
Loose or worn idler arm bushing	See FRONT SUSPENSION article
Loose or worn strut bushings	See FRONT SUSPENSION article
Incorrect front wheel alignment	See WHEEL ALIGNMENT article
Steering gear not centered	See MANUAL STEERING GEARS article
Springs or shock	Check and replace if necessary
Improper cross shaft	See MANUAL STEERING GEARS article

POWER STEERING TROUBLE SHOOTING

NOTE: This is GENERAL information. This article is not intended to be specific to any unique situation or individual vehicle configuration. The purpose of this Trouble Shooting information is to provide a list of common causes to problem symptoms. For model-specific Trouble Shooting, refer to SUBJECT, DIAGNOSTIC, or TESTING articles available in the section(s) you are accessing.

BASIC POWER STEERING TROUBLE SHOOTING CHART

CONDITION & POSSIBLE CAUSE	CORRECTION
Rattle or Chucking Noise	
Pressure hoses touching engine parts	Adjust to proper clearance
Loose Pitman shaft	Adjust or replace if necessary
Tie rods ends or Pitman arm loose	Tighten and check system
Rack and pinion mounts loose	Tighten all mounting bolts

Free play in worm gear	See POWER STEERING GEAR article
Loose sector shaft or thrust bearing adjustment	See POWER STEERING GEAR
Free play in pot coupling	See STEERING COLUMN article
Worn shaft serrations	See STEERING COLUMN article
Growl in Steering Pump	
Excessive pressure in hoses	Restricted hoses, see POWER STEERING GEAR article
Scored pressure plates	See POWER STEERING GEAR article
Scored thrust plates or rotor	See POWER STEERING GEAR article
Extreme wear of cam ring	See POWER STEERING GEAR article
Rattle in Steering Pump	
Vanes not installed	See POWER STEERING PUMP article
Vanes sticking in rotor	See POWER STEERING PUMP article
Swish noise in Pump	
Defective flow control valve	See POWER STEERING PUMP article
Groan in Steering Pump	
Air in fluid	See POWER STEERING PUMP article
Poor pressure hose connection	Tighten and check, replace if necessary
Squawk When Turning	
Damper "O" ring on valve spool cut	See POWER STEERING PUMP article
Moan or Whine in Pump	
Pump shaft bearing scored	Replace bearing and fluid
Air in fluid or fluid level low	See POWER STEERING PUMP article
Hose or column grounded	Check and replace if necessary
Cover "O" ring missing or damaged	See POWER STEERING PUMP article
Valve cover baffle missing or damaged	See POWER STEERING PUMP article
Interference of components in pump	See POWER STEERING

	PUMP article
Loose or poor bracket alignment	Correct or replace if necessary
Hissing When Parking	
Internal leakage in steering gear	Check valved assembly first
Chirp in Steering Pump	
Loose or worn power steering belt	Adjust or replace if necessary
Buzzing When Not Steering	
Noisy pump	See POWER STEERING PUMP article
Free play in steering shaft bearing	See STEERING COLUMN article
Bearing loose on shaft serrations	See STEERING COLUMN article
Clicking Noise in Pump	
Pump slippers too long	See POWER STEERING PUMP article
Broken slipper springs	See POWER STEERING PUMP article
Excessive wear or nicked rotors	See POWER STEERING PUMP article
Damaged cam contour	See POWER STEERING PUMP article
Poor Return of Wheel	
Wheel rubbing against turn signal	See STEERING COLUMN SWITCHES article
Flange rubbing steering gear adjuster	See STEERING COLUMN article
Tight or frozen steering shaft bearing	See STEERING COLUMN article
Steering gear out of adjustment	See POWER STEERING GEAR article
Sticking or plugged spool valve	See POWER STEERING PUMP article
Improper front end alignment	See WHEEL ALIGNMENT article
Wheel bearings worn or loose	See FRONT SUSPENSION article
Ties rods or ball joints binding	Check and replace if necessary
Intermediate shaft joints binding	See STEERING COLUMN article
Kinked pressure hoses	Correct or replace if necessary
Loose housing head spanner nut	See POWER STEERING GEAR article

Damaged valve lever	See POWER STEERING GEAR article
Sector shaft adjusted too tight	See ADJUSTMENTS in POWER STEERING GEAR article
Worm thrust bearing adjusted too tight	See ADJUSTMENTS in POWER STEERING GEAR article
Reaction ring sticking in cylinder	See POWER STEERING GEAR article
Reaction ring sticking in housing head	See POWER STEERING GEAR article
Steering pump internal leakage	See POWER STEERING PUMP article
Steering gear-to-column misalignment	See STEERING COLUMN article
Lack of lubrication in linkage	Service front suspension
Lack of lubrication in ball joints	Service front suspension
Increased Effort When Turning Wheel Fast Foaming, Milky Power Steering Fluid, Low Fluid Level or Low Pressure	
High internal pump leakage	See POWER STEERING PUMP article
Power steering pump belt slipping	Adjust or replace if necessary
Low fluid level	Check and fill to proper level
Engine idle speed to low	Adjust to correct setting
Air in pump fluid system	See POWER STEERING PUMP article
Pump output low	See POWER STEERING PUMP article
Steering gear malfunctioning	See POWER STEERING GEAR article
Wheel Surges or Jerks	
Low fluid level	Check and fill to proper level
Loose fan belt	Adjust or replace if necessary
Insufficient pump pressure	See POWER STEERING PUMP article
Sticky flow control valve	See POWER STEERING PUMP article
Linkage hitting oil pan at full turn	Replace bent components
Kick Back or Free Play	
Air in pump fluid system	See POWER STEERING PUMP article
Worn poppet valve in steering gear	See POWER STEERING PUMP article

Excessive over center lash	See POWER STEERING GEAR article
Thrust bearing out of adjustment	See POWER STEERING GEAR article
Free play in pot coupling	See POWER STEERING PUMP article
Steering gear coupling loose on shaft	See POWER STEERING PUMP article
Steering disc mounting bolts loose	Tighten or replace if necessary
Coupling loose on worm shaft	Tighten or replace if necessary
Improper sector shaft adjustment	See POWER STEERING GEAR article
Excessive worm piston side play	See POWER STEERING GEAR article
Damaged valve lever	See POWER STEERING GEAR article
Universal joint loose	Tighten or replace if necessary
Defective rotary valve	See POWER STEERING GEAR article
No Power When Parking	
Sticking flow control valve	See POWER STEERING PUMP article
Insufficient pump pressure output	See POWER STEERING PUMP article
Excessive internal pump leakage	See POWER STEERING PUMP article
Excessive internal gear leakage	See POWER STEERING PUMP article
Flange rubs against gear adjust plug	See STEERING COLUMN article
Loose pump belt	Adjust or replace if necessary
Low fluid level	Check and add proper amount of fluid
Engine idle too low	Adjust to correct setting
Steering gear-to-column misaligned	See STEERING COLUMN article
No Power, Left Turn	
Left turn reaction seal "O" ring worn	See POWER STEERING GEAR article
Left turn reaction seal damaged/missing	See POWER STEERING GEAR article

Cylinder head "O" ring damaged	See POWER STEERING PUMP article
No Power, Right Turns	
Column pot coupling bottomed	See STEERING COLUMN article
Right turn reaction seal "O" ring worn	See POWER STEERING GEAR article
Right turn reaction seal damaged	See POWER STEERING GEAR article
Internal leakage through piston end plug	See POWER STEERING GEAR article
Internal leakage through side plugs	See POWER STEERING GEAR article
Lack of Effort in Turning	
Left and/or right reaction seal sticking in cylinder head	Replace, see POWER STEERING GEAR article
Wanders to One Side	
Front end alignment incorrect	See WHEEL ALIGNMENT article
Unbalanced steering gear valve	See POWER STEERING GEAR article
Low Pressure Due to Steering Pump	
Flow control valve stuck or inoperative	See POWER STEERING PUMP article
Pressure plate not flat against cam ring	See POWER STEERING PUMP article
Extreme wear of cam ring	Replace and check adjustments
Scored plate, thrust plate or rotor	See POWER STEERING PUMP article
Vanes not installed properly	See POWER STEERING PUMP article
Vanes sticking in rotor slots	See POWER STEERING PUMP article
Cracked/broken thrust or pressure plate	See POWER STEERING PUMP article

STEERING COLUMN TROUBLE SHOOTING

NOTE: **This is GENERAL information. This article is not intended to be specific to any unique situation or individual vehicle configuration. The purpose of this Trouble Shooting information is to provide a list of common causes to problem symptoms. For model-specific Trouble Shooting, refer to SUBJECT, DIAGNOSTIC, or TESTING articles available in the section(s) you are accessing.**

BASIC STEERING COLUMN TROUBLE SHOOTING CHART

CONDITION & POSSIBLE CAUSE	**CORRECTION**
Noise in Steering	
Coupling pulled apart	See STEERING COLUMNS article
Column not correctly aligned	See STEERING COLUMNS article
Broken lower joint	Replace joint
Horn contact ring not	See STEERING COLUMN article
Bearing not lubricated	See STEERING COLUMN article
Shaft snap ring not properly seated	Reseat or replace snap ring
Plastic spherical joint not lubricated	See STEERING COLUMN article
Shroud or housing loose	Tighten holding screws
Lock plate retaining ring not seated	See STEERING COLUMN article
Loose sight shield	Tighten holding screws
High Steering Shaft Effort	
Column assembly misaligned	See STEERING COLUMN article
Improperly installed dust shield	Adjust or replace
Tight steering universal joint	See STEERING COLUMN article
High Shift Effort	
Column is out of alignment	See STEERING COLUMN article
Improperly installed dust shield	Adjust or replace
Seals or bearings not lubricated	See STEERING COLUMNS article
Mounting bracket screws too long	Replace with new shorter screws
Burrs on shift tube	Remove burrs or replace tube
Lower bowl bearing assembled wrong	See STEERING COLUMN article
Shift tube bent or broken	Replace as necessary
Improper adjustment of shift levers	See STEERING COLUMN article
Improper Trans. Shifting	
Sheared shift tube joint	Replace as necessary
Sheared lower shaft lever	Replace as necessary
Improper shift lever adjustment	See STEERING COLUMN

	article
Improper gate plate adjustment	See STEERING COLUMN article
Excess Play in Column	
Instrument panel bracket bolts loose	Tighten bolts and check bracket
Broken weld nut on jacket	See STEERING COLUMN article
Instrument bracket capsule sheared	See STEERING COLUMN article
Column bracket/jacket bolts loose	Tighten bolts and check bracket
Steering Locks in Gear	
Release lever mechanism	See STEERING COLUMN article

SUSPENSION TROUBLE SHOOTING

NOTE: This is GENERAL information. This article is not intended to be specific to any unique situation or individual vehicle configuration. The purpose of this Trouble Shooting information is to provide a list of common causes to problem symptoms. For model-specific Trouble Shooting, refer to SUBJECT, DIAGNOSTIC, or TESTING articles available in the section(s) you are accessing.

BASIC SUSPENSION TROUBLE SHOOTING CHART

CONDITION & POSSIBLE CAUSE	CORRECTION
Front End Noise	
Loose or worn wheel	See Wheel Bearing Adjustment in SUSPENSION
Worn shocks or shock mountings	Replace struts or strut mountings
Worn struts or strut mountings	Replace struts or strut mountings
Loose or worn lower control arm	See SUSPENSION
Loose steering gear-to-frame bolts	See STEERING
Worn control arm bushings	See SUSPENSION
Ball joints not lubricated	Lubricate ball joints & see Ball Joint Checking in SUSPENSION
Front Wheel Shake, Shimmy, or Vibration	
Tires or wheels out of balance	Check tire balance
Incorrect wheel alignment	See WHEEL ALIGNMENT
Drive shaft unbalanced	Check drive shaft balance
Loose or worn wheel bearings	See WHEEL ALIGNMENT

Loose or worn tie rod ends	See SUSPENSION
Worn upper ball joints	See Ball Joint Checking in SUSPENSION
Worn shock absorbers	Replace shock absorbers
Worn strut bushings	Replace strut bushings
Car Pulls to One Side	
Mismatched or uneven tires	Check tire condition
Broken or sagging springs	See SUSPENSION
Loose or worn strut bushings	See SUSPENSION
Improper wheel alignment	See WHEEL ALIGNMENT
Improper rear axle alignment	Check rear axle alignment
Power steering gear unbalanced	See STEERING
Front brakes dragging	See BRAKES
Abnormal Tire Wear	
Unbalanced tires	Check tire balance & rotation
Sagging or broken springs	See SUSPENSION
Incorrect front end alignment	See WHEEL ALIGNMENT
Faulty shock absorbers	Replace chock absorbers
Scuffed Tires	
Toe-In incorrect	See WHEEL ALIGNMENT
Suspension arm bent or twisted	See appropriate SUSPENSION article
Springs Bottom or Sag	
Bent or broken springs	See SUSPENSION
Leaking or worn shock absorbers	Replace shock absorbers
Frame misalignment	Check frame for damage
Spring Noises	
Loose "U" Bolts	See SUSPENSION
Loose or worn bushings	See SUSPENSION
Worn or missing interliners	See SUSPENSION
Shock Absorber Noise	
Loose shock mountings	Check & tighten mountings
Worn bushings	Replace bushings
Air in system	Bleed air from system
Undercoating on shocks	Remove undercoating
Car Leans or Sways on Corners	
Loose stabilizer bar	See SUSPENSION
Faulty shocks or mountings	Replace shocks or mountings
Broken or sagging springs	See SUSPENSION
Shock Absorbers Leaking	
Worn seals or reservoir tube crimped	See SUSPENSION

Broken Springs	
Loose "U" bolts	See SUSPENSION
Inoperative shock absorbers	Replace shock absorbers

WHEEL ALIGNMENT TROUBLE SHOOTING

NOTE: **This is GENERAL information. This article is not intended to be specific to any unique situation or individual vehicle configuration. The purpose of this Trouble Shooting information is to provide a list of common causes to problem symptoms. For model-specific Trouble Shooting, refer to SUBJECT, DIAGNOSTIC, or TESTING articles available in the section(s) you are accessing.**

BASIC WHEEL ALIGNMENT TROUBLE SHOOTING CHART

CONDITION & POSSIBLE CAUSE	**CORRECTION**
Premature Tire Wear	
Improper tire inflation	Check tire pressure
Front alignment out of tolerance	See ALIGNMENT SPECS in WHEEL ALIGNMENT section
Suspension components worn	See SUSPENSION section
Steering system components worn	See STEERING section
Improper standing height	See WHEEL ALIGNMENT
Uneven or sagging springs	See SUSPENSION section
Bent wheel	See WHEEL ALIGNMENT
Improper torsion bar adjustment	See SUSPENSION section
Loose or worn wheel bearings	See WHEEL BEARING ADJ. in SUSPENSION section
Worn or defective shock	Replace shock absorbers
Tires out of balance	Check tire balance
Pulls to One Side	
Improper tire inflation	Check tire pressure
Brake dragging	See BRAKE section
Mismatched tires	See WHEEL ALIGNMENT
Broken or sagging spring	See SUSPENSION section
Broken torsion bar	See SUSPENSION section
Power steering valve not centered	See STEERING section
Front alignment out of tolerance	See WHEEL ALIGNMENT section
Defective wheel bearing	See WHEEL BEARINGS in SUSPENSION section
Uneven sway bar links	See SUSPENSION section
Frame bent	Check for frame damage
Steering system bushing worn	See STEERING section

Hard Steering	
Idler arm bushing too tight	See STEERING LINKAGE in STEERING section
Ball joint tight or seized	See SUSPENSION section
Steering linkage too tight	See STEERING LINKAGE in STEERING section
Power steering fluid low	Add proper amount of fluid
Power steering drive belt loose	See STEERING section
Power steering pump defective	See STEERING section
Steering gear out of adjustment	See STEERING section
Incorrect wheel alignment	See WHEEL ALIGNMENT
Damaged steering gear	See STEERING section
Damaged suspension	See SUSPENSION section
Bent steering knuckle or supports	See SUSPENSION section
Vehicle "Wanders"	
Strut rod or control arm bushing worn	See SUSPENSION section
Loose or worn wheel bearings	See WHEEL BEARINGS in SUSPENSION section
Improper tire inflation	Check tire pressure
Stabilizer bar missing or defective	See SUSPENSION section
Wheel alignment out of tolerance	See Adjustment in WHEEL ALIGNMENT section
Broken spring	See SUSPENSION section
Defective shock absorber	Replace shock absorbers
Worn steering & suspension components	See SUSPENSION section
Front End Shimmy	
Tire out of balance/round	Check tire balance
Excessive wheel runout	See WHEEL ALIGNMENT
Insufficient or improper caster	See WHEEL ALIGNMENT section
Worn suspension or steering components	See SUSPENSION section
Defective shock absorbers	Replace shock absorber
Wheel bearings worn or loose	See WHEEL BEARING ADJ. in SUSPENSION section
Power steering reaction Bracket loose	See STEERING section
Steering gear box (rack) mounting loose	See STEERING section
Steering gear adjustment loose	See STEERING section
Worn spherical joints	See SUSPENSION section
Toe-In Not Adjustable	
Lower control arm bent	See SUSPENSION section
Frame bent	Check frame for damage
Camber Not Adjustable	

Control arm bent	See SUSPENSION section
Frame bent	Check frame for damage
Hub & bearing not seated properly	See SUSPENSION section

AUXILIARY BATTERY

COMPONENTS

ILLUSTRATION

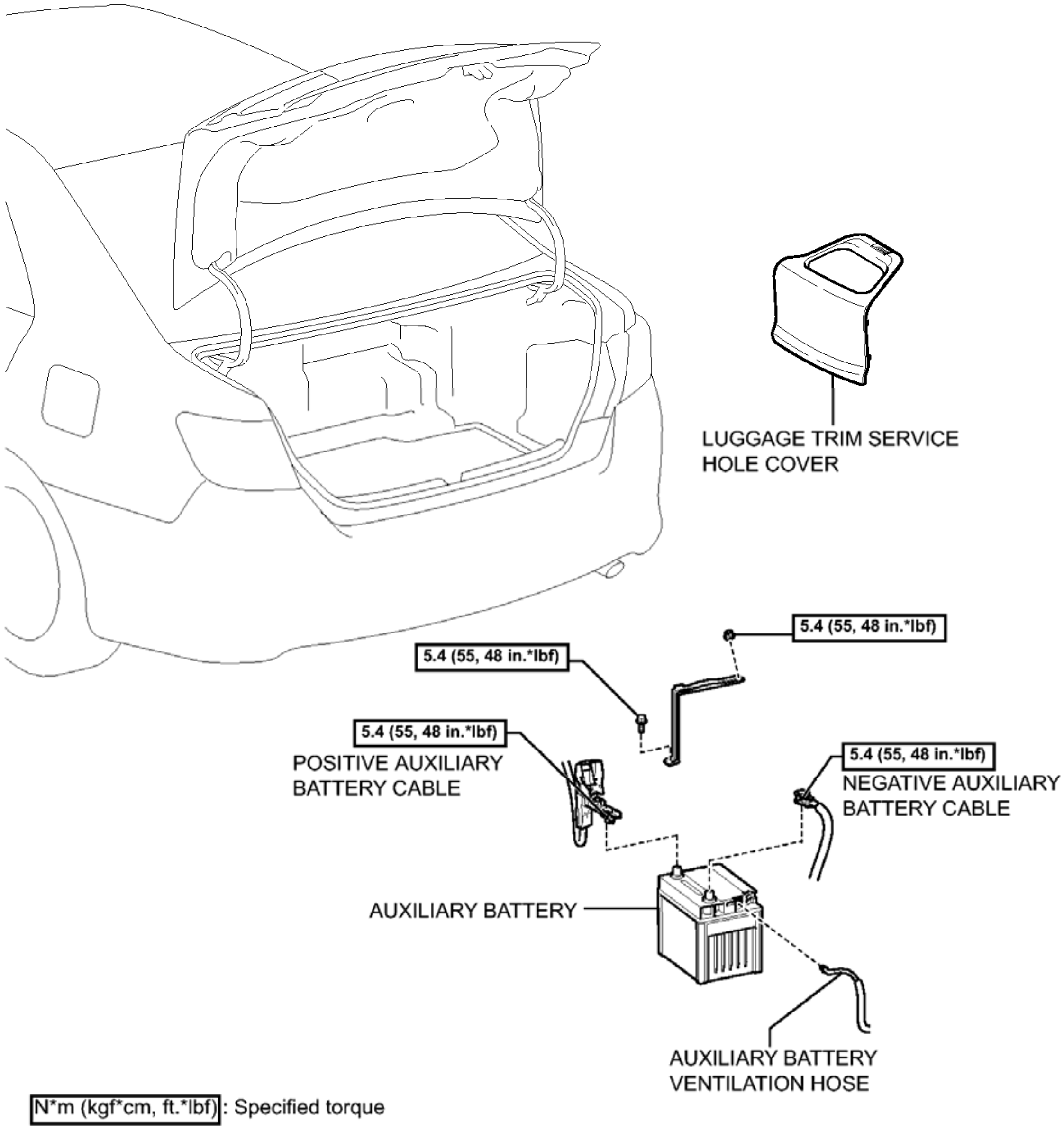
LUGGAGE TRIM SERVICE HOLE COVER
5.4 (55, 48 in.*lbf)
5.4 (55, 48 in.*lbf)
5.4 (55, 48 in.*lbf)
POSITIVE AUXILIARY BATTERY CABLE
5.4 (55, 48 in.*lbf)
NEGATIVE AUXILIARY BATTERY CABLE
AUXILIARY BATTERY
AUXILIARY BATTERY VENTILATION HOSE
N*m (kgf*cm, ft.*lbf): Specified torque

Fig. 1: Identifying Auxiliary Battery Replacement Components With Torque Specifications
Courtesy of TOYOTA MOTOR SALES, U.S.A., INC.

REMOVAL

REMOVAL

1. **PRECAUTION**

NOTE: **After turning the power switch off, waiting time may be required before disconnecting the cable from the negative (-) auxiliary battery terminal. Therefore, make sure to read the disconnecting the cable from the negative (-) auxiliary battery terminal notice before proceeding with work. Refer to PRECAUTION .**

2. **REMOVE LUGGAGE TRIM SERVICE HOLE COVER**
   a. Disengage the claw to remove the luggage trim service hole cover.

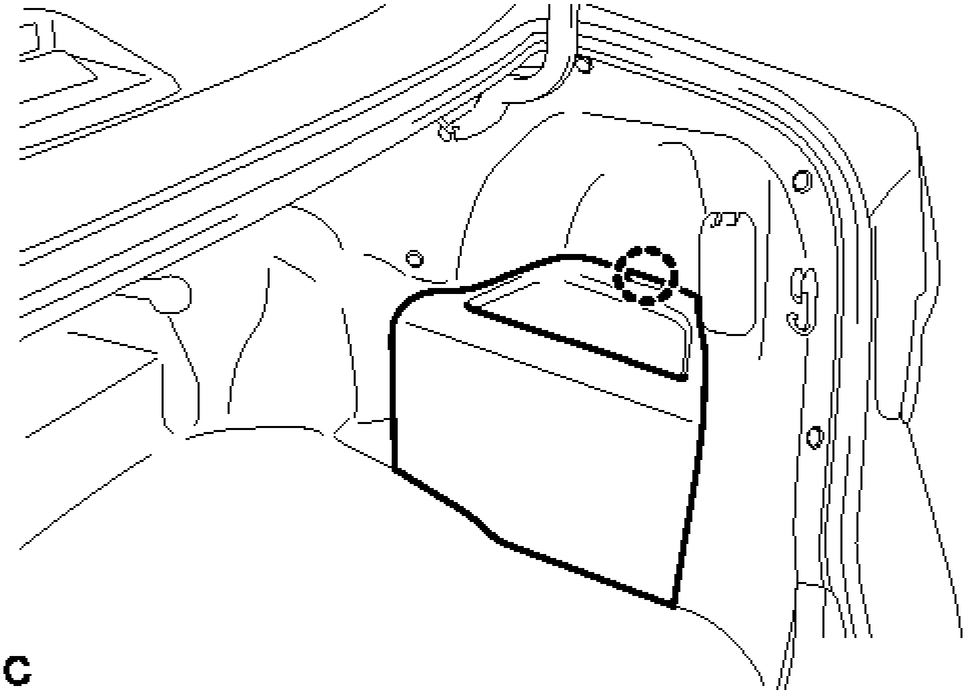

Fig. 2: Identifying Luggage Trim Service Hall Cover
Courtesy of TOYOTA MOTOR SALES, U.S.A., INC.

3. **DISCONNECT CABLE FROM AUXILIARY BATTERY NEGATIVE TERMINAL**

NOTE: **When disconnecting the cable, some systems need to be initialized after the cable is reconnected. Refer to INITIALIZATION .**

4. **REMOVE AUXILIARY BATTERY**
   a. Open the auxiliary battery terminal cap.

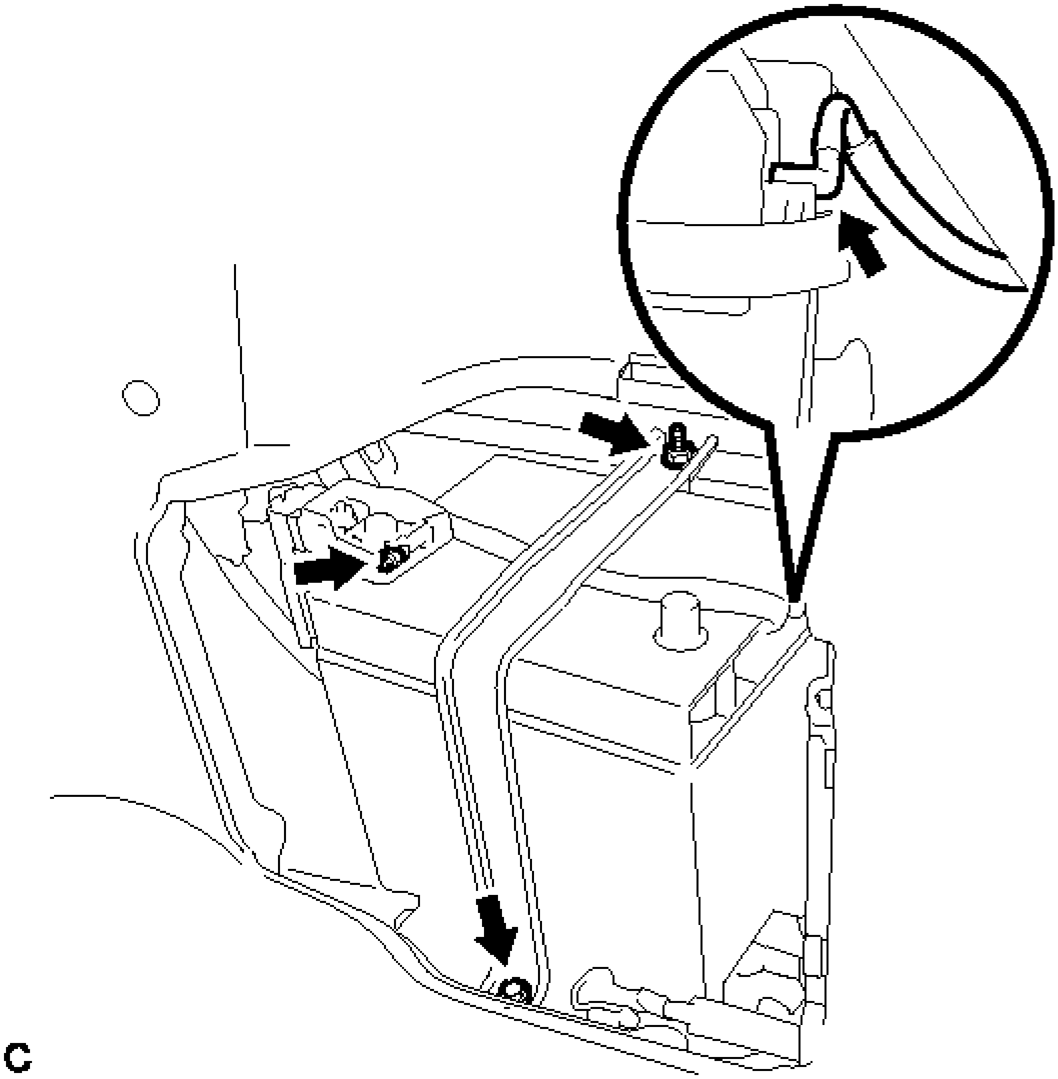

Fig. 3: Identifying Auxiliary Battery Cable And Bolts
Courtesy of TOYOTA MOTOR SALES, U.S.A., INC.

b. Loosen the nut, and disconnect the positive (+) auxiliary battery cable.
c. Disconnect the auxiliary battery hose.
d. Loosen the nut, and remove the bolt.
e. Remove the auxiliary battery clamp.
f. Remove the auxiliary battery.

INSTALLATION

INSTALLATION

1. **INSTALL AUXILIARY BATTERY**
    a. Install the auxiliary battery.

b. Install the auxiliary battery clamp with the bolt and nut.

Nut

Torque: 5.4 N*m (55 kgf*cm, 48 in.*lbf)

Bolt

Torque: 5.4 N*m (55 kgf*cm, 48 in.*lbf)

c. Connect the auxiliary battery hose.

HINT:

Push in the auxiliary battery hose to the auxiliary battery until a click sound is heard.

d. Connect the positive (+) auxiliary battery cable with the nut.

Torque: 5.4 N*m (55 kgf*cm, 48 in.*lbf)

e. Install the auxiliary battery terminal cover.

2. **CONNECT CABLE TO AUXILIARY BATTERY NEGATIVE TERMINAL**

NOTE: **When disconnecting the cable, some systems need to be initialized after the cable is reconnected. Refer to INITIALIZATION .**

3. **INSTALL LUGGAGE TRIM SERVICE HOLE COVER**
   a. Engage the claw to connect the luggage trim service hole cover.

BATTERY THERMOMETER SENSOR

ON-VEHICLE INSPECTION

ON-VEHICLE INSPECTION

1. **INSPECT AUXILIARY BATTERY THERMOMETER SENSOR**
   a. Disconnect the connector from the auxiliary battery thermometer sensor.

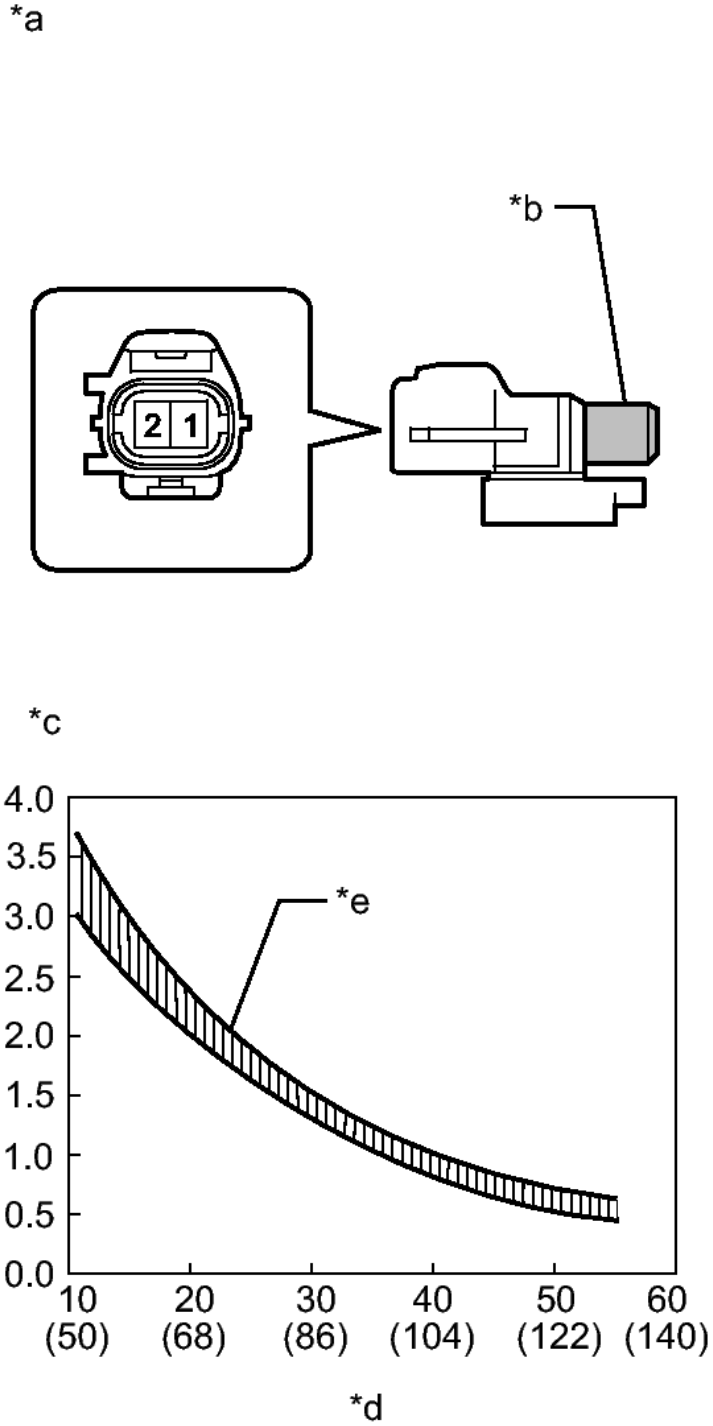
*a
*b
2
1
*c
4.0
3.5
3.0
2.5
2.0
1.5
1.0
0.5
0.0
*e
10 (50)
20 (68)
30 (86)
40 (104)
50 (122)
60 (140)
*d

Fig. 4: Inspecting Auxiliary Battery Thermometer Sensor
Courtesy of TOYOTA MOTOR SALES, U.S.A., INC.

b. Measure the resistance according to the value(s) in the table below.

Standard Resistance

Tester Connection	Condition	Specified Condition
1 - 2	10°C (50°F)	3.00 to 3.73 kohms
1 - 2	15°C (59°F)	2.45 to 2.88 kohms
1 - 2	20°C (68°F)	1.95 to 2.30 kohms
1 - 2	25°C (77°F)	1.60 to 1.80 kohms
1 - 2	30°C (86°F)	1.28 to 1.47 kohms
1 - 2	35°C (95°F)	1.00 to 1.22 kohms
1 - 2	40°C (104°F)	0.80 to 1.00 kohms
1 - 2	45°C (113°F)	0.65 to 0.85 kohms
1 - 2	50°C (122°F)	0.50 to 0.70 kohms
1 - 2	55°C (131°F)	0.44 to 0.60 kohms
1 - 2	60°C (140°F)	0.36 to 0.50 kohms

TEXT IN ILLUSTRATION

*a	Component without harness connected (Auxiliary Battery Thermometer

	Sensor)
*b	Sensing Portion
*c	Resistance (kohms)
*d	Temperature °C (°F)
*e	Allowable Range

NOTE:

- **Hold the sensor only by its connector. Touching the sensor may change the resistance value.**
- **When measuring, the sensor temperature must be the same as the ambient temperature.**

HINT:

As the temperature increases, the resistance decreases (see the graph).

If the resistance is not as specified, replace the auxiliary battery thermometer sensor.

2012-2017 BRAKES

Brake Control System (Service Information) (Hybrid) - Camry

FRONT SPEED SENSOR

COMPONENTS

ILLUSTRATION

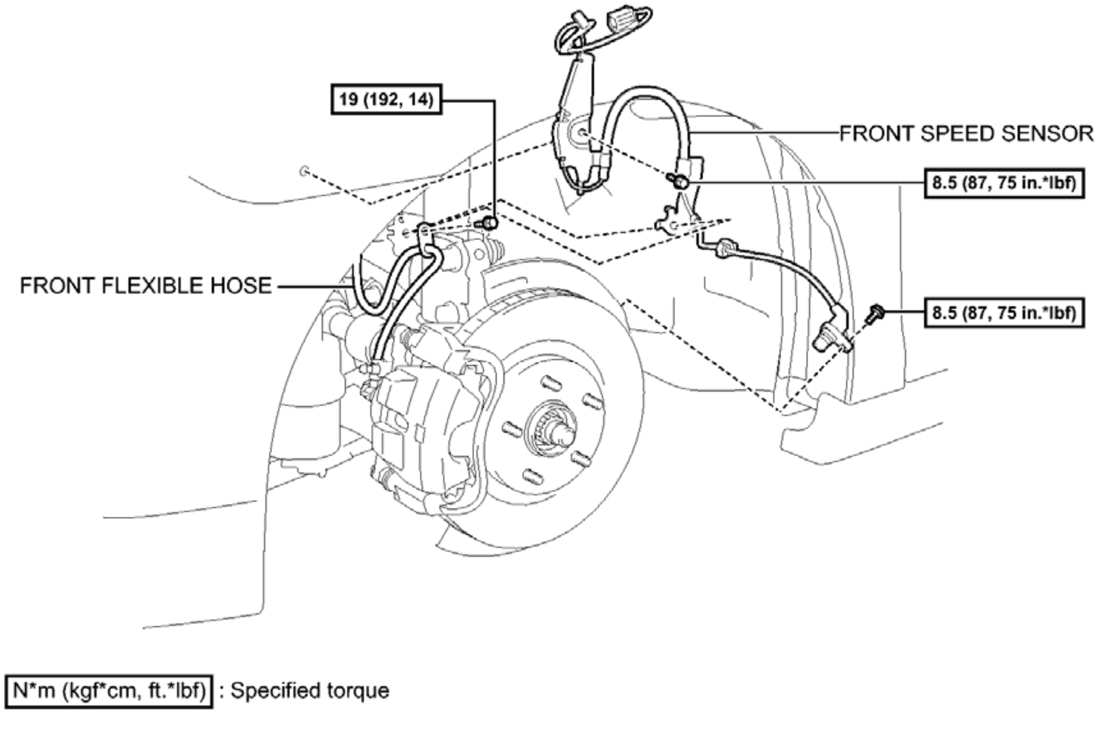
19 (192, 14)
FRONT SPEED SENSOR
8.5 (87, 75 in.*lbf)
FRONT FLEXIBLE HOSE
8.5 (87, 75 in.*lbf)
N*m (kgf*cm, ft.*lbf) : Specified torque
c

Fig. 1: Identifying Front Speed Sensor Replacement Components With Torque Specifications
Courtesy of TOYOTA MOTOR SALES, U.S.A., INC.

REMOVAL

REMOVAL

HINT:

- Use the same procedure for the LH side and RH side.
- The following procedure is for the LH side.
- If the sensor rotor needs to be replaced, replace the front drive outboard joint shaft assembly.

1. **PRECAUTION**

NOTE: **After turning the power switch off, waiting time may be required before disconnecting the cable from the negative (-) auxiliary battery terminal. Therefore, make sure to read the disconnecting the cable from the negative (-) auxiliary battery terminal notice before proceeding with work. Refer to PRECAUTION .**

2. **DISCONNECT CABLE FROM AUXILIARY BATTERY NEGATIVE TERMINAL**

   Refer to **REMOVAL**

3. **REMOVE FRONT FENDER LINER**

   HINT:

   Use the same procedure for the LH side and RH side. Refer to **REMOVAL** .

4. **REMOVE FRONT SPEED SENSOR**
   1. Disconnect the connector and disengage the clamp.

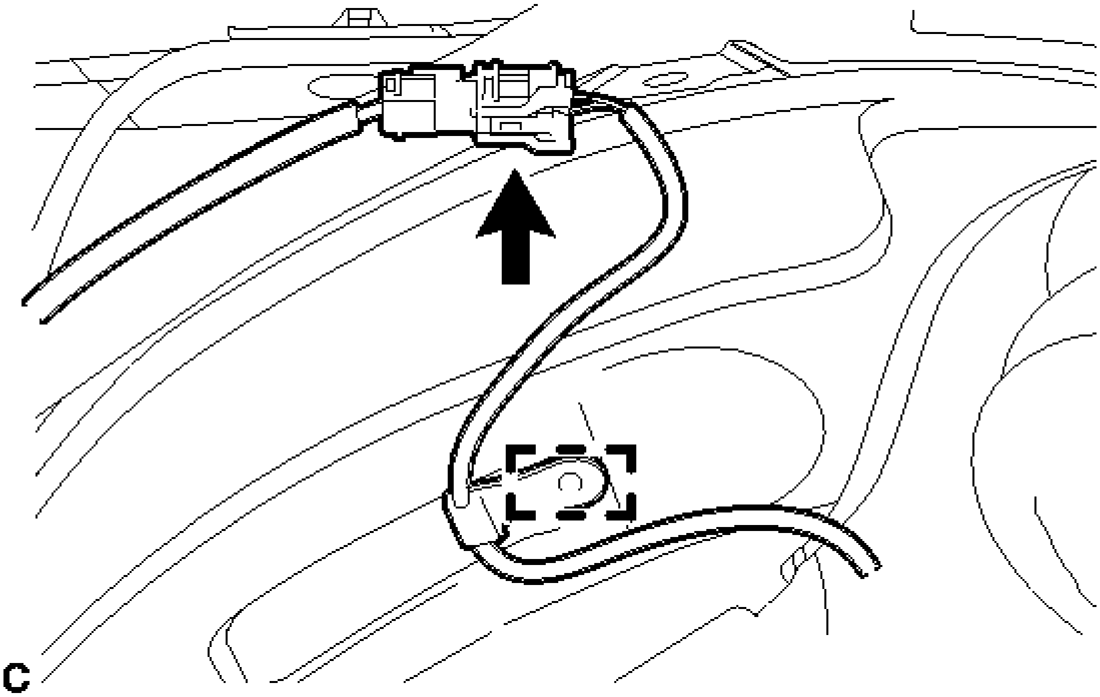

Fig. 2: Identifying Front Speed Sensor Connector And Clamp
Courtesy of TOYOTA MOTOR SALES, U.S.A., INC.

   2. Remove the bolt and front speed sensor clamp from the body.

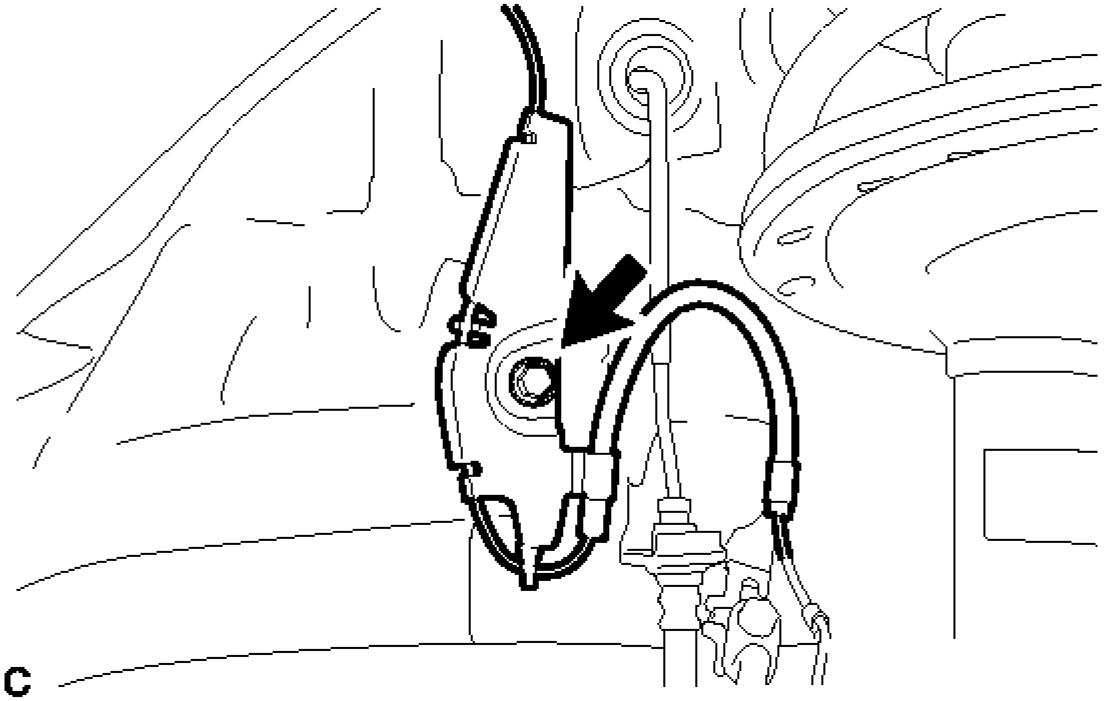

Fig. 3: Identifying Front Speed Sensor Clamp Bolt
Courtesy of TOYOTA MOTOR SALES, U.S.A., INC.

c. Remove the bolt, front flexible hose and front speed sensor clamp together from the shock absorber assembly.

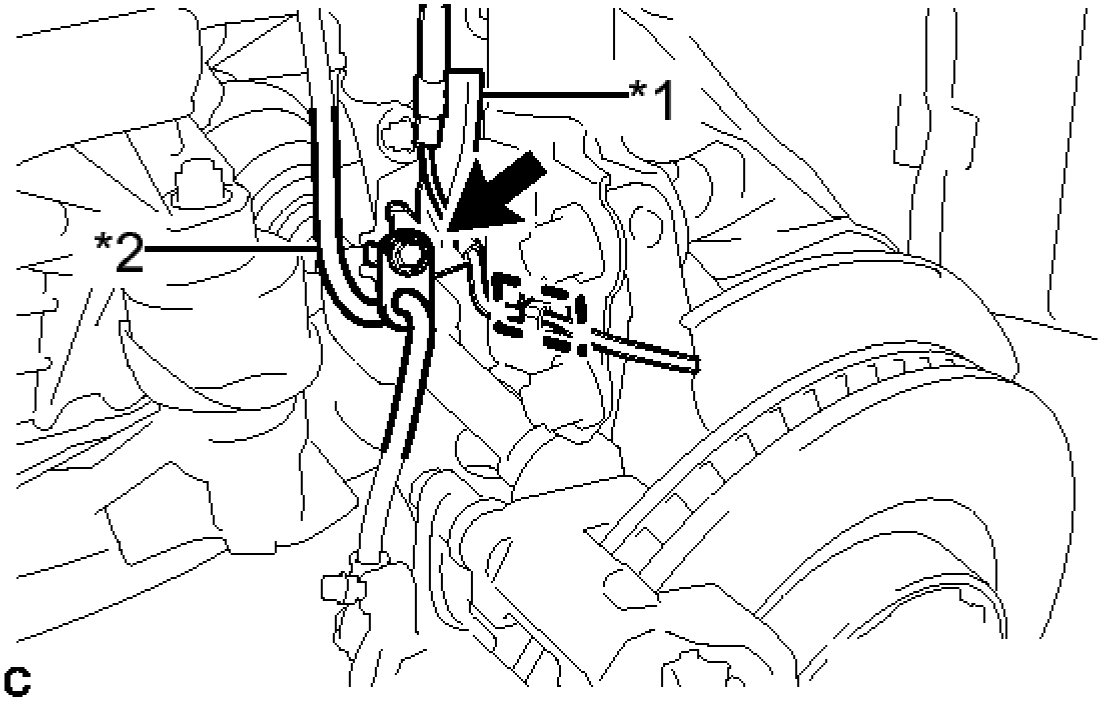

Fig. 4: Locating Front Speed Sensor Clamp And Flexible Hose

Courtesy of TOYOTA MOTOR SALES, U.S.A., INC.

TEXT IN ILLUSTRATION

*1	Front Speed Sensor Clamp
*2	Front Flexible Hose

d. Disengage the clamp from the front shock absorber assembly.
e. Remove the bolt and front speed sensor from the steering knuckle.

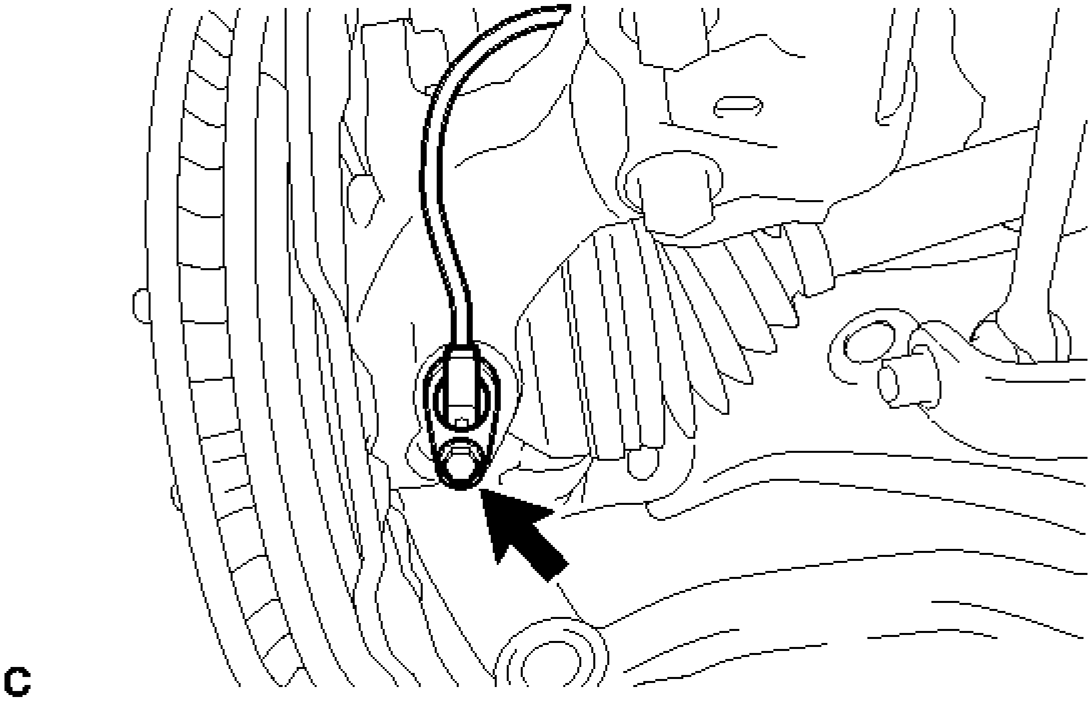

Fig. 5: Locating Front Speed Sensor And Bolt
Courtesy of TOYOTA MOTOR SALES, U.S.A., INC.

NOTE:

- **Prevent foreign matter from attaching to the front speed sensor tip.**
- **Clean the speed sensor installation hole and the contact surfaces every time the front speed sensor is removed.**

INSTALLATION

INSTALLATION

HINT:

- Use the same procedure for the LH side and RH side.
- The following procedure is for the LH side.
- If the sensor rotor needs to be replaced, replace the front drive outboard joint shaft assembly.

1. **INSTALL FRONT SPEED SENSOR**
    a. Install the front speed sensor to the steering knuckle with the bolt.

    Torque: 8.5 N*m (87 kgf*cm, 75 in.*lbf)

    NOTE:

    - **Prevent foreign matter from attaching to the front speed sensor tip.**
    - **Firmly insert the front speed sensor body into the steering knuckle before tightening the bolt.**
    - **After installing the front speed sensor to the steering knuckle, make sure that there is no clearance between the front speed sensor stay and steering knuckle. Also make sure that no foreign matter is stuck between the parts.**

    b. Install the front speed sensor clamp and front flexible hose to the shock absorber bracket with the bolt.

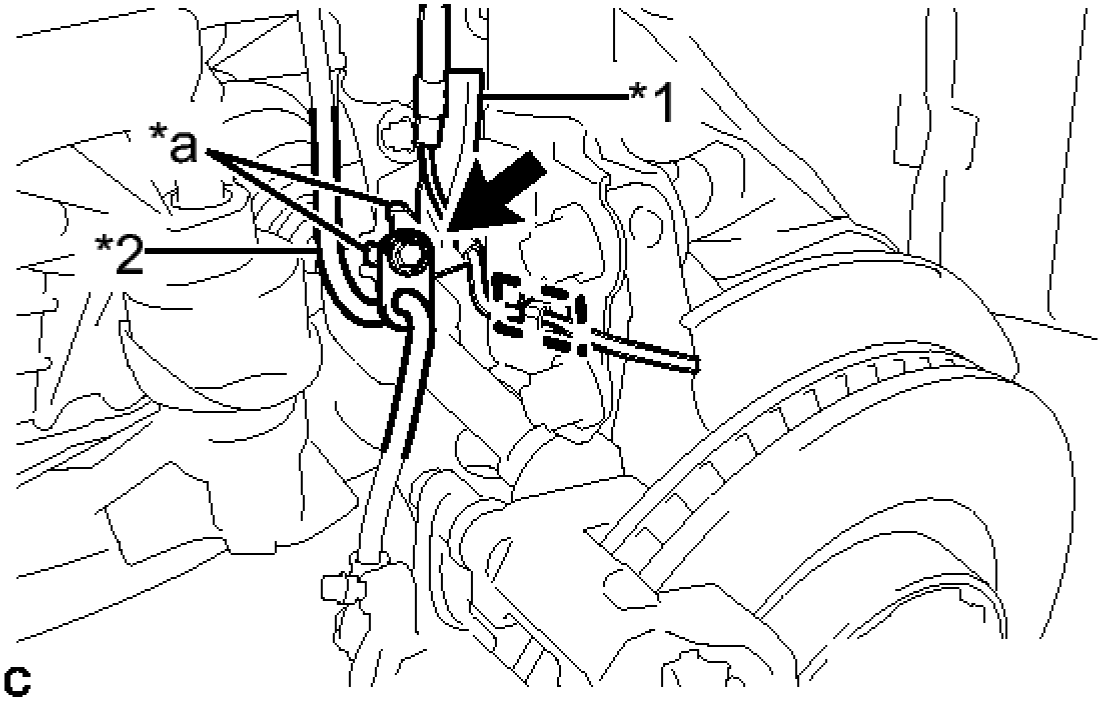

Fig. 6: Locating Front Speed Sensor Clamp, Flexible Hose And Claw
Courtesy of TOYOTA MOTOR SALES, U.S.A., INC.

TEXT IN ILLUSTRATION

*1	Front Speed Sensor Clamp
*2	Front Flexible Hose
*a	Claw

Torque: 19 N*m (192 kgf*cm, 14 ft.*lbf)

NOTE:

- **Do not twist the wire harness for the front speed sensor when installing it.**
- **Securely set the 2 claws of the front speed sensor clamp to the shock absorber bracket.**
- **A bolt tightens the brake flexible hose and front speed sensor together. Make sure that the front flexible hose is positioned over the front speed sensor.**

c. Engage the clamp to the front shock absorber.
d. Install the speed sensor clamp to the body with the bolt.

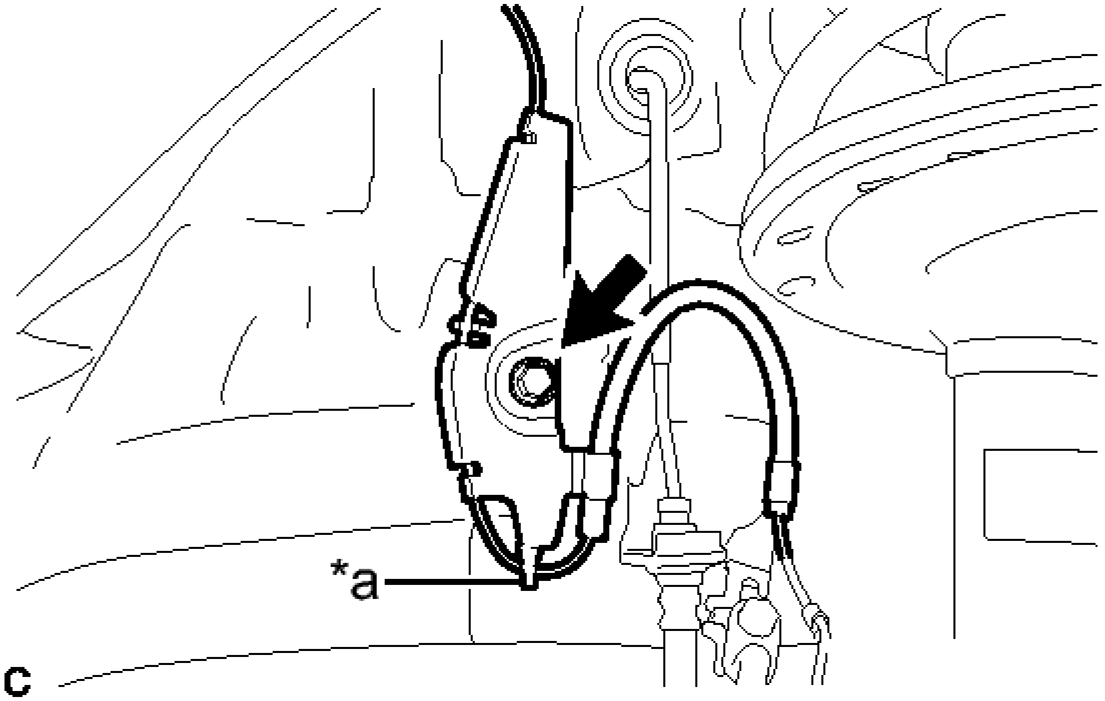

Fig. 7: Identifying Front Speed Sensor Clamp Bolt And Claw
Courtesy of TOYOTA MOTOR SALES, U.S.A., INC.

TEXT IN ILLUSTRATION

*a	Claw

Torque: 8.5 N*m (87 kgf*cm, 75 in.*lbf)

NOTE:

- **Do not twist the wire harness for the front speed sensor when installing it.**
- **Securely set the claw of the front speed sensor clamp to the body.**

e. Engage the clamp and connect the connector.

2. **INSTALL FRONT FENDER LINER**

   HINT:

   Use the same procedure for the LH side and RH side. Refer to **INSTALLATION - Step 3** .

3. **CONNECT CABLE TO AUXILIARY BATTERY NEGATIVE TERMINAL**

   Refer to **INSTALLATION - Step 2**

4. **CHECK FOR SPEED SENSOR SIGNAL**

   Refer to **TEST MODE PROCEDURE**

REAR SPEED SENSOR

COMPONENTS

ILLUSTRATION

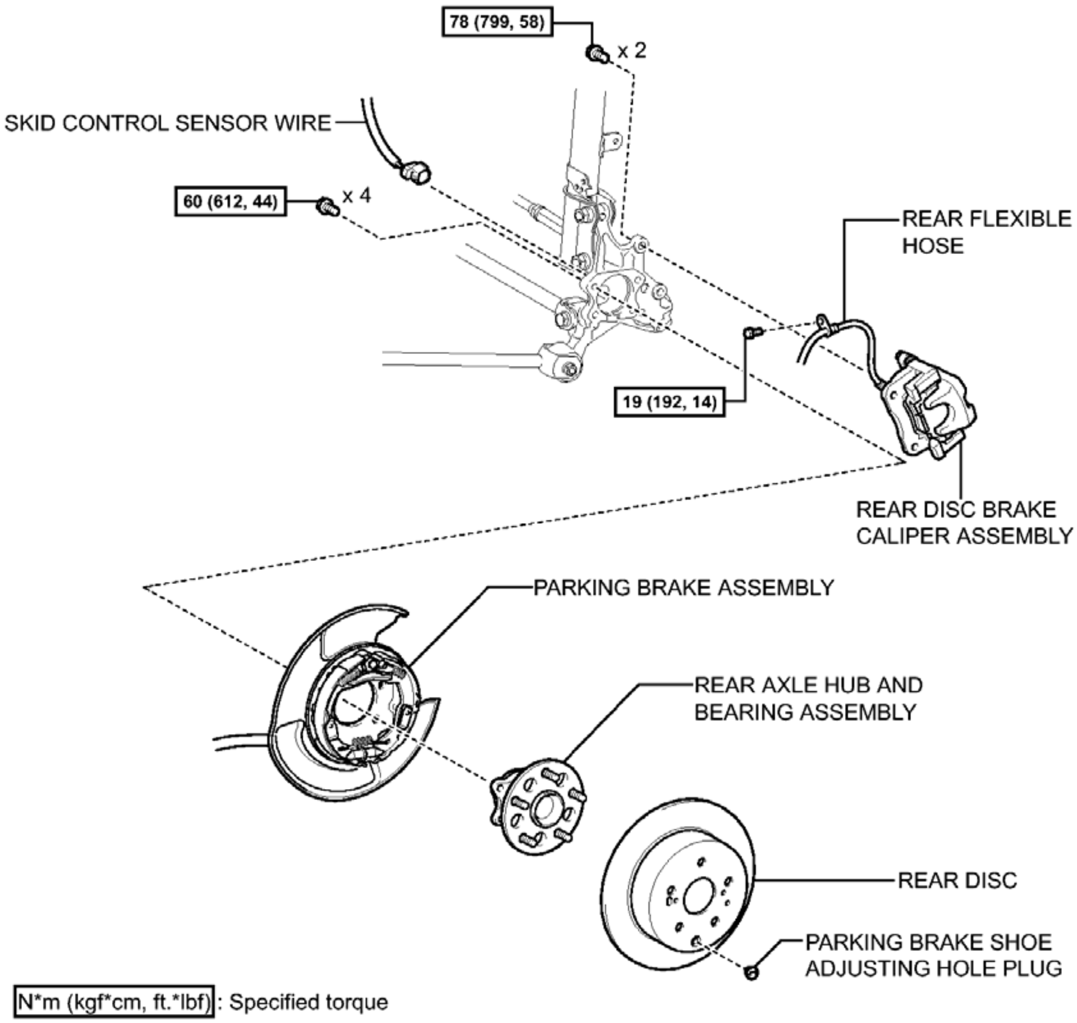
78 (799, 58)
x 2
SKID CONTROL SENSOR WIRE
60 (612, 44)
x 4
REAR FLEXIBLE HOSE
19 (192, 14)
REAR DISC BRAKE CALIPER ASSEMBLY
PARKING BRAKE ASSEMBLY
REAR AXLE HUB AND BEARING ASSEMBLY
REAR DISC
PARKING BRAKE SHOE ADJUSTING HOLE PLUG
N*m (kgf*cm, ft.*lbf): Specified torque
c

Fig. 8: Identifying Rear Speed Sensor Replacement Components With Torque Specifications
Courtesy of TOYOTA MOTOR SALES, U.S.A., INC.

REMOVAL

REMOVAL

HINT:

- Use the same procedure for the LH side and RH side.
- The following procedure is for the LH side.
- If the sensor rotor needs to be replaced, replace the rear axle hub and bearing assembly.
- The rear speed sensor is a component of the rear axle hub and bearing assembly. If the rear speed sensor malfunctions, replace the rear axle hub and bearing assembly.

1. **PRECAUTION**

NOTE: **After turning the power switch off, waiting time may be required before disconnecting the cable from the negative (-) auxiliary battery terminal. Therefore, make sure to read the disconnecting the cable from the negative (-) auxiliary battery terminal notice before proceeding with work. Refer to PRECAUTION .**

2. **DISABLE BRAKE CONTROL** . Refer to **REMOVAL - Step 2**
3. **REMOVE REAR WHEEL**
4. **SEPARATE REAR DISC BRAKE CALIPER ASSEMBLY** . Refer to **REPLACEMENT - Step 4**
5. **REMOVE PARKING BRAKE SHOE ADJUSTING HOLE PLUG** . Refer to **REMOVAL - Step 15**
6. **REMOVE REAR DISC** . Refer to **REMOVAL - Step 16**
7. **DISCONNECT SKID CONTROL SENSOR WIRE**
    a. Using a screwdriver, disconnect the connector from the rear axle hub and bearing assembly.

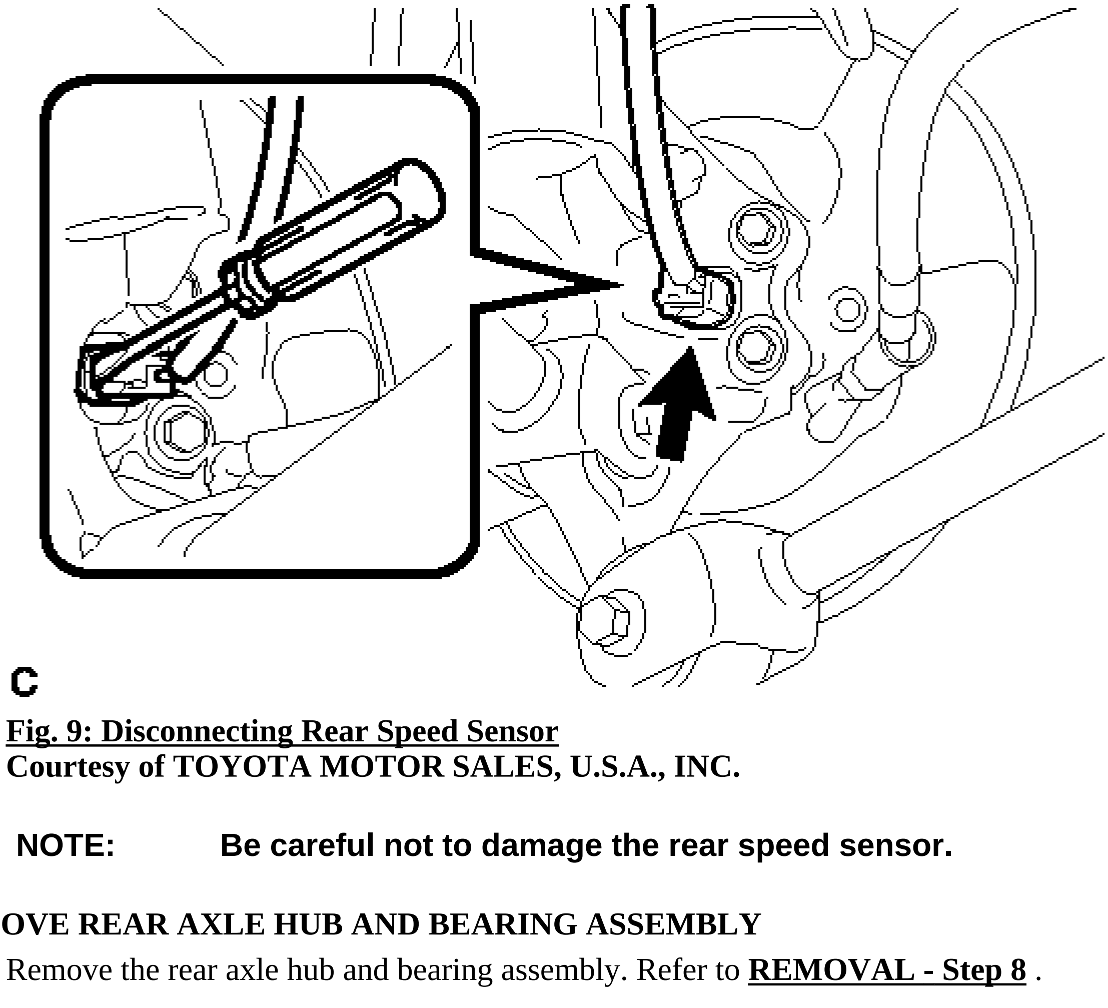

Fig. 9: Disconnecting Rear Speed Sensor
Courtesy of TOYOTA MOTOR SALES, U.S.A., INC.

NOTE: **Be careful not to damage the rear speed sensor.**

8. **REMOVE REAR AXLE HUB AND BEARING ASSEMBLY**
    a. Remove the rear axle hub and bearing assembly. Refer to **REMOVAL - Step 8** .

    HINT:

    - The rear speed sensor is a component of the rear axle hub and bearing assembly. If the rear

speed sensor malfunctions, replace the rear axle hub and bearing assembly.
    - If the sensor rotor needs to be replaced, replace the rear axle hub and bearing assembly.

INSTALLATION

INSTALLATION

HINT:

- Use the same procedure for the LH side and RH side.
- The following procedure is for the LH side.
- If the sensor rotor needs to be replaced, replace the rear axle hub and bearing assembly.
- The rear speed sensor is a component of the rear axle hub and bearing assembly. If the rear speed sensor malfunctions, replace the rear axle hub and bearing assembly.

1. **INSTALL REAR AXLE HUB AND BEARING ASSEMBLY**
    a. Install the rear axle hub and bearing assembly. Refer to **INSTALLATION - Step 1** .

       HINT:

        - The rear speed sensor is a component of the rear axle hub and bearing assembly. If the sensor malfunctions, replace the rear axle hub and bearing assembly.
        - If the sensor rotor needs to be replaced, replace the rear axle hub and bearing assembly.
2. **INSPECT REAR AXLE HUB BEARING LOOSENESS** . Refer to **ON-VEHICLE INSPECTION - Step 7**
3. **INSPECT REAR AXLE HUB RUNOUT** . Refer to **ON-VEHICLE INSPECTION - Step 8**
4. **CONNECT SKID CONTROL SENSOR WIRE**
    a. Connect the connector to the rear axle hub and bearing assembly.
5. **INSTALL REAR DISC** . Refer to **INSTALLATION - Step 1**
6. **INSTALL PARKING BRAKE SHOE ADJUSTING HOLE PLUG** . Refer to **INSTALLATION - Step 2**
7. **INSTALL REAR DISC BRAKE CALIPER ASSEMBLY** . Refer to **REPLACEMENT - Step 11**
8. **CONNECT CABLE TO AUXILIARY BATTERY NEGATIVE TERMINAL**
    a. Connect the cable to the negative (-) auxiliary battery terminal. Refer to **INSTALLATION - Step 2** .
    b. Connect the reservoir level switch connector.
    c. Clear the DTCs. Refer to **DTC CHECK / CLEAR** .
9. **ADJUST PARKING BRAKE**

   Refer to **INSTALLATION - Step 9**

10. **INSTALL REAR WHEEL**

Torque: 103 N*m (1049 kgf*cm, 76 ft.*lbf)

11. **CHECK FOR SPEED SENSOR SIGNAL**

    Refer to **TEST MODE PROCEDURE**

YAW RATE AND ACCELERATION SENSOR (FOR SEPARATE TYPE YAW RATE SENSOR)

COMPONENTS

ILLUSTRATION

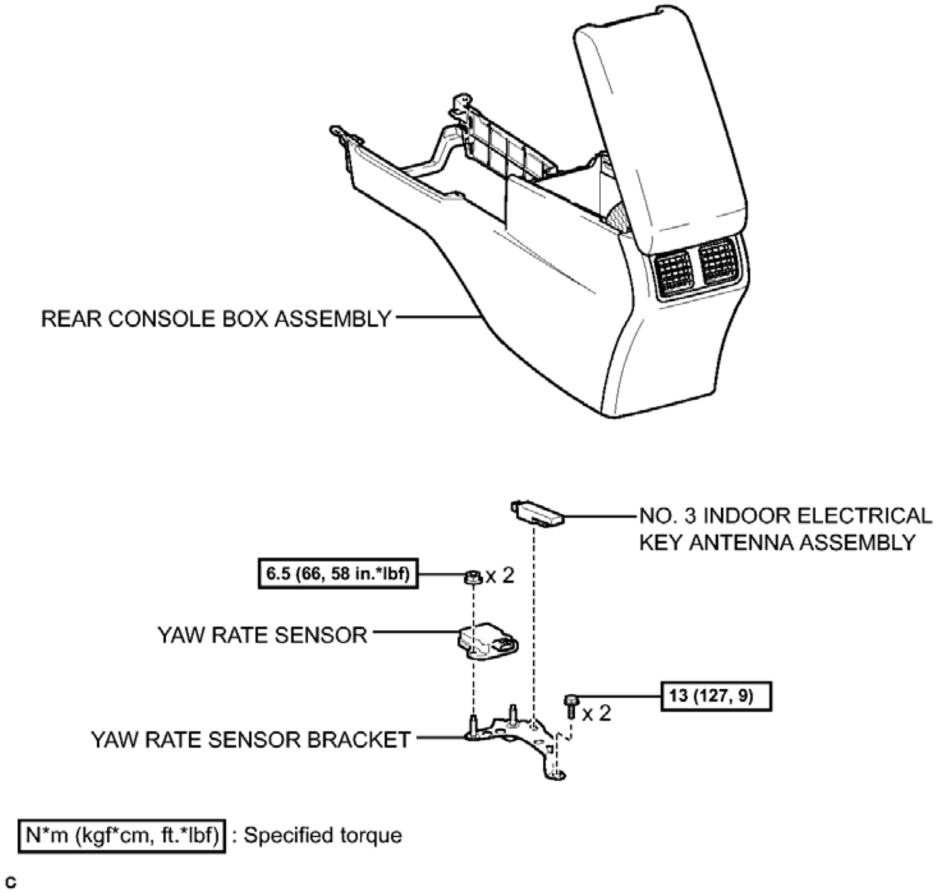
REAR CONSOLE BOX ASSEMBLY
NO. 3 INDOOR ELECTRICAL KEY ANTENNA ASSEMBLY
6.5 (66, 58 in.*lbf)
x 2
YAW RATE SENSOR
13 (127, 9)
x 2
YAW RATE SENSOR BRACKET
N*m (kgf*cm, ft.*lbf) : Specified torque
c

Fig. 10: Identifying Yaw Rate And Acceleration Sensor Replacement Components With Torque Specifications
Courtesy of TOYOTA MOTOR SALES, U.S.A., INC.

REMOVAL

REMOVAL

1. **PRECAUTION**

   NOTE: **After turning the power switch off, waiting time may be required before disconnecting the cable from the negative (-) auxiliary battery terminal. Therefore, make sure to read the disconnecting the cable from the negative (-) auxiliary battery terminal notices before proceeding with work. Refer to PRECAUTION .**

2. **DISCONNECT CABLE FROM AUXILIARY BATTERY NEGATIVE TERMINAL**

   Refer to **REMOVAL**

3. **REMOVE REAR CONSOLE BOX ASSEMBLY**

   Refer to **REMOVAL**

4. **REMOVE YAW RATE SENSOR**
   1. Disconnect the connector from the yaw rate sensor.

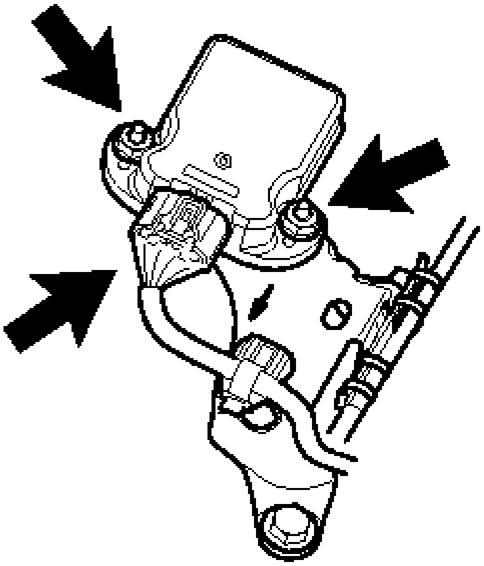

Fig. 11: Identifying Yaw Rate Sensor Nuts And Connector
Courtesy of TOYOTA MOTOR SALES, U.S.A., INC.

   2. Remove the 2 nuts and yaw rate sensor.

5. **REMOVE NO. 3 INDOOR ELECTRICAL KEY ANTENNA ASSEMBLY**
   1. Disengage the clamp to remove the No. 3 indoor electrical key antenna assembly from the yaw rate sensor bracket.

   b. Disconnect the connector from the No. 3 indoor electrical key antenna assembly.

6. **REMOVE YAW RATE SENSOR BRACKET**
   a. Disengage the 2 clamps to separate the wire harnesses.

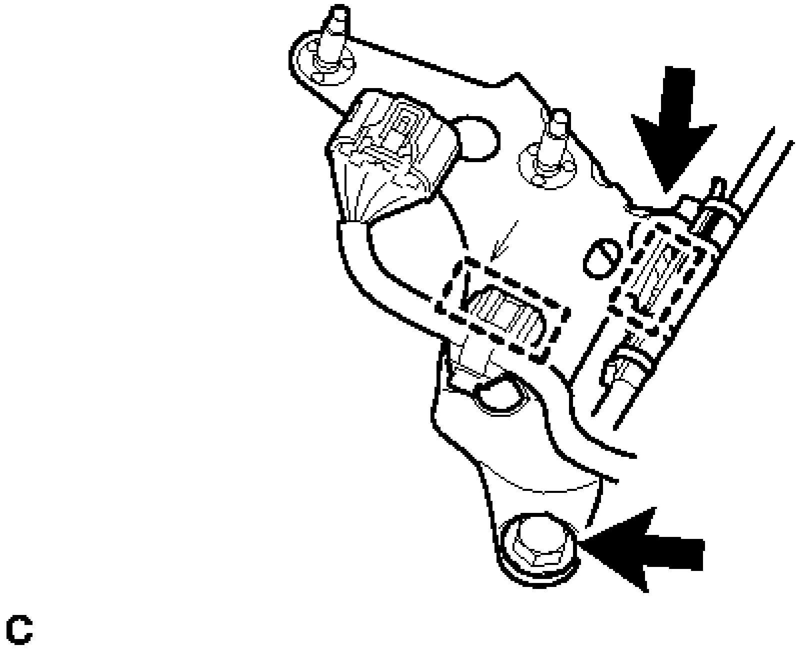

Fig. 12: Identifying Yaw Rate Sensor Bracket Clamps And Bolts
Courtesy of TOYOTA MOTOR SALES, U.S.A., INC.

   b. Remove the 2 bolts and yaw rate sensor bracket.

INSTALLATION

INSTALLATION

1. **INSTALL YAW RATE SENSOR BRACKET**
   a. Install the yaw rate sensor bracket with the 2 bolts.

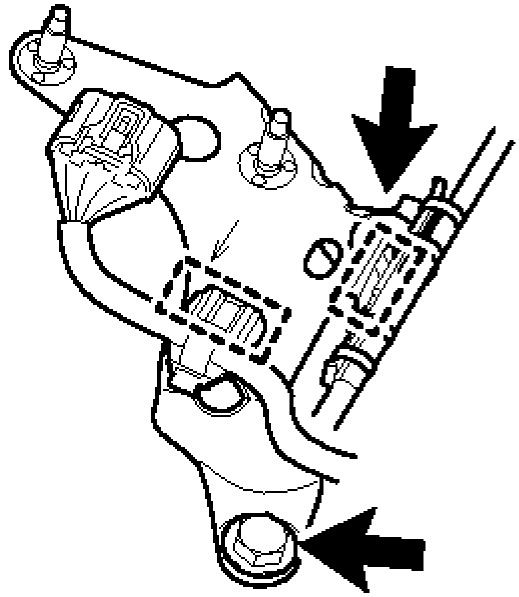

C

Fig. 13: Identifying Yaw Rate Sensor Bracket Clamps And Bolts
Courtesy of TOYOTA MOTOR SALES, U.S.A., INC.

Torque: 13 N*m (127 kgf*cm, 9 ft.*lbf)

b. Engage the 2 clamps to install the wire harnesses.

2. **INSTALL NO. 3 INDOOR ELECTRICAL KEY ANTENNA ASSEMBLY**
   a. Connect the connector to the No. 3 indoor electrical key antenna assembly.

NOTE:	**Be careful when installing the No. 3 indoor electrical key antenna assembly. If the antenna is dropped, replace it with a new one.**

   b. Engage the clamp to install the No. 3 indoor electrical key antenna assembly to the yaw rate sensor bracket.
3. **INSTALL YAW RATE SENSOR**
   a. Install the yaw rate sensor to the yaw rate sensor bracket with the 2 nuts.

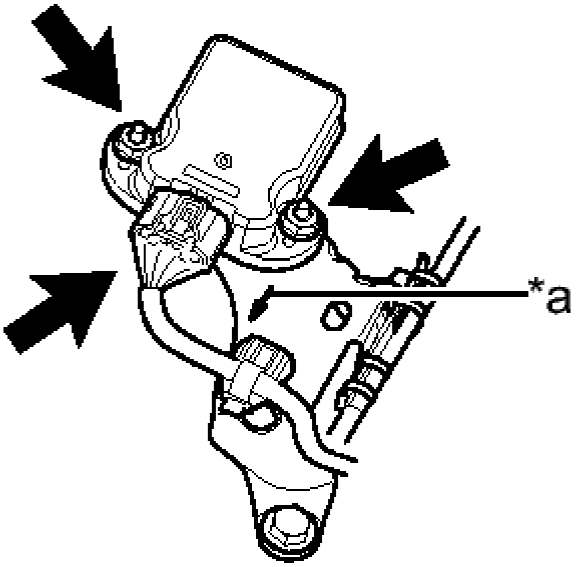

C

Fig. 14: Identifying Yaw Rate Sensor Nuts And Connector
Courtesy of TOYOTA MOTOR SALES, U.S.A., INC.

TEXT IN ILLUSTRATION

*a	Arrow Mark

Torque: 6.5 N*m (66 kgf*cm, 58 in.*lbf)

NOTE:

- **Do not damage the yaw sensor.**
- **Make sure that the yaw rate sensor is installed securely.**
- **Do not use dropped or damaged parts.**
- **Keep the contact surfaces of the yaw rate sensor and yaw rate sensor bracket free of foreign matter.**
- **Make sure that the connector end of the yaw rate sensor is facing in the same direction as the arrow mark on the yaw rate sensor bracket when installing the yaw rate sensor.**

b. Connect the connector to the yaw rate sensor.

NOTE: **Make sure that the yaw rate sensor connector is connected securely.**

4. **INSTALL REAR CONSOLE BOX ASSEMBLY**

Refer to **INSTALLATION**

5. **CONNECT CABLE TO AUXILIARY BATTERY NEGATIVE TERMINAL**

   Refer to **INSTALLATION - Step 2**

6. **OBTAIN ZERO POINT OF YAW RATE AND ACCELERATION SENSOR**

   Refer to **CALIBRATION**

STEERING ANGLE SENSOR

COMPONENTS

ILLUSTRATION

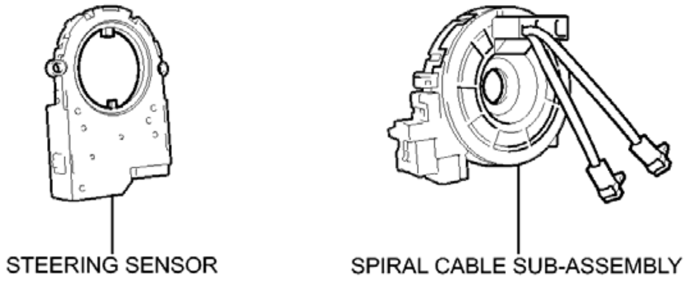

c

Fig. 15: Identifying Steering Angle Sensor Replacement Components
Courtesy of TOYOTA MOTOR SALES, U.S.A., INC.

REMOVAL

REMOVAL

NOTE: **If the both spiral cable sub-assembly and the steering sensor are malfunctioning, replace them with a new spiral cable with sensor sub-assembly.**

1. **REMOVE SPIRAL CABLE WITH SENSOR SUB-ASSEMBLY**

   Refer to **REMOVAL**

2. **REMOVE STEERING SENSOR**
   a. Disengage the 6 claws and remove the steering sensor from the spiral cable sub-assembly.

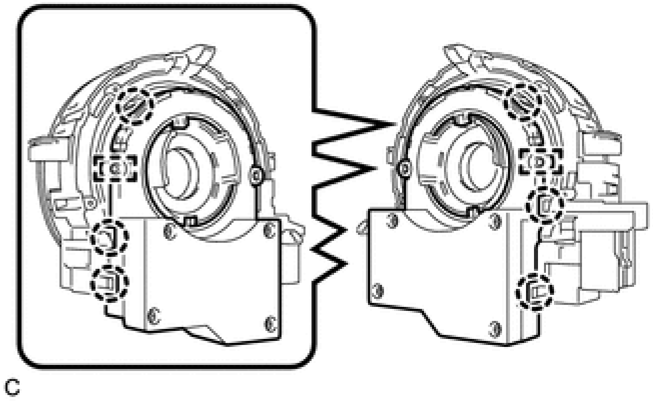

Fig. 16: Identifying Spiral Cable Sub-Assembly Claws And Pins
Courtesy of TOYOTA MOTOR SALES, U.S.A., INC.

NOTE: **Do not damage the claws and pins of the spiral cable sub-assembly.**

INSTALLATION

INSTALLATION

NOTE: **A lock pin is installed to a new steering sensor. Do not remove the lock pin before the steering sensor is installed to the spiral cable sub-assembly.**

1. **INSPECT SPIRAL CABLE SUB-ASSEMBLY** . Refer to **INSTALLATION - Step 1**
2. **INSTALL STEERING SENSOR**
   a. Align the 2 pins and 2 guides, and engage the 6 claws to install the steering sensor to the spiral cable sub-assembly.

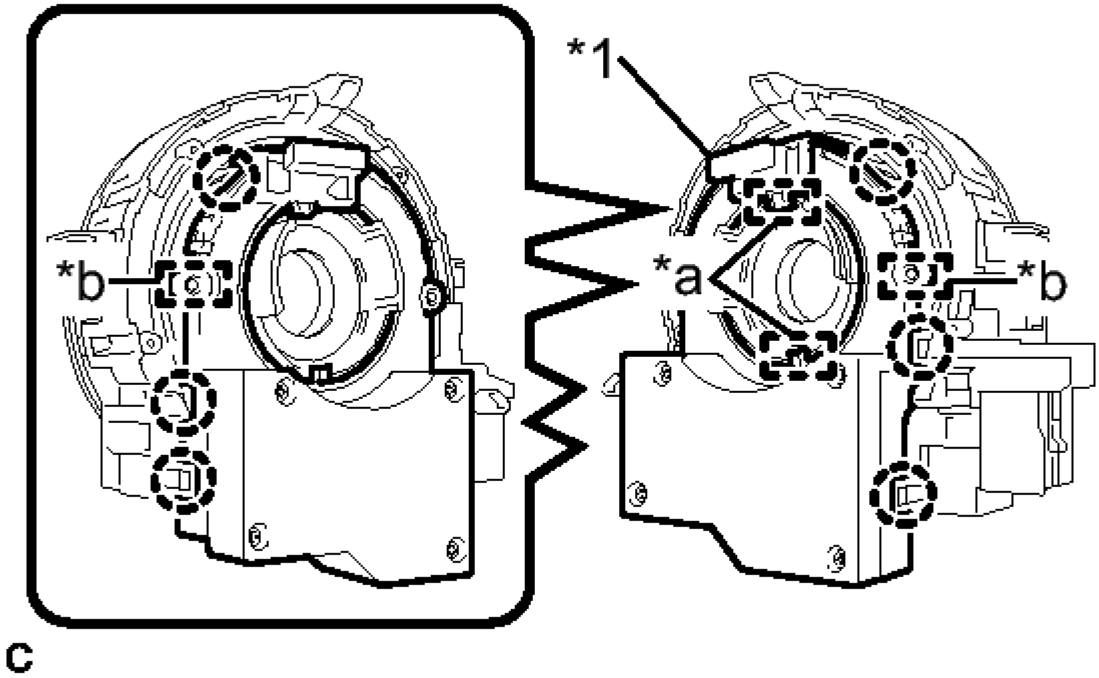

Fig. 17: Identifying Spiral Cable Sub-Assembly Lock Pin, Claws And Pins
Courtesy of TOYOTA MOTOR SALES, U.S.A., INC.

TEXT IN ILLUSTRATION

*1	Lock Pin
*a	Guide
*b	Pin

NOTE:

- **Do not remove the lock pin before the steering sensor is installed to the spiral cable sub-assembly.**
- **Do not damage the pins of the spiral cable sub-assembly and guides of the steering sensor.**
- **The spiral cable sub-assembly can be rotate up to 30° even when the interlock is engaged. Therefore, make sure that both guides are aligned properly when installing the steering sensor to the spiral cable sub-assembly.**

b. Remove the lock pin from the steering sensor.

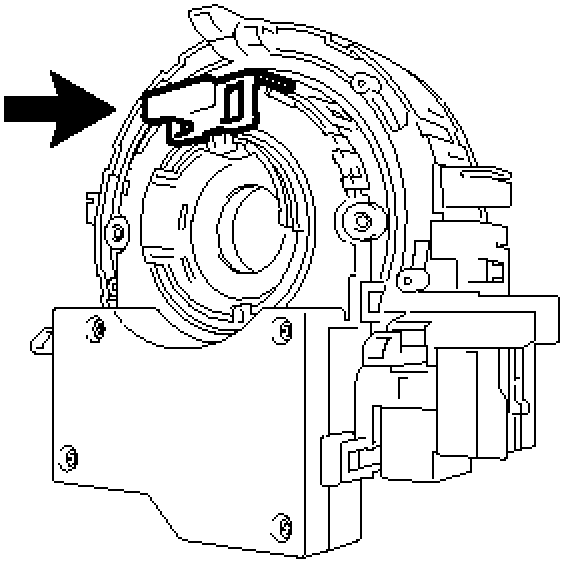

Fig. 18: Locating Steering Sensor Lock Pin
Courtesy of TOYOTA MOTOR SALES, U.S.A., INC.

3. **ALIGN FRONT WHEELS TO FACE STRAIGHT AHEAD**
4. **INSTALL SPIRAL CABLE WITH SENSOR SUB-ASSEMBLY**

   Refer to **INSTALLATION - Step 4**

BRAKE PEDAL STROKE SENSOR

COMPONENTS

ILLUSTRATION

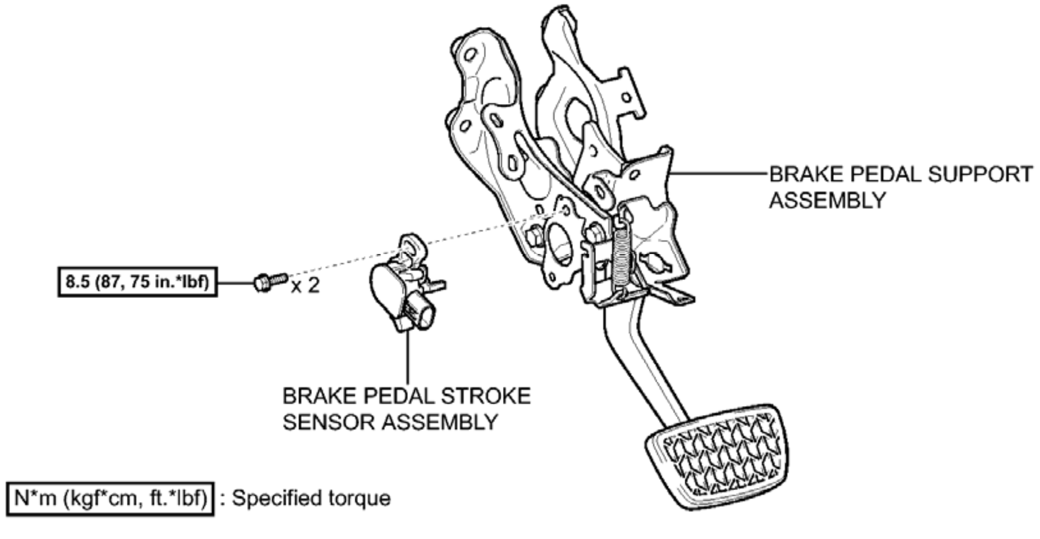
BRAKE PEDAL SUPPORT ASSEMBLY
8.5 (87, 75 in.*lbf)
x 2
BRAKE PEDAL STROKE SENSOR ASSEMBLY
N*m (kgf*cm, ft.*lbf) : Specified torque
c

Fig. 19: Identifying Brake Pedal Stroke Sensor Replacement Components With Torque Specifications
Courtesy of TOYOTA MOTOR SALES, U.S.A., INC.

REMOVAL

REMOVAL

NOTE: **While the auxiliary battery is connected, even if the power switch is off, the brake control system activates when the brake pedal is depressed or any door courtesy switch is turned on. Therefore, when servicing brake system components, do not depress the brake pedal or open/close the doors while the auxiliary battery is connected.**

1. **PRECAUTION**

   NOTE: **After turning the power switch off, waiting time may be required before disconnecting the cable from the negative (-) auxiliary battery terminal. Therefore, make sure to read the disconnecting the cable from the negative (-) auxiliary battery terminal notices before proceeding with work. Refer to PRECAUTION .**

2. **DISCONNECT CABLE FROM AUXILIARY BATTERY NEGATIVE TERMINAL**

   Refer to **REMOVAL**

3. **REMOVE BRAKE PEDAL STROKE SENSOR ASSEMBLY**
   a. Disconnect the connector from the brake pedal stroke sensor assembly.

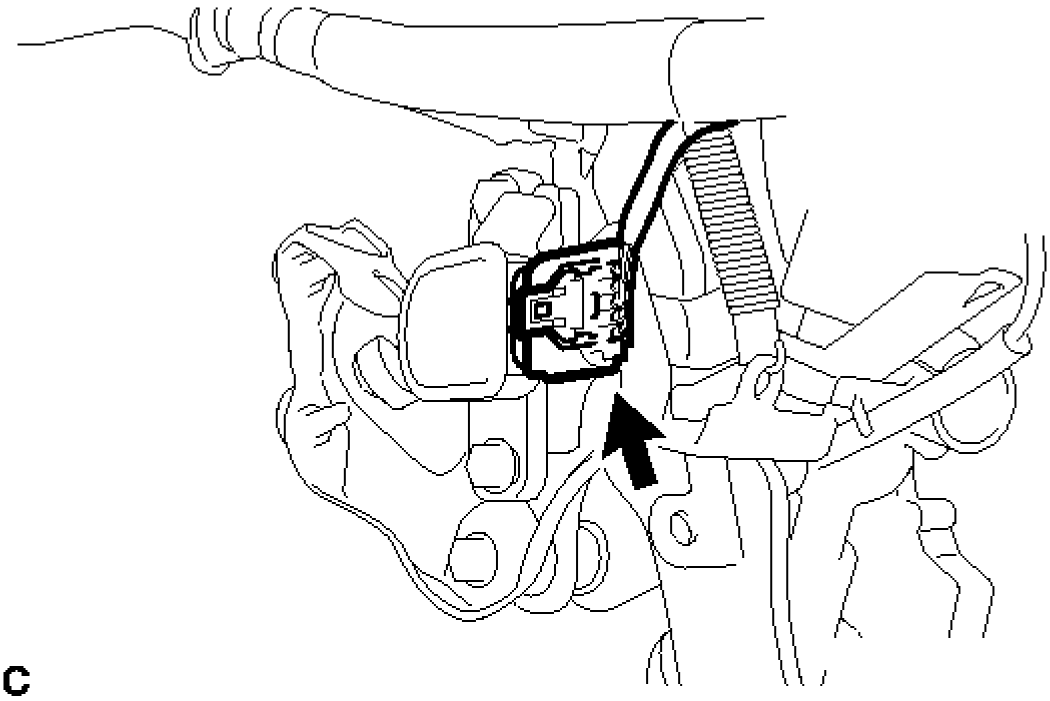

Fig. 20: Identifying Brake Pedal Stroke Sensor Connector
Courtesy of TOYOTA MOTOR SALES, U.S.A., INC.

b. Remove the 2 bolts and brake pedal stroke sensor assembly from the brake pedal support assembly.

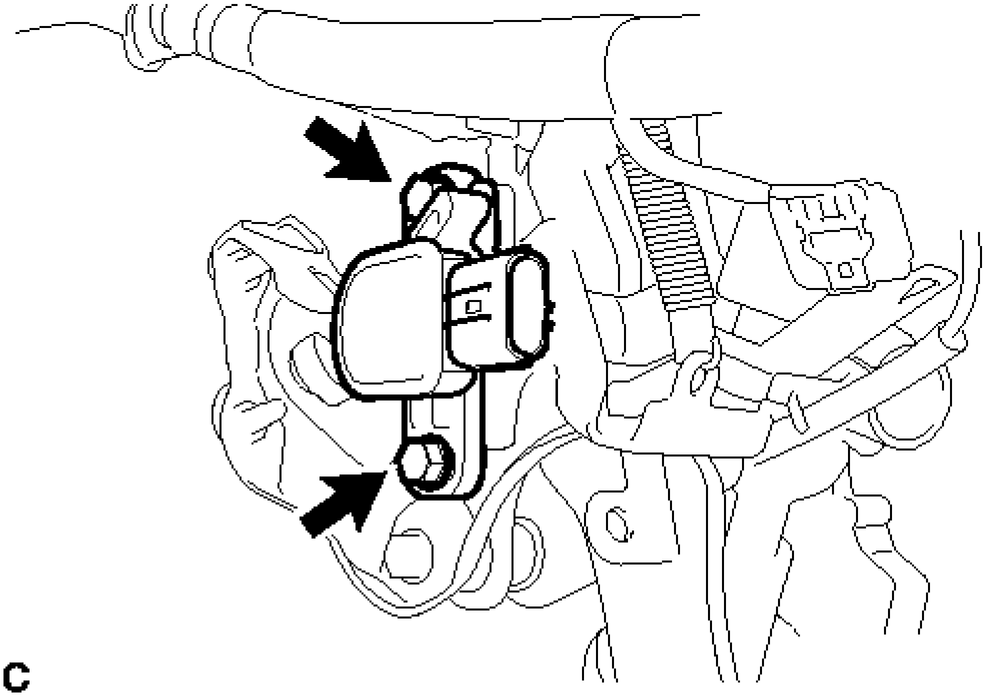

Fig. 21: Identifying Brake Pedal Stroke Sensor Bolts
Courtesy of TOYOTA MOTOR SALES, U.S.A., INC.

NOTE:

- **Do not drop the brake pedal stroke sensor assembly.**
- **If the brake pedal stroke sensor assembly has been dropped, replace the brake pedal stroke sensor assembly with a new one.**

INSTALLATION

INSTALLATION

NOTE:

- **Do not drop the brake pedal stroke sensor assembly.**
- **If the brake pedal stroke sensor assembly has been dropped, replace the brake pedal stroke sensor assembly with a new one.**

1. **INSPECT AND ADJUST BRAKE PEDAL HEIGHT** . Refer to **ADJUSTMENT - Step 1**
2. **INSTALL BRAKE PEDAL STROKE SENSOR ASSEMBLY**

   NOTE:

   - **Do not drop the brake pedal stroke sensor assembly.**
   - **If the brake pedal stroke sensor assembly has been dropped, replace the brake pedal stroke sensor assembly with a new one.**

   a. When installing a new brake pedal stroke sensor assembly:

      NOTE: **Do not break the brake pedal stroke sensor assembly lever set pin before installing the brake pedal stroke sensor assembly with the bolt.**

      1. Install a new brake pedal stroke sensor assembly to the brake pedal support assembly with the 2 bolts.

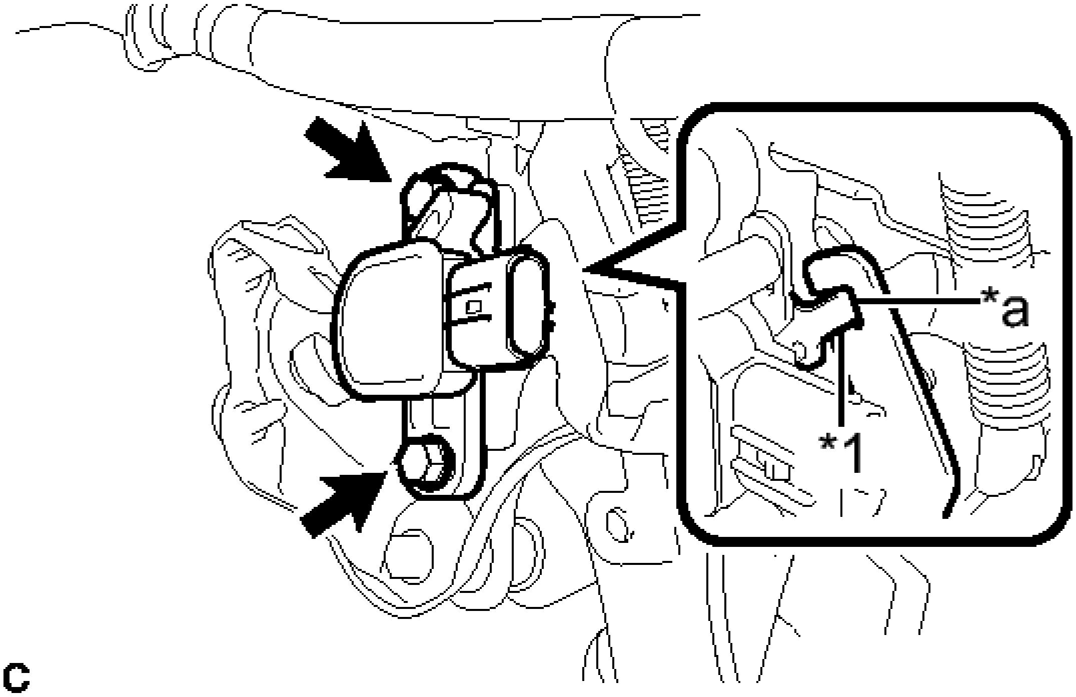

Fig. 22: Identifying Brake Pedal Stroke Sensor Assembly Lever
Courtesy of TOYOTA MOTOR SALES, U.S.A., INC.

TEXT IN ILLUSTRATION

*1	Brake Pedal Stroke Sensor Assembly Lever
*a	Brake Pedal Groove

Torque: 8.5 N*m (87 kgf*cm, 75 in.*lbf)

NOTE:

- **Engage the brake pedal stroke sensor assembly lever with the brake pedal groove.**
- **Check that there is no foreign matter attached to the contact surface of the brake pedal stroke sensor assembly.**
- **Check that the tip of the brake pedal stroke sensor assembly lever is protruding from the brake pedal groove.**

2. Firmly depress the brake pedal and break the brake pedal stroke sensor assembly lever set pin.

3. Remove the broken lever set pin.
4. Connect the connector to the brake pedal stroke sensor assembly.

b. When reusing the brake pedal stroke sensor assembly:

1. Temporarily install the brake pedal stroke sensor assembly to the brake pedal support assembly with the 2 bolts.

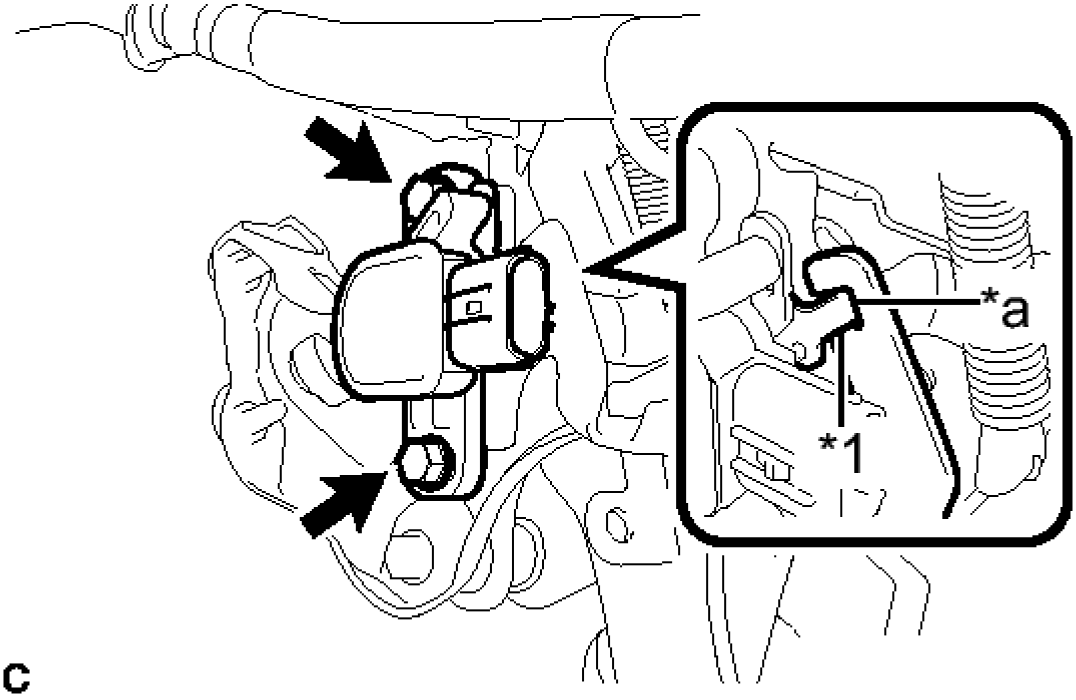

Fig. 23: Identifying Brake Pedal Stroke Sensor Assembly Lever
Courtesy of TOYOTA MOTOR SALES, U.S.A., INC.

TEXT IN ILLUSTRATION

*1	Brake Pedal Stroke Sensor Assembly Lever
*a	Brake Pedal Groove

NOTE:

- **Engage the brake pedal stroke sensor assembly lever with the brake pedal groove.**
- **Check that there is no foreign matter attached to the contact surface of the brake pedal stroke sensor assembly.**

- **Check that the tip of the brake pedal stroke sensor assembly lever is protruding from the brake pedal groove.**

HINT:

Fully tighten the 2 bolts when adjusting the brake pedal stroke sensor assembly.

2. Connect the connector to the brake pedal stroke sensor assembly.

3. **CONNECT CABLE TO AUXILIARY BATTERY NEGATIVE TERMINAL**

   Refer to **INSTALLATION - Step 2**

4. **ADJUST BRAKE PEDAL STROKE SENSOR ASSEMBLY**

   NOTE: **When the brake pedal stroke sensor assembly is being reused, perform the following procedure to adjust it.**

   a. Connect the Techstream to the DLC3.
   b. Turn the power switch on (IG).
   c. Turn the Techstream on.
   d. Enter the following menus: Chassis / ABS/VSC/TRAC / Data List "Stroke Sensor".
   e. Read the stroke sensor value in the Data List, and turn the brake pedal stroke sensor assembly slowly to the right or left to adjust the output voltage so that it is within the following range.

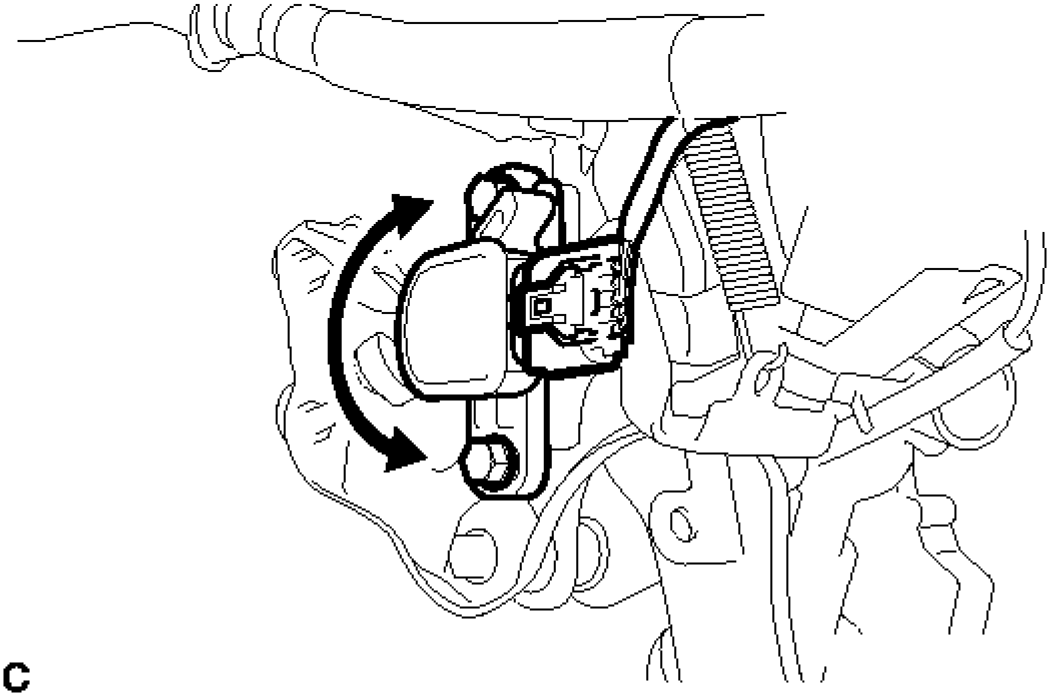

Fig. 24: Adjusting Brake Pedal Stroke Sensor Assembly

Courtesy of TOYOTA MOTOR SALES, U.S.A., INC.

Standard voltage (without the brake pedal depressed)

0.8 to 1.2 V

f. Tighten the 2 bolts.

Torque: 8.5 N*m (87 kgf*cm, 75 in.*lbf)

NOTE: **Do not depress the brake pedal after turning the power switch on (IG).**

g. Turn the Techstream off.
h. Turn the power switch off.
i. Disconnect the Techstream.

5. **CHECK AND CLEAR DTC**

Refer to **DTC CHECK / CLEAR**

6. **PERFORM INITIALIZATION AND CALIBRATION OF LINEAR SOLENOID VALVE**

Refer to **INITIALIZATION**

VSC OFF SWITCH

COMPONENTS

ILLUSTRATION

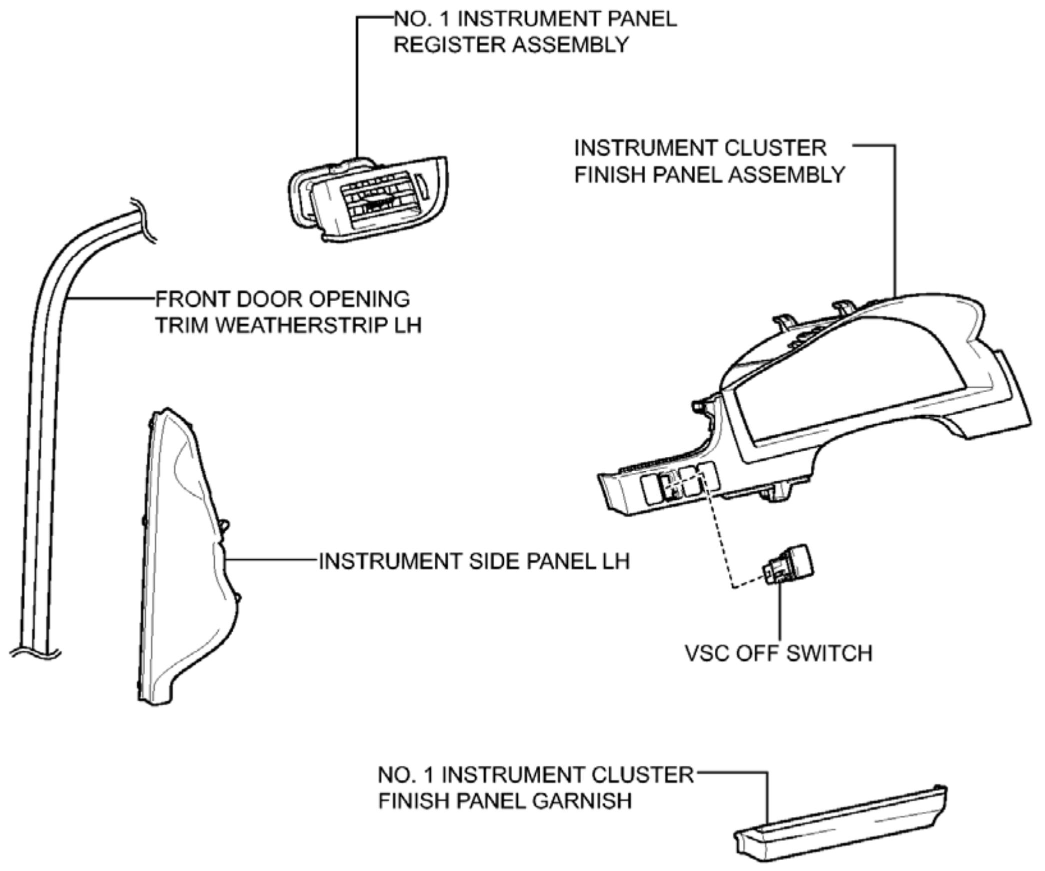
NO. 1 INSTRUMENT PANEL REGISTER ASSEMBLY
INSTRUMENT CLUSTER FINISH PANEL ASSEMBLY
FRONT DOOR OPENING TRIM WEATHERSTRIP LH
INSTRUMENT SIDE PANEL LH
VSC OFF SWITCH
NO. 1 INSTRUMENT CLUSTER FINISH PANEL GARNISH

P

Fig. 25: Identifying VSC OFF Switch Replacement Components
Courtesy of TOYOTA MOTOR SALES, U.S.A., INC.

REMOVAL

REMOVAL

1. **PRECAUTION**

   NOTE: **After turning the power switch off, waiting time may be required before disconnecting the cable from the negative (-) auxiliary battery terminal. Therefore, make sure to read the disconnecting the cable from the negative (-) auxiliary battery terminal notice before proceeding with work. Refer to PRECAUTION .**

2. **DISCONNECT CABLE FROM AUXILIARY BATTERY NEGATIVE TERMINAL**

Refer to **REMOVAL**

3. **DISCONNECT FRONT DOOR OPENING TRIM WEATHERSTRIP LH** . Refer to **REMOVAL - Step 6**
4. **REMOVE INSTRUMENT SIDE PANEL LH** . Refer to **REMOVAL - Step 7**
5. **REMOVE NO. 1 INSTRUMENT CLUSTER FINISH PANEL GARNISH** . Refer to **REMOVAL - Step 8**
6. **REMOVE NO. 1 INSTRUMENT PANEL REGISTER ASSEMBLY** . Refer to **REMOVAL - Step 9**
7. **REMOVE INSTRUMENT CLUSTER FINISH PANEL ASSEMBLY** . Refer to **REMOVAL - Step 10**
8. **REMOVE VSC OFF SWITCH**
    a. Disengage the 2 claws and remove the VSC OFF switch from the instrument cluster finish panel assembly.

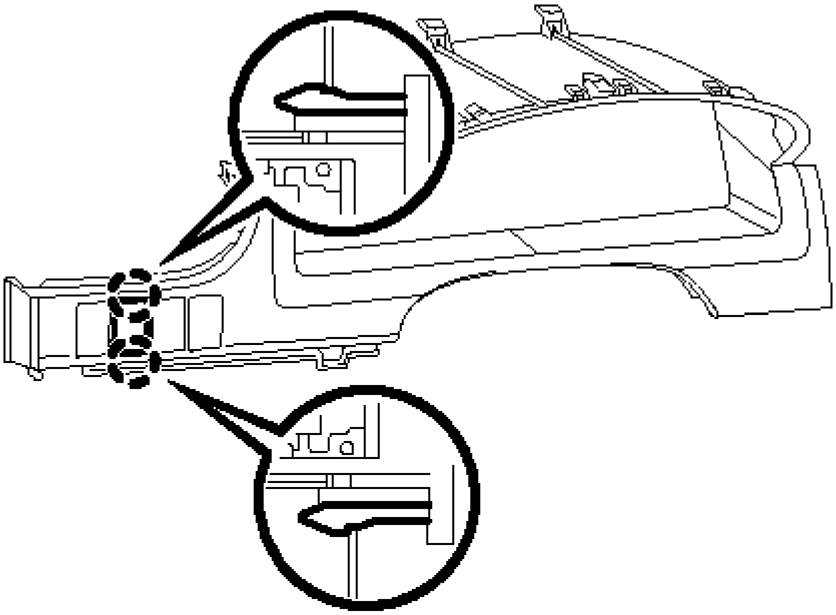

Fig. 26: Identifying VSC OFF Switch Claws
Courtesy of TOYOTA MOTOR SALES, U.S.A., INC.

INSPECTION

INSPECTION

1. **INSPECT VSC OFF SWITCH**
    a. Make sure that there is no looseness in the locking part and the connecting part of the connector.

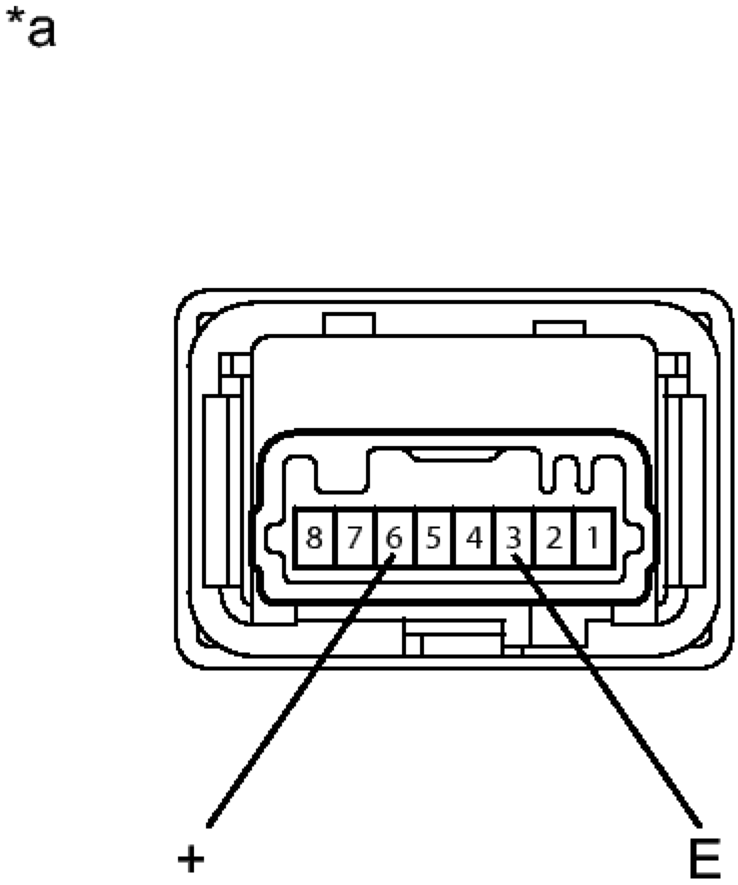

Fig. 27: Inspecting VSC OFF Switch Connector Terminals
Courtesy of TOYOTA MOTOR SALES, U.S.A., INC.

b. Disconnect the VSC OFF switch connector.
c. Check both the connector case and the terminal for deformation and corrosion.

OK

No deformation or corrosion.

d. Measure the resistance according to the value(s) in the table below.

Standard Resistance

Tester Connection	Switch Condition	Specified Condition

6 (+) - 3 (E)	Switch pushed in	Below 1 ohms
6 (+) - 3 (E)	Switch not pushed in	10 kohms or higher

TEXT IN ILLUSTRATION

*a	Component without harness connected (VSC OFF Switch)

If the result is not as specified, replace the VSC OFF switch.

INSTALLATION

INSTALLATION

1. **INSTALL VSC OFF SWITCH**
    a. Engage the 2 claws to install the VSC OFF switch to the instrument cluster finish panel assembly.
2. **INSTALL INSTRUMENT CLUSTER FINISH PANEL ASSEMBLY** . Refer to **INSTALLATION - Step 42**
3. **INSTALL NO. 1 INSTRUMENT PANEL REGISTER ASSEMBLY** . Refer to **INSTALLATION - Step 43**
4. **INSTALL NO. 1 INSTRUMENT CLUSTER FINISH PANEL GARNISH** . Refer to **INSTALLATION - Step 44**
5. **INSTALL INSTRUMENT SIDE PANEL LH** . Refer to **INSTALLATION - Step 45**
6. **INSTALL FRONT DOOR OPENING TRIM WEATHERSTRIP LH** . Refer to **INSTALLATION - Step 43**
7. **CONNECT CABLE TO AUXILIARY BATTERY NEGATIVE TERMINAL**

    Refer to **INSTALLATION - Step 2**

RELAY

ON-VEHICLE INSPECTION

ON-VEHICLE INSPECTION

1. **INSPECT STOP LIGHT CONTROL RELAY (STOP RELAY)**
    a. Remove the stop light control relay (STOP relay).

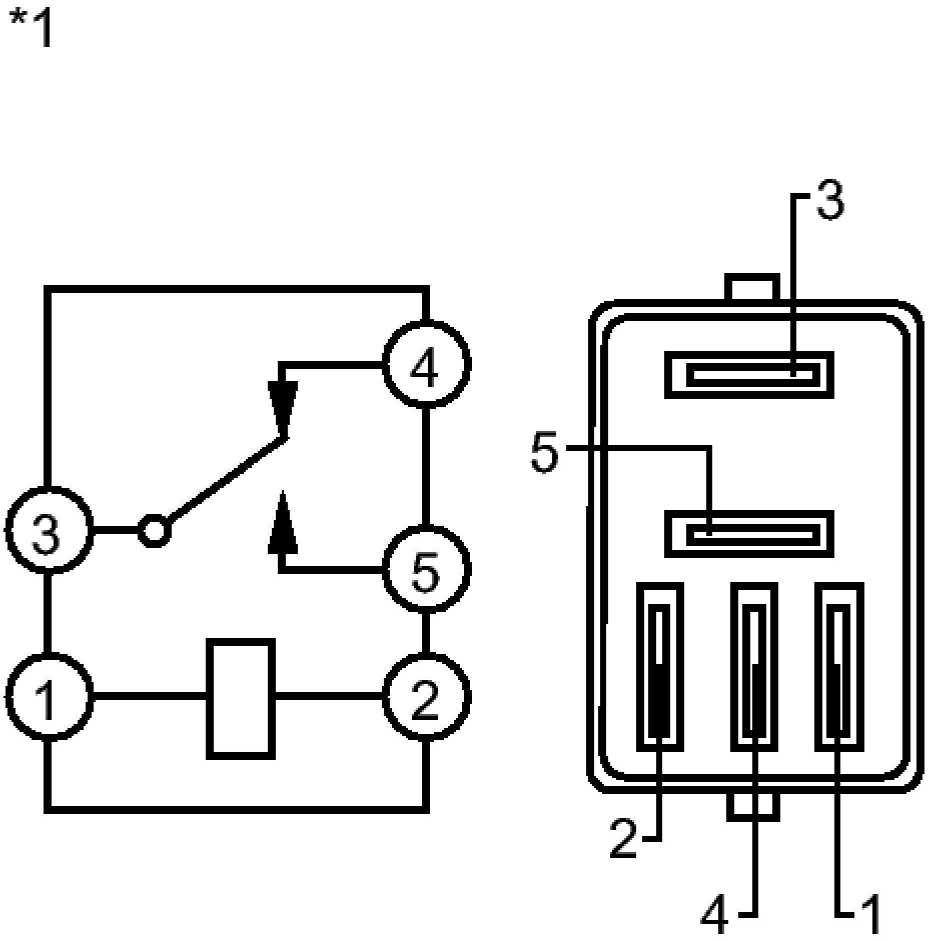

Fig. 28: Identifying Stop Light Control Relay
Courtesy of TOYOTA MOTOR SALES, U.S.A., INC.

b. Check both the relay case and the terminal for deformation and corrosion.

OK

No deformation or corrosion.

c. Measure the resistance according to the value(s) in the table below.

Standard Resistance

Tester Connection	Condition	Specified Condition
	Voltage is	

3 - 4	not applied between terminals 1 and 2	Below 1 ohms
3 - 5	Voltage is not applied between terminals 1 and 2	10 kohms or higher
3 - 4	Voltage is applied between terminals 1 and 2	10 kohms or higher
3 - 5	Voltage is applied between terminals 1 and 2	Below 1 ohms

TEXT IN ILLUSTRATION

*1	Stop Light Control Relay (STOP Relay)

If the result is not as specified, replace the stop light control relay (STOP relay).

BRAKE ACTUATOR

COMPONENTS

ILLUSTRATION

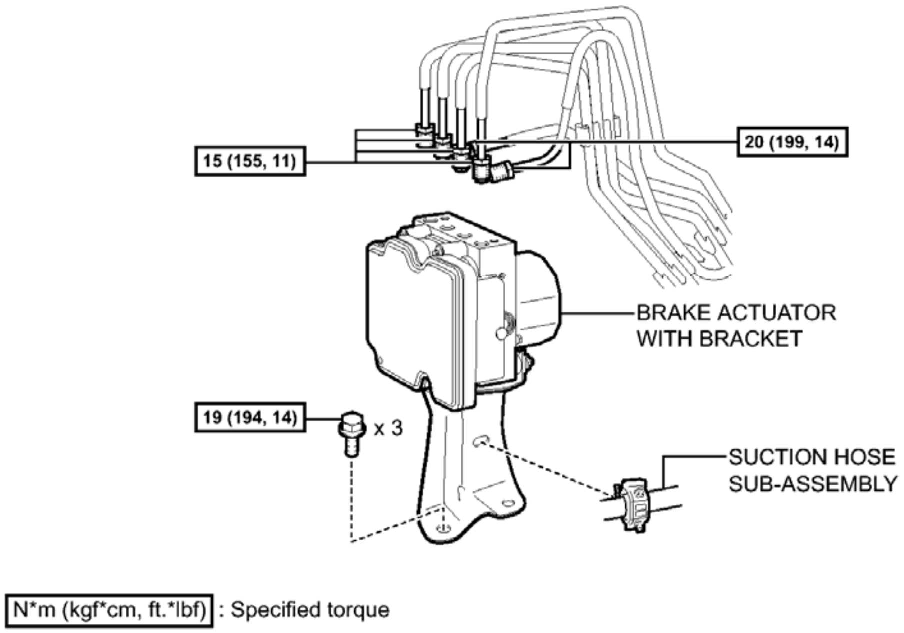
15 (155, 11)
20 (199, 14)
BRAKE ACTUATOR WITH BRACKET
19 (194, 14)
x 3
SUCTION HOSE SUB-ASSEMBLY
N*m (kgf*cm, ft.*lbf) : Specified torque

c

Fig. 1: Identifying Brake Actuator Replacement Components With Torque Specifications (1 Of 2)
Courtesy of TOYOTA MOTOR SALES, U.S.A., INC.

ILLUSTRATION

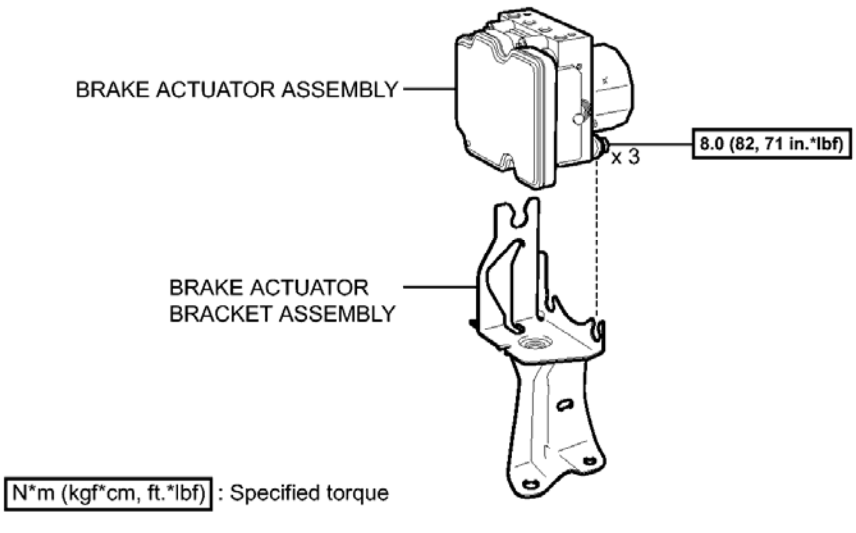
BRAKE ACTUATOR ASSEMBLY
8.0 (82, 71 in.*lbf)
x 3
BRAKE ACTUATOR BRACKET ASSEMBLY
N*m (kgf*cm, ft.*lbf) : Specified torque
c

Fig. 2: Identifying Brake Actuator Replacement Components With Torque Specifications (2 Of 2)
Courtesy of TOYOTA MOTOR SALES, U.S.A., INC.

ON-VEHICLE INSPECTION

ON-VEHICLE INSPECTION

1. **CONNECT TECHSTREAM**
   a. Connect the Techstream to the DLC3.
   b. Start the engine and run it at idle.
   c. Turn the Techstream on.
   d. Enter the following menus: Chassis / ABS/VSC/TRAC / Active Test.

      HINT:

      Refer to the Techstream operator's manual for further details.

2. **INSPECT ACTUATOR MOTOR OPERATION**
   a. Enter the following menus: Chassis / ABS/VSC/TRAC / Active Test / Motor Relay.
   b. Turn the motor relay on, and check for actuator motor operation sounds.

      NOTE: **Do not keep the motor relay on continuously for more than 5 seconds. If it needs to be operated repeatedly, set an interval of more than 20 seconds between operations.**

   c. Turn the motor relay off.
   d. Fully depress the brake pedal and hold it for approximately 15 seconds. Check that the initial pedal depth is maintained for the entire 15 seconds.

e. Turn the motor relay on, check that the pedal does not pulsate.
f. Turn the motor relay off and release the brake pedal.

3. **INSPECT RIGHT FRONT WHEEL OPERATION**
   a. Enter the following menus: Chassis / ABS /VSC/TRAC / Active Test / ABS Solenoid.
   b. Depress the brake pedal and hold it.

NOTE: Do not turn on a solenoid in a manner different than that shown in the following steps.

   c. Turn the SFRH and SFRR solenoids on simultaneously, and check that the pedal cannot be depressed further.

NOTE: Each solenoid operates for 2 seconds and turns off automatically. If a solenoid needs to be operated repeatedly, set an interval of more than 20 seconds between operations.

   d. Turn the SFRH and SFRR solenoids off simultaneously, and check that the pedal can be depressed.
   e. With the pedal still depressed, turn the motor relay on and check that the pedal returns.

NOTE: Do not keep the motor relay on continuously for more than 5 seconds. If it needs to be operated repeatedly, set an interval of more than 20 seconds between operations.

   f. Turn the motor relay off and release the brake pedal.

4. **INSPECT OTHER WHEEL OPERATION**
   a. Using the same procedure, check the solenoids for the other wheels.

HINT:

- Front left wheel: SFLH, SFLR
- Rear right wheel: SRRH, SRRR
- Rear left wheel: SRLH, SRLR

REMOVAL

REMOVAL

1. **PRECAUTION**

NOTE: After turning the ignition switch off, waiting time may be required before disconnecting the cable from the negative (-) battery terminal. Therefore, make sure to read the disconnecting the cable from the negative (-) battery terminal notice before proceeding with work. Refer to PRECAUTION .

2. **DISCONNECT CABLE FROM NEGATIVE BATTERY TERMINAL**

NOTE: **When disconnecting the cable, some systems need to be initialized after the cable is reconnected. Refer to INITIALIZATION .**

3. **SEPARATE SUCTION HOSE SUB-ASSEMBLY**
   a. Disengage the clamp and separate the suction hose sub-assembly from the brake actuator bracket assembly.

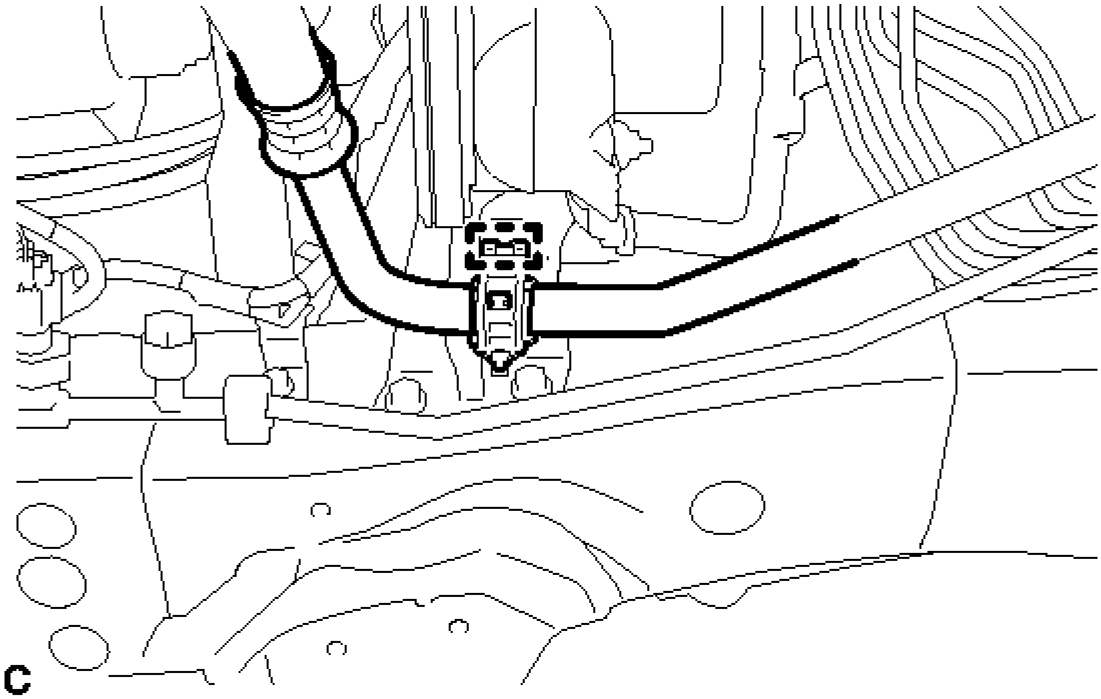

Fig. 3: Locating Suction Hose Sub-Assembly Clamp
Courtesy of TOYOTA MOTOR SALES, U.S.A., INC.

4. **REMOVE BRAKE ACTUATOR WITH BRACKET**
   a. Disengage the claw (a) and raise the lock lever.

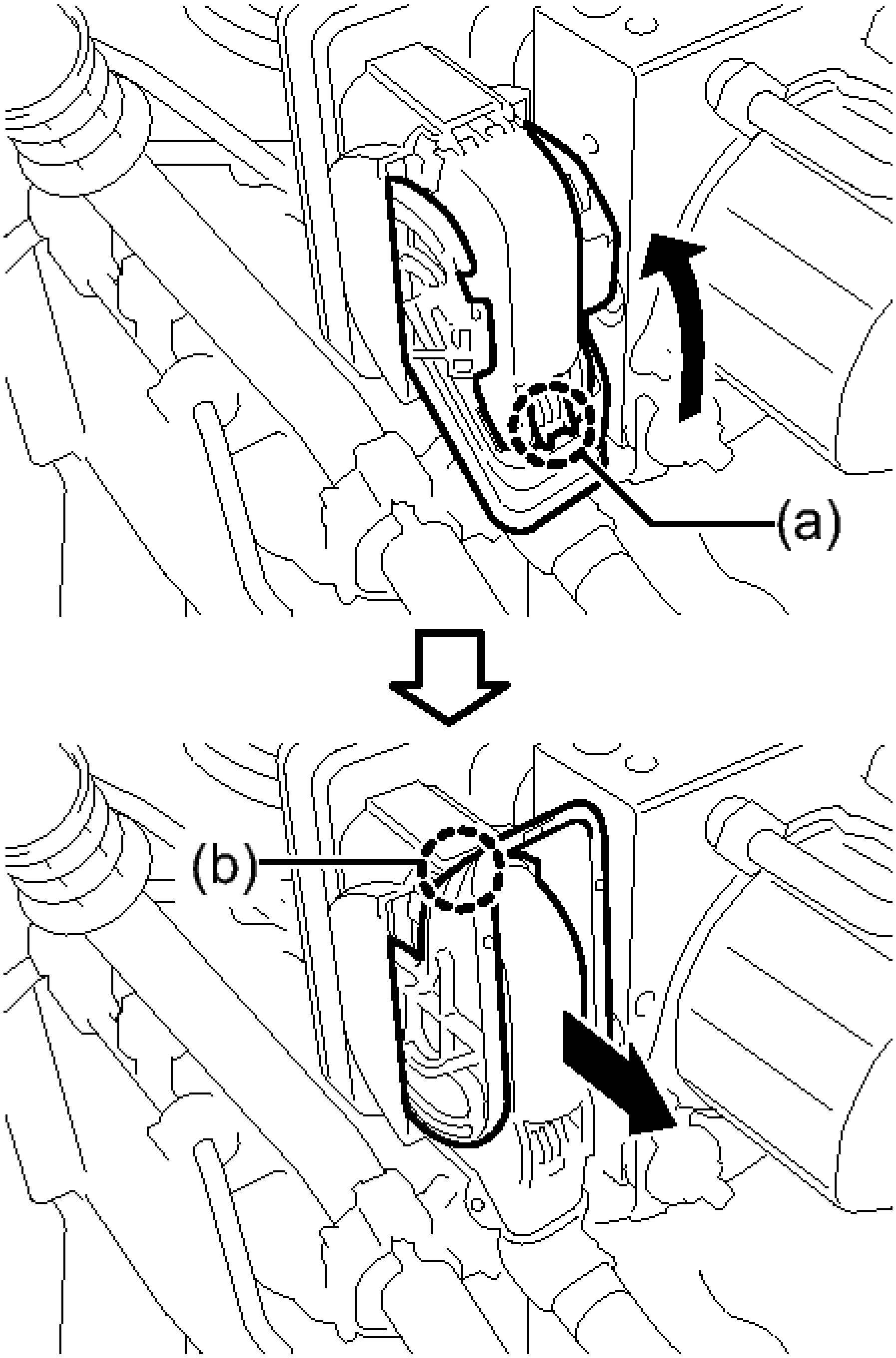

C

Fig. 4: Disengage/Engage Brake Actuator Assembly Claw And Connector
Courtesy of TOYOTA MOTOR SALES, U.S.A., INC.

b. Engage the claw (b) and disconnect the connector from the brake actuator assembly.

NOTE: Be careful not to allow any brake fluid to enter the connector.

c. Using a union nut wrench, disconnect the 6 brake lines from the brake actuator assembly.

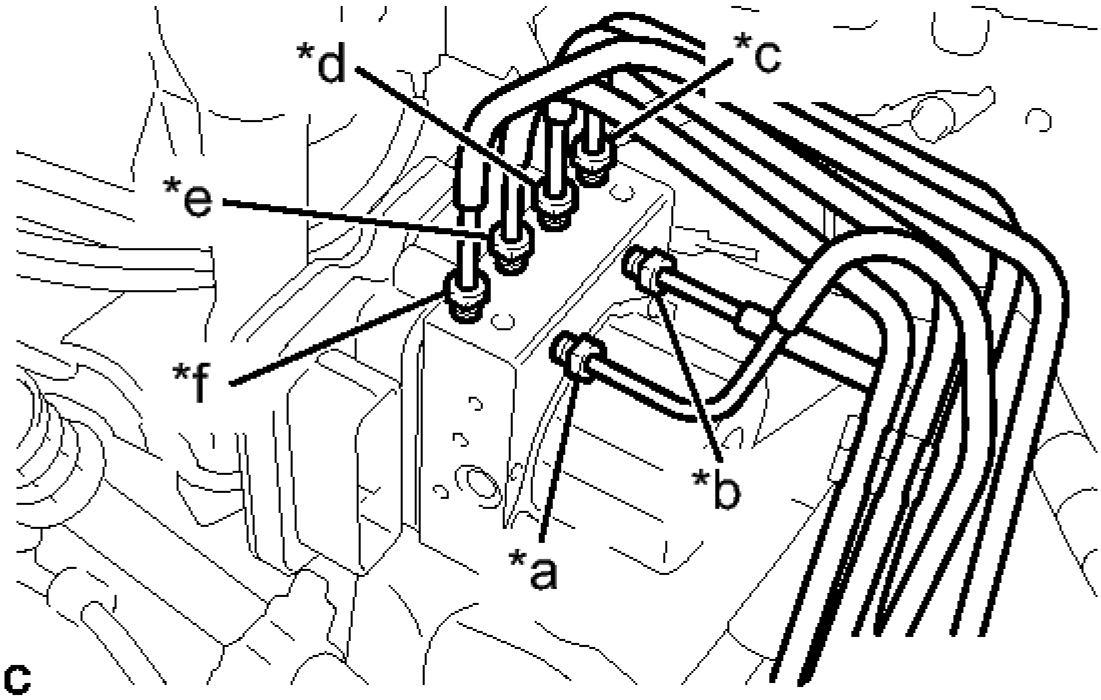

Fig. 5: Identifying Brake Actuator Assembly Brake Lines
Courtesy of TOYOTA MOTOR SALES, U.S.A., INC.

TEXT IN ILLUSTRATION

*a	From 1st Chamber of Master Cylinder Sub-assembly
*b	From 2nd Chamber of Master Cylinder Sub-assembly
*c	To Front Wheel Cylinder Assembly LH
	To Rear Wheel

*d	Cylinder Assembly RH
*e	To Rear Wheel Cylinder Assembly LH
*f	To Front Wheel Cylinder Assembly RH

d. Use tags or make a memo to identify the places to reconnect the lines.

e. Remove the 3 bolts and brake actuator with bracket from the vehicle body.

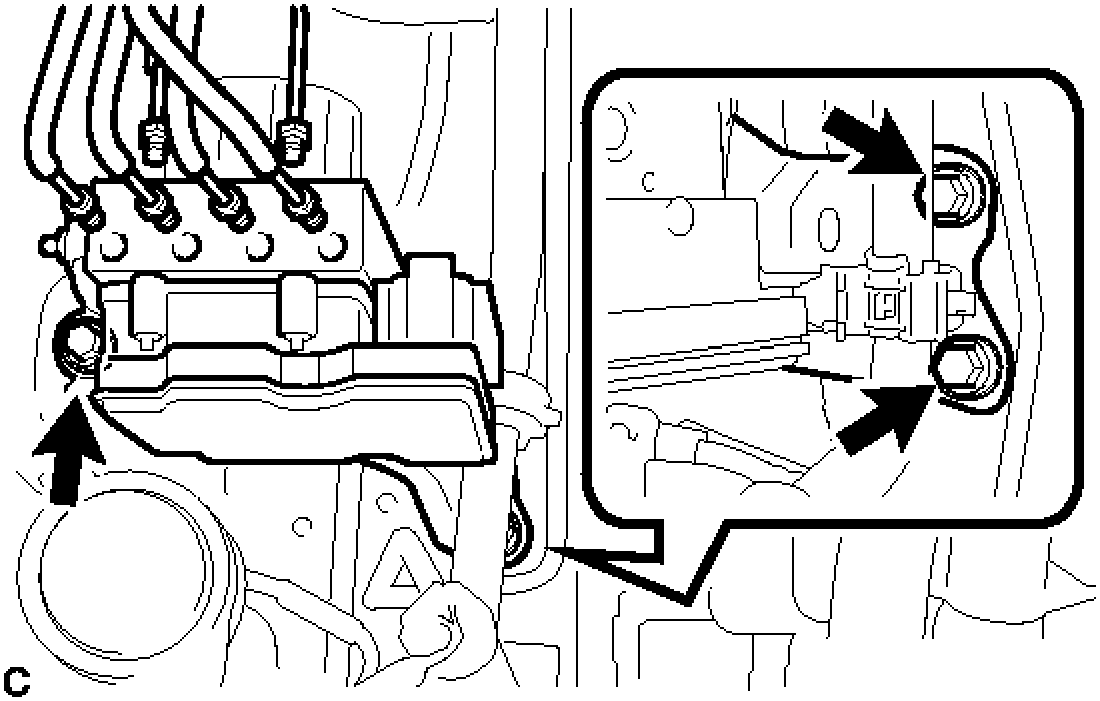

Fig. 6: Identifying Brake Actuator Bracket And Bolts
Courtesy of TOYOTA MOTOR SALES, U.S.A., INC.

NOTE: **Do not damage the brake lines, suction hose sub-assembly or wire harness.**

5. **REMOVE BRAKE ACTUATOR ASSEMBLY**

a. Loosen the 3 nuts and remove the brake actuator assembly from the brake actuator bracket assembly.

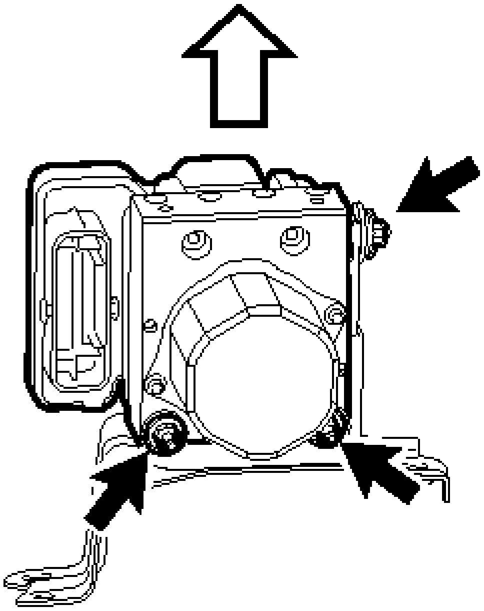

Fig. 7: Identifying Brake Actuator Assembly Fasteners
Courtesy of TOYOTA MOTOR SALES, U.S.A., INC.

INSTALLATION

INSTALLATION

1. **INSTALL BRAKE ACTUATOR ASSEMBLY**
    a. Install the brake actuator assembly to the brake actuator bracket assembly.

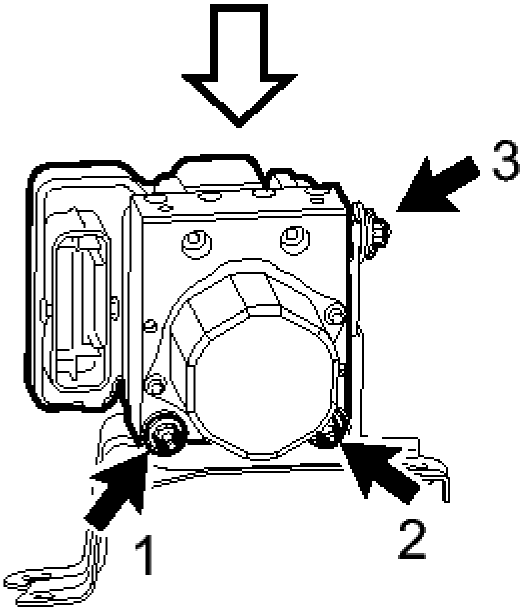

C

Fig. 8: Identifying Brake Actuator Assembly Fasteners With Tightening Sequence
Courtesy of TOYOTA MOTOR SALES, U.S.A., INC.

NOTE:

- **Do not remove the hole plugs of a new brake actuator assembly before connecting the brake lines because the brake actuator assembly is filled with brake fluid.**
- **Do not hold the brake actuator assembly by the connector.**

b. Tighten the 3 nuts.

Torque: 8.0 N*m (82 kgf*cm, 71 in.*lbf)

NOTE: Tighten the 3 nuts in the order shown in the illustration.

2. **INSTALL BRAKE ACTUATOR WITH BRACKET**
   a. Install the brake actuator with bracket to the vehicle body with the 3 bolts.

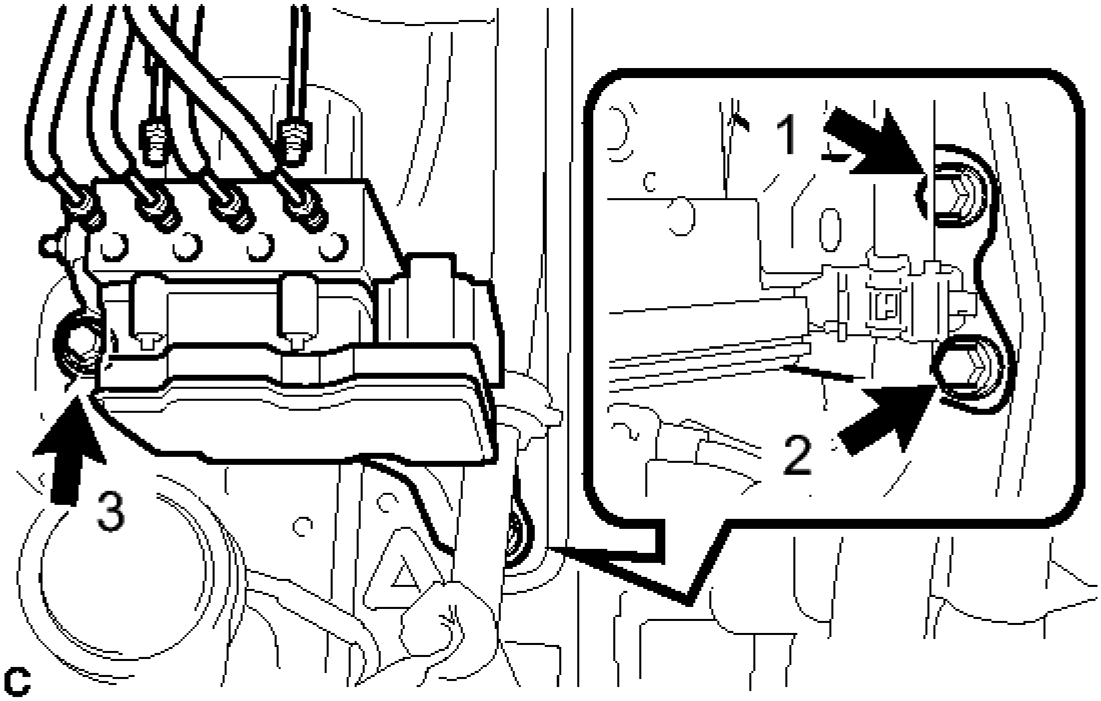

Fig. 9: Identifying Brake Actuator Bracket And Bolts With Tightening Sequence
Courtesy of TOYOTA MOTOR SALES, U.S.A., INC.

Torque: 19 N*m (194 kgf*cm, 14 ft.*lbf)

NOTE:	- **Do not damage the brake lines, suction hose sub-assembly or wire harness.** - **Tighten the 3 bolts in the order shown in the illustration.**

b. Temporarily tighten each brake line to the correct position on the brake actuator assembly as shown in the illustration.

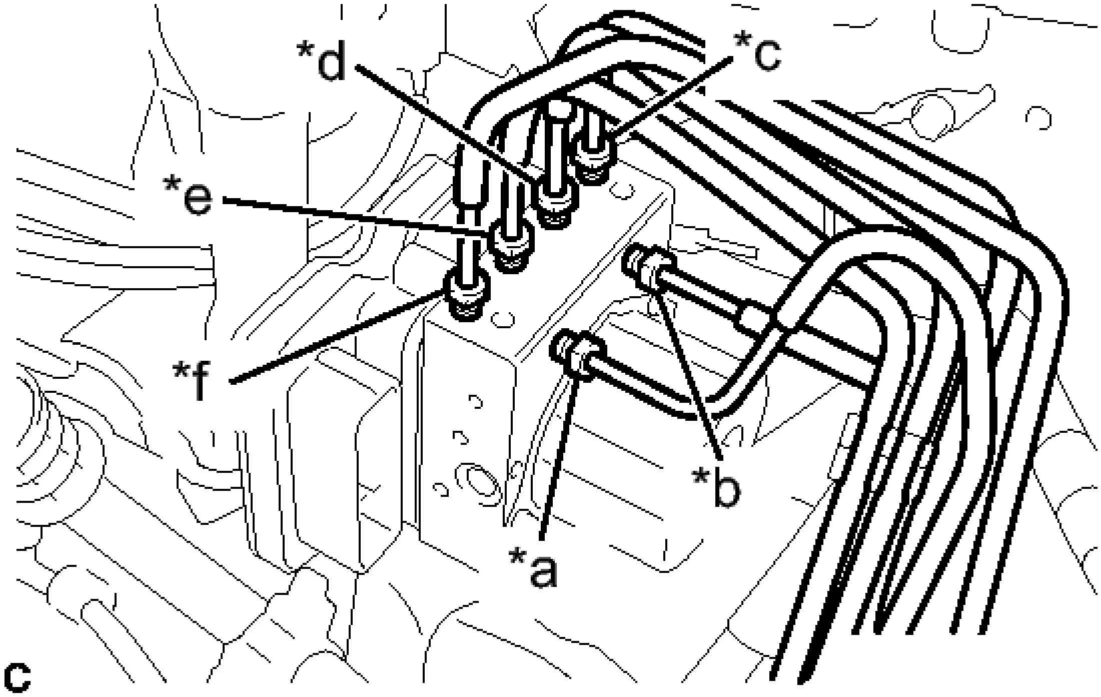

Fig. 10: Identifying Brake Actuator Assembly Brake Lines
Courtesy of TOYOTA MOTOR SALES, U.S.A., INC.

TEXT IN ILLUSTRATION

*a	From 1st Chamber of Master Cylinder Sub-assembly
*b	From 2nd Chamber of Master Cylinder Sub-assembly
*c	To Front Wheel Cylinder Assembly LH
*d	To Rear Wheel Cylinder Assembly RH
	To Rear

*e	Wheel Cylinder Assembly LH
*f	To Front Wheel Cylinder Assembly RH

c. Using a union nut wrench, fully tighten each brake line.

***c, *d, *e, *f**

Torque: 15 N*m (155 kgf*cm, 11 ft.*lbf)

***a, *b**

Torque: 20 N*m (199 kgf*cm, 14 ft.*lbf)

NOTE: **Use the formula to calculate special torque values for situations where the union nut wrench is combined with a torque wrench. Refer to PRECAUTION .**

d. Connect the brake actuator connector and disengage the claw (b).

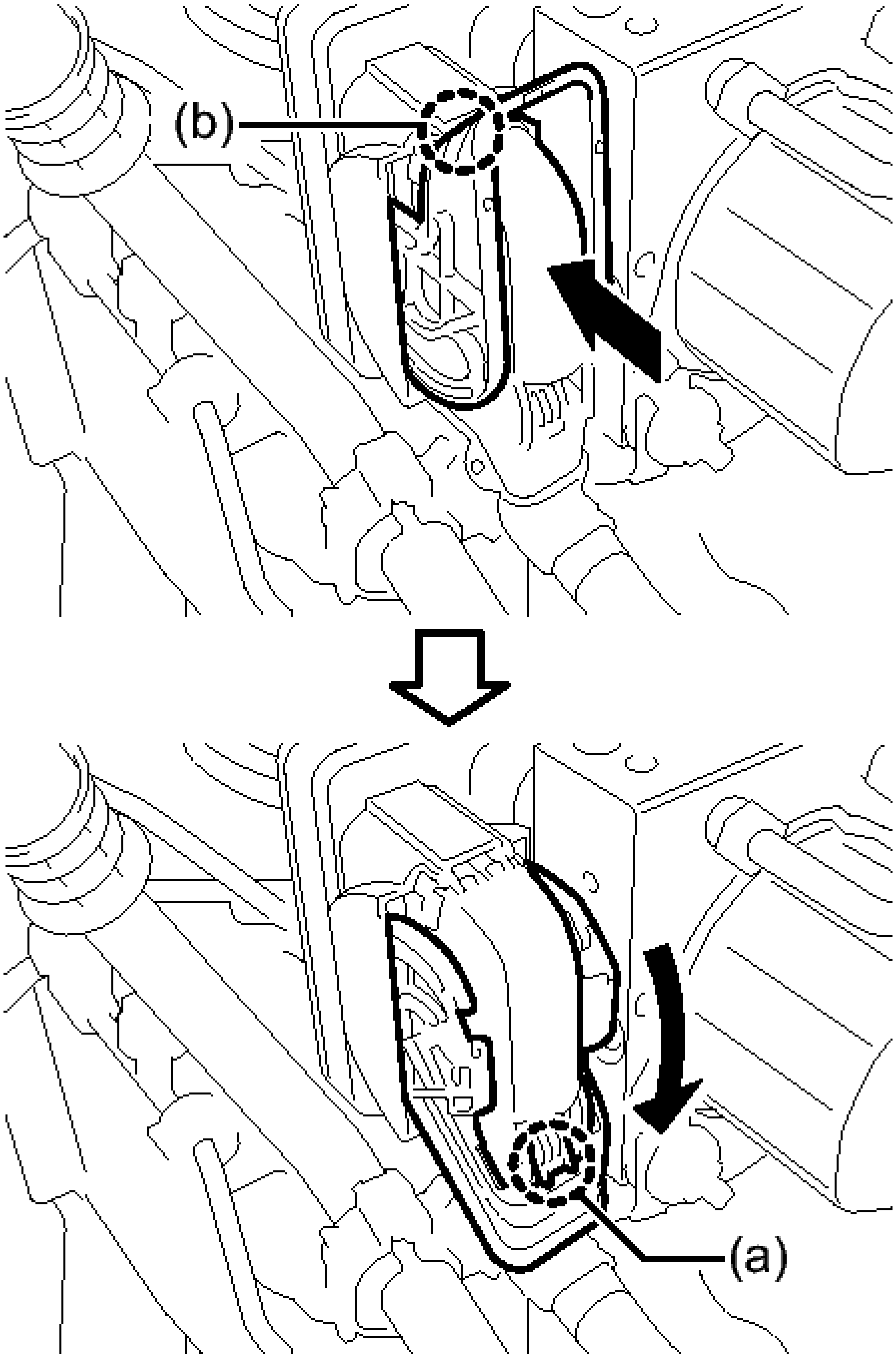

Fig. 11: Disengage/Engage Brake Actuator Assembly Claw And Connector
Courtesy of TOYOTA MOTOR SALES, U.S.A., INC.

e. Put the lever down and engage the claw (a) to engage the connector lock.

NOTE:

- **Make sure that the connector is locked securely.**
- **Make sure that the actuator connector can be connected smoothly. Do not allow water, oil or dirt to enter.**

3. **INSTALL SUCTION HOSE SUB-ASSEMBLY**
    a. Engage the clamp to install the suction hose sub-assembly to the brake actuator bracket assembly.
4. **CONNECT CABLE TO NEGATIVE BATTERY TERMINAL**

NOTE: **When disconnecting the cable, some systems need to be initialized after the cable is reconnected. Refer to INITIALIZATION .**

5. **BLEED BRAKE SYSTEM**

    Refer to **BLEEDING** .

6. **INSPECT BRAKE ACTUATOR USING TECHSTREAM**

    Refer to **ON-VEHICLE INSPECTION**.

7. **PERFORM SYSTEM VARIANT LEARNING**

    Refer to **CALIBRATION** .

8. **CHECK FOR AND CLEAR DTCS**

    Refer to **DTC CHECK / CLEAR** .

FRONT SPEED SENSOR

COMPONENTS

ILLUSTRATION

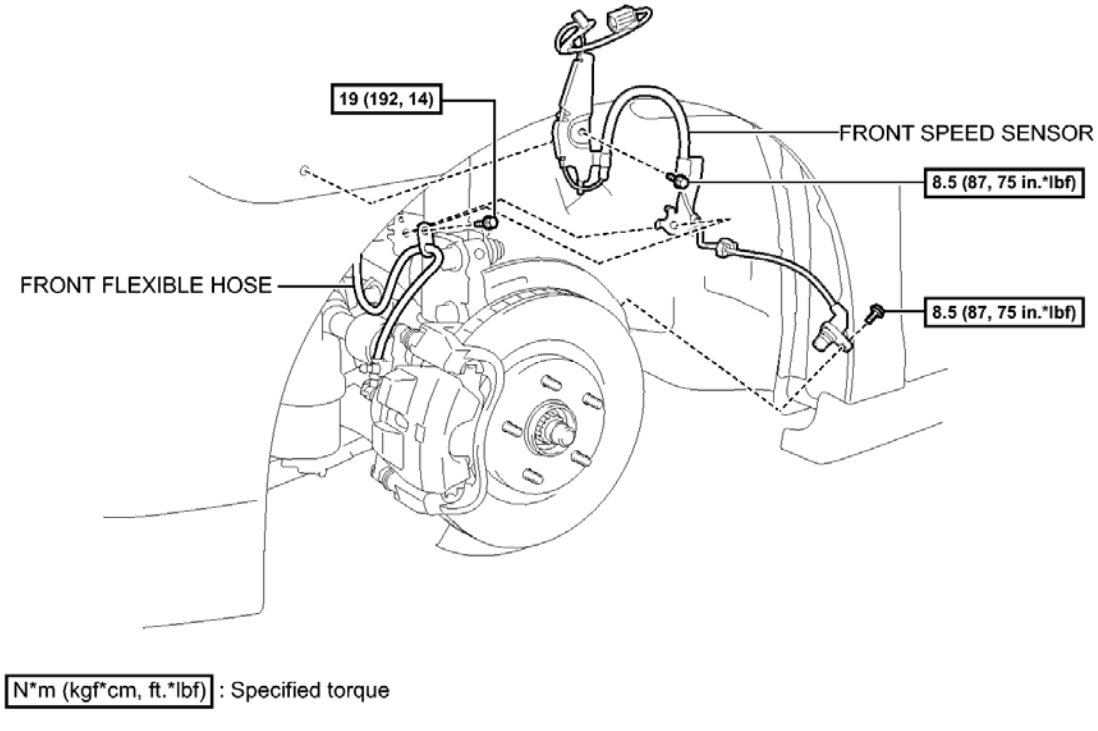
19 (192, 14)
FRONT SPEED SENSOR
8.5 (87, 75 in.*lbf)
FRONT FLEXIBLE HOSE
8.5 (87, 75 in.*lbf)
N*m (kgf*cm, ft.*lbf) : Specified torque
c

Fig. 12: Identifying Front Speed Sensor Replacement Components With Torque Specifications
Courtesy of TOYOTA MOTOR SALES, U.S.A., INC.

REMOVAL

REMOVAL

HINT:

- Use the same procedure for the LH side and RH side.
- The following procedure is for the LH side.
- If the sensor rotor needs to be replaced, replace the front drive outboard joint shaft assembly.

1. **PRECAUTION**

   NOTE: **After turning the ignition switch off, waiting time may be required before disconnecting the cable from the negative (-) battery terminal. Therefore, make sure to read the disconnecting the cable from the negative (-) battery terminal notice before proceeding with work. Refer to PRECAUTION .**

2. **DISCONNECT CABLE FROM NEGATIVE BATTERY TERMINAL**

   NOTE: **When disconnecting the cable, some systems need to be initialized after the cable is reconnected. Refer to INITIALIZATION .**

3. **REMOVE FRONT WHEEL**
4. **REMOVE FRONT FENDER LINER**

   HINT:

   Use the same procedure for the LH side and RH side. Refer to **REMOVAL - Step 3** .

5. **REMOVE FRONT SPEED SENSOR**
   a. Disconnect the connector and disengage the clamp.

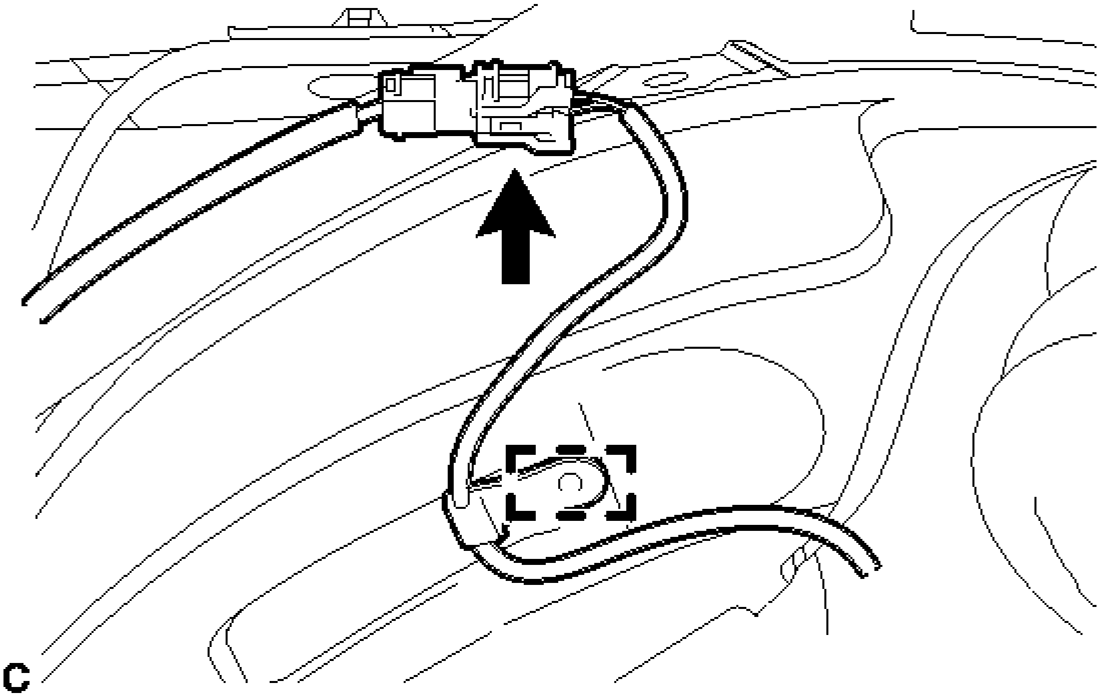

Fig. 13: Identifying Front Speed Sensor Connector And Clamp
Courtesy of TOYOTA MOTOR SALES, U.S.A., INC.

   b. Remove the bolt and front speed sensor clamp from the body.

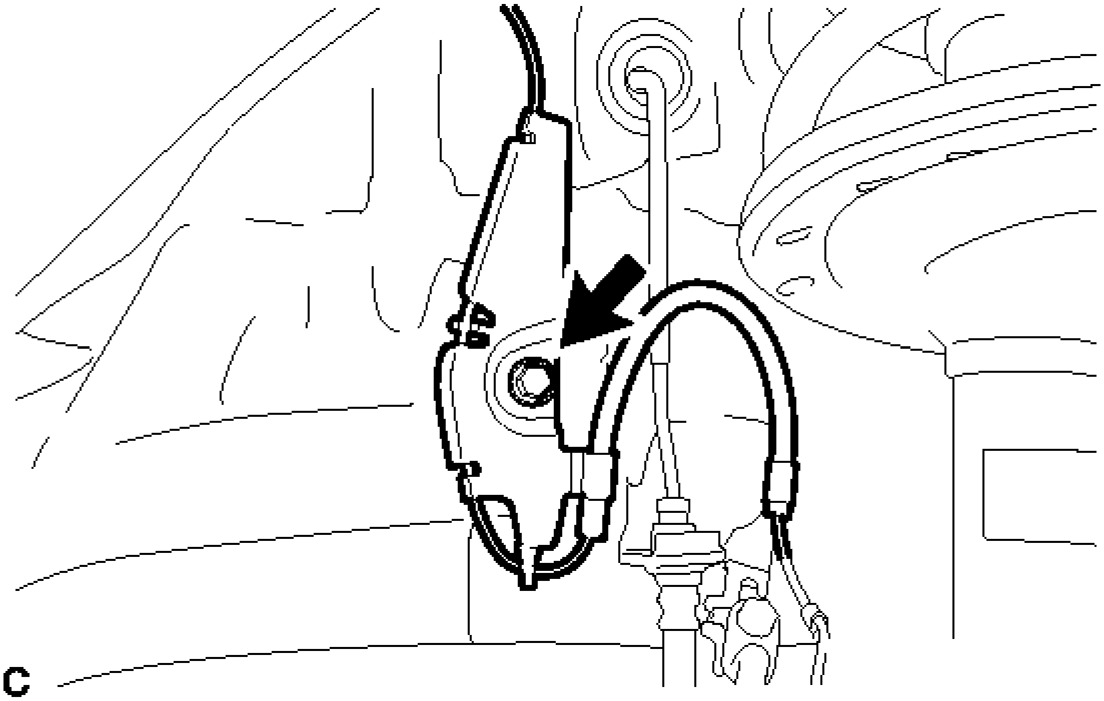

Fig. 14: Identifying Front Speed Sensor Clamp Bolt
Courtesy of TOYOTA MOTOR SALES, U.S.A., INC.

c. Remove the bolt, front flexible hose and front speed sensor clamp together from the shock absorber assembly.

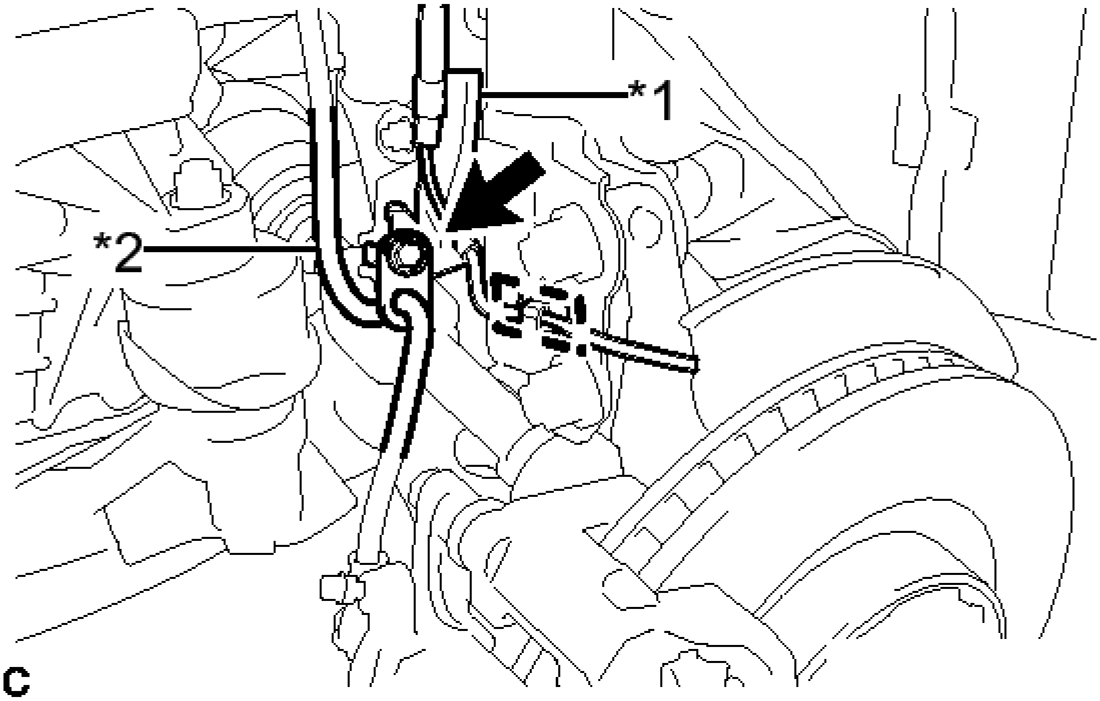

Fig. 15: Locating Front Speed Sensor Clamp And Flexible Hose

Courtesy of TOYOTA MOTOR SALES, U.S.A., INC.

TEXT IN ILLUSTRATION

*1	Front Speed Sensor Clamp
*2	Front Flexible Hose

d. Disengage the clamp from the front shock absorber assembly.

e. Remove the bolt and front speed sensor from the steering knuckle.

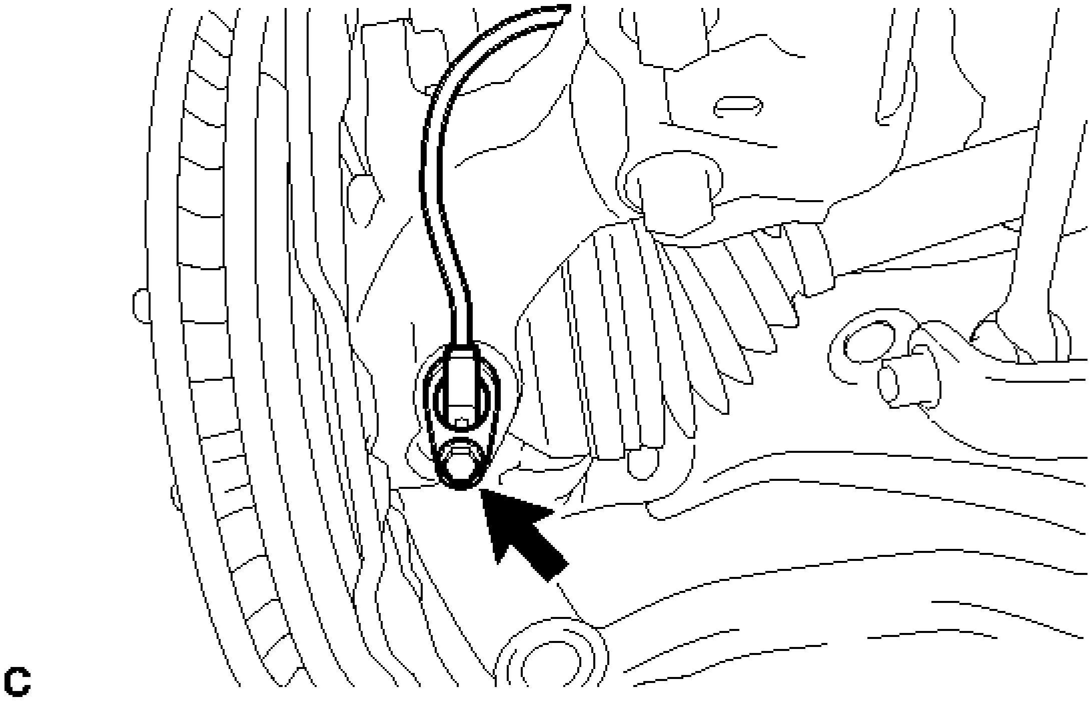

Fig. 16: Locating Front Speed Sensor And Bolt
Courtesy of TOYOTA MOTOR SALES, U.S.A., INC.

NOTE:

- **Prevent foreign matter from attaching to the front speed sensor tip.**
- **Clean the speed sensor installation hole and the contact surfaces every time the front speed sensor is removed.**

INSTALLATION

INSTALLATION

HINT:

- Use the same procedure for the LH side and RH side.
- The following procedure is for the LH side.
- If the sensor rotor needs to be replaced, replace the front drive outboard joint shaft assembly.

1. **INSTALL FRONT SPEED SENSOR**
    a. Install the front speed sensor to the steering knuckle with the bolt.

    Torque: 8.5 N*m (87 kgf*cm, 75 in.*lbf)

    NOTE:

    - **Prevent foreign matter from attaching to the front speed sensor tip.**
    - **Firmly insert the front speed sensor body into the steering knuckle before tightening the bolt.**
    - **After installing the front speed sensor to the steering knuckle, make sure that there is no clearance between the front speed sensor stay and steering knuckle. Also make sure that no foreign matter is stuck between the parts.**

    b. Install the front speed sensor clamp and front flexible hose to the shock absorber bracket with the bolt.

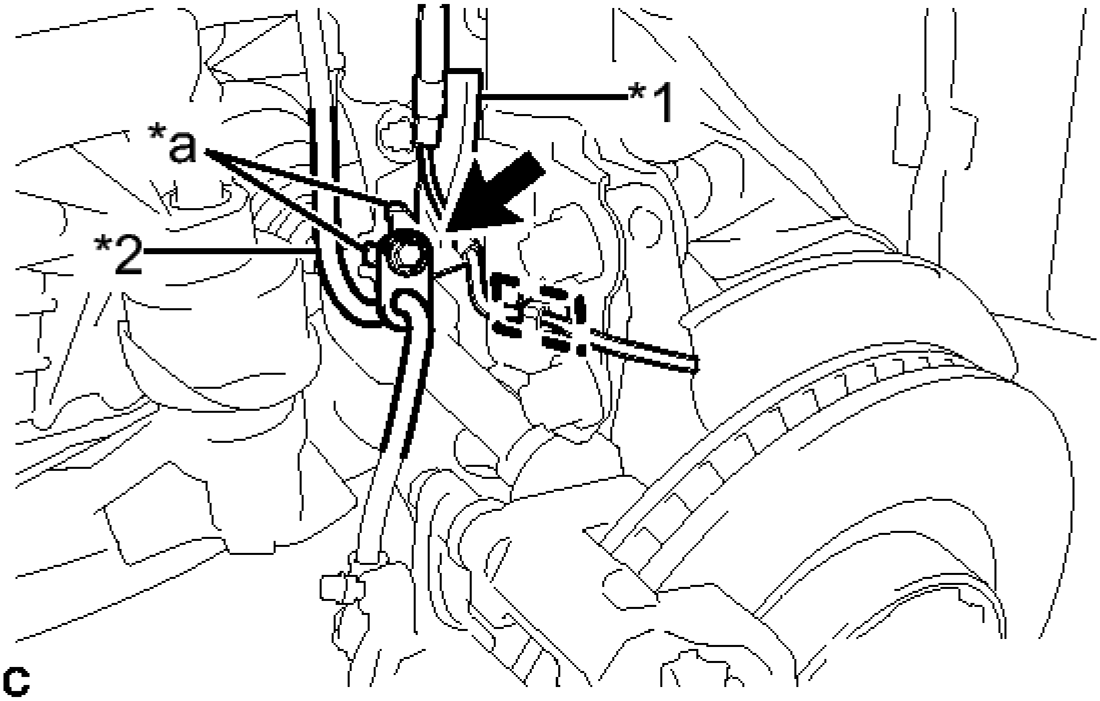

Fig. 17: Locating Front Speed Sensor Clamp, Flexible Hose And Claw
Courtesy of TOYOTA MOTOR SALES, U.S.A., INC.

TEXT IN ILLUSTRATION

*1	Front Speed Sensor Clamp
*2	Front Flexible Hose
*a	Claw

Torque: 19 N*m (192 kgf*cm, 14 ft.*lbf)

NOTE:

- **Do not twist the wire harness for the front speed sensor when installing it.**
- **Securely set the 2 claws of the front speed sensor clamp to the shock absorber bracket.**
- **A bolt tightens the brake flexible hose and front speed sensor together. Make sure that the front flexible hose is positioned over the front speed sensor.**

c. Engage the clamp to the front shock absorber.

d. Install the speed sensor clamp to the body with the bolt.

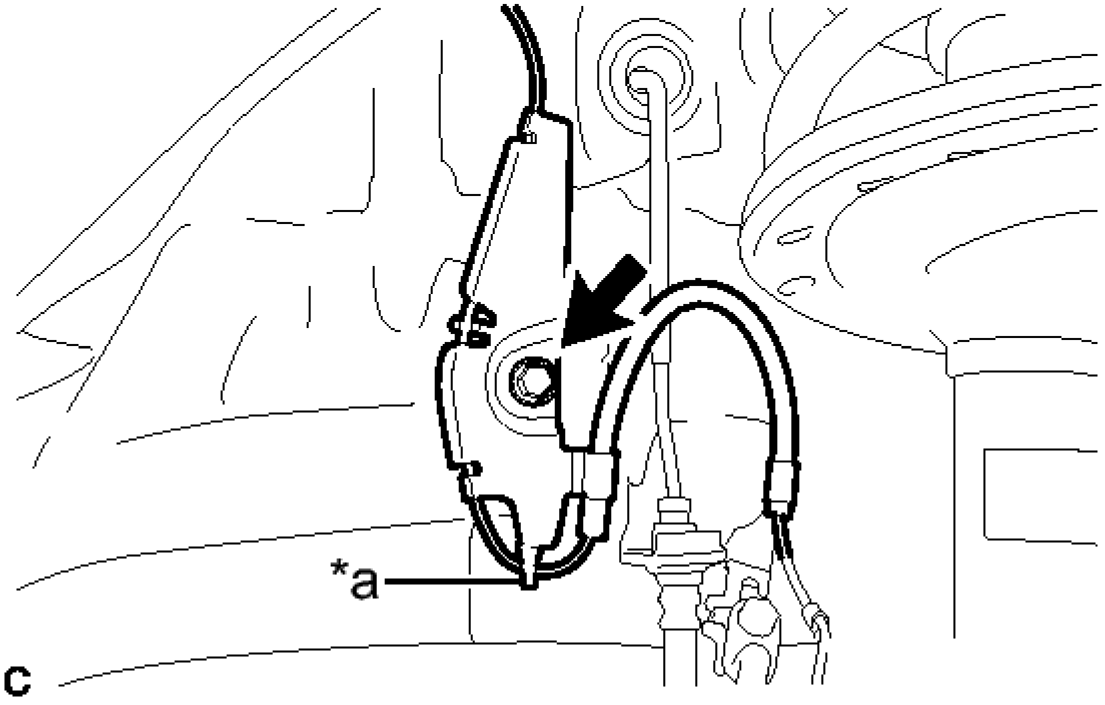

Fig. 18: Identifying Front Speed Sensor Clamp Bolt And Claw
Courtesy of TOYOTA MOTOR SALES, U.S.A., INC.

TEXT IN ILLUSTRATION

*a	Claw

Torque: 8.5 N*m (87 kgf*cm, 75 in.*lbf)

NOTE:

- **Do not twist the wire harness for the front speed sensor when installing it.**
- **Securely set the claw of the front speed sensor clamp to the body.**

e. Engage the clamp and connect the connector.

2. **INSTALL FRONT FENDER LINER**

   HINT:

   Use the same procedure for the LH side and RH side. Refer to **INSTALLATION - Step 3** .

3. **INSTALL FRONT WHEEL**

   Torque: 103 N*m (1049 kgf*cm, 76 ft.*lbf)

4. **CONNECT CABLE TO NEGATIVE BATTERY TERMINAL**

   NOTE: **When disconnecting the cable, some systems need to be initialized after the cable is reconnected. Refer to INITIALIZATION .**

5. **CHECK FOR SPEED SENSOR SIGNAL**

   Refer to **TEST MODE PROCEDURE** .

REAR SPEED SENSOR

COMPONENTS

ILLUSTRATION

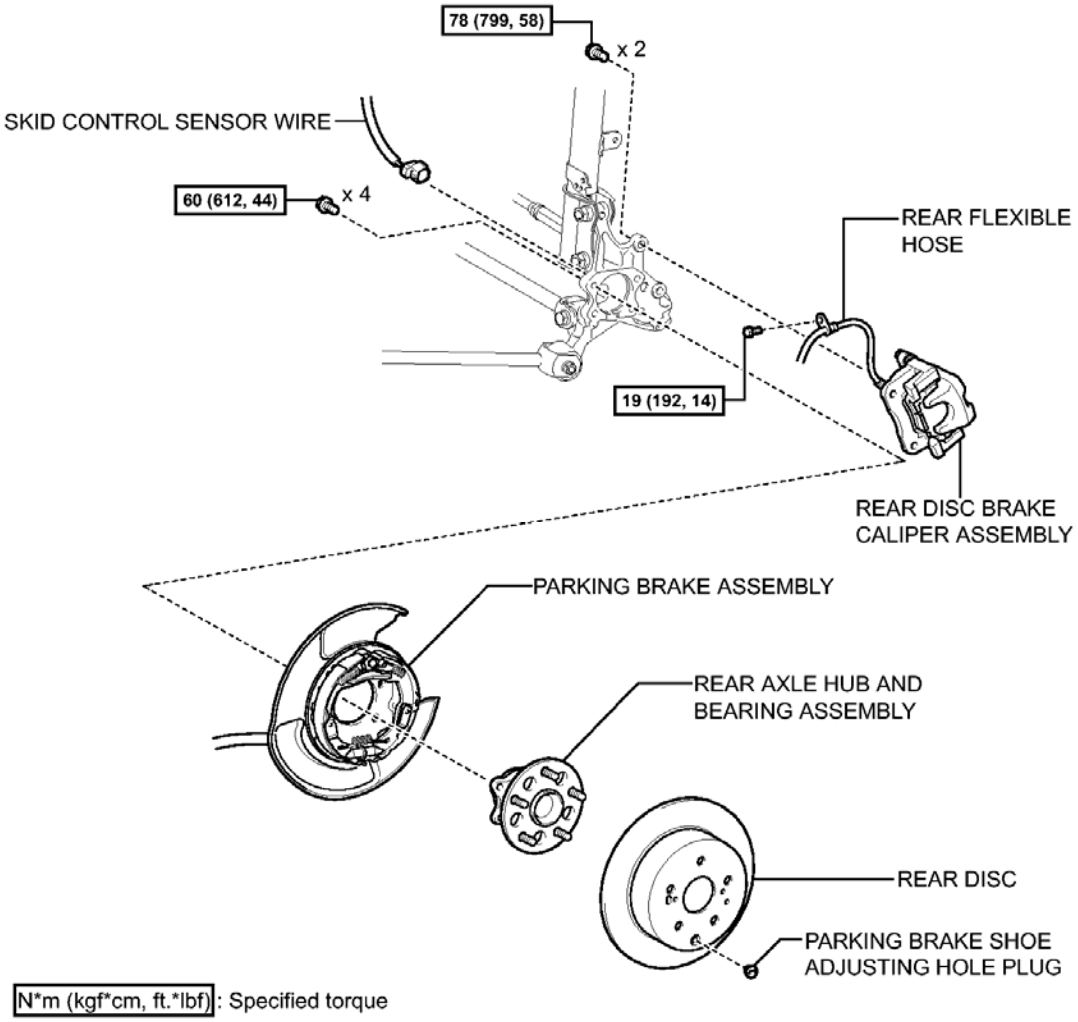
78 (799, 58)
x 2
SKID CONTROL SENSOR WIRE
60 (612, 44)
x 4
REAR FLEXIBLE HOSE
19 (192, 14)
REAR DISC BRAKE CALIPER ASSEMBLY
PARKING BRAKE ASSEMBLY
REAR AXLE HUB AND BEARING ASSEMBLY
REAR DISC
PARKING BRAKE SHOE ADJUSTING HOLE PLUG
N*m (kgf*cm, ft.*lbf): Specified torque

c

Fig. 19: Identifying Rear Speed Sensor Replacement Components With Torque Specifications
Courtesy of TOYOTA MOTOR SALES, U.S.A., INC.

REMOVAL

REMOVAL

HINT:

- Use the same procedure for the LH side and RH side.
- The following procedure is for the LH side.
- If the sensor rotor needs to be replaced, replace the rear axle hub and bearing assembly.
- The rear speed sensor is a component of the rear axle hub and bearing assembly. If the rear speed sensor malfunctions, replace the rear axle hub and bearing assembly.

1. **PRECAUTION**

NOTE: **After turning the ignition switch off, waiting time may be required before disconnecting the cable from the negative (-) battery terminal. Therefore, make sure to read the disconnecting the cable from the negative (-) battery terminal notice before proceeding with work. Refer to PRECAUTION .**

2. **DISCONNECT CABLE FROM NEGATIVE BATTERY TERMINAL**

NOTE: **When disconnecting the cable, some systems need to be initialized after the cable is reconnected. Refer to INITIALIZATION .**

3. **REMOVE REAR WHEEL**
4. **SEPARATE REAR DISC BRAKE CALIPER ASSEMBLY** . Refer to **REPLACEMENT - Step 2** .
5. **REMOVE PARKING BRAKE SHOE ADJUSTING HOLE PLUG** . Refer to **REMOVAL - Step 13** .
6. **REMOVE REAR DISC** . Refer to **REMOVAL - Step 14** .
7. **DISCONNECT SKID CONTROL SENSOR WIRE**
    a. Using a screwdriver, disconnect the connector from the rear speed sensor.

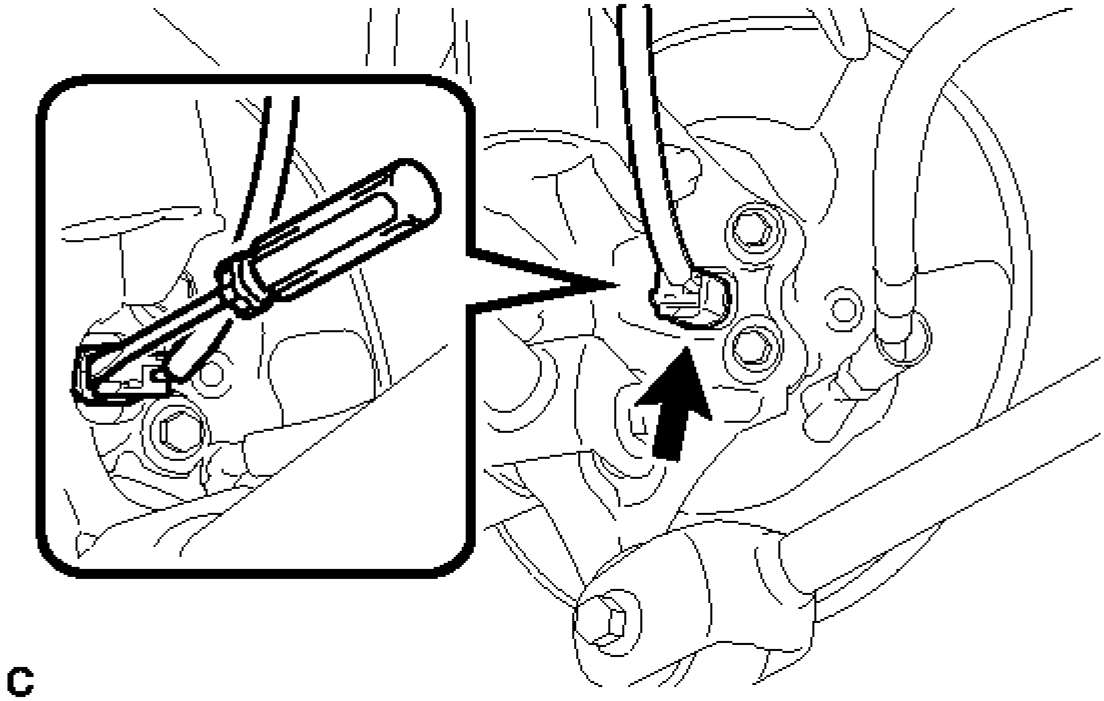

Fig. 20: Disconnecting Rear Speed Sensor
Courtesy of TOYOTA MOTOR SALES, U.S.A., INC.

NOTE: **Be careful not to damage the rear speed sensor.**

8. **REMOVE REAR AXLE HUB AND BEARING ASSEMBLY**
    a. Remove the rear axle hub and bearing assembly. Refer to **REMOVAL - Step 6** .

HINT:

  - The rear speed sensor is a component of the rear axle hub and bearing assembly. If the rear speed sensor malfunctions, replace the rear axle hub and bearing assembly.
  - If the sensor rotor needs to be replaced, replace the rear axle hub and bearing assembly.

INSTALLATION

INSTALLATION

HINT:

- Use the same procedure for the LH side and RH side.
- The following procedure is for the LH side.
- If the sensor rotor needs to be replaced, replace the rear axle hub and bearing assembly.
- The rear speed sensor is a component of the rear axle hub and bearing assembly. If the rear speed sensor malfunctions, replace the rear axle hub and bearing assembly.

1. **INSTALL REAR AXLE HUB AND BEARING ASSEMBLY**
    a. Install the rear axle hub and bearing assembly. Refer to **INSTALLATION - Step 1** .

    HINT:

    - The rear speed sensor is a component of the rear axle hub and bearing assembly. If the sensor malfunctions, replace the rear axle hub and bearing assembly.
    - If the sensor rotor needs to be replaced, replace the rear axle hub and bearing assembly.
2. **INSPECT REAR AXLE HUB BEARING LOOSENESS** . Refer to **ON-VEHICLE INSPECTION - Step 5** .
3. **INSPECT REAR AXLE HUB RUNOUT** . Refer to **ON-VEHICLE INSPECTION - Step 6** .
4. **CONNECT SKID CONTROL SENSOR WIRE**
    a. Connect the connector to the rear speed sensor.
5. **INSTALL REAR DISC** . Refer to **INSTALLATION - Step 1** .
6. **INSTALL PARKING BRAKE SHOE ADJUSTING HOLE PLUG** . Refer to **INSTALLATION - Step 2** .
7. **INSTALL REAR DISC BRAKE CALIPER ASSEMBLY** . Refer to **REPLACEMENT - Step 9** .
8. **ADJUST PARKING BRAKE**

    Refer to **ADJUSTMENT** .

9. **INSTALL REAR WHEEL**

    Torque: 103 N*m (1049 kgf*cm, 76 ft.*lbf)

10. **CONNECT CABLE TO NEGATIVE BATTERY TERMINAL**

NOTE: When disconnecting the cable, some systems need to be initialized after the cable is reconnected. Refer to INITIALIZATION .

11. **CHECK FOR SPEED SENSOR SIGNAL**

    Refer to **TEST MODE PROCEDURE** .

YAW RATE AND ACCELERATION SENSOR (FOR SEPARATE TYPE YAW RATE SENSOR)

COMPONENTS

ILLUSTRATION

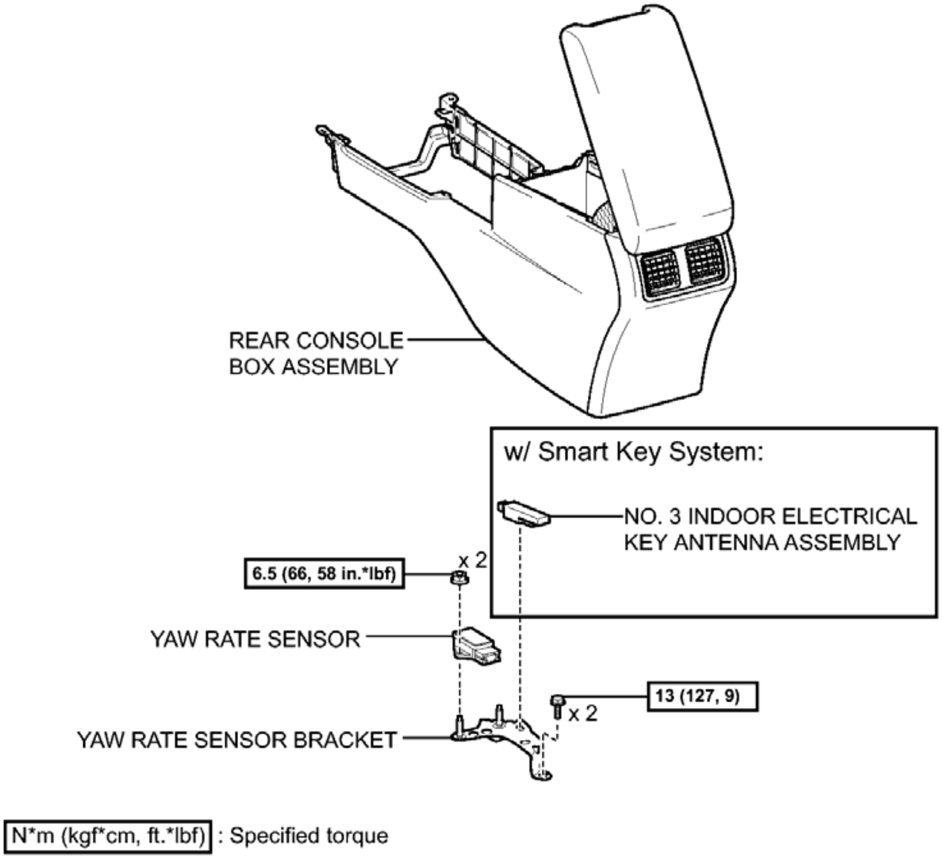
REAR CONSOLE BOX ASSEMBLY
w/ Smart Key System:
NO. 3 INDOOR ELECTRICAL KEY ANTENNA ASSEMBLY
6.5 (66, 58 in.*lbf)
x 2
YAW RATE SENSOR
13 (127, 9)
x 2
YAW RATE SENSOR BRACKET
N*m (kgf*cm, ft.*lbf) : Specified torque
c

Fig. 21: Identifying Yaw Rate And Acceleration Sensor (For Separate Type Yaw Rate Sensor) Replacement Components With Torque Specifications
Courtesy of TOYOTA MOTOR SALES, U.S.A., INC.

REMOVAL

REMOVAL

1. **PRECAUTION**

   NOTE: After turning the ignition switch off, waiting time may be required before disconnecting the cable from the negative (-) battery terminal, Therefore, make sure to read the disconnecting the cable from the negative (-) battery terminal notices before proceeding with work. Refer to PRECAUTION .

2. **DISCONNECT CABLE FROM NEGATIVE BATTERY TERMINAL**

   NOTE: When disconnecting the cable, some systems need to be initialized after the cable is reconnected. Refer to INITIALIZATION .

3. **REMOVE REAR CONSOLE BOX ASSEMBLY**

   Refer to **REMOVAL** .

4. **REMOVE YAW RATE SENSOR**
   a. Disconnect the connector from the yaw rate sensor.

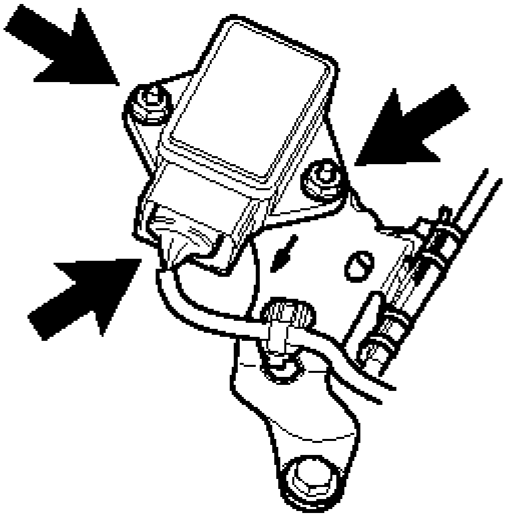

Fig. 22: Identifying Yaw Rate Sensor Connector And Fasteners
Courtesy of TOYOTA MOTOR SALES, U.S.A., INC.

   b. Remove the 2 nuts and yaw rate sensor.

5. **REMOVE NO. 3 INDOOR ELECTRICAL KEY ANTENNA ASSEMBLY (w/ Smart Key System)**
   a. Disengage the clamp to remove the No. 3 indoor electrical key antenna assembly from the yaw rate sensor bracket.

b. Disconnect the connector from the No. 3 indoor electrical key antenna assembly.

NOTE: **Be careful when removing the No. 3 indoor electrical key antenna assembly. If the antenna is dropped, replace it with a new one.**

6. REMOVE YAW RATE SENSOR BRACKET

a. Disengage the 2 clamps to separate the wire harnesses.

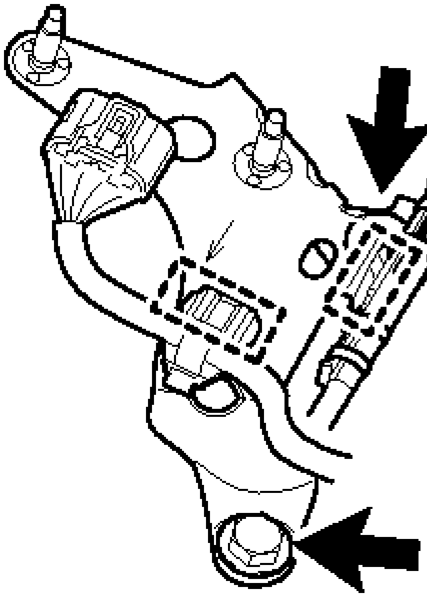

C

Fig. 23: Identifying Yaw Rate Sensor Bracket Clamps And Bolts
Courtesy of TOYOTA MOTOR SALES, U.S.A., INC.

b. Remove the 2 bolts and yaw rate sensor bracket.

INSTALLATION

INSTALLATION

1. INSTALL YAW RATE SENSOR BRACKET

a. Install the yaw rate sensor bracket with the 2 bolts.

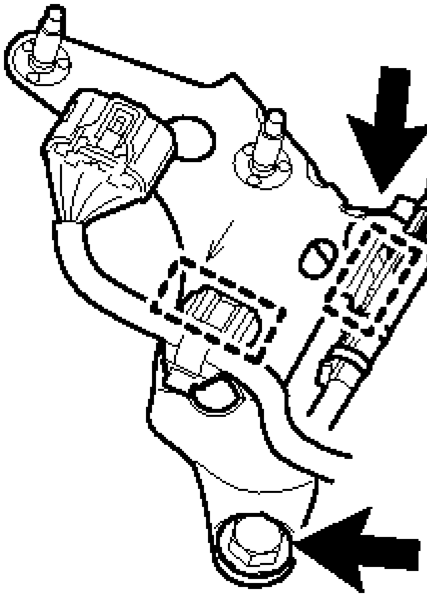

Fig. 24: Identifying Yaw Rate Sensor Bracket Clamps And Bolts
Courtesy of TOYOTA MOTOR SALES, U.S.A., INC.

Torque: 13 N*m (127 kgf*cm, 9 ft.*lbf)

b. Engage the 2 clamps to install the wire harnesses.

2. **INSTALL NO. 3 INDOOR ELECTRICAL KEY ANTENNA ASSEMBLY (w/ Smart Key System)**
   a. Connect the connector to the No. 3 indoor electrical key antenna assembly.

   NOTE: **Be careful when installing the No. 3 indoor electrical key antenna assembly. If the antenna is dropped, replace it with a new one.**

   b. Engage the clamp to install the No. 3 indoor electrical key antenna assembly to the yaw rate sensor bracket.
3. **INSTALL YAW RATE SENSOR**
   a. Install the yaw rate sensor to the yaw rate sensor bracket with the 2 nuts.

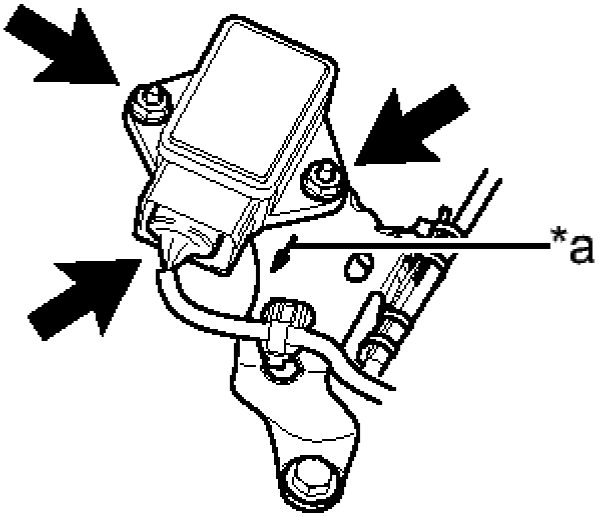

Fig. 25: Identifying Yaw Rate Sensor Connector And Fasteners
Courtesy of TOYOTA MOTOR SALES, U.S.A., INC.

TEXT IN ILLUSTRATION

*a	Arrow Mark

Torque: 6.5 N*m (66 kgf*cm, 58 in.*lbf)

NOTE:

- **Do not damage the yaw sensor.**
- **Make sure that the yaw rate sensor is installed securely.**
- **Do not use dropped or damaged parts.**
- **Keep the contact surfaces of the yaw rate sensor and yaw rate sensor bracket free of foreign matter.**
- **Make sure that the connector end of the yaw rate sensor is facing in the same direction as the arrow mark on the bracket when installing the yaw rate sensor.**

b. Connect the connector to the yaw rate sensor.

NOTE: **Make sure that the yaw rate sensor connector is connected securely.**

4. **INSTALL REAR CONSOLE BOX ASSEMBLY**

Refer to **INSTALLATION** .

5. **CONNECT CABLE TO NEGATIVE BATTERY TERMINAL**

NOTE: **When disconnecting the cable, some systems need to be initialized after the cable is reconnected. Refer to INITIALIZATION .**

STEERING ANGLE SENSOR

COMPONENTS

ILLUSTRATION

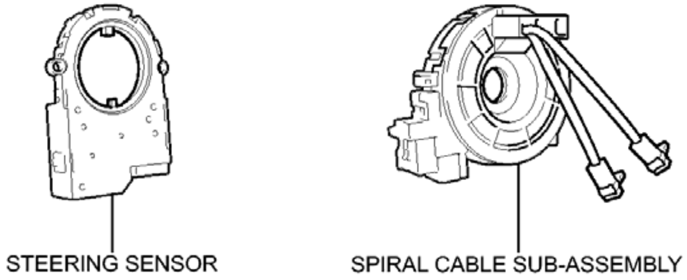

c

Fig. 26: Identifying Steering Angle Sensor Replacement Components
Courtesy of TOYOTA MOTOR SALES, U.S.A., INC.

REMOVAL

REMOVAL

NOTE: **If the both spiral cable sub-assembly and the steering sensor are malfunctioning, replace them with a new spiral cable with sensor sub-assembly.**

1. **REMOVE SPIRAL CABLE WITH SENSOR SUB-ASSEMBLY**

   Refer to **REMOVAL** .

2. **REMOVE STEERING SENSOR**
   a. Disengage the 6 claws and remove the steering sensor from the spiral cable sub-assembly.

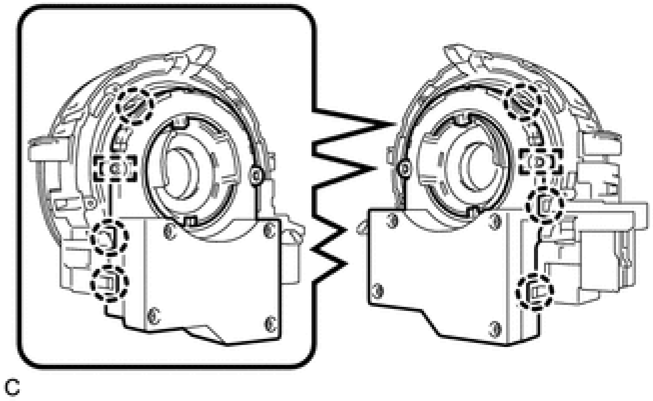

Fig. 27: Identifying Spiral Cable Sub-Assembly Claws And Pins
Courtesy of TOYOTA MOTOR SALES, U.S.A., INC.

NOTE: **Do not damage the claws and pins of the spiral cable sub-assembly.**

INSTALLATION

INSTALLATION

NOTE: **A lock pin is installed to a new steering sensor. Do not remove the lock pin before the steering sensor is installed to the spiral cable sub-assembly.**

1. **INSPECT SPIRAL CABLE SUB-ASSEMBLY** . Refer to **INSTALLATION - Step 1** .
2. **INSTALL STEERING SENSOR**
   a. Align the 2 pins and 2 guides, and engage the 6 claws to install the steering sensor to the spiral cable sub-assembly.

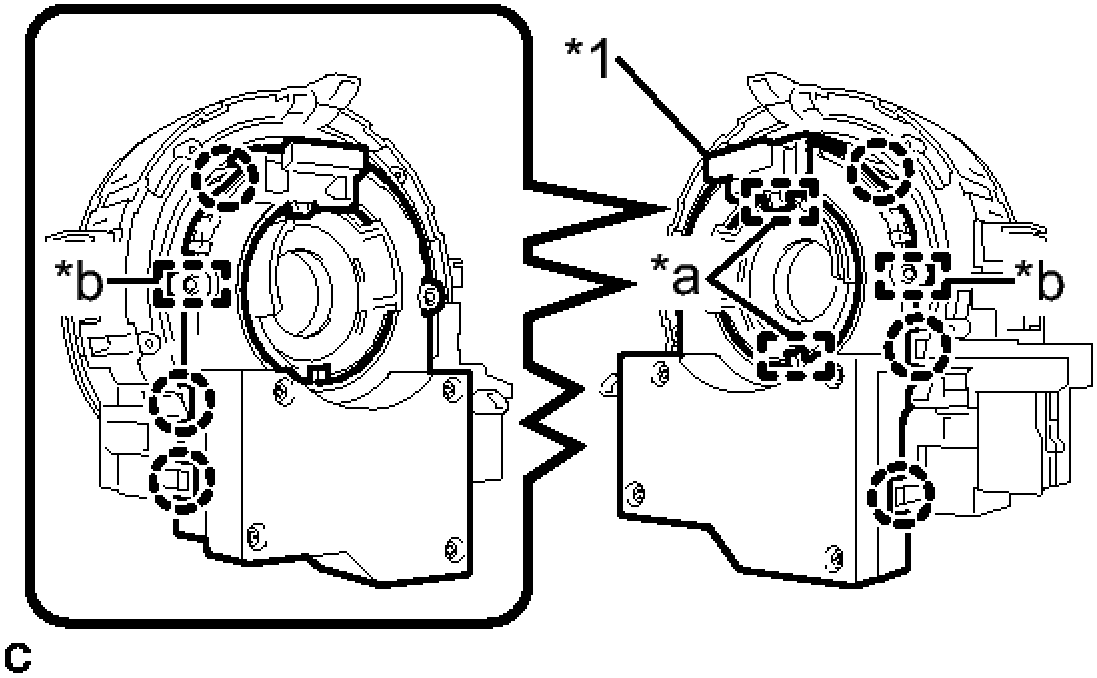

Fig. 28: Identifying Spiral Cable Sub-Assembly Lock Pin, Claws And Pins
Courtesy of TOYOTA MOTOR SALES, U.S.A., INC.

TEXT IN ILLUSTRATION

*1	Lock Pin
*a	Guide
*b	Pin

NOTE:

- **Do not remove the lock pin before the steering sensor is installed to the spiral cable sub-assembly.**
- **Do not damage the pins of the spiral cable sub-assembly and guides of the steering sensor.**
- **The spiral cable sub-assembly can be rotate up to 30° even when the interlock is engaged. Therefore, make sure that both guides are aligned properly when installing the steering sensor to the spiral cable sub-assembly.**

b. Remove the lock pin from the steering sensor.

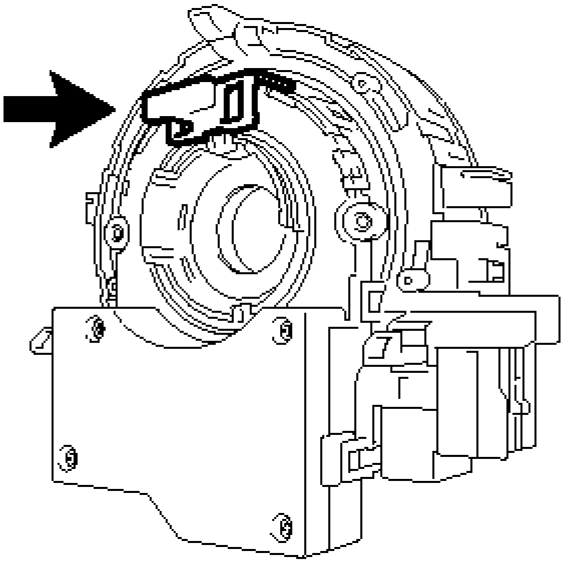

C

Fig. 29: Locating Steering Sensor Lock Pin
Courtesy of TOYOTA MOTOR SALES, U.S.A., INC.

3. **ALIGN FRONT WHEELS TO FACE STRAIGHT AHEAD**
4. **INSTALL SPIRAL CABLE WITH SENSOR SUB-ASSEMBLY**

   Refer to **INSTALLATION - Step 4** .

VSC OFF SWITCH

COMPONENTS

ILLUSTRATION

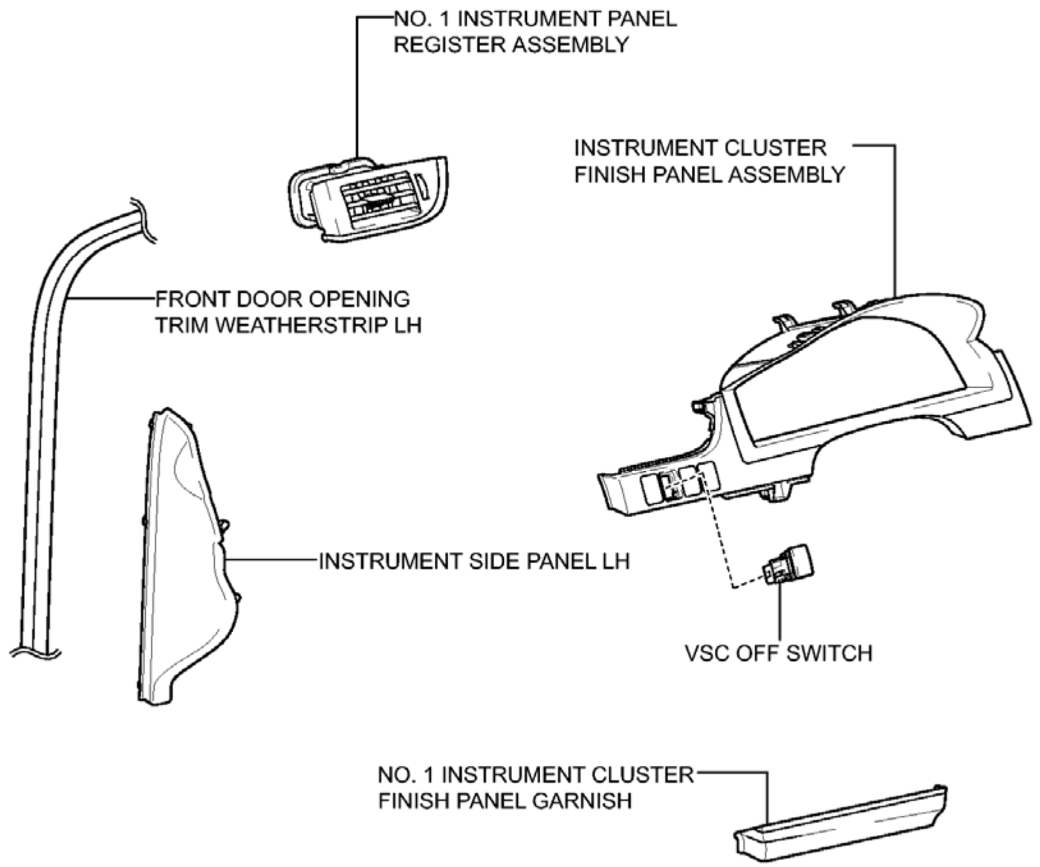
NO. 1 INSTRUMENT PANEL REGISTER ASSEMBLY
INSTRUMENT CLUSTER FINISH PANEL ASSEMBLY
FRONT DOOR OPENING TRIM WEATHERSTRIP LH
INSTRUMENT SIDE PANEL LH
VSC OFF SWITCH
NO. 1 INSTRUMENT CLUSTER FINISH PANEL GARNISH

P

Fig. 30: Identifying VSC OFF Switch Replacement Components
Courtesy of TOYOTA MOTOR SALES, U.S.A., INC.

REMOVAL

REMOVAL

1. **PRECAUTION**

   NOTE: **After turning the ignition switch off, waiting time may be required before disconnecting the cable from the negative (-) battery terminal. Therefore, make sure to read the disconnecting the cable from the negative (-) battery terminal notice before proceeding with work. Refer to PRECAUTION .**

2. **DISCONNECT CABLE FROM NEGATIVE BATTERY TERMINAL**

   NOTE: **When disconnecting the cable, some systems need to be initialized after**

the cable is reconnected. Refer to INITIALIZATION .

3. **DISCONNECT FRONT DOOR OPENING TRIM WEATHERSTRIP LH** . Refer to **REMOVAL - Step 5** .
4. **REMOVE INSTRUMENT SIDE PANEL LH** . Refer to **REMOVAL - Step 6** .
5. **REMOVE NO. 1 INSTRUMENT CLUSTER FINISH PANEL GARNISH** . Refer to **REMOVAL - Step 7** .
6. **REMOVE NO. 1 INSTRUMENT PANEL REGISTER ASSEMBLY** . Refer to **REMOVAL - Step 8** .
7. **REMOVE INSTRUMENT CLUSTER FINISH PANEL ASSEMBLY** . Refer to **REMOVAL - Step 9** .
8. **REMOVE VSC OFF SWITCH**
    a. Disengage the 2 claws and remove the VSC OFF switch from the instrument cluster finish panel assembly.

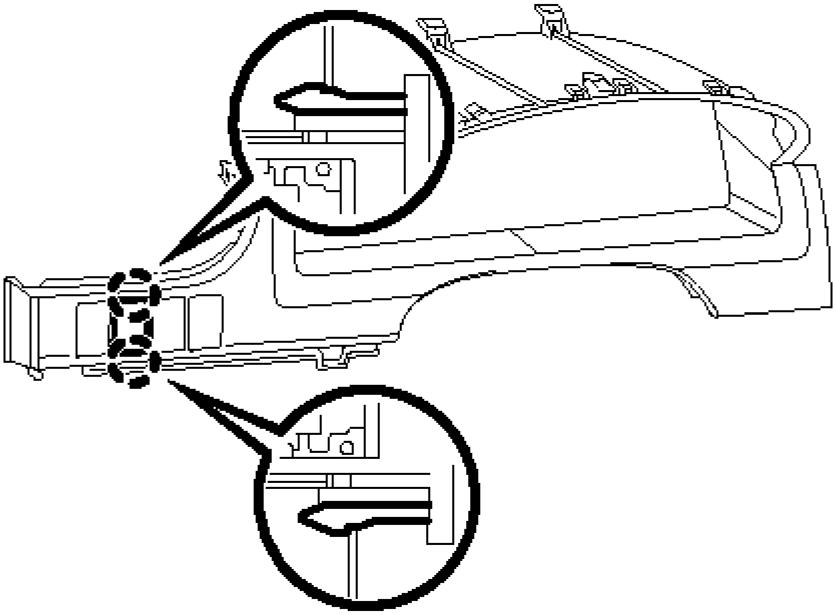

Fig. 31: Identifying VSC OFF Switch Claws
Courtesy of TOYOTA MOTOR SALES, U.S.A., INC.

INSPECTION

INSPECTION

1. **INSPECT VSC OFF SWITCH**
    a. Make sure that there is no looseness in the locking part and the connecting part of the connector.

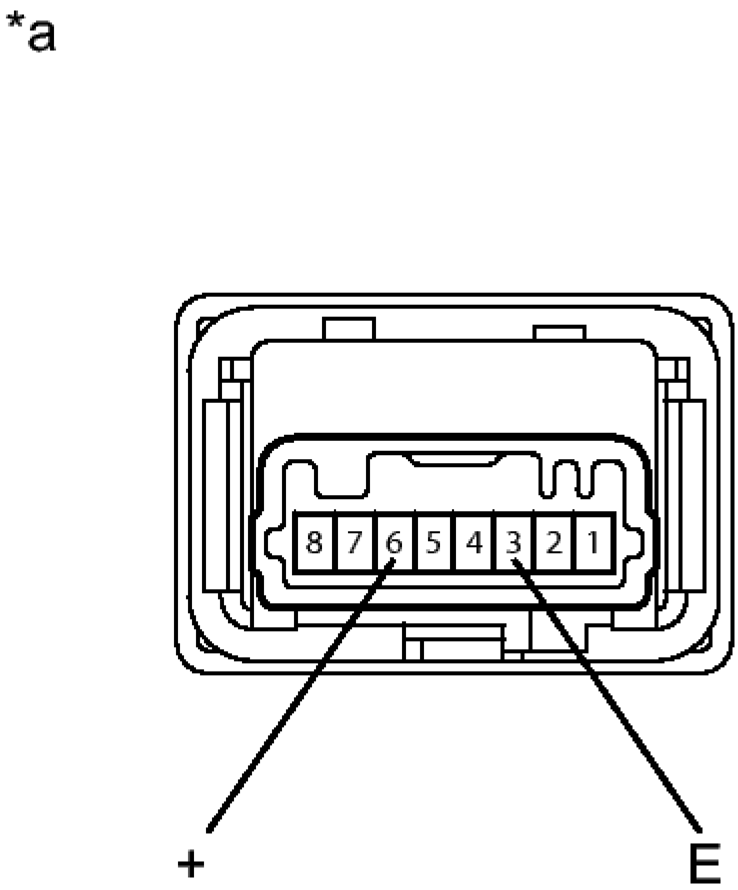

Fig. 32: Inspecting VSC OFF Switch Connector Terminals
Courtesy of TOYOTA MOTOR SALES, U.S.A., INC.

b. Disconnect the VSC OFF switch connector.
c. Check both the connector case and the terminal for deformation and corrosion.

OK

No deformation or corrosion.

d. Measure the resistance according to the value(s) in the table below.

Standard Resistance

Tester Connection	Switch Condition	Specified Condition

6 (+) - 3 (E)	Switch pushed in	Below 1 ohms
6 (+) - 3 (E)	Switch not pushed in	10 kohms or higher

TEXT IN ILLUSTRATION

*a	Component without harness connected (VSC OFF Switch)

If the result is not as specified, replace the VSC OFF switch.

INSTALLATION

INSTALLATION

1. **INSTALL VSC OFF SWITCH**
    a. Engage the 2 claws to install the VSC OFF switch to the instrument cluster finish panel assembly.
2. **INSTALL INSTRUMENT CLUSTER FINISH PANEL ASSEMBLY** . Refer to **INSTALLATION - Step 44** .
3. **INSTALL NO. 1 INSTRUMENT PANEL REGISTER ASSEMBLY** . Refer to **INSTALLATION - Step 45** .
4. **INSTALL NO. 1 INSTRUMENT CLUSTER FINISH PANEL GARNISH** . Refer to **INSTALLATION - Step 46** .
5. **INSTALL INSTRUMENT SIDE PANEL LH** . Refer to **INSTALLATION - Step 47** .
6. **INSTALL FRONT DOOR OPENING TRIM WEATHERSTRIP LH** . Refer to **INSTALLATION - Step 42** .
7. **CONNECT CABLE TO NEGATIVE BATTERY TERMINAL**

NOTE: **When disconnecting the cable, some systems need to be initialized after the cable is reconnected. Refer to INITIALIZATION .**

BRAKE PEDAL LOAD SENSING SWITCH

ON-VEHICLE INSPECTION

ON-VEHICLE INSPECTION

1. **INSPECT BRAKE PEDAL LOAD SENSING SWITCH**
    a. Make sure that there is no looseness in the locking part and the connecting part of the connector.

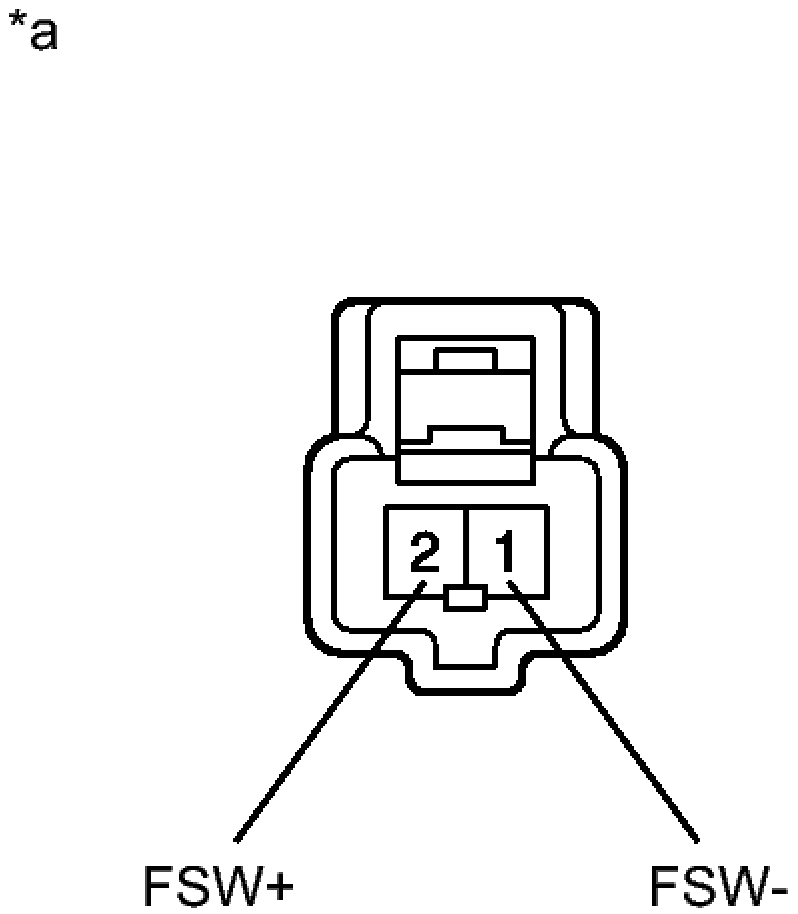

Fig. 33: Inspecting Brake Pedal Load Sensing Switch Connector Terminals
Courtesy of TOYOTA MOTOR SALES, U.S.A., INC.

b. Disconnect the brake pedal load sensing switch connector.
c. Check both the connector case and the terminal for deformation and corrosion.

OK

No deformation or corrosion.

NOTE:

- **Do not remove the brake pedal load sensing switch from the brake pedal support assembly.**
- **When there is a malfunction in the brake pedal load sensing switch, replace the brake pedal support assembly.**

d. Measure the resistance according to the value(s) in the table below.

Standard Resistance

Tester Connection	Switch Condition	Specified Condition
2 (FSW+) - 1 (FSW-)	Switch OFF (Brake pedal depressed)	950 to 1050 ohms
2 (FSW+) - 1 (FSW-)	Switch ON (Brake pedal released)	203 to 223 ohms

TEXT IN ILLUSTRATION

*a	Component without harness connected (Brake Pedal Load Sensing Switch (Brake Pedal Support Assembly))

If the result is not as specified, replace the brake pedal load sensing switch (brake pedal support assembly).

FRONT BRAKE

COMPONENTS

ILLUSTRATION

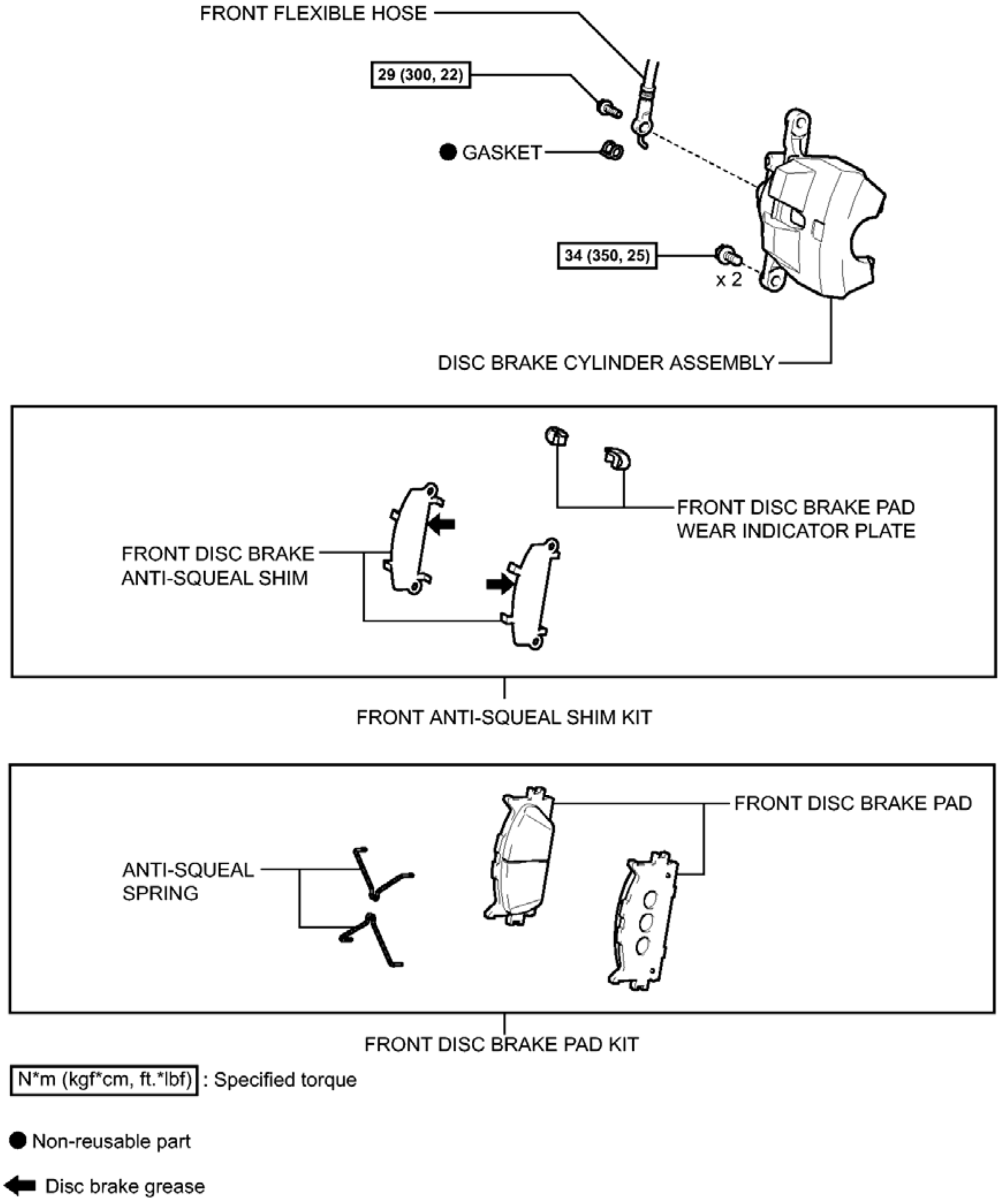
FRONT FLEXIBLE HOSE
29 (300, 22)
● GASKET
34 (350, 25)
x 2
DISC BRAKE CYLINDER ASSEMBLY
FRONT DISC BRAKE PAD
WEAR INDICATOR PLATE
FRONT DISC BRAKE
ANTI-SQUEAL SHIM
FRONT ANTI-SQUEAL SHIM KIT
FRONT DISC BRAKE PAD
ANTI-SQUEAL
SPRING
FRONT DISC BRAKE PAD KIT
N*m (kgf*cm, ft.*lbf) : Specified torque
● Non-reusable part
⬅ Disc brake grease

Fig. 1: Identifying Front Brake Replacement Components With Torque Specifications (1 Of 3)
Courtesy of TOYOTA MOTOR SALES, U.S.A., INC.

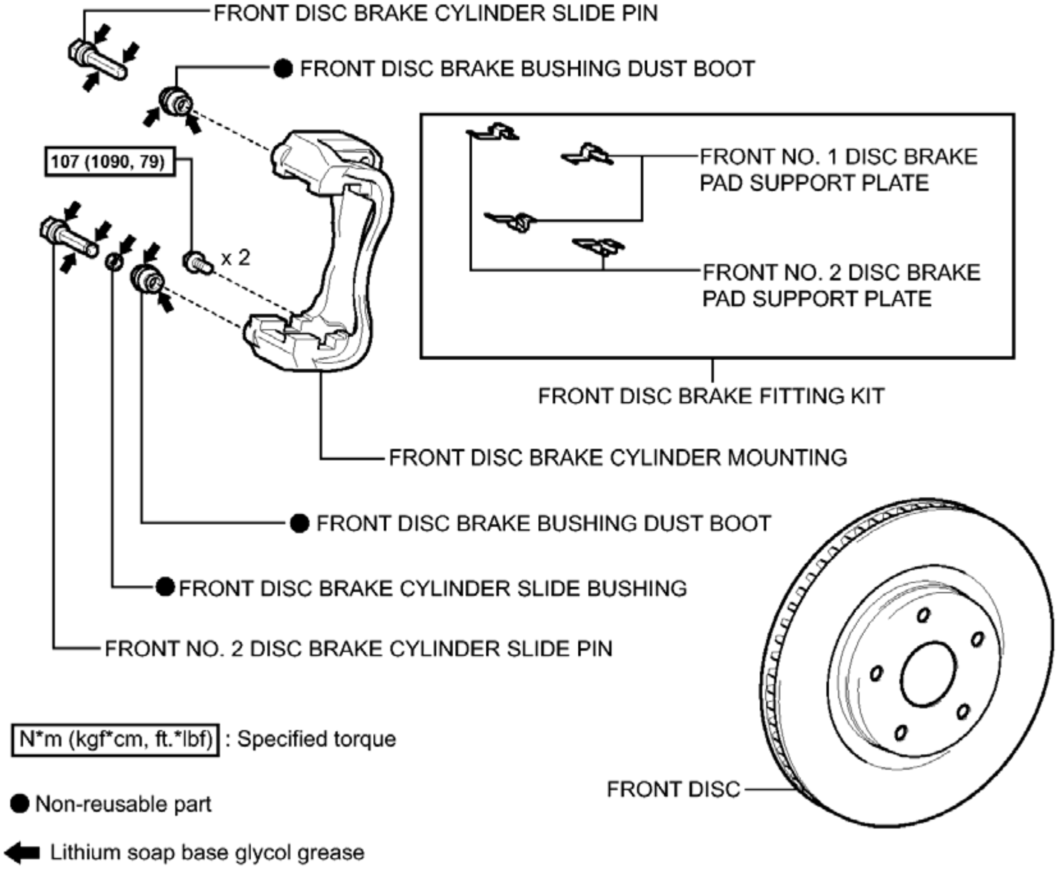
FRONT DISC BRAKE CYLINDER SLIDE PIN
● FRONT DISC BRAKE BUSHING DUST BOOT
107 (1090, 79)
x 2
FRONT NO. 1 DISC BRAKE PAD SUPPORT PLATE
FRONT NO. 2 DISC BRAKE PAD SUPPORT PLATE
FRONT DISC BRAKE FITTING KIT
FRONT DISC BRAKE CYLINDER MOUNTING
● FRONT DISC BRAKE BUSHING DUST BOOT
● FRONT DISC BRAKE CYLINDER SLIDE BUSHING
FRONT NO. 2 DISC BRAKE CYLINDER SLIDE PIN
N*m (kgf*cm, ft.*lbf) : Specified torque
● Non-reusable part
Lithium soap base glycol grease
FRONT DISC

Fig. 2: Identifying Front Brake Replacement Components With Torque Specifications (2 Of 3)
Courtesy of TOYOTA MOTOR SALES, U.S.A., INC.

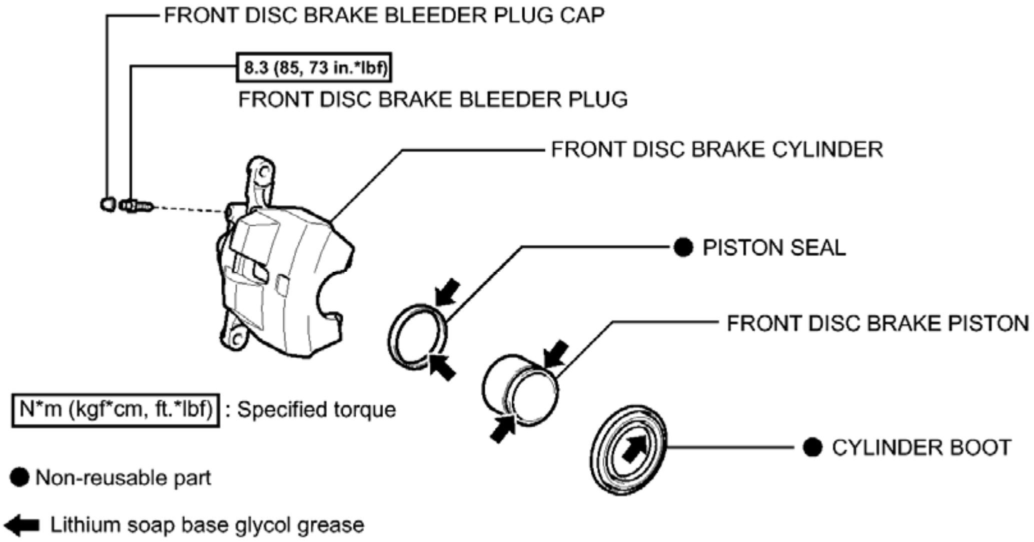
FRONT DISC BRAKE BLEEDER PLUG CAP
8.3 (85, 73 in.*lbf)
FRONT DISC BRAKE BLEEDER PLUG
FRONT DISC BRAKE CYLINDER
● PISTON SEAL
FRONT DISC BRAKE PISTON
● CYLINDER BOOT
N*m (kgf*cm, ft.*lbf) : Specified torque
● Non-reusable part
Lithium soap base glycol grease

Fig. 3: Identifying Front Brake Replacement Components With Torque Specifications (3 Of 3)
Courtesy of TOYOTA MOTOR SALES, U.S.A., INC.

REMOVAL

REMOVAL

NOTE:

- **When the brake pedal is first depressed after replacing the brake pads or pushing back the disc brake piston, DTC C1214 may be output. As there is no malfunction, clear the DTC.**
- **While the auxiliary battery is connected, even if the power switch is off, the brake control system activates when the brake pedal is depressed or the door courtesy switch is turned on. Therefore, even if only brake pads are to be removed and installed, be sure to perform the Disable Brake Control procedure and disconnect the cable from the negative (-) terminal of the auxiliary battery before beginning work.**

HINT:

- Use the same procedure for the LH side and RH side.
- The following procedure is for the LH side.

1. **PRECAUTION**

   NOTE: **After turning the power switch off, waiting time may be required before disconnecting the cable from the negative (-) auxiliary battery terminal. Therefore, make sure to read the disconnecting the cable from the negative (-) auxiliary battery terminal notice before proceeding with work. Refer to PRECAUTION .**

2. **DISABLE BRAKE CONTROL** . Refer to **REMOVAL - Step 2**
3. **REMOVE FRONT WHEEL**
4. **DRAIN BRAKE FLUID**

   NOTE: **If brake fluid leaks onto any painted surface, immediately wash it off.**

5. **SEPARATE FRONT FLEXIBLE HOSE**
   a. Remove the union bolt and gasket, and separate the front flexible hose from the disc brake cylinder assembly.

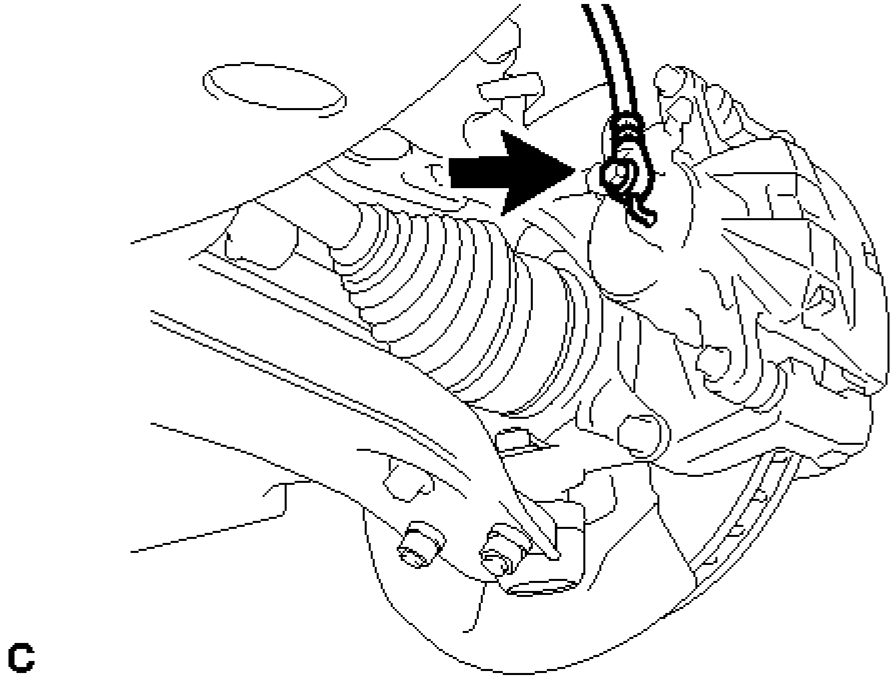

Fig. 4: Identifying Front Flexible Hose Union Bolt
Courtesy of TOYOTA MOTOR SALES, U.S.A., INC.

6. **REMOVE DISC BRAKE CYLINDER ASSEMBLY**
   a. Hold the front disc brake cylinder slide pin, and remove the 2 bolts and disc brake cylinder assembly.

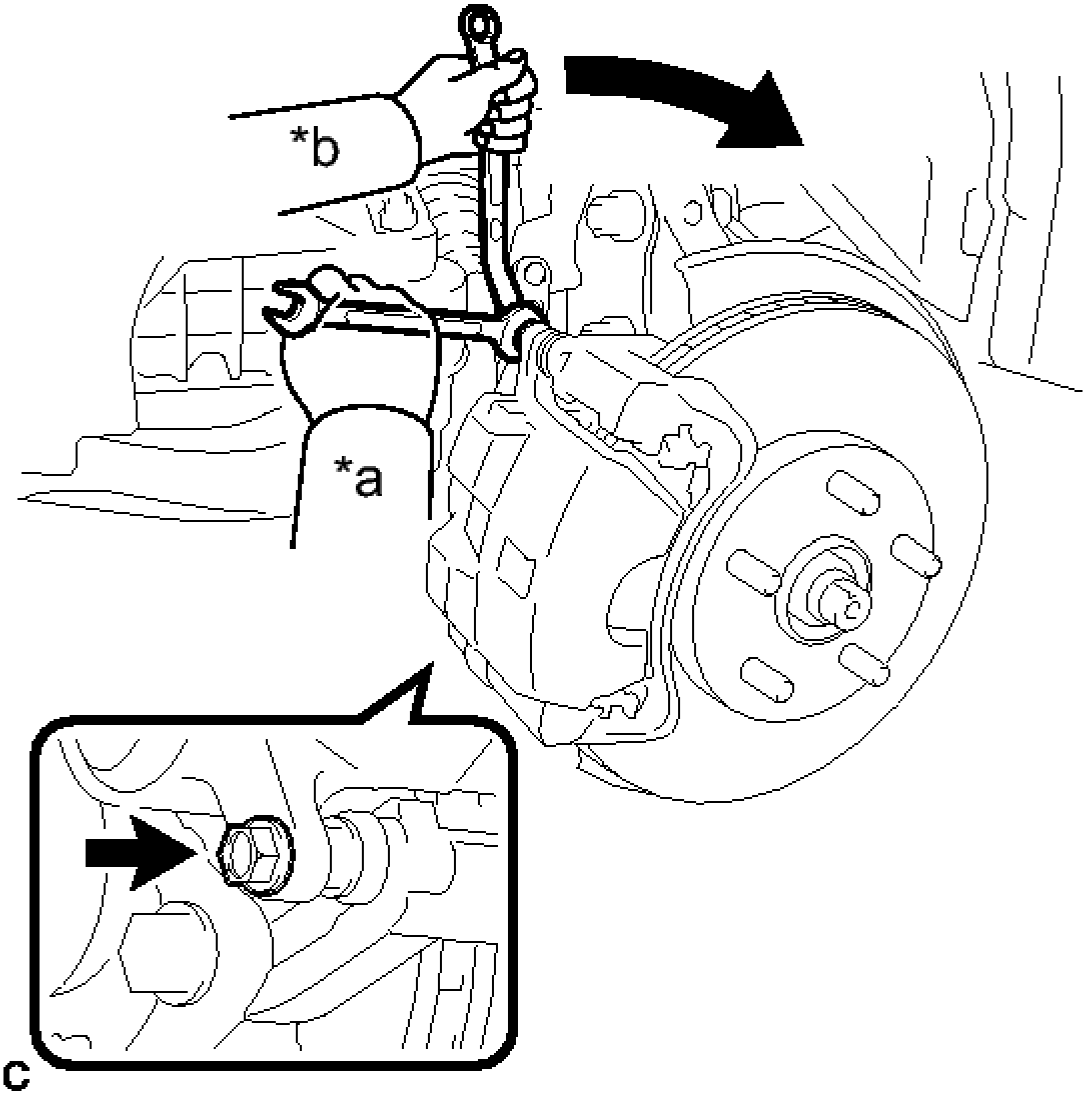

Fig. 5: Removing Disc Brake Cylinder Assembly
Courtesy of TOYOTA MOTOR SALES, U.S.A., INC.

TEXT IN ILLUSTRATION

*a	Hold
*b	Turn

7. **REMOVE FRONT DISC BRAKE PAD KIT**
    a. Remove the 2 anti-squeal springs from the front disc brake pads.

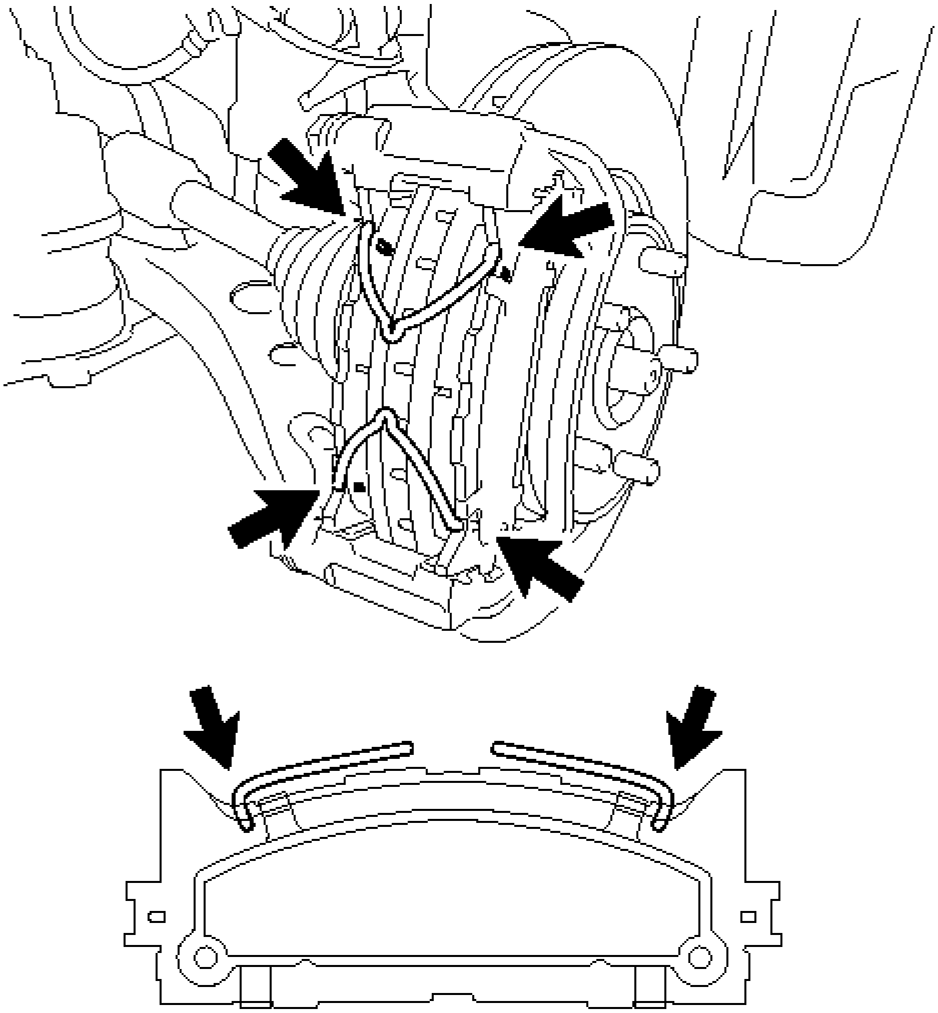

Fig. 6: Identifying Anti-Squeal Springs
Courtesy of TOYOTA MOTOR SALES, U.S.A., INC.

b. Remove the 2 front disc brake pads with front anti-squeal shim kit from the front disc brake cylinder mounting.

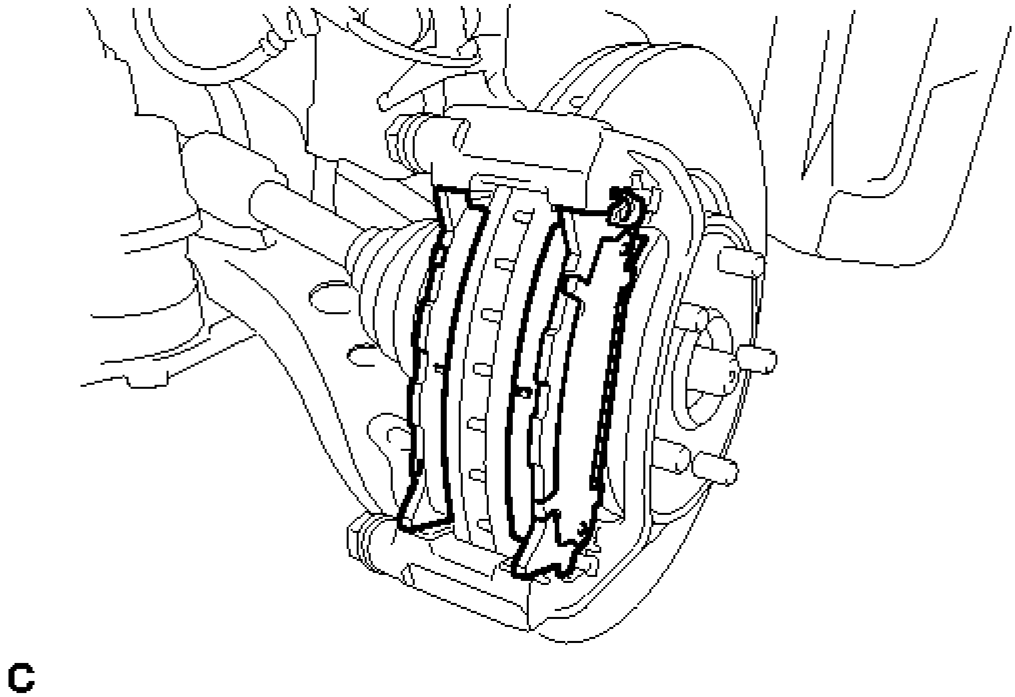

Fig. 7: Identifying Front Disc Brake Pads
Courtesy of TOYOTA MOTOR SALES, U.S.A., INC.

8. **REMOVE FRONT ANTI-SQUEAL SHIM KIT**
    a. Remove the front disc brake anti-squeal shim from each front disc brake pad.

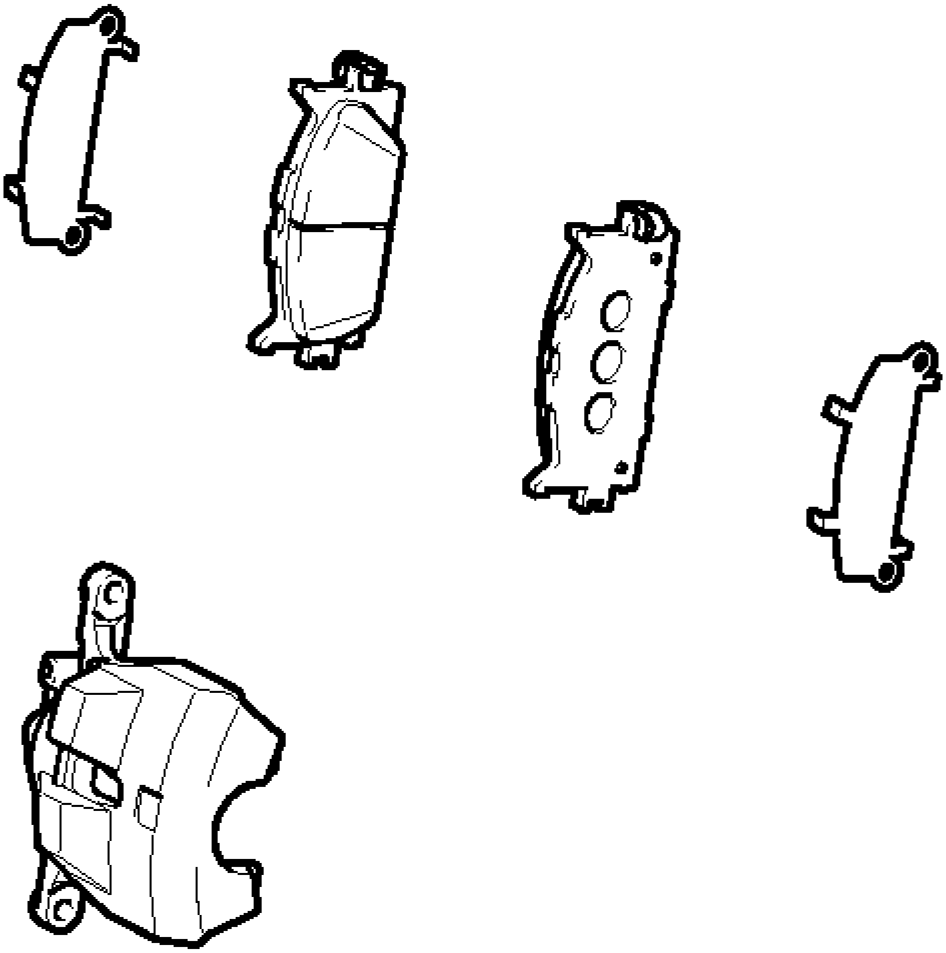

Fig. 8: Identifying Front Disc Brake Anti-Squeal Shims
Courtesy of TOYOTA MOTOR SALES, U.S.A., INC.

b. Remove the front disc brake pad wear indicator plate from each front disc brake pad.

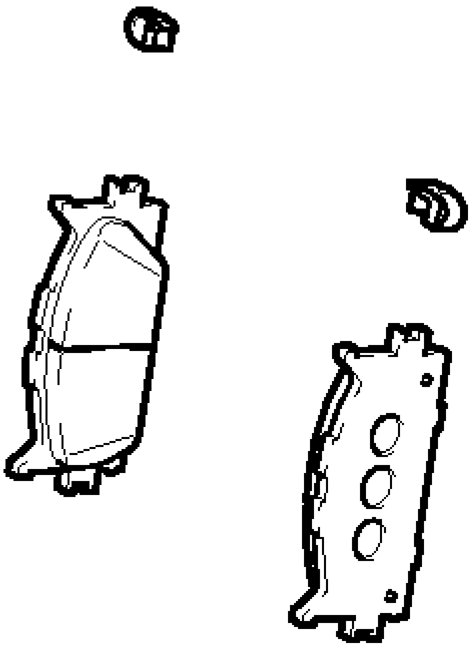

Fig. 9: Identifying Front Disc Brake Pad Wear Indicator
Courtesy of TOYOTA MOTOR SALES, U.S.A., INC.

9. **REMOVE FRONT DISC BRAKE FITTING KIT**
    a. Remove the 2 front No. 1 disc brake pad support plates and 2 front No. 2 disc brake pad support plates from the front disc brake cylinder mounting.

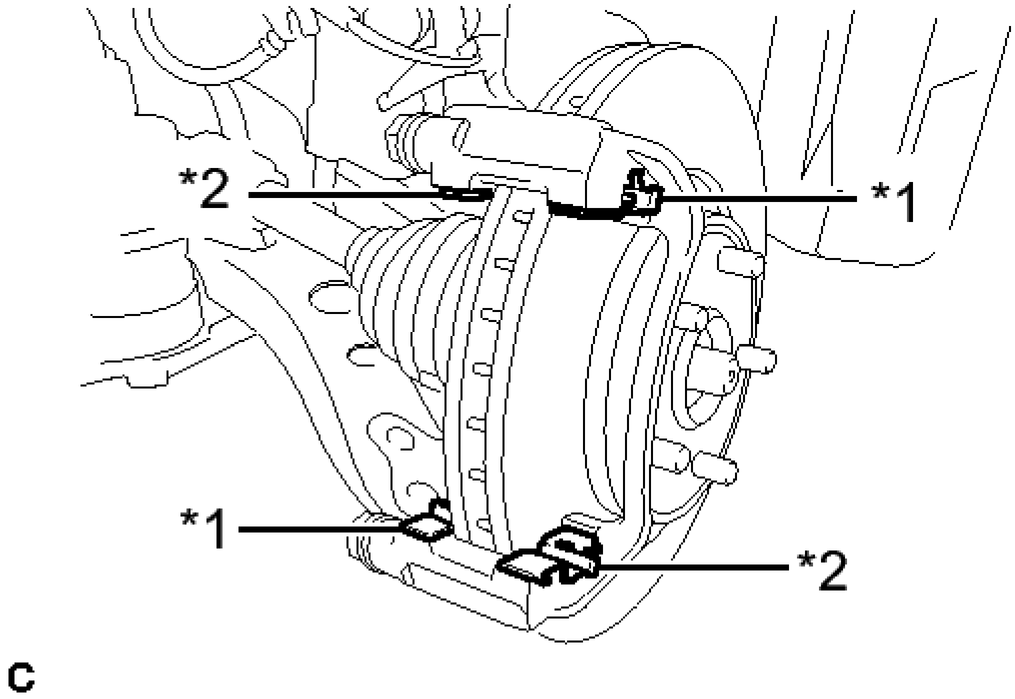

Fig. 10: Identifying Front Disc Brake Pad Support Plates
Courtesy of TOYOTA MOTOR SALES, U.S.A., INC.

TEXT IN ILLUSTRATION

*1	Front No. 1 Disc Brake Pad Support Plate
*2	Front No. 2 Disc Brake Pad Support Plate

NOTE: **Each front disc brake pad support plate has a different shape. Be sure to put an identification mark on each front disc brake pad support plate so that it can be reinstalled to its original position.**

10. **REMOVE FRONT DISC BRAKE CYLINDER SLIDE PIN**
    a. Remove the front disc brake cylinder slide pin from the front disc brake cylinder mounting.

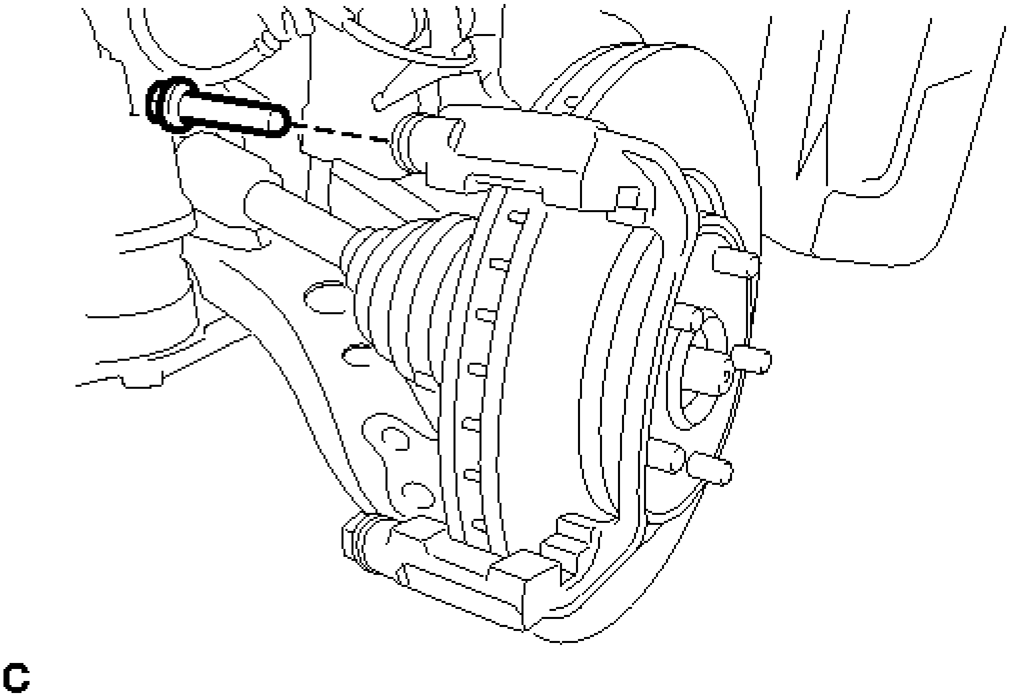

Fig. 11: Identifying Front Disc Brake Cylinder Slide Pin

Courtesy of TOYOTA MOTOR SALES, U.S.A., INC.

11. **REMOVE FRONT NO. 2 DISC BRAKE CYLINDER SLIDE PIN**
    a. Remove the front No. 2 disc brake cylinder slide pin from the front disc brake cylinder mounting.

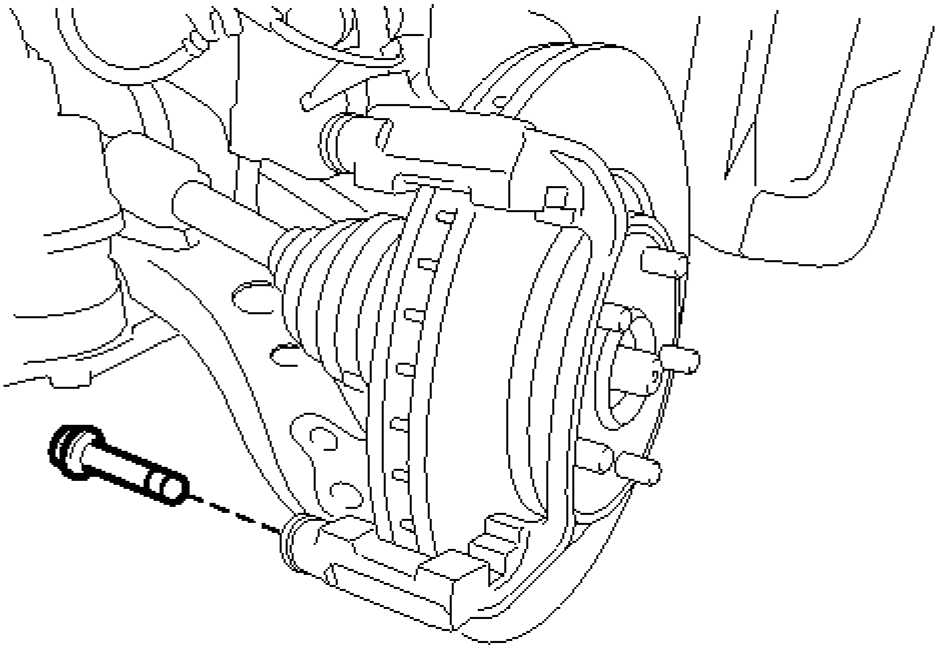

Fig. 12: Identifying Front Disc Brake Cylinder Slide Pin
Courtesy of TOYOTA MOTOR SALES, U.S.A., INC.

12. **REMOVE FRONT DISC BRAKE CYLINDER SLIDE BUSHING**
    a. Using a screwdriver with its tip wrapped with vinyl tape, remove the front disc brake cylinder slide bushing from the front No. 2 disc brake cylinder slide pin.

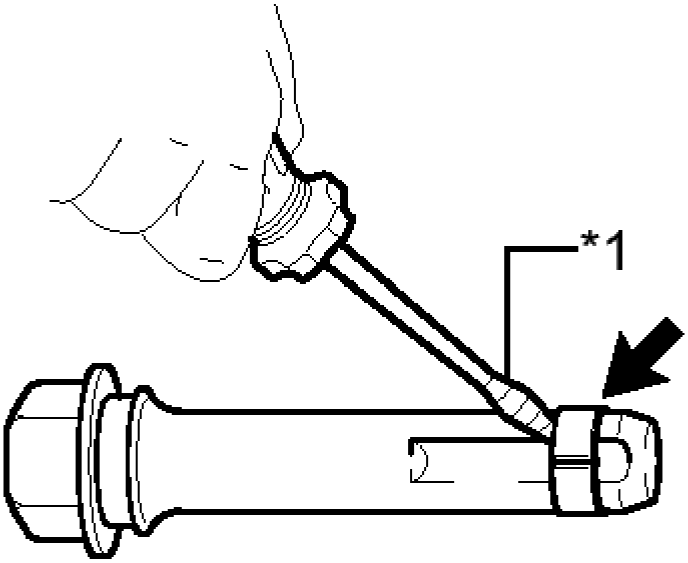

C

Fig. 13: Removing Front Disc Brake Cylinder Slide Bushing
Courtesy of TOYOTA MOTOR SALES, U.S.A., INC.

TEXT IN ILLUSTRATION

*1	Vinyl Tape

NOTE: **Do not damage the front No. 2 disc brake cylinder slide pin.**

13. **REMOVE FRONT DISC BRAKE CYLINDER MOUNTING**
    a. Remove the 2 bolts and front disc brake cylinder mounting from the steering knuckle.

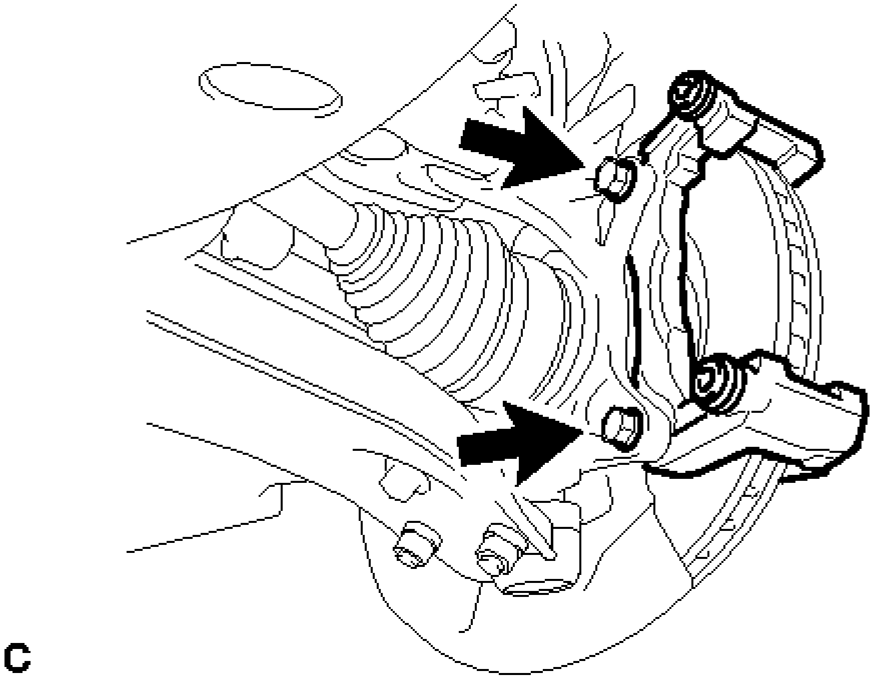

Fig. 14: Identifying Front Disc Brake Cylinder Mounting Bolts
Courtesy of TOYOTA MOTOR SALES, U.S.A., INC.

14. **REMOVE FRONT DISC BRAKE BUSHING DUST BOOT**
    a. Secure the front disc brake cylinder mounting in a vise.

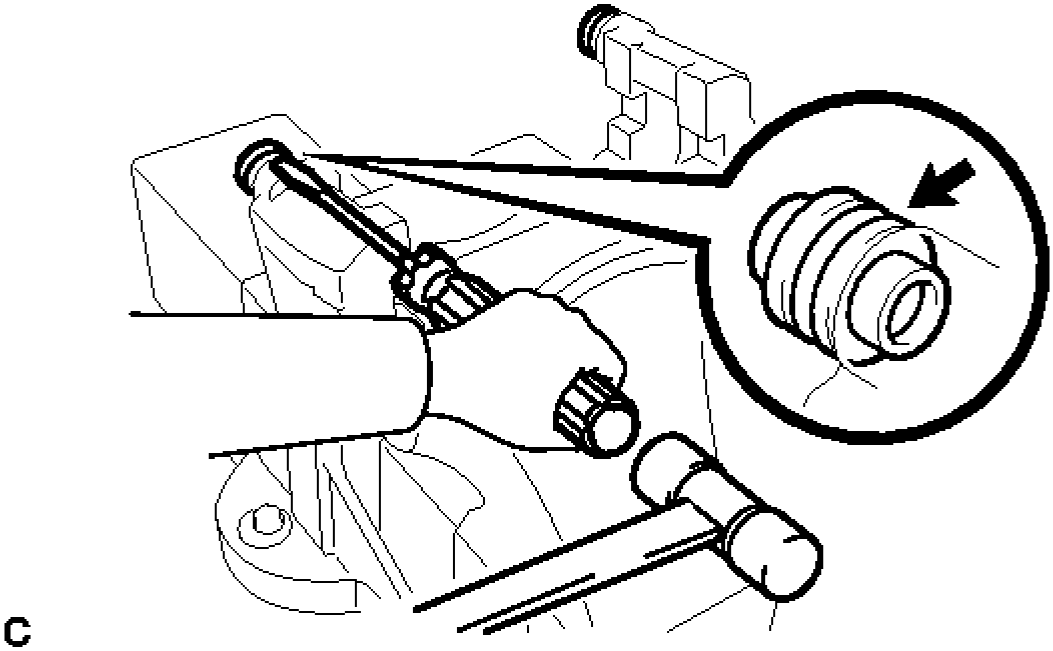

Fig. 15: Removing Front Disc Brake Bushing Dust Boot

Courtesy of TOYOTA MOTOR SALES, U.S.A., INC.

b. Using a screwdriver and a plastic hammer, remove the 2 front disc brake bushing dust boots.

15. **REMOVE FRONT DISC**
    a. Put matchmarks on the front disc and the front axle hub.

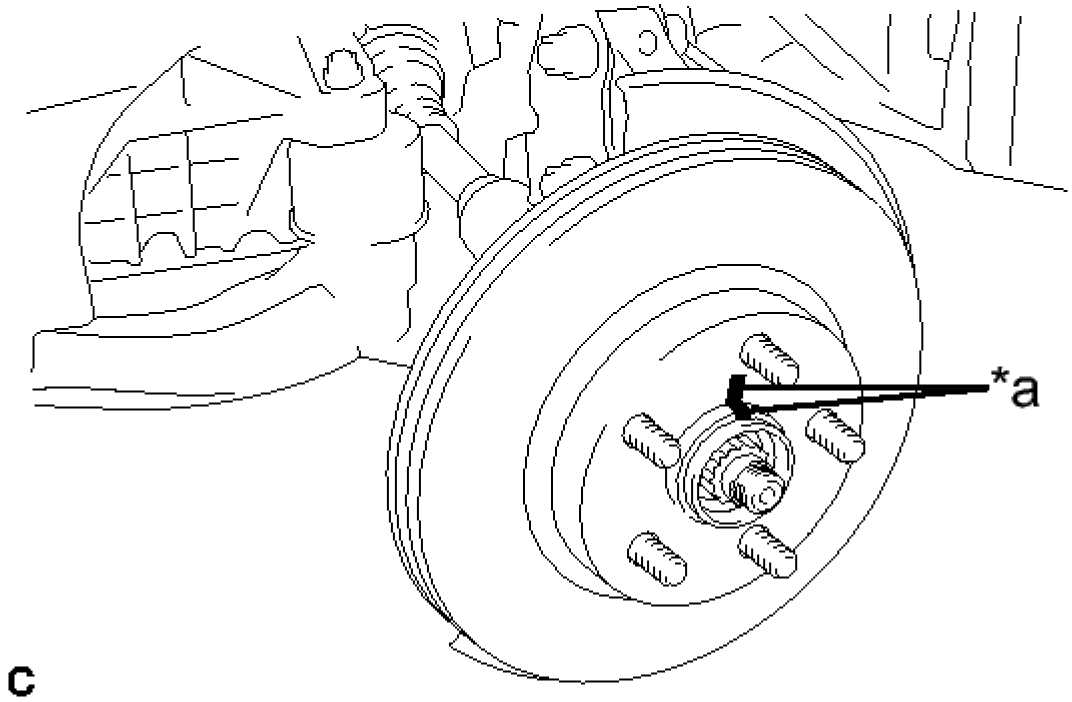

Fig. 16: Identifying Front Disc And Axle Hub Matchmarks
Courtesy of TOYOTA MOTOR SALES, U.S.A., INC.

TEXT IN ILLUSTRATION

*a	Matchmark

b. Remove the front disc.

DISASSEMBLY

DISASSEMBLY

1. **REMOVE FRONT DISC BRAKE PISTON**
    a. Place a piece of cloth between the front disc brake piston and front disc brake cylinder assembly.
    b. Apply compressed air to remove the front disc brake piston from the front disc brake cylinder assembly.

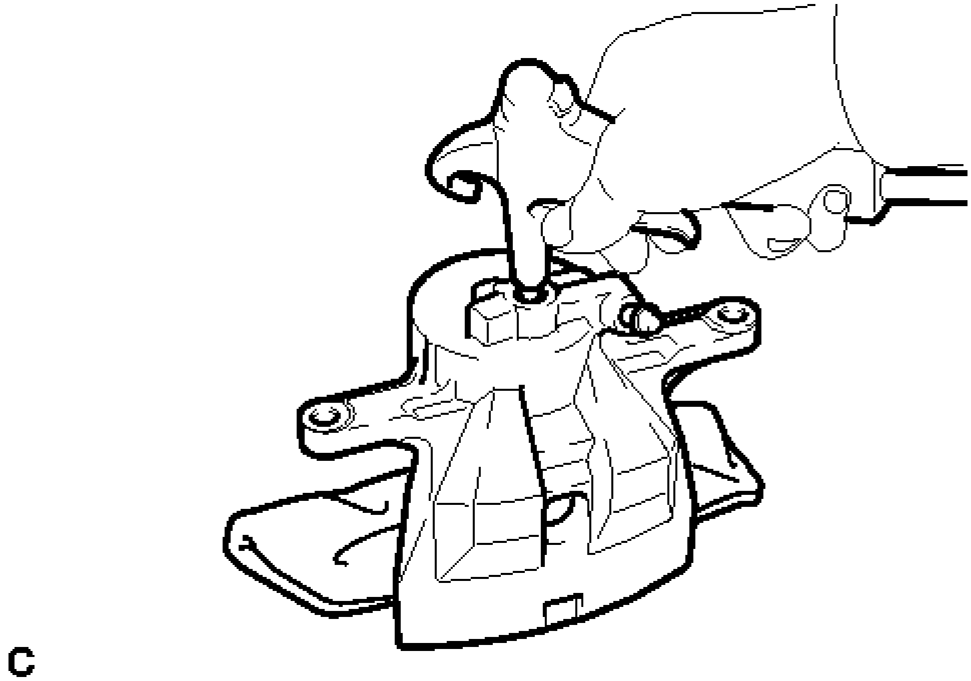

Fig. 17: Applying Compressed Air To Front Disc Brake Cylinder
Courtesy of TOYOTA MOTOR SALES, U.S.A., INC.

WARNING: **Do not place your fingers in front of the front disc brake piston when using compressed air.**

NOTE: Do not allow any brake fluid to spatter.

2. **REMOVE CYLINDER BOOT**
   a. Using a screwdriver with its tip wrapped with vinyl tape, remove the cylinder boot from the front disc brake cylinder.

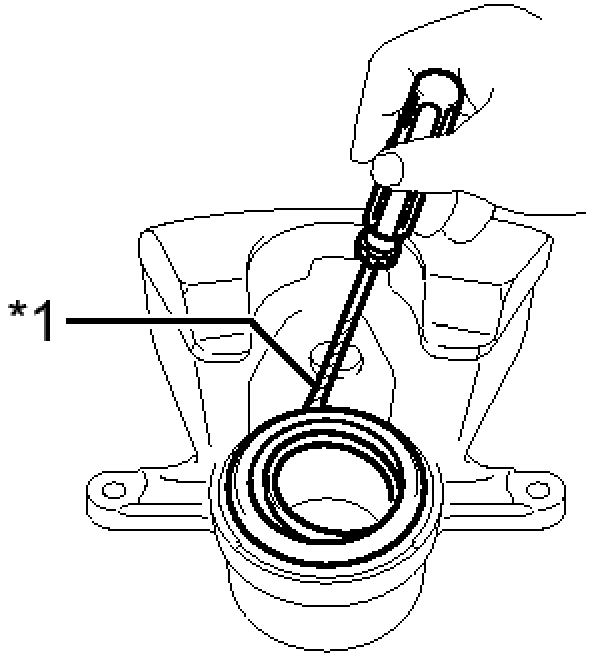

Fig. 18: Removing Cylinder Boot
Courtesy of TOYOTA MOTOR SALES, U.S.A., INC.

TEXT IN ILLUSTRATION

*1	Vinyl Tape

NOTE: **Be careful not to damage the front disc brake cylinder.**

3. **REMOVE PISTON SEAL**
   1. Using a screwdriver with its tip wrapped with vinyl tape, remove the piston seal from the front disc brake cylinder.

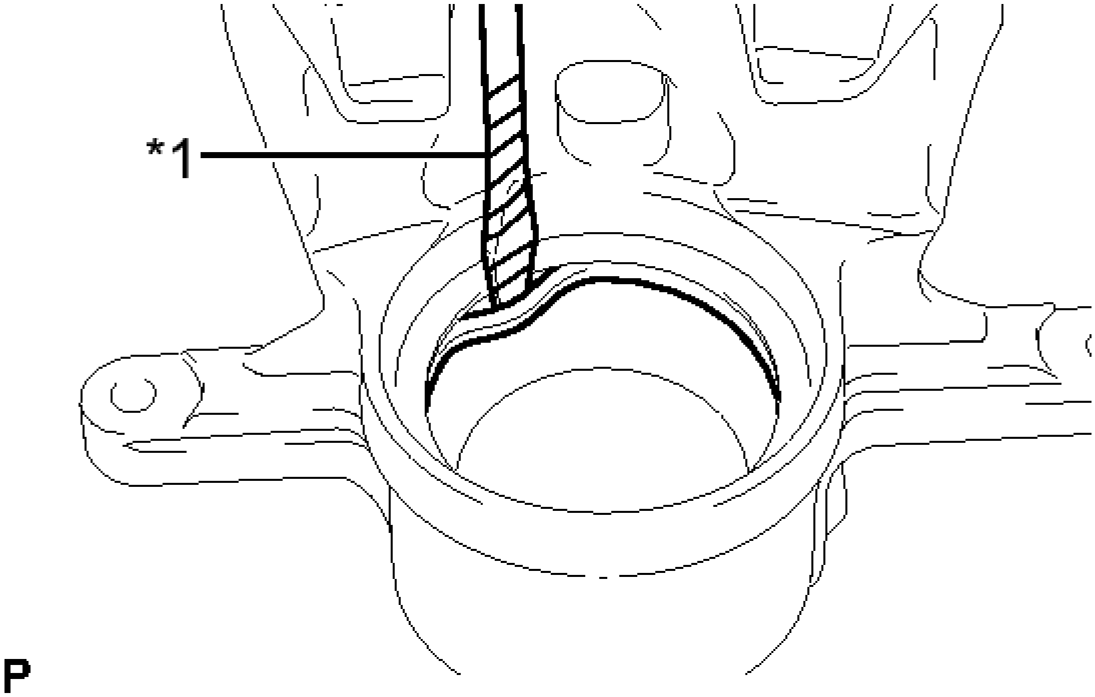

Fig. 19: Removing Piston Seal
Courtesy of TOYOTA MOTOR SALES, U.S.A., INC.

TEXT IN ILLUSTRATION

*1	Vinyl Tape

NOTE: **Do not damage the inner surface or piston seal groove of the front disc brake cylinder.**

4. **REMOVE FRONT DISC BRAKE BLEEDER PLUG CAP**
5. **REMOVE FRONT DISC BRAKE BLEEDER PLUG**

INSPECTION

INSPECTION

1. **INSPECT BRAKE CYLINDER AND PISTON**
   a. Check the front disc brake cylinder bore and front disc brake piston for rust and scoring. If necessary, replace the disc brake cylinder assembly and/or front disc brake piston.
2. **INSPECT PAD LINING THICKNESS**
   a. Using a ruler, measure the pad lining thickness.

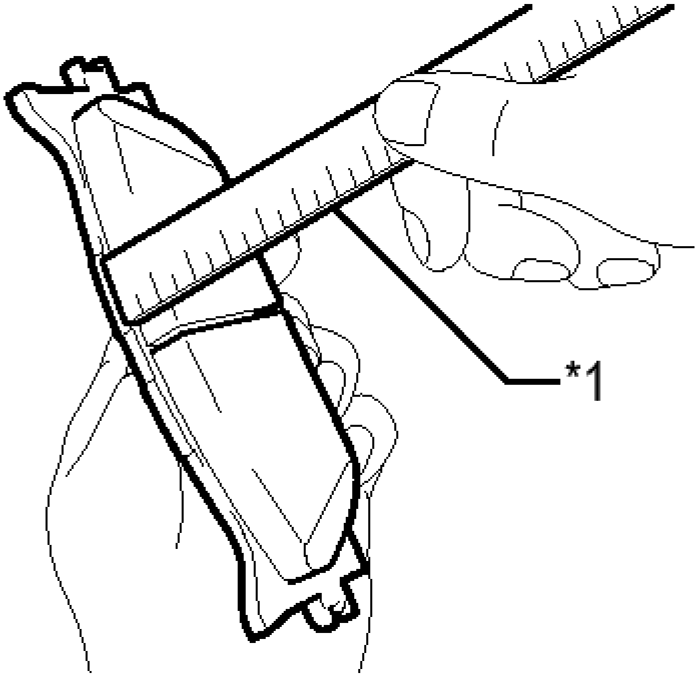

Fig. 20: Measuring Pad Lining Thickness
Courtesy of TOYOTA MOTOR SALES, U.S.A., INC.

TEXT IN ILLUSTRATION

*1	Ruler

Standard thickness

12.0 mm (0.472 in.)

Minimum thickness

1.0 mm (0.0394 in.)

If the pad lining thickness is less than the minimum, replace the front disc brake pads.

HINT:

Be sure to check the wear of the front disc when replacing the front disc brake pads.

3. **INSPECT FRONT DISC BRAKE PAD SUPPORT PLATE**
   a. Make sure that the front disc brake pad support plates have sufficient rebound, no deformation, cracks or wear, and that all rust and dirt are cleaned off.

      If necessary, replace the front disc brake pad support plates.

4. **INSPECT DISC THICKNESS**

a. Using a micrometer, measure the disc thickness.

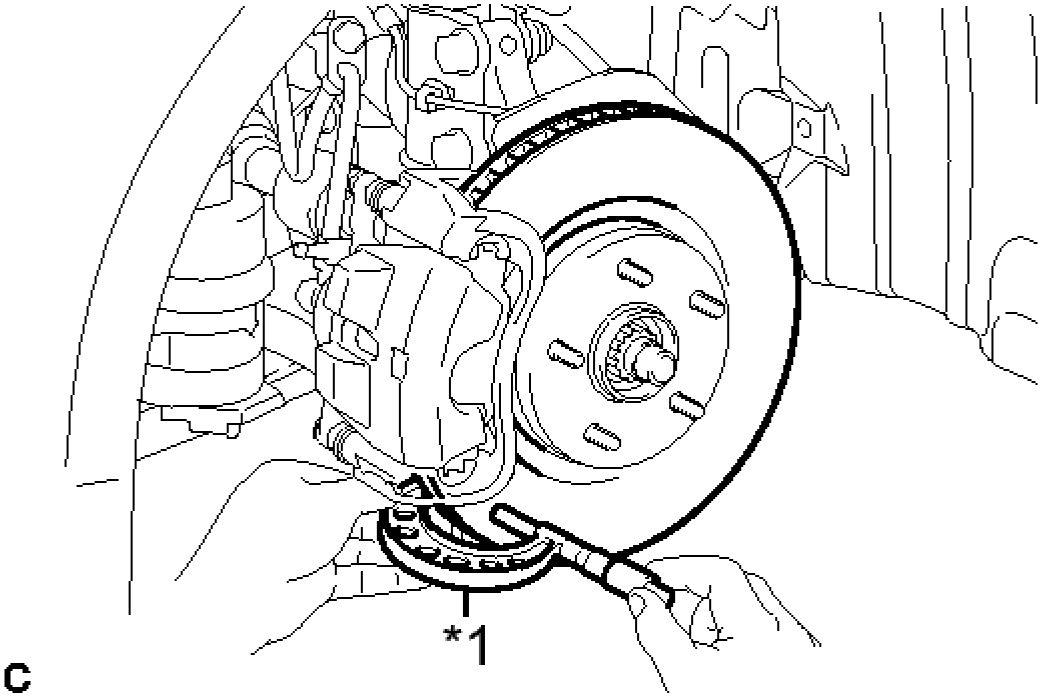

Fig. 21: Measuring Disc Thickness
Courtesy of TOYOTA MOTOR SALES, U.S.A., INC.

TEXT IN ILLUSTRATION

*1	Micrometer

Standard thickness

28.0 mm (1.10 in.)

Minimum thickness

25.0 mm (0.984 in.)

If the disc thickness is less than the minimum, replace the front disc.

5. **INSPECT DISC RUNOUT**
   a. Inspect the front axle hub bearing looseness and front axle hub runout. Refer to **ON-VEHICLE INSPECTION** .
   b. Using SST to hold the disc, tighten the disc with the 5 nuts.
      - **SST: 09330-00021**

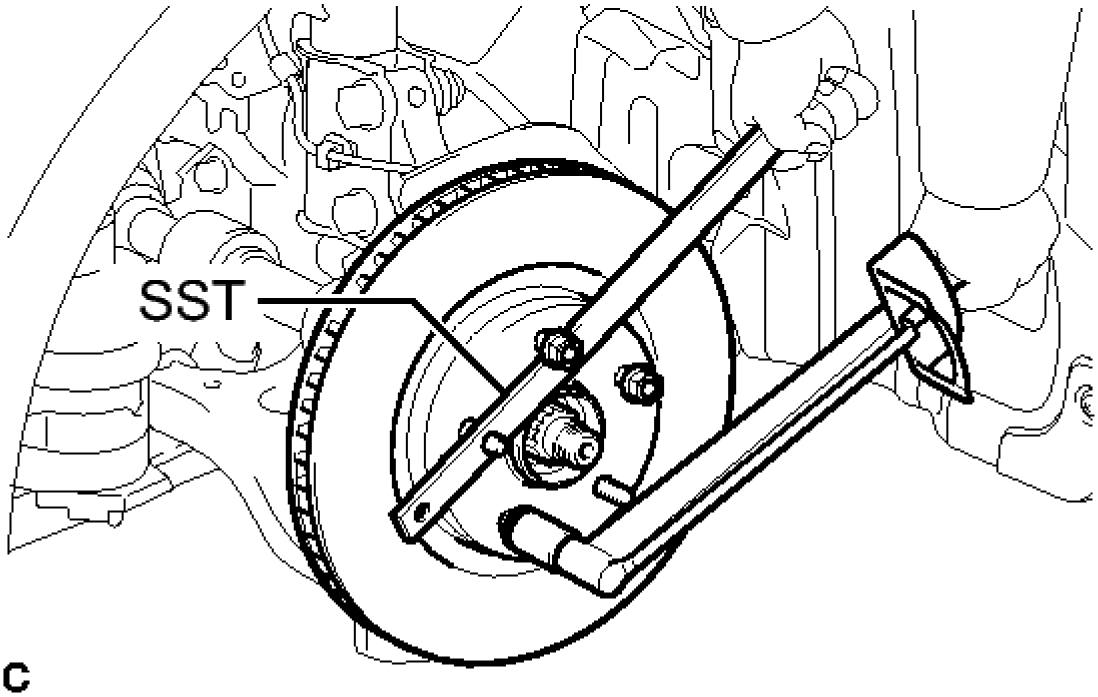

Fig. 22: Tightening Disc With The Nuts
Courtesy of TOYOTA MOTOR SALES, U.S.A., INC.

Torque: 103 N*m (1049 kgf*cm, 76 ft.*lbf)

c. Using a dial indicator, measure the disc runout 10 mm (0.394 in.) away from the outer edge of the front disc.

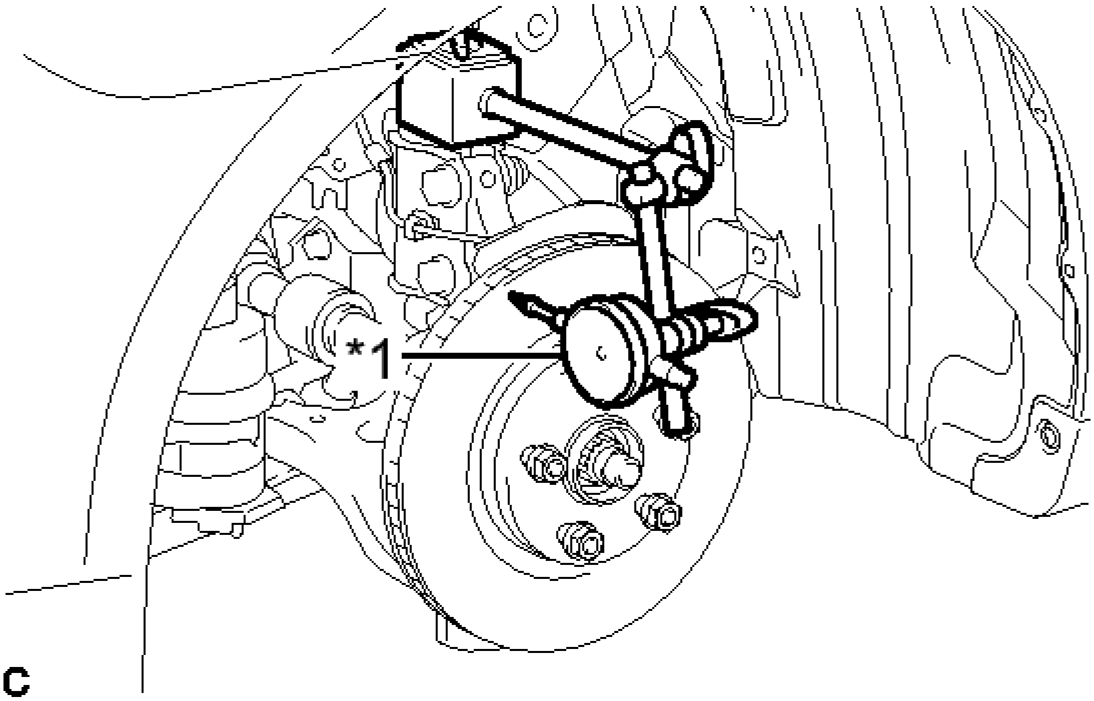

Fig. 23: Measuring Disc Runout
Courtesy of TOYOTA MOTOR SALES, U.S.A., INC.

TEXT IN ILLUSTRATION

*1	Dial Indicator

Maximum disc runout

0.05 mm (0.00197 in.)

NOTE: **Keep the magnet of the dial indicator away from the axle hub and speed sensor.**

If the runout exceeds the maximum value, change the installation position of the disc to minimize the runout. If the runout exceeds the maximum even when the installation position is changed, grind the front disc. If the front disc thickness is less than the minimum, replace the front disc.

d. Remove the 5 nuts and front disc.

REASSEMBLY

REASSEMBLY

1. **TEMPORARILY TIGHTEN FRONT DISC BRAKE BLEEDER PLUG**

   HINT:

   Fully tighten the front disc brake bleeder plug after bleeding.

2. **INSTALL FRONT DISC BRAKE BLEEDER PLUG CAP**
3. **INSTALL PISTON SEAL**
   a. Apply a light layer of lithium soap base glycol grease to the entire circumference of a new piston seal.

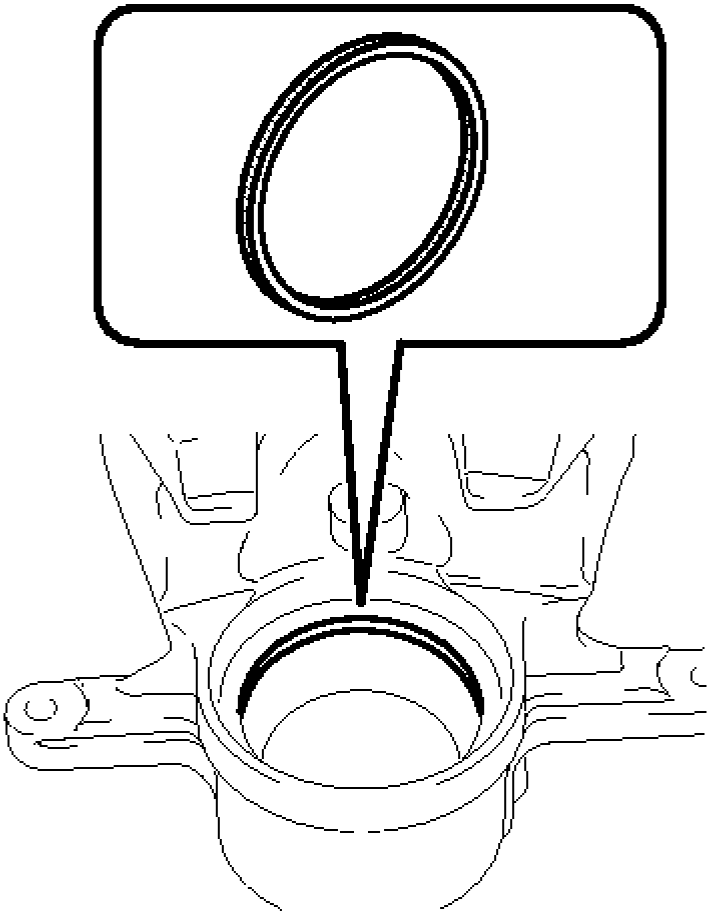

Fig. 24: Installing Piston Seal
Courtesy of TOYOTA MOTOR SALES, U.S.A., INC.

TEXT IN ILLUSTRATION

Lithium Soap Base Glycol Grease

b. Install the piston seal to the front disc brake cylinder.

NOTE: **Securely install the piston seal to the groove of the front disc brake cylinder.**

4. **INSTALL CYLINDER BOOT**

a. Apply a light layer of lithium soap base glycol grease to the entire circumference of a new cylinder boot and front disc brake piston.

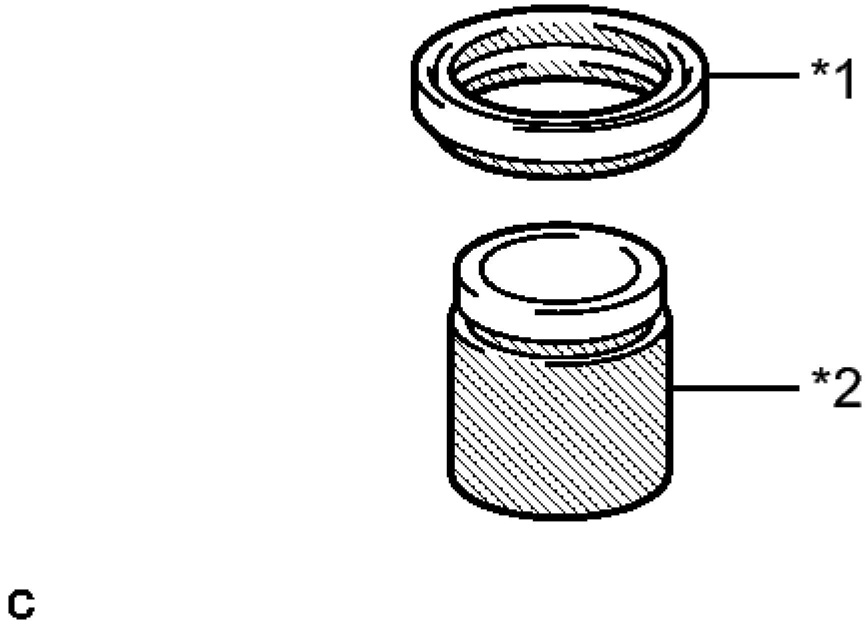

Fig. 25: Identifying Cylinder Boot And Front Disc Brake Piston
Courtesy of TOYOTA MOTOR SALES, U.S.A., INC.

TEXT IN ILLUSTRATION

*1	Cylinder Boot
*2	Front Disc Brake Piston
▨	Lithium Soap Base Glycol Grease

b. Install the cylinder boot to the front disc brake piston as shown in the illustration.

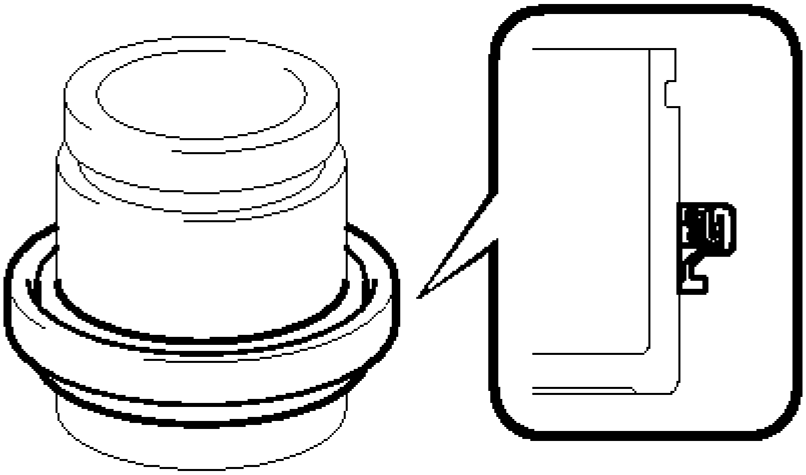

Fig. 26: Installing Cylinder Boot To Front Disc Brake Piston
Courtesy of TOYOTA MOTOR SALES, U.S.A., INC.

5. **INSTALL FRONT DISC BRAKE PISTON**
    a. Install the cylinder boot to the front disc brake cylinder as shown in the illustration.

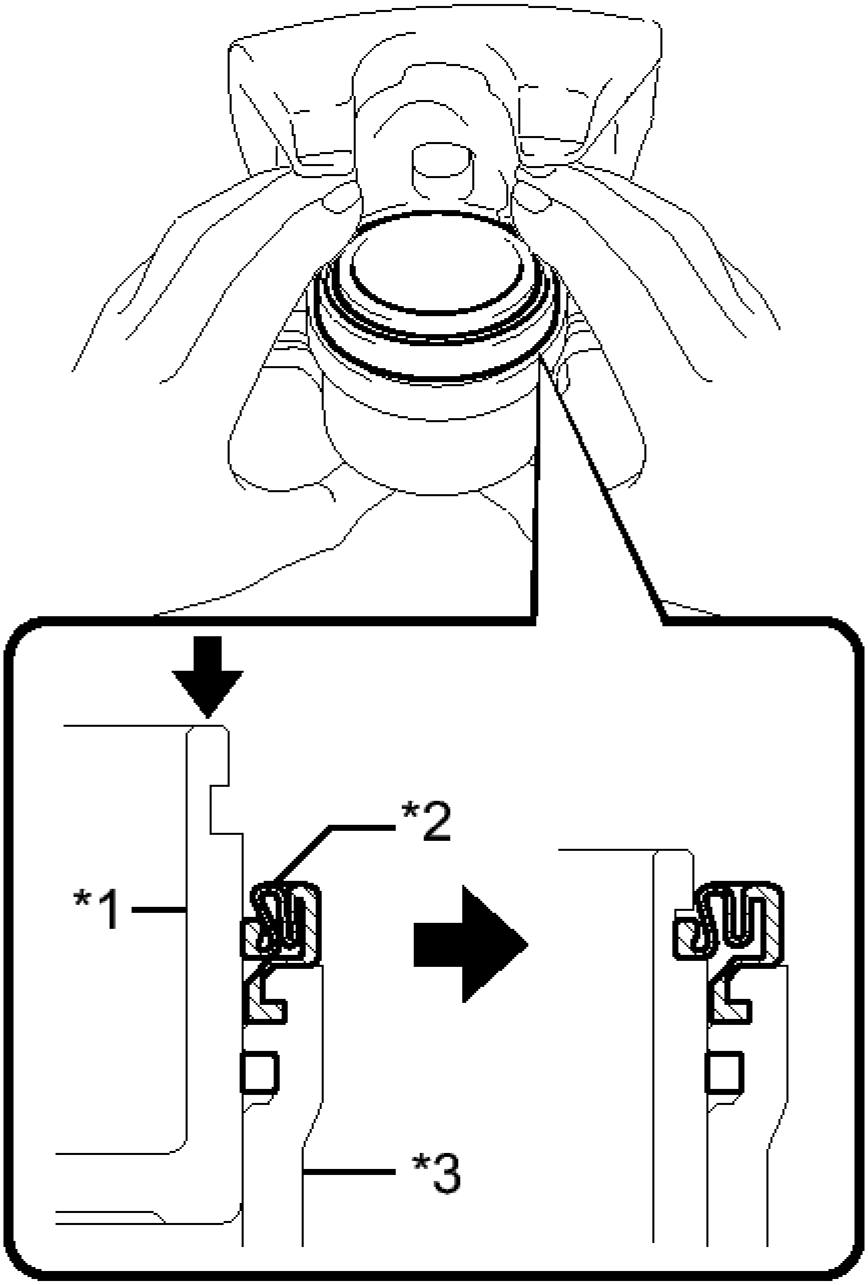

Fig. 27: Installing Cylinder Boot To Front Disc Brake Cylinder
Courtesy of TOYOTA MOTOR SALES, U.S.A., INC.

TEXT IN ILLUSTRATION

	Front

*1	Disc Brake Piston
*2	Cylinder Boot
*3	Front Disc Brake Cylinder

NOTE:

- **Securely install the cylinder boot into the groove of the disc brake cylinder and front disc brake piston.**
- **Do not damage the cylinder boot.**

INSTALLATION

INSTALLATION

HINT:

- Use the same procedure for the LH side and RH side.
- The following procedure is for the LH side.

1. **INSTALL FRONT DISC**
    a. Align the matchmarks of the front disc and front axle hub, and install the front disc.

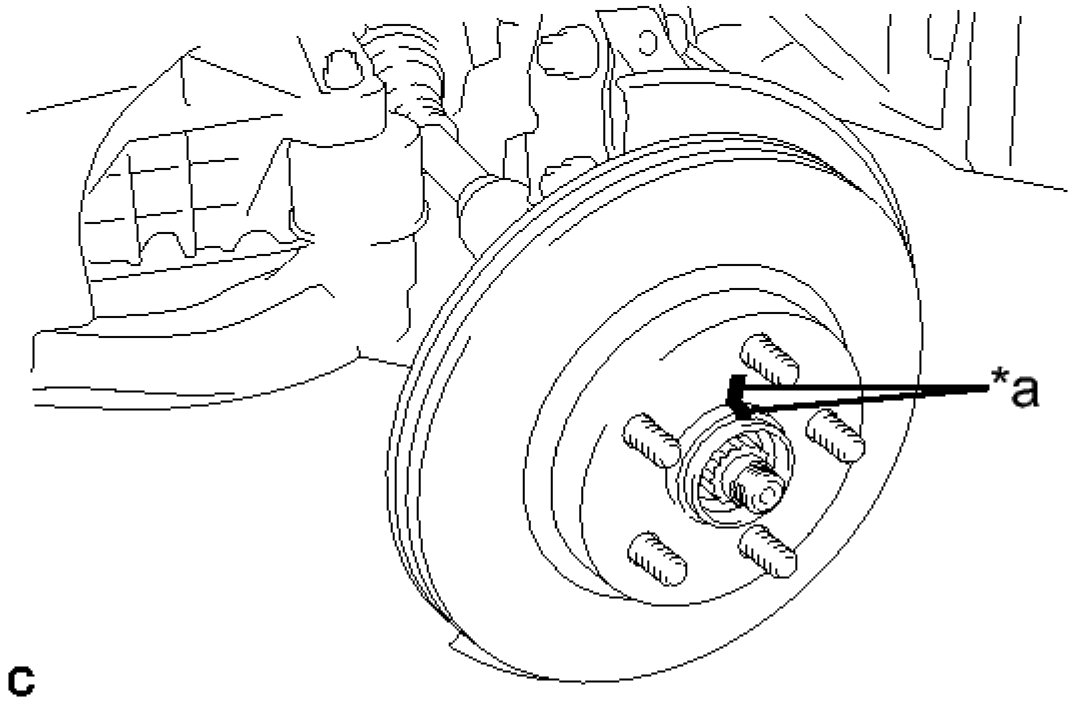

Fig. 28: Identifying Front Disc And Axle Hub Matchmarks
Courtesy of TOYOTA MOTOR SALES, U.S.A., INC.

TEXT IN ILLUSTRATION

*a	Matchmark

NOTE: **When replacing the front disc with a new one, select the installation position where the front disc has minimal runout.**

2. **INSTALL FRONT DISC BRAKE BUSHING DUST BOOT**
   a. Secure the front disc brake cylinder mounting in a vise.
   b. Apply a light layer of lithium soap base glycol grease to the entire circumference of 2 new front disc brake bushing dust boots.

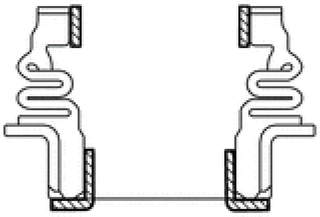

Fig. 29: Identifying Front Disc Brake Bushing Dust Boots
Courtesy of TOYOTA MOTOR SALES, U.S.A., INC.

TEXT IN ILLUSTRATION

	Lithium Soap Base Glycol Grease

HINT:

Apply at least 0.3 g (0.01 oz.) of lithium soap base glycol grease to each front disc brake bushing dust boot.

   c. Using a socket wrench (19 mm) and a hammer, install the 2 front disc brake bushing dust boots to the front disc brake cylinder mounting.

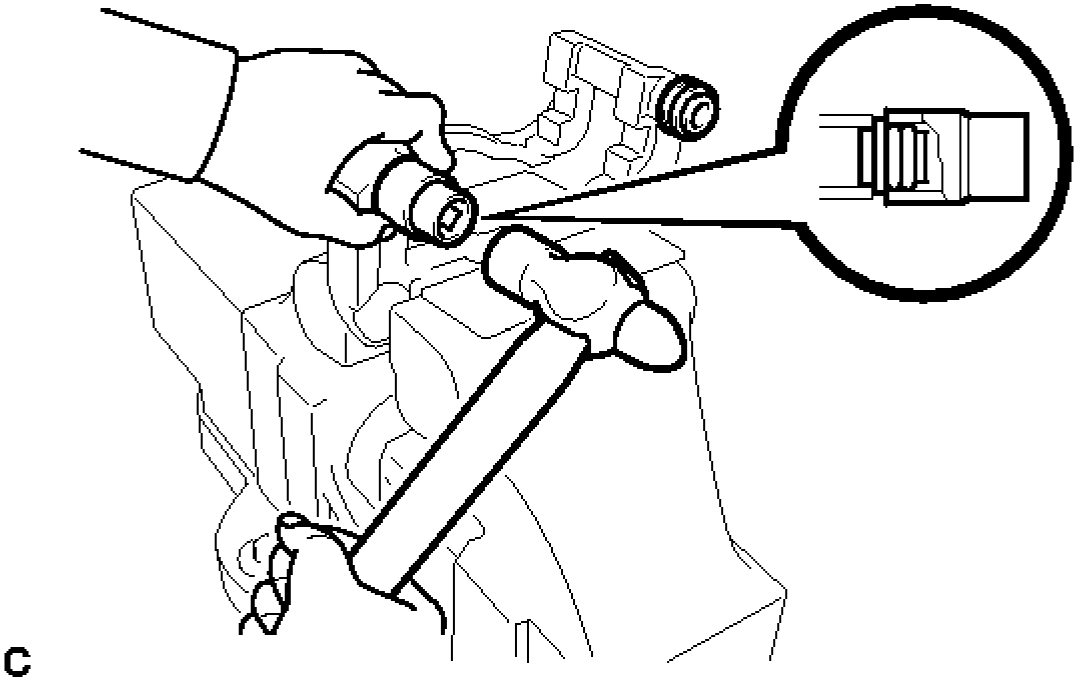

Fig. 30: Installing Front Disc Brake Bushing Dust Boot
Courtesy of TOYOTA MOTOR SALES, U.S.A., INC.

3. **INSTALL FRONT DISC BRAKE CYLINDER MOUNTING**
    a. Install the front disc brake cylinder mounting to the steering knuckle with the 2 bolts.

       Torque: 107 N*m (1090 kgf*cm, 79 ft.*lbf)

4. **INSTALL FRONT DISC BRAKE CYLINDER SLIDE BUSHING**
    a. Apply a light layer of lithium soap base glycol grease to the contact surface of the No. 2 front disc brake cylinder slide pin.

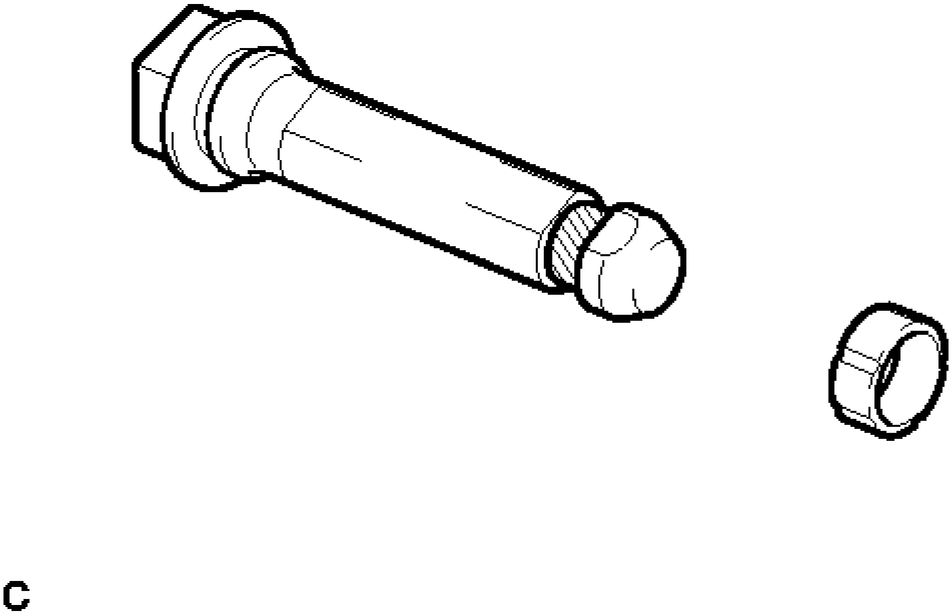

Fig. 31: Identifying Light Layer Of Grease On Front No. 2 Disc Brake Cylinder Slide Pin
Courtesy of TOYOTA MOTOR SALES, U.S.A., INC.

TEXT IN ILLUSTRATION

Lithium Soap Base Glycol Grease

b. Install a new front disc brake cylinder slide bushing to the front No. 2 disc brake cylinder slide pin.

5. **INSTALL FRONT NO. 2 DISC BRAKE CYLINDER SLIDE PIN**
    a. Apply a light layer of lithium soap base glycol grease to the sliding part and the sealing surfaces of the front No. 2 disc brake cylinder slide pin.

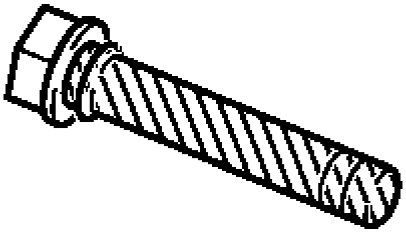

Fig. 32: Identifying Light Layer Of Grease On Front No. 2 Disc Brake Cylinder Slide Pin
Courtesy of TOYOTA MOTOR SALES, U.S.A., INC.

TEXT IN ILLUSTRATION

	Lithium Soap Base Glycol Grease

b. Install the front No. 2 disc brake cylinder slide pin to the front disc brake cylinder mounting.

c. Push the front No. 2 disc brake cylinder slide pin into the front disc brake bushing dust boot to engage the pin to the boot.

6. **INSTALL FRONT DISC BRAKE CYLINDER SLIDE PIN**

    a. Apply a light layer of lithium soap base glycol grease to the sliding part and the sealing surfaces of the front disc brake cylinder slide pin.

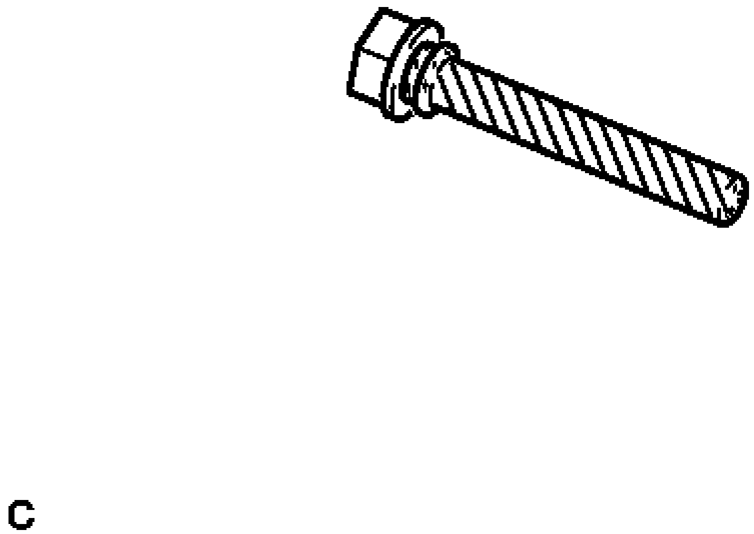

Fig. 33: Identifying Light Layer Of Grease On No. 1 Disc Brake Cylinder Slide Pin
Courtesy of TOYOTA MOTOR SALES, U.S.A., INC.

TEXT IN ILLUSTRATION

	Lithium Soap Base Glycol Grease

b. Install the front disc brake cylinder slide pin to the front disc brake cylinder mounting.
c. Push the front disc brake cylinder slide pin into the front disc brake bushing dust boot to engage the pin to the boot.

7. **INSTALL FRONT DISC BRAKE FITTING KIT**
    a. Install the 2 front No. 1 disc brake pad support plates and 2 front No. 2 disc brake pad support plates to the front disc brake cylinder mounting.

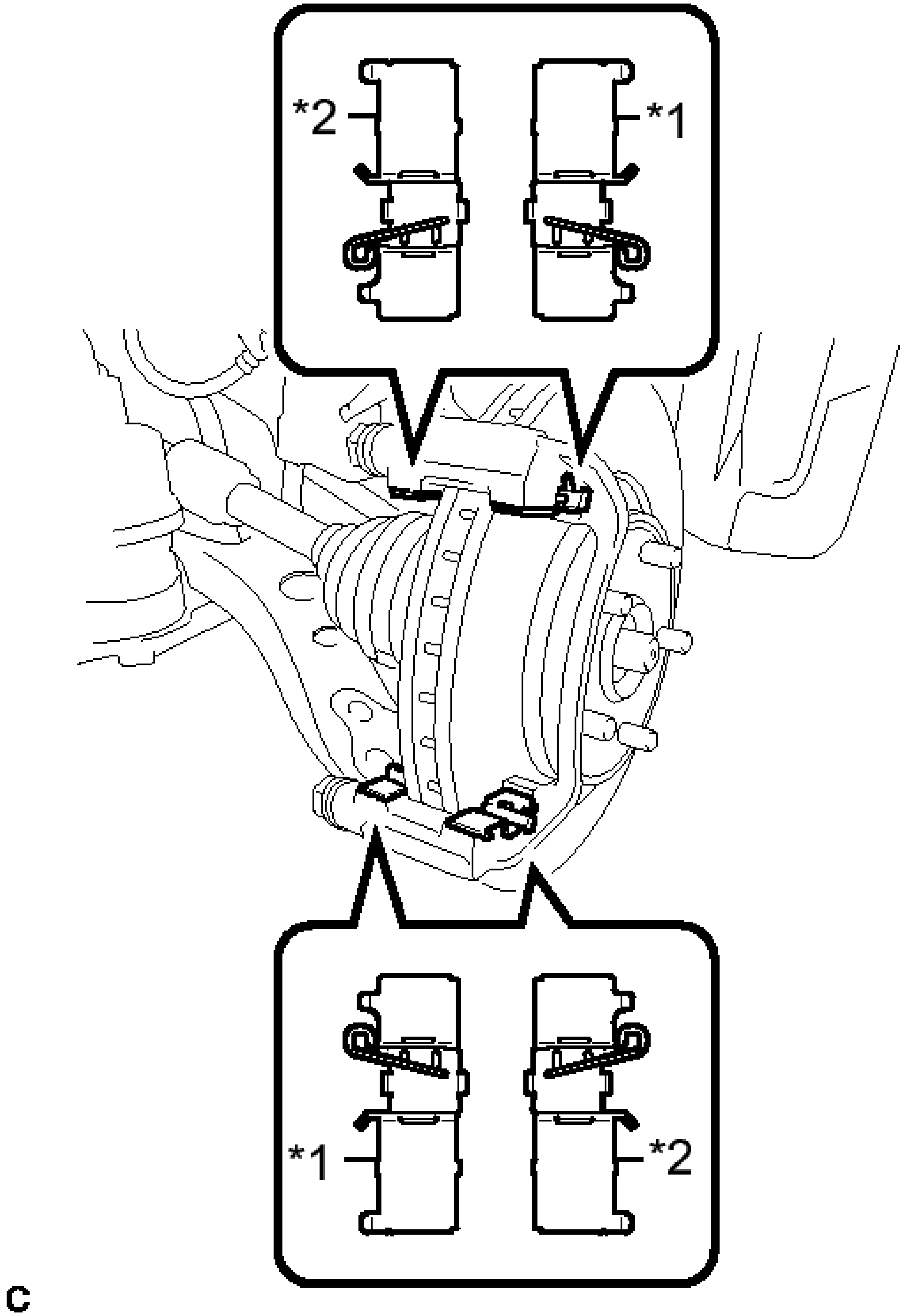

Fig. 34: Identifying Front Disc Brake Pad Support Plates
Courtesy of TOYOTA MOTOR SALES, U.S.A., INC.

TEXT IN ILLUSTRATION

	Front

*1	No. 1 Disc Brake Pad Support Plate
*2	Front No. 2 Disc Brake Pad Support Plate

NOTE: **Be sure to install each front disc brake pad support plate in the correct position and direction.**

8. **INSTALL FRONT ANTI-SQUEAL SHIM KIT**
    a. Install the front disc brake pad wear indicator plate to each front disc brake pad.

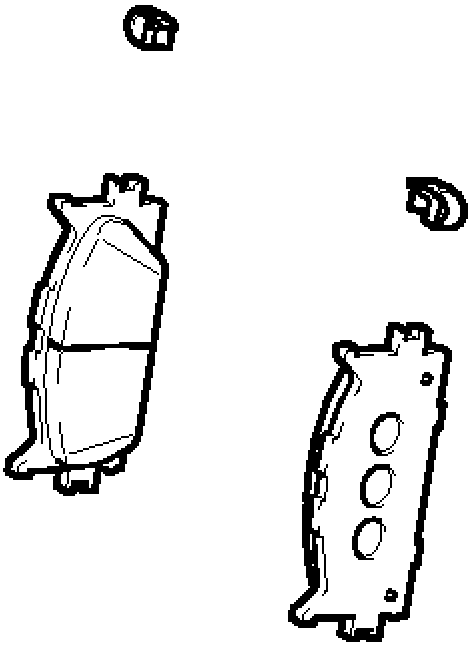

Fig. 35: Identifying Front Disc Brake Pad Wear Indicator
Courtesy of TOYOTA MOTOR SALES, U.S.A., INC.

NOTE: **Install each front disc brake pad wear indicator plate in the correct position and direction.**

b. Apply disc brake grease to the inside of each front disc brake anti-squeal shim as shown in the illustration.

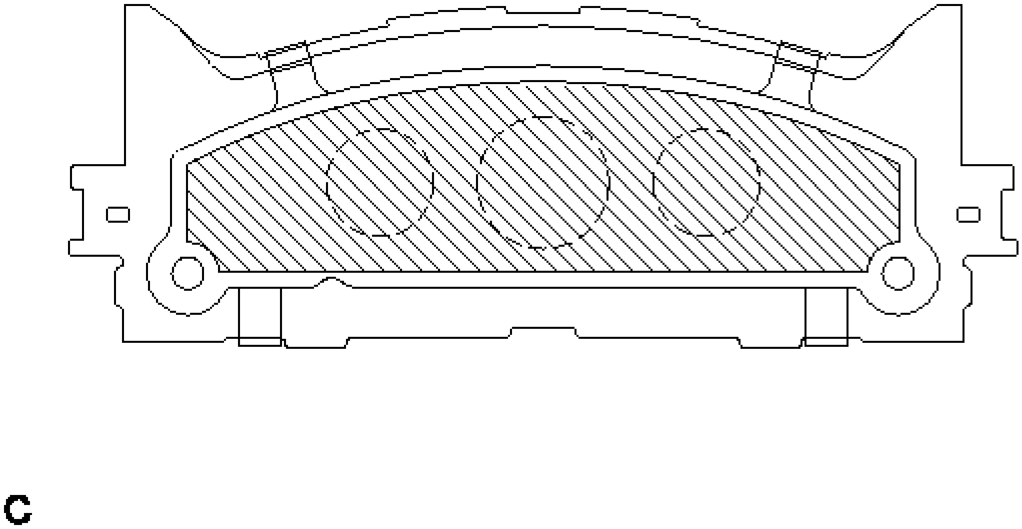

Fig. 36: Identifying Brake Grease Application Area
Courtesy of TOYOTA MOTOR SALES, U.S.A., INC.

TEXT IN ILLUSTRATION

▨	Disc Brake Grease

c. Install the front disc brake anti-squeal shim to each front disc brake pad.

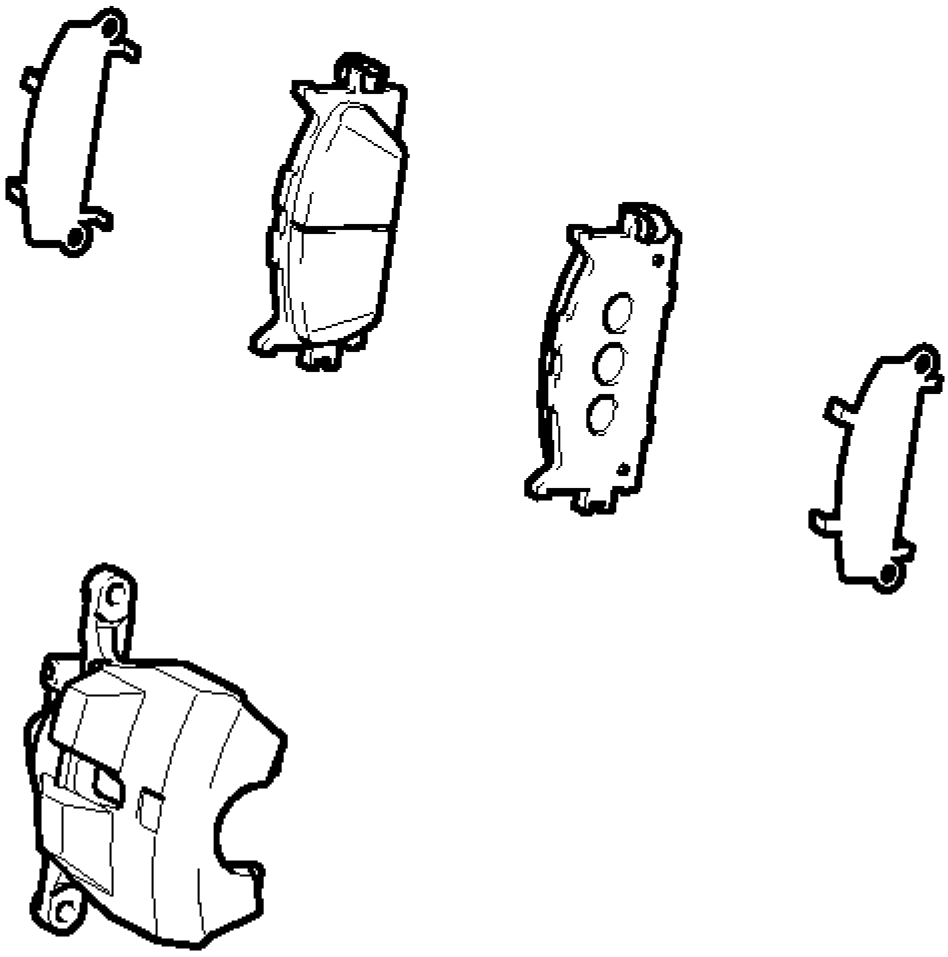

Fig. 37: Identifying Front Disc Brake Anti-Squeal Shims
Courtesy of TOYOTA MOTOR SALES, U.S.A., INC.

NOTE:

- **Install the front disc brake anti-squeal shims in the correct positions and directions.**
- **Disc brake grease can seep out slightly from the area where the front disc brake anti-squeal shim is installed.**
- **Make sure that disc brake grease is not applied onto the lining surface.**

9. **INSTALL FRONT DISC BRAKE PAD KIT**
    a. Install the 2 front disc brake pads with front anti-squeal shim kit to the front disc brake cylinder mounting.

NOTE: **There should be no oil or grease on the friction surfaces of the disc**

brake pads or the front disc.

b. Install the 2 anti-squeal springs to the front disc brake pads.

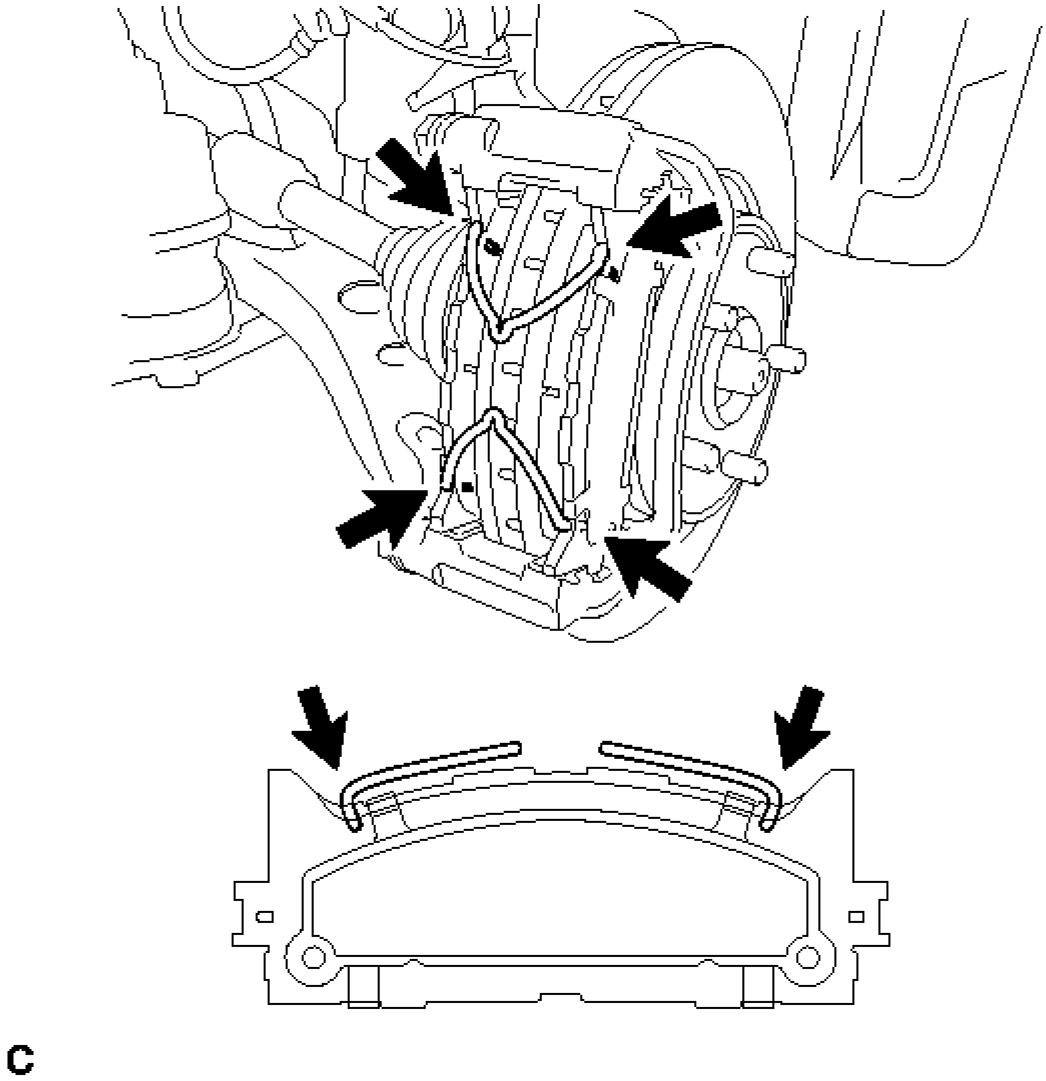

Fig. 38: Identifying Anti-Squeal Springs
Courtesy of TOYOTA MOTOR SALES, U.S.A., INC.

NOTE:

- **When replacing the front disc brake pads with new ones, make sure to replace the anti-squeal springs at the same time.**
- **Be sure to install the anti-squeal springs into the front disc brake pad installation holes as far as they will go.**

10. **INSTALL DISC BRAKE CYLINDER ASSEMBLY**

a. Hold the front disc brake cylinder slide pin, and install the front disc brake cylinder assembly to the front disc brake cylinder mounting with the 2 bolts.

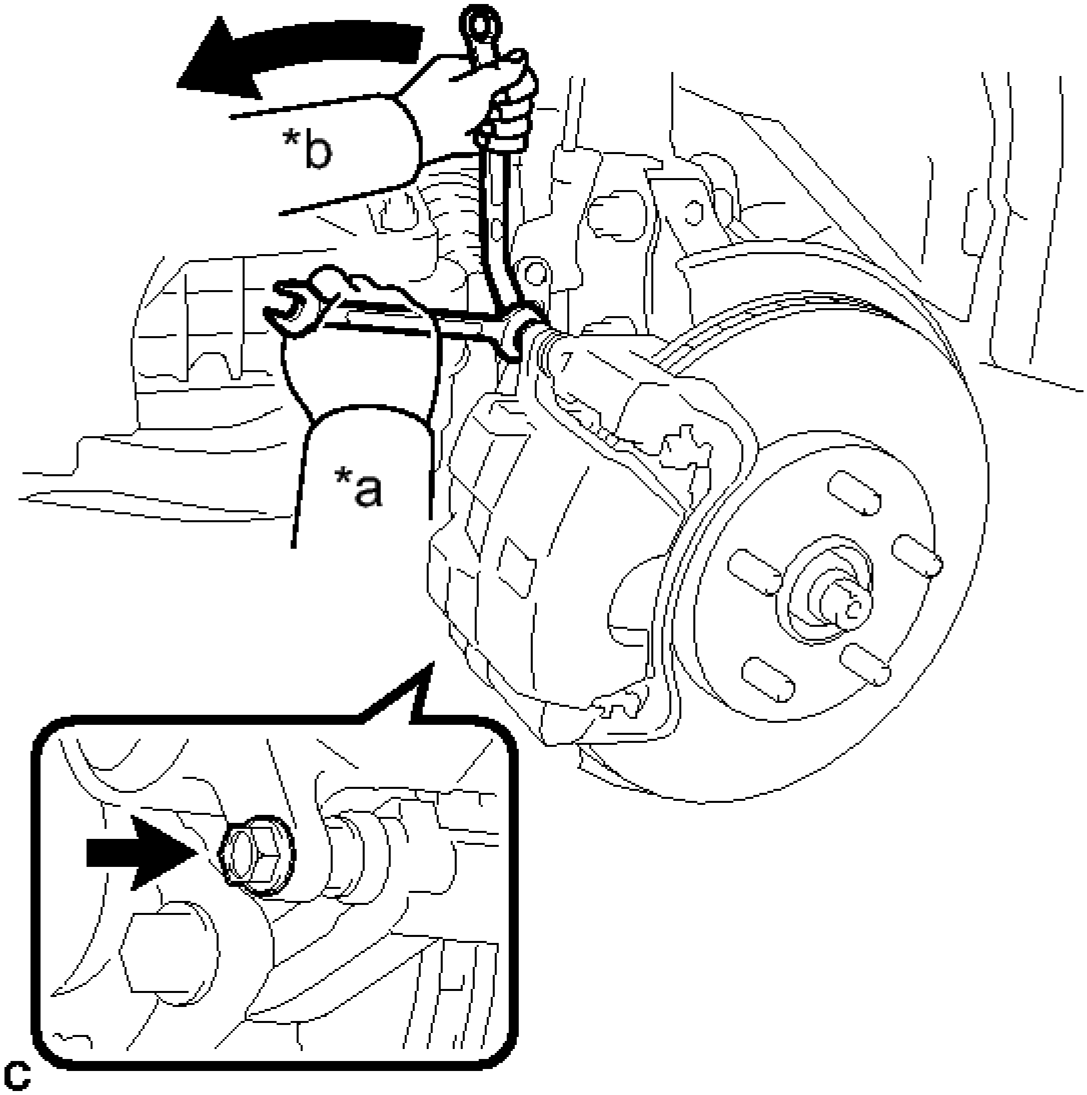

Fig. 39: Installing Disc Brake Cylinder Assembly
Courtesy of TOYOTA MOTOR SALES, U.S.A., INC.

TEXT IN ILLUSTRATION

*a	Hold
*b	Turn

Torque: 34 N*m (350 kgf*cm, 25 ft.*lbf)

11. **CONNECT FRONT FLEXIBLE HOSE**
    a. Connect the front flexible hose to the front disc brake cylinder assembly with the union bolt and a new gasket.

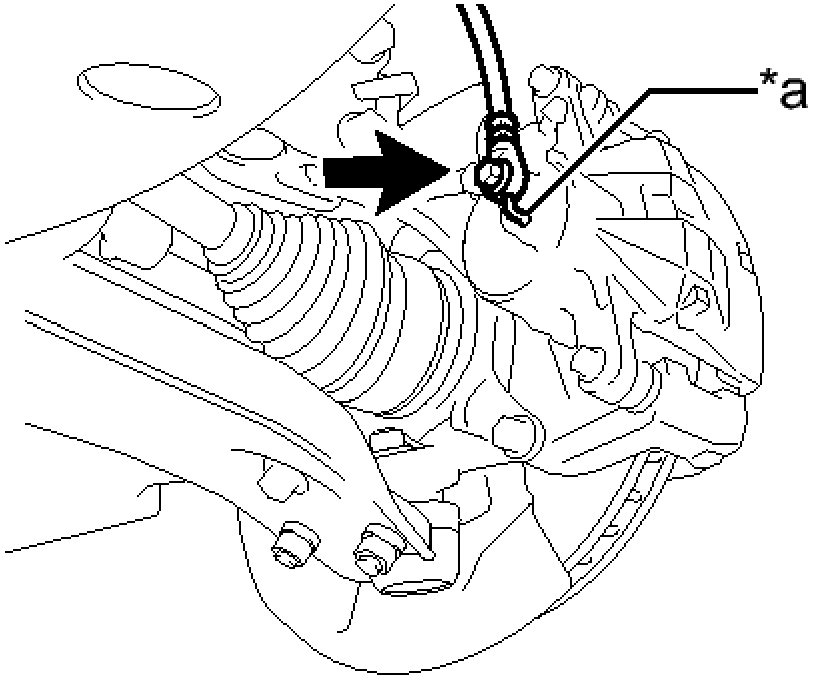

Fig. 40: Identifying Front Flexible Hose Union Bolt
Courtesy of TOYOTA MOTOR SALES, U.S.A., INC.

TEXT IN ILLUSTRATION

*a	Lock Hole

Torque: 29 N*m (300 kgf*cm, 22 ft.*lbf)

NOTE: **Install the flexible hose lock securely into the lock hole in the front disc brake cylinder.**

12. **CONNECT CABLE TO AUXILIARY BATTERY NEGATIVE TERMINAL**
    a. Connect the cable to the negative (-) auxiliary battery terminal. Refer to **INSTALLATION - Step 2** .
    b. Perform the following procedure if air bleeding is not necessary:
        1. Connect the reservoir level switch connector.
        2. Clear the DTCs. Refer to **DTC CHECK / CLEAR** .
13. **BLEED BRAKE LINE** . Refer to **BLEEDING - Step 1**
14. **INSTALL FRONT WHEEL**

    Torque: 103 N*m (1049 kgf*cm, 76 ft.*lbf)

FRONT BRAKE FLEXIBLE HOSE

COMPONENTS

ILLUSTRATION

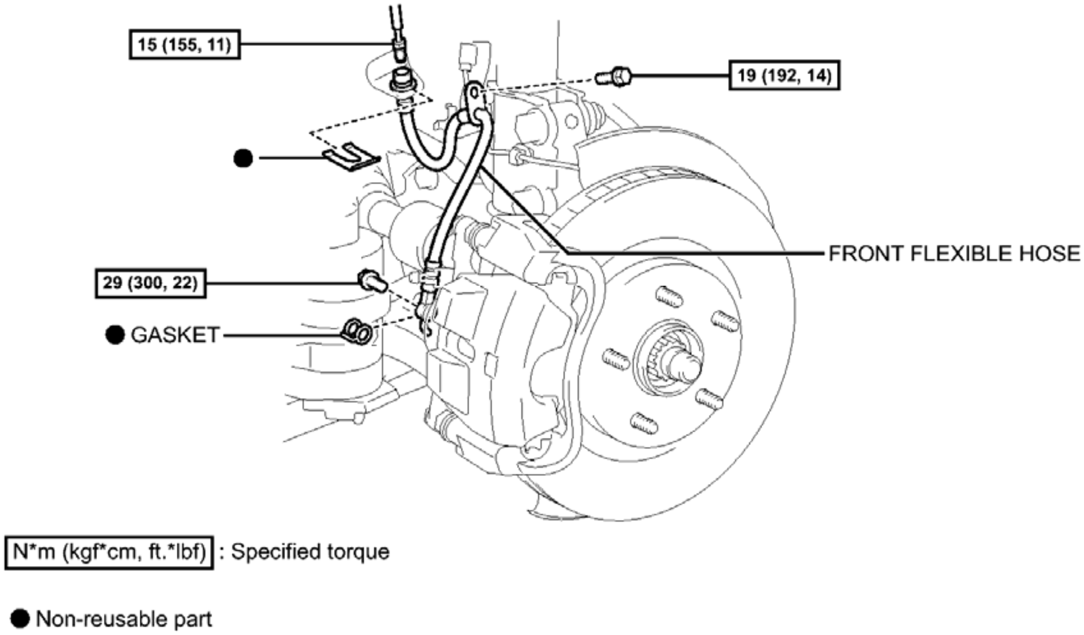
15 (155, 11)
19 (192, 14)
●
FRONT FLEXIBLE HOSE
29 (300, 22)
● GASKET
N*m (kgf*cm, ft.*lbf) : Specified torque
● Non-reusable part

Fig. 41: Identifying Front Brake Flexible Hose Replacement Components With Torque Specifications
Courtesy of TOYOTA MOTOR SALES, U.S.A., INC.

REMOVAL

REMOVAL

NOTE: **If the left and right hoses are disconnected at the same time, be sure to place a mark on each hose to indicate its installation position.**

HINT:

- Use the same procedure for the LH side and RH side.
- The following procedure is for the LH side.

1. **PRECAUTION**

   NOTE: **After turning the power switch off, waiting time may be required before disconnecting the cable from the negative (-) auxiliary battery terminal. Therefore, make sure to read the disconnecting the cable from the negative (-) auxiliary battery terminal notice before proceeding with work.**

Refer to PRECAUTION .

2. **DISABLE BRAKE CONTROL** . Refer to **REMOVAL - Step 2**
3. **REMOVE FRONT WHEEL**
4. **DRAIN BRAKE FLUID**

NOTE: If brake fluid leaks onto any painted surface, immediately wash it off.

5. **REMOVE FRONT FLEXIBLE HOSE**
   a. Remove the union bolt and gasket, and separate the front flexible hose from the front disc brake cylinder assembly.

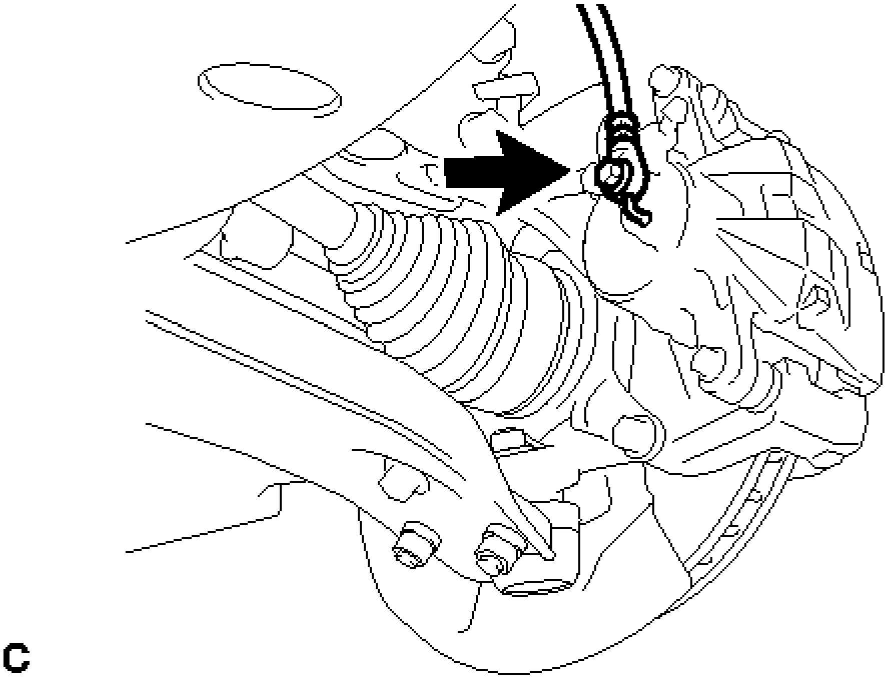

Fig. 42: Identifying Front Flexible Hose Union Bolt
Courtesy of TOYOTA MOTOR SALES, U.S.A., INC.

   b. Using a union nut wrench, disconnect the brake line while holding the front flexible hose with a wrench.

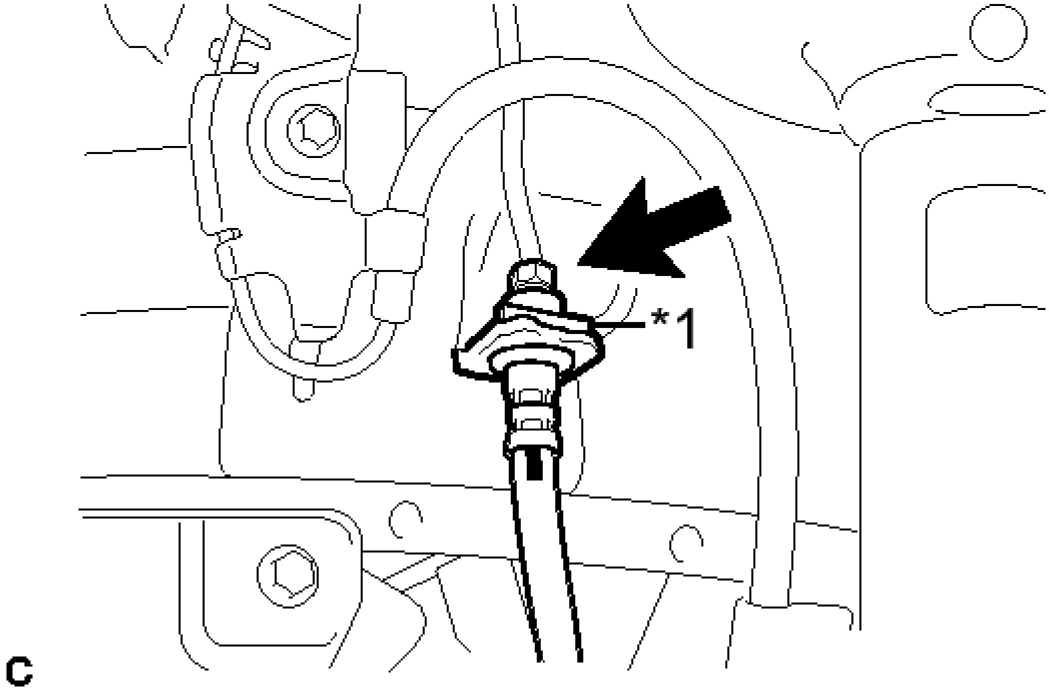

Fig. 43: Identifying Brake Line Nut
Courtesy of TOYOTA MOTOR SALES, U.S.A., INC.

TEXT IN ILLUSTRATION

*1	Clip

NOTE:

- **Do not bend or damage the brake line.**
- **Do not allow any foreign matter such as dirt or dust to enter the brake line from the connecting points.**

c. Remove the clip.

d. Remove the bolt and front flexible hose from the front shock absorber assembly.

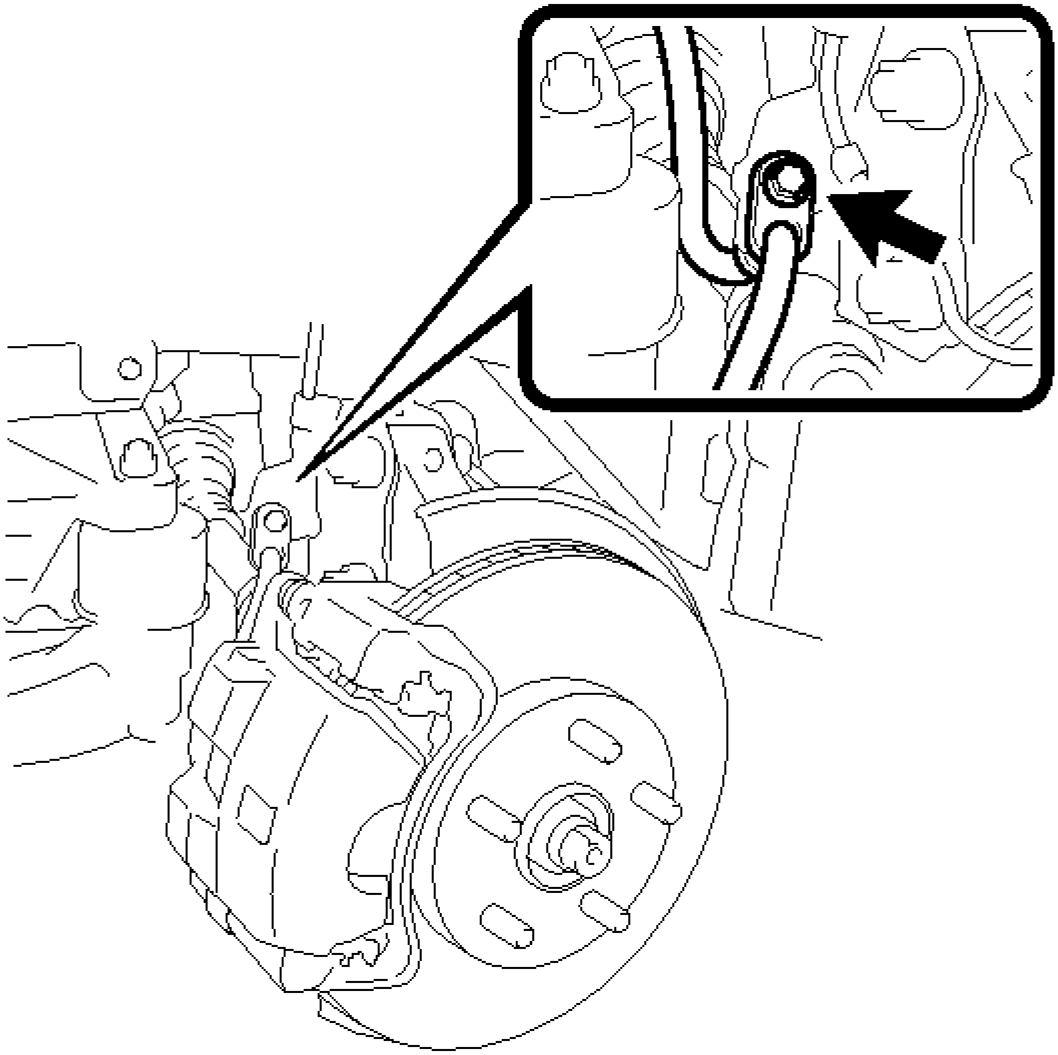

Fig. 44: Identifying Flexible Hose Mounting Bracket Bolt
Courtesy of TOYOTA MOTOR SALES, U.S.A., INC.

INSTALLATION

INSTALLATION

NOTE:

- **Because the left and right hoses are not interchangeable, verify the part number when installing the flexible hoses.**
- **If the hoses are to be reused, connect them after checking the identification marks placed when each hose was disconnected.**

HINT:

- Use the same procedure for the LH side and RH side.

- The following procedure is for the LH side.

1. **INSTALL FRONT FLEXIBLE HOSE**
    1. Install a new clip to the front flexible hose.

       NOTE: **Install the clip as far as it will go.**

    2. Using a union nut wrench, connect the brake line to the front flexible hose while holding the flexible hose with a wrench.

       Torque: 15 N*m (155 kgf*cm, 11 ft.*lbf)

       NOTE:

       - **Do not bend or damage the brake line.**
       - **Do not allow any foreign matter such as dirt or dust to enter the brake line from the connecting points.**
       - **Use the formula to calculate special torque values for situations where the union nut wrench is combined with a torque wrench. Refer to PRECAUTION .**

    3. Install the front speed sensor clamp and front flexible hose to the shock absorber bracket with the bolt.

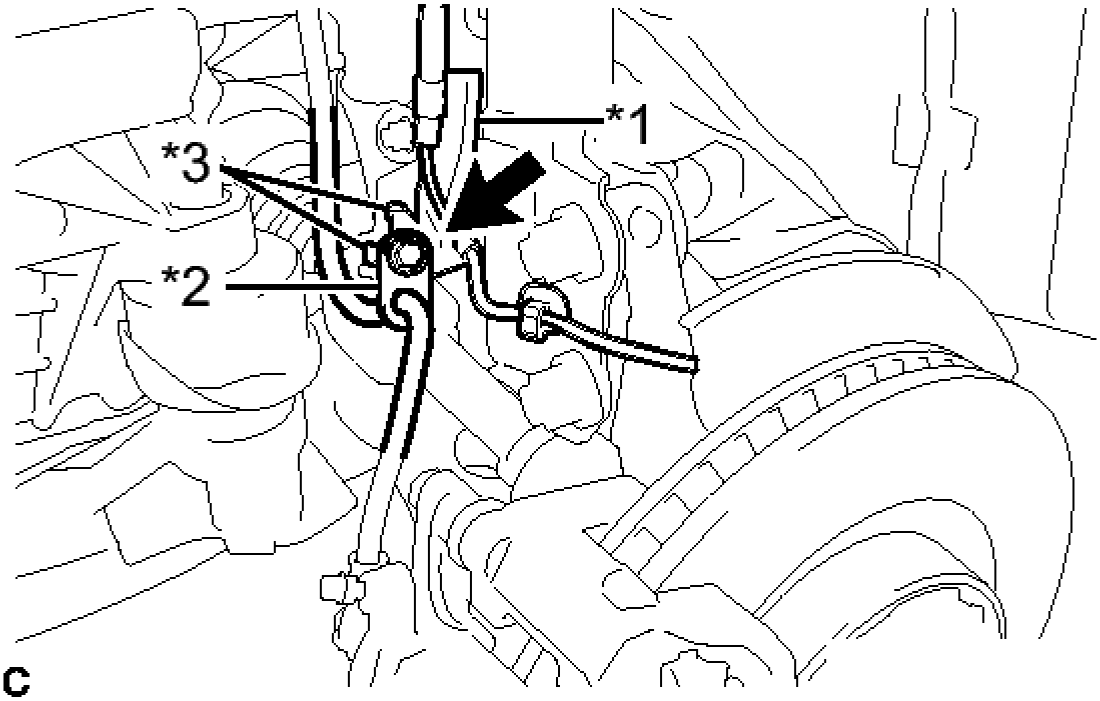

Fig. 45: Installing Front Speed Sensor Clamp And Front Flexible Hose
Courtesy of TOYOTA MOTOR SALES, U.S.A., INC.

TEXT IN ILLUSTRATION

*1	Front Speed Sensor Clamp
*2	Front Flexible Hose
*3	Claw

Torque: 19 N*m (192 kgf*cm, 14 ft.*lbf)

NOTE:

- **Do not twist the wire harness for the front speed sensor when installing it.**
- **Securely set the 2 claws of the front speed sensor clamp to the shock absorber bracket.**
- **A bolt tightens the brake flexible hose and front speed sensor together. Make sure that the front flexible hose is positioned over the front speed sensor.**

d. Connect the front flexible hose to the front disc brake cylinder assembly with the union bolt and a new gasket.

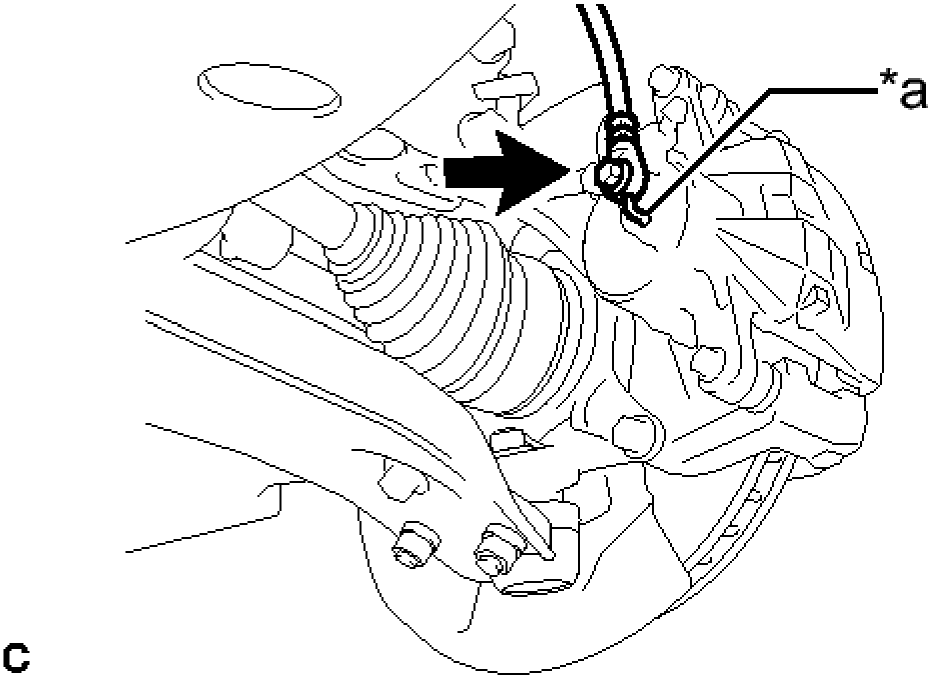

Fig. 46: Identifying Front Flexible Hose Union Bolt
Courtesy of TOYOTA MOTOR SALES, U.S.A., INC.

TEXT IN ILLUSTRATION

*a	Lock Hole

Torque: 29 N*m (300 kgf*cm, 22 ft.*lbf)

NOTE: **Install the flexible hose lock securely into the lock hole in the front disc brake cylinder.**

2. **CONNECT CABLE TO AUXILIARY BATTERY NEGATIVE TERMINAL**

   Refer to **INSTALLATION - Step 2**

3. **BLEED BRAKE LINE** . Refer to **BLEEDING - Step 1**
4. **INSTALL FRONT WHEEL**

   Torque: 103 N*m (1049 kgf*cm, 76 ft.*lbf)

FRONT BRAKE

COMPONENTS

ILLUSTRATION

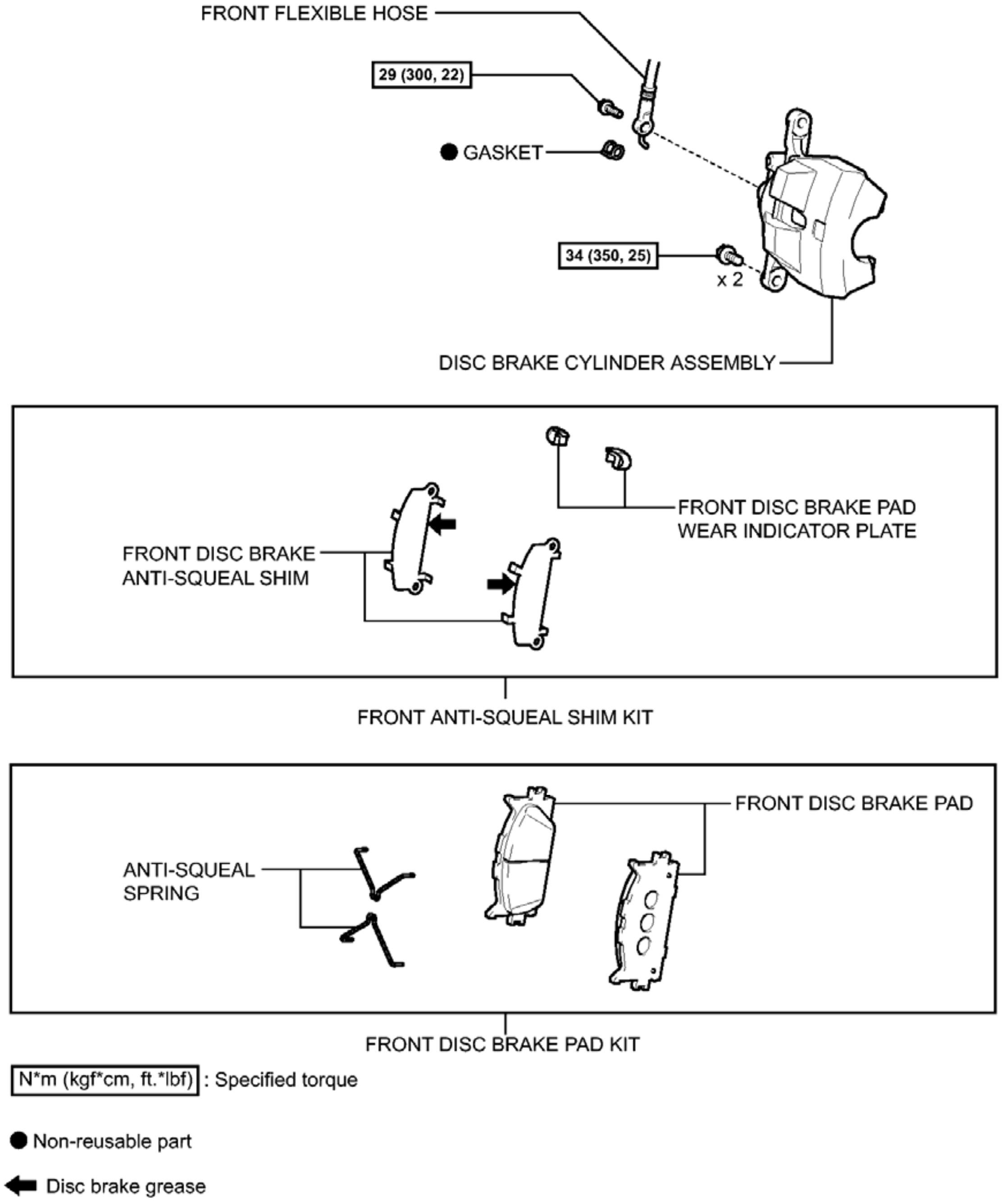
FRONT FLEXIBLE HOSE
29 (300, 22)
● GASKET
34 (350, 25)
x 2
DISC BRAKE CYLINDER ASSEMBLY
FRONT DISC BRAKE PAD WEAR INDICATOR PLATE
FRONT DISC BRAKE ANTI-SQUEAL SHIM
FRONT ANTI-SQUEAL SHIM KIT
FRONT DISC BRAKE PAD
ANTI-SQUEAL SPRING
FRONT DISC BRAKE PAD KIT
N*m (kgf*cm, ft.*lbf) : Specified torque
● Non-reusable part
⬅ Disc brake grease

Fig. 1: Identifying Front Brake Replacement Components With Torque Specifications (1 Of 3)
Courtesy of TOYOTA MOTOR SALES, U.S.A., INC.

ILLUSTRATION

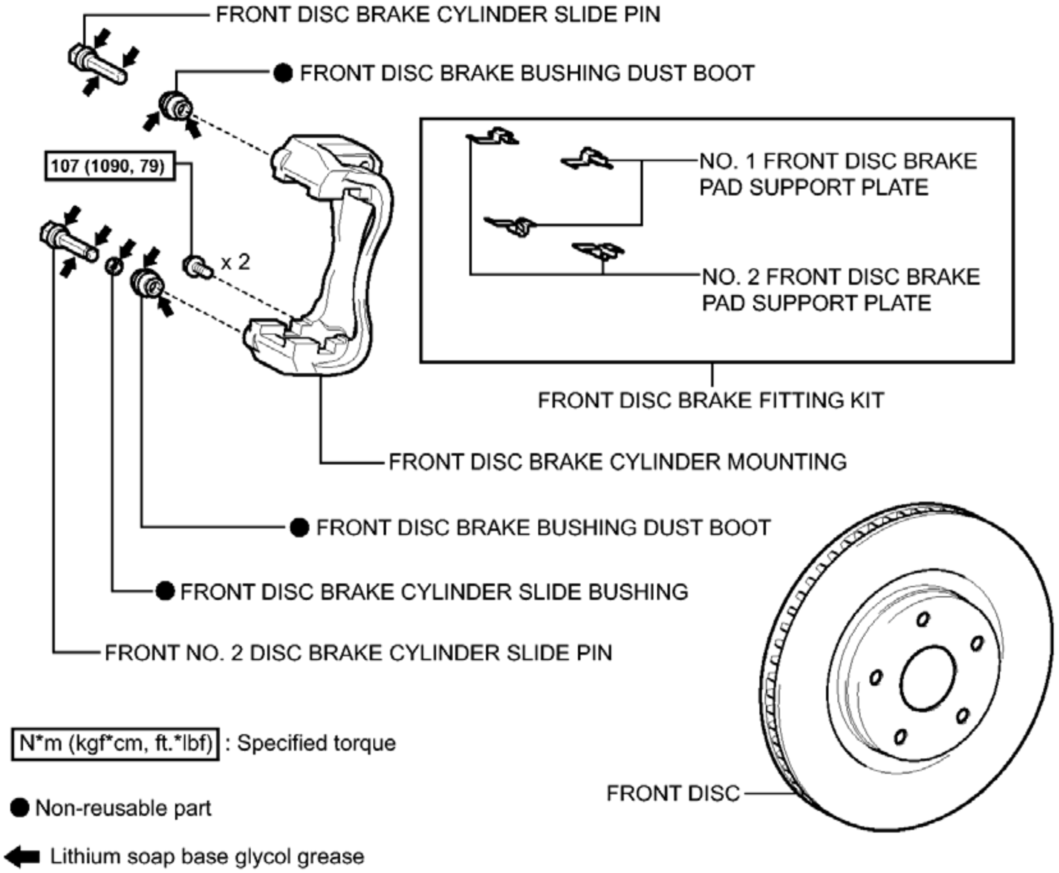
FRONT DISC BRAKE CYLINDER SLIDE PIN
● FRONT DISC BRAKE BUSHING DUST BOOT
107 (1090, 79)
x 2
NO. 1 FRONT DISC BRAKE PAD SUPPORT PLATE
NO. 2 FRONT DISC BRAKE PAD SUPPORT PLATE
FRONT DISC BRAKE FITTING KIT
FRONT DISC BRAKE CYLINDER MOUNTING
● FRONT DISC BRAKE BUSHING DUST BOOT
● FRONT DISC BRAKE CYLINDER SLIDE BUSHING
FRONT NO. 2 DISC BRAKE CYLINDER SLIDE PIN
N*m (kgf*cm, ft.*lbf) : Specified torque
● Non-reusable part
⬅ Lithium soap base glycol grease
FRONT DISC

Fig. 2: Identifying Front Brake Replacement Components With Torque Specifications (2 Of 3)
Courtesy of TOYOTA MOTOR SALES, U.S.A., INC.

ILLUSTRATION

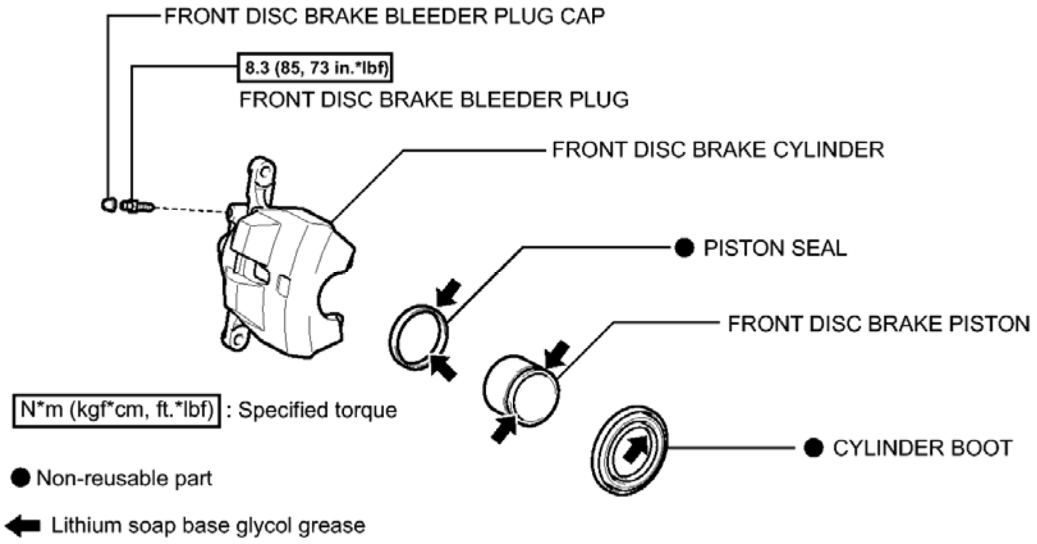
FRONT DISC BRAKE BLEEDER PLUG CAP
8.3 (85, 73 in.*lbf)
FRONT DISC BRAKE BLEEDER PLUG
FRONT DISC BRAKE CYLINDER
● PISTON SEAL
FRONT DISC BRAKE PISTON
● CYLINDER BOOT
N*m (kgf*cm, ft.*lbf) : Specified torque
● Non-reusable part
⬅ Lithium soap base glycol grease

Fig. 3: Identifying Front Brake Replacement Components With Torque Specifications (3 Of 3)
Courtesy of TOYOTA MOTOR SALES, U.S.A., INC.

REMOVAL

REMOVAL

HINT:

- Use the same procedure for the LH side and RH side.
- The following procedure is for the LH side.

1. **REMOVE FRONT WHEEL**
2. **DRAIN BRAKE FLUID**

   NOTE: If brake fluid leaks onto any painted surface, immediately wash it off.

3. **SEPARATE FRONT FLEXIBLE HOSE**
   a. Remove the union bolt and gasket, and separate the front flexible hose from the disc brake cylinder assembly.

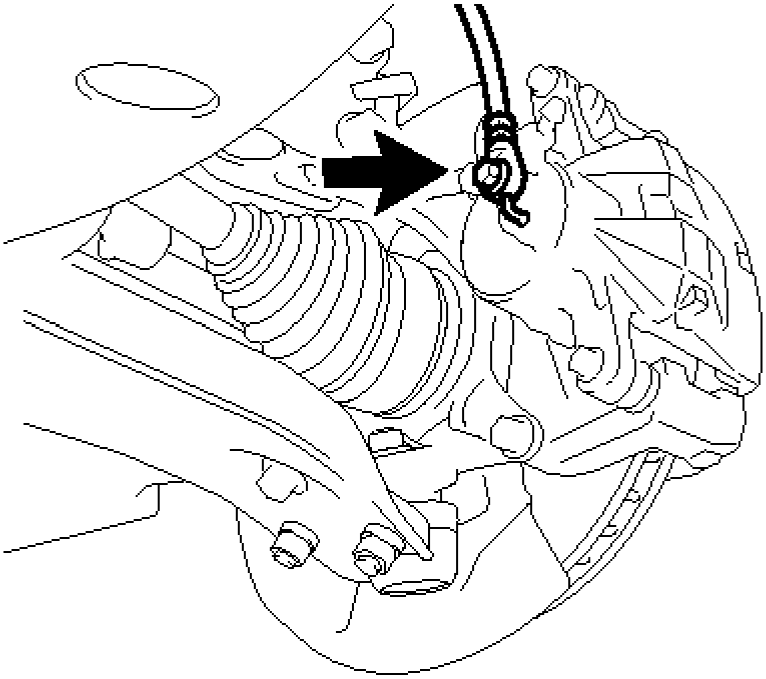

Fig. 4: Identifying Front Flexible Hose Union Bolt
Courtesy of TOYOTA MOTOR SALES, U.S.A., INC.

4. **REMOVE DISC BRAKE CYLINDER ASSEMBLY**
   a. Hold the front disc brake cylinder slide pin, and remove the 2 bolts and disc brake cylinder

assembly.

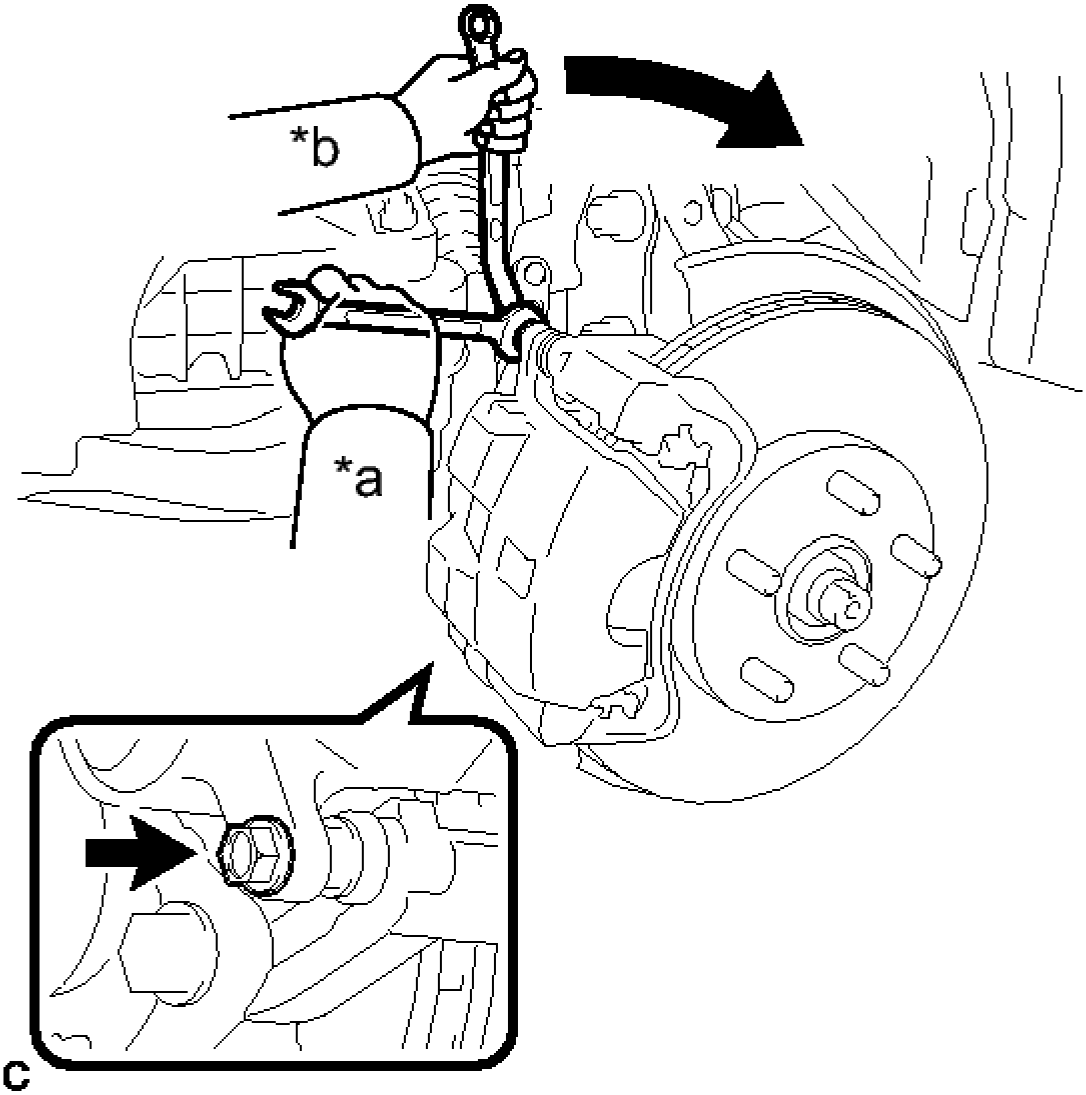

Fig. 5: Removing Disc Brake Cylinder Assembly
Courtesy of TOYOTA MOTOR SALES, U.S.A., INC.

TEXT IN ILLUSTRATION

*a	Hold
*b	Turn

5. **REMOVE FRONT DISC BRAKE PAD KIT**
   a. Remove the 2 anti-squeal springs from the front disc brake pads.

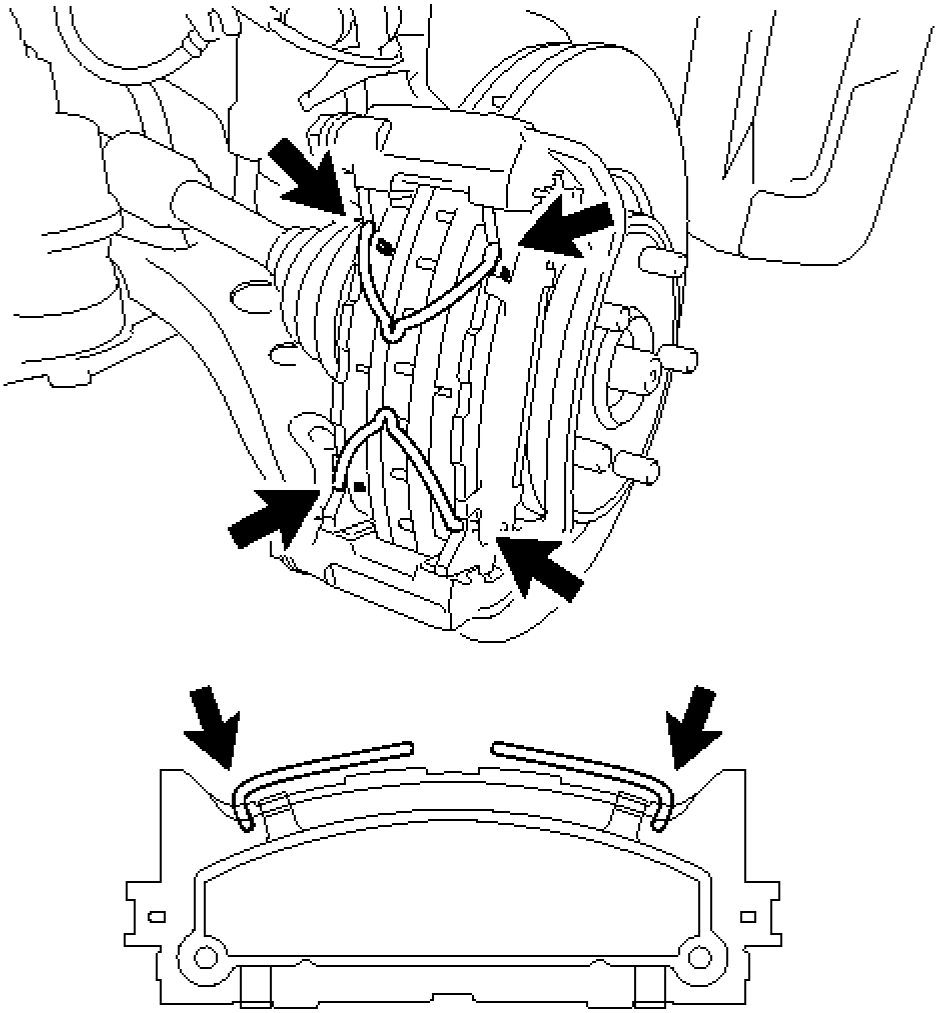

Fig. 6: Identifying Anti-Squeal Springs
Courtesy of TOYOTA MOTOR SALES, U.S.A., INC.

b. Remove the 2 front disc brake pads with front anti-squeal shim kit from the front disc brake cylinder mounting.

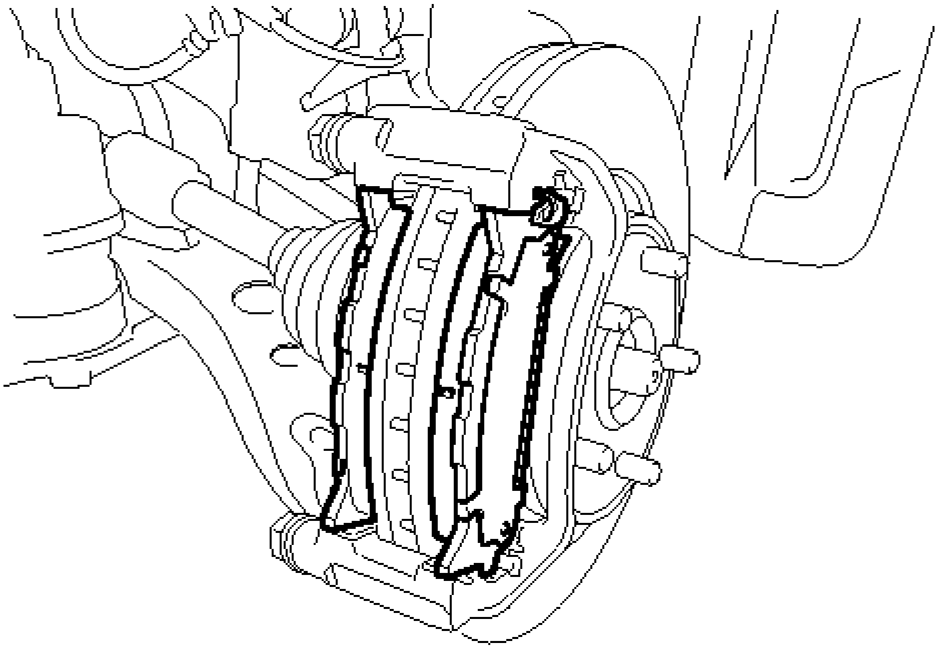

Fig. 7: Identifying Front Disc Brake Pads
Courtesy of TOYOTA MOTOR SALES, U.S.A., INC.

6. **REMOVE FRONT ANTI-SQUEAL SHIM KIT**
    a. Remove the front disc brake anti-squeal shim from each front disc brake pad.

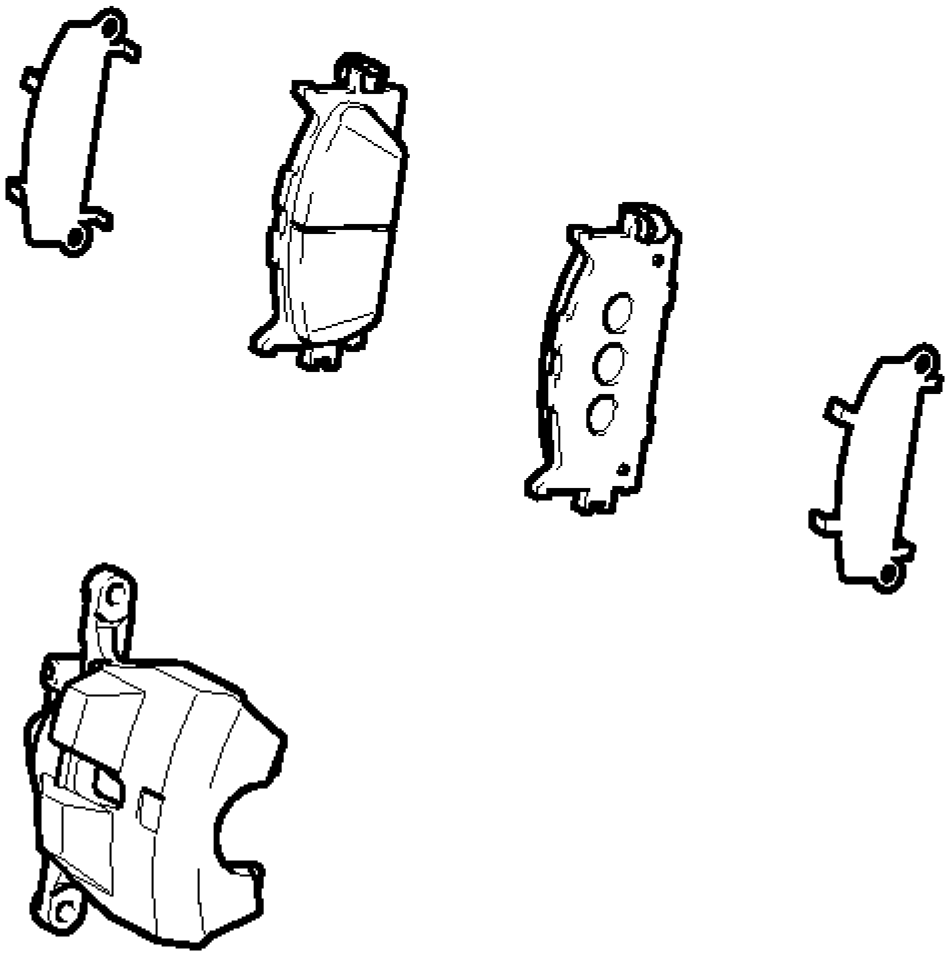

Fig. 8: Identifying Front Disc Brake Anti-Squeal Shims
Courtesy of TOYOTA MOTOR SALES, U.S.A., INC.

b. Remove the front disc brake pad wear indicator plate from each front disc brake pad.

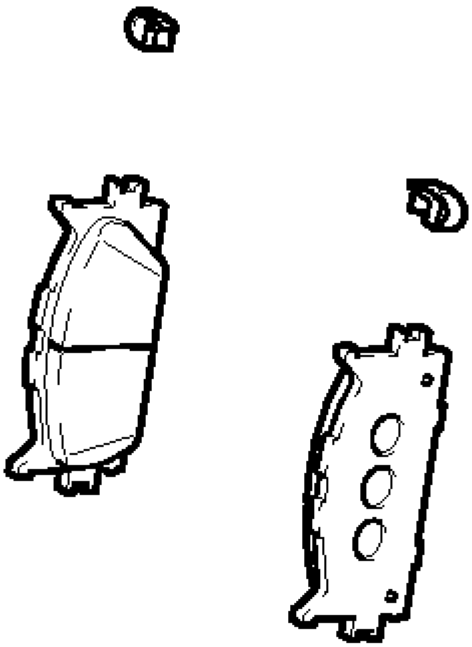

Fig. 9: Identifying Front Disc Brake Pad Wear Indicator
Courtesy of TOYOTA MOTOR SALES, U.S.A., INC.

7. **REMOVE FRONT DISC BRAKE FITTING KIT**
   a. Remove the 2 front No. 1 disc brake pad support plates and 2 front No. 2 disc brake pad support plates from the front disc brake cylinder mounting.

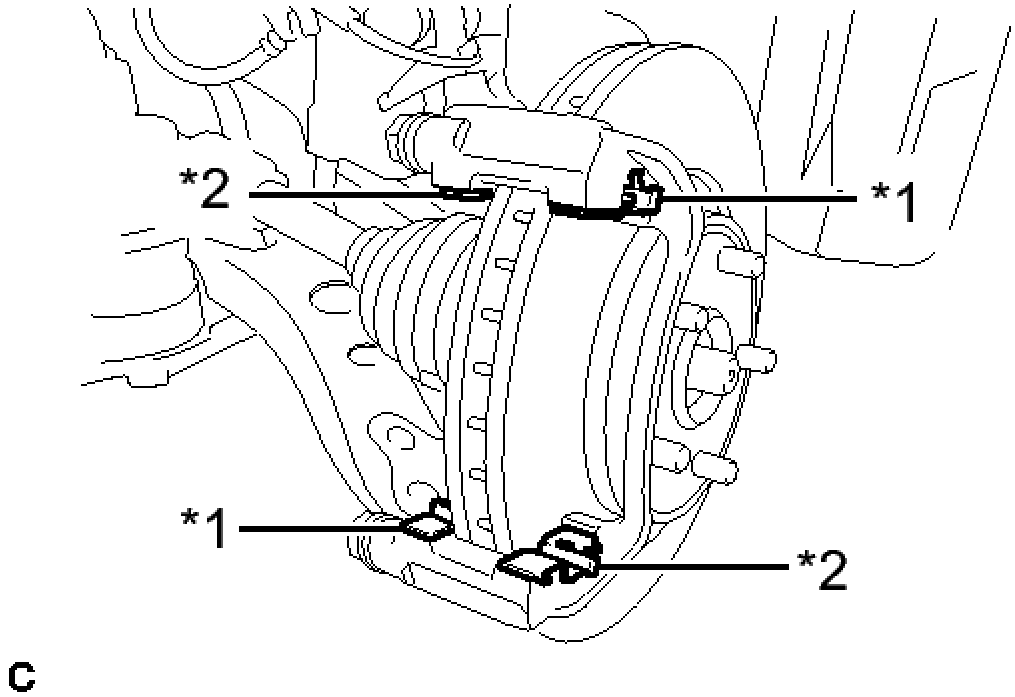

Fig. 10: Identifying Front Disc Brake Pad Support Plates
Courtesy of TOYOTA MOTOR SALES, U.S.A., INC.

TEXT IN ILLUSTRATION

*1	Front No. 1 Disc Brake Pad Support Plate
*2	Front No. 2 Disc Brake Pad Support Plate

NOTE: **Each front disc brake pad support plate has a different shape. Be sure to put an identification mark on each front disc brake pad support plate so that it can be reinstalled to its original position.**

8. REMOVE FRONT DISC BRAKE CYLINDER SLIDE PIN

a. Remove the front disc brake cylinder slide pin from the front disc brake cylinder mounting.

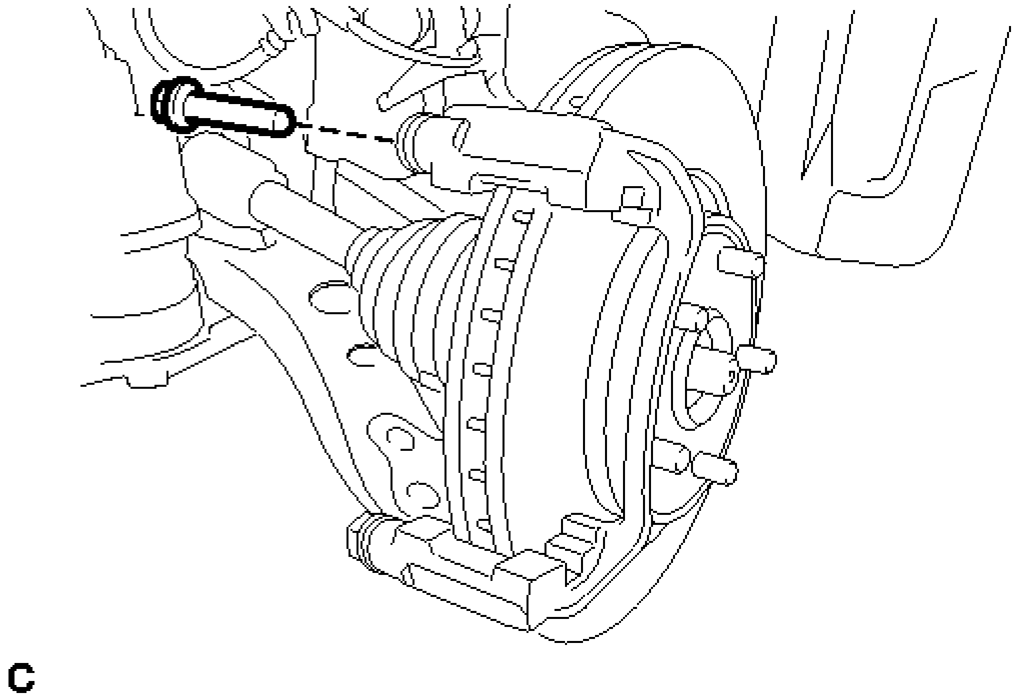

Fig. 11: Identifying Front Disc Brake Cylinder Slide Pin

Courtesy of TOYOTA MOTOR SALES, U.S.A., INC.

9. REMOVE FRONT NO. 2 DISC BRAKE CYLINDER SLIDE PIN

a. Remove the front No. 2 disc brake cylinder slide pin from the front disc brake cylinder mounting.

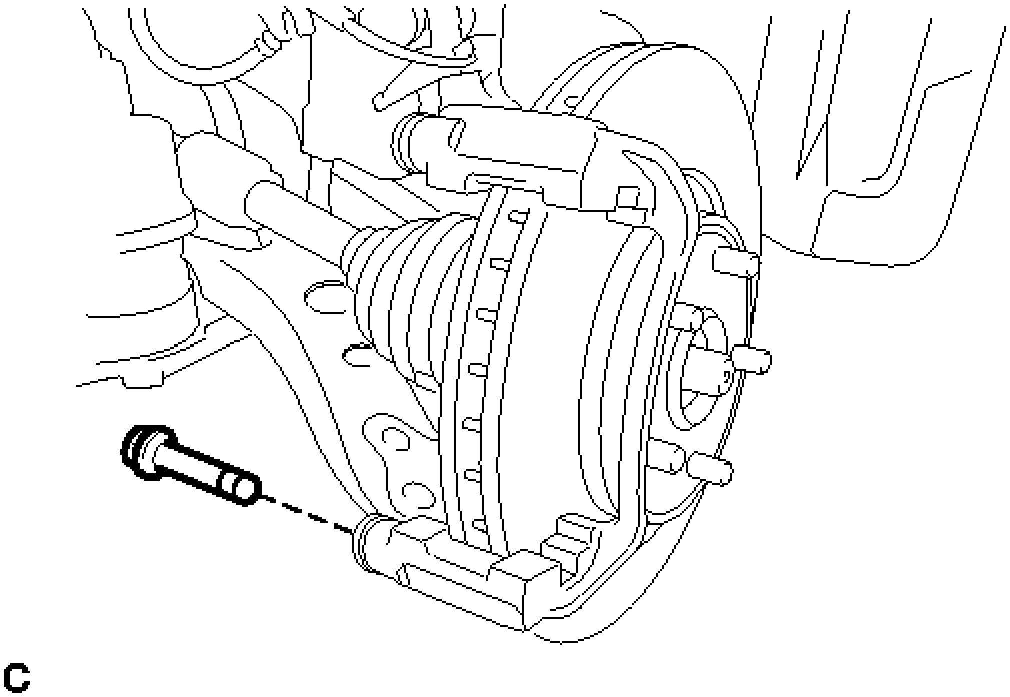

Fig. 12: Identifying Front No. 2 Disc Brake Cylinder Slide Pin
Courtesy of TOYOTA MOTOR SALES, U.S.A., INC.

10. REMOVE FRONT DISC BRAKE CYLINDER SLIDE BUSHING

a. Using a screwdriver with its tip wrapped with vinyl tape, remove the front disc brake cylinder slide bushing from the front No. 2 disc brake cylinder slide pin.

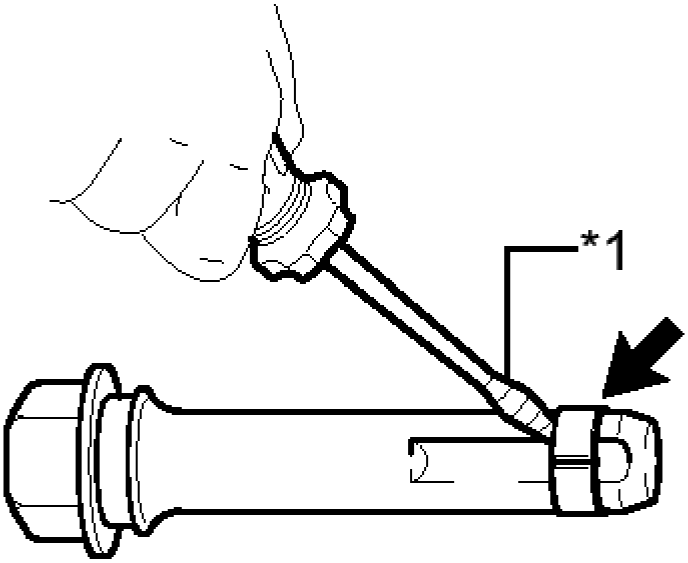

C

Fig. 13: Removing Front Disc Brake Cylinder Slide Bushing
Courtesy of TOYOTA MOTOR SALES, U.S.A., INC.

TEXT IN ILLUSTRATION

*1	Vinyl Tape

NOTE: **Do not damage the front No. 2 disc brake cylinder slide pin.**

11. **REMOVE FRONT DISC BRAKE CYLINDER MOUNTING**
    a. Remove the 2 bolts and front disc brake cylinder mounting from the steering knuckle.

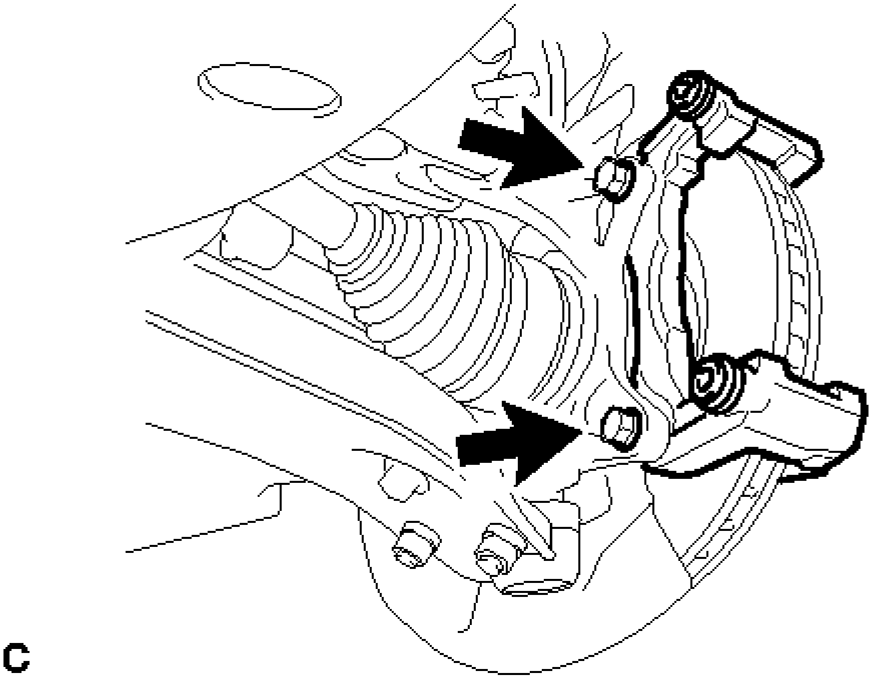

Fig. 14: Identifying Front Disc Brake Cylinder Mounting Bolts
Courtesy of TOYOTA MOTOR SALES, U.S.A., INC.

12. **REMOVE FRONT DISC BRAKE BUSHING DUST BOOT**
    a. Secure the front disc brake cylinder mounting in a vise.

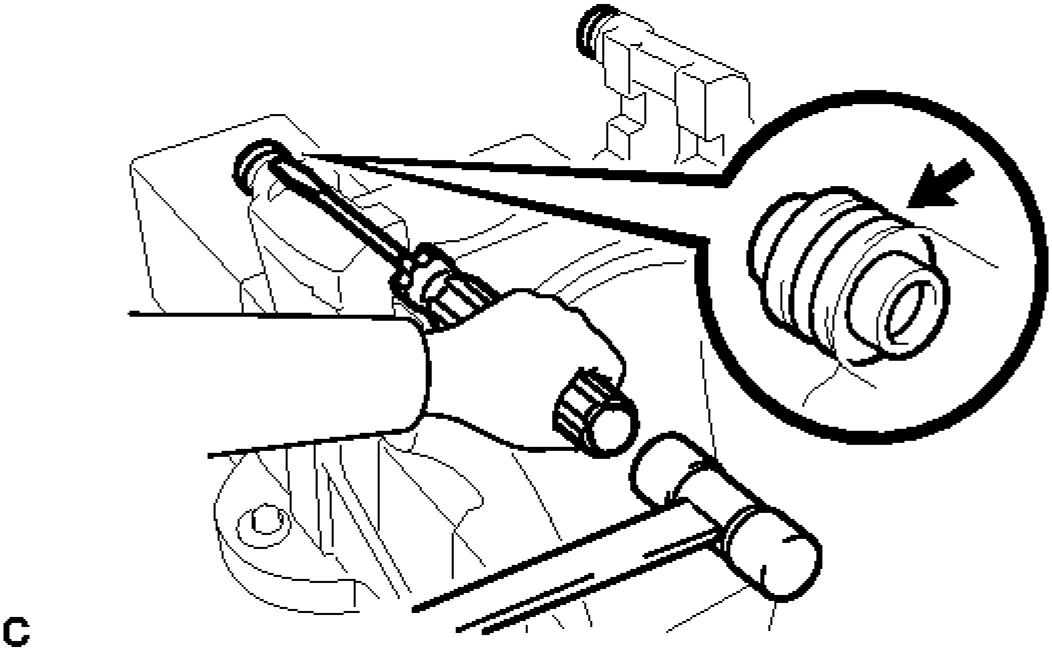

Fig. 15: Removing Front Disc Brake Bushing Dust Boot

Courtesy of TOYOTA MOTOR SALES, U.S.A., INC.

b. Using a screwdriver and a plastic hammer, remove the 2 front disc brake bushing dust boots.

13. **REMOVE FRONT DISC**
    a. Put matchmarks on the front disc and the front axle hub.

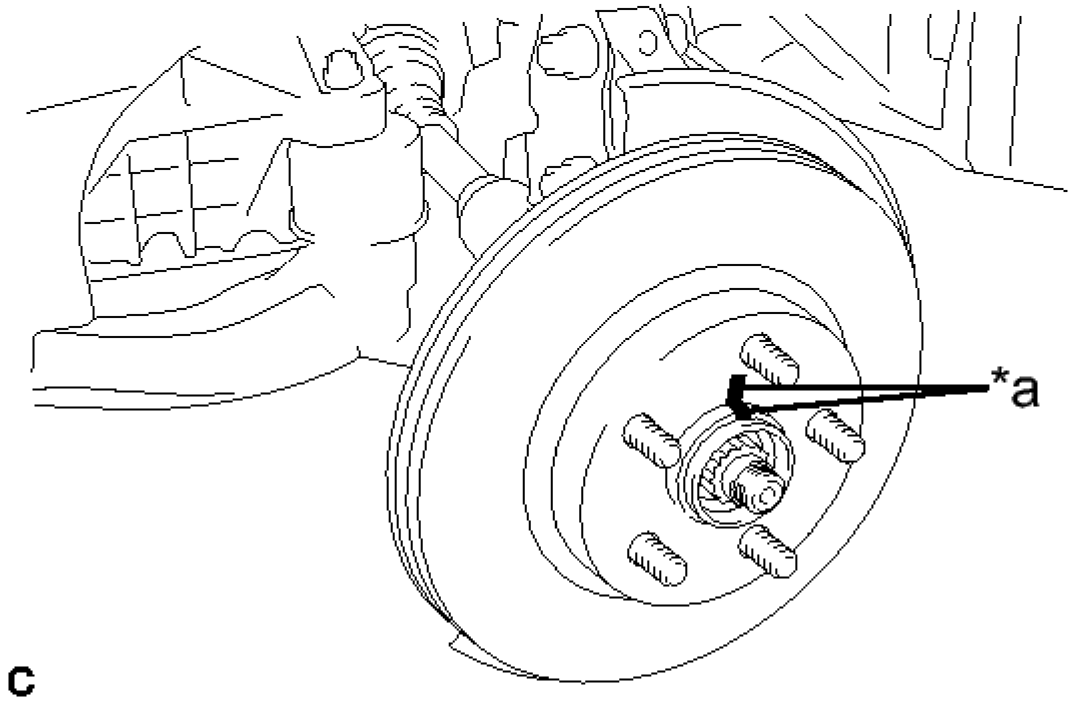

Fig. 16: Identifying Front Disc And Axle Hub Matchmarks
Courtesy of TOYOTA MOTOR SALES, U.S.A., INC.

TEXT IN ILLUSTRATION

*a	Matchmark

    b. Remove the front disc.

DISASSEMBLY

DISASSEMBLY

1. **REMOVE FRONT DISC BRAKE PISTON**
    a. Place a piece of cloth between the front disc brake piston and front disc brake cylinder assembly.
    b. Apply compressed air to remove the front disc brake piston from the front disc brake cylinder assembly.

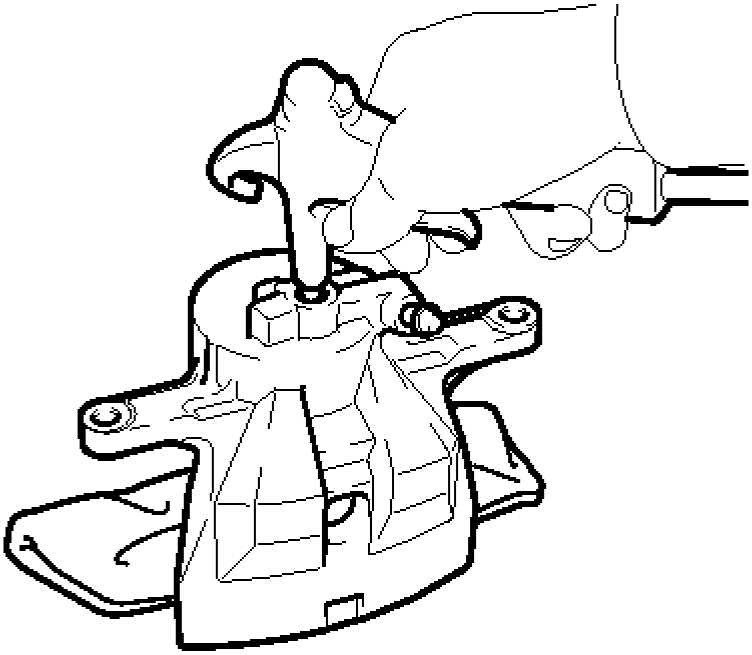

Fig. 17: Applying Compressed Air To Front Disc Brake Cylinder
Courtesy of TOYOTA MOTOR SALES, U.S.A., INC.

WARNING: **Do not place your fingers in front of the front disc brake piston when using compressed air.**

NOTE: Do not allow any brake fluid to spatter.

2. **REMOVE CYLINDER BOOT**
   a. Using a screwdriver with its tip wrapped with vinyl tape, remove the cylinder boot from the front disc brake cylinder.

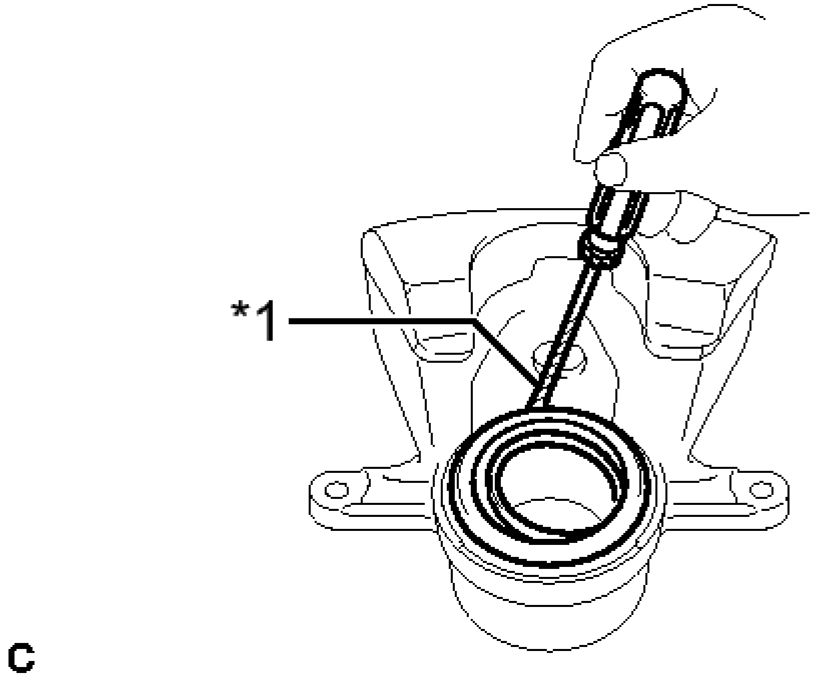

Fig. 18: Removing Cylinder Boot
Courtesy of TOYOTA MOTOR SALES, U.S.A., INC.

TEXT IN ILLUSTRATION

*1	Vinyl Tape

NOTE: **Be careful not to damage the front disc brake cylinder.**

3. **REMOVE PISTON SEAL**
    a. Using a screwdriver with its tip wrapped with vinyl tape, remove the piston seal from the front disc brake cylinder.

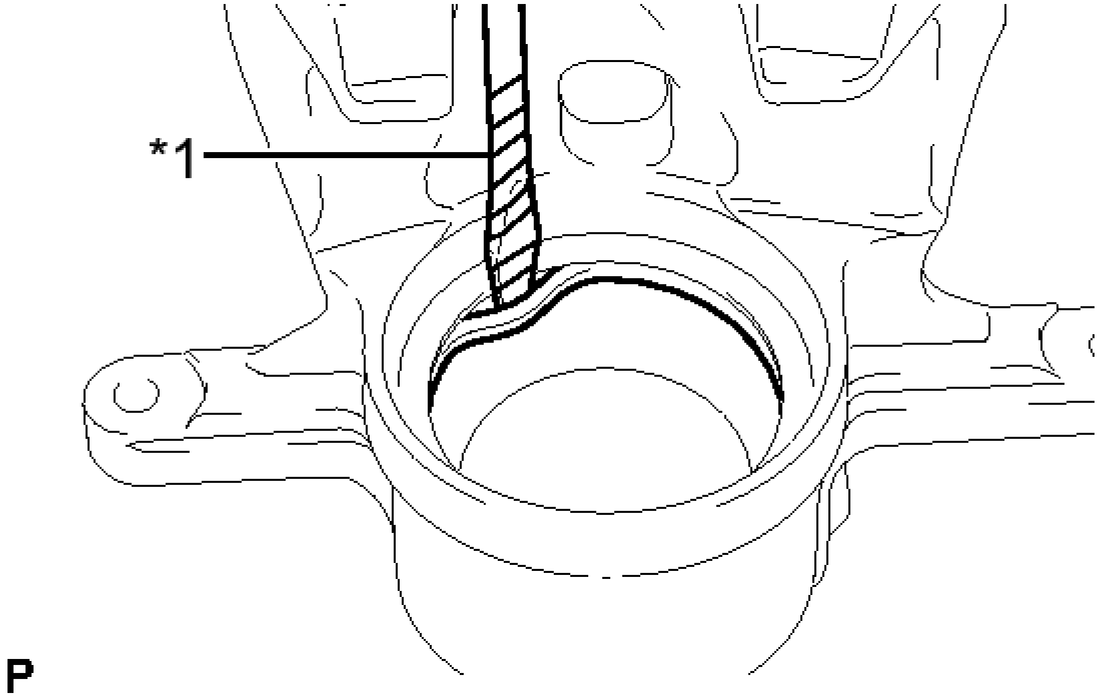

Fig. 19: Removing Piston Seal
Courtesy of TOYOTA MOTOR SALES, U.S.A., INC.

TEXT IN ILLUSTRATION

*1	Vinyl Tape

NOTE: **Do not damage the inner surface or piston seal groove of the front disc brake cylinder.**

4. **REMOVE FRONT DISC BRAKE BLEEDER PLUG CAP**
5. **REMOVE FRONT DISC BRAKE BLEEDER PLUG**

INSPECTION

INSPECTION

1. **INSPECT BRAKE CYLINDER AND PISTON**
    a. Check the front disc brake cylinder bore and front disc brake piston for rust and scoring. If necessary, replace the disc brake cylinder assembly and/or front disc brake piston.
2. **INSPECT PAD LINING THICKNESS**
    a. Using a ruler, measure the pad lining thickness.

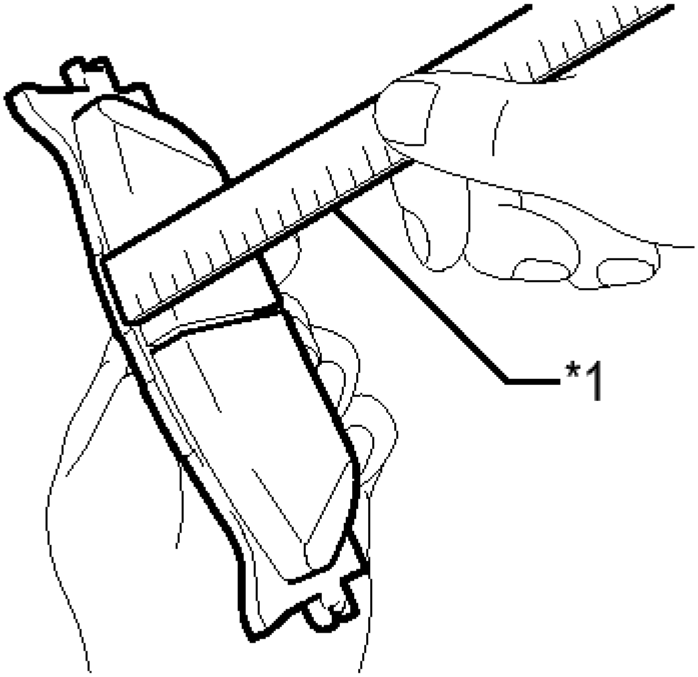

Fig. 20: Measuring Pad Lining Thickness
Courtesy of TOYOTA MOTOR SALES, U.S.A., INC.

TEXT IN ILLUSTRATION

*1	Ruler

Standard thickness

12.0 mm (0.472 in.)

Minimum thickness

1.0 mm (0.0394 in.)

If the pad lining thickness is less than the minimum, replace the front disc brake pads.

HINT:

Be sure to check the wear of the front disc when replacing the front disc brake pads.

3. **INSPECT FRONT DISC BRAKE PAD SUPPORT PLATE**
    a. Make sure that the front disc brake pad support plates have sufficient rebound, no deformation, cracks or wear, and that all rust and dirt are cleaned off.

       If necessary, replace the front disc brake pad support plates.
4. **INSPECT DISC THICKNESS**

a. Using a micrometer, measure the disc thickness.

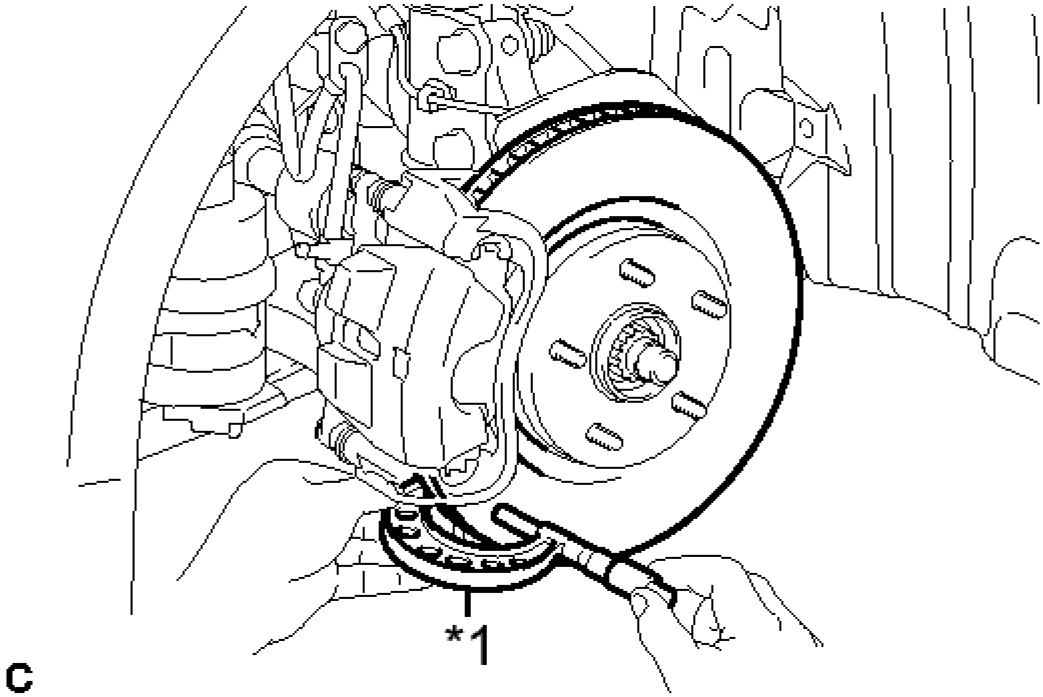

Fig. 21: Measuring Disc Thickness
Courtesy of TOYOTA MOTOR SALES, U.S.A., INC.

TEXT IN ILLUSTRATION

*1	Micrometer

Standard thickness

28.0 mm (1.10 in.)

Minimum thickness

25.0 mm (0.984 in.)

If the disc thickness is less than the minimum, replace the front disc.

5. **INSPECT DISC RUNOUT**
   a. Inspect the front axle hub bearing looseness and front axle hub runout. Refer to **ON-VEHICLE INSPECTION** .
   b. Using SST to hold the disc, tighten the disc with the 5 nuts.
      - **SST: 09330-00021**

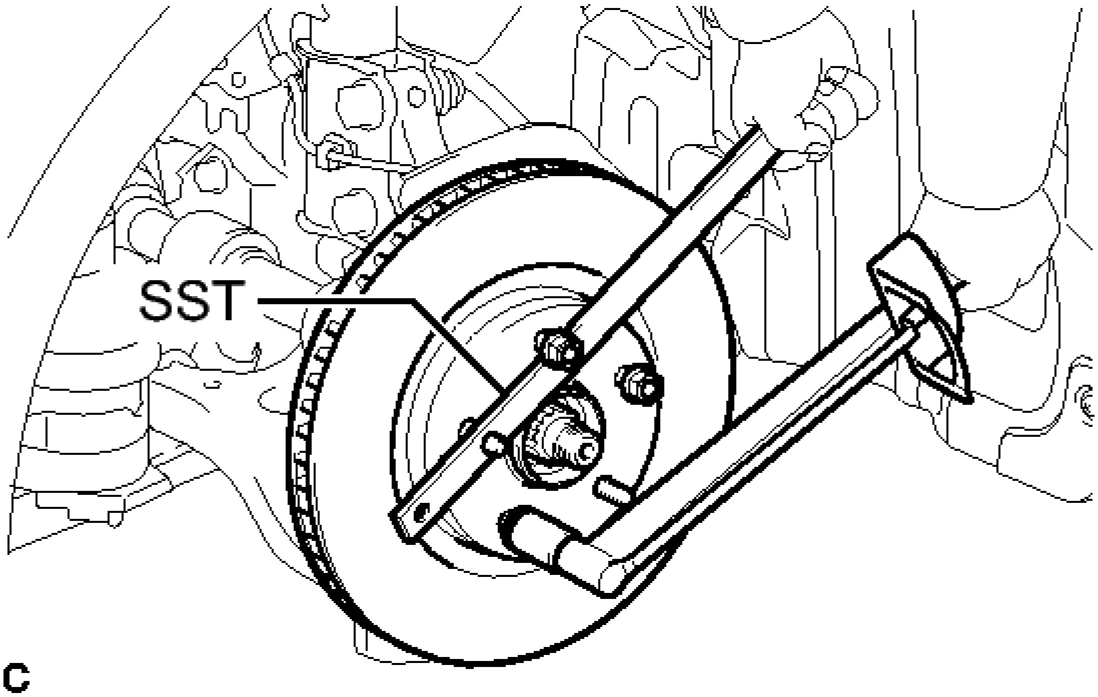

Fig. 22: Tightening Disc With The Nuts
Courtesy of TOYOTA MOTOR SALES, U.S.A., INC.

Torque: 103 N*m (1049 kgf*cm, 76 ft.*lbf)

c. Using a dial indicator, measure the disc runout 10 mm (0.394 in.) away from the outer edge of the front disc.

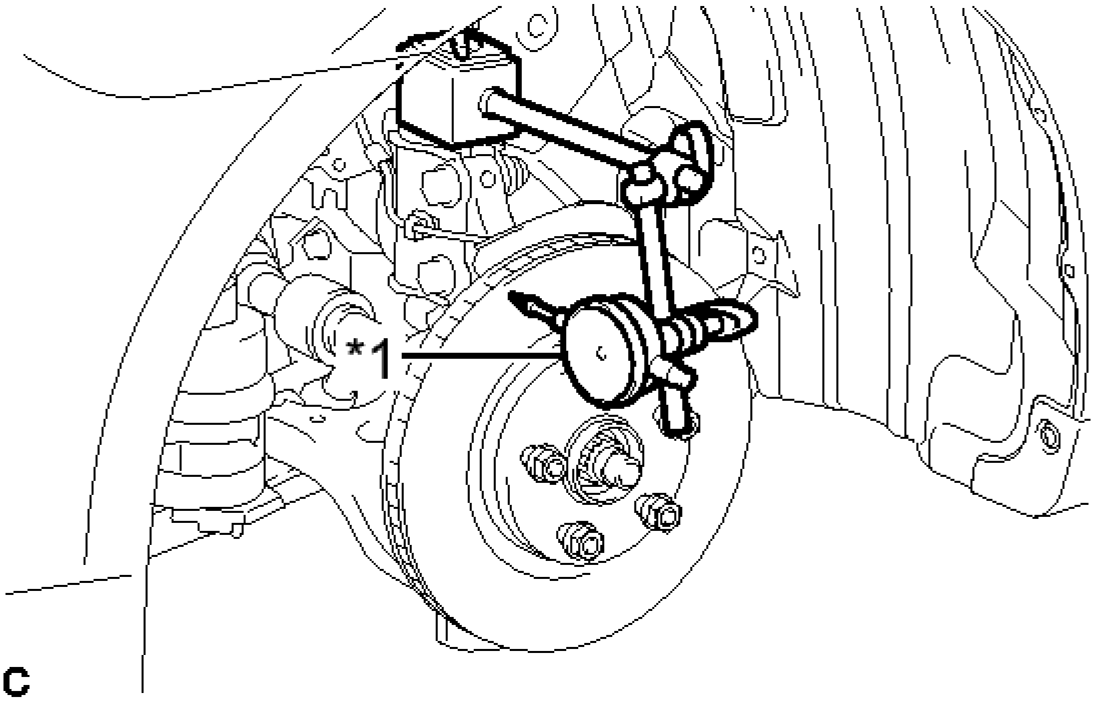

Fig. 23: Measuring Disc Runout
Courtesy of TOYOTA MOTOR SALES, U.S.A., INC.

TEXT IN ILLUSTRATION

*1	Dial Indicator

Maximum disc runout

0.05 mm (0.00197 in.)

NOTE: **Keep the magnet of the dial indicator away from the axle hub and speed sensor.**

If the runout exceeds the maximum value, change the installation position of the disc to minimize the runout. If the runout exceeds the maximum even when the installation position is changed, grind the front disc. If the front disc thickness is less than the minimum, replace the front disc.

d. Remove the 5 nuts and front disc.

REASSEMBLY

REASSEMBLY

1. **TEMPORARILY TIGHTEN FRONT DISC BRAKE BLEEDER PLUG**

   HINT:

   Fully tighten the front disc brake bleeder plug after bleeding.

2. **INSTALL FRONT DISC BRAKE BLEEDER PLUG CAP**
3. **INSTALL PISTON SEAL**
   a. Apply a light layer of lithium soap base glycol grease to the entire circumference of a new piston seal.

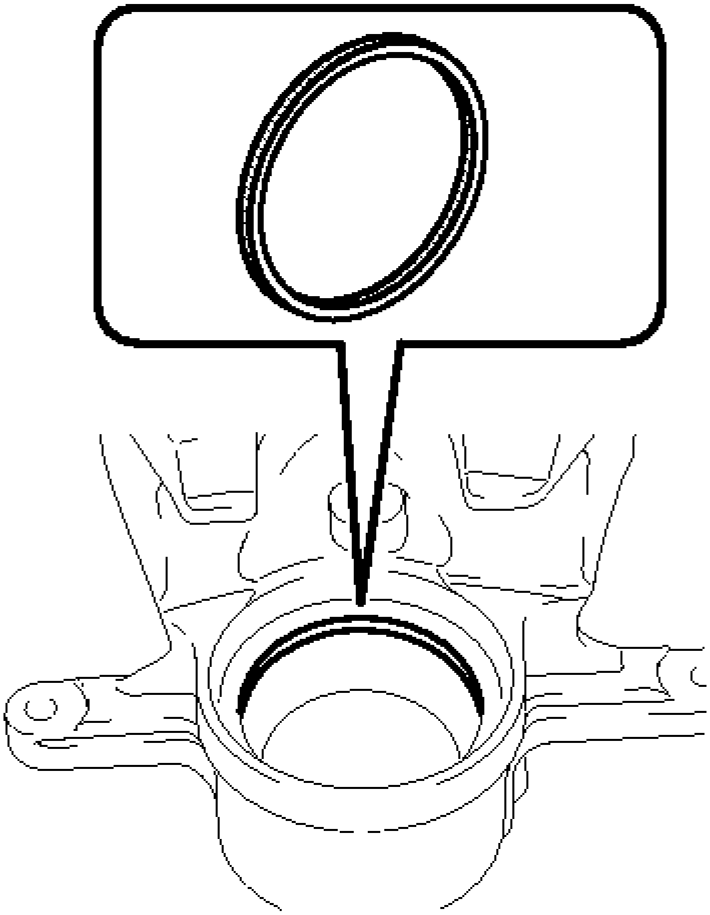

Fig. 24: Identifying Piston Seal
Courtesy of TOYOTA MOTOR SALES, U.S.A., INC.

TEXT IN ILLUSTRATION

Lithium Soap Base Glycol Grease

b. Install the piston seal to the front disc brake cylinder.

NOTE: **Securely install the piston seal to the groove of the front disc brake cylinder.**

4. **INSTALL CYLINDER BOOT**

a. Apply a light layer of lithium soap base glycol grease to the entire circumference of a new cylinder boot and front disc brake piston.

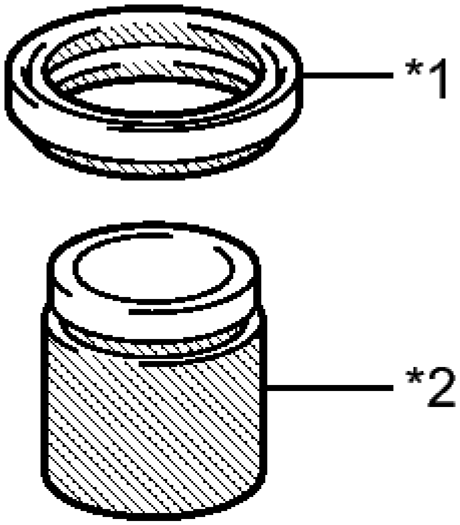

Fig. 25: Identifying Cylinder Boot And Front Disc Brake Piston
Courtesy of TOYOTA MOTOR SALES, U.S.A., INC.

TEXT IN ILLUSTRATION

*1	Cylinder Boot
*2	Front Disc Brake Piston
▨	Lithium Soap Base Glycol Grease

b. Install the cylinder boot to the front disc brake piston as shown in the illustration.

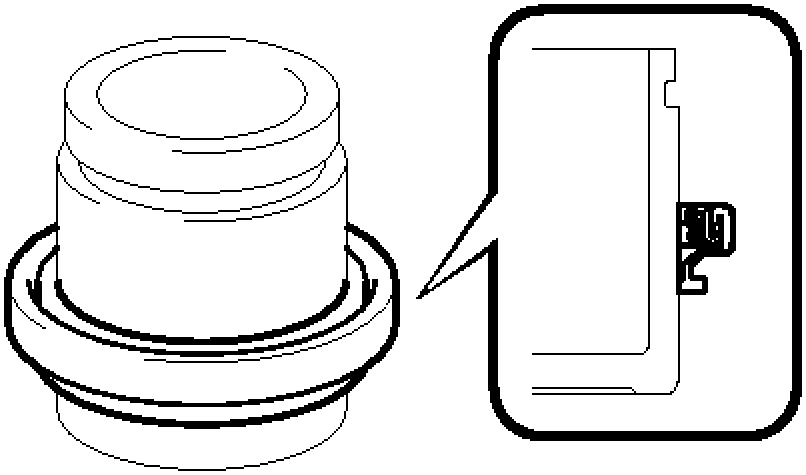

Fig. 26: Identifying Cylinder Boot To Front Disc Brake Piston
Courtesy of TOYOTA MOTOR SALES, U.S.A., INC.

5. **INSTALL FRONT DISC BRAKE PISTON**
    a. Install the cylinder boot to the front disc brake cylinder as shown in the illustration.

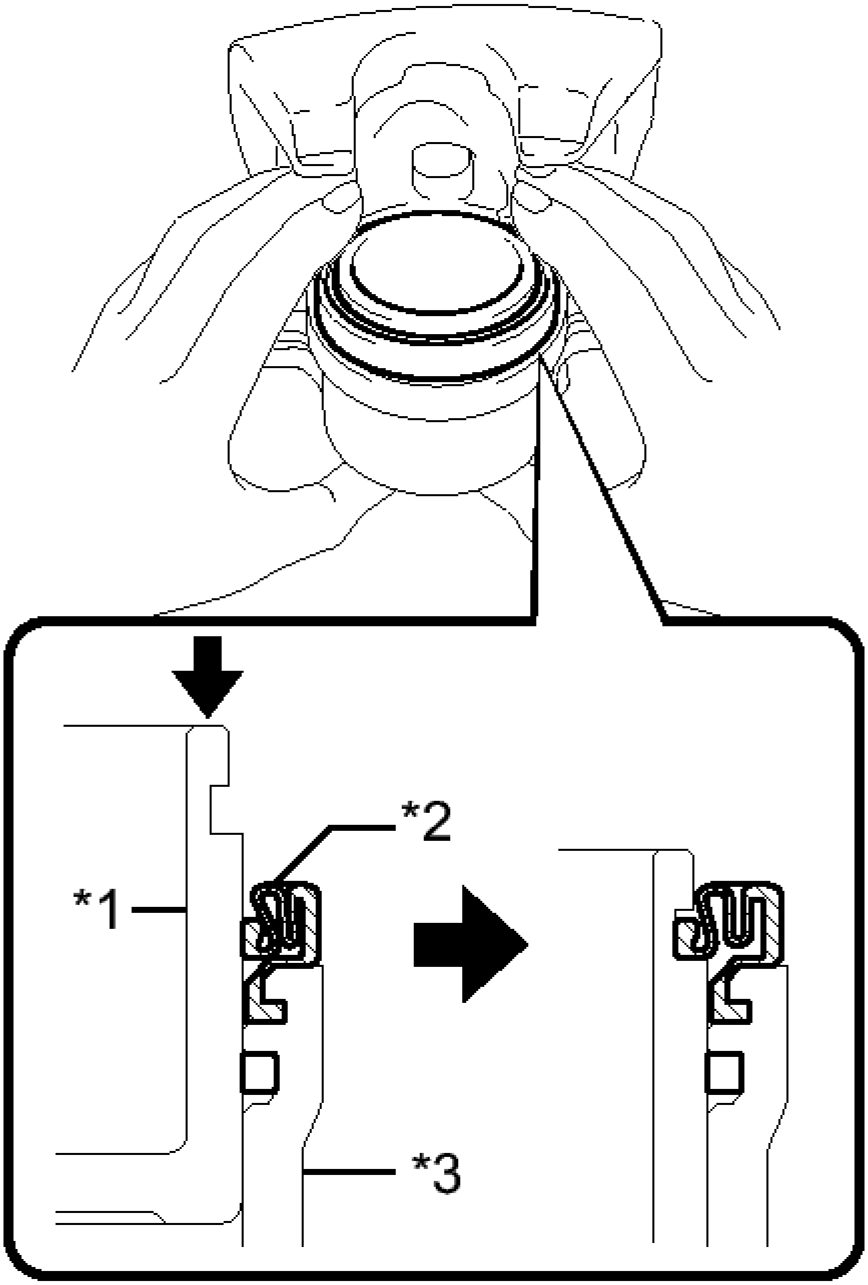

Fig. 27: Installing Cylinder Boot To Front Disc Brake Cylinder
Courtesy of TOYOTA MOTOR SALES, U.S.A., INC.

TEXT IN ILLUSTRATION

	Front

*1	Disc Brake Piston
*2	Cylinder Boot
*3	Front Disc Brake Cylinder

NOTE:

- **Securely install the cylinder boot into the groove of the disc brake cylinder and front disc brake piston.**
- **Do not damage the cylinder boot.**

INSTALLATION

INSTALLATION

HINT:

- Use the same procedure for the LH side and RH side.
- The following procedure is for the LH side.

1. **INSTALL FRONT DISC**
   a. Align the matchmarks of the front disc and front axle hub, and install the front disc.

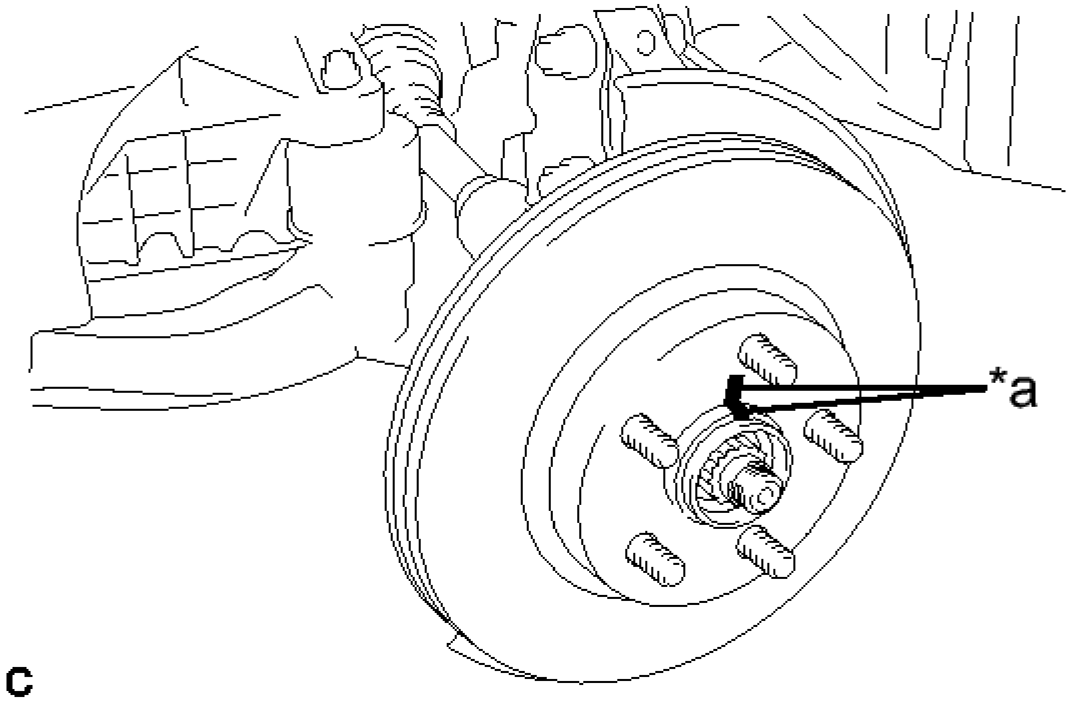

Fig. 28: Identifying Front Disc And Axle Hub Matchmarks
Courtesy of TOYOTA MOTOR SALES, U.S.A., INC.

TEXT IN ILLUSTRATION

*a	Matchmark

NOTE: **When replacing the front disc with a new one, select the installation position where the front disc has minimal runout.**

2. **INSTALL FRONT DISC BRAKE BUSHING DUST BOOT**
   1. Secure the front disc brake cylinder mounting in a vise.
   2. Apply a light layer of lithium soap base glycol grease to the entire circumference of 2 new front disc brake bushing dust boots.

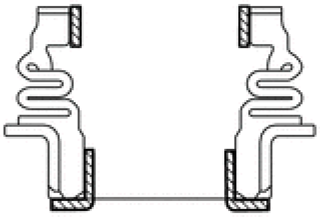

Fig. 29: Identifying Front Disc Brake Bushing Dust Boots
Courtesy of TOYOTA MOTOR SALES, U.S.A., INC.

TEXT IN ILLUSTRATION

	Lithium Soap Base Glycol Grease

HINT:

Apply at least 0.3 g (0.01 oz.) of lithium soap base glycol grease to each front disc brake bushing dust boot.

c. Using a socket wrench (19 mm) and a hammer, install the 2 front disc brake bushing dust boots to the front disc brake cylinder mounting.

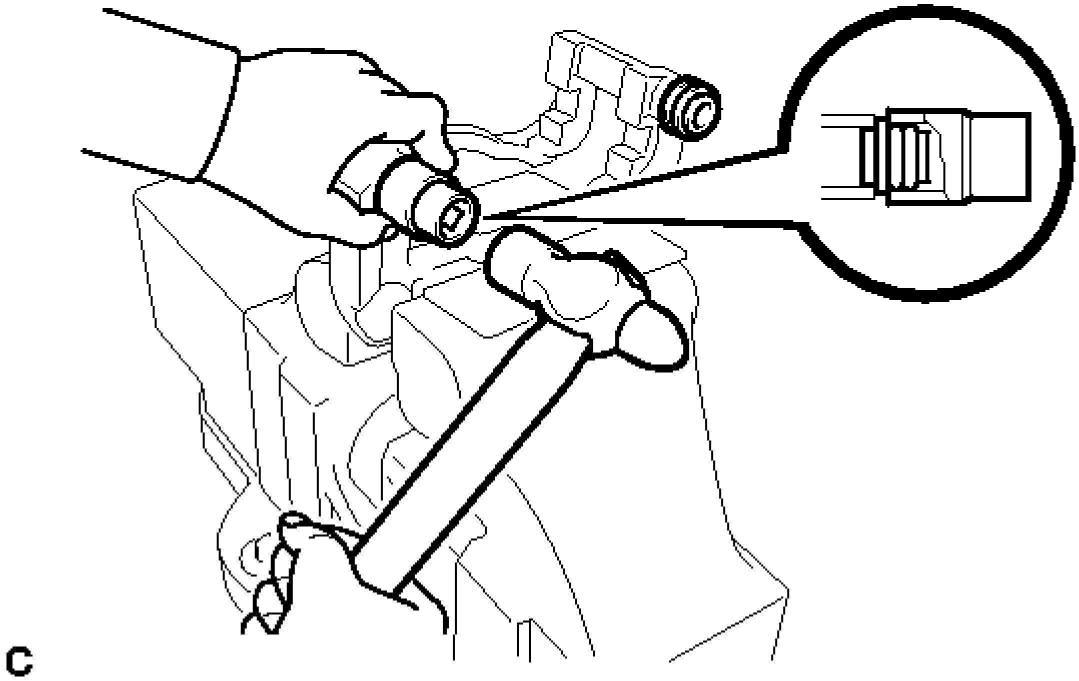

Fig. 30: Installing Front Disc Brake Bushing Dust Boot
Courtesy of TOYOTA MOTOR SALES, U.S.A., INC.

3. **INSTALL FRONT DISC BRAKE CYLINDER MOUNTING**
    a. Install the front disc brake cylinder mounting to the steering knuckle with the 2 bolts.

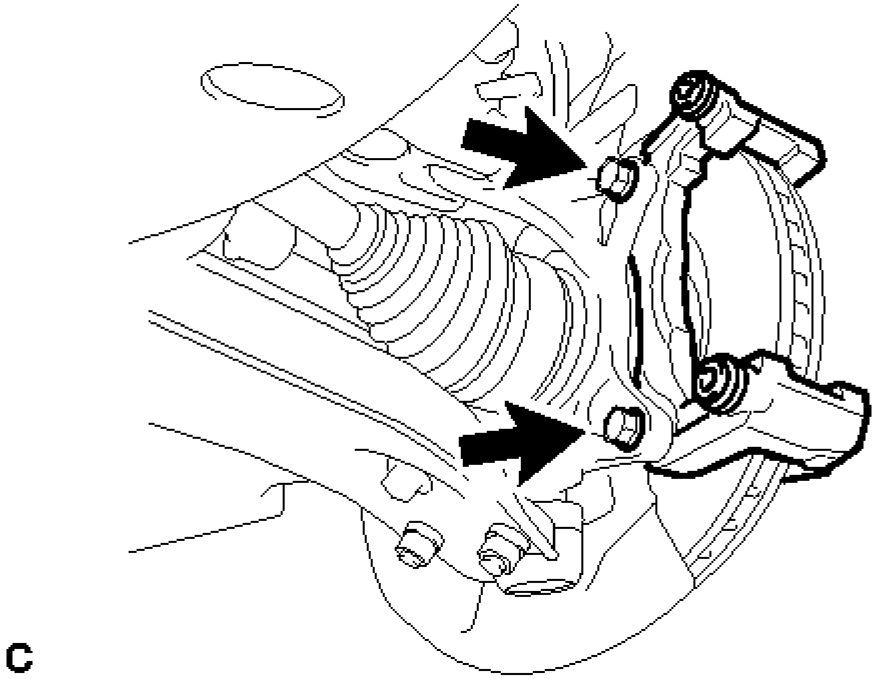

Fig. 31: Identifying Front Disc Brake Cylinder Mounting Bolts

Courtesy of TOYOTA MOTOR SALES, U.S.A., INC.

Torque: 107 N*m (1090 kgf*cm, 79 ft.*lbf)

4. **INSTALL FRONT DISC BRAKE CYLINDER SLIDE BUSHING**
    a. Apply a light layer of lithium soap base glycol grease to the contact surface of the No. 2 front disc brake cylinder slide pin.

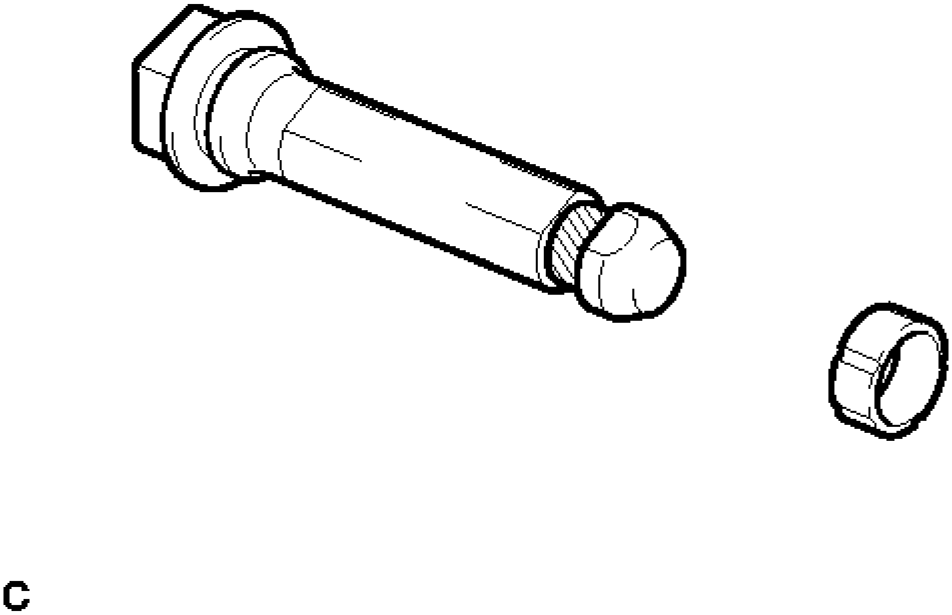

Fig. 32: Identifying Light Layer Of Grease On Front No. 2 Disc Brake Cylinder Slide Pin
Courtesy of TOYOTA MOTOR SALES, U.S.A., INC.

TEXT IN ILLUSTRATION

Lithium Soap Base Glycol Grease

    b. Install a new front disc brake cylinder slide bushing to the front No. 2 disc brake cylinder slide pin.

5. **INSTALL FRONT NO. 2 DISC BRAKE CYLINDER SLIDE PIN**
    a. Apply a light layer of lithium soap base glycol grease to the sliding part and the sealing surfaces of the front No. 2 disc brake cylinder slide pin.

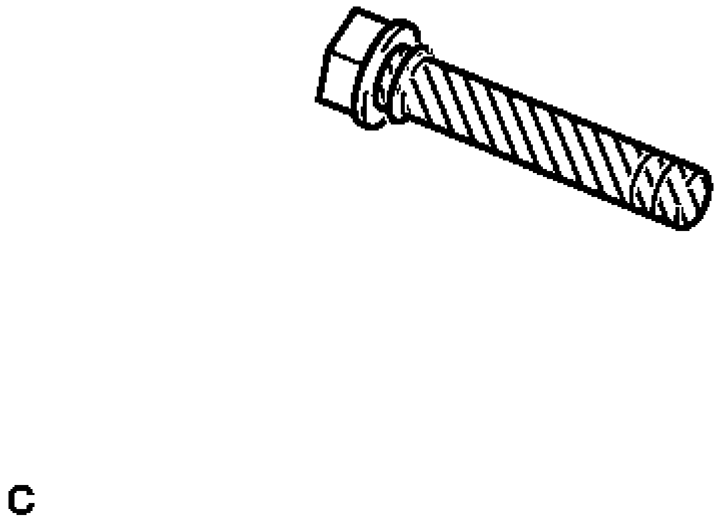

Fig. 33: Identifying Light Layer Of Grease On Front No. 2 Disc Brake Cylinder Slide Pin
Courtesy of TOYOTA MOTOR SALES, U.S.A., INC.

TEXT IN ILLUSTRATION

	Lithium Soap Base Glycol Grease

b. Install the front No. 2 disc brake cylinder slide pin to the front disc brake cylinder mounting.

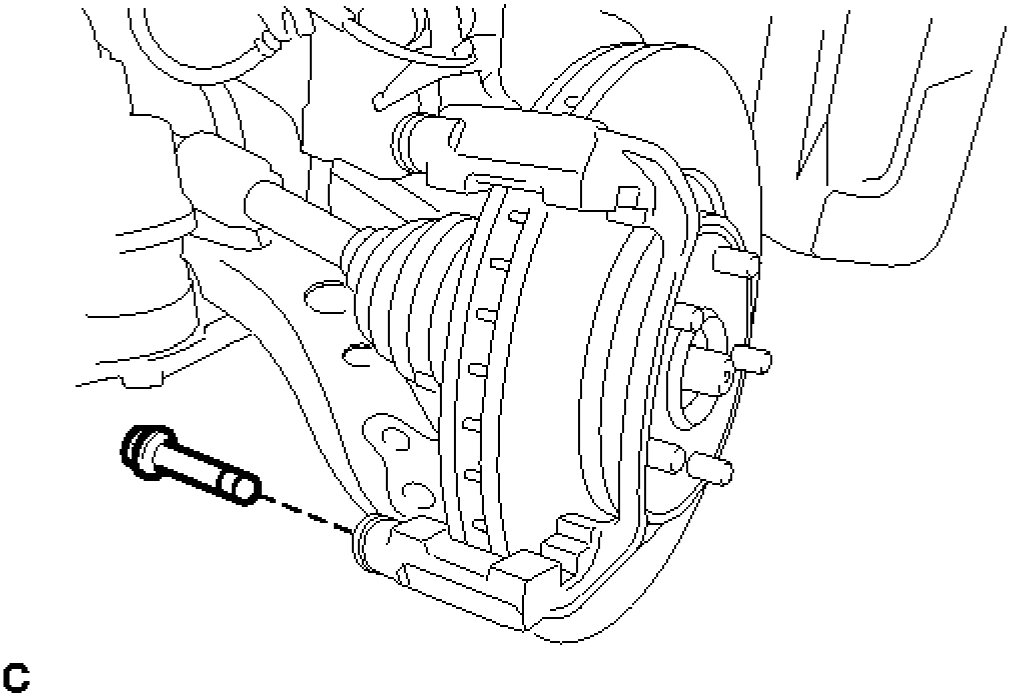

Fig. 34: Identifying Front No. 2 Disc Brake Cylinder Slide Pin
Courtesy of TOYOTA MOTOR SALES, U.S.A., INC.

c. Push the front No. 2 disc brake cylinder slide pin into the front disc brake bushing dust boot to engage the pin to the boot.

6. **INSTALL FRONT DISC BRAKE CYLINDER SLIDE PIN**

   a. Apply a light layer of lithium soap base glycol grease to the sliding part and the sealing surfaces of the front disc brake cylinder slide pin.

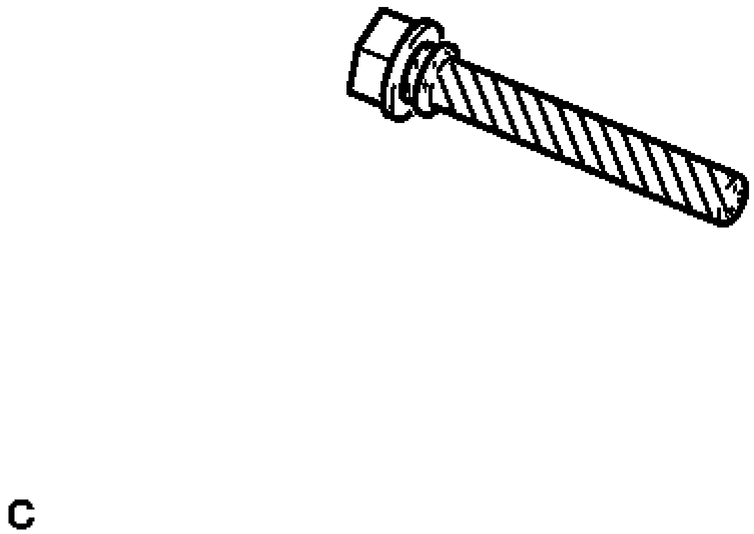

Fig. 35: Identifying Light Layer Of Grease On No. 1 Disc Brake Cylinder Slide Pin
Courtesy of TOYOTA MOTOR SALES, U.S.A., INC.

TEXT IN ILLUSTRATION

	Lithium Soap Base Glycol Grease

b. Install the front disc brake cylinder slide pin to the front disc brake cylinder mounting.

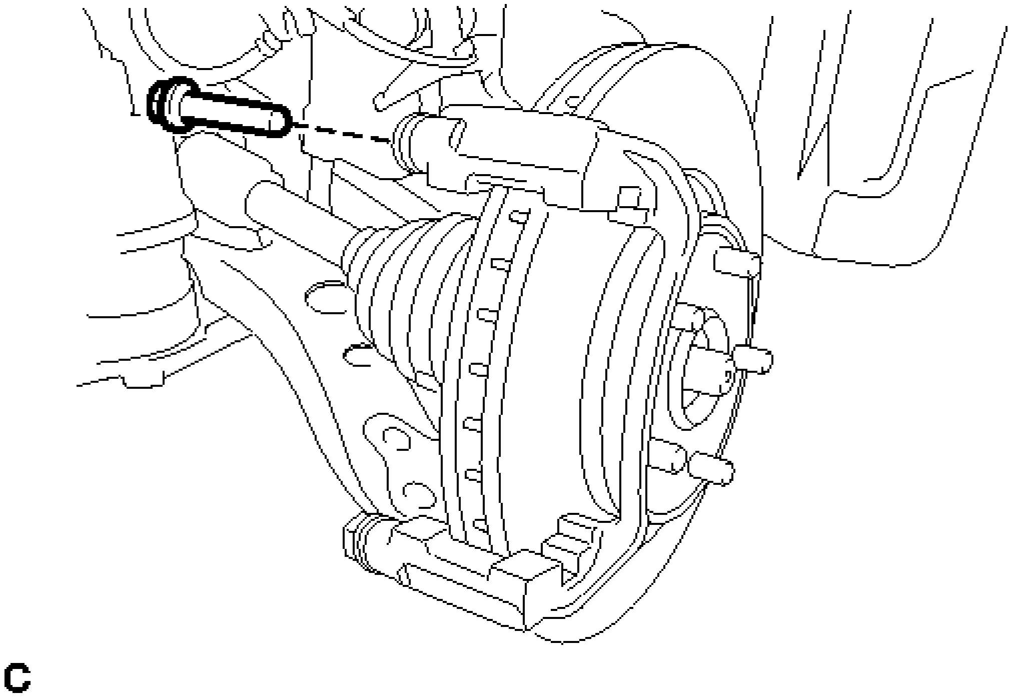

Fig. 36: Identifying Front Disc Brake Cylinder Slide Pin
Courtesy of TOYOTA MOTOR SALES, U.S.A., INC.

c. Push the front disc brake cylinder slide pin into the front disc brake bushing dust boot to engage the pin to the boot.

7. **INSTALL FRONT DISC BRAKE FITTING KIT**
    a. Install the 2 front No. 1 disc brake pad support plates and 2 front No. 2 disc brake pad support plates to the front disc brake cylinder mounting.

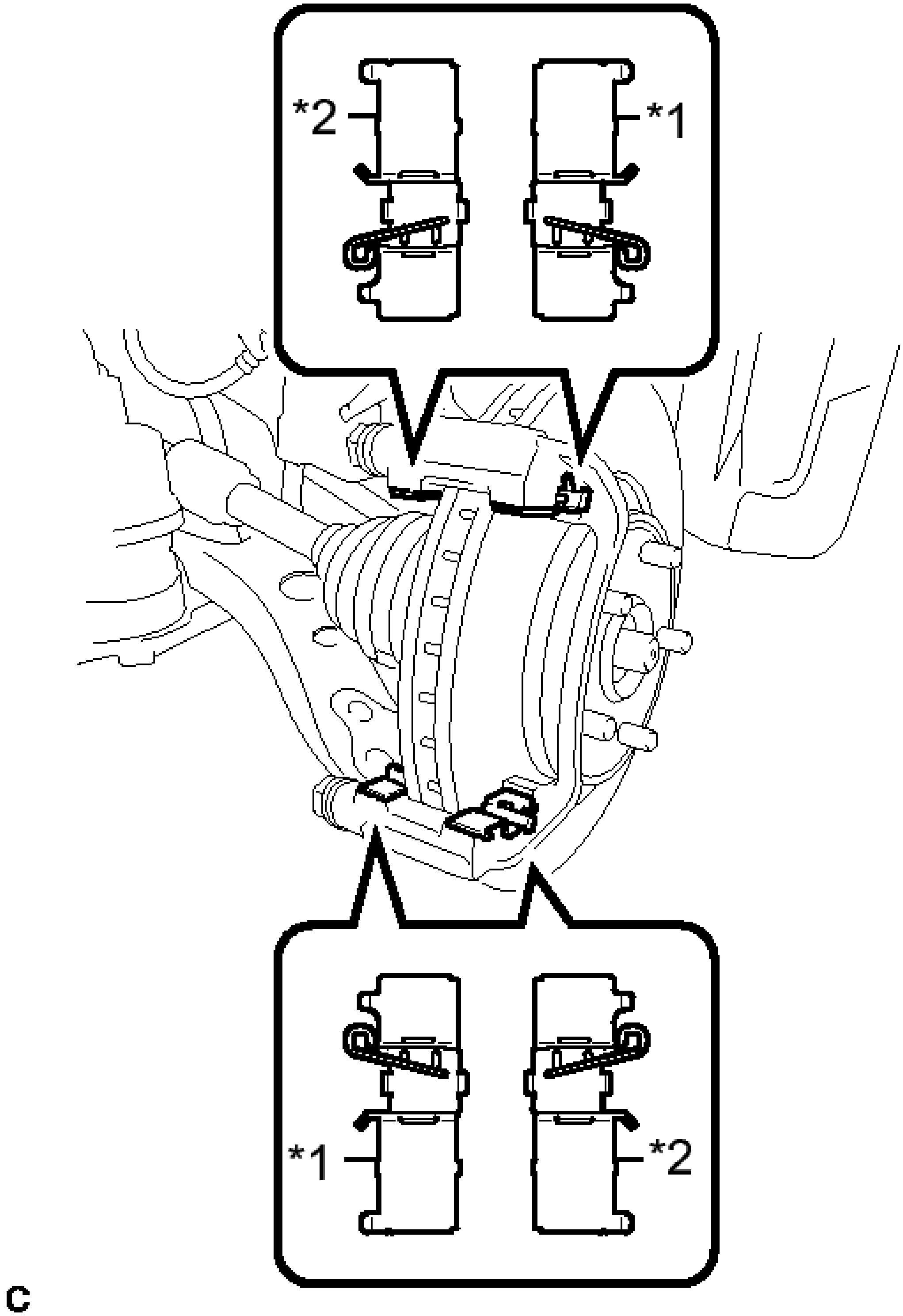

Fig. 37: Identifying Front Disc Brake Pad Support Plates
Courtesy of TOYOTA MOTOR SALES, U.S.A., INC.

TEXT IN ILLUSTRATION

	Front

*1	No. 1 Disc Brake Pad Support Plate
*2	Front No. 2 Disc Brake Pad Support Plate

NOTE: **Be sure to install each front disc brake pad support plate in the correct position and direction.**

8. **INSTALL FRONT ANTI-SQUEAL SHIM KIT**
    a. Install the front disc brake pad wear indicator plate to each front disc brake pad.

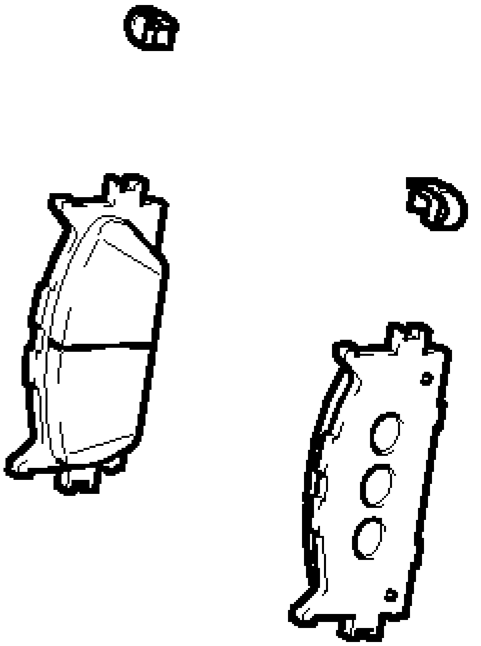

Fig. 38: Identifying Front Disc Brake Pad Wear Indicator
Courtesy of TOYOTA MOTOR SALES, U.S.A., INC.

NOTE: **Install each front disc brake pad wear indicator plate in the correct position and direction.**

b. Apply disc brake grease to the inside of each front disc brake anti-squeal shim as shown in the illustration.

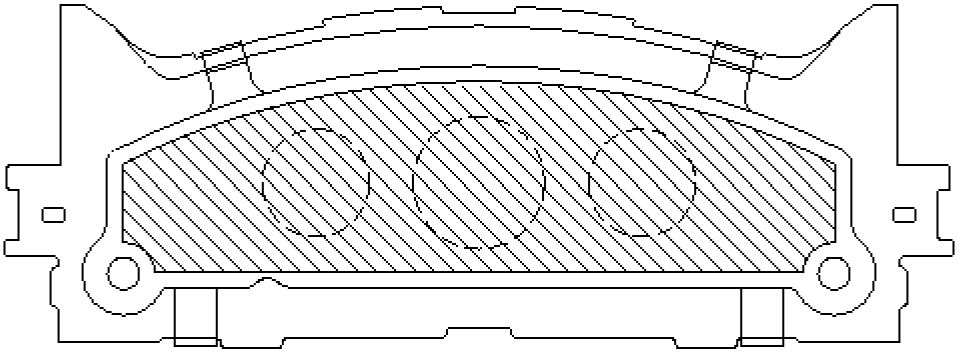

Fig. 39: Identifying Brake Grease Application Area
Courtesy of TOYOTA MOTOR SALES, U.S.A., INC.

TEXT IN ILLUSTRATION

	Disc Brake Grease

c. Install the front disc brake anti-squeal shim to each front disc brake pad.

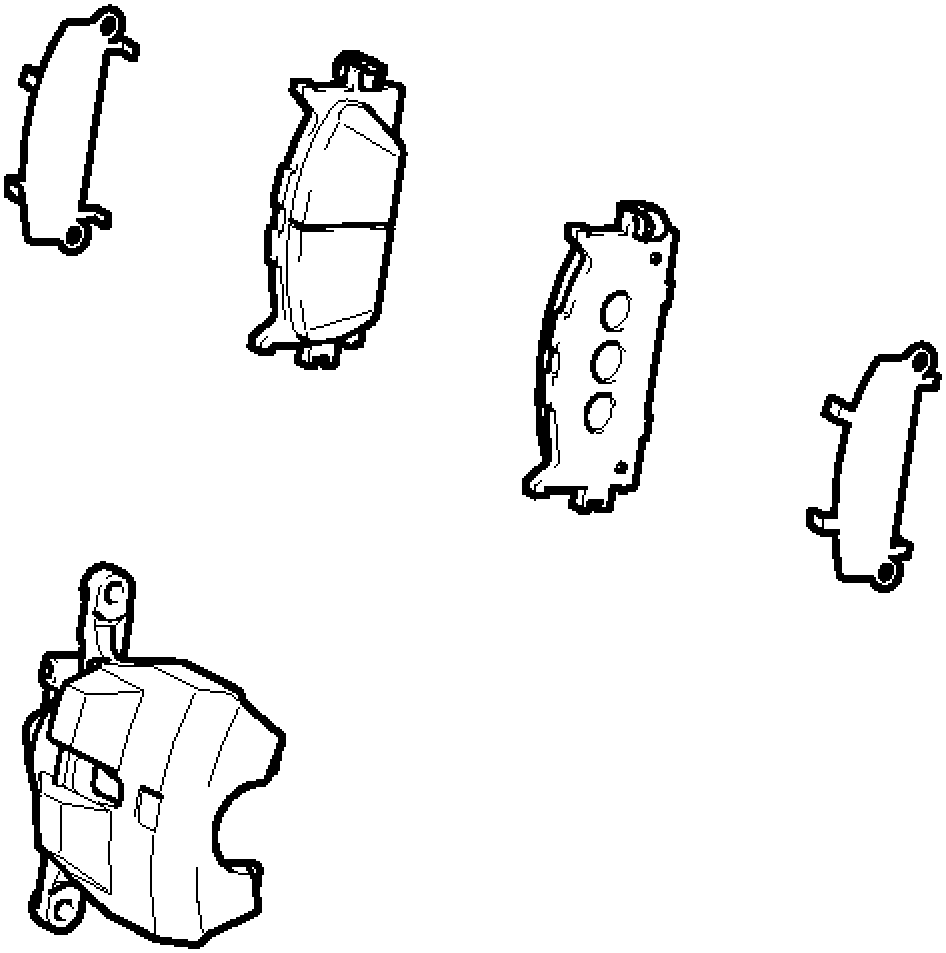

Fig. 40: Identifying Front Disc Brake Anti-Squeal Shims
Courtesy of TOYOTA MOTOR SALES, U.S.A., INC.

NOTE:

- **Install the front disc brake anti-squeal shims in the correct positions and directions.**
- **Disc brake grease can seep out slightly from the area where the front disc brake anti-squeal shim is installed.**
- **Make sure that disc brake grease is not applied onto the lining surface.**

9. **INSTALL FRONT DISC BRAKE PAD KIT**
   a. Install the 2 front disc brake pads with front anti-squeal shim kit to the front disc brake cylinder mounting.

NOTE: **There should be no oil or grease on the friction surfaces of the disc**

brake pads or the front disc.

b. Install the 2 anti-squeal springs to the front disc brake pads.

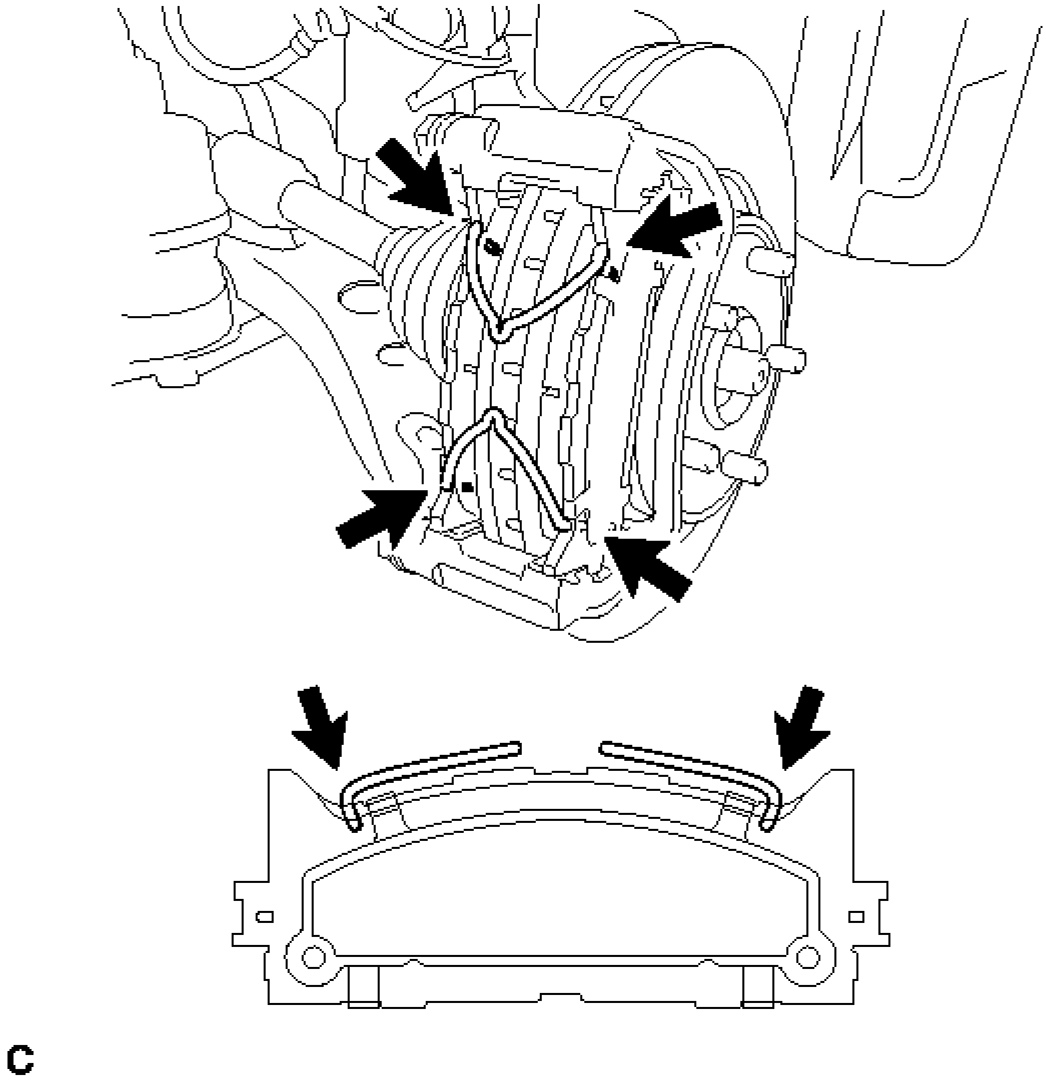

Fig. 41: Identifying Anti-Squeal Springs
Courtesy of TOYOTA MOTOR SALES, U.S.A., INC.

NOTE:

- **When replacing the front disc brake pads with new ones, make sure to replace the anti-squeal springs at the same time.**
- **Be sure to install the anti-squeal springs into the front disc brake pad installation holes as far as they will go.**

10. **INSTALL DISC BRAKE CYLINDER ASSEMBLY**

    a. Hold the front disc brake cylinder slide pin, and install the front disc brake cylinder assembly to the front disc brake cylinder mounting with the 2 bolts.

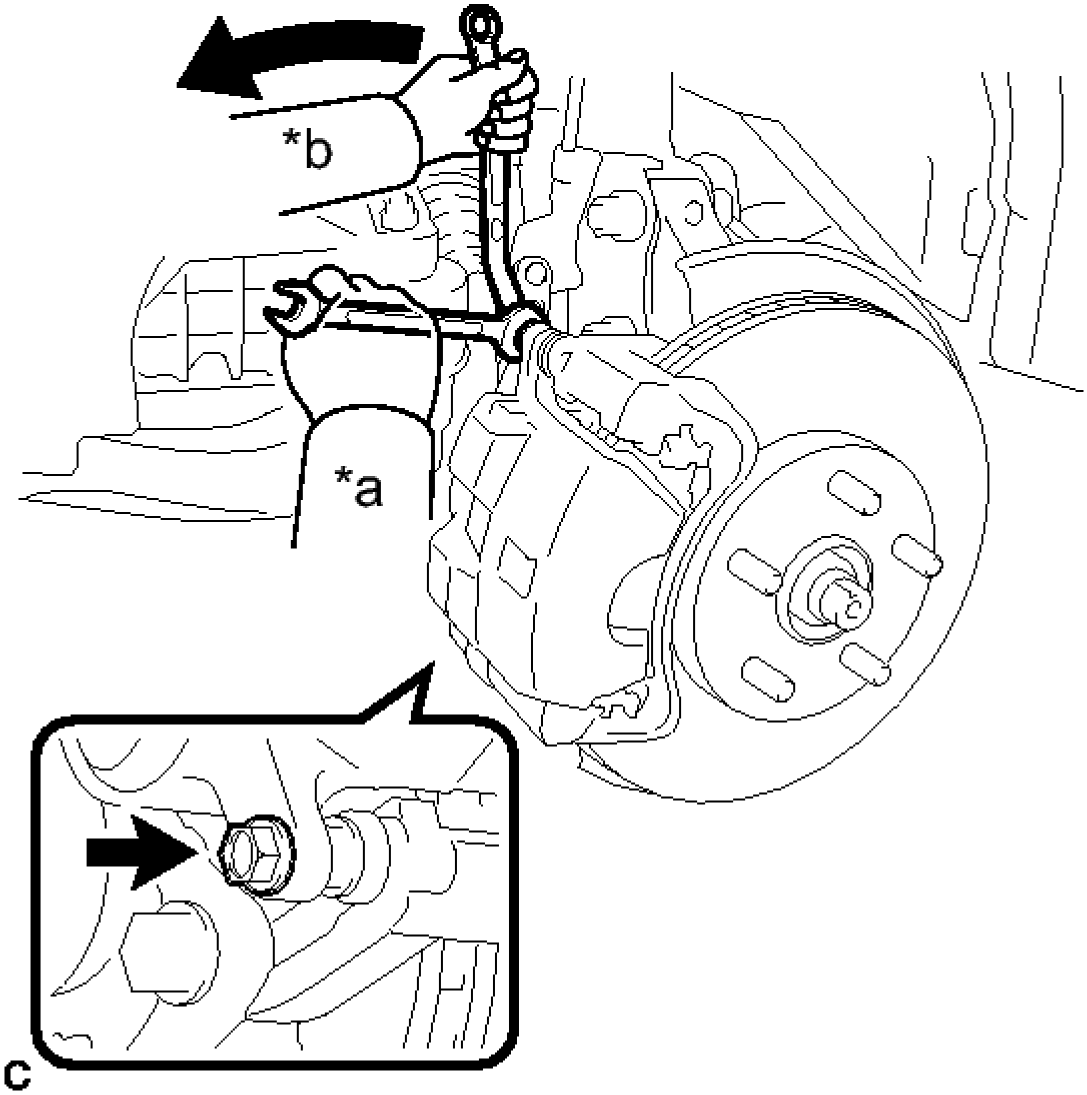

Fig. 42: Installing Disc Brake Cylinder Assembly
Courtesy of TOYOTA MOTOR SALES, U.S.A., INC.

TEXT IN ILLUSTRATION

*a	Hold
*b	Turn

Torque: 34 N*m (350 kgf*cm, 25 ft.*lbf)

11. **CONNECT FRONT FLEXIBLE HOSE**
    a. Connect the front flexible hose to the front disc brake cylinder assembly with the union bolt and a new gasket.

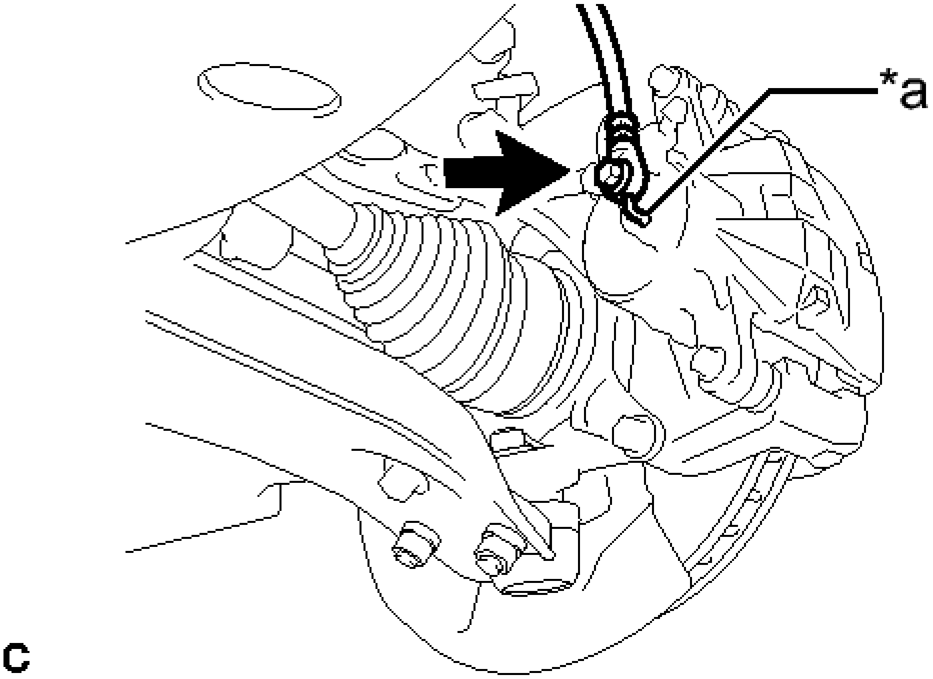

Fig. 43: Identifying Front Flexible Hose Union Bolt
Courtesy of TOYOTA MOTOR SALES, U.S.A., INC.

TEXT IN ILLUSTRATION

*a	Lock Hole

Torque: 29 N*m (300 kgf*cm, 22 ft.*lbf)

NOTE: Install the flexible hose lock securely into the lock hole in the front disc brake cylinder.

12. **BLEED BRAKE LINE**

    Refer to **BLEEDING**

13. **INSTALL FRONT WHEEL**

    Torque: 103 N*m (1049 kgf*cm, 76 ft.*lbf)

FRONT BRAKE FLEXIBLE HOSE

COMPONENTS

ILLUSTRATION

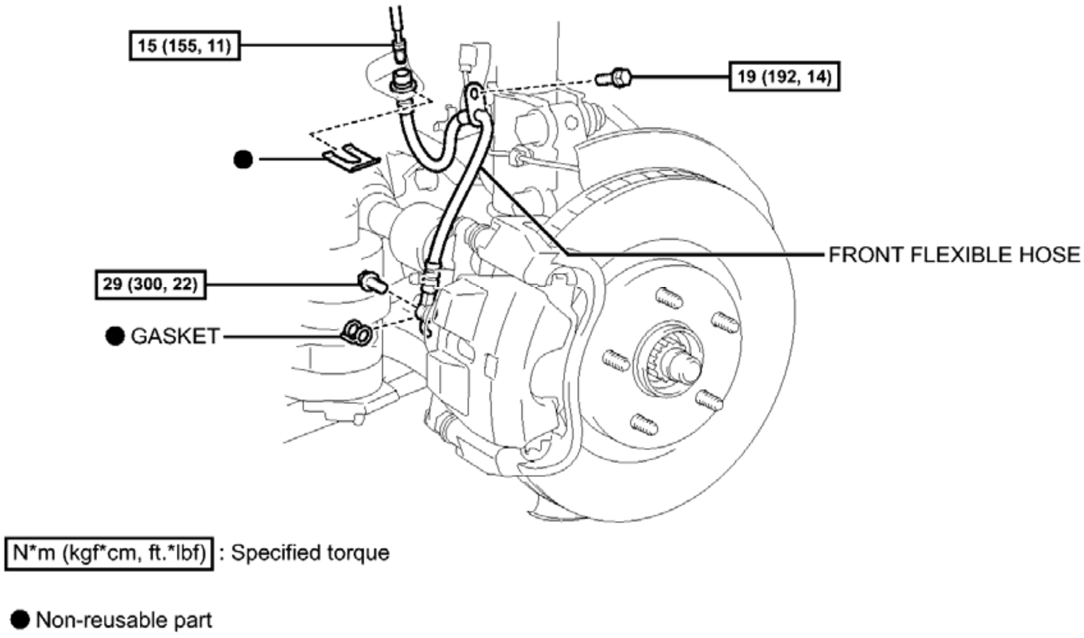
15 (155, 11)
19 (192, 14)
●
FRONT FLEXIBLE HOSE
29 (300, 22)
● GASKET
N*m (kgf*cm, ft.*lbf) : Specified torque
● Non-reusable part

Fig. 44: Identifying Front Brake Flexible Hose Replacement Components With Torque Specifications
Courtesy of TOYOTA MOTOR SALES, U.S.A., INC.

REMOVAL

REMOVAL

NOTE: If the left and right hoses are disconnected at the same time, be sure to place a mark on each hose to indicate its installation position.

HINT:

- Use the same procedure for the LH side and RH side.
- The following procedure is for the LH side.

REMOVAL

1. **REMOVE FRONT WHEEL**
2. **DRAIN BRAKE FLUID**

   NOTE: If brake fluid leaks onto any painted surface, immediately wash it off.

3. **REMOVE FRONT FLEXIBLE HOSE**
   a. Remove the union bolt and gasket, and separate the front flexible hose from the front disc brake cylinder assembly.

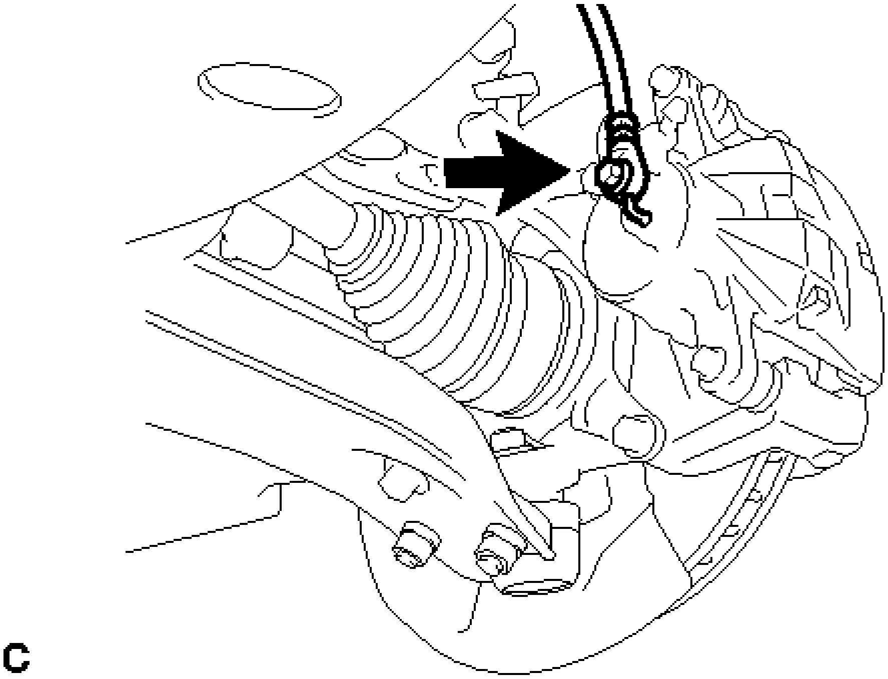

Fig. 45: Identifying Front Flexible Hose Union Bolt
Courtesy of TOYOTA MOTOR SALES, U.S.A., INC.

b. Using a union nut wrench, disconnect the brake line while holding the front flexible hose with a wrench.

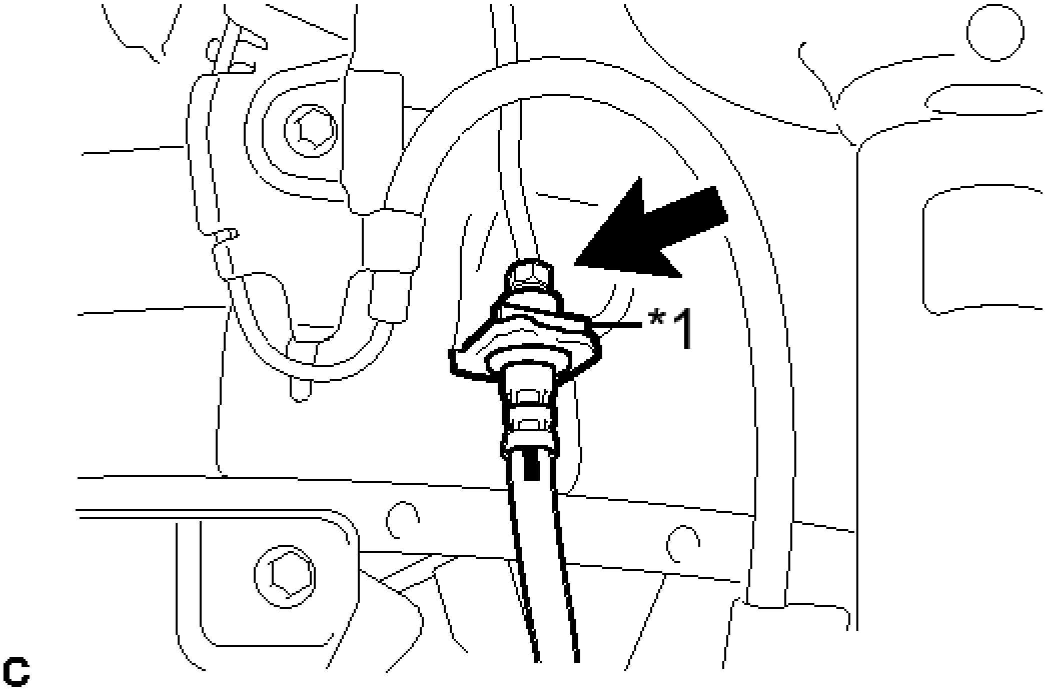

Fig. 46: Identifying Brake Line Nut

Courtesy of TOYOTA MOTOR SALES, U.S.A., INC.

TEXT IN ILLUSTRATION

*1	Clip

NOTE:

- **Do not bend or damage the brake line.**
- **Do not allow any foreign matter such as dirt or dust to enter the brake line from the connecting points.**

c. Remove the clip.

d. Remove the bolt and front flexible hose from the front shock absorber assembly.

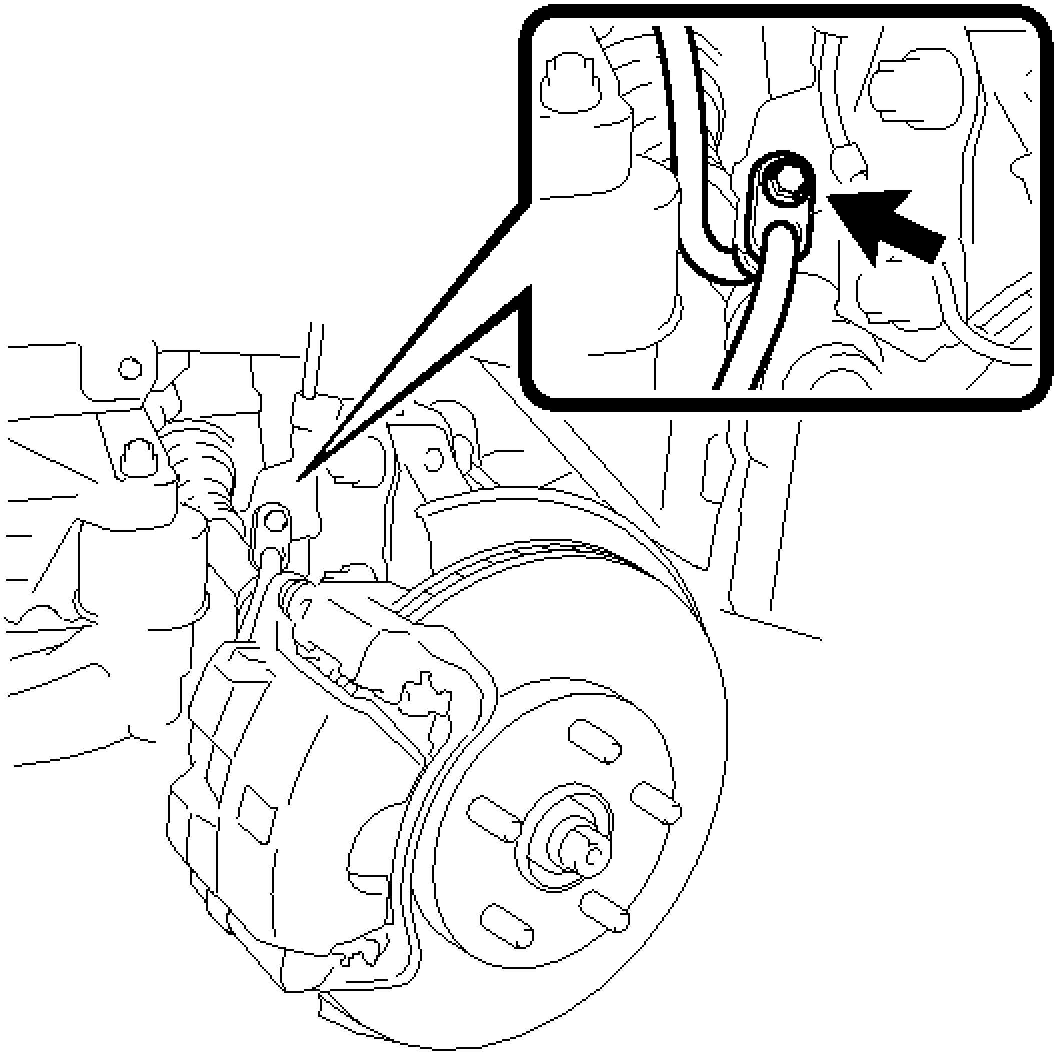

Fig. 47: Identifying Flexible Hose Mounting Bracket Bolt
Courtesy of TOYOTA MOTOR SALES, U.S.A., INC.

INSTALLATION

INSTALLATION

NOTE:

- **Because the left and right hoses are not interchangeable, verify the part number when installing the flexible hoses.**
- **If the hoses are to be reused, connect them after checking the identification marks placed when each hose was disconnected.**

HINT:

- Use the same procedure for the LH side and RH side.
- The following procedure is for the LH side.

INSTALLATION

1. **INSTALL FRONT FLEXIBLE HOSE**
    a. Install a new clip to the front flexible hose.

    NOTE: **Install the clip as far as it will go.**

    b. Using a union nut wrench, connect the brake line to the front flexible hose while holding the flexible hose with a wrench.

    Torque: 15 N*m (155 kgf*cm, 11 ft.*lbf)

    NOTE:

    - **Do not bend or damage the brake line.**
    - **Do not allow any foreign matter such as dirt or dust to enter the brake line from the connecting points.**
    - **Use the formula to calculate special torque values for situations where the union nut wrench is combined with a torque wrench. Refer to PRECAUTION .**

    c. Install the front speed sensor clamp and front flexible hose to the shock absorber bracket with the bolt.

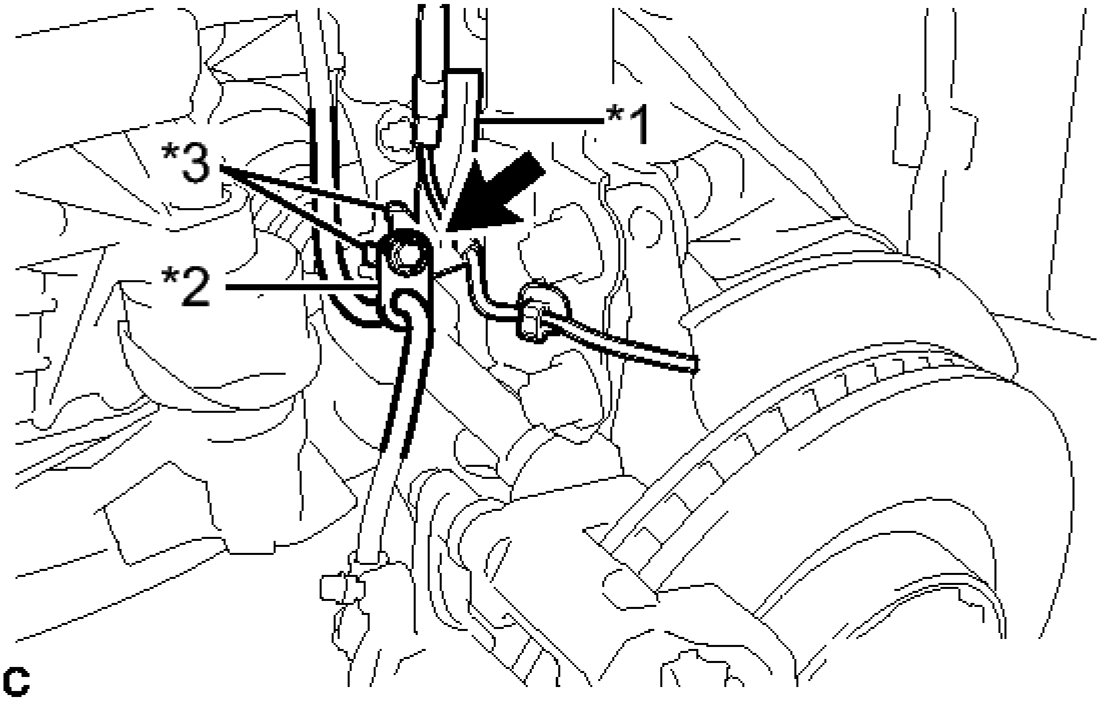

Fig. 48: Identifying Front Speed Sensor Clamp And Front Flexible Hose
Courtesy of TOYOTA MOTOR SALES, U.S.A., INC.

TEXT IN ILLUSTRATION

*1	Front Speed Sensor Clamp
*2	Front Flexible Hose
*3	Claw

Torque: 19 N*m (192 kgf*cm, 14 ft.*lbf)

NOTE:

- **Do not twist the wire harness for the front speed sensor when installing it.**
- **Securely set the 2 claws of the front speed sensor clamp to the shock absorber bracket.**
- **A bolt tightens the brake flexible hose and front speed sensor together. Make sure that the front flexible hose is positioned over the front speed sensor.**

d. Connect the front flexible hose to the front disc brake cylinder assembly with the union bolt and a new gasket.

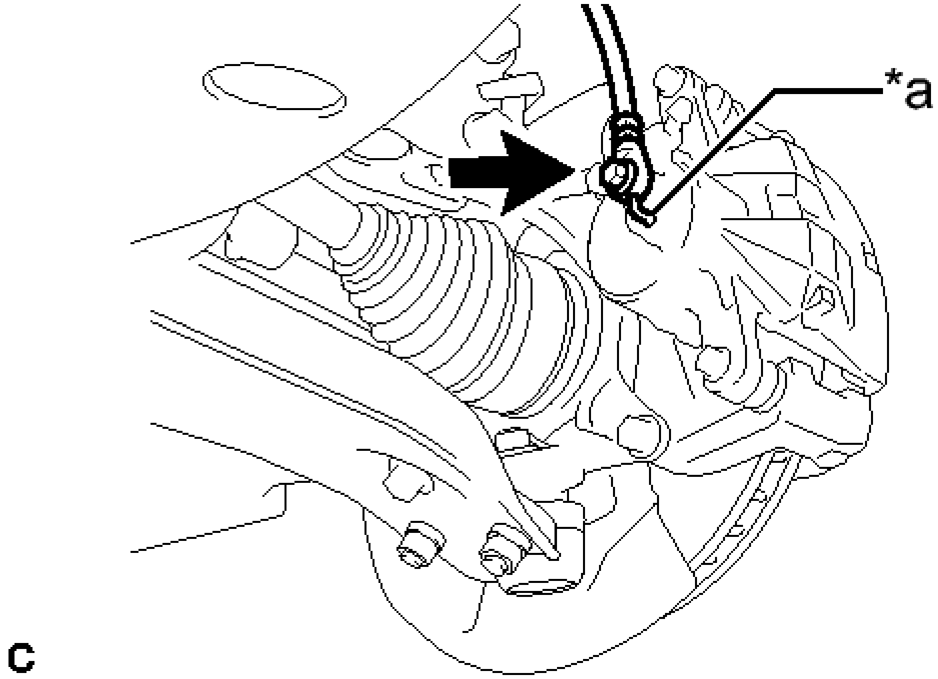

Fig. 49: Identifying Front Flexible Hose Union Bolt
Courtesy of TOYOTA MOTOR SALES, U.S.A., INC.

TEXT IN ILLUSTRATION

*a	Lock Hole

Torque: 29 N*m (300 kgf*cm, 22 ft.*lbf)

NOTE: **Install the flexible hose lock securely into the lock hole in the front disc brake cylinder.**

2. **BLEED BRAKE LINE**

   Refer to **BLEEDING**

3. **INSTALL FRONT WHEEL**

   Torque: 103 N*m (1049 kgf*cm, 76 ft.*lbf)

BRAKE LINE

PRECAUTION

PRECAUTION

NOTE:

- **Since the brake lines are classified as critical safety related parts, be sure to disassemble and inspect the components if any brake fluid leaks are found. If any abnormality is found, replace the component with a new one.**
- **When removing brake system components, cover the brake line connections to prevent foreign matter such as dust or dirt from entering the lines.**
- **Do not allow brake fluid to adhere to any painted surface such as the vehicle body. If brake fluid leaks onto any painted surface, immediately clean it off.**
- **When installing a grommet to the body, ensure that the brake line passes through the center of the grommet.**
- **Do not damage or deform the brake lines when removing and installing them.**
- **When installing a brake line or flexible hose, ensure that they are free from twists or kinks.**
- **Do not deform the bracket or the body when connecting a brake line and flexible hose.**
- **If the cap of a flexible hose does not match the groove on the bracket, twist the hose slightly to insert it.**
- **Flexible hoses must be free from shock absorber oil, grease, etc.**
- **When installing a brake line to a plastic clamp, ensure that the brake line is not loose or pinched.**
- **Do not reuse any clips or plastic clamps removed from a flexible hose.**
- **After installing a brake line or flexible hose, ensure that they do not interfere with any other components.**
- **When disconnecting and connecting a flexible hose and brake line:**

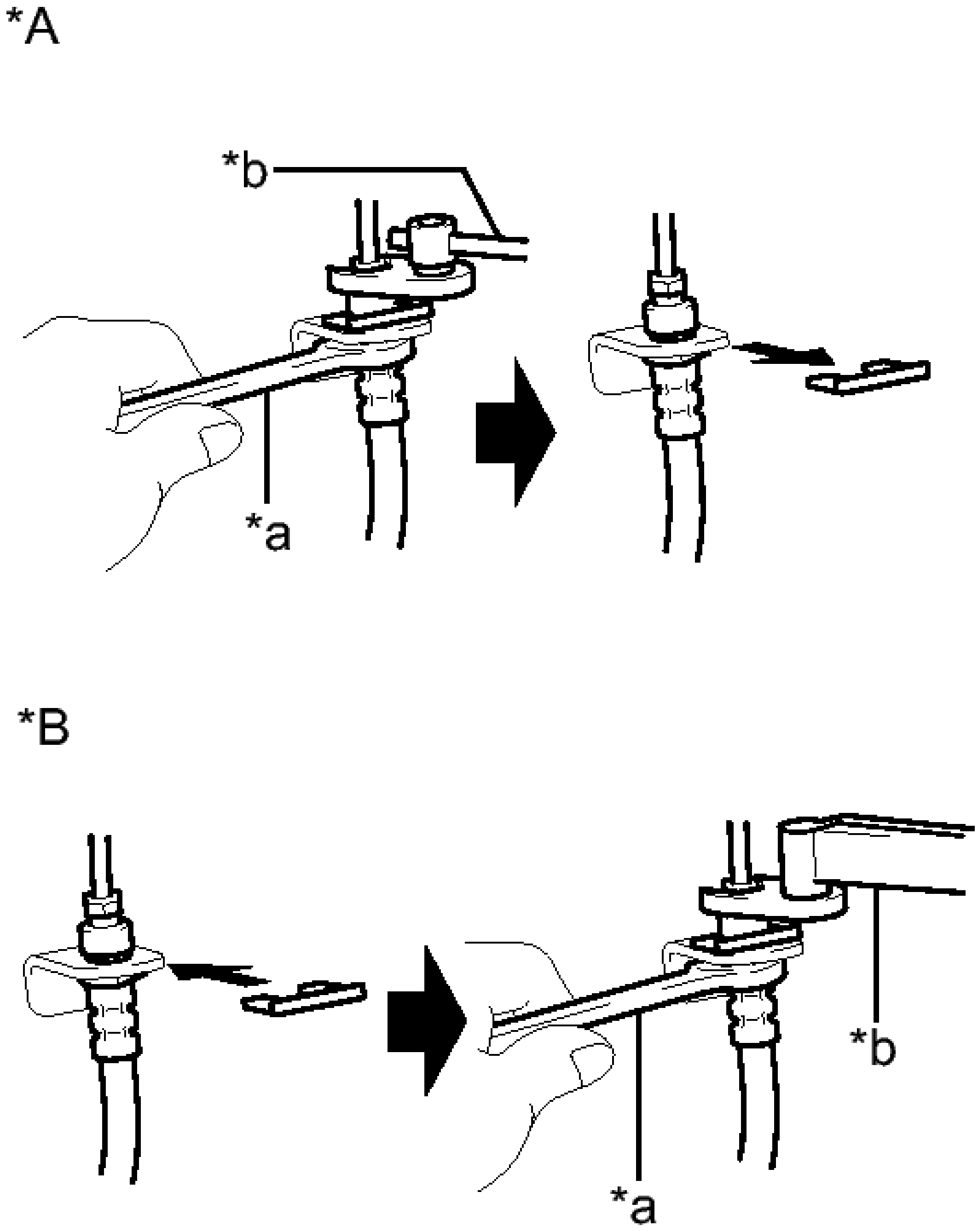

P

Fig. 1: Disconnecting / Connecting Flexible Hose & Brake Line
Courtesy of TOYOTA MOTOR SALES, U.S.A., INC.

TEXT IN ILLUSTRATION

*A	Disconnecting

*B	Connecting
*a	Hold
*b	Turn

a. Hold the flexible hose with a wrench and disconnect the brake line using a union nut wrench without deforming the line.
b. Remove the clip.
c. Install a new clip.
d. Connect the brake line with a union nut wrench without deforming the line.

- When connecting a brake line and way:

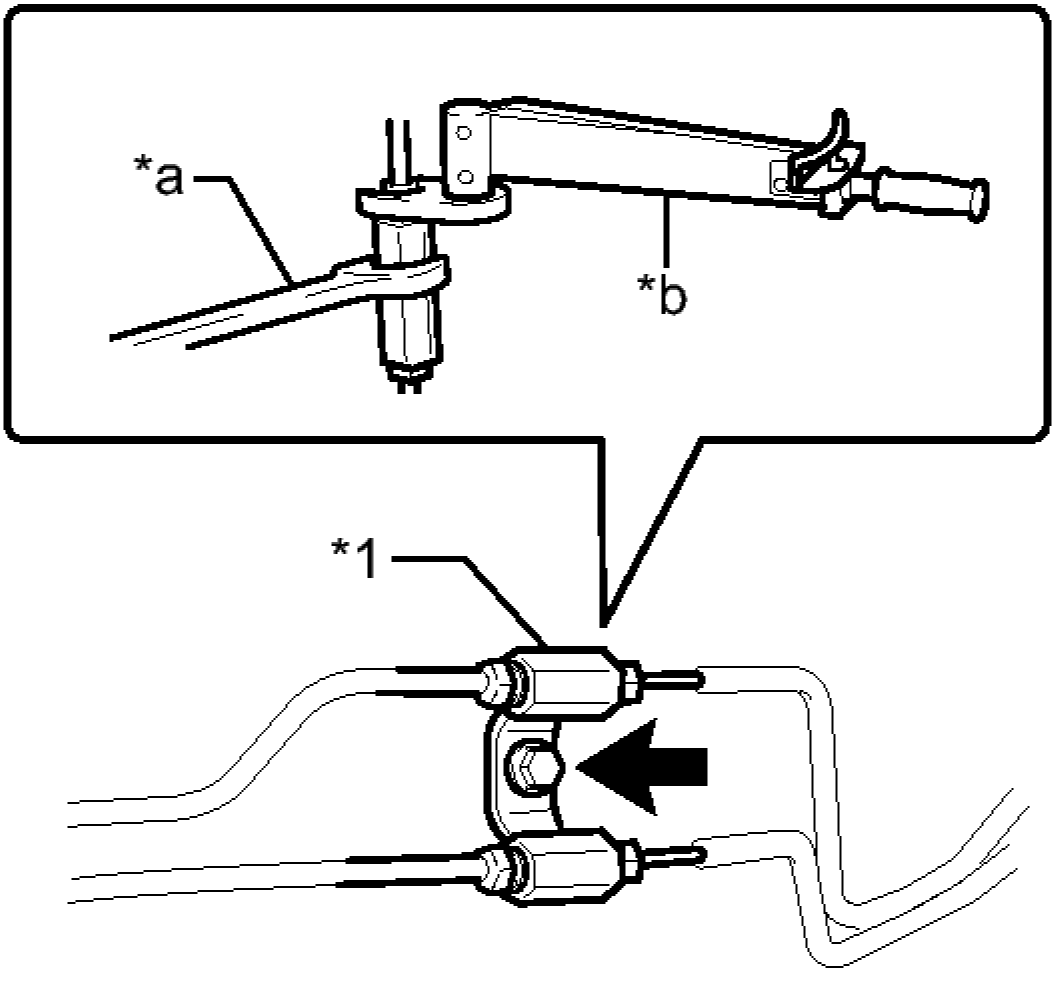

T

Fig. 2: Identifying Brake Line And Way
Courtesy of TOYOTA MOTOR SALES, U.S.A., INC.

TEXT IN ILLUSTRATION

*1	Way
*a	Hold
*b	Turn

a. Support the way to prevent deformation of the brake line and connect the brake line to the way with a union nut wrench.
b. Support the way to prevent deformation of the brake line and install the bolt to secure the way to the body.

SYSTEM DIAGRAM

SYSTEM DIAGRAM

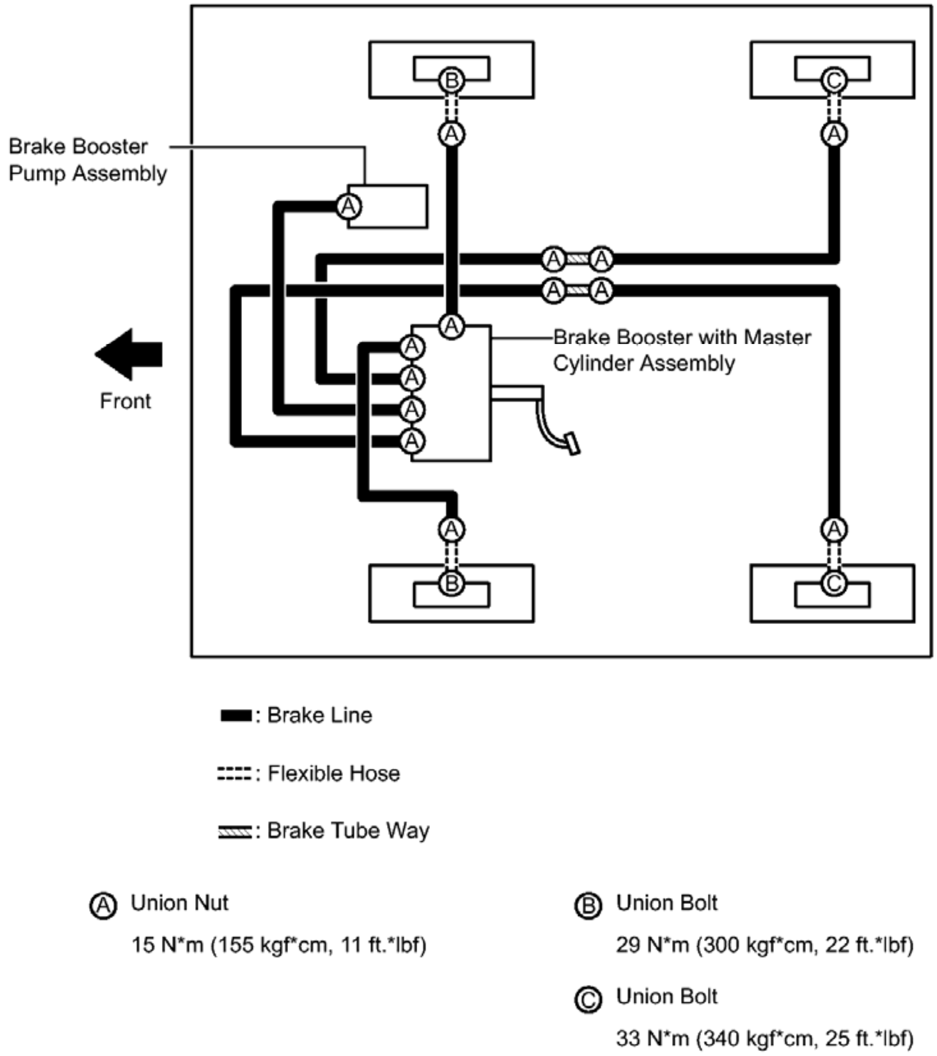
Brake Booster Pump Assembly
Brake Booster with Master Cylinder Assembly
Front
A
B
C
▬: Brake Line
┅: Flexible Hose
▨: Brake Tube Way
Ⓐ Union Nut
15 N*m (155 kgf*cm, 11 ft.*lbf)
Ⓑ Union Bolt
29 N*m (300 kgf*cm, 22 ft.*lbf)
Ⓒ Union Bolt
33 N*m (340 kgf*cm, 25 ft.*lbf)

c

Fig. 3: Brake Line System Diagram
Courtesy of TOYOTA MOTOR SALES, U.S.A., INC.

BRAKE FLUID

ON-VEHICLE INSPECTION

ON-VEHICLE INSPECTION

NOTE: **If using a dropper to adjust the fluid amount, make sure that the dropper has not been used with mineral oils, water or deteriorated brake fluid. Sealed areas may deteriorate and lead to fluid leaks, or the fluid may deteriorate and lead to**

decreased efficiency.

HINT:

If the brake fluid level is lower than the MIN line, inspect for brake fluid leaks and brake pad wear. After repair or replacement, adjust the brake fluid level in the reservoir as specified below.

1. **INSPECT AND ADJUST FLUID LEVEL IN RESERVOIR (for Using the Techstream)**
    a. Connect the Techstream to the DLC3 with the power switch off.
    b. Check that the shift lever is in P and the parking brake is applied, and turn the power switch on (IG).
    c. Turn the Techstream on and enter the following menus: Chassis / ABS/VSC/TRAC / Utility / ECB (Electronically Controlled Brake system) Utility / Zero Down.
    d. Select "Next" and wait for 10 seconds.
    e. After the booster pump has stopped, inspect that the fluid level is between the MAX and MIN lines. If necessary, refill the brake fluid to the MAX line.

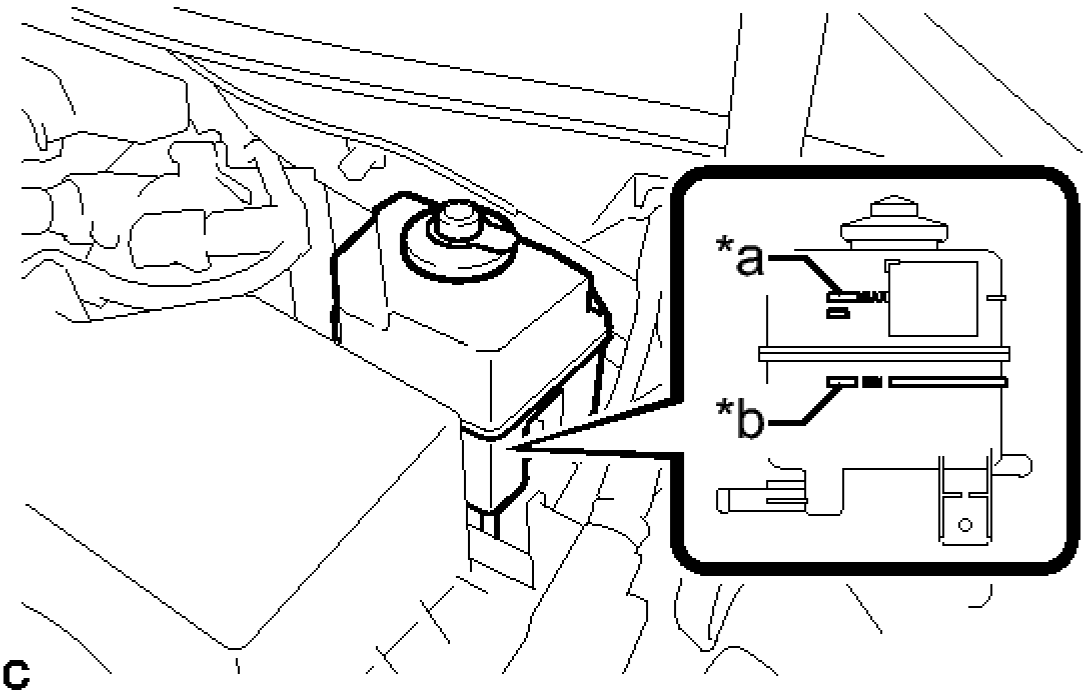

Fig. 4: Identifying Master Cylinder MAX And MIN Lines
Courtesy of TOYOTA MOTOR SALES, U.S.A., INC.

TEXT IN ILLUSTRATION

*a	MAX Line
*b	MIN Line

Brake fluid

SAE J1703 or FMVSS No. 116 DOT3

2. **INSPECT AND ADJUST FLUID LEVEL IN RESERVOIR (for not Using the Techstream)**
    a. Inspect that the fluid level is above the MIN line with the power switch on (IG).

       If necessary, refill the brake fluid to the fluid level support line with the power switch on (IG).

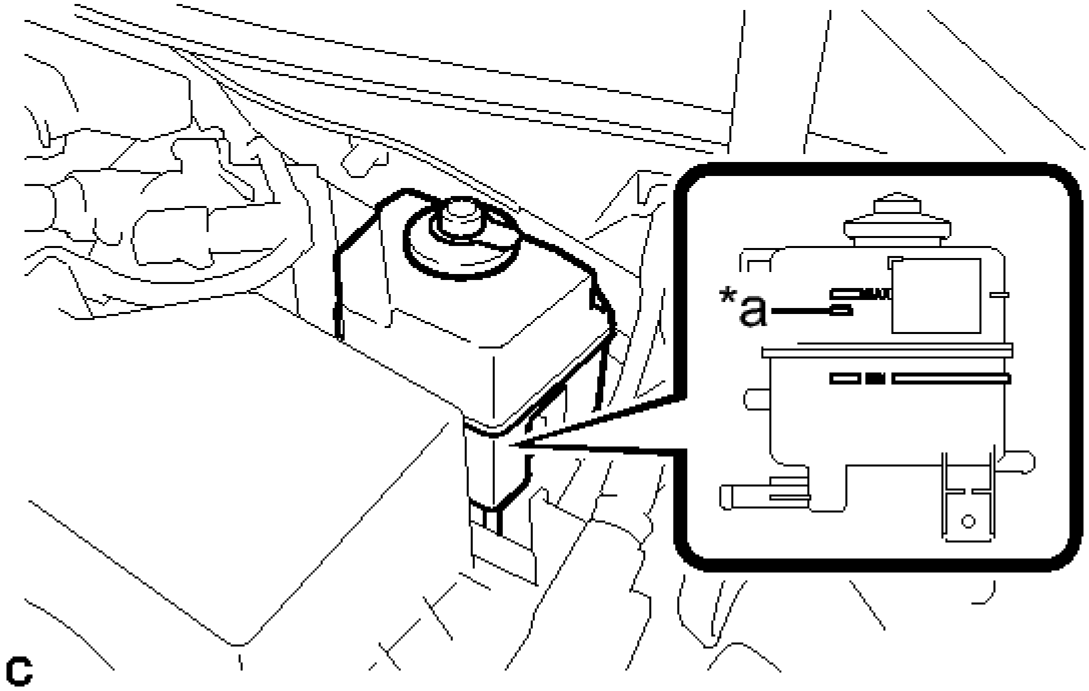

Fig. 5: Identifying Master Cylinder Fluid Level Support Line
Courtesy of TOYOTA MOTOR SALES, U.S.A., INC.

TEXT IN ILLUSTRATION

*a	Fluid Level Support Line

Brake fluid

SAE J1703 or FMVSS No. 116 DOT3

REPLACEMENT

REPLACEMENT

NOTE:

- **Perform fluid replacement with the shift lever in P and the parking brake applied.**
- **As brake fluid may overflow when replacing brake fluid, do not place the fluid can on the reservoir filler opening.**
- **Perform fluid replacement while maintaining the brake fluid level between the MIN/MAX level on the brake fluid reservoir.**
- **Replacing brake fluid will be difficult if the following occurs:**
    a. **The brake actuator hose (the hose between the brake booster pump assembly and brake master cylinder reservoir assembly) is higher than the fluid level and air enters the hose.**
    b. **During the fluid replacement procedure, air enters the brake booster pump assembly while the pump motor is operating.**
- **While performing fluid replacement, the accumulator pressure drop may cause a buzzer to sound. As there is no problem, continue with the fluid replacement.**
- **During fluid replacement, DTCs for pressure sensor malfunctions, etc. may be stored. After fluid replacement and if instructed in the procedures, clear the DTCs.**
- **Do not allow brake fluid to adhere to any painted surface such as the vehicle body. If brake fluid leaks onto any painted surface, immediately clean it off.**

HINT:

There are 2 ways of brake fluid replacement: using the Techstream or not using the Techstream.

1. **REPLACE BRAKE FLUID (for Using the Techstream)**

NOTE:

- **Add brake fluid carefully and check that the reservoir level remains between the MIN and MAX lines.**
- **Do not stand the fluid can on the reservoir inlet. Doing so will cause brake fluid to overflow.**

a. Replace brake fluid.
    1. Remove the brake master cylinder reservoir filler cap assembly.

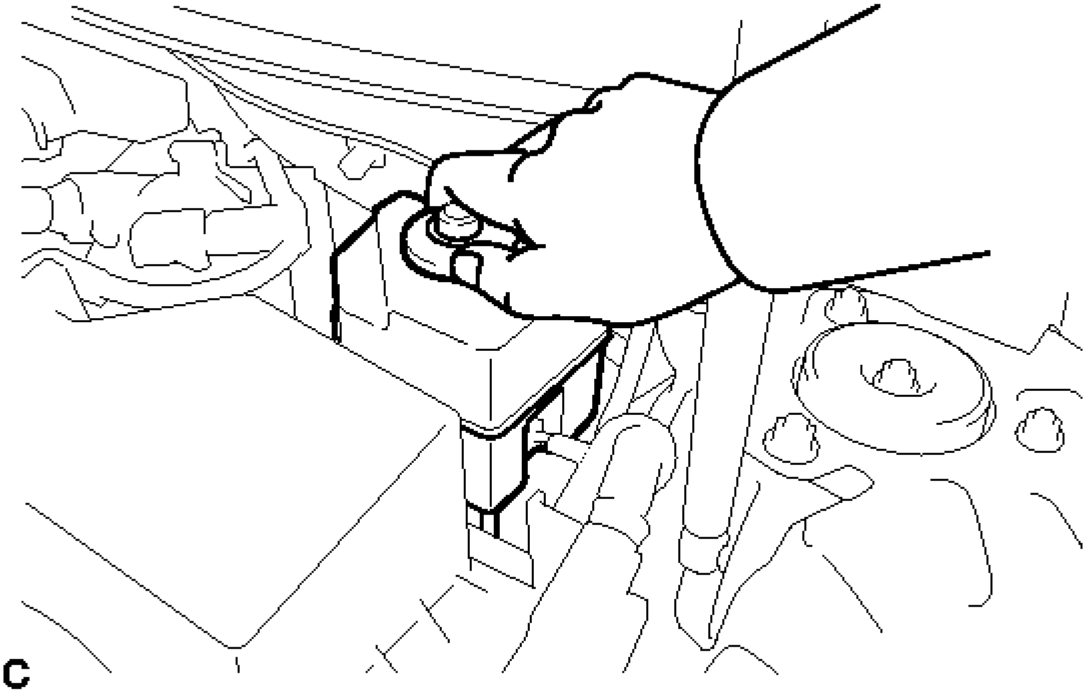

Fig. 6: Removing Brake Master Cylinder Reservoir Filler Cap
Courtesy of TOYOTA MOTOR SALES, U.S.A., INC.

2. Add brake fluid into the reservoir between the MAX and MIN level on the brake fluid reservoir.

   Brake fluid

   SAE J1703 or FMVSS No. 116 DOT3

3. Connect the Techstream to the DLC3 and turn the power switch on (IG).
4. Turn the Techstream on and enter the following menus: Chassis / ABS/VSC/TRAC / Air Bleeding.
5. Select "Usual air bleeding" on the Techstream display, and replace the brake fluid following the instructions on the Techstream.
6. After replacing brake fluid, tighten each bleeder plug.

   Torque: 8.3 N*m (85 kgf*cm, 73 in.*lbf)

b. Clear the DTCs. Refer to **DTC CHECK / CLEAR** .
c. Turn the Techstream off and turn the power switch off.
d. Inspect for brake fluid leaks.
e. Install the brake master cylinder reservoir filler cap.

2. **REPLACE BRAKE FLUID (for not Using the Techstream)**

NOTE:

- **Performing the following procedure will select ECB (Electronically Controlled Brake system) Invalid Mode without using the Techstream.**
- **ECB (Electronically Controlled Brake system) Invalid Mode allows the brake fluid to be replaced without using the Techstream.**
- **The brake warning light / yellow will blink to indicate when ECB (Electronically Controlled Brake system) Invalid Mode is selected.**
- **Be sure to inspect that the brake warning light / yellow is blinking while replacing the brake fluid.**
- **When one of the following conditions is met, ECB (Electronically Controlled Brake system) Invalid Mode is cancelled, and DTCs may be stored. Do not cancel ECB (Electronically Controlled Brake system) Invalid Mode while replacing brake fluid.**

The shift lever is moved to any other position from P.
The power switch is turned on (READY).
The power switch is turned off.
The parking brake is released.
The vehicle speed is not 0 km/h (0 mph).

- **Do not rotate the brake disc while ECB (Electronically Controlled Brake system) Invalid Mode is selected.**

- **When replacing the brake fluid from the brake line, do not depress the brake pedal to operate the brake booster pump assembly for more than 100 seconds. If the brake booster pump assembly is operated more than 100 seconds, ECB (Electronically Controlled Brake system) Invalid Mode is automatically finished and the DTCs may be stored.**
- **Add brake fluid carefully and check that the reservoir level remains between the MIN and MAX lines.**
- **Do not stand the fluid can on the reservoir inlet. Doing so will cause brake fluid to overflow.**

a. Remove all 4 wheels.
b. Select ECB (Electronically Controlled Brake system) Invalid Mode.
    1. Perform the procedure listed below within 1 minute.
        a. Turn the power switch on (IG) with the shift lever in P and the parking brake applied.
        b. Move the shift lever to N and then depress the brake pedal more than 8 times in 5 seconds.
        c. Move the shift lever to P and then depress the brake pedal more than 8 times in 5 seconds.
        d. Move the shift lever to N and then depress the brake pedal more than 8 times in 5 seconds.
        e. Move the shift lever to P.
    2. Check that the brake warning light / yellow is blinking.

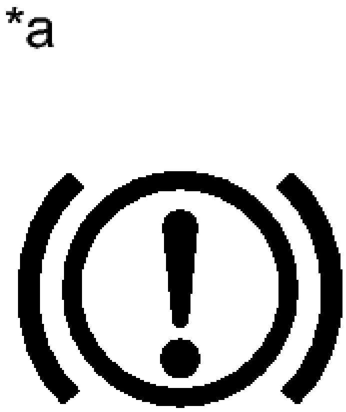

N

Fig. 7: Identifying Brake Warning Light / Yellow (Minor Malfunction)
Courtesy of TOYOTA MOTOR SALES, U.S.A., INC.

TEXT IN ILLUSTRATION

*a	Brake Warning Light / Yellow

c. Replace the brake fluid.
   1. Remove the brake master cylinder reservoir filler cap assembly.

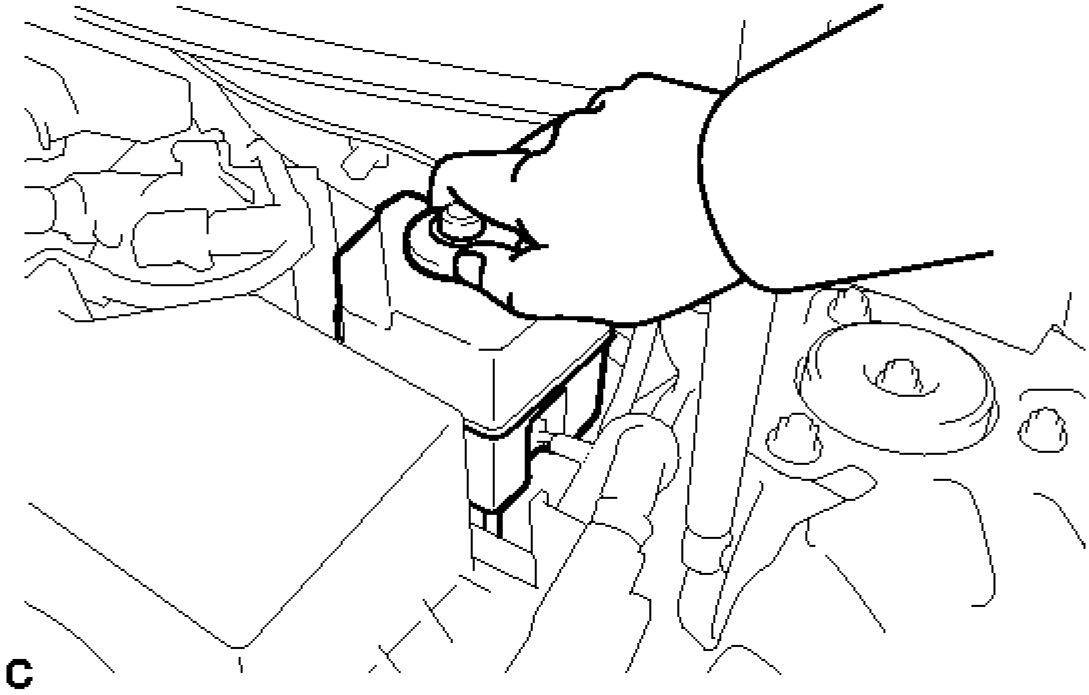

Fig. 8: Removing Brake Master Cylinder Reservoir Filler Cap
Courtesy of TOYOTA MOTOR SALES, U.S.A., INC.

   2. Add brake fluid into the reservoir between the MAX and MIN level on the brake fluid reservoir.

      Brake fluid

      SAE J1703 or FMVSS No. 116 DOT3

   3. Connect a vinyl tube to the bleeder plug of the front disc brake cylinder assembly RH.
   4. Depress the brake pedal several times, and then loosen the bleeder plug with the pedal depressed.*1
   5. When fluid stops coming out, tighten the bleeder plug, and then release the brake pedal.*2

6. Repeat *1 and *2 until all the air in the brake fluid is completely bled out and new brake fluid comes out.
7. Tighten the bleeder plug completely.

   Torque: 8.3 N*m (85 kgf*cm, 73 in.*lbf)

8. Replace the brake fluid from the front disc brake cylinder assembly LH using the same procedure as for the RH side.
9. Connect a vinyl tube to the bleeder plug of the rear disc brake cylinder assembly LH.
10. Loosen the bleeder plug while depressing and holding the brake pedal, and replace the brake fluid with the brake booster pump assembly and solenoid running.*3

    NOTE:

    - **Be sure to keep the brake pedal depressed.**
    - **Do not depress the brake pedal to operate the brake booster pump assembly for more than 100 seconds. When performing this procedure continuously, release the brake pedal to stop brake booster pump assembly operation and depress the brake pedal again.**

11. Tighten the bleeder plug, then release the brake pedal.*4
12. Repeat steps *3 and *4 until all the air in the brake fluid is completely bled out and a new brake fluid comes out.
13. Tighten the bleeder plug completely.

    Torque: 8.3 N*m (85 kgf*cm, 73 in.*lbf)

14. Replace the brake fluid from the rear disc brake cylinder assembly RH using the same procedure as for the LH side.
15. Turn the power switch off.

d. Inspect for brake fluid leaks.
e. Adjust the brake fluid level in the reservoir See step 2.
f. Install the brake master cylinder reservoir filler cap.
g. Install the 4 wheels.

   Torque: 103 N*m (1049 kgf*cm, 76 ft.*lbf)

BLEEDING

BLEEDING

WARNING: **The Techstream must be used for air bleeding. If it is not used, the air bleeding will be incomplete, which is hazardous and may lead to an accident.**

NOTE:

- **Perform air bleeding with the shift lever in P and the parking brake applied.**
- **As brake fluid may overflow when bleeding, do not place the fluid can on the reservoir filler opening.**
- **Perform air bleeding while maintaining the brake fluid level between the MIN/MAX level on the brake fluid reservoir.**
- **Air bleeding will be difficult if the following occurs:**
    a. **The brake actuator hose (the hose between the brake booster pump assembly and brake master cylinder reservoir assembly) is higher than the fluid level and air enters the hose.**
    b. **During the air bleeding procedure, air enters the brake booster pump assembly while the pump motor is operating.**
- **While performing air bleeding, the accumulator pressure drop may cause a buzzer to sound. As there is no problem, continue with the operation.**
- **During air bleeding, DTCs for pressure sensor malfunctions, etc. may be stored. After air bleeding and if instructed in the procedures, clear the DTCs.**
- **Release the parking brake during the linear valve offset calibration procedure.**
- **Do not allow brake fluid to adhere to any painted surface such as the vehicle body. If brake fluid leaks onto any painted surface, immediately clean it off.**
- **When bleeding air, select the suitable work procedure according the table below.**

Replaced/Installed Item	**Work Procedure**
Flexible hose (front/rear)	**Bleed brake line**
Disc brake cylinder assembly (front/rear)	
Brake booster pump assembly	**Bleed brake system**
Brake booster with master cylinder assembly	
Brake master cylinder reservoir assembly	

1. **BLEED BRAKE LINE**
    a. Bleed brake line.
        1. Remove the brake master cylinder reservoir filler cap assembly.

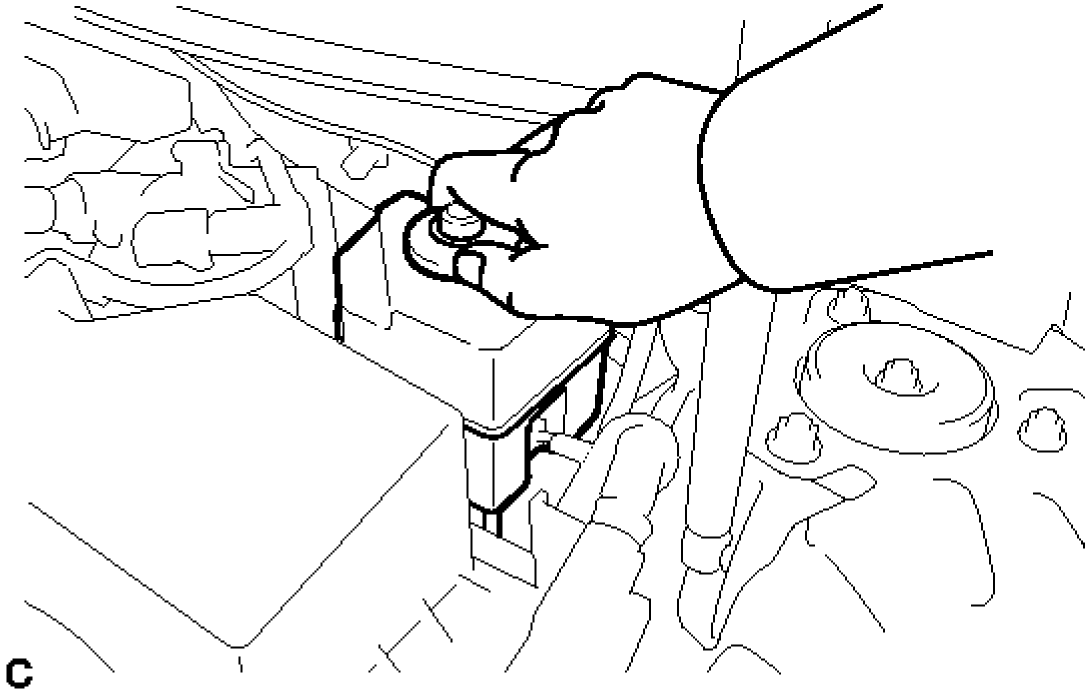

Fig. 9: Removing Brake Master Cylinder Reservoir Filler Cap
Courtesy of TOYOTA MOTOR SALES, U.S.A., INC.

2. Add brake fluid into the reservoir between the MAX and MIN level on the brake fluid reservoir.

   Brake fluid

   SAE J1703 or FMVSS No. 116 DOT3

3. Connect the Techstream to the DLC3 and turn the power switch on (IG).
4. Turn the Techstream on and enter the following menus: Chassis / ABS/VSC/TRAC / Air Bleeding.
5. Select "Usual air bleeding" on the Techstream display, and bleed air from the brake fluid following the instructions on the Techstream.
6. After air bleeding, tighten each bleeder plug.

   Torque: 8.3 N*m (85 kgf*cm, 73 in.*lbf)

7. Clear the DTCs. Refer to **DTC CHECK / CLEAR** .
8. Turn the Techstream off and turn the power switch off.

b. Inspect for brake fluid leaks.

c. Install the brake master cylinder reservoir filler cap.

2. **BLEED BRAKE SYSTEM**

a. Remove the front outer cowl top panel sub-assembly See step 4.

b. Bleed the brake system.

   1. Wait at least 2 minutes with the power switch off, and disconnect the reservoir level switch connector.

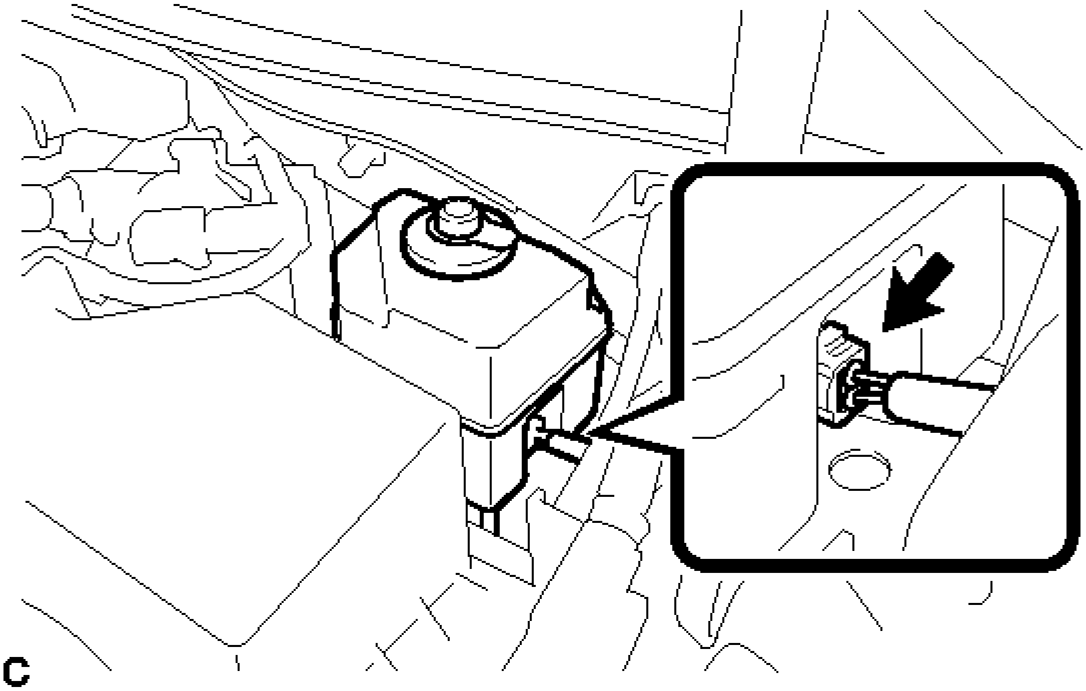

Fig. 10: Identifying Reservoir Level Switch Connector
Courtesy of TOYOTA MOTOR SALES, U.S.A., INC.

NOTE: **Do not depress the brake pedal or open/close the doors until the reservoir level switch connector is disconnected.**

HINT:

This procedure is not required if the reservoir level switch connector has been disconnected.

   2. Remove the brake master cylinder reservoir filler cap assembly.

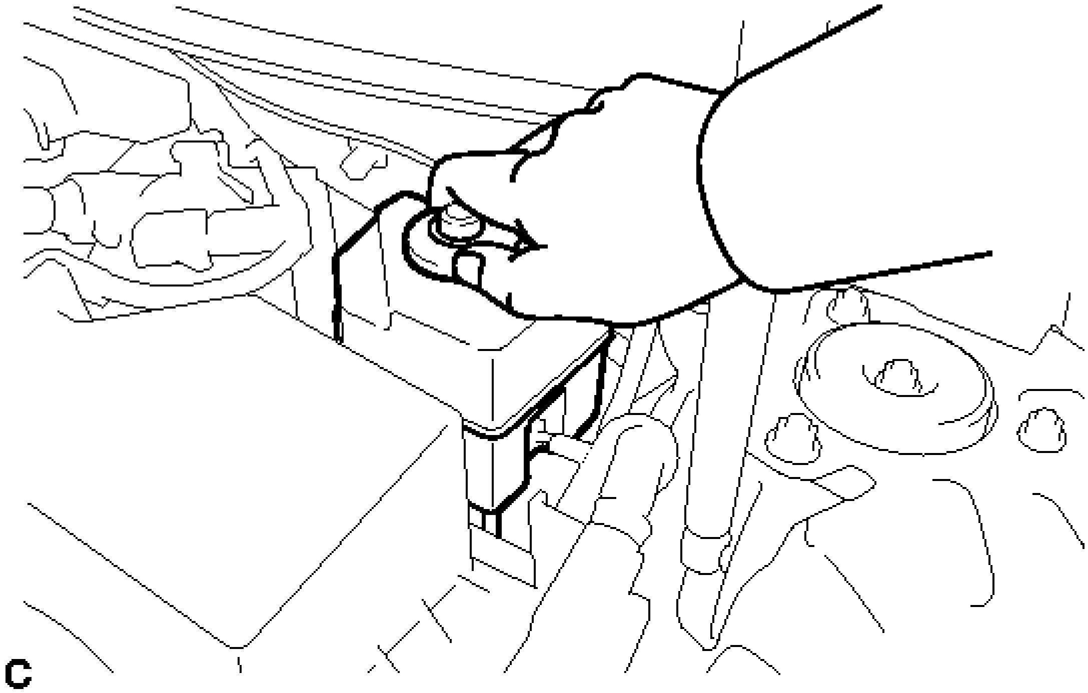

Fig. 11: Removing Brake Master Cylinder Reservoir Filler Cap
Courtesy of TOYOTA MOTOR SALES, U.S.A., INC.

3. Add brake fluid into the reservoir between the MAX and MIN level on the brake fluid reservoir.

   Brake fluid

   SAE J1703 or FMVSS No. 116 DOT3

4. Connect the Techstream to the DLC3 and turn the power switch on (IG).
5. Turn the Techstream on and enter the following menus: Chassis / ABS/VSC/TRAC / Air Bleeding.
6. Select "ABS actuator has been replaced" on the Techstream display, and bleed air from the brake fluid following the instructions on the Techstream.

   NOTE: **Before following the instructions on the Techstream to perform linear valve offset calibration, release the parking brake. When calibration is complete, immediately apply the parking brake.**

7. After air bleeding, tighten each bleeder plug.

   disc brake cylinder bleeder plug

   Torque: 8.3 N*m (85 kgf*cm, 73 in.*lbf)

stroke simulator bleeder plug

Torque: 8.5 N*m (87 kgf*cm, 75 in.*lbf)

HINT:

The stroke simulator bleeder plug is positioned as shown in the illustration.

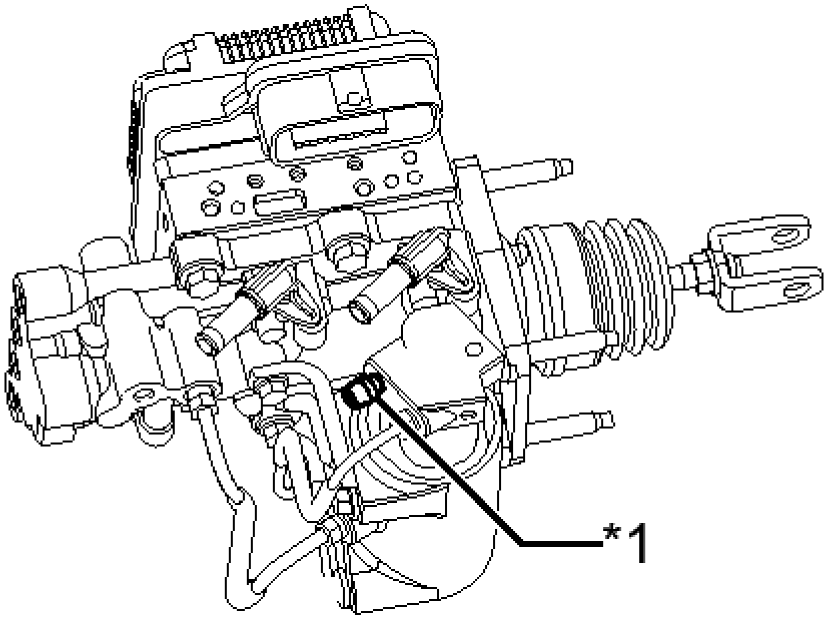

C

Fig. 12: Identifying Stroke Simulator Bleeder Plug
Courtesy of TOYOTA MOTOR SALES, U.S.A., INC.

TEXT IN ILLUSTRATION

*1	Stroke Simulator Bleeder Plug

8. Clear the DTCs. Refer to **DTC CHECK / CLEAR** .
9. Turn the Techstream off and turn the power switch off.

c. Install the brake master cylinder reservoir filler cap.
d. Inspect for brake fluid leaks.
e. Install the outer cowl top panel sub-assembly See step 18.

BRAKE PEDAL

COMPONENTS

ILLUSTRATION

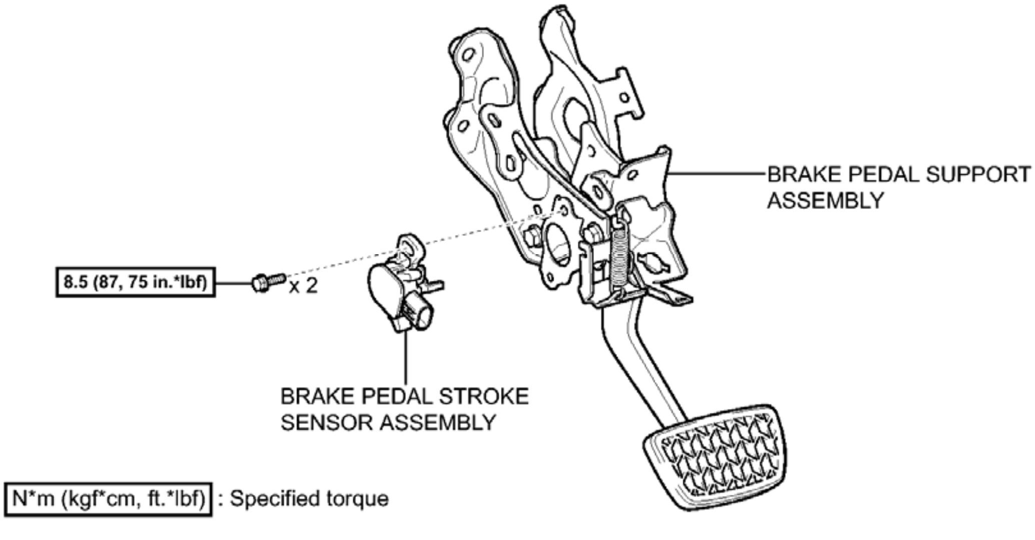
BRAKE PEDAL SUPPORT ASSEMBLY
8.5 (87, 75 in.*lbf)
x 2
BRAKE PEDAL STROKE SENSOR ASSEMBLY
N*m (kgf*cm, ft.*lbf) : Specified torque
c

Fig. 13: Identifying Brake Pedal Replacement Components With Torque Specifications (1 Of 3)
Courtesy of TOYOTA MOTOR SALES, U.S.A., INC.

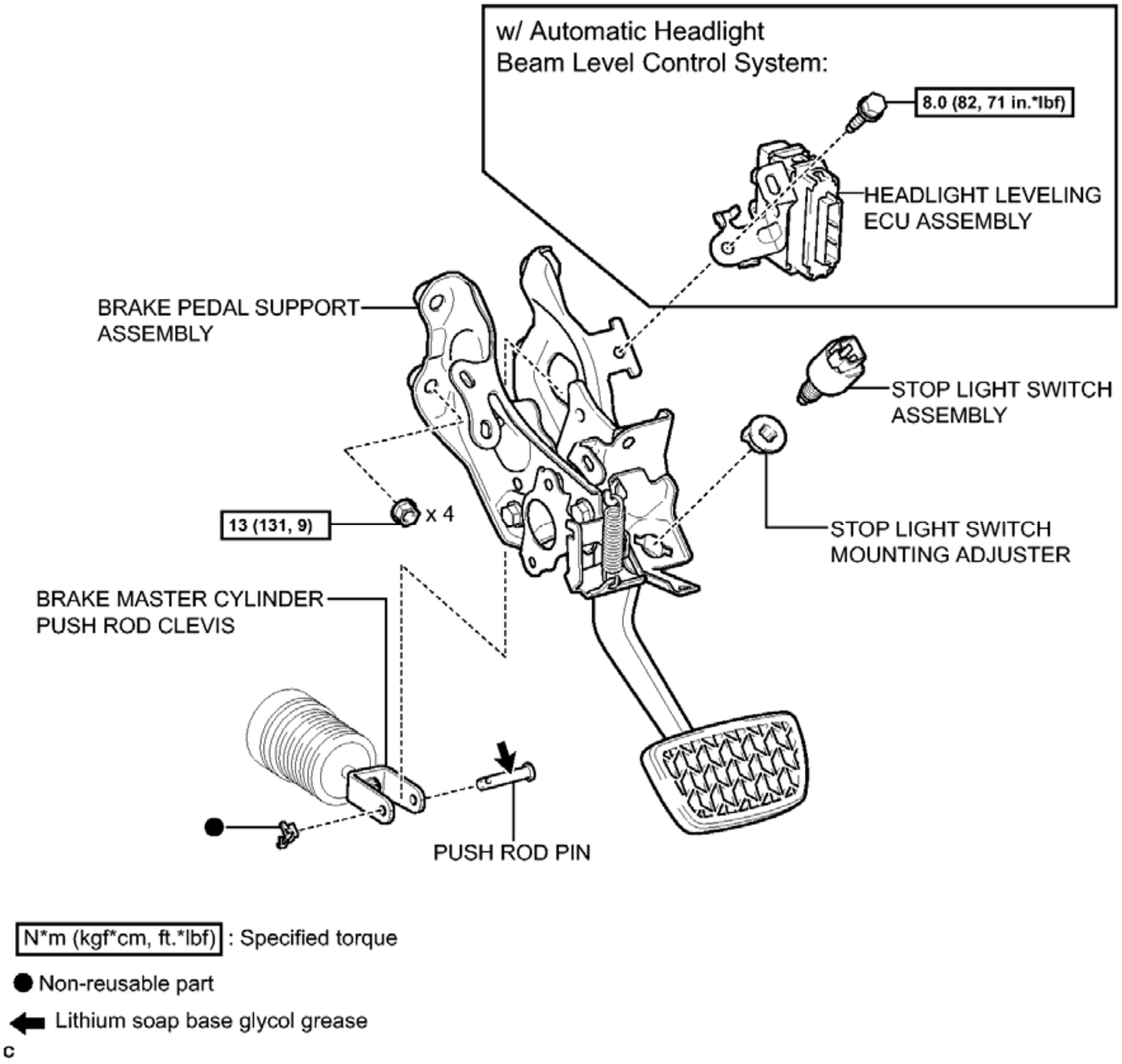
w/ Automatic Headlight
Beam Level Control System:
8.0 (82, 71 in.*lbf)
HEADLIGHT LEVELING
ECU ASSEMBLY
BRAKE PEDAL SUPPORT
ASSEMBLY
STOP LIGHT SWITCH
ASSEMBLY
STOP LIGHT SWITCH
MOUNTING ADJUSTER
13 (131, 9)
x 4
BRAKE MASTER CYLINDER
PUSH ROD CLEVIS
PUSH ROD PIN
N*m (kgf*cm, ft.*lbf) : Specified torque
● Non-reusable part
⬅ Lithium soap base glycol grease
c

Fig. 14: Identifying Brake Pedal Replacement Components With Torque Specifications (2 Of 3)
Courtesy of TOYOTA MOTOR SALES, U.S.A., INC.

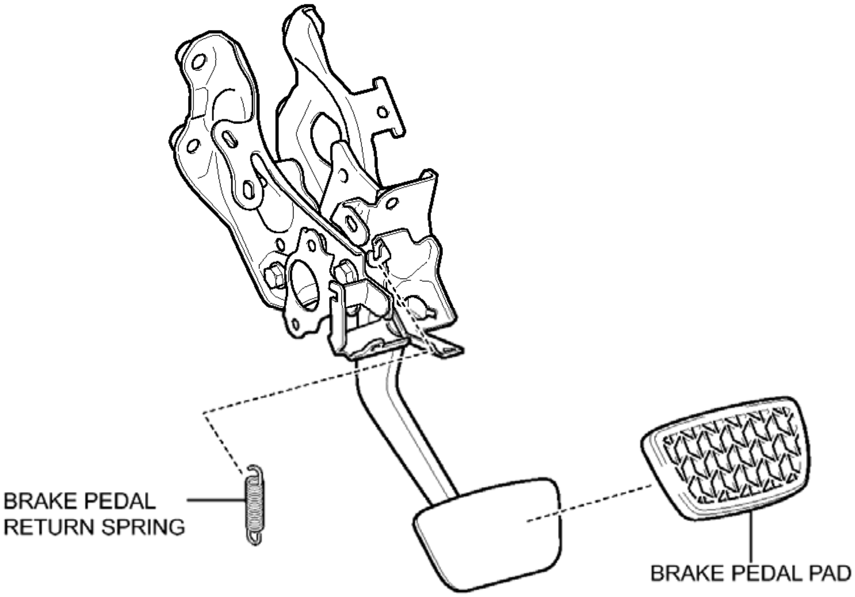

c

Fig. 15: Identifying Brake Pedal Replacement Components (3 Of 3)
Courtesy of TOYOTA MOTOR SALES, U.S.A., INC.

REMOVAL

REMOVAL

1. **REMOVE INSTRUMENT PANEL REINFORCEMENT ASSEMBLY WITH AIR CONDITIONING UNIT**

   Refer to **REMOVAL**

2. **REMOVE BRAKE PEDAL STROKE SENSOR ASSEMBLY** . Refer to **REMOVAL - Step 3**
3. **REMOVE HEADLIGHT LEVELING ECU ASSEMBLY (w/ Automatic Headlight Beam Level Control System)** . Refer to **REMOVAL - Step 2**
4. **REMOVE STOP LIGHT SWITCH ASSEMBLY** . Refer to **REMOVAL - Step 1**
5. **REMOVE STOP LIGHT SWITCH MOUNTING ADJUSTER**
6. **REMOVE PUSH ROD PIN**
   a. Remove the clip and push rod pin.

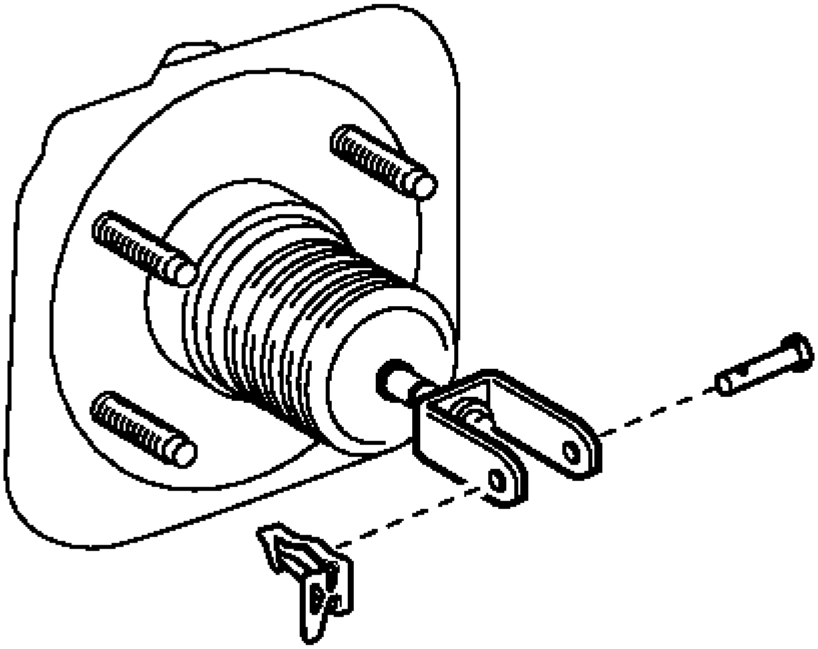

Fig. 16: Identifying Clip And Push Rod Pin
Courtesy of TOYOTA MOTOR SALES, U.S.A., INC.

b. Separate the brake master cylinder push rod clevis from the brake pedal support assembly.

7. **REMOVE BRAKE PEDAL RETURN SPRING**
   a. Remove the brake pedal return spring from the brake pedal support assembly.

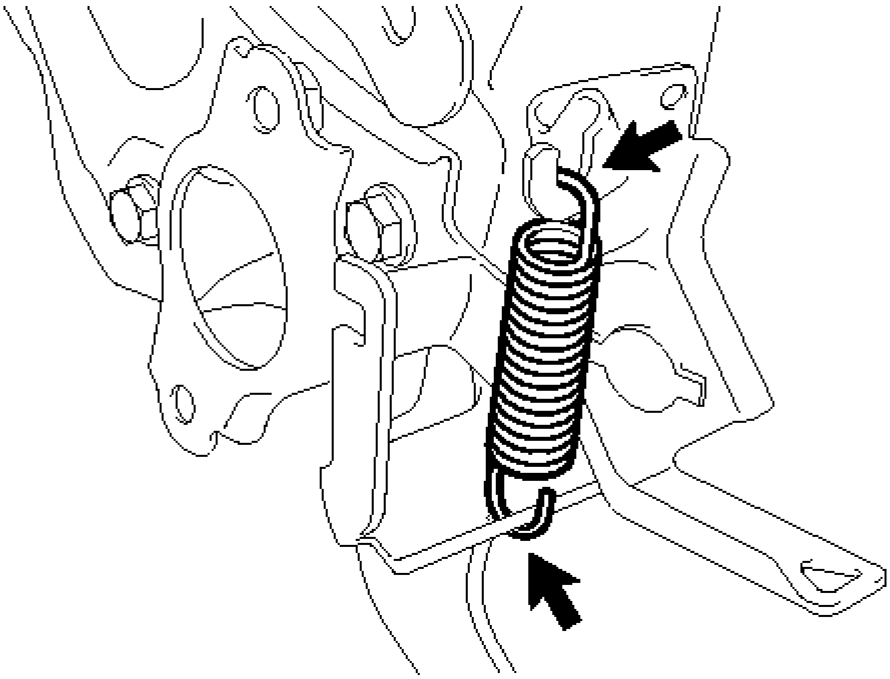

Fig. 17: Identifying Brake Pedal Return Spring
Courtesy of TOYOTA MOTOR SALES, U.S.A., INC.

8. **REMOVE BRAKE PEDAL SUPPORT ASSEMBLY**
   a. Disengage the clamp.

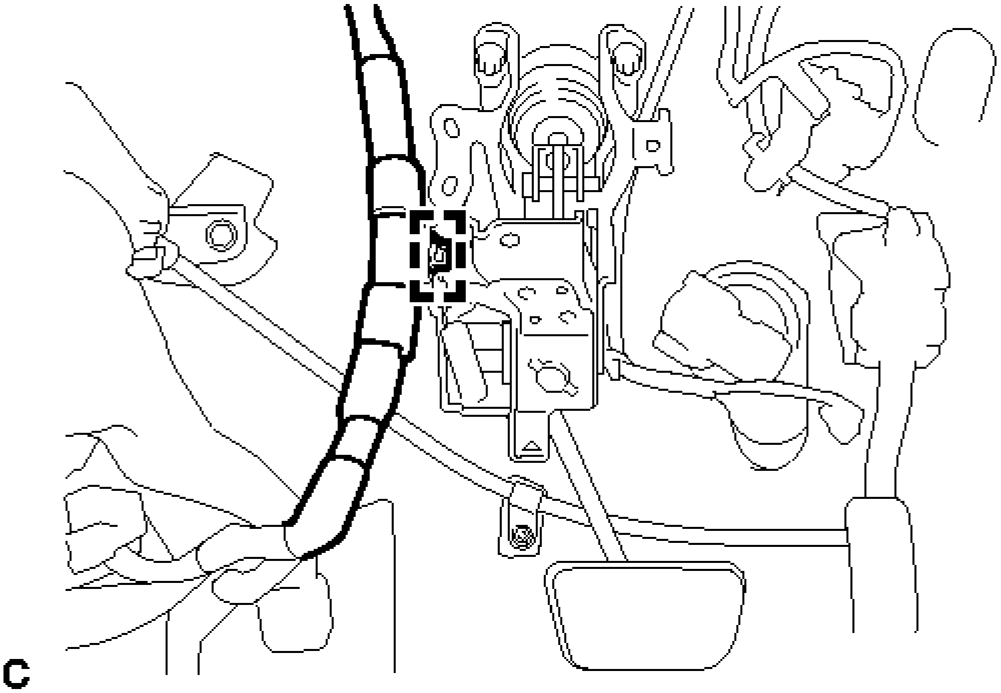

Fig. 18: Identifying Clamp
Courtesy of TOYOTA MOTOR SALES, U.S.A., INC.

   b. Disengage the 3 clamps and separate the wire harness from the brake pedal support assembly.

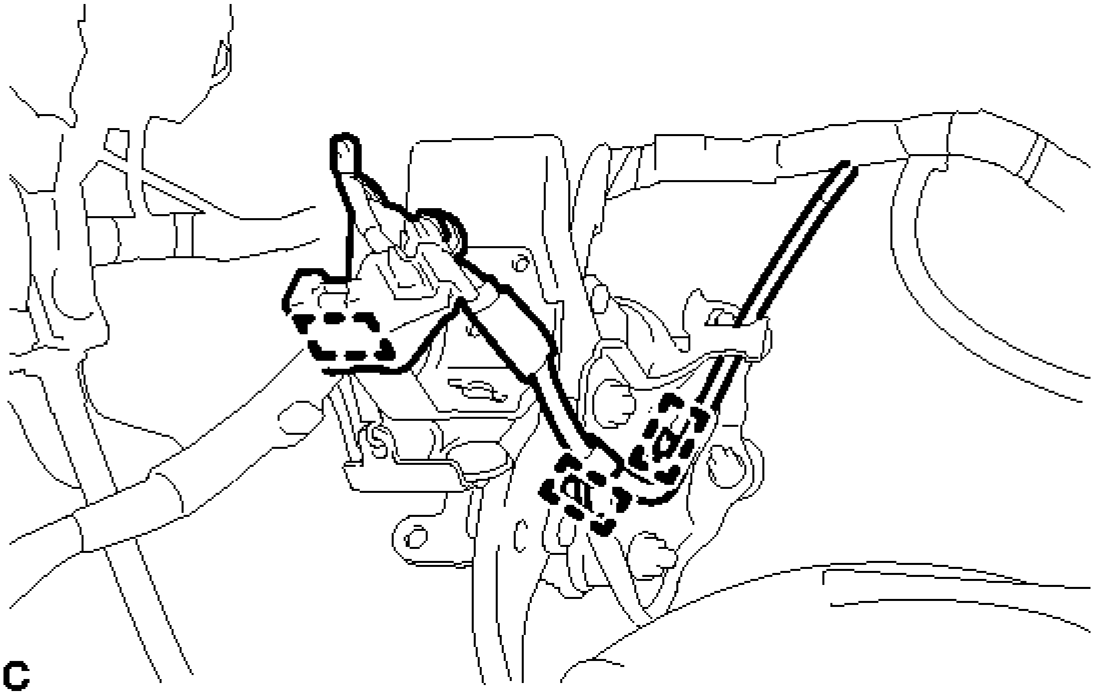

Fig. 19: Identifying Wire Harness Clamps
Courtesy of TOYOTA MOTOR SALES, U.S.A., INC.

c. Remove the 4 nuts and brake pedal support assembly.

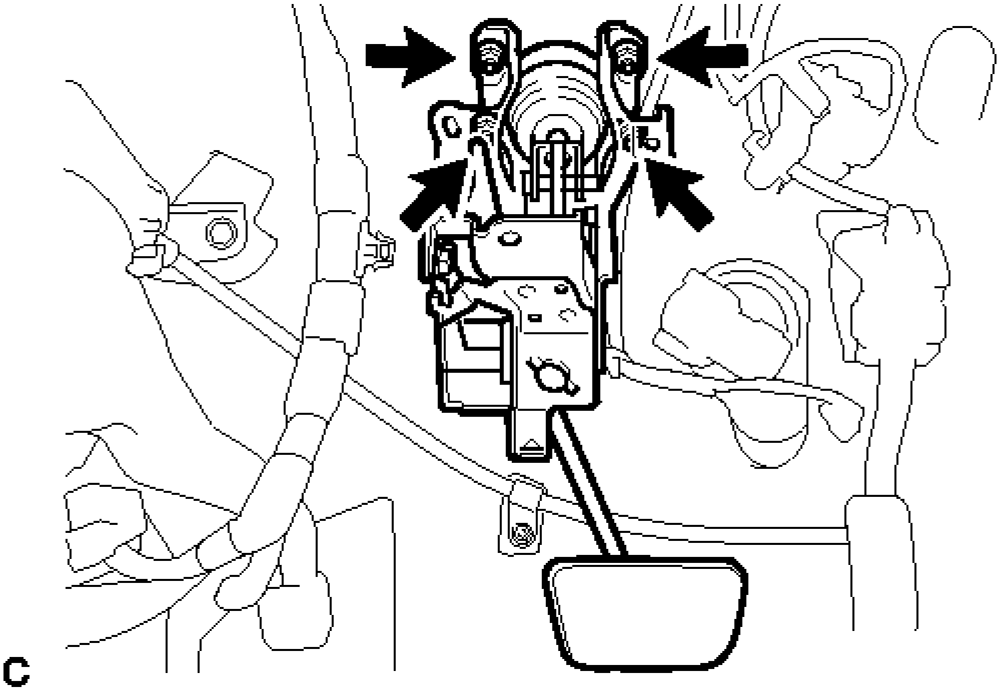

Fig. 20: Identifying Brake Pedal Support Assembly Nuts
Courtesy of TOYOTA MOTOR SALES, U.S.A., INC.

DISASSEMBLY

DISASSEMBLY

1. **REMOVE BRAKE PEDAL PAD**
    a. Remove the brake pedal pad from the brake pedal support assembly.

ADJUSTMENT

ADJUSTMENT

1. **INSPECT AND ADJUST BRAKE PEDAL HEIGHT**
    a. Check the brake pedal height.
        1. Turn back the carpet.
        2. Turn back the dash panel insulator assembly from the slit provided on the dash panel insulator assembly.
        3. Measure the shortest distance between the brake pedal pad surface and floor panel.

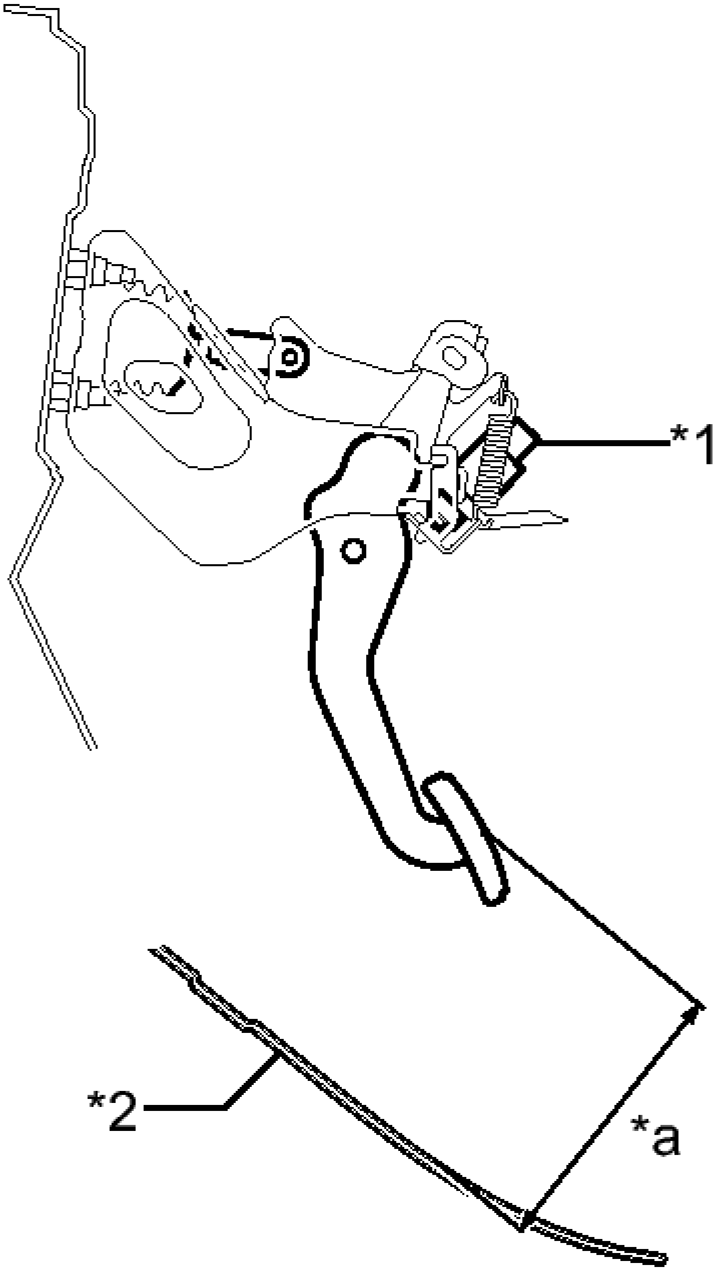

Fig. 21: Identifying Stop Light Switch And Brake Pedal Height
Courtesy of TOYOTA MOTOR SALES, U.S.A., INC.

TEXT IN ILLUSTRATION

	Stop

*1	Light Switch Assembly
*2	Floor Panel
*a	Brake Pedal Height

Pedal height from floor panel

138.5 to 148.5 mm (5.46 to 5.84 in.)

If pedal height is incorrect, inspect and adjust the push rod length according to the procedure below.

b. Adjust the push rod length.
    1. Remove the stop light switch assembly. Refer to **REMOVAL - Step 1** .
    2. Remove the brake booster with master cylinder assembly. Refer to **REMOVAL**.
    3. Loosen the lock nut and adjust the push rod length shown in the illustration by turning the brake master cylinder push rod clevis to achieve the correct length.

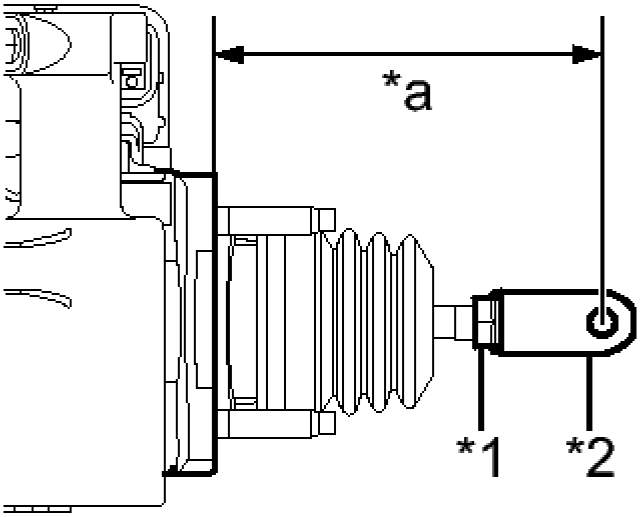

C

Fig. 22: Identifying Brake Master Cylinder Push Rod Clevis And Lock Nut
Courtesy of TOYOTA MOTOR SALES, U.S.A., INC.

TEXT IN ILLUSTRATION

*1	Lock Nut
*2	Brake Master Cylinder Push Rod Clevis
*a	Push Rod Length

Push rod length

115.5 to 116.5 mm (4.55 to 4.58 in.)

4. Tighten the lock nut.

   Torque: 26 N*m (260 kgf*cm, 19 ft.*lbf)

5. Install the brake booster with master cylinder assembly. Refer to **INSTALLATION**.
   - If the pedal height is incorrect even when the push rod length is adjusted, check the brake pedal support assembly and floor panel.
   - If necessary, replace the brake pedal support assembly.
6. Install the stop light switch assembly. Refer to **INSTALLATION - Step 1** .

c. After adjusting the pedal height, check the brake pedal free play.

2. **INSPECT AND ADJUST BRAKE PEDAL STROKE SENSOR ASSEMBLY**

a. Loosen the 2 bolts.

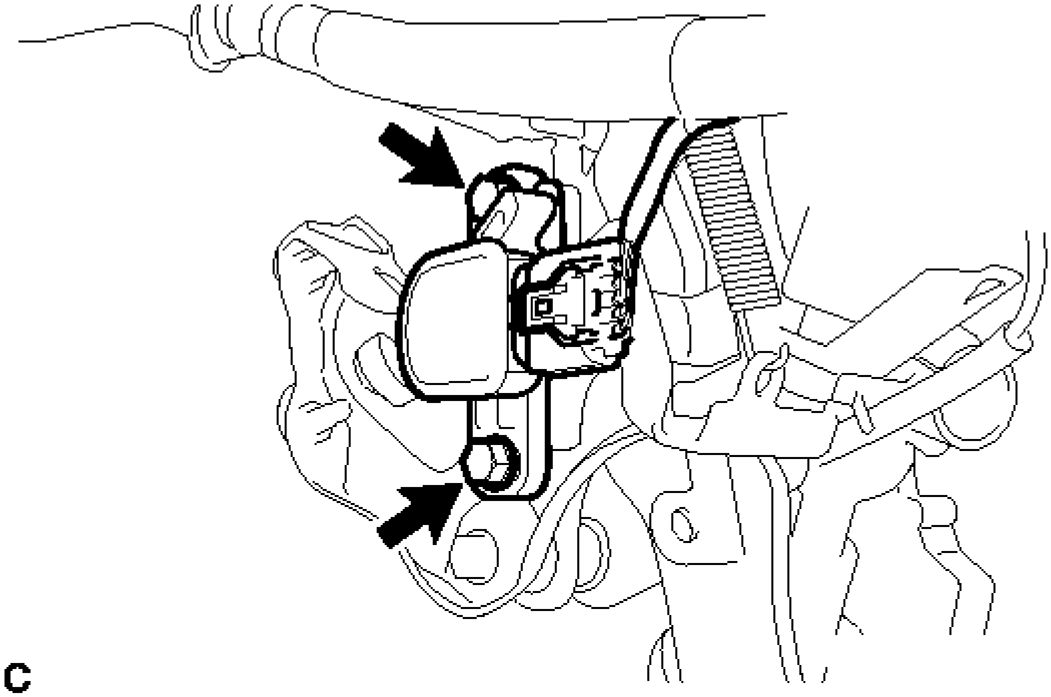

Fig. 23: Identifying Brake Pedal Stroke Bolts
Courtesy of TOYOTA MOTOR SALES, U.S.A., INC.

b. Connect the Techstream to the DLC3.
c. Turn the power switch on (IG).
d. Turn the Techstream on and enter the following menus: Chassis / ABS/VSC/TRAC / Data List "Stroke Sensor".
e. Read the stroke sensor value in the Data List, and turn the brake pedal stroke sensor assembly slowly to the right or left to adjust the output voltage so that it is within the following range.

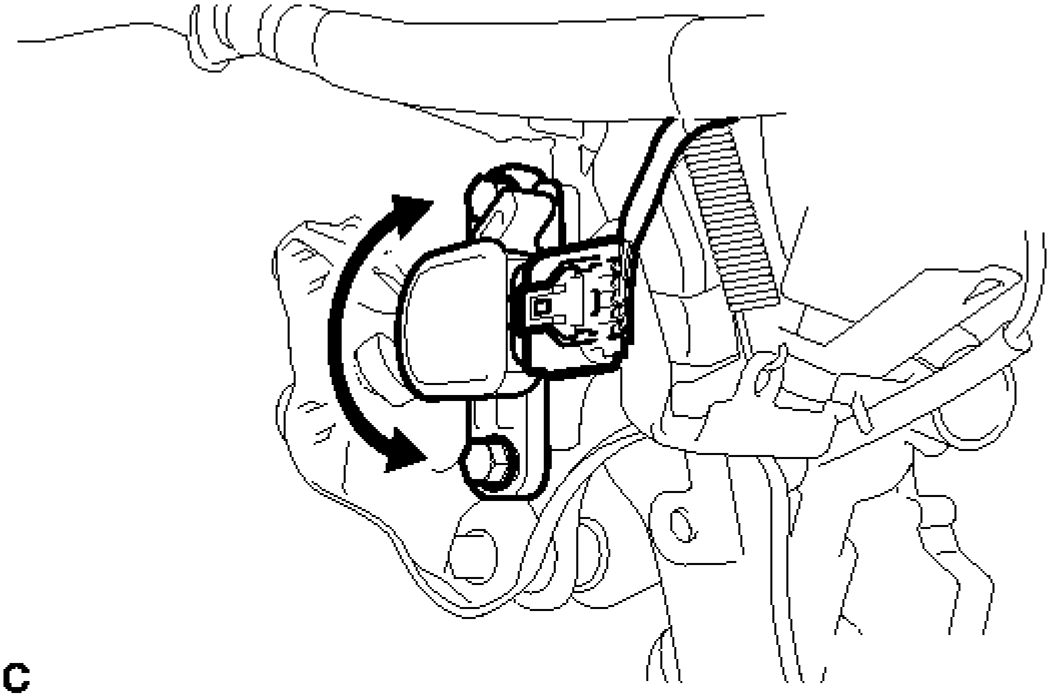

Fig. 24: Adjusting Brake Pedal Stroke Sensor
Courtesy of TOYOTA MOTOR SALES, U.S.A., INC.

Standard voltage (without the brake pedal depressed)

0.8 to 1.2 V

f. Tighten the 2 bolts.

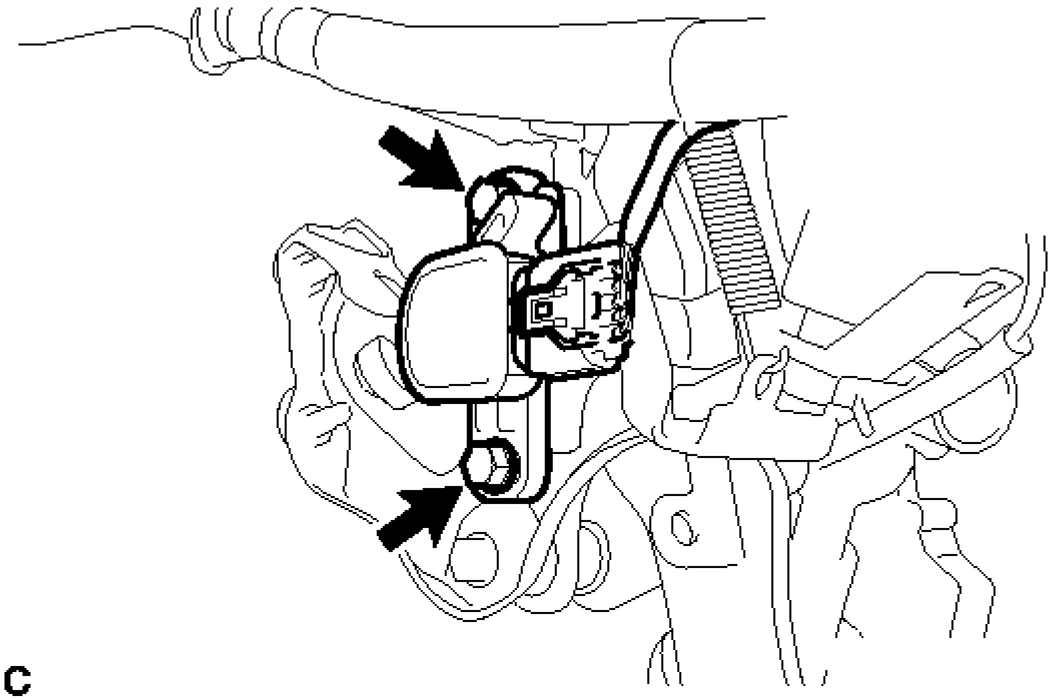

Fig. 25: Identifying Brake Pedal Stroke Bolts
Courtesy of TOYOTA MOTOR SALES, U.S.A., INC.

Torque: 8.5 N*m (87 kgf*cm, 75 in.*lbf)

NOTE: **Do not depress the brake pedal after turning the power switch on (IG).**

g. Turn the Techstream off and turn the power switch off.
h. Disconnect the Techstream.

3. **INSPECT BRAKE PEDAL FREE PLAY**

a. Depress the pedal until a slight resistance is felt. Measure the brake pedal free play as shown in the illustration.

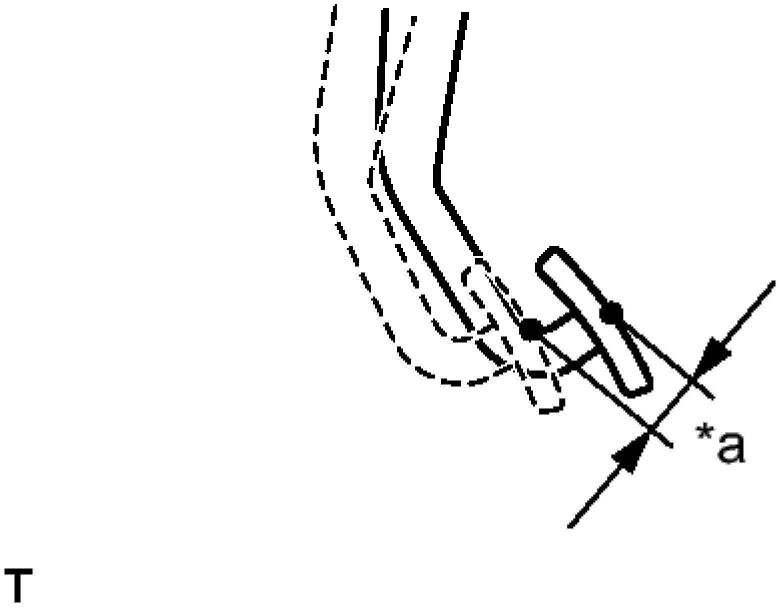

Fig. 26: Identifying Brake Pedal Free Play
Courtesy of TOYOTA MOTOR SALES, U.S.A., INC.

TEXT IN ILLUSTRATION

*a	Brake Pedal Free Play

Pedal free play

1.0 to 6.0 mm (0.0394 to 0.236 in.)

If the pedal free play is not as specified, check the stop light switch clearance. Refer to **INSTALLATION - Step 1** . If the pedal free play is as specified, proceed to the Inspect Brake Pedal Reserve Distance procedure.

4. **INSPECT BRAKE PEDAL RESERVE DISTANCE**

   HINT:

   Measure the distance at the same point used for the brake pedal height inspection.

   a. Release the parking brake.
   b. With the power switch on (READY), depress the brake pedal and measure the pedal reserve distance.

Pedal reserve distance from the floor panel at 500 N (51 kgf, 112 lbf)

More than 92 mm (3.62 in.)

If the distance is not as specified, troubleshoot the brake system. Refer to **PROBLEM SYMPTOMS TABLE** .

5. **PERFORM INITIALIZATION AND CALIBRATION OF LINEAR SOLENOID VALVE**

   Refer to **INITIALIZATION**

REASSEMBLY

REASSEMBLY

1. **INSTALL BRAKE PEDAL PAD**
   a. Install the brake pedal pad to the brake pedal support assembly.

INSTALLATION

INSTALLATION

1. **INSTALL BRAKE PEDAL SUPPORT ASSEMBLY**
   a. Install the brake pedal support assembly with the 4 nuts.

      Torque: 13 N*m (131 kgf*cm, 9 ft.*lbf)

   b. Engage the 3 clamps to install the wire harness to the brake pedal support assembly.
   c. Engage the clamp.
2. **INSTALL BRAKE PEDAL RETURN SPRING**
   a. Install the brake pedal return spring to the brake pedal support assembly.

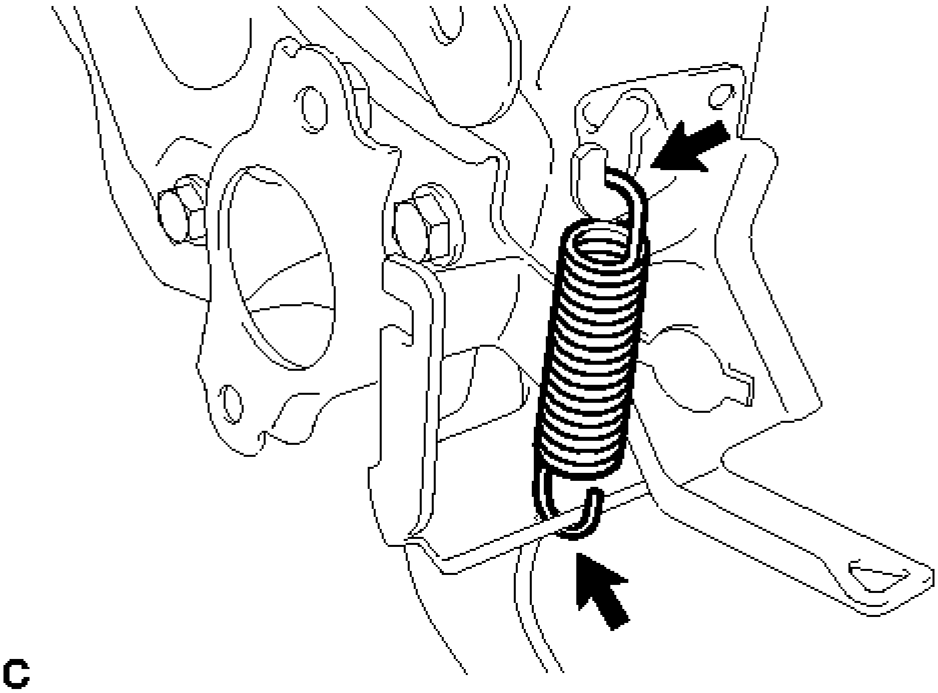

Fig. 27: Identifying Brake Pedal Return Spring
Courtesy of TOYOTA MOTOR SALES, U.S.A., INC.

NOTE: **Attach the bottom part of the brake pedal return spring first, making sure that the open part of the hook is facing the rear of the vehicle. Attach the top part of the brake pedal return spring second, making sure that the open part of the hook is facing the front of the vehicle.**

3. **INSTALL PUSH ROD PIN**
   a. Apply lithium soap base glycol grease to the push rod pin.

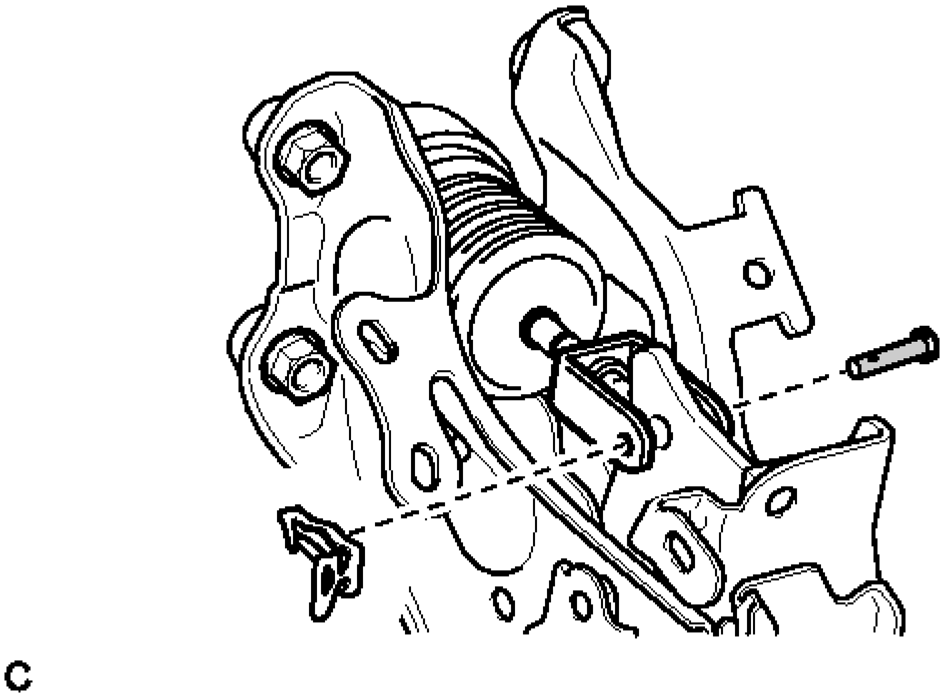

Fig. 28: Identifying Push Rod Pin
Courtesy of TOYOTA MOTOR SALES, U.S.A., INC.

TEXT IN ILLUSTRATION

Lithium Soap Base Glycol Grease

b. Connect the brake master cylinder push rod clevis to the brake pedal support assembly with the push rod pin, and install a new clip as shown in the illustration.

NOTE:

- **Be sure to insert the pin with its clip end facing the outside of the vehicle.**
- **Make sure that the brake master cylinder push rod clevis moves sideway.**

4. **INSTALL STOP LIGHT SWITCH MOUNTING ADJUSTER**
5. **INSTALL STOP LIGHT SWITCH ASSEMBLY** . Refer to **INSTALLATION - Step 1**
6. **INSTALL HEADLIGHT LEVELING ECU ASSEMBLY (w/ Automatic Headlight Beam Level Control System)** . Refer to **INSTALLATION - Step 1**
7. **INSTALL BRAKE PEDAL STROKE SENSOR ASSEMBLY** . Refer to **INSTALLATION - Step 2**
8. **INSTALL INSTRUMENT PANEL REINFORCEMENT ASSEMBLY WITH AIR CONDITIONING UNIT**

Refer to **INSTALLATION - Step 2**

9. **INSPECT AND ADJUST BRAKE PEDAL**

   Refer to **ADJUSTMENT**

BRAKE BOOSTER

COMPONENTS

ILLUSTRATION

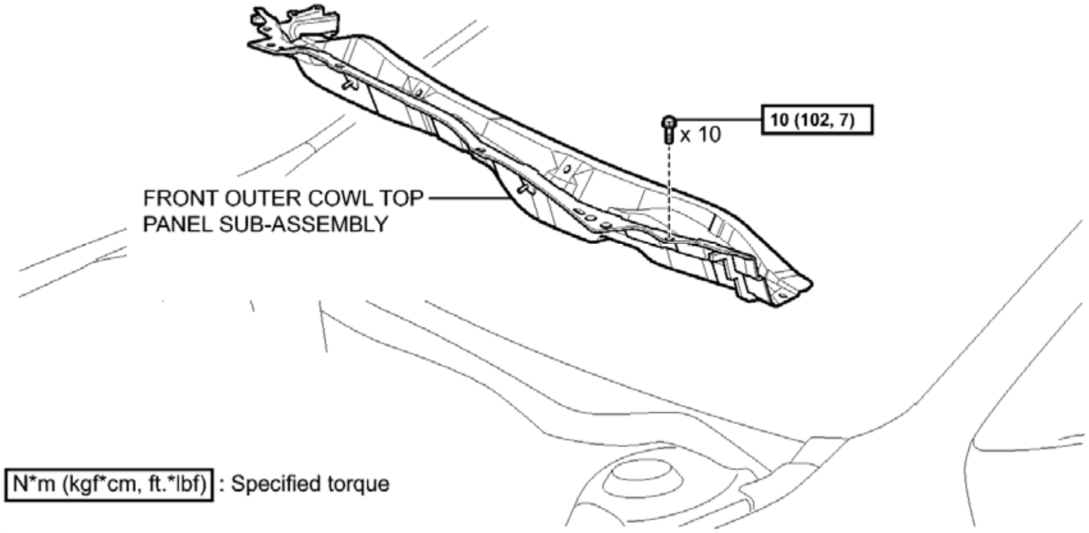
10 (102, 7)
x 10
FRONT OUTER COWL TOP PANEL SUB-ASSEMBLY
N*m (kgf*cm, ft.*lbf) : Specified torque

c

Fig. 29: Identifying Brake Booster Replacement Components With Torque Specifications (1 Of 3)
Courtesy of TOYOTA MOTOR SALES, U.S.A., INC.

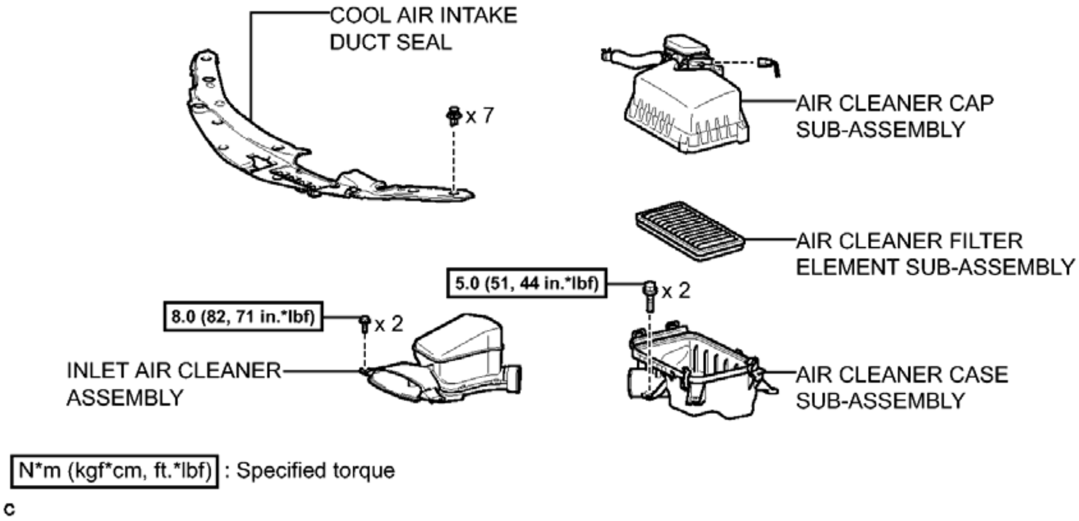
COOL AIR INTAKE DUCT SEAL
x 7
AIR CLEANER CAP SUB-ASSEMBLY
AIR CLEANER FILTER ELEMENT SUB-ASSEMBLY
5.0 (51, 44 in.*lbf)
x 2
8.0 (82, 71 in.*lbf)
x 2
INLET AIR CLEANER ASSEMBLY
AIR CLEANER CASE SUB-ASSEMBLY
N*m (kgf*cm, ft.*lbf) : Specified torque
c

Fig. 30: Identifying Brake Booster Replacement Components With Torque Specifications (2 Of 3)
Courtesy of TOYOTA MOTOR SALES, U.S.A., INC.

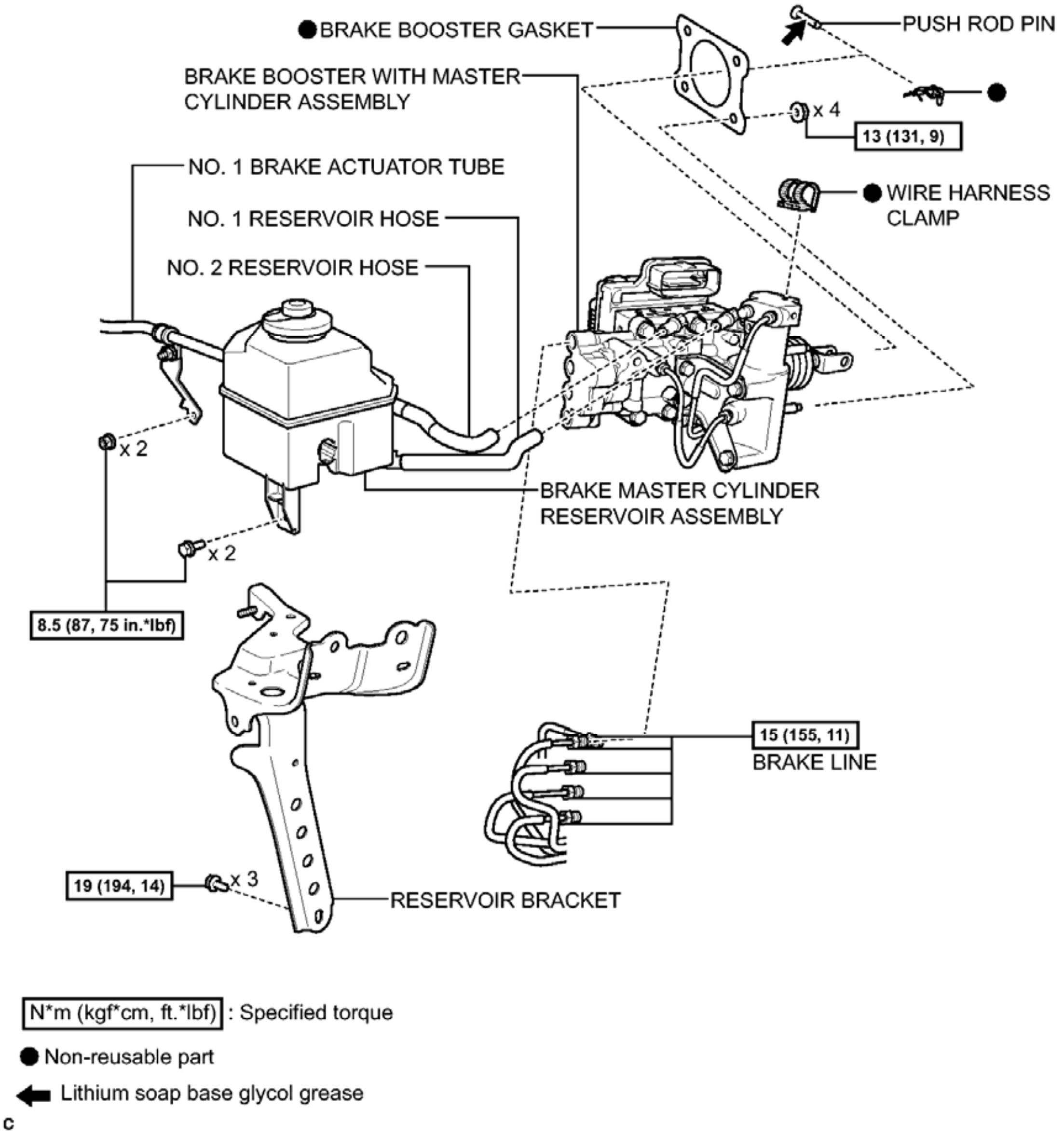
BRAKE BOOSTER GASKET
PUSH ROD PIN
BRAKE BOOSTER WITH MASTER CYLINDER ASSEMBLY
x 4
13 (131, 9)
NO. 1 BRAKE ACTUATOR TUBE
WIRE HARNESS CLAMP
NO. 1 RESERVOIR HOSE
NO. 2 RESERVOIR HOSE
x 2
BRAKE MASTER CYLINDER RESERVOIR ASSEMBLY
x 2
8.5 (87, 75 in.*lbf)
15 (155, 11)
BRAKE LINE
19 (194, 14)
x 3
RESERVOIR BRACKET
N*m (kgf*cm, ft.*lbf) : Specified torque
Non-reusable part
Lithium soap base glycol grease
c

Fig. 31: Identifying Brake Booster Replacement Components With Torque Specifications (3 Of 3)
Courtesy of TOYOTA MOTOR SALES, U.S.A., INC.

REMOVAL

REMOVAL

1. **PRECAUTION**

NOTE: **After turning the power switch off, waiting time may be required before disconnecting the cable from the negative (-) auxiliary battery terminal, Therefore, make sure to read the disconnecting the cable from the negative (-) auxiliary battery terminal notice before proceeding with work.**

Refer to PRECAUTION .

2. **DISABLE BRAKE CONTROL**
    a. Wait at least 2 minutes after turning the power switch off.

    NOTE: When the brake pedal is depressed or the door courtesy switch is turned on even if the power switch is off, the brake control system activates. Therefore do not depress the brake pedal or open/close the doors until the reservoir level switch connector is disconnected.

    b. Disconnect the reservoir level switch connector with the parking brake applied.

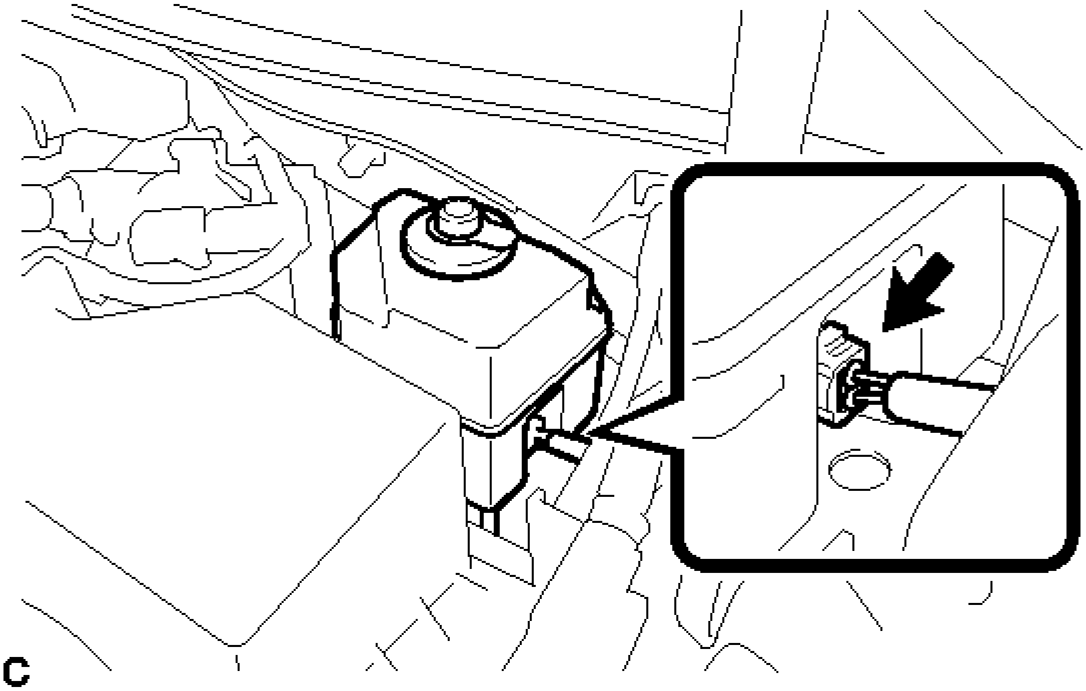

Fig. 32: Identifying Reservoir Level Switch Connector
Courtesy of TOYOTA MOTOR SALES, U.S.A., INC.

    c. Disconnect the cable from the negative (-) auxiliary battery terminal. Refer to **REMOVAL** .
    d. Depress the brake pedal 40 times or more to return all the fluid in the accumulator back to the reservoir.
    e. Check that the brake pedal can not be further depressed.
    f. Release the parking brake.
3. **REMOVE WINDSHIELD WIPER MOTOR AND LINK ASSEMBLY**

    Refer to **REMOVAL**

4. **REMOVE FRONT OUTER COWL TOP PANEL SUB-ASSEMBLY**

a. Disengage the 2 clamps and separate the wire harness from the front outer cowl top panel sub-assembly.

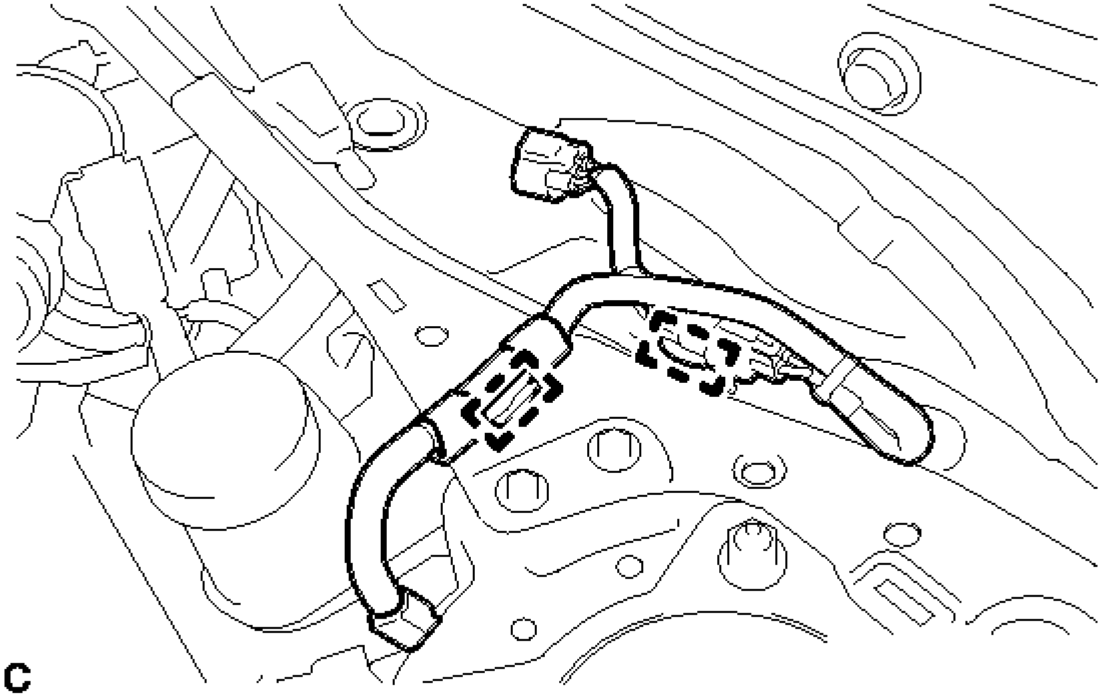

Fig. 33: Identifying Wire Harness Clamps
Courtesy of TOYOTA MOTOR SALES, U.S.A., INC.

b. Remove the 10 bolts and front outer cowl top panel sub-assembly.

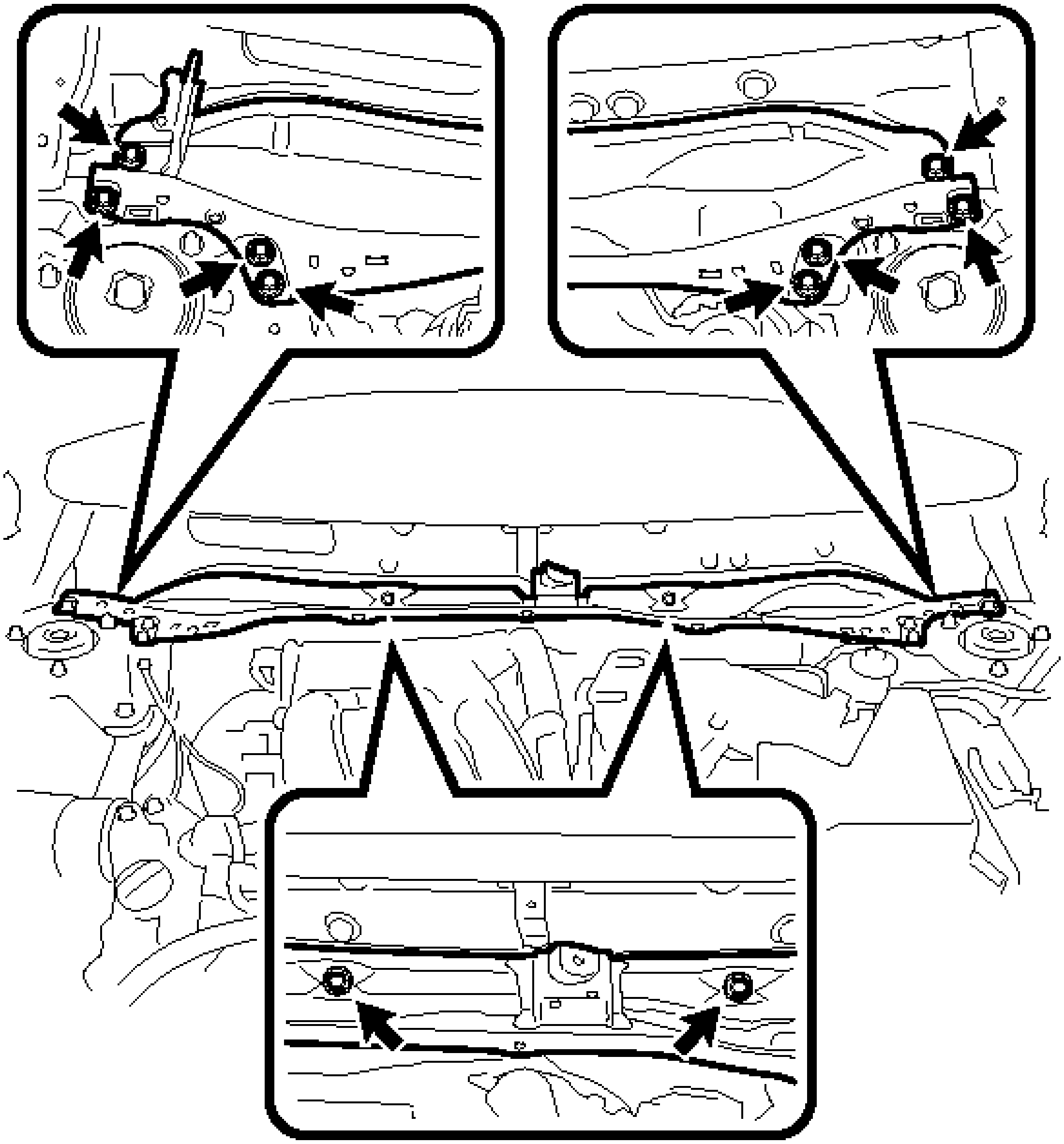

Fig. 34: Identifying Front Outer Cowl Top Panel Bolts
Courtesy of TOYOTA MOTOR SALES, U.S.A., INC.

5. **DRAIN BRAKE FLUID**

NOTE: **If brake fluid leaks onto any painted surface, immediately clean it off.**

6. **REMOVE COOL AIR INTAKE DUCT SEAL** . Refer to **REMOVAL - Step 1**
7. **REMOVE INLET AIR CLEANER ASSEMBLY** . Refer to **REMOVAL - Step 30**
8. **REMOVE AIR CLEANER CAP SUB-ASSEMBLY** . Refer to **REMOVAL - Step 3**
9. **REMOVE AIR CLEANER FILTER ELEMENT SUB-ASSEMBLY**
10. **REMOVE AIR CLEANER CASE SUB-ASSEMBLY** . Refer to **REMOVAL - Step 33**
11. **REMOVE PUSH ROD PIN** See step 6
12. **SEPARATE BRAKE MASTER CYLINDER RESERVOIR ASSEMBLY**
    a. Remove the 2 bolts and brake master cylinder reservoir assembly.

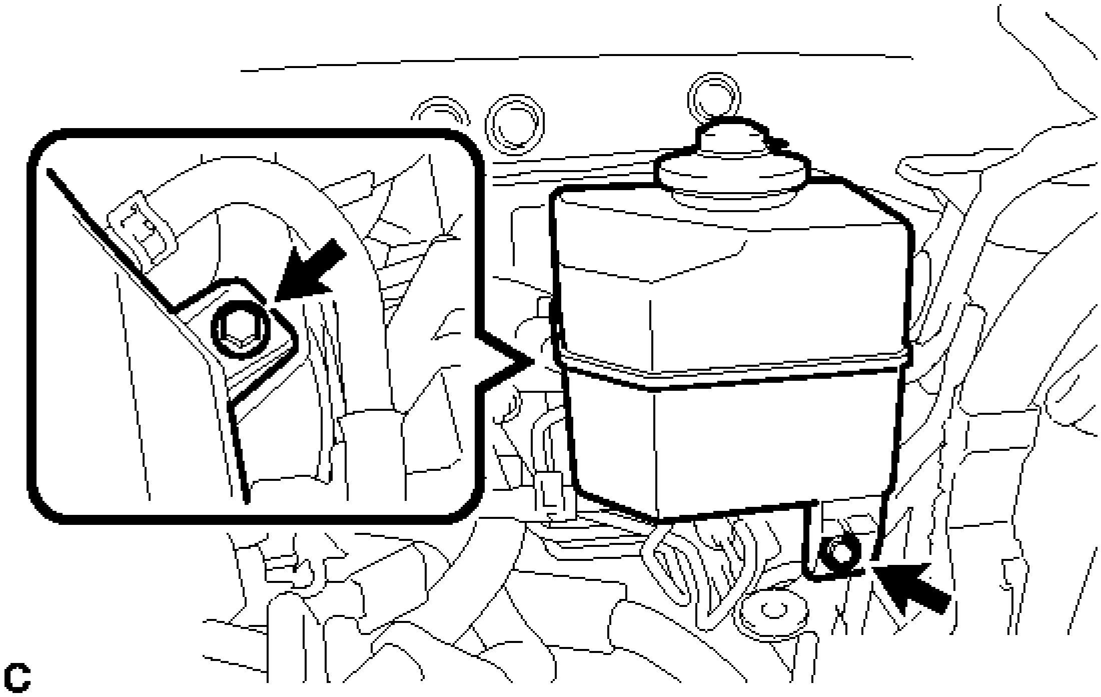

Fig. 35: Identifying Brake Master Cylinder Reservoir Bolts
Courtesy of TOYOTA MOTOR SALES, U.S.A., INC.

13. **SEPARATE NO. 1 BRAKE ACTUATOR TUBE**
    a. Remove the nut and disengage the clamp.

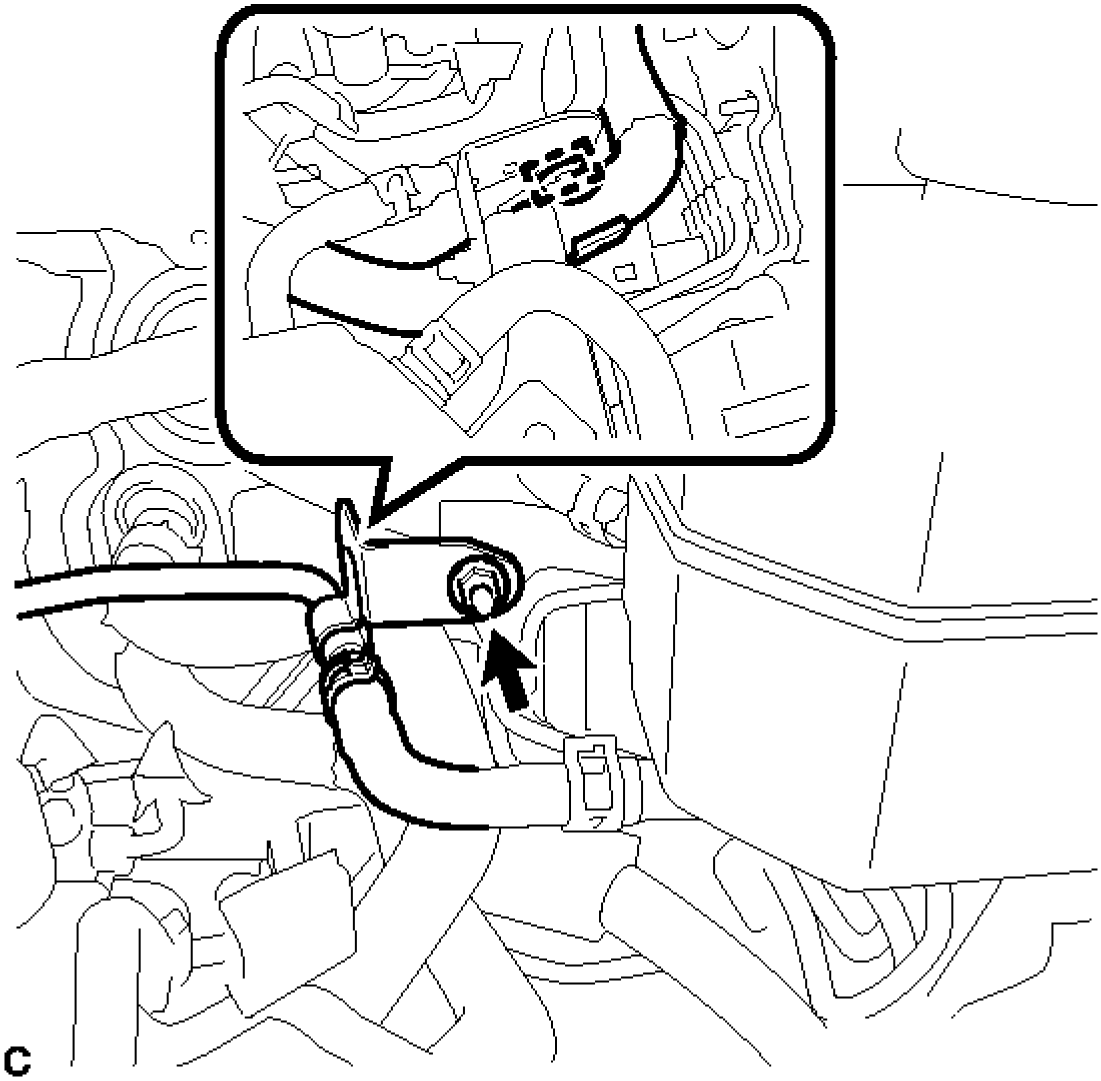

Fig. 36: Identifying No. 1 Brake Actuator Tube Nut And Clamp
Courtesy of TOYOTA MOTOR SALES, U.S.A., INC.

b. Remove the nut and separate the No. 1 brake actuator tube from the vehicle body.

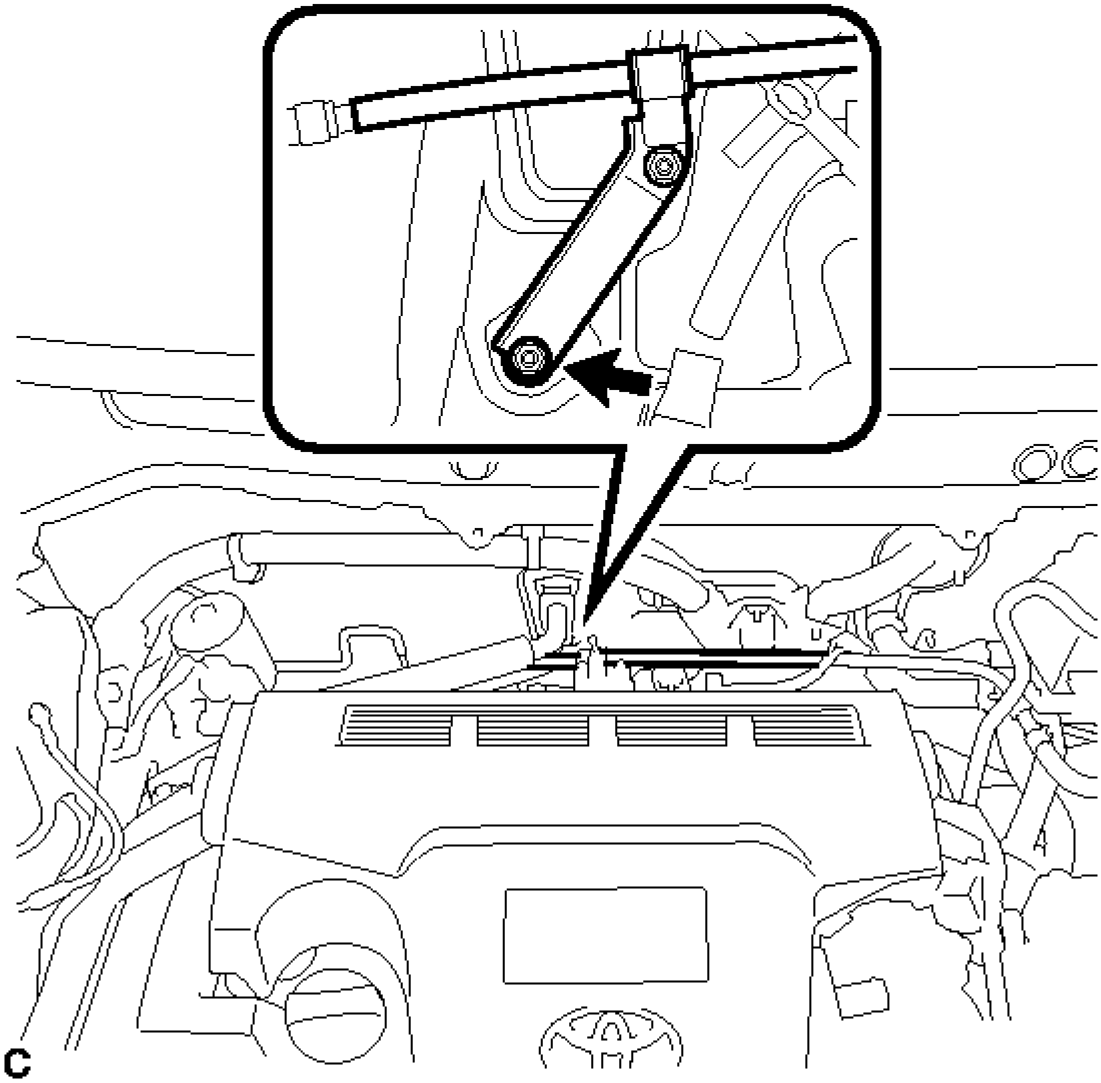

Fig. 37: Identifying No. 1 Brake Actuator Tube Bracket Nut
Courtesy of TOYOTA MOTOR SALES, U.S.A., INC.

14. **DISCONNECT NO. 2 RESERVOIR HOSE**
    a. Move the clip and disconnect the No. 2 reservoir hose from the brake booster with master cylinder assembly.

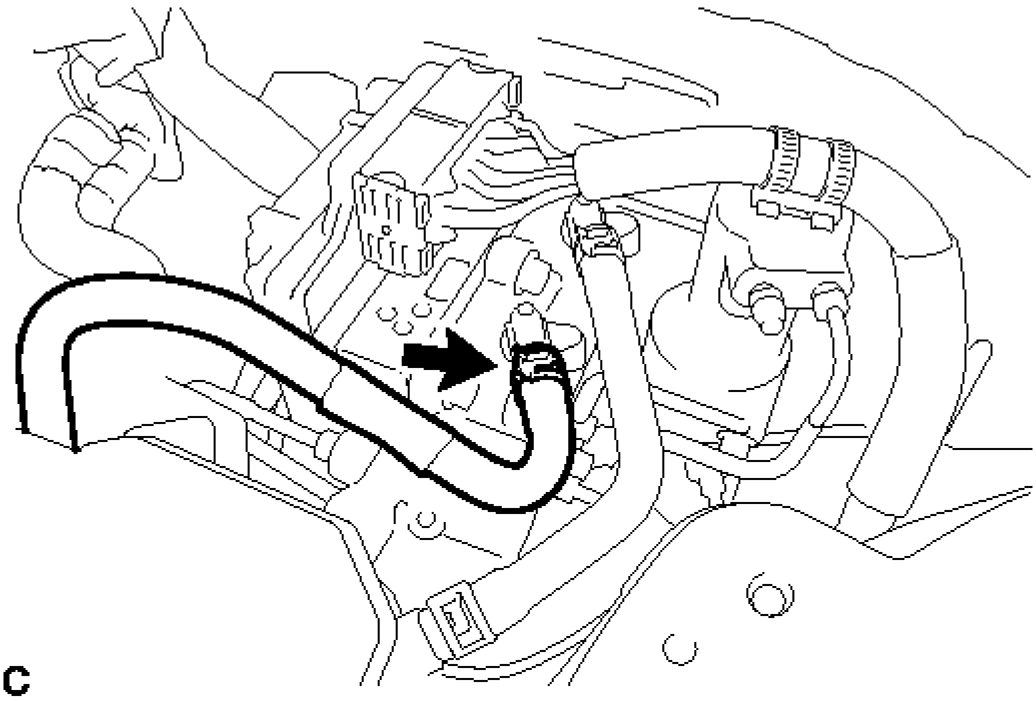

Fig. 38: Identifying No. 2 Reservoir Hose Clip
Courtesy of TOYOTA MOTOR SALES, U.S.A., INC.

15. **DISCONNECT NO. 1 RESERVOIR HOSE**
    a. Move the clip and disconnect the No. 1 reservoir hose from the brake booster with master cylinder assembly.

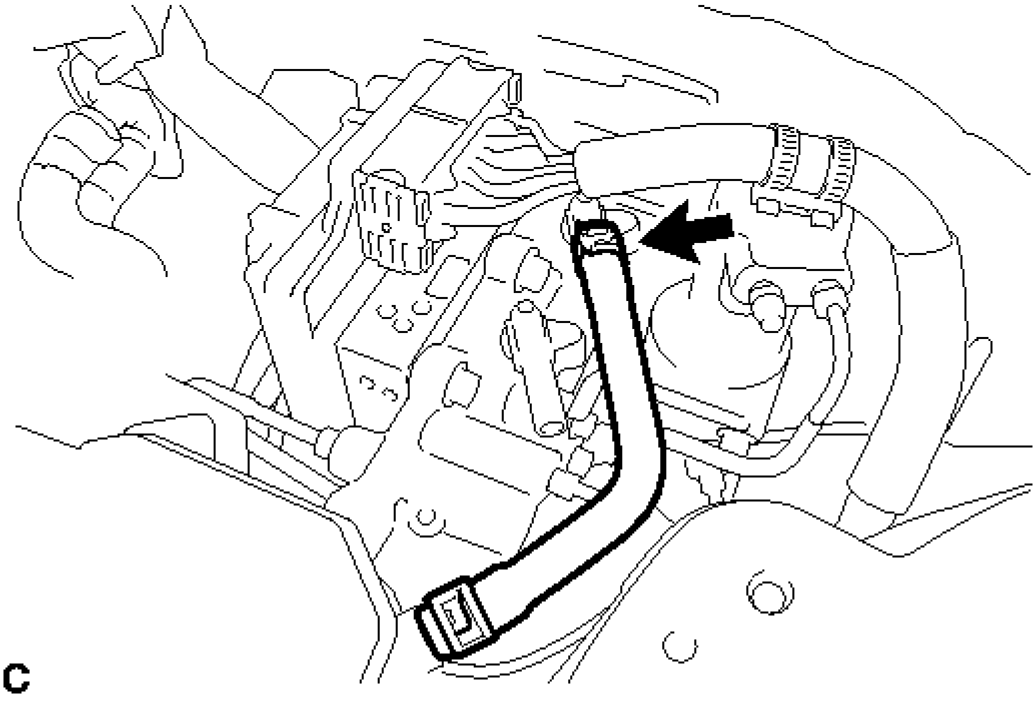

Fig. 39: Identifying No. 1 Reservoir Hose Clip
Courtesy of TOYOTA MOTOR SALES, U.S.A., INC.

16. **REMOVE RESERVOIR BRACKET**
    a. Disengage the 2 clamps to separate the wire harness from the reservoir bracket.

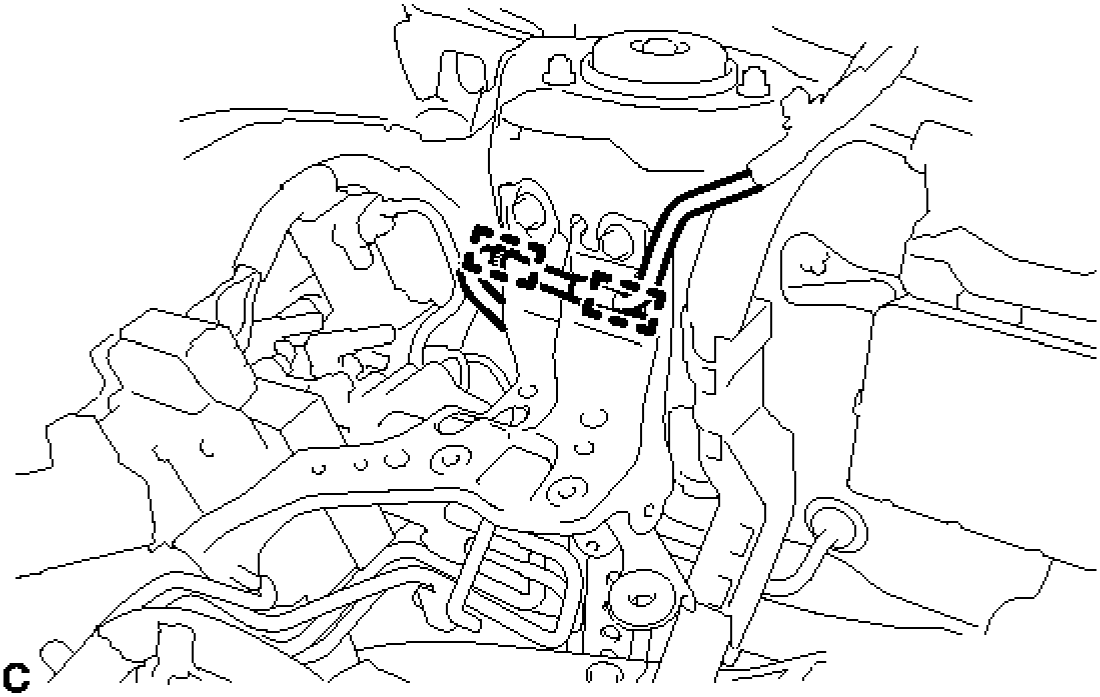

Fig. 40: Identifying Wire Harness Clamps
Courtesy of TOYOTA MOTOR SALES, U.S.A., INC.

    b. Remove the 3 bolts and reservoir bracket.

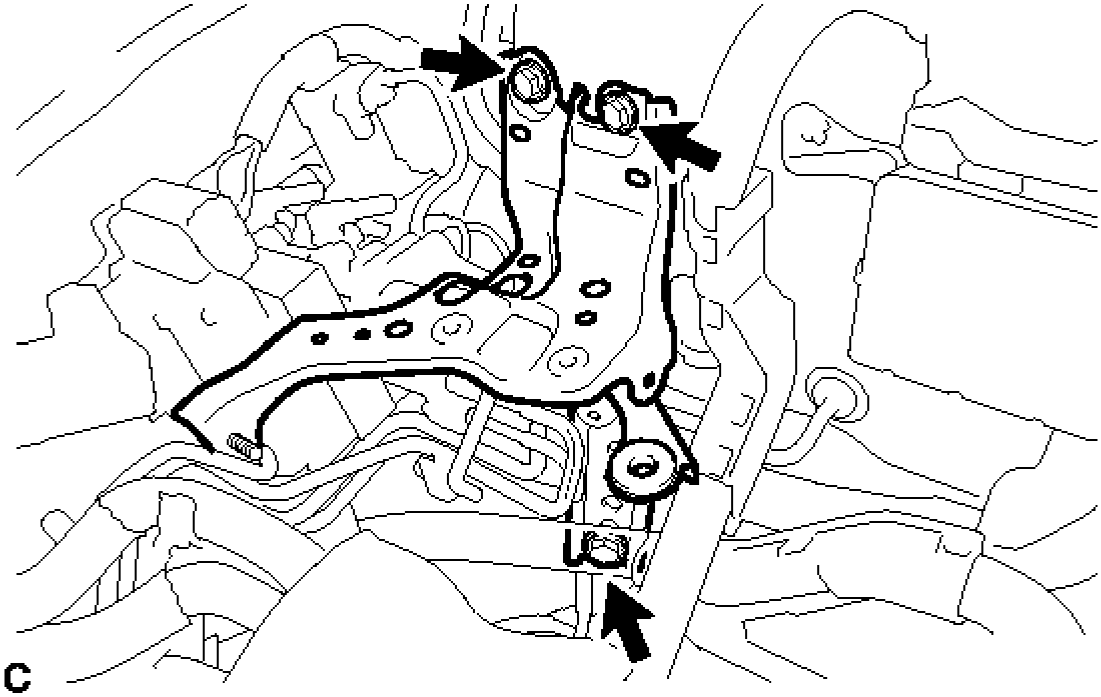

Fig. 41: Identifying Reservoir Bracket Bolts
Courtesy of TOYOTA MOTOR SALES, U.S.A., INC.

17. **REMOVE BRAKE BOOSTER WITH MASTER CYLINDER ASSEMBLY**
    a. Put matchmarks at the position where the wire harness clamp is installed.

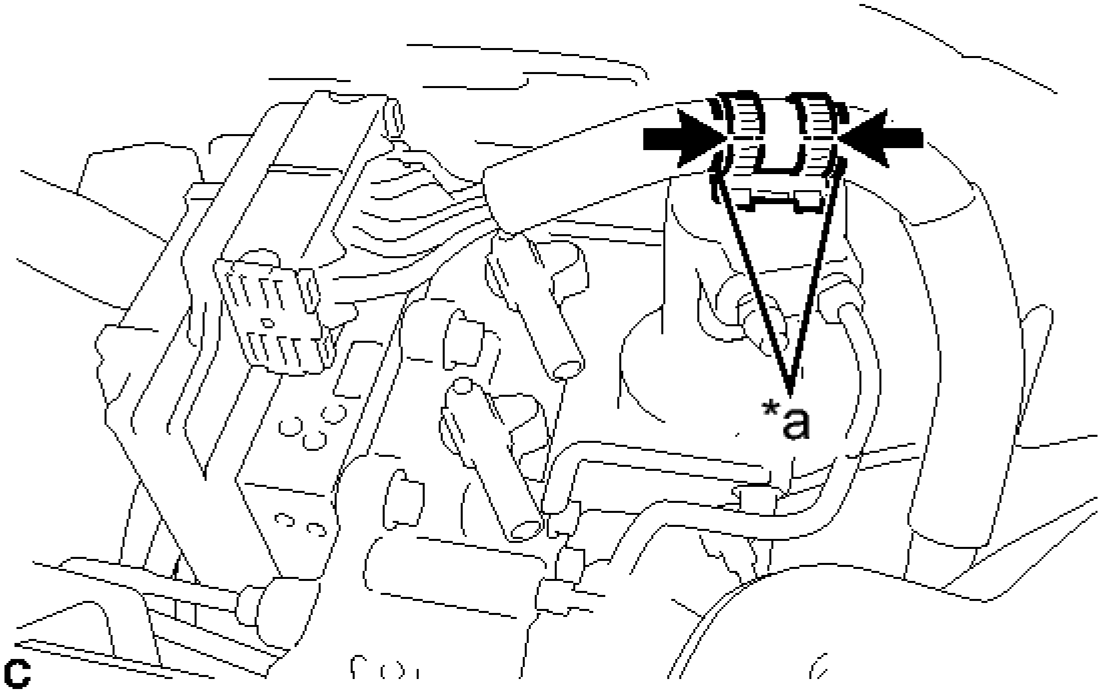

Fig. 42: Identifying Wire Harness Clamp Matchmarks

Courtesy of TOYOTA MOTOR SALES, U.S.A., INC.

TEXT IN ILLUSTRATION

*a	Matchmark
·	Cut

b. Cut the wire harness clamp and separate the wire harness from the brake booster with master cylinder assembly.

c. Release the lock lever and disconnect the connector from the brake booster with master cylinder assembly.

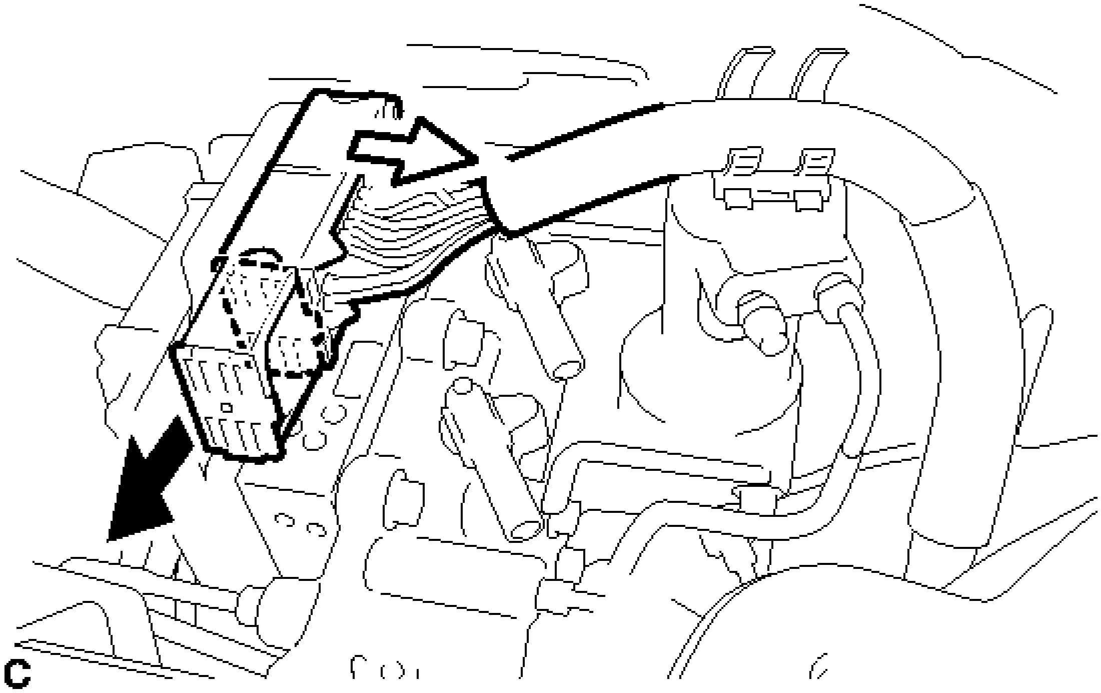

Fig. 43: Releasing Lock Lever
Courtesy of TOYOTA MOTOR SALES, U.S.A., INC.

TEXT IN ILLUSTRATION

·	Release the lock lever
·	Disconnect the connector

d. Using a union nut wrench, disconnect the 5 brake lines from the brake booster with master cylinder assembly.

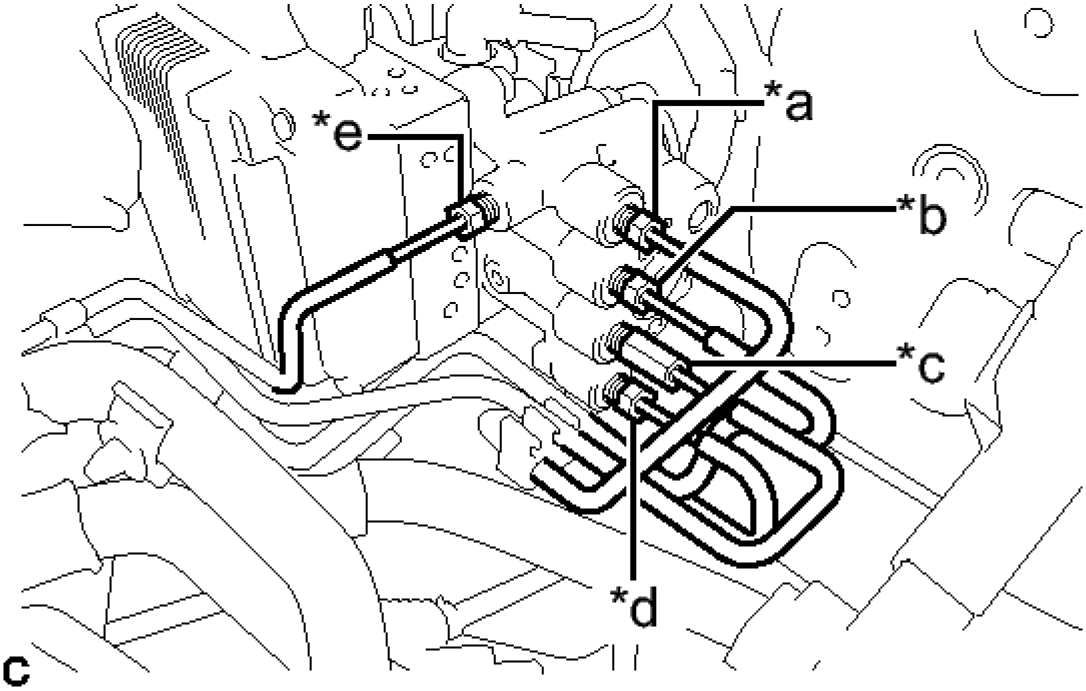

Fig. 44: Identifying Brake Lines At Brake Booster
Courtesy of TOYOTA MOTOR SALES, U.S.A., INC.

e. Use tags or make a memo to identify the places to reconnect.

TEXT IN ILLUSTRATION

*a	to Front Wheel Cylinder LH
*b	to Rear Wheel Cylinder RH
*c	to Brake Booster Pump Assembly
*d	to Rear Wheel Cylinder LH
*e	to Front Wheel Cylinder RH

f. Remove the 4 nuts and brake booster with master cylinder assembly.

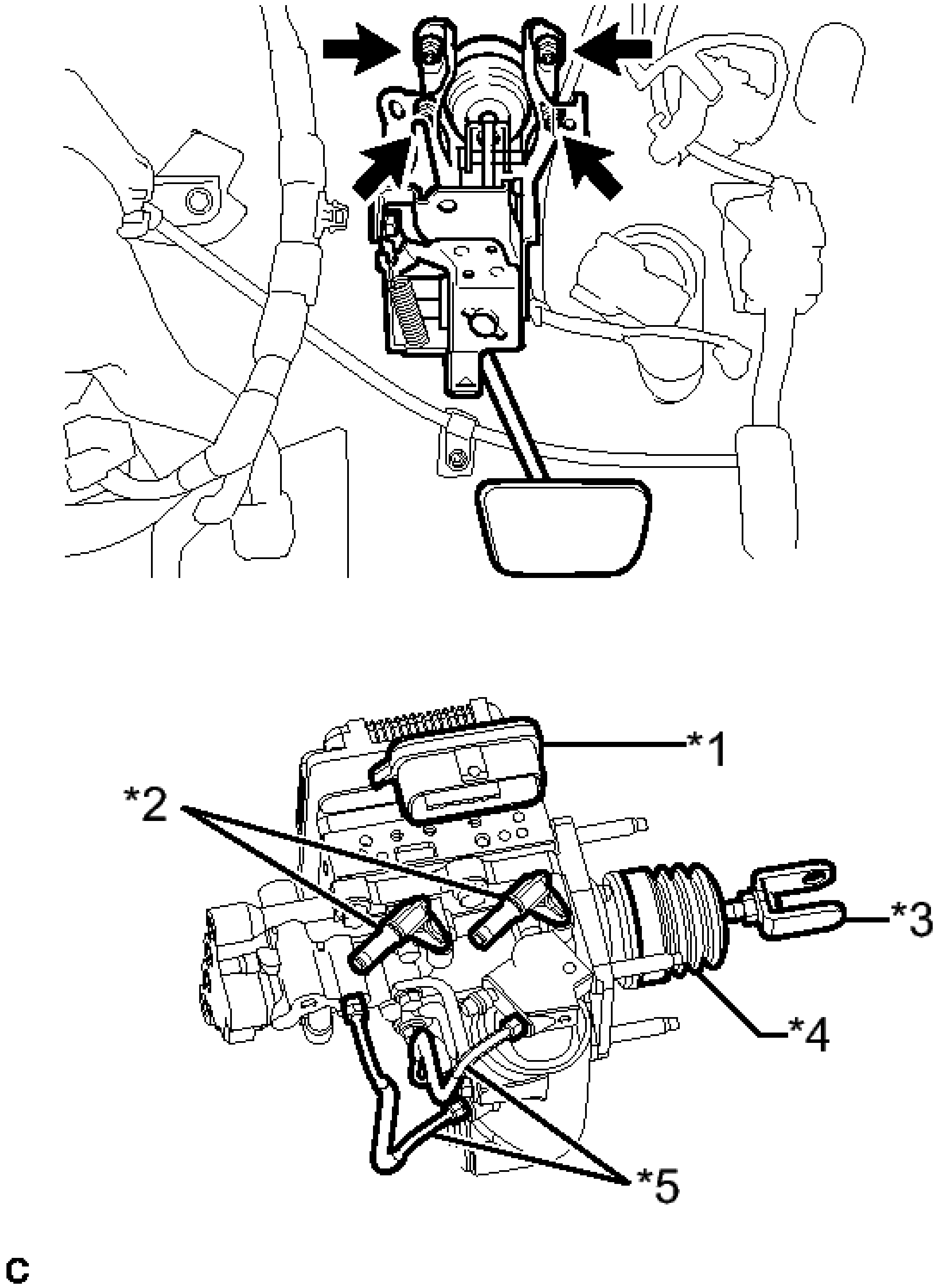

Fig. 45: Identifying Master Cylinder Assembly Nuts
Courtesy of TOYOTA MOTOR SALES, U.S.A., INC.

TEXT IN ILLUSTRATION

*1	Connector Portion
*2	Union
*3	Push Rod Clevis
*4	Boot
*5	Front No. 2 Brake Tube

NOTE:

- **Do not kink or damage the brake lines.**
- **Do not carry the brake booster with master cylinder assembly by the parts shown in bold in the illustration.**
- **Be careful not to allow any brake fluid to enter the connector.**

g. Turn the wire harness clamp counterclockwise to remove it from the brake booster with master cylinder assembly.

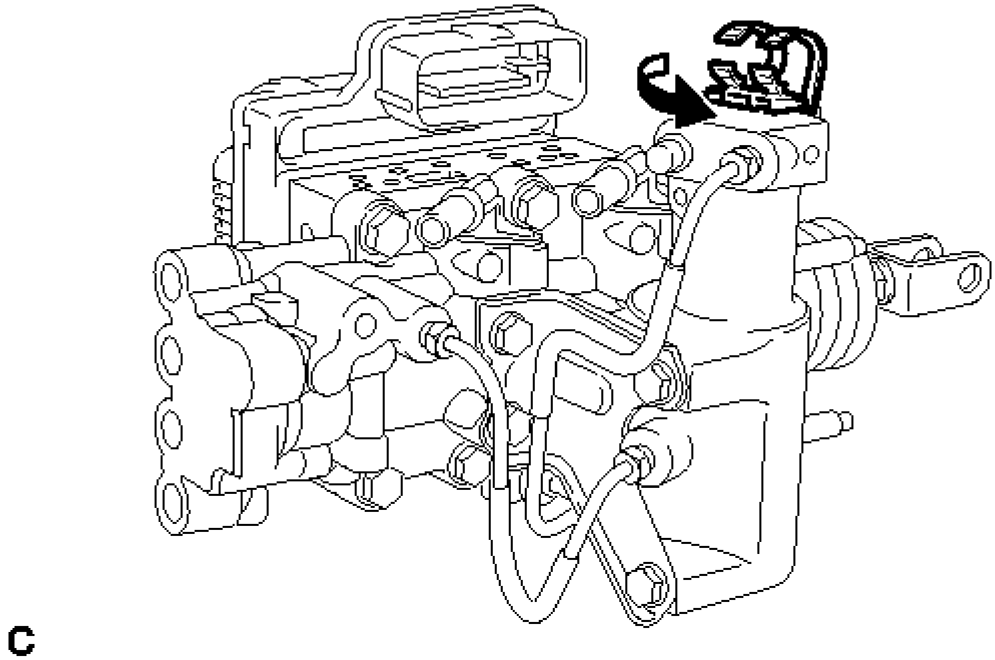

Fig. 46: Removing Wire Harness Clamp
Courtesy of TOYOTA MOTOR SALES, U.S.A., INC.

18. **REMOVE BRAKE BOOSTER GASKET**

INSTALLATION

INSTALLATION

1. **INSTALL BRAKE BOOSTER GASKET**
   1. Install a new brake booster gasket to the brake booster with master cylinder assembly.
2. **INSTALL BRAKE BOOSTER WITH MASTER CYLINDER ASSEMBLY**
   1. Align the matchmarks on the wire harness and a new wire harness clamp, and install it to the wire harness.

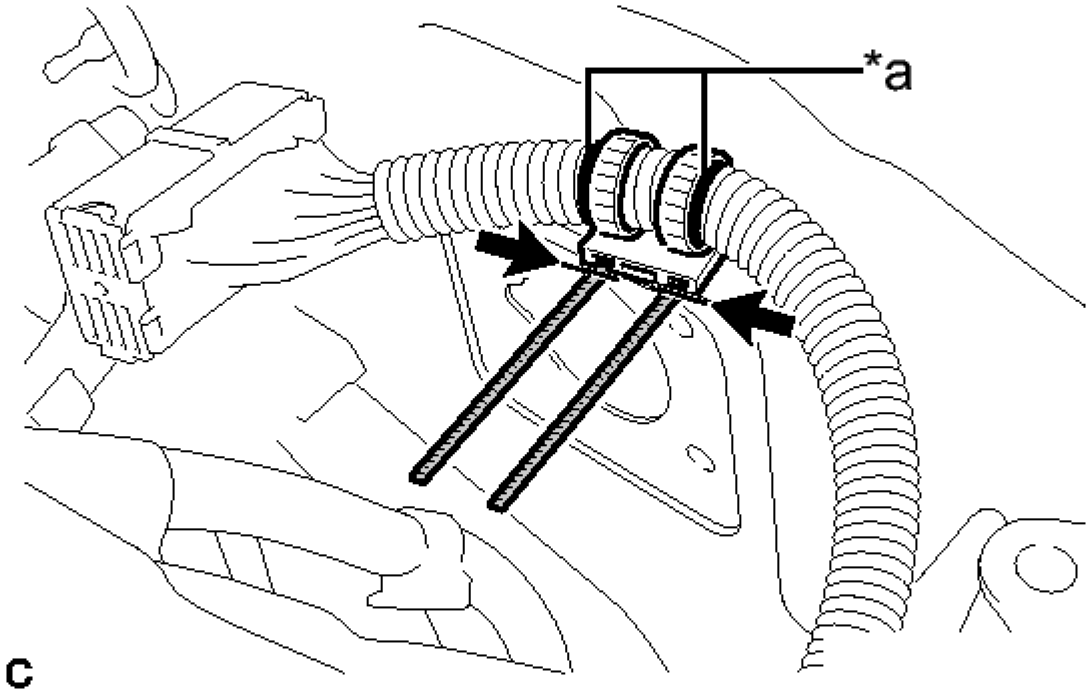

Fig. 47: Aligning Matchmarks On Wire Harness
Courtesy of TOYOTA MOTOR SALES, U.S.A., INC.

TEXT IN ILLUSTRATION

*a	Matchmark
	Cut
	Disposal Portion

NOTE: Make sure to install the wire harness clamp in the correct direction.

b. Tighten the bands of the clamp and cut off the excess.

c. Install the brake booster with master cylinder assembly with the 4 nuts.

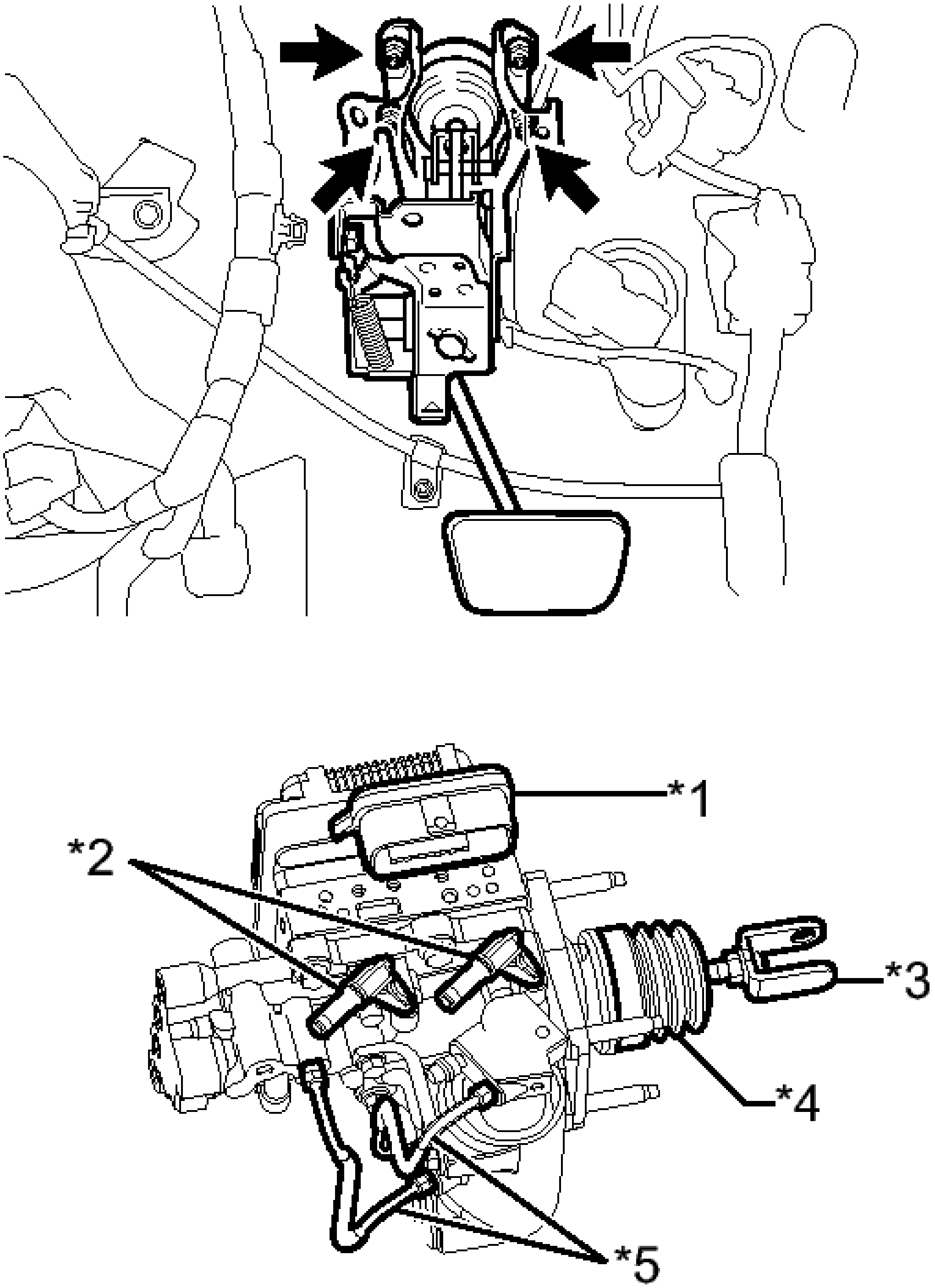

C

Fig. 48: Identifying Master Cylinder Assembly Nuts
Courtesy of TOYOTA MOTOR SALES, U.S.A., INC.

TEXT IN ILLUSTRATION

	Connector

*1	Portion
*2	Union
*3	Push Rod Clevis
*4	Boot
*5	Front No. 2 Brake Tube

Torque: 13 N*m (131 kgf*cm, 9 ft.*lbf)

NOTE:

- **Do not kink or damage the brake lines.**
- **Do not carry the brake booster with master cylinder assembly by the parts shown in bold in the illustration.**
- **Be careful not to allow any brake fluid to enter the connector.**
- **If installing a new brake booster with master cylinder assembly, do not remove the hole plugs before connecting the brake lines because the brake booster with master cylinder is filled with brake fluid.**

d. Temporarily tighten each brake line to the correct position on the brake booster with master cylinder assembly as shown in the illustration.

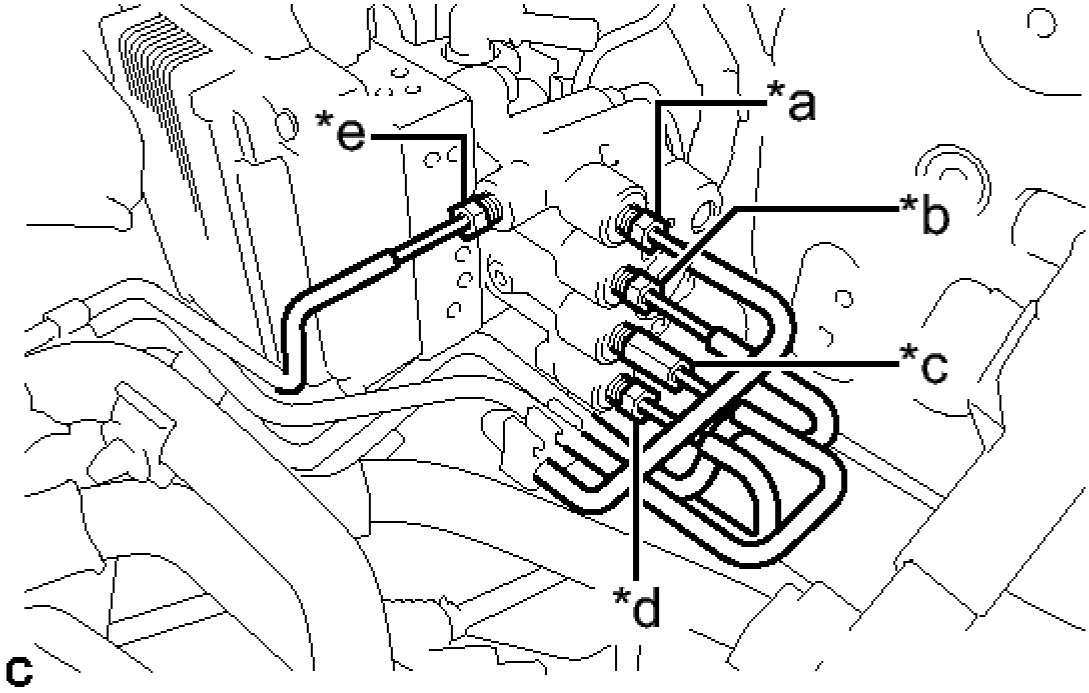

Fig. 49: Identifying Brake Lines At Brake Booster
Courtesy of TOYOTA MOTOR SALES, U.S.A., INC.

TEXT IN ILLUSTRATION

*a	to Front Wheel Cylinder LH
*b	to Rear Wheel Cylinder RH
*c	to Brake Booster Pump Assembly
*d	to Rear Wheel Cylinder LH
*e	to Front Wheel Cylinder RH

e. Using a union nut wrench, fully tighten each brake line.

Torque: 15 N*m (155 kgf*cm, 11 ft.*lbf)

NOTE:

- **Do not kink or damage the brake lines.**
- **Use the formula to calculate special torque values for situations where the union nut wrench is combined with a torque wrench. Refer to PRECAUTION .**

f. Connect the connector to the brake booster with master cylinder assembly.

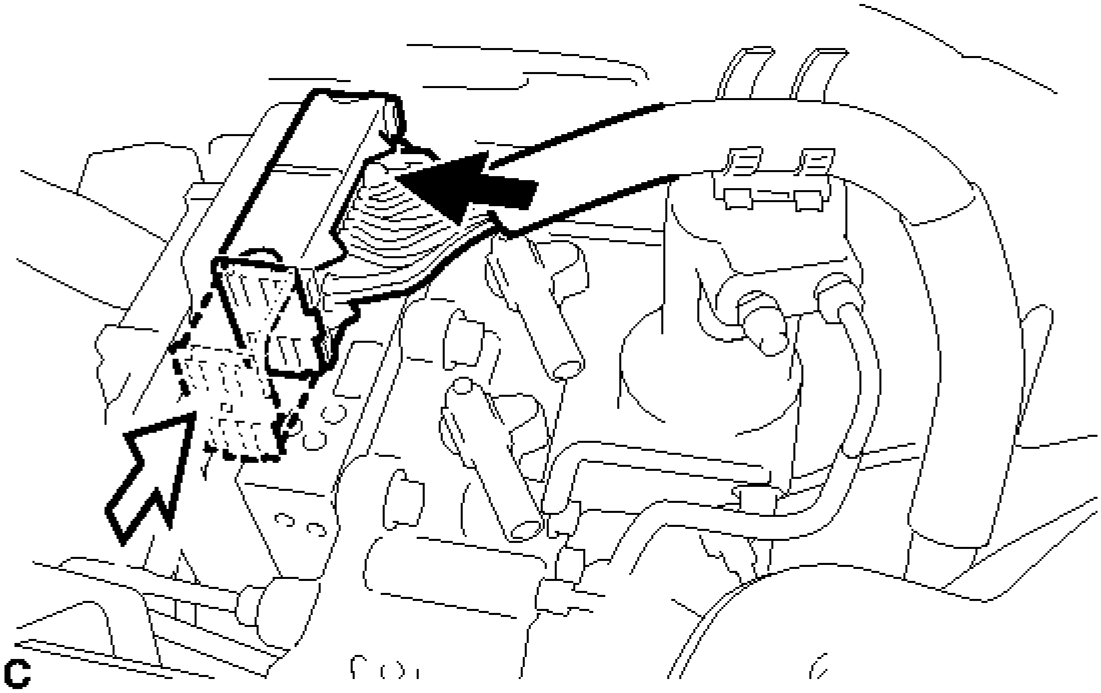

Fig. 50: Connecting The Connector
Courtesy of TOYOTA MOTOR SALES, U.S.A., INC.

TEXT IN ILLUSTRATION

	Connect the connector
	Lock the lock lever

NOTE:

- **Make sure that the connector can be connected smoothly. Do not allow water, oil or dirt to enter.**
- **Make sure that the connector lock is locked securely.**

g. Push in the wire harness clamp to install it to the brake booster with master cylinder assembly.

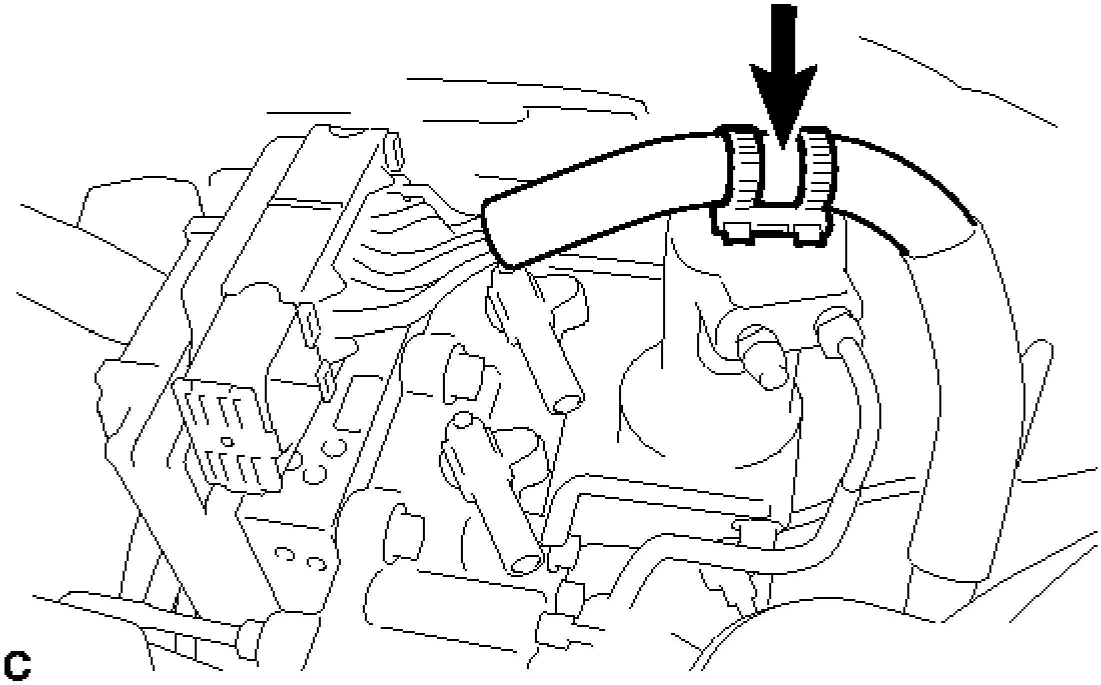

Fig. 51: Identifying Wire Harness Clamp
Courtesy of TOYOTA MOTOR SALES, U.S.A., INC.

3. **INSTALL RESERVOIR BRACKET**
   a. Engage the claw to set the reservoir bracket to the vehicle body.

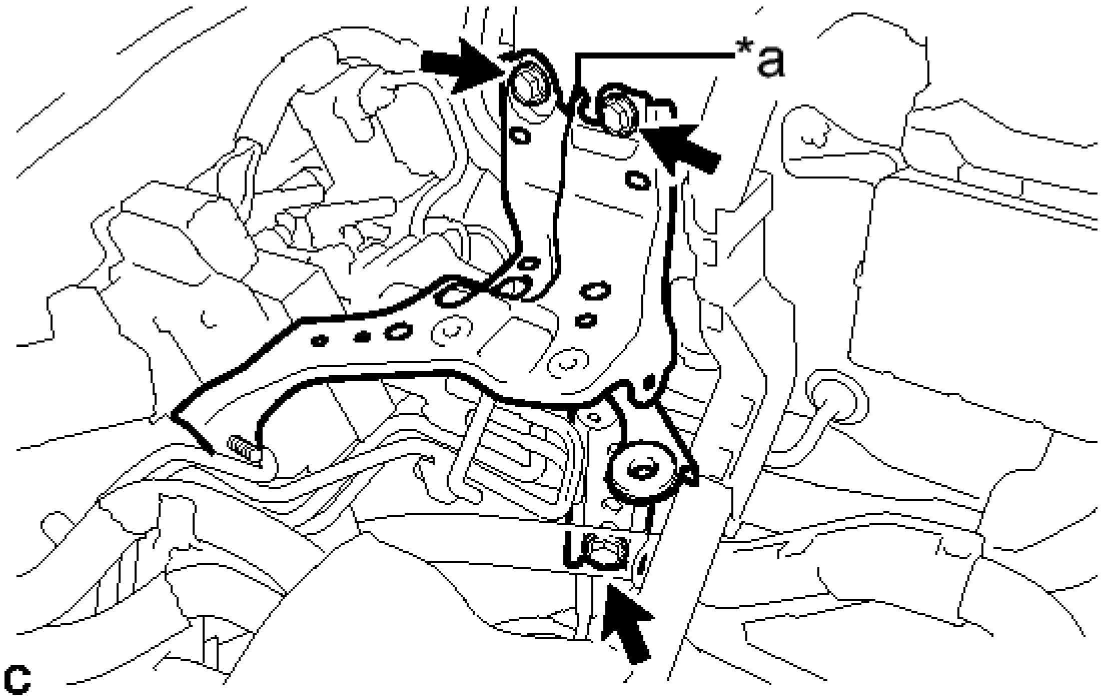

Fig. 52: Identifying Reservoir Bracket Claw And Bolts

Courtesy of TOYOTA MOTOR SALES, U.S.A., INC.

TEXT IN ILLUSTRATION

*a	Claw

b. Install the 3 bolts to secure the reservoir bracket to the vehicle body.

Torque: 19 N*m (194 kgf*cm, 14 ft.*lbf)

c. Engage the 2 clamps to install the wire harness to the reservoir bracket.

4. **CONNECT NO. 1 RESERVOIR HOSE**

a. Connect the No. 1 reservoir hose to the brake booster with master cylinder assembly with the clip.

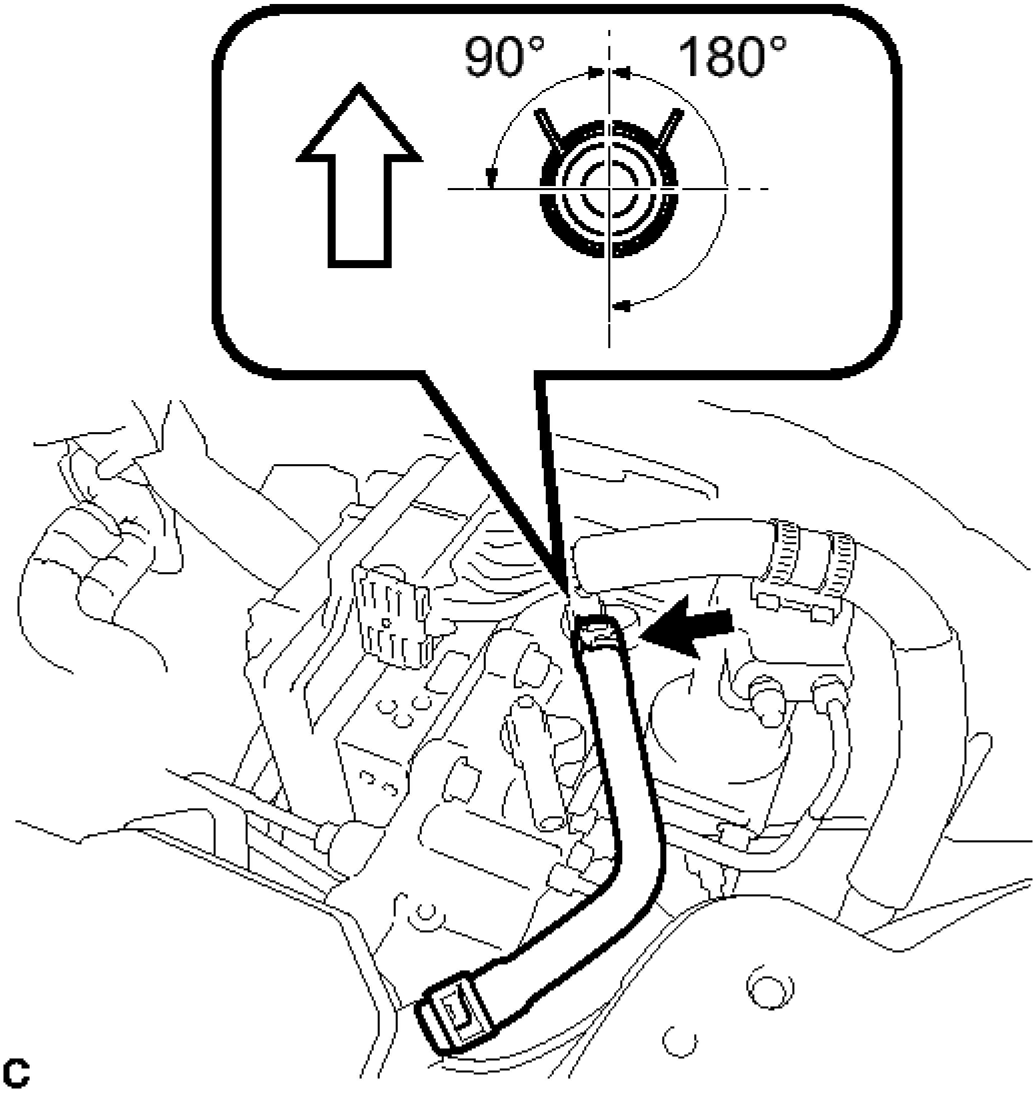

Fig. 53: Identifying No. 1 Reservoir Hose Clip
Courtesy of TOYOTA MOTOR SALES, U.S.A., INC.

TEXT IN ILLUSTRATION

Up

NOTE:

- **When connecting the No. 1 reservoir hose, face the identification mark up.**
- **Match the identification mark of the No. 1 reservoir hose and the rib of the brake booster with master cylinder assembly.**
- **Make sure to install the hose to the proper location.**
- **Install the clip within the range shown in the illustration.**

5. **CONNECT NO. 2 RESERVOIR HOSE**
   a. Connect the No. 2 reservoir hose to the brake booster with master cylinder assembly with the clip.

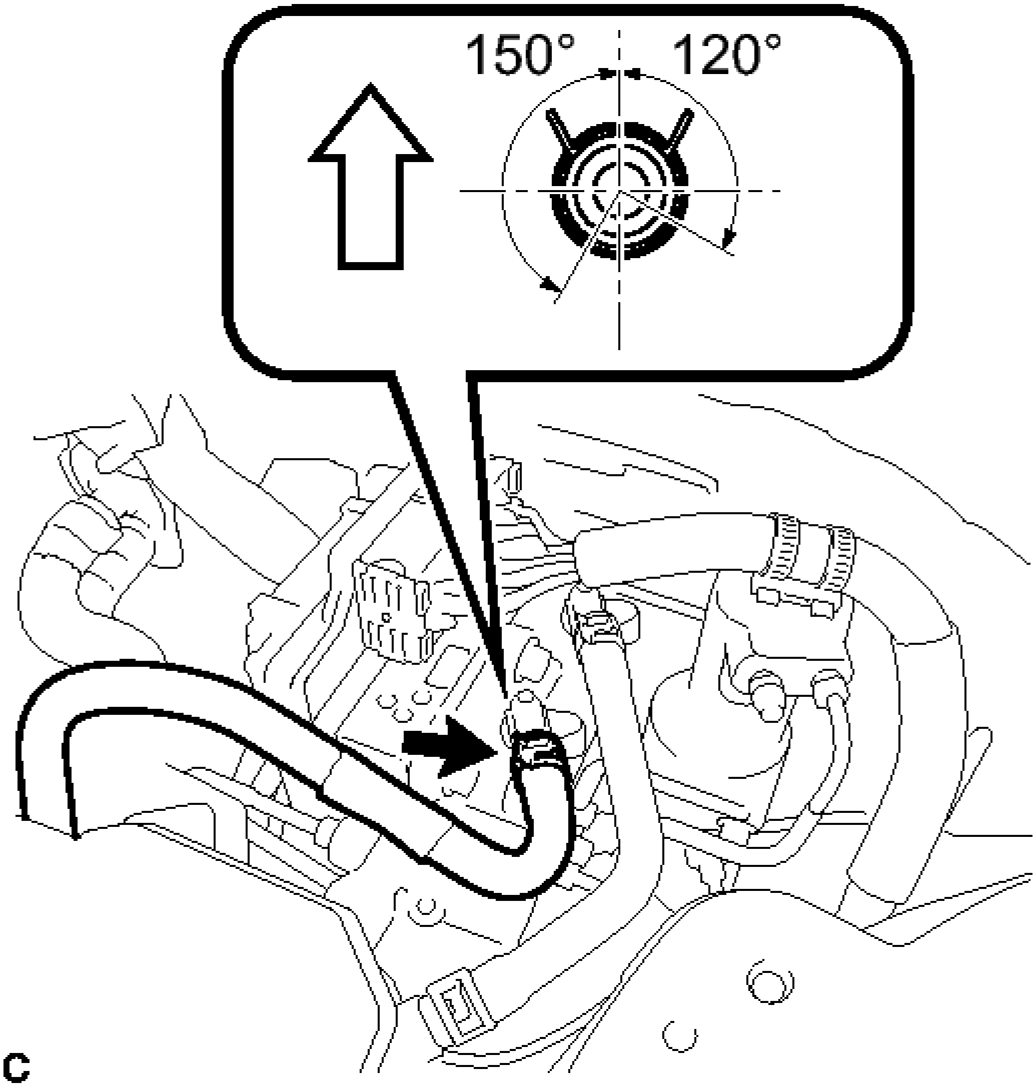

Fig. 54: Identifying No. 2 Reservoir Hose Clip

Courtesy of TOYOTA MOTOR SALES, U.S.A., INC.

TEXT IN ILLUSTRATION

Up

NOTE:

- **When connecting the No. 2 reservoir hose, face the identification mark up.**
- **Match the identification mark of the No. 2 reservoir hose and the identification mark of the brake booster with master cylinder assembly.**
- **Make sure to install the hose to the proper location.**
- **Install the clip within the range shown in the illustration.**

6. **BLEED NO. 1 BRAKE ACTUATOR TUBE**
    a. Add brake fluid into the brake master cylinder reservoir assembly.
    b. Lift up the brake master cylinder reservoir assembly as far as possible and rock it back and forth to bleed air from the reservoir tube assembly.

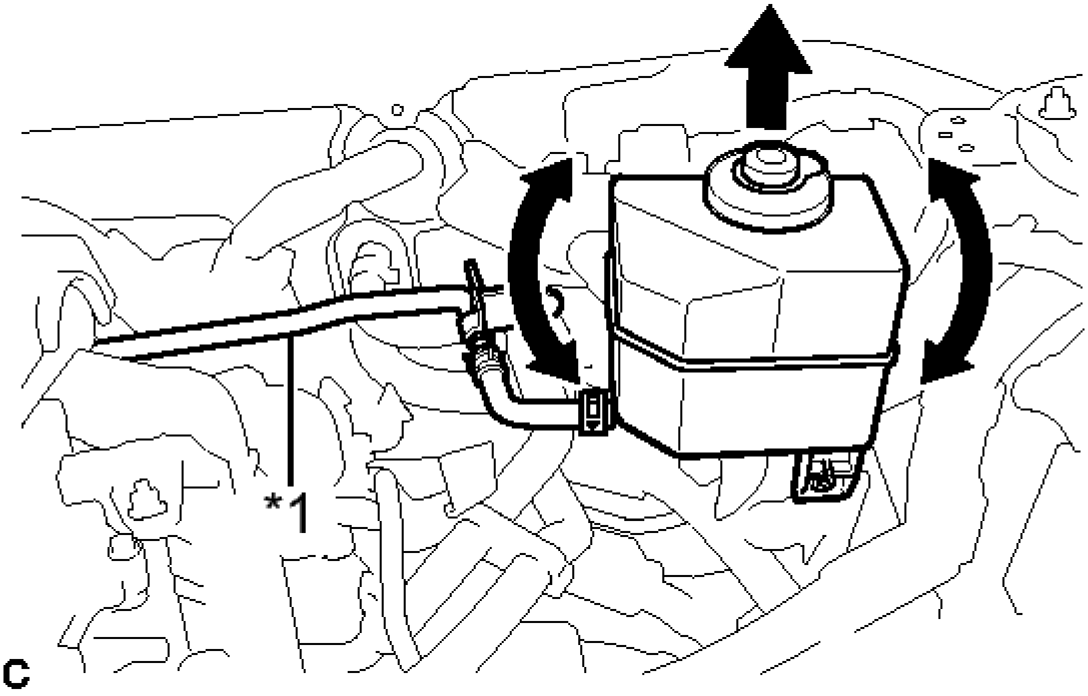

Fig. 55: Rocking Brake Master Cylinder Reservoir Back And Forth
Courtesy of TOYOTA MOTOR SALES, U.S.A., INC.

TEXT IN ILLUSTRATION

*1	No. 1 Brake Actuator

	Tube

NOTE:

- **Do not damage the hoses or tubes.**
- **Do not spill the brake fluid.**
- **Continue this procedure until only a minor amount of air remains in the No. 1 brake actuator tube.**

7. **INSTALL NO. 1 BRAKE ACTUATOR TUBE**
    a. Install the No. 1 brake actuator tube to the vehicle body with the nut.

    Torque: 8.5 N*m (87 kgf*cm, 75 in.*lbf)

    b. Install the nut and engage the clamp.

    Torque: 8.5 N*m (87 kgf*cm, 75 in.*lbf)

8. **INSTALL BRAKE MASTER CYLINDER RESERVOIR ASSEMBLY**
    a. Install the brake master cylinder reservoir assembly to the reservoir bracket with the 2 bolts.

    Torque: 8.5 N*m (87 kgf*cm, 75 in.*lbf)

9. **INSTALL PUSH ROD PIN** See step 3
10. **FILL RESERVOIR WITH BRAKE FLUID**
11. **CONNECT CABLE TO AUXILIARY BATTERY NEGATIVE TERMINAL**

    Refer to **INSTALLATION - Step 2**

12. **BLEED BRAKE SYSTEM** See step 2
13. **INSTALL AIR CLEANER CASE SUB-ASSEMBLY** . Refer to **INSTALLATION - Step 60**
14. **INSTALL AIR CLEANER FILTER ELEMENT SUB-ASSEMBLY**
15. **INSTALL AIR CLEANER CAP SUB-ASSEMBLY** . Refer to **INSTALLATION - Step 2**
16. **INSTALL INLET AIR CLEANER ASSEMBLY** . Refer to **INSTALLATION - Step 63**
17. **INSTALL COOL AIR INTAKE DUCT SEAL** . Refer to **INSTALLATION - Step 4**
18. **INSTALL FRONT OUTER COWL TOP PANEL SUB-ASSEMBLY**
    a. Install the front outer cowl top panel sub-assembly with the 10 bolts.

    Torque: 10 N*m (102 kgf*cm, 7 ft.*lbf)

    b. Engage the 2 clamps to install the wire harness to the front outer cowl top panel sub-assembly.
19. **INSTALL WINDSHIELD WIPER MOTOR AND LINK ASSEMBLY**

    Refer to **INSTALLATION - Step 2**

20. **INSPECT AND ADJUST BRAKE PEDAL**

    Refer to **ADJUSTMENT**

21. **OBTAIN ZERO POINT OF YAW RATE AND ACCELERATION SENSOR**

    HINT:

    After the brake booster with master cylinder assembly is replaced, obtain the zero point of the yaw rate and acceleration sensor. Refer to **CALIBRATION** .

BRAKE BOOSTER PUMP

COMPONENTS

ILLUSTRATION

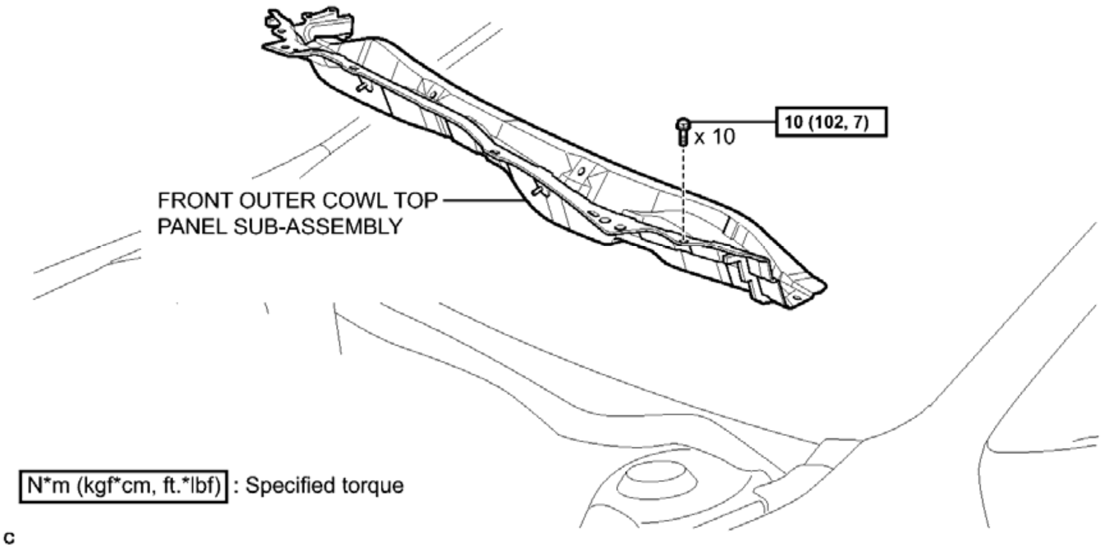
x 10
10 (102, 7)
FRONT OUTER COWL TOP PANEL SUB-ASSEMBLY
N*m (kgf*cm, ft.*lbf) : Specified torque
c

Fig. 56: Identifying Brake Booster Pump Replacement Components With Torque Specifications (1 Of 4)
Courtesy of TOYOTA MOTOR SALES, U.S.A., INC.

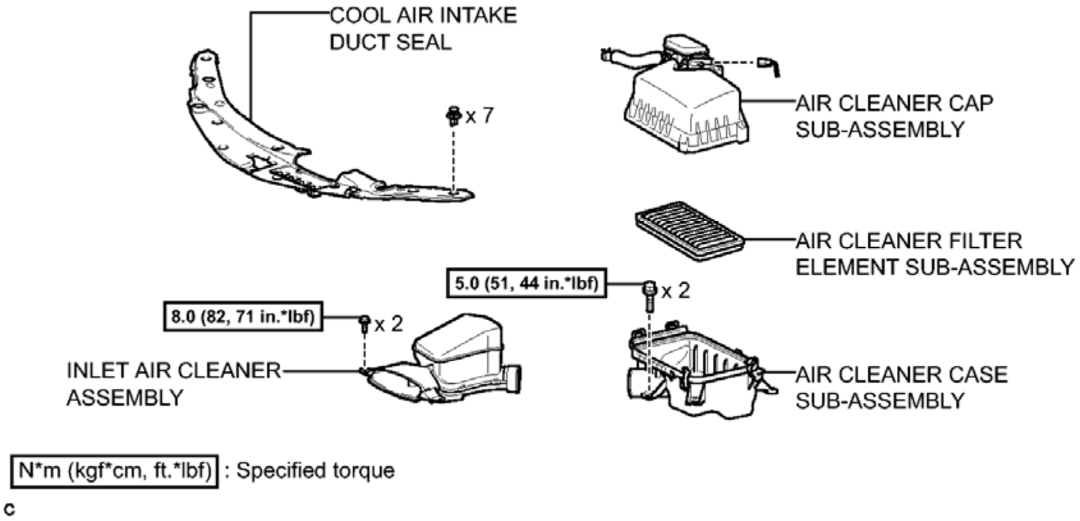
COOL AIR INTAKE DUCT SEAL
x 7
AIR CLEANER CAP SUB-ASSEMBLY
AIR CLEANER FILTER ELEMENT SUB-ASSEMBLY
5.0 (51, 44 in.*lbf)
x 2
8.0 (82, 71 in.*lbf)
x 2
INLET AIR CLEANER ASSEMBLY
AIR CLEANER CASE SUB-ASSEMBLY
N*m (kgf*cm, ft.*lbf) : Specified torque
C

Fig. 57: Identifying Brake Booster Pump Replacement Components With Torque Specifications (2 Of 4)
Courtesy of TOYOTA MOTOR SALES, U.S.A., INC.

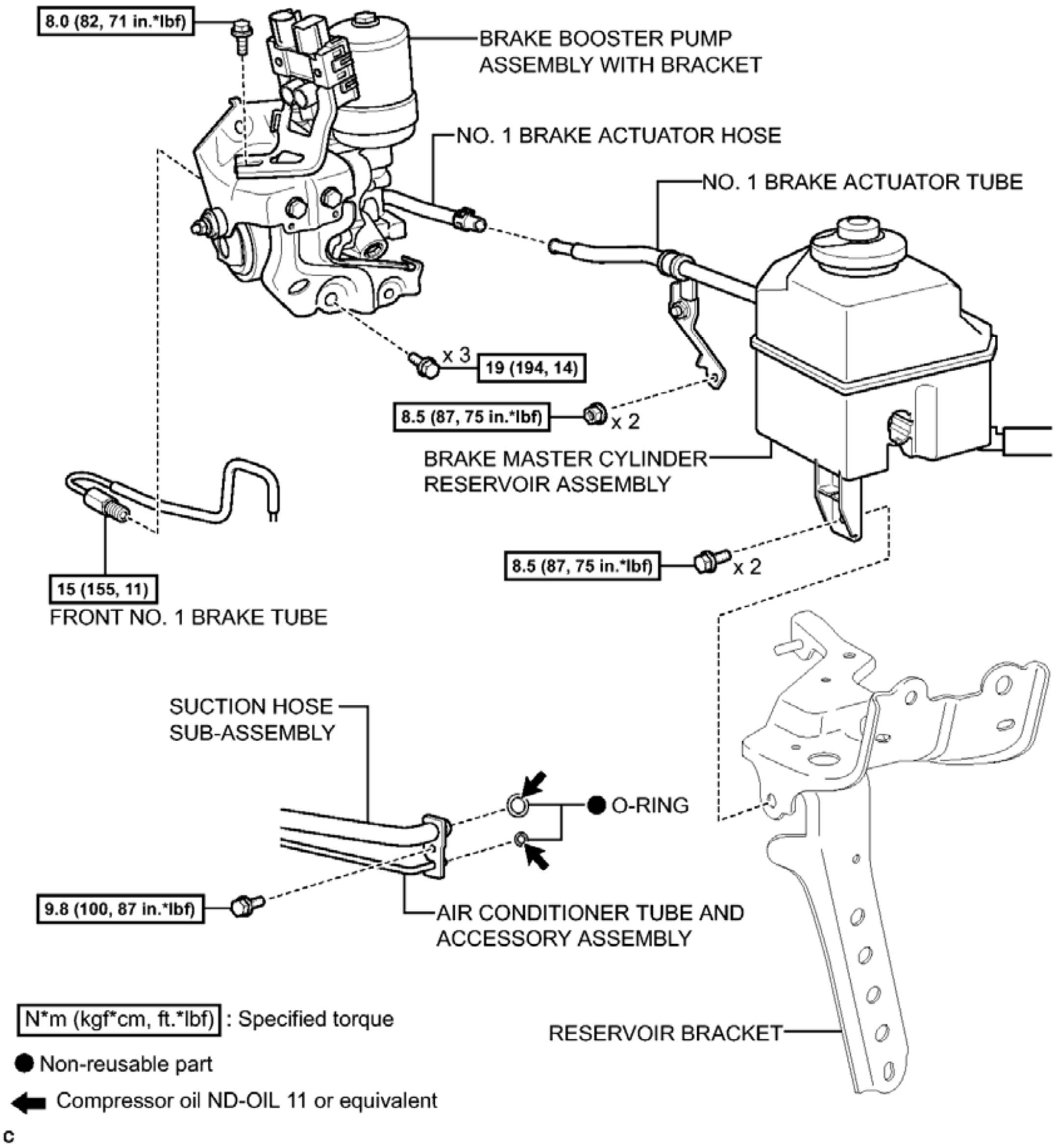
8.0 (82, 71 in.*lbf)
BRAKE BOOSTER PUMP ASSEMBLY WITH BRACKET
NO. 1 BRAKE ACTUATOR HOSE
NO. 1 BRAKE ACTUATOR TUBE
x 3
19 (194, 14)
8.5 (87, 75 in.*lbf)
x 2
BRAKE MASTER CYLINDER RESERVOIR ASSEMBLY
15 (155, 11)
FRONT NO. 1 BRAKE TUBE
8.5 (87, 75 in.*lbf)
x 2
SUCTION HOSE SUB-ASSEMBLY
● O-RING
9.8 (100, 87 in.*lbf)
AIR CONDITIONER TUBE AND ACCESSORY ASSEMBLY
N*m (kgf*cm, ft.*lbf) : Specified torque
● Non-reusable part
⬅ Compressor oil ND-OIL 11 or equivalent
RESERVOIR BRACKET
c

Fig. 58: Identifying Brake Booster Pump Replacement Components With Torque Specifications (3 Of 4)
Courtesy of TOYOTA MOTOR SALES, U.S.A., INC.

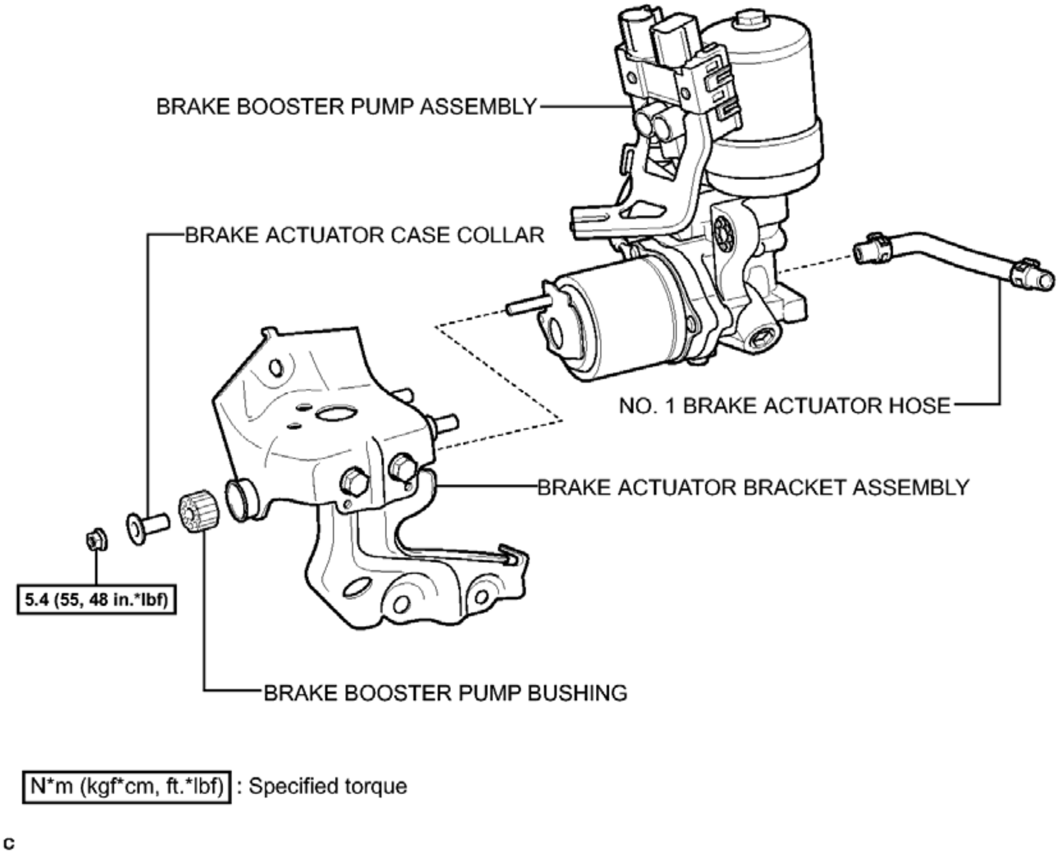
BRAKE BOOSTER PUMP ASSEMBLY
BRAKE ACTUATOR CASE COLLAR
NO. 1 BRAKE ACTUATOR HOSE
BRAKE ACTUATOR BRACKET ASSEMBLY
5.4 (55, 48 in.*lbf)
BRAKE BOOSTER PUMP BUSHING
N*m (kgf*cm, ft.*lbf) : Specified torque
c

Fig. 59: Identifying Brake Booster Pump Replacement Components With Torque Specifications (4 Of 4)
Courtesy of TOYOTA MOTOR SALES, U.S.A., INC.

REMOVAL

REMOVAL

1. **PRECAUTION**

   NOTE: **After turning the power switch off, waiting time may be required before disconnecting the cable from the negative (-) auxiliary battery terminal. Therefore, make sure to read the disconnecting the cable from the negative (-) auxiliary battery terminal notices before proceeding with work. Refer to PRECAUTION .**

2. **RECOVER REFRIGERANT FROM AIR CONDITIONING SYSTEM** . Refer to **REPLACEMENT - Step 1**
3. **DISABLE BRAKE CONTROL** See step 2
4. **REMOVE WINDSHIELD WIPER MOTOR AND LINK ASSEMBLY**

   Refer to **REMOVAL**

5. **REMOVE FRONT OUTER COWL TOP PANEL SUB-ASSEMBLY** See step 4
6. **REMOVE COOL AIR INTAKE DUCT SEAL** . Refer to **REMOVAL - Step 1**
7. **REMOVE INLET AIR CLEANER ASSEMBLY** . Refer to **REMOVAL - Step 30**
8. **REMOVE AIR CLEANER CAP SUB-ASSEMBLY** . Refer to **REMOVAL - Step 3**
9. **REMOVE AIR CLEANER FILTER ELEMENT SUB-ASSEMBLY**
10. **REMOVE AIR CLEANER CASE SUB-ASSEMBLY** . Refer to **REMOVAL - Step 33**
11. **SEPARATE AIR CONDITIONER TUBE AND ACCESSORY ASSEMBLY**
    a. Remove the bolt from the hook connector.

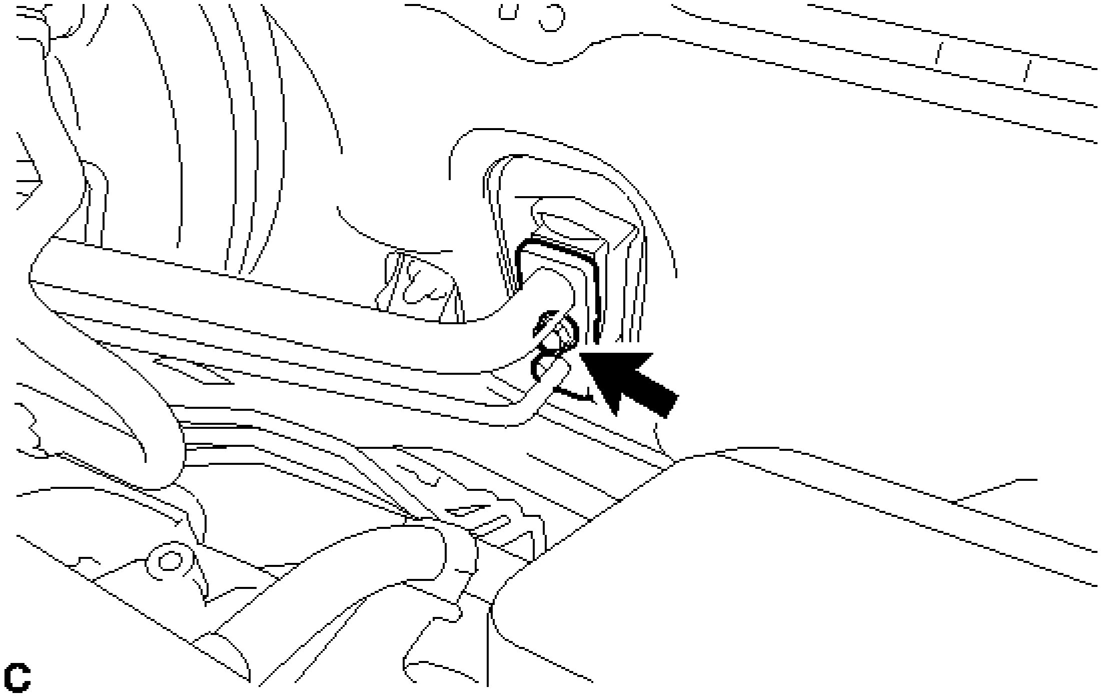

Fig. 60: Identifying Air Conditioner Tube Bolt
Courtesy of TOYOTA MOTOR SALES, U.S.A., INC.

    b. Turn the hook connector and separate the air conditioning tube and accessory assembly from the air conditioning unit.

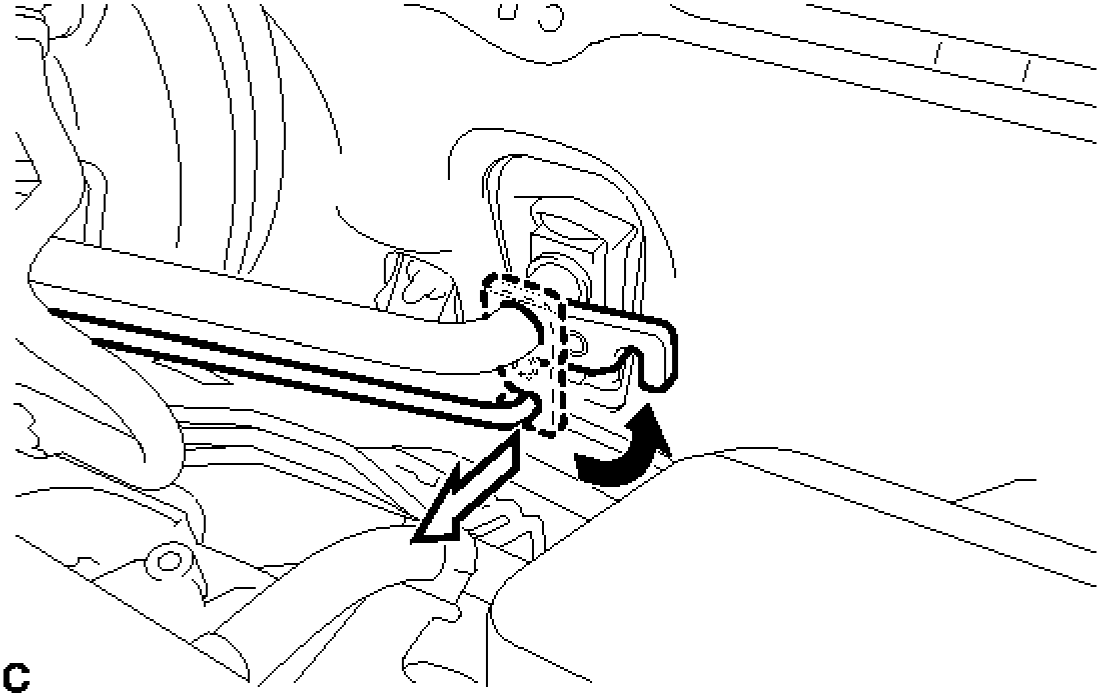

Fig. 61: Turning The Hook Connector
Courtesy of TOYOTA MOTOR SALES, U.S.A., INC.

NOTE:

- **Do not deform the piping.**
- **Do not damage the plastic clamp.**

c. Remove the O-ring from the air conditioning tube and accessory assembly.

NOTE: **Seal the openings of the disconnected parts using vinyl tape to prevent entry of moisture and foreign matter.**

12. **SEPARATE SUCTION HOSE SUB-ASSEMBLY**

a. Separate the suction hose sub-assembly from the air conditioning unit.

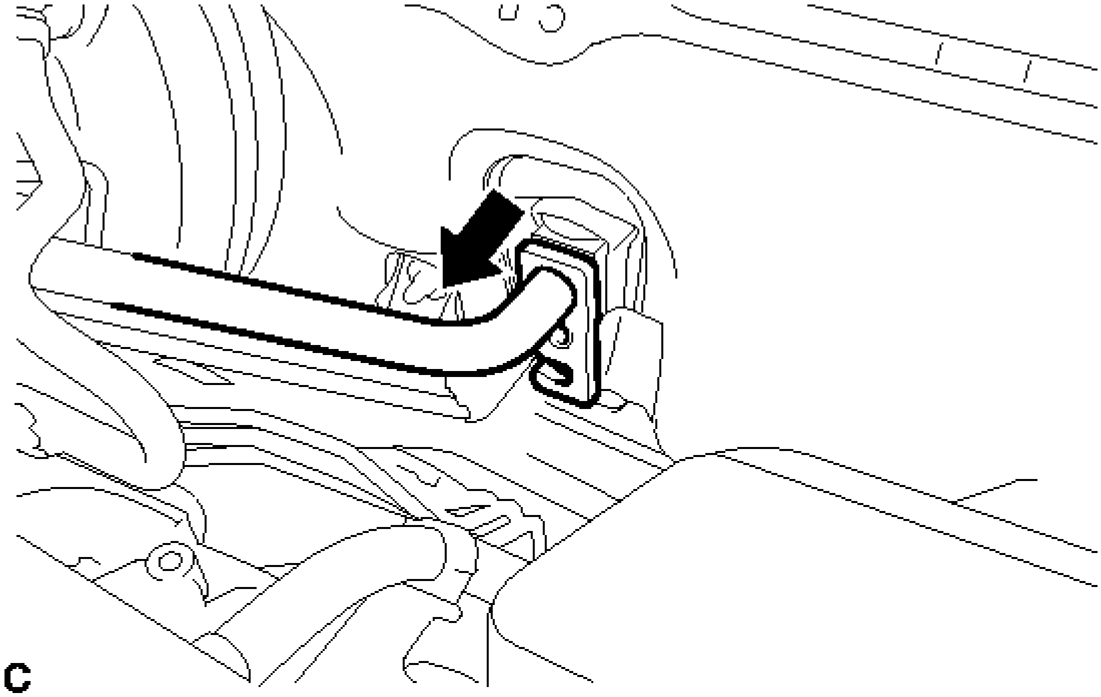

Fig. 62: Separating Suction Hose Sub-Assembly
Courtesy of TOYOTA MOTOR SALES, U.S.A., INC.

NOTE:

- **Do not deform the piping.**
- **Do not damage the plastic clamp.**

b. Remove the O-ring from the suction hose sub-assembly.

NOTE: **Seal the openings of the disconnected parts using vinyl tape to prevent entry of moisture and foreign matter.**

13. **DRAIN BRAKE FLUID**

NOTE: **If brake fluid leaks onto any painted surface, immediately clean it off.**

14. **SEPARATE BRAKE MASTER CYLINDER RESERVOIR ASSEMBLY** See step 12
15. **SEPARATE NO. 1 BRAKE ACTUATOR TUBE** See step 13
16. **DISCONNECT NO. 1 BRAKE ACTUATOR HOSE**
    a. Move the clip and disconnect the No. 1 brake actuator hose from the No. 1 brake actuator tube.

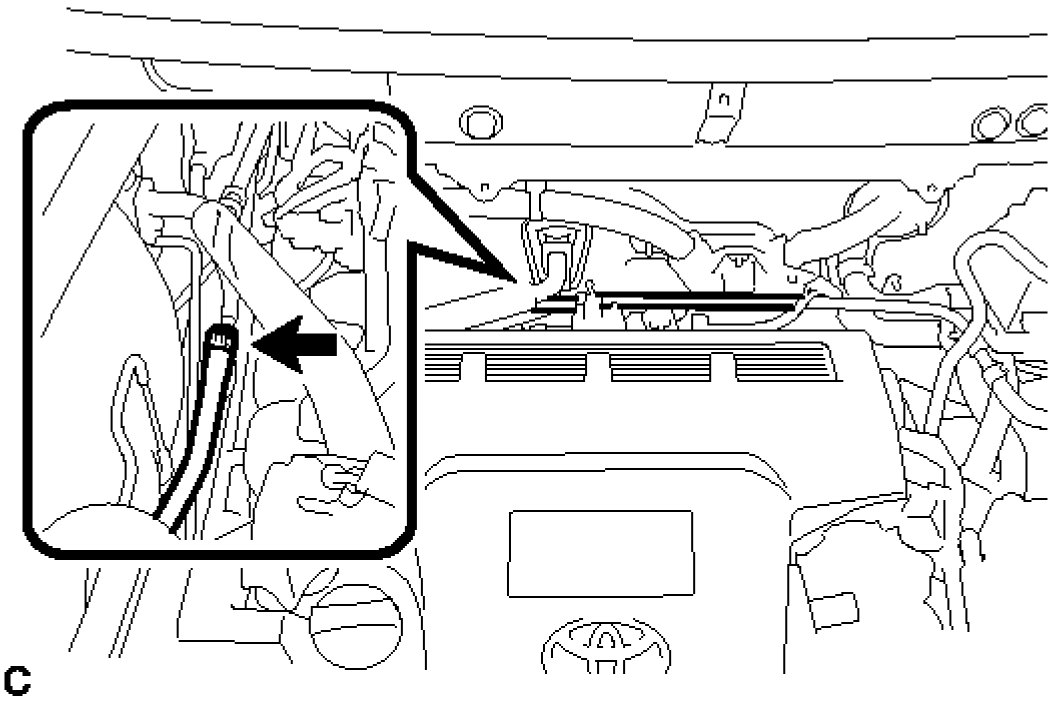

Fig. 63: Identifying No. 1 Brake Actuator Hose Clip
Courtesy of TOYOTA MOTOR SALES, U.S.A., INC.

17. **DISCONNECT FRONT NO. 1 BRAKE TUBE**
    a. Using a union nut wrench, disconnect the front No. 1 brake tube from the brake booster pump assembly.

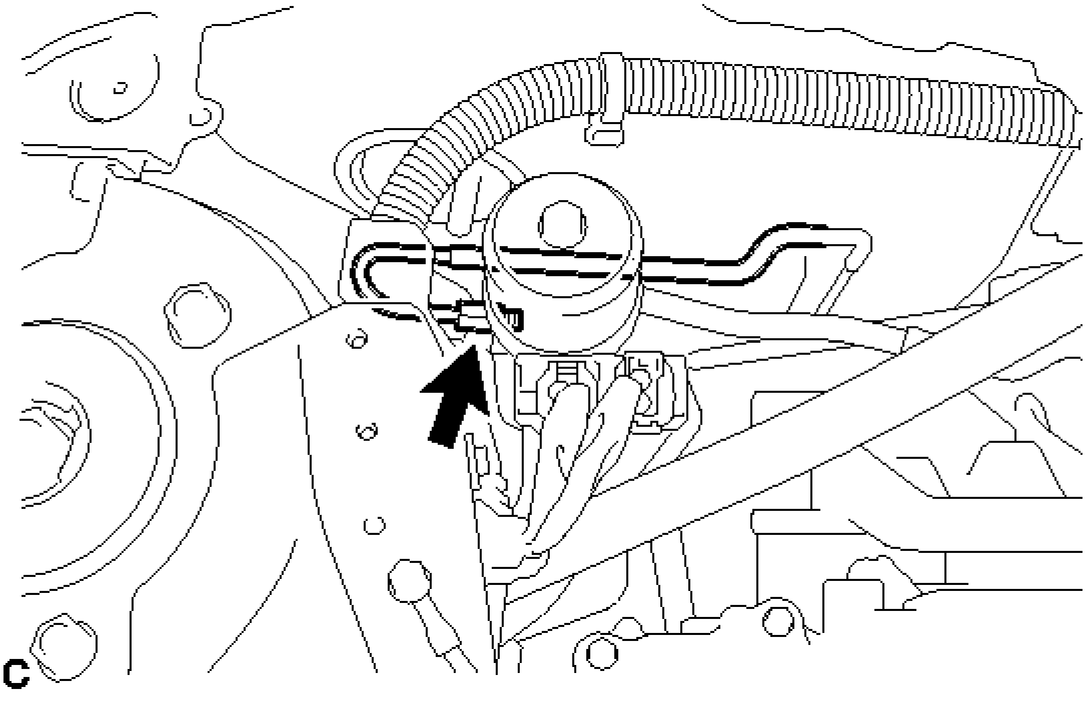

Fig. 64: Identifying Front No. 1 Brake Tube Union Nut
Courtesy of TOYOTA MOTOR SALES, U.S.A., INC.

18. **REMOVE BRAKE BOOSTER PUMP ASSEMBLY WITH BRACKET**
    a. Disconnect the 2 connectors from the brake booster pump assembly.

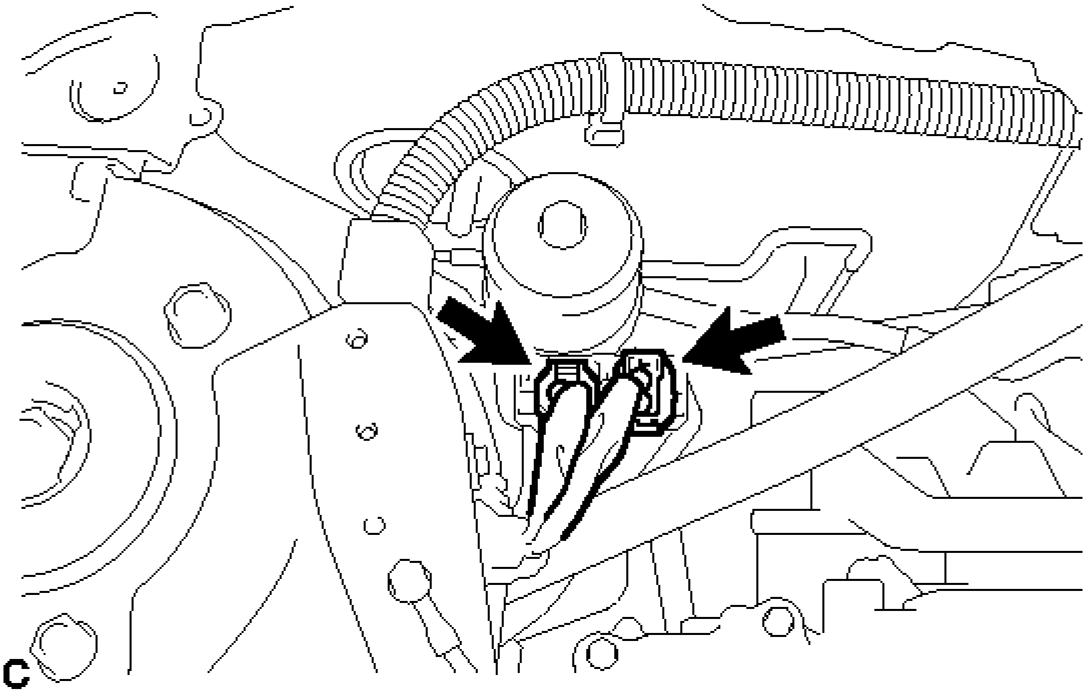

Fig. 65: Identifying Brake Booster Pump Connectors
Courtesy of TOYOTA MOTOR SALES, U.S.A., INC.

    b. Remove the bolt and separate the connector box of the brake booster pump assembly from the brake actuator bracket assembly.

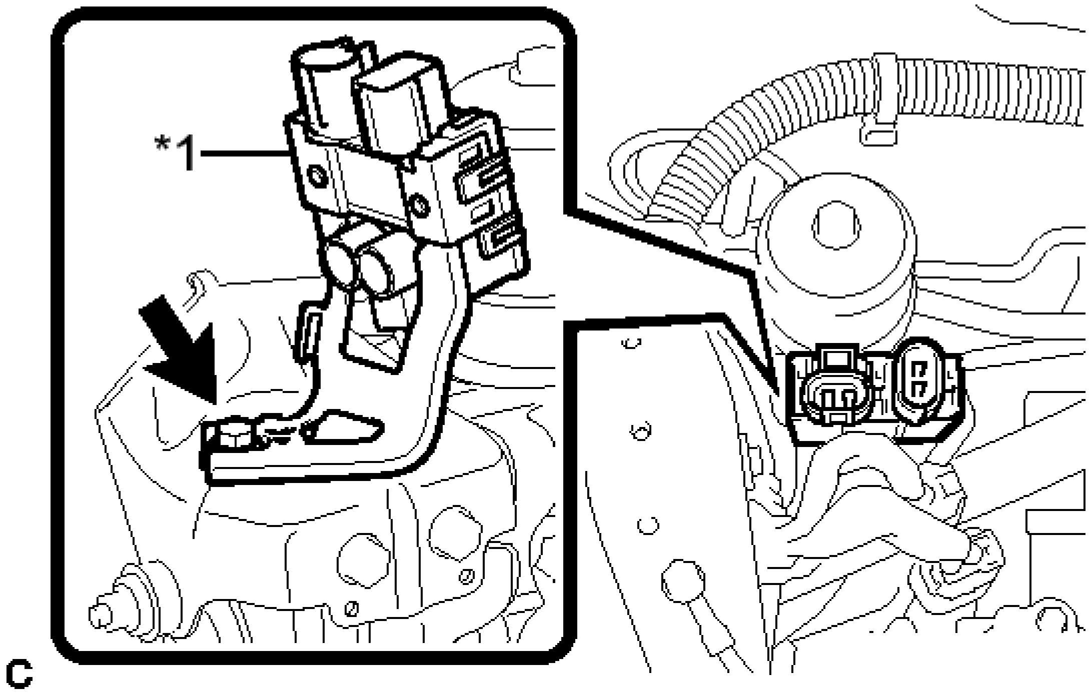

Fig. 66: Identifying Brake Actuator Bracket Bolt
Courtesy of TOYOTA MOTOR SALES, U.S.A., INC.

TEXT IN ILLUSTRATION

*1	Connector Box

c. Remove the 3 bolts and brake booster pump assembly with bracket from the vehicle body.

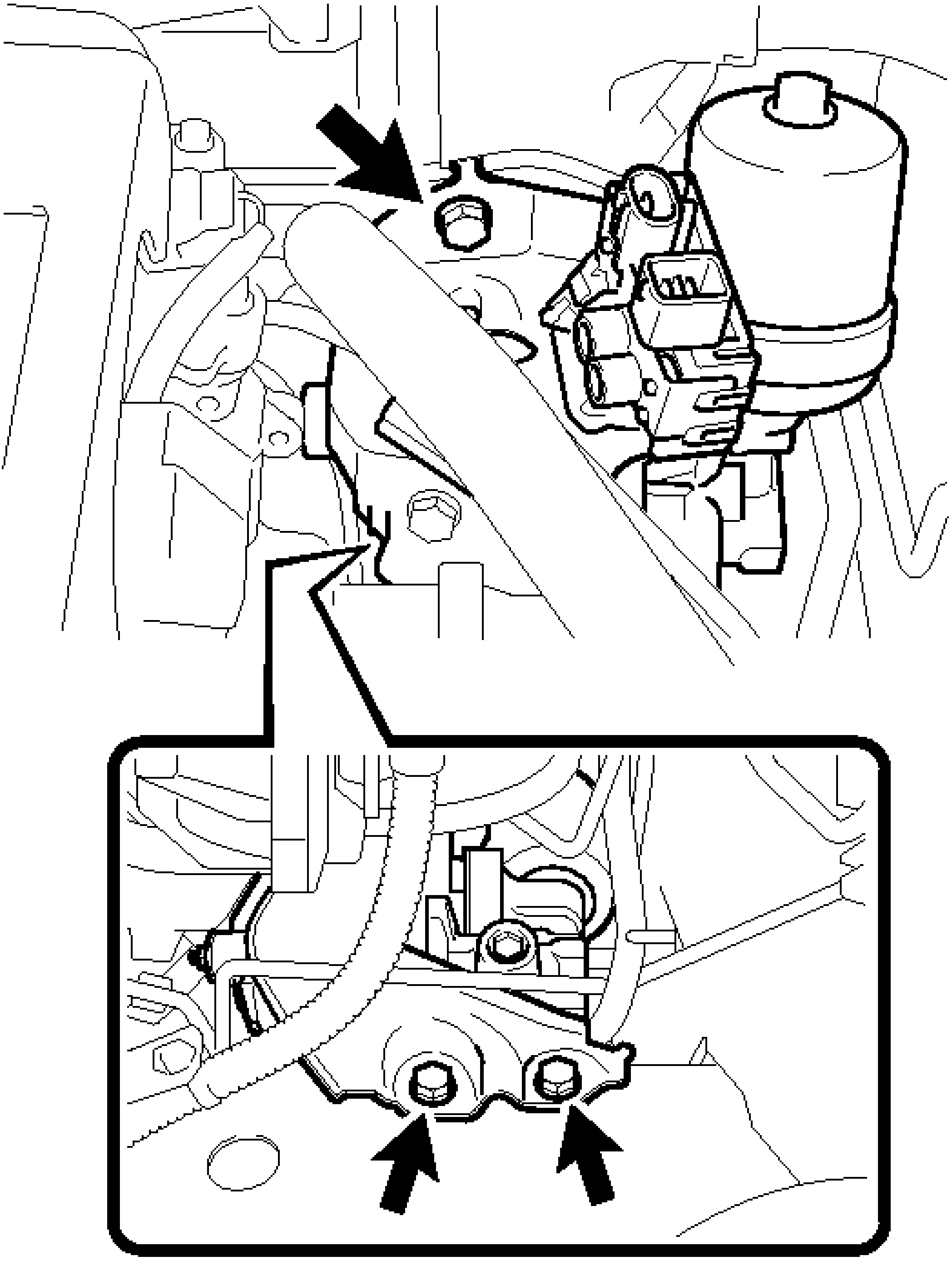

Fig. 67: Identifying Brake Booster Pump Assembly Bolts
Courtesy of TOYOTA MOTOR SALES, U.S.A., INC.

NOTE: Do not kink or damage the brake line, suction hose sub-assembly or air conditioning tube and accessory assembly.

19. **REMOVE NO. 1 BRAKE ACTUATOR HOSE**

   a. Move the clip and remove the No. 1 brake actuator hose from the brake booster pump assembly.

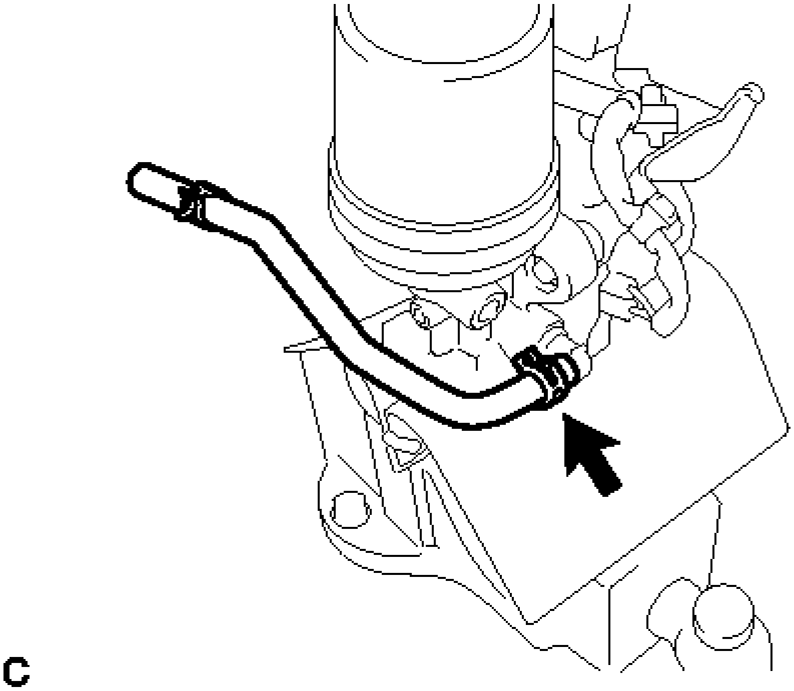

Fig. 68: Identifying No. 1 Brake Actuator Hose Clip
Courtesy of TOYOTA MOTOR SALES, U.S.A., INC.

20. **REMOVE BRAKE BOOSTER PUMP ASSEMBLY**

   a. Disengage the wire harness clamp from the brake actuator bracket assembly.

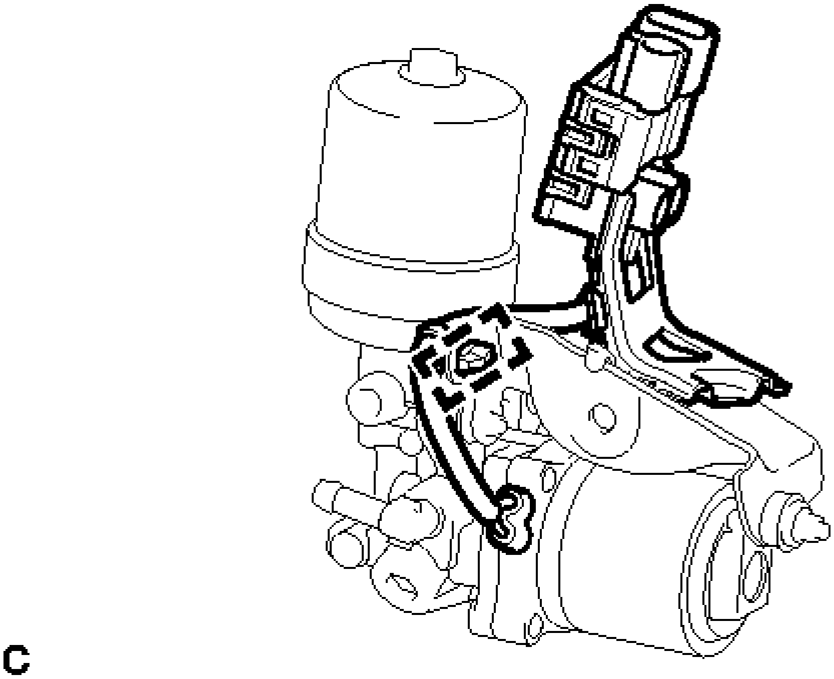

Fig. 69: Identifying Wire Harness Clamp
Courtesy of TOYOTA MOTOR SALES, U.S.A., INC.

b. Remove the nut, brake actuator case collar, brake booster pump bushing and brake booster pump assembly from the brake actuator bracket assembly.

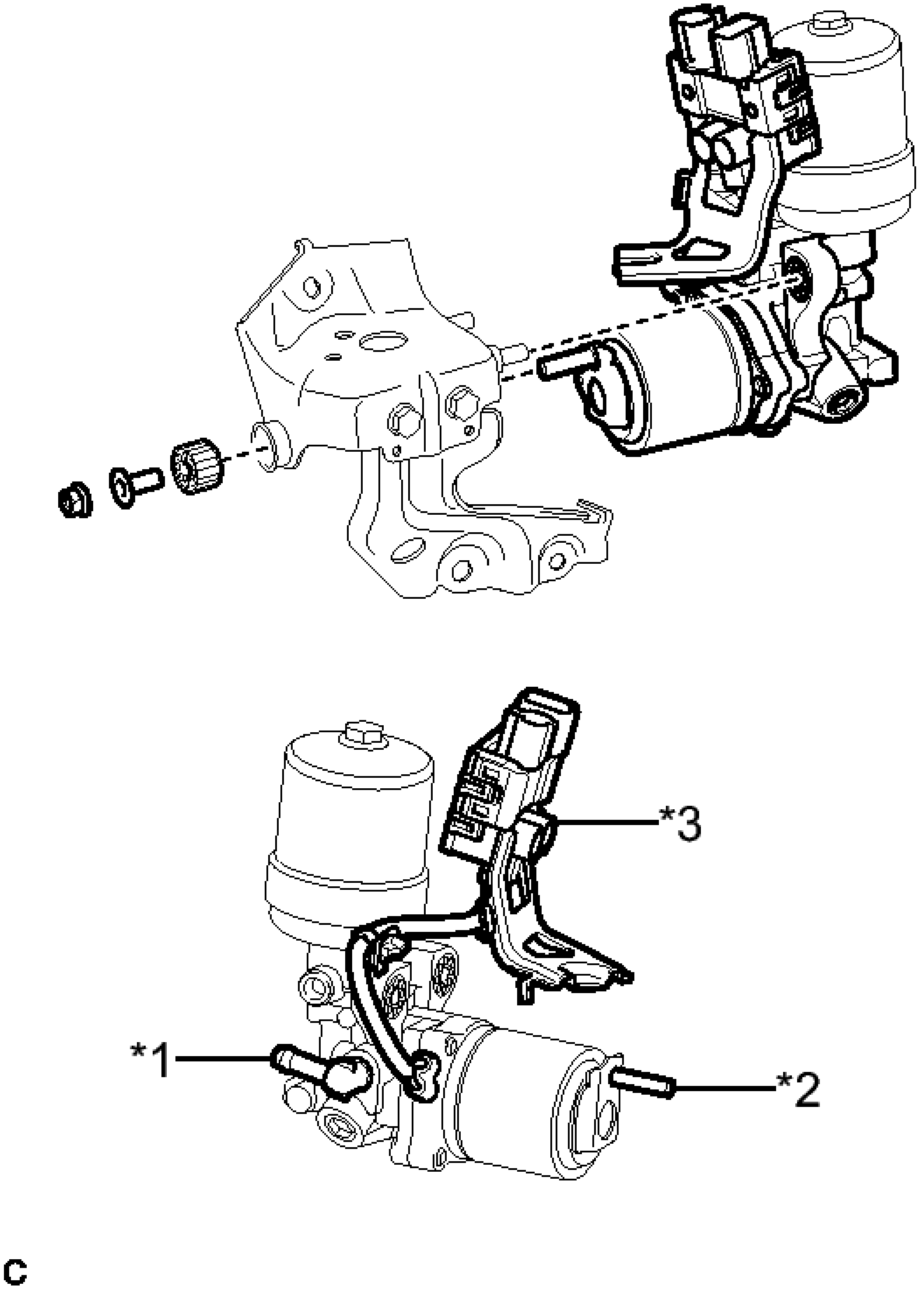

Fig. 70: Removing Brake Booster Pump From Brake Actuator Bracket
Courtesy of TOYOTA MOTOR SALES, U.S.A., INC.

TEXT IN ILLUSTRATION

*1	Union

*2	Stud
*3	Connector Box and Wire Harness

NOTE:

- **Do not carry the brake booster pump assembly by the parts shown in bold (*1, *2 and *3) in the illustration.**
- **Do not drop the brake booster pump assembly when carrying it.**
- **Be careful not to allow any brake fluid to enter the connector.**

INSPECTION

INSPECTION

1. **INSPECT BRAKE BOOSTER PUMP ASSEMBLY**
    a. Measure the resistance according to the value(s) in the table below.

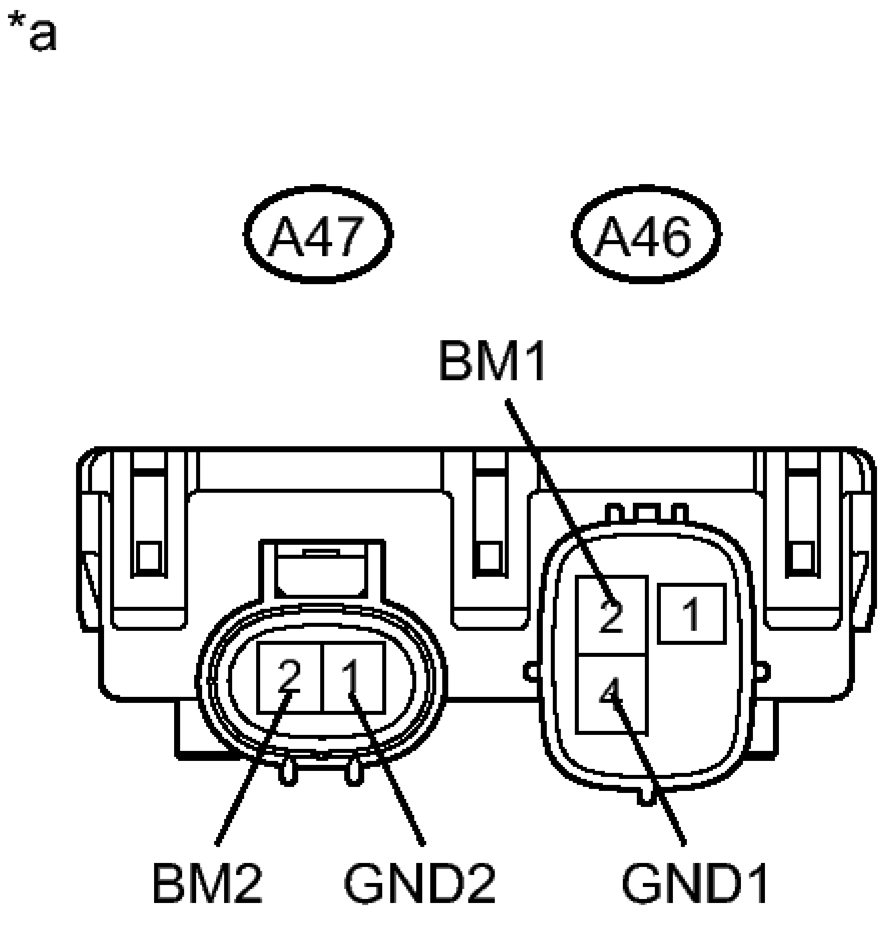
*a
A47
A46
BM1
2
1
2
1
4
BM2
GND2
GND1
Y

Fig. 71: Identifying Brake Booster Pump Assembly Connector Terminals
Courtesy of TOYOTA MOTOR SALES, U.S.A., INC.

Standard Resistance

Tester Connection	Condition	Specified Condition
A46-2 (BM1) - A46-4 (GND1)	Always	Below 10 ohms
A47-2 (BM2) - A47-1 (GND2)	Always	Below 10 ohms
A46-2		

(BM1) - A47-2 (BM2)	Always	Below 1 ohms
A46-4 (GND1) - A47-1 (GND2)	Always	Below 1 ohms

TEXT IN ILLUSTRATION

*a	Component without harness connected (Brake Booster Pump Assembly)

INSTALLATION

INSTALLATION

1. **INSTALL BRAKE BOOSTER PUMP ASSEMBLY**
    a. Insert the stud of the brake booster pump assembly to the hole of the brake actuator bracket assembly, and insert the 2 pins of the brake actuator bracket assembly to the 2 brake booster pump bushings (*5).

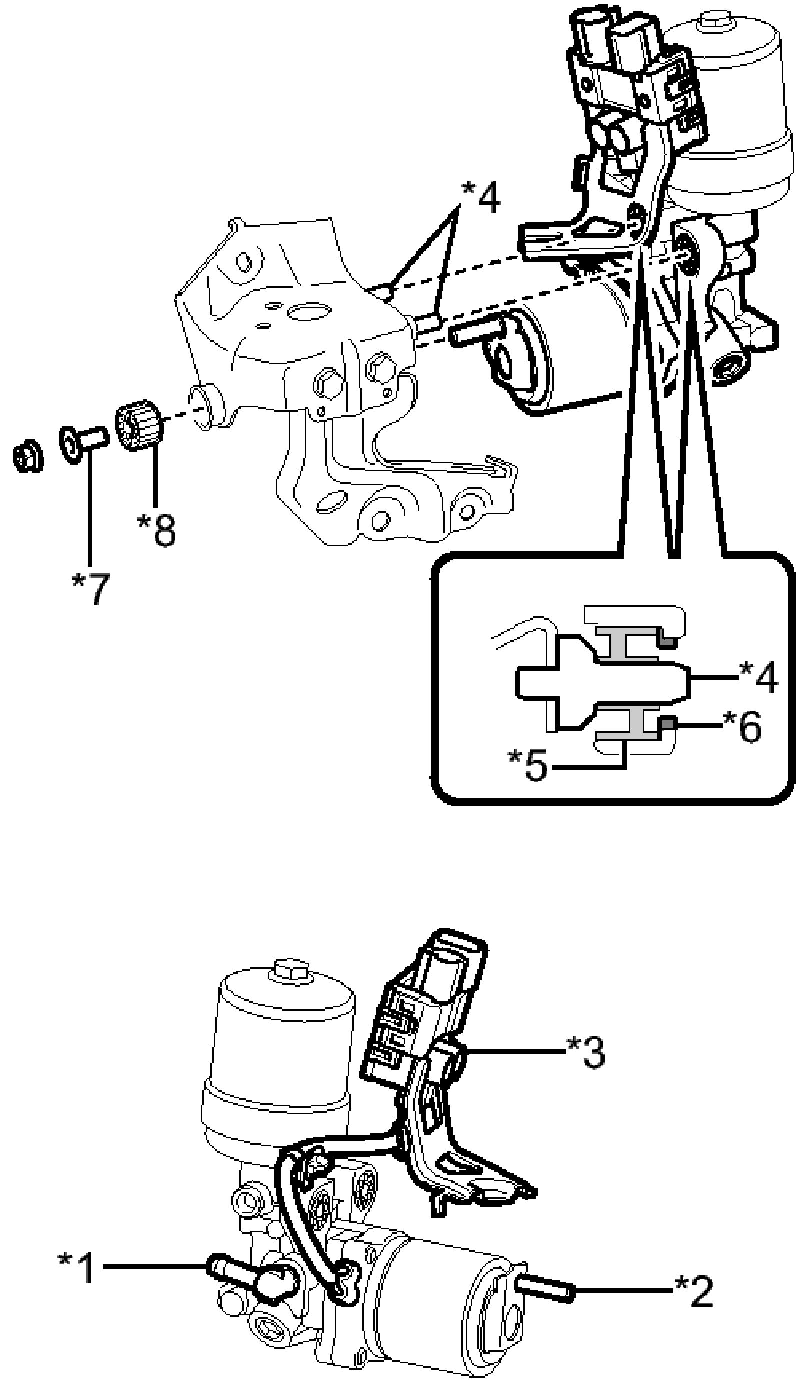

C

Fig. 72: Installing Brake Booster Pump Assembly
Courtesy of TOYOTA MOTOR SALES, U.S.A., INC.

TEXT IN ILLUSTRATION

*1	Union
*2	Stud
*3	Connector Box and Wire Harness
*4	Pin
*5	Brake Booster Pump Bushing
*6	Brake Booster Pump Collar
*7	Brake Actuator Case Collar
*8	Brake Booster Pump Bushing

NOTE:

- **Do not carry the brake booster pump assembly by the parts shown in bold (*1, *2 and *3) in the illustration.**
- **Do not drop the brake booster pump assembly when carrying it.**
- **Be careful not to allow any brake fluid to enter the connector.**
- **When installing the brake booster pump assembly to the brake actuator bracket assembly, confirm that the 2 brake booster pump collars (*6) and 2 brake booster pump bushings (*5) are installed on the brake booster pump assembly.**
- **Do not remove the hole plugs before installing a new brake booster pump assembly because the brake booster pump assembly is filled with brake fluid.**

b. Install the brake actuator case collar (*7), brake booster pump bushing (*8) and brake booster pump assembly to the brake actuator bracket assembly with the nut.

Torque: 5.4 N*m (55 kgf*cm, 48 in.*lbf)

c. Engage the wire harness clamp to the brake actuator bracket assembly.

2. **INSTALL NO. 1 BRAKE ACTUATOR HOSE**

a. Install the No. 1 brake actuator hose to the brake booster pump assembly with the clip.

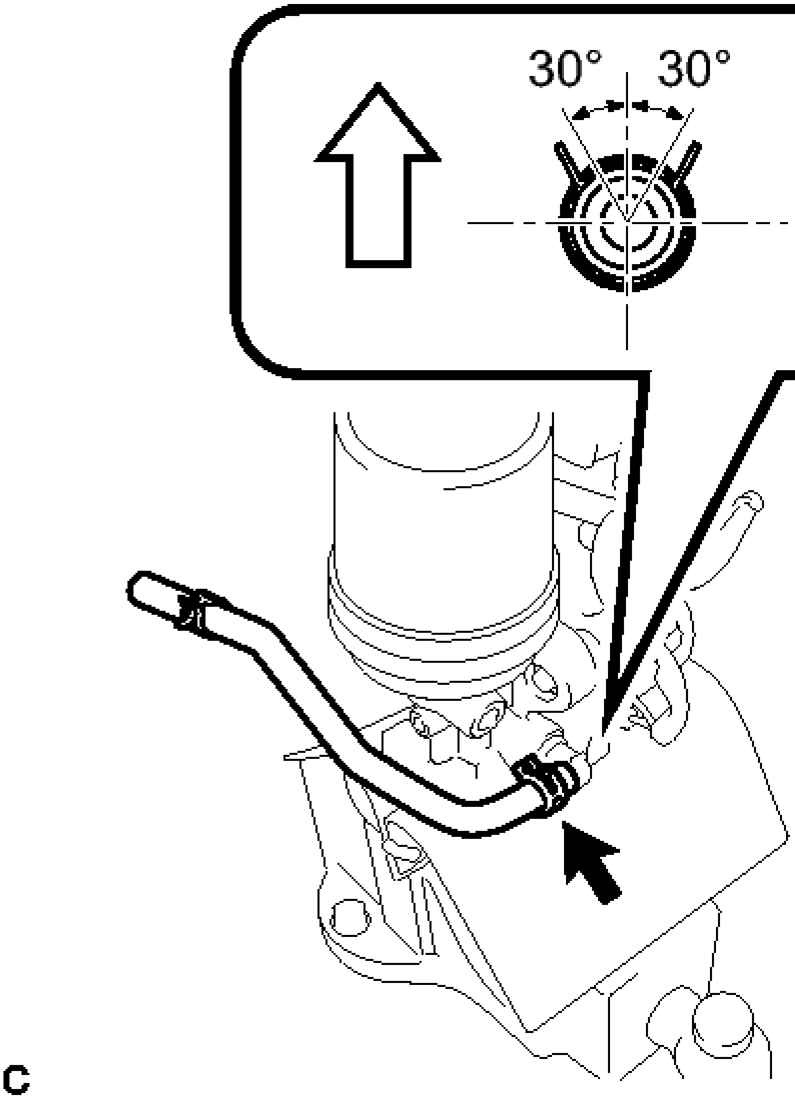

Fig. 73: Identifying No. 1 Brake Actuator Hose Clip
Courtesy of TOYOTA MOTOR SALES, U.S.A., INC.

TEXT IN ILLUSTRATION

Up

NOTE:

- **Match the identification mark of the No. 1 brake actuator hose and the rib of the brake booster pump assembly.**
- **Install the clip within the range shown in the illustration.**

3. **INSTALL BRAKE BOOSTER PUMP ASSEMBLY WITH BRACKET**
    a. Engage the claw to set the brake booster pump assembly with bracket to the vehicle body.

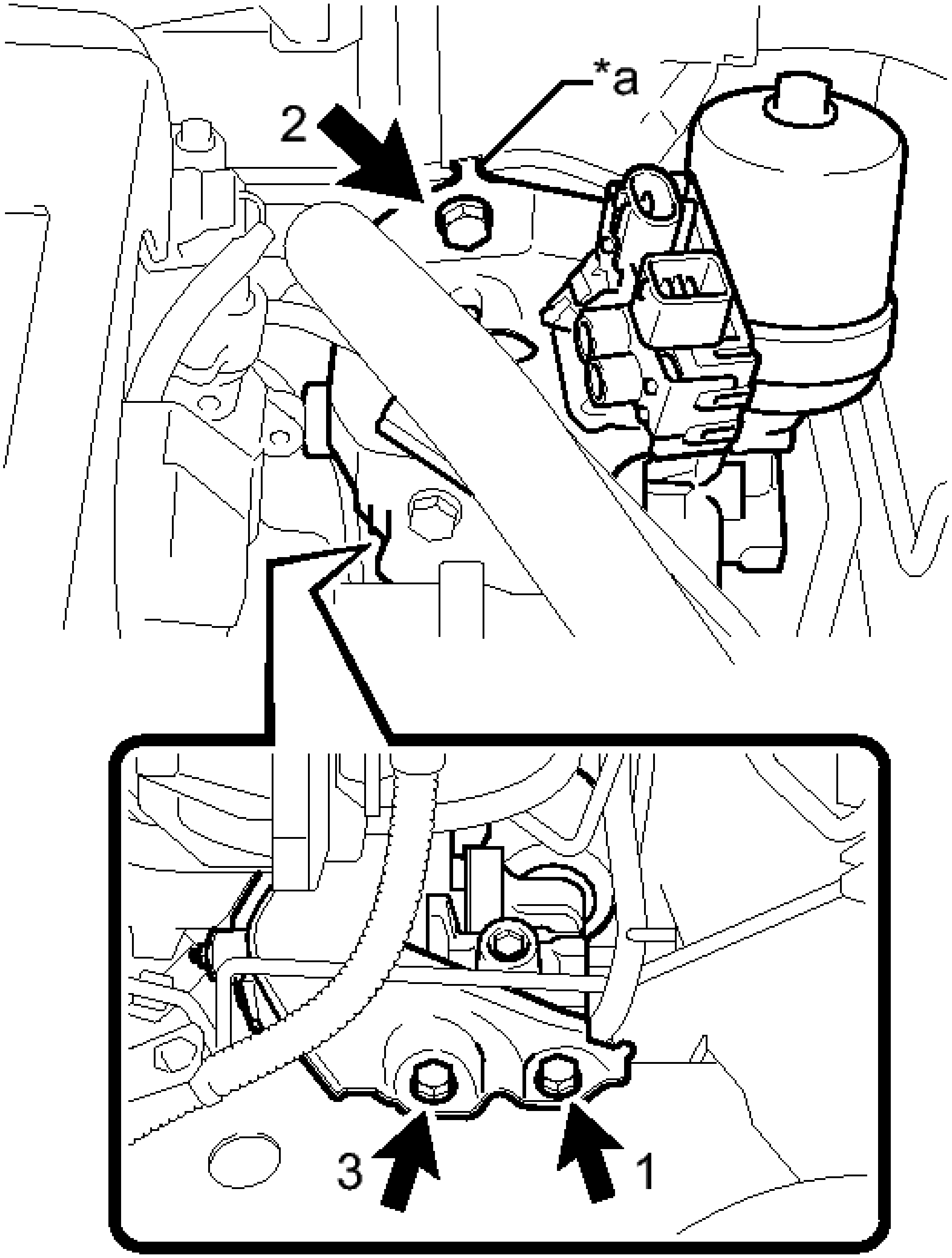

Fig. 74: Identifying Brake Booster Pump Assembly Bolts
Courtesy of TOYOTA MOTOR SALES, U.S.A., INC.

TEXT IN ILLUSTRATION

*a	Claw

NOTE: **Do not kink or damage the brake line, suction hose sub-assembly or air conditioning tube and accessory assembly.**

b. Install the 3 bolts to secure the brake booster pump assembly with bracket to the vehicle body.

Torque: 19 N*m (194 kgf*cm, 14 ft.*lbf)

NOTE: **Tighten the 3 bolts in the order shown in the illustration.**

c. Engage the claw to set the connector box to the brake actuator bracket assembly.

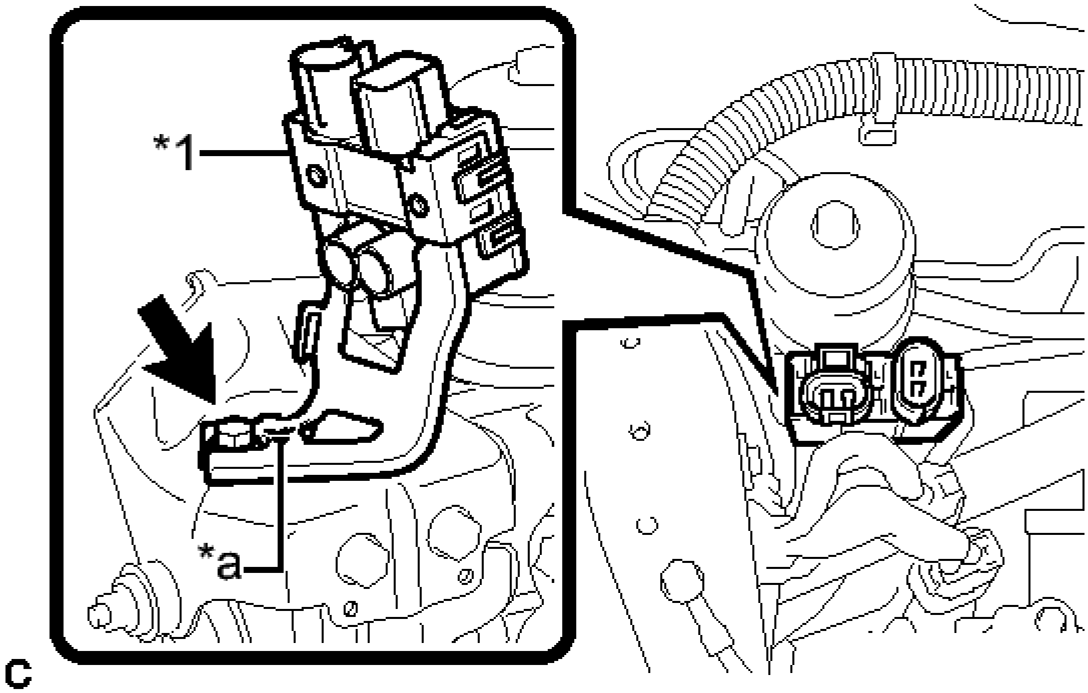

Fig. 75: Identifying Brake Actuator Bracket Bolt
Courtesy of TOYOTA MOTOR SALES, U.S.A., INC.

TEXT IN ILLUSTRATION

*1	Connector Box
*a	Claw

d. Install the bolt to secure the connector box to the brake actuator bracket assembly.

Torque: 8.0 N*m (82 kgf*cm, 71 in.*lbf)

e. Connect the 2 connectors to the brake booster pump assembly.

4. **CONNECT FRONT NO. 1 BRAKE TUBE**

a. Using a union nut wrench, connect the front No. 1 brake tube to the brake booster pump assembly.

Torque: 15 N*m (155 kgf*cm, 11 ft.*lbf)

NOTE: **Use the formula to calculate special torque values for situations where the union nut wrench is combined with a torque wrench. Refer to PRECAUTION .**

5. **CONNECT NO. 1 BRAKE ACTUATOR HOSE**
   a. Connect the No. 1 brake actuator hose to the No. 1 brake actuator tube with the clip.

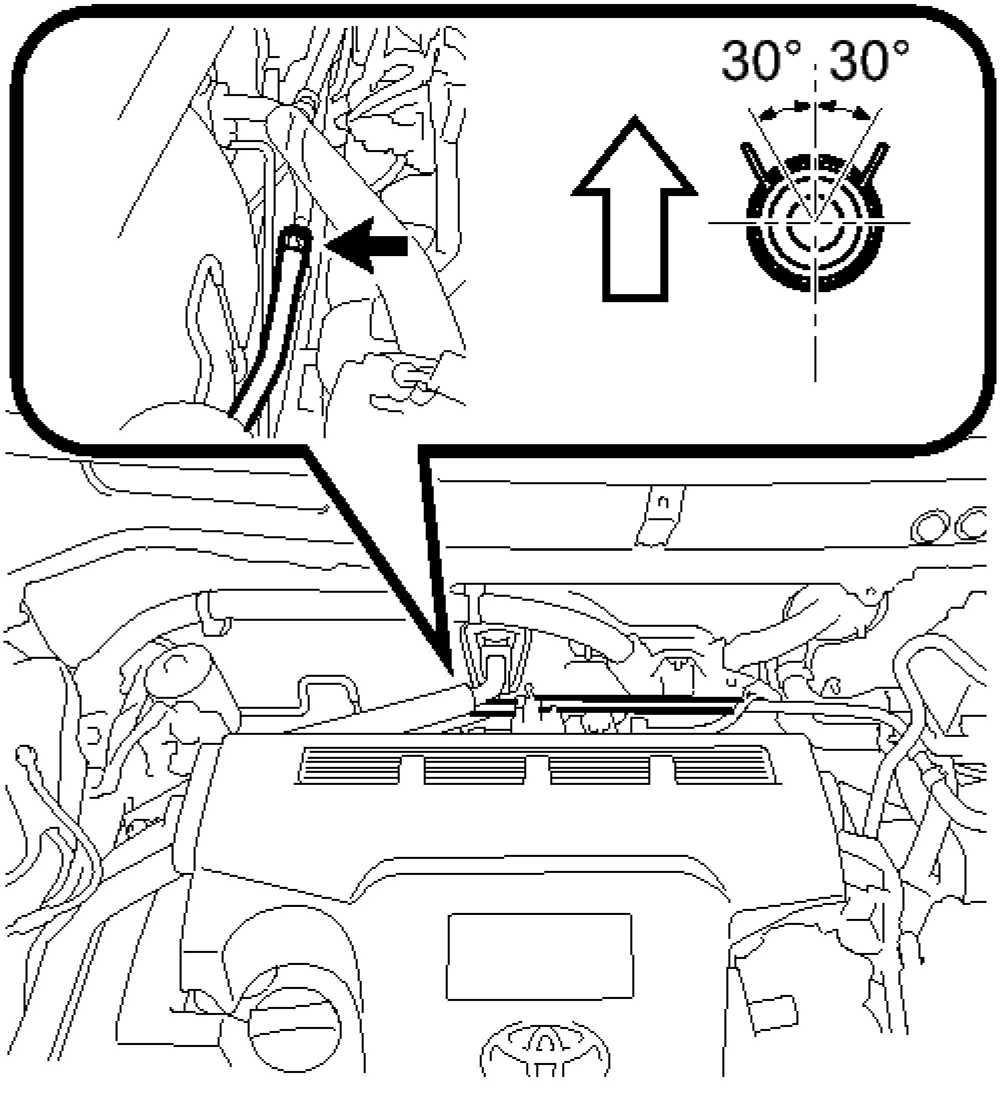

Fig. 76: Identifying No. 1 Brake Actuator Hose Clip
Courtesy of TOYOTA MOTOR SALES, U.S.A., INC.

TEXT IN ILLUSTRATION

Up

NOTE:

- **Match the identification mark of the No. 1 brake actuator hose and No. 1 brake actuator tube.**
- **Install the clip within the range shown in the illustration.**

6. **BLEED NO. 1 BRAKE ACTUATOR TUBE** See step 6
7. **INSTALL NO. 1 BRAKE ACTUATOR TUBE** See step 7
8. **INSTALL BRAKE MASTER CYLINDER RESERVOIR ASSEMBLY** See step 8
9. **INSTALL SUCTION HOSE SUB-ASSEMBLY**
   a. Remove the vinyl tape from the openings of the disconnected parts.
   b. Sufficiently apply compressor oil to a new O-ring, the fitting surface of the suction hose sub-assembly and air conditioning unit.

   Compressor oil

   ND-OIL 11 or equivalent

   NOTE: **Do not use any compressor oil other than ND-OIL 11 or equivalent. If any compressor oil other than ND-OIL 11 or equivalent is used, compressor motor insulation performance may decrease, resulting in a leakage of electric power.**

   c. Install the O-ring to the suction hose sub-assembly.

   NOTE: **Keep the O-ring and O-ring fitting surfaces free from dirt or any foreign matter.**

   d. Insert the suction hose sub-assembly to the air conditioning unit.

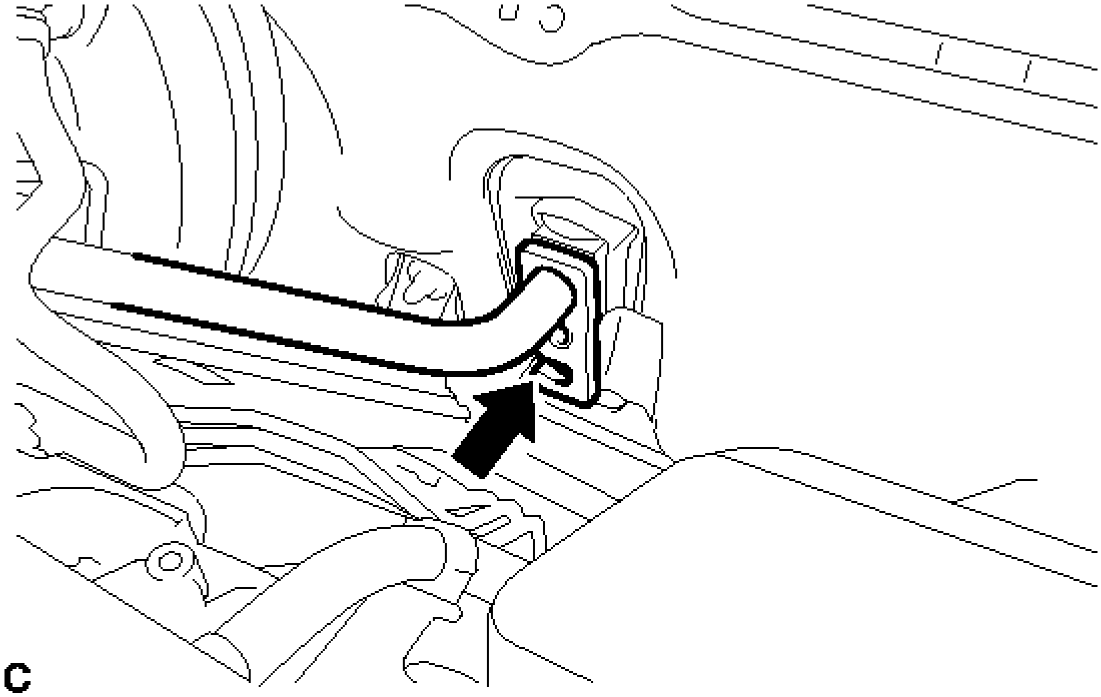

Fig. 77: Connecting Suction Hose Sub-Assembly
Courtesy of TOYOTA MOTOR SALES, U.S.A., INC.

NOTE:

- **Insert the pipe joint into the fitting hole securely.**
- **Do not deform the piping.**
- **Do not damage the plastic clamp.**

10. **INSTALL AIR CONDITIONER TUBE AND ACCESSORY ASSEMBLY**
    a. Remove the vinyl tape from the openings of the disconnected parts.
    b. Sufficiently apply compressor oil to a new O-ring, the fitting surface of the air conditioning tube and accessory assembly and air conditioning unit.

    Compressor oil

    ND-OIL 11 or equivalent

    NOTE: **Do not use any compressor oil other than ND-OIL 11 or equivalent. If any compressor oil other than ND-OIL 11 or equivalent is used, compressor motor insulation performance may decrease, resulting in a leakage of electric power.**

    c. Install the O-ring to the air conditioning tube and accessory assembly.

    NOTE: **Keep the O-ring and O-ring fitting surface free from dirt or any foreign matter.**

d. Insert the air conditioning tube and accessory assembly to the air conditioning unit.

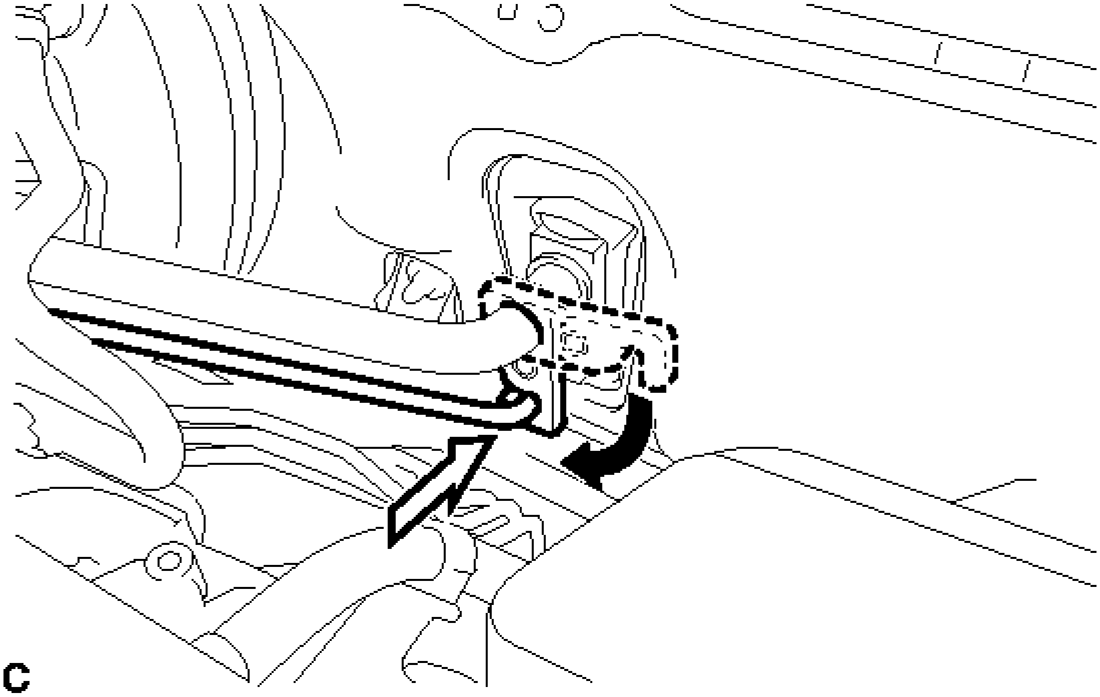

Fig. 78: Turning The Hook Connector
Courtesy of TOYOTA MOTOR SALES, U.S.A., INC.

NOTE: **Insert the pipe joint into the fitting hole securely.**

e. Turn the hook connector and install the bolt.

Torque: 9.8 N*m (100 kgf*cm, 87 in.*lbf)

11. **FILL RESERVOIR WITH BRAKE FLUID**
12. **CONNECT CABLE TO AUXILIARY BATTERY NEGATIVE TERMINAL**

    Refer to **INSTALLATION - Step 2**

13. **BLEED BRAKE SYSTEM** See step 2
14. **INSTALL AIR CLEANER CASE SUB-ASSEMBLY** . Refer to **INSTALLATION - Step 60**
15. **INSTALL AIR CLEANER FILTER ELEMENT SUB-ASSEMBLY**
16. **INSTALL AIR CLEANER CAP SUB-ASSEMBLY** . Refer to **INSTALLATION - Step 2**
17. **INSTALL INLET AIR CLEANER ASSEMBLY** . Refer to **INSTALLATION - Step 63**
18. **INSTALL COOL AIR INTAKE DUCT SEAL** . Refer to **INSTALLATION - Step 4**
19. **CHARGE AIR CONDITIONING SYSTEM WITH REFRIGERANT** . Refer to **REPLACEMENT - Step 2**
20. **WARM UP COMPRESSOR** . Refer to **REPLACEMENT - Step 3**

21. **INSPECT FOR REFRIGERANT LEAK** . Refer to **REPLACEMENT - Step 4**
22. **INSTALL FRONT OUTER COWL TOP PANEL SUB-ASSEMBLY** See step 18
23. **INSTALL WINDSHIELD WIPER MOTOR AND LINK ASSEMBLY**

    Refer to **INSTALLATION - Step 2**

DISPOSAL

DISPOSAL

1. **DISPOSE OF BRAKE BOOSTER PUMP ASSEMBLY**
    - a. Remove the accumulator from the brake booster pump assembly.
    - b. Secure the accumulator in a vise.
    - c. Using a hacksaw, make a cut in the side of the accumulator at location [A] to release the high-pressure gas.

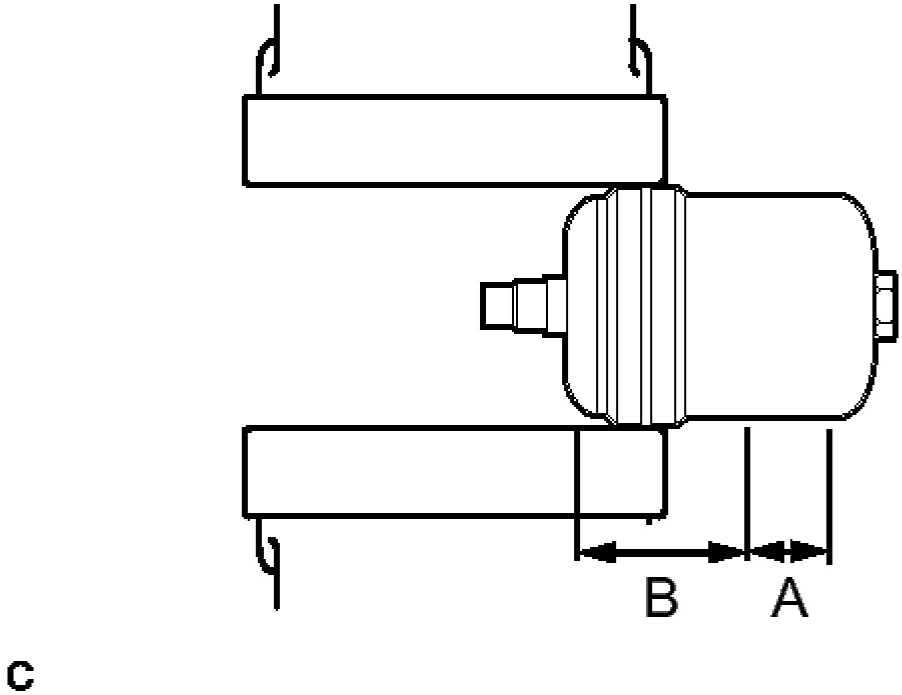

Fig. 79: Identifying Cutting Point On Accumulator
Courtesy of TOYOTA MOTOR SALES, U.S.A., INC.

Point	Area
A	25 mm (0.984 in.)
	60

B	mm (2.362 in.)

WARNING: **Small pieces of metal may fly out when cutting into the accumulator. Put a cloth over the hacksaw when cutting the accumulator. Cut the accumulator slowly so that the gas will be released gradually.**

HINT:

The gas is colorless, odorless and non-poisonous.

BRAKE LINE

PRECAUTION

PRECAUTION

1. **TROUBLESHOOTING PRECAUTION**

NOTE:

- Since the brake lines are critical safety related parts, be sure to disassemble and inspect the components if a brake fluid leak is found. If any abnormality is found, replace the component with a new one.
- When removing brake components, cover the brake line connections to prevent foreign matter such as dust or dirt from entering the lines.
- Do not damage or deform the brake lines during the removal and installation procedures.
- When installing a grommet to the vehicle body, ensure that the brake line passes through the center of the grommet.
- When installing a brake line or flexible hose, ensure that they are free from twists or kinks.
- If the metal end of a flexible hose does not match the groove on the bracket, twist the hose slightly to insert it.
- Flexible hoses must be free from shock absorber oil, grease, etc.
- When installing a brake line to a plastic clamp, ensure that the brake line is not loose or pinched.
- Do not reuse any clips or plastic clamps removed from a flexible hose.
- After installing a brake line or flexible hose, ensure that they do not interfere with any other components or vehicle body.
- Do not allow brake fluid on any painted vehicle body surface. If brake fluid leaks onto any painted surface, immediately wash it off.
- When disconnecting and connecting a flexible hose and brake line:

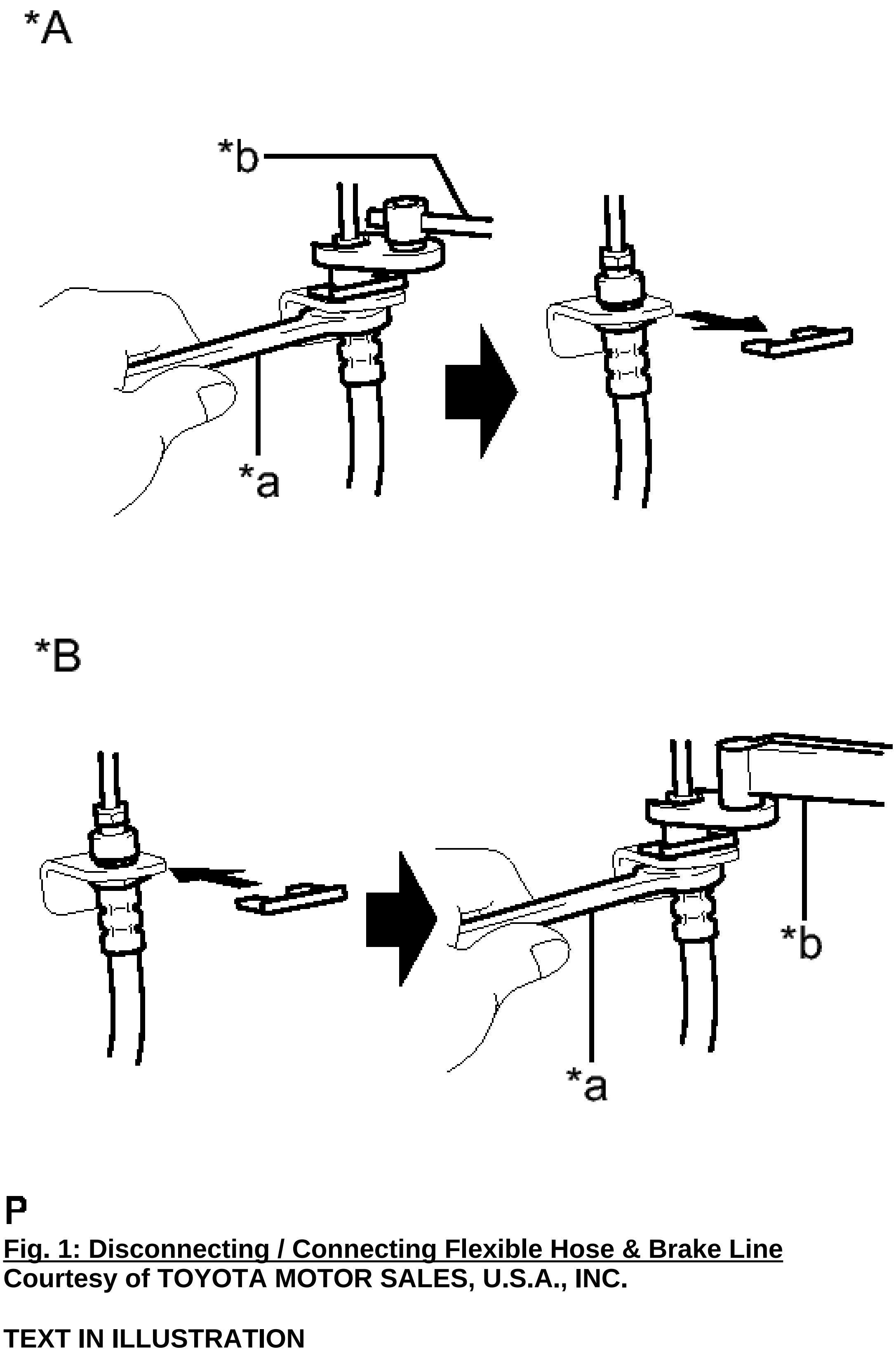

P

Fig. 1: Disconnecting / Connecting Flexible Hose & Brake Line
Courtesy of TOYOTA MOTOR SALES, U.S.A., INC.

TEXT IN ILLUSTRATION

*A	Disconnecting

*B	Connecting
*a	Hold
*b	Turn

1. Hold the flexible hose with a wrench and disconnect the brake line using a union nut wrench without deforming the line.
2. Remove the clip and disconnect the flexible hose.
3. Secure the flexible hose with a new clip. At this time, be sure to securely install the clip.
4. Connect the brake line using a union nut wrench without deforming the line.

- When connecting a brake line and way:

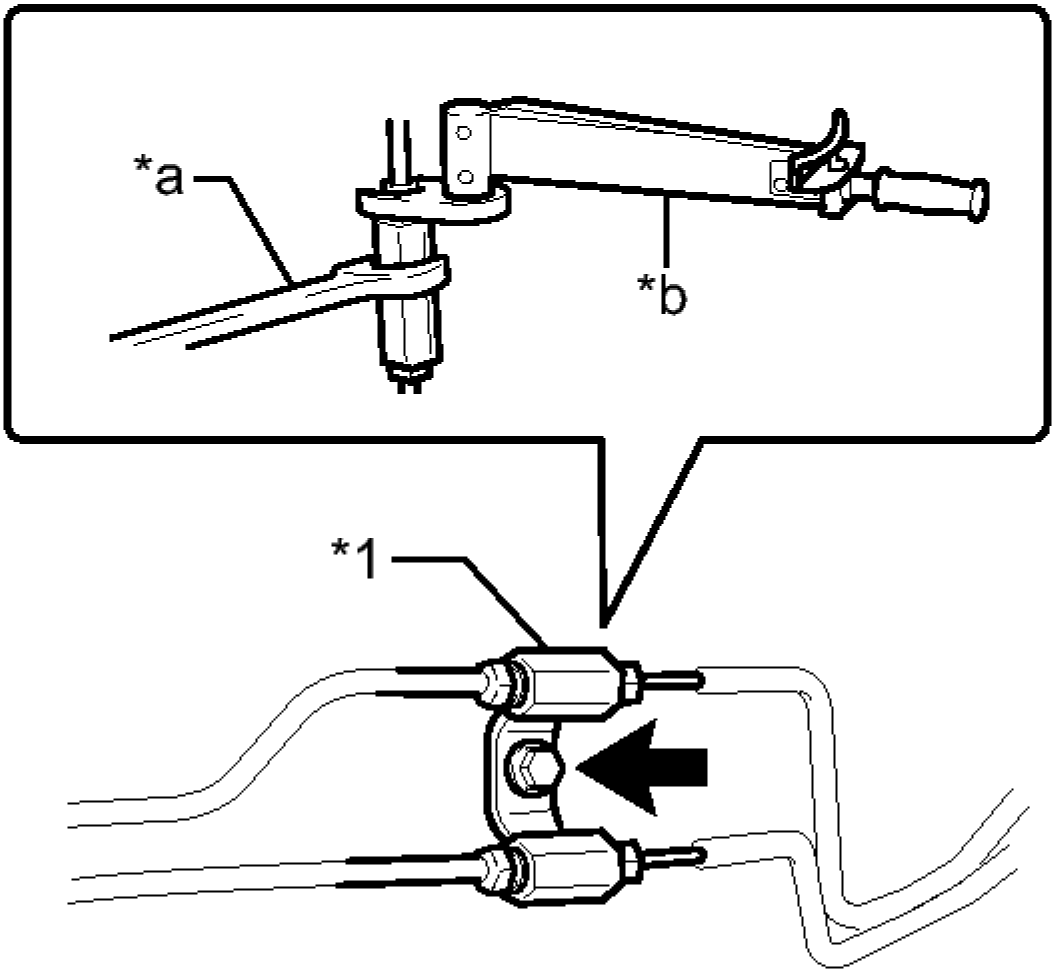

T

Fig. 2: Identifying Brake Line And Way

Courtesy of TOYOTA MOTOR SALES, U.S.A., INC.

TEXT IN ILLUSTRATION

*1	Way
*a	Hold
*b	Turn

1. **Support the way to prevent deformation of the brake line and connect the brake line to the way with a union nut wrench.**
2. **Support the way to prevent deformation of the brake line and install the bolt to secure the way to the vehicle body.**

SYSTEM DIAGRAM

SYSTEM DIAGRAM

HINT:

See the layout drawing to confirm the locations and tightening torque of flexible hoses and brake lines.

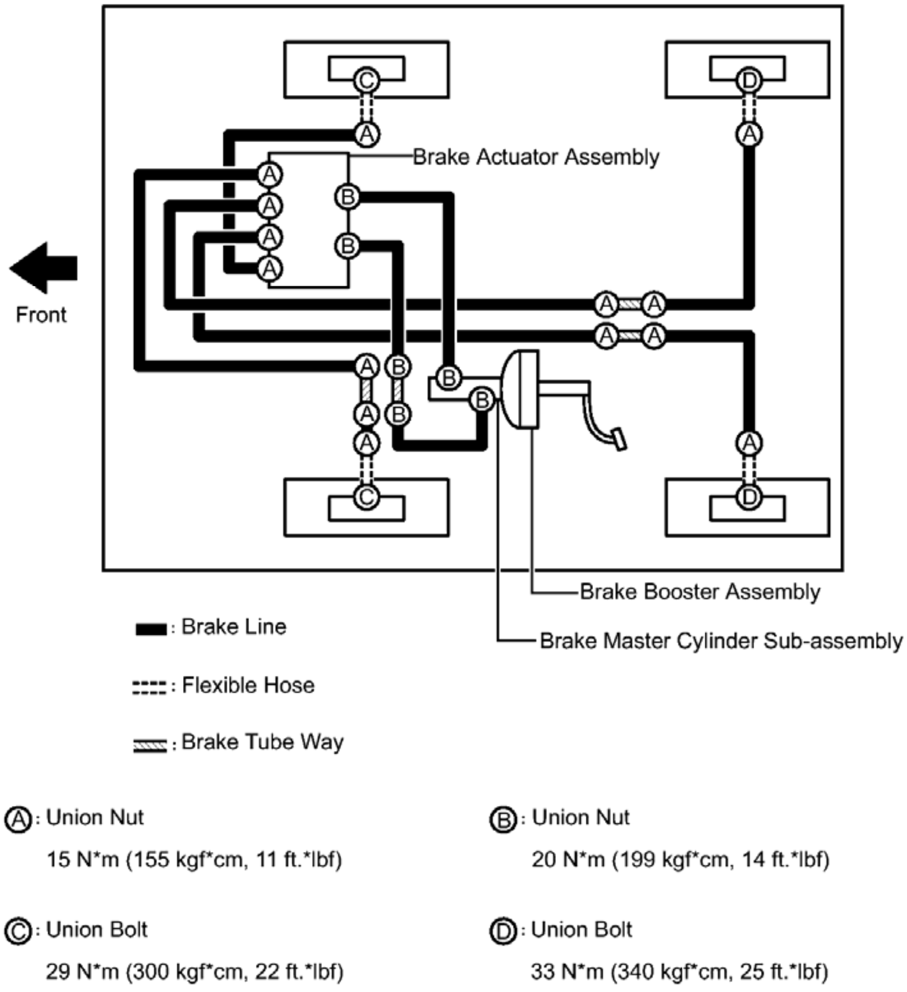
Brake Actuator Assembly
Front
Brake Booster Assembly
Brake Master Cylinder Sub-assembly
A
B
C
D
: Brake Line
: Flexible Hose
: Brake Tube Way
A: Union Nut
15 N*m (155 kgf*cm, 11 ft.*lbf)
B: Union Nut
20 N*m (199 kgf*cm, 14 ft.*lbf)
C: Union Bolt
29 N*m (300 kgf*cm, 22 ft.*lbf)
D: Union Bolt
33 N*m (340 kgf*cm, 25 ft.*lbf)

c

Fig. 3: Identifying Brake Line System Diagram
Courtesy of TOYOTA MOTOR SALES, U.S.A., INC.

BRAKE FLUID

ON-VEHICLE INSPECTION

ON-VEHICLE INSPECTION

1. **INSPECT BRAKE FLUID LEVEL IN RESERVOIR**
    a. Check the fluid level.

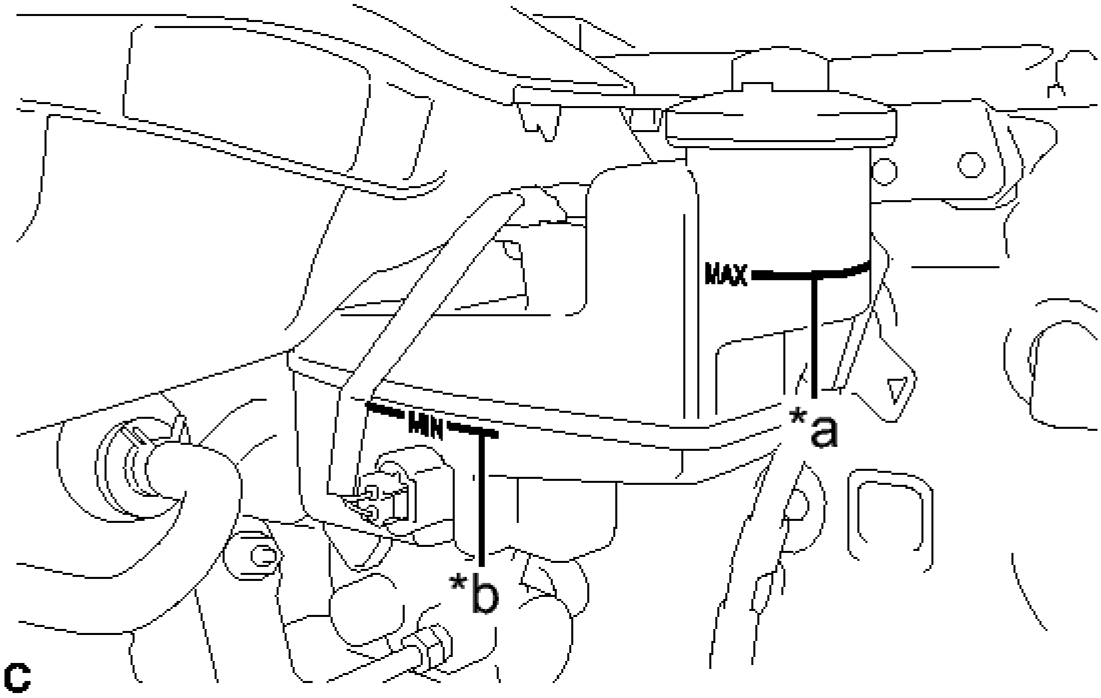

Fig. 4: Identifying Brake Fluid Level In Reservoir
Courtesy of TOYOTA MOTOR SALES, U.S.A., INC.

TEXT IN ILLUSTRATION

*a	MAX Line
*b	MIN Line

If brake fluid level is lower than the MIN line, check for leaks and inspect the disc brake pads. If necessary, refill the reservoir with brake fluid to the MAX line after repair or replacement.

Brake Fluid

SAE J1703 or FMVSS No. 116 DOT 3

NOTE: **If using a dropper to adjust the fluid amount, make sure that the dropper has not been used with mineral oils, water or deteriorated brake fluid. Sealed areas may deteriorate and lead to fluid leaks, or the fluid may deteriorate and lead to decreased efficiency.**

REPLACEMENT

REPLACEMENT

NOTE:

- **Move the shift lever to P and apply the parking brake before replacing the**

brake fluid.

- **Add brake fluid to keep the level between the MIN and MAX lines of the reservoir while replacing the brake fluid.**
- **If brake fluid leaks onto any painted surface, immediately wash it off.**

HINT:

If any work is performed on the brake system or if air in the brake lines is suspected, bleed the brake system.

REPLACEMENT

1. **FILL RESERVOIR WITH BRAKE FLUID**
   a. Remove the brake master cylinder reservoir filler cap.

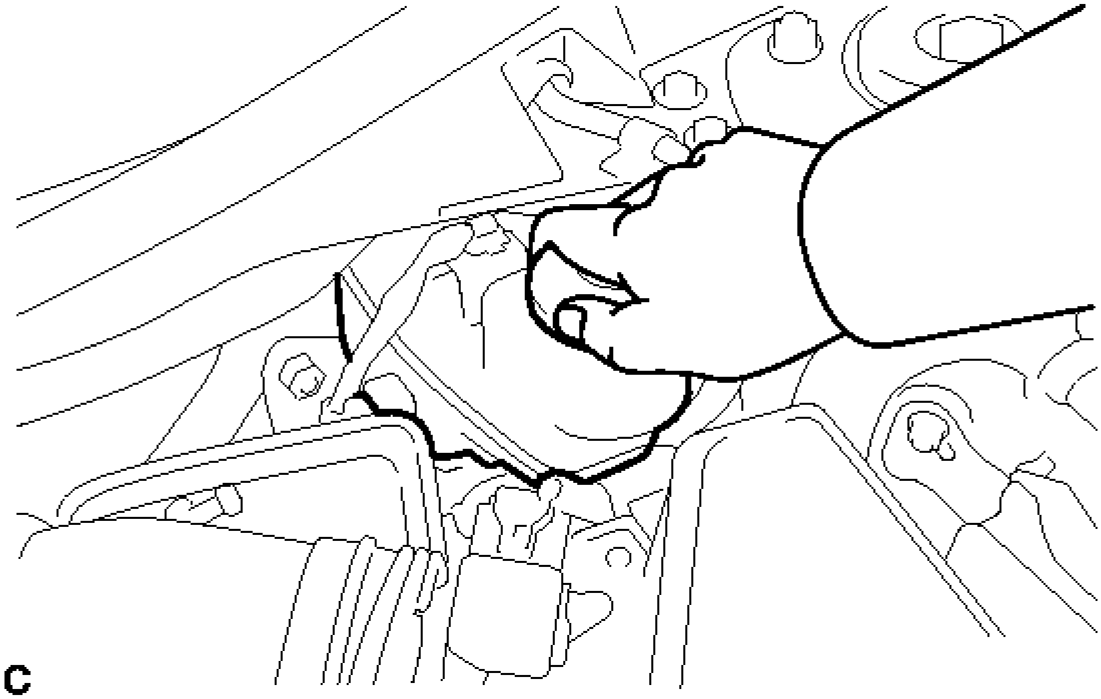

Fig. 5: Identifying Reservoir
Courtesy of TOYOTA MOTOR SALES, U.S.A., INC.

   b. Fill the reservoir with brake fluid.

   Brake Fluid

   SAE J1703 or FMVSS No. 116 DOT 3

   NOTE: **Make sure that there is sufficient brake fluid in the reservoir.**

2. **BLEED BRAKE LINE**

NOTE:

- **Bleed the brake line of the wheel farthest from the master cylinder first.**
- **Add brake fluid to keep the level between the MIN and MAX lines of the reservoir while bleeding the brake lines.**

a. Connect a vinyl tube to the bleeder plug.
b. Depress the brake pedal several times, and then loosen the bleeder plug with the pedal depressed.*1
c. When fluid stops coming out, tighten the bleeder plug and release the brake pedal.*2
d. Repeat steps *1 and *2 until all the air in the brake fluid is completely bled out and a new brake fluid comes out.
e. Tighten the bleeder plug completely.

   Torque: 8.3 N*m (85 kgf*cm, 73 in.*lbf)

f. Repeat the above steps to replace the brake fluid of the brake lines for each wheel.

3. **INSPECT FOR BRAKE FLUID LEAK**
4. **INSPECT BRAKE FLUID LEVEL IN RESERVOIR** See step 1

BLEEDING

BLEEDING

NOTE:

- **Move the shift lever to P and apply the parking brake before bleeding the brakes.**
- **Add brake fluid to keep the level between the MIN and MAX lines of the reservoir while bleeding the brakes.**
- **If brake fluid leaks onto any painted surface, immediately wash it off.**
- **Do not operate the brake actuator assembly while air is in the brake system or in the brake master cylinder sub-assembly. Doing so may cause air to enter the brake actuator assembly.**
- **If bleeding the brake actuator assembly is difficult due to air in the brake actuator assembly, replace it with a new one.**

HINT:

If any work is performed on the brake system or if air in the brake lines is suspected, bleed the air from the brake system.

BLEEDING

1. **FILL RESERVOIR WITH BRAKE FLUID** See step 1
2. **BLEED BRAKE MASTER CYLINDER**

NOTE: To prevent brake fluid from damaging painted surfaces, cover any surrounding parts with a piece of cloth.

HINT:

If the brake master cylinder sub-assembly is reinstalled or runs out of brake fluid, bleed the brake master cylinder sub-assembly.

a. Using a union nut wrench, disconnect the 2 brake lines from the brake master cylinder sub-assembly.

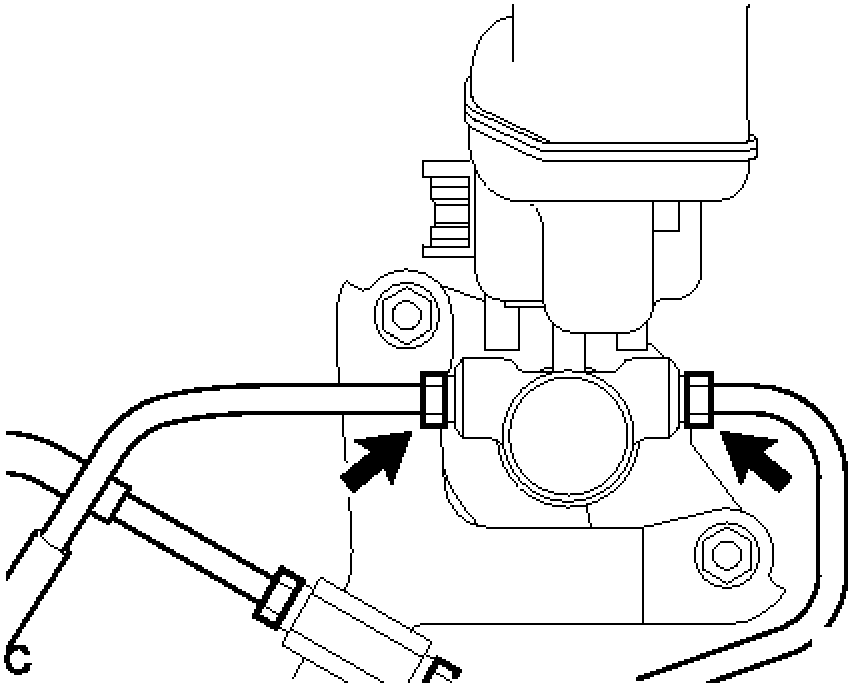

Fig. 6: Identifying Brake Lines
Courtesy of TOYOTA MOTOR SALES, U.S.A., INC.

b. Slowly depress the brake pedal and hold it.*1

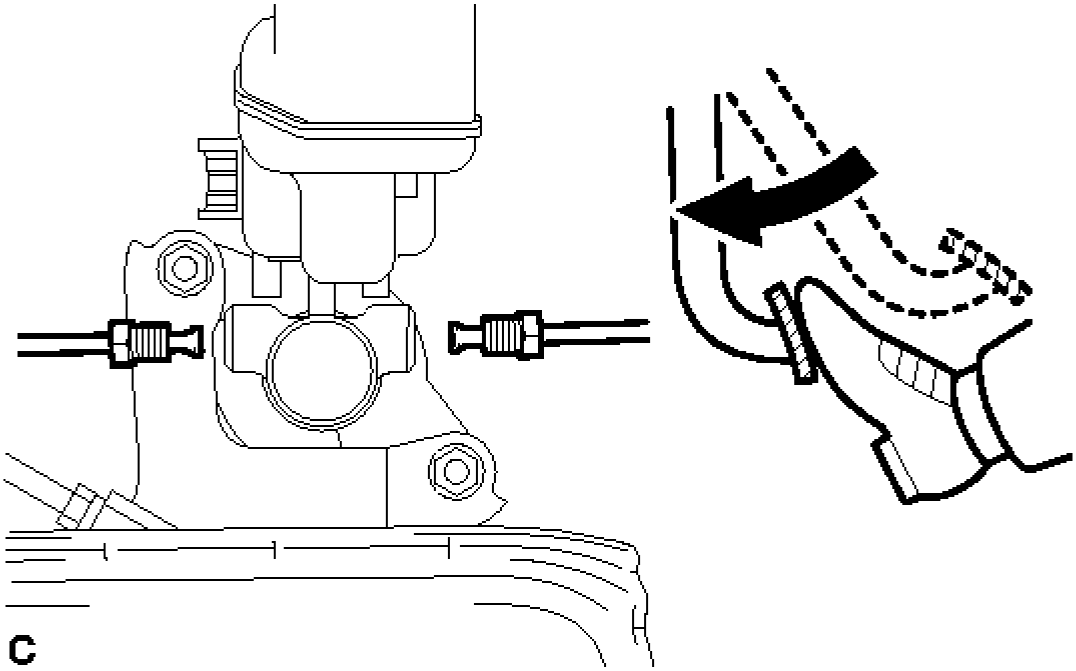

Fig. 7: Depressing Brake Pedal
Courtesy of TOYOTA MOTOR SALES, U.S.A., INC.

c. Cover the 2 outer holes with fingers, and release the brake pedal.*2

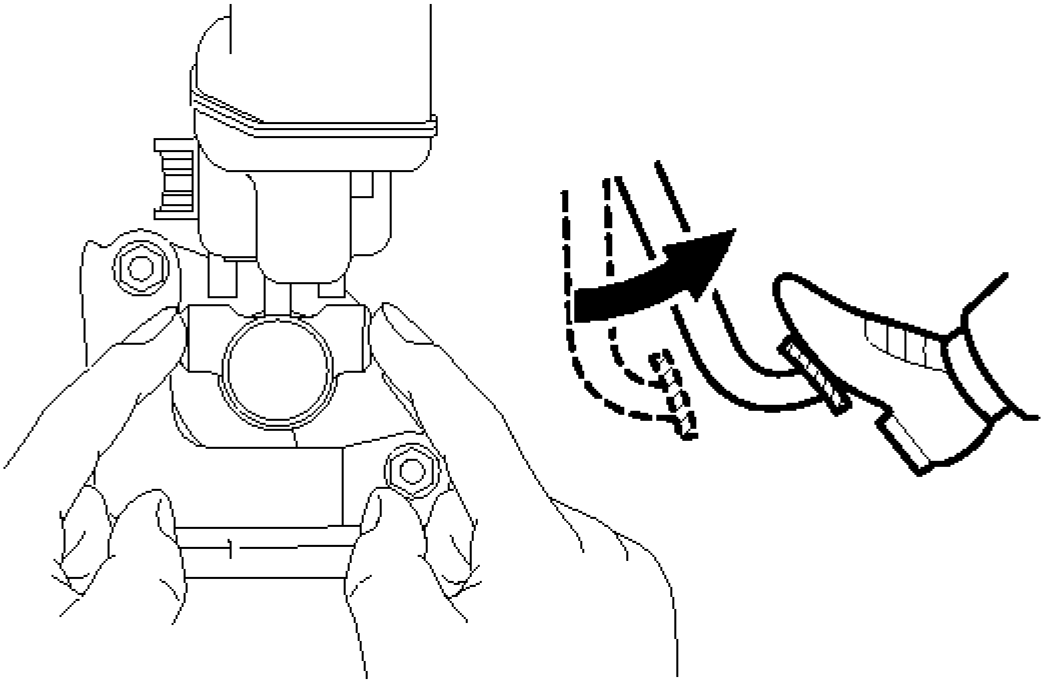

Fig. 8: Covering Outer Holes And Releasing Brake Pedal
Courtesy of TOYOTA MOTOR SALES, U.S.A., INC.

d. Repeat steps *1 and *2, 3 or 4 times.
e. Using a union nut wrench, connect the 2 brake lines to the brake master cylinder sub-assembly.

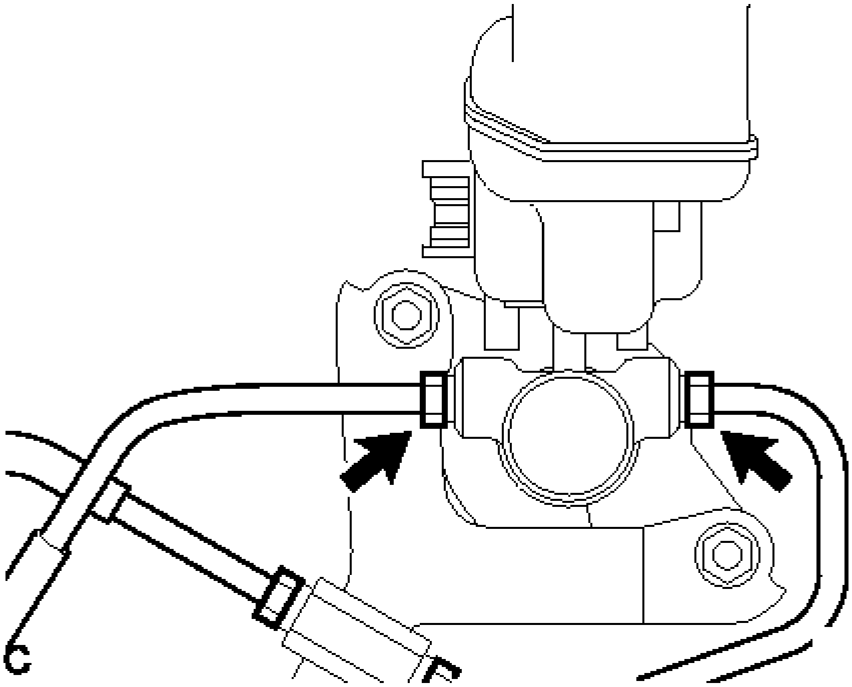

Fig. 9: Identifying Brake Lines
Courtesy of TOYOTA MOTOR SALES, U.S.A., INC.

Torque: 20 N*m (199 kgf*cm, 14 ft.*lbf)

NOTE:

- **Do not bend or damage the brake lines.**
- **Do not allow brake lines to twist and interfere with other parts or vehicle body during tightening.**
- **Do not allow any foreign matter such as dirt or dust to enter the brake lines.**
- **Use the formula to calculate special torque values for situations where the union nut wrench is combined with a torque wrench. Refer to PRECAUTION .**

3. **BLEED BRAKE LINE** See step 2
4. **INSPECT FOR BRAKE FLUID LEAK**
5. **INSPECT BRAKE FLUID LEVEL IN RESERVOIR** See step 1

BRAKE PEDAL

COMPONENTS

ILLUSTRATION

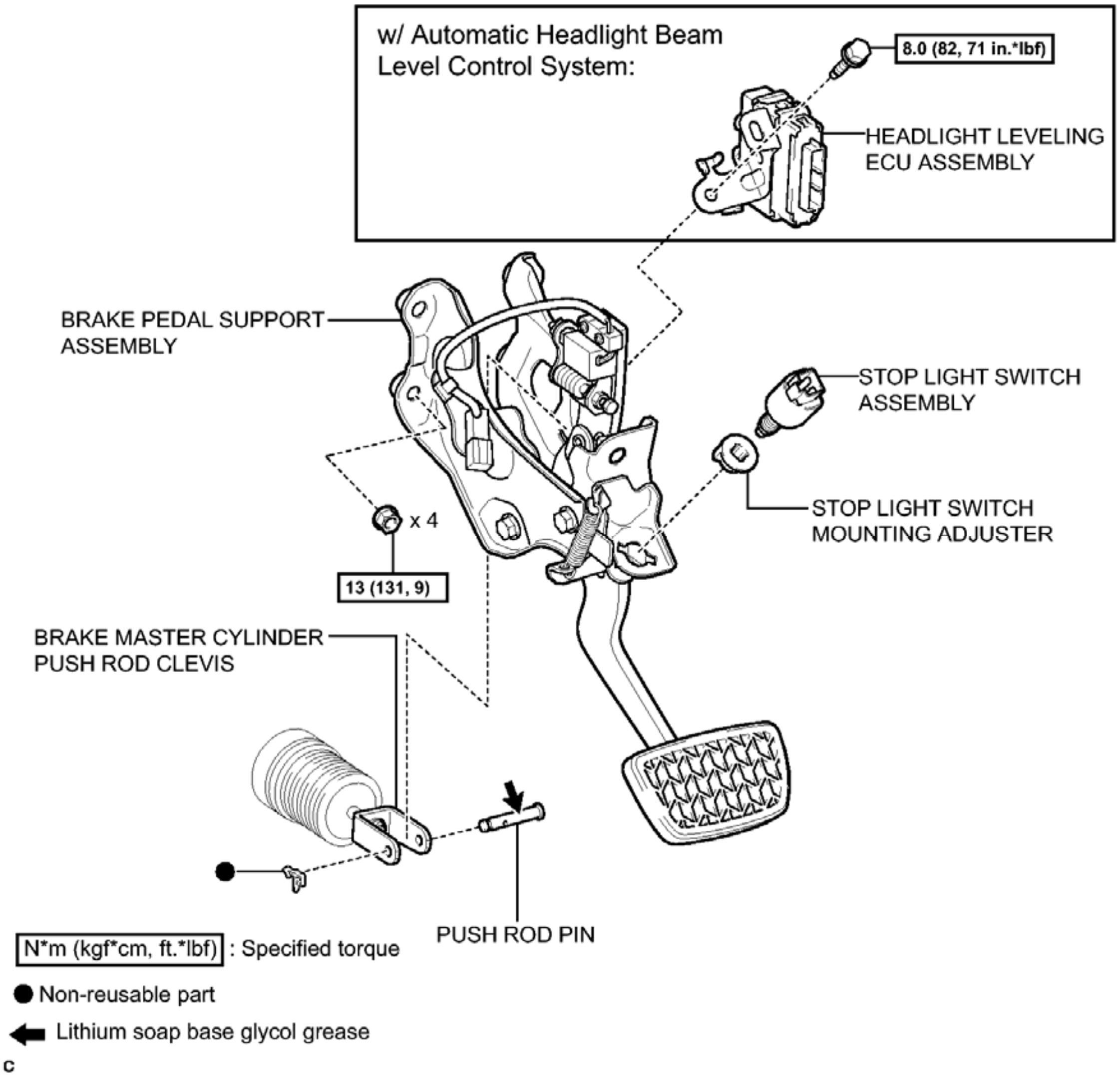
w/ Automatic Headlight Beam Level Control System:
8.0 (82, 71 in.*lbf)
HEADLIGHT LEVELING ECU ASSEMBLY
BRAKE PEDAL SUPPORT ASSEMBLY
STOP LIGHT SWITCH ASSEMBLY
x 4
STOP LIGHT SWITCH MOUNTING ADJUSTER
13 (131, 9)
BRAKE MASTER CYLINDER PUSH ROD CLEVIS
PUSH ROD PIN
N*m (kgf*cm, ft.*lbf) : Specified torque
● Non-reusable part
Lithium soap base glycol grease
c

Fig. 10: Identifying Brake Pedal Replacement Components With Torque Specifications (1 Of 2)
Courtesy of TOYOTA MOTOR SALES, U.S.A., INC.

ILLUSTRATION

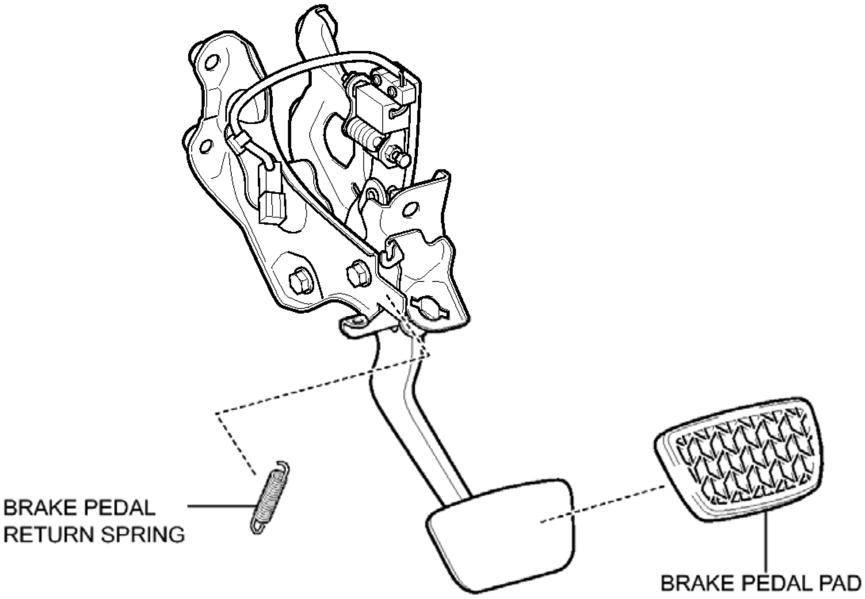

c

Fig. 11: Identifying Brake Pedal Replacement Components With Torque Specifications (2 Of 2)
Courtesy of TOYOTA MOTOR SALES, U.S.A., INC.

REMOVAL

REMOVAL

1. **REMOVE INSTRUMENT PANEL REINFORCEMENT ASSEMBLY WITH AIR CONDITIONING UNIT**

   Refer to **REMOVAL**

2. **REMOVE HEADLIGHT LEVELING ECU ASSEMBLY (w/ Automatic Headlight Beam Level Control System)** . Refer to **REMOVAL - Step 2**
3. **REMOVE STOP LIGHT SWITCH ASSEMBLY** . Refer to **REMOVAL - Step 1**
4. **REMOVE STOP LIGHT SWITCH MOUNTING ADJUSTER**
5. **REMOVE PUSH ROD PIN**
   1. Remove the clip and push rod pin.

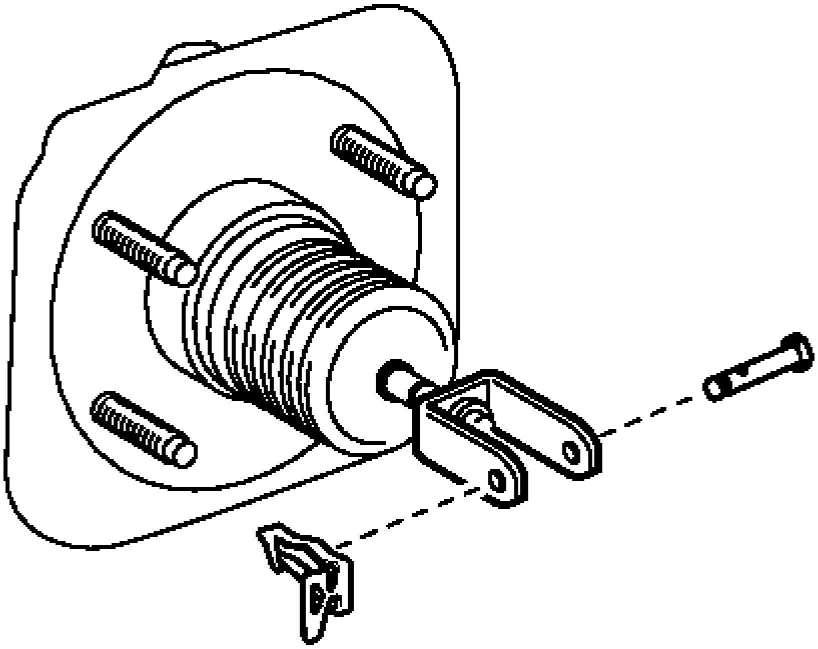

Fig. 12: Identifying Push Rod Pin Clip
Courtesy of TOYOTA MOTOR SALES, U.S.A., INC.

b. Separate the brake master cylinder push rod clevis from the brake pedal support assembly.

6. **REMOVE BRAKE PEDAL RETURN SPRING**
   a. Remove the brake pedal return spring from the brake pedal support assembly.

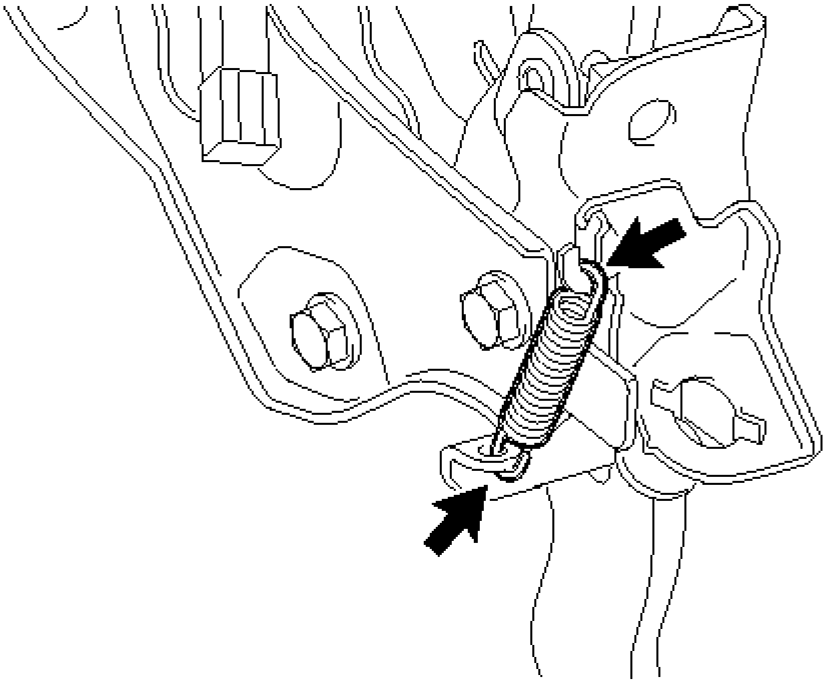

Fig. 13: Identifying Brake Pedal Return Spring
Courtesy of TOYOTA MOTOR SALES, U.S.A., INC.

7. **REMOVE BRAKE PEDAL SUPPORT ASSEMBLY**
    a. Disconnect the brake pedal load sensing switch connector and disengage the clamp.

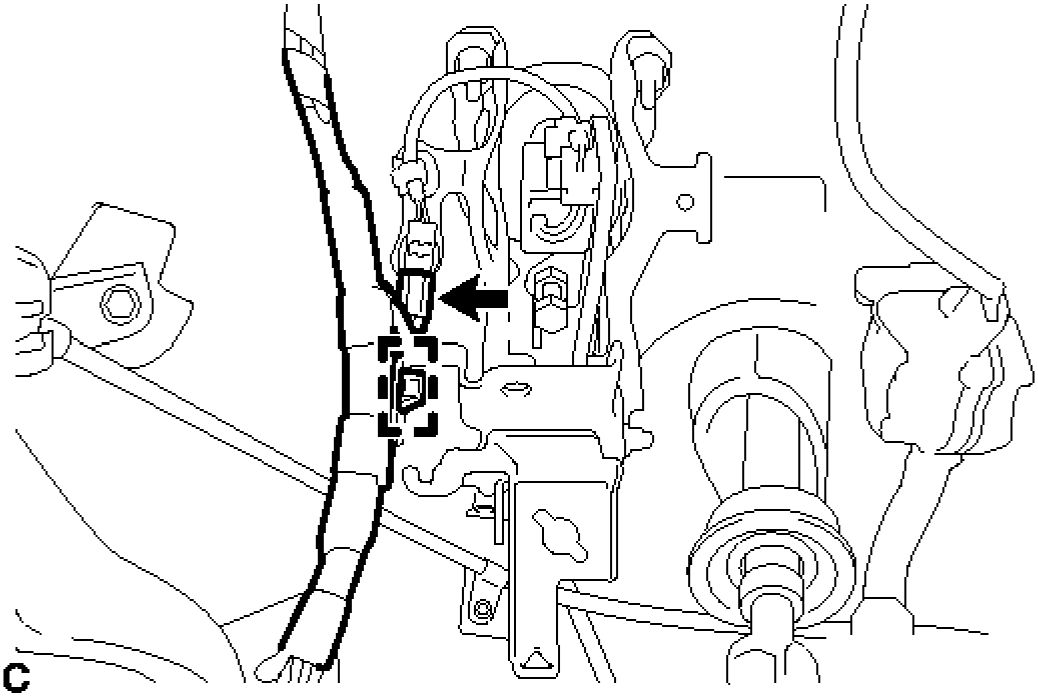

Fig. 14: Identifying Brake Pedal Load Sensing Switch Connector And Clamp
Courtesy of TOYOTA MOTOR SALES, U.S.A., INC.

    b. Disengage the 3 clamps and separate the wire harness from the brake pedal support assembly.

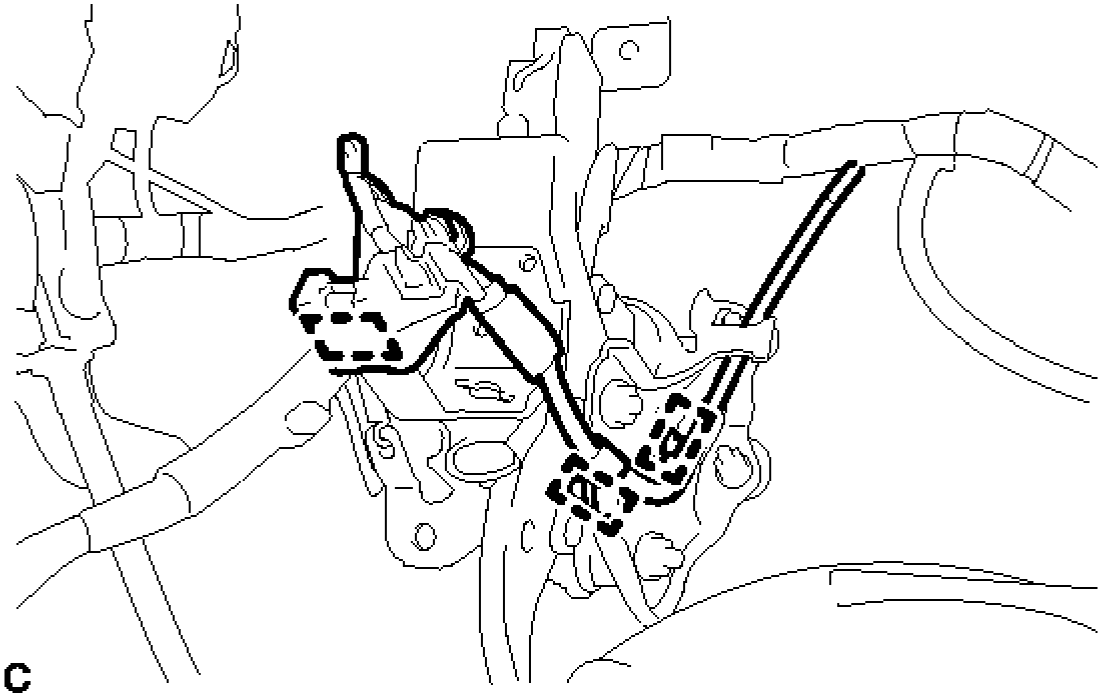

Fig. 15: Identifying Brake Pedal Support Assembly Clamps
Courtesy of TOYOTA MOTOR SALES, U.S.A., INC.

c. Remove the 4 nuts and brake pedal support assembly.

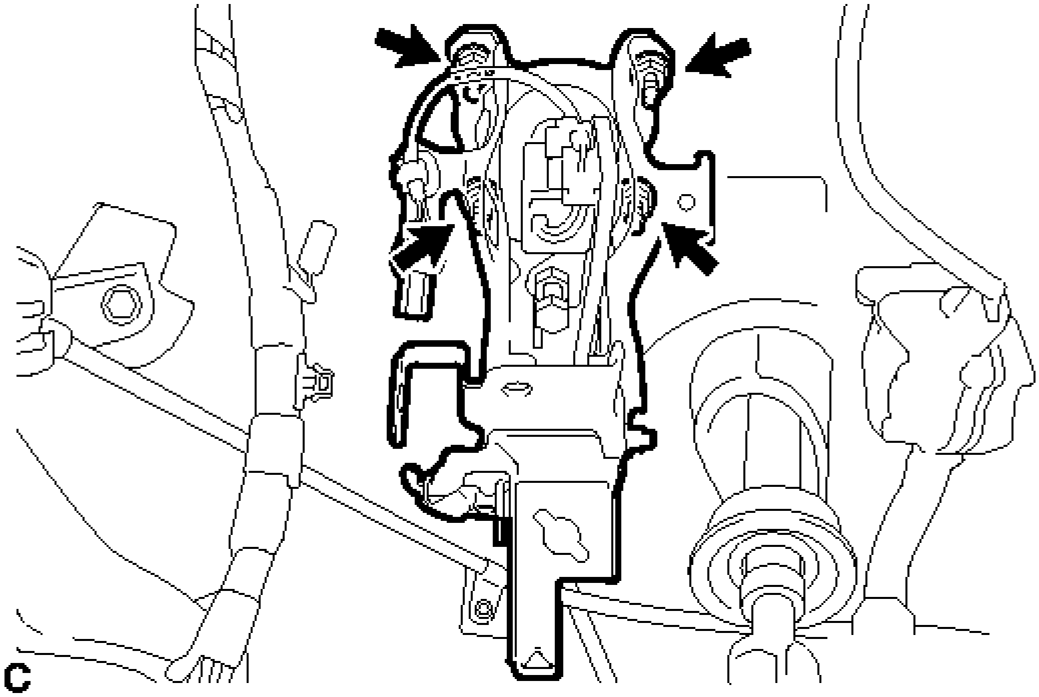

Fig. 16: Identifying Brake Pedal Support Assembly Nuts
Courtesy of TOYOTA MOTOR SALES, U.S.A., INC.

DISASSEMBLY

DISASSEMBLY

1. **REMOVE BRAKE PEDAL PAD**
   a. Remove the brake pedal pad from the brake pedal support assembly.

ADJUSTMENT

ADJUSTMENT

1. **INSPECT AND ADJUST BRAKE PEDAL HEIGHT**
   a. Check the brake pedal height.
      1. Turn back the carpet.
      2. Turn back the dash panel insulator assembly from the slit provided on the dash panel insulator assembly.
      3. Measure the shortest distance between the brake pedal pad surface and floor panel.

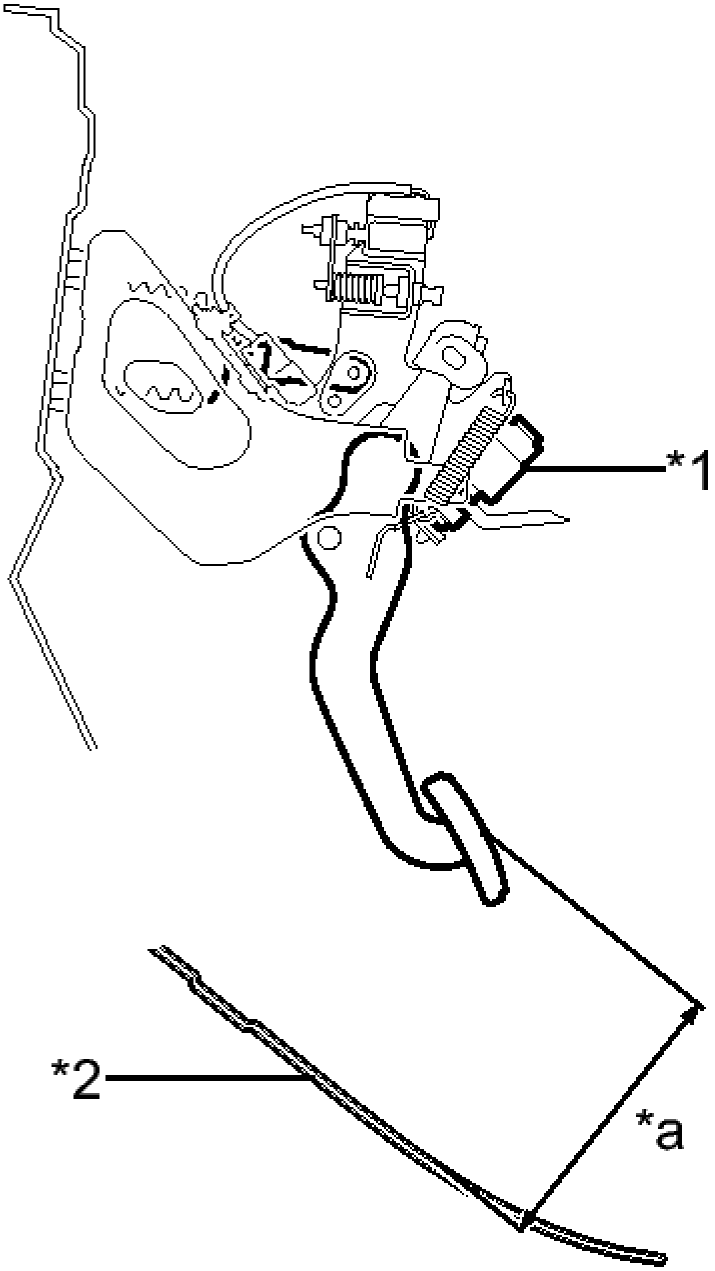

C

Fig. 17: Identifying Stop Light Switch Assembly, Floor Panel And Brake Pedal Height
Courtesy of TOYOTA MOTOR SALES, U.S.A., INC.

TEXT IN ILLUSTRATION

	Stop

*1	Light Switch Assembly
*2	Floor Panel
*a	Brake Pedal Height

Pedal height from floor panel

138.5 to 148.5 mm (5.46 to 5.84 in.)

If pedal height is incorrect, inspect and adjust the push rod length according to the procedure below.

b. Adjust the push rod length.
   1. Remove the stop light switch assembly. Refer to **REMOVAL - Step 1** .
   2. Remove the brake booster assembly. Refer to **REMOVAL**.
   3. Loosen the lock nut and adjust the push rod length shown in the illustration by turning the brake master cylinder push rod clevis to achieve the correct length.

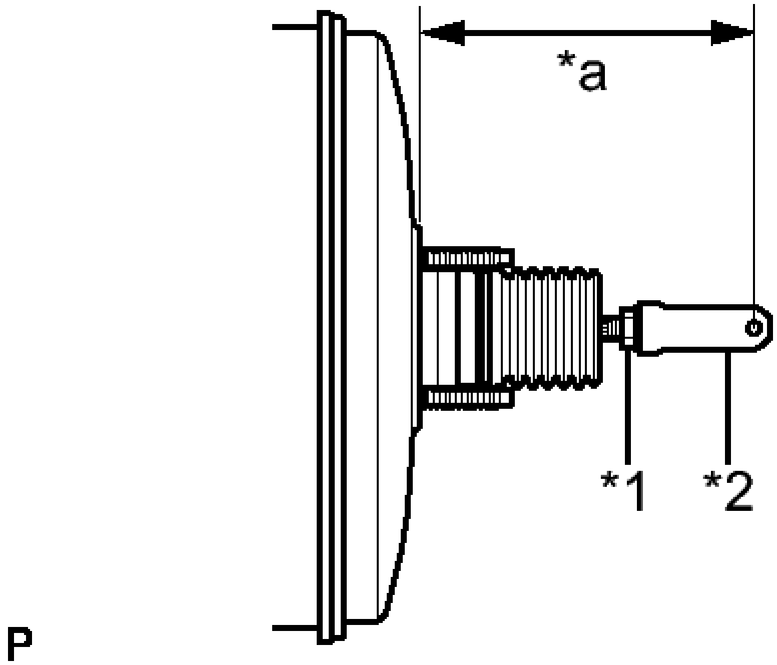

Fig. 18: Identifying Lock Nut And Brake Master Cylinder Push Rod Clevis
Courtesy of TOYOTA MOTOR SALES, U.S.A., INC.

TEXT IN ILLUSTRATION

*1	Lock Nut
*2	Brake Master Cylinder Push Rod Clevis
*a	Push Rod Length

Push rod length

148.6 to 149.6 mm (5.86 to 5.88 in.)

4. Tighten the lock nut.

   Torque: 26 N*m (265 kgf*cm, 19 ft.*lbf)

5. Install the brake booster assembly. Refer to **INSTALLATION**.
   - If the pedal height is incorrect even when the push rod length is adjusted, check the brake pedal support assembly and floor panel.
   - If necessary, replace the brake pedal support assembly.
6. Install the stop light switch assembly. Refer to **INSTALLATION - Step 1** .

c. After adjusting the pedal height, check the brake pedal free play.

2. **INSPECT BRAKE PEDAL FREE PLAY**
   a. Stop the engine and firmly depress the brake pedal several times until no vacuum is left in the booster.
   b. Depress the pedal until a slight resistance is felt. Measure the distance as shown in the illustration.

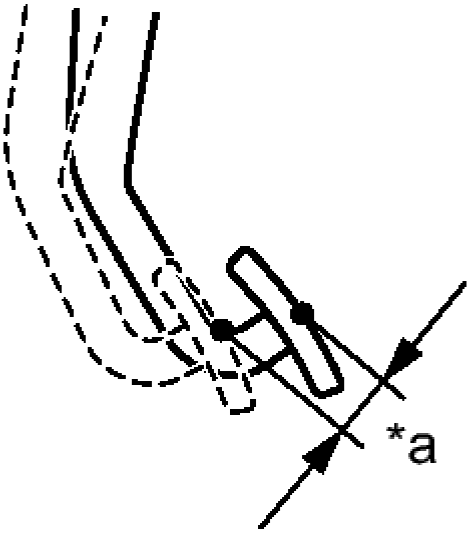

Fig. 19: Identifying Brake Pedal Free Play
Courtesy of TOYOTA MOTOR SALES, U.S.A., INC.

TEXT IN ILLUSTRATION

*a	Brake Pedal Free Play

Pedal free play

1.0 to 6.0 mm (0.0394 to 0.236 in.)

If the pedal free play is not as specified, check the stop light switch clearance. Refer to **INSTALLATION - Step 1** . If the pedal free play is as specified, proceed to the Inspect Brake Pedal Reserve Distance procedure in step 3.

3. **INSPECT BRAKE PEDAL RESERVE DISTANCE**

   HINT:

   Measure the distance at the same point used for the brake pedal height inspection.

   a. Release the parking brake.
   b. With the engine running, depress the brake pedal and measure the pedal reserve distance.

      Pedal reserve distance from the floor panel at 500 N (51 kgf, 112 lbf)

More than 96.0 mm (3.78 in.)

If the distance is not as specified, troubleshoot the brake system. Refer to **PROBLEM SYMPTOMS TABLE** .

REASSEMBLY

REASSEMBLY

1. **INSTALL BRAKE PEDAL PAD**
    a. Install the brake pedal pad to the brake pedal support assembly.

INSTALLATION

INSTALLATION

1. **INSTALL BRAKE PEDAL SUPPORT ASSEMBLY**
    a. Install the brake pedal support assembly with the 4 nuts.

    Torque: 13 N*m (131 kgf*cm, 9 ft.*lbf)

    b. Engage the 3 clamps to install the wire harness to the brake pedal support assembly.
    c. Connect the brake pedal load sensing switch connector and engage the clamp.
2. **INSTALL BRAKE PEDAL RETURN SPRING**
    a. Install the brake pedal return spring to the brake pedal support assembly.

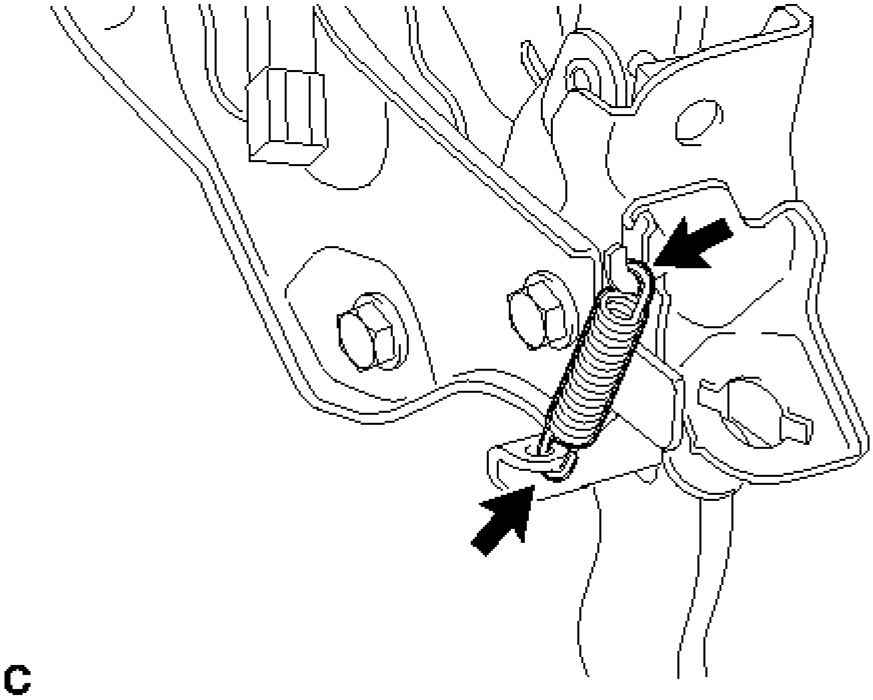

Fig. 20: Identifying Brake Pedal Return Spring
Courtesy of TOYOTA MOTOR SALES, U.S.A., INC.

NOTE: **Attach the bottom part of the brake pedal return spring first, making sure that the open part of the hook is facing the rear of the vehicle. Attach the top part of the brake pedal return spring second, making sure that the open part of the hook is facing the front of the vehicle.**

3. **INSTALL PUSH ROD PIN**
   a. Apply lithium soap base glycol grease to the push rod pin.

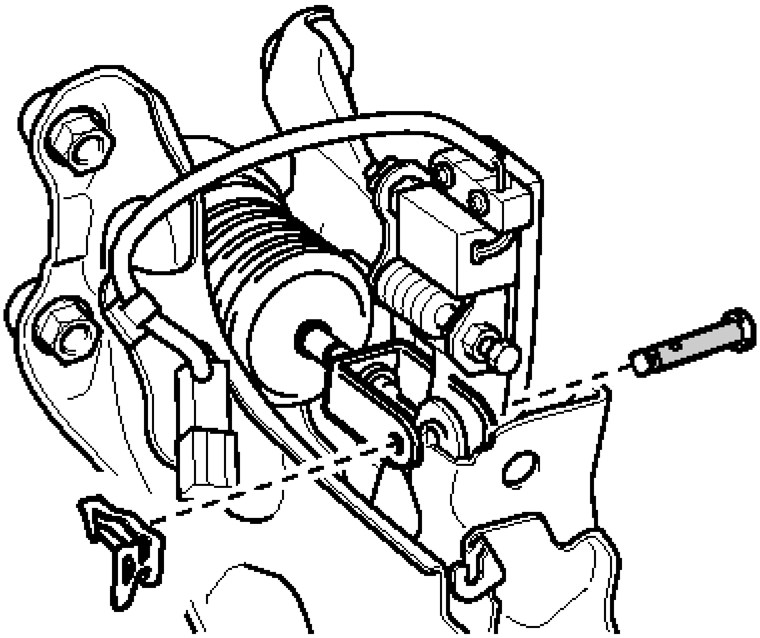

C

Fig. 21: Identifying Push Rod Pin
Courtesy of TOYOTA MOTOR SALES, U.S.A., INC.

TEXT IN ILLUSTRATION

Lithium Soap Base Glycol Grease

   b. Connect the brake master cylinder push rod clevis to the brake pedal support assembly with the push rod pin, and install a new clip as shown in the illustration.

NOTE:

- **Be sure to insert the pin with its clip end facing the outside of the vehicle.**

- **Make sure that the brake master cylinder push rod clevis moves sideway.**

4. **INSTALL STOP LIGHT SWITCH MOUNTING ADJUSTER**
5. **INSTALL STOP LIGHT SWITCH ASSEMBLY** . Refer to **INSTALLATION - Step 1**
6. **INSTALL HEADLIGHT LEVELING ECU ASSEMBLY (w/ Automatic Headlight Beam Level Control System)** . Refer to **INSTALLATION - Step 1**
7. **INSTALL INSTRUMENT PANEL REINFORCEMENT ASSEMBLY WITH AIR CONDITIONING UNIT**

   Refer to **INSTALLATION - Step 3**

8. **INSPECT AND ADJUST BRAKE PEDAL**

   Refer to **ADJUSTMENT**

BRAKE MASTER CYLINDER

COMPONENTS

ILLUSTRATION

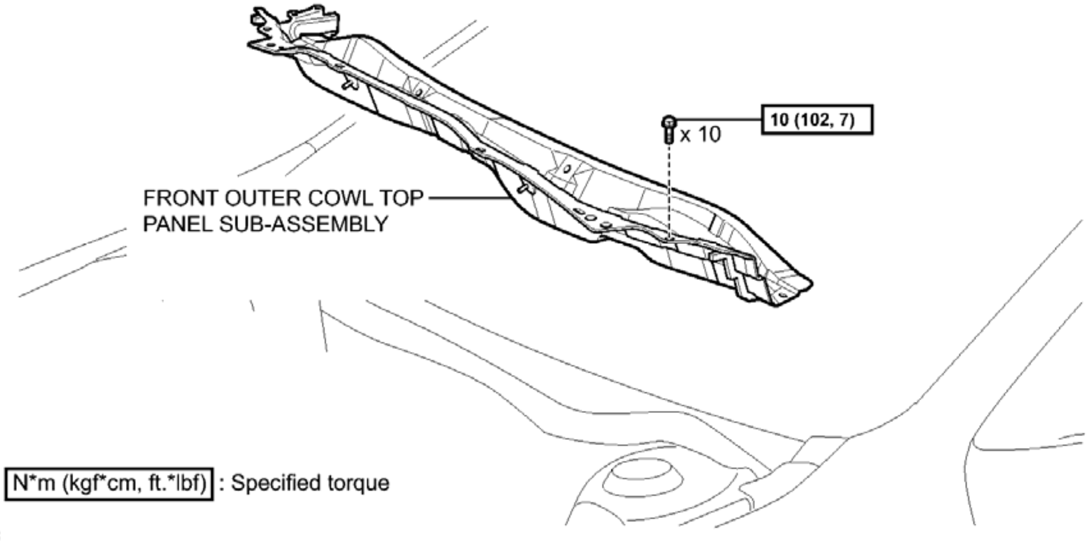
10 (102, 7)
x 10
FRONT OUTER COWL TOP PANEL SUB-ASSEMBLY
N*m (kgf*cm, ft.*lbf) : Specified torque
c

Fig. 22: Identifying Brake Master Cylinder Replacement Components With Torque Specifications (1 Of 5)
Courtesy of TOYOTA MOTOR SALES, U.S.A., INC.

ILLUSTRATION

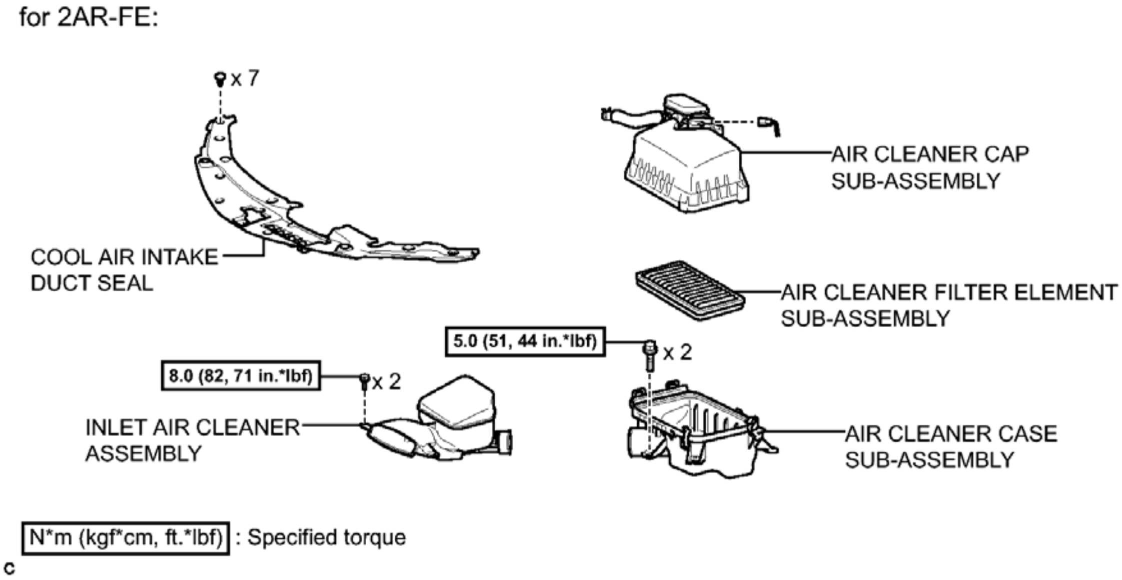
for 2AR-FE:
x 7
COOL AIR INTAKE DUCT SEAL
AIR CLEANER CAP SUB-ASSEMBLY
AIR CLEANER FILTER ELEMENT SUB-ASSEMBLY
5.0 (51, 44 in.*lbf)
x 2
8.0 (82, 71 in.*lbf)
x 2
INLET AIR CLEANER ASSEMBLY
AIR CLEANER CASE SUB-ASSEMBLY
N*m (kgf*cm, ft.*lbf) : Specified torque
c

Fig. 23: Identifying Brake Master Cylinder Replacement Components With Torque Specifications (2 Of 5)
Courtesy of TOYOTA MOTOR SALES, U.S.A., INC.

ILLUSTRATION

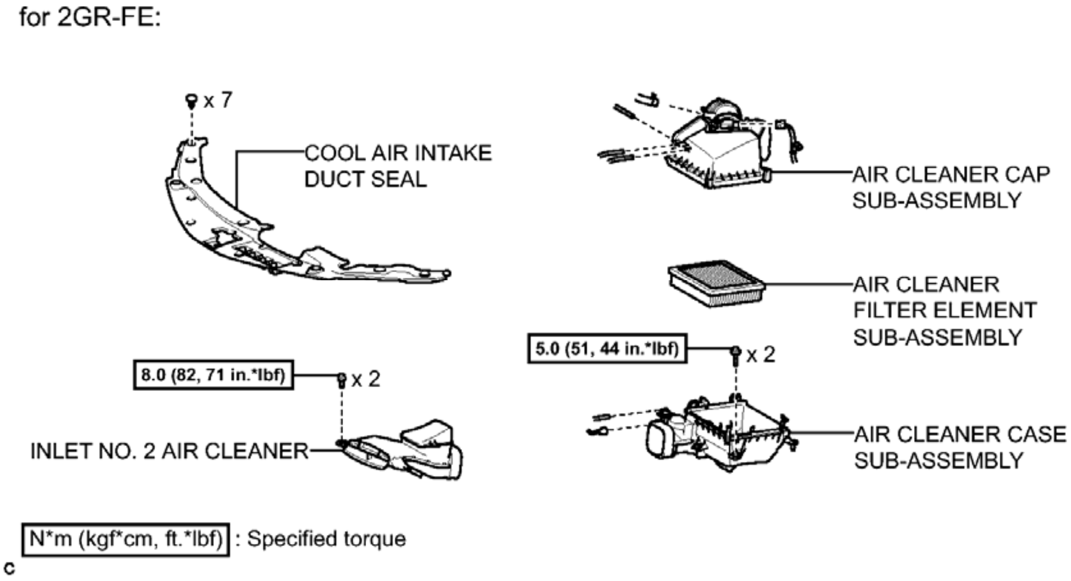
for 2GR-FE:
x 7
COOL AIR INTAKE DUCT SEAL
AIR CLEANER CAP SUB-ASSEMBLY
AIR CLEANER FILTER ELEMENT SUB-ASSEMBLY
5.0 (51, 44 in.*lbf)
x 2
8.0 (82, 71 in.*lbf)
x 2
INLET NO. 2 AIR CLEANER
AIR CLEANER CASE SUB-ASSEMBLY
N*m (kgf*cm, ft.*lbf) : Specified torque
c

Fig. 24: Identifying Brake Master Cylinder Replacement Components With Torque Specifications (3 Of 5)
Courtesy of TOYOTA MOTOR SALES, U.S.A., INC.

ILLUSTRATION

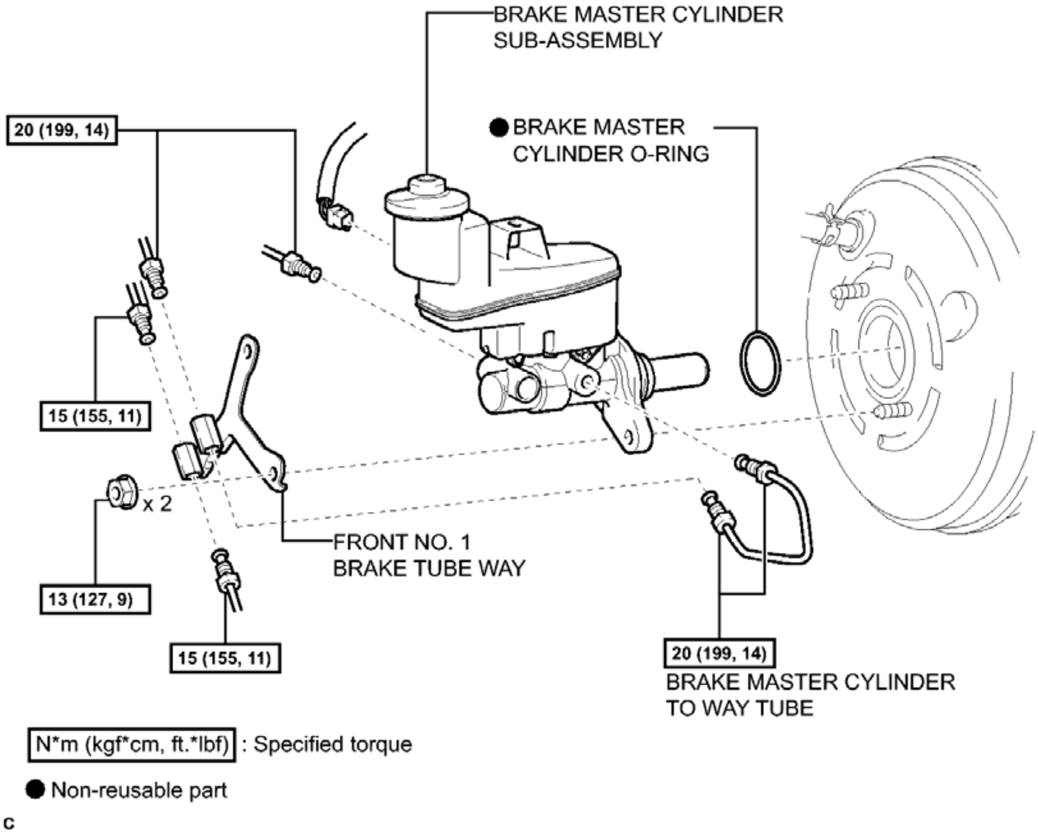

BRAKE MASTER CYLINDER SUB-ASSEMBLY
20 (199, 14)
● BRAKE MASTER CYLINDER O-RING
15 (155, 11)
x 2
13 (127, 9)
FRONT NO. 1 BRAKE TUBE WAY
15 (155, 11)
20 (199, 14)
BRAKE MASTER CYLINDER TO WAY TUBE
N*m (kgf*cm, ft.*lbf) : Specified torque
● Non-reusable part
c

Fig. 25: Identifying Brake Master Cylinder Replacement Components With Torque Specifications (4 Of 5)
Courtesy of TOYOTA MOTOR SALES, U.S.A., INC.

ILLUSTRATION

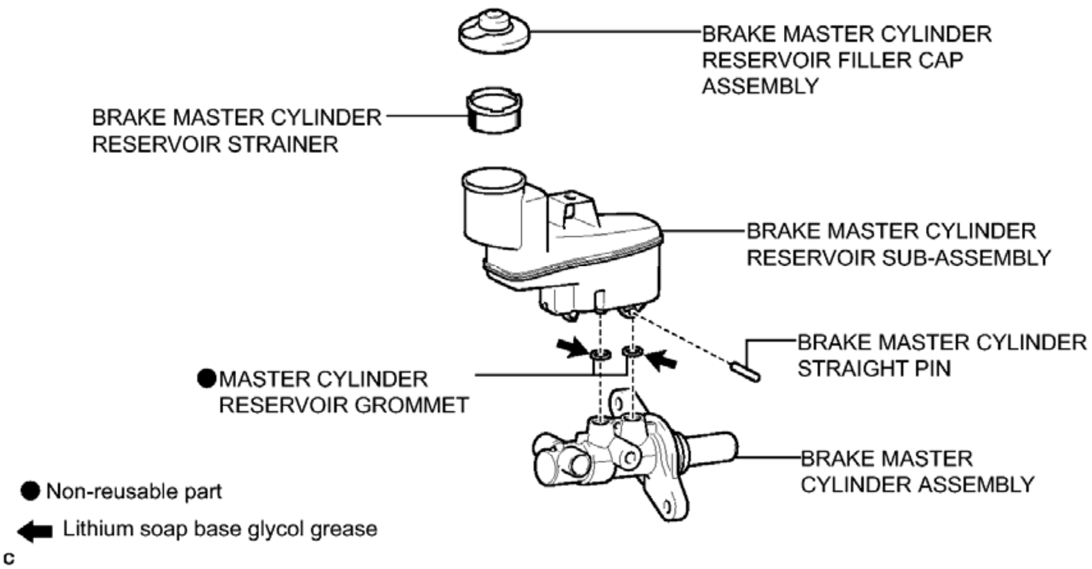
BRAKE MASTER CYLINDER RESERVOIR FILLER CAP ASSEMBLY
BRAKE MASTER CYLINDER RESERVOIR STRAINER
BRAKE MASTER CYLINDER RESERVOIR SUB-ASSEMBLY
BRAKE MASTER CYLINDER STRAIGHT PIN
● MASTER CYLINDER RESERVOIR GROMMET
BRAKE MASTER CYLINDER ASSEMBLY
● Non-reusable part
Lithium soap base glycol grease
c

Fig. 26: Identifying Brake Master Cylinder Replacement Components With Torque Specifications (5 Of 5)
Courtesy of TOYOTA MOTOR SALES, U.S.A., INC.

REMOVAL

REMOVAL

NOTE: **Make sure to release vacuum from the brake booster assembly before removing the brake master cylinder sub-assembly from the brake booster assembly.**

1. **DRAIN BRAKE FLUID**

   NOTE: **If brake fluid leaks onto any painted surface, immediately wash it off.**

2. **REMOVE WINDSHIELD WIPER MOTOR AND LINK ASSEMBLY**

   Refer to **REMOVAL**

3. **REMOVE FRONT OUTER COWL TOP PANEL SUB-ASSEMBLY**
   a. Disengage the 2 clamps and separate the wire harness from the front outer cowl top panel sub-assembly.

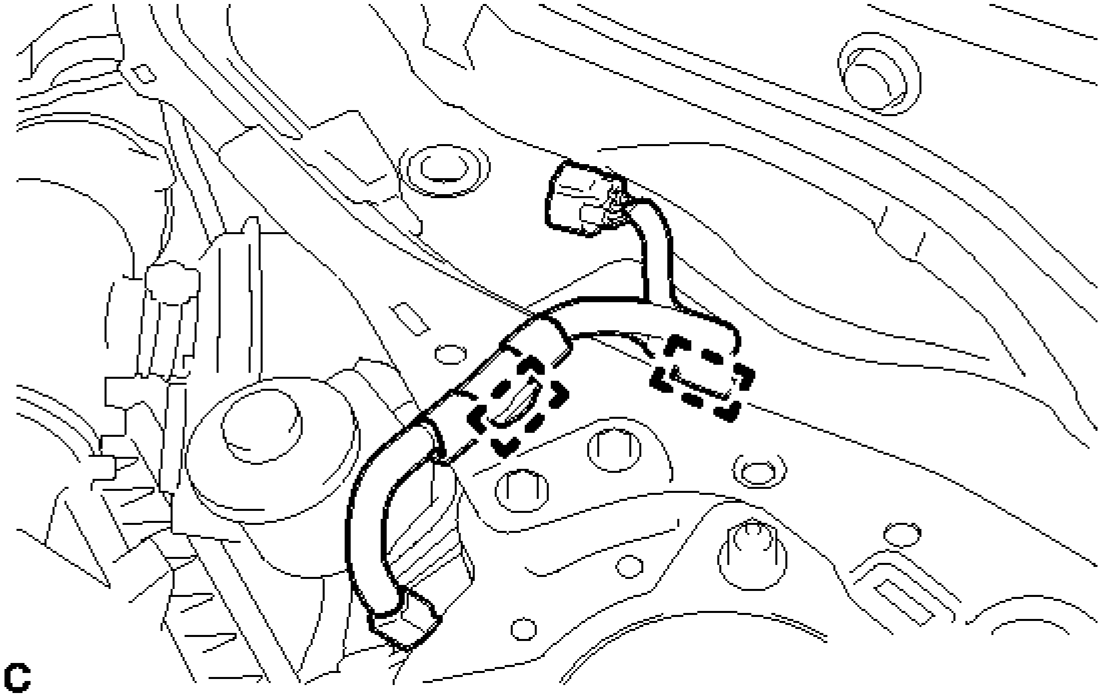

Fig. 27: Identifying Front Outer Cowl Top Panel Sub-Assembly Clamps
Courtesy of TOYOTA MOTOR SALES, U.S.A., INC.

b. Remove the 10 bolts and front outer cowl top panel sub-assembly.

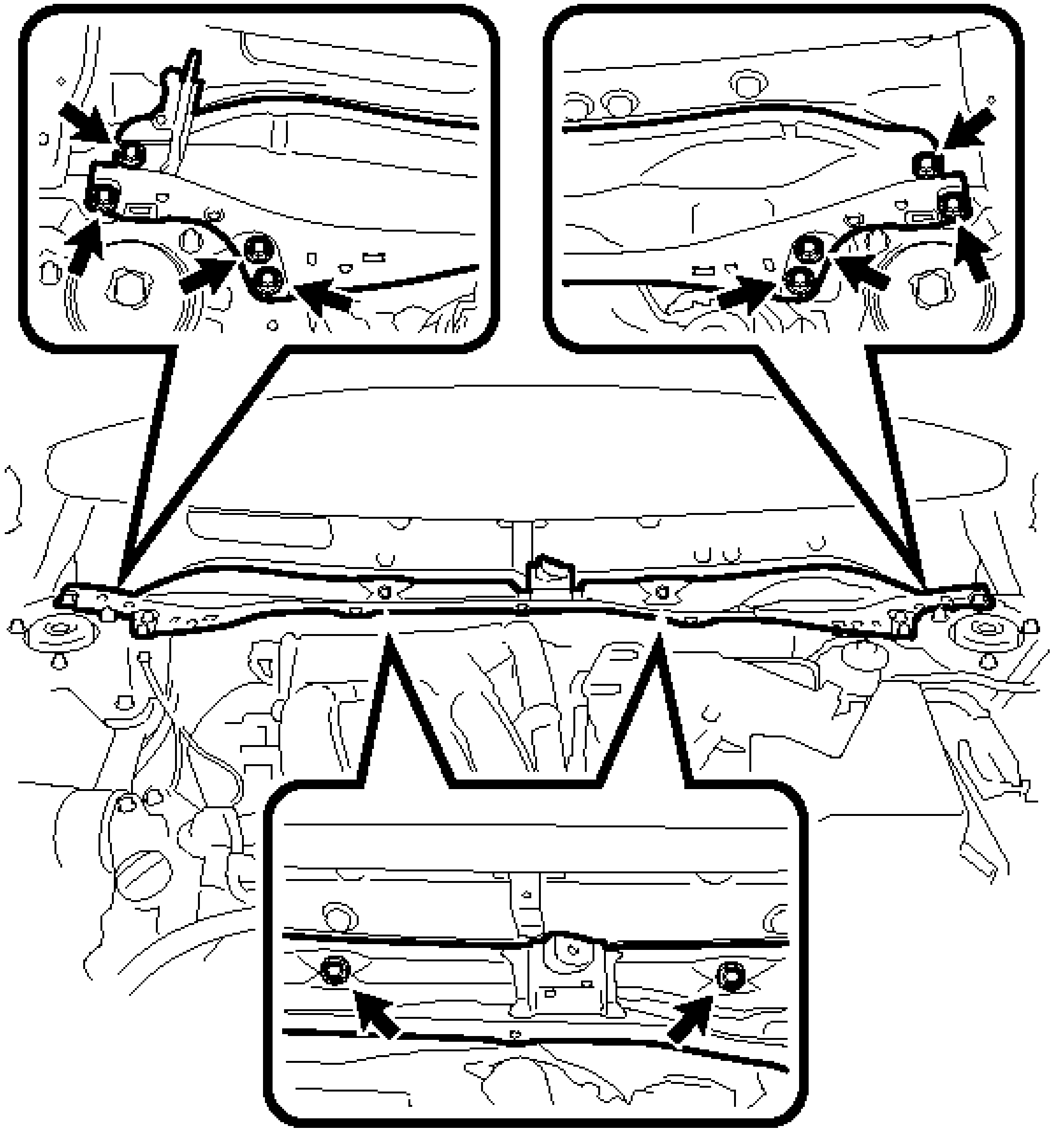

C

Fig. 28: Identifying Front Outer Cowl Top Panel Bolts
Courtesy of TOYOTA MOTOR SALES, U.S.A., INC.

4. **REMOVE COOL AIR INTAKE DUCT SEAL** . Refer to **REMOVAL - Step 1**
5. **REMOVE INLET AIR CLEANER ASSEMBLY (for 2AR-FE)** . Refer to **REMOVAL - Step 19**

6. **REMOVE AIR CLEANER CAP SUB-ASSEMBLY (for 2AR-FE)** . Refer to **REMOVAL - Step 7**
7. **REMOVE AIR CLEANER FILTER ELEMENT SUB-ASSEMBLY (for 2AR-FE)**
8. **REMOVE AIR CLEANER CASE SUB-ASSEMBLY (for 2AR-FE)** . Refer to **REMOVAL - Step 22**
9. **REMOVE INLET NO. 2 AIR CLEANER (for 2GR-FE)** . Refer to **REMOVAL - Step 18**
10. **REMOVE AIR CLEANER CAP SUB-ASSEMBLY (for 2GR-FE)** . Refer to **REMOVAL - Step 7**
11. **REMOVE AIR CLEANER FILTER ELEMENT SUB-ASSEMBLY (for 2GR-FE)**
12. **REMOVE AIR CLEANER CASE SUB-ASSEMBLY (for 2GR-FE)** . Refer to **REMOVAL - Step 21**
13. **REMOVE BRAKE MASTER CYLINDER SUB-ASSEMBLY**
    a. Disengage the clamp and disconnect the reservoir level switch connector.

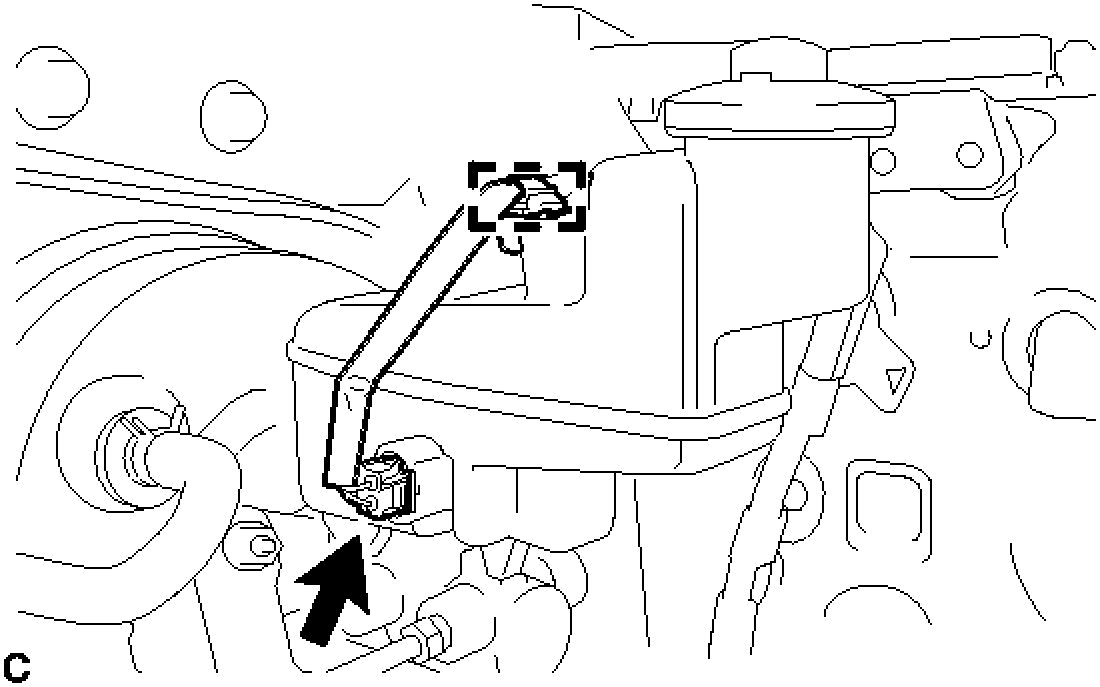

Fig. 29: Identifying Brake Master Cylinder Sub-Assembly Clamp And Connector
Courtesy of TOYOTA MOTOR SALES, U.S.A., INC.

    b. Using a union nut wrench, disconnect the 6 brake lines and remove the brake master cylinder to way tube from the brake master cylinder sub-assembly.

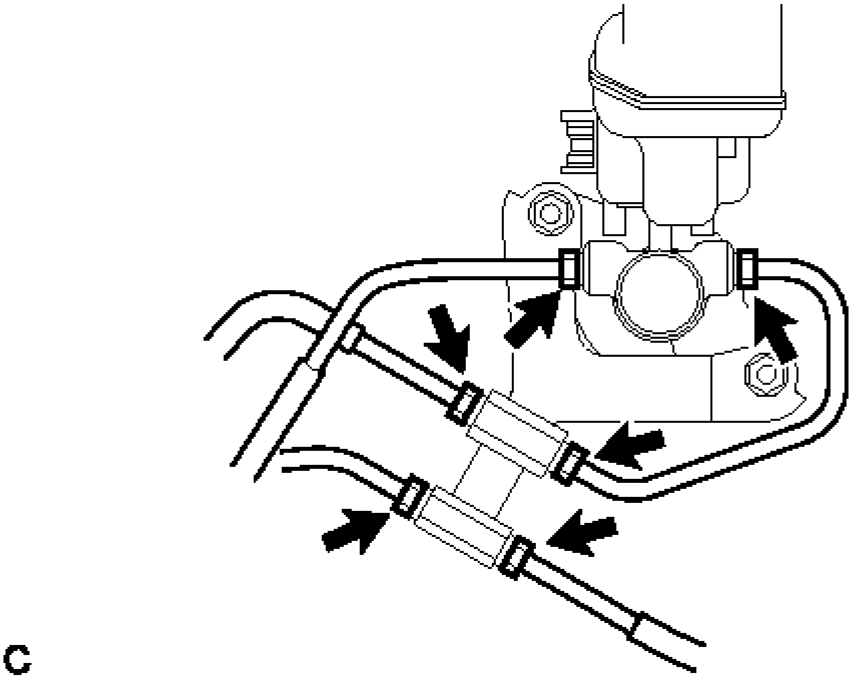

Fig. 30: Identifying Brake Lines
Courtesy of TOYOTA MOTOR SALES, U.S.A., INC.

NOTE:

- **Do not damage or deform the brake lines during the removal procedure.**
- **Do not allow any foreign matter such as dirt or dust to enter the brake lines.**

c. Remove the 2 nuts, front No. 1 brake tube way and brake master cylinder sub-assembly from the brake booster assembly.

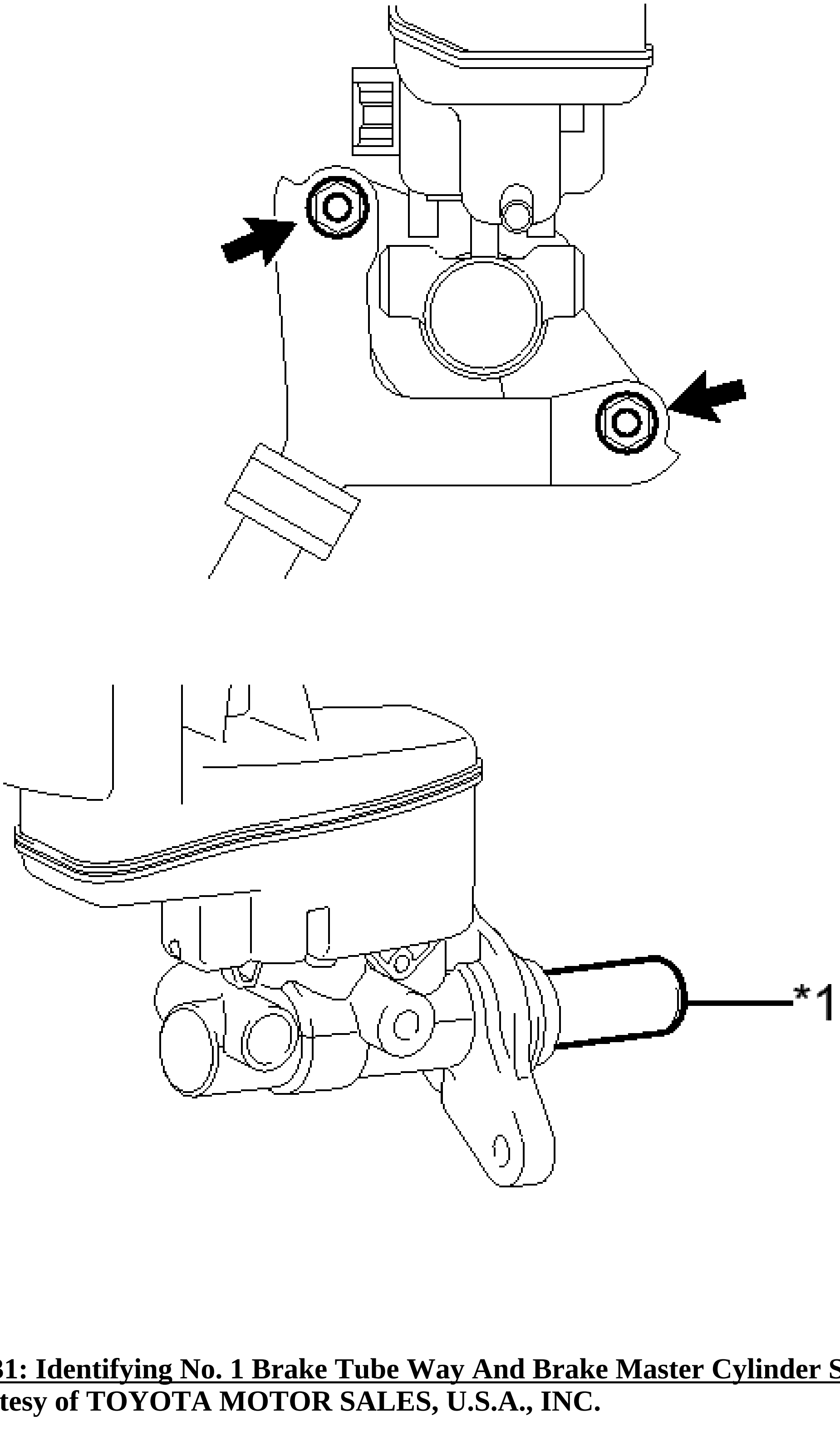

Fig. 31: Identifying No. 1 Brake Tube Way And Brake Master Cylinder Sub-Assembly Nuts
Courtesy of TOYOTA MOTOR SALES, U.S.A., INC.

TEXT IN ILLUSTRATION

	Master

*1	Cylinder Piston

NOTE:

- **Do not hold the brake master cylinder sub-assembly by the master cylinder piston. Hold the brake master cylinder sub-assembly by its body or its reservoir when carrying it.**
- **Do not pull out the master cylinder piston.**
- **Do not strike or pinch the master cylinder piston, and do not cause any damage to the master cylinder piston by any other means.**
- **When installing the brake master cylinder sub-assembly to the brake booster assembly, or when removing the brake master cylinder sub-assembly from the brake booster assembly, make sure that the brake master cylinder sub-assembly is kept horizontal or its tip faces downward (the master cylinder piston faces upward) to prevent the master cylinder piston from falling out.**
- **Do not allow any foreign matter to contaminate the master cylinder piston. If any foreign matter gets on the master cylinder piston, remove it by using a piece of cloth and then apply an even layer of lithium soap base glycol grease around the circumference (sliding part) of the master cylinder piston.**

14. **REMOVE BRAKE MASTER CYLINDER O-RING**
    a. Remove the brake master cylinder O-ring from the brake master cylinder sub-assembly.

DISASSEMBLY

DISASSEMBLY

1. **REMOVE BRAKE MASTER CYLINDER RESERVOIR FILLER CAP ASSEMBLY**
2. **REMOVE BRAKE MASTER CYLINDER RESERVOIR STRAINER**
3. **REMOVE BRAKE MASTER CYLINDER STRAIGHT PIN**
    a. Mount the brake master cylinder sub-assembly in a vise.

    NOTE: **Place aluminum plates on the vise to prevent damage to the brake master cylinder sub-assembly.**

    b. Using a pin punch and a hammer, tap out the brake master cylinder straight pin from the brake master cylinder sub-assembly.

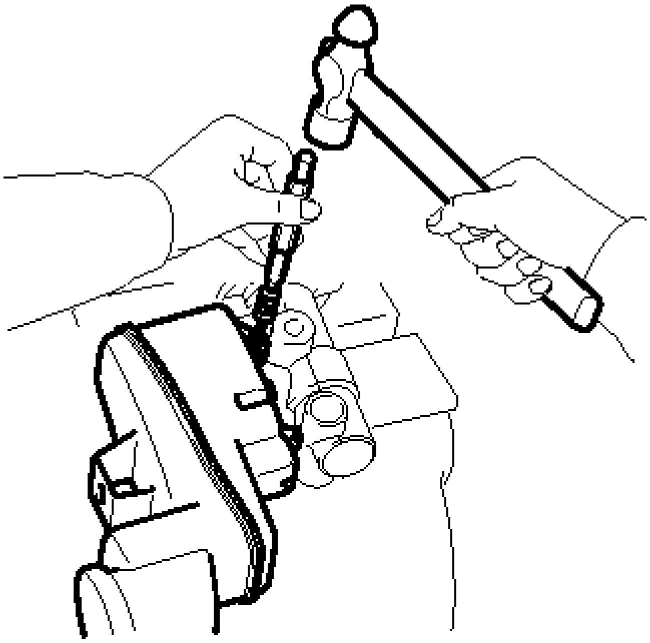

Fig. 32: Tapping Brake Master Cylinder Straight Pin
Courtesy of TOYOTA MOTOR SALES, U.S.A., INC.

NOTE: **Do not drop the brake master cylinder reservoir sub-assembly.**

4. **REMOVE BRAKE MASTER CYLINDER RESERVOIR SUB-ASSEMBLY**
    a. Remove the brake master cylinder reservoir sub-assembly from the brake master cylinder assembly.
5. **REMOVE MASTER CYLINDER RESERVOIR GROMMET**
    a. Remove the 2 master cylinder reservoir grommets from the brake master cylinder reservoir sub-assembly.

INSPECTION

INSPECTION

1. **INSPECT AND ADJUST BRAKE BOOSTER PUSH ROD**

NOTE: **Make the adjustment with no vacuum in the brake booster assembly. (Depress the brake pedal several times with the engine stopped.)**

HINT:

- Adjustment of the brake booster push rod is required when the brake master cylinder sub-assembly is replaced with a new one.
- Adjustment is not necessary when the removed brake master cylinder sub-assembly is reused and

the brake booster assembly is replaced with a new one.

a. Apply chalk to the tip of the accessory tool.

  HINT:

  The accessory tool is enclosed with a new brake master cylinder sub-assembly.

b. Place the accessory tool on the brake booster assembly.

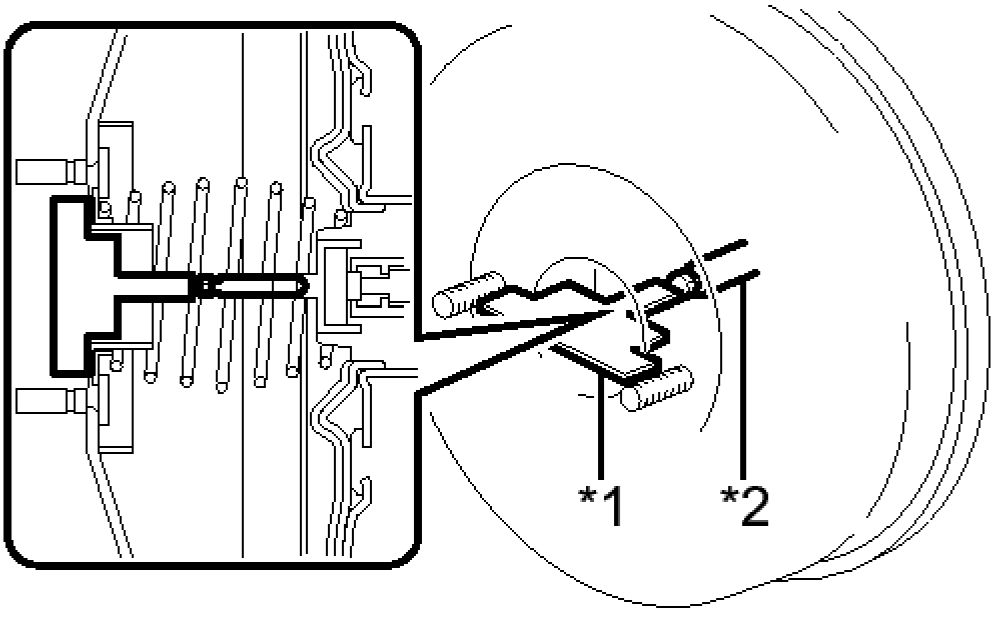

Fig. 33: Identifying Brake Booster Push Rod And Accessory Tool
Courtesy of TOYOTA MOTOR SALES, U.S.A., INC.

TEXT IN ILLUSTRATION

*1	Accessory Tool
*2	Brake Booster Push Rod

c. Measure the clearance between the brake booster push rod and accessory tool.

  Standard clearance

  0 mm (0 in.)

  HINT:

Adjust the clearance in the following cases:

- If there is a clearance between the accessory tool and the shell of the brake booster (the accessory tool does not contact the body of the brake booster), the push rod is protruding too far.
- If the chalk does not stick on the tip of the brake booster push rod, the push rod protrusion is insufficient.

d. If the clearance is not as specified, adjust the push rod length by holding the rod using SST and turning the tip of the rod using a socket driver (7 mm).

  - **SST: 09737-00020**

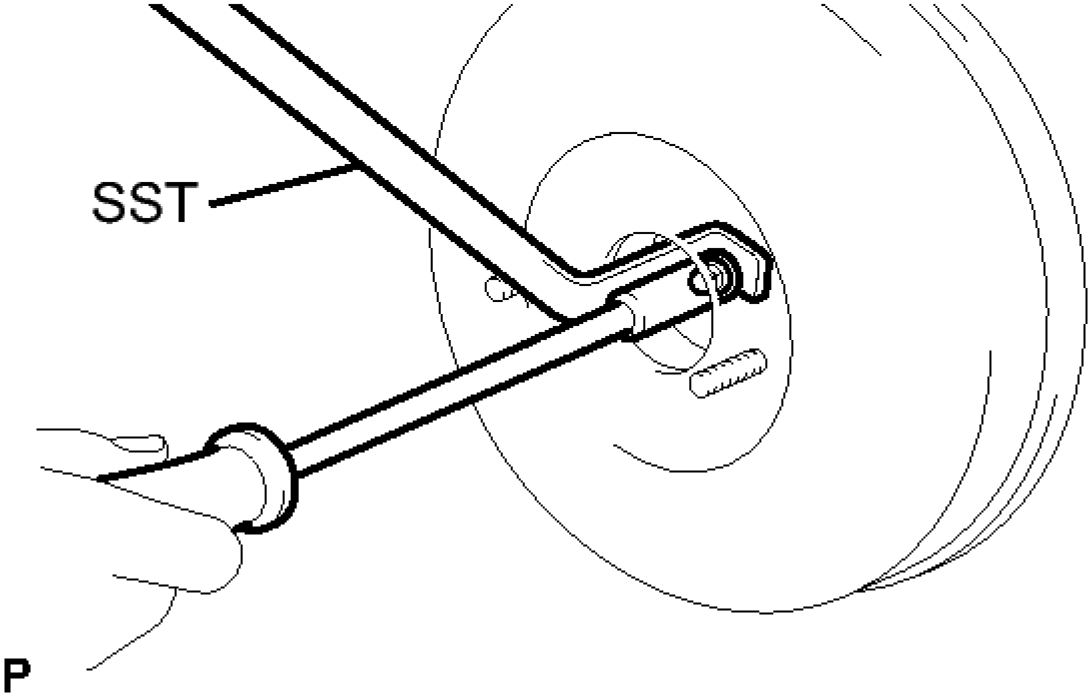

Fig. 34: Adjusting Push Rod Length
Courtesy of TOYOTA MOTOR SALES, U.S.A., INC.

HINT:

Check the push rod clearance again after adjustment.

REASSEMBLY

REASSEMBLY

1. **INSTALL MASTER CYLINDER RESERVOIR GROMMET**
   a. Apply a light layer of lithium soap base glycol grease to the entire circumference of 2 new master cylinder reservoir grommets.
   b. Install the 2 master cylinder reservoir grommets to the brake master cylinder reservoir sub-

assembly.

2. **INSTALL BRAKE MASTER CYLINDER RESERVOIR SUB-ASSEMBLY**
    a. Install the brake master cylinder reservoir sub-assembly to the brake master cylinder assembly.
3. **INSTALL BRAKE MASTER CYLINDER STRAIGHT PIN**
    a. Mount the brake master cylinder assembly in a vise.

NOTE:

- **Place aluminum plates on the vise to prevent damage to the brake master cylinder assembly.**
- **Do not drop the brake master cylinder reservoir sub-assembly.**

    b. Using a pin punch and a hammer, tap in the brake master cylinder straight pin to secure the brake master cylinder reservoir sub-assembly.

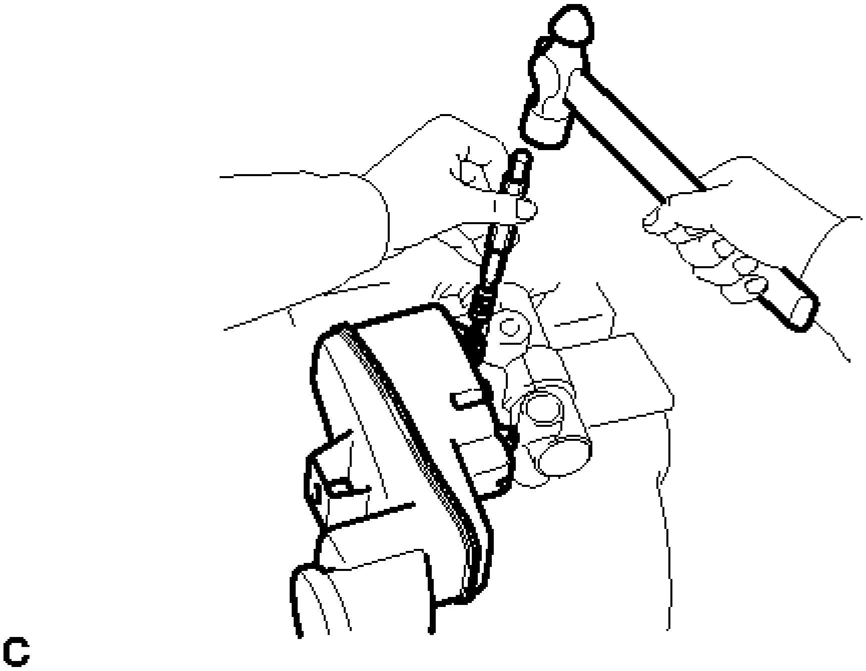

Fig. 35: Tapping Brake Master Cylinder Straight Pin
Courtesy of TOYOTA MOTOR SALES, U.S.A., INC.

4. **INSTALL BRAKE MASTER CYLINDER RESERVOIR STRAINER**
5. **INSTALL BRAKE MASTER CYLINDER RESERVOIR FILLER CAP ASSEMBLY**

INSTALLATION

INSTALLATION

1. **INSPECT AND ADJUST BRAKE BOOSTER PUSH ROD** See step 1
2. **INSTALL BRAKE MASTER CYLINDER O-RING**

a. Install a new brake master cylinder O-ring to the brake master cylinder sub-assembly.

3. INSTALL BRAKE MASTER CYLINDER SUB-ASSEMBLY

NOTE: When installing a new brake master cylinder sub-assembly, remove the protectors from the master cylinder piston and outlet ports.

a. Install the brake master cylinder sub-assembly and front No. 1 brake tube way to the brake booster assembly with the 2 nuts.

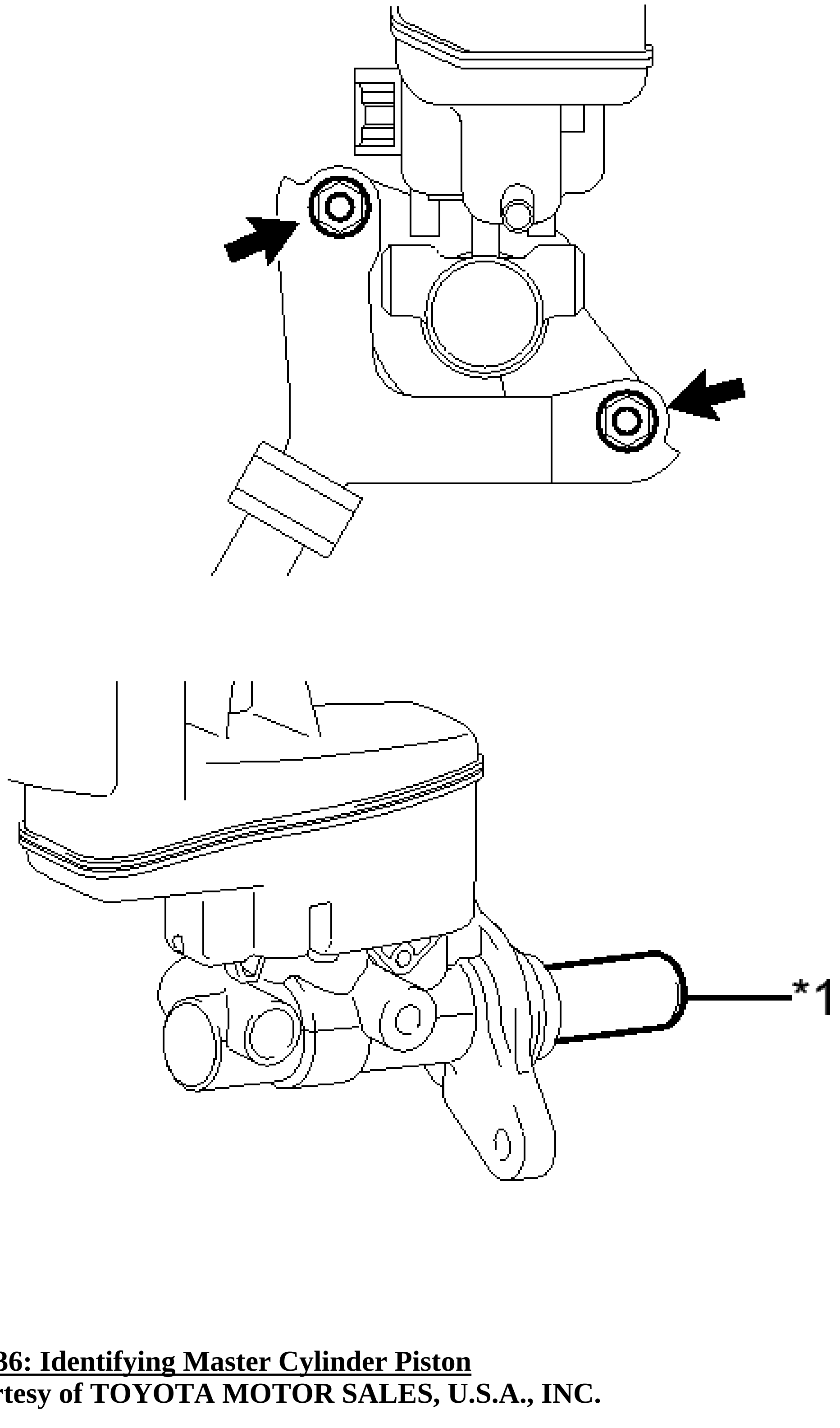

Fig. 36: Identifying Master Cylinder Piston
Courtesy of TOYOTA MOTOR SALES, U.S.A., INC.

TEXT IN ILLUSTRATION

	Master

*1	Cylinder Piston

Torque: 13 N*m (127 kgf*cm, 9 ft.*lbf)

NOTE:

- **Do not hold the brake master cylinder sub-assembly by the master cylinder piston. Hold the brake master cylinder sub-assembly by its body or its reservoir when carrying it.**
- **Do not pull out the master cylinder piston.**
- **Do not strike or pinch the master cylinder piston, and do not cause any damage to the master cylinder piston by any other means.**
- **When installing the brake master cylinder sub-assembly to the brake booster assembly, or when removing the brake master cylinder sub-assembly from the brake booster assembly, make sure that the brake master cylinder sub-assembly is kept horizontal or its tip faces downward (the master cylinder piston faces upward) to prevent the master cylinder piston from falling out.**
- **Do not allow any foreign matter to contaminate the master cylinder piston. If any foreign matter gets on the master cylinder piston, remove it by using a piece of cloth and then apply an even layer of lithium soap base glycol grease around the circumference (sliding part) of the master cylinder piston.**
- **Do not kink or damage the brake lines.**
- **Do not allow brake lines to twist and interfere with other parts or vehicle body during flexible hose tightening.**
- **Do not allow any foreign matter such as dirt or dust to enter the brake lines.**

b. Using a union nut wrench, connect the 6 brake lines and install the brake master cylinder to way tube to the brake master cylinder sub-assembly.

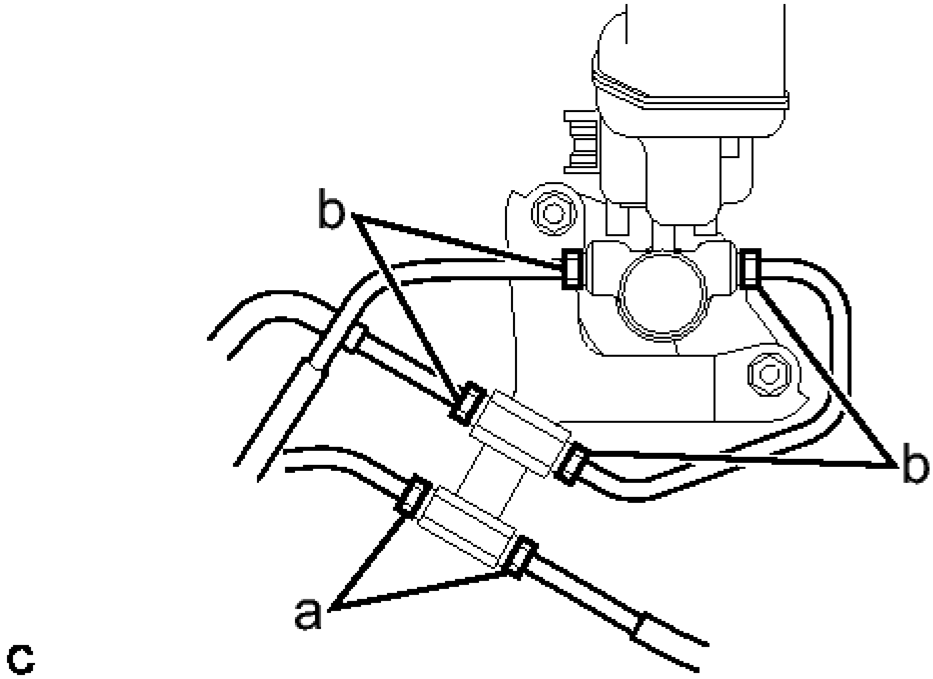

Fig. 37: Identifying Brake Master Cylinder Brake Lines
Courtesy of TOYOTA MOTOR SALES, U.S.A., INC.

a

Torque: 15 N*m (155 kgf*cm, 11 ft.*lbf)

b

Torque: 20 N*m (199 kgf*cm, 14 ft.*lbf)

NOTE:	- **Do not kink or damage the brake lines.** - **Do not allow brake lines to twist and interfere with other parts or vehicle body during flexible hose tightening.** - **Do not allow any foreign matter such as dirt or dust to enter the brake lines.** - **Use the formula to calculate special torque values for situations where the union nut wrench is combined with a torque wrench. Refer to PRECAUTION .**

c. Connect the reservoir level switch connector and engage the clamp.

4. **BLEED BRAKE SYSTEM**

   Refer to **BLEEDING**

5. **INSTALL AIR CLEANER CASE SUB-ASSEMBLY (for 2AR-FE)** . Refer to **INSTALLATION -**

Step 50

6. **INSTALL AIR CLEANER FILTER ELEMENT SUB-ASSEMBLY (for 2AR-FE)**
7. **INSTALL AIR CLEANER CAP SUB-ASSEMBLY (for 2AR-FE)** . Refer to **INSTALLATION - Step 2**
8. **INSTALL INLET AIR CLEANER ASSEMBLY (for 2AR-FE)** . Refer to **INSTALLATION - Step 53**
9. **INSTALL AIR CLEANER CASE SUB-ASSEMBLY (for 2GR-FE)** . Refer to **INSTALLATION - Step 56**
10. **INSTALL AIR CLEANER FILTER ELEMENT SUB-ASSEMBLY (for 2GR-FE)**
11. **INSTALL AIR CLEANER CAP SUB-ASSEMBLY (for 2GR-FE)** . Refer to **INSTALLATION - Step 2**
12. **INSTALL INLET NO. 2 AIR CLEANER (for 2GR-FE)** . Refer to **INSTALLATION - Step 59**
13. **INSTALL COOL AIR INTAKE DUCT SEAL** . Refer to **INSTALLATION - Step 4**
14. **INSTALL FRONT OUTER COWL TOP PANEL SUB-ASSEMBLY**
    a. Install the front outer cowl top panel sub-assembly with the 10 bolts.

       Torque: 10 N*m (102 kgf*cm, 7 ft.*lbf)

    b. Engage the 2 clamps to install the wire harness to the front outer cowl top panel sub-assembly.
15. **INSTALL WINDSHIELD WIPER MOTOR AND LINK ASSEMBLY**

    Refer to **INSTALLATION - Step 2**

BRAKE BOOSTER

COMPONENTS

ILLUSTRATION

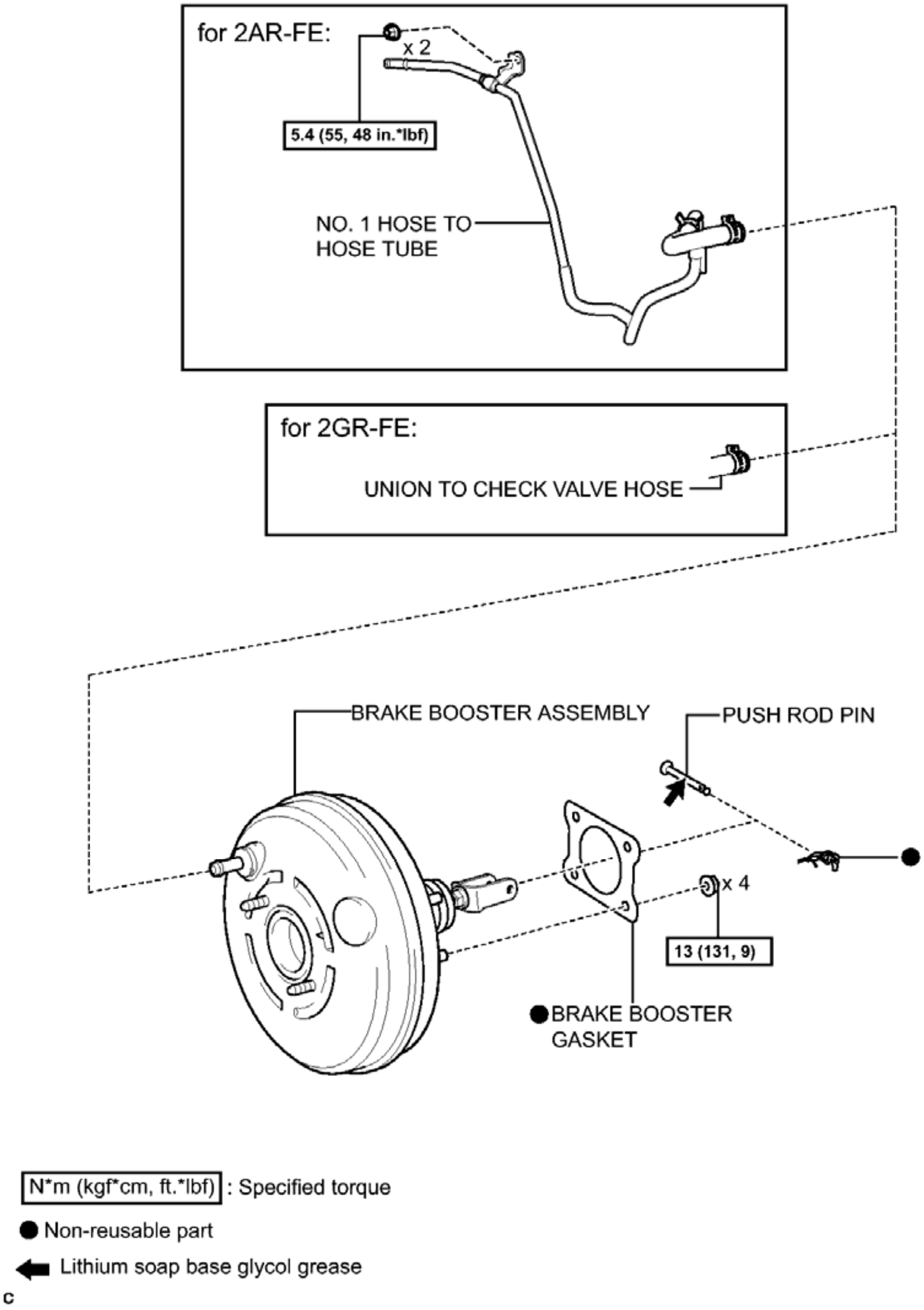
for 2AR-FE:
x 2
5.4 (55, 48 in.*lbf)
NO. 1 HOSE TO HOSE TUBE
for 2GR-FE:
UNION TO CHECK VALVE HOSE
BRAKE BOOSTER ASSEMBLY
PUSH ROD PIN
x 4
13 (131, 9)
● BRAKE BOOSTER GASKET
N*m (kgf*cm, ft.*lbf) : Specified torque
● Non-reusable part
Lithium soap base glycol grease
c

Fig. 38: Identifying Brake Booster Replacement Components With Torque Specifications (1 Of 2)
Courtesy of TOYOTA MOTOR SALES, U.S.A., INC.

ILLUSTRATION

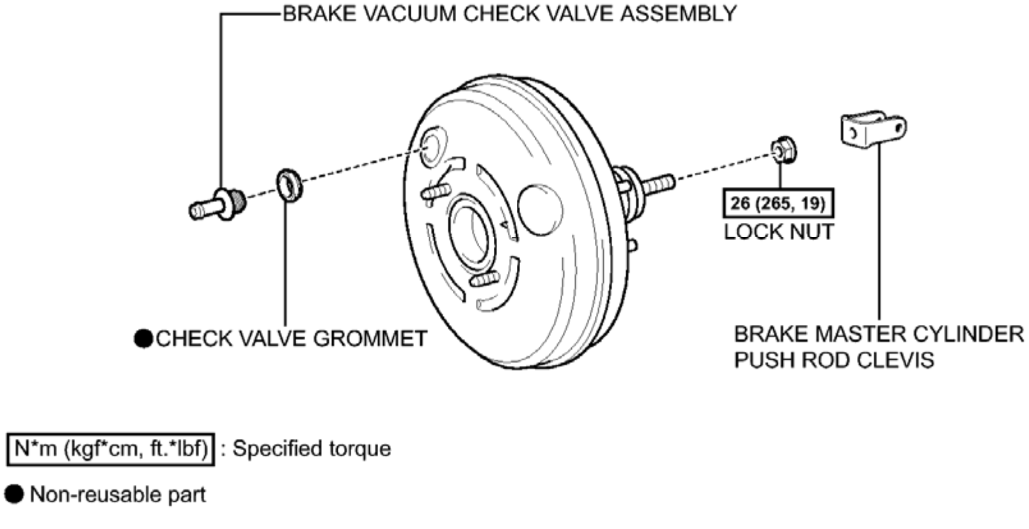
BRAKE VACUUM CHECK VALVE ASSEMBLY
● CHECK VALVE GROMMET
26 (265, 19)
LOCK NUT
BRAKE MASTER CYLINDER PUSH ROD CLEVIS
N*m (kgf*cm, ft.*lbf) : Specified torque
● Non-reusable part
c

Fig. 39: Identifying Brake Booster Replacement Components With Torque Specifications (2 Of 2)
Courtesy of TOYOTA MOTOR SALES, U.S.A., INC.

ON-VEHICLE INSPECTION

ON-VEHICLE INSPECTION

1. **INSPECT BRAKE BOOSTER ASSEMBLY**
    a. Airtightness check
        1. Start the engine and stop it after 1 or 2 minutes. Slowly depress the brake pedal several times.

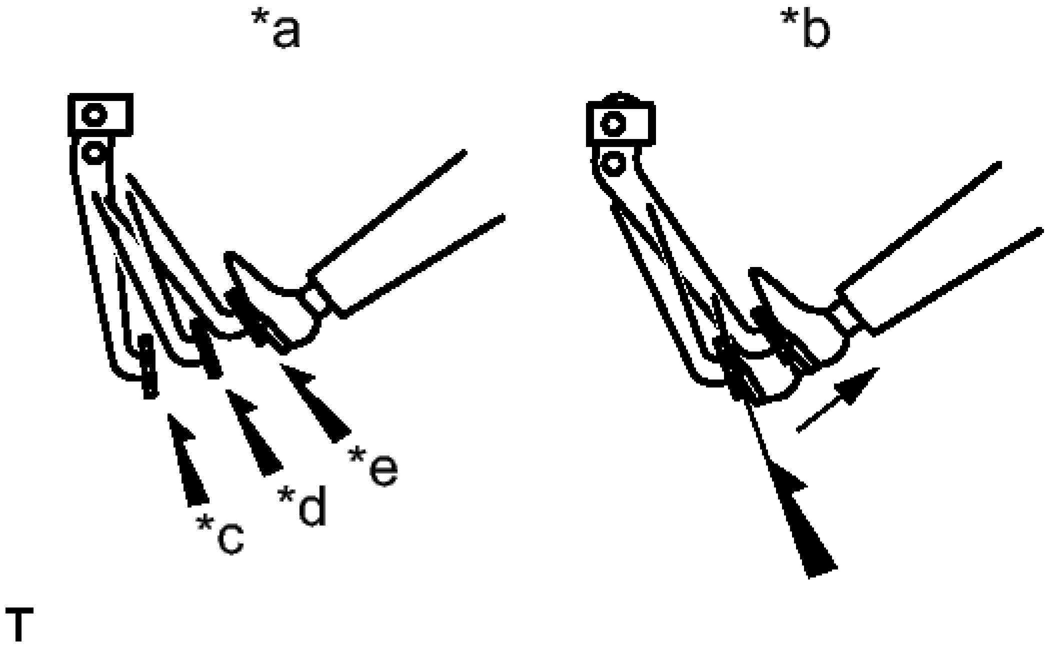

Fig. 40: Inspecting Brake Booster
Courtesy of TOYOTA MOTOR SALES, U.S.A., INC.

TEXT IN ILLUSTRATION

*a	Correct
*b	Incorrect
*c	1st
*d	2nd
*e	3rd

If the pedal can be depressed nearly to the floor the first time, but on the 2nd and 3rd time cannot be depressed as far, the brake booster assembly is airtight.

2. Depress the brake pedal while the engine is running, and stop the engine with the brake pedal depressed.

   If there is no change in the pedal reserve distance while holding the pedal depressed for 30 seconds, the brake booster assembly is airtight.

b. Operation check

   1. Depress the brake pedal several times with the ignition switch off and check that there is no change in the pedal reserve distance when the pedal is depressed.

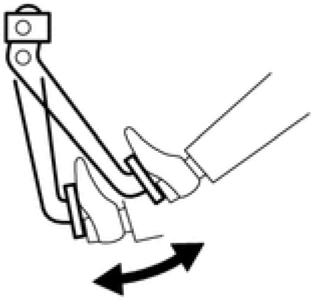

Fig. 41: Depressing Pedal Several Times
Courtesy of TOYOTA MOTOR SALES, U.S.A., INC.

2. Depress and hold the brake pedal, then start the engine.

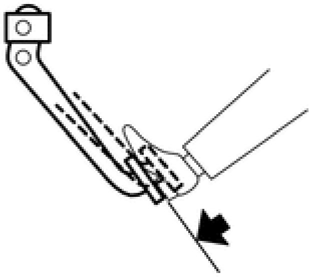

Fig. 42: Depressing And Holding Down Pedal
Courtesy of TOYOTA MOTOR SALES, U.S.A., INC.

If the pedal goes down slightly, operation is normal.

REMOVAL

REMOVAL

NOTE: **Make sure to release vacuum from the brake booster assembly before removing the brake master cylinder sub-assembly from the brake booster assembly.**

1. **REMOVE BRAKE MASTER CYLINDER SUB-ASSEMBLY**

   Refer to **REMOVAL**

2. **SEPARATE NO. 1 HOSE TO HOSE TUBE (for 2AR-FE)**
   a. Slide the clip and disconnect the No. 1 hose to hose tube from the brake booster assembly.

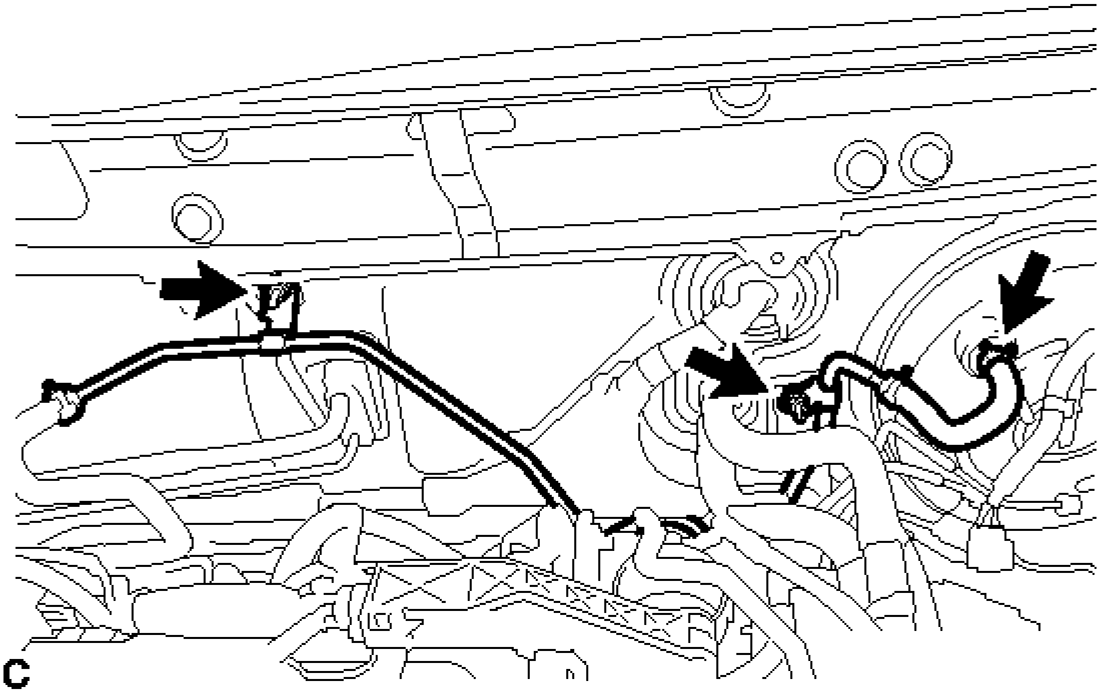

Fig. 43: Identifying No. 1 Hose to Hose Tube Clip And Nuts (For 2AR-FE)
Courtesy of TOYOTA MOTOR SALES, U.S.A., INC.

b. Remove the 2 nuts and separate the No. 1 hose to hose tube.

3. **DISCONNECT UNION TO CHECK VALVE HOSE (for 2GR-FE)**
   a. Slide the clip and disconnect the union to check valve hose from the brake booster assembly.

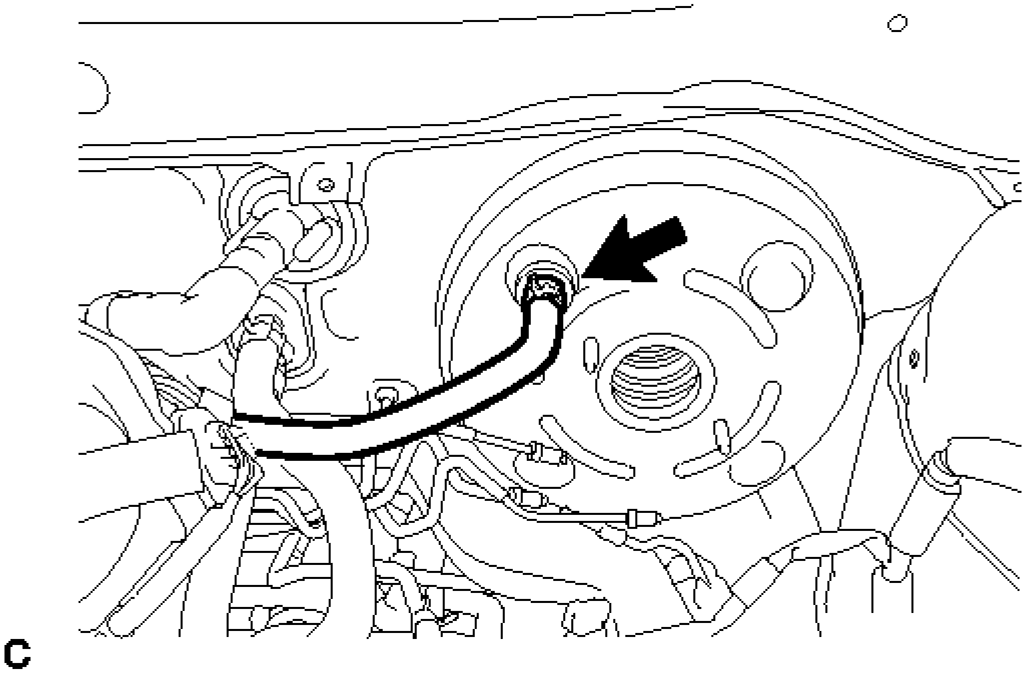

Fig. 44: Identifying Check Valve Hose Union (For 2GR-FE)
Courtesy of TOYOTA MOTOR SALES, U.S.A., INC.

4. **REMOVE PUSH ROD PIN** See step 5
5. **REMOVE BRAKE BOOSTER ASSEMBLY**
   a. Remove the 4 nuts and brake booster assembly from the vehicle body.

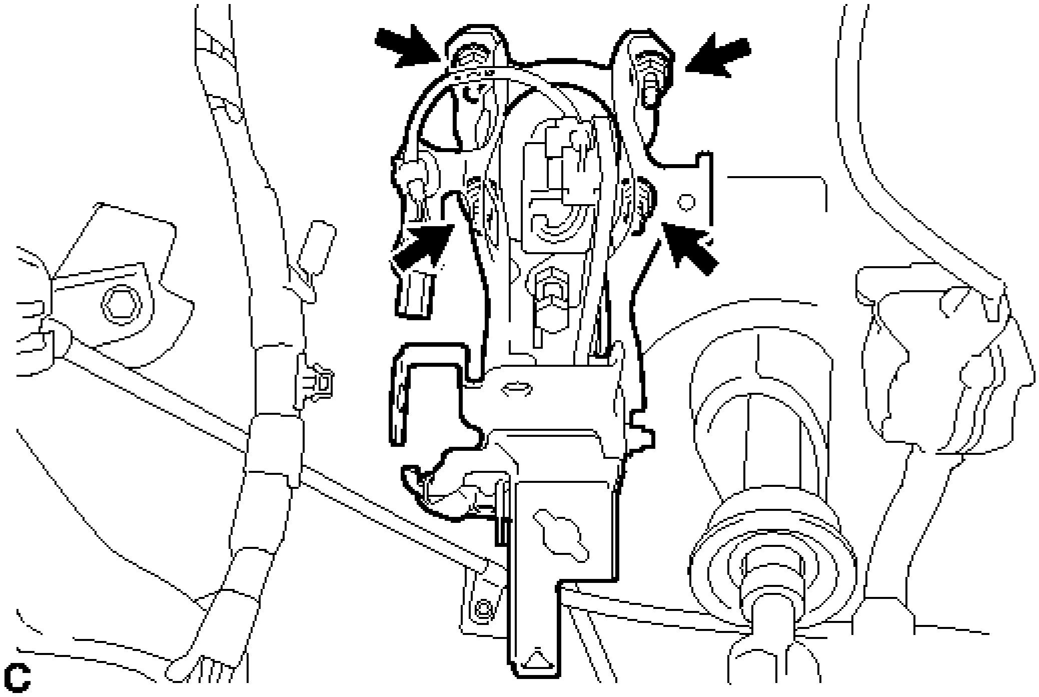

Fig. 45: Identifying Brake Booster Assembly Nuts
Courtesy of TOYOTA MOTOR SALES, U.S.A., INC.

NOTE: Do not kink or damage the brake lines.

6. **REMOVE BRAKE BOOSTER GASKET**
   a. Remove the brake booster gasket from the brake booster assembly.

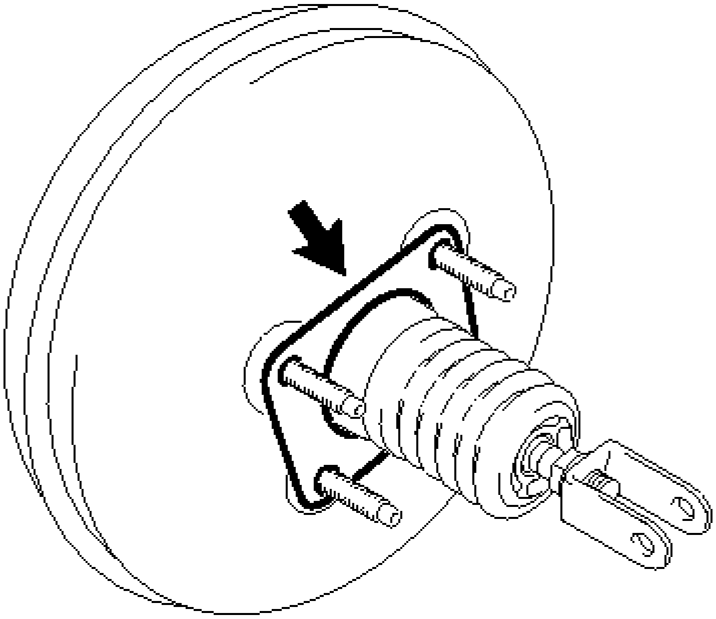

Fig. 46: Locating Brake Booster Gasket
Courtesy of TOYOTA MOTOR SALES, U.S.A., INC.

7. **REMOVE BRAKE MASTER CYLINDER PUSH ROD CLEVIS**
    a. Loosen the lock nut and remove the brake master cylinder push rod clevis and lock nut from the brake booster assembly.
8. **REMOVE BRAKE VACUUM CHECK VALVE ASSEMBLY**
    a. Remove the brake vacuum check valve assembly from the brake booster assembly.
9. **REMOVE CHECK VALVE GROMMET**
    a. Remove the check valve grommet from the brake booster assembly.

INSPECTION

INSPECTION

1. **INSPECT BRAKE VACUUM CHECK VALVE ASSEMBLY**
    a. Check that there is ventilation from the booster side to the engine side, and no ventilation from the engine side to the booster side.

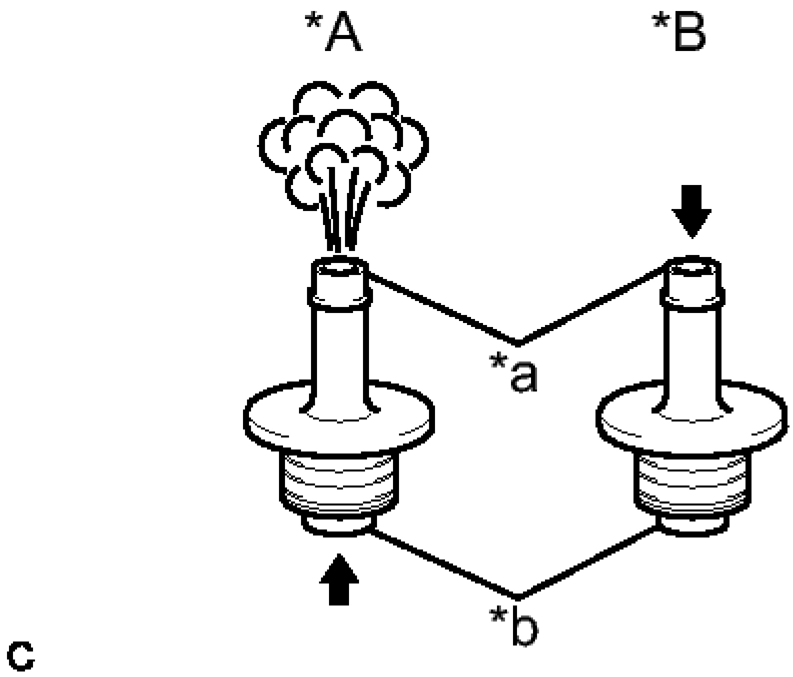

Fig. 47: Identifying Brake Vacuum Check Valve Assembly For Ventilation
Courtesy of TOYOTA MOTOR SALES, U.S.A., INC.

TEXT IN ILLUSTRATION

*A	Ventilation
*B	No Ventilation
*a	Engine Side
*b	Booster Side

If the results are not as specified, replace the brake vacuum check valve assembly.

INSTALLATION

INSTALLATION

1. **INSTALL CHECK VALVE GROMMET**
    a. Install a new check valve grommet to the brake booster assembly.
2. **INSTALL BRAKE VACUUM CHECK VALVE ASSEMBLY**
    a. Install the brake vacuum check valve assembly to the brake booster assembly.
3. **INSTALL BRAKE MASTER CYLINDER PUSH ROD CLEVIS**
    a. Temporarily install the lock nut and brake master cylinder push rod clevis to the brake booster assembly.

b. Set the push rod length as shown in the illustration.

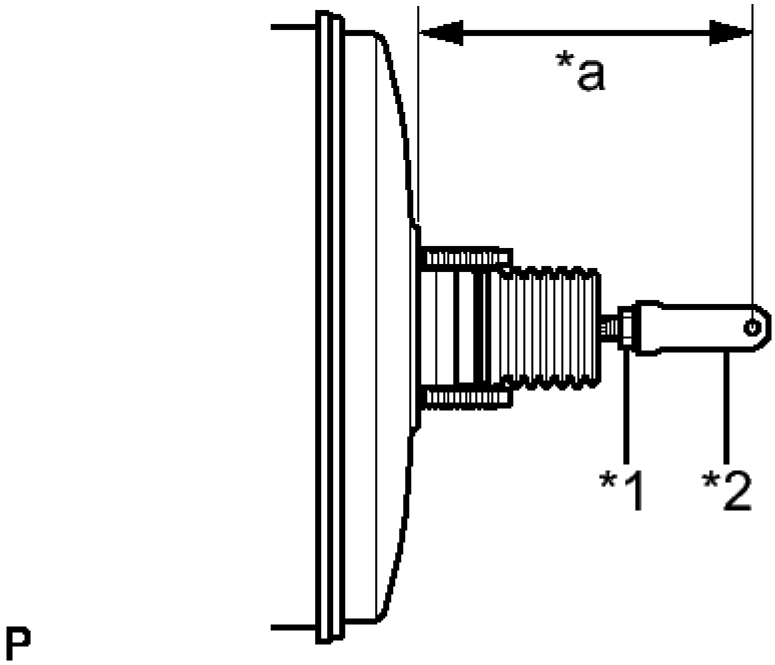

Fig. 48: Identifying Lock Nut And Brake Master Cylinder Push Rod Clevis
Courtesy of TOYOTA MOTOR SALES, U.S.A., INC.

TEXT IN ILLUSTRATION

*1	Lock Nut
*2	Brake Master Cylinder Push Rod Clevis
*a	Push Rod Length

Push rod length

148.6 to 149.6 mm (5.86 to 5.88 in.)

c. Tighten the lock nut.

Torque: 26 N*m (265 kgf*cm, 19 ft.*lbf)

4. **INSTALL BRAKE BOOSTER GASKET**

   a. Install a new brake booster gasket to the brake booster assembly.

5. **INSTALL BRAKE BOOSTER ASSEMBLY**
   a. Install the brake booster assembly to the vehicle body with the 4 nuts.

   Torque: 13 N*m (131 kgf*cm, 9 ft.*lbf)

   NOTE: Do not kink or damage the brake lines.

6. **INSTALL PUSH ROD PIN** See step 3
7. **INSTALL NO. 1 HOSE TO HOSE TUBE (for 2AR-FE)**
   a. Install the No. 1 hose to hose tube with the 2 nuts.

   Torque: 5.4 N*m (55 kgf*cm, 48 in.*lbf)

   b. Connect the No. 1 hose to hose tube to the brake booster assembly, and slide the clip to secure it.
8. **CONNECT UNION TO CHECK VALVE HOSE (for 2GR-FE)**
   a. Connect the union to check valve hose to the brake booster assembly, and slide the clip to secure it.
9. **INSTALL BRAKE MASTER CYLINDER SUB-ASSEMBLY**

   Refer to **INSTALLATION**

10. **INSPECT AND ADJUST BRAKE PEDAL**

   Refer to **ADJUSTMENT**

2012-2017 BRAKES

Brake System (Rear) (Service Information) (Hybrid) - Camry

REAR BRAKE

COMPONENTS

ILLUSTRATION

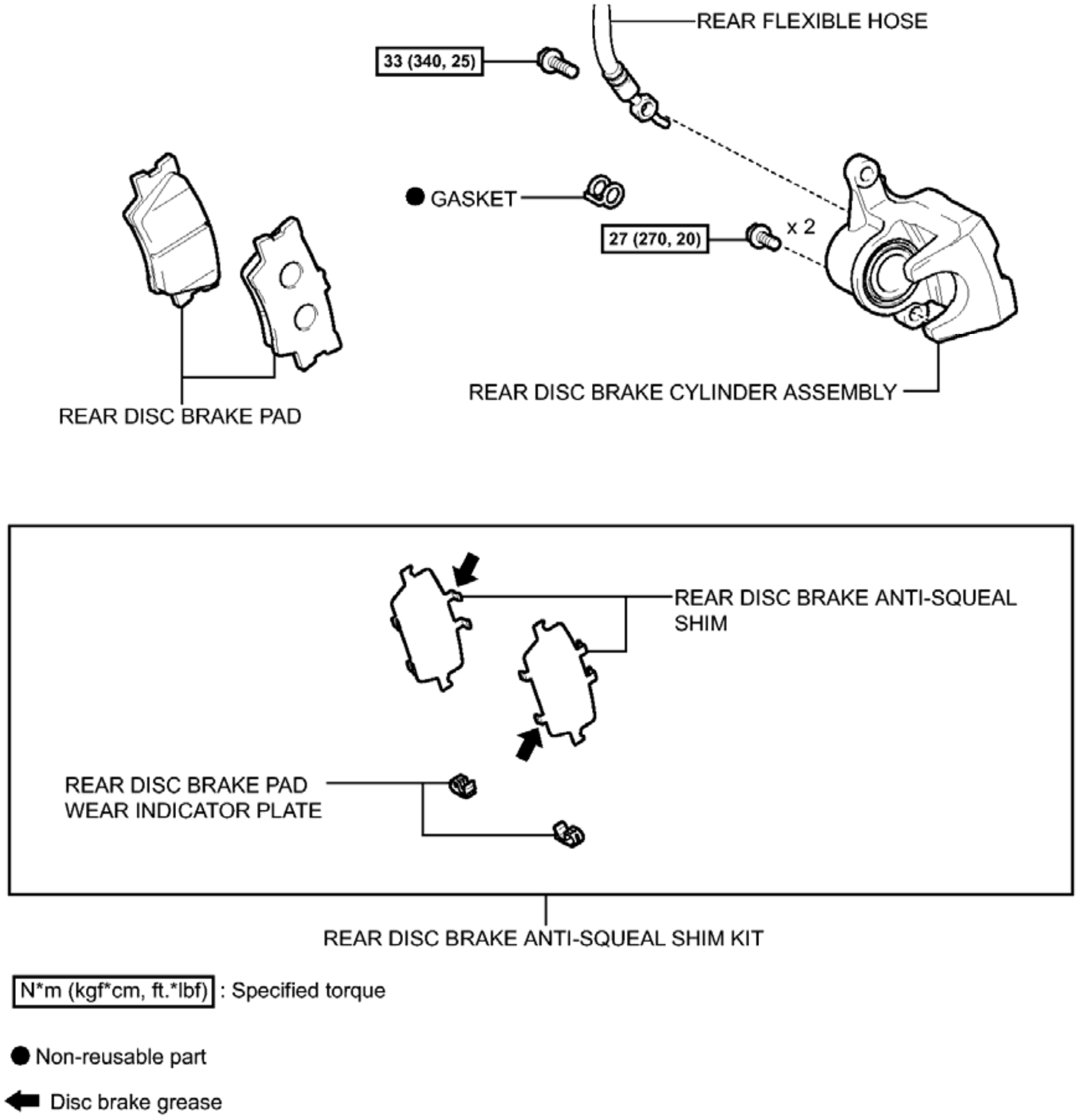
REAR FLEXIBLE HOSE
33 (340, 25)
● GASKET
27 (270, 20)
x 2
REAR DISC BRAKE PAD
REAR DISC BRAKE CYLINDER ASSEMBLY
REAR DISC BRAKE ANTI-SQUEAL SHIM
REAR DISC BRAKE PAD WEAR INDICATOR PLATE
REAR DISC BRAKE ANTI-SQUEAL SHIM KIT
N*m (kgf*cm, ft.*lbf) : Specified torque
● Non-reusable part
Disc brake grease

Fig. 1: Identifying Rear Brake Replacement Components With Torque Specifications (1 Of 3)
Courtesy of TOYOTA MOTOR SALES, U.S.A., INC.

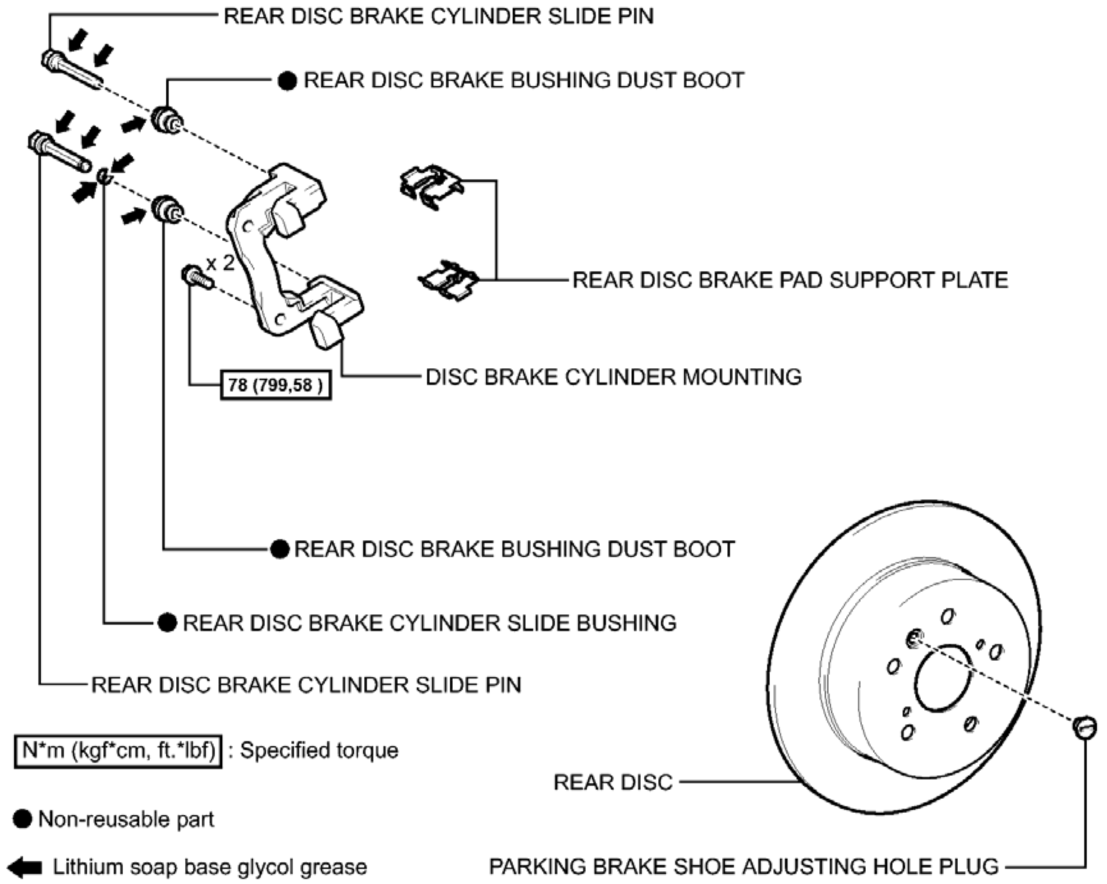
REAR DISC BRAKE CYLINDER SLIDE PIN
● REAR DISC BRAKE BUSHING DUST BOOT
REAR DISC BRAKE PAD SUPPORT PLATE
x 2
78 (799,58)
DISC BRAKE CYLINDER MOUNTING
● REAR DISC BRAKE BUSHING DUST BOOT
● REAR DISC BRAKE CYLINDER SLIDE BUSHING
REAR DISC BRAKE CYLINDER SLIDE PIN
N*m (kgf*cm, ft.*lbf) : Specified torque
REAR DISC
● Non-reusable part
Lithium soap base glycol grease
PARKING BRAKE SHOE ADJUSTING HOLE PLUG

Fig. 2: Identifying Rear Brake Replacement Components With Torque Specifications (2 Of 3)
Courtesy of TOYOTA MOTOR SALES, U.S.A., INC.

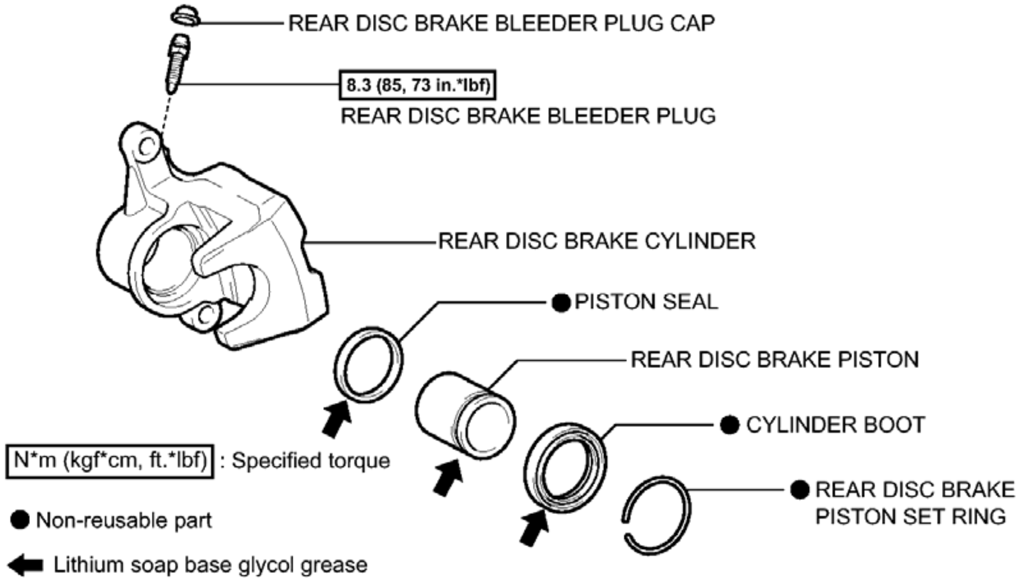
REAR DISC BRAKE BLEEDER PLUG CAP
8.3 (85, 73 in.*lbf)
REAR DISC BRAKE BLEEDER PLUG
REAR DISC BRAKE CYLINDER
● PISTON SEAL
REAR DISC BRAKE PISTON
● CYLINDER BOOT
N*m (kgf*cm, ft.*lbf) : Specified torque
● REAR DISC BRAKE PISTON SET RING
● Non-reusable part
Lithium soap base glycol grease

Fig. 3: Identifying Rear Brake Replacement Components With Torque Specifications (3 Of 3)
Courtesy of TOYOTA MOTOR SALES, U.S.A., INC.

REMOVAL

REMOVAL

NOTE:

- **When the brake pedal is first depressed after replacing the brake pads or pushing back the disc brake piston, DTC C1214 may be output. As there is no malfunction, clear the DTC.**
- **While the auxiliary battery is connected, even if the power switch is off, the brake control system activates when the brake pedal is depressed or the door courtesy switch is turned on. Therefore, even if only brake pads are to be removed and installed, be sure to perform the Disable Brake Control procedure and disconnect the cable from the negative (-) terminal of the auxiliary battery before beginning work.**

HINT:

- Use the same procedure for the LH side and RH side.
- The following procedure is for the LH side.

1. **PRECAUTION**

   NOTE: **After turning the power switch off, waiting time may be required before disconnecting the cable from the negative (-) auxiliary battery terminal. Therefore, make sure to read the disconnecting the cable from the negative (-) auxiliary battery terminal notice before proceeding with work. Refer to PRECAUTION .**

2. **DISABLE BRAKE CONTROL** . Refer to **REMOVAL - Step 2**
3. **REMOVE REAR WHEEL**
4. **DRAIN BRAKE FLUID**

   NOTE: **If brake fluid leaks onto any painted surface, immediately wash it off.**

5. **SEPARATE REAR FLEXIBLE HOSE**
   a. Remove the union bolt and gasket, and separate the rear flexible hose from the rear disc brake cylinder assembly.

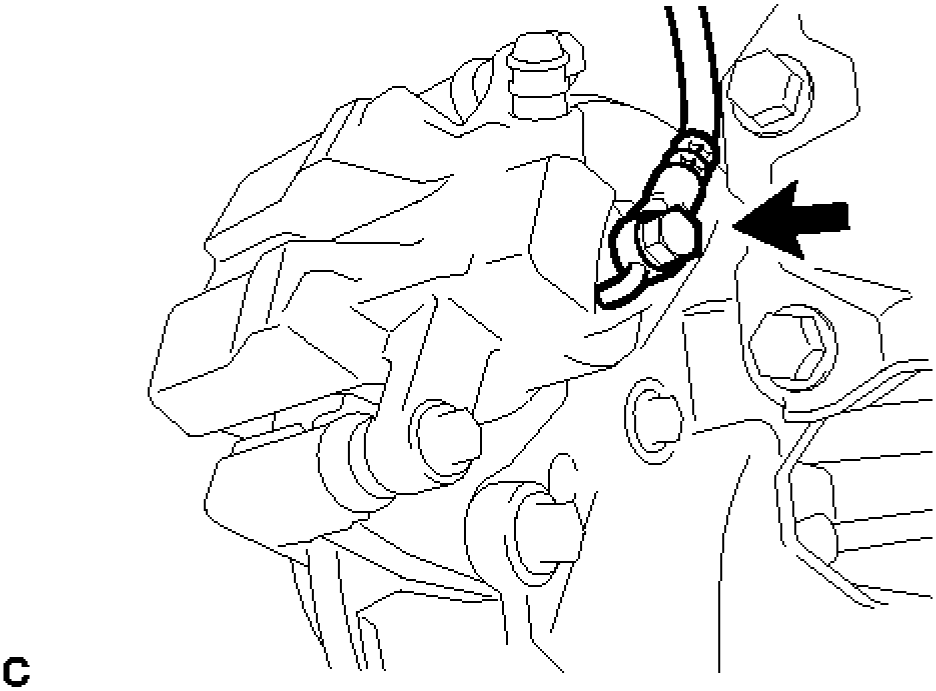

Fig. 4: Identifying Rear Flexible Hose Union Bolt
Courtesy of TOYOTA MOTOR SALES, U.S.A., INC.

6. **REMOVE REAR DISC BRAKE CYLINDER ASSEMBLY**
   a. Hold the rear disc brake cylinder slide pin, and remove the 2 bolts and rear disc brake cylinder assembly.

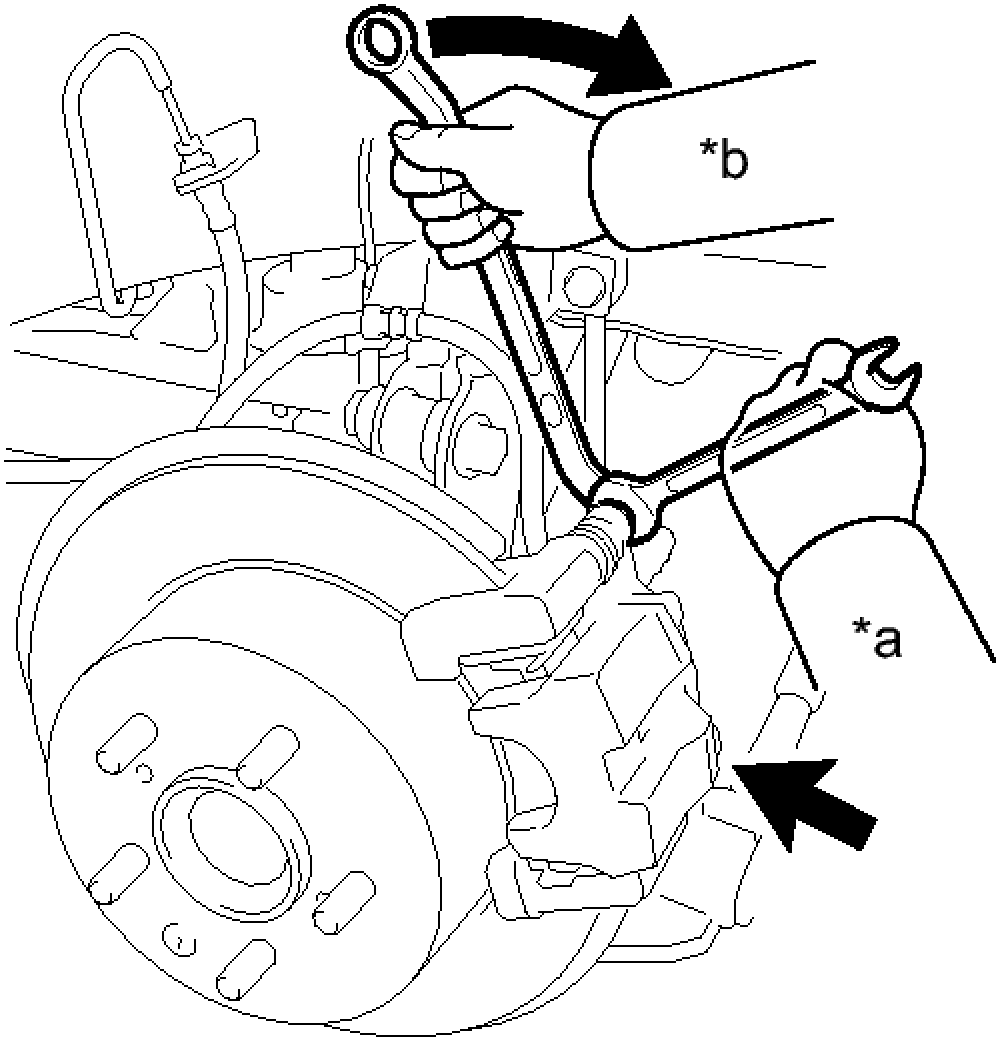

C

Fig. 5: Removing Disc Brake Cylinder Assembly
Courtesy of TOYOTA MOTOR SALES, U.S.A., INC.

TEXT IN ILLUSTRATION

*a	Hold
*b	Turn

7. **REMOVE REAR DISC BRAKE PAD**
    a. Remove the 2 rear disc brake pads with rear disc brake anti-squeal shim kit from the disc brake cylinder mounting.

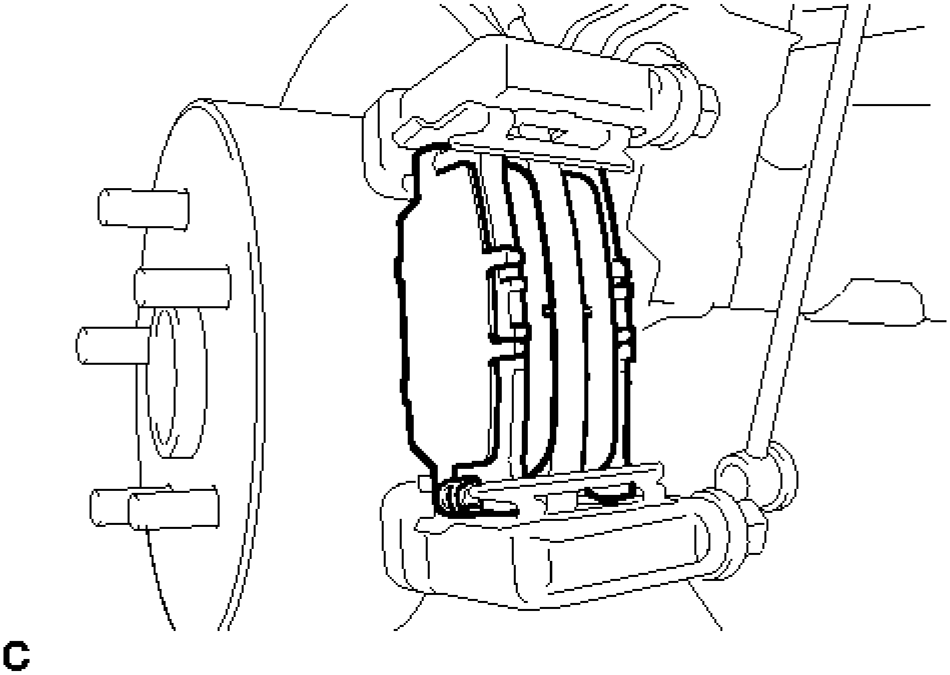

Fig. 6: Identifying Rear Disc Brake Pads
Courtesy of TOYOTA MOTOR SALES, U.S.A., INC.

8. **REMOVE REAR DISC BRAKE ANTI-SQUEAL SHIM KIT**
    a. Remove the rear disc brake anti-squeal shim from each rear disc brake pad.

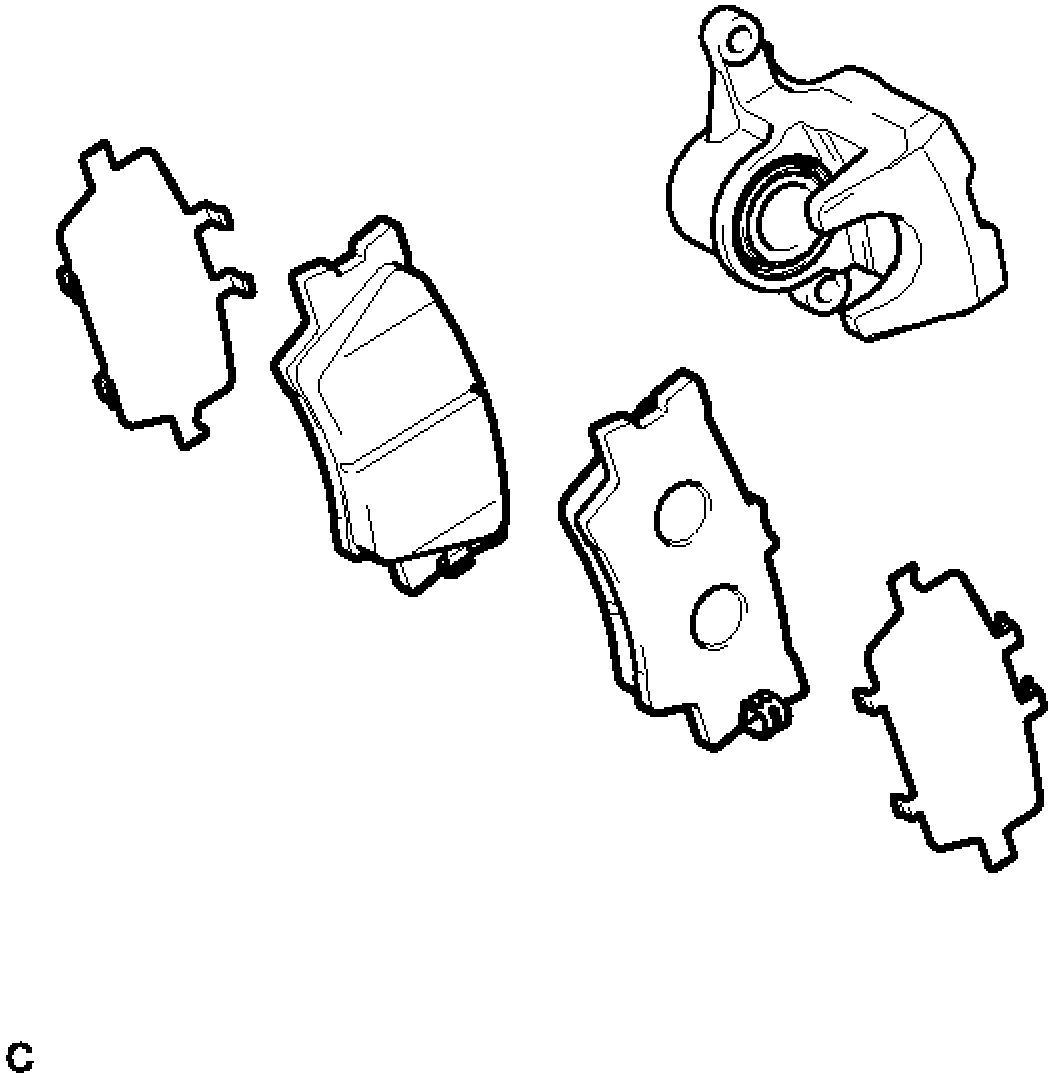

Fig. 7: Identifying Rear Disc Brake Anti-Squeal Shims
Courtesy of TOYOTA MOTOR SALES, U.S.A., INC.

b. Remove the rear disc brake pad wear indicator plate from each rear disc brake pad.

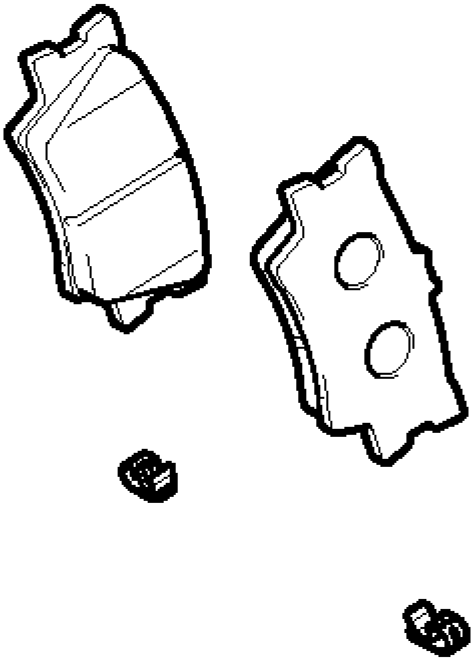

Fig. 8: Identifying Rear Disc Brake Pad Wear Indicator
Courtesy of TOYOTA MOTOR SALES, U.S.A., INC.

9. **REMOVE REAR DISC BRAKE PAD SUPPORT PLATE**
    a. Remove the 2 rear disc brake pad support plates from the disc brake cylinder mounting.

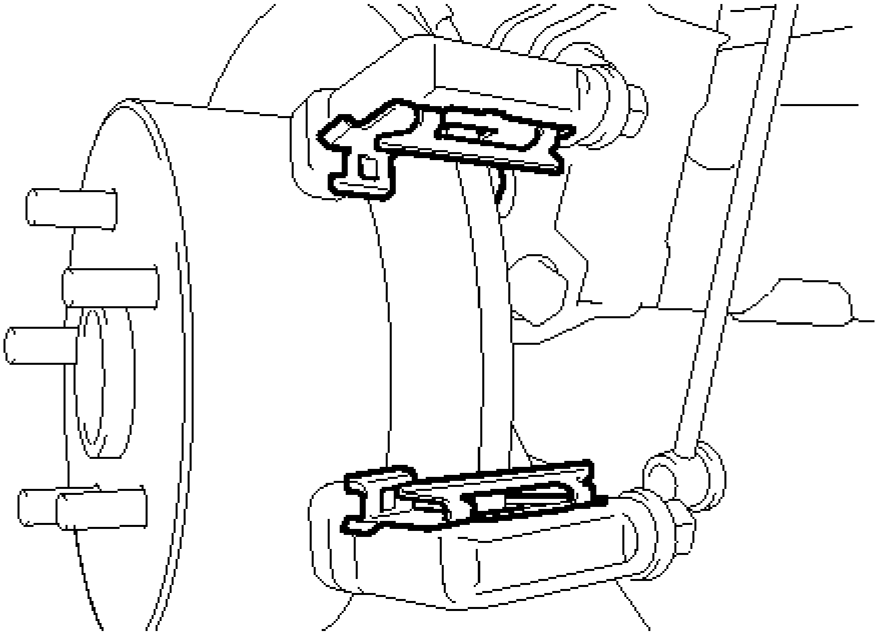

Fig. 9: Identifying Rear Disc Brake Pad Support Plates

Courtesy of TOYOTA MOTOR SALES, U.S.A., INC.

10. **REMOVE REAR DISC BRAKE CYLINDER SLIDE PIN (for Upper Side)**
    a. Remove the rear disc brake cylinder slide pin from the disc brake cylinder mounting.

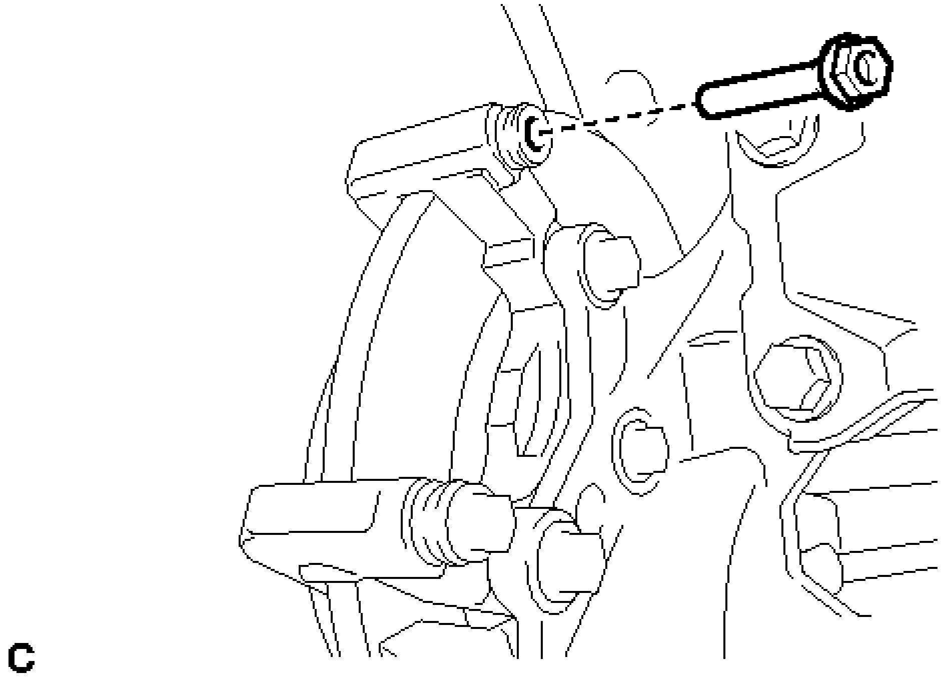

Fig. 10: Identifying Rear Disc Brake Cylinder Slide Pin
Courtesy of TOYOTA MOTOR SALES, U.S.A., INC.

11. **REMOVE REAR DISC BRAKE CYLINDER SLIDE PIN (for Lower Side)**
    a. Remove the rear disc brake cylinder slide pin from the disc brake cylinder mounting.

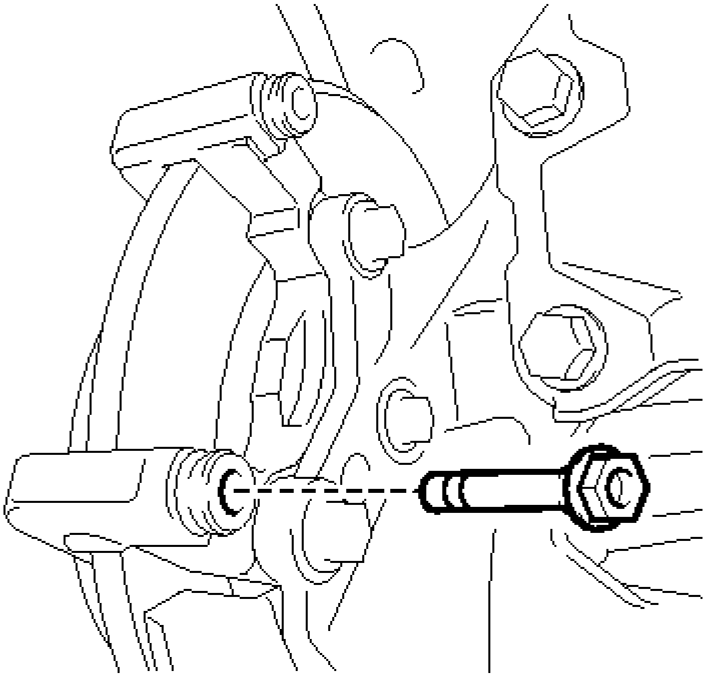

Fig. 11: Identifying Rear Disc Brake Cylinder Slide Pin
Courtesy of TOYOTA MOTOR SALES, U.S.A., INC.

12. **REMOVE REAR DISC BRAKE CYLINDER SLIDE BUSHING**
    a. Using a screwdriver with its tip wrapped with vinyl tape, remove the rear disc brake cylinder slide bushing from the rear disc brake cylinder slide pin (for Lower Side).

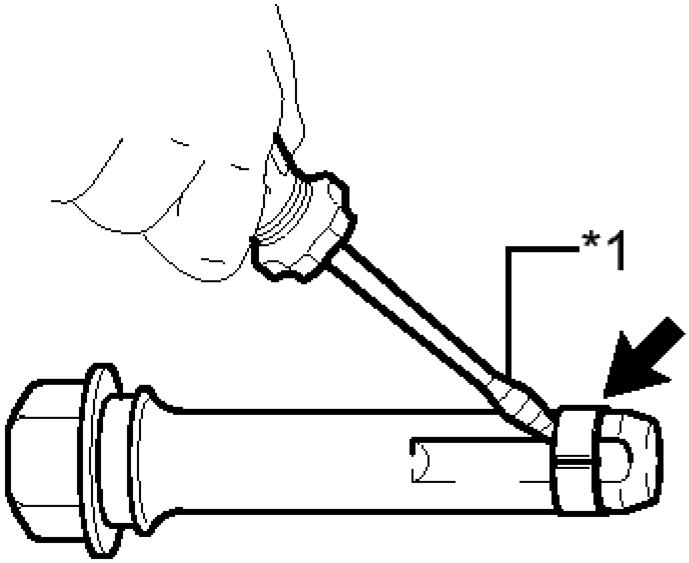

Fig. 12: Removing Front Disc Brake Cylinder Slide Bushing
Courtesy of TOYOTA MOTOR SALES, U.S.A., INC.

TEXT IN ILLUSTRATION

*1	Vinyl Tape

NOTE: **Do not damage the rear disc brake cylinder slide pin (for Lower Side).**

13. **REMOVE REAR DISC BRAKE BUSHING DUST BOOT**
    a. Remove the 2 rear disc brake bushing dust boots from the disc brake cylinder mounting.

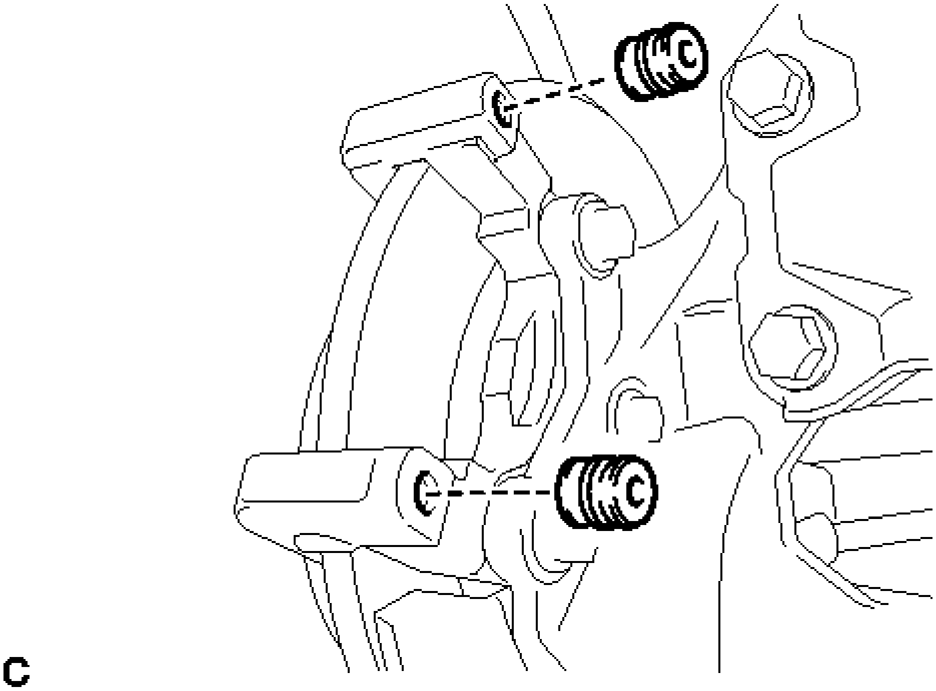

Fig. 13: Identifying Rear Disc Brake Bushing Dust Boots
Courtesy of TOYOTA MOTOR SALES, U.S.A., INC.

14. **REMOVE DISC BRAKE CYLINDER MOUNTING**
    a. Remove the 2 bolts and disc brake cylinder mounting.

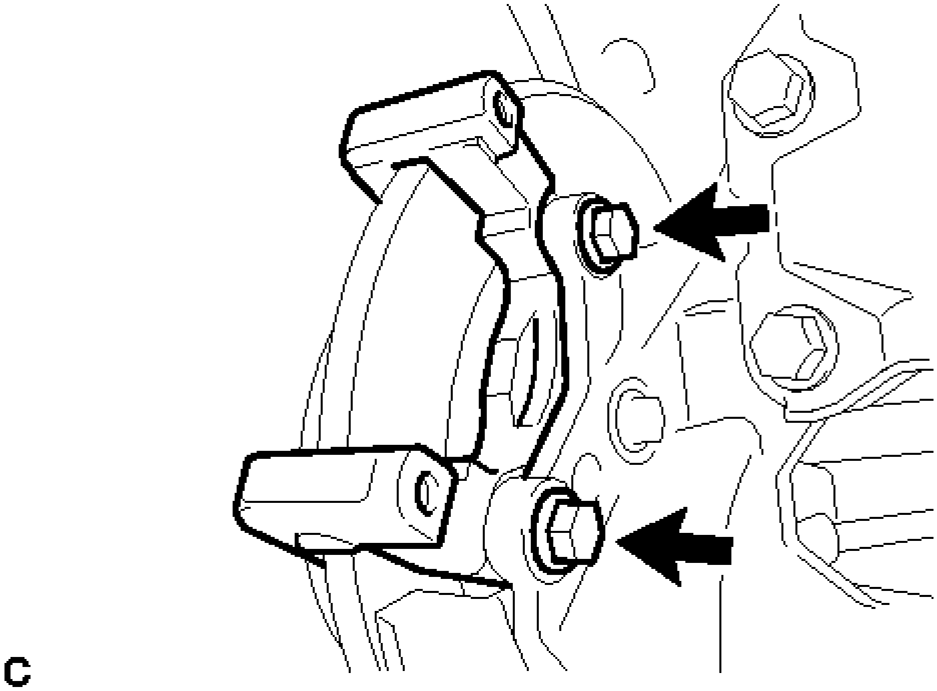

Fig. 14: Identifying Rear Disc Brake Cylinder Mounting Bolts
Courtesy of TOYOTA MOTOR SALES, U.S.A., INC.

15. **REMOVE PARKING BRAKE SHOE ADJUSTING HOLE PLUG**
    a. Remove the parking brake shoe adjusting hole plug.
16. **REMOVE REAR DISC**
    a. Put matchmarks on the rear disc and the rear axle hub.

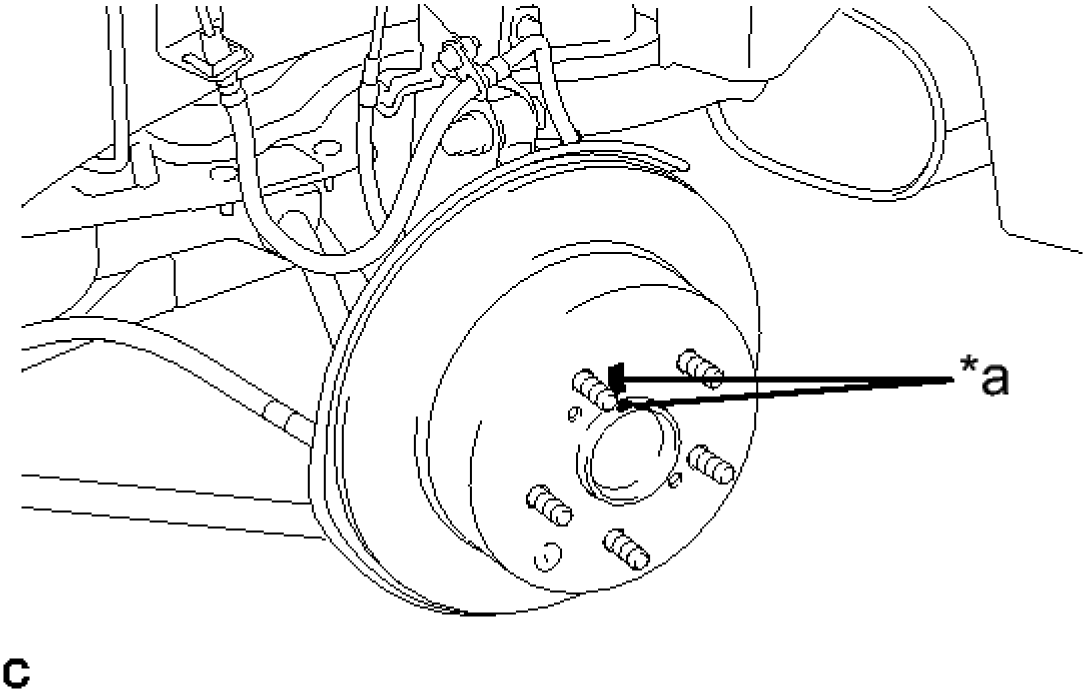

Fig. 15: Identifying Rear Disc And Axle Hub Matchmarks
Courtesy of TOYOTA MOTOR SALES, U.S.A., INC.

TEXT IN ILLUSTRATION

*a	Matchmark

b. Release the parking brake and remove the rear disc.

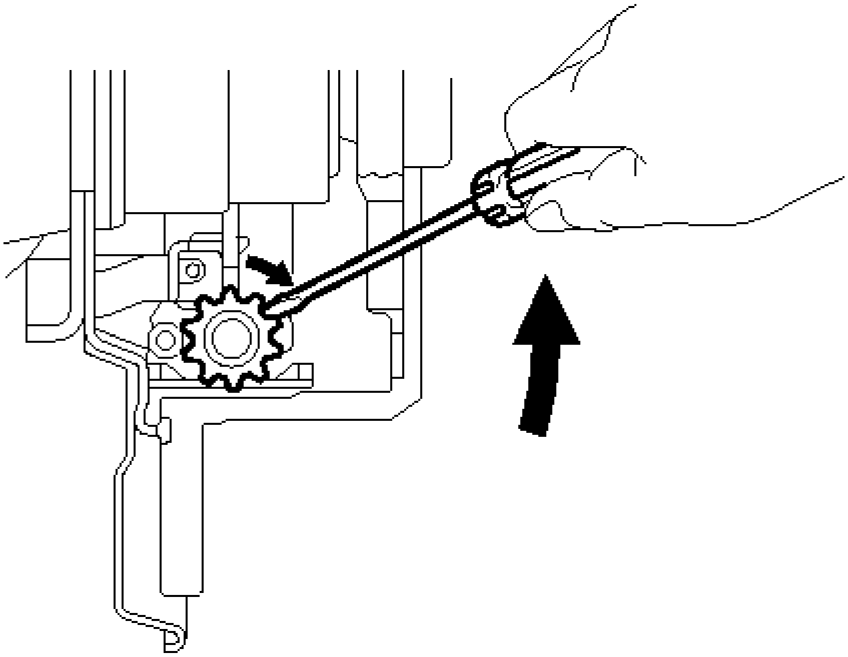

Fig. 16: Turning Shoe Adjuster With Taped screwdriver
Courtesy of TOYOTA MOTOR SALES, U.S.A., INC.

HINT:

If the disc cannot be removed easily, use a screwdriver to turn the shoe adjuster as shown in the illustration in order to contract the parking brake shoes.

DISASSEMBLY

DISASSEMBLY

1. **REMOVE CYLINDER BOOT**
   a. Using a screwdriver with its tip wrapped with vinyl tape, remove the rear disc brake piston set ring and cylinder boot from the rear disc brake cylinder assembly.

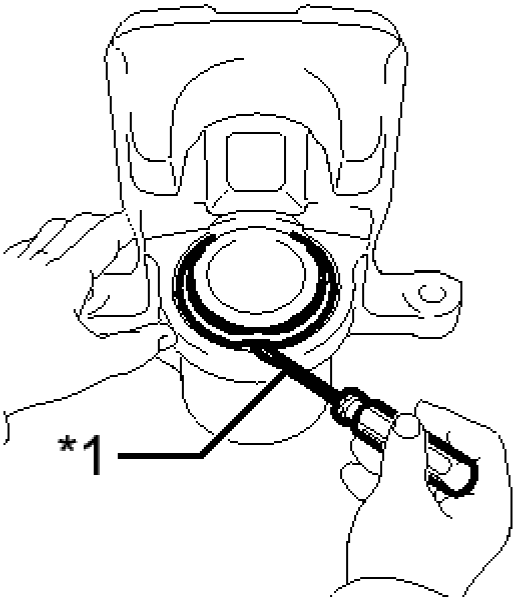

Fig. 17: Removing Cylinder Boot
Courtesy of TOYOTA MOTOR SALES, U.S.A., INC.

TEXT IN ILLUSTRATION

*1	Vinyl Tape

NOTE: **Be careful not to damage the rear disc brake piston or rear disc brake cylinder.**

2. **REMOVE REAR DISC BRAKE PISTON**
   a. Place a piece of cloth between the rear disc brake piston and rear disc brake cylinder.

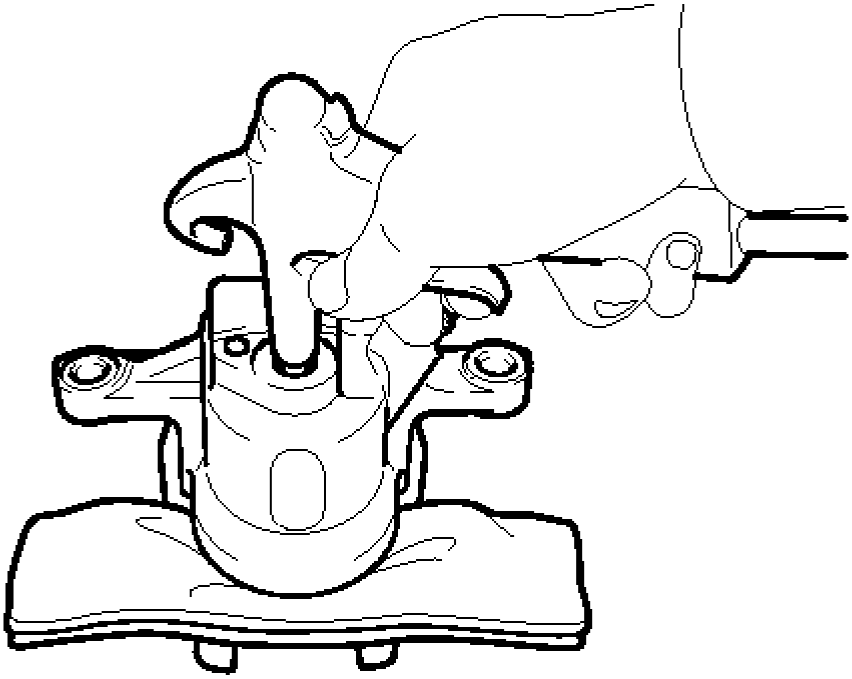

Fig. 18: Applying Compressed Air To Rear Disc Brake Cylinder
Courtesy of TOYOTA MOTOR SALES, U.S.A., INC.

b. Apply compressed air to remove the rear disc brake piston from the rear disc brake cylinder.

WARNING: **Do not place your fingers in front of the rear disc brake piston when using compressed air.**

NOTE: Do not allow any brake fluid to spatter.

3. **REMOVE PISTON SEAL**
   a. Using a screwdriver with its tip wrapped with vinyl tape, remove the piston seal from the disc brake cylinder.

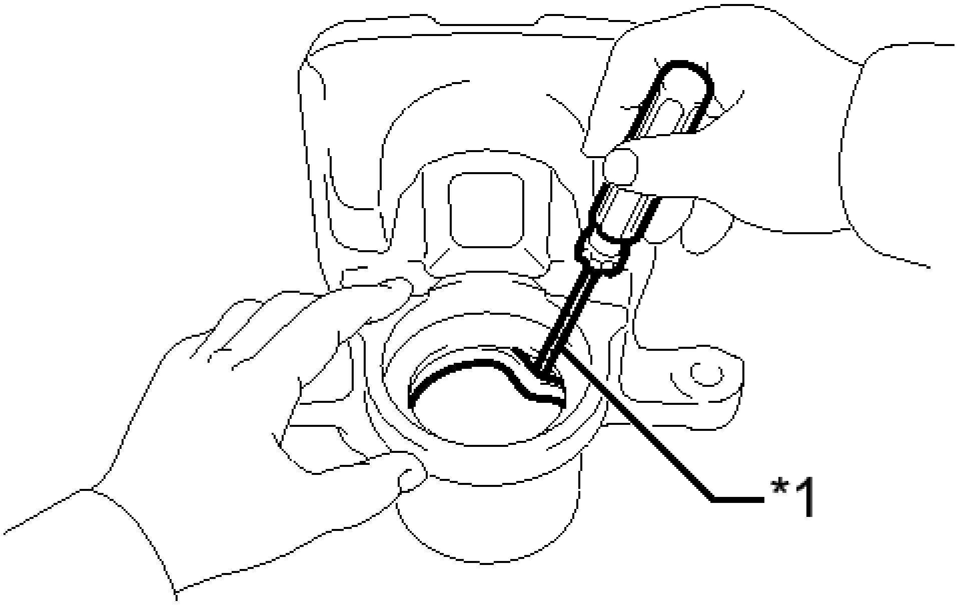

Fig. 19: Removing Piston Seal
Courtesy of TOYOTA MOTOR SALES, U.S.A., INC.

TEXT IN ILLUSTRATION

*1	Vinyl Tape

NOTE: **Do not damage the inner surface or piston seal groove of the cylinder.**

4. **REMOVE REAR DISC BRAKE BLEEDER PLUG CAP**
5. **REMOVE REAR DISC BRAKE BLEEDER PLUG**

INSPECTION

INSPECTION

1. **INSPECT BRAKE CYLINDER AND PISTON**
    a. Check the cylinder bore and piston for rust and scoring. If necessary, replace the rear disc brake cylinder assembly and/or piston.
2. **INSPECT PAD LINING THICKNESS**
    a. Using a ruler, measure the pad lining thickness.

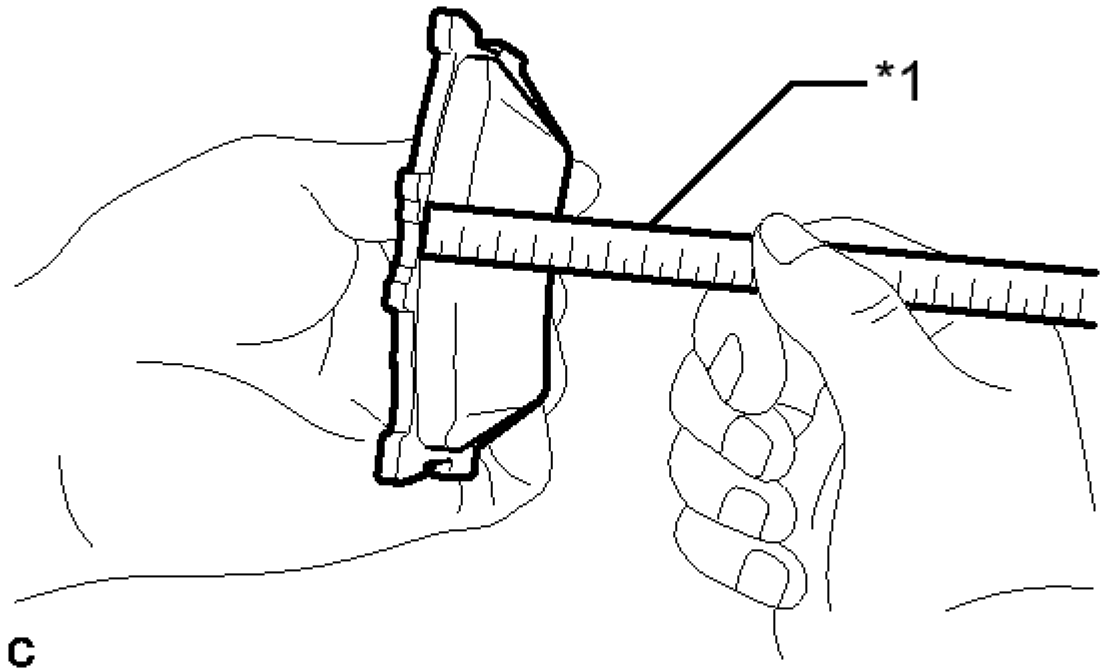

Fig. 20: Measuring Pad Lining Thickness
Courtesy of TOYOTA MOTOR SALES, U.S.A., INC.

TEXT IN ILLUSTRATION

*1	Ruler

Standard thickness

10.5 mm (0.413 in.)

Minimum thickness

1.0 mm (0.0394 in.)

If the pad lining thickness is less than the minimum, replace the brake pads.

HINT:

Be sure to check the wear of the rear disc when replacing the brake pads.

3. **INSPECT REAR DISC BRAKE PAD SUPPORT PLATE**
    a. Make sure that the rear disc brake pad support plates have sufficient rebound, no deformation, cracks or wear, and that all rust and dirt are removed.

    If necessary, replace the rear disc brake pad support plates.

4. **INSPECT DISC THICKNESS**

a. Using a micrometer, measure the disc thickness.

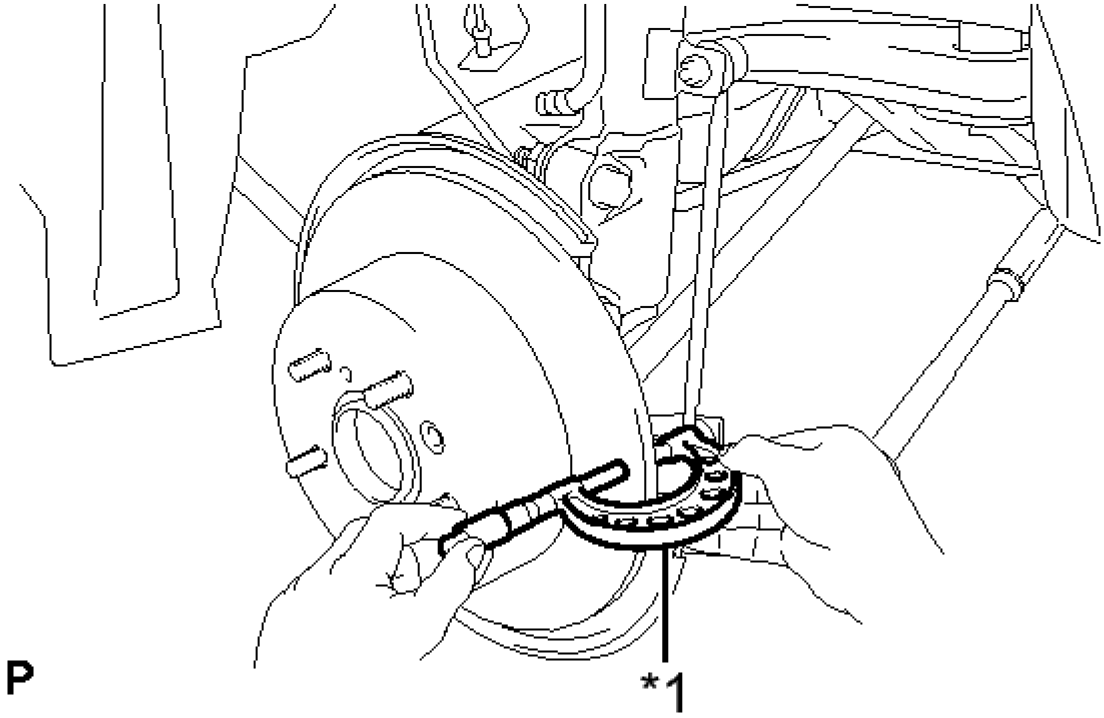

Fig. 21: Measuring Disc Thickness
Courtesy of TOYOTA MOTOR SALES, U.S.A., INC.

TEXT IN ILLUSTRATION

*1	Micrometer

Standard thickness

10.0 mm (0.394 in.)

Minimum thickness

8.5 mm (0.335 in.)

If the disc thickness is less than the minimum, replace the rear disc.

5. **INSPECT DISC RUNOUT**
   a. Inspect the rear axle hub bearing looseness and axle hub runout. Refer to **ON-VEHICLE INSPECTION** .
   b. While holding the disc using SST, tighten the disc with the 5 hub nuts.
      - **SST: 09330-00021**

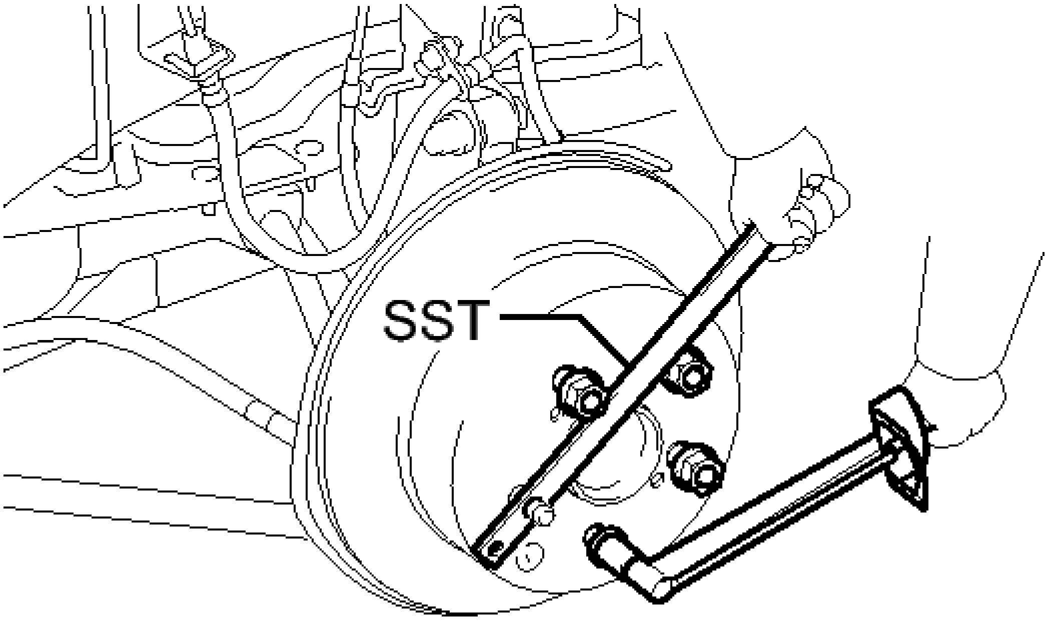

Fig. 22: Tightening Disc With The Nuts
Courtesy of TOYOTA MOTOR SALES, U.S.A., INC.

Torque: 103 N*m (1049 kgf*cm, 76 ft.*lbf)

c. Using a dial indicator with magnetic base, measure the disc runout 10 mm (0.394 in.) away from the outer edge of the rear disc.

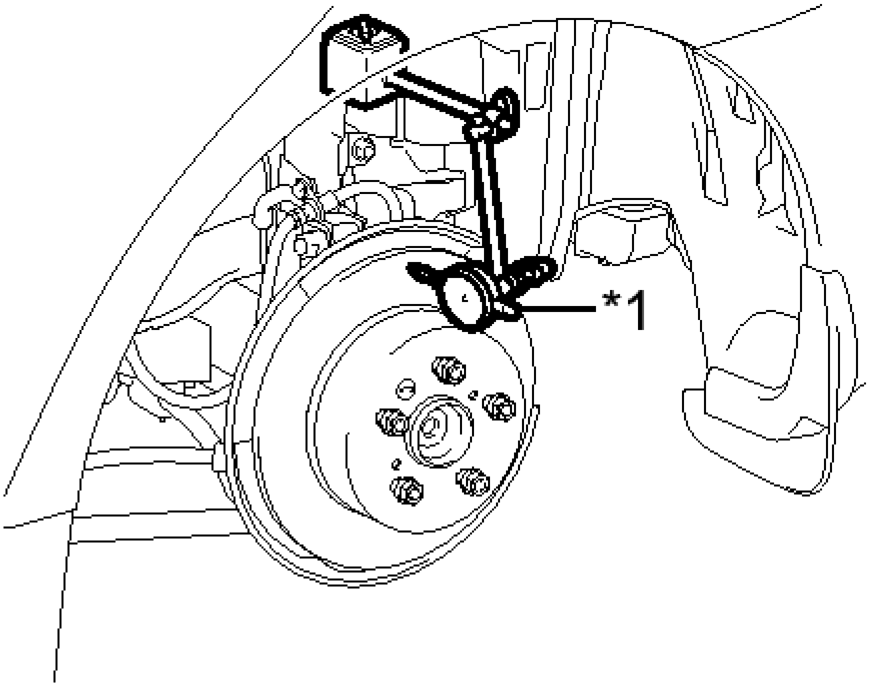

Fig. 23: Measuring Disc Runout
Courtesy of TOYOTA MOTOR SALES, U.S.A., INC.

TEXT IN ILLUSTRATION

*1	Dial Indicator

Maximum disc runout

0.15 mm (0.00591 in.)

NOTE: **Keep the magnet of the dial indicator away from the rear axle hub and bearing assembly.**

If the runout exceeds the maximum value, change the installation position of the disc to minimize the runout. If the runout exceeds the maximum even when the installation position is changed, grind the disc. If the disc thickness is less than the minimum, replace the rear disc.

d. Remove the 5 nuts and rear disc.

REASSEMBLY

REASSEMBLY

1. **TEMPORARILY TIGHTEN REAR DISC BRAKE BLEEDER PLUG**

   HINT:

   Fully tighten the rear disc brake bleeder plug after bleeding the system.

2. **INSTALL REAR DISC BRAKE BLEEDER PLUG CAP**
3. **INSTALL PISTON SEAL**
   a. Apply a light layer of lithium soap base glycol grease to the entire circumference of a new piston seal.

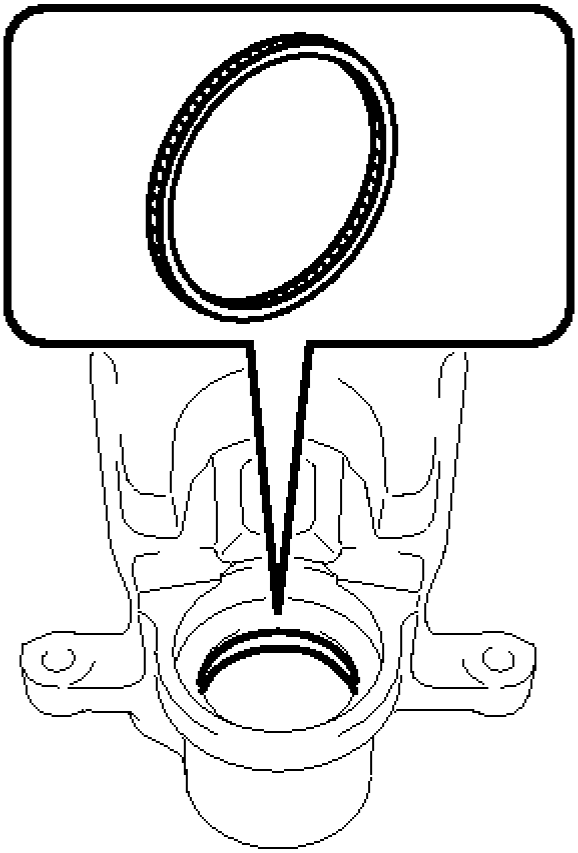

Fig. 24: Installing Piston Seal
Courtesy of TOYOTA MOTOR SALES, U.S.A., INC.

TEXT IN ILLUSTRATION

Lithium Soap Base Glycol Grease

b. Install the piston seal to the rear disc brake cylinder.

NOTE: **Securely install the piston seal to the groove of the rear disc brake cylinder.**

4. **INSTALL REAR DISC BRAKE PISTON**

a. Apply a light layer of lithium soap base glycol grease to the entire circumference of a new cylinder boot.

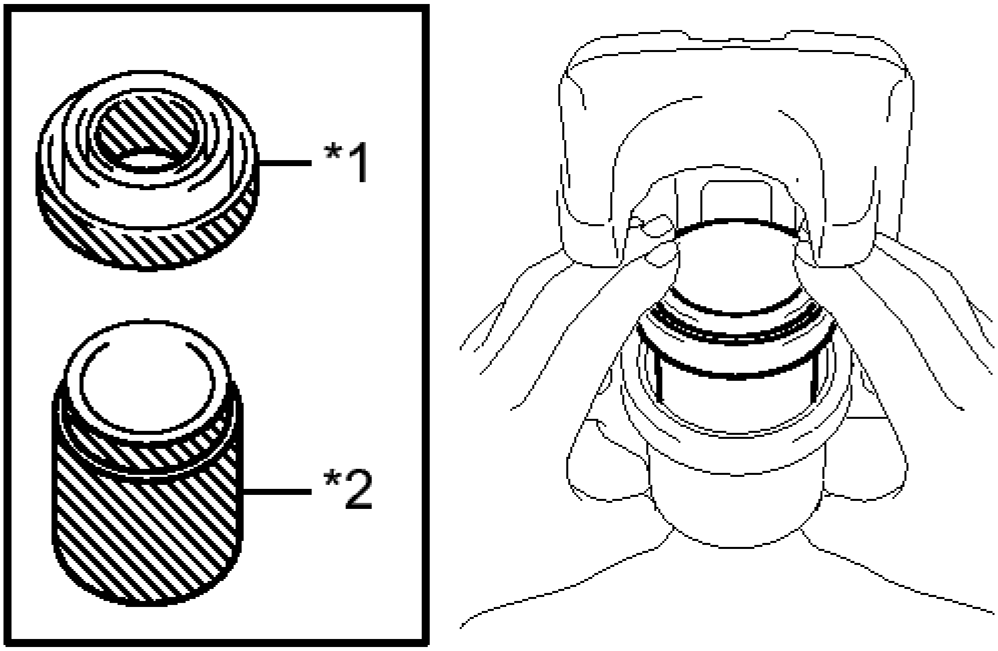

Fig. 25: Identifying Cylinder Boot And Rear Disc Brake Piston
Courtesy of TOYOTA MOTOR SALES, U.S.A., INC.

TEXT IN ILLUSTRATION

*1	Cylinder Boot
*2	Rear Disc Brake Piston
	Lithium Soap

	Base Glycol Grease

b. Install the cylinder boot to the rear disc brake piston.

c. Apply a light layer of lithium soap base glycol grease to the contact surfaces of the rear disc brake piston, and install it to the rear disc brake cylinder.

NOTE: **Do not install the rear disc brake piston forcibly in the rear disc brake cylinder.**

5. **INSTALL CYLINDER BOOT**

a. Install the cylinder boot to the rear disc brake cylinder.

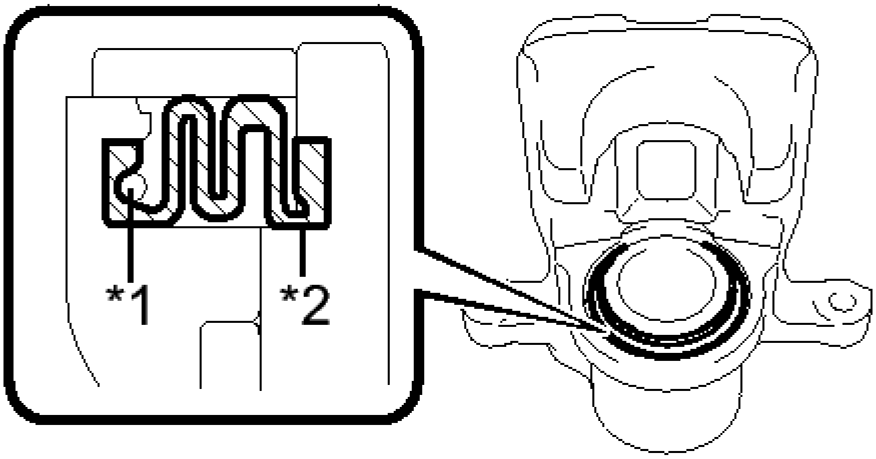

Fig. 26: Installing Cylinder Boot
Courtesy of TOYOTA MOTOR SALES, U.S.A., INC.

TEXT IN ILLUSTRATION

*1	Set Ring
*2	Cylinder Boot

NOTE: **Securely install the cylinder boot to the groove of the rear disc brake cylinder and rear disc brake piston.**

b. Using a screwdriver with its tip wrapped with vinyl tape, install a new rear disc brake piston set ring.

NOTE:

- **Securely install the rear disc brake piston set ring to the outer groove of the cylinder boot.**
- **Do not damage the cylinder boot.**

INSTALLATION

INSTALLATION

HINT:

- Use the same procedure for the LH side and RH side.
- The following procedure is for the LH side.

1. **INSTALL REAR DISC**
   a. Align the matchmarks of the rear disc and rear axle hub, and install the rear disc.

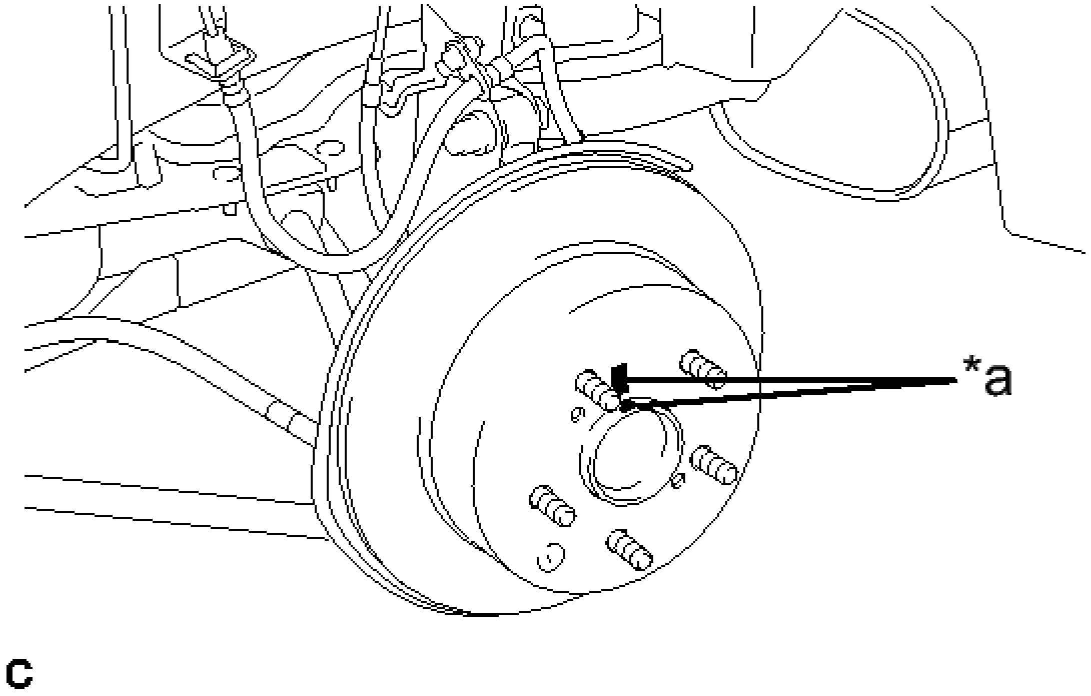

Fig. 27: Identifying Rear Disc And Axle Hub Matchmarks
Courtesy of TOYOTA MOTOR SALES, U.S.A., INC.

TEXT IN ILLUSTRATION

*a	Matchmark

NOTE: **When replacing the disc with a new one, select the installation position where the rear disc has minimal runout.**

2. **INSTALL PARKING BRAKE SHOE ADJUSTING HOLE PLUG**
    a. Install the parking brake shoe adjusting hole plug.
3. **INSTALL DISC BRAKE CYLINDER MOUNTING**
    a. Install the disc brake cylinder mounting with the 2 bolts.

    Torque: 78 N*m (799 kgf*cm, 58 ft.*lbf)

4. **INSTALL REAR DISC BRAKE BUSHING DUST BOOT**
    a. Apply a light layer of lithium soap base glycol grease to the entire circumference of 2 new rear disc brake bushing dust boots.

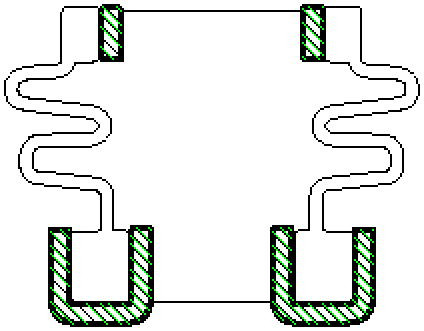

C

Fig. 28: Identifying Rear Disc Brake Bushing Dust Boots
Courtesy of TOYOTA MOTOR SALES, U.S.A., INC.

TEXT IN ILLUSTRATION

	Lithium Soap Base Glycol Grease

HINT:

Apply at least 0.3 g (0.01 oz.) of lithium soap base glycol grease to each rear disc brake bushing dust boot.

b. Install the 2 rear disc brake bushing dust boots to the disc brake cylinder mounting.

5. **INSTALL REAR DISC BRAKE CYLINDER SLIDE BUSHING**
   a. Apply a light layer of lithium soap base glycol grease to the contact surface of the rear disc brake cylinder slide pin (for Lower Side).

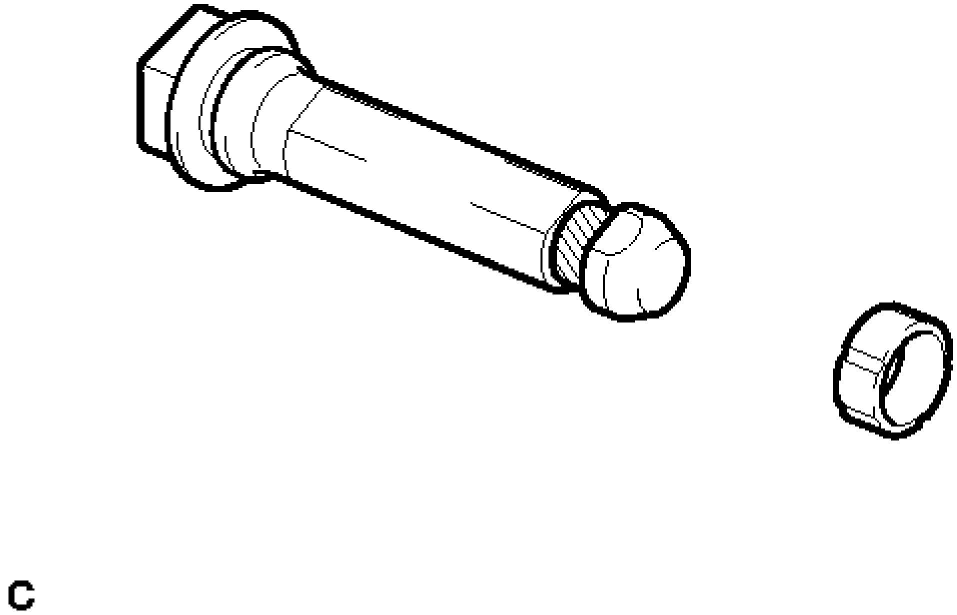

Fig. 29: Identifying Light Layer Of Grease On Front No. 2 Disc Brake Cylinder Slide Pin
Courtesy of TOYOTA MOTOR SALES, U.S.A., INC.

TEXT IN ILLUSTRATION

Lithium Soap Base Glycol Grease

   b. Install a new rear disc brake cylinder slide bushing to the rear disc brake cylinder slide pin (for Lower Side).

6. **INSTALL REAR DISC BRAKE CYLINDER SLIDE PIN (for Lower Side)**
   a. Apply a light layer of lithium soap base glycol grease to the sliding and sealing surfaces of the rear disc brake cylinder slide pin.

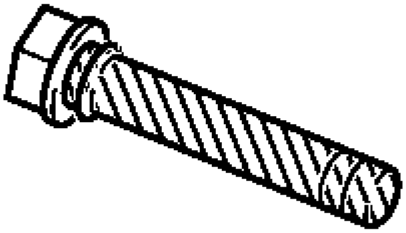

C

Fig. 30: Identifying Light Layer Of Grease On Front No. 2 Disc Brake Cylinder Slide Pin
Courtesy of TOYOTA MOTOR SALES, U.S.A., INC.

TEXT IN ILLUSTRATION

	Lithium Soap Base Glycol Grease

b. Install the rear disc brake cylinder slide pin to the disc brake cylinder mounting.
c. Push the rear disc brake cylinder slide pin into the rear disc brake bushing dust boot to engage the pin to the boot.

7. **INSTALL REAR DISC BRAKE CYLINDER SLIDE PIN (for Upper Side)**
    a. Apply a light layer of lithium soap base glycol grease to the sliding and sealing surfaces of the rear disc brake cylinder slide pin.

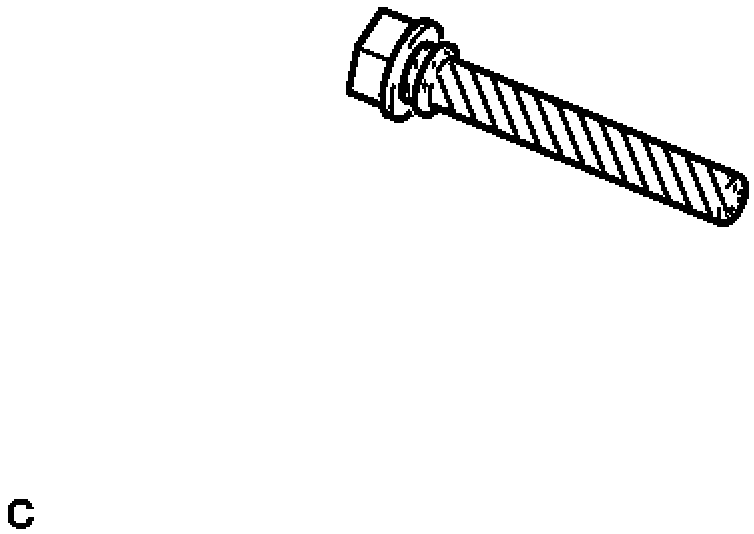

Fig. 31: Identifying Light Layer Of Grease On No. 1 Disc Brake Cylinder Slide Pin
Courtesy of TOYOTA MOTOR SALES, U.S.A., INC.

TEXT IN ILLUSTRATION

	Lithium Soap Base Glycol Grease

b. Install the rear disc brake cylinder slide pin to the disc brake cylinder mounting.
c. Push the rear disc brake cylinder slide pin into the rear disc brake bushing dust boot to engage the pin to the boot.

8. **INSTALL REAR DISC BRAKE PAD SUPPORT PLATE**
    a. Install the 2 rear disc brake pad support plates to the disc brake cylinder mounting.
9. **INSTALL REAR DISC BRAKE ANTI-SQUEAL SHIM KIT**
    a. Install the rear disc brake pad wear indicator plate to each rear disc brake pad.

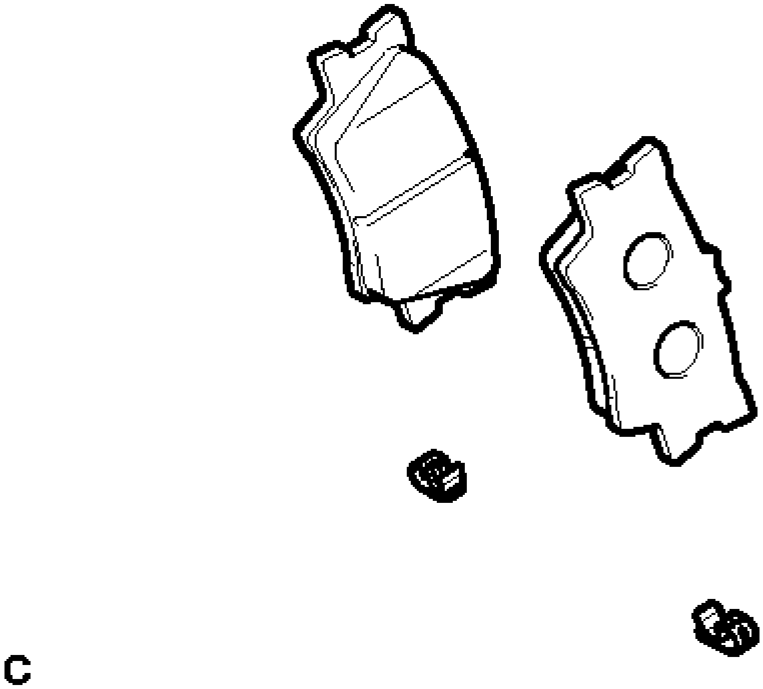

Fig. 32: Identifying Rear Disc Brake Pad Wear Indicator
Courtesy of TOYOTA MOTOR SALES, U.S.A., INC.

NOTE: **Install each pad wear indicator plate in the correct position and direction.**

b. Apply disc brake grease to the inside of the rear disc brake anti-squeal shims.

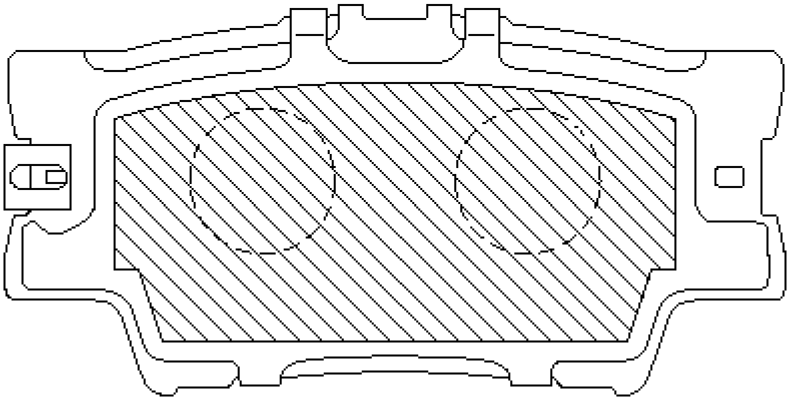

Fig. 33: Identifying Brake Grease Application Area
Courtesy of TOYOTA MOTOR SALES, U.S.A., INC.

TEXT IN ILLUSTRATION

▨	Disc Brake Grease

c. Install the rear disc brake anti-squeal shim to each rear disc brake pad with pad wear indicator plate.

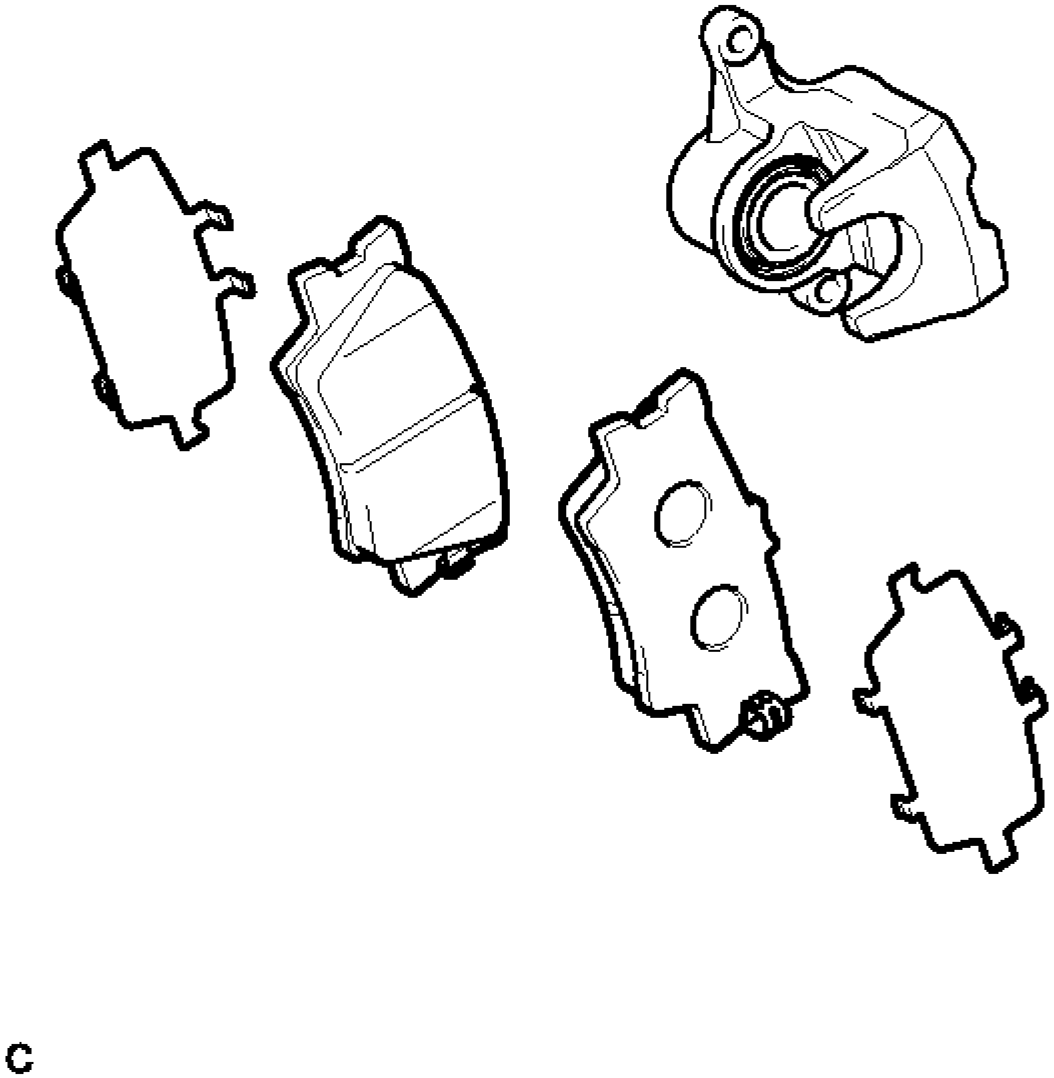

Fig. 34: Identifying Rear Disc Brake Anti-Squeal Shims
Courtesy of TOYOTA MOTOR SALES, U.S.A., INC.

NOTE:

- **Disc brake grease may seep out slightly from the areas where the rear disc brake anti-squeal shims are installed.**
- **Make sure that disc brake grease is not applied onto the lining surface.**

10. **INSTALL REAR DISC BRAKE PAD**
    a. Install the 2 rear disc brake pads with rear disc brake anti-squeal shim kit to the disc brake cylinder mounting.

NOTE: **There should be no oil or grease on the friction surfaces of the disc brake pads or the rear disc.**

11. **INSTALL REAR DISC BRAKE CYLINDER ASSEMBLY**

   a. Hold the rear disc brake cylinder slide pin, and install the rear disc brake cylinder assembly to the disc brake cylinder mounting with the 2 bolts.

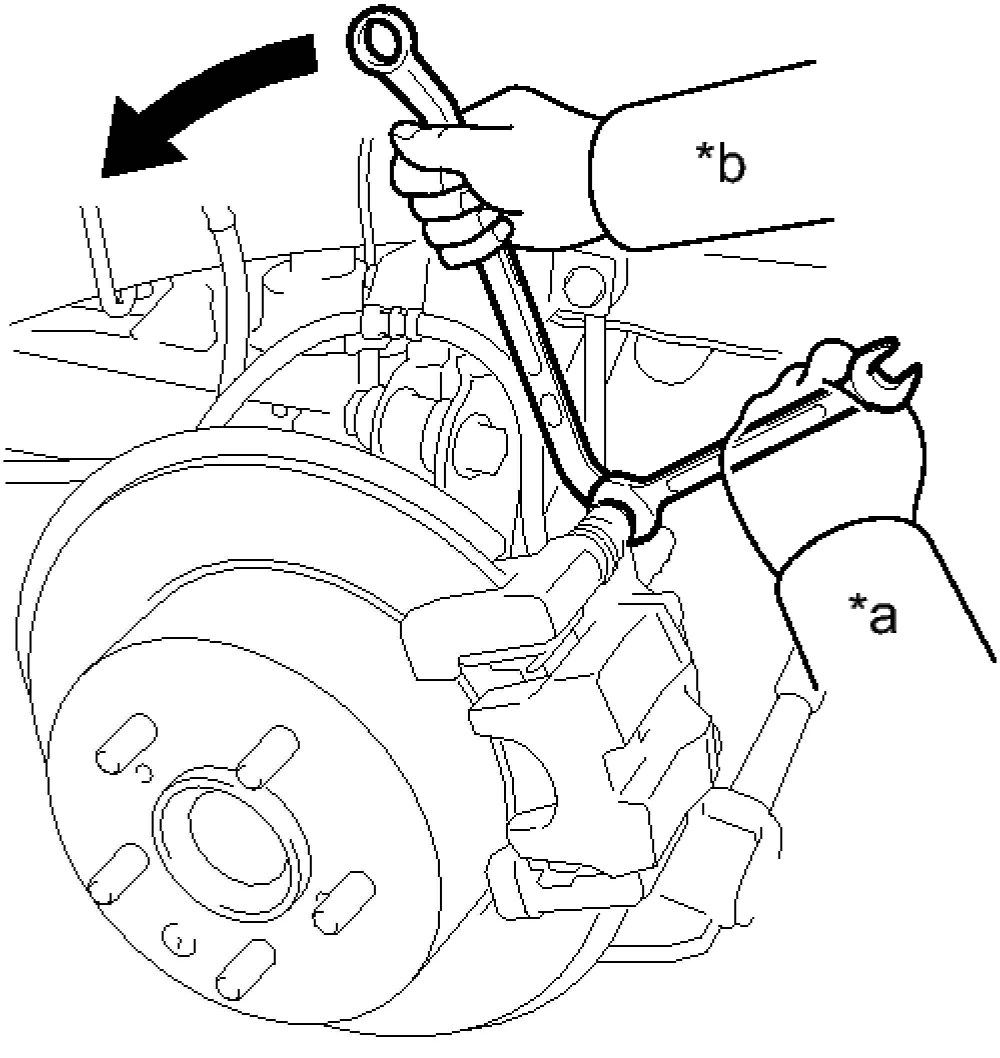

Fig. 35: Installing Disc Brake Cylinder Assembly
Courtesy of TOYOTA MOTOR SALES, U.S.A., INC.

TEXT IN ILLUSTRATION

*a	Hold
*b	Turn

Torque: 27 N*m (270 kgf*cm, 20 ft.*lbf)

12. **CONNECT REAR FLEXIBLE HOSE**

   a. Connect the rear flexible hose to the rear disc brake cylinder assembly with the union bolt and a new gasket.

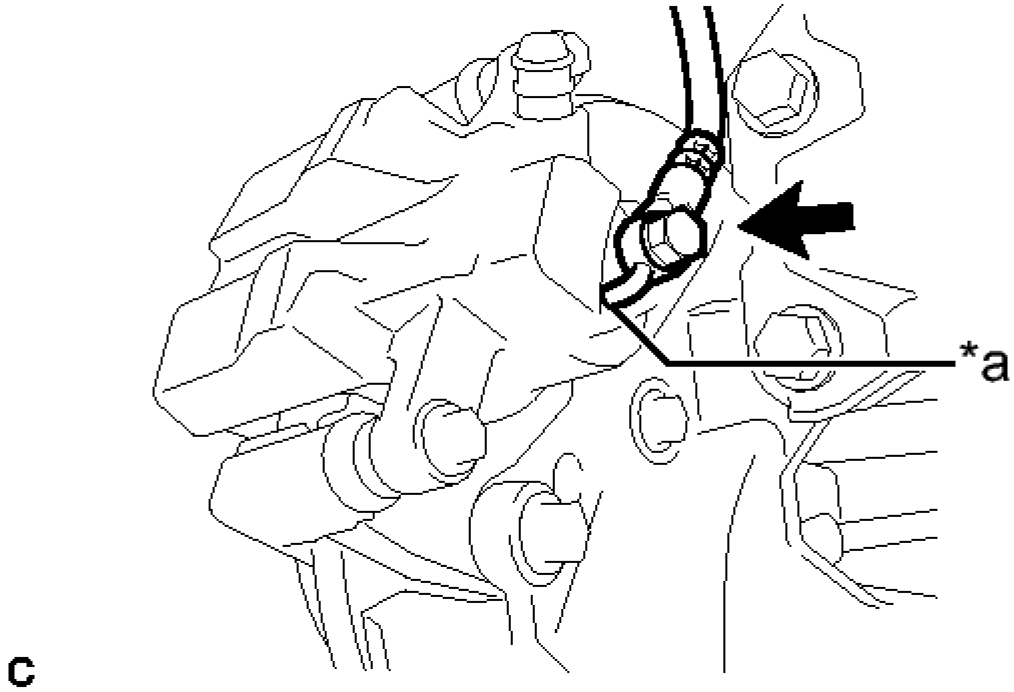

Fig. 36: Identifying Rear Flexible Hose Union Bolt
Courtesy of TOYOTA MOTOR SALES, U.S.A., INC.

TEXT IN ILLUSTRATION

*a	Lock Hole

Torque: 33 N*m (340 kgf*cm, 25 ft.*lbf)

NOTE: **Install the flexible hose lock securely into the lock hole in the disc brake cylinder.**

13. **CONNECT CABLE TO AUXILIARY BATTERY NEGATIVE TERMINAL**
    a. Connect the cable to the negative (-) auxiliary battery terminal. Refer to **INSTALLATION - Step 2** .
    b. Perform the following procedure if air bleeding is not necessary:
        1. Connect the reservoir level switch connector.
        2. Clear the DTCs. Refer to **DTC CHECK / CLEAR** .
14. **BLEED BRAKE LINE** . Refer to **BLEEDING - Step 1**
15. **ADJUST PARKING BRAKE**

    Refer to **ADJUSTMENT**

16. **INSTALL REAR WHEEL**

    Torque: 103 N*m (1049 kgf*cm, 76 ft.*lbf)

REAR BRAKE FLEXIBLE HOSE

COMPONENTS

ILLUSTRATION

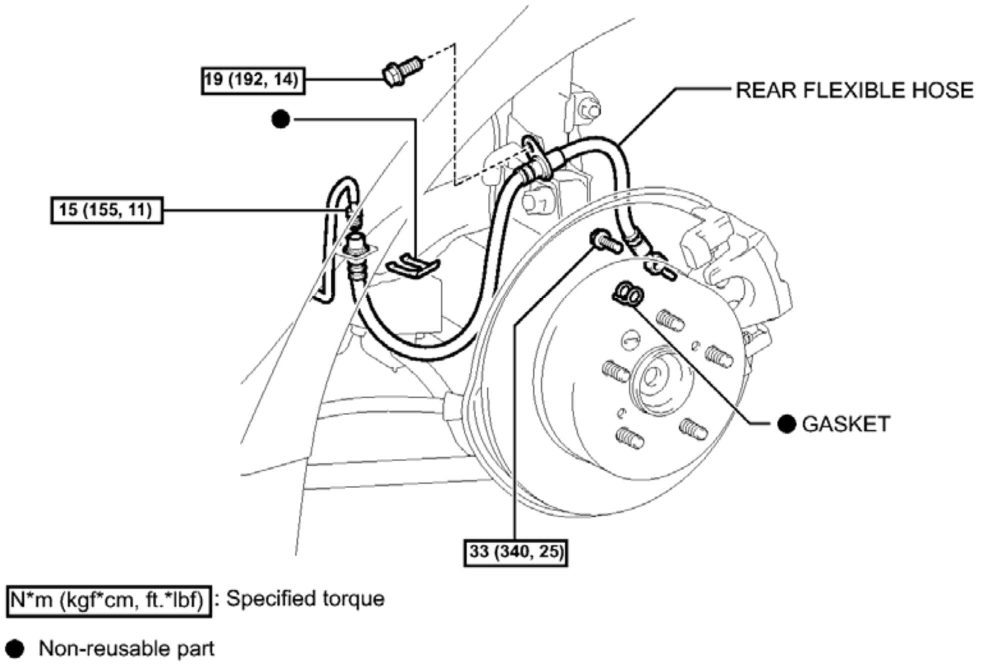
19 (192, 14)
REAR FLEXIBLE HOSE
●
15 (155, 11)
● GASKET
33 (340, 25)
N*m (kgf*cm, ft.*lbf) : Specified torque
● Non-reusable part

Fig. 37: Identifying Rear Brake Flexible Hose Replacement Components With Torque Specifications
Courtesy of TOYOTA MOTOR SALES, U.S.A., INC.

REMOVAL

REMOVAL

NOTE: If the left and right hoses are disconnected at the same time, be sure to place a mark on each hose to indicate its installation position.

HINT:

- Use the same procedure for the LH side and RH side.
- The following procedure is for the LH side.

1. **PRECAUTION**

NOTE: **After turning the power switch off, waiting time may be required before disconnecting the cable from the negative (-) auxiliary battery terminal. Therefore, make sure to read the disconnecting the cable from the negative (-) auxiliary battery terminal notice before proceeding with work. Refer to PRECAUTION .**

2. **DISABLE BRAKE CONTROL** . Refer to **REMOVAL - Step 2**
3. **REMOVE REAR WHEEL**
4. **DRAIN BRAKE FLUID**

NOTE: **If brake fluid leaks onto any painted surface, immediately wash it off.**

5. **REMOVE REAR FLEXIBLE HOSE**
   a. Using a union nut wrench, disconnect the brake line while holding the rear flexible hose with a wrench.

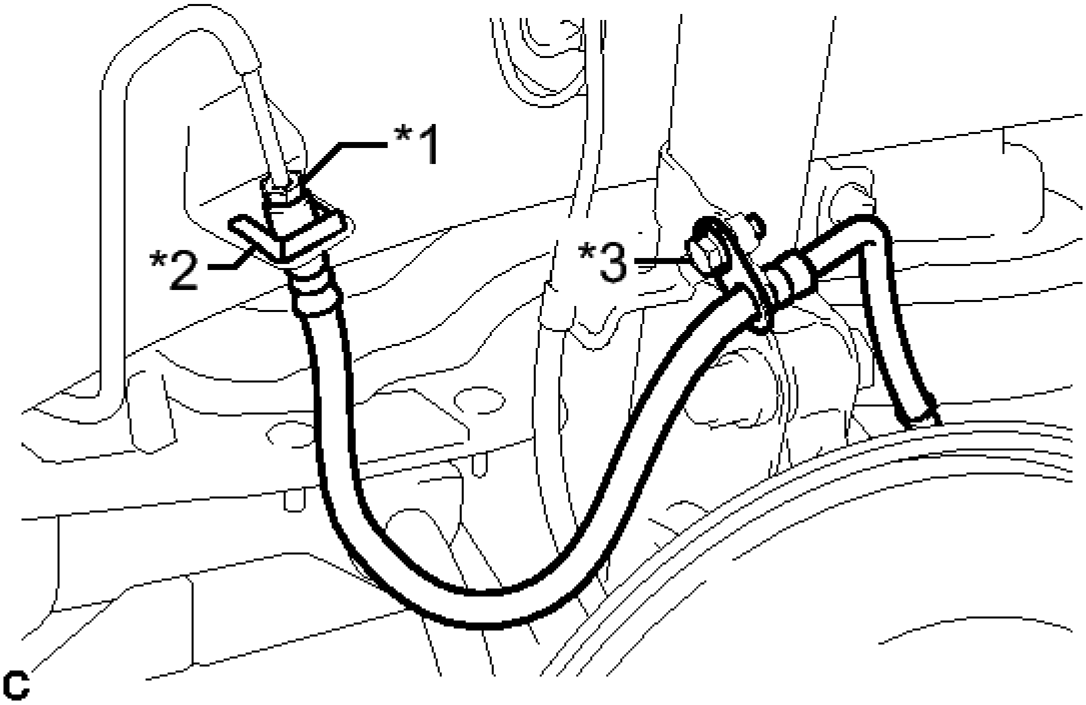

Fig. 38: Identifying Rear Flexible Hose, Brake Line, Clip, And Bolt
Courtesy of TOYOTA MOTOR SALES, U.S.A., INC.

TEXT IN ILLUSTRATION

*1	Brake Line
*2	Clip

*3	Bolt

NOTE:

- **Do not bend or damage the brake line.**
- **Do not allow any foreign matter such as dirt or dust to enter the brake line from the connecting points.**

b. Remove the clip from the rear flexible hose.
c. Remove the bolt.
d. Remove the union bolt, gasket and rear flexible hose.

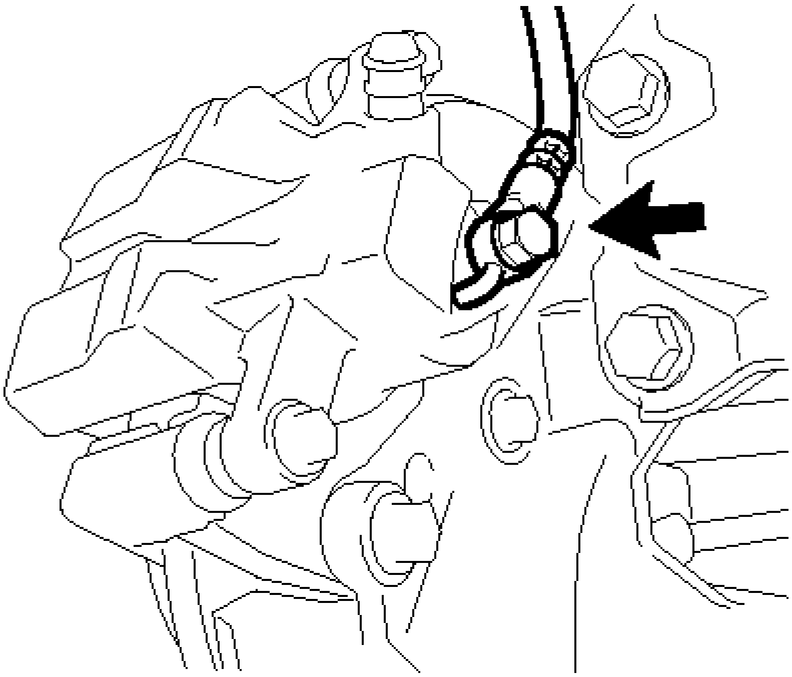

Fig. 39: Identifying Rear Flexible Hose Union Bolt
Courtesy of TOYOTA MOTOR SALES, U.S.A., INC.

INSTALLATION

INSTALLATION

NOTE:

- **Because the left and right rear flexible hoses are not interchangeable, verify the part number when installing the flexible hoses.**
- **If the hoses are to be reused, connect them after checking the identification marks placed when each hose was disconnected.**

HINT:

- Use the same procedure for the LH side and RH side.

- The following procedure is for the LH side.

1. **INSTALL REAR FLEXIBLE HOSE**
   a. Connect the rear flexible hose to the rear disc brake cylinder assembly with the union bolt and a new gasket.

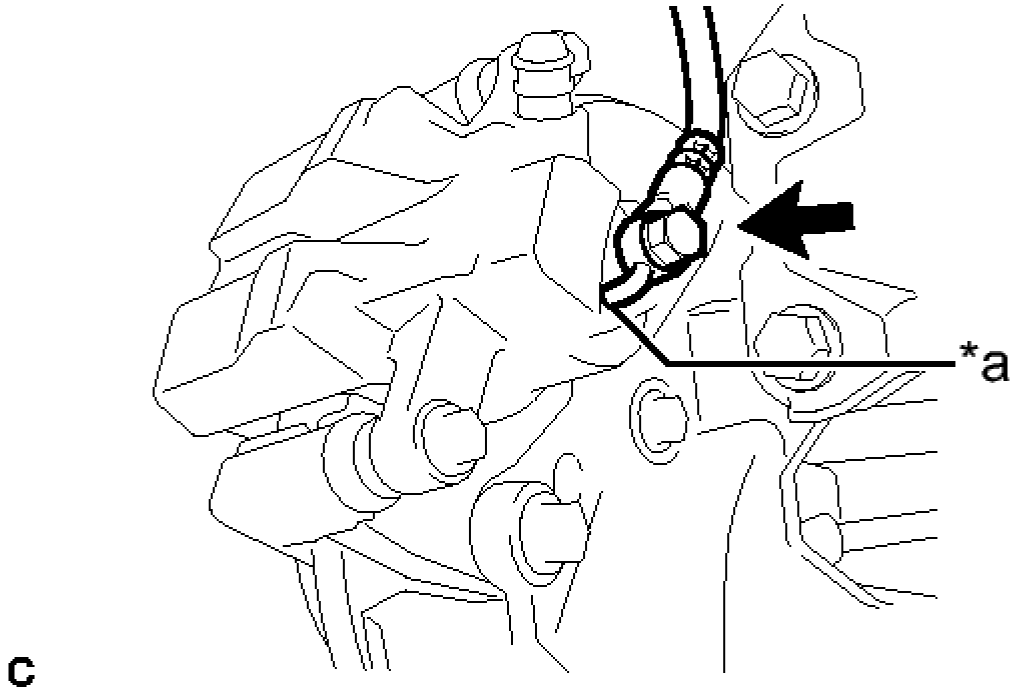

Fig. 40: Identifying Rear Flexible Hose Union Bolt
Courtesy of TOYOTA MOTOR SALES, U.S.A., INC.

Torque: 33 N*m (340 kgf*cm, 25 ft.*lbf)

TEXT IN ILLUSTRATION

*a	Lock Hole

NOTE: **Install the flexible hose lock securely into the lock hole in the disc brake cylinder.**

   b. Install the rear flexible hose with the bolt.

Torque: 19 N*m (192 kgf*cm, 14 ft.*lbf)

   c. Install a new clip.

NOTE: **Install the clip as far as it will go.**

d. Using a union nut wrench, connect the brake line to the rear flexible hose while holding the rear flexible hose with a wrench.

   Torque: 15 N*m (155 kgf*cm, 11 ft.*lbf)

   NOTE:

   - **Do not bend or damage the brake line.**
   - **Do not allow any foreign matter such as dirt or dust to enter the brake line from the connecting points.**
   - **Use the formula to calculate special torque values for situations where the union nut wrench is combined with a torque wrench. Refer to PRECAUTION .**

2. **CONNECT CABLE TO AUXILIARY BATTERY NEGATIVE TERMINAL**

   Refer to **INSTALLATION - Step 2**

3. **BLEED BRAKE LINE** . Refer to **BLEEDING - Step 1**
4. **INSTALL REAR WHEEL**

   Torque: 103 N*m (1049 kgf*cm, 76 ft.*lbf)

2012-2017 BRAKES

Brake System (Rear) (Service Information) (Except Hybrid) - Camry

REAR BRAKE

COMPONENTS

ILLUSTRATION

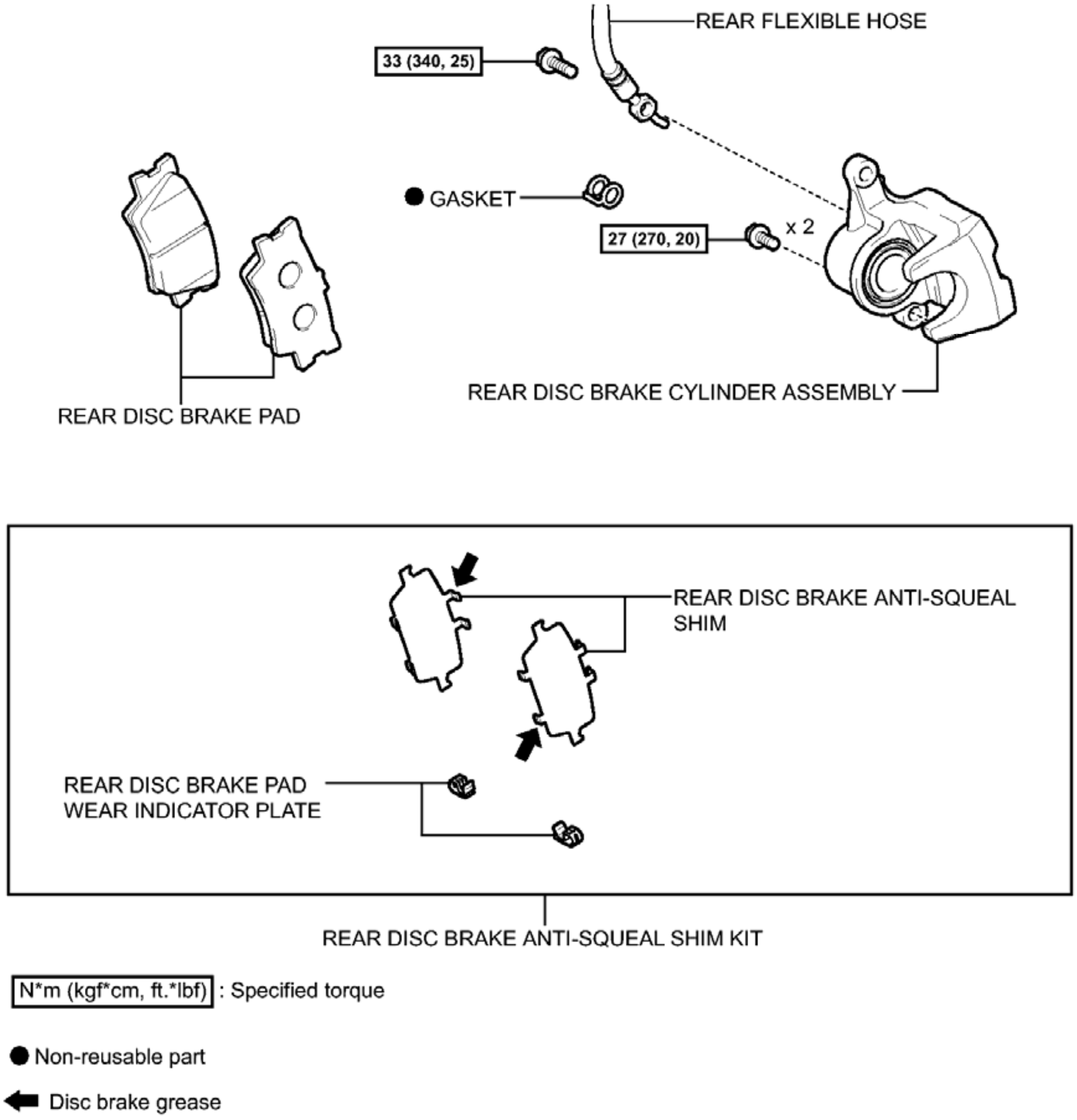

REAR FLEXIBLE HOSE
33 (340, 25)
● GASKET
27 (270, 20)
x 2
REAR DISC BRAKE PAD
REAR DISC BRAKE CYLINDER ASSEMBLY
REAR DISC BRAKE ANTI-SQUEAL SHIM
REAR DISC BRAKE PAD WEAR INDICATOR PLATE
REAR DISC BRAKE ANTI-SQUEAL SHIM KIT
N*m (kgf*cm, ft.*lbf) : Specified torque
● Non-reusable part
⬅ Disc brake grease

Fig. 1: Identifying Rear Brake Replacement Components With Torque Specifications (1 Of 3)
Courtesy of TOYOTA MOTOR SALES, U.S.A., INC.

ILLUSTRATION

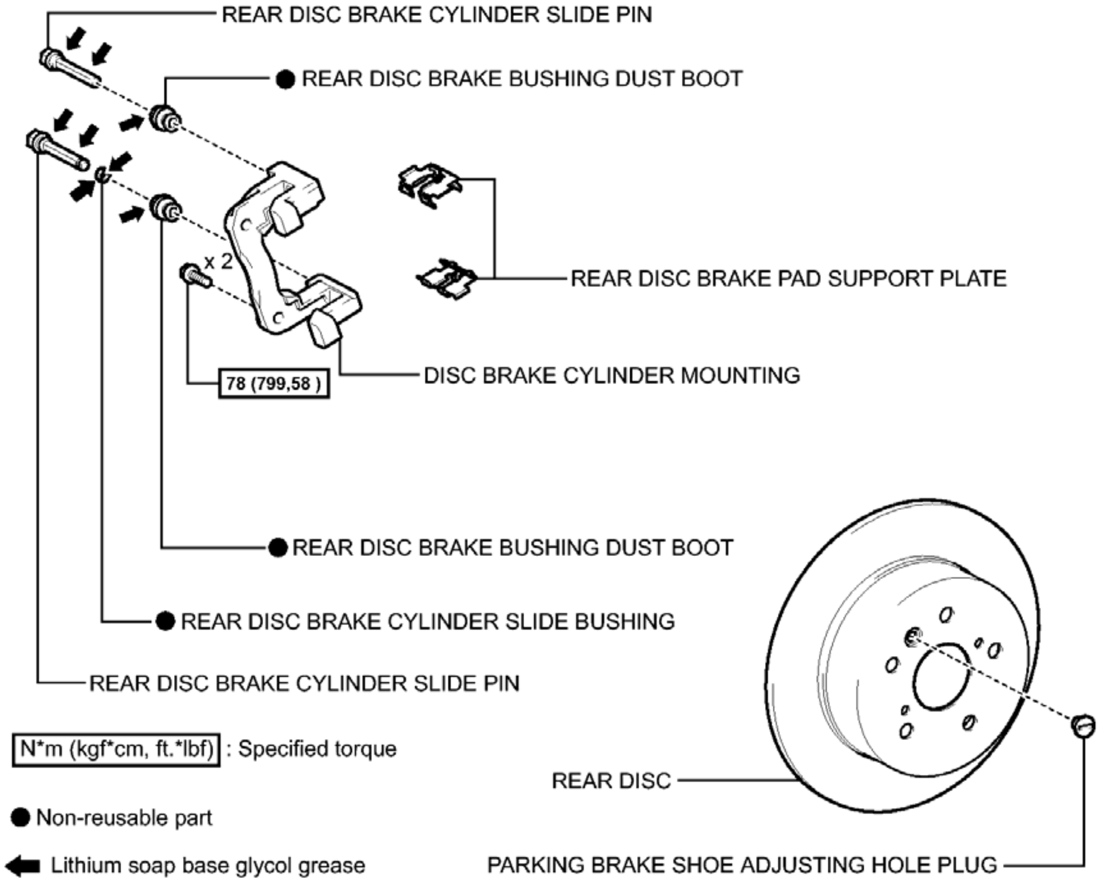
REAR DISC BRAKE CYLINDER SLIDE PIN
● REAR DISC BRAKE BUSHING DUST BOOT
REAR DISC BRAKE PAD SUPPORT PLATE
x 2
78 (799,58)
DISC BRAKE CYLINDER MOUNTING
● REAR DISC BRAKE BUSHING DUST BOOT
● REAR DISC BRAKE CYLINDER SLIDE BUSHING
REAR DISC BRAKE CYLINDER SLIDE PIN
N*m (kgf*cm, ft.*lbf) : Specified torque
REAR DISC
● Non-reusable part
Lithium soap base glycol grease
PARKING BRAKE SHOE ADJUSTING HOLE PLUG

Fig. 2: Identifying Rear Brake Replacement Components With Torque Specifications (2 Of 3)
Courtesy of TOYOTA MOTOR SALES, U.S.A., INC.

ILLUSTRATION

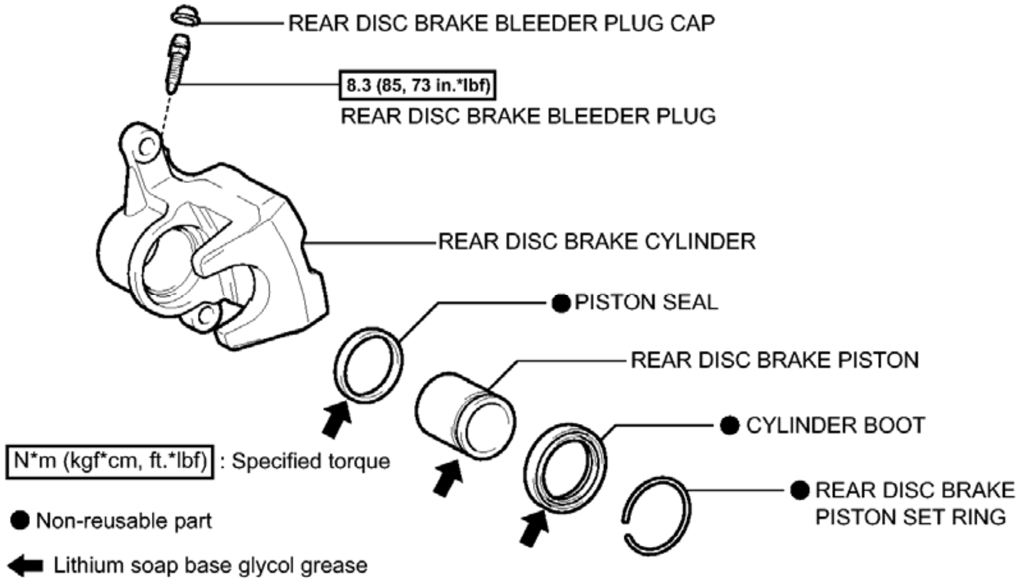
REAR DISC BRAKE BLEEDER PLUG CAP
8.3 (85, 73 in.*lbf)
REAR DISC BRAKE BLEEDER PLUG
REAR DISC BRAKE CYLINDER
● PISTON SEAL
REAR DISC BRAKE PISTON
● CYLINDER BOOT
● REAR DISC BRAKE PISTON SET RING
N*m (kgf*cm, ft.*lbf) : Specified torque
● Non-reusable part
Lithium soap base glycol grease

Fig. 3: Identifying Rear Brake Replacement Components With Torque Specifications (3 Of 3)
Courtesy of TOYOTA MOTOR SALES, U.S.A., INC.

REMOVAL

REMOVAL

HINT:

- Use the same procedure for the LH side and RH side.
- The following procedure is for the LH side.

1. **REMOVE REAR WHEEL**
2. **DRAIN BRAKE FLUID**

NOTE: If brake fluid leaks onto any painted surface, immediately wash it off.

3. **SEPARATE REAR FLEXIBLE HOSE**
   a. Remove the union bolt and gasket, and separate the rear flexible hose from the rear disc brake cylinder assembly.

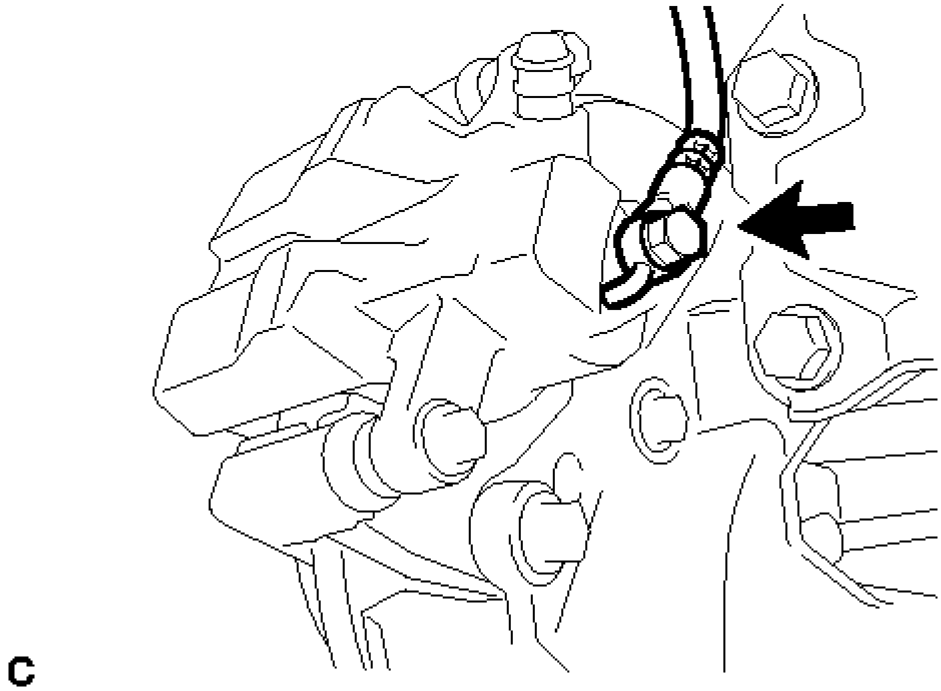

Fig. 4: Identifying Rear Flexible Hose Union Bolt
Courtesy of TOYOTA MOTOR SALES, U.S.A., INC.

4. **REMOVE REAR DISC BRAKE CYLINDER ASSEMBLY**
   a. Hold the rear disc brake cylinder slide pin, and remove the 2 bolts and rear disc brake cylinder assembly.

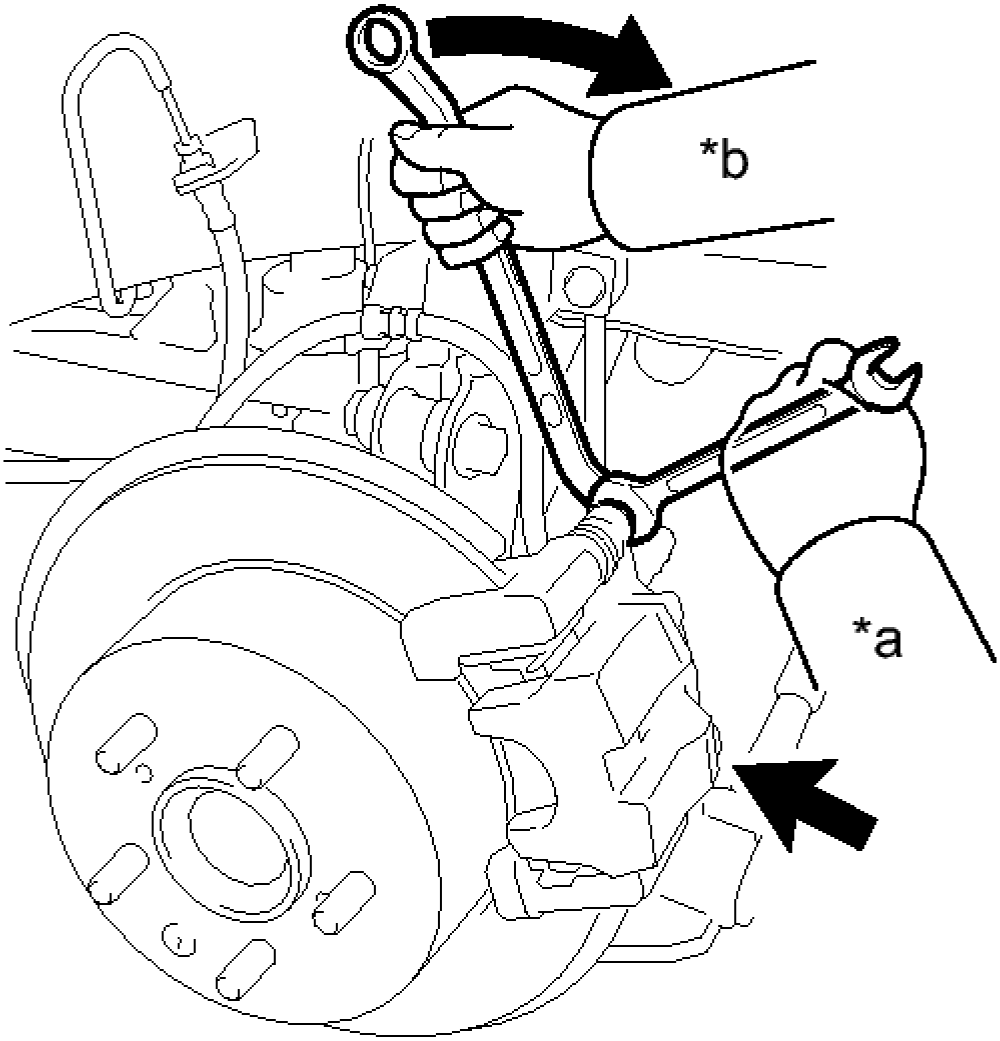

Fig. 5: Removing Disc Brake Cylinder Assembly
Courtesy of TOYOTA MOTOR SALES, U.S.A., INC.

TEXT IN ILLUSTRATION

*a	Hold
*b	Turn

5. **REMOVE REAR DISC BRAKE PAD**
    a. Remove the 2 rear disc brake pads with rear disc brake anti-squeal shim kit from the disc brake cylinder mounting.

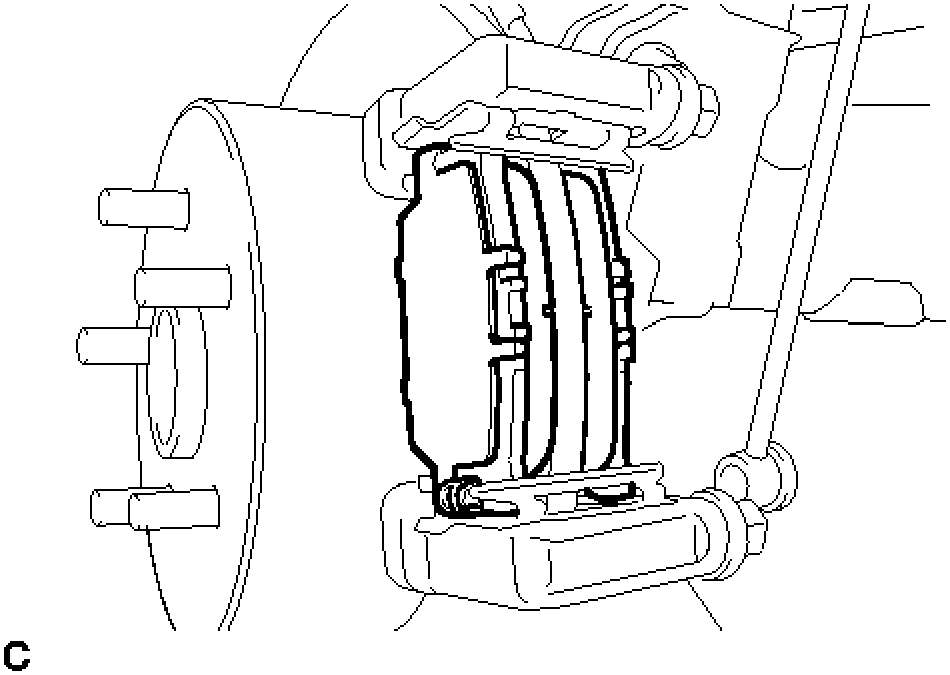

Fig. 6: Identifying Rear Disc Brake Pads
Courtesy of TOYOTA MOTOR SALES, U.S.A., INC.

6. **REMOVE REAR DISC BRAKE ANTI-SQUEAL SHIM KIT**
    a. Remove the rear disc brake anti-squeal shim from each rear disc brake pad.

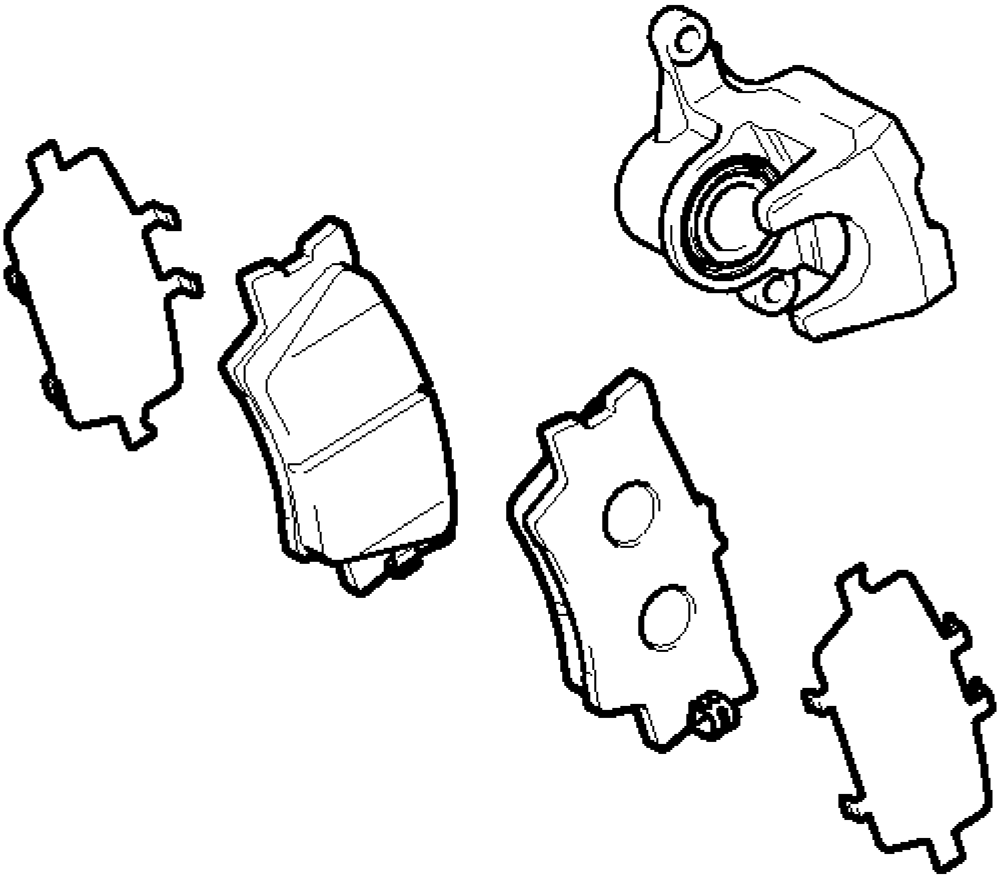

Fig. 7: Identifying Rear Disc Brake Anti-Squeal Shims
Courtesy of TOYOTA MOTOR SALES, U.S.A., INC.

b. Remove the rear disc brake pad wear indicator plate from each rear disc brake pad.

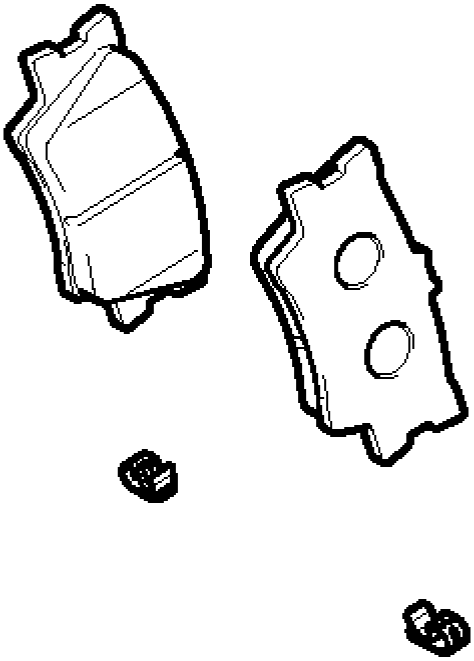

C

Fig. 8: Identifying Rear Disc Brake Pad Wear Indicator
Courtesy of TOYOTA MOTOR SALES, U.S.A., INC.

7. **REMOVE REAR DISC BRAKE PAD SUPPORT PLATE**
   a. Remove the 2 rear disc brake pad support plates from the disc brake cylinder mounting.

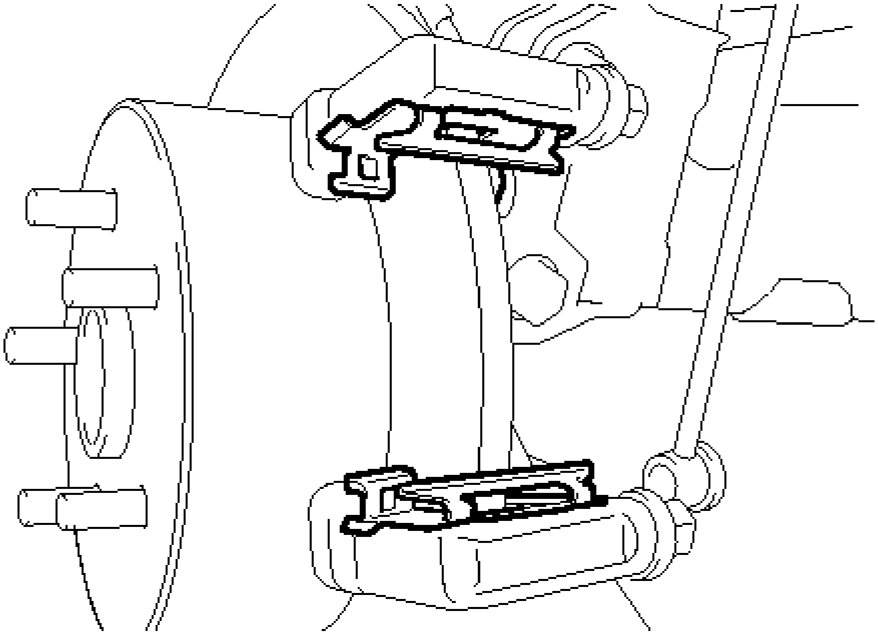

C

Fig. 9: Identifying Rear Disc Brake Pad Support Plate

Courtesy of TOYOTA MOTOR SALES, U.S.A., INC.

8. **REMOVE REAR DISC BRAKE CYLINDER SLIDE PIN (for Upper Side)**
    a. Remove the rear disc brake cylinder slide pin from the disc brake cylinder mounting.

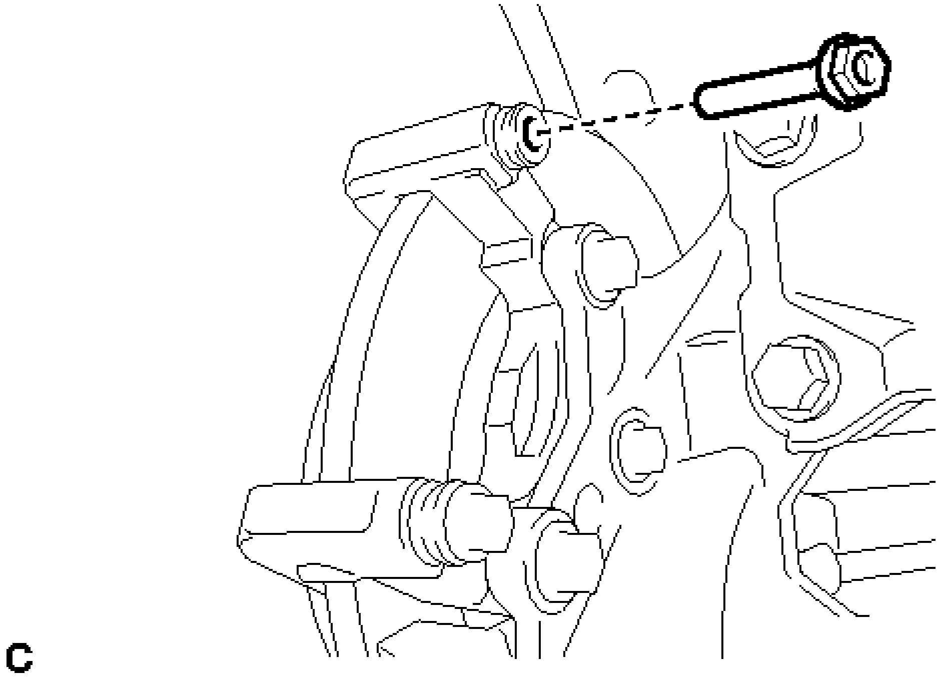

Fig. 10: Identifying Rear Disc Brake Cylinder Slide Pin (For Upper Side)
Courtesy of TOYOTA MOTOR SALES, U.S.A., INC.

9. **REMOVE REAR DISC BRAKE CYLINDER SLIDE PIN (for Lower Side)**
    a. Remove the rear disc brake cylinder slide pin from the disc brake cylinder mounting.

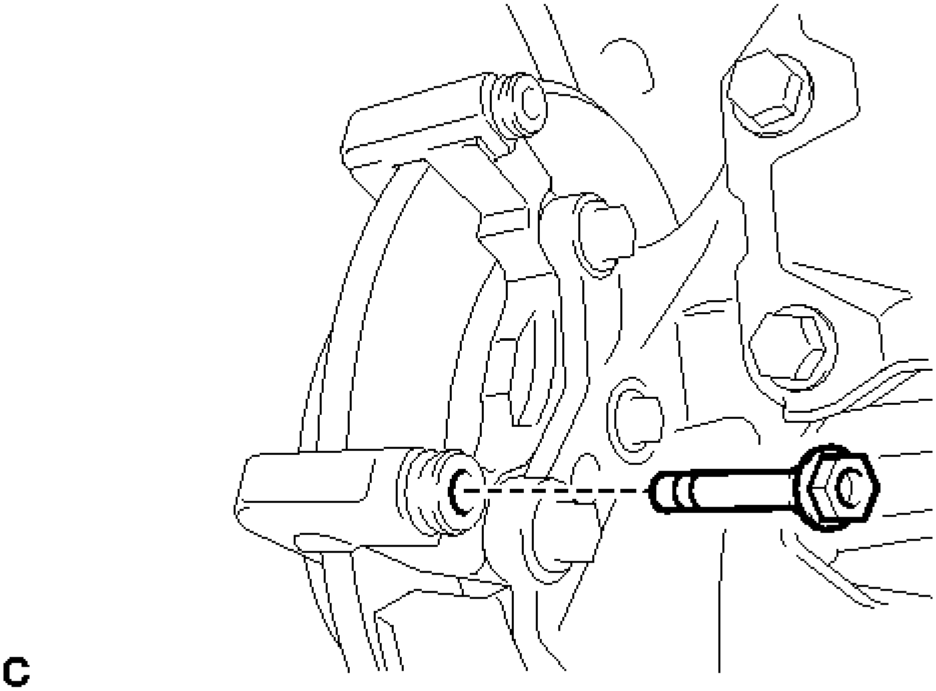

Fig. 11: Identifying Rear Disc Brake Cylinder Pin (For Lower Side)
Courtesy of TOYOTA MOTOR SALES, U.S.A., INC.

10. **REMOVE REAR DISC BRAKE CYLINDER SLIDE BUSHING**
    a. Using a screwdriver with its tip wrapped with vinyl tape, remove the rear disc brake cylinder slide bushing from the rear disc brake cylinder slide pin.

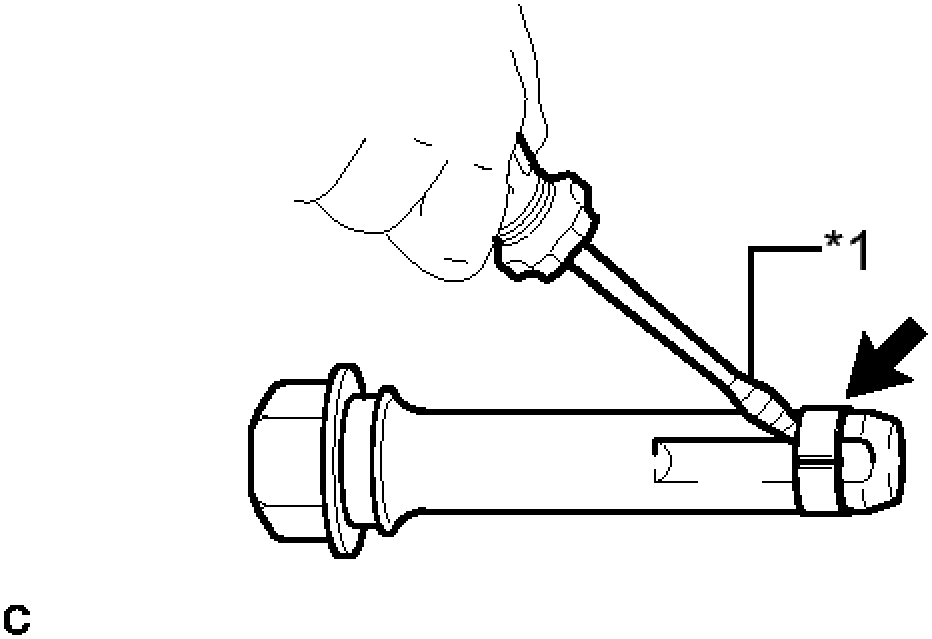

Fig. 12: Removing Front Disc Brake Cylinder Slide Bushing
Courtesy of TOYOTA MOTOR SALES, U.S.A., INC.

TEXT IN ILLUSTRATION

*1	Vinyl Tape

NOTE: **Do not damage the rear disc brake cylinder slide pin.**

11. **REMOVE REAR DISC BRAKE BUSHING DUST BOOT**
    a. Remove the 2 rear disc brake bushing dust boots from the disc brake cylinder mounting.

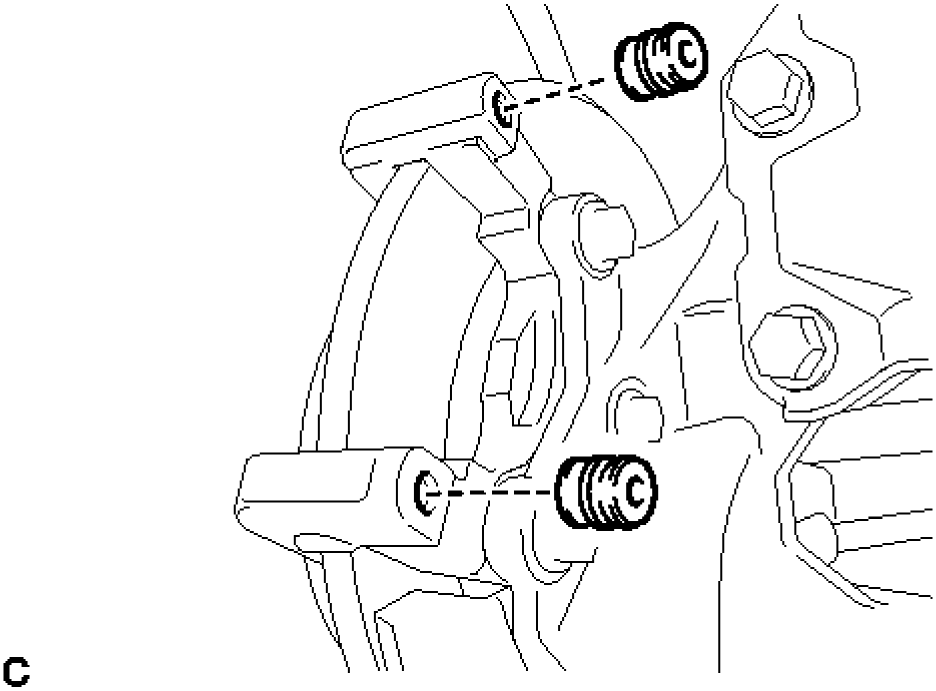

Fig. 13: Identifying Rear Disc Brake Bushing Dust Boot
Courtesy of TOYOTA MOTOR SALES, U.S.A., INC.

12. **REMOVE DISC BRAKE CYLINDER MOUNTING**
    a. Remove the 2 bolts and disc brake cylinder mounting.

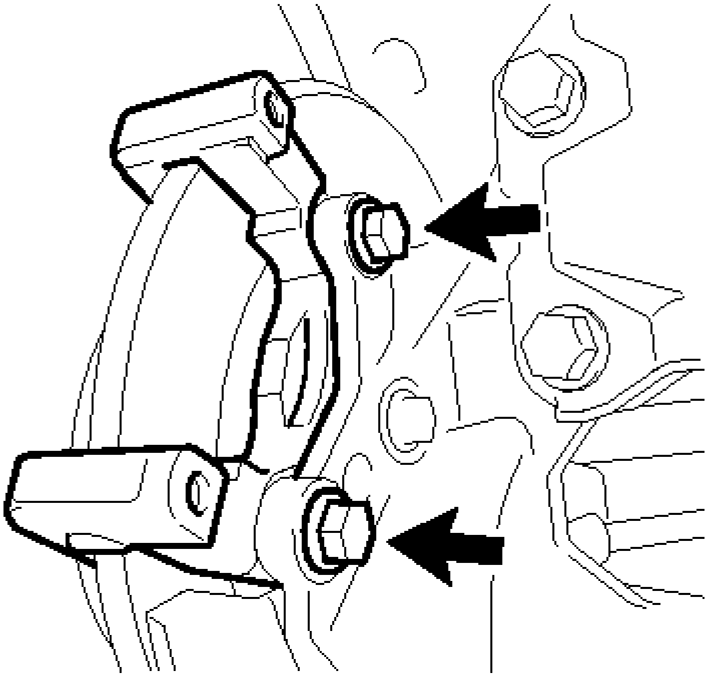

Fig. 14: Identifying Disc Brake Cylinder Mounting Bolts
Courtesy of TOYOTA MOTOR SALES, U.S.A., INC.

13. **REMOVE PARKING BRAKE SHOE ADJUSTING HOLE PLUG**
    a. Remove the parking brake shoe adjusting hole plug.
14. **REMOVE REAR DISC**
    a. Put matchmarks on the rear disc and the rear axle hub.

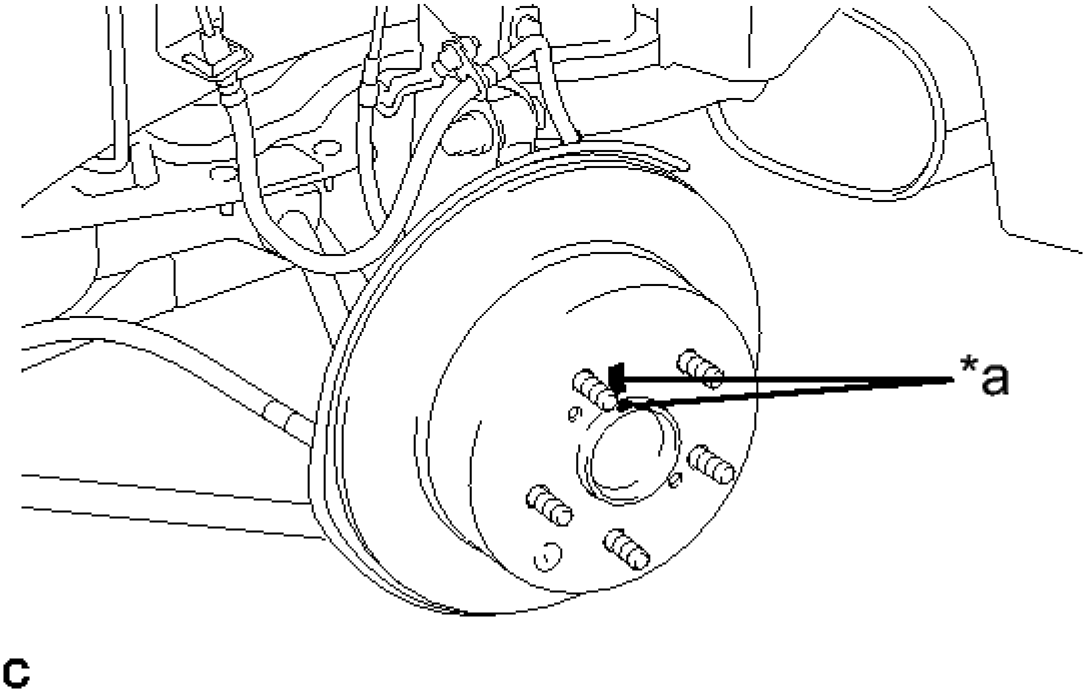

Fig. 15: Identifying Rear Disc And Axle Hub Matchmarks
Courtesy of TOYOTA MOTOR SALES, U.S.A., INC.

TEXT IN ILLUSTRATION

*a	Matchmark

b. Release the parking brake and remove the rear disc.

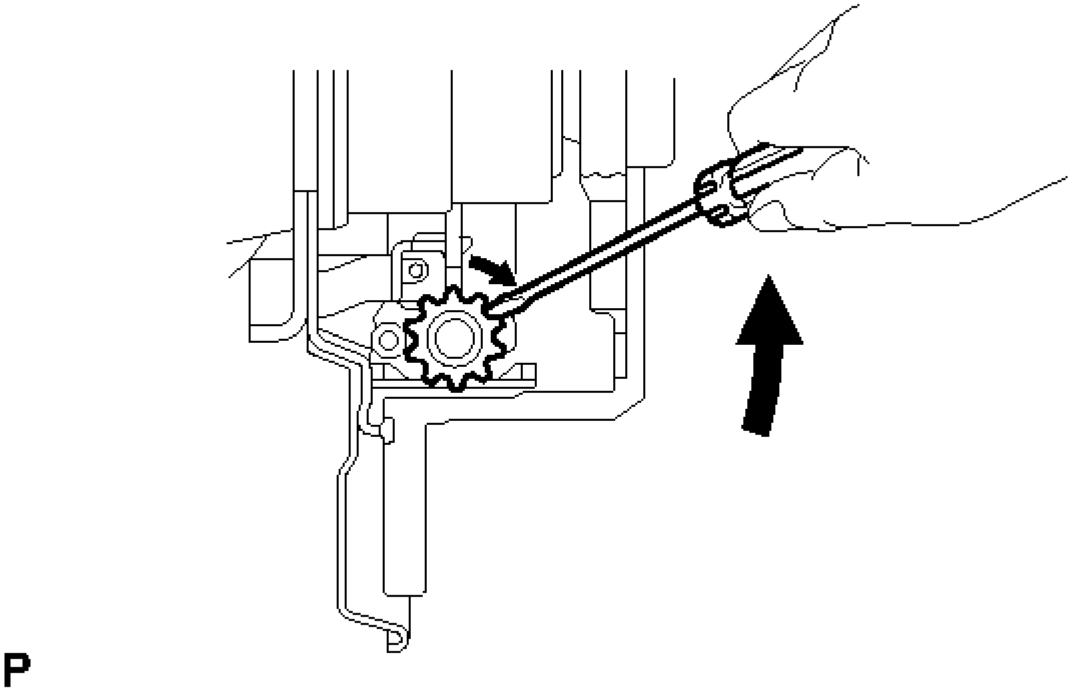

Fig. 16: Turning Shoe Adjuster With Taped screwdriver
Courtesy of TOYOTA MOTOR SALES, U.S.A., INC.

HINT:

If the disc cannot be removed easily, use a screwdriver to turn the shoe adjuster as shown in the illustration in order to contract the parking brake shoes.

DISASSEMBLY

DISASSEMBLY

1. **REMOVE CYLINDER BOOT**
    a. Using a screwdriver with its tip wrapped with vinyl tape, remove the rear disc brake piston set ring and cylinder boot from the rear disc brake cylinder assembly.

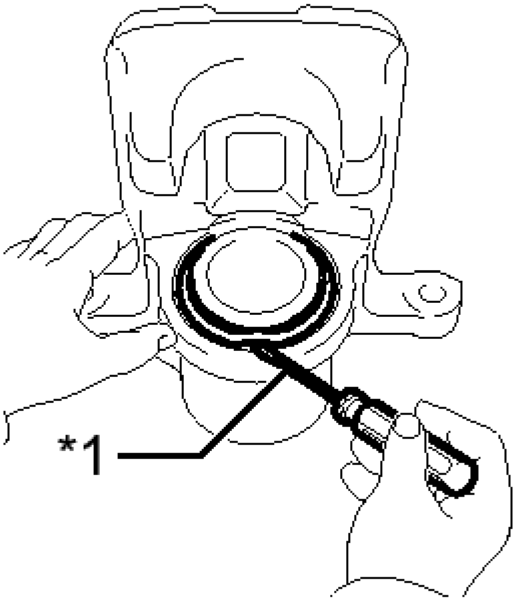

Fig. 17: Removing Cylinder Boot
Courtesy of TOYOTA MOTOR SALES, U.S.A., INC.

TEXT IN ILLUSTRATION

*1	Vinyl Tape

NOTE: **Be careful not to damage the rear disc brake piston or rear disc brake cylinder.**

2. **REMOVE REAR DISC BRAKE PISTON**
    a. Place a piece of cloth between the rear disc brake piston and rear disc brake cylinder.

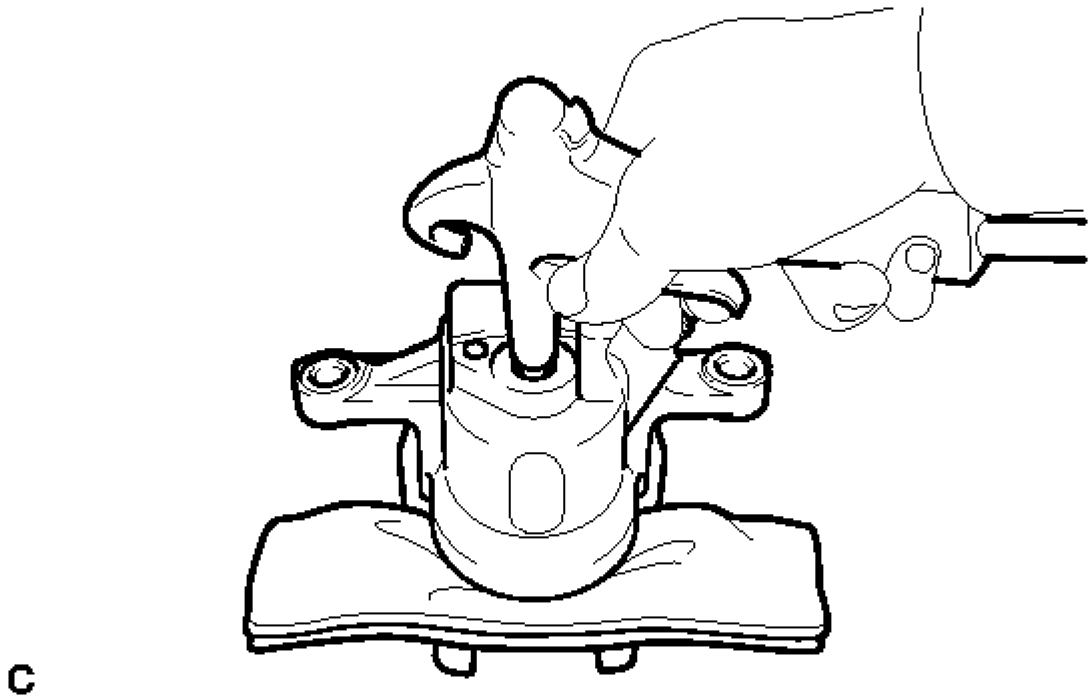

Fig. 18: Applying Compressed Air To Rear Disc Brake Cylinder
Courtesy of TOYOTA MOTOR SALES, U.S.A., INC.

b. Apply compressed air to remove the rear disc brake piston from the rear disc brake cylinder.

WARNING: **Do not place your fingers in front of the rear disc brake piston when using compressed air.**

NOTE: **Do not allow any brake fluid to spatter.**

3. **REMOVE PISTON SEAL**
   a. Using a screwdriver with its tip wrapped with vinyl tape, remove the piston seal from the disc brake cylinder.

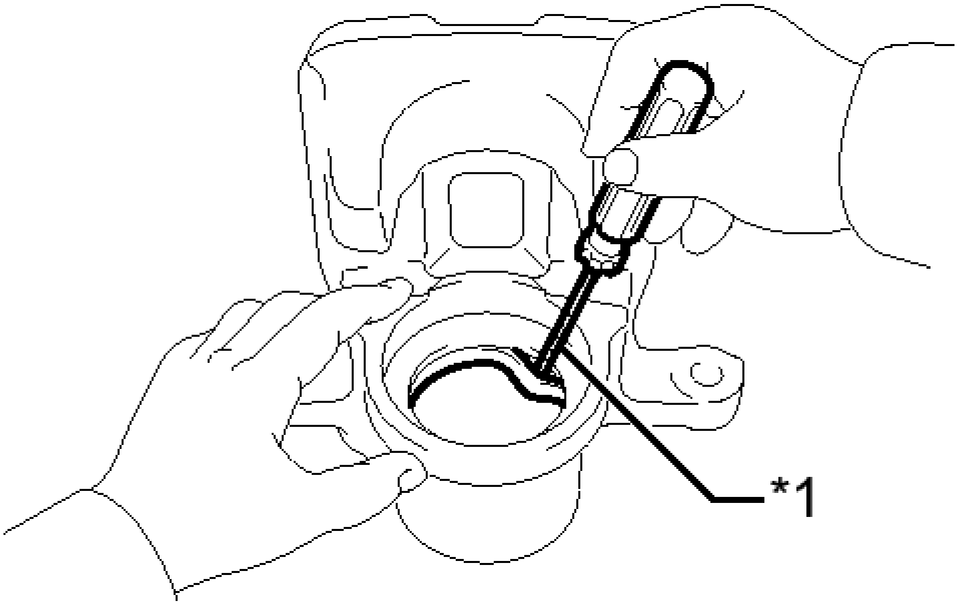

Fig. 19: Removing Piston Seal
Courtesy of TOYOTA MOTOR SALES, U.S.A., INC.

TEXT IN ILLUSTRATION

*1	Vinyl Tape

NOTE: **Do not damage the inner surface or piston seal groove of the cylinder.**

4. **REMOVE REAR DISC BRAKE BLEEDER PLUG CAP**
5. **REMOVE REAR DISC BRAKE BLEEDER PLUG**

INSPECTION

INSPECTION

1. **INSPECT BRAKE CYLINDER AND PISTON**
    a. Check the cylinder bore and piston for rust and scoring. If necessary, replace the rear disc brake cylinder assembly and/or piston.
2. **INSPECT PAD LINING THICKNESS**
    a. Using a ruler, measure the pad lining thickness.

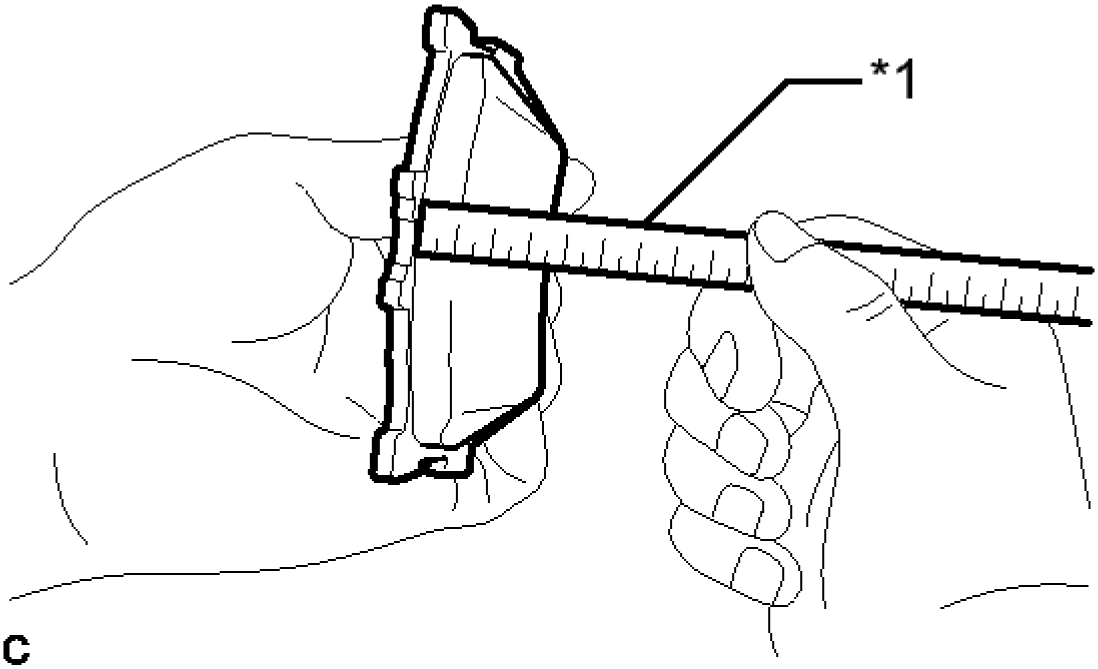

Fig. 20: Measuring Pad Lining Thickness
Courtesy of TOYOTA MOTOR SALES, U.S.A., INC.

TEXT IN ILLUSTRATION

*1	Ruler

Standard thickness

10.5 mm (0.413 in.)

Minimum thickness

1.0 mm (0.0394 in.)

If the pad lining thickness is less than the minimum, replace the brake pads.

HINT:

Be sure to check the wear of the rear disc when replacing the brake pads.

3. **INSPECT REAR DISC BRAKE PAD SUPPORT PLATE**
   a. Make sure that the rear disc brake pad support plates have sufficient rebound, no deformation, cracks or wear, and that all rust and dirt are removed.

      If necessary, replace the rear disc brake pad support plates.

4. **INSPECT DISC THICKNESS**

a. Using a micrometer, measure the disc thickness.

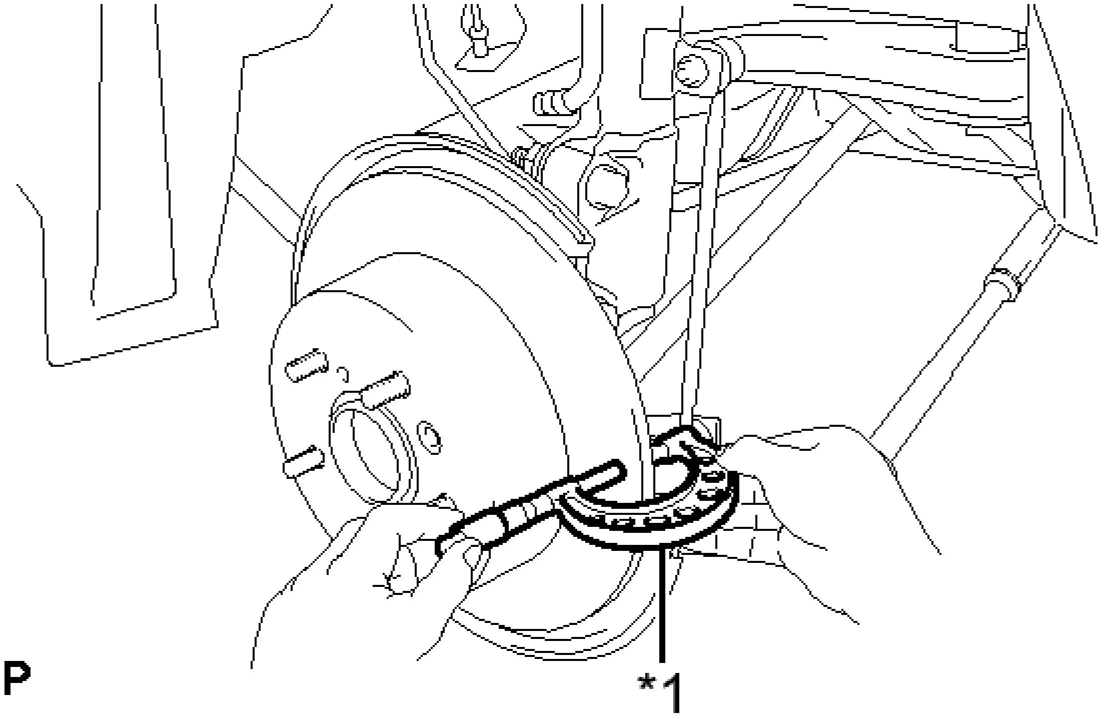

Fig. 21: Measuring Disc Thickness
Courtesy of TOYOTA MOTOR SALES, U.S.A., INC.

TEXT IN ILLUSTRATION

*1	Micrometer

Standard thickness

10.0 mm (0.394 in.)

Minimum thickness

8.5 mm (0.335 in.)

If the disc thickness is less than the minimum, replace the rear disc.

5. **INSPECT DISC RUNOUT**
    a. Inspect the rear axle hub bearing looseness and axle hub runout. Refer to **ON-VEHICLE INSPECTION** .
    b. While holding the disc using SST, tighten the disc with the 5 hub nuts.
        - **SST: 09330-00021**

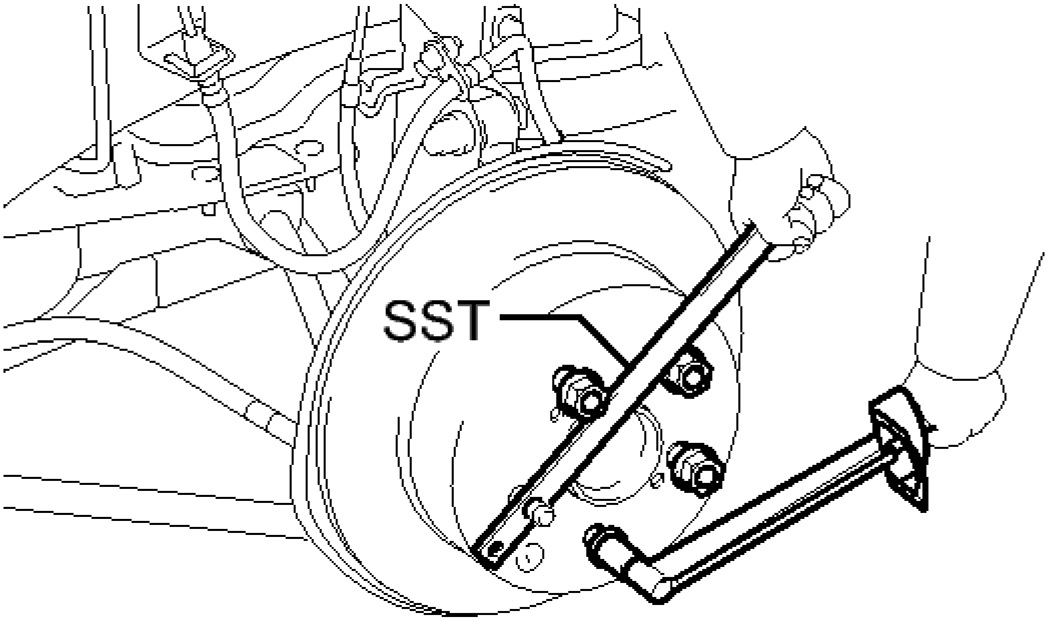

Fig. 22: Tightening Disc With The Nuts
Courtesy of TOYOTA MOTOR SALES, U.S.A., INC.

Torque: 103 N*m (1049 kgf*cm, 76 ft.*lbf)

c. Using a dial indicator with magnetic base, measure the disc runout 10 mm (0.394 in.) away from the outer edge of the rear disc.

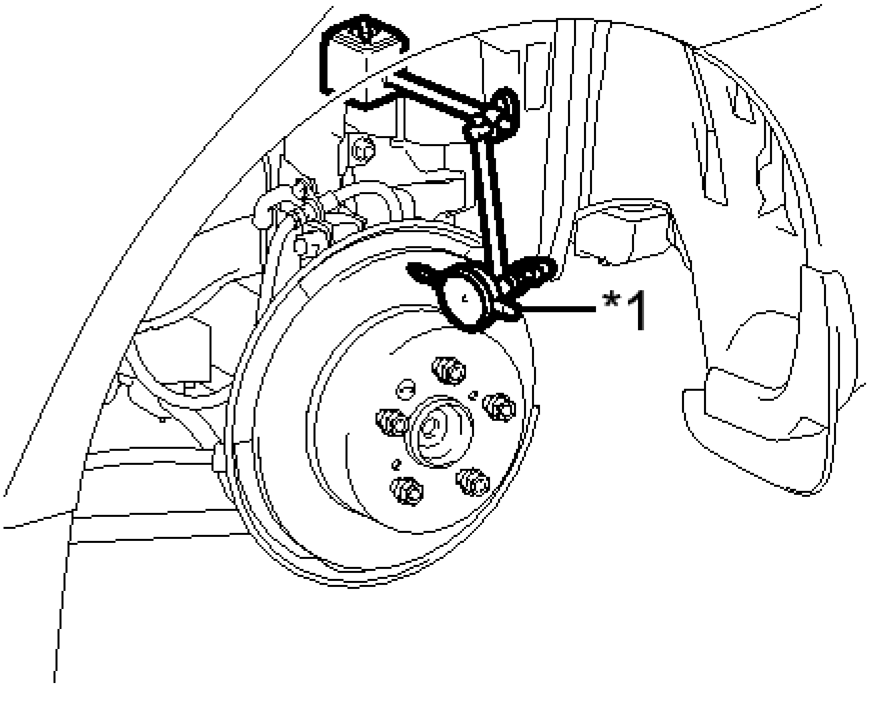

Fig. 23: Measuring Disc Runout
Courtesy of TOYOTA MOTOR SALES, U.S.A., INC.

TEXT IN ILLUSTRATION

*1	Dial Indicator

Maximum disc runout

0.15 mm (0.00591 in.)

NOTE: **Keep the magnet of the dial indicator away from the rear axle hub and bearing assembly.**

If the runout exceeds the maximum value, change the installation position of the disc to minimize the runout. If the runout exceeds the maximum even when the installation position is changed, grind the disc. If the disc thickness is less than the minimum, replace the rear disc.

d. Remove the 5 nuts and rear disc.

REASSEMBLY

REASSEMBLY

1. **TEMPORARILY TIGHTEN REAR DISC BRAKE BLEEDER PLUG**

   HINT:

   Fully tighten the rear disc brake bleeder plug after bleeding the system.

2. **INSTALL REAR DISC BRAKE BLEEDER PLUG CAP**
3. **INSTALL PISTON SEAL**
   a. Apply a light layer of lithium soap base glycol grease to the entire circumference of a new piston seal.

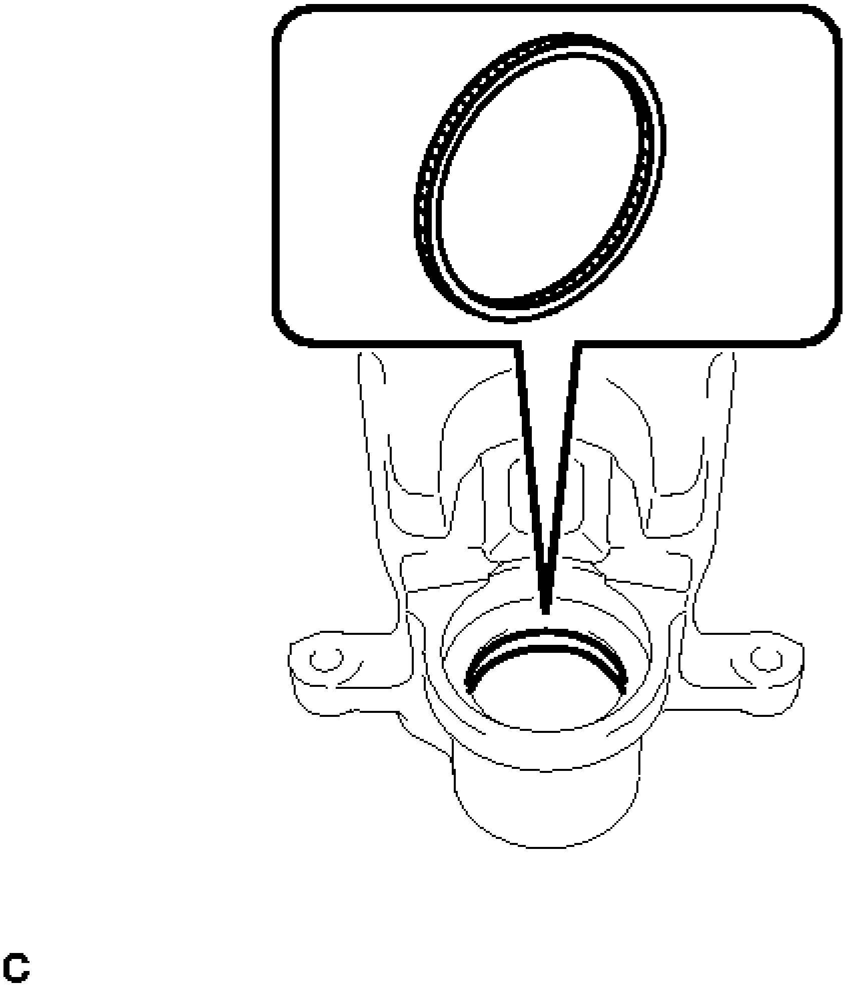

Fig. 24: Installing Piston Seal
Courtesy of TOYOTA MOTOR SALES, U.S.A., INC.

TEXT IN ILLUSTRATION

	Lithium Soap Base Glycol Grease

b. Install the piston seal to the rear disc brake cylinder.

NOTE: **Securely install the piston seal to the groove of the rear disc brake cylinder.**

4. **INSTALL REAR DISC BRAKE PISTON**

a. Apply a light layer of lithium soap base glycol grease to the entire circumference of a new cylinder boot.

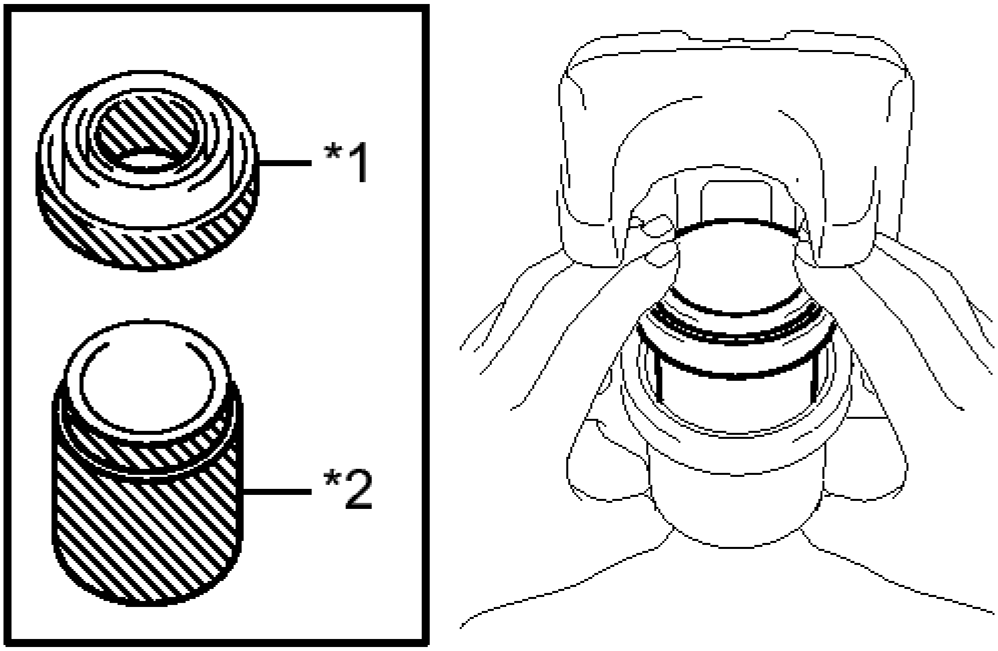

Fig. 25: Identifying Cylinder Boot And Rear Disc Brake Piston
Courtesy of TOYOTA MOTOR SALES, U.S.A., INC.

TEXT IN ILLUSTRATION

*1	Cylinder Boot
*2	Rear Disc Brake Piston
	Lithium Soap

	Base Glycol Grease

b. Install the cylinder boot to the rear disc brake piston.

c. Apply a light layer of lithium soap base glycol grease to the contact surfaces of the rear disc brake piston, and install it to the rear disc brake cylinder.

NOTE: Do not install the rear disc brake piston forcibly in the rear disc brake cylinder.

5. **INSTALL CYLINDER BOOT**

a. Install the cylinder boot to the rear disc brake cylinder.

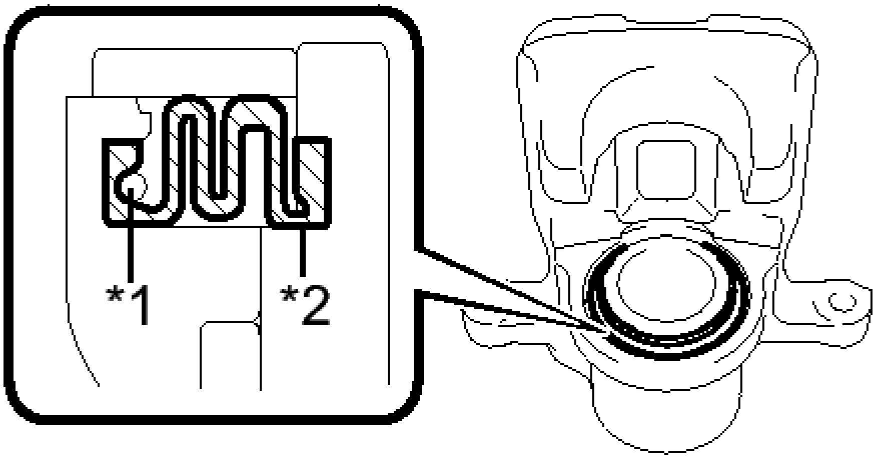

Fig. 26: Installing Cylinder Boot To Rear Disc Brake Cylinder
Courtesy of TOYOTA MOTOR SALES, U.S.A., INC.

TEXT IN ILLUSTRATION

*1	Set Ring
*2	Cylinder Boot

NOTE: Securely install the cylinder boot to the groove of the rear disc brake cylinder and rear disc brake piston.

b. Using a screwdriver with its tip wrapped with vinyl tape, install a new rear disc brake piston set ring.

NOTE:	- **Securely install the rear disc brake piston set ring to the outer groove of the cylinder boot.** - **Do not damage the cylinder boot.**

INSTALLATION

INSTALLATION

HINT:

- Use the same procedure for the LH side and RH side.
- The following procedure is for the LH side.

1. **INSTALL REAR DISC**
   a. Align the matchmarks of the rear disc and rear axle hub, and install the rear disc.

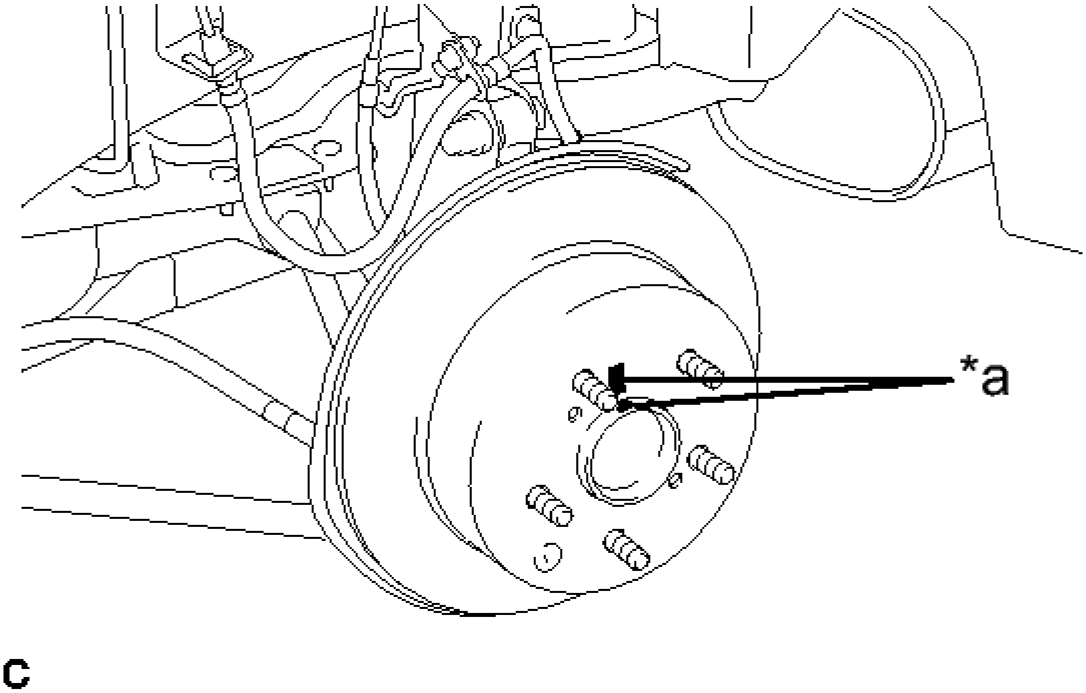

Fig. 27: Identifying Rear Disc And Axle Hub Matchmarks
Courtesy of TOYOTA MOTOR SALES, U.S.A., INC.

TEXT IN ILLUSTRATION

*a	Matchmark

NOTE: **When replacing the disc with a new one, select the installation position where the rear disc has minimal runout.**

2. **INSTALL PARKING BRAKE SHOE ADJUSTING HOLE PLUG**
   a. Install the parking brake shoe adjusting hole plug.
3. **INSTALL DISC BRAKE CYLINDER MOUNTING**
   a. Install the disc brake cylinder mounting with the 2 bolts.

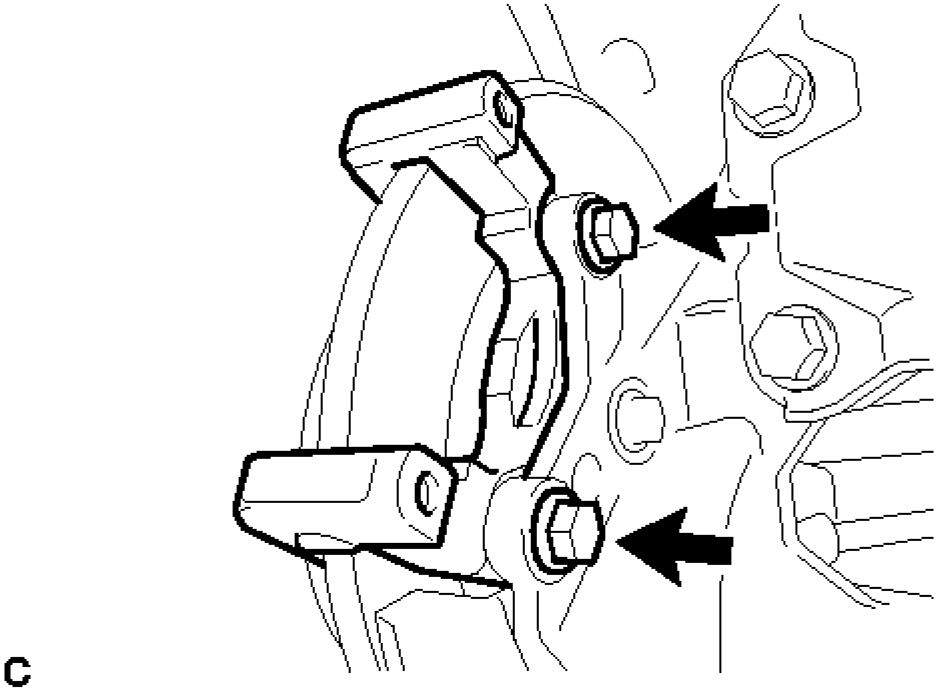

Fig. 28: Identifying Disc Brake Cylinder Mounting Bolts
Courtesy of TOYOTA MOTOR SALES, U.S.A., INC.

Torque: 78 N*m (799 kgf*cm, 58 ft.*lbf)

4. **INSTALL REAR DISC BRAKE BUSHING DUST BOOT**
   a. Apply a light layer of lithium soap base glycol grease to the entire circumference of 2 new rear disc brake bushing dust boots.

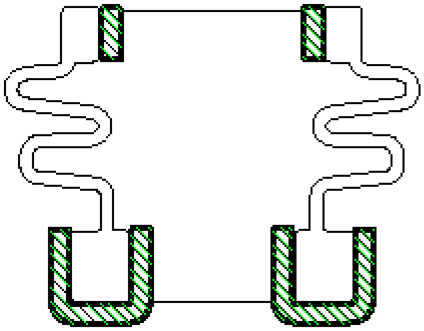

C

Fig. 29: Identifying Rear Disc Brake Bushing Dust Boots
Courtesy of TOYOTA MOTOR SALES, U.S.A., INC.

TEXT IN ILLUSTRATION

	Lithium Soap Base Glycol Grease

HINT:

Apply at least 0.3 g (0.01 oz.) of lithium soap base glycol grease to each rear disc brake bushing dust boot.

b. Install the 2 rear disc brake bushing dust boots to the disc brake cylinder mounting.

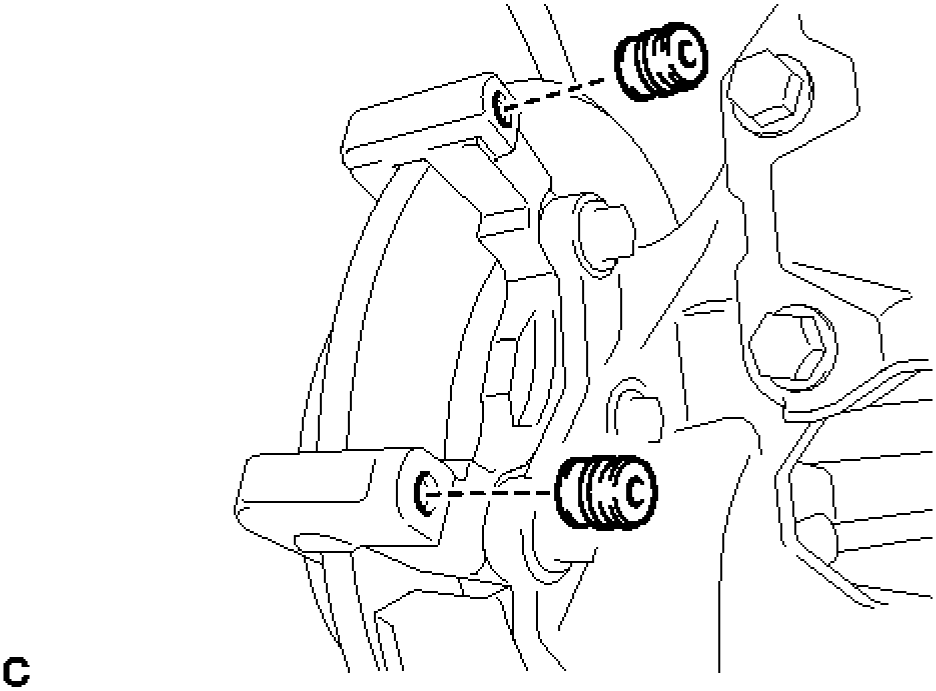

Fig. 30: Identifying Rear Disc Brake Bushing Dust Boot
Courtesy of TOYOTA MOTOR SALES, U.S.A., INC.

5. **INSTALL REAR DISC BRAKE CYLINDER SLIDE BUSHING**
    a. Apply a light layer of lithium soap base glycol grease to the contact surface of the rear disc brake cylinder slide pin.

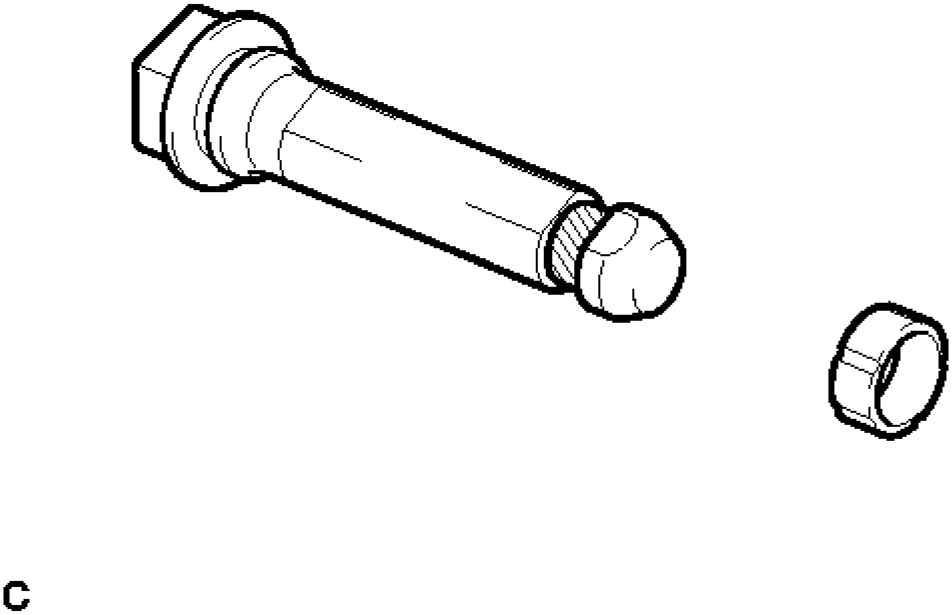

Fig. 31: Identifying Light Layer Of Grease On Front No. 2 Disc Brake Cylinder Slide Pin
Courtesy of TOYOTA MOTOR SALES, U.S.A., INC.

TEXT IN ILLUSTRATION

Lithium Soap Base Glycol Grease

b. Install a new rear disc brake cylinder slide bushing to the rear disc brake cylinder slide pin.

6. **INSTALL REAR DISC BRAKE CYLINDER SLIDE PIN (for Lower Side)**
    a. Apply a light layer of lithium soap base glycol grease to the sliding and sealing surfaces of the rear disc brake cylinder slide pin.

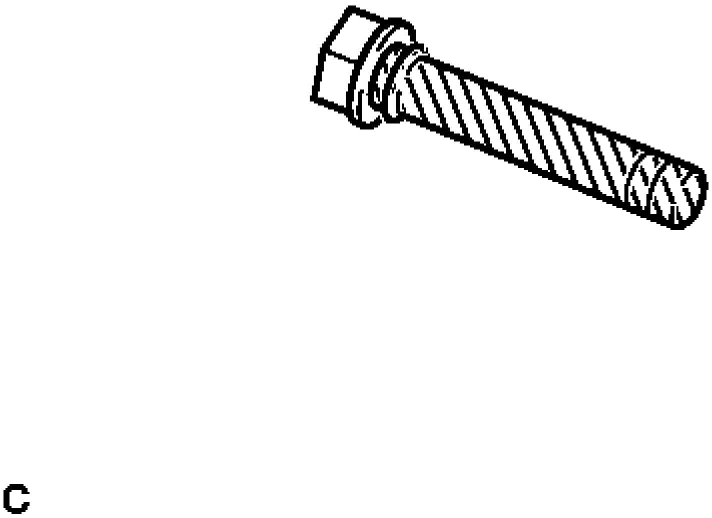

Fig. 32: Identifying Light Layer Of Grease On Front No. 2 Disc Brake Cylinder Slide Pin
Courtesy of TOYOTA MOTOR SALES, U.S.A., INC.

TEXT IN ILLUSTRATION

Lithium Soap Base Glycol Grease

b. Install the rear disc brake cylinder slide pin to the disc brake cylinder mounting.

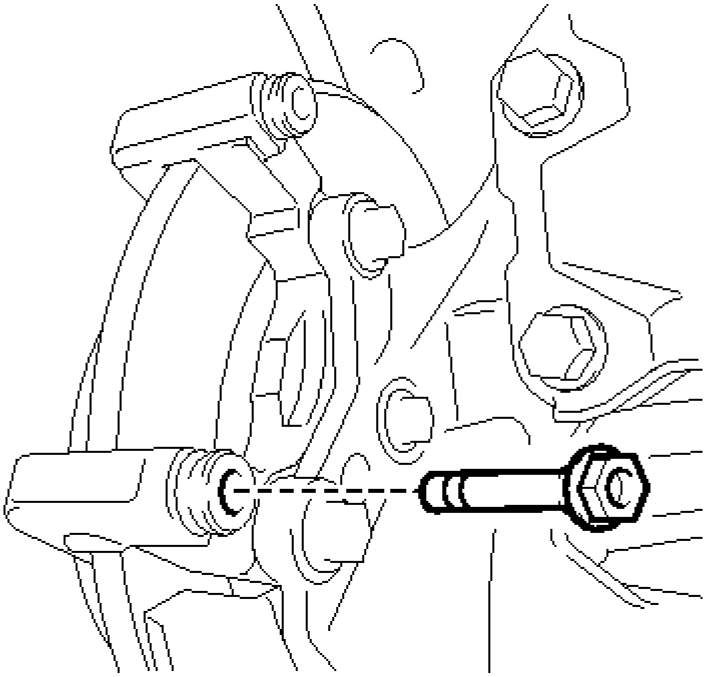

Fig. 33: Identifying Rear Disc Brake Cylinder Pin (For Lower Side)
Courtesy of TOYOTA MOTOR SALES, U.S.A., INC.

c. Push the rear disc brake cylinder slide pin into the rear disc brake bushing dust boot to engage the pin to the boot.

7. **INSTALL REAR DISC BRAKE CYLINDER SLIDE PIN (for Upper Side)**

    a. Apply a light layer of lithium soap base glycol grease to the sliding and sealing surfaces of the rear disc brake cylinder slide pin.

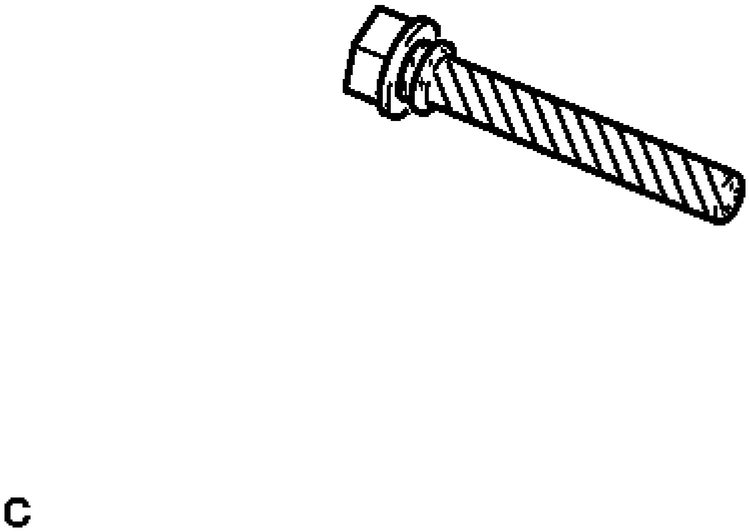

Fig. 34: Identifying Light Layer Of Grease On No. 1 Disc Brake Cylinder Slide Pin
Courtesy of TOYOTA MOTOR SALES, U.S.A., INC.

TEXT IN ILLUSTRATION

	Lithium Soap Base Glycol Grease

b. Install the rear disc brake cylinder slide pin to the disc brake cylinder mounting.

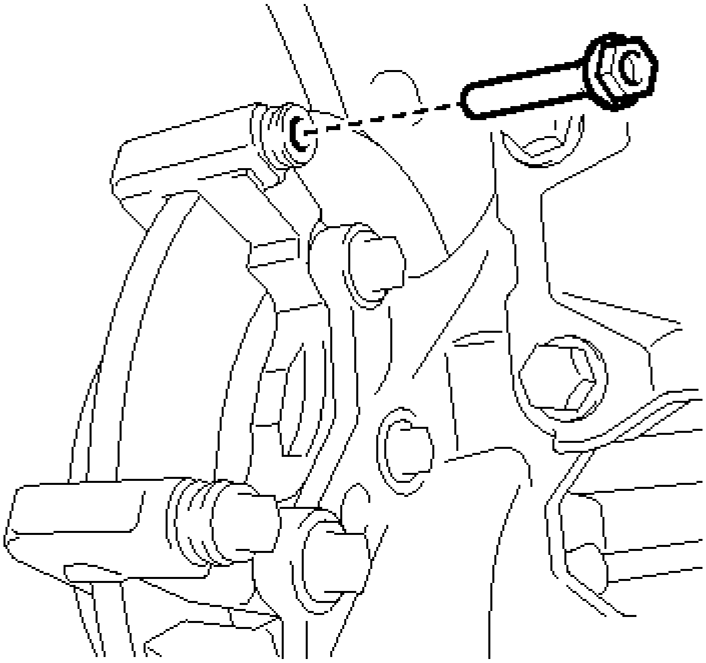

Fig. 35: Identifying Rear Disc Brake Cylinder Slide Pin (For Upper Side)
Courtesy of TOYOTA MOTOR SALES, U.S.A., INC.

c. Push the rear disc brake cylinder slide pin into the rear disc brake bushing dust boot to engage the pin to the boot.

8. **INSTALL REAR DISC BRAKE PAD SUPPORT PLATE**

   a. Install the 2 rear disc brake pad support plates to the disc brake cylinder mounting.

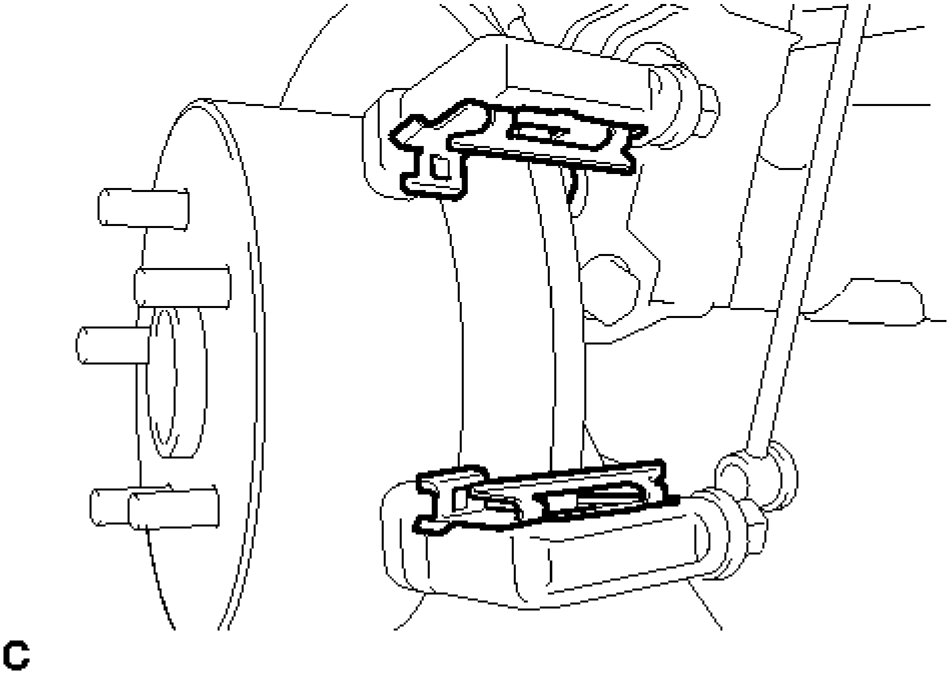

Fig. 36: Identifying Rear Disc Brake Pad Support Plate
Courtesy of TOYOTA MOTOR SALES, U.S.A., INC.

9. **INSTALL REAR DISC BRAKE ANTI-SQUEAL SHIM KIT**
    a. Install the pad wear indicator plate to each rear disc brake pad.

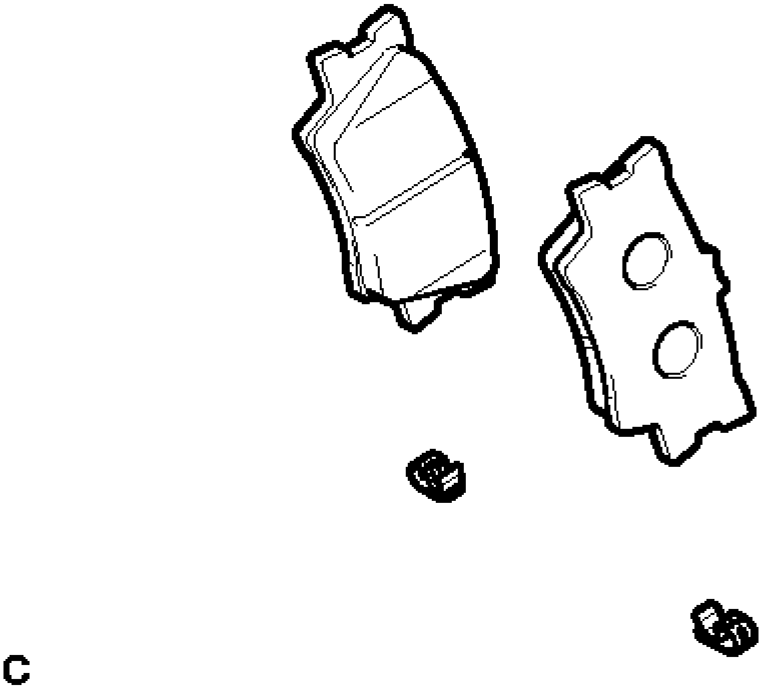

Fig. 37: Identifying Rear Disc Brake Pad Wear Indicator

Courtesy of TOYOTA MOTOR SALES, U.S.A., INC.

NOTE: **Install each pad wear indicator plate in the correct position and direction.**

b. Apply disc brake grease to the inside of the rear disc brake anti-squeal shims.

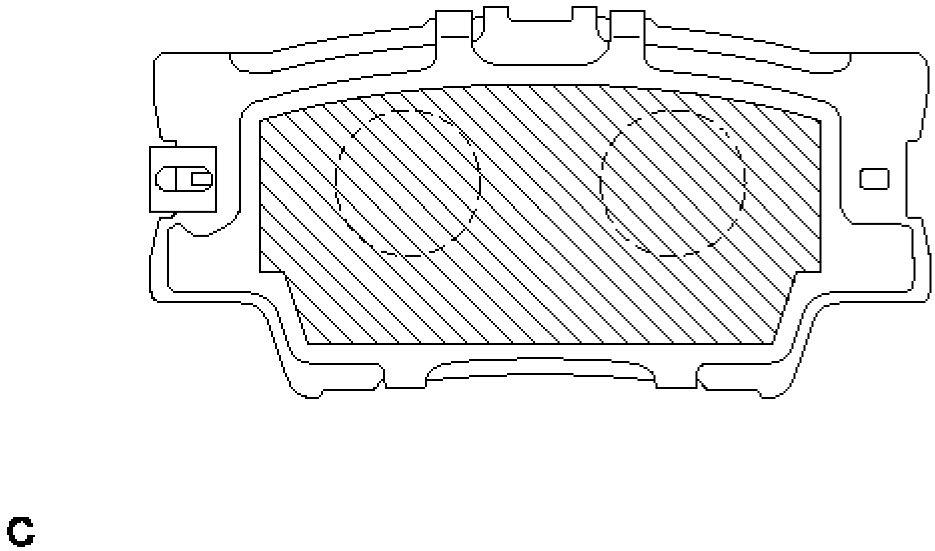

Fig. 38: Identifying Brake Grease Application Area
Courtesy of TOYOTA MOTOR SALES, U.S.A., INC.

TEXT IN ILLUSTRATION

▨	Disc Brake Grease

c. Install the rear disc brake anti-squeal shim to each rear disc brake pad with pad wear indicator plate.

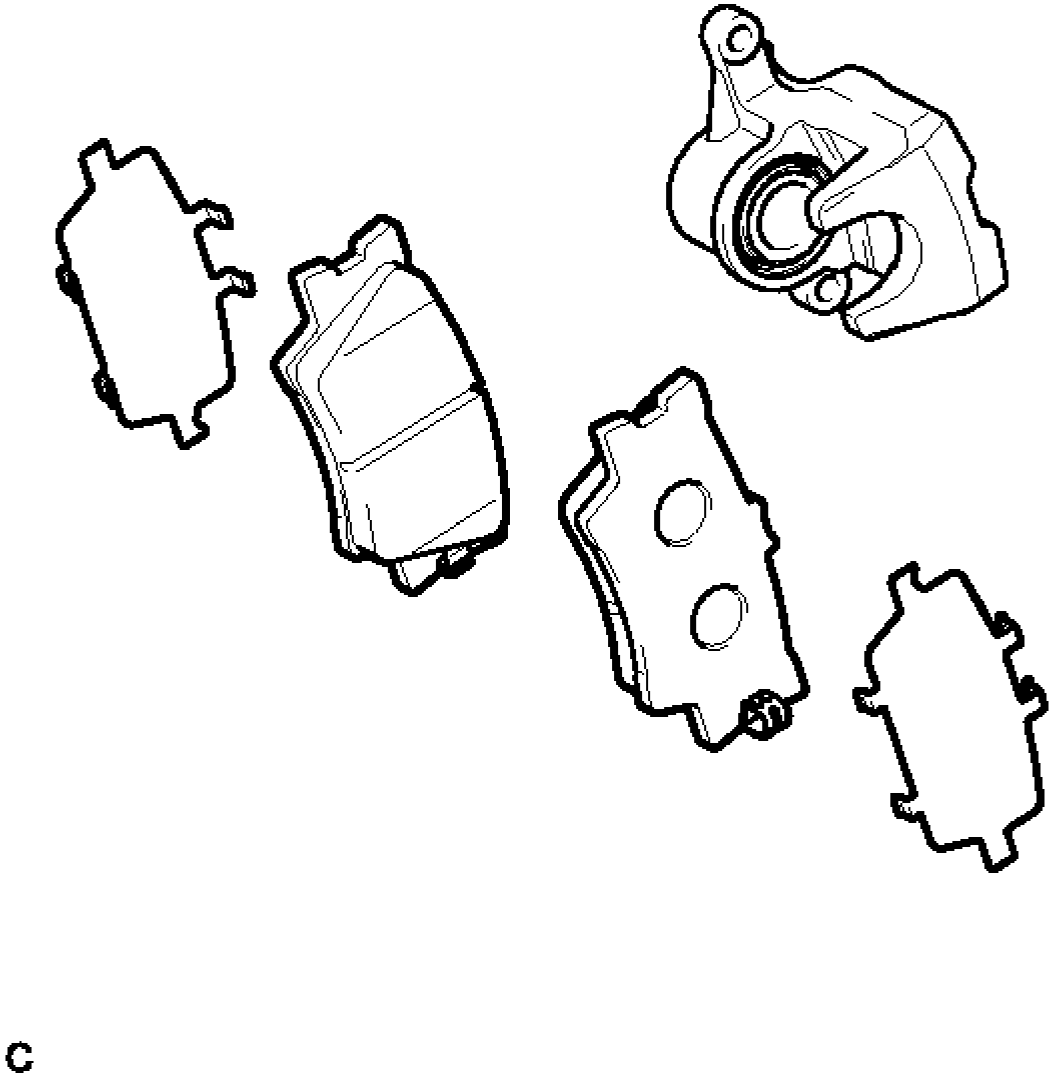

Fig. 39: Identifying Rear Disc Brake Anti-Squeal Shims
Courtesy of TOYOTA MOTOR SALES, U.S.A., INC.

NOTE:

- **Disc brake grease may seep out slightly from the areas where the rear disc brake anti-squeal shims are installed.**
- **Make sure that disc brake grease is not applied onto the lining surface.**

10. **INSTALL REAR DISC BRAKE PAD**
    a. Install the 2 rear disc brake pads with rear disc brake anti-squeal shim kit to the disc brake cylinder mounting.

NOTE: **There should be no oil or grease on the friction surfaces of the disc brake pads or the rear disc.**

11. **INSTALL REAR DISC BRAKE CYLINDER ASSEMBLY**
    a. Hold the rear disc brake cylinder slide pin, and install the rear disc brake cylinder assembly to the disc brake cylinder mounting with the 2 bolts.

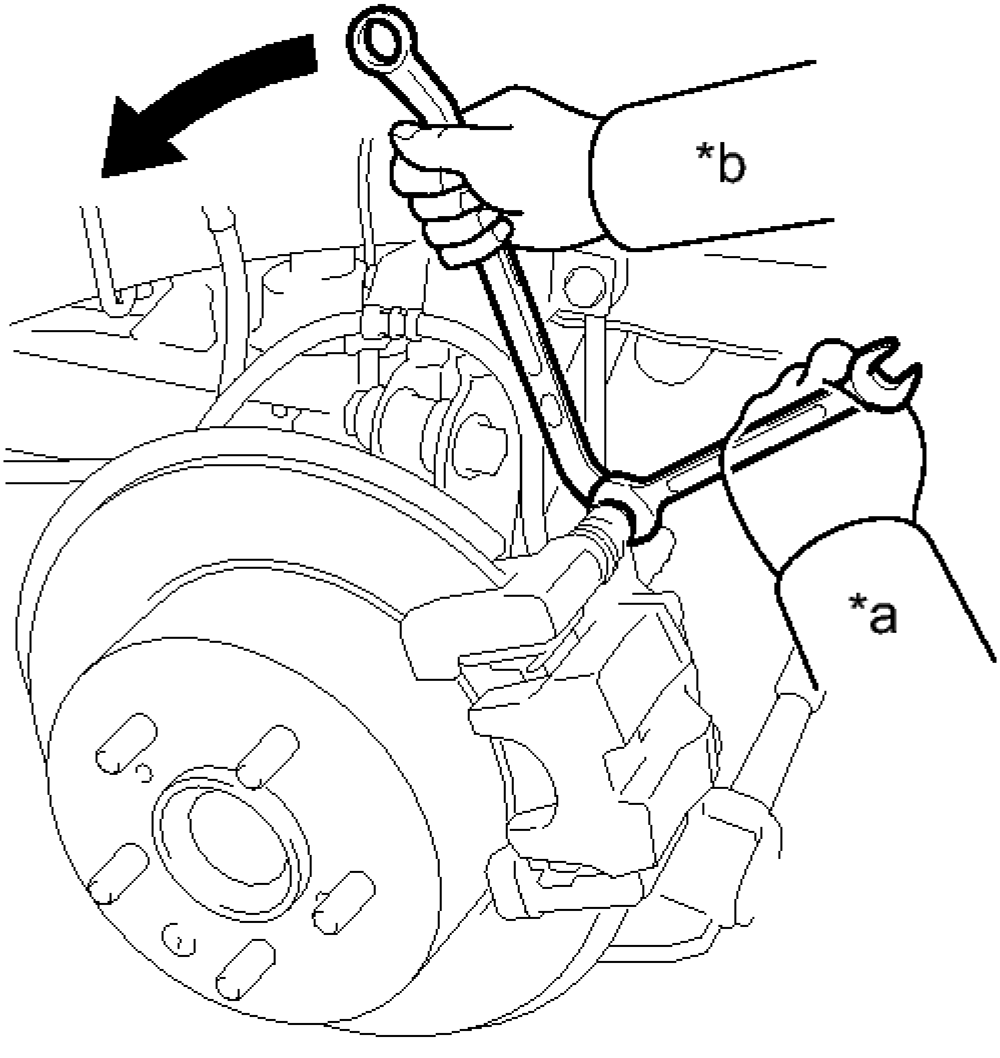

Fig. 40: Installing Disc Brake Cylinder Assembly
Courtesy of TOYOTA MOTOR SALES, U.S.A., INC.

TEXT IN ILLUSTRATION

*a	Hold
*b	Turn

Torque: 27 N*m (270 kgf*cm, 20 ft.*lbf)

12. **CONNECT REAR FLEXIBLE HOSE**
    a. Connect the rear flexible hose to the rear disc brake cylinder assembly with the union bolt and a

new gasket.

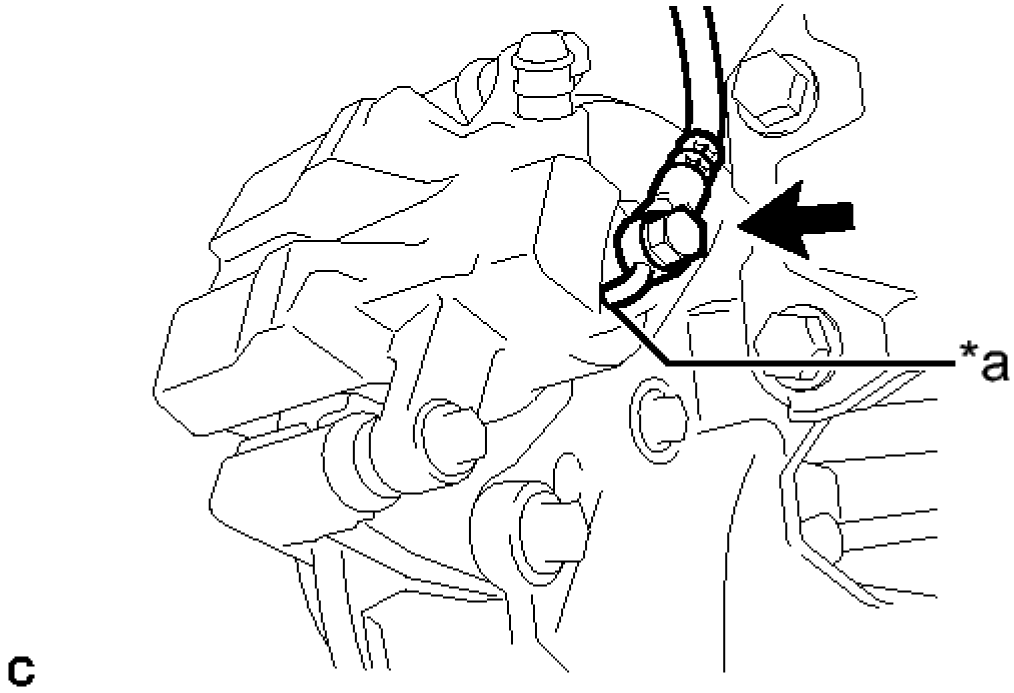

Fig. 41: Identifying Rear Flexible Hose Union Bolt
Courtesy of TOYOTA MOTOR SALES, U.S.A., INC.

TEXT IN ILLUSTRATION

*a	Lock Hole

Torque: 33 N*m (340 kgf*cm, 25 ft.*lbf)

NOTE: **Install the flexible hose lock securely into the lock hole in the disc brake cylinder.**

13. **BLEED BRAKE LINE**

    Refer to **BLEEDING**

14. **ADJUST PARKING BRAKE**

    Refer to **ADJUSTMENT**

15. **INSTALL REAR WHEEL**

    Torque: 103 N*m (1049 kgf*cm, 76 ft.*lbf)

REAR BRAKE FLEXIBLE HOSE

COMPONENTS

ILLUSTRATION

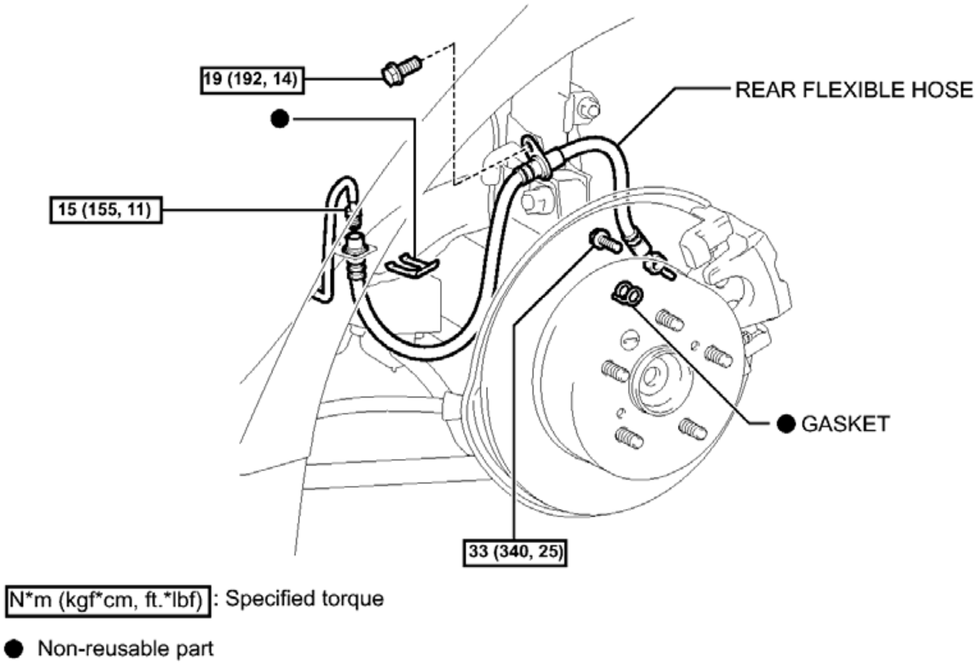
19 (192, 14)
●
REAR FLEXIBLE HOSE
15 (155, 11)
● GASKET
33 (340, 25)
N*m (kgf*cm, ft.*lbf) : Specified torque
● Non-reusable part

Fig. 42: Identifying Rear Brake Flexible Hose Replacement Components With Torque Specifications
Courtesy of TOYOTA MOTOR SALES, U.S.A., INC.

REMOVAL

REMOVAL

NOTE: If the left and right hoses are disconnected at the same time, be sure to place a mark on each hose to indicate its installation position.

HINT:

- Use the same procedure for the LH side and RH side.
- The following procedure is for the LH side.

REMOVAL

1. **REMOVE REAR WHEEL**
2. **DRAIN BRAKE FLUID**

NOTE: **If brake fluid leaks onto any painted surface, immediately wash it off.**

3. **REMOVE REAR FLEXIBLE HOSE**
   a. Using a union nut wrench, disconnect the brake line while holding the rear flexible hose with a wrench.

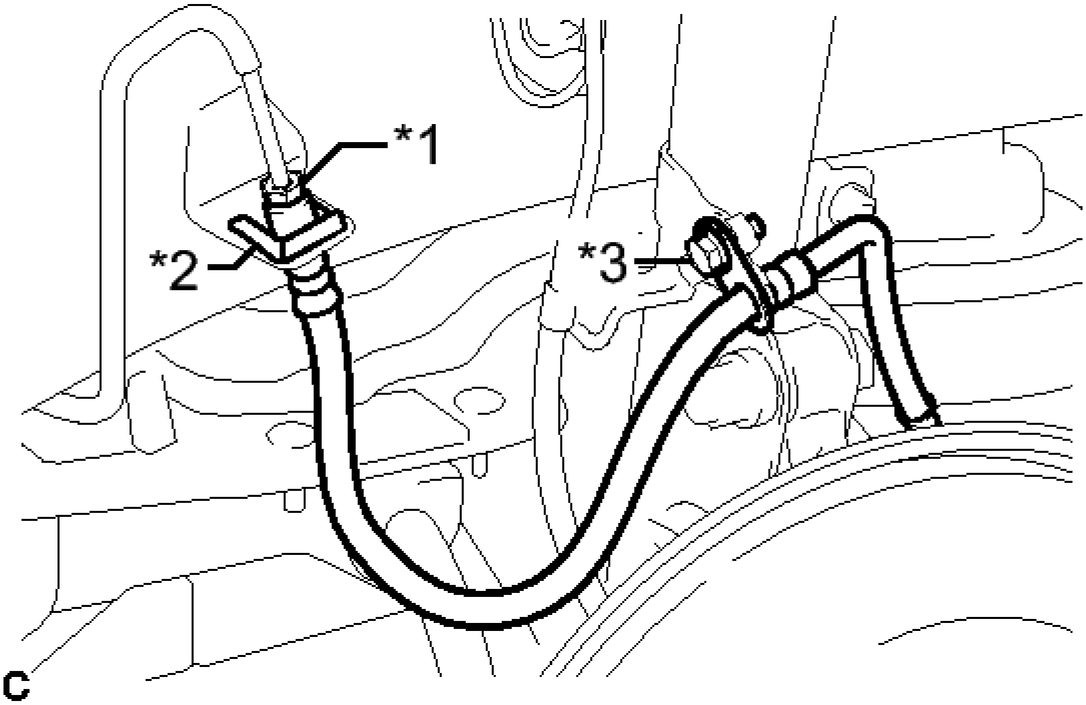

Fig. 43: Identifying Rear Flexible Hose, Brake Line, Clip, And Bolt
Courtesy of TOYOTA MOTOR SALES, U.S.A., INC.

TEXT IN ILLUSTRATION

*1	Brake Line
*2	Clip
*3	Bolt

NOTE:

- **Do not bend or damage the brake line.**
- **Do not allow any foreign matter such as dirt or dust to enter the brake line from the connecting points.**

   b. Remove the clip from the rear flexible hose.
   c. Remove the bolt.
   d. Remove the union bolt, gasket and rear flexible hose.

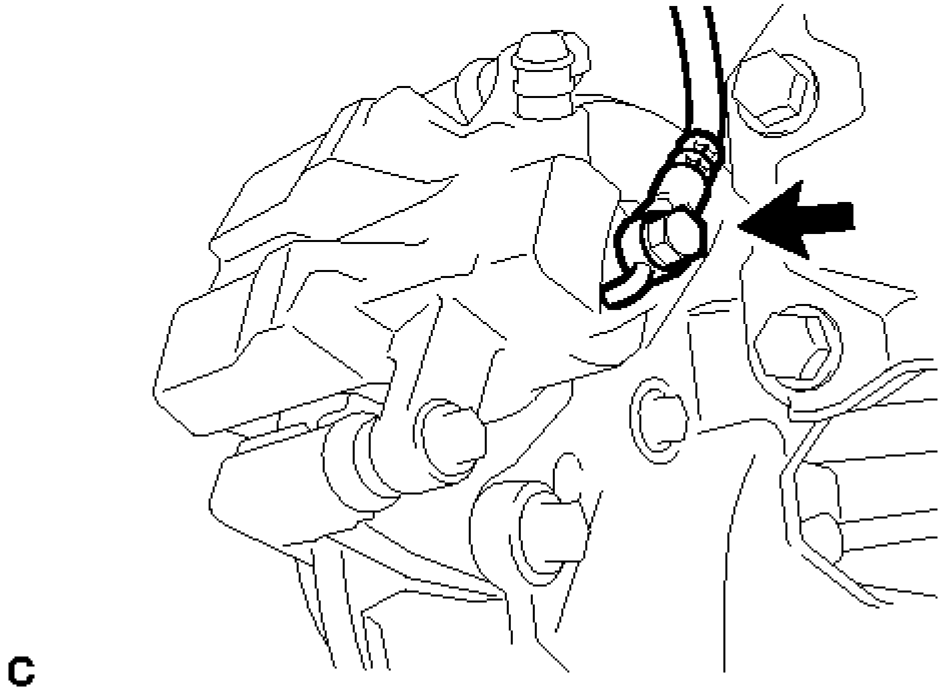

Fig. 44: Identifying Rear Flexible Hose Union Bolt
Courtesy of TOYOTA MOTOR SALES, U.S.A., INC.

INSTALLATION

INSTALLATION

NOTE:

- **Because the left and right rear flexible hoses are not interchangeable, verify the part number when installing the flexible hoses.**
- **If the hoses are to be reused, connect them after checking the identification marks placed when each hose was disconnected.**

HINT:

- Use the same procedure for the LH side and RH side.
- The following procedure is for the LH side.

INSTALLATION

1. **INSTALL REAR FLEXIBLE HOSE**
   a. Connect the rear flexible hose to the rear disc brake cylinder assembly with the union bolt and a new gasket.

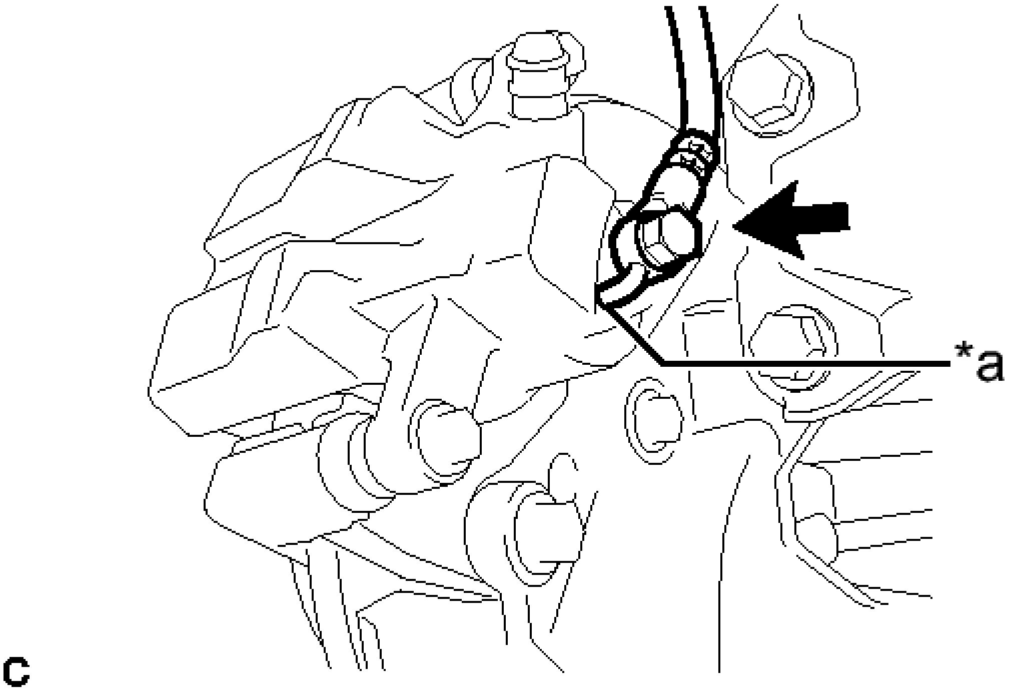

Fig. 45: Identifying Rear Flexible Hose Union Bolt
Courtesy of TOYOTA MOTOR SALES, U.S.A., INC.

Torque: 33 N*m (340 kgf*cm, 25 ft.*lbf)

TEXT IN ILLUSTRATION

*a	Lock Hole

NOTE: **Install the flexible hose lock securely into the lock hole in the disc brake cylinder.**

b. Install the rear flexible hose with the bolt.

Torque: 19 N*m (192 kgf*cm, 14 ft.*lbf)

c. Install a new clip.

NOTE: **Install the clip as far as it will go.**

d. Using a union nut wrench, connect the brake line to the rear flexible hose while holding the rear flexible hose with a wrench.

Torque: 15 N*m (155 kgf*cm, 11 ft.*lbf)

NOTE:

- **Do not bend or damage the brake line.**

- **Do not allow any foreign matter such as dirt or dust to enter the brake line from the connecting points.**
- **Use the formula to calculate special torque values for situations where the union nut wrench is combined with a torque wrench. Refer to PRECAUTION .**

2. **BLEED BRAKE LINE**

   Refer to **BLEEDING**

3. **INSTALL REAR WHEEL**

   Torque: 103 N*m (1049 kgf*cm, 76 ft.*lbf)

2012-2017-14 CABIN AIR

FILTER Toyota - Camry

REMOVAL & INSTALLATION

NOTE: **Manufacturer's terminology for this filter is air refiner filter or air conditioning filter.**

CABIN AIR FILTER

Removal & Installation ()

1. Vehicles without a smart key system: Turn the engine switch off. Vehicles with a smart key system: Turn the "ENGINE START STOP" switch off.
2. Open the glove box and remove the glove box cover inside the glove box. See **Fig. 1**.

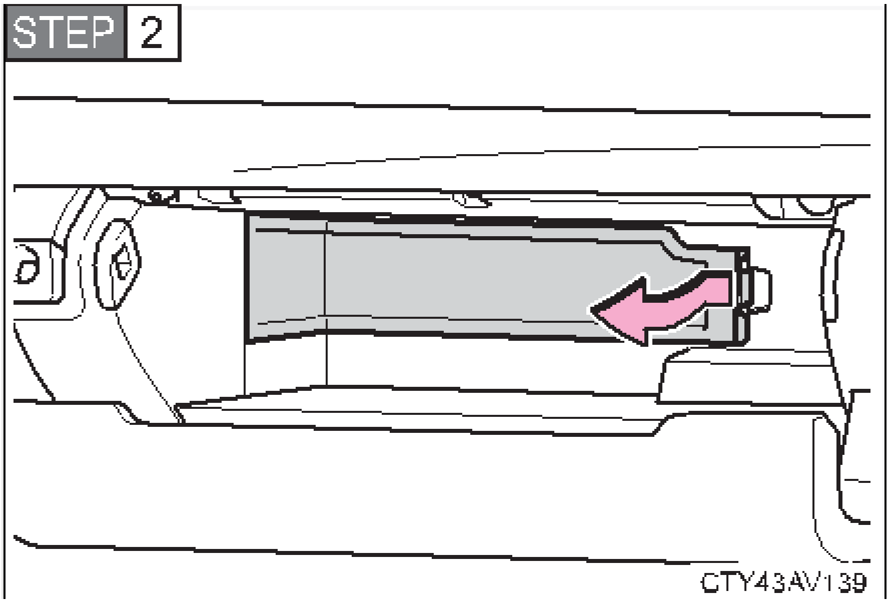

Fig. 1: Removing Glove Box Cover
Courtesy of TOYOTA MOTOR SALES, U.S.A., INC.

3. Remove the filter cover. See **Fig. 2**.

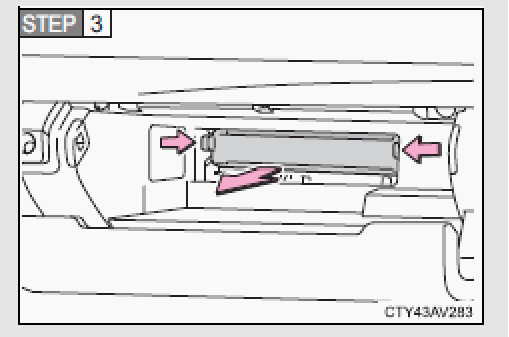

Fig. 2: Removing Filter Cover
Courtesy of TOYOTA MOTOR SALES, U.S.A., INC.

4. Remove the air conditioning filter and replace it with a new one. The UP marks shown on the filter should be pointing up. See **Fig. 3**.

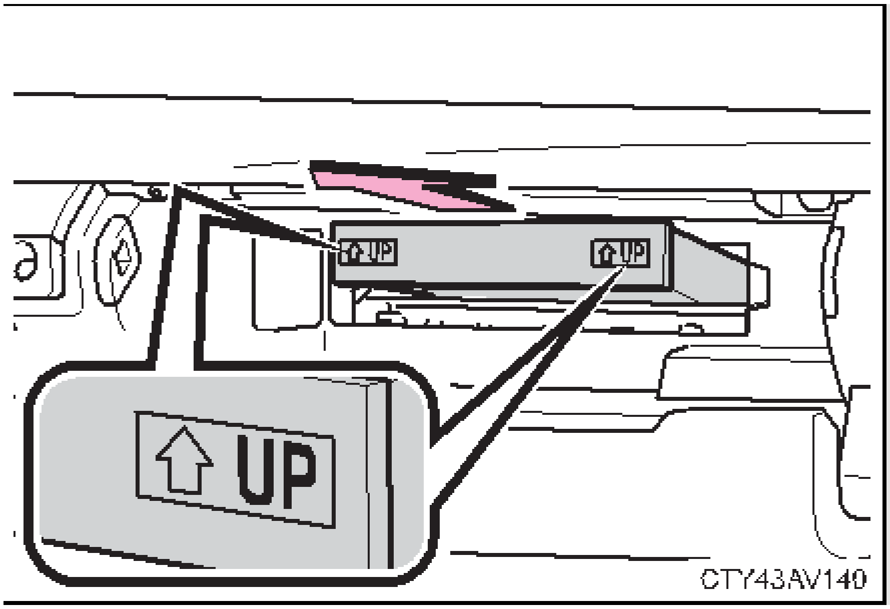

Fig. 3: Removing Filter
Courtesy of TOYOTA MOTOR SALES, U.S.A., INC.

Checking interval

nspect and replace the air conditioning filter according to the maintenance schedule. In dusty areas or areas with heavy traffic flow, early replacement may be required. (For scheduled maintenance information, please refer to the "Scheduled Maintenance Guide" or "Owner's Manual Supplement".)

If air flow from the vents decreases dramatical

The filter may be clogged. Check the filter and replace if necessary.

WARNING: To prevent damage to the system

- **When using the air conditioning system, make sure that a filter is always installed.**
- **When cleaning the filter, do not clean the filter with water.**

2012-2017 ACCESSORIES & EQUIPMENT

Cellular Communication System (Service Information) (Hybrid)

DCM (TELEMATICS TRANSCEIVER)

COMPONENTS

ILLUSTRATION

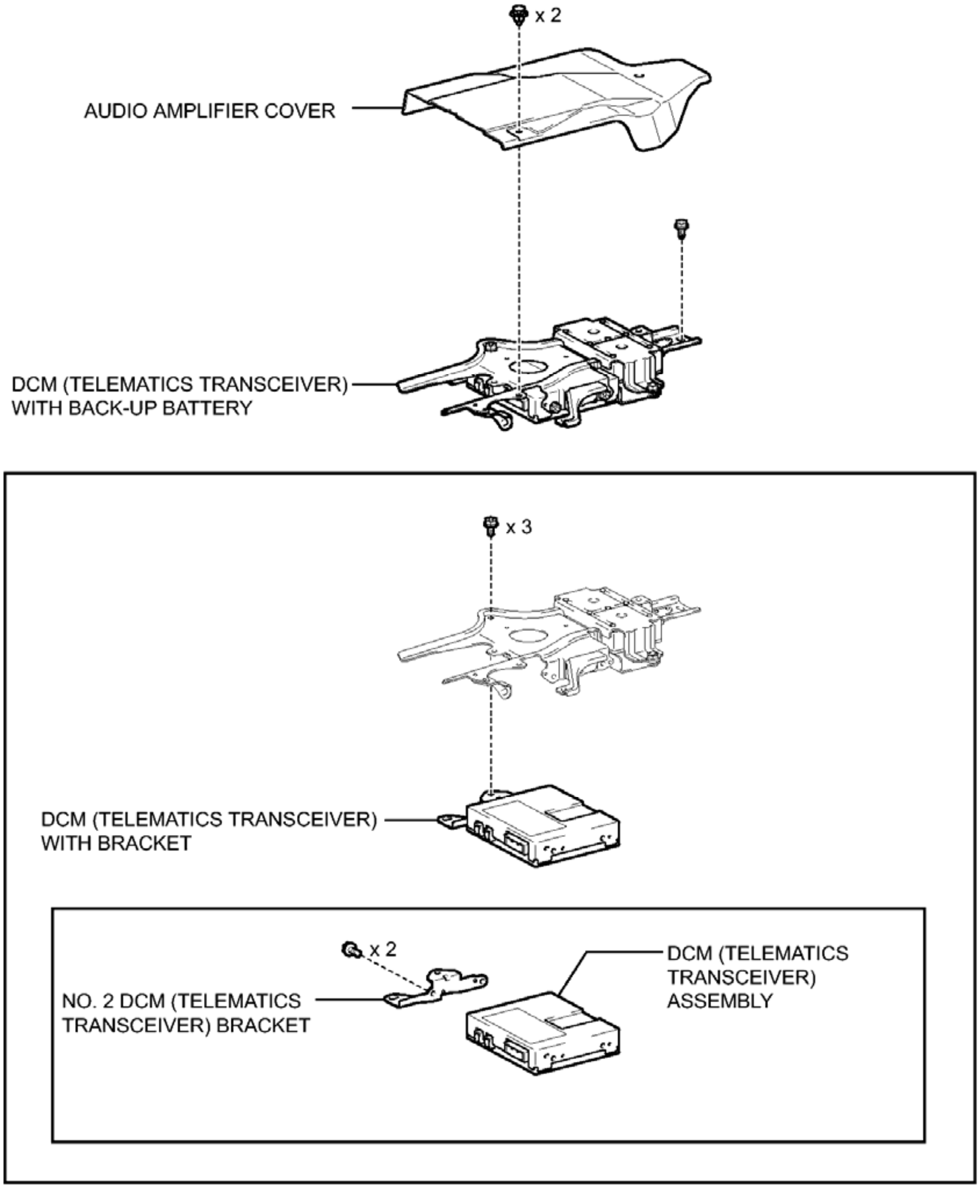
x 2
AUDIO AMPLIFIER COVER
DCM (TELEMATICS TRANSCEIVER)
WITH BACK-UP BATTERY
x 3
DCM (TELEMATICS TRANSCEIVER)
WITH BRACKET
x 2
NO. 2 DCM (TELEMATICS
TRANSCEIVER) BRACKET
DCM (TELEMATICS
TRANSCEIVER)
ASSEMBLY
P

Fig. 1: Identifying DCM (Telematics Transceiver) Replacement Components
Courtesy of TOYOTA MOTOR SALES, U.S.A., INC.

REMOVAL

REMOVAL

1. **REMOVE FRONT SEAT ASSEMBLY RH**

Refer to **REMOVAL**

2. **REMOVE AUDIO AMPLIFIER COVER**
    a. Using a clip remover, remove the 2 clips and audio amplifier cover.

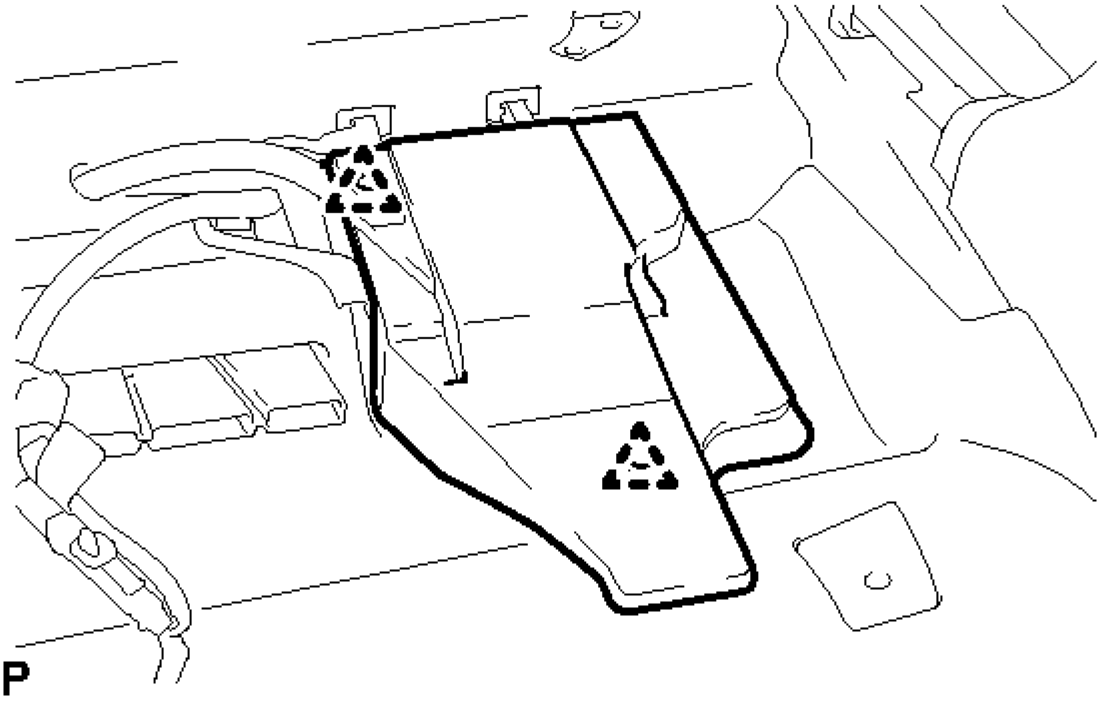

Fig. 2: Identifying Audio Amplifier Cover Clips
Courtesy of TOYOTA MOTOR SALES, U.S.A., INC.

3. **REMOVE DCM (TELEMATICS TRANSCEIVER) WITH BACK-UP BATTERY**
    a. Disconnect each connector.

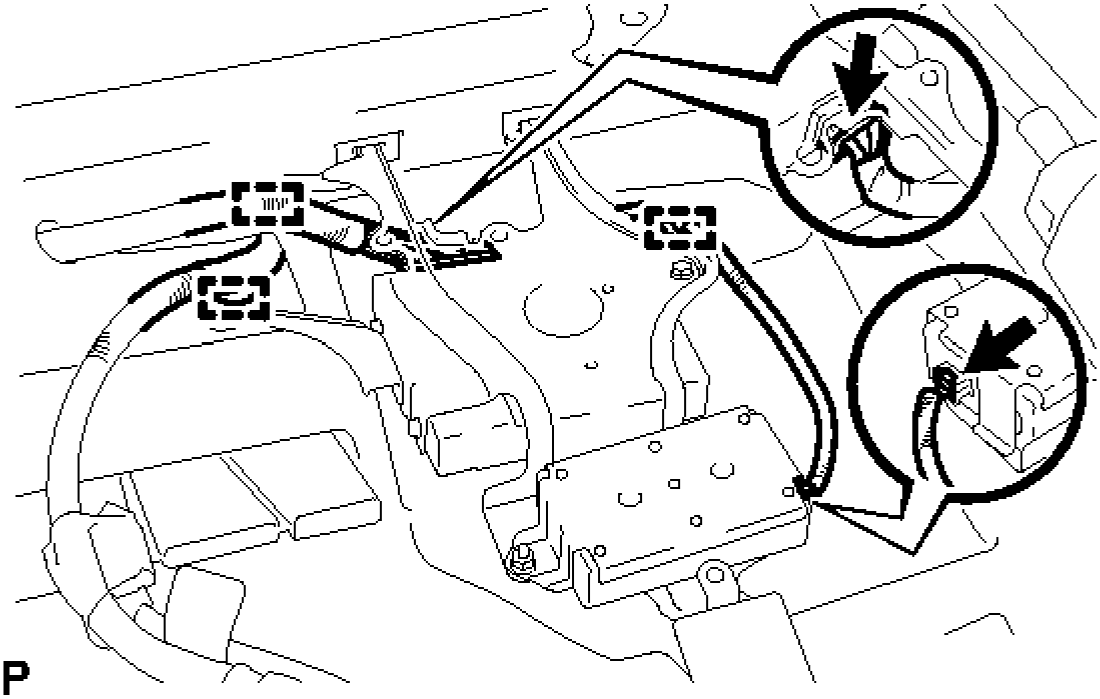

Fig. 3: Identifying DCM (Telematics Transceiver) Clamps And Connector
Courtesy of TOYOTA MOTOR SALES, U.S.A., INC.

b. Disengage the 3 clamps.
c. Remove the bolt.

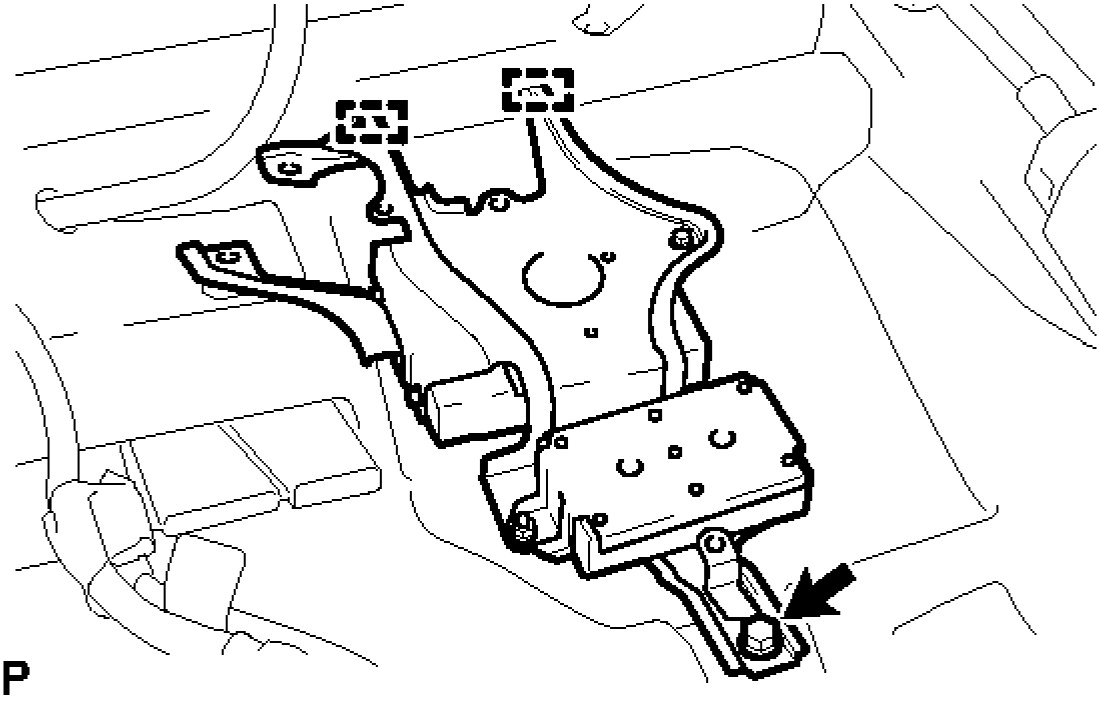

Fig. 4: Identifying DCM (Telematics Transceiver) Guides And Bolt

Courtesy of TOYOTA MOTOR SALES, U.S.A., INC.

d. Disengage the 2 guides and remove the DCM (telematics transceiver) with back-up battery.

4. **REMOVE DCM (TELEMATICS TRANSCEIVER) WITH BRACKET**
    a. Remove the 3 screws and DCM (telematics transceiver) with bracket.

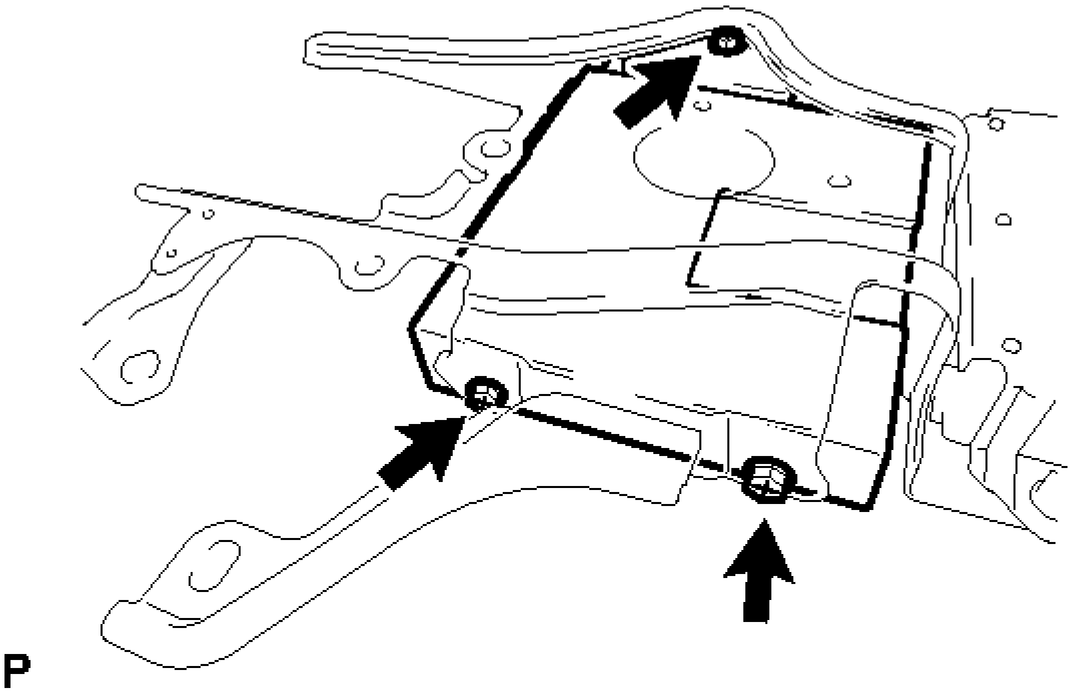

Fig. 5: Identifying DCM (Telematics Transceiver) Bracket Screws
Courtesy of TOYOTA MOTOR SALES, U.S.A., INC.

5. **REMOVE NO. 2 DCM (TELEMATICS TRANSCEIVER) BRACKET**
    a. Remove the 2 screws and No. 2 DCM (telematics transceiver) bracket.

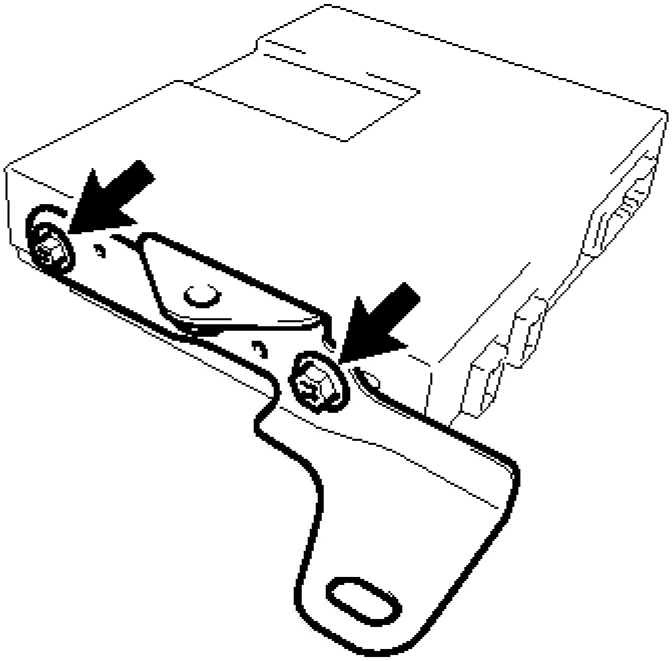

Fig. 6: Identifying No. 2 DCM (Telematics Transceiver) Bracket Screws
Courtesy of TOYOTA MOTOR SALES, U.S.A., INC.

6. **REMOVE DCM (TELEMATICS TRANSCEIVER) ASSEMBLY**

INSTALLATION

INSTALLATION

1. **INSTALL DCM (TELEMATICS TRANSCEIVER) ASSEMBLY**
2. **INSTALL NO. 2 DCM (TELEMATICS TRANSCEIVER) BRACKET**
    a. Install the No. 2 DCM (telematics transceiver) bracket with the 2 screws.
3. **INSTALL DCM (TELEMATICS TRANSCEIVER) WITH BRACKET**
    a. Install the DCM (telematics transceiver) with bracket with the 3 screws.
4. **INSTALL DCM (TELEMATICS TRANSCEIVER) WITH BACK-UP BATTERY**
    a. Engage the 2 guides to the vehicle body to temporarily install the DCM (telematics transceiver) with back-up battery.
    b. Install the DCM (telematics transceiver) with back-up battery with the bolt.
    c. Connect each connector.
    d. Engage the 3 clamps.
5. **INSTALL AUDIO AMPLIFIER COVER**
    a. Install the audio amplifier cover with the 2 clips.
6. **INSTALL FRONT SEAT ASSEMBLY RH**

Refer to **INSTALLATION**

7. **DCM ACTIVATION**

   HINT:

   When replacing the DCM (telematics transceiver) assembly, perform vehicle contract setting. Refer to **DCM ACTIVATION** .

BACK-UP BATTERY

COMPONENTS

ILLUSTRATION

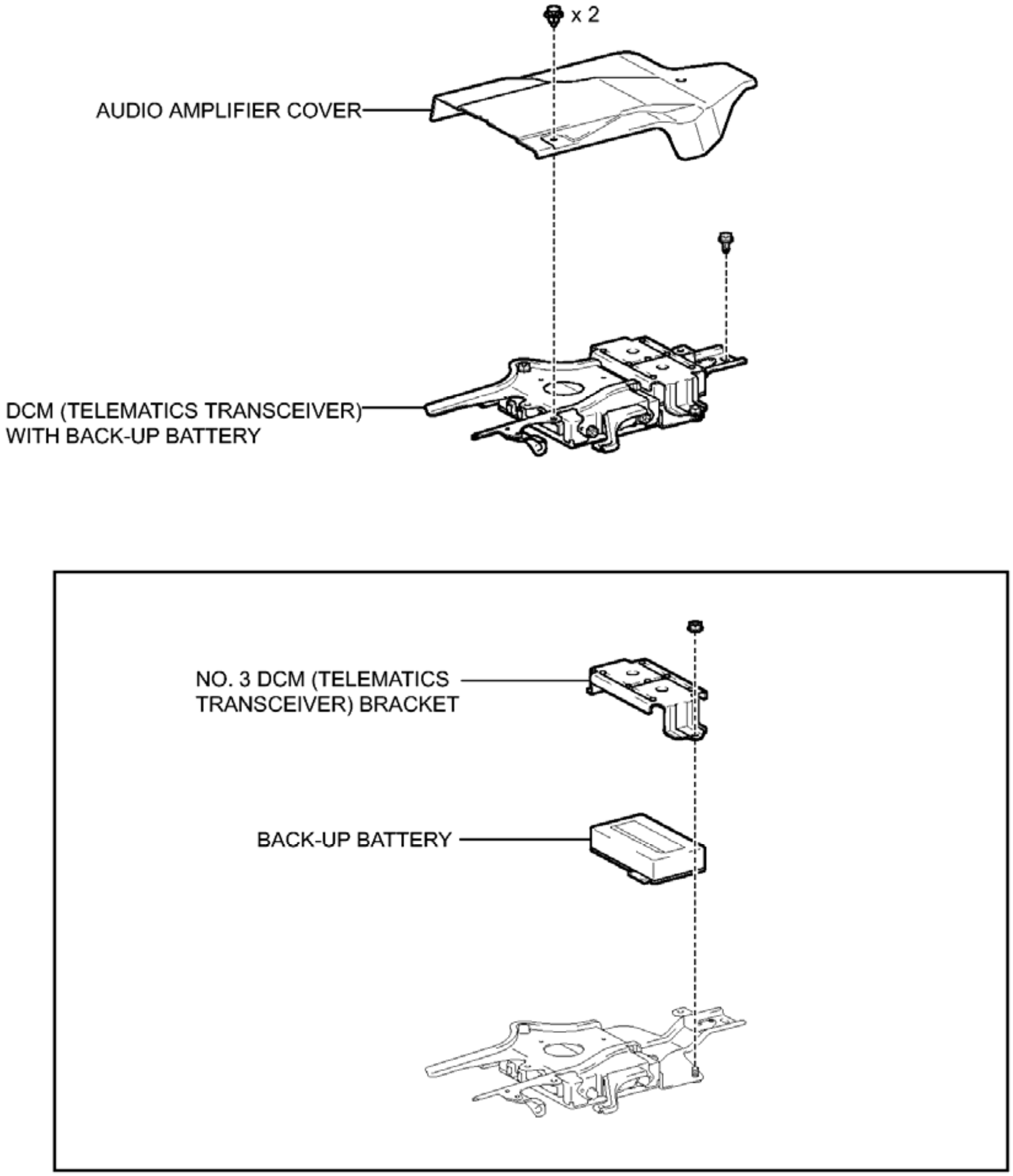
x 2
AUDIO AMPLIFIER COVER
DCM (TELEMATICS TRANSCEIVER)
WITH BACK-UP BATTERY
NO. 3 DCM (TELEMATICS
TRANSCEIVER) BRACKET
BACK-UP BATTERY

P

Fig. 7: Identifying Back-Up Battery Replacement Components
Courtesy of TOYOTA MOTOR SALES, U.S.A., INC.

REMOVAL

REMOVAL

1. **REMOVE FRONT SEAT ASSEMBLY RH**

Refer to **REMOVAL**

2. **REMOVE AUDIO AMPLIFIER COVER** See step 2
3. **REMOVE DCM (TELEMATICS TRANSCEIVER) WITH BACK-UP BATTERY** See step 3
4. **REMOVE NO. 3 DCM (TELEMATICS TRANSCEIVER) BRACKET**
    a. Remove the nut and No. 3 DCM (telematics transceiver) bracket.

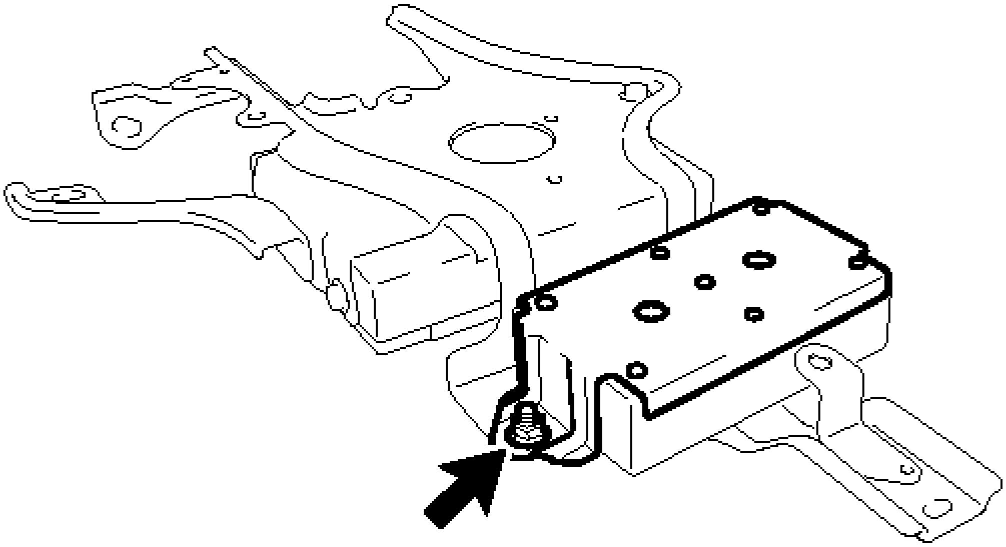

P

Fig. 8: Identifying No. 3 DCM (Telematics Transceiver) Bracket Nut
Courtesy of TOYOTA MOTOR SALES, U.S.A., INC.

5. **REMOVE BACK-UP BATTERY**

INSTALLATION

INSTALLATION

1. **INSTALL BACK-UP BATTERY**
2. **INSTALL NO. 3 DCM (TELEMATICS TRANSCEIVER) BRACKET**
    a. Install the No. 3 DCM (telematics transceiver) bracket with the nut.
3. **INSTALL DCM (TELEMATICS TRANSCEIVER) WITH BACK-UP BATTERY** See step 4
4. **INSTALL AUDIO AMPLIFIER COVER** See step 5
5. **INSTALL FRONT SEAT ASSEMBLY RH**

Refer to **INSTALLATION**

6. **DCM ACTIVATION**

   HINT:

   When replacing the DCM (telematics transceiver) assembly, perform vehicle contract setting. Refer to **DCM ACTIVATION** .

MANUAL (SOS) SWITCH

COMPONENTS

ILLUSTRATION

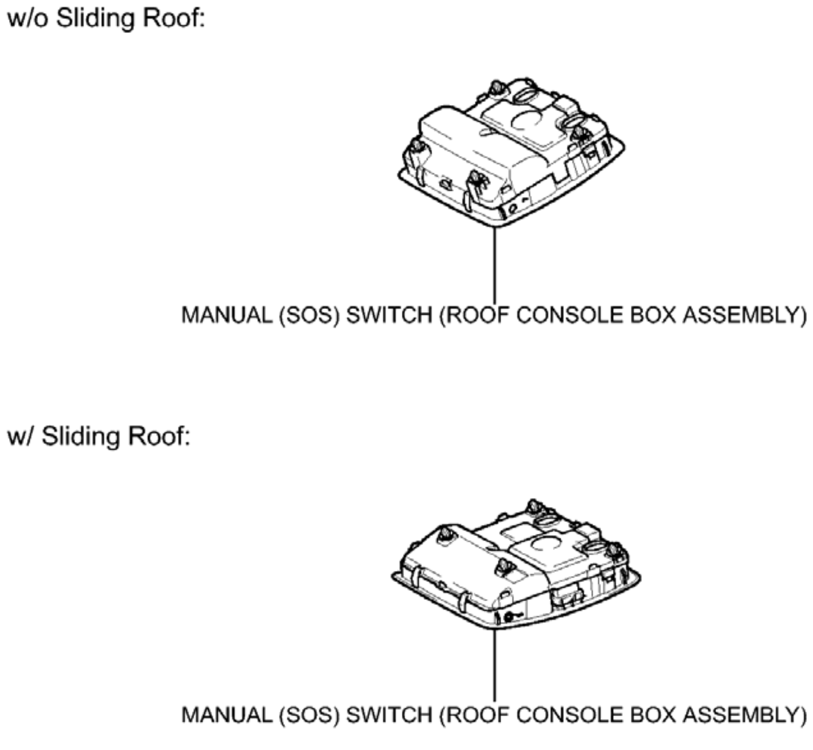
w/o Sliding Roof:
MANUAL (SOS) SWITCH (ROOF CONSOLE BOX ASSEMBLY)
w/ Sliding Roof:
MANUAL (SOS) SWITCH (ROOF CONSOLE BOX ASSEMBLY)
P

Fig. 9: Identifying Manual (SOS) Switch Replacement Components
Courtesy of TOYOTA MOTOR SALES, U.S.A., INC.

REMOVAL

REMOVAL

1. **REMOVE MANUAL (SOS) SWITCH (ROOF CONSOLE BOX ASSEMBLY) (w/o Sliding Roof)** .

Refer to **REMOVAL - Step 1**

2. **REMOVE MANUAL (SOS) SWITCH (ROOF CONSOLE BOX ASSEMBLY) (w/ Sliding Roof)** .
   Refer to **REMOVAL - Step 2**

INSTALLATION

INSTALLATION

1. **INSTALL MANUAL (SOS) SWITCH (ROOF CONSOLE BOX ASSEMBLY) (w/o Sliding Roof)** .
   Refer to **INSTALLATION - Step 2**
2. **INSTALL MANUAL (SOS) SWITCH (ROOF CONSOLE BOX ASSEMBLY) (w/ Sliding Roof)** .
   Refer to **INSTALLATION - Step 3**

TELEPHONE AND GPS ANTENNA

COMPONENTS

ILLUSTRATION

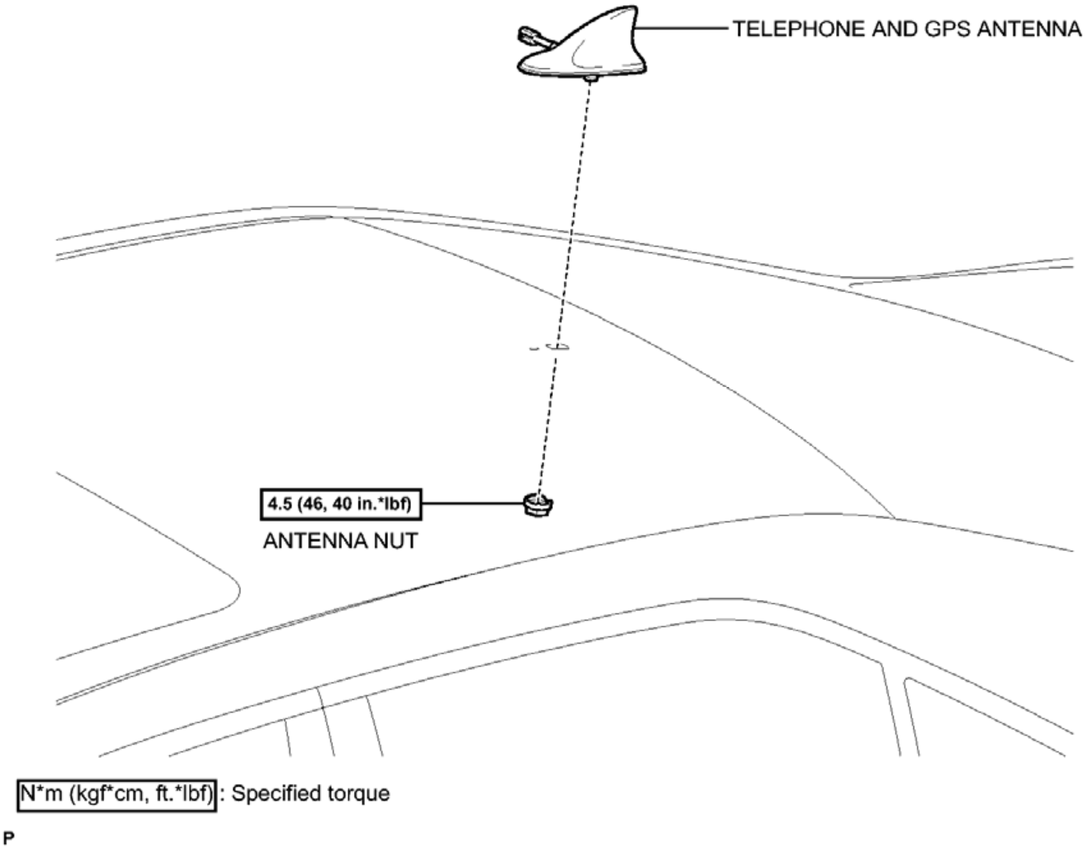
TELEPHONE AND GPS ANTENNA
4.5 (46, 40 in.*lbf)
ANTENNA NUT
N*m (kgf*cm, ft.*lbf) : Specified torque
P

Fig. 10: Identifying Telephone And GPS Antenna Replacement Components With Torque Specifications
Courtesy of TOYOTA MOTOR SALES, U.S.A., INC.

REMOVAL

REMOVAL

1. **REMOVE ROOF HEADLINING ASSEMBLY**

   Refer to **REMOVAL**

2. **REMOVE TELEPHONE AND GPS ANTENNA**
   a. Disconnect the connector.

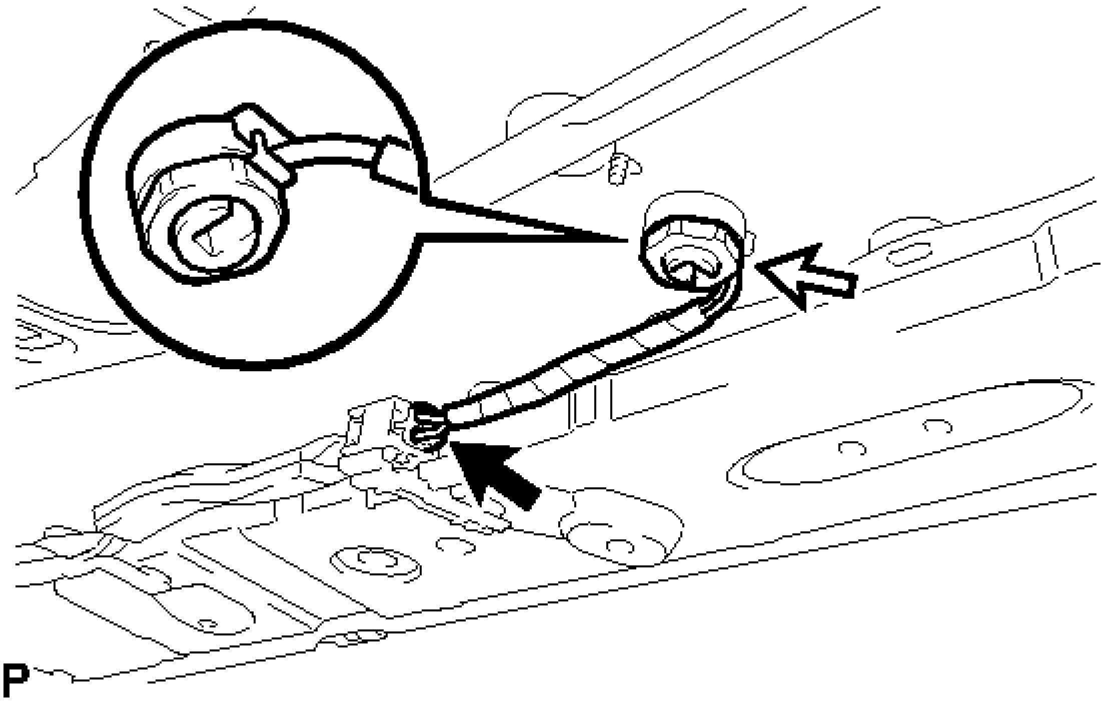

Fig. 11: Locating Roof Antenna Assembly Connector And Fastener
Courtesy of TOYOTA MOTOR SALES, U.S.A., INC.

   b. Remove the antenna nut.
   c. Disengage the 2 claws.

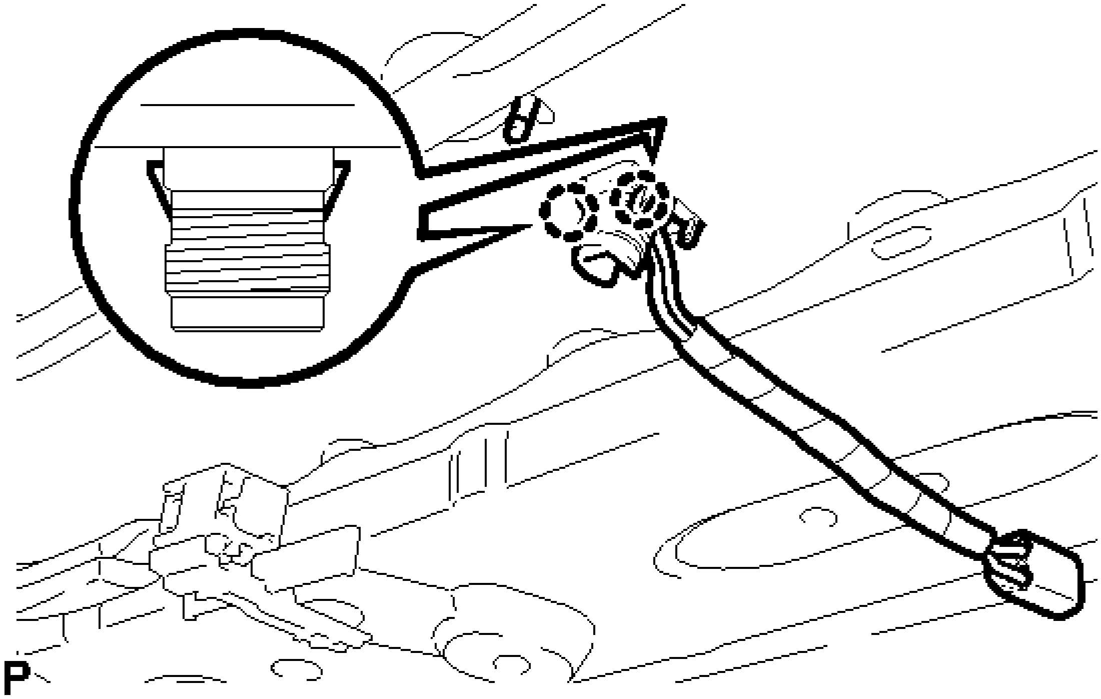

Fig. 12: Locating Roof Antenna Assembly Claws
Courtesy of TOYOTA MOTOR SALES, U.S.A., INC.

d. Disengage the 3 guides and remove the telephone and GPS antenna.

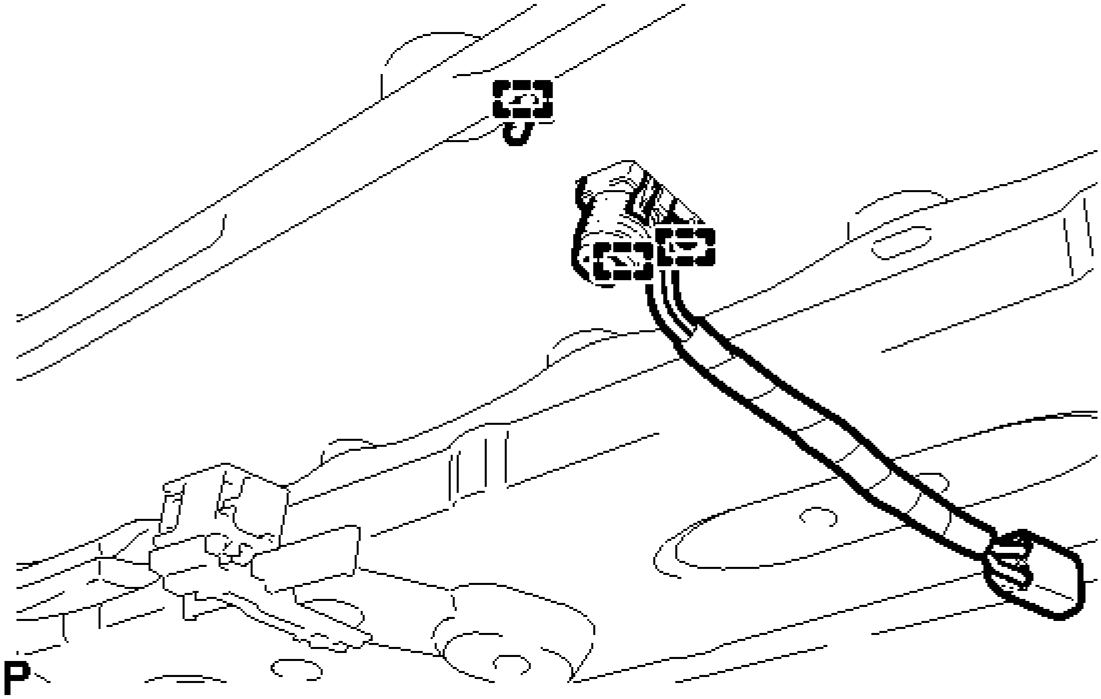

Fig. 13: Locating Roof Antenna Assembly Guides
Courtesy of TOYOTA MOTOR SALES, U.S.A., INC.

INSTALLATION

INSTALLATION

1. **INSTALL TELEPHONE AND GPS ANTENNA**
    a. Engage the 3 guides and 2 claws to the vehicle body to temporarily install the telephone and GPS antenna.
    b. Place the antenna cord in the cutout of the antenna nut.

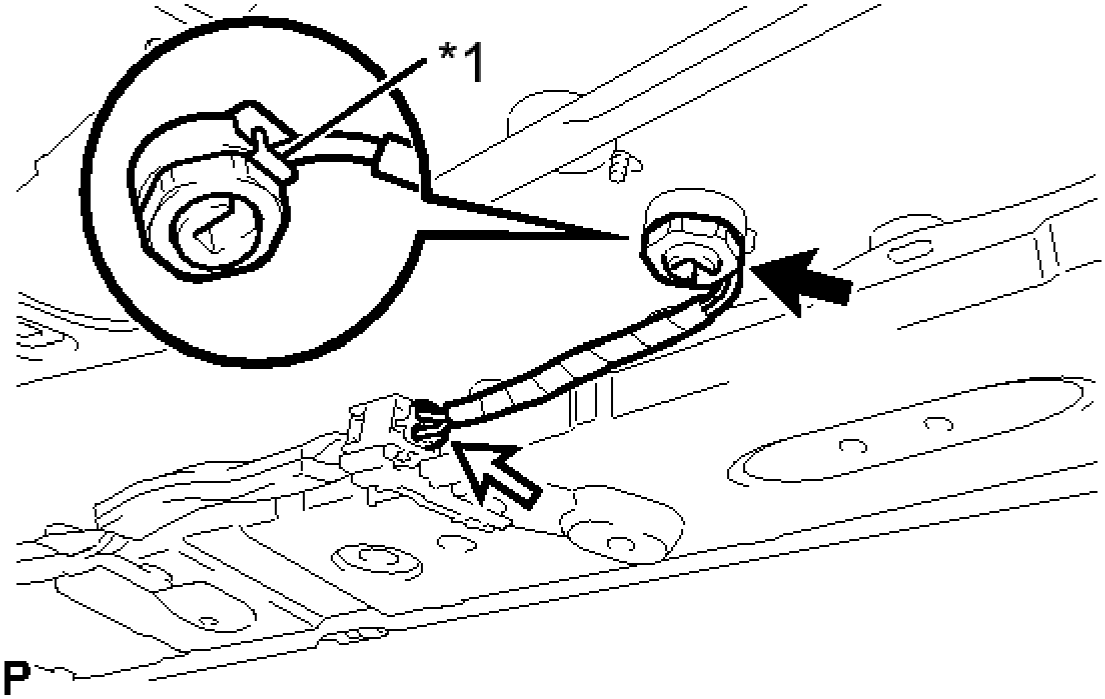

Fig. 14: Locating Roof Antenna Assembly Connector And Fastener
Courtesy of TOYOTA MOTOR SALES, U.S.A., INC.

TEXT IN ILLUSTRATION

*1	Cutout

    c. Install the telephone and GPS antenna with the antenna nut.

    Torque: 4.5 N*m (46 kgf*cm, 40 in.*lbf)

    d. Connect the connector.
2. **INSTALL ROOF HEADLINING ASSEMBLY**

    Refer to **INSTALLATION**

2012-2017 ACCESSORIES & EQUIPMENT

Cellular Communication System (Service Information) - Camry (Except Hybrid)

DCM (TELEMATICS TRANSCEIVER)

COMPONENTS

ILLUSTRATION

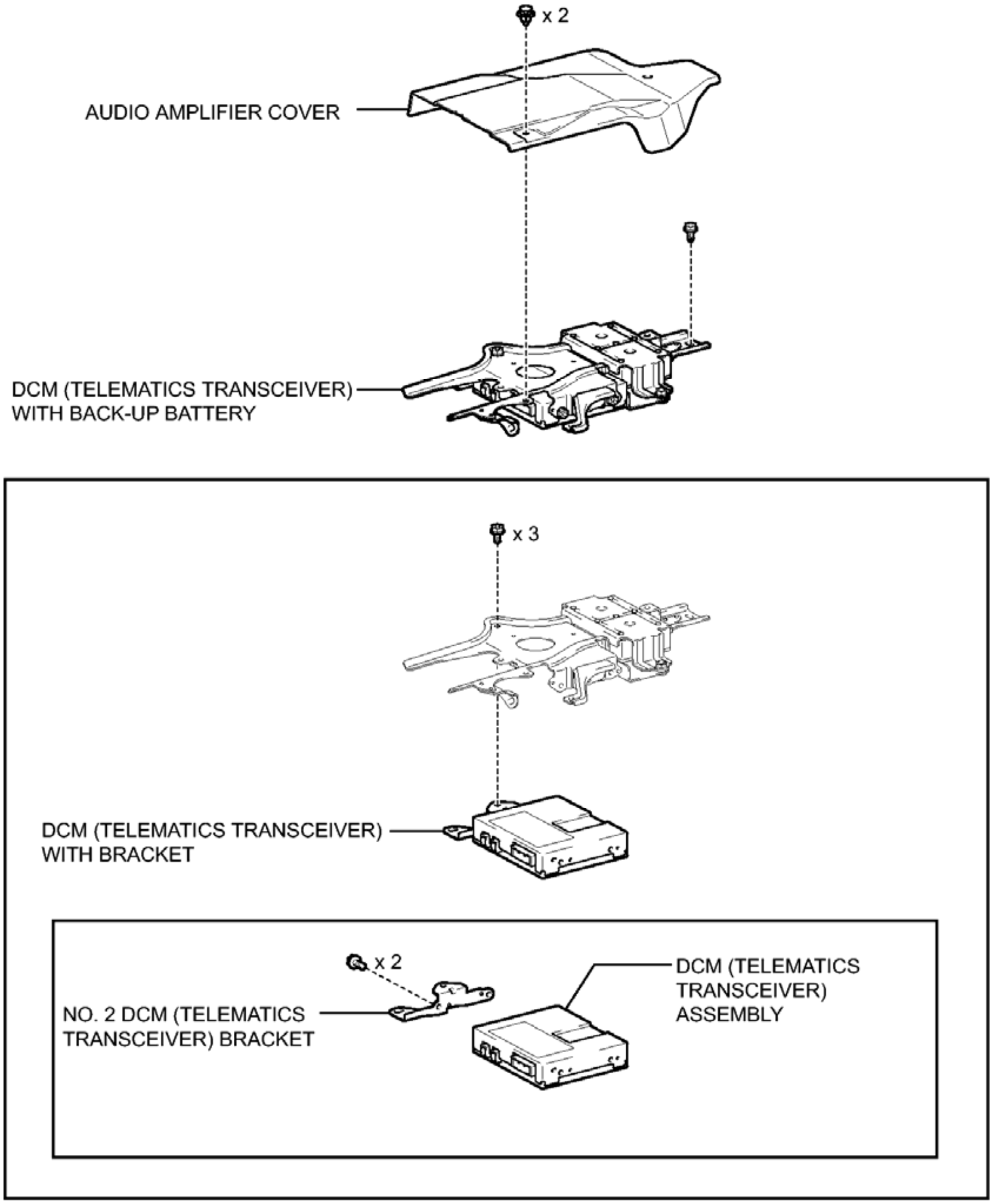
x 2
AUDIO AMPLIFIER COVER
DCM (TELEMATICS TRANSCEIVER) WITH BACK-UP BATTERY
x 3
DCM (TELEMATICS TRANSCEIVER) WITH BRACKET
x 2
NO. 2 DCM (TELEMATICS TRANSCEIVER) BRACKET
DCM (TELEMATICS TRANSCEIVER) ASSEMBLY

P

Fig. 1: Identifying DCM (Telematics Transceiver) Replacement Components
Courtesy of TOYOTA MOTOR SALES, U.S.A., INC.

REMOVAL

REMOVAL

1. **REMOVE FRONT SEAT ASSEMBLY RH**

Refer to **REMOVAL**

2. **REMOVE AUDIO AMPLIFIER COVER**
    a. Using a clip remover, remove the 2 clips and audio amplifier cover.

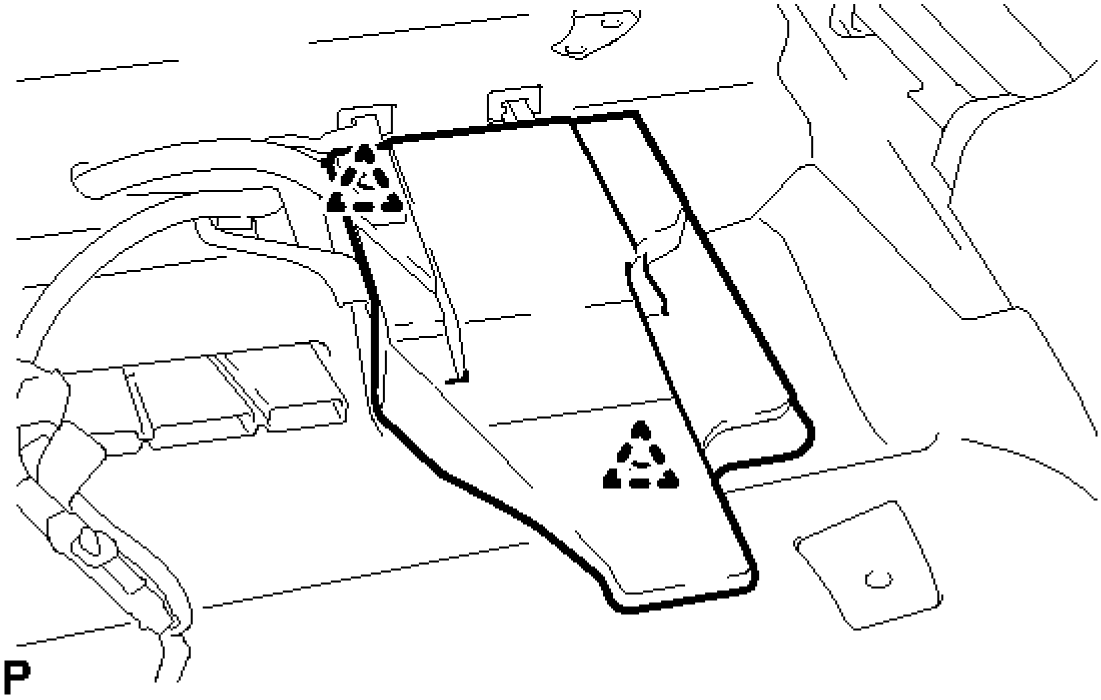

Fig. 2: Identifying Audio Amplifier Cover Clips
Courtesy of TOYOTA MOTOR SALES, U.S.A., INC.

3. **REMOVE DCM (TELEMATICS TRANSCEIVER) WITH BACK-UP BATTERY**
    a. Disconnect each connector.

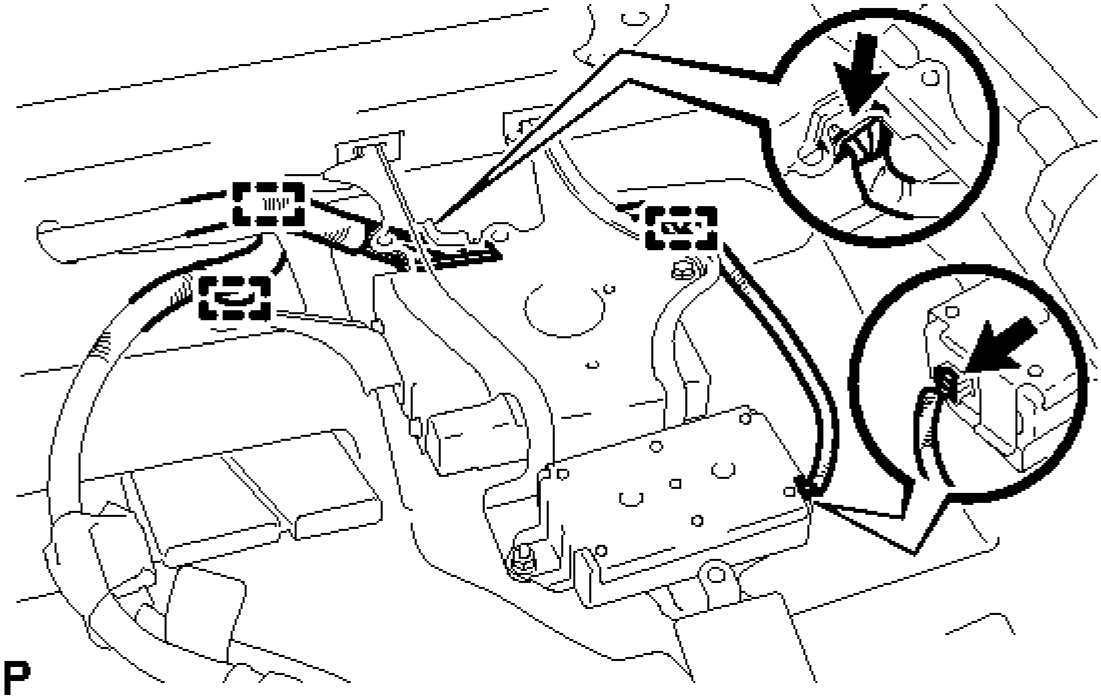

Fig. 3: Identifying DCM (Telematics Transceiver) Clamps And Connector
Courtesy of TOYOTA MOTOR SALES, U.S.A., INC.

b. Disengage the 3 clamps.
c. Remove the bolt.

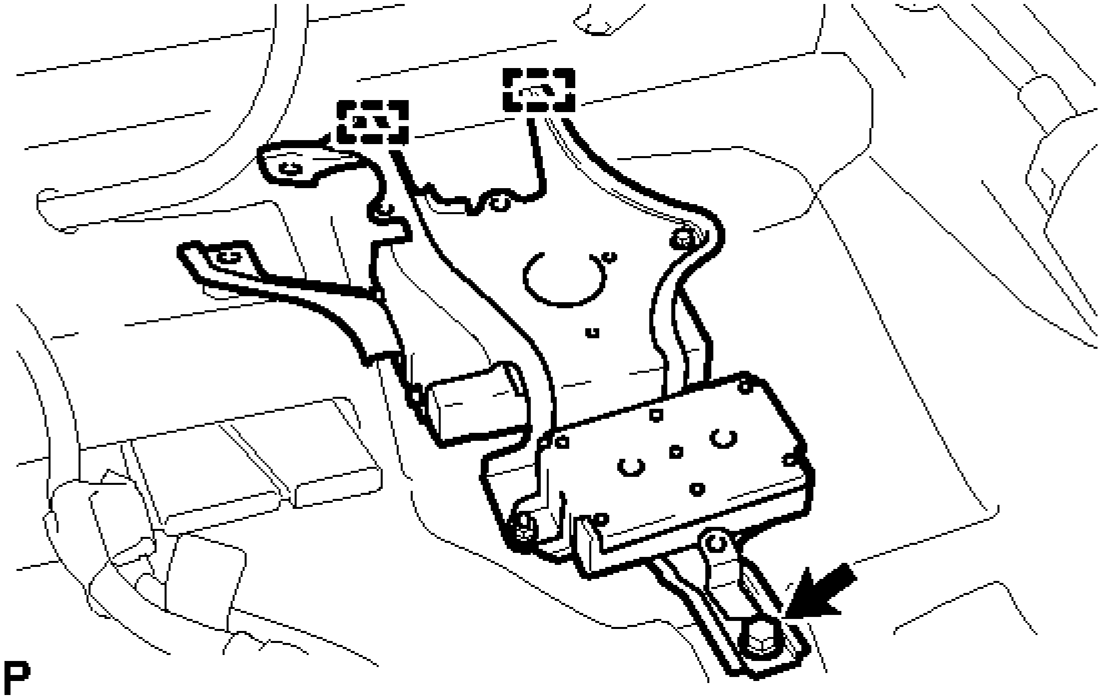

Fig. 4: Identifying DCM (Telematics Transceiver) Guides And Bolt

Courtesy of TOYOTA MOTOR SALES, U.S.A., INC.

d. Disengage the 2 guides and remove the DCM (telematics transceiver) with back-up battery.

4. **REMOVE DCM (TELEMATICS TRANSCEIVER) WITH BRACKET**
   a. Remove the 3 screws and DCM (telematics transceiver) with bracket.

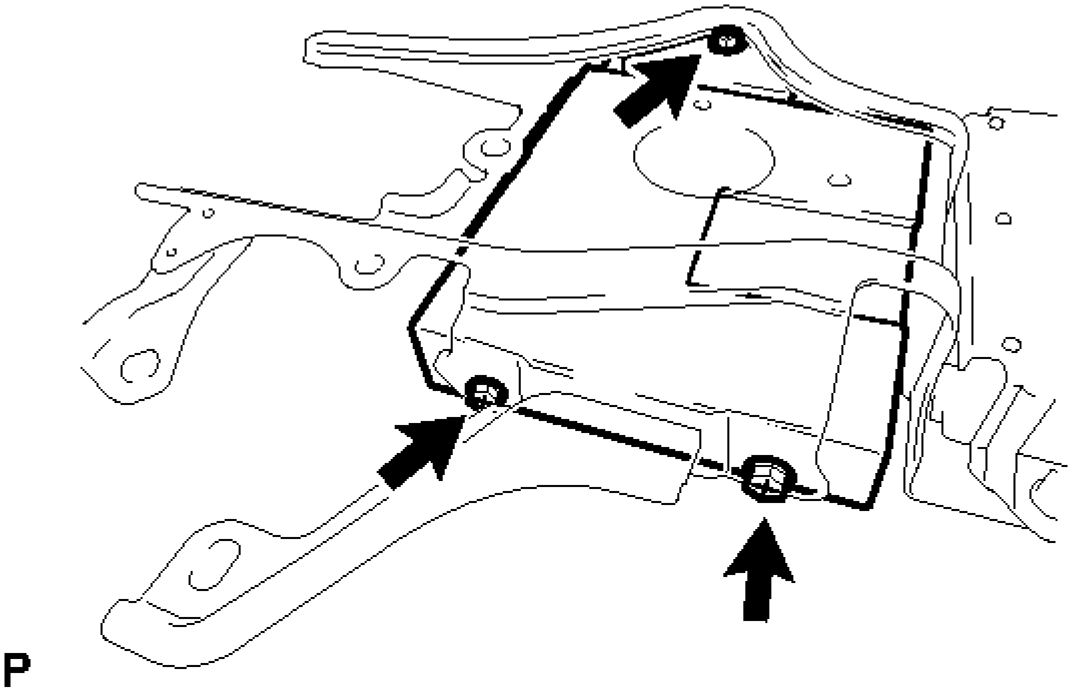

Fig. 5: Identifying DCM (Telematics Transceiver) Bracket Screws
Courtesy of TOYOTA MOTOR SALES, U.S.A., INC.

5. **REMOVE NO. 2 DCM (TELEMATICS TRANSCEIVER) BRACKET**
   a. Remove the 2 screws and No. 2 DCM (telematics transceiver) bracket.

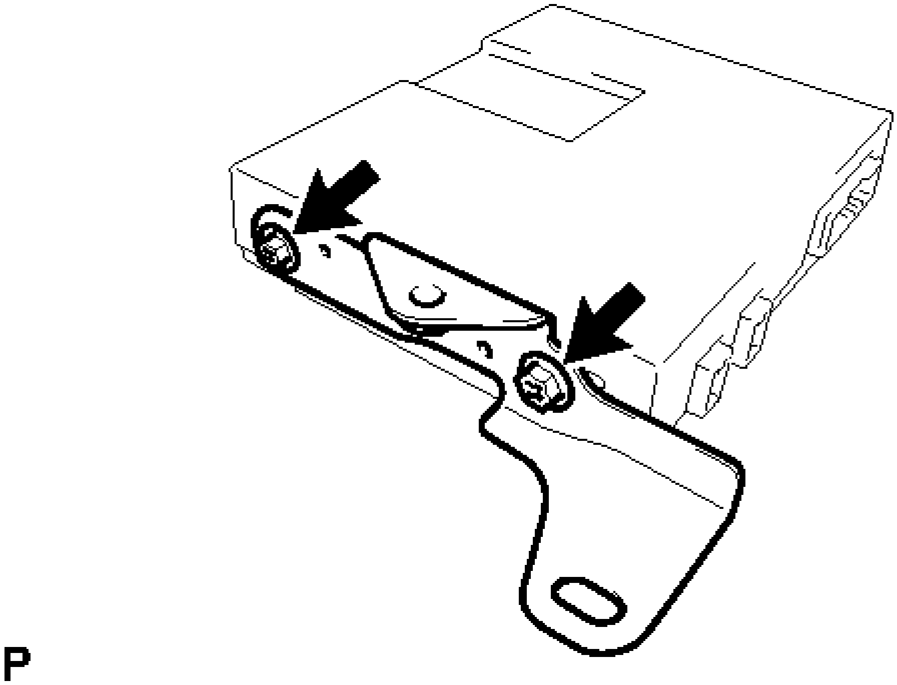

Fig. 6: Identifying No. 2 DCM (Telematics Transceiver) Bracket Screws
Courtesy of TOYOTA MOTOR SALES, U.S.A., INC.

6. **REMOVE DCM (TELEMATICS TRANSCEIVER) ASSEMBLY**

INSTALLATION

INSTALLATION

1. **INSTALL DCM (TELEMATICS TRANSCEIVER) ASSEMBLY**
2. **INSTALL NO. 2 DCM (TELEMATICS TRANSCEIVER) BRACKET**
    a. Install the No. 2 DCM (telematics transceiver) bracket with the 2 screws.
3. **INSTALL DCM (TELEMATICS TRANSCEIVER) WITH BRACKET**
    a. Install the DCM (telematics transceiver) with bracket with the 3 screws.
4. **INSTALL DCM (TELEMATICS TRANSCEIVER) WITH BACK-UP BATTERY**
    a. Engage the 2 guides to the vehicle body to temporarily install the DCM (telematics transceiver) with back-up battery.
    b. Install the DCM (telematics transceiver) with back-up battery with the bolt.
    c. Connect each connector.
    d. Engage the 3 clamps.
5. **INSTALL AUDIO AMPLIFIER COVER**
    a. Install the audio amplifier cover with the 2 clips.
6. **INSTALL FRONT SEAT ASSEMBLY RH**

Refer to **INSTALLATION**

7. **DCM ACTIVATION**

   HINT:

   When replacing the DCM (telematics transceiver) assembly, perform vehicle contract setting. Refer to **DCM ACTIVATION** .

BACK-UP BATTERY

COMPONENTS

ILLUSTRATION

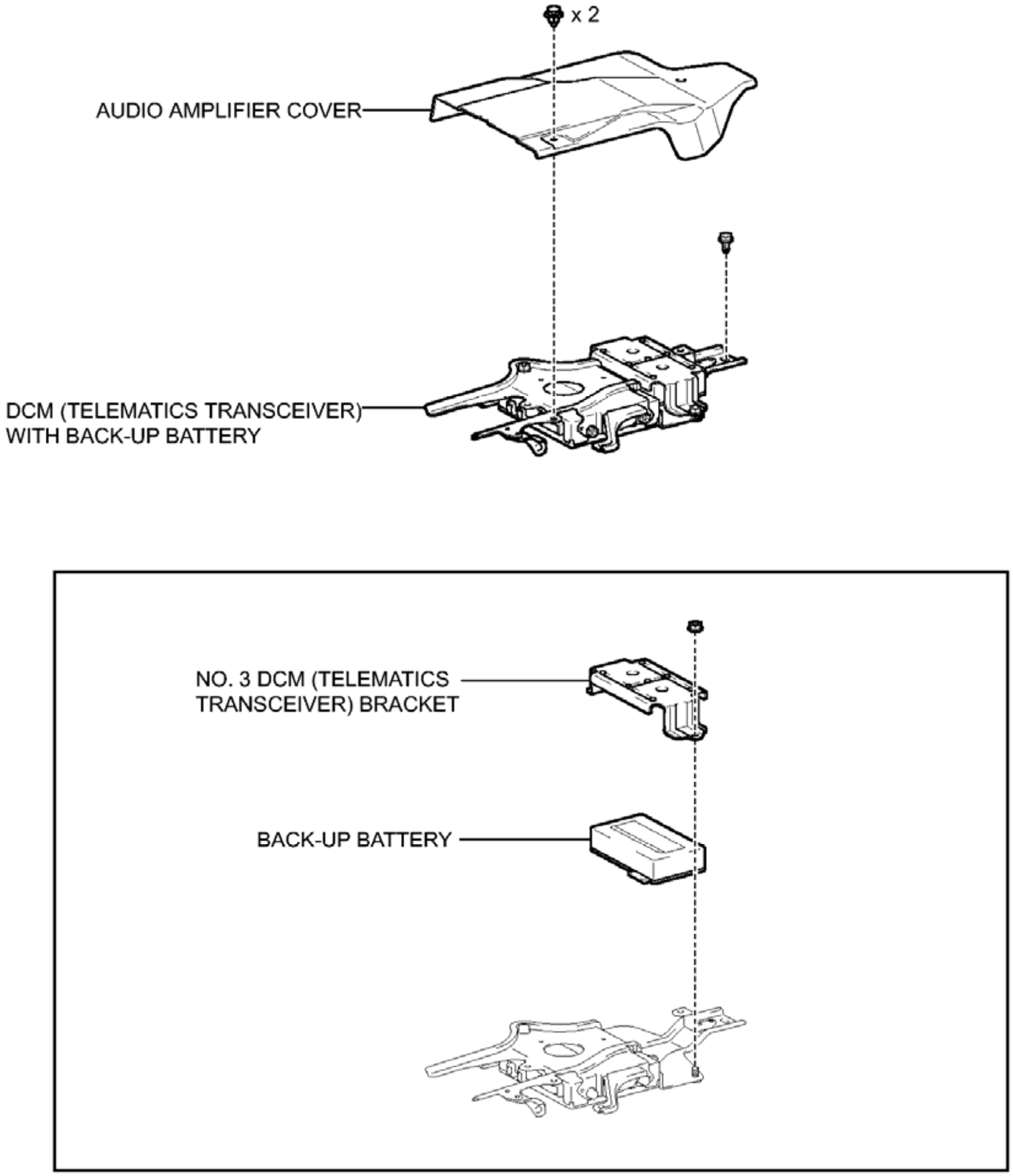
x 2
AUDIO AMPLIFIER COVER
DCM (TELEMATICS TRANSCEIVER)
WITH BACK-UP BATTERY
NO. 3 DCM (TELEMATICS
TRANSCEIVER) BRACKET
BACK-UP BATTERY

P

Fig. 7: Identifying Back-Up Battery Replacement Components
Courtesy of TOYOTA MOTOR SALES, U.S.A., INC.

REMOVAL

REMOVAL

1. **REMOVE FRONT SEAT ASSEMBLY RH**

Refer to **REMOVAL**

2. **REMOVE AUDIO AMPLIFIER COVER** See step 2
3. **REMOVE DCM (TELEMATICS TRANSCEIVER) WITH BACK-UP BATTERY** See step 3
4. **REMOVE NO. 3 DCM (TELEMATICS TRANSCEIVER) BRACKET**
    a. Remove the nut and No. 3 DCM (telematics transceiver) bracket.

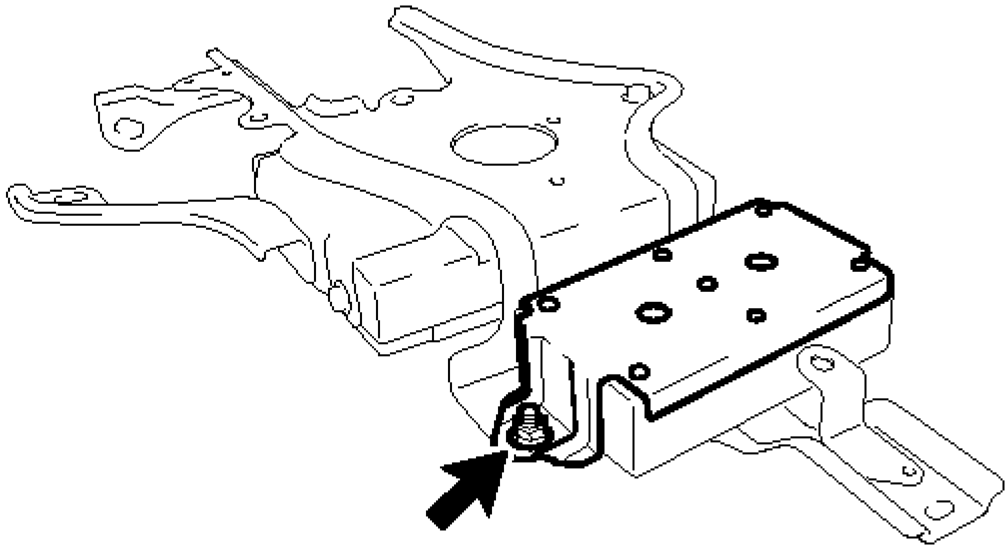

P

Fig. 8: Identifying No. 3 DCM (Telematics Transceiver) Bracket Nut
Courtesy of TOYOTA MOTOR SALES, U.S.A., INC.

5. **REMOVE BACK-UP BATTERY**

INSTALLATION

INSTALLATION

1. **INSTALL BACK-UP BATTERY**
2. **INSTALL NO. 3 DCM (TELEMATICS TRANSCEIVER) BRACKET**
    a. Install the No. 3 DCM (telematics transceiver) bracket with the nut.
3. **INSTALL DCM (TELEMATICS TRANSCEIVER) WITH BACK-UP BATTERY** See step 4
4. **INSTALL AUDIO AMPLIFIER COVER** See step 5
5. **INSTALL FRONT SEAT ASSEMBLY RH**

Refer to **INSTALLATION**

6. **DCM ACTIVATION**

   HINT:

   When replacing the DCM (telematics transceiver) assembly, perform vehicle contract setting. Refer to **DCM ACTIVATION** .

MANUAL (SOS) SWITCH

COMPONENTS

ILLUSTRATION

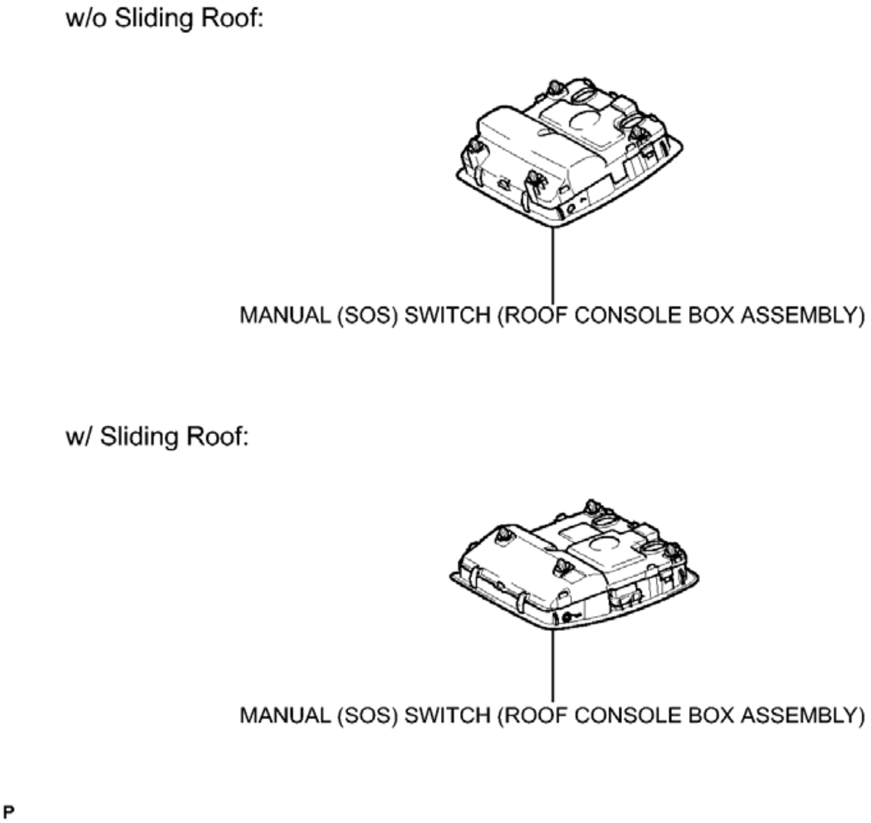
w/o Sliding Roof:
MANUAL (SOS) SWITCH (ROOF CONSOLE BOX ASSEMBLY)
w/ Sliding Roof:
MANUAL (SOS) SWITCH (ROOF CONSOLE BOX ASSEMBLY)
P

Fig. 9: Identifying Manual (SOS) Switch Replacement Components
Courtesy of TOYOTA MOTOR SALES, U.S.A., INC.

REMOVAL

REMOVAL

1. **REMOVE MANUAL (SOS) SWITCH (ROOF CONSOLE BOX ASSEMBLY) (w/o Sliding Roof)** .

Refer to **REMOVAL - Step 1**

2. **REMOVE MANUAL (SOS) SWITCH (ROOF CONSOLE BOX ASSEMBLY) (w/ Sliding Roof)** .
   Refer to **REMOVAL - Step 2**

INSTALLATION

INSTALLATION

1. **INSTALL MANUAL (SOS) SWITCH (ROOF CONSOLE BOX ASSEMBLY) (w/o Sliding Roof)** .
   Refer to **INSTALLATION - Step 2**
2. **INSTALL MANUAL (SOS) SWITCH (ROOF CONSOLE BOX ASSEMBLY) (w/ Sliding Roof)** .
   Refer to **INSTALLATION - Step 3**

TELEPHONE AND GPS ANTENNA

COMPONENTS

ILLUSTRATION

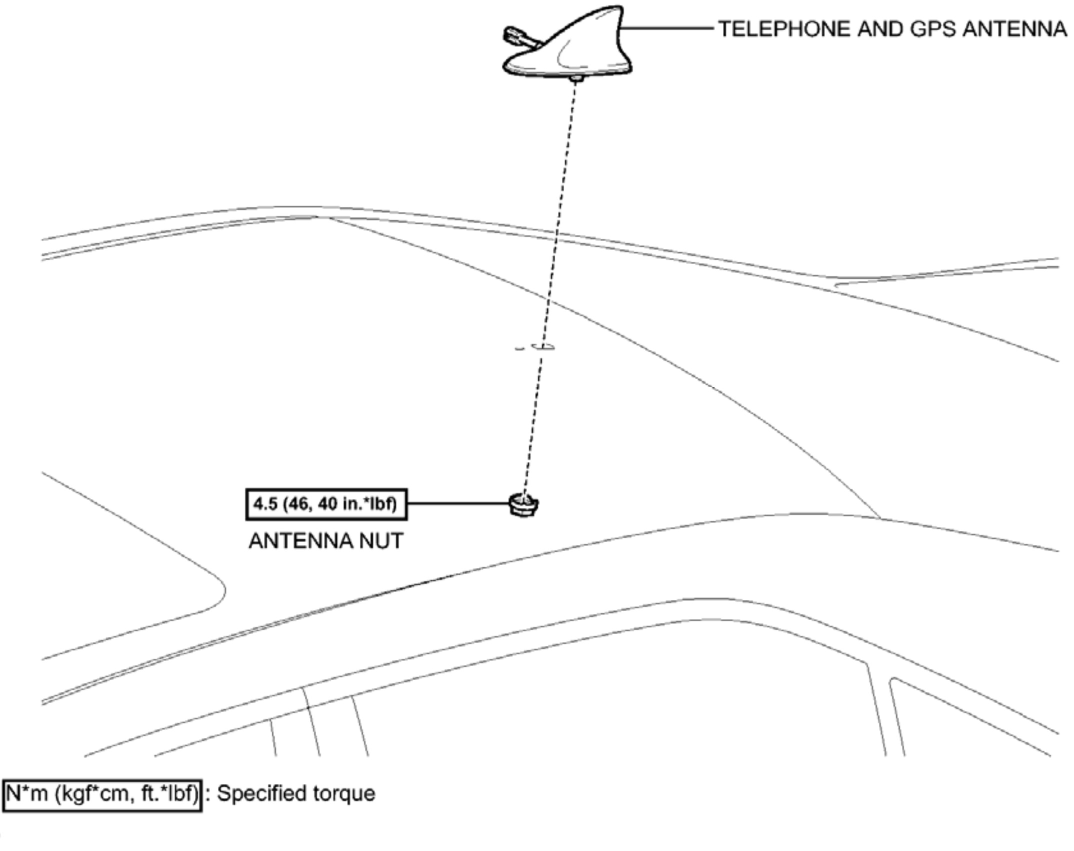
TELEPHONE AND GPS ANTENNA
4.5 (46, 40 in.*lbf)
ANTENNA NUT
N*m (kgf*cm, ft.*lbf) : Specified torque
P

Fig. 10: Identifying Telephone And GPS Antenna Replacement Components With Torque Specifications
Courtesy of TOYOTA MOTOR SALES, U.S.A., INC.

REMOVAL

REMOVAL

1. **REMOVE ROOF HEADLINING ASSEMBLY**

   Refer to **REMOVAL**

2. **REMOVE TELEPHONE AND GPS ANTENNA**
   a. Disconnect the connector.

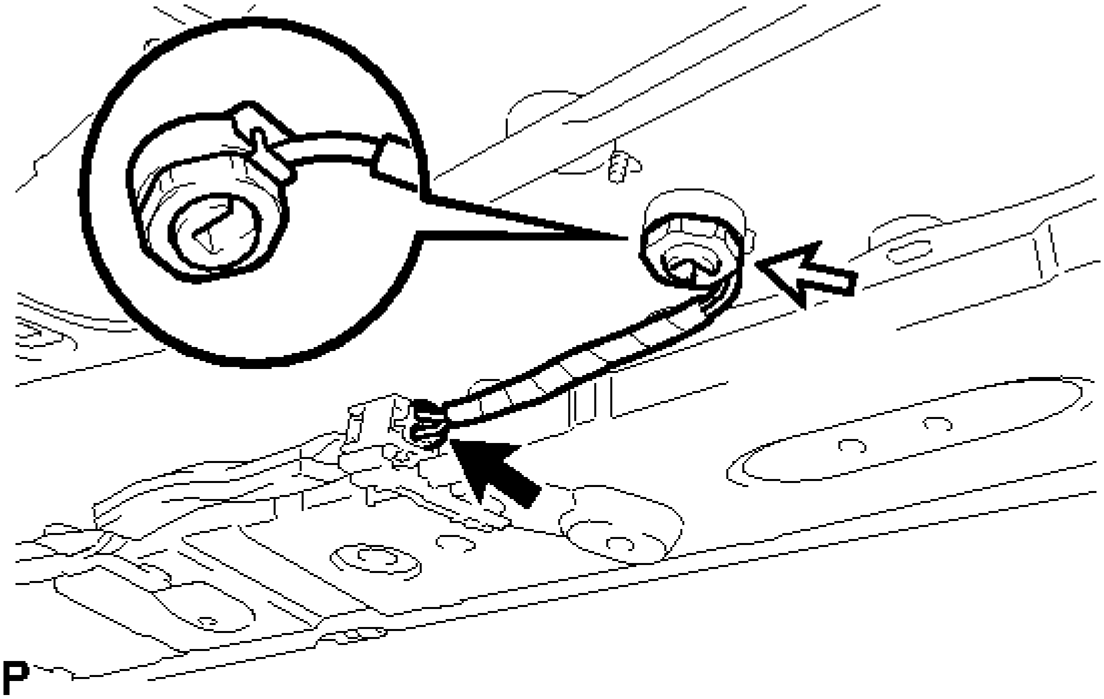

Fig. 11: Locating Roof Antenna Assembly Connector And Fastener
Courtesy of TOYOTA MOTOR SALES, U.S.A., INC.

   b. Remove the antenna nut.
   c. Disengage the 2 claws.

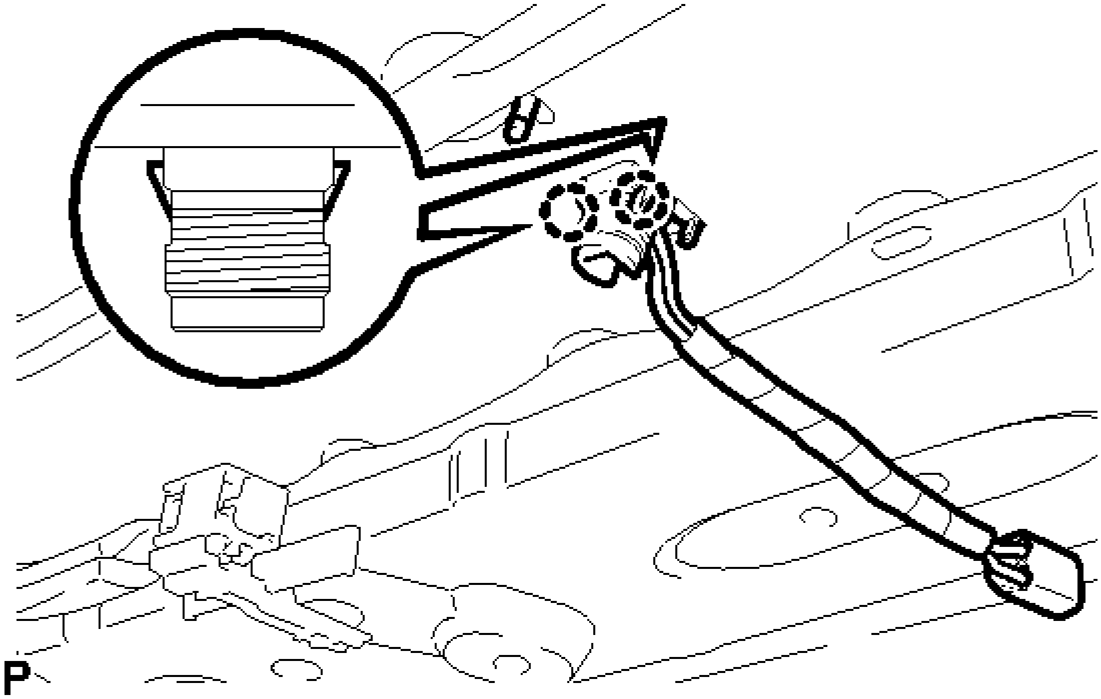

Fig. 12: Identifying Roof Antenna Assembly Claws
Courtesy of TOYOTA MOTOR SALES, U.S.A., INC.

d. Disengage the 3 guides and remove the telephone and GPS antenna.

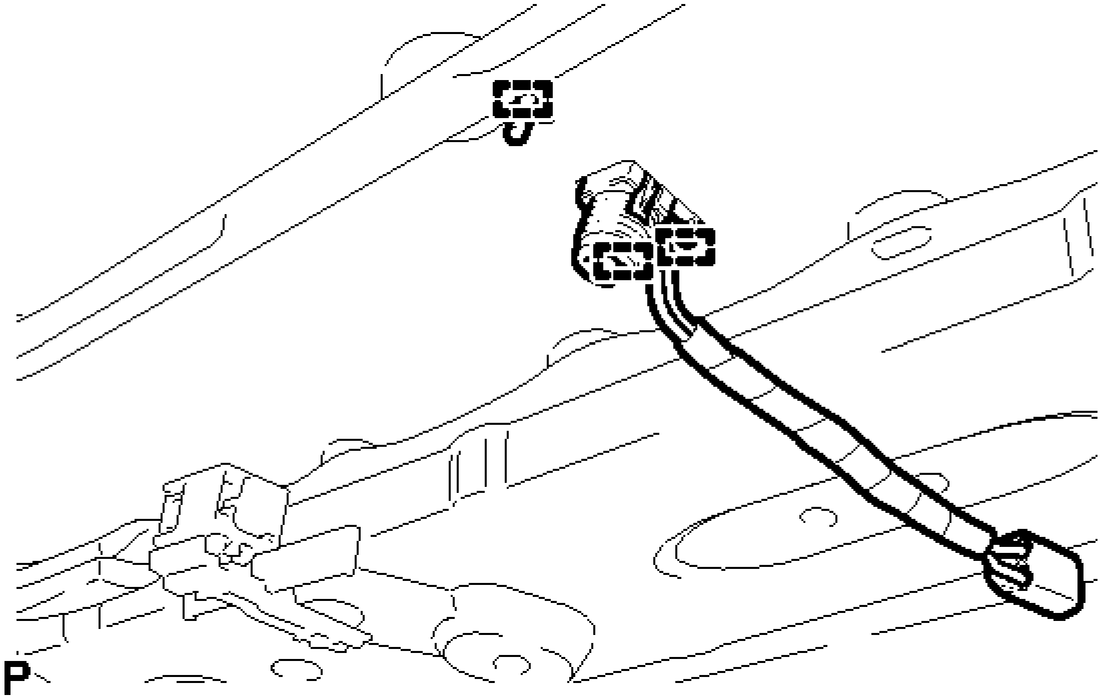

Fig. 13: Identifying Roof Antenna Assembly Guides
Courtesy of TOYOTA MOTOR SALES, U.S.A., INC.

INSTALLATION

INSTALLATION

1. **INSTALL TELEPHONE AND GPS ANTENNA**
    a. Engage the 3 guides and 2 claws to the vehicle body to temporarily install the telephone and GPS antenna.
    b. Place the antenna cord in the cutout of the antenna nut.

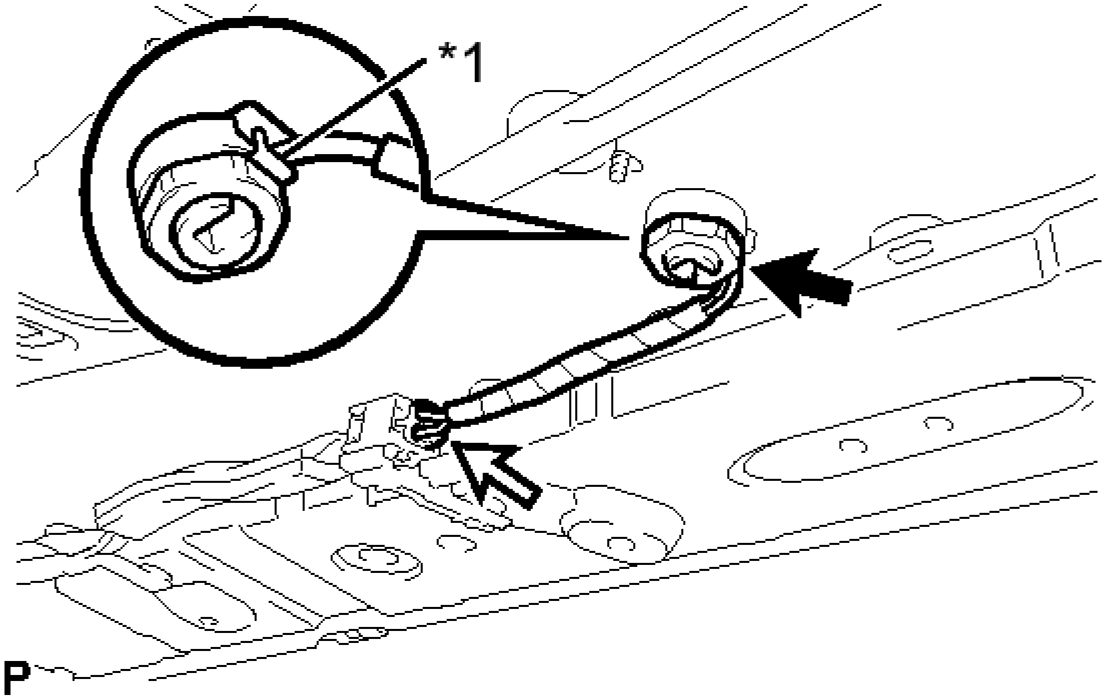

Fig. 14: Locating Roof Antenna Assembly Connector And Fastener
Courtesy of TOYOTA MOTOR SALES, U.S.A., INC.

TEXT IN ILLUSTRATION

*1	Cutout

    c. Install the telephone and GPS antenna with the antenna nut.

    Torque: 4.5 N*m (46 kgf*cm, 40 in.*lbf)

    d. Connect the connector.
2. **INSTALL ROOF HEADLINING ASSEMBLY**

    Refer to **INSTALLATION**

2012-2017 ELECTRICAL

Charging System (Service Information) - Camry (2AR-FE)

GENERATOR

COMPONENTS

ILLUSTRATION

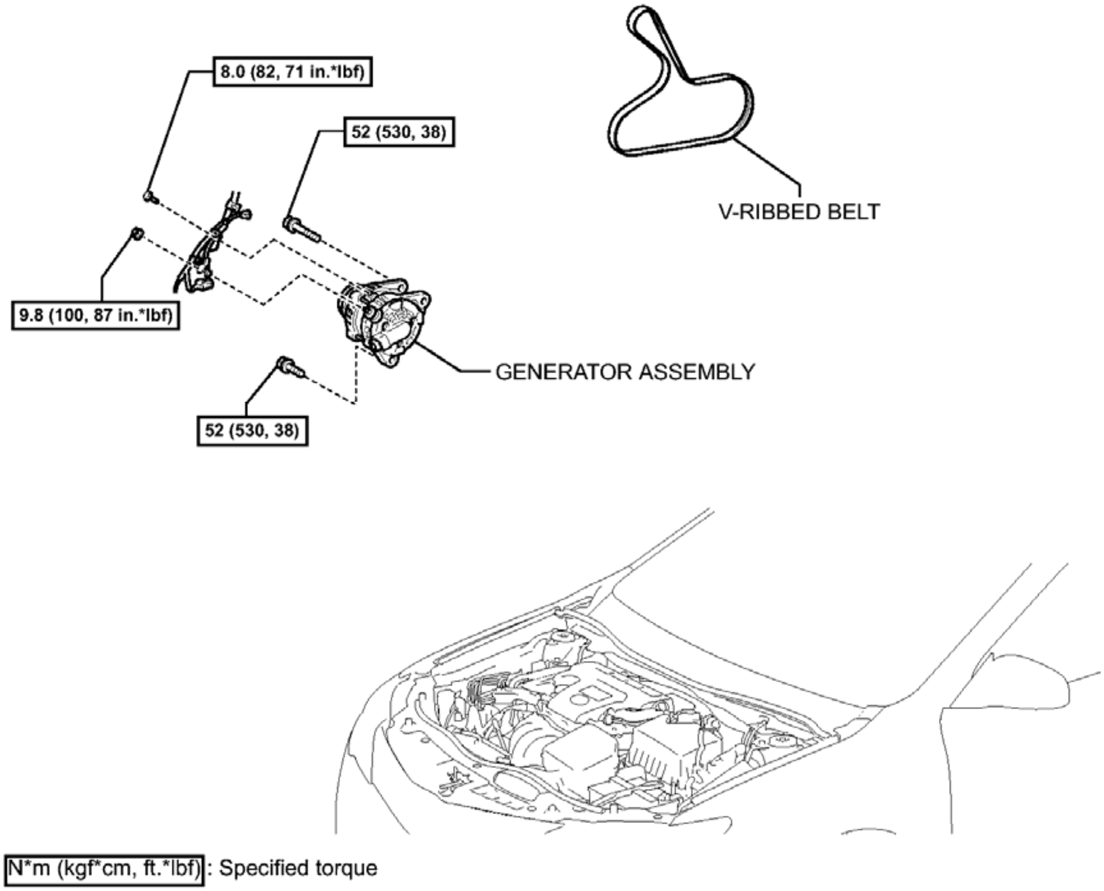
8.0 (82, 71 in.*lbf)
52 (530, 38)
V-RIBBED BELT
9.8 (100, 87 in.*lbf)
GENERATOR ASSEMBLY
52 (530, 38)
N*m (kgf*cm, ft.*lbf): Specified torque

Fig. 1: Identifying Generator Replacement Components With Torque Specifications (1 Of 2)
Courtesy of TOYOTA MOTOR SALES, U.S.A., INC.

ILLUSTRATION

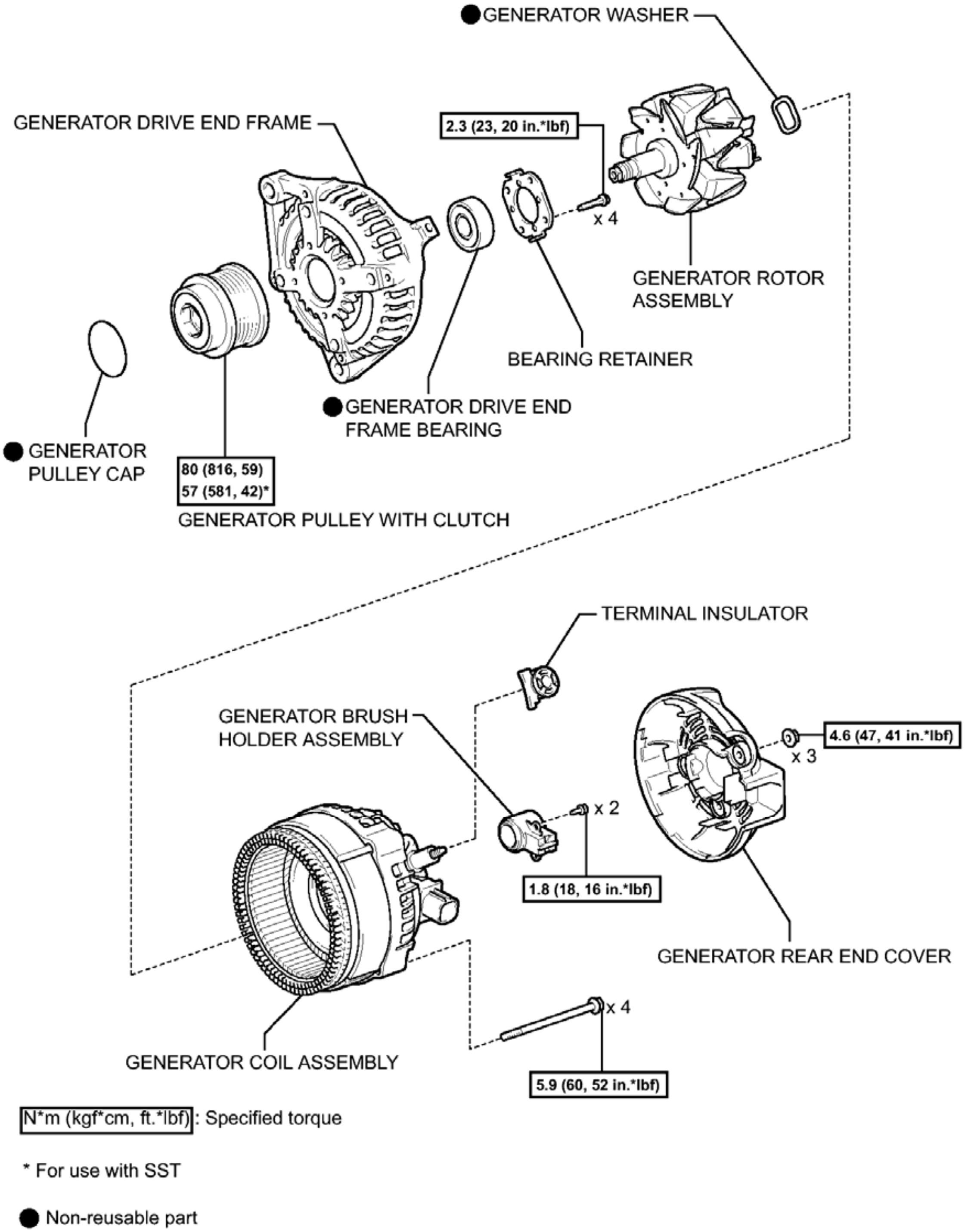
● GENERATOR WASHER
GENERATOR DRIVE END FRAME
2.3 (23, 20 in.*lbf)
x 4
GENERATOR ROTOR ASSEMBLY
BEARING RETAINER
● GENERATOR DRIVE END FRAME BEARING
● GENERATOR PULLEY CAP
80 (816, 59)
57 (581, 42)*
GENERATOR PULLEY WITH CLUTCH
TERMINAL INSULATOR
GENERATOR BRUSH HOLDER ASSEMBLY
4.6 (47, 41 in.*lbf)
x 3
x 2
1.8 (18, 16 in.*lbf)
GENERATOR REAR END COVER
x 4
GENERATOR COIL ASSEMBLY
5.9 (60, 52 in.*lbf)
N*m (kgf*cm, ft.*lbf) : Specified torque
* For use with SST
● Non-reusable part

Fig. 2: Identifying Generator Replacement Components With Torque Specifications (2 Of 2)
Courtesy of TOYOTA MOTOR SALES, U.S.A., INC.

REMOVAL

REMOVAL

1. **PRECAUTION**

NOTE: **After turning the ignition switch off, waiting time may be required before disconnecting the cable from the negative (-) battery terminal. Therefore, make sure to read the disconnecting the cable from the negative (-) battery terminal notices before proceeding with work. Refer to PRECAUTION .**

2. **DISCONNECT CABLE FROM NEGATIVE BATTERY TERMINAL**

NOTE: **When disconnecting the cable, some systems need to be initialized after the cable is reconnected. Refer to INITIALIZATION .**

3. **REMOVE V-RIBBED BELT**

Refer to **REMOVAL** .

4. **REMOVE GENERATOR ASSEMBLY**
   a. Disconnect the generator connector.

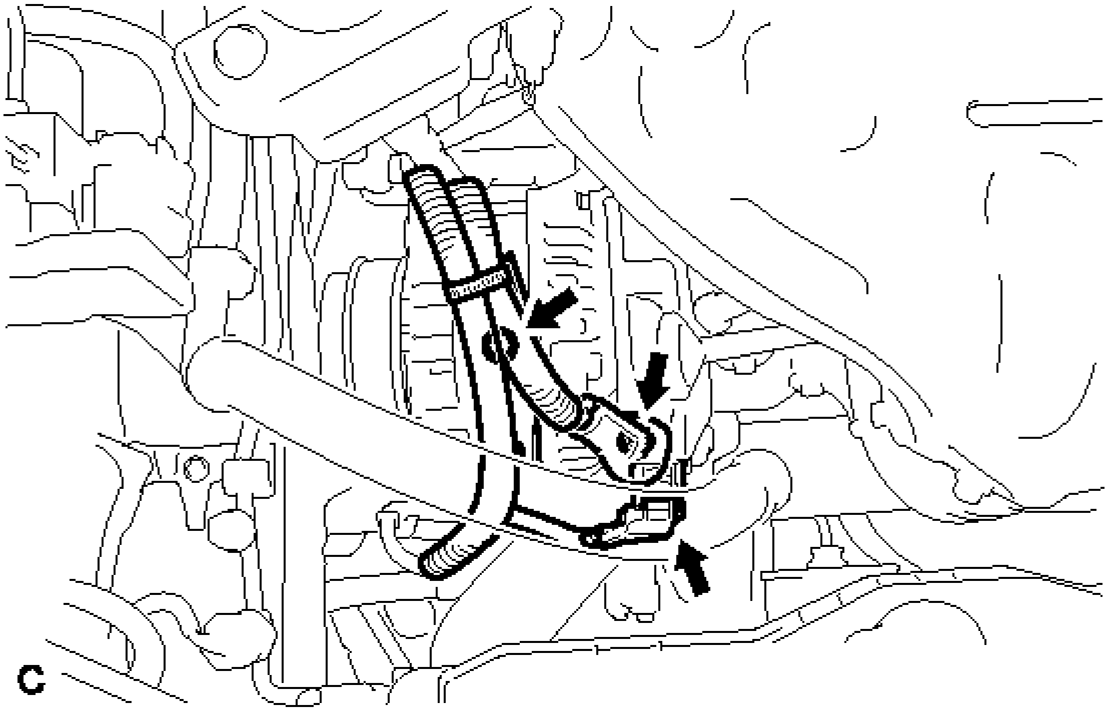

Fig. 3: Identifying Generator Connector
Courtesy of TOYOTA MOTOR SALES, U.S.A., INC.

   b. Remove the terminal cap.
   c. Remove the nut and disconnect the generator wire.

d. Remove the bolt and wire harness clamp bracket.
e. Remove the 2 bolts and generator.

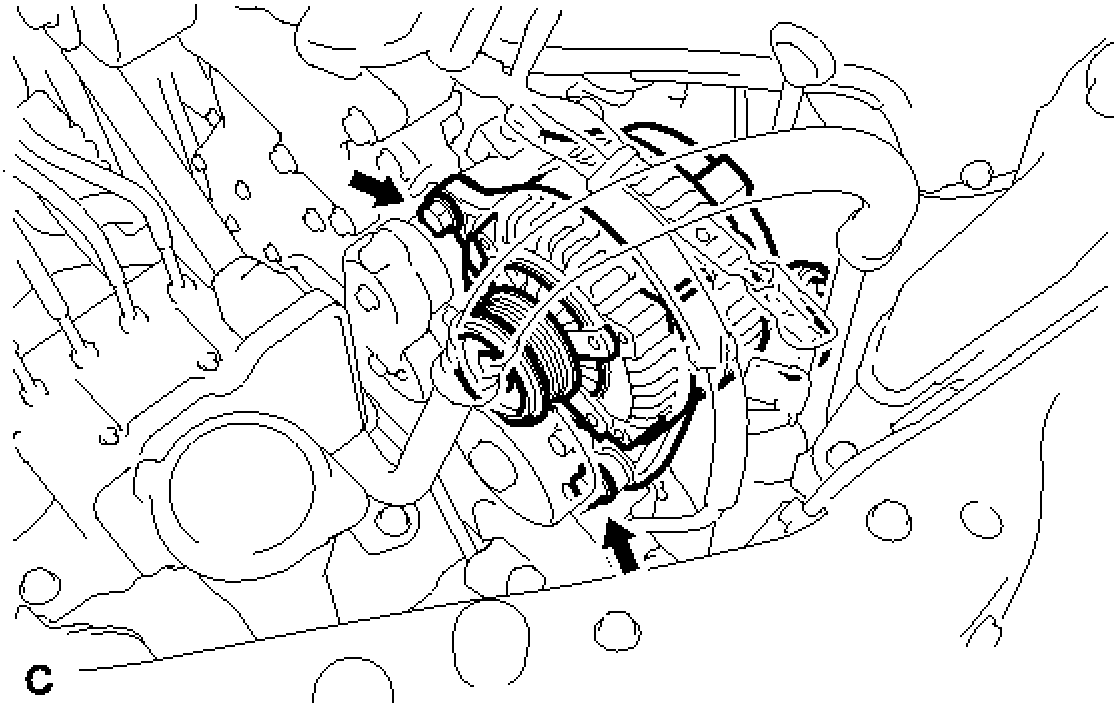

Fig. 4: Identifying Generator Bolts
Courtesy of TOYOTA MOTOR SALES, U.S.A., INC.

DISASSEMBLY

DISASSEMBLY

1. **REMOVE GENERATOR PULLEY CAP**
   a. Using a screwdriver, puncture the center of the generator pulley cap and pry it off.

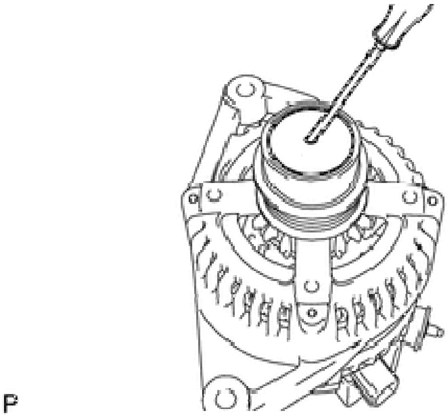

Fig. 5: Removing Generator Pulley Cap
Courtesy of TOYOTA MOTOR SALES, U.S.A., INC.

NOTE: Do not reuse the generator pulley cap.

2. **REMOVE GENERATOR PULLEY WITH CLUTCH**
    a. Mount the generator in a vise.

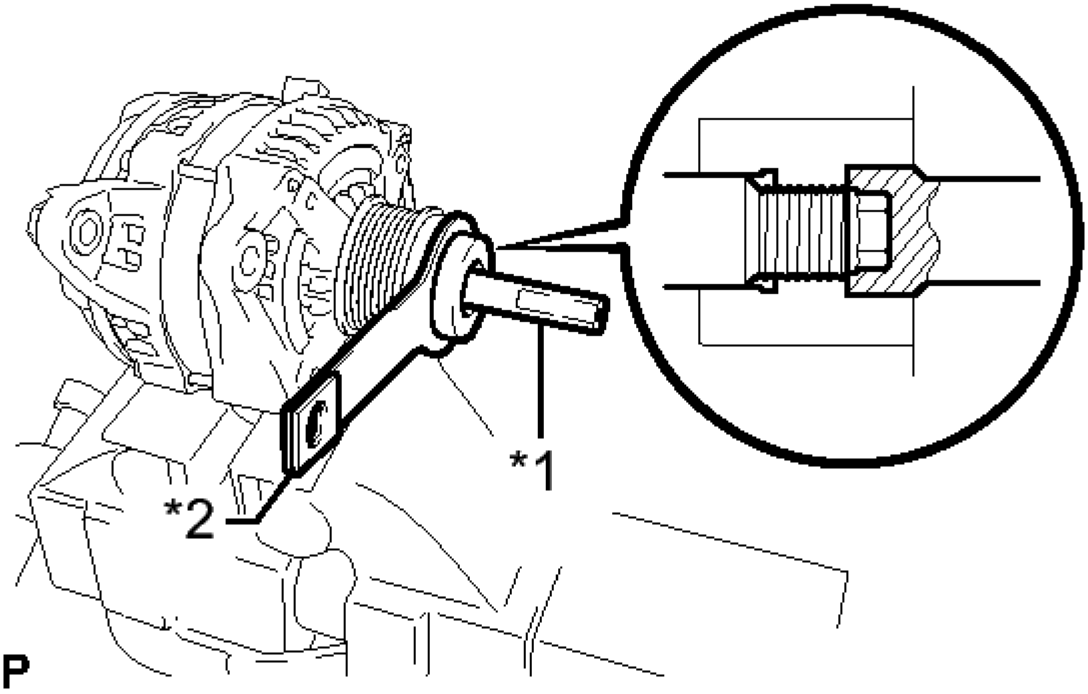

Fig. 6: Identifying SST And Pulley
Courtesy of TOYOTA MOTOR SALES, U.S.A., INC.

TEXT IN ILLUSTRATION

*1	SST (A)
*2	SST (B)

b. Install SST (A) and (B) to the pulley as shown in the illustration.
    - **SST: 09820-63021**

c. Use a wrench to hold SST (A), and turn SST (B) counterclockwise to loosen the generator pulley.

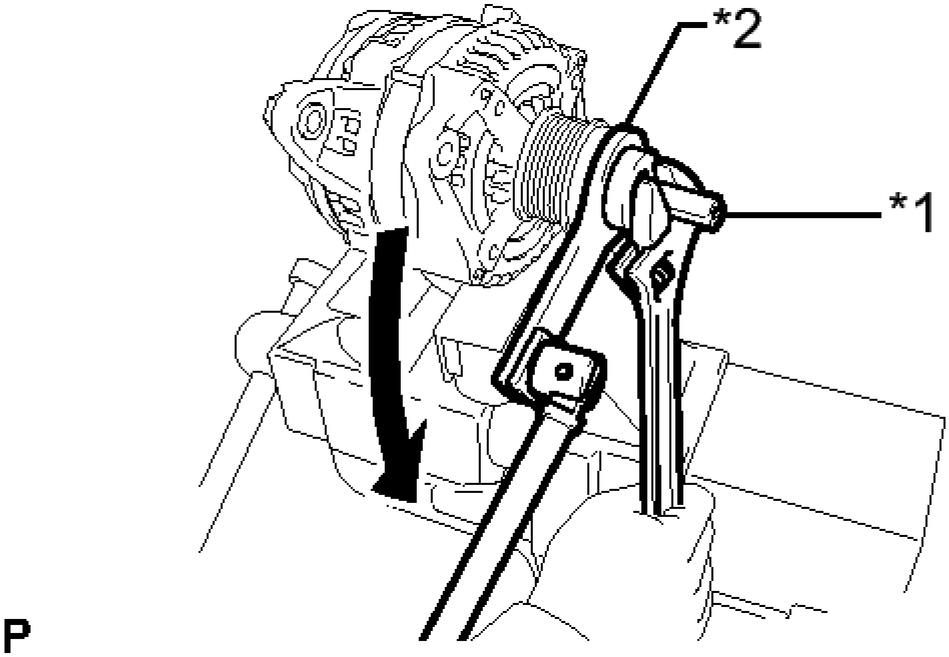

Fig. 7: Turning SST Counterclockwise
Courtesy of TOYOTA MOTOR SALES, U.S.A., INC.

TEXT IN ILLUSTRATION

*1	SST (A)
*2	SST (B)

NOTE:

- **Check that the drive end frame is secured in the vise tightly.**
- **Hold SST (A) tightly during the operation.**

d. Remove the generator pulley.

3. **REMOVE GENERATOR REAR END COVER**
   a. Place the generator on the generator pulley.
   b. Remove the 3 nuts and generator rear end cover.

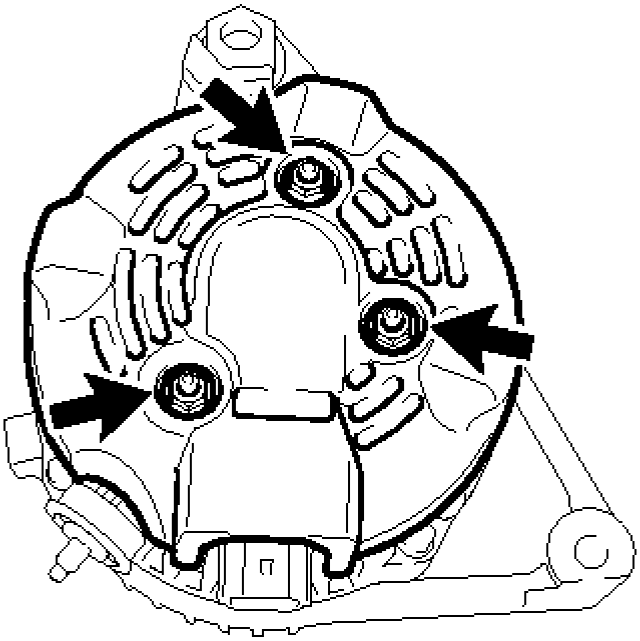

P

Fig. 8: Locating Generator Rear End Cover Nuts
Courtesy of TOYOTA MOTOR SALES, U.S.A., INC.

c. Remove the terminal insulator.

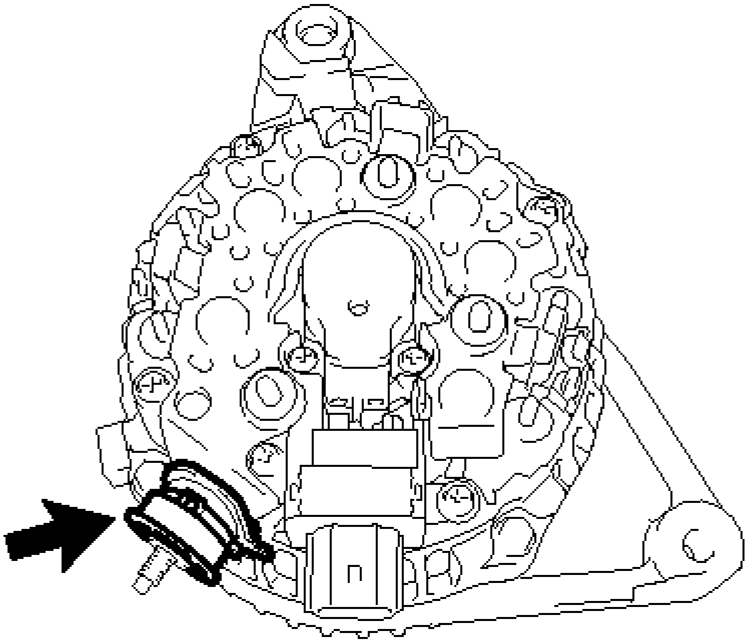

P

Fig. 9: Locating Terminal Insulator
Courtesy of TOYOTA MOTOR SALES, U.S.A., INC.

4. **REMOVE GENERATOR BRUSH HOLDER ASSEMBLY**
   a. Remove the 2 screws and generator brush holder.

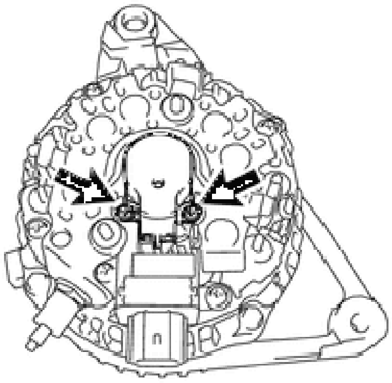

Fig. 10: Locating Generator Brush Holder Screws
Courtesy of TOYOTA MOTOR SALES, U.S.A., INC.

5. **REMOVE GENERATOR COIL ASSEMBLY**
   a. Remove the 4 bolts.

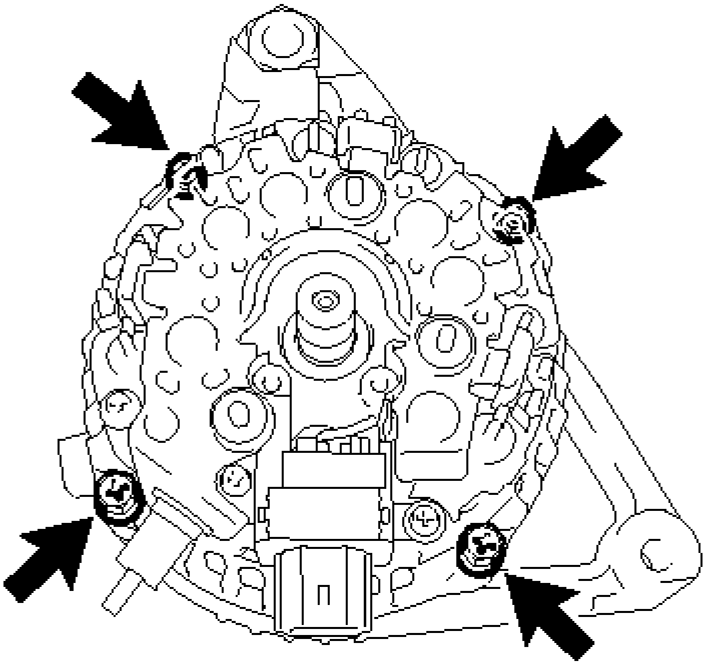

Fig. 11: Locating Generator Coil Assembly Bolts
Courtesy of TOYOTA MOTOR SALES, U.S.A., INC.

   b. Using SST, remove the generator coil.

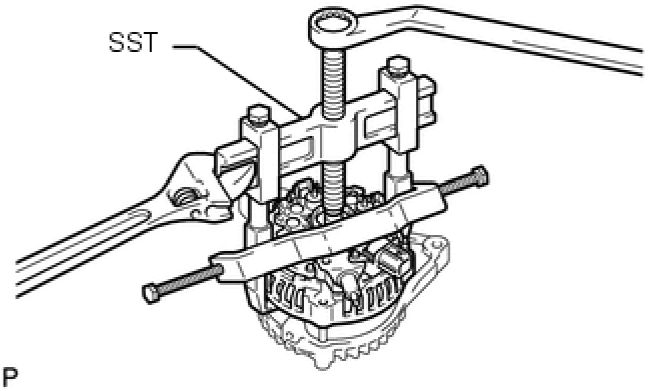

Fig. 12: Removing Generator Coil
Courtesy of TOYOTA MOTOR SALES, U.S.A., INC.

- **SST: 09950-40011**
  09951-04020
  09952-04010
  09953-04020
  09954-04010
  09955-04071
  09957-04010

6. **REMOVE GENERATOR ROTOR ASSEMBLY**
   a. Remove the generator washer.

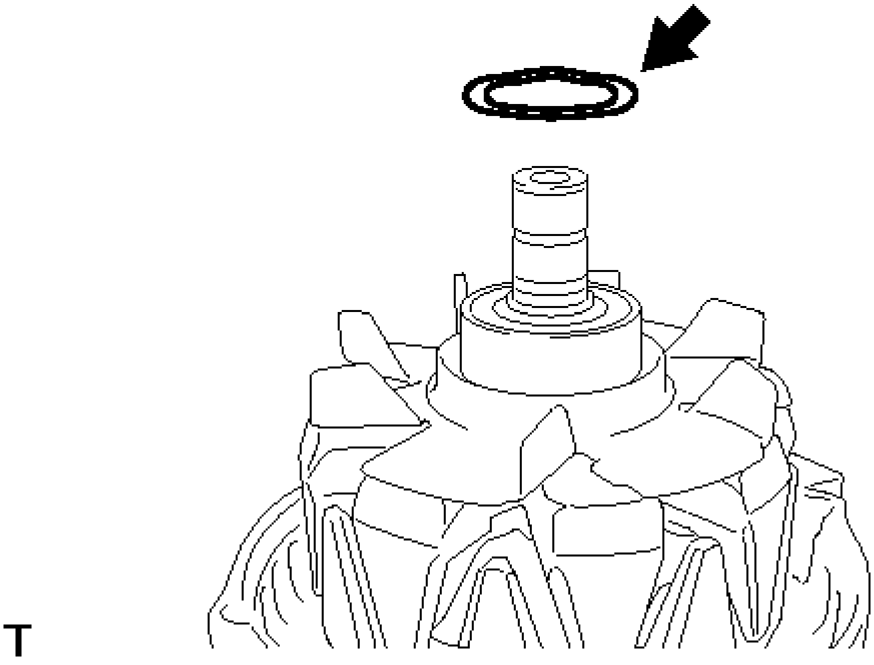

Fig. 13: Locating Generator Washer
Courtesy of TOYOTA MOTOR SALES, U.S.A., INC.

b. Remove the generator rotor assembly.

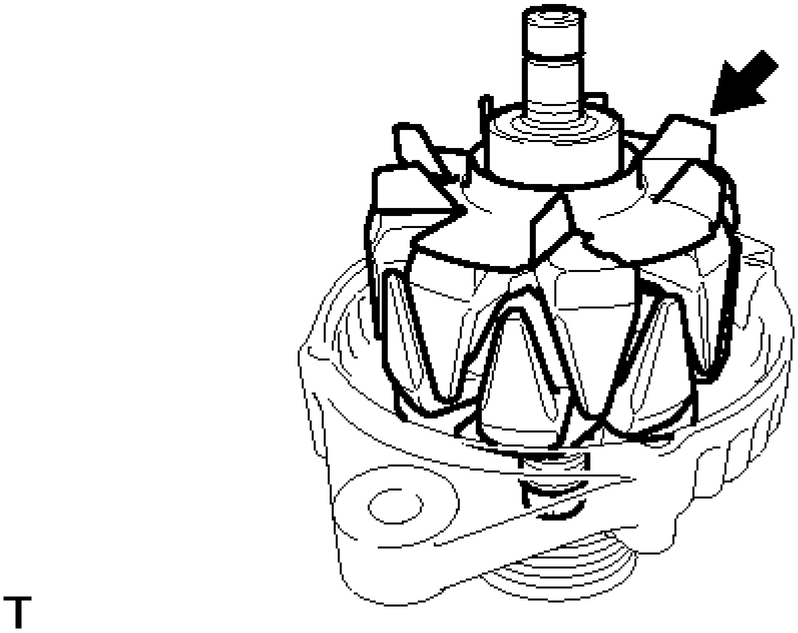

Fig. 14: Locating Generator Rotor Assembly
Courtesy of TOYOTA MOTOR SALES, U.S.A., INC.

7. **INSPECT GENERATOR DRIVE END FRAME BEARING** See step 2
8. **REMOVE GENERATOR DRIVE END FRAME BEARING**
    a. Remove the 4 screws and bearing retainer.

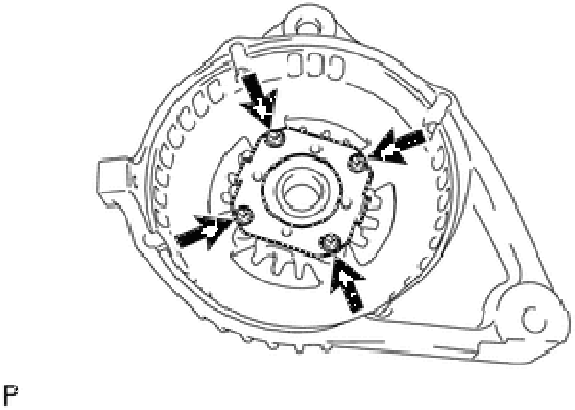

Fig. 15: Locating Bearing Retainer Screws
Courtesy of TOYOTA MOTOR SALES, U.S.A., INC.

b. Using SST and a hammer, tap out the bearing.

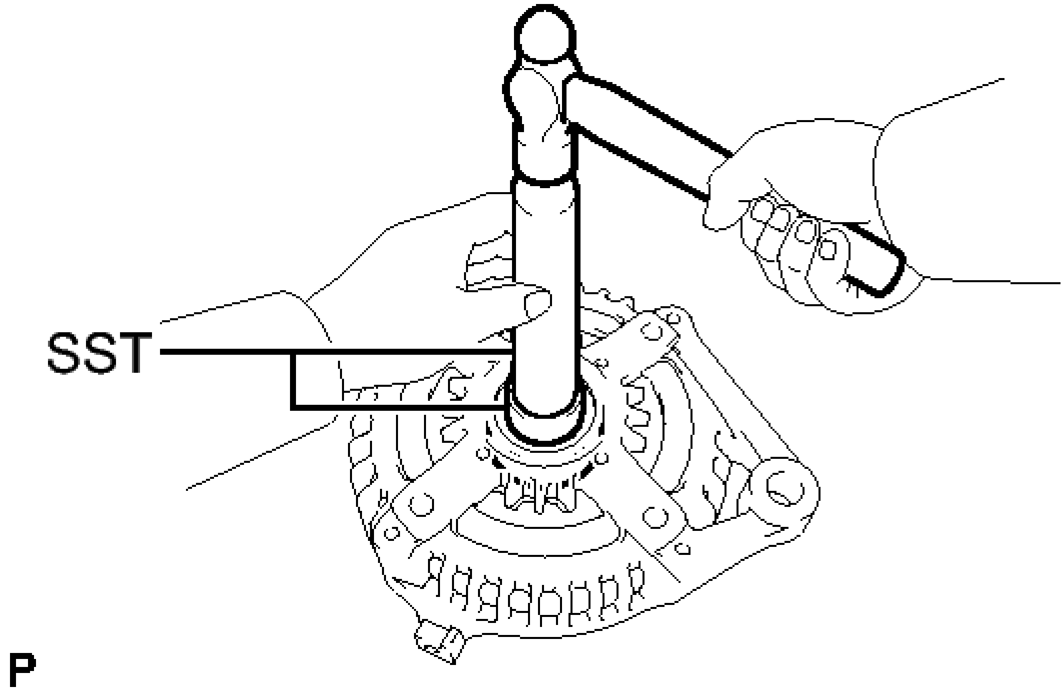

Fig. 16: Tapping Out Bearing
Courtesy of TOYOTA MOTOR SALES, U.S.A., INC.

- **SST: 09950-60010**
  09951-00250
- **SST: 09950-70010**
  09951-07100

INSPECTION

INSPECTION

1. **INSPECT GENERATOR PULLEY WITH CLUTCH**
   a. Hold the generator rotor using SST, and turn the generator pulley with clutch clockwise to check that the outer ring locks.
   - **SST: 09820-63021**

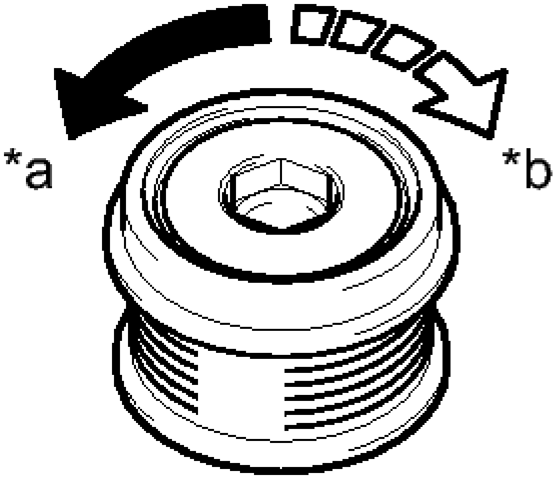

Fig. 17: Inspecting Generator Pulley
Courtesy of TOYOTA MOTOR SALES, U.S.A., INC.

TEXT IN ILLUSTRATION

*a	Free
*b	Lock

If the result is not as specified, replace the generator pulley with clutch.

2. **INSPECT GENERATOR DRIVE END FRAME BEARING**
   1. Check that the bearing is not rough or worn and that it rotates smoothly.

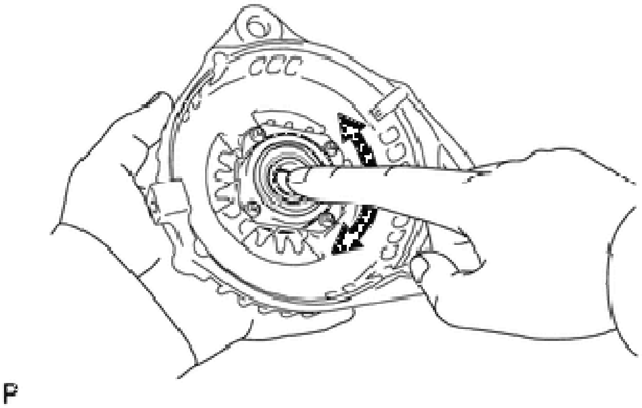

Fig. 18: Inspecting Generator Drive End Frame Bearing
Courtesy of TOYOTA MOTOR SALES, U.S.A., INC.

OK

The bearing rotates smoothly.

If the bearing does not rotate smoothly, replace the bearing.

3. **INSPECT GENERATOR BRUSH HOLDER ASSEMBLY**
    a. Using a vernier caliper, measure the brush length.

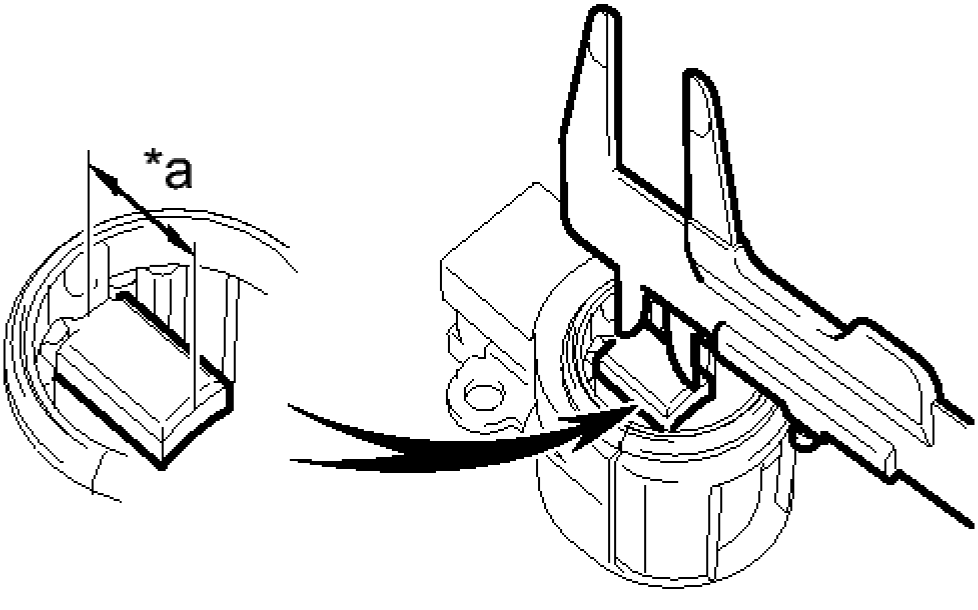

Fig. 19: Measuring Brush Length
Courtesy of TOYOTA MOTOR SALES, U.S.A., INC.

TEXT IN ILLUSTRATION

*a	Length

Standard length

9.5 to 11.5 mm (0.374 to 0.453 in.)

Minimum length

4.5 mm (0.177 in.)

If the brush length is less than the minimum, replace the generator brush holder assembly.

4. **INSPECT GENERATOR ROTOR ASSEMBLY**

a. Check that the generator rotor bearing is not rough or worn.

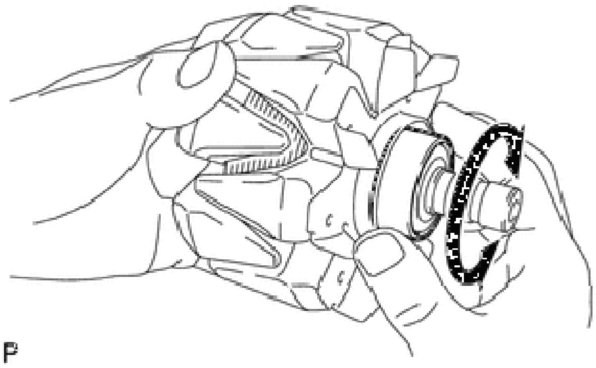

Fig. 20: Checking Bearing For Rough Or Worn And Rotates Smoothly
Courtesy of TOYOTA MOTOR SALES, U.S.A., INC.

If the result is not as specified, replace the generator rotor assembly.

b. Check the rotor for an open circuit.

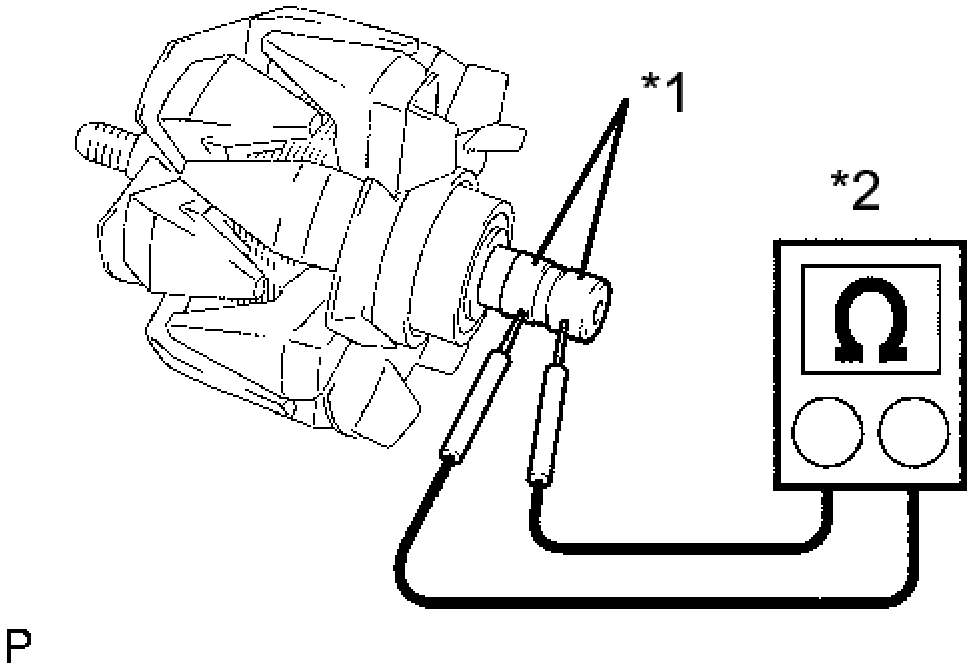

Fig. 21: Checking Rotor For An Open Circuit
Courtesy of TOYOTA MOTOR SALES, U.S.A., INC.

TEXT IN ILLUSTRATION

*1	Slip Ring
*2	Ohmmeter

1. Measure the resistance according to the value(s) in the table below.

   Standard Resistance

Tester Connection	Condition	Specified Condition
Slip ring - Slip ring	Approx. 20°C (68° F)	2.3 to 2.7 ohms

   If the result is not as specified, replace the generator rotor assembly.

c. Check if the rotor is grounded.

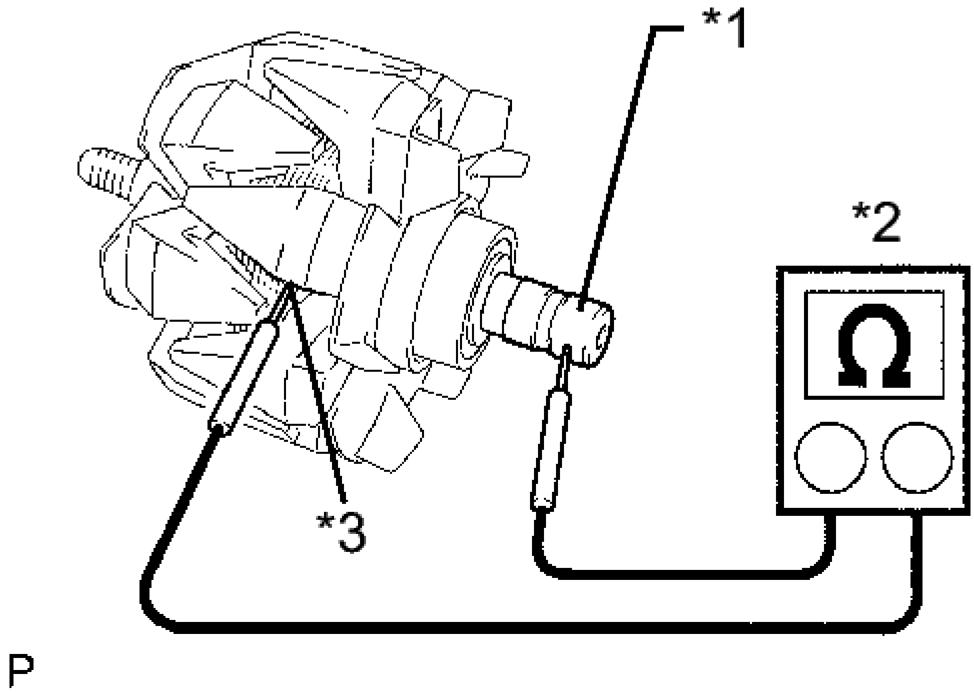

Fig. 22: Checking Rotor Grounded
Courtesy of TOYOTA MOTOR SALES, U.S.A., INC.

TEXT IN ILLUSTRATION

*1	Slip Ring
*2	Ohmmeter
*3	Rotor

1. Measure the resistance according to the value(s) in the table below.

   Standard Resistance

Tester Connection	Condition	Specified Condition
Slip ring - Rotor	Always	10 kohms or higher

If the result is not as specified, replace the generator rotor assembly.

d. Check the slip ring diameter.
    1. Using a vernier caliper, measure the diameter of each slip ring.

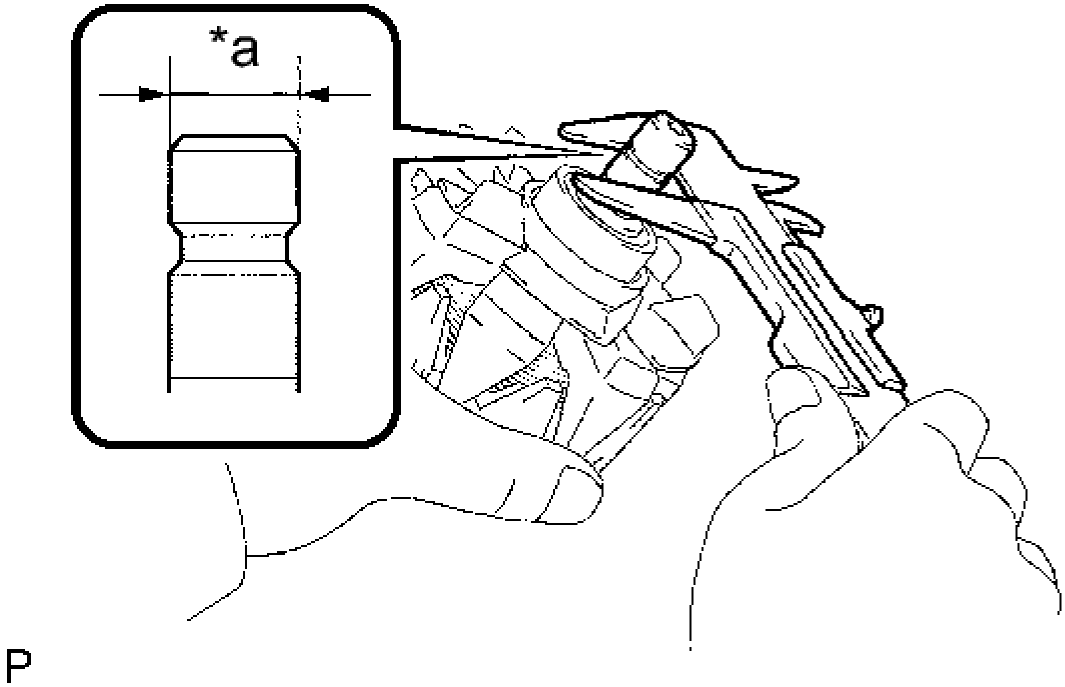

Fig. 23: Measuring Slip Ring Diameter
Courtesy of TOYOTA MOTOR SALES, U.S.A., INC.

TEXT IN ILLUSTRATION

*a	Diameter

Standard diameter

14.2 to 14.4 mm (0.559 to 0.567 in.)

Minimum diameter

14 mm (0.551 in.)

If the diameter is less than the minimum, replace the generator rotor assembly.

REASSEMBLY

REASSEMBLY

1. **INSTALL GENERATOR DRIVE END FRAME BEARING**
   a. Using SST and a press, press in a new bearing.

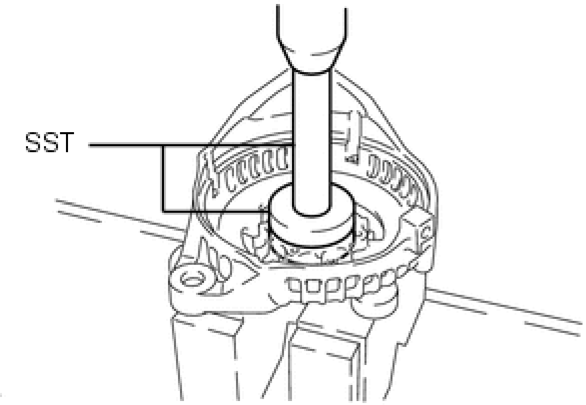

Fig. 24: Installing Bearing Using SST
Courtesy of TOYOTA MOTOR SALES, U.S.A., INC.

- **SST: 09950-60010**
  09951-00520
- **SST: 09950-70010**
  09951-07100

   b. Fit the tabs on the bearing retainer into the cutouts on the drive end frame to install the bearing retainer.

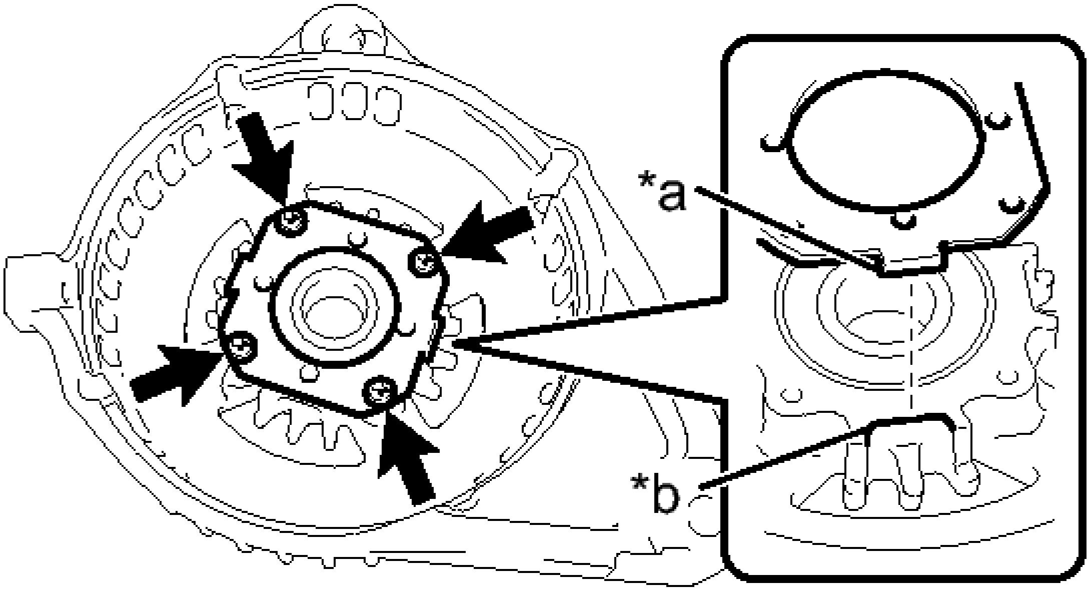

Fig. 25: Identifying Drive End Frame Screws
Courtesy of TOYOTA MOTOR SALES, U.S.A., INC.

TEXT IN ILLUSTRATION

*a	Tab
*b	Cutout

c. Install the 4 screws.

   Torque: 2.3 N*m (23 kgf*cm, 20 in.*lbf)

2. **INSTALL GENERATOR ROTOR ASSEMBLY**
   a. Place the generator drive end frame on the generator pulley.

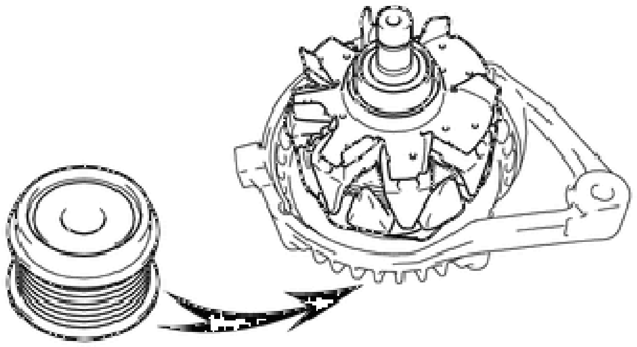

Fig. 26: Installing Generator Rotor To Generator Drive End Frame
Courtesy of TOYOTA MOTOR SALES, U.S.A., INC.

   b. Install the generator rotor to the generator drive end frame.
   c. Place a new generator washer on the generator rotor.

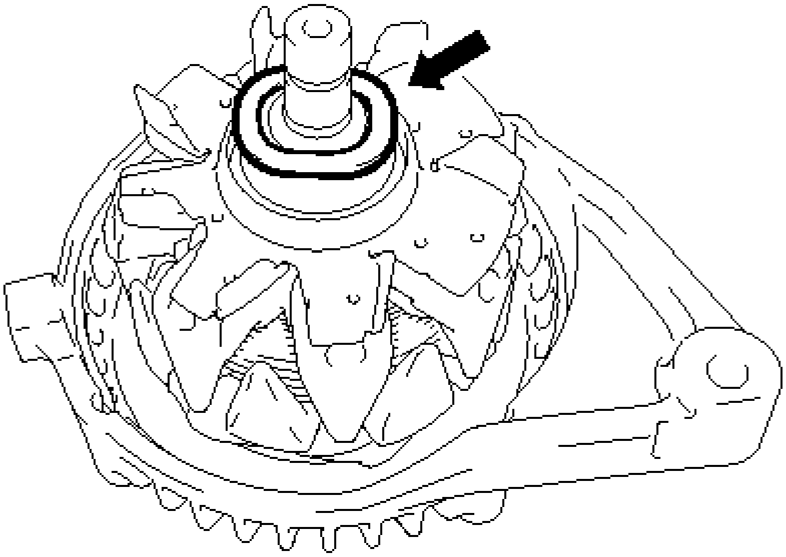

Fig. 27: Locating Washer On Generator Rotor
Courtesy of TOYOTA MOTOR SALES, U.S.A., INC.

3. **INSTALL GENERATOR COIL ASSEMBLY**
   a. Using a 21 mm socket wrench and a press, slowly press in the generator coil.

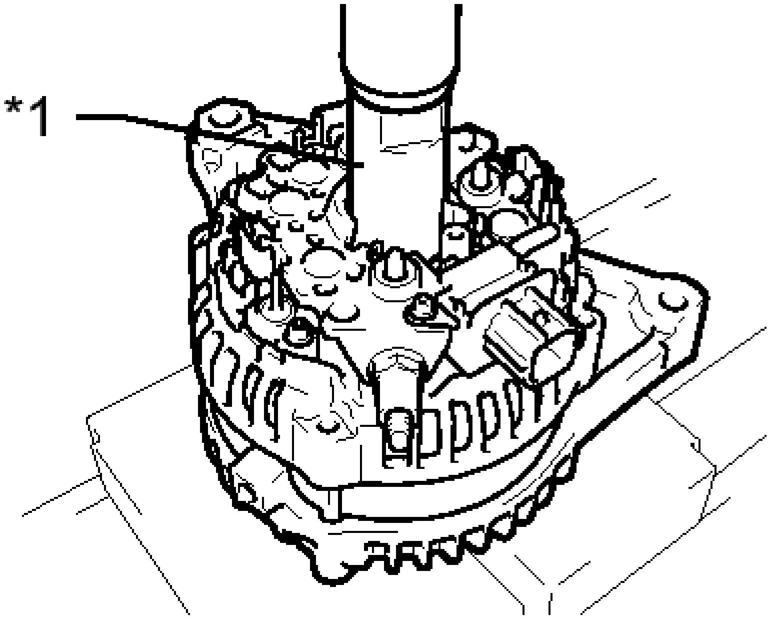

Fig. 28: Identifying Generator Coil Assembly

Courtesy of TOYOTA MOTOR SALES, U.S.A., INC.

TEXT IN ILLUSTRATION

*1	Deep Socket Wrench (21 mm)

b. Install the 4 bolts.

Torque: 5.9 N*m (60 kgf*cm, 52 in.*lbf)

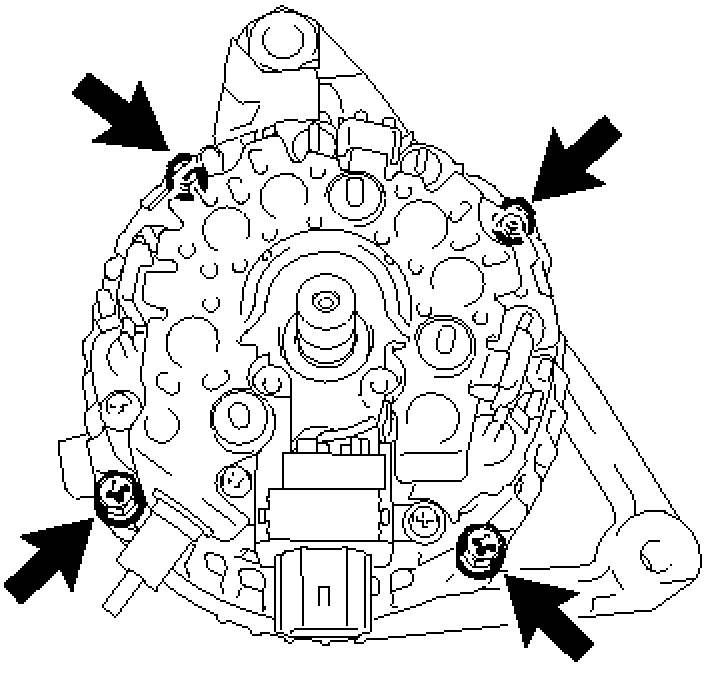

Fig. 29: Locating Generator Coil Assembly Bolts
Courtesy of TOYOTA MOTOR SALES, U.S.A., INC.

4. **INSTALL GENERATOR BRUSH HOLDER ASSEMBLY**
    a. While pushing the 2 brushes into the generator brush holder, insert a 1.0 mm (0.0394 in.) pin into the generator brush holder.

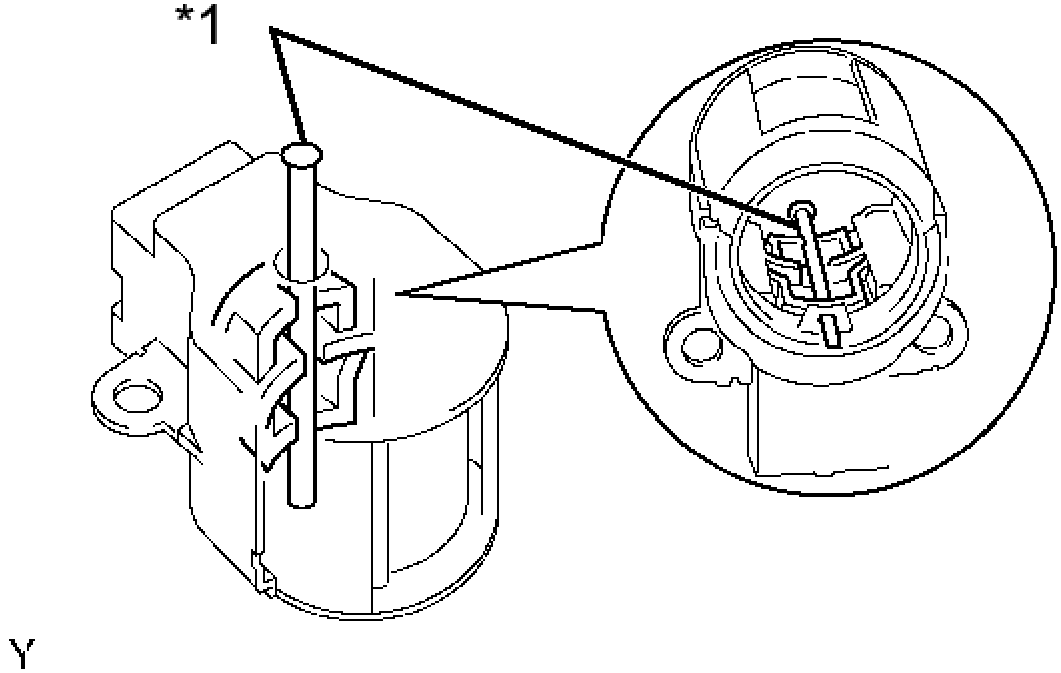

Fig. 30: Identifying Generator Brush Holder Assembly
Courtesy of TOYOTA MOTOR SALES, U.S.A., INC.

TEXT IN ILLUSTRATION

*1	Pin

b. Install the generator brush holder with the 2 screws.

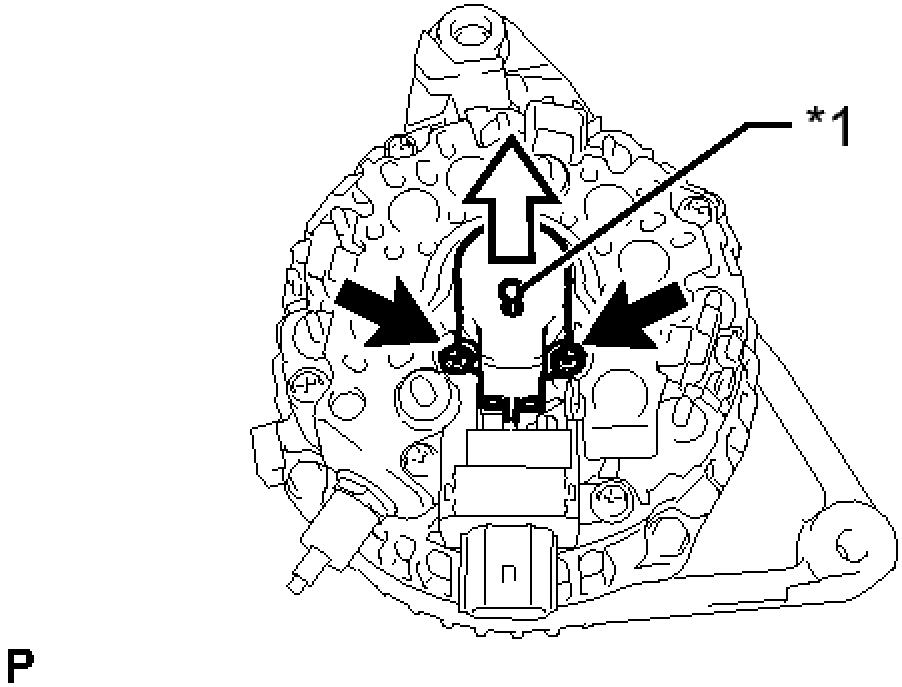

Fig. 31: Locating Generator Brush Holder Screws
Courtesy of TOYOTA MOTOR SALES, U.S.A., INC.

TEXT IN ILLUSTRATION

*1	Pin

Torque: 1.8 N*m (18 kgf*cm, 16 in.*lbf)

c. Pull the pin out of the generator brush holder.

5. **INSTALL GENERATOR REAR END COVER**
    a. Install the terminal insulator onto the generator coil assembly.

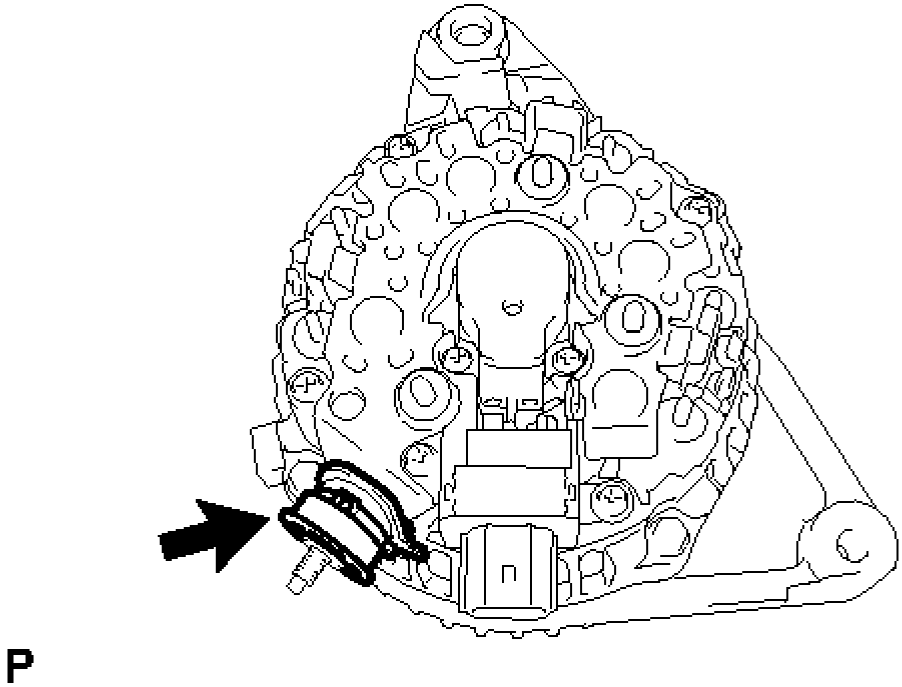

Fig. 32: Locating Terminal Insulator
Courtesy of TOYOTA MOTOR SALES, U.S.A., INC.

b. Install the generator rear end cover with the 3 nuts.

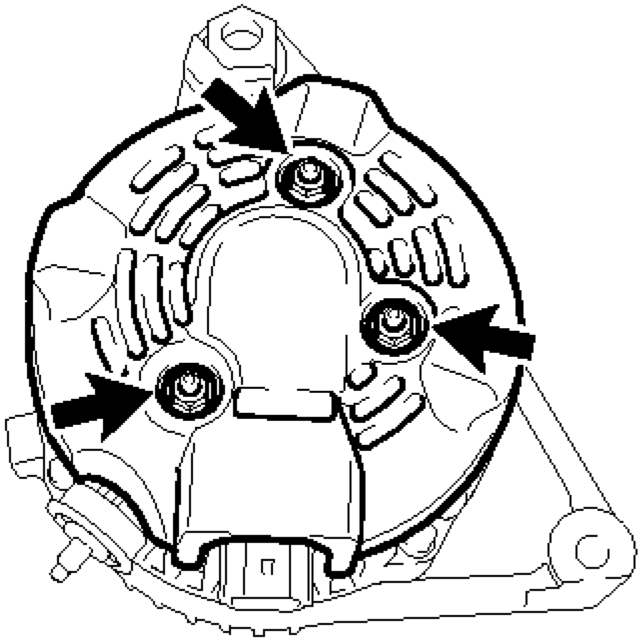

Fig. 33: Locating Generator Rear End Cover Nuts
Courtesy of TOYOTA MOTOR SALES, U.S.A., INC.

Torque: 4.6 N*m (47 kgf*cm, 41 in.*lbf)

6. **INSTALL GENERATOR PULLEY WITH CLUTCH**
    a. Temporarily install the generator pulley by hand.
    b. Mount the generator in a vise.
    c. Install SST (A) and (B) to the generator pulley as shown in the illustration.

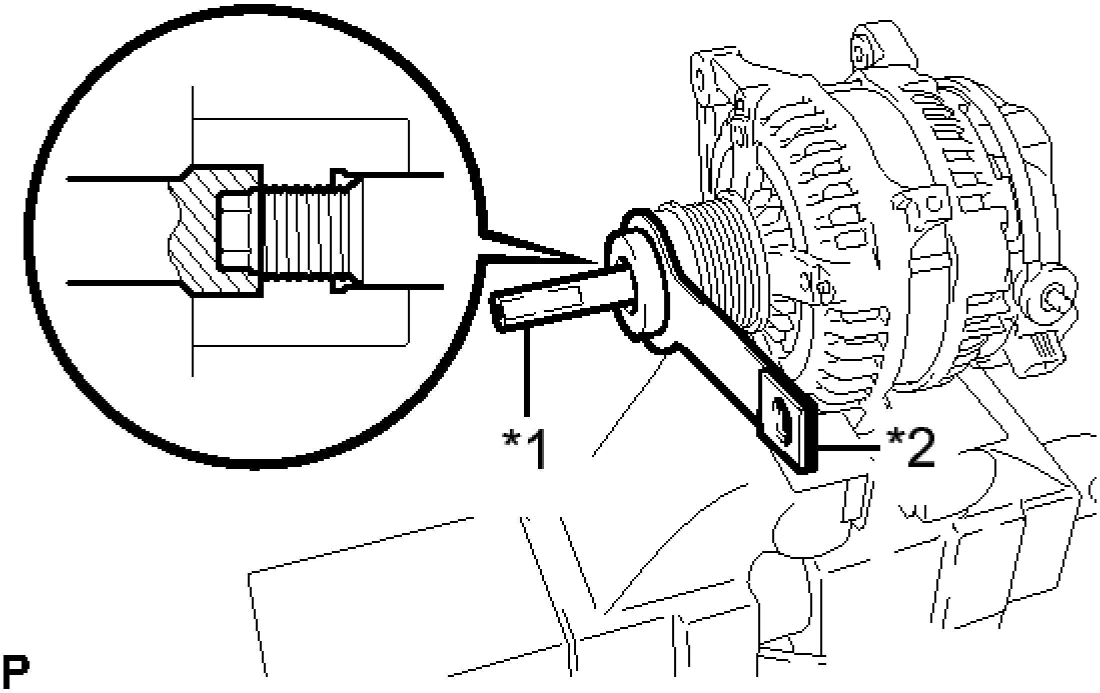

Fig. 34: Installing SST To Generator Pulley
Courtesy of TOYOTA MOTOR SALES, U.S.A., INC.

TEXT IN ILLUSTRATION

*1	SST (A)
*2	SST (B)

- **SST: 09820-63021**

d. Using a wrench to hold SST (A), turn SST (B) clockwise to tighten the generator pulley.

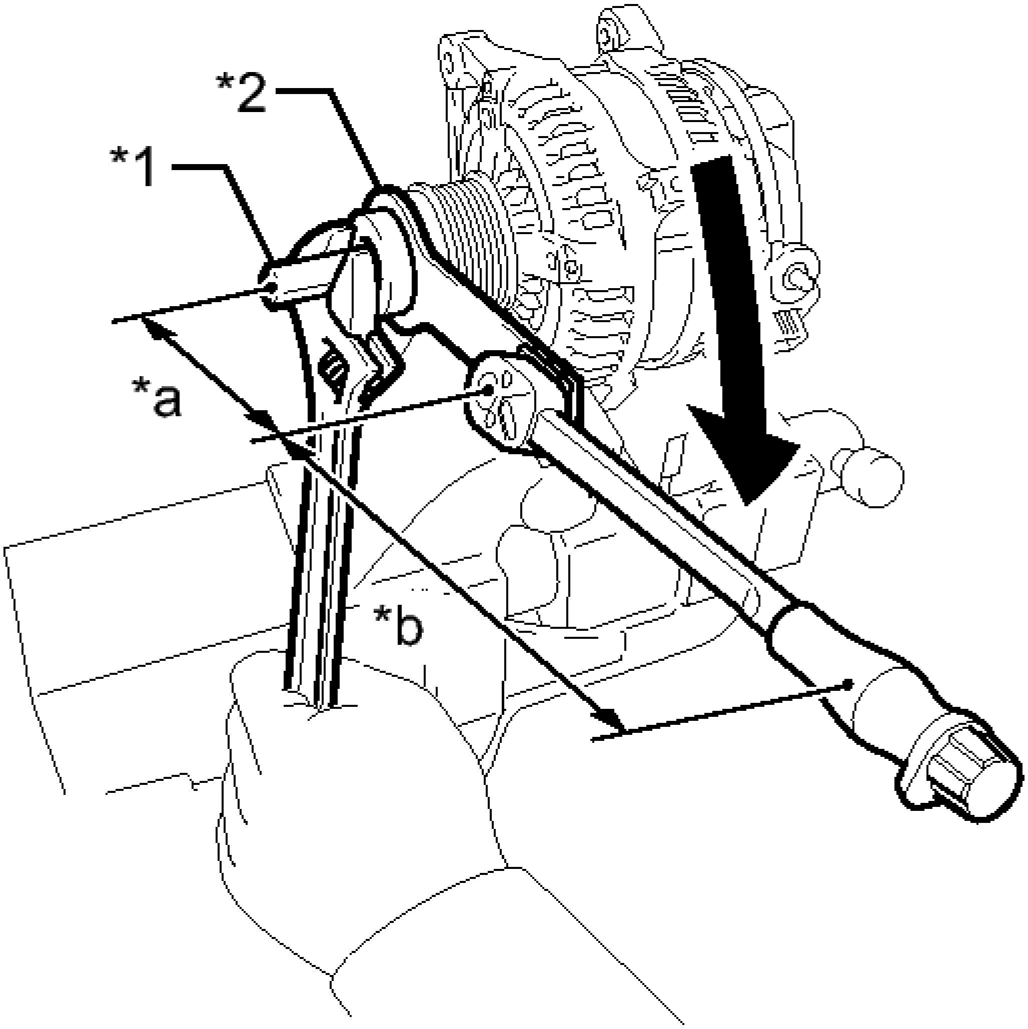

Fig. 35: Tightening Generator Pulley Using SST
Courtesy of TOYOTA MOTOR SALES, U.S.A., INC.

TEXT IN ILLUSTRATION

*1	SST (A)
*2	SST (B)
*a	Fulcrum Length 100 mm (3.94 in.)
*b	Fulcrum Length 255 mm (10.04 in.)

without SST

Torque: 80 N*m (816 kgf*cm, 59 ft.*lbf)

with SST

Torque: 57 N*m (581 kgf*cm, 42 ft.*lbf)

NOTE:

- **The "with SST" torque value is effective when using SST with a fulcrum length of 100 mm (3.94 in.) and a torque wrench with a fulcrum length of 255 mm (10.04 in.). Refer to PRECAUTION .**
- **The "with SST" torque value is effective when SST is parallel to the torque wrench**
- **Check that the drive end frame is secured in the vise tightly.**
- **Hold SST (A) tightly during the operation.**

e. Check that the generator pulley rotates smoothly.

7. **INSTALL GENERATOR PULLEY CAP**

a. Install a new generator pulley cap to the pulley.

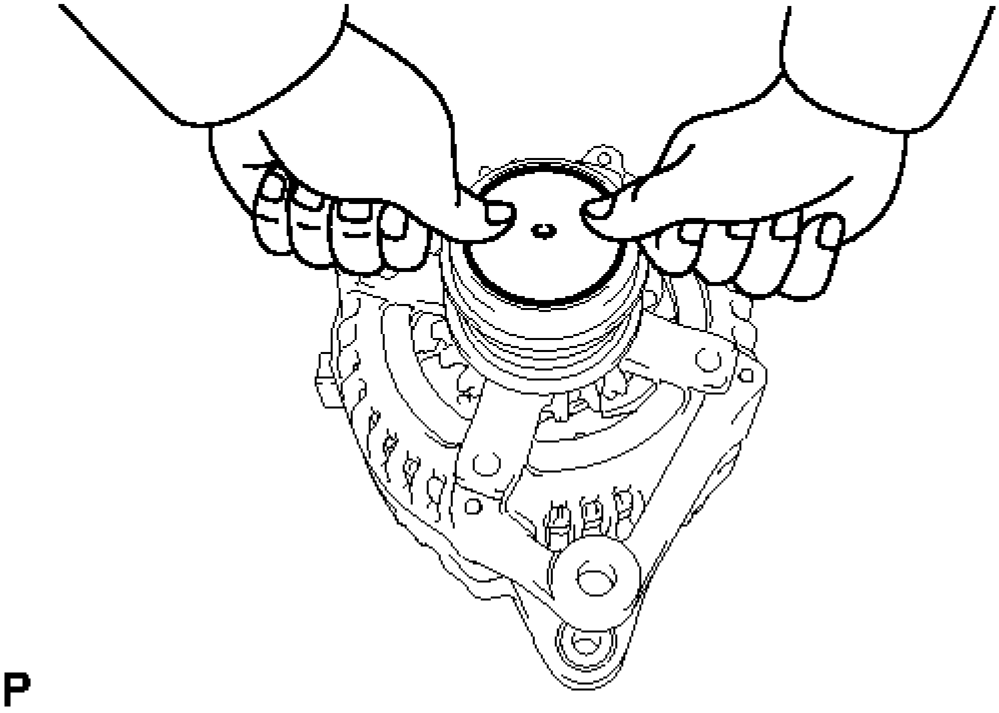

Fig. 36: Installing Generator Pulley Cap To Pulley
Courtesy of TOYOTA MOTOR SALES, U.S.A., INC.

INSTALLATION

INSTALLATION

1. **INSTALL GENERATOR ASSEMBLY**
   1. Install the generator with the 2 bolts.

      Torque: 52 N*m (530 kgf*cm, 38 ft.*lbf)

   2. Install the wire harness clamp bracket with the bolt.

      Torque: 8.0 N*m (82 kgf*cm, 71 in.*lbf)

   3. Connect the generator wire with the nut.

      Torque: 9.8 N*m (100 kgf*cm, 87 in.*lbf)

   4. Install the terminal cap.
   5. Connect the generator connector.
2. **INSTALL V-RIBBED BELT**

   Refer to **INSTALLATION** .

3. **CONNECT CABLE TO NEGATIVE BATTERY TERMINAL**

   NOTE: When disconnecting the cable, some systems need to be initialized after the cable is reconnected. Refer to INITIALIZATION .

2012-2017 ELECTRICAL

Charging System (Service Information) - Camry (2GR-FE)

GENERATOR

COMPONENTS

ILLUSTRATION

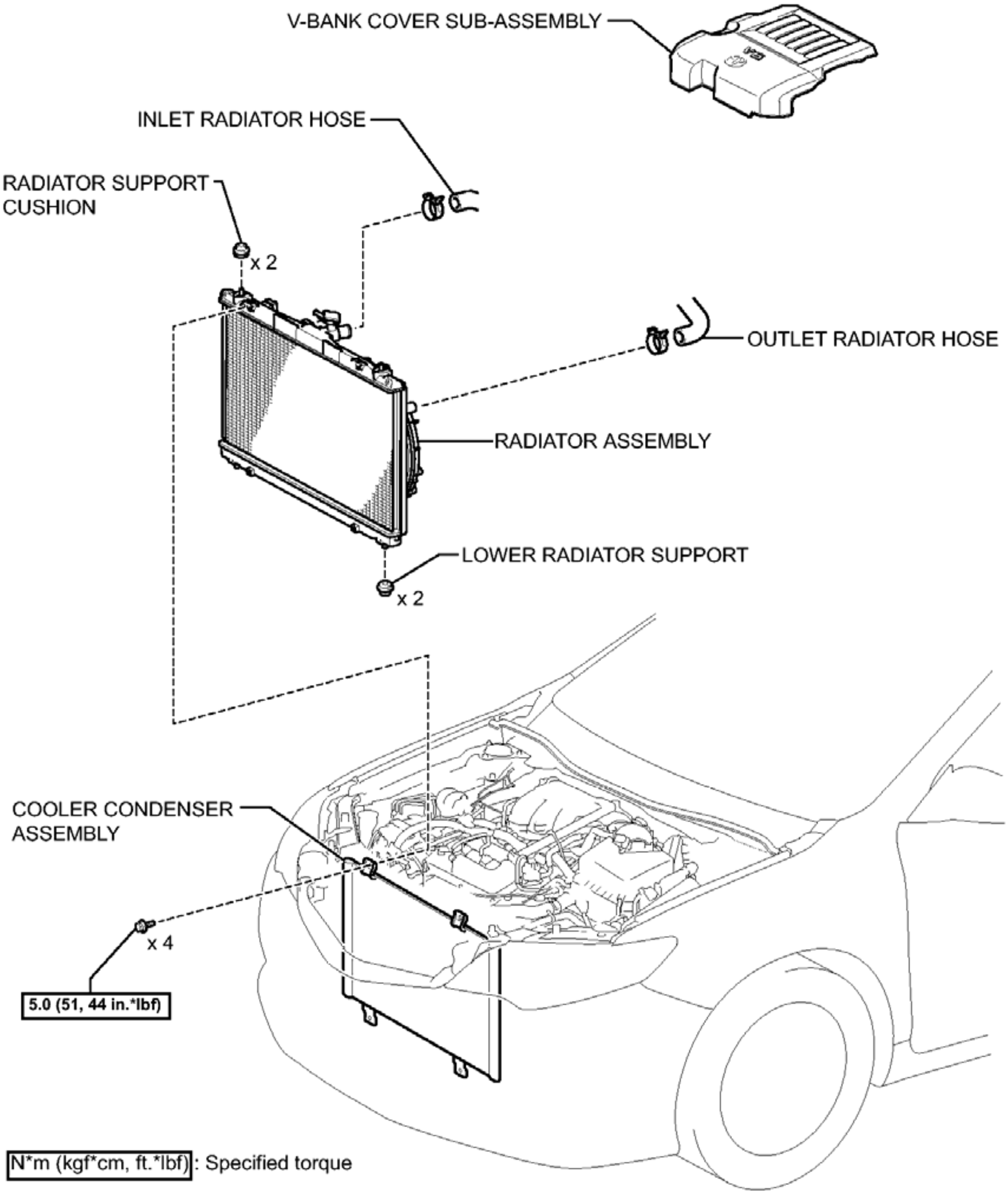
V-BANK COVER SUB-ASSEMBLY
INLET RADIATOR HOSE
RADIATOR SUPPORT CUSHION
x 2
OUTLET RADIATOR HOSE
RADIATOR ASSEMBLY
LOWER RADIATOR SUPPORT
x 2
COOLER CONDENSER ASSEMBLY
x 4
5.0 (51, 44 in.*lbf)
N*m (kgf*cm, ft.*lbf): Specified torque

Fig. 1: Identifying Generator Replacement Components With Torque Specifications (1 Of 3)
Courtesy of TOYOTA MOTOR SALES, U.S.A., INC.

ILLUSTRATION

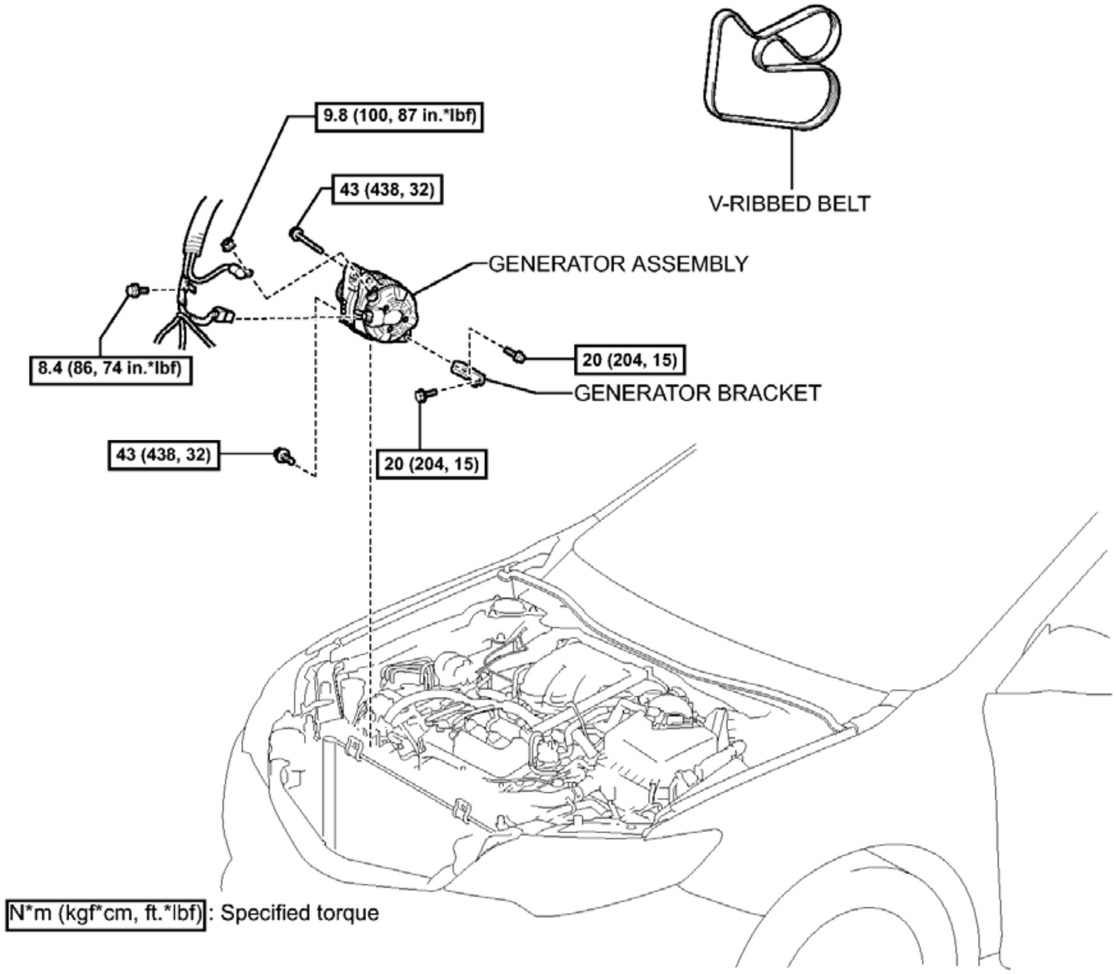
V-RIBBED BELT
9.8 (100, 87 in.*lbf)
43 (438, 32)
GENERATOR ASSEMBLY
8.4 (86, 74 in.*lbf)
20 (204, 15)
GENERATOR BRACKET
43 (438, 32)
20 (204, 15)
N*m (kgf*cm, ft.*lbf): Specified torque

Fig. 2: Identifying Generator Replacement Components With Torque Specifications (2 Of 3)
Courtesy of TOYOTA MOTOR SALES, U.S.A., INC.

ILLUSTRATION

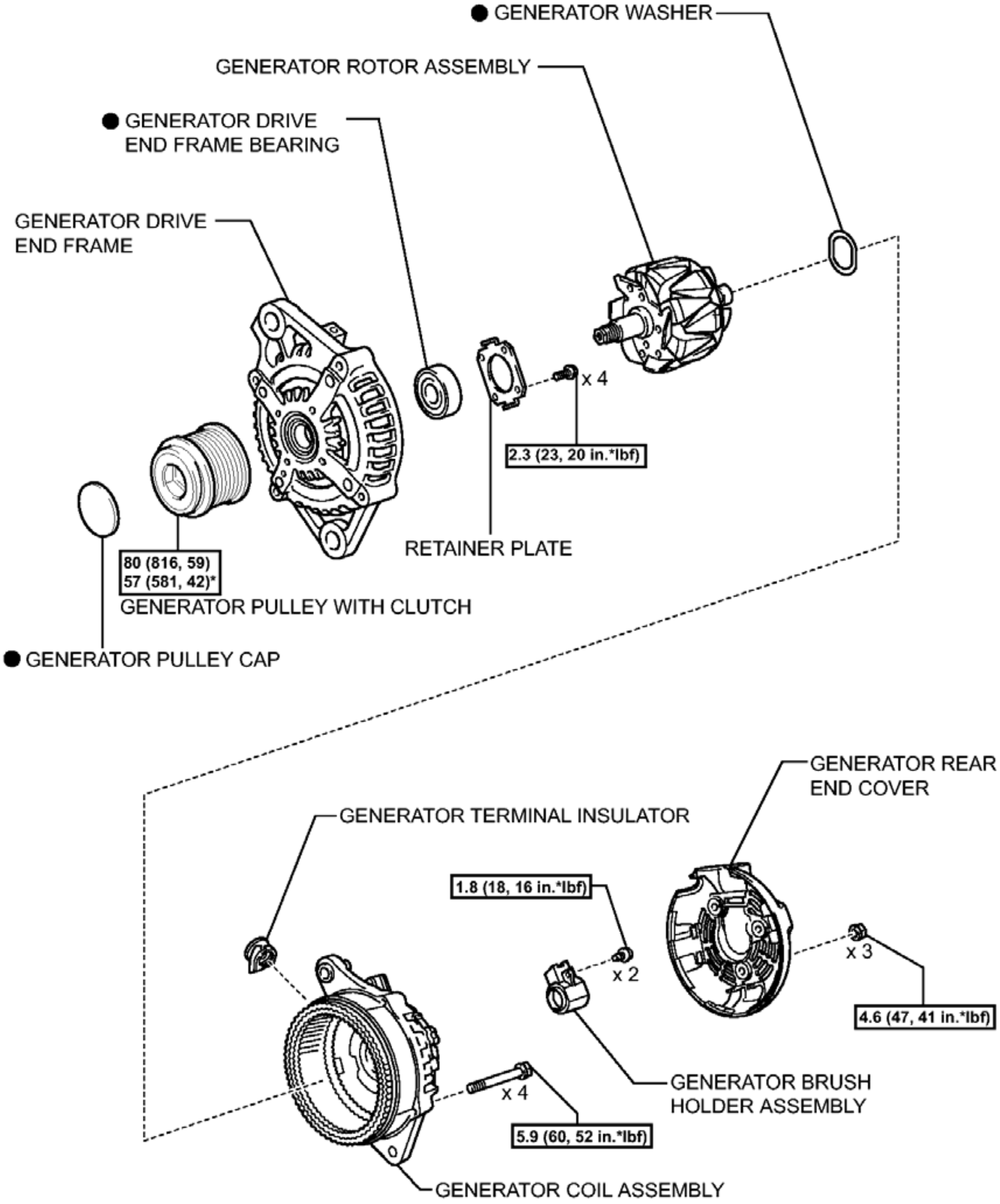
● GENERATOR WASHER
GENERATOR ROTOR ASSEMBLY
● GENERATOR DRIVE END FRAME BEARING
GENERATOR DRIVE END FRAME
x 4
2.3 (23, 20 in.*lbf)
RETAINER PLATE
80 (816, 59)
57 (581, 42)*
GENERATOR PULLEY WITH CLUTCH
● GENERATOR PULLEY CAP
GENERATOR REAR END COVER
GENERATOR TERMINAL INSULATOR
1.8 (18, 16 in.*lbf)
x 2
x 3
4.6 (47, 41 in.*lbf)
GENERATOR BRUSH HOLDER ASSEMBLY
x 4
5.9 (60, 52 in.*lbf)
GENERATOR COIL ASSEMBLY

N*m (kgf*cm, ft.*lbf): Specified torque

* For use with SST

● Non-reusable part

Fig. 3: Identifying Generator Replacement Components With Torque Specifications (3 Of 3)
Courtesy of TOYOTA MOTOR SALES, U.S.A., INC.

REMOVAL

REMOVAL

1. **PRECAUTION**

   NOTE: **After turning the engine switch off, waiting time may be required before disconnecting the cable from the negative (-) battery terminal. Therefore, make sure to read the disconnecting the cable from the negative (-) battery terminal notices before proceeding with work. Refer to PRECAUTION .**

2. **DISCONNECT CABLE FROM NEGATIVE BATTERY TERMINAL**

   NOTE: **When disconnecting the cable, some systems need to be initialized after the cable is reconnected. Refer to INITIALIZATION .**

3. **REMOVE V-BANK COVER SUB-ASSEMBLY** . Refer to **REMOVAL - Step 17**
4. **REMOVE RADIATOR ASSEMBLY**

   Refer to **REMOVAL** .

5. **REMOVE V-RIBBED BELT**

   Refer to **REMOVAL** .

6. **REMOVE GENERATOR ASSEMBLY**
   1. Remove the terminal cap.

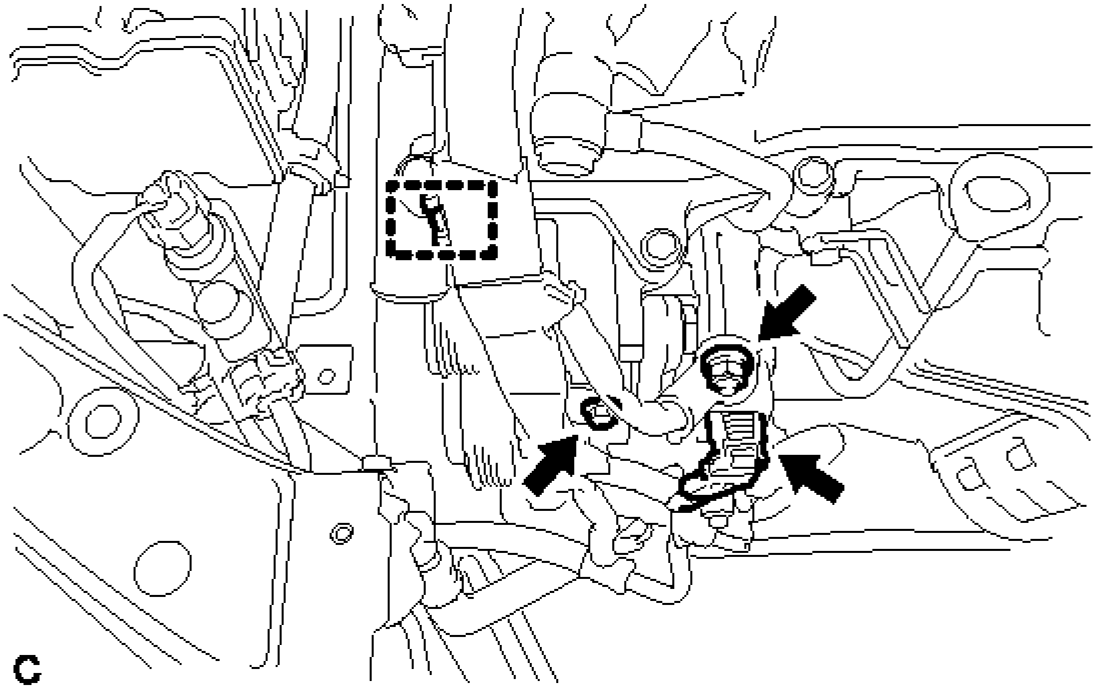

Fig. 4: Identifying Terminal Cap
Courtesy of TOYOTA MOTOR SALES, U.S.A., INC.

b. Remove the nut and disconnect the wire harness from terminal B.
c. Disconnect the generator connector from the generator assembly.
d. Remove the bolt and disconnect the wire harness clamp.
e. Remove the 2 bolts.

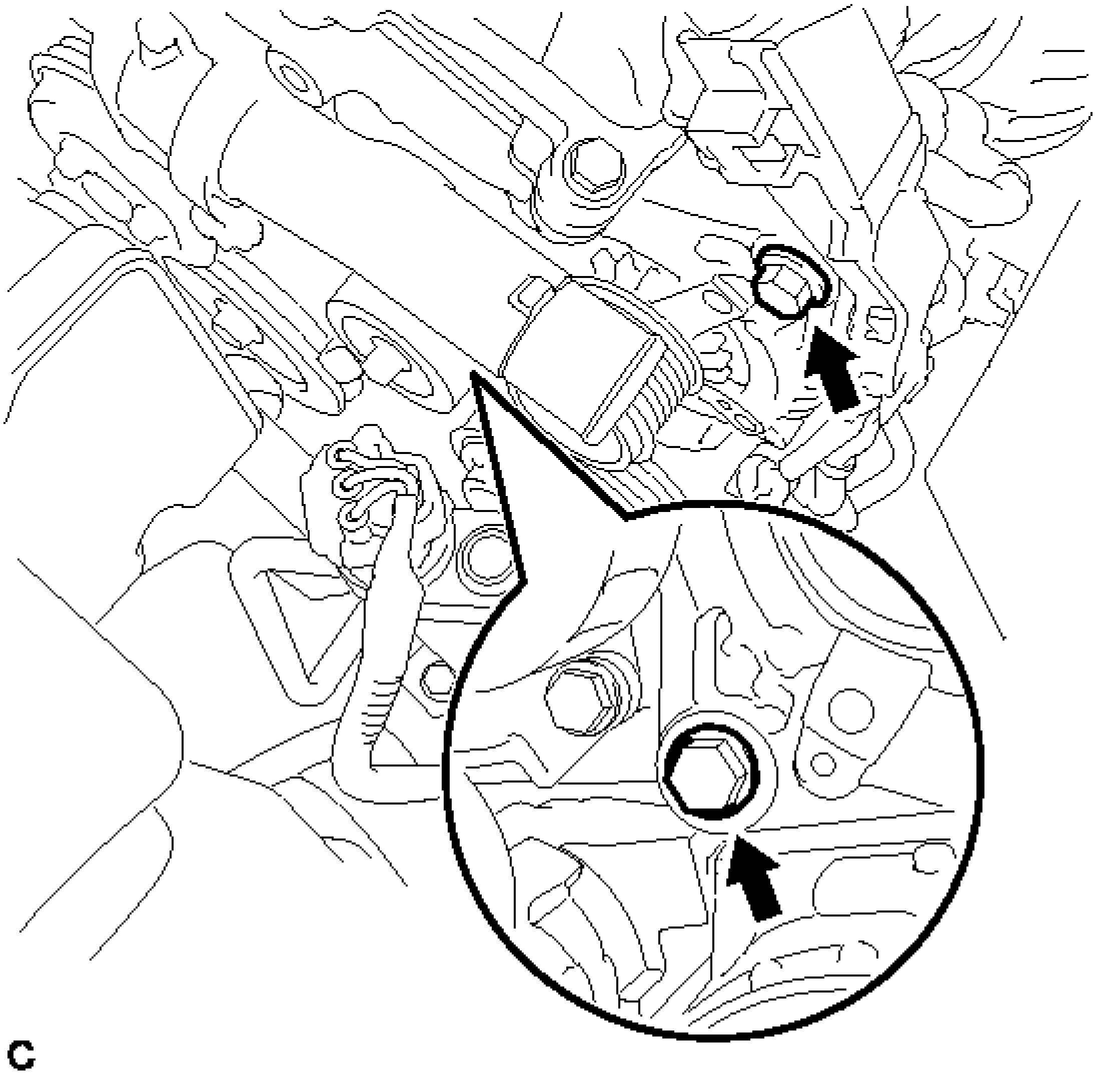

Fig. 5: Identifying Bolts
Courtesy of TOYOTA MOTOR SALES, U.S.A., INC.

f. Remove the 2 bolts and generator assembly.

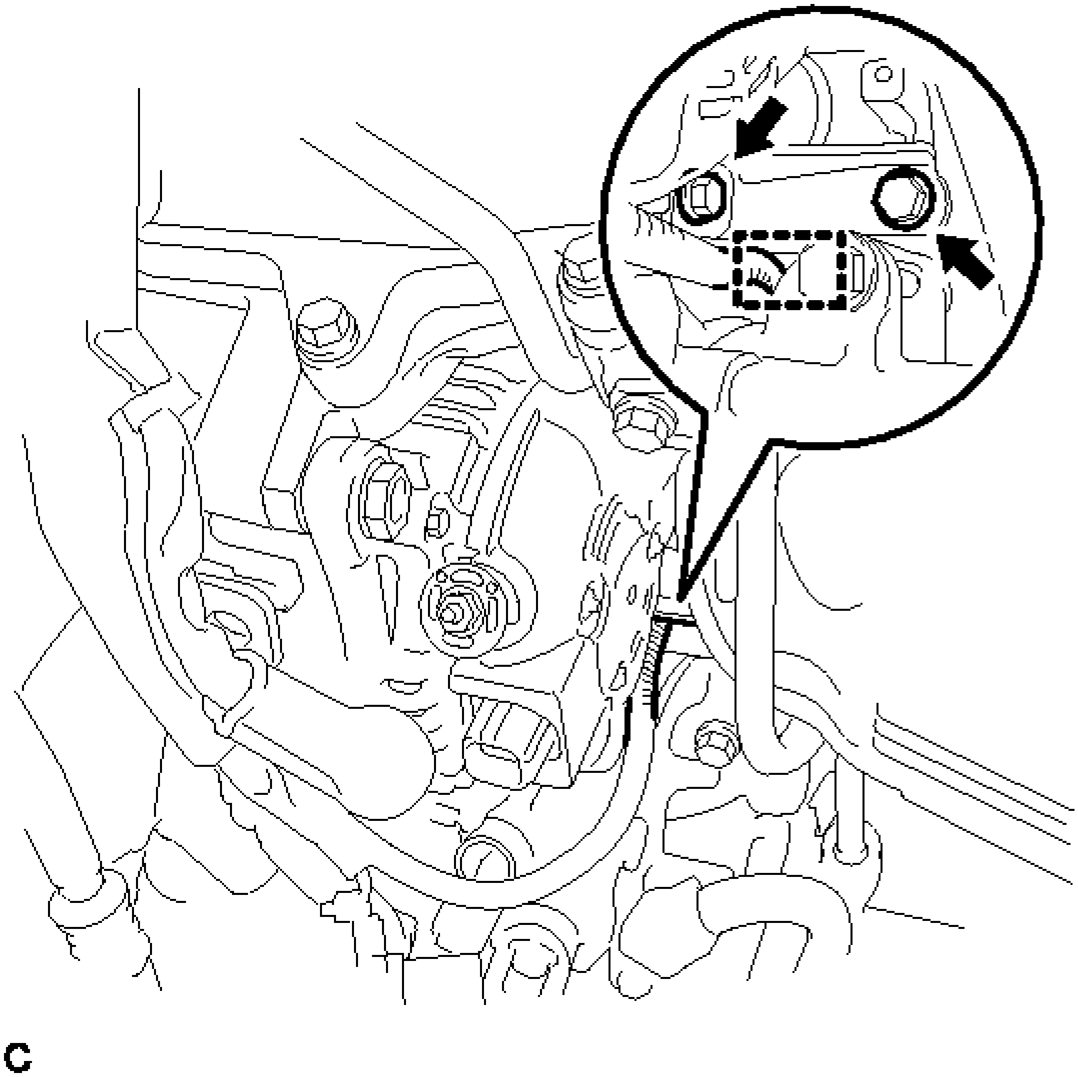

Fig. 6: Identifying Generator Bolts
Courtesy of TOYOTA MOTOR SALES, U.S.A., INC.

g. Disconnect the wire harness clamp and remove the generator bracket.

DISASSEMBLY

DISASSEMBLY

1. **REMOVE GENERATOR REAR END COVER**
    a. Remove the 3 nuts and generator rear end cover.

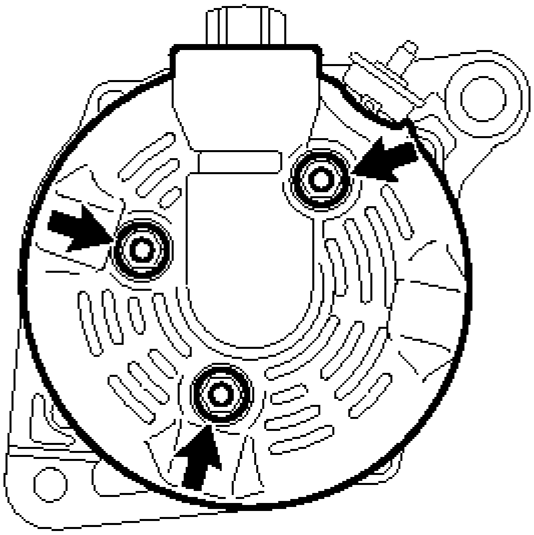

Fig. 7: Locating Generator Rear End Cover Nuts
Courtesy of TOYOTA MOTOR SALES, U.S.A., INC.

2. **REMOVE GENERATOR TERMINAL INSULATOR**
    a. Remove the generator terminal insulator from the generator coil.

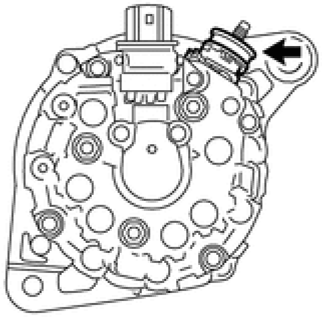

Fig. 8: Locating Terminal Insulator
Courtesy of TOYOTA MOTOR SALES, U.S.A., INC.

3. **REMOVE GENERATOR BRUSH HOLDER ASSEMBLY**
    a. Remove the 2 screws and brush holder from the generator coil.

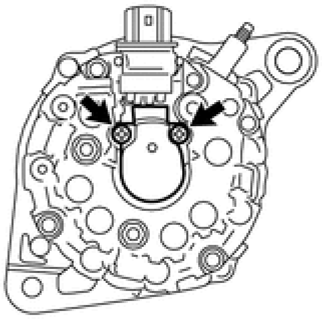

T

Fig. 9: Locating Generator Brush Holder Assembly Screws
Courtesy of TOYOTA MOTOR SALES, U.S.A., INC.

4. **REMOVE GENERATOR COIL ASSEMBLY**
    a. Remove the 4 bolts.

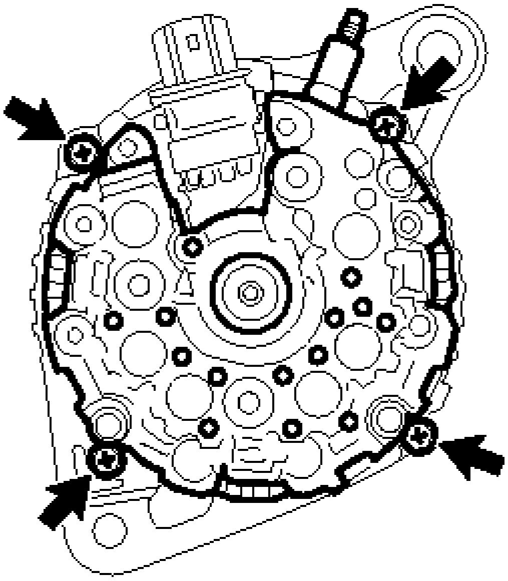

T

Fig. 10: Locating Generator Coil Assembly Bolts
Courtesy of TOYOTA MOTOR SALES, U.S.A., INC.

b. Using SST, remove the generator coil assembly.

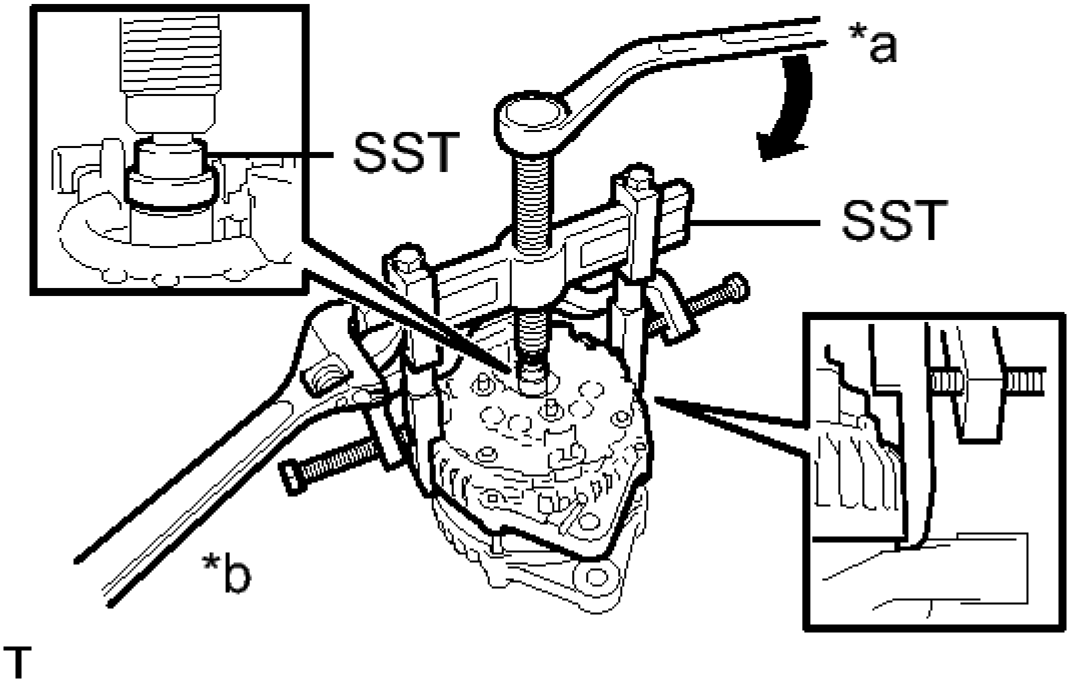

Fig. 11: Identifying Generator Coil Assembly And SST
Courtesy of TOYOTA MOTOR SALES, U.S.A., INC.

TEXT IN ILLUSTRATION

*a	Turn
*b	Hold

- **SST: 09950-40011**
  09951-04020
  09952-04010
  09953-04020
  09954-04010
  09955-04071
  09957-04010
  09958-04011

c. Remove the generator washer.

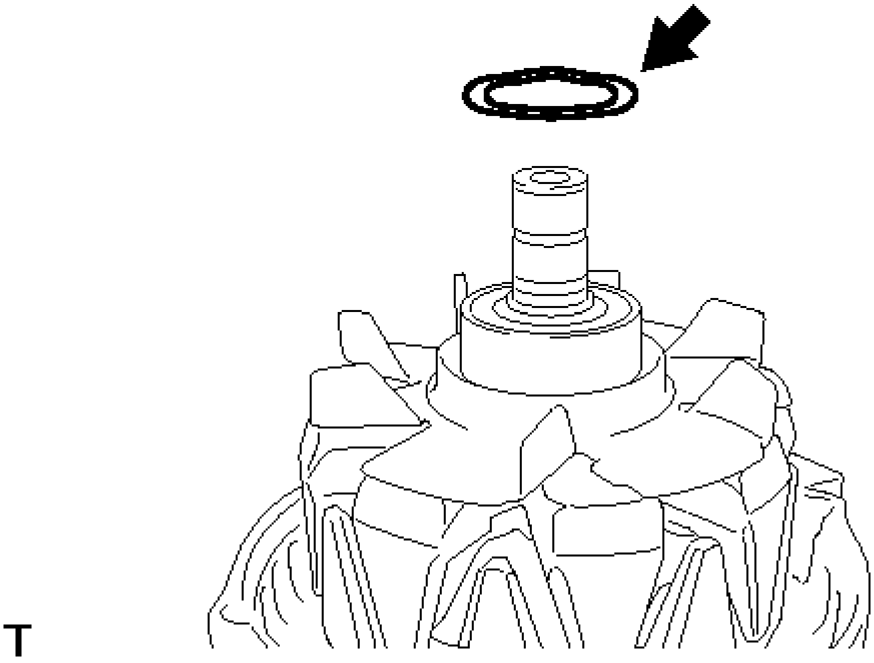

Fig. 12: Locating Generator Washer
Courtesy of TOYOTA MOTOR SALES, U.S.A., INC.

5. **REMOVE GENERATOR PULLEY WITH CLUTCH**
   a. Using a screwdriver, remove the generator pulley cap.

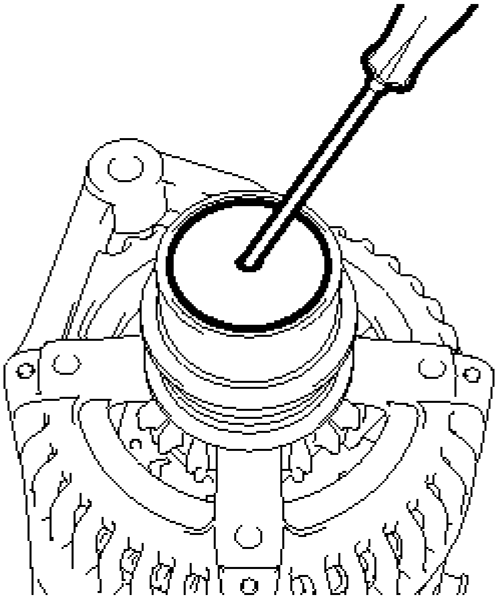

Fig. 13: Removing Pulley Cap

Courtesy of TOYOTA MOTOR SALES, U.S.A., INC.

NOTE: **Do not reuse the generator pulley cap.**

b. Mount the generator drive end frame in a vise tightly.
c. Confirm SST (A) and (B) shown in the illustration.

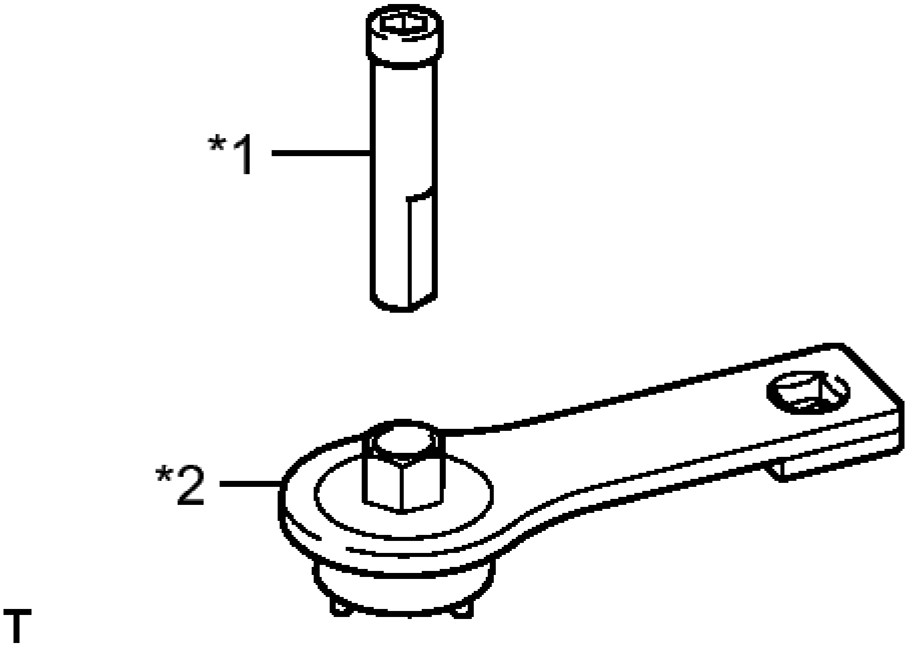

Fig. 14: Identifying SST
Courtesy of TOYOTA MOTOR SALES, U.S.A., INC.

TEXT IN ILLUSTRATION

*1	SST (A)
*2	SST (B)

- **SST: 09820-63021**

d. Place the rotor shaft end into SST (A).

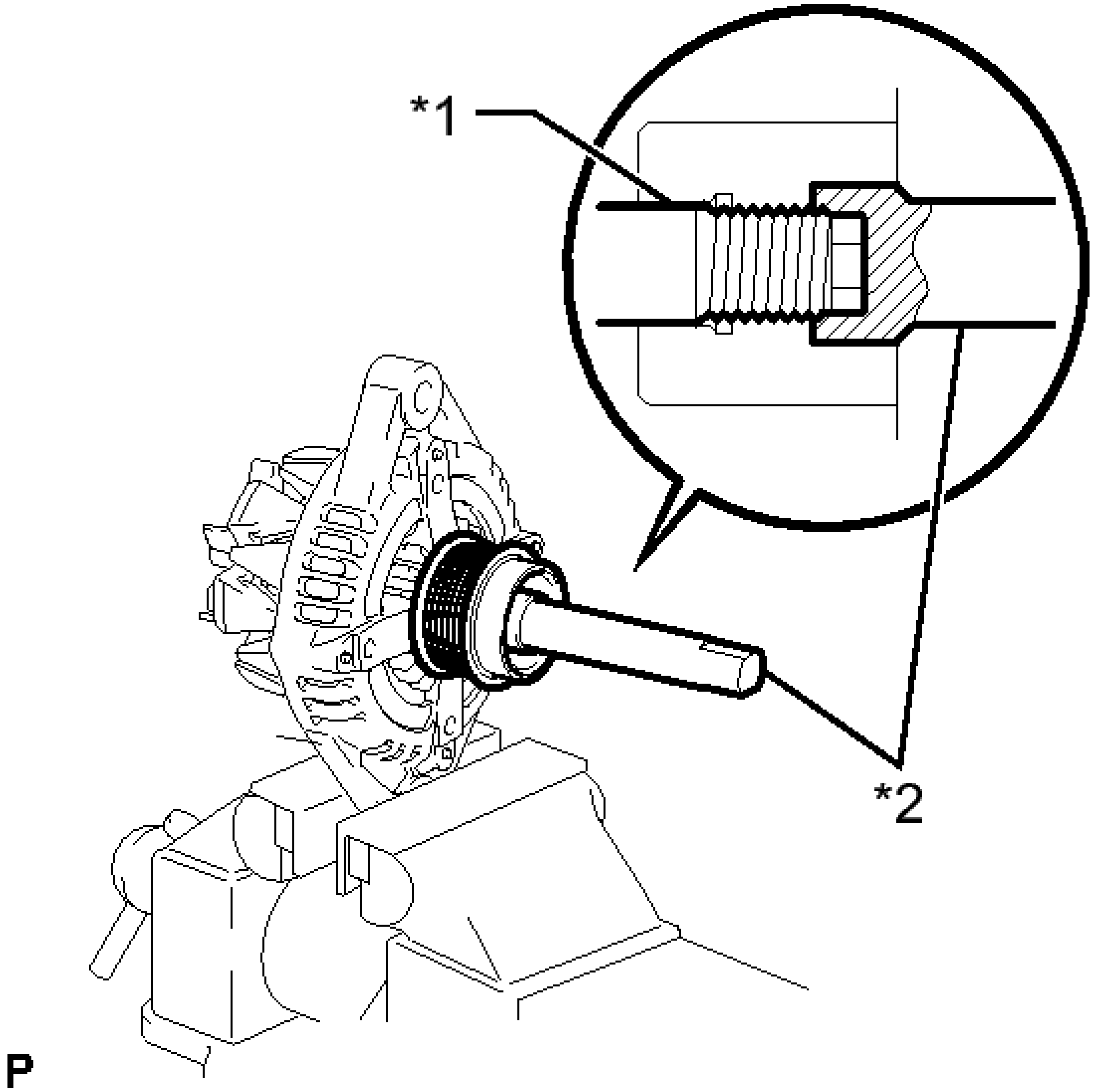

Fig. 15: Placing Rotor Shaft End Into SST
Courtesy of TOYOTA MOTOR SALES, U.S.A., INC.

TEXT IN ILLUSTRATION

*1	Rotor Shaft
*2	SST (A)

e. Fit SST (B) to the generator pulley with clutch.

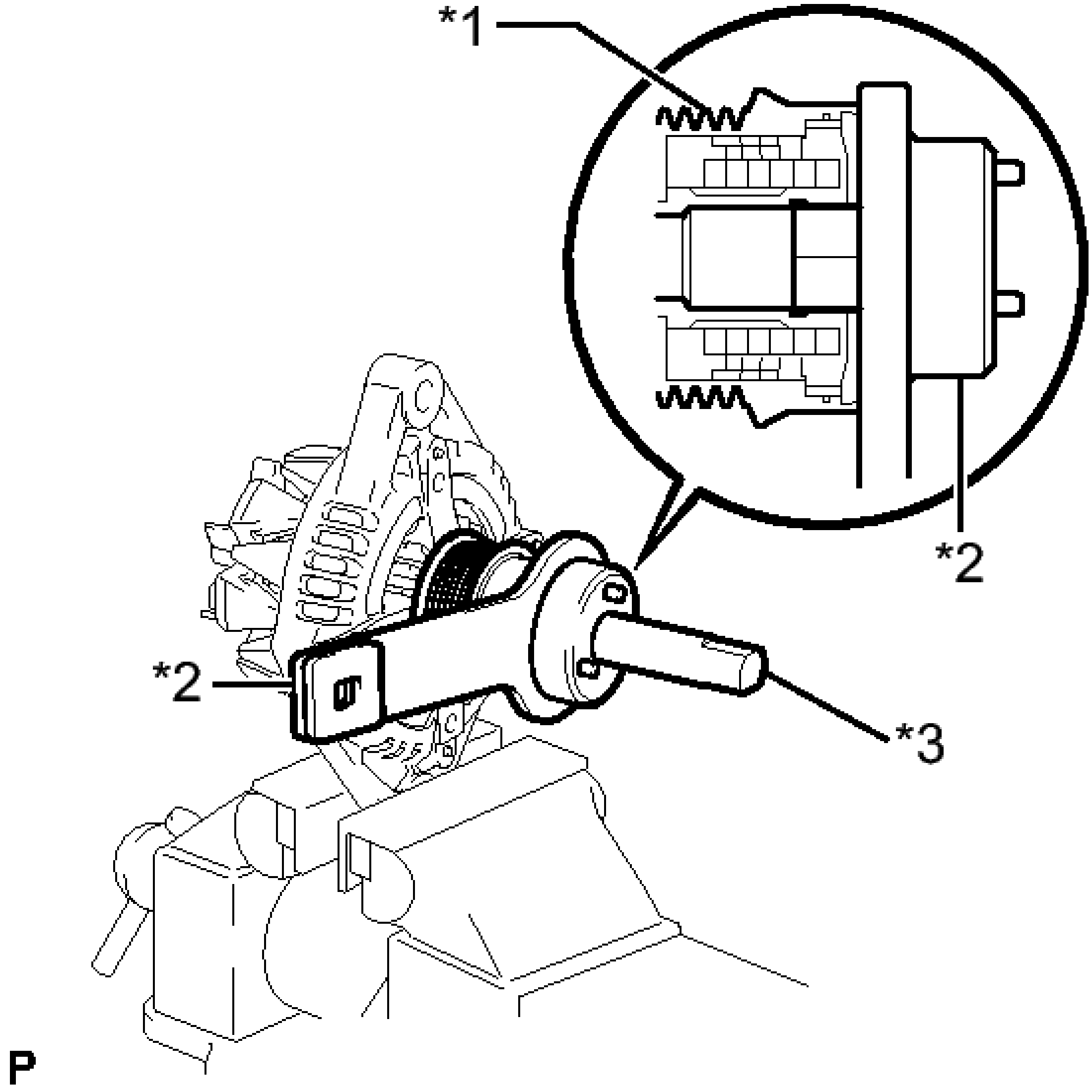

Fig. 16: Fitting SST To Clutch Pulley
Courtesy of TOYOTA MOTOR SALES, U.S.A., INC.

TEXT IN ILLUSTRATION

*1	Generator Pulley with Clutch
*2	SST (B)
*3	SST (A)

f. Loosen the pulley by turning SST (B) in the direction shown in the illustration.

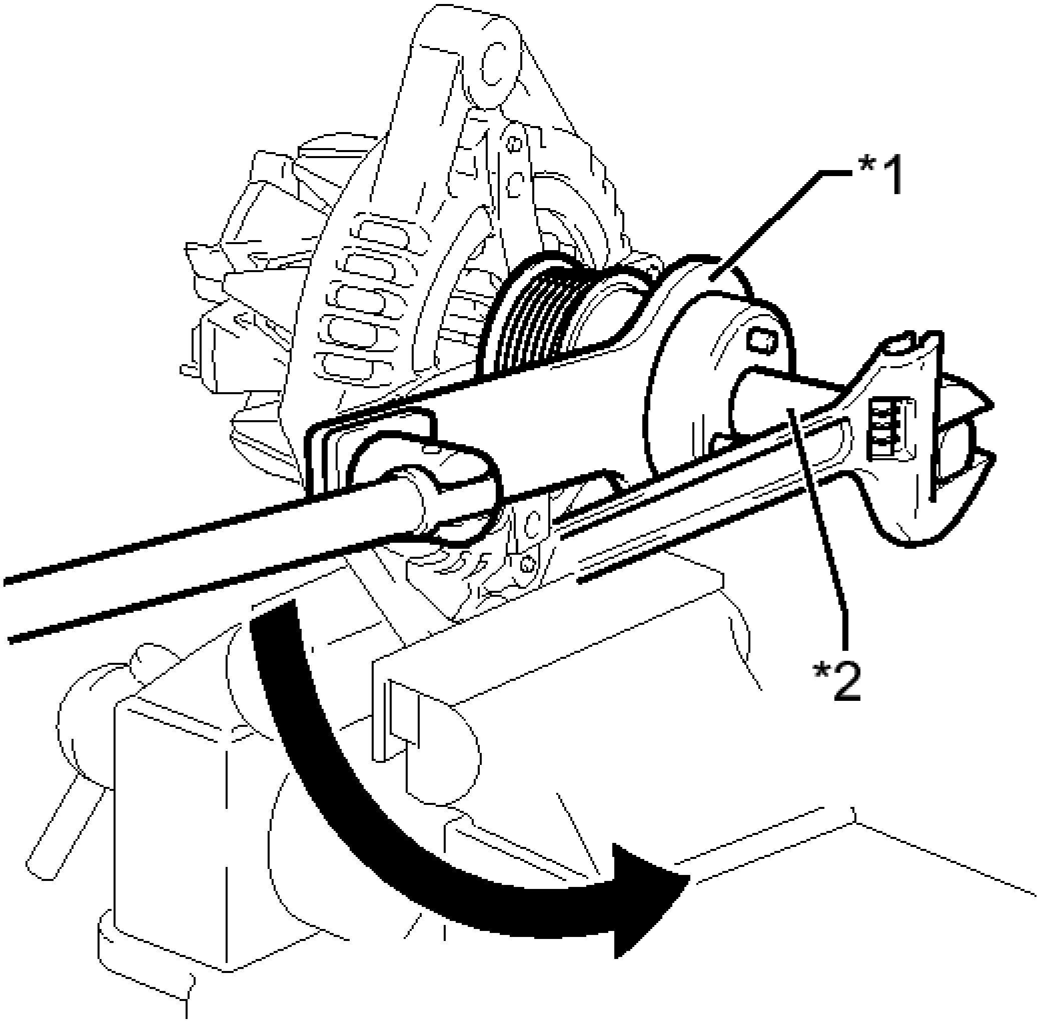

Fig. 17: Loosening Pulley Turning SST
Courtesy of TOYOTA MOTOR SALES, U.S.A., INC.

TEXT IN ILLUSTRATION

*1	SST (B)
*2	SST (A)

NOTE:

- **Check that the drive end frame is secured in the vise tightly.**
- **Hold SST (A) tightly during the operation.**

g. Remove SST from the generator assembly.
h. Remove the generator pulley with clutch from the rotor shaft.

6. **REMOVE GENERATOR ROTOR ASSEMBLY**
    a. Remove the generator rotor assembly.

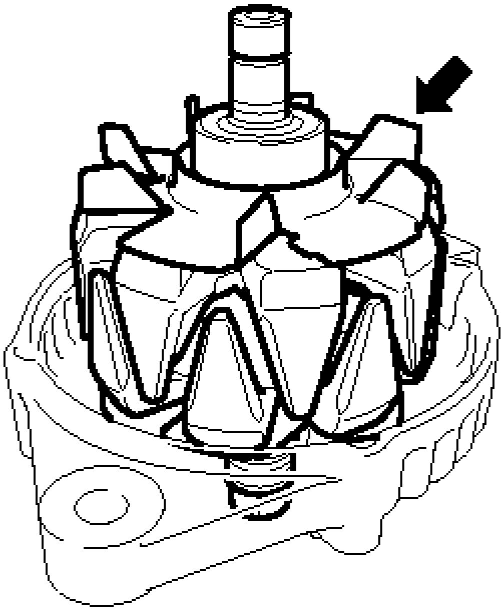

Fig. 18: Locating Generator Rotor Assembly
Courtesy of TOYOTA MOTOR SALES, U.S.A., INC.

7. **INSPECT GENERATOR DRIVE END FRAME BEARING** See step 2
8. **REMOVE GENERATOR DRIVE END FRAME BEARING**
    a. Remove the 4 screws and bearing retainer from the drive end frame.

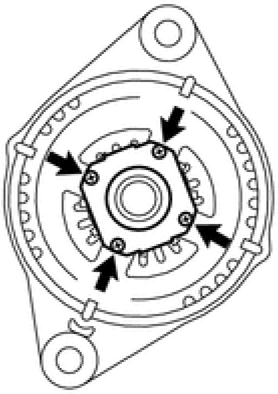

Fig. 19: Locating Bearing Retainer Screws
Courtesy of TOYOTA MOTOR SALES, U.S.A., INC.

    b. Using SST and a hammer, tap out the drive end frame bearing from the drive end frame.

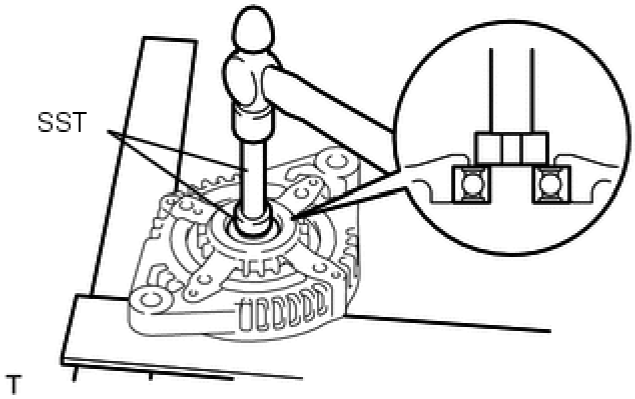

Fig. 20: Tapping Out Drive End Frame Bearing From Drive End Frame
Courtesy of TOYOTA MOTOR SALES, U.S.A., INC.

- **SST: 09950-60010**
  09951-00250
- **SST: 09950-70010**
  09951-07100

INSPECTION

INSPECTION

1. **INSPECT GENERATOR PULLEY WITH CLUTCH**
    a. Hold the generator rotor using SST, and turn the generator pulley with clutch clockwise to check that the outer ring locks.

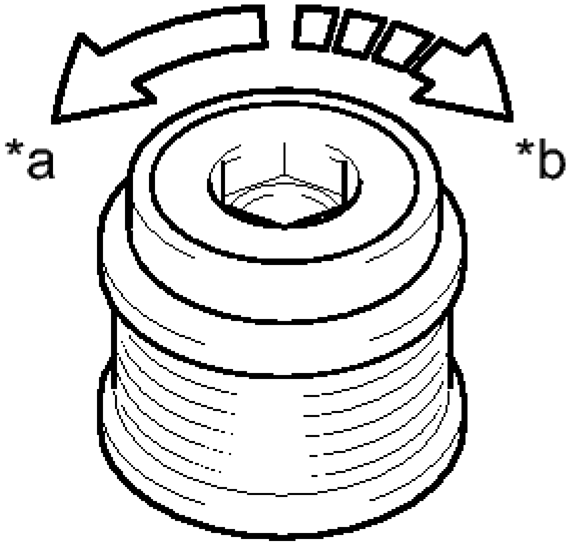

Fig. 21: Turning Generator Pulley With Clutch Clockwise
Courtesy of TOYOTA MOTOR SALES, U.S.A., INC.

- **SST: 09820-63021**

TEXT IN ILLUSTRATION

*a	Free
*b	Lock

If the result is not as specified, replace the generator pulley with clutch.

2. **INSPECT GENERATOR DRIVE END FRAME BEARING**
    a. Check that the bearing is not rough or worn.

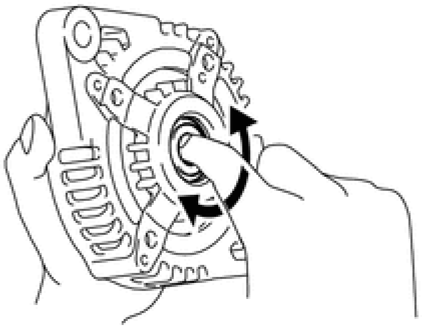

T

Fig. 22: Inspecting Generator Drive End Frame Bearing

Courtesy of TOYOTA MOTOR SALES, U.S.A., INC.

OK

The bearing rotates smoothly.

If the bearing does not rotate smoothly, replace the bearing.

3. **INSPECT GENERATOR BRUSH HOLDER ASSEMBLY**
    a. Using a vernier caliper, measure the length of the exposed brushes.

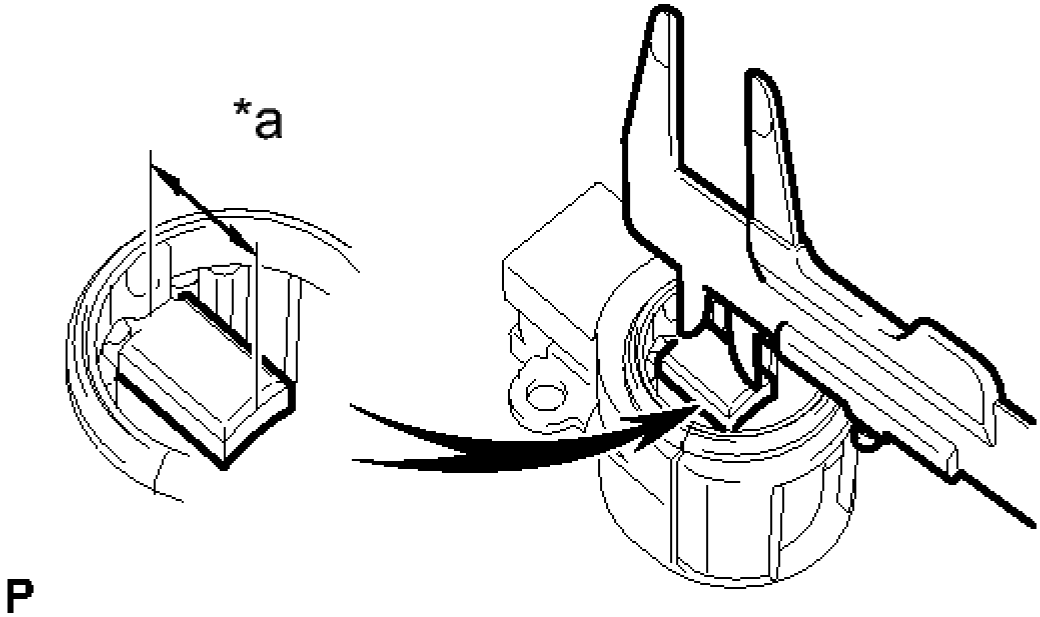

Fig. 23: Measuring Length Of Exposed Brushes
Courtesy of TOYOTA MOTOR SALES, U.S.A., INC.

TEXT IN ILLUSTRATION

*a	Length

Standard exposed brush length

9.5 to 11.5 mm (0.375 to 0.452 in.)

Minimum exposed brush length

4.5 mm (0.178 in.)

If the exposed brush length is less than the minimum, replace the brush holder assembly.

4. **INSPECT GENERATOR ROTOR ASSEMBLY**

   a. Check that the generator rotor bearing is not rough or worn.

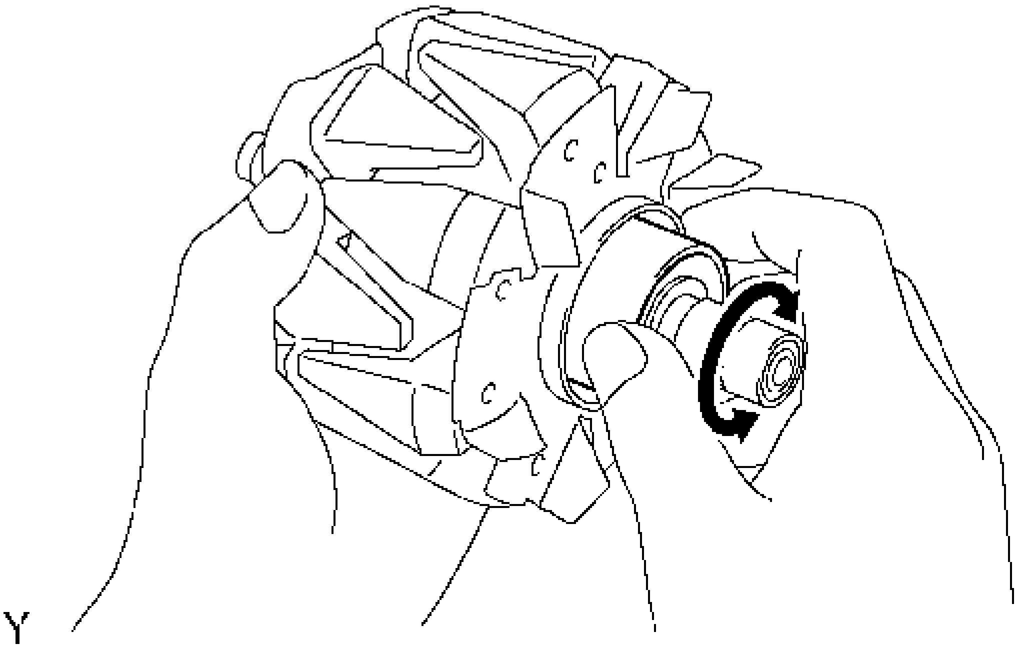

Fig. 24: Inspecting Generator Rotor Assembly
Courtesy of TOYOTA MOTOR SALES, U.S.A., INC.

If necessary, replace the generator rotor assembly.

   b. Check the generator rotor for an open circuit.

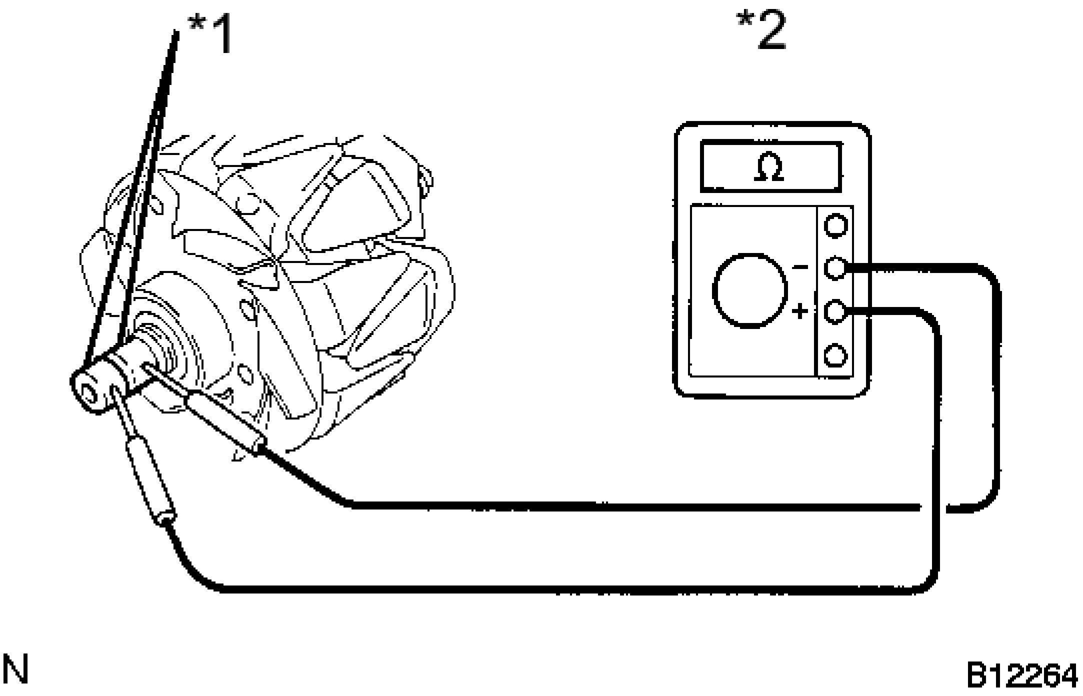

Fig. 25: Measuring Resistance Between Slip Rings
Courtesy of TOYOTA MOTOR SALES, U.S.A., INC.

TEXT IN ILLUSTRATION

*1	Slip Ring
*2	Ohmmeter

1. Using an ohmmeter, measure the resistance between the slip rings.

   Standard Resistance

Tester Connection	Condition	Specified Condition
Slip ring - Slip ring	Approx. 20°C (68° F)	2.3 to 2.7 ohms

   If the result is not as specified, replace the generator rotor assembly.

c. Check the rotor for a short to ground.

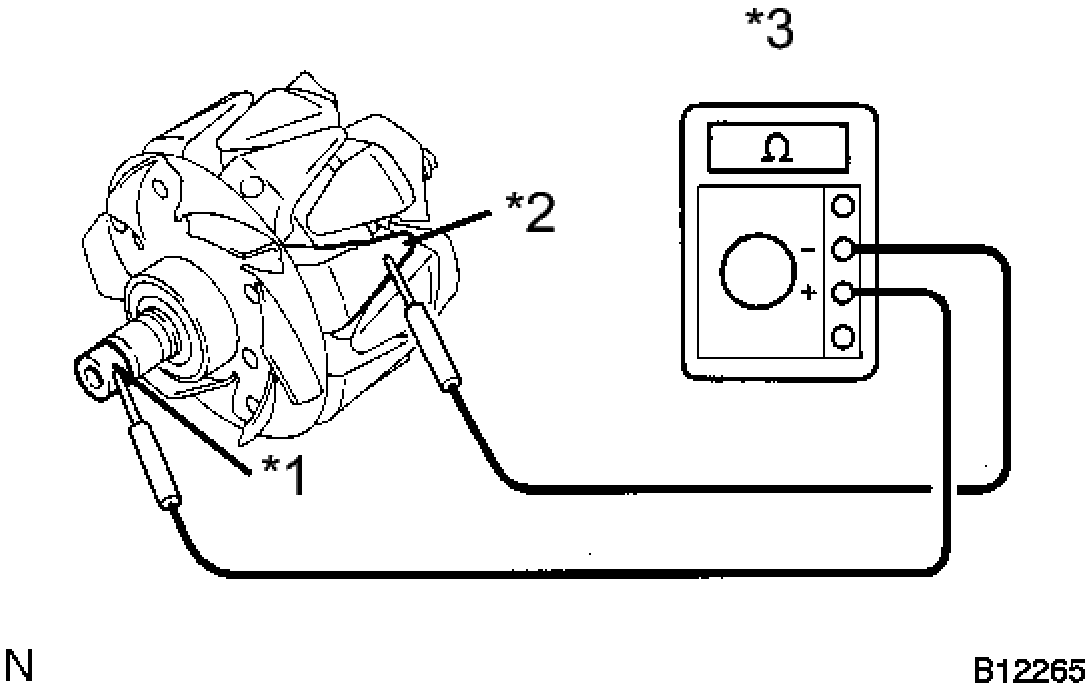

Fig. 26: Measuring Resistance Between Slip Ring And Rotor
Courtesy of TOYOTA MOTOR SALES, U.S.A., INC.

TEXT IN ILLUSTRATION

*1	Slip Ring
*2	Rotor
*3	Ohmmeter

1. Using an ohmmeter, measure the resistance between the slip ring and rotor.

   Standard Resistance

Tester Condition	Specified Condition
Slip ring - Rotor	1 Mohms or higher

   If the result is not as specified, replace the generator rotor assembly.

d. Using a vernier caliper, measure the slip ring diameter.

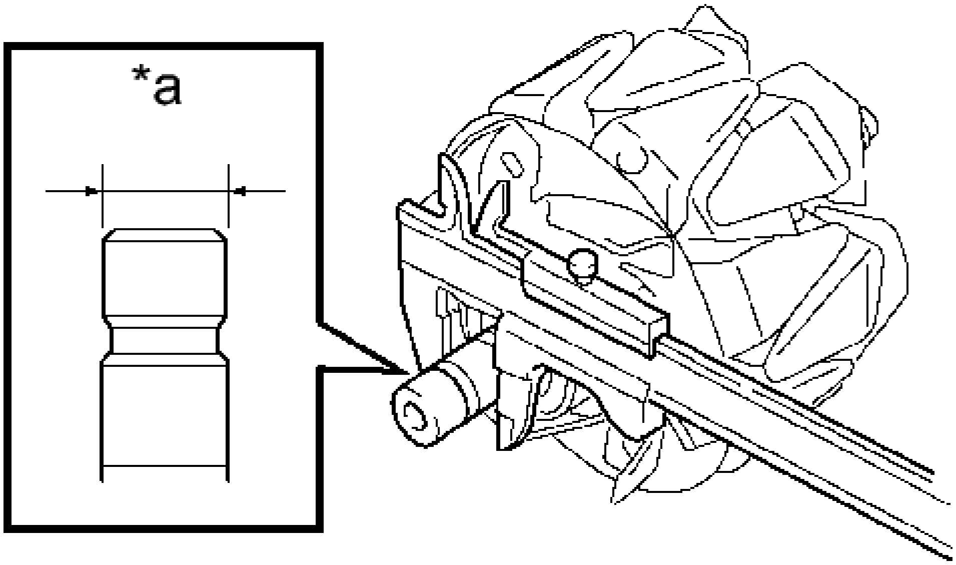

Fig. 27: Measuring Slip Ring Diameter
Courtesy of TOYOTA MOTOR SALES, U.S.A., INC.

TEXT IN ILLUSTRATION

*a	Diameter

Standard diameter

14.2 to 14.4 mm (0.560 to 0.566 in.)

Minimum diameter

14.0 mm (0.552 in.)

If the diameter is less than the minimum, replace the generator rotor assembly.

REASSEMBLY

REASSEMBLY

1. **INSTALL GENERATOR DRIVE END FRAME BEARING**
    a. Using SST and a press, press in a new generator drive end frame bearing.

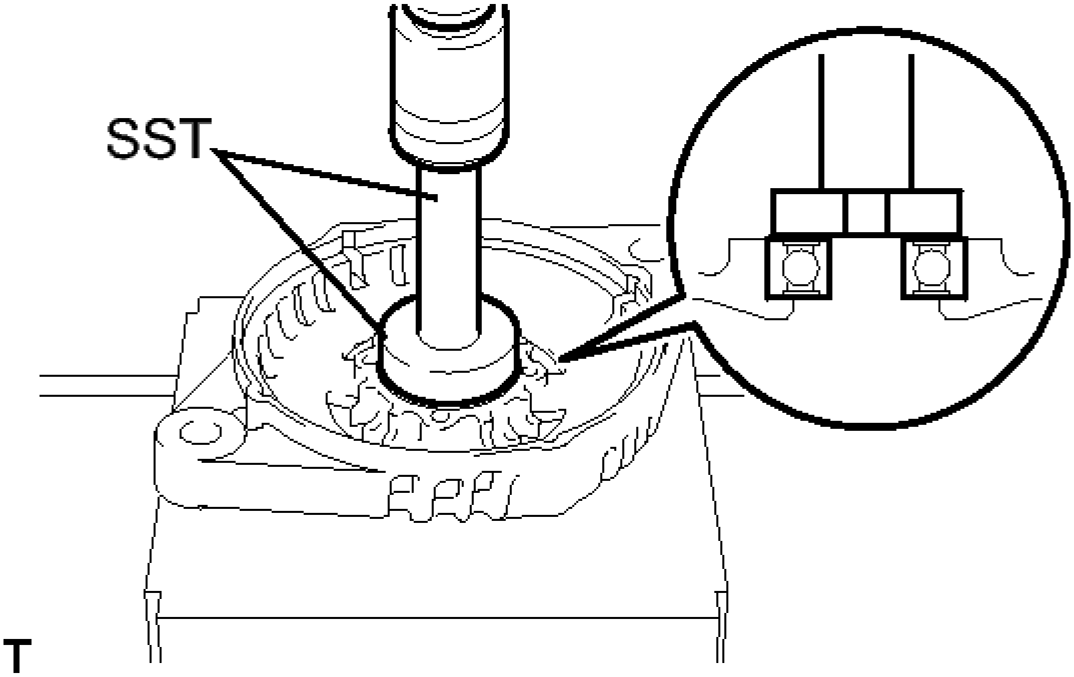

Fig. 28: Installing Generator Drive End Frame Bearing Using SST
Courtesy of TOYOTA MOTOR SALES, U.S.A., INC.

- **SST: 09950-60010**
  09951-00470
- **SST: 09950-70010**
  09951-07100

b. Fit the tabs on the retainer plate into the cutouts on the drive end frame to install the retainer plate.

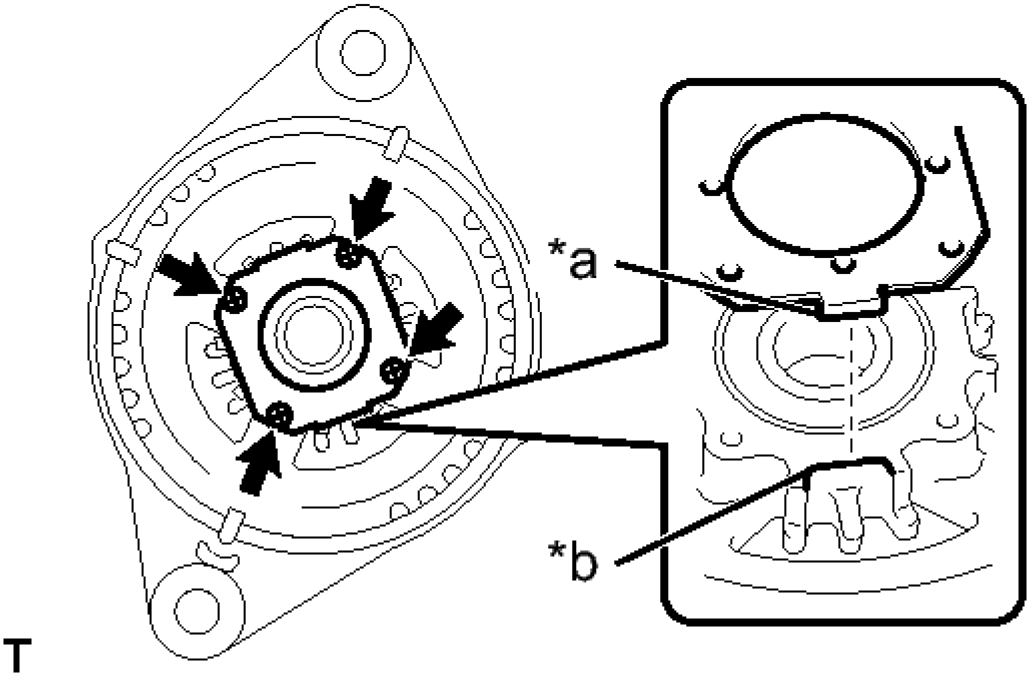

Fig. 29: Identifying Retainer Plate Tabs And Cutout
Courtesy of TOYOTA MOTOR SALES, U.S.A., INC.

TEXT IN ILLUSTRATION

*a	Tab
*b	Cutout

c. Install the 4 screws.

Torque: 2.3 N*m (23 kgf*cm, 20 in.*lbf)

2. **INSTALL GENERATOR ROTOR ASSEMBLY**
    1. Place the drive end frame on the generator pulley with clutch.
    2. Install the generator rotor assembly to the drive end frame.

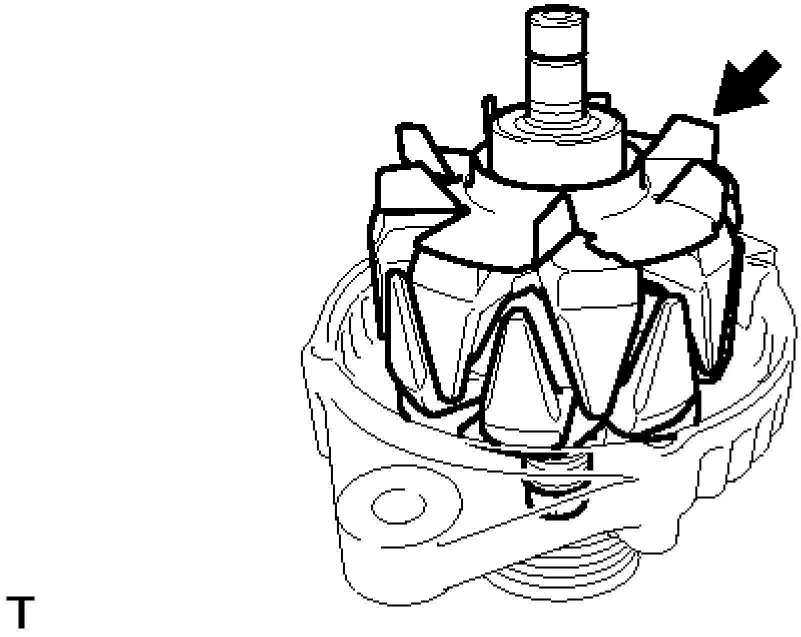

Fig. 30: Locating Generator Rotor Assembly
Courtesy of TOYOTA MOTOR SALES, U.S.A., INC.

3. **INSTALL GENERATOR PULLEY WITH CLUTCH**
   a. Temporarily install the generator pulley with clutch onto the rotor shaft.
   b. Mount the generator drive end frame in a vise tightly.
   c. Confirm SST (A) and (B) shown in the illustration.

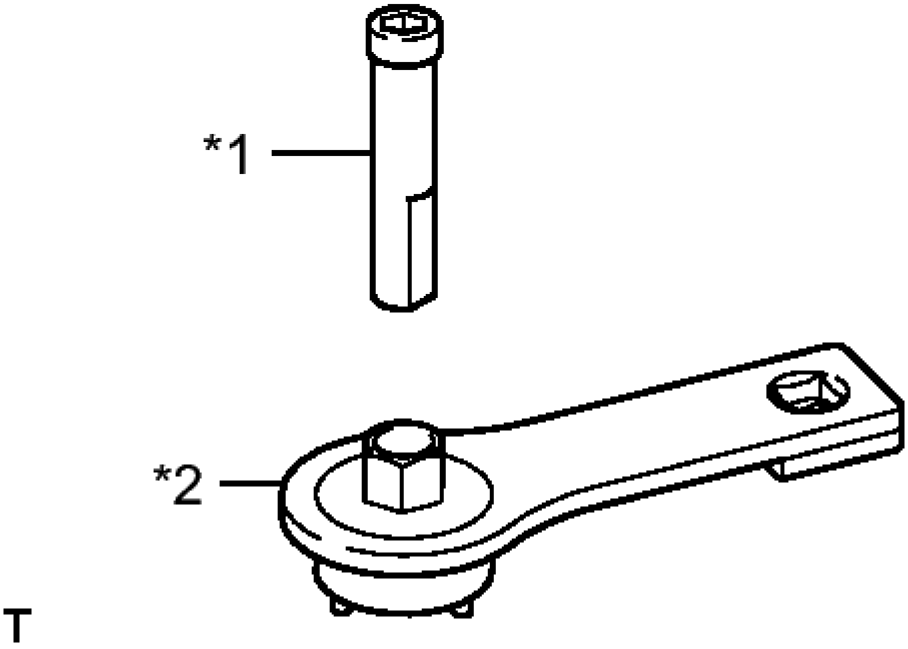

Fig. 31: Identifying SST
Courtesy of TOYOTA MOTOR SALES, U.S.A., INC.

TEXT IN ILLUSTRATION

*1	SST (A)
*2	SST (B)

- **SST: 09820-63021**

d. Place the rotor shaft end into SST (A).

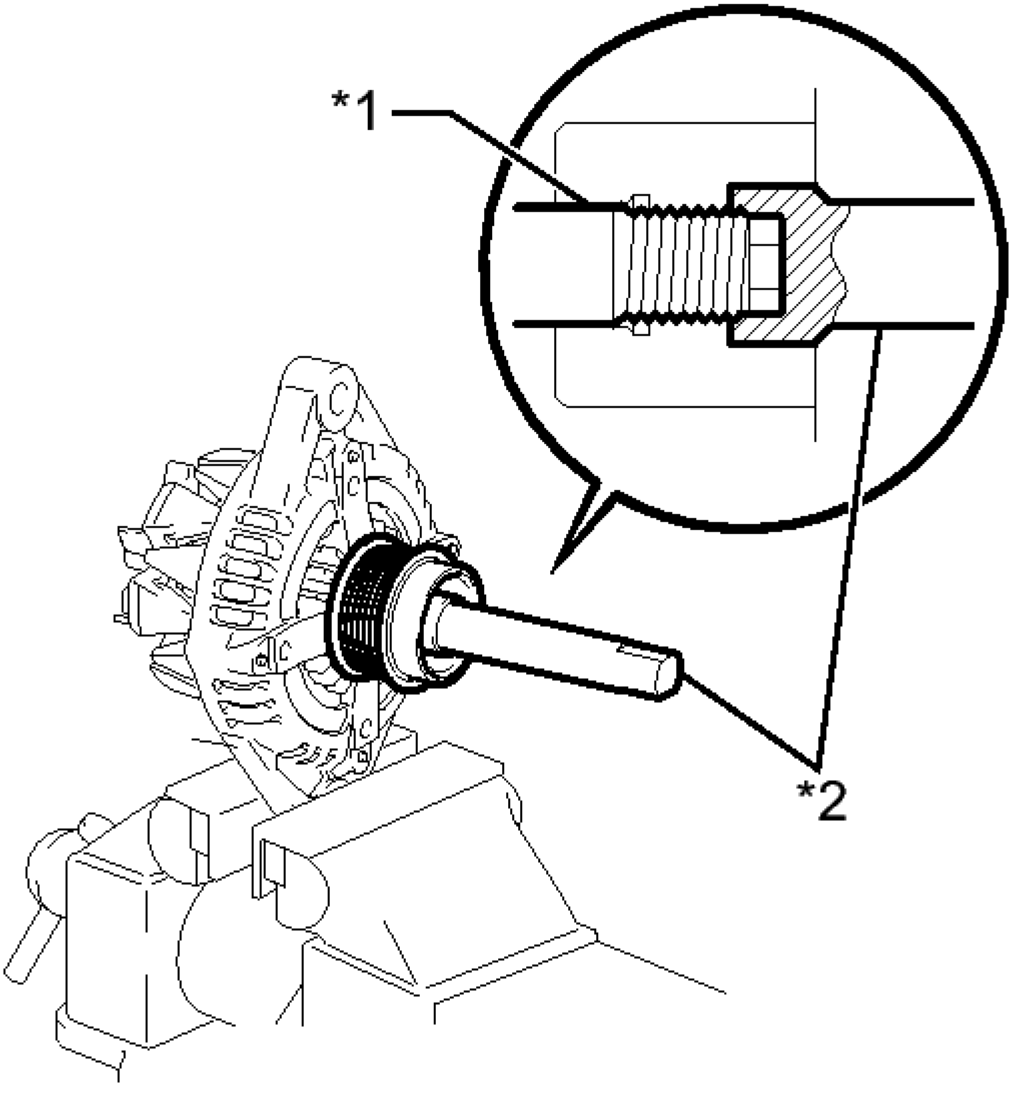

Fig. 32: Placing Rotor Shaft End Into SST
Courtesy of TOYOTA MOTOR SALES, U.S.A., INC.

TEXT IN ILLUSTRATION

*1	Rotor Shaft
*2	SST (A)

e. Fit SST (B) to the generator pulley with clutch.

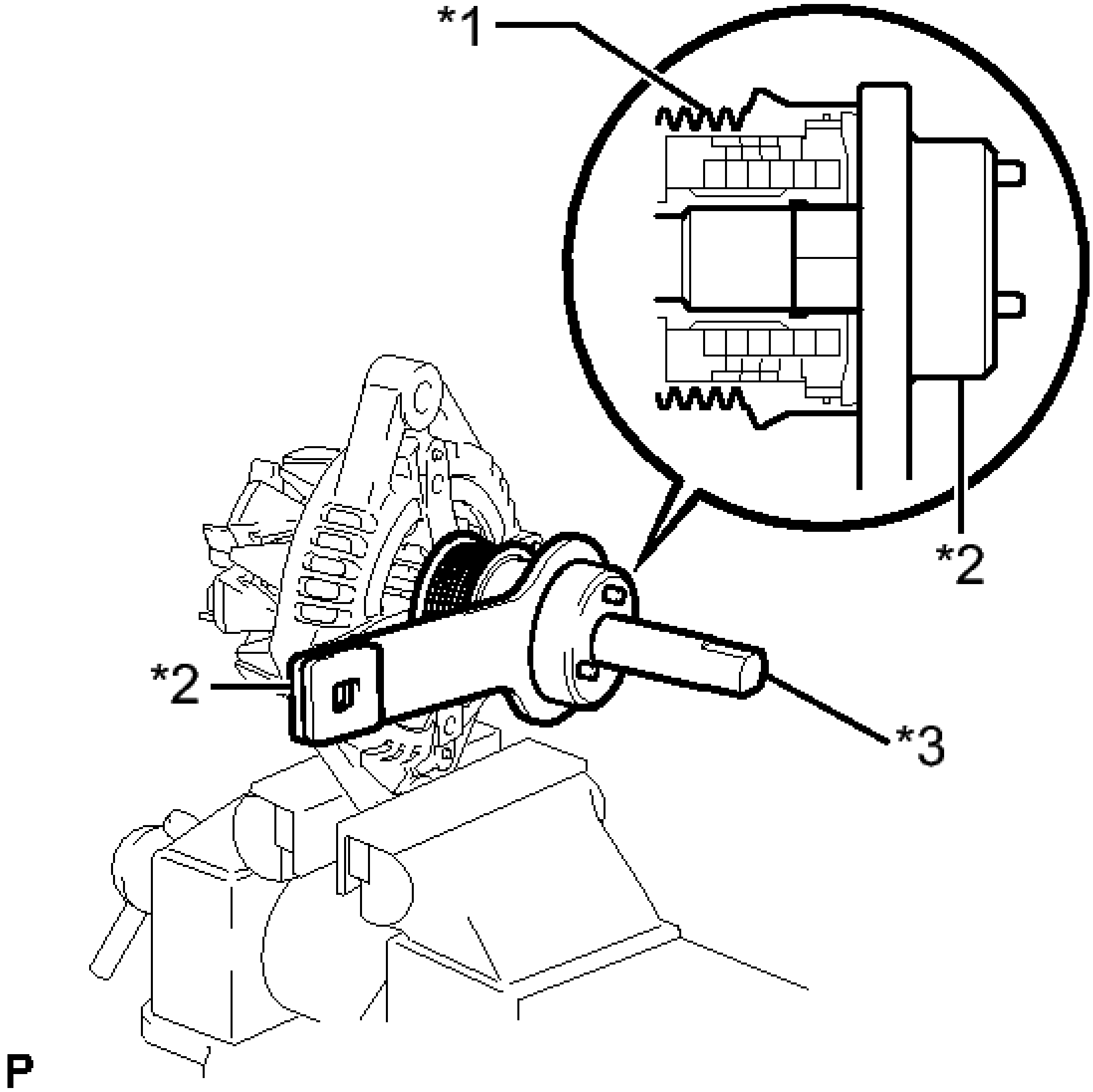

Fig. 33: Fitting SST To Clutch Pulley
Courtesy of TOYOTA MOTOR SALES, U.S.A., INC.

TEXT IN ILLUSTRATION

*1	Generator Pulley with Clutch
*2	SST (B)
*3	SST (A)

f. Tighten the pulley by turning SST (B) in the direction shown in the illustration.

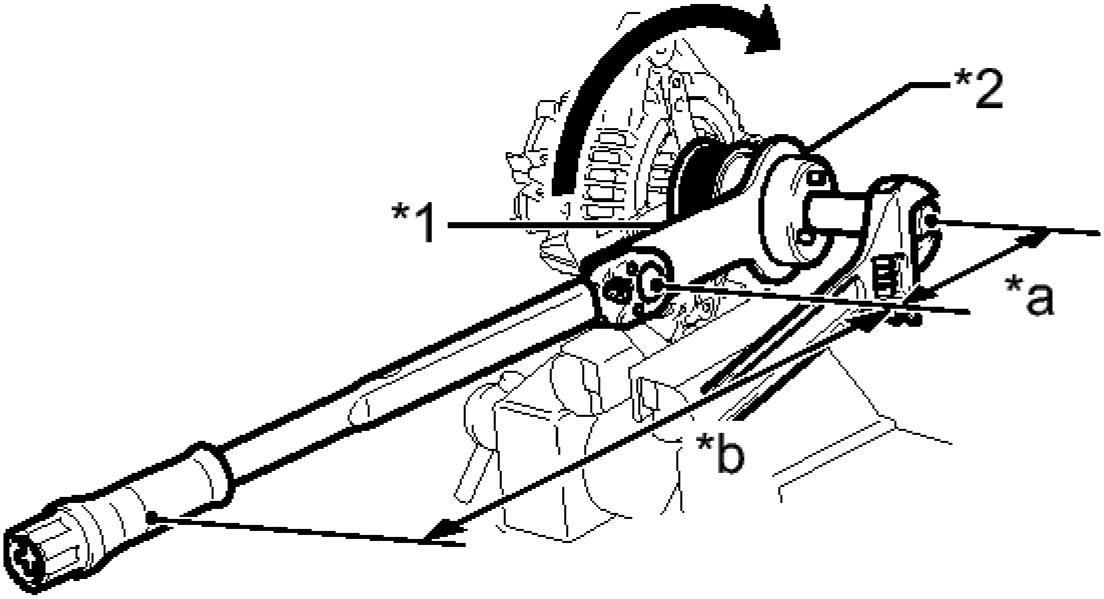

Fig. 34: Tightening Pulley Using SST
Courtesy of TOYOTA MOTOR SALES, U.S.A., INC.

TEXT IN ILLUSTRATION

*1	SST (B)
*2	SST (A)
*a	Fulcrum Length 100 mm (3.94 in.)
*b	Fulcrum Length 255 mm (10.04 in.)

without SST

Torque: 80 N*m (816 kgf*cm, 59 ft.*lbf)

with SST

Torque: 57 N*m (581 kgf*cm, 42 ft.*lbf)

NOTE:

- **The "with SST" torque value is effective when using SST with a fulcrum length of 100 mm (3.94 in.) and a torque wrench with a fulcrum length of 255 mm (10.04 in.). Refer to PRECAUTION .**
- **The "with SST" torque value is effective when SST is parallel to the torque wrench.**
- **Check that the drive end frame is secured in the vise tightly.**
- **Hold SST (A) tightly during the operation.**

g. Remove SST from the generator assembly.
h. Check that the generator pulley with clutch rotates smoothly.
i. Install a new generator pulley cap to the generator pulley with clutch.

4. **INSTALL GENERATOR COIL ASSEMBLY**

a. Place a new generator washer on the generator rotor.

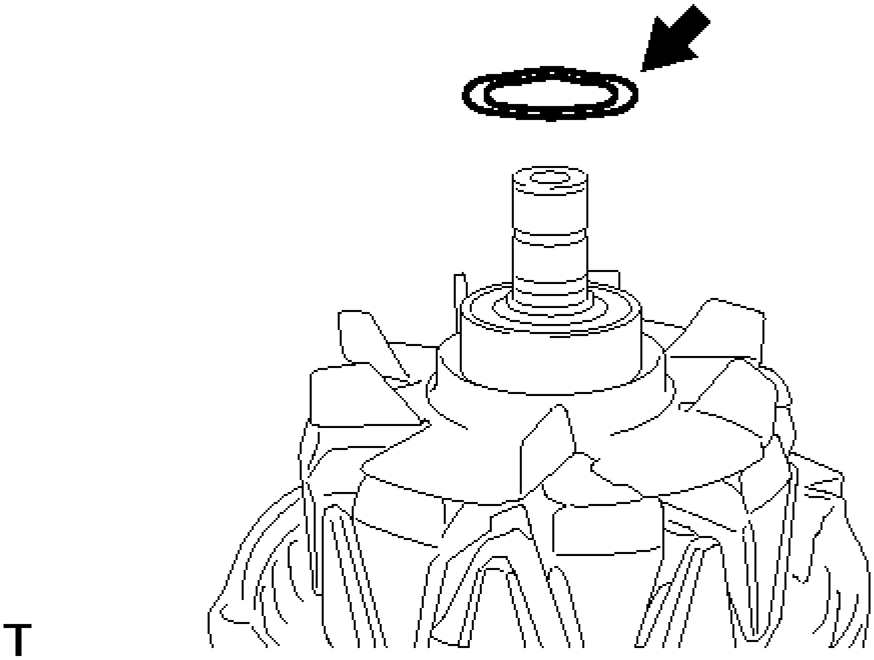

Fig. 35: Locating Generator Washer
Courtesy of TOYOTA MOTOR SALES, U.S.A., INC.

b. Using a deep socket wrench (21 mm) and a press, slowly press in the generator coil assembly.

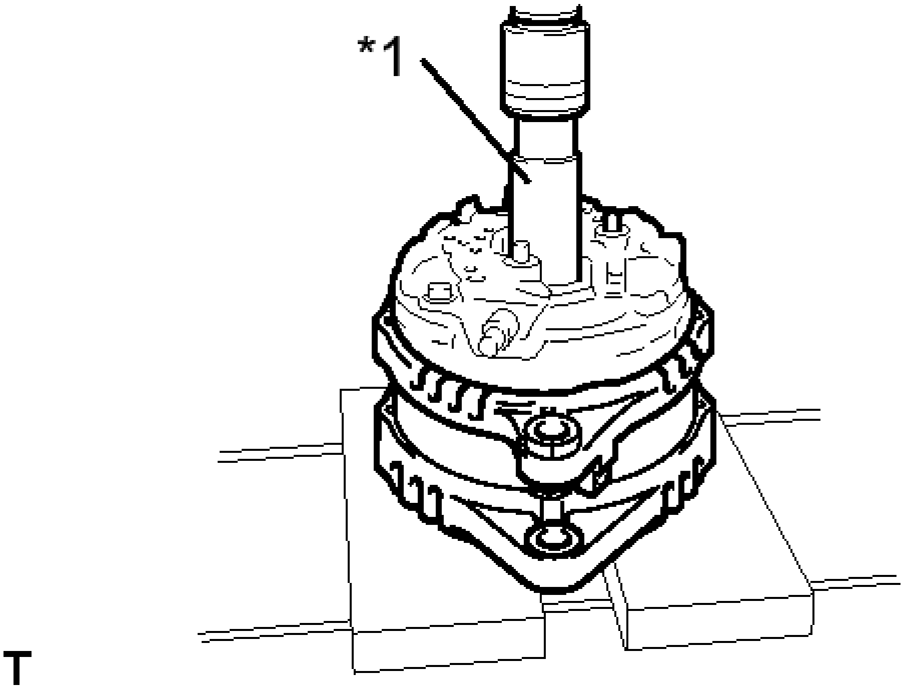

Fig. 36: Pressing Generator Coil Assembly
Courtesy of TOYOTA MOTOR SALES, U.S.A., INC.

TEXT IN ILLUSTRATION

*1	Deep Socket Wrench (21 mm)

c. Install the 4 bolts.

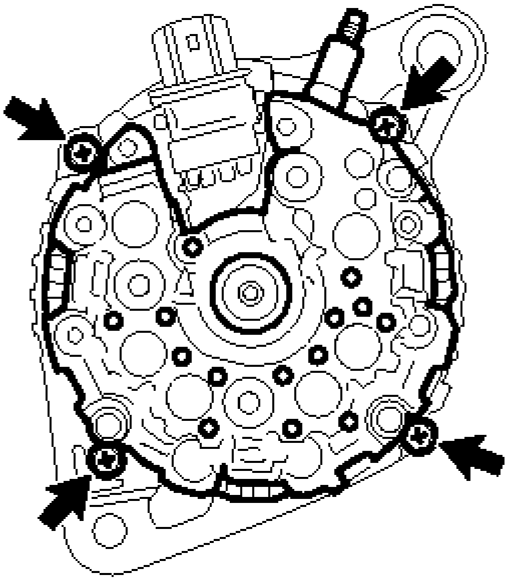

T

Fig. 37: Locating Generator Coil Assembly Bolts
Courtesy of TOYOTA MOTOR SALES, U.S.A., INC.

Torque: 5.9 N*m (60 kgf*cm, 52 in.*lbf)

5. **INSTALL GENERATOR BRUSH HOLDER ASSEMBLY**
    a. While pushing the 2 brushes into the generator brush holder assembly, insert a 1.0 mm (0.0394 in.) pin into the brush holder hole.

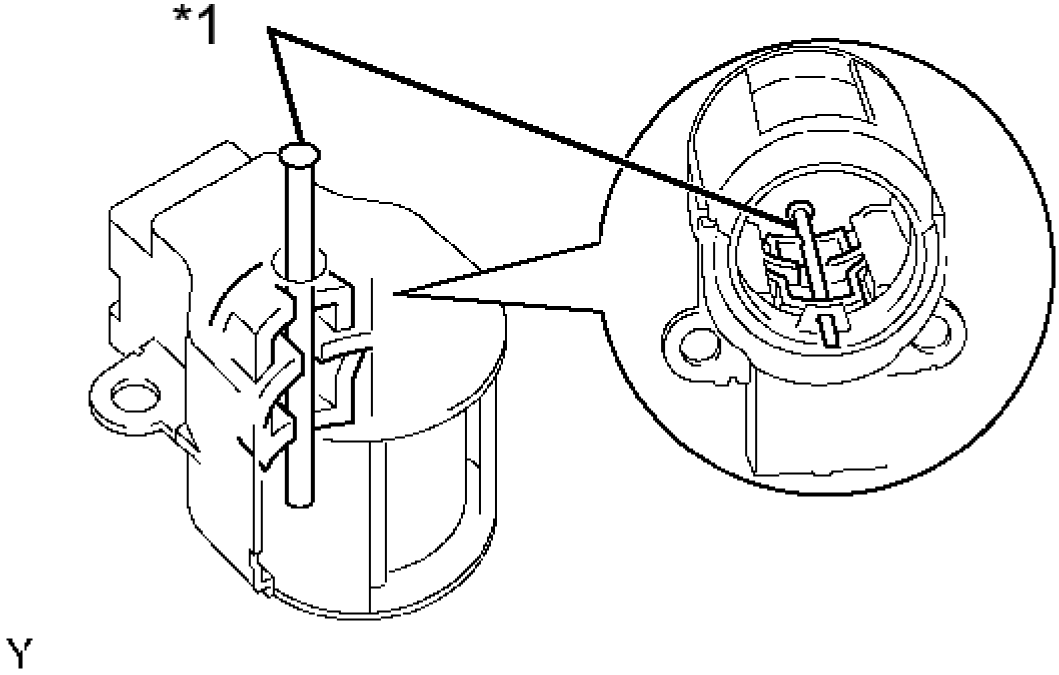

Fig. 38: Identifying Generator Brush Holder Pin
Courtesy of TOYOTA MOTOR SALES, U.S.A., INC.

TEXT IN ILLUSTRATION

*1	Pin

b. Install the brush holder assembly to the generator coil with the 2 screws.

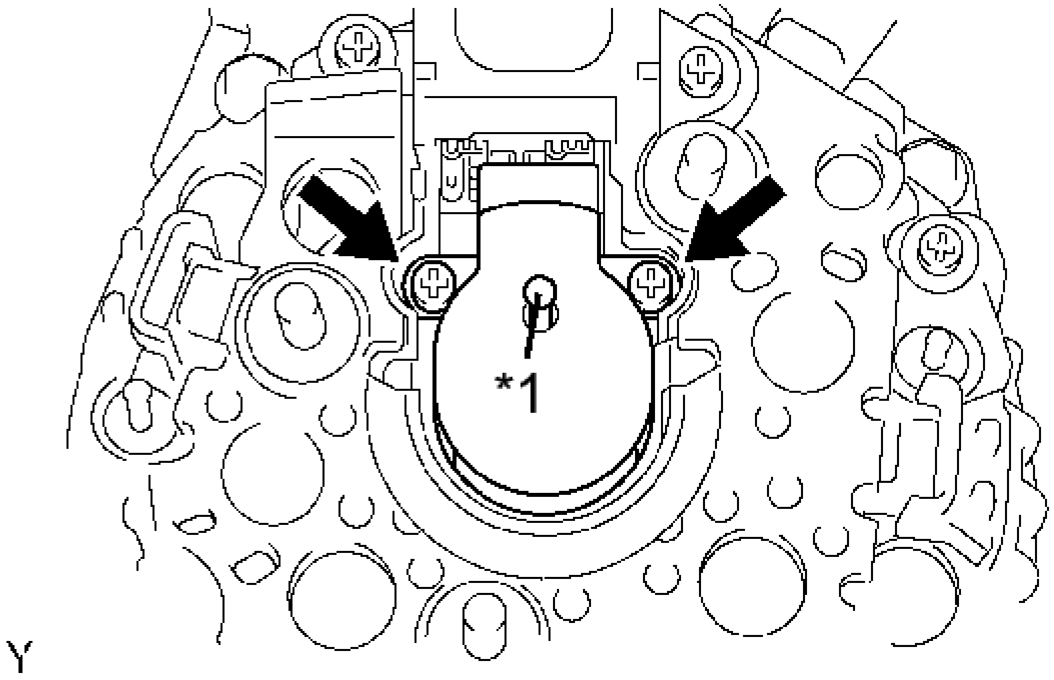

Fig. 39: Identifying Brush Holder Assembly With Screws
Courtesy of TOYOTA MOTOR SALES, U.S.A., INC.

Torque: 1.8 N*m (18 kgf*cm, 16 in.*lbf)

c. Pull out the pin from the generator brush holder.

TEXT IN ILLUSTRATION

*1	Pin

6. **INSTALL GENERATOR TERMINAL INSULATOR**
   a. Install the generator terminal insulator to the generator coil.

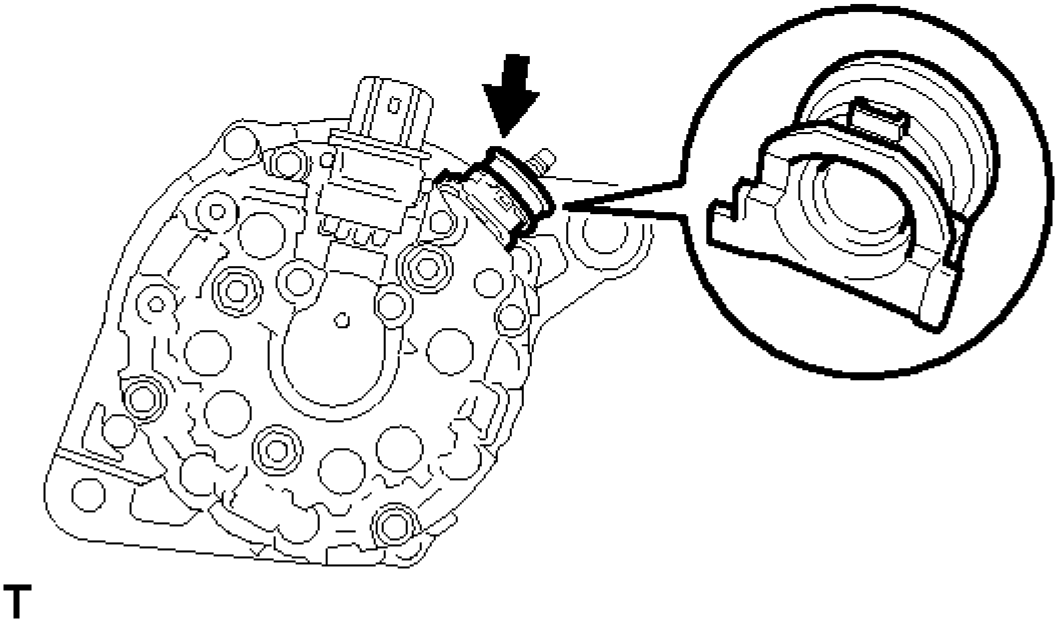

Fig. 40: Locating Terminal Insulator
Courtesy of TOYOTA MOTOR SALES, U.S.A., INC.

NOTE: Be sure to install the terminal insulator in the correct direction.

7. **INSTALL GENERATOR REAR END COVER**
   a. Install the generator rear end cover to the generator coil with the 3 nuts.

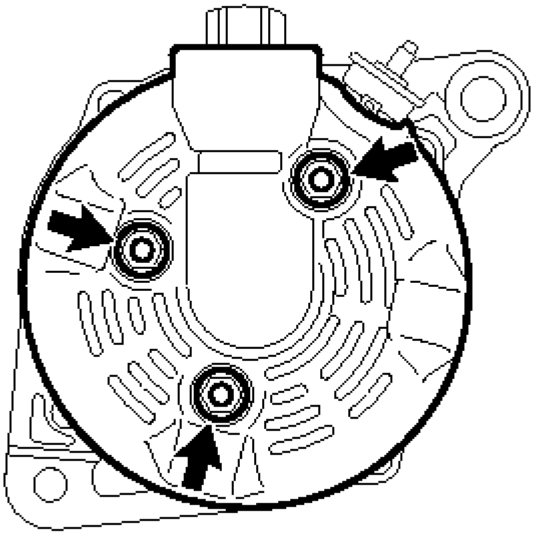

T

Fig. 41: Locating Generator Rear End Cover Nuts
Courtesy of TOYOTA MOTOR SALES, U.S.A., INC.

Torque: 4.6 N*m (47 kgf*cm, 41 in.*lbf)

INSTALLATION

INSTALLATION

1. **INSTALL GENERATOR ASSEMBLY**
    1. Install the generator assembly with the 2 bolts.

       Torque: 43 N*m (438 kgf*cm, 32 ft.*lbf)

    2. Connect the wire harness clamp.
    3. Install the generator bracket with the 2 bolts.

       Torque: 20 N*m (204 kgf*cm, 15 ft.*lbf)

    4. Connect the generator connector to the generator assembly.
    5. Install the generator wire with the bolt.

       Torque: 8.4 N*m (86 kgf*cm, 74 in.*lbf)

    6. Install the nut and connect the wire harness to terminal B.

       Torque: 9.8 N*m (100 kgf*cm, 87 in.*lbf)

g. Install the terminal cap.

2. **INSTALL V-RIBBED BELT**

   Refer to **INSTALLATION** .

3. **INSTALL RADIATOR ASSEMBLY**

   Refer to **INSTALLATION** .

4. **INSTALL V-BANK COVER SUB-ASSEMBLY** . Refer to **INSTALLATION - Step 82**
5. **CONNECT CABLE TO NEGATIVE BATTERY TERMINAL**

NOTE: **When disconnecting the cable, some systems need to be initialized after the cable is reconnected. Refer to INITIALIZATION .**

2012-2017 ENGINE

Cooling System (Service Specifications) (Hybrid)

2AR-FXE COOLING

SERVICE DATA

SERVICE DATA

THERMOSTAT

Condition	Specified Condition
Standard valve opening temperature	80 to 84°C (176 to 183°F)
Standard valve lift	10 to 11.3 mm (0.394 to 0.445 in.) at 95°C (203°F)

COOLING FAN MOTOR

Item	Condition	Specified Condition
Cooling fan motor	Auxiliary battery voltage applied at 20°C (68°F)	10.6 to 16.6 A
No. 2 cooling fan motor	Auxiliary battery voltage applied at 20°C (68°F)	10.6 to 16.6 A

COOLING FAN RELAY

Item	Tester Connection	Specified Condition
Cooling fan relay	3 - 5	10 kohmsor higher (Battery voltage is not applied between terminals 1 and 2)
	3 - 5	Below 1 ohms (Battery voltage is applied between terminals 1 and 2)

RADIATOR

Item	Condition	Specified Condition
Radiator cap	Standard value (for brand-new cap)	93.3 to 122.7 kPa (1.0 to 1.3 kgf/cm^2 , 13.5 to 18.0 psi)
	Minimum standard value (for used cap)	78.5 kPa (0.8 kgf/cm^2 , 11.4 psi)

TORQUE SPECIFICATIONS

TORQUE SPECIFICATIONS

WATER PUMP

Part Tightened	N*m	kgf*cm	ft.*lbf
Water pump x Water inlet housing	21	214	15

THERMOSTAT

Part Tightened	N*m	kgf*cm	ft.*lbf
Water inlet x Water inlet housing	10	102	7

COOLING FAN MOTOR

Part Tightened	N*m	kgf*cm	ft.*lbf
Fan shroud x cooling fan motor	3.9	40	35 in.*lbf
Fan shroud x No. 2 cooling fan motor	3.9	40	35 in.*lbf
Fan x Cooling fan motor	6.3	64	56 in.*lbf
Fan x No. 2 cooling fan motor	6.3	64	56 in.*lbf
Cooling fan motor insulator x Fan shroud	2.6	27	23 in.*lbf

RADIATOR

Part Tightened	N*m	kgf*cm	ft.*lbf
Cooler condenser assembly x Radiator assembly	5.0	51	44 in.*lbf
Upper radiator support sub-assembly x Body	12	122	9
No. 1 inverter cooling pipe assembly x Fan shroud	6.0	61	53 in.*lbf
Radiator reserve tank assembly x Fan shroud	7.0	71	62 in.*lbf

2012-2017 ACCESSORIES & EQUIPMENT

Clock System (Inspection) (Hybrid) - Camry

CLOCK SYSTEM

PARTS LOCATION

ILLUSTRATION

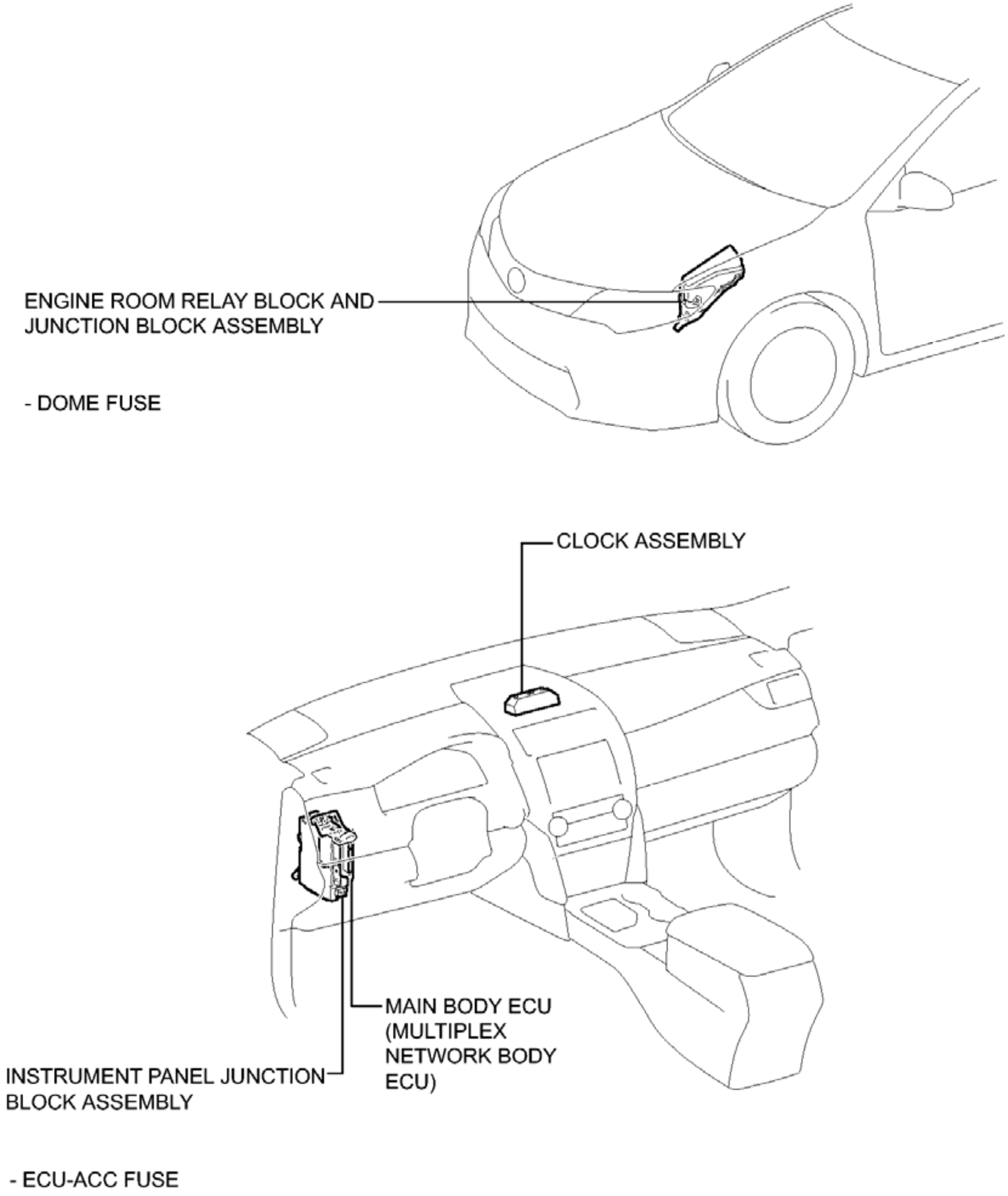
ENGINE ROOM RELAY BLOCK AND JUNCTION BLOCK ASSEMBLY
- DOME FUSE
CLOCK ASSEMBLY
MAIN BODY ECU (MULTIPLEX NETWORK BODY ECU)
INSTRUMENT PANEL JUNCTION BLOCK ASSEMBLY
- ECU-ACC FUSE

Fig. 1: Identifying Clock System Components Location
Courtesy of TOYOTA MOTOR SALES, U.S.A., INC.

SYSTEM DIAGRAM

SYSTEM DIAGRAM

1. **DIRECT LINE SIGNAL**

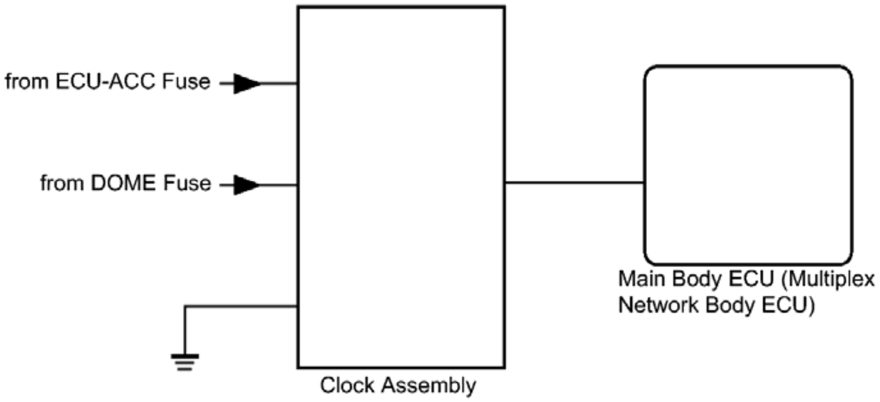
from ECU-ACC Fuse
from DOME Fuse
Main Body ECU (Multiplex Network Body ECU)
Clock Assembly

Fig. 2: Clock System Diagram
Courtesy of TOYOTA MOTOR SALES, U.S.A., INC.

HOW TO PROCEED WITH TROUBLESHOOTING

HOW TO PROCEED WITH TROUBLESHOOTING

1. **VEHICLE BROUGHT TO WORKSHOP**

   NEXT: Go to next step

2. **CUSTOMER PROBLEM ANALYSIS**

   NEXT: Go to next step

3. **PROBLEM SYMPTOM CONFIRMATION**

   NEXT: Go to next step

4. **PROBLEM SIMULATION**

   NEXT: Go to next step

5. **PROBLEM SYMPTOMS TABLE**
   a. Refer to Problem Symptoms Table. Refer to **PROBLEM SYMPTOMS TABLE**.

      NEXT: Go to next step

6. **REPAIR OR REPLACE**

NEXT: Go to next step

7. **CONFIRMATION TEST**

   NEXT --> END

PROBLEM SYMPTOMS TABLE

PROBLEM SYMPTOMS TABLE

HINT:

Use the table below to help determine the cause of problem symptoms. If multiple suspected areas are listed, the potential causes of the symptoms are listed in order of probability in the "Suspected Area" column of the table. Check each symptom by checking the suspected areas in the order they are listed. Replace parts as necessary.

CLOCK

Symptom	Suspected Area	See
Clock does not operate at all.	Fuse (ECU-ACC, DOME)	-
	Wire harness or connector	-
	Clock assembly	Refer to **REMOVAL**
Clock display illumination malfunction	Wire harness or connector	-
	Main body ECU (multiplex network body ECU)	Refer to **REMOVAL**
	Clock assembly	Refer to **REMOVAL**
Clock loses or gains time.	Clock assembly	Refer to **REMOVAL**
Clock cannot be adjusted.	Clock assembly	Refer to **REMOVAL**

2012-2017 ACCESSORIES & EQUIPMENT

Clock System (Inspection) (Except Hybrid) - Camry

CLOCK SYSTEM

PARTS LOCATION

ILLUSTRATION

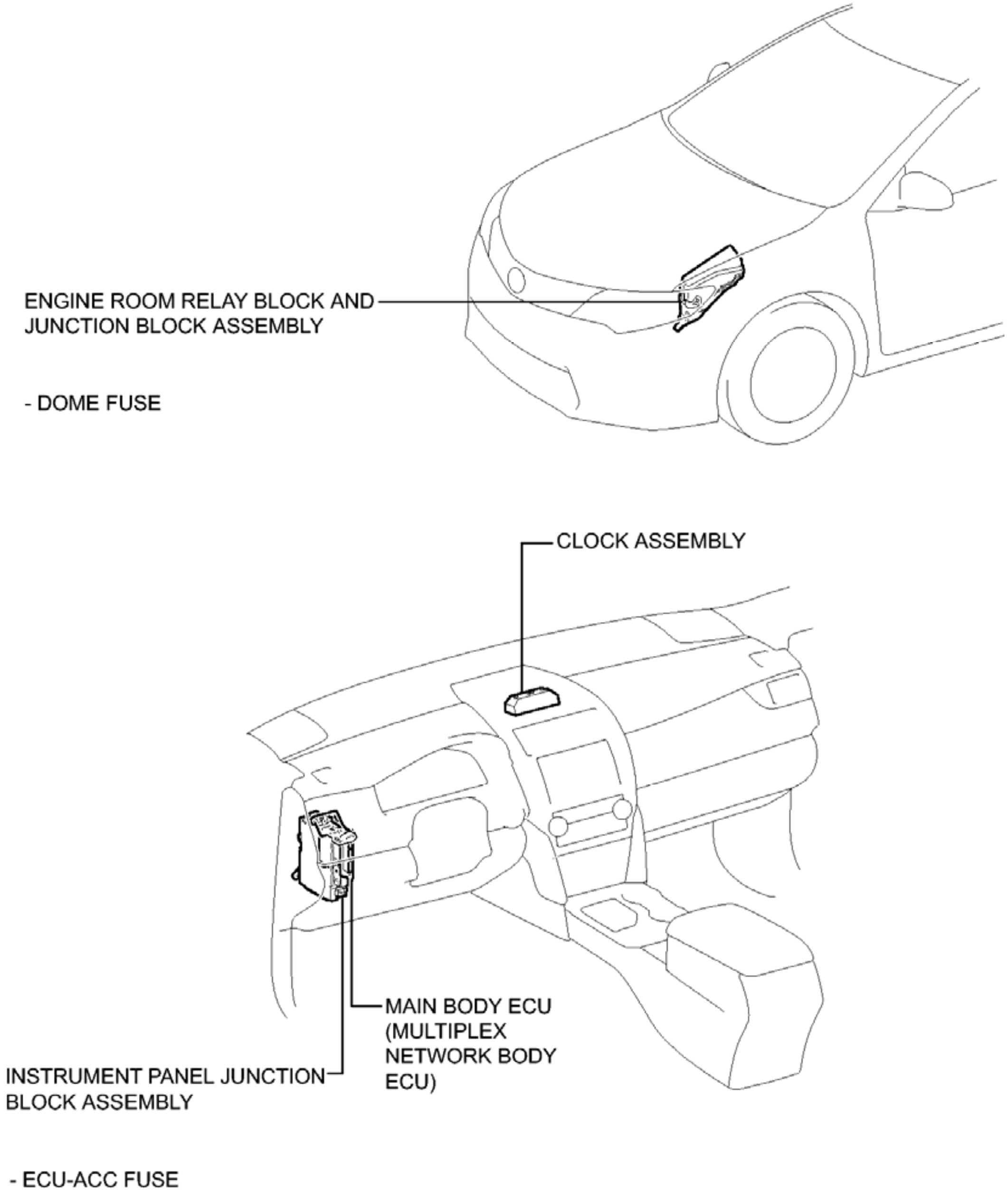
ENGINE ROOM RELAY BLOCK AND JUNCTION BLOCK ASSEMBLY
- DOME FUSE
CLOCK ASSEMBLY
MAIN BODY ECU (MULTIPLEX NETWORK BODY ECU)
INSTRUMENT PANEL JUNCTION BLOCK ASSEMBLY
- ECU-ACC FUSE

Fig. 1: Identifying Clock System Components Location
Courtesy of TOYOTA MOTOR SALES, U.S.A., INC.

SYSTEM DIAGRAM

SYSTEM DIAGRAM

1. **DIRECT LINE SIGNAL**

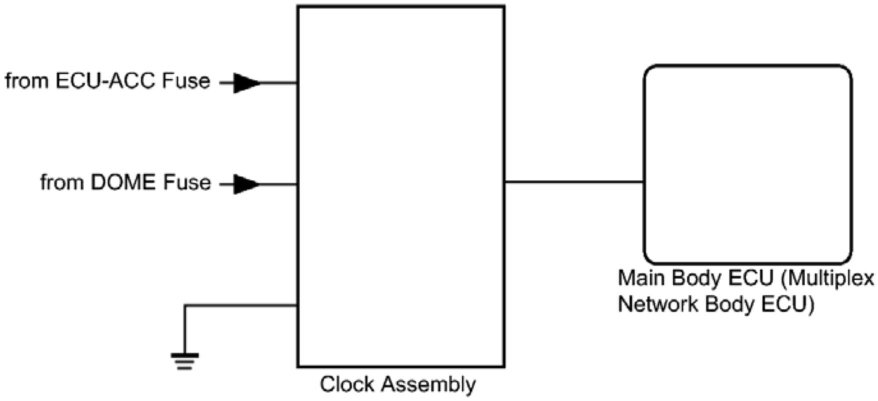
from ECU-ACC Fuse
from DOME Fuse
Main Body ECU (Multiplex Network Body ECU)
Clock Assembly

Fig. 2: Clock System Diagram
Courtesy of TOYOTA MOTOR SALES, U.S.A., INC.

HOW TO PROCEED WITH TROUBLESHOOTING

HOW TO PROCEED WITH TROUBLESHOOTING

1. **VEHICLE BROUGHT TO WORKSHOP**

   NEXT: Go to next step

2. **CUSTOMER PROBLEM ANALYSIS**

   NEXT: Go to next step

3. **PROBLEM SYMPTOM CONFIRMATION**

   NEXT: Go to next step

4. **PROBLEM SIMULATION**

   NEXT: Go to next step

5. **PROBLEM SYMPTOMS TABLE**
   a. Refer to Problem Symptoms Table. Refer to **PROBLEM SYMPTOMS TABLE**.

      NEXT: Go to next step

6. **REPAIR OR REPLACE**

NEXT: Go to next step

7. **CONFIRMATION TEST**

   NEXT --> END

PROBLEM SYMPTOMS TABLE

PROBLEM SYMPTOMS TABLE

HINT:

Use the table below to help determine the cause of problem symptoms. If multiple suspected areas are listed, the potential causes of the symptoms are listed in order of probability in the "Suspected Area" column of the table. Check each symptom by checking the suspected areas in the order they are listed. Replace parts as necessary.

CLOCK

Symptom	Suspected Area	See
Clock does not operate at all.	Fuse (ECU-ACC, DOME)	-
	Wire harness or connector	-
	Clock assembly	Refer to **REMOVAL**
Clock display illumination malfunction	Wire harness or connector	-
	Main body ECU (Multiplex network body ECU)	Refer to **REMOVAL**
	Clock assembly	Refer to **REMOVAL**
Clock loses or gains time.	Clock assembly	Refer to **REMOVAL**
Clock cannot be adjusted.	Clock assembly	Refer to **REMOVAL**

2012-2017 ENGINE

Cooling System (Service Specifications) - Camry (2AR-FE)

2AR-FE COOLING

SERVICE DATA

SERVICE DATA

THERMOSTAT

Condition	Specified Condition
Standard valve opening temperature	80 to 84°C (176 to 183°F)
Standard valve lift	10 mm (0.394 in.) or more at 95°C (203°F)

COOLING FAN MOTOR

Item	Condition	Specified Condition
Cooling fan motor	Battery voltage applied at 20°C (68°F)	5.8 to 7.4 A
No. 2 cooling fan motor	Battery voltage applied at 20°C (68°F)	5.8 to 7.4 A

COOLING FAN RELAY

Item	Tester Connection	Specified Condition
Cooling fan relay	3 - 5	10 kohmsor higher (Battery voltage is not applied between terminals 1 and 2)
	3 - 5	Below 1 ohms (Battery voltage is applied between terminals 1 and 2)

RADIATOR

Item	Condition	Specified Condition
Radiator cap	Standard value (for brand-new cap)	93.3 to 122.7 kPa (0.95 to 1.25 kgf/cm^2 , 13.5 to 17.8 psi)
	Minimum standard value (for used cap)	78.5 kPa (0.8 kgf/cm^2 , 11.4 psi)

TORQUE SPECIFICATIONS

TORQUE SPECIFICATIONS

WATER PUMP

Part Tightened	N*m	kgf*cm	ft.*lbf

Water pump x Water inlet housing	21	214	15

THERMOSTAT

Part Tightened	N*m	kgf*cm	ft.*lbf
Water inlet x Water inlet housing	10	102	7

COOLING FAN MOTOR

Part Tightened	N*m	kgf*cm	ft.*lbf
Fan shroud x cooling fan motor	2.6	26	23 in.*lbf
Fan shroud x No. 2 cooling fan motor	2.6	26	23 in.*lbf
Fan x Cooling fan motor	6.3	64	56 in.*lbf
Fan x No. 2 cooling fan motor	6.3	64	56 in.*lbf

RADIATOR

Part Tightened	N*m	kgf*cm	ft.*lbf
Cooler condenser assembly x Radiator assembly	6.0	61	53 in.*lbf
Upper radiator support sub-assembly x Body	12	122	9
Radiator reserve tank assembly x Fan shroud	7.0	71	62 in.*lbf

2012-2017 ENGINE

Cooling System (Service Specifications) - Camry (2GR-FE)

2GR-FE COOLING

SERVICE DATA

SERVICE DATA

THERMOSTAT

Condition	Specified Condition
Standard valve opening temperature	80 to 84°C (176 to 183°F)
Standard valve lift	7.7 mm (0.3031 in.) or more at 95°C (203°F)

COOLING FAN MOTOR

Item	Condition	Specified Condition
Cooling fan motor	Battery voltage applied at 20°C (68° F)	7.3 to 9.3 A
No. 2 cooling fan motor	Battery voltage applied at 20°C (68° F)	7.3 to 9.3 A

COOLING FAN RELAY

Item	Tester Connection	Specified Condition
Fan relay	3 - 5	10 kohmsor higher (Battery voltage is not applied between terminals 1 and 2)
	3 - 5	Below 1 ohms (Battery voltage is applied between terminals 1 and 2)

RADIATOR

Item	Condition	Specified Condition
Radiator cap	Standard value (for brand-new cap)	93.3 to 122.7 kPa (0.95 to 1.25 kgf/cm^2 , 13.5 to 17.8 psi)
	Minimum standard value (for used cap)	78.5 kPa (0.8 kgf/cm^2 , 11.4 psi)

TORQUE SPECIFICATIONS

TORQUE SPECIFICATIONS

COOLANT

Part Tightened	N*m	kgf*cm	ft.*lbf
Cylinder block drain cock plug x Cylinder block	13	130	9
Air drain cock plug x Water inlet housing	13	130	9

WATER PUMP

Part Tightened		N*m	kgf*cm	ft.*lbf
Water pump x Timing chain cover sub-assembly	for bolt A	21	214	15
	for bolt B	11	112	8
	for bolt C	11	112	8
Water pump pulley x Water pump	without SST	21	214	15
	with SST	11	112	8
Water inlet housing x Timing chain cover sub-assembly		10	102	7
V-ribbed belt tensioner pulley x V-ribbed belt tensioner pulley bracket		48	489	35
Front No. 1 engine mounting bracket LH x Timing chain cover sub-assembly	without SST	54	551	40
	with SST	34	347	25

THERMOSTAT

Part Tightened	N*m	kgf*cm	ft.*lbf
Water inlet x Water inlet housing	10	102	7

COOLING FAN MOTOR

Part Tightened	N*m	kgf*cm	ft.*lbf

Cooling fan motor x Fan shroud	2.6	27	23 in.*lbf
No. 2 cooling fan motor x Fan shroud	2.6	27	23 in.*lbf
Fan x Cooling fan motor	6.3	64	56
No. 2 Fan x No. 2 Cooling fan motor	6.3	64	56

RADIATOR

Part Tightened	N*m	kgf*cm	ft.*lbf
Radiator assembly x Cooler condenser assembly	6.0	61	53 in.*lbf
Upper radiator support sub-assembly x Body	12	122	9
Radiator reserve tank assembly x Fan shroud	7.0	71	62 in.*lbf

CRUISE CONTROL MAIN SWITCH

COMPONENTS

ILLUSTRATION

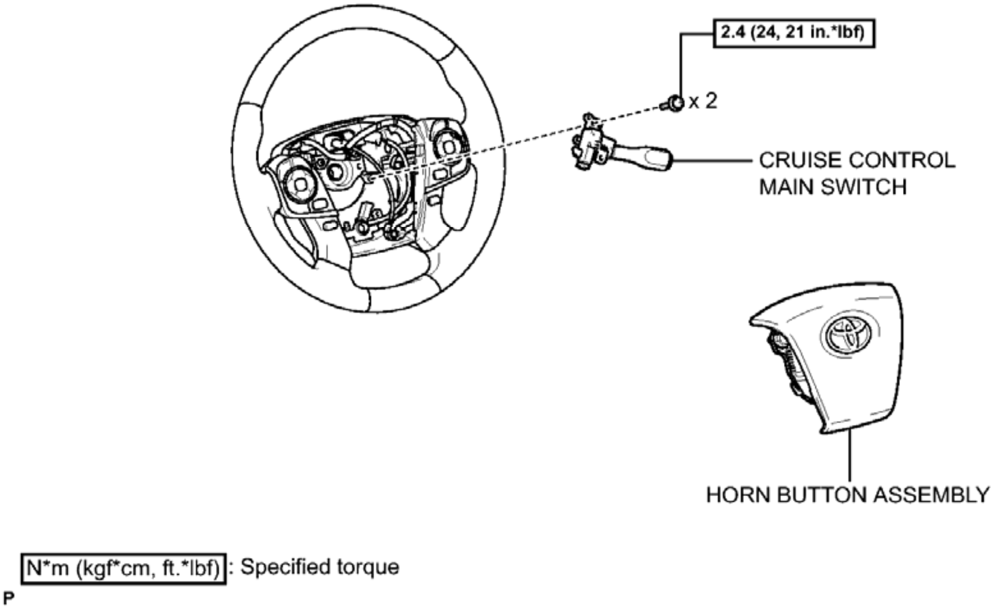
2.4 (24, 21 in.*lbf)
x 2
CRUISE CONTROL MAIN SWITCH
HORN BUTTON ASSEMBLY
N*m (kgf*cm, ft.*lbf) : Specified torque
P

Fig. 1: Identifying Cruise Control Main Switch Replacement Components With Torque Specifications
Courtesy of TOYOTA MOTOR SALES, U.S.A., INC.

REMOVAL

REMOVAL

1. **REMOVE HORN BUTTON ASSEMBLY**

   Refer to **REMOVAL**

2. **REMOVE CRUISE CONTROL MAIN SWITCH**
   a. Remove the 2 screws.

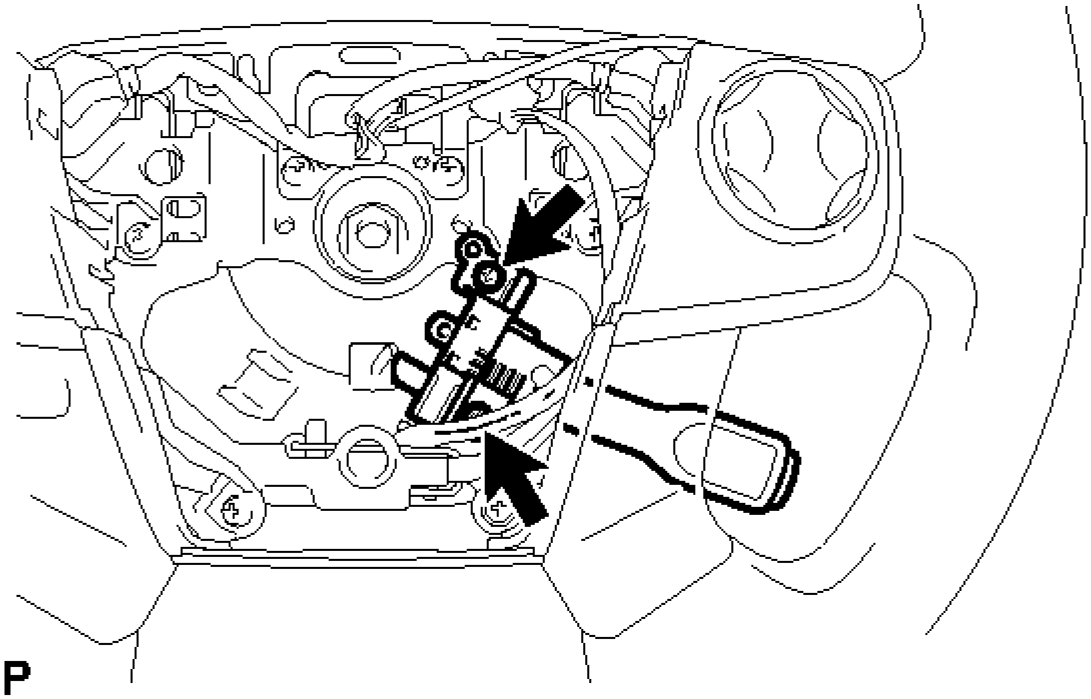

Fig. 2: Identifying Cruise Control Main Switch Screws
Courtesy of TOYOTA MOTOR SALES, U.S.A., INC.

b. Disconnect the connector and remove the cruise control main switch.

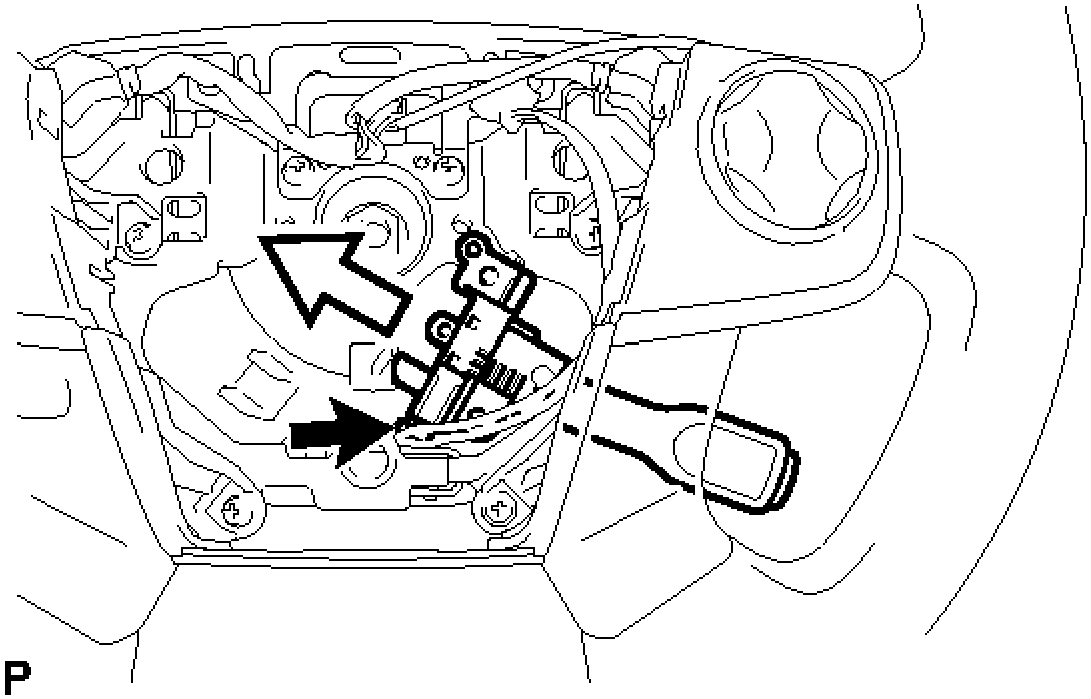

Fig. 3: Removing Cruise Control Main Switch
Courtesy of TOYOTA MOTOR SALES, U.S.A., INC.

INSPECTION

INSPECTION

1. **INSPECT CRUISE CONTROL SWITCH**
    a. Measure the resistance according to the value(s) in the table below.

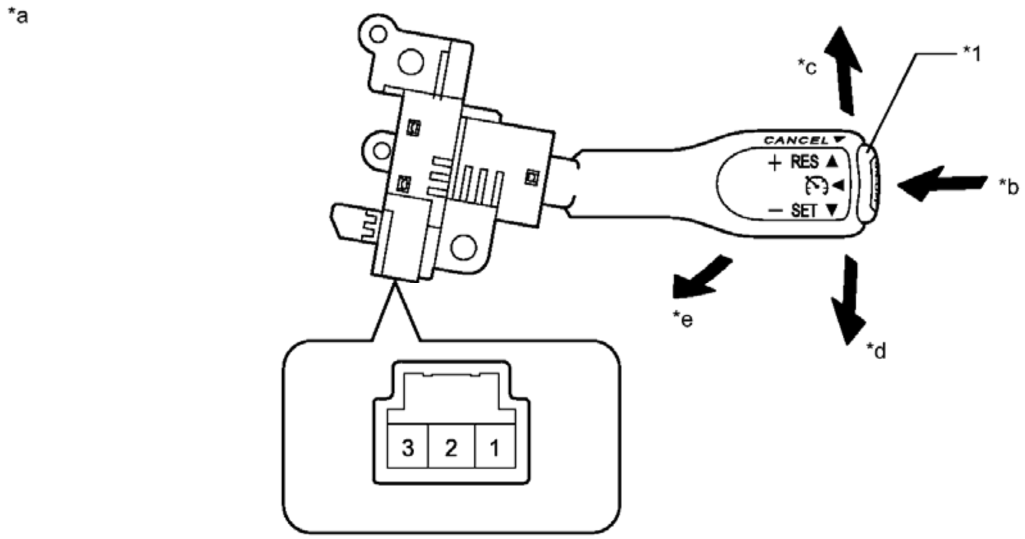

Fig. 4: Inspecting Cruise Control Main Switch
Courtesy of TOYOTA MOTOR SALES, U.S.A., INC.

Standard Resistance

Tester Connection	Switch Condition	Specified Condition
1 - 3	Cruise control switch (ON-OFF button) released	1 Mohms or higher
	Cruise control switch (ON-OFF button) pushed	Below 2.5 ohms
	+/RES	235 to 245 ohms
	-/SET	617 to 643 ohms

	CANCEL	1509 to 1571 ohms

TEXT IN ILLUSTRATION

*1	Cruise Control Switch (ON-OFF button)	-	-
*a	Component without harness connected (Cruise Control Switch)	*b	ON-OFF
*c	+/RES	*d	-/SET
*e	CANCEL	-	-

INSTALLATION

INSTALLATION

1. **INSTALL CRUISE CONTROL MAIN SWITCH**
    a. Connect the connector.
    b. Install the cruise control switch main with the 2 screws shown in the illustration.

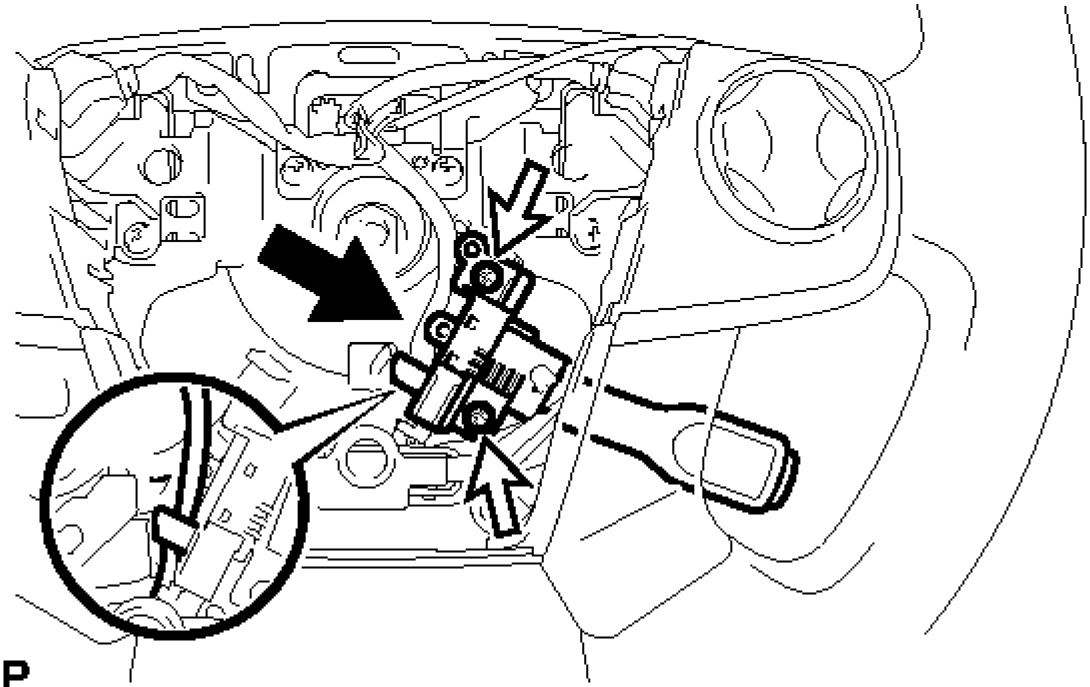

Fig. 5: Installing Cruise Control Main Switch
Courtesy of TOYOTA MOTOR SALES, U.S.A., INC.

Torque: 2.4 N*m (24 kgf*cm, 21 in.*lbf)

2. **INSTALL HORN BUTTON ASSEMBLY**

   Refer to **INSTALLATION**

CRUISE CONTROL MAIN SWITCH

COMPONENTS

ILLUSTRATION

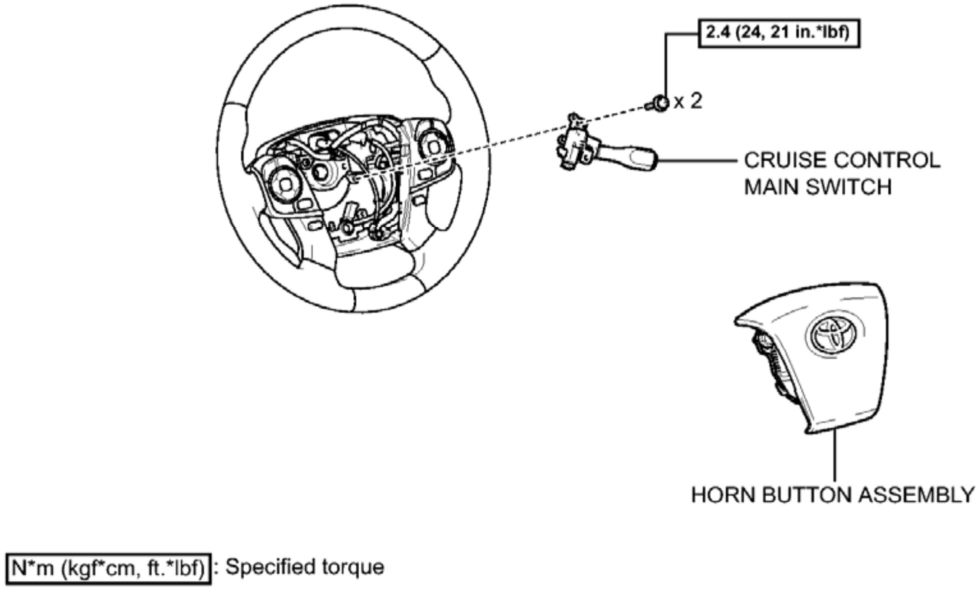
2.4 (24, 21 in.*lbf)
x 2
CRUISE CONTROL MAIN SWITCH
HORN BUTTON ASSEMBLY
N*m (kgf*cm, ft.*lbf): Specified torque
P

Fig. 1: Identifying Cruise Control Main Switch Replacement Components With Torque Specifications
Courtesy of TOYOTA MOTOR SALES, U.S.A., INC.

REMOVAL

REMOVAL

1. **REMOVE HORN BUTTON ASSEMBLY**

   Refer to **REMOVAL**

2. **REMOVE CRUISE CONTROL MAIN SWITCH**
   a. Remove the 2 screws.

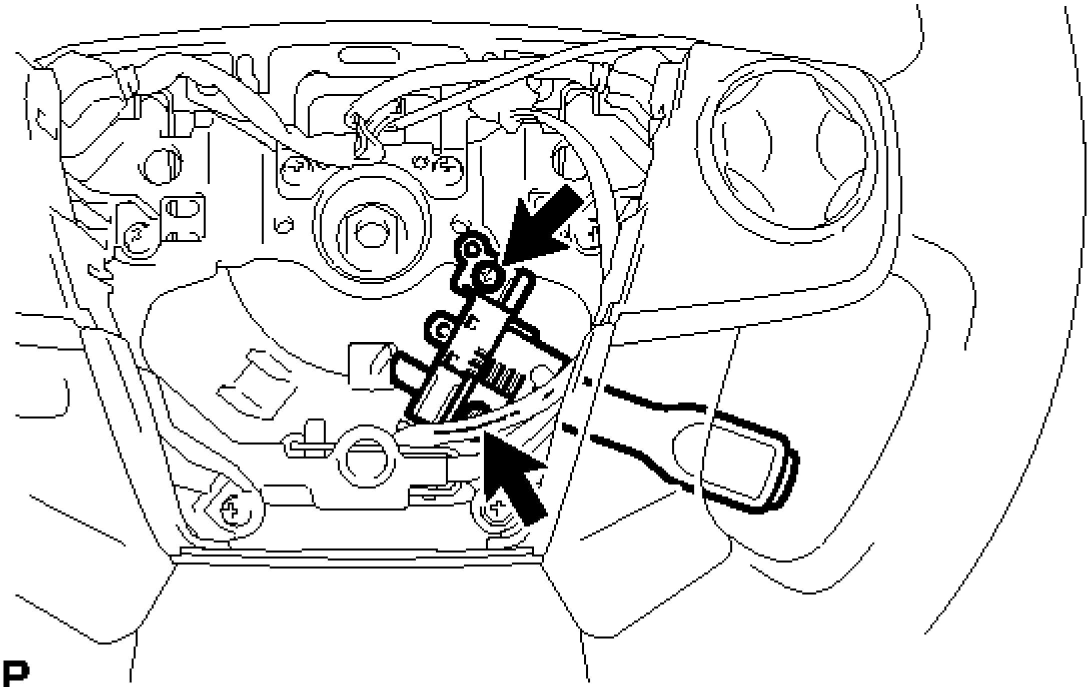

Fig. 2: Identifying Cruise Control Main Switch Screws
Courtesy of TOYOTA MOTOR SALES, U.S.A., INC.

b. Disconnect the connector and remove the cruise control main switch.

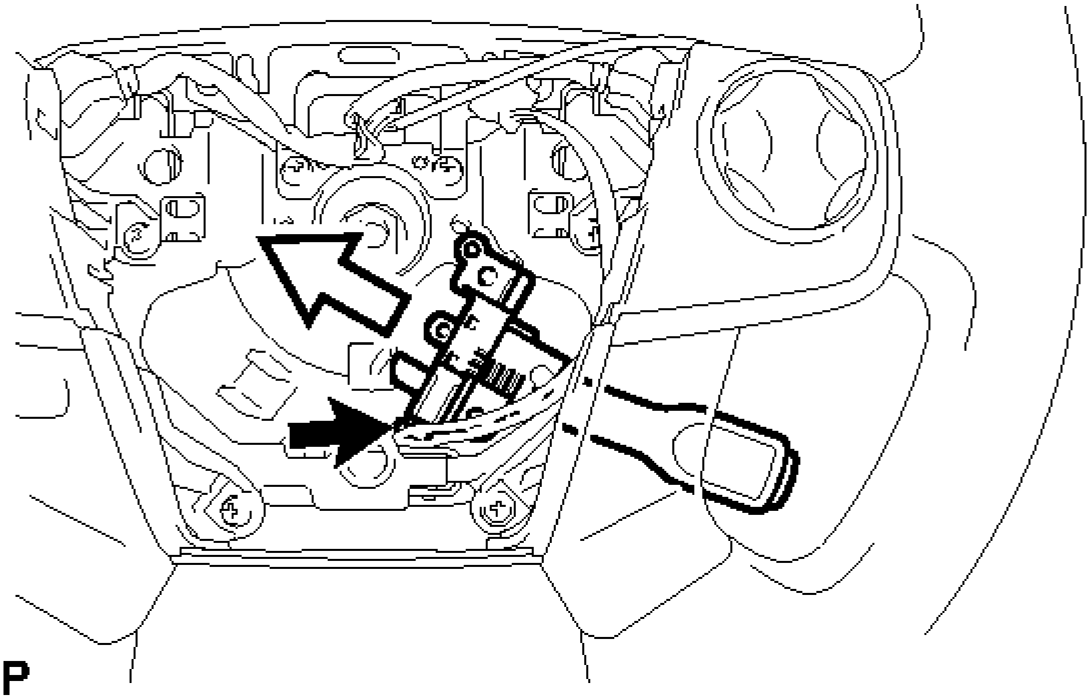

Fig. 3: Removing Cruise Control Main Switch
Courtesy of TOYOTA MOTOR SALES, U.S.A., INC.

INSPECTION

INSPECTION

1. **INSPECT CRUISE CONTROL SWITCH**
    a. Measure the resistance according to the value(s) in the table below.

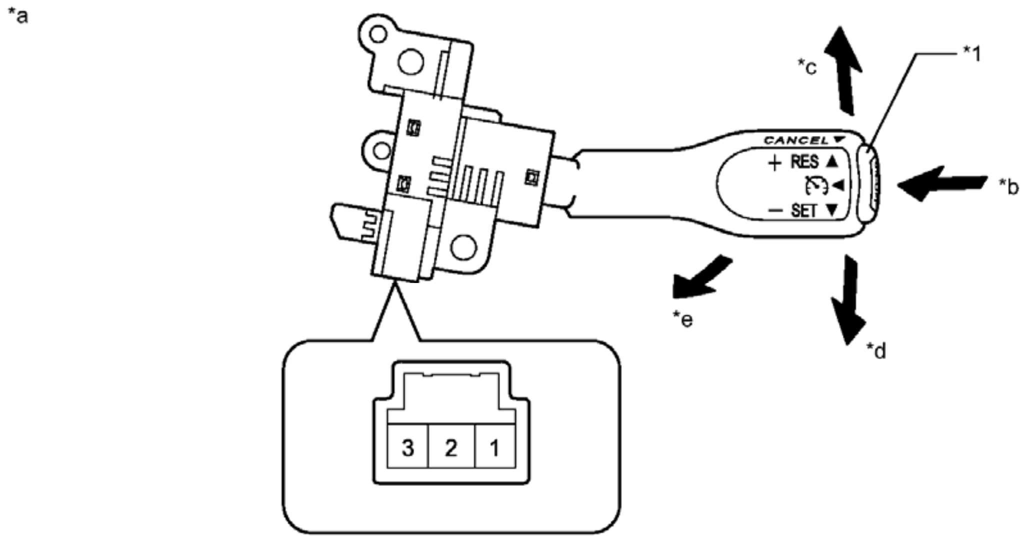

Fig. 4: Inspecting Cruise Control Main Switch
Courtesy of TOYOTA MOTOR SALES, U.S.A., INC.

Standard Resistance

Tester Connection	Switch Condition	Specified Condition
1 - 3	Cruise control switch (ON-OFF button) released	1 Mohms or higher
	Cruise control switch (ON-OFF button) pushed	Below 2.5 ohms
	+/RES switch ON	235 to 245 ohms
	-/SET	

	switch ON	617 to 643 ohms
	CANCEL switch ON	1509 to 1571 ohms

TEXT IN ILLUSTRATION

*1	Cruise Control Switch (ON-OFF button)	-	-
*a	Component without harness connected (Cruise Control Switch)	*b	ON-OFF
*c	+/RES	*d	-/SET
*e	CANCEL	-	-

INSTALLATION

INSTALLATION

1. **INSTALL CRUISE CONTROL MAIN SWITCH**
    a. Connect the connector.
    b. Install the cruise control switch with the 2 screws shown in the illustration.

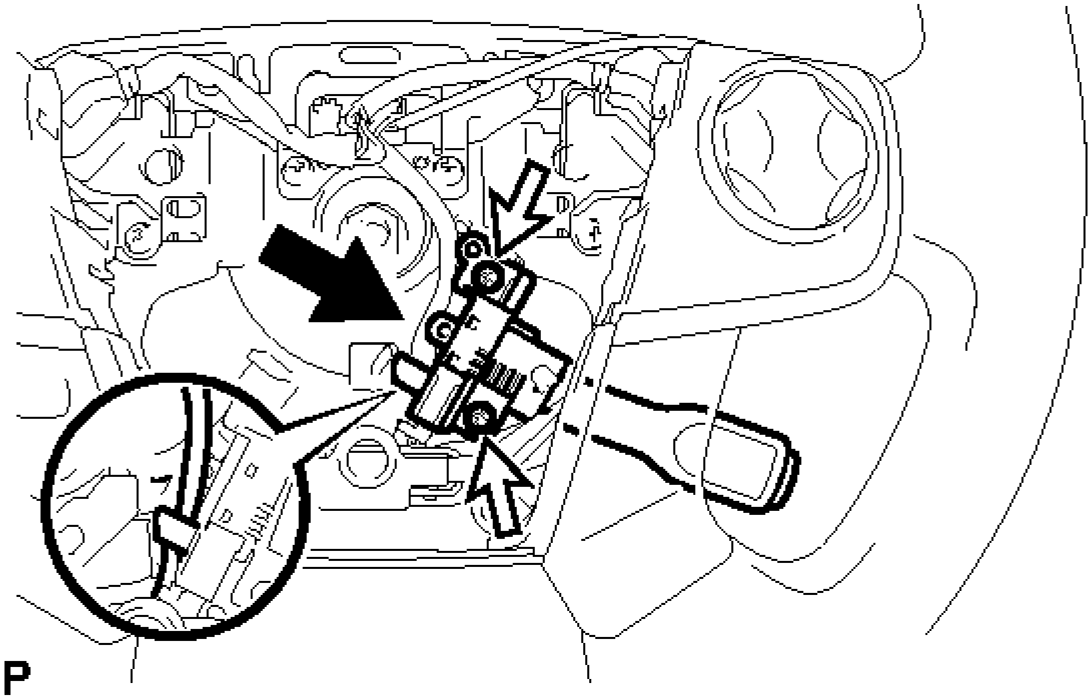

Fig. 5: Installing Cruise Control Main Switch
Courtesy of TOYOTA MOTOR SALES, U.S.A., INC.

Torque: 2.4 N*m (24 kgf*cm, 21 in.*lbf)

2. **INSTALL HORN BUTTON ASSEMBLY**

   Refer to **INSTALLATION**

FRONT AXLE HUB BOLT

COMPONENTS

ILLUSTRATION

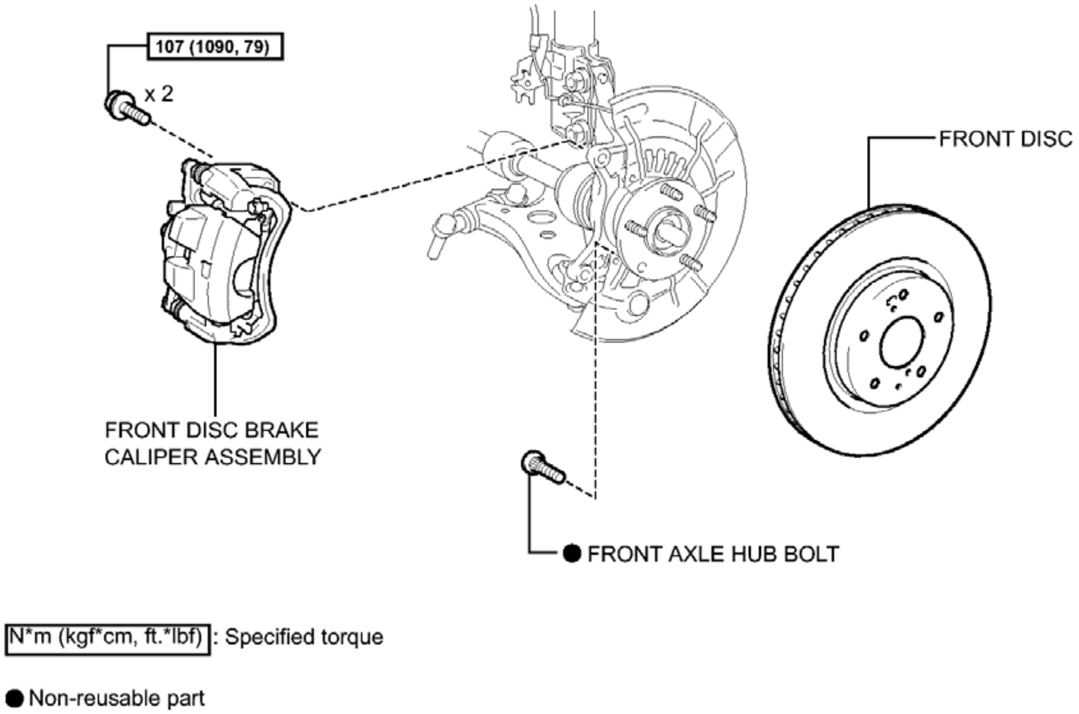
107 (1090, 79)
x 2
FRONT DISC
FRONT DISC BRAKE
CALIPER ASSEMBLY
● FRONT AXLE HUB BOLT
N*m (kgf*cm, ft.*lbf) : Specified torque
● Non-reusable part

c

Fig. 1: Identifying Front Axle Hub Bolt Replacement Components With Torque Specifications
Courtesy of TOYOTA MOTOR SALES, U.S.A., INC.

REPLACEMENT

REPLACEMENT

NOTE: **When the brake pedal is first depressed after replacing the brake pads or pushing back the disc brake piston, DTC C1214 may be output. As there is no malfunction, clear the DTC.**

HINT:

- Use the same procedure for the RH side and LH side.
- The procedure listed below is for the LH side.

1. **PRECAUTION**

   NOTE: **After turning the power switch off, waiting time may be required before disconnecting the cable from the negative (-) auxiliary battery terminal. Therefore, make sure to read the disconnecting the cable from the negative (-) auxiliary battery terminal notice before proceeding with work. Refer to PRECAUTION .**

2. **DISABLE BRAKE CONTROL** . Refer to **REMOVAL - Step 2**
3. **REMOVE FRONT WHEEL**
4. **SEPARATE FRONT DISC BRAKE CALIPER ASSEMBLY**
   a. Remove the 2 bolts and separate the front disc brake caliper assembly.

      NOTE: **Use wire or an equivalent tool to keep the front disc brake caliper assembly from hanging down by the front flexible hose.**

5. **REMOVE FRONT DISC** . Refer to **REMOVAL - Step 15**
6. **REMOVE FRONT AXLE HUB BOLT**
   a. Position the front axle hub bolt to be removed as shown in the illustration.

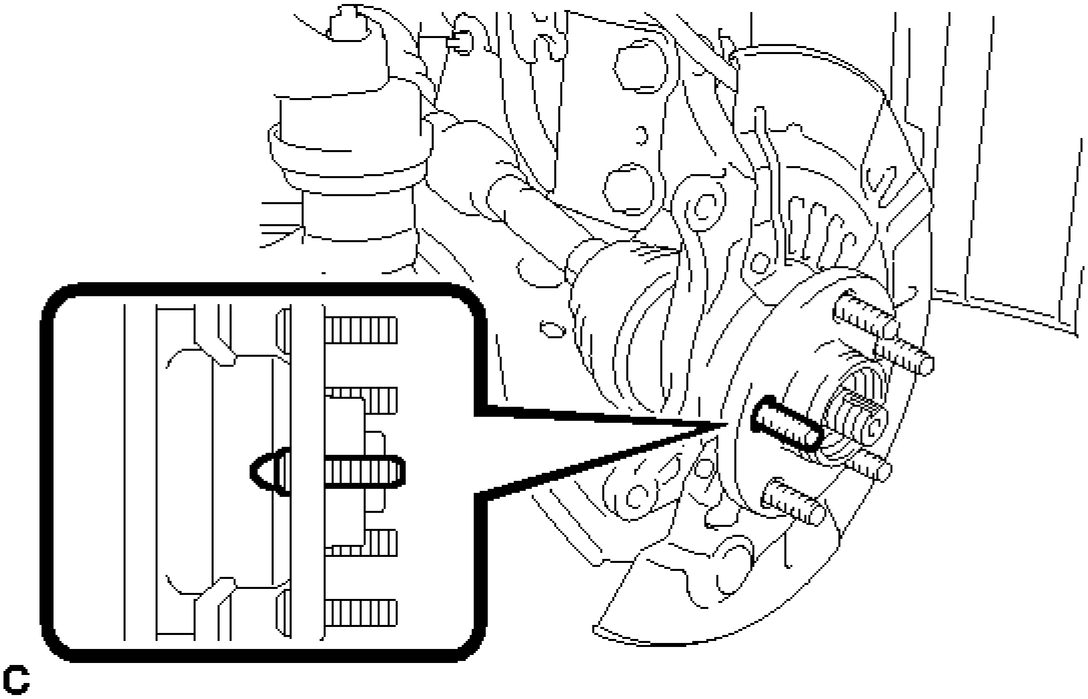

Fig. 2: Identifying Front Axle Hub Stud
Courtesy of TOYOTA MOTOR SALES, U.S.A., INC.

b. Temporarily install 2 nuts to the front axle hub bolts as shown in the illustration.

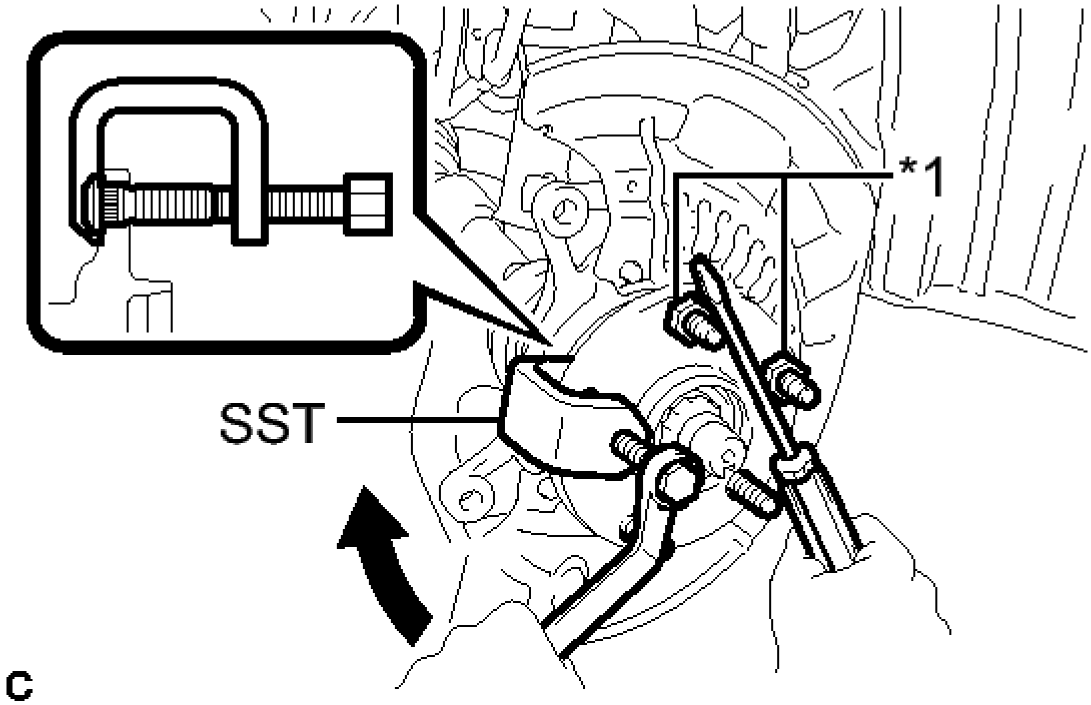

Fig. 3: Removing Front Axle Hub Stud With SST
Courtesy of TOYOTA MOTOR SALES, U.S.A., INC.

TEXT IN ILLUSTRATION

*1	Nut

Recommended service nut

Thread diameter: 12.0 mm (0.472 in.)

Thread pitch: 1.5 mm (0.0591 in.)

NOTE: Install the nuts to prevent damage to the front axle hub bolts.

c. Using SST and a screwdriver or an equivalent tool to hold the front axle hub, remove the front axle hub bolt.

- **SST: 09628-10011**

7. **INSTALL FRONT AXLE HUB BOLT**

a. Position a new front axle hub bolt as shown in the illustration.

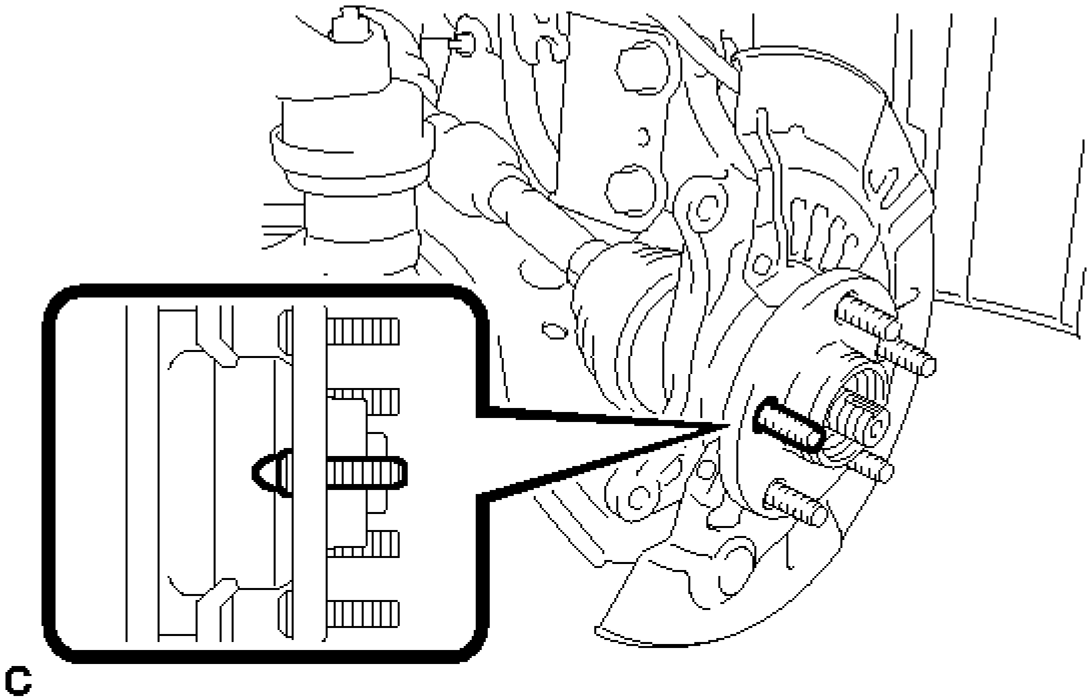

Fig. 4: Identifying Front Axle Hub Stud
Courtesy of TOYOTA MOTOR SALES, U.S.A., INC.

b. Temporarily install the front axle hub bolt to the front axle hub.
c. Install a washer and nut to the front axle hub bolt as shown in the illustration.

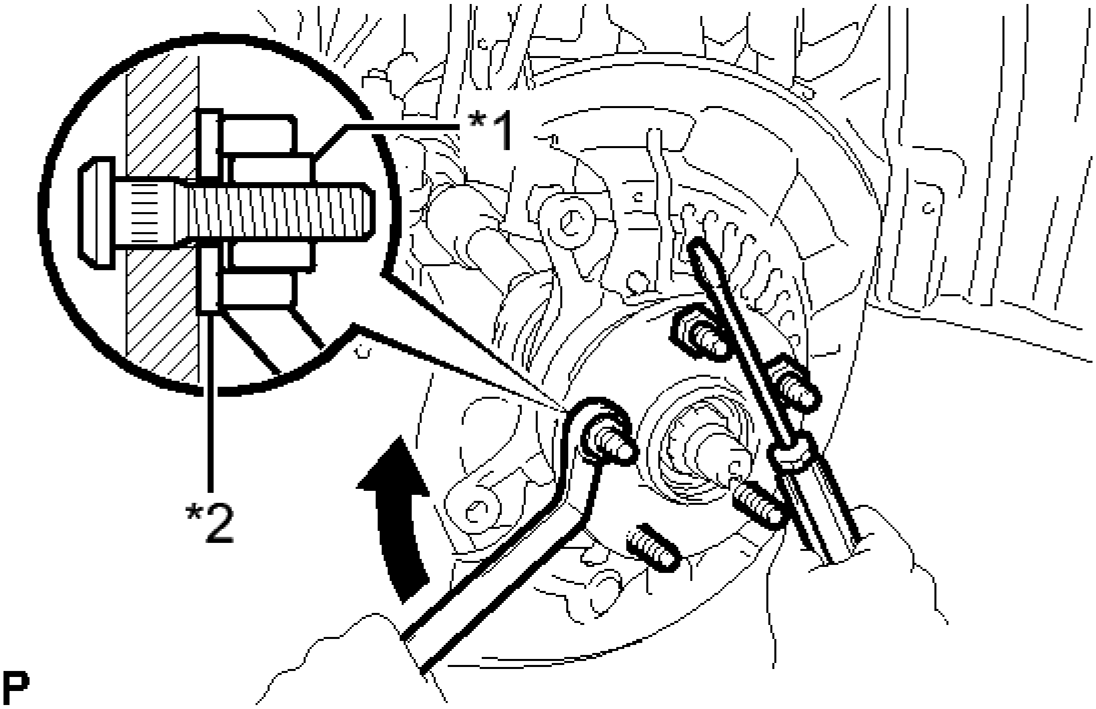

Fig. 5: Installing Front Axle Hub Stud

Courtesy of TOYOTA MOTOR SALES, U.S.A., INC.

TEXT IN ILLUSTRATION

*1	Nut
*2	Washer

Recommended service nut

Thread diameter: 12.0 mm (0.472 in.)

Thread pitch: 1.5 mm (0.0591 in.)

HINT:

Recommended washer thickness is 5 mm (0.197 in.) or more.

d. Using a screwdriver or an equivalent tool to hold the front axle hub, install the front axle hub bolt by tightening the nut.

NOTE:

- **Install the nuts to prevent damage to the front axle hub bolts.**
- **Do not damage the threads of the front axle hub bolts.**

e. Remove the 3 nuts and washer from the 3 front axle hub bolts.

8. **INSTALL FRONT DISC** . Refer to **INSTALLATION - Step 1**
9. **INSTALL FRONT DISC BRAKE CALIPER ASSEMBLY**
   a. Install the front disc brake caliper assembly to the steering knuckle with the 2 bolts.

   Torque: 107 N*m (1090 kgf*cm, 79 ft.*lbf)

   NOTE: **Do not twist the front flexible hose when installing the front disc brake caliper assembly.**

10. **INSTALL FRONT WHEEL**

    Torque: 103 N*m (1049 kgf*cm, 76 ft.*lbf)

11. **CONNECT CABLE TO AUXILIARY BATTERY NEGATIVE TERMINAL**
    a. Connect the cable to the negative (-) auxiliary battery terminal. Refer to **INSTALLATION - Step 2** .
    b. Connect the reservoir level switch connector.
    c. Clear the DTCs. Refer to **DTC CHECK / CLEAR** .

FRONT AXLE HUB

COMPONENTS

ILLUSTRATION

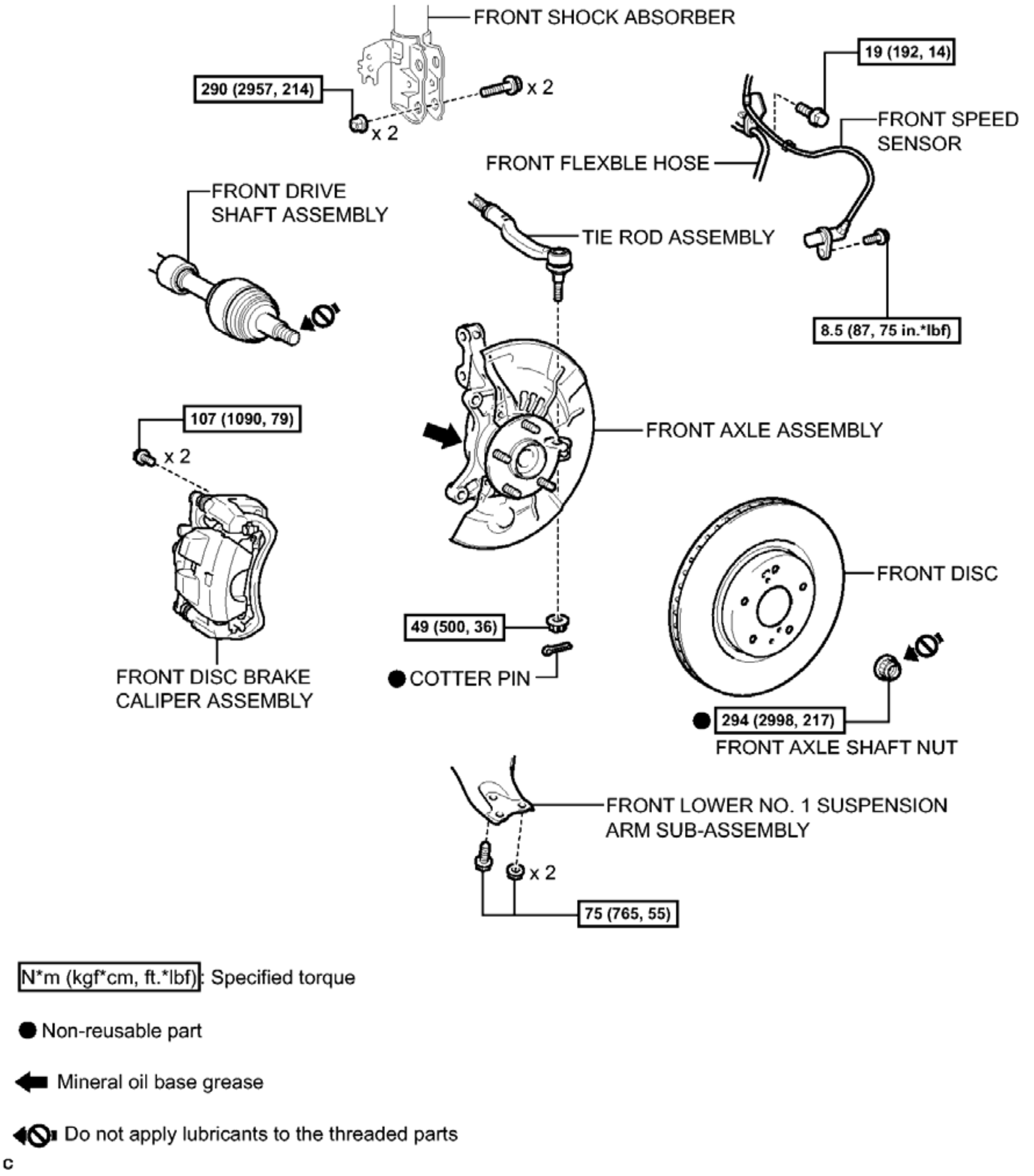
FRONT SHOCK ABSORBER
290 (2957, 214)
x 2
x 2
19 (192, 14)
FRONT SPEED SENSOR
FRONT FLEXBLE HOSE
FRONT DRIVE SHAFT ASSEMBLY
TIE ROD ASSEMBLY
8.5 (87, 75 in.*lbf)
107 (1090, 79)
x 2
FRONT AXLE ASSEMBLY
FRONT DISC
49 (500, 36)
● COTTER PIN
FRONT DISC BRAKE CALIPER ASSEMBLY
● 294 (2998, 217)
FRONT AXLE SHAFT NUT
FRONT LOWER NO. 1 SUSPENSION ARM SUB-ASSEMBLY
x 2
75 (765, 55)
N*m (kgf*cm, ft.*lbf): Specified torque
● Non-reusable part
Mineral oil base grease
Do not apply lubricants to the threaded parts
c

Fig. 6: Identifying Front Axle Hub Replacement Components With Torque Specifications (1 Of 2)

Courtesy of TOYOTA MOTOR SALES, U.S.A., INC.

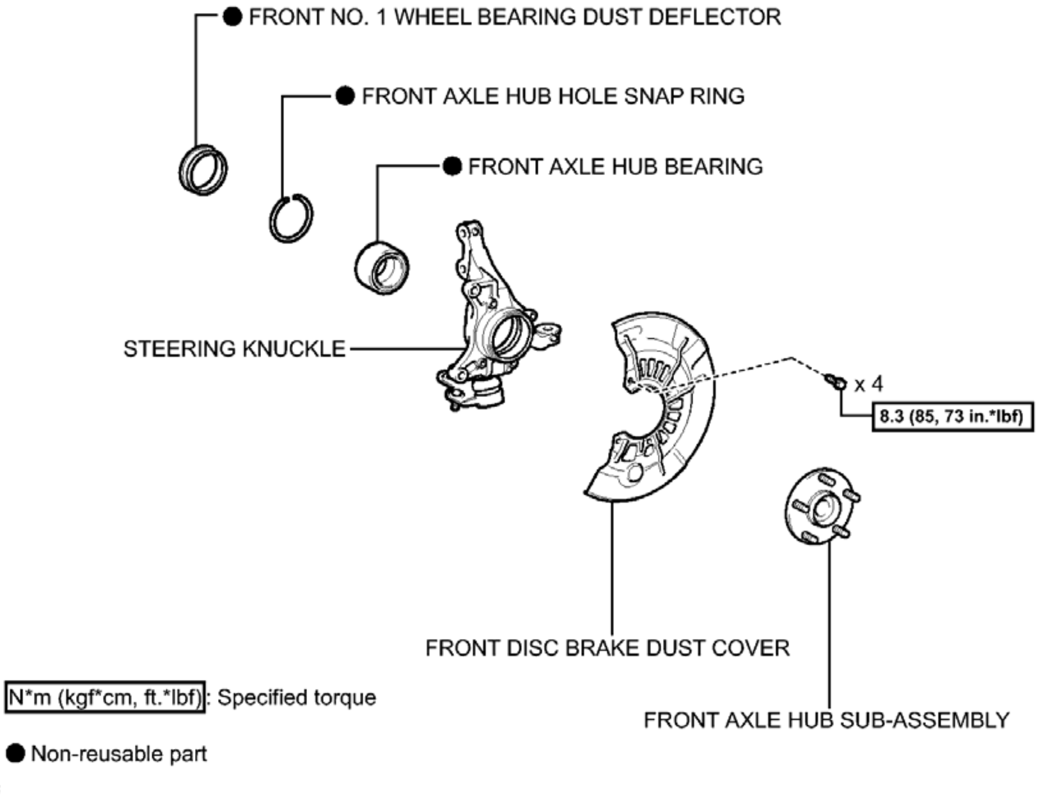
● FRONT NO. 1 WHEEL BEARING DUST DEFLECTOR
● FRONT AXLE HUB HOLE SNAP RING
● FRONT AXLE HUB BEARING
STEERING KNUCKLE
x 4
8.3 (85, 73 in.*lbf)
FRONT DISC BRAKE DUST COVER
FRONT AXLE HUB SUB-ASSEMBLY
N*m (kgf*cm, ft.*lbf): Specified torque
● Non-reusable part
c

Fig. 7: Identifying Front Axle Hub Replacement Components With Torque Specifications (2 Of 2)
Courtesy of TOYOTA MOTOR SALES, U.S.A., INC.

ON-VEHICLE INSPECTION

ON-VEHICLE INSPECTION

NOTE: When the brake pedal is first depressed after replacing the brake pads or pushing back the disc brake piston, DTC C1214 may be output. As there is no malfunction, clear the DTC.

HINT:

- Use the same procedure for the RH side and LH side.
- The procedure listed below is for the LH side.

1. **PRECAUTION**

   NOTE: After turning the power switch off, waiting time may be required before disconnecting the cable from the negative (-) auxiliary battery terminal. Therefore, make sure to read the disconnecting the cable from the

negative (-) auxiliary battery terminal notice before proceeding with work. Refer to PRECAUTION .

2. **DISABLE BRAKE CONTROL** . Refer to **REMOVAL - Step 2**
3. **REMOVE FRONT WHEEL**
4. **SEPARATE FRONT DISC BRAKE CALIPER ASSEMBLY** See step 4
5. **REMOVE FRONT DISC** . Refer to **REMOVAL - Step 15**
6. **INSPECT FRONT AXLE HUB BEARING LOOSENESS**
   a. Using a dial indicator, check for looseness near the center of the front axle hub.

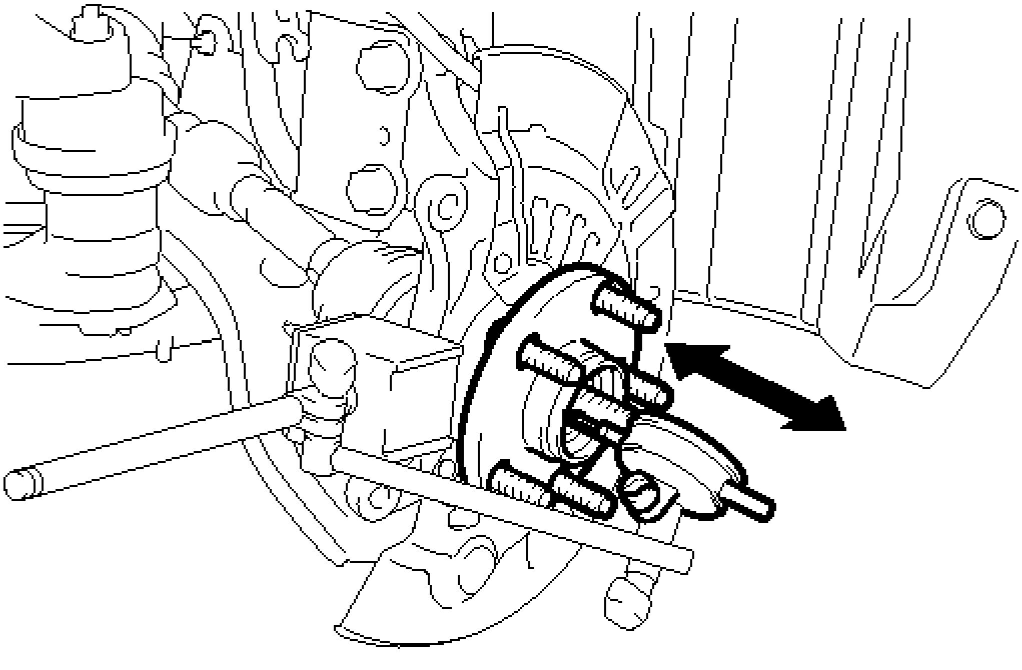

Fig. 8: Inspecting Front Axle Hub Bearing Looseness
Courtesy of TOYOTA MOTOR SALES, U.S.A., INC.

Maximum looseness

0.05 mm (0.00197 in.)

NOTE:

- **Ensure that the dial indicator is set perpendicular to the measurement surface.**
- **Keep the magnet of the dial indicator away from the front speed sensor.**

If the looseness exceeds the maximum, replace the front axle hub bearing.

7. **INSPECT FRONT AXLE HUB RUNOUT**

a. Using a dial indicator, check for runout on the surface of the front axle hub outside the hub bolts.

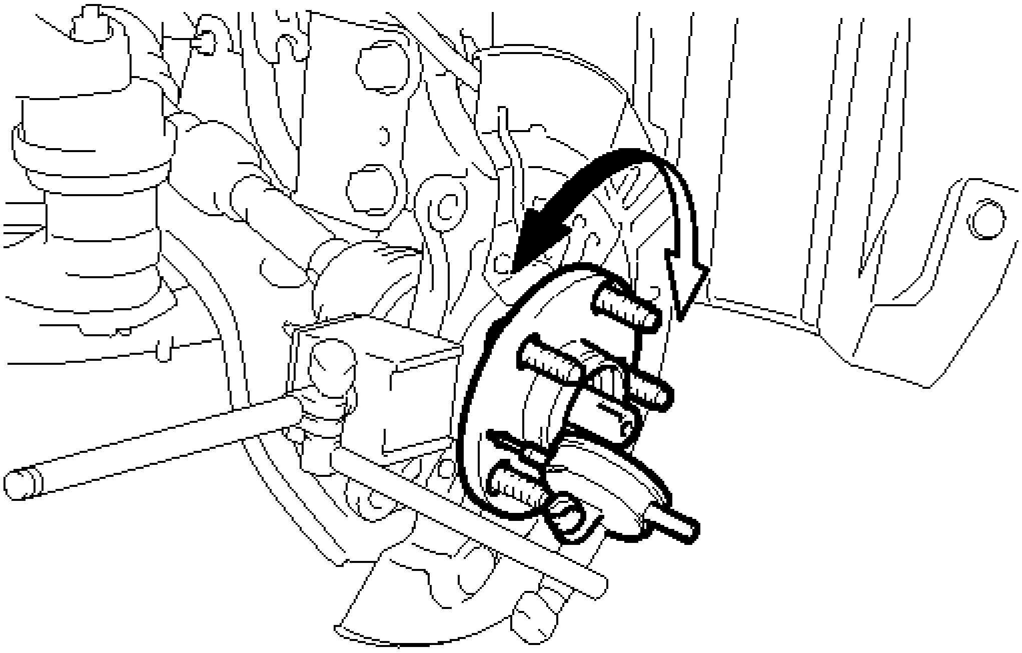

Fig. 9: Inspecting Front Axle Hub Runout
Courtesy of TOYOTA MOTOR SALES, U.S.A., INC.

Maximum runout

0.05 mm (0.00197 in.)

NOTE:

- **Ensure that the dial indicator is set perpendicular to the measurement surface.**
- **Keep the magnet of the dial indicator away from the front speed sensor.**

If the runout exceeds the maximum, replace the front axle hub.

8. **INSTALL FRONT DISC** . Refer to **INSTALLATION - Step 1**
9. **INSTALL FRONT DISC BRAKE CALIPER ASSEMBLY** See step 9
10. **INSTALL FRONT WHEEL**

    Torque: 103 N*m (1049 kgf*cm, 76 ft.*lbf)

11. **CONNECT CABLE TO AUXILIARY BATTERY NEGATIVE TERMINAL**
    a. Connect the cable to the negative (-) auxiliary battery terminal. Refer to **INSTALLATION - Step 2** .

  b. Connect the reservoir level switch connector.
  c. Clear the DTCs. Refer to **DTC CHECK / CLEAR** .

REMOVAL

REMOVAL

NOTE: **When the brake pedal is first depressed after replacing the brake pads or pushing back the disc brake piston, DTC C1214 may be output. As there is no malfunction, clear the DTC.**

HINT:

- Use the same procedure for the RH side and LH side.
- The procedure listed below is for the LH side.

1. **PRECAUTION**

   NOTE: **After turning the power switch off, waiting time may be required before disconnecting the cable from the negative (-) auxiliary battery terminal. Therefore, make sure to read the disconnecting the cable from the negative (-) auxiliary battery terminal notice before proceeding with work. Refer to PRECAUTION .**

2. **DISABLE BRAKE CONTROL** . Refer to **REMOVAL - Step 2**
3. **REMOVE FRONT WHEEL**
4. **REMOVE FRONT AXLE SHAFT NUT** . Refer to **REMOVAL - Step 9**
5. **SEPARATE FRONT SPEED SENSOR**
   a. Remove the bolt, disengage the clamp and separate the front speed sensor and front flexible hose.

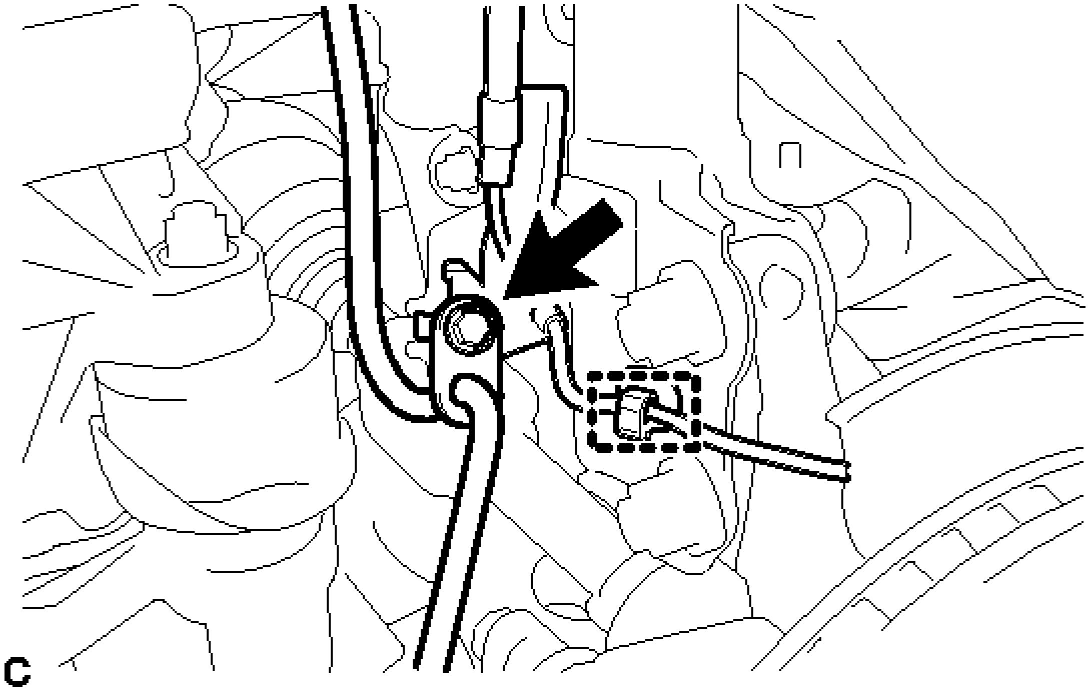

Fig. 10: Locating Front Speed Sensor Clamp And Front Flexible Hose Bolt
Courtesy of TOYOTA MOTOR SALES, U.S.A., INC.

NOTE: **Be sure to separate the front speed sensor from the front shock absorber completely.**

b. Remove the bolt and front speed sensor from the steering knuckle.

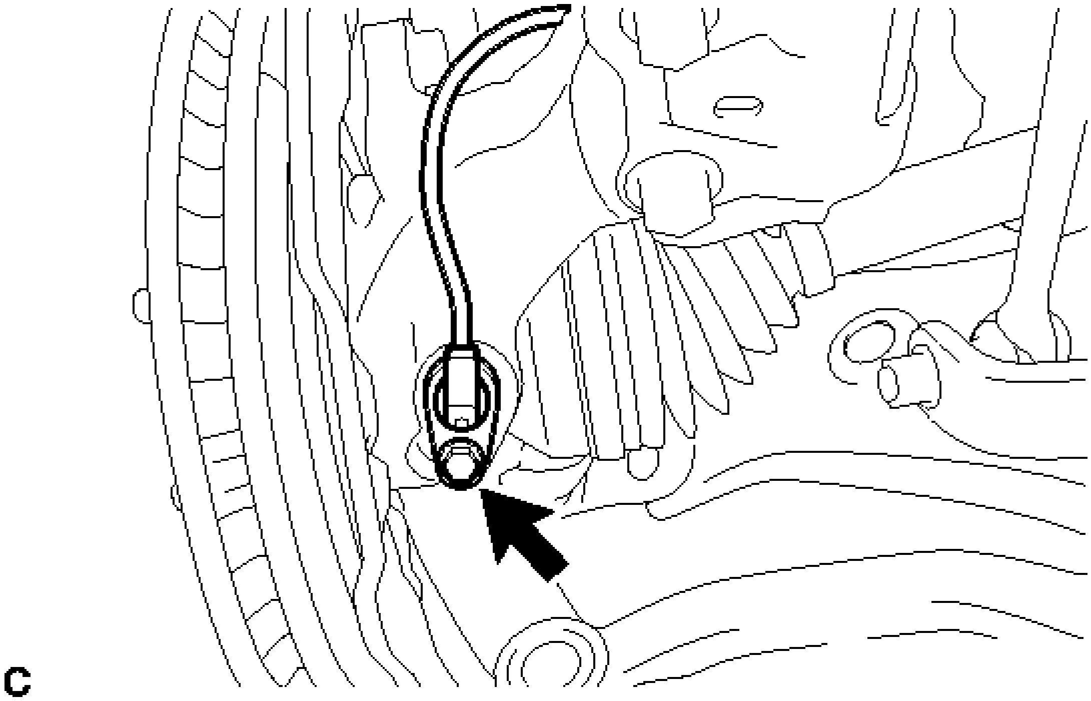

Fig. 11: Locating Front Speed Sensor And Bolt
Courtesy of TOYOTA MOTOR SALES, U.S.A., INC.

NOTE:

- **Prevent foreign matter from contacting the sensor tip.**
- **Be careful not to damage the front speed sensor.**
- **Clean the speed sensor installation hole and the contact surfaces every time the speed sensor is removed.**

6. **SEPARATE FRONT DISC BRAKE CALIPER ASSEMBLY** See step 4
7. **REMOVE FRONT DISC** . Refer to **REMOVAL - Step 15**
8. **SEPARATE TIE ROD ASSEMBLY** . Refer to **REMOVAL - Step 5**
9. **SEPARATE FRONT DRIVE SHAFT ASSEMBLY**
    a. Put matchmarks on the front drive shaft assembly and the front axle hub sub-assembly.

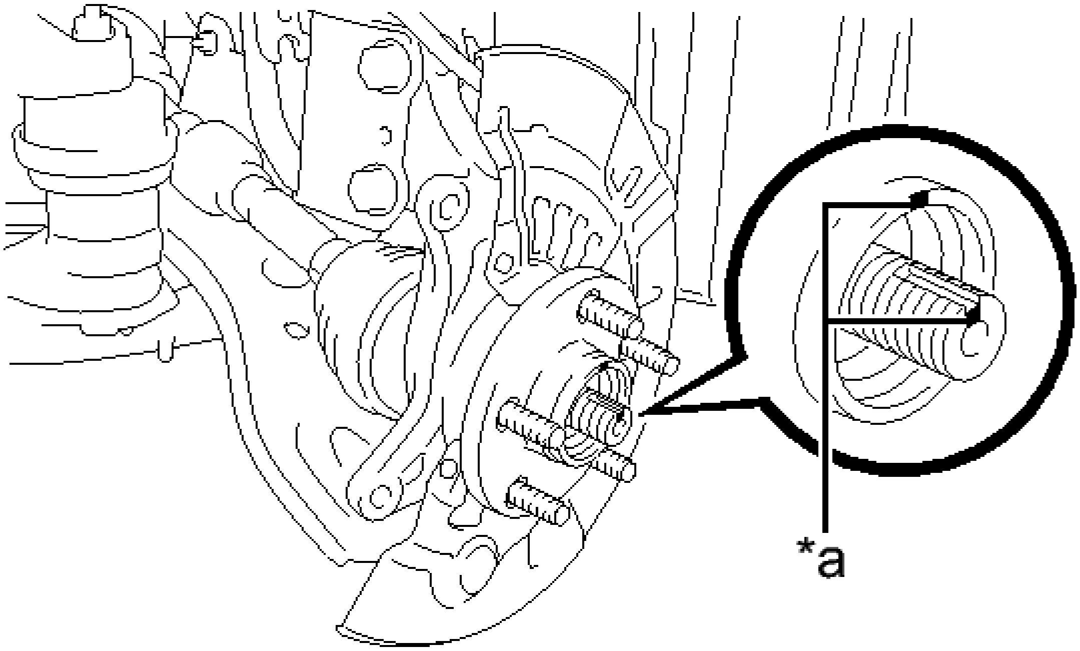

Fig. 12: Locating Front Drive Shaft Assembly And Front Axle Hub Sub-Assembly Matchmarks
Courtesy of TOYOTA MOTOR SALES, U.S.A., INC.

TEXT IN ILLUSTRATION

*a	Matchmark

b. Using a plastic hammer, separate the front drive shaft assembly from the front axle assembly.

   If it is difficult to separate, tap the end of the front drive shaft assembly using a brass bar and a hammer.

10. **SEPARATE FRONT LOWER NO. 1 SUSPENSION ARM SUB-ASSEMBLY**

    a. Remove the bolt and 2 nuts, and separate the front lower No. 1 suspension arm sub-assembly from the front lower ball joint assembly.

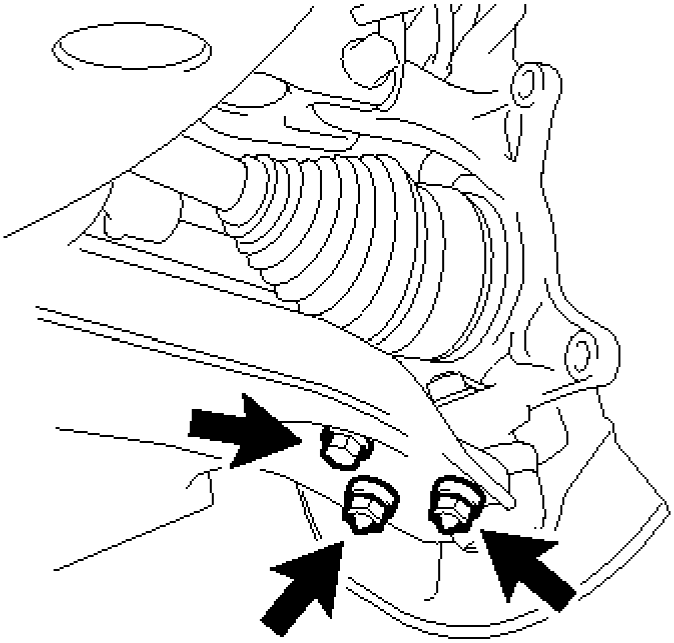

Fig. 13: Locating Front Lower Ball Joint Assembly Fasteners
Courtesy of TOYOTA MOTOR SALES, U.S.A., INC.

11. **REMOVE FRONT AXLE ASSEMBLY**
    a. Remove the 2 bolts, 2 nuts and front axle assembly from the front shock absorber.

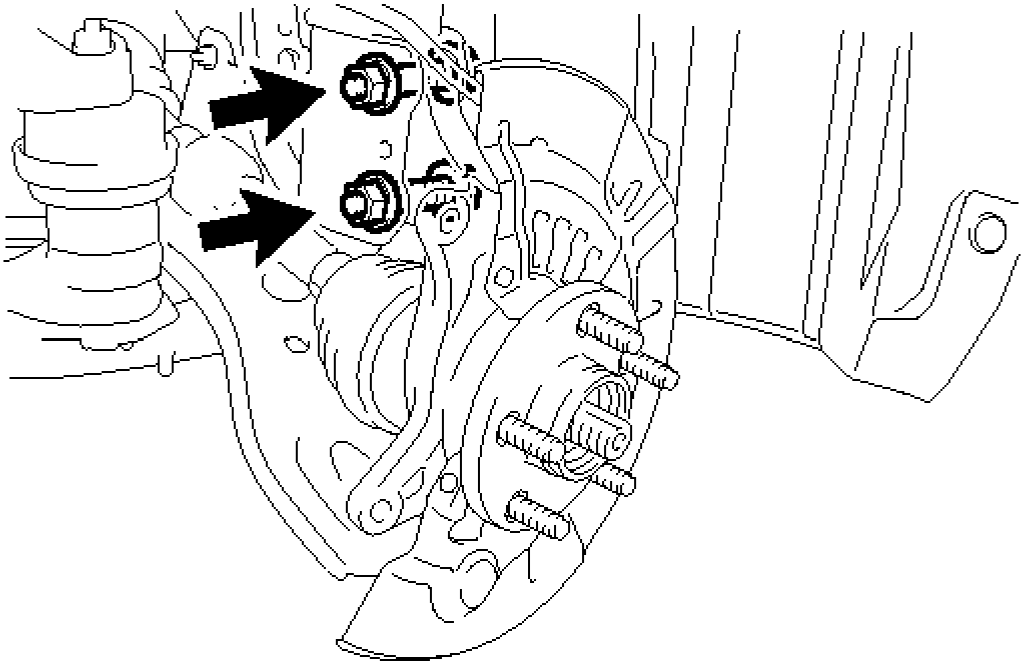

Fig. 14: Locating Front Shock Absorber Fasteners

Courtesy of TOYOTA MOTOR SALES, U.S.A., INC.

NOTE:	- **When removing the nuts, keep the bolts from rotating.** - **Be careful not to damage the drive shaft boot or speed sensor rotor.**

12. **REMOVE FRONT NO. 1 WHEEL BEARING DUST DEFLECTOR**
    a. Using a screwdriver with its tip wrapped with vinyl tape, remove the front No. 1 wheel bearing dust deflector.

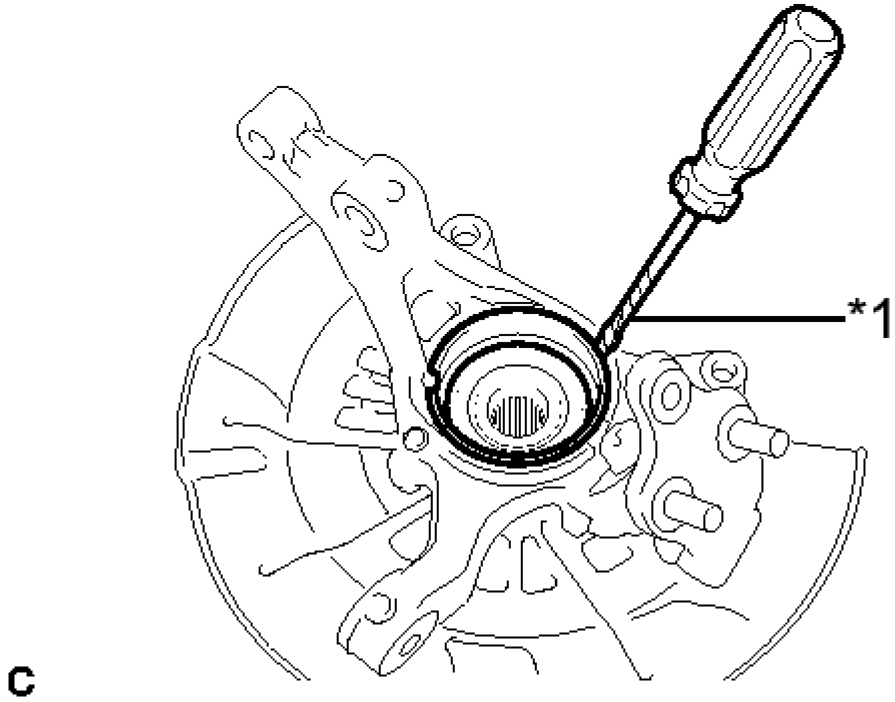

Fig. 15: Removing Front No. 1 Wheel Bearing Dust Deflector
Courtesy of TOYOTA MOTOR SALES, U.S.A., INC.

TEXT IN ILLUSTRATION

*1	Vinyl Tape

NOTE:	**Be careful not to damage the steering knuckle.**

13. **REMOVE FRONT AXLE HUB HOLE SNAP RING**
    a. Using snap ring pliers, remove the front axle hub hole snap ring.

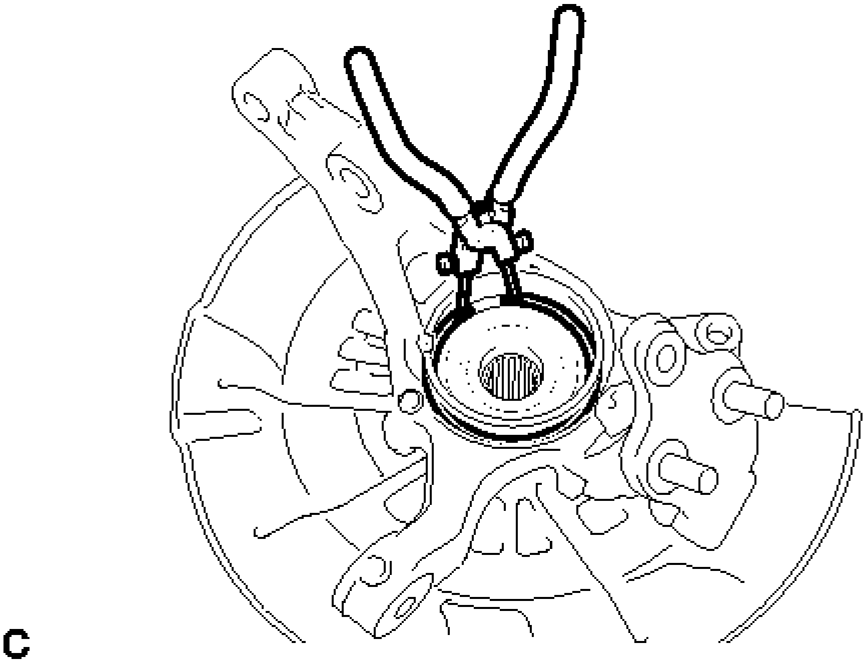

Fig. 16: Removing Front Axle Hub Hole Snap Ring
Courtesy of TOYOTA MOTOR SALES, U.S.A., INC.

14. **REMOVE FRONT AXLE HUB SUB-ASSEMBLY**
    a. Hold the front axle assembly between aluminium plates in a vise.

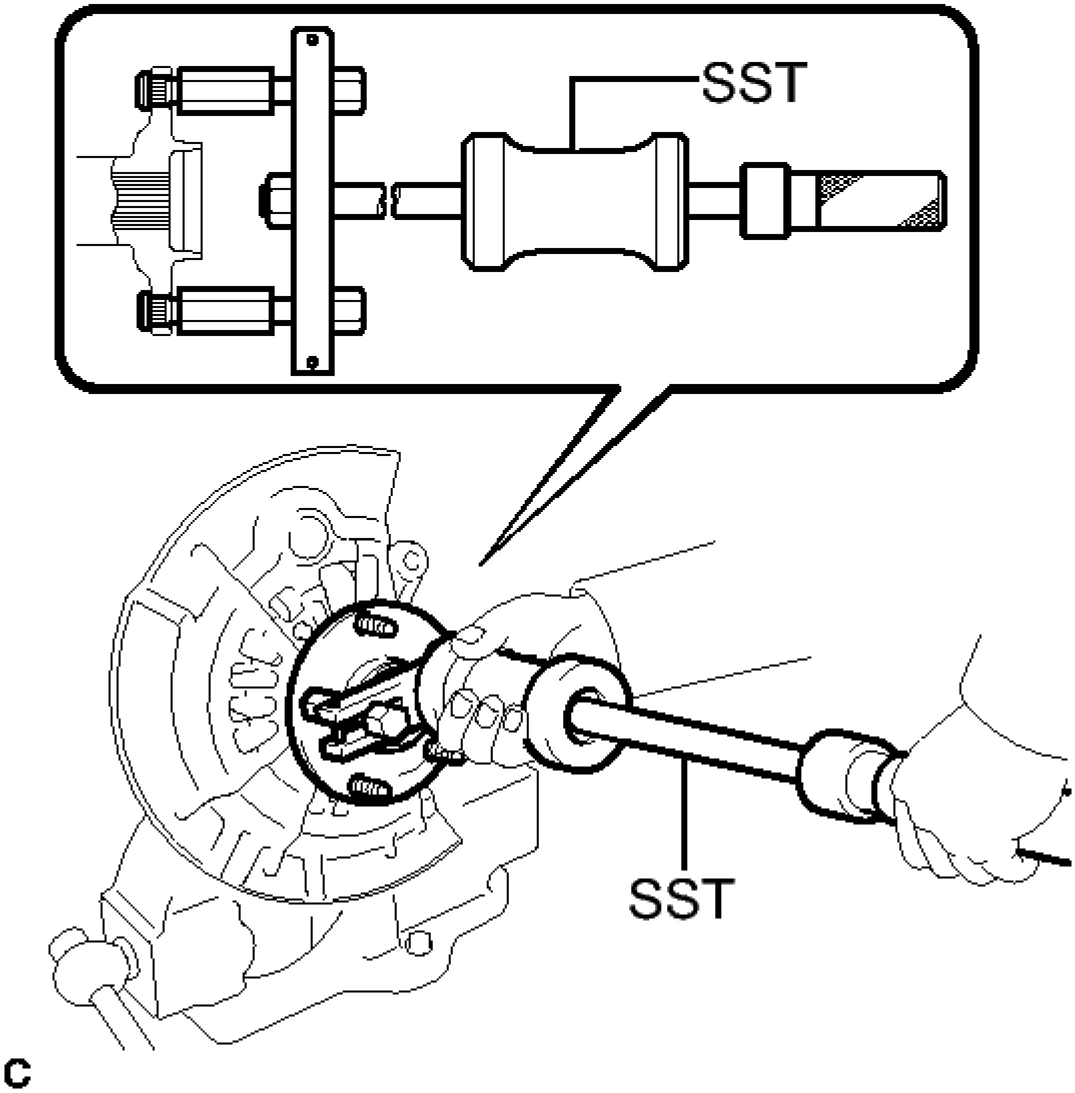

Fig. 17: Removing Front Axle Hub Sub-Assembly Using SST
Courtesy of TOYOTA MOTOR SALES, U.S.A., INC.

NOTE: **Do not overtighten the vise.**

b. Using SST, remove the front axle hub sub-assembly.

  - **SST: 09520-00031**

c. Using SST and a press, remove the bearing inner race (outside) from the front axle hub sub-assembly.

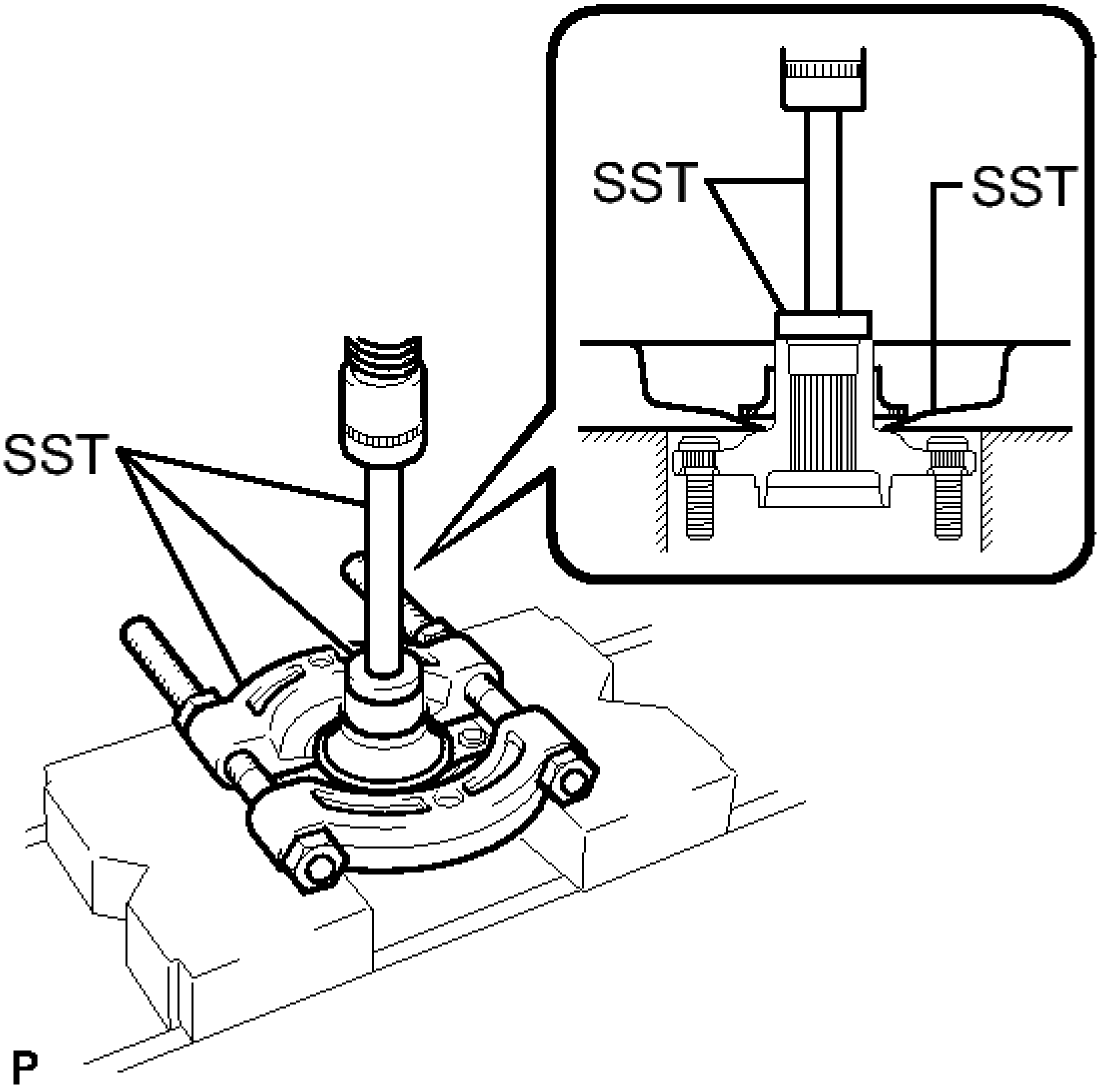

Fig. 18: Identifying Bearing Inner Race (Outside)
Courtesy of TOYOTA MOTOR SALES, U.S.A., INC.

- **SST: 09555-55010**
- **SST: 09950-60010**
  09951-00440
- **SST: 09950-70010**
  09951-07100

NOTE: Be careful not to drop the front axle hub sub-assembly.

15. **REMOVE FRONT DISC BRAKE DUST COVER**
    a. Remove the 4 bolts and front disc brake dust cover from the steering knuckle.

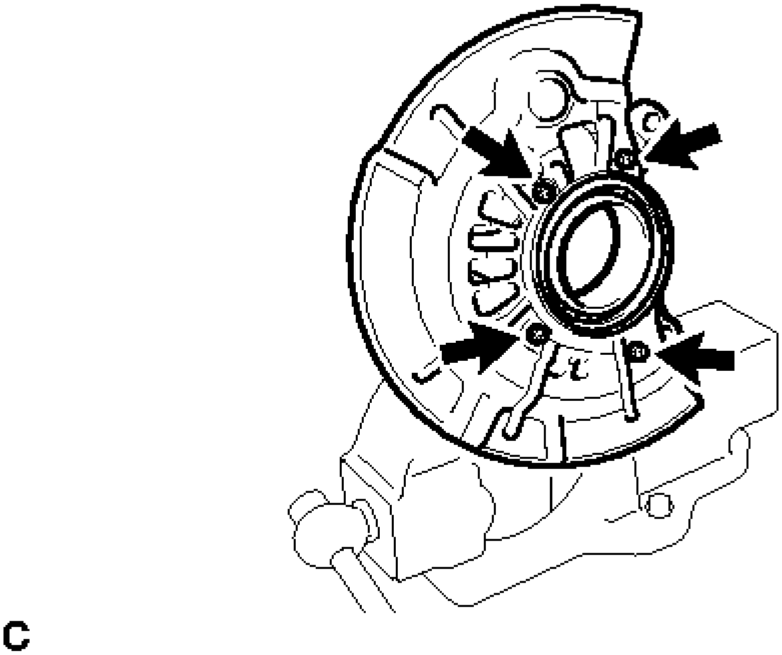

Fig. 19: Locating Front Disc Brake Dust Cover Bolts
Courtesy of TOYOTA MOTOR SALES, U.S.A., INC.

16. **REMOVE FRONT AXLE HUB BEARING**
    a. Place the bearing inner race (outside) on the front axle hub bearing.

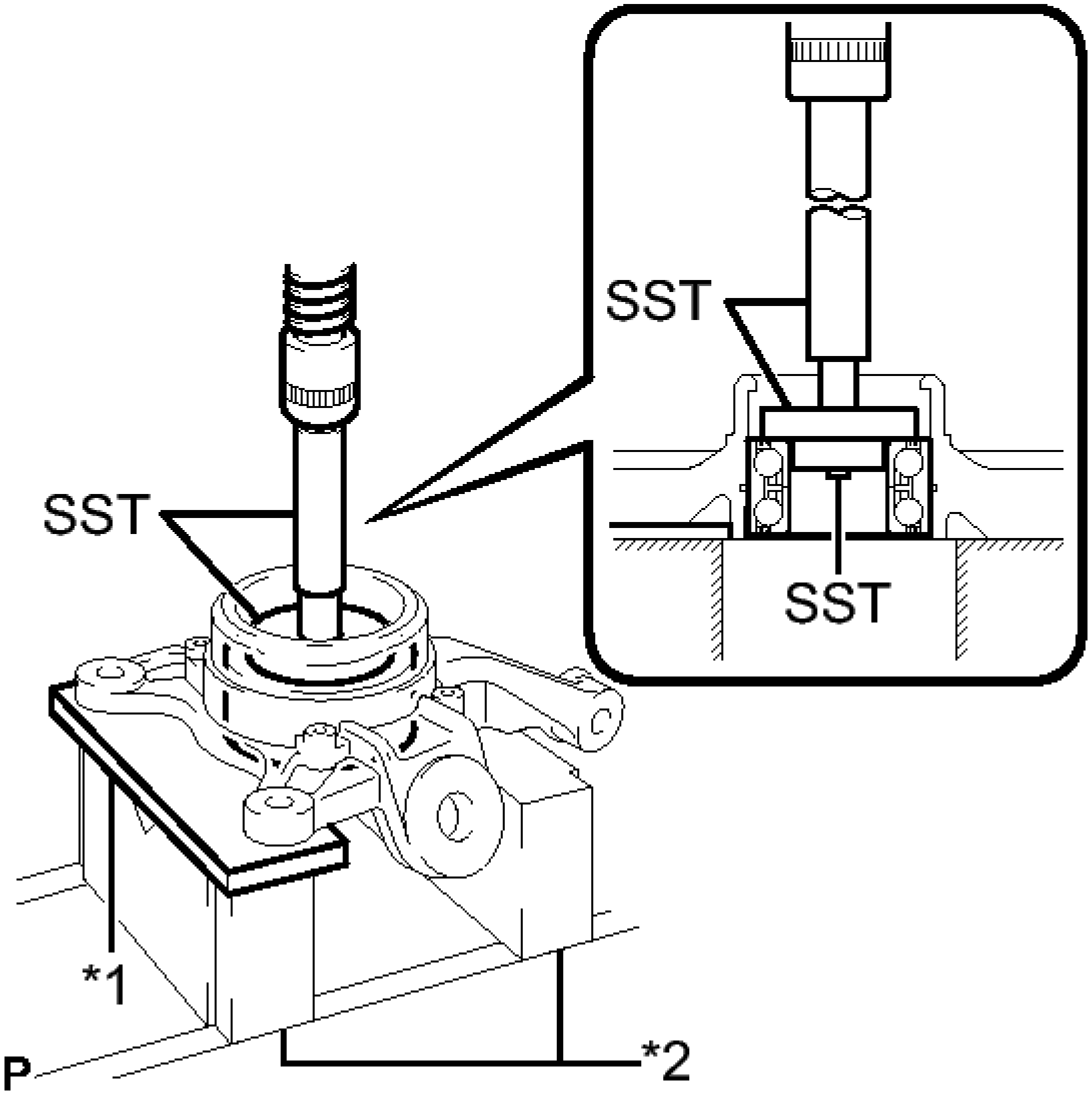

Fig. 20: Identifying Bearing Inner Race (Outside)
Courtesy of TOYOTA MOTOR SALES, U.S.A., INC.

TEXT IN ILLUSTRATION

*1	Steel Plate
*2	V-block

b. Using SST, a steel plate, V-blocks and a press, remove the front axle hub bearing from the steering knuckle.
   - **SST: 09950-60010**
     09951-00440
     09952-06010
   - **SST: 09950-60020**

09951-00750

- **SST: 09950-70010**

  09951-07100

NOTE: **Keep the steering knuckle level.**

INSTALLATION

INSTALLATION

HINT:

- Use the same procedure for the RH side and LH side.
- The procedure listed below is for the LH side.

1. **INSTALL FRONT AXLE HUB BEARING**
   a. Using SST and a press, install a new front axle hub bearing to the steering knuckle.

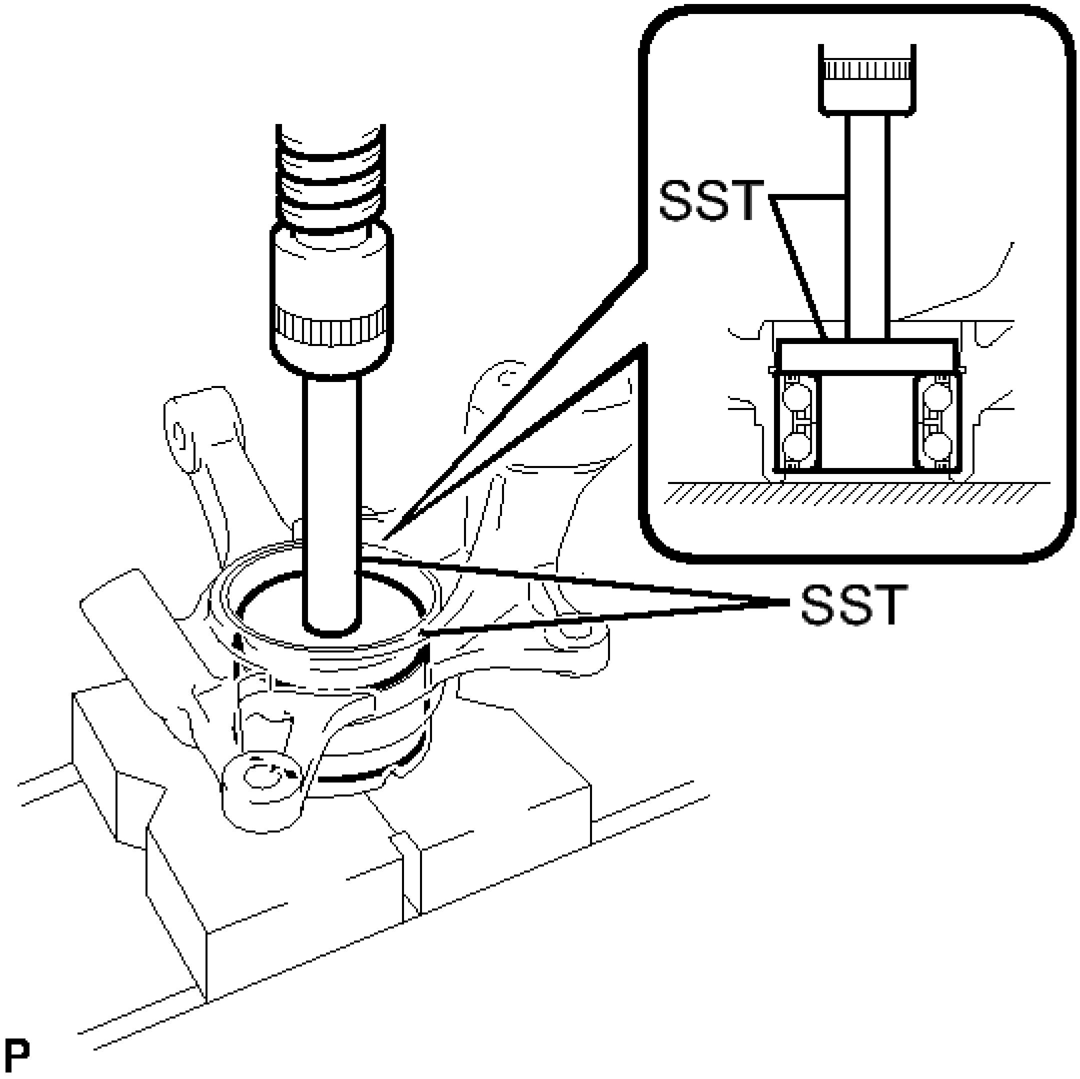

Fig. 21: Identifying Front Axle Hub
Courtesy of TOYOTA MOTOR SALES, U.S.A., INC.

- **SST: 09950-60020**
  09951-00810
- **SST: 09950-70010**
  09951-07100

2. **INSTALL FRONT DISC BRAKE DUST COVER**
   a. Install the front disc brake dust cover to the steering knuckle with the 4 bolts.

      Torque: 8.3 N*m (85 kgf*cm, 73 in.*lbf)

3. **INSTALL FRONT AXLE HUB SUB-ASSEMBLY**
   a. Using SST and a press, install the front axle hub sub-assembly to the steering knuckle.

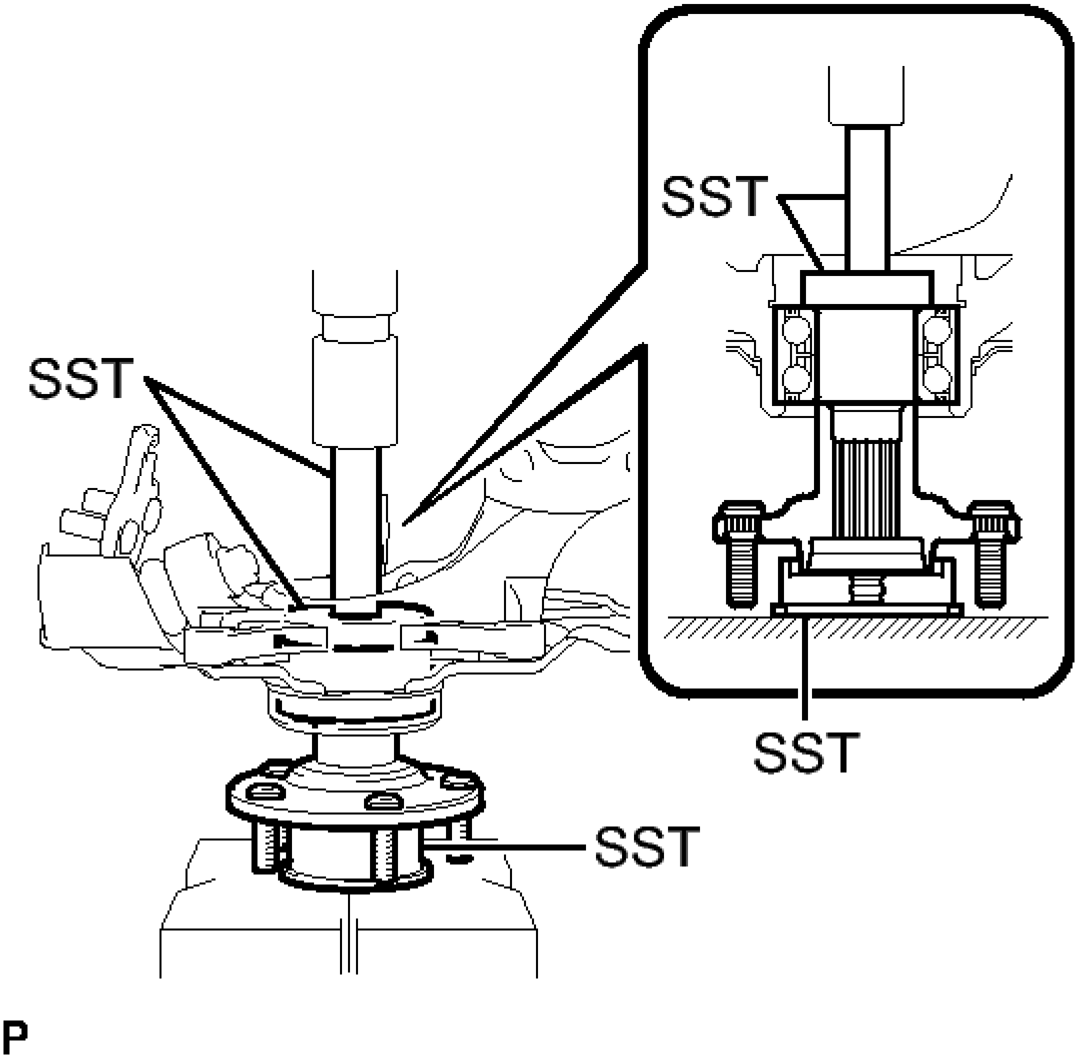

Fig. 22: Installing Front Axle Hub Sub-Assembly Using SST
Courtesy of TOYOTA MOTOR SALES, U.S.A., INC.

- **SST: 09608-32010**
- **SST: 09950-60010**
  09951-00610
- **SST: 09950-70010**
  09951-07100

4. **INSTALL FRONT AXLE HUB HOLE SNAP RING**
   a. Using snap ring pliers, install a new front axle hub hole snap ring.
5. **INSTALL FRONT NO. 1 WHEEL BEARING DUST DEFLECTOR**
   a. Set a new front No. 1 wheel bearing dust deflector to the steering knuckle while aligning the cutout for the speed sensor in the front No. 1 wheel bearing dust deflector with the hole of the steering knuckle.

b. Using SST and a hammer, install the front No. 1 wheel bearing dust deflector.

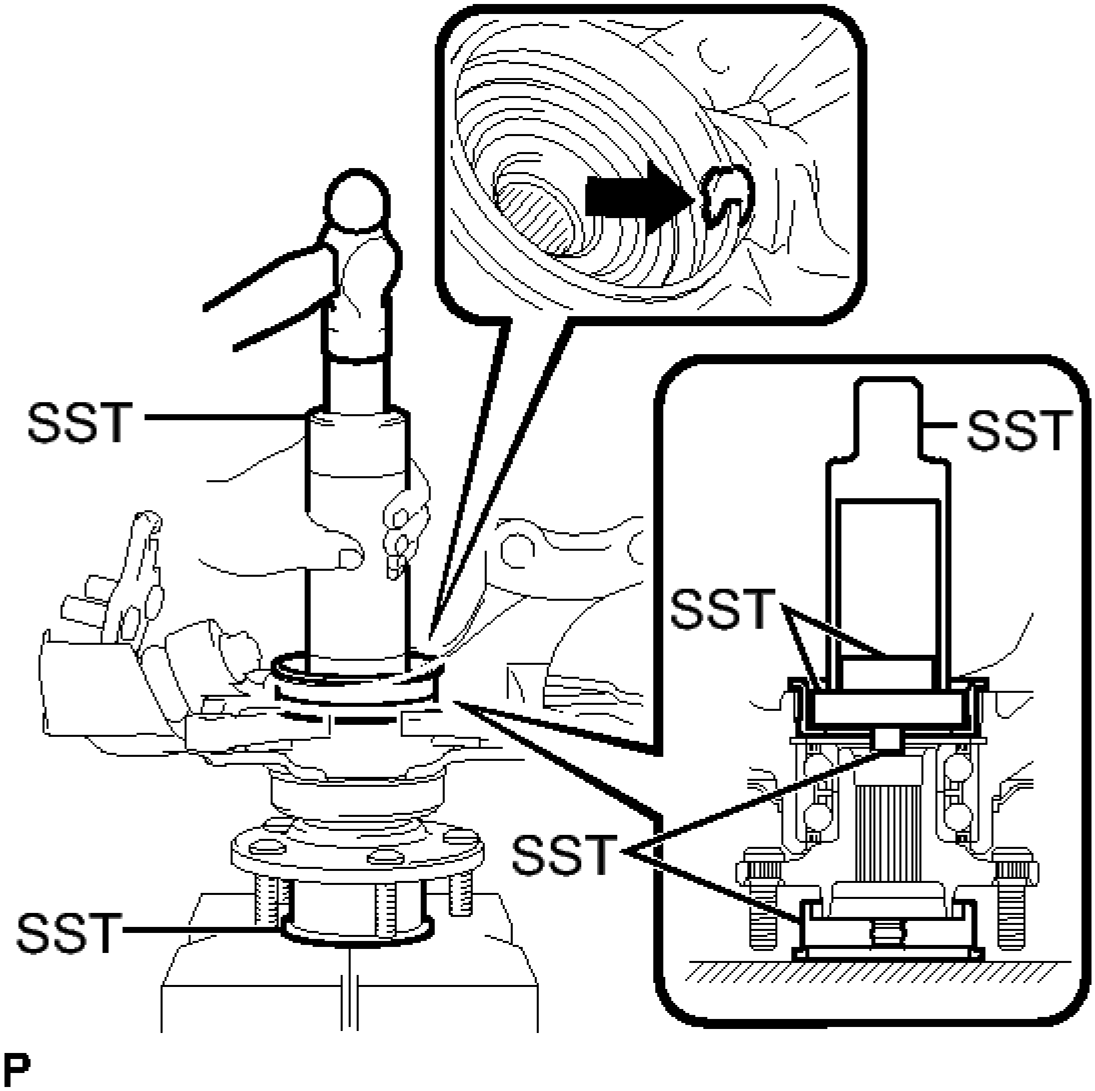

Fig. 23: Installing No. 1 Front Wheel Bearing Dust Deflector
Courtesy of TOYOTA MOTOR SALES, U.S.A., INC.

- **SST: 09316-60011**
  09316-00011
- **SST: 09608-32010**
- **SST: 09950-60010**
  09951-00500
  09952-06010
- **SST: 09950-60020**
  09951-00810

c. Apply mineral oil base grease to the areas indicated by the arrows in the illustration on the front drive shaft assembly contact surface of the front axle hub bearing.

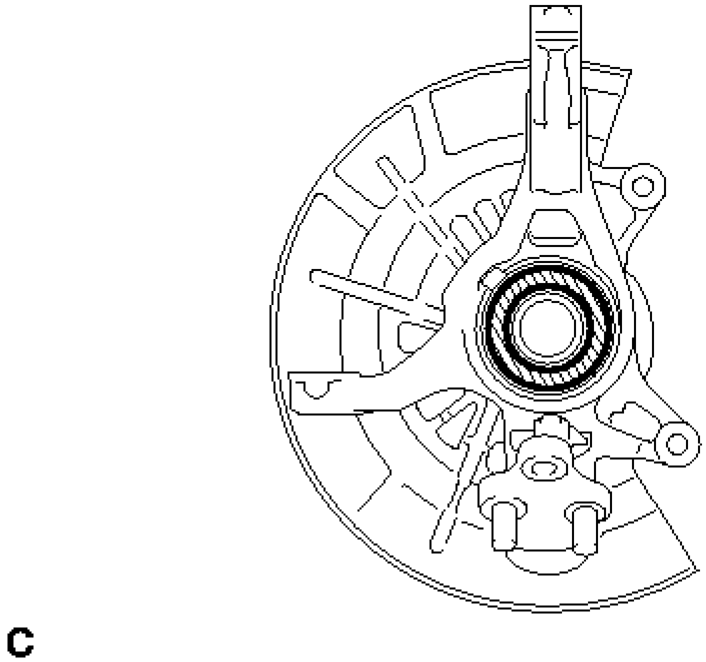

Fig. 24: Identifying Front Axle Hub Bearing Mineral Oil Base Grease Application Area
Courtesy of TOYOTA MOTOR SALES, U.S.A., INC.

TEXT IN ILLUSTRATION

	Mineral Oil Base Grease

HINT:

Apply 0.1 to 0.3 g (0.00353 to 0.0106 oz.) of mineral oil base grease to each area.

6. **INSTALL FRONT AXLE ASSEMBLY**
   a. Install the front axle assembly to the front shock absorber with the 2 bolts and 2 nuts.

   Torque: 290 N*m (2957 kgf*cm, 214 ft.*lbf)

   NOTE: When installing the nuts, keep the bolts from rotating.

7. **INSTALL FRONT DRIVE SHAFT ASSEMBLY**
   a. Align the matchmarks and install the front drive shaft assembly to the front axle hub sub-assembly.

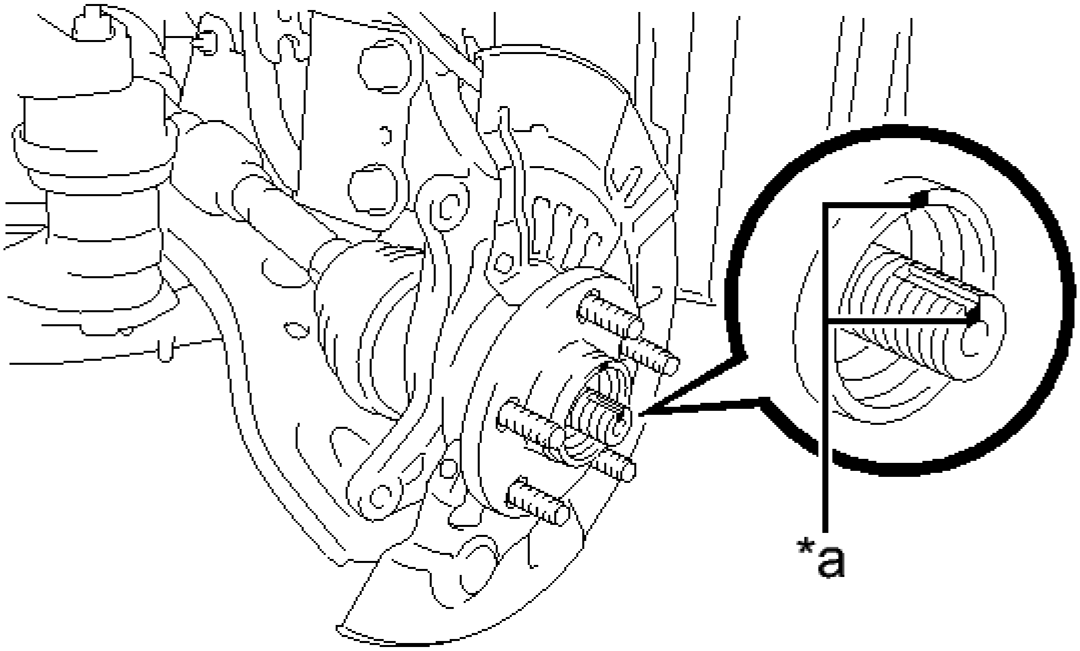

Fig. 25: Locating Front Drive Shaft Assembly And Front Axle Hub Sub-Assembly Matchmarks
Courtesy of TOYOTA MOTOR SALES, U.S.A., INC.

TEXT IN ILLUSTRATION

*a	Matchmark

NOTE: **Be careful not to damage the drive shaft boot or speed sensor rotor.**

8. **CONNECT FRONT LOWER NO. 1 SUSPENSION ARM SUB-ASSEMBLY**
    a. Connect the front lower No. 1 suspension arm sub-assembly to the front lower ball joint assembly with the bolt and 2 nuts.

       Torque: 75 N*m (765 kgf*cm, 55 ft.*lbf)
9. **CONNECT TIE ROD ASSEMBLY** . Refer to **INSTALLATION - Step 8**
10. **INSTALL FRONT DISC** . Refer to **INSTALLATION - Step 1**
11. **INSTALL FRONT DISC BRAKE CALIPER ASSEMBLY** See step 9
12. **INSTALL FRONT AXLE SHAFT NUT**
    a. Clean the threaded parts on the front drive shaft assembly and a new front axle shaft nut using a non-residue solvent.

NOTE:

- **Be sure to perform this work even, when using a new front drive shaft assembly.**
- **Keep the threaded parts free of oil and foreign matter.**

b. Using a socket wrench (30 mm), install the front axle shaft nut.

Torque: 294 N*m (2998 kgf*cm, 217 ft.*lbf)

NOTE: **Stake the nut after inspecting for looseness and runout in the following steps.**

HINT:

Keep depressing the brake pedal to prevent the front drive shaft from rotating.

13. **SEPARATE FRONT DISC BRAKE CALIPER ASSEMBLY** See step 4
14. **REMOVE FRONT DISC** . Refer to **REMOVAL - Step 15**
15. **INSPECT FRONT AXLE HUB BEARING LOOSENESS** See step 6
16. **INSPECT FRONT AXLE HUB RUNOUT** See step 7
17. **INSTALL FRONT DISC** . Refer to **INSTALLATION - Step 1**
18. **INSTALL FRONT DISC BRAKE CALIPER ASSEMBLY** See step 9
19. **INSTALL FRONT SPEED SENSOR**

a. Install the front speed sensor and front flexible hose to the front shock absorber with the bolt and clamp.

Torque: 19 N*m (192 kgf*cm, 14 ft.*lbf)

NOTE: **Do not twist the front speed sensor when installing it.**

HINT:

Install the speed sensor harness bracket first and then the front flexible hose.

b. Install the front speed sensor to the steering knuckle with the bolt.

Torque: 8.5 N*m (87 kgf*cm, 75 in.*lbf)

NOTE: **Do not twist the front speed sensor when installing it.**

20. **STAKE FRONT AXLE SHAFT NUT**

a. Using a chisel and a hammer, stake the front axle shaft nut.

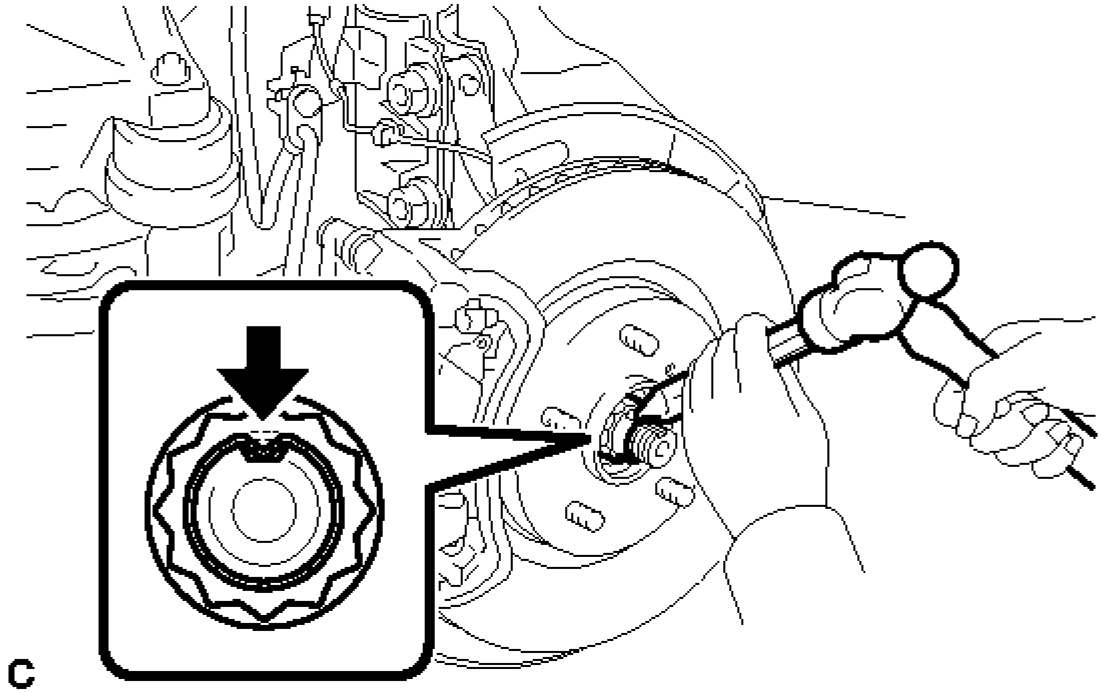

Fig. 26: Staking Front Axle Shaft Nut
Courtesy of TOYOTA MOTOR SALES, U.S.A., INC.

21. **INSTALL FRONT WHEEL**

    Torque: 103 N*m (1049 kgf*cm, 76 ft.*lbf)

22. **CONNECT CABLE TO AUXILIARY BATTERY NEGATIVE TERMINAL**
    a. Connect the cable to the negative (-) auxiliary battery terminal. Refer to **INSTALLATION - Step 2** .
    b. Connect the reservoir level switch connector.
    c. Clear the DTCs. Refer to **DTC CHECK / CLEAR** .
23. **INSPECT AND ADJUST FRONT WHEEL ALIGNMENT**

    Refer to **ADJUSTMENT**

24. **CHECK FOR SPEED SENSOR SIGNAL**

    Refer to **TEST MODE PROCEDURE**

STEERING KNUCKLE

COMPONENTS

ILLUSTRATION

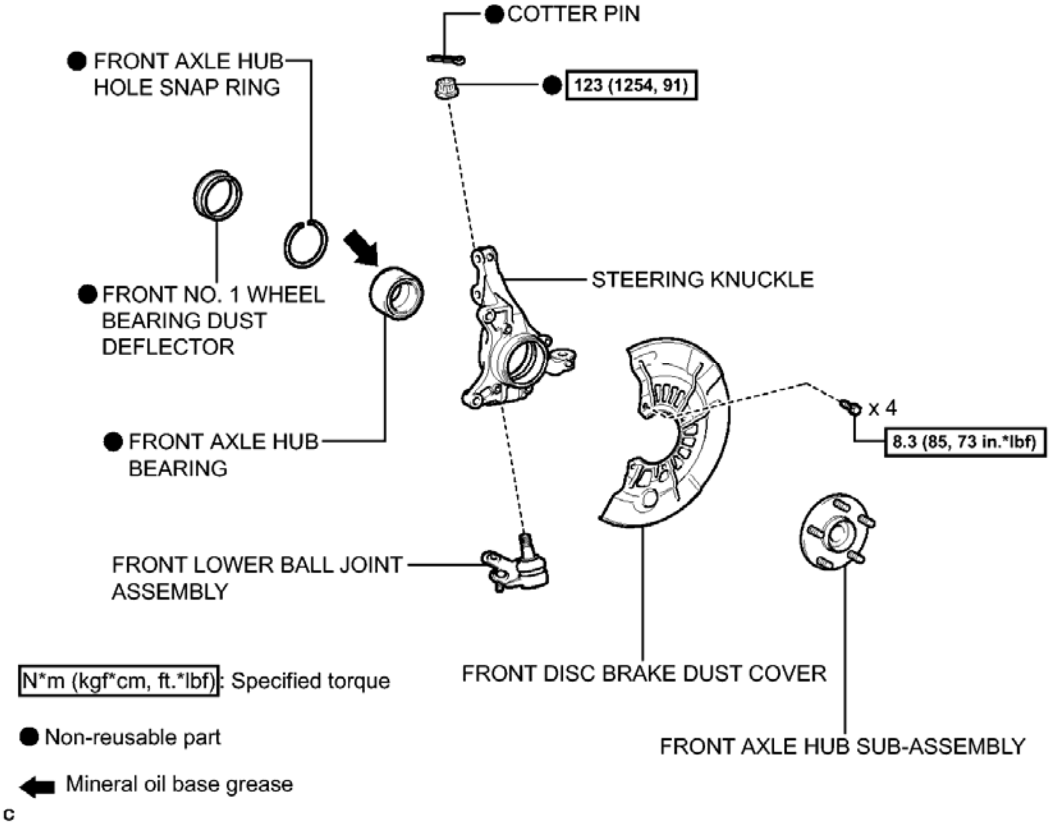
COTTER PIN
FRONT AXLE HUB HOLE SNAP RING
123 (1254, 91)
STEERING KNUCKLE
FRONT NO. 1 WHEEL BEARING DUST DEFLECTOR
x 4
8.3 (85, 73 in.*lbf)
FRONT AXLE HUB BEARING
FRONT LOWER BALL JOINT ASSEMBLY
N*m (kgf*cm, ft.*lbf): Specified torque
FRONT DISC BRAKE DUST COVER
● Non-reusable part
FRONT AXLE HUB SUB-ASSEMBLY
Mineral oil base grease
c

Fig. 27: Identifying Steering Knuckle Replacement Components With Torque Specifications
Courtesy of TOYOTA MOTOR SALES, U.S.A., INC.

REMOVAL

REMOVAL

NOTE: **When the brake pedal is first depressed after replacing the brake pads or pushing back the disc brake piston, DTC C1214 may be output. As there is no malfunction, clear the DTC.**

HINT:

- Use the same procedure for the RH side and LH side.
- The procedure listed below is for the LH side.

1. **REMOVE FRONT AXLE ASSEMBLY**

   Refer to **REMOVAL**

2. **REMOVE FRONT LOWER BALL JOINT ASSEMBLY** . Refer to **REMOVAL - Step 2**

3. **REMOVE FRONT NO. 1 WHEEL BEARING DUST DEFLECTOR** See step 12
4. **REMOVE FRONT AXLE HUB HOLE SNAP RING** See step 13
5. **REMOVE FRONT AXLE HUB SUB-ASSEMBLY** See step 14
6. **REMOVE FRONT DISC BRAKE DUST COVER** See step 15
7. **REMOVE STEERING KNUCKLE**
    a. Place the bearing inner race (outside) on the front axle hub bearing.

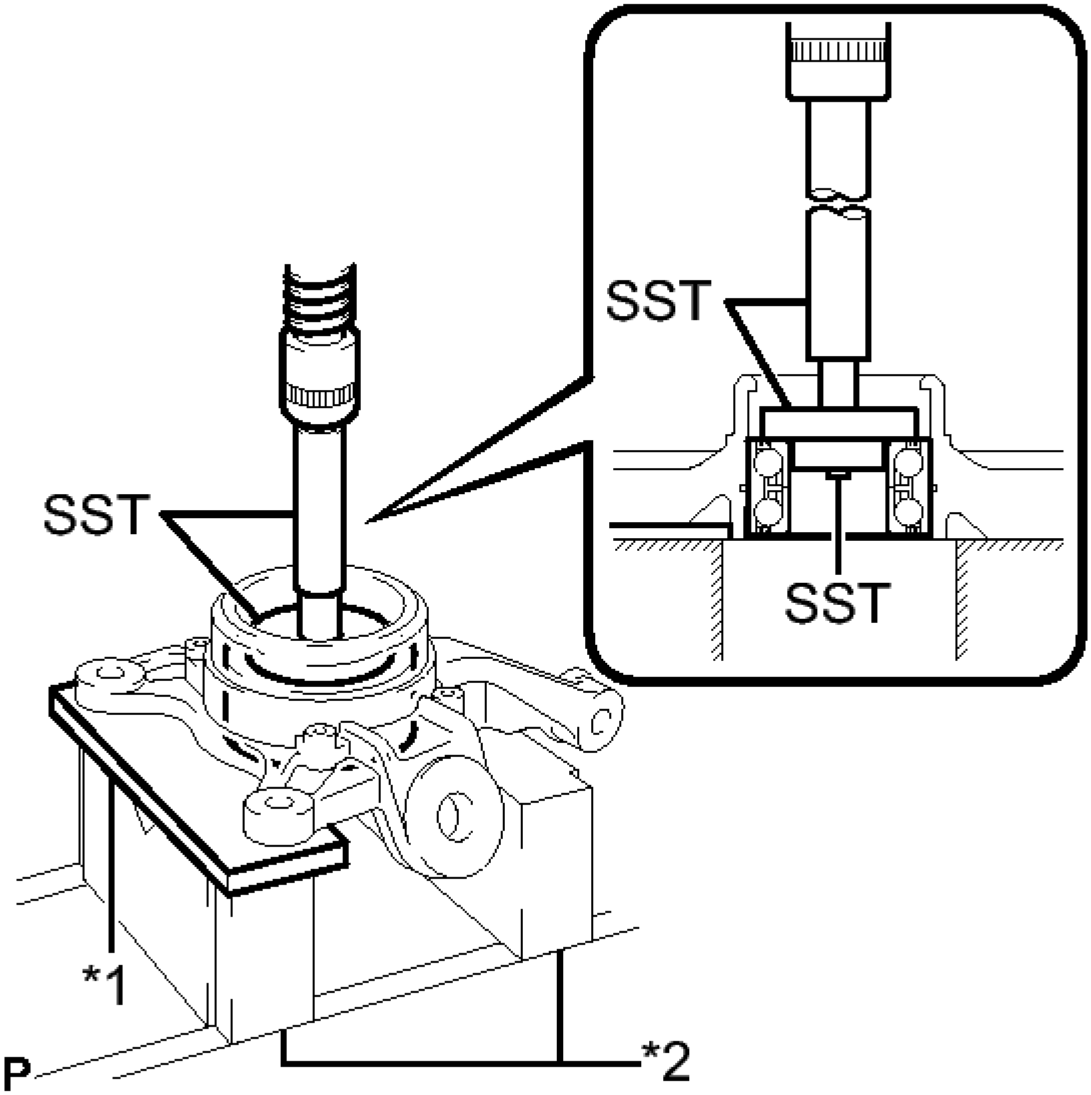

Fig. 28: Identifying Bearing Inner Race (Outside)
Courtesy of TOYOTA MOTOR SALES, U.S.A., INC.

TEXT IN ILLUSTRATION

*1	Steel Plate
*2	V-

	block

b. Using SST, a steel plate, V-blocks and a press, remove the front axle hub bearing from the steering knuckle.
   - **SST: 09950-60010**
     09951-00440
     09952-06010
   - **SST: 09950-60020**
     09951-00750
   - **SST: 09950-70010**
     09951-07100

NOTE: **Keep the steering knuckle level.**

INSTALLATION

INSTALLATION

HINT:

- Use the same procedure for the RH side and LH side.
- The procedure listed below is for the LH side.

1. **INSTALL STEERING KNUCKLE**
   a. Using SST and a press, install a new front axle hub bearing to the steering knuckle.

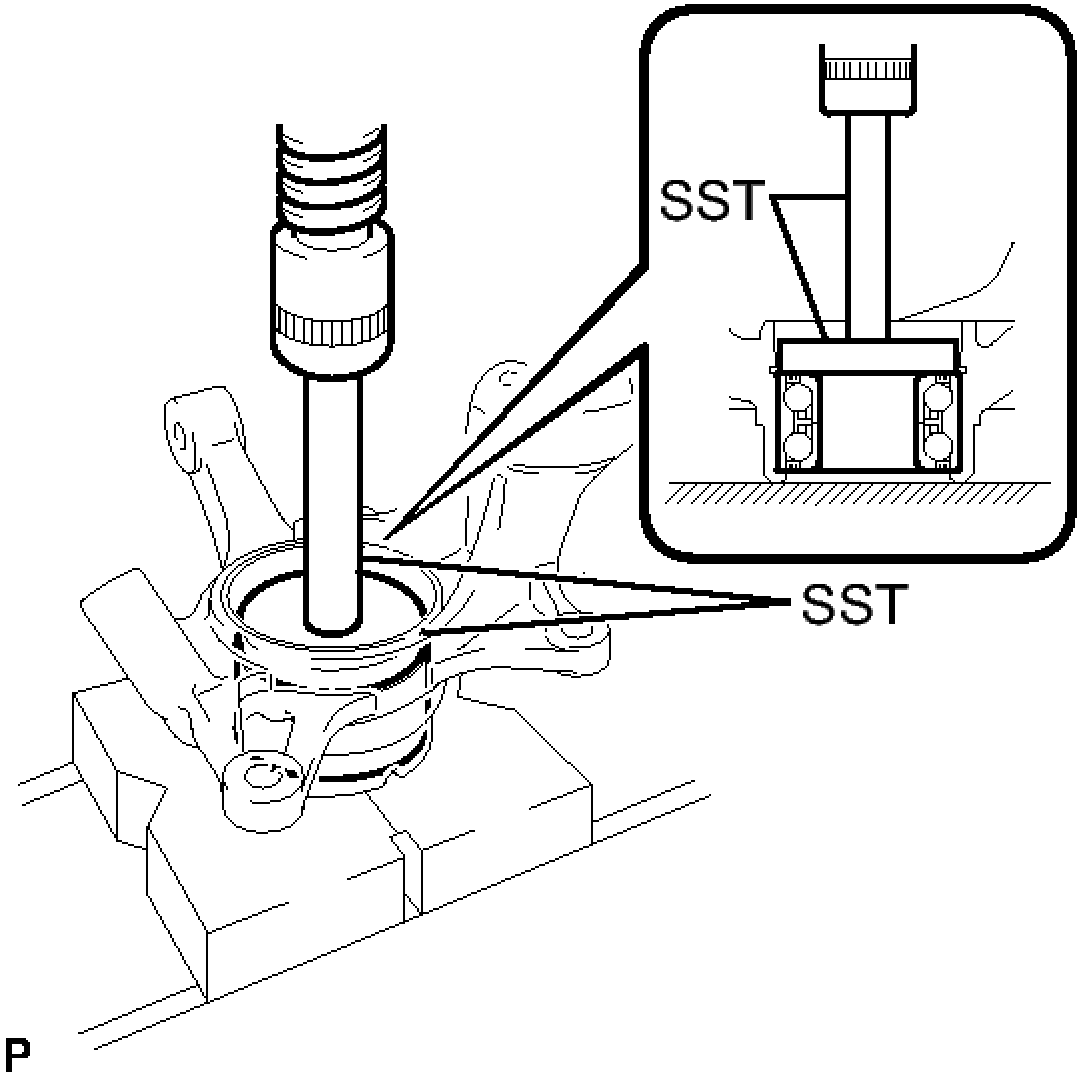

Fig. 29: Identifying Front Axle Hub
Courtesy of TOYOTA MOTOR SALES, U.S.A., INC.

- **SST: 09950-60020**
  09951-00810
- **SST: 09950-70010**
  09951-07100

2. **INSTALL FRONT DISC BRAKE DUST COVER** See step 2
3. **INSTALL FRONT AXLE HUB SUB-ASSEMBLY** See step 3
4. **INSTALL FRONT AXLE HUB HOLE SNAP RING** See step 4
5. **INSTALL FRONT NO. 1 WHEEL BEARING DUST DEFLECTOR** See step 5
6. **INSTALL FRONT LOWER BALL JOINT ASSEMBLY** . Refer to **INSTALLATION - Step 1**
7. **INSTALL FRONT AXLE ASSEMBLY**

See step 6

REAR AXLE HUB BOLT

COMPONENTS

ILLUSTRATION

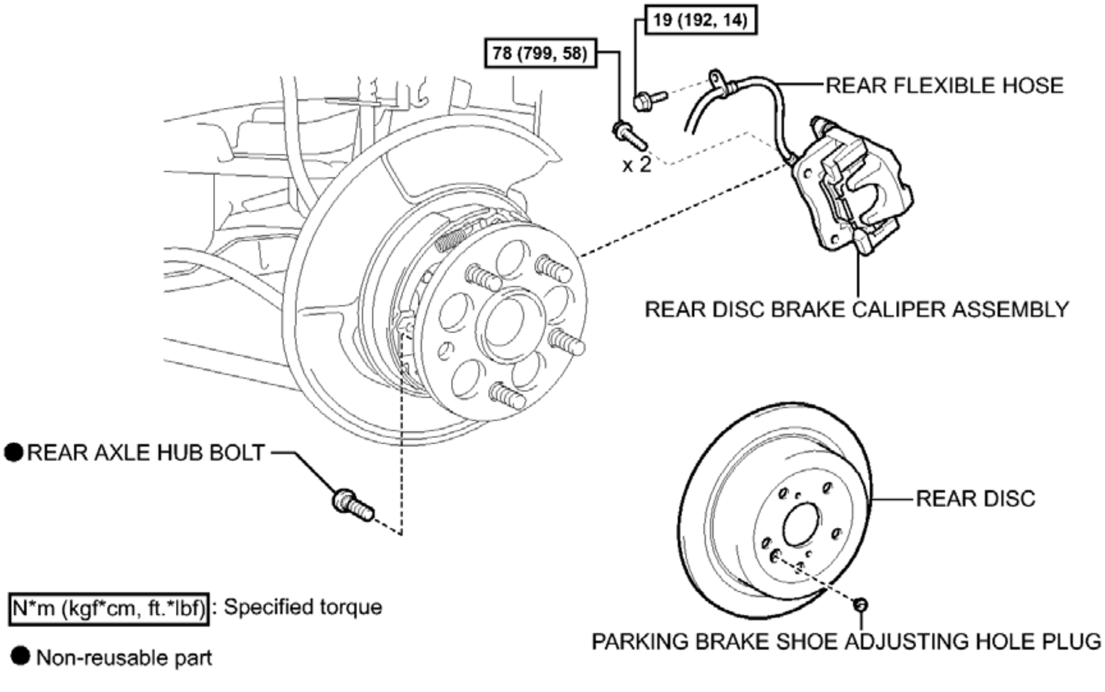
19 (192, 14)
78 (799, 58)
REAR FLEXIBLE HOSE
x 2
REAR DISC BRAKE CALIPER ASSEMBLY
● REAR AXLE HUB BOLT
REAR DISC
PARKING BRAKE SHOE ADJUSTING HOLE PLUG
N*m (kgf*cm, ft.*lbf) : Specified torque
● Non-reusable part
c

Fig. 30: Identifying Rear Axle Hub Bolt Replacement Components With Torque Specifications
Courtesy of TOYOTA MOTOR SALES, U.S.A., INC.

REPLACEMENT

REPLACEMENT

NOTE: **When the brake pedal is first depressed after replacing the brake pads or pushing back the disc brake piston, DTC C1214 may be output. As there is no malfunction, clear the DTC.**

HINT:

- Use the same procedure for the RH side and LH side.
- The procedure listed below is for the LH side.

1. **PRECAUTION**

NOTE: **After turning the power switch off, waiting time may be required before disconnecting the cable from the negative (-) auxiliary battery terminal. Therefore, make sure to read the disconnecting the cable from the negative (-) auxiliary battery terminal notice before proceeding with work. Refer to PRECAUTION .**

2. **DISABLE BRAKE CONTROL** . Refer to **REMOVAL - Step 2**
3. **REMOVE REAR WHEEL**
4. **SEPARATE REAR DISC BRAKE CALIPER ASSEMBLY**
   a. Remove the bolt and separate the rear flexible hose from the rear shock absorber.

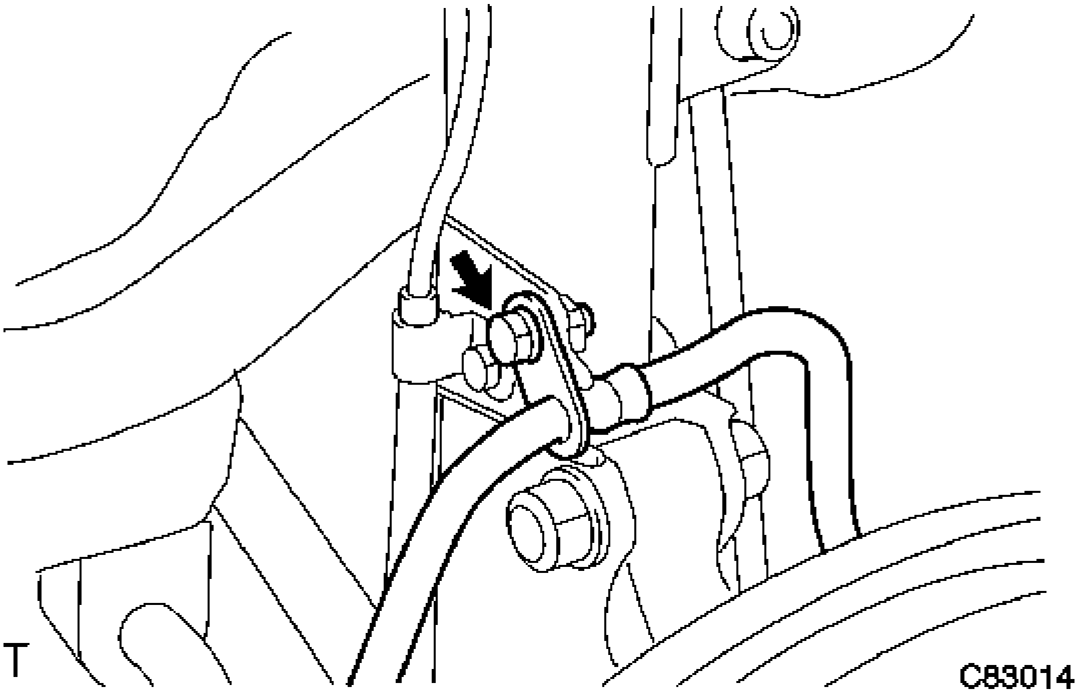

Fig. 31: Identifying Bolt On Flexible Hose
Courtesy of TOYOTA MOTOR SALES, U.S.A., INC.

   b. Remove the 2 bolts, and separate the rear disc brake caliper assembly.

NOTE: **Use wire or an equivalent tool to keep the rear disc brake caliper from hanging down by the flexible hose.**

5. **REMOVE PARKING BRAKE SHOE ADJUSTING HOLE PLUG** . Refer to **REMOVAL - Step 15**
6. **REMOVE REAR DISC** . Refer to **REMOVAL - Step 16**
7. **REMOVE REAR AXLE HUB BOLT**
   a. Temporarily install 2 nuts to the rear axle hub bolts as shown in the illustration.

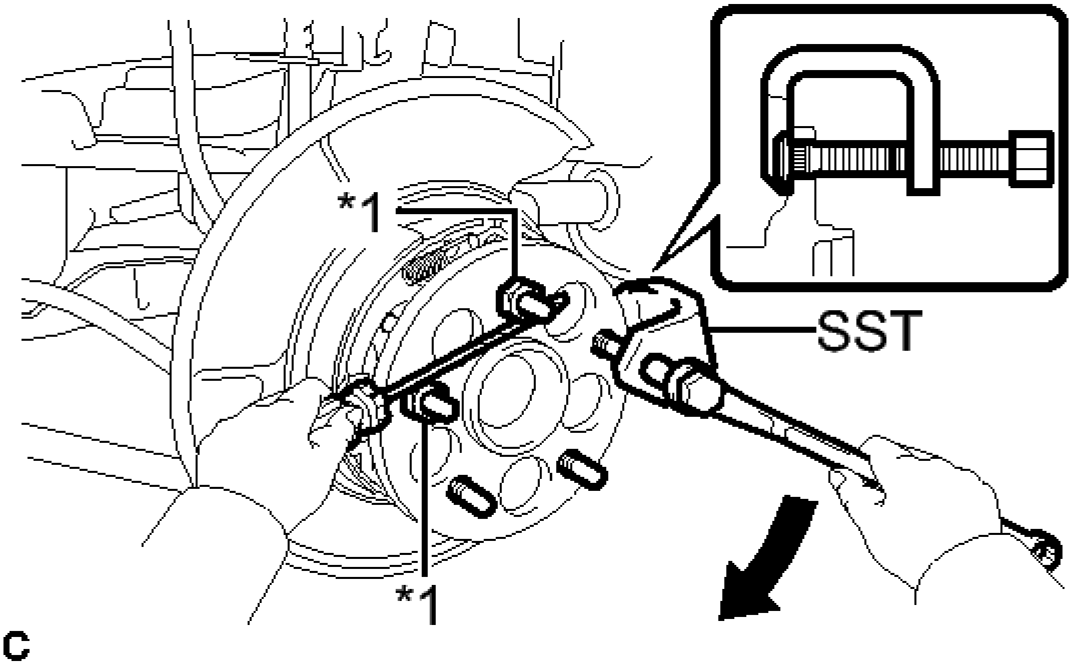

Fig. 32: Removing Rear Axle Hub Stud With SST
Courtesy of TOYOTA MOTOR SALES, U.S.A., INC.

TEXT IN ILLUSTRATION

*1	Nut

Recommended service nut

Thread diameter: 12.0 mm (0.472 in.)

Thread pitch: 1.5 mm (0.0591 in.)

NOTE: **Install the nuts to prevent damage to the rear axle hub bolts.**

b. Using SST and a screwdriver or an equivalent tool to hold the rear axle hub and bearing assembly, remove the rear axle hub bolt.
   - **SST: 09611-12010**

NOTE: **Do not damage the threads of the rear axle hub bolts.**

8. **INSTALL REAR AXLE HUB BOLT**
   a. Temporarily install a new rear axle hub bolt to the rear axle hub and bearing assembly.

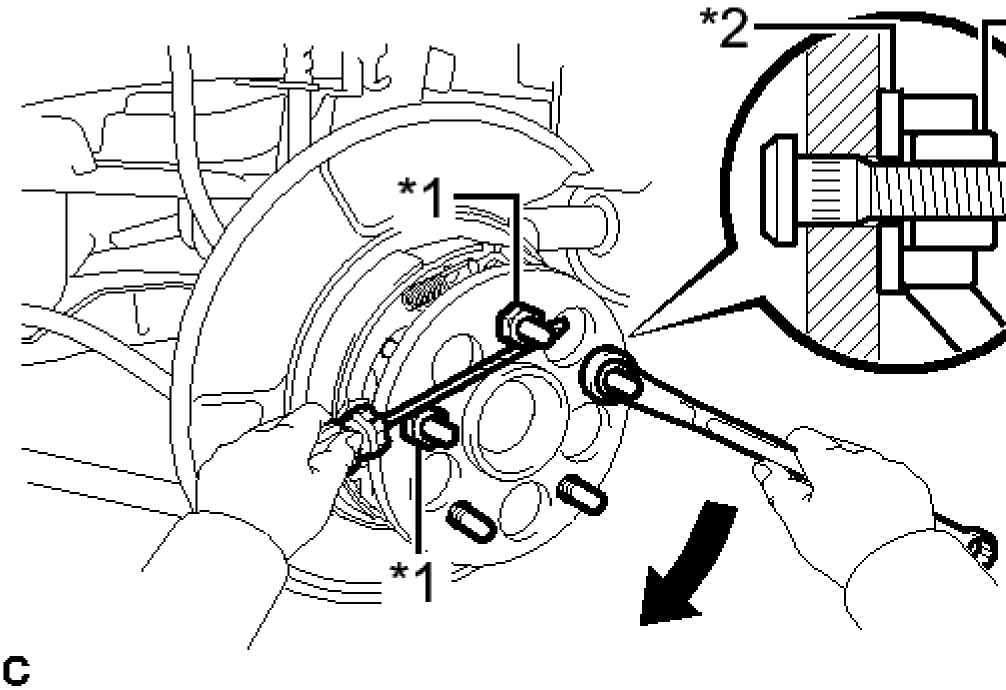

Fig. 33: Installing Rear Axle Hub Stud
Courtesy of TOYOTA MOTOR SALES, U.S.A., INC.

TEXT IN ILLUSTRATION

*1	Nut
*2	Washer

b. Install a washer and nut to the rear axle hub bolt as shown in the illustration.

Recommended service nut

Thread diameter: 12.0 mm (0.472 in.)

Thread pitch: 1.5 mm (0.0591 in.)

HINT:

Recommended washer thickness is 5 mm (0.197 in.) or more.

c. Using a screwdriver or an equivalent tool to hold the rear axle hub and bearing assembly, install the rear axle hub bolt by tightening the nut.

NOTE:

- **Install the nuts to prevent damage to the rear axle hub bolts.**
- **Do not damage the threads of the rear axle hub bolts.**

d. Remove the 3 nuts and washer from the 3 rear axle hub bolts.

9. **INSTALL REAR DISC** . Refer to **INSTALLATION - Step 1**
10. **INSTALL PARKING BRAKE SHOE ADJUSTING HOLE PLUG** . Refer to **INSTALLATION - Step 2**
11. **INSTALL REAR DISC BRAKE CALIPER ASSEMBLY**
    a. Install the rear disc brake caliper assembly with the 2 bolts.

       Torque: 78 N*m (799 kgf*cm, 58 ft.*lbf)

    b. Install the rear flexible hose to the rear shock absorber with the bolt.

       Torque: 19 N*m (192 kgf*cm, 14 ft.*lbf)

12. **CONNECT CABLE TO AUXILIARY BATTERY NEGATIVE TERMINAL**
    a. Connect the cable to the negative (-) auxiliary battery terminal. Refer to **INSTALLATION - Step 2** .
    b. Connect the reservoir level switch connector.
    c. Clear the DTCs. Refer to **DTC CHECK / CLEAR** .
13. **ADJUST PARKING BRAKE**

    Refer to **ADJUSTMENT**

14. **INSTALL REAR WHEEL**

    Torque: 103 N*m (1049 kgf*cm, 76 ft.*lbf)

REAR AXLE HUB

COMPONENTS

ILLUSTRATION

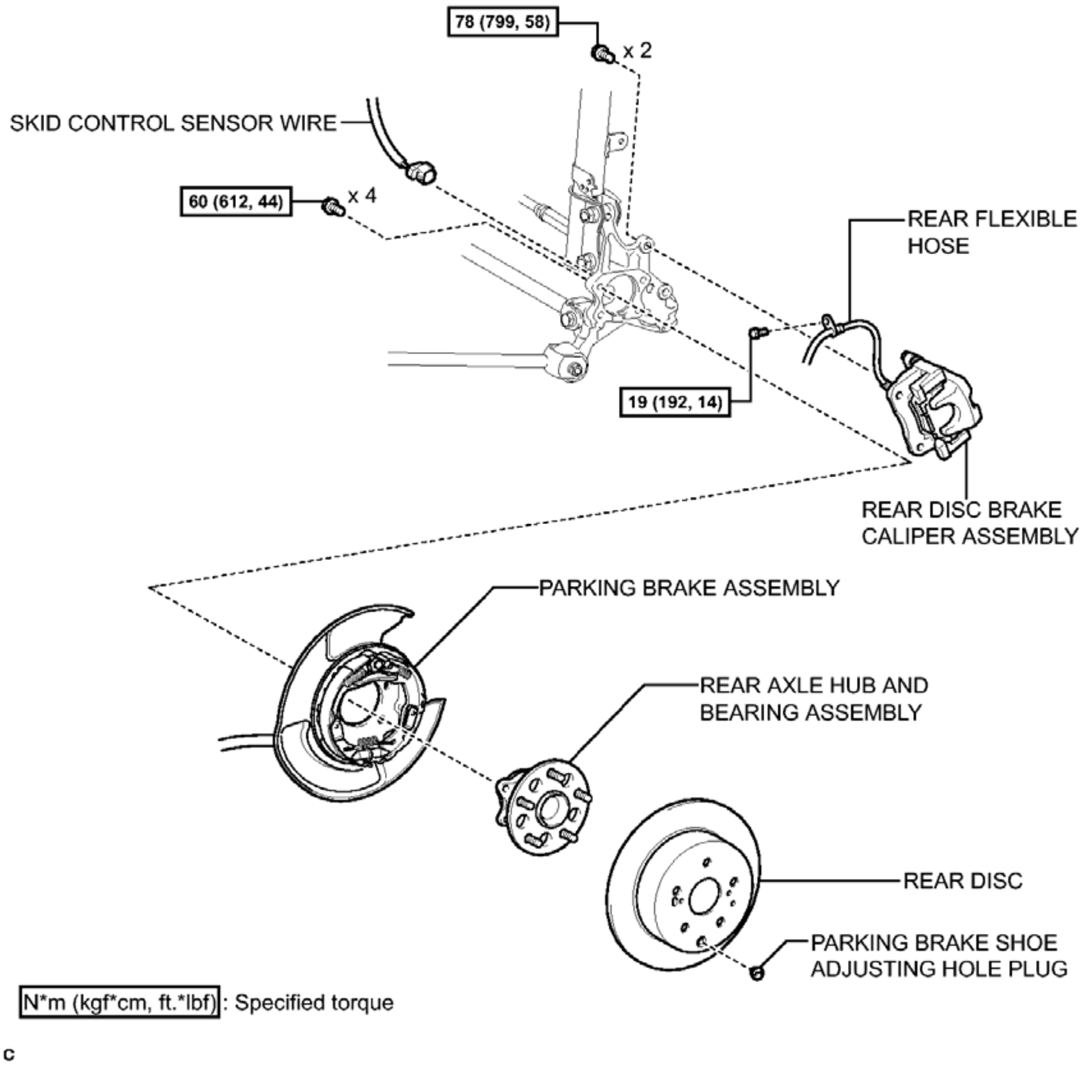
78 (799, 58)
x 2
SKID CONTROL SENSOR WIRE
60 (612, 44)
x 4
REAR FLEXIBLE HOSE
19 (192, 14)
REAR DISC BRAKE CALIPER ASSEMBLY
PARKING BRAKE ASSEMBLY
REAR AXLE HUB AND BEARING ASSEMBLY
REAR DISC
PARKING BRAKE SHOE ADJUSTING HOLE PLUG
N*m (kgf*cm, ft.*lbf): Specified torque
c

Fig. 34: Identifying Rear Speed Sensor Replacement Components With Torque Specifications
Courtesy of TOYOTA MOTOR SALES, U.S.A., INC.

ON-VEHICLE INSPECTION

ON-VEHICLE INSPECTION

NOTE: **When the brake pedal is first depressed after replacing the brake pads or pushing back the disc brake piston, DTC C1214 may be output. As there is no malfunction, clear the DTC.**

HINT:

- Use the same procedure for the RH side and LH side.
- The procedure listed below is for the LH side.

1. **PRECAUTION**

NOTE: **After turning the power switch off, waiting time may be required before disconnecting the cable from the negative (-) auxiliary battery terminal. Therefore, make sure to read the disconnecting the cable from the negative (-) auxiliary battery terminal notice before proceeding with work. Refer to PRECAUTION .**

2. **DISABLE BRAKE CONTROL** . Refer to **REMOVAL - Step 2**
3. **REMOVE REAR WHEEL**
4. **SEPARATE REAR DISC BRAKE CALIPER ASSEMBLY** See step 4
5. **REMOVE PARKING BRAKE SHOE ADJUSTING HOLE PLUG** . Refer to **REMOVAL - Step 15**
6. **REMOVE REAR DISC** . Refer to **REMOVAL - Step 16**
7. **INSPECT REAR AXLE HUB BEARING LOOSENESS**
   a. Using a dial indicator, check for looseness near the center of the rear axle hub.

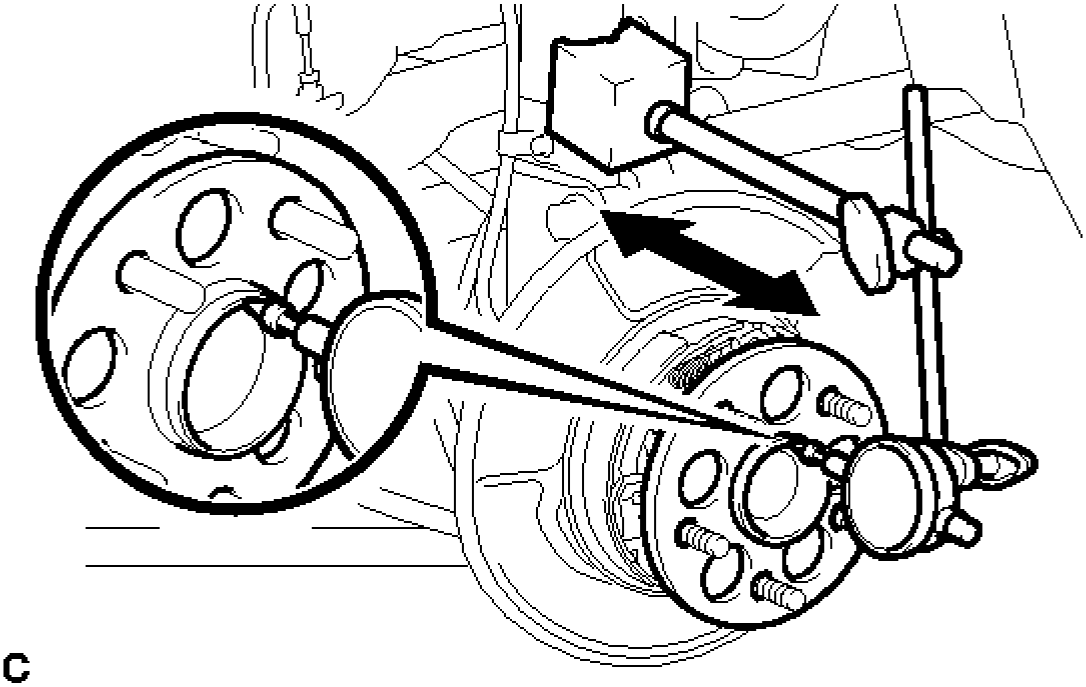

Fig. 35: Inspecting Rear Axle Hub Bearing Looseness
Courtesy of TOYOTA MOTOR SALES, U.S.A., INC.

Maximum looseness

0.05 mm (0.00197 in.)

NOTE:

- **Ensure that the dial indicator is set perpendicular to the measurement surface.**
- **Keep the magnet of the dial indicator away from the rear axle hub and bearing assembly.**

If the looseness exceeds the maximum, replace the rear axle hub and bearing assembly.

8. **INSPECT REAR AXLE HUB RUNOUT**
   a. Using a dial indicator, check for runout on the surface of the rear axle hub outside the rear axle hub bolts.

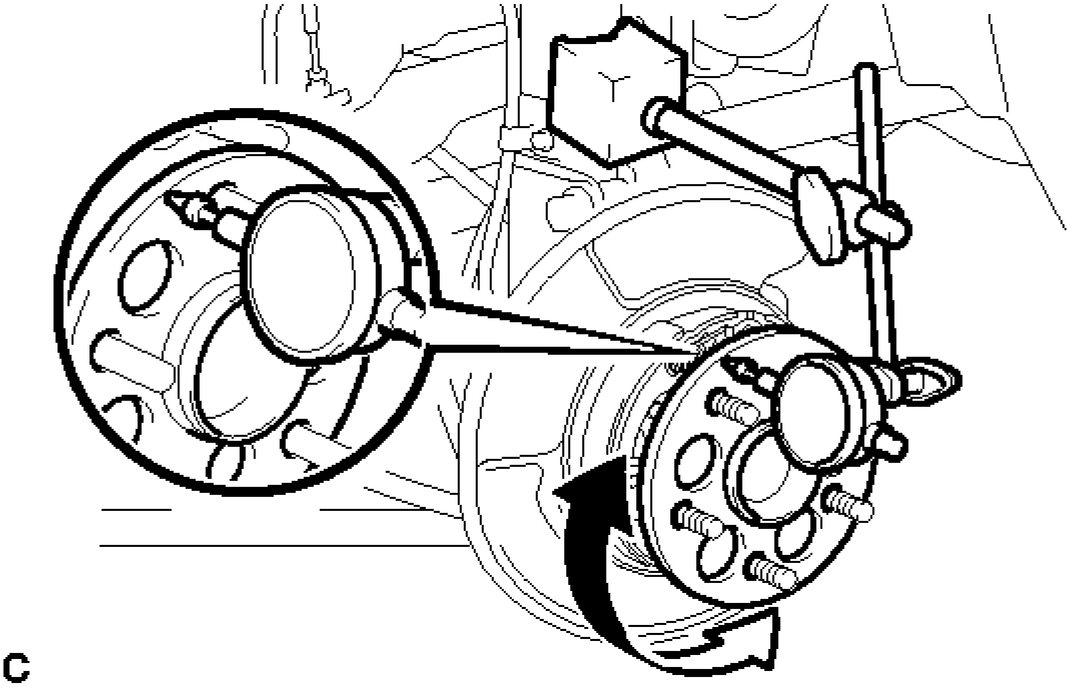

Fig. 36: Inspecting Rear Axle Hub Runout
Courtesy of TOYOTA MOTOR SALES, U.S.A., INC.

Maximum runout

0.07 mm (0.00276 in.)

NOTE:

- **Ensure that the dial indicator is set perpendicular to the measurement surface.**
- **Make sure to install the tip of the dial indicator towards the outside of the rear axle hub bolt.**
- **Keep the magnet of the dial indicator away from the rear axle hub and bearing assembly.**

If the runout exceeds the maximum, replace the rear axle hub and bearing assembly.

9. **INSTALL REAR DISC** . Refer to **INSTALLATION - Step 1**
10. **INSTALL PARKING BRAKE SHOE ADJUSTING HOLE PLUG** . Refer to **INSTALLATION - Step 2**

11. **INSTALL REAR DISC BRAKE CALIPER ASSEMBLY** See step 11
12. **CONNECT CABLE TO AUXILIARY BATTERY NEGATIVE TERMINAL**
    a. Connect the cable to the negative (-) auxiliary battery terminal. Refer to **INSTALLATION - Step 2** .
    b. Connect the reservoir level switch connector.
    c. Clear the DTCs. Refer to **DTC CHECK / CLEAR** .
13. **ADJUST PARKING BRAKE**

    Refer to **ADJUSTMENT**

14. **INSTALL REAR WHEEL**

    Torque: 103 N*m (1049 kgf*cm, 76 ft.*lbf)

REMOVAL

REMOVAL

NOTE: **When the brake pedal is first depressed after replacing the brake pads or pushing back the disc brake piston, DTC C1214 may be output. As there is no malfunction, clear the DTC.**

HINT:

- Use the same procedure for the RH side and LH side.
- The procedure listed below is for the LH side.

1. **PRECAUTION**

   NOTE: **After turning the power switch off, waiting time may be required before disconnecting the cable from the negative (-) auxiliary battery terminal. Therefore, make sure to read the disconnecting the cable from the negative (-) auxiliary battery terminal notice before proceeding with work. Refer to PRECAUTION .**

2. **DISABLE BRAKE CONTROL** . Refer to **REMOVAL - Step 2**
3. **REMOVE REAR WHEEL**
4. **SEPARATE REAR DISC BRAKE CALIPER ASSEMBLY** See step 4
5. **REMOVE PARKING BRAKE SHOE ADJUSTING HOLE PLUG** . Refer to **REMOVAL - Step 15**
6. **REMOVE REAR DISC** . Refer to **REMOVAL - Step 16**
7. **DISCONNECT SKID CONTROL SENSOR WIRE** . Refer to **REMOVAL - Step 7**
8. **REMOVE REAR AXLE HUB AND BEARING ASSEMBLY**
    a. Remove the 4 bolts and the rear axle hub and bearing assembly from the rear axle carrier sub-

assembly.

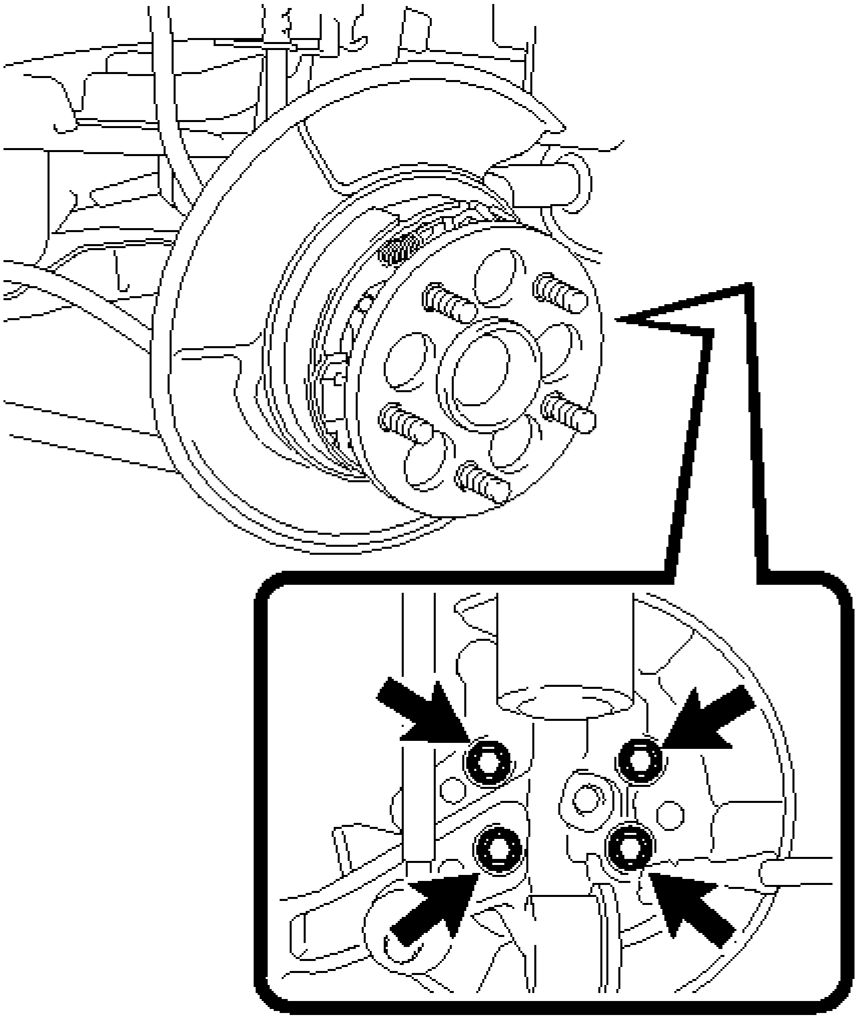

Fig. 37: Locating Rear Axle Hub And Bearing Assembly
Courtesy of TOYOTA MOTOR SALES, U.S.A., INC.

NOTE: **Use wire or an equivalent tool to keep the parking brake assembly from hanging down by the parking brake cable assembly.**

INSTALLATION

INSTALLATION

HINT:

- Use the same procedure for the RH side and LH side.
- The procedure listed below is for the LH side.

1. **INSTALL REAR AXLE HUB AND BEARING ASSEMBLY**
    a. Install the rear axle hub and bearing assembly and parking brake assembly to the rear axle carrier sub-assembly with the 4 bolts.

       Torque: 60 N*m (612 kgf*cm, 44 ft.*lbf)

2. **INSPECT REAR AXLE HUB BEARING LOOSENESS** See step 7
3. **INSPECT REAR AXLE HUB RUNOUT** See step 8
4. **CONNECT SKID CONTROL SENSOR WIRE** . Refer to **INSTALLATION - Step 4**
5. **INSTALL REAR DISC** . Refer to **INSTALLATION - Step 1**
6. **INSTALL PARKING BRAKE SHOE ADJUSTING HOLE PLUG** . Refer to **INSTALLATION - Step 2**
7. **INSTALL REAR DISC BRAKE CALIPER ASSEMBLY** See step 11
8. **CONNECT CABLE TO AUXILIARY BATTERY NEGATIVE TERMINAL**
    a. Connect the cable to the negative (-) auxiliary battery terminal. Refer to **INSTALLATION - Step 2** .
    b. Connect the reservoir level switch connector.
    c. Clear the DTCs. Refer to **DTC CHECK / CLEAR** .
9. **ADJUST PARKING BRAKE**

   Refer to **ADJUSTMENT**

10. **INSTALL REAR WHEEL**

    Torque: 103 N*m (1049 kgf*cm, 76 ft.*lbf)

11. **CHECK FOR SPEED SENSOR SIGNAL**

    Refer to **TEST MODE PROCEDURE**

REAR AXLE CARRIER

COMPONENTS

ILLUSTRATION

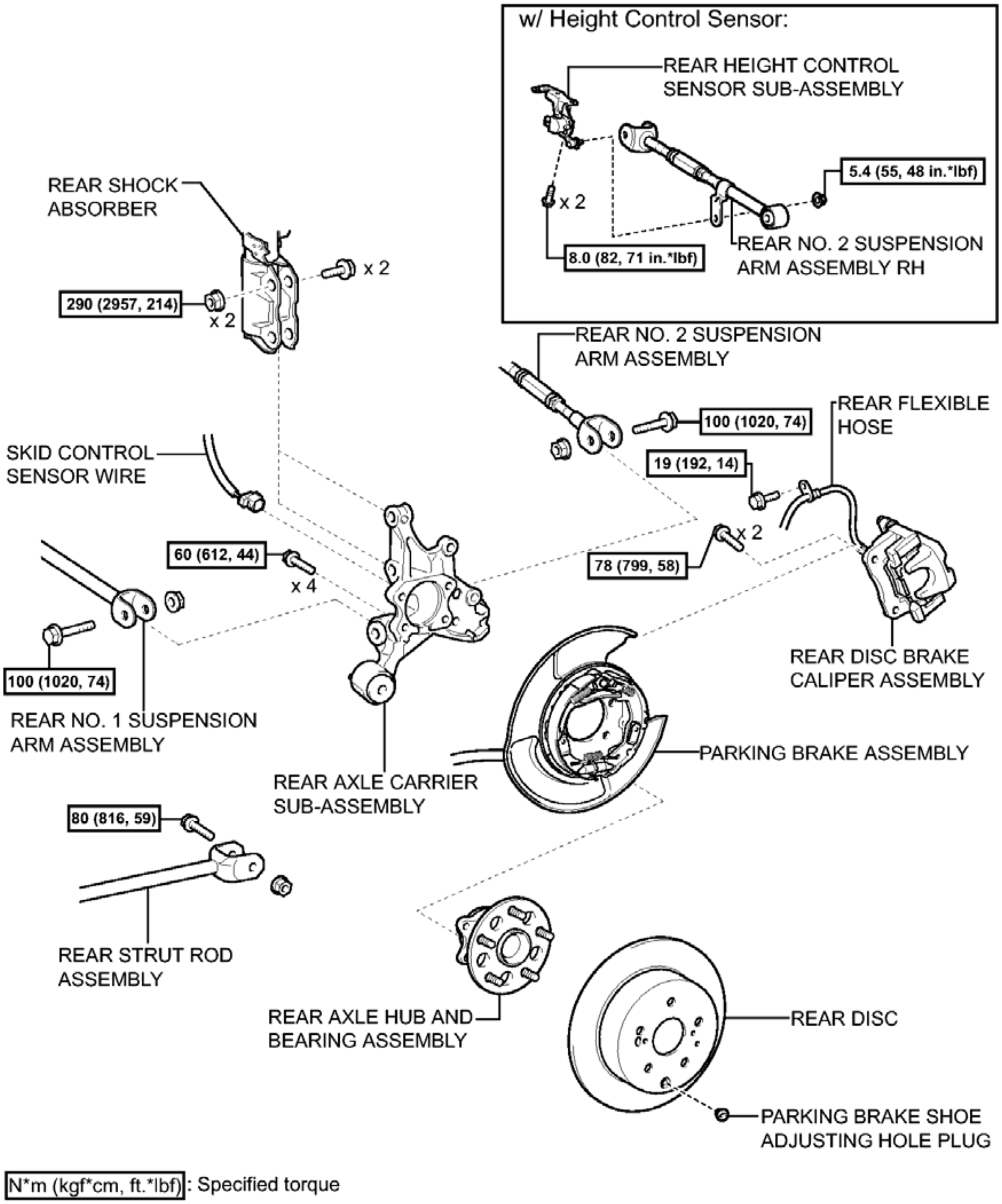
w/ Height Control Sensor:
REAR HEIGHT CONTROL SENSOR SUB-ASSEMBLY
5.4 (55, 48 in.*lbf)
x 2
8.0 (82, 71 in.*lbf)
REAR NO. 2 SUSPENSION ARM ASSEMBLY RH
REAR SHOCK ABSORBER
290 (2957, 214)
x 2
x 2
REAR NO. 2 SUSPENSION ARM ASSEMBLY
100 (1020, 74)
REAR FLEXIBLE HOSE
SKID CONTROL SENSOR WIRE
19 (192, 14)
x 2
60 (612, 44)
x 4
78 (799, 58)
100 (1020, 74)
REAR DISC BRAKE CALIPER ASSEMBLY
REAR NO. 1 SUSPENSION ARM ASSEMBLY
PARKING BRAKE ASSEMBLY
REAR AXLE CARRIER SUB-ASSEMBLY
80 (816, 59)
REAR STRUT ROD ASSEMBLY
REAR AXLE HUB AND BEARING ASSEMBLY
REAR DISC
PARKING BRAKE SHOE ADJUSTING HOLE PLUG
N*m (kgf*cm, ft.*lbf): Specified torque
c

Fig. 38: Exploded View Of Rear Axle Carrier Replacement Components With Torque Specifications
Courtesy of TOYOTA MOTOR SALES, U.S.A., INC.

REMOVAL

REMOVAL

NOTE: **When the brake pedal is first depressed after replacing the brake pads or pushing back the disc brake piston, DTC C1214 may be output. As there is no**

malfunction, clear the DTC.

HINT:

- Use the same procedure for the RH side and LH side.
- The procedure listed below is for the LH side.

1. **PRECAUTION**

   NOTE: **After turning the power switch off, waiting time may be required before disconnecting the cable from the negative (-) auxiliary battery terminal. Therefore, make sure to read the disconnecting the cable from the negative (-) auxiliary battery terminal notice before proceeding with work. Refer to PRECAUTION .**

2. **DISABLE BRAKE CONTROL** . Refer to **REMOVAL - Step 2**
3. **REMOVE REAR WHEEL**
4. **SEPARATE REAR DISC BRAKE CALIPER ASSEMBLY** See step 4
5. **REMOVE PARKING BRAKE SHOE ADJUSTING HOLE PLUG** . Refer to **REMOVAL - Step 15**
6. **REMOVE REAR DISC** . Refer to **REMOVAL - Step 16**
7. **DISCONNECT SKID CONTROL SENSOR WIRE** . Refer to **REMOVAL - Step 7**
8. **REMOVE REAR AXLE HUB AND BEARING ASSEMBLY** See step 8
9. **REMOVE REAR HEIGHT CONTROL SENSOR SUB-ASSEMBLY (w/ Height Control Sensor)**

   Refer to **REMOVAL**

   HINT:

   It is necessary to remove the rear height control sensor sub-assembly when separating the rear No. 2 suspension arm assembly RH.

10. **SEPARATE REAR STRUT ROD ASSEMBLY**
    1. Use a jack and wooden block to support the rear axle carrier sub-assembly.

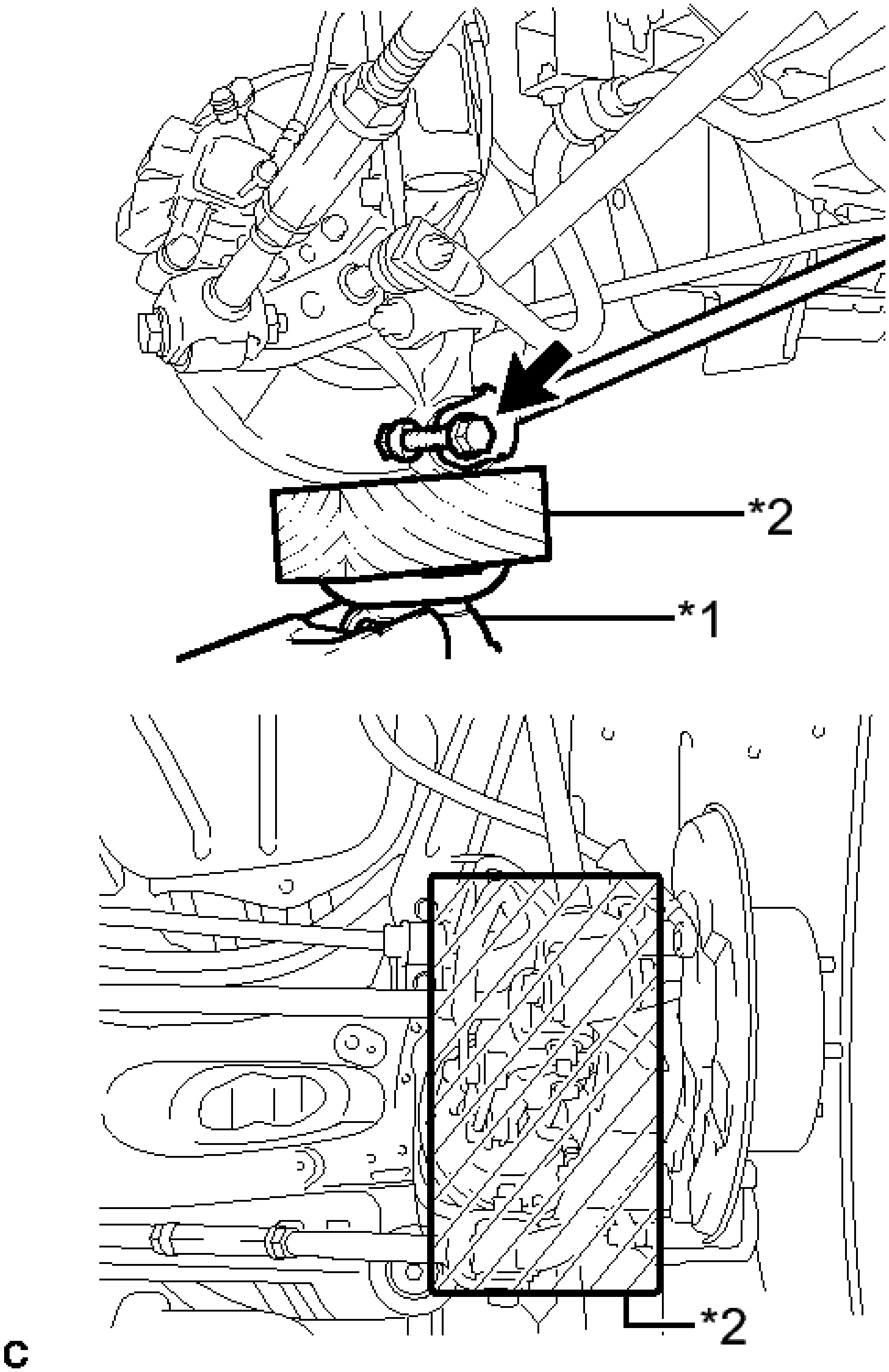

Fig. 39: Identifying Rear Axle Carrier Sub-Assembly Supported By Wooden Block
Courtesy of TOYOTA MOTOR SALES, U.S.A., INC.

TEXT IN ILLUSTRATION

*1	Jack

*2	Wooden Block

b. Remove the bolt and nut, and separate the rear strut rod assembly (rear side) from the rear axle carrier sub-assembly.

NOTE: When removing the bolt, keep the nut from rotating.

11. **SEPARATE REAR NO. 2 SUSPENSION ARM ASSEMBLY** . Refer to **REMOVAL - Step 3**
12. **SEPARATE REAR NO. 1 SUSPENSION ARM ASSEMBLY**
    a. Remove the bolt and nut, and separate the rear No. 1 suspension arm assembly (outer side) from the rear axle carrier sub-assembly.

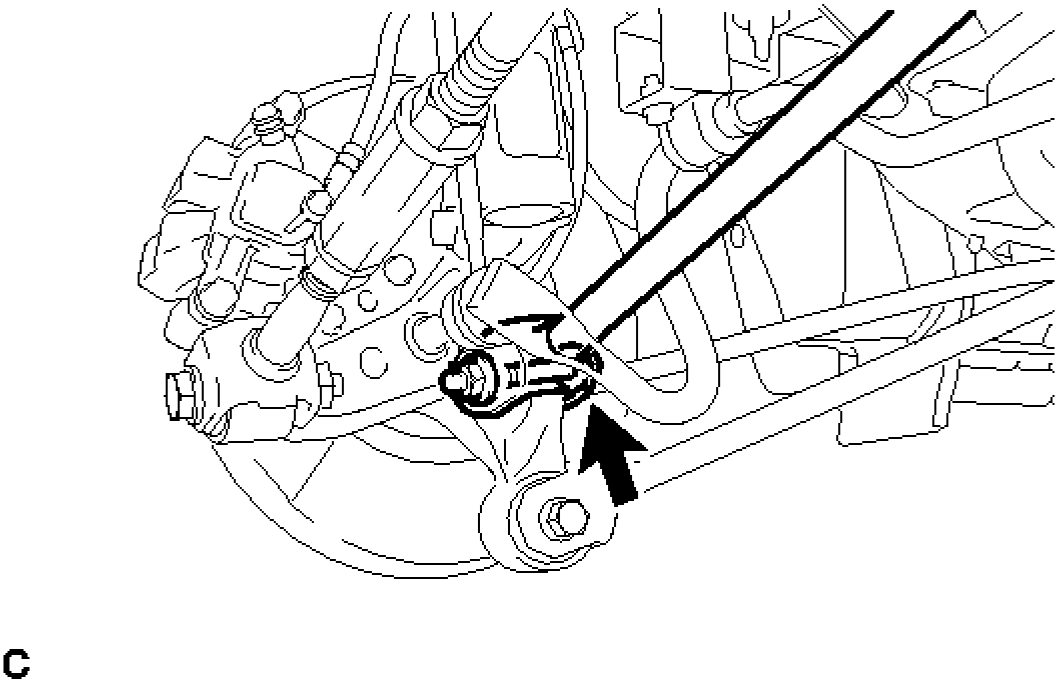

Fig. 40: Locating Rear No. 1 Suspension Arm Assembly Fasteners
Courtesy of TOYOTA MOTOR SALES, U.S.A., INC.

NOTE: When removing the bolt, keep the nut from rotating.

13. **REMOVE REAR AXLE CARRIER SUB-ASSEMBLY**
    a. Remove the 2 bolts, 2 nuts and rear axle carrier sub-assembly from the rear shock absorber.

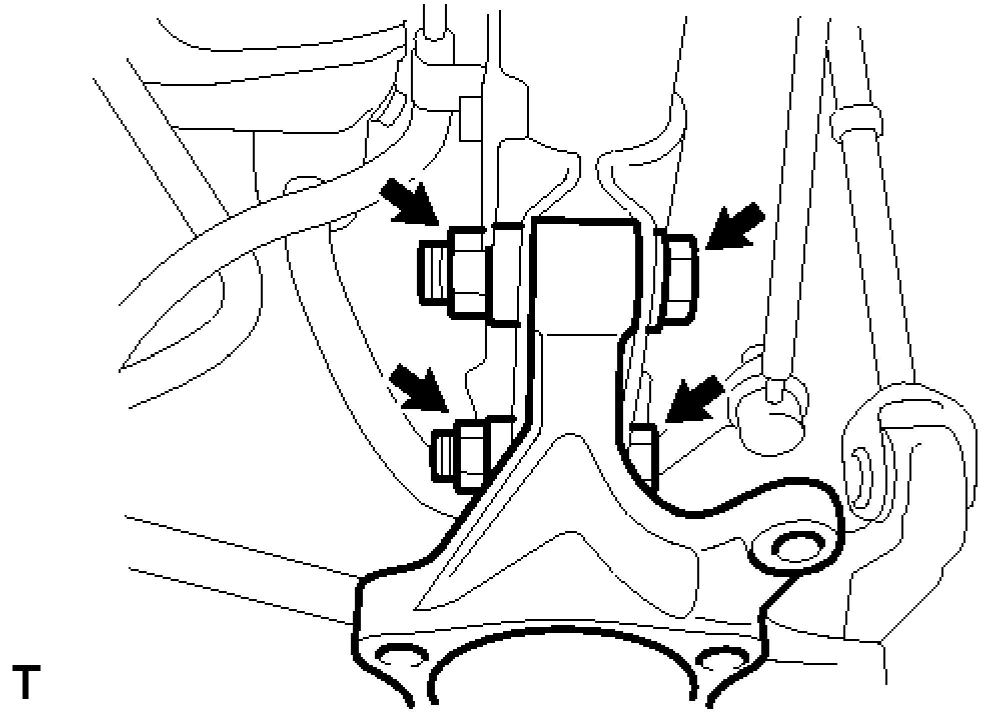

Fig. 41: Locating Rear Axle Carrier Sub-Assembly Bolts And Nuts
Courtesy of TOYOTA MOTOR SALES, U.S.A., INC.

NOTE: **When removing the nuts, keep the bolts from rotating.**

INSTALLATION

INSTALLATION

HINT:

- Use the same procedure for the RH side and LH side.
- The procedure listed below is for the LH side.

1. **INSTALL REAR AXLE CARRIER SUB-ASSEMBLY**
    a. Install the rear axle carrier sub-assembly to the rear shock absorber with the 2 bolts and 2 nuts.

    Torque: 290 N*m (2957 kgf*cm, 214 ft.*lbf)

    NOTE: **While keeping the bolts from rotating, tighten the nuts.**

2. **TEMPORARILY TIGHTEN REAR NO. 1 SUSPENSION ARM ASSEMBLY**
    a. Connect the rear No. 1 suspension arm assembly (outer side) to the rear axle carrier sub-assembly with the bolt and nut.

    NOTE: **When temporarily tightening the bolt, keep the nut from rotating.**

HINT:

Insert the bolt from the front of the vehicle.

3. **TEMPORARILY TIGHTEN REAR NO. 2 SUSPENSION ARM ASSEMBLY** . Refer to **INSTALLATION - Step 4**
4. **TEMPORARILY TIGHTEN REAR STRUT ROD ASSEMBLY**
    a. Temporarily tighten the rear strut rod assembly (rear side) to the rear axle carrier sub-assembly with the bolt and nut.

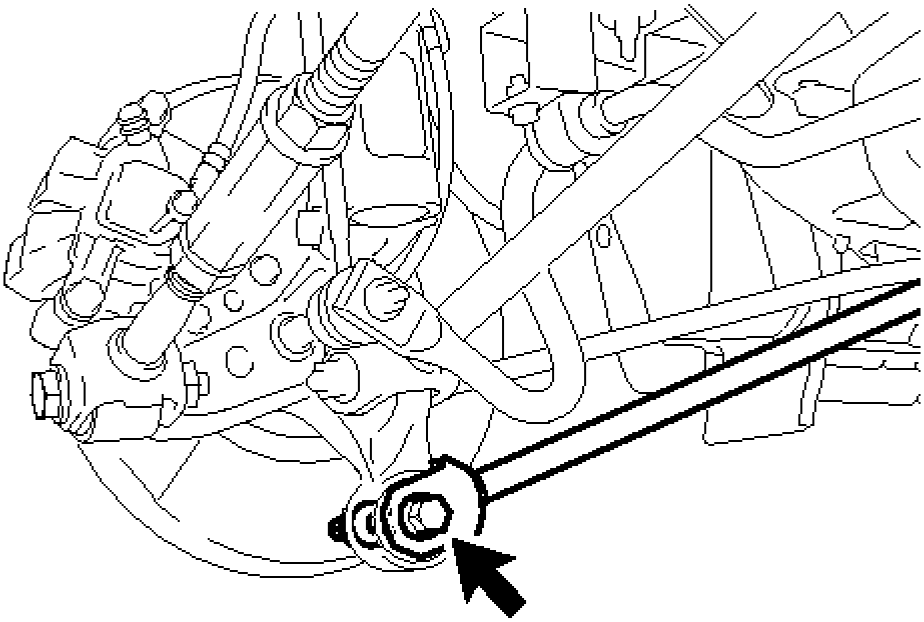

Fig. 42: Locating Rear Strut Rod Assembly Fasteners
Courtesy of TOYOTA MOTOR SALES, U.S.A., INC.

NOTE: **Since a stopper nut is used, turn the bolt.**

HINT:

Insert the bolt from the inside of the vehicle.

5. **INSTALL REAR AXLE HUB AND BEARING ASSEMBLY** See step 1
6. **CONNECT SKID CONTROL SENSOR WIRE** . Refer to **INSTALLATION - Step 4**
7. **INSTALL REAR DISC** . Refer to **INSTALLATION - Step 1**
8. **INSTALL PARKING BRAKE SHOE ADJUSTING HOLE PLUG** . Refer to **INSTALLATION - Step 2**
9. **INSTALL REAR DISC BRAKE CALIPER ASSEMBLY** See step 11

10. **STABILIZE SUSPENSION**

a. Jack up the rear axle carrier sub-assembly, placing a wooden block under it to avoid damage. Apply load to the suspension so that the installed bolt of the rear No. 1 suspension arm assembly (inner side) is horizontally aligned with the center of the rear axle hub.

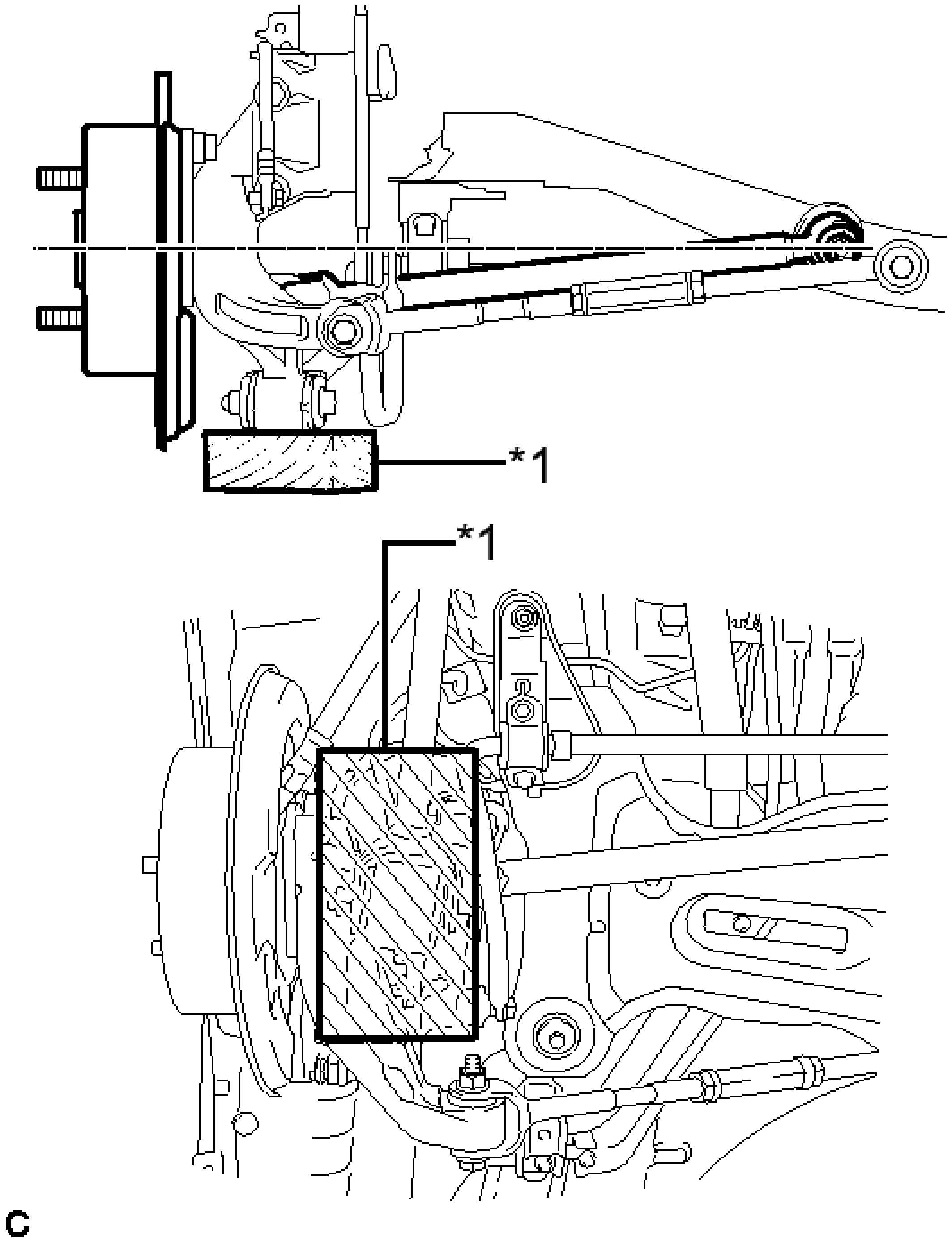

Fig. 43: Identifying Rear Axle Carrier Sub-Assembly Supported By Wooden Block
Courtesy of TOYOTA MOTOR SALES, U.S.A., INC.

TEXT IN ILLUSTRATION

*1	Wooden Block

WARNING: **Do not jack up the rear axle carrier sub-assembly too high as the vehicle may fall.**

NOTE:

- **When jacking up the rear axle carrier sub-assembly, be sure to jack it up slowly.**
- **Make sure to perform this operation with the vehicle kept as low as possible.**

11. **FULLY TIGHTEN REAR NO. 1 SUSPENSION ARM ASSEMBLY**
    a. Fully tighten the bolt.

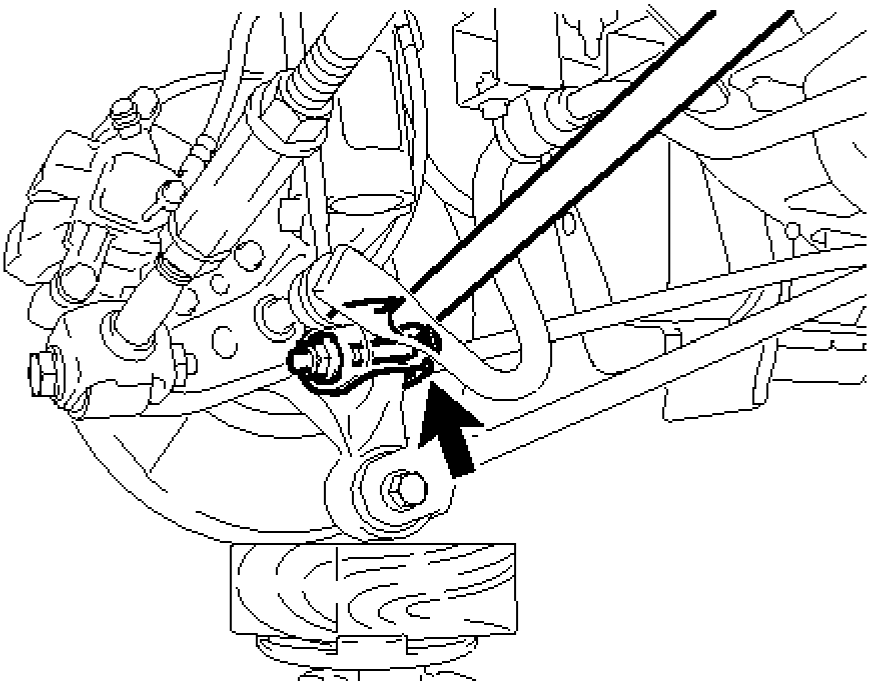

Fig. 44: Locating Rear No. 1 Suspension Arm Assembly Fasteners
Courtesy of TOYOTA MOTOR SALES, U.S.A., INC.

Torque: 100 N*m (1020 kgf*cm, 74 ft.*lbf)

NOTE: **Since a stopper nut is used, fully tighten the bolt.**

12. **FULLY TIGHTEN REAR NO. 2 SUSPENSION ARM ASSEMBLY**
    a. Fully tighten the bolt.

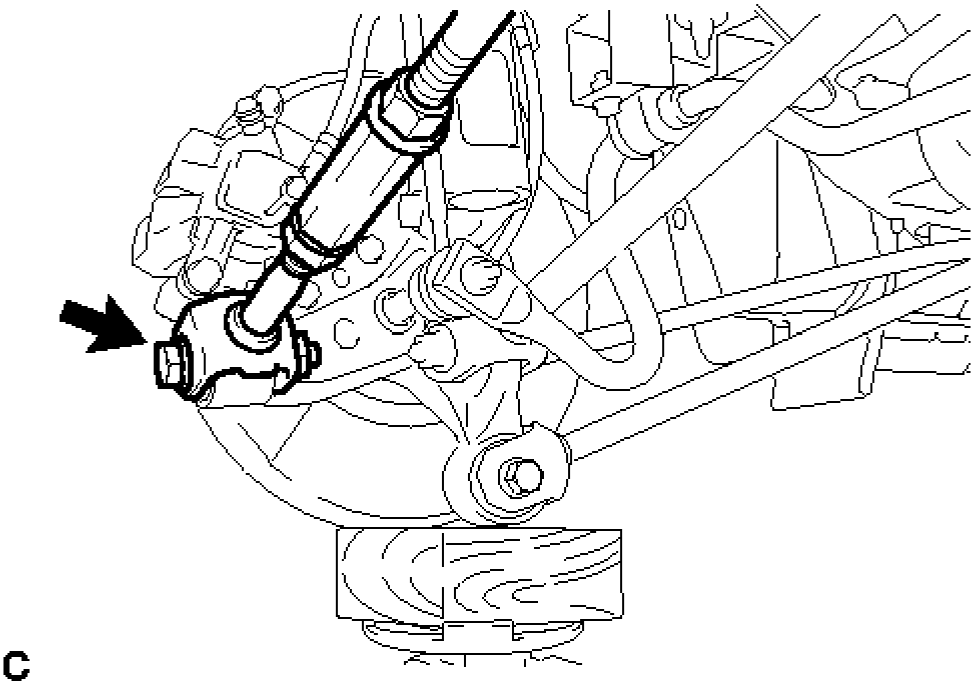

Fig. 45: Locating Rear No. 2 Suspension Arm Assembly Bolt
Courtesy of TOYOTA MOTOR SALES, U.S.A., INC.

Torque: 100 N*m (1020 kgf*cm, 74 ft.*lbf)

NOTE: **Since a stopper nut is used, fully tighten the bolt.**

13. **FULLY TIGHTEN REAR STRUT ROD ASSEMBLY**
    a. Fully tighten the bolt.

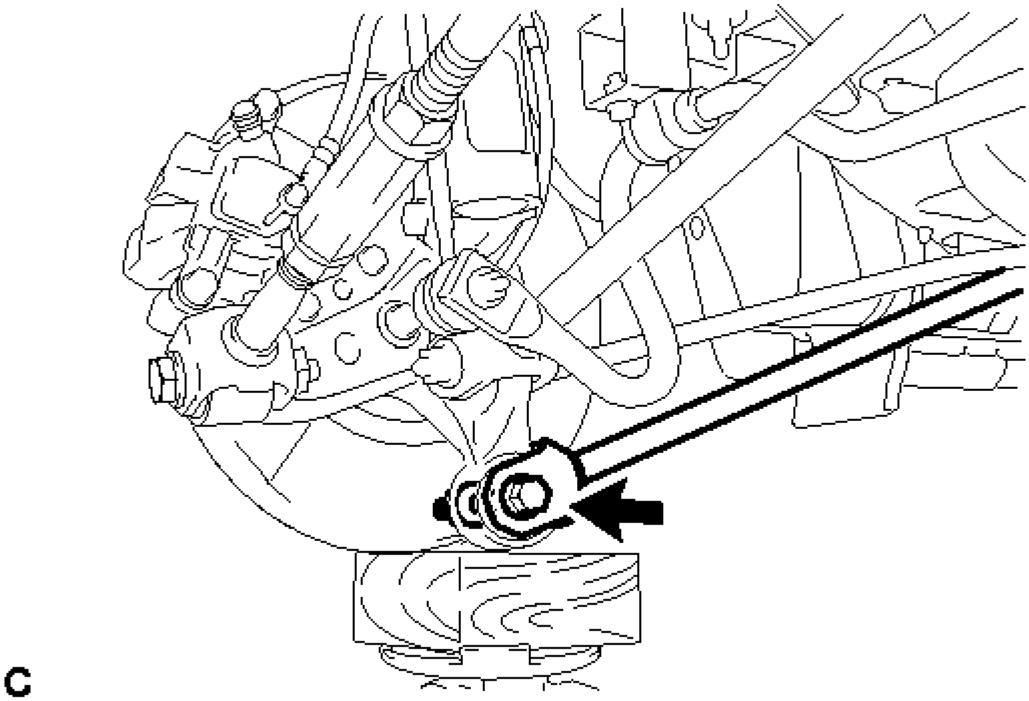

Fig. 46: Locating Rear Strut Rod Assembly Fasteners
Courtesy of TOYOTA MOTOR SALES, U.S.A., INC.

Torque: 80 N*m (816 kgf*cm, 59 ft.*lbf)

NOTE: **Since a stopper nut is used, fully tighten the bolt.**

14. **INSTALL REAR HEIGHT CONTROL SENSOR SUB-ASSEMBLY (w/ Height Control Sensor)**

    Refer to **INSTALLATION**

    HINT:

    It is necessary to install the rear height control sensor sub-assembly when installing the rear No. 2 suspension arm assembly RH.

15. **CONNECT CABLE TO AUXILIARY BATTERY NEGATIVE TERMINAL**
    a. Connect the cable to the negative (-) auxiliary battery terminal. Refer to **INSTALLATION - Step 2** .
    b. Connect the reservoir level switch connector.
    c. Clear the DTCs. Refer to **DTC CHECK / CLEAR** .
16. **ADJUST PARKING BRAKE**

    Refer to **ADJUSTMENT**

17. **INSTALL REAR WHEEL**

Torque: 103 N*m (1049 kgf*cm, 76 ft.*lbf)

18. **INSPECT AND ADJUST REAR WHEEL ALIGNMENT**

    Refer to **ADJUSTMENT**

19. **HEIGHT CONTROL SENSOR SIGNAL INITIALIZE (w/ Height Control Sensor)**

    Refer to **INITIALIZATION**

20. **ADJUST HEADLIGHT AIMING (w/ Height Control Sensor)**

    Refer to **ADJUSTMENT**

21. **CHECK FOR SPEED SENSOR SIGNAL**

    Refer to **TEST MODE PROCEDURE**

FRONT AXLE HUB BOLT

COMPONENTS

ILLUSTRATION

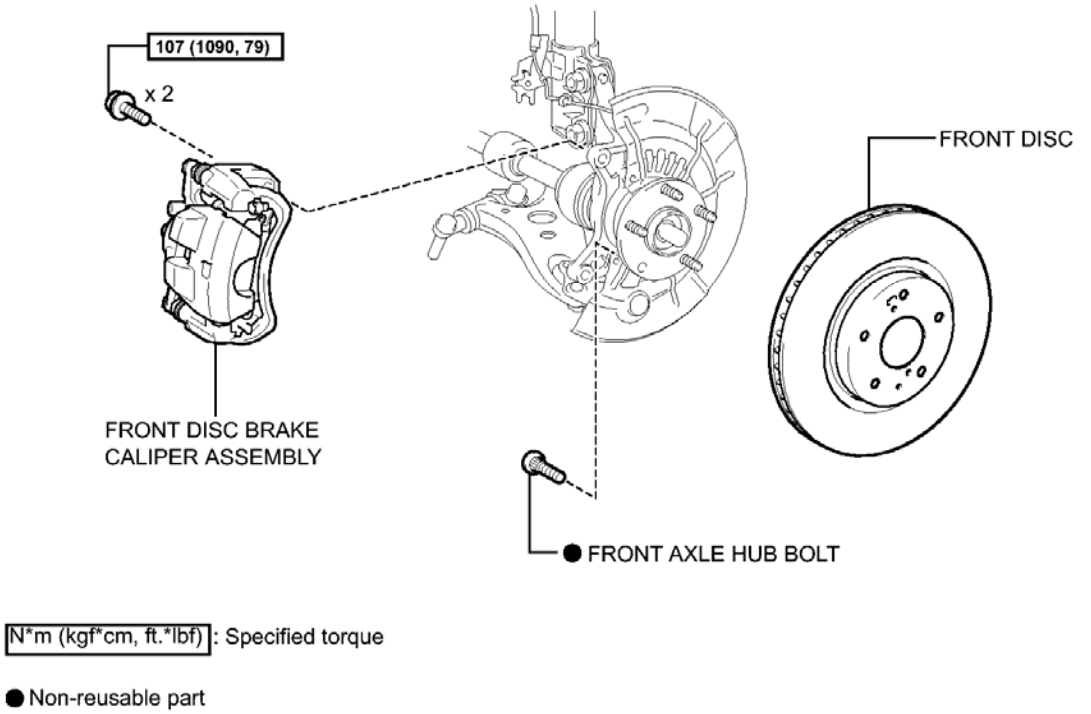
107 (1090, 79)
x 2
FRONT DISC
FRONT DISC BRAKE CALIPER ASSEMBLY
● FRONT AXLE HUB BOLT
N*m (kgf*cm, ft.*lbf) : Specified torque
● Non-reusable part

c

Fig. 1: Identifying Front Axle Hub Bolt Replacement Components With Torque Specifications

Courtesy of TOYOTA MOTOR SALES, U.S.A., INC.

REPLACEMENT

REPLACEMENT

HINT:

- Use the same procedure for the RH side and LH side.
- The procedure listed below is for the LH side.

1. **REMOVE FRONT WHEEL**
2. **SEPARATE FRONT DISC BRAKE CALIPER ASSEMBLY**
   a. Remove the 2 bolts and separate the front disc brake caliper assembly.

      NOTE: Use wire or an equivalent tool to keep the front disc brake caliper assembly from hanging down by the front flexible hose.

3. **REMOVE FRONT DISC** . Refer to **REMOVAL - Step 13** .
4. **REMOVE FRONT AXLE HUB BOLT**
   a. Position the front axle hub bolt to be removed as shown in the illustration.

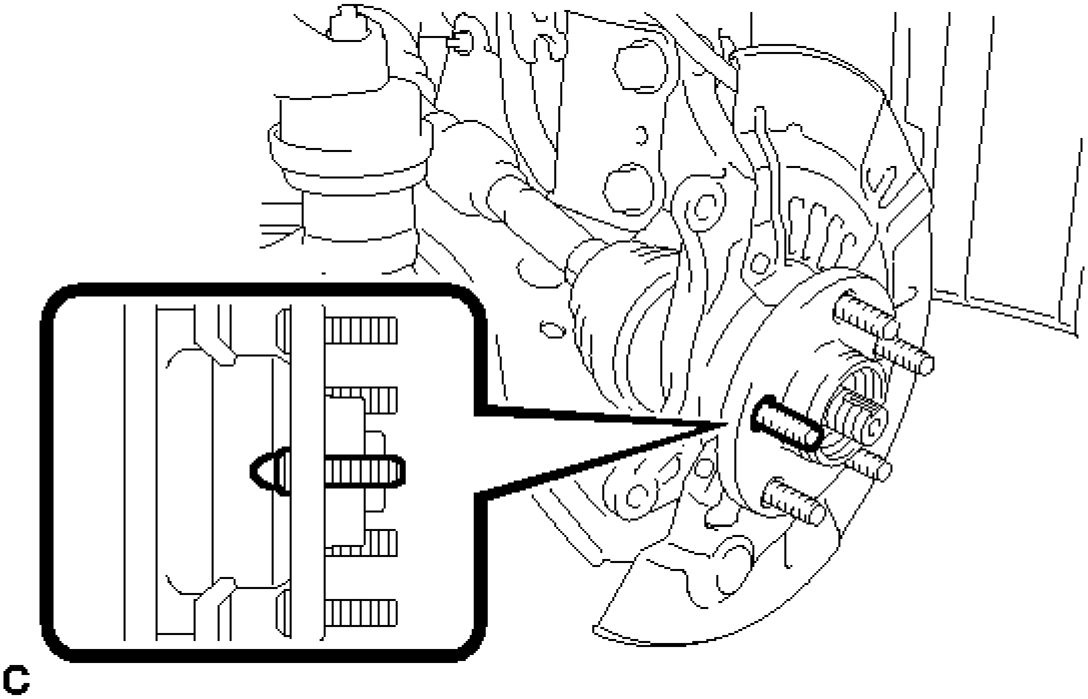

Fig. 2: Identifying Front Axle Hub Stud
Courtesy of TOYOTA MOTOR SALES, U.S.A., INC.

   b. Temporarily install 2 nuts to the front axle hub bolts as shown in the illustration.

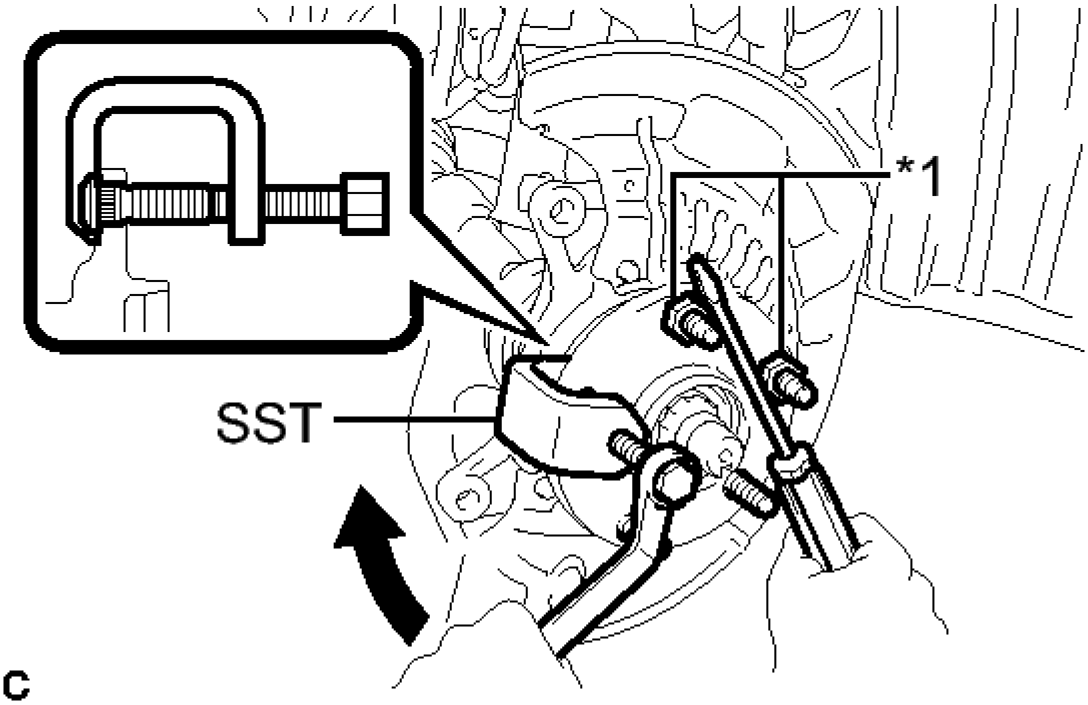

Fig. 3: Removing Front Axle Hub Stud With SST
Courtesy of TOYOTA MOTOR SALES, U.S.A., INC.

TEXT IN ILLUSTRATION

*1	Nut

Recommended service nut

Thread diameter: 12.0 mm (0.472 in.)

Thread pitch: 1.5 mm (0.0591 in.)

NOTE: **Install the nuts to prevent damage to the front axle hub bolts.**

c. Using SST and a screwdriver or an equivalent tool to hold the front axle hub, remove the front axle hub bolt.
   - **SST: 09628-10011**

5. **INSTALL FRONT AXLE HUB BOLT**

a. Position a new front axle hub bolt as shown in the illustration.

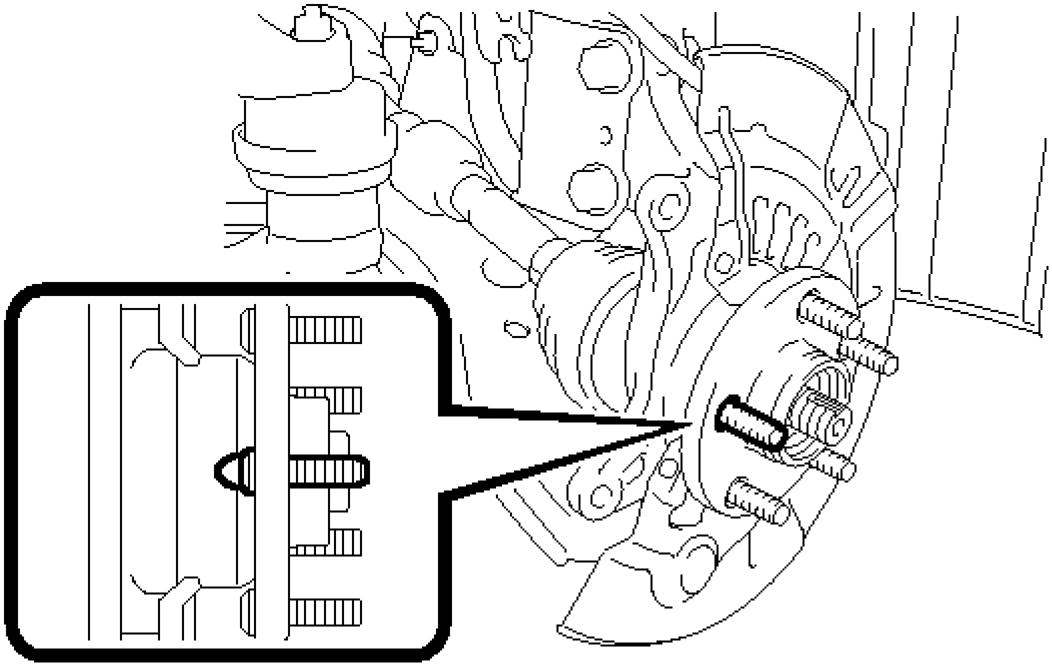

Fig. 4: Identifying Front Axle Hub Stud
Courtesy of TOYOTA MOTOR SALES, U.S.A., INC.

b. Temporarily install the front axle hub bolt to the front axle hub.
c. Install a washer and nut to the front axle hub bolt as shown in the illustration.

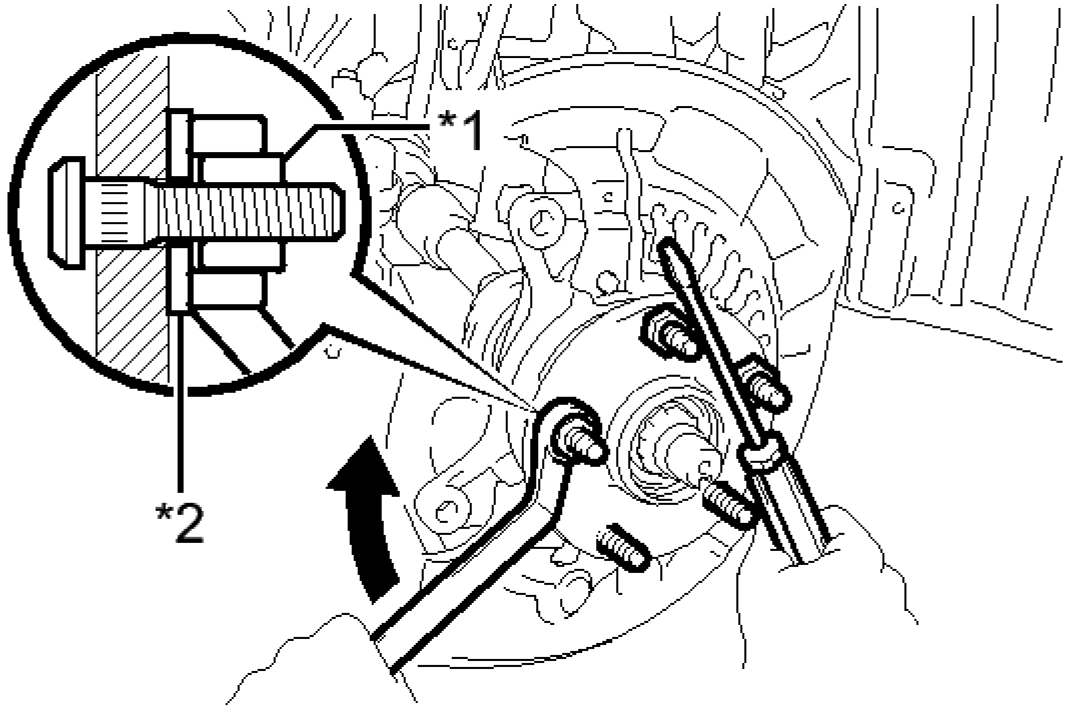

Fig. 5: Installing Front Axle Hub Stud

Courtesy of TOYOTA MOTOR SALES, U.S.A., INC.

TEXT IN ILLUSTRATION

*1	Nut
*2	Washer

Recommended service nut

Thread diameter: 12.0 mm (0.472 in.)

Thread pitch: 1.5 mm (0.0591 in.)

HINT:

Recommended washer thickness is 5 mm (0.197 in.) or more.

d. Using a screwdriver or an equivalent tool to hold the front axle hub, install the front axle hub bolt by tightening the nut.

NOTE:

- **Install the nuts to prevent damage to the front axle hub bolts.**
- **Do not damage the threads of the front axle hub bolts.**

e. Remove the 3 nuts and washer from the 3 front axle hub bolts.

6. **INSTALL FRONT DISC** . Refer to **INSTALLATION - Step 1** .
7. **INSTALL FRONT DISC BRAKE CALIPER ASSEMBLY**

a. Install the front disc brake caliper assembly to the steering knuckle with the 2 bolts.

Torque: 107 N*m (1090 kgf*cm, 79 ft.*lbf)

NOTE: **Do not twist the front flexible hose when installing the front disc brake caliper assembly.**

8. **INSTALL FRONT WHEEL**

Torque: 103 N*m (1049 kgf*cm, 76 ft.*lbf)

FRONT AXLE HUB

COMPONENTS

ILLUSTRATION

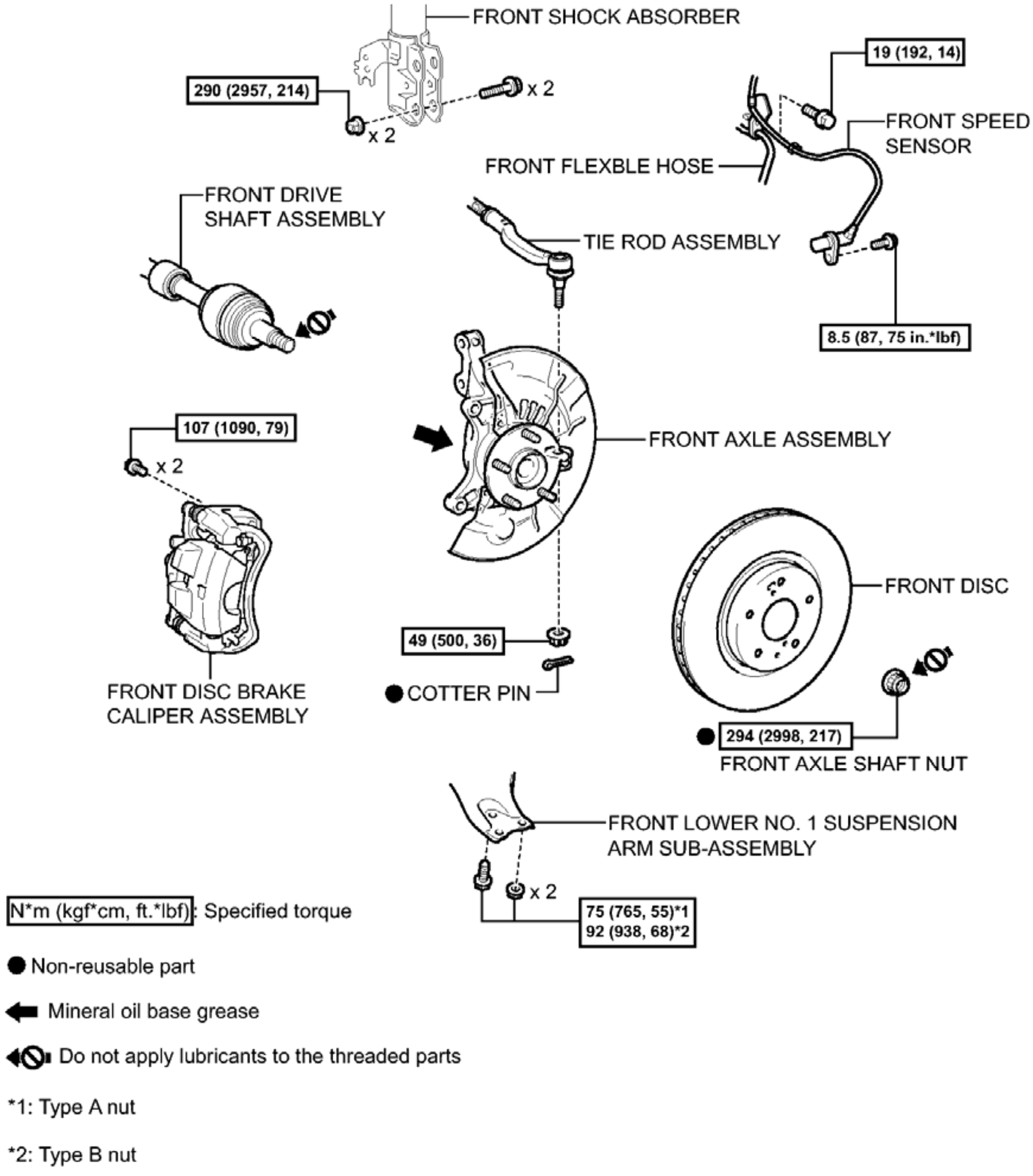
FRONT SHOCK ABSORBER
290 (2957, 214)
x 2
x 2
19 (192, 14)
FRONT SPEED SENSOR
FRONT FLEXBLE HOSE
FRONT DRIVE SHAFT ASSEMBLY
TIE ROD ASSEMBLY
8.5 (87, 75 in.*lbf)
107 (1090, 79)
x 2
FRONT AXLE ASSEMBLY
FRONT DISC
49 (500, 36)
● COTTER PIN
FRONT DISC BRAKE CALIPER ASSEMBLY
● 294 (2998, 217)
FRONT AXLE SHAFT NUT
FRONT LOWER NO. 1 SUSPENSION ARM SUB-ASSEMBLY
x 2
75 (765, 55)*1
92 (938, 68)*2
N*m (kgf*cm, ft.*lbf): Specified torque
● Non-reusable part
Mineral oil base grease
Do not apply lubricants to the threaded parts
*1: Type A nut
*2: Type B nut

c

Fig. 6: Exploded View Of Front Axle Hub Replacement Components With Torque Specifications (1 Of 2)
Courtesy of TOYOTA MOTOR SALES, U.S.A., INC.

ILLUSTRATION

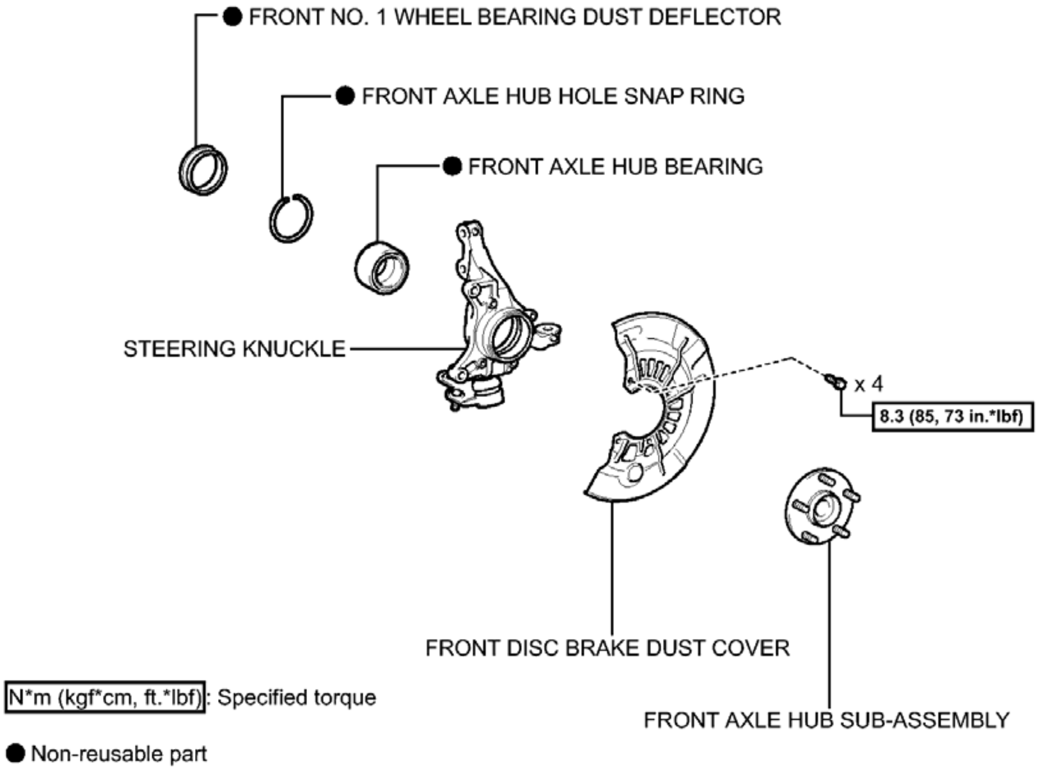
● FRONT NO. 1 WHEEL BEARING DUST DEFLECTOR
● FRONT AXLE HUB HOLE SNAP RING
● FRONT AXLE HUB BEARING
STEERING KNUCKLE
x 4
8.3 (85, 73 in.*lbf)
FRONT DISC BRAKE DUST COVER
FRONT AXLE HUB SUB-ASSEMBLY
N*m (kgf*cm, ft.*lbf): Specified torque
● Non-reusable part
c

Fig. 7: Exploded View Of Front Axle Hub Replacement Components With Torque Specifications (2 Of 2)
Courtesy of TOYOTA MOTOR SALES, U.S.A., INC.

ON-VEHICLE INSPECTION

ON-VEHICLE INSPECTION

HINT:

- Use the same procedure for the RH side and LH side.
- The procedure listed below is for the LH side.

1. **REMOVE FRONT WHEEL**
2. **SEPARATE FRONT DISC BRAKE CALIPER ASSEMBLY** . See step 2.
3. **REMOVE FRONT DISC** . Refer to **REMOVAL - Step 13** .
4. **INSPECT FRONT AXLE HUB BEARING LOOSENESS**
   a. Using a dial indicator, check for looseness near the center of the front axle hub.

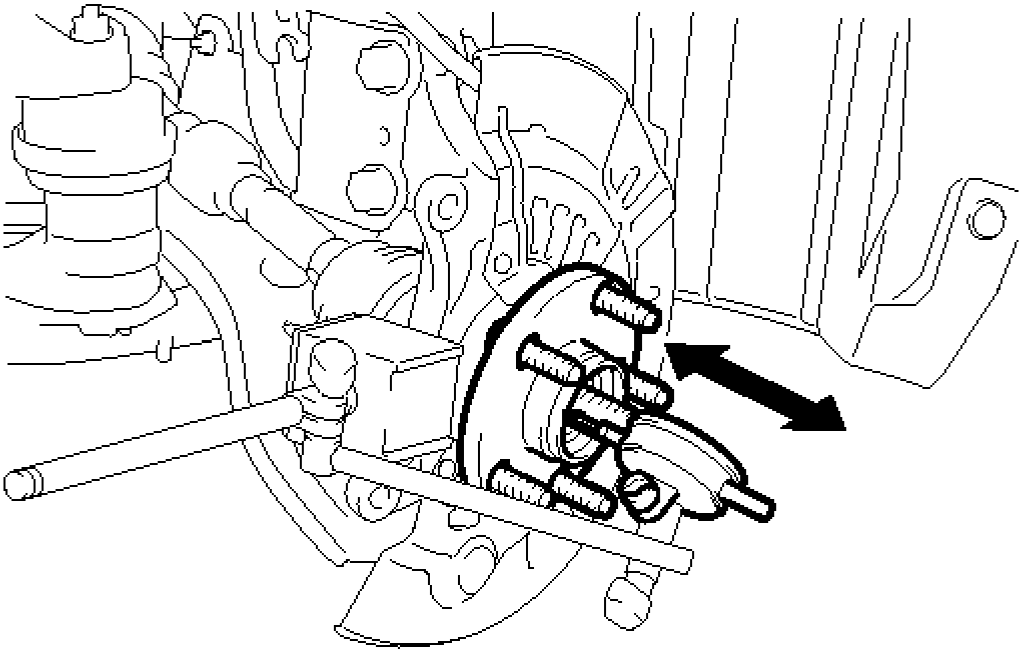

Fig. 8: Inspecting Front Axle Hub Bearing Looseness
Courtesy of TOYOTA MOTOR SALES, U.S.A., INC.

Maximum looseness

0.05 mm (0.00197 in.)

NOTE:

- **Ensure that the dial indicator is set perpendicular to the measurement surface.**
- **Keep the magnet of the dial indicator away from the front speed sensor.**

If the looseness exceeds the maximum, replace the front axle hub bearing.

5. **INSPECT FRONT AXLE HUB RUNOUT**
    a. Using a dial indicator, check for runout on the surface of the front axle hub outside the hub bolts.

HINT:

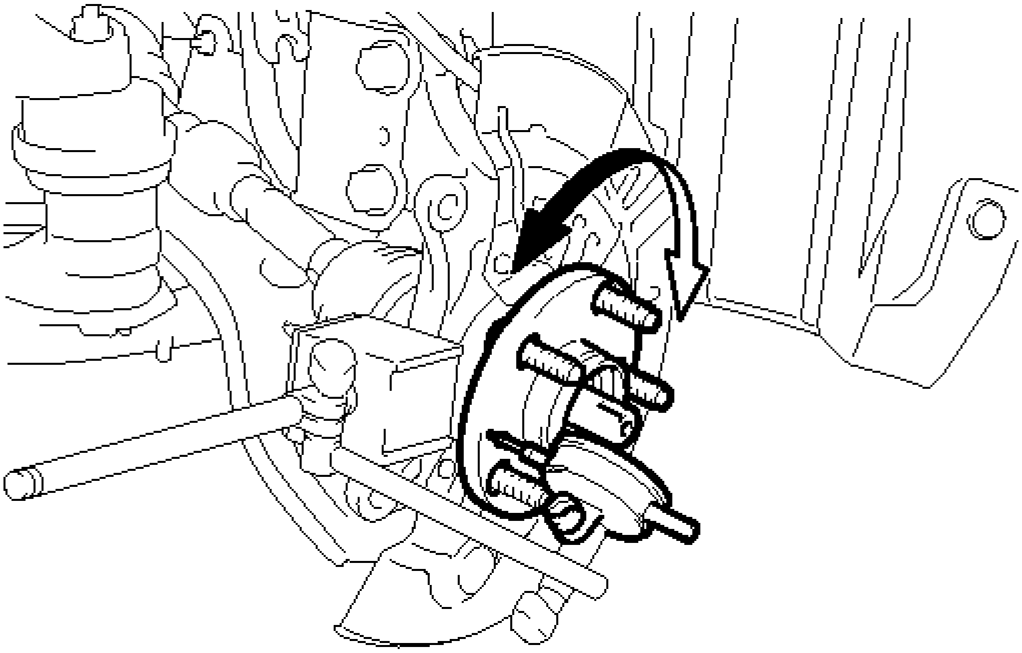

Fig. 9: Inspecting Front Axle Hub Runout
Courtesy of TOYOTA MOTOR SALES, U.S.A., INC.

Maximum runout

0.05 mm (0.00197 in.)

NOTE:

- **Ensure that the dial indicator is set perpendicular to the measurement surface.**
- **Keep the magnet of the dial indicator away from the front speed sensor.**

If the runout exceeds the maximum, replace the front axle hub.

6. **INSTALL FRONT DISC** . Refer to **INSTALLATION - Step 1** .
7. **INSTALL FRONT DISC BRAKE CALIPER ASSEMBLY** . See step 7.
8. **INSTALL FRONT WHEEL**

   Torque: 103 N*m (1049 kgf*cm, 76 ft.*lbf)

REMOVAL

REMOVAL

HINT:

- Use the same procedure for the RH side and LH side.
- The procedure listed below is for the LH side.

1. **REMOVE FRONT WHEEL**
2. **REMOVE FRONT AXLE SHAFT NUT** . Refer to **REMOVAL - Step 9** .
3. **SEPARATE FRONT SPEED SENSOR**
    a. Remove the bolt, disengage the clamp and separate the front speed sensor and front flexible hose.

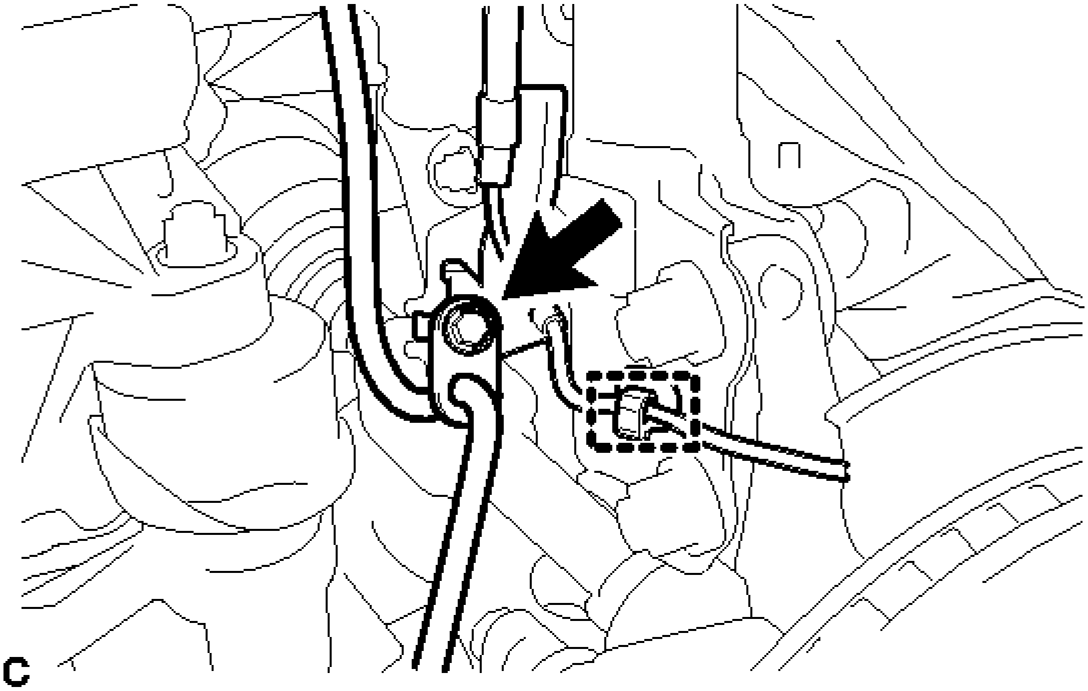

Fig. 10: Locating Front Speed Sensor Clamp And Front Flexible Hose Bolt
Courtesy of TOYOTA MOTOR SALES, U.S.A., INC.

NOTE: Be sure to separate the front speed sensor from the front shock absorber completely.

    b. Remove the bolt and front speed sensor from the steering knuckle.

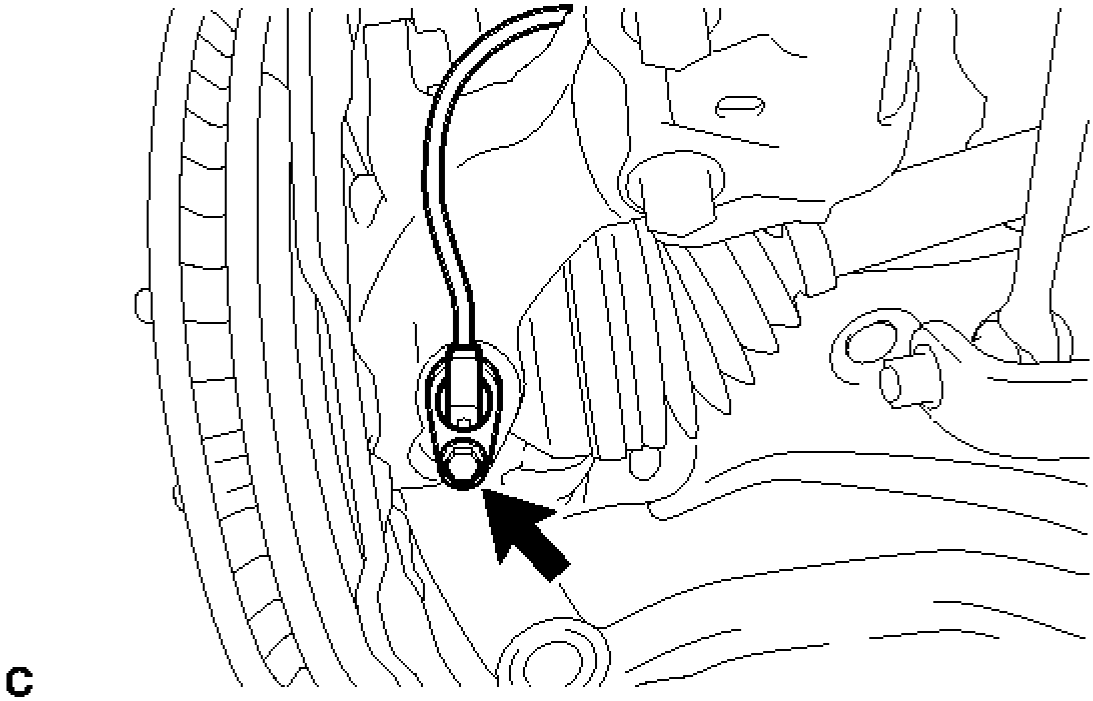

Fig. 11: Locating Front Speed Sensor And Bolt
Courtesy of TOYOTA MOTOR SALES, U.S.A., INC.

NOTE:

- **Prevent foreign matter from contacting the sensor tip.**
- **Be careful not to damage the front speed sensor.**
- **Clean the speed sensor installation hole and the contact surfaces every time the speed sensor is removed.**

4. **SEPARATE FRONT DISC BRAKE CALIPER ASSEMBLY** . See step 2.
5. **REMOVE FRONT DISC** . Refer to **REMOVAL - Step 13** .
6. **SEPARATE TIE ROD ASSEMBLY** . Refer to **REMOVAL - Step 5** .
7. **SEPARATE FRONT DRIVE SHAFT ASSEMBLY**
    a. Put matchmarks on the front drive shaft assembly and the front axle hub sub-assembly.

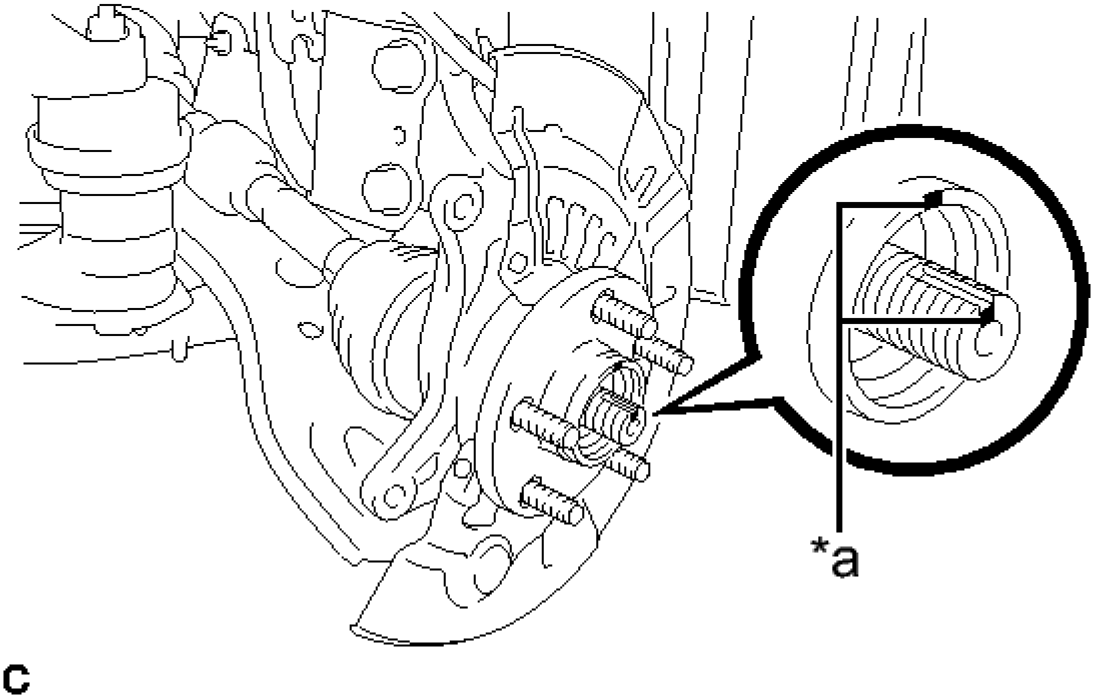

Fig. 12: Locating Front Drive Shaft Assembly And Front Axle Hub Sub-Assembly Matchmarks
Courtesy of TOYOTA MOTOR SALES, U.S.A., INC.

TEXT IN ILLUSTRATION

*a	Matchmark

b. Using a plastic hammer, separate the front drive shaft assembly from the front axle assembly.

   If it is difficult to separate, tap the end of the front drive shaft assembly using a brass bar and a hammer.

8. **SEPARATE FRONT LOWER NO. 1 SUSPENSION ARM SUB-ASSEMBLY**

   a. Remove the bolt and 2 nuts, and separate the front lower No. 1 suspension arm sub-assembly from the front lower ball joint assembly.

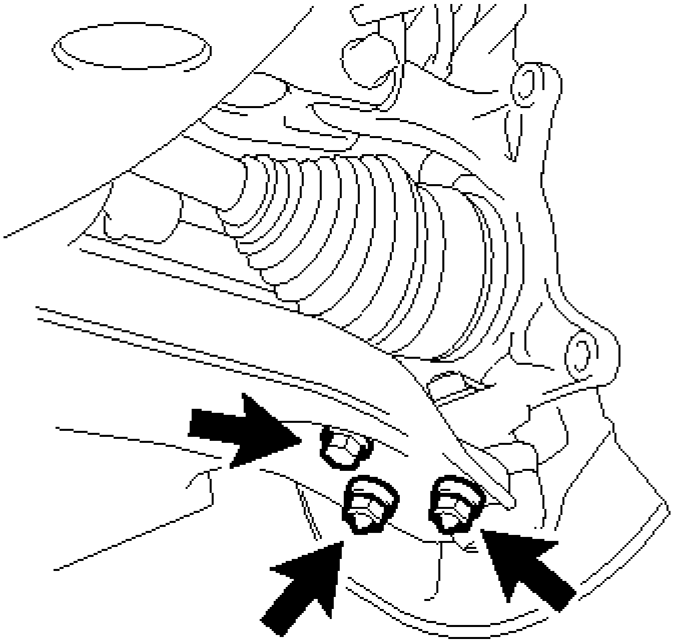

Fig. 13: Locating Front Lower Ball Joint Assembly Fasteners
Courtesy of TOYOTA MOTOR SALES, U.S.A., INC.

9. **REMOVE FRONT AXLE ASSEMBLY**
    a. Remove the 2 bolts, 2 nuts and front axle assembly from the front shock absorber.

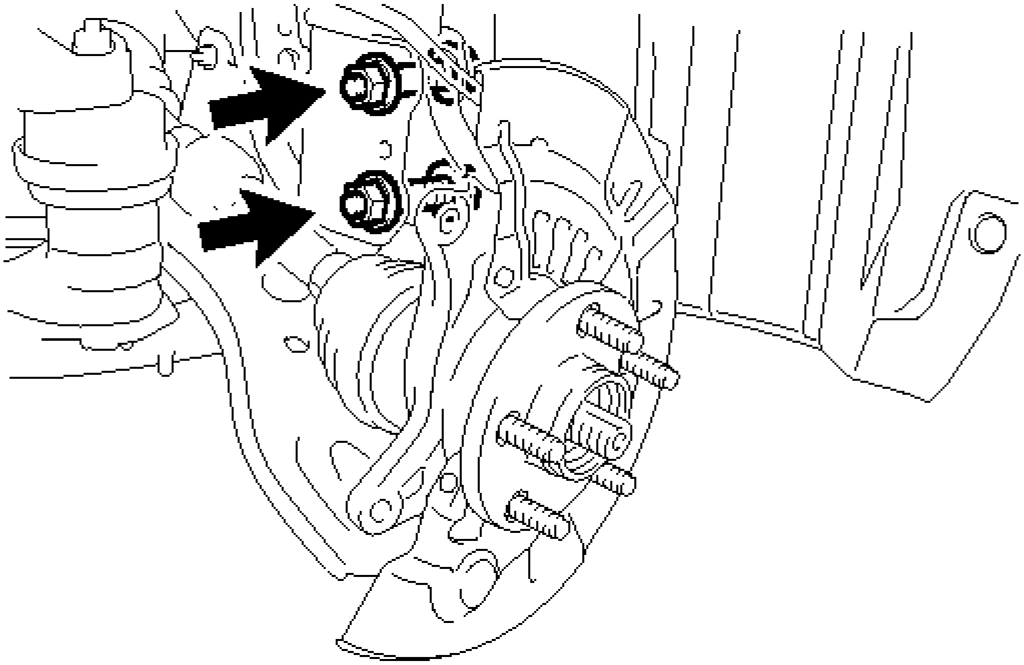

Fig. 14: Locating Front Shock Absorber Fasteners

Courtesy of TOYOTA MOTOR SALES, U.S.A., INC.

NOTE:	**When removing the nuts, keep the bolts from rotating.** **Be careful not to damage the drive shaft boot or speed sensor rotor.**

10. **REMOVE FRONT NO. 1 WHEEL BEARING DUST DEFLECTOR**
    a. Using a screwdriver with its tip wrapped with vinyl tape, remove the front No. 1 wheel bearing dust deflector.

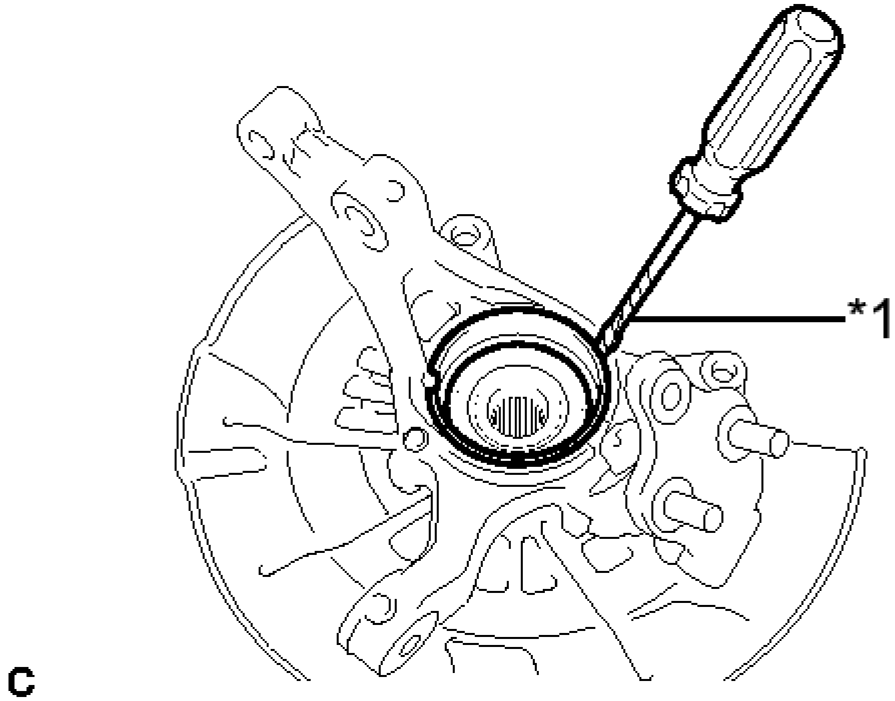

Fig. 15: Removing Front No. 1 Wheel Bearing Dust Deflector
Courtesy of TOYOTA MOTOR SALES, U.S.A., INC.

TEXT IN ILLUSTRATION

*1	Vinyl Tape

NOTE:	**Be careful not to damage the steering knuckle.**

11. **REMOVE FRONT AXLE HUB HOLE SNAP RING**
    a. Using snap ring pliers, remove the front axle hub hole snap ring.

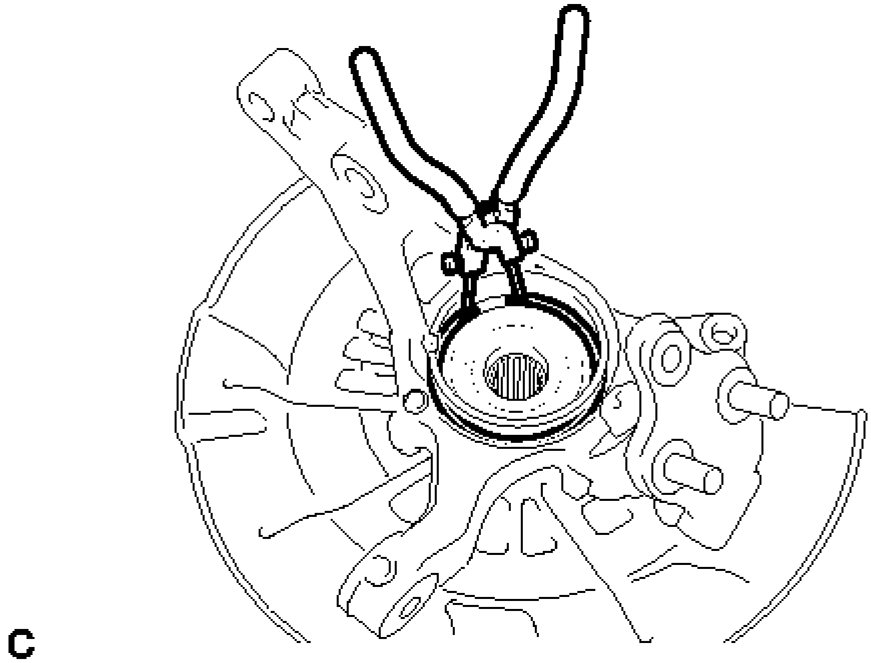

Fig. 16: Removing Front Axle Hub Hole Snap Ring
Courtesy of TOYOTA MOTOR SALES, U.S.A., INC.

12. **REMOVE FRONT AXLE HUB SUB-ASSEMBLY**
    a. Hold the front axle assembly between aluminum plates in a vise.

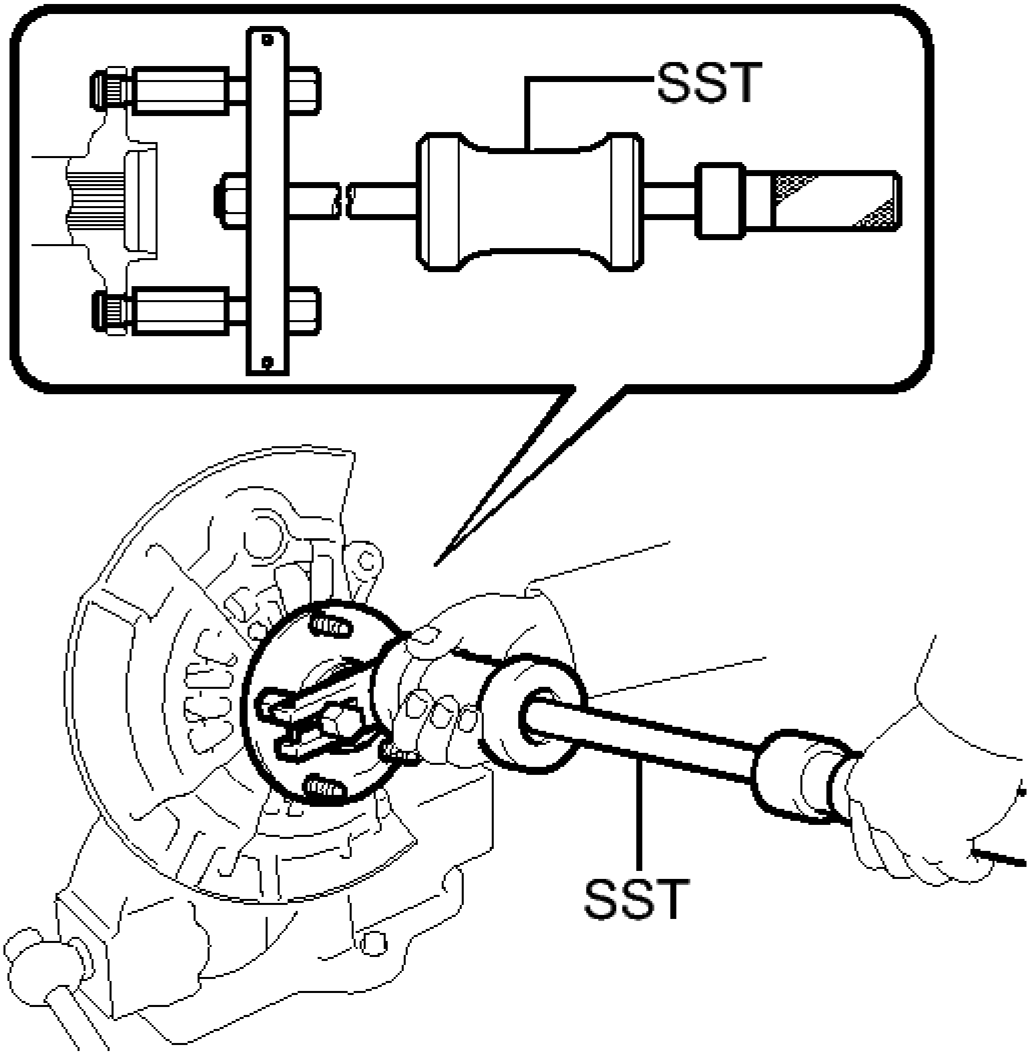

C

Fig. 17: Removing Front Axle Hub Sub-Assembly Using SST
Courtesy of TOYOTA MOTOR SALES, U.S.A., INC.

NOTE: Do not overtighten the vise.

b. Using SST, remove the front axle hub sub-assembly.
  - **SST: 09520-00031**

c. Using SST and a press, remove the bearing inner race (outside) from the front axle hub sub-assembly.

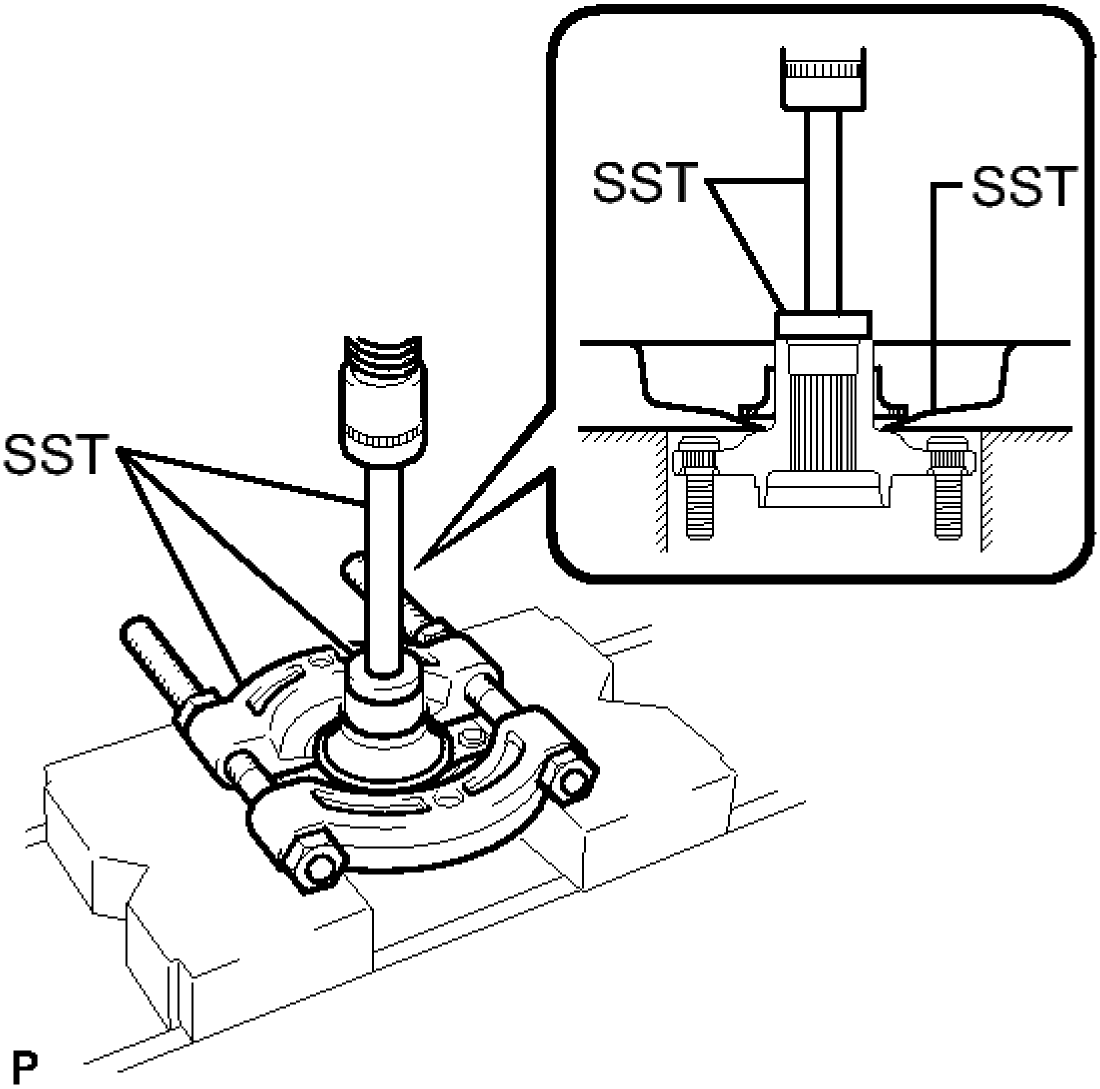

Fig. 18: Removing Front Axle Hub Sub-Assembly Bearing Inner Race Using SST & Press
Courtesy of TOYOTA MOTOR SALES, U.S.A., INC.

- **SST: 09555-55010**
- **SST: 09950-60010**
  09951-00440
- **SST: 09950-70010**
  09951-07100

NOTE: **Be careful not to drop the front axle hub sub-assembly.**

13. REMOVE FRONT DISC BRAKE DUST COVER

a. Remove the 4 bolts and front disc brake dust cover from the steering knuckle.

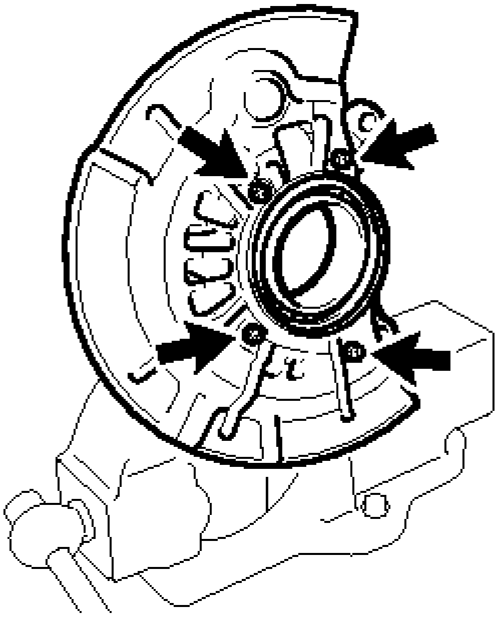

Fig. 19: Locating Front Disc Brake Dust Cover Bolts
Courtesy of TOYOTA MOTOR SALES, U.S.A., INC.

14. **REMOVE FRONT AXLE HUB BEARING**
    a. Place the bearing inner race (outside) on the front axle hub bearing.

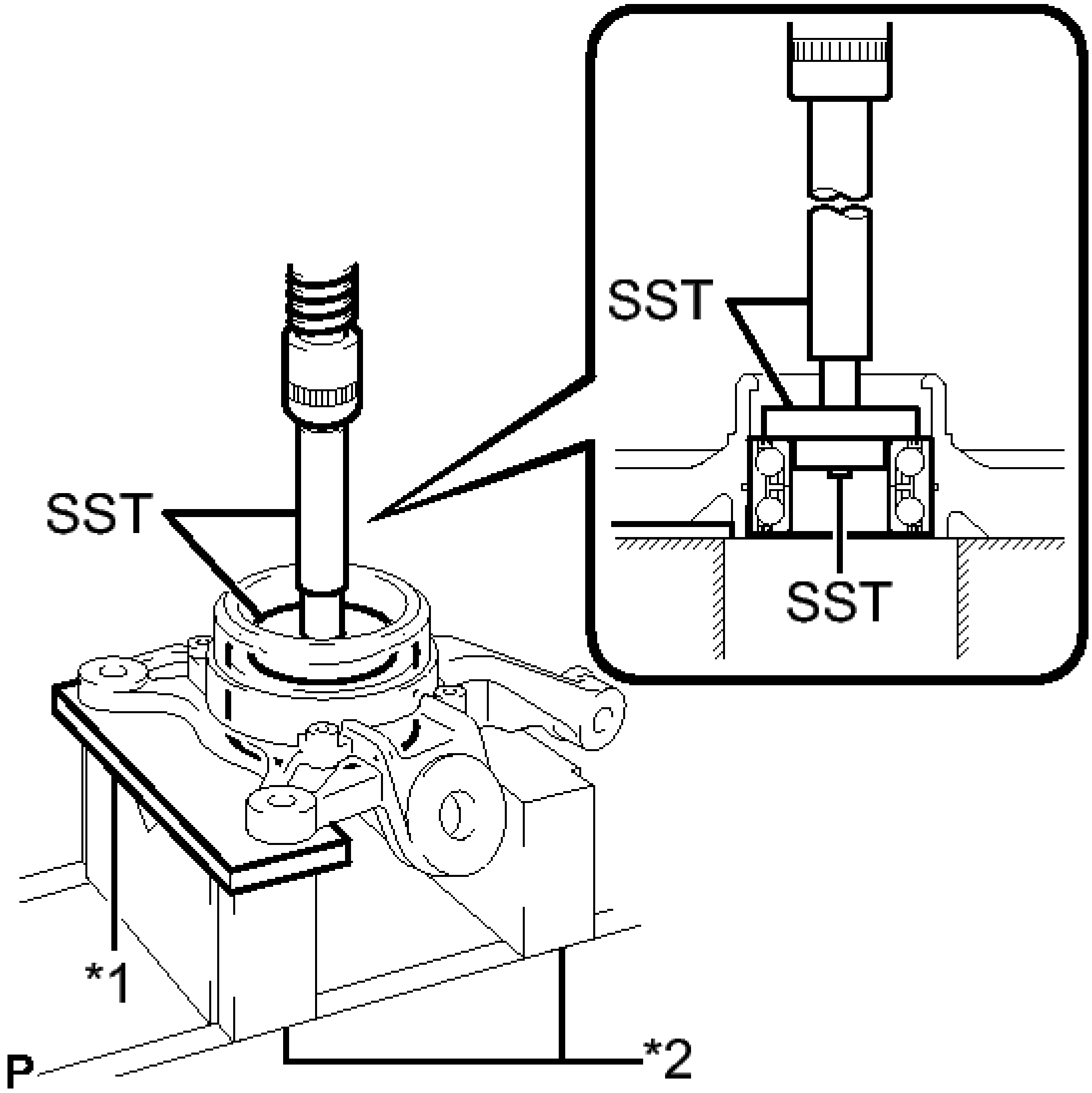

Fig. 20: Removing Front Axle Hub Bearing Using SST
Courtesy of TOYOTA MOTOR SALES, U.S.A., INC.

TEXT IN ILLUSTRATION

*1	Steel Plate
*2	V-block

b. Using SST, a steel plate, V-blocks and a press, remove the front axle hub bearing from the steering knuckle.
   - **SST: 09950-60010**
     09951-00440
     09952-06010
   - **SST: 09950-60020**

09951-00750

- **SST: 09950-70010**

  09951-07100

NOTE: **Keep the steering knuckle level.**

INSTALLATION

INSTALLATION

HINT:

- Use the same procedure for the RH side and LH side.
- The procedure listed below is for the LH side.

1. **INSTALL FRONT AXLE HUB BEARING**
   a. Using SST and a press, install a new front axle hub bearing to the steering knuckle.

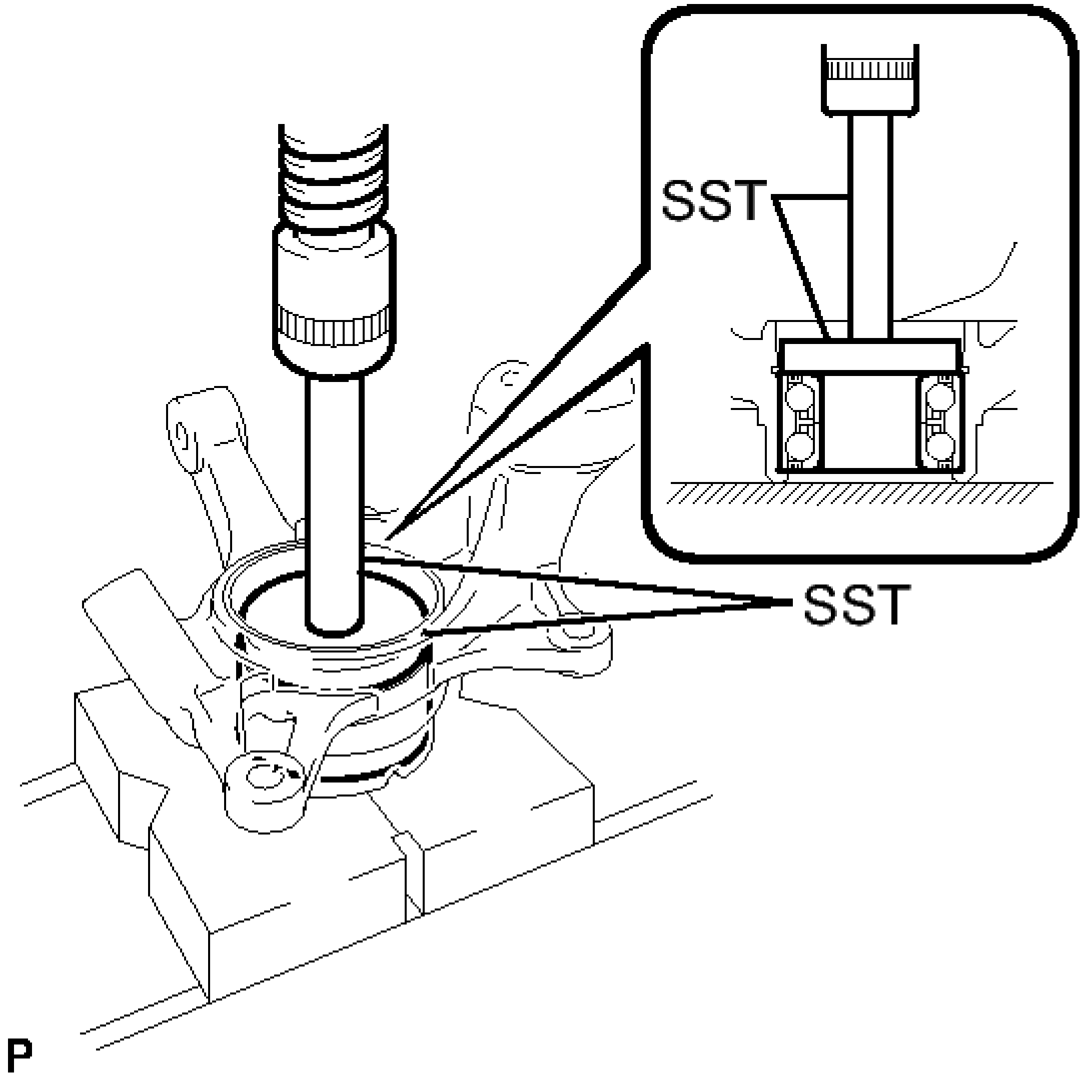

Fig. 21: Installing Front Axle Hub Bearing Using SST
Courtesy of TOYOTA MOTOR SALES, U.S.A., INC.

- **SST: 09950-60020**
  09951-00810
- **SST: 09950-70010**
  09951-07100

2. **INSTALL FRONT DISC BRAKE DUST COVER**
   a. Install the front disc brake dust cover to the steering knuckle with the 4 bolts.

      Torque: 8.3 N*m (85 kgf*cm, 73 in.*lbf)

3. **INSTALL FRONT AXLE HUB SUB-ASSEMBLY**
   a. Using SST and a press, install the front axle hub sub-assembly to the steering knuckle.

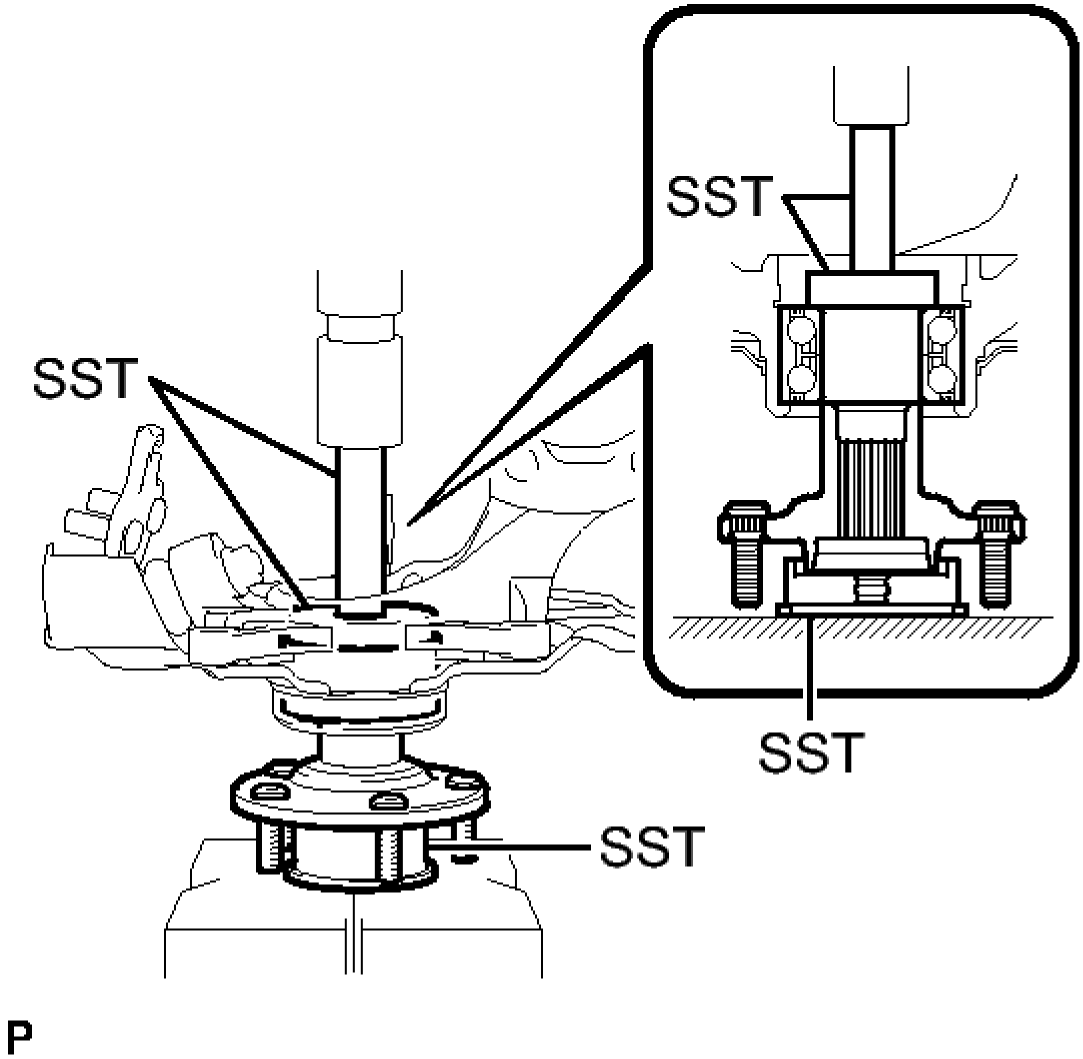

Fig. 22: Installing Front Axle Hub Sub-Assembly Using SST
Courtesy of TOYOTA MOTOR SALES, U.S.A., INC.

- **SST: 09608-32010**
- **SST: 09950-60010**
  09951-00610
- **SST: 09950-70010**
  09951-07100

4. **INSTALL FRONT AXLE HUB HOLE SNAP RING**
   a. Using snap ring pliers, install a new front axle hub hole snap ring.
5. **INSTALL FRONT NO. 1 WHEEL BEARING DUST DEFLECTOR**
   a. Set a new front No. 1 wheel bearing dust deflector to the steering knuckle while aligning the cutout for the speed sensor in the front No. 1 wheel bearing dust deflector with the hole of the steering knuckle.

b. Using SST and a hammer, install the front No. 1 wheel bearing dust deflector.

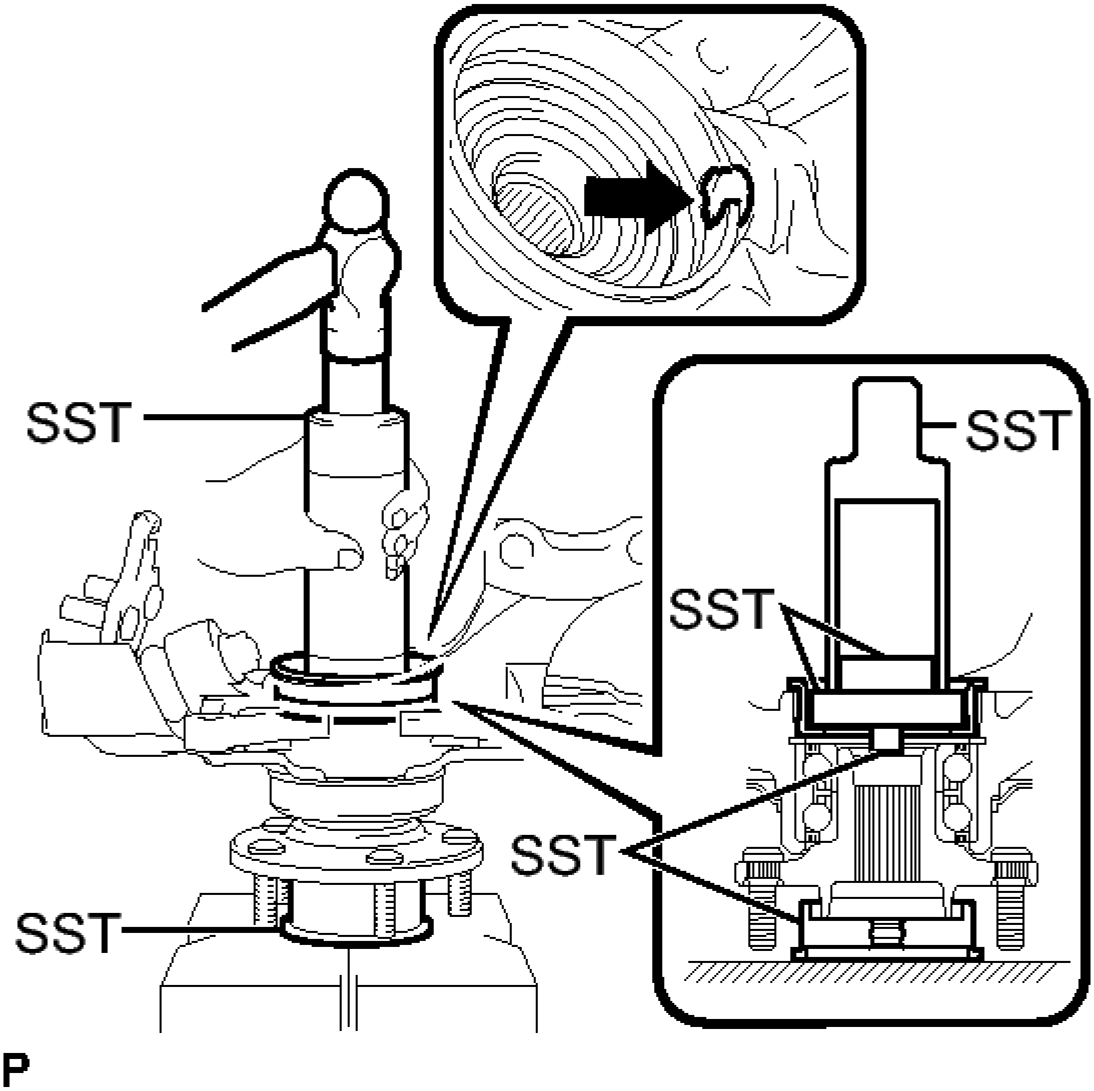

Fig. 23: Installing No. 1 Front Wheel Bearing Dust Deflector Using SST
Courtesy of TOYOTA MOTOR SALES, U.S.A., INC.

- **SST: 09316-60011**
  09316-00011
- **SST: 09608-32010**
- **SST: 09950-60010**
  09951-00500
  09952-06010
- **SST: 09950-60020**
  09951-00810

c. Apply mineral oil base grease to the areas indicated by the arrows in the illustration on the front drive shaft assembly contact surface of the front axle hub bearing.

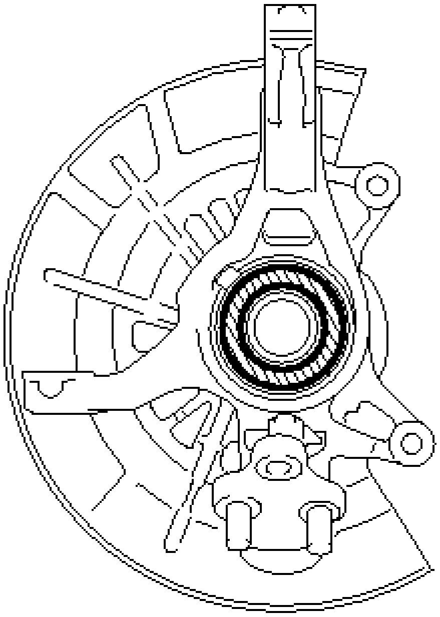

Fig. 24: Identifying Front Axle Hub Bearing Mineral Oil Base Grease Application Area
Courtesy of TOYOTA MOTOR SALES, U.S.A., INC.

TEXT IN ILLUSTRATION

	Mineral Oil Base Grease

HINT:

Apply 0.1 to 0.3 g (0.00353 to 0.0106 oz.) of mineral oil base grease to each area.

6. **INSTALL FRONT AXLE ASSEMBLY**
    a. Install the front axle assembly to the front shock absorber with the 2 bolts and 2 nuts.

    Torque: 290 N*m (2957 kgf*cm, 214 ft.*lbf)

    NOTE: When installing the nuts, keep the bolts from rotating.

7. **INSTALL FRONT DRIVE SHAFT ASSEMBLY**
    a. Align the matchmarks and install the front drive shaft assembly to the front axle hub sub-assembly.

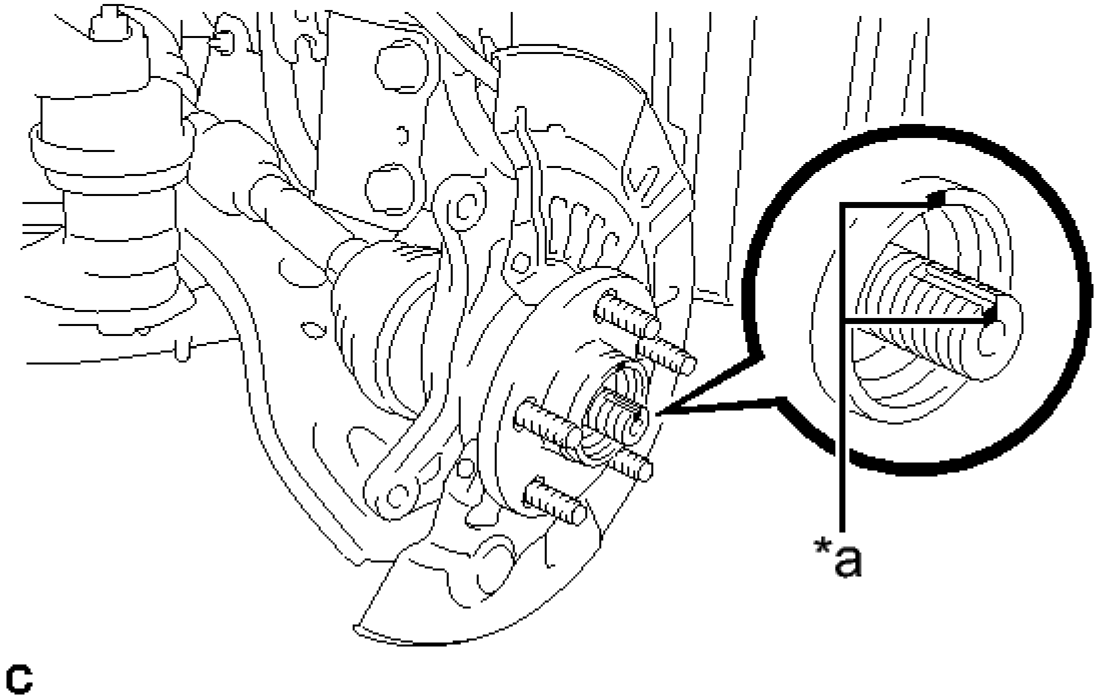

Fig. 25: Locating Front Drive Shaft Assembly And Front Axle Hub Sub-Assembly Matchmarks
Courtesy of TOYOTA MOTOR SALES, U.S.A., INC.

TEXT IN ILLUSTRATION

*a	Matchmark

NOTE: **Be careful not to damage the drive shaft boot or speed sensor rotor.**

8. **CONNECT FRONT LOWER NO. 1 SUSPENSION ARM SUB-ASSEMBLY**
    a. Connect the front lower No. 1 suspension arm sub-assembly to the front lower ball joint assembly with the bolt and 2 nuts.

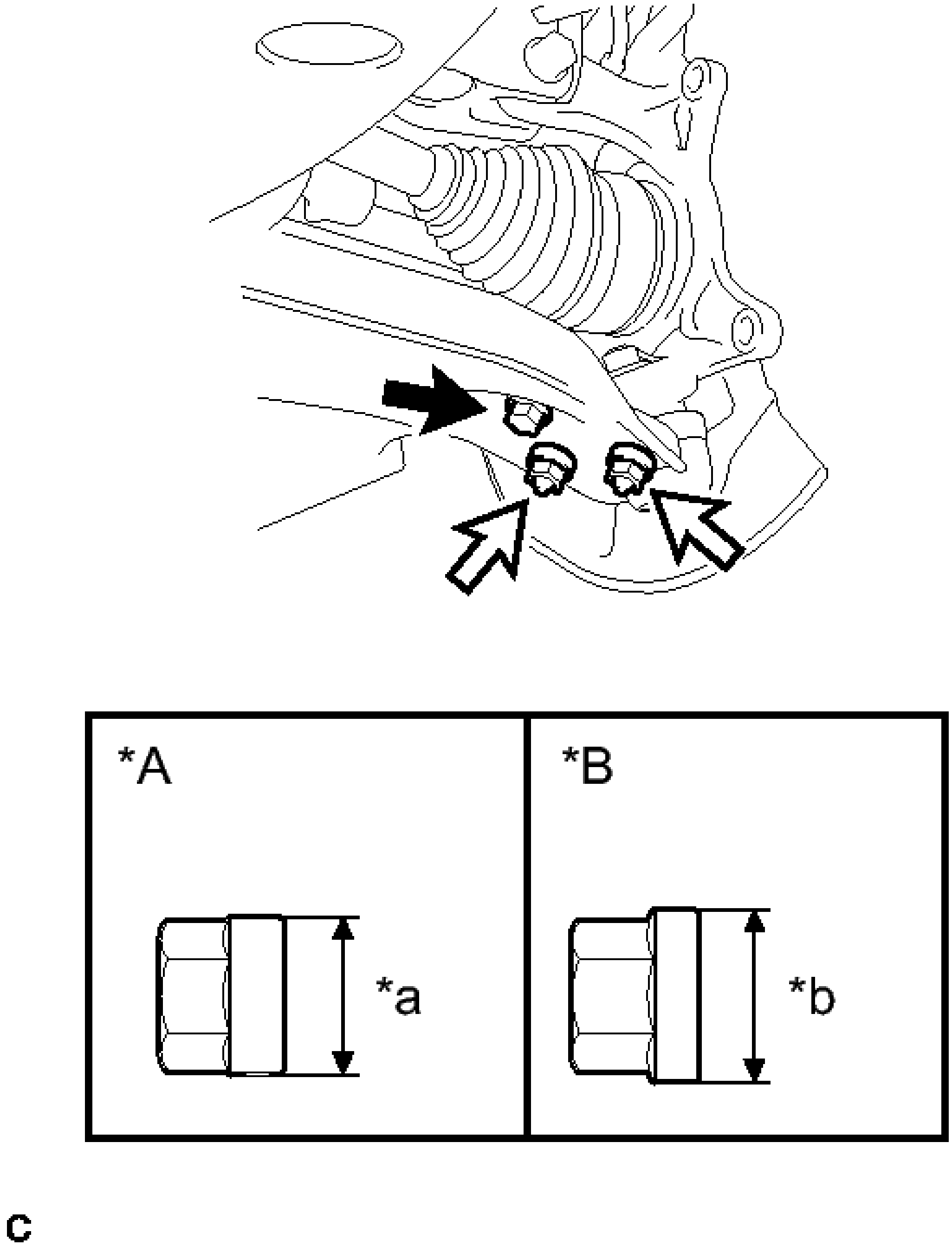

Fig. 26: Identifying Front Lower Ball Joint Assembly Fasteners
Courtesy of TOYOTA MOTOR SALES, U.S.A., INC.

TEXT IN ILLUSTRATION

	Type

*A	A Nut
*B	Type B Nut
*a	20 mm (0.787 in.)
*b	22 mm (0.866 in.)
·	Bolt
·	Nut

Type A Nut and Bolt

Torque: 75 N*m (765 kgf*cm, 55 ft.*lbf)

Type B Nut and Bolt

Torque: 92 N*m (938 kgf*cm, 68 ft.*lbf)

NOTE:

- **The tightening torque for the bolt differs depending on the type of nut.**
- **Make sure to tighten the bolt to the same torque as the nuts.**

9. **CONNECT TIE ROD ASSEMBLY** . Refer to **INSTALLATION - Step 8** .
10. **INSTALL FRONT DISC** . Refer to **INSTALLATION - Step 1** .
11. **INSTALL FRONT DISC BRAKE CALIPER ASSEMBLY** . See step 7.
12. **INSTALL FRONT AXLE SHAFT NUT**
    a. Clean the threaded parts on the front drive shaft assembly and a new front axle shaft nut using a non-residue solvent.

    NOTE:

    - **Be sure to perform this work even, when using a new front drive shaft assembly.**
    - **Keep the threaded parts free of oil and foreign matter.**

    b. Using a socket wrench (30 mm), install the front axle hub shaft nut.

    Torque: 294 N*m (2998 kgf*cm, 217 ft.*lbf)

    NOTE: **Stake the nut after inspecting for looseness and runout in the following steps.**

HINT:

Keep depressing the brake pedal to prevent the front drive shaft from rotating.

13. **SEPARATE FRONT DISC BRAKE CALIPER ASSEMBLY** . See step 2.
14. **REMOVE FRONT DISC** . Refer to **REMOVAL - Step 13** .
15. **INSPECT FRONT AXLE HUB BEARING LOOSENESS** . See step 4.
16. **INSPECT FRONT AXLE HUB RUNOUT** . See step 5.
17. **INSTALL FRONT DISC** . Refer to **INSTALLATION - Step 1** .
18. **INSTALL FRONT DISC BRAKE CALIPER ASSEMBLY** . See step 7.
19. **INSTALL FRONT SPEED SENSOR**
    a. Install the front speed sensor and front flexible hose to the front shock absorber with the bolt and clamp.

    Torque: 19 N*m (192 kgf*cm, 14 ft.*lbf)

    NOTE: **Do not twist the front speed sensor when installing it.**

    HINT:

    Install the speed sensor harness bracket first and then the front flexible hose.

    b. Install the front speed sensor to the steering knuckle with the bolt.

    Torque: 8.5 N*m (87 kgf*cm, 75 in.*lbf)

    NOTE: **Do not twist the front speed sensor when installing it.**

20. **STAKE FRONT AXLE SHAFT NUT**
    a. Using a chisel and a hammer, stake the front axle shaft nut.

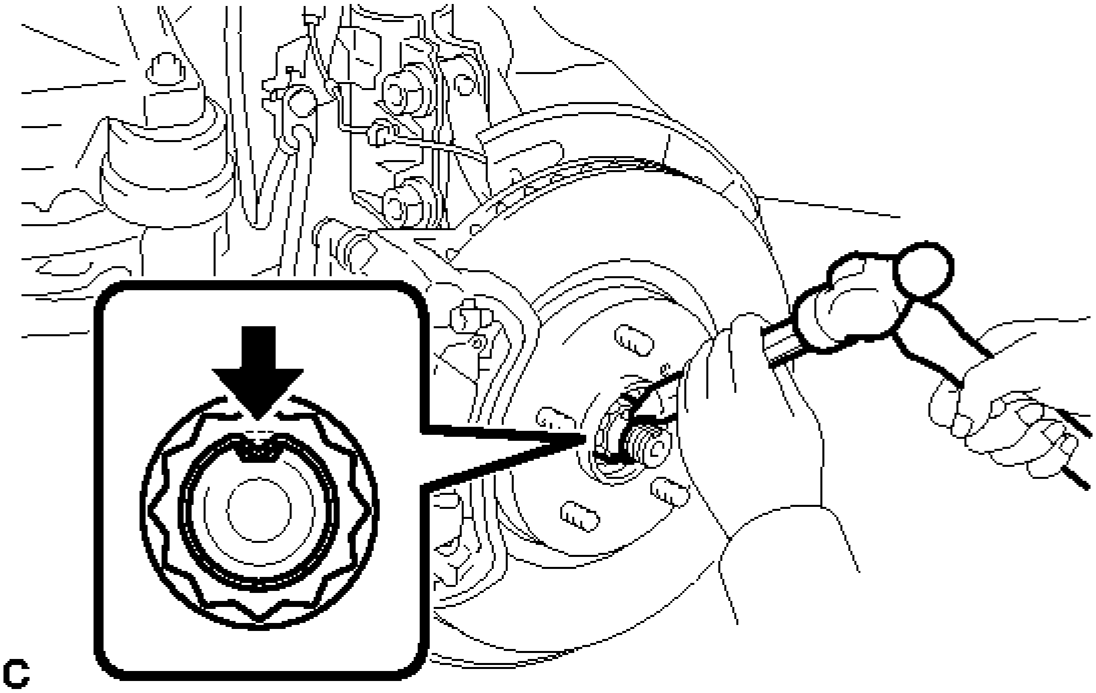

Fig. 27: Staking Front Axle Shaft Nut
Courtesy of TOYOTA MOTOR SALES, U.S.A., INC.

21. **INSTALL FRONT WHEEL**

    Torque: 103 N*m (1049 kgf*cm, 76 ft.*lbf)

22. **INSPECT AND ADJUST FRONT WHEEL ALIGNMENT**

    Refer to **ADJUSTMENT** .

23. **CHECK FOR SPEED SENSOR SIGNAL**

    Refer to **TEST MODE PROCEDURE** .

STEERING KNUCKLE

COMPONENTS

ILLUSTRATION

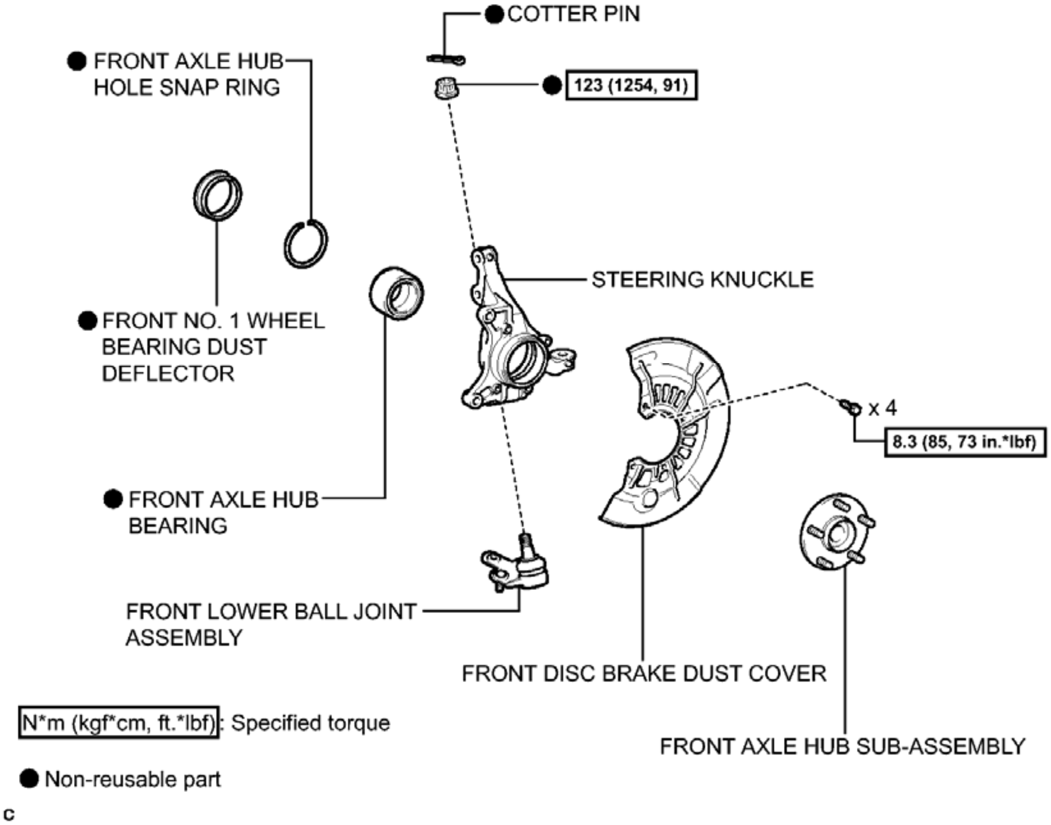
● COTTER PIN
● FRONT AXLE HUB HOLE SNAP RING
● 123 (1254, 91)
STEERING KNUCKLE
● FRONT NO. 1 WHEEL BEARING DUST DEFLECTOR
x 4
8.3 (85, 73 in.*lbf)
● FRONT AXLE HUB BEARING
FRONT LOWER BALL JOINT ASSEMBLY
FRONT DISC BRAKE DUST COVER
N*m (kgf*cm, ft.*lbf): Specified torque
FRONT AXLE HUB SUB-ASSEMBLY
● Non-reusable part
c

Fig. 28: Exploded View Of Steering Knuckle Replacement Components With Torque Specifications
Courtesy of TOYOTA MOTOR SALES, U.S.A., INC.

REMOVAL

REMOVAL

HINT:

- Use the same procedure for the RH side and LH side.
- The procedure listed below is for the LH side.

1. **REMOVE FRONT AXLE ASSEMBLY**

   Refer to **REMOVAL**.

2. **REMOVE FRONT LOWER BALL JOINT ASSEMBLY** . Refer to **REMOVAL - Step 2** .
3. **REMOVE FRONT NO. 1 WHEEL BEARING DUST DEFLECTOR** . See step 10.
4. **REMOVE FRONT AXLE HUB HOLE SNAP RING** . See step 11.
5. **REMOVE FRONT AXLE HUB SUB-ASSEMBLY** . See step 12.

6. **REMOVE FRONT DISC BRAKE DUST COVER** . See step 13.
7. **REMOVE STEERING KNUCKLE**
    a. Place the bearing inner race (outside) on the front axle hub bearing.

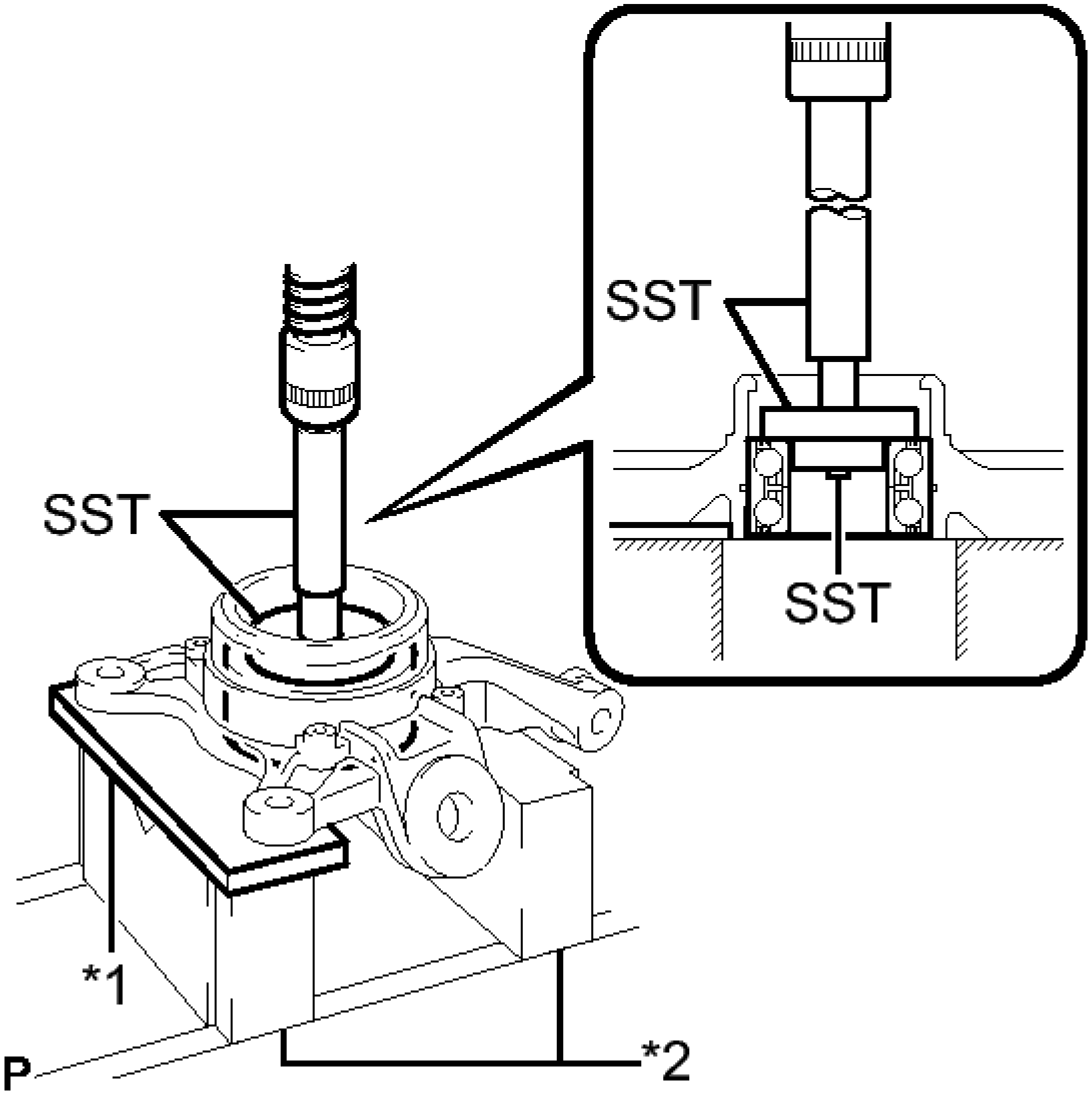

Fig. 29: Removing Front Axle Hub Bearing Using SST
Courtesy of TOYOTA MOTOR SALES, U.S.A., INC.

TEXT IN ILLUSTRATION

*1	Steel Plate
*2	V-block

    b. Using SST, a steel plate, V-blocks and a press, remove the front axle hub bearing from the steering knuckle.

- **SST: 09950-60010**
  09951-00440
  09952-06010
- **SST: 09950-60020**
  09951-00750
- **SST: 09950-70010**
  09951-07100

NOTE: Keep the steering knuckle level.

INSTALLATION

INSTALLATION

HINT:

- Use the same procedure for the RH side and LH side.
- The procedure listed below is for the LH side.

1. **INSTALL STEERING KNUCKLE**
   a. Using SST and a press, install a new front axle hub bearing to the steering knuckle.

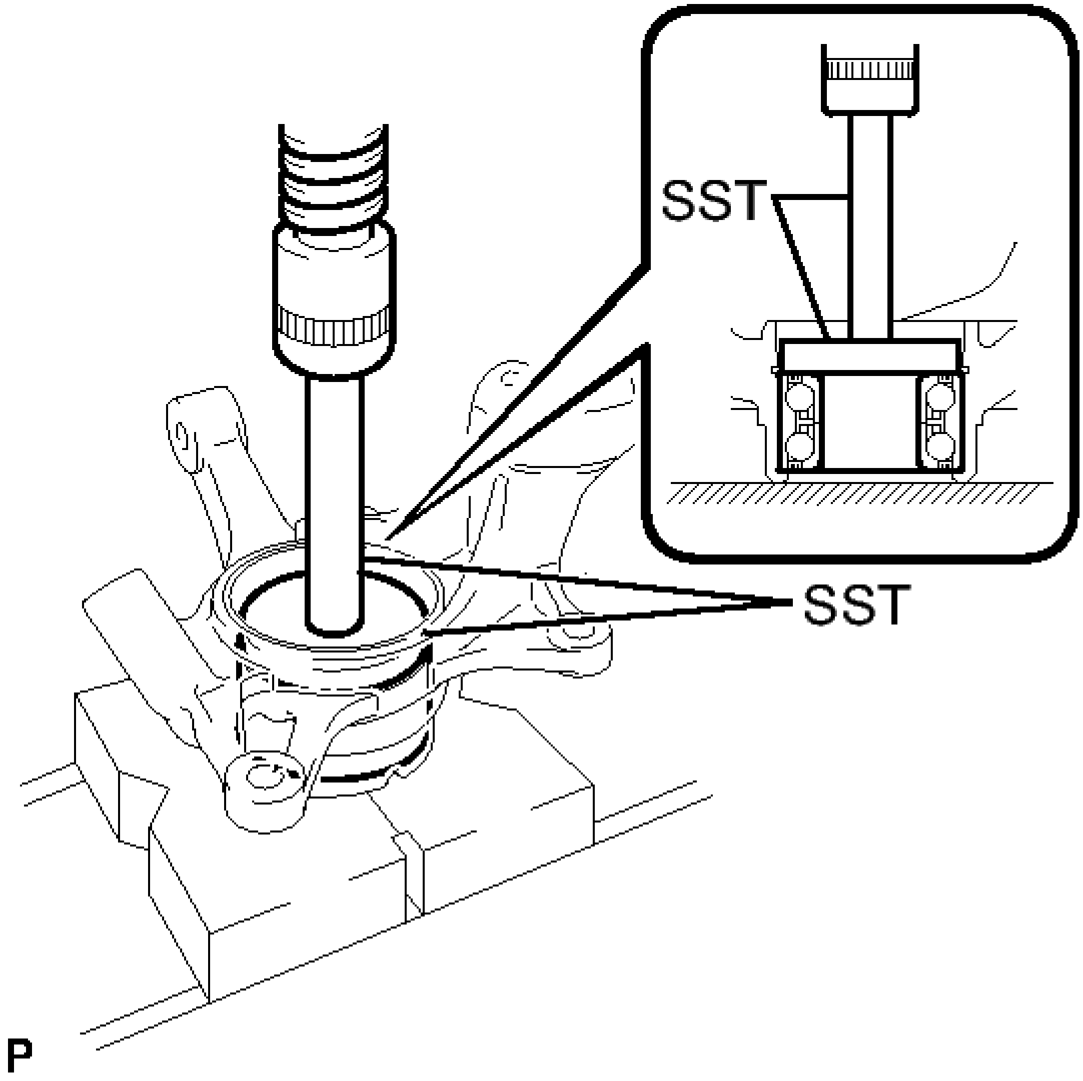

Fig. 30: Installing Front Axle Hub Bearing Using SST
Courtesy of TOYOTA MOTOR SALES, U.S.A., INC.

- **SST: 09950-60020**
  09951-00810
- **SST: 09950-70010**
  09951-07100

2. **INSTALL FRONT DISC BRAKE DUST COVER** . See step 2.
3. **INSTALL FRONT AXLE HUB SUB-ASSEMBLY** . See step 3.
4. **INSTALL FRONT AXLE HUB HOLE SNAP RING** . See step 4.
5. **INSTALL FRONT NO. 1 WHEEL BEARING DUST DEFLECTOR** . See step 5.
6. **INSTALL FRONT LOWER BALL JOINT ASSEMBLY** . Refer to **INSTALLATION - Step 1** .
7. **INSTALL FRONT AXLE ASSEMBLY**

See step 6.

REAR AXLE HUB BOLT

COMPONENTS

ILLUSTRATION

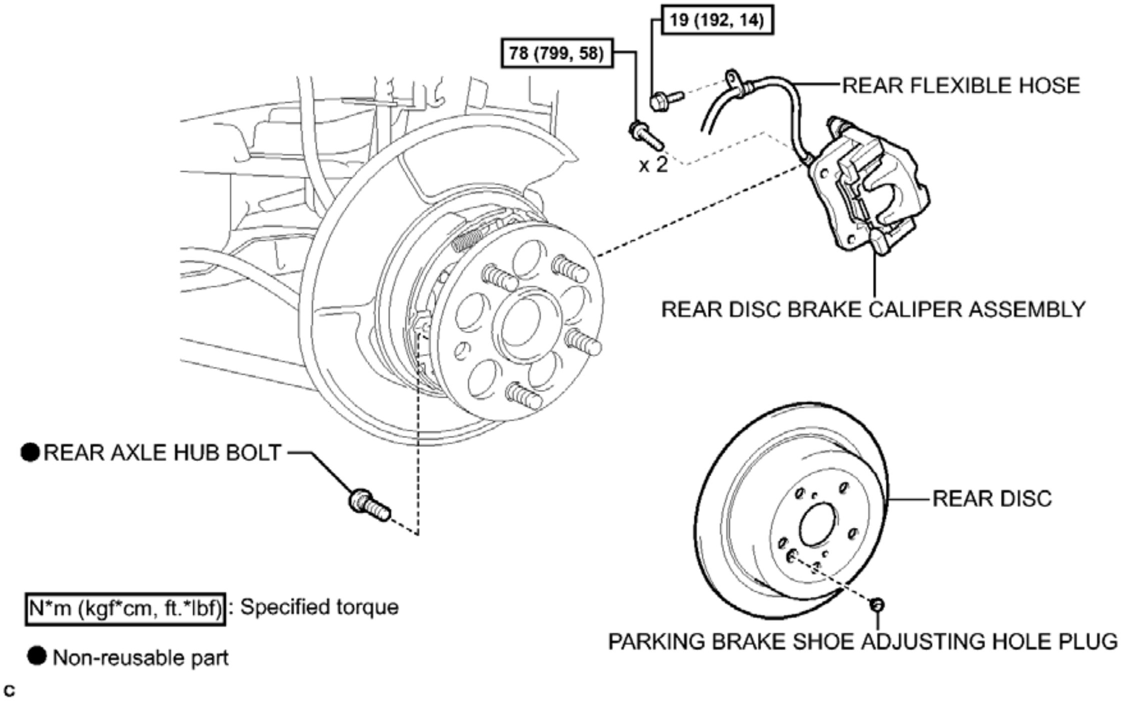
19 (192, 14)
78 (799, 58)
REAR FLEXIBLE HOSE
x 2
REAR DISC BRAKE CALIPER ASSEMBLY
● REAR AXLE HUB BOLT
REAR DISC
N*m (kgf*cm, ft.*lbf): Specified torque
● Non-reusable part
PARKING BRAKE SHOE ADJUSTING HOLE PLUG
c

Fig. 31: Identifying Rear Axle Hub Bolt Replacement Components With Torque Specifications
Courtesy of TOYOTA MOTOR SALES, U.S.A., INC.

REPLACEMENT

REPLACEMENT

HINT:

- Use the same procedure for the RH side and LH side.
- The procedure listed below is for the LH side.

1. **REMOVE REAR WHEEL**
2. **SEPARATE REAR DISC BRAKE CALIPER ASSEMBLY**
    a. Remove the bolt and separate the rear flexible hose from the rear shock absorber.

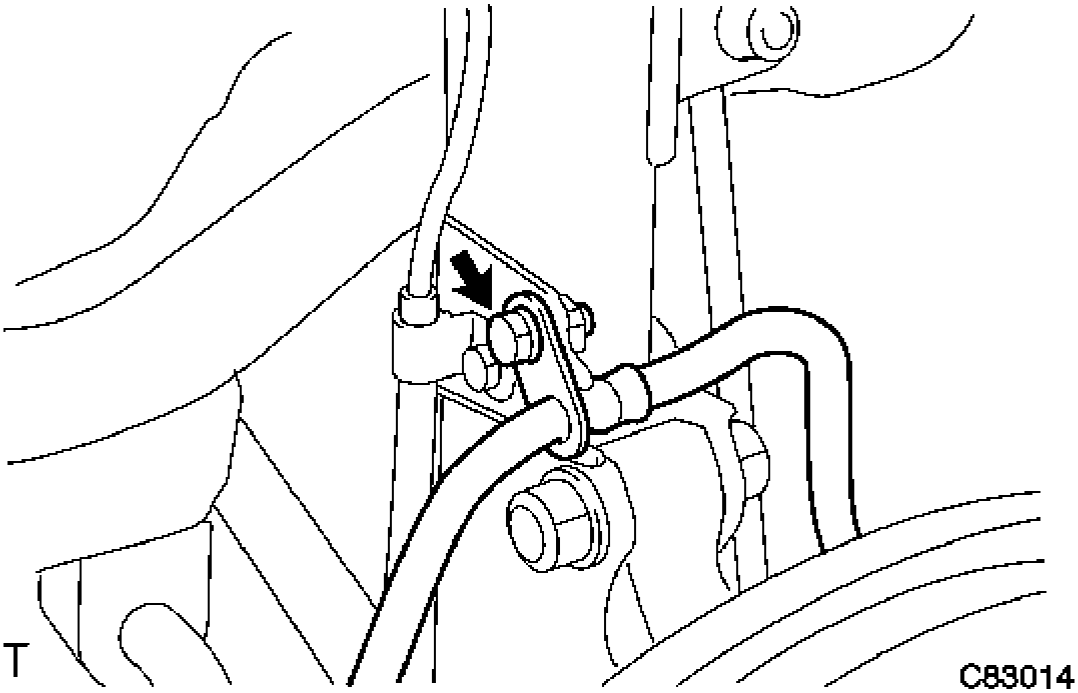

Fig. 32: Identifying Bolt On Flexible Hose
Courtesy of TOYOTA MOTOR SALES, U.S.A., INC.

b. Remove the 2 bolts, and separate the rear disc brake caliper assembly.

NOTE: Use wire or an equivalent tool to keep the rear disc brake caliper from hanging down by the flexible hose.

3. **REMOVE PARKING BRAKE SHOE ADJUSTING HOLE PLUG** . Refer to **REMOVAL - Step 13** .
4. **REMOVE REAR DISC** . Refer to **REMOVAL - Step 14** .
5. **REMOVE REAR AXLE HUB BOLT**
    a. Temporarily install 2 nuts to the rear axle hub bolts as shown in the illustration.

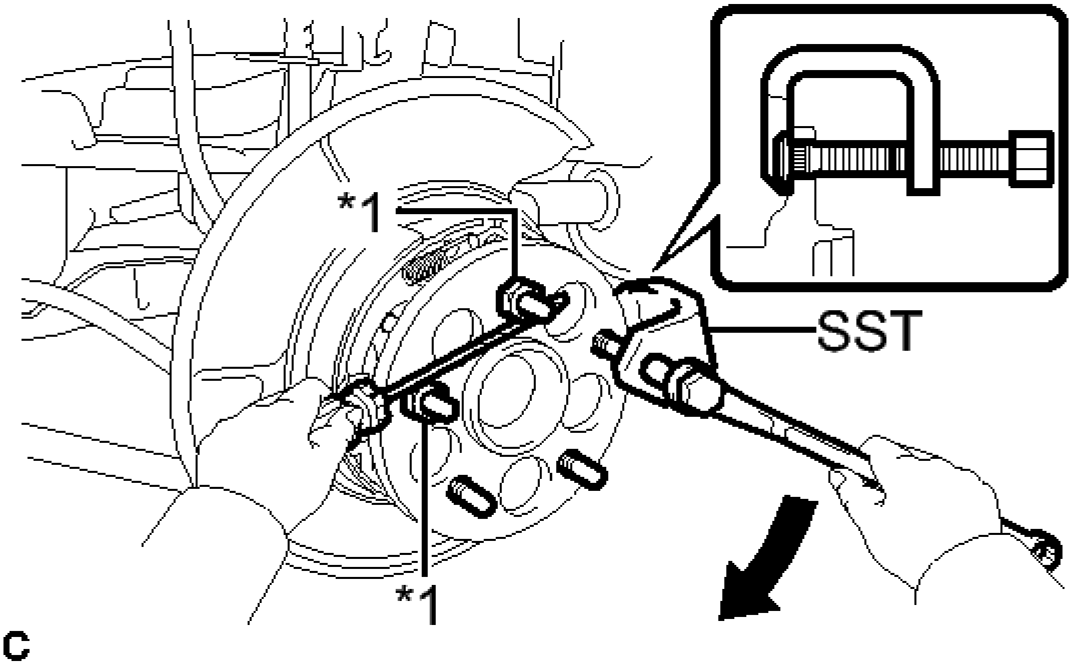

Fig. 33: Removing Rear Axle Hub Stud With SST
Courtesy of TOYOTA MOTOR SALES, U.S.A., INC.

TEXT IN ILLUSTRATION

*1	Nut

Recommended service nut

Thread diameter: 12.0 mm (0.472 in.)

Thread pitch: 1.5 mm (0.0591 in.)

NOTE: **Install the nuts to prevent damage to the rear axle hub bolts.**

b. Using SST and a screwdriver or an equivalent tool to hold the rear axle hub and bearing assembly, remove the rear axle hub bolt.
   - **SST: 09611-12010**

NOTE: **Do not damage the threads of the rear axle hub bolts.**

6. **INSTALL REAR AXLE HUB BOLT**
   a. Temporarily install a new rear axle hub bolt to the rear axle hub and bearing assembly.

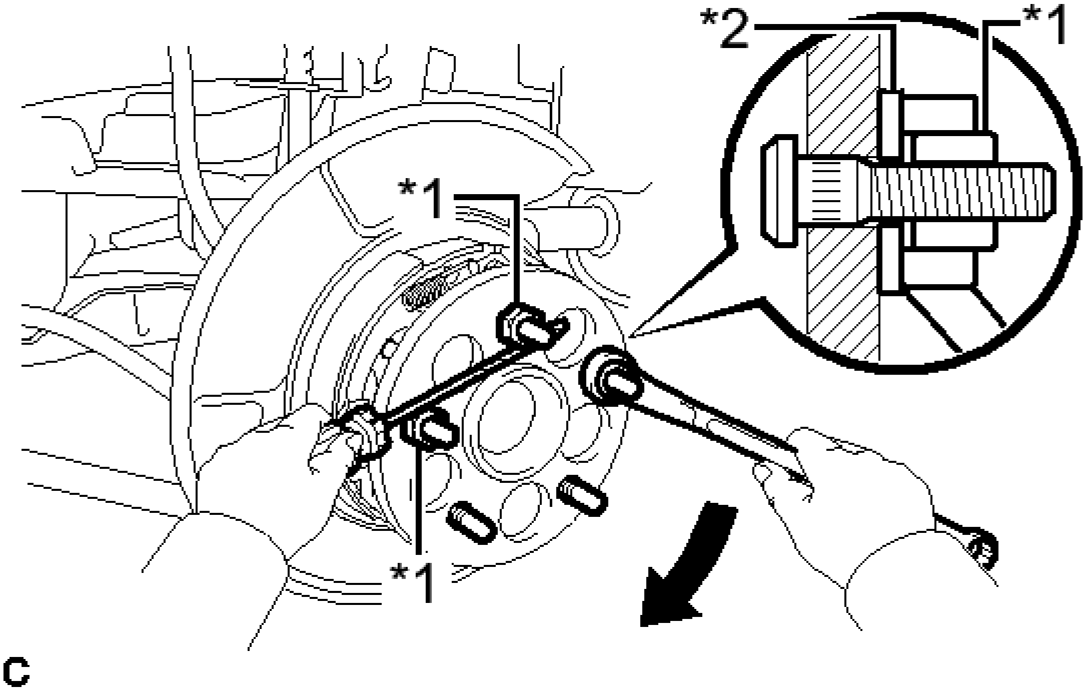

Fig. 34: Installing Rear Axle Hub Stud
Courtesy of TOYOTA MOTOR SALES, U.S.A., INC.

TEXT IN ILLUSTRATION

*1	Nut
*2	Washer

b. Install a washer and nut to the rear axle hub bolt as shown in the illustration.

Recommended service nut

Thread diameter: 12.0 mm (0.472 in.)

Thread pitch: 1.5 mm (0.0591 in.)

HINT:

Recommended washer thickness is 5 mm (0.197 in.) or more.

c. Using a screwdriver or an equivalent tool to hold the rear axle hub and bearing assembly, install the rear axle hub bolt by tightening the nut.

NOTE:

- **Install the nuts to prevent damage to the rear axle hub bolts.**
- **Do not damage the threads of the rear axle hub bolts.**

d. Remove the 3 nuts and washer from the 3 rear axle hub bolts.

7. **INSTALL REAR DISC** . Refer to **INSTALLATION - Step 1** .
8. **INSTALL PARKING BRAKE SHOE ADJUSTING HOLE PLUG** . Refer to **INSTALLATION - Step 2** .
9. **INSTALL REAR DISC BRAKE CALIPER ASSEMBLY**
    a. Install the rear disc brake caliper assembly with the 2 bolts.

       Torque: 78 N*m (799 kgf*cm, 58 ft.*lbf)

    b. Install the rear flexible hose to the rear shock absorber with the bolt.

       Torque: 19 N*m (192 kgf*cm, 14 ft.*lbf)

10. **ADJUST PARKING BRAKE**

    Refer to **ADJUSTMENT** .

11. **INSTALL REAR WHEEL**

    Torque: 103 N*m (1049 kgf*cm, 76 ft.*lbf)

REAR AXLE HUB

COMPONENTS

ILLUSTRATION

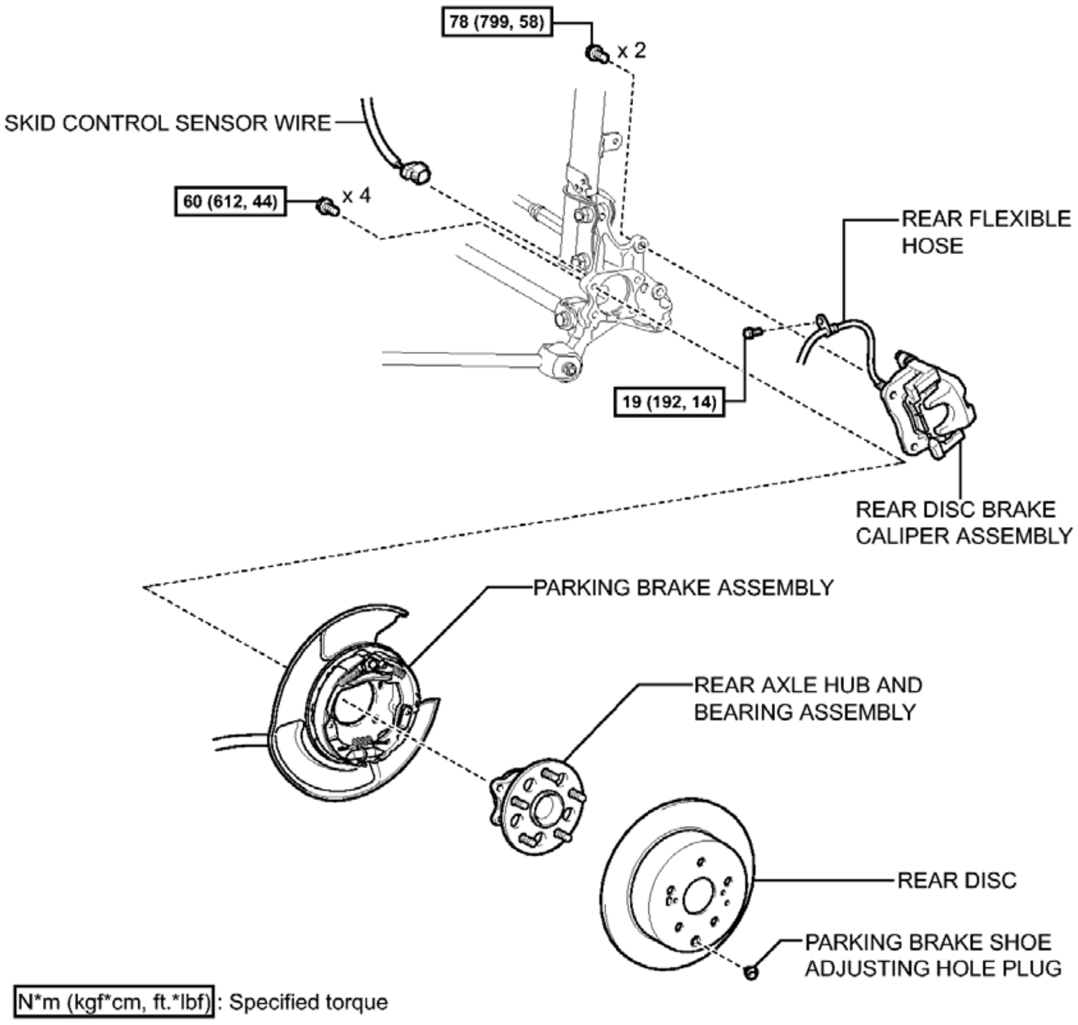
78 (799, 58)
x 2
SKID CONTROL SENSOR WIRE
60 (612, 44)
x 4
REAR FLEXIBLE HOSE
19 (192, 14)
REAR DISC BRAKE CALIPER ASSEMBLY
PARKING BRAKE ASSEMBLY
REAR AXLE HUB AND BEARING ASSEMBLY
REAR DISC
PARKING BRAKE SHOE ADJUSTING HOLE PLUG
N*m (kgf*cm, ft.*lbf) : Specified torque

c

Fig. 35: Identifying Rear Axle Hub Replacement Components With Torque Specifications
Courtesy of TOYOTA MOTOR SALES, U.S.A., INC.

ON-VEHICLE INSPECTION

ON-VEHICLE INSPECTION

HINT:

- Use the same procedure for the RH side and LH side.
- The procedure listed below is for the LH side.

1. **REMOVE REAR WHEEL**
2. **SEPARATE REAR DISC BRAKE CALIPER ASSEMBLY** . See step 2.
3. **REMOVE PARKING BRAKE SHOE ADJUSTING HOLE PLUG** . Refer to **REMOVAL - Step 13** .
4. **REMOVE REAR DISC** . Refer to **REMOVAL - Step 14** .

5. **INSPECT REAR AXLE HUB BEARING LOOSENESS**
    a. Using a dial indicator, check for looseness near the center of the rear axle hub.

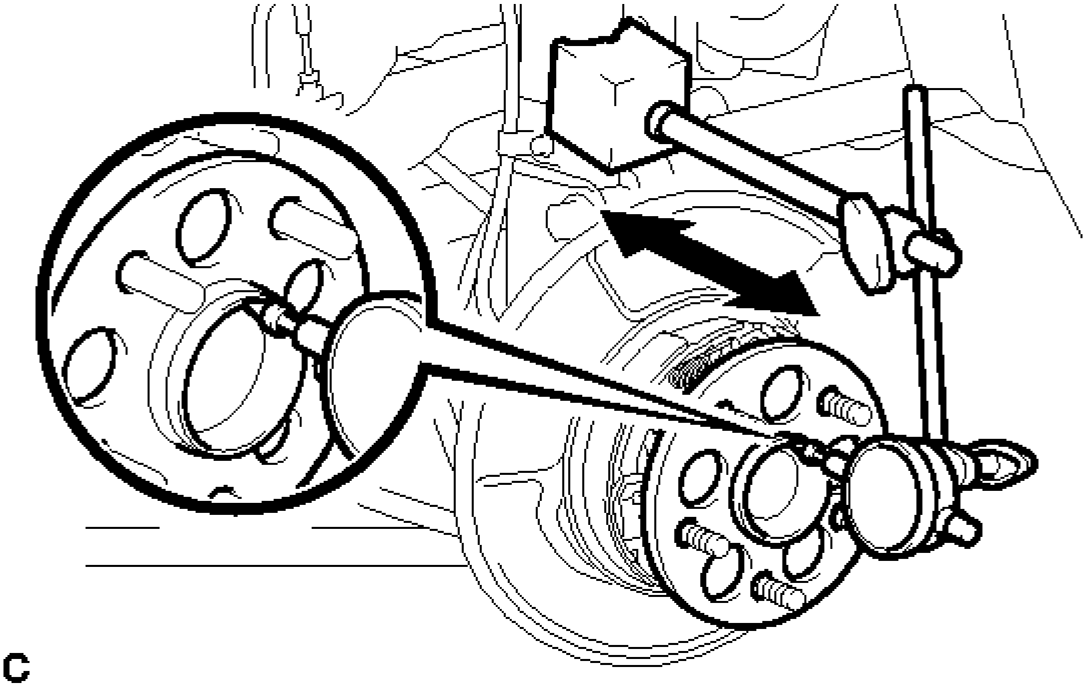

Fig. 36: Inspecting Rear Axle Hub Bearing Looseness
Courtesy of TOYOTA MOTOR SALES, U.S.A., INC.

Maximum looseness

0.05 mm (0.00197 in.)

NOTE:

- **Ensure that the dial indicator is set perpendicular to the measurement surface.**
- **Keep the magnet of the dial indicator away from the rear axle hub and bearing assembly.**

If the looseness exceeds the maximum, replace the rear axle hub and bearing assembly.

6. **INSPECT REAR AXLE HUB RUNOUT**
    a. Using a dial indicator, check for runout on the surface of the rear axle hub outside the rear axle hub bolts.

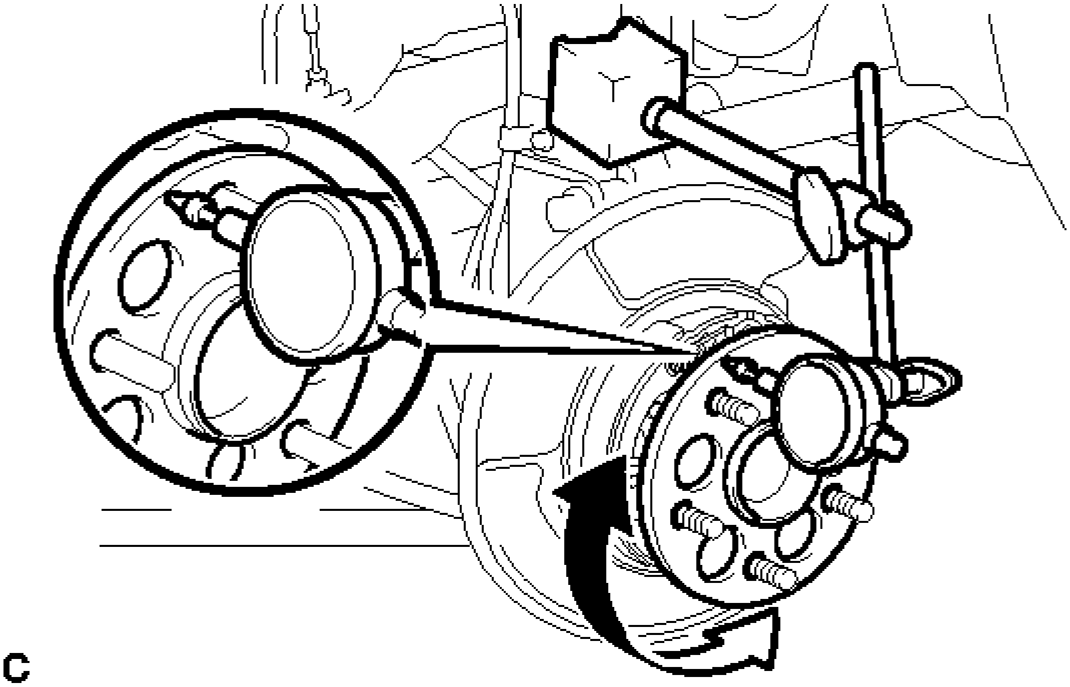

Fig. 37: Inspecting Rear Axle Hub Runout
Courtesy of TOYOTA MOTOR SALES, U.S.A., INC.

Maximum runout

0.07 mm (0.00276 in.)

NOTE:

- **Ensure that the dial indicator is set perpendicular to the measurement surface.**
- **Make sure to install the tip of the dial indicator towards the outside of the rear axle hub bolt.**
- **Keep the magnet of the dial indicator away from the rear axle hub and bearing.**

If the runout exceeds the maximum, replace the rear axle hub and bearing assembly.

7. **INSTALL REAR DISC** . Refer to **INSTALLATION - Step 1** .
8. **INSTALL PARKING BRAKE SHOE ADJUSTING HOLE PLUG** . Refer to **INSTALLATION - Step 2** .
9. **INSTALL REAR DISC BRAKE CALIPER ASSEMBLY** . See step 9.
10. **ADJUST PARKING BRAKE**

    Refer to **ADJUSTMENT** .

11. **INSTALL REAR WHEEL**

Torque: 103 N*m (1049 kgf*cm, 76 ft.*lbf)

REMOVAL

REMOVAL

HINT:

- Use the same procedure for the RH side and LH side.
- The procedure listed below is for the LH side.

1. **REMOVE REAR WHEEL**
2. **SEPARATE REAR DISC BRAKE CALIPER ASSEMBLY** . See step 2.
3. **REMOVE PARKING BRAKE SHOE ADJUSTING HOLE PLUG** . Refer to **REMOVAL - Step 13** .
4. **REMOVE REAR DISC** . Refer to **REMOVAL - Step 14** .
5. **DISCONNECT SKID CONTROL SENSOR WIRE** . Refer to **REMOVAL - Step 7** .
6. **REMOVE REAR AXLE HUB AND BEARING ASSEMBLY**
    a. Remove the 4 bolts and the rear axle hub and bearing assembly from the rear axle carrier sub-assembly.

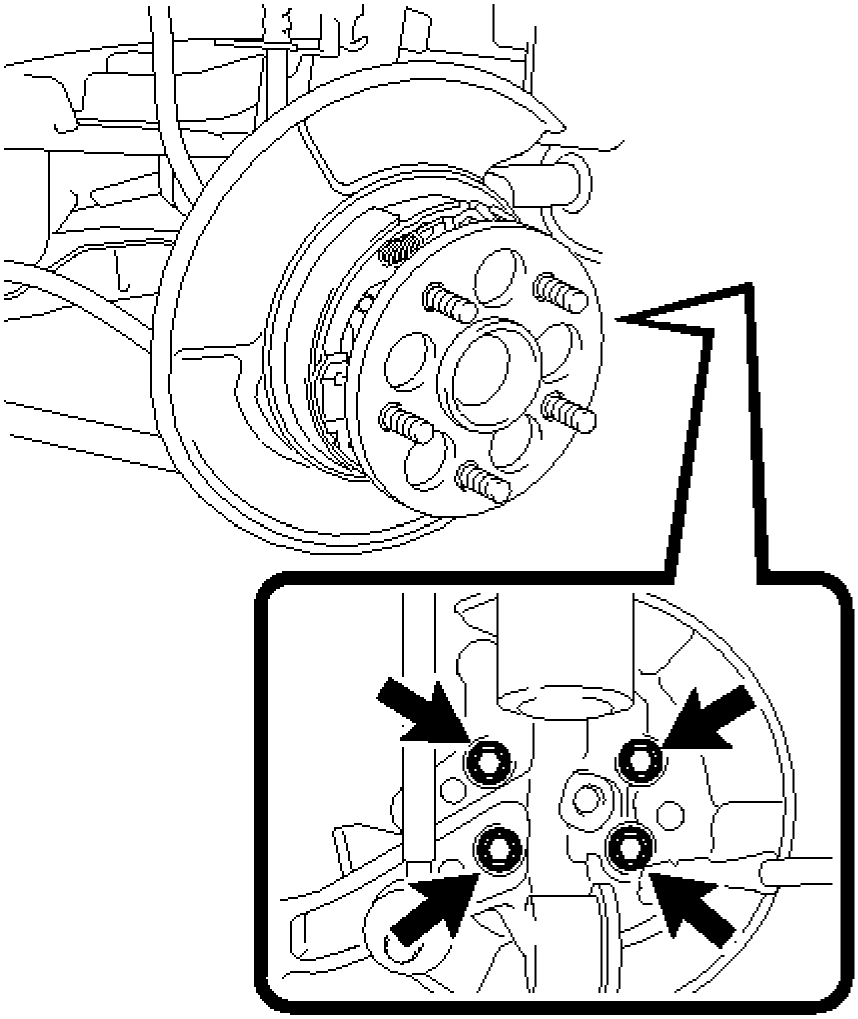

Fig. 38: Locating Rear Axle Hub And Bearing Assembly
Courtesy of TOYOTA MOTOR SALES, U.S.A., INC.

NOTE: **Use wire or an equivalent tool to keep the parking brake assembly from hanging down by the parking brake cable assembly.**

INSTALLATION

INSTALLATION

HINT:

- Use the same procedure for the RH side and LH side.
- The procedure listed below is for the LH side.

1. **INSTALL REAR AXLE HUB AND BEARING ASSEMBLY**

    a. Install the rear axle hub and bearing assembly and parking brake assembly to the rear axle carrier sub-assembly with the 4 bolts.

       Torque: 60 N*m (612 kgf*cm, 44 ft.*lbf)

2. **INSPECT REAR AXLE HUB BEARING LOOSENESS** . See step 5.
3. **INSPECT REAR AXLE HUB RUNOUT** . See step 6.
4. **CONNECT SKID CONTROL SENSOR WIRE** . Refer to **INSTALLATION - Step 4** .
5. **INSTALL REAR DISC** . Refer to **INSTALLATION - Step 1** .
6. **INSTALL PARKING BRAKE SHOE ADJUSTING HOLE PLUG** . Refer to **INSTALLATION - Step 2** .
7. **INSTALL REAR DISC BRAKE CALIPER ASSEMBLY** . See step 9.
8. **ADJUST PARKING BRAKE**

   Refer to **ADJUSTMENT** .

9. **INSTALL REAR WHEEL**

   Torque: 103 N*m (1049 kgf*cm, 76 ft.*lbf)

10. **CHECK FOR SPEED SENSOR SIGNAL**

    Refer to **TEST MODE PROCEDURE** .

REAR AXLE CARRIER

COMPONENTS

ILLUSTRATION

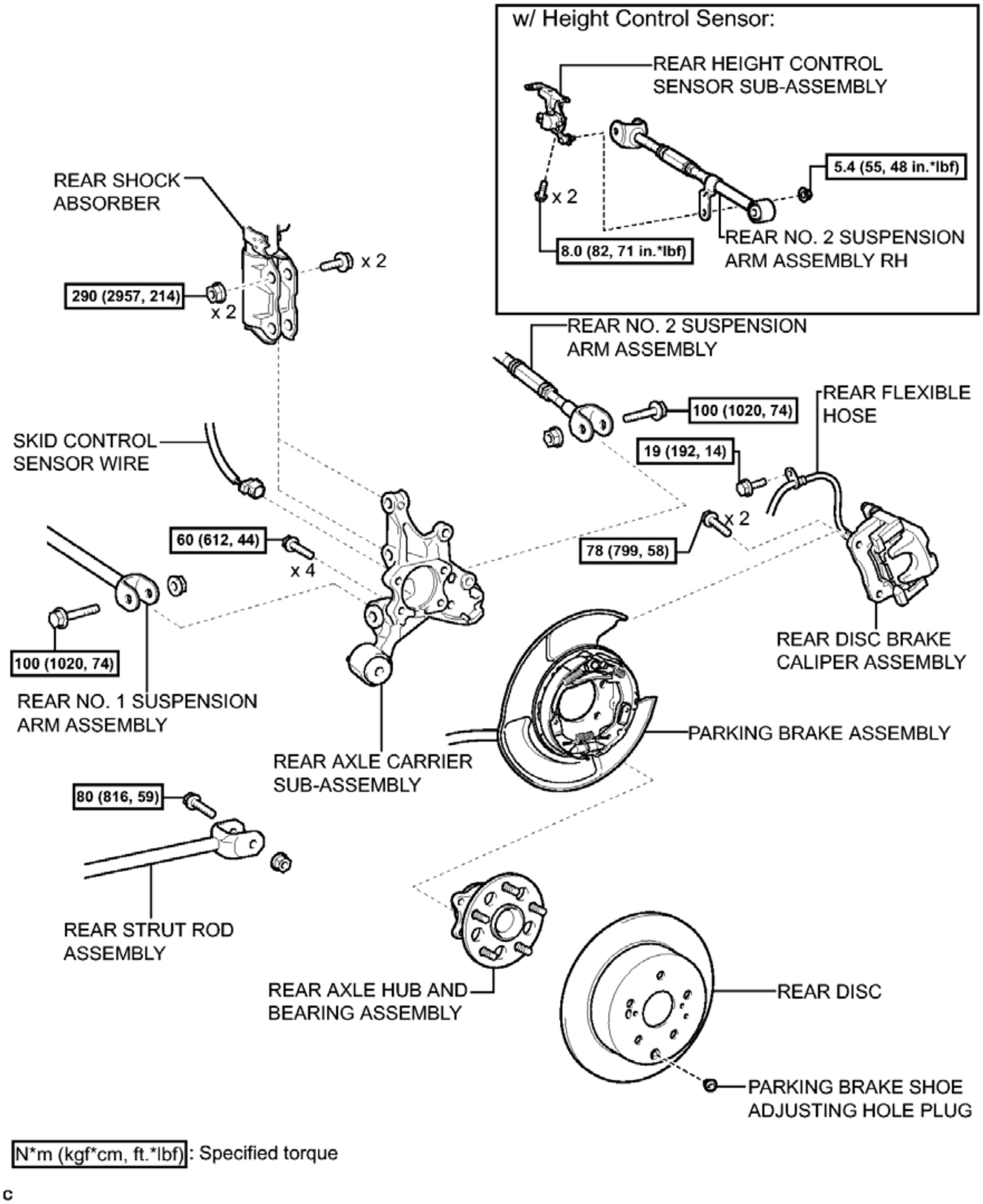
w/ Height Control Sensor:
REAR HEIGHT CONTROL SENSOR SUB-ASSEMBLY
5.4 (55, 48 in.*lbf)
x 2
REAR NO. 2 SUSPENSION ARM ASSEMBLY RH
8.0 (82, 71 in.*lbf)
REAR SHOCK ABSORBER
x 2
290 (2957, 214)
x 2
REAR NO. 2 SUSPENSION ARM ASSEMBLY
100 (1020, 74)
REAR FLEXIBLE HOSE
SKID CONTROL SENSOR WIRE
19 (192, 14)
x 2
60 (612, 44)
x 4
78 (799, 58)
100 (1020, 74)
REAR DISC BRAKE CALIPER ASSEMBLY
REAR NO. 1 SUSPENSION ARM ASSEMBLY
PARKING BRAKE ASSEMBLY
REAR AXLE CARRIER SUB-ASSEMBLY
80 (816, 59)
REAR STRUT ROD ASSEMBLY
REAR AXLE HUB AND BEARING ASSEMBLY
REAR DISC
PARKING BRAKE SHOE ADJUSTING HOLE PLUG
N*m (kgf*cm, ft.*lbf): Specified torque
c

Fig. 39: Exploded View Of Rear Axle Carrier Replacement Components With Torque Specifications
Courtesy of TOYOTA MOTOR SALES, U.S.A., INC.

REMOVAL

REMOVAL

HINT:

- Use the same procedure for the RH side and LH side.
- The procedure listed below is for the LH side.

1. **REMOVE REAR WHEEL**
2. **SEPARATE REAR DISC BRAKE CALIPER ASSEMBLY** . See step 2.
3. **REMOVE PARKING BRAKE SHOE ADJUSTING HOLE PLUG** . Refer to **REMOVAL - Step 13** .
4. **REMOVE REAR DISC** . Refer to **REMOVAL - Step 14** .
5. **DISCONNECT SKID CONTROL SENSOR WIRE** . Refer to **REMOVAL - Step 7** .
6. **REMOVE REAR AXLE HUB AND BEARING ASSEMBLY** . See step 6.
7. **REMOVE REAR HEIGHT CONTROL SENSOR SUB-ASSEMBLY (w/ Height Control Sensor)**

   Refer to **REMOVAL** .

   HINT:

   It is necessary to remove the rear height control sensor sub-assembly when separating the rear No. 2 suspension arm assembly RH.

8. **SEPARATE REAR STRUT ROD ASSEMBLY**
   a. Use a jack and wooden block to support the rear axle carrier sub-assembly.

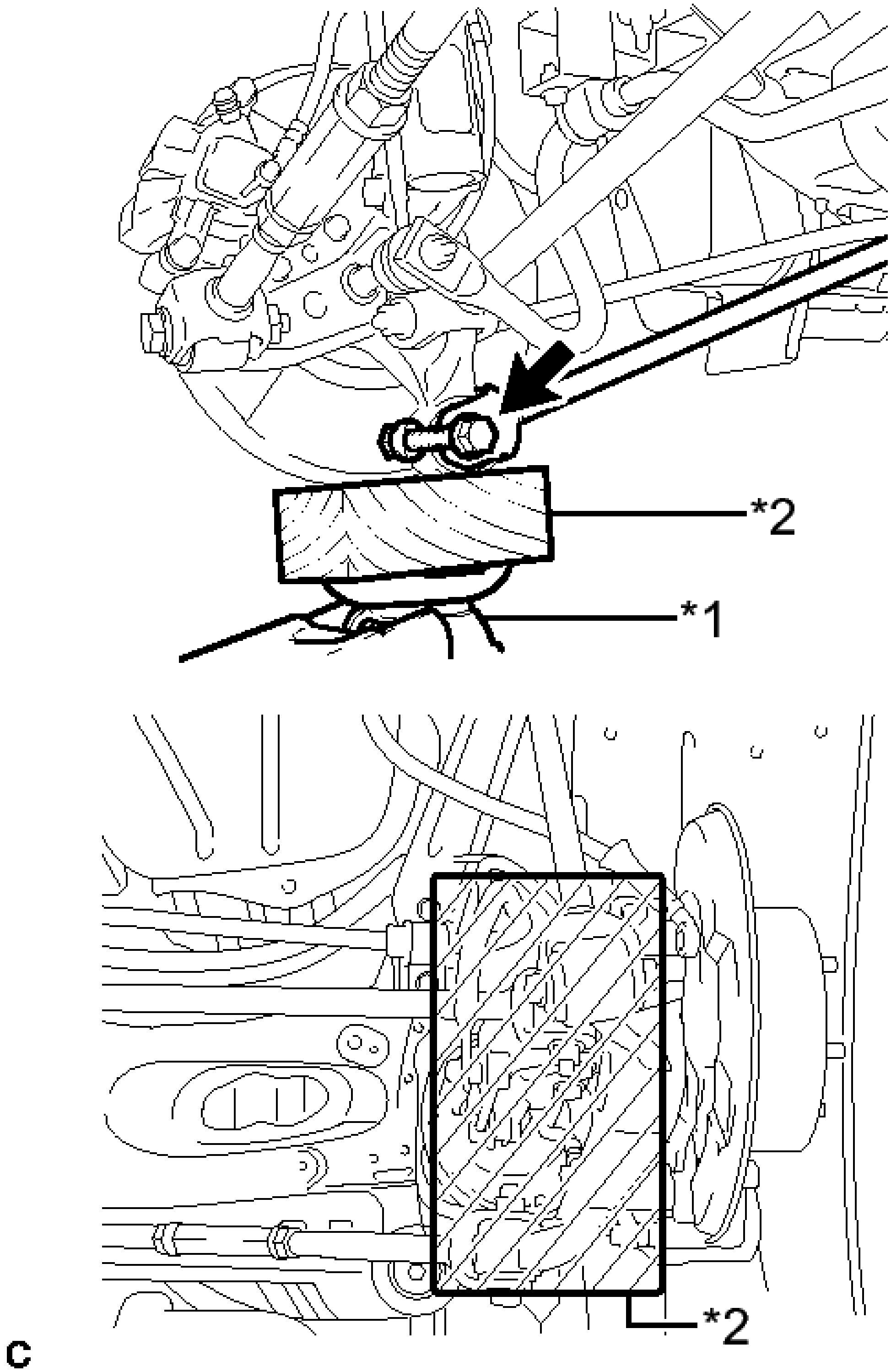

Fig. 40: Identifying Rear Axle Carrier Sub-Assembly Supported By Wooden Block
Courtesy of TOYOTA MOTOR SALES, U.S.A., INC.

TEXT IN ILLUSTRATION

*1	Jack

*2	Wooden Block

b. Remove the bolt and nut, and separate the rear strut rod assembly (rear side) from the rear axle carrier sub-assembly.

NOTE: **When removing the bolt, keep the nut from rotating.**

9. **SEPARATE REAR NO. 2 SUSPENSION ARM ASSEMBLY** . Refer to **REMOVAL - Step 3** .
10. **SEPARATE REAR NO. 1 SUSPENSION ARM ASSEMBLY**
    a. Remove the bolt and nut, and separate the rear No. 1 suspension arm assembly (outer side) from the rear axle carrier sub-assembly.

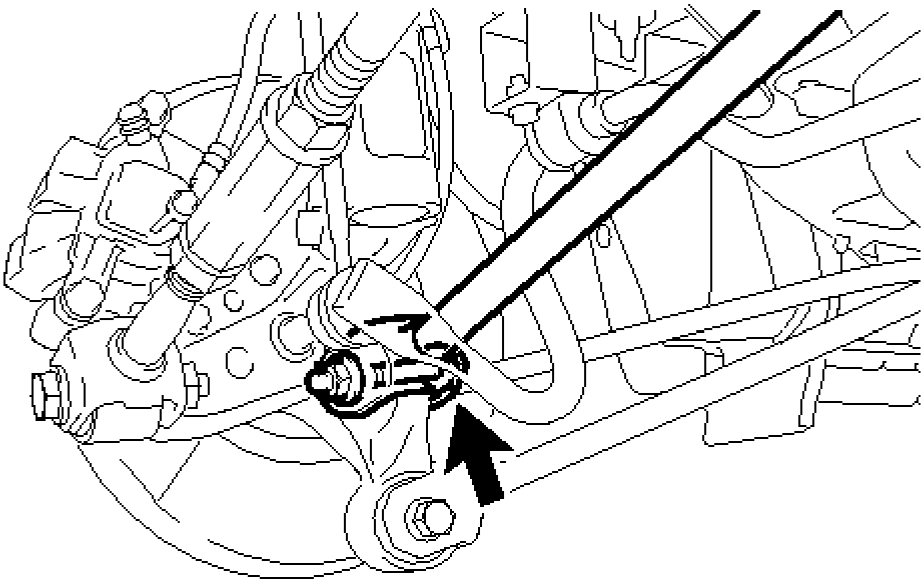

Fig. 41: Locating Rear No. 1 Suspension Arm Assembly Fasteners
Courtesy of TOYOTA MOTOR SALES, U.S.A., INC.

NOTE: **When removing the bolt, keep the nut from rotating.**

11. **REMOVE REAR AXLE CARRIER SUB-ASSEMBLY**
    a. Remove the 2 bolts, 2 nuts and rear axle carrier sub-assembly from the rear shock absorber.

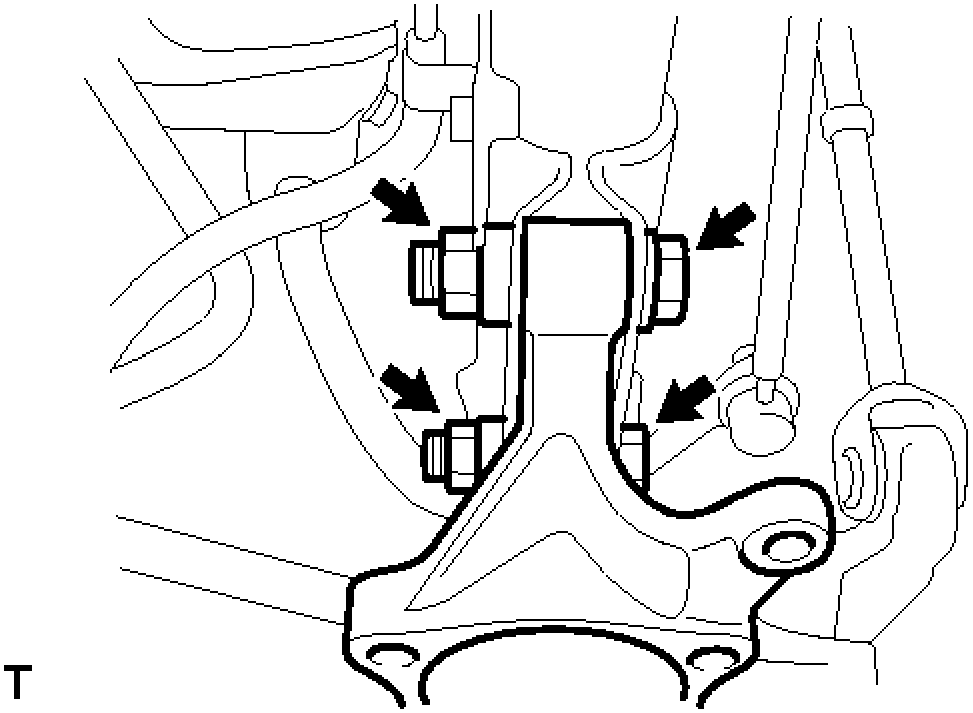

Fig. 42: Locating Rear Axle Carrier Sub-Assembly Bolts And Nuts
Courtesy of TOYOTA MOTOR SALES, U.S.A., INC.

NOTE: **When removing the nuts, keep the bolts from rotating.**

INSTALLATION

INSTALLATION

HINT:

- Use the same procedure for the RH side and LH side.
- The procedure listed below is for the LH side.

1. **INSTALL REAR AXLE CARRIER SUB-ASSEMBLY**
   a. Install the rear axle carrier sub-assembly to the rear shock absorber with the 2 bolts and 2 nuts.

      Torque: 290 N*m (2957 kgf*cm, 214 ft.*lbf)

      NOTE: **While keeping the bolts from rotating, tighten the nuts.**

2. **TEMPORARILY TIGHTEN REAR NO. 1 SUSPENSION ARM ASSEMBLY**
   a. Connect the rear No. 1 suspension arm assembly (outer side) to the rear axle carrier sub-assembly with the bolt and nut.

      NOTE: **When temporarily tightening the bolt, keep the nut from rotating.**

HINT:

Insert the bolt from the front of the vehicle.

3. **TEMPORARILY TIGHTEN REAR NO. 2 SUSPENSION ARM ASSEMBLY** . Refer to **INSTALLATION - Step 4** .
4. **TEMPORARILY TIGHTEN REAR STRUT ROD ASSEMBLY**
   a. Temporarily tighten the rear strut rod assembly (rear side) to the rear axle carrier sub-assembly with the bolt and nut.

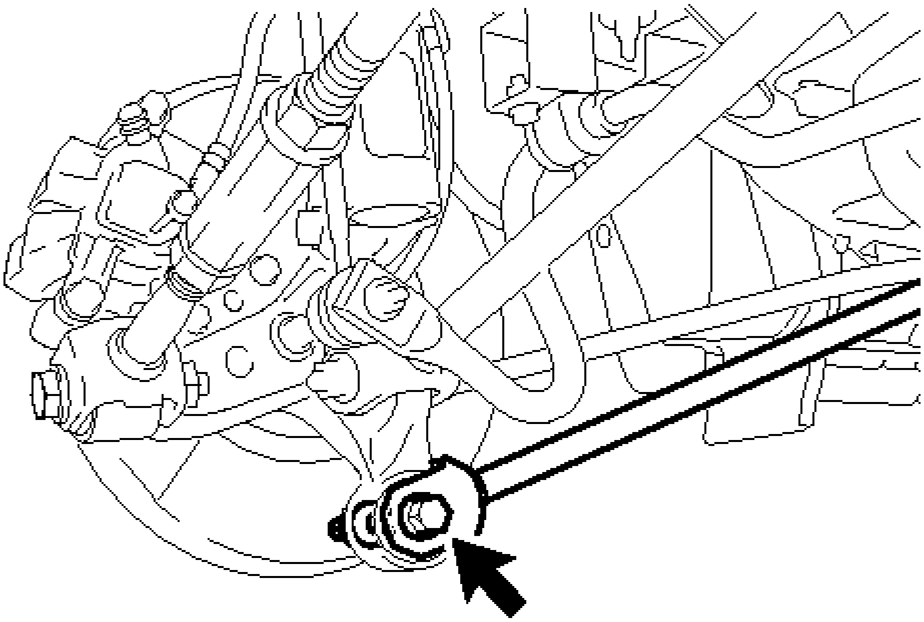

Fig. 43: Locating Rear Strut Rod Assembly Fasteners
Courtesy of TOYOTA MOTOR SALES, U.S.A., INC.

NOTE: **Since a stopper nut is used, turn the bolt.**

HINT:

Insert the bolt from the inside of the vehicle.

5. **INSTALL REAR AXLE HUB AND BEARING ASSEMBLY** . See step 1.
6. **CONNECT SKID CONTROL SENSOR WIRE** . Refer to **INSTALLATION - Step 4** .
7. **INSTALL REAR DISC** . Refer to **INSTALLATION - Step 1** .
8. **INSTALL PARKING BRAKE SHOE ADJUSTING HOLE PLUG** . Refer to **INSTALLATION - Step 2** .
9. **INSTALL REAR DISC BRAKE CALIPER ASSEMBLY** . See step 9.

10. **STABILIZE SUSPENSION**

a. Jack up the rear axle carrier sub-assembly, placing a wooden block under it to avoid damage. Apply load to the suspension so that the installed bolt of the rear No. 1 suspension arm assembly (inner side) is horizontally aligned with the center of the rear axle hub.

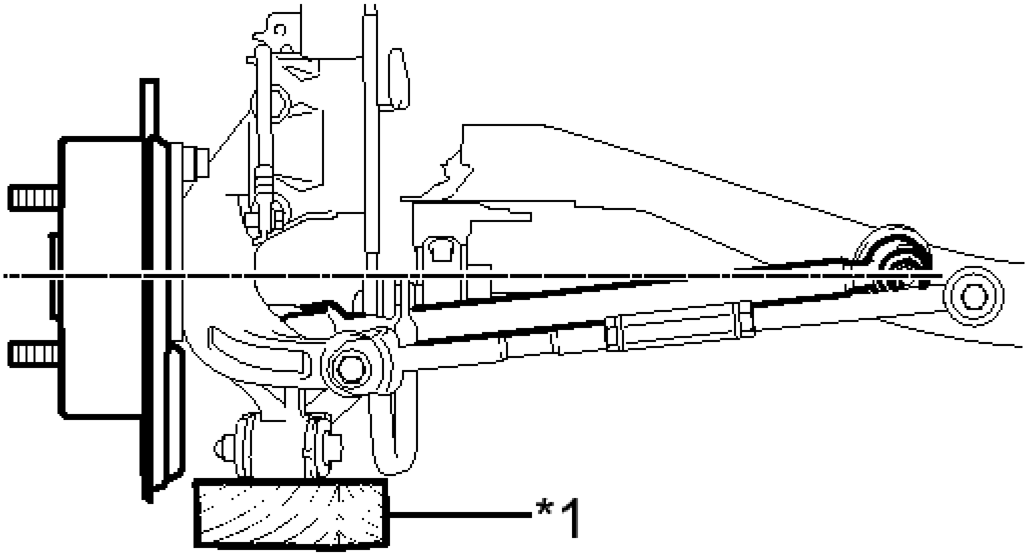

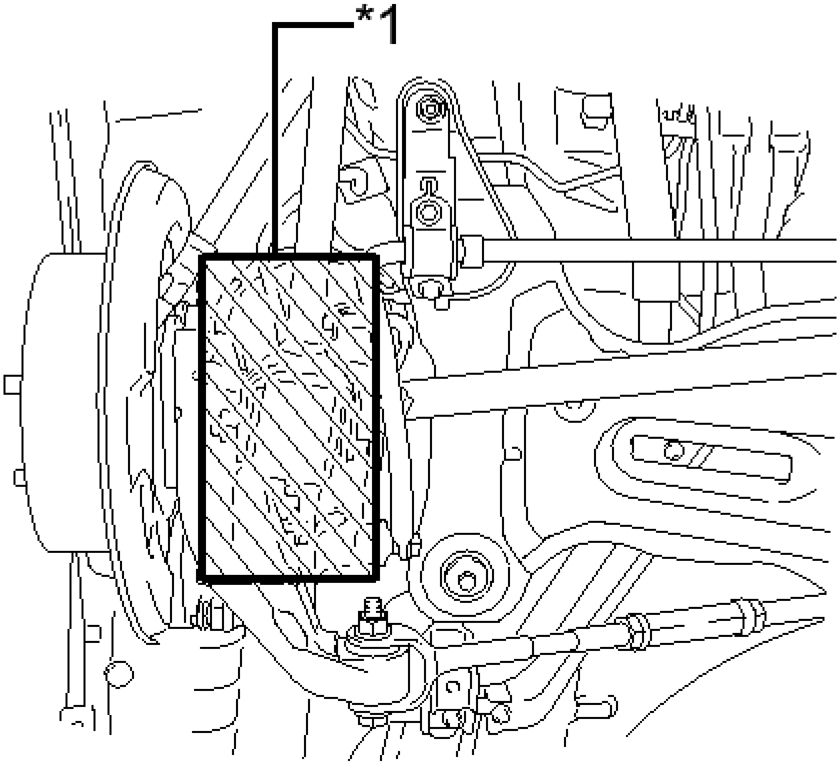

Fig. 44: Identifying Rear Axle Carrier Sub-Assembly Supported By Wooden Block
Courtesy of TOYOTA MOTOR SALES, U.S.A., INC.

TEXT IN ILLUSTRATION

*1	Wooden Block

WARNING: **Do not jack up the rear axle carrier sub-assembly too high as the vehicle may fall.**

NOTE:

- **When jacking up the rear axle carrier sub-assembly, be sure to jack it up slowly.**
- **Make sure to perform this operation with the vehicle kept as low as possible.**

11. **FULLY TIGHTEN REAR NO. 1 SUSPENSION ARM ASSEMBLY**
    a. Fully tighten the bolt.

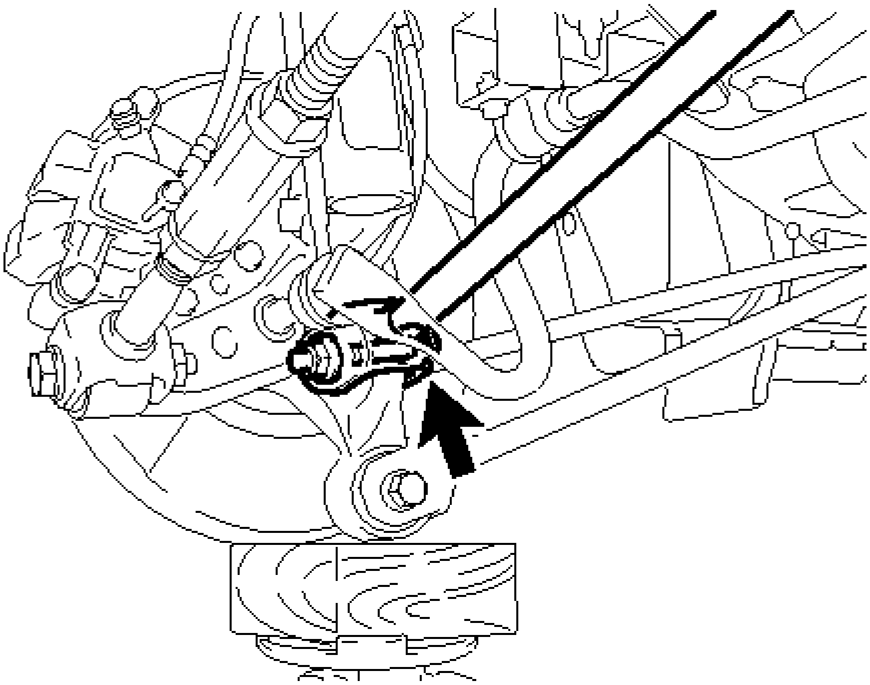

Fig. 45: Locating Rear No. 1 Suspension Arm Assembly Fasteners
Courtesy of TOYOTA MOTOR SALES, U.S.A., INC.

Torque: 100 N*m (1020 kgf*cm, 74 ft.*lbf)

NOTE: **Since a stopper nut is used, fully tighten the bolt.**

12. **FULLY TIGHTEN REAR NO. 2 SUSPENSION ARM ASSEMBLY**

   a. Fully tighten the bolt.

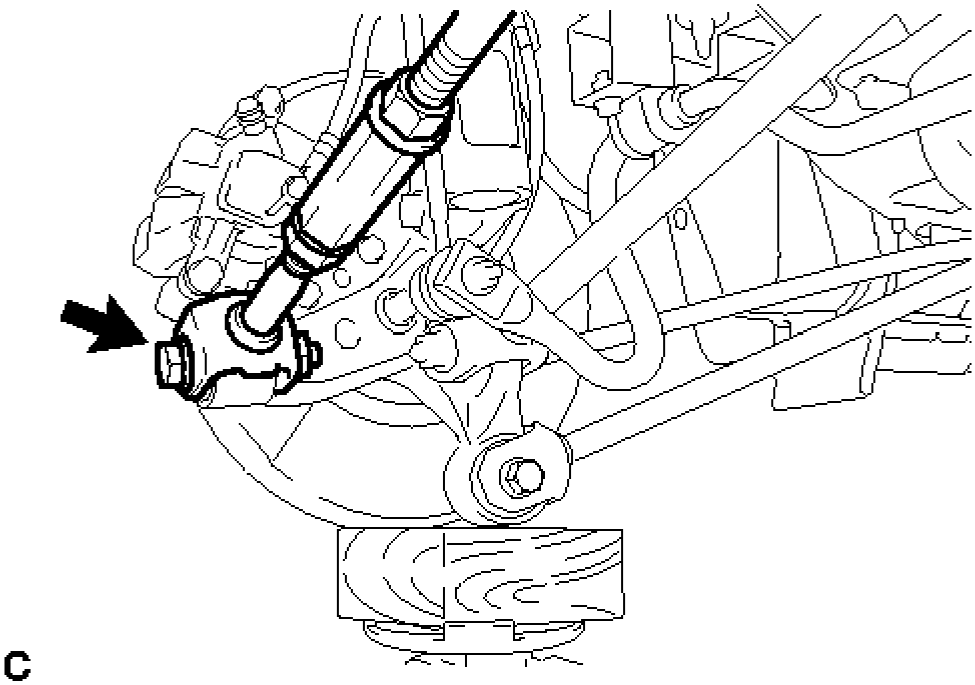

Fig. 46: Locating Rear No. 2 Suspension Arm Assembly Bolt
Courtesy of TOYOTA MOTOR SALES, U.S.A., INC.

Torque: 100 N*m (1020 kgf*cm, 74 ft.*lbf)

NOTE: **Since a stopper nut is used, fully tighten the bolt.**

13. **FULLY TIGHTEN REAR STRUT ROD ASSEMBLY**

   a. Fully tighten the bolt

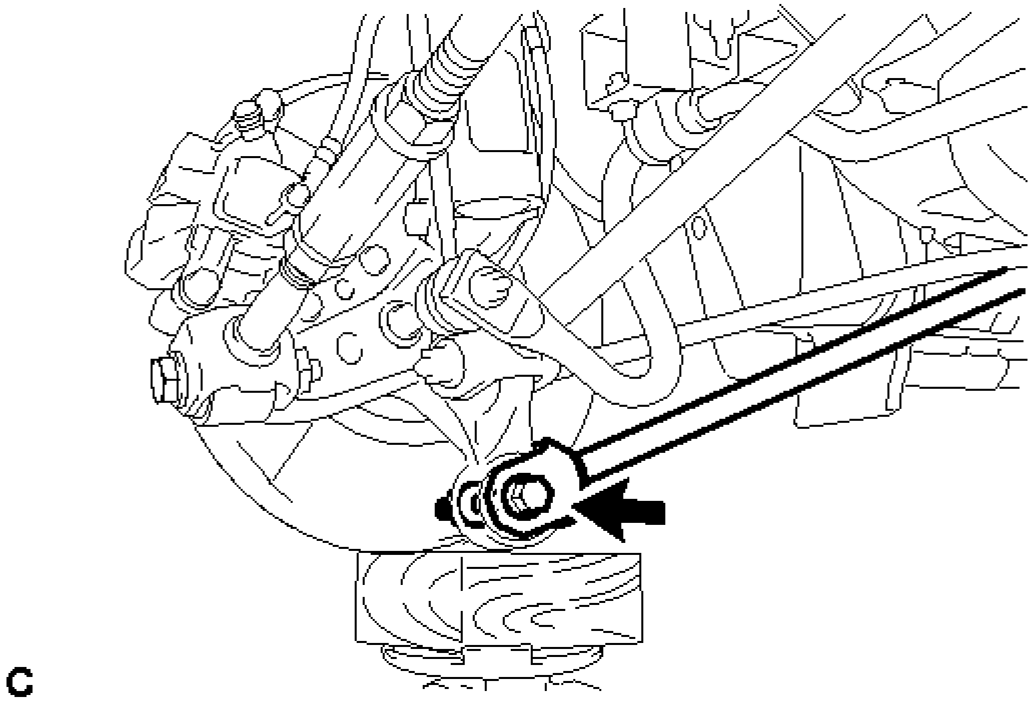

Fig. 47: Locating Rear Strut Rod Assembly Fasteners
Courtesy of TOYOTA MOTOR SALES, U.S.A., INC.

Torque: 80 N*m (816 kgf*cm, 59 ft.*lbf)

NOTE: **Since a stopper nut is used, fully tighten the bolt.**

14. **INSTALL REAR HEIGHT CONTROL SENSOR SUB-ASSEMBLY (w/ Height Control Sensor)**

    Refer to **INSTALLATION** .

    HINT:

    It is necessary to install the rear height control sensor sub-assembly when installing the rear No. 2 suspension arm assembly RH.

15. **ADJUST PARKING BRAKE**

    Refer to **ADJUSTMENT** .

16. **INSTALL REAR WHEEL**

    Torque: 103 N*m (1049 kgf*cm, 76 ft.*lbf)

17. **INSPECT AND ADJUST REAR WHEEL ALIGNMENT**

    Refer to **ADJUSTMENT** .

18. **HEIGHT CONTROL SENSOR SIGNAL INITIALIZE (w/ Height Control Sensor)**

    Refer to **INITIALIZATION** .

19. **ADJUST HEADLIGHT AIMING (w/ Height Control Sensor)**

    Refer to **ADJUSTMENT** .

20. **CHECK FOR SPEED SENSOR SIGNAL**

    Refer to **TEST MODE PROCEDURE** .

2012-2017 ACCESSORIES & EQUIPMENT

Door Control Transmitter (W/O Smart Key System) (Service Information) - Camry (Except Hybrid)

DOOR CONTROL TRANSMITTER (W/O SMART KEY SYSTEM)

COMPONENTS

ILLUSTRATION

for Type A:

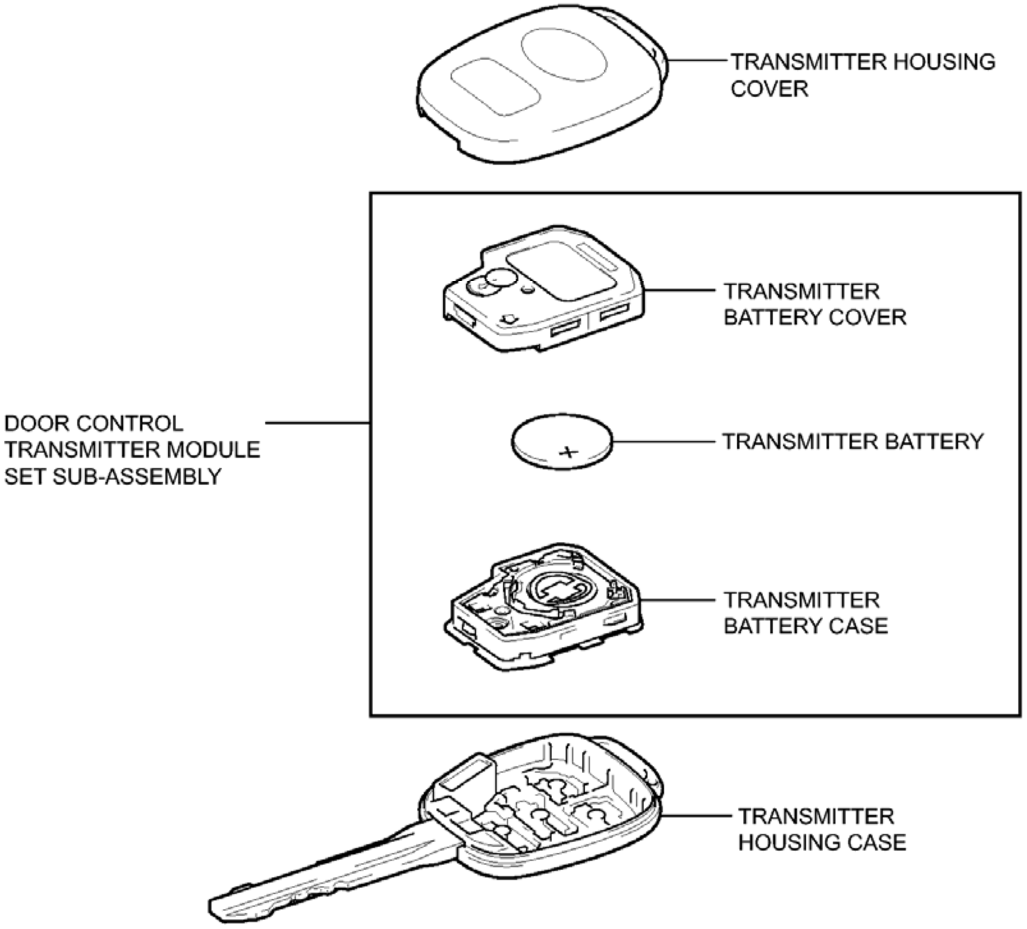
TRANSMITTER HOUSING COVER
TRANSMITTER BATTERY COVER
DOOR CONTROL TRANSMITTER MODULE SET SUB-ASSEMBLY
TRANSMITTER BATTERY
TRANSMITTER BATTERY CASE
TRANSMITTER HOUSING CASE

P

Fig. 1: Identifying Door Control Transmitter Replacement Components (W/O Smart Key System) (For Type A)

Courtesy of TOYOTA MOTOR SALES, U.S.A., INC.

ILLUSTRATION

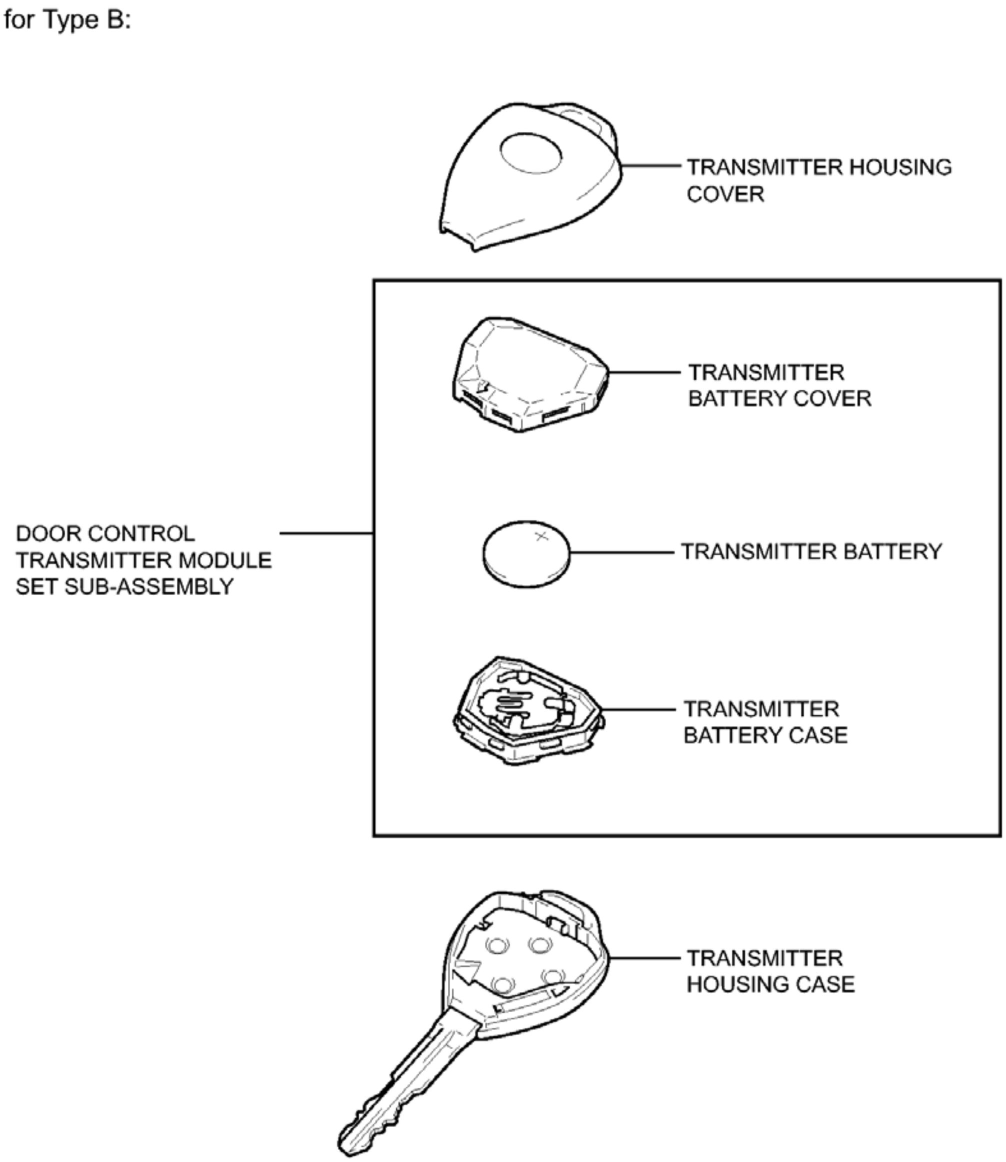
for Type B:
TRANSMITTER HOUSING COVER
TRANSMITTER BATTERY COVER
DOOR CONTROL TRANSMITTER MODULE SET SUB-ASSEMBLY
TRANSMITTER BATTERY
TRANSMITTER BATTERY CASE
TRANSMITTER HOUSING CASE
P

Fig. 2: Identifying Door Control Transmitter Replacement Components (W/O Smart Key System) (For Type B)

Courtesy of TOYOTA MOTOR SALES, U.S.A., INC.

REMOVAL

REMOVAL

1. **REMOVE TRANSMITTER HOUSING COVER (for Type A)** . Refer to **REPLACEMENT - Step 1**

2. **REMOVE DOOR CONTROL TRANSMITTER MODULE SET SUB-ASSEMBLY (for Type A)** . Refer to **REPLACEMENT - Step 2**
3. **REMOVE TRANSMITTER HOUSING COVER (for Type B)** . Refer to **REPLACEMENT - Step 4**
4. **REMOVE DOOR CONTROL TRANSMITTER MODULE SET SUB-ASSEMBLY (for Type B)** . Refer to **REPLACEMENT - Step 5**

INSPECTION

INSPECTION

1. **INSPECT DOOR CONTROL TRANSMITTER MODULE SET SUB-ASSEMBLY**
    a. Inspect operation of the door control transmitter module set sub-assembly (for Type A).
        1. Remove the transmitter battery from the door control transmitter module set sub-assembly. Refer to **REPLACEMENT** .
        2. Install a new or non-depleted transmitter battery. Refer to **REPLACEMENT** .

NOTE: **When replacing the transmitter battery, before starting work, remove static electricity that has built up in the body by touching, for example, the vehicle to prevent the electrical key transmitter from being damaged.**

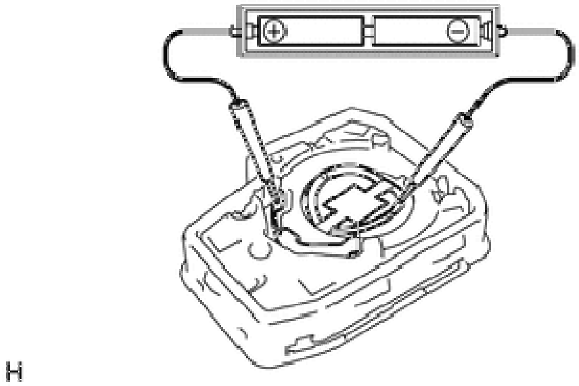

Fig. 3: Inspecting Door Control Transmitter Module Set Sub-Assembly (For Type A)
Courtesy of TOYOTA MOTOR SALES, U.S.A., INC.

HINT:

When a new or non-depleted battery is not available, first connect 2 new 1.5 V batteries in series. Then connect leads to the batteries and apply 3 V to the door control transmitter module set sub-assembly, as shown in the illustration.

3. From outside the vehicle, approximately 1 m (3.28 ft) from the driver door outside door handle, test the door control transmitter module set sub-assembly by pointing its key plate at the vehicle and pressing a door control transmitter module set sub-assembly switch.

OK

The door lock can be operated via the door control transmitter module set sub-assembly.

- The operational area differs depending on the user, the way the door control transmitter module set sub-assembly is held and the location.
- The door control transmitter module set sub-assembly weak radio waves may be affected if the area has strong radio waves or electrical noise. The door control transmitter module set sub-assembly operation area may be shortened or the door control transmitter module set sub-assembly may not function.

b. Inspect the battery capacity.

1. Remove the battery from the door control transmitter module set sub-assembly that does not operate. Attach a lead wire (0.6 mm (0.0236 in.) in diameter or less including wire sheath) with tape or equivalent to the negative terminal. Refer to **REMOVAL**.

   NOTE: Do not wrap the lead wire around a terminal, wedge it between the terminals, or solder it. A terminal may be deformed or damaged, and the battery will not be able to be installed correctly.

2. Carefully pull the lead wire out from the position shown in the illustration and install the previously removed transmitter battery.

   NOTE: When replacing the transmitter battery, before starting work, remove static electricity that has built up in the body by touching, for example, the vehicle to prevent the electrical key transmitter from being damaged.

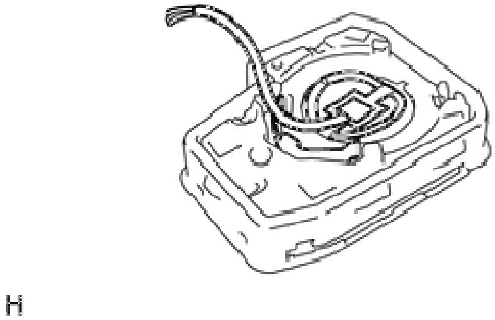

Fig. 4: Identifying Lead Wire
Courtesy of TOYOTA MOTOR SALES, U.S.A., INC.

3. Check the transmitter battery voltage.

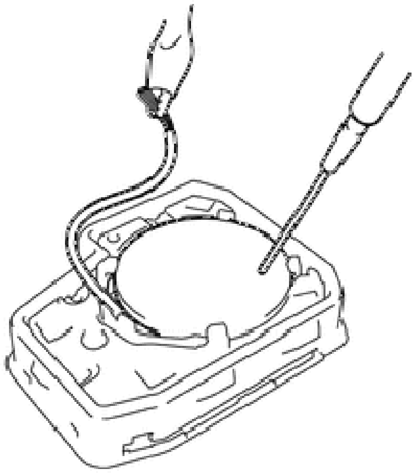

Fig. 5: Checking Transmitter Battery Voltage
Courtesy of TOYOTA MOTOR SALES, U.S.A., INC.

HINT:

Measure the transmitter battery voltage while pressing the lock or unlock switch on the door control transmitter module set sub-assembly.

Standard voltage

Tester Connection	Condition	Specified Condition
Battery positive (+) - Battery negative (-)	Ignition switch off, all doors closed and lock or unlock switch is pressed	2.5 to 3.2 V

If the result is not as specified, replace the transmitter battery.

c. Inspect operation of the door control transmitter module set sub-assembly (for Type B).
   1. Remove the transmitter battery from the door control transmitter module set sub-assembly. Refer to **REPLACEMENT** .
   2. Install a new or non-depleted transmitter battery. Refer to **REPLACEMENT** .

NOTE: **When replacing the transmitter battery, before starting work, remove static electricity that has built up in the body by touching, for example, the vehicle to prevent the electrical key transmitter from being damaged.**

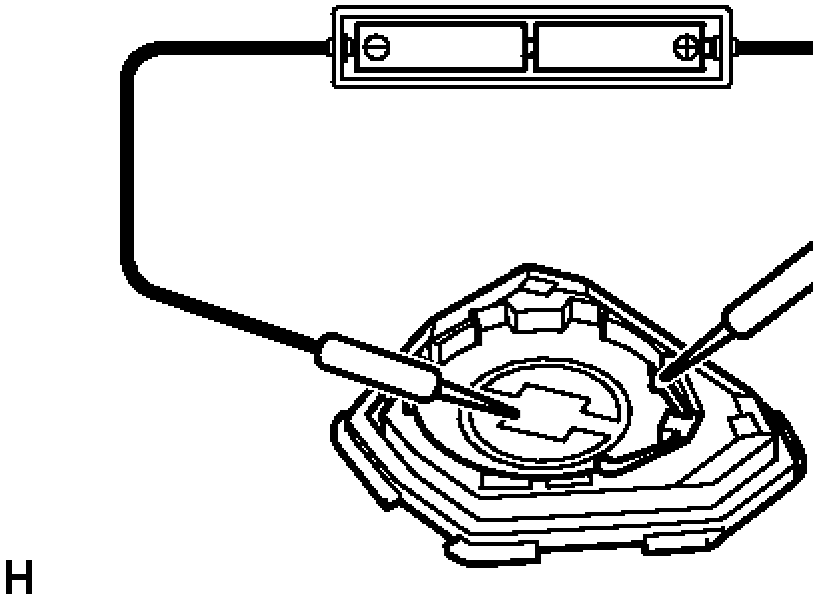

Fig. 6: Inspecting Door Control Transmitter Module Set Sub-Assembly (For Type B)
Courtesy of TOYOTA MOTOR SALES, U.S.A., INC.

HINT:

When a new or non-depleted battery is not available, first connect 2 new 1.5 V batteries in series. Then connect leads to the batteries and apply 3 V to the door control transmitter module set sub-assembly, as shown in the illustration.

3. From outside the vehicle, approximately 1 m (3.28 ft) from the driver door outside door handle, test the door control transmitter module set sub-assembly by pointing its key plate at the vehicle and pressing a door control transmitter module set sub-assembly switch.

   OK

   The door lock can be operated via the door control transmitter module set sub-assembly.

   The LED comes on more than once.

   - The operational area differs depending on the user, the way the door control transmitter module set sub-assembly is held and the location.
   - The door control transmitter module set sub-assembly weak radio waves may be

affected if the area has strong radio waves or electrical noise. The door control transmitter module set sub-assembly operation area may be shortened or the door control transmitter module set sub-assembly may not function.

d. Inspect the battery capacity.

    1. Remove the battery from the door control transmitter module set sub-assembly that does not operate. Attach a lead wire (0.6 mm (0.0236 in.) in diameter or less including wire sheath) with tape or equivalent to the negative terminal. Refer to **REMOVAL**.

        NOTE: **Do not wrap the lead wire around a terminal, wedge it between the terminals, or solder it. A terminal may be deformed or damaged, and the battery will not be able to be installed correctly.**

    2. Carefully pull the lead wire out from the position shown in the illustration and install the previously removed transmitter battery.

        NOTE: **When replacing the transmitter battery, before starting work, remove static electricity that has built up in the body by touching, for example, the vehicle to prevent the electrical key transmitter from being damaged.**

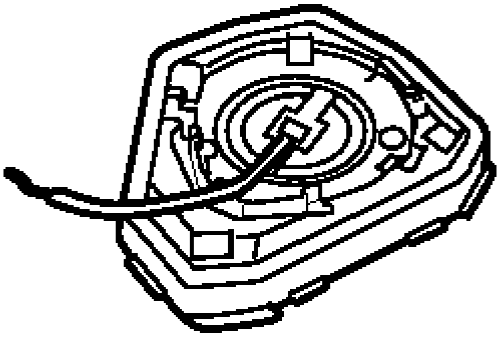

Fig. 7: Identifying Lead Wire
Courtesy of TOYOTA MOTOR SALES, U.S.A., INC.

    3. Check the transmitter battery voltage.

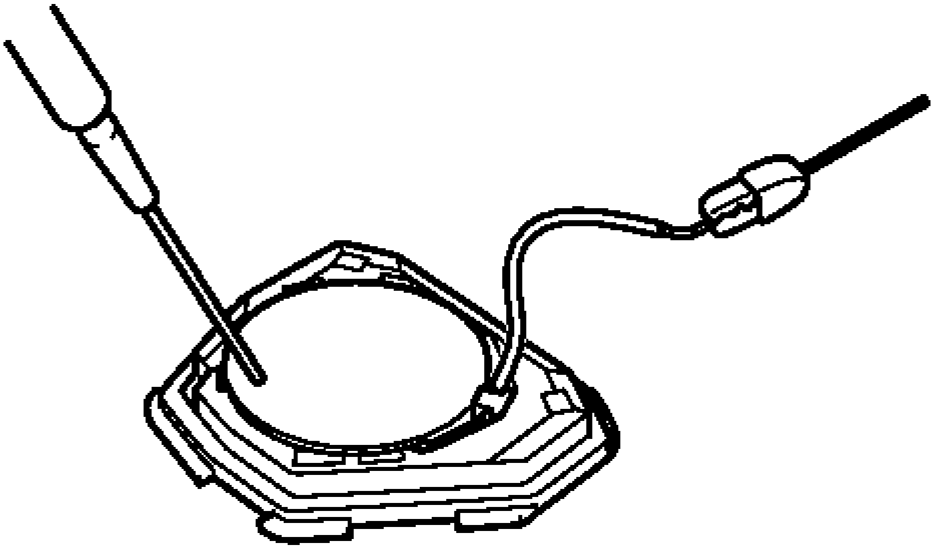

Fig. 8: Checking Transmitter Battery Voltage
Courtesy of TOYOTA MOTOR SALES, U.S.A., INC.

HINT:

Measure the transmitter battery voltage while pressing the lock or unlock switch on the door control transmitter module set sub-assembly.

Standard voltage

Tester Connection	Condition	Specified Condition
Battery positive (+)	Ignition switch off, all doors closed and	2.2 to 3.2

- Battery negative (-)	lock or unlock switch is pressed	V

If the result is not as specified, replace the transmitter battery.

INSTALLATION

INSTALLATION

1. **INSTALL DOOR CONTROL TRANSMITTER MODULE SET SUB-ASSEMBLY (for Type A)** . Refer to **REPLACEMENT - Step 8**
2. **INSTALL TRANSMITTER HOUSING COVER (for Type A)** . Refer to **REPLACEMENT - Step 9**
3. **INSTALL DOOR CONTROL TRANSMITTER MODULE SET SUB-ASSEMBLY (for Type B)** . Refer to **REPLACEMENT - Step 11**
4. **INSTALL TRANSMITTER HOUSING COVER (for Type B)** . Refer to **REPLACEMENT - Step 12**

DOOR CONTROL TRANSMITTER (W/ SMART KEY SYSTEM)

COMPONENTS

ILLUSTRATION

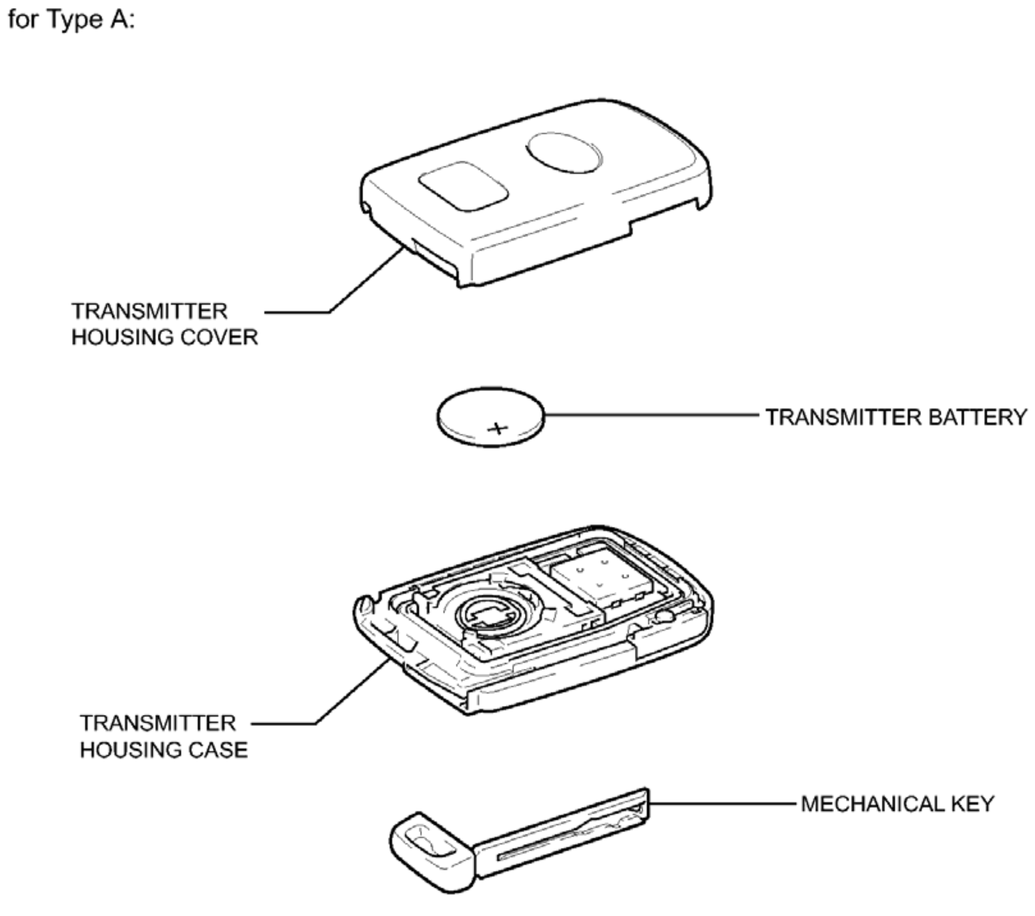
for Type A:
TRANSMITTER HOUSING COVER
TRANSMITTER BATTERY
+
TRANSMITTER HOUSING CASE
MECHANICAL KEY
P

Fig. 1: Identifying Door Control Transmitter Replacement Components (Type A)
Courtesy of TOYOTA MOTOR SALES, U.S.A., INC.

ILLUSTRATION

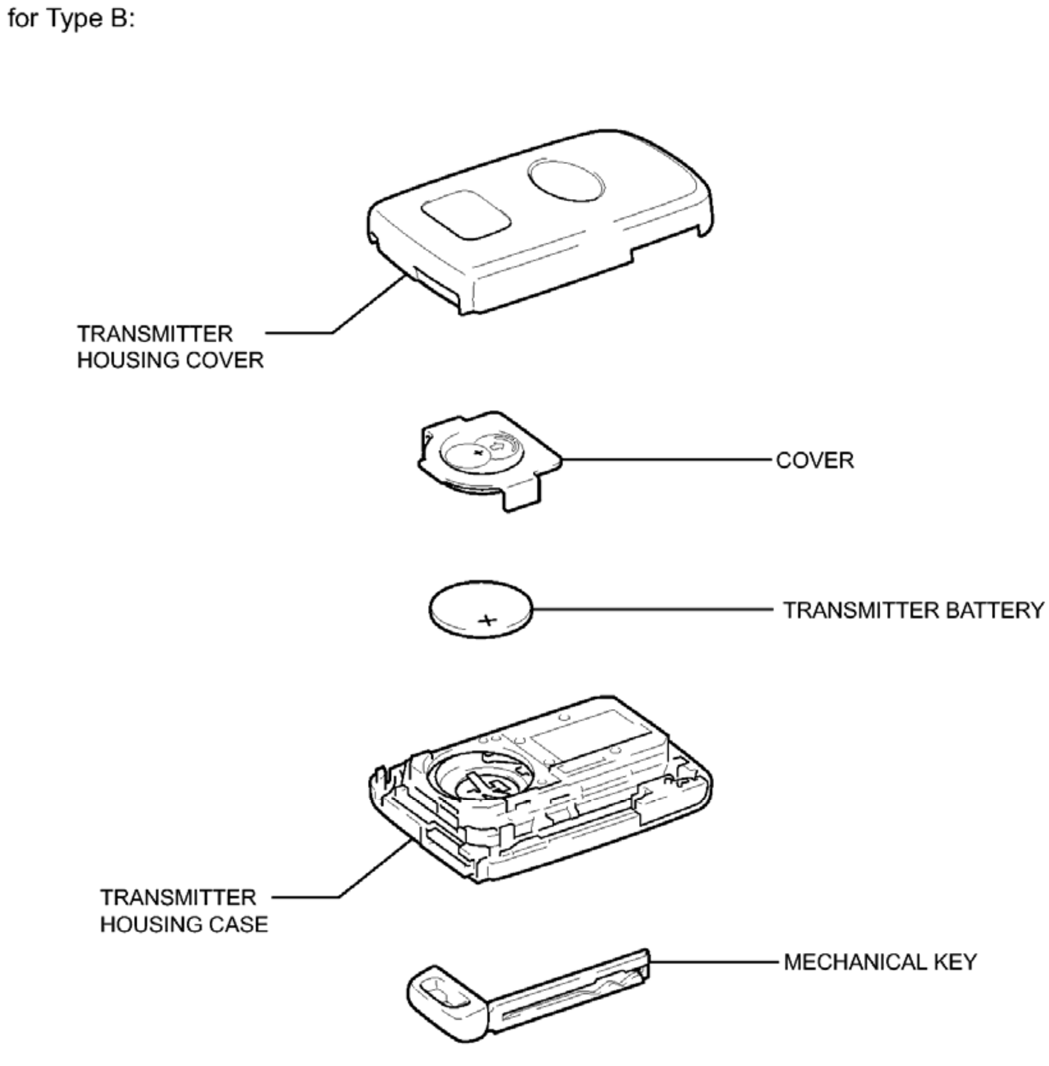
for Type B:
TRANSMITTER HOUSING COVER
COVER
TRANSMITTER BATTERY
TRANSMITTER HOUSING CASE
MECHANICAL KEY
P

Fig. 2: Identifying Door Control Transmitter Replacement Components (Type B)
Courtesy of TOYOTA MOTOR SALES, U.S.A., INC.

REMOVAL

REMOVAL

1. **REMOVE TRANSMITTER BATTERY** . Refer to **REPLACEMENT - Step 1**

INSPECTION

INSPECTION

1. **INSPECT ELECTRICAL KEY TRANSMITTER SUB-ASSEMBLY**
    a. Inspect the operation of the electrical key transmitter sub-assembly (for Type A).
        1. Remove the transmitter battery from the electrical key transmitter sub-assembly. Refer to **REPLACEMENT** .
        2. Install a new or known good transmitter battery. Refer to **REPLACEMENT** .

NOTE: **When replacing the transmitter battery, before starting work, remove static electricity that has built up in the body by touching, for example, the vehicle to prevent the electrical key transmitter from being damaged.**

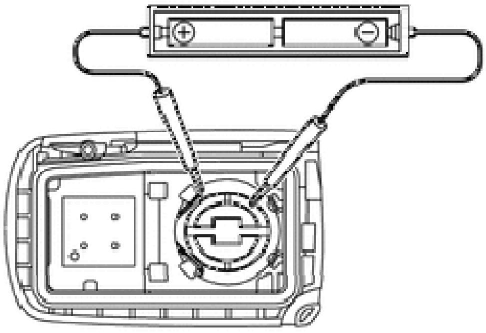

Fig. 3: Inspecting Electrical Key Transmitter Sub-Assembly
Courtesy of TOYOTA MOTOR SALES, U.S.A., INC.

HINT:

If a new or known good battery is not available, first connect 2 new 1.5 V batteries in series. Then connect leads to the batteries and apply 3 V to the electrical key transmitter sub-assembly, as shown in the illustration.

3. From outside the vehicle, approximately 1 m (3.28 ft.) away from the driver door outside door handle, test the electrical key transmitter sub-assembly by pointing its key plate at the vehicle and pressing a electrical key transmitter sub-assembly switch.

OK

The door lock can be operated via the electrical key transmitter sub-assembly.

The LED comes on more than once.

- The operation area differs depending on the user, the way the electrical key transmitter sub-assembly is held, and the location.
- The electrical key transmitter sub-assembly weak radio waves may be affected if the area has strong radio waves or noise. The electrical key transmitter sub-assembly

operation area may be shortened or the electrical key transmitter sub-assembly may not function.

b. Inspect the battery capacity (for Type A).

1. Remove the battery. Refer to **REPLACEMENT** from the electrical key transmitter sub-assembly that does not operate. Attach a lead wire (0.6 mm (0.0236 in.) in diameter or less including wire sheath) with tape or equivalent to the negative terminal.

NOTE: **Do not wrap the lead wire around a terminal, wedge it between the terminals, or solder it. A terminal may be deformed or damaged, and the battery will not be able to be installed correctly.**

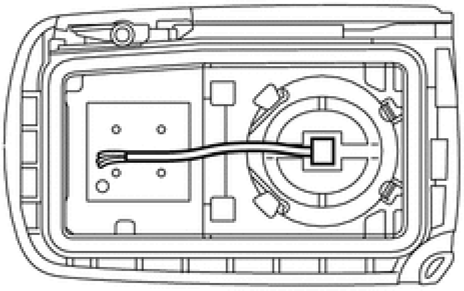

Fig. 4: Lead Wire
Courtesy of TOYOTA MOTOR SALES, U.S.A., INC.

NOTE: **When replacing the transmitter battery, before starting work, remove static electricity that has built up in the body by touching, for example, the vehicle to prevent the electrical key transmitter from being damaged.**

2. Carefully pull the lead wire out from the position shown in the illustration and install the previously removed transmitter battery.
3. Check the transmitter battery voltage.

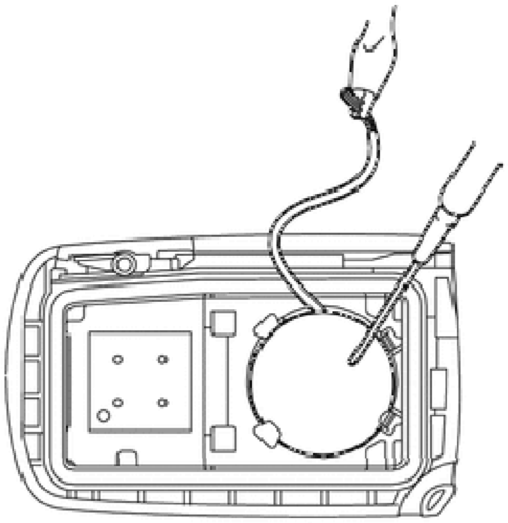

Fig. 5: Transmitter Battery Voltage
Courtesy of TOYOTA MOTOR SALES, U.S.A., INC.

HINT:

When measuring the battery voltage, while operating the lock sensor of a door handle, bring the electrical key transmitter sub-assembly within the entry operating range to perform the measurement. For the entry operating range, refer to System Description. Refer to **SYSTEM DESCRIPTION** .

Standard Voltage

Tester Connection	Condition	Specified Condition
Battery positive (+) - Battery negative (-)	Engine switch off, all doors closed and lock sensor touched	2.2 to 3.2 V

If the result is not as specified, replace the transmitter battery.

c. Inspect operation of the electrical key transmitter sub-assembly (for Type B).
    1. Remove the transmitter battery from the electrical key transmitter sub-assembly. Refer to **REPLACEMENT** .
    2. Install a new or normal transmitter battery. Refer to **REPLACEMENT** .

NOTE: **When replacing the transmitter battery, before starting work, remove static electricity that has built up in the body by touching, for example, the vehicle to prevent the electrical key transmitter from being damaged.**

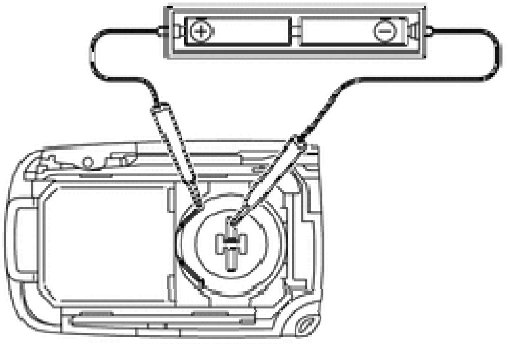

Fig. 6: Applying Voltage To Electrical Key Transmitter Sub-Assembly
Courtesy of TOYOTA MOTOR SALES, U.S.A., INC.

HINT:

If a new or normal battery is not available, first connect 2 new 1.5 V batteries in series. Then connect leads to the batteries and apply 3 V to the electrical key transmitter sub-assembly, as shown in the illustration.

3. From outside the vehicle, approximately 1 m (3.28 ft.) away from the driver door outside door handle, test the electrical key transmitter sub-assembly by pointing its key plate at the vehicle and pressing a electrical key transmitter sub-assembly switch.

   OK

   The door lock can be operated via the electrical key transmitter sub-assembly.

   The LED comes on more than once.

   - The operation area differs depending on the user, the way the electrical key transmitter sub-assembly is held, and the location.
   - The electrical key transmitter sub-assembly weak radio waves may be affected if the area has strong radio waves or noise. The electrical key transmitter sub-assembly operation area may be shortened or the electrical key transmitter sub-assembly may not function.

d. Inspect the battery capacity (for Type B).

   1. Remove the battery. Refer to **REPLACEMENT** from the electrical key transmitter sub-assembly that does not operate. Attach a lead wire (0.6 mm (0.0236 in.) in diameter or less including wire sheath) with tape or equivalent to the negative terminal.

NOTE: Do not wrap the lead wire around a terminal, wedge it between the terminals, or solder it. A terminal may be deformed or damaged, and the battery will not be able to be installed correctly.

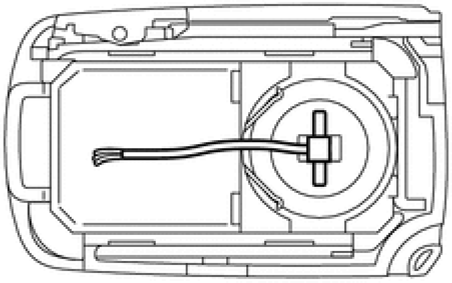

H

Fig. 7: Identifying Lead Wire
Courtesy of TOYOTA MOTOR SALES, U.S.A., INC.

NOTE: When replacing the transmitter battery, before starting work, remove static electricity that has built up in the body by touching, for example, the vehicle to prevent the electrical key transmitter from being damaged.

2. Carefully pull the lead wire out from the position shown in the illustration and install the previously removed transmitter battery.
3. Check the transmitter battery voltage.

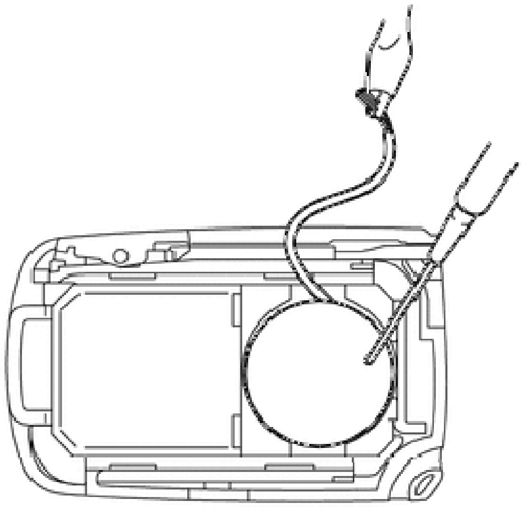

Fig. 8: Checking Transmitter Battery Voltage
Courtesy of TOYOTA MOTOR SALES, U.S.A., INC.

HINT:

When measuring the battery voltage, while operating the lock switch of a door handle, bring the electrical key transmitter sub-assembly within the entry operating range to perform the measurement. For the entry operating range, refer to System Description. Refer to **SYSTEM DESCRIPTION** .

Standard Voltage

Tester Connection	Condition	Specified Condition
Battery positive (+) - Battery negative (-)	Engine switch off, all doors closed and lock sensor touched	2.2 to 3.2 V

If the result is not as specified, replace the transmitter battery.

INSTALLATION

INSTALLATION

1. **INSTALL TRANSMITTER BATTERY** . Refer to **REPLACEMENT - Step 2**

2012-2017 ACCESSORIES & EQUIPMENT

Door Lock System (Service Information) (Hybrid)

TRANSMITTER BATTERY

REPLACEMENT

REPLACEMENT

1. **REMOVE TRANSMITTER BATTERY**

   NOTE: Take extra care when handling these precision electronic components.

   a. for Type A:

      1. Push the release hook knob and extract the mechanical key.

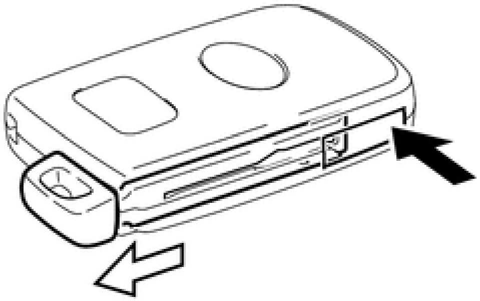

P

Fig. 1: Release Hook Knob
Courtesy of TOYOTA MOTOR SALES, U.S.A., INC.

      2. Insert a precision screwdriver into the gap, and turn the screwdriver to detach the transmitter housing cover.

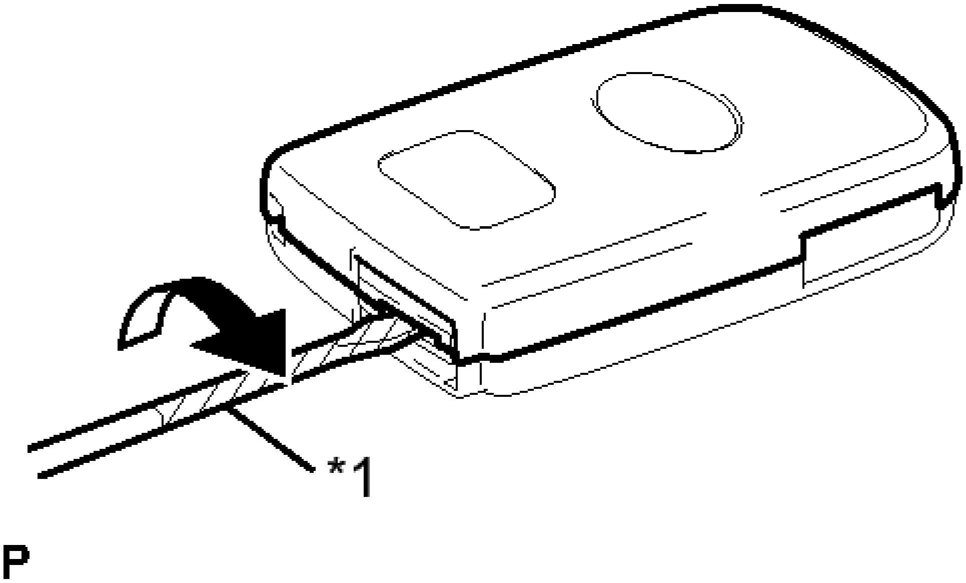

Fig. 2: Screwdriver & Transmitter Housing Cover
Courtesy of TOYOTA MOTOR SALES, U.S.A., INC.

TEXT IN ILLUSTRATION

*1	Protective Tape

HINT:

Tape the screwdriver tip before use.

3. Insert a precision screwdriver into the gap and gently remove the transmitter battery (lithium battery: CR2032).

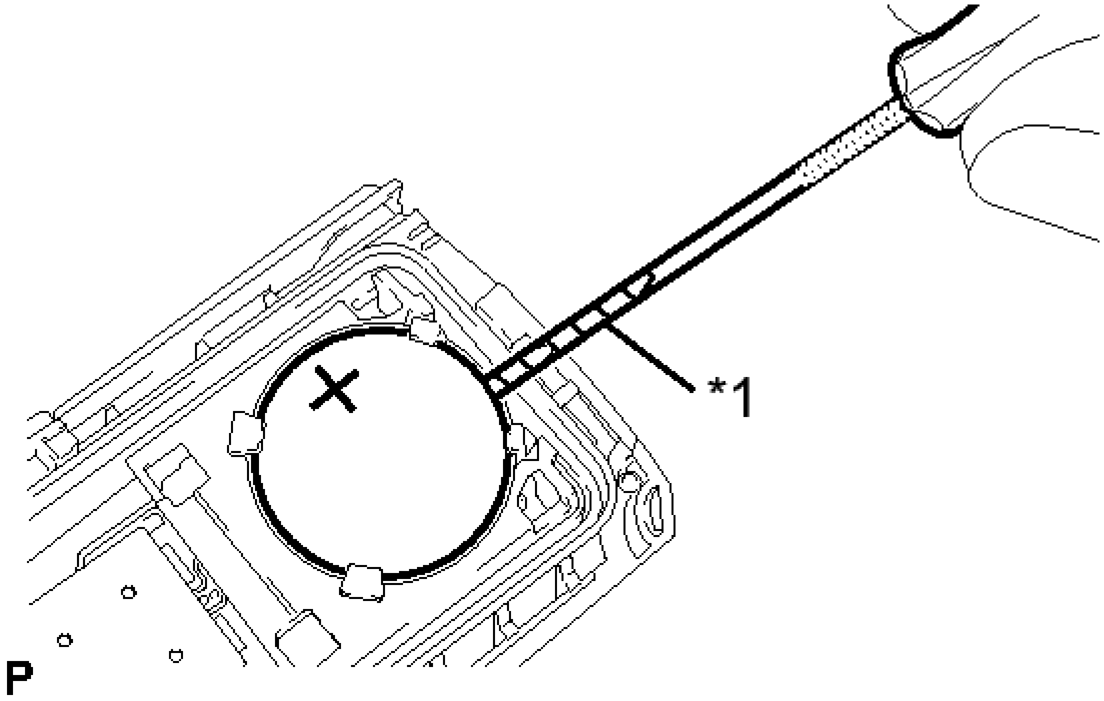

Fig. 3: Precision Screwdriver Transmitter Battery (Lithium Battery: CR2032)
Courtesy of TOYOTA MOTOR SALES, U.S.A., INC.

TEXT IN ILLUSTRATION

*1	Protective Tape

NOTE:

- **Do not push the terminals with your finger.**
- **Do not forcibly pry up the transmitter battery. The terminals may be damaged.**
- **Do not touch the transmitter battery with wet hands. Water may cause rust.**
- **Do not touch or move any components inside the transmitter. It may interfere with proper operation.**
- **When replacing the transmitter battery, before starting work, remove static electricity that has built up in the body by touching, for example, the vehicle to prevent the electrical transmitter from being damaged.**

HINT:

Tape the screwdriver tip before use.

b. for Type B:
    1. Push the release hook knob and extract the mechanical key.

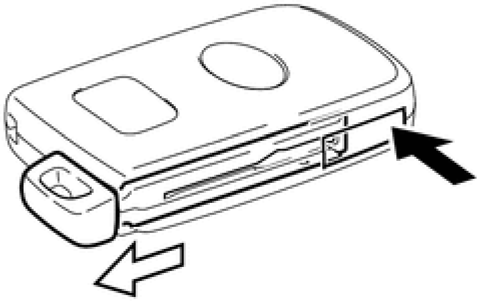

P

Fig. 4: Release Hook Knob
Courtesy of TOYOTA MOTOR SALES, U.S.A., INC.

2. Insert a precision screwdriver into the gap, and turn the screwdriver to detach the transmitter housing cover.

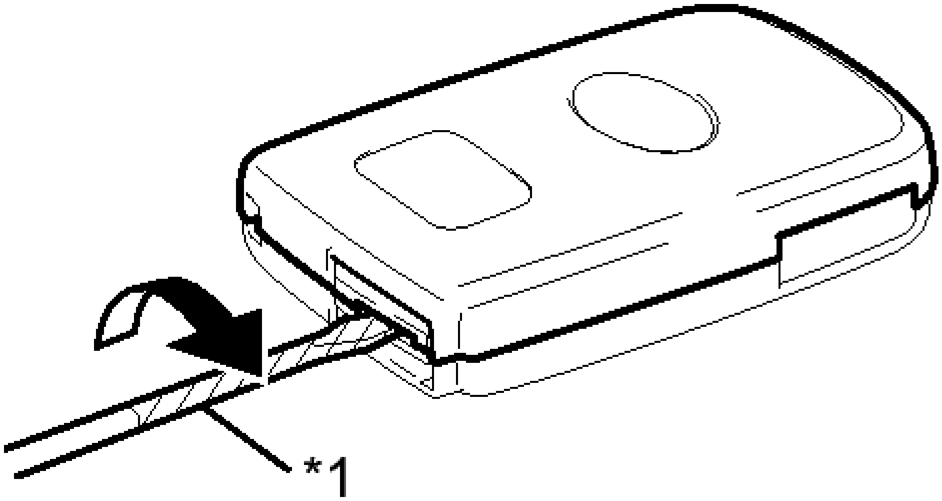

P

Fig. 5: Screwdriver & Transmitter Housing Cover
Courtesy of TOYOTA MOTOR SALES, U.S.A., INC.

TEXT IN ILLUSTRATION

*1	Protective Tape

HINT:

Tape the screwdriver tip before use.

3. Disengage the 2 claws and remove the cover.

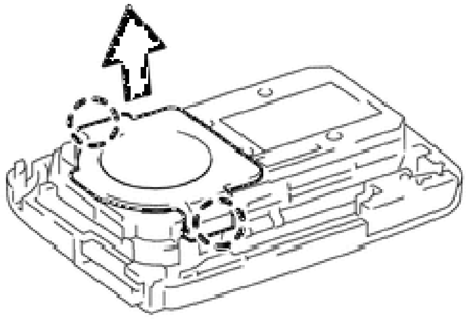

P

Fig. 6: Removing The Battery Cover
Courtesy of TOYOTA MOTOR SALES, U.S.A., INC.

4. Insert a precision screwdriver into the gap and gently remove the transmitter battery (lithium battery: CR2032).

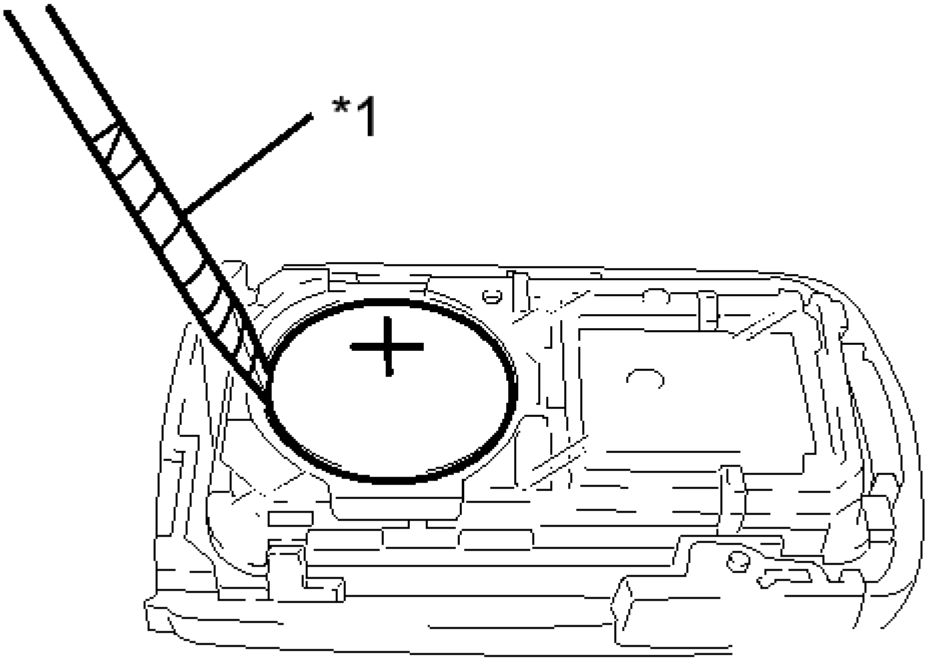

P

Fig. 7: Removing Transmitter Battery
Courtesy of TOYOTA MOTOR SALES, U.S.A., INC.

TEXT IN ILLUSTRATION

*1	Protective

	Tape

NOTE:

- **Do not push the terminals with your finger.**
- **Do not forcibly pry up the transmitter battery. The terminals may be damaged.**
- **Do not touch the transmitter battery with wet hands. Water may cause rust.**
- **Do not touch or move any components inside the transmitter. It may interfere with proper operation.**
- **When replacing the transmitter battery, before starting work, remove static electricity that has built up in the body by touching, for example, the vehicle to prevent the electrical transmitter from being damaged.**

HINT:

Tape the screwdriver tip before use.

2. **INSTALL TRANSMITTER BATTERY**
   a. for Type A:
      1. Install a new transmitter battery (lithium battery: CR2032) with the positive (+) side facing upward, as shown in the illustration.

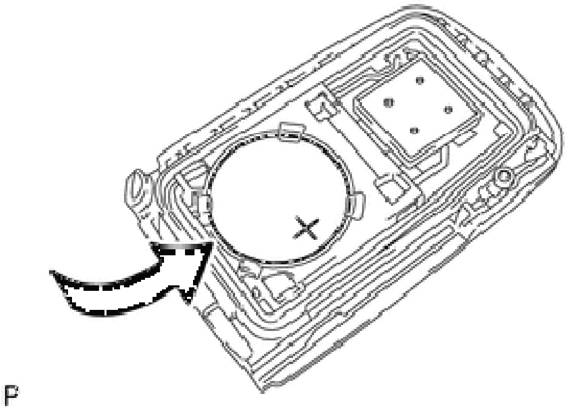

Fig. 8: Transmitter Battery
Courtesy of TOYOTA MOTOR SALES, U.S.A., INC.

NOTE:

- **Do not bend the transmitter battery electrode during insertion.**
- **Keep the transmitter cover interior free of dust and oil.**
- **When replacing the transmitter battery, before starting work, remove static electricity that has built up in the body by touching, for example, the vehicle to prevent the**

electrical transmitter from being damaged.

2. Install the transmitter housing cover by pressing down on it as shown in the illustration.

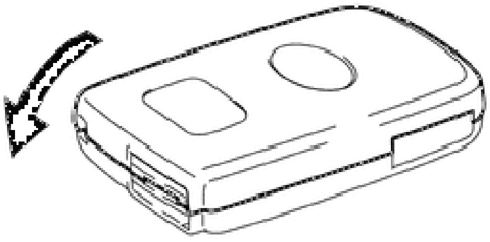

P

Fig. 9: Transmitter Housing Cover
Courtesy of TOYOTA MOTOR SALES, U.S.A., INC.

3. Insert the mechanical key into the transmitter.

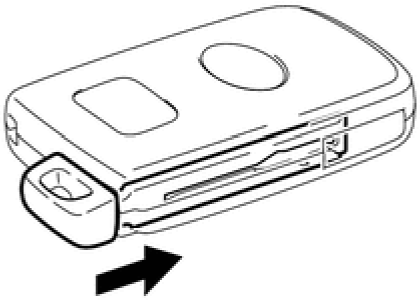

P

Fig. 10: Mechanical Key Into The Transmitter
Courtesy of TOYOTA MOTOR SALES, U.S.A., INC.

4. Press one of the transmitter switches and check that the LED illuminates.

   OK

   Transmitter LED illuminates when switch is pressed.

b. for Type B:

   1. Install a new transmitter battery (lithium battery: CR2032) with the positive (+) side facing upward, as shown in the illustration.

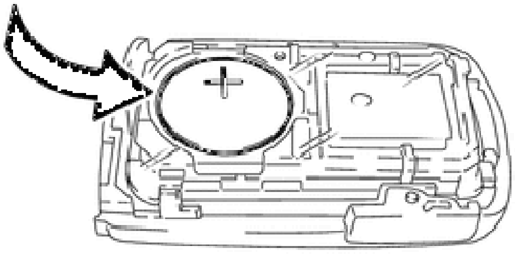

Fig. 11: Installing Transmitter Battery
Courtesy of TOYOTA MOTOR SALES, U.S.A., INC.

NOTE:

- **Do not bend the transmitter battery electrode during insertion.**
- **Keep the transmitter cover interior free of dust and oil.**
- **When replacing the transmitter battery, before starting work, remove static electricity that has built up in the body by touching, for example, the vehicle to prevent the electrical transmitter from being damaged.**

2. Engage the 2 claws and install the cover.

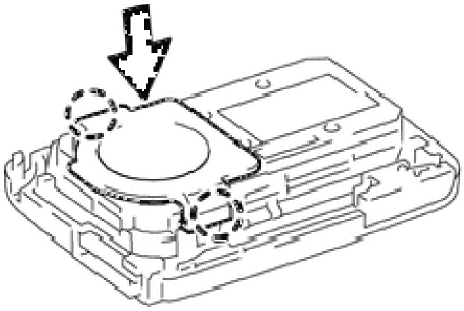

Fig. 12: Installing The Battery Cover
Courtesy of TOYOTA MOTOR SALES, U.S.A., INC.

3. Install the transmitter housing cover by pressing down on it as shown in the illustration.

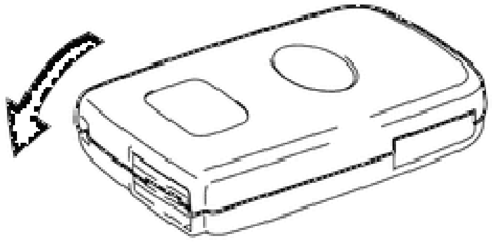

Fig. 13: Transmitter Housing Cover
Courtesy of TOYOTA MOTOR SALES, U.S.A., INC.

4. Insert the mechanical key into the transmitter.

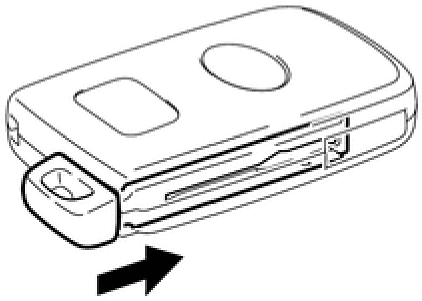

Fig. 14: Mechanical Key Into The Transmitter
Courtesy of TOYOTA MOTOR SALES, U.S.A., INC.

5. Press one of the transmitter switches and check that the LED illuminates.

   OK

   Transmitter LED illuminates when switch is pressed.

DOOR CONTROL TRANSMITTER

COMPONENTS

ILLUSTRATION

for Type A:

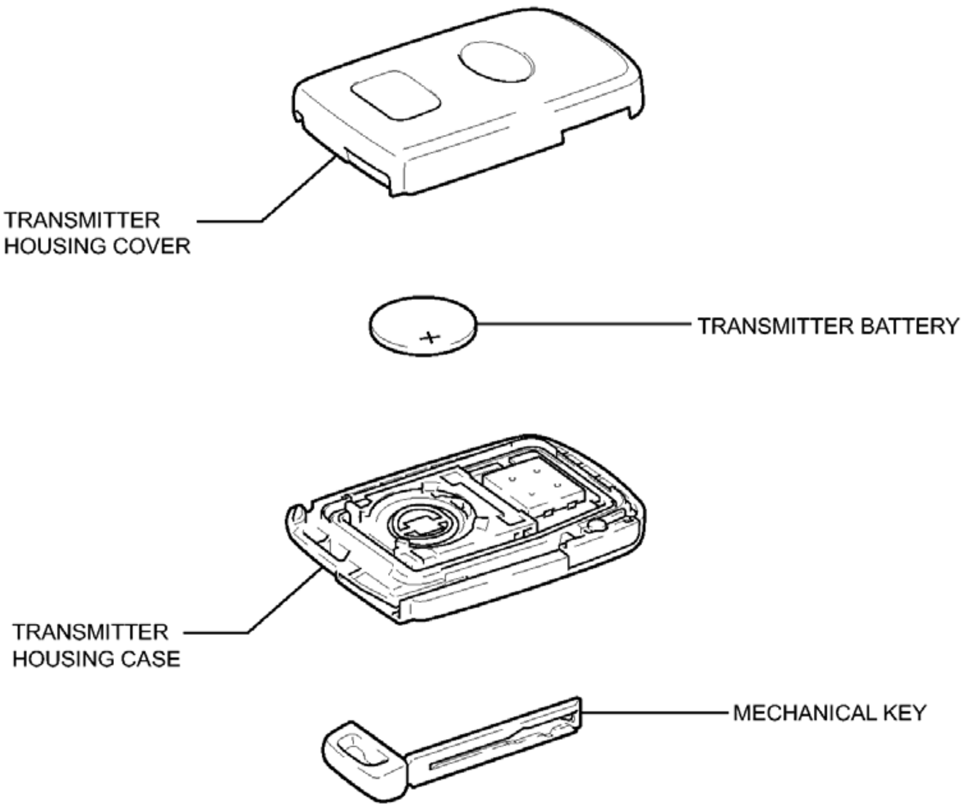
TRANSMITTER HOUSING COVER
TRANSMITTER BATTERY
+
TRANSMITTER HOUSING CASE
MECHANICAL KEY

P

Fig. 15: Identifying Door Control Transmitter Replacement Components (1 Of 2)

Courtesy of TOYOTA MOTOR SALES, U.S.A., INC.

for Type B:

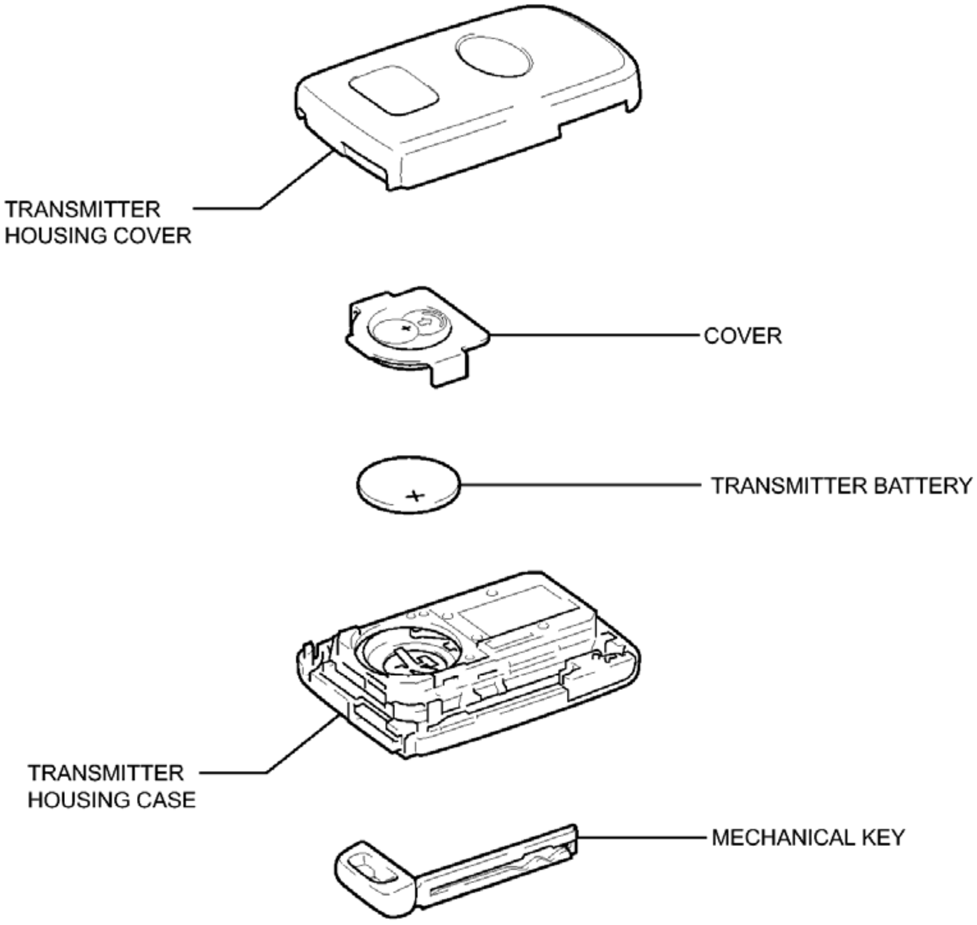
TRANSMITTER HOUSING COVER
COVER
TRANSMITTER BATTERY
TRANSMITTER HOUSING CASE
MECHANICAL KEY

P

Fig. 16: Identifying Door Control Transmitter Replacement Components (2 Of 2)
Courtesy of TOYOTA MOTOR SALES, U.S.A., INC.

REMOVAL

REMOVAL

1. **REMOVE TRANSMITTER BATTERY** See step 1

INSPECTION

INSPECTION

1. **INSPECT ELECTRICAL KEY TRANSMITTER SUB-ASSEMBLY**
    a. Inspect the operation of the electrical key transmitter sub-assembly (for Type A).
        1. Remove the transmitter battery from the electrical key transmitter sub-assembly. Refer to **REPLACEMENT**.
        2. Install a new or known good transmitter battery. Refer to **REPLACEMENT**.

NOTE: **When replacing the transmitter battery, before starting work, remove static electricity that has built up in the body by touching, for example, the vehicle to prevent the electrical key transmitter from being damaged.**

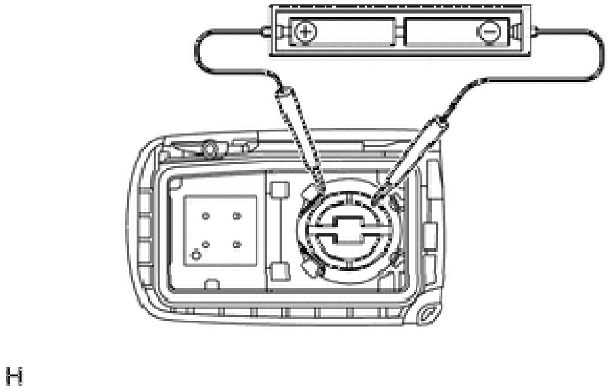

Fig. 17: 2 New 1.5 V Batteries & Electrical Key Transmitter Sub-Assembly
Courtesy of TOYOTA MOTOR SALES, U.S.A., INC.

HINT:

If a new or known good transmitter battery is not available, first connect 2 new 1.5 V batteries in series. Then connect leads to the batteries and apply 3 V to the electrical key transmitter sub-assembly, as shown in the illustration.

3. From outside the vehicle, approximately 1 m (3.28 ft.) away from the driver door outside door handle, test the electrical key transmitter sub-assembly by pointing its key plate at the vehicle and pressing a electrical key transmitter sub-assembly switch.

OK

The door lock can be operated via the electrical key transmitter sub-assembly.

The LED comes on more than once.

- The operation area differs depending on the user, the way the electrical key transmitter sub-assembly is held, and the location.
- The electrical key transmitter sub-assembly weak radio waves may be affected if the area has strong radio waves or noise. The electrical key transmitter sub-assembly

operation area may be shortened or the electrical key transmitter sub-assembly may not function.

b. Inspect the transmitter battery capacity (for Type A).

1. Remove the transmitter battery. Refer to **REPLACEMENT** from the electrical key transmitter sub-assembly that does not operate. Attach a lead wire (0.6 mm (0.0236 in.) in diameter or less including wire sheath) with tape or equivalent to the negative terminal.

NOTE: **Do not wrap the lead wire around a terminal, wedge it between the terminals, or solder it. A terminal may be deformed or damaged, and the transmitter battery will not be able to be installed correctly.**

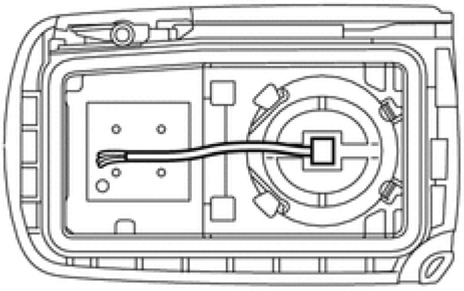

H

Fig. 18: Lead Wire
Courtesy of TOYOTA MOTOR SALES, U.S.A., INC.

NOTE: **When replacing the transmitter battery, before starting work, remove static electricity that has built up in the body by touching, for example, the vehicle to prevent the electrical key transmitter from being damaged.**

2. Carefully pull the lead wire out from the position shown in the illustration and install the previously removed transmitter battery.
3. Check the transmitter battery voltage.

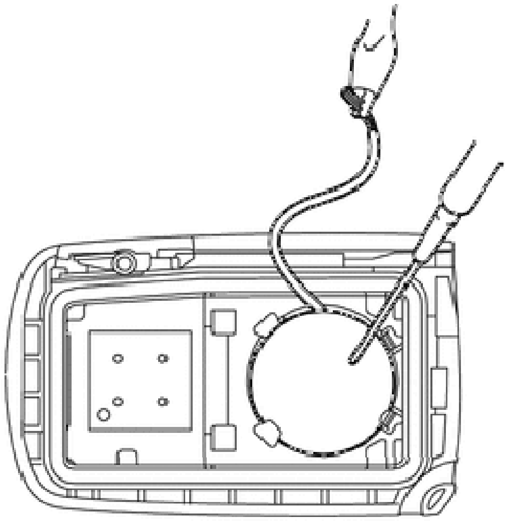

Fig. 19: Transmitter Battery Voltage
Courtesy of TOYOTA MOTOR SALES, U.S.A., INC.

HINT:

When measuring the transmitter battery voltage, while operating the lock sensor of a door handle, bring the electrical key transmitter sub-assembly within the entry operating range to perform the measurement. For the entry operating range, refer to System Description. Refer to **SYSTEM DESCRIPTION** .

Standard Voltage

Tester Connection	Condition	Specified Condition
Battery positive (+) - Battery negative (-)	Power switch off, all doors closed and lock sensor touched	2.2 to 3.2 V

If the result is not as specified, replace the transmitter battery.

c. Inspect operation of the electrical key transmitter sub-assembly (for Type B).
   1. Remove the transmitter battery from the electrical key transmitter sub-assembly. Refer to **REPLACEMENT**.
   2. Install a new or normal transmitter battery. Refer to **REPLACEMENT**.

NOTE: When replacing the transmitter battery, before starting work, remove static electricity that has built up in the body by touching, for example, the vehicle to prevent the electrical key transmitter from being damaged.

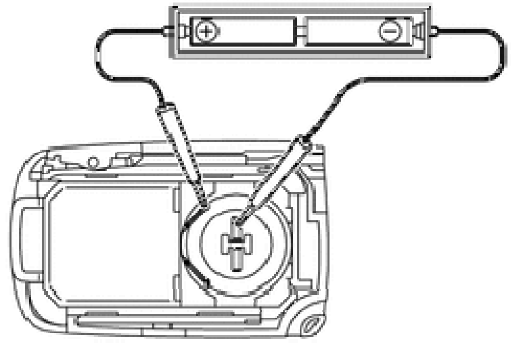

Fig. 20: Applying Voltage To Electrical Key Transmitter Sub-Assembly
Courtesy of TOYOTA MOTOR SALES, U.S.A., INC.

HINT:

If a new or normal transmitter battery is not available, first connect 2 new 1.5 V batteries in series. Then connect leads to the batteries and apply 3 V to the electrical key transmitter sub-assembly, as shown in the illustration.

3. From outside the vehicle, approximately 1 m (3.28 ft.) away from the driver door outside door handle, test the electrical key transmitter sub-assembly by pointing its key plate at the vehicle and pressing a electrical key transmitter sub-assembly switch.

   OK

   The door lock can be operated via the electrical key transmitter sub-assembly.

   The LED comes on more than once.

   - The operation area differs depending on the user, the way the electrical key transmitter sub-assembly is held, and the location.
   - The electrical key transmitter sub-assembly weak radio waves may be affected if the area has strong radio waves or noise. The electrical key transmitter sub-assembly operation area may be shortened or the electrical key transmitter sub-assembly may not function.

d. Inspect the transmitter battery capacity (for Type B).

   1. Remove the transmitter battery. Refer to **REPLACEMENT** from the electrical key transmitter sub-assembly that does not operate. Attach a lead wire (0.6 mm (0.0236 in.) in diameter or less including wire sheath) with tape or equivalent to the negative terminal.

NOTE: **Do not wrap the lead wire around a terminal, wedge it between the terminals, or solder it. A terminal may be deformed or damaged, and the transmitter battery will not be able to be installed correctly.**

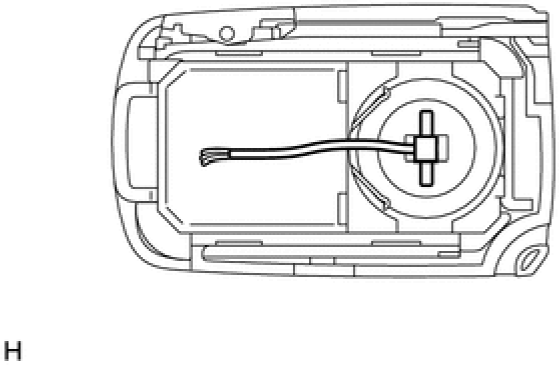

Fig. 21: Identifying Lead Wire
Courtesy of TOYOTA MOTOR SALES, U.S.A., INC.

NOTE: **When replacing the transmitter battery, before starting work, remove static electricity that has built up in the body by touching, for example, the vehicle to prevent the electrical key transmitter from being damaged.**

2. Carefully pull the lead wire out from the position shown in the illustration and install the previously removed transmitter battery.
3. Check the transmitter battery voltage.

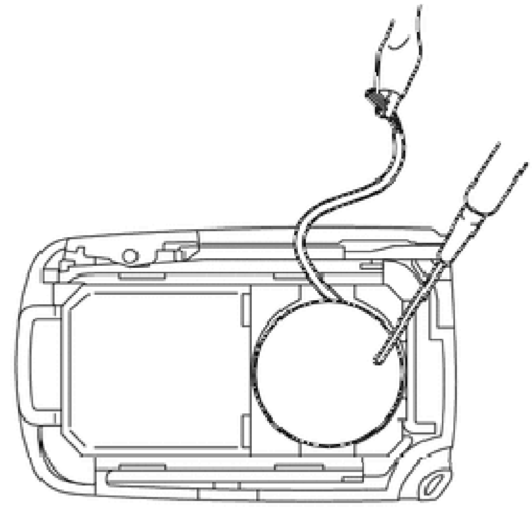

Fig. 22: Checking Transmitter Battery Voltage
Courtesy of TOYOTA MOTOR SALES, U.S.A., INC.

HINT:

When measuring the transmitter battery voltage, while operating the lock switch of a door handle, bring the electrical key transmitter sub-assembly within the entry operating range to perform the measurement. For the entry operating range, refer to System Description. Refer to **SYSTEM DESCRIPTION** .

Standard Voltage

Tester Connection	Condition	Specified Condition
Battery positive (+) - Battery negative (-)	Power switch off, all doors closed and lock sensor touched	2.2 to 3.2 V

If the result is not as specified, replace the transmitter battery.

INSTALLATION

INSTALLATION

1. **INSTALL TRANSMITTER BATTERY** See step 2

DOOR CONTROL SWITCH

COMPONENTS

ILLUSTRATION

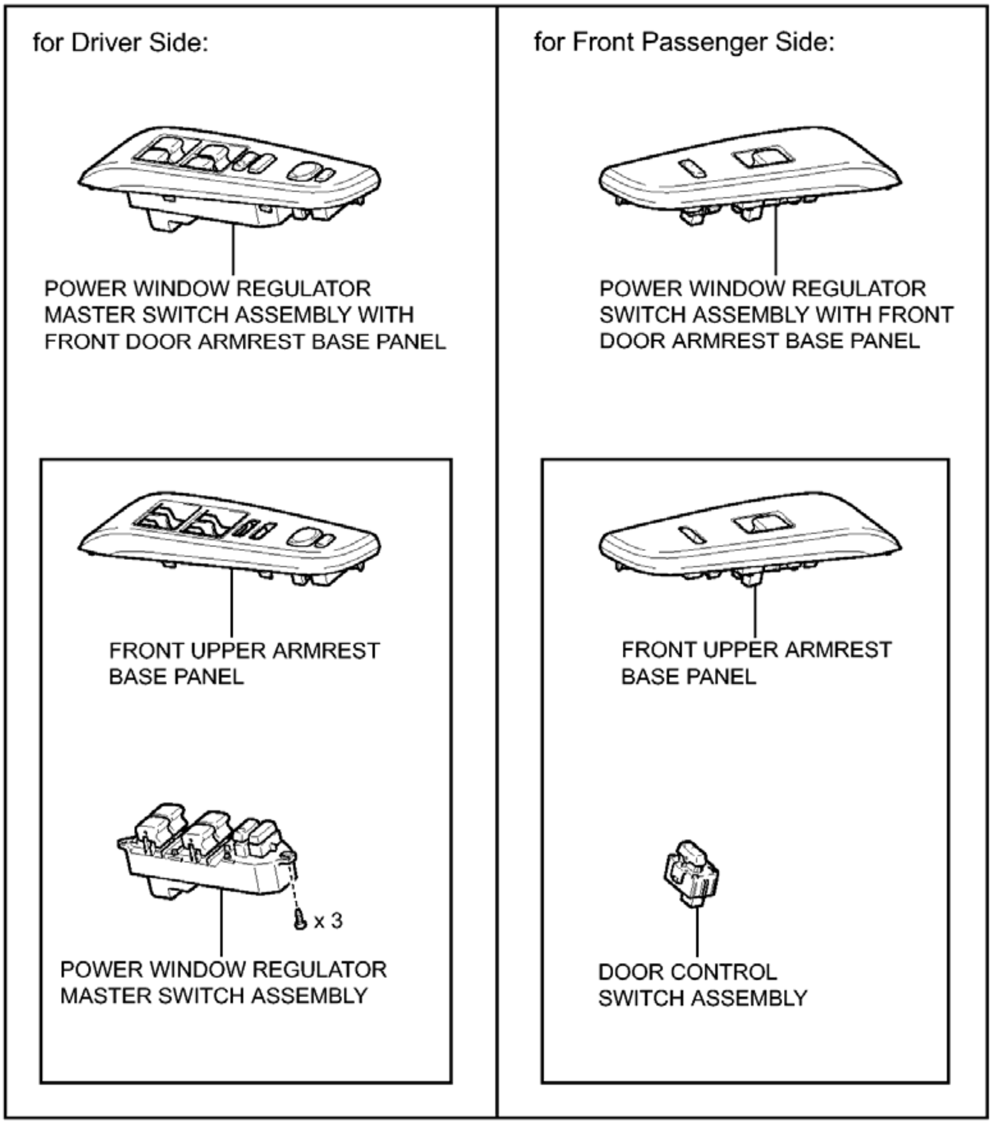
for Driver Side:
for Front Passenger Side:
POWER WINDOW REGULATOR MASTER SWITCH ASSEMBLY WITH FRONT DOOR ARMREST BASE PANEL
POWER WINDOW REGULATOR SWITCH ASSEMBLY WITH FRONT DOOR ARMREST BASE PANEL
FRONT UPPER ARMREST BASE PANEL
FRONT UPPER ARMREST BASE PANEL
x 3
POWER WINDOW REGULATOR MASTER SWITCH ASSEMBLY
DOOR CONTROL SWITCH ASSEMBLY

P

Fig. 23: Identifying Door Control Switch Replacement Components
Courtesy of TOYOTA MOTOR SALES, U.S.A., INC.

REMOVAL

REMOVAL

1. **REMOVE POWER WINDOW REGULATOR MASTER SWITCH ASSEMBLY WITH FRONT DOOR ARMREST BASE PANEL (for Driver Side)** . Refer to **DISASSEMBLY - Step 6**
2. **REMOVE POWER WINDOW REGULATOR SWITCH ASSEMBLY WITH FRONT DOOR ARMREST BASE PANEL (for Front Passenger Side)** . Refer to **DISASSEMBLY - Step 7**
3. **REMOVE POWER WINDOW REGULATOR MASTER SWITCH ASSEMBLY (for Driver Side)** . Refer to **REMOVAL - Step 2**
4. **REMOVE DOOR CONTROL SWITCH ASSEMBLY (for Front Passenger Side)**
    a. Disengage the 2 claws and remove the door control switch assembly.

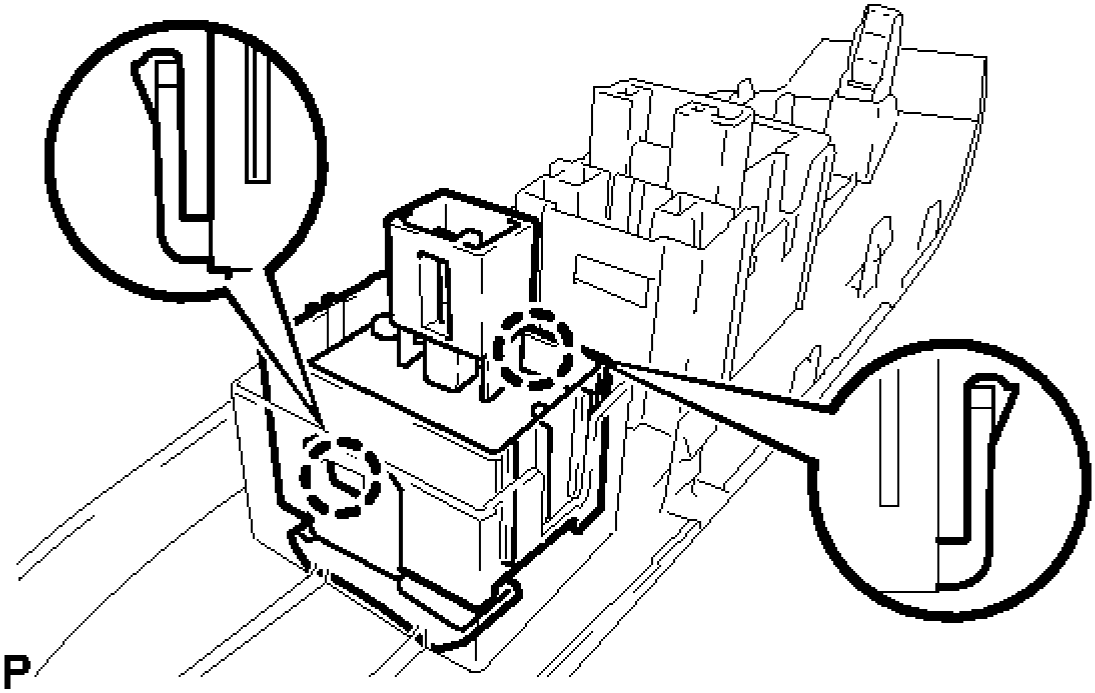

Fig. 24: Identifying Door Control Switch Assembly Claws
Courtesy of TOYOTA MOTOR SALES, U.S.A., INC.

INSPECTION

INSPECTION

1. **INSPECT POWER WINDOW REGULATOR MASTER SWITCH ASSEMBLY**
    a. Measure the resistance according to the value(s) in the table below.

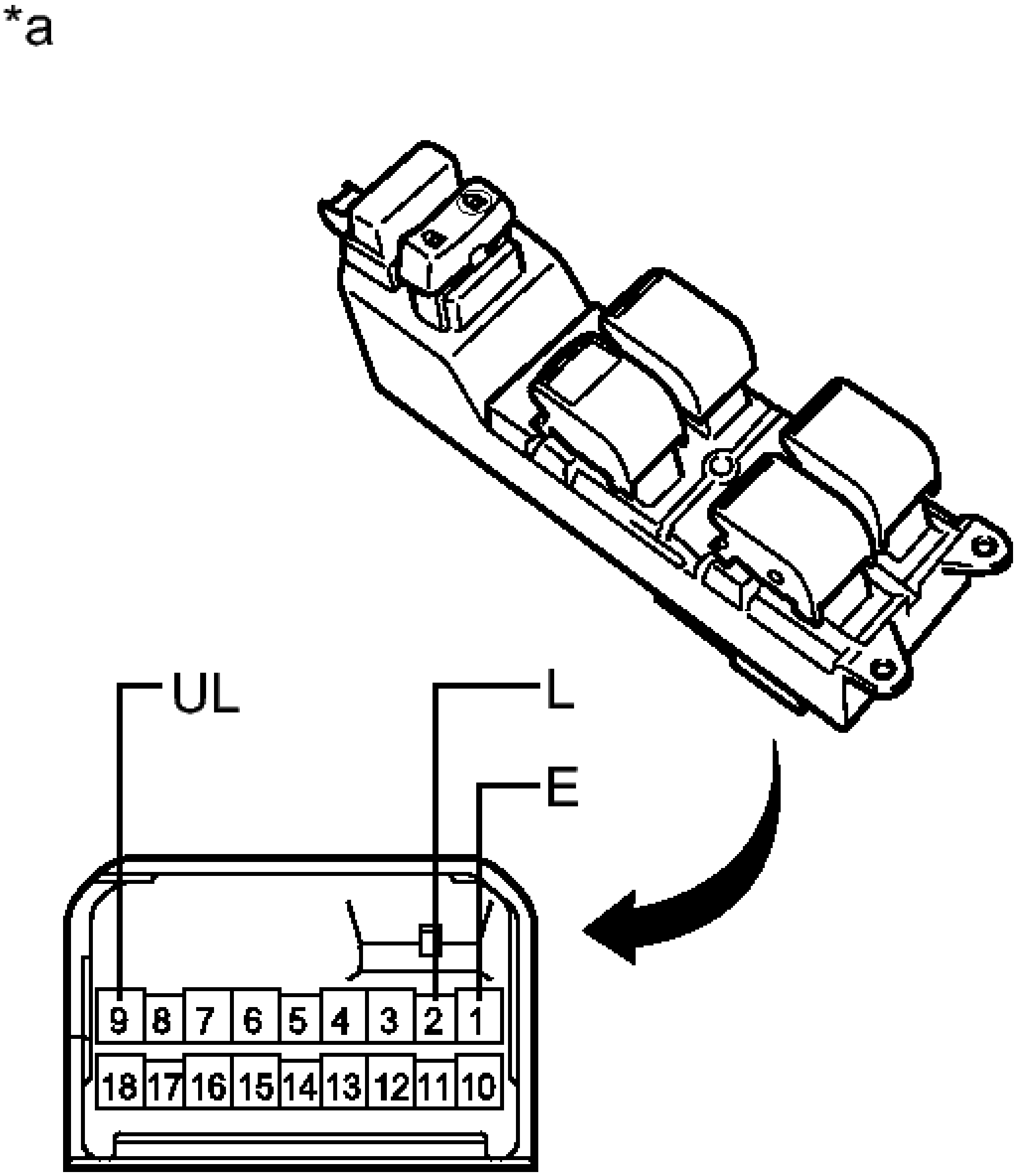
*a
UL
L
E
9 8 7 6 5 4 3 2 1
18 17 16 15 14 13 12 11 10

Fig. 25: Identifying Power Window Regulator Master Switch Connector Terminals
Courtesy of TOYOTA MOTOR SALES, U.S.A., INC.

Standard Resistance

Tester Connection	Condition	Specified Condition
2 (L) - 1 (E)	Lock switch pushed	Below 1 ohms
2 (L) - 1 (E)	off	10 kohms or higher
9 (UL) - 1 (E)	Unlock switch pushed	Below 1 ohms
9 (UL) - 1 (E)	off	10 kohms or higher

TEXT IN ILLUSTRATION

*a	Component without harness connected (Power Window Regulator Master Switch Assembly)

If the result is not as specified, replace the power window regulator master switch assembly.

2. **INSPECT DOOR CONTROL SWITCH ASSEMBLY**
    a. Measure the resistance according to the value(s) in the table below.

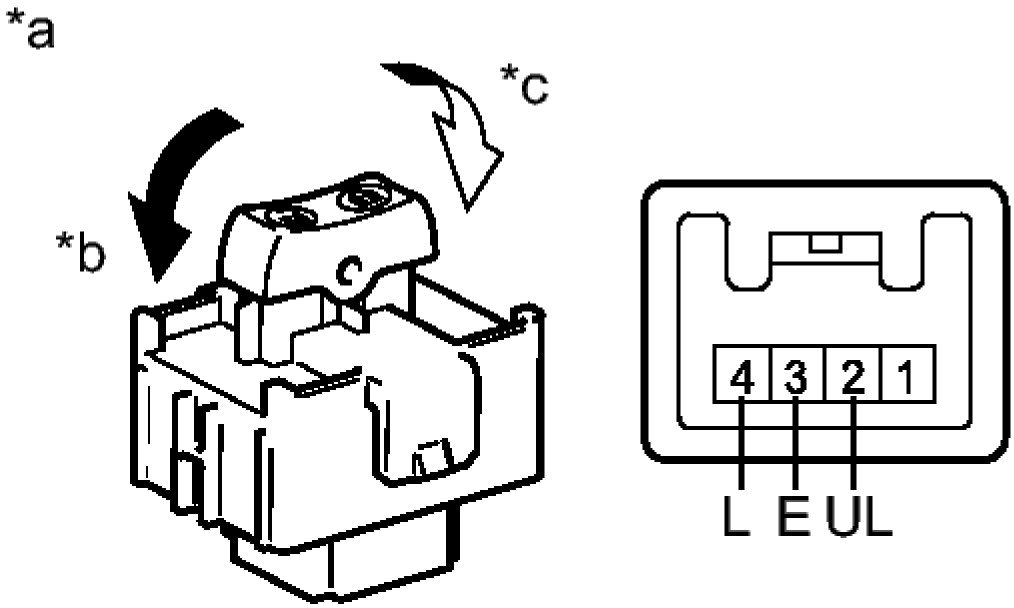

Fig. 26: Identifying Door Control Switch Connector Terminals
Courtesy of TOYOTA MOTOR SALES, U.S.A., INC.

Standard Resistance

Tester Connection	Condition	Specified Condition
4 (L) - 3 (E)	Locked	Below 1 ohms
4 (L) - 3 (E)	off	10 kohms or higher
2 (UL) - 3 (E)	Unlocked	Below 1 ohms
2 (UL) - 3 (E)	off	10 kohms or higher

TEXT IN ILLUSTRATION

*a	Component without harness connected (Door Control Switch Assembly)
*b	Unlock

*c	Lock

If the result is not as specified, replace the door control switch assembly.

INSTALLATION

INSTALLATION

1. **INSTALL DOOR CONTROL SWITCH ASSEMBLY (for Front Passenger Side)**
    a. Engage the 2 claws to install the door control switch assembly.
2. **INSTALL POWER WINDOW REGULATOR MASTER SWITCH ASSEMBLY (for Driver Side)** . Refer to **INSTALLATION - Step 1**
3. **INSTALL POWER WINDOW REGULATOR SWITCH ASSEMBLY WITH FRONT DOOR ARMREST BASE PANEL (for Front Passenger Side)** . Refer to **REASSEMBLY - Step 43**
4. **INSTALL POWER WINDOW REGULATOR MASTER SWITCH ASSEMBLY WITH FRONT DOOR ARMREST BASE PANEL (for Driver Side)** . Refer to **REASSEMBLY - Step 42**

FRONT DOOR LOCK

COMPONENTS

ILLUSTRATION

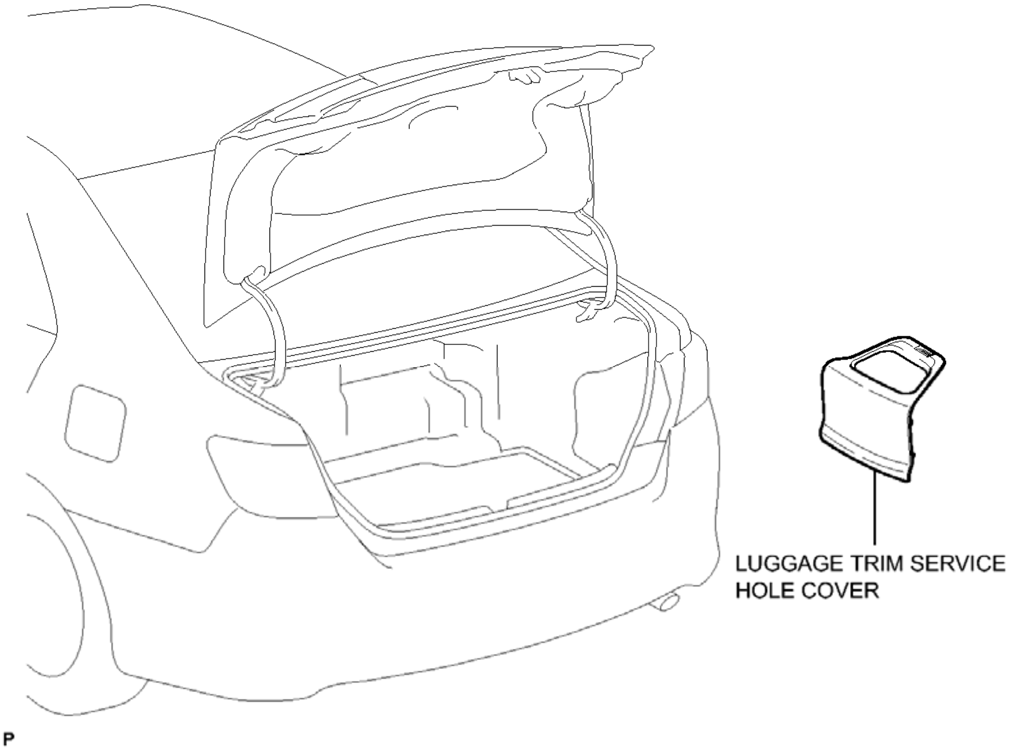

Fig. 27: Identifying Front Door Lock Replacement Components (1 Of 3)
Courtesy of TOYOTA MOTOR SALES, U.S.A., INC.

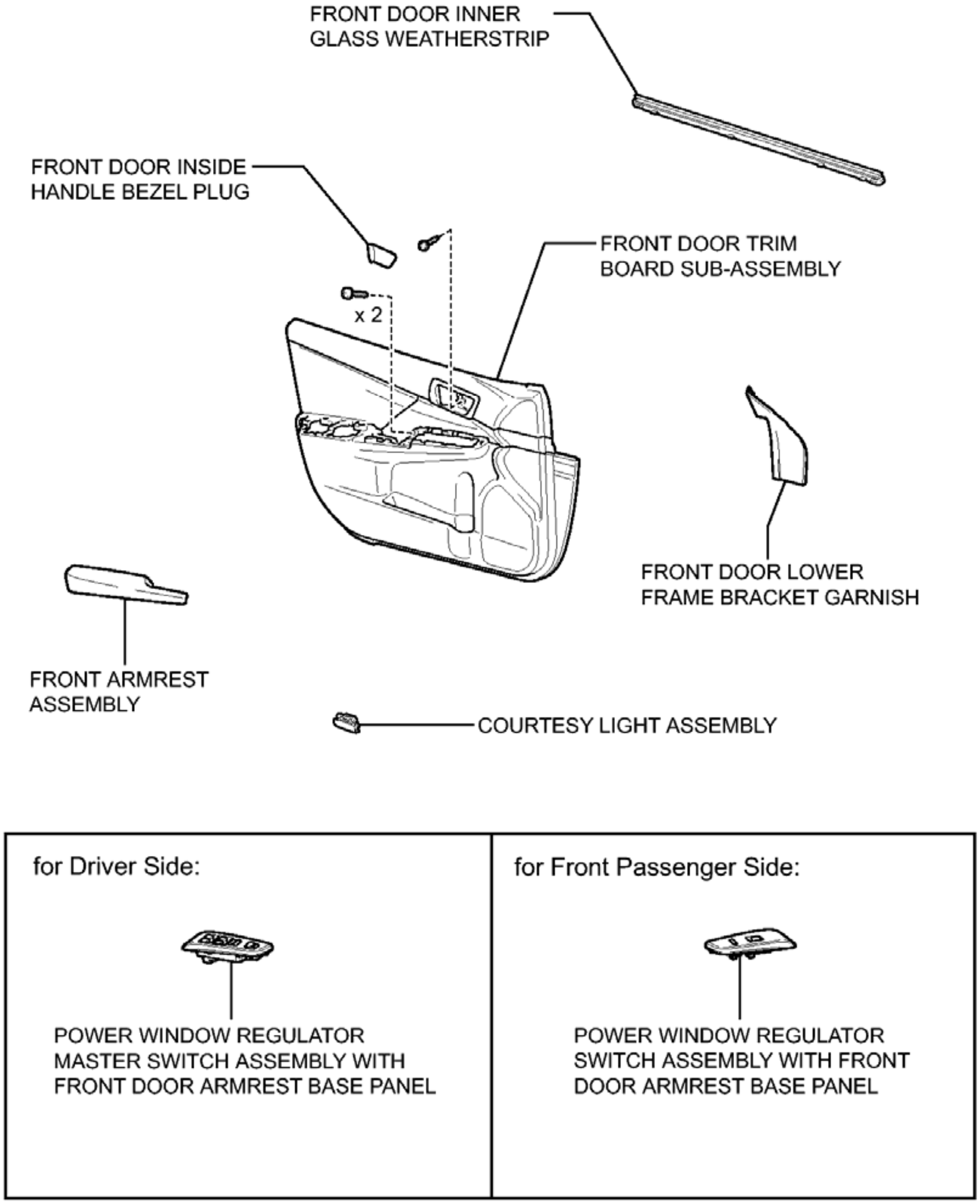
FRONT DOOR INNER
GLASS WEATHERSTRIP
FRONT DOOR INSIDE
HANDLE BEZEL PLUG
FRONT DOOR TRIM
BOARD SUB-ASSEMBLY
x 2
FRONT DOOR LOWER
FRAME BRACKET GARNISH
FRONT ARMREST
ASSEMBLY
COURTESY LIGHT ASSEMBLY
for Driver Side:
POWER WINDOW REGULATOR
MASTER SWITCH ASSEMBLY WITH
FRONT DOOR ARMREST BASE PANEL
for Front Passenger Side:
POWER WINDOW REGULATOR
SWITCH ASSEMBLY WITH FRONT
DOOR ARMREST BASE PANEL

P

Fig. 28: Identifying Front Door Lock Replacement Components (2 Of 3)
Courtesy of TOYOTA MOTOR SALES, U.S.A., INC.

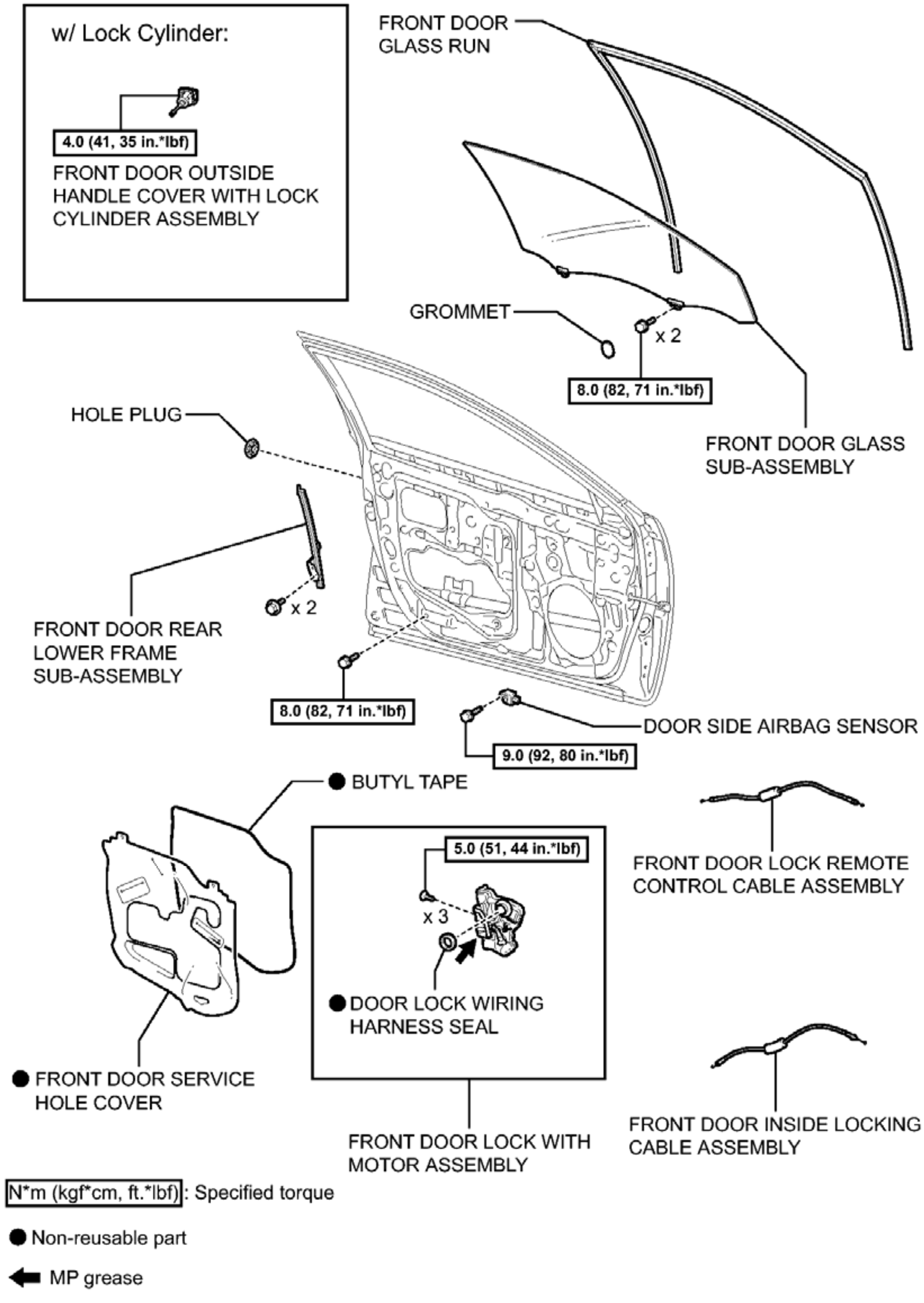

w/ Lock Cylinder:
4.0 (41, 35 in.*lbf)
FRONT DOOR OUTSIDE HANDLE COVER WITH LOCK CYLINDER ASSEMBLY
FRONT DOOR GLASS RUN
GROMMET
x 2
8.0 (82, 71 in.*lbf)
FRONT DOOR GLASS SUB-ASSEMBLY
HOLE PLUG
x 2
FRONT DOOR REAR LOWER FRAME SUB-ASSEMBLY
8.0 (82, 71 in.*lbf)
DOOR SIDE AIRBAG SENSOR
9.0 (92, 80 in.*lbf)
● BUTYL TAPE
5.0 (51, 44 in.*lbf)
x 3
FRONT DOOR LOCK REMOTE CONTROL CABLE ASSEMBLY
● DOOR LOCK WIRING HARNESS SEAL
● FRONT DOOR SERVICE HOLE COVER
FRONT DOOR LOCK WITH MOTOR ASSEMBLY
FRONT DOOR INSIDE LOCKING CABLE ASSEMBLY
N*m (kgf*cm, ft.*lbf): Specified torque
● Non-reusable part
MP grease
P

Fig. 29: Identifying Front Door Lock Replacement Components With Torque Specifications (3 Of 3)
Courtesy of TOYOTA MOTOR SALES, U.S.A., INC.

REMOVAL

REMOVAL

HINT:

- Use the same procedure for the LH side and RH side.
- The following procedure is for the LH side.

1. **PRECAUTION**

   NOTE: **After turning the power switch off, waiting time may be required before disconnecting the cable from the negative (-) auxiliary battery terminal. Therefore, make sure to read the disconnecting the cable from the negative (-) auxiliary battery terminal notices before proceeding with work. Refer to PRECAUTION .**

2. **REMOVE LUGGAGE TRIM SERVICE HOLE COVER** . Refer to **REMOVAL - Step 2**
3. **DISCONNECT CABLE FROM NEGATIVE AUXILIARY BATTERY TERMINAL**

   WARNING: **Wait at least 90 seconds after disconnecting the cable from the negative (-) auxiliary battery terminal to disable the SRS system.**

   NOTE: **When disconnecting the cable, some systems need to be initialized after the cable is reconnected. Refer to INITIALIZATION .**

4. **REMOVE FRONT DOOR INSIDE HANDLE BEZEL PLUG** . Refer to **DISASSEMBLY - Step 4**
5. **REMOVE FRONT DOOR LOWER FRAME BRACKET GARNISH** . Refer to **DISASSEMBLY - Step 5**
6. **REMOVE POWER WINDOW REGULATOR MASTER SWITCH ASSEMBLY WITH FRONT DOOR ARMREST BASE PANEL (for Driver Side)** . Refer to **DISASSEMBLY - Step 6**
7. **REMOVE POWER WINDOW REGULATOR SWITCH ASSEMBLY WITH FRONT DOOR ARMREST BASE PANEL (for Front Passenger Side)** . Refer to **DISASSEMBLY - Step 7**
8. **REMOVE FRONT ARMREST ASSEMBLY** . Refer to **DISASSEMBLY - Step 8**
9. **REMOVE COURTESY LIGHT ASSEMBLY** . Refer to **REMOVAL - Step 1**
10. **REMOVE FRONT DOOR TRIM BOARD SUB-ASSEMBLY** . Refer to **DISASSEMBLY - Step 10**
11. **REMOVE FRONT DOOR INNER GLASS WEATHERSTRIP** . Refer to **DISASSEMBLY - Step 12**
12. **REMOVE DOOR SIDE AIRBAG SENSOR** . Refer to **REMOVAL - Step 11**
13. **REMOVE FRONT DOOR SERVICE HOLE COVER** . Refer to **DISASSEMBLY - Step 16**
14. **REMOVE FRONT DOOR GLASS SUB-ASSEMBLY** . Refer to **DISASSEMBLY - Step 17**
15. **REMOVE FRONT DOOR GLASS RUN** . Refer to **DISASSEMBLY - Step 21**
16. **REMOVE FRONT DOOR REAR LOWER FRAME SUB-ASSEMBLY** . Refer to **DISASSEMBLY - Step 23**
17. **REMOVE FRONT DOOR OUTSIDE HANDLE COVER WITH LOCK CYLINDER ASSEMBLY**

(w/ Lock Cylinder) . Refer to **DISASSEMBLY - Step 24**

18. **REMOVE FRONT DOOR LOCK WITH MOTOR ASSEMBLY**
    a. Using a T30 "TORX" socket wrench, remove the 3 screws.

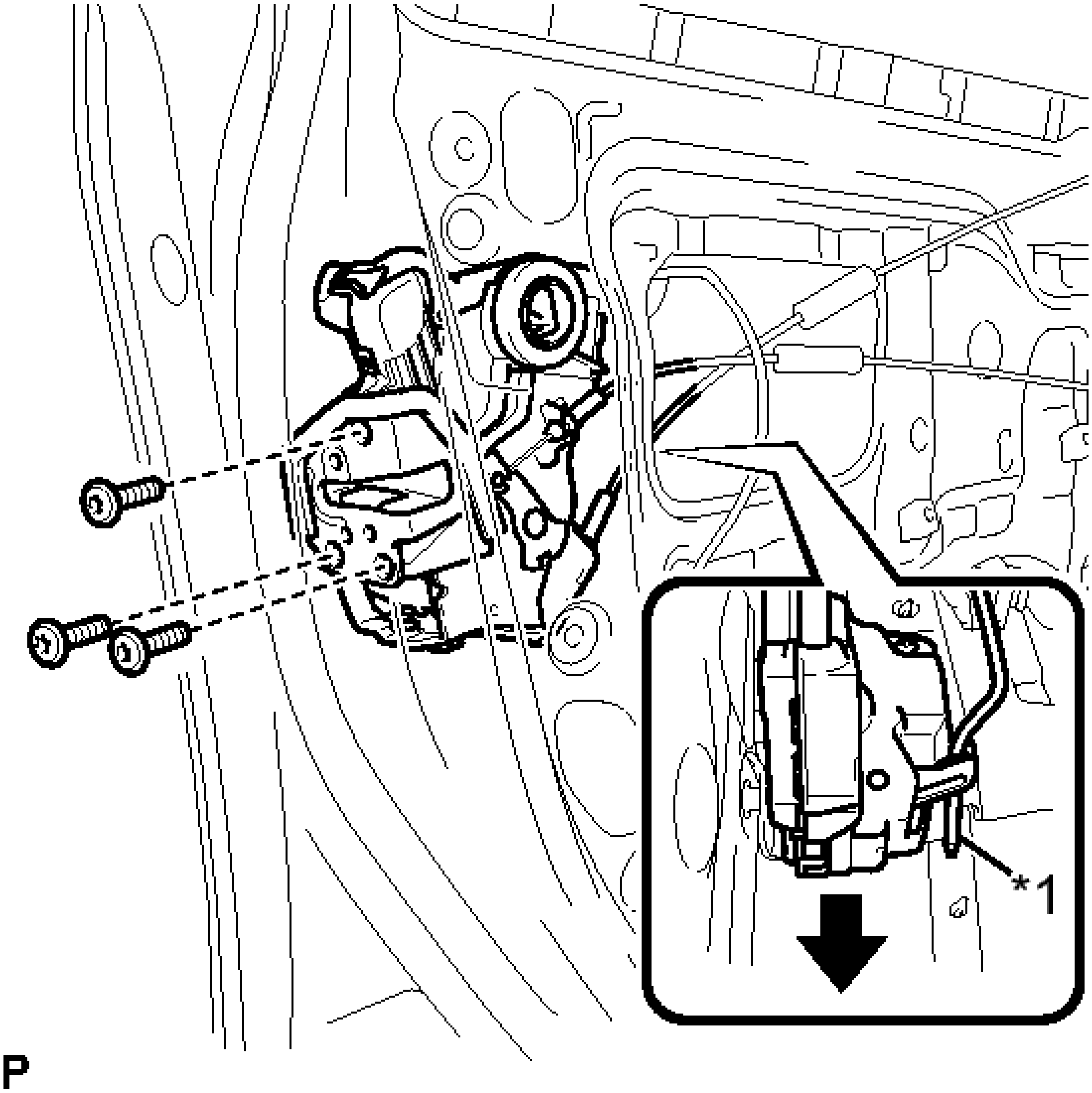

Fig. 30: Identifying Front Door Lock With Motor Assembly Screws
Courtesy of TOYOTA MOTOR SALES, U.S.A., INC.

TEXT IN ILLUSTRATION

*1	Front Door Lock Open Rod

    b. Slide the front door lock with motor assembly downward, and remove the front door lock with motor assembly and cables as a unit.

c. When reusing the front door lock with motor assembly.
    1. Remove the door lock wiring harness seal from the front door lock with motor assembly.

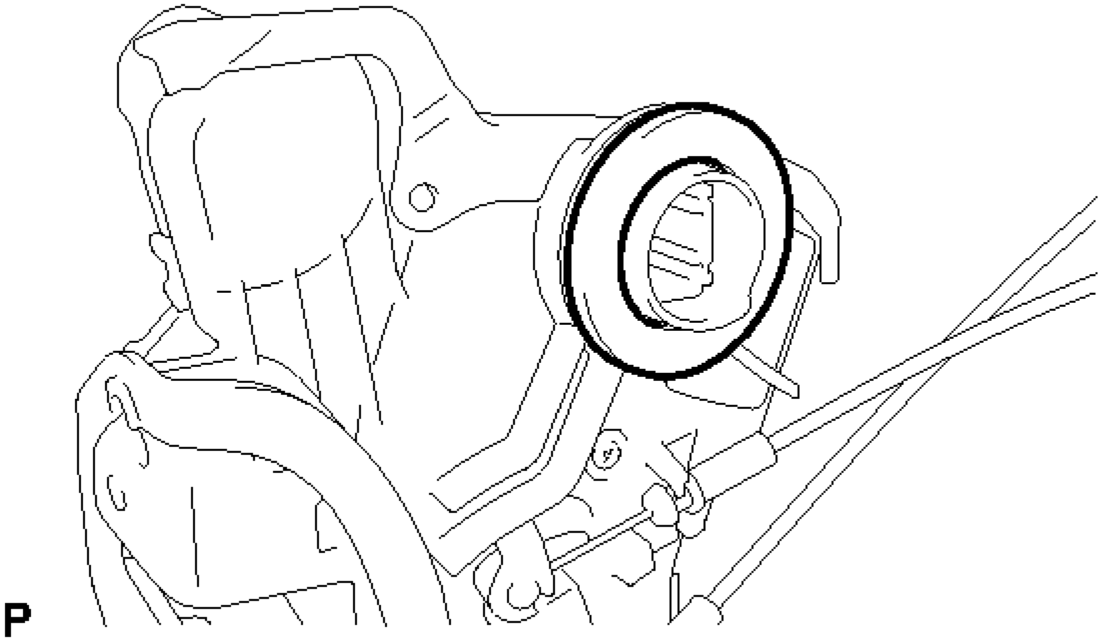

Fig. 31: Identifying Door Lock Wiring Harness Seal
Courtesy of TOYOTA MOTOR SALES, U.S.A., INC.

19. **REMOVE FRONT DOOR LOCK REMOTE CONTROL CABLE ASSEMBLY** . Refer to **DISASSEMBLY - Step 31**
20. **REMOVE FRONT DOOR INSIDE LOCKING CABLE ASSEMBLY** . Refer to **DISASSEMBLY - Step 32**

INSPECTION

INSPECTION

1. **INSPECT FRONT DOOR LOCK WITH MOTOR ASSEMBLY LH**
    a. Check the operation of the door lock motor.

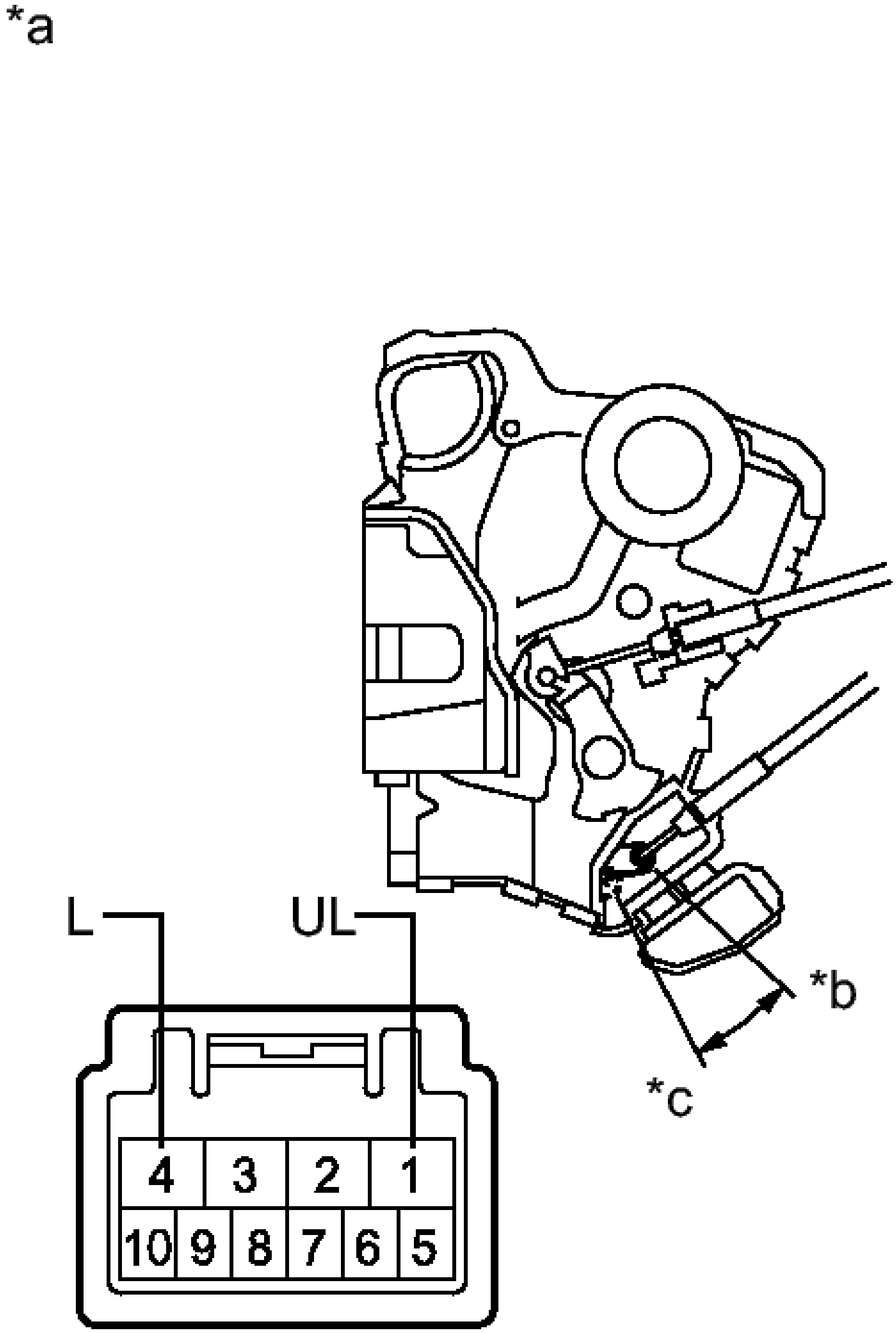

Fig. 32: Inspecting Front Door Lock Assembly LH With Connector End View
Courtesy of TOYOTA MOTOR SALES, U.S.A., INC.

1. Apply auxiliary battery voltage and check the operation of the door lock motor.

OK

Connection	Result
Auxiliary battery positive (+) --> Terminal 4 (L) Auxiliary battery negative (-) --> Terminal 1 (UL)	Locks
Auxiliary battery positive (+) --> Terminal 1 (UL) Auxiliary battery negative (-) --> Terminal 4 (L)	Unlocks

TEXT IN ILLUSTRATION

*a	Component without harness connected (Front Door Lock with Motor Assembly LH)
*b	Unlock
*c	Lock

If the result is not as specified, replace the front door lock with motor assembly LH.

b. Check the operation of the door unlock detection switch.

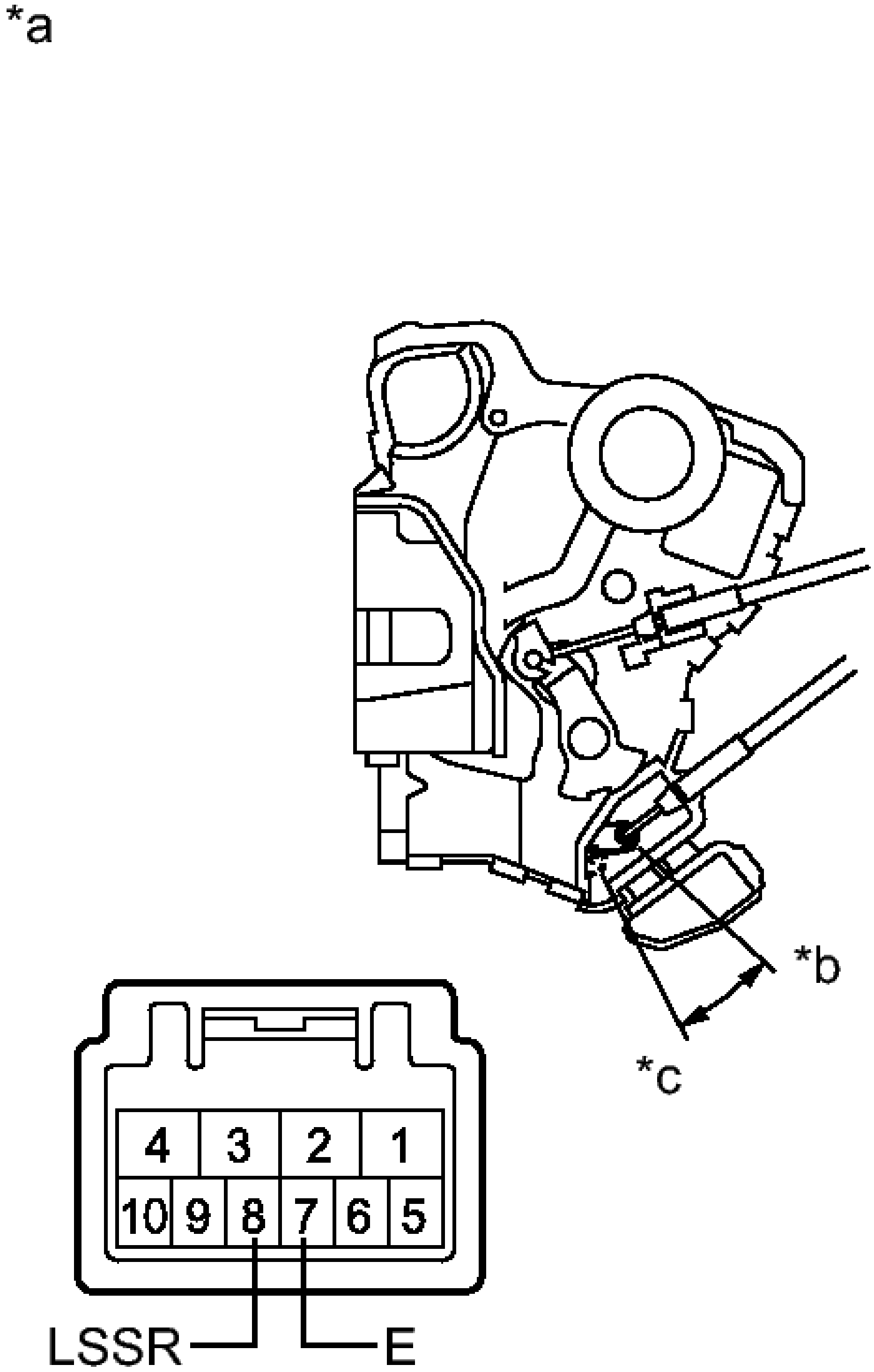
*a
*b
*c
4
3
2
1
10
9
8
7
6
5
LSSR
E

Fig. 33: Checking The Operation Of The Door Unlock Detection Switch
Courtesy of TOYOTA MOTOR SALES, U.S.A., INC.

1. Measure the resistance according to the value(s) in the table below.

Standard Resistance

Tester Connection	Condition	Specified Condition
7 (E) - 8 (LSSR)	Locked	10 kohms or higher
7 (E) - 8 (LSSR)	Unlocked	Below 1 ohms

TEXT IN ILLUSTRATION

*a	Component without harness connected (Front Door Lock with Motor Assembly LH)
*b	Unlock
*c	Lock

If the result is not as specified, replace the front door lock with motor assembly LH.

c. Check the operation of the door key lock and unlock switch.

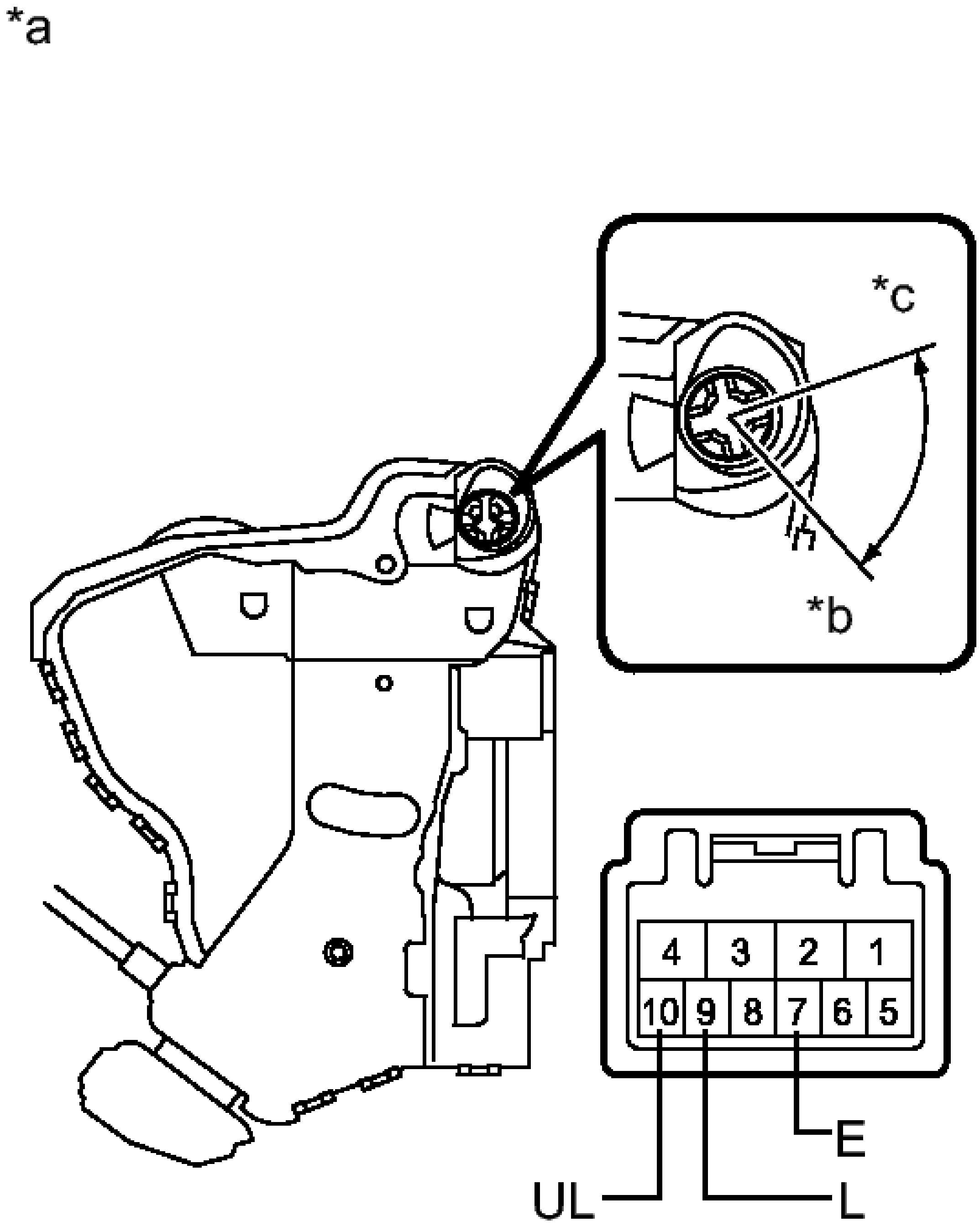
*a
*c
*b
4
3
2
1
10
9
8
7
6
5
E
UL
L

Fig. 34: Checking The Operation Of The Door Key Lock And Unlock Switch
Courtesy of TOYOTA MOTOR SALES, U.S.A., INC.

1. Measure the resistance according to the value(s) in the table below.

Standard Resistance

Tester Connection	Condition	Specified Condition
9 (L) - 7 (E)	Held to lock side	Below 1 ohms
9 (L) - 7 (E)	Neutral or held to unlock side	10 kohms or higher
10 (UL) - 7 (E)	Held to unlock side	Below 1 ohms
10 (UL) - 7 (E)	Neutral or held to lock side	10 kohms or higher

TEXT IN ILLUSTRATION

*a	Component without harness connected (Front Door Lock with Motor Assembly LH)
*b	Unlock
*c	Lock

If the result is not as specified, replace the front door lock with motor assembly LH.

2. **INSPECT FRONT DOOR LOCK WITH MOTOR ASSEMBLY RH**
    a. Check the operation of the door lock motor.

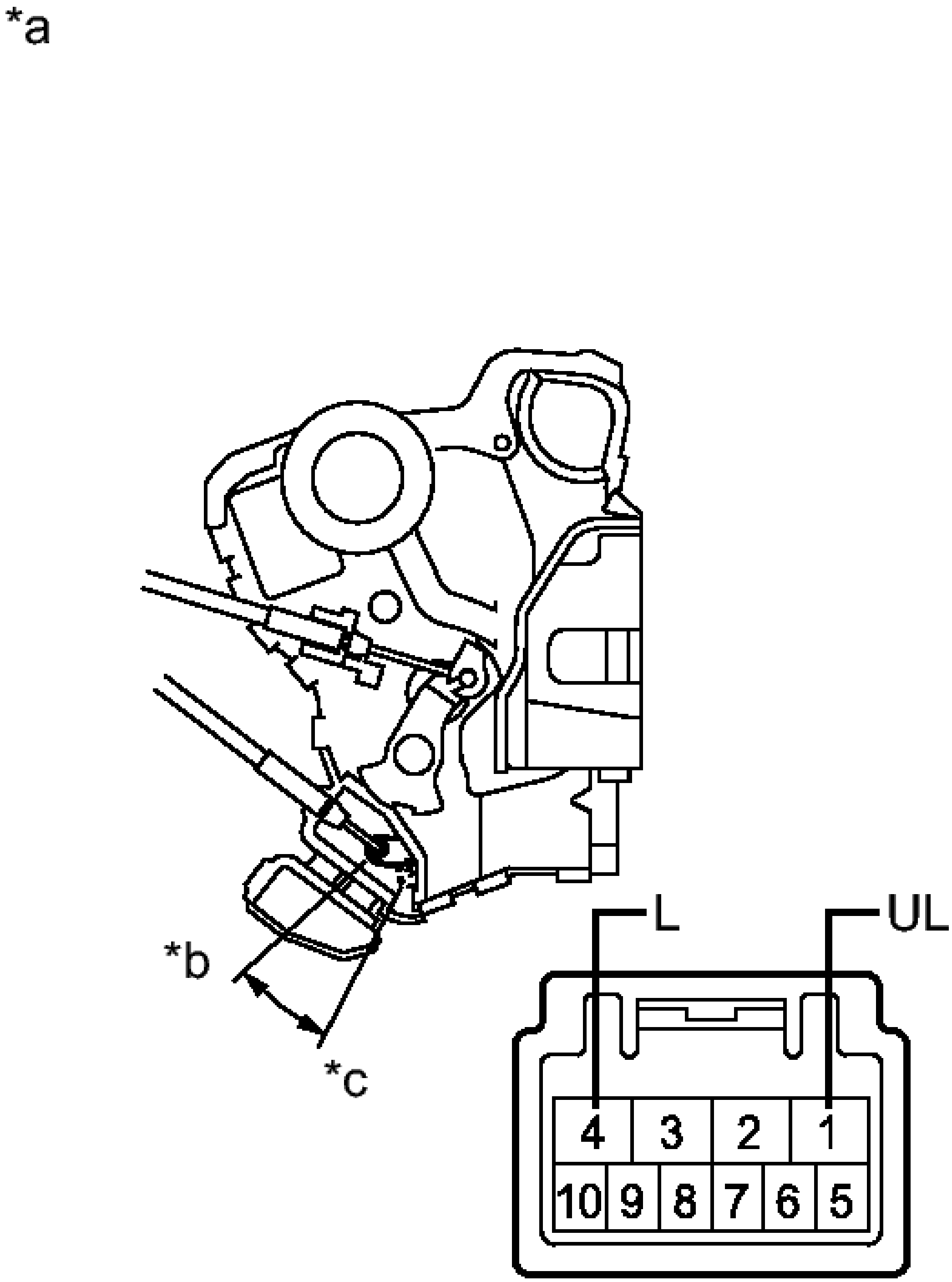

Fig. 35: Inspecting Front Door Lock Assembly RH With Connector End View
Courtesy of TOYOTA MOTOR SALES, U.S.A., INC.

1. Apply auxiliary battery voltage and check the operation of the door lock motor.

OK

Connection	Result
Auxiliary battery positive (+) --> Terminal 4 (L) Auxiliary battery negative (-) --> Terminal 1 (UL)	Locks
Auxiliary battery positive (+) --> Terminal 1 (UL) Auxiliary battery negative (-) --> Terminal 4 (L)	Unlocks

TEXT IN ILLUSTRATION

*a	Component without harness connected (Front Door Lock with Motor Assembly RH)
*b	Unlock
*c	Lock

If the result is not as specified, replace the front door lock with motor assembly RH.

b. Check the operation of the door unlock detection switch.

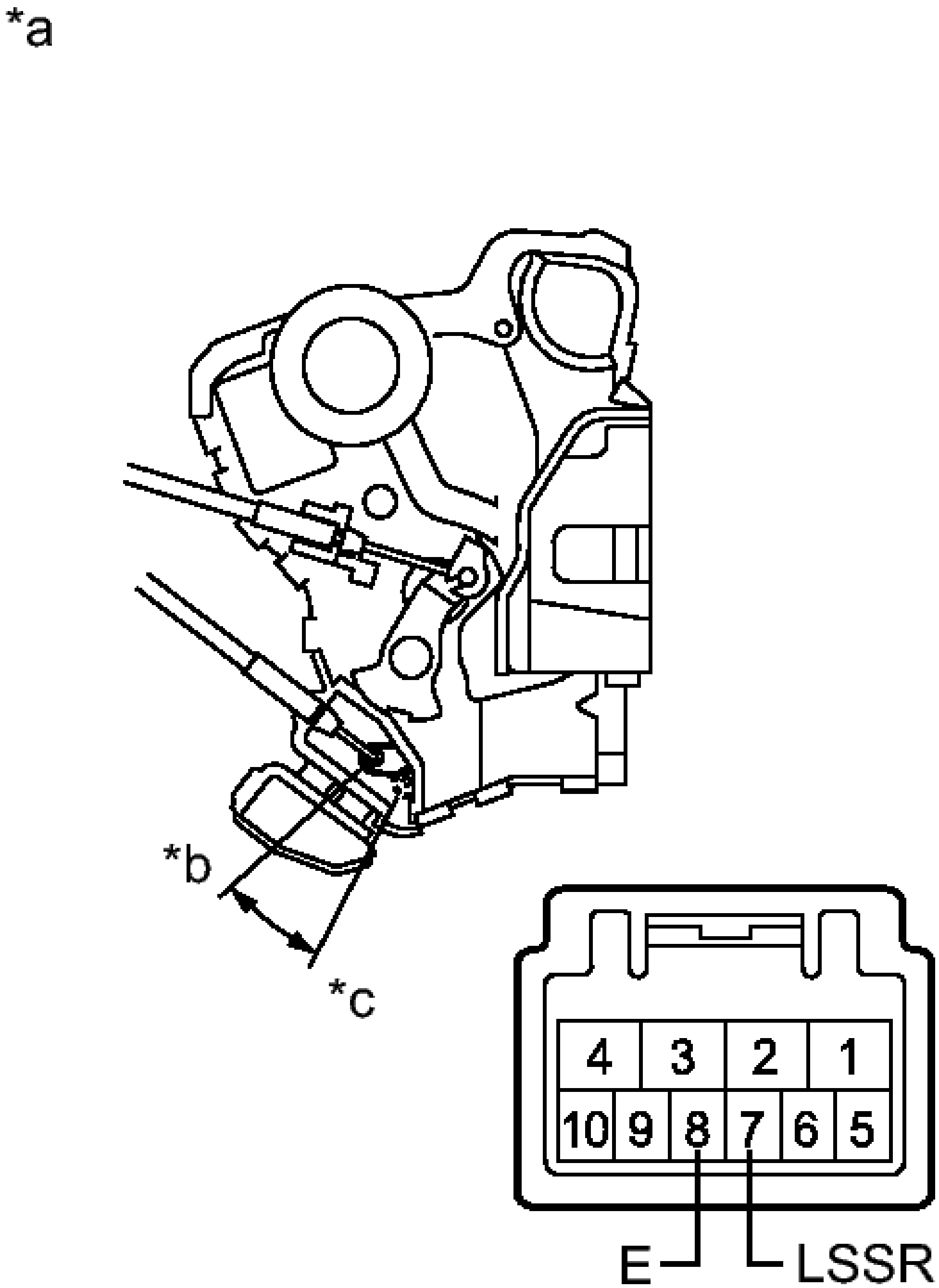
*a
*b
*c
4
3
2
1
10
9
8
7
6
5
E
LSSR

Fig. 36: Checking The Operation Of The Door Unlock Detection Switch
Courtesy of TOYOTA MOTOR SALES, U.S.A., INC.

1. Measure the resistance according to the value(s) in the table below.

Standard Resistance

Tester Connection	Condition	Specified Condition
7 (LSSR) - 8 (E)	Locked	10 kohms or higher
7 (LSSR) - 8 (E)	Unlocked	Below 1 ohms

TEXT IN ILLUSTRATION

*a	Component without harness connected (Front Door Lock with Motor Assembly RH)
*b	Unlock
*c	Lock

If the result is not as specified, replace the front door lock with motor assembly RH.

INSTALLATION

INSTALLATION

HINT:

- Use the same procedure for the LH side and RH side.
- The following procedure is for the LH side.

1. **INSTALL FRONT DOOR INSIDE LOCKING CABLE ASSEMBLY** . Refer to **REASSEMBLY - Step 17**
2. **INSTALL FRONT DOOR LOCK REMOTE CONTROL CABLE ASSEMBLY** . Refer to **REASSEMBLY - Step 18**
3. **INSTALL FRONT DOOR LOCK WITH MOTOR ASSEMBLY**

NOTE:

- **When reusing the removed front door lock with motor assembly, replace the door lock wiring harness seal on the connector with a new one.**
- **Do not allow grease or dust to adhere to the door lock wiring harness seal surface of the connector.**

- **Reusing the door lock wiring harness seal or using a damaged door lock wiring harness seal may cause water intrusion. This may result in a malfunction of the front door lock with motor assembly.**

a. Apply MP grease to the sliding parts of the front door lock with motor assembly.
b. When reusing the front door lock with motor assembly.
   1. Install a new door lock wiring harness seal to the front door lock with motor assembly.
c. Insert the front door lock open rod to the front door lock with motor assembly.

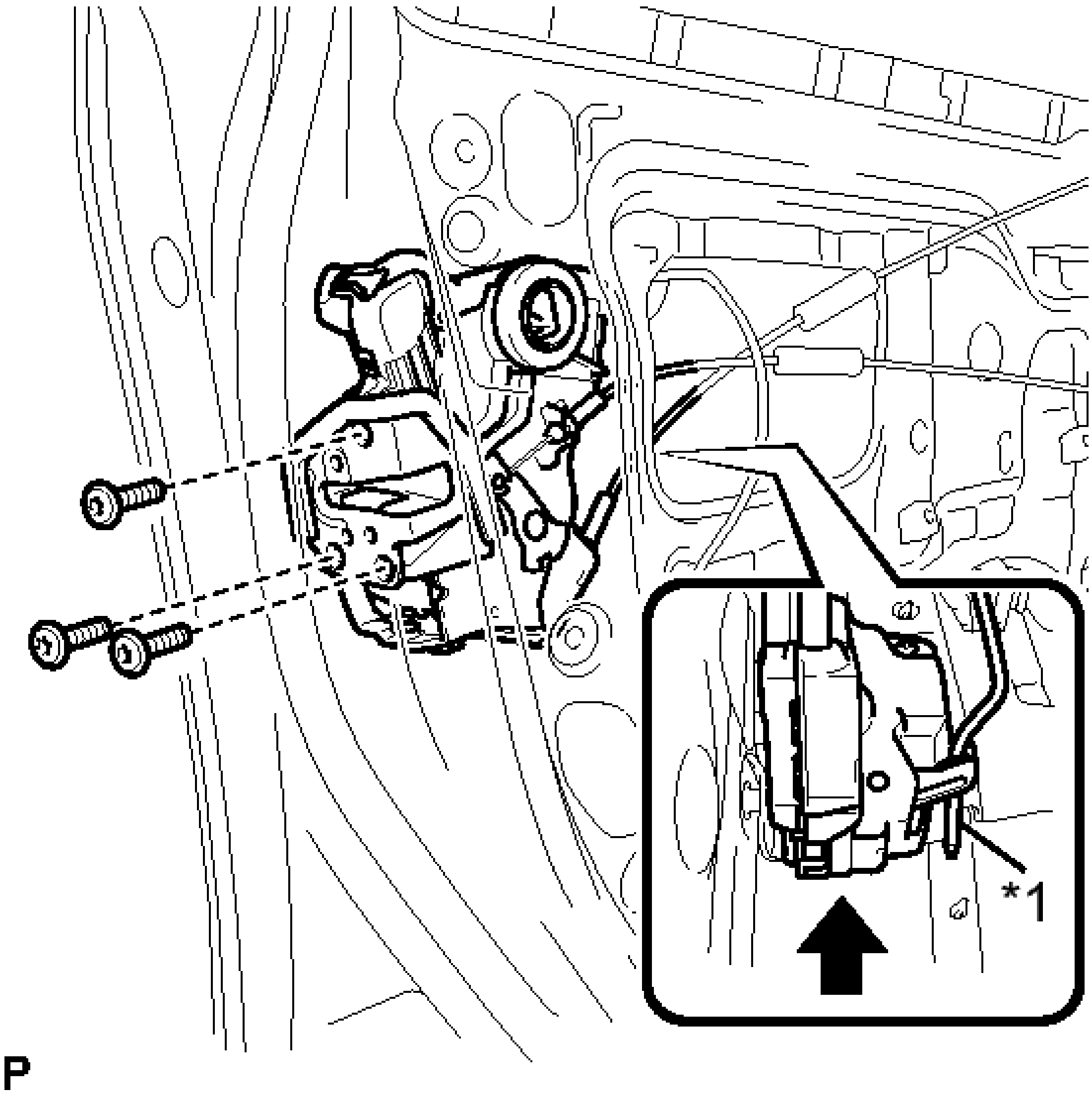

Fig. 37: Identifying Front Door Lock With Motor Assembly Screws
Courtesy of TOYOTA MOTOR SALES, U.S.A., INC.

TEXT IN ILLUSTRATION

	Front Door

*1	Lock Open Rod

d. Make sure that the front door lock open rod is securely connected to the front door lock with motor assembly.

e. Using a T30 "TORX" socket wrench, install the front door lock with motor assembly with the 3 screws.

Torque: 5.0 N*m (51 kgf*cm, 44 in.*lbf)

4. **INSTALL FRONT DOOR OUTSIDE HANDLE COVER WITH LOCK CYLINDER ASSEMBLY (w/ Lock Cylinder)** . Refer to **REASSEMBLY - Step 25**
5. **INSTALL FRONT DOOR REAR LOWER FRAME SUB-ASSEMBLY** . Refer to **REASSEMBLY - Step 26**
6. **INSTALL FRONT DOOR GLASS RUN** . Refer to **REASSEMBLY - Step 28**
7. **INSTALL FRONT DOOR GLASS SUB-ASSEMBLY** . Refer to **REASSEMBLY - Step 32**
8. **INSTALL FRONT DOOR SERVICE HOLE COVER** . Refer to **REASSEMBLY - Step 33**
9. **INSTALL DOOR SIDE AIRBAG SENSOR** . Refer to **INSTALLATION - Step 1**
10. **INSTALL FRONT DOOR INNER GLASS WEATHERSTRIP** . Refer to **REASSEMBLY - Step 37**
11. **INSTALL FRONT DOOR TRIM BOARD SUB-ASSEMBLY** . Refer to **REASSEMBLY - Step 39**
12. **INSTALL COURTESY LIGHT ASSEMBLY** . Refer to **INSTALLATION - Step 1**
13. **INSTALL FRONT ARMREST ASSEMBLY** . Refer to **REASSEMBLY - Step 41**
14. **INSTALL POWER WINDOW REGULATOR MASTER SWITCH ASSEMBLY WITH FRONT DOOR ARMREST BASE PANEL (for Driver Side)** . Refer to **REASSEMBLY - Step 42**
15. **INSTALL POWER WINDOW REGULATOR SWITCH ASSEMBLY WITH FRONT DOOR ARMREST BASE PANEL (for Front Passenger Side)** . Refer to **REASSEMBLY - Step 43**
16. **INSTALL FRONT DOOR LOWER FRAME BRACKET GARNISH** . Refer to **REASSEMBLY - Step 44**
17. **INSTALL FRONT DOOR INSIDE HANDLE BEZEL PLUG** . Refer to **REASSEMBLY - Step 45**
18. **CONNECT CABLE TO NEGATIVE AUXILIARY BATTERY TERMINAL**

NOTE: **When disconnecting the cable, some systems need to be initialized after the cable is reconnected. Refer to INITIALIZATION .**

19. **INSTALL LUGGAGE TRIM SERVICE HOLE COVER** . Refer to **INSTALLATION - Step 3**
20. **INITIALIZE POWER WINDOW CONTROL SYSTEM (for Driver Side)**

    Refer to **INITIALIZATION**

21. **CHECK POWER WINDOW CONTROL SYSTEM**

    Refer to **OPERATION CHECK**

22. **INSPECT SRS WARNING LIGHT**

- for Built-in Type Yaw Rate Sensor: Refer to **DIAGNOSIS SYSTEM**
- for Separate Type Yaw Rate Sensor: Refer to **DIAGNOSIS SYSTEM**

REAR DOOR LOCK

COMPONENTS

ILLUSTRATION

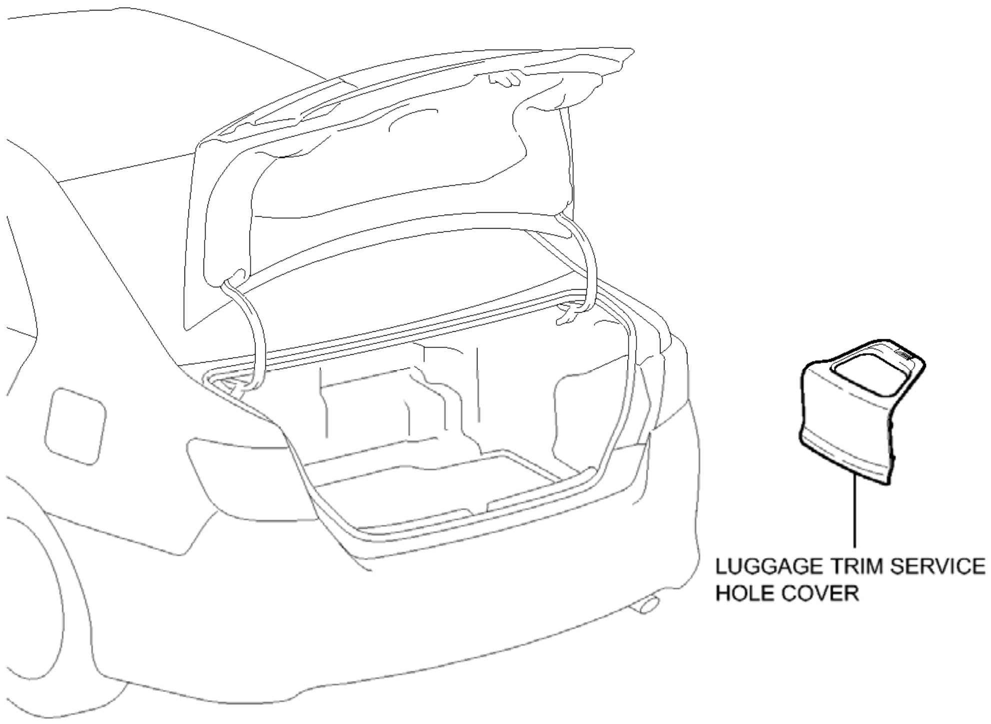
LUGGAGE TRIM SERVICE HOLE COVER

P

Fig. 38: Identifying Rear Door Lock Replacement Components (1 Of 3)
Courtesy of TOYOTA MOTOR SALES, U.S.A., INC.

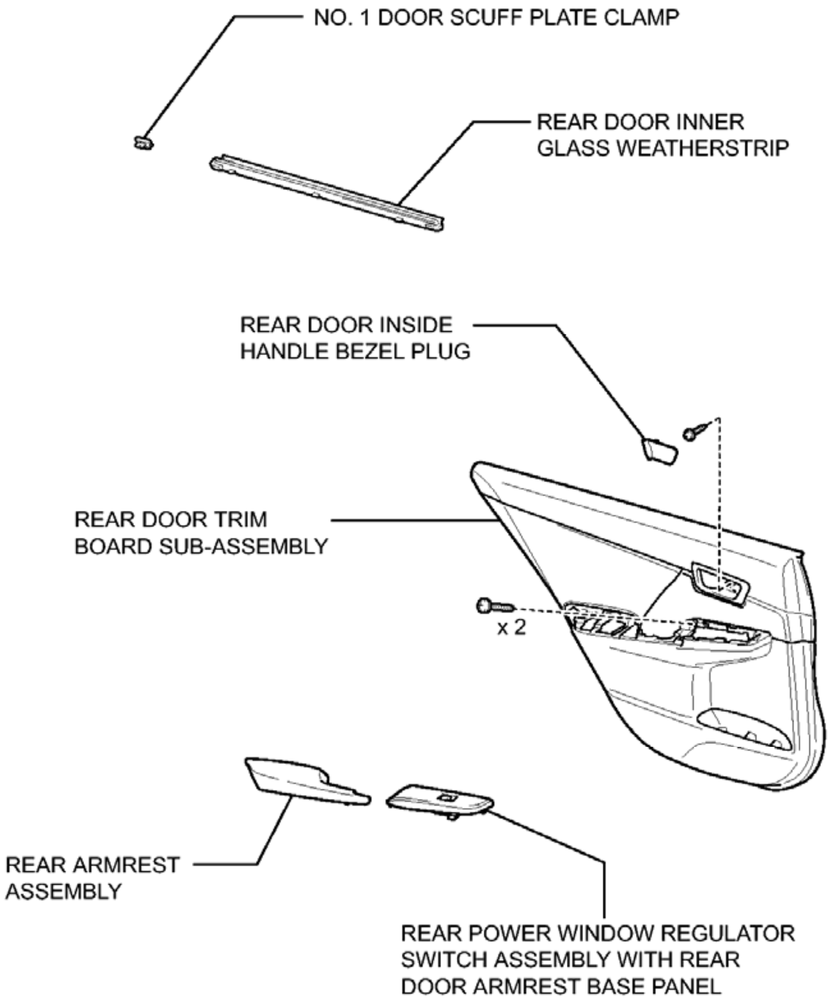
NO. 1 DOOR SCUFF PLATE CLAMP
REAR DOOR INNER GLASS WEATHERSTRIP
REAR DOOR INSIDE HANDLE BEZEL PLUG
REAR DOOR TRIM BOARD SUB-ASSEMBLY
x 2
REAR ARMREST ASSEMBLY
REAR POWER WINDOW REGULATOR SWITCH ASSEMBLY WITH REAR DOOR ARMREST BASE PANEL

P

Fig. 39: Identifying Rear Door Lock Replacement Components (2 Of 3)

Courtesy of TOYOTA MOTOR SALES, U.S.A., INC.

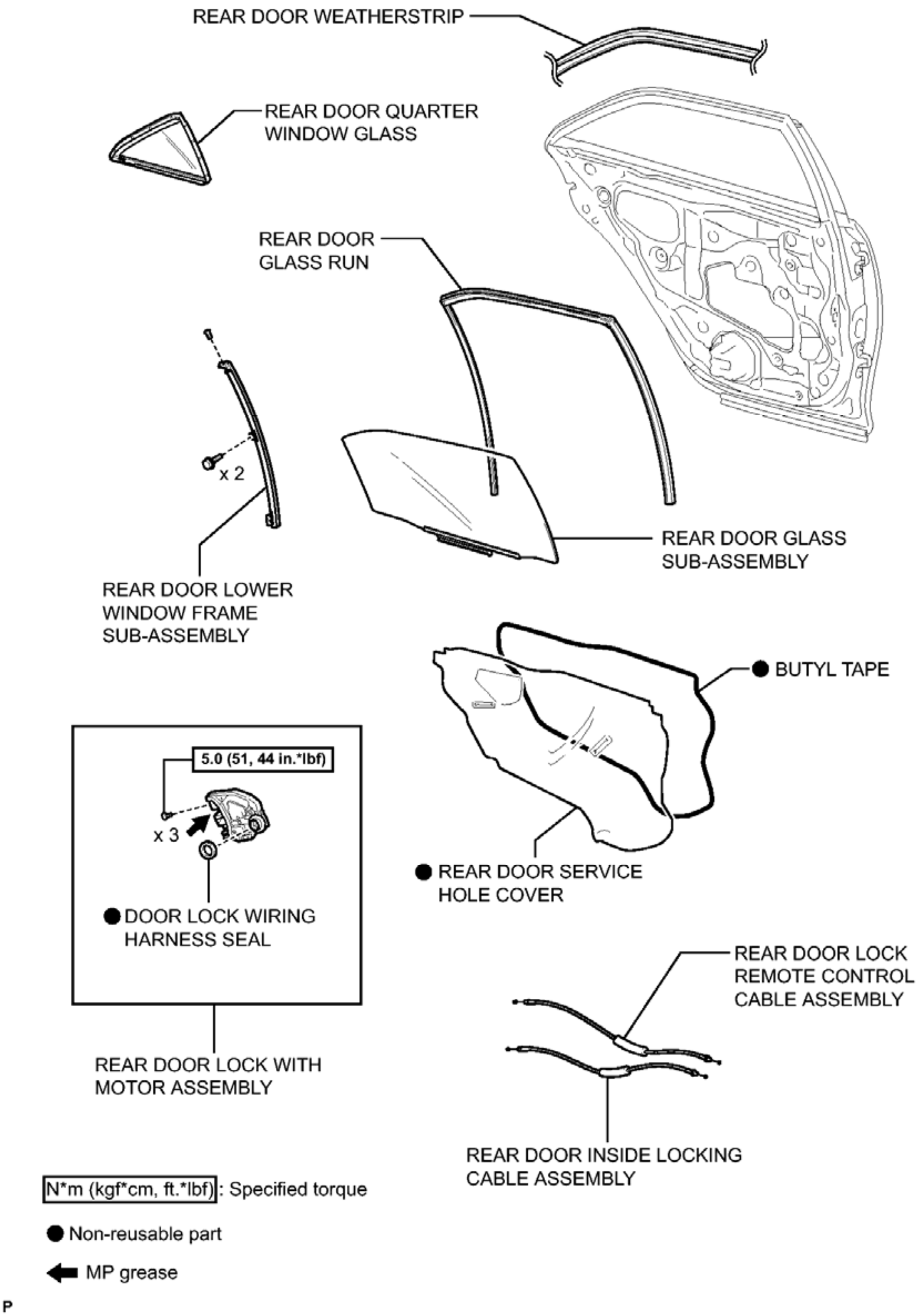
REAR DOOR WEATHERSTRIP
REAR DOOR QUARTER WINDOW GLASS
REAR DOOR GLASS RUN
x 2
REAR DOOR GLASS SUB-ASSEMBLY
REAR DOOR LOWER WINDOW FRAME SUB-ASSEMBLY
● BUTYL TAPE
5.0 (51, 44 in.*lbf)
x 3
● DOOR LOCK WIRING HARNESS SEAL
● REAR DOOR SERVICE HOLE COVER
REAR DOOR LOCK WITH MOTOR ASSEMBLY
REAR DOOR LOCK REMOTE CONTROL CABLE ASSEMBLY
REAR DOOR INSIDE LOCKING CABLE ASSEMBLY
N*m (kgf*cm, ft.*lbf) : Specified torque
● Non-reusable part
MP grease
P

Fig. 40: Identifying Rear Door Lock Replacement Components With Torque Specifications (3 Of 3)
Courtesy of TOYOTA MOTOR SALES, U.S.A., INC.

REMOVAL

REMOVAL

HINT:

- Use the same procedure for the LH side and RH side.
- The following procedure is for the LH side.

1. **PRECAUTION**

   NOTE: **After turning the power switch off, waiting time may be required before disconnecting the cable from the negative (-) auxiliary battery terminal. Therefore, make sure to read the disconnecting the cable from the negative (-) auxiliary battery terminal notices before proceeding with work. Refer to PRECAUTION .**

2. **REMOVE LUGGAGE TRIM SERVICE HOLE COVER** . Refer to **REMOVAL - Step 2**
3. **DISCONNECT CABLE FROM NEGATIVE AUXILIARY BATTERY TERMINAL**

   NOTE: **When disconnecting the cable, some systems need to be initialized after the cable is reconnected. Refer to INITIALIZATION .**

4. **REMOVE REAR DOOR INSIDE HANDLE BEZEL PLUG** . Refer to **DISASSEMBLY - Step 4**
5. **REMOVE REAR POWER WINDOW REGULATOR SWITCH ASSEMBLY WITH REAR DOOR ARMREST BASE PANEL** . Refer to **DISASSEMBLY - Step 5**
6. **REMOVE REAR ARMREST ASSEMBLY** . Refer to **DISASSEMBLY - Step 6**
7. **REMOVE REAR DOOR TRIM BOARD SUB-ASSEMBLY** . Refer to **DISASSEMBLY - Step 7**
8. **REMOVE REAR DOOR INNER GLASS WEATHERSTRIP** . Refer to **DISASSEMBLY - Step 9**
9. **REMOVE REAR DOOR SERVICE HOLE COVER** . Refer to **DISASSEMBLY - Step 10**
10. **DISCONNECT REAR DOOR WEATHERSTRIP** . Refer to **REMOVAL - Step 10**
11. **REMOVE REAR DOOR GLASS RUN** . Refer to **DISASSEMBLY - Step 13**
12. **REMOVE REAR DOOR LOWER WINDOW FRAME SUB-ASSEMBLY** . Refer to **DISASSEMBLY - Step 14**
13. **REMOVE REAR DOOR QUARTER WINDOW GLASS**
    1. Remove the rear door quarter window glass as shown in the illustration.

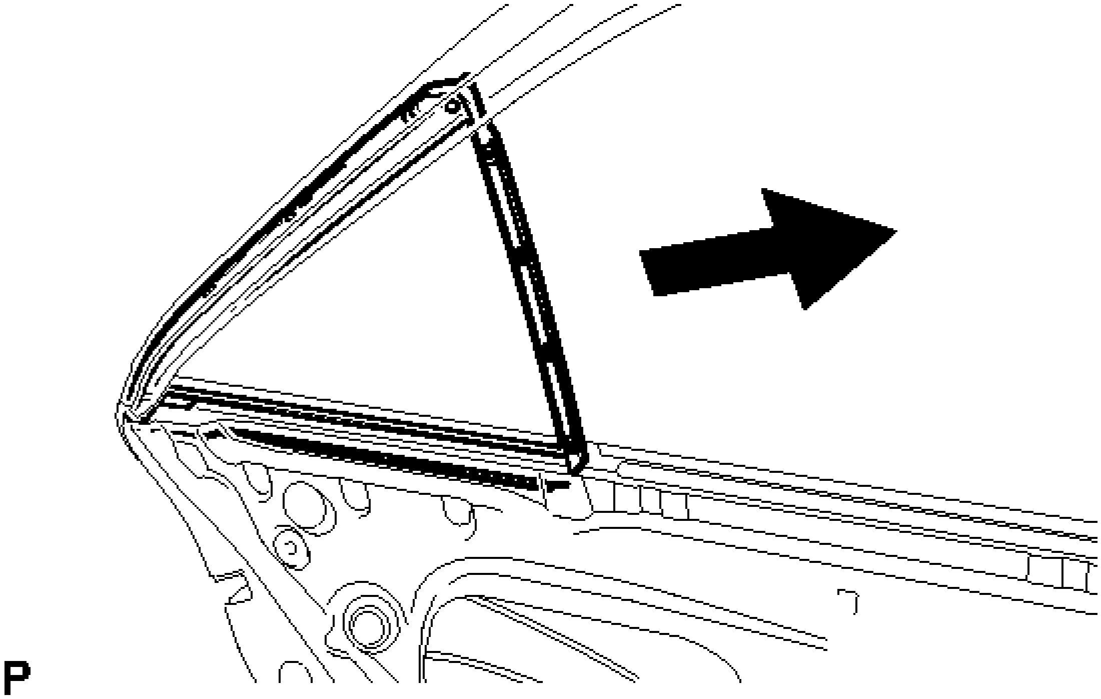

Fig. 41: Removing Rear Door Quarter Window Glass
Courtesy of TOYOTA MOTOR SALES, U.S.A., INC.

14. **REMOVE REAR DOOR GLASS SUB-ASSEMBLY** . Refer to **DISASSEMBLY - Step 16**
15. **REMOVE REAR DOOR LOCK WITH MOTOR ASSEMBLY**
    a. Using a T30 "TORX" socket wrench, remove the 3 screws.

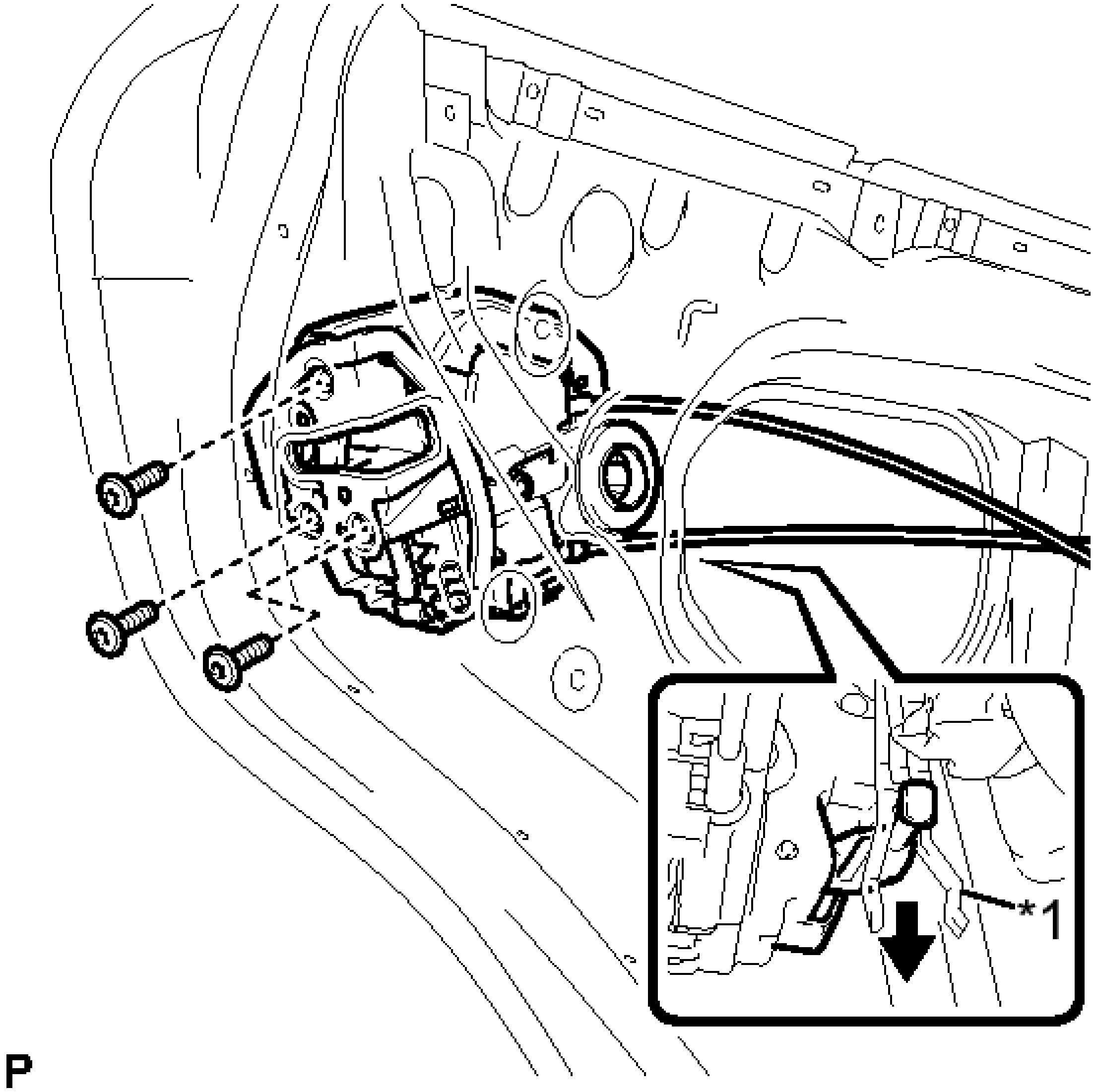

Fig. 42: Identifying Rear Door Lock With Motor Assembly Screws
Courtesy of TOYOTA MOTOR SALES, U.S.A., INC.

TEXT IN ILLUSTRATION

*1	Release Plate

b. Move the rear door lock with motor assembly downward and pull the release plate out of the rear door outside handle frame.
c. When reusing the rear door lock with motor assembly.
    1. Remove the door lock wiring harness seal from the rear door lock with motor assembly.

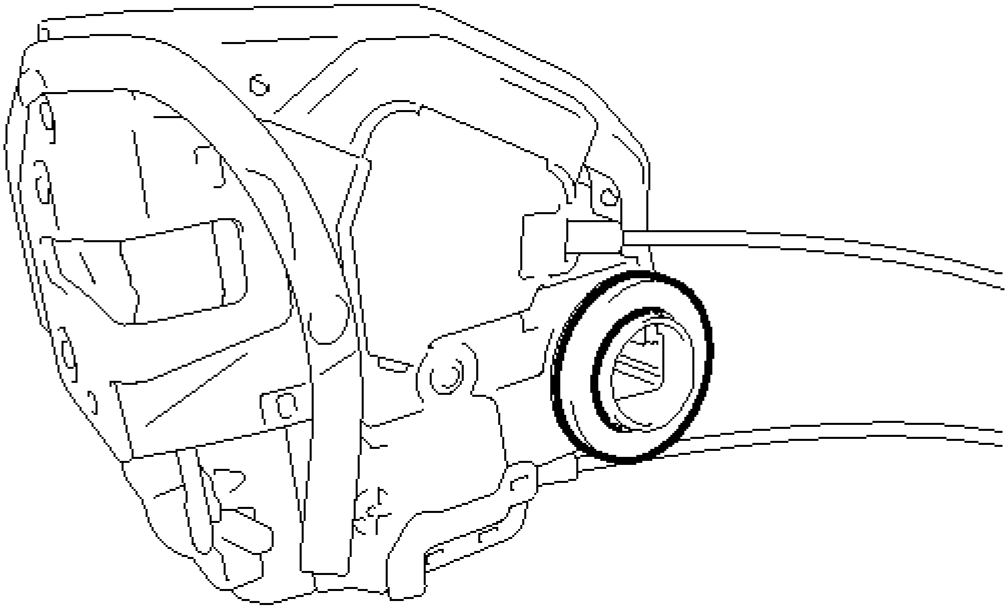

Fig. 43: Identifying Door Lock Wiring Harness Seal
Courtesy of TOYOTA MOTOR SALES, U.S.A., INC.

16. **REMOVE REAR DOOR LOCK REMOTE CONTROL CABLE ASSEMBLY** . Refer to **DISASSEMBLY - Step 22**
17. **REMOVE REAR DOOR INSIDE LOCKING CABLE ASSEMBLY** . Refer to **DISASSEMBLY - Step 23**

INSPECTION

INSPECTION

1. **INSPECT REAR DOOR LOCK WITH MOTOR ASSEMBLY LH**
    a. Check the operation of the door lock motor.

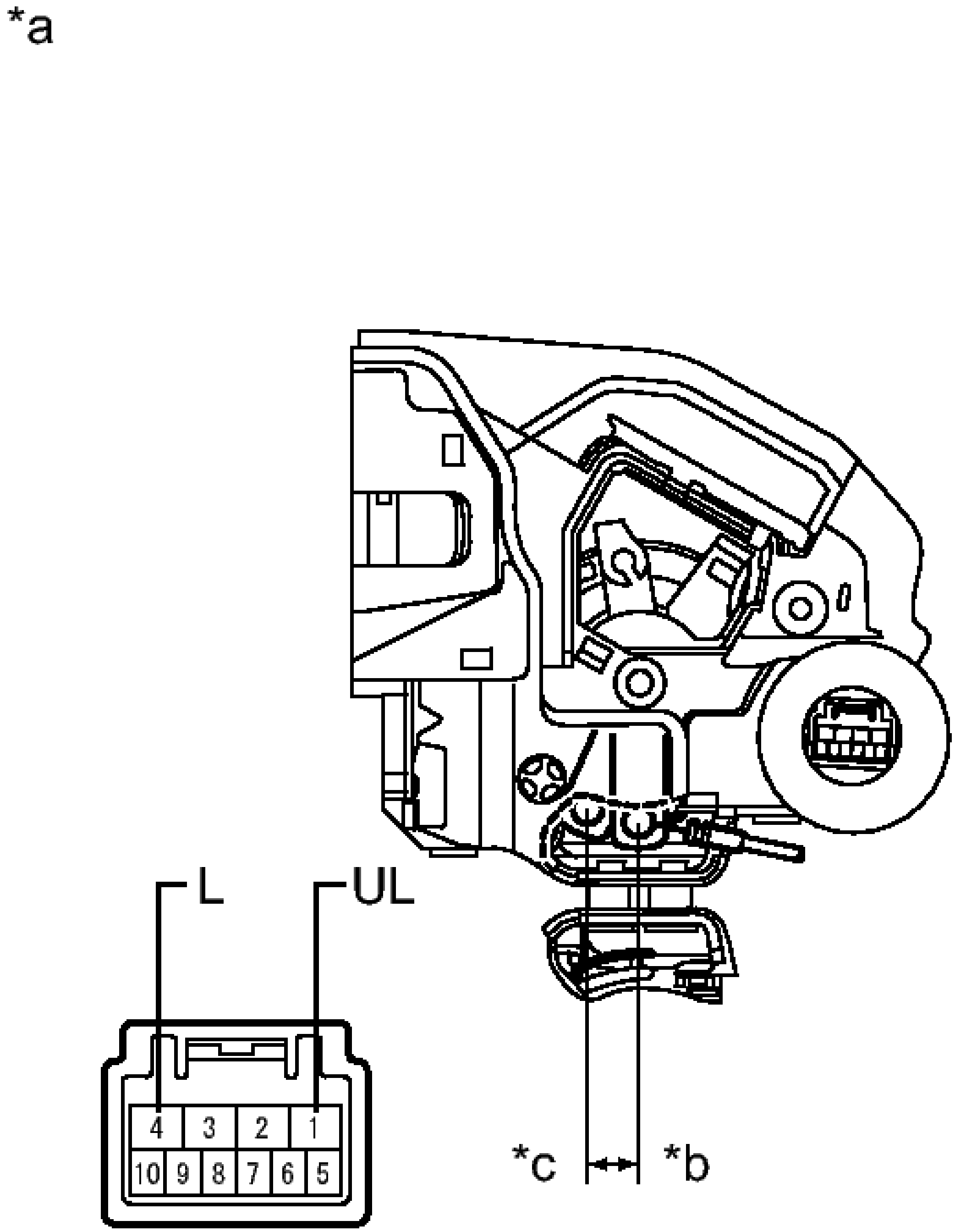
*a
L
UL
4
3
2
1
10
9
8
7
6
5
*c
*b

Fig. 44: Checking The Operation Of The Door Lock Motor
Courtesy of TOYOTA MOTOR SALES, U.S.A., INC.

1. Apply auxiliary battery voltage and check the operation of the door lock motor.

OK

Connection	Result
Auxiliary battery positive (+) --> Terminal 4 (L) Auxiliary battery negative (-) --> Terminal 1 (UL)	Locks
Auxiliary battery positive (+) --> Terminal 1 (UL) Auxiliary battery negative (-) --> Terminal 4 (L)	Unlocks

TEXT IN ILLUSTRATION

*a	Component without harness connected (Rear Door Lock with Motor Assembly LH)
*b	Unlock
*c	Lock

If the result is not as specified, replace the rear door lock with motor assembly LH.

b. Check the operation of the unlock detection switch.

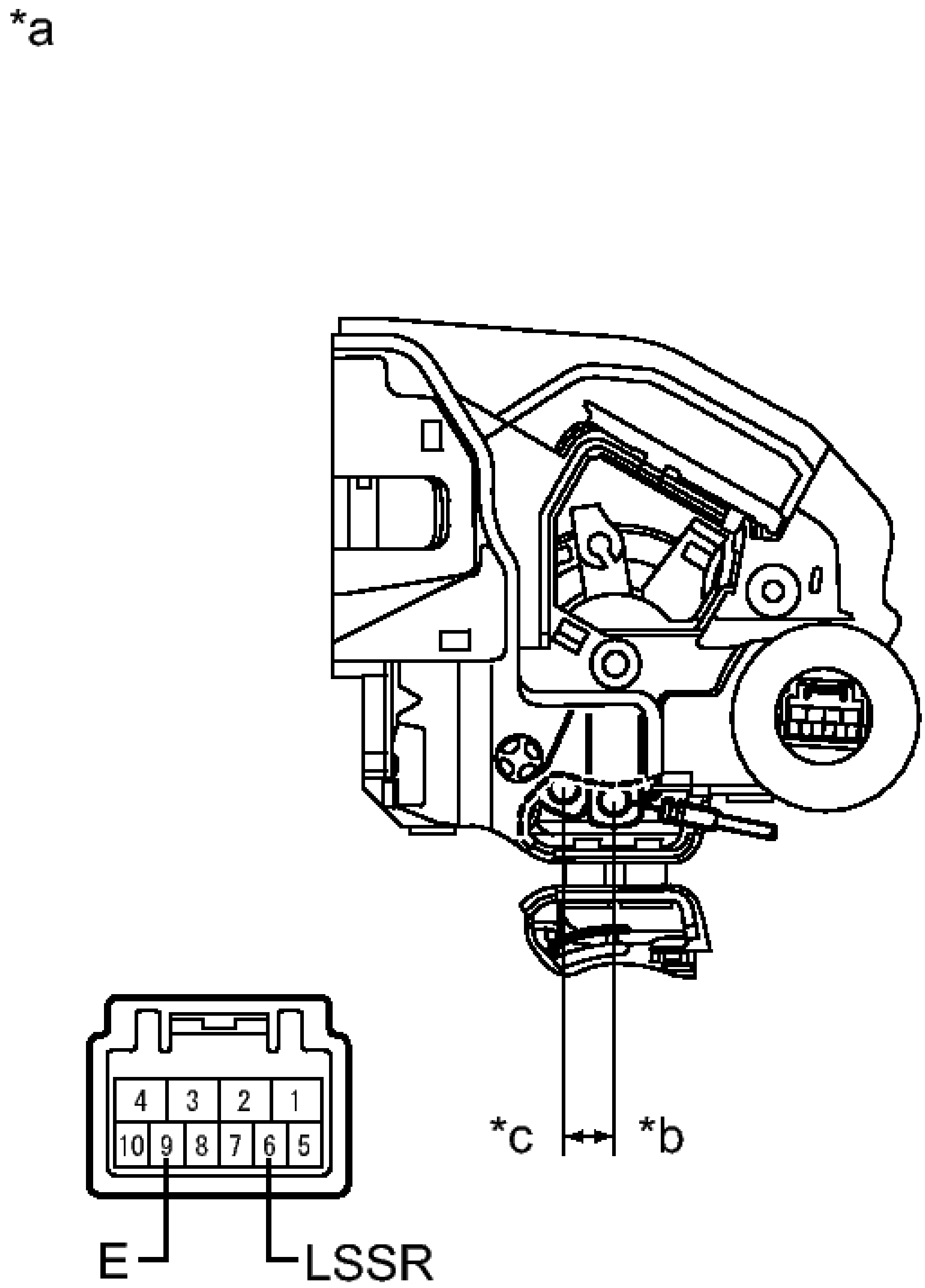
*a
4
3
2
1
10
9
8
7
6
5
E
LSSR
*c
*b

Fig. 45: Checking The Operation Of The Unlock Detection Switch
Courtesy of TOYOTA MOTOR SALES, U.S.A., INC.

1. Measure the resistance according to the value(s) in the table below.

Standard Resistance

Tester Connection	Condition	Specified Condition
6 (LSSR) - 9 (E)	Locked	10 kohms or higher
6 (LSSR) - 9 (E)	Unlocked	Below 1 ohms

TEXT IN ILLUSTRATION

*a	Component without harness connected (Rear Door Lock with Motor Assembly LH)
*b	Unlock
*c	Lock

If the result is not as specified, replace the rear door lock with motor assembly LH.

2. **INSPECT REAR DOOR LOCK WITH MOTOR ASSEMBLY RH**
    a. Check the operation of the door lock motor.

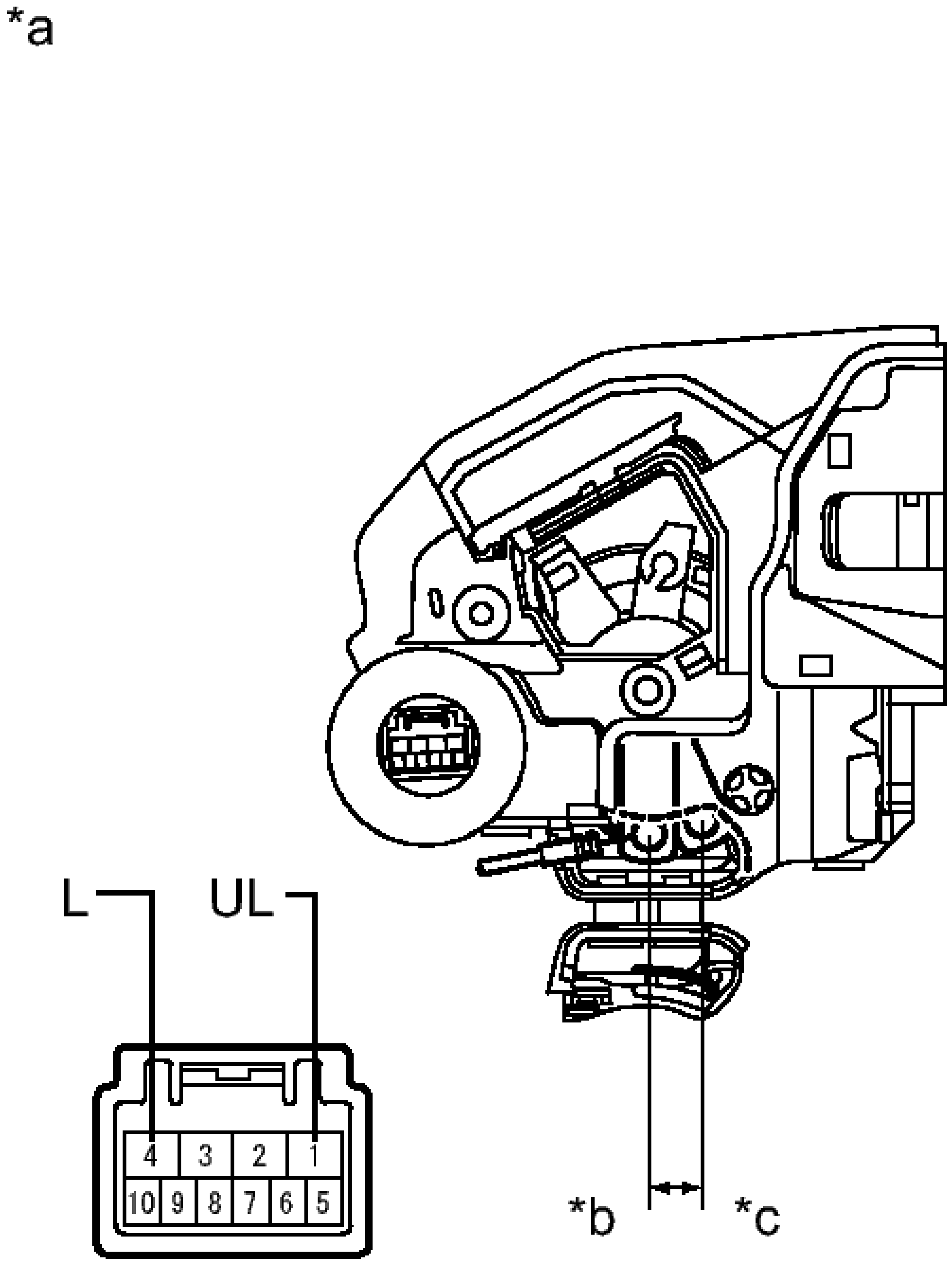
*a
L
UL
4
3
2
1
10
9
8
7
6
5
*b
*c

Fig. 46: Checking The Operation Of The Door Lock Motor
Courtesy of TOYOTA MOTOR SALES, U.S.A., INC.

1. Apply auxiliary battery voltage and check the operation of the door lock motor.

OK

Connection	Result
Auxiliary battery positive (+) --> Terminal 4 (L) Auxiliary battery negative (-) --> Terminal 1 (UL)	Locks
Auxiliary battery positive (+) --> Terminal 1 (UL) Auxiliary battery negative (-) --> Terminal 4 (L)	Unlocks

TEXT IN ILLUSTRATION

*a	Component without harness connected (Rear Door Lock with Motor Assembly RH)
*b	Unlock
*c	Lock

If the result is not as specified, replace the rear door lock with motor assembly RH.

b. Check the operation of the unlock detection switch.

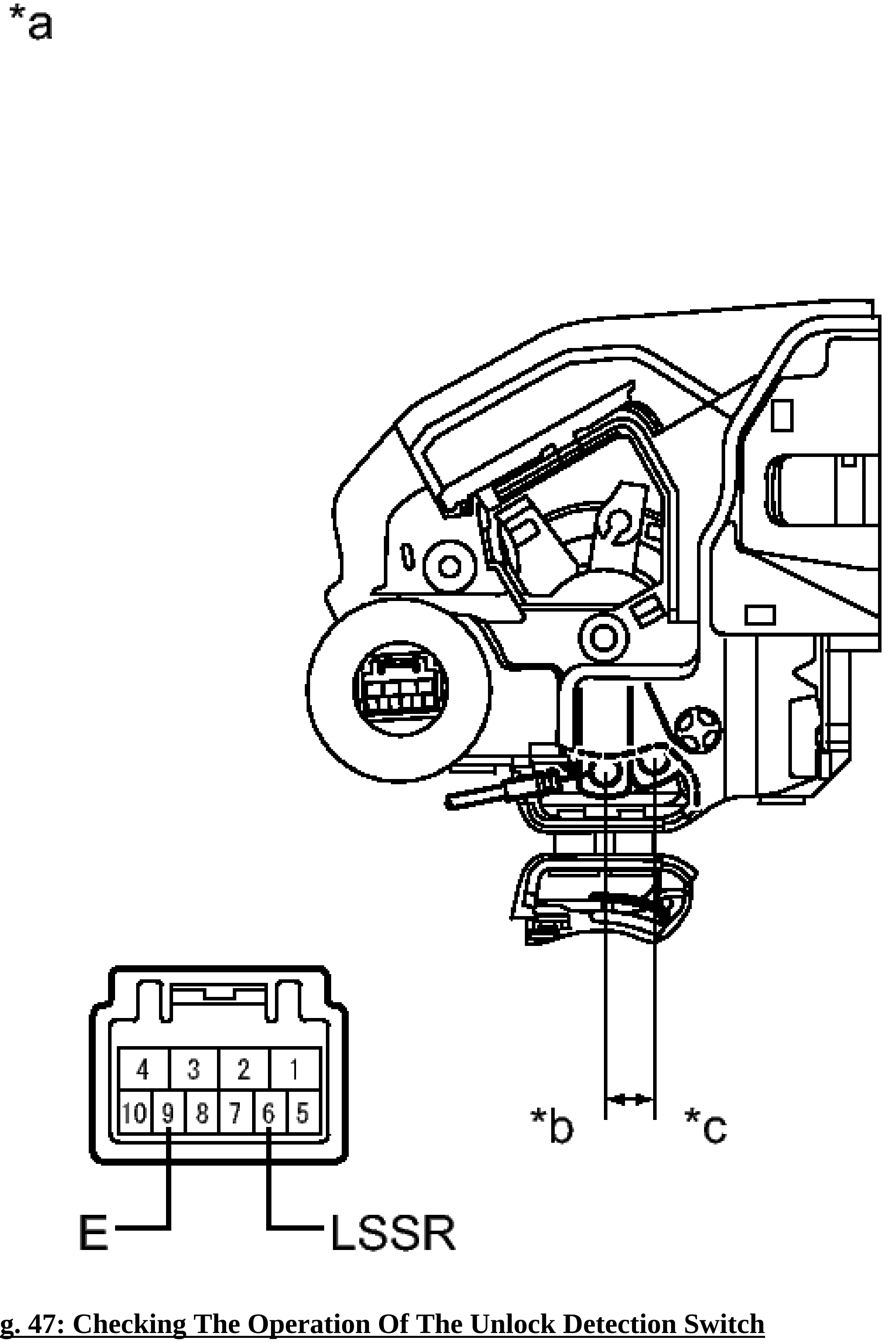
*a
4
3
2
1
10
9
8
7
6
5
E
LSSR
*b
*c

Fig. 47: Checking The Operation Of The Unlock Detection Switch
Courtesy of TOYOTA MOTOR SALES, U.S.A., INC.

1. Measure the resistance according to the value(s) in the table below.

Standard Resistance

Tester Connection	Condition	Specified Condition
6 (LSSR) - 9 (E)	Locked	10 kohms or higher
6 (LSSR) - 9 (E)	Unlocked	Below 1 ohms

TEXT IN ILLUSTRATION

*a	Component without harness connected (Rear Door Lock with Motor Assembly RH)
*b	Unlock
*c	Lock

If the result is not as specified, replace the rear door lock with motor assembly RH.

INSTALLATION

INSTALLATION

HINT:

- Use the same procedure for the LH side and RH side.
- The following procedure is for the LH side.

1. **INSTALL REAR DOOR INSIDE LOCKING CABLE ASSEMBLY** . Refer to **REASSEMBLY - Step 14**
2. **INSTALL REAR DOOR LOCK REMOTE CONTROL CABLE ASSEMBLY** . Refer to **REASSEMBLY - Step 15**
3. **INSTALL REAR DOOR LOCK WITH MOTOR ASSEMBLY**

NOTE:

- **When reusing the removed rear door lock with motor assembly, replace the door lock wiring harness seal on the connector with a new one.**
- **Do not allow grease or dust to adhere to the door lock wiring harness seal surface of the connector.**

- **Reusing the door lock wiring harness seal or using a damaged door lock wiring harness seal may cause water intrusion. This may result in a malfunction of the rear door lock with motor assembly.**

a. Apply MP grease to the sliding parts of the rear door lock with motor assembly.

b. When reusing the rear door lock with motor assembly.

   1. Install a new door lock wiring harness seal to the rear door lock with motor assembly.

c. Insert the rear door lock with motor assembly to the rear door outside handle release plate, and set it to the rear door panel.

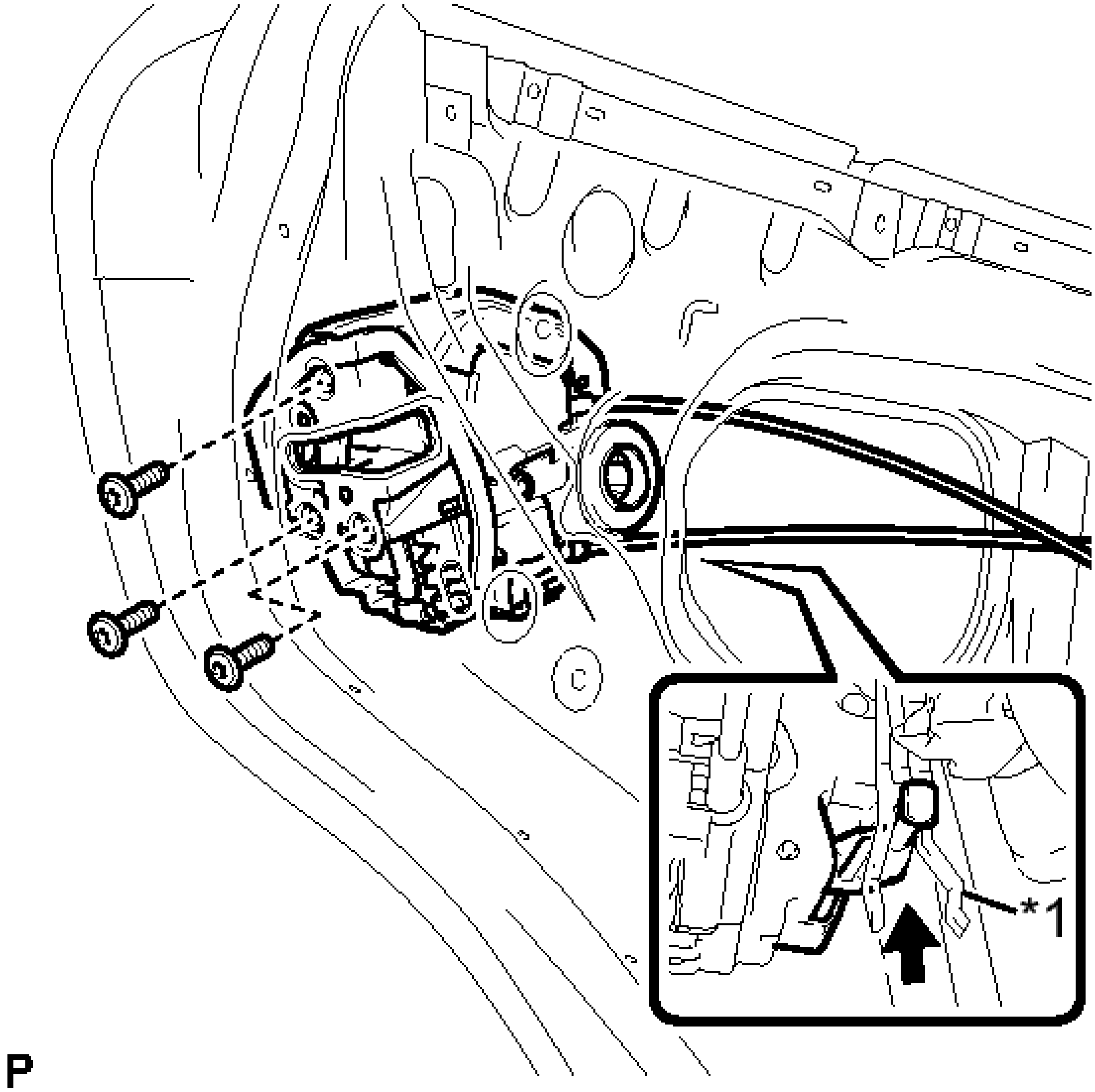

Fig. 48: Identifying Rear Door Lock With Motor Assembly Screws
Courtesy of TOYOTA MOTOR SALES, U.S.A., INC.

TEXT IN ILLUSTRATION

	Release

*1	Plate

d. Make sure that the rear door outside handle frame release plate is securely connected to the rear door lock with motor assembly.
e. Using a T30 "TORX" socket wrench, install the rear door lock with motor assembly with the 3 screws.

Torque: 5.0 N*m (51 kgf*cm, 44 in.*lbf)

4. **INSTALL REAR DOOR GLASS SUB-ASSEMBLY** . Refer to **REASSEMBLY - Step 21**
5. **INSTALL REAR DOOR QUARTER WINDOW GLASS**
   a. Install the rear door quarter window glass in the direction indicated by the arrow in the illustration.

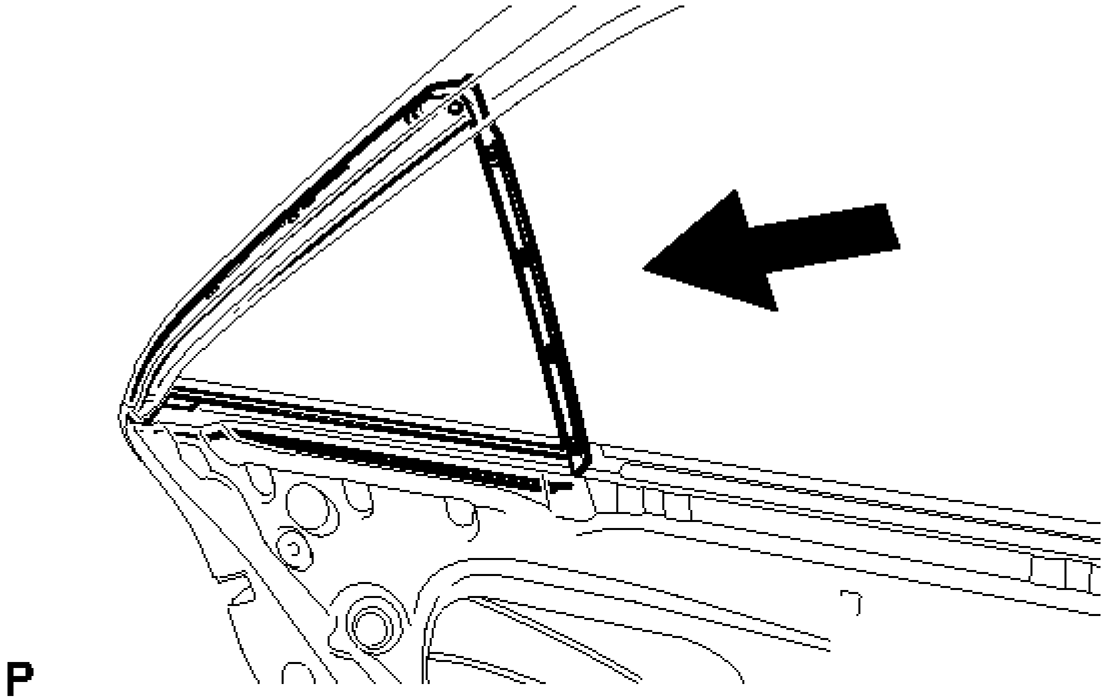

Fig. 49: Installing Rear Door Quarter Window Glass
Courtesy of TOYOTA MOTOR SALES, U.S.A., INC.

6. **INSTALL REAR DOOR LOWER WINDOW FRAME SUB-ASSEMBLY** . Refer to **REASSEMBLY - Step 23**
7. **INSTALL REAR DOOR GLASS RUN** . Refer to **REASSEMBLY - Step 24**
8. **INSTALL REAR DOOR WEATHERSTRIP** . Refer to **INSTALLATION - Step 7**
9. **INSTALL REAR DOOR SERVICE HOLE COVER** . Refer to **REASSEMBLY - Step 27**
10. **INSTALL REAR DOOR INNER GLASS WEATHERSTRIP** . Refer to **REASSEMBLY - Step 28**
11. **INSTALL REAR DOOR TRIM BOARD SUB-ASSEMBLY** . Refer to **REASSEMBLY - Step 30**
12. **INSTALL REAR ARMREST ASSEMBLY** . Refer to **REASSEMBLY - Step 31**

13. **INSTALL REAR POWER WINDOW REGULATOR SWITCH ASSEMBLY WITH REAR DOOR ARMREST BASE PANEL** . Refer to **REASSEMBLY - Step 32**
14. **INSTALL REAR DOOR INSIDE HANDLE BEZEL PLUG** . Refer to **REASSEMBLY - Step 33**
15. **CONNECT CABLE TO NEGATIVE AUXILIARY BATTERY TERMINAL**

    NOTE: When disconnecting the cable, some systems need to be initialized after the cable is reconnected. Refer to INITIALIZATION .

16. **INSTALL LUGGAGE TRIM SERVICE HOLE COVER** . Refer to **INSTALLATION - Step 3**
17. **CHECK POWER WINDOW CONTROL SYSTEM**

    Refer to **OPERATION CHECK**

LUGGAGE COMPARTMENT DOOR LOCK

COMPONENTS

ILLUSTRATION

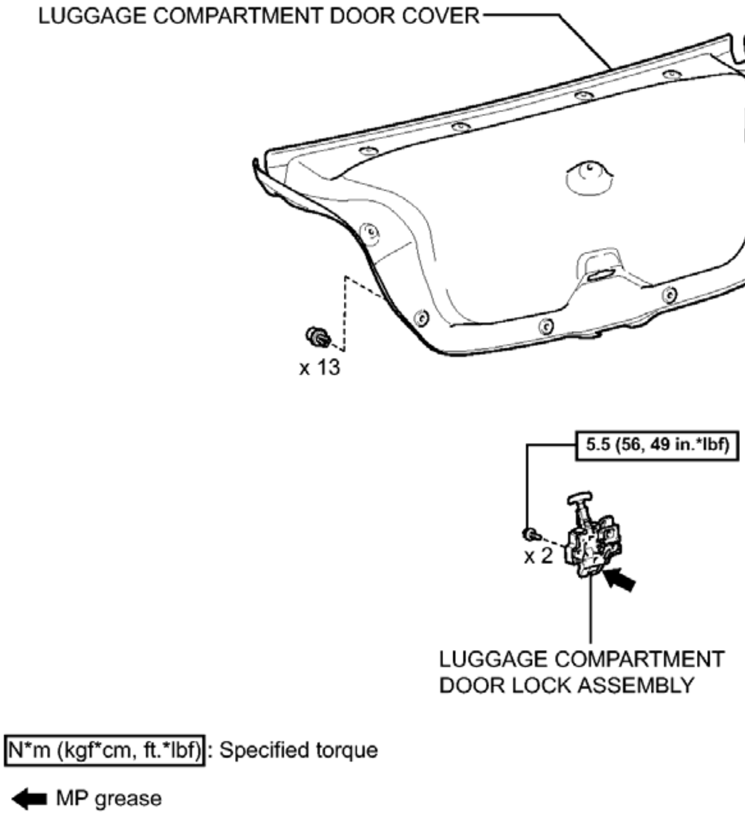
LUGGAGE COMPARTMENT DOOR COVER
x 13
5.5 (56, 49 in.*lbf)
x 2
LUGGAGE COMPARTMENT DOOR LOCK ASSEMBLY
N*m (kgf*cm, ft.*lbf): Specified torque
MP grease
P

Fig. 50: Identifying Luggage Compartment Door Lock Replacement Components With Torque

Specifications
Courtesy of TOYOTA MOTOR SALES, U.S.A., INC.

REMOVAL

REMOVAL

1. **REMOVE LUGGAGE COMPARTMENT DOOR COVER** . Refer to **DISASSEMBLY - Step 1**
2. **REMOVE LUGGAGE COMPARTMENT DOOR LOCK ASSEMBLY**
   a. Disconnect the connector.
   b. Remove the 2 bolts and disengage the luggage compartment door lock assembly.

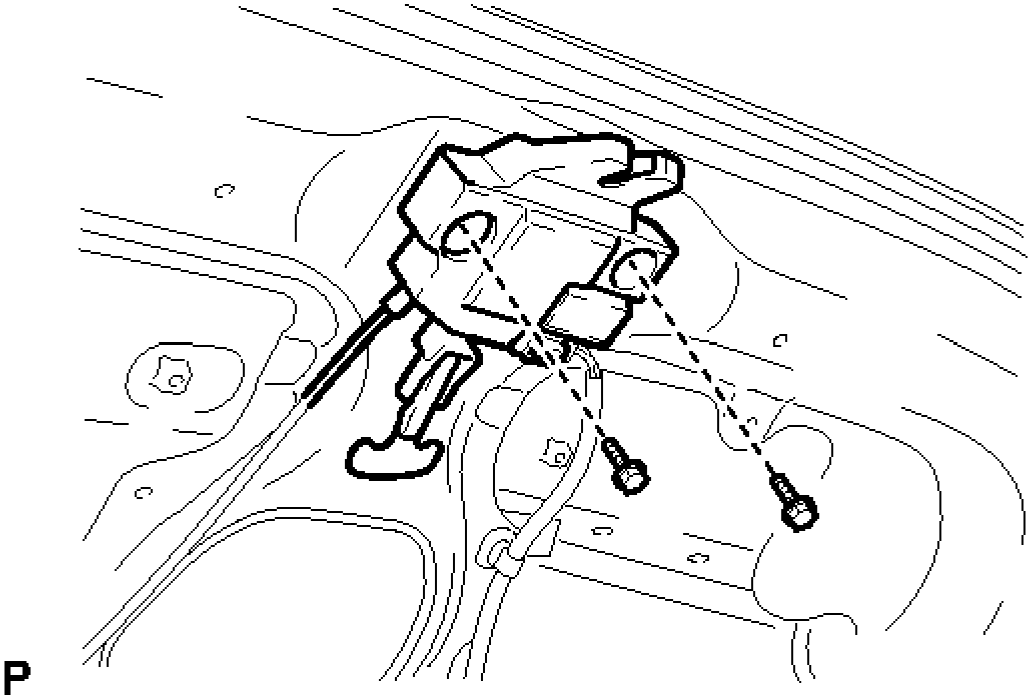

Fig. 51: Identifying Luggage Compartment Door Lock Assembly Bolts
Courtesy of TOYOTA MOTOR SALES, U.S.A., INC.

   c. Disengage the claw as shown in the illustration.

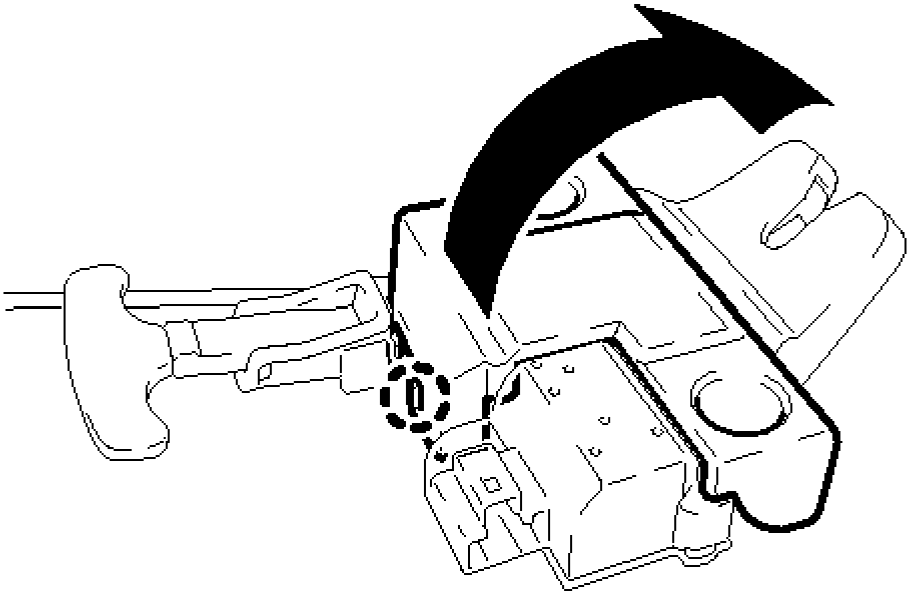

P

Fig. 52: Disengaging Luggage Compartment Door Lock Claw
Courtesy of TOYOTA MOTOR SALES, U.S.A., INC.

d. Disengage the luggage door lock control cable sub-assembly and remove the luggage compartment door lock assembly.

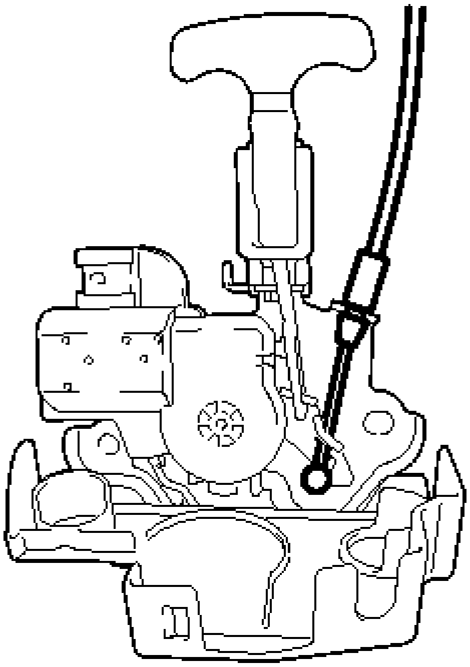

P

Fig. 53: Identifying Luggage Door Lock Control Cable Sub-Assembly

Courtesy of TOYOTA MOTOR SALES, U.S.A., INC.

INSPECTION

INSPECTION

1. **INSPECT LUGGAGE COMPARTMENT DOOR LOCK ASSEMBLY**
    a. Check the operation of the door lock motor.
        1. Move the door lock to the close (lock) position.

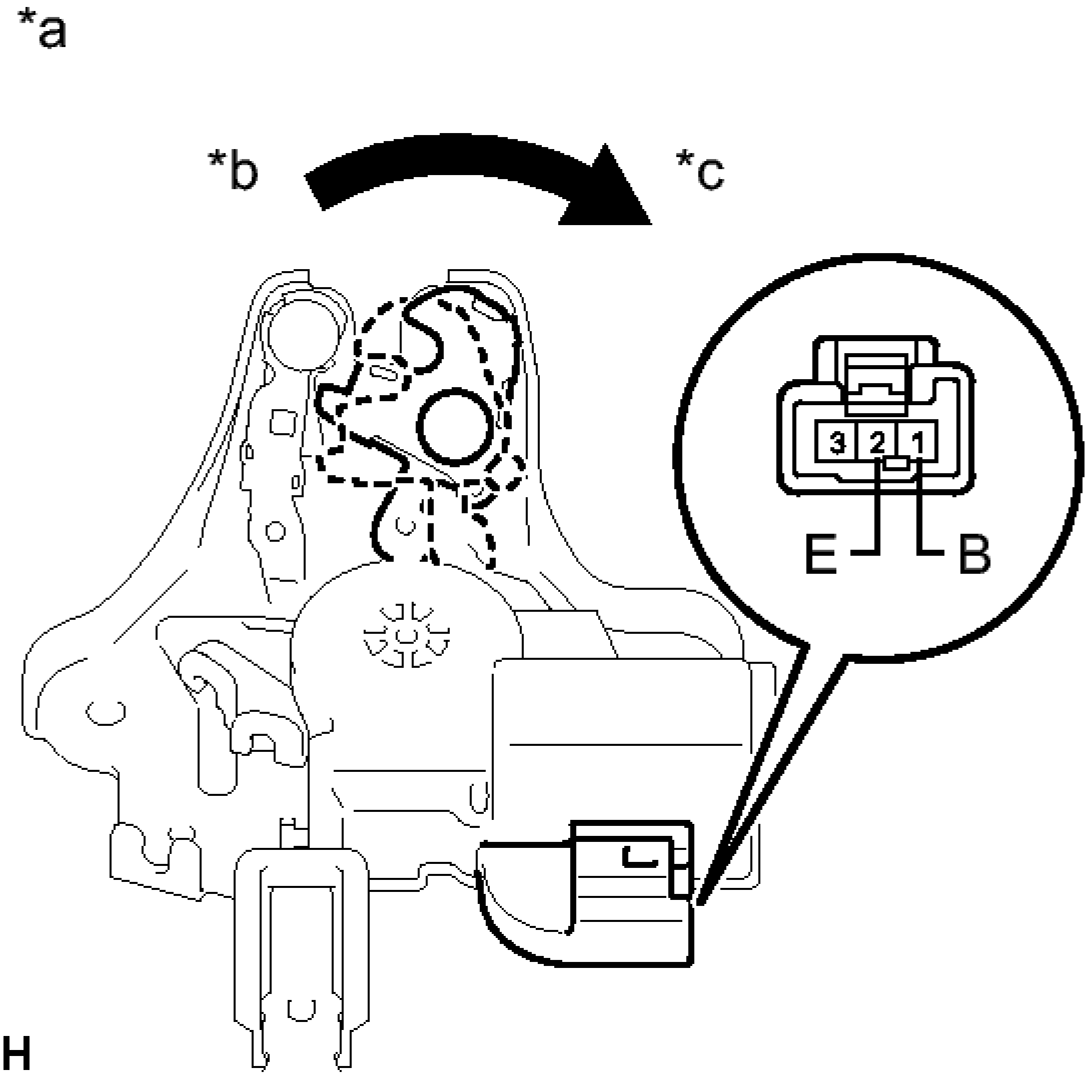

Fig. 54: Checking Operation Of The Door Lock Motor
Courtesy of TOYOTA MOTOR SALES, U.S.A., INC.

2. Apply auxiliary battery voltage to the door lock motor and check operation of the door lock motor.

OK

Measurement Condition	**Specified Condition**
Auxiliary battery positive (+) --> 1 (B) Auxiliary battery negative (-) --> 2 (E)	Luggage compartment door lock motor open (unlock) operation

TEXT IN ILLUSTRATION

*a	Component without harness connected: (Luggage Compartment Door Lock Assembly)
*b	Close (Lock)
*c	Open (Unlock)

If the result is not as specified, replace the luggage compartment door lock assembly.

b. Check the operation of the door courtesy switch.
   1. Measure the resistance according to the value(s) in the table below.

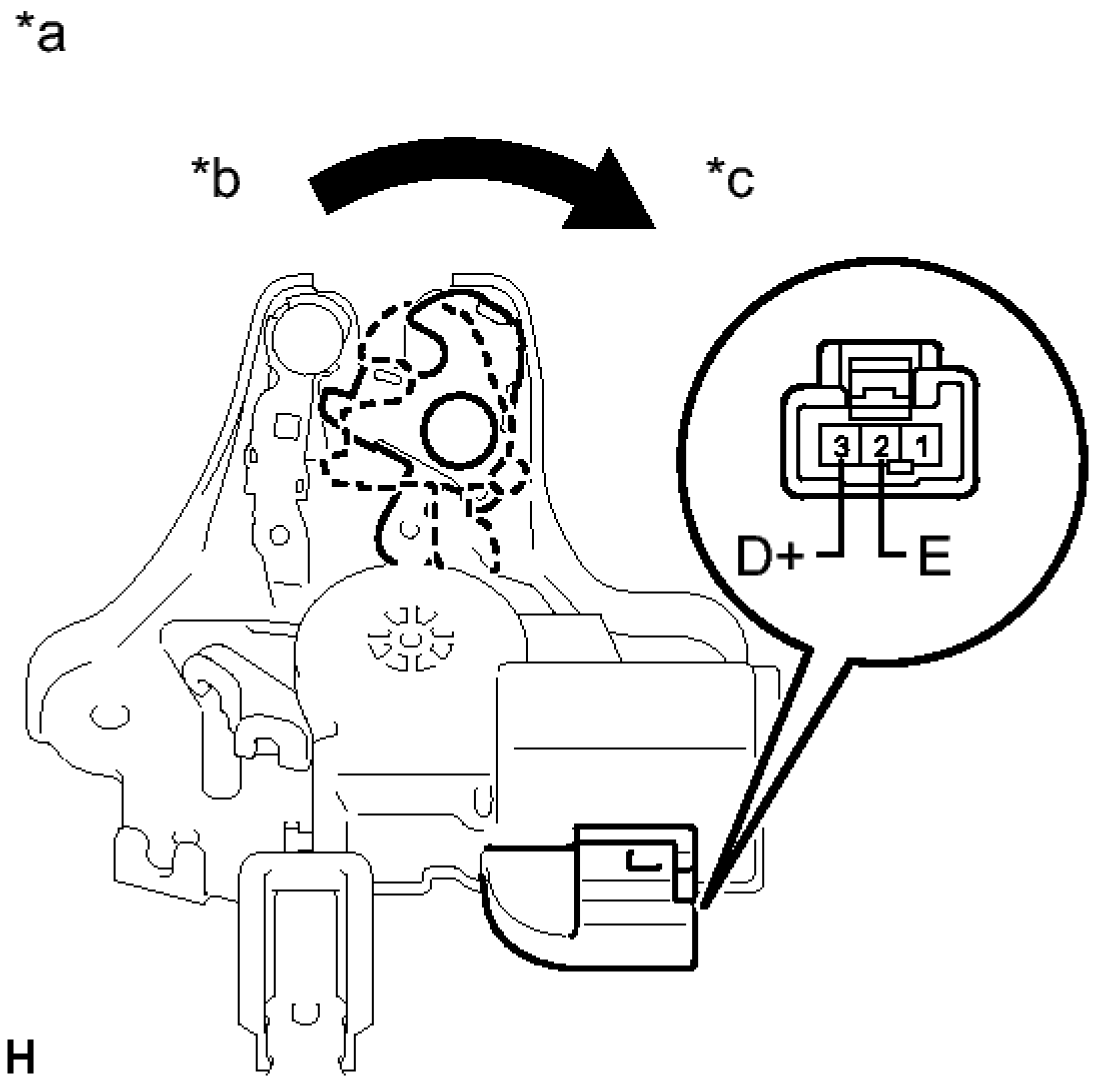

Fig. 55: Inspecting Luggage Compartment Door Lock Assembly
Courtesy of TOYOTA MOTOR SALES, U.S.A., INC.

Standard Resistance

Measurement Condition	Door Lock Condition	Specified Condition
2 (E) - 3 (D+)	Close (Lock)	10 kohms or higher
2 (E) - 3 (D+)	Open (Unlock)	Below 1 ohms

TEXT IN ILLUSTRATION

	Component

*a	without harness connected: (Luggage Compartment Door Lock Assembly)
*b	Close (Lock)
*c	Open (Unlock)

If the result is not as specified, replace the luggage compartment door lock assembly.

INSTALLATION

INSTALLATION

1. **INSTALL LUGGAGE COMPARTMENT DOOR LOCK ASSEMBLY**
    a. Apply MP grease to the sliding parts of the luggage compartment door lock assembly.
    b. Engage the luggage door lock control cable sub-assembly.
    c. Engage the claw as shown in the illustration.

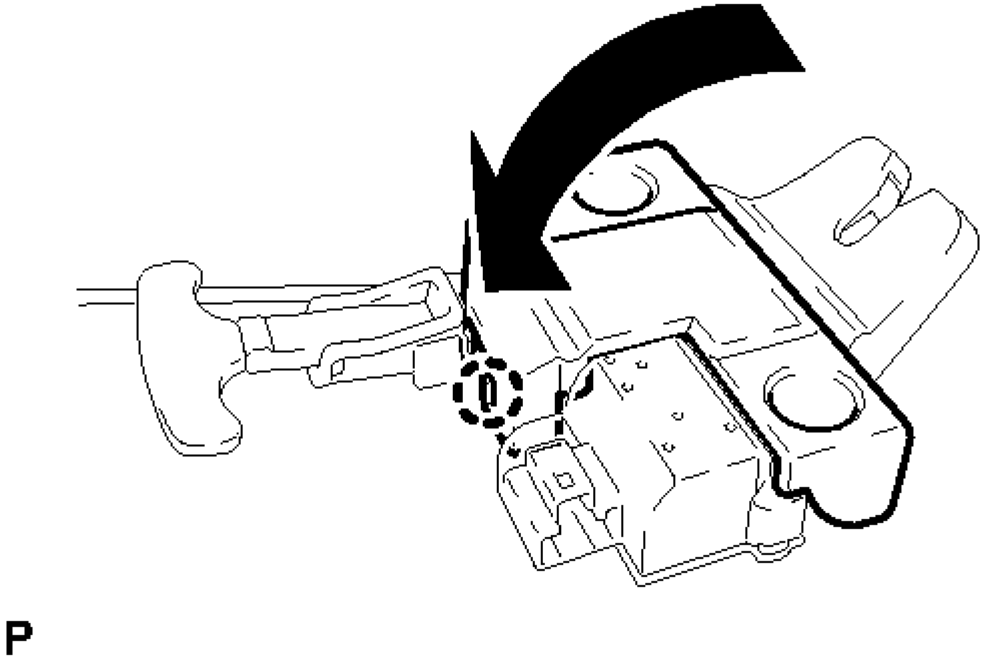

Fig. 56: Engaging Luggage Compartment Door Lock Claw
Courtesy of TOYOTA MOTOR SALES, U.S.A., INC.

d. Install the luggage compartment door lock assembly with the 2 bolts.

Torque: 5.5 N*m (56 kgf*cm, 49 in.*lbf)

e. Connect the connector.

2. **INSTALL LUGGAGE COMPARTMENT DOOR COVER** . Refer to **REASSEMBLY - Step 10**

DOOR CONTROL RECEIVER

COMPONENTS

ILLUSTRATION

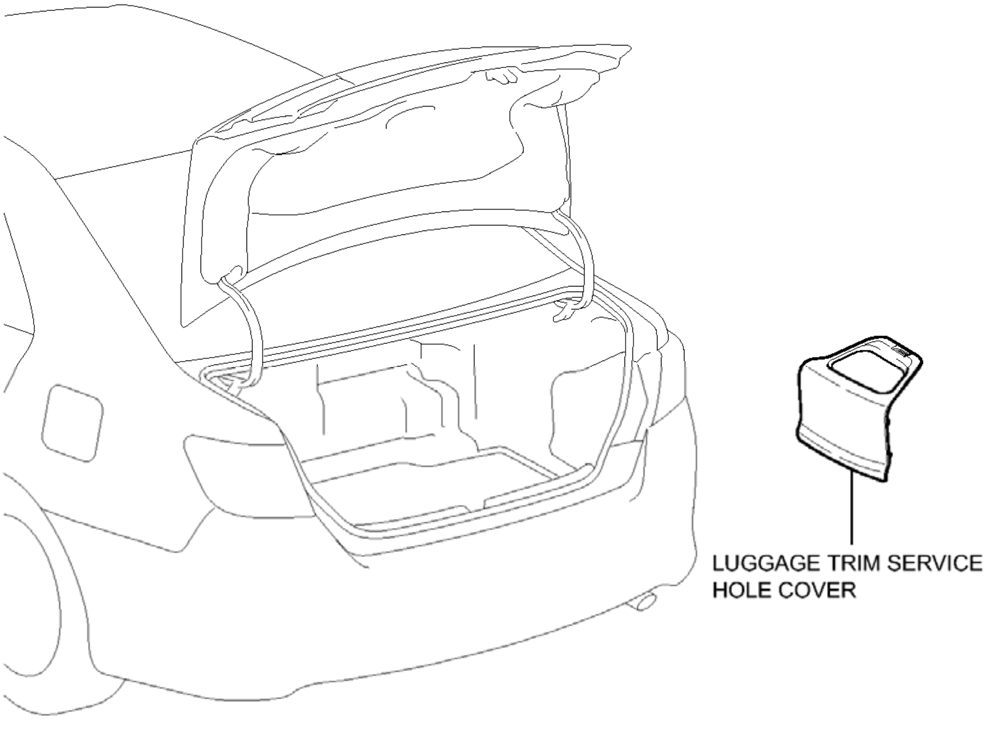
LUGGAGE TRIM SERVICE HOLE COVER
P

Fig. 57: Identifying Door Control Receiver Replacement Components (1 Of 2)
Courtesy of TOYOTA MOTOR SALES, U.S.A., INC.

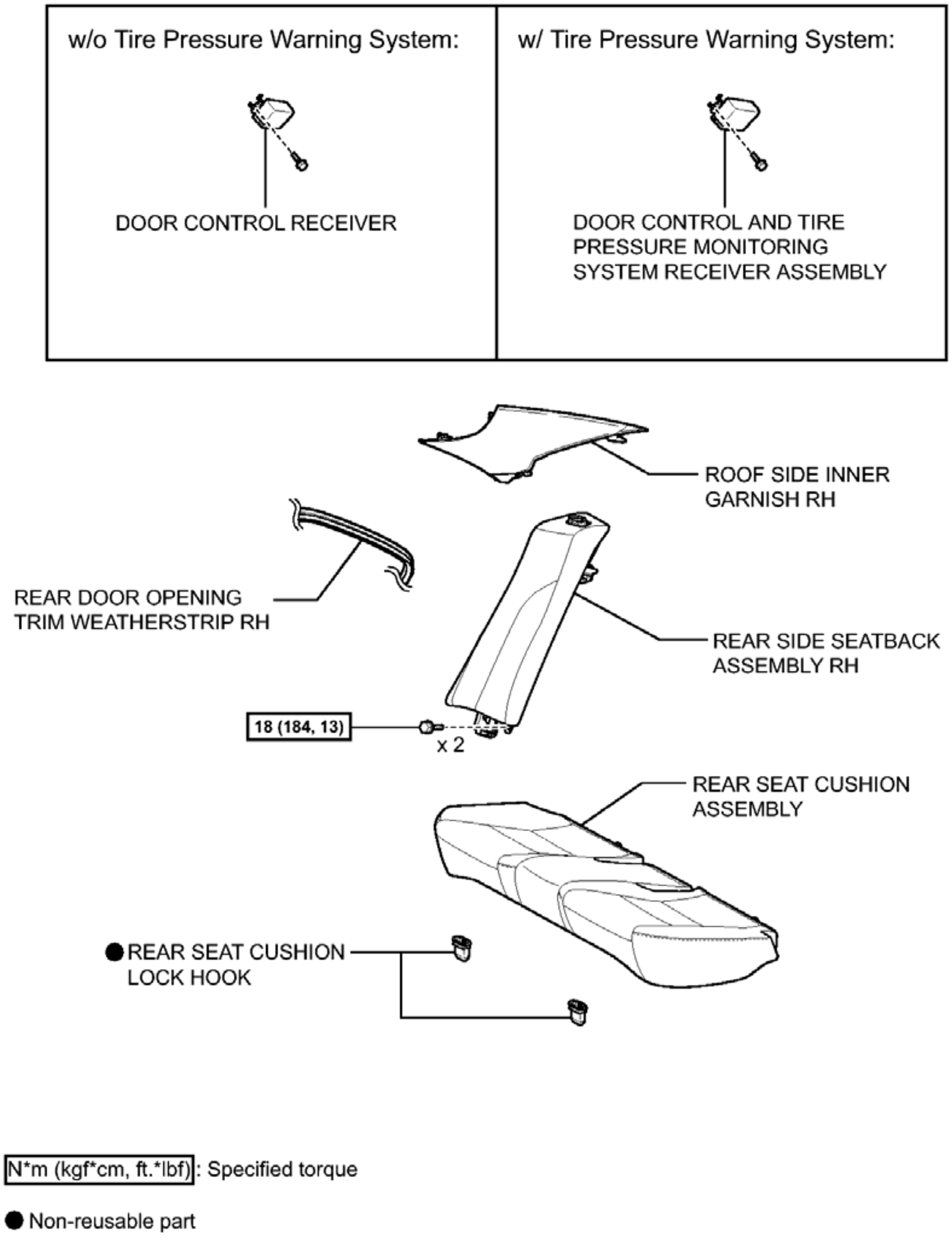
w/o Tire Pressure Warning System:
DOOR CONTROL RECEIVER
w/ Tire Pressure Warning System:
DOOR CONTROL AND TIRE PRESSURE MONITORING SYSTEM RECEIVER ASSEMBLY
ROOF SIDE INNER GARNISH RH
REAR DOOR OPENING TRIM WEATHERSTRIP RH
REAR SIDE SEATBACK ASSEMBLY RH
18 (184, 13)
x 2
REAR SEAT CUSHION ASSEMBLY
● REAR SEAT CUSHION LOCK HOOK
N*m (kgf*cm, ft.*lbf): Specified torque
● Non-reusable part
P

Fig. 58: Identifying Door Control Receiver Replacement Components With Torque Specifications (2 Of 2)
Courtesy of TOYOTA MOTOR SALES, U.S.A., INC.

REMOVAL

REMOVAL

1. **PRECAUTION**

NOTE: **After turning the power switch off, waiting time may be required before disconnecting the cable from the negative (-) auxiliary battery terminal. Therefore, make sure to read the disconnecting the cable from the negative (-) auxiliary battery terminal notices before proceeding with work. Refer to PRECAUTION .**

2. **REMOVE LUGGAGE TRIM SERVICE HOLE COVER** . Refer to **REMOVAL - Step 2**
3. **DISCONNECT CABLE FROM NEGATIVE AUXILIARY BATTERY TERMINAL**

WARNING: **Wait at least 90 seconds after disconnecting the cable from the negative (-) auxiliary battery terminal to disable the SRS.**

NOTE: **When disconnecting the cable, some systems need to be initialized after the cable is reconnected. Refer to INITIALIZATION .**

4. **REMOVE REAR SEAT CUSHION ASSEMBLY** . Refer to **REMOVAL - Step 4**
5. **REMOVE REAR SEAT CUSHION LOCK HOOK** . Refer to **REMOVAL - Step 5**
6. **REMOVE REAR SIDE SEATBACK ASSEMBLY RH** . Refer to **REMOVAL - Step 10**
7. **DISCONNECT REAR DOOR OPENING TRIM WEATHERSTRIP RH** . Refer to **REMOVAL - Step 14**
8. **REMOVE ROOF SIDE INNER GARNISH RH**

   HINT:

   Use the same procedure for the RH side and LH side. Refer to **REMOVAL - Step 25** .

9. **REMOVE DOOR CONTROL RECEIVER (w/o Tire Pressure Warning System)**
   a. Disconnect the connector.

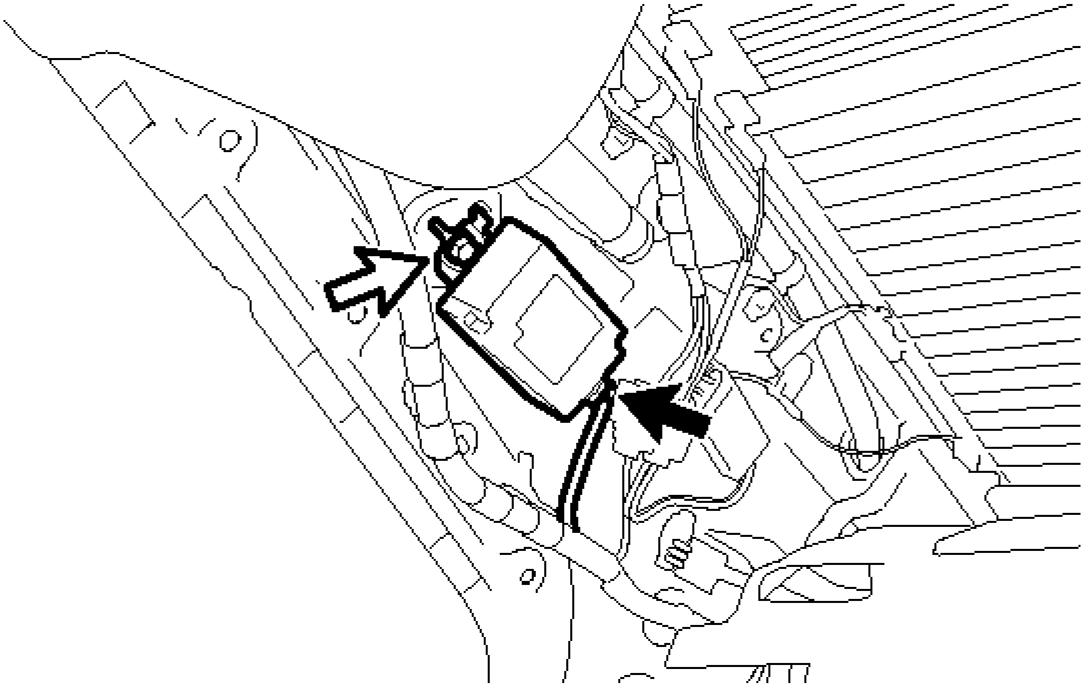

Fig. 59: Identifying Door Control Receiver Bolt And Connector
Courtesy of TOYOTA MOTOR SALES, U.S.A., INC.

b. Remove the bolt and door control receiver.

10. **REMOVE DOOR CONTROL AND TIRE PRESSURE MONITORING SYSTEM RECEIVER ASSEMBLY (w/ Tire Pressure Warning System)**

    a. Disconnect the connector.

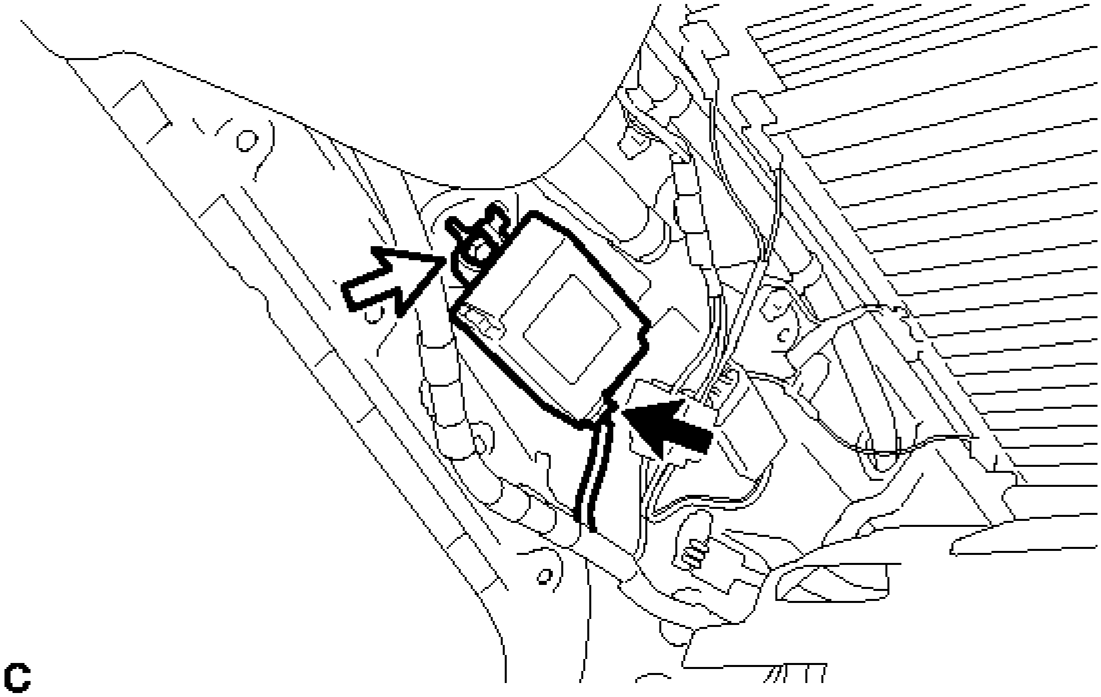

Fig. 60: Identifying Door Control And Tire Pressure Monitoring System Receiver Bolt And Connector
Courtesy of TOYOTA MOTOR SALES, U.S.A., INC.

b. Remove the bolt and door control and tire pressure monitoring system receiver assembly.

INSTALLATION

INSTALLATION

1. **INSTALL DOOR CONTROL RECEIVER (w/o Tire Pressure Warning System)**
    a. Install the door control receiver with the bolt.
    b. Connect the connector.
2. **INSTALL DOOR CONTROL AND TIRE PRESSURE MONITORING SYSTEM RECEIVER ASSEMBLY (w/ Tire Pressure Warning System)**
    a. Install the door control and tire pressure monitoring system receiver assembly with the bolt.
    b. Connect the connector.
3. **INSTALL ROOF SIDE INNER GARNISH RH**

    HINT:

    Use the same procedure for the RH side and LH side. Refer to **INSTALLATION - Step 21** .

4. **INSTALL REAR DOOR OPENING TRIM WEATHERSTRIP RH** . Refer to **INSTALLATION - Step 33**
5. **INSTALL REAR SIDE SEATBACK ASSEMBLY RH** . Refer to **INSTALLATION - Step 2**

6. **INSTALL REAR SEAT CUSHION LOCK HOOK** . Refer to **INSTALLATION - Step 6**
7. **INSTALL REAR SEAT CUSHION ASSEMBLY** . Refer to **INSTALLATION - Step 7**
8. **CONNECT CABLE FROM NEGATIVE AUXILIARY BATTERY TERMINAL**

   NOTE: **When disconnecting the cable, some systems need to be initialized after the cable is reconnected. Refer to INITIALIZATION .**

9. **INSTALL LUGGAGE TRIM SERVICE HOLE COVER** . Refer to **INSTALLATION - Step 3**
10. **REGISTER TRANSMITTER ID (w/ Tire Pressure Warning System)**

    Refer to **REGISTRATION**

11. **INSPECT TIRE PRESSURE WARNING SYSTEM (w/ Tire Pressure Warning System)**

    Refer to **TEST MODE PROCEDURE**

12. **PERFORM INITIALIZATION (w/ Tire Pressure Warning System)**

    Refer to **INITIALIZATION**

13. **INSPECT SRS WARNING LIGHT**
    - for Built-in Type Yaw Rate Sensor: Refer to **DIAGNOSIS SYSTEM**
    - for Separate Type Yaw Rate Sensor: Refer to **DIAGNOSIS SYSTEM**

WIRELESS DOOR LOCK BUZZER

COMPONENTS

ILLUSTRATION

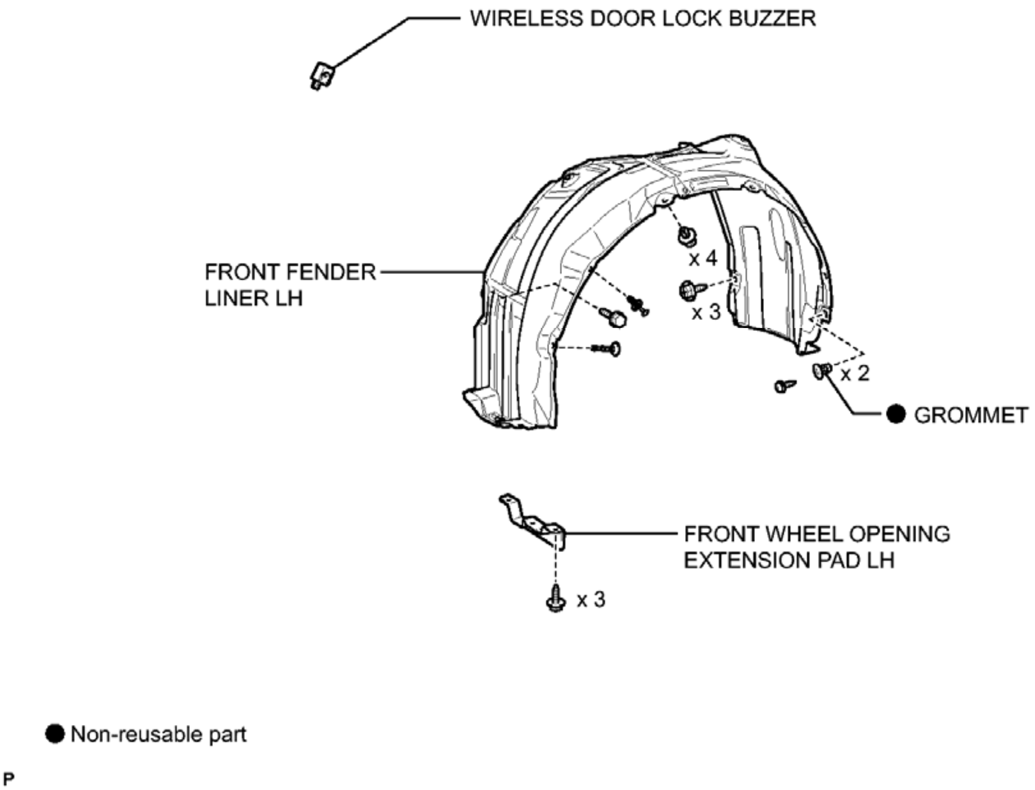
WIRELESS DOOR LOCK BUZZER
FRONT FENDER LINER LH
x 4
x 3
x 2
GROMMET
FRONT WHEEL OPENING EXTENSION PAD LH
x 3
● Non-reusable part
P

Fig. 61: Identifying Wireless Door Lock Buzzer Replacement Components
Courtesy of TOYOTA MOTOR SALES, U.S.A., INC.

REMOVAL

REMOVAL

1. **REMOVE FRONT WHEEL LH**
2. **REMOVE FRONT WHEEL OPENING EXTENSION PAD LH**

   HINT:

   Use the same procedure for the LH side and RH side. Refer to **REMOVAL - Step 2** .

3. **REMOVE FRONT FENDER LINER LH**

   HINT:

   Use the same procedure for the LH side and RH side. Refer to **REMOVAL - Step 3** .

4. **REMOVE WIRELESS DOOR LOCK BUZZER**

a. Disconnect the connector.

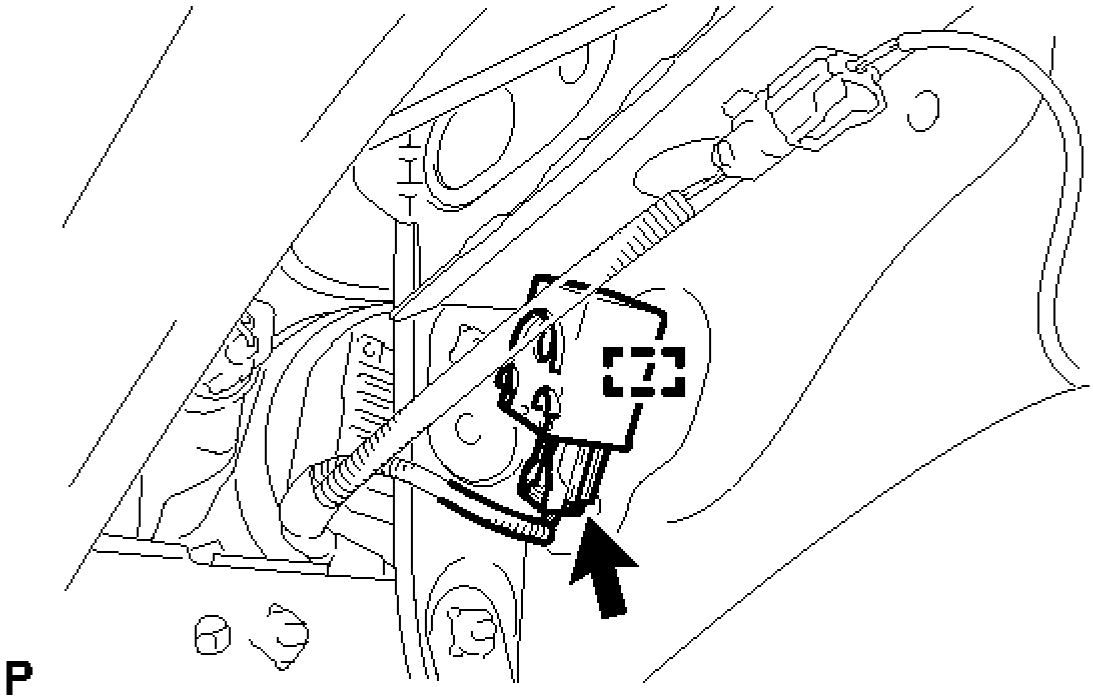

Fig. 62: Identifying Wireless Door Lock Buzzer Clamp And Connector
Courtesy of TOYOTA MOTOR SALES, U.S.A., INC.

b. Disengage the clamp and remove the wireless door lock buzzer.

INSTALLATION

INSTALLATION

1. **INSTALL WIRELESS DOOR LOCK BUZZER**
    a. Engage the clamp to install the wireless door lock buzzer.
    b. Connect the connector.
2. **INSTALL FRONT FENDER LINER LH**

    HINT:

    Use the same procedure for the LH side and RH side. Refer to **INSTALLATION - Step 3** .

3. **INSTALL FRONT WHEEL OPENING EXTENSION PAD LH**

    HINT:

    Use the same procedure for the LH side and RH side. Refer to **INSTALLATION - Step 4** .

4. **INSTALL FRONT WHEEL LH** . Refer to **INSTALLATION - Step 13**

DOOR CONTROL SWITCH

COMPONENTS

ILLUSTRATION

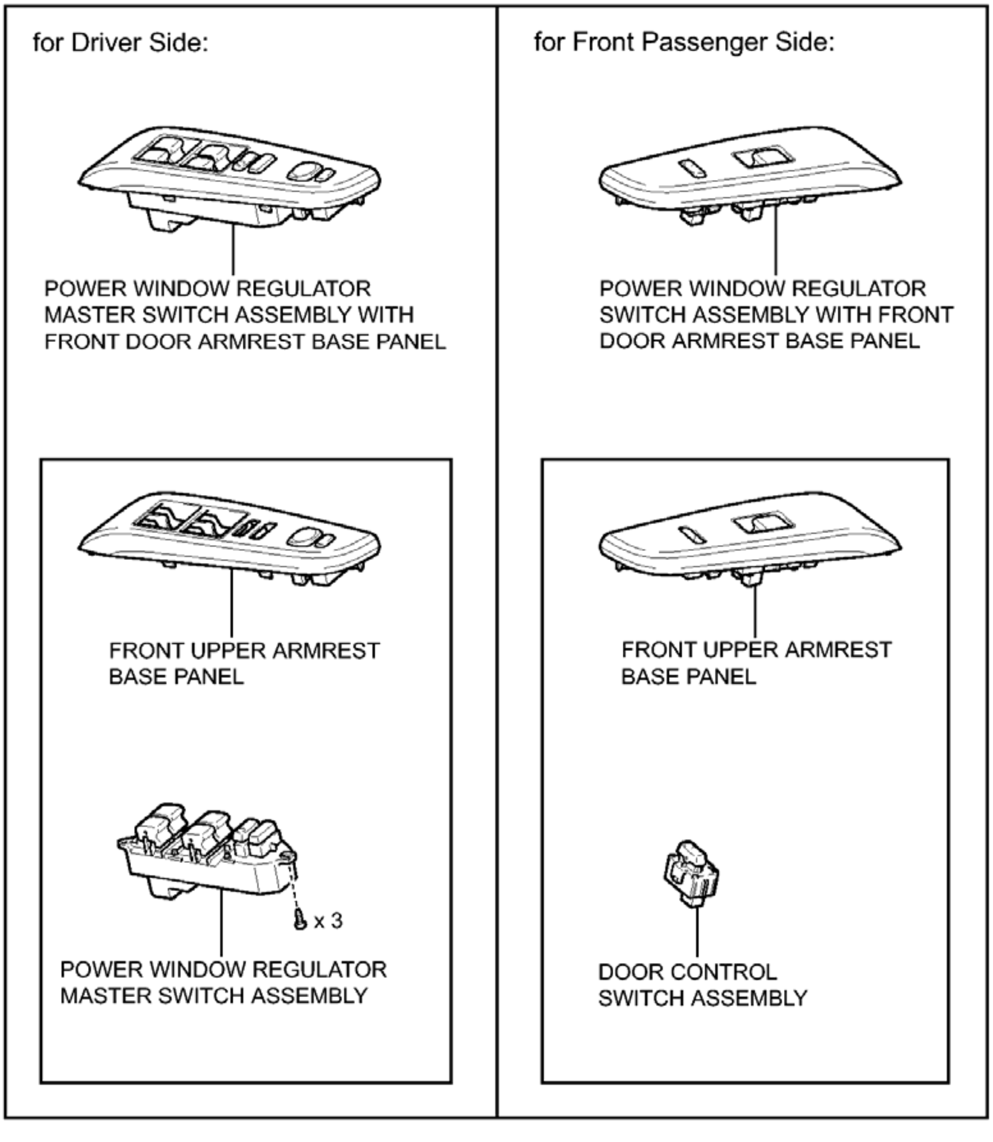
for Driver Side:
for Front Passenger Side:
POWER WINDOW REGULATOR MASTER SWITCH ASSEMBLY WITH FRONT DOOR ARMREST BASE PANEL
POWER WINDOW REGULATOR SWITCH ASSEMBLY WITH FRONT DOOR ARMREST BASE PANEL
FRONT UPPER ARMREST BASE PANEL
FRONT UPPER ARMREST BASE PANEL
x 3
POWER WINDOW REGULATOR MASTER SWITCH ASSEMBLY
DOOR CONTROL SWITCH ASSEMBLY
P

Fig. 1: Identifying Door Control Switch Replacement Components
Courtesy of TOYOTA MOTOR SALES, U.S.A., INC.

REMOVAL

REMOVAL

1. **REMOVE POWER WINDOW REGULATOR MASTER SWITCH ASSEMBLY WITH FRONT DOOR ARMREST BASE PANEL (for Driver Side)** . Refer to **DISASSEMBLY - Step 5**
2. **REMOVE POWER WINDOW REGULATOR SWITCH ASSEMBLY WITH FRONT DOOR ARMREST BASE PANEL (for Front Passenger Side)** . Refer to **DISASSEMBLY - Step 6**
3. **REMOVE POWER WINDOW REGULATOR MASTER SWITCH ASSEMBLY (for Driver Side)** . Refer to **REMOVAL - Step 2**
4. **REMOVE DOOR CONTROL SWITCH ASSEMBLY (for Front Passenger Side)**
   a. Disengage the 2 claws and remove the door control switch assembly.

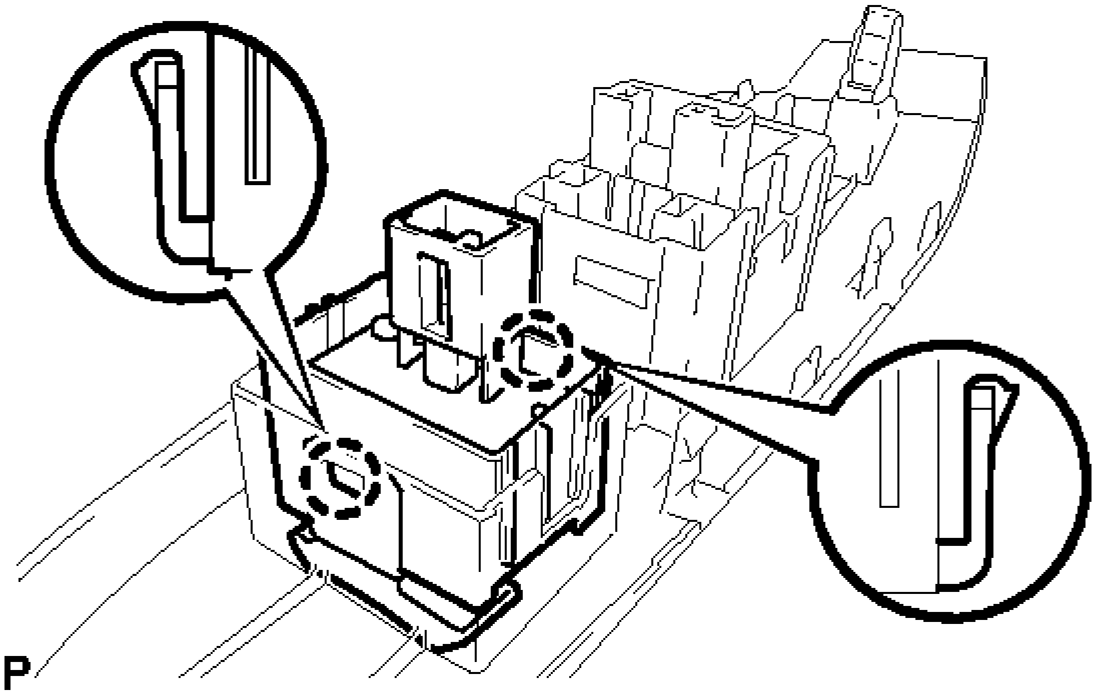

Fig. 2: Identifying Door Control Switch Assembly Claws
Courtesy of TOYOTA MOTOR SALES, U.S.A., INC.

INSPECTION

INSPECTION

1. **INSPECT POWER WINDOW REGULATOR MASTER SWITCH ASSEMBLY**
   a. Measure the resistance according to the value(s) in the table below.

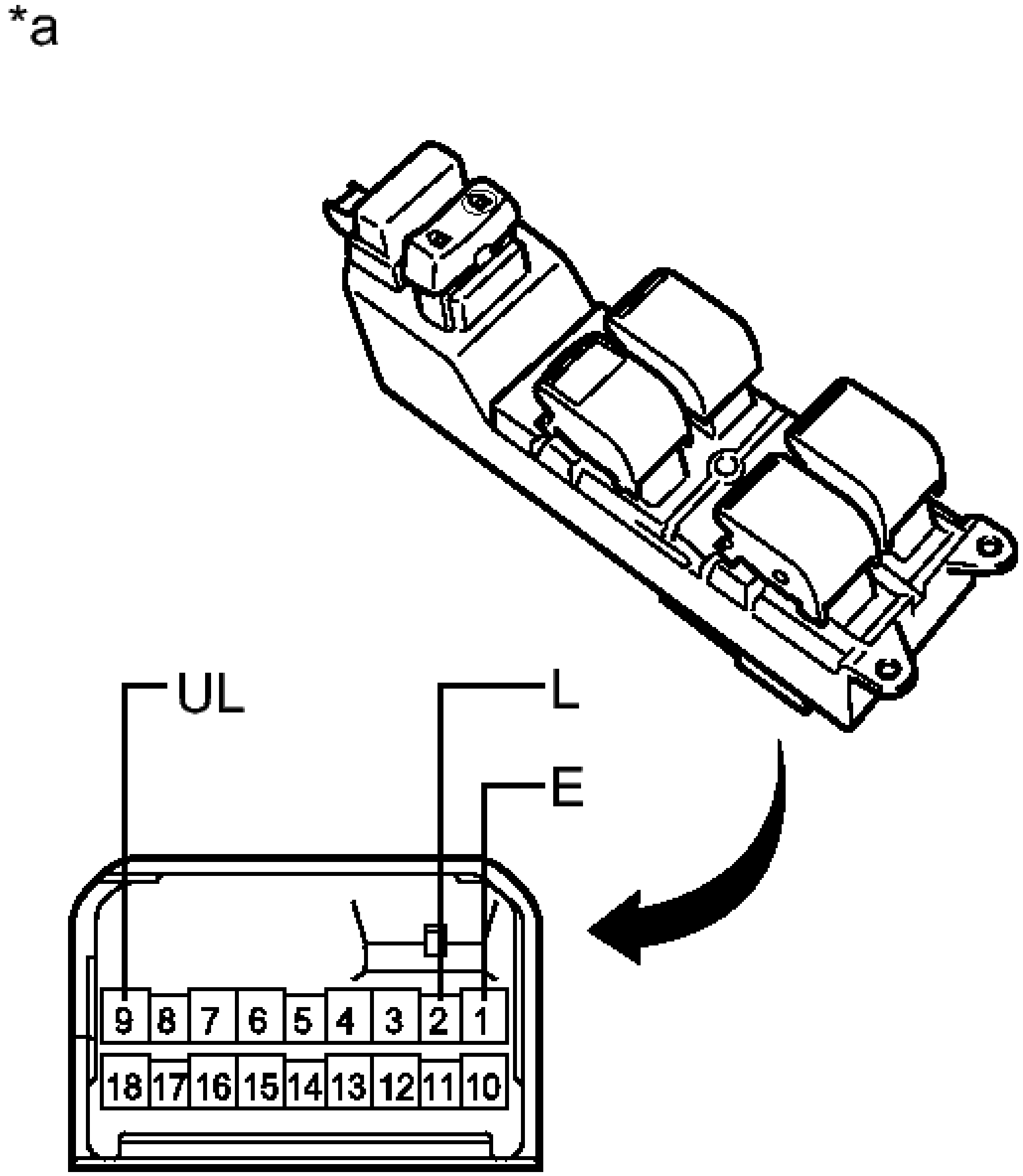
*a
UL
L
E
9
8
7
6
5
4
3
2
1
18
17
16
15
14
13
12
11
10

Fig. 3: Identifying Power Window Regulator Switch Assembly Connector Terminal Identification
Courtesy of TOYOTA MOTOR SALES, U.S.A., INC.

Standard Resistance

Tester Connection	Condition	Specified Condition
2 (L) - 1 (E)	Lock switch pushed	Below 1 ohms
2 (L) - 1 (E)	off	10 kohms or higher
9 (UL) - 1 (E)	Unlock switch pushed	Below 1 ohms
9 (UL) - 1 (E)	off	10 kohms or higher

TEXT IN ILLUSTRATION

*a	Component without harness connected (Power Window Regulator Master Switch Assembly)

If the result is not as specified, replace the power window regulator master switch assembly.

2. **INSPECT DOOR CONTROL SWITCH ASSEMBLY**
    a. Measure the resistance according to the value(s) in the table below.

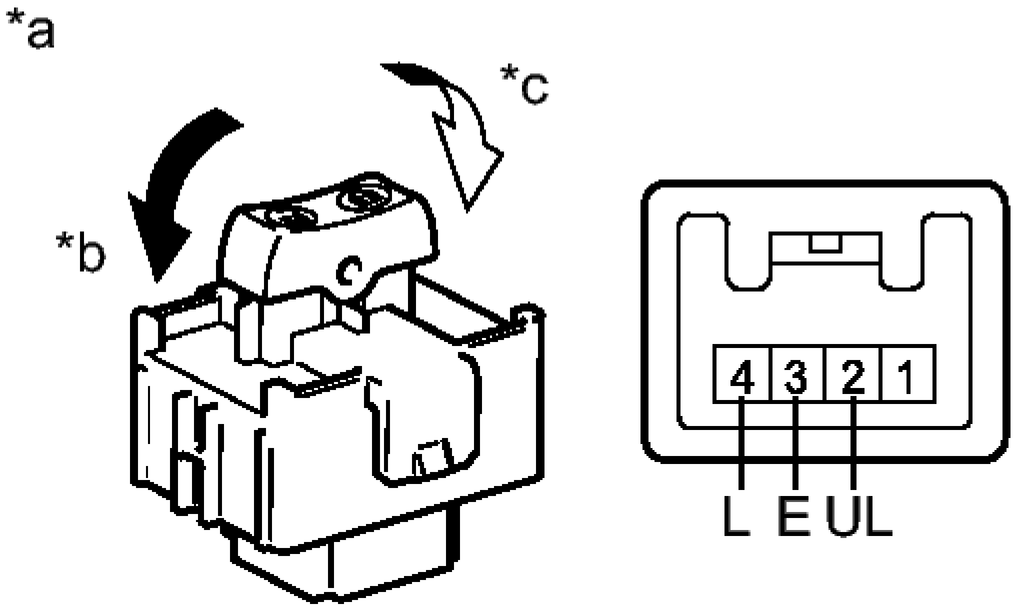

Fig. 4: Identifying Door Control Switch Connector Terminals
Courtesy of TOYOTA MOTOR SALES, U.S.A., INC.

Standard Resistance

Tester Connection	Condition	Specified Condition
4 (L) - 3 (E)	Locked	Below 1 ohms
4 (L) - 3 (E)	off	10 kohms or higher
2 (UL) - 3 (E)	Unlocked	Below 1 ohms
2 (UL) - 3 (E)	off	10 kohms or higher

TEXT IN ILLUSTRATION

*a	Component without harness connected (Door Control Switch Assembly)
*b	Unlock

*c	Lock

If the result is not as specified, replace the door control switch assembly.

INSTALLATION

INSTALLATION

1. **INSTALL DOOR CONTROL SWITCH ASSEMBLY (for Front Passenger Side)**
   a. Engage the 2 claws to install the door control switch assembly.
2. **INSTALL POWER WINDOW REGULATOR MASTER SWITCH ASSEMBLY (for Driver Side)** . Refer to **INSTALLATION - Step 1**
3. **INSTALL POWER WINDOW REGULATOR SWITCH ASSEMBLY WITH FRONT DOOR ARMREST BASE PANEL (for Front Passenger Side)** . Refer to **REASSEMBLY - Step 44**
4. **INSTALL POWER WINDOW REGULATOR MASTER SWITCH ASSEMBLY WITH FRONT DOOR ARMREST BASE PANEL (for Driver Side)** . Refer to **REASSEMBLY - Step 43**

UNLOCK WARNING SWITCH

COMPONENTS

ILLUSTRATION

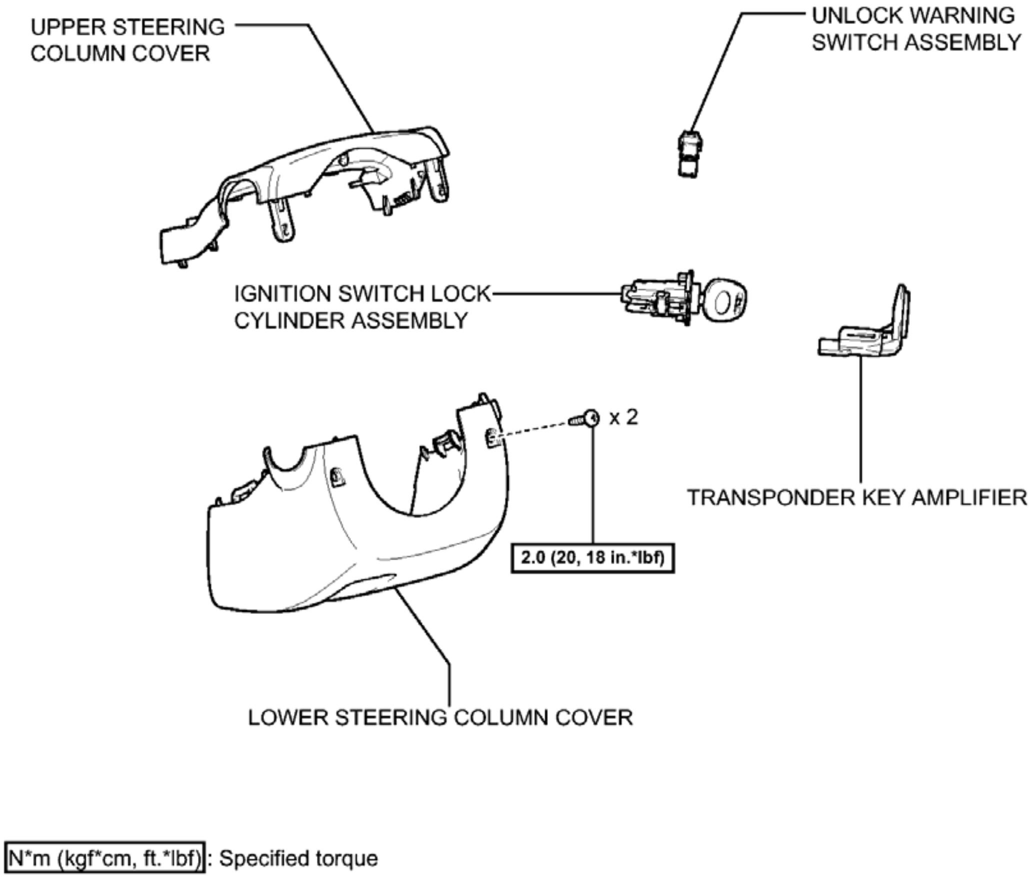
UPPER STEERING COLUMN COVER
UNLOCK WARNING SWITCH ASSEMBLY
IGNITION SWITCH LOCK CYLINDER ASSEMBLY
x 2
TRANSPONDER KEY AMPLIFIER
2.0 (20, 18 in.*lbf)
LOWER STEERING COLUMN COVER
N*m (kgf*cm, ft.*lbf): Specified torque
P

Fig. 5: Identifying Unlock Warning Switch Replacement Components With Torque Specifications
Courtesy of TOYOTA MOTOR SALES, U.S.A., INC.

REMOVAL

REMOVAL

1. **PRECAUTION**

   NOTE: **After turning the ignition switch off, waiting time may be required before disconnecting the cable from the negative (-) battery terminal. Therefore, make sure to read the disconnecting the cable from the negative (-) battery terminal notice before proceeding with work. Refer to PRECAUTION .**

2. **ALIGN FRONT WHEELS FACING STRAIGHT AHEAD**
3. **DISCONNECT CABLE FROM NEGATIVE BATTERY TERMINAL**

NOTE: When disconnecting the cable, some systems need to be initialized after the cable is reconnected. Refer to INITIALIZATION .

4. **REMOVE LOWER STEERING COLUMN COVER** . Refer to **REMOVAL - Step 1**
5. **REMOVE UPPER STEERING COLUMN COVER** . Refer to **REMOVAL - Step 2**
6. **REMOVE TRANSPONDER KEY AMPLIFIER** . Refer to **REMOVAL - Step 2**
7. **REMOVE IGNITION SWITCH LOCK CYLINDER ASSEMBLY** . Refer to **DISASSEMBLY - Step 16**
8. **REMOVE UNLOCK WARNING SWITCH ASSEMBLY**
   a. Disconnect the connector.
   b. Remove the unlock warning switch assembly by pushing up the center part and releasing the 2 claws.

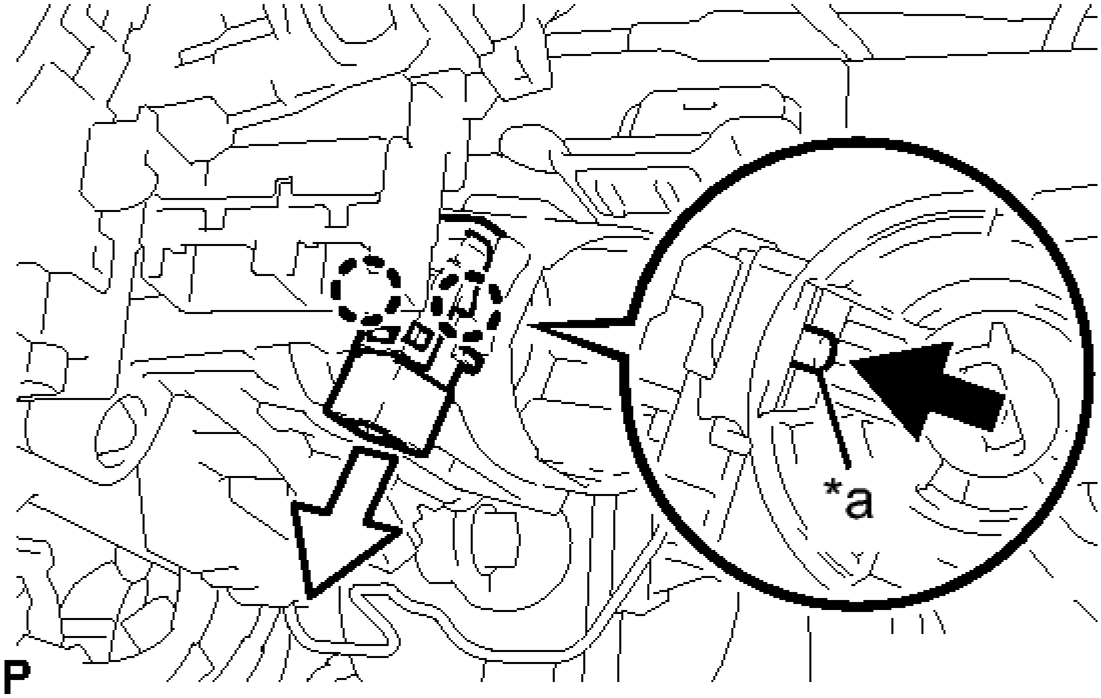

Fig. 6: Identifying Center Part
Courtesy of TOYOTA MOTOR SALES, U.S.A., INC.

TEXT IN ILLUSTRATION

*a	Center Part

HINT:

Slide the unlock warning switch assembly in the direction shown by the arrow in the illustration to remove it.

INSPECTION

INSPECTION

1. **INSPECT UNLOCK WARNING SWITCH ASSEMBLY**

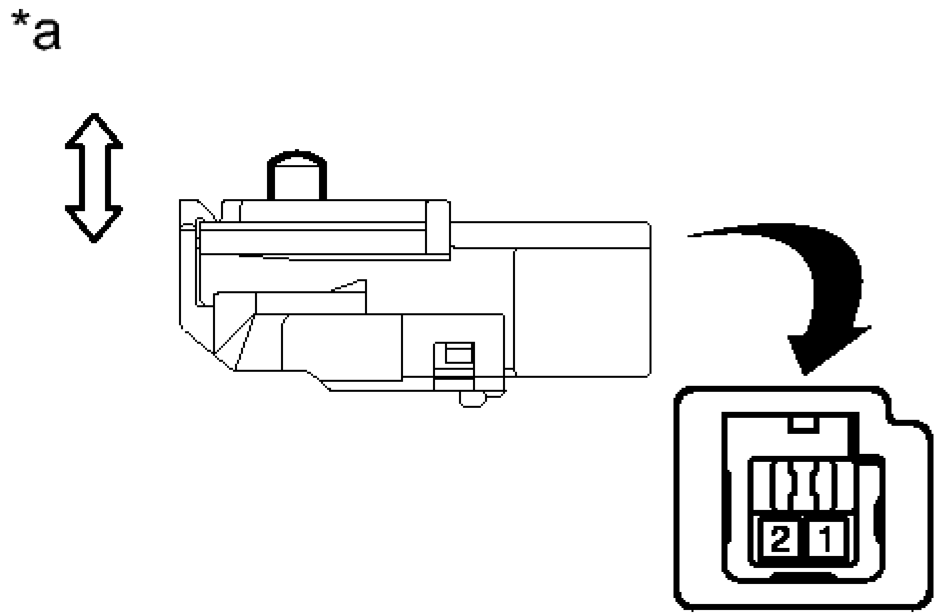

Fig. 7: Identifying Unlock Warning Switch Assembly Connector Terminal Identification
Courtesy of TOYOTA MOTOR SALES, U.S.A., INC.

a. Measure the resistance according to the value(s) in the table below.

Standard Resistance

Tester Connection	Switch Condition	Specified Condition
1 - 2	Switch free (Key removed)	10 kohms or higher
1 - 2	Switch pushed (Key set)	Below 1 ohms

TEXT IN ILLUSTRATION

	Component without harness connected

*a	(Unlock Warning Switch Assembly)

If the result is not as specified, replace the unlock warning switch assembly.

INSTALLATION

INSTALLATION

1. **INSTALL UNLOCK WARNING SWITCH ASSEMBLY**
   a. Engage the 2 claws and install the unlock warning switch assembly to the steering column upper bracket.
   b. Connect the connector.
2. **ALIGN FRONT WHEELS FACING STRAIGHT AHEAD**
3. **INSPECT STEERING WHEEL CENTER POINT**
4. **INSTALL IGNITION SWITCH LOCK CYLINDER ASSEMBLY** . Refer to **REASSEMBLY - Step 2**
5. **INSTALL TRANSPONDER KEY AMPLIFIER** . Refer to **INSTALLATION - Step 1**
6. **INSTALL UPPER STEERING COLUMN COVER** . Refer to **INSTALLATION - Step 2**
7. **INSTALL LOWER STEERING COLUMN COVER** . Refer to **INSTALLATION - Step 3**
8. **CONNECT CABLE TO NEGATIVE BATTERY TERMINAL**

NOTE: **When disconnecting the cable, some systems need to be initialized after the cable is reconnected. Refer to INITIALIZATION .**

FRONT DOOR LOCK

COMPONENTS

ILLUSTRATION

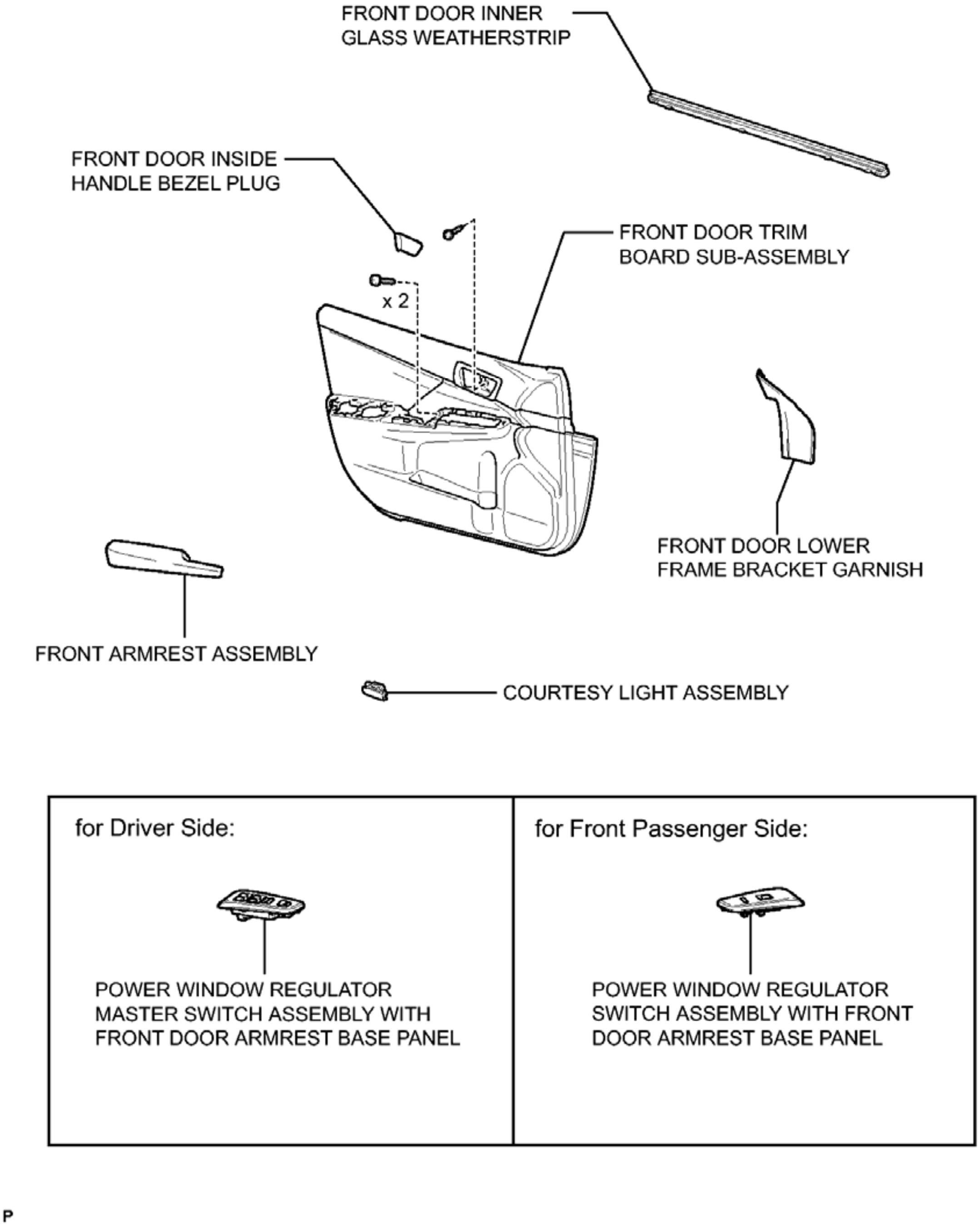
FRONT DOOR INNER
GLASS WEATHERSTRIP
FRONT DOOR INSIDE
HANDLE BEZEL PLUG
FRONT DOOR TRIM
BOARD SUB-ASSEMBLY
x 2
FRONT DOOR LOWER
FRAME BRACKET GARNISH
FRONT ARMREST ASSEMBLY
COURTESY LIGHT ASSEMBLY
for Driver Side:
POWER WINDOW REGULATOR
MASTER SWITCH ASSEMBLY WITH
FRONT DOOR ARMREST BASE PANEL
for Front Passenger Side:
POWER WINDOW REGULATOR
SWITCH ASSEMBLY WITH FRONT
DOOR ARMREST BASE PANEL
P

Fig. 8: Identifying Front Door Lock Replacement Components With Torque Specifications (1 Of 2)
Courtesy of TOYOTA MOTOR SALES, U.S.A., INC.

ILLUSTRATION

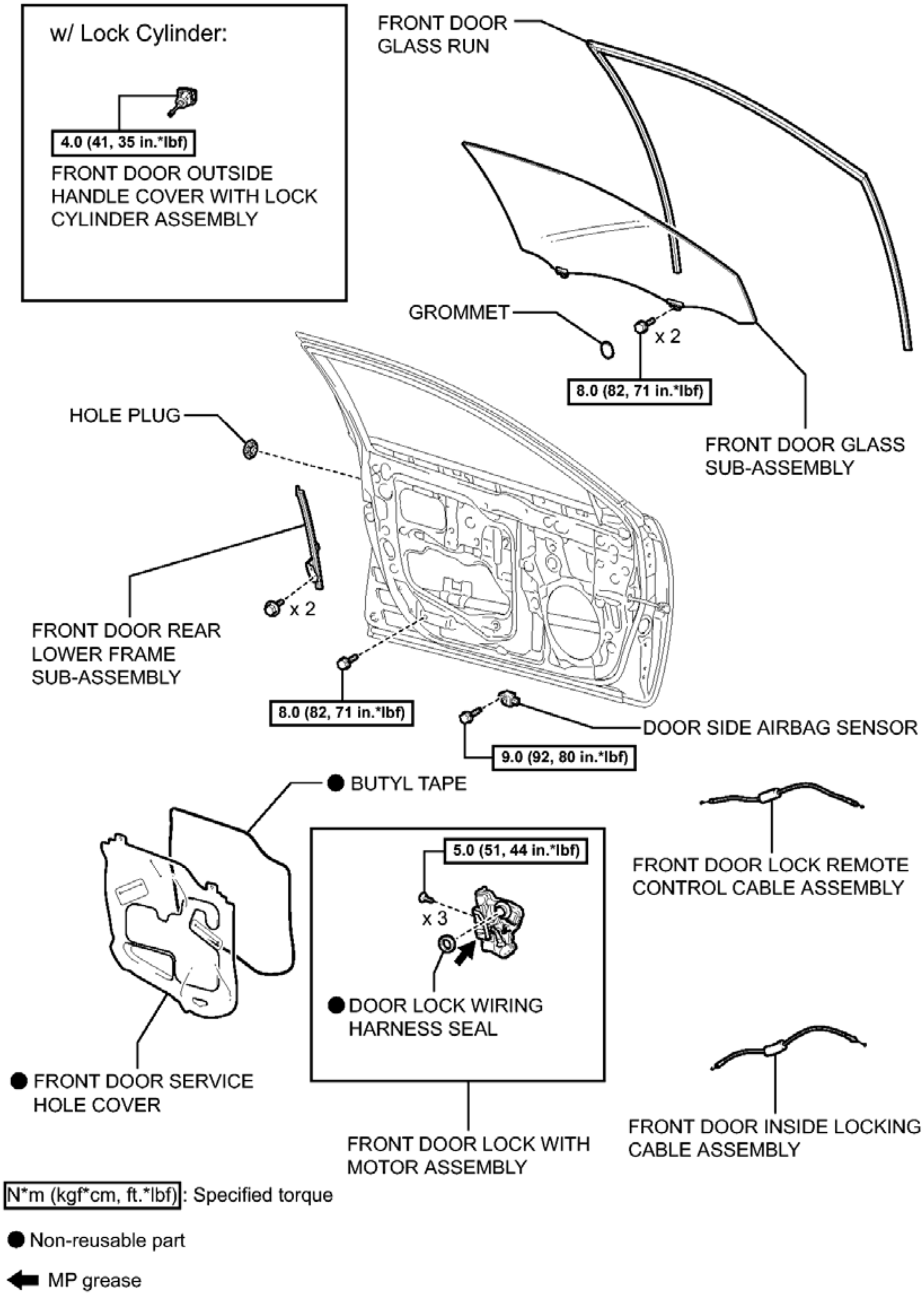
w/ Lock Cylinder:
4.0 (41, 35 in.*lbf)
FRONT DOOR OUTSIDE HANDLE COVER WITH LOCK CYLINDER ASSEMBLY
FRONT DOOR GLASS RUN
GROMMET
x 2
8.0 (82, 71 in.*lbf)
FRONT DOOR GLASS SUB-ASSEMBLY
HOLE PLUG
x 2
FRONT DOOR REAR LOWER FRAME SUB-ASSEMBLY
8.0 (82, 71 in.*lbf)
DOOR SIDE AIRBAG SENSOR
9.0 (92, 80 in.*lbf)
● BUTYL TAPE
5.0 (51, 44 in.*lbf)
x 3
FRONT DOOR LOCK REMOTE CONTROL CABLE ASSEMBLY
● DOOR LOCK WIRING HARNESS SEAL
● FRONT DOOR SERVICE HOLE COVER
FRONT DOOR LOCK WITH MOTOR ASSEMBLY
FRONT DOOR INSIDE LOCKING CABLE ASSEMBLY
N*m (kgf*cm, ft.*lbf): Specified torque
● Non-reusable part
MP grease

P

Fig. 9: Identifying Front Door Lock Replacement Components With Torque Specifications (2 Of 2)
Courtesy of TOYOTA MOTOR SALES, U.S.A., INC.

REMOVAL

REMOVAL

HINT:

- Use the same procedure for the LH side and RH side.
- The following procedure is for the LH side.

1. **PRECAUTION**

   NOTE: **After turning the ignition switch off, waiting time may be required before disconnecting the cable from the negative (-) battery terminal. Therefore, make sure to read the disconnecting the cable from the negative (-) battery terminal notices before proceeding with work. Refer to PRECAUTION .**

2. **DISCONNECT CABLE FROM NEGATIVE BATTERY TERMINAL**

   WARNING: **Wait at least 90 seconds after disconnecting the cable from the negative (-) battery terminal to disable the SRS system.**

   NOTE: **When disconnecting the cable, some systems need to be initialized after the cable is reconnected. Refer to INITIALIZATION .**

3. **REMOVE FRONT DOOR INSIDE HANDLE BEZEL PLUG** . Refer to **DISASSEMBLY - Step 3**
4. **REMOVE FRONT DOOR LOWER FRAME BRACKET GARNISH** . Refer to **DISASSEMBLY - Step 4**
5. **REMOVE POWER WINDOW REGULATOR MASTER SWITCH ASSEMBLY WITH FRONT DOOR ARMREST BASE PANEL (for Driver Side)** . Refer to **DISASSEMBLY - Step 5**
6. **REMOVE POWER WINDOW REGULATOR SWITCH ASSEMBLY WITH FRONT DOOR ARMREST BASE PANEL (for Front Passenger Side)** . Refer to **DISASSEMBLY - Step 6**
7. **REMOVE FRONT ARMREST ASSEMBLY** . Refer to **DISASSEMBLY - Step 7**
8. **REMOVE COURTESY LIGHT ASSEMBLY** . Refer to **REMOVAL - Step 1**
9. **REMOVE FRONT DOOR TRIM BOARD SUB-ASSEMBLY** . Refer to **DISASSEMBLY - Step 9**
10. **REMOVE FRONT DOOR INNER GLASS WEATHERSTRIP** . Refer to **DISASSEMBLY - Step 11**
11. **REMOVE DOOR SIDE AIRBAG SENSOR** . Refer to **REMOVAL - Step 10**
12. **REMOVE FRONT DOOR SERVICE HOLE COVER** . Refer to **DISASSEMBLY - Step 15**
13. **REMOVE FRONT DOOR GLASS SUB-ASSEMBLY** . Refer to **DISASSEMBLY - Step 16**
14. **REMOVE FRONT DOOR GLASS RUN** . Refer to **DISASSEMBLY - Step 20**
15. **REMOVE FRONT DOOR REAR LOWER FRAME SUB-ASSEMBLY** . Refer to **DISASSEMBLY - Step 22**
16. **REMOVE FRONT DOOR OUTSIDE HANDLE COVER WITH LOCK CYLINDER ASSEMBLY (w/ Lock Cylinder)** . Refer to **DISASSEMBLY - Step 23**
17. **REMOVE FRONT DOOR LOCK WITH MOTOR ASSEMBLY**

a. Using a T30 "TORX" socket wrench, remove the 3 screws.

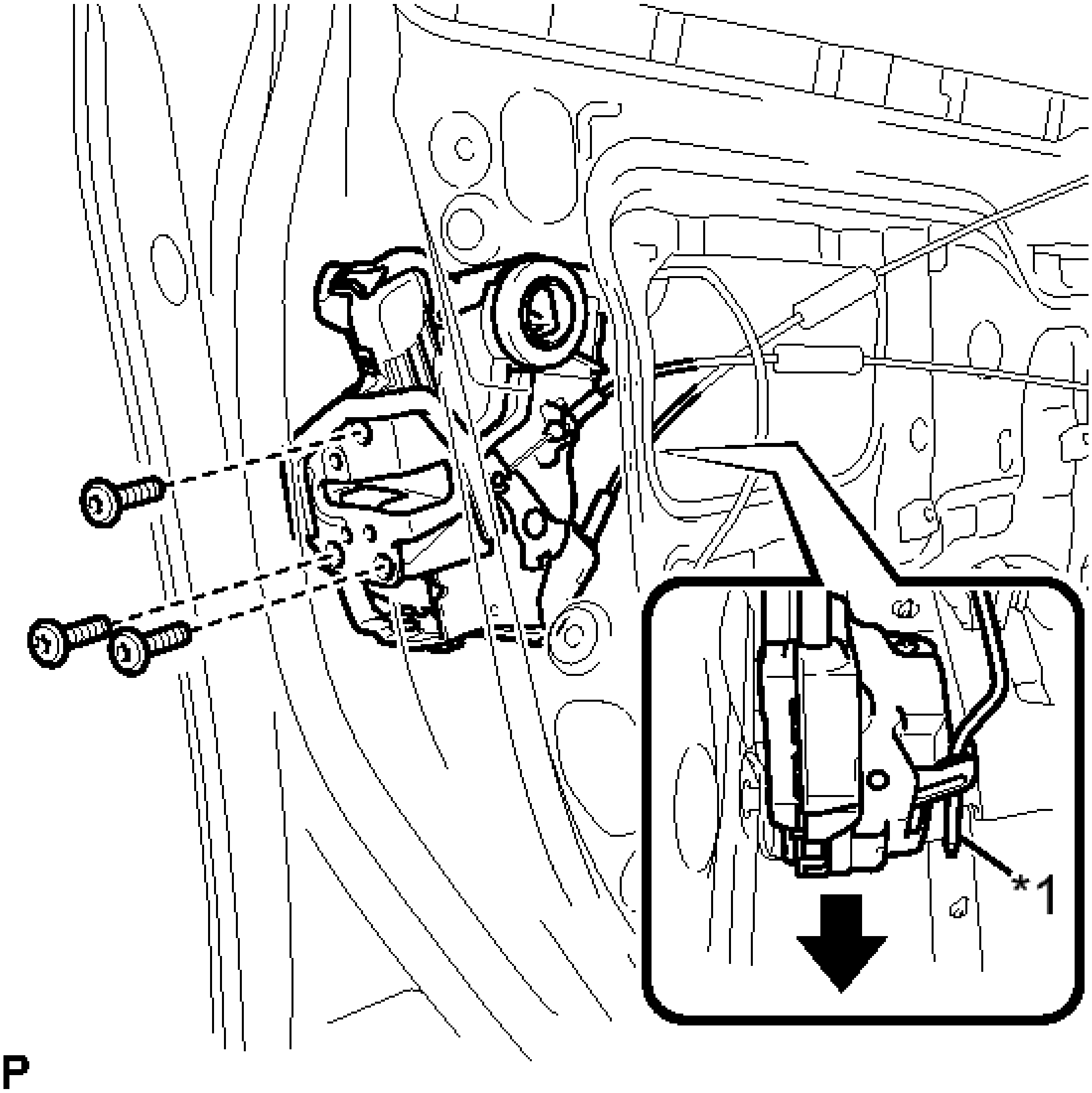

Fig. 10: Identifying Front Door Lock Open Rod
Courtesy of TOYOTA MOTOR SALES, U.S.A., INC.

TEXT IN ILLUSTRATION

*1	Front Door Lock Open Rod

b. Slide the front door lock with motor assembly downward, and remove the front door lock with motor assembly and cables as a unit.
c. When reusing the front door lock with motor assembly.

1. Remove the door lock wiring harness seal from the front door lock with motor assembly.

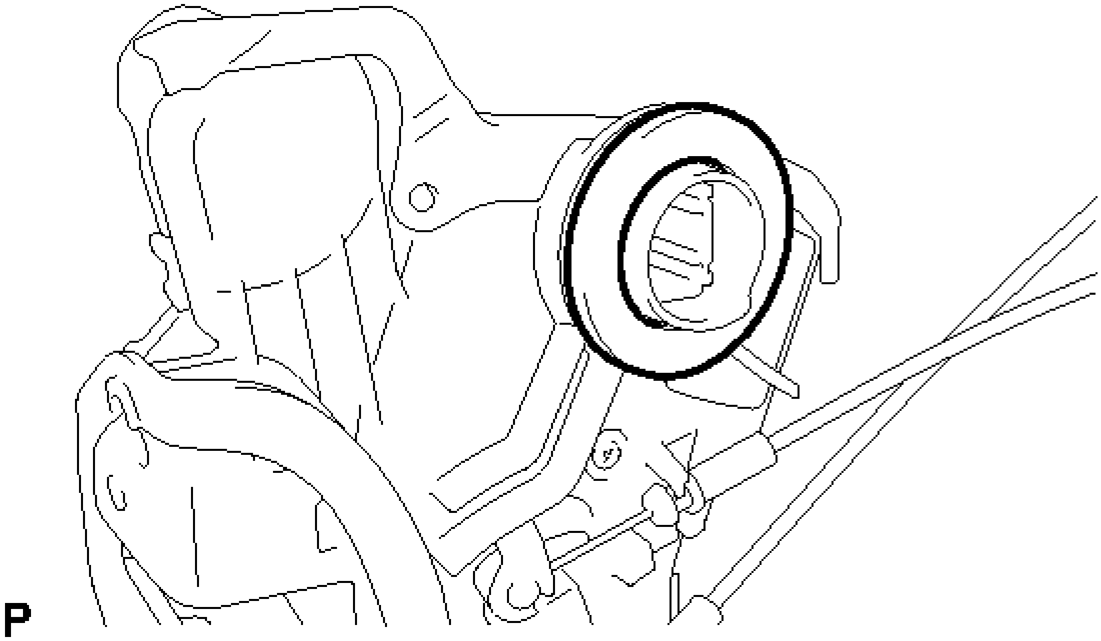

Fig. 11: Identifying Door Lock Wiring Harness Seal
Courtesy of TOYOTA MOTOR SALES, U.S.A., INC.

18. **REMOVE FRONT DOOR LOCK REMOTE CONTROL CABLE ASSEMBLY** . Refer to **DISASSEMBLY - Step 31**
19. **REMOVE FRONT DOOR INSIDE LOCKING CABLE ASSEMBLY** . Refer to **DISASSEMBLY - Step 32**

INSPECTION

INSPECTION

1. **INSPECT FRONT DOOR LOCK WITH MOTOR ASSEMBLY LH**
    a. Check the operation of the door lock motor.

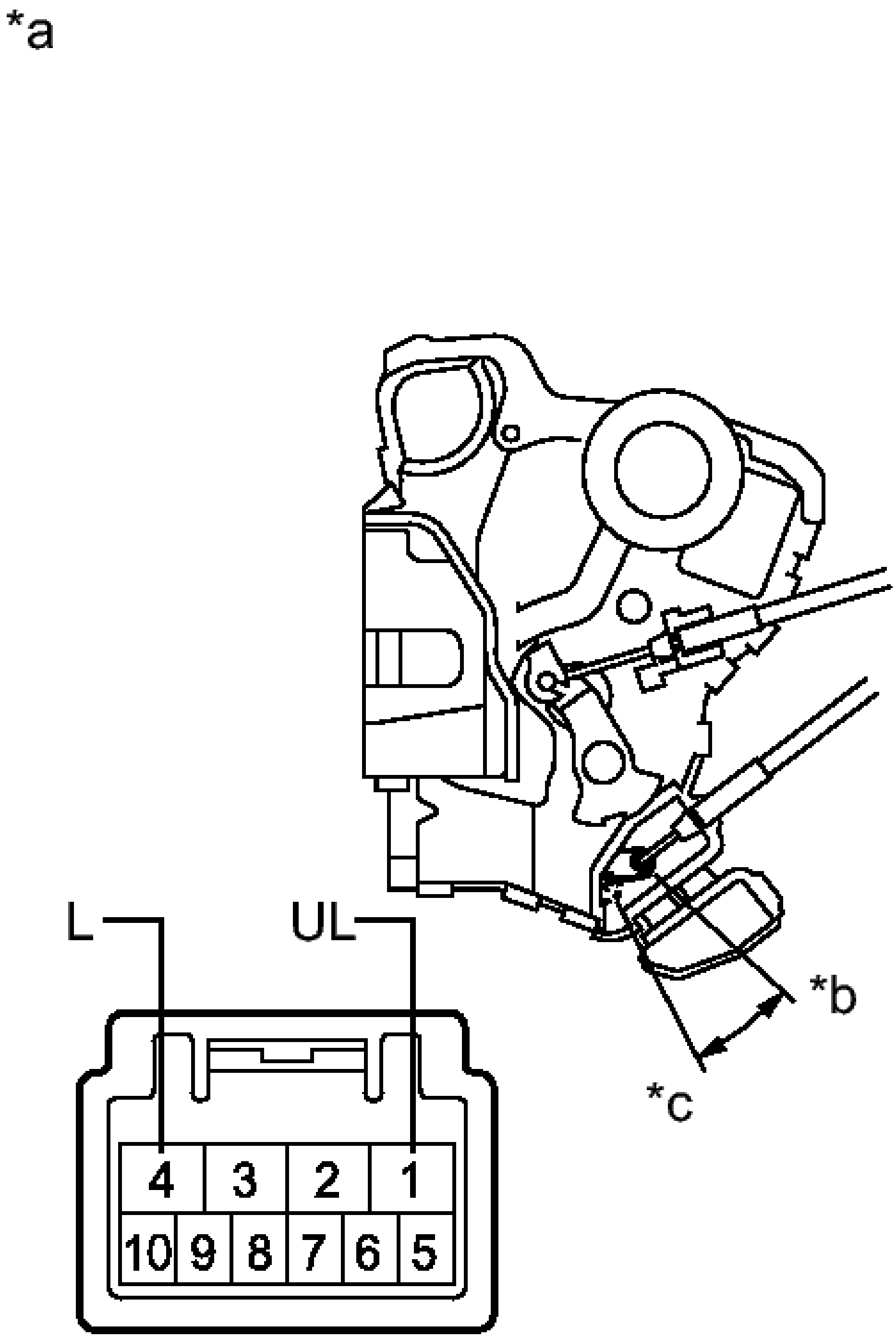
*a
L
UL
*b
*c
4
3
2
1
10
9
8
7
6
5

Fig. 12: Inspecting Front Door Lock Assembly With Connector End View LH
Courtesy of TOYOTA MOTOR SALES, U.S.A., INC.

1. Apply battery voltage and check the operation of the door lock motor.

OK

Connection	Result
Battery positive (+) --> Terminal 4 (L) Battery negative (-) --> Terminal 1 (UL)	Locks
Battery positive (+) --> Terminal 1 (UL) Battery negative (-) --> Terminal 4 (L)	Unlocks

TEXT IN ILLUSTRATION

*a	Component without harness connected (Front Door Lock with Motor Assembly LH)
*b	Unlock
*c	Lock

If the result is not as specified, replace the front door lock with motor assembly LH.

b. Check the operation of the door unlock detection switch.

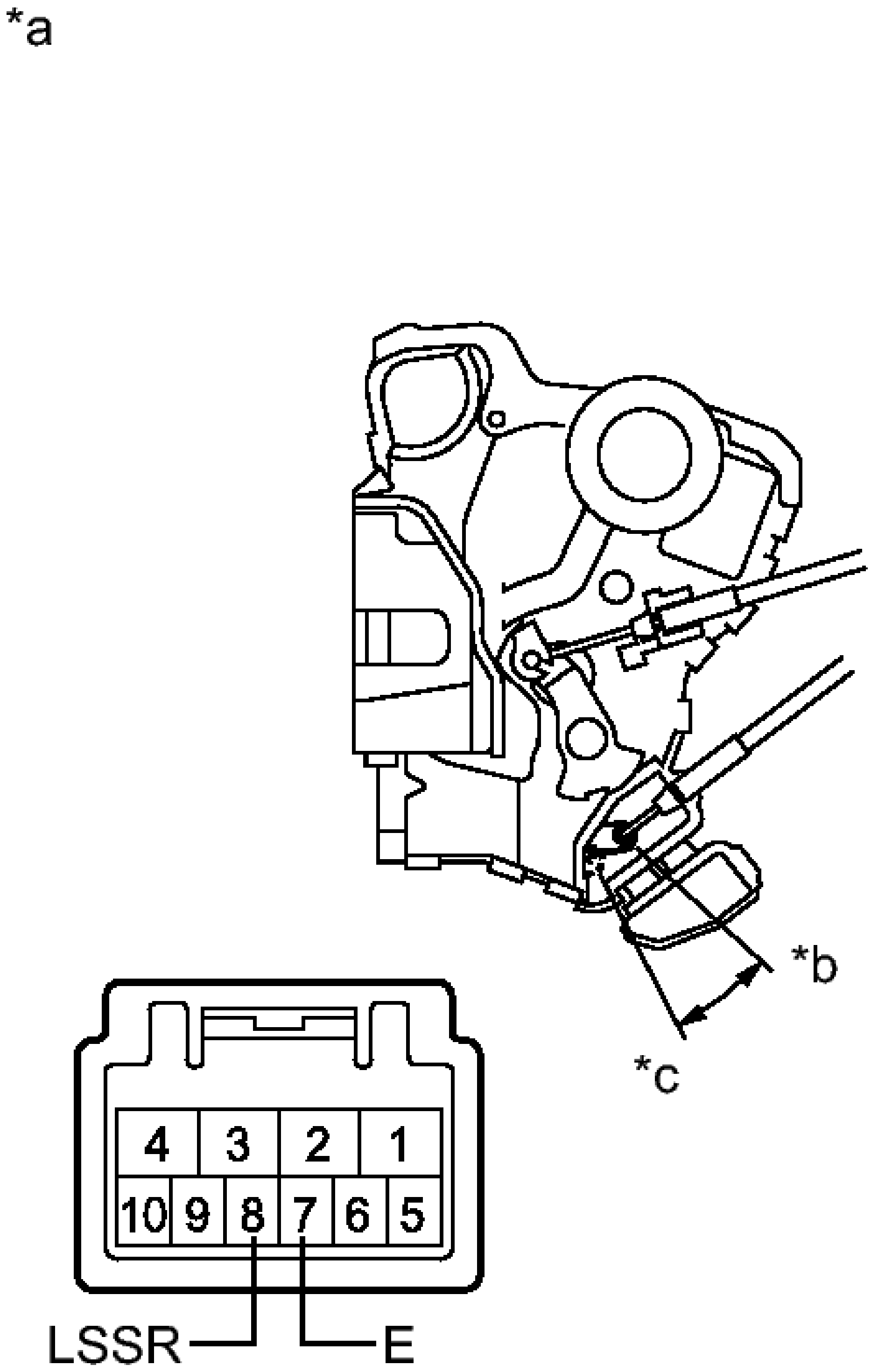
*a
*b
*c
4
3
2
1
10
9
8
7
6
5
LSSR
E

Fig. 13: Identifying Door Unlock Detection Switch Connector Terminal Identification
Courtesy of TOYOTA MOTOR SALES, U.S.A., INC.

1. Measure the resistance according to the value(s) in the table below.

Standard Resistance

Tester Connection	Condition	Specified Condition
7 (E) - 8 (LSSR)	Locked	10 kohms or higher
7 (E) - 8 (LSSR)	Unlocked	Below 1 ohms

TEXT IN ILLUSTRATION

*a	Component without harness connected (Front Door Lock with Motor Assembly LH)
*b	Unlock
*c	Lock

If the result is not as specified, replace the front door lock with motor assembly LH.

c. Check the operation of the door key lock and unlock switch.

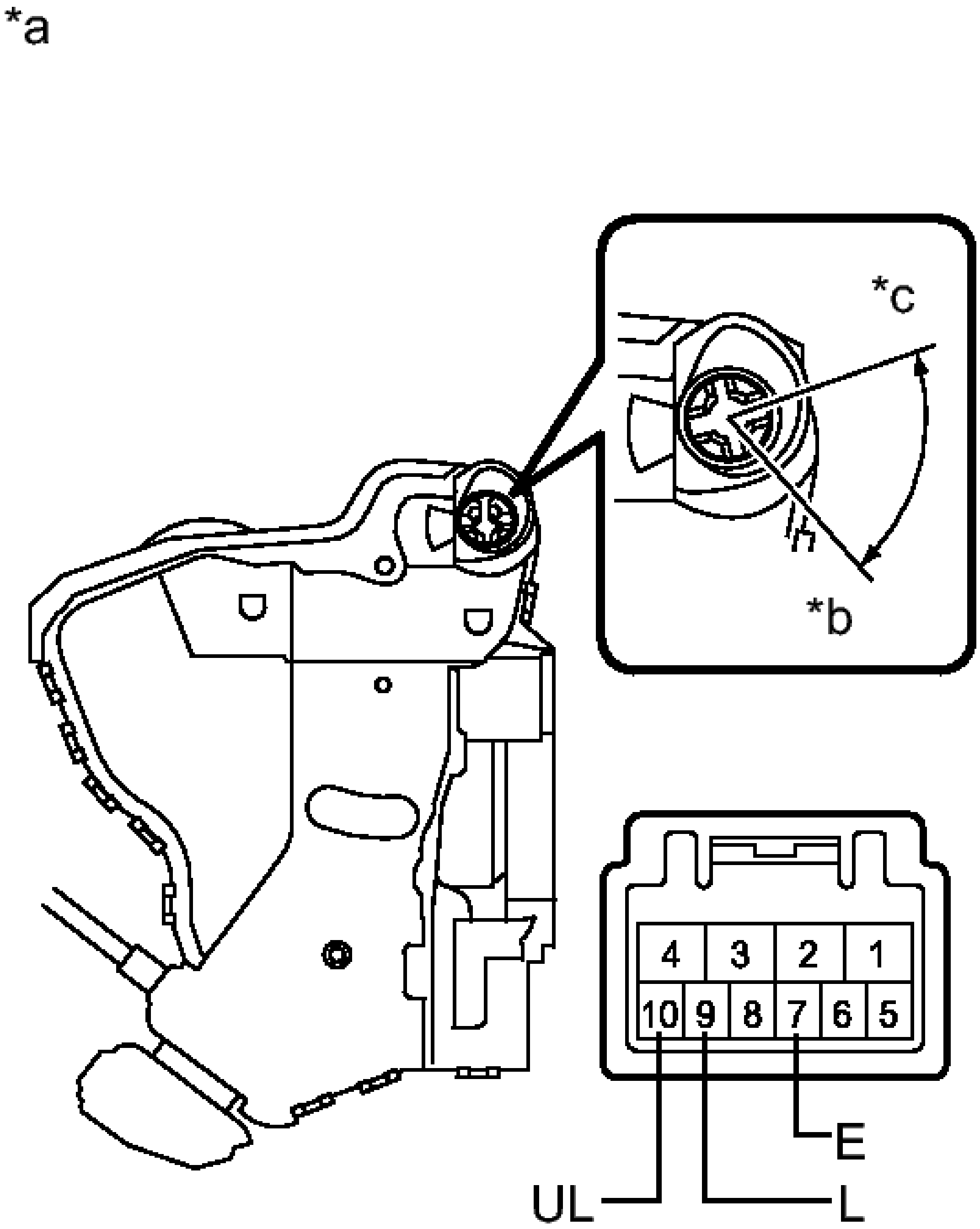
*a
*c
*b
4
3
2
1
10
9
8
7
6
5
E
UL
L

Fig. 14: Identifying Door Key Lock And Unlock Switch Connector Terminal Identification
Courtesy of TOYOTA MOTOR SALES, U.S.A., INC.

1. Measure the resistance according to the value(s) in the table below.

Standard Resistance

Tester Connection	**Condition**	**Specified Condition**
9 (L) - 7 (E)	Held to lock side	Below 1 ohms
9 (L) - 7 (E)	Neutral or held to unlock side	10 kohms or higher
10 (UL) - 7 (E)	Held to unlock side	Below 1 ohms
10 (UL) - 7 (E)	Neutral or held to lock side	10 kohms or higher

TEXT IN ILLUSTRATION

*a	Component without harness connected (Front Door Lock with Motor Assembly LH)
*b	Unlock
*c	Lock

If the result is not as specified, replace the front door lock with motor assembly LH.

2. **INSPECT FRONT DOOR LOCK WITH MOTOR ASSEMBLY RH**
    a. Check the operation of the door lock motor.

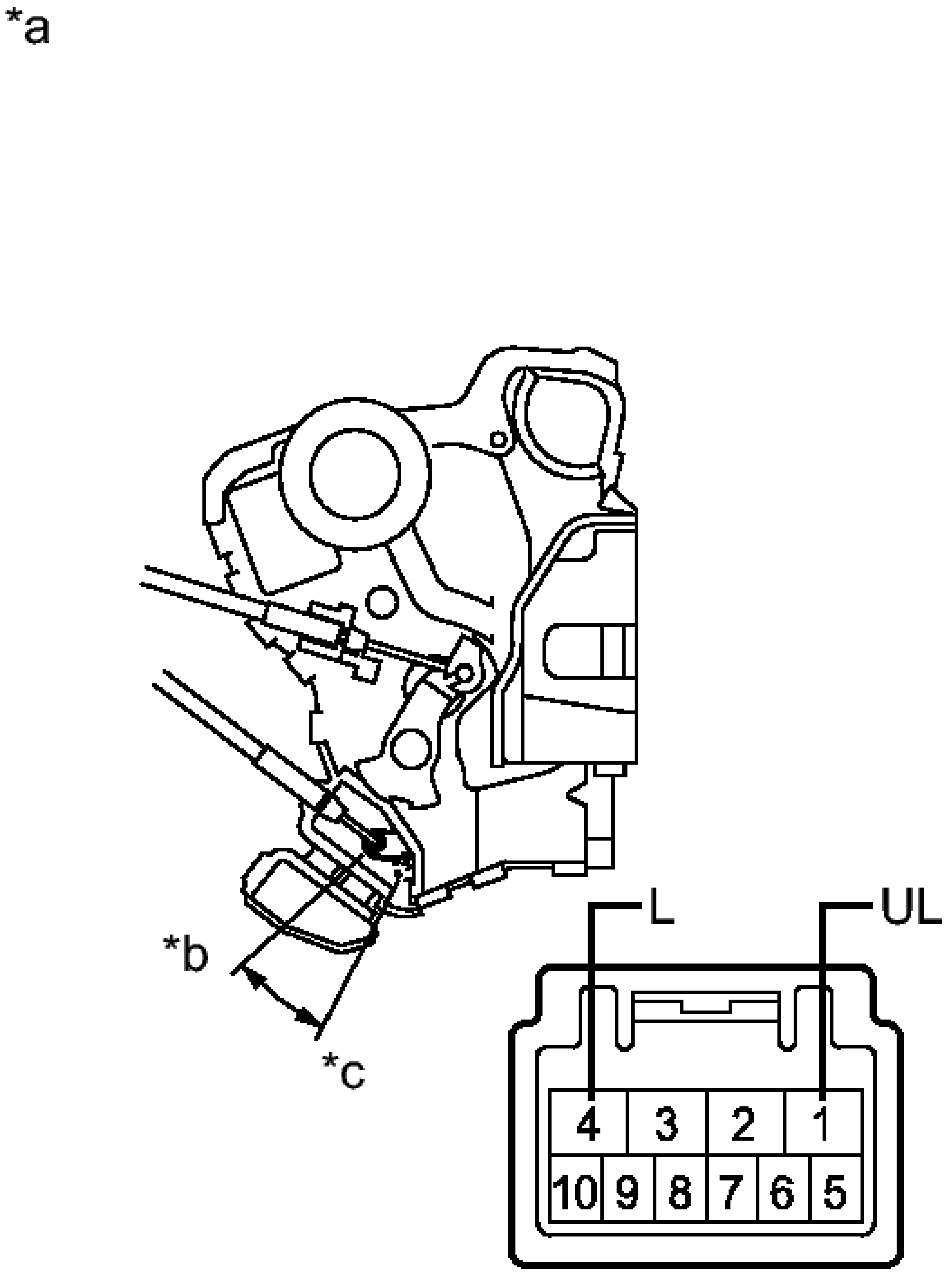
*a
*b
*c
L
UL
4
3
2
1
10
9
8
7
6
5

Fig. 15: Inspecting Front Door Lock Assembly RH With Connector End View
Courtesy of TOYOTA MOTOR SALES, U.S.A., INC.

1. Apply battery voltage and check the operation of the door lock motor.

OK

Connection	**Result**
Battery positive (+) --> Terminal 4 (L) Battery negative (-) --> Terminal 1 (UL)	Locks
Battery positive (+) --> Terminal 1 (UL) Battery negative (-) --> Terminal 4 (L)	Unlocks

TEXT IN ILLUSTRATION

*a	Component without harness connected (Front Door Lock with Motor Assembly RH)
*b	Unlock
*c	Lock

If the result is not as specified, replace the front door lock with motor assembly RH.

b. Check the operation of the door unlock detection switch.

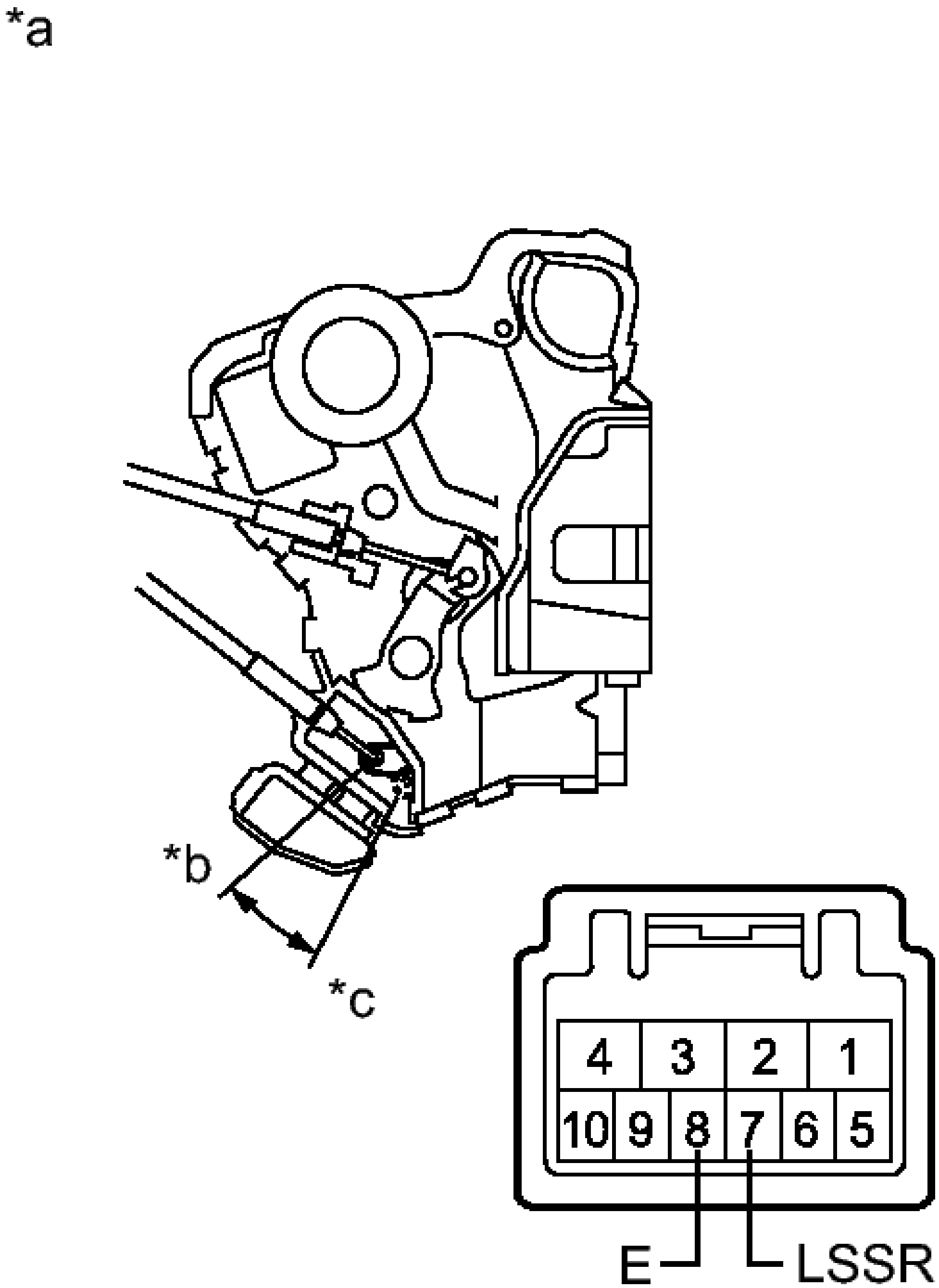
*a
*b
*c
4
3
2
1
10
9
8
7
6
5
E
LSSR

Fig. 16: Identifying Door Unlock Detection Switch Connector Terminal Identification
Courtesy of TOYOTA MOTOR SALES, U.S.A., INC.

1. Measure the resistance according to the value(s) in the table below.

Standard Resistance

Tester Connection	Condition	Specified Condition
7 (LSSR) - 8 (E)	Locked	10 kohms or higher
7 (LSSR) - 8 (E)	Unlocked	Below 1 ohms

TEXT IN ILLUSTRATION

*a	Component without harness connected (Front Door Lock with Motor Assembly RH)
*b	Unlock
*c	Lock

If the result is not as specified, replace the front door lock with motor assembly RH.

c. Check the operation of the door key lock and unlock switch (w/o Wireless Door Lock Control Function).

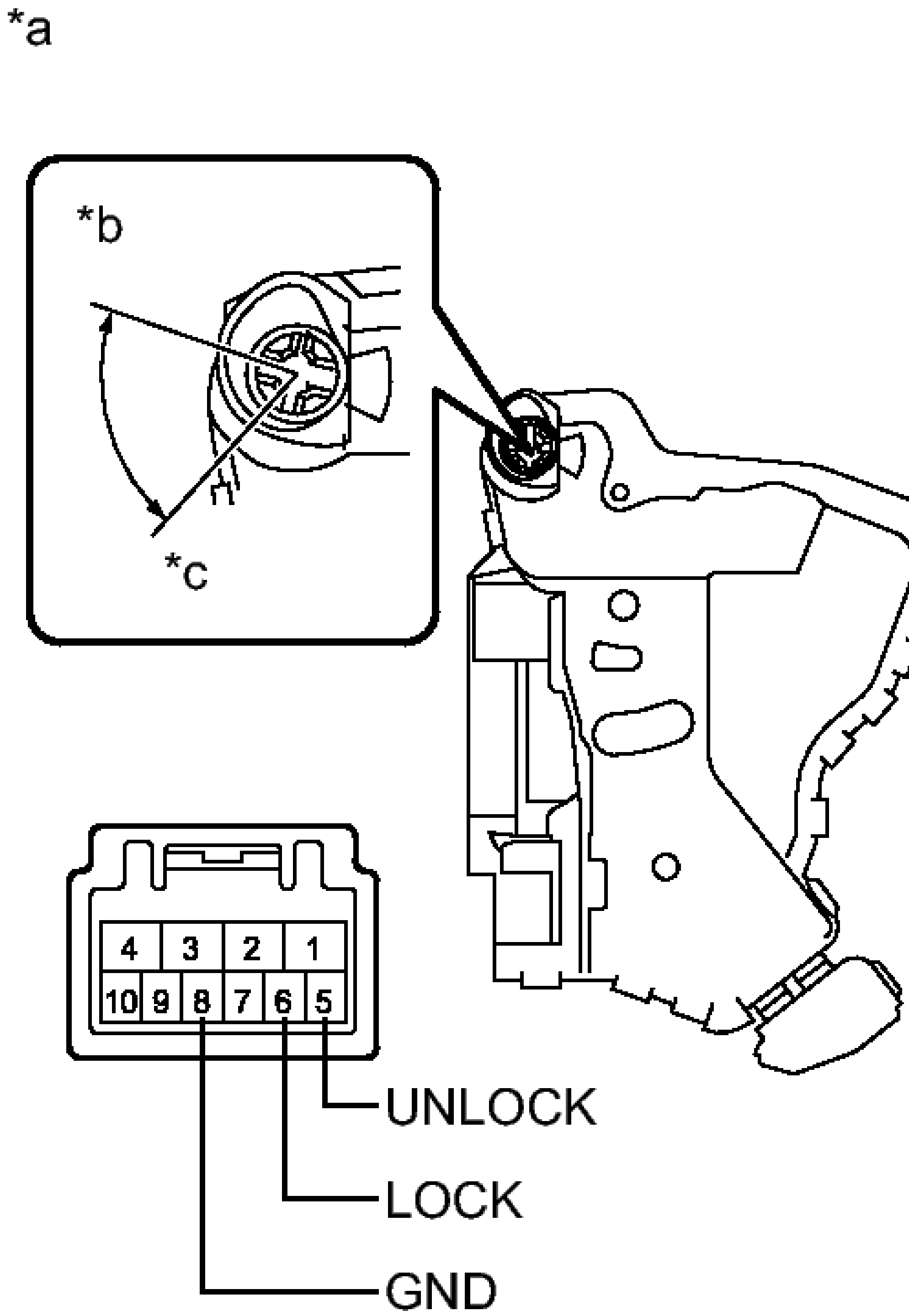
*a
*b
*c
4
3
2
1
10
9
8
7
6
5
UNLOCK
LOCK
GND

Fig. 17: Identifying Door Key Lock And Unlock Switch Connector Terminal Identification (W/O Wireless Door Lock Control Function)
Courtesy of TOYOTA MOTOR SALES, U.S.A., INC.

1. Measure the resistance according to the value(s) in the table below.

Standard Resistance

Tester Connection	**Condition**	**Specified Condition**
6 (L) - 8 (E)	Held to lock side	Below 1 ohms
6 (L) - 8 (E)	Neutral or held to unlock side	10 kohms or higher
5 (UL) - 8 (E)	Held to unlock side	Below 1 ohms
5 (UL) - 8 (E)	Neutral or held to lock side	10 kohms or higher

TEXT IN ILLUSTRATION

*a	Component without harness connected (Front Door Lock with Motor Assembly RH)
*b	Unlock
*c	Lock

If the result is not as specified, replace the front door lock with motor assembly RH.

INSTALLATION

INSTALLATION

HINT:

- Use the same procedure for the LH side and RH side.
- The following procedure is for the LH side.

1. **INSTALL FRONT DOOR INSIDE LOCKING CABLE ASSEMBLY** . Refer to **REASSEMBLY - Step 17**
2. **INSTALL FRONT DOOR LOCK REMOTE CONTROL CABLE ASSEMBLY** . Refer to **REASSEMBLY - Step 18**

3. **INSTALL FRONT DOOR LOCK WITH MOTOR ASSEMBLY**

NOTE:

- **When reusing the removed front door lock with motor assembly, replace the door lock wiring harness seal on the connector with a new one.**
- **Do not allow grease or dust to adhere to the door lock wiring harness seal surface of the connector.**
- **Reusing the door lock wiring harness seal or using a damaged door lock wiring harness seal may cause water intrusion. This may result in a malfunction of the front door lock with motor assembly.**

a. Apply MP grease to the sliding parts of the front door lock with motor assembly.
b. When reusing the front door lock with motor assembly.
    1. Install a new door lock wiring harness seal to the front door lock with motor assembly.
c. Insert the front door lock open rod to the front door lock with motor assembly.

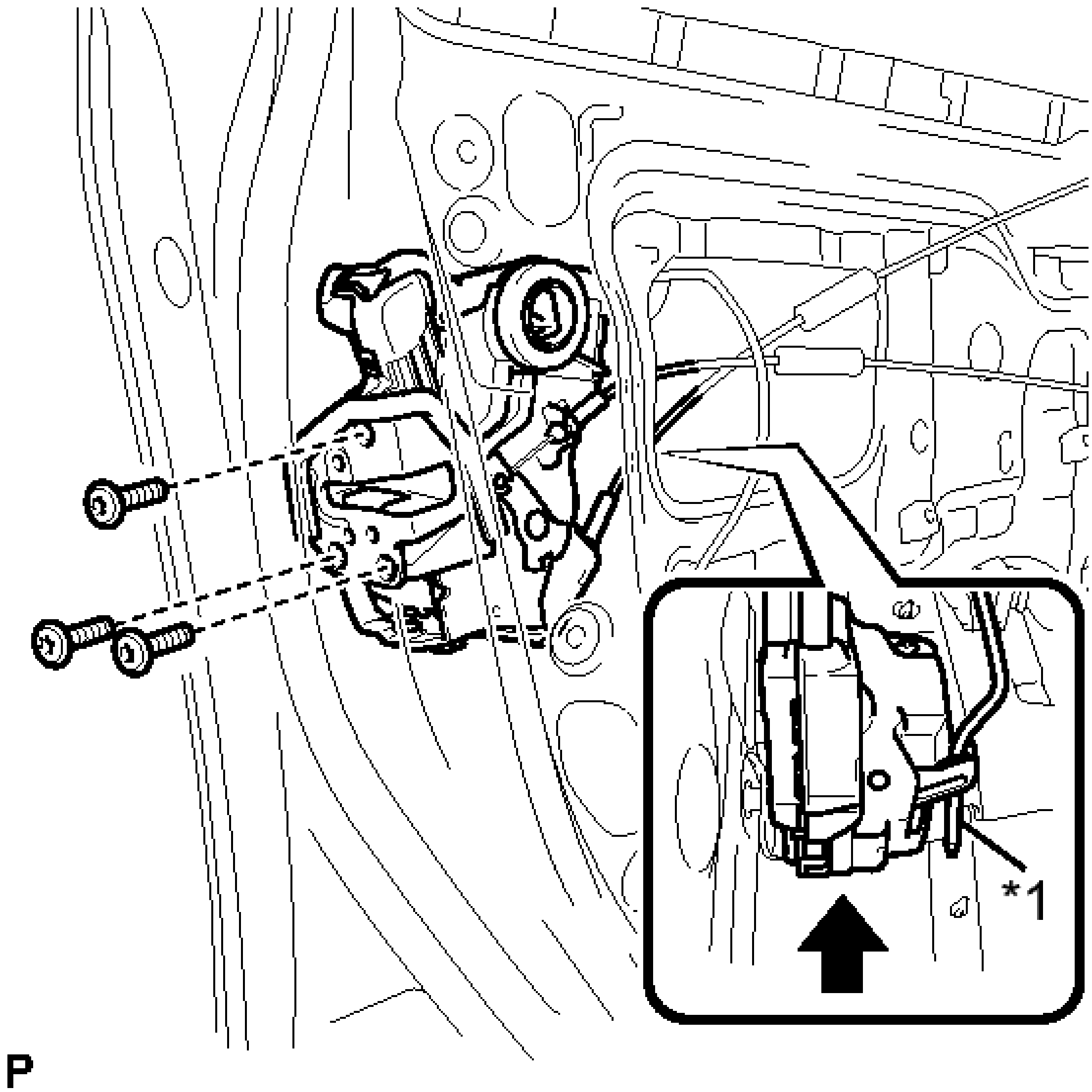

Fig. 18: Inserting Front Door Lock Open Rod
Courtesy of TOYOTA MOTOR SALES, U.S.A., INC.

TEXT IN ILLUSTRATION

*1	Front Door Lock Open Rod

d. Make sure that the front door lock open rod is securely connected to the front door lock with motor assembly.
e. Using a T30 "TORX" socket wrench, install the front door lock with motor assembly with the 3 screws.

Torque: 5.0 N*m (51 kgf*cm, 44 in.*lbf)

4. **INSTALL FRONT DOOR OUTSIDE HANDLE COVER WITH LOCK CYLINDER ASSEMBLY (w/ Lock Cylinder)** . Refer to **REASSEMBLY - Step 25**
5. **INSTALL FRONT DOOR REAR LOWER FRAME SUB-ASSEMBLY** . Refer to **REASSEMBLY - Step 27**
6. **INSTALL FRONT DOOR GLASS RUN** . Refer to **REASSEMBLY - Step 29**
7. **INSTALL FRONT DOOR GLASS SUB-ASSEMBLY** . Refer to **REASSEMBLY - Step 33**
8. **INSTALL FRONT DOOR SERVICE HOLE COVER** . Refer to **REASSEMBLY - Step 34**
9. **INSTALL DOOR SIDE AIRBAG SENSOR** . Refer to **INSTALLATION - Step 1**
10. **INSTALL FRONT DOOR INNER GLASS WEATHERSTRIP** . Refer to **REASSEMBLY - Step 38**
11. **INSTALL FRONT DOOR TRIM BOARD SUB-ASSEMBLY** . Refer to **REASSEMBLY - Step 40**
12. **INSTALL COURTESY LIGHT ASSEMBLY** . Refer to **INSTALLATION - Step 1**
13. **INSTALL FRONT ARMREST ASSEMBLY** . Refer to **REASSEMBLY - Step 42**
14. **INSTALL POWER WINDOW REGULATOR MASTER SWITCH ASSEMBLY WITH FRONT DOOR ARMREST BASE PANEL (for Driver Side)** . Refer to **REASSEMBLY - Step 43**
15. **INSTALL POWER WINDOW REGULATOR SWITCH ASSEMBLY WITH FRONT DOOR ARMREST BASE PANEL (for Front Passenger Side)** . Refer to **REASSEMBLY - Step 44**
16. **INSTALL FRONT DOOR LOWER FRAME BRACKET GARNISH** . Refer to **REASSEMBLY - Step 45**
17. **INSTALL FRONT DOOR INSIDE HANDLE BEZEL PLUG** . Refer to **REASSEMBLY - Step 46**
18. **CONNECT CABLE TO NEGATIVE BATTERY TERMINAL**

    NOTE: **When disconnecting the cable, some systems need to be initialized after the cable is reconnected. Refer to INITIALIZATION .**

19. **INITIALIZE POWER WINDOW CONTROL SYSTEM (for Driver Side)**

    Refer to **INITIALIZATION**

20. **CHECK POWER WINDOW CONTROL SYSTEM**

    Refer to **OPERATION CHECK**

21. **INSPECT SRS WARNING LIGHT**
    - for Built-in Type Yaw Rate Sensor: Refer to **DIAGNOSIS SYSTEM**
    - for Separate Type Yaw Rate Sensor: Refer to **DIAGNOSIS SYSTEM**

REAR DOOR LOCK

COMPONENTS

ILLUSTRATION

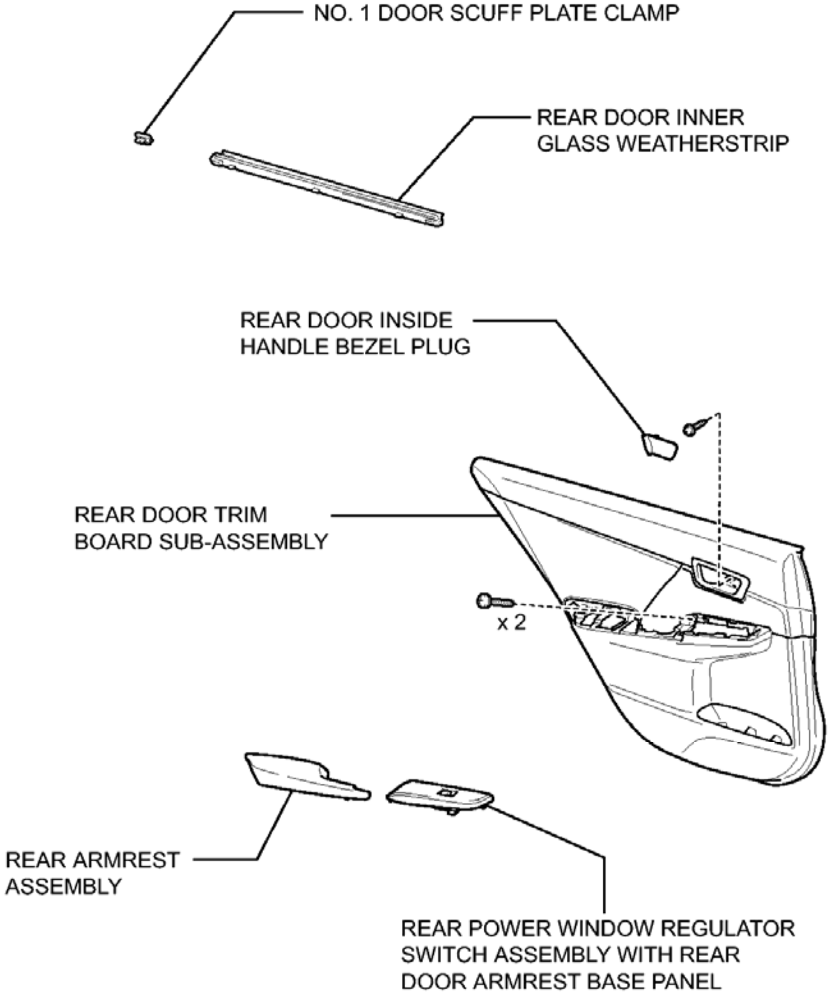
NO. 1 DOOR SCUFF PLATE CLAMP
REAR DOOR INNER GLASS WEATHERSTRIP
REAR DOOR INSIDE HANDLE BEZEL PLUG
REAR DOOR TRIM BOARD SUB-ASSEMBLY
x 2
REAR ARMREST ASSEMBLY
REAR POWER WINDOW REGULATOR SWITCH ASSEMBLY WITH REAR DOOR ARMREST BASE PANEL
P

Fig. 19: Identifying Rear Door Lock Replacement Components With Torque Specifications (1 Of 2)
Courtesy of TOYOTA MOTOR SALES, U.S.A., INC.

ILLUSTRATION

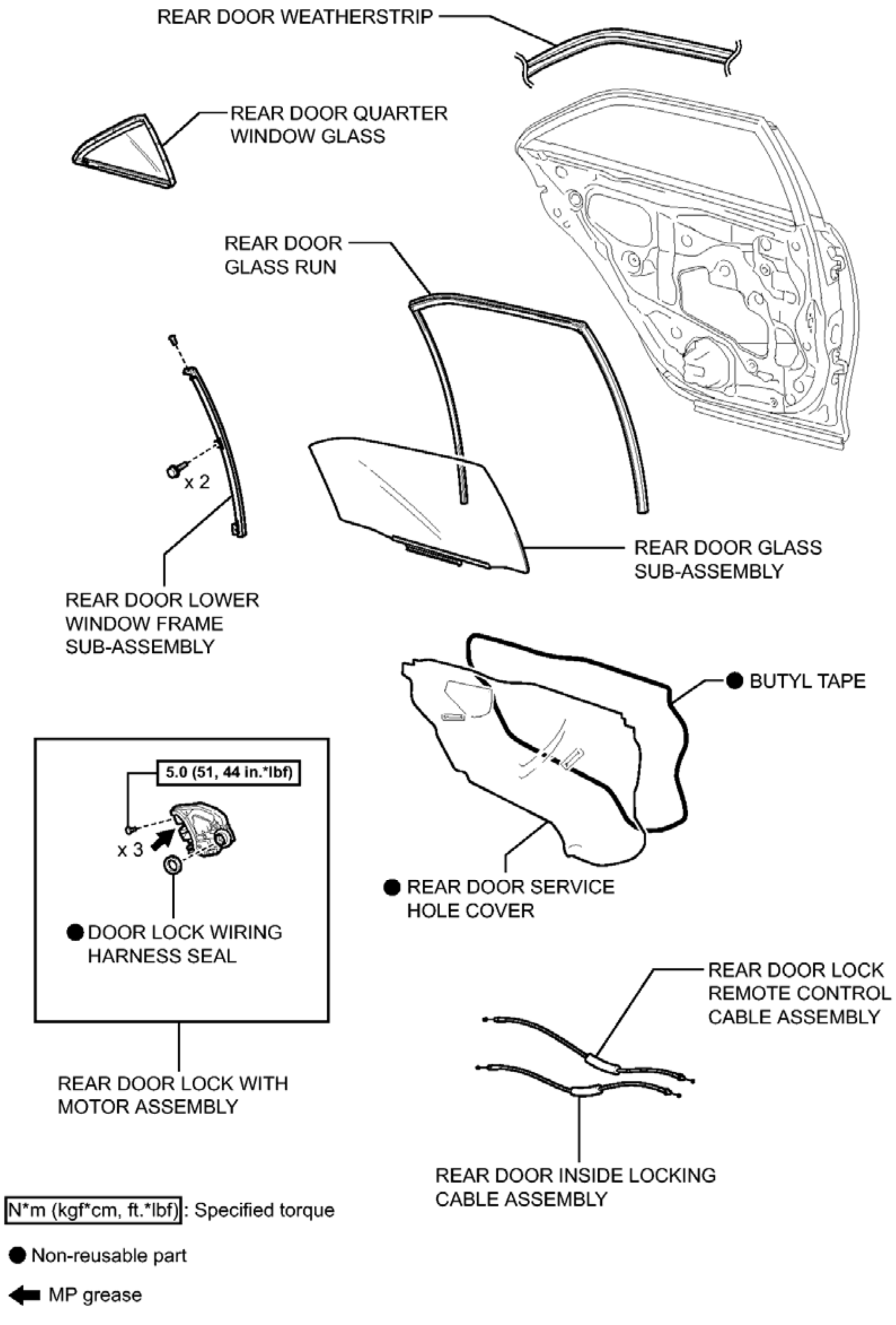
REAR DOOR WEATHERSTRIP
REAR DOOR QUARTER WINDOW GLASS
REAR DOOR GLASS RUN
x 2
REAR DOOR LOWER WINDOW FRAME SUB-ASSEMBLY
REAR DOOR GLASS SUB-ASSEMBLY
● BUTYL TAPE
● REAR DOOR SERVICE HOLE COVER
5.0 (51, 44 in.*lbf)
x 3
● DOOR LOCK WIRING HARNESS SEAL
REAR DOOR LOCK WITH MOTOR ASSEMBLY
REAR DOOR LOCK REMOTE CONTROL CABLE ASSEMBLY
REAR DOOR INSIDE LOCKING CABLE ASSEMBLY
N*m (kgf*cm, ft.*lbf): Specified torque
● Non-reusable part
MP grease
P

Fig. 20: Identifying Rear Door Lock Replacement Components With Torque Specifications (2 Of 2)
Courtesy of TOYOTA MOTOR SALES, U.S.A., INC.

REMOVAL

REMOVAL

HINT:

- Use the same procedure for the LH side and RH side.
- The following procedure is for the LH side.

1. **PRECAUTION**

   NOTE: **After turning the ignition switch off, waiting time may be required before disconnecting the cable from the negative (-) battery terminal. Therefore, make sure to read the disconnecting the cable from the negative (-) battery terminal notices before proceeding with work. Refer to PRECAUTION .**

2. **DISCONNECT CABLE FROM NEGATIVE BATTERY TERMINAL**

   NOTE: **When disconnecting the cable, some systems need to be initialized after the cable is reconnected. Refer to INITIALIZATION .**

3. **REMOVE REAR DOOR INSIDE HANDLE BEZEL PLUG** . Refer to **DISASSEMBLY - Step 3**
4. **REMOVE REAR POWER WINDOW REGULATOR SWITCH ASSEMBLY WITH REAR DOOR ARMREST BASE PANEL** . Refer to **DISASSEMBLY - Step 4**
5. **REMOVE REAR ARMREST ASSEMBLY** . Refer to **DISASSEMBLY - Step 5**
6. **REMOVE REAR DOOR TRIM BOARD SUB-ASSEMBLY** . Refer to **DISASSEMBLY - Step 6**
7. **REMOVE REAR DOOR INNER GLASS WEATHERSTRIP** . Refer to **DISASSEMBLY - Step 8**
8. **REMOVE REAR DOOR SERVICE HOLE COVER** . Refer to **DISASSEMBLY - Step 9**
9. **DISCONNECT REAR DOOR WEATHERSTRIP** . Refer to **REMOVAL - Step 9**
10. **REMOVE REAR DOOR GLASS RUN** . Refer to **DISASSEMBLY - Step 12**
11. **REMOVE REAR DOOR LOWER WINDOW FRAME SUB-ASSEMBLY** . Refer to **DISASSEMBLY - Step 13**
12. **REMOVE REAR DOOR QUARTER WINDOW GLASS** . Refer to **DISASSEMBLY - Step 14**
13. **REMOVE REAR DOOR GLASS SUB-ASSEMBLY** . Refer to **DISASSEMBLY - Step 15**
14. **REMOVE REAR DOOR LOCK WITH MOTOR ASSEMBLY**
    a. Using a T30 "TORX" socket wrench, remove the 3 screws.

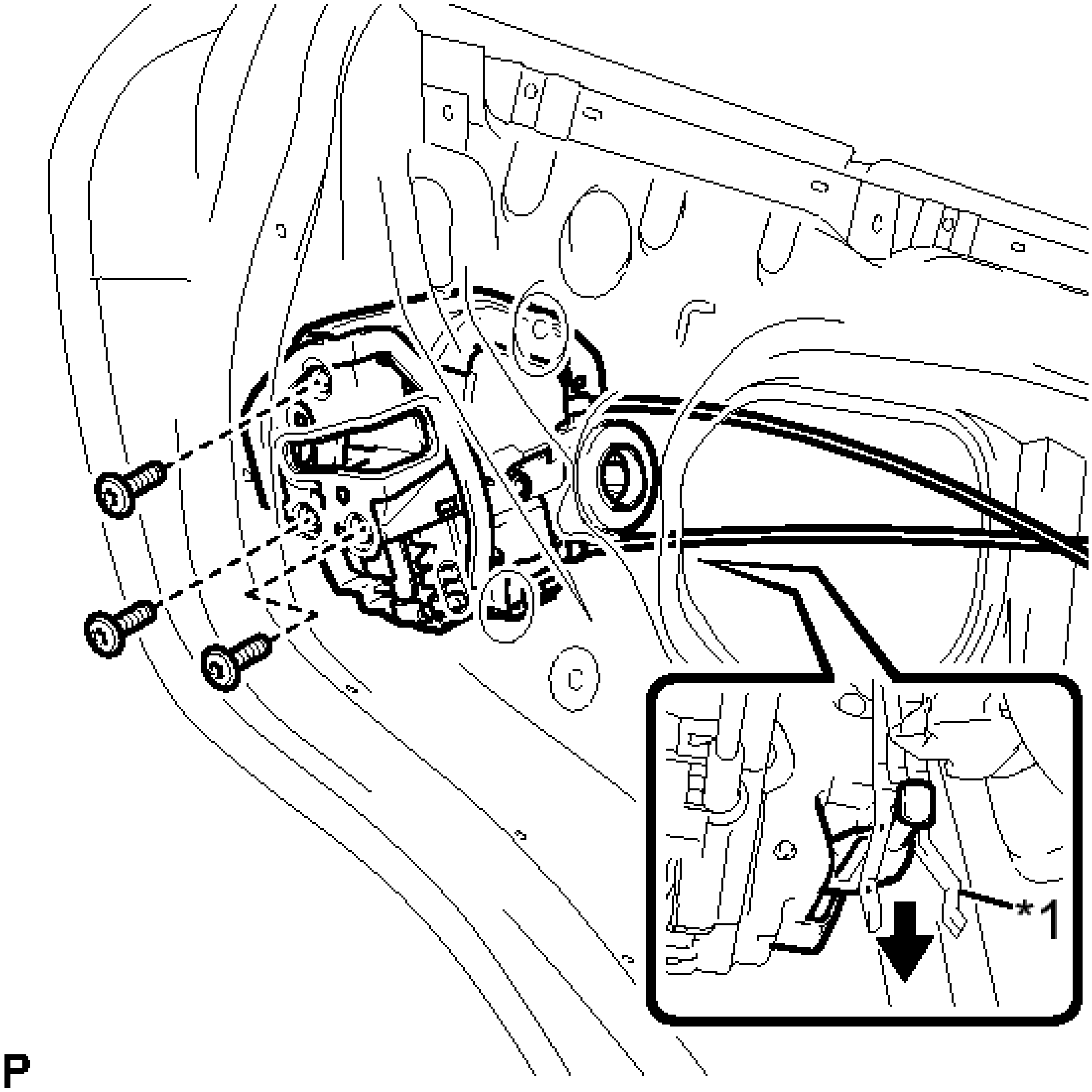

Fig. 21: Removing Rear Door Lock With Motor Assembly
Courtesy of TOYOTA MOTOR SALES, U.S.A., INC.

TEXT IN ILLUSTRATION

*1	Release Plate

b. Move the rear door lock with motor assembly downward and pull the release plate out of the rear door outside handle frame.
c. When reusing the rear door lock with motor assembly.
    1. Remove the door lock wiring harness seal from the rear door lock with motor assembly.

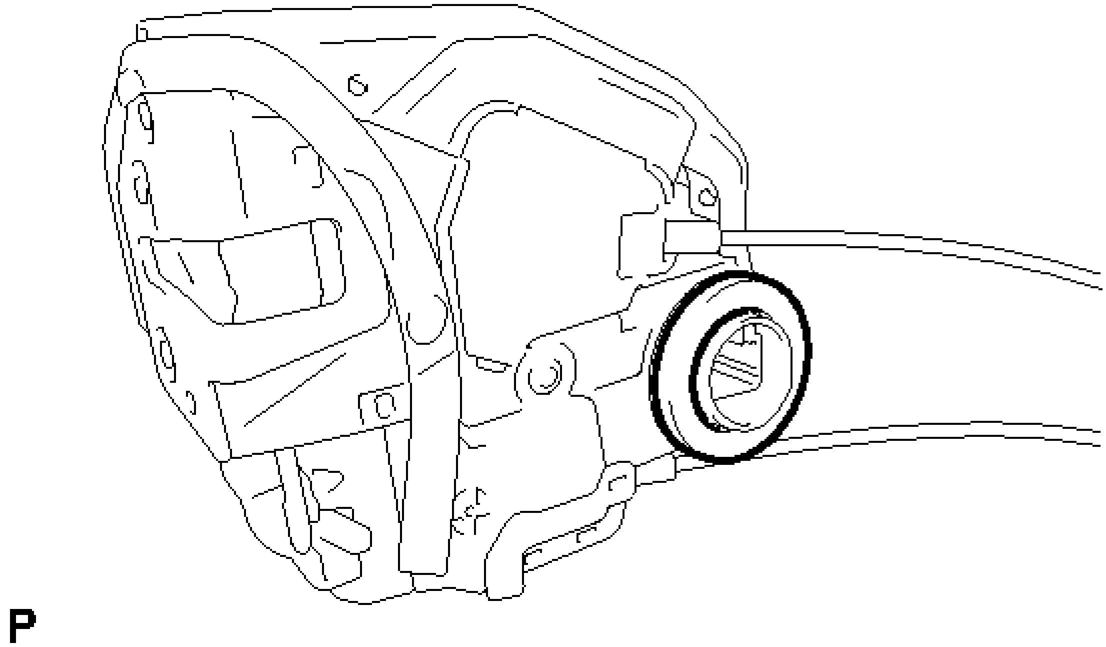

Fig. 22: Identifying Door Lock Wiring Harness Seal
Courtesy of TOYOTA MOTOR SALES, U.S.A., INC.

15. **REMOVE REAR DOOR LOCK REMOTE CONTROL CABLE ASSEMBLY** . Refer to **DISASSEMBLY - Step 21**
16. **REMOVE REAR DOOR INSIDE LOCKING CABLE ASSEMBLY** . Refer to **DISASSEMBLY - Step 22**

INSPECTION

INSPECTION

1. **INSPECT REAR DOOR LOCK WITH MOTOR ASSEMBLY LH**
    a. Check the operation of the door lock motor.

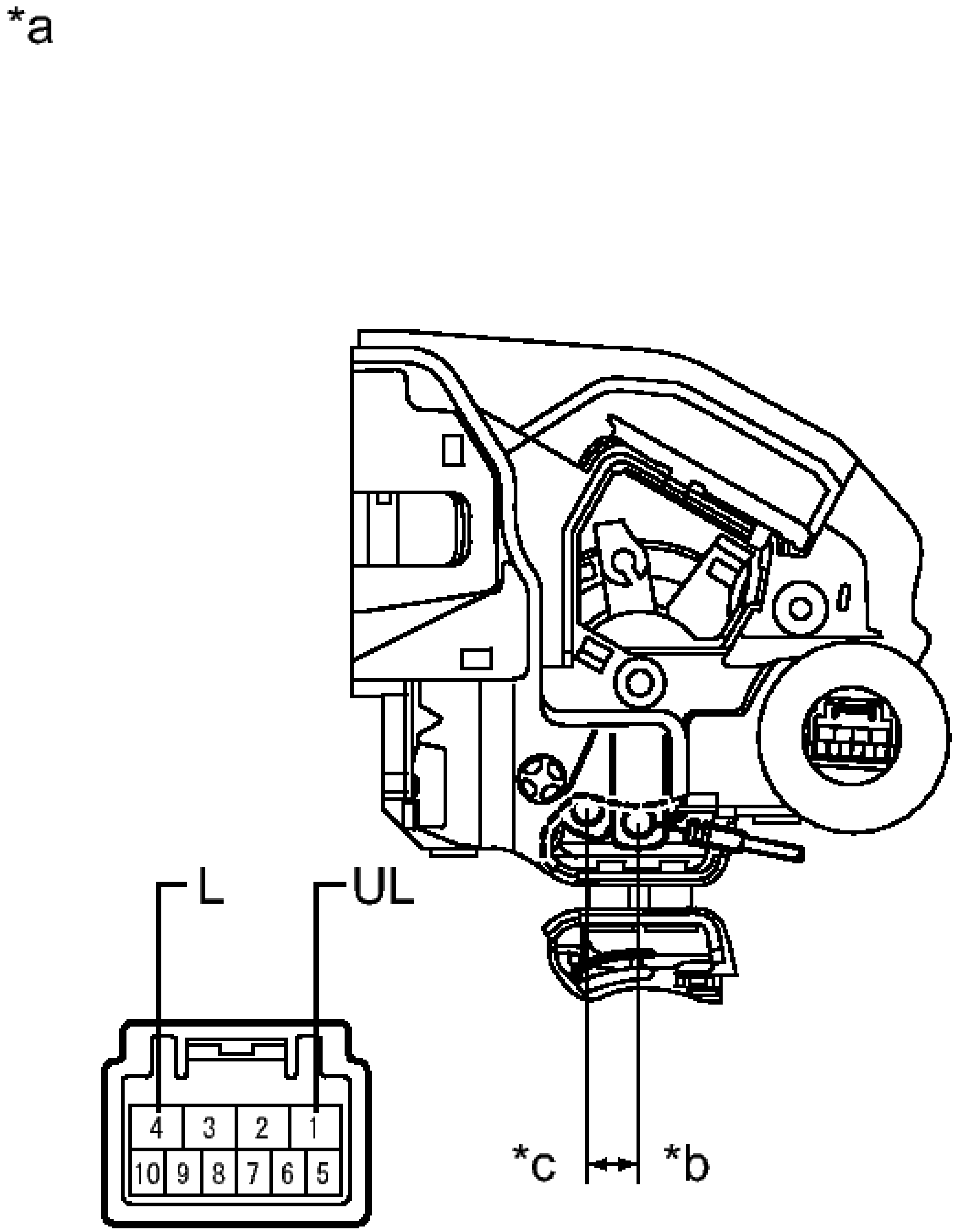
*a
L
UL
4
3
2
1
10
9
8
7
6
5
*c
*b

Fig. 23: Identifying Door Lock Motor Connector Terminal Identification
Courtesy of TOYOTA MOTOR SALES, U.S.A., INC.

1. Apply battery voltage and check the operation of the door lock motor.

OK

Connection	**Result**
Battery positive (+) --> Terminal 4 (L) Battery negative (-) --> Terminal 1 (UL)	Locks
Battery positive (+) --> Terminal 1 (UL) Battery negative (-) --> Terminal 4 (L)	Unlocks

TEXT IN ILLUSTRATION

*a	Component without harness connected (Rear Door Lock with Motor Assembly LH)
*b	Unlock
*c	Lock

If the result is not as specified, replace the rear door lock with motor assembly LH.

b. Check the operation of the unlock detection switch.

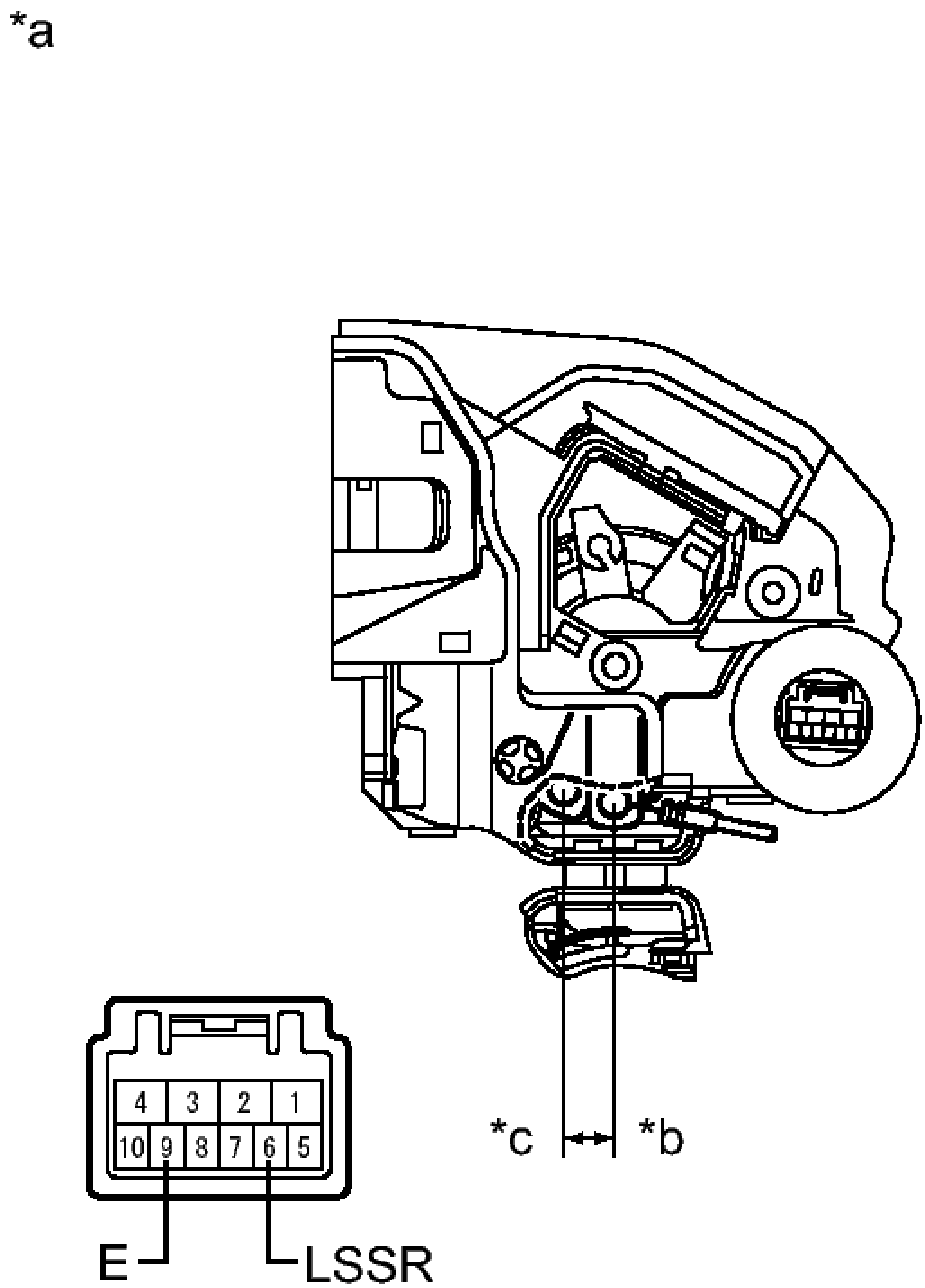
*a
4
3
2
1
10
9
8
7
6
5
E
LSSR
*c
*b

Fig. 24: Identifying Unlock Detection Switch Connector Terminal Identification
Courtesy of TOYOTA MOTOR SALES, U.S.A., INC.

1. Measure the resistance according to the value(s) in the table below.

Standard Resistance

Tester Connection	**Condition**	**Specified Condition**
6 (LSSR) - 9 (E)	Locked	10 kohms or higher
6 (LSSR) - 9 (E)	Unlocked	Below 1 ohms

TEXT IN ILLUSTRATION

*a	Component without harness connected (Rear Door Lock with Motor Assembly LH)
*b	Unlock
*c	Lock

If the result is not as specified, replace the rear door lock with motor assembly LH.

2. **INSPECT REAR DOOR LOCK WITH MOTOR ASSEMBLY RH**
    a. Check the operation of the door lock motor.

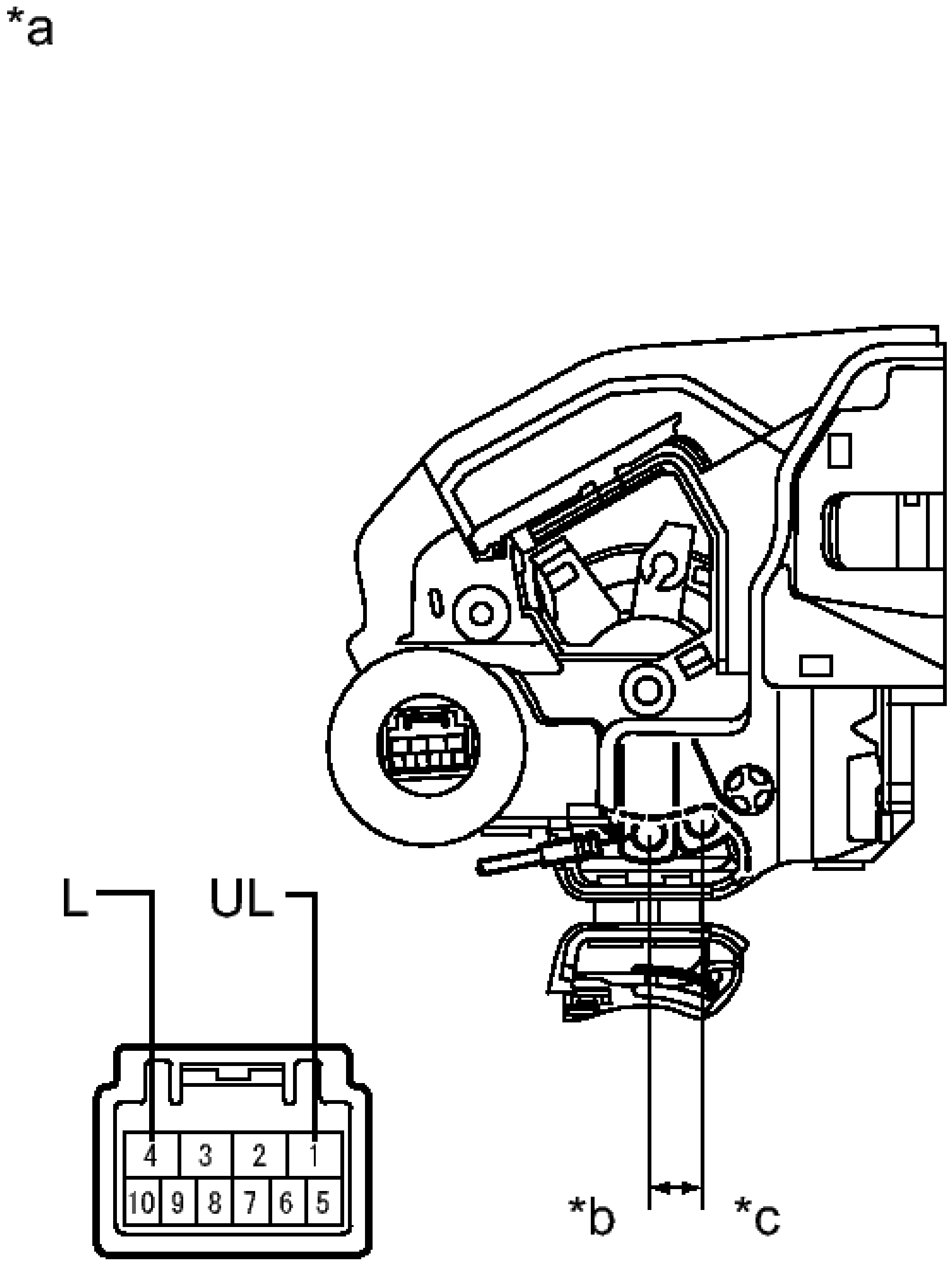
*a
L
UL
4
3
2
1
10
9
8
7
6
5
*b
*c

Fig. 25: Identifying Door Lock Motor Connector Terminal Identification
Courtesy of TOYOTA MOTOR SALES, U.S.A., INC.

1. Apply battery voltage and check the operation of the door lock motor.

OK

Connection	**Result**
Battery positive (+) --> Terminal 4 (L) Battery negative (-) --> Terminal 1 (UL)	Locks
Battery positive (+) --> Terminal 1 (UL) Battery negative (-) --> Terminal 4 (L)	Unlocks

TEXT IN ILLUSTRATION

*a	Component without harness connected (Rear Door Lock with Motor Assembly RH)
*b	Unlock
*c	Lock

If the result is not as specified, replace the rear door lock with motor assembly RH.

b. Check the operation of the unlock detection switch.

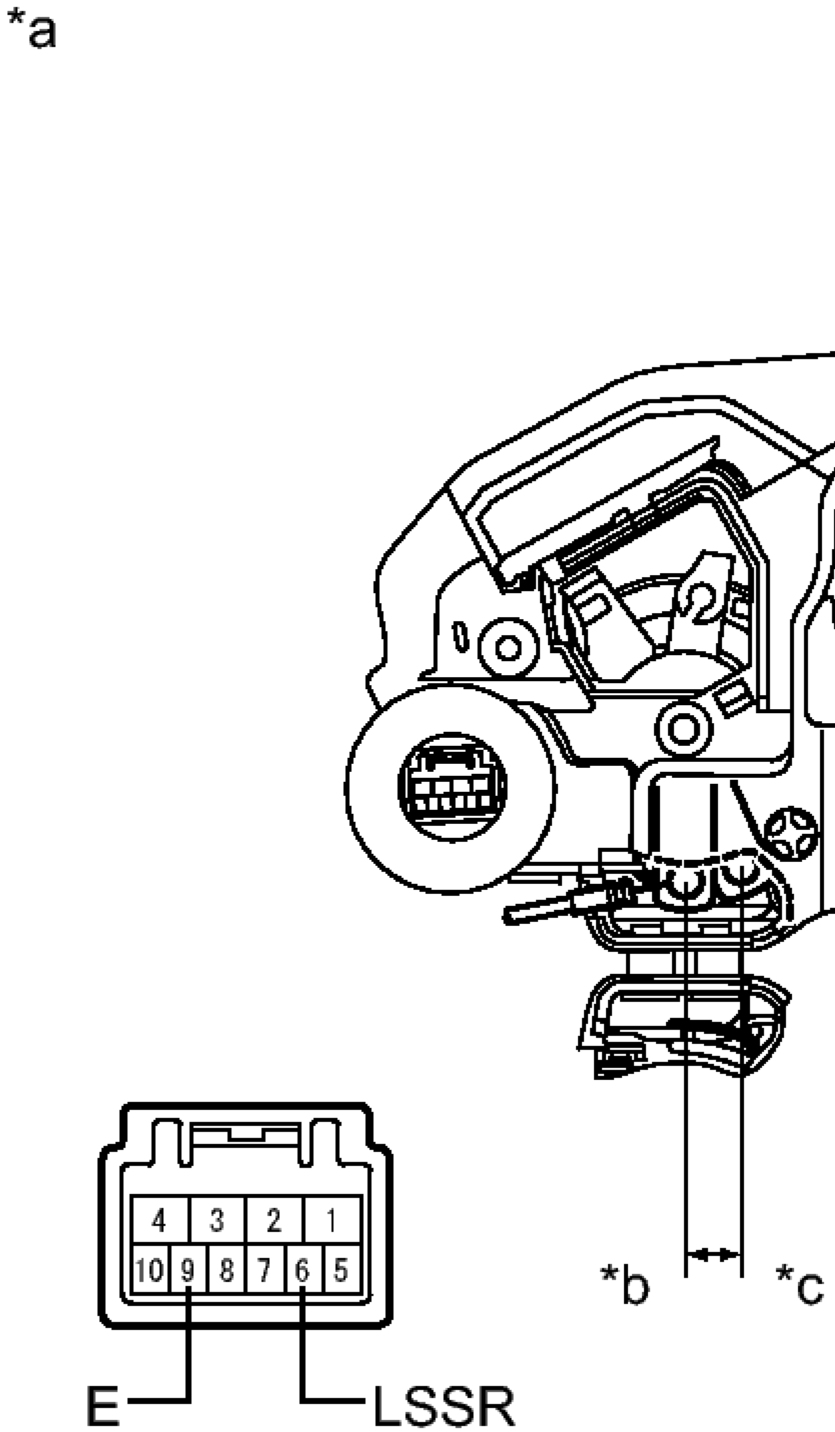
*a
4
3
2
1
10
9
8
7
6
5
E
LSSR
*b
*c

Fig. 26: Identifying Unlock Detection Switch Connector Terminal Identification
Courtesy of TOYOTA MOTOR SALES, U.S.A., INC.

1. Measure the resistance according to the value(s) in the table below.

Standard Resistance

Tester Connection	Condition	Specified Condition
6 (LSSR) - 9 (E)	Locked	10 kohms or higher
6 (LSSR) - 9 (E)	Unlocked	Below 1 ohms

TEXT IN ILLUSTRATION

*a	Component without harness connected (Rear Door Lock with Motor Assembly RH)
*b	Unlock
*c	Lock

If the result is not as specified, replace the rear door lock with motor assembly RH.

INSTALLATION

INSTALLATION

HINT:

- Use the same procedure for the LH side and RH side.
- The following procedure is for the LH side.

1. **INSTALL REAR DOOR INSIDE LOCKING CABLE ASSEMBLY** . Refer to **REASSEMBLY - Step 14**
2. **INSTALL REAR DOOR LOCK REMOTE CONTROL CABLE ASSEMBLY** . Refer to **REASSEMBLY - Step 15**
3. **INSTALL REAR DOOR LOCK WITH MOTOR ASSEMBLY**

NOTE:

- **When reusing the removed rear door lock with motor assembly, replace the door lock wiring harness seal on the connector with a new one.**
- **Do not allow grease or dust to adhere to the door lock wiring harness seal surface of the connector.**

- **Reusing the door lock wiring harness seal or using a damaged door lock wiring harness seal may cause water intrusion. This may result in a malfunction of the rear door lock with motor assembly.**

a. Apply MP grease to the sliding parts of the rear door lock with motor assembly.
b. When reusing the rear door lock with motor assembly.
    1. Install a new door lock wiring harness seal to the rear door lock with motor assembly.
c. Insert the rear door lock with motor assembly to the rear door outside handle release plate, and set it to the rear door panel.

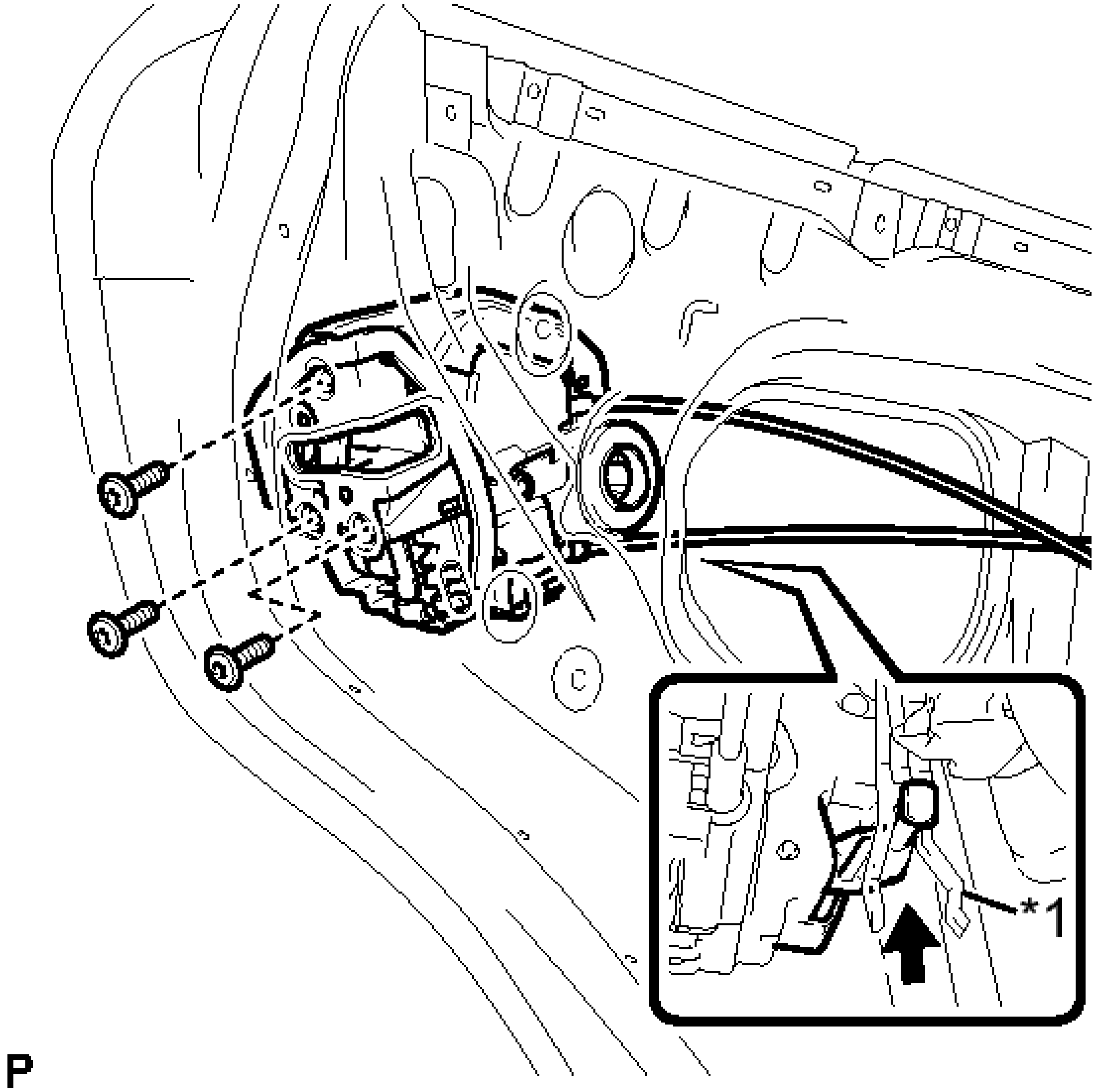

Fig. 27: Installing Rear Door Lock With Motor Assembly
Courtesy of TOYOTA MOTOR SALES, U.S.A., INC.

TEXT IN ILLUSTRATION

	Release

*1	Plate

d. Make sure that the rear door outside handle frame release plate is securely connected to the rear door lock with motor assembly.

e. Using a T30 "TORX" socket wrench, install the rear door lock with motor assembly with the 3 screws.

Torque: 5.0 N*m (51 kgf*cm, 44 in.*lbf)

4. **INSTALL REAR DOOR GLASS SUB-ASSEMBLY** . Refer to **REASSEMBLY - Step 21**
5. **INSTALL REAR DOOR QUARTER WINDOW GLASS** . Refer to **REASSEMBLY - Step 22**
6. **INSTALL REAR DOOR LOWER WINDOW FRAME SUB-ASSEMBLY** . Refer to **REASSEMBLY - Step 23**
7. **INSTALL REAR DOOR GLASS RUN** . Refer to **REASSEMBLY - Step 24**
8. **INSTALL REAR DOOR WEATHERSTRIP** . Refer to **INSTALLATION - Step 7**
9. **INSTALL REAR DOOR SERVICE HOLE COVER** . Refer to **REASSEMBLY - Step 27**
10. **INSTALL REAR DOOR INNER GLASS WEATHERSTRIP** . Refer to **REASSEMBLY - Step 28**
11. **INSTALL REAR DOOR TRIM BOARD SUB-ASSEMBLY** . Refer to **REASSEMBLY - Step 30**
12. **INSTALL REAR ARMREST ASSEMBLY** . Refer to **REASSEMBLY - Step 31**
13. **INSTALL REAR POWER WINDOW REGULATOR SWITCH ASSEMBLY WITH REAR DOOR ARMREST BASE PANEL** . Refer to **REASSEMBLY - Step 32**
14. **INSTALL REAR DOOR INSIDE HANDLE BEZEL PLUG** . Refer to **REASSEMBLY - Step 33**
15. **CONNECT CABLE TO NEGATIVE BATTERY TERMINAL**

NOTE: **When disconnecting the cable, some systems need to be initialized after the cable is reconnected. Refer to INITIALIZATION .**

16. **CHECK POWER WINDOW CONTROL SYSTEM**

Refer to **OPERATION CHECK**

LUGGAGE COMPARTMENT DOOR LOCK

COMPONENTS

ILLUSTRATION

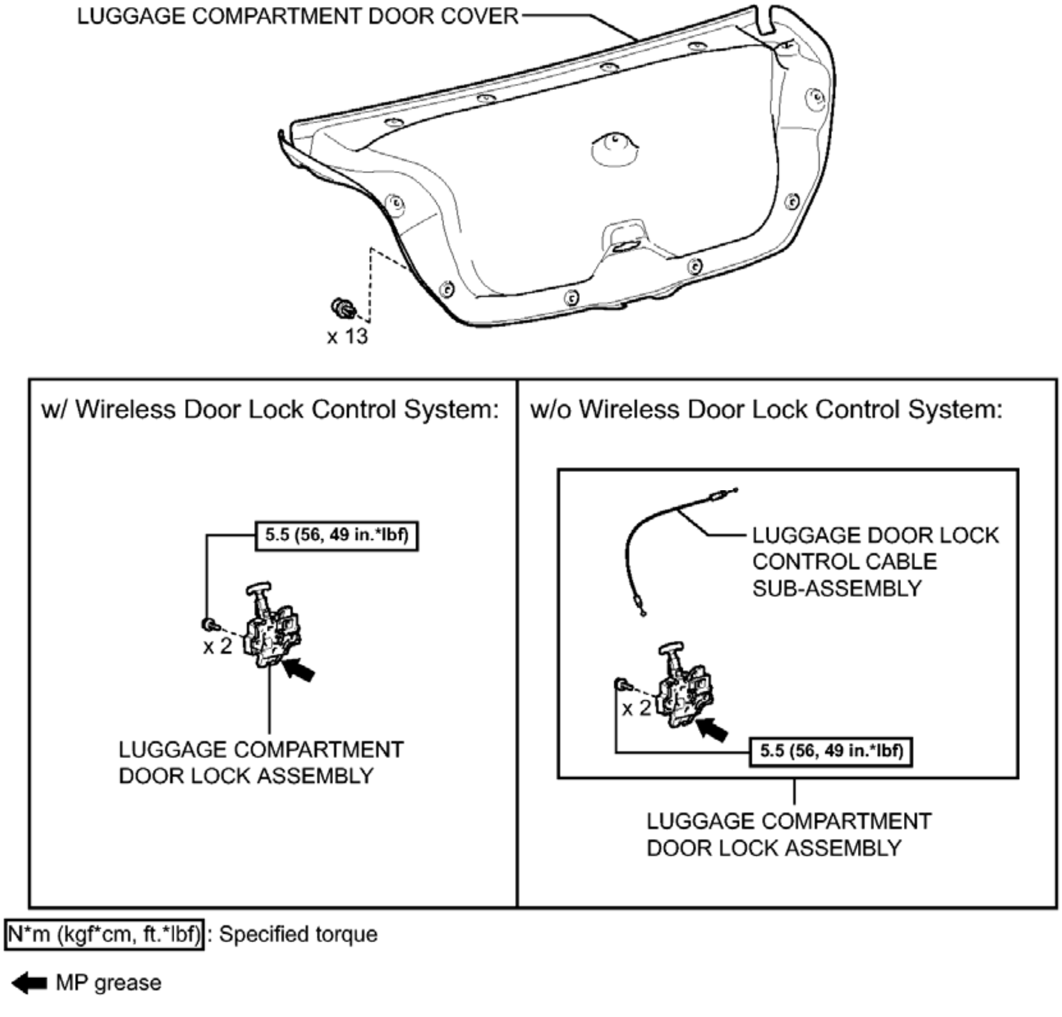
LUGGAGE COMPARTMENT DOOR COVER
x 13
w/ Wireless Door Lock Control System:
5.5 (56, 49 in.*lbf)
x 2
LUGGAGE COMPARTMENT DOOR LOCK ASSEMBLY
w/o Wireless Door Lock Control System:
LUGGAGE DOOR LOCK CONTROL CABLE SUB-ASSEMBLY
x 2
5.5 (56, 49 in.*lbf)
LUGGAGE COMPARTMENT DOOR LOCK ASSEMBLY
N*m (kgf*cm, ft.*lbf): Specified torque
MP grease
P

Fig. 28: Identifying Luggage Compartment Door Lock Replacement Components With Torque Specifications
Courtesy of TOYOTA MOTOR SALES, U.S.A., INC.

REMOVAL

REMOVAL

1. **REMOVE LUGGAGE COMPARTMENT DOOR COVER** . Refer to **DISASSEMBLY - Step 1**
2. **REMOVE LUGGAGE COMPARTMENT DOOR LOCK ASSEMBLY (w/ Wireless Door Lock Control System)**
   a. Disconnect the connector.
   b. Remove the 2 bolts and disengage the luggage compartment door lock assembly.

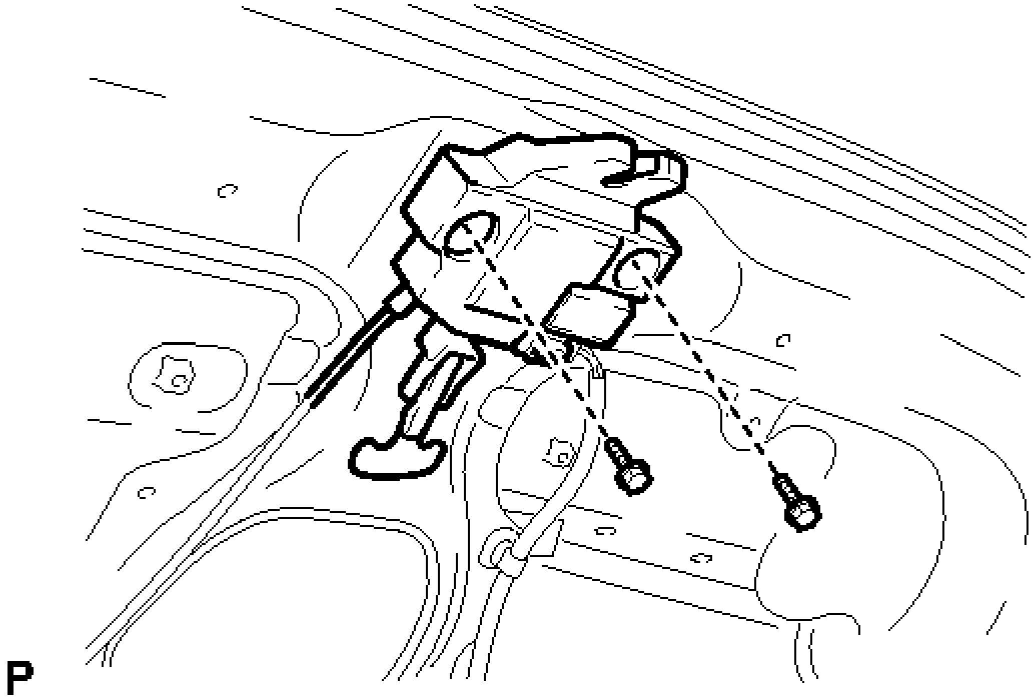

Fig. 29: Identifying Luggage Compartment Door Lock Assembly Bolts
Courtesy of TOYOTA MOTOR SALES, U.S.A., INC.

c. Disengage the claw as shown in the illustration.

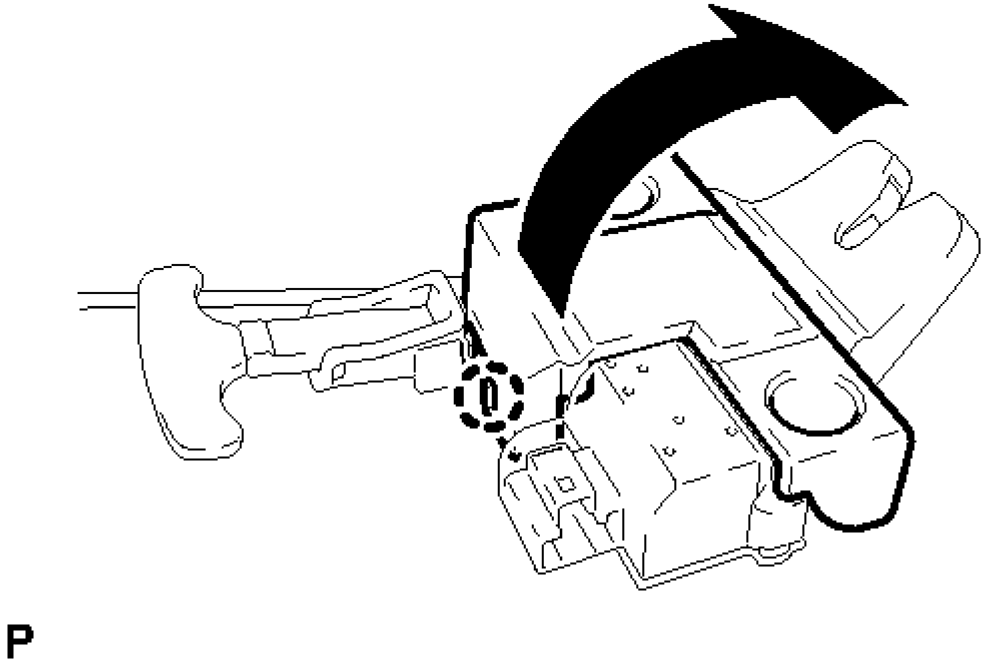

Fig. 30: Disengaging Luggage Compartment Door Lock Claw
Courtesy of TOYOTA MOTOR SALES, U.S.A., INC.

d. Disengage the luggage door lock control cable sub-assembly and remove the luggage compartment door lock assembly.

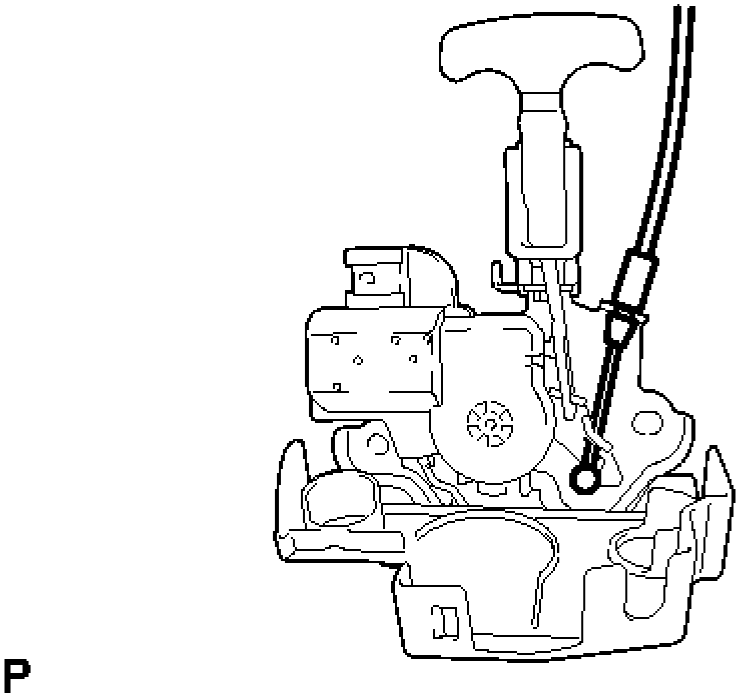

Fig. 31: Identifying Luggage Door Lock Control Cable Sub-Assembly
Courtesy of TOYOTA MOTOR SALES, U.S.A., INC.

3. **REMOVE LUGGAGE COMPARTMENT DOOR LOCK ASSEMBLY (w/o Wireless Door Lock Control System)**
    a. Disconnect the luggage door lock control cable sub-assembly.

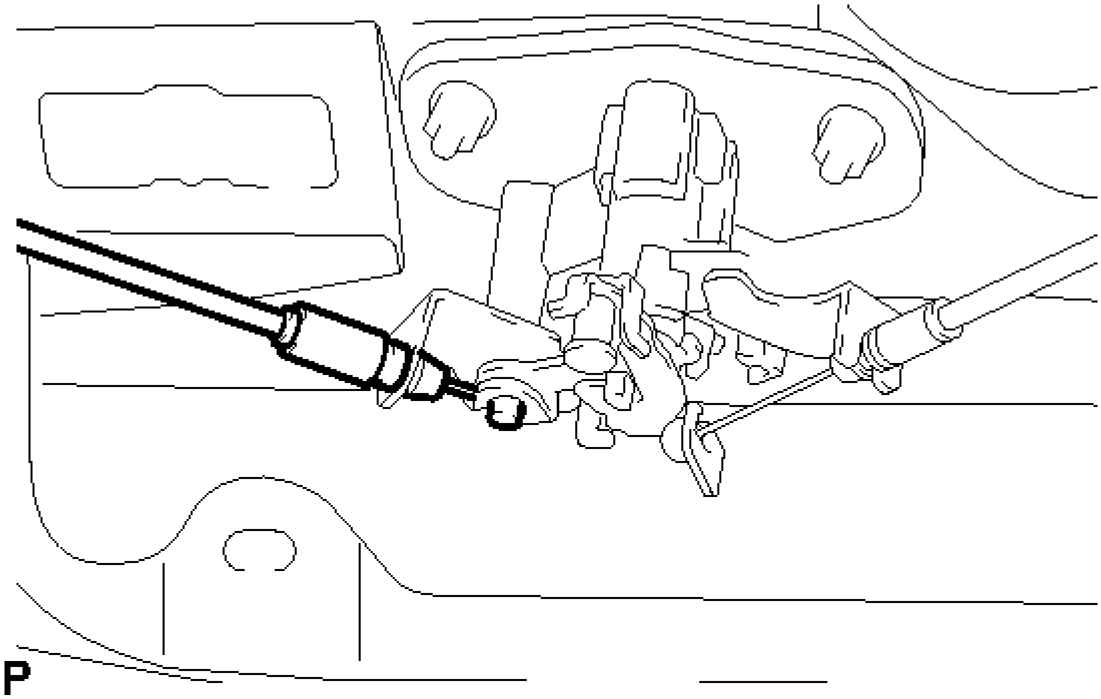

Fig. 32: Identifying Luggage Door Lock Control Cable Sub-Assembly
Courtesy of TOYOTA MOTOR SALES, U.S.A., INC.

b. Disconnect the connector.
c. Remove the 2 bolts and luggage compartment door lock assembly.

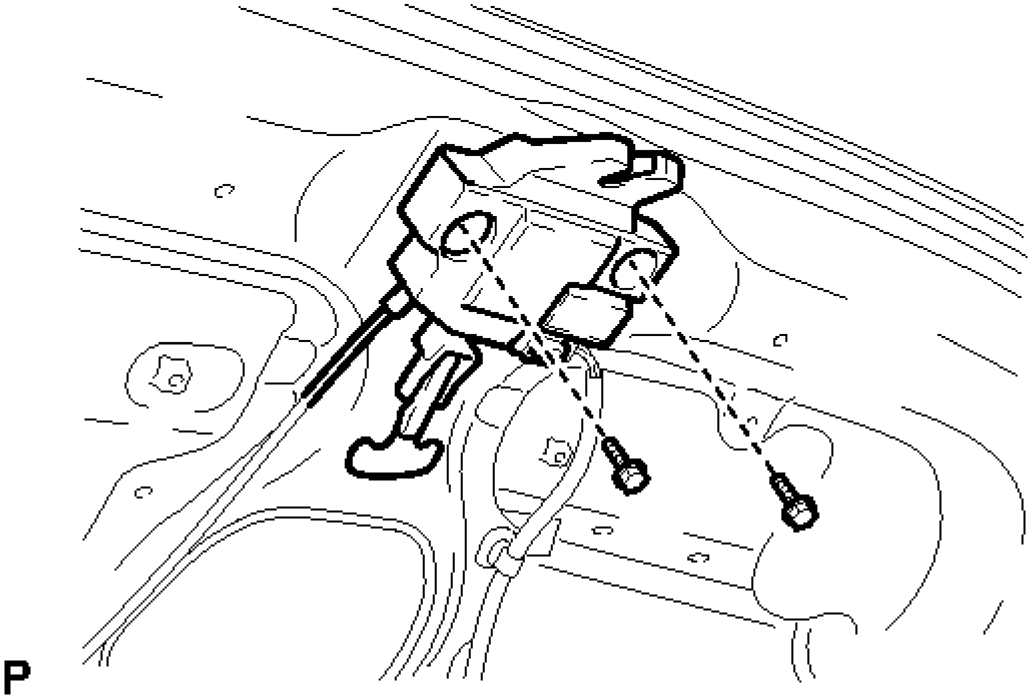

Fig. 33: Identifying Luggage Compartment Door Lock Assembly Bolts

Courtesy of TOYOTA MOTOR SALES, U.S.A., INC.

4. **REMOVE LUGGAGE DOOR LOCK CONTROL CABLE SUB-ASSEMBLY (w/o Wireless Door Lock Control System)**
    a. Disengage the claw as shown in the illustration.

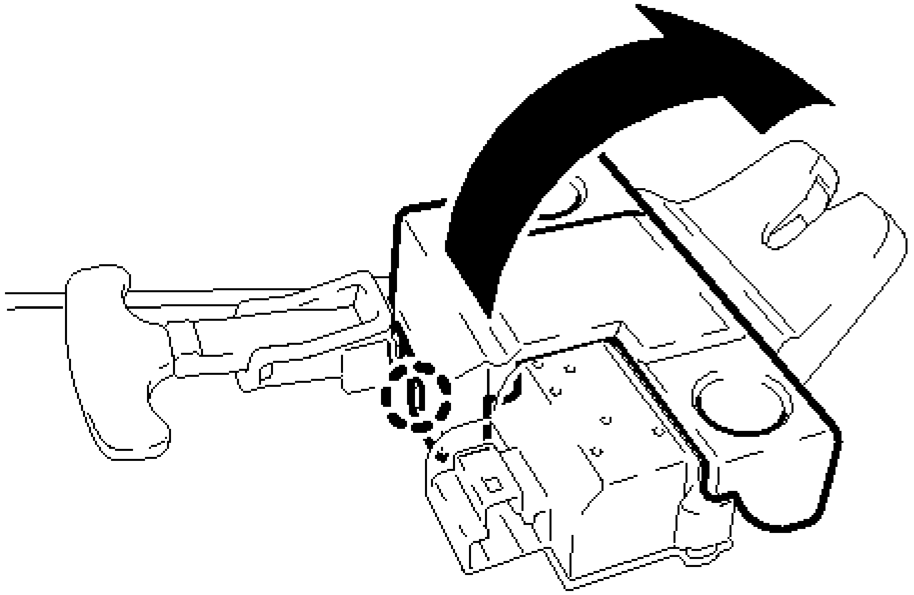

Fig. 34: Disengaging Luggage Compartment Door Lock Claw
Courtesy of TOYOTA MOTOR SALES, U.S.A., INC.

    b. Disengage the luggage door lock control cable sub-assembly.

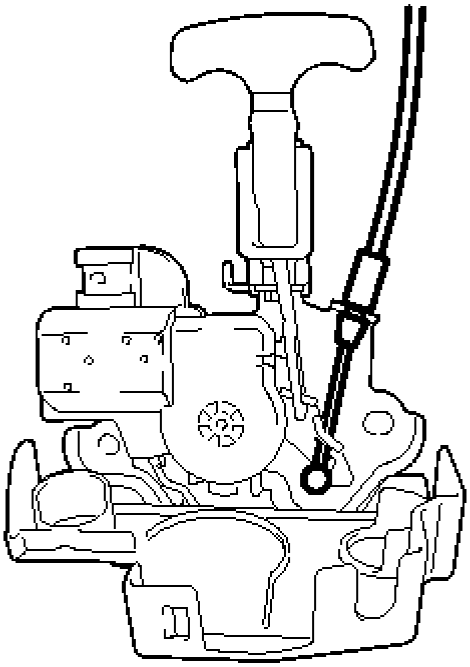

P

Fig. 35: Identifying Luggage Door Lock Control Cable Sub-Assembly
Courtesy of TOYOTA MOTOR SALES, U.S.A., INC.

INSPECTION

INSPECTION

1. **INSPECT LUGGAGE COMPARTMENT DOOR LOCK ASSEMBLY**
    a. Check the operation of the door lock motor.
        1. Move the door lock to the close (lock) position.

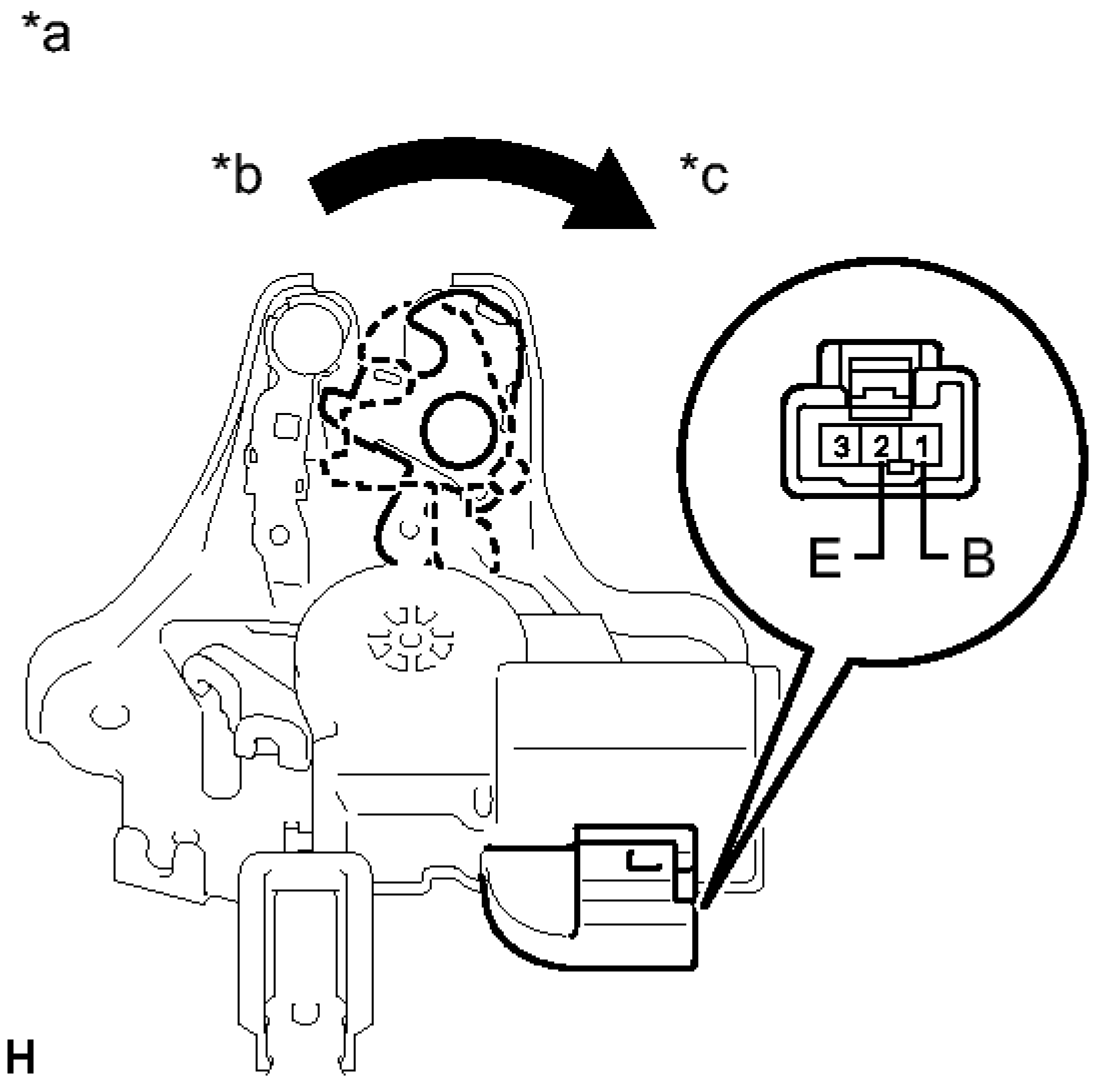

Fig. 36: Identifying Door Lock Motor Connector Terminal Identification
Courtesy of TOYOTA MOTOR SALES, U.S.A., INC.

2. Apply battery voltage to the door lock motor and check operation of the door lock motor.

   OK

Measurement Condition	Specified Condition
Battery positive (+) --> 1 (B) Battery negative (-) --> 2 (E)	Luggage compartment door lock motor open (unlock) operation

TEXT IN ILLUSTRATION

*a	Component without harness connected: (Luggage Compartment Door Lock Assembly)
*b	Close (Lock)
*c	Open (Unlock)

If the result is not as specified, replace the luggage compartment door lock assembly.

b. Check the operation of the door courtesy switch.

   1. Measure the resistance according to the value(s) in the table below.

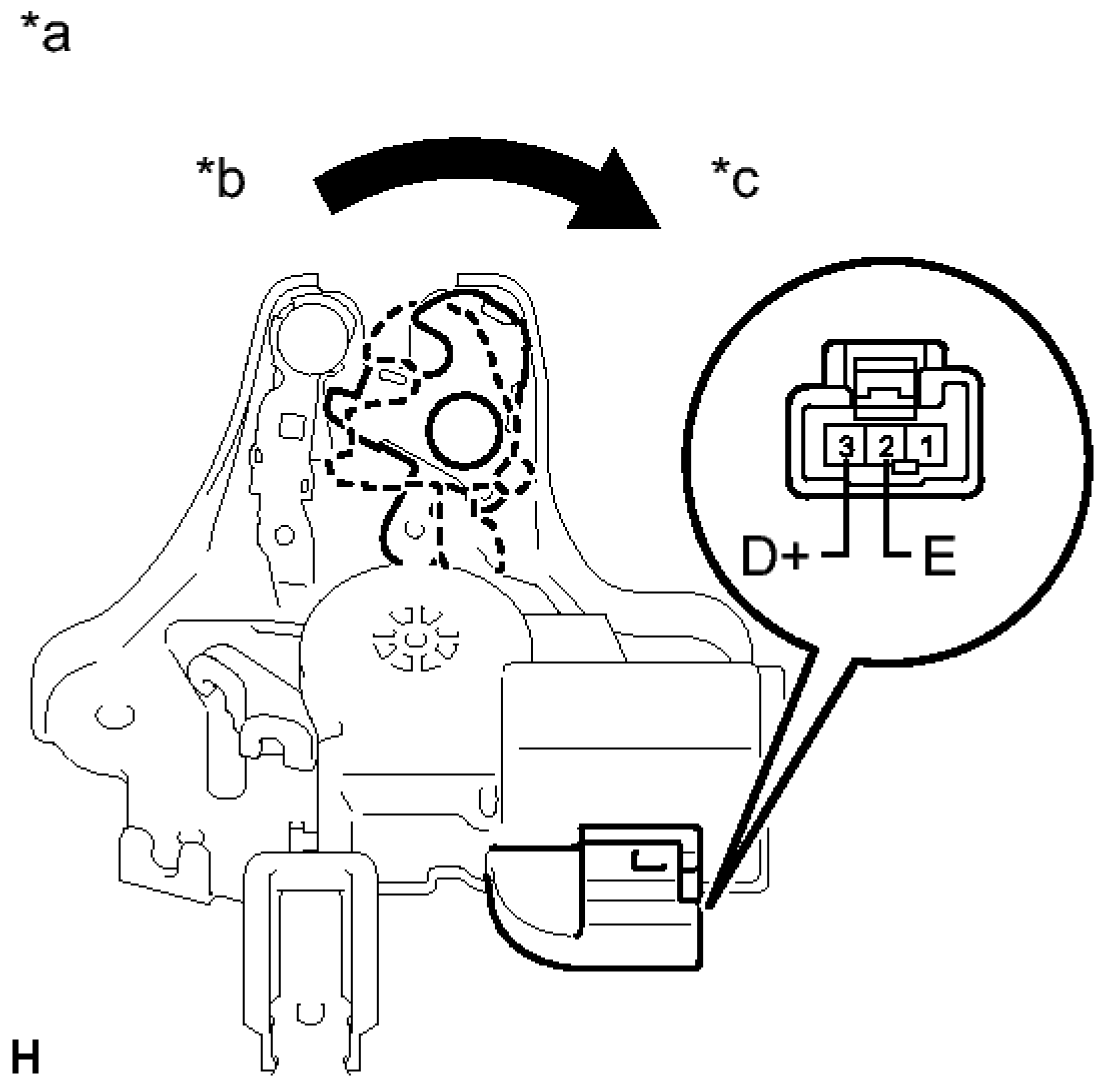

Fig. 37: Identifying Door Courtesy Switch Connector Terminal Identification
Courtesy of TOYOTA MOTOR SALES, U.S.A., INC.

Standard resistance

Measurement Condition	Door Lock Condition	Specified Condition
2 (E) - 3 (D+)	Close (Lock)	10 kohms or higher
2 (E) - 3 (D+)	Open (Unlock)	Below 1 ohms

TEXT IN ILLUSTRATION

	Component

*a	without harness connected: (Luggage Compartment Door Lock Assembly)
*b	Close (Lock)
*c	Open (Unlock)

If the result is not as specified, replace the luggage compartment door lock assembly.

INSTALLATION

INSTALLATION

1. **INSTALL LUGGAGE COMPARTMENT DOOR LOCK ASSEMBLY (w/ Wireless Door Lock Control System)**
    a. Apply MP grease to the sliding parts of the luggage compartment door lock assembly.
    b. Engage the luggage door lock control cable sub-assembly.
    c. Engage the claw as shown in the illustration.

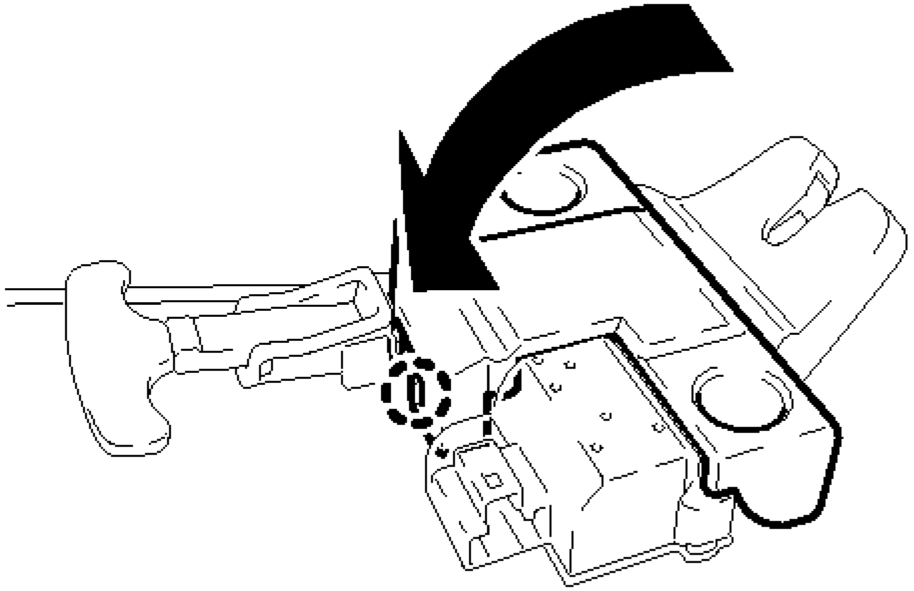

P

Fig. 38: Engaging Luggage Compartment Door Lock Claw
Courtesy of TOYOTA MOTOR SALES, U.S.A., INC.

d. Install the luggage compartment door lock assembly with the 2 bolts.

   Torque: 5.5 N*m (56 kgf*cm, 49 in.*lbf)

e. Connect the connector.

2. **INSTALL LUGGAGE DOOR LOCK CONTROL CABLE SUB-ASSEMBLY (w/o Wireless Door Lock Control System)**
   a. Engage the luggage door lock control cable sub-assembly.
   b. Engage the claw as shown in the illustration.

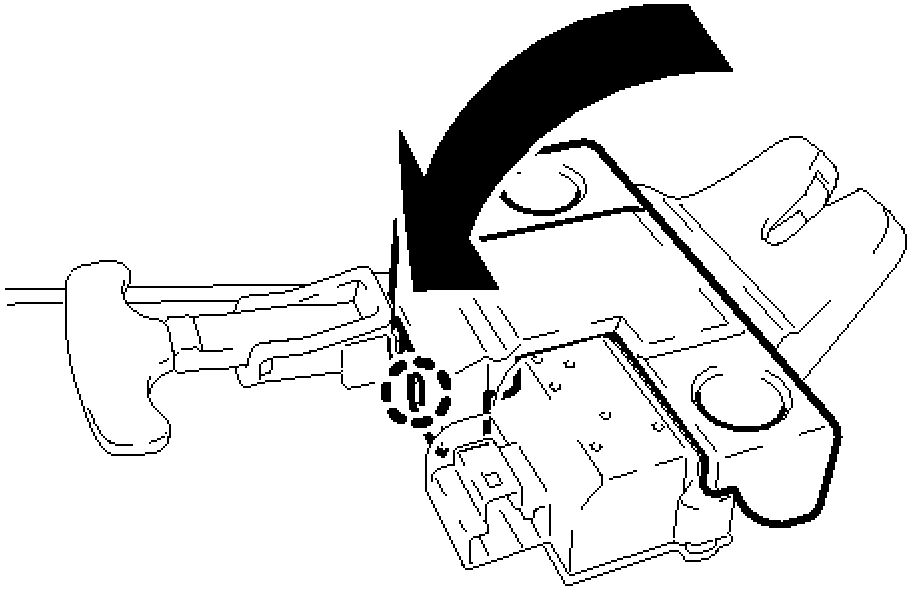

P

Fig. 39: Engaging Luggage Compartment Door Lock Claw
Courtesy of TOYOTA MOTOR SALES, U.S.A., INC.

3. **INSTALL LUGGAGE COMPARTMENT DOOR LOCK ASSEMBLY (w/o Wireless Door Lock Control System)**
   a. Apply MP grease to the sliding parts of the luggage compartment door lock assembly.
   b. Install the luggage compartment door lock assembly with the 2 bolts.

      Torque: 5.5 N*m (56 kgf*cm, 49 in.*lbf)

   c. Connect the connector.
   d. Connect the luggage door lock control cable sub-assembly.
4. **INSTALL LUGGAGE COMPARTMENT DOOR COVER** . Refer to **REASSEMBLY - Step 12**

DOOR CONTROL RECEIVER

COMPONENTS

ILLUSTRATION

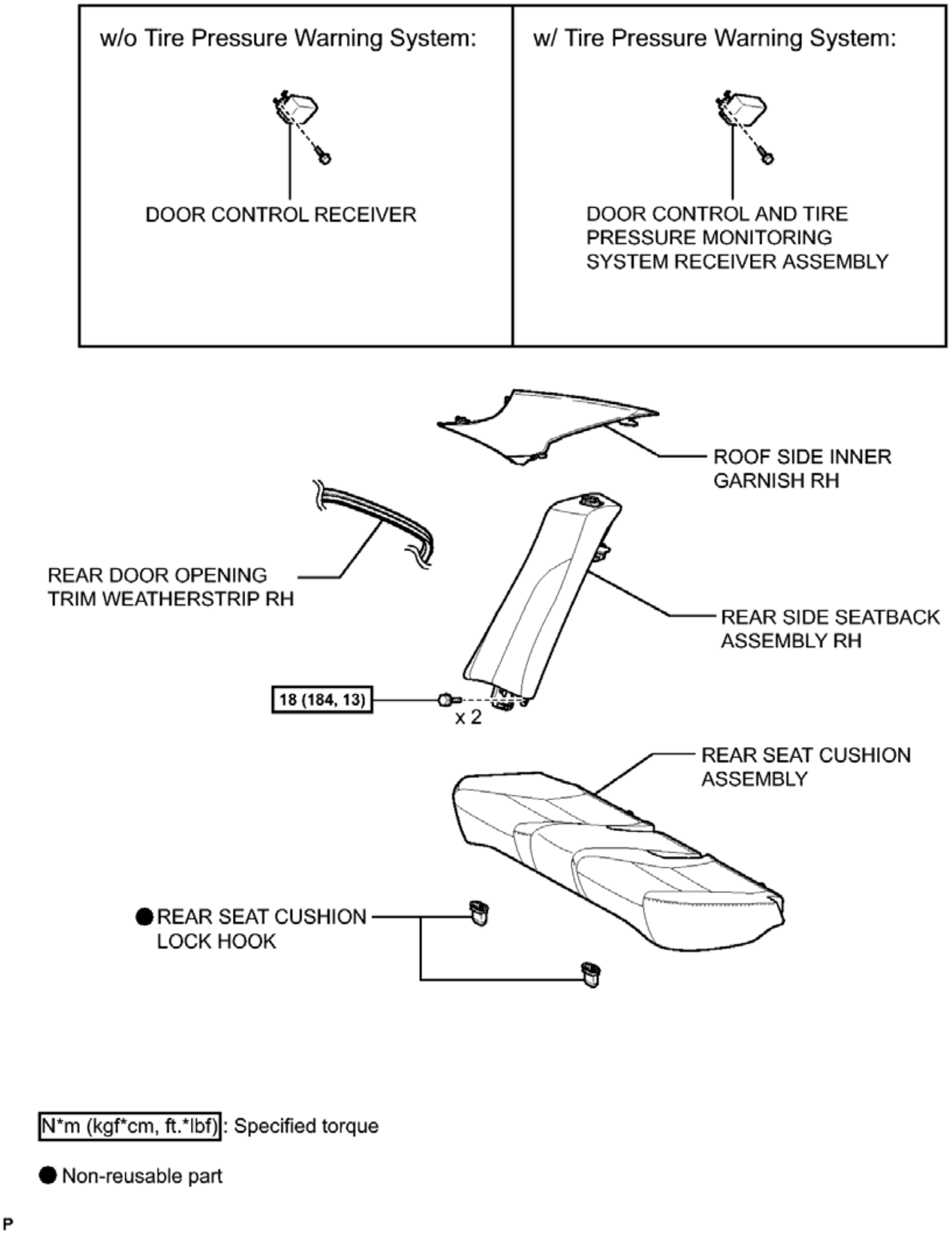
w/o Tire Pressure Warning System:
DOOR CONTROL RECEIVER
w/ Tire Pressure Warning System:
DOOR CONTROL AND TIRE PRESSURE MONITORING SYSTEM RECEIVER ASSEMBLY
ROOF SIDE INNER GARNISH RH
REAR DOOR OPENING TRIM WEATHERSTRIP RH
REAR SIDE SEATBACK ASSEMBLY RH
18 (184, 13)
x 2
REAR SEAT CUSHION ASSEMBLY
● REAR SEAT CUSHION LOCK HOOK
N*m (kgf*cm, ft.*lbf): Specified torque
● Non-reusable part
P

Fig. 40: Identifying Door Control Receiver Replacement Components With Torque Specifications
Courtesy of TOYOTA MOTOR SALES, U.S.A., INC.

REMOVAL

REMOVAL

1. **PRECAUTION**

   NOTE: **After turning the ignition switch off, waiting time may be required before disconnecting the cable from the negative (-) battery terminal. Therefore, make sure to read the disconnecting the cable from the negative (-) battery terminal notice before proceeding with work. Refer to PRECAUTION .**

2. **DISCONNECT CABLE FROM NEGATIVE BATTERY TERMINAL**

   WARNING: **Wait at least 90 seconds after disconnecting the cable from the negative (-) battery terminal to disable the SRS.**

   NOTE: **When disconnecting the cable, some systems need to be initialized after the cable is reconnected. Refer to INITIALIZATION .**

3. **REMOVE REAR SEAT CUSHION ASSEMBLY** . Refer to **REMOVAL - Step 3**
4. **REMOVE REAR SEAT CUSHION LOCK HOOK** . Refer to **REMOVAL - Step 4**
5. **REMOVE REAR SIDE SEATBACK ASSEMBLY RH** . Refer to **REMOVAL - Step 9**
6. **DISCONNECT REAR DOOR OPENING TRIM WEATHERSTRIP RH** . Refer to **REMOVAL - Step 13**
7. **REMOVE ROOF SIDE INNER GARNISH RH**

   HINT:

   Use the same procedure for the RH side and LH side. Refer to **REMOVAL - Step 24** .

8. **REMOVE DOOR CONTROL RECEIVER (w/o Tire Pressure Warning System)**
   a. Disconnect the connector.

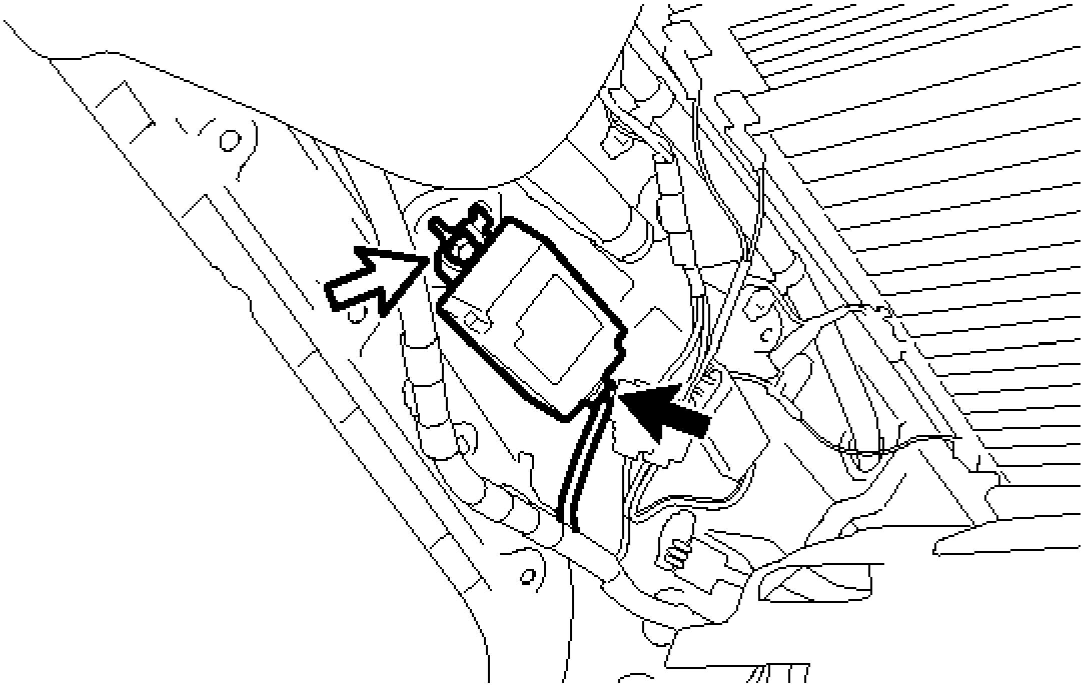

Fig. 41: Identifying Door Control Receiver Bolt And Connector
Courtesy of TOYOTA MOTOR SALES, U.S.A., INC.

b. Remove the bolt and door control receiver.

9. **REMOVE DOOR CONTROL AND TIRE PRESSURE MONITORING SYSTEM RECEIVER ASSEMBLY (w/ Tire Pressure Warning System)**
    a. Disconnect the connector.

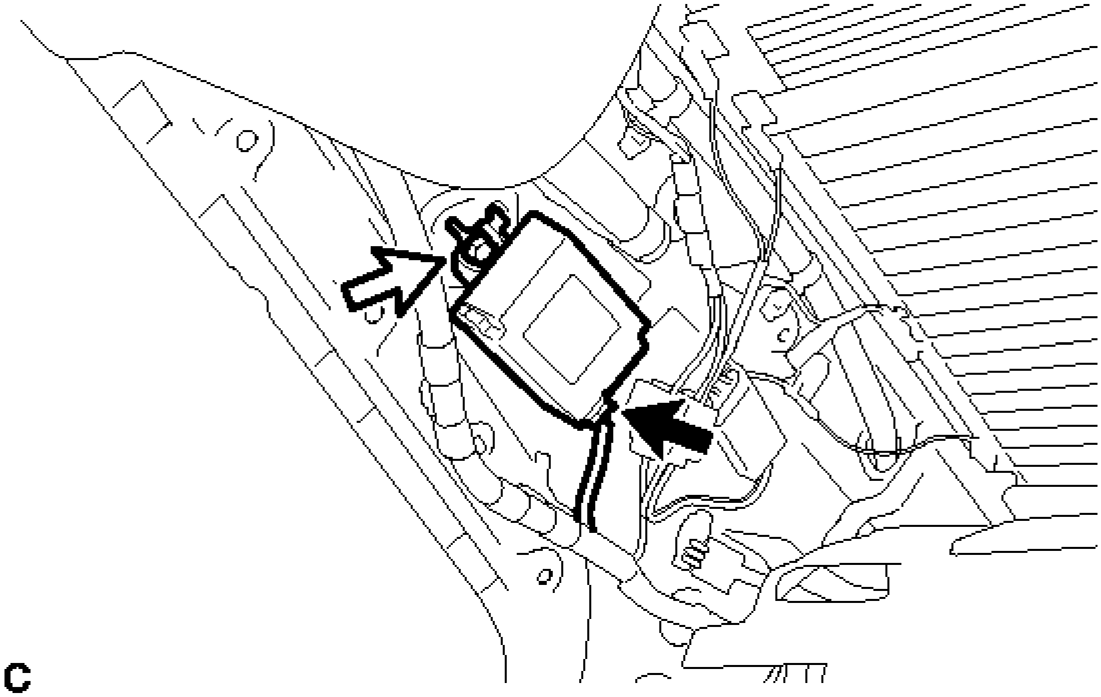

Fig. 42: Identifying Door Control And Tire Pressure Monitoring System Receiver Bolt And Connector
Courtesy of TOYOTA MOTOR SALES, U.S.A., INC.

b. Remove the bolt and door control and tire pressure monitoring system receiver assembly.

INSTALLATION

INSTALLATION

1. **INSTALL DOOR CONTROL RECEIVER (w/o Tire Pressure Warning System)**
    a. Install the door control receiver with the bolt.
    b. Connect the connector.
2. **INSTALL DOOR CONTROL AND TIRE PRESSURE MONITORING SYSTEM RECEIVER ASSEMBLY (w/ Tire Pressure Warning System)**
    a. Install the door control and tire pressure monitoring system receiver assembly with the bolt.
    b. Connect the connector.
3. **INSTALL ROOF SIDE INNER GARNISH RH**

    HINT:

    Use the same procedure for the RH side and LH side. Refer to **INSTALLATION - Step 20** .

4. **INSTALL REAR DOOR OPENING TRIM WEATHERSTRIP RH** . Refer to **INSTALLATION - Step 32**
5. **INSTALL REAR SIDE SEATBACK ASSEMBLY RH** . Refer to **INSTALLATION - Step 1**

6. **INSTALL REAR SEAT CUSHION LOCK HOOK** . Refer to **INSTALLATION - Step 6**
7. **INSTALL REAR SEAT CUSHION ASSEMBLY** . Refer to **INSTALLATION - Step 7**
8. **CONNECT CABLE TO NEGATIVE BATTERY TERMINAL**

   NOTE: **When disconnecting the cable, some systems need to be initialized after the cable is reconnected. Refer to INITIALIZATION .**

9. **REGISTER DOOR CONTROL TRANSMITTER MODULE SET SUB-ASSEMBLY ID (w/o Smart Key System)**

   HINT:

   In case of door control receiver or door control and tire pressure monitoring system receiver assembly replacement. Refer to **REGISTRATION** .

10. **REGISTER TRANSMITTER ID (w/ Tire Pressure Warning System)**

    HINT:

    In case of door control and tire pressure monitoring system receiver assembly replacement. Refer to **REGISTRATION** .

11. **INSPECT TIRE PRESSURE WARNING SYSTEM (w/ Tire Pressure Warning System)**

    HINT:

    In case of door control and tire pressure monitoring system receiver assembly replacement. Refer to **TEST MODE PROCEDURE** .

12. **PERFORM INITIALIZATION (w/ Tire Pressure Warning System)**

    HINT:

    In case of door control and tire pressure monitoring system receiver assembly replacement. Refer to **INITIALIZATION** .

13. **INSPECT SRS WARNING LIGHT**
    - for Built-in Type Yaw Rate Sensor: Refer to **DIAGNOSIS SYSTEM**
    - for Separate Type Yaw Rate Sensor: Refer to **DIAGNOSIS SYSTEM**

WIRELESS DOOR LOCK BUZZER

COMPONENTS

ILLUSTRATION

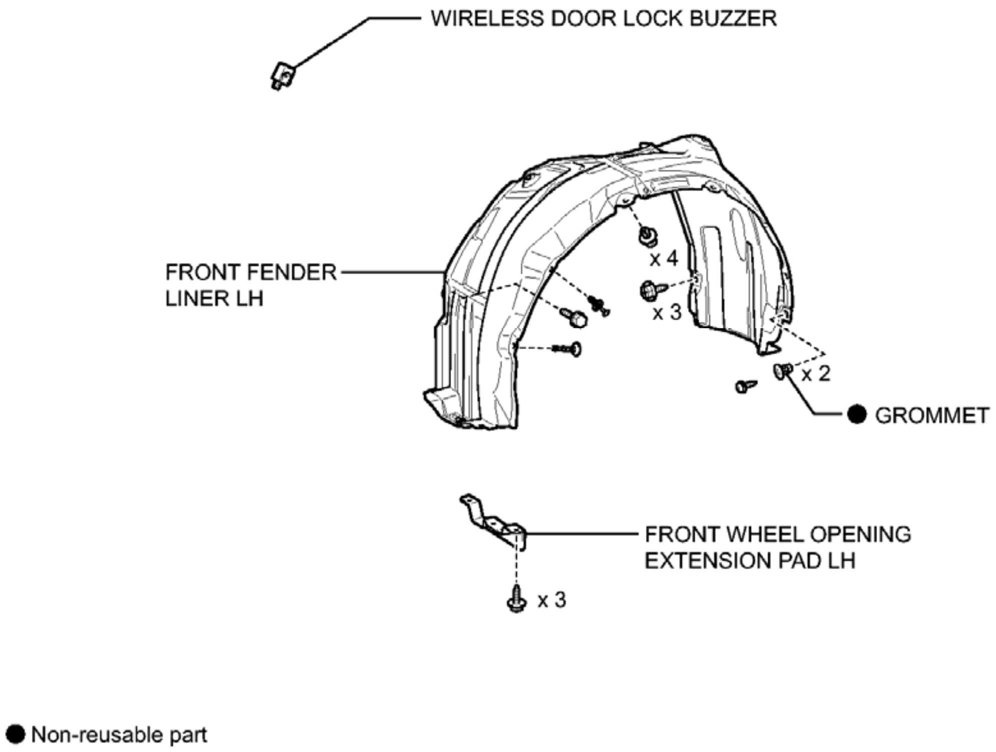
WIRELESS DOOR LOCK BUZZER
FRONT FENDER LINER LH
x 4
x 3
x 2
GROMMET
FRONT WHEEL OPENING EXTENSION PAD LH
x 3
● Non-reusable part

P

Fig. 43: Identifying Wireless Door Lock Buzzer Replacement Components
Courtesy of TOYOTA MOTOR SALES, U.S.A., INC.

REMOVAL

REMOVAL

1. **REMOVE FRONT WHEEL LH**
2. **REMOVE FRONT WHEEL OPENING EXTENSION PAD LH**

   HINT:

   Use the same procedure for the LH side and RH side. Refer to **REMOVAL - Step 2** .

3. **REMOVE FRONT FENDER LINER LH**

   HINT:

   Use the same procedure for the LH side and RH side. Refer to **REMOVAL - Step 3** .

4. **REMOVE WIRELESS DOOR LOCK BUZZER**

a. Disconnect the connector.

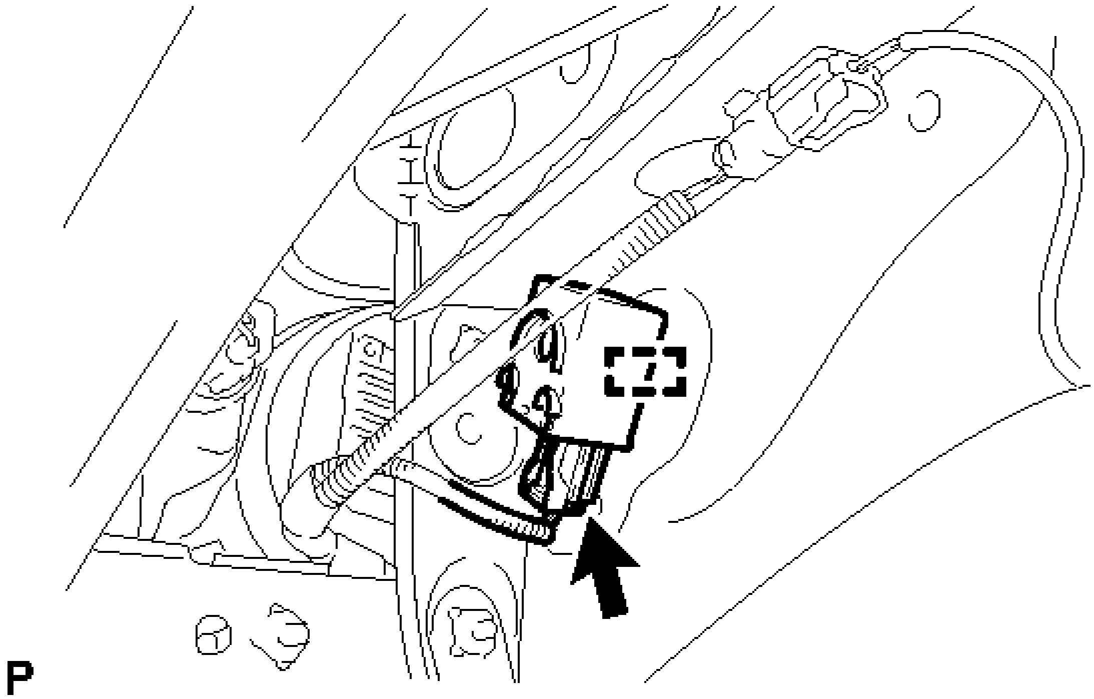

Fig. 44: Identifying Wireless Door Lock Buzzer Clamp And Connector
Courtesy of TOYOTA MOTOR SALES, U.S.A., INC.

b. Disengage the clamp and remove the wireless door lock buzzer.

INSTALLATION

INSTALLATION

1. **INSTALL WIRELESS DOOR LOCK BUZZER**
    a. Engage the clamp to install the wireless door lock buzzer.
    b. Connect the connector.
2. **INSTALL FRONT FENDER LINER LH**

    HINT:

    Use the same procedure for the LH side and RH side. Refer to **INSTALLATION - Step 3** .

3. **INSTALL FRONT WHEEL OPENING EXTENSION PAD LH**

    HINT:

    Use the same procedure for the LH side and RH side. Refer to **INSTALLATION - Step 4** .

4. **INSTALL FRONT WHEEL LH** . Refer to **INSTALLATION - Step 13**

2012-2017 ACCESSORIES & EQUIPMENT

Door / Hood (Service Information) (Hybrid) - Camry

HOOD

ON-VEHICLE INSPECTION

ON-VEHICLE INSPECTION

1. **INSPECT HOOD SUB-ASSEMBLY**
    a. Check that the clearance measurements of areas a through d are within each standard range.

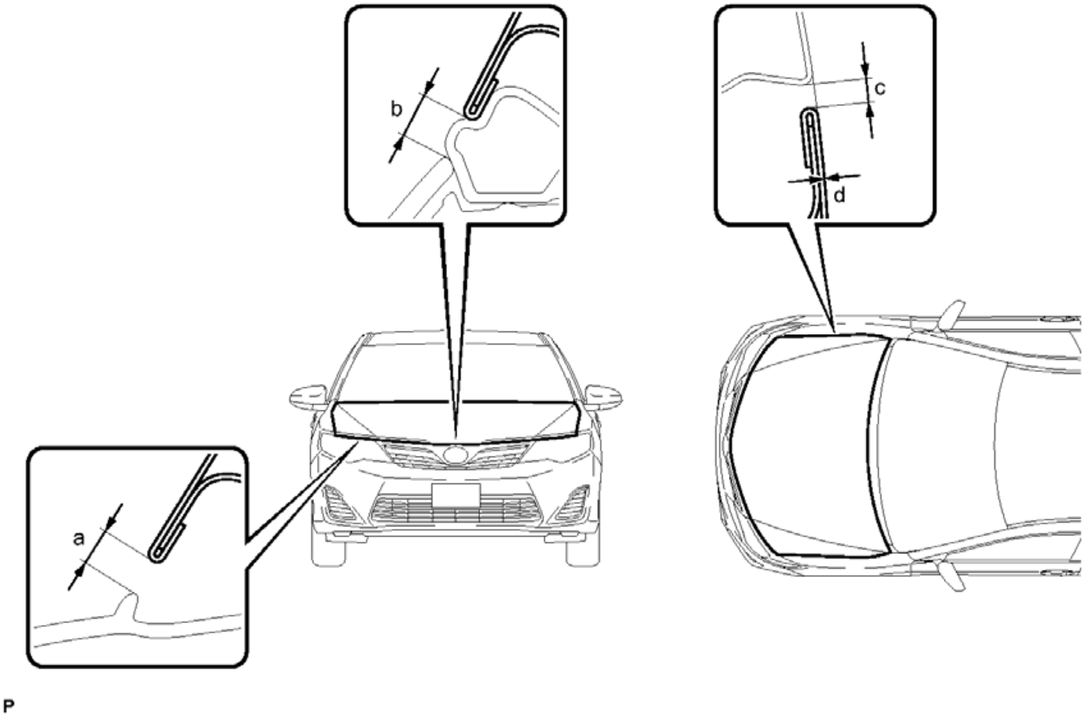

Fig. 1: Checking Hood Sub-Assembly Clearance Measurements
Courtesy of TOYOTA MOTOR SALES, U.S.A., INC.

STANDARD CLEARANCE

Area	Measurement	Area	Measurement
a	2.45 to 6.45 mm (0.0965 to 0.254 in.)	b	3.55 to 7.55 mm (0.140 to 0.297 in.)
c	2.0 to 5.0 mm (0.0787 to 0.197 in.)	d	-1.5 to 1.5 mm (-0.0591 to 0.0591 in.)

DISASSEMBLY

DISASSEMBLY

1. **REMOVE HOOD TO RADIATOR SUPPORT SEAL**
    a. Using a clip remover, disengage the 8 clips and remove the hood to radiator support seal.

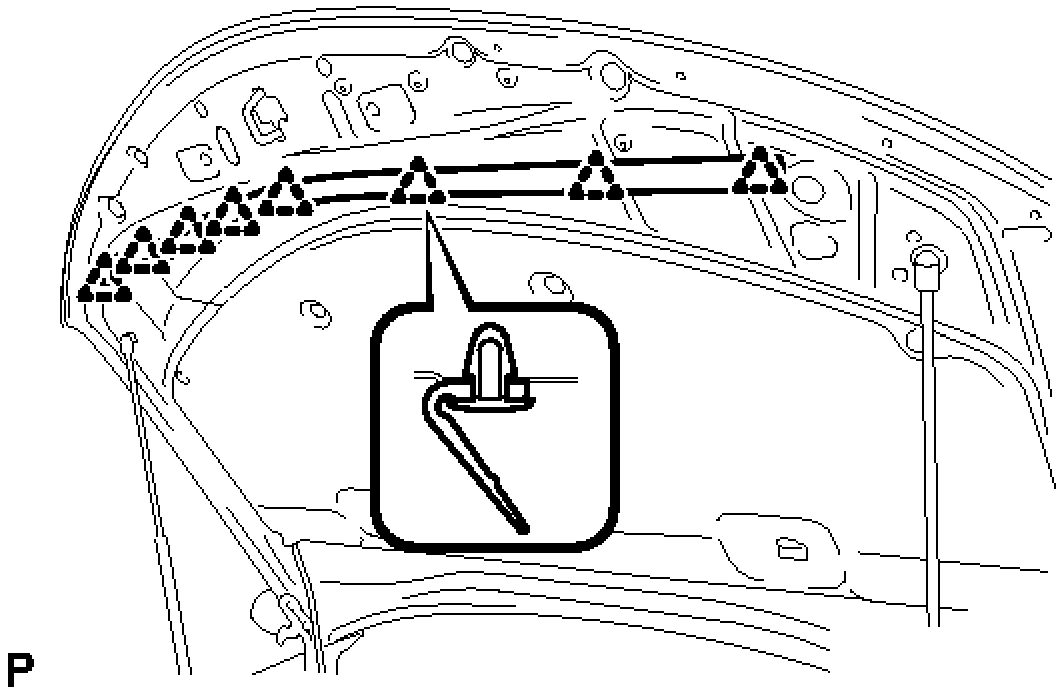

Fig. 2: Identifying Hood To Radiator Support Seal Clips
Courtesy of TOYOTA MOTOR SALES, U.S.A., INC.

2. **REMOVE HOOD INSULATOR**
    a. Using a clip remover, remove the 7 clips.

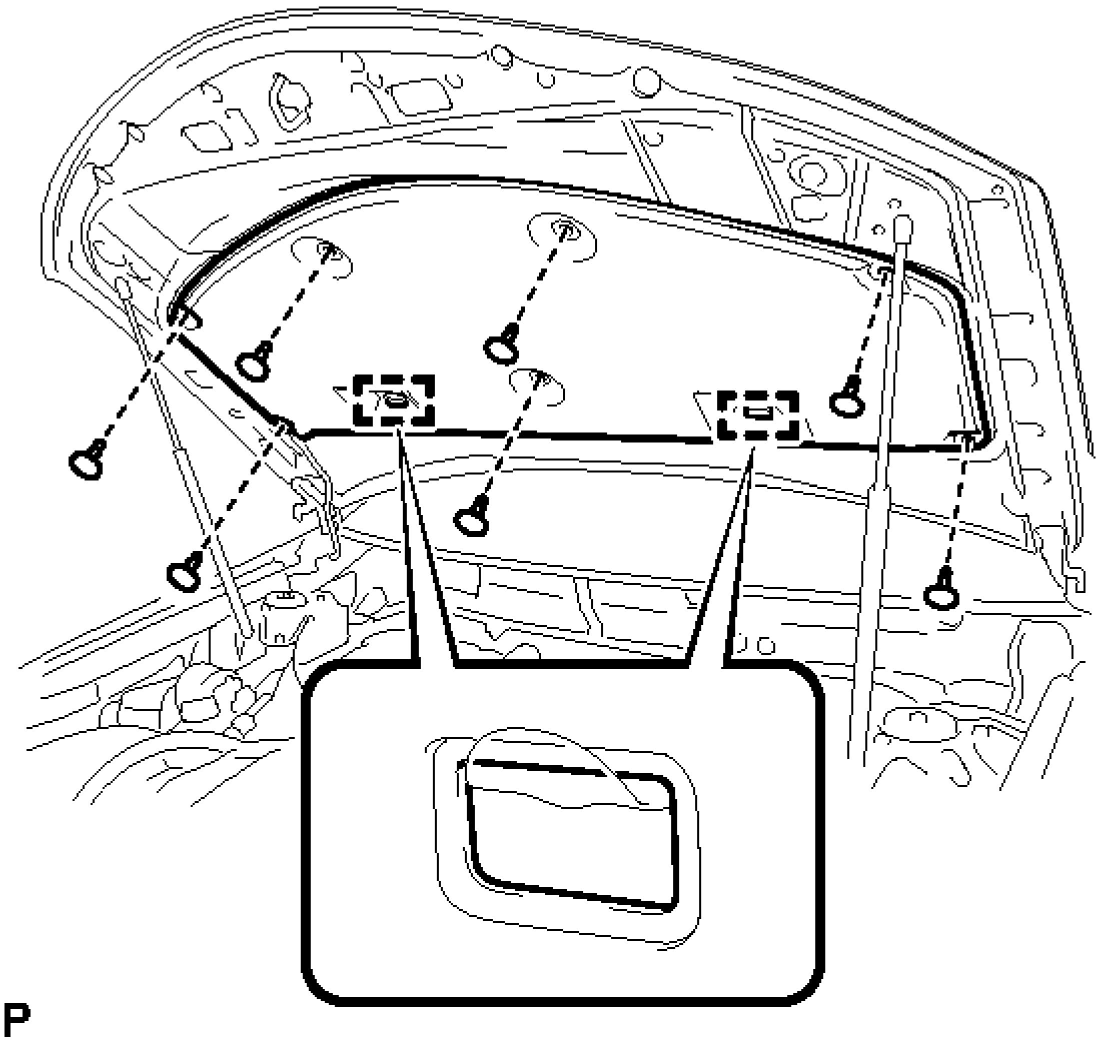

Fig. 3: Identifying Hood Insulator Clips
Courtesy of TOYOTA MOTOR SALES, U.S.A., INC.

  b. Disengage the 2 guides and remove the hood insulator.

3. **REMOVE WASHER NOZZLE SUB-ASSEMBLY** . Refer to **REMOVAL - Step 1**
4. **DISCONNECT WASHER HOSE ASSEMBLY**
   a. Disengage the 6 clamps and disconnect the washer hose assembly.

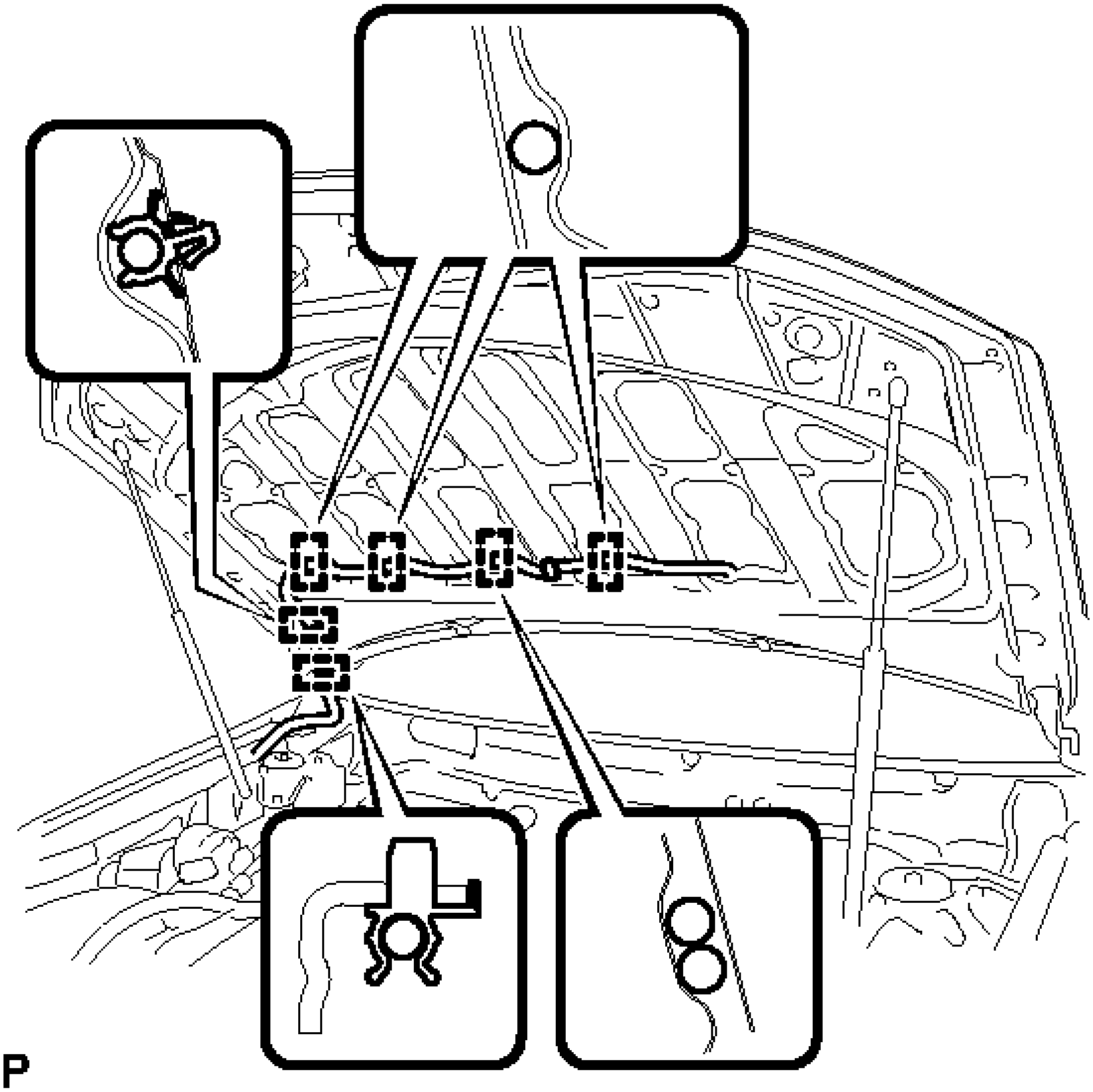

Fig. 4: Identifying Washer Hose Clamps
Courtesy of TOYOTA MOTOR SALES, U.S.A., INC.

5. **REMOVE HOOD SUPPORT ASSEMBLY LH** See step 1
6. **REMOVE HOOD SUPPORT ASSEMBLY RH**

   HINT:

   Use the same procedure as for the LH side.

ADJUSTMENT

ADJUSTMENT

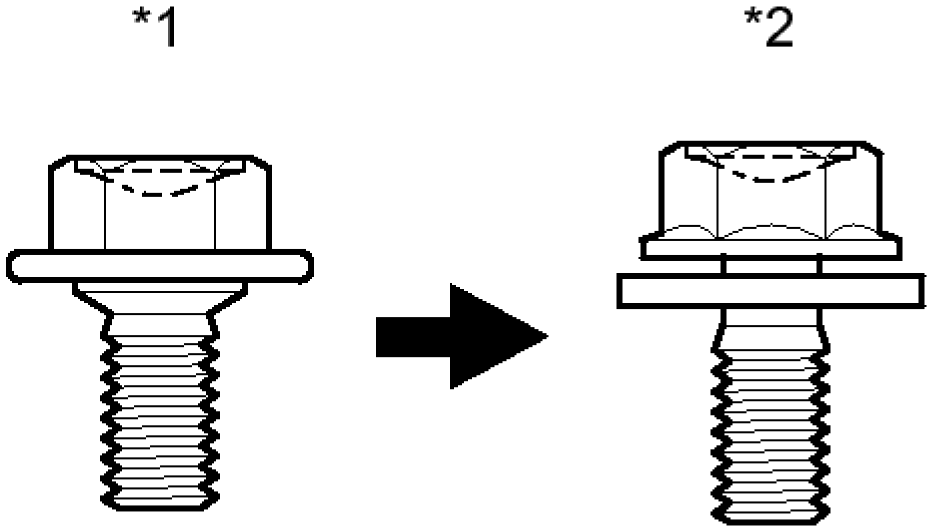

P

Fig. 5: Identifying Centering Bolt And Standard Bolt
Courtesy of TOYOTA MOTOR SALES, U.S.A., INC.

TEXT IN ILLUSTRATION

*1	Centering Bolt
*2	Standard Bolt

HINT:

- Centering bolts are used to mount the hood hinge and hood lock. The hood and hood lock cannot be adjusted with the centering bolts installed. Substitute the centering bolts with standard bolts when making adjustments.
- Specified torque for standard bolts is shown in the standard bolt chart. Refer to **SPECIFIED TORQUE FOR STANDARD BOLTS** .

1. **INSPECT HOOD SUB-ASSEMBLY** See step 1
2. **ADJUST HOOD SUB-ASSEMBLY**
    a. Horizontally and vertically adjust the hood.
        1. Loosen the 4 hinge bolts of the hood.

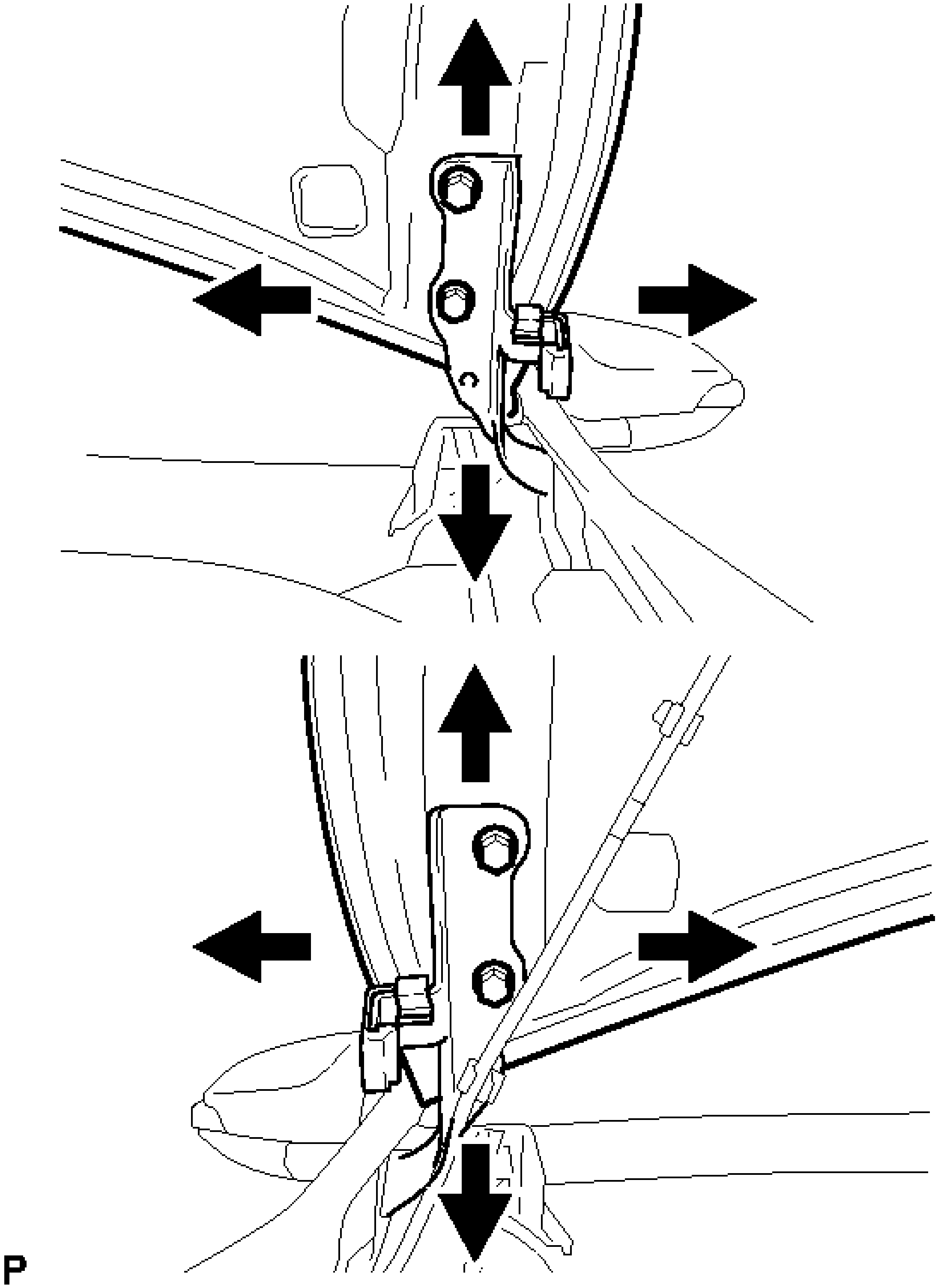

Fig. 6: Adjusting Hood Horizontally And Vertically
Courtesy of TOYOTA MOTOR SALES, U.S.A., INC.

2. Adjust the clearance between the hood and front fender by moving the hood.
3. Tighten the 4 hinge bolts after the adjustment.

Torque: 13 N*m (133 kgf*cm, 10 ft.*lbf)

b. Adjust the height of the front end of the hood using the cushion rubbers.
    1. Adjust the 2 cushion rubbers so that the heights of the hood and fender are aligned.

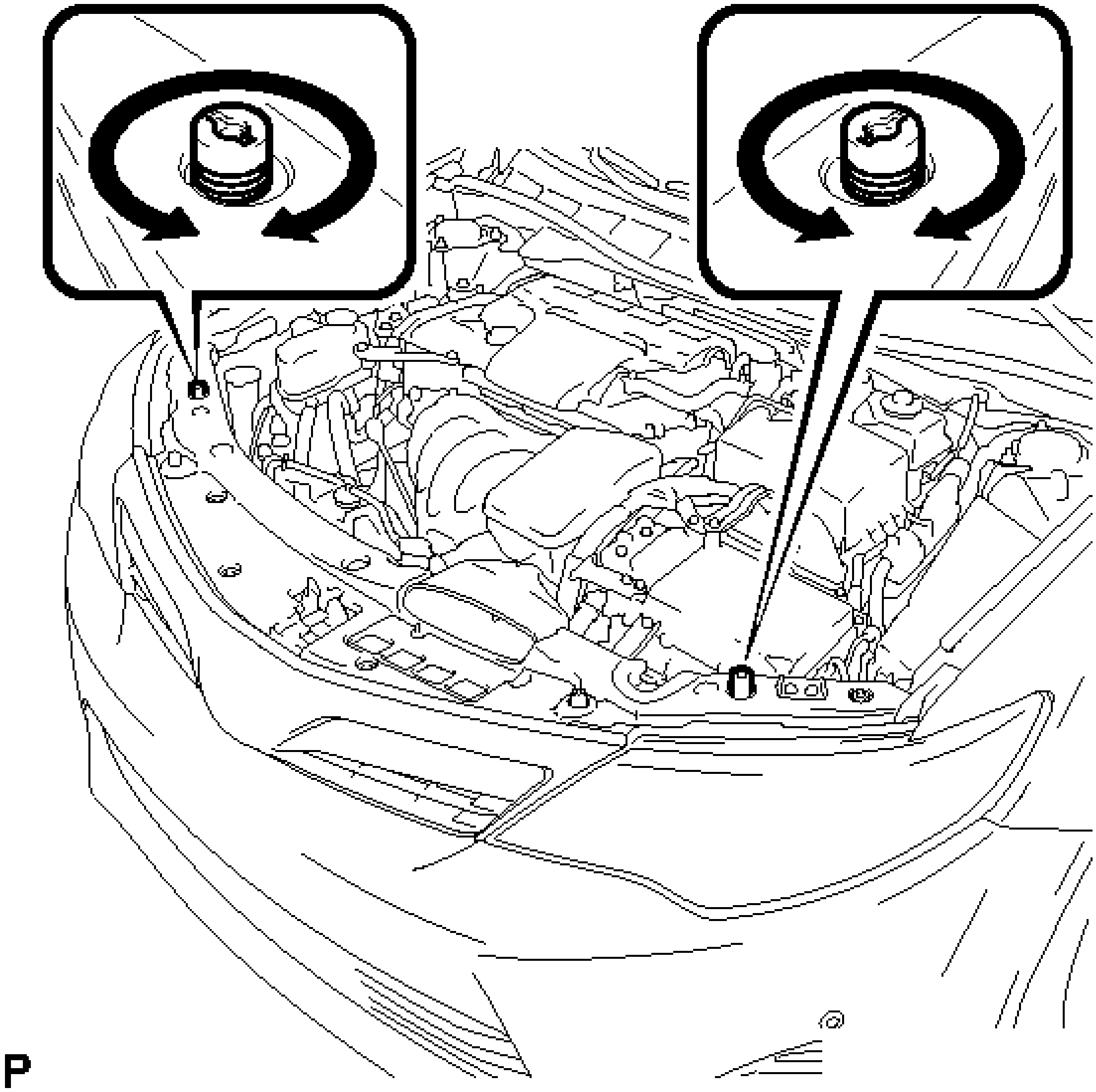

Fig. 7: Adjusting Hood Cushion Rubbers
Courtesy of TOYOTA MOTOR SALES, U.S.A., INC.

HINT:

Raise or lower the front end of the hood by turning the 2 cushion rubbers.

c. Remove the radiator grille sub-assembly. Refer to **REMOVAL** .

d. Adjust the hood lock.
    1. Loosen the 3 bolts.

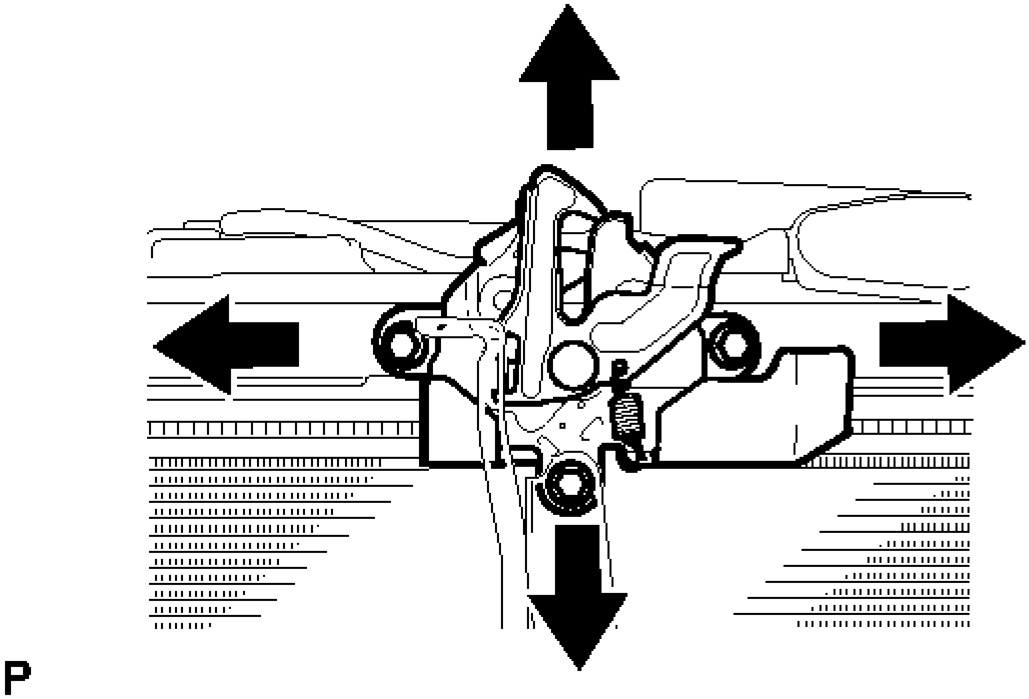

Fig. 8: Adjusting The Hood Lock
Courtesy of TOYOTA MOTOR SALES, U.S.A., INC.

    2. Adjust the hood lock and tighten the 3 bolts.

       Torque: 7.5 N*m (76 kgf*cm, 66 in.*lbf)

    3. Check that the striker can engage with the hood lock smoothly.

  e. Install the radiator grille sub-assembly. Refer to **INSTALLATION** .

REASSEMBLY

REASSEMBLY

1. **INSTALL HOOD SUPPORT ASSEMBLY LH** See step 1
2. **INSTALL HOOD SUPPORT ASSEMBLY RH**

   HINT:

   Use the same procedure as for the LH side.

3. **CONNECT WASHER HOSE ASSEMBLY**
   a. Engage the 6 clamps to connect the washer hose assembly.

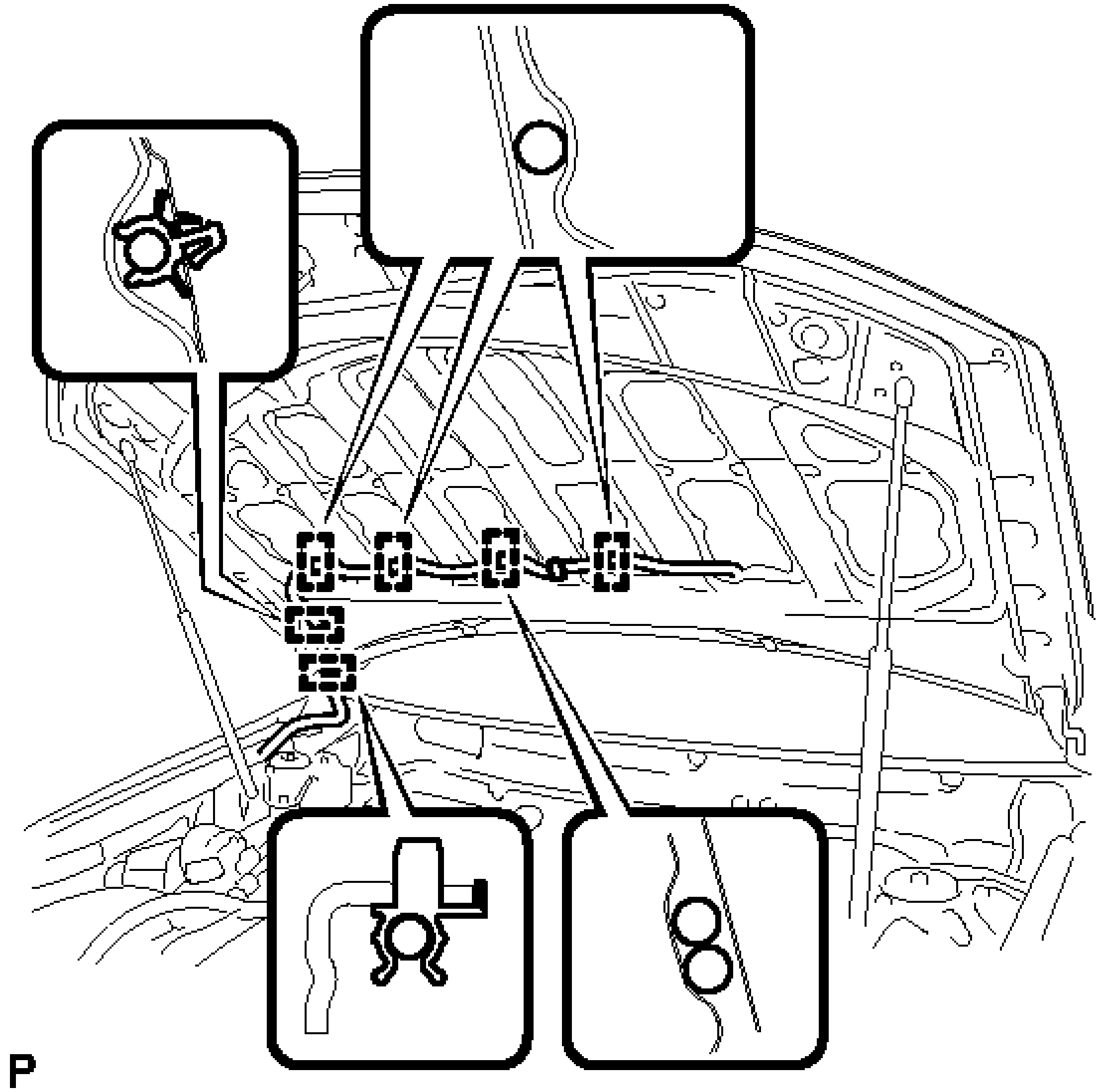

Fig. 9: Identifying Washer Hose Clamps
Courtesy of TOYOTA MOTOR SALES, U.S.A., INC.

4. **INSTALL WASHER NOZZLE SUB-ASSEMBLY** . Refer to **INSTALLATION - Step 1**
5. **INSPECT WASHER NOZZLE SUB-ASSEMBLY** . Refer to **ON-VEHICLE INSPECTION - Step 1**
6. **ADJUST WASHER NOZZLE SUB-ASSEMBLY** . Refer to **ADJUSTMENT - Step 2**
7. **INSTALL HOOD INSULATOR**
    a. Engage the 2 guides.

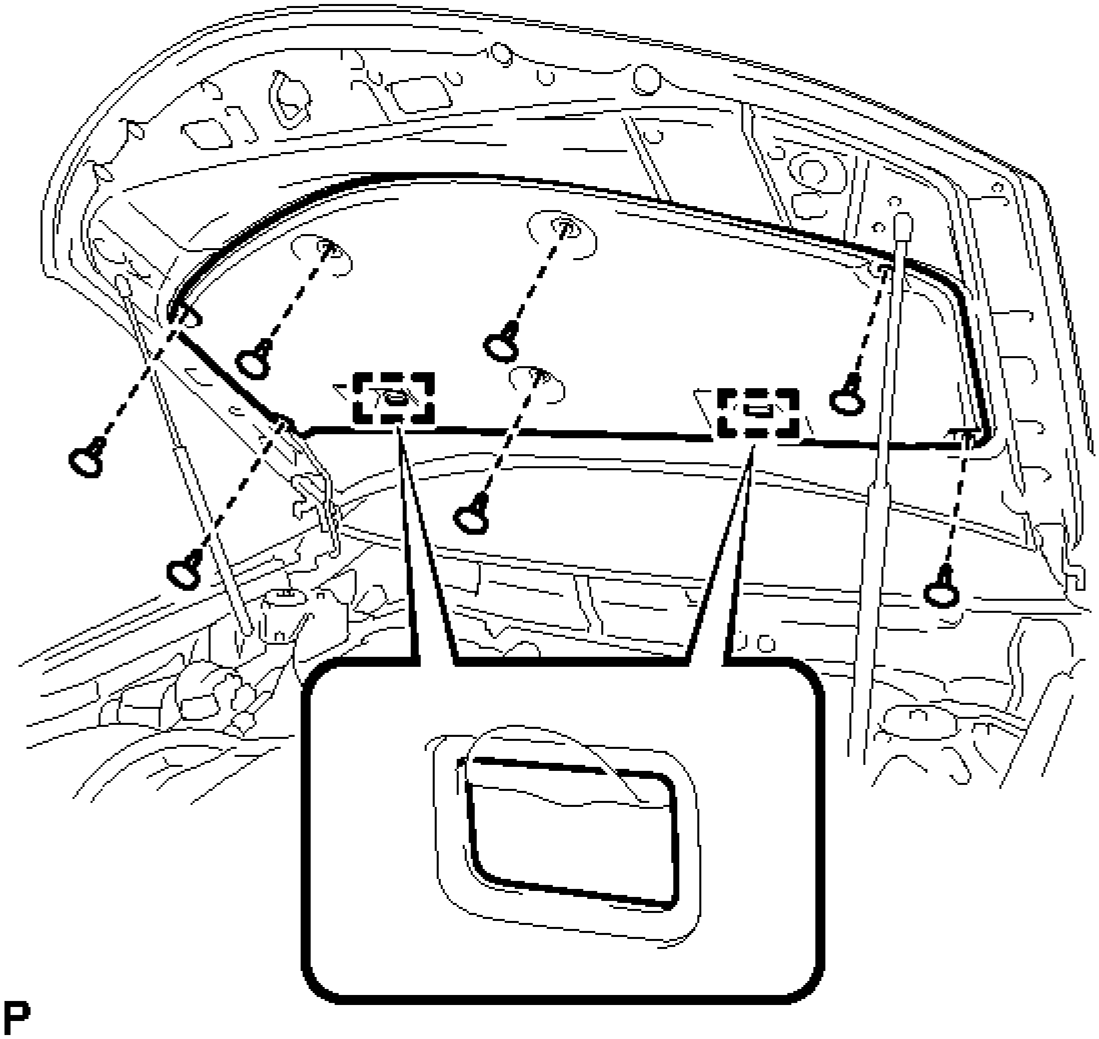

Fig. 10: Identifying Hood Insulator Clips
Courtesy of TOYOTA MOTOR SALES, U.S.A., INC.

b. Install the hood insulator with the 7 new clips.

8. **INSTALL HOOD TO RADIATOR SUPPORT SEAL**
   a. Engage the 8 clips to install the hood to radiator support seal.

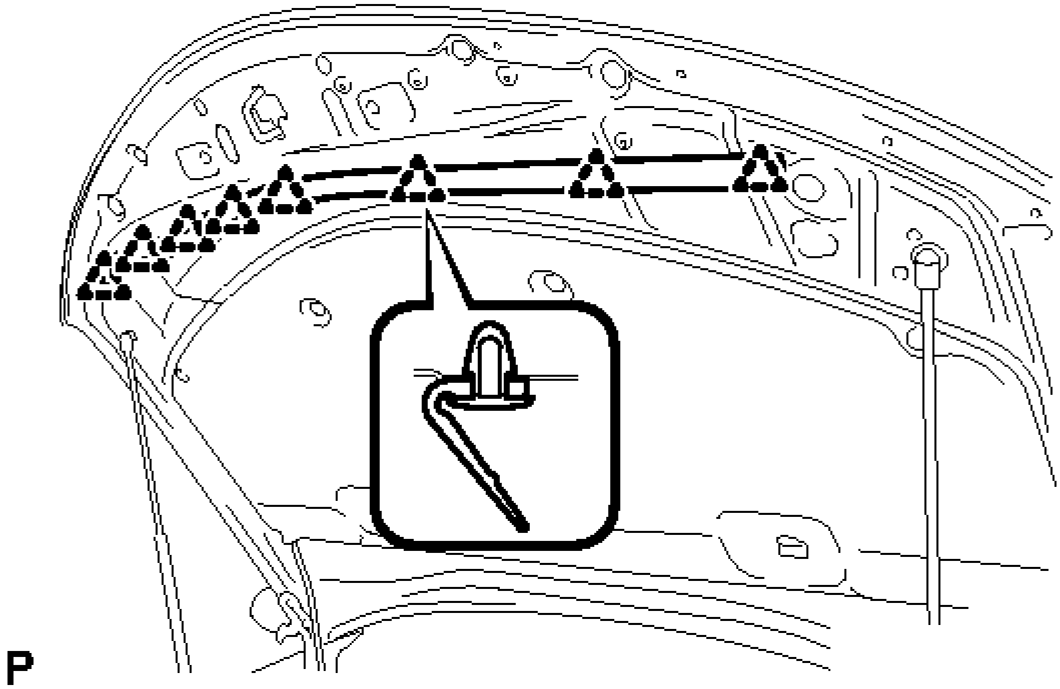

Fig. 11: Identifying Hood To Radiator Support Seal Clips
Courtesy of TOYOTA MOTOR SALES, U.S.A., INC.

HOOD SUPPORT

COMPONENTS

ILLUSTRATION

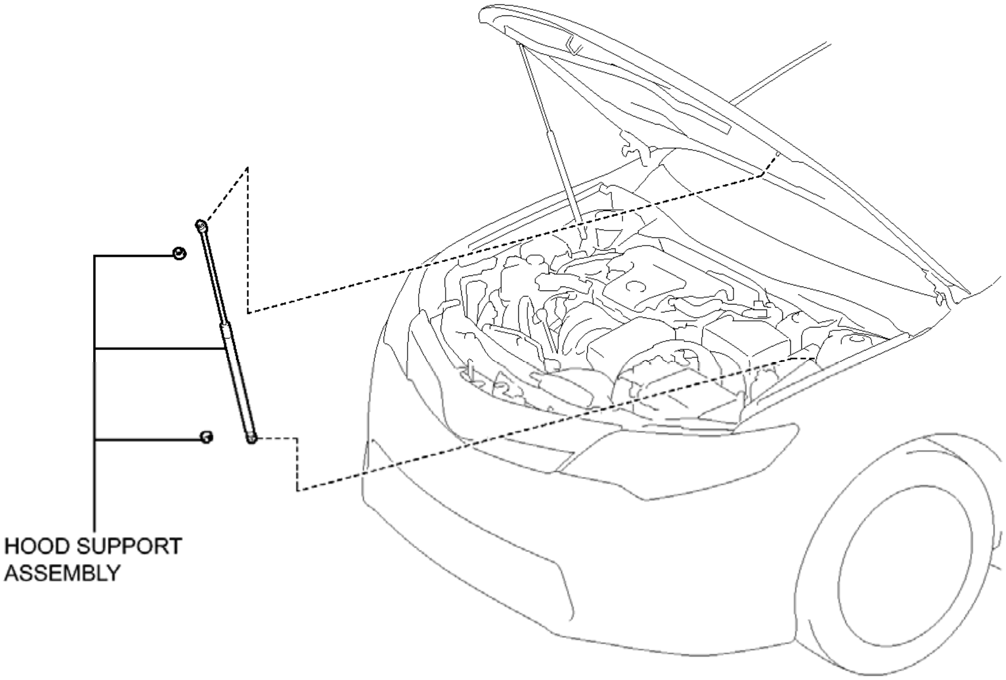

P

Fig. 12: Identifying Hood Support Replacement Components
Courtesy of TOYOTA MOTOR SALES, U.S.A., INC.

REMOVAL

REMOVAL

HINT:

- Use the same procedure for both the RH and LH sides.
- The procedure described below is for the LH side.

1. **REMOVE HOOD SUPPORT ASSEMBLY**

NOTE:

- **Avoid touching the piston rod as much as possible to prevent foreign matter from attaching to it. Be sure to hold the cylinder while servicing.**
- **Do not wear cotton gloves or other similar materials when handling the piston rod. Fibers may attach to the rod and result in gas leaks.**
- **In order to prevent the piston rod from deforming, do not apply any horizontal load to the door stay.**

a. Using a screwdriver, remove the 2 stop rings as indicated by the arrows, in the order shown in the illustration.

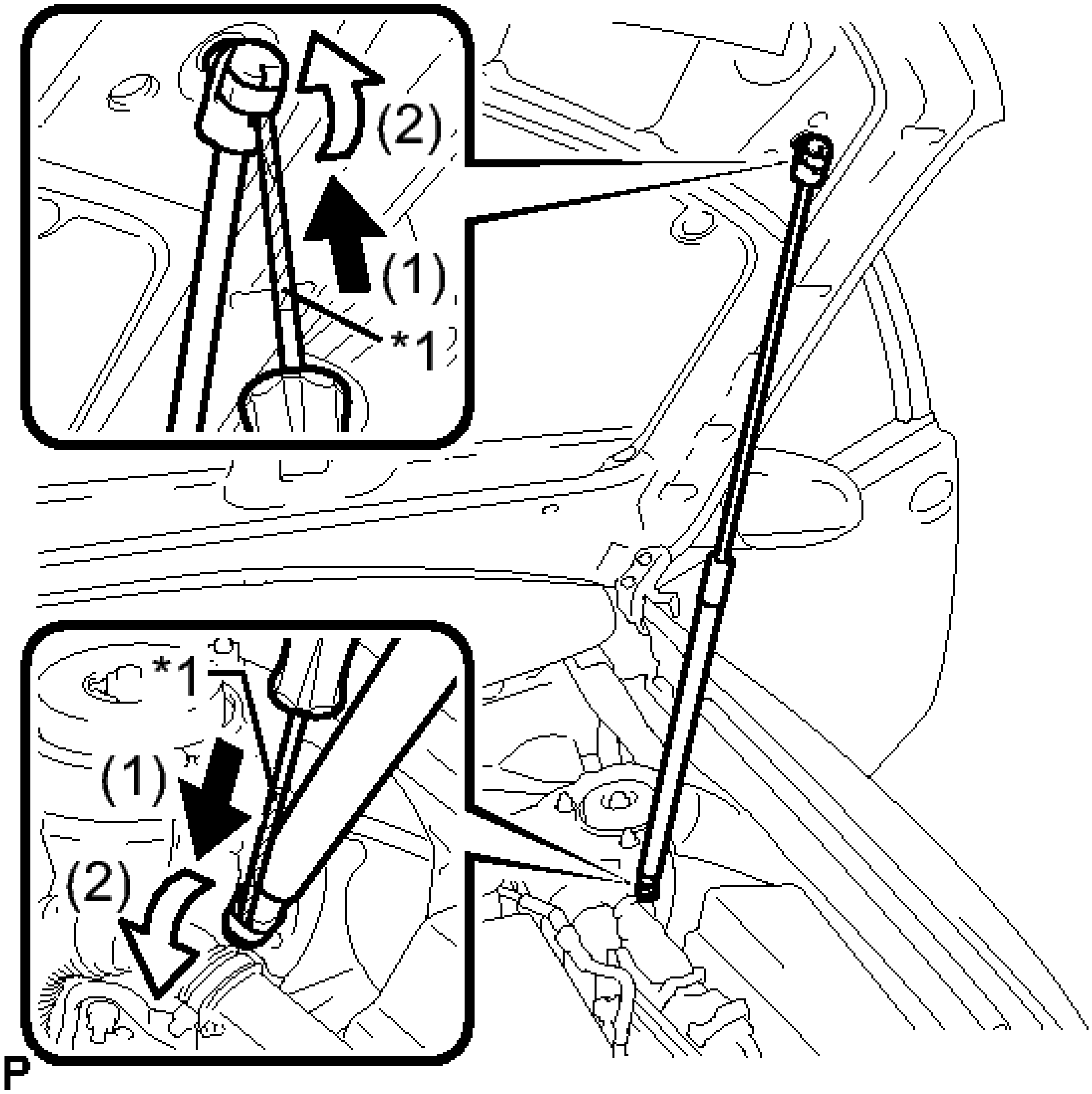

Fig. 13: Removing Hood Support Stop Rings
Courtesy of TOYOTA MOTOR SALES, U.S.A., INC.

TEXT IN ILLUSTRATION

*1	Protective Tape

HINT:

Tape the screwdriver tip before use.

b. Release the ball joint and remove the hood support assembly.

NOTE: **Remove the hood support assembly while supporting the hood by hand.**

INSTALLATION

INSTALLATION

HINT:

- Use the same procedure for both the RH and LH sides.
- The procedure described below is for the LH side.

1. **INSTALL HOOD SUPPORT ASSEMBLY**

NOTE:

- **Avoid touching the piston rod as much as possible to prevent foreign matter from attaching to it. Be sure to hold the cylinder while servicing.**
- **Do not wear cotton gloves or other similar materials when handling the piston rod. Fibers may attach to the rod and result in gas leaks.**
- **In order to prevent the piston rod from deforming, do not apply any horizontal load to the door stay.**

a. When reusing the hood support assembly:
   1. Install the 2 stop rings to the hood support assembly.

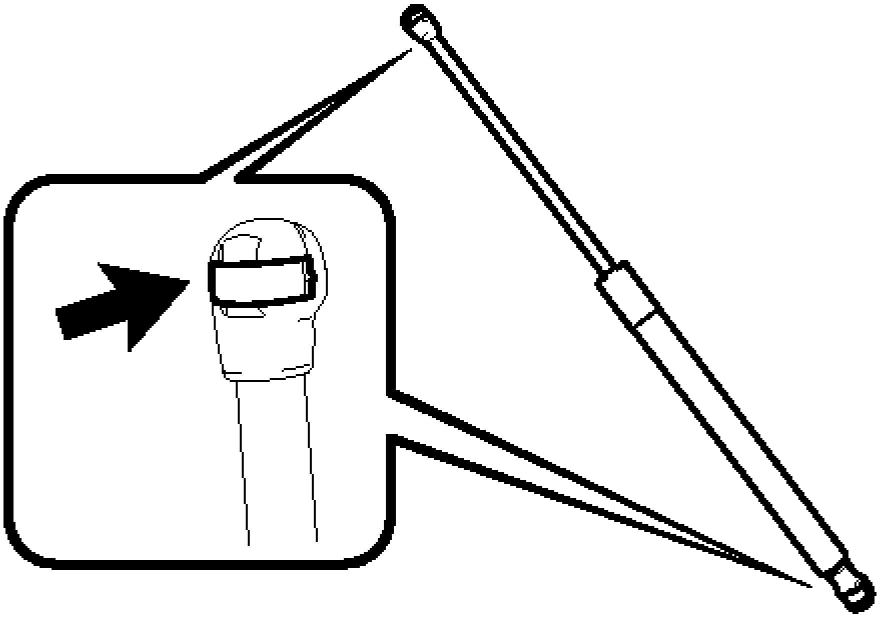

Fig. 14: Identifying Hood Support Stop Rings
Courtesy of TOYOTA MOTOR SALES, U.S.A., INC.

b. Install the hood support assembly.

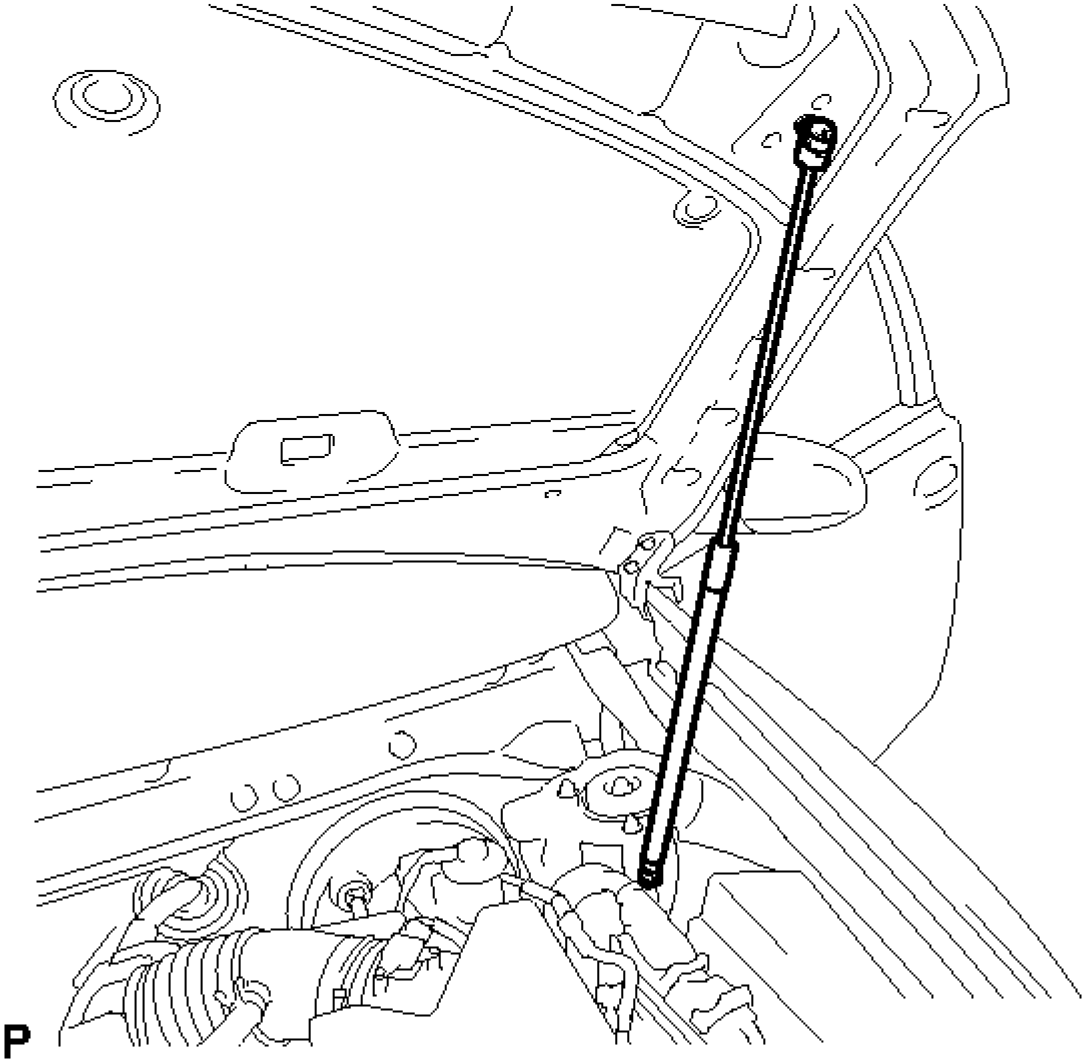

Fig. 15: Identifying Hood Support
Courtesy of TOYOTA MOTOR SALES, U.S.A., INC.

NOTE: **Install the hood support assembly while supporting the hood by hand.**

c. Check that the hood support assembly is engaged in the ball joint and it cannot be pulled out.

DISPOSAL

DISPOSAL

1. **DISPOSE OF HOOD SUPPORT ASSEMBLY**
   a. Horizontally hold the hood support in a vise with the piston-rod pulled out.
   b. Wear safety glasses. Gradually cut a part between A and B shown in the illustration using a metal

saw to release the gas.

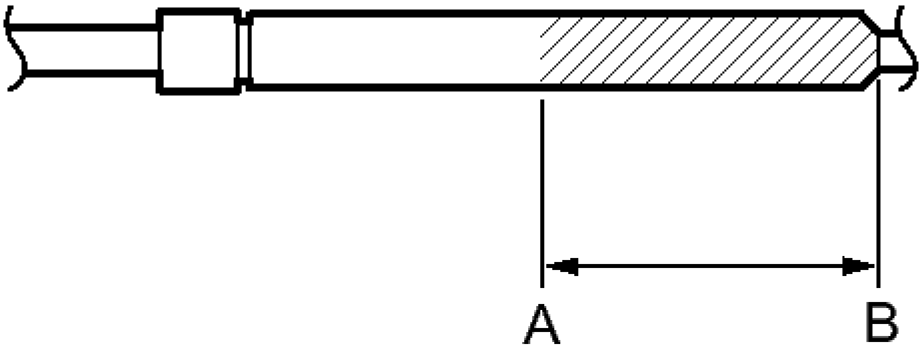

P

Fig. 16: Identifying Hood Support Assembly Dimension
Courtesy of TOYOTA MOTOR SALES, U.S.A., INC.

Area	Measurement
A-B	100 mm (3.94 in.)

NOTE: **Although the gas inside the hood support is colorless, odorless and harmless, there is a possibility that metal debris could scatter. Therefore, cover it with a piece of cloth or other material.**

HOOD LOCK CONTROL CABLE ASSEMBLY

COMPONENTS

ILLUSTRATION

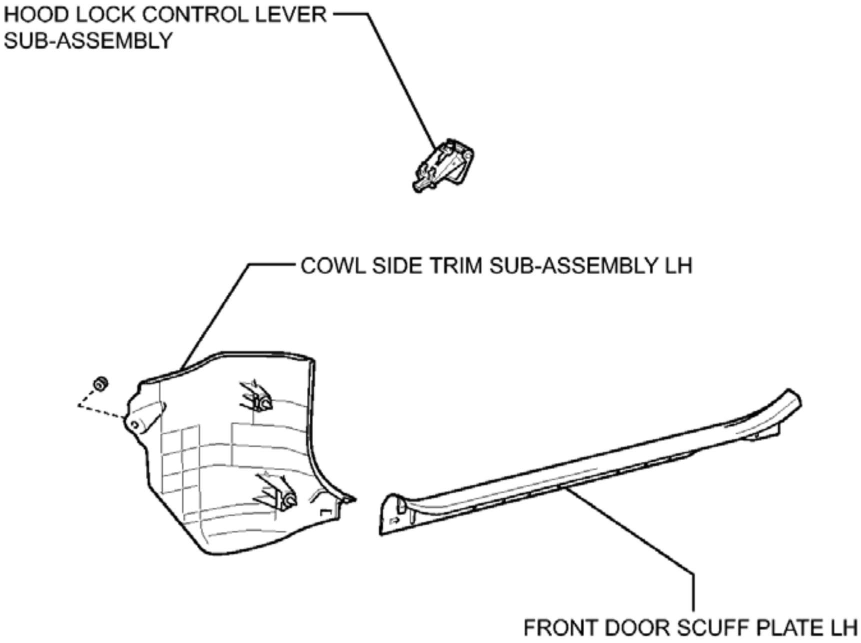
HOOD LOCK CONTROL LEVER SUB-ASSEMBLY
COWL SIDE TRIM SUB-ASSEMBLY LH
FRONT DOOR SCUFF PLATE LH

P

Fig. 17: Identifying Hood Lock Control Cable Assembly Replacement Components (1 Of 2)
Courtesy of TOYOTA MOTOR SALES, U.S.A., INC.

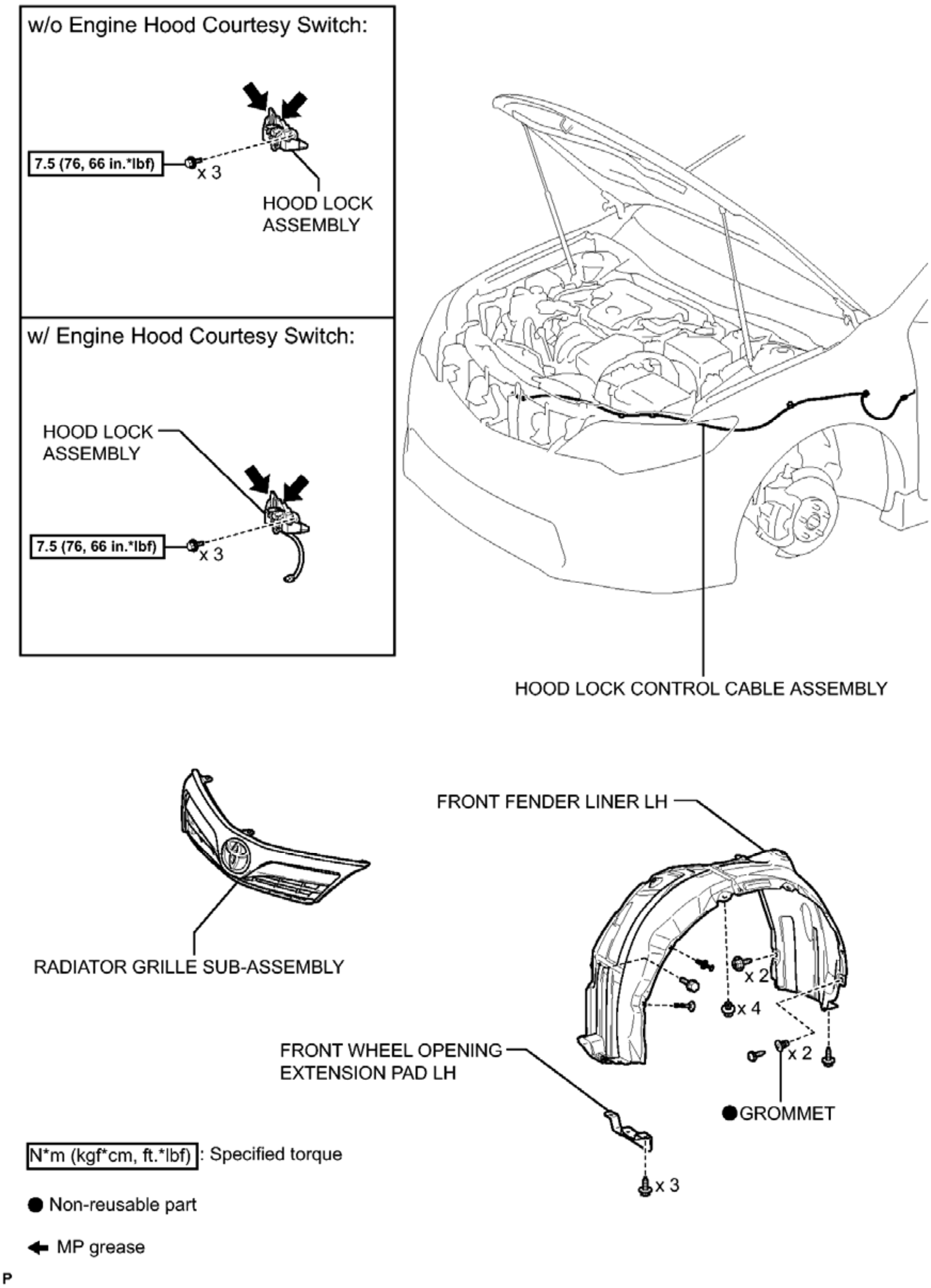
w/o Engine Hood Courtesy Switch:
7.5 (76, 66 in.*lbf)
x 3
HOOD LOCK ASSEMBLY
w/ Engine Hood Courtesy Switch:
HOOD LOCK ASSEMBLY
7.5 (76, 66 in.*lbf)
x 3
HOOD LOCK CONTROL CABLE ASSEMBLY
FRONT FENDER LINER LH
RADIATOR GRILLE SUB-ASSEMBLY
x 2
x 4
FRONT WHEEL OPENING EXTENSION PAD LH
x 2
● GROMMET
x 3
N*m (kgf*cm, ft.*lbf) : Specified torque
● Non-reusable part
MP grease
P

Fig. 18: Identifying Hood Lock Control Cable Assembly Replacement Components With Torque Specifications (2 Of 2)
Courtesy of TOYOTA MOTOR SALES, U.S.A., INC.

REMOVAL

REMOVAL

1. **REMOVE RADIATOR GRILLE SUB-ASSEMBLY**

   Refer to **REMOVAL**

2. **REMOVE FRONT WHEEL LH**
3. **REMOVE FRONT WHEEL OPENING EXTENSION PAD LH**

   HINT:

   Use the same procedure for the RH side and LH side. Refer to **REMOVAL - Step 2** .

4. **REMOVE FRONT FENDER LINER LH**

   HINT:

   Use the same procedure for the RH side and LH side. Refer to **REMOVAL - Step 3** .

5. **REMOVE FRONT DOOR SCUFF PLATE LH** . Refer to **REMOVAL - Step 4**
6. **REMOVE COWL SIDE TRIM SUB-ASSEMBLY LH** . Refer to **REMOVAL - Step 5**
7. **DISCONNECT HOOD LOCK CONTROL LEVER SUB-ASSEMBLY** . Refer to **REMOVAL - Step 13**
8. **REMOVE HOOD LOCK CONTROL LEVER SUB-ASSEMBLY**
   a. Disconnect the hood lock control cable assembly and remove the hood lock control lever sub-assembly.

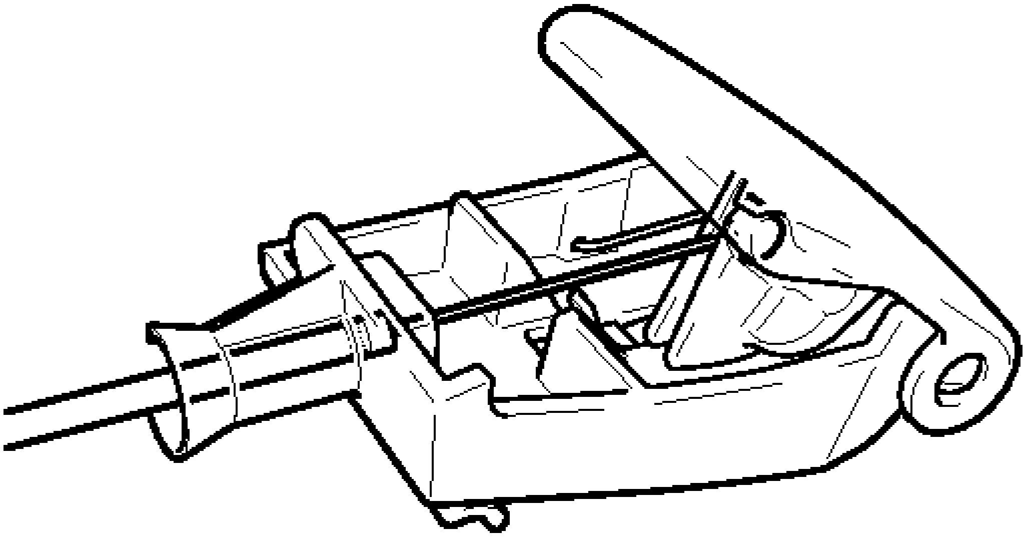

Fig. 19: Identifying Hood Lock Control Cable
Courtesy of TOYOTA MOTOR SALES, U.S.A., INC.

9. **REMOVE HOOD LOCK ASSEMBLY**
   a. w/ Engine Hood Courtesy Switch:
      1. Disconnect the connector.

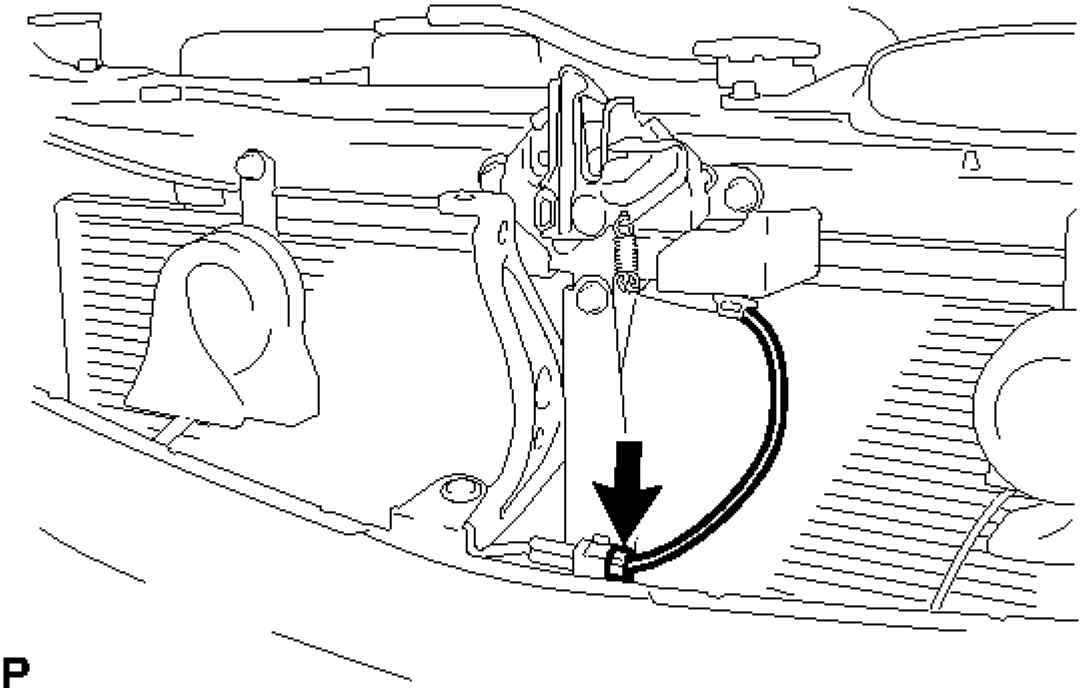

Fig. 20: Identifying Hood Lock Connector
Courtesy of TOYOTA MOTOR SALES, U.S.A., INC.

b. Remove the 3 bolts.

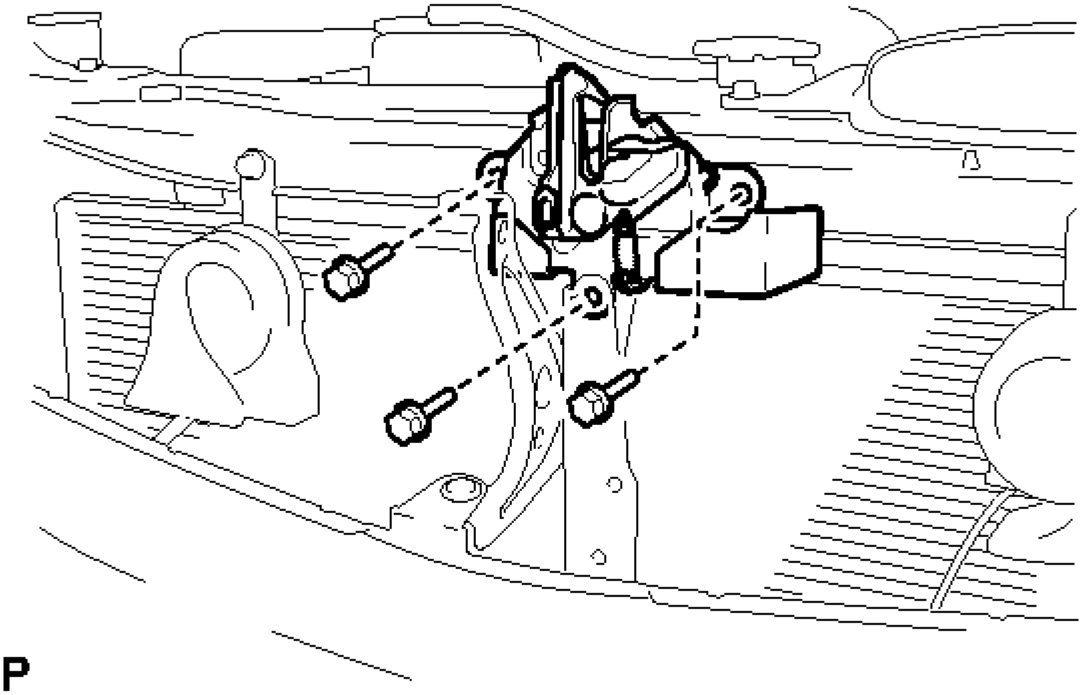

Fig. 21: Identifying Hood Lock Bolts
Courtesy of TOYOTA MOTOR SALES, U.S.A., INC.

c. Disconnect the hood lock control cable assembly and remove the hood lock assembly.

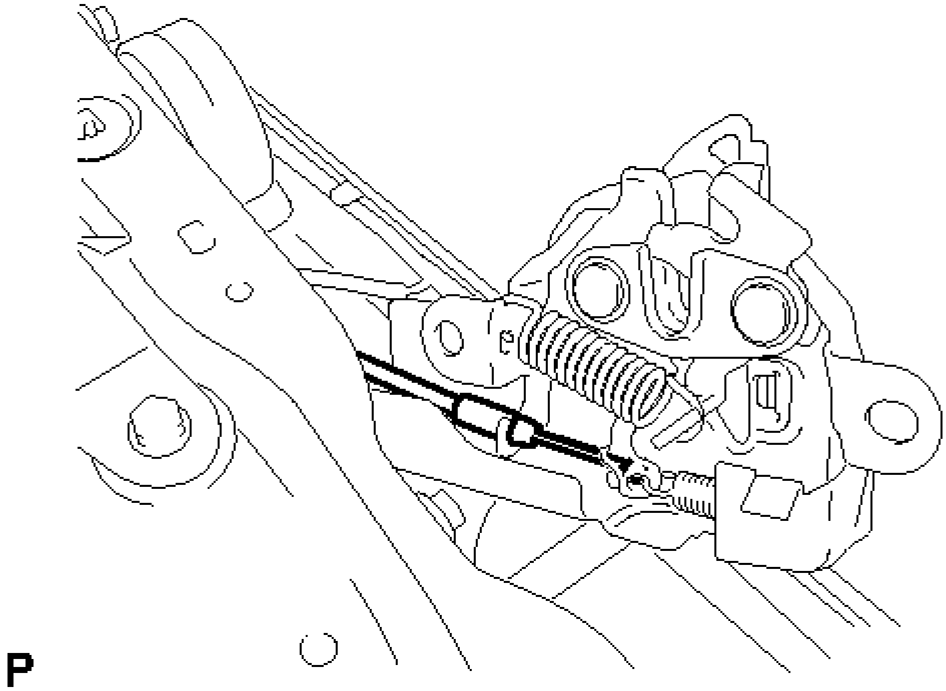

Fig. 22: Removing The Hood Lock Assembly
Courtesy of TOYOTA MOTOR SALES, U.S.A., INC.

10. **REMOVE HOOD LOCK CONTROL CABLE ASSEMBLY**
    a. Using a screwdriver, disengage the 5 clamps and hood cable grommet as shown in the illustration.

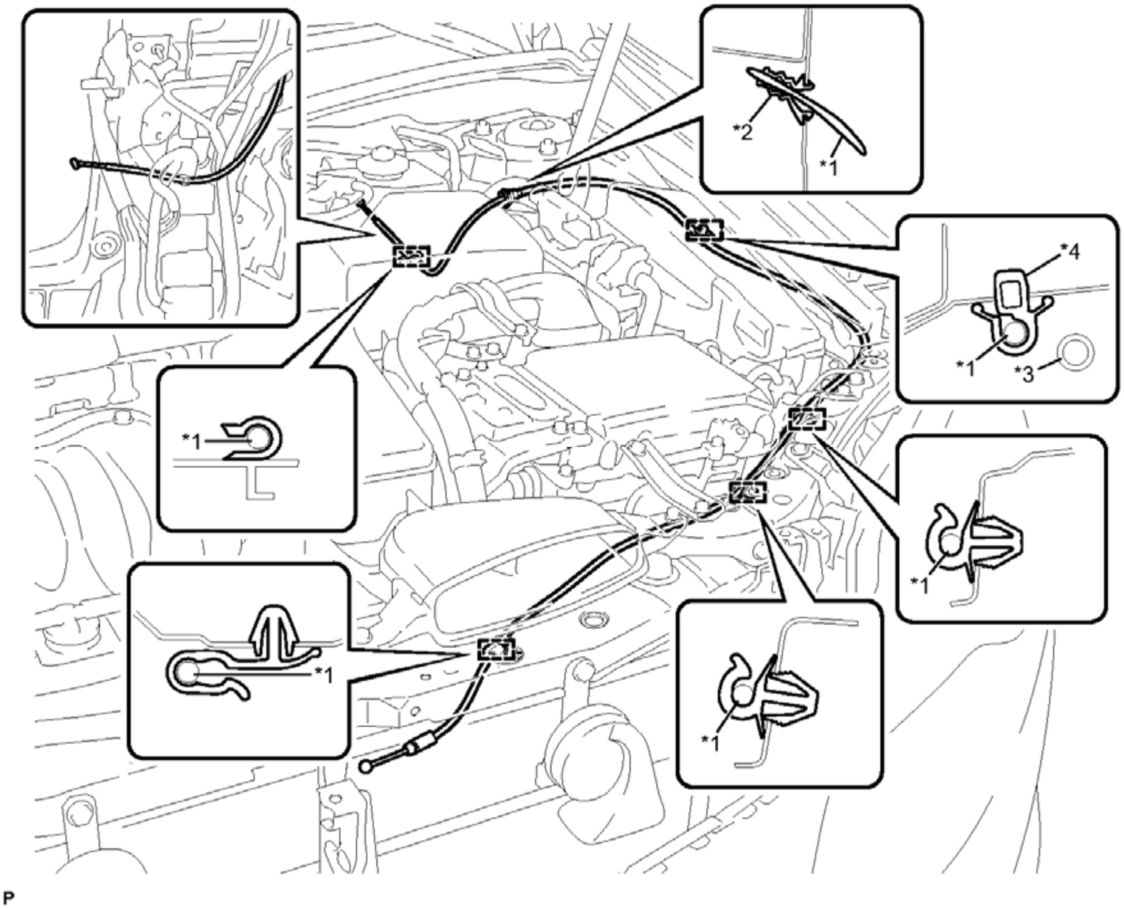

Fig. 23: Identifying Hood Lock Control Cable Clamps
Courtesy of TOYOTA MOTOR SALES, U.S.A., INC.

TEXT IN ILLUSTRATION

*1	Hood Lock Control Cable	*2	Hood Cable Grommet
*3	Washer Hose	*4	Hood Lock Control Cable Clamp

HINT:

Tape the screwdriver tip before use.

b. Pull the hood lock control cable assembly from the engine compartment and remove it.

INSTALLATION

INSTALLATION

1. **INSTALL HOOD LOCK CONTROL CABLE ASSEMBLY**
    a. Pass the hood lock control cable assembly into the engine compartment.
    b. Pass the cable through the upper radiator support.
    c. Engage the hood cable grommet.
    d. Engage the 5 clamps and install the hood lock control cable assembly.
2. **INSTALL HOOD LOCK ASSEMBLY**
    a. Apply MP grease to the sliding areas of the lock.

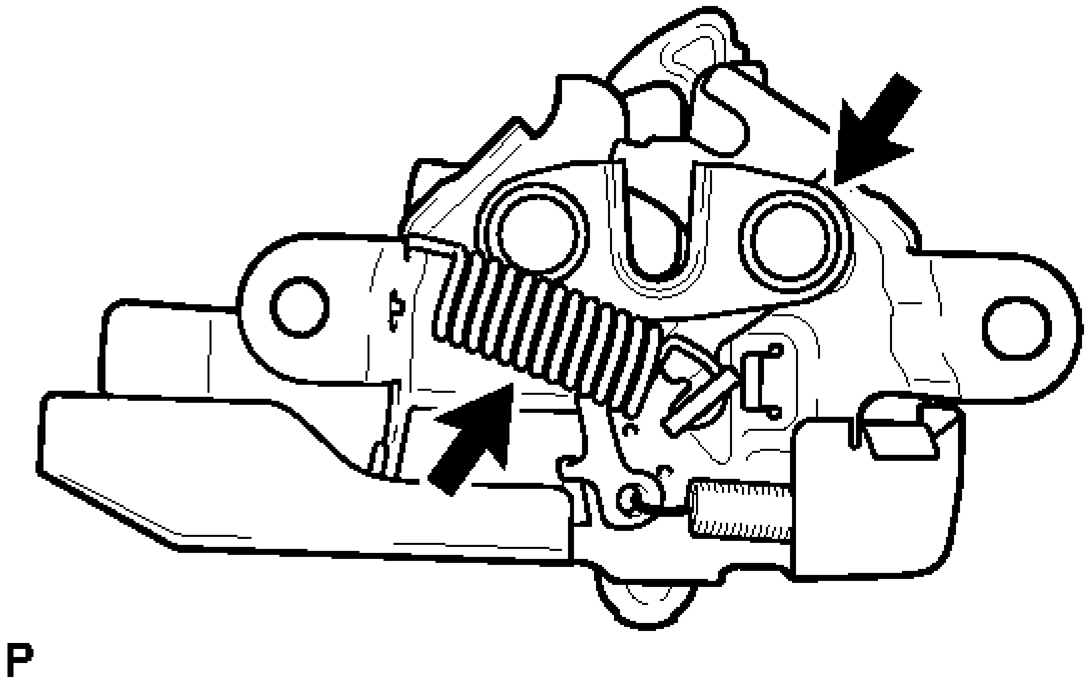

Fig. 24: Identifying Sliding Areas To Apply Grease
Courtesy of TOYOTA MOTOR SALES, U.S.A., INC.

    b. Connect the hood lock control cable assembly.
    c. Install the hood lock assembly with the 3 bolts.

    Torque: 7.5 N*m (76 kgf*cm, 66 in.*lbf)

    d. w/ Engine Hood Courtesy Switch:
        1. Connect the connector.
3. **INSTALL HOOD LOCK CONTROL LEVER SUB-ASSEMBLY**
    a. Connect the hood lock control cable assembly and install the hood lock control lever sub-assembly.
4. **CONNECT HOOD LOCK CONTROL LEVER SUB-ASSEMBLY** . Refer to **INSTALLATION - Step 39**

5. **INSTALL COWL SIDE TRIM SUB-ASSEMBLY LH** . Refer to **INSTALLATION - Step 44**
6. **INSTALL FRONT DOOR SCUFF PLATE LH** . Refer to **INSTALLATION - Step 45**
7. **INSTALL FRONT FENDER LINER LH**

   HINT:

   Use the same procedure for the RH side and LH side. Refer to **INSTALLATION - Step 3** .

8. **INSTALL FRONT WHEEL OPENING EXTENSION PAD LH**

   HINT:

   Use the same procedure for the RH side and LH side. Refer to **INSTALLATION - Step 4** .

9. **INSTALL FRONT WHEEL LH** . Refer to **INSTALLATION - Step 13**
10. **INSTALL RADIATOR GRILLE SUB-ASSEMBLY**

    Refer to **INSTALLATION**

11. **ADJUST HOOD SUB-ASSEMBLY**

    Refer to **ADJUSTMENT**

FRONT DOOR

COMPONENTS

ILLUSTRATION

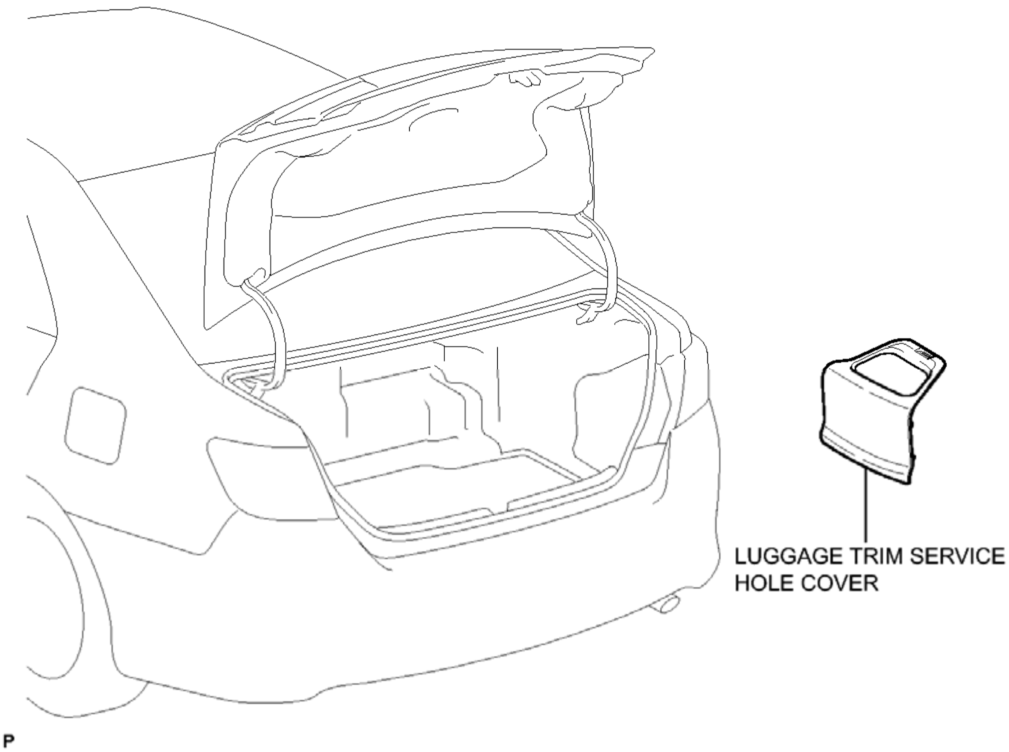
LUGGAGE TRIM SERVICE HOLE COVER
P

Fig. 25: Identifying Front Door Replacement Components (1 Of 5)
Courtesy of TOYOTA MOTOR SALES, U.S.A., INC.

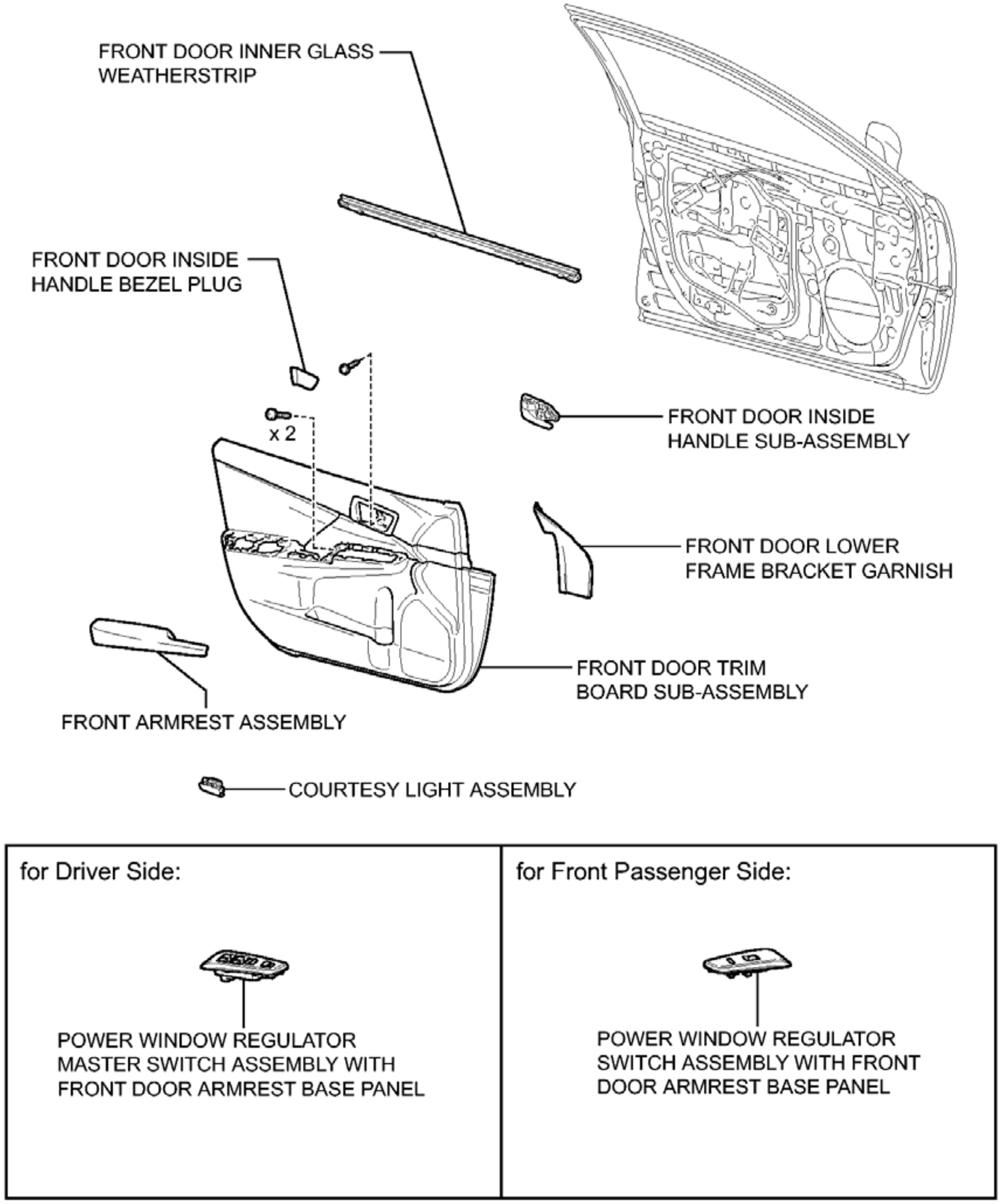
FRONT DOOR INNER GLASS WEATHERSTRIP
FRONT DOOR INSIDE HANDLE BEZEL PLUG
x 2
FRONT DOOR INSIDE HANDLE SUB-ASSEMBLY
FRONT DOOR LOWER FRAME BRACKET GARNISH
FRONT DOOR TRIM BOARD SUB-ASSEMBLY
FRONT ARMREST ASSEMBLY
COURTESY LIGHT ASSEMBLY
for Driver Side:
POWER WINDOW REGULATOR MASTER SWITCH ASSEMBLY WITH FRONT DOOR ARMREST BASE PANEL
for Front Passenger Side:
POWER WINDOW REGULATOR SWITCH ASSEMBLY WITH FRONT DOOR ARMREST BASE PANEL
P

Fig. 26: Identifying Front Door Replacement Components (2 Of 5)
Courtesy of TOYOTA MOTOR SALES, U.S.A., INC.

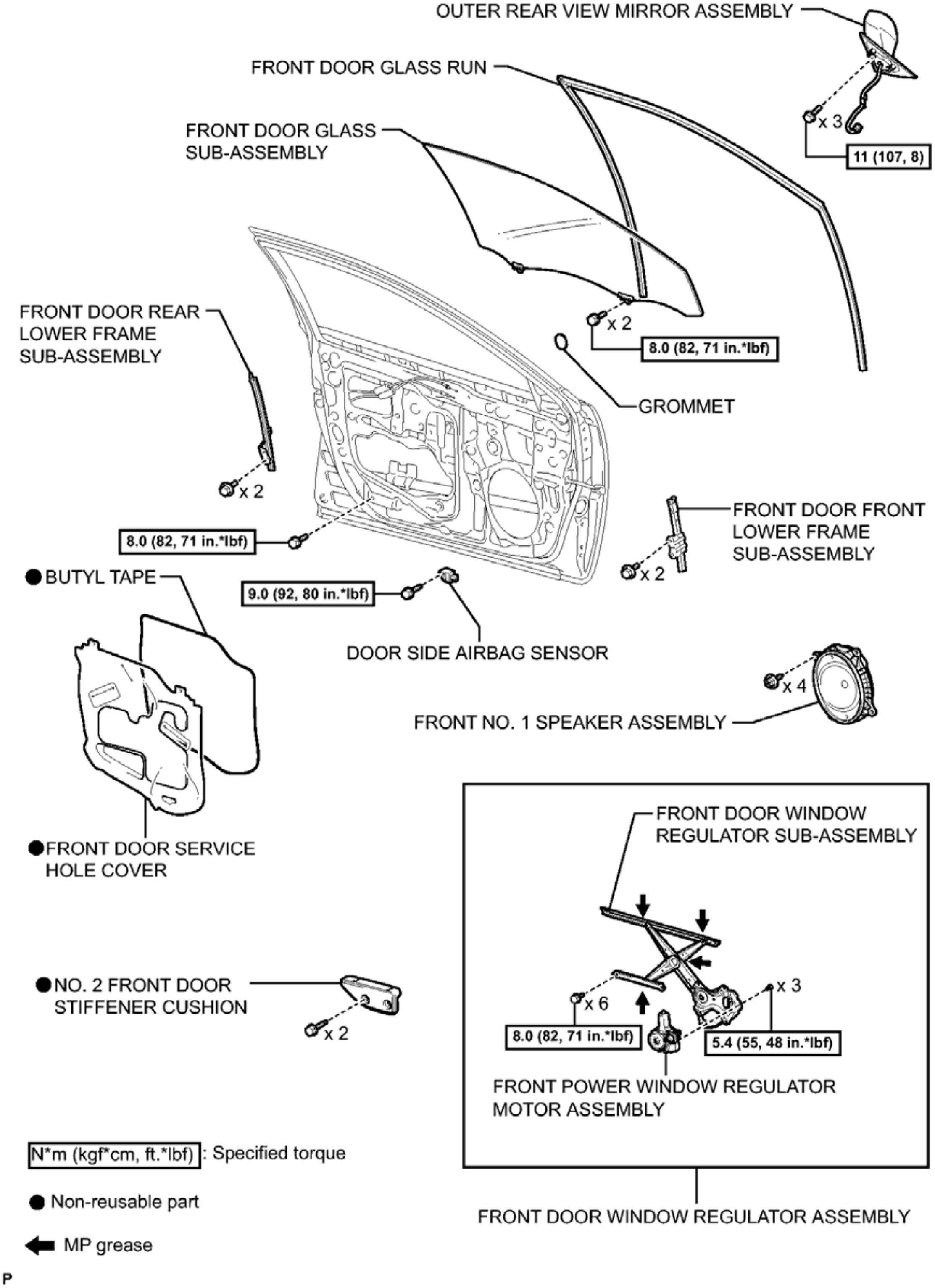
OUTER REAR VIEW MIRROR ASSEMBLY
FRONT DOOR GLASS RUN
x 3
11 (107, 8)
FRONT DOOR GLASS SUB-ASSEMBLY
FRONT DOOR REAR LOWER FRAME SUB-ASSEMBLY
x 2
8.0 (82, 71 in.*lbf)
GROMMET
x 2
8.0 (82, 71 in.*lbf)
FRONT DOOR FRONT LOWER FRAME SUB-ASSEMBLY
x 2
● BUTYL TAPE
9.0 (92, 80 in.*lbf)
DOOR SIDE AIRBAG SENSOR
x 4
FRONT NO. 1 SPEAKER ASSEMBLY
● FRONT DOOR SERVICE HOLE COVER
FRONT DOOR WINDOW REGULATOR SUB-ASSEMBLY
● NO. 2 FRONT DOOR STIFFENER CUSHION
x 2
x 3
x 6
8.0 (82, 71 in.*lbf)
5.4 (55, 48 in.*lbf)
FRONT POWER WINDOW REGULATOR MOTOR ASSEMBLY
N*m (kgf*cm, ft.*lbf) : Specified torque
● Non-reusable part
⬅ MP grease
FRONT DOOR WINDOW REGULATOR ASSEMBLY
P

Fig. 27: Identifying Front Door Replacement Components With Torque Specifications (3 Of 5)
Courtesy of TOYOTA MOTOR SALES, U.S.A., INC.

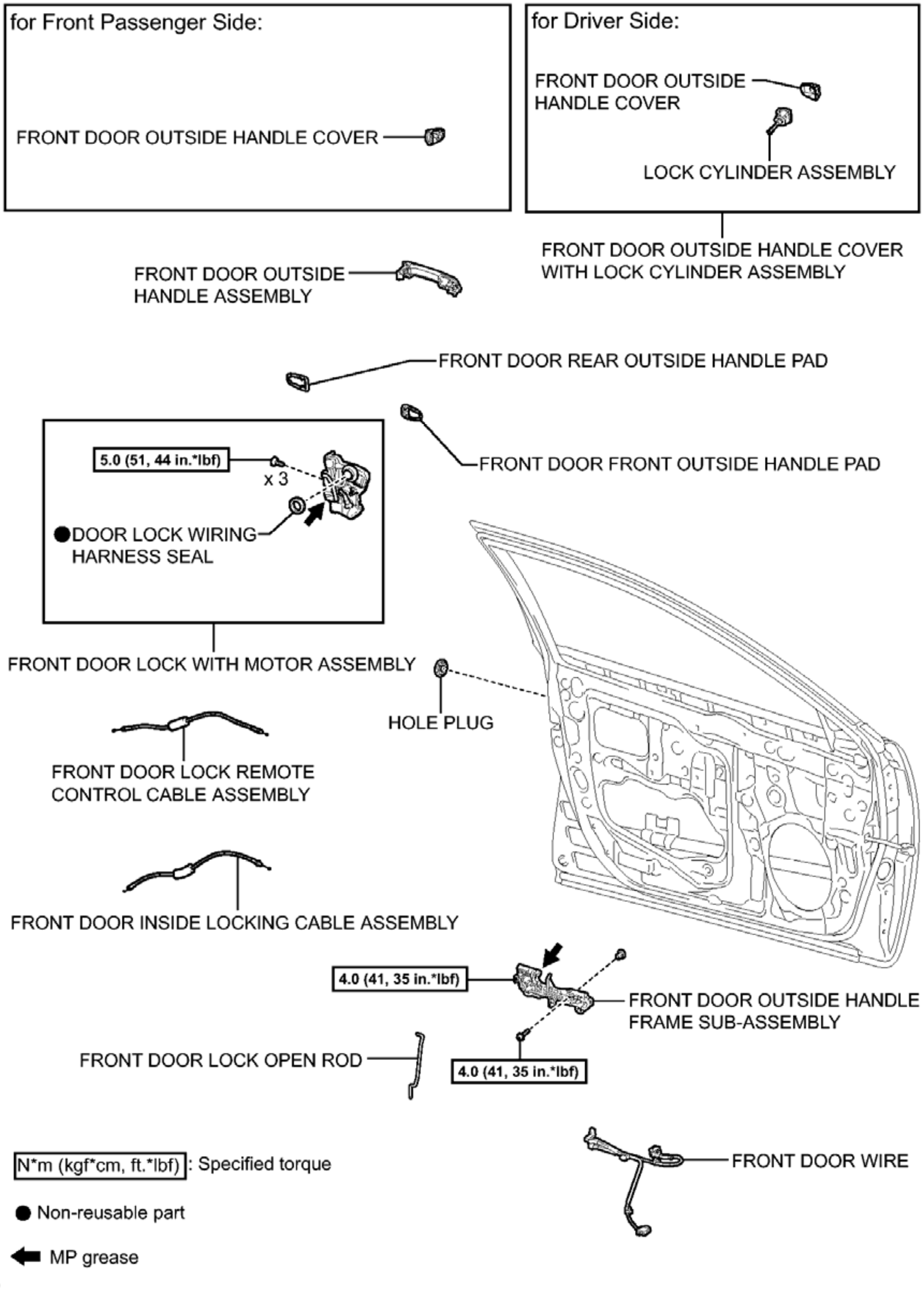
for Front Passenger Side:
FRONT DOOR OUTSIDE HANDLE COVER
for Driver Side:
FRONT DOOR OUTSIDE HANDLE COVER
LOCK CYLINDER ASSEMBLY
FRONT DOOR OUTSIDE HANDLE COVER WITH LOCK CYLINDER ASSEMBLY
FRONT DOOR OUTSIDE HANDLE ASSEMBLY
FRONT DOOR REAR OUTSIDE HANDLE PAD
FRONT DOOR FRONT OUTSIDE HANDLE PAD
5.0 (51, 44 in.*lbf)
x 3
● DOOR LOCK WIRING HARNESS SEAL
FRONT DOOR LOCK WITH MOTOR ASSEMBLY
HOLE PLUG
FRONT DOOR LOCK REMOTE CONTROL CABLE ASSEMBLY
FRONT DOOR INSIDE LOCKING CABLE ASSEMBLY
4.0 (41, 35 in.*lbf)
FRONT DOOR OUTSIDE HANDLE FRAME SUB-ASSEMBLY
FRONT DOOR LOCK OPEN ROD
4.0 (41, 35 in.*lbf)
FRONT DOOR WIRE
N*m (kgf*cm, ft.*lbf) : Specified torque
● Non-reusable part
MP grease
P

Fig. 28: Identifying Front Door Replacement Components With Torque Specifications (4 Of 5)
Courtesy of TOYOTA MOTOR SALES, U.S.A., INC.

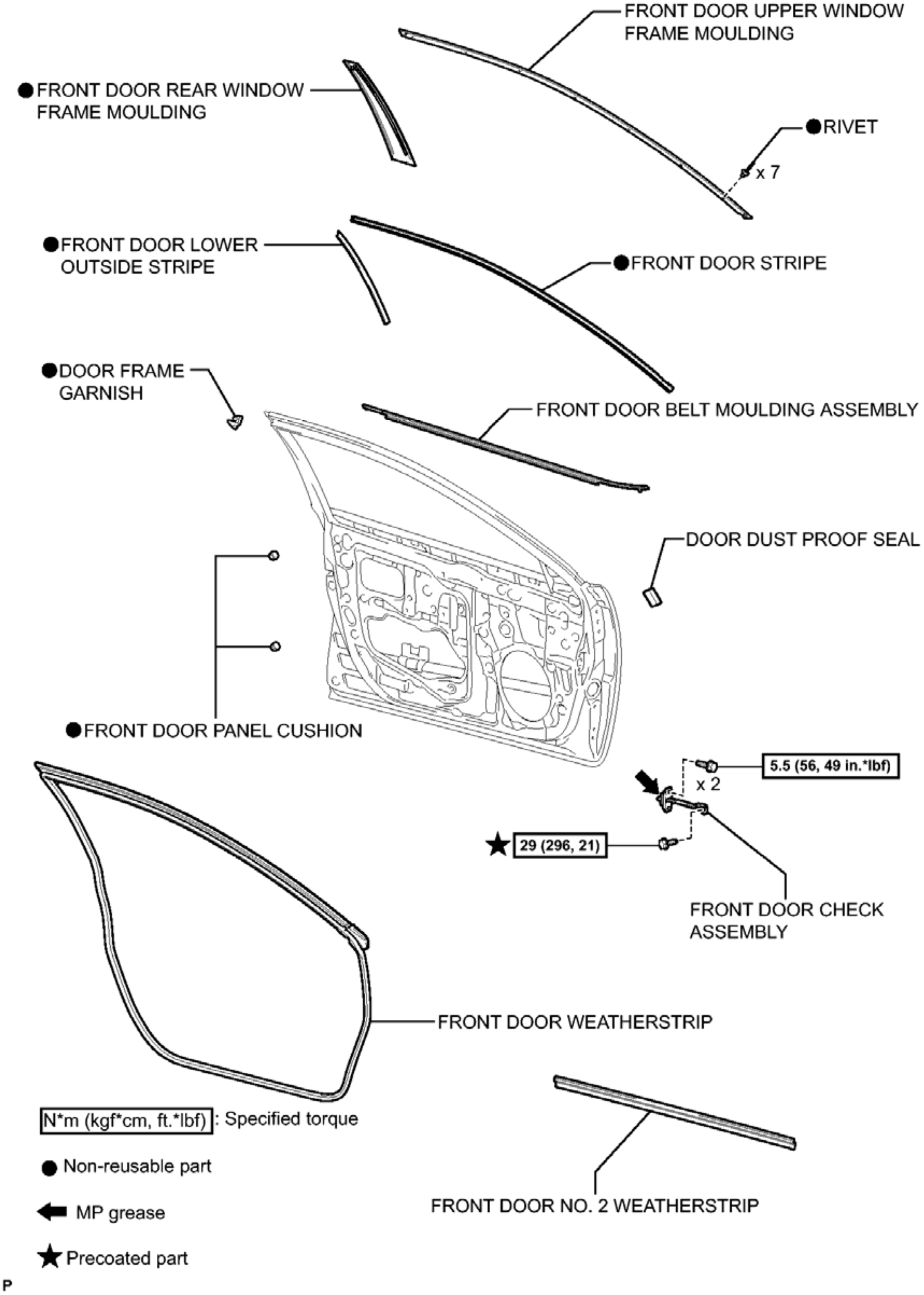
FRONT DOOR UPPER WINDOW FRAME MOULDING
●FRONT DOOR REAR WINDOW FRAME MOULDING
●RIVET
x 7
●FRONT DOOR LOWER OUTSIDE STRIPE
●FRONT DOOR STRIPE
●DOOR FRAME GARNISH
FRONT DOOR BELT MOULDING ASSEMBLY
DOOR DUST PROOF SEAL
●FRONT DOOR PANEL CUSHION
5.5 (56, 49 in.*lbf)
x 2
★ 29 (296, 21)
FRONT DOOR CHECK ASSEMBLY
FRONT DOOR WEATHERSTRIP
FRONT DOOR NO. 2 WEATHERSTRIP
N*m (kgf*cm, ft.*lbf) : Specified torque
● Non-reusable part
⬅ MP grease
★ Precoated part
P

Fig. 29: Identifying Front Door Replacement Components With Torque Specifications (5 Of 5)
Courtesy of TOYOTA MOTOR SALES, U.S.A., INC.

DISASSEMBLY

DISASSEMBLY

HINT:

- Use the same procedure for both the RH and LH sides.
- The procedure described below is for the LH side.

1. **PRECAUTION**

NOTE: **After turning the power switch off, waiting time may be required before disconnecting the cable from the negative (-) auxiliary battery terminal. Therefore, make sure to read the disconnecting the cable from the negative (-) auxiliary battery terminal notices before proceeding with work. Refer to PRECAUTION .**

2. **REMOVE LUGGAGE TRIM SERVICE HOLE COVER** . Refer to **REMOVAL - Step 2**
3. **DISCONNECT CABLE FROM AUXILIARY BATTERY NEGATIVE TERMINAL**

WARNING: **Wait at least 90 seconds after disconnecting the cable from the negative (-) auxiliary battery terminal to disable the SRS system.**

NOTE: **When disconnecting the cable, some systems need to be initialized after the cable is reconnected. Refer to INITIALIZATION .**

4. **REMOVE FRONT DOOR INSIDE HANDLE BEZEL PLUG**
   a. Using a moulding remover, disengage the 3 claws and remove the front door inside handle bezel plug as shown in the illustration.

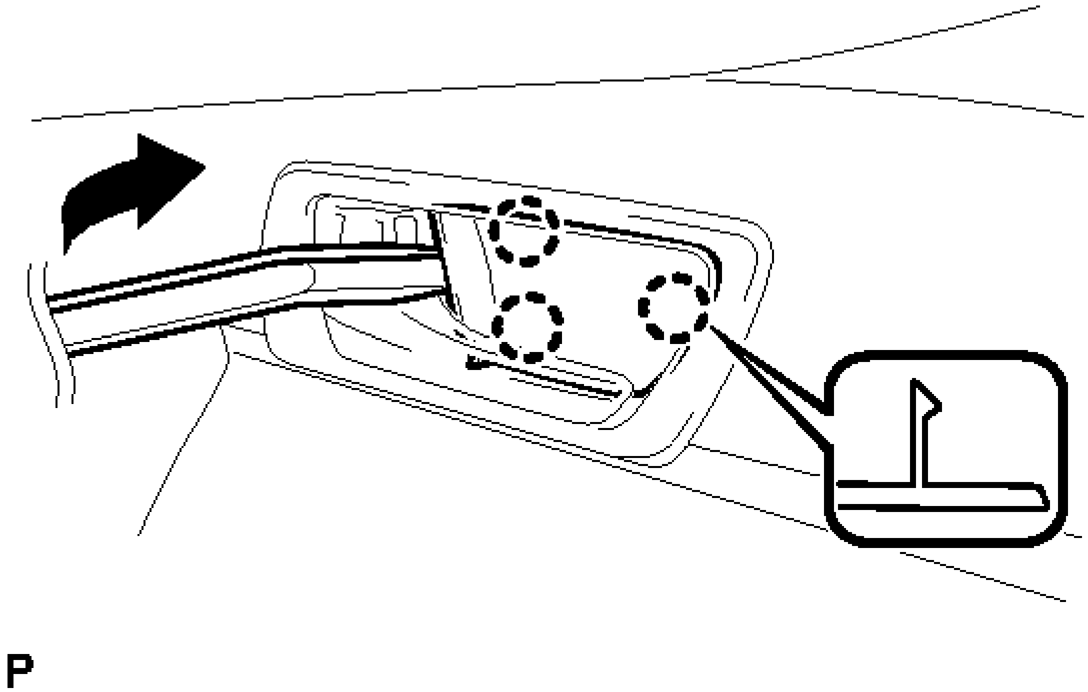

Fig. 30: Identifying Front Door Inside Handle Bezel Plug Claws
Courtesy of TOYOTA MOTOR SALES, U.S.A., INC.

5. **REMOVE FRONT DOOR LOWER FRAME BRACKET GARNISH**
    a. Disengage the 3 clips and remove the front door lower frame bracket garnish.

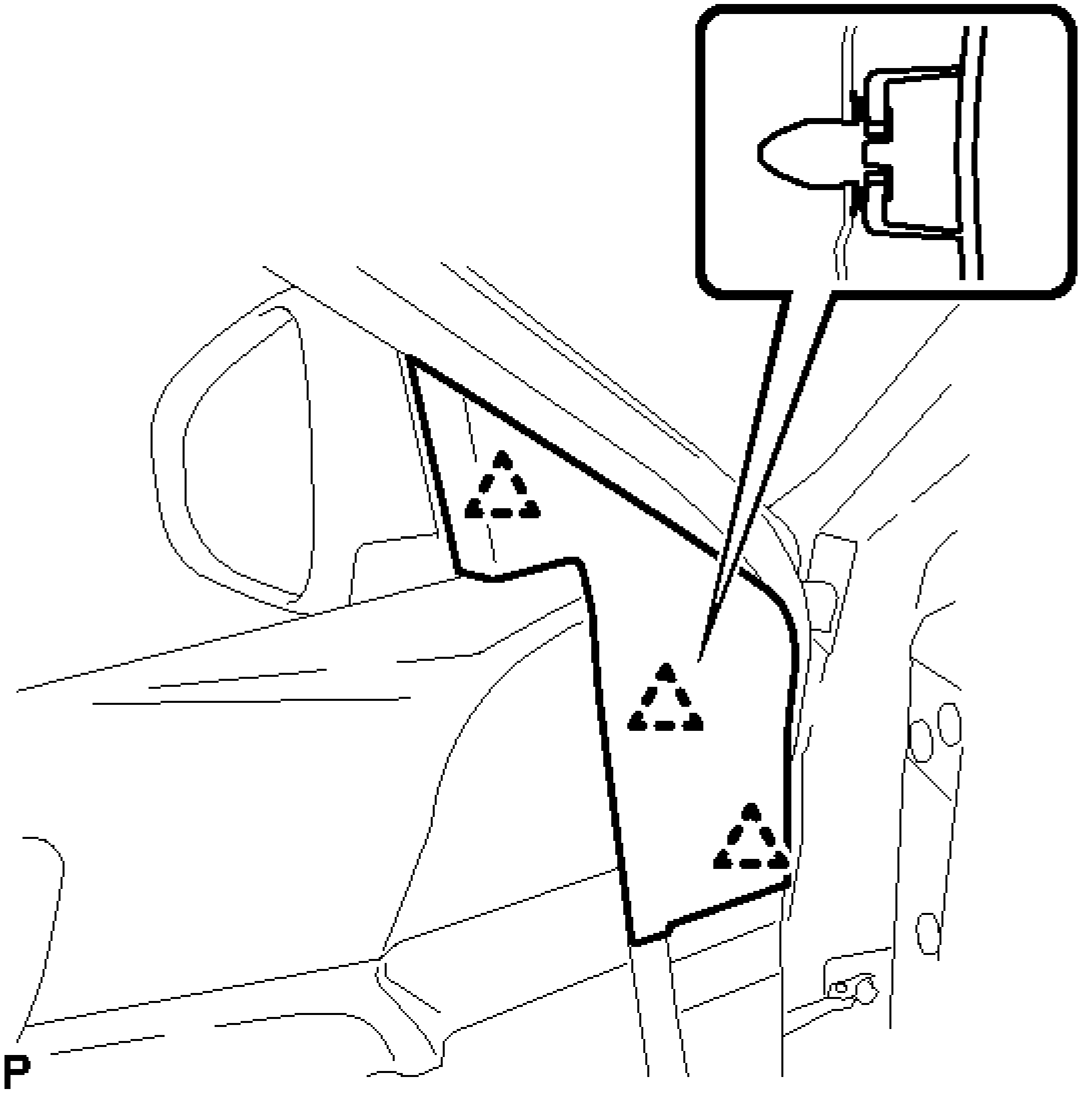

Fig. 31: Identifying Front Door Lower Frame Bracket Garnish Clips
Courtesy of TOYOTA MOTOR SALES, U.S.A., INC.

6. **REMOVE POWER WINDOW REGULATOR MASTER SWITCH ASSEMBLY WITH FRONT DOOR ARMREST BASE PANEL (for Driver Side)**
    a. Using a moulding remover, disengage the 2 clips, 5 claws and 4 guides as shown in the illustration.

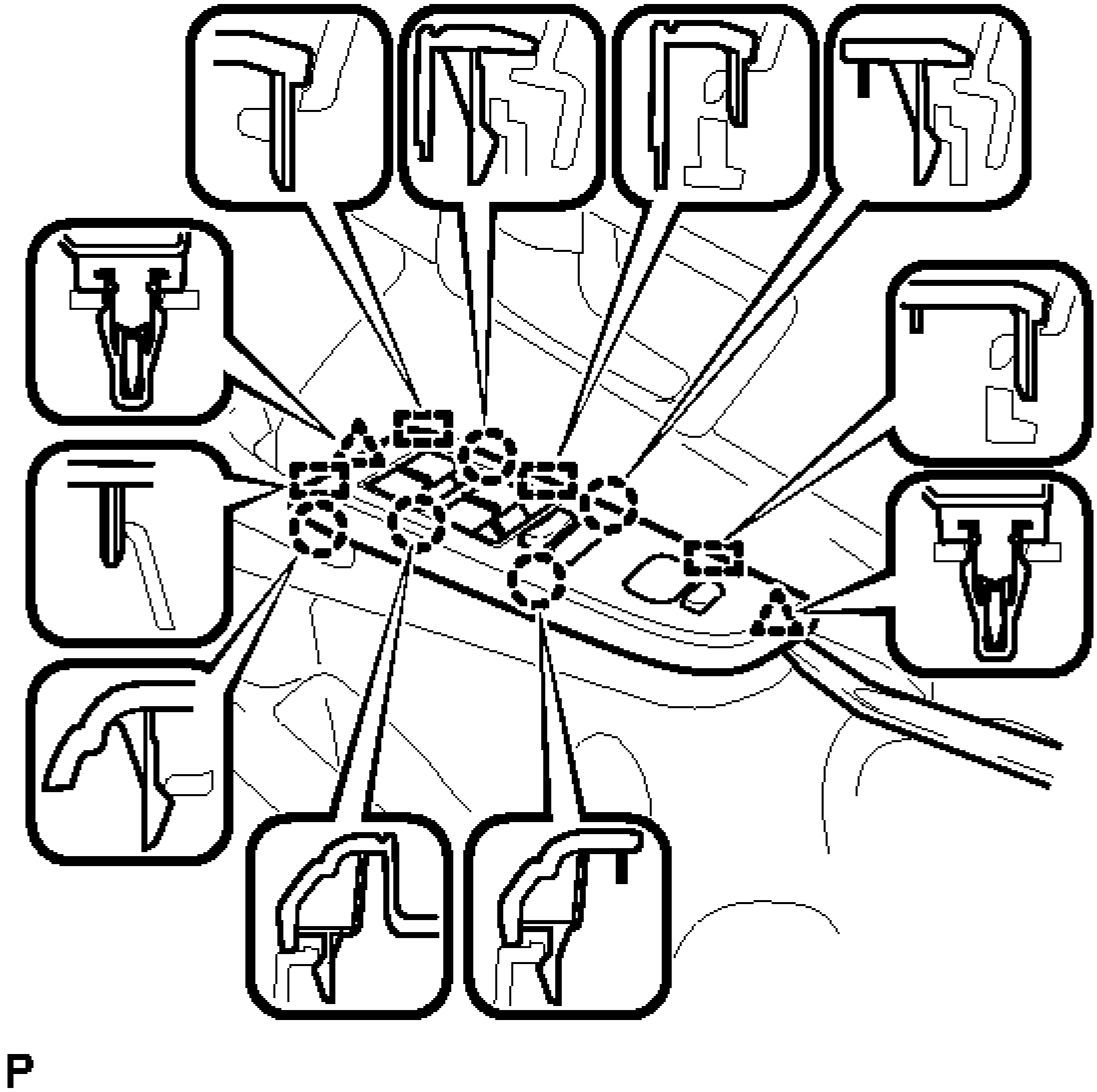

Fig. 32: Identifying Power Window Regulator Master Switch Clips, Claws And Guides (For Driver Side)
Courtesy of TOYOTA MOTOR SALES, U.S.A., INC.

b. Disconnect each connector and remove the power window regulator master switch assembly with front door armrest base panel.

7. **REMOVE POWER WINDOW REGULATOR SWITCH ASSEMBLY WITH FRONT DOOR ARMREST BASE PANEL (for Front Passenger Side)**

   a. Using a moulding remover, disengage the 2 clips, 5 claws and 4 guides as shown in the illustration.

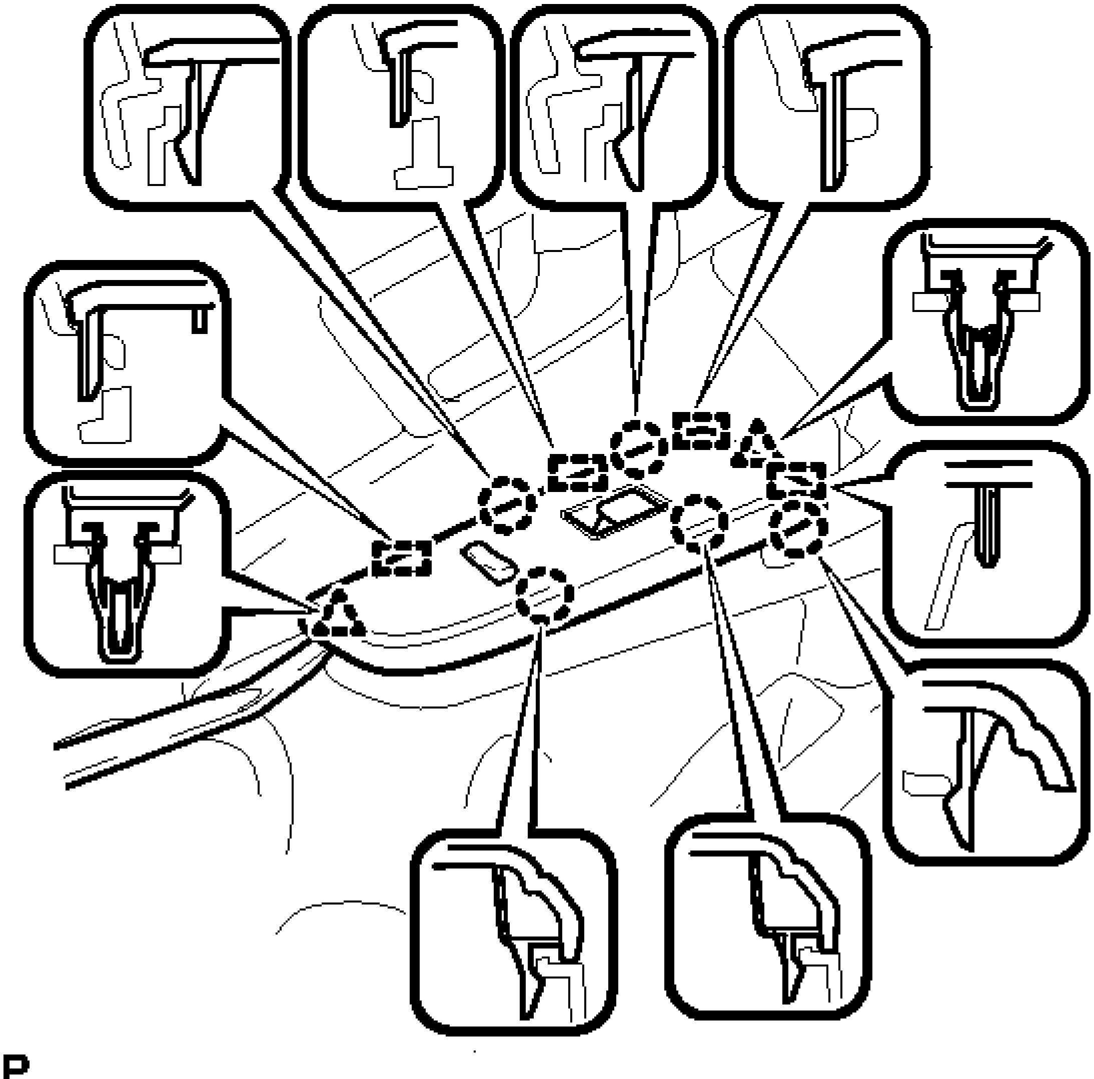

Fig. 33: Identifying Power Window Regulator Master Switch Clips, Claws And Guides (For Passenger Side)
Courtesy of TOYOTA MOTOR SALES, U.S.A., INC.

b. Disconnect each connector and remove the power window regulator switch assembly with front door armrest base panel.

8. **REMOVE FRONT ARMREST ASSEMBLY**

   a. Using a moulding remover, disengage the 3 clips, 7 claws and 2 guides and remove the front armrest assembly.

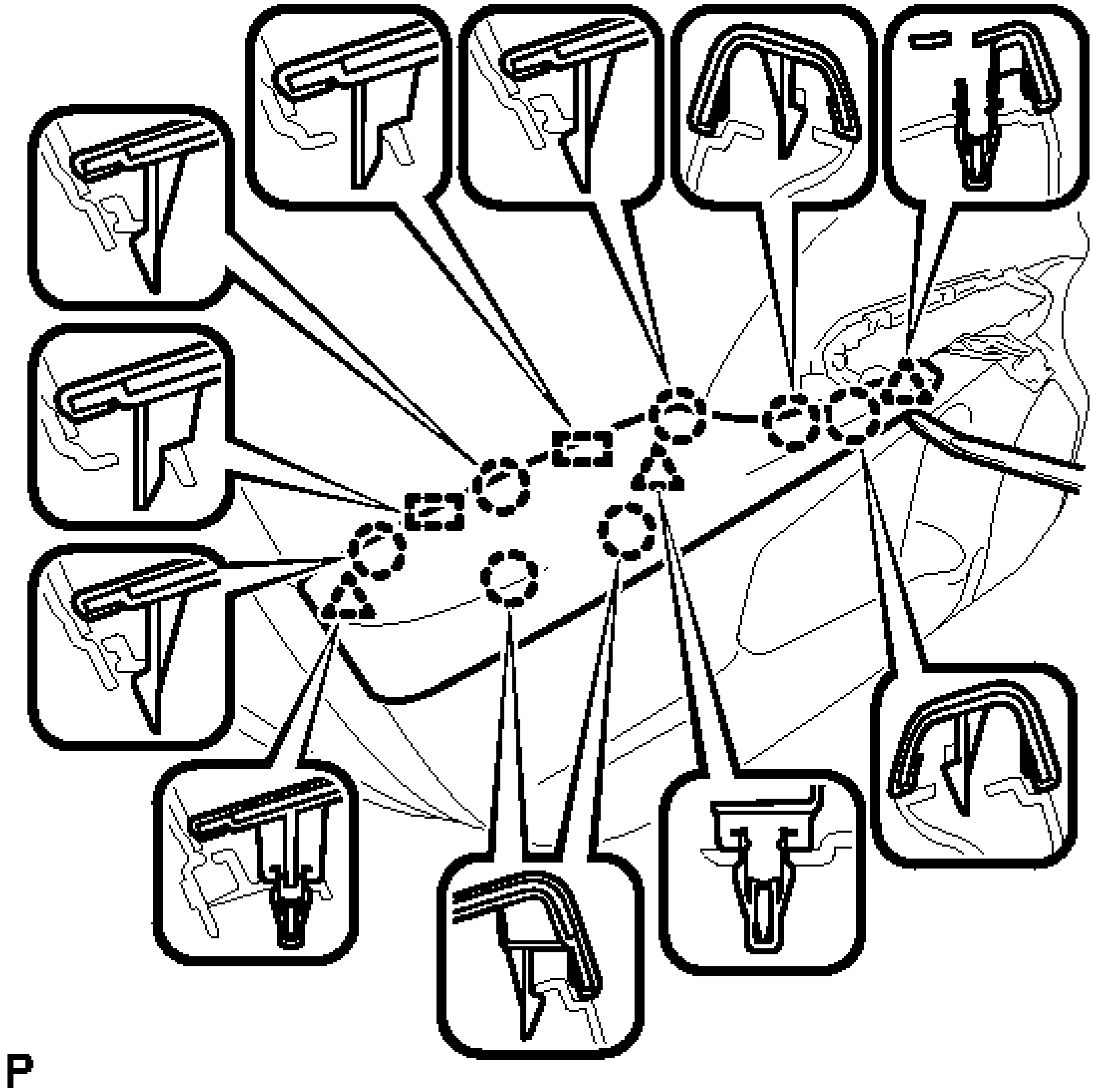

Fig. 34: Identifying Front Armrest Assembly Clips, Claws And Guides
Courtesy of TOYOTA MOTOR SALES, U.S.A., INC.

9. **REMOVE COURTESY LIGHT ASSEMBLY** . Refer to **REMOVAL - Step 1**
10. **REMOVE FRONT DOOR TRIM BOARD SUB-ASSEMBLY**
    a. Put protective tape around the front door panel.

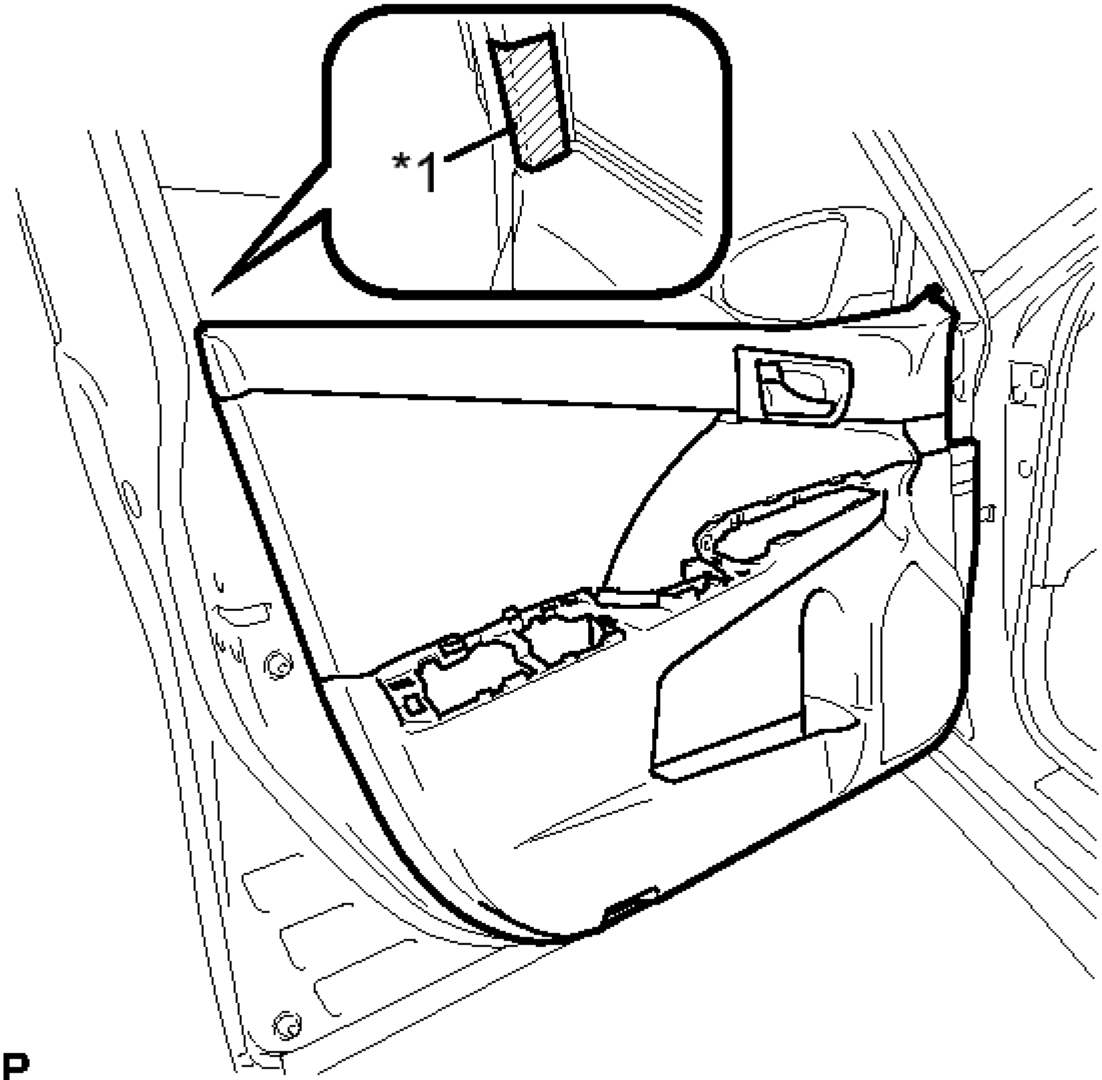

Fig. 35: Identifying Protective Tape Placement
Courtesy of TOYOTA MOTOR SALES, U.S.A., INC.

TEXT IN ILLUSTRATION

*1	Protective Tape

b. Remove the 3 screws.

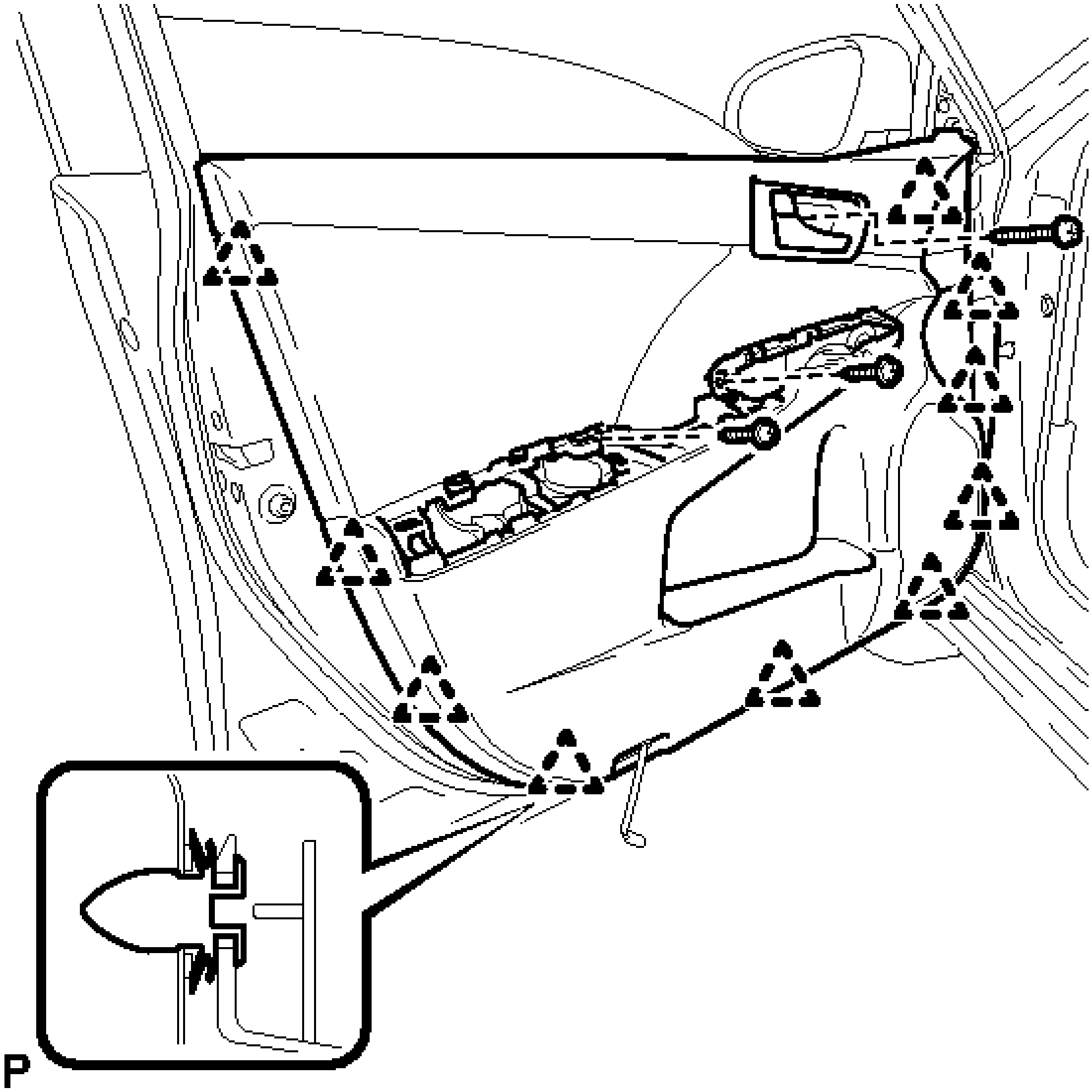

Fig. 36: Identifying Front Door Trim Board Screws And Clips
Courtesy of TOYOTA MOTOR SALES, U.S.A., INC.

c. Using a clip remover, disengage the 10 clips.
d. Pull out the front door trim board sub-assembly in the direction indicated by the arrow as shown in the illustration.

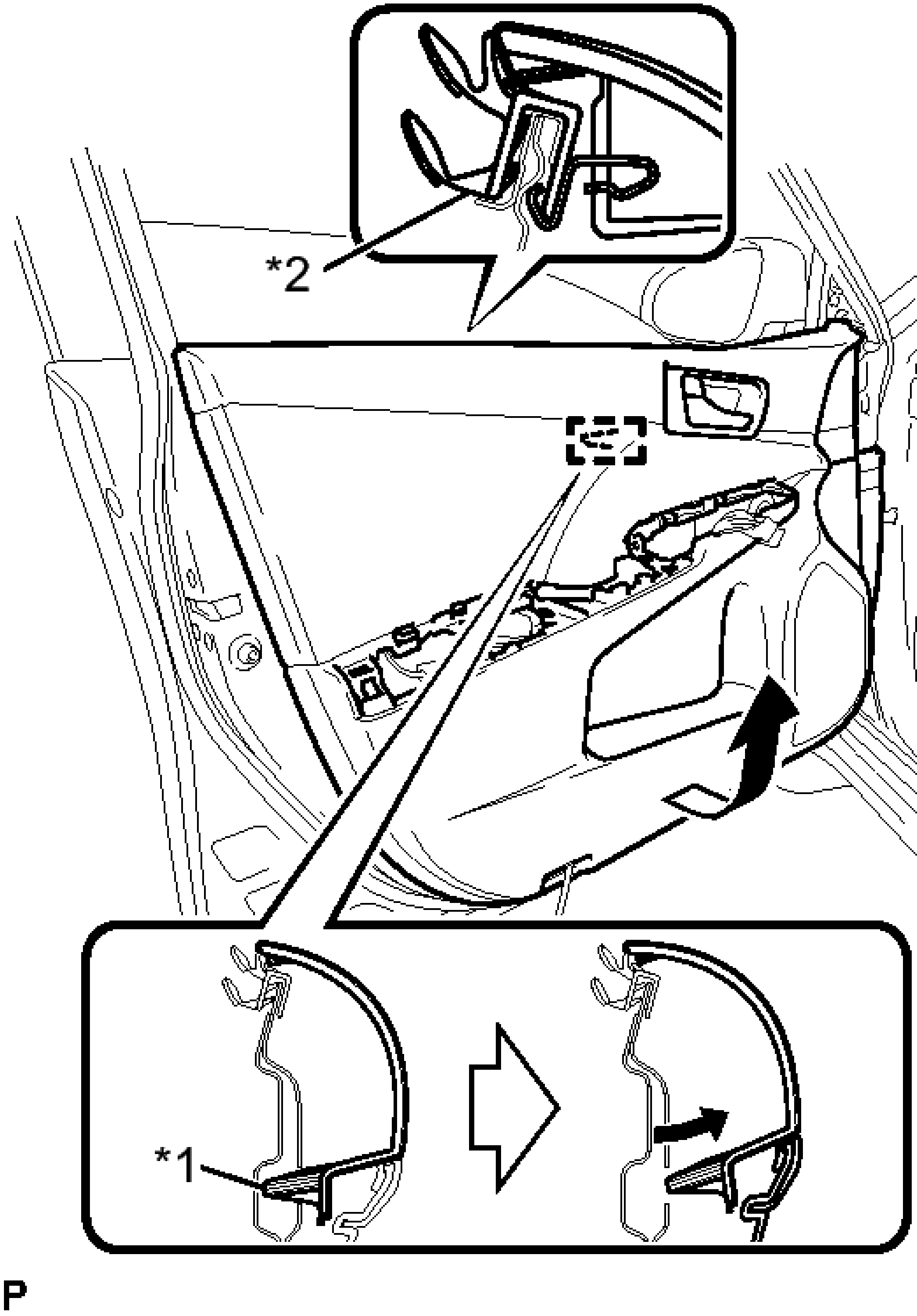

Fig. 37: Pulling Out Front Door Trim Board Sub-Assembly
Courtesy of TOYOTA MOTOR SALES, U.S.A., INC.

TEXT IN ILLUSTRATION

	Reference

*1	Boss
*2	Front Door Inner Glass Weatherstrip

e. Disengage the reference boss from the front door panel.

f. Raise the front door trim board sub-assembly to remove the front door trim board sub-assembly together with the front door inner glass weatherstrip.

g. Disconnect the front door lock remote control cable assembly and front door inside locking cable assembly.

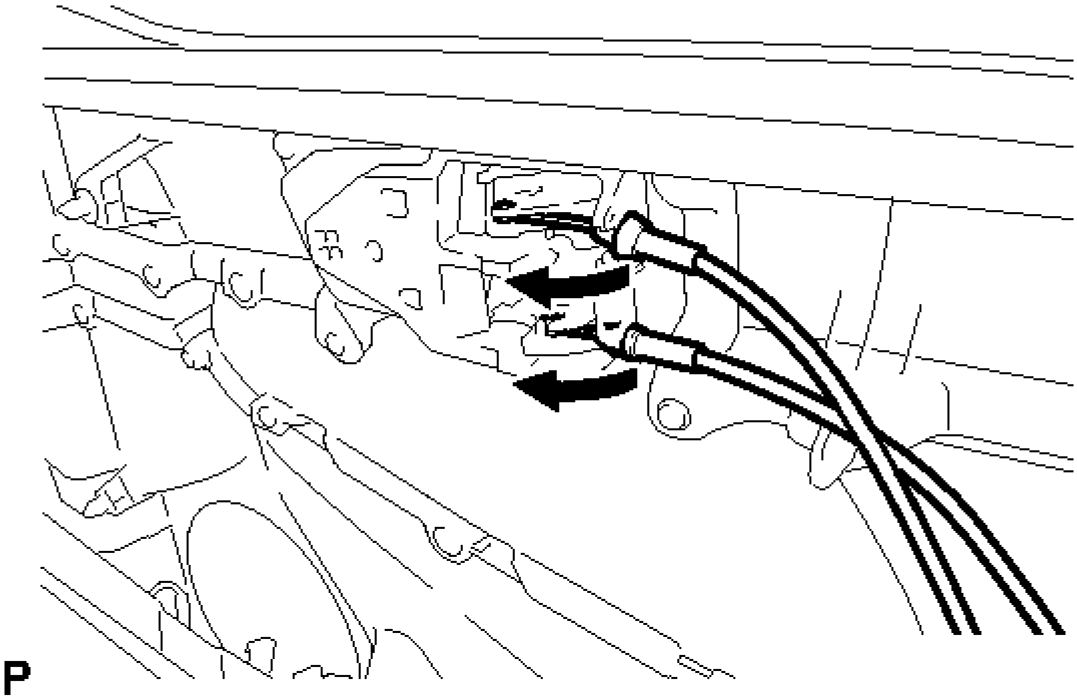

Fig. 38: Disconnecting Front Door Lock Remote Control And Inside Locking Cables
Courtesy of TOYOTA MOTOR SALES, U.S.A., INC.

11. **REMOVE FRONT DOOR INSIDE HANDLE SUB-ASSEMBLY**

a. Disengage the 2 claws and guides, and remove the front door inside handle sub-assembly.

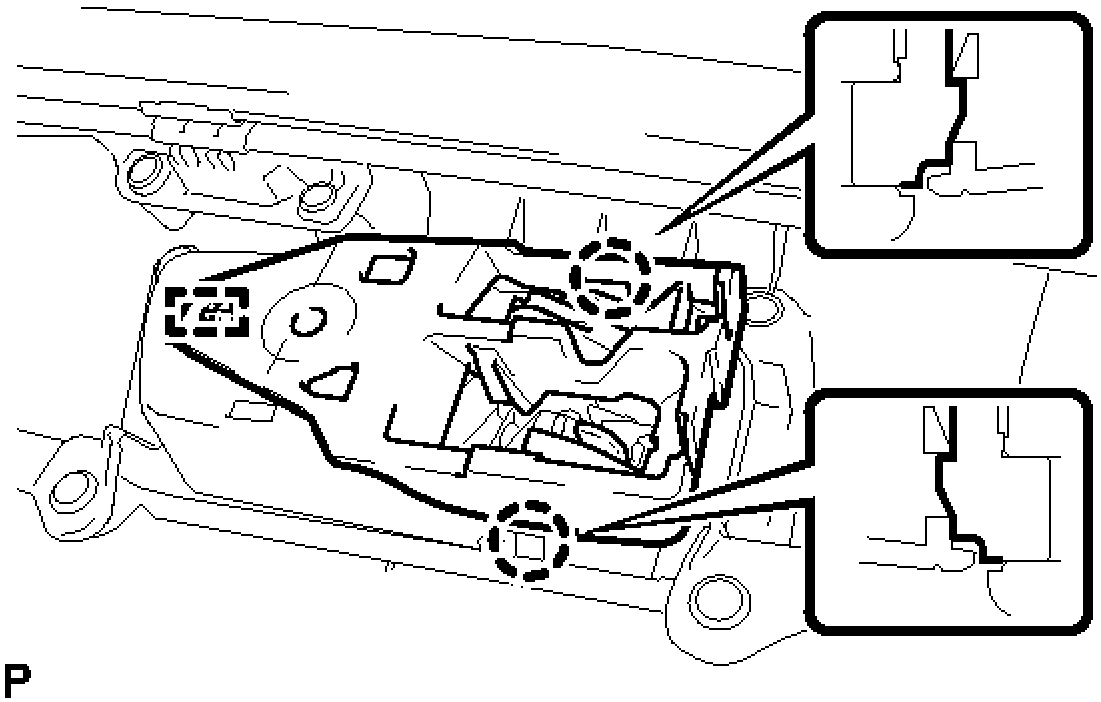

Fig. 39: Identifying Front Door Inside Handle Sub-Assembly Claws And Guides
Courtesy of TOYOTA MOTOR SALES, U.S.A., INC.

12. **REMOVE FRONT DOOR INNER GLASS WEATHERSTRIP**
    a. Using a screwdriver, disengage the 4 claws and remove the front door inner glass weatherstrip from the front door trim board sub-assembly as shown in the illustration.

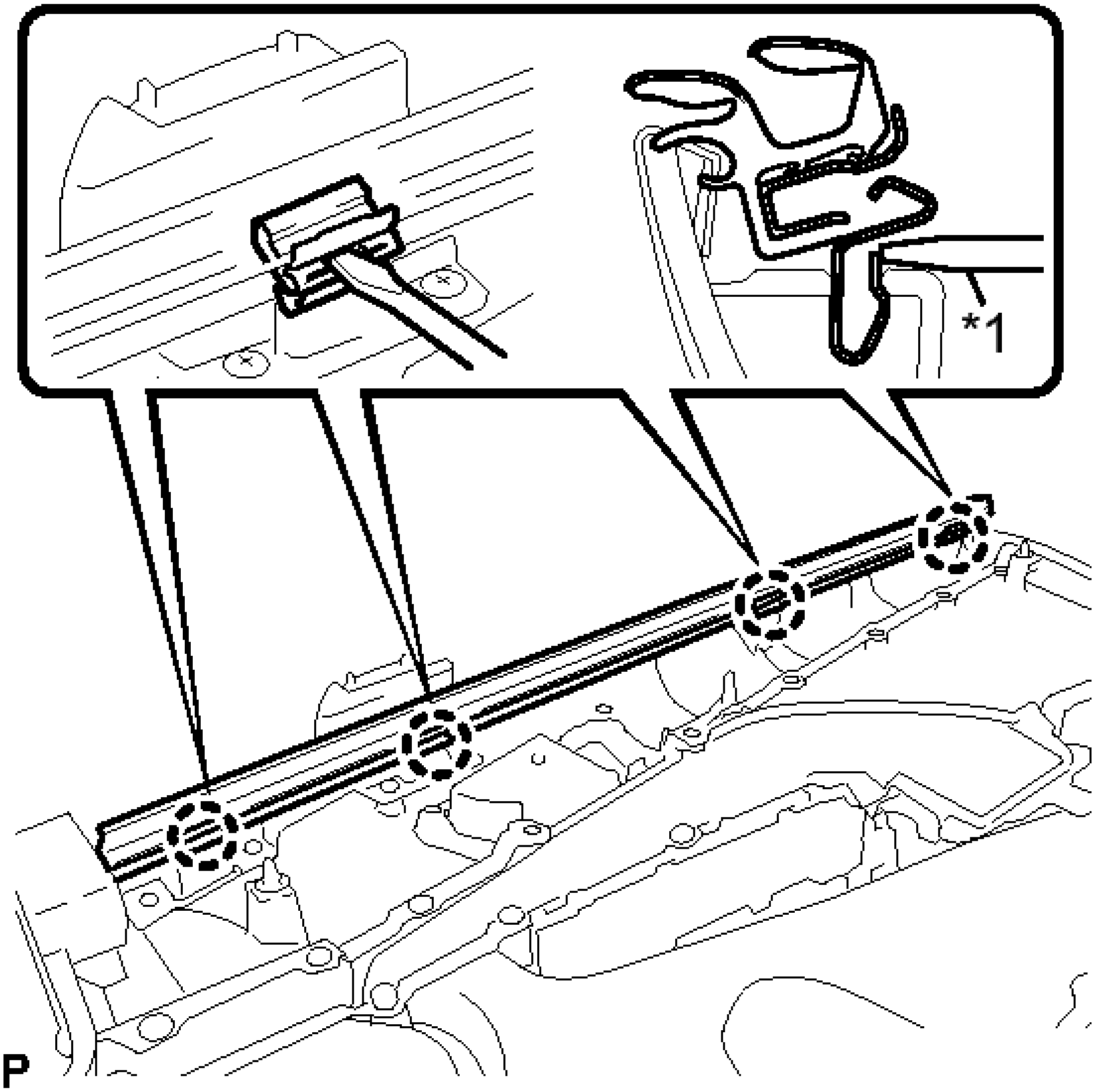

Fig. 40: Identifying Front Door Inner Glass Weatherstrip Claws
Courtesy of TOYOTA MOTOR SALES, U.S.A., INC.

TEXT IN ILLUSTRATION

*1	Screwdriver

13. **REMOVE DOOR SIDE AIRBAG SENSOR** . Refer to **REMOVAL - Step 11**
14. **REMOVE FRONT NO. 1 SPEAKER ASSEMBLY** . Refer to **REMOVAL - Step 9**
15. **REMOVE OUTER REAR VIEW MIRROR ASSEMBLY** . Refer to **REMOVAL - Step 9**
16. **REMOVE FRONT DOOR SERVICE HOLE COVER**
    a. Remove the bolt.

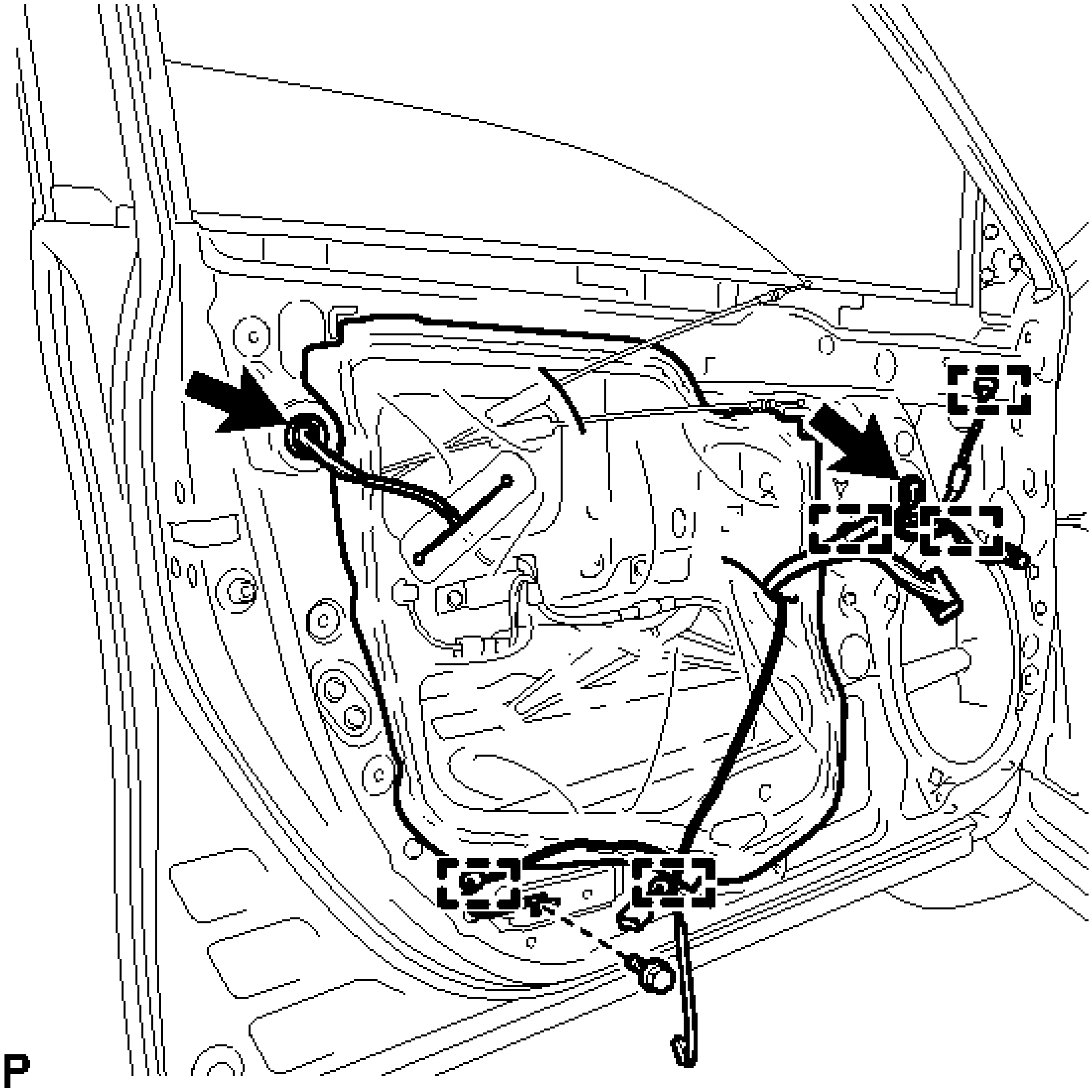

Fig. 41: Removing Front Door Service Hole Cover
Courtesy of TOYOTA MOTOR SALES, U.S.A., INC.

b. Disconnect each connector.
c. Disengage the 5 clamps.
d. Remove the front door service hole cover.

HINT:

Remove any remaining butyl tape from the door.

17. **REMOVE FRONT DOOR GLASS SUB-ASSEMBLY**
    a. Remove the grommet.

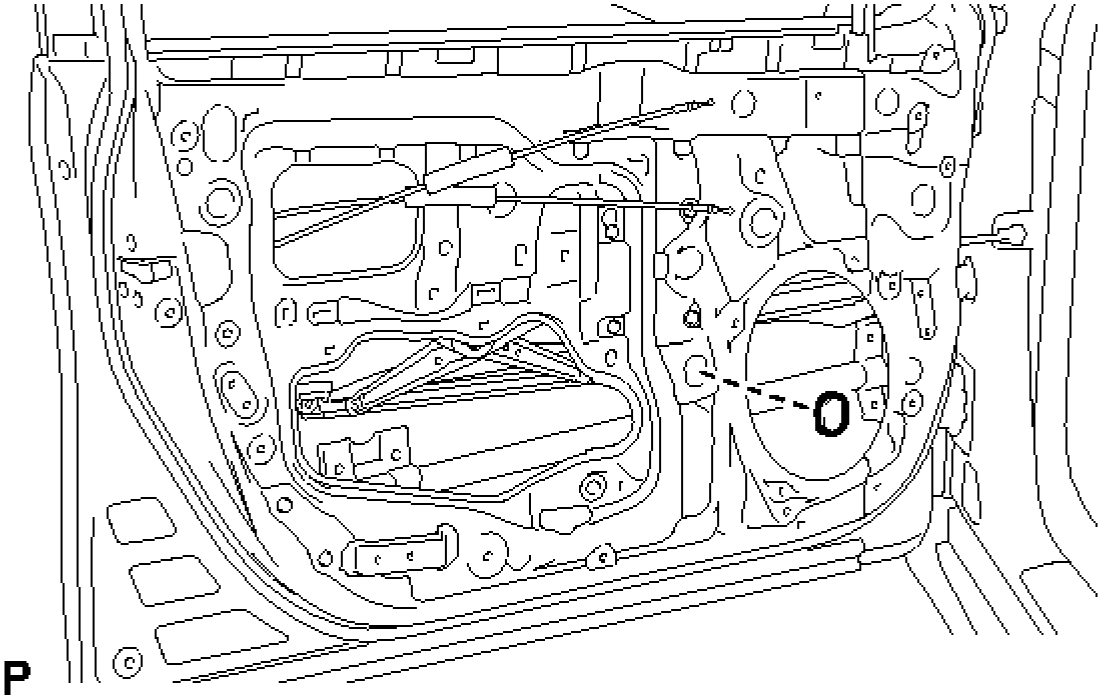

Fig. 42: Identifying Front Door Grommet
Courtesy of TOYOTA MOTOR SALES, U.S.A., INC.

b. Connect the cable to the negative (-) auxiliary battery terminal.
c. Connect the power window regulator master switch assembly and move the front door glass sub-assembly so that the door glass bolts can be seen.
d. Disconnect the cable from the negative (-) auxiliary battery terminal.

WARNING: **Wait at least 90 seconds after disconnecting the cable from the negative (-) auxiliary battery terminal to disable the SRS system.**

NOTE: When disconnecting the cable, some systems need to be initialized after the cable is reconnected. Refer to INITIALIZATION .

e. Disconnect the power window regulator master switch assembly.
f. Remove the 2 bolts.

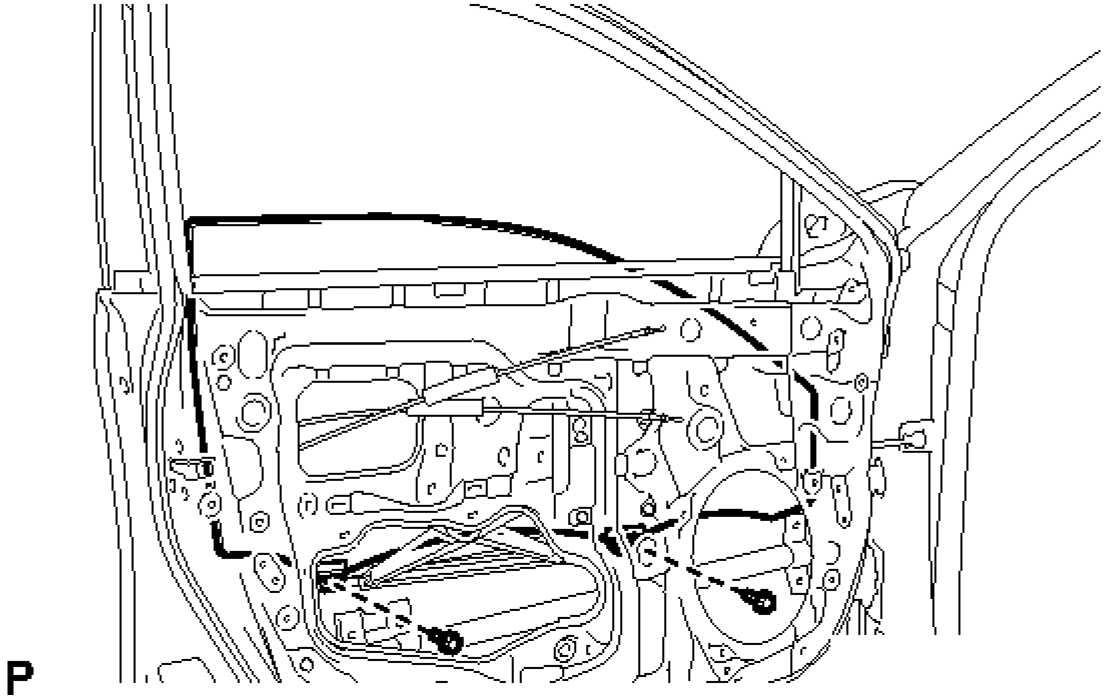

Fig. 43: Identifying Front Door Glass Bolts
Courtesy of TOYOTA MOTOR SALES, U.S.A., INC.

NOTE: After the bolts are removed, do not allow the door glass to fall.

g. Remove the front door glass sub-assembly as indicated by the arrows, in the order shown in the illustration.

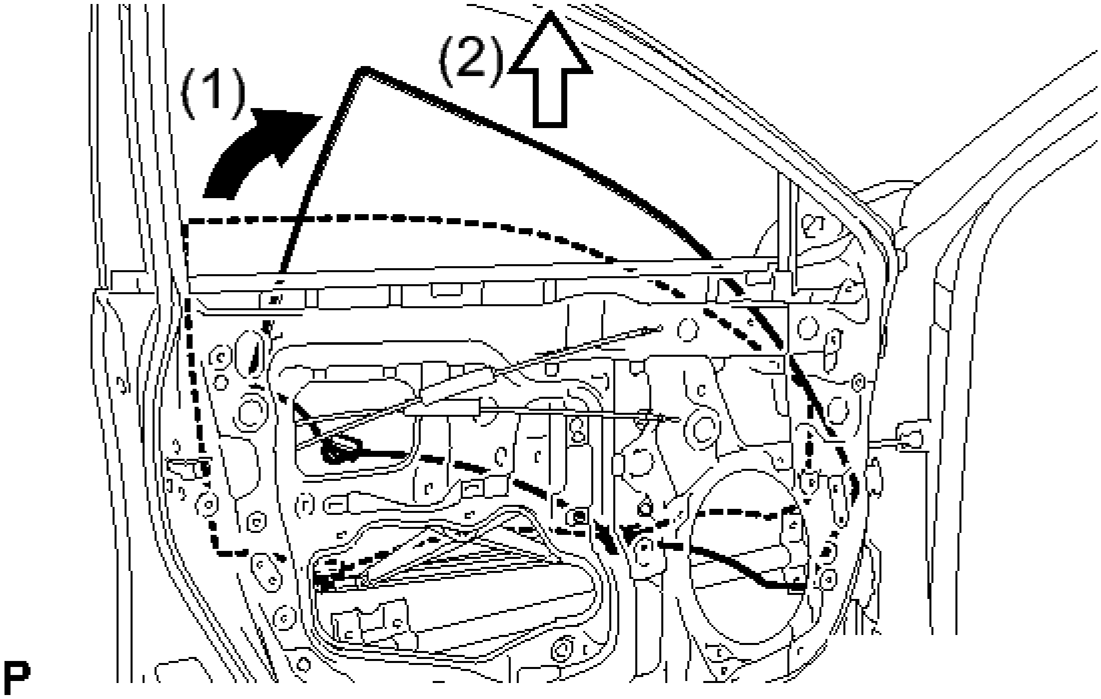

Fig. 44: Removing The Front Door Glass
Courtesy of TOYOTA MOTOR SALES, U.S.A., INC.

NOTE: **Do not damage the door glass.**

18. **REMOVE FRONT DOOR WINDOW REGULATOR ASSEMBLY**
    a. Loosen the temporary bolt.

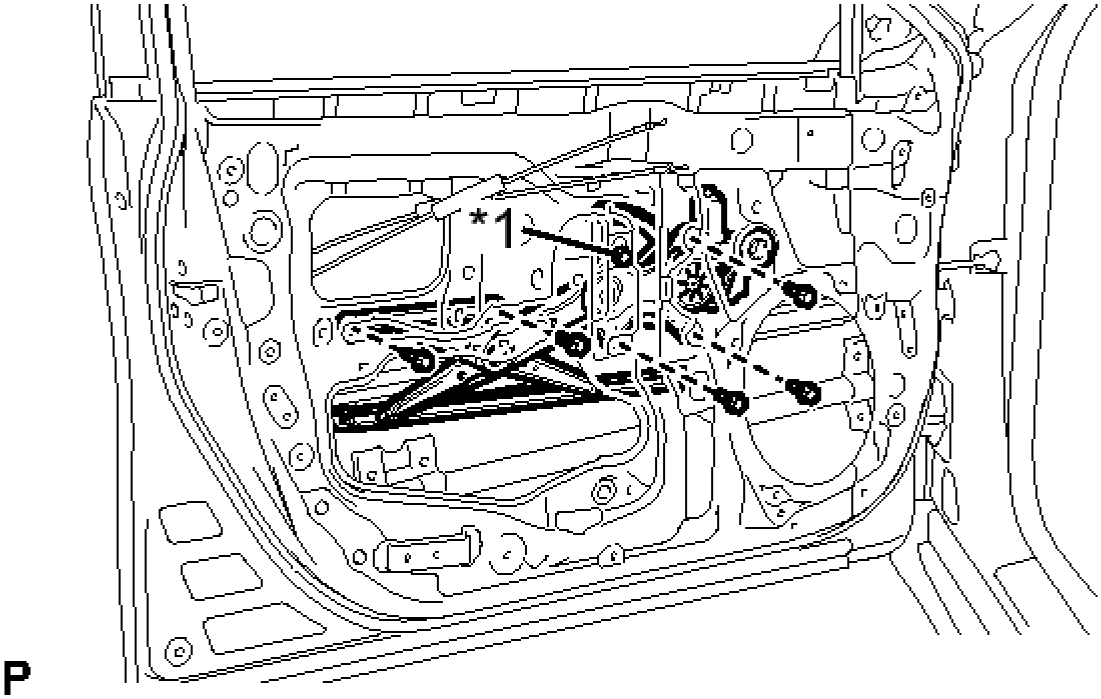

Fig. 45: Identifying Front Door Window Regulator Temporary Bolt
Courtesy of TOYOTA MOTOR SALES, U.S.A., INC.

TEXT IN ILLUSTRATION

*1	Temporary Bolt

NOTE: **Do not remove the temporary bolt. If the temporary bolt is removed, the front door window regulator may fall and cause damage.**

b. Remove the 5 bolts.
c. Remove the front door window regulator assembly.
d. Remove the temporary bolt from the front door window regulator assembly.

19. **REMOVE FRONT POWER WINDOW REGULATOR MOTOR ASSEMBLY**
    a. Using a T25 "TORX" socket wrench, remove the 3 screws and front power window regulator motor assembly.

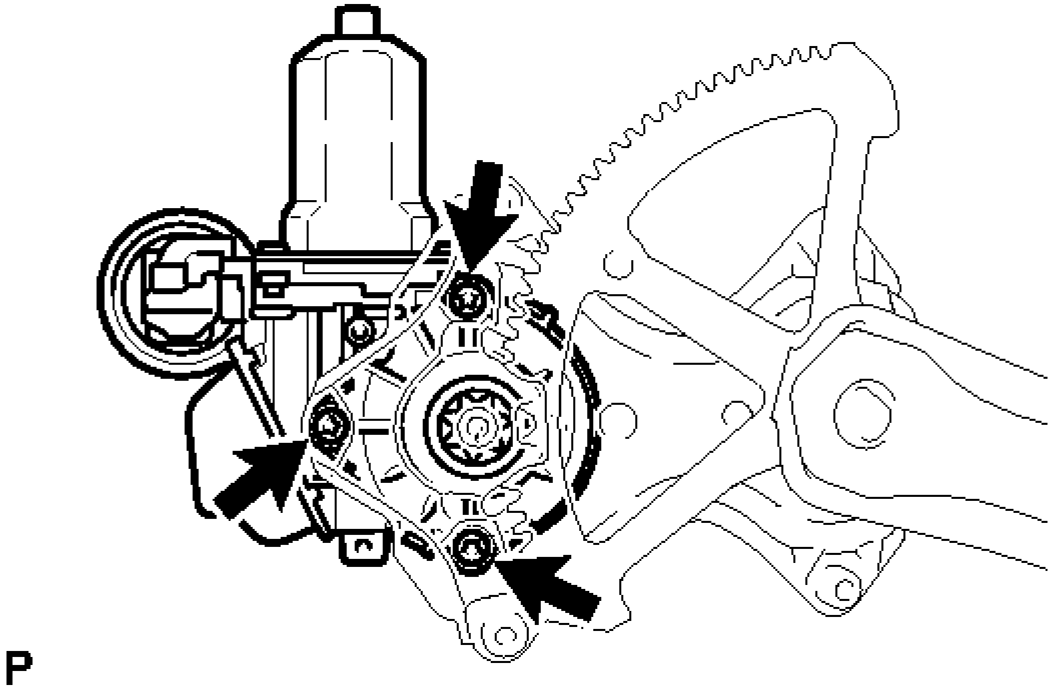

Fig. 46: Identifying Front Power Window Regulator Motor Screws
Courtesy of TOYOTA MOTOR SALES, U.S.A., INC.

20. **REMOVE NO. 2 FRONT DOOR STIFFENER CUSHION**
    a. Remove the 2 bolts.

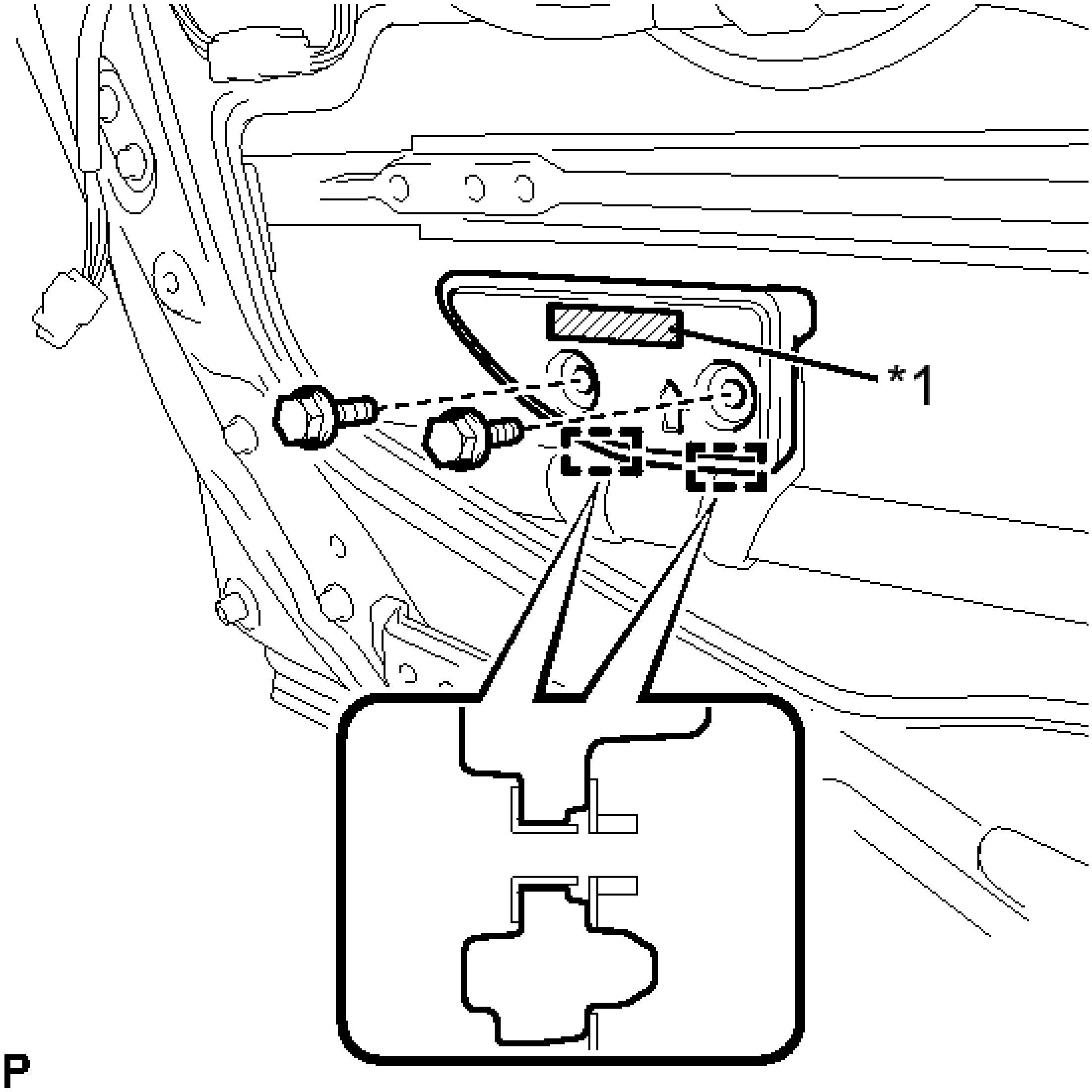

Fig. 47: Identifying No. 2 Front Door Stiffener Cushion Bolts
Courtesy of TOYOTA MOTOR SALES, U.S.A., INC.

TEXT IN ILLUSTRATION

*1	Double-sided Tape

b. Disengage the 2 guides and remove the No. 2 front door stiffener cushion.

21. **REMOVE FRONT DOOR GLASS RUN**
    a. Remove the front door glass run.

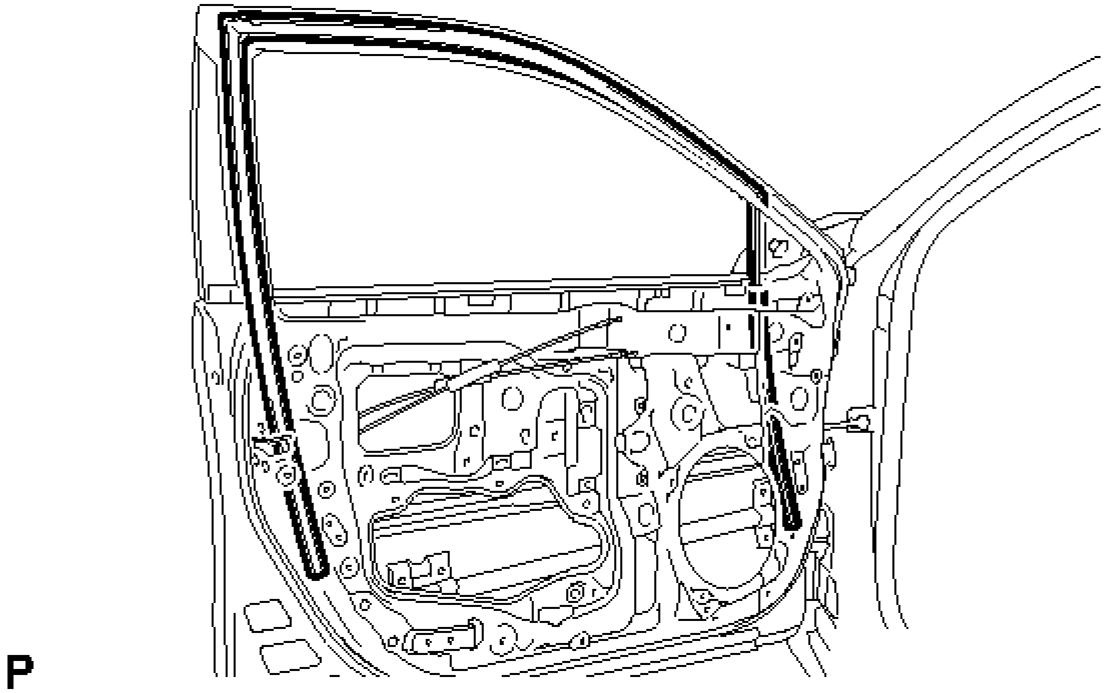

Fig. 48: Identifying Front Door Glass Run
Courtesy of TOYOTA MOTOR SALES, U.S.A., INC.

22. **REMOVE FRONT DOOR FRONT LOWER FRAME SUB-ASSEMBLY**
    a. Remove the 2 bolts.

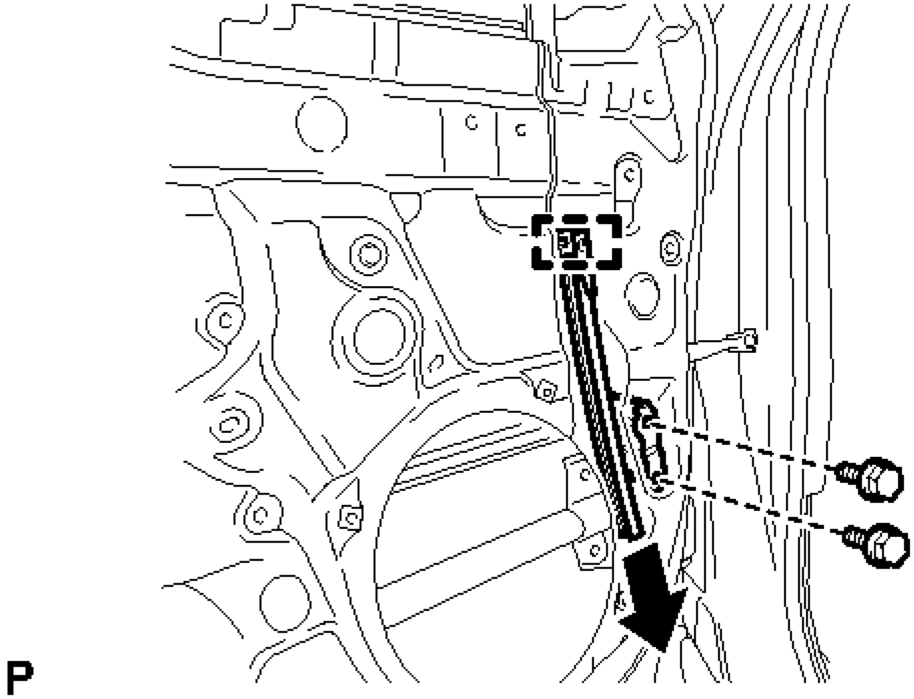

Fig. 49: Identifying Front Door Front Lower Frame Bolts

Courtesy of TOYOTA MOTOR SALES, U.S.A., INC.

b. Disengage the guide and remove the front door front lower frame sub-assembly as shown in the illustration.

23. **REMOVE FRONT DOOR REAR LOWER FRAME SUB-ASSEMBLY**

a. Remove the 2 bolts.

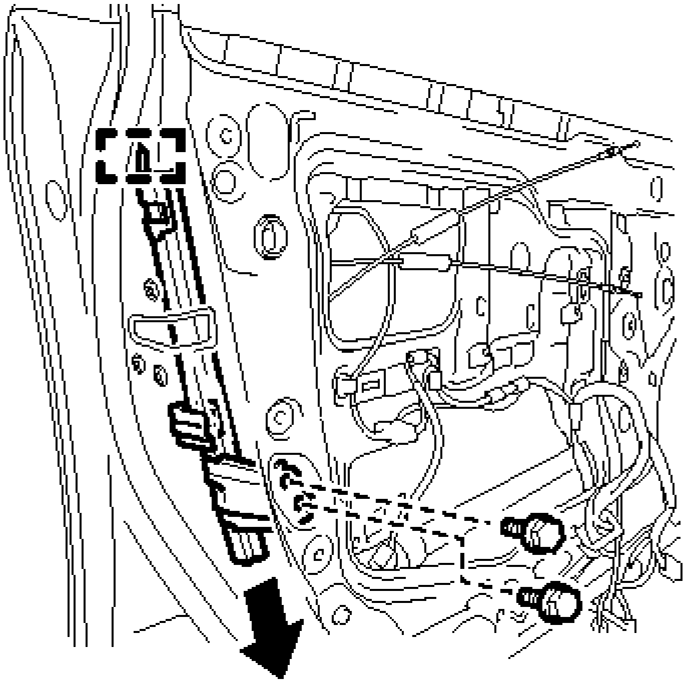

Fig. 50: Identifying Front Door Rear Lower Frame Bolts
Courtesy of TOYOTA MOTOR SALES, U.S.A., INC.

b. Disengage the guide and remove the front door rear lower frame sub-assembly as shown in the illustration.

24. **REMOVE FRONT DOOR OUTSIDE HANDLE COVER WITH LOCK CYLINDER ASSEMBLY (for Driver Side)**

a. Remove the hole plug.

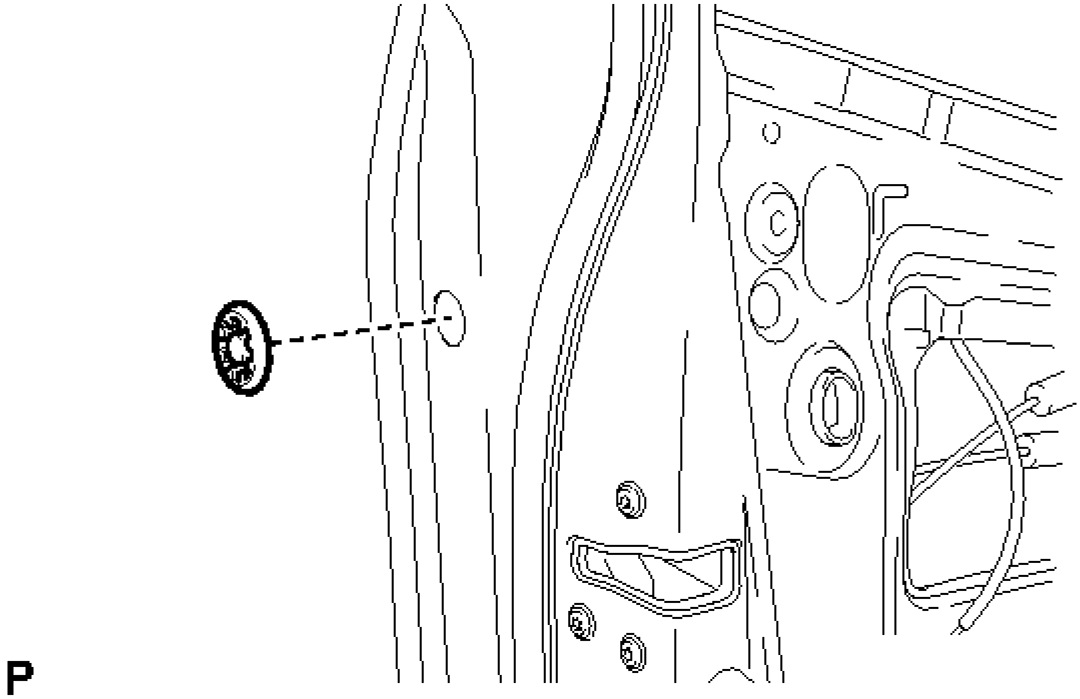

Fig. 51: Identifying Front Door Hole Plug
Courtesy of TOYOTA MOTOR SALES, U.S.A., INC.

b. Using a T30 "TORX" socket wrench, loosen the screw and remove the front door outside handle cover with lock cylinder assembly.

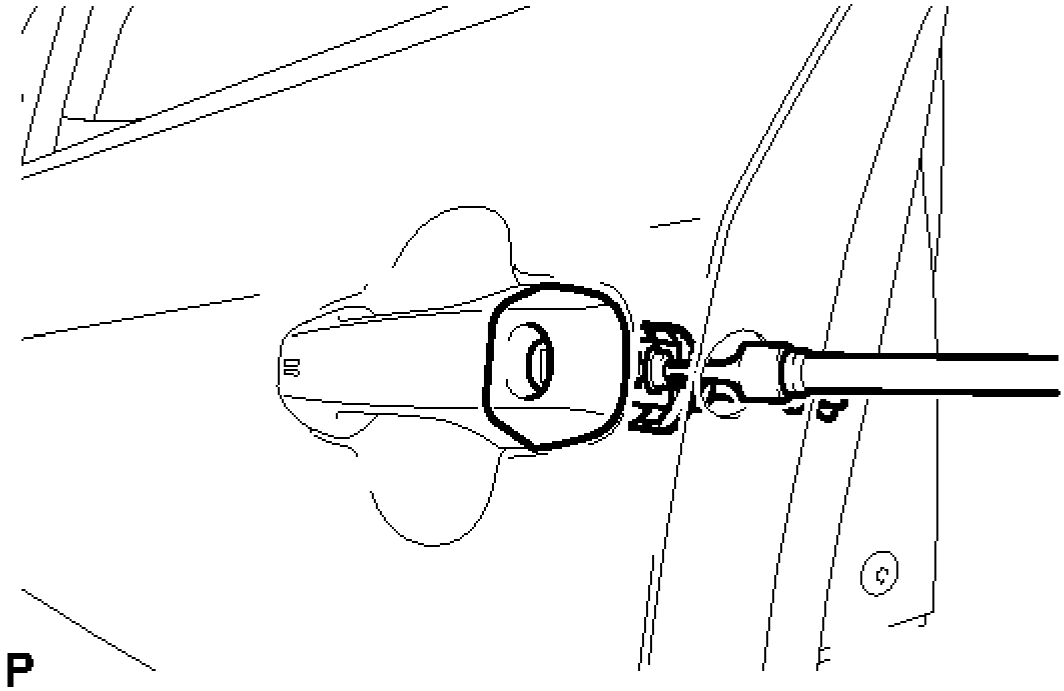

Fig. 52: Removing Front Door Outside Handle Cover With Lock Cylinder

Courtesy of TOYOTA MOTOR SALES, U.S.A., INC.

HINT:

The screw cannot be removed because it is integrated into the front door outside handle frame sub-assembly.

25. **REMOVE FRONT DOOR OUTSIDE HANDLE COVER (for Driver Side)**
    a. Using a screwdriver, disengage the claw and 2 guides, and remove the front door outside handle cover as shown in the illustration.

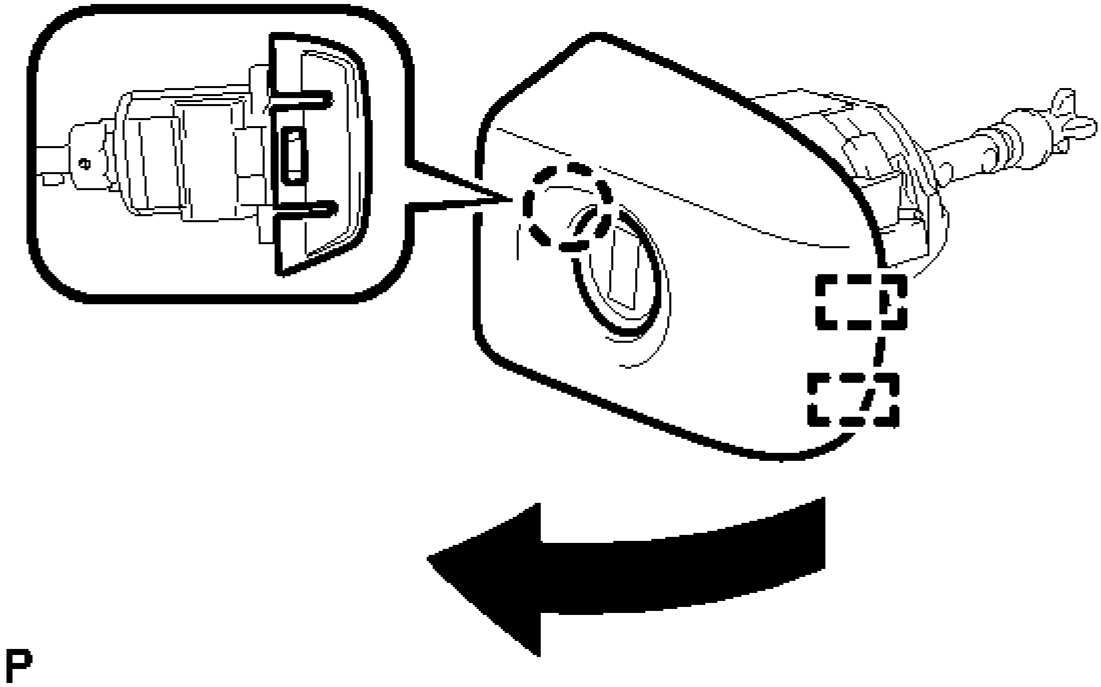

Fig. 53: Removing Front Door Outside Handle Cover
Courtesy of TOYOTA MOTOR SALES, U.S.A., INC.

26. **REMOVE FRONT DOOR OUTSIDE HANDLE COVER (for Front Passenger Side)**
    a. Remove the hole plug.

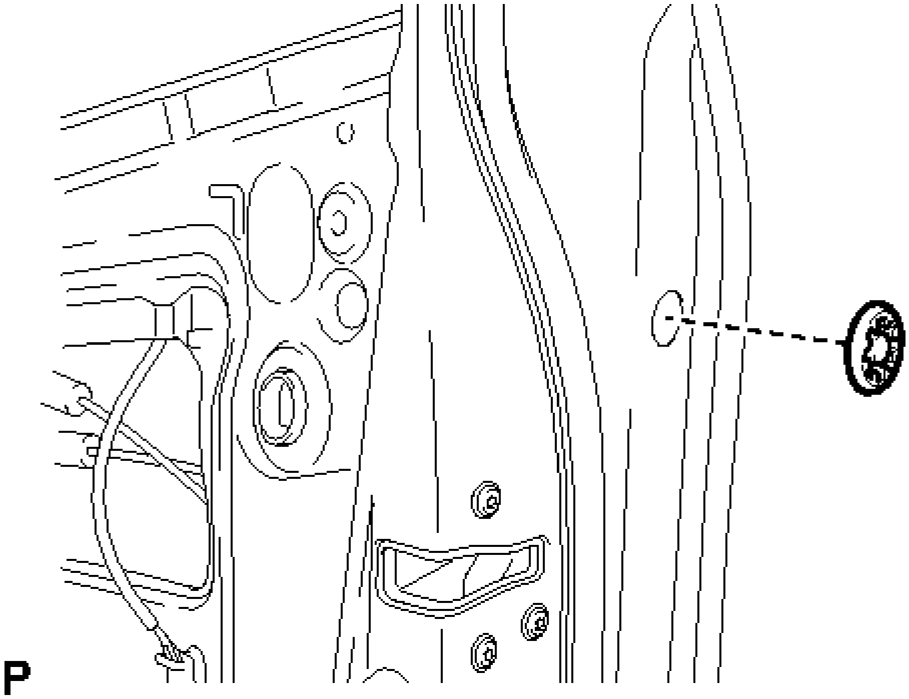

Fig. 54: Identifying Front Door Hole Plug
Courtesy of TOYOTA MOTOR SALES, U.S.A., INC.

b. Using a T30 "TORX" socket wrench, loosen the screw and remove the front door outside handle cover.

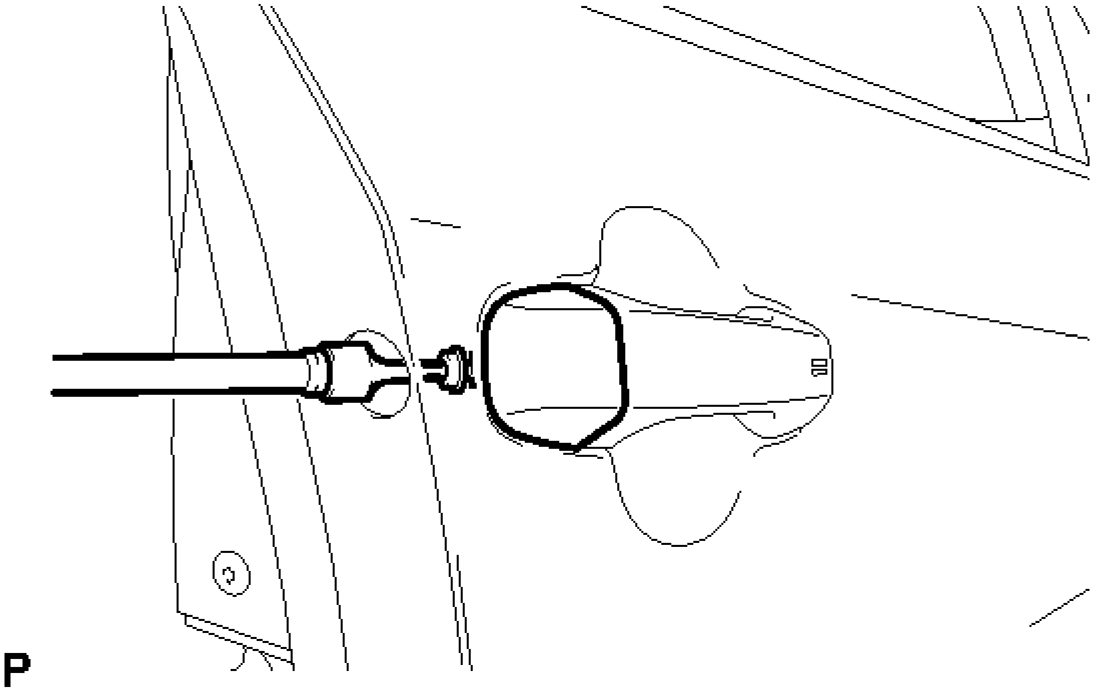

Fig. 55: Removing Front Door Outside Handle Cover

Courtesy of TOYOTA MOTOR SALES, U.S.A., INC.

HINT:

The screw cannot be removed because it is integrated into the front door outside handle frame sub-assembly.

27. **REMOVE FRONT DOOR OUTSIDE HANDLE ASSEMBLY**
    a. Disengage the 2 claws.
    b. Using a screwdriver, disconnect the connector.

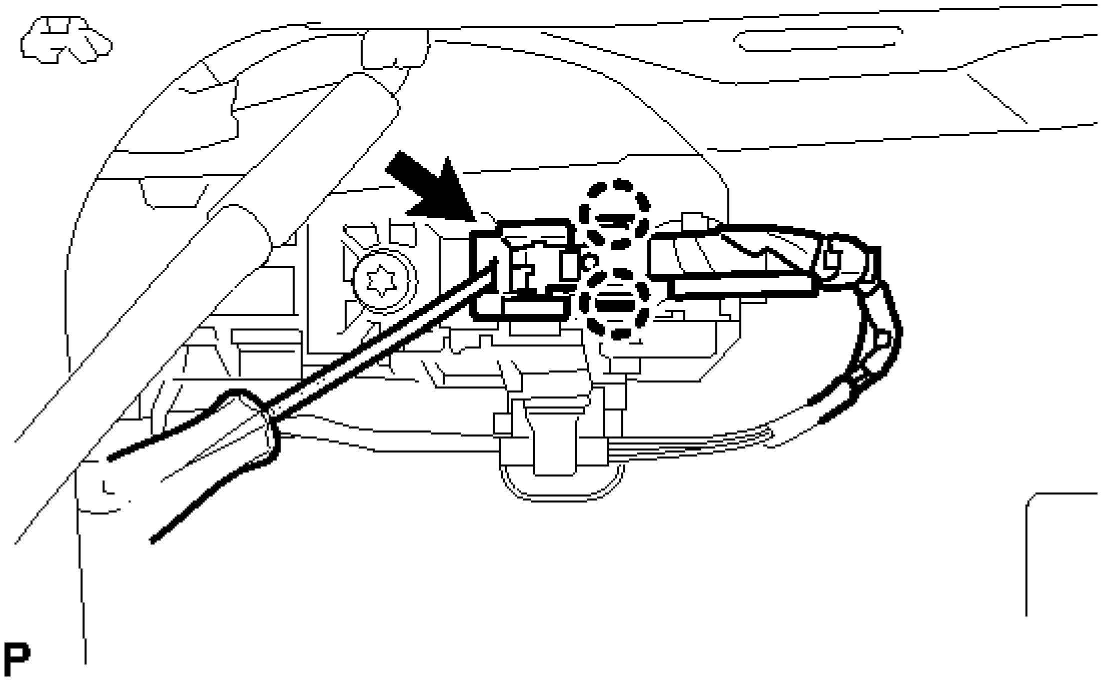

Fig. 56: Identifying Front Door Outside Handle Connector
Courtesy of TOYOTA MOTOR SALES, U.S.A., INC.

    c. Remove the front door outside handle assembly as shown in the illustration.

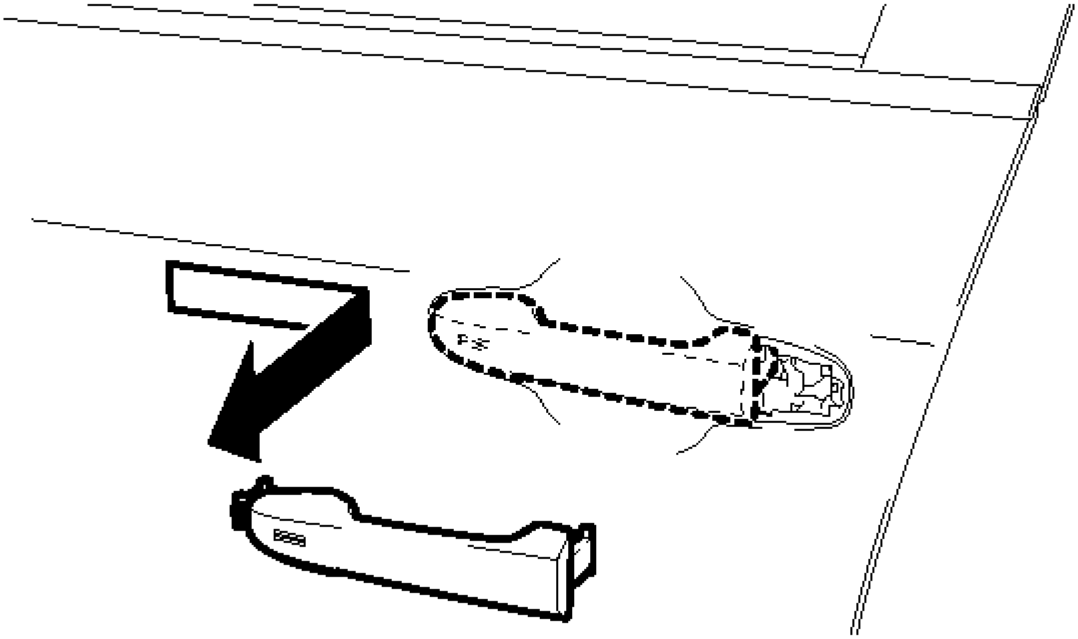

P

Fig. 57: Removing Front Door Outside Handle
Courtesy of TOYOTA MOTOR SALES, U.S.A., INC.

28. **REMOVE FRONT DOOR FRONT OUTSIDE HANDLE PAD**
    a. Disengage the 3 claws and remove the front door front outside handle pad.

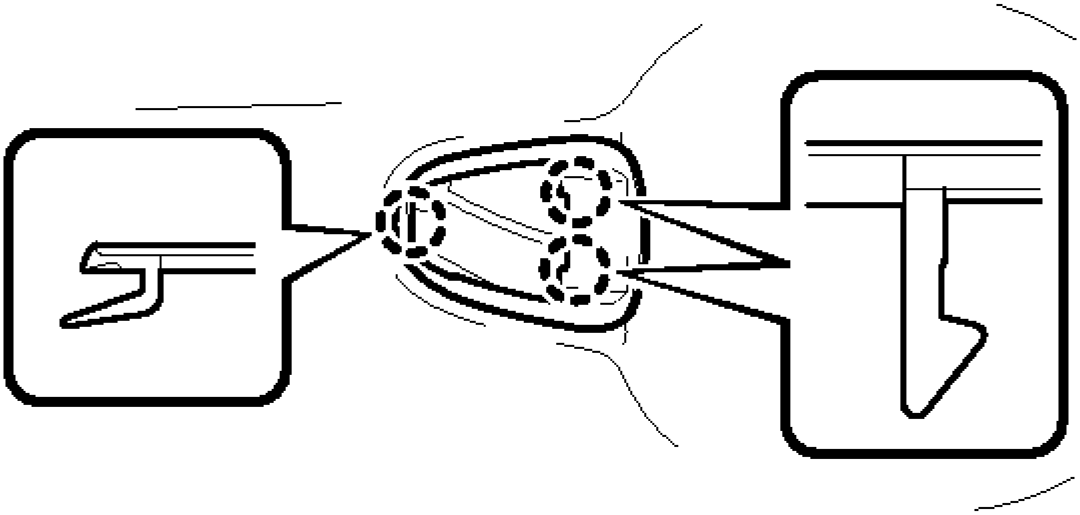

P

Fig. 58: Identifying Front Door Front Outside Handle Pad Claws

Courtesy of TOYOTA MOTOR SALES, U.S.A., INC.

29. **REMOVE FRONT DOOR REAR OUTSIDE HANDLE PAD**
    a. Disengage the 2 claws and remove the front door rear outside handle pad.

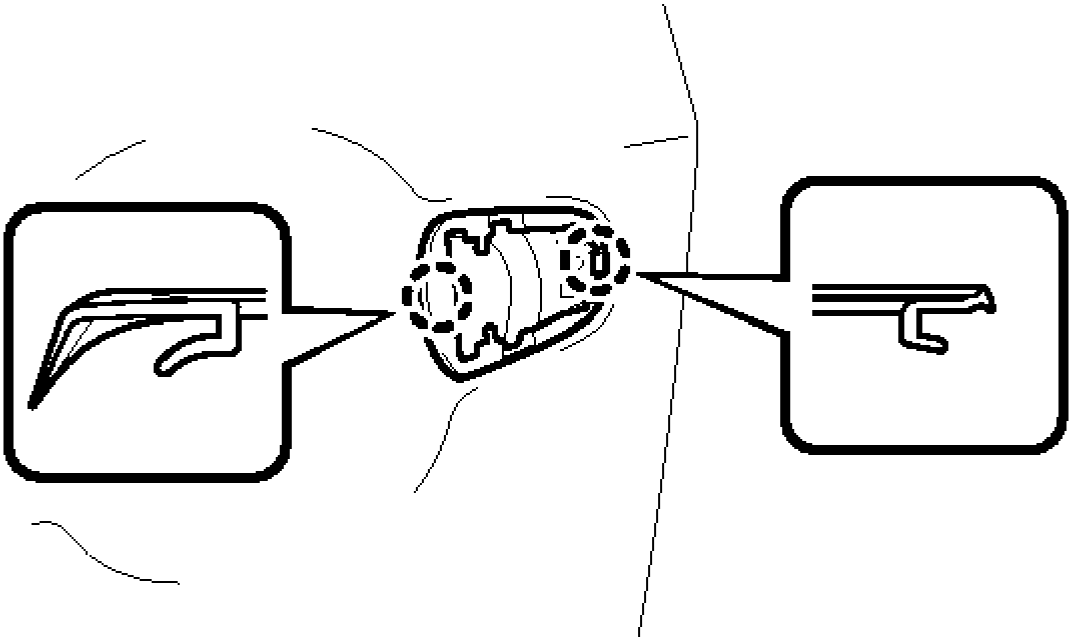

P

Fig. 59: Identifying Front Door Rear Outside Handle Pad Claws
Courtesy of TOYOTA MOTOR SALES, U.S.A., INC.

30. **REMOVE FRONT DOOR LOCK WITH MOTOR ASSEMBLY**
    a. Using a T30 "TORX" socket wrench, remove the 3 screws.

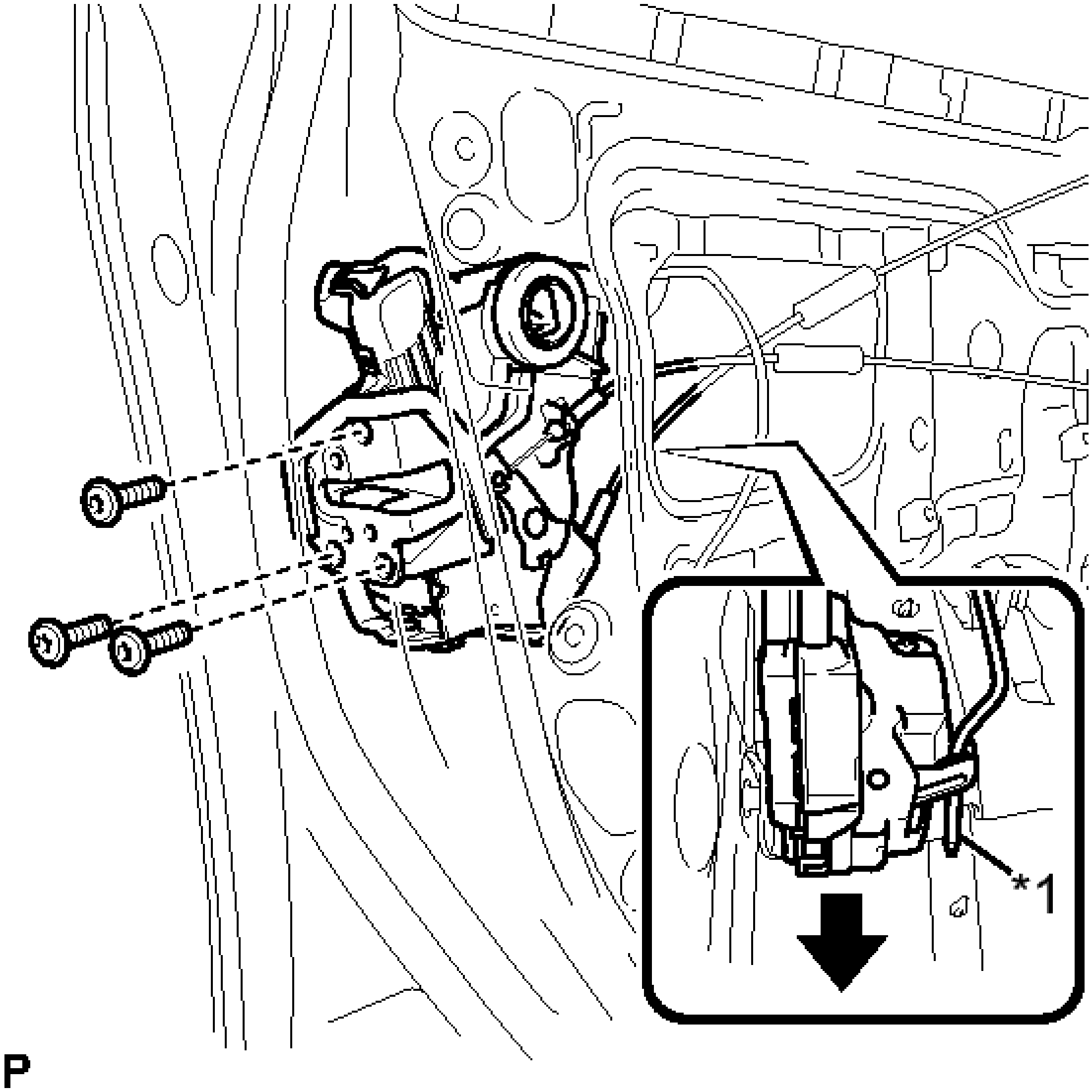

Fig. 60: Removing Front Door Lock Open Rod
Courtesy of TOYOTA MOTOR SALES, U.S.A., INC.

TEXT IN ILLUSTRATION

*1	Front Door Lock Open Rod

b. Slide the front door lock with motor assembly downward, and remove the front door lock with motor assembly and cables as a unit.
c. When reusing the front door lock with motor assembly:
    1. Remove the door lock wiring harness seal from the front door lock with motor assembly.

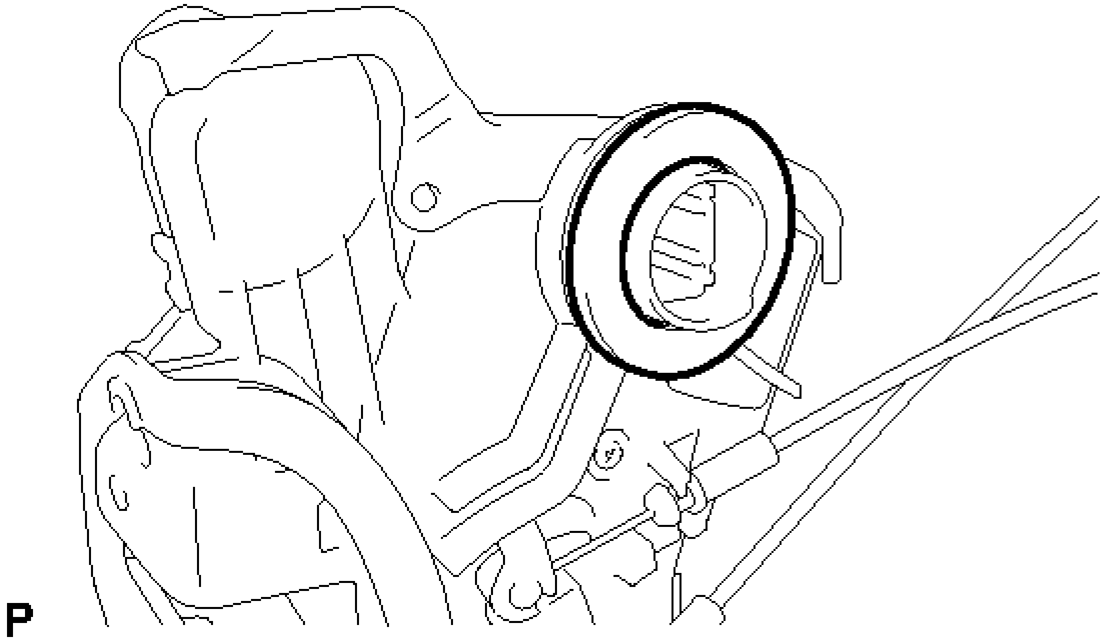

Fig. 61: Identifying Door Lock Wiring Harness Seal
Courtesy of TOYOTA MOTOR SALES, U.S.A., INC.

31. **REMOVE FRONT DOOR LOCK REMOTE CONTROL CABLE ASSEMBLY**
    a. Remove the front door lock remote control cable assembly.

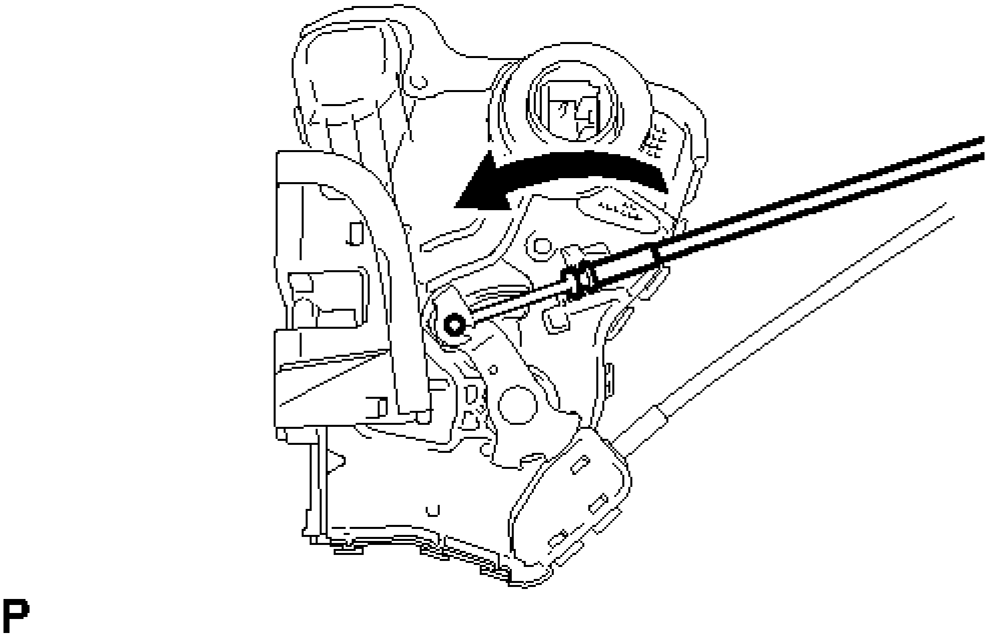

Fig. 62: Removing Front Door Lock Remote Control Cable

Courtesy of TOYOTA MOTOR SALES, U.S.A., INC.

32. REMOVE FRONT DOOR INSIDE LOCKING CABLE ASSEMBLY

a. Using a screwdriver, disengage the 3 claws.

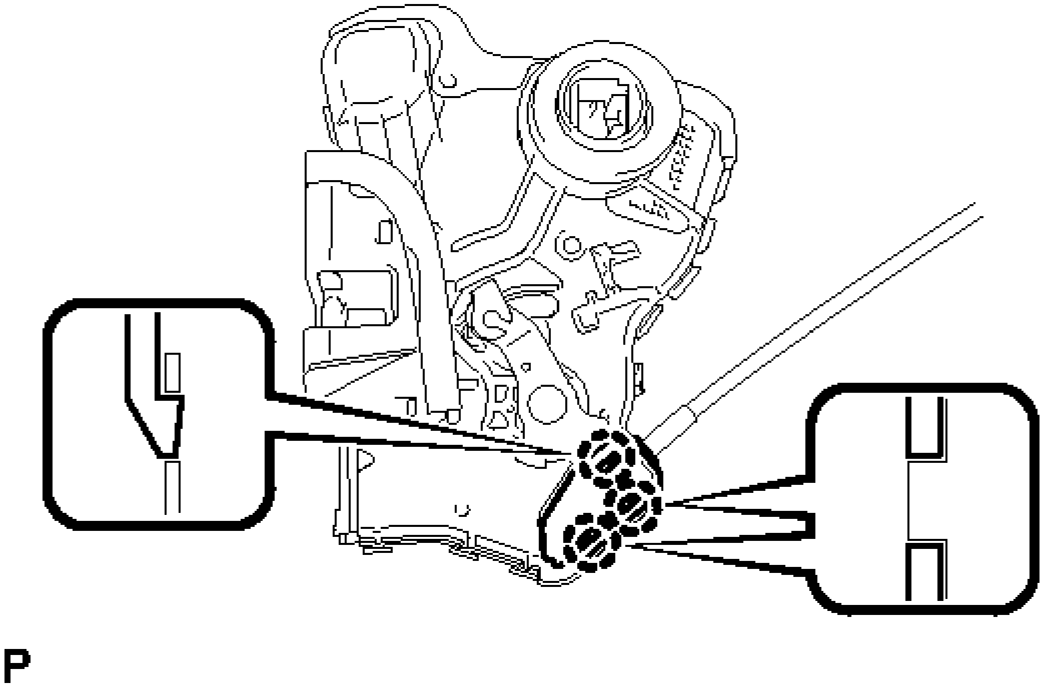

Fig. 63: Identifying Front Door Inside Locking Cable Claws
Courtesy of TOYOTA MOTOR SALES, U.S.A., INC.

b. Remove the front door inside locking cable assembly.

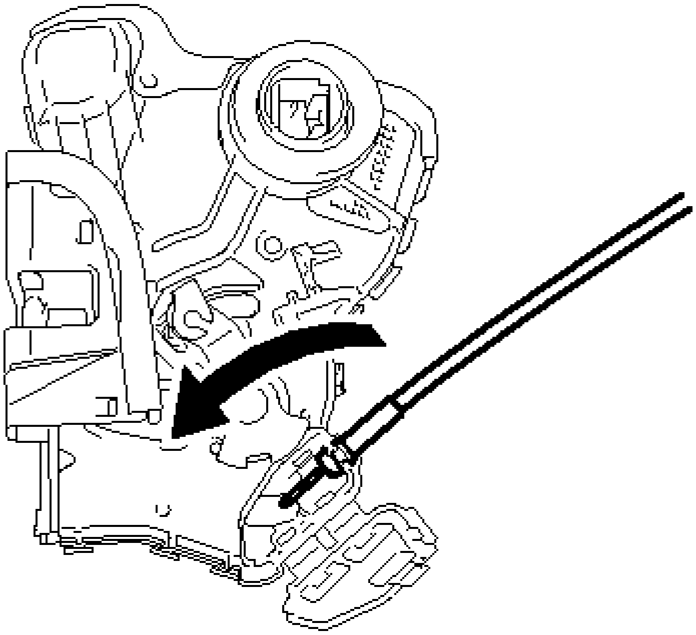

P

Fig. 64: Removing Front Door Inside Locking Cable
Courtesy of TOYOTA MOTOR SALES, U.S.A., INC.

33. **REMOVE FRONT DOOR OUTSIDE HANDLE FRAME SUB-ASSEMBLY**
    a. Disconnect the connector.

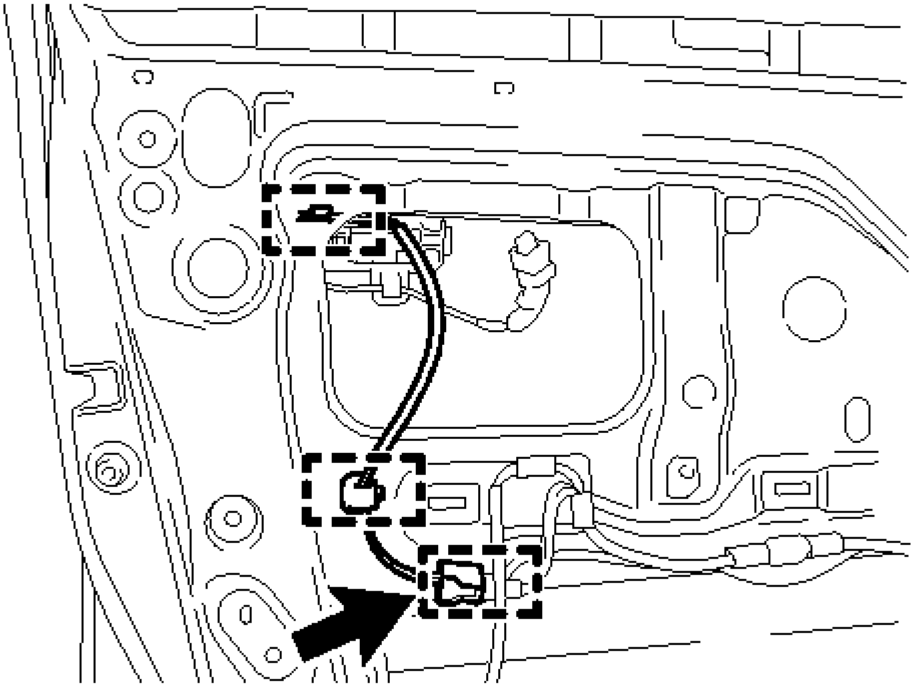

P

Fig. 65: Identifying Connector And Clamps

Courtesy of TOYOTA MOTOR SALES, U.S.A., INC.

b. Disengage the 3 clamps.

c. Using a T30 "TORX" socket wrench, remove the screw and door handle nut.

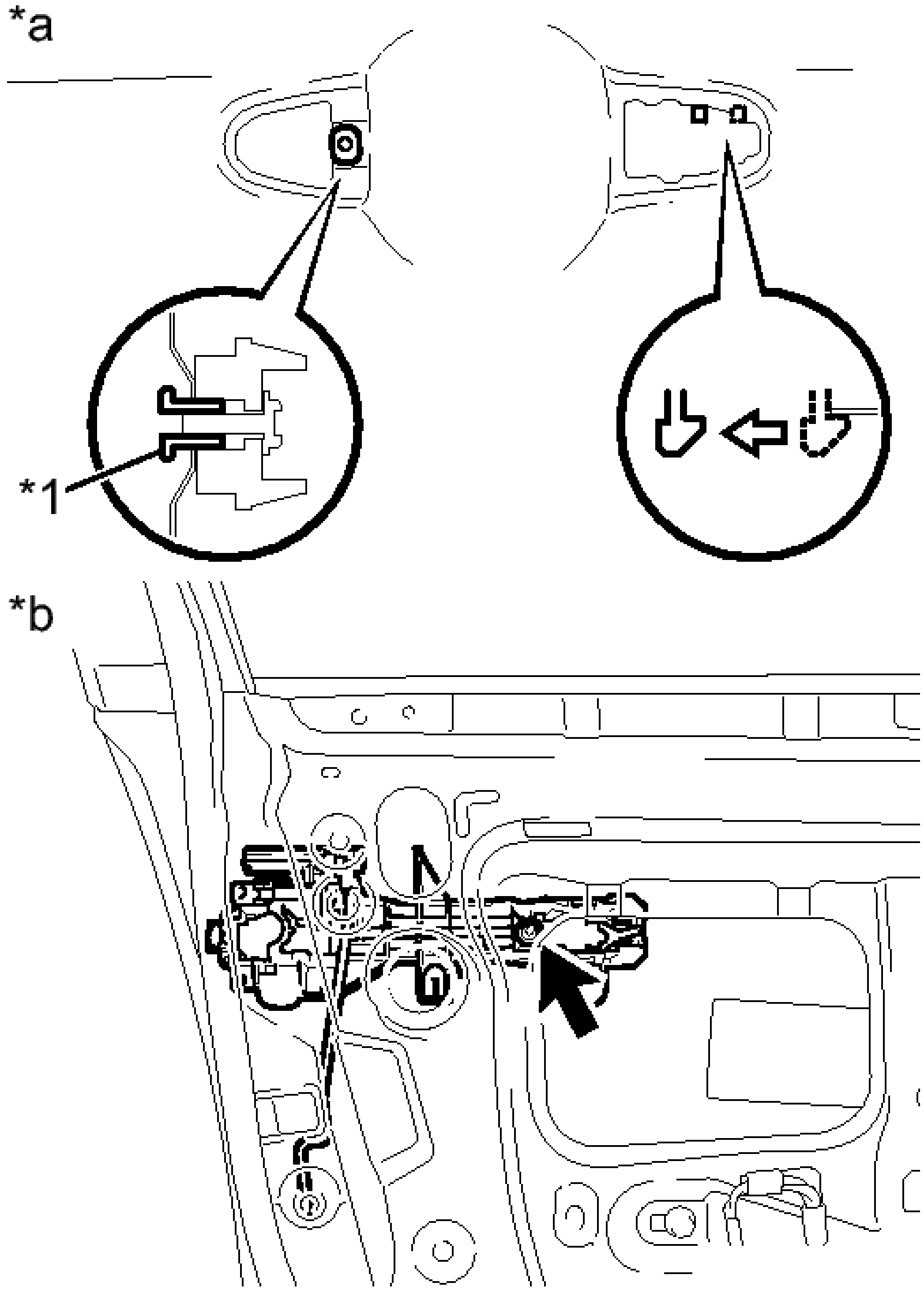

Fig. 66: Identifying Front Door Outside Handle Frame Screw And Door Handle Nut
Courtesy of TOYOTA MOTOR SALES, U.S.A., INC.

TEXT IN ILLUSTRATION

*1	Door Handle Nut
*a	Outside
*b	Inside

d. Slide the front door outside handle frame sub-assembly to disengage the claw of the front door outside handle frame sub-assembly, and then remove it.

34. **REMOVE FRONT DOOR WIRE**

a. Disengage the 3 clamps and remove the front door wire.

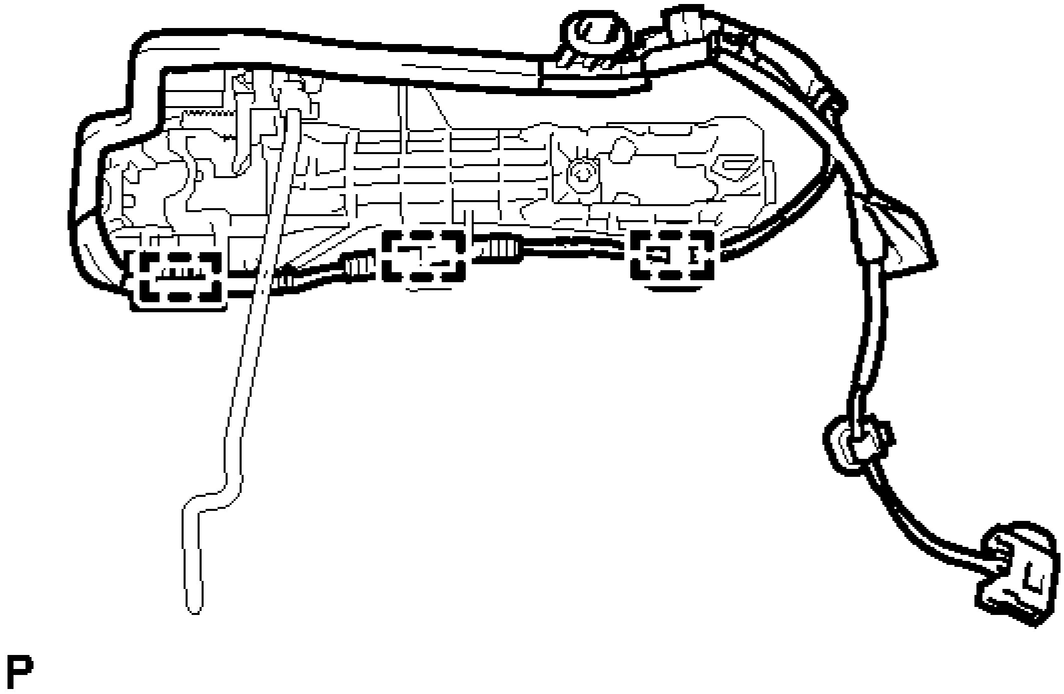

Fig. 67: Identifying Front Door Wire Clamps
Courtesy of TOYOTA MOTOR SALES, U.S.A., INC.

35. **REMOVE FRONT DOOR LOCK OPEN ROD**

a. Remove the front door lock open rod as indicated by the arrows, in the order shown in the illustration.

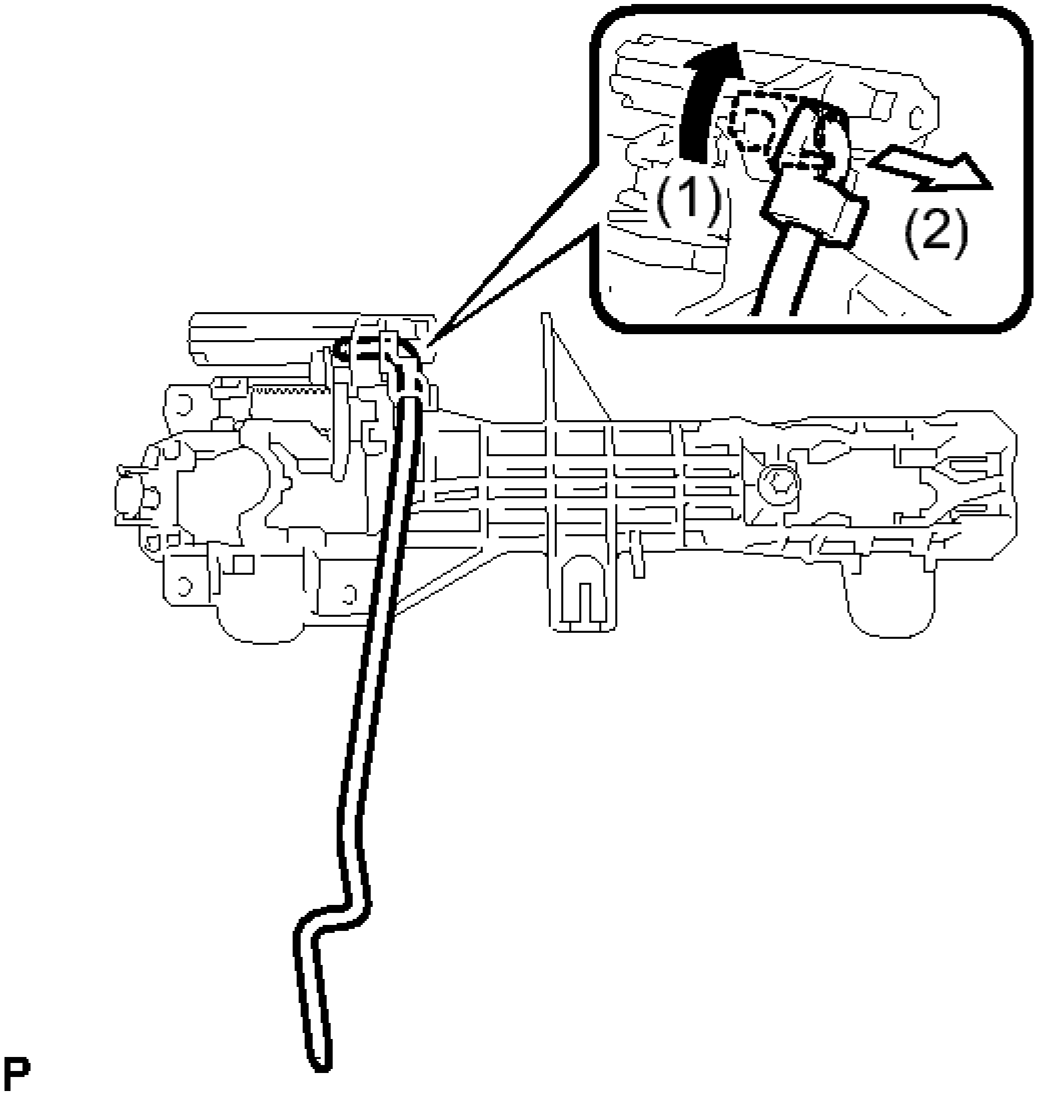

Fig. 68: Removing Front Door Lock Open Rod
Courtesy of TOYOTA MOTOR SALES, U.S.A., INC.

36. **REMOVE FRONT DOOR CHECK ASSEMBLY**
    a. Remove the 3 bolts and front door check assembly.

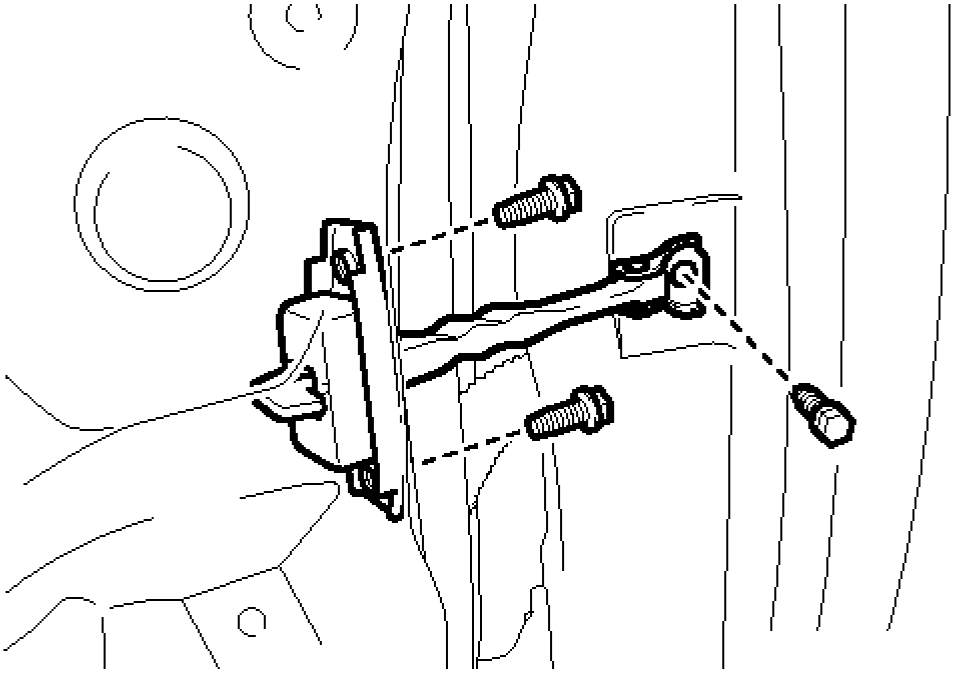

Fig. 69: Identifying Front Door Check Bolts
Courtesy of TOYOTA MOTOR SALES, U.S.A., INC.

37. **REMOVE FRONT DOOR WEATHERSTRIP**
    a. Using a clip remover, disengage the 19 clips and remove the front door weatherstrip.

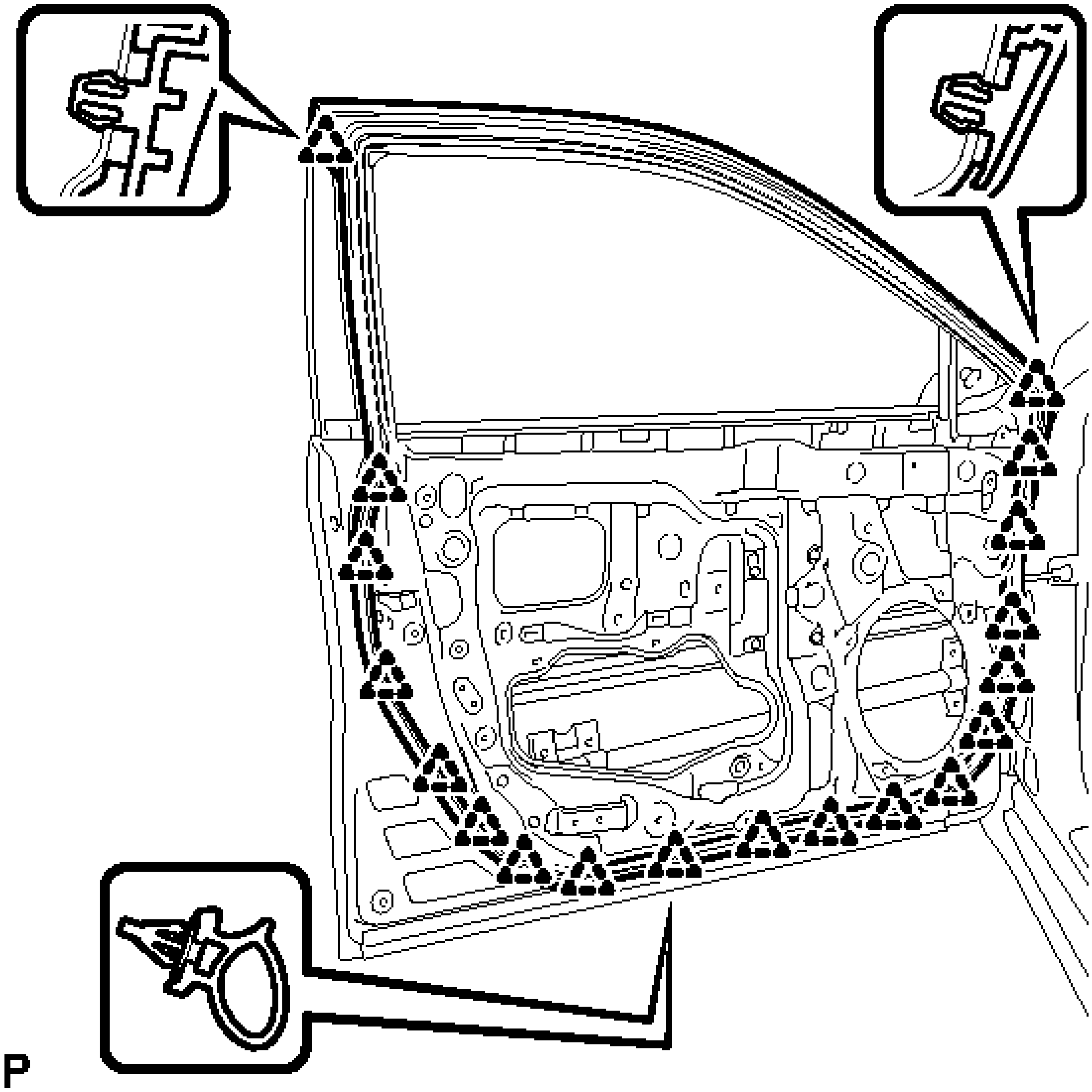

Fig. 70: Identifying Front Door Weatherstrip Clips
Courtesy of TOYOTA MOTOR SALES, U.S.A., INC.

38. **REMOVE DOOR FRAME GARNISH**
    a. Disengage the clip and remove the door frame garnish.

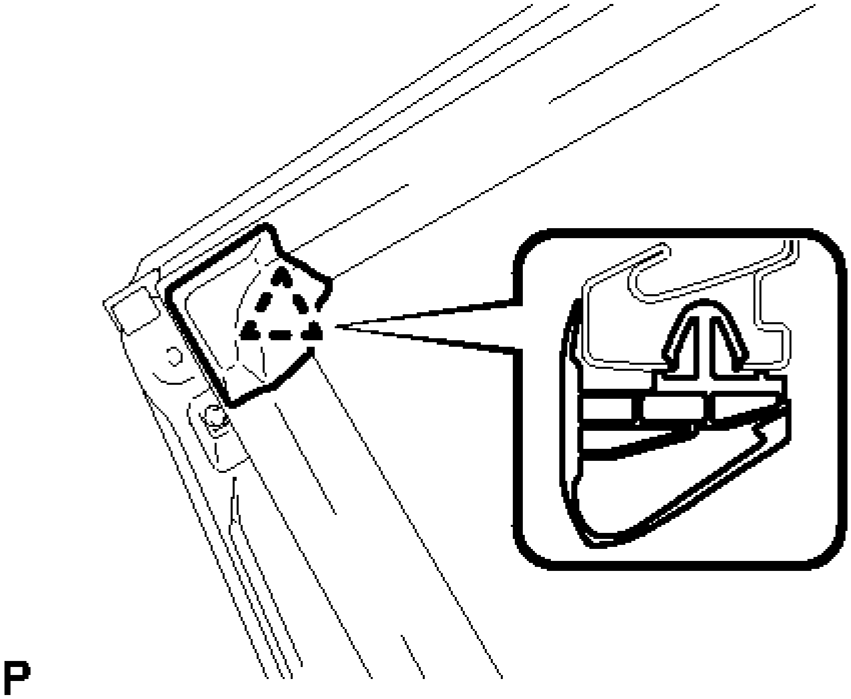

Fig. 71: Identifying Door Frame Garnish Clip
Courtesy of TOYOTA MOTOR SALES, U.S.A., INC.

HINT:

This garnish needs to be replaced with a new one because the clip will break when removing it.

39. **REMOVE FRONT DOOR NO. 2 WEATHERSTRIP**
    a. Using a clip remover, disengage the 8 clips and remove the front door No. 2 weatherstrip.

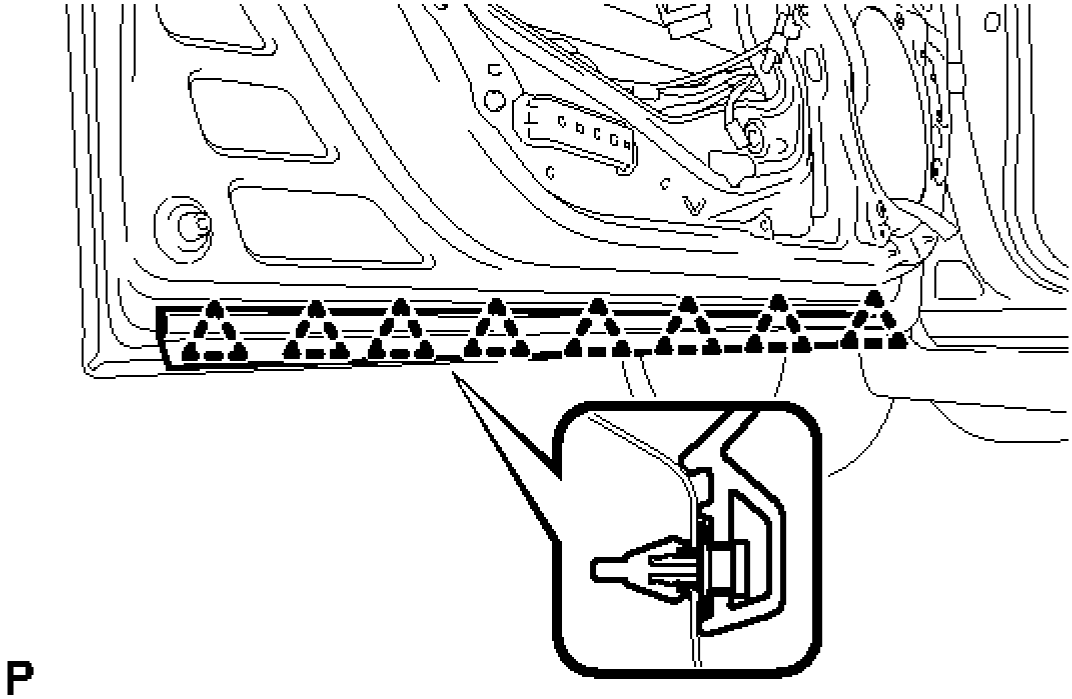

Fig. 72: Identifying Front Door No. 2 Weatherstrip Clips
Courtesy of TOYOTA MOTOR SALES, U.S.A., INC.

40. **REMOVE FRONT DOOR PANEL CUSHION**
    a. Disengage the 2 claws and remove the 2 front door panel cushions.

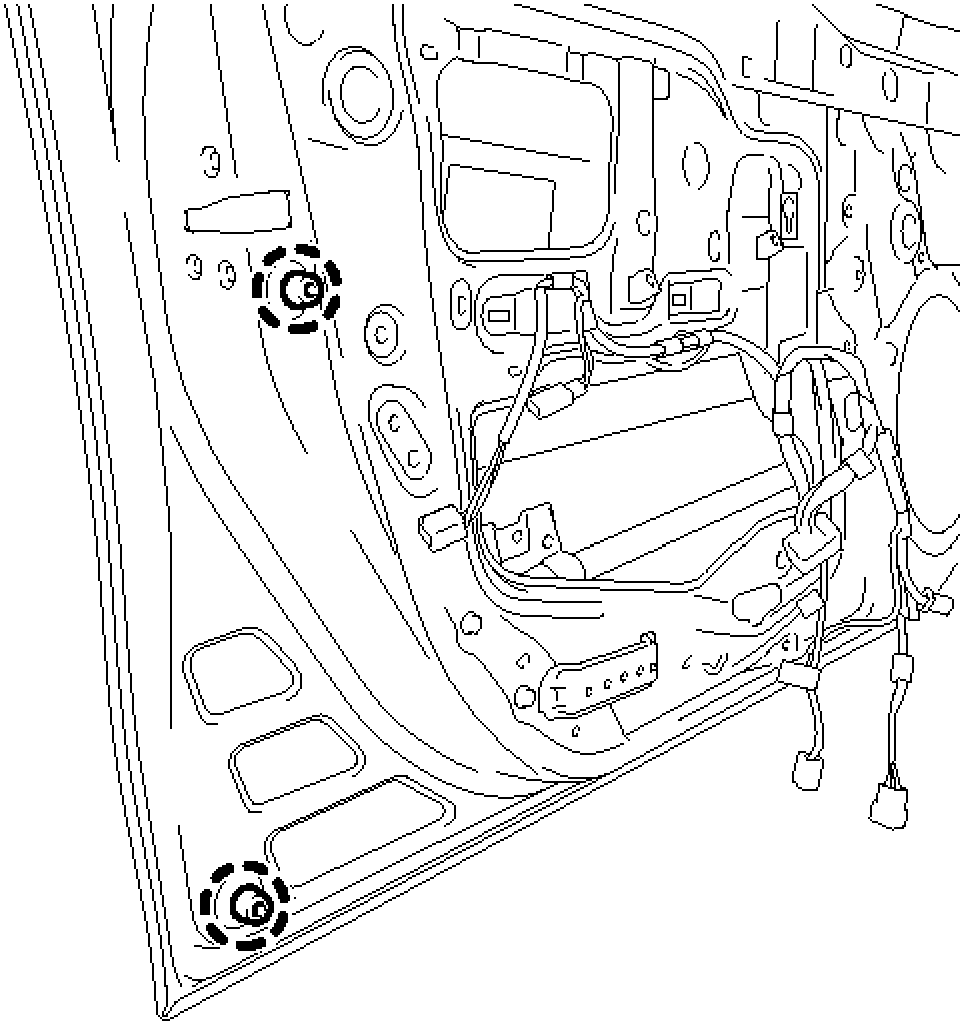

P

Fig. 73: Identifying Front Door Panel Cushions
Courtesy of TOYOTA MOTOR SALES, U.S.A., INC.

41. **REMOVE DOOR DUST PROOF SEAL**
    a. Remove the door dust proof seal.

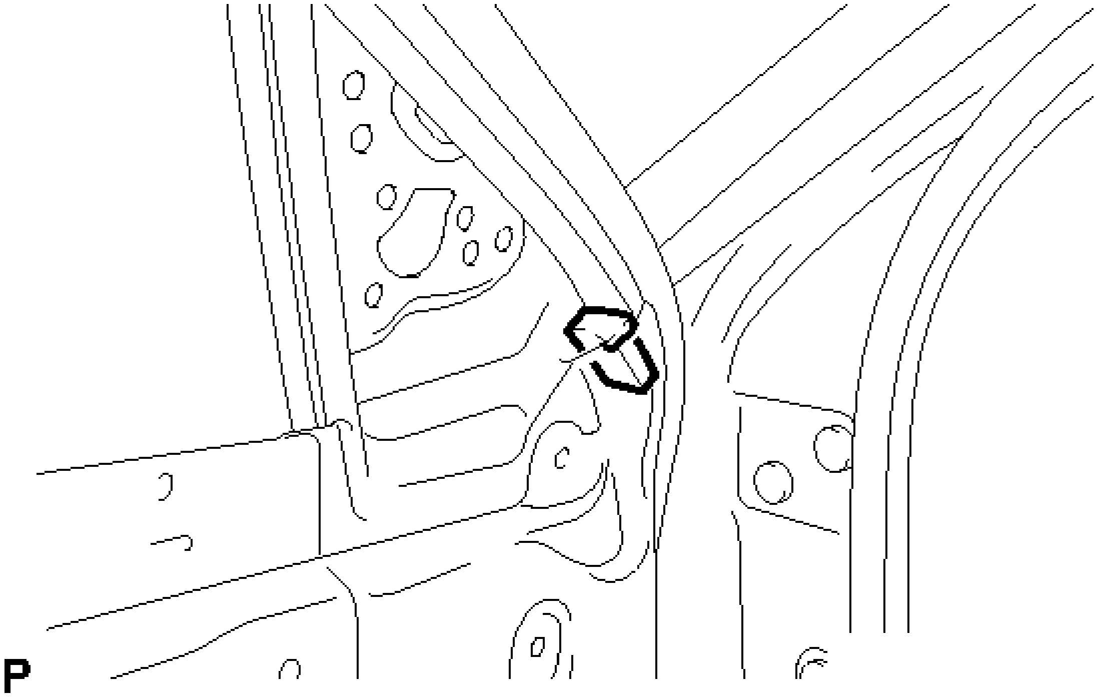

Fig. 74: Identifying Door Dust Proof Seal
Courtesy of TOYOTA MOTOR SALES, U.S.A., INC.

42. **REMOVE FRONT DOOR BELT MOULDING ASSEMBLY** . Refer to **REMOVAL - Step 8**
43. **REMOVE FRONT DOOR REAR WINDOW FRAME MOULDING** . Refer to **REMOVAL - Step 5**
44. **REMOVE FRONT DOOR UPPER WINDOW FRAME MOULDING** . Refer to **REMOVAL - Step 6**
45. **REMOVE FRONT DOOR STRIPE** . Refer to **REMOVAL - Step 12**
46. **REMOVE FRONT DOOR LOWER OUTSIDE STRIPE** . Refer to **REMOVAL - Step 13**

ADJUSTMENT

ADJUSTMENT

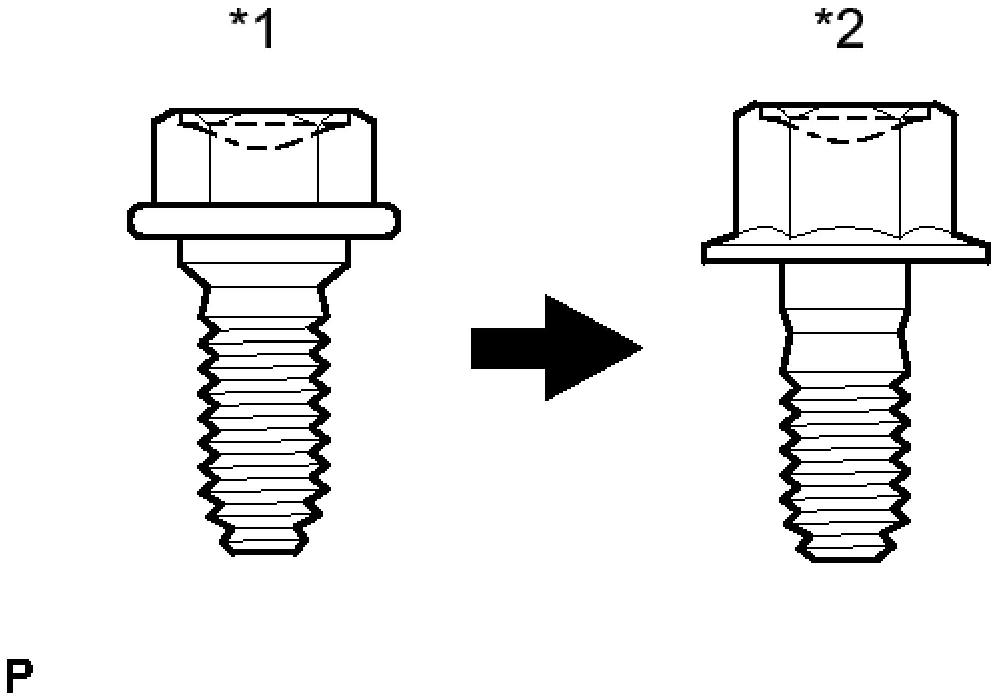

Fig. 75: Identifying Centering Bolt And Standard Bolt
Courtesy of TOYOTA MOTOR SALES, U.S.A., INC.

TEXT IN ILLUSTRATION

*1	Centering Bolt
*2	Standard Bolt

HINT:

- Use the same procedure for the RH side and LH side.
- The procedure listed below is for the LH side.
- Centering bolts are used to mount the door hinge to the vehicle body and door. The door cannot be adjusted with the centering bolts installed. Substitute the centering bolts with standard bolts when making adjustments.
- Specified torque for standard bolts is shown in the standard bolt chart. Refer to **SPECIFIED TORQUE FOR STANDARD BOLTS** .

1. **INSPECT FRONT DOOR**
    a. Check that the clearance measurements of areas a through p are within each standard range.

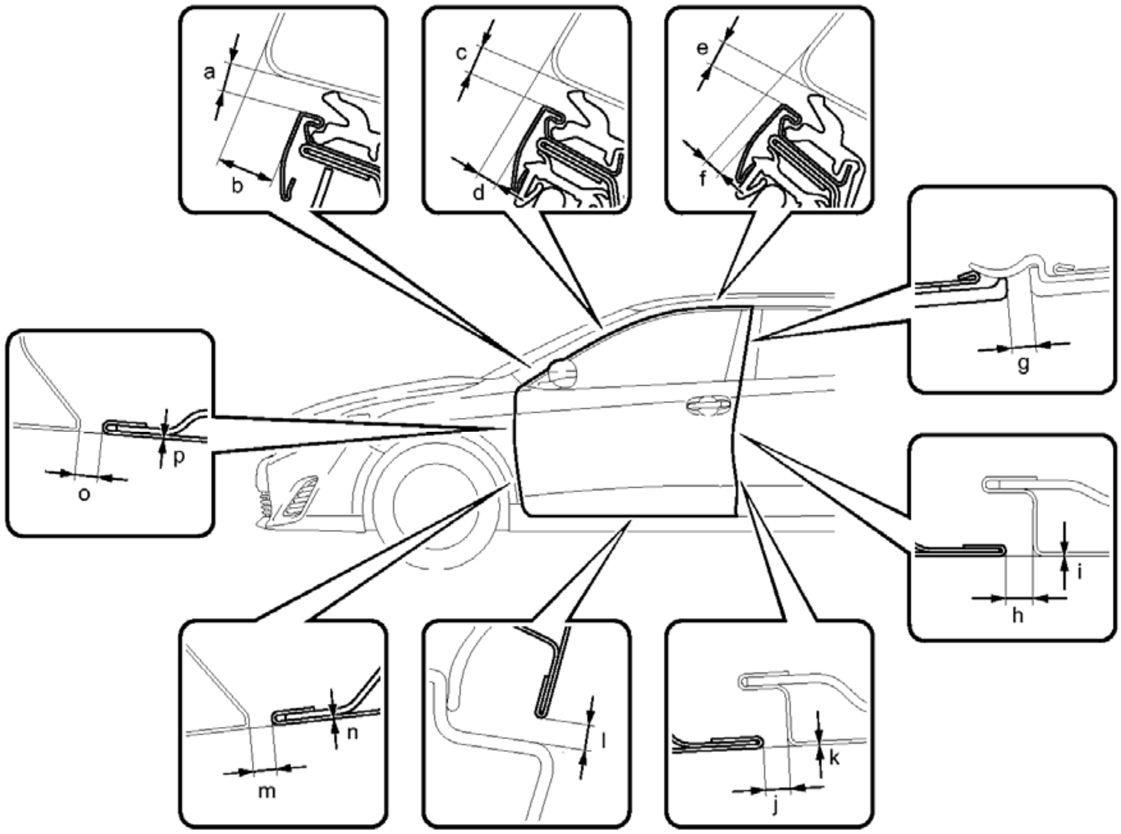

P

Fig. 76: Checking Front Door Clearance Measurements
Courtesy of TOYOTA MOTOR SALES, U.S.A., INC.

STANDARD CLEARANCE

Area	Measurement	Area	Measurement
a	3.35 to 6.35 mm (0.132 to 0.250 in.)	b	9.0 to 12.0 mm (0.354 to 0.472 in.)
c	3.35 to 6.35 mm (0.132 to 0.250 in.)	d	1.7 to 4.7 mm (0.0669 to 0.185 in.)
e	3.35 to 6.35 mm (0.132 to 0.250 in.)	f	1.0 to 4.0 mm (0.0394 to 0.157 in.)
g	2.3 to 6.3 mm (0.0906 to 0.248 in.)	h	2.6 to 5.0 mm (0.102 to 0.197 in.)

i	-1.2 to 1.2 mm (-0.0472 to 0.0472 in.)	j	2.6 to 5.0 mm (0.102 to 0.197 in.)
k	-1.2 to 1.2 mm (-0.0472 to 0.0472 in.)	l	2.9 to 7.1 mm (0.114 to 0.280 in.)
m	2.3 to 4.7 mm (0.0906 to 0.185 in.)	n	-1.2 to 1.2 mm (-0.0472 to 0.0472 in.)
o	2.3 to 4.7 mm (0.0906 to 0.185 in.)	p	-1.2 to 1.2 mm (-0.0472 to 0.0472 in.)

2. **REMOVE FRONT WHEEL**
3. **REMOVE FRONT WHEEL OPENING EXTENSION PAD**

   HINT:

   Use the same procedure for the RH side and LH side. Refer to **REMOVAL - Step 2** .

4. **REMOVE FRONT FENDER LINER**

   HINT:

   Use the same procedure for the RH side and LH side. Refer to **REMOVAL - Step 3** .

5. **REMOVE FRONT FENDER SEAL**
   a. Disengage the 3 clips and remove the front fender seal.

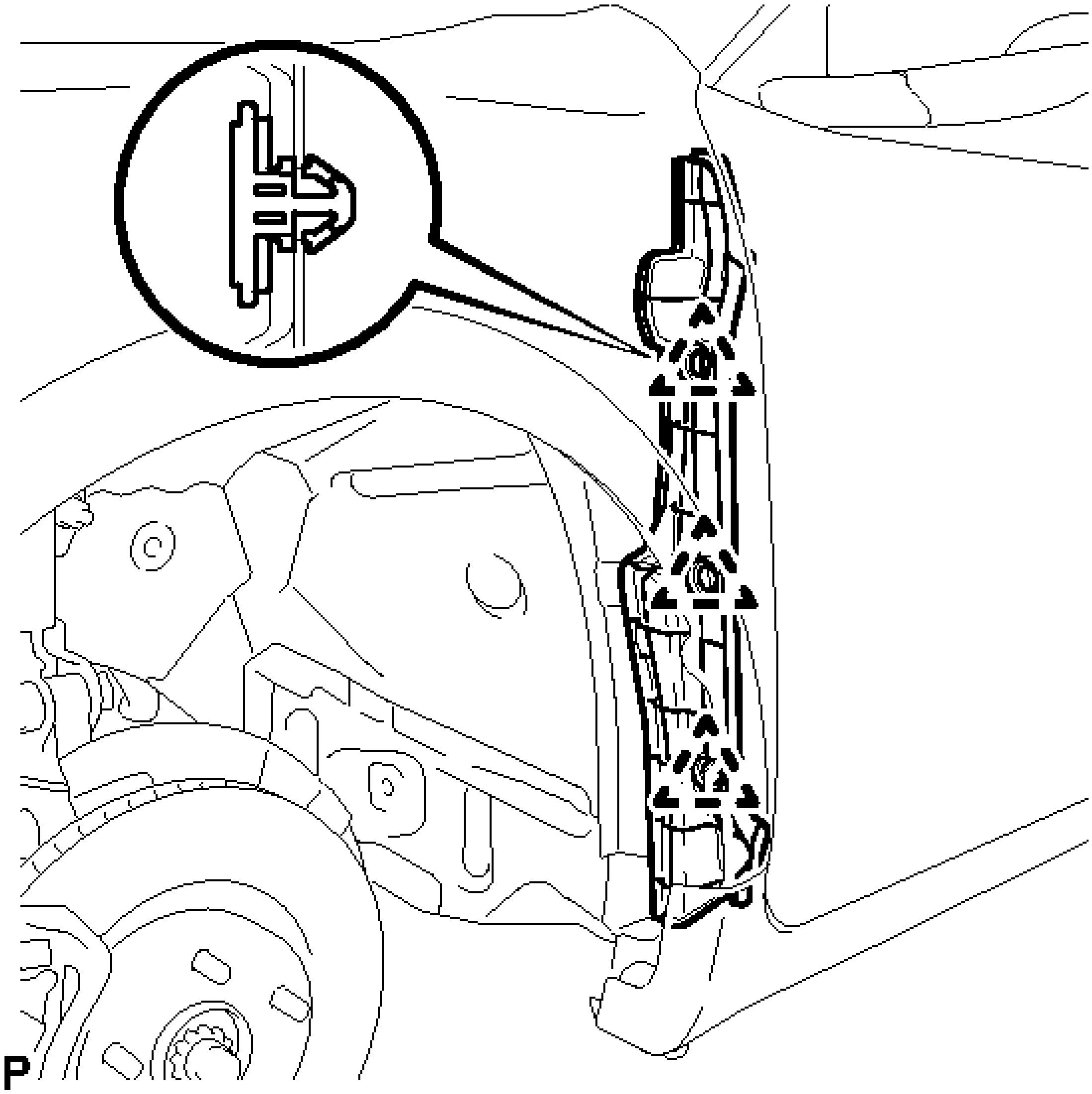

Fig. 77: Identifying Front Fender Seal Clips
Courtesy of TOYOTA MOTOR SALES, U.S.A., INC.

6. **ADJUST FRONT DOOR**

NOTE: Make sure to turn the power switch off when adjusting door lock strikers.

a. Using SST, loosen the hinge bolts on the vehicle body and adjust the door position.
    - **SST: 09812-00010**

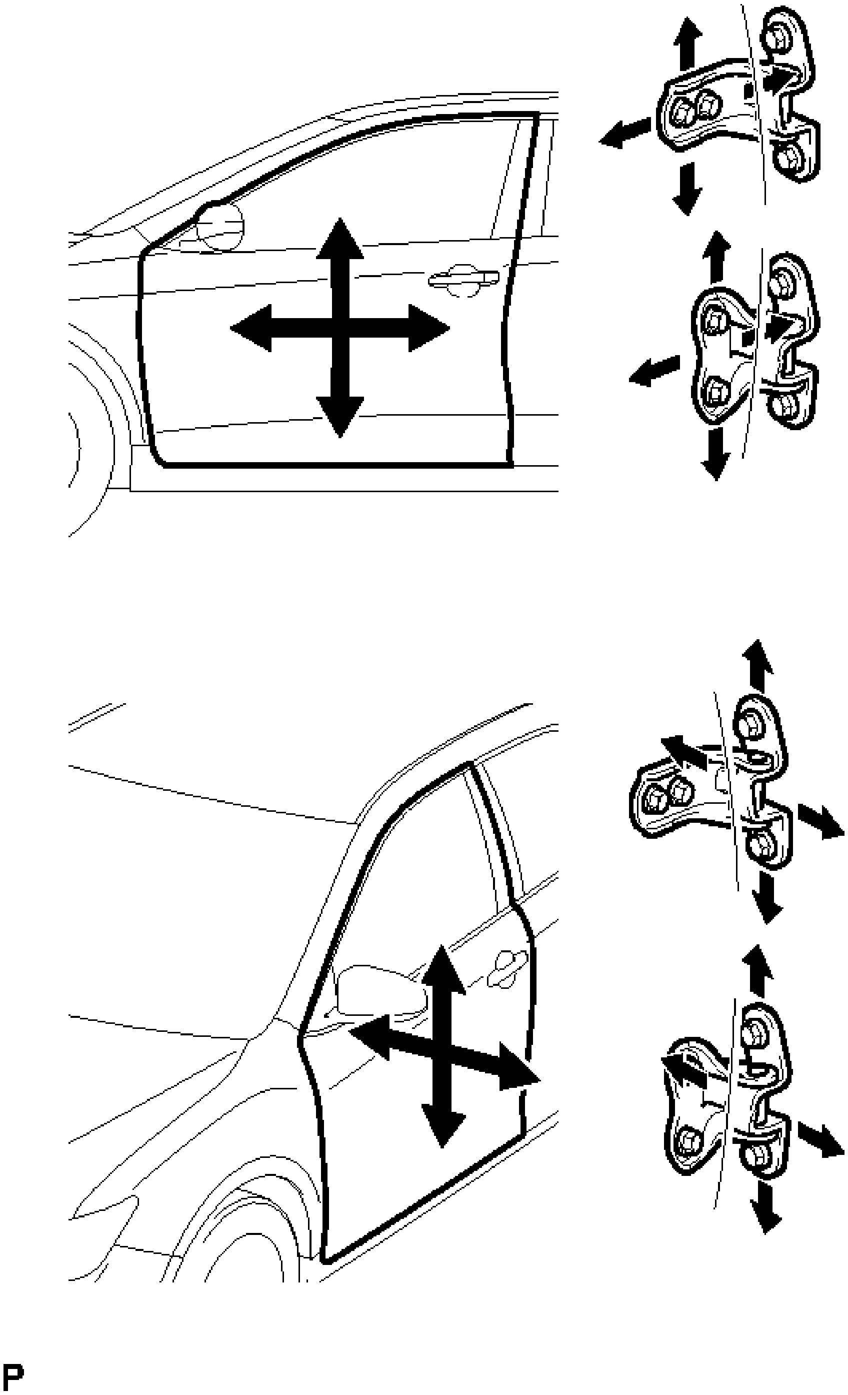

Fig. 78: Adjusting The Door Position
Courtesy of TOYOTA MOTOR SALES, U.S.A., INC.

b. Tighten the hinge bolts on the vehicle body after adjustment.

Torque: 26 N*m (265 kgf*cm, 19 ft.*lbf)

c. Loosen the hinge bolts on the door and adjust the door position.
d. Tighten the hinge bolts on the door after adjustment.

Torque: 26 N*m (265 kgf*cm, 19 ft.*lbf)

e. Using a T40 "TORX" socket wrench, slightly loosen the striker mounting screws.

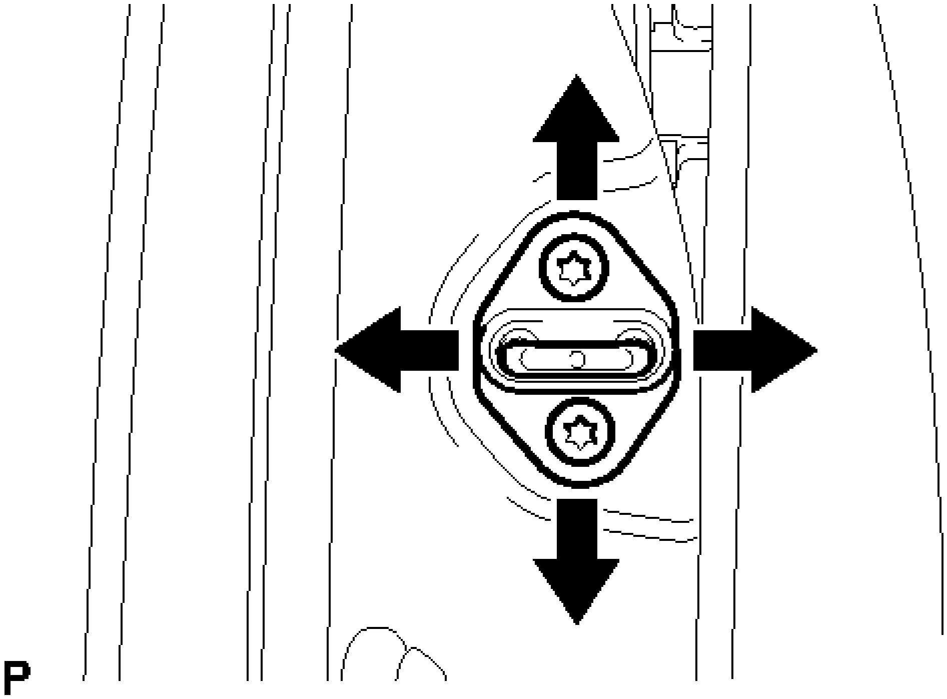

Fig. 79: Adjusting Door Striker
Courtesy of TOYOTA MOTOR SALES, U.S.A., INC.

f. Using a brass bar and a hammer, hit the striker to adjust its position.
g. Using a T40 "TORX" socket wrench, tighten the striker mounting screws after adjustment.

Torque: 23 N*m (235 kgf*cm, 17 ft.*lbf)

7. **INSTALL FRONT FENDER SEAL**
    a. Install the front fender seal with new 3 clips.

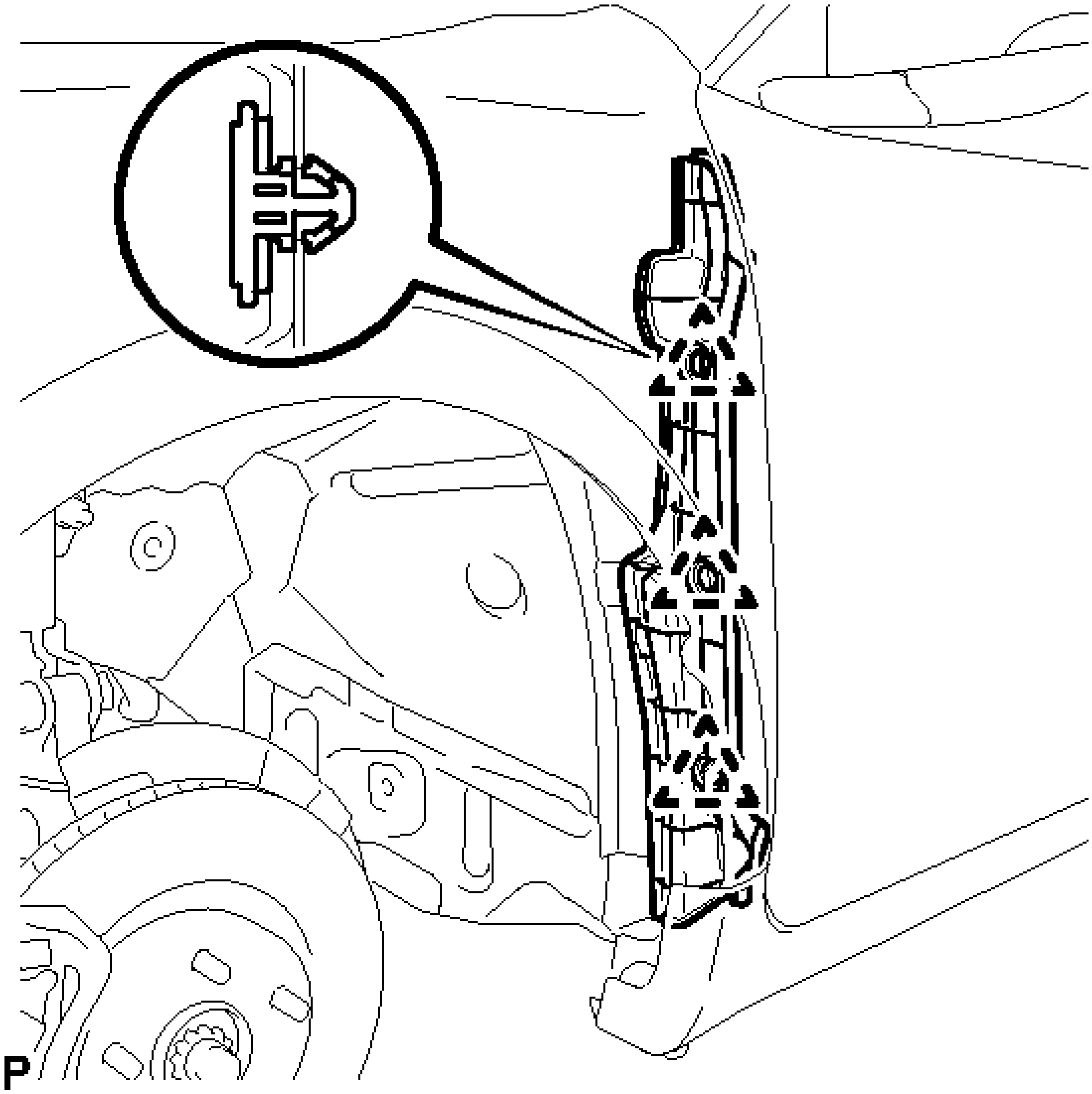

Fig. 80: Identifying Front Fender Seal Clips
Courtesy of TOYOTA MOTOR SALES, U.S.A., INC.

8. **INSTALL FRONT FENDER LINER**

   HINT:

   Use the same procedure for the RH side and LH side. Refer to **INSTALLATION - Step 3** .

9. **INSTALL FRONT WHEEL OPENING EXTENSION PAD**

   HINT:

   Use the same procedure for the RH side and LH side. Refer to **INSTALLATION - Step 4** .

10. **INSTALL FRONT WHEEL** . Refer to **INSTALLATION - Step 13**

REASSEMBLY

REASSEMBLY

HINT:

- Use the same procedure for both the RH and LH sides.
- The procedure described below is for the LH side.

1. **PRECAUTION**

   NOTE: **After turning the power switch off, waiting time may be required before disconnecting the cable from the negative (-) auxiliary battery terminal. Therefore, make sure to read the disconnecting the cable from the negative (-) auxiliary battery terminal notices before proceeding with work. Refer to PRECAUTION .**

2. **REPAIR INSTRUCTION** . Refer to **INSTALLATION - Step 2**
3. **INSTALL FRONT DOOR LOWER OUTSIDE STRIPE** . Refer to **INSTALLATION - Step 3**
4. **INSTALL FRONT DOOR STRIPE** . Refer to **INSTALLATION - Step 4**
5. **INSTALL FRONT DOOR UPPER WINDOW FRAME MOULDING** . Refer to **INSTALLATION - Step 1**
6. **INSTALL FRONT DOOR REAR WINDOW FRAME MOULDING** . Refer to **INSTALLATION - Step 2**
7. **INSTALL FRONT DOOR BELT MOULDING ASSEMBLY** . Refer to **INSTALLATION - Step 2**
8. **INSTALL DOOR DUST PROOF SEAL**
   a. Install door dust proof seal.

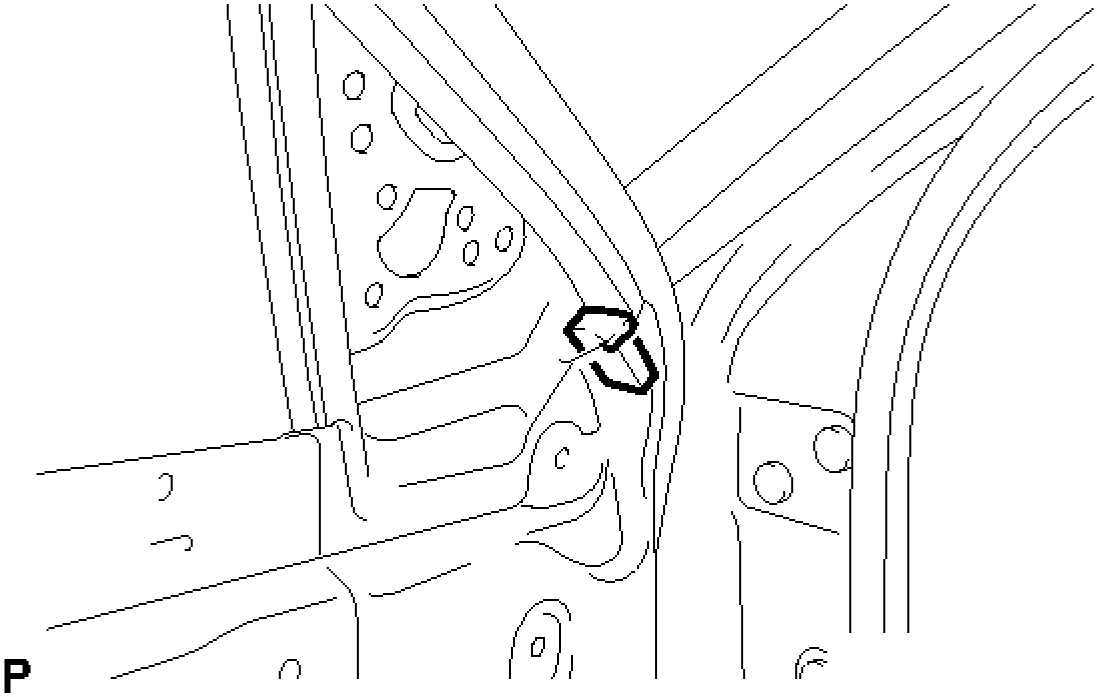

Fig. 81: Identifying Door Dust Proof Seal
Courtesy of TOYOTA MOTOR SALES, U.S.A., INC.

9. **INSTALL FRONT DOOR PANEL CUSHION**
   a. Engage the 2 claws to install 2 new front door panel cushions.

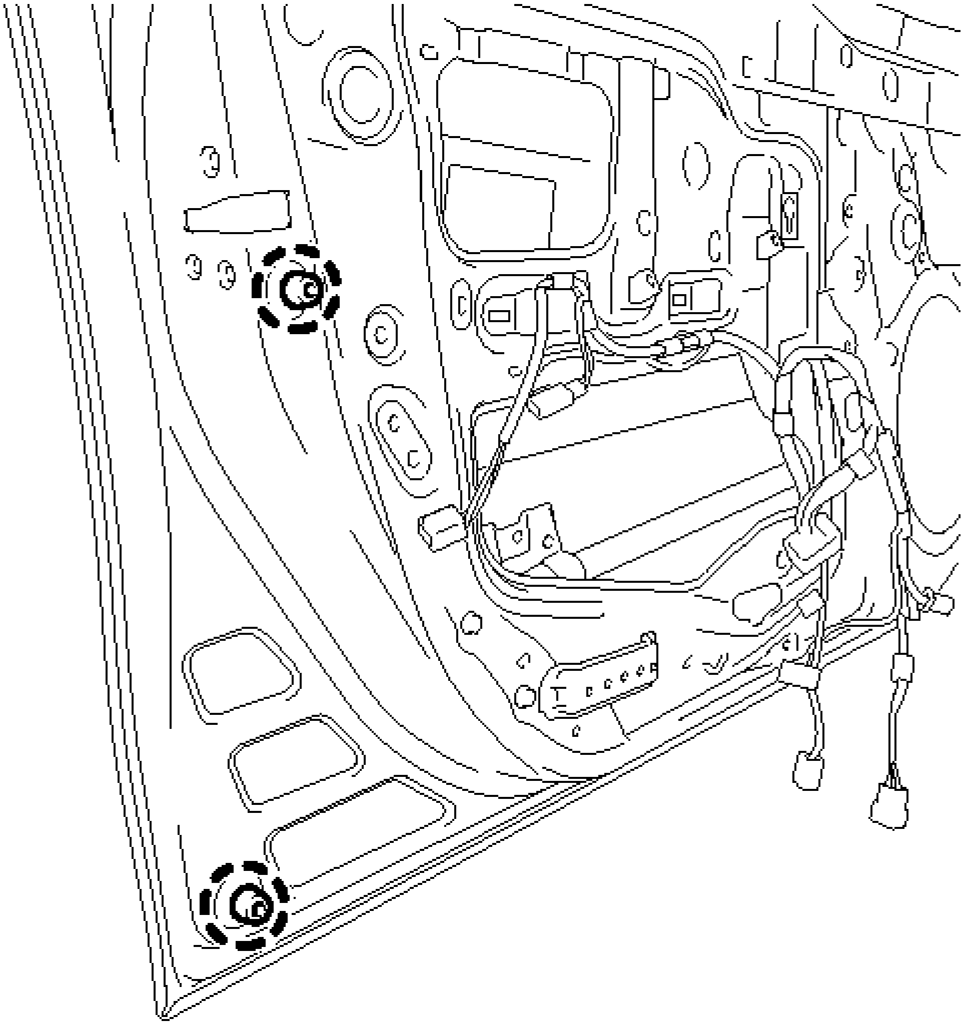

Fig. 82: Identifying Front Door Panel Cushions
Courtesy of TOYOTA MOTOR SALES, U.S.A., INC.

10. **INSTALL FRONT DOOR NO. 2 WEATHERSTRIP**
    a. Engage the 8 clips to install the front door No. 2 weatherstrip.

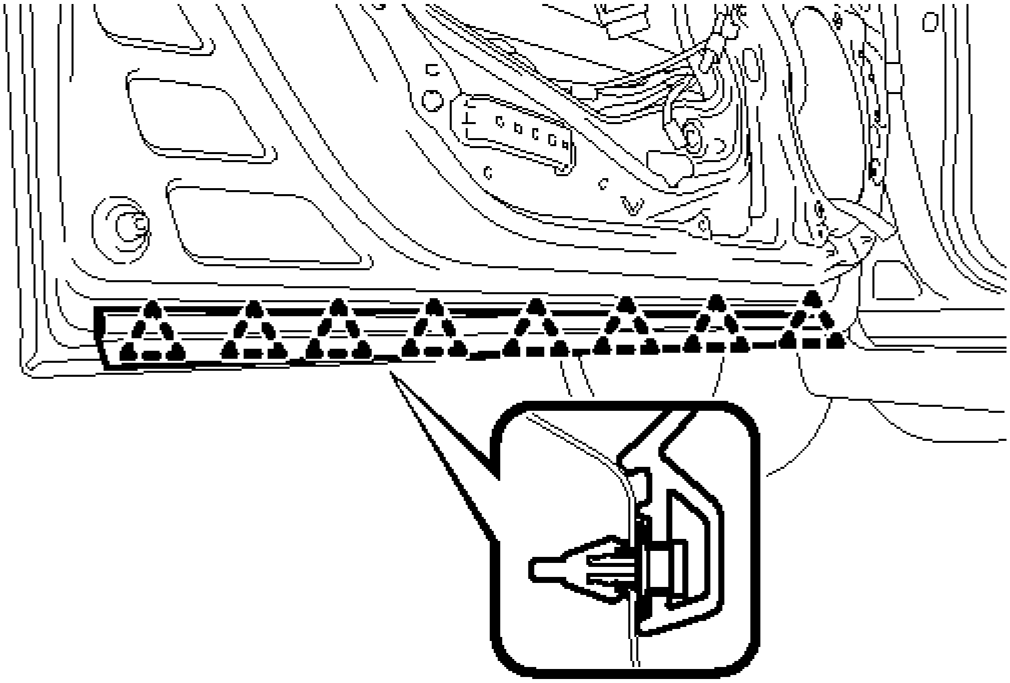

Fig. 83: Identifying Front Door No. 2 Weatherstrip Clips
Courtesy of TOYOTA MOTOR SALES, U.S.A., INC.

11. **INSTALL DOOR FRAME GARNISH**
    a. Engage the clip to install a new door frame garnish.

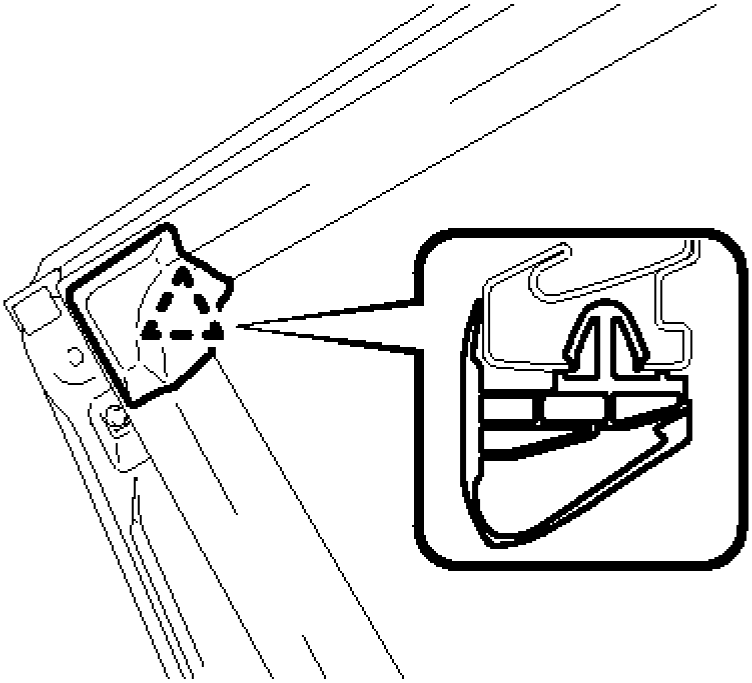

Fig. 84: Identifying Door Frame Garnish Clip

Courtesy of TOYOTA MOTOR SALES, U.S.A., INC.

12. INSTALL FRONT DOOR WEATHERSTRIP

a. Engage the 19 clips and install the front door weatherstrip.

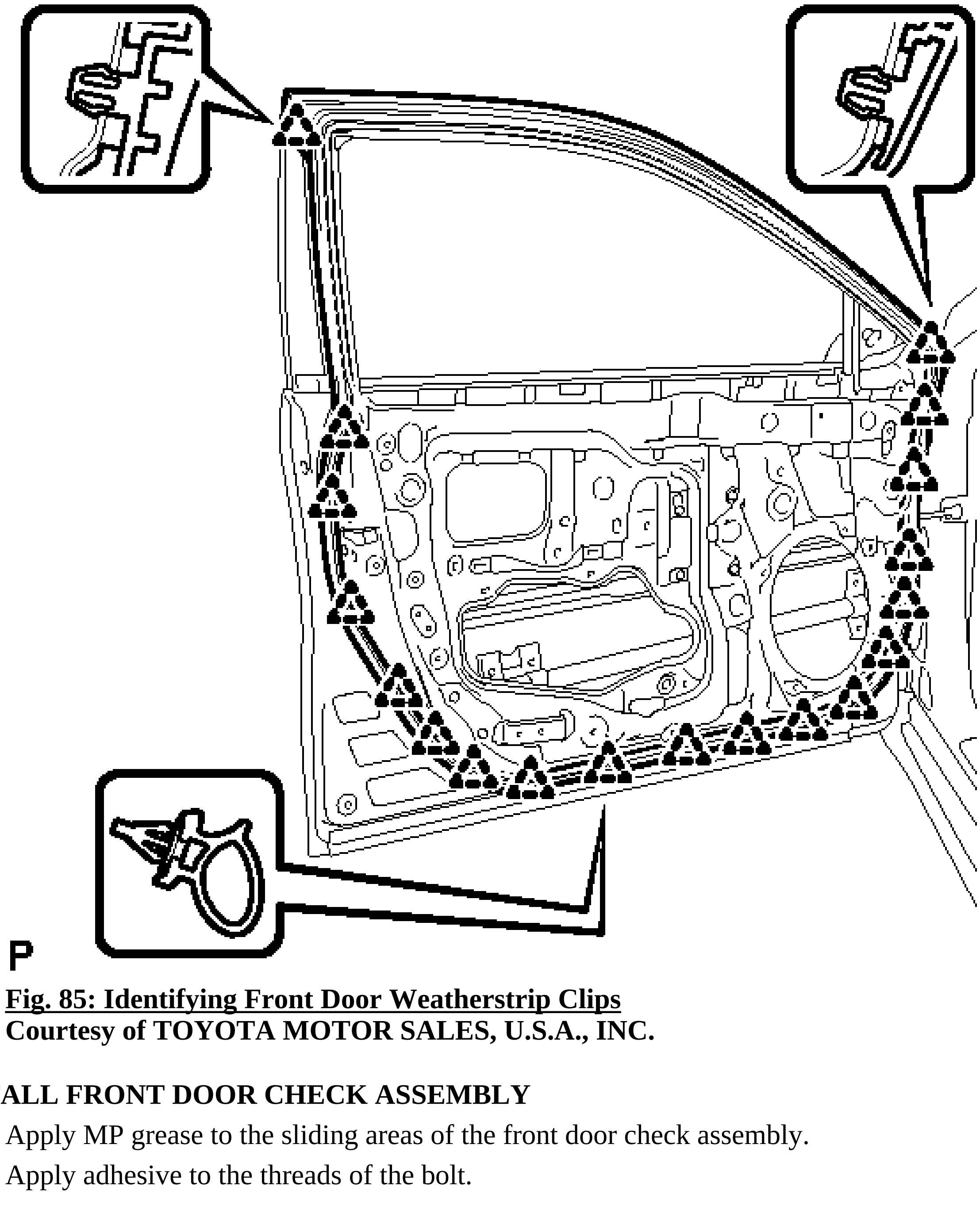

Fig. 85: Identifying Front Door Weatherstrip Clips
Courtesy of TOYOTA MOTOR SALES, U.S.A., INC.

13. INSTALL FRONT DOOR CHECK ASSEMBLY

a. Apply MP grease to the sliding areas of the front door check assembly.
b. Apply adhesive to the threads of the bolt.

Adhesive

Toyota Genuine Adhesive 1324, Three Bond 1324 or equivalent

c. Install the front door check assembly with the 3 bolts.

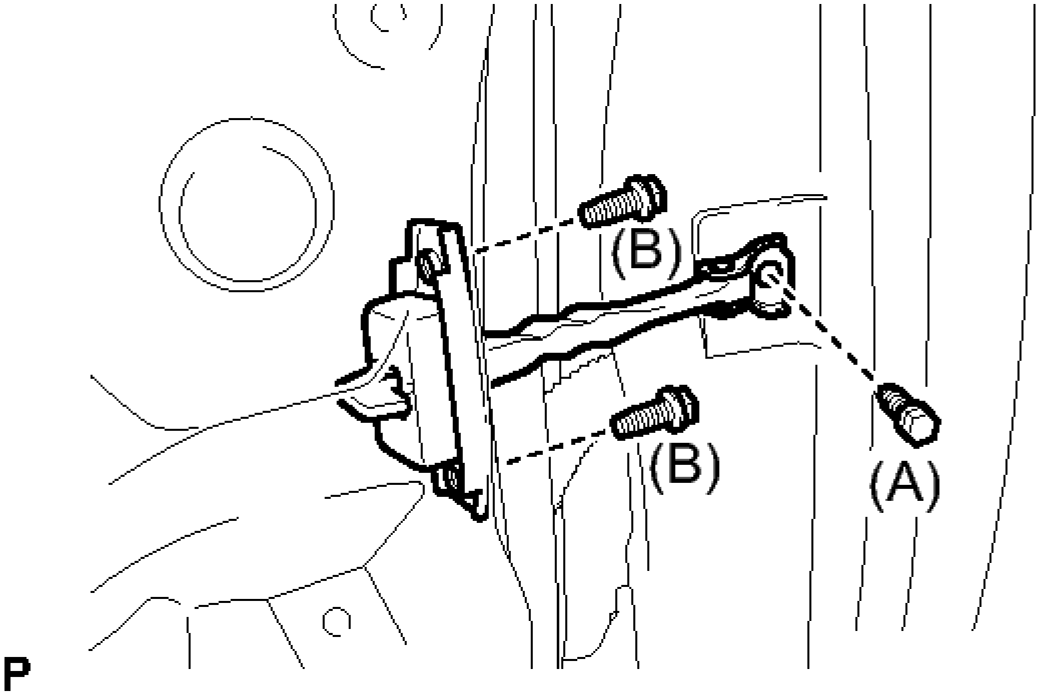

Fig. 86: Identifying Front Door Check Bolts
Courtesy of TOYOTA MOTOR SALES, U.S.A., INC.

Bolt (A)

Torque: 29 N*m (296 kgf*cm, 21 ft.*lbf)

Bolt (B)

Torque: 5.5 N*m (56 kgf*cm, 49 in.*lbf)

14. **INSTALL FRONT DOOR LOCK OPEN ROD**
    a. Install the front door lock open rod as indicated by the arrows, in the order shown in the illustration.

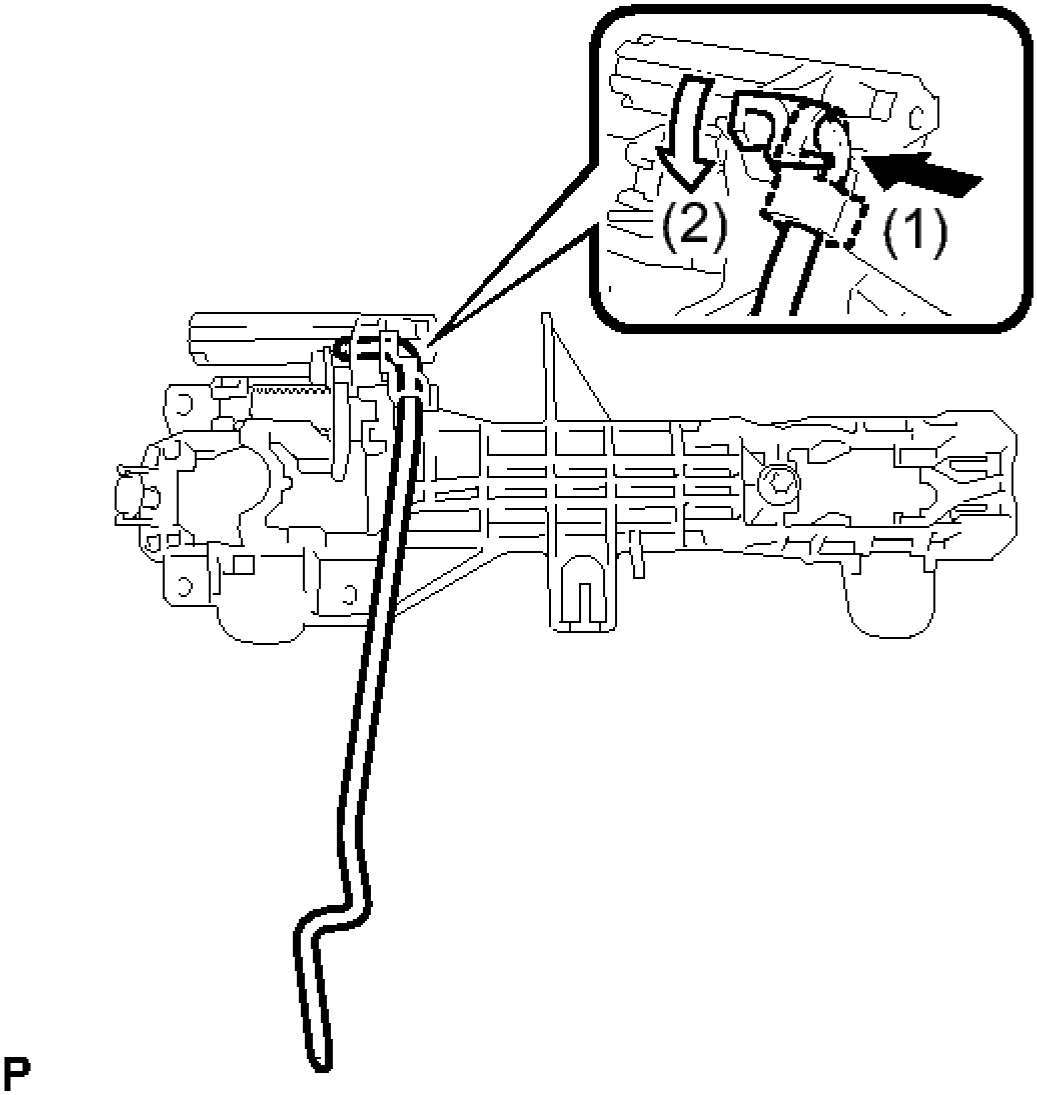

Fig. 87: Installing Front Door Lock Open Rod
Courtesy of TOYOTA MOTOR SALES, U.S.A., INC.

15. **INSTALL FRONT DOOR WIRE**
    a. Engage the 3 clamps to install the front door wire.

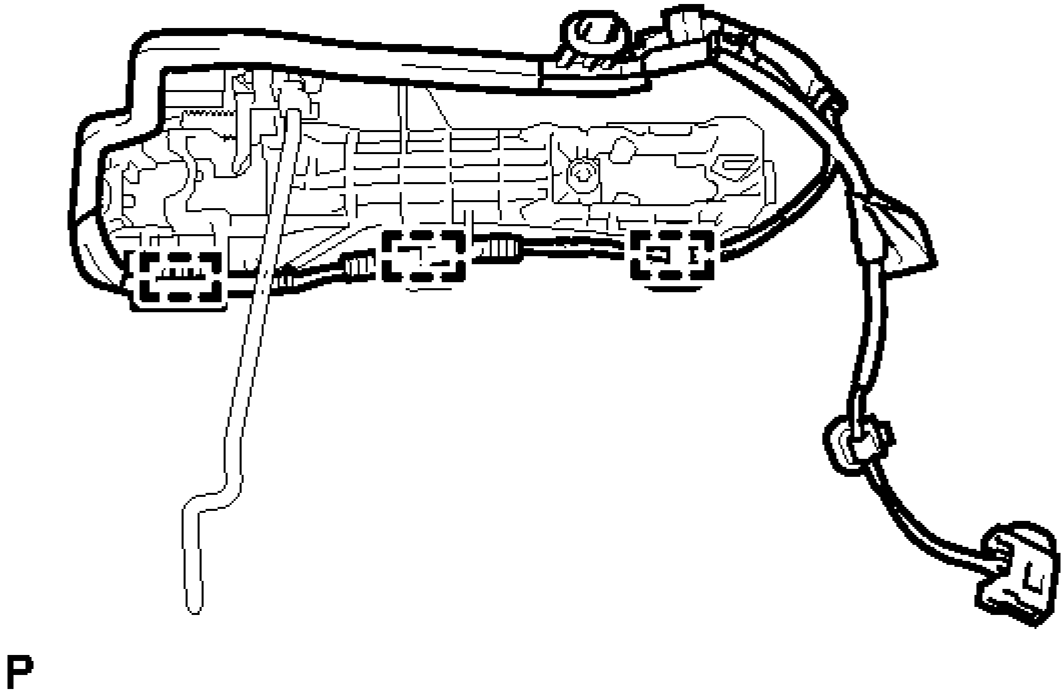

Fig. 88: Identifying Front Door Wire Clamps
Courtesy of TOYOTA MOTOR SALES, U.S.A., INC.

16. **INSTALL FRONT DOOR OUTSIDE HANDLE FRAME SUB-ASSEMBLY**
    a. Apply MP grease to the sliding parts on the front door outside handle frame sub-assembly.
    b. Engage the claw.

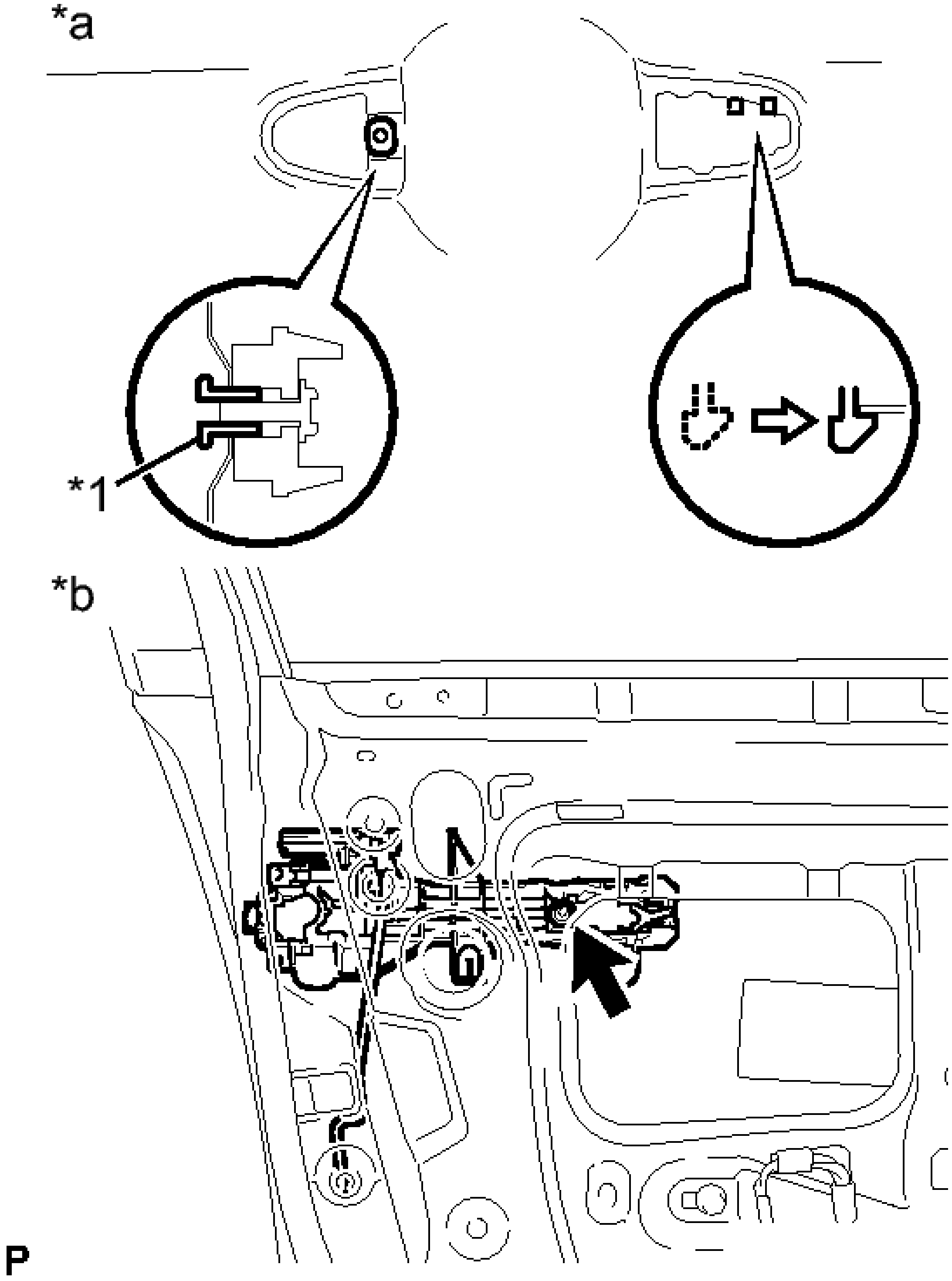

Fig. 89: Identifying Screw And Door Handle Nut
Courtesy of TOYOTA MOTOR SALES, U.S.A., INC.

TEXT IN ILLUSTRATION

	Door

*1	Handle Nut
*a	Outside
*b	Inside

c. Using a T30 "TORX" socket wrench, install the front door outside handle frame sub-assembly with the screw and door handle nut.

Torque: 4.0 N*m (41 kgf*cm, 35 in.*lbf)

d. Engage the 3 clamps.

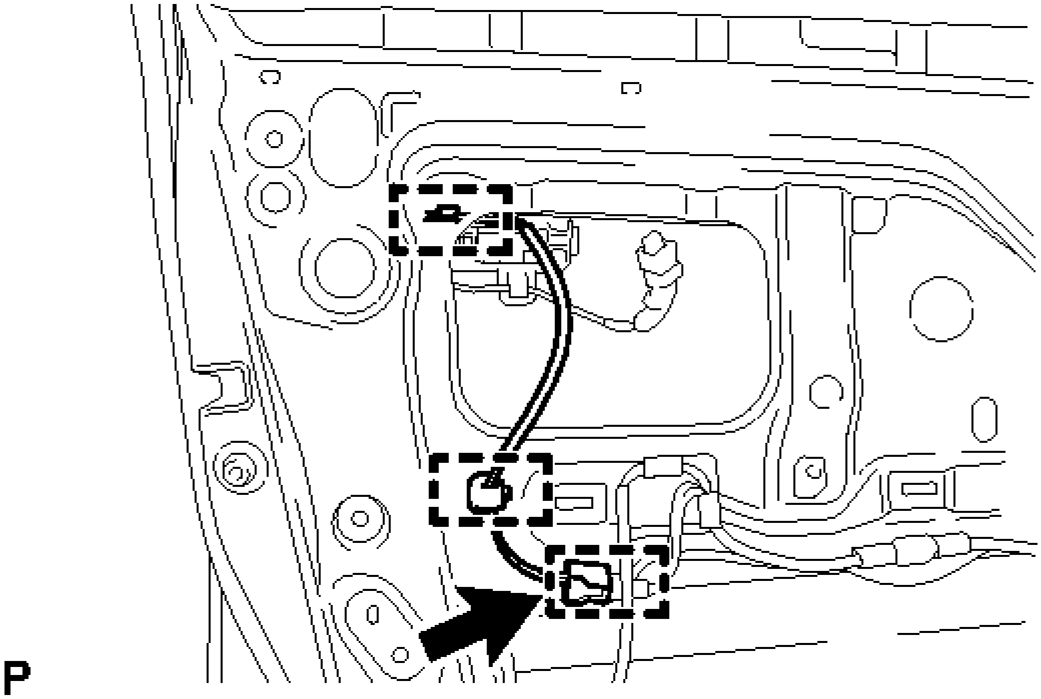

Fig. 90: Identifying Connector And Clamps
Courtesy of TOYOTA MOTOR SALES, U.S.A., INC.

e. Connect the connector.

17. **INSTALL FRONT DOOR INSIDE LOCKING CABLE ASSEMBLY**

a. Install the front door inside locking cable assembly.

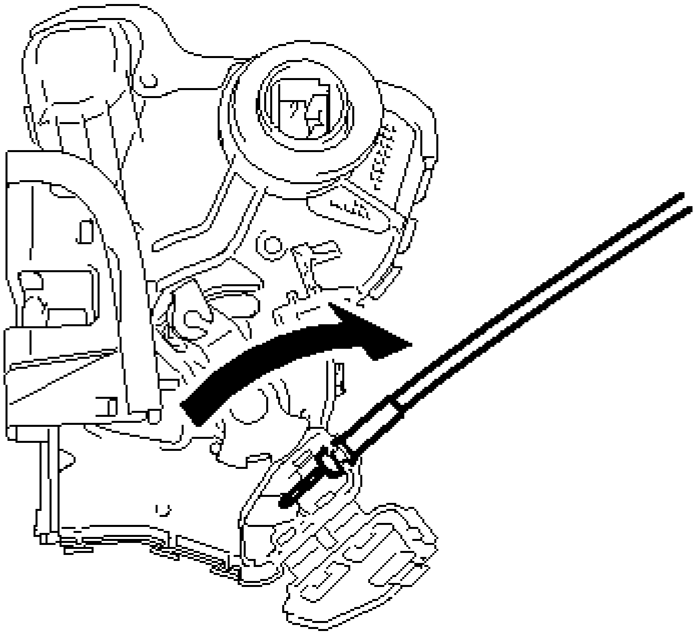

P

Fig. 91: Installing Front Door Inside Locking Cable
Courtesy of TOYOTA MOTOR SALES, U.S.A., INC.

b. Engage the 3 claws.

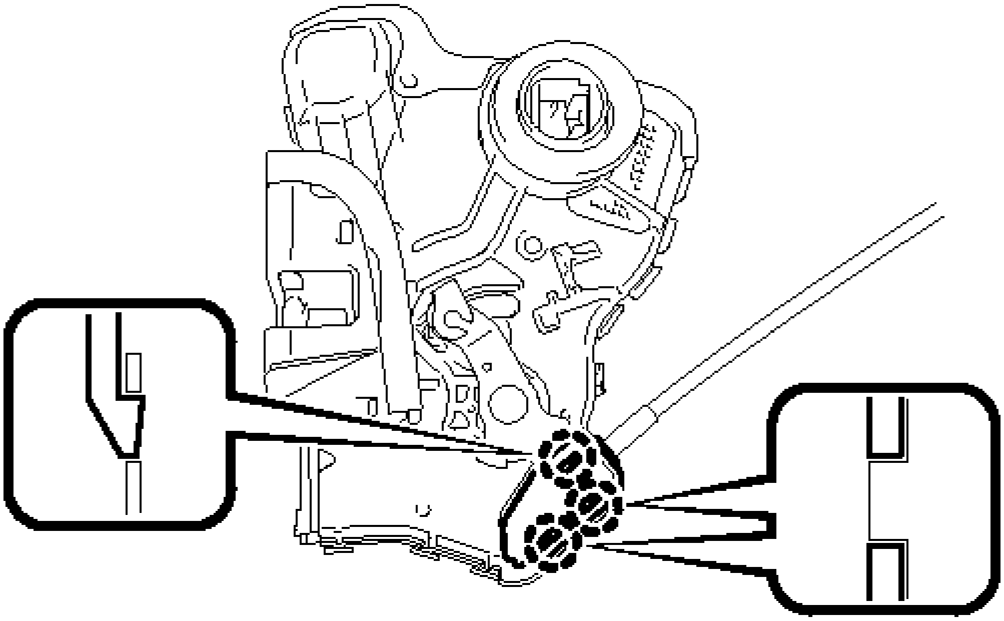

P

Fig. 92: Identifying Front Door Inside Locking Cable Claws
Courtesy of TOYOTA MOTOR SALES, U.S.A., INC.

18. **INSTALL FRONT DOOR LOCK REMOTE CONTROL CABLE ASSEMBLY**

a. Install the front door lock remote control cable assembly.

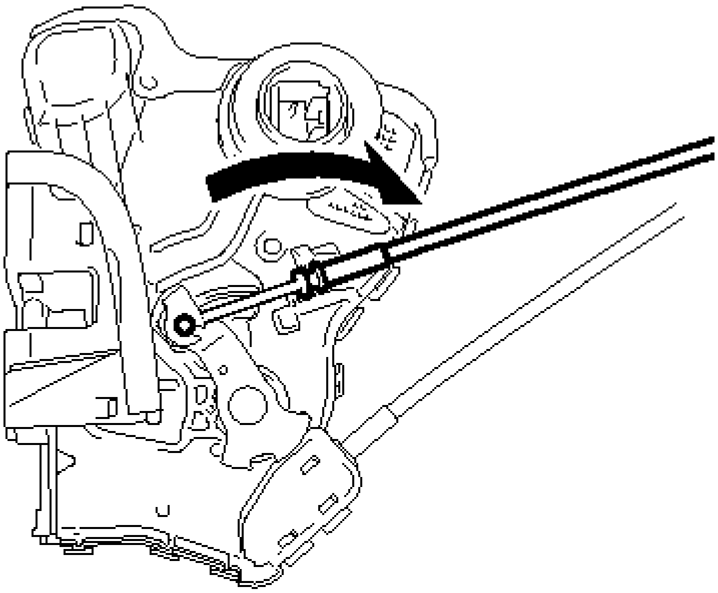

Fig. 93: Installing Front Door Lock Remote Control Cable
Courtesy of TOYOTA MOTOR SALES, U.S.A., INC.

19. **INSTALL FRONT DOOR LOCK WITH MOTOR ASSEMBLY**

NOTE:

- **When reusing the removed front door lock with motor assembly, replace the door lock wiring harness seal on the connector with a new one.**
- **Do not allow grease or dust to adhere to the door lock wiring harness seal surface of the connector.**
- **Reusing the door lock wiring harness seal or using a damaged door lock wiring harness seal may cause water intrusion. This may result in a malfunction of the front door lock with motor assembly.**

a. Apply MP grease to the sliding parts of the front door lock with motor assembly.

b. When reusing the front door lock with motor assembly:

  1. Install a new door lock wiring harness seal to the front door lock with motor assembly.

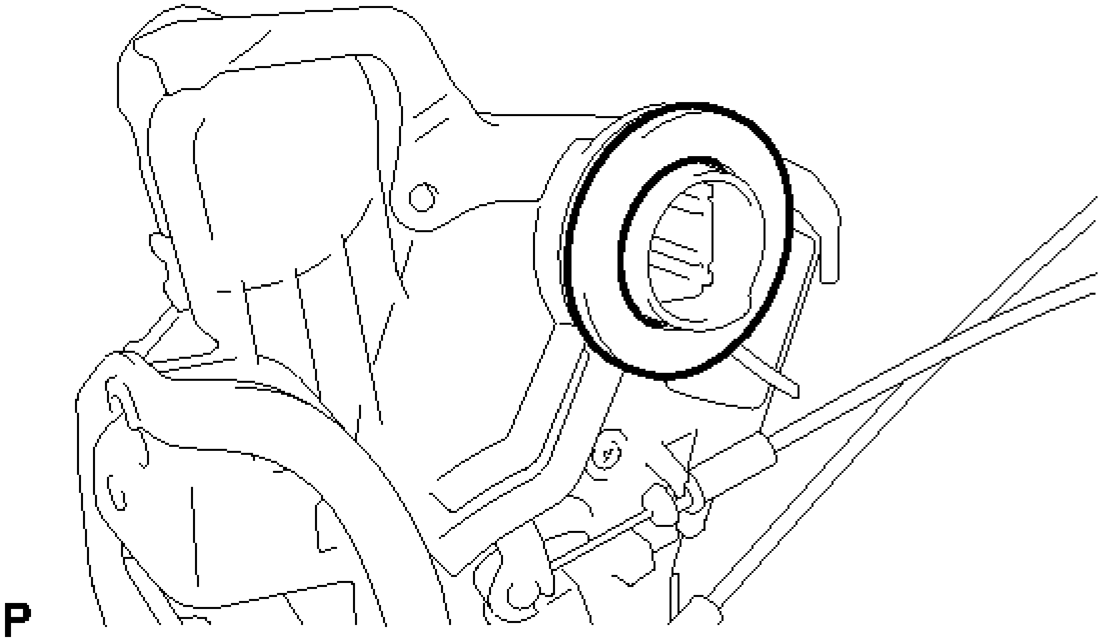

Fig. 94: Identifying Door Lock Wiring Harness Seal
Courtesy of TOYOTA MOTOR SALES, U.S.A., INC.

c. Insert the front door lock open rod to the front door lock with motor assembly.

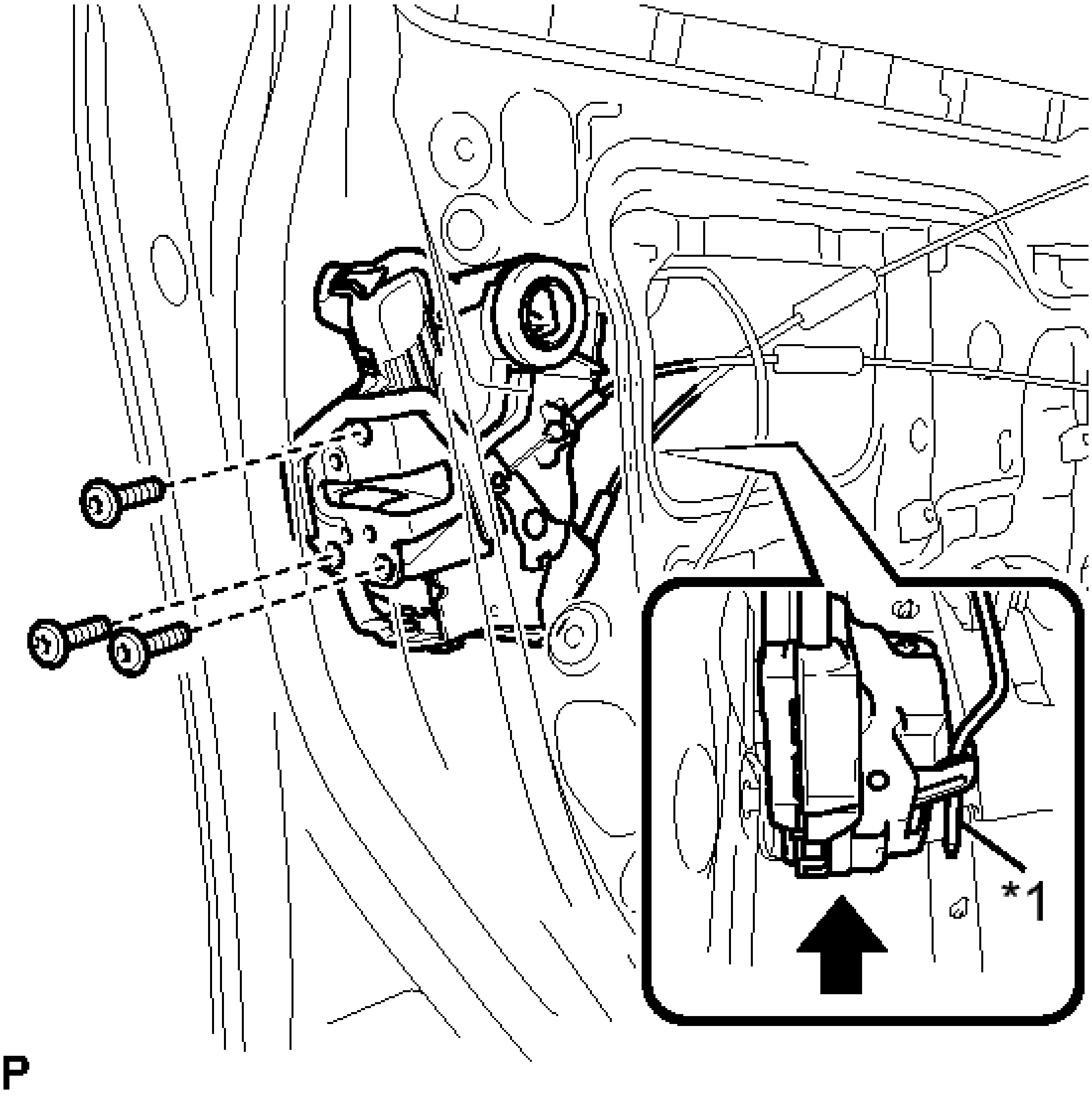

Fig. 95: Inserting Front Door Lock Open Rod
Courtesy of TOYOTA MOTOR SALES, U.S.A., INC.

TEXT IN ILLUSTRATION

*1	Front Door Lock Open Rod

d. Make sure that the front door lock open rod is securely connected to the front door lock with motor assembly.
e. Using a T30 "TORX" socket wrench, install the front door lock with motor assembly with the 3 screws.

Torque: 5.0 N*m (51 kgf*cm, 44 in.*lbf)

20. **INSTALL FRONT DOOR REAR OUTSIDE HANDLE PAD**

   a. Engage the 2 claws to install the front door rear outside handle pad.

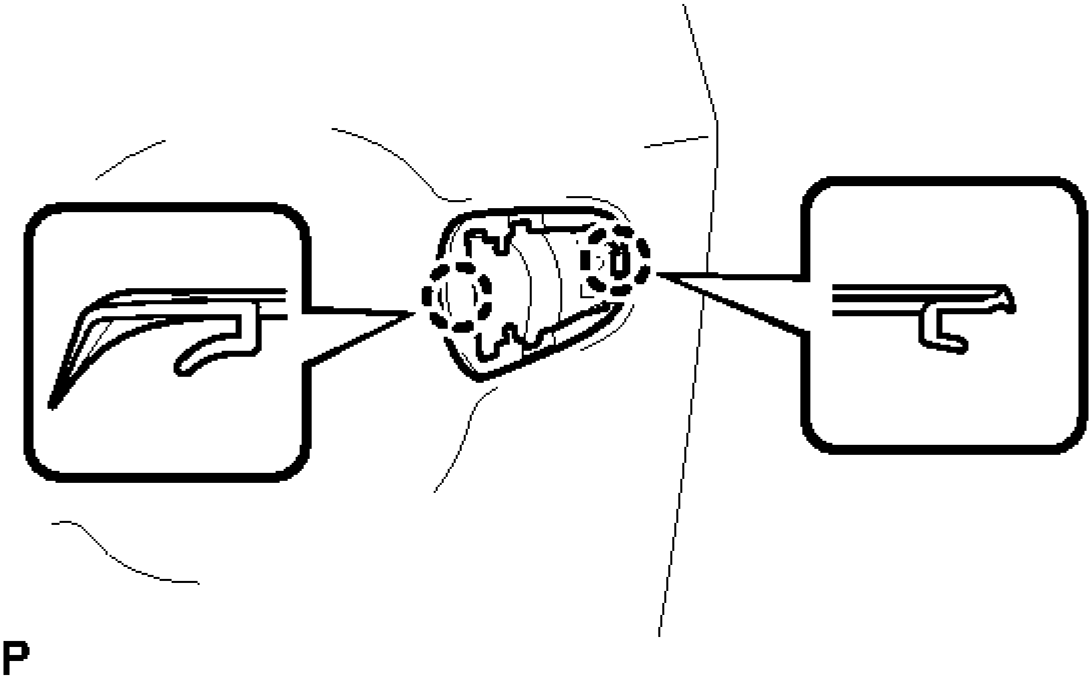

Fig. 96: Identifying Front Door Rear Outside Handle Pad Claws
Courtesy of TOYOTA MOTOR SALES, U.S.A., INC.

21. **INSTALL FRONT DOOR FRONT OUTSIDE HANDLE PAD**

   a. Engage the 3 claws to install the front door front outside handle pad.

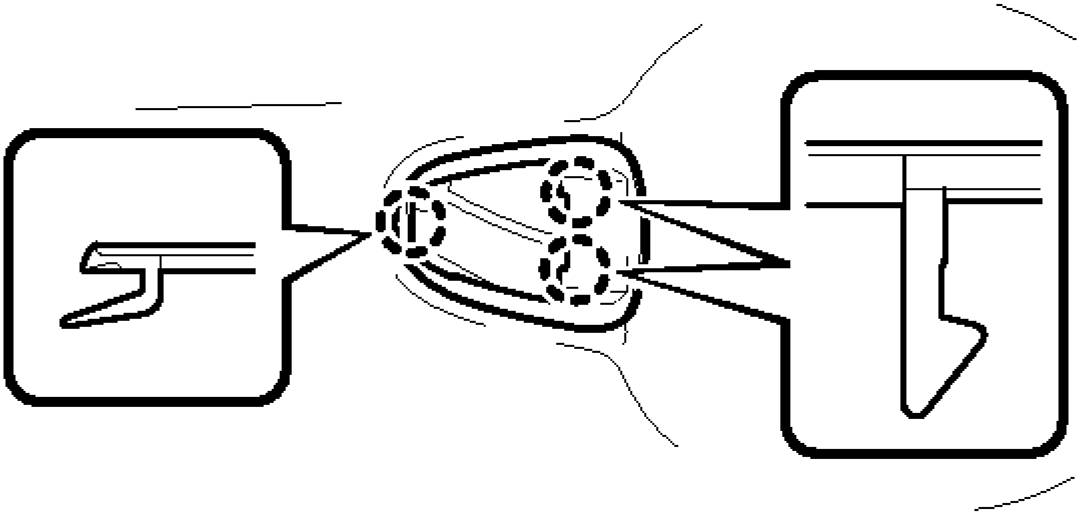

P

Fig. 97: Identifying Front Door Front Outside Handle Pad Claws
Courtesy of TOYOTA MOTOR SALES, U.S.A., INC.

22. **INSTALL FRONT DOOR OUTSIDE HANDLE ASSEMBLY**
    a. Insert the front end of the front door outside handle assembly into the front door outside handle frame.

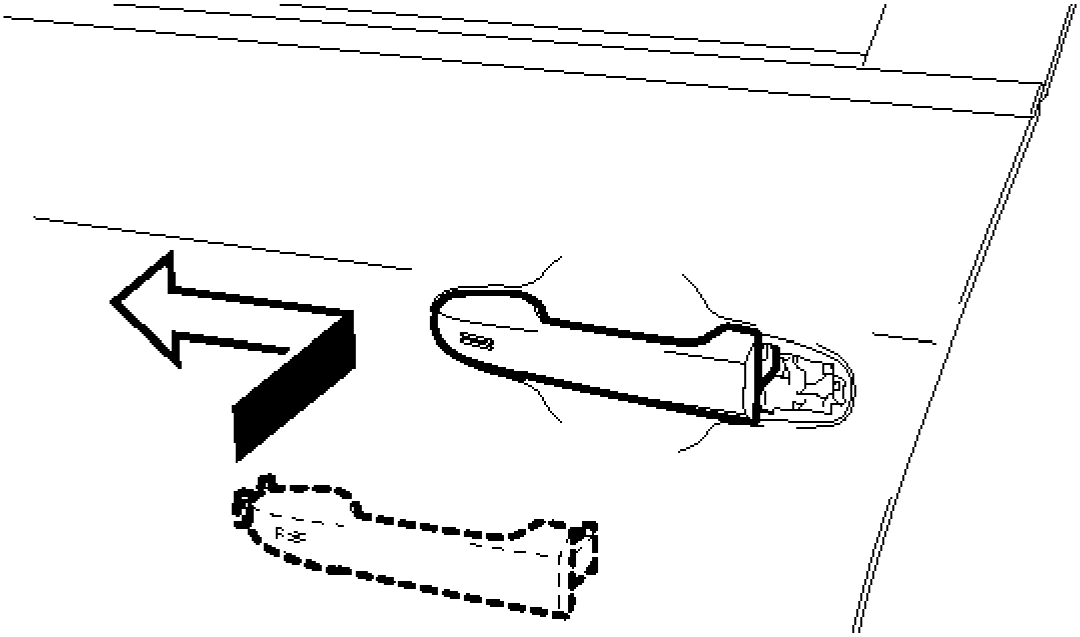

P

Fig. 98: Installing Front Door Outside Handle
Courtesy of TOYOTA MOTOR SALES, U.S.A., INC.

b. Insert the rear end of the front door outside handle assembly into the front door outside handle frame, then slide the front door outside handle assembly toward the front of the vehicle to install it.
c. Connect the connector.

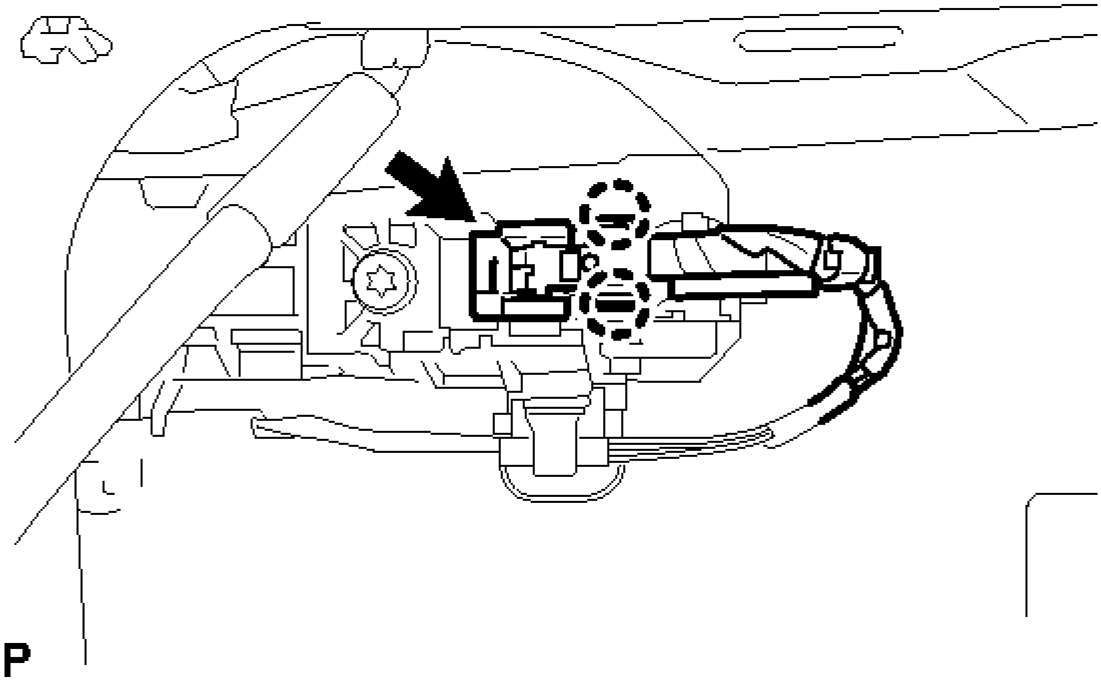

Fig. 99: Identifying Front Door Outside Handle Connector
Courtesy of TOYOTA MOTOR SALES, U.S.A., INC.

d. Engage the 2 claws.

23. **INSTALL FRONT DOOR OUTSIDE HANDLE COVER (for Driver Side)**

a. Engage the 2 guides and claw, and install the front door outside handle cover to the lock cylinder assembly as shown in the illustration.

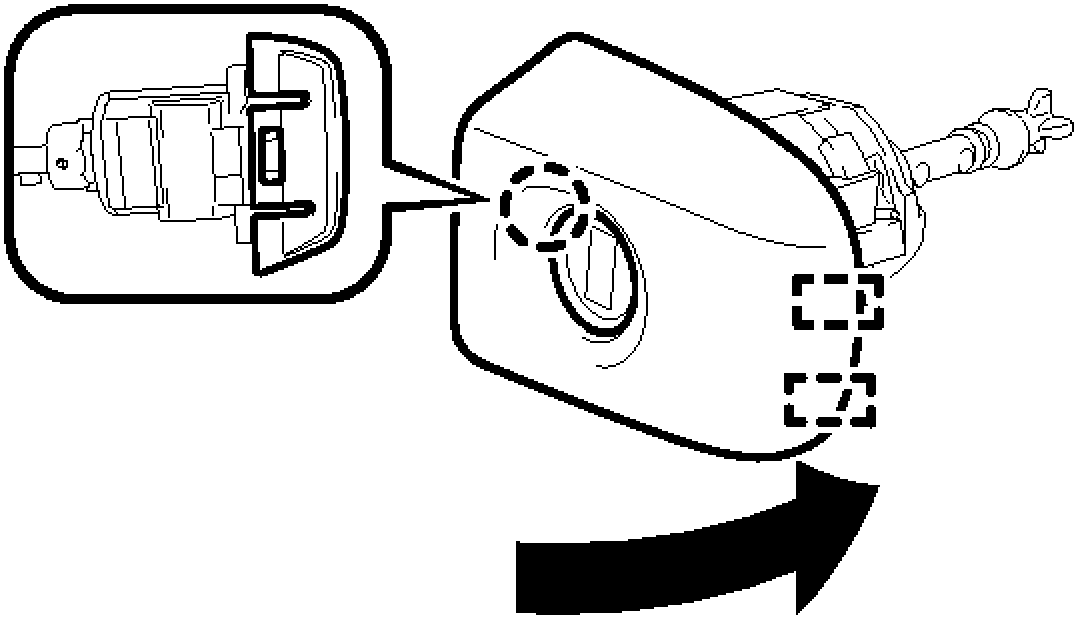

P

Fig. 100: Installing Front Door Outside Handle Cover
Courtesy of TOYOTA MOTOR SALES, U.S.A., INC.

24. **INSTALL FRONT DOOR OUTSIDE HANDLE COVER (for Front Passenger Side)**
    a. Using a T30 "TORX" socket wrench, install the front door outside handle cover with the screw.

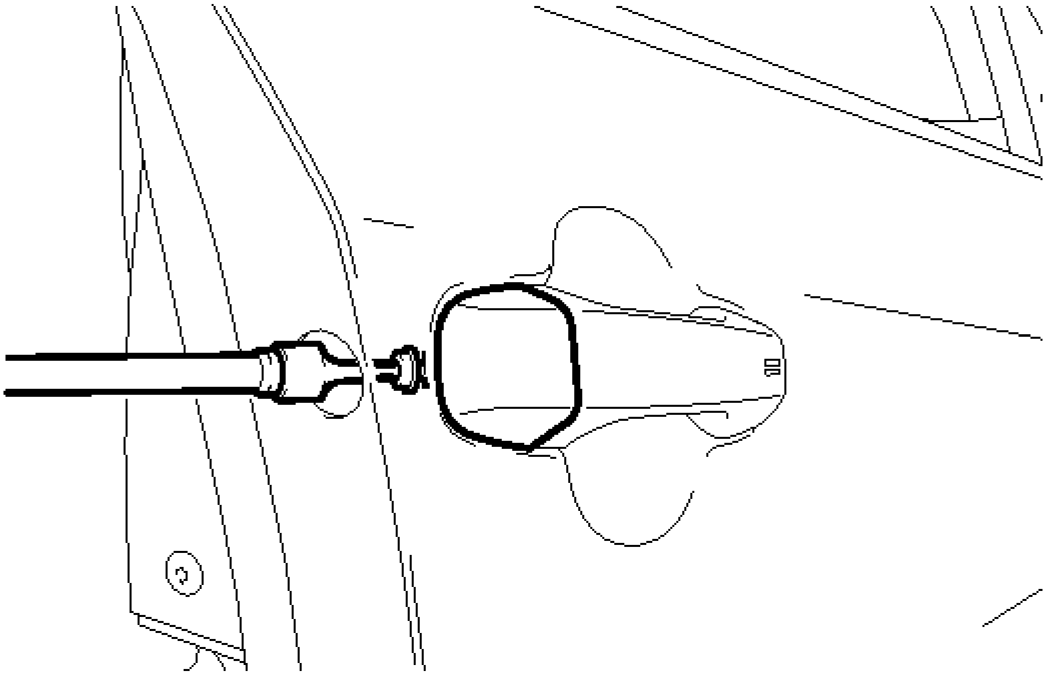

P

Fig. 101: Installing Front Door Outside Handle Cover

Courtesy of TOYOTA MOTOR SALES, U.S.A., INC.

Torque: 4.0 N*m (41 kgf*cm, 35 in.*lbf)

b. Install the hole plug.

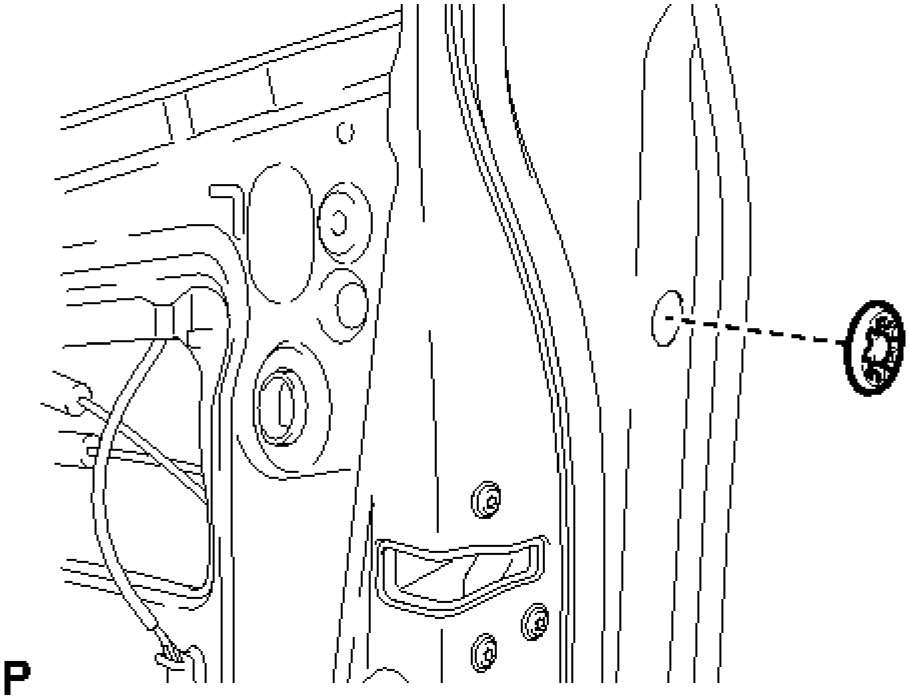

Fig. 102: Identifying Front Door Hole Plug
Courtesy of TOYOTA MOTOR SALES, U.S.A., INC.

25. **INSTALL FRONT DOOR OUTSIDE HANDLE COVER WITH LOCK CYLINDER ASSEMBLY (for Driver Side)**
    a. Using a T30 "TORX" socket wrench, install the front door outside handle cover with lock cylinder assembly with the screw.

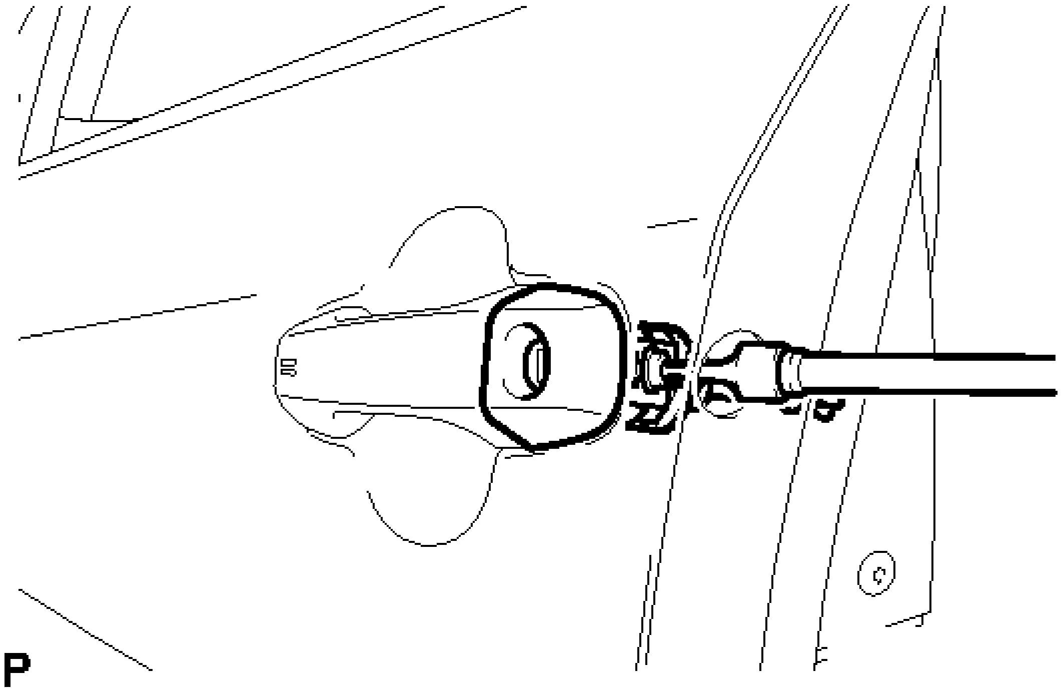

Fig. 103: Installing Front Door Outside Handle Cover With Lock Cylinder
Courtesy of TOYOTA MOTOR SALES, U.S.A., INC.

Torque: 4.0 N*m (41 kgf*cm, 35 in.*lbf)

b. Install the hole plug.

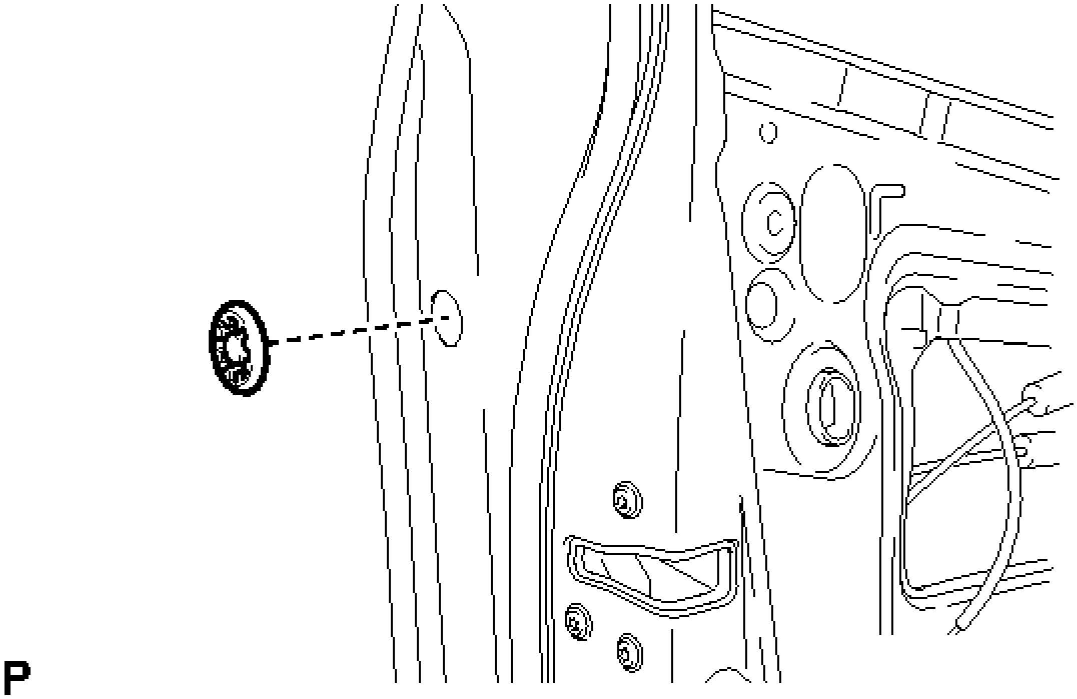

Fig. 104: Identifying Front Door Hole Plug
Courtesy of TOYOTA MOTOR SALES, U.S.A., INC.

26. **INSTALL FRONT DOOR REAR LOWER FRAME SUB-ASSEMBLY**
    a. Engage the guide as shown in the illustration.

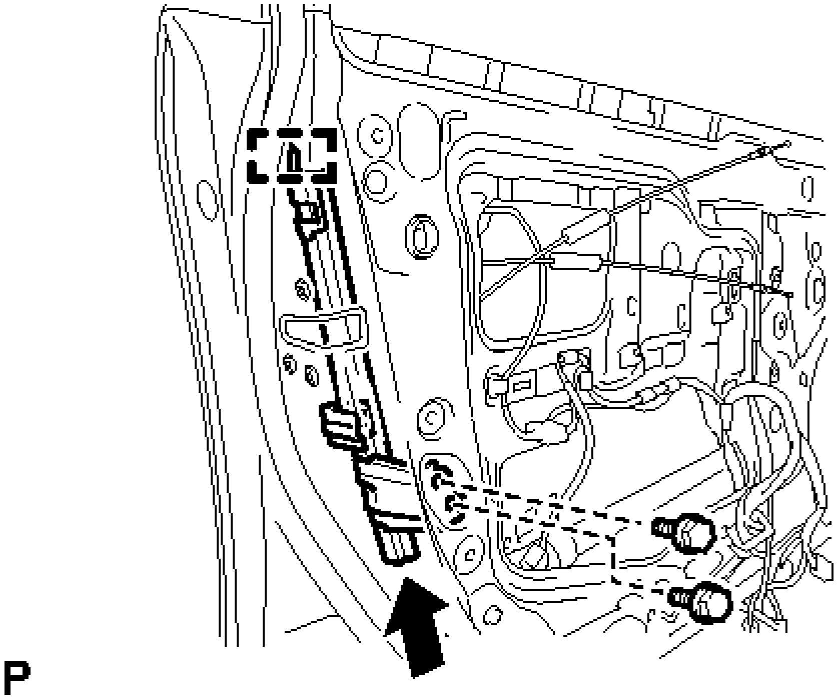

Fig. 105: Identifying Front Door Rear Lower Frame Bolts
Courtesy of TOYOTA MOTOR SALES, U.S.A., INC.

    b. Install the front door rear lower frame sub-assembly with the 2 bolts.

27. **INSTALL FRONT DOOR FRONT LOWER FRAME SUB-ASSEMBLY**
    a. Engage the guide as shown in the illustration.

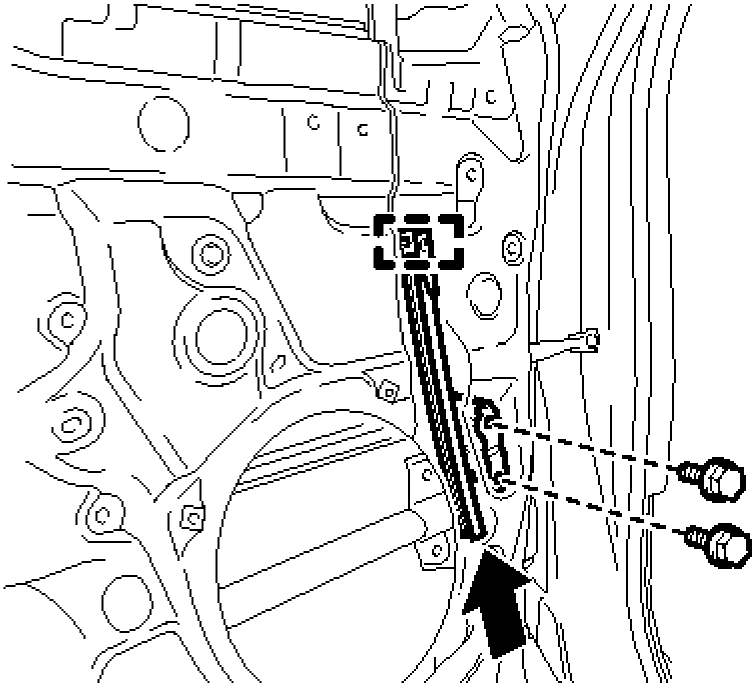

Fig. 106: Identifying Front Door Front Lower Frame Bolts
Courtesy of TOYOTA MOTOR SALES, U.S.A., INC.

b. Install the front door front lower frame sub-assembly with the 2 bolts.

28. **INSTALL FRONT DOOR GLASS RUN**

 a. Install the front door glass run.

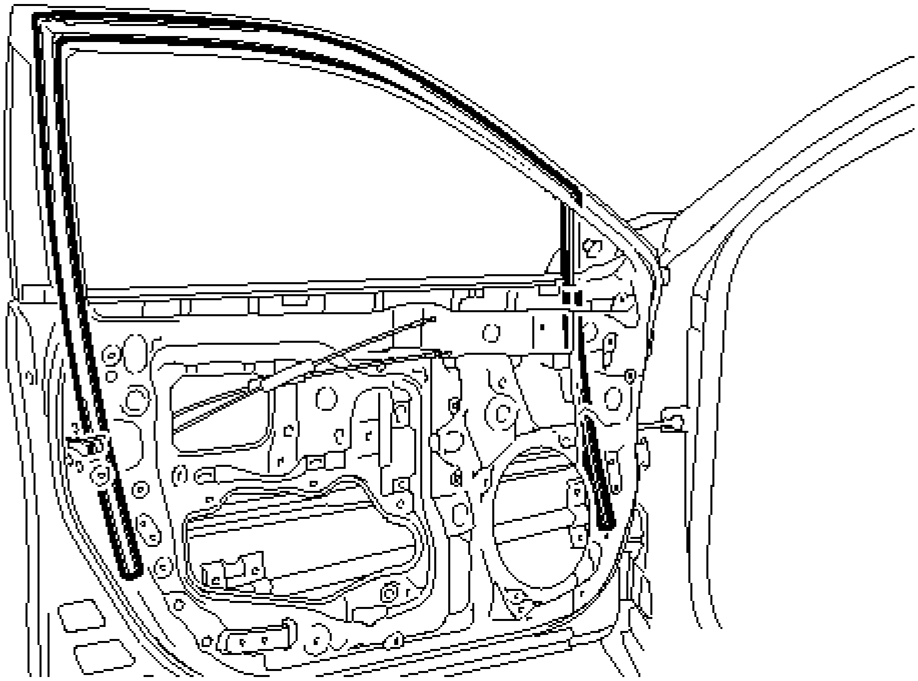

Fig. 107: Identifying Front Door Glass Run
Courtesy of TOYOTA MOTOR SALES, U.S.A., INC.

29. **INSTALL NO. 2 FRONT DOOR STIFFENER CUSHION**
    1. Clean the front door panel sub-assembly.
    2. Engage the 2 guides.

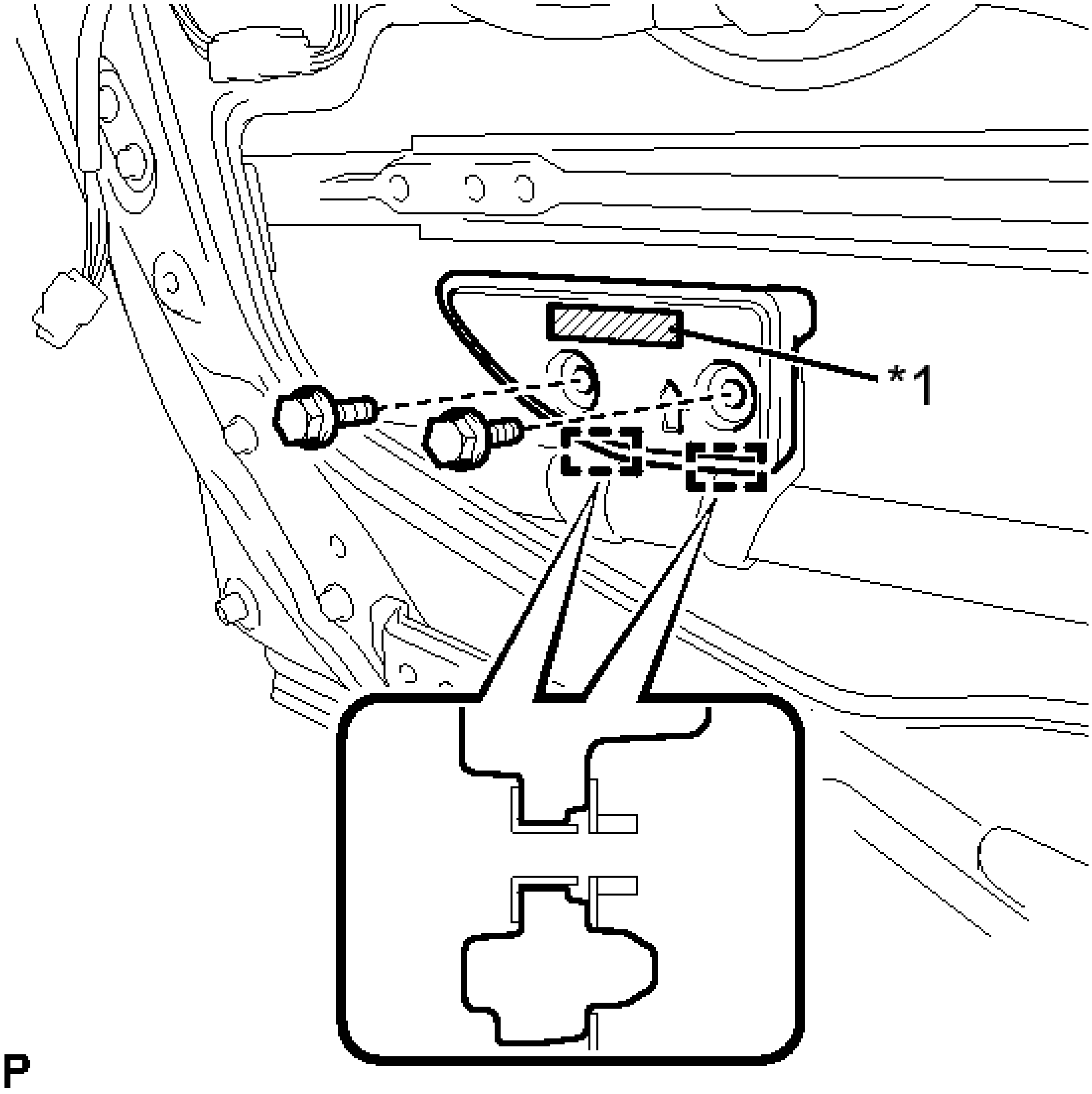

Fig. 108: Identifying No. 2 Front Door Stiffener Cushion Bolts
Courtesy of TOYOTA MOTOR SALES, U.S.A., INC.

TEXT IN ILLUSTRATION

*1	Double-sided Tape

c. Install a new No. 2 front door stiffener cushion with the 2 bolts.

30. INSTALL FRONT POWER WINDOW REGULATOR MOTOR ASSEMBLY

NOTE: The regulator arm must be below the intermediate position when installing the power window regulator motor.

a. Using a T25 "TORX" socket wrench, install the front power window regulator motor assembly with the 3 screws.

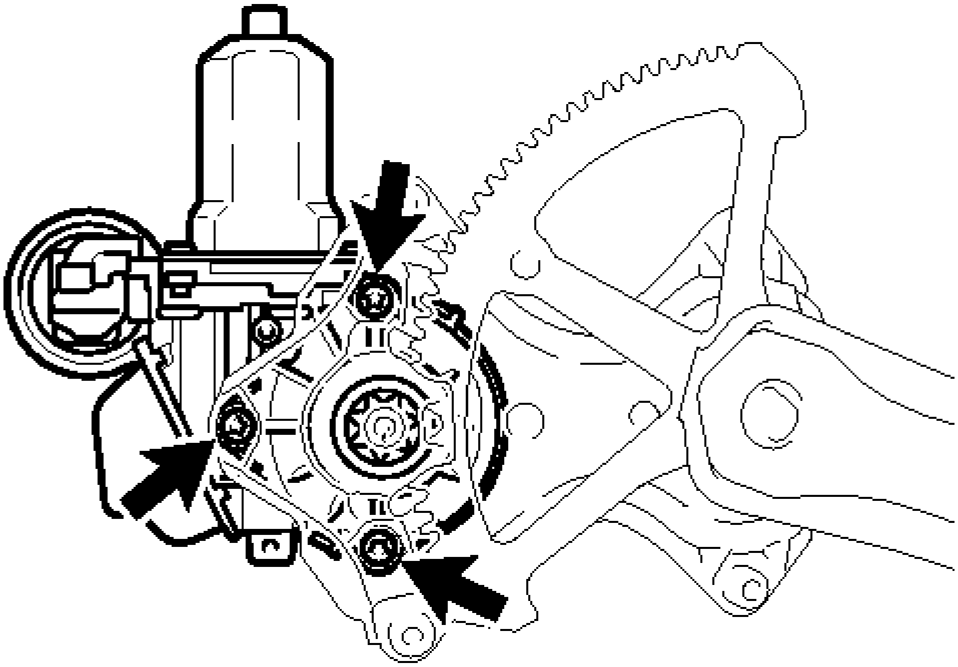

Fig. 109: Identifying Front Power Window Regulator Motor Screws
Courtesy of TOYOTA MOTOR SALES, U.S.A., INC.

Torque: 5.4 N*m (55 kgf*cm, 48 in.*lbf)

HINT:

A new front window regulator uses self-tapping screws to thread new installation holes when the self-tapping screws are inserted.

31. INSTALL FRONT DOOR WINDOW REGULATOR ASSEMBLY

a. Apply MP grease to the sliding parts of the front door window regulator assembly.
b. Install the temporary bolt to the front door window regulator assembly.
c. Temporarily install the front door window regulator assembly.

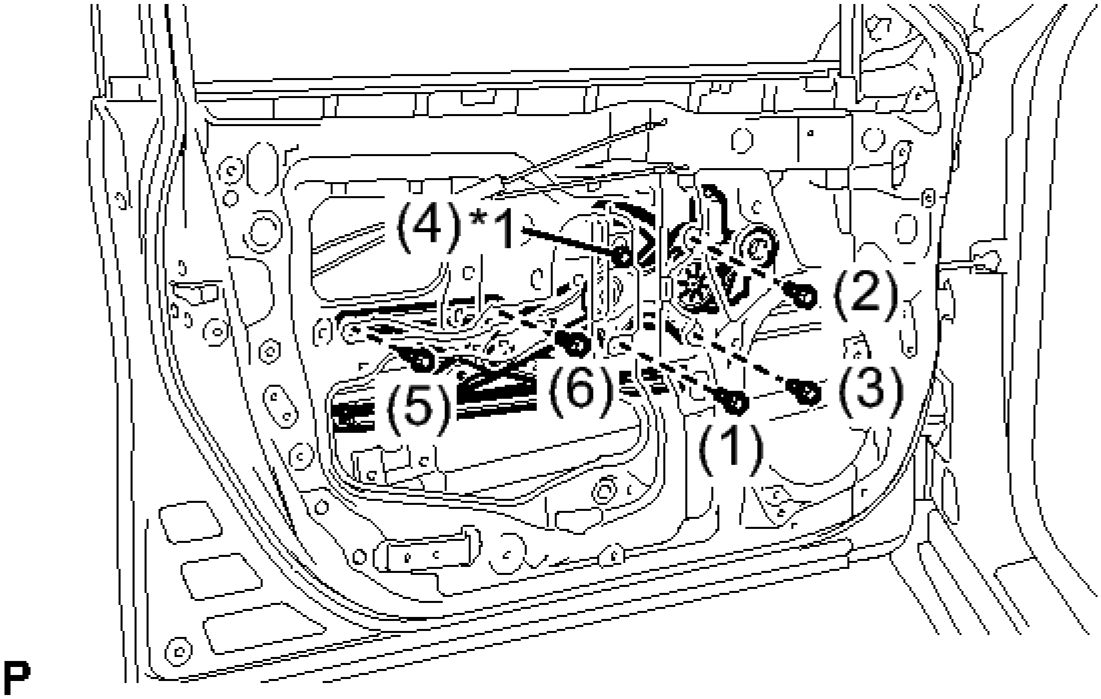

Fig. 110: Identifying Front Door Window Regulator Temporary Bolt
Courtesy of TOYOTA MOTOR SALES, U.S.A., INC.

TEXT IN ILLUSTRATION

*1	Temporary Bolt

d. Tighten the temporary bolt and 5 bolts to install the front door window regulator assembly.

HINT:

Tighten the bolts in the order shown in the illustration.

Torque: 8.0 N*m (82 kgf*cm, 71 in.*lbf)

32. **INSTALL FRONT DOOR GLASS SUB-ASSEMBLY**
   a. Connect the cable to the negative (-) auxiliary battery terminal.
   b. Connect the power window regulator master switch assembly and move the front door glass sub-assembly so that the door glass bolts can be seen.
   c. Disconnect the cable from the negative (-) auxiliary battery terminal.

WARNING: **Wait at least 90 seconds after disconnecting the cable from the negative (-) auxiliary battery terminal to disable the SRS system.**

NOTE: When disconnecting the cable, some systems need to be initialized

after the cable is reconnected. Refer to INITIALIZATION .

d. Disconnect the power window regulator master switch assembly.
e. Insert the front door glass sub-assembly into the front door panel along the front door glass run as indicated by the arrows, in the order shown in the illustration.

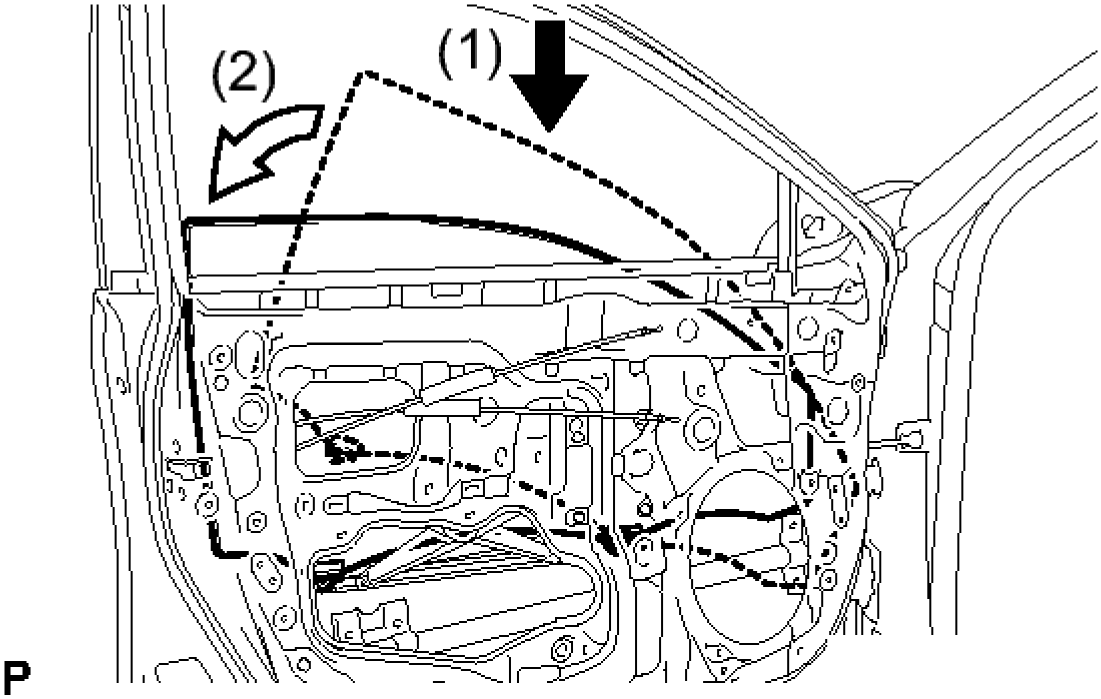

Fig. 111: Installing The Front Door Glass
Courtesy of TOYOTA MOTOR SALES, U.S.A., INC.

f. Install the front door glass sub-assembly with the 2 bolts.

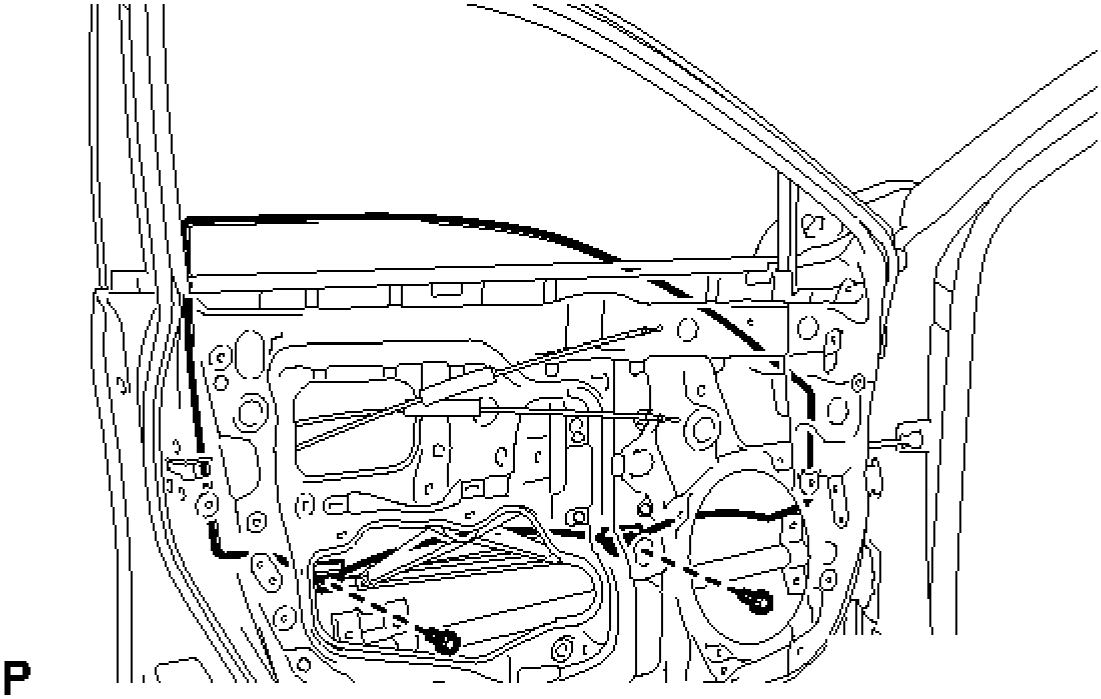

Fig. 112: Identifying Front Door Glass Bolts
Courtesy of TOYOTA MOTOR SALES, U.S.A., INC.

Torque: 8.0 N*m (82 kgf*cm, 71 in.*lbf)

g. Install the grommet.

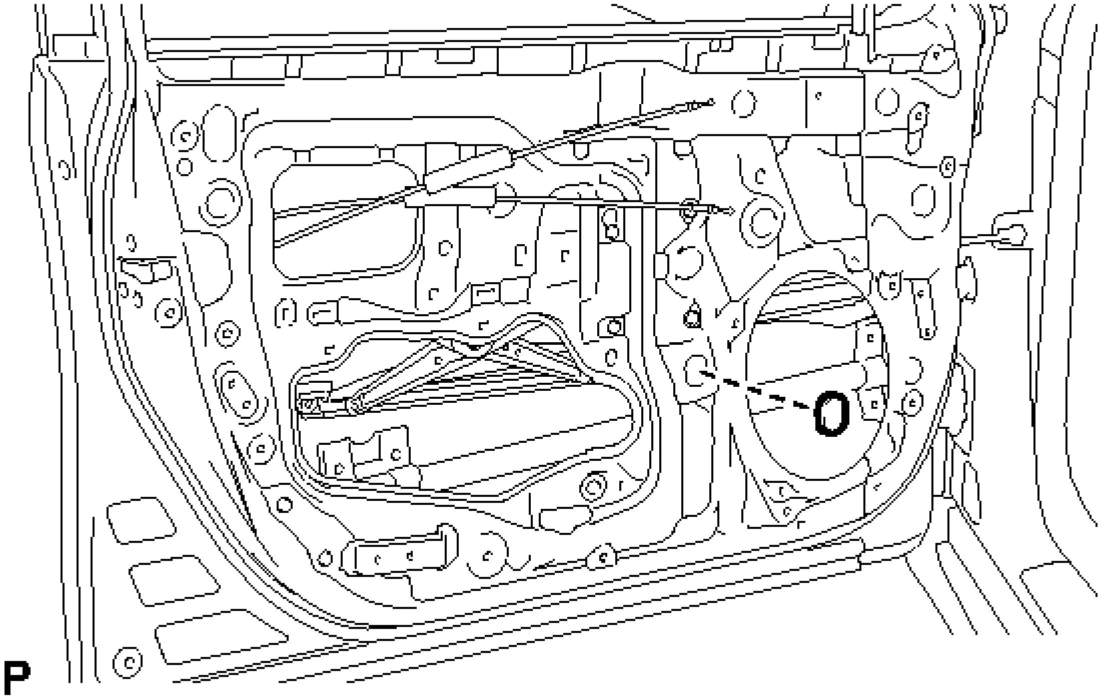

Fig. 113: Identifying Front Door Grommet
Courtesy of TOYOTA MOTOR SALES, U.S.A., INC.

33. **INSTALL FRONT DOOR SERVICE HOLE COVER**
    a. Apply new butyl tape to the front door panel.
    b. Pass the front door lock remote control cable assembly and front door inside locking cable assembly through a new front door service hole cover.

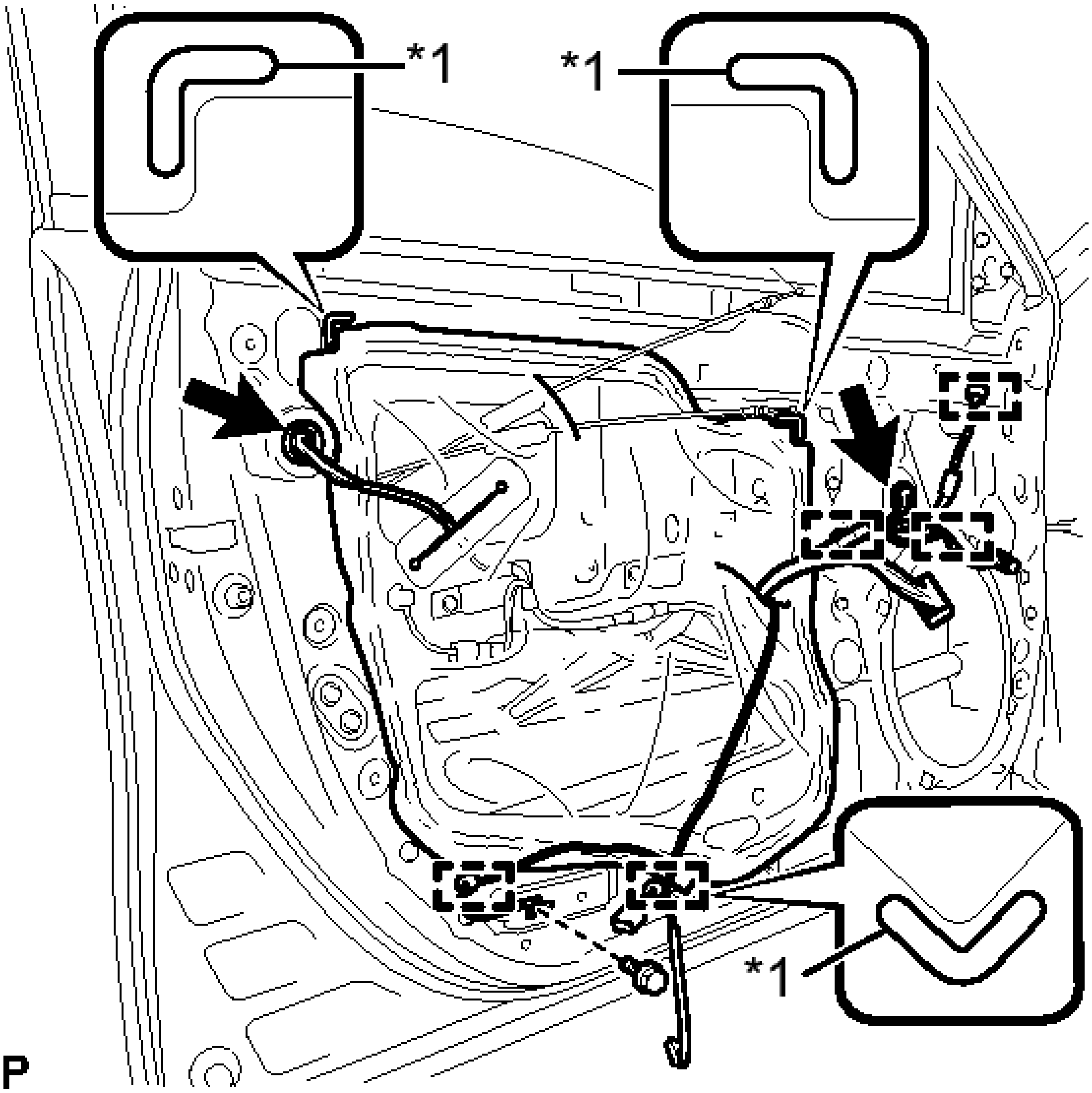

Fig. 114: Installing Front Door Service Hole Cover
Courtesy of TOYOTA MOTOR SALES, U.S.A., INC.

TEXT IN ILLUSTRATION

*1	Reference Point

c. Attach the front door service hole cover according to the reference points on the front door panel.

NOTE: **Securely install the front door service hole cover preventing wrinkles and air bubbles.**

d. Engage the 5 clamps.

e. Install the bolt.

Torque: 8.0 N*m (82 kgf*cm, 71 in.*lbf)

f. Connect each connector.

34. **INSTALL DOOR SIDE AIRBAG SENSOR** . Refer to **INSTALLATION - Step 1**
35. **INSTALL OUTER REAR VIEW MIRROR ASSEMBLY** . Refer to **INSTALLATION - Step 1**
36. **INSTALL FRONT NO. 1 SPEAKER ASSEMBLY** . Refer to **INSTALLATION - Step 1**
37. **INSTALL FRONT DOOR INNER GLASS WEATHERSTRIP**

a. Install the front door inner glass weatherstrip.

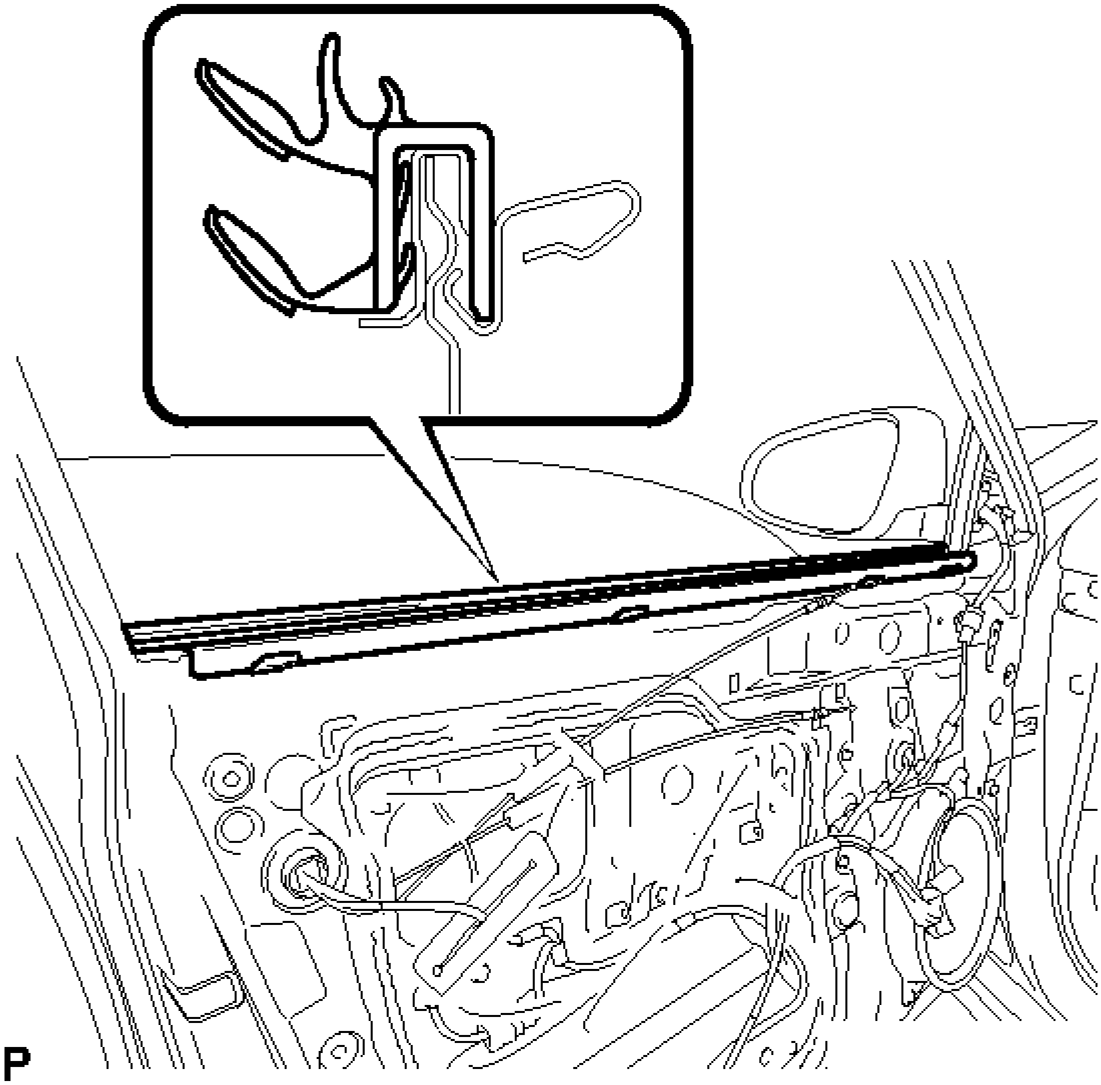

Fig. 115: Identifying Front Door Inner Glass Weatherstrip
Courtesy of TOYOTA MOTOR SALES, U.S.A., INC.

38. **INSTALL FRONT DOOR INSIDE HANDLE SUB-ASSEMBLY**
    a. Engage the 2 claws and guide, and install the front door inside handle sub-assembly to the front door trim board sub-assembly.

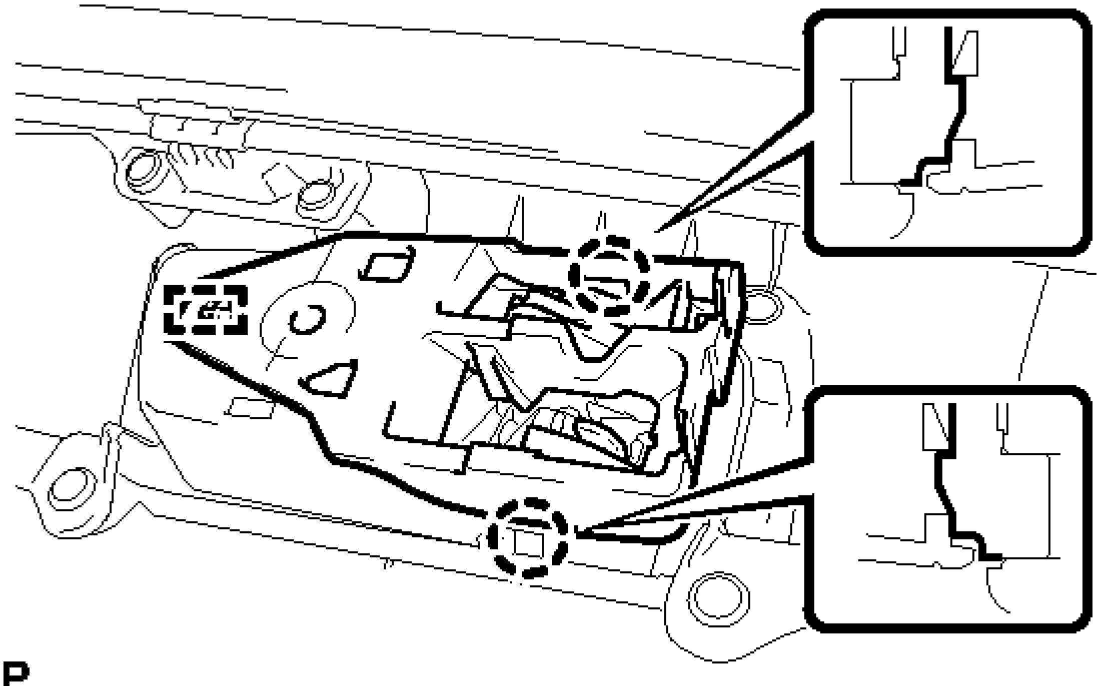

Fig. 116: Identifying Front Door Inside Handle Sub-Assembly Claws And Guides
Courtesy of TOYOTA MOTOR SALES, U.S.A., INC.

39. INSTALL FRONT DOOR TRIM BOARD SUB-ASSEMBLY

a. Connect the front door lock remote control cable assembly and front door inside locking cable assembly.

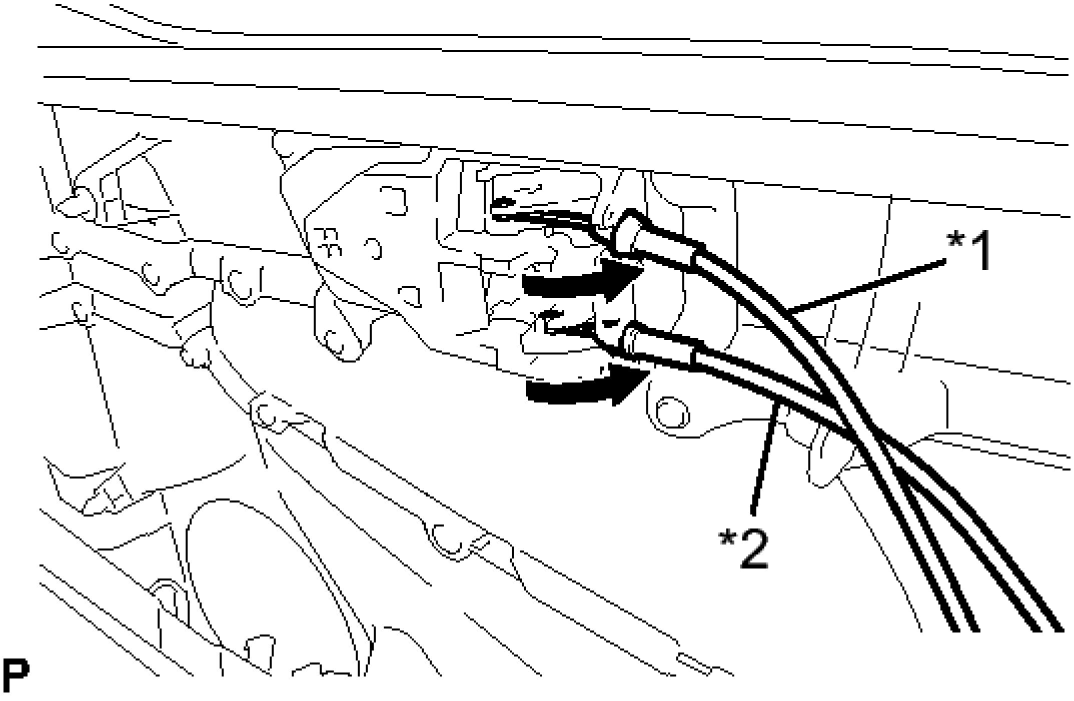

Fig. 117: Connecting Front Door Lock Remote Control And Inside Locking Cables
Courtesy of TOYOTA MOTOR SALES, U.S.A., INC.

TEXT IN ILLUSTRATION

*1	Front Door Inside Locking Cable Assembly
*2	Front Door Lock Remote Control Cable Assembly

b. Engage the front door trim board sub-assembly with the 4 claws and reference boss as shown in the illustration.

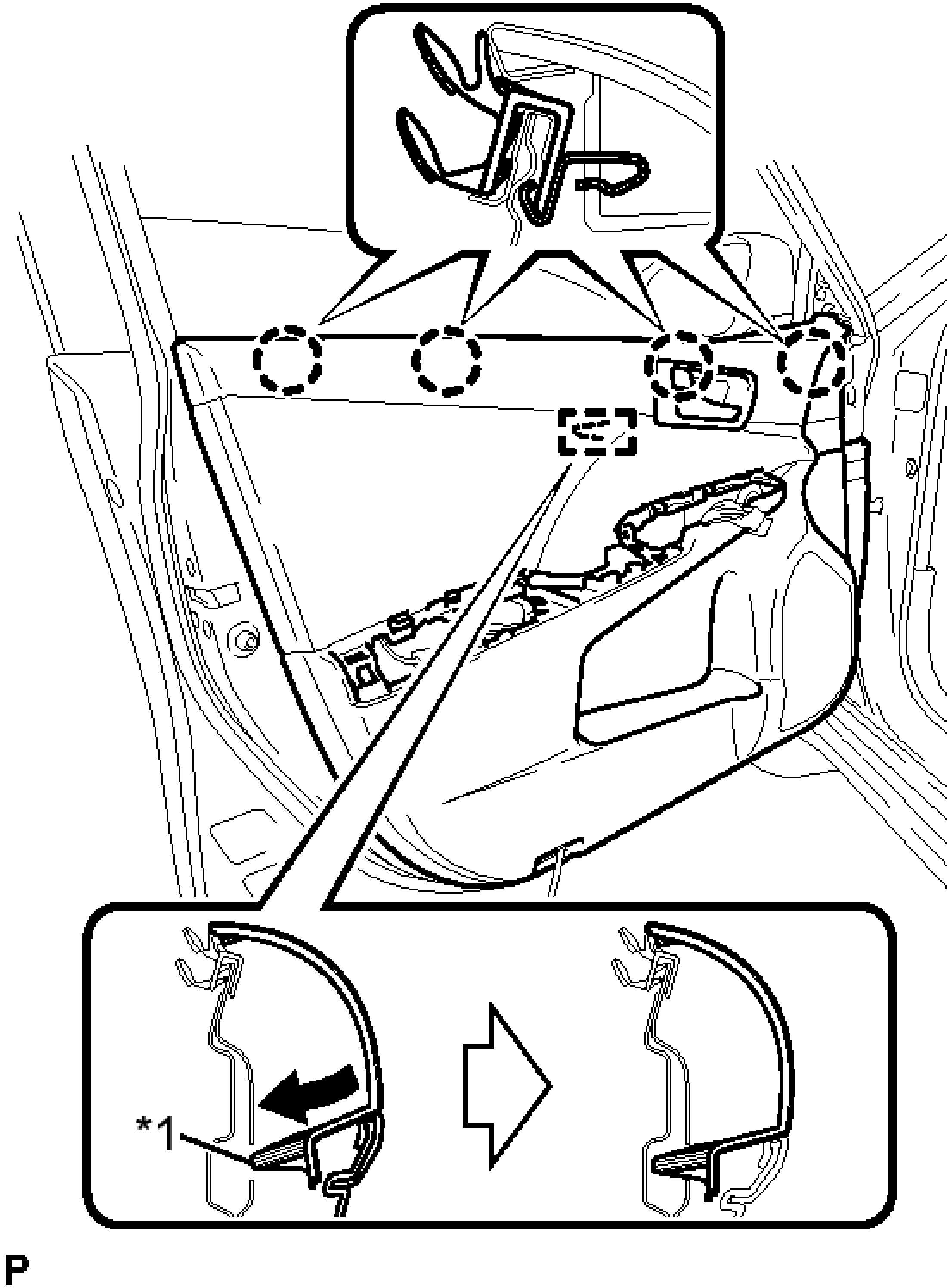

Fig. 118: Engaging Front Door Trim Board Sub-Assembly
Courtesy of TOYOTA MOTOR SALES, U.S.A., INC.

TEXT IN ILLUSTRATION

	Reference

*1	Boss

c. Engage the 10 clips and install to front door trim board sub-assembly.

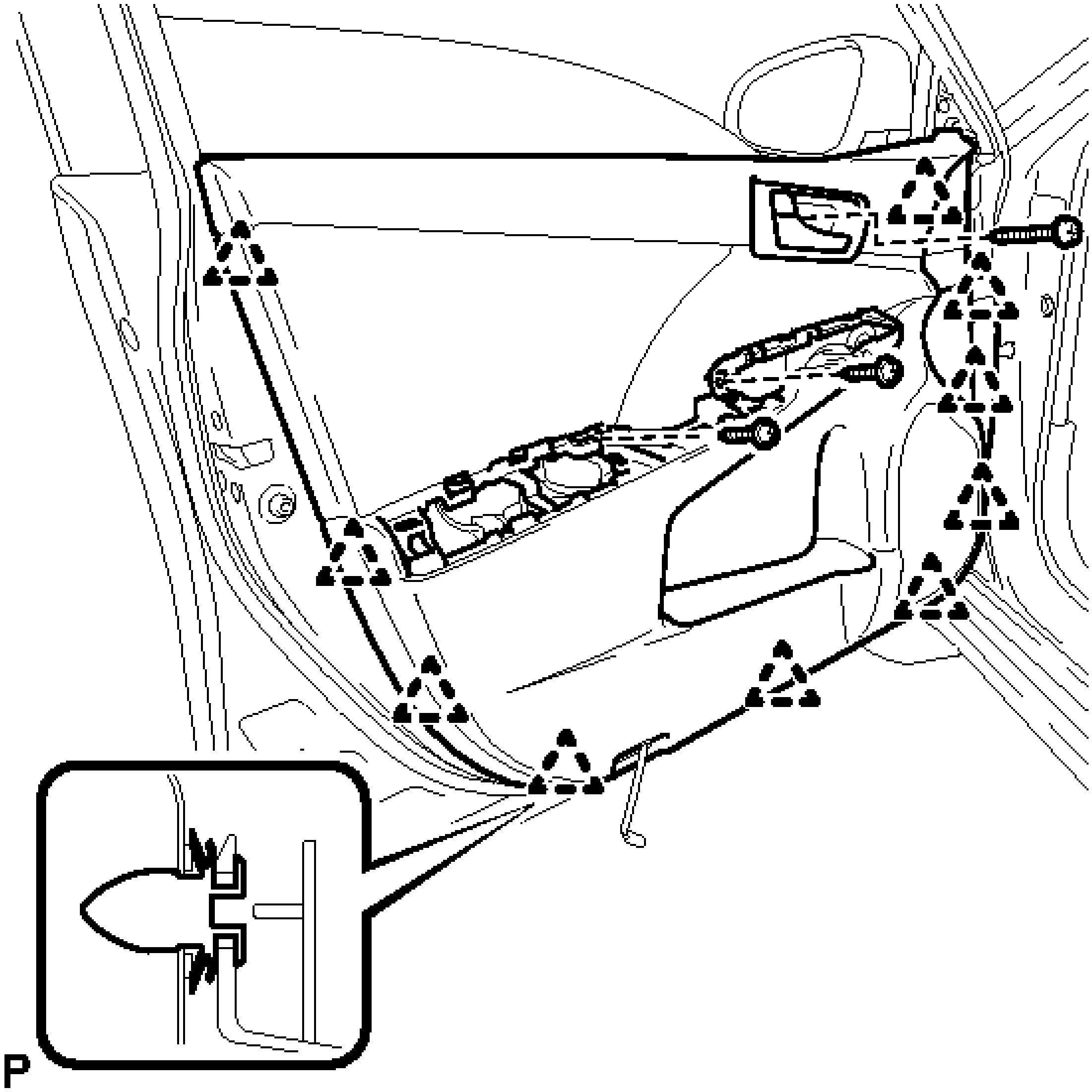

Fig. 119: Identifying Front Door Trim Board Screws And Clips
Courtesy of TOYOTA MOTOR SALES, U.S.A., INC.

d. Install the 3 screws.

e. If protective tape has been applied, remove it.

40. **INSTALL COURTESY LIGHT ASSEMBLY** . Refer to **INSTALLATION - Step 1**

41. **INSTALL FRONT ARMREST ASSEMBLY**

a. Engage the 2 guides, 3 clips and 7 claws, and install the front armrest assembly.

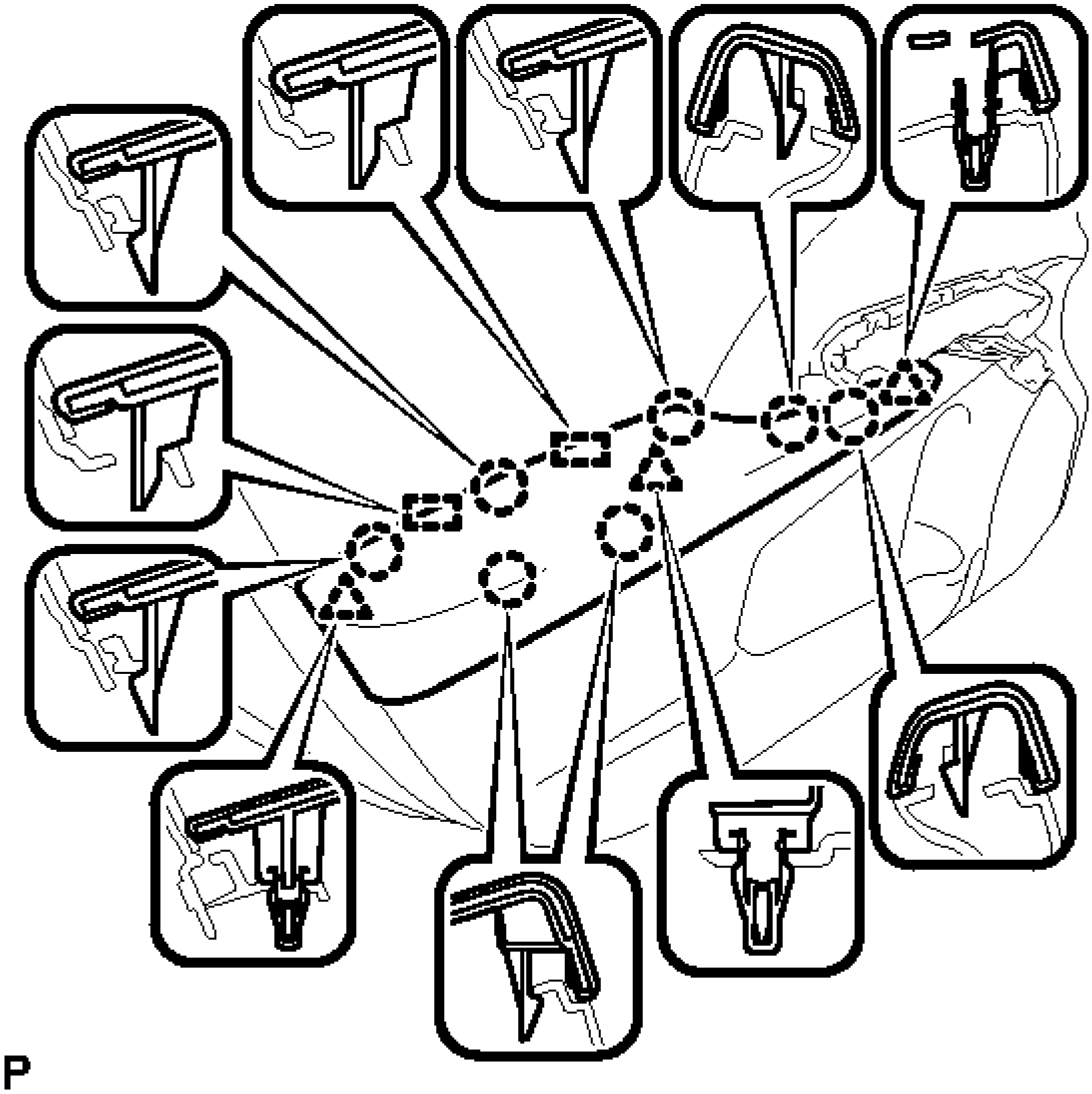

Fig. 120: Identifying Front Armrest Assembly Clips, Claws And Guides
Courtesy of TOYOTA MOTOR SALES, U.S.A., INC.

42. **INSTALL POWER WINDOW REGULATOR MASTER SWITCH ASSEMBLY WITH FRONT DOOR ARMREST BASE PANEL (for Driver Side)**
    a. Connect each connector.
    b. Engage the 4 guides, 2 clips and 5 claws, and install the power window regulator master switch assembly with front door armrest base panel.

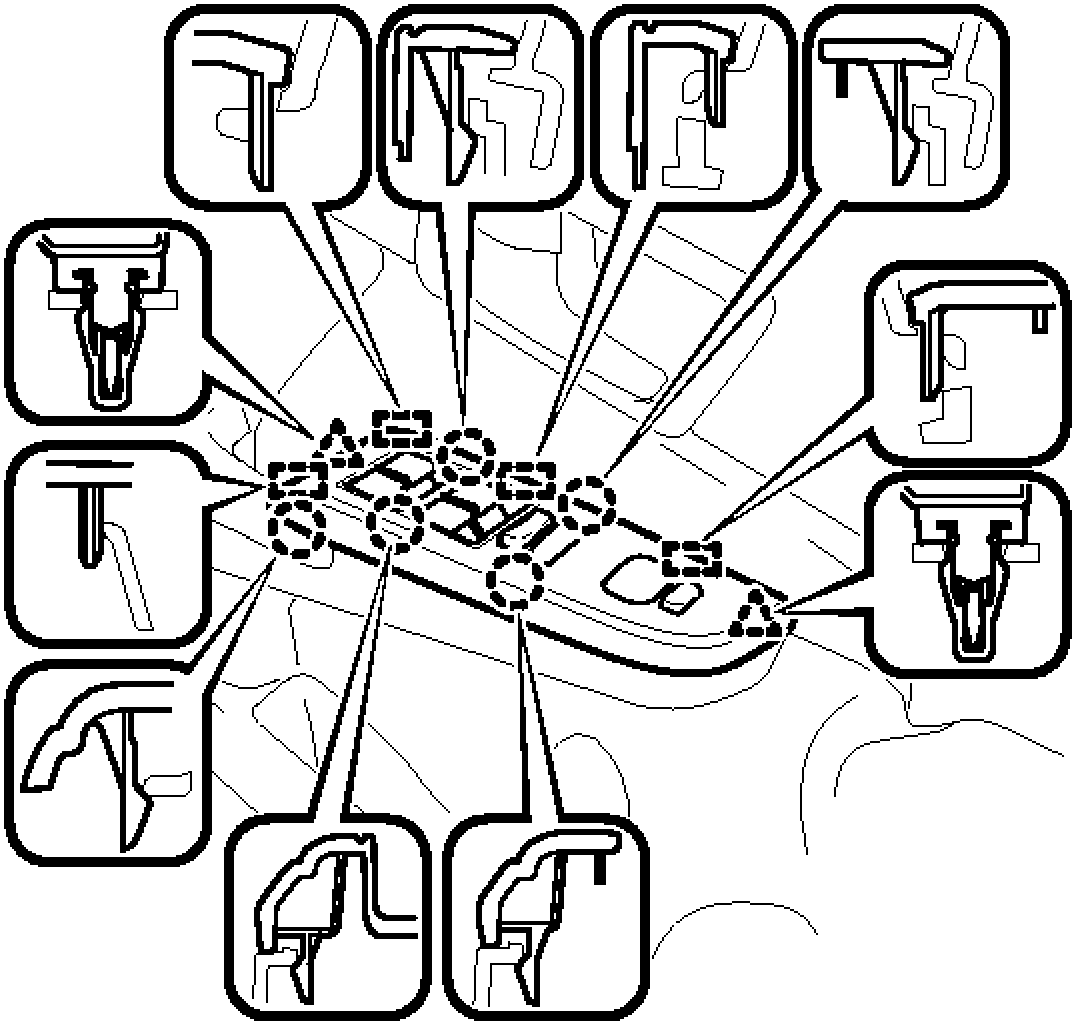

Fig. 121: Identifying Power Window Regulator Master Switch Clips, Claws And Guides (For Driver Side)
Courtesy of TOYOTA MOTOR SALES, U.S.A., INC.

43. **INSTALL POWER WINDOW REGULATOR SWITCH ASSEMBLY WITH FRONT DOOR ARMREST BASE PANEL (for Front Passenger Side)**
    a. Connect each connector.
    b. Engage the 4 guides, 2 clips and 5 claws, and install the power window regulator switch assembly with front door armrest base panel.

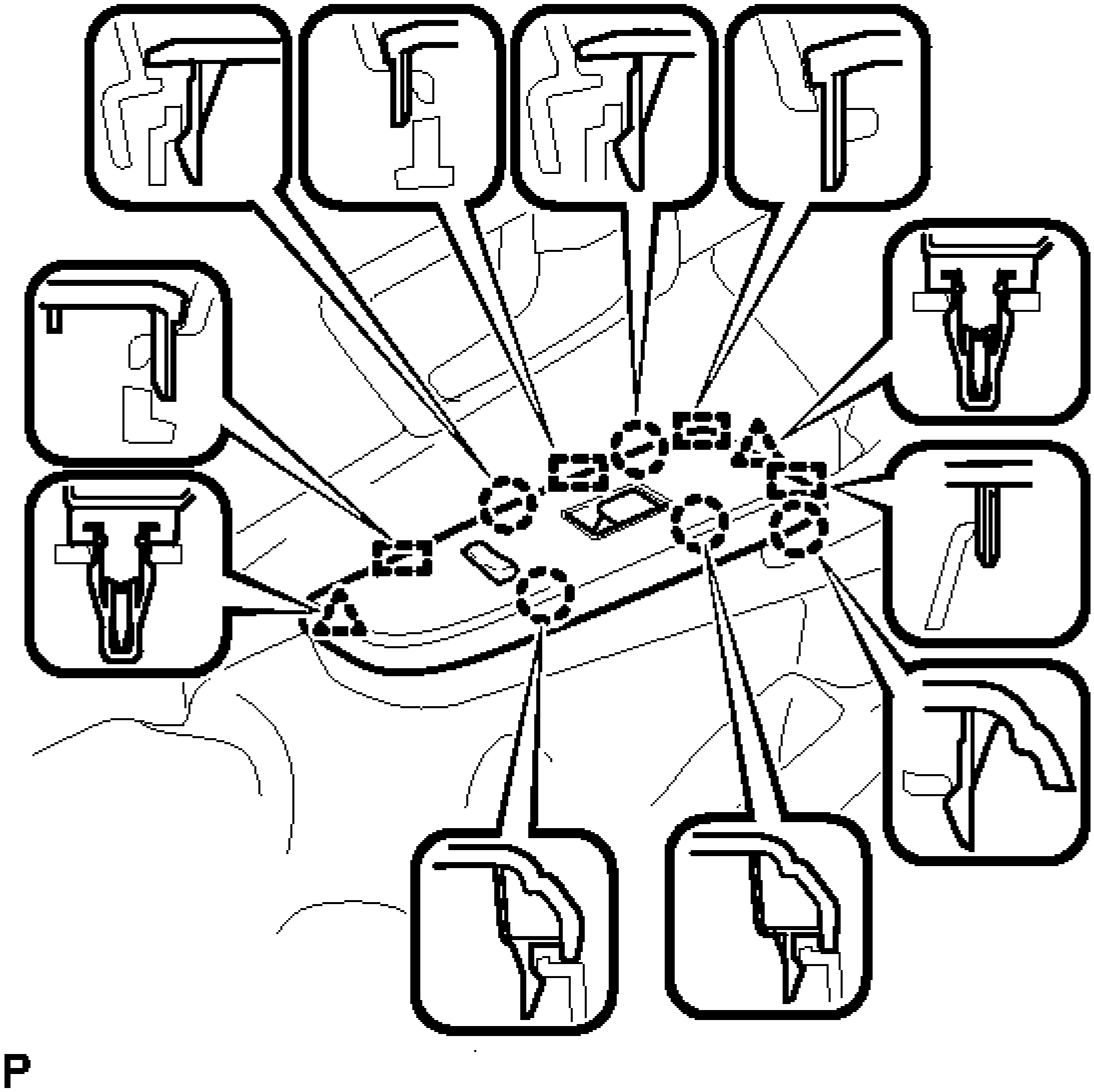

Fig. 122: Identifying Power Window Regulator Switch Clips, Claws And Guides (For Front Passenger Side)
Courtesy of TOYOTA MOTOR SALES, U.S.A., INC.

44. **INSTALL FRONT DOOR LOWER FRAME BRACKET GARNISH**
    a. Engage the 3 clips to install the front door lower frame bracket garnish.

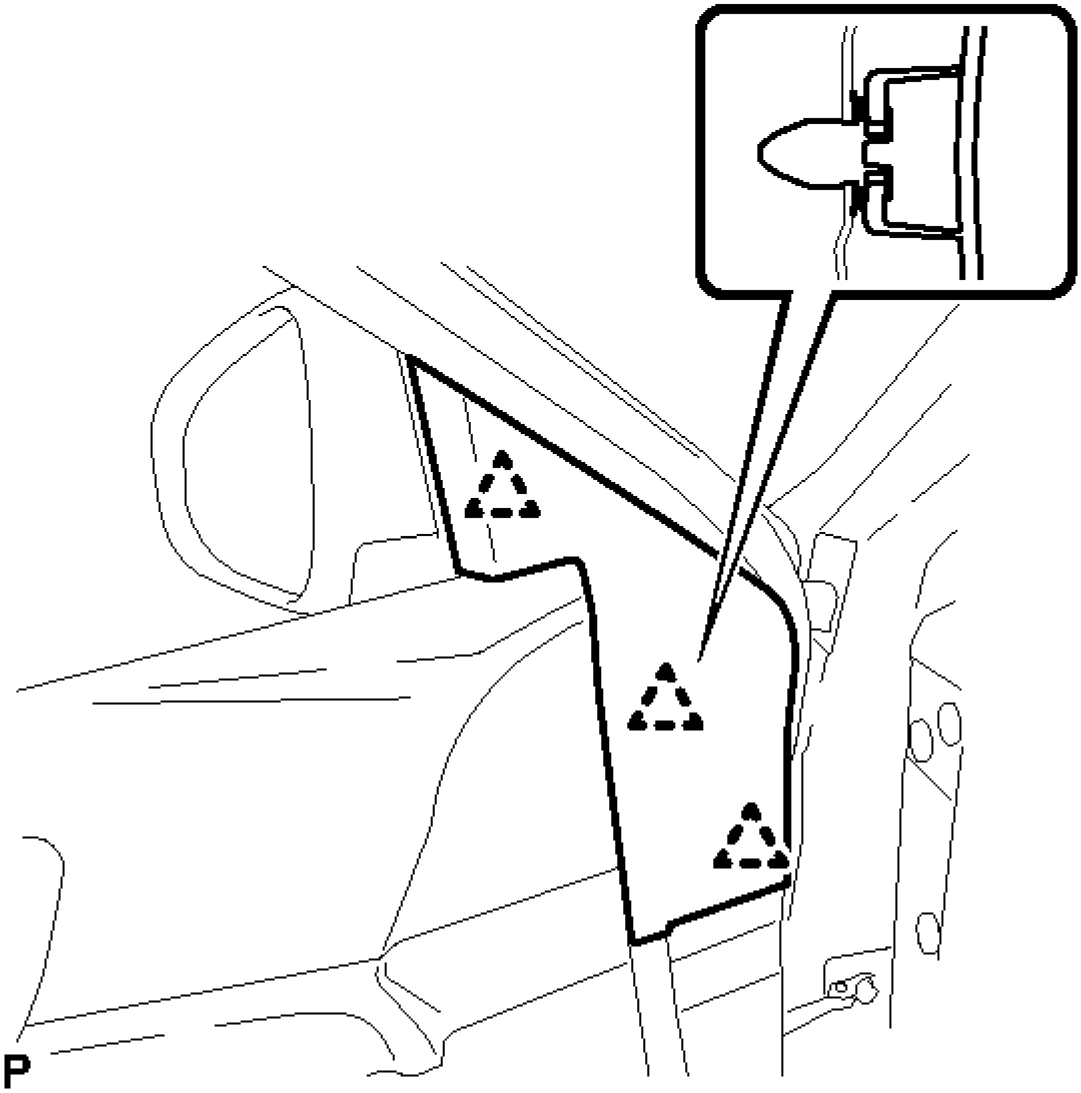

Fig. 123: Identifying Front Door Lower Frame Bracket Garnish Clips
Courtesy of TOYOTA MOTOR SALES, U.S.A., INC.

45. **INSTALL FRONT DOOR INSIDE HANDLE BEZEL PLUG**
    a. Engage the 3 claws to install the front door inside handle bezel plug.

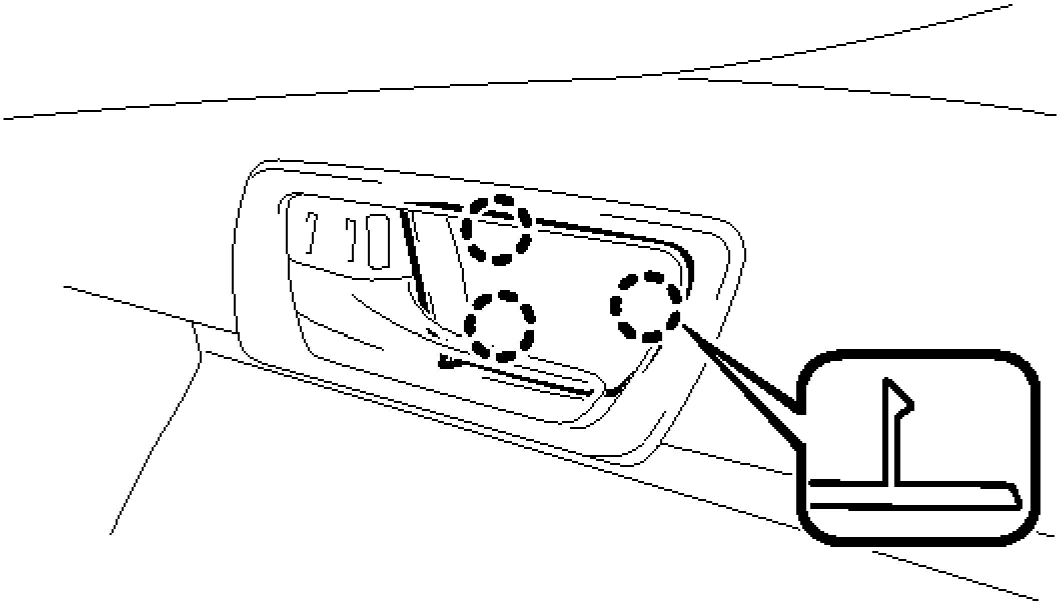

Fig. 124: Identifying Front Door Inside Handle Bezel Plug Claws
Courtesy of TOYOTA MOTOR SALES, U.S.A., INC.

46. **CONNECT CABLE TO AUXILIARY BATTERY NEGATIVE TERMINAL**

    NOTE: **When disconnecting the cable, some systems need to be initialized after the cable is reconnected. Refer to INITIALIZATION .**

47. **INSTALL LUGGAGE TRIM SERVICE HOLE COVER** . Refer to **INSTALLATION - Step 3**
48. **INITIALIZE POWER WINDOW CONTROL SYSTEM (for Driver Side)**

    Refer to **INITIALIZATION**

49. **INSPECT POWER WINDOW OPERATION**

    Refer to **OPERATION CHECK**

50. **INSPECT SRS WARNING LIGHT**

    for Separate Type Yaw Rate Sensor: Refer to **DIAGNOSIS SYSTEM**

    for Built-in Type Yaw Rate Sensor: Refer to **DIAGNOSIS SYSTEM**

REAR DOOR

COMPONENTS

ILLUSTRATION

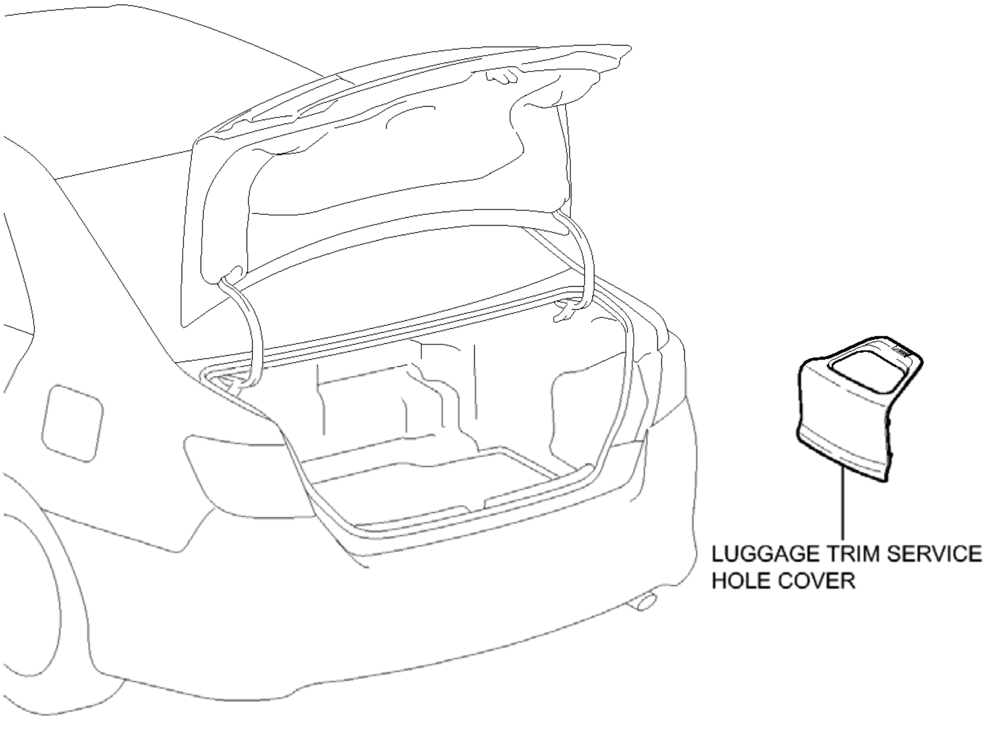
LUGGAGE TRIM SERVICE HOLE COVER
P

Fig. 125: Identifying Rear Door Replacement Components (1 Of 5)
Courtesy of TOYOTA MOTOR SALES, U.S.A., INC.

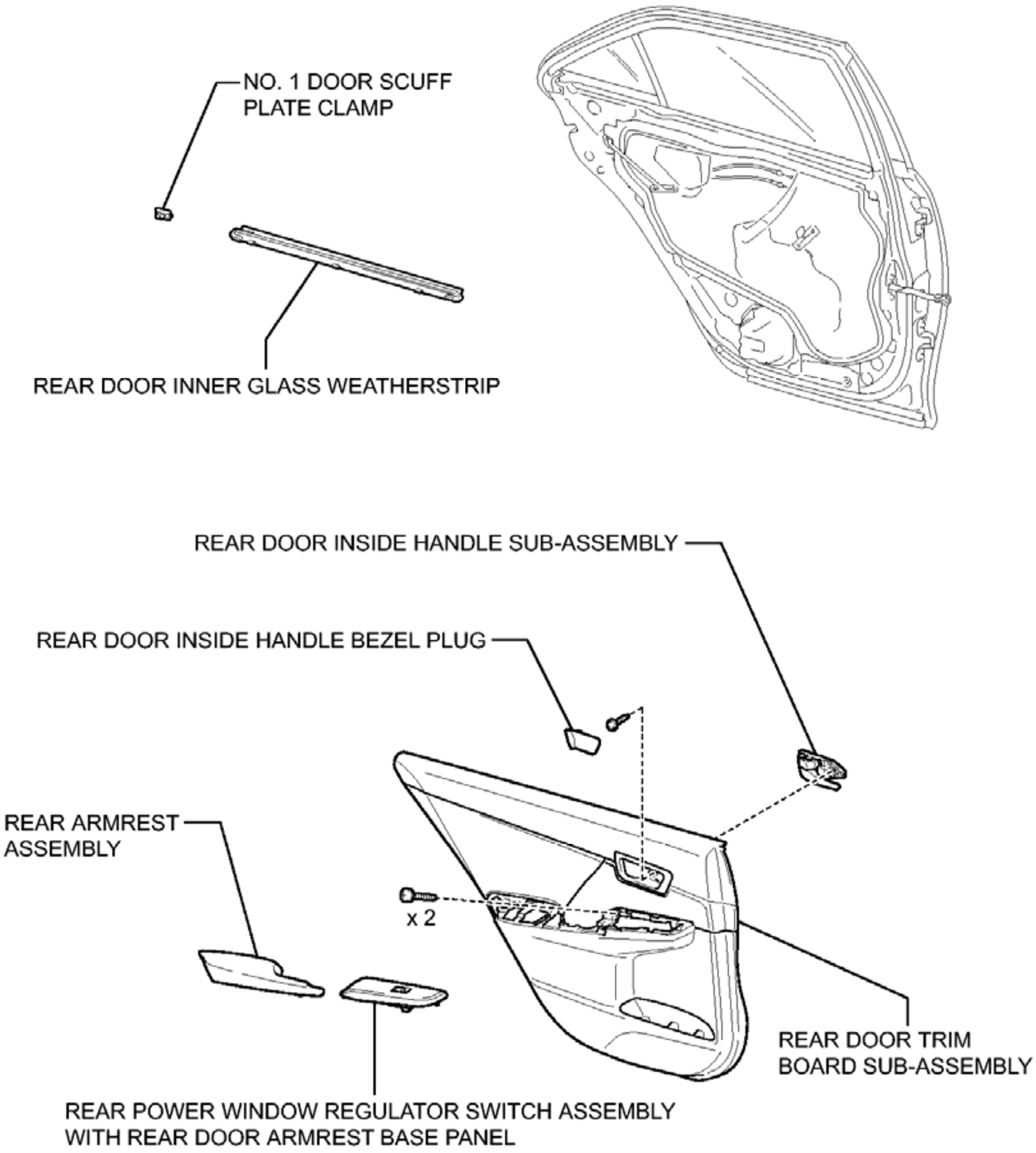
NO. 1 DOOR SCUFF PLATE CLAMP
REAR DOOR INNER GLASS WEATHERSTRIP
REAR DOOR INSIDE HANDLE SUB-ASSEMBLY
REAR DOOR INSIDE HANDLE BEZEL PLUG
REAR ARMREST ASSEMBLY
x 2
REAR DOOR TRIM BOARD SUB-ASSEMBLY
REAR POWER WINDOW REGULATOR SWITCH ASSEMBLY WITH REAR DOOR ARMREST BASE PANEL

P

Fig. 126: Identifying Rear Door Replacement Components (2 Of 5)
Courtesy of TOYOTA MOTOR SALES, U.S.A., INC.

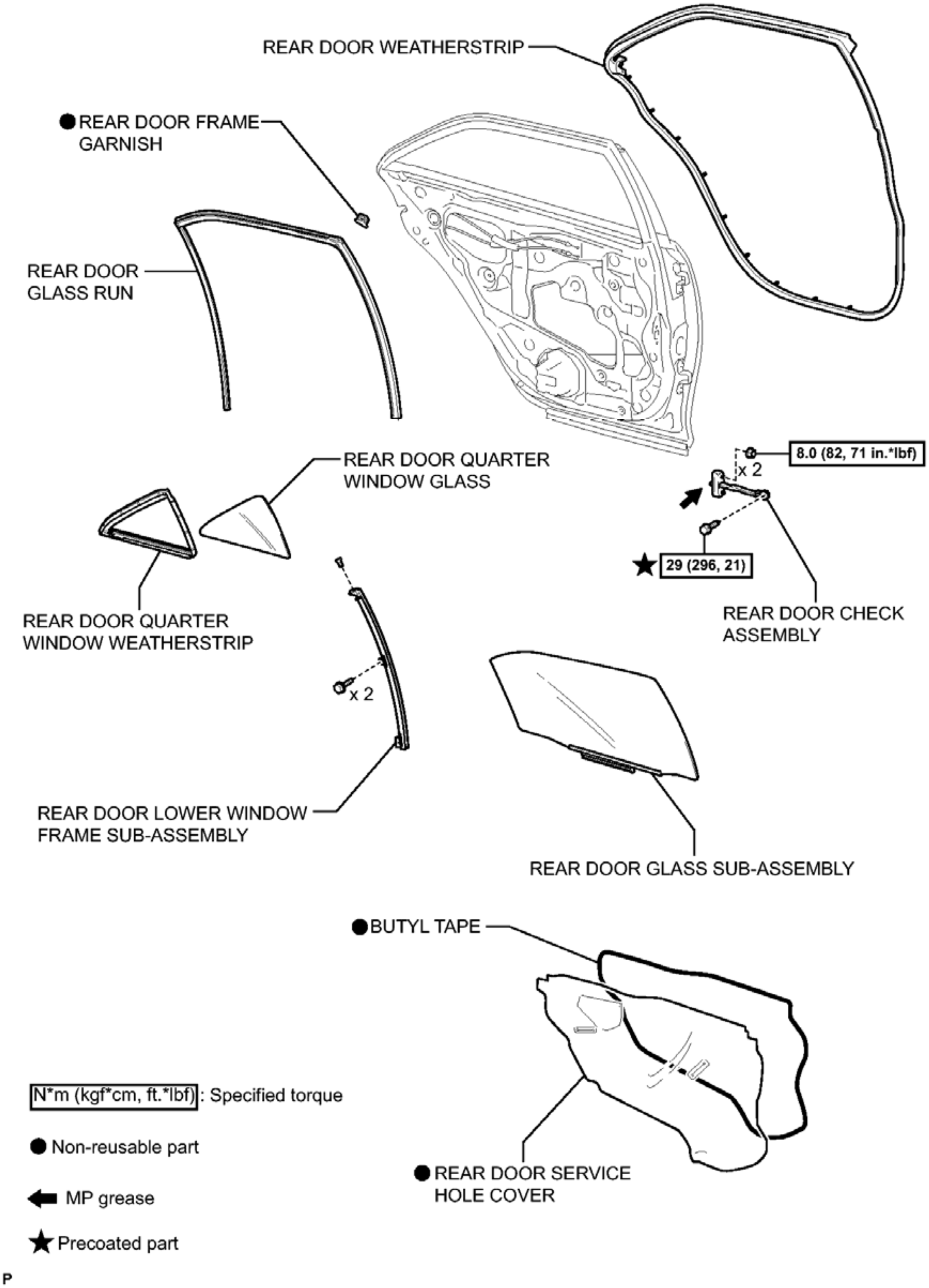
REAR DOOR WEATHERSTRIP
● REAR DOOR FRAME GARNISH
REAR DOOR GLASS RUN
REAR DOOR QUARTER WINDOW GLASS
8.0 (82, 71 in.*lbf)
x 2
★ 29 (296, 21)
REAR DOOR CHECK ASSEMBLY
REAR DOOR QUARTER WINDOW WEATHERSTRIP
x 2
REAR DOOR LOWER WINDOW FRAME SUB-ASSEMBLY
REAR DOOR GLASS SUB-ASSEMBLY
● BUTYL TAPE
N*m (kgf*cm, ft.*lbf) : Specified torque
● Non-reusable part
MP grease
★ Precoated part
● REAR DOOR SERVICE HOLE COVER
P

Fig. 127: Identifying Rear Door Replacement Components With Torque Specifications (3 Of 5)
Courtesy of TOYOTA MOTOR SALES, U.S.A., INC.

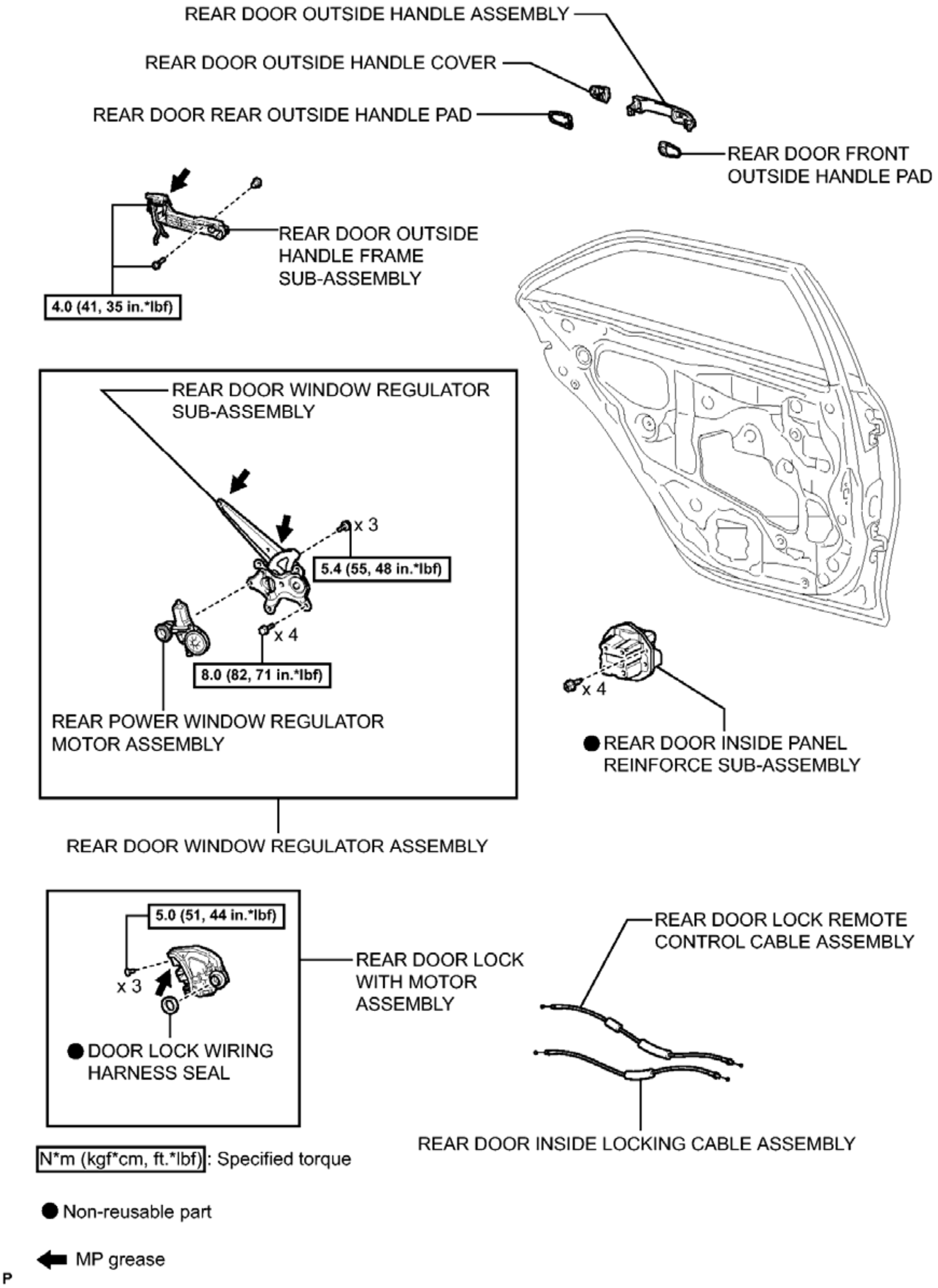
REAR DOOR OUTSIDE HANDLE ASSEMBLY
REAR DOOR OUTSIDE HANDLE COVER
REAR DOOR REAR OUTSIDE HANDLE PAD
REAR DOOR FRONT OUTSIDE HANDLE PAD
REAR DOOR OUTSIDE HANDLE FRAME SUB-ASSEMBLY
4.0 (41, 35 in.*lbf)
REAR DOOR WINDOW REGULATOR SUB-ASSEMBLY
x 3
5.4 (55, 48 in.*lbf)
x 4
8.0 (82, 71 in.*lbf)
REAR POWER WINDOW REGULATOR MOTOR ASSEMBLY
x 4
● REAR DOOR INSIDE PANEL REINFORCE SUB-ASSEMBLY
REAR DOOR WINDOW REGULATOR ASSEMBLY
5.0 (51, 44 in.*lbf)
x 3
REAR DOOR LOCK WITH MOTOR ASSEMBLY
● DOOR LOCK WIRING HARNESS SEAL
REAR DOOR LOCK REMOTE CONTROL CABLE ASSEMBLY
REAR DOOR INSIDE LOCKING CABLE ASSEMBLY
N*m (kgf*cm, ft.*lbf) : Specified torque
● Non-reusable part
MP grease
P

Fig. 128: Identifying Rear Door Replacement Components With Torque Specifications (4 Of 5)
Courtesy of TOYOTA MOTOR SALES, U.S.A., INC.

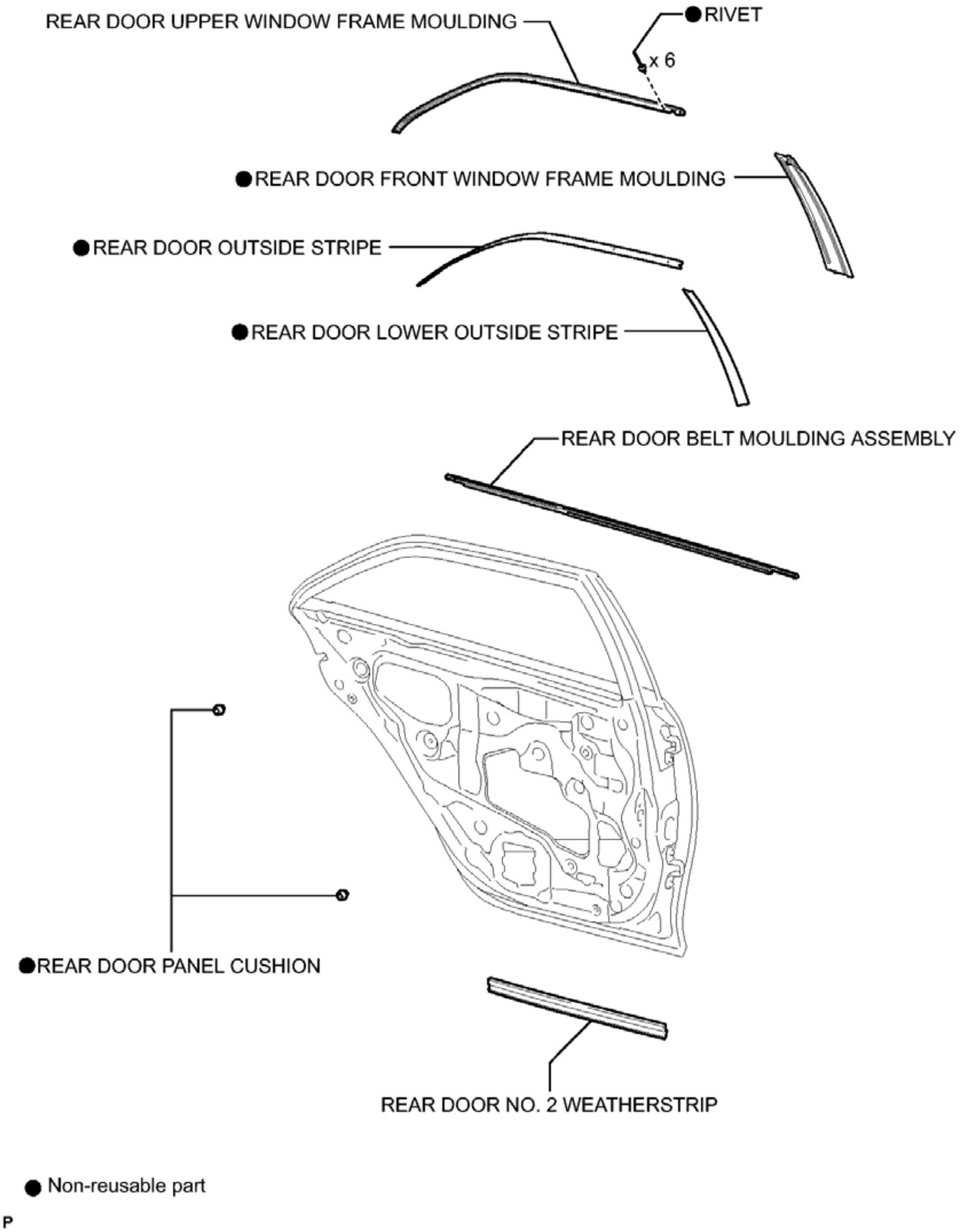
REAR DOOR UPPER WINDOW FRAME MOULDING
● RIVET
x 6
● REAR DOOR FRONT WINDOW FRAME MOULDING
● REAR DOOR OUTSIDE STRIPE
● REAR DOOR LOWER OUTSIDE STRIPE
REAR DOOR BELT MOULDING ASSEMBLY
● REAR DOOR PANEL CUSHION
REAR DOOR NO. 2 WEATHERSTRIP
● Non-reusable part
P

Fig. 129: Identifying Rear Door Replacement Components (5 Of 5)
Courtesy of TOYOTA MOTOR SALES, U.S.A., INC.

DISASSEMBLY

DISASSEMBLY

HINT:

- Use the same procedure for both the RH and LH sides.
- The procedure described below is for the LH side.

1. **PRECAUTION**

   NOTE: After turning the power switch off, waiting time may be required before disconnecting the cable from the negative (-) auxiliary battery terminal. Therefore, make sure to read the disconnecting the cable from the negative (-) auxiliary battery terminal notices before proceeding with work. Refer to PRECAUTION .

2. **REMOVE LUGGAGE TRIM SERVICE HOLE COVER** . Refer to **REMOVAL - Step 2**
3. **DISCONNECT CABLE FROM AUXILIARY BATTERY NEGATIVE TERMINAL**

   NOTE: When disconnecting the cable, some systems need to be initialized after the cable is reconnected. Refer to INITIALIZATION .

4. **REMOVE REAR DOOR INSIDE HANDLE BEZEL PLUG**
   1. Using a moulding remover, disengage the 3 claws and remove the rear door inside handle bezel plug as shown in the illustration.

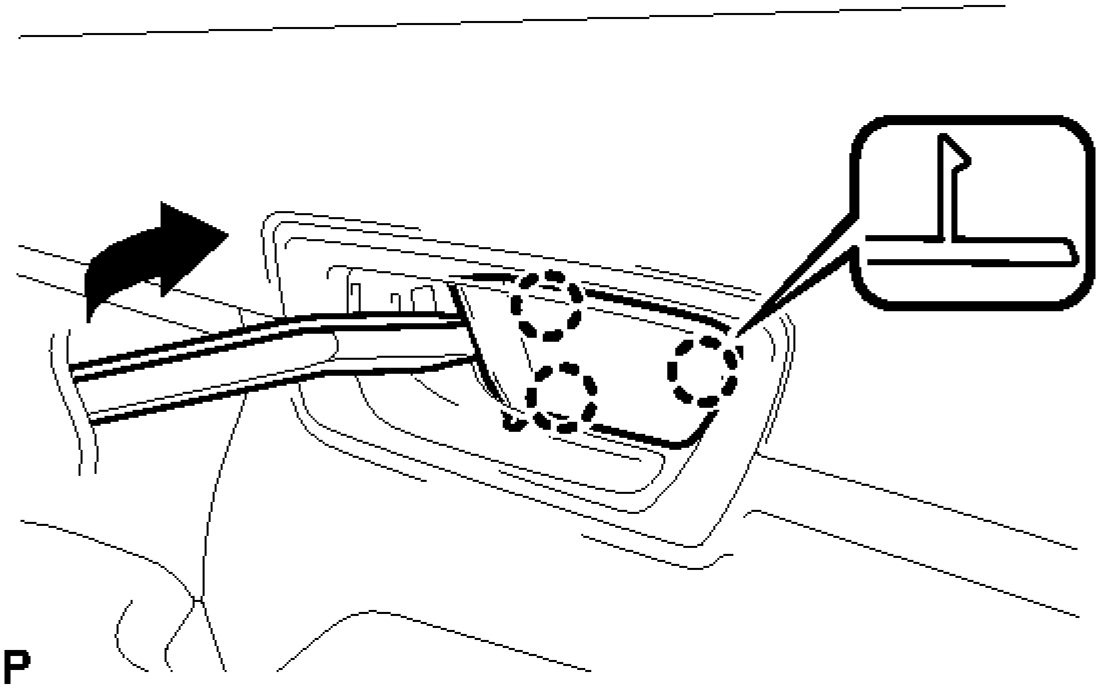

Fig. 130: Identifying Rear Door Inside Handle Bezel Plug Claws
Courtesy of TOYOTA MOTOR SALES, U.S.A., INC.

5. **REMOVE REAR POWER WINDOW REGULATOR SWITCH ASSEMBLY WITH REAR DOOR ARMREST BASE PANEL**

a. Using a moulding remover, disengage the 2 clips, 5 claws and 4 guides as shown in the illustration.

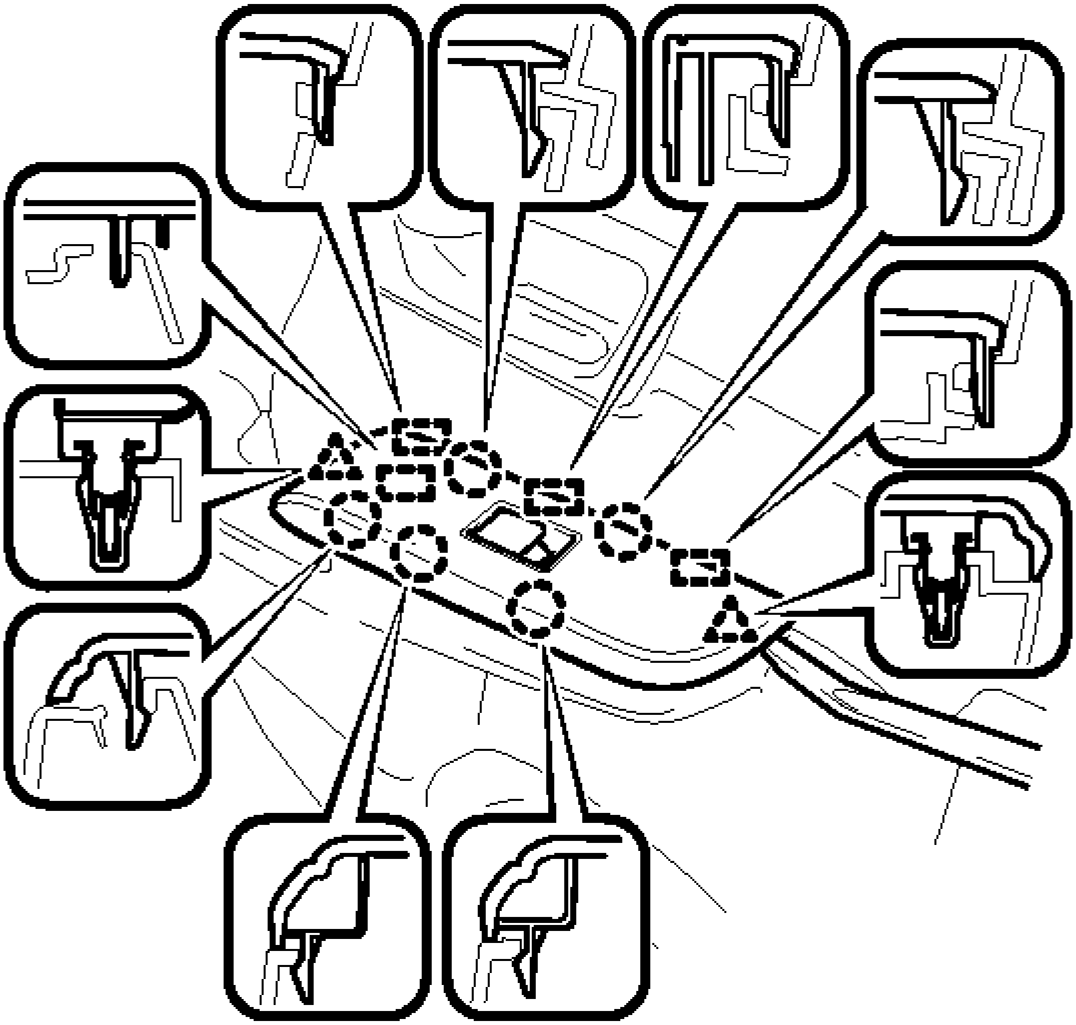

P

Fig. 131: Identifying Rear Power Window Regulator Switch Clips, Claws And Guides
Courtesy of TOYOTA MOTOR SALES, U.S.A., INC.

b. Disconnect the connector and remove the rear power window regulator switch assembly with rear door armrest base panel.

6. **REMOVE REAR ARMREST ASSEMBLY**

a. Using a moulding remover, disengage the 3 clips, 7 claws and 2 guides and remove the rear armrest assembly.

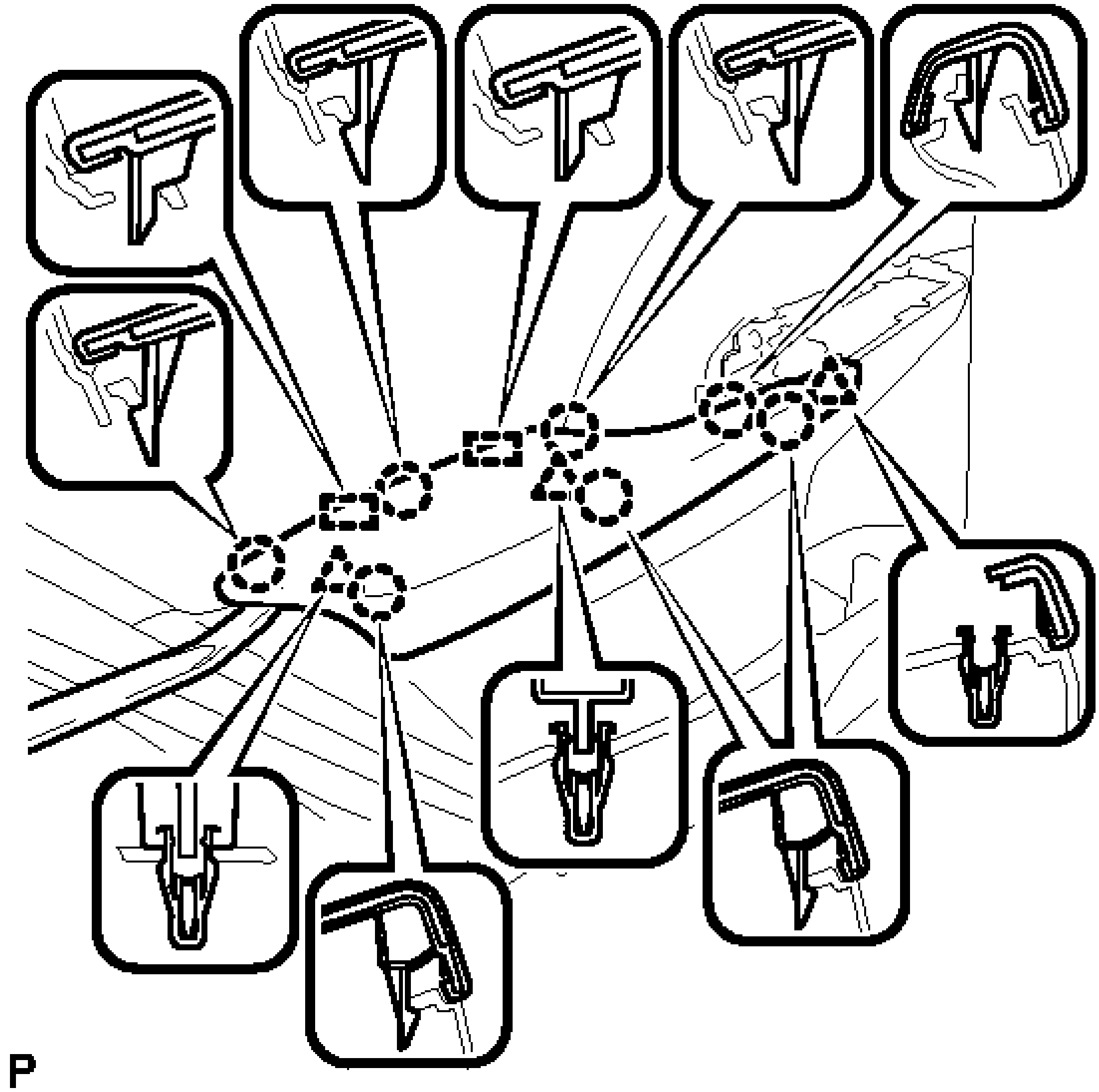

Fig. 132: Identifying Rear Armrest Clips, Claws And Guides
Courtesy of TOYOTA MOTOR SALES, U.S.A., INC.

7. **REMOVE REAR DOOR TRIM BOARD SUB-ASSEMBLY**
    a. Put protective tape around the rear door panel.

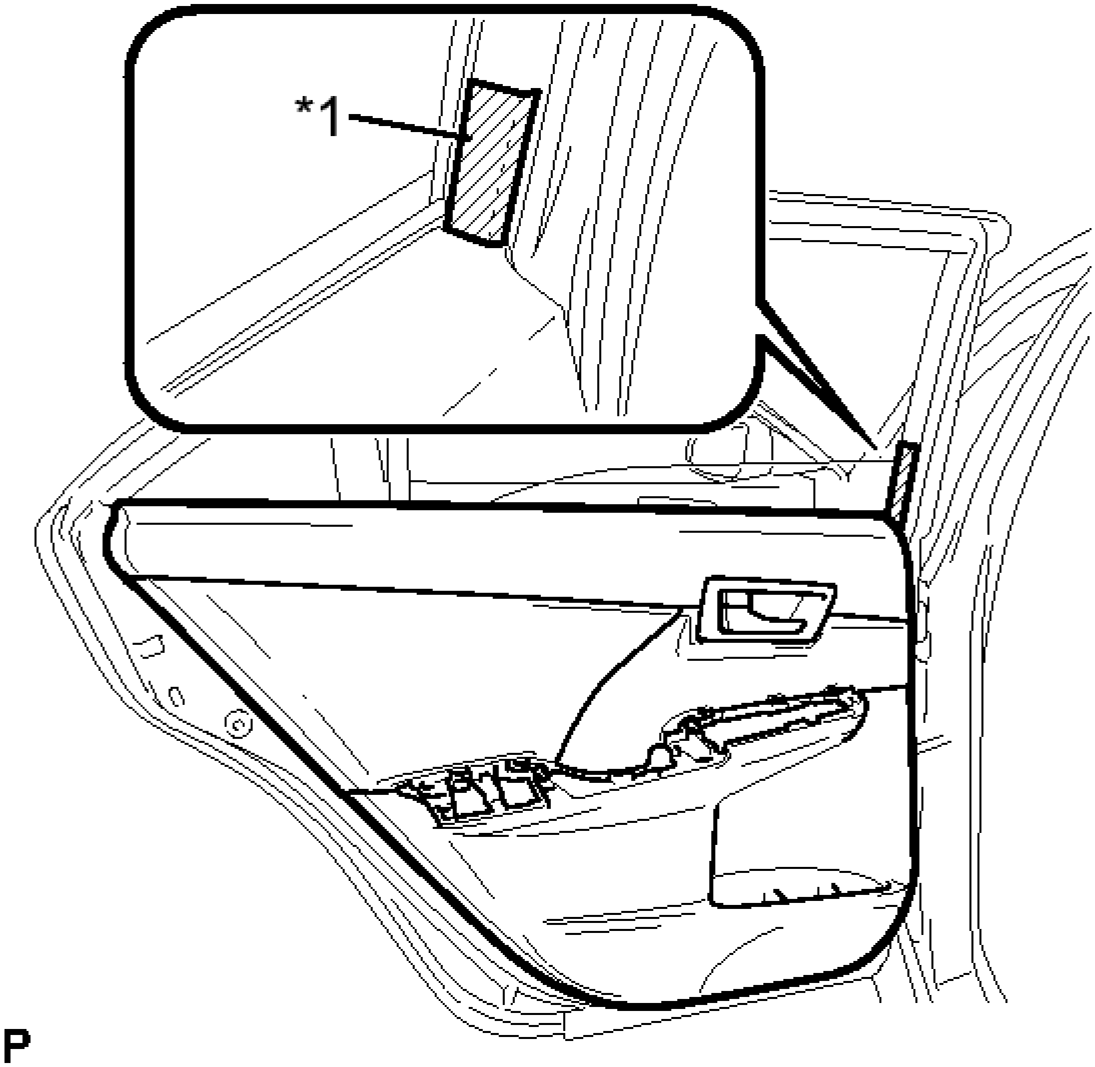

Fig. 133: Identifying Protective Tape Placement
Courtesy of TOYOTA MOTOR SALES, U.S.A., INC.

TEXT IN ILLUSTRATION

*1	Protective Tape

b. Remove the 3 screws.

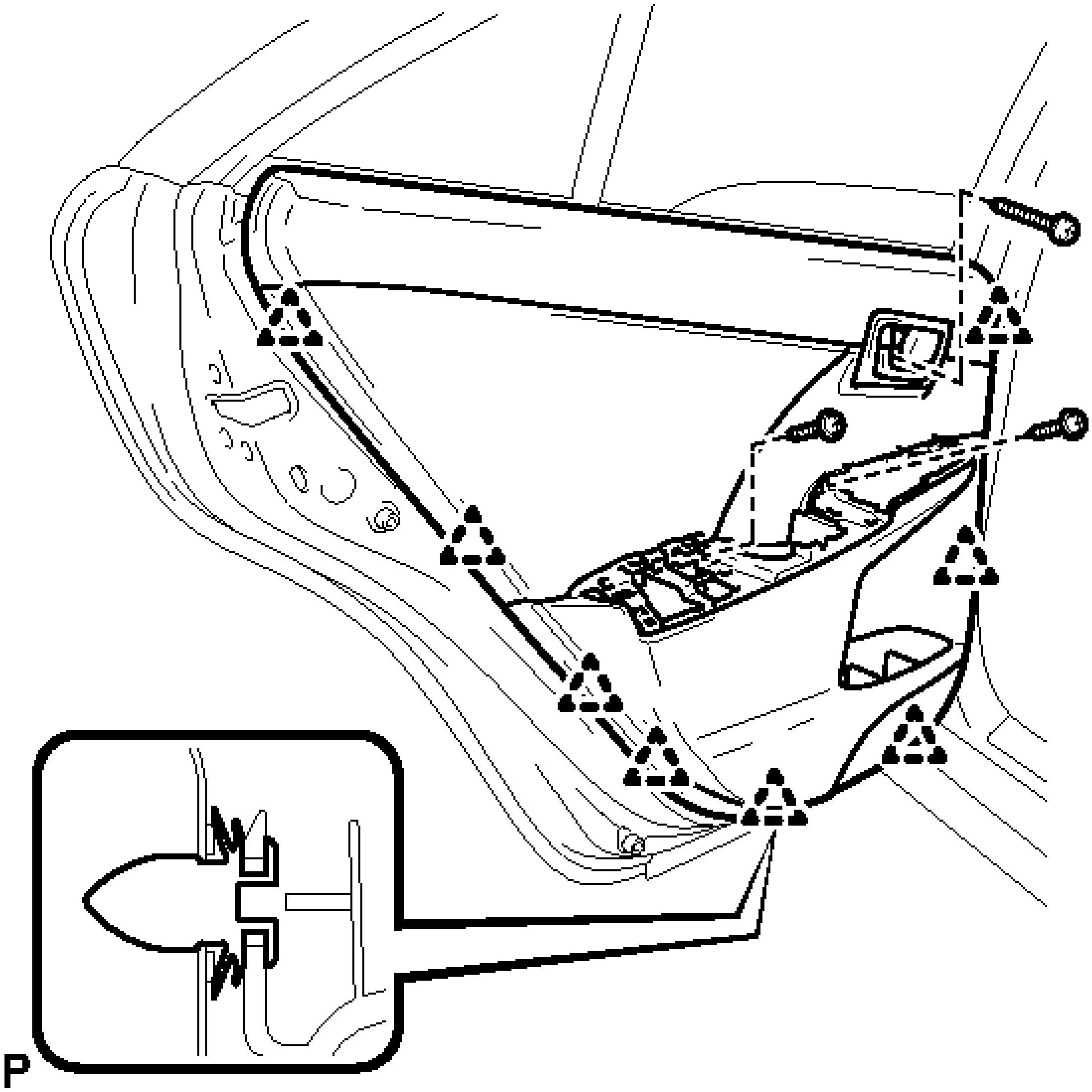

Fig. 134: Identifying Rear Door Trim Board Sub-Assembly Clips And Screws
Courtesy of TOYOTA MOTOR SALES, U.S.A., INC.

c. Using a clip remover, disengage the 8 clips.

d. Pull out the rear door trim board sub-assembly in the direction indicated by the arrow as shown in the illustration.

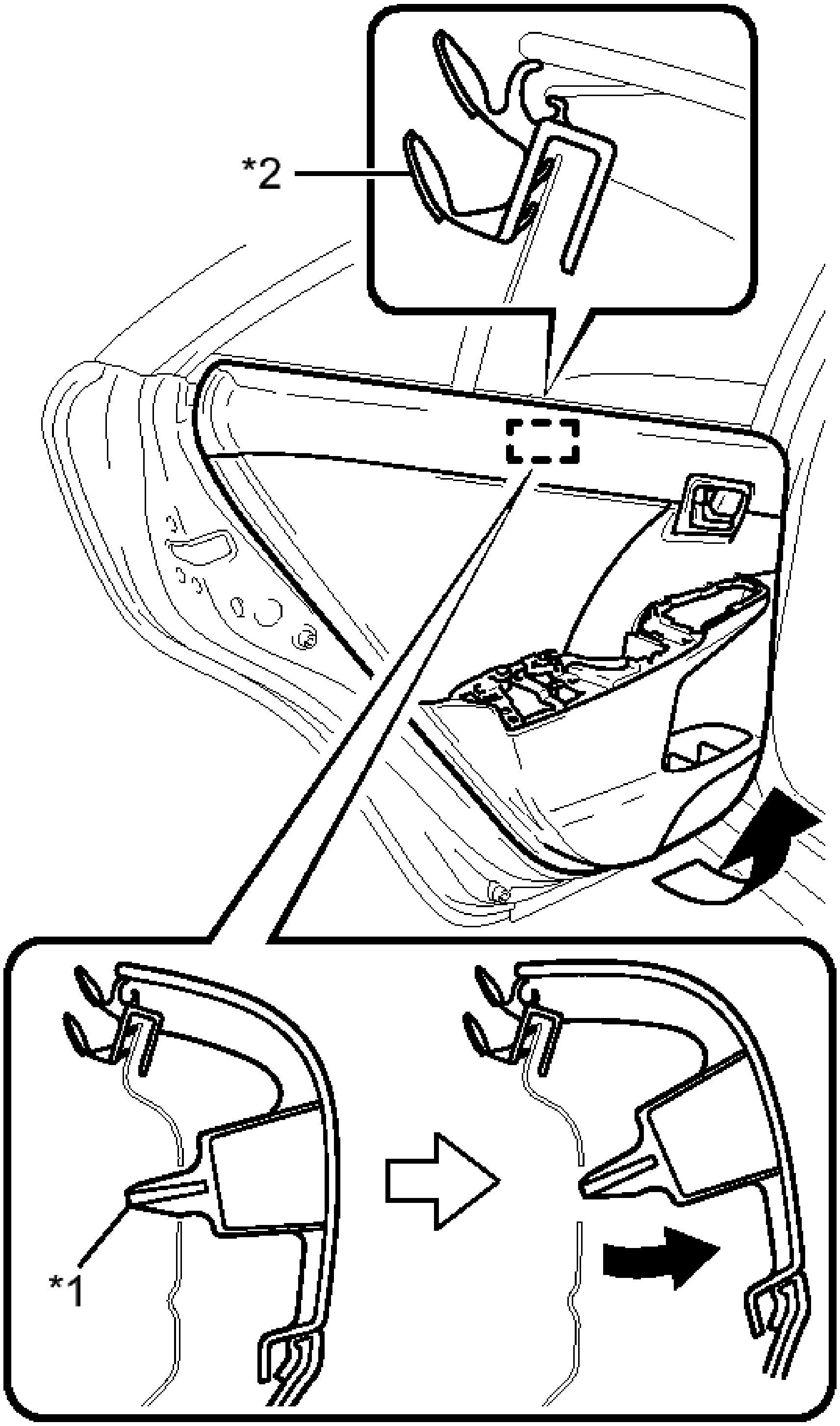

P

Fig. 135: Pulling Out Rear Door Trim Board Sub-Assembly
Courtesy of TOYOTA MOTOR SALES, U.S.A., INC.

TEXT IN ILLUSTRATION

*1	Reference Boss
*2	Rear Door Inner Glass Weatherstrip

e. Disengage the reference boss from the rear door panel.
f. Raise the rear door trim board sub-assembly to remove the rear door trim board sub-assembly together with the rear door inner glass weatherstrip.
g. Disconnect the rear door lock remote control cable assembly and rear door inside locking cable assembly.

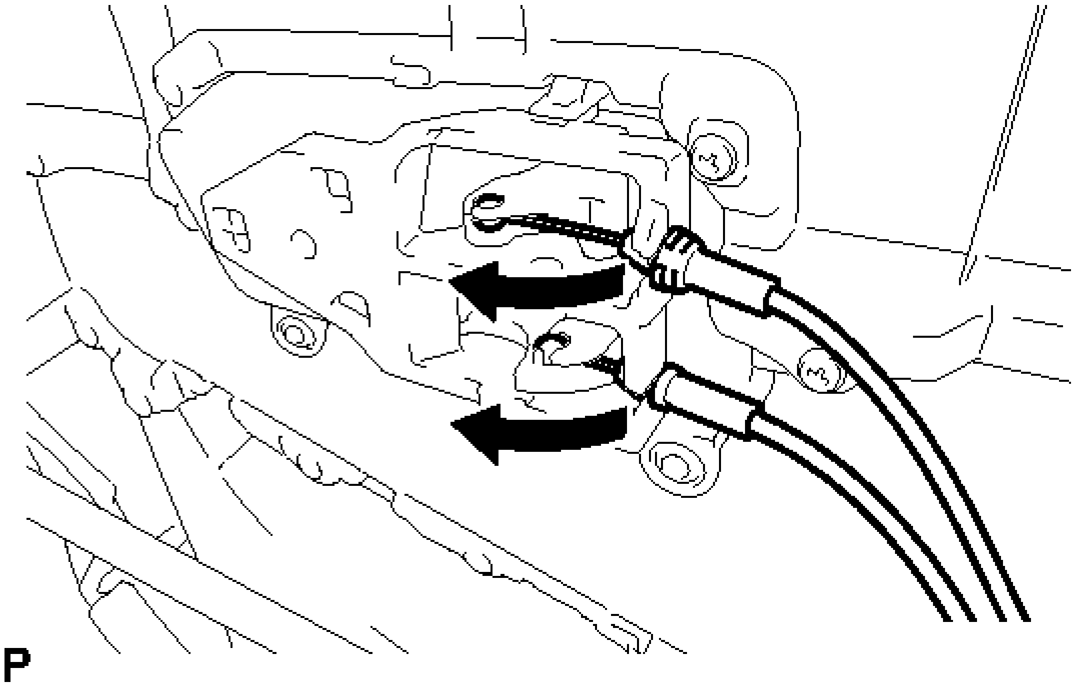

Fig. 136: Disconnecting Rear Door Lock Remote Control And Inside Locking Cables
Courtesy of TOYOTA MOTOR SALES, U.S.A., INC.

h. Using a screwdriver, disengage the claw and remove the No. 1 door scuff plate clamp from the rear door trim board sub-assembly as shown in the illustration.

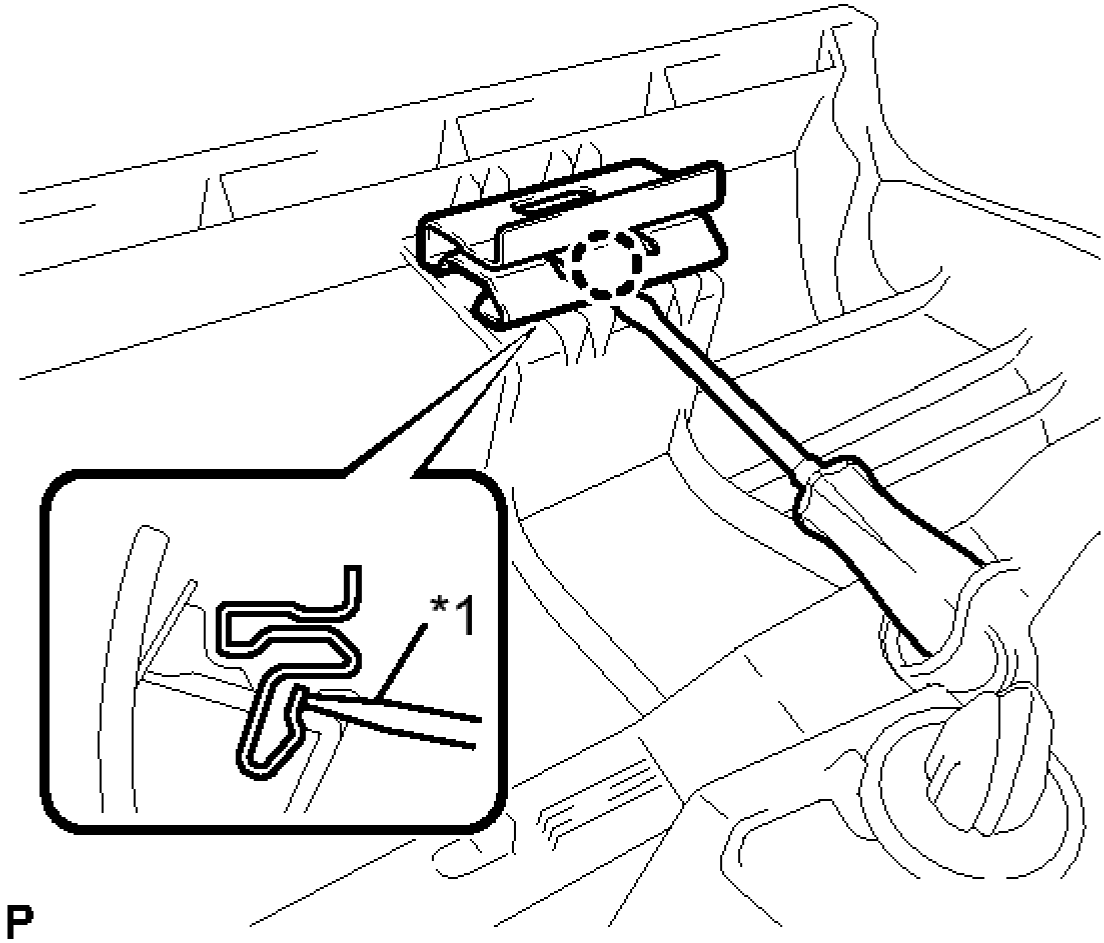

Fig. 137: Disengaging No. 1 Door Scuff Plate Clamp
Courtesy of TOYOTA MOTOR SALES, U.S.A., INC.

TEXT IN ILLUSTRATION

*1	Screwdriver

8. **REMOVE REAR DOOR INSIDE HANDLE SUB-ASSEMBLY**
    a. Disengage the 2 claws and guide, and remove the rear door inside handle sub-assembly.

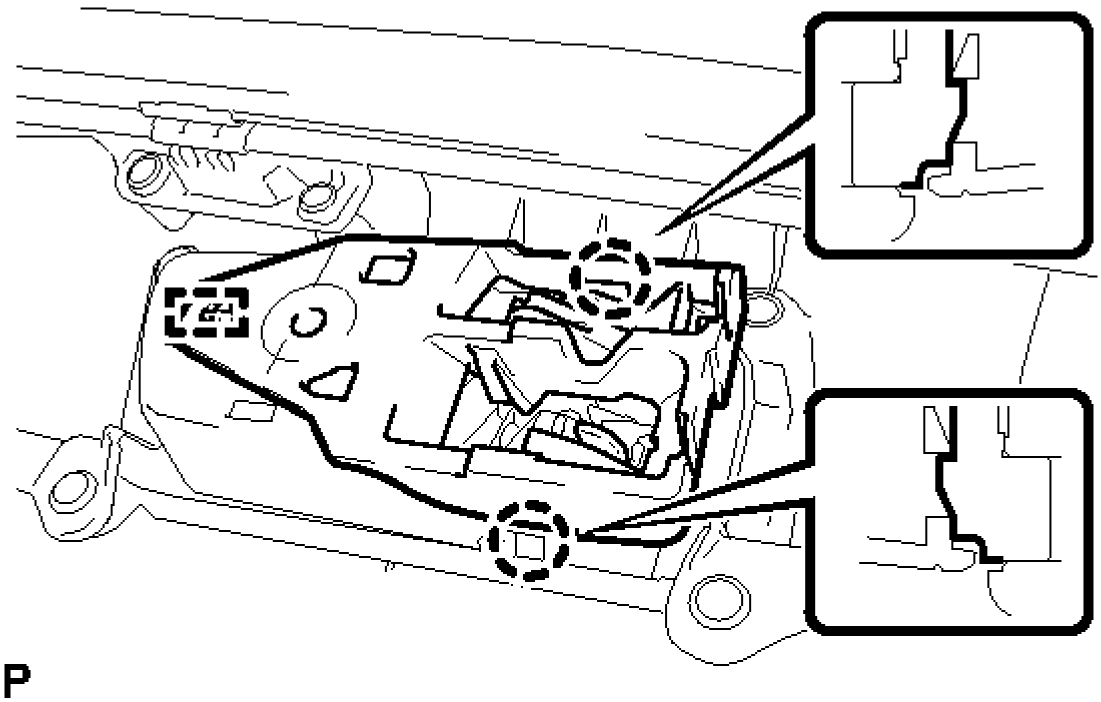

Fig. 138: Identifying Rear Door Inside Handle Sub-Assembly Claws And Guides
Courtesy of TOYOTA MOTOR SALES, U.S.A., INC.

9. **REMOVE REAR DOOR INNER GLASS WEATHERSTRIP**
   1. Using a screwdriver, disengage the 3 claws and remove the rear door inner glass weatherstrip from the rear door trim board sub-assembly as shown in the illustration.

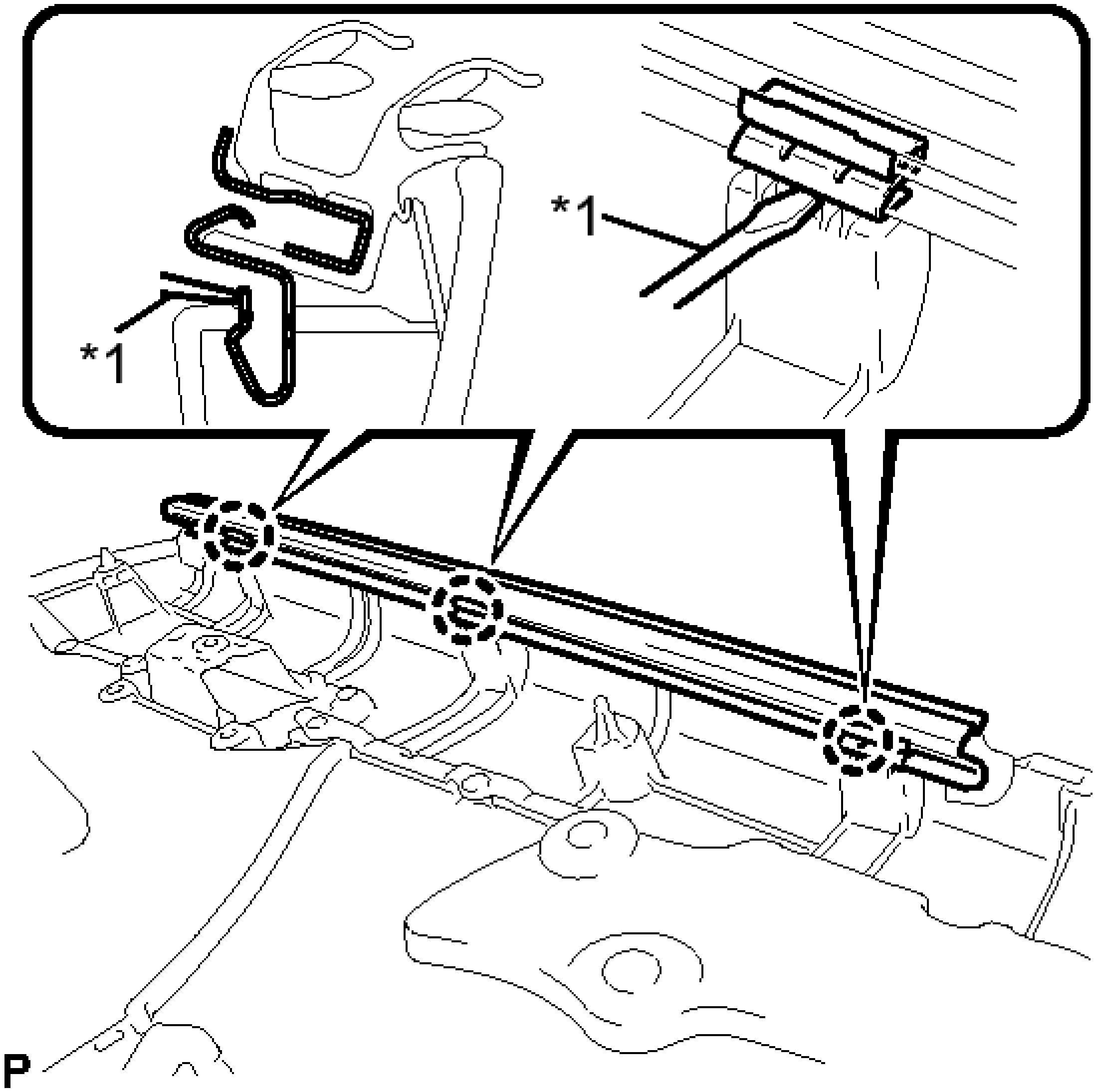

Fig. 139: Disengaging Rear Door Inner Glass Weatherstrip Claws
Courtesy of TOYOTA MOTOR SALES, U.S.A., INC.

TEXT IN ILLUSTRATION

*1	Screwdriver

10. **REMOVE REAR DOOR SERVICE HOLE COVER**
    a. Disconnect the connector and remove the rear door service hole cover.

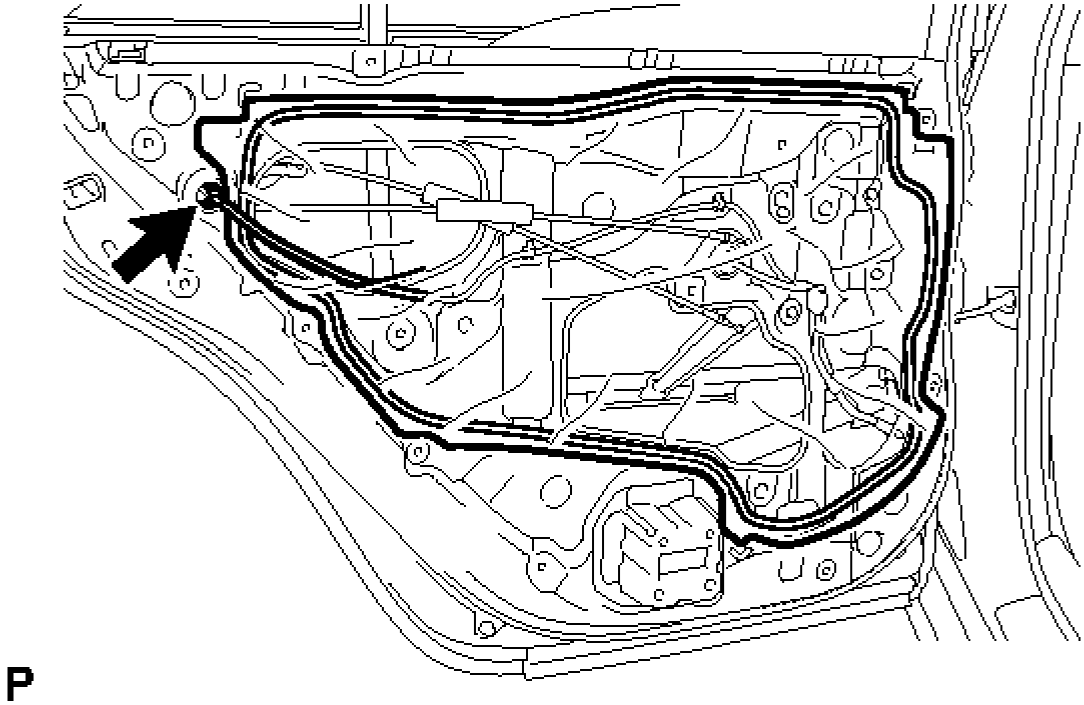

Fig. 140: Removing Rear Door Service Hole Cover
Courtesy of TOYOTA MOTOR SALES, U.S.A., INC.

HINT:

Remove any remaining butyl tape from the door.

11. **REMOVE REAR DOOR CHECK ASSEMBLY**
    a. Remove the bolt and 2 nuts, and rear door check assembly.

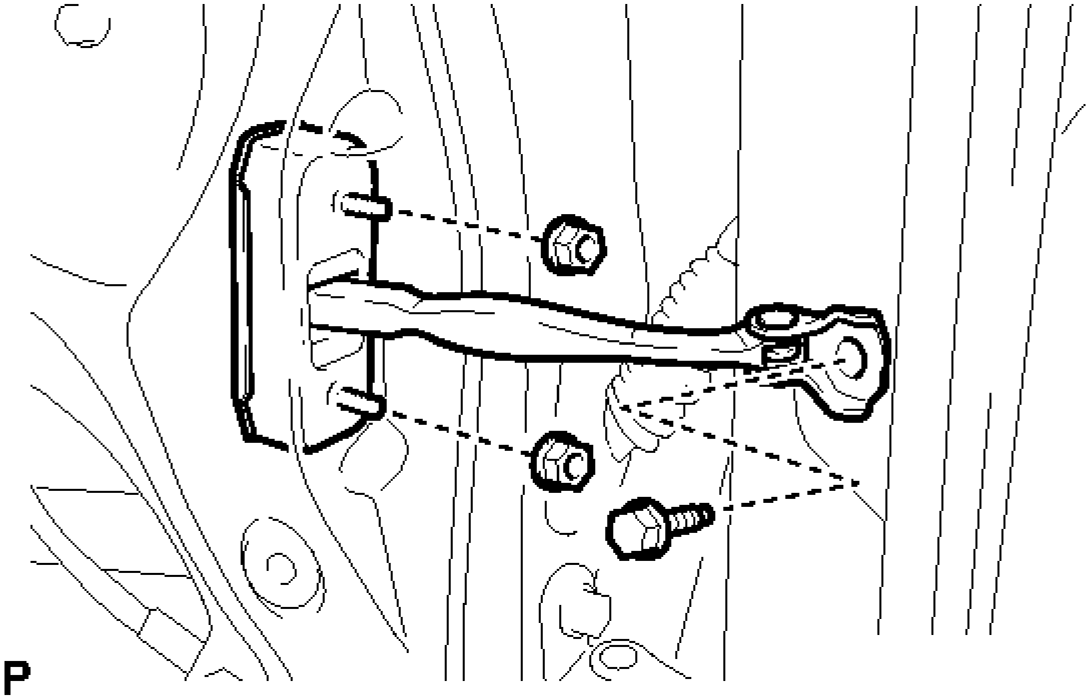

Fig. 141: Identifying Rear Door Check Bolts
Courtesy of TOYOTA MOTOR SALES, U.S.A., INC.

12. **REMOVE REAR DOOR WEATHERSTRIP**
    a. Using a clip remover, disengage the 20 clips and remove the rear door weatherstrip.

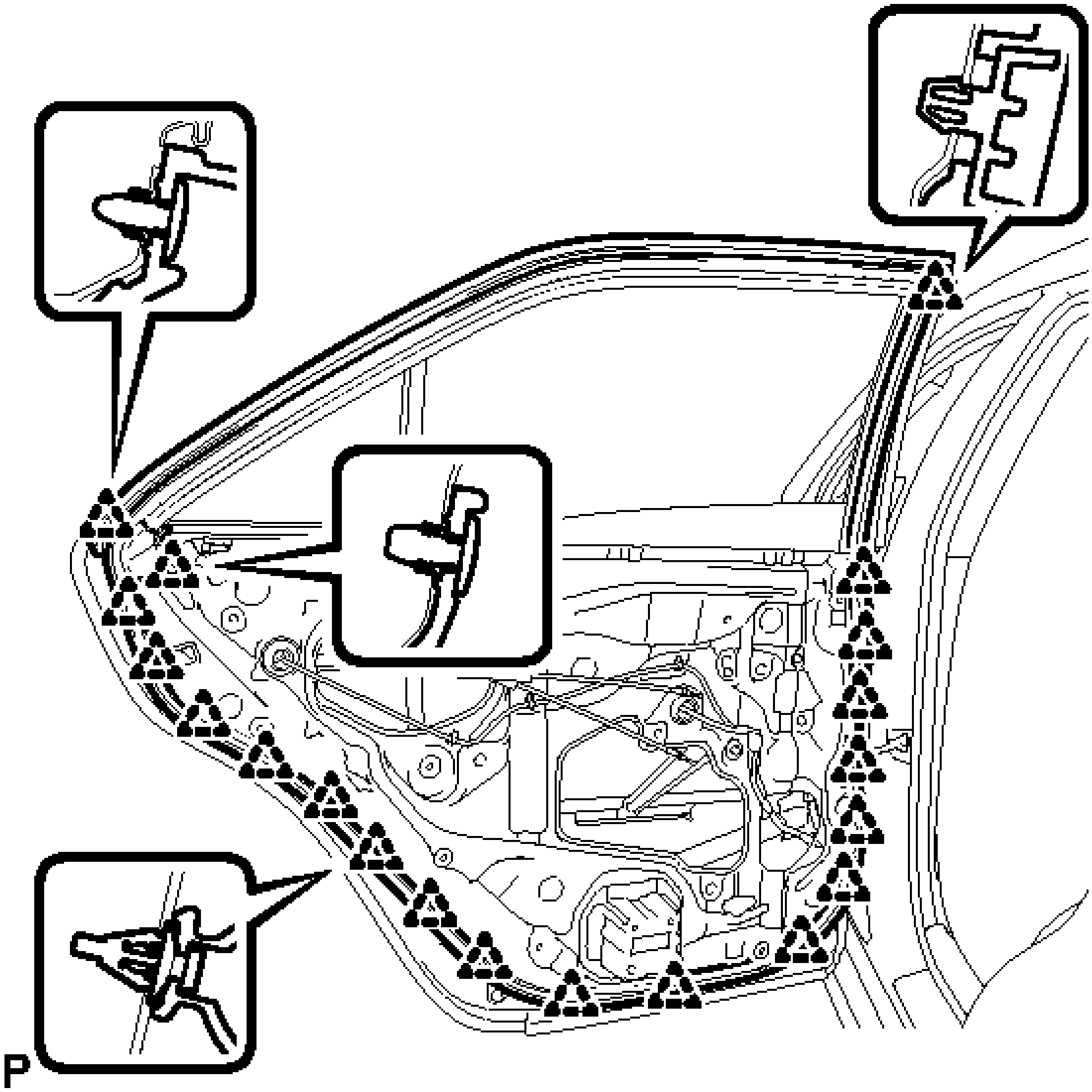

Fig. 142: Identifying Rear Door Weatherstrip Clips
Courtesy of TOYOTA MOTOR SALES, U.S.A., INC.

13. **REMOVE REAR DOOR GLASS RUN**
    a. Remove the rear door glass run.

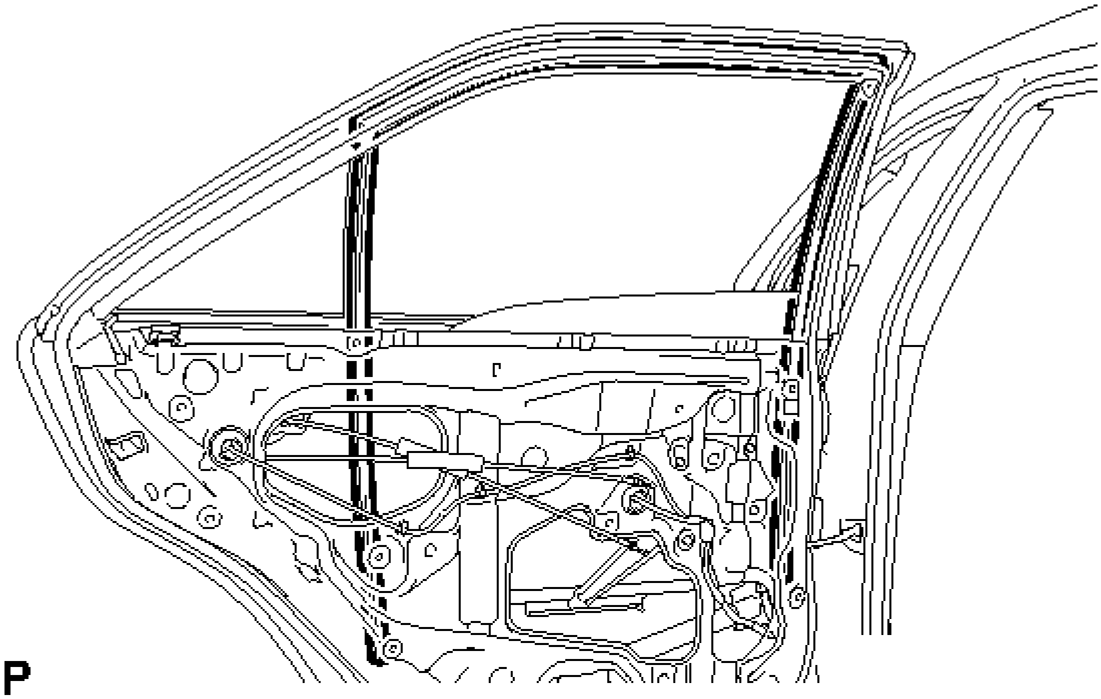

Fig. 143: Identifying Rear Door Glass Run
Courtesy of TOYOTA MOTOR SALES, U.S.A., INC.

14. **REMOVE REAR DOOR LOWER WINDOW FRAME SUB-ASSEMBLY**
    a. Remove the 2 bolts and screw, and rear door lower window frame sub-assembly.

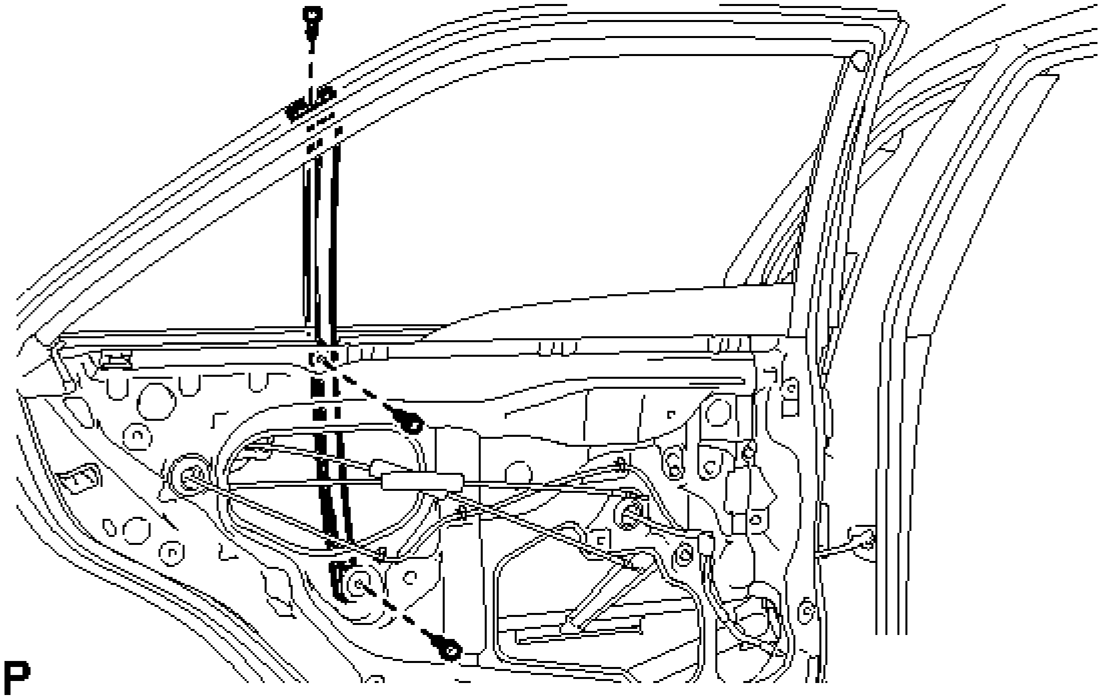

Fig. 144: Identifying Rear Door Lower Window Frame Bolts

Courtesy of TOYOTA MOTOR SALES, U.S.A., INC.

NOTE: **When the rear door lower window frame sub-assembly is removed, do not allow the rear door quarter window glass to fall.**

15. **REMOVE REAR DOOR QUARTER WINDOW GLASS**
    a. Remove the rear door quarter window glass with the rear door quarter window weatherstrip as shown in the illustration.

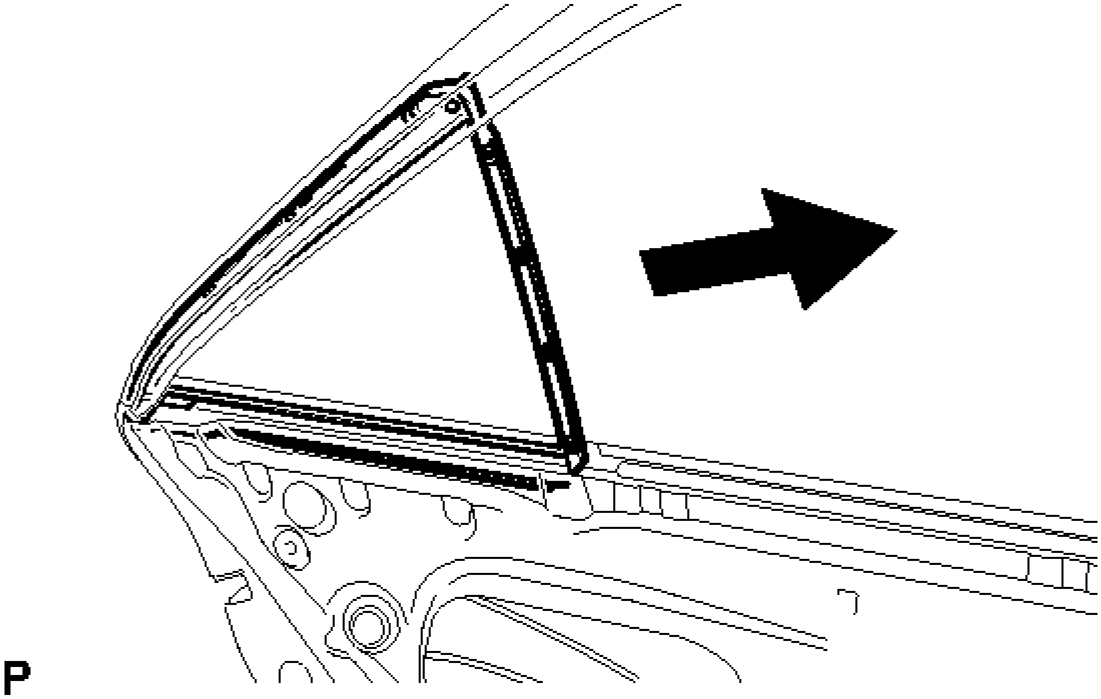

Fig. 145: Removing Rear Door Quarter Window Glass
Courtesy of TOYOTA MOTOR SALES, U.S.A., INC.

    b. Remove the rear door quarter window glass from the rear door quarter window weatherstrip.

16. **REMOVE REAR DOOR GLASS SUB-ASSEMBLY**
    a. Remove the rear door glass sub-assembly from the rear door window regulator sub-assembly as shown in the illustration.

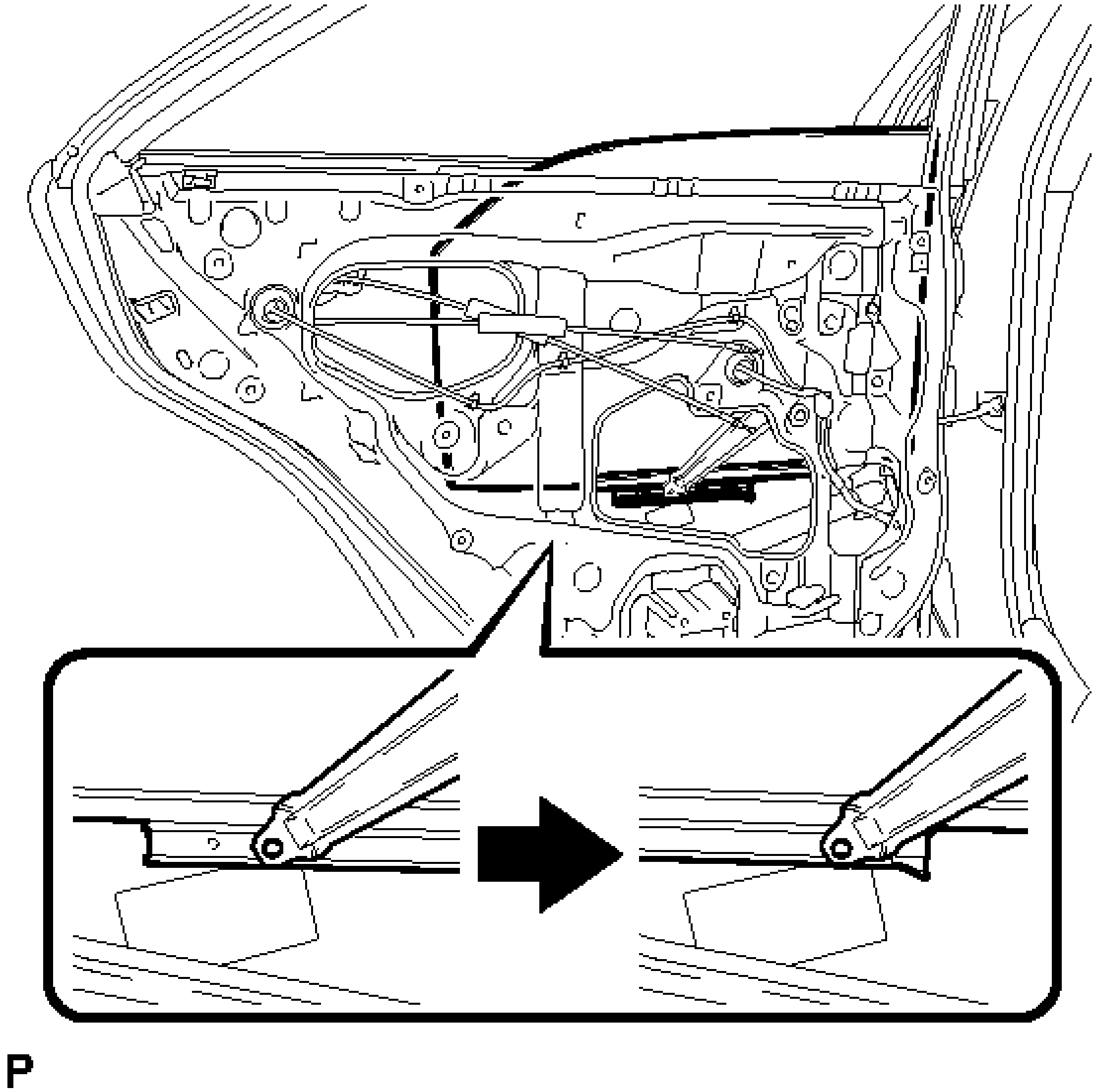

Fig. 146: Removing Rear Door Glass From Rear Door Window Regulator
Courtesy of TOYOTA MOTOR SALES, U.S.A., INC.

NOTE: **Do not damage the door glass.**

17. **REMOVE REAR DOOR FRAME GARNISH**
    a. Disengage the clip and remove the rear door frame garnish.

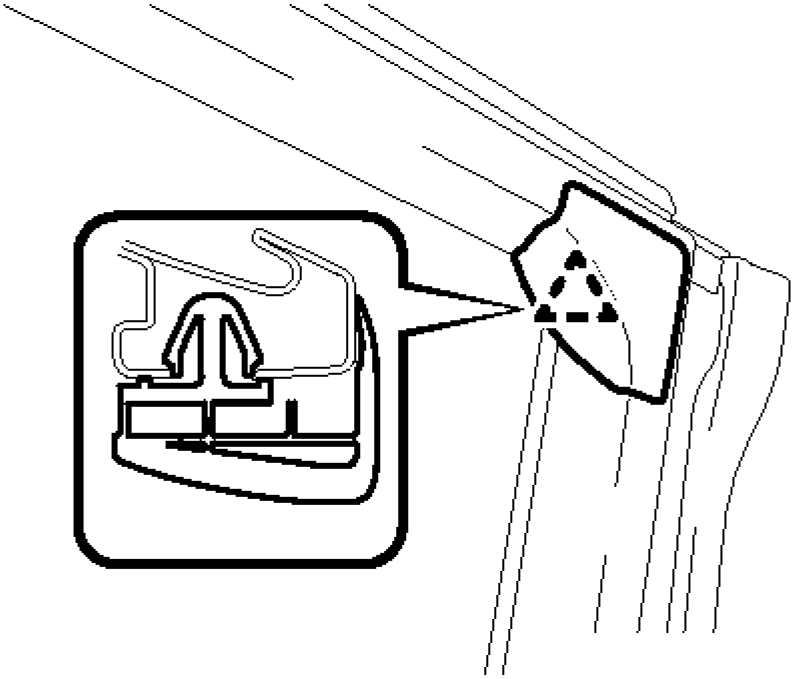

Fig. 147: Identifying Rear Door Frame Garnish Clip
Courtesy of TOYOTA MOTOR SALES, U.S.A., INC.

HINT:

This garnish needs to be replaced with a new one because the clip will break when removing it.

18. **REMOVE REAR DOOR INSIDE PANEL REINFORCE SUB-ASSEMBLY**
    a. Remove the 4 screws.

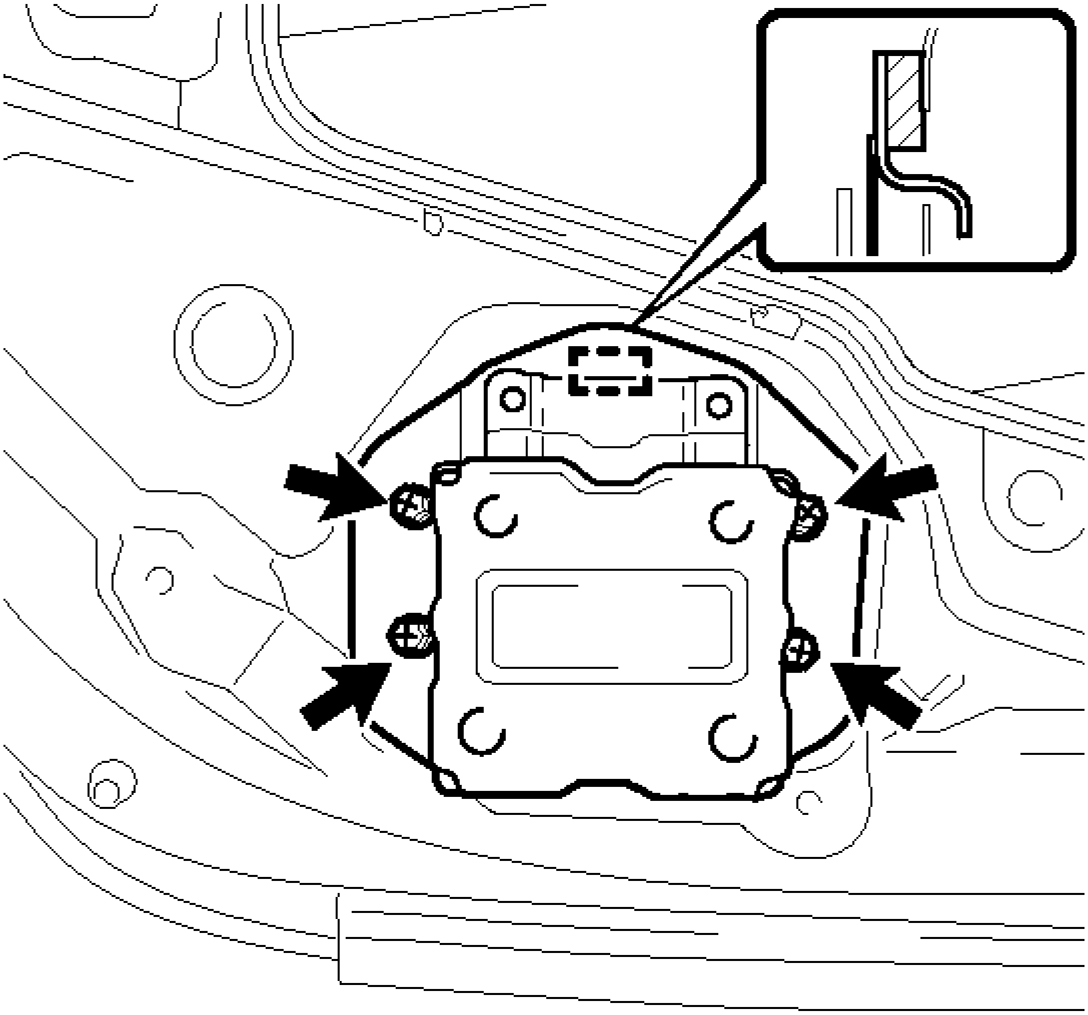

Fig. 148: Identifying Rear Door Inside Panel Reinforce Sub-Assembly Screws And Guide
Courtesy of TOYOTA MOTOR SALES, U.S.A., INC.

b. Disengage the guide and remove the rear door inside panel reinforce sub-assembly.

19. **REMOVE REAR DOOR WINDOW REGULATOR ASSEMBLY**

a. Disconnect the connector.

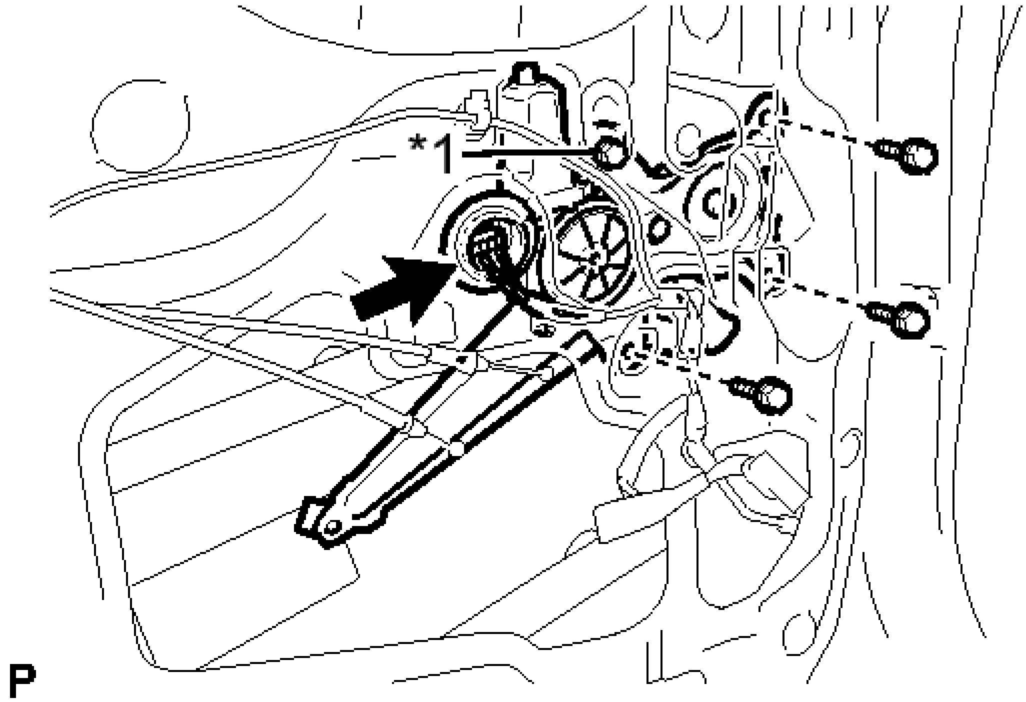

Fig. 149: Identifying Rear Door Window Regulator Temporary Bolt
Courtesy of TOYOTA MOTOR SALES, U.S.A., INC.

TEXT IN ILLUSTRATION

*1	Temporary Bolt

b. Loosen the temporary bolt.

NOTE: **Do not remove the temporary bolt. If the temporary bolt is removed, the rear door window regulator assembly may fall and cause damage.**

c. Remove the 3 bolts.
d. Remove the rear door window regulator assembly.
e. Remove the temporary bolt from the rear door window regulator assembly.

20. **REMOVE REAR POWER WINDOW REGULATOR MOTOR ASSEMBLY**

a. Using a T25 "TORX" socket wrench, remove the 3 screws and rear power window regulator motor assembly.

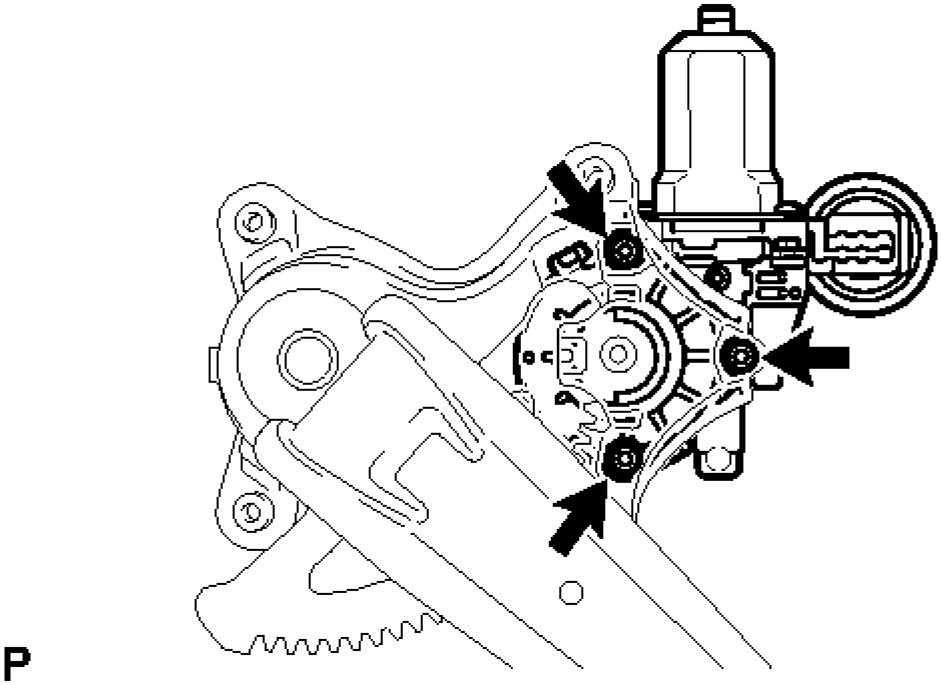

Fig. 150: Identifying Rear Power Window Regulator Motor Screws
Courtesy of TOYOTA MOTOR SALES, U.S.A., INC.

21. **REMOVE REAR DOOR LOCK WITH MOTOR ASSEMBLY**
    a. Using a T30 "TORX" socket wrench, remove the 3 screws.

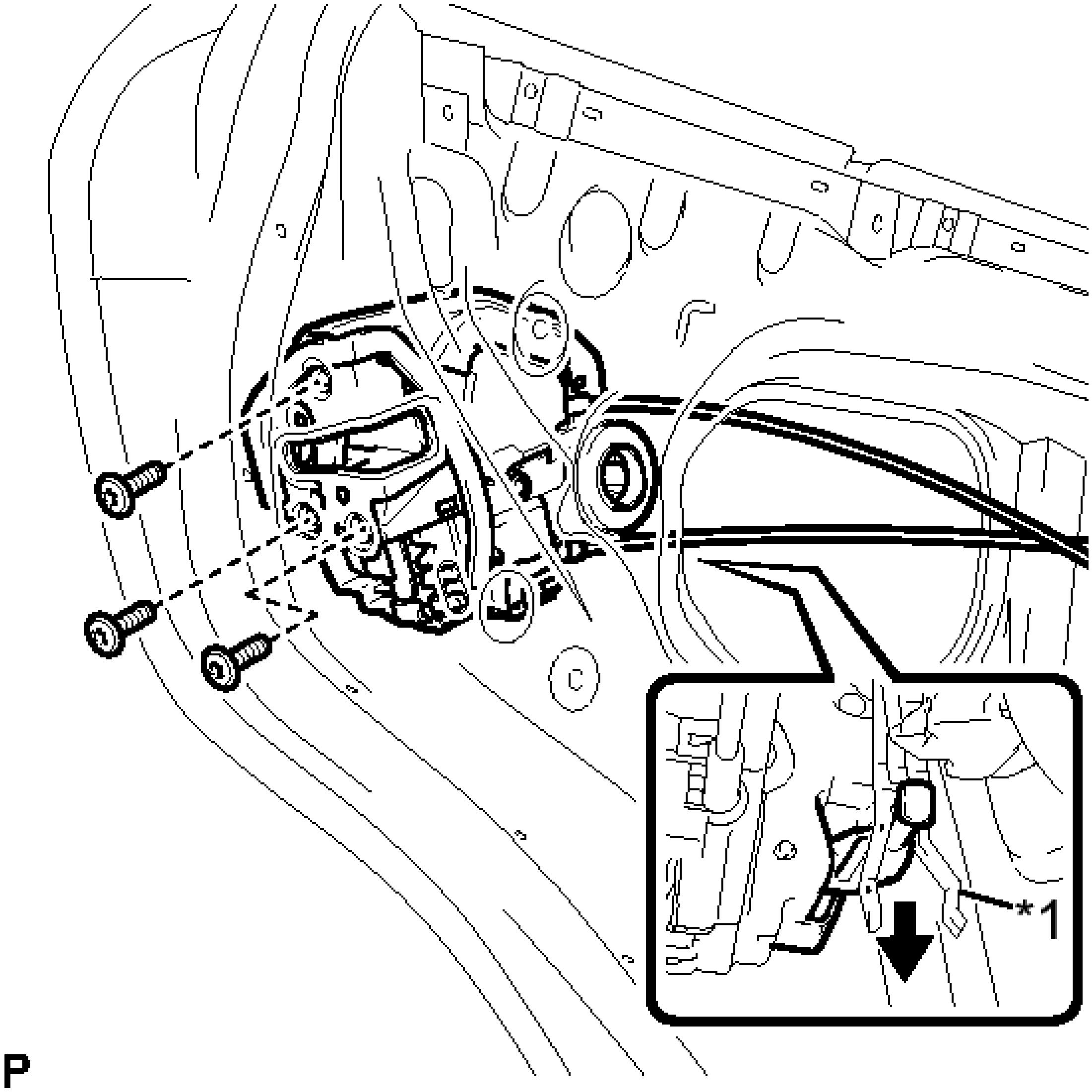

Fig. 151: Removing Rear Door Lock With Motor Assembly
Courtesy of TOYOTA MOTOR SALES, U.S.A., INC.

TEXT IN ILLUSTRATION

*1	Release Plate

b. Move the rear door lock with motor assembly downward and pull the release plate out of the rear door outside handle frame.
c. When reusing the rear door lock with motor assembly:
    1. Remove the door lock wiring harness seal from the rear door lock with motor assembly.

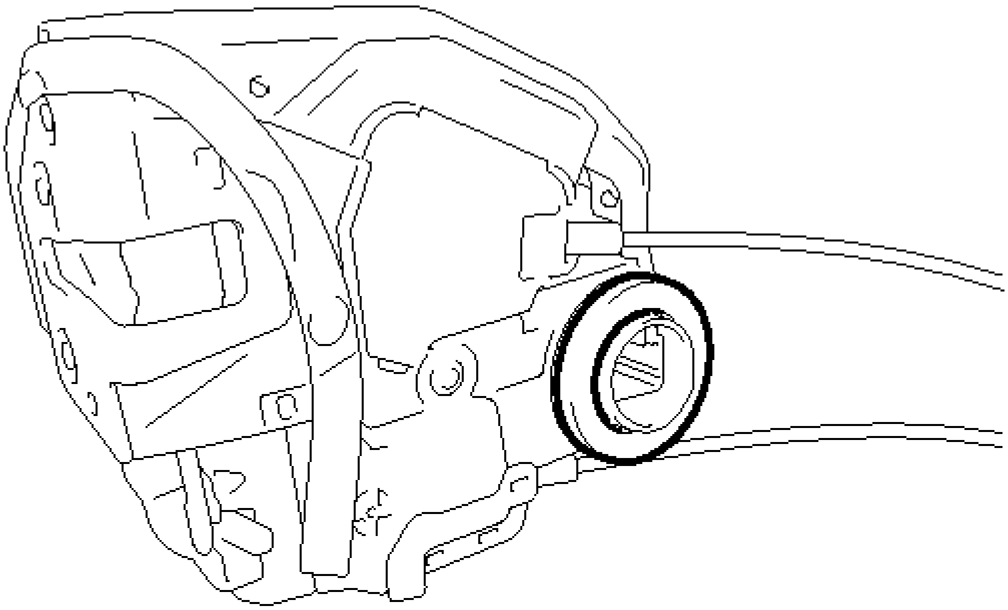

Fig. 152: Identifying Door Lock Wiring Harness Seal
Courtesy of TOYOTA MOTOR SALES, U.S.A., INC.

22. **REMOVE REAR DOOR LOCK REMOTE CONTROL CABLE ASSEMBLY**
    a. Using a screwdriver, disengage the claw.

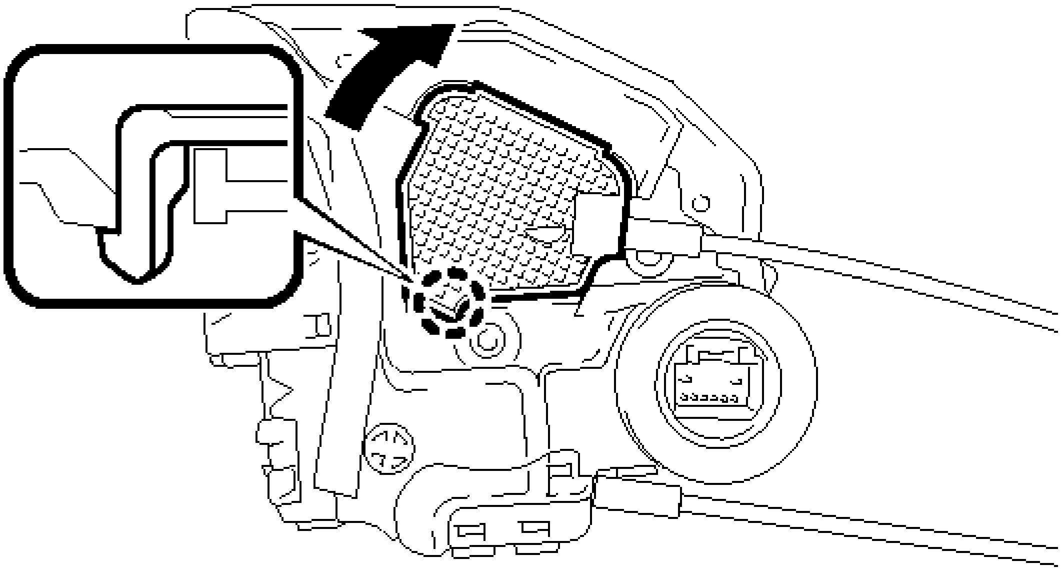

Fig. 153: Identifying Rear Door Lock Remote Control Cable Cover Claw

Courtesy of TOYOTA MOTOR SALES, U.S.A., INC.

b. Remove the rear door lock remote control cable assembly.

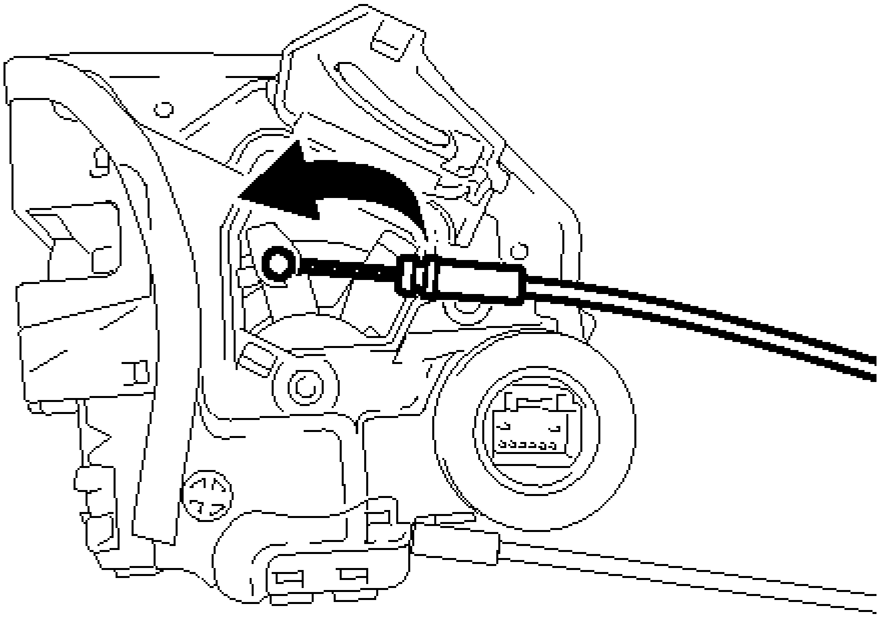

Fig. 154: Removing Rear Door Lock Remote Control Cable
Courtesy of TOYOTA MOTOR SALES, U.S.A., INC.

23. **REMOVE REAR DOOR INSIDE LOCKING CABLE ASSEMBLY**
    a. Using a screwdriver, disengage the 3 claws.

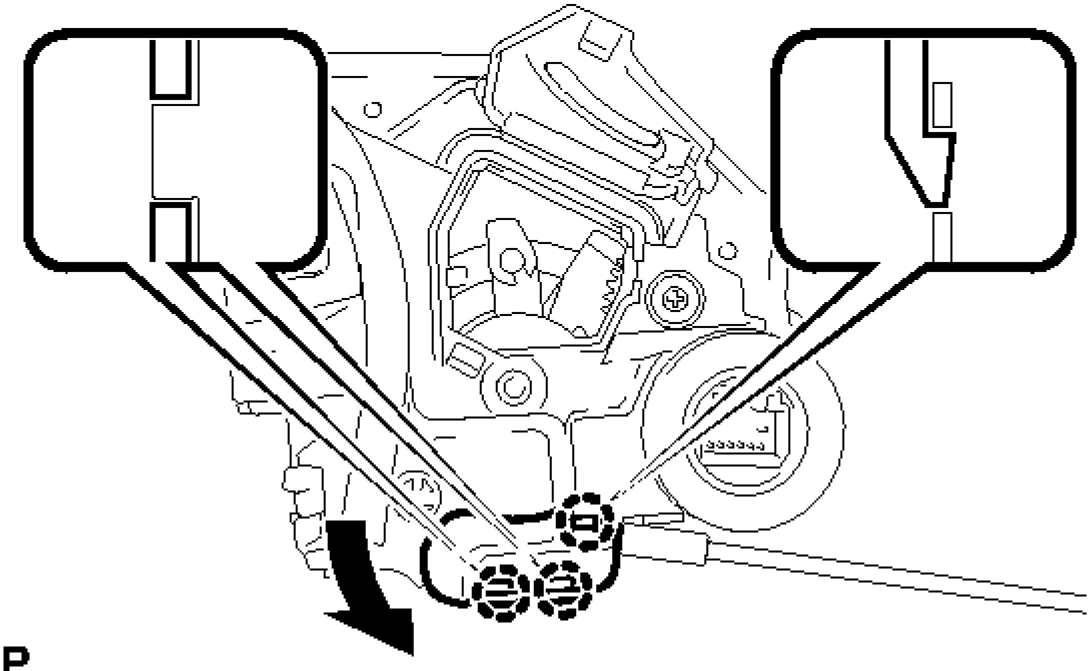

Fig. 155: Identifying Rear Door Inside Locking Cable Cover Claws
Courtesy of TOYOTA MOTOR SALES, U.S.A., INC.

b. Remove the rear door inside locking cable assembly.

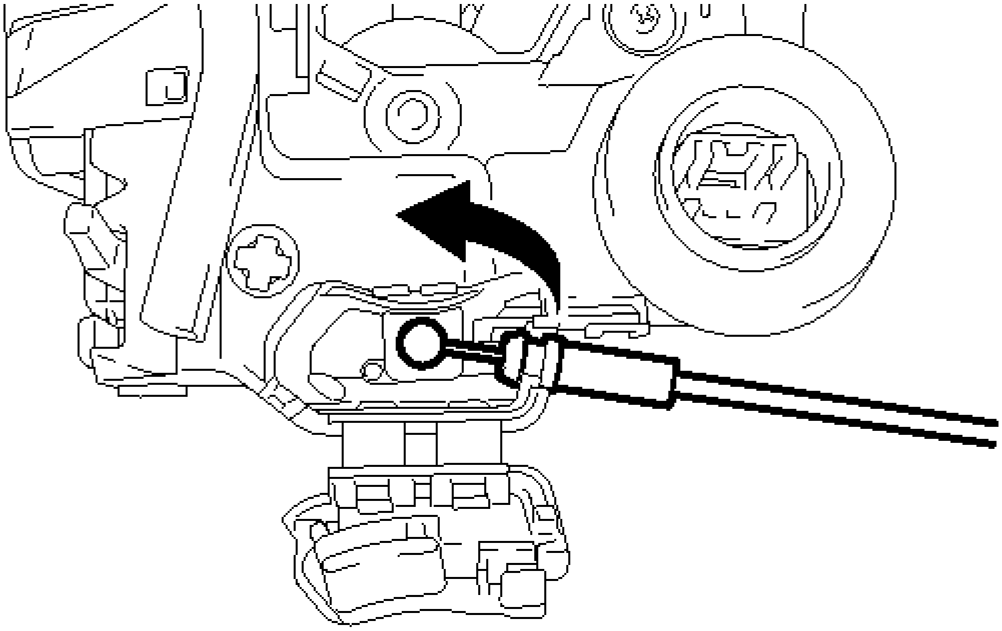

Fig. 156: Removing Rear Door Inside Locking Cable
Courtesy of TOYOTA MOTOR SALES, U.S.A., INC.

24. **REMOVE REAR DOOR OUTSIDE HANDLE COVER**

a. Using a T30 "TORX" socket wrench, loosen the screw.

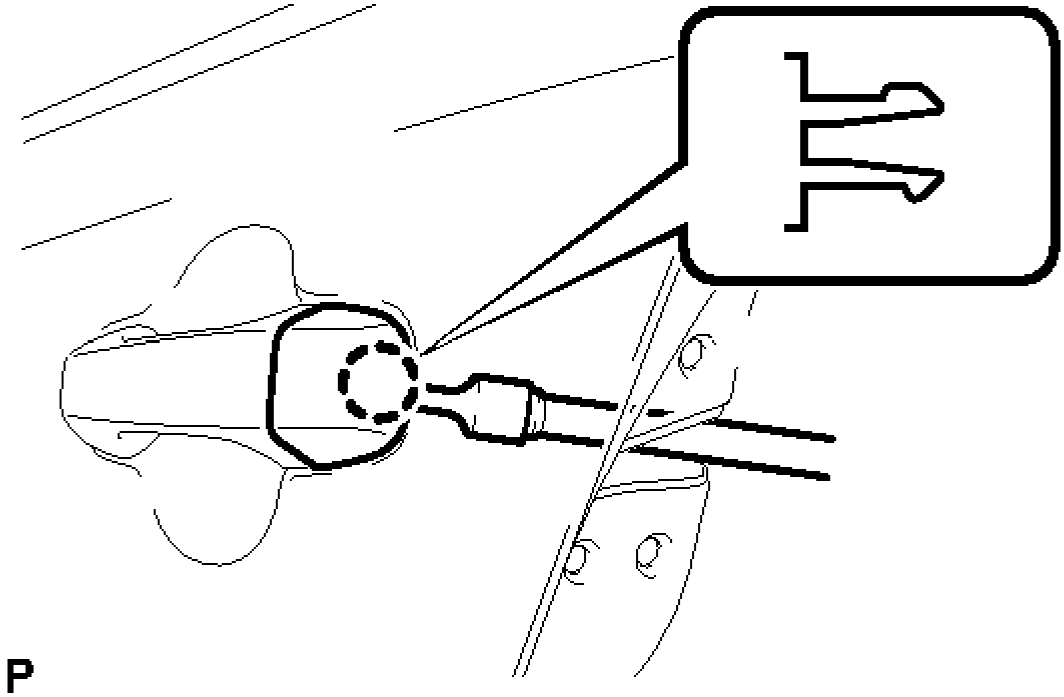

Fig. 157: Identifying Rear Door Outside Handle Cover Claw
Courtesy of TOYOTA MOTOR SALES, U.S.A., INC.

HINT:

The screw cannot be removed because it is integrated into the rear door outside handle frame sub-assembly.

b. Disengage the claw and remove the rear door outside handle cover.

25. **REMOVE REAR DOOR OUTSIDE HANDLE ASSEMBLY**

a. Pull and hold the release plate of the rear door outside handle frame sub-assembly as shown in the illustration.

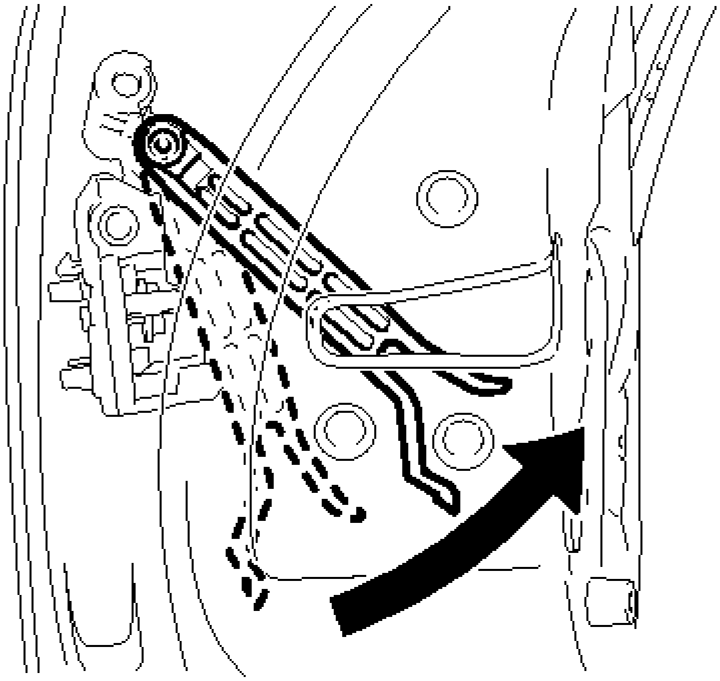

Fig. 158: Pulling Rear Door Outside Handle Frame Release Plate
Courtesy of TOYOTA MOTOR SALES, U.S.A., INC.

NOTE: The release plate may interfere with the rear door outside handle assembly and may be damaged when removing the rear door outside handle assembly, unless the release plate of the rear door outside handle frame sub-assembly is pulled and held.

b. Remove the rear door outside handle assembly as shown in the illustration.

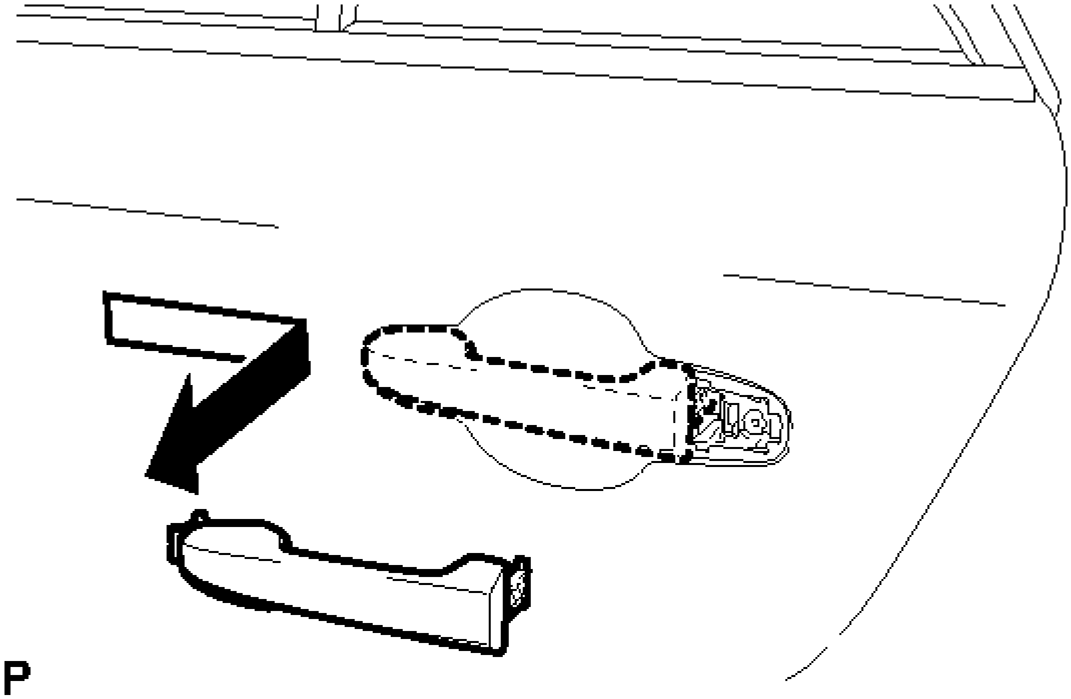

Fig. 159: Removing Rear Door Outside Handle
Courtesy of TOYOTA MOTOR SALES, U.S.A., INC.

26. **REMOVE REAR DOOR FRONT OUTSIDE HANDLE PAD**
    a. Disengage the 3 claws and remove the rear door front outside handle pad.

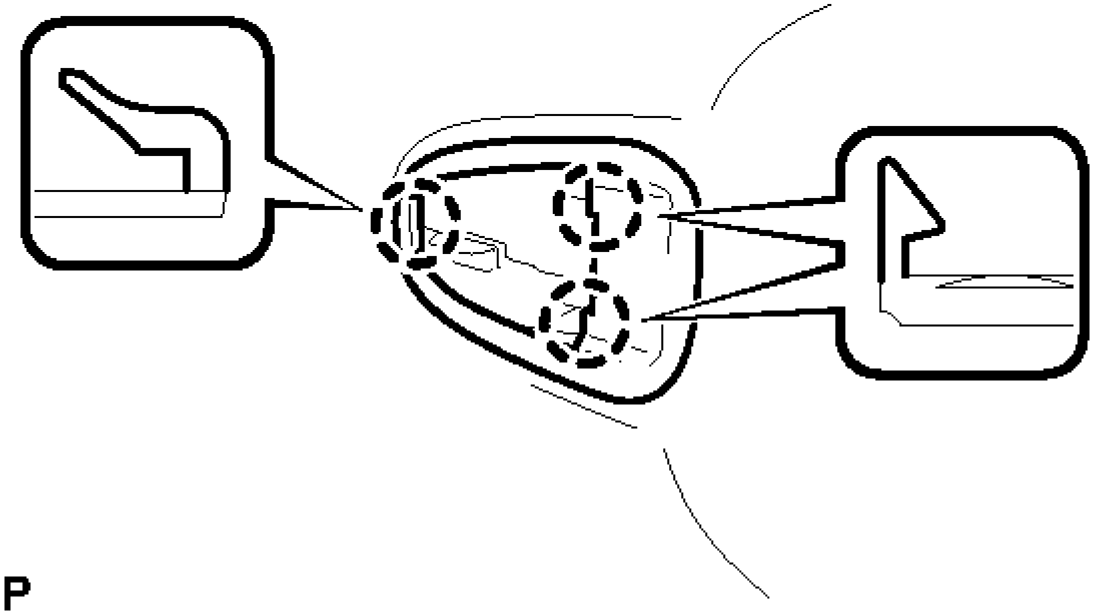

Fig. 160: Identifying Rear Door Front Outside Handle Pad Claws

Courtesy of TOYOTA MOTOR SALES, U.S.A., INC.

27. **REMOVE REAR DOOR REAR OUTSIDE HANDLE PAD**
    a. Disengage the 2 claws and remove the rear door rear outside handle pad.

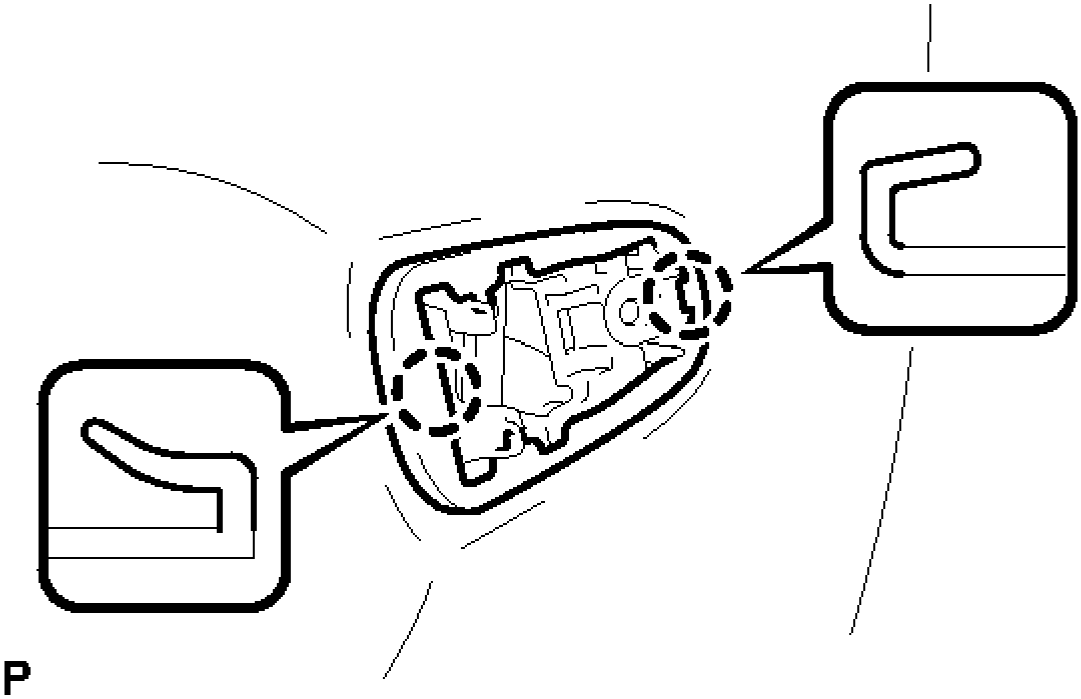

Fig. 161: Identifying Rear Door Rear Outside Handle Pad Claws
Courtesy of TOYOTA MOTOR SALES, U.S.A., INC.

28. **REMOVE REAR DOOR OUTSIDE HANDLE FRAME SUB-ASSEMBLY**
    a. Using a T30 "TORX" socket wrench, remove the screw and door handle nut.

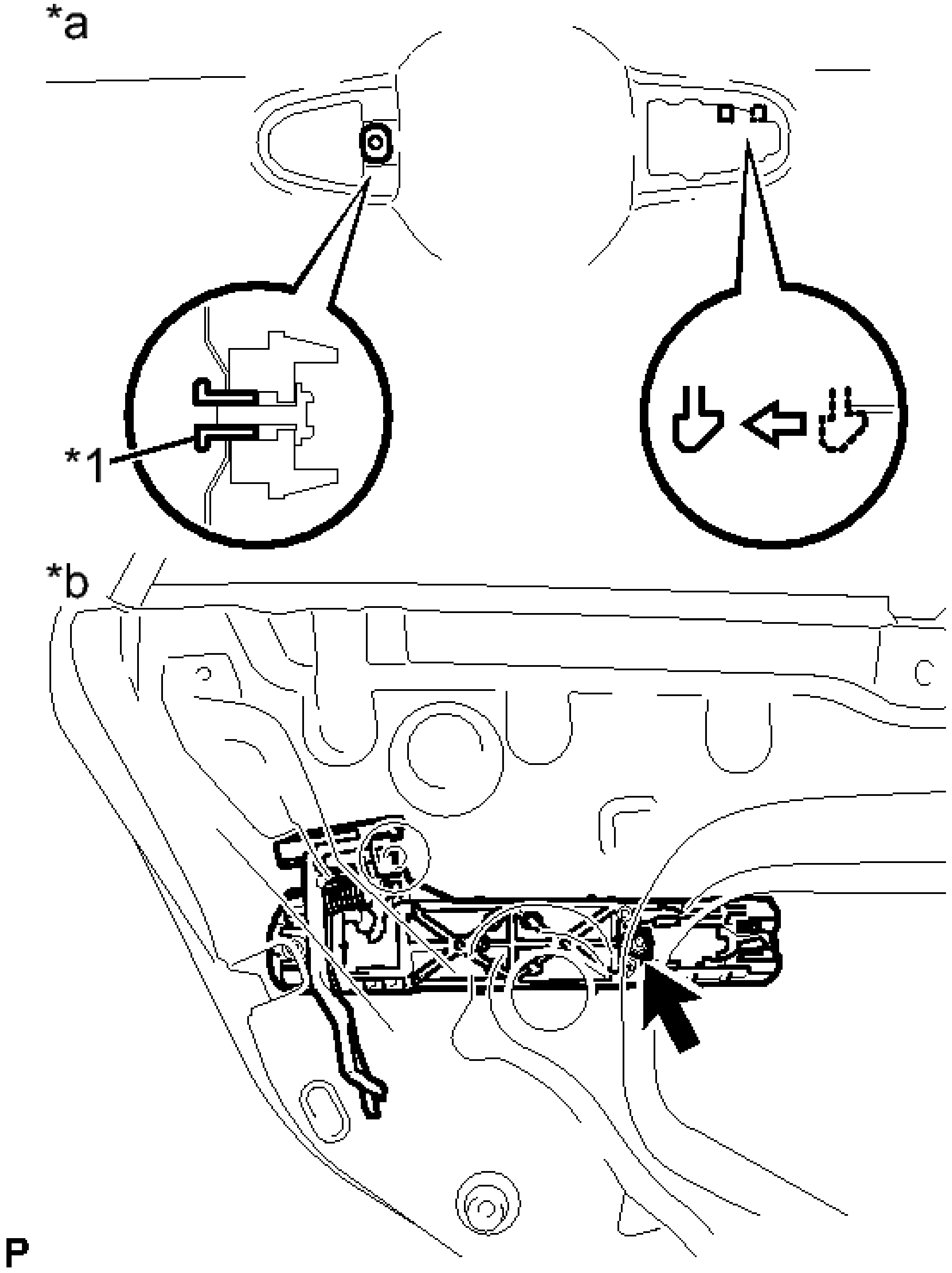

Fig. 162: Identifying Rear Door Outside Handle Frame Screw And Door Handle Nut
Courtesy of TOYOTA MOTOR SALES, U.S.A., INC.

TEXT IN ILLUSTRATION

	Door

*1	Handle Nut
*a	Outside
*b	Inside

b. Slide the rear door outside handle frame sub-assembly to disengage the claw of the rear door outside handle frame sub-assembly, and then remove it.

29. **REMOVE REAR DOOR NO. 2 WEATHERSTRIP**

a. Using a clip remover, disengage the 5 clips and remove the rear door No. 2 weatherstrip.

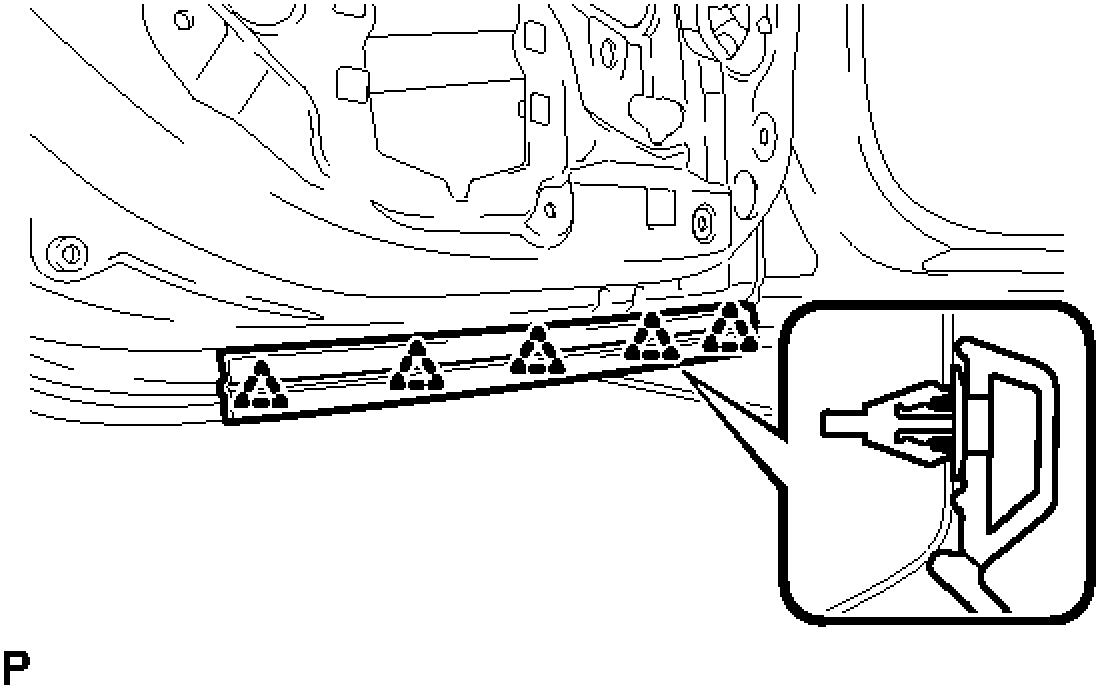

Fig. 163: Identifying Rear Door No. 2 Weatherstrip Clips
Courtesy of TOYOTA MOTOR SALES, U.S.A., INC.

30. **REMOVE REAR DOOR PANEL CUSHION**

a. Disengage the 2 claws and remove the 2 rear door panel cushions.

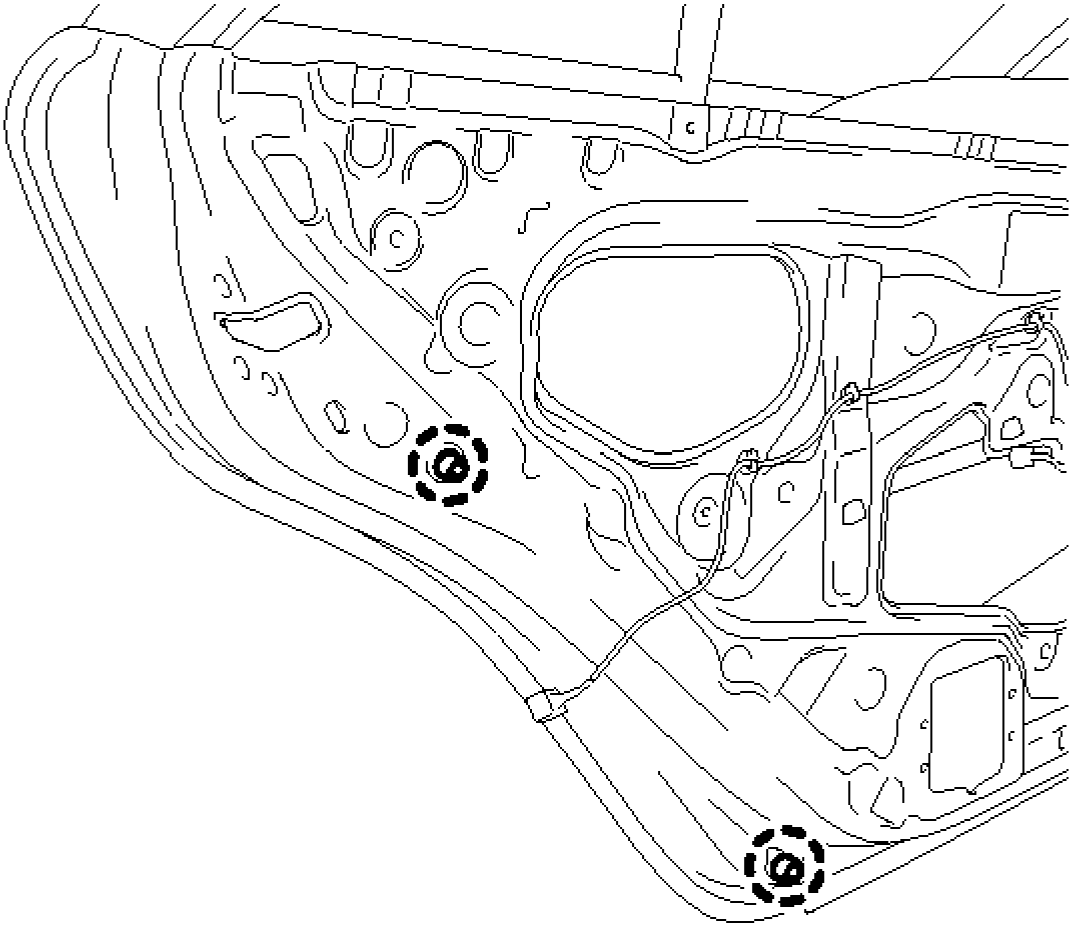

Fig. 164: Identifying Rear Door Panel Cushions
Courtesy of TOYOTA MOTOR SALES, U.S.A., INC.

31. **REMOVE REAR DOOR BELT MOULDING ASSEMBLY** . Refer to **REMOVAL - Step 16**
32. **REMOVE REAR DOOR FRONT WINDOW FRAME MOULDING** . Refer to **REMOVAL - Step 2**
33. **REMOVE REAR DOOR UPPER WINDOW FRAME MOULDING** . Refer to **REMOVAL - Step 3**
34. **REMOVE REAR DOOR OUTSIDE STRIPE** . Refer to **REMOVAL - Step 17**
35. **REMOVE REAR DOOR LOWER OUTSIDE STRIPE** . Refer to **REMOVAL - Step 18**

ADJUSTMENT

ADJUSTMENT

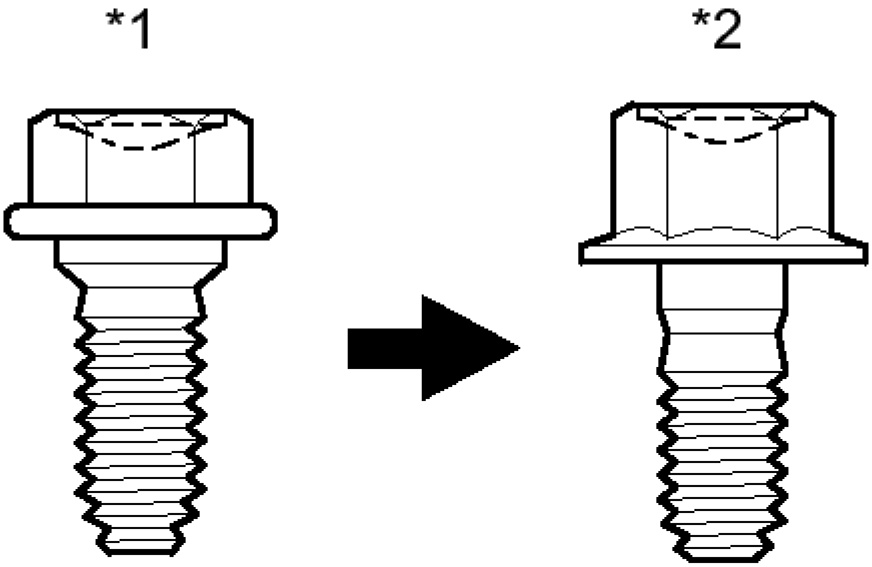

P

Fig. 165: Identifying Centering Bolt And Standard Bolt
Courtesy of TOYOTA MOTOR SALES, U.S.A., INC.

TEXT IN ILLUSTRATION

*1	Centering Bolt
*2	Standard Bolt

HINT:

- Use the same procedure for the RH side and LH side.
- The procedure listed below is for the LH side.
- Centering bolts are used to mount the door hinge to the vehicle body and door. The door cannot be adjusted with the centering bolts installed. Substitute the centering bolts with standard bolts when making adjustments.
- Specified torque for standard bolts is shown in the standard bolt chart. Refer to **SPECIFIED TORQUE FOR STANDARD BOLTS** .

1. **INSPECT REAR DOOR**
    a. Check that the clearance measurements of areas a through r are within each standard range.

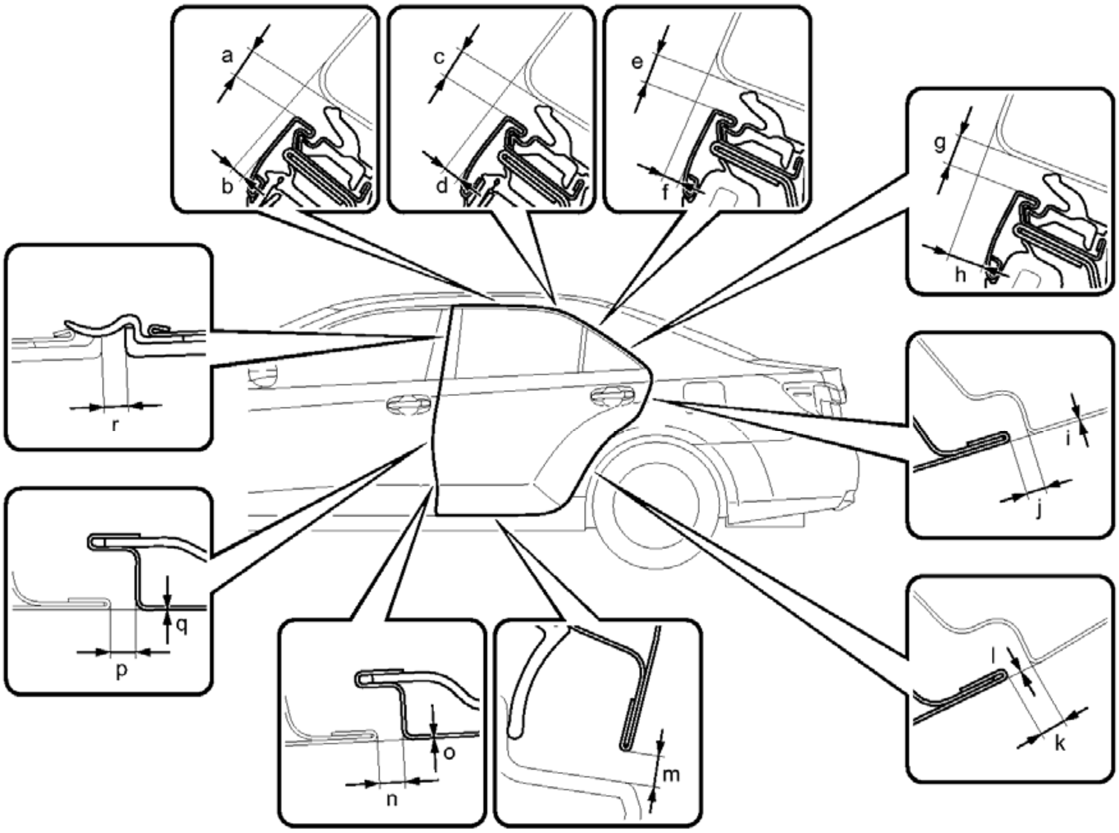

P

Fig. 166: Checking Rear Door Clearance Measurements
Courtesy of TOYOTA MOTOR SALES, U.S.A., INC.

STANDARD CLEARANCE

Area	Measurement	Area	Measurement
a	3.35 to 6.35 mm (0.132 to 0.250 in.)	b	0.6 to 3.6 mm (0.0236 to 0.142 in.)
c	3.35 to 6.35 mm (0.132 to 0.250 in.)	d	0.9 to 3.9 mm (0.0354 to 0.154 in.)
e	3.35 to 6.35 mm (0.132 to 0.250 in.)	f	1.5 to 4.5 mm (0.0591 to 0.177 in.)
g	3.35 to 6.35 mm (0.132 to 0.250 in.)	h	5.4 to 8.4 mm (0.213 to 0.331 in.)

i	-1.5 to 1.5 mm (-0.0591 to 0.0591 in.)	j	2.0 to 5.0 mm (0.0787 to 0.197 in.)
k	2.0 to 5.0 mm (0.0787 to 0.197 in.)	l	-1.5 to 1.5 mm (-0.0591 to 0.0591 in.)
m	2.9 to 7.1 mm (0.114 to 0.280 in.)	n	2.6 to 5.0 mm (0.102 to 0.197 in.)
o	-1.2 to 1.2 mm (-0.0472 to 0.0472 in.)	p	2.6 to 5.0 mm (0.102 to 0.197 in.)
q	-1.2 to 1.2 mm (-0.0472 to 0.0472 in.)	r	2.3 to 6.3 mm (0.0906 to 0.248 in.)

2. **ADJUST REAR DOOR**

NOTE: **Make sure to turn the power switch off when adjusting door lock strikers.**

a. Using SST, loosen the hinge bolts on the vehicle body and adjust the door position.
   - **SST: 09812-00010**

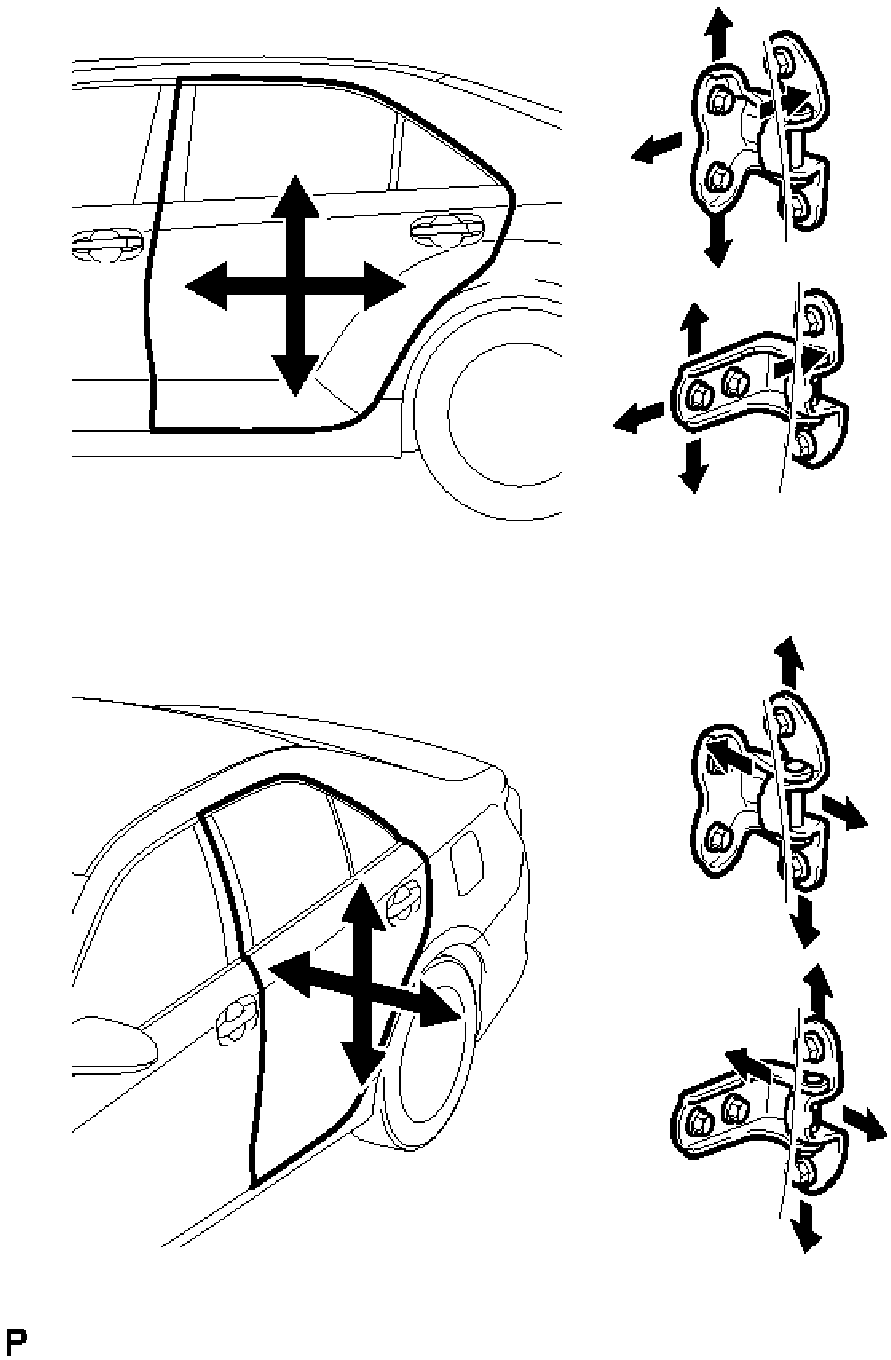

Fig. 167: Adjusting The Door Position
Courtesy of TOYOTA MOTOR SALES, U.S.A., INC.

b. Tighten the hinge bolts on the vehicle body after the adjustment.

Torque: 26 N*m (265 kgf*cm, 19 ft.*lbf)

c. Loosen the hinge bolts on the door and adjust the door position.
d. Tighten the hinge bolts on the door after the adjustment.

Torque: 26 N*m (265 kgf*cm, 19 ft.*lbf)

e. Using a T40 "TORX" socket wrench, slightly loosen the striker mounting screws.

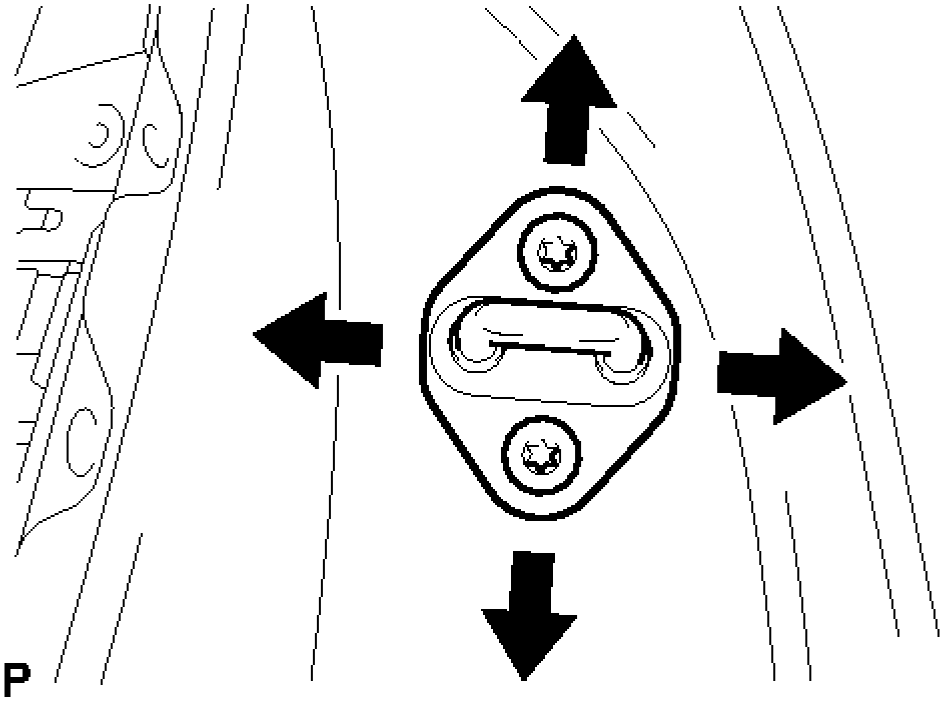

Fig. 168: Adjusting Door Striker
Courtesy of TOYOTA MOTOR SALES, U.S.A., INC.

f. Using a brass bar and a hammer, hit the striker to adjust its position.
g. Using a T40 "TORX" socket wrench, tighten the striker mounting screws after adjustment.

Torque: 23 N*m (235 kgf*cm, 17 ft.*lbf)

REASSEMBLY

REASSEMBLY

HINT:

- Use the same procedure for both the RH and LH sides.
- The procedure described below is for the LH side.

1. **REPAIR INSTRUCTION** . Refer to **INSTALLATION - Step 2**

2. **INSTALL REAR DOOR LOWER OUTSIDE STRIPE** . Refer to **INSTALLATION - Step 2**
3. **INSTALL REAR DOOR OUTSIDE STRIPE** . Refer to **INSTALLATION - Step 3**
4. **INSTALL REAR DOOR UPPER WINDOW FRAME MOULDING** . Refer to **INSTALLATION - Step 1**
5. **INSTALL REAR DOOR FRONT WINDOW FRAME MOULDING** . Refer to **INSTALLATION - Step 2**
6. **INSTALL REAR DOOR BELT MOULDING ASSEMBLY** . Refer to **INSTALLATION - Step 1**
7. **INSTALL REAR DOOR PANEL CUSHION**
    a. Engage the 2 claws to install 2 new rear door panel cushions.

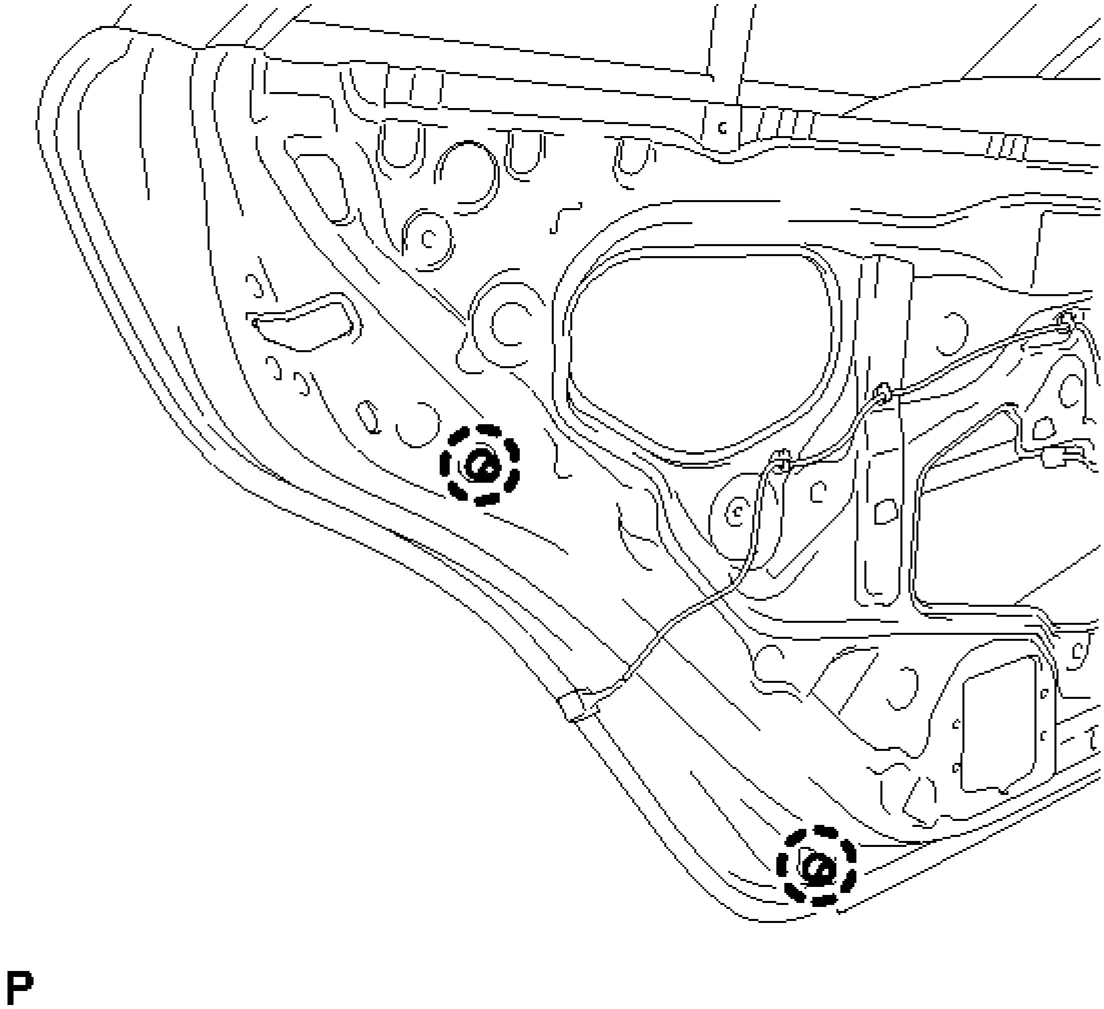

Fig. 169: Identifying Rear Door Panel Cushions
Courtesy of TOYOTA MOTOR SALES, U.S.A., INC.

8. **INSTALL REAR DOOR NO. 2 WEATHERSTRIP**

a. Engage the 5 clips to install the rear door No. 2 weatherstrip.

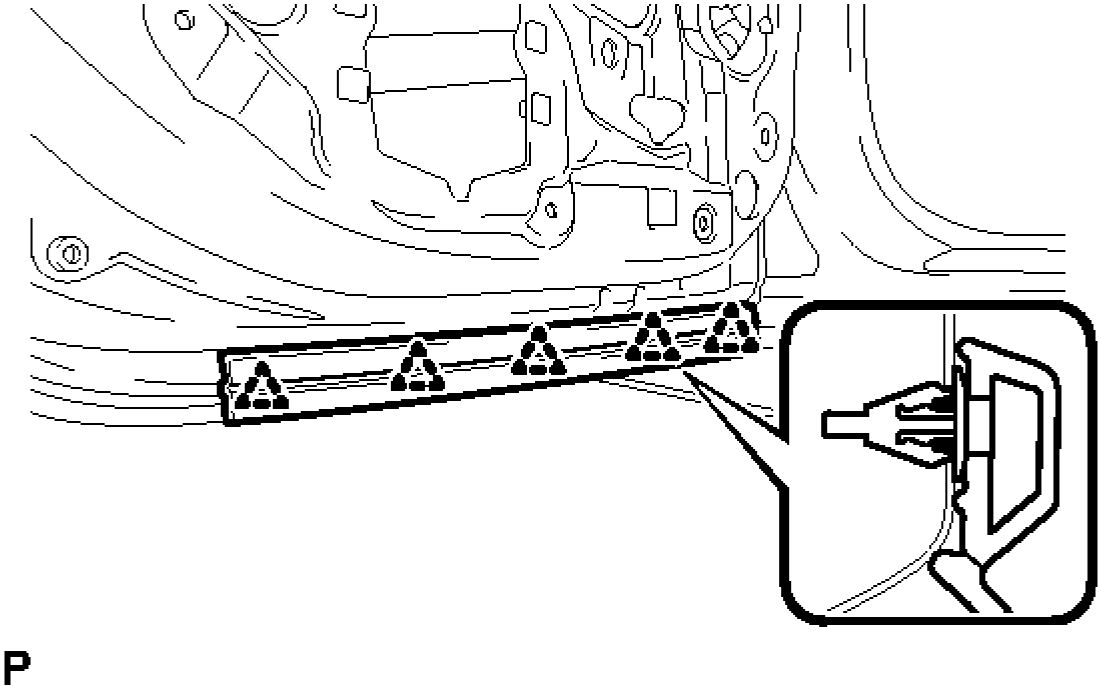

Fig. 170: Identifying Rear Door No. 2 Weatherstrip Clips
Courtesy of TOYOTA MOTOR SALES, U.S.A., INC.

9. **INSTALL REAR DOOR OUTSIDE HANDLE FRAME SUB-ASSEMBLY**
    a. Apply MP grease to the sliding parts of the rear door outside handle frame sub-assembly.
    b. Engage the claw.

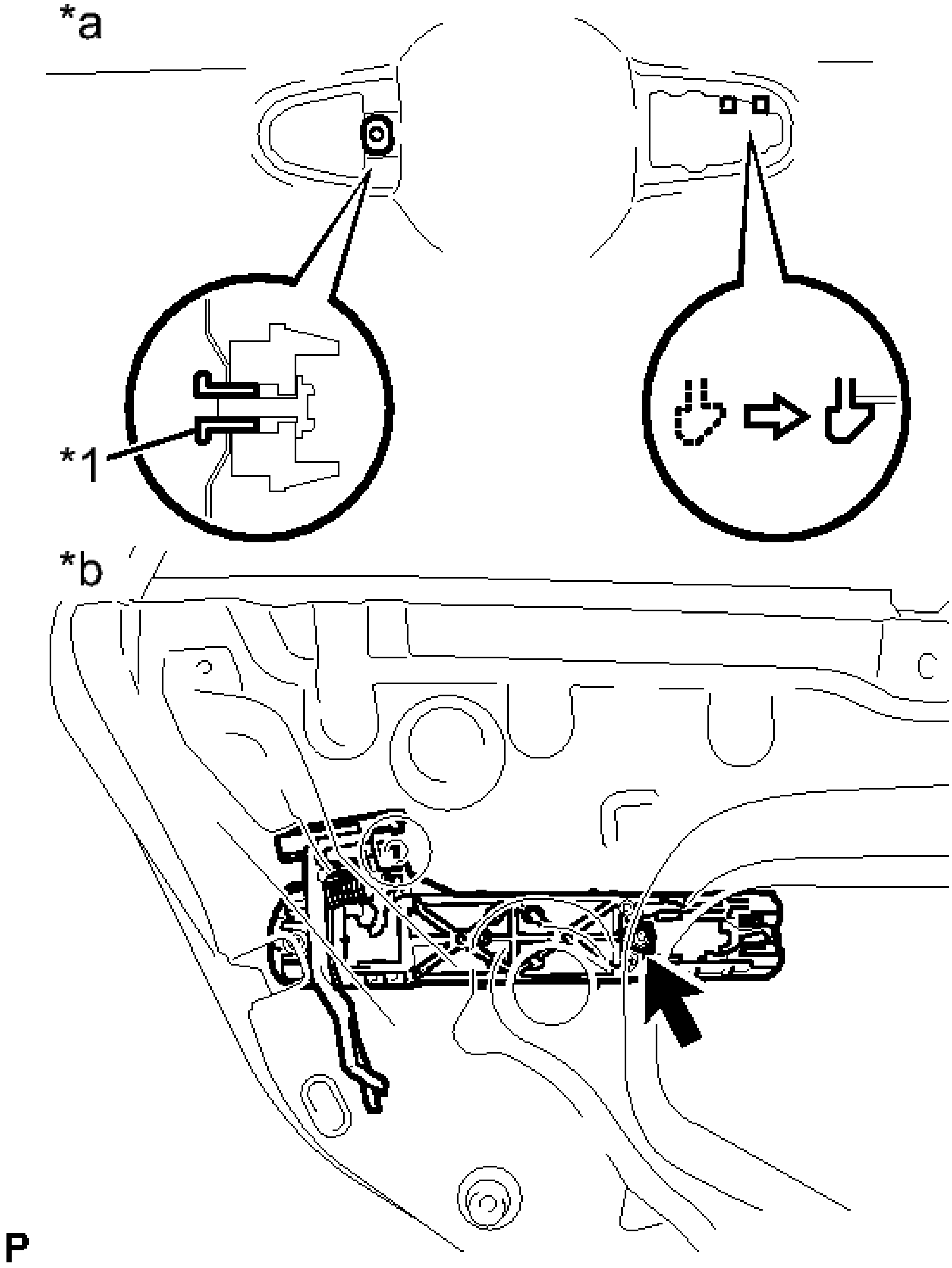

Fig. 171: Identifying Rear Door Outside Handle Frame Screw And Door Handle Nut
Courtesy of TOYOTA MOTOR SALES, U.S.A., INC.

TEXT IN ILLUSTRATION

	Door

*1	Handle Nut
*a	Outside
*b	Inside

c. Using a T30 "TORX" socket wrench, install the rear door outside handle frame sub-assembly with the screw and door handle nut.

Torque: 4.0 N*m (41 kgf*cm, 35 in.*lbf)

10. **INSTALL REAR DOOR REAR OUTSIDE HANDLE PAD**
    a. Engage the 2 claws to install the rear door rear outside handle pad.

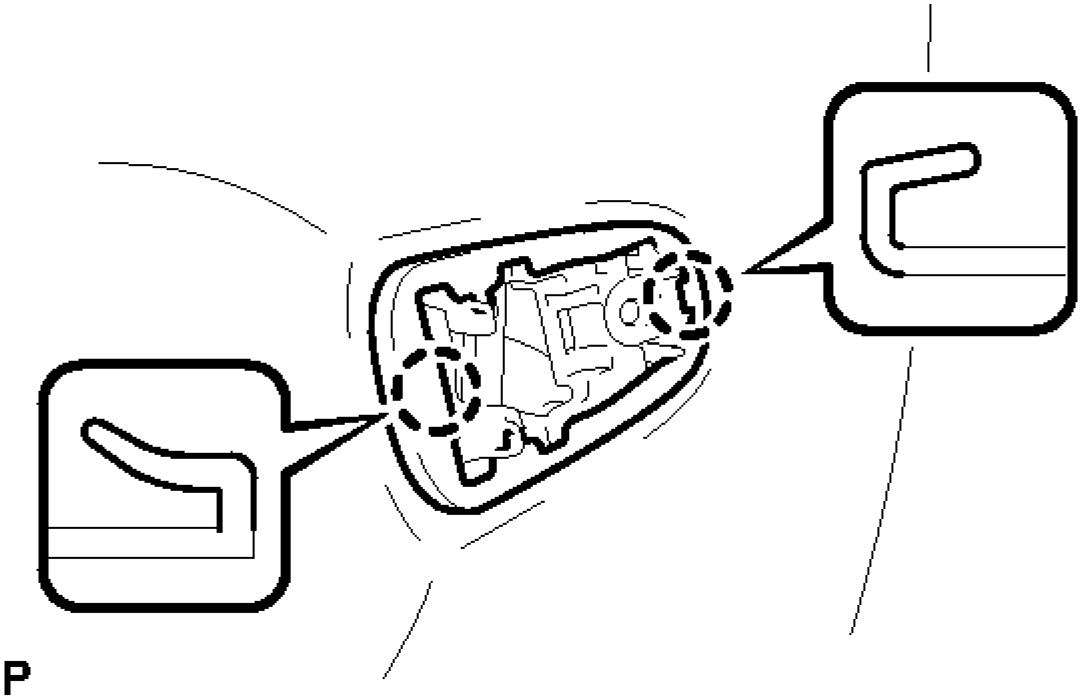

Fig. 172: Identifying Rear Door Rear Outside Handle Pad Claws
Courtesy of TOYOTA MOTOR SALES, U.S.A., INC.

11. **INSTALL REAR DOOR FRONT OUTSIDE HANDLE PAD**
    a. Engage the 3 claws to install the rear door front outside handle pad.

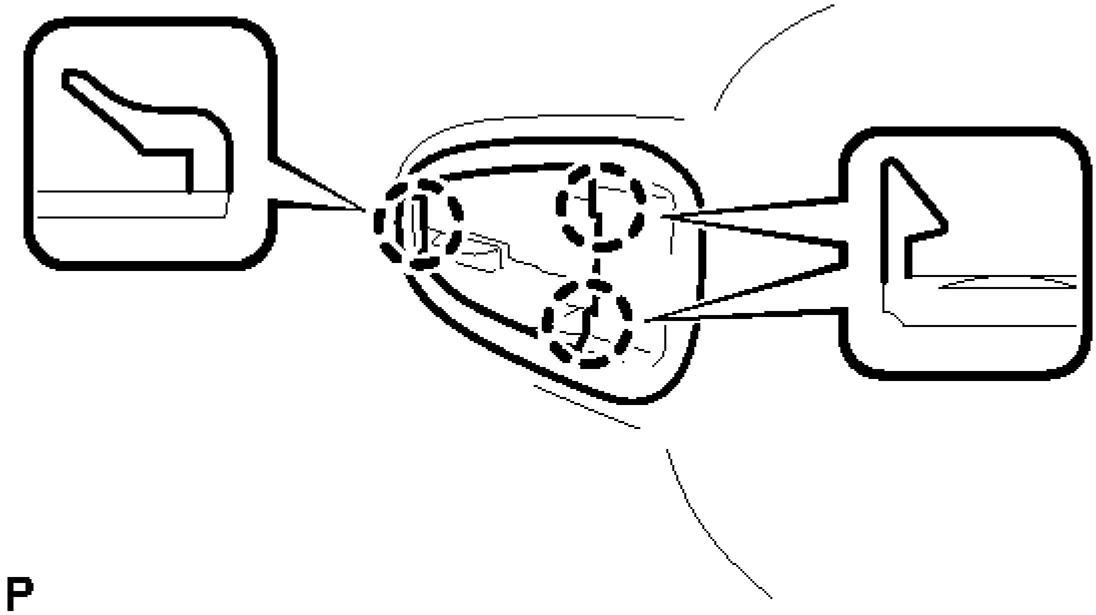

Fig. 173: Identifying Rear Door Front Outside Handle Pad Claws
Courtesy of TOYOTA MOTOR SALES, U.S.A., INC.

12. **INSTALL REAR DOOR OUTSIDE HANDLE ASSEMBLY**
    a. Insert the front end of the rear door outside handle assembly into the rear door outside handle frame.

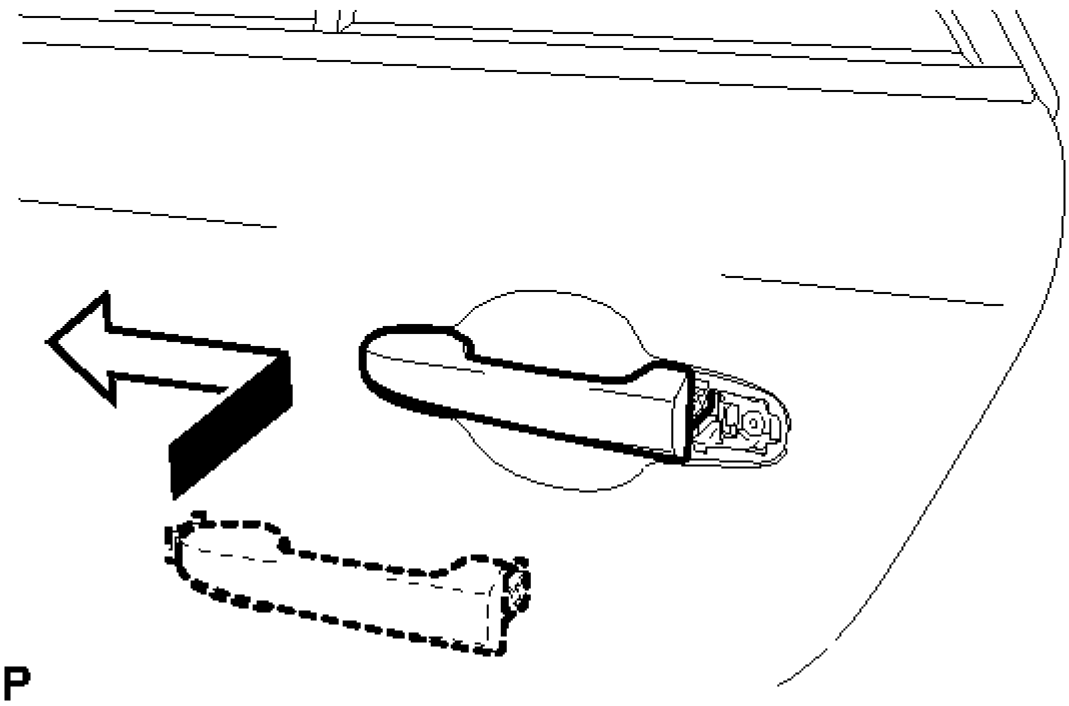

Fig. 174: Inserting Rear Door Outside Handle
Courtesy of TOYOTA MOTOR SALES, U.S.A., INC.

NOTE: **If the bellcrank lever is not pulled and held when installing the outside handle, the bellcrank lever will interfere with the outside handle and the release plate will be damaged.**

b. Insert the rear end of the rear door outside handle assembly into the rear door outside handle frame. Next, slide the rear door outside handle assembly toward the front of the vehicle to install it.

13. **INSTALL REAR DOOR OUTSIDE HANDLE COVER**

a. Engage the claw and install the rear door outside handle cover.

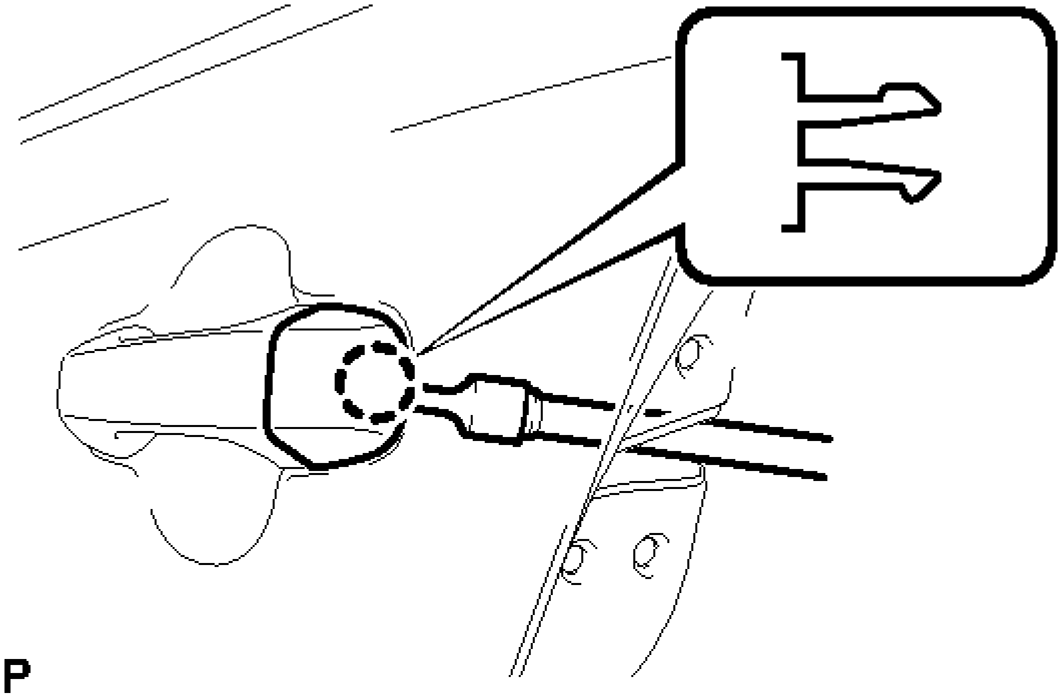

Fig. 175: Identifying Rear Door Outside Handle Cover Claw
Courtesy of TOYOTA MOTOR SALES, U.S.A., INC.

b. Using a T30 "TORX" socket wrench, install the rear door outside handle cover with the screw.

Torque: 4.0 N*m (41 kgf*cm, 35 in.*lbf)

14. **INSTALL REAR DOOR INSIDE LOCKING CABLE ASSEMBLY**

a. Install the rear door inside locking cable assembly.

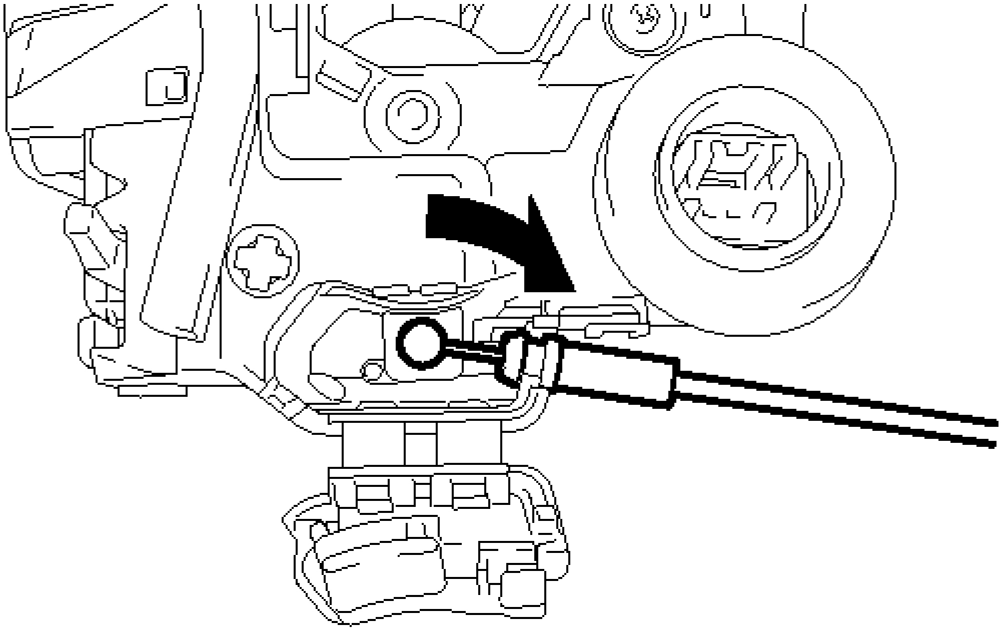

Fig. 176: Installing Rear Door Inside Locking Cable
Courtesy of TOYOTA MOTOR SALES, U.S.A., INC.

b. Engage the 3 claws.

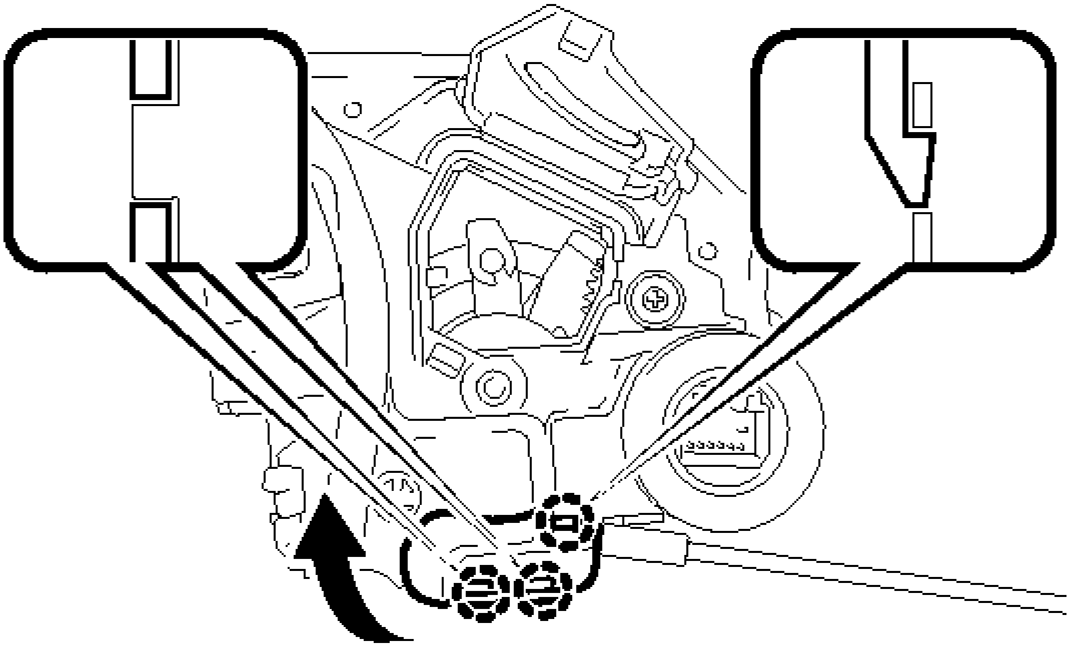

Fig. 177: Identifying Rear Door Inside Locking Cable Cover Claws
Courtesy of TOYOTA MOTOR SALES, U.S.A., INC.

15. **INSTALL REAR DOOR LOCK REMOTE CONTROL CABLE ASSEMBLY**

   a. Install the rear door lock remote control cable assembly.

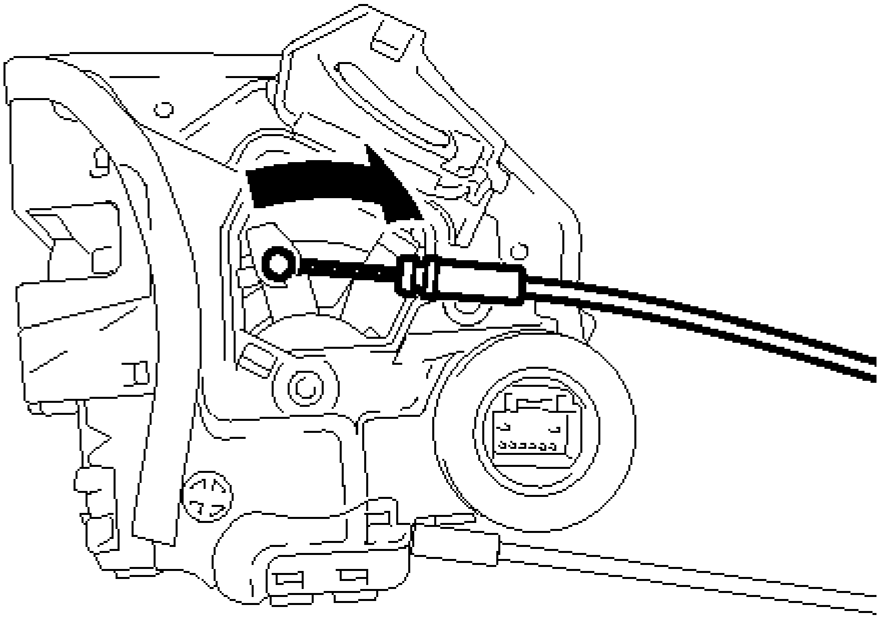

P

Fig. 178: Removing Rear Door Lock Remote Control Cable
Courtesy of TOYOTA MOTOR SALES, U.S.A., INC.

   b. Engage the claw.

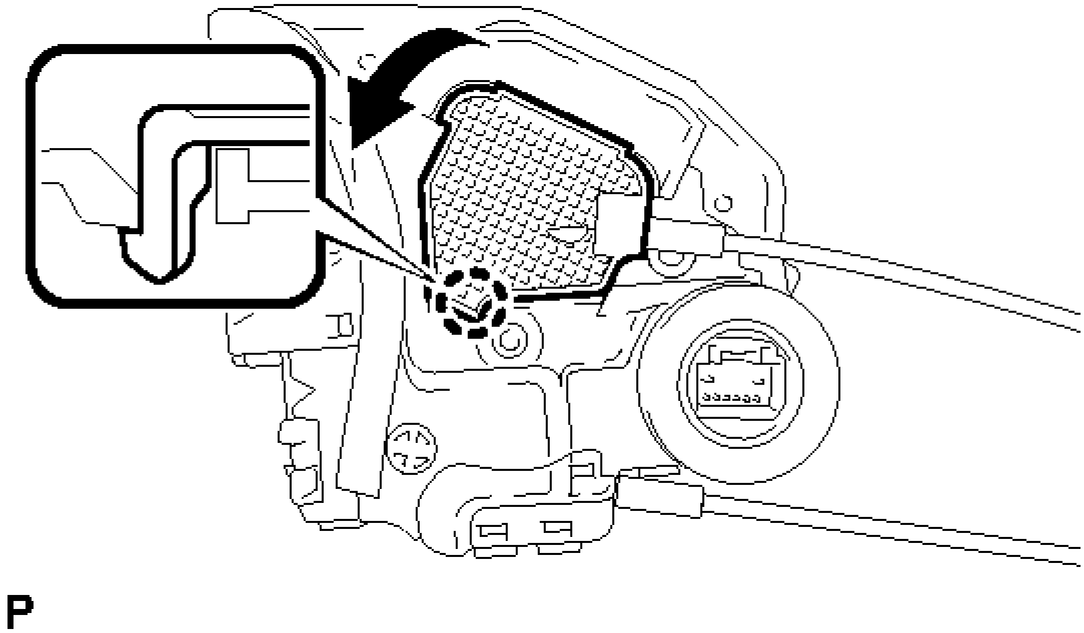

Fig. 179: Identifying Rear Door Lock Remote Control Cable Cover Claw
Courtesy of TOYOTA MOTOR SALES, U.S.A., INC.

16. **INSTALL REAR DOOR LOCK WITH MOTOR ASSEMBLY**

NOTE:

- **When reusing the removed rear door lock with motor assembly, replace the door lock wiring harness seal on the connector with a new one.**
- **Do not allow grease or dust to adhere to the door lock wiring harness seal surface of the connector.**
- **Reusing the door lock wiring harness seal or using a damaged door lock wiring harness seal may cause water intrusion. This may result in a malfunction of the rear door lock with motor assembly.**

a. Apply MP grease to the sliding parts of the rear door lock with motor assembly.
b. When reusing the rear door lock with motor assembly:
    1. Install a new door lock wiring harness seal to the rear door lock with motor assembly.

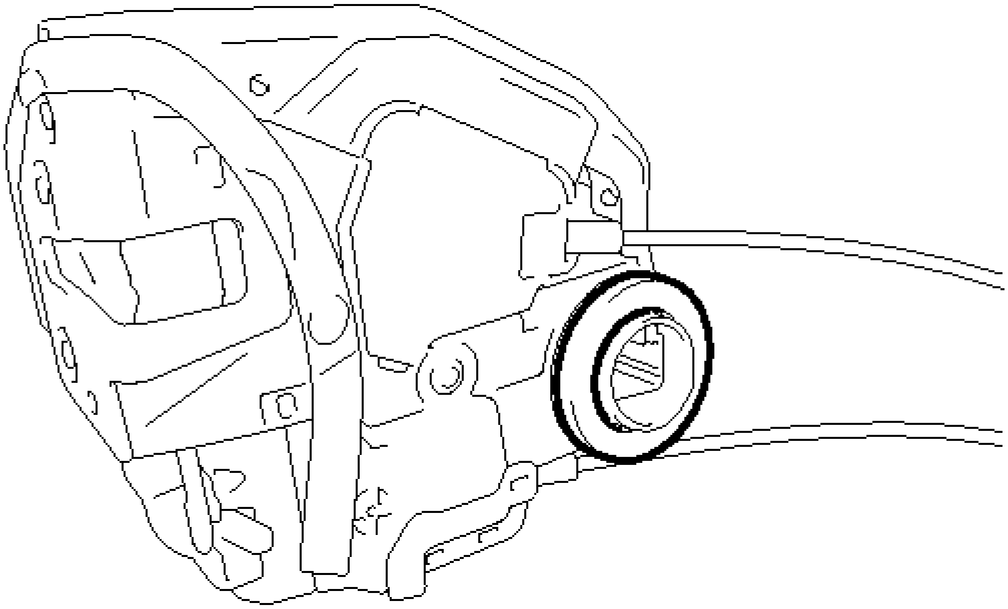

Fig. 180: Identifying Door Lock Wiring Harness Seal
Courtesy of TOYOTA MOTOR SALES, U.S.A., INC.

c. Insert the rear door lock with motor assembly to the rear door outside handle release plate, and set it to the rear door panel.

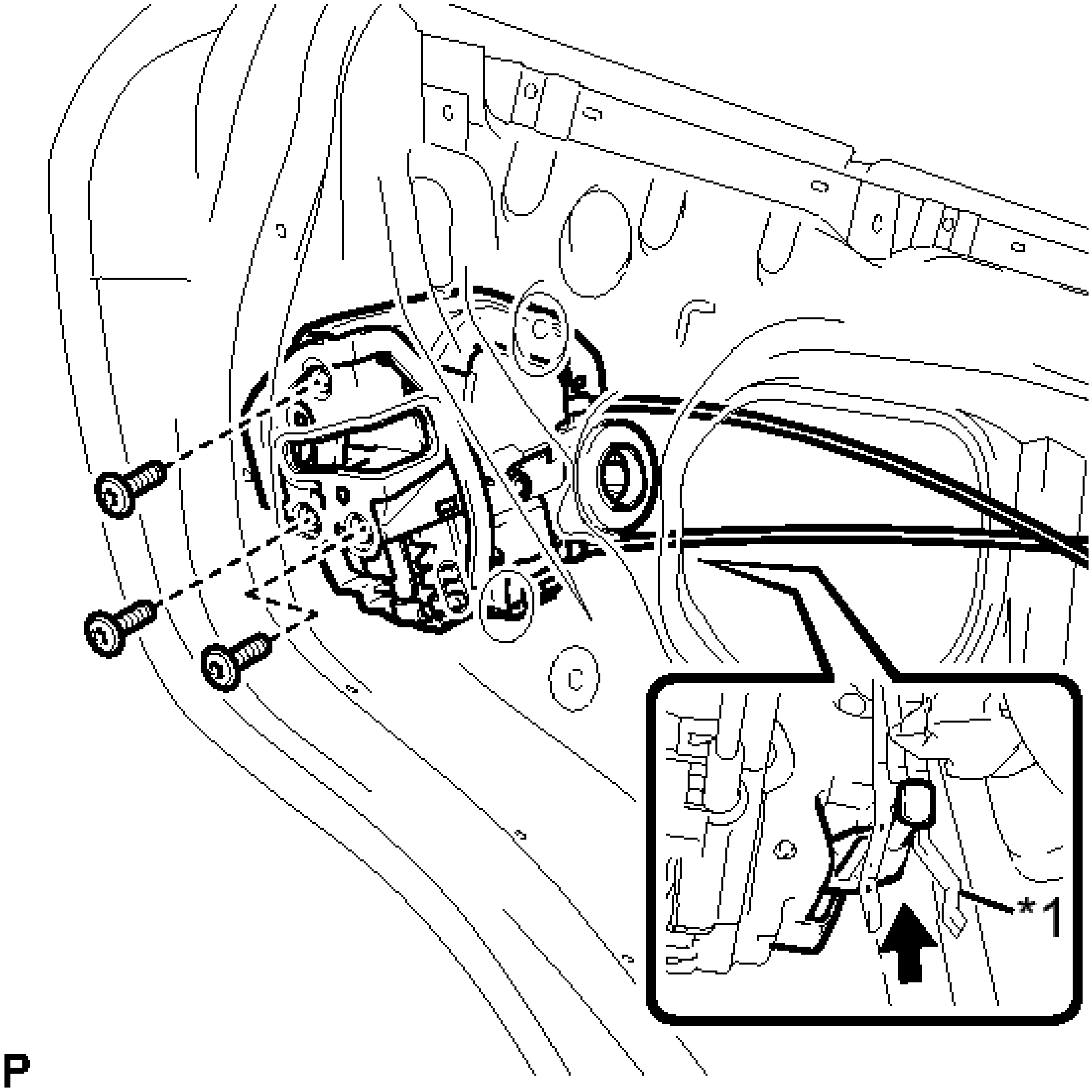

Fig. 181: Installing Rear Door Lock With Motor Assembly
Courtesy of TOYOTA MOTOR SALES, U.S.A., INC.

TEXT IN ILLUSTRATION

*1	Release Plate

d. Make sure that the rear door outside handle frame release plate is securely connected to the rear door lock with motor assembly.
e. Using a T30 "TORX" socket wrench, install the rear door lock with motor assembly with the 3 screws.

Torque: 5.0 N*m (51 kgf*cm, 44 in.*lbf)

17. **INSTALL REAR POWER WINDOW REGULATOR MOTOR ASSEMBLY**

NOTE: The regulator arm must be below the intermediate position when installing the rear power window regulator motor assembly.

a. Using a T25 "TORX" socket wrench, install the rear power window regulator motor assembly with the 3 screws.

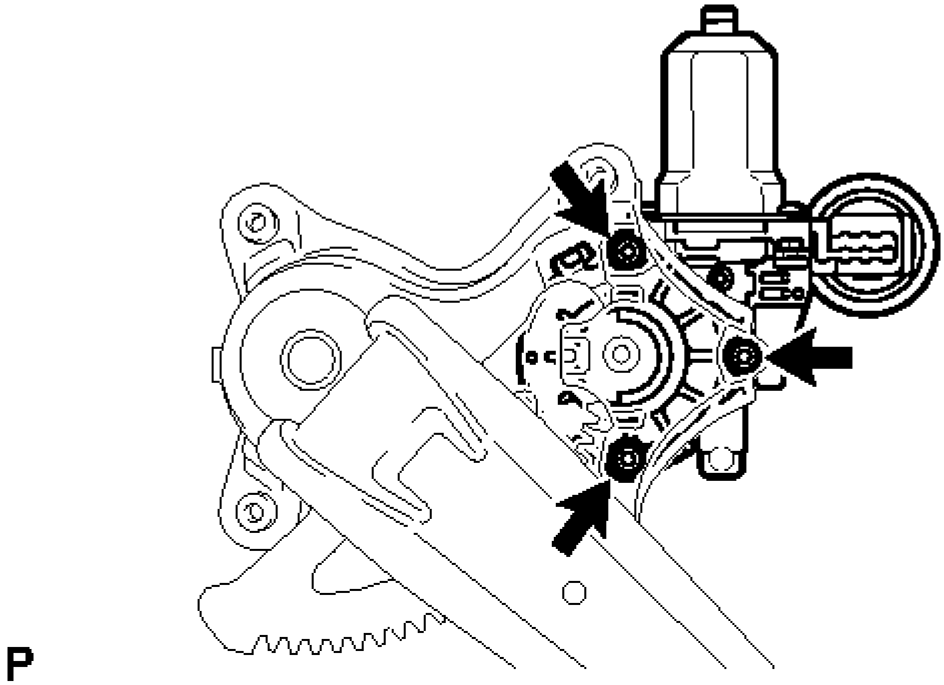

Fig. 182: Identifying Rear Power Window Regulator Motor Screws
Courtesy of TOYOTA MOTOR SALES, U.S.A., INC.

Torque: 5.4 N*m (55 kgf*cm, 48 in.*lbf)

HINT:

When replacing the rear window regulator, a new rear window regulator uses self-tapping screws to thread new installation holes when the self-tapping screws are inserted.

18. **INSTALL REAR DOOR WINDOW REGULATOR ASSEMBLY**
    a. Apply MP grease to the sliding parts of the rear door window regulator assembly.
    b. Install the temporary bolt to the rear door window regulator assembly.
    c. Temporarily install the rear door window regulator assembly.

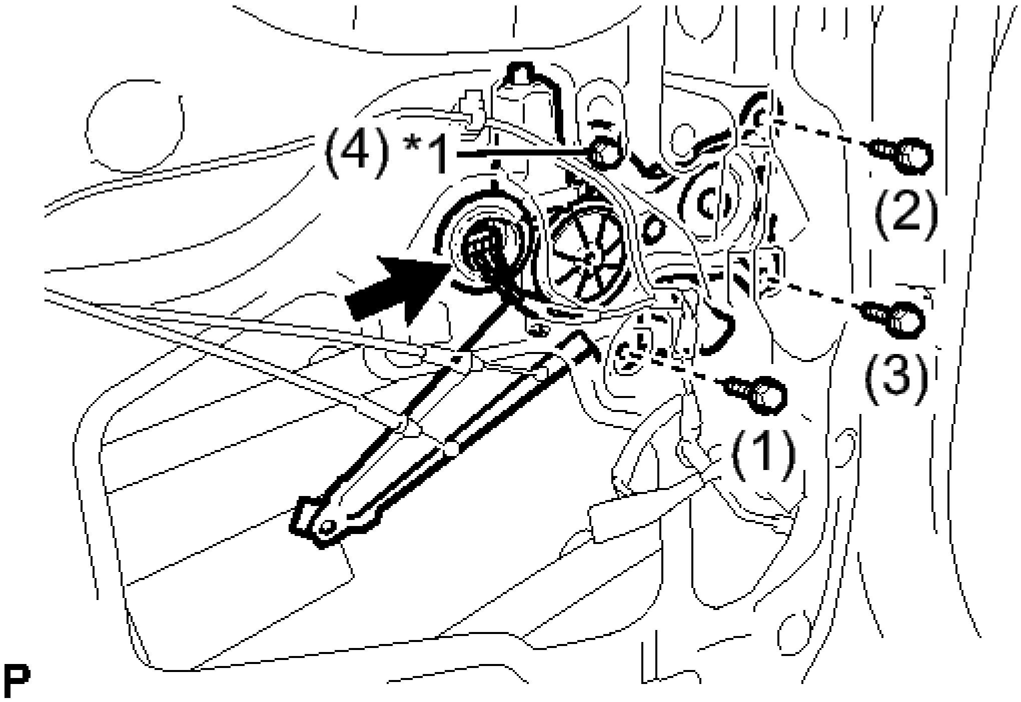

Fig. 183: Identifying Rear Door Window Regulator Temporary Bolt
Courtesy of TOYOTA MOTOR SALES, U.S.A., INC.

TEXT IN ILLUSTRATION

*1	Temporary Bolt

d. Tighten the temporary bolt and 3 bolts to install the rear door window regulator assembly.

HINT:

Tighten the bolts in the order shown in the illustration.

Torque: 8.0 N*m (82 kgf*cm, 71 in.*lbf)

19. **INSTALL REAR DOOR INSIDE PANEL REINFORCE SUB-ASSEMBLY**
    a. Engage the guide.

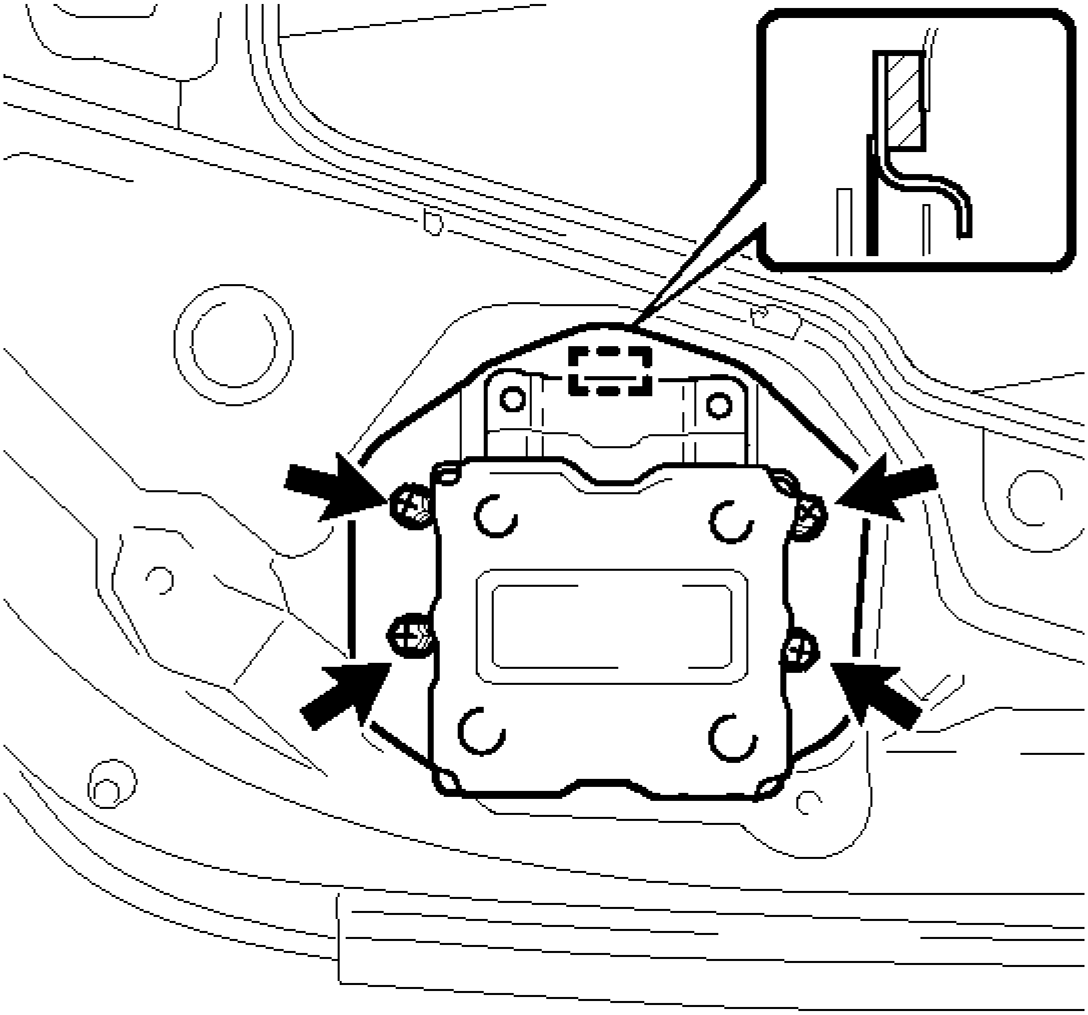

Fig. 184: Identifying Rear Door Inside Panel Reinforce Sub-Assembly Screws And Guide
Courtesy of TOYOTA MOTOR SALES, U.S.A., INC.

b. Install a new rear door inside panel reinforce sub-assembly with the 4 screws.

20. **INSTALL REAR DOOR FRAME GARNISH**

a. Engage the clip to install a new rear door frame garnish.

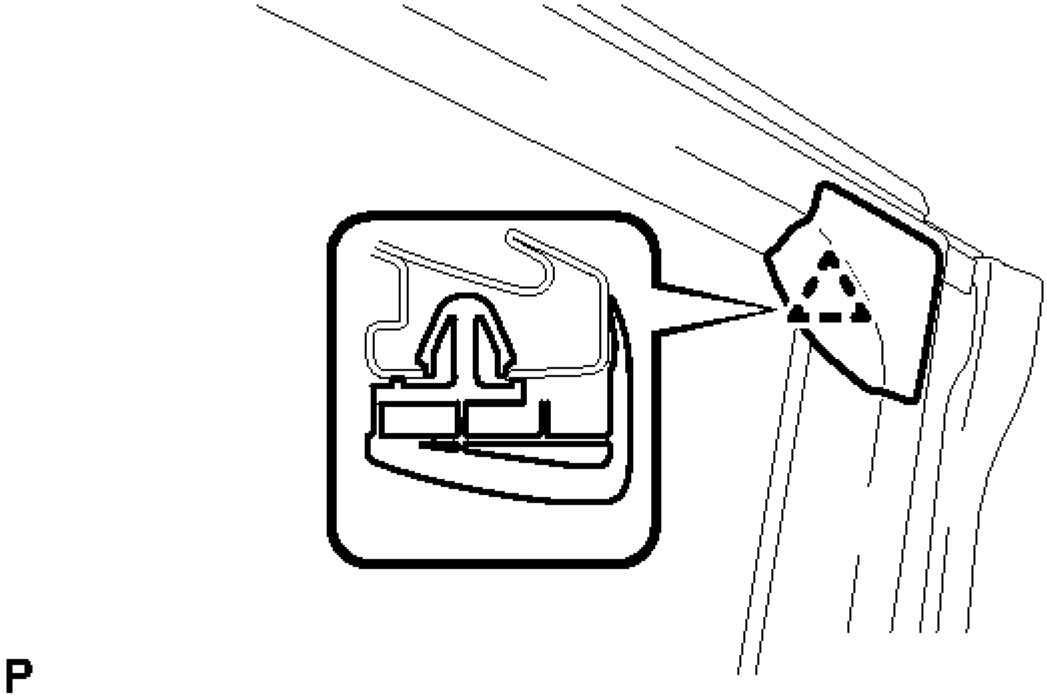

Fig. 185: Identifying Rear Door Frame Garnish Clip
Courtesy of TOYOTA MOTOR SALES, U.S.A., INC.

21. **INSTALL REAR DOOR GLASS SUB-ASSEMBLY**
    a. Slide the rear door glass sub-assembly to install it as shown in the illustration.

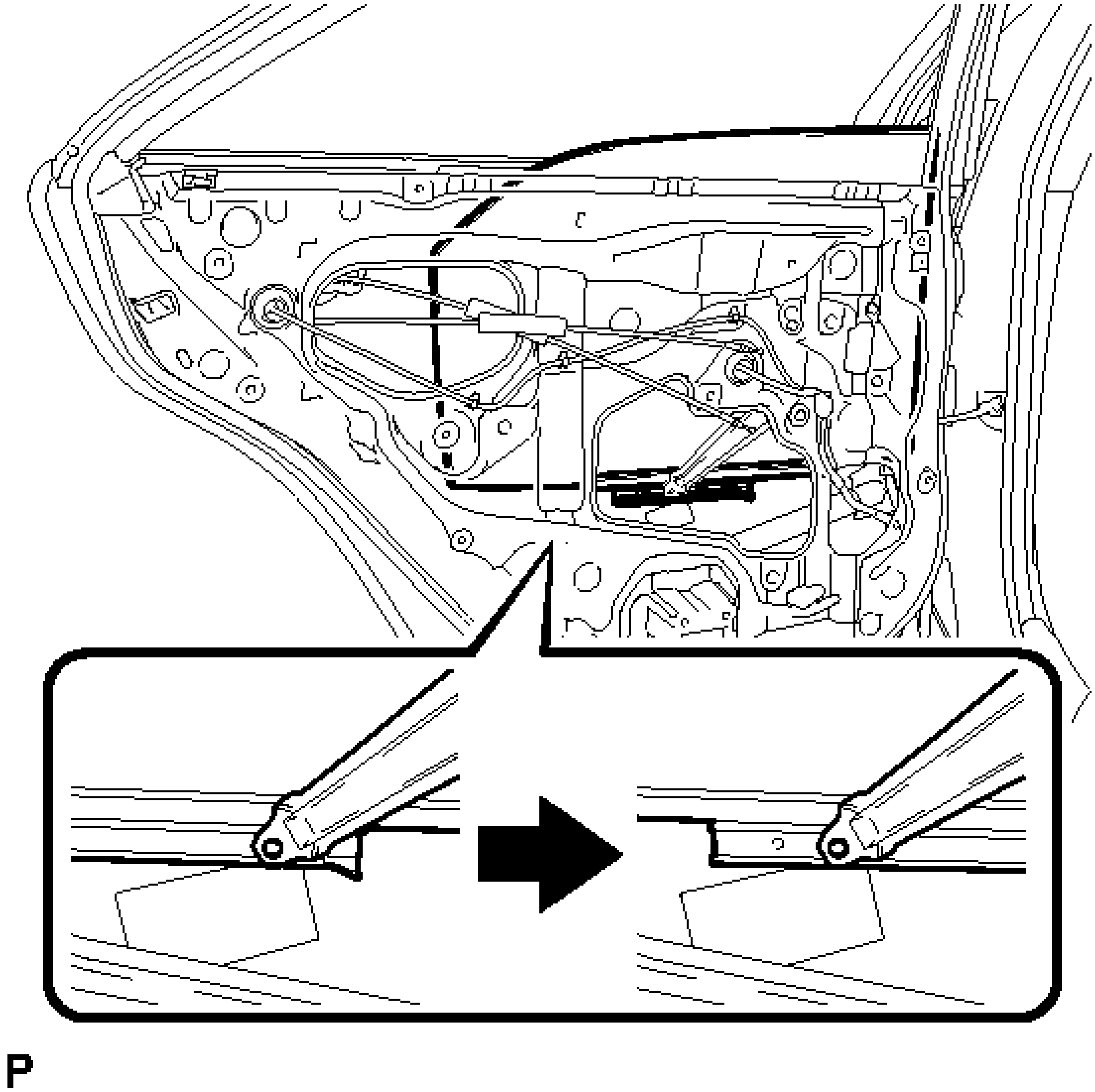

Fig. 186: Installing Rear Door Glass From Rear Door Window Regulator
Courtesy of TOYOTA MOTOR SALES, U.S.A., INC.

22. **INSTALL REAR DOOR QUARTER WINDOW GLASS**
    a. Install the rear door quarter window glass to the rear door quarter window weatherstrip.
    b. Install the rear door quarter window glass together with the rear door quarter window weatherstrip in the direction indicated by the arrow in the illustration.

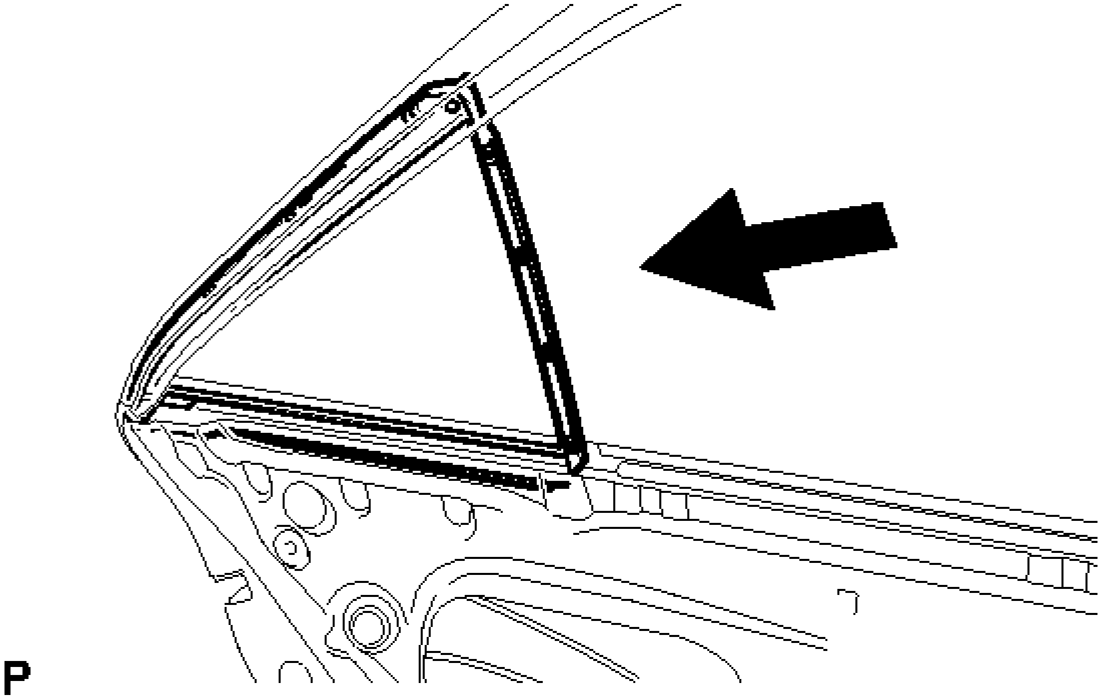

Fig. 187: Installing Rear Door Quarter Window Glass
Courtesy of TOYOTA MOTOR SALES, U.S.A., INC.

23. **INSTALL REAR DOOR LOWER WINDOW FRAME SUB-ASSEMBLY**
    a. Install the rear door lower window frame sub-assembly with the screw and 2 bolts.

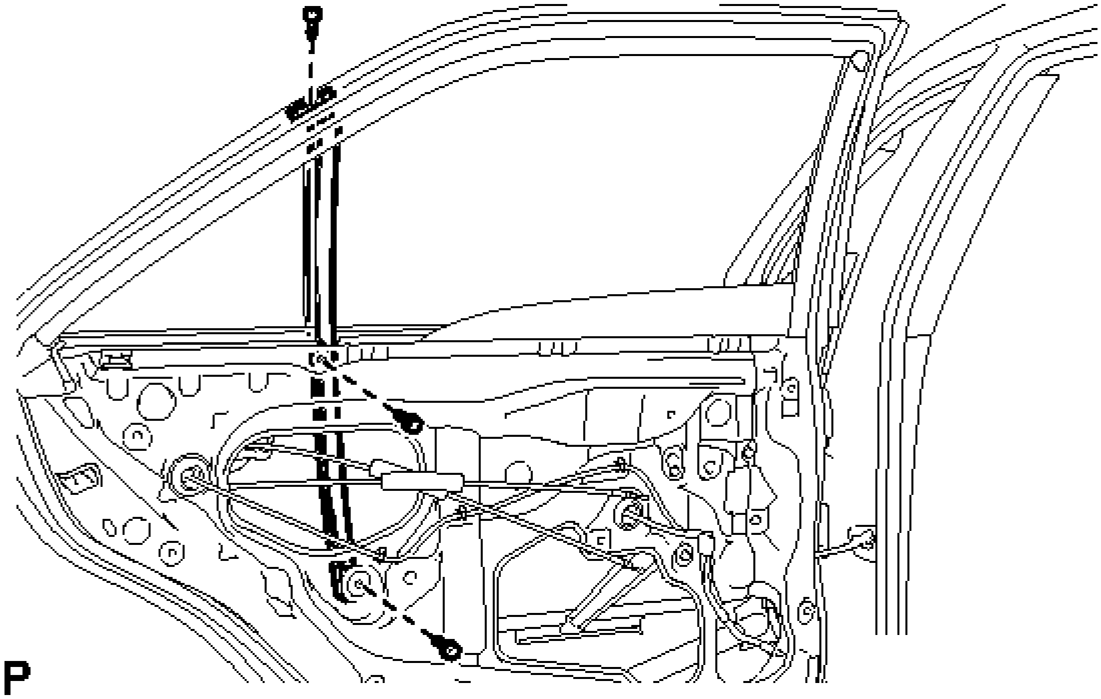

Fig. 188: Identifying Rear Door Lower Window Frame Bolts

Courtesy of TOYOTA MOTOR SALES, U.S.A., INC.

24. **INSTALL REAR DOOR GLASS RUN**
    a. Install the rear door glass run.

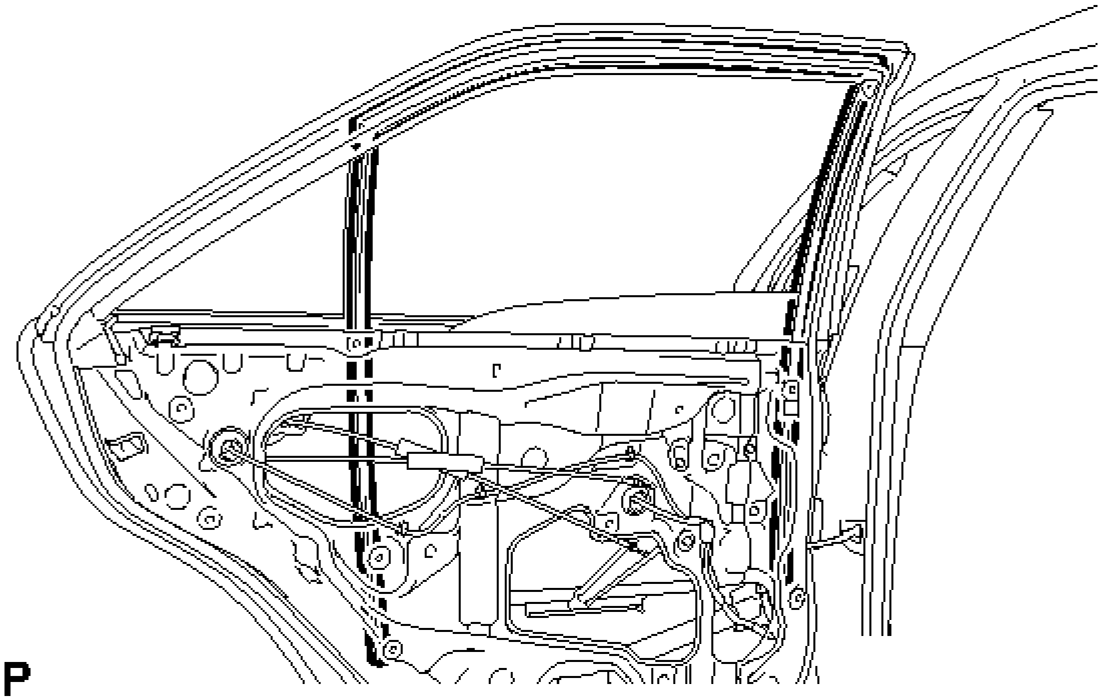

Fig. 189: Identifying Rear Door Glass Run
Courtesy of TOYOTA MOTOR SALES, U.S.A., INC.

25. **INSTALL REAR DOOR WEATHERSTRIP**
    a. Engage the 20 clips to install the rear door weatherstrip.

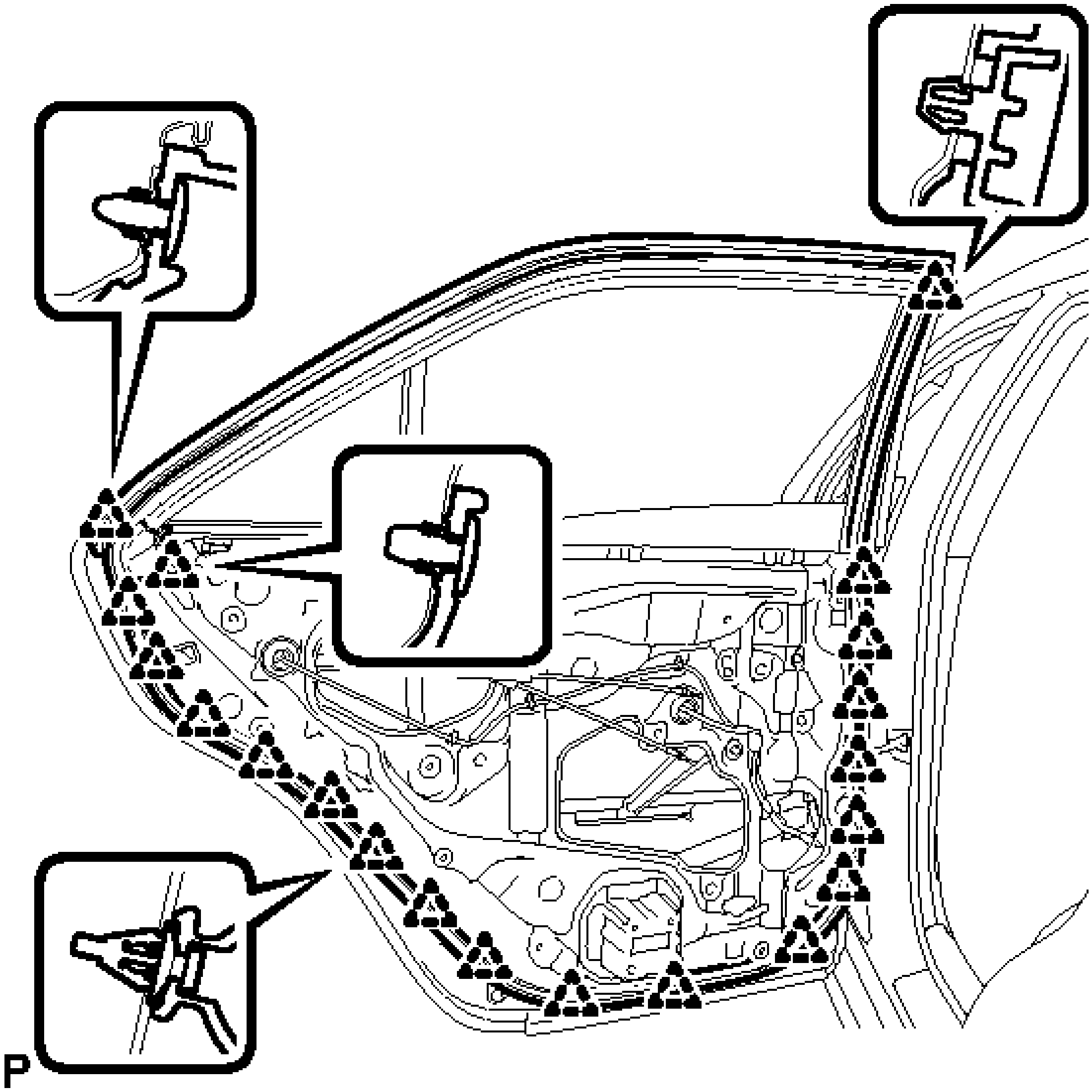

Fig. 190: Identifying Rear Door Weatherstrip Clips
Courtesy of TOYOTA MOTOR SALES, U.S.A., INC.

26. **INSTALL REAR DOOR CHECK ASSEMBLY**
    a. Apply MP grease to the sliding parts of the rear door check assembly.
    b. Apply adhesive to the threads of the bolt.

    Adhesive

    Toyota Genuine Adhesive 1324, Three Bond 1324 or equivalent

    c. Install the rear door check assembly with the 2 nuts and bolt.

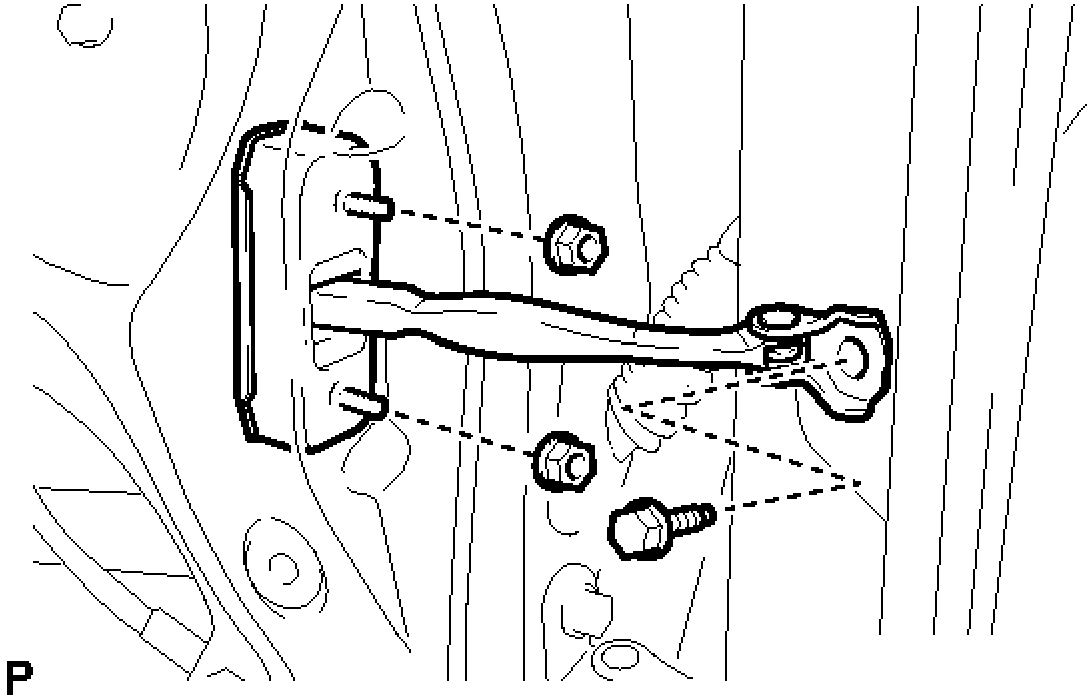

Fig. 191: Identifying Rear Door Check Bolts
Courtesy of TOYOTA MOTOR SALES, U.S.A., INC.

Bolt

Torque: 29 N*m (296 kgf*cm, 21 ft.*lbf)

Nut

Torque: 8.0 N*m (82 kgf*cm, 71 in.*lbf)

27. **INSTALL REAR DOOR SERVICE HOLE COVER**
    a. Apply new butyl tape to the rear door panel.
    b. Pass the rear door lock remote control cable assembly, rear door inside locking cable assembly and each connector through a new rear door service hole cover.

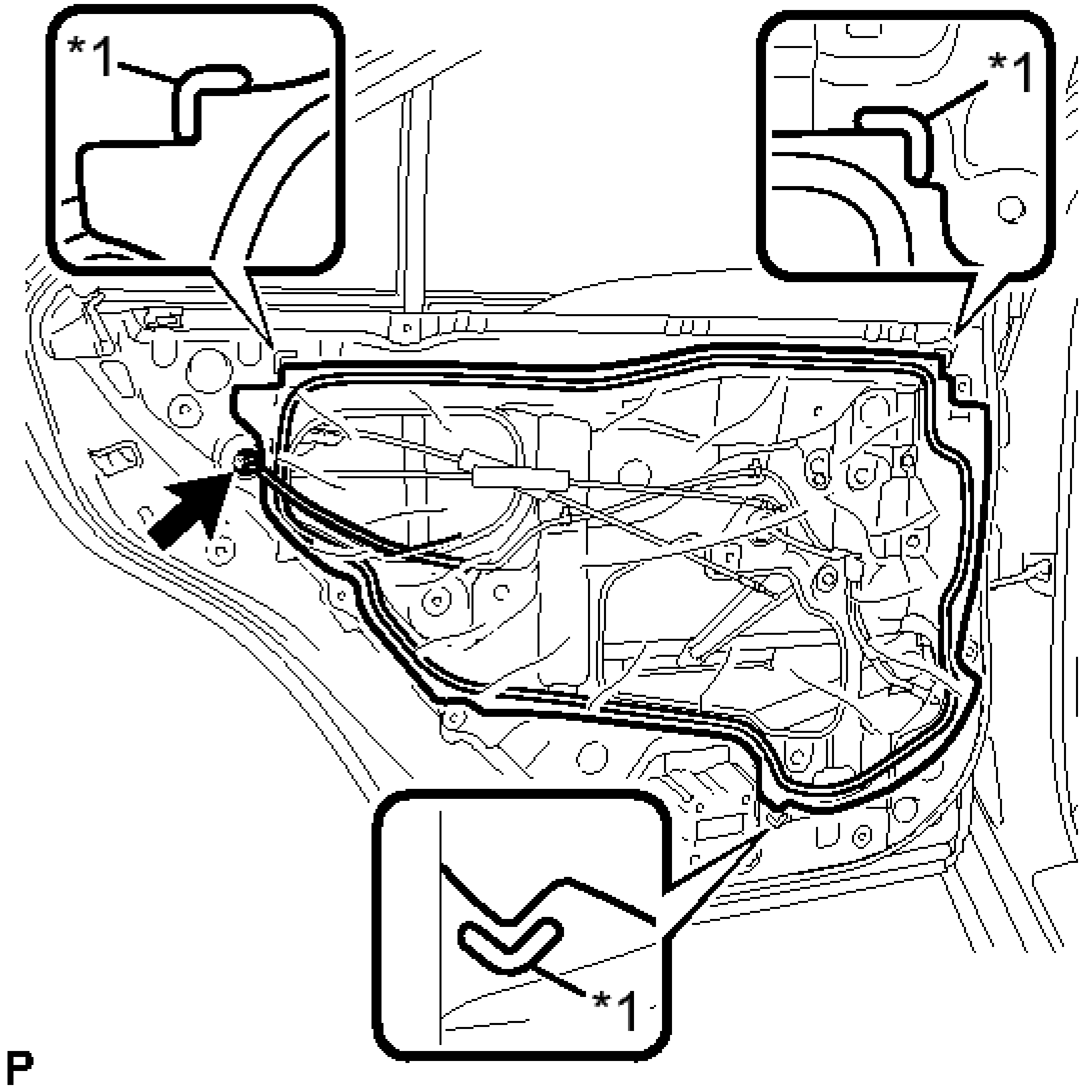

Fig. 192: Installing Rear Door Service Hole Cover
Courtesy of TOYOTA MOTOR SALES, U.S.A., INC.

TEXT IN ILLUSTRATION

*1	Reference Point

c. Attach the rear door service hole cover according to the reference points on the rear door panel.

NOTE: **Securely install the rear door service hole cover preventing wrinkles and air bubbles.**

d. Connect the connector.

28. **INSTALL REAR DOOR INNER GLASS WEATHERSTRIP**

a. Install the rear door inner glass weatherstrip.

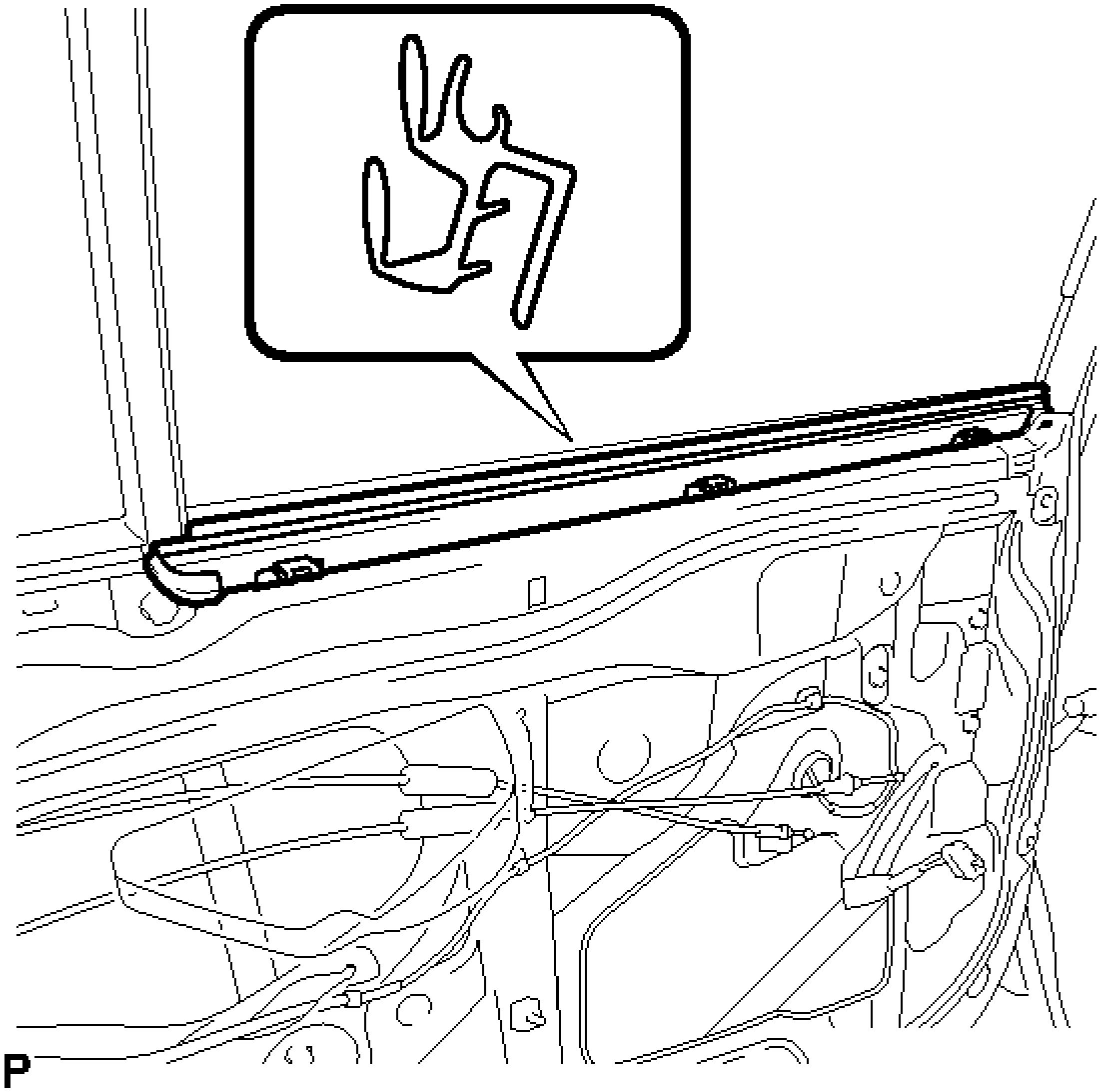

Fig. 193: Installing Rear Door Inner Glass Weatherstrip
Courtesy of TOYOTA MOTOR SALES, U.S.A., INC.

29. INSTALL REAR DOOR INSIDE HANDLE SUB-ASSEMBLY

a. Engage the guide and 2 claws to install the rear door inside handle sub-assembly to the rear door trim board sub-assembly.

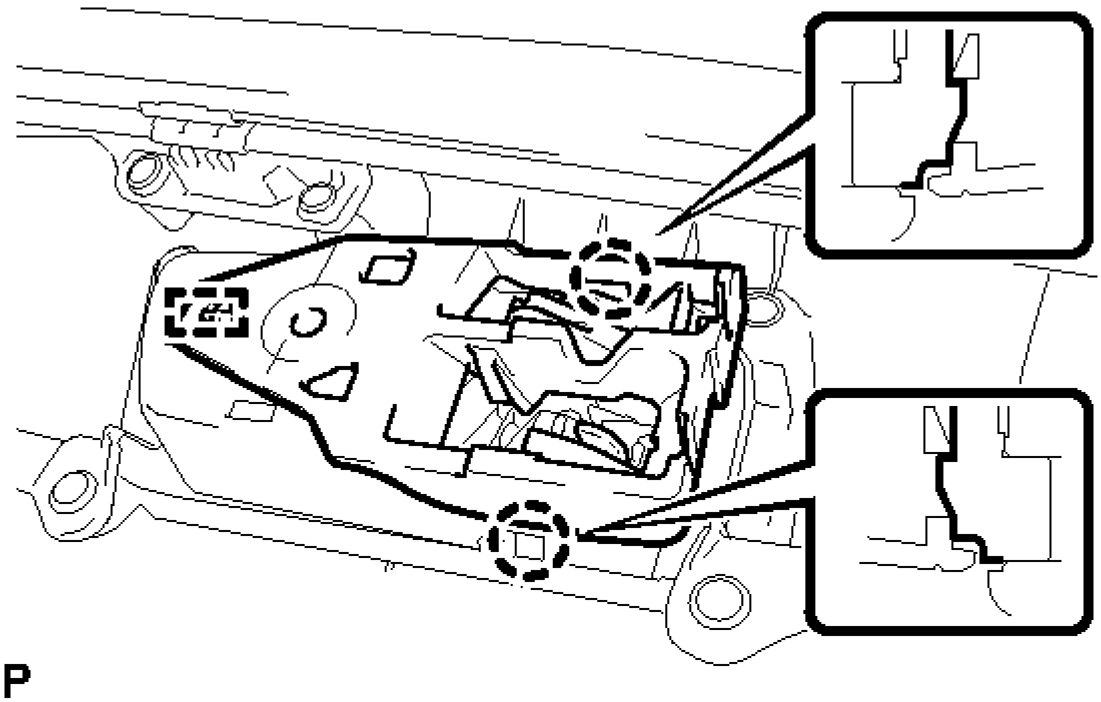

Fig. 194: Identifying Rear Door Inside Handle Sub-Assembly Claws And Guides
Courtesy of TOYOTA MOTOR SALES, U.S.A., INC.

30. **INSTALL REAR DOOR TRIM BOARD SUB-ASSEMBLY**
    a. Install the No. 1 door scuff plate clamp as shown in the illustration.

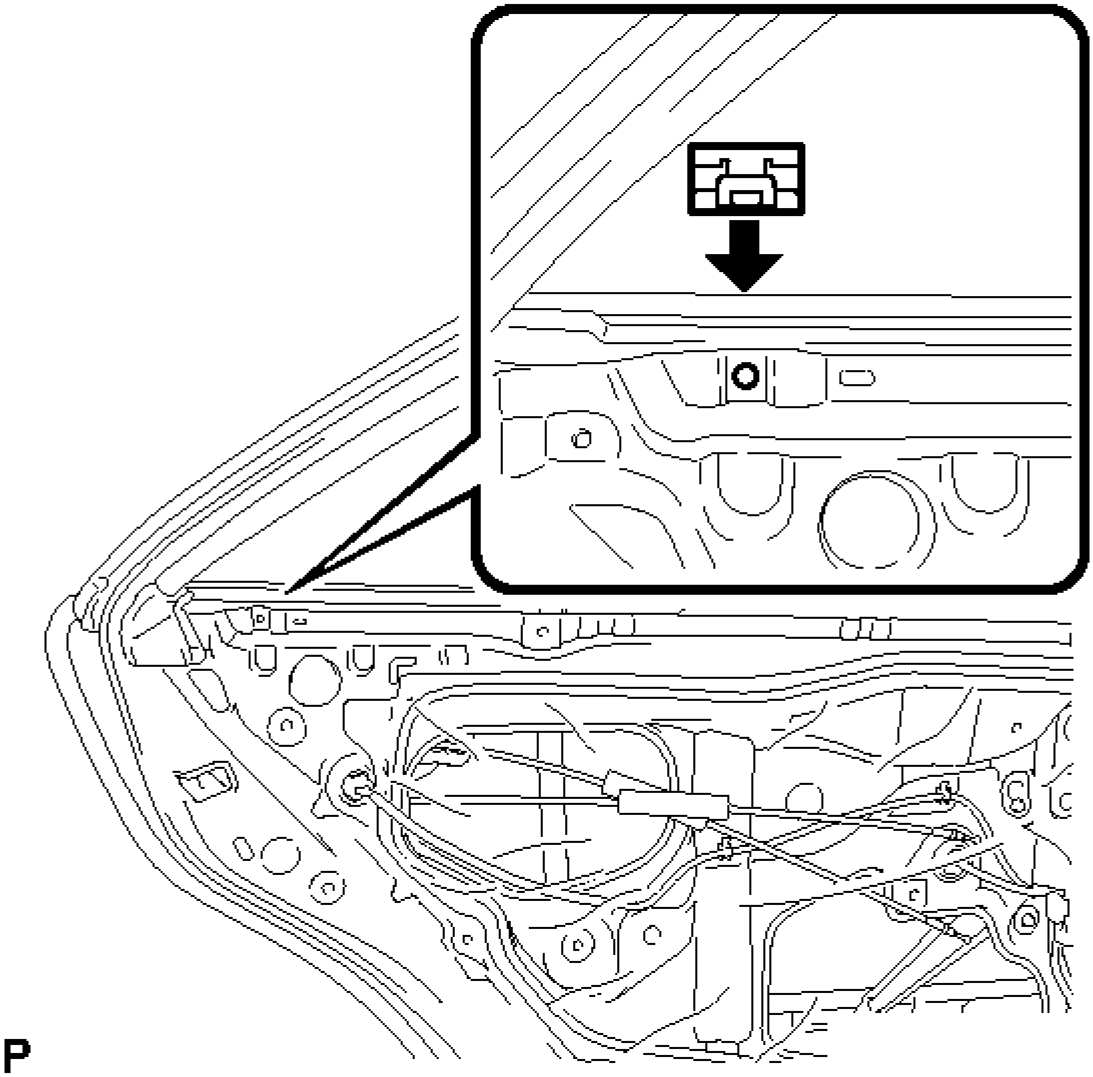

Fig. 195: Identifying No. 1 Door Scuff Plate Clamp
Courtesy of TOYOTA MOTOR SALES, U.S.A., INC.

b. Connect the rear door lock remote control cable assembly and rear door inside locking cable assembly.

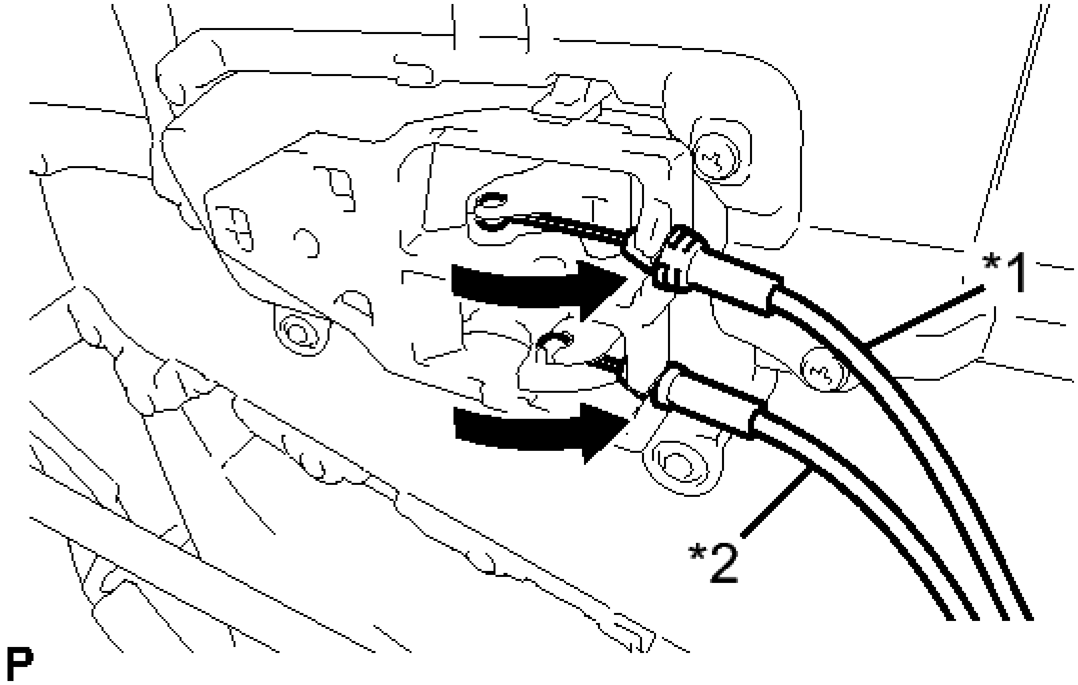

Fig. 196: Connecting Rear Door Lock Remote Control And Inside Locking Cables
Courtesy of TOYOTA MOTOR SALES, U.S.A., INC.

TEXT IN ILLUSTRATION

*1	Rear Door Inside Locking Cable Assembly
*2	Rear Door Lock Remote Control Cable Assembly

c. Engage the rear door trim board sub-assembly with the 4 claws and reference boss as shown in the illustration.

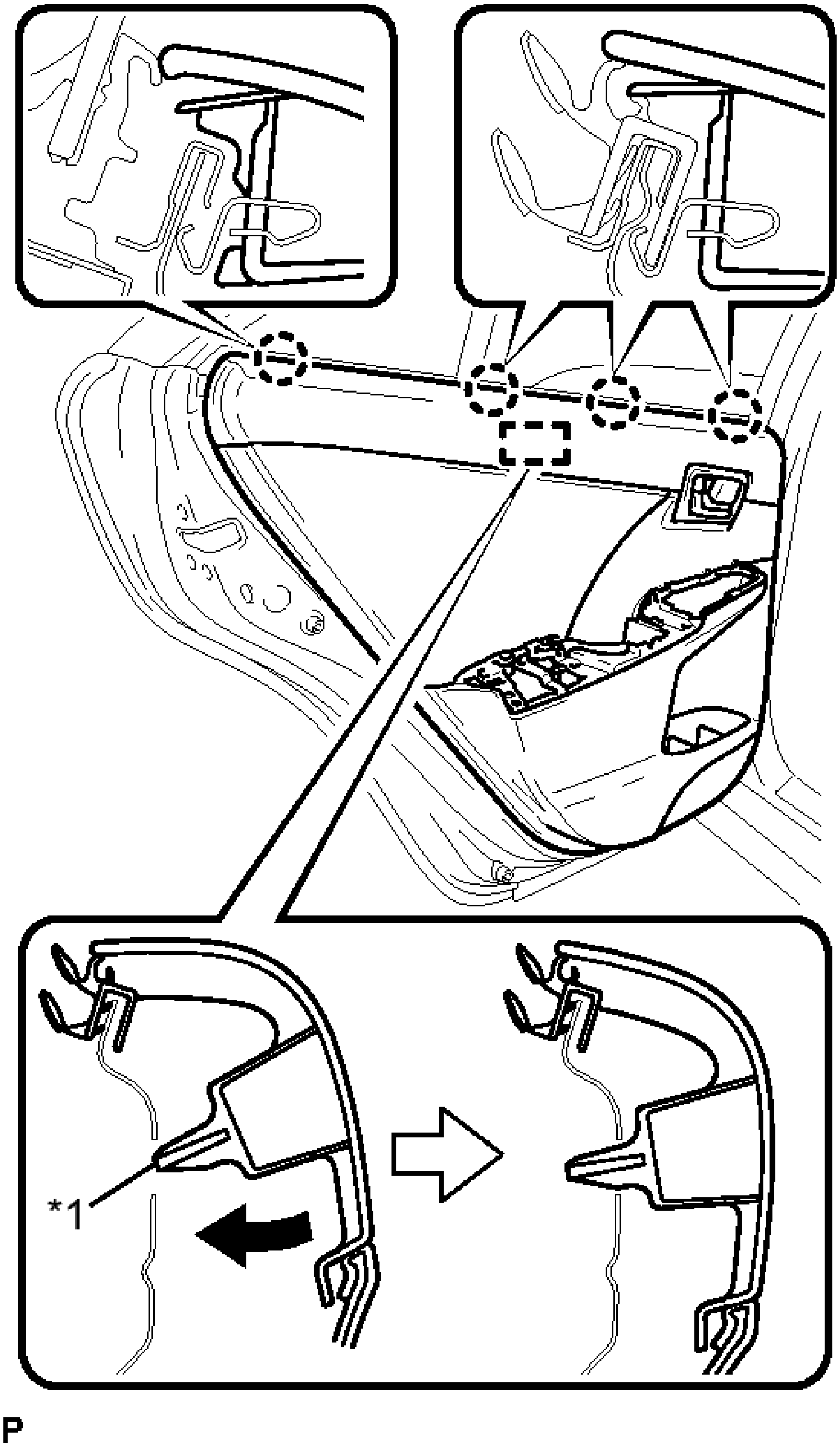

Fig. 197: Engaging Rear Door Trim Board Sub-Assembly
Courtesy of TOYOTA MOTOR SALES, U.S.A., INC.

TEXT IN ILLUSTRATION

*1	Reference Boss

d. Engage the 8 clips and install the rear door trim board sub-assembly.

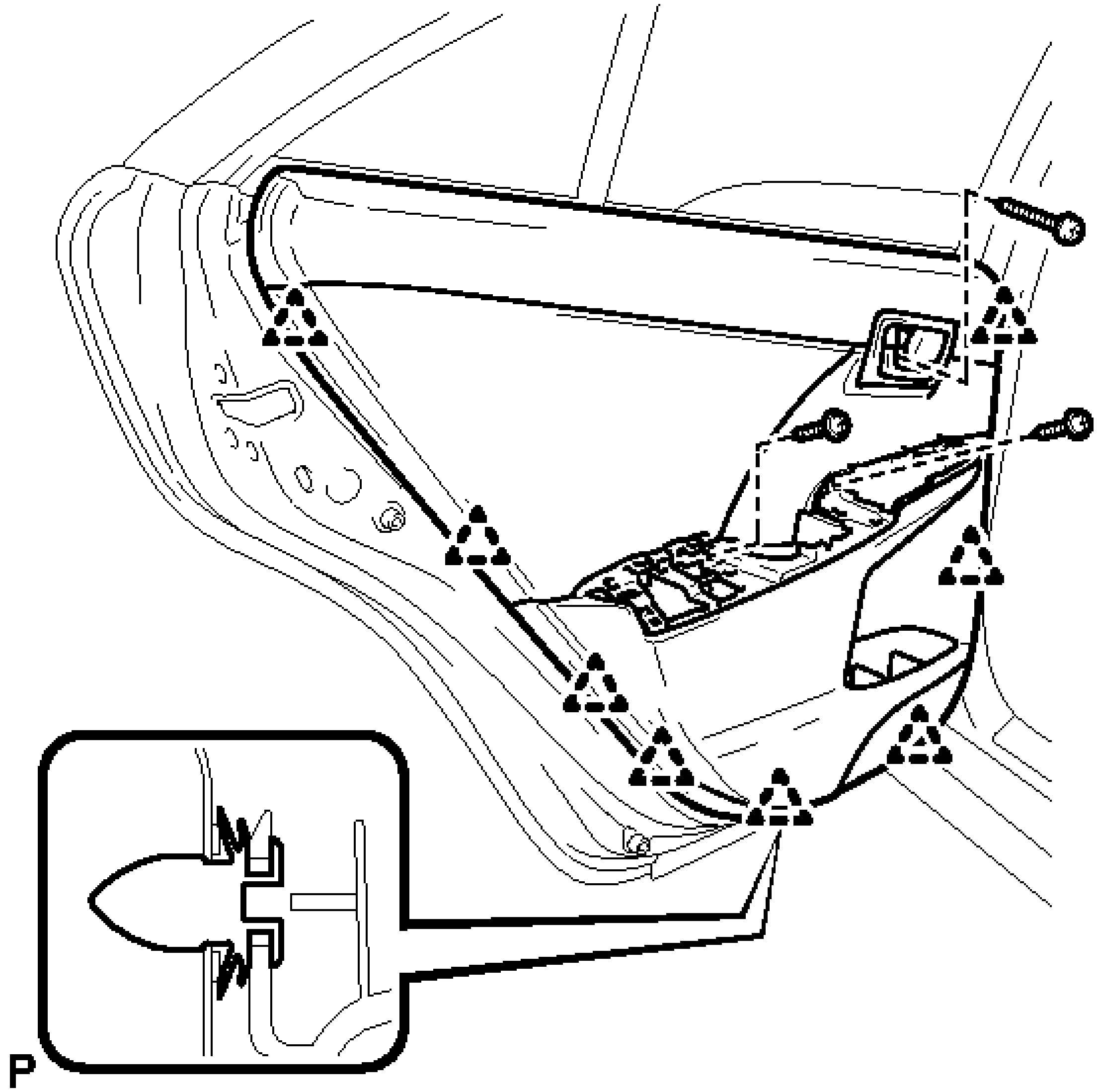

Fig. 198: Identifying Rear Door Trim Board Sub-Assembly Clips And Screws
Courtesy of TOYOTA MOTOR SALES, U.S.A., INC.

e. Install the 3 screws.

f. If protective tape has been applied, remove it.

31. **INSTALL REAR ARMREST ASSEMBLY**

a. Engage the 2 guides, 3 clips and 7 claws to install the rear armrest assembly.

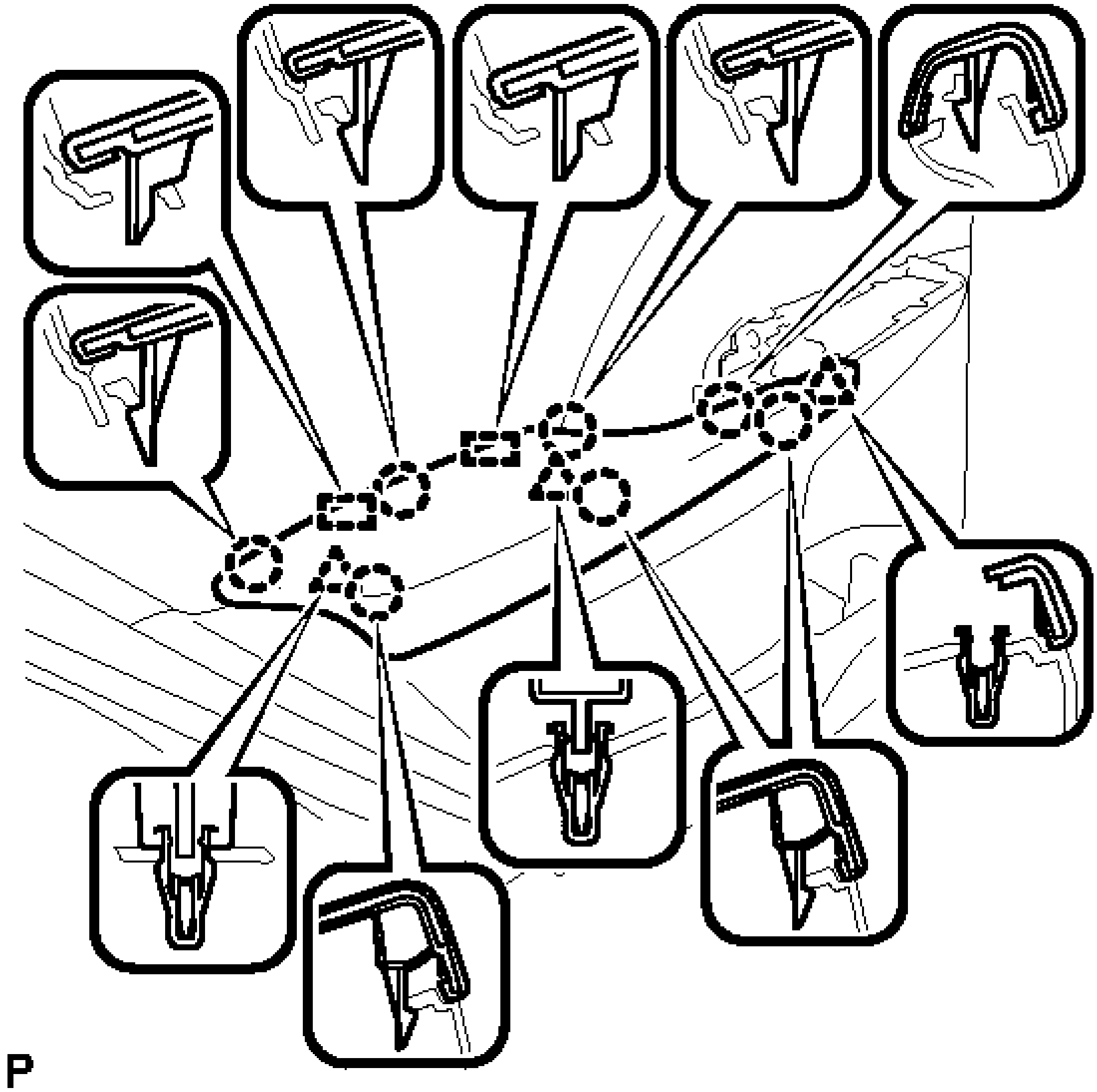

Fig. 199: Identifying Rear Armrest Clips, Claws And Guides
Courtesy of TOYOTA MOTOR SALES, U.S.A., INC.

32. **INSTALL REAR POWER WINDOW REGULATOR SWITCH ASSEMBLY WITH REAR DOOR ARMREST BASE PANEL**
    a. Connect the connector.
    b. Engage the 4 guides, 2 clips and 5 claws to install the rear power window regulator switch assembly with rear door armrest base panel.

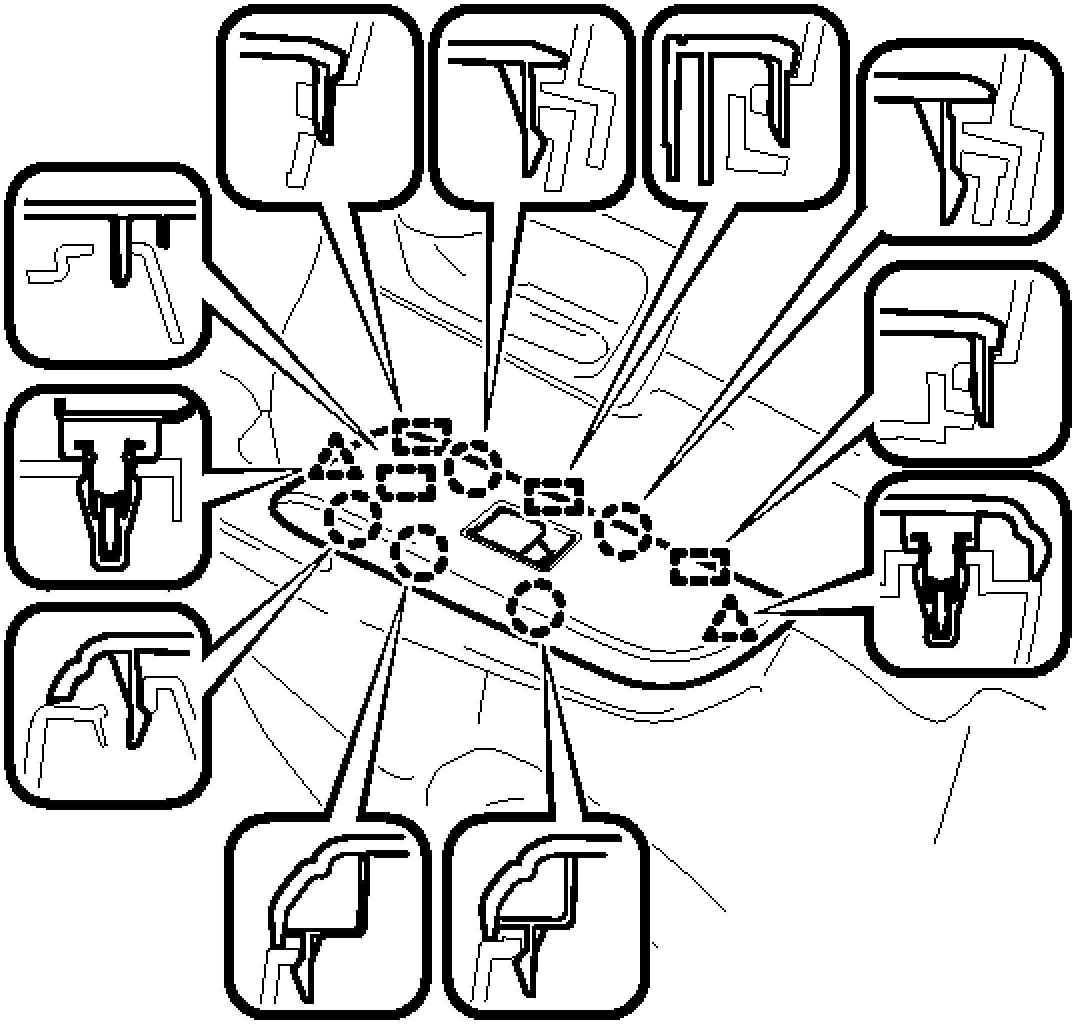

Fig. 200: Identifying Rear Power Window Regulator Switch Clips, Claws And Guides
Courtesy of TOYOTA MOTOR SALES, U.S.A., INC.

33. INSTALL REAR DOOR INSIDE HANDLE BEZEL PLUG

a. Engage the 3 claws to install the rear door inside handle bezel plug.

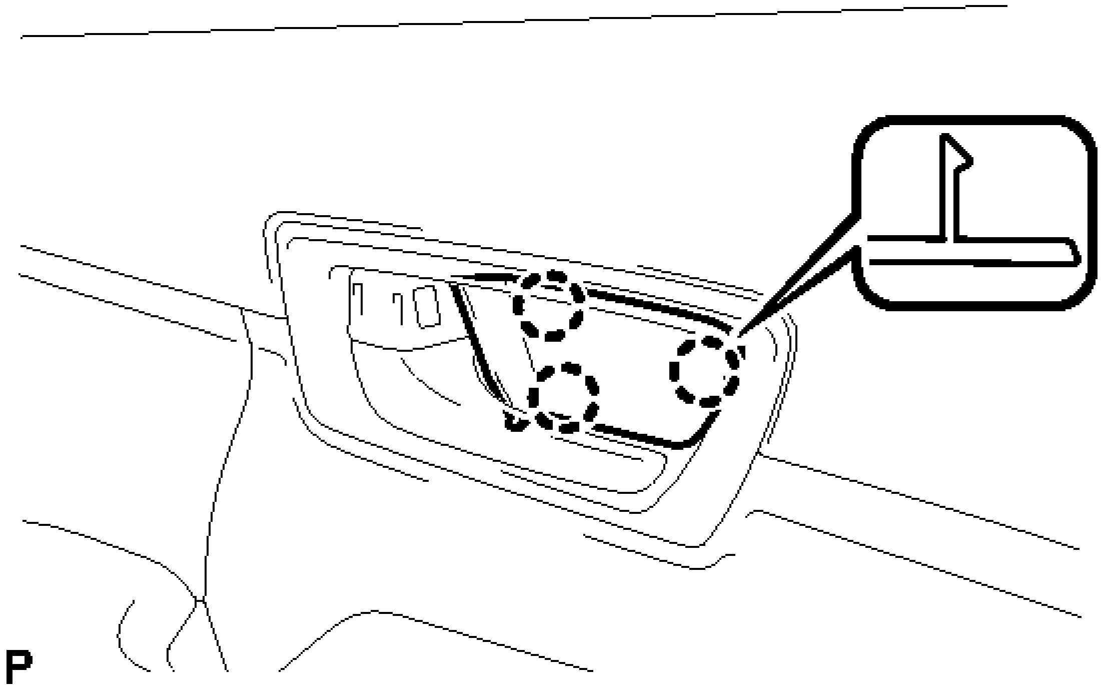

Fig. 201: Identifying Rear Door Inside Handle Bezel Plug Claws
Courtesy of TOYOTA MOTOR SALES, U.S.A., INC.

34. **CONNECT CABLE TO AUXILIARY BATTERY NEGATIVE TERMINAL**

    NOTE: **When disconnecting the cable, some systems need to be initialized after the cable is reconnected. Refer to INITIALIZATION**

35. **INSTALL LUGGAGE TRIM SERVICE HOLE COVER** . Refer to **INSTALLATION - Step 3**
36. **INSPECT POWER WINDOW OPERATION**

    Refer to **OPERATION CHECK**

LUGGAGE COMPARTMENT DOOR

COMPONENTS

ILLUSTRATION

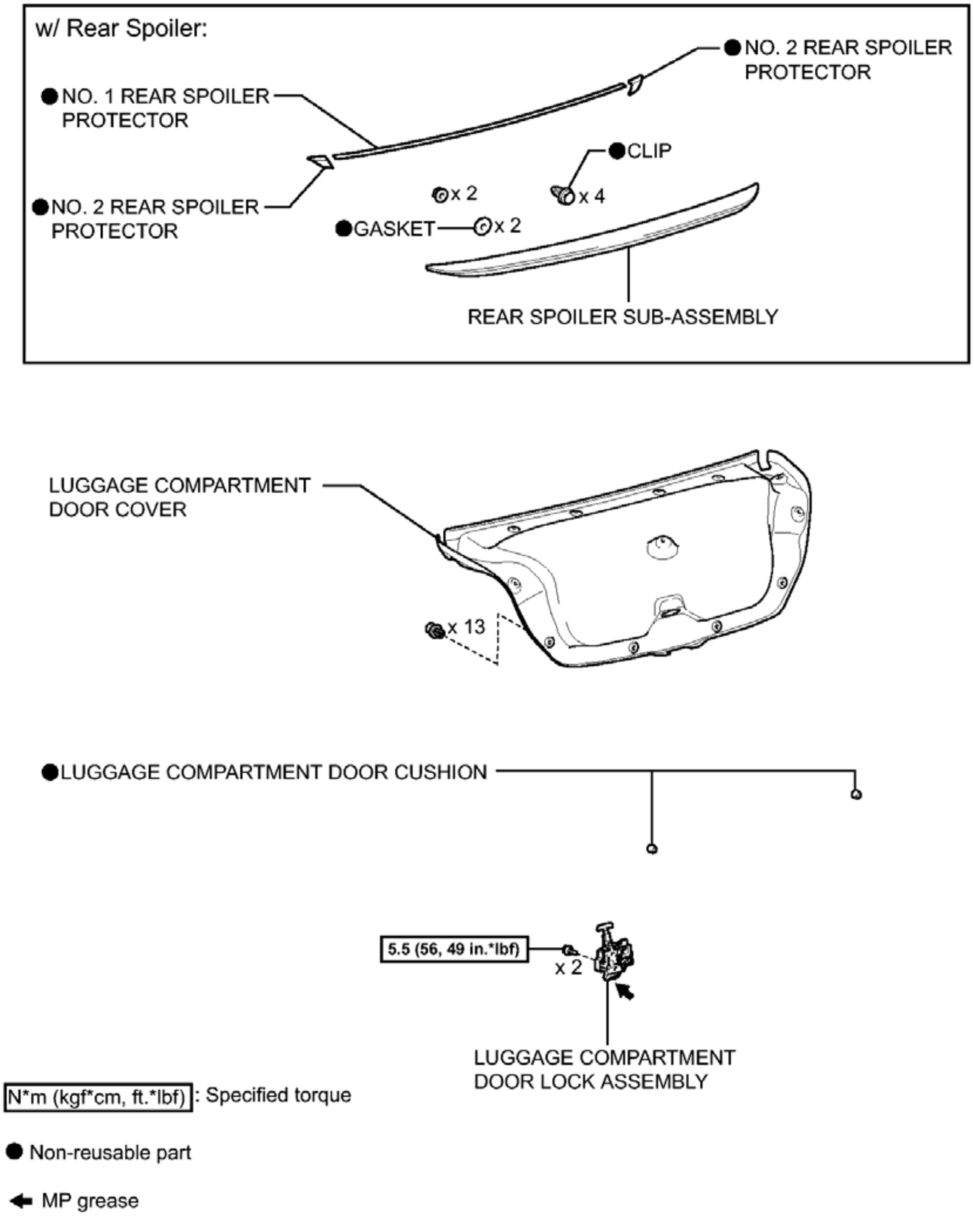
w/ Rear Spoiler:
● NO. 2 REAR SPOILER PROTECTOR
● NO. 1 REAR SPOILER PROTECTOR
● CLIP
x 4
x 2
● NO. 2 REAR SPOILER PROTECTOR
● GASKET
x 2
REAR SPOILER SUB-ASSEMBLY
LUGGAGE COMPARTMENT DOOR COVER
x 13
● LUGGAGE COMPARTMENT DOOR CUSHION
5.5 (56, 49 in.*lbf)
x 2
LUGGAGE COMPARTMENT DOOR LOCK ASSEMBLY
N*m (kgf*cm, ft.*lbf) : Specified torque
● Non-reusable part
MP grease
P

Fig. 202: Identifying Luggage Compartment Door Replacement Components With Torque Specifications (1 Of 2)
Courtesy of TOYOTA MOTOR SALES, U.S.A., INC.

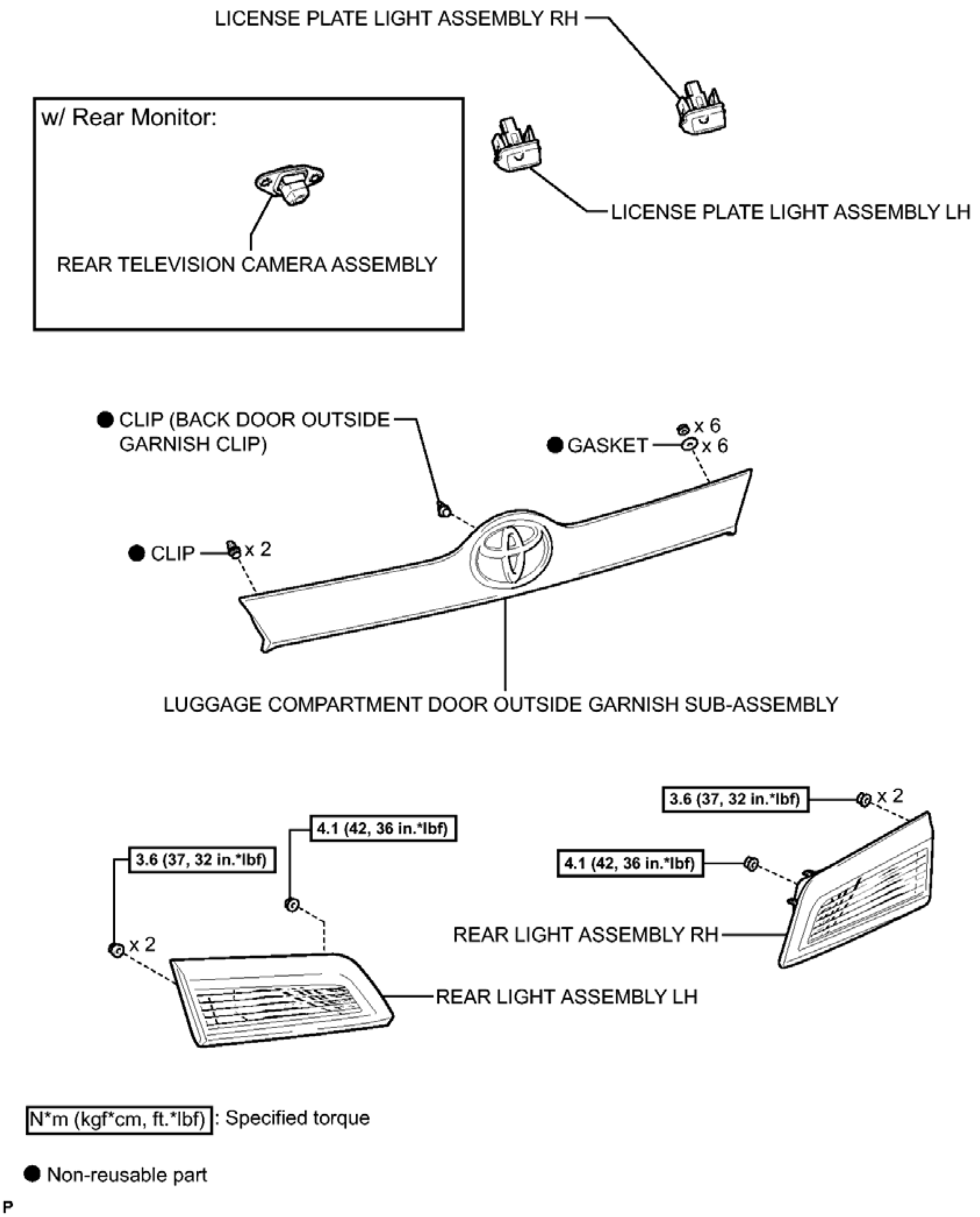
LICENSE PLATE LIGHT ASSEMBLY RH
w/ Rear Monitor:
REAR TELEVISION CAMERA ASSEMBLY
LICENSE PLATE LIGHT ASSEMBLY LH
● CLIP (BACK DOOR OUTSIDE GARNISH CLIP)
x 6
● GASKET
x 6
● CLIP
x 2
LUGGAGE COMPARTMENT DOOR OUTSIDE GARNISH SUB-ASSEMBLY
3.6 (37, 32 in.*lbf)
x 2
4.1 (42, 36 in.*lbf)
4.1 (42, 36 in.*lbf)
3.6 (37, 32 in.*lbf)
x 2
REAR LIGHT ASSEMBLY RH
REAR LIGHT ASSEMBLY LH
N*m (kgf*cm, ft.*lbf) : Specified torque
● Non-reusable part
P

Fig. 203: Identifying Luggage Compartment Door Replacement Components With Torque Specifications (2 Of 2)

Courtesy of TOYOTA MOTOR SALES, U.S.A., INC.

DISASSEMBLY

DISASSEMBLY

1. **REMOVE LUGGAGE COMPARTMENT DOOR COVER**

a. Remove the 13 clips and luggage compartment door cover.

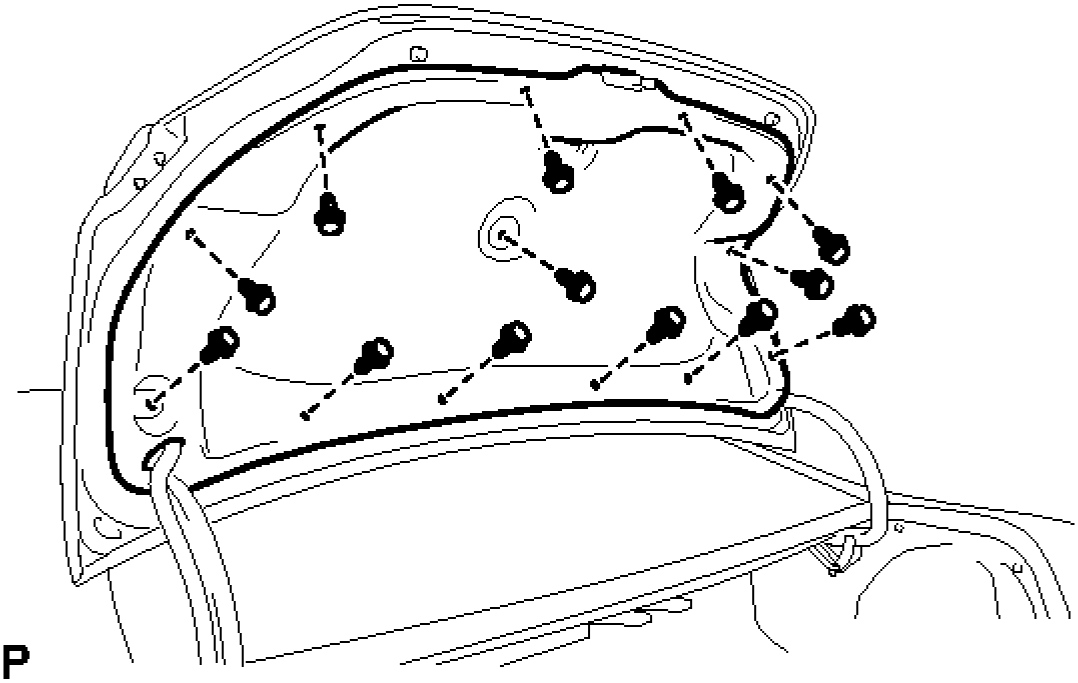

Fig. 204: Identifying Luggage Compartment Door Cover Clips
Courtesy of TOYOTA MOTOR SALES, U.S.A., INC.

2. **REMOVE LUGGAGE COMPARTMENT DOOR CUSHION**
   a. Disengage the 2 claws and remove the 2 luggage compartment door panel cushions.

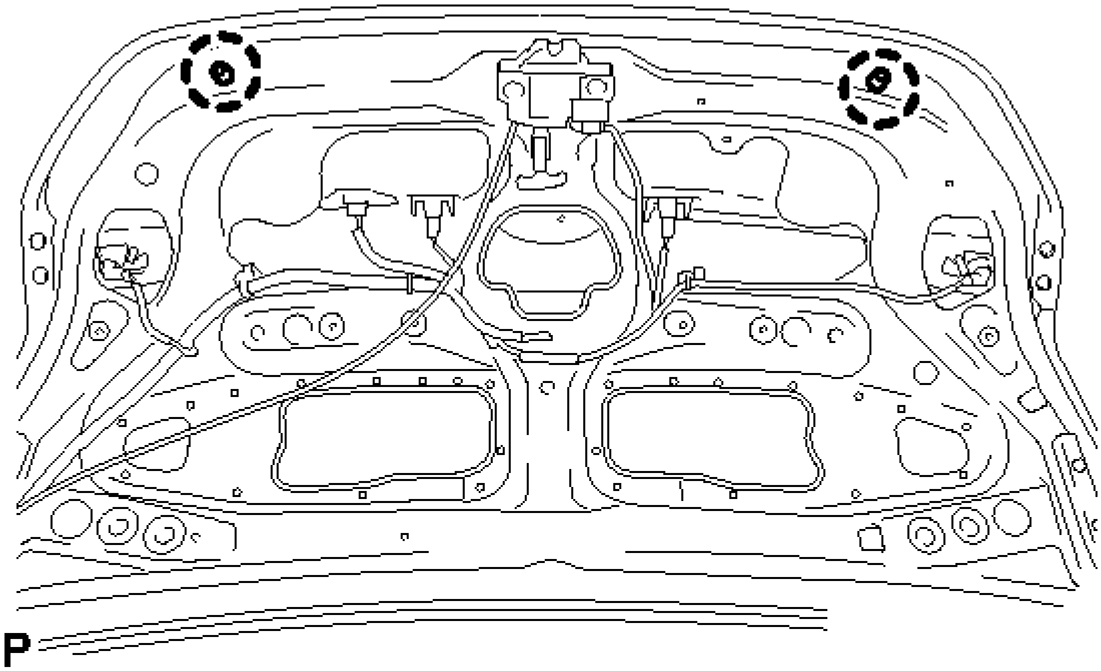

Fig. 205: Identifying Luggage Compartment Door Panel Cushions
Courtesy of TOYOTA MOTOR SALES, U.S.A., INC.

3. **REMOVE LUGGAGE COMPARTMENT DOOR LOCK ASSEMBLY** . Refer to **REMOVAL - Step 2**
4. **REMOVE REAR SPOILER SUB-ASSEMBLY (w/ Rear Spoiler)** . Refer to **REMOVAL - Step 2**
5. **REMOVE LUGGAGE COMPARTMENT DOOR OUTSIDE GARNISH SUB-ASSEMBLY** . Refer to **REMOVAL - Step 2**
6. **REMOVE REAR TELEVISION CAMERA ASSEMBLY (w/ Rear Monitor)** . Refer to **REMOVAL - Step 2**
7. **REMOVE LICENSE PLATE LIGHT ASSEMBLY LH** . Refer to **REMOVAL - Step 2**
8. **REMOVE LICENSE PLATE LIGHT ASSEMBLY RH**

   HINT:

   Use the same procedure for the RH side and LH side.

9. **REMOVE REAR LIGHT ASSEMBLY LH** . Refer to **REMOVAL - Step 2**
10. **REMOVE REAR LIGHT ASSEMBLY RH**

    HINT:

    Use the same procedure as for the LH side.

ADJUSTMENT

ADJUSTMENT

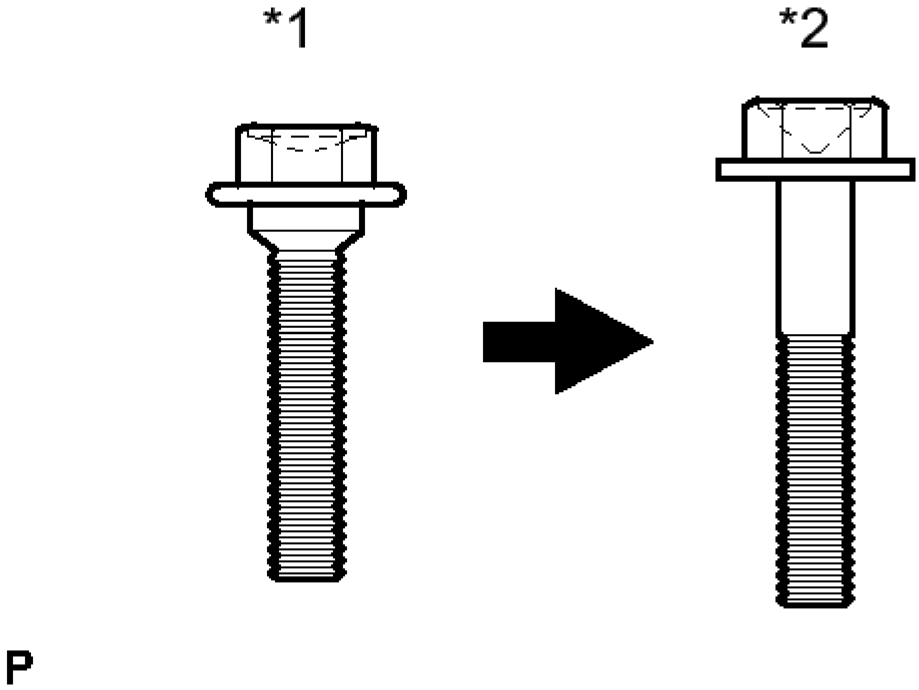

Fig. 206: Identifying Centering Bolt And Standard Bolt
Courtesy of TOYOTA MOTOR SALES, U.S.A., INC.

TEXT IN ILLUSTRATION

*1	Centering Bolt
*2	Standard Bolt

HINT:

- Centering bolts are used to mount the door hinge to the door. The door cannot be adjusted with the centering bolts installed. Substitute the centering bolts with standard bolts when making adjustments.
- Specified torque for standard bolts is shown in the standard bolt chart. Refer to **SPECIFIED TORQUE FOR STANDARD BOLTS** .

1. **REMOVE LUGGAGE COMPARTMENT DOOR COVER** See step 1
2. **REMOVE LUGGAGE COMPARTMENT FLOOR MAT** See step 1
3. **REMOVE BAGGAGE HOLDER NET (w/ Partition Net)** See step 3
4. **REMOVE REAR FLOOR FINISH PLATE** See step 4
5. **ADJUST LUGGAGE COMPARTMENT DOOR**
    a. Loosen the door side hinge bolts to adjust the door horizontally and vertically.

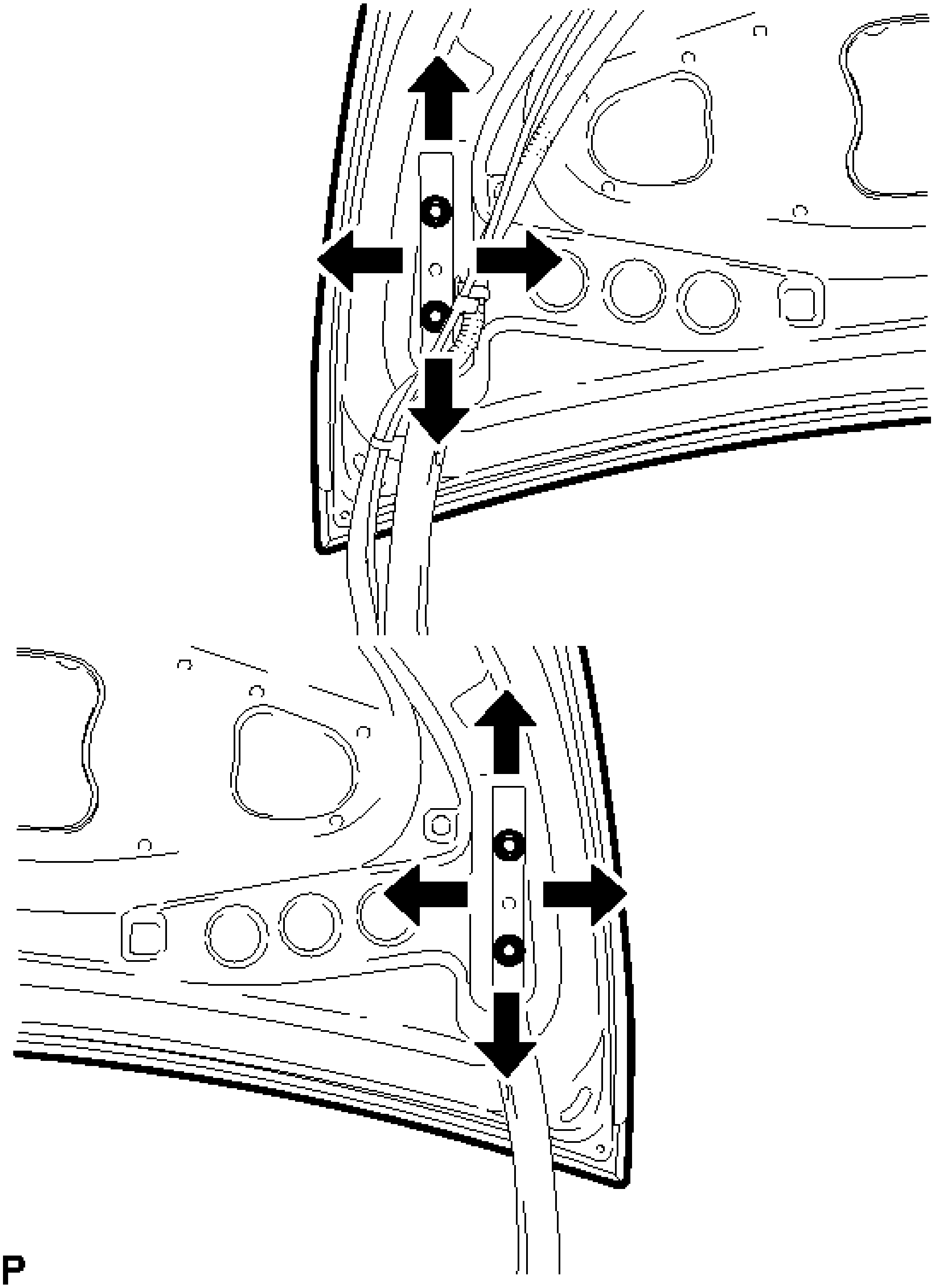

Fig. 207: Adjusting Luggage Compartment Door
Courtesy of TOYOTA MOTOR SALES, U.S.A., INC.

Torque: 7.5 N*m (76 kgf*cm, 66 in.*lbf)

b. Using a T40 "TORX" socket wrench, slightly loosen the striker mounting screws.

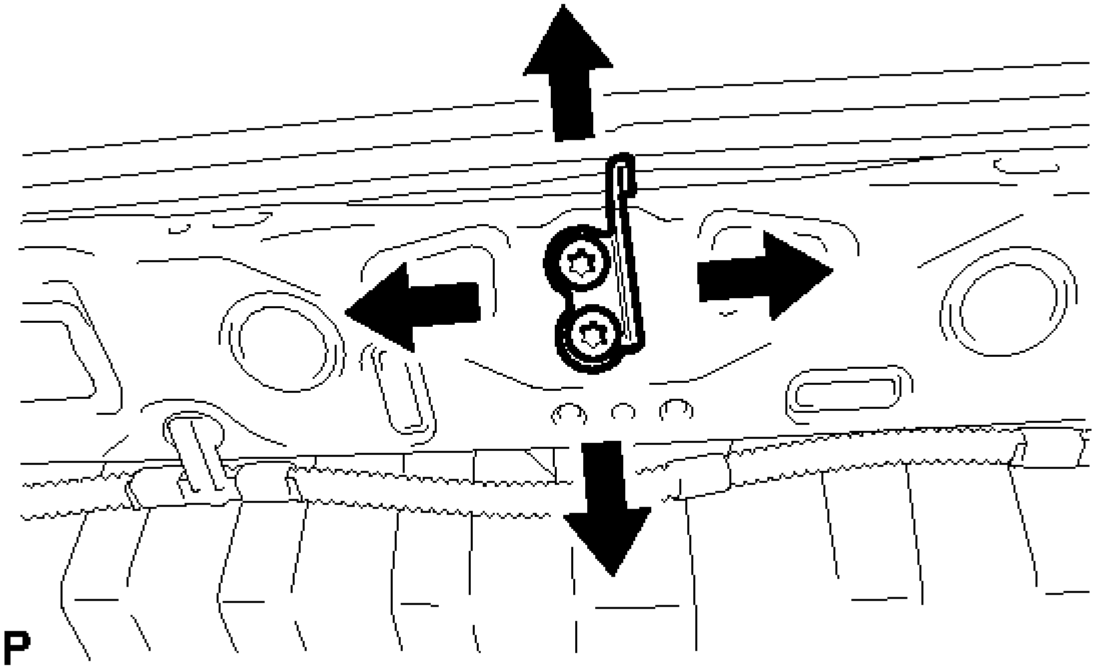

Fig. 208: Adjusting Luggage Compartment Door Striker
Courtesy of TOYOTA MOTOR SALES, U.S.A., INC.

c. Using a brass bar and a hammer, hit the striker to adjust its position.
d. Using a T40 "TORX" socket wrench, tighten the striker mounting screws after adjustment.

Torque: 23 N*m (235 kgf*cm, 17 ft.*lbf)

6. **INSTALL REAR FLOOR FINISH PLATE** See step 10
7. **INSTALL BAGGAGE HOLDER NET (w/ Partition Net)** See step 11
8. **INSTALL LUGGAGE COMPARTMENT FLOOR MAT** See step 13
9. **INSTALL LUGGAGE COMPARTMENT DOOR COVER** See step 10
10. **INSPECT LUGGAGE COMPARTMENT DOOR**
    a. Check that the clearance measurements of areas a through d are within each standard range.

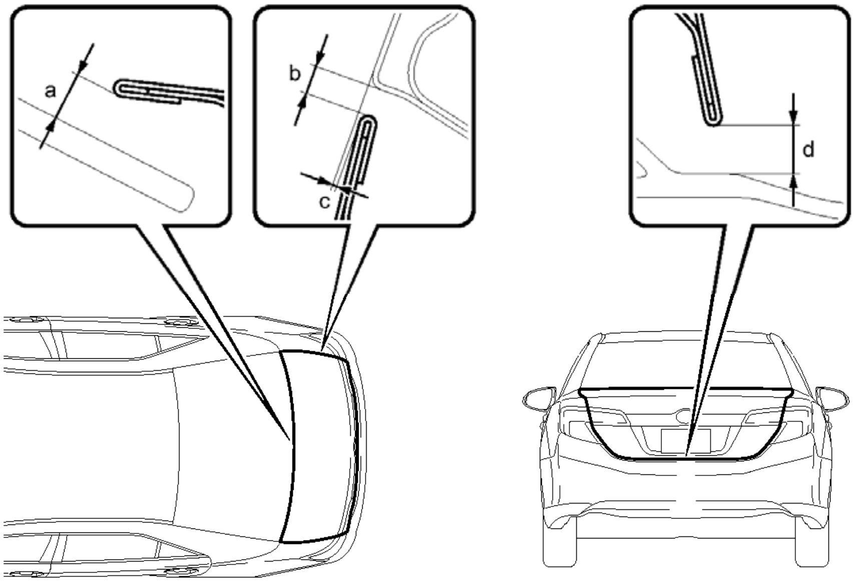

P

Fig. 209: Checking Luggage Compartment Door Clearance Measurements
Courtesy of TOYOTA MOTOR SALES, U.S.A., INC.

STANDARD CLEARANCE

Area	Measurement	Area	Measurement
a	6.4 mm (0.252 in.)	b	2.0 to 5.0 mm (0.0787 to 0.197 in.)
c	-1.0 to 2.0 mm (-0.0394 to 0.0787 in.)	d	3.85 to 7.85 mm (0.152 to 0.309 in.)

REASSEMBLY

REASSEMBLY

1. **INSTALL REAR LIGHT ASSEMBLY LH** . Refer to **INSTALLATION - Step 1**
2. **INSTALL REAR LIGHT ASSEMBLY RH**

   HINT:

   Use the same procedure as for the LH side.

3. **INSTALL LICENSE PLATE LIGHT ASSEMBLY LH** . Refer to **INSTALLATION - Step 2**
4. **INSTALL LICENSE PLATE LIGHT ASSEMBLY RH**

HINT:

Use the same procedure as for the LH side.

5. **INSTALL REAR TELEVISION CAMERA ASSEMBLY (w/ Rear Monitor)** . Refer to **INSTALLATION - Step 1**
6. **INSTALL LUGGAGE COMPARTMENT DOOR OUTSIDE GARNISH SUB-ASSEMBLY** . Refer to **INSTALLATION - Step 4**
7. **INSTALL REAR SPOILER SUB-ASSEMBLY (w/ Rear Spoiler)** . Refer to **INSTALLATION - Step 4**
8. **INSTALL LUGGAGE COMPARTMENT DOOR LOCK ASSEMBLY** . Refer to **INSTALLATION - Step 1**
9. **INSTALL LUGGAGE COMPARTMENT DOOR CUSHION**
   a. Engage the 2 claws and install the 2 new luggage compartment door panel cushions.

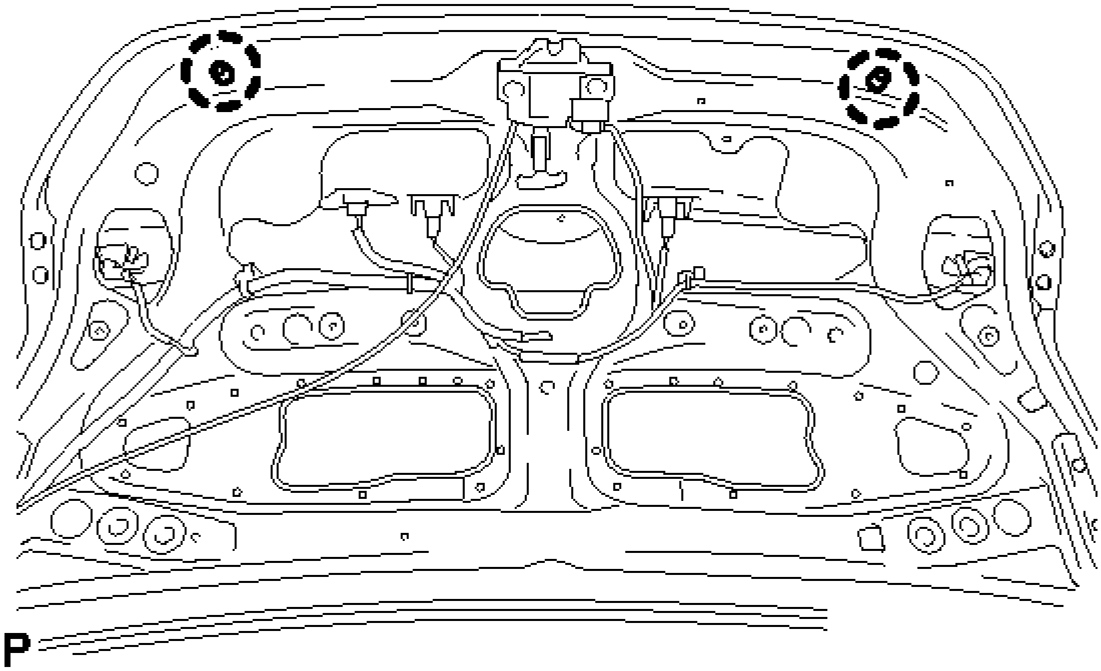

Fig. 210: Identifying Luggage Compartment Door Panel Cushions
Courtesy of TOYOTA MOTOR SALES, U.S.A., INC.

10. **INSTALL LUGGAGE COMPARTMENT DOOR COVER**
    a. Install the luggage compartment door cover with the 13 clips.

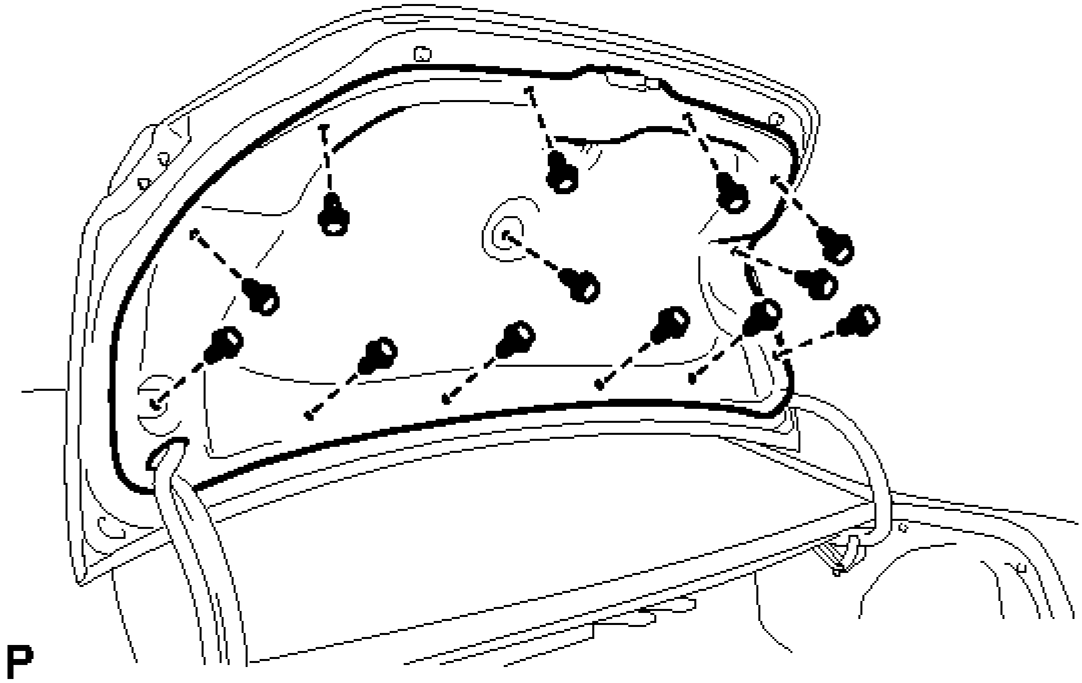

Fig. 211: Identifying Luggage Compartment Door Cover Clips
Courtesy of TOYOTA MOTOR SALES, U.S.A., INC.

11. **ADJUST REAR TELEVISION CAMERA ASSEMBLY OPTICAL AXIS (w/ Parking Assist Monitor System)**

    Refer to **CALIBRATION**

LUGGAGE DOOR HINGE TORSION BAR

COMPONENTS

ILLUSTRATION

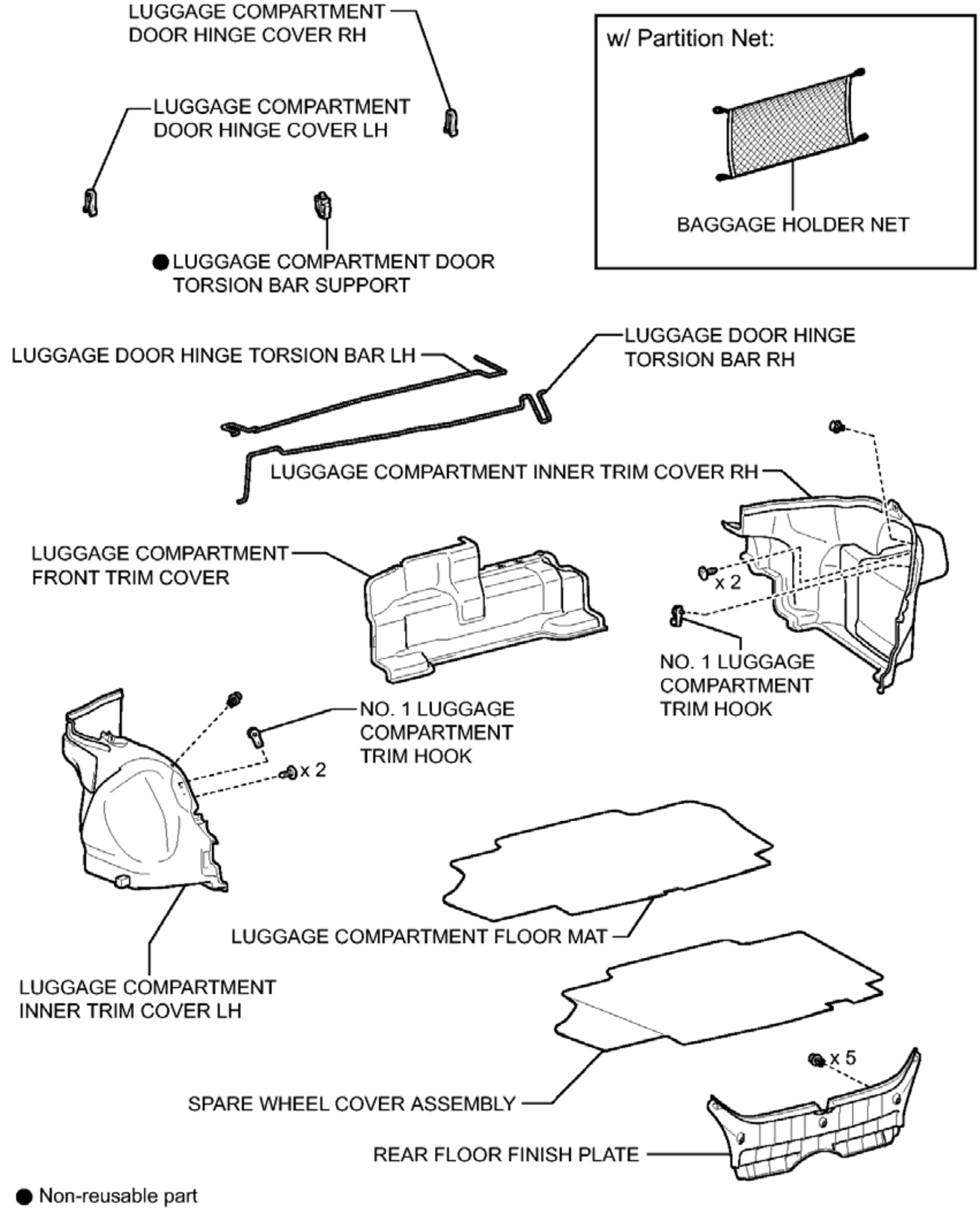
LUGGAGE COMPARTMENT DOOR HINGE COVER RH
LUGGAGE COMPARTMENT DOOR HINGE COVER LH
● LUGGAGE COMPARTMENT DOOR TORSION BAR SUPPORT
w/ Partition Net:
BAGGAGE HOLDER NET
LUGGAGE DOOR HINGE TORSION BAR LH
LUGGAGE DOOR HINGE TORSION BAR RH
LUGGAGE COMPARTMENT INNER TRIM COVER RH
LUGGAGE COMPARTMENT FRONT TRIM COVER
x 2
NO. 1 LUGGAGE COMPARTMENT TRIM HOOK
NO. 1 LUGGAGE COMPARTMENT TRIM HOOK
x 2
LUGGAGE COMPARTMENT FLOOR MAT
LUGGAGE COMPARTMENT INNER TRIM COVER LH
x 5
SPARE WHEEL COVER ASSEMBLY
REAR FLOOR FINISH PLATE
● Non-reusable part
P

Fig. 212: Identifying Luggage Door Hinge Torsion Bar Replacement Components
Courtesy of TOYOTA MOTOR SALES, U.S.A., INC.

REMOVAL

REMOVAL

NOTE: **After installing the torsion bar, use your hand to open and close the luggage**

door. Make sure the luggage door can open and close smoothly.

1. **REMOVE LUGGAGE COMPARTMENT FLOOR MAT**
    a. Remove the luggage compartment floor mat.
2. **REMOVE SPARE WHEEL COVER ASSEMBLY**
    a. Remove the spare wheel cover assembly.
3. **REMOVE BAGGAGE HOLDER NET (w/ Partition Net)**
    a. Remove the baggage holder net.
4. **REMOVE REAR FLOOR FINISH PLATE**
    a. Remove the 5 clips.

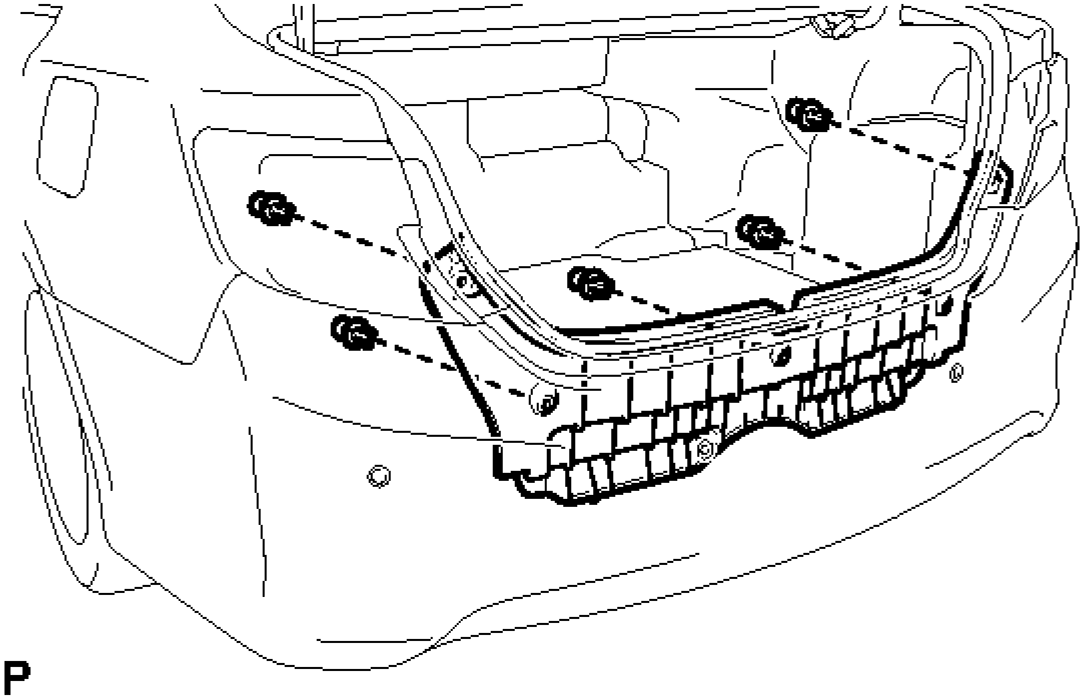

Fig. 213: Identifying Rear Floor Finish Plate Clips
Courtesy of TOYOTA MOTOR SALES, U.S.A., INC.

b. Disengage the 4 clips and remove the rear floor finish plate.

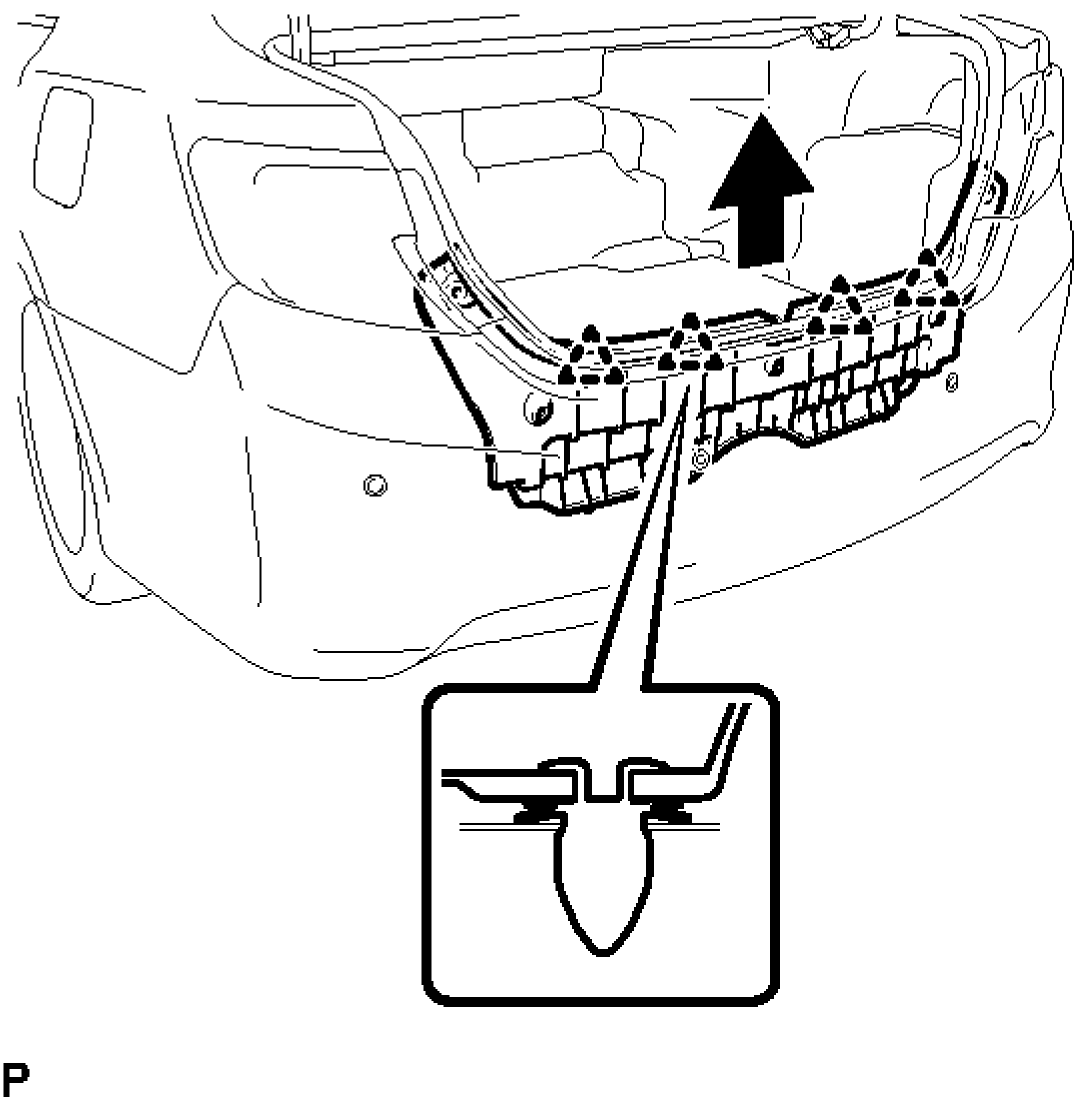

Fig. 214: Removing Rear Floor Finish Plate Clips
Courtesy of TOYOTA MOTOR SALES, U.S.A., INC.

5. **REMOVE NO. 1 LUGGAGE COMPARTMENT TRIM HOOK**
    a. Push the 2 pins and remove the 2 No. 1 luggage compartment trim hooks.

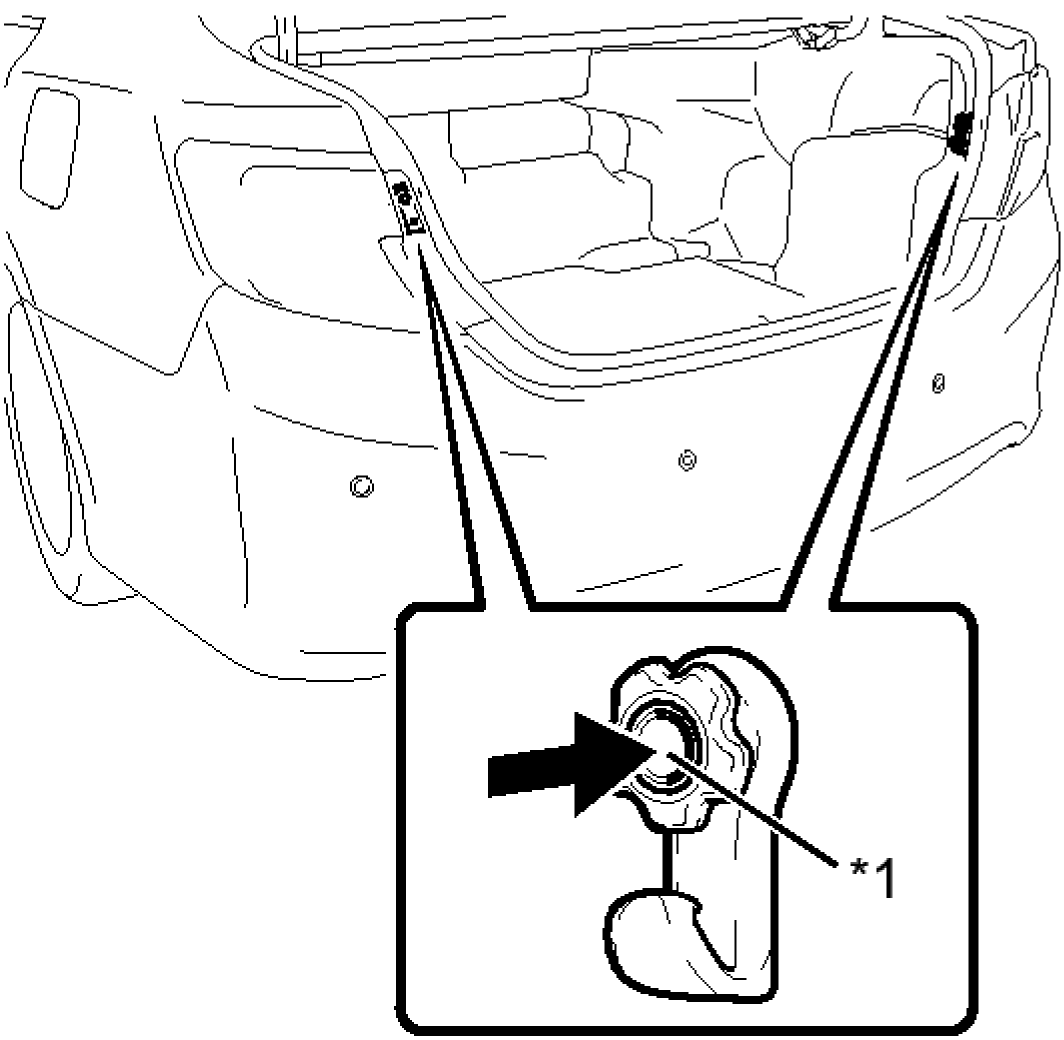

P

Fig. 215: Identifying No. 1 Luggage Compartment Trim Hooks
Courtesy of TOYOTA MOTOR SALES, U.S.A., INC.

TEXT IN ILLUSTRATION

*1	Pin

6. **REMOVE LUGGAGE COMPARTMENT FRONT TRIM COVER**
   a. Disengage the 8 fasteners.

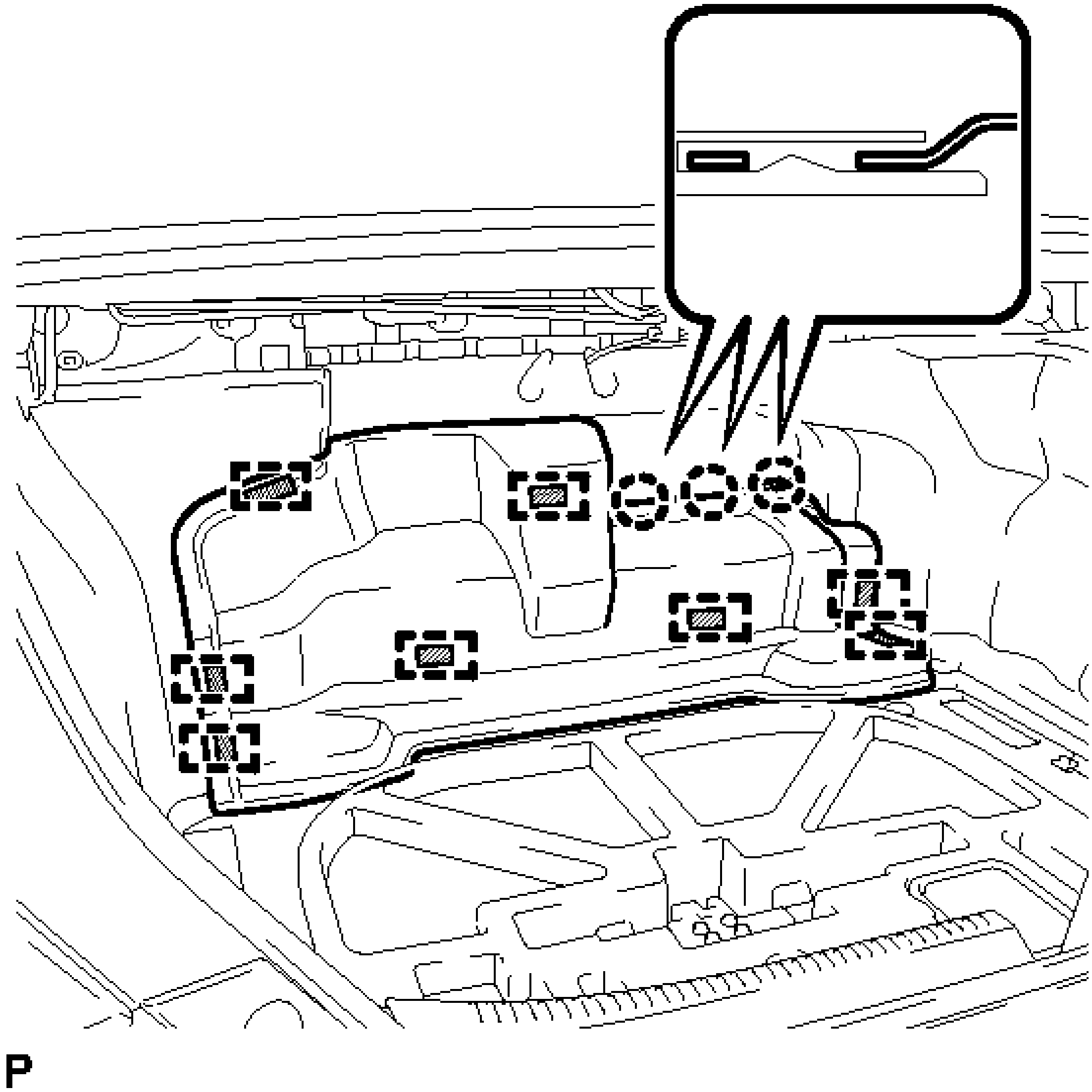

Fig. 216: Identifying Luggage Compartment Front Trim Cover Claws And Fasteners
Courtesy of TOYOTA MOTOR SALES, U.S.A., INC.

b. Disengage the 3 claws and remove the luggage compartment front trim cover.

7. **REMOVE LUGGAGE COMPARTMENT INNER TRIM COVER LH**

   a. Remove the clip <A>.

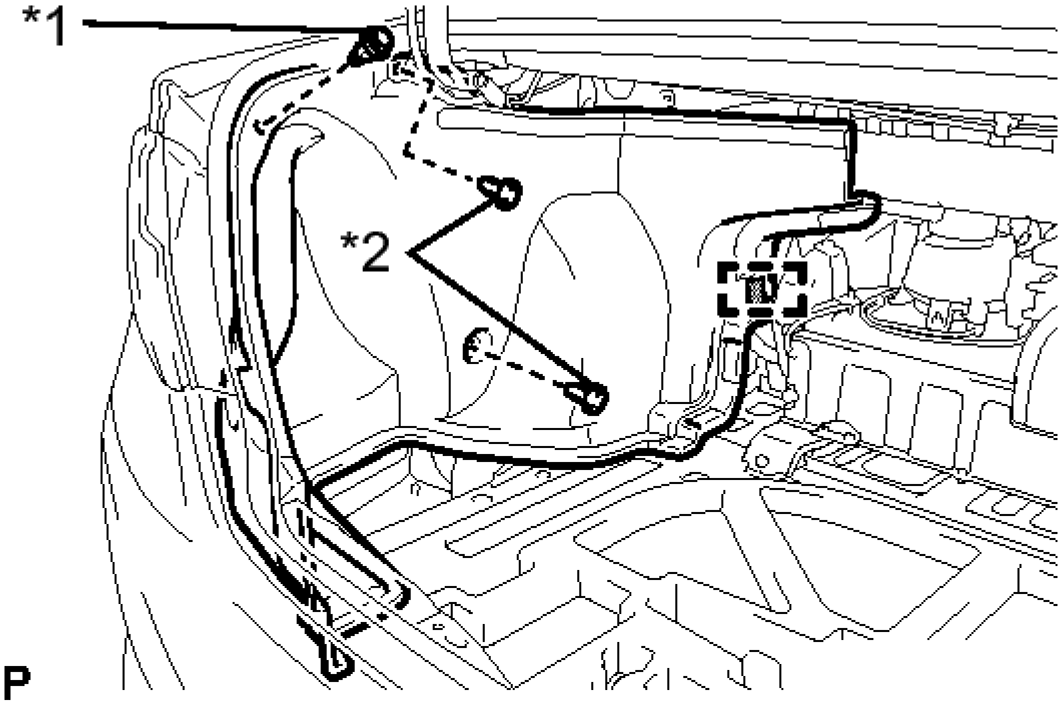

Fig. 217: Identifying Luggage Compartment Inner Trim Cover LH
Courtesy of TOYOTA MOTOR SALES, U.S.A., INC.

TEXT IN ILLUSTRATION

*1	Clip <A>
*2	Clip <B>

b. Remove the 2 clips <B>.
c. Disengage the fastener and remove the luggage compartment inner trim cover LH.

8. **REMOVE LUGGAGE COMPARTMENT INNER TRIM COVER RH**
   a. Remove the clip <A>.

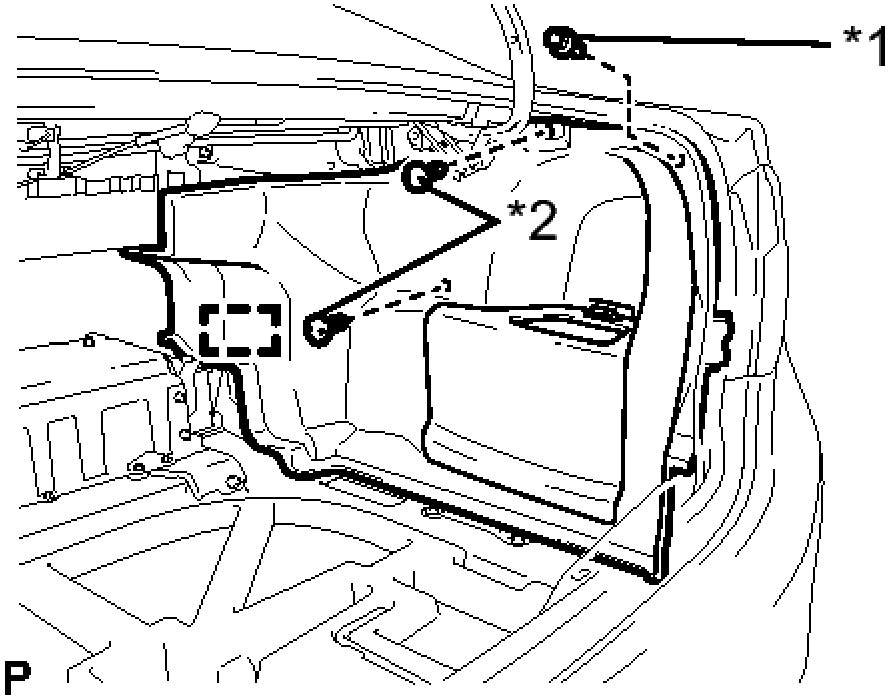

Fig. 218: Identifying Luggage Compartment Inner Trim Cover RH
Courtesy of TOYOTA MOTOR SALES, U.S.A., INC.

TEXT IN ILLUSTRATION

*1	Clip <A>
*2	Clip <B>

b. Remove the 2 clips <B>.
c. Disengage the fastener and remove the luggage compartment inner trim cover RH.

9. **REMOVE LUGGAGE COMPARTMENT DOOR HINGE COVER LH**

a. Disengage the 4 claws and remove the luggage compartment door hinge cover LH.

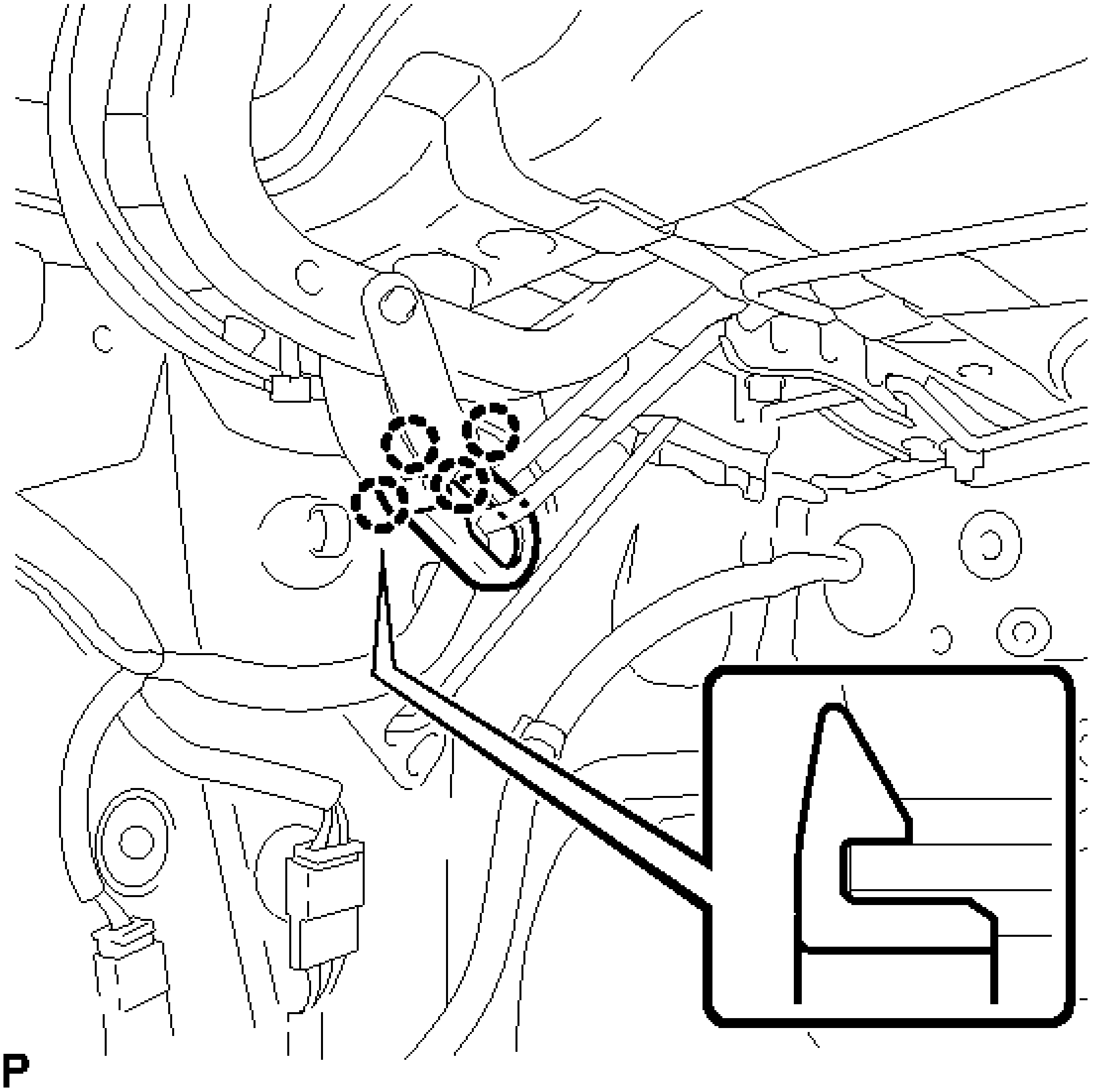

Fig. 219: Identifying Luggage Compartment Door Hinge Cover LH
Courtesy of TOYOTA MOTOR SALES, U.S.A., INC.

10. **REMOVE LUGGAGE COMPARTMENT DOOR HINGE COVER RH**

    HINT:

    Use the same procedure as for the LH side.

11. **REMOVE LUGGAGE DOOR HINGE TORSION BAR LH**
    a. Disengage the hook in the order indicated in the illustration and disconnect the rear seatback lock assembly RH (rear seat lock control cable RH).

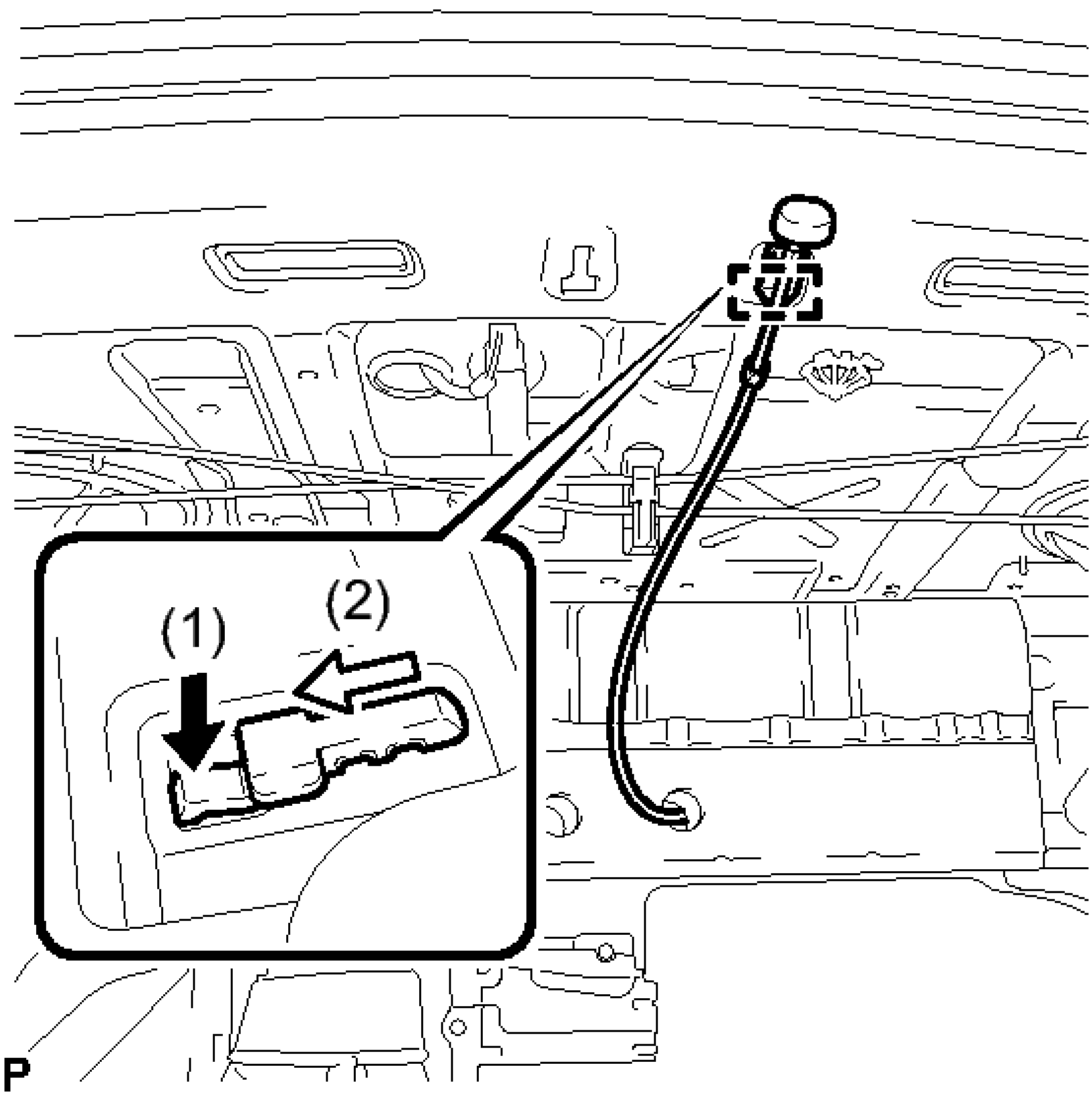

Fig. 220: Disconnecting Rear Seatback Lock Assembly
Courtesy of TOYOTA MOTOR SALES, U.S.A., INC.

b. Put protective tape around the luggage door hinge.

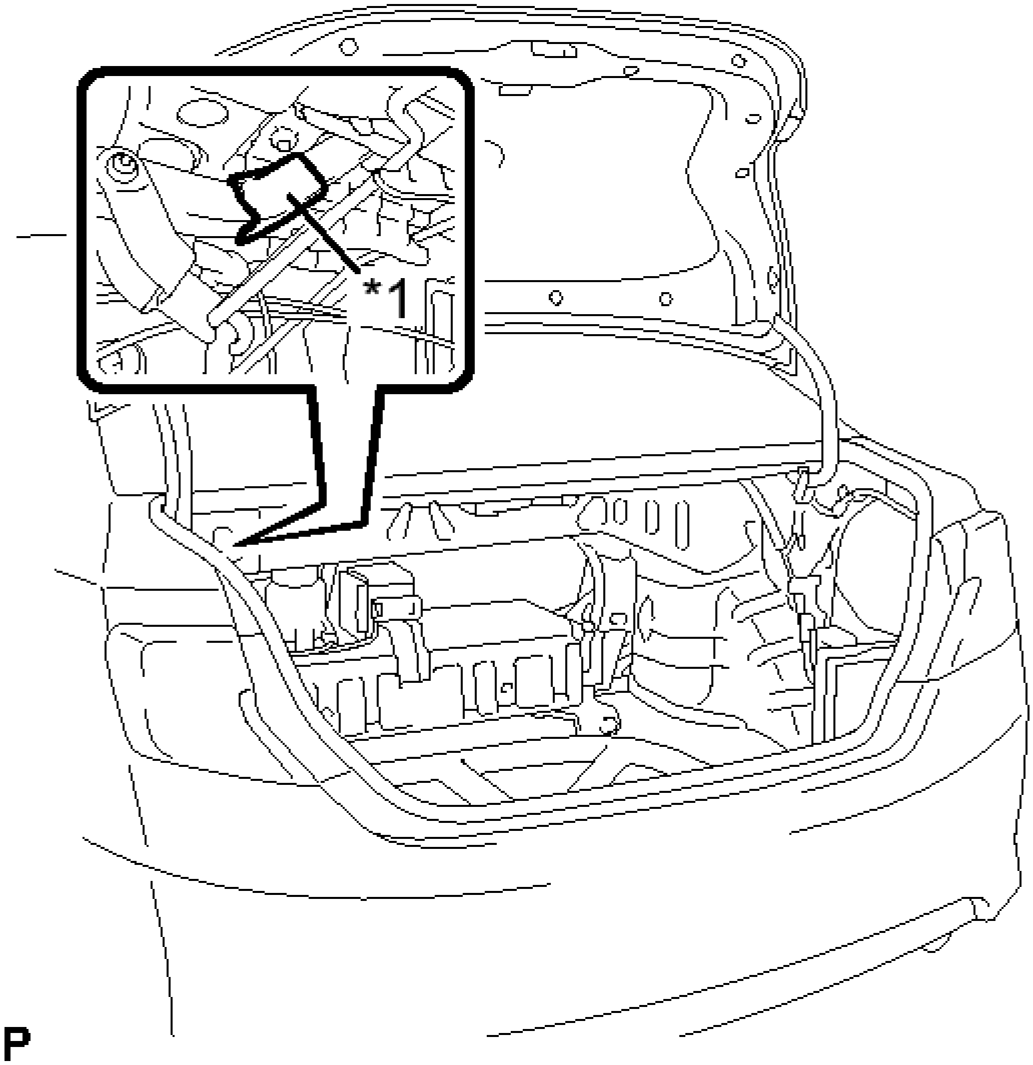

Fig. 221: Identifying Protective Tape Placement
Courtesy of TOYOTA MOTOR SALES, U.S.A., INC.

TEXT IN ILLUSTRATION

*1	Protective Tape

c. Using SST, disconnect the luggage door hinge torsion bar LH from the luggage door hinge and the left side of the vehicle body as shown in the illustration.
    - **SST: 09804-24010**

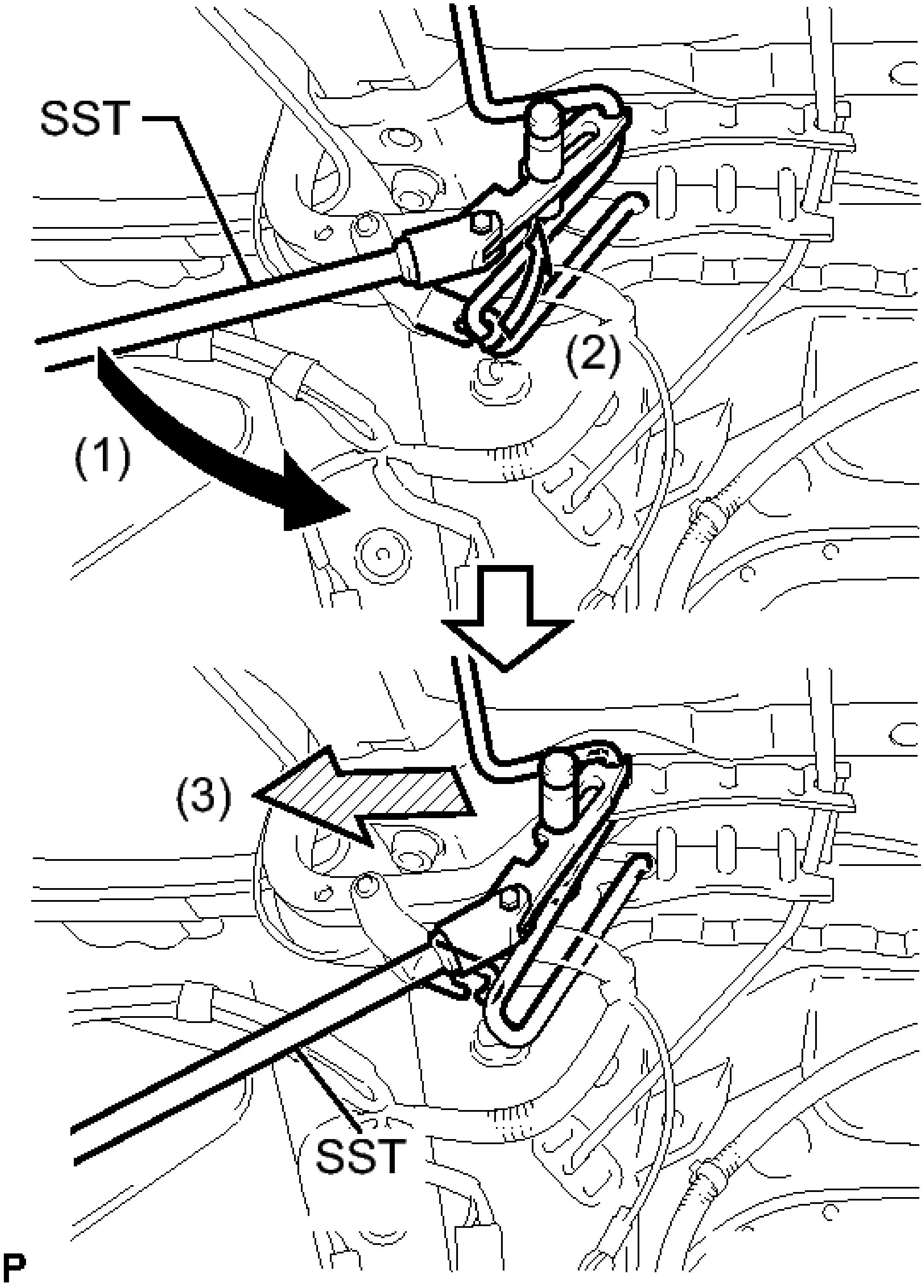

Fig. 222: Disconnecting Luggage Door Hinge Torsion Bar LH From Luggage Door Hinge
Courtesy of TOYOTA MOTOR SALES, U.S.A., INC.

d. Disengage the 2 claws as shown in the illustration.

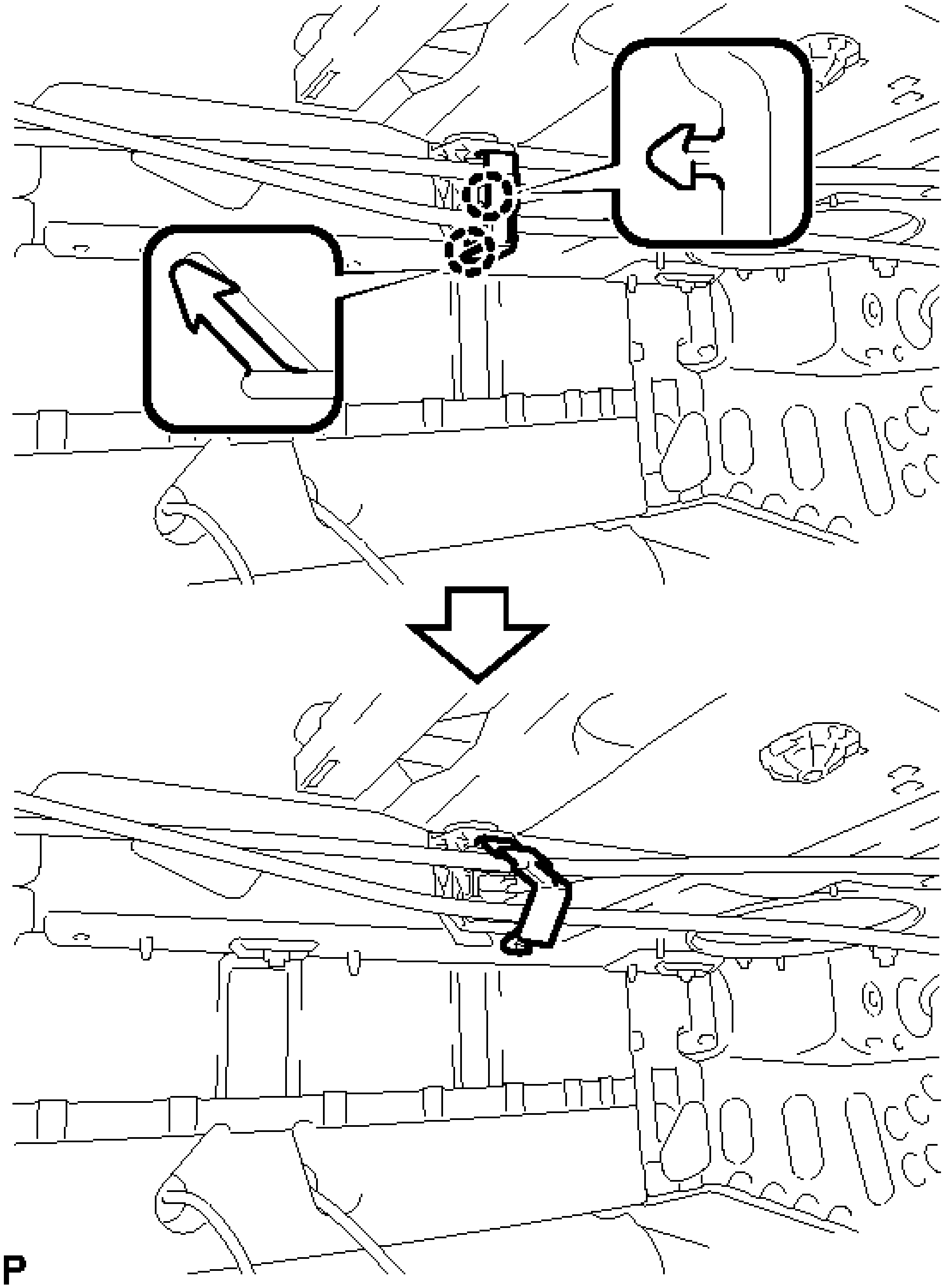

Fig. 223: Identifying Claws
Courtesy of TOYOTA MOTOR SALES, U.S.A., INC.

e. Disconnect the luggage door hinge torsion bar LH from the luggage compartment door torsion bar support as shown in the illustration.

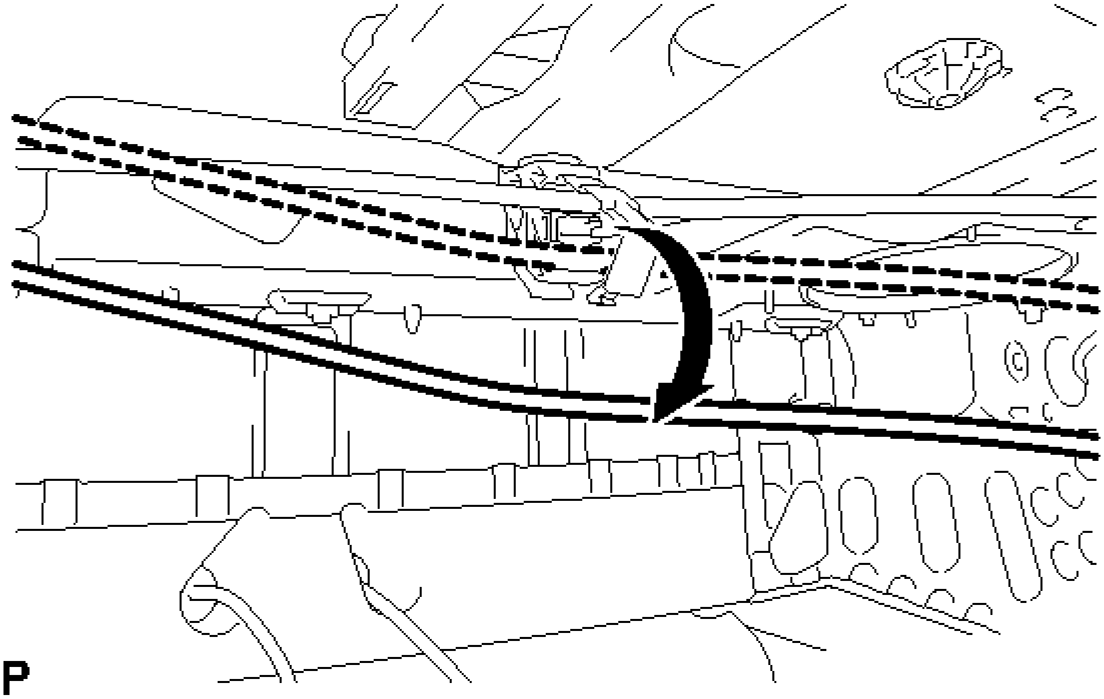

Fig. 224: Disconnecting Luggage Door Hinge Torsion Bar LH From Luggage Compartment Door Torsion Bar Support
Courtesy of TOYOTA MOTOR SALES, U.S.A., INC.

f. Remove the luggage door hinge torsion bar LH from the right side of the vehicle body as shown in the illustration.

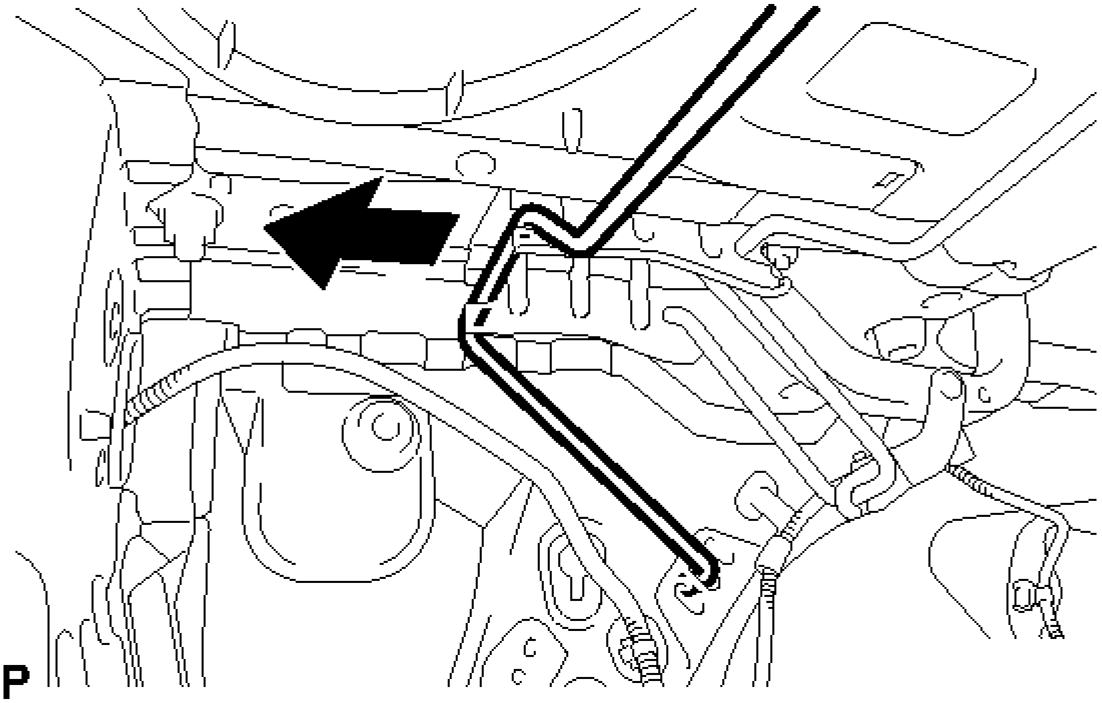

Fig. 225: Removing Luggage Door Hinge Torsion Bar LH
Courtesy of TOYOTA MOTOR SALES, U.S.A., INC.

12. **REMOVE LUGGAGE DOOR HINGE TORSION BAR RH**
    a. Put protective tape around the luggage door hinge.

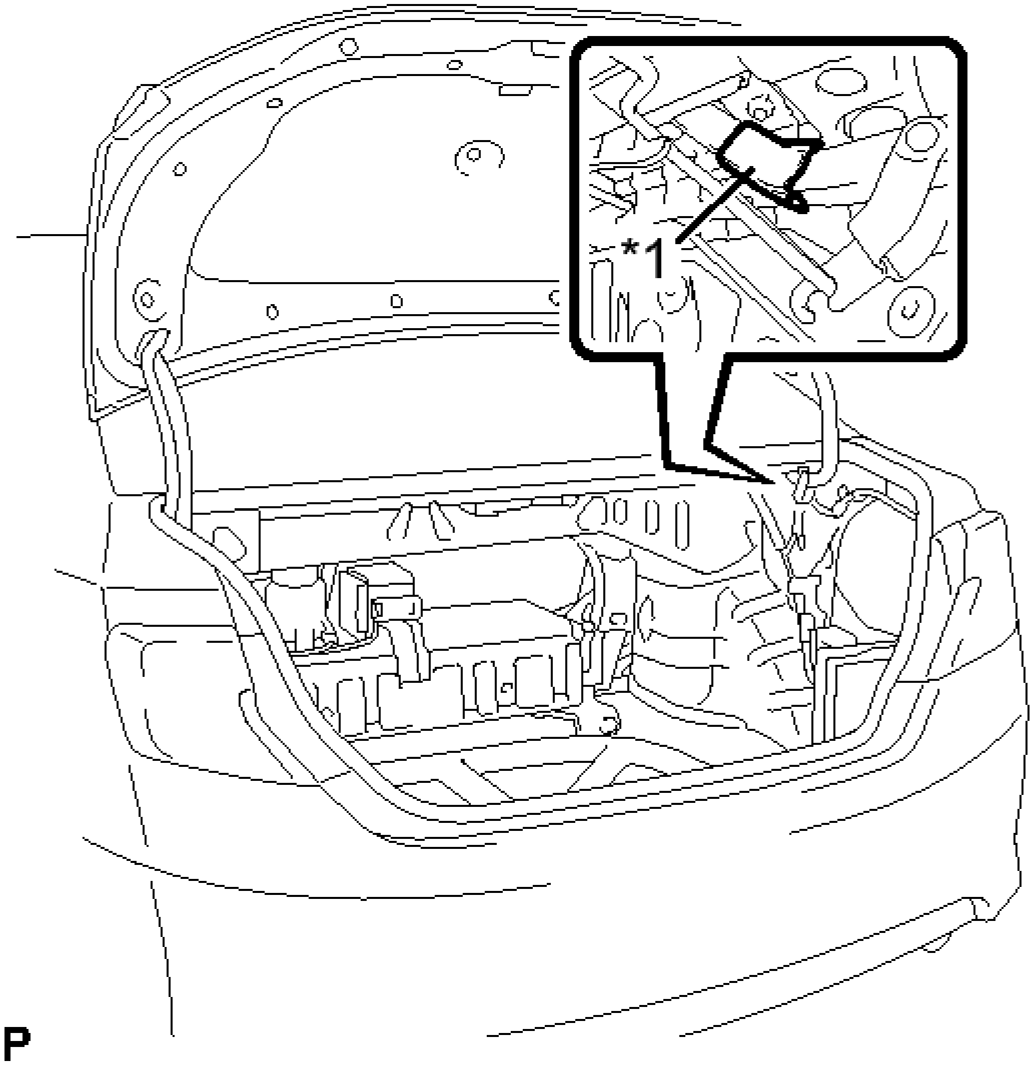

Fig. 226: Identifying Protective Tape Placement
Courtesy of TOYOTA MOTOR SALES, U.S.A., INC.

TEXT IN ILLUSTRATION

*1	Protective Tape

    b. Using SST, disconnect the luggage door hinge torsion bar RH from the luggage door hinge and the right side of the vehicle body as shown in the illustration.

- **SST: 09804-24010**

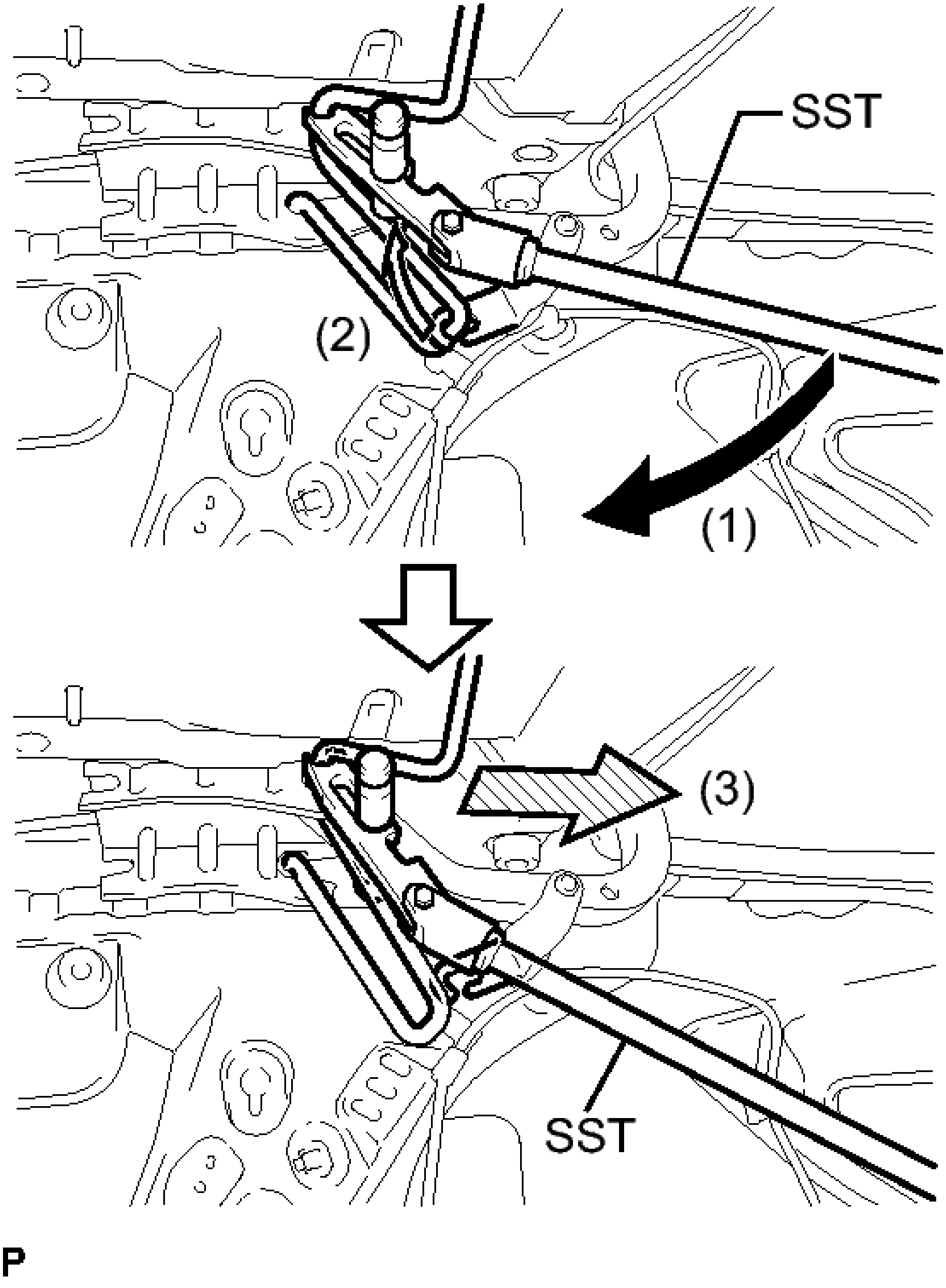

Fig. 227: Disconnecting Luggage Door Hinge Torsion Bar RH From Luggage Door Hinge
Courtesy of TOYOTA MOTOR SALES, U.S.A., INC.

c. Disconnect the luggage door hinge torsion bar RH from the luggage compartment door torsion bar support as shown in the illustration.

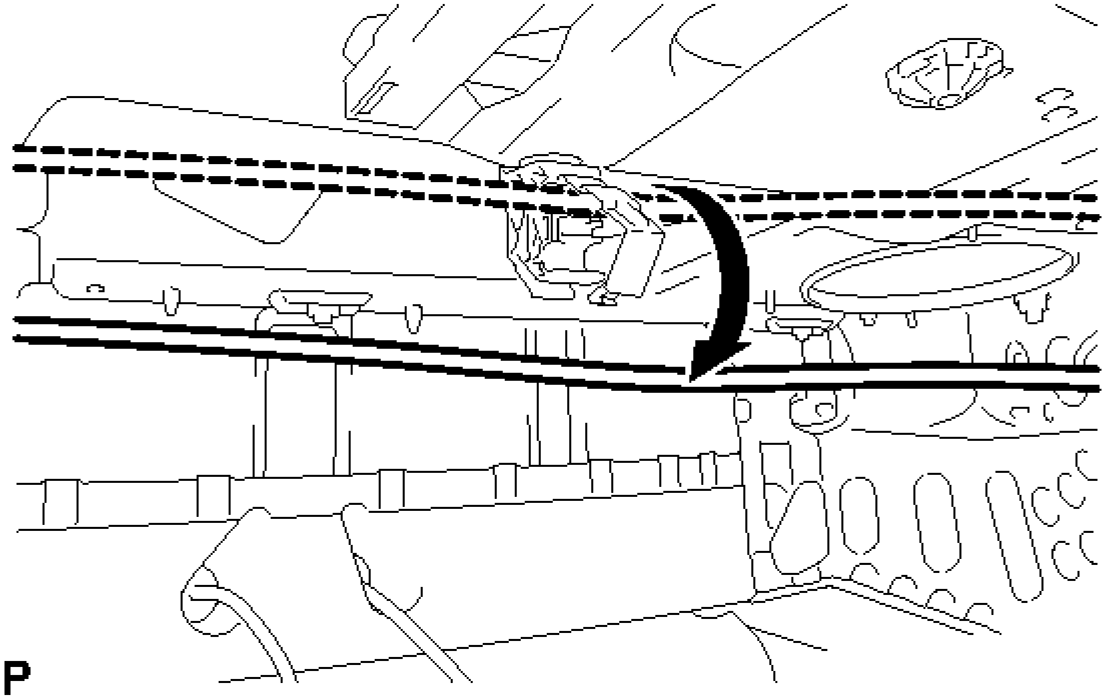

Fig. 228: Disconnecting Luggage Door Hinge Torsion Bar RH From Luggage Compartment Door Torsion Bar Support
Courtesy of TOYOTA MOTOR SALES, U.S.A., INC.

d. Remove the luggage door hinge torsion bar RH from the left side of the vehicle body as shown in the illustration.

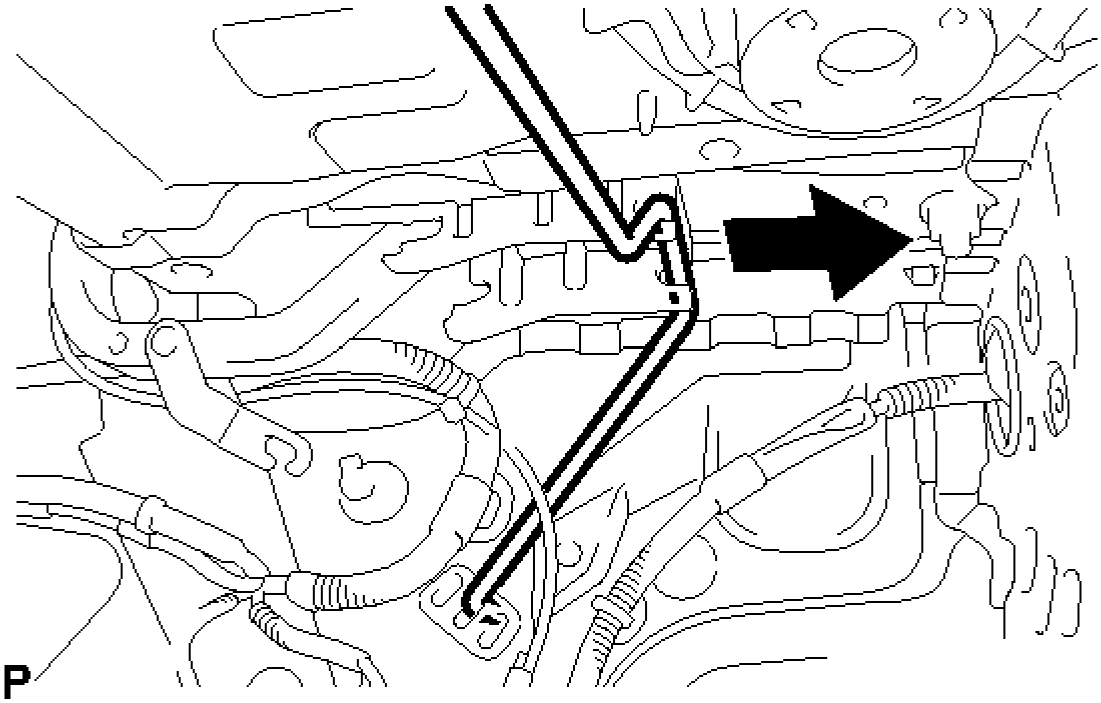

Fig. 229: Removing Luggage Door Hinge Torsion Bar RH
Courtesy of TOYOTA MOTOR SALES, U.S.A., INC.

13. **REMOVE LUGGAGE COMPARTMENT DOOR TORSION BAR SUPPORT**
    a. Remove the luggage compartment door torsion bar support as shown in the illustration.

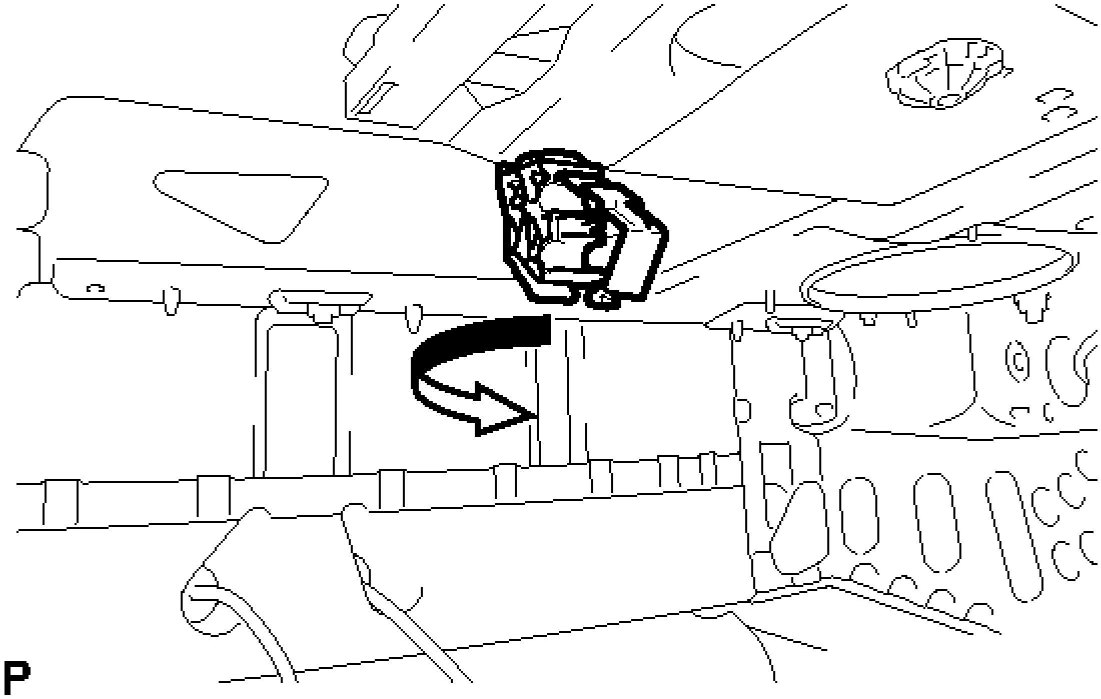

Fig. 230: Removing Luggage Compartment Door Torsion Bar Support

Courtesy of TOYOTA MOTOR SALES, U.S.A., INC.

NOTE: **Make sure to replace the luggage compartment door torsion bar support with a new one.**

INSTALLATION

INSTALLATION

NOTE: **After installing the torsion bar, use your hand to open and close the luggage door. Make sure the luggage door can open and close smoothly.**

1. **INSTALL LUGGAGE COMPARTMENT DOOR TORSION BAR SUPPORT**
   a. Install a new luggage compartment door torsion bar support as shown in the illustration.

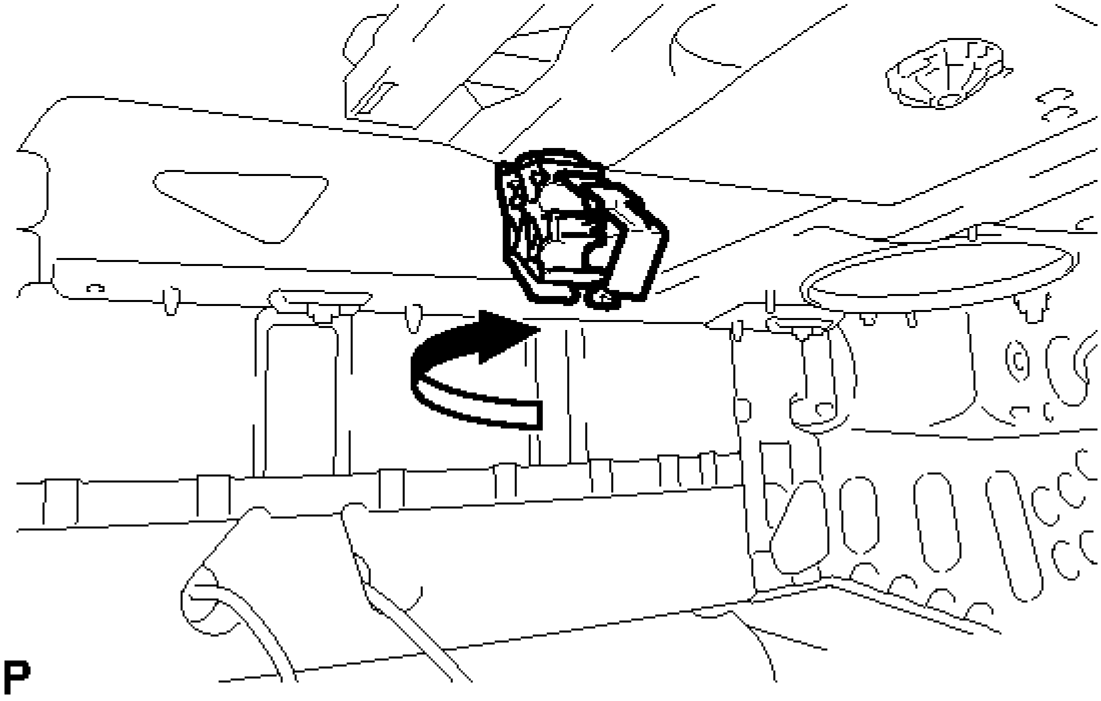

Fig. 231: Installing Luggage Compartment Door Torsion Bar Support
Courtesy of TOYOTA MOTOR SALES, U.S.A., INC.

2. **INSTALL LUGGAGE DOOR HINGE TORSION BAR RH**
   a. Check the identification mark on the luggage door hinge torsion bar RH.

   w/o Rear Spoiler

   Green

   w/ Rear Spoiler

Pink

b. Set the tip of the luggage door hinge torsion bar RH in the center installation hole. The upper and lower installation holes are used for adjustment.

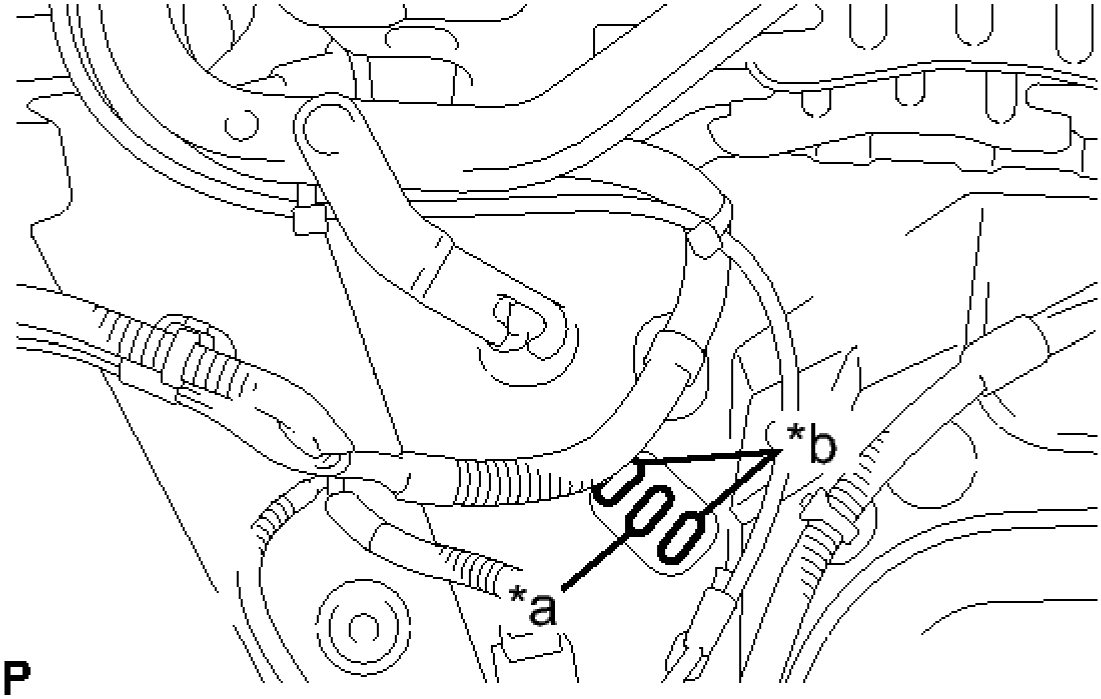

Fig. 232: Identifying Upper And Lower Installation Holes
Courtesy of TOYOTA MOTOR SALES, U.S.A., INC.

TEXT IN ILLUSTRATION

*a	Installation Hole
*b	Installation Hole (For Adjustment)

c. Connect the luggage door hinge torsion bar RH to the left side of the vehicle body as shown in the illustration.

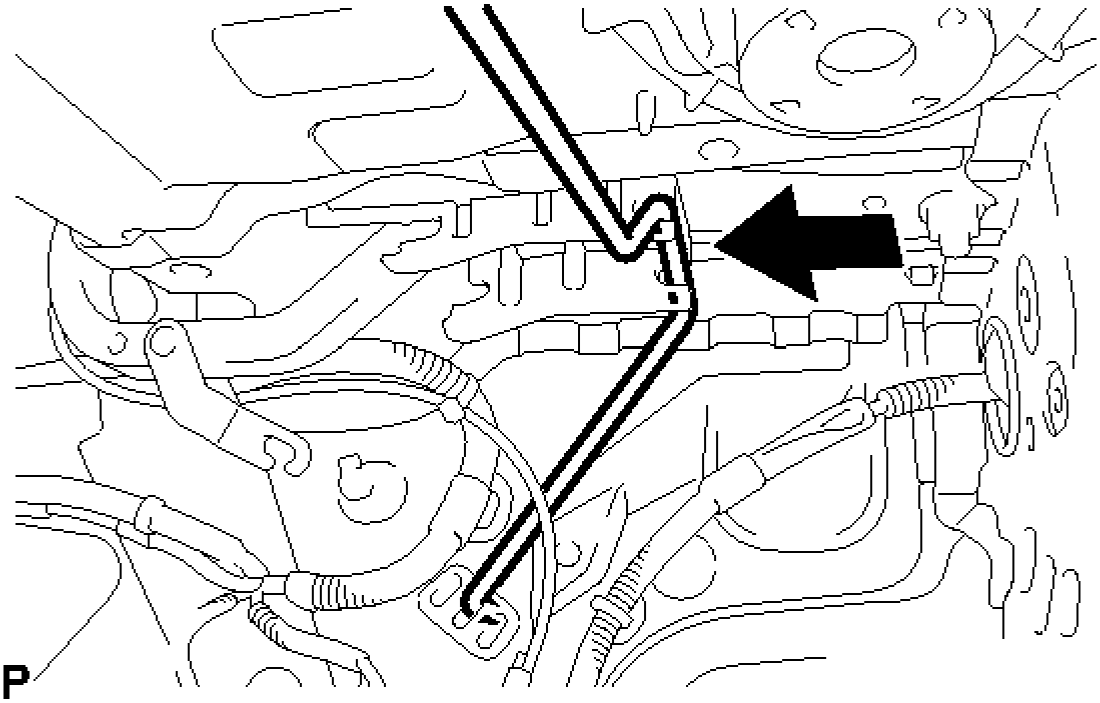

Fig. 233: Connecting Luggage Door Hinge Torsion Bar RH
Courtesy of TOYOTA MOTOR SALES, U.S.A., INC.

d. Connect the luggage door hinge torsion bar RH to the luggage compartment door torsion bar support as shown in the illustration.

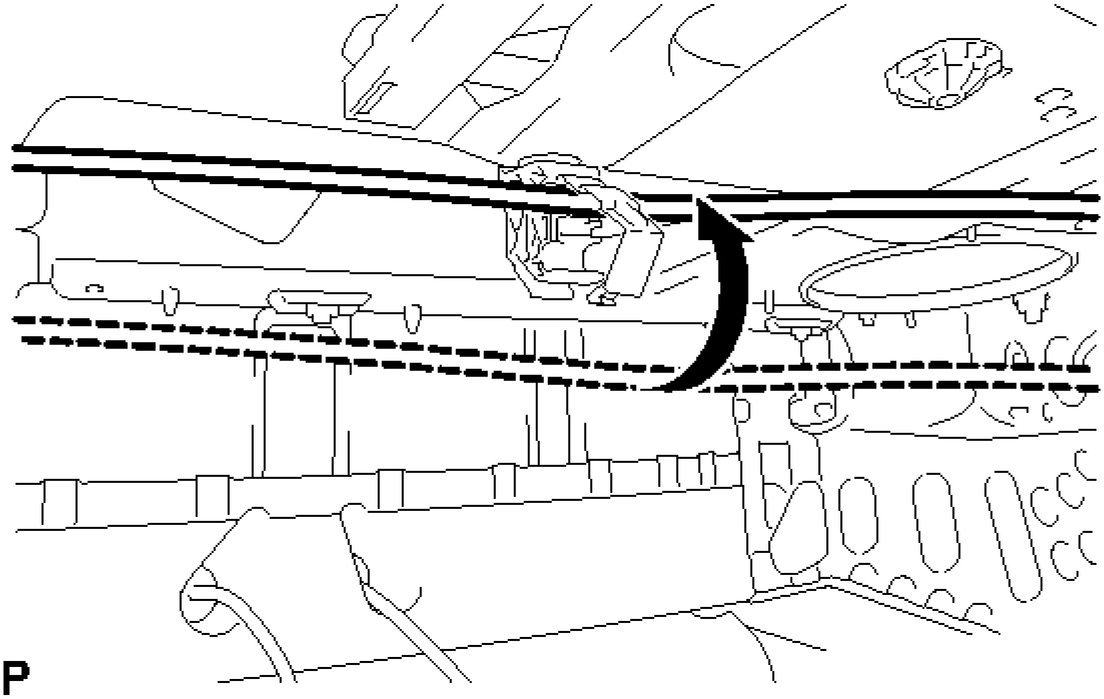

Fig. 234: Connecting Luggage Door Hinge Torsion Bar RH To Luggage Compartment Door

Torsion Bar Support
Courtesy of TOYOTA MOTOR SALES, U.S.A., INC.

e. Using SST, install the luggage door hinge torsion bar RH to the luggage door hinge and the right side of the vehicle body as shown in the illustration.
    - **SST: 09804-24010**

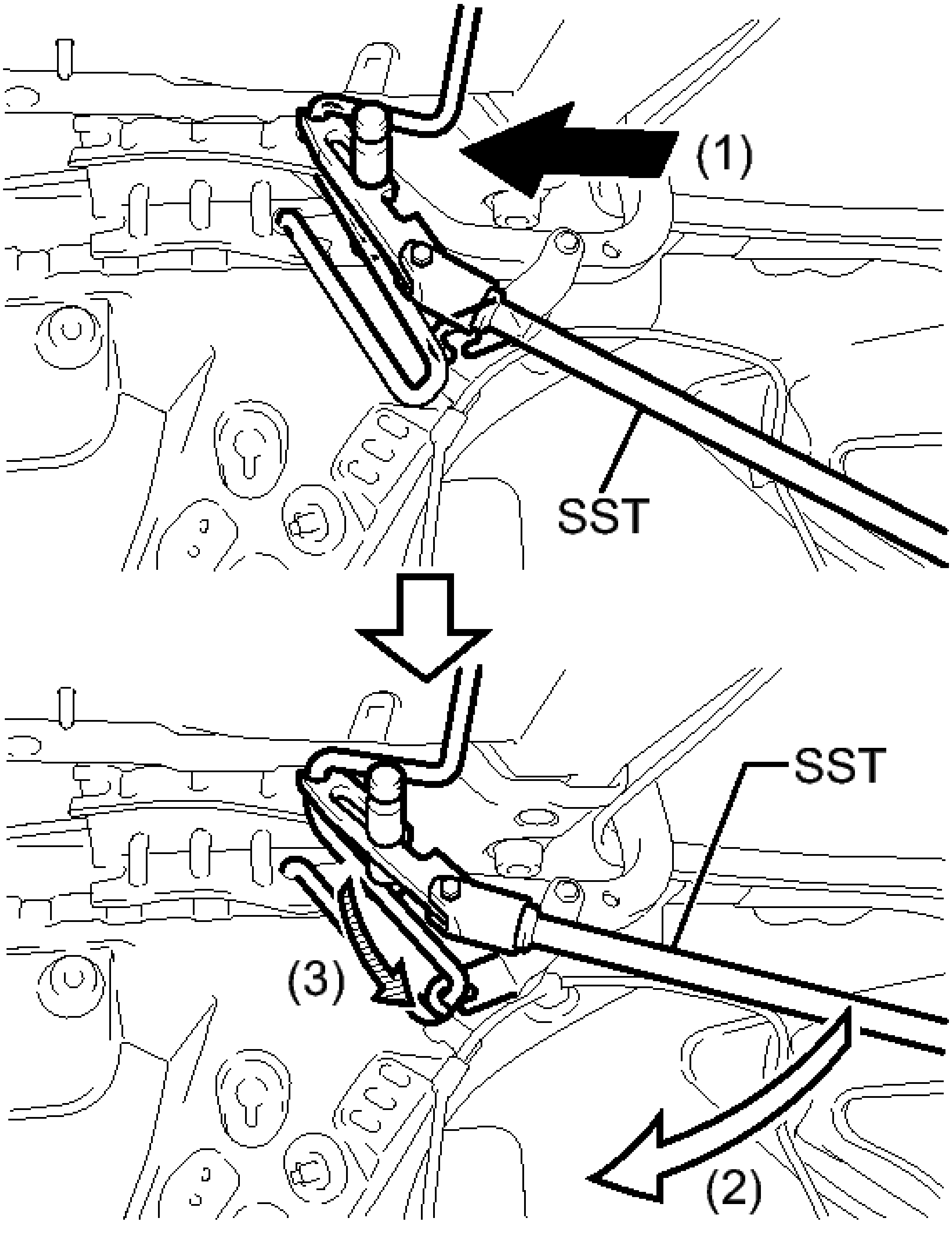

Fig. 235: Installing Luggage Door Hinge Torsion Bar RH To Luggage Door Hinge
Courtesy of TOYOTA MOTOR SALES, U.S.A., INC.

f. Remove the protective tape.

3. **INSTALL LUGGAGE DOOR HINGE TORSION BAR LH**

a. Check the identification mark on the luggage door hinge torsion bar RH.

   w/o Rear Spoiler

   White

   w/ Rear Spoiler

   Yellow

b. Set the tip of the luggage door hinge torsion bar LH in the center installation hole. The upper and lower installation holes are used for adjustment.

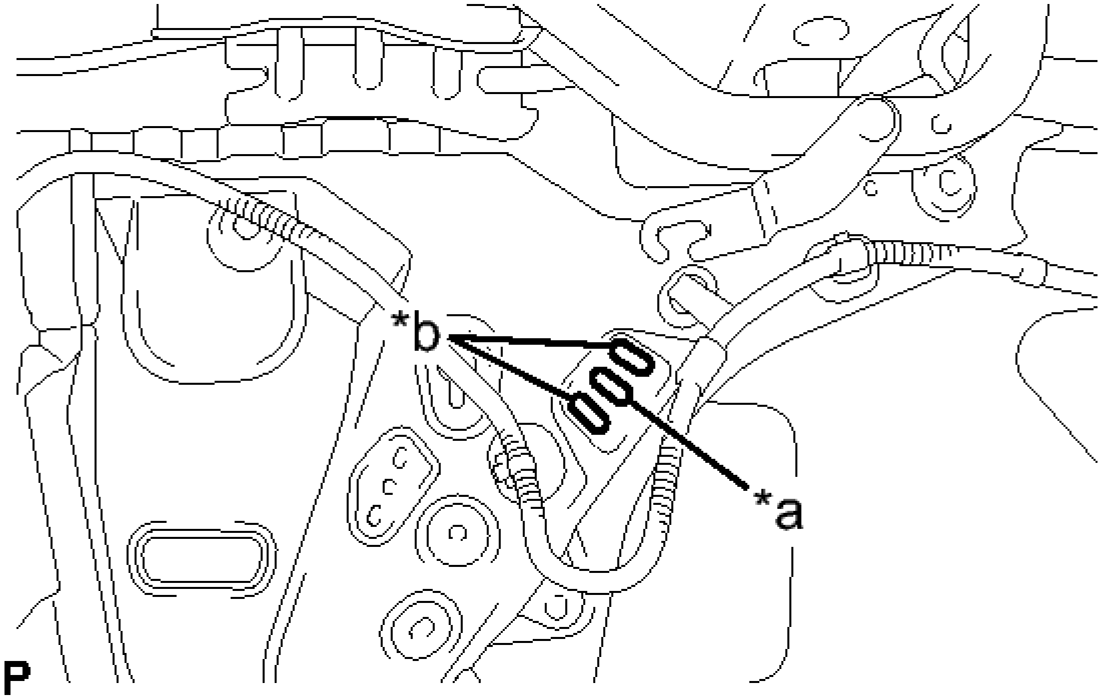

Fig. 236: Identifying Upper And Lower Installation Holes
Courtesy of TOYOTA MOTOR SALES, U.S.A., INC.

TEXT IN ILLUSTRATION

*a	Installation Hole
*b	Installation Hole (For Adjustment)

c. Connect the luggage door hinge torsion bar LH to the right side of the vehicle body as shown in the illustration.

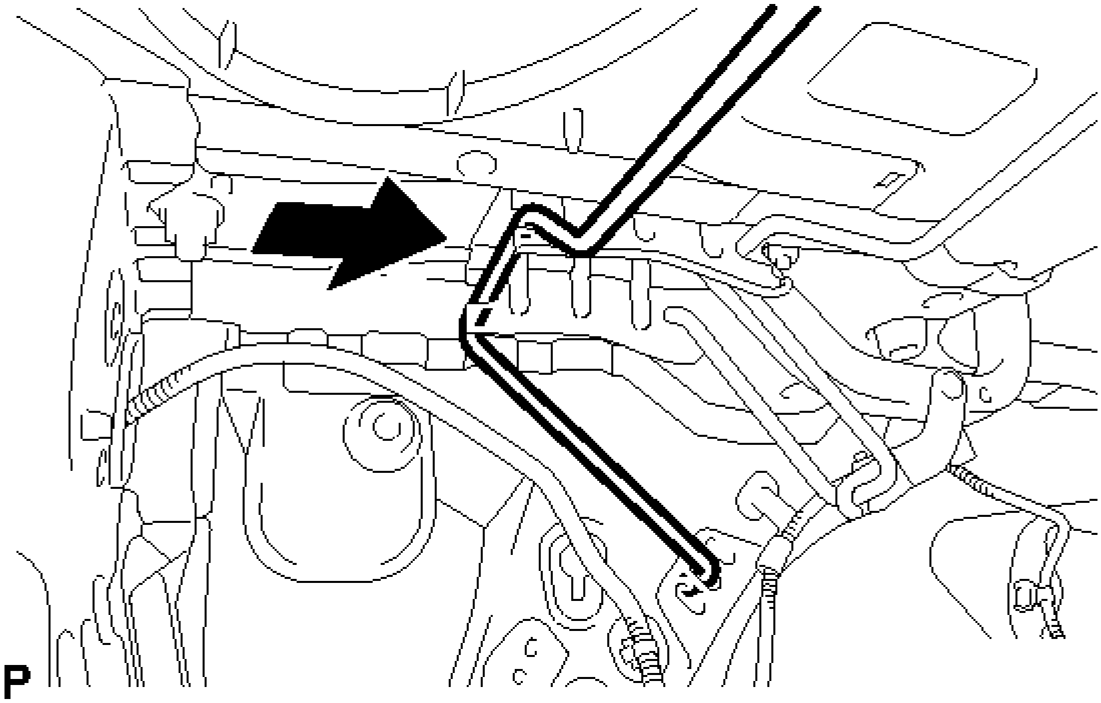

Fig. 237: Connecting Luggage Door Hinge Torsion Bar LH
Courtesy of TOYOTA MOTOR SALES, U.S.A., INC.

d. Connect the luggage door hinge torsion bar LH to the luggage compartment door torsion bar support as shown in the illustration.

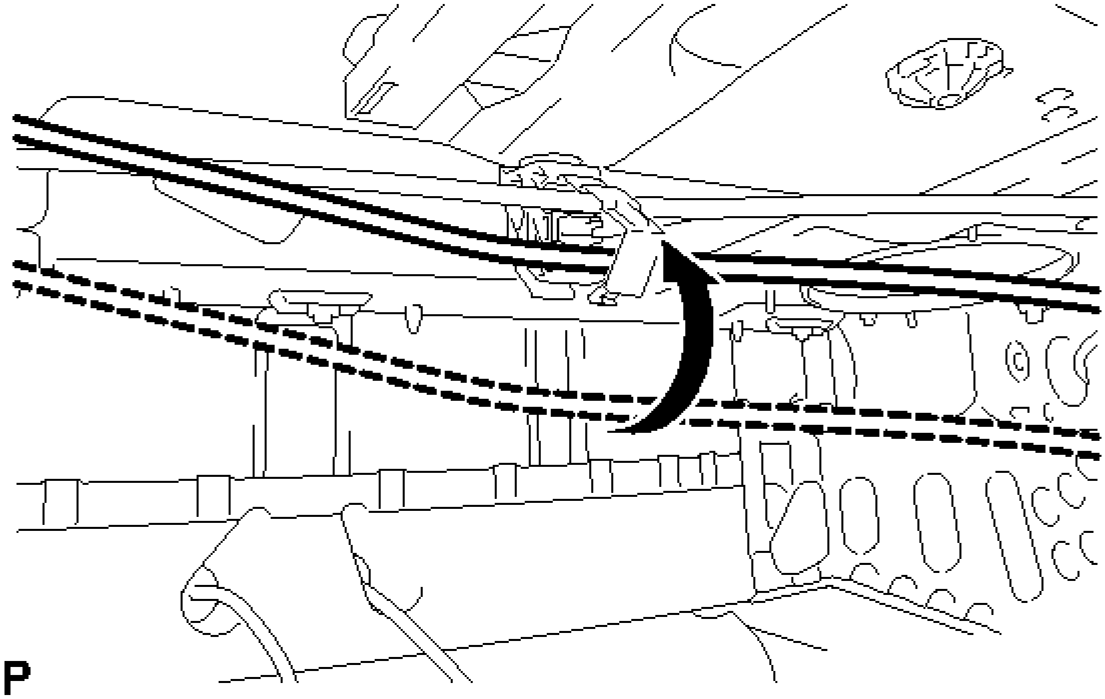

Fig. 238: Connecting Luggage Door Hinge Torsion Bar LH To Luggage Compartment Door

Torsion Bar Support
Courtesy of TOYOTA MOTOR SALES, U.S.A., INC.

e. Using SST, install the luggage door hinge torsion bar LH to the luggage door hinge and the left side of the vehicle body as shown in the illustration.
    - **SST: 09804-24010**

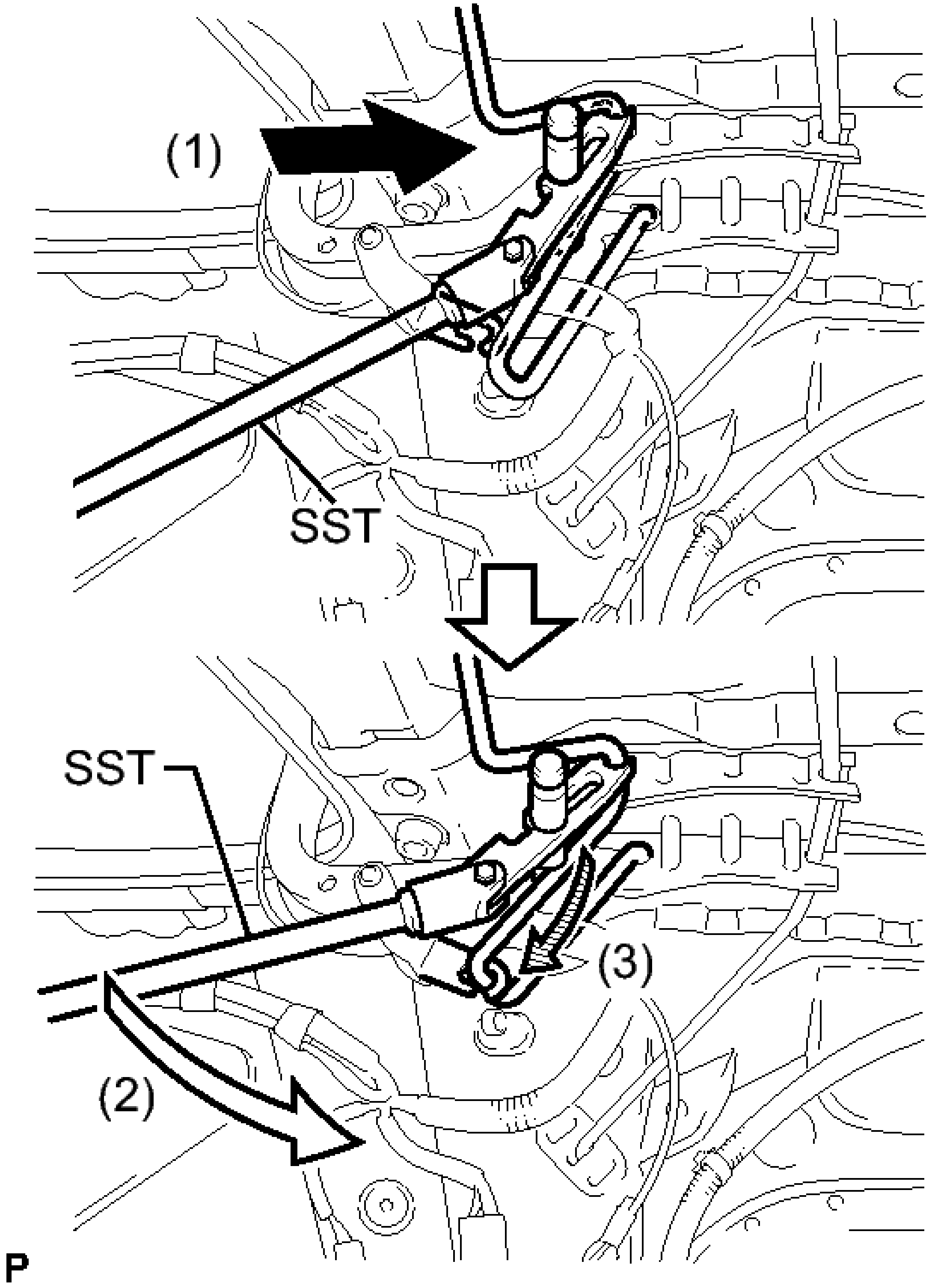

Fig. 239: Installing Luggage Door Hinge Torsion Bar LH To Luggage Door Hinge
Courtesy of TOYOTA MOTOR SALES, U.S.A., INC.

f. Engage the 2 claws as shown in the illustration.

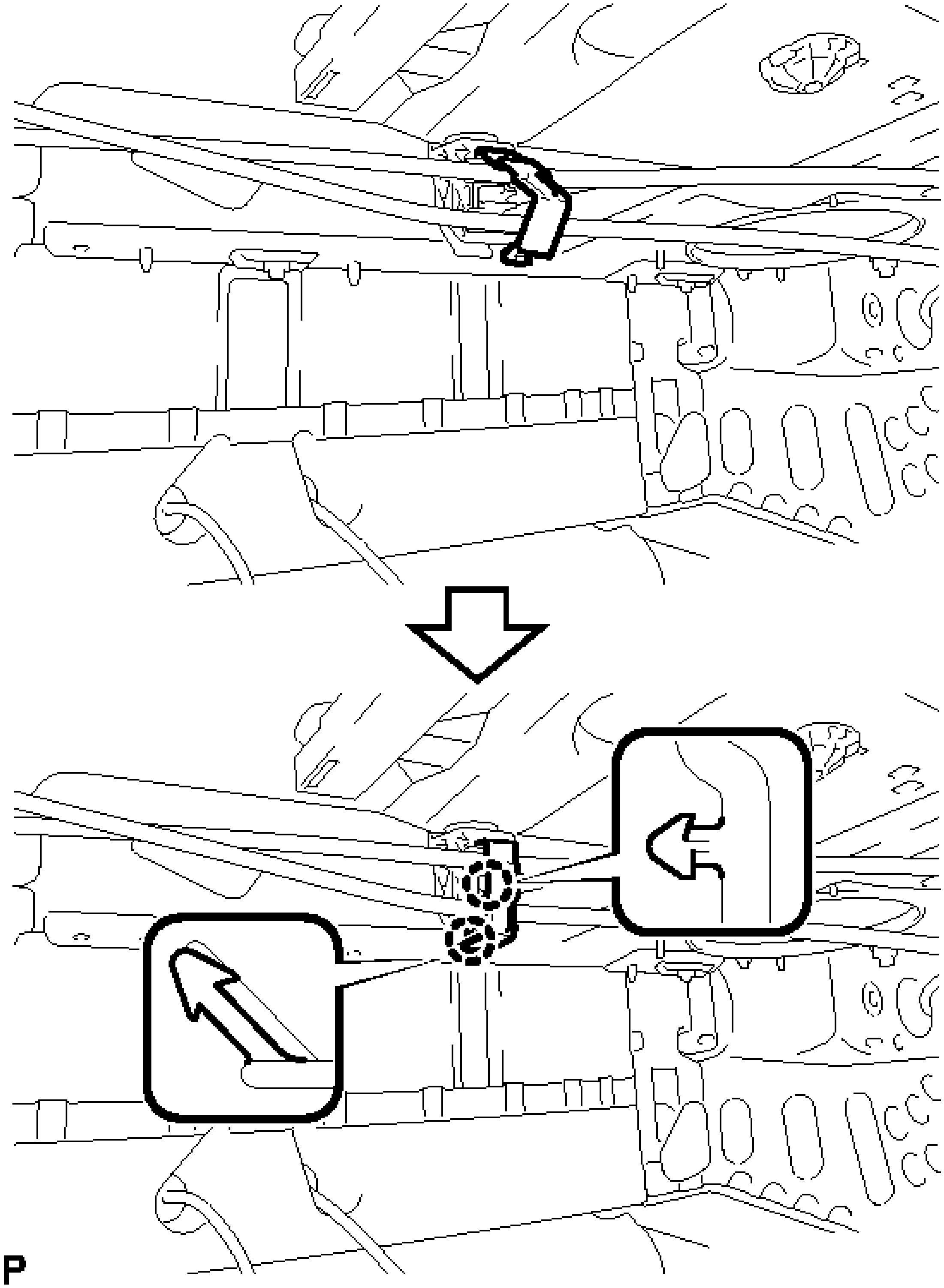

Fig. 240: Identifying Claws
Courtesy of TOYOTA MOTOR SALES, U.S.A., INC.

g. Connect the rear seatback lock assembly RH (rear seat lock control cable RH) and engage the hook in the order indicated in the illustration.

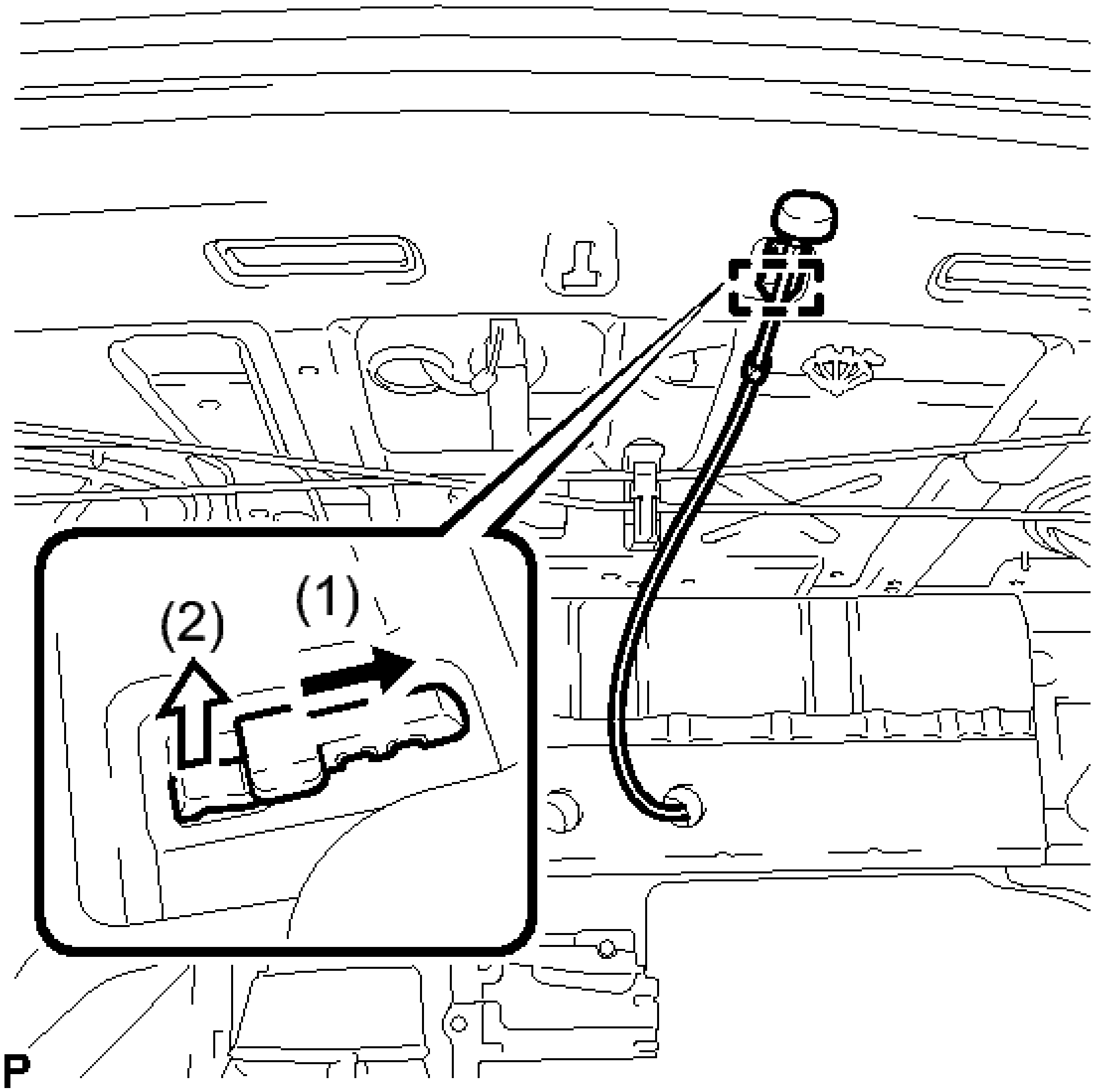

Fig. 241: Connecting Rear Seatback Lock Assembly
Courtesy of TOYOTA MOTOR SALES, U.S.A., INC.

h. Remove the protective tape.

4. **INSTALL LUGGAGE COMPARTMENT DOOR HINGE COVER LH**
   a. Engage the 4 claws and install the luggage compartment door hinge cover LH.
5. **INSTALL LUGGAGE COMPARTMENT DOOR HINGE COVER RH**

   HINT:

   Use the same procedure as for the LH side.

6. **INSTALL LUGGAGE COMPARTMENT INNER TRIM COVER LH**
   a. Install the clip <A>.

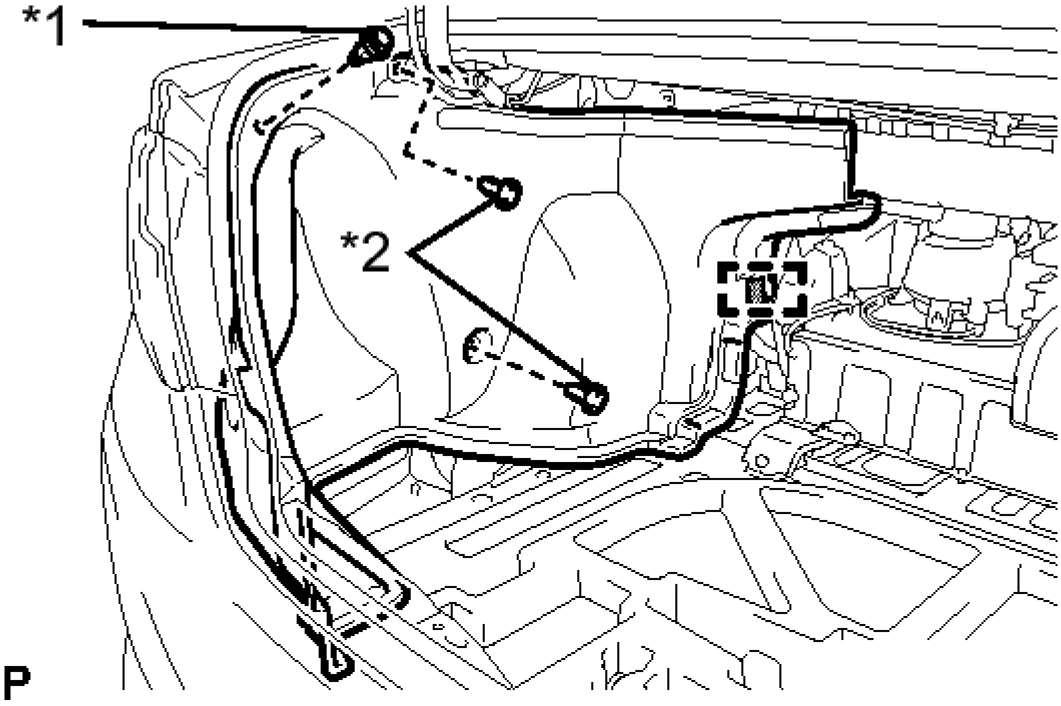

Fig. 242: Identifying Luggage Compartment Inner Trim Cover LH
Courtesy of TOYOTA MOTOR SALES, U.S.A., INC.

TEXT IN ILLUSTRATION

*1	Clip <A>
*2	Clip <B>

b. Install the 2 clips <B>.

c. Engage the fastener and install the luggage compartment inner trim cover LH.

7. **INSTALL LUGGAGE COMPARTMENT INNER TRIM COVER RH**

a. Install the clip <A>.

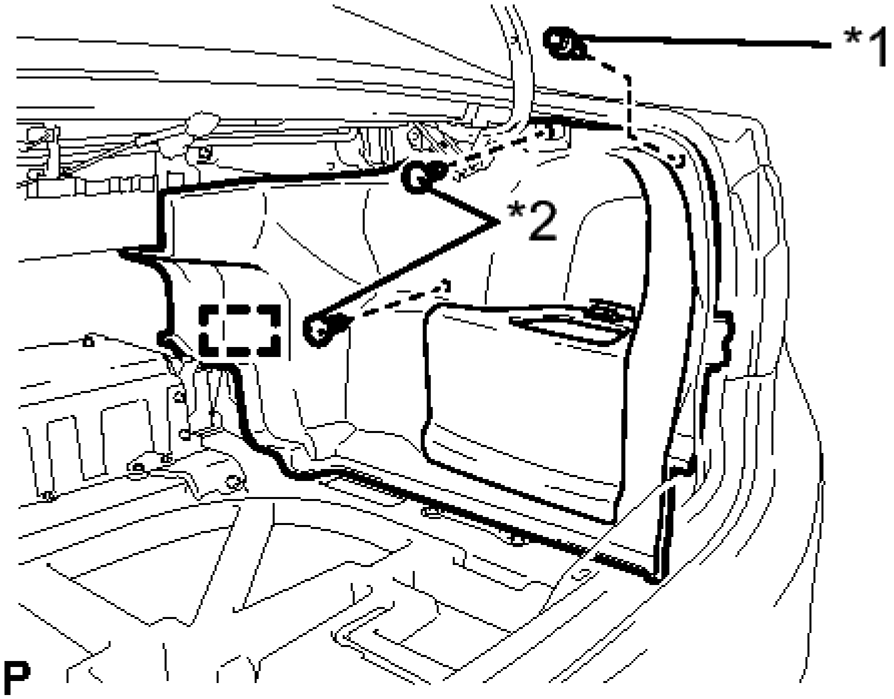

Fig. 243: Identifying Luggage Compartment Inner Trim Cover RH
Courtesy of TOYOTA MOTOR SALES, U.S.A., INC.

TEXT IN ILLUSTRATION

*1	Clip <A>
*2	Clip <B>

b. Install the 2 clips <B>.

c. Engage the fastener and install the luggage compartment inner trim cover RH.

8. **INSTALL NO. 1 LUGGAGE COMPARTMENT TRIM HOOK**

a. Engage the 2 pins to install the 2 No. 1 luggage compartment trim hooks.

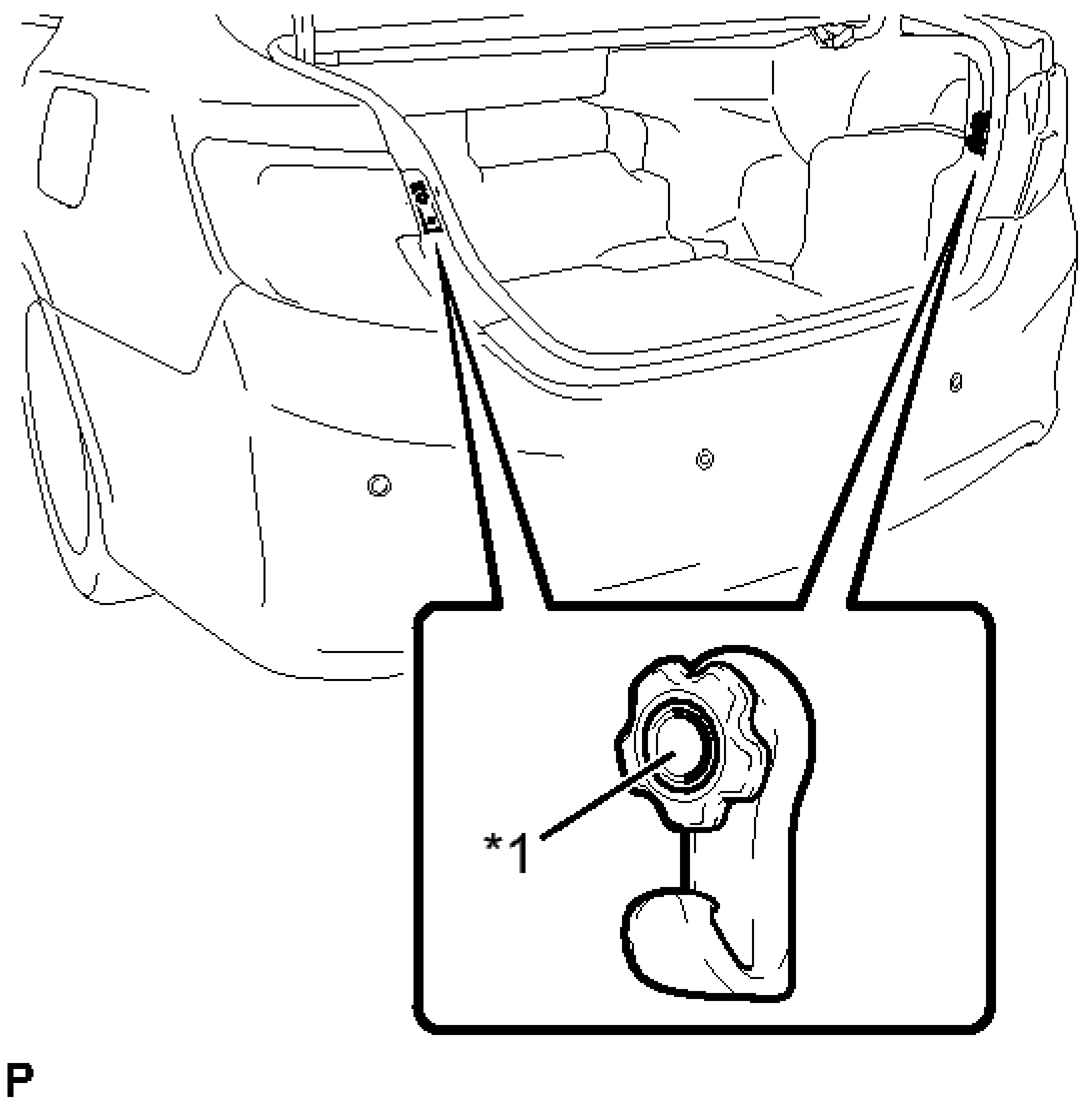

Fig. 244: Identifying No. 1 Luggage Compartment Trim Hooks
Courtesy of TOYOTA MOTOR SALES, U.S.A., INC.

TEXT IN ILLUSTRATION

*1	Pin

9. **INSTALL LUGGAGE COMPARTMENT FRONT TRIM COVER**
    a. Engage the 2 claws.
    b. Engage the 8 fasteners and install the luggage compartment front trim cover.
10. **INSTALL REAR FLOOR FINISH PLATE**
    a. Engage the 4 clips and install the rear floor finish plate.

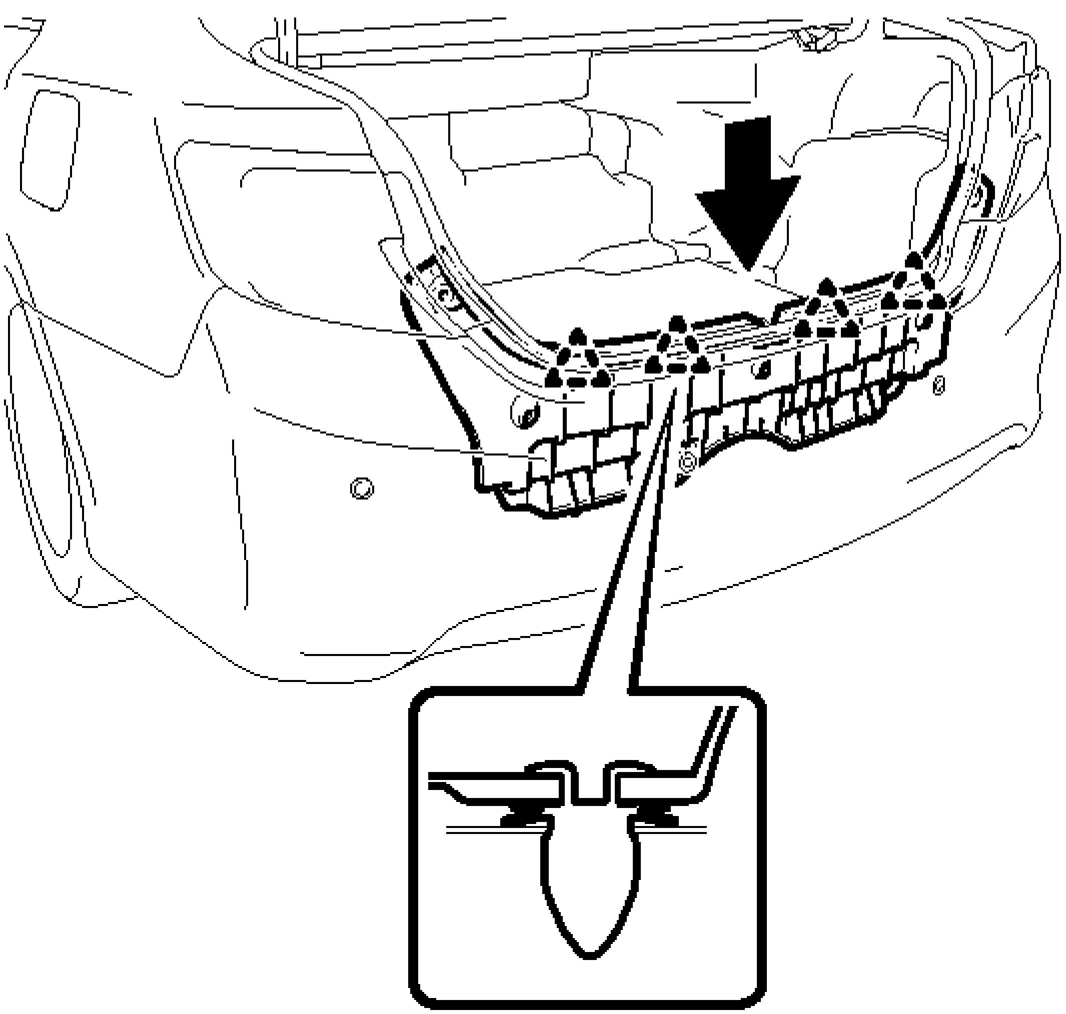

P

Fig. 245: Installing Rear Floor Finish Plate
Courtesy of TOYOTA MOTOR SALES, U.S.A., INC.

   b. Install the 5 clips.

11. **INSTALL BAGGAGE HOLDER NET (w/ Partition Net)**
    a. Install the baggage holder net.
12. **INSTALL SPARE WHEEL COVER ASSEMBLY**
    a. Install the spare wheel cover assembly.
13. **INSTALL LUGGAGE COMPARTMENT FLOOR MAT**
    a. Install the luggage compartment floor mat.

LUGGAGE DOOR LOCK CONTROL CABLE ASSEMBLY

COMPONENTS

ILLUSTRATION

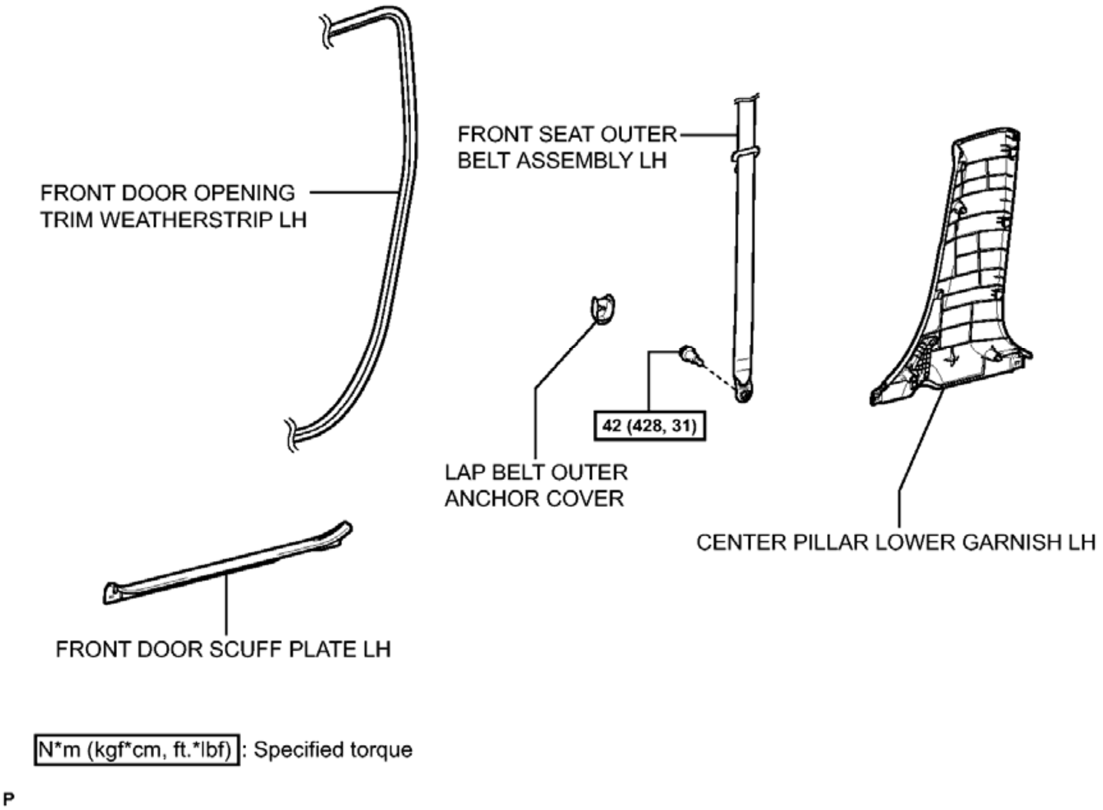
FRONT DOOR OPENING TRIM WEATHERSTRIP LH
FRONT SEAT OUTER BELT ASSEMBLY LH
42 (428, 31)
LAP BELT OUTER ANCHOR COVER
CENTER PILLAR LOWER GARNISH LH
FRONT DOOR SCUFF PLATE LH
N*m (kgf*cm, ft.*lbf) : Specified torque
P

Fig. 246: Identifying Luggage Door Lock Control Cable Assembly Replacement Components With Torque Specifications (1 Of 4)
Courtesy of TOYOTA MOTOR SALES, U.S.A., INC.

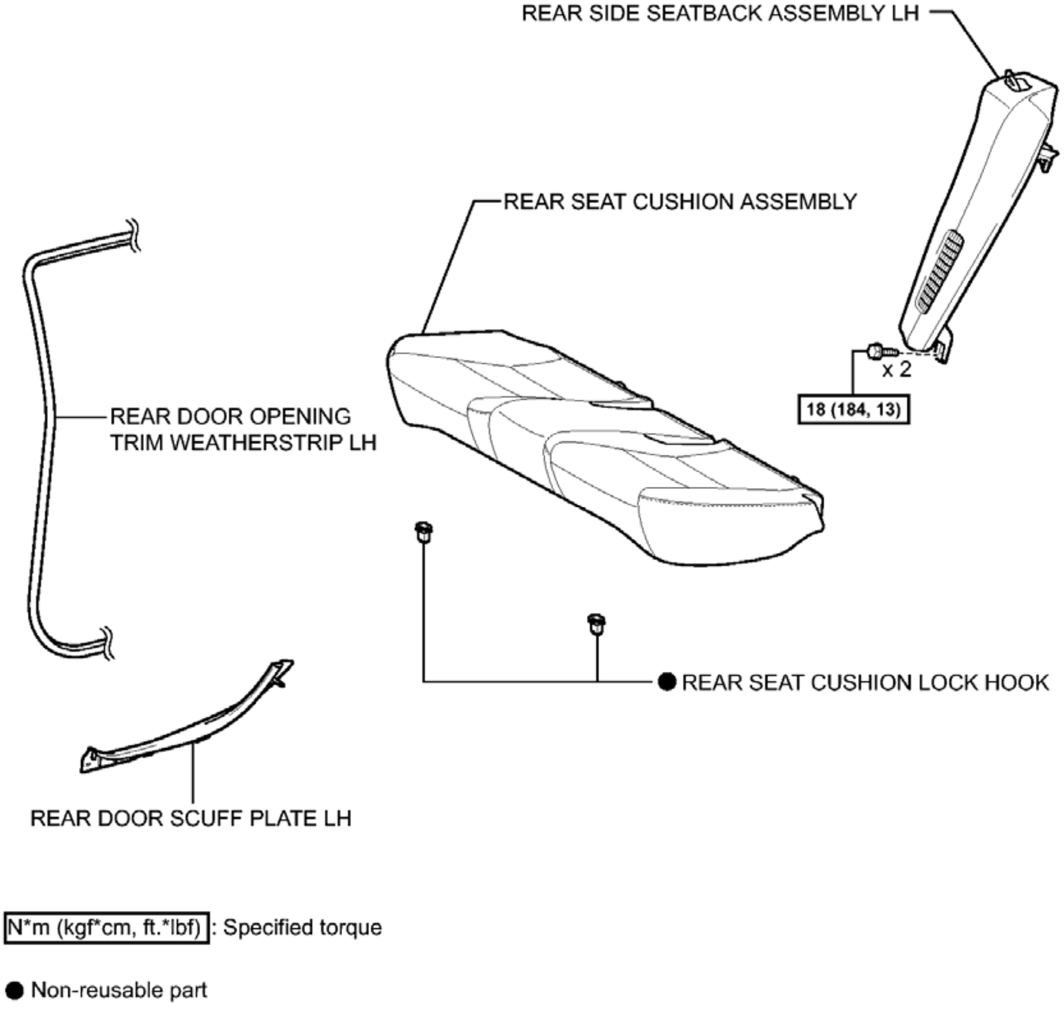
REAR SIDE SEATBACK ASSEMBLY LH
REAR SEAT CUSHION ASSEMBLY
REAR DOOR OPENING TRIM WEATHERSTRIP LH
x 2
18 (184, 13)
● REAR SEAT CUSHION LOCK HOOK
REAR DOOR SCUFF PLATE LH
N*m (kgf*cm, ft.*lbf) : Specified torque
● Non-reusable part
P

Fig. 247: Identifying Luggage Door Lock Control Cable Assembly Replacement Components With Torque Specifications (2 Of 4)
Courtesy of TOYOTA MOTOR SALES, U.S.A., INC.

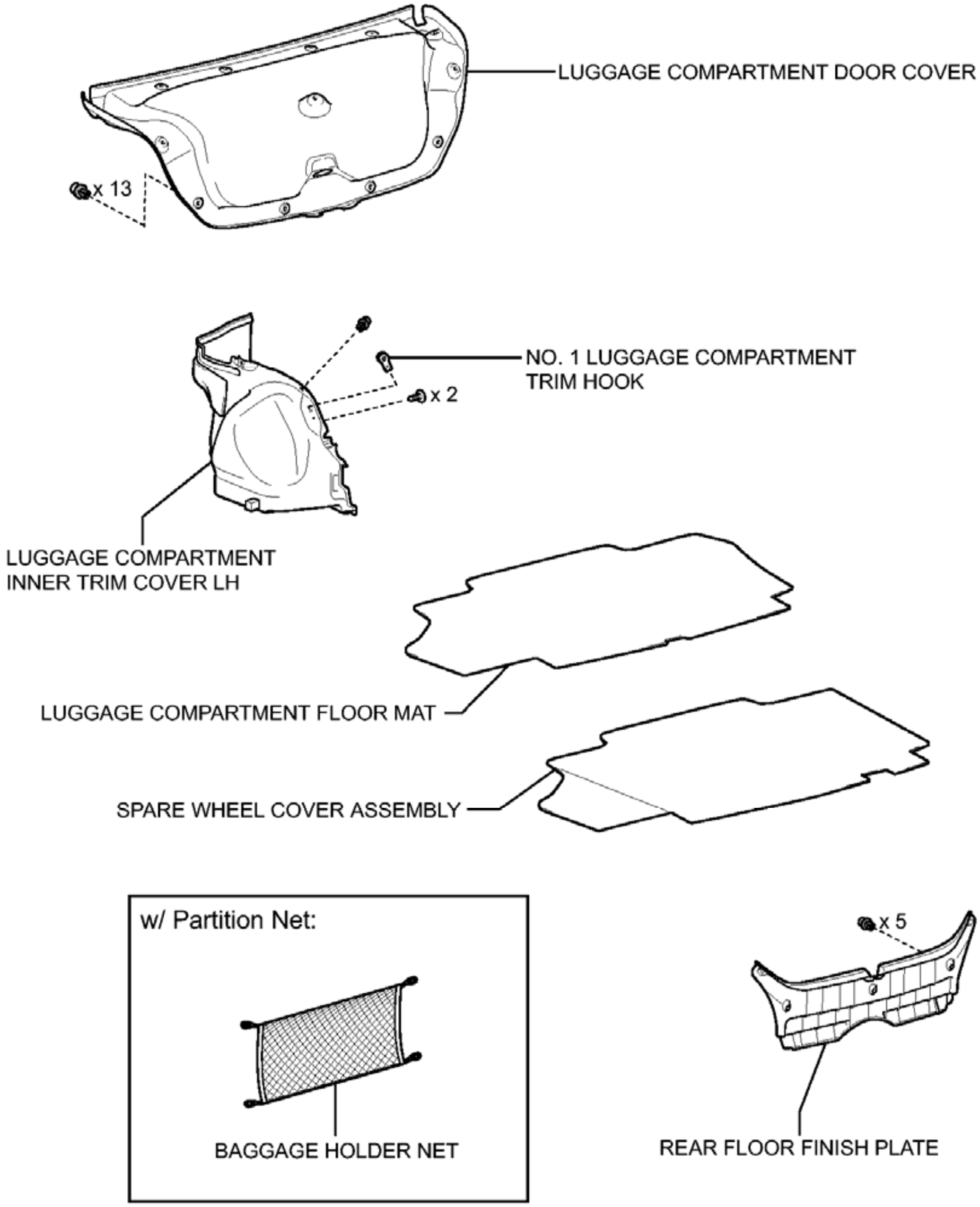
LUGGAGE COMPARTMENT DOOR COVER
x 13
NO. 1 LUGGAGE COMPARTMENT TRIM HOOK
x 2
LUGGAGE COMPARTMENT INNER TRIM COVER LH
LUGGAGE COMPARTMENT FLOOR MAT
SPARE WHEEL COVER ASSEMBLY
w/ Partition Net:
BAGGAGE HOLDER NET
x 5
REAR FLOOR FINISH PLATE
P

Fig. 248: Identifying Luggage Door Lock Control Cable Assembly Replacement Components (3 Of 4)
Courtesy of TOYOTA MOTOR SALES, U.S.A., INC.

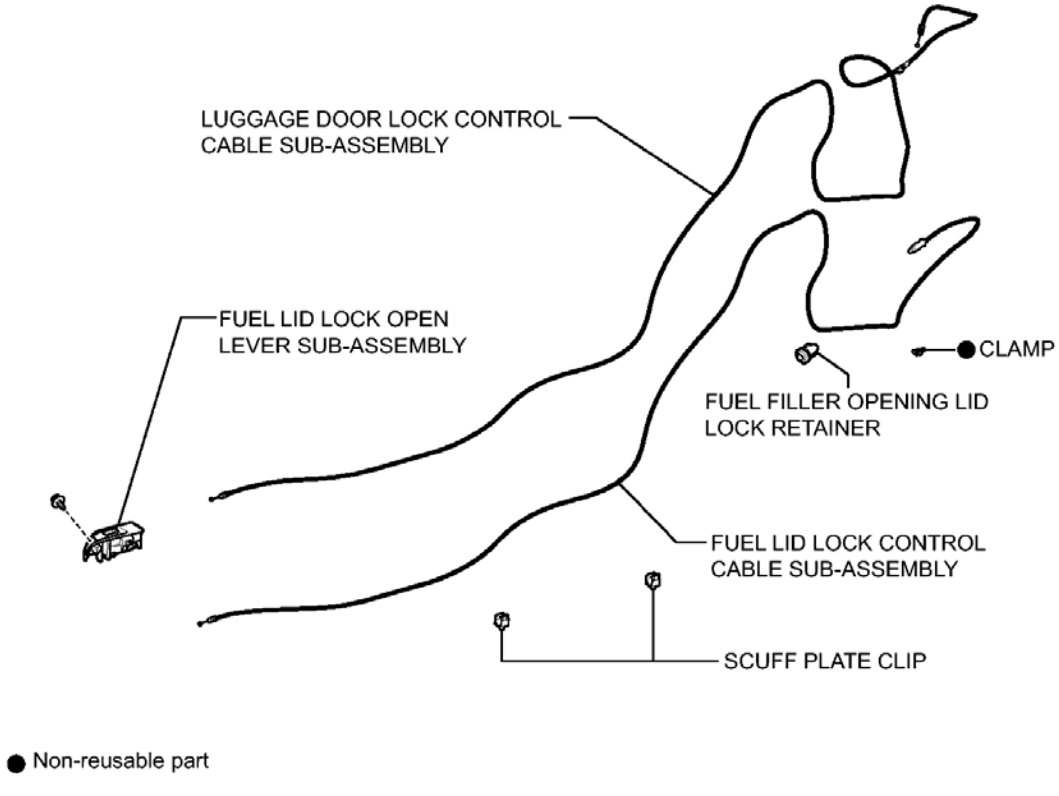
LUGGAGE DOOR LOCK CONTROL CABLE SUB-ASSEMBLY
FUEL LID LOCK OPEN LEVER SUB-ASSEMBLY
● CLAMP
FUEL FILLER OPENING LID LOCK RETAINER
FUEL LID LOCK CONTROL CABLE SUB-ASSEMBLY
SCUFF PLATE CLIP
● Non-reusable part
P

Fig. 249: Identifying Luggage Door Lock Control Cable Assembly Replacement Components (4 Of 4)
Courtesy of TOYOTA MOTOR SALES, U.S.A., INC.

REMOVAL

REMOVAL

1. **REMOVE FRONT SEAT ASSEMBLY LH (for Manual Seat)**

   Refer to **REMOVAL**

2. **REMOVE FRONT SEAT ASSEMBLY LH (for Power Seat)**

   Refer to **REMOVAL**

3. **REMOVE REAR SEAT CUSHION ASSEMBLY** . Refer to **REMOVAL - Step 4**
4. **REMOVE REAR SEAT CUSHION LOCK HOOK** . Refer to **REMOVAL - Step 5**
5. **REMOVE REAR SIDE SEATBACK ASSEMBLY LH** . Refer to **REMOVAL - Step 9**
6. **REMOVE FRONT DOOR SCUFF PLATE LH** . Refer to **REMOVAL - Step 4**
7. **DISCONNECT FRONT DOOR OPENING TRIM WEATHERSTRIP LH** . Refer to **REMOVAL - Step 5**

8. **REMOVE REAR DOOR SCUFF PLATE LH** . Refer to **REMOVAL - Step 19**
9. **DISCONNECT REAR DOOR OPENING TRIM WEATHERSTRIP LH** . Refer to **REMOVAL - Step 7**
10. **REMOVE LAP BELT OUTER ANCHOR COVER** . Refer to **REMOVAL - Step 8**
11. **DISCONNECT FRONT SEAT OUTER BELT ASSEMBLY LH** . Refer to **REMOVAL - Step 9**
12. **REMOVE CENTER PILLAR LOWER GARNISH LH** . Refer to **REMOVAL - Step 23**
13. **REMOVE LUGGAGE COMPARTMENT DOOR COVER** See step 1
14. **REMOVE LUGGAGE COMPARTMENT FLOOR MAT** See step 1
15. **REMOVE SPARE WHEEL COVER ASSEMBLY** See step 2
16. **REMOVE BAGGAGE HOLDER NET (w/ Partition Net)** See step 3
17. **REMOVE REAR FLOOR FINISH PLATE** See step 4
18. **REMOVE NO. 1 LUGGAGE COMPARTMENT TRIM HOOK**
    a. Push the pin and remove the No. 1 luggage compartment trim hook.

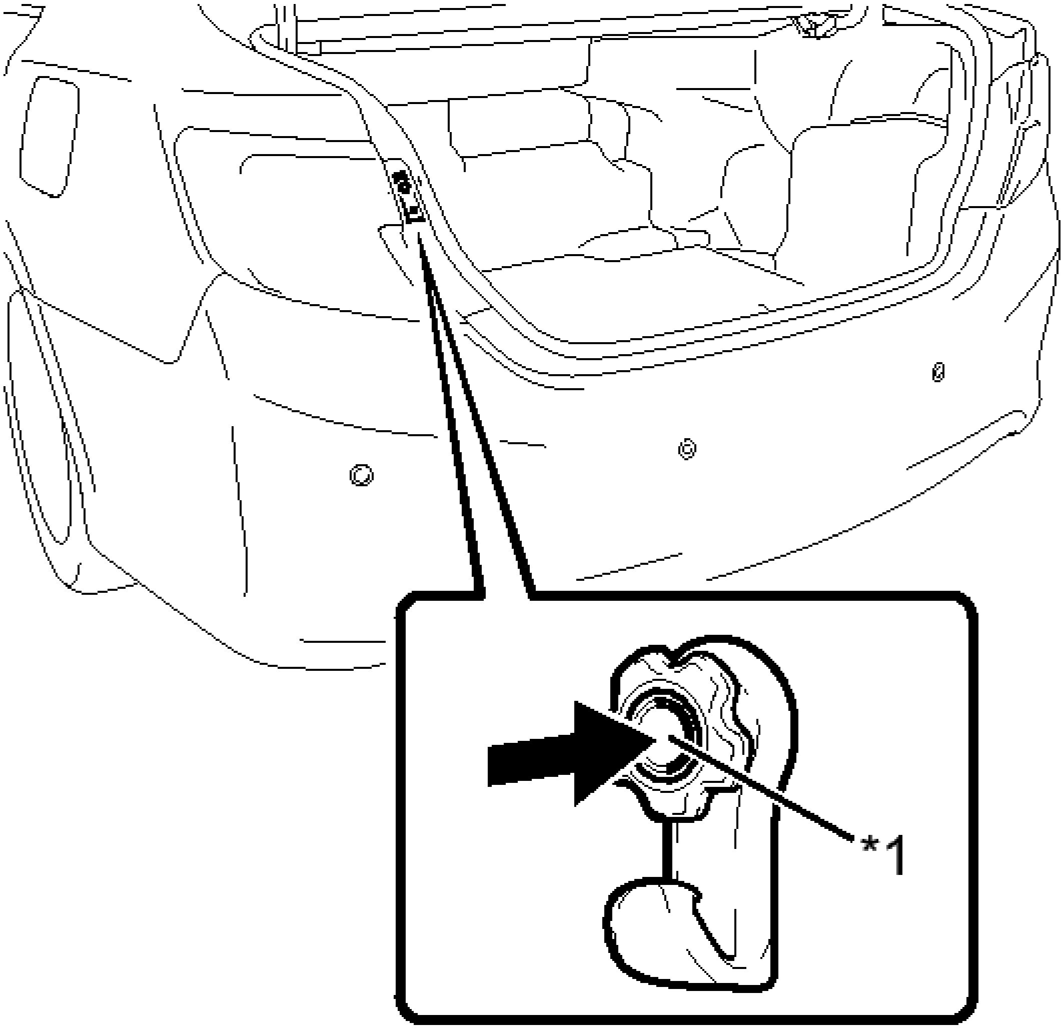

Fig. 250: Identifying No. 1 Luggage Compartment Trim Hook
Courtesy of TOYOTA MOTOR SALES, U.S.A., INC.

TEXT IN ILLUSTRATION

*1	Pin

19. **REMOVE LUGGAGE COMPARTMENT INNER TRIM COVER LH** See step 7
20. **REMOVE FUEL LID LOCK OPEN LEVER SUB-ASSEMBLY**
    a. Remove the screw.

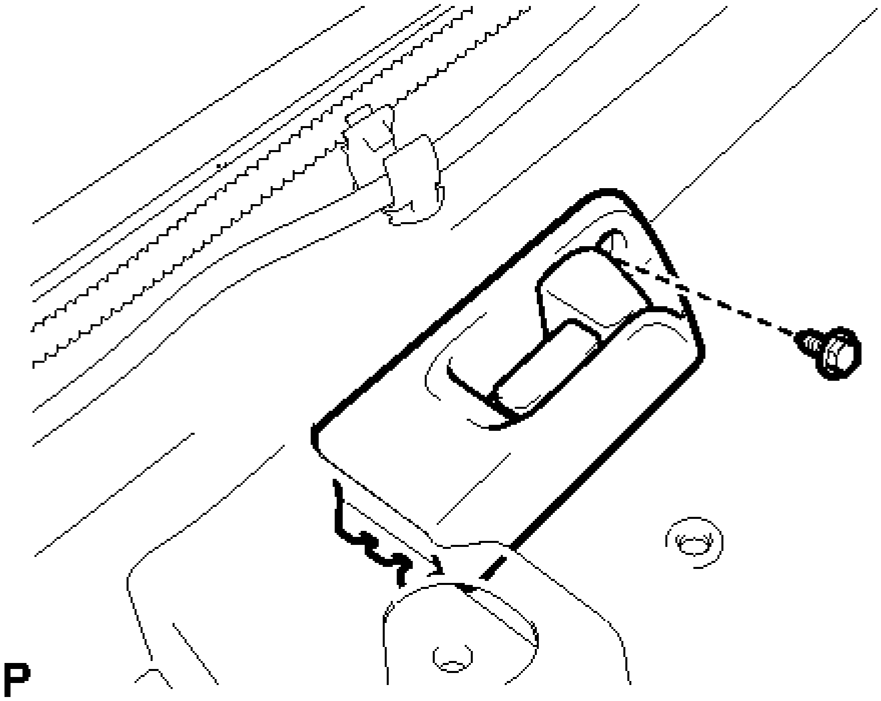

Fig. 251: Identifying Fuel Lid Lock Open Lever Screw
Courtesy of TOYOTA MOTOR SALES, U.S.A., INC.

b. Disengage the guide and disconnect the fuel lid lock open lever sub-assembly as shown in the illustration.

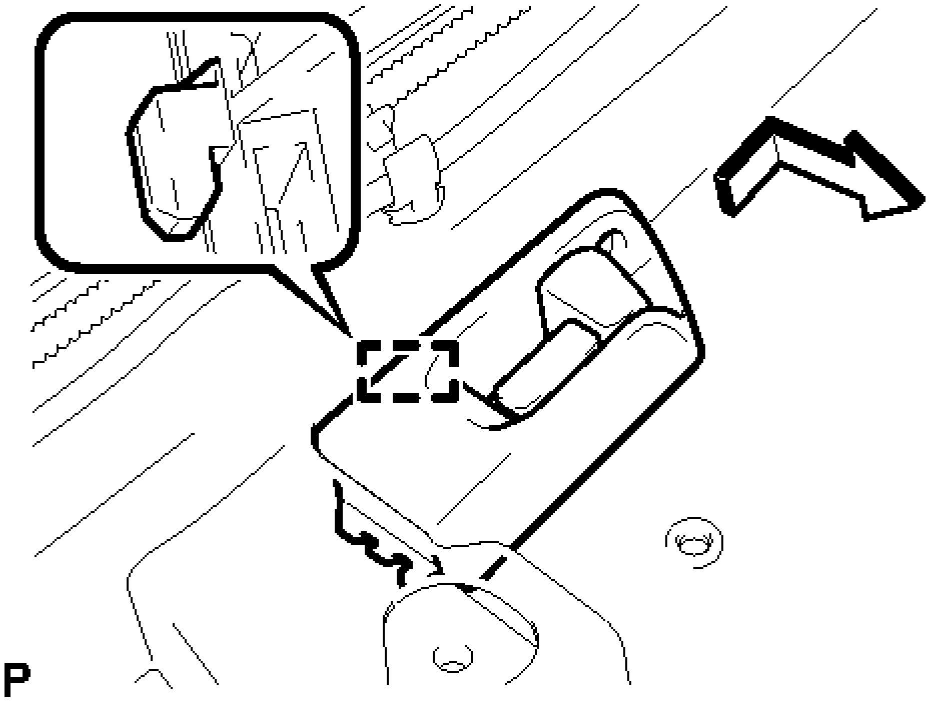

Fig. 252: Identifying Fuel Lid Lock Open Lever Guide

Courtesy of TOYOTA MOTOR SALES, U.S.A., INC.

c. Disconnect the fuel lid lock control cable sub-assembly and luggage door lock control cable sub-assembly and remove the fuel lid lock open lever sub-assembly.

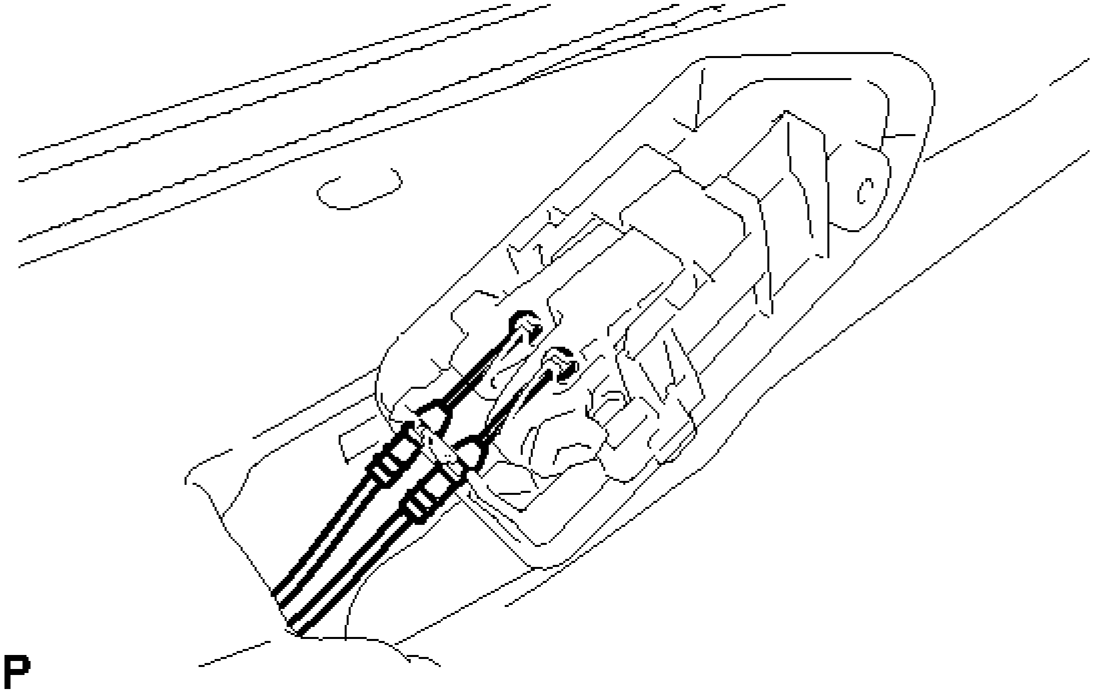

Fig. 253: Disconnecting Fuel Lid Lock And Luggage Door Lock Control Cables
Courtesy of TOYOTA MOTOR SALES, U.S.A., INC.

21. **REMOVE LUGGAGE DOOR LOCK CONTROL CABLE SUB-ASSEMBLY**

a. Disengage the 2 clamps.

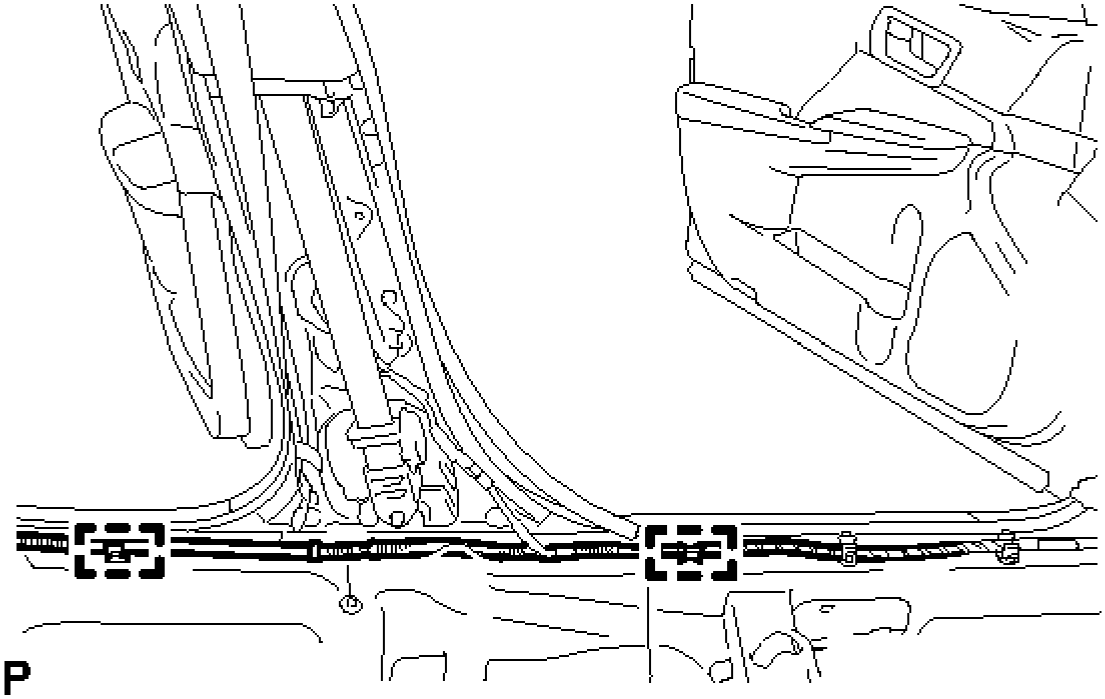

Fig. 254: Identifying Luggage Door Lock Control Cable Clamps
Courtesy of TOYOTA MOTOR SALES, U.S.A., INC.

b. Using a clip remover, disengage the clamp and disconnect the wire harness.

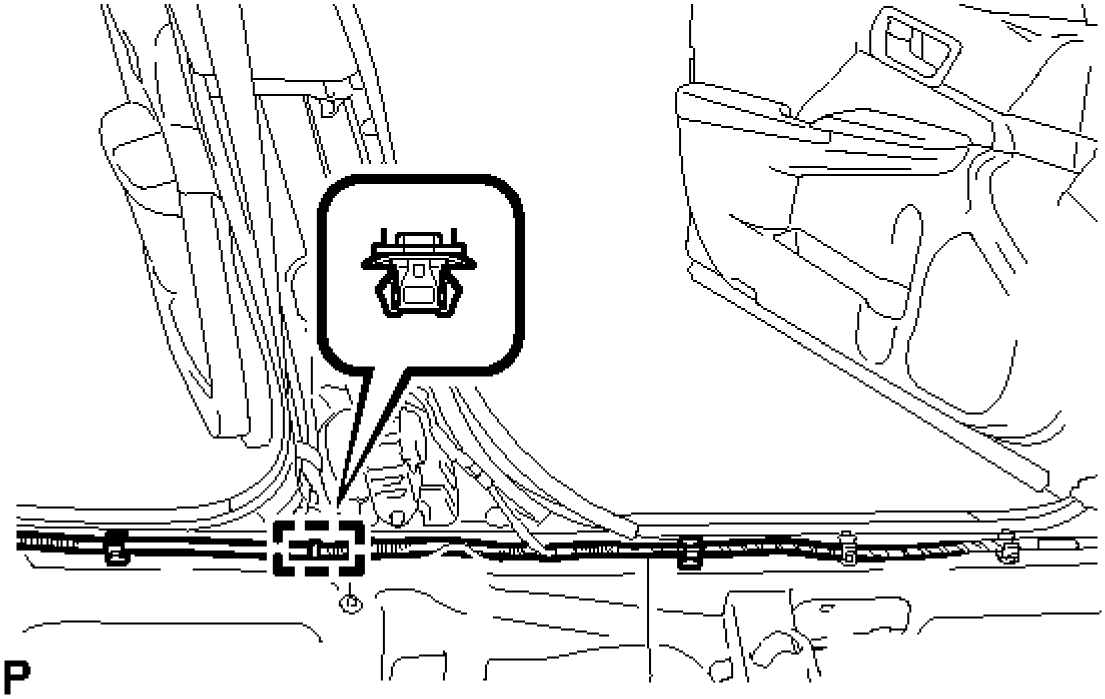

Fig. 255: Identifying Wire Harness Clamp
Courtesy of TOYOTA MOTOR SALES, U.S.A., INC.

c. Using a clip remover, disengage the 2 clamps and remove the 2 scuff plate clips.

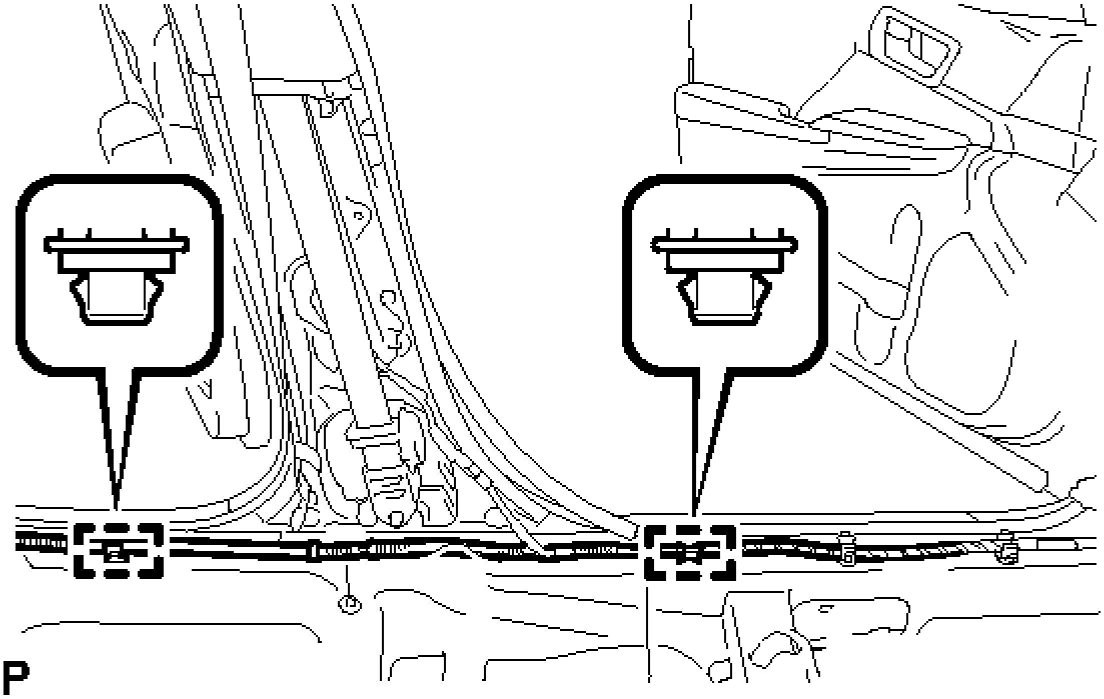

Fig. 256: Identifying Scuff Plate Clip Clamps
Courtesy of TOYOTA MOTOR SALES, U.S.A., INC.

d. Turn back the floor carpet so that the luggage door lock control cable sub-assembly and fuel lid lock control cable sub-assembly can be removed.

e. Disengage the guide as shown in the illustration.

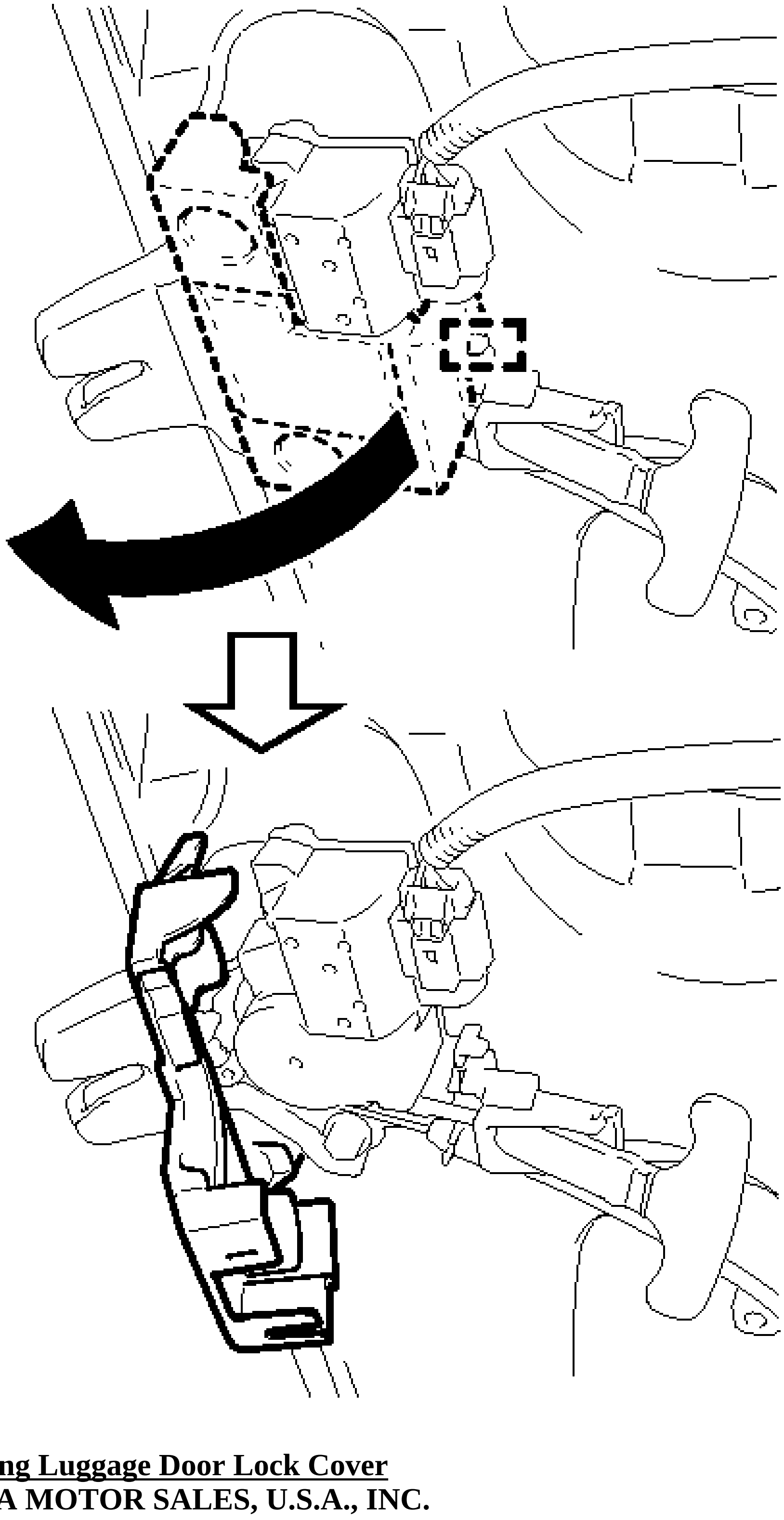

P

Fig. 257: Disconnecting Luggage Door Lock Cover
Courtesy of TOYOTA MOTOR SALES, U.S.A., INC.

f. Disconnect the luggage door lock control cable sub-assembly.

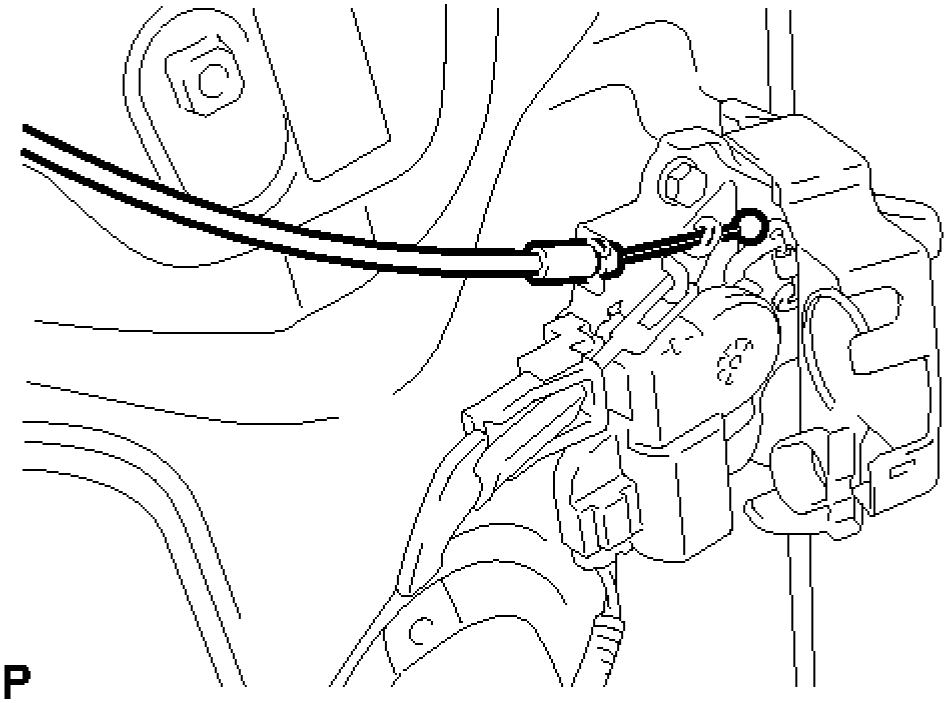

Fig. 258: Identifying The Luggage Door Lock Control Cable End
Courtesy of TOYOTA MOTOR SALES, U.S.A., INC.

g. Disengage the clamp and disconnect the luggage door lock control cable sub-assembly.

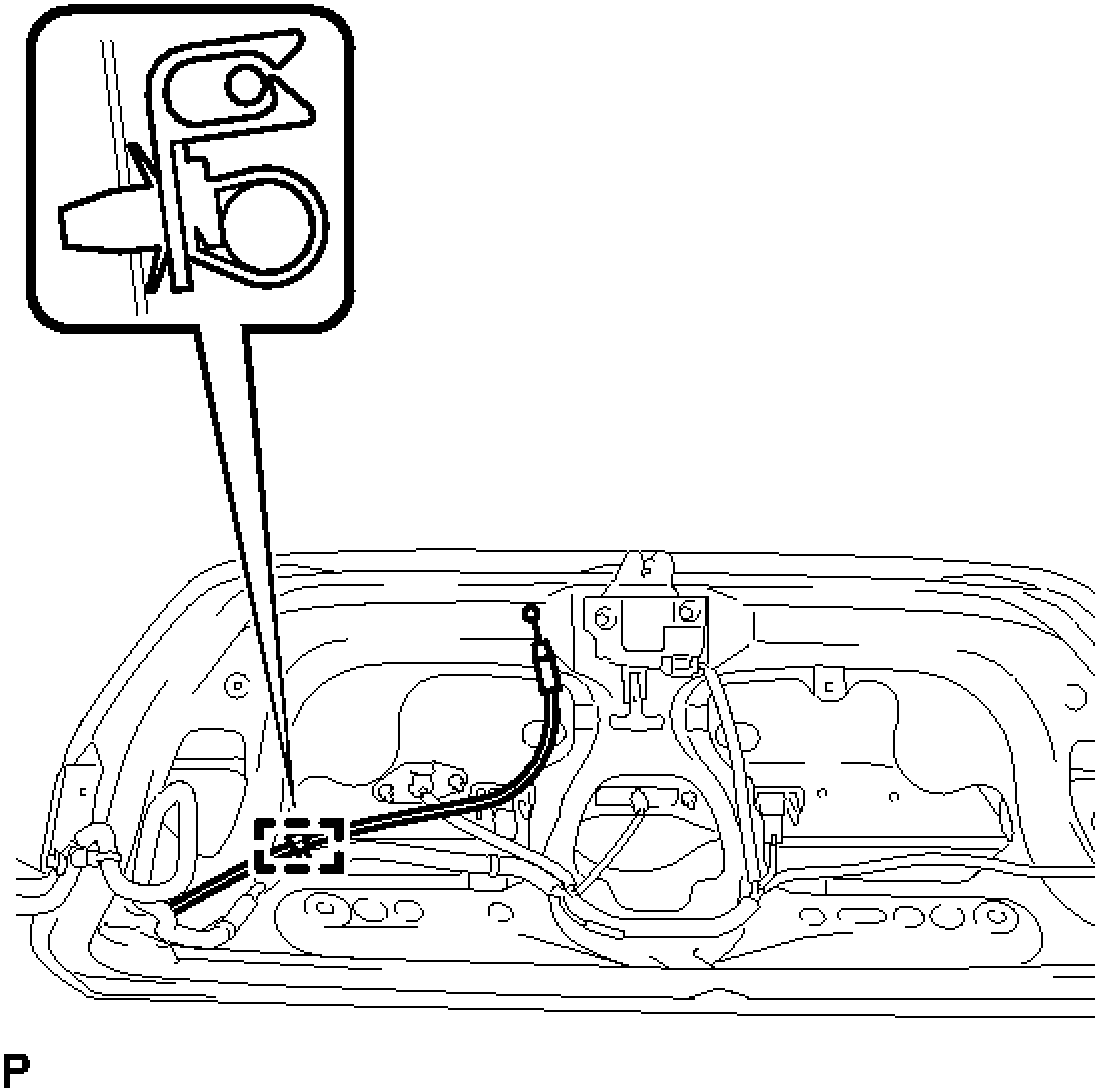

Fig. 259: Identifying Luggage Door Lock Control Cable Clamp
Courtesy of TOYOTA MOTOR SALES, U.S.A., INC.

h. Rotate the fuel filler opening lid lock retainer as shown in the illustration to align the cutouts and the guides <A>, and then pull the fuel filler opening lid lock retainer.

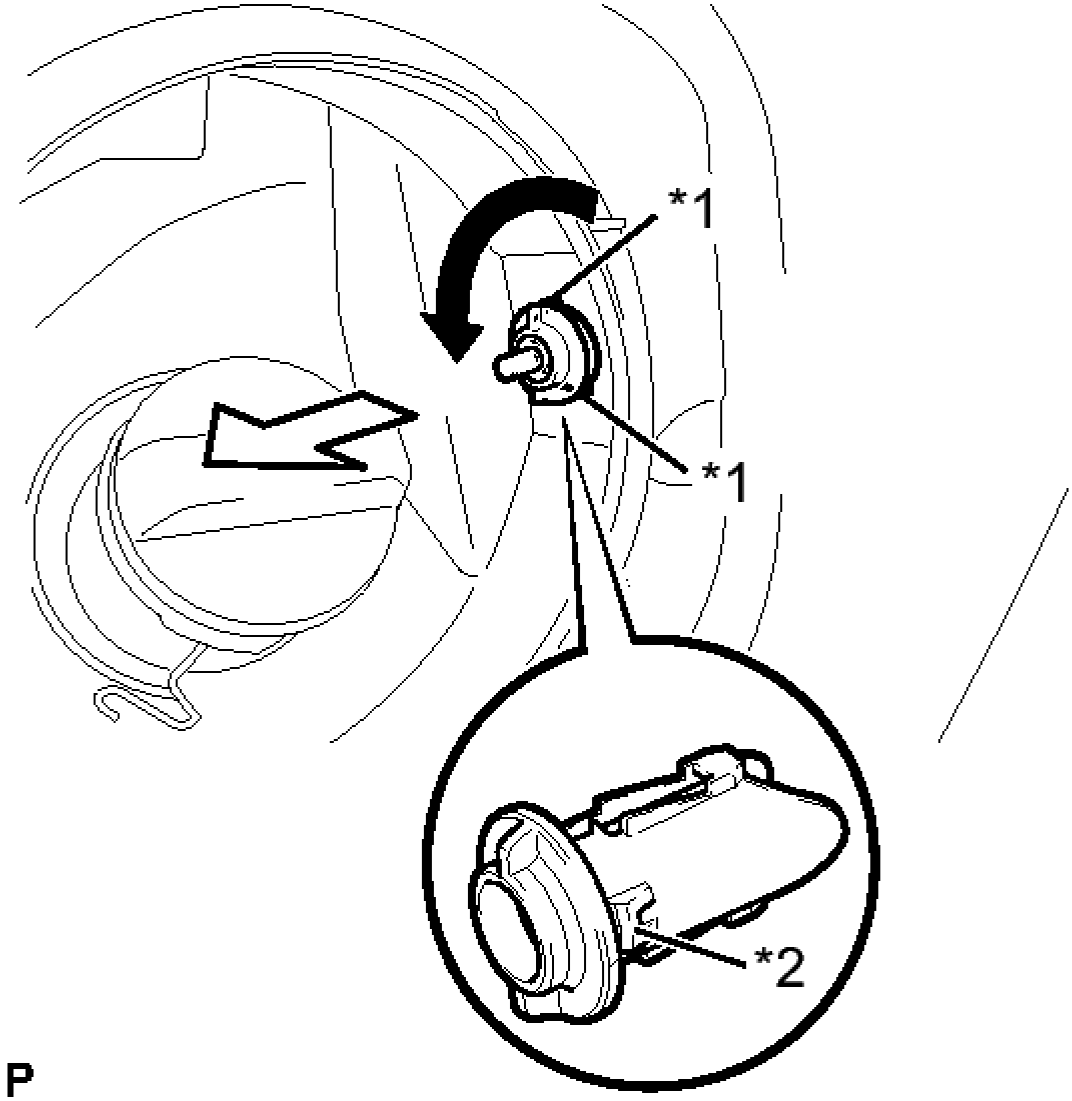

Fig. 260: Rotating Fuel Filler Opening Lid Lock Retainer
Courtesy of TOYOTA MOTOR SALES, U.S.A., INC.

TEXT IN ILLUSTRATION

*1	Cutout
*2	Guide <A>

i. Rotate the fuel filler opening lid lock retainer as shown in the illustration to align the cutouts and guides <B>, and then pull the fuel filler opening lid lock retainer.

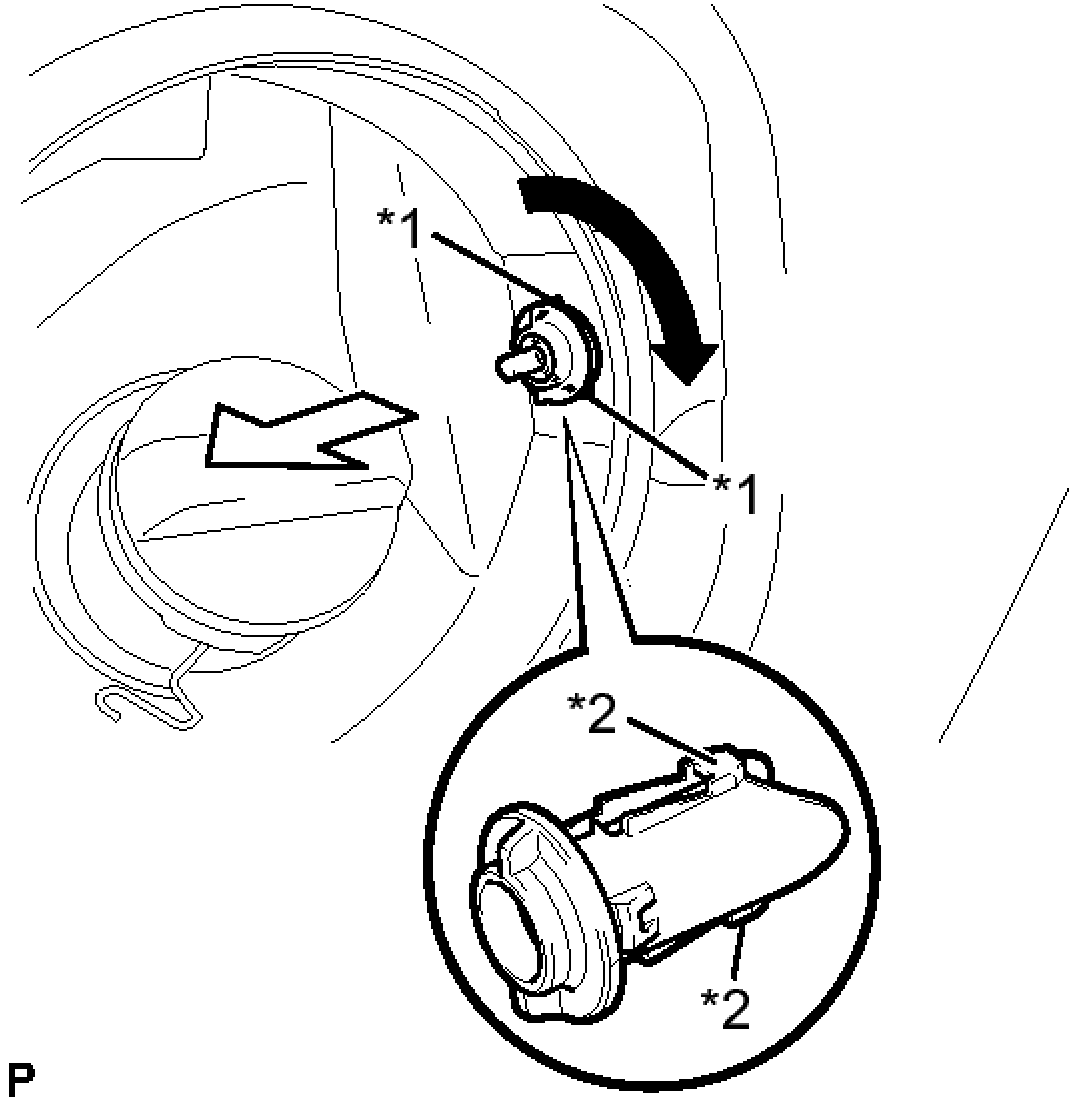

Fig. 261: Rotating Fuel Filler Opening Lid Lock Retainer
Courtesy of TOYOTA MOTOR SALES, U.S.A., INC.

TEXT IN ILLUSTRATION

*1	Cutout
*2	Guide <B>

j. Pull out the fuel filler opening lid lock retainer with both guides <B> and <C> aligned with the cutouts.

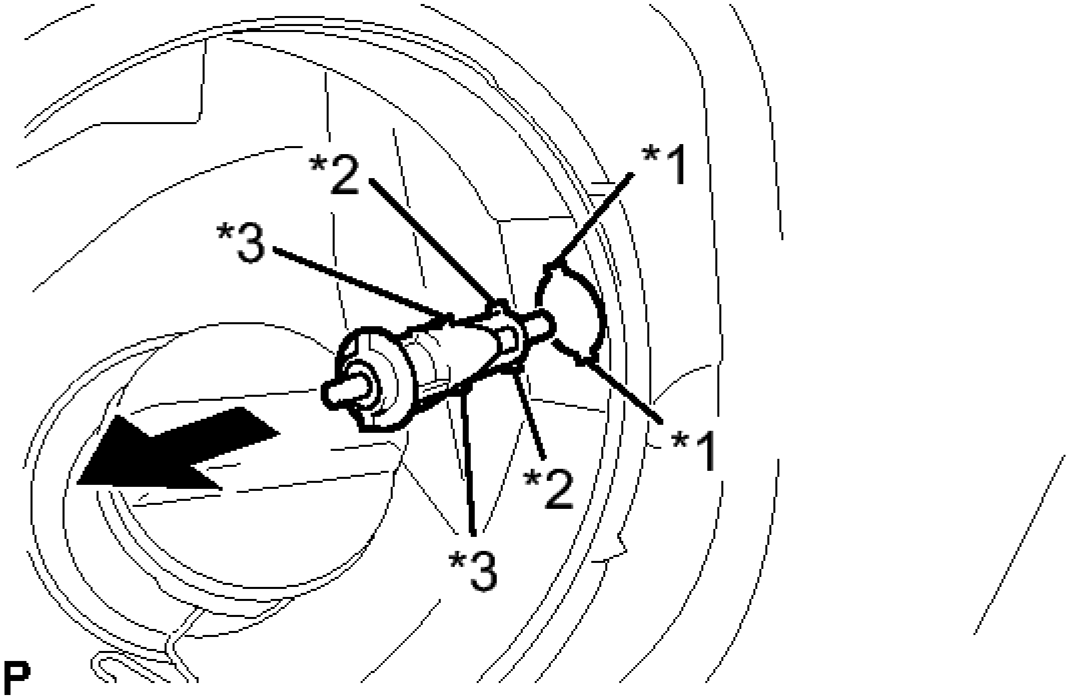

Fig. 262: Removing Fuel Filler Opening Lid Lock Retainer
Courtesy of TOYOTA MOTOR SALES, U.S.A., INC.

TEXT IN ILLRemoving Fuel Filler Opening Lid Lock RetainerUSTRATION

*1	Cutout
*2	Guide <C>
*3	Guide <B>

k. Disengage the 2 claws and remove the fuel filler opening lid lock retainer.

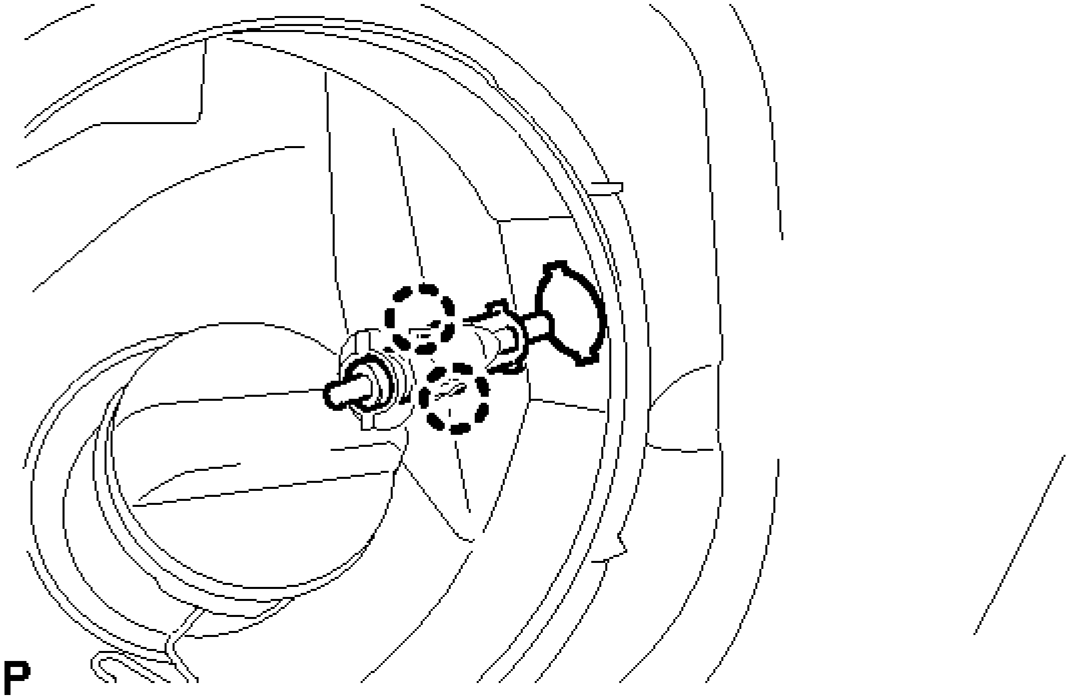

Fig. 263: Identifying Fuel Filler Opening Lid Lock Retainer Claws
Courtesy of TOYOTA MOTOR SALES, U.S.A., INC.

l. Disengage the 10 clamps and remove the fuel lid lock control cable sub-assembly and luggage door lock control cable sub-assembly.

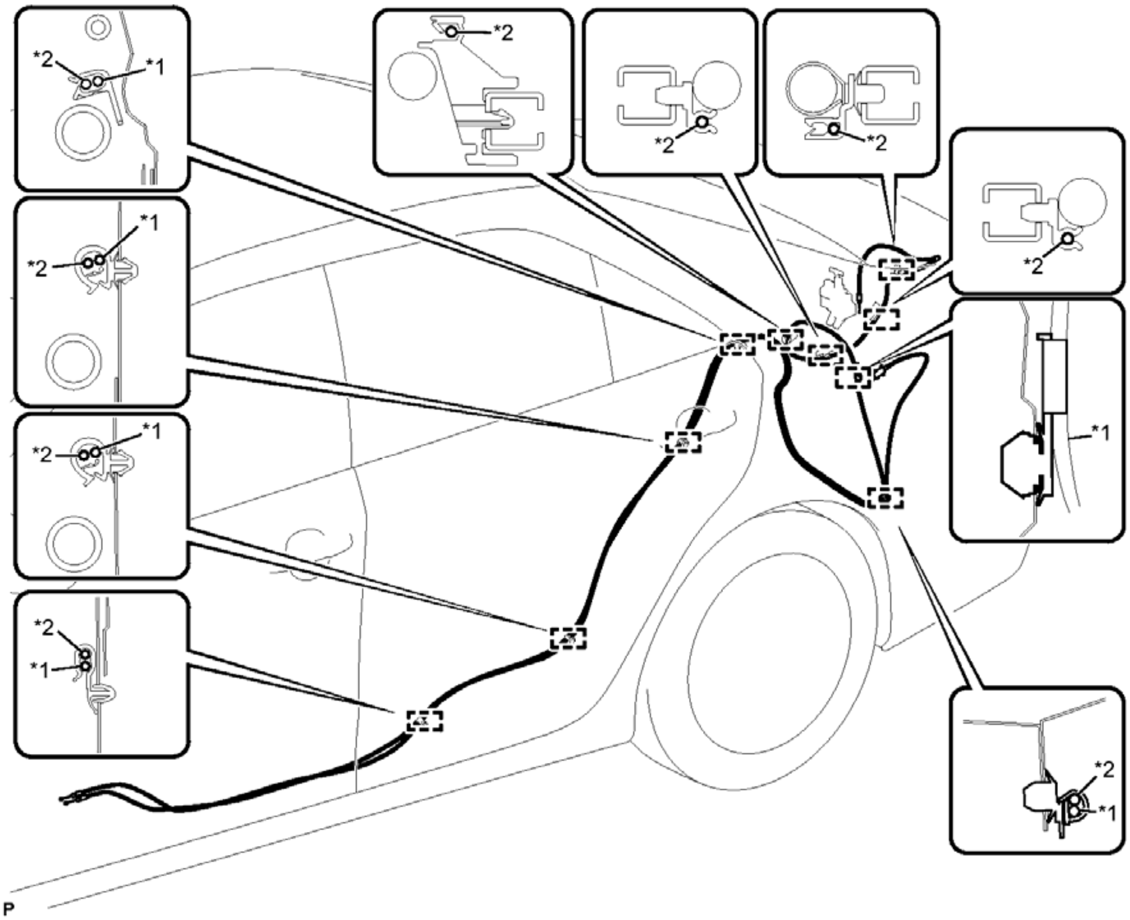

Fig. 264: Identifying Fuel Lid Lock Control Cable Clamps
Courtesy of TOYOTA MOTOR SALES, U.S.A., INC.

TEXT IN ILLUSTRATION

*1	Fuel Lid Lock Control Cable Sub-assembly	*2	Luggage Door Lock Control Cable Sub-assembly

m. Using a knife, cut off the clamp as shown in the illustration.

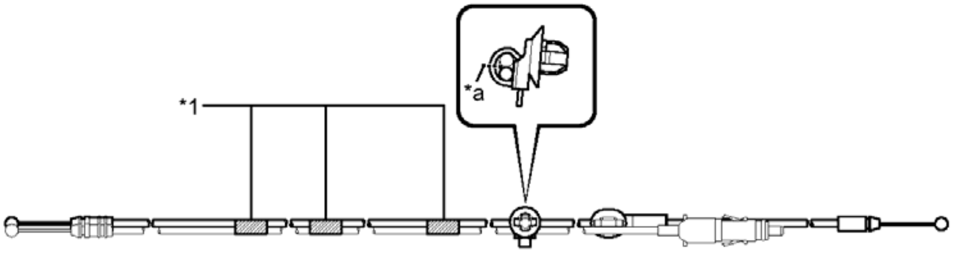

P

Fig. 265: Identifying Clamp To Be Cut
Courtesy of TOYOTA MOTOR SALES, U.S.A., INC.

TEXT IN ILLUSTRATION

*1	Tape	-	-
*a	Cut	-	-

NOTE: **Be careful not to damage the vehicle fuel lid lock control cable sub-assembly and luggage door lock control cable sub-assembly.**

n. Remove the clamp.
o. Remove the 3 pieces of tape and fuel lid lock control cable sub-assembly.

INSTALLATION

INSTALLATION

1. **INSTALL LUGGAGE DOOR LOCK CONTROL CABLE SUB-ASSEMBLY**
   a. Install the luggage door lock control cable sub-assembly to the fuel lid lock control cable sub-assembly with the new clamp (A) and the 3 pieces of tape as shown in the illustration.

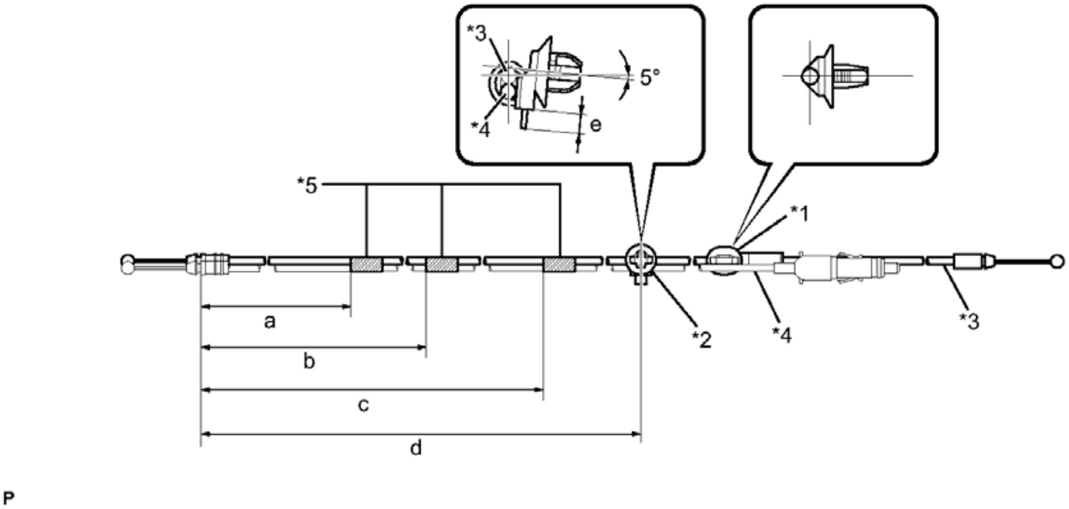

Fig. 266: Identifying Luggage Door Lock Control Cable Clamp And Tape
Courtesy of TOYOTA MOTOR SALES, U.S.A., INC.

TEXT IN ILLUSTRATION

*1	Clamp (A)	*2	Clamp
*3	Luggage Door Lock Control Cable Sub-assembly	*4	Fuel Lid Lock Control Cable Sub-assembly
*5	Tape	-	-

REFERENCE MEASUREMENT

Area	Measurement	Area	Measurement
a	295 to 305 mm (11.6 to 12.0 in.)	b	880 to 900 mm (2.29 to 2.95 ft.)
c	2090 to 2110 mm (6.86 to 6.92 ft.)	d	2970 to 2990 mm (8.86 to 9.81 ft.)
e	5.0 mm (0.197 in.) or less	-	-

NOTE:

- **Wrap tape around the designated position 1 to 3 times.**
- **Make sure that the fuel lid lock control cable sub-assembly and**

luggage door lock control cable sub-assembly are not kinked.

b. Engage the 10 clamps and install the fuel lid lock control cable sub-assembly and luggage door lock control cable sub-assembly.
c. Align the cutouts and guides <C>, and then insert the fuel filler opening lid lock retainer.

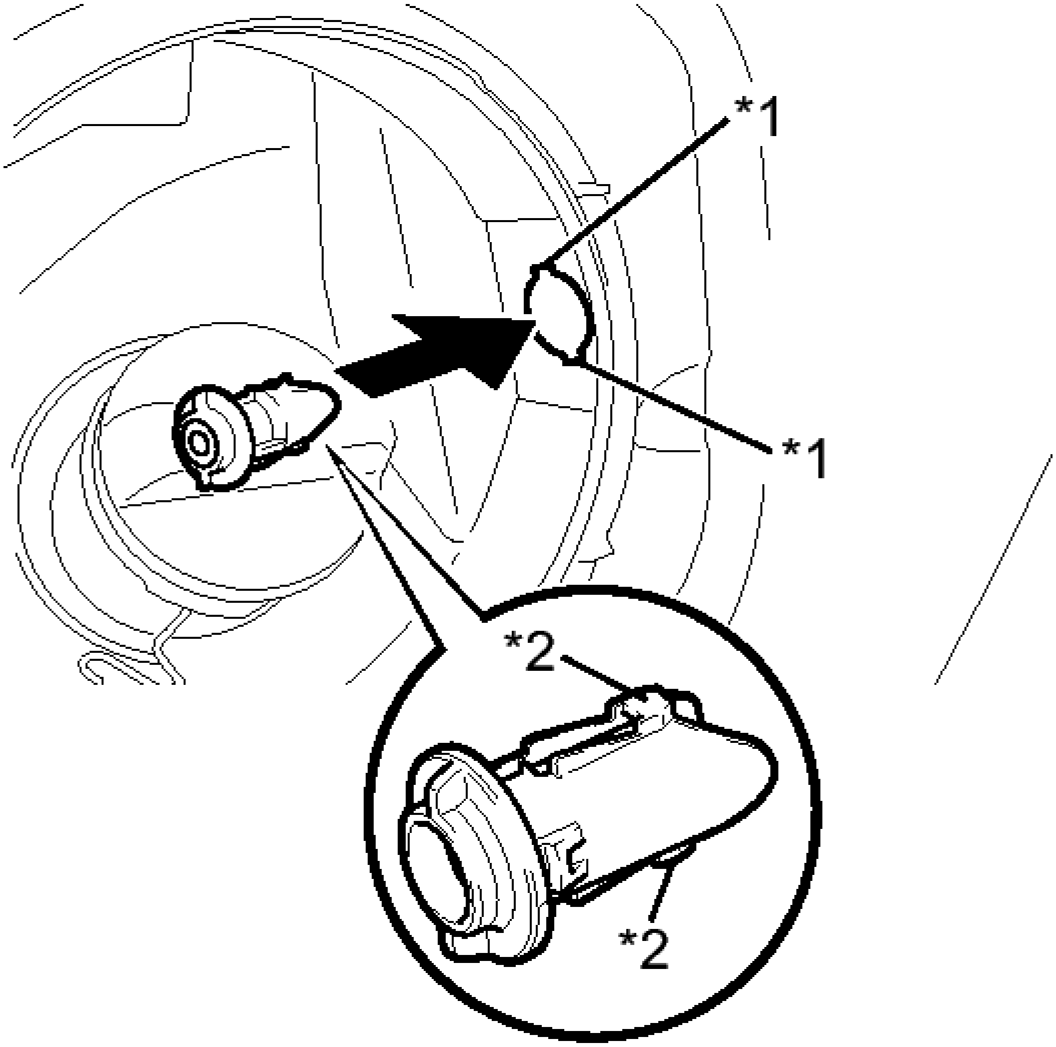

P

Fig. 267: Installing Fuel Filler Opening Lid Lock Retainer
Courtesy of TOYOTA MOTOR SALES, U.S.A., INC.

TEXT IN ILLUSTRATION

*1	Cutout
*2	Guide <C>

d. Engage the 2 claws to install the fuel filler opening lid lock retainer.

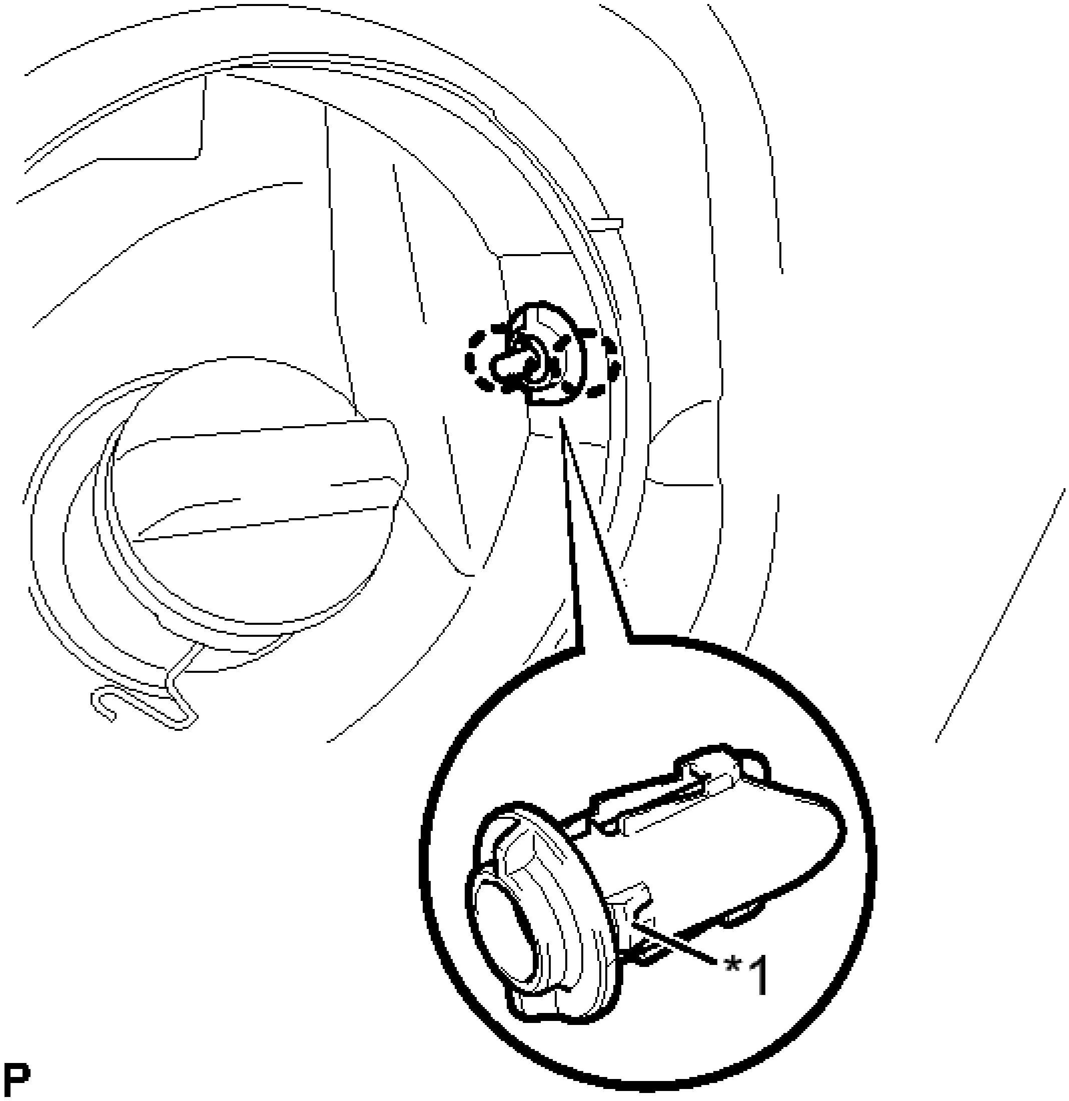

Fig. 268: Identifying Fuel Filler Opening Lid Lock Retainer Claws
Courtesy of TOYOTA MOTOR SALES, U.S.A., INC.

TEXT IN ILLUSTRATION

*1	Claw

e. Engage the 2 claws to install the fuel lid lock control cable sub-assembly.

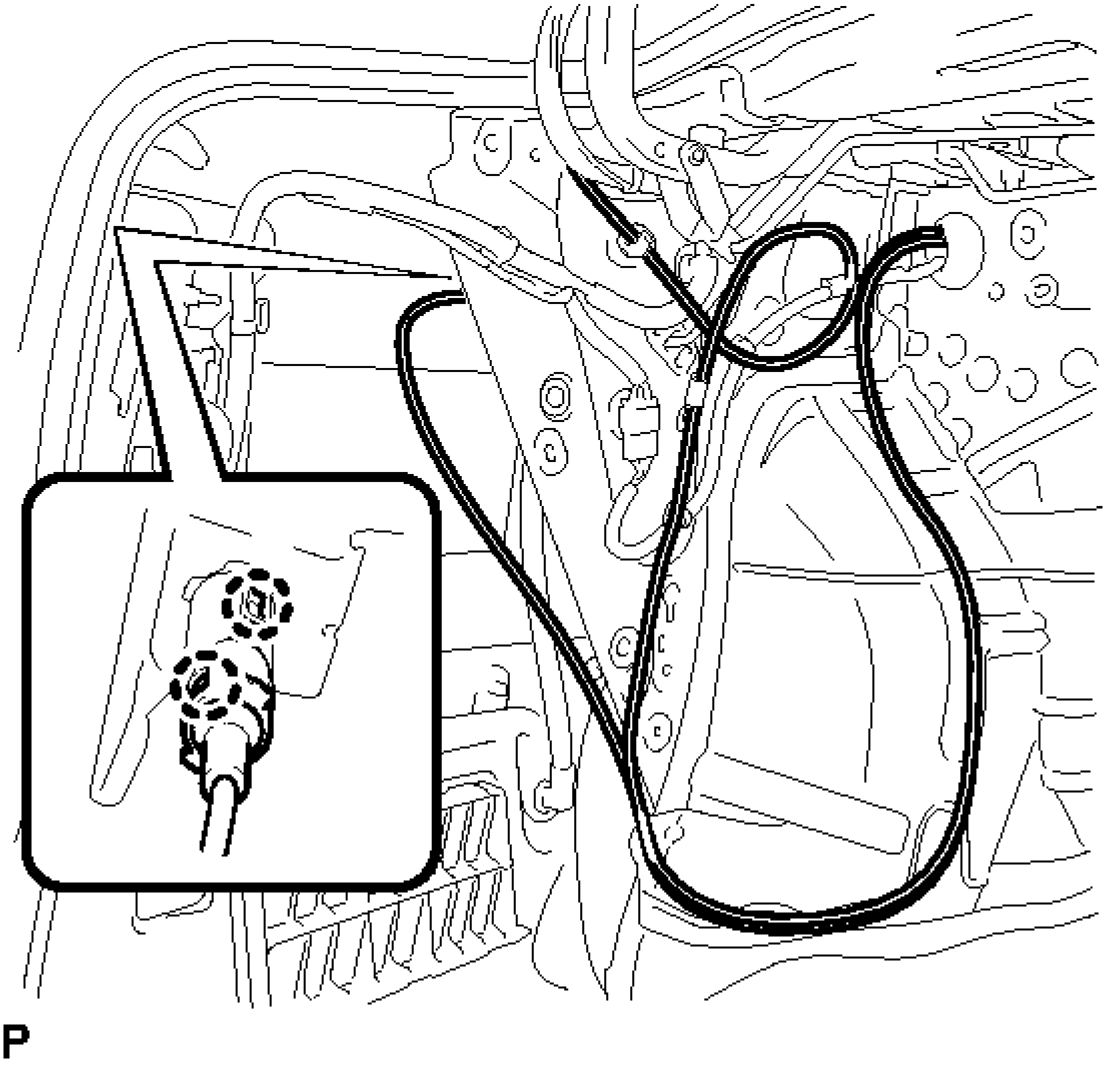

Fig. 269: Identifying Fuel Lid Lock Control Cable Claws
Courtesy of TOYOTA MOTOR SALES, U.S.A., INC.

f. Engage the clamp and connect the luggage door lock control cable sub-assembly.
g. Connect the luggage door lock control cable sub-assembly.
h. Engage the guide as shown in the illustration.

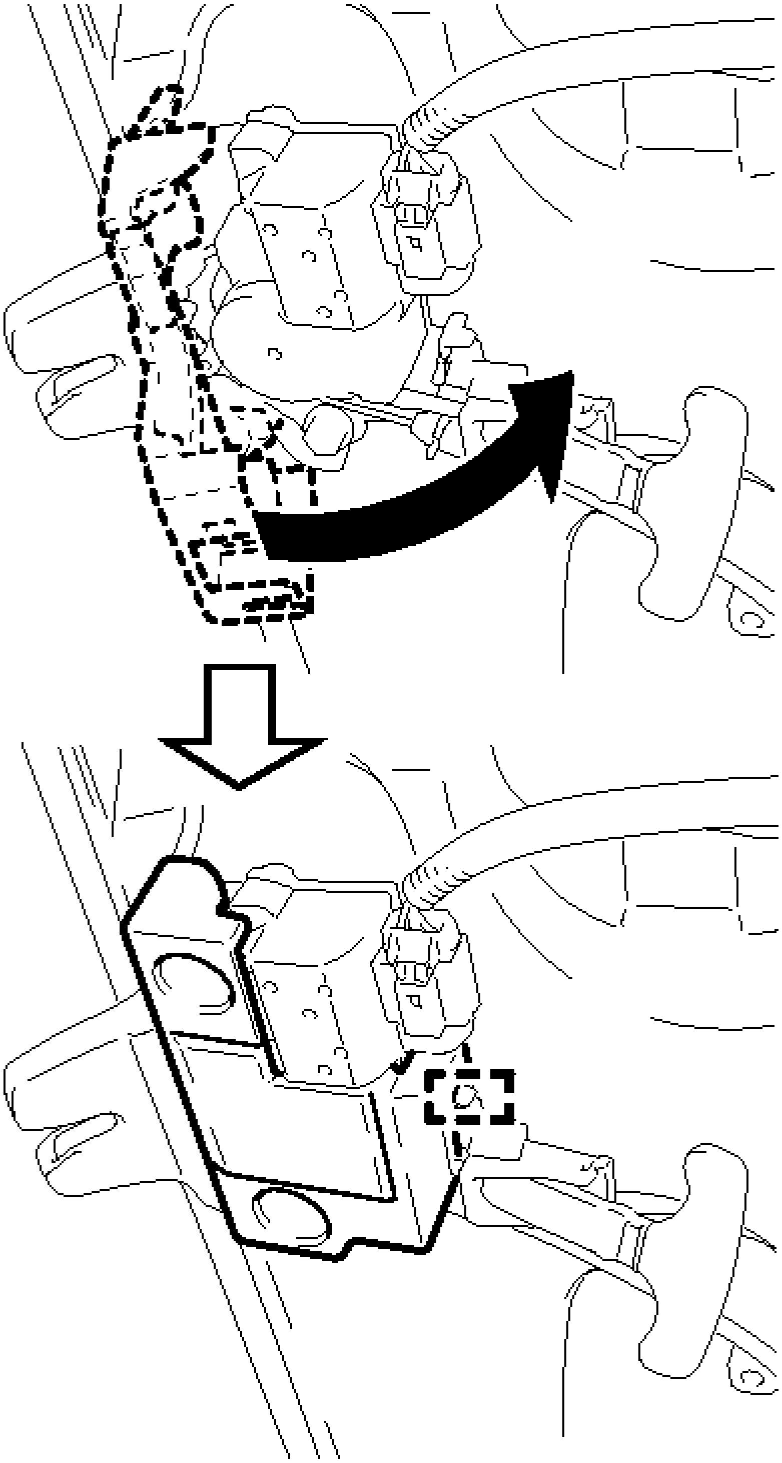

P

Fig. 270: Connecting Luggage Door Lock Control Cable Cover
Courtesy of TOYOTA MOTOR SALES, U.S.A., INC.

i. Return the floor carpet to the original position.
j. Engage the 2 clamps and install the 2 scuff plate clips.

k. Engage the 3 clamps to connect the wire harness.

2. **INSTALL FUEL LID LOCK OPEN LEVER SUB-ASSEMBLY**

a. Connect the fuel lid lock control cable sub-assembly and luggage door lock control cable sub-assembly to the fuel lid lock open lever sub-assembly.

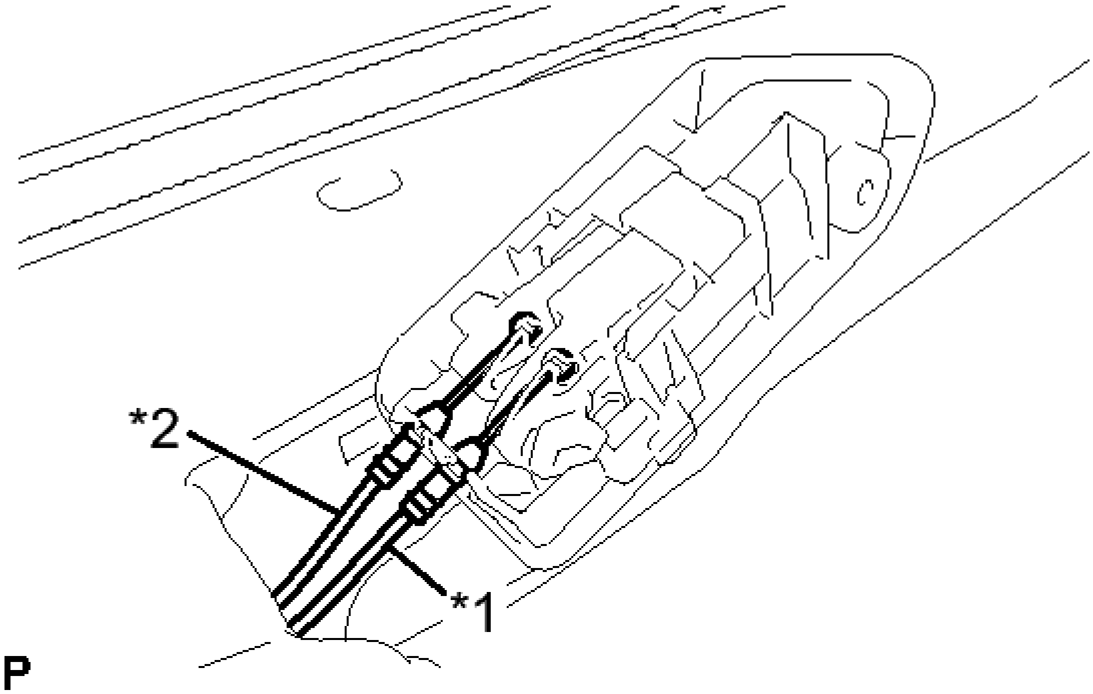

Fig. 271: Connecting Fuel Lid Lock And Luggage Door Lock Control Cables
Courtesy of TOYOTA MOTOR SALES, U.S.A., INC.

TEXT IN ILLUSTRATION

*1	Luggage Door Lock Control Cable Sub-assembly
*2	Fuel Lid Lock Control Cable Sub-assembly

b. Engage the guide and install the fuel lid lock open lever sub-assembly as shown in the illustration.

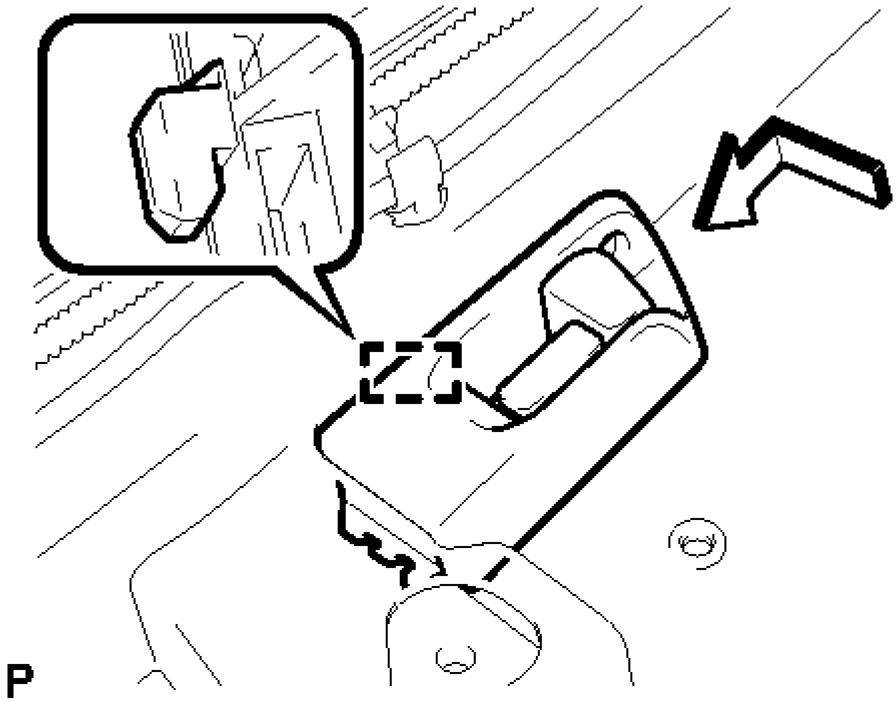

Fig. 272: Identifying Fuel Lid Lock Open Lever Guide
Courtesy of TOYOTA MOTOR SALES, U.S.A., INC.

   c. Install the screw.

3. **INSTALL LUGGAGE COMPARTMENT INNER TRIM COVER LH** See step 6
4. **INSTALL NO. 1 LUGGAGE COMPARTMENT TRIM HOOK**
   a. Engage the pin to install the No. 1 luggage compartment trim hook.

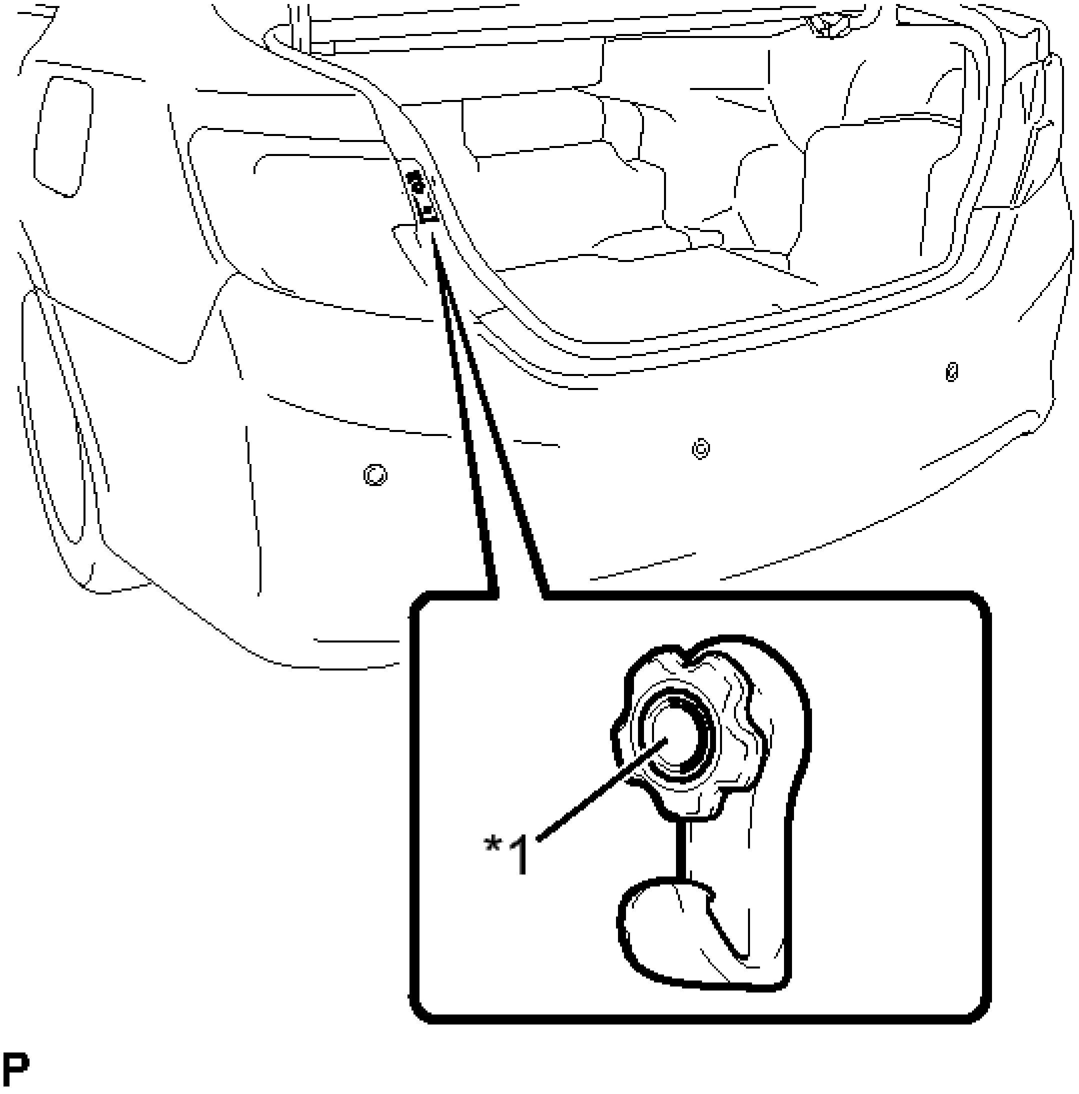

Fig. 273: Identifying No. 1 Luggage Compartment Trim Hook
Courtesy of TOYOTA MOTOR SALES, U.S.A., INC.

TEXT IN ILLUSTRATION

*1	Pin

5. **INSTALL REAR FLOOR FINISH PLATE** See step 10
6. **INSTALL BAGGAGE HOLDER NET (w/ Partition Net)** See step 11
7. **INSTALL SPARE WHEEL COVER ASSEMBLY** See step 12
8. **INSTALL LUGGAGE COMPARTMENT FLOOR MAT** See step 13
9. **INSTALL LUGGAGE COMPARTMENT DOOR COVER** See step 10
10. **INSTALL REAR SIDE SEATBACK ASSEMBLY LH** . Refer to **INSTALLATION - Step 1**
11. **INSTALL CENTER PILLAR LOWER GARNISH LH** . Refer to **INSTALLATION - Step 23**
12. **CONNECT FRONT SEAT OUTER BELT ASSEMBLY LH** . Refer to **INSTALLATION - Step 6**

13. **INSTALL LAP BELT OUTER ANCHOR COVER** . Refer to **INSTALLATION - Step 7**
14. **INSTALL REAR DOOR OPENING TRIM WEATHERSTRIP LH** . Refer to **INSTALLATION - Step 26**
15. **INSTALL REAR DOOR SCUFF PLATE LH** . Refer to **INSTALLATION - Step 27**
16. **INSTALL FRONT DOOR OPENING TRIM WEATHERSTRIP LH** . Refer to **INSTALLATION - Step 43**
17. **INSTALL FRONT DOOR SCUFF PLATE LH** . Refer to **INSTALLATION - Step 45**
18. **INSTALL REAR SEAT CUSHION LOCK HOOK** . Refer to **INSTALLATION - Step 6**
19. **INSTALL REAR SEAT CUSHION ASSEMBLY** . Refer to **INSTALLATION - Step 7**
20. **INSTALL FRONT SEAT ASSEMBLY LH (for Manual Seat)**

    Refer to **INSTALLATION**

21. **INSTALL FRONT SEAT ASSEMBLY LH (for Power Seat)**

    Refer to **INSTALLATION**

LUGGAGE COMPARTMENT DOOR OPENER OUTER SWITCH

COMPONENTS

ILLUSTRATION

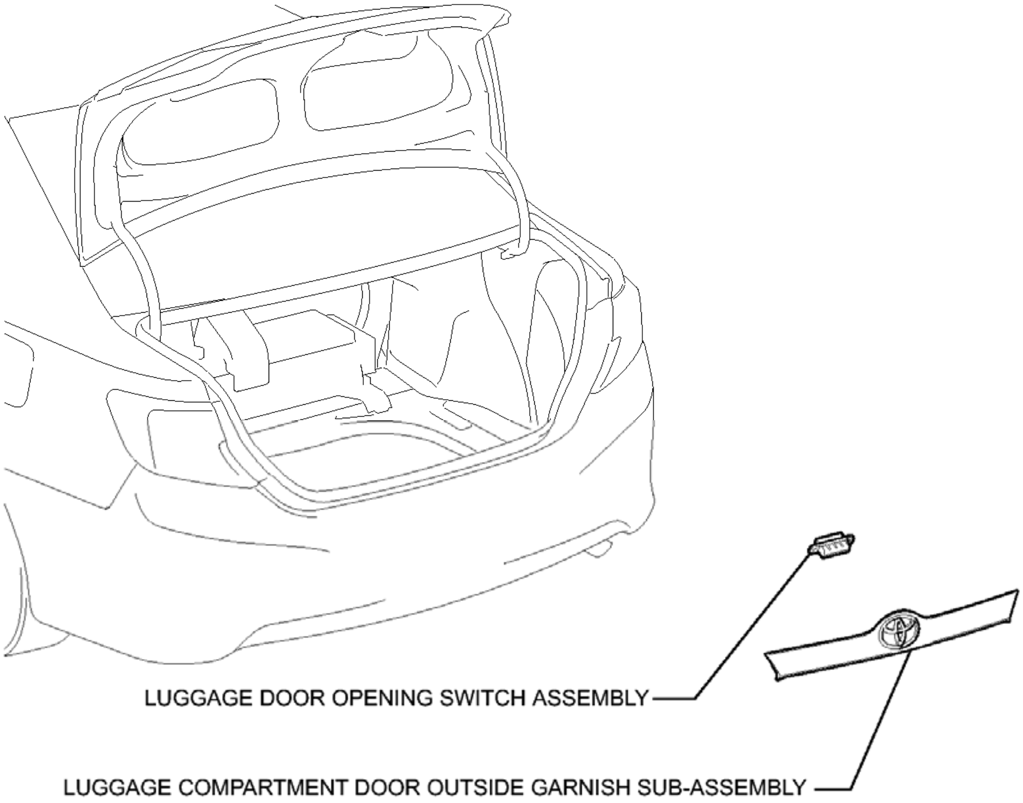
LUGGAGE DOOR OPENING SWITCH ASSEMBLY
LUGGAGE COMPARTMENT DOOR OUTSIDE GARNISH SUB-ASSEMBLY

P

Fig. 274: Identifying Luggage Compartment Door Opener Outer Switch Replacement Components
Courtesy of TOYOTA MOTOR SALES, U.S.A., INC.

REMOVAL

REMOVAL

1. **REMOVE LUGGAGE COMPARTMENT DOOR OUTSIDE GARNISH SUB-ASSEMBLY**

   Refer to **REMOVAL - Step 2**

2. **REMOVE LUGGAGE DOOR OPENING SWITCH ASSEMBLY**
   1. Remove the luggage door opening switch assembly.

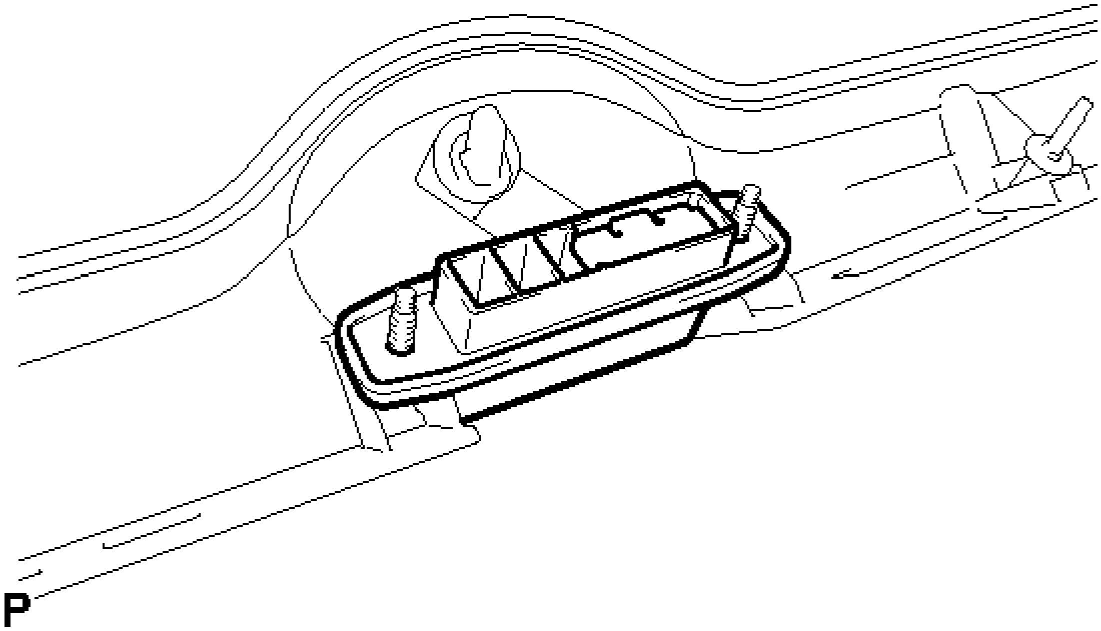

Fig. 275: Identifying Luggage Door Opening Switch
Courtesy of TOYOTA MOTOR SALES, U.S.A., INC.

INSPECTION

INSPECTION

1. **INSPECT LUGGAGE DOOR OPENING SWITCH ASSEMBLY**
    a. Measure the resistance according to the value(s) in the table below.

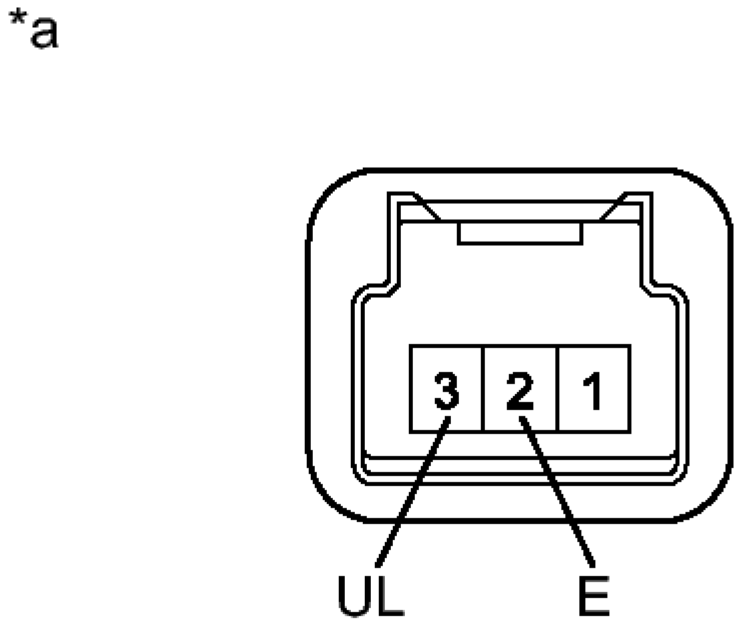

Fig. 276: Inspecting Luggage Door Opening Switch Assembly Connector Terminals
Courtesy of TOYOTA MOTOR SALES, U.S.A., INC.

Standard Resistance

Tester Connection	Switch Condition	Specified Condition
2 (E) - 3 (UL)	Luggage door opening switch assembly not pushed	10 kohms or higher
2 (E) - 3 (UL)	Luggage door opening switch assembly pushed	Below 1 ohms

TEXT IN ILLUSTRATION

*a	Component without harness connected (Luggage

	Door Opening Switch Assembly)

INSTALLATION

INSTALLATION

1. **INSTALL LUGGAGE DOOR OPENING SWITCH ASSEMBLY**
    a. Install the luggage door opening switch assembly.
2. **INSTALL LUGGAGE COMPARTMENT DOOR OUTSIDE GARNISH SUB-ASSEMBLY**

    Refer to **INSTALLATION - Step 4**

FUEL LID LOCK CONTROL CABLE ASSEMBLY

COMPONENTS

ILLUSTRATION

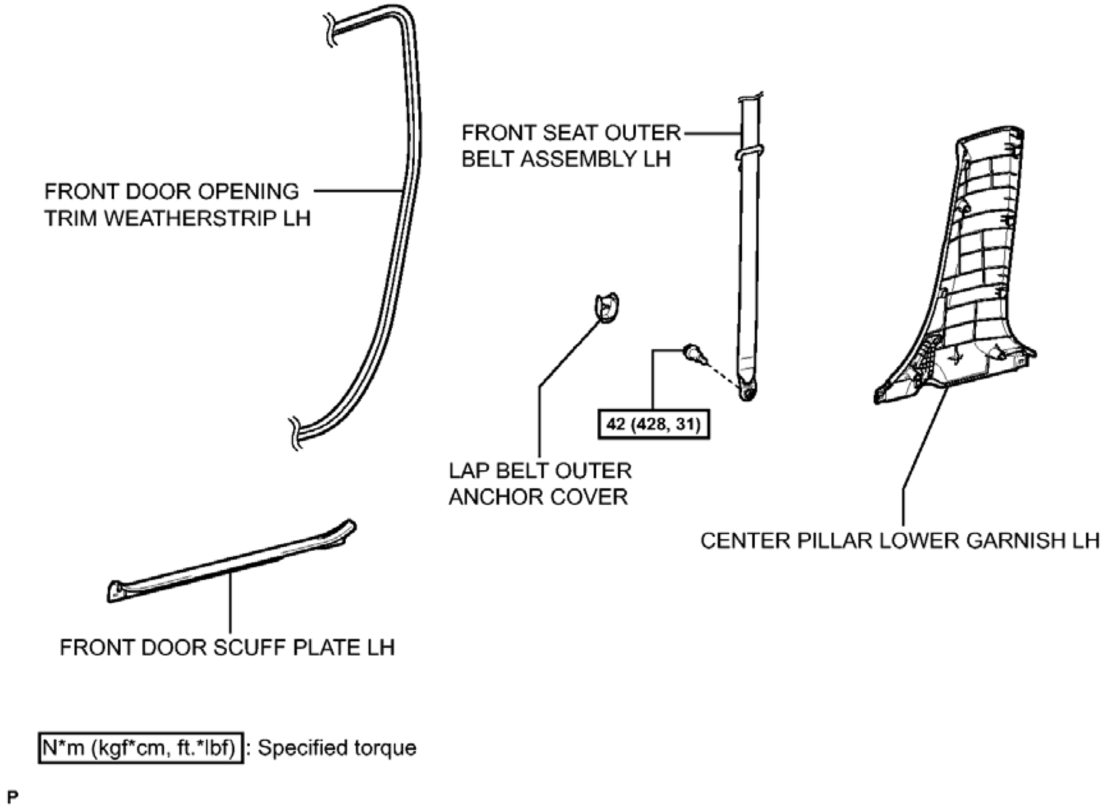
FRONT DOOR OPENING
TRIM WEATHERSTRIP LH
FRONT SEAT OUTER
BELT ASSEMBLY LH
42 (428, 31)
LAP BELT OUTER
ANCHOR COVER
CENTER PILLAR LOWER GARNISH LH
FRONT DOOR SCUFF PLATE LH
N*m (kgf*cm, ft.*lbf) : Specified torque
P

Fig. 277: Identifying Fuel Lid Lock Control Cable Assembly Replacement Components With Torque Specifications (1 Of 4)
Courtesy of TOYOTA MOTOR SALES, U.S.A., INC.

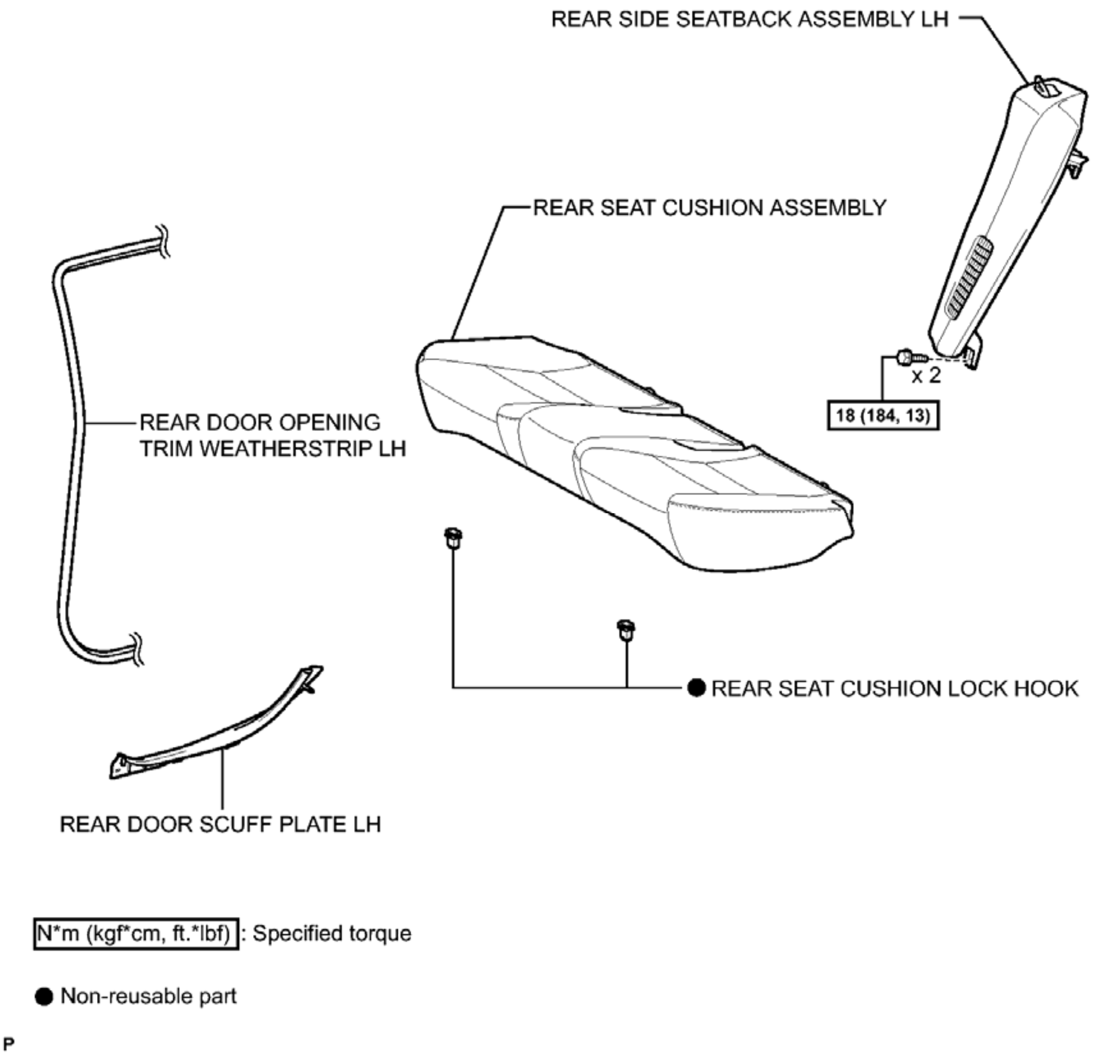
REAR SIDE SEATBACK ASSEMBLY LH
REAR SEAT CUSHION ASSEMBLY
x 2
18 (184, 13)
REAR DOOR OPENING TRIM WEATHERSTRIP LH
● REAR SEAT CUSHION LOCK HOOK
REAR DOOR SCUFF PLATE LH
N*m (kgf*cm, ft.*lbf) : Specified torque
● Non-reusable part
P

Fig. 278: Identifying Fuel Lid Lock Control Cable Assembly Replacement Components With Torque Specifications (2 Of 4)
Courtesy of TOYOTA MOTOR SALES, U.S.A., INC.

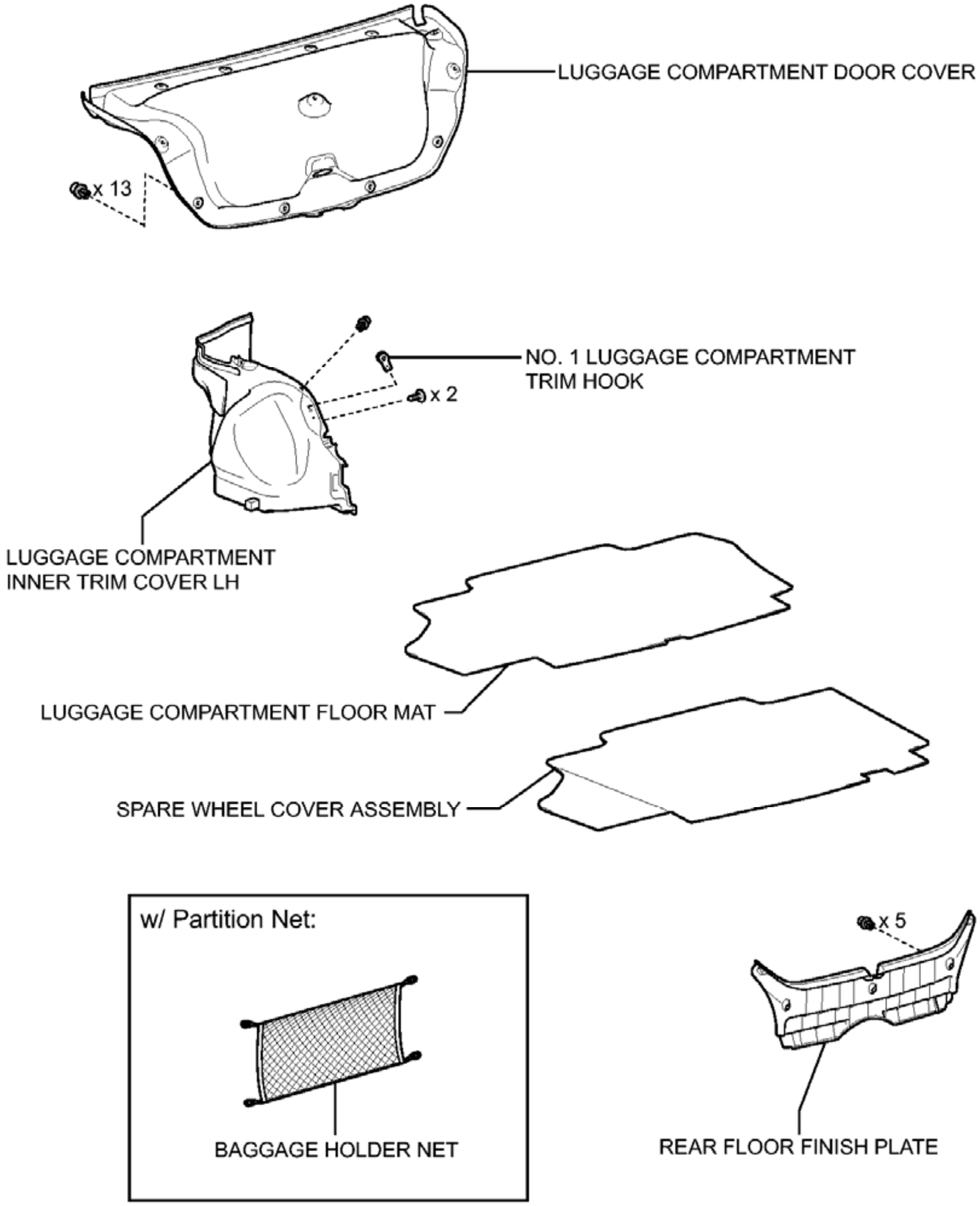
LUGGAGE COMPARTMENT DOOR COVER
x 13
NO. 1 LUGGAGE COMPARTMENT TRIM HOOK
x 2
LUGGAGE COMPARTMENT INNER TRIM COVER LH
LUGGAGE COMPARTMENT FLOOR MAT
SPARE WHEEL COVER ASSEMBLY
w/ Partition Net:
BAGGAGE HOLDER NET
x 5
REAR FLOOR FINISH PLATE

P

Fig. 279: Identifying Fuel Lid Lock Control Cable Assembly Replacement Components (3 Of 4)
Courtesy of TOYOTA MOTOR SALES, U.S.A., INC.

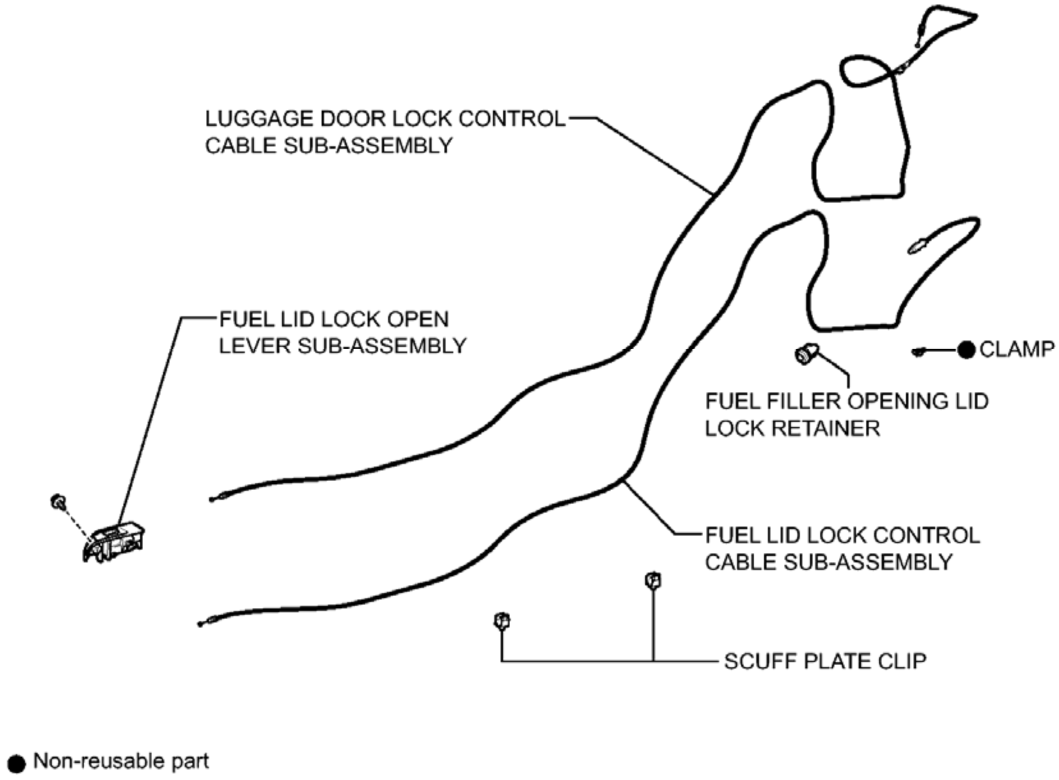
LUGGAGE DOOR LOCK CONTROL CABLE SUB-ASSEMBLY
FUEL LID LOCK OPEN LEVER SUB-ASSEMBLY
● CLAMP
FUEL FILLER OPENING LID LOCK RETAINER
FUEL LID LOCK CONTROL CABLE SUB-ASSEMBLY
SCUFF PLATE CLIP
● Non-reusable part
P

Fig. 280: Identifying Fuel Lid Lock Control Cable Assembly Replacement Components (4 Of 4)
Courtesy of TOYOTA MOTOR SALES, U.S.A., INC.

REMOVAL

REMOVAL

1. **REMOVE FRONT SEAT ASSEMBLY LH (for Manual Seat)**

   Refer to **REMOVAL**

2. **REMOVE FRONT SEAT ASSEMBLY LH (for Power Seat)**

   Refer to **REMOVAL**

3. **REMOVE REAR SEAT CUSHION ASSEMBLY** . Refer to **REMOVAL - Step 4**
4. **REMOVE REAR SEAT CUSHION LOCK HOOK** . Refer to **REMOVAL - Step 5**
5. **REMOVE REAR SIDE SEATBACK ASSEMBLY LH** . Refer to **REMOVAL - Step 9**
6. **REMOVE FRONT DOOR SCUFF PLATE LH** . Refer to **REMOVAL - Step 4**
7. **DISCONNECT FRONT DOOR OPENING TRIM WEATHERSTRIP LH** . Refer to **REMOVAL - Step 5**

8. **REMOVE REAR DOOR SCUFF PLATE LH** . Refer to **REMOVAL - Step 19**
9. **DISCONNECT REAR DOOR OPENING TRIM WEATHERSTRIP LH** . Refer to **REMOVAL - Step 7**
10. **REMOVE LAP BELT OUTER ANCHOR COVER** . Refer to **REMOVAL - Step 8**
11. **DISCONNECT FRONT SEAT OUTER BELT ASSEMBLY LH** . Refer to **REMOVAL - Step 9**
12. **REMOVE CENTER PILLAR LOWER GARNISH LH** . Refer to **REMOVAL - Step 23**
13. **REMOVE LUGGAGE COMPARTMENT DOOR COVER** See step 1
14. **REMOVE LUGGAGE COMPARTMENT FLOOR MAT** See step 1
15. **REMOVE SPARE WHEEL COVER ASSEMBLY** See step 2
16. **REMOVE BAGGAGE HOLDER NET (w/ Partition Net)** See step 3
17. **REMOVE REAR FLOOR FINISH PLATE** See step 4
18. **REMOVE NO. 1 LUGGAGE COMPARTMENT TRIM HOOK** See step 18
19. **REMOVE LUGGAGE COMPARTMENT INNER TRIM COVER LH** See step 7
20. **REMOVE FUEL LID LOCK OPEN LEVER SUB-ASSEMBLY** See step 20
21. **REMOVE FUEL LID LOCK CONTROL CABLE SUB-ASSEMBLY**
    a. Disengage the 2 clamps.

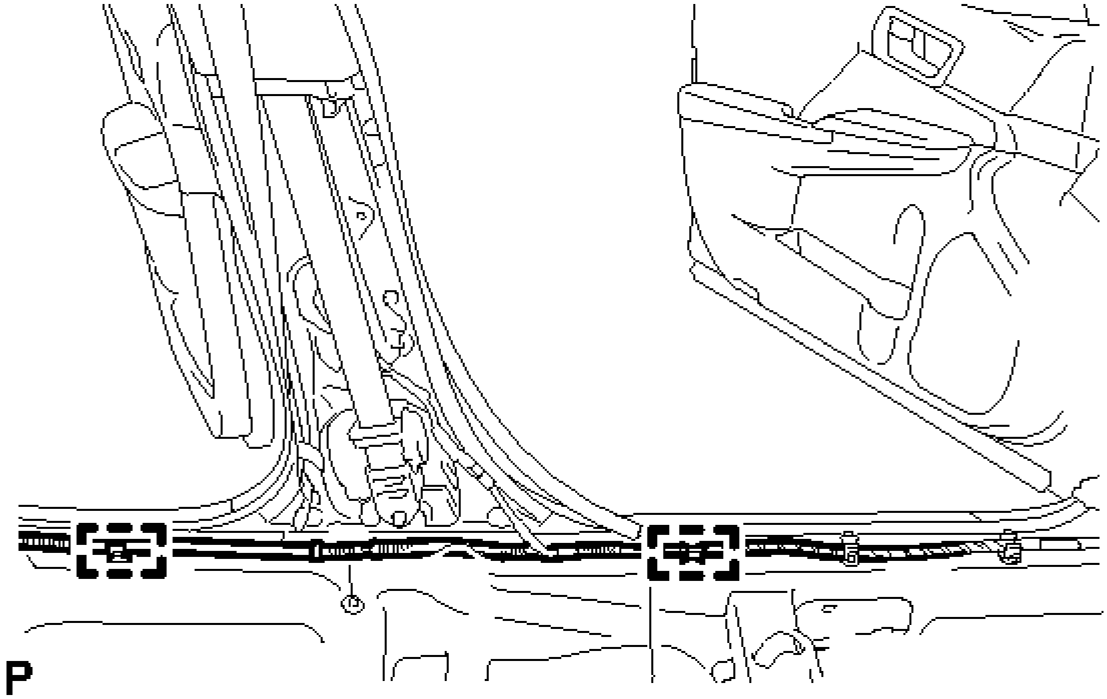

Fig. 281: Identifying Luggage Door Lock Control Cable Clamps
Courtesy of TOYOTA MOTOR SALES, U.S.A., INC.

    b. Using a clip remover, disengage the clamp and disconnect the wire harness.

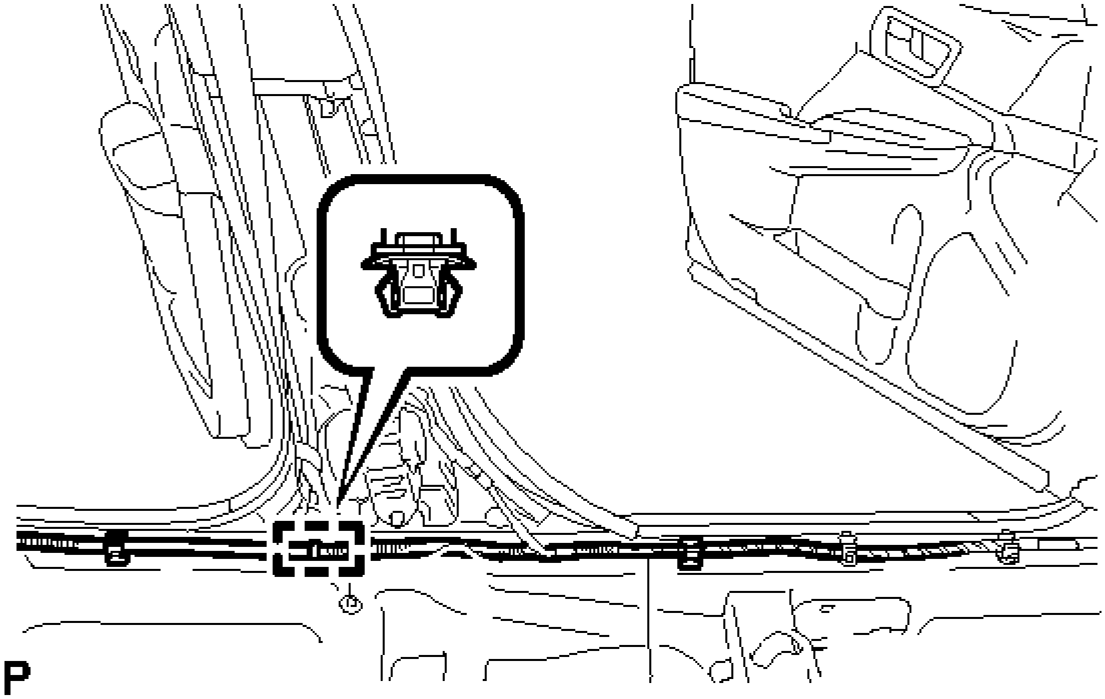

Fig. 282: Identifying Wire Harness Clamp
Courtesy of TOYOTA MOTOR SALES, U.S.A., INC.

c. Using a clip remover, disengage the 2 clamps and remove the 2 scuff plate clips.

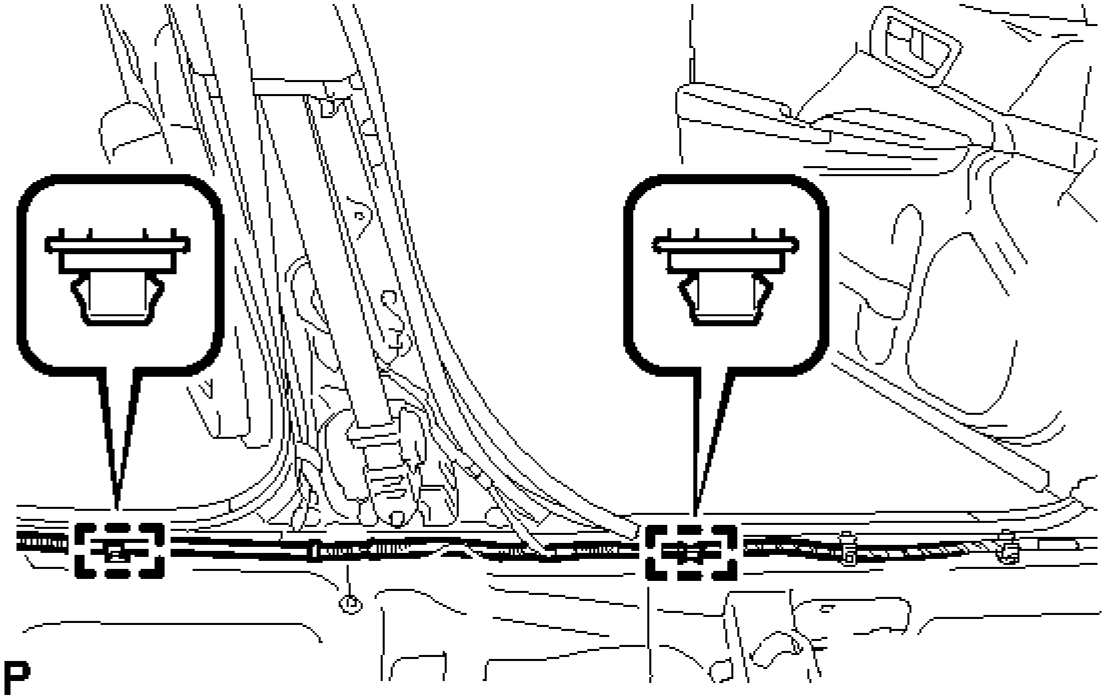

Fig. 283: Identifying Scuff Plate Clip Clamps
Courtesy of TOYOTA MOTOR SALES, U.S.A., INC.

d. Turn back the floor carpet so that the luggage door lock control cable sub-assembly and fuel lid lock control cable sub-assembly can be removed.

e. Disengage the guide as shown in the illustration.

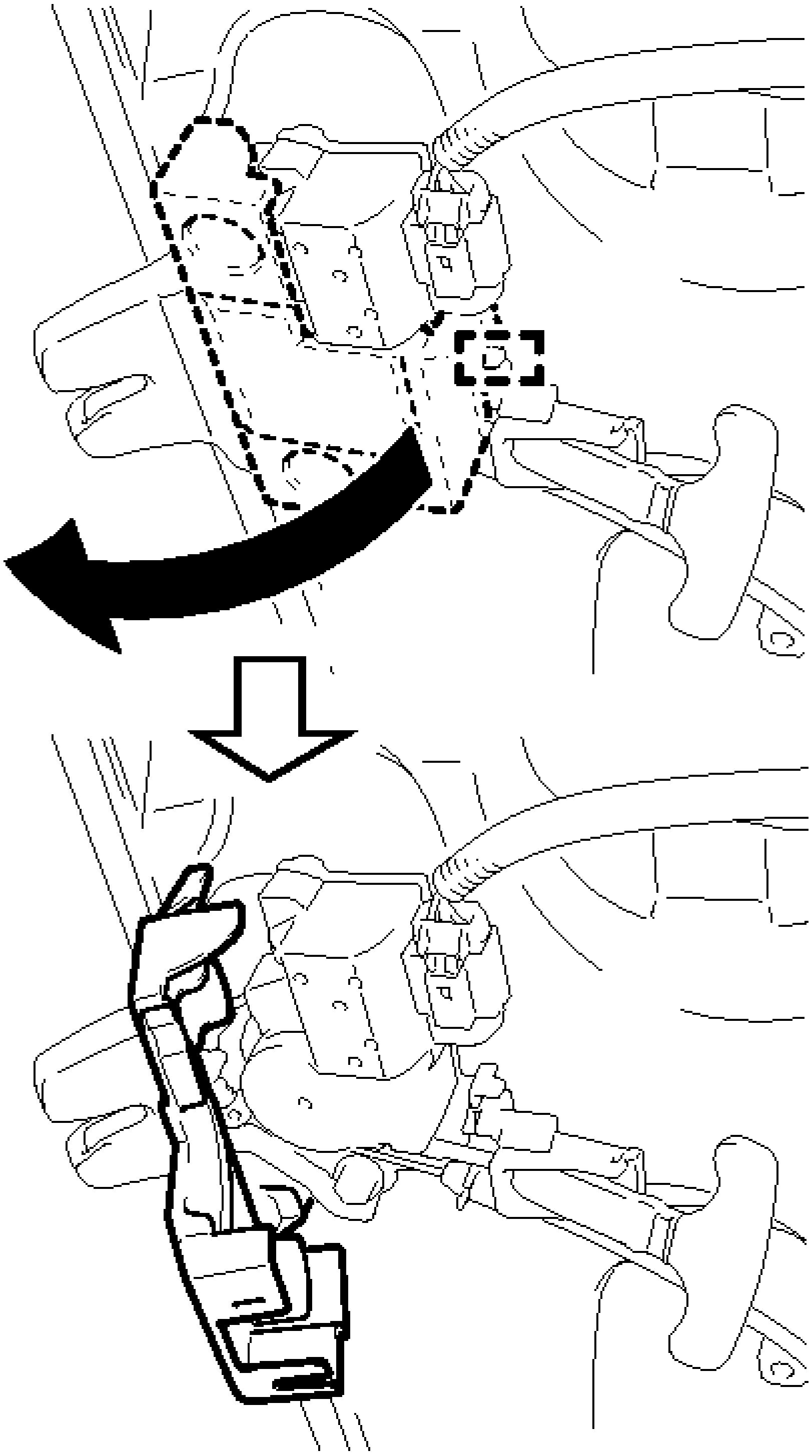

P

Fig. 284: Disconnecting Luggage Door Lock Cover

Courtesy of TOYOTA MOTOR SALES, U.S.A., INC.

f. Disconnect the luggage door lock control cable sub-assembly.

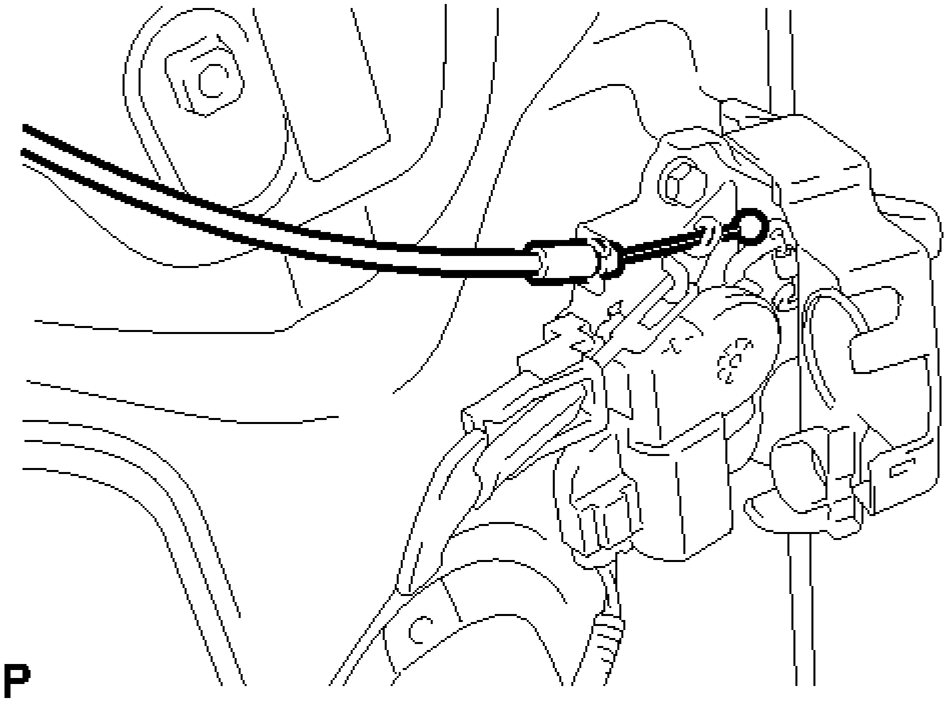

Fig. 285: Identifying The Luggage Door Lock Control Cable End
Courtesy of TOYOTA MOTOR SALES, U.S.A., INC.

g. Disengage the clamp and disconnect the luggage door lock control cable sub-assembly.

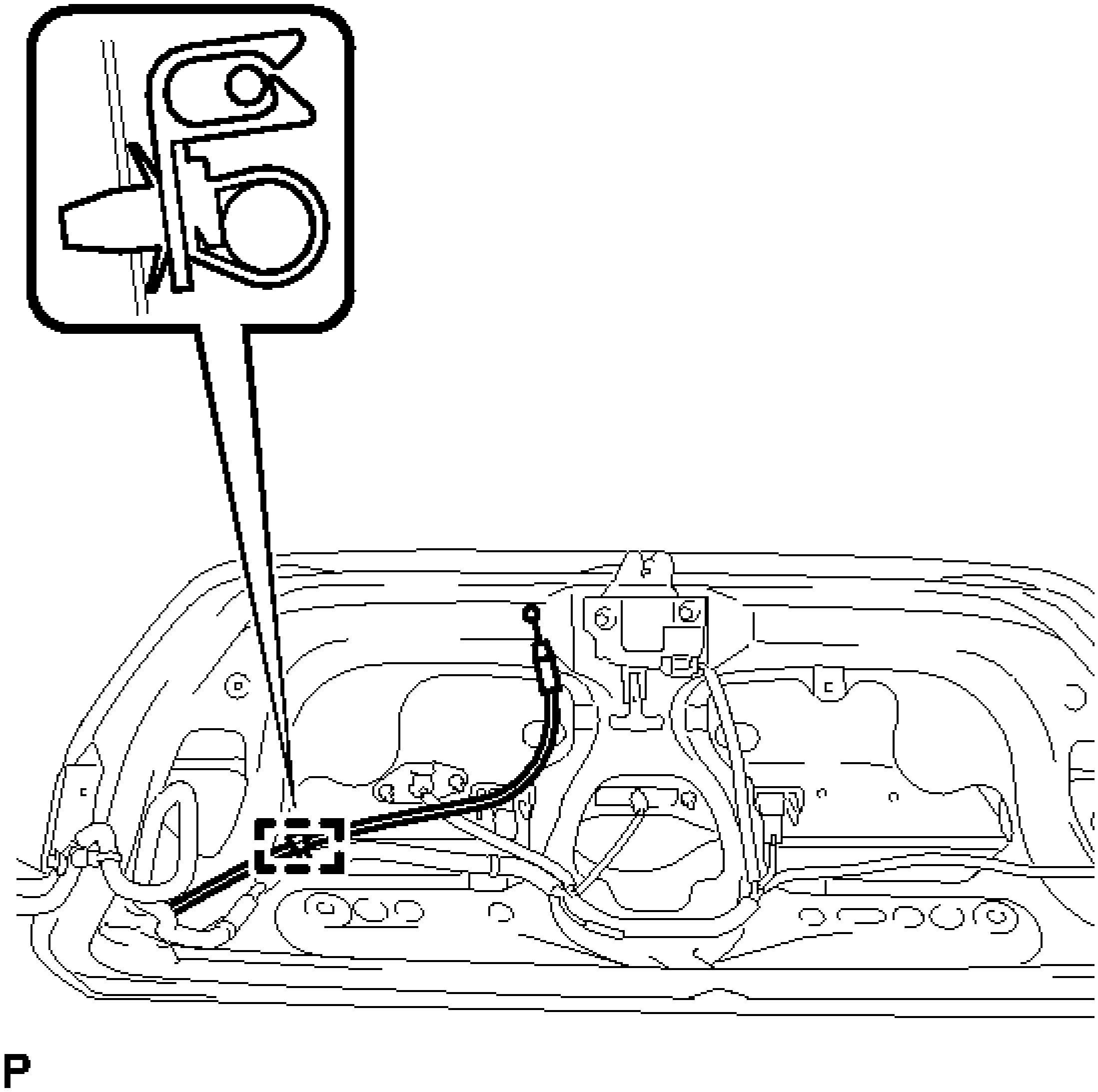

<u>Fig. 286: Identifying Luggage Door Lock Control Cable Clamp</u>
Courtesy of TOYOTA MOTOR SALES, U.S.A., INC.

h. Rotate the fuel filler opening lid lock retainer as shown in the illustration to align the cutouts and the guides <A>, and then pull the fuel filler opening lid lock retainer.

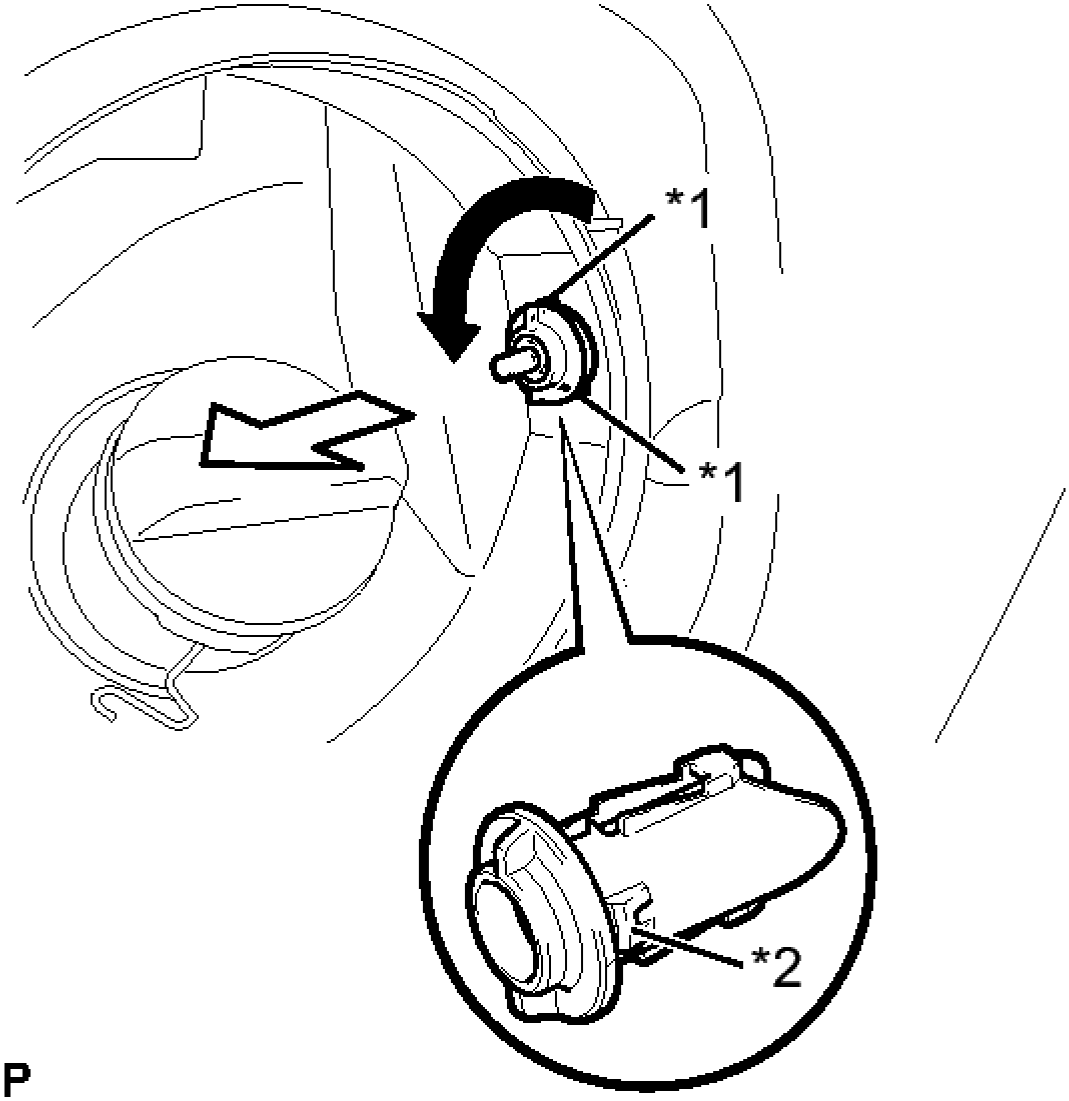

Fig. 287: Rotating Fuel Filler Opening Lid Lock Retainer
Courtesy of TOYOTA MOTOR SALES, U.S.A., INC.

TEXT IN ILLUSTRATION

*1	Cutout
*2	Guide <A>

i. Rotate the fuel filler opening lid lock retainer as shown in the illustration to align the cutouts and guides <B>, and then pull the fuel filler opening lid lock retainer.

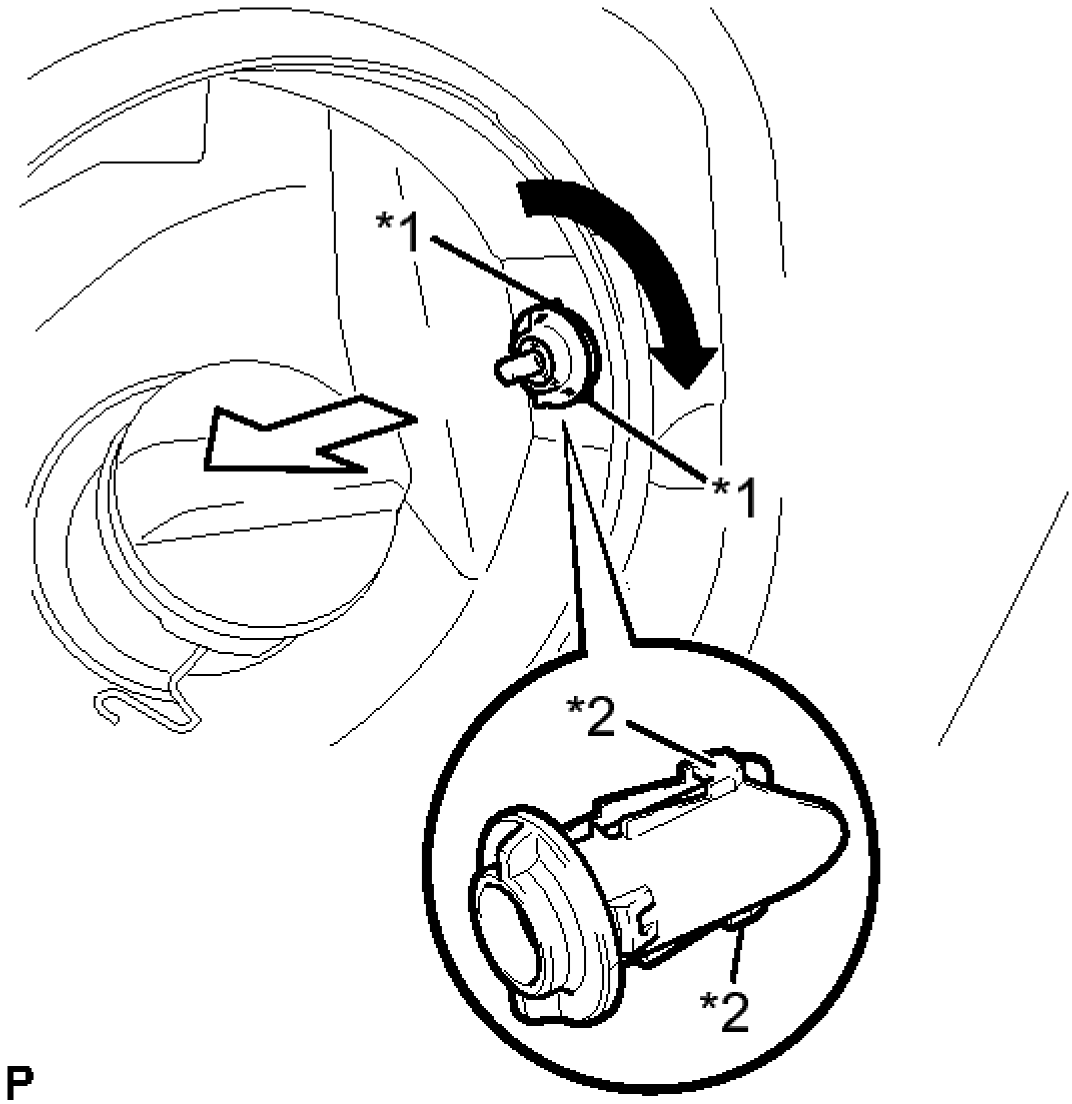

Fig. 288: Rotating Fuel Filler Opening Lid Lock Retainer
Courtesy of TOYOTA MOTOR SALES, U.S.A., INC.

TEXT IN ILLUSTRATION

*1	Cutout
*2	Guide <B>

j. Pull out the fuel filler opening lid lock retainer with both guides <B> and <C> aligned with the cutouts.

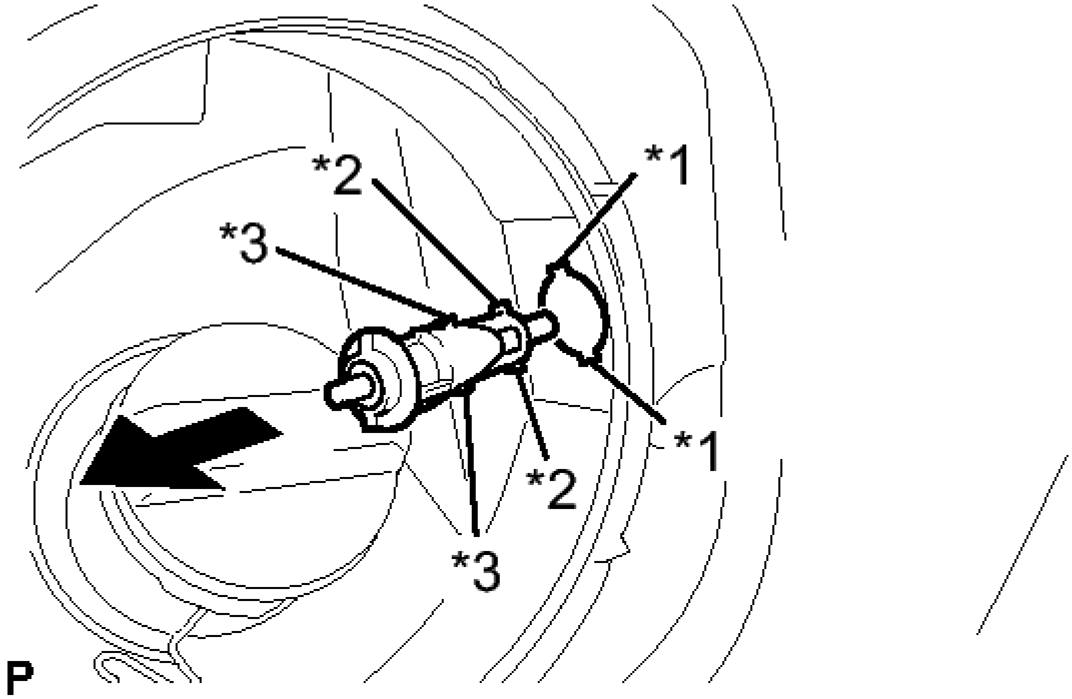

Fig. 289: Removing Fuel Filler Opening Lid Lock Retainer
Courtesy of TOYOTA MOTOR SALES, U.S.A., INC.

TEXT IN ILLUSTRATION

*1	Cutout
*2	Guide <C>
*3	Guide <B>

k. Disengage the 2 claws and remove the fuel filler opening lid lock retainer.

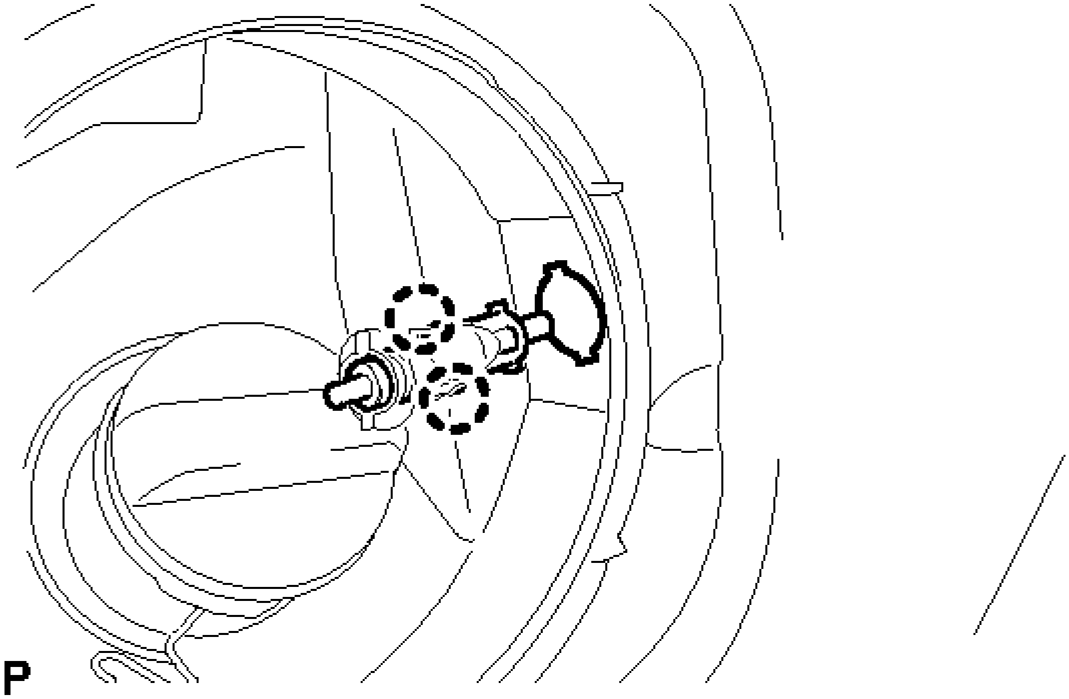

Fig. 290: Identifying Fuel Filler Opening Lid Lock Retainer Claws
Courtesy of TOYOTA MOTOR SALES, U.S.A., INC.

l. Disengage the 10 clamps and remove the fuel lid lock control cable sub-assembly and luggage door lock control cable sub-assembly.

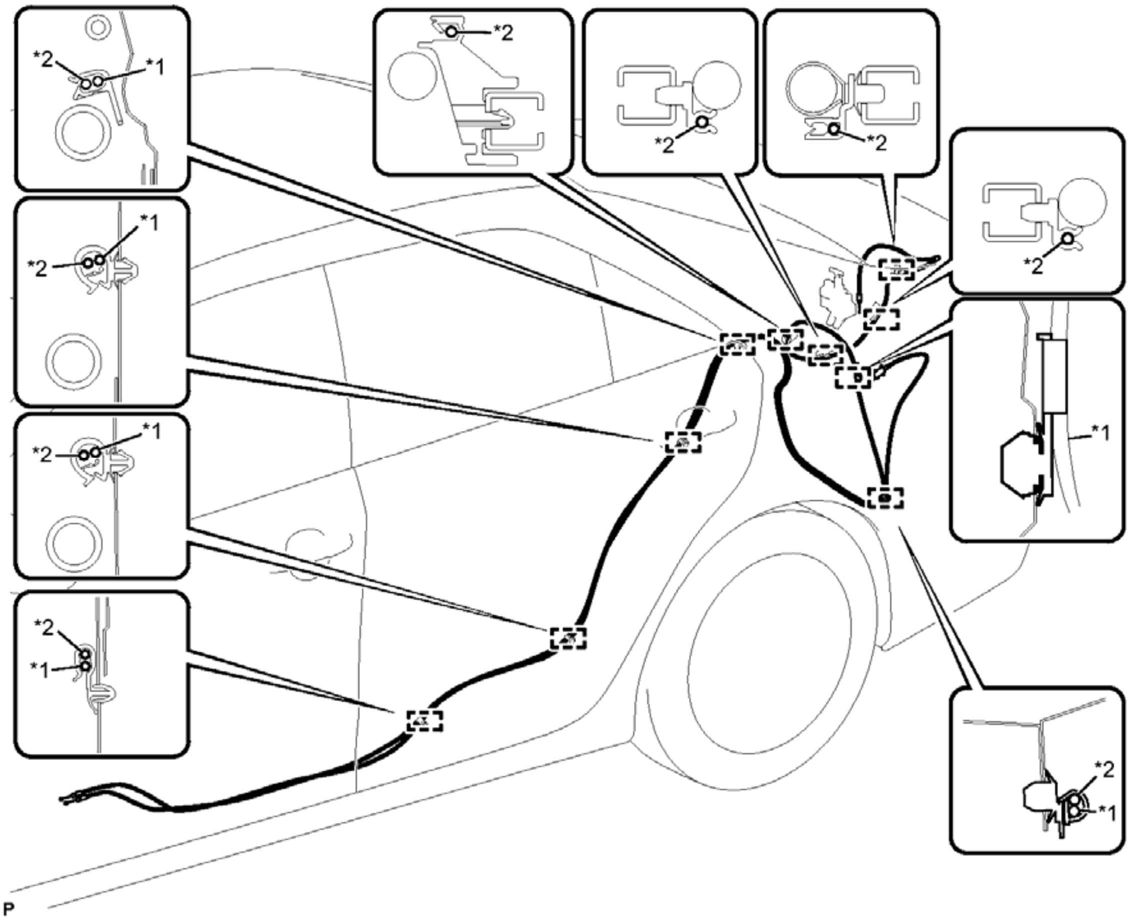

Fig. 291: Identifying Fuel Lid Lock Control Cable Clamps
Courtesy of TOYOTA MOTOR SALES, U.S.A., INC.

TEXT IN ILLUSTRATION

*1	Fuel Lid Lock Control Cable Sub-assembly	*2	Luggage Door Lock Control Cable Sub-assembly

m. Using a knife, cut off the clamp as shown in the illustration.

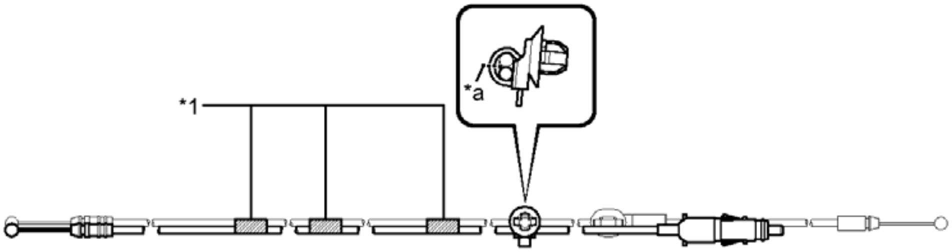

P

Fig. 292: Identifying Clamp To Be Cut
Courtesy of TOYOTA MOTOR SALES, U.S.A., INC.

TEXT IN ILLUSTRATION

*1	Tape	-	-
*a	Cut	-	-

NOTE: **Be careful not to damage the vehicle fuel lid lock control cable sub-assembly and luggage door lock control cable sub-assembly.**

n. Remove the clamp.
o. Remove the 3 pieces of tape and fuel lid lock control cable sub-assembly.

INSTALLATION

INSTALLATION

1. **INSTALL FUEL LID LOCK CONTROL CABLE SUB-ASSEMBLY**
    a. Install the fuel lid lock control cable sub-assembly to the luggage door lock control cable sub-assembly with the new clamp and the 3 pieces of tape as shown in the illustration.

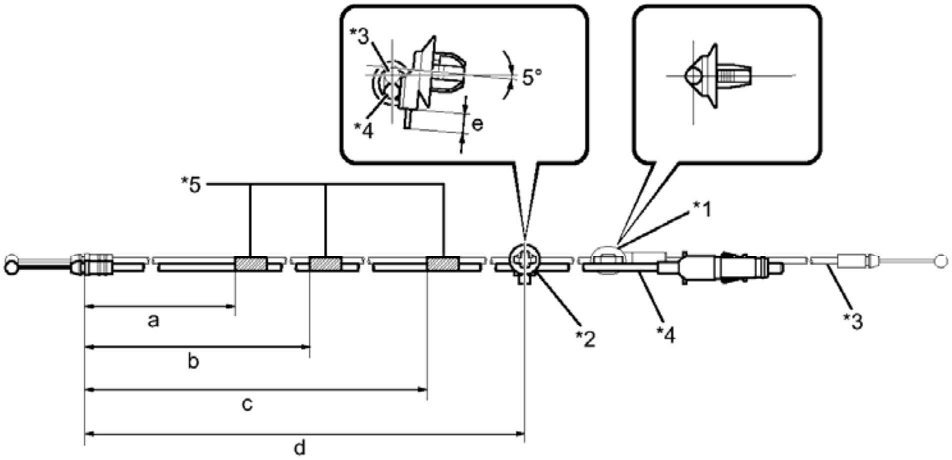

P

Fig. 293: Identifying Fuel Lid Lock Control Cable Clamp And Tape
Courtesy of TOYOTA MOTOR SALES, U.S.A., INC.

TEXT IN ILLUSTRATION

*1	Clamp (A)	*2	Clamp
*3	Luggage Door Lock Control Cable Sub-assembly	*4	Fuel Lid Lock Control Cable Sub-assembly
*5	Tape	-	-

REFERENCE MEASUREMENT

Area	Measurement	Area	Measurement
a	295 to 305 mm (11.6 to 12.0 in.)	b	880 to 900 mm (2.29 to 2.95 ft.)
c	2090 to 2110 mm (6.86 to 6.92 ft.)	d	2970 to 2990 mm (8.86 to 9.81 ft.)
e	5.0 mm (0.197 in.) or less	-	-

NOTE:

- **Wrap tape around the designated position 1 to 3 times.**
- **Make sure that the fuel lid lock control cable sub-assembly and**

luggage door lock control cable sub-assembly are not kinked.

b. Engage the 10 clamps and install the fuel lid lock control cable sub-assembly and luggage door lock control cable sub-assembly.
c. Align the cutouts and guides <C>, and then insert the fuel filler opening lid lock retainer.

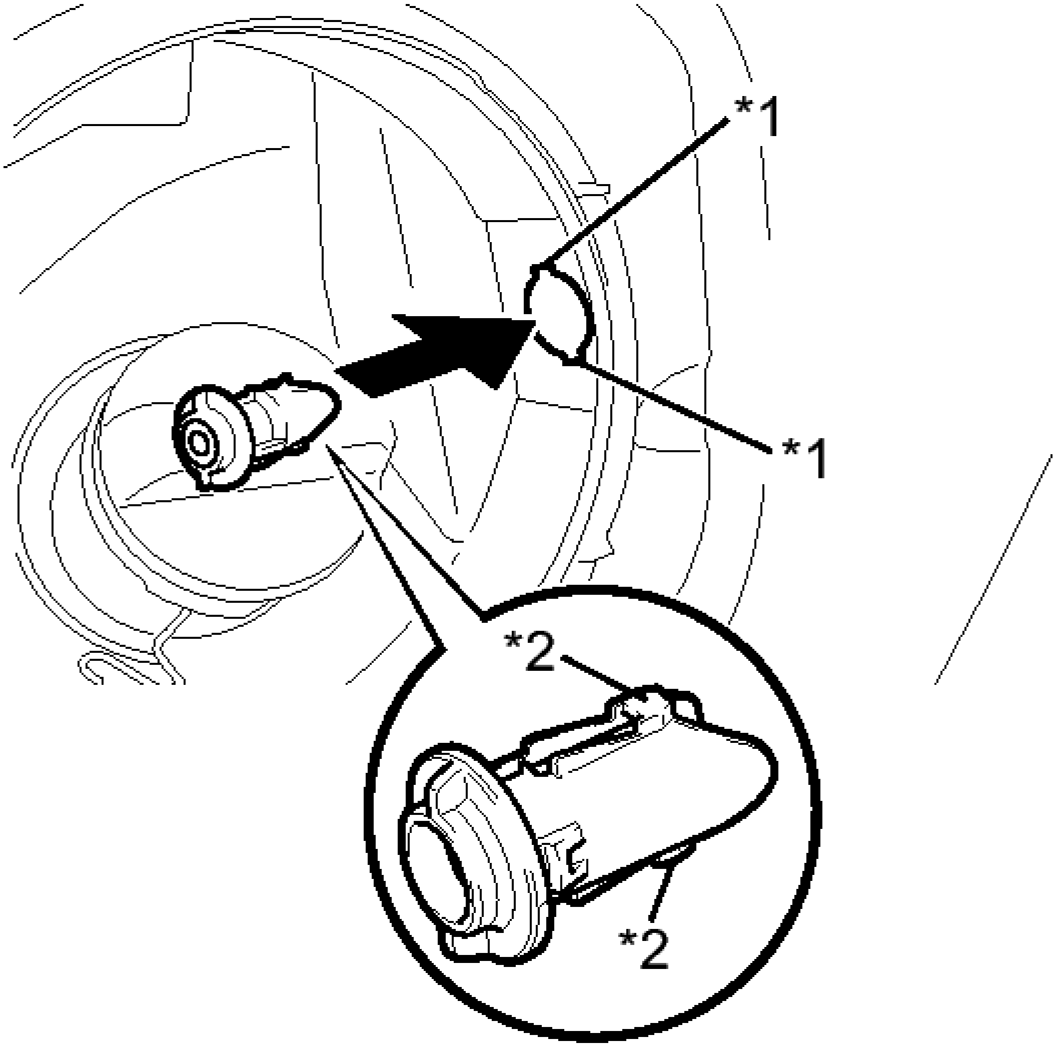

P

Fig. 294: Installing Fuel Filler Opening Lid Lock Retainer
Courtesy of TOYOTA MOTOR SALES, U.S.A., INC.

TEXT IN ILLUSTRATION

*1	Cutout
*2	Guide <C>

d. Engage the 2 claws to install the fuel filler opening lid lock retainer.

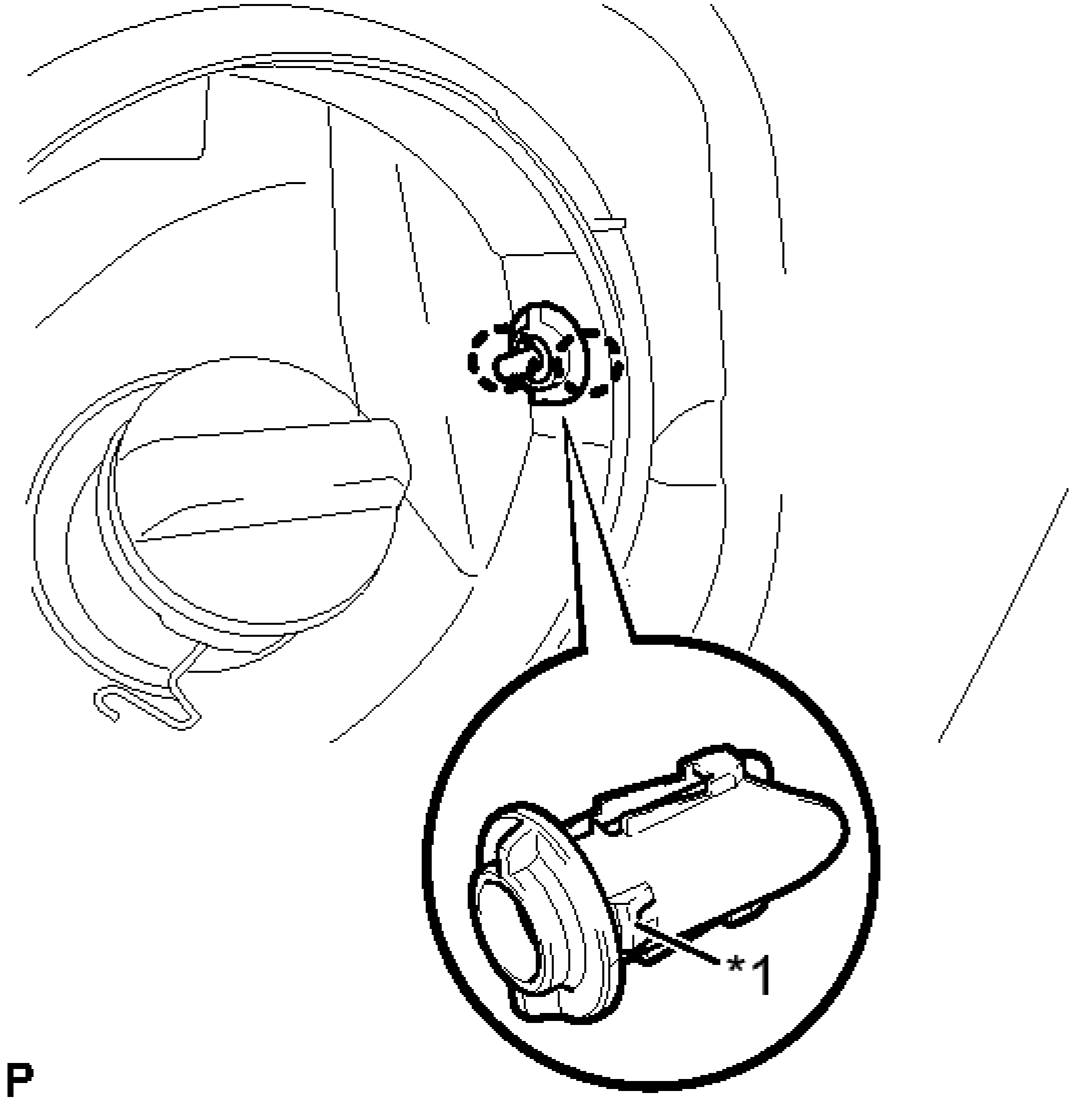

Fig. 295: Identifying Fuel Filler Opening Lid Lock Retainer Claws
Courtesy of TOYOTA MOTOR SALES, U.S.A., INC.

TEXT IN ILLUSTRATION

*1	Claw

e. Engage the 2 claws to install the fuel lid lock control cable sub-assembly.

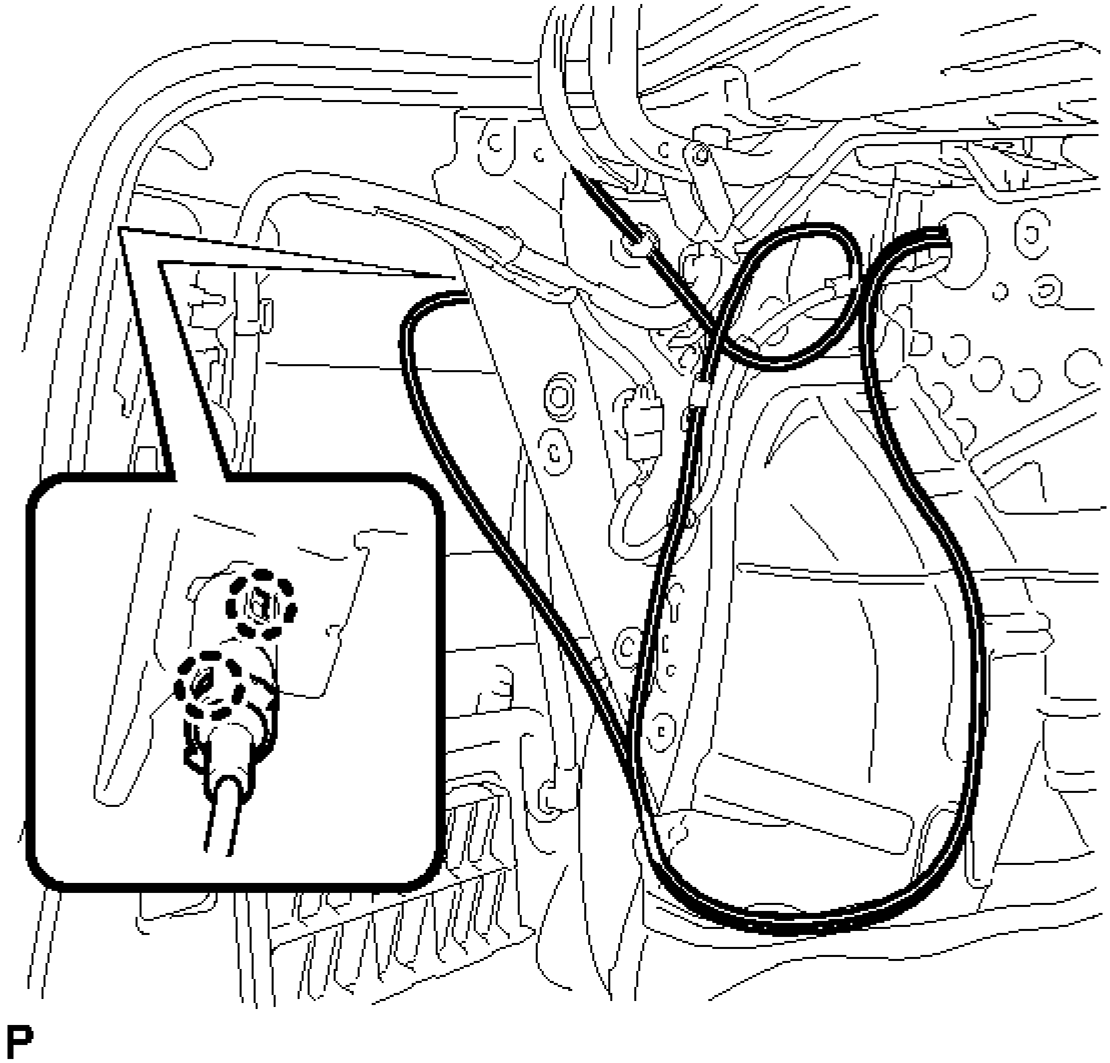

Fig. 296: Identifying Fuel Lid Lock Control Cable Claws
Courtesy of TOYOTA MOTOR SALES, U.S.A., INC.

f. Engage the clamp and connect the luggage door lock control cable sub-assembly.
g. Connect the luggage door lock control cable sub-assembly.
h. Engage the guide as shown in the illustration.

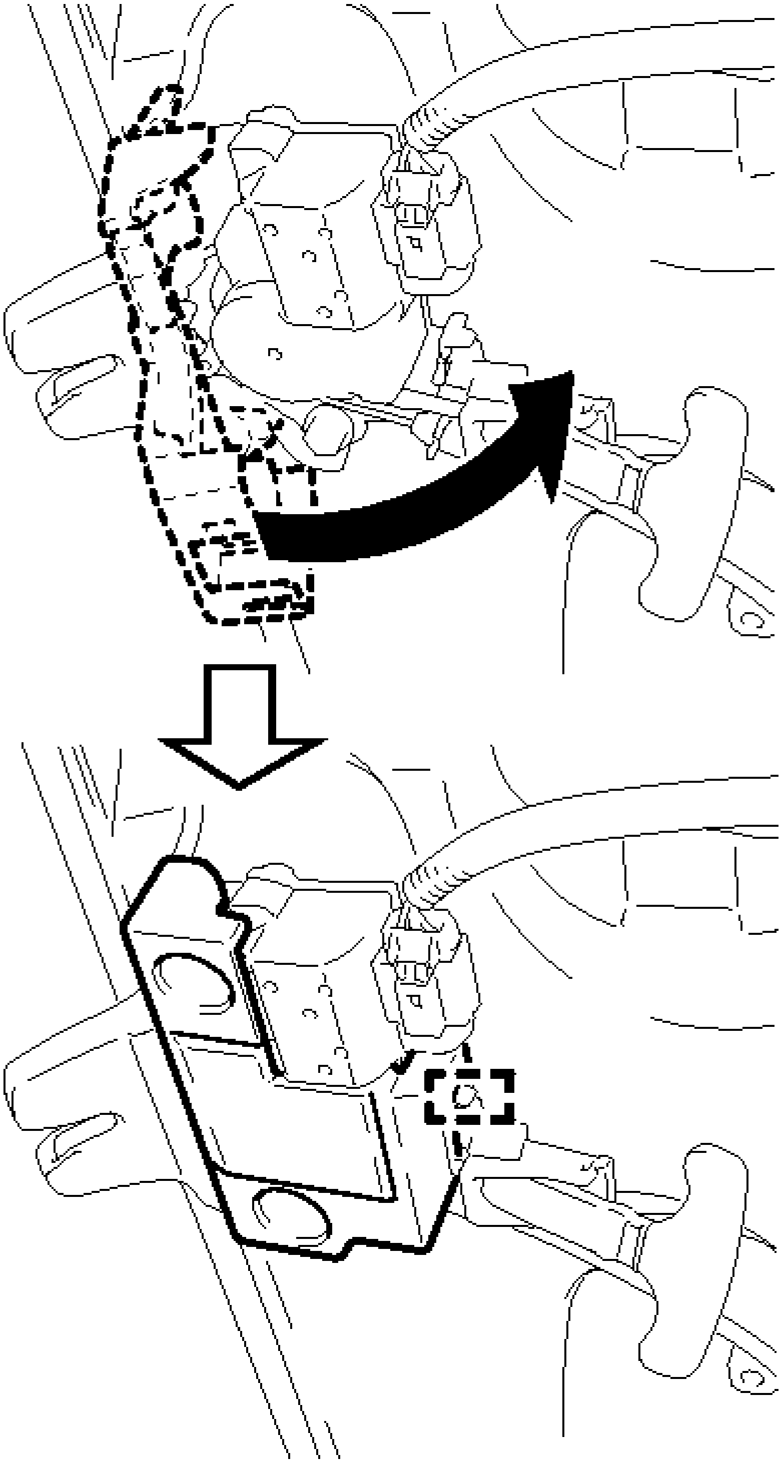

Fig. 297: Connecting Luggage Door Lock Control Cable Cover
Courtesy of TOYOTA MOTOR SALES, U.S.A., INC.

i. Return the floor carpet to the original position.
j. Engage the 2 clamps and install the 2 scuff plate clips.

   k. Engage the 3 clamps to connect the wire harness.

2. **INSTALL FUEL LID LOCK OPEN LEVER SUB-ASSEMBLY** See step 2
3. **INSTALL LUGGAGE COMPARTMENT INNER TRIM COVER LH** See step 6
4. **INSTALL NO. 1 LUGGAGE COMPARTMENT TRIM HOOK** See step 4
5. **INSTALL REAR FLOOR FINISH PLATE** See step 10
6. **INSTALL BAGGAGE HOLDER NET (w/ Partition Net)** See step 11
7. **INSTALL SPARE WHEEL COVER ASSEMBLY** See step 12
8. **INSTALL LUGGAGE COMPARTMENT FLOOR MAT** See step 13
9. **INSTALL LUGGAGE COMPARTMENT DOOR COVER** See step 10
10. **INSTALL REAR SIDE SEATBACK ASSEMBLY LH** . Refer to **INSTALLATION - Step 1**
11. **INSTALL REAR SEAT CUSHION LOCK HOOK** . Refer to **INSTALLATION - Step 6**
12. **INSTALL REAR SEAT CUSHION ASSEMBLY** . Refer to **INSTALLATION - Step 7**
13. **INSTALL CENTER PILLAR LOWER GARNISH LH** . Refer to **INSTALLATION - Step 23**
14. **CONNECT FRONT SEAT OUTER BELT ASSEMBLY LH** . Refer to **INSTALLATION - Step 6**
15. **INSTALL LAP BELT OUTER ANCHOR COVER** . Refer to **INSTALLATION - Step 7**
16. **INSTALL REAR DOOR OPENING TRIM WEATHERSTRIP LH** . Refer to **INSTALLATION - Step 26**
17. **INSTALL REAR DOOR SCUFF PLATE LH** . Refer to **INSTALLATION - Step 27**
18. **INSTALL FRONT DOOR OPENING TRIM WEATHERSTRIP LH** . Refer to **INSTALLATION - Step 43**
19. **INSTALL FRONT DOOR SCUFF PLATE LH** . Refer to **INSTALLATION - Step 45**
20. **INSTALL FRONT SEAT ASSEMBLY LH (for Manual Seat)**

    Refer to **INSTALLATION**

21. **INSTALL FRONT SEAT ASSEMBLY LH (for Power Seat)**

    Refer to **INSTALLATION**

2012-2017 ACCESSORIES & EQUIPMENT

Door / Hood (Service Information) (Except Hybrid) - Camry

HOOD

ON-VEHICLE INSPECTION

ON-VEHICLE INSPECTION

1. **INSPECT HOOD SUB-ASSEMBLY**
    a. Check that the clearance measurements of areas a through d are within each standard range.

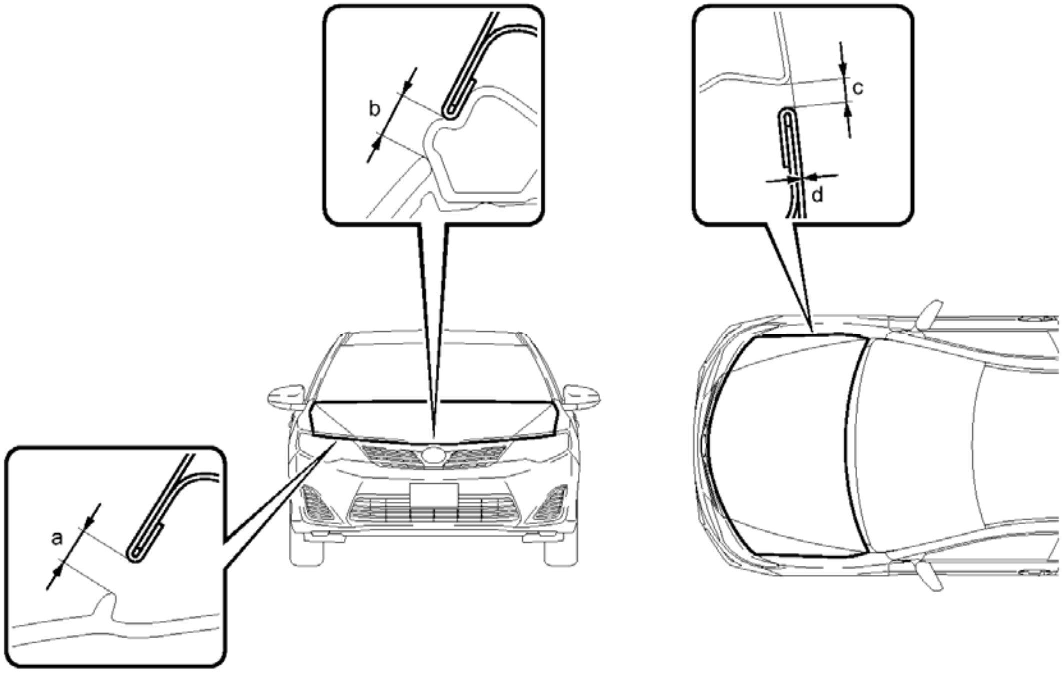

P

Fig. 1: Inspecting Hood Sub-Assembly
Courtesy of TOYOTA MOTOR SALES, U.S.A., INC.

STANDARD CLEARANCE

Area	Measurement	Area	Measurement
a	2.45 to 6.45 mm (0.0965 to 0.254 in.)	b	3.55 to 7.55 mm (0.140 to 0.297 in.)
c	2.0 to 5.0 mm (0.0787 to 0.197 in.)	d	-1.5 to 1.5 mm (-0.0591 to 0.0591 in.)

DISASSEMBLY

DISASSEMBLY

1. **REMOVE HOOD TO RADIATOR SUPPORT SEAL**
    a. Using a clip remover, disengage the 8 clips and remove the hood to radiator support seal.

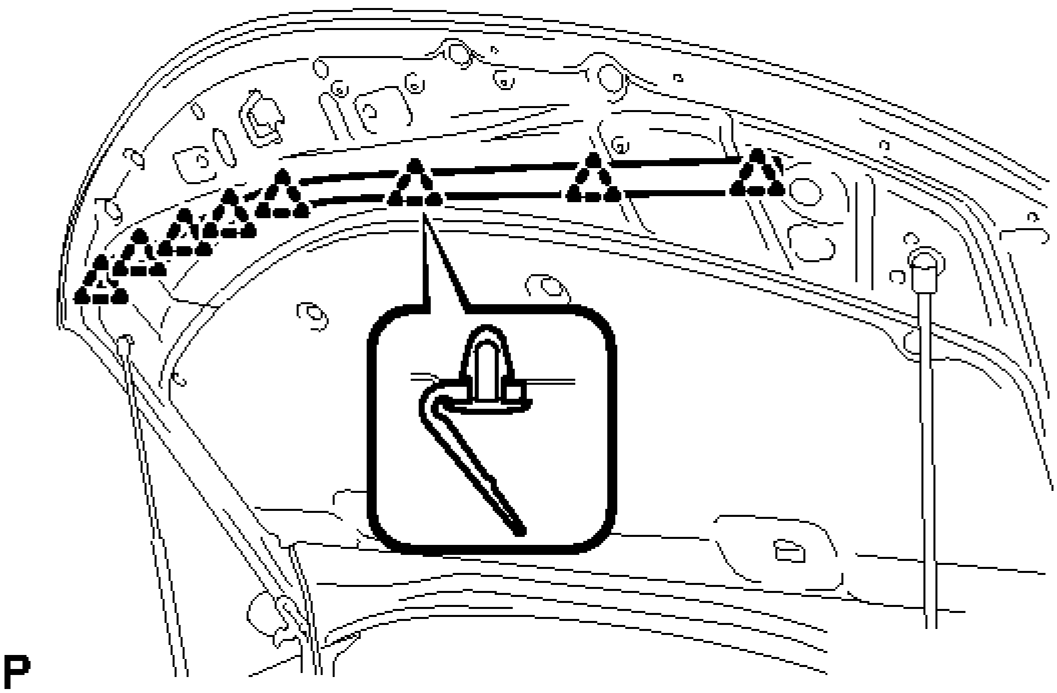

Fig. 2: Identifying Hood To Radiator Support Seal Clips
Courtesy of TOYOTA MOTOR SALES, U.S.A., INC.

2. **REMOVE HOOD INSULATOR**
    a. Using a clip remover, remove the 7 clips.

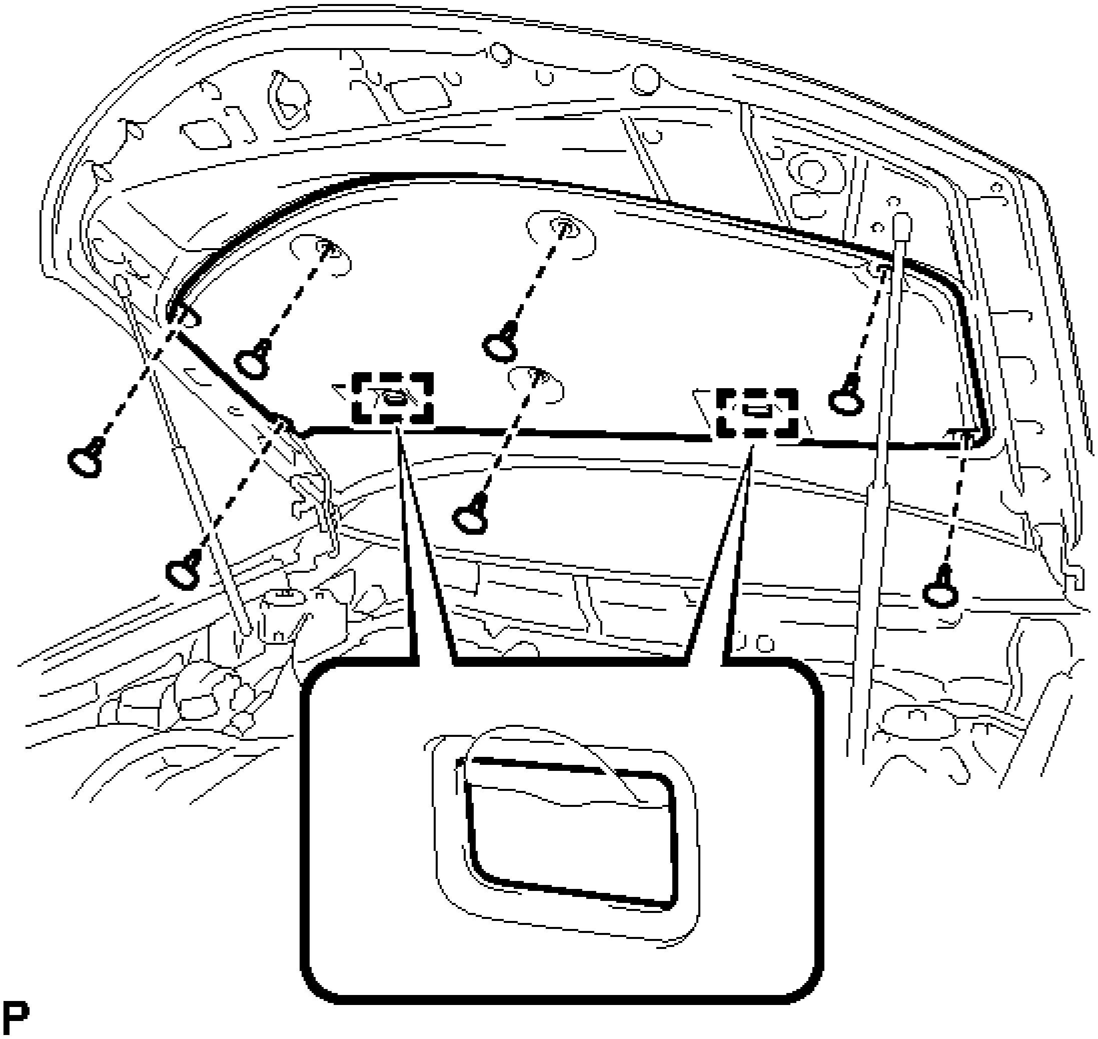

Fig. 3: Identifying Hood Insulator Clips
Courtesy of TOYOTA MOTOR SALES, U.S.A., INC.

b. Disengage the 2 guides and remove the hood insulator.

3. **REMOVE WASHER NOZZLE SUB-ASSEMBLY** . Refer to **REMOVAL - Step 1** .
4. **DISCONNECT WASHER HOSE ASSEMBLY**

a. Disengage the 6 clamps and disconnect the washer hose assembly.

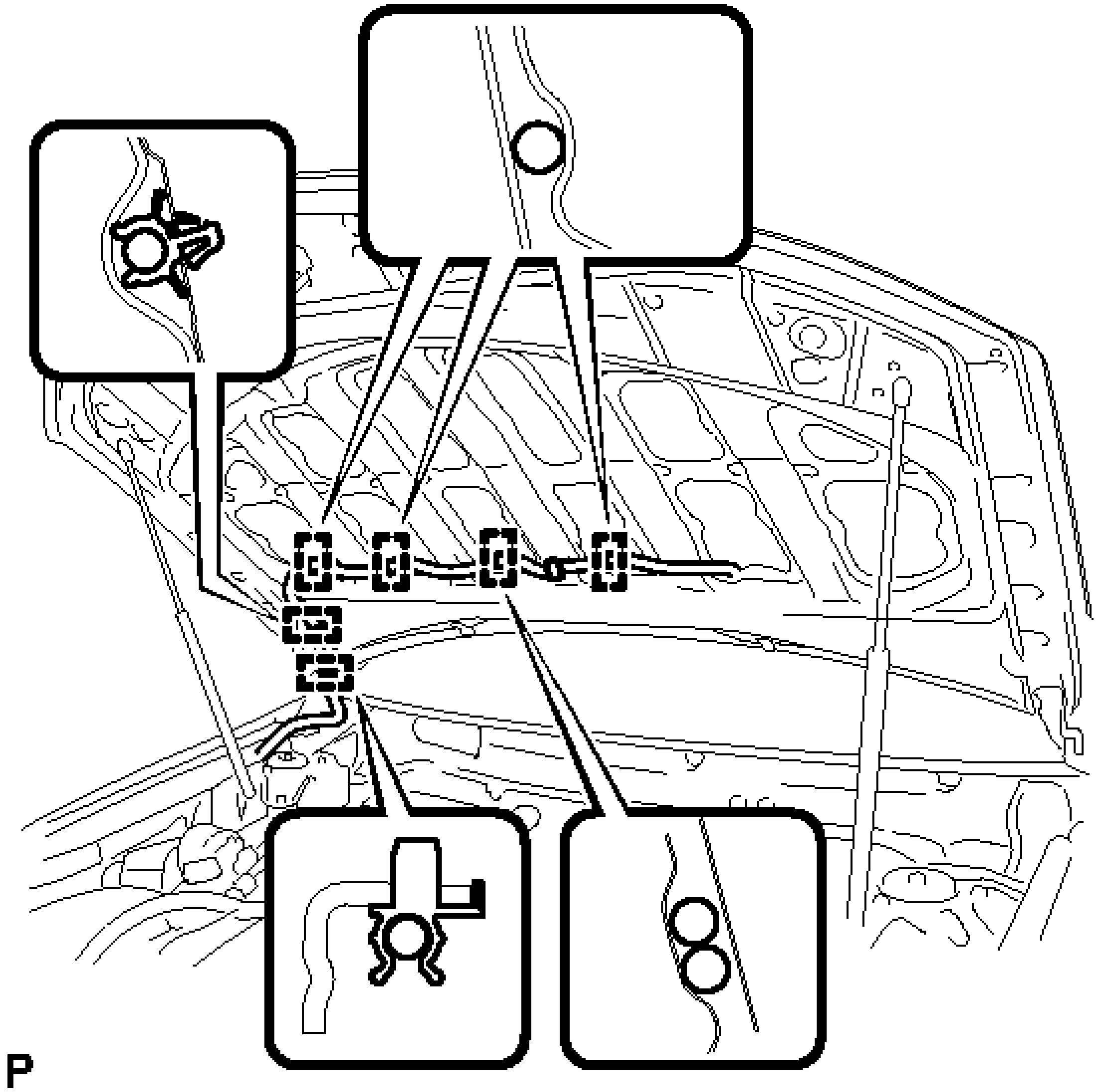

Fig. 4: Identifying Washer Hose Clamps
Courtesy of TOYOTA MOTOR SALES, U.S.A., INC.

5. **REMOVE HOOD SUPPORT ASSEMBLY LH** . See step 1.
6. **REMOVE HOOD SUPPORT ASSEMBLY RH**

   HINT:

   Use the same procedure as for the LH side.

ADJUSTMENT

ADJUSTMENT

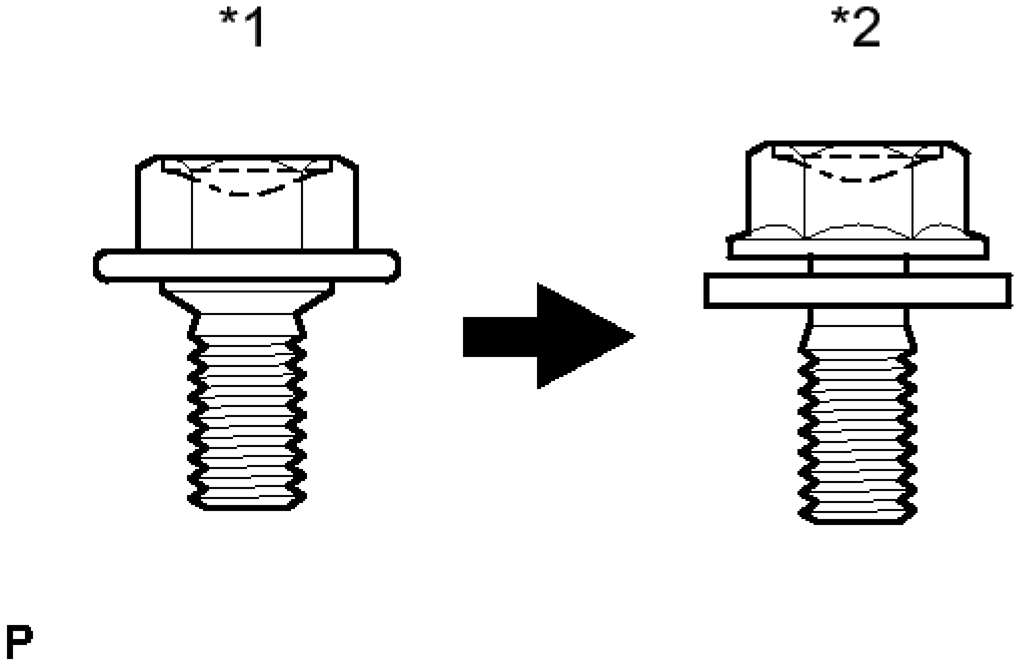

Fig. 5: Identifying Centering Bolt And Standard Bolt
Courtesy of TOYOTA MOTOR SALES, U.S.A., INC.

TEXT IN ILLUSTRATION

*1	Centering Bolt
*2	Standard Bolt

HINT:

- Centering bolts are used to mount the hood hinge and hood lock. The hood and hood lock cannot be adjusted with the centering bolts installed. Substitute the centering bolts with standard bolts when making adjustments.
- Specified torque for standard bolts is shown in the standard bolt chart. Refer to **SPECIFIED TORQUE FOR STANDARD BOLTS** .

1. **INSPECT HOOD SUB-ASSEMBLY** . See step 1.
2. **ADJUST HOOD SUB-ASSEMBLY**
    a. Horizontally and vertically adjust the hood.
        1. Loosen the 4 hinge bolts of the hood.

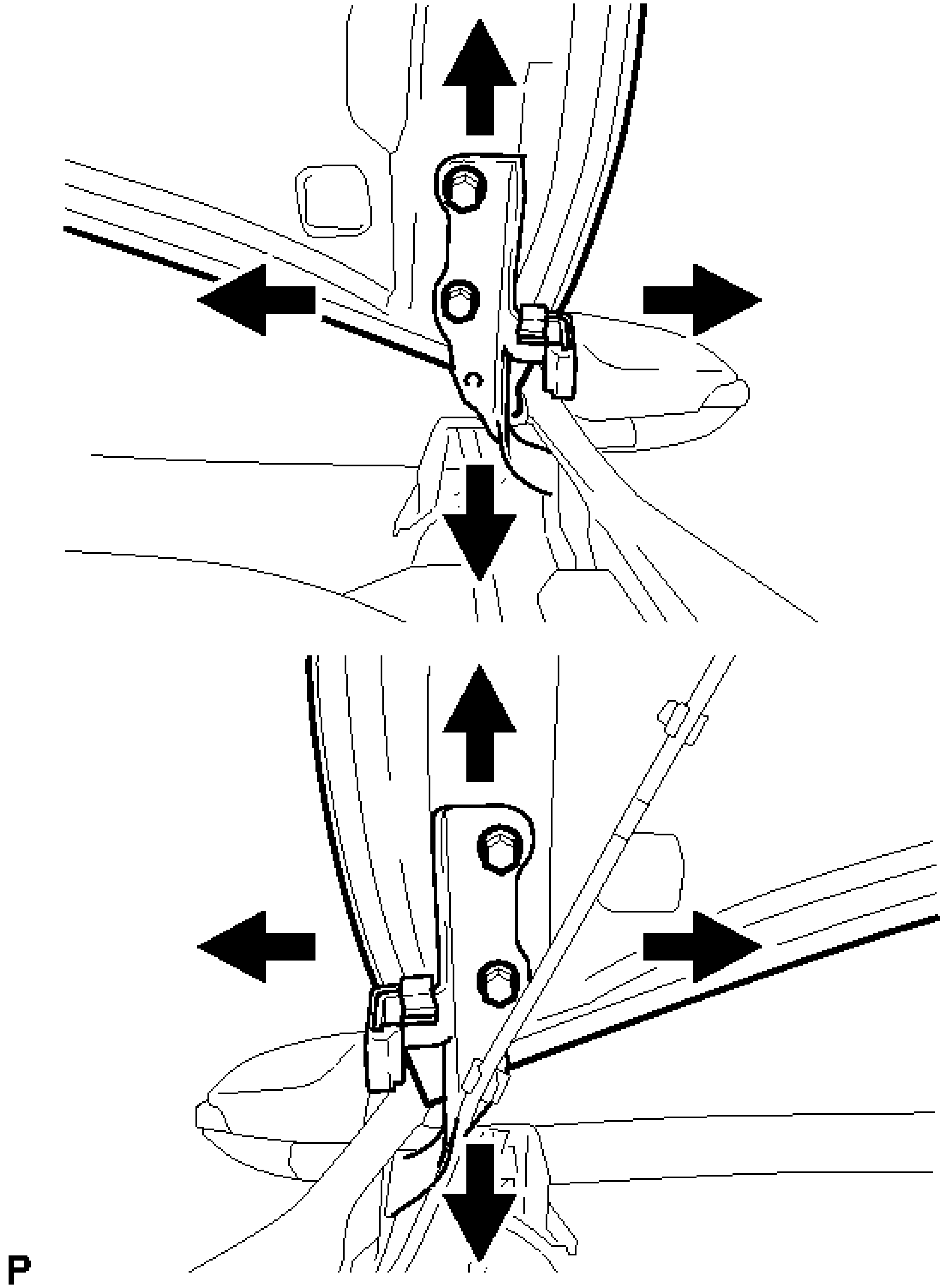

Fig. 6: Adjusting Hood Horizontally And Vertically
Courtesy of TOYOTA MOTOR SALES, U.S.A., INC.

2. Adjust the clearance between the hood and front fender by moving the hood.
3. Tighten the 4 hinge bolts after the adjustment.

Torque: 13 N*m (133 kgf*cm, 10 ft.*lbf)

b. Adjust the height of the front end of the hood using the cushion rubbers.
   1. Adjust the 2 cushion rubbers so that the heights of the hood and fender are aligned.

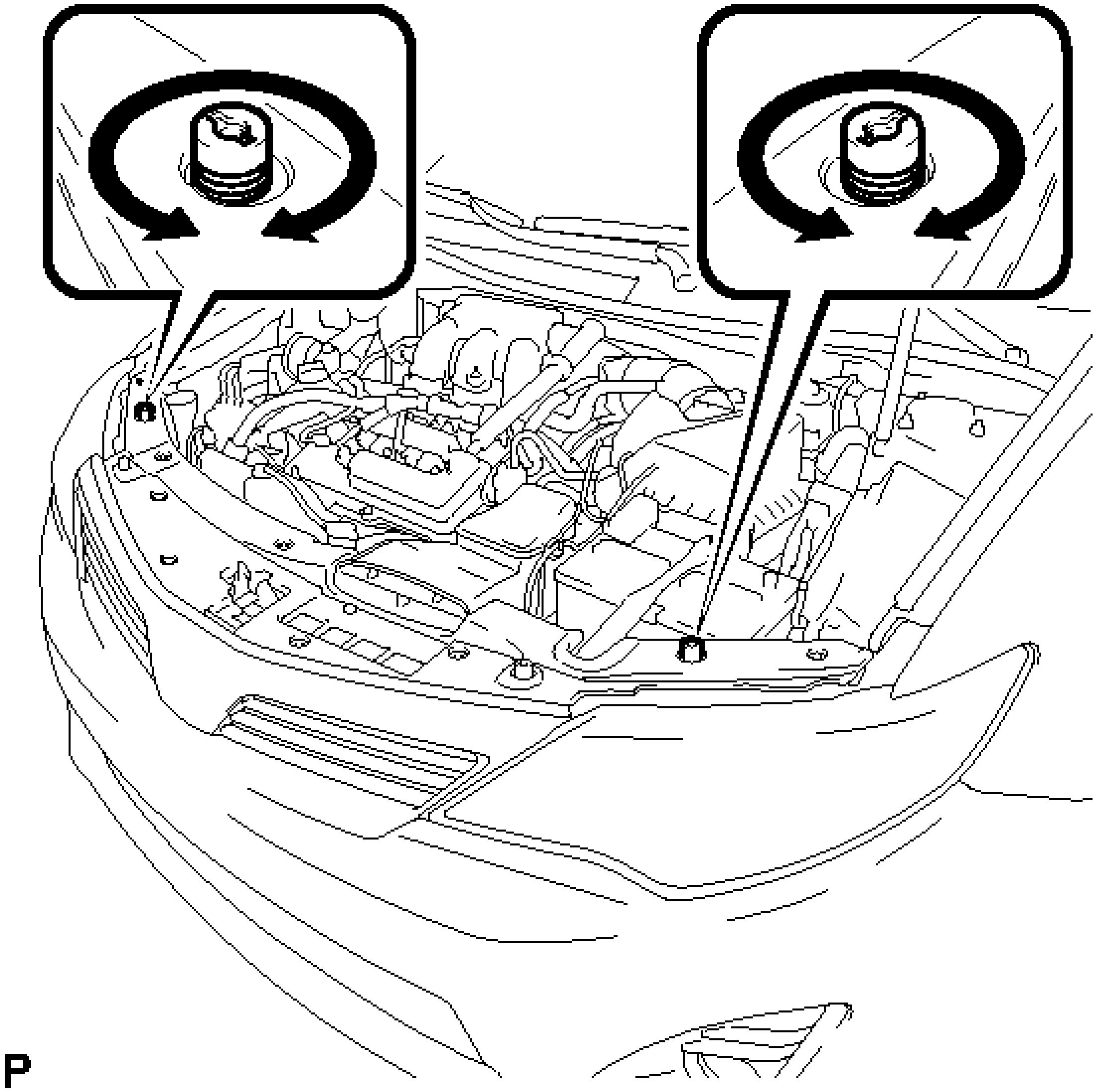

Fig. 7: Adjusting Height Of Hood Using Cushion Rubbers
Courtesy of TOYOTA MOTOR SALES, U.S.A., INC.

HINT:

Raise or lower the front end of the hood by turning the 2 cushion rubbers.

c. Remove the radiator grille sub-assembly. Refer to **REMOVAL** .
d. Adjust the hood lock.
   1. Loosen the 3 bolts.

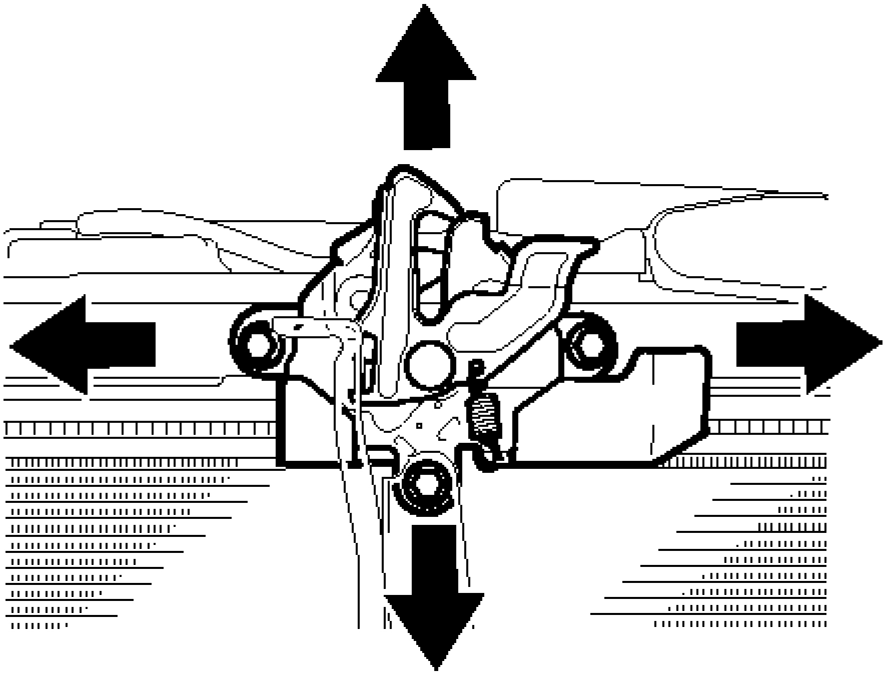

Fig. 8: Adjusting The Hood Lock
Courtesy of TOYOTA MOTOR SALES, U.S.A., INC.

2. Adjust the hood lock and tighten the 3 bolts.

   Torque: 7.5 N*m (76 kgf*cm, 66 in.*lbf)

3. Check that the striker can engage with the hood lock smoothly.

e. Install the radiator grille sub-assembly. Refer to **INSTALLATION** .

REASSEMBLY

REASSEMBLY

1. **INSTALL HOOD SUPPORT ASSEMBLY LH** . See step 1.
2. **INSTALL HOOD SUPPORT ASSEMBLY RH**

   HINT:

   Use the same procedure as for the LH side.

3. **CONNECT WASHER HOSE ASSEMBLY**
   a. Engage the 6 clamps to connect the washer hose assembly.

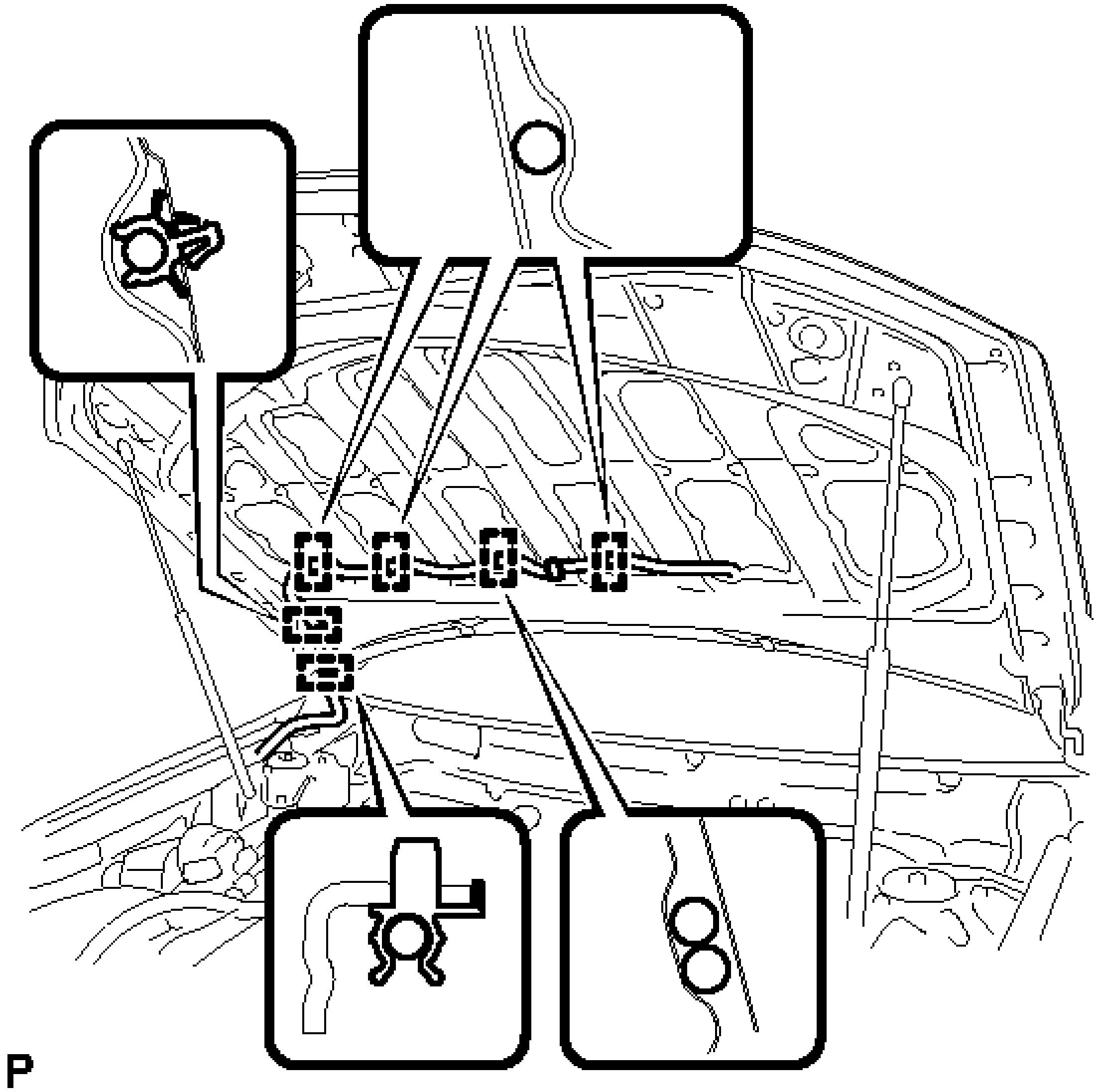

Fig. 9: Identifying Washer Hose Clamps
Courtesy of TOYOTA MOTOR SALES, U.S.A., INC.

4. **INSTALL WASHER NOZZLE SUB-ASSEMBLY** . Refer to **INSTALLATION - Step 1** .
5. **INSPECT WASHER NOZZLE SUB-ASSEMBLY** . Refer to **ON-VEHICLE INSPECTION - Step 1** .
6. **ADJUST WASHER NOZZLE SUB-ASSEMBLY** . Refer to **ADJUSTMENT - Step 2** .
7. **INSTALL HOOD INSULATOR**
    a. Engage the 2 guides.

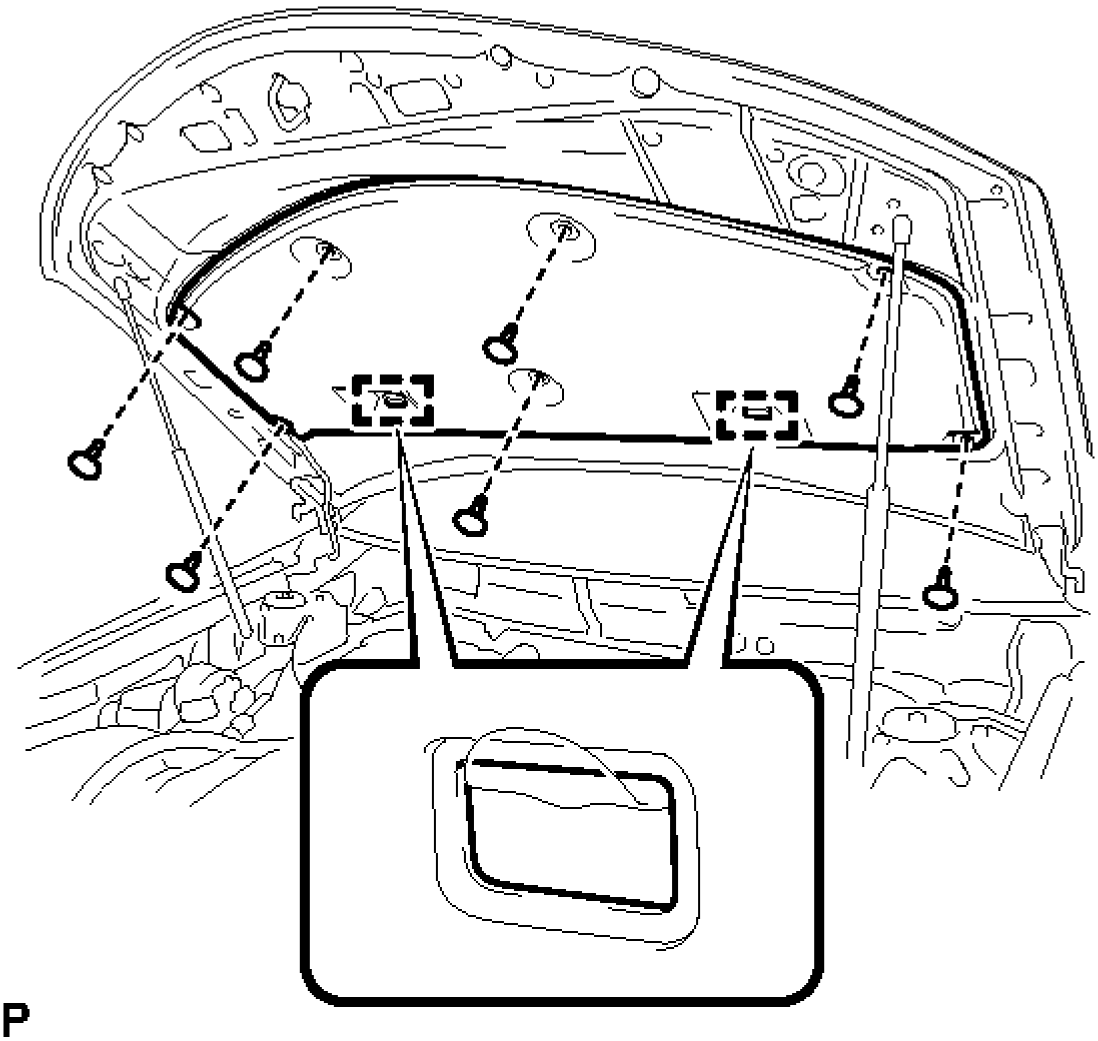

Fig. 10: Identifying Hood Insulator Clips
Courtesy of TOYOTA MOTOR SALES, U.S.A., INC.

b. Install the hood insulator with the 7 new clips.

8. **INSTALL HOOD TO RADIATOR SUPPORT SEAL**
    a. Engage the 8 clips to install the hood to radiator support seal.

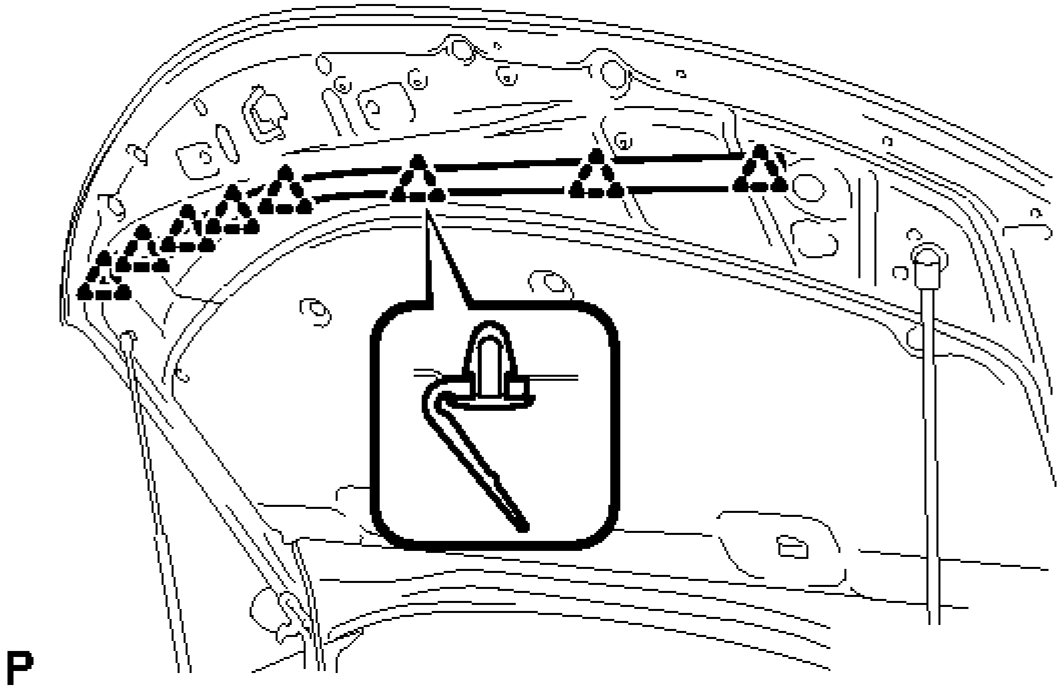

Fig. 11: Identifying Hood To Radiator Support Seal Clips
Courtesy of TOYOTA MOTOR SALES, U.S.A., INC.

HOOD SUPPORT

COMPONENTS

ILLUSTRATION

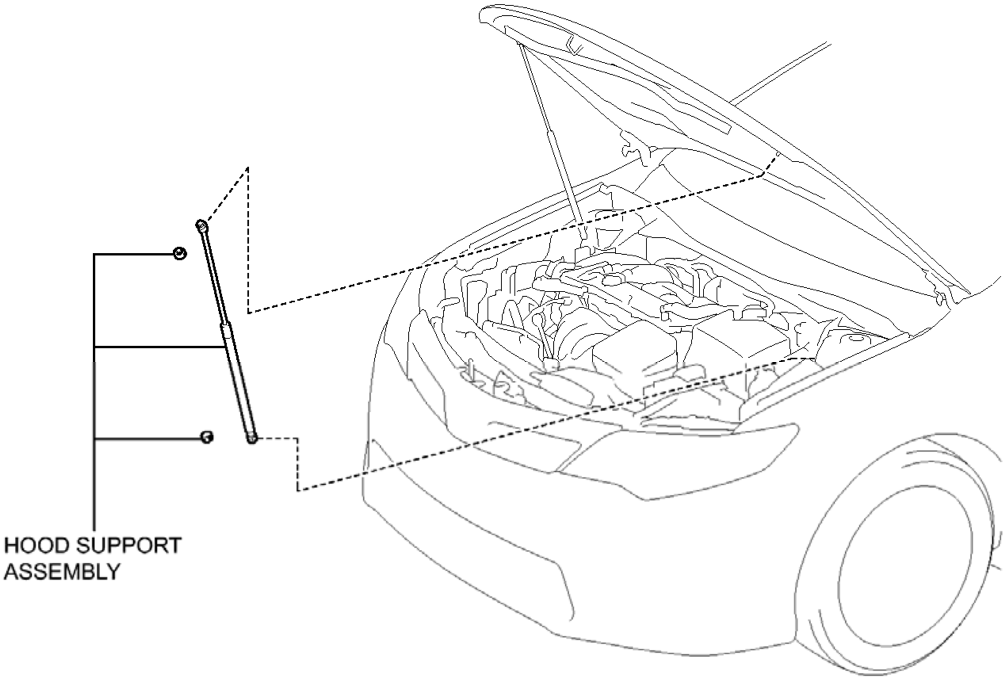

Fig. 12: Identifying Hood Support Replacement Components
Courtesy of TOYOTA MOTOR SALES, U.S.A., INC.

REMOVAL

REMOVAL

HINT:

- Use the same procedure for both the RH and LH sides.
- The procedure described below is for the LH side.

1. **REMOVE HOOD SUPPORT ASSEMBLY**

   NOTE:

   - **Avoid touching the piston rod as much as possible to prevent foreign matter from attaching to it. Be sure to hold the cylinder while servicing.**
   - **Do not wear cotton gloves or other similar materials when handling the piston rod. Fibers may attach to the rod and result in gas leaks.**
   - **In order to prevent the piston rod from deforming, do not apply any horizontal load to the door stay.**

   a. Using a screwdriver, remove the 2 stop rings as indicated by the arrows, in the order shown in the illustration.

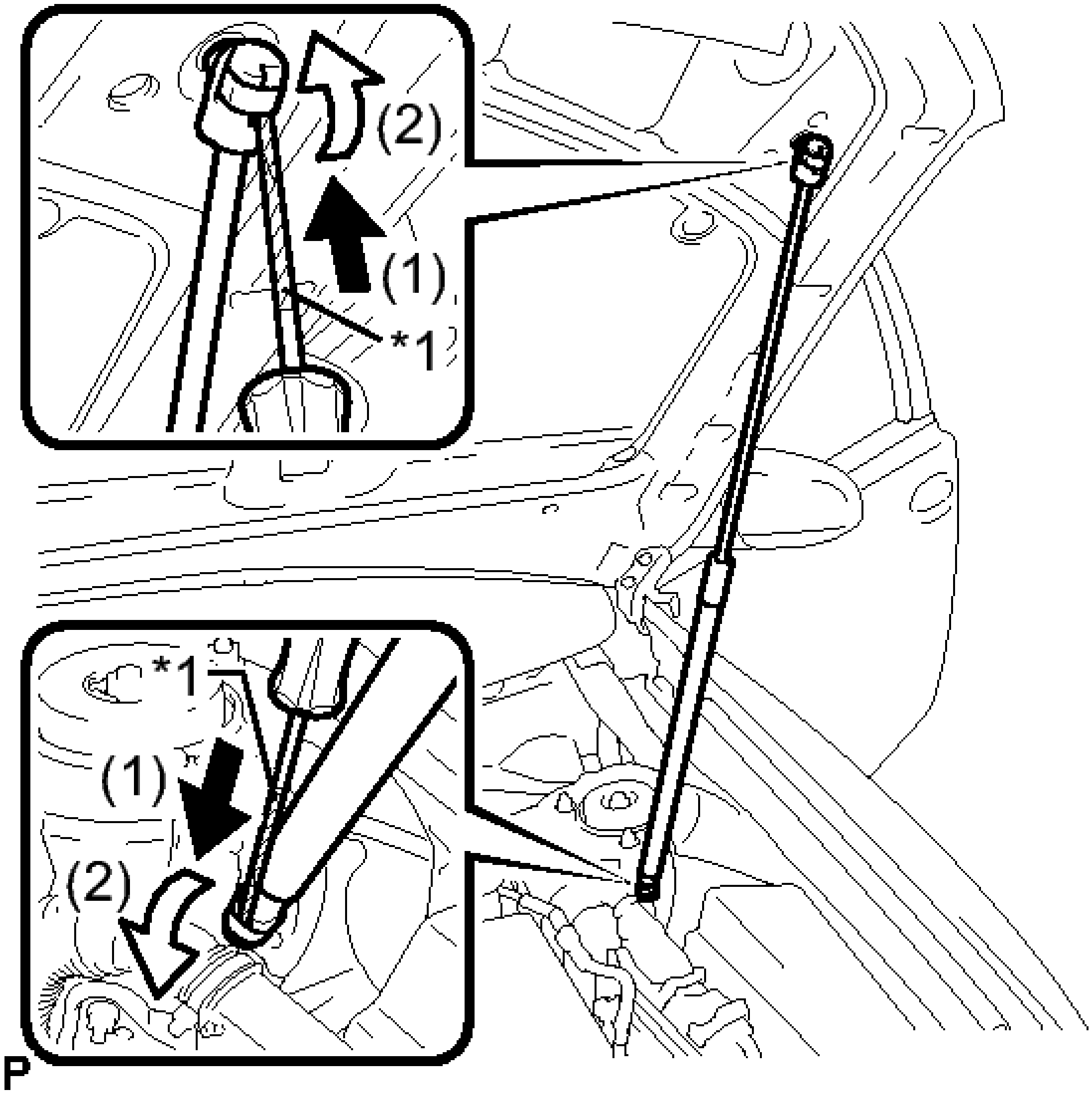

Fig. 13: Removing Hood Support Stop Rings
Courtesy of TOYOTA MOTOR SALES, U.S.A., INC.

TEXT IN ILLUSTRATION

*1	Protective Tape

HINT:

Tape the screwdriver tip before use.

b. Release the ball joint and remove the hood support assembly.

NOTE: **Remove the hood support assembly while supporting the hood by hand.**

INSTALLATION

INSTALLATION

HINT:

- Use the same procedure for both the RH and LH sides.
- The procedure described below is for the LH side.

1. **INSTALL HOOD SUPPORT ASSEMBLY**

NOTE:

- **Avoid touching the piston rod as much as possible to prevent foreign matter from attaching to it. Be sure to hold the cylinder while servicing.**
- **Do not wear cotton gloves or other similar materials when handling the piston rod. Fibers may attach to the rod and result in gas leaks.**
- **In order to prevent the piston rod from deforming, do not apply any horizontal load to the door stay.**

a. When reusing the hood support assembly:
   1. Install the 2 stop rings to the hood support assembly.

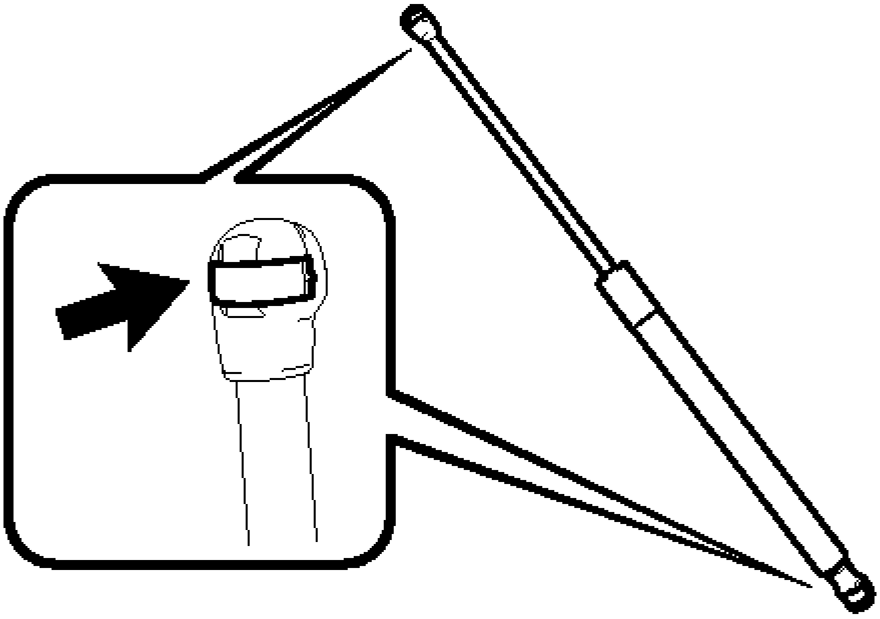

P

Fig. 14: Identifying Hood Support Stop Rings
Courtesy of TOYOTA MOTOR SALES, U.S.A., INC.

b. Install the hood support assembly.

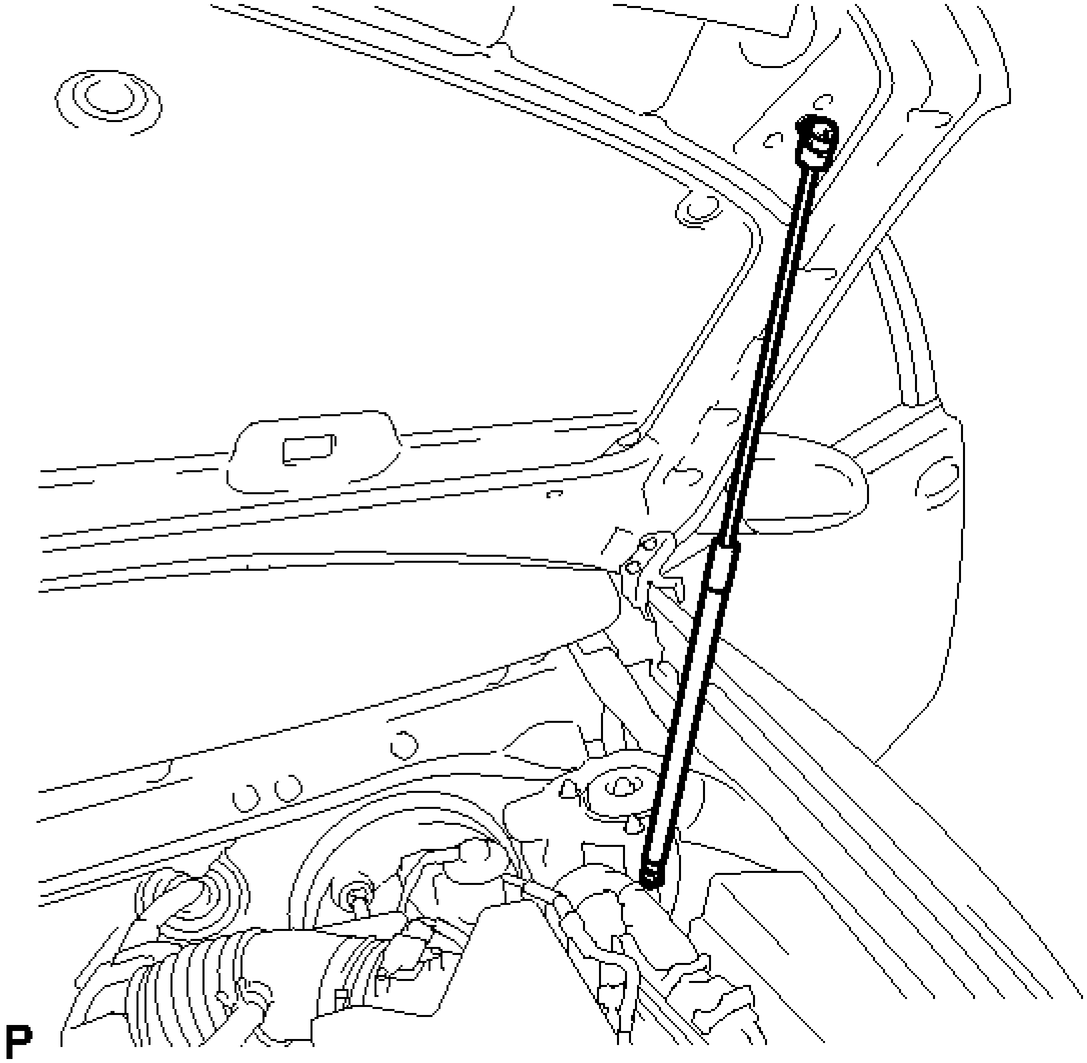

Fig. 15: Identifying Hood Support
Courtesy of TOYOTA MOTOR SALES, U.S.A., INC.

NOTE: Install the hood support assembly while supporting the hood by hand.

c. Check that the hood support assembly is engaged in the ball joint and it cannot be pulled out.

DISPOSAL

DISPOSAL

1. **DISPOSE OF HOOD SUPPORT ASSEMBLY**
    a. Horizontally hold the hood support in a vise with the piston-rod pulled out.
    b. Wear safety glasses. Gradually cut a part between A and B shown in the illustration using a metal

saw to release the gas.

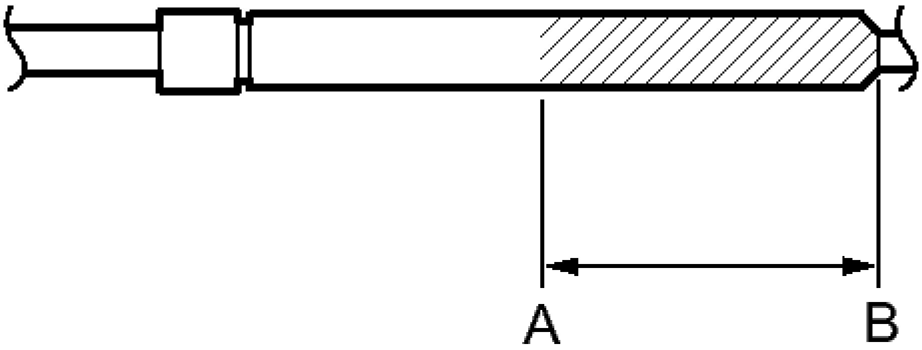

P

Fig. 16: Identifying Hood Support Assembly Dimension
Courtesy of TOYOTA MOTOR SALES, U.S.A., INC.

Area	Measurement
A-B	100 mm (3.94 in.)

NOTE: **Although the gas inside the hood support is colorless, odorless and harmless, there is a possibility that metal debris could scatter. Therefore, cover it with a piece of cloth or other material.**

HOOD LOCK CONTROL CABLE ASSEMBLY

COMPONENTS

ILLUSTRATION

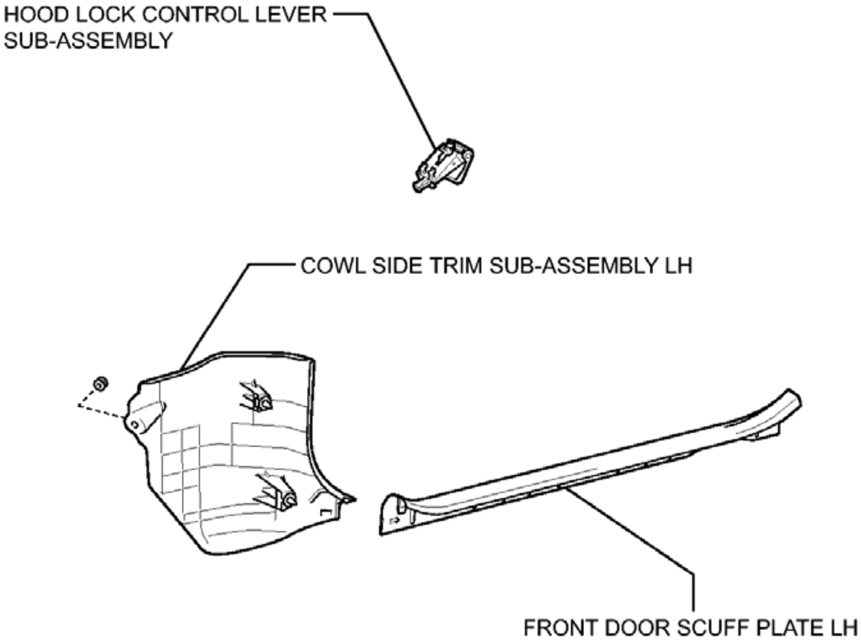
HOOD LOCK CONTROL LEVER SUB-ASSEMBLY
COWL SIDE TRIM SUB-ASSEMBLY LH
FRONT DOOR SCUFF PLATE LH
P

Fig. 17: Identifying Hood Lock Control Cable Assembly Replacement Components (1 Of 2)
Courtesy of TOYOTA MOTOR SALES, U.S.A., INC.

ILLUSTRATION

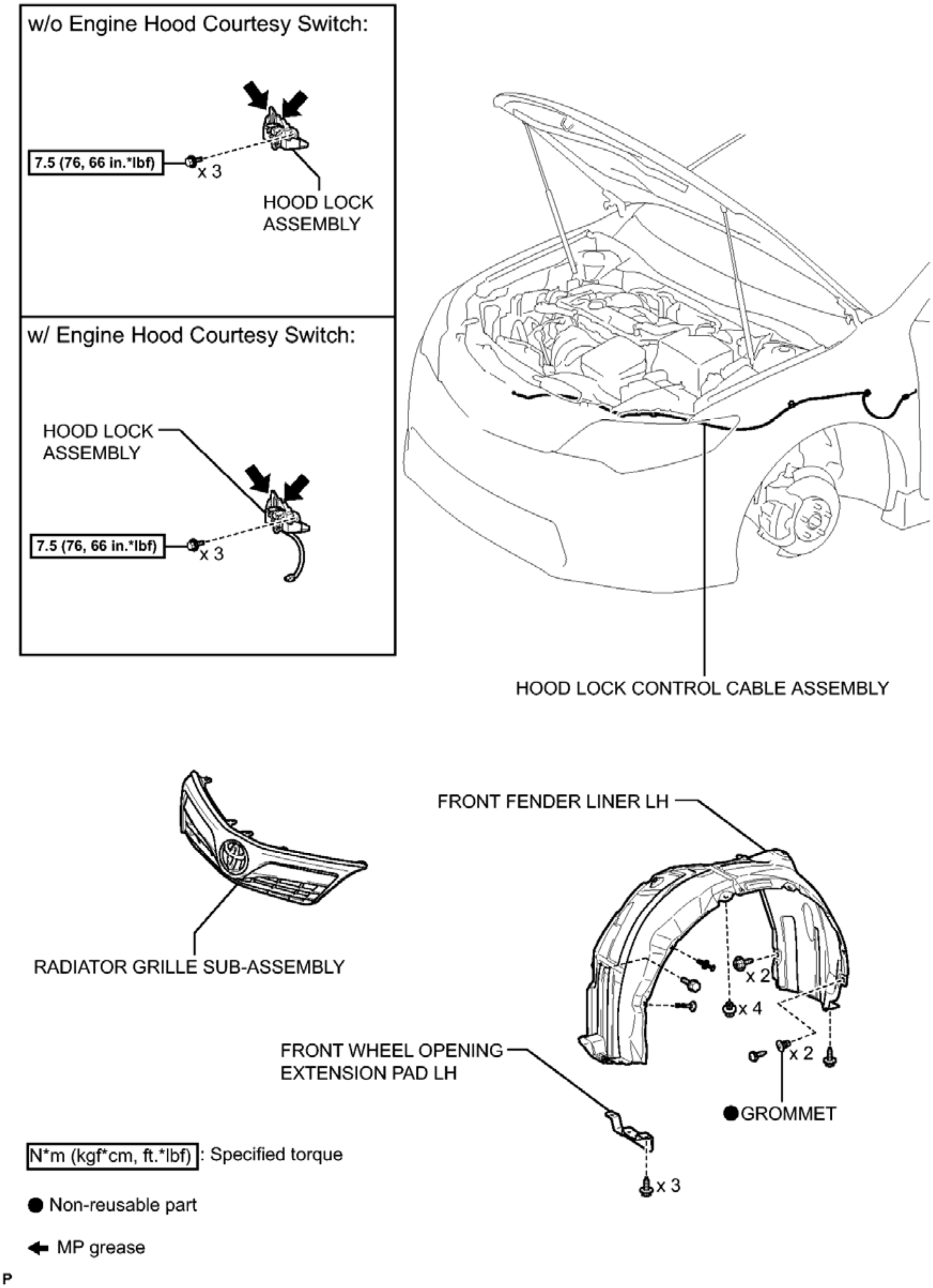
w/o Engine Hood Courtesy Switch:
7.5 (76, 66 in.*lbf)
x 3
HOOD LOCK ASSEMBLY
w/ Engine Hood Courtesy Switch:
HOOD LOCK ASSEMBLY
7.5 (76, 66 in.*lbf)
x 3
HOOD LOCK CONTROL CABLE ASSEMBLY
RADIATOR GRILLE SUB-ASSEMBLY
FRONT FENDER LINER LH
x 2
x 4
x 2
FRONT WHEEL OPENING EXTENSION PAD LH
● GROMMET
x 3
N*m (kgf*cm, ft.*lbf) : Specified torque
● Non-reusable part
MP grease
P

Fig. 18: Identifying Hood Lock Control Cable Assembly Replacement Components With Torque Specifications (2 Of 2)

Courtesy of TOYOTA MOTOR SALES, U.S.A., INC.

REMOVAL

REMOVAL

1. **REMOVE RADIATOR GRILLE SUB-ASSEMBLY**

   Refer to **REMOVAL** .

2. **REMOVE FRONT WHEEL LH**
3. **REMOVE FRONT WHEEL OPENING EXTENSION PAD LH**

   HINT:

   Use the same procedure for the RH side and LH side. Refer to **REMOVAL - Step 2** .

4. **REMOVE FRONT FENDER LINER LH**

   HINT:

   Use the same procedure for the RH side and LH side. Refer to **REMOVAL - Step 3** .

5. **REMOVE FRONT DOOR SCUFF PLATE LH** . Refer to **REMOVAL - Step 3** .
6. **REMOVE COWL SIDE TRIM SUB-ASSEMBLY LH** . Refer to **REMOVAL - Step 4** .
7. **DISCONNECT HOOD LOCK CONTROL LEVER SUB-ASSEMBLY** . Refer to **REMOVAL - Step 12** .
8. **REMOVE HOOD LOCK CONTROL LEVER SUB-ASSEMBLY**
   - a. Disconnect the hood lock control cable assembly and remove the hood lock control lever sub-assembly.

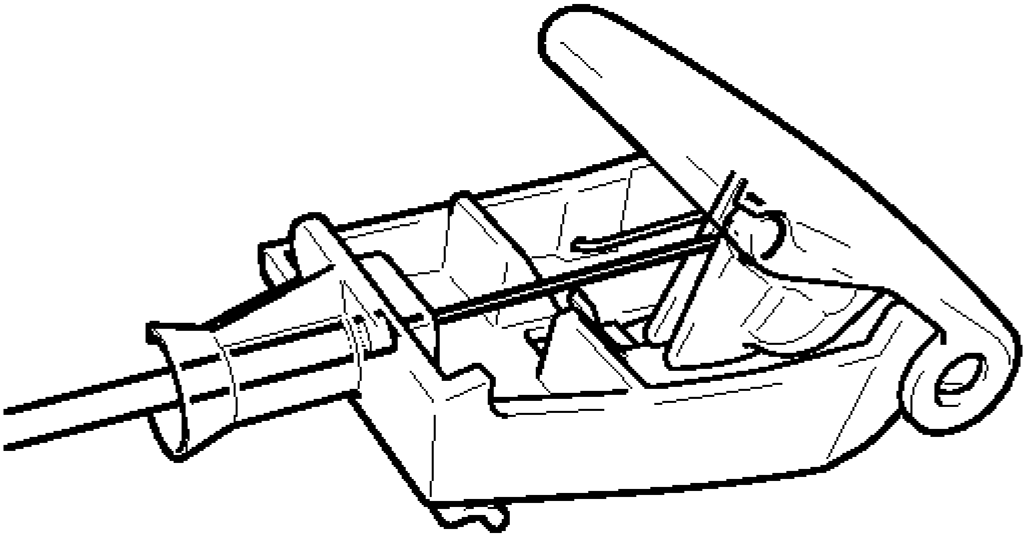

Fig. 19: Identifying Hood Lock Control Cable
Courtesy of TOYOTA MOTOR SALES, U.S.A., INC.

9. **REMOVE HOOD LOCK ASSEMBLY**
    a. w/ Engine Hood Courtesy Switch:
        1. Disconnect the connector.

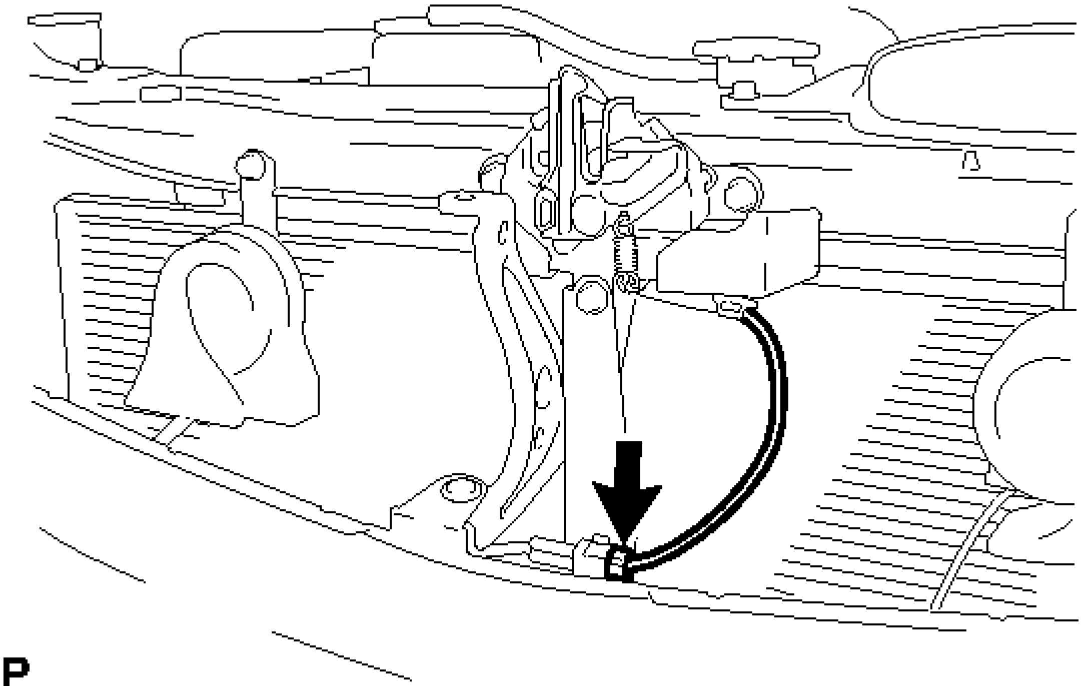

Fig. 20: Identifying Hood Lock Connector
Courtesy of TOYOTA MOTOR SALES, U.S.A., INC.

b. Remove the 3 bolts.

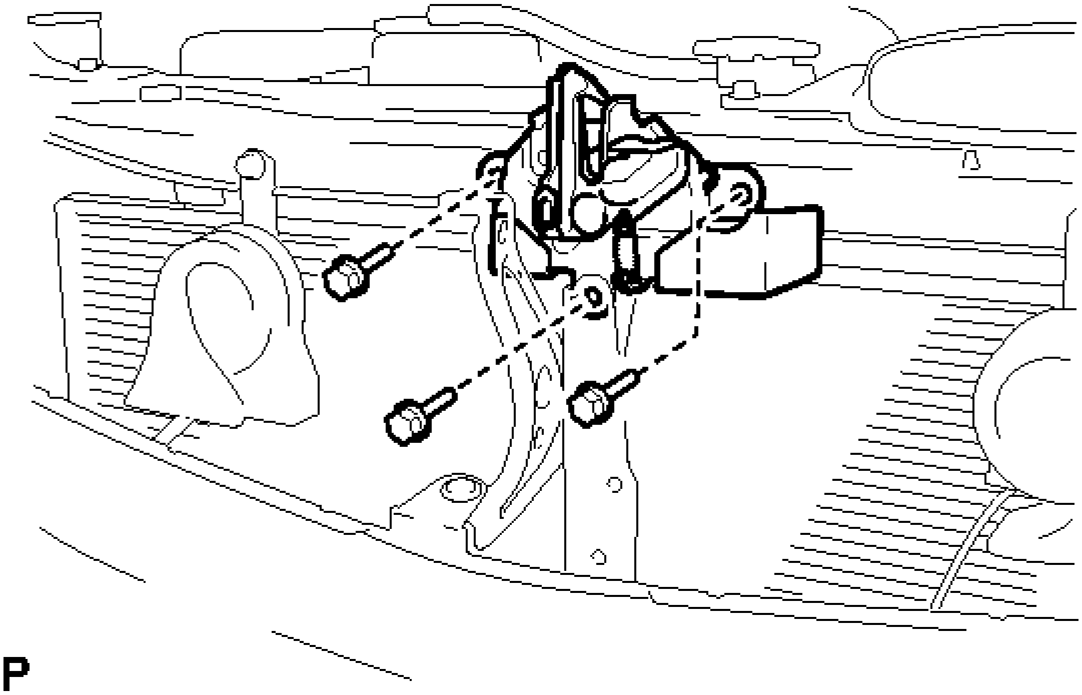

Fig. 21: Identifying Hood Lock Bolts
Courtesy of TOYOTA MOTOR SALES, U.S.A., INC.

c. Disconnect the hood lock control cable assembly and remove the hood lock assembly.

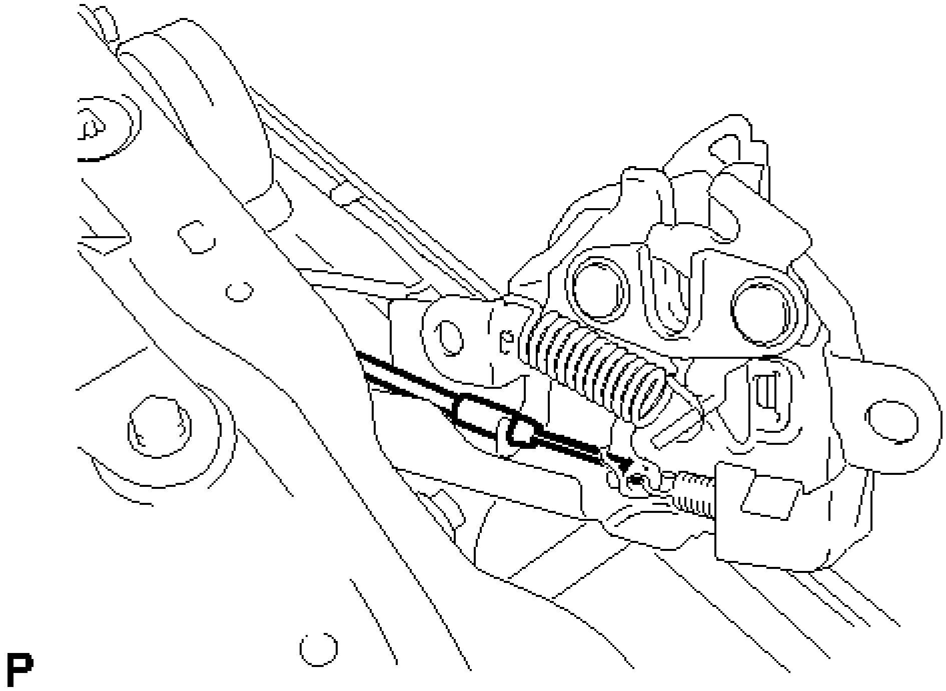

Fig. 22: Identifying Hood Lock Assembly
Courtesy of TOYOTA MOTOR SALES, U.S.A., INC.

10. **REMOVE HOOD LOCK CONTROL CABLE ASSEMBLY**
    a. Using a screwdriver, disengage 5 clamps and hood cable grommet as shown in the illustration.

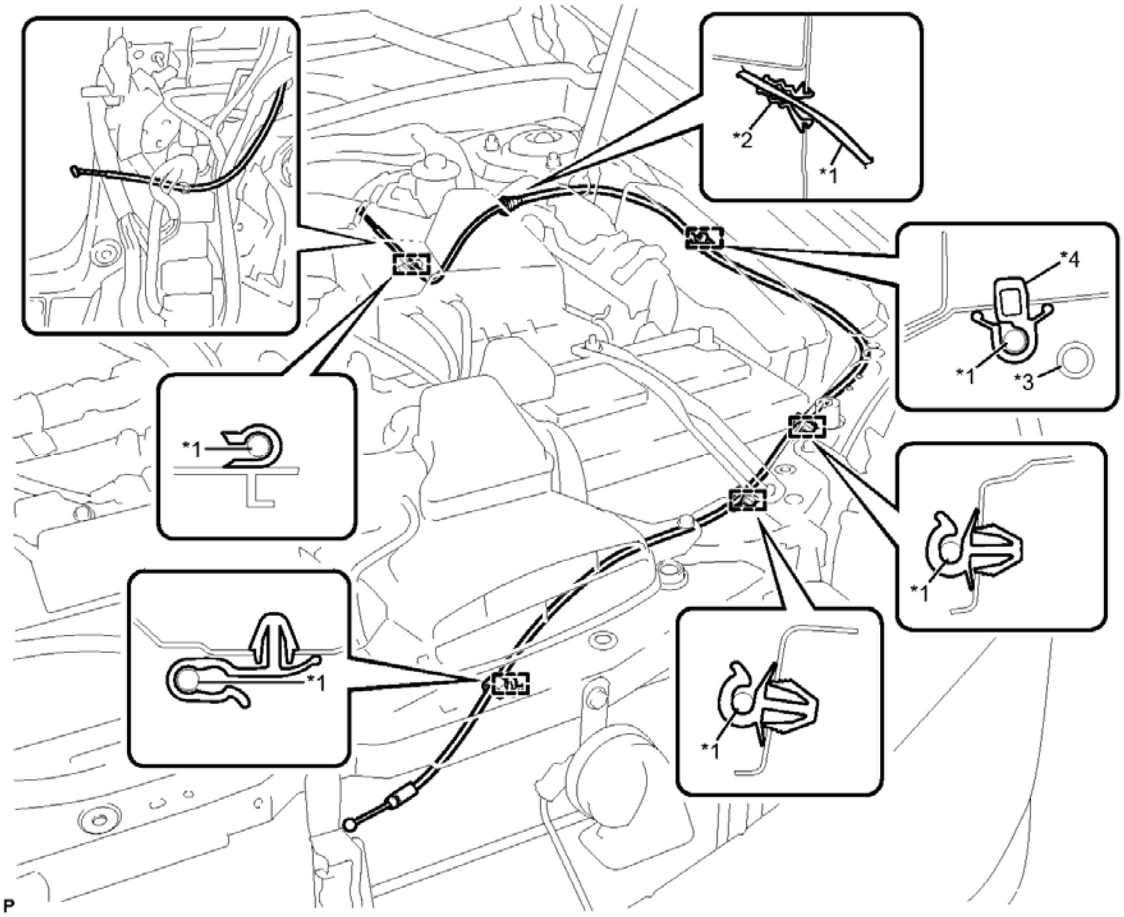

Fig. 23: Locating Hood Lock Control Cable Assembly Fasteners
Courtesy of TOYOTA MOTOR SALES, U.S.A., INC.

TEXT IN ILLUSTRATION

*1	Hood Lock Control Cable	*2	Hood Cable Grommet
*3	Washer Hose	*4	Hood Lock Control Cable Clamp

HINT:

Tape the screwdriver tip before use.

b. Pull the hood lock control cable assembly from the engine compartment and remove it.

INSTALLATION

INSTALLATION

1. **INSTALL HOOD LOCK CONTROL CABLE ASSEMBLY**
    a. Pass the hood lock control cable assembly into the engine compartment.
    b. Pass the cable through the upper radiator support.
    c. Engage the hood cable grommet.
    d. Engage the 5 clamps and install the hood lock control cable assembly.
2. **INSTALL HOOD LOCK ASSEMBLY**
    a. Apply MP grease to the sliding areas of the lock.

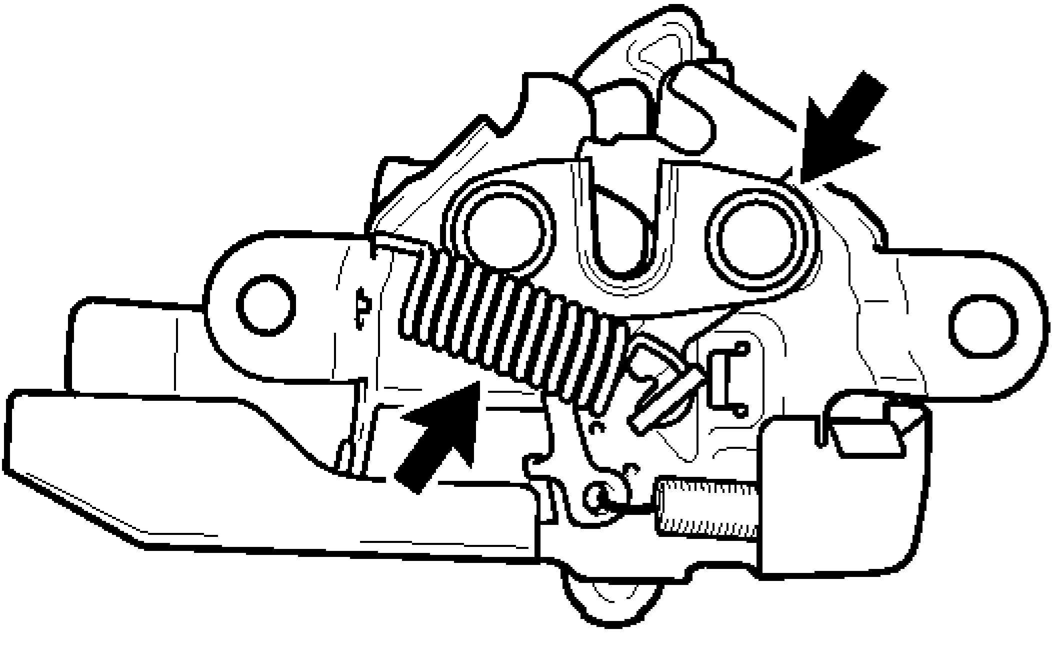

Fig. 24: Identifying Sliding Areas To Apply Grease
Courtesy of TOYOTA MOTOR SALES, U.S.A., INC.

    b. Connect the hood lock control cable assembly.
    c. Install the hood lock assembly with the 3 bolts.

    Torque: 7.5 N*m (76 kgf*cm, 66 in.*lbf)

    d. w/ Engine Hood Courtesy Switch:
        1. Connect the connector.
3. **INSTALL HOOD LOCK CONTROL LEVER SUB-ASSEMBLY**
    a. Connect the hood lock control cable assembly and install the hood lock control lever sub-assembly.
4. **CONNECT HOOD LOCK CONTROL LEVER SUB-ASSEMBLY** . Refer to **INSTALLATION - Step 41** .

5. **INSTALL COWL SIDE TRIM SUB-ASSEMBLY LH** . Refer to **INSTALLATION - Step 43** .
6. **INSTALL FRONT DOOR SCUFF PLATE LH** . Refer to **INSTALLATION - Step 44** .
7. **INSTALL FRONT FENDER LINER LH**

   HINT:

   Use the same procedure for the RH side and LH side. Refer to **INSTALLATION - Step 3** .

8. **INSTALL FRONT WHEEL OPENING EXTENSION PAD LH**

   HINT:

   Use the same procedure for the RH side and LH side. Refer to **INSTALLATION - Step 4** .

9. **INSTALL FRONT WHEEL LH** . Refer to **INSTALLATION - Step 13** .
10. **INSTALL RADIATOR GRILLE SUB-ASSEMBLY**

    Refer to **INSTALLATION** .

11. **ADJUST HOOD SUB-ASSEMBLY**

    Refer to **ADJUSTMENT**.

FRONT DOOR

COMPONENTS

ILLUSTRATION

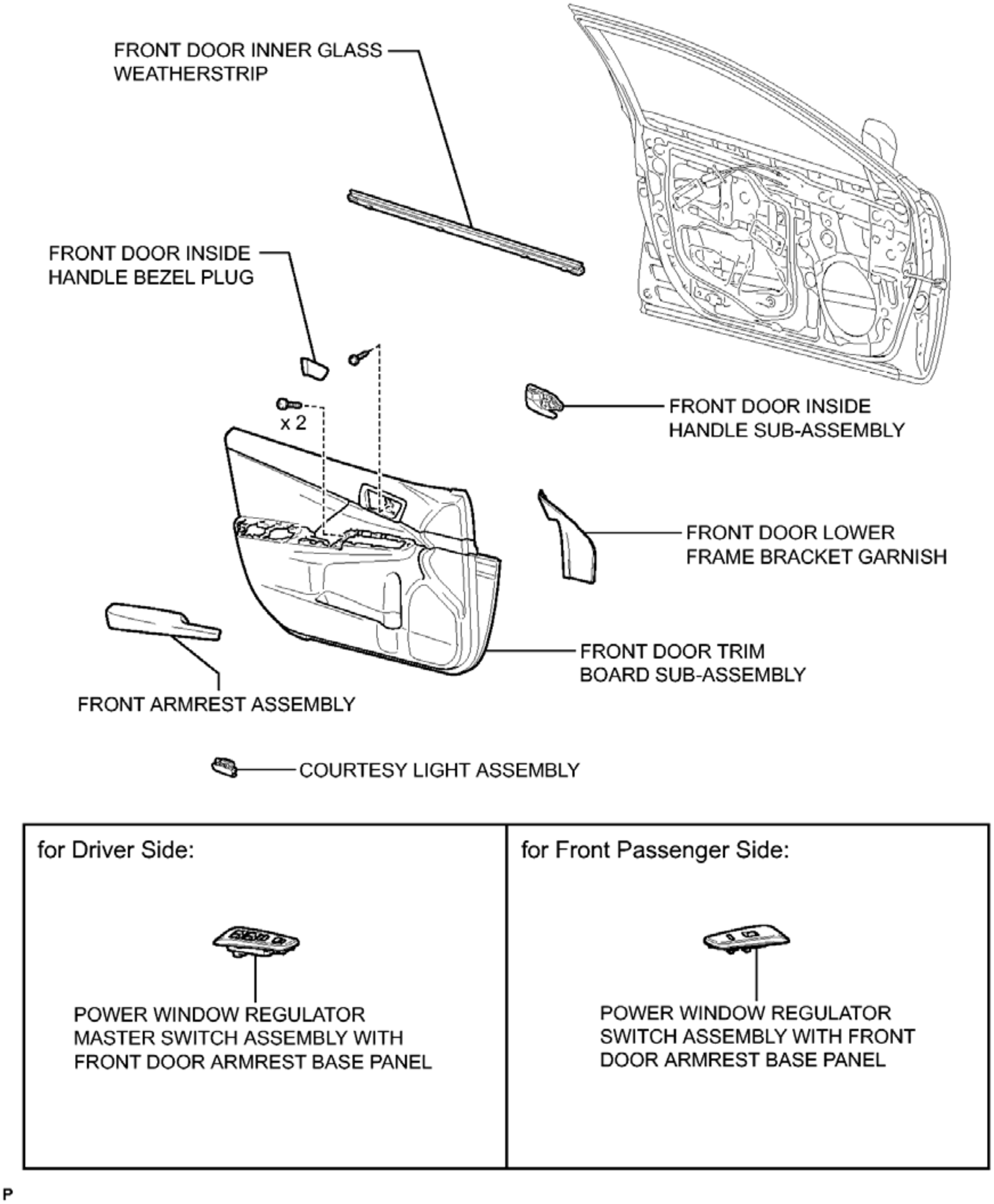
FRONT DOOR INNER GLASS WEATHERSTRIP
FRONT DOOR INSIDE HANDLE BEZEL PLUG
x 2
FRONT DOOR INSIDE HANDLE SUB-ASSEMBLY
FRONT DOOR LOWER FRAME BRACKET GARNISH
FRONT DOOR TRIM BOARD SUB-ASSEMBLY
FRONT ARMREST ASSEMBLY
COURTESY LIGHT ASSEMBLY
for Driver Side:
POWER WINDOW REGULATOR MASTER SWITCH ASSEMBLY WITH FRONT DOOR ARMREST BASE PANEL
for Front Passenger Side:
POWER WINDOW REGULATOR SWITCH ASSEMBLY WITH FRONT DOOR ARMREST BASE PANEL
P

Fig. 25: Identifying Front Door Replacement Components (1 Of 4)
Courtesy of TOYOTA MOTOR SALES, U.S.A., INC.

ILLUSTRATION

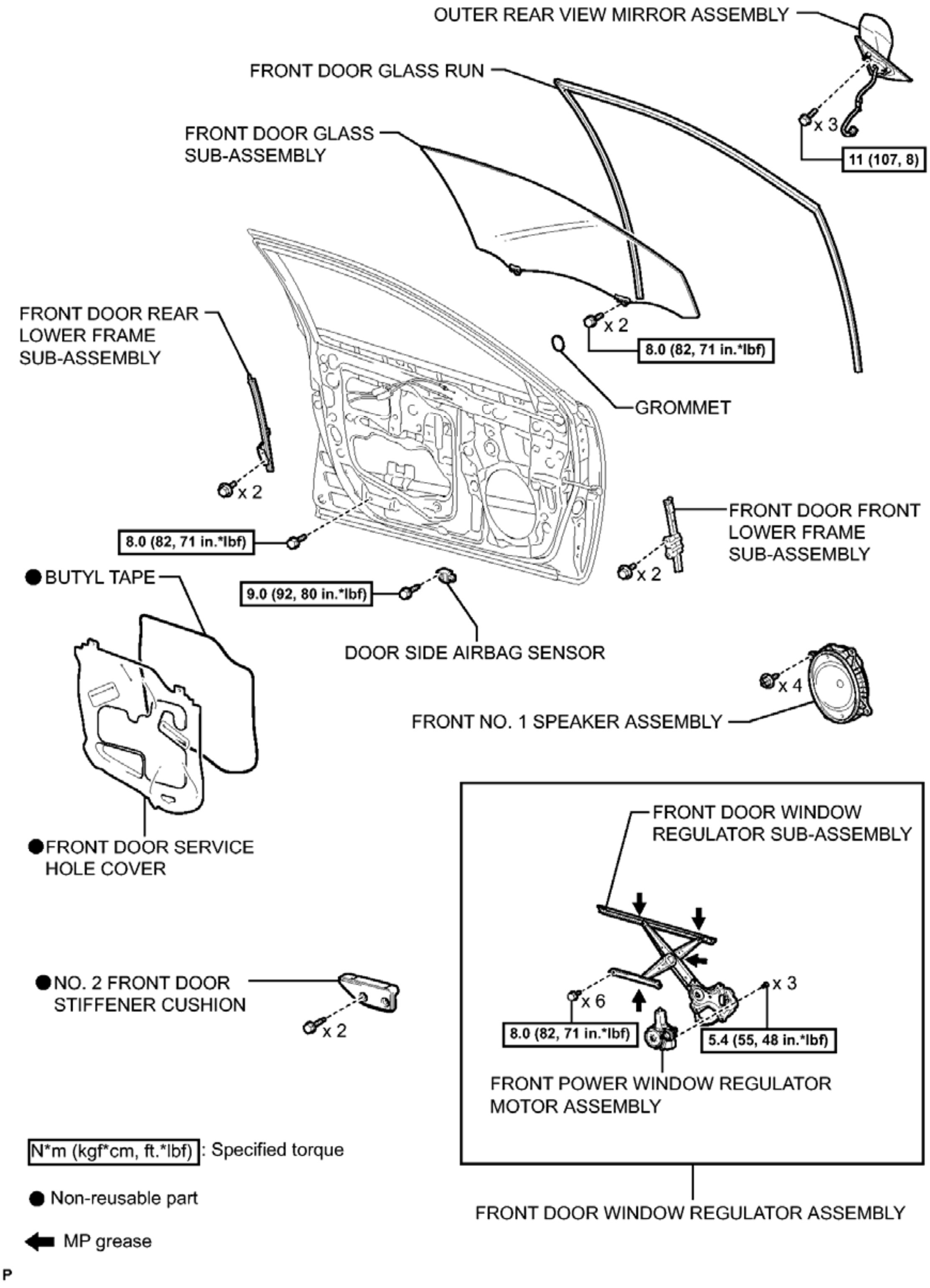
OUTER REAR VIEW MIRROR ASSEMBLY
FRONT DOOR GLASS RUN
FRONT DOOR GLASS SUB-ASSEMBLY
x 3
11 (107, 8)
FRONT DOOR REAR LOWER FRAME SUB-ASSEMBLY
x 2
8.0 (82, 71 in.*lbf)
GROMMET
x 2
8.0 (82, 71 in.*lbf)
FRONT DOOR FRONT LOWER FRAME SUB-ASSEMBLY
x 2
● BUTYL TAPE
9.0 (92, 80 in.*lbf)
DOOR SIDE AIRBAG SENSOR
x 4
FRONT NO. 1 SPEAKER ASSEMBLY
● FRONT DOOR SERVICE HOLE COVER
FRONT DOOR WINDOW REGULATOR SUB-ASSEMBLY
● NO. 2 FRONT DOOR STIFFENER CUSHION
x 2
x 6
x 3
8.0 (82, 71 in.*lbf)
5.4 (55, 48 in.*lbf)
FRONT POWER WINDOW REGULATOR MOTOR ASSEMBLY
N*m (kgf*cm, ft.*lbf) : Specified torque
● Non-reusable part
MP grease
FRONT DOOR WINDOW REGULATOR ASSEMBLY
P

Fig. 26: Identifying Front Door Replacement Components With Torque Specifications (2 Of 4)
Courtesy of TOYOTA MOTOR SALES, U.S.A., INC.

ILLUSTRATION

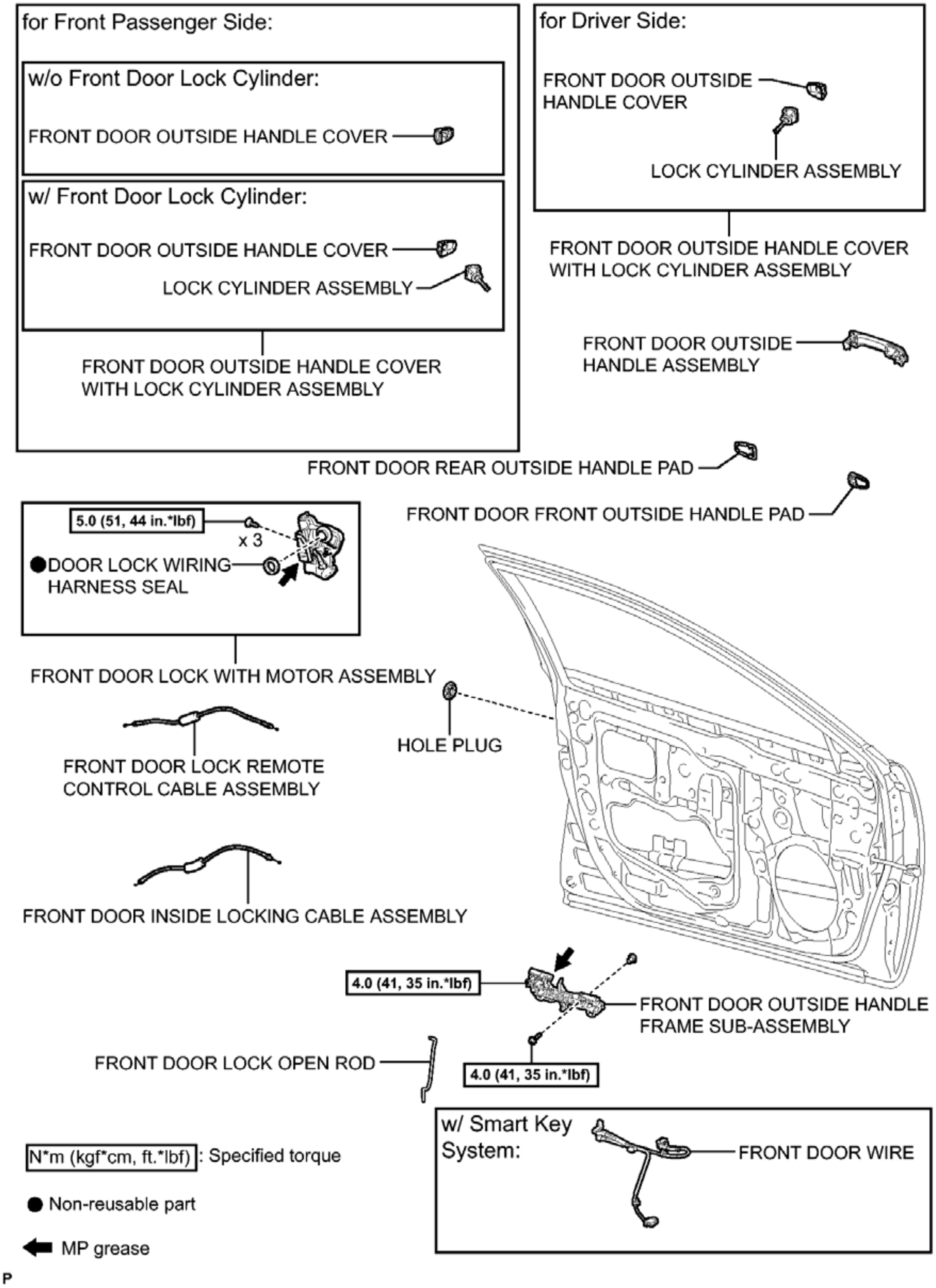
for Front Passenger Side:
w/o Front Door Lock Cylinder:
FRONT DOOR OUTSIDE HANDLE COVER
w/ Front Door Lock Cylinder:
FRONT DOOR OUTSIDE HANDLE COVER
LOCK CYLINDER ASSEMBLY
FRONT DOOR OUTSIDE HANDLE COVER WITH LOCK CYLINDER ASSEMBLY
for Driver Side:
FRONT DOOR OUTSIDE HANDLE COVER
LOCK CYLINDER ASSEMBLY
FRONT DOOR OUTSIDE HANDLE COVER WITH LOCK CYLINDER ASSEMBLY
FRONT DOOR OUTSIDE HANDLE ASSEMBLY
FRONT DOOR REAR OUTSIDE HANDLE PAD
FRONT DOOR FRONT OUTSIDE HANDLE PAD
5.0 (51, 44 in.*lbf)
x 3
● DOOR LOCK WIRING HARNESS SEAL
FRONT DOOR LOCK WITH MOTOR ASSEMBLY
HOLE PLUG
FRONT DOOR LOCK REMOTE CONTROL CABLE ASSEMBLY
FRONT DOOR INSIDE LOCKING CABLE ASSEMBLY
4.0 (41, 35 in.*lbf)
FRONT DOOR OUTSIDE HANDLE FRAME SUB-ASSEMBLY
FRONT DOOR LOCK OPEN ROD
4.0 (41, 35 in.*lbf)
w/ Smart Key System:
FRONT DOOR WIRE
N*m (kgf*cm, ft.*lbf) : Specified torque
● Non-reusable part
MP grease
P

Fig. 27: Identifying Front Door Replacement Components With Torque Specifications (3 Of 4)
Courtesy of TOYOTA MOTOR SALES, U.S.A., INC.

ILLUSTRATION

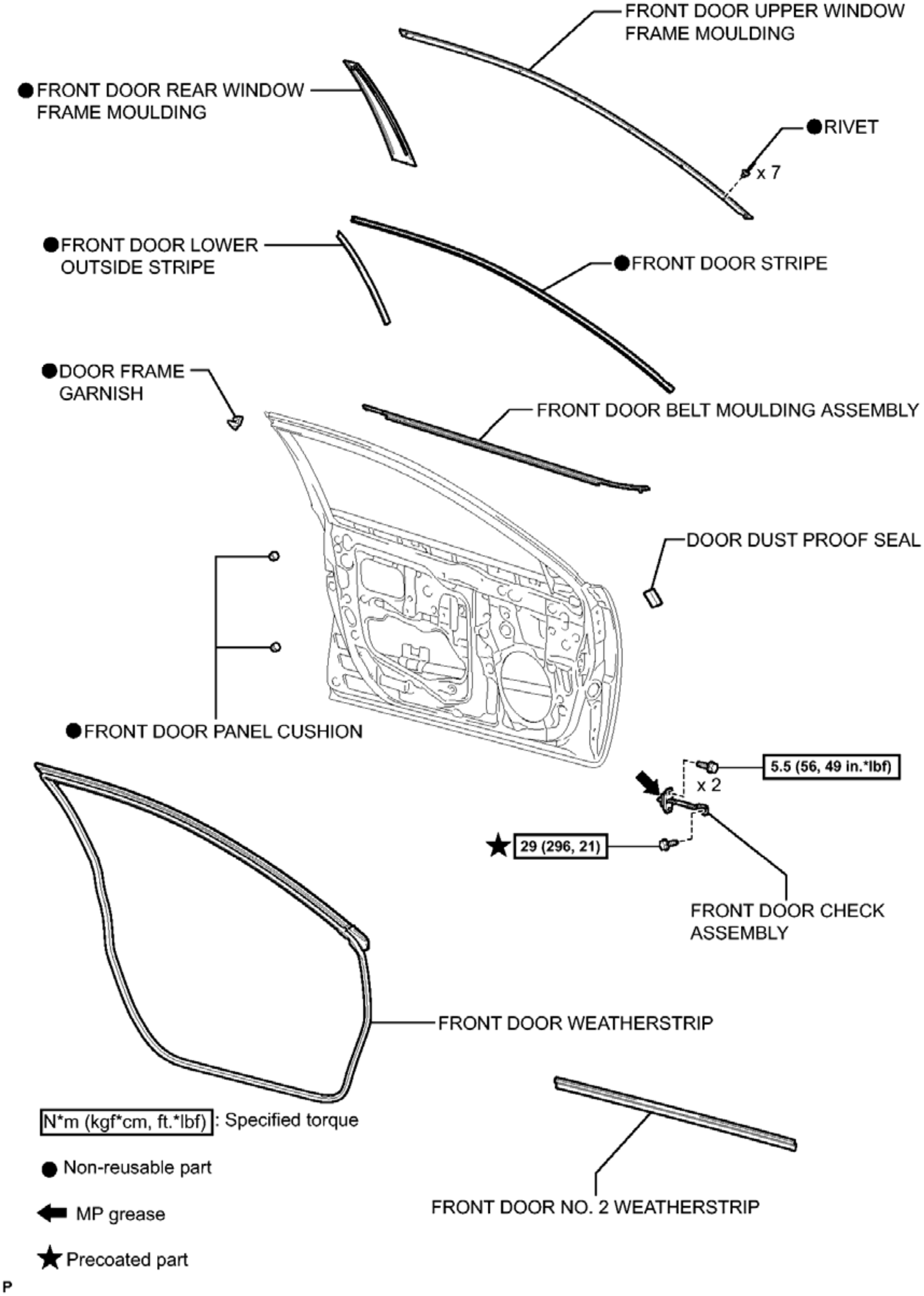
FRONT DOOR UPPER WINDOW FRAME MOULDING
● FRONT DOOR REAR WINDOW FRAME MOULDING
● RIVET
x 7
● FRONT DOOR LOWER OUTSIDE STRIPE
● FRONT DOOR STRIPE
● DOOR FRAME GARNISH
FRONT DOOR BELT MOULDING ASSEMBLY
DOOR DUST PROOF SEAL
● FRONT DOOR PANEL CUSHION
5.5 (56, 49 in.*lbf)
x 2
★ 29 (296, 21)
FRONT DOOR CHECK ASSEMBLY
FRONT DOOR WEATHERSTRIP
N*m (kgf*cm, ft.*lbf) : Specified torque
● Non-reusable part
MP grease
FRONT DOOR NO. 2 WEATHERSTRIP
★ Precoated part
P

Fig. 28: Identifying Front Door Replacement Components With Torque Specifications (4 Of 4)
Courtesy of TOYOTA MOTOR SALES, U.S.A., INC.

DISASSEMBLY

DISASSEMBLY

HINT:

- Use the same procedure for both the RH and LH sides.
- The procedure described below is for the LH side.

1. **PRECAUTION**

NOTE: **After turning the ignition switch off, waiting time may be required before disconnecting the cable from the negative (-) battery terminal. Therefore, make sure to read the disconnecting the cable from the negative (-) battery terminal notices before proceeding with work. Refer to PRECAUTION .**

2. **DISCONNECT CABLE FROM NEGATIVE BATTERY TERMINAL**

WARNING: **Wait at least 90 seconds after disconnecting the cable from the negative (-) battery terminal to disable the SRS system.**

NOTE: **When disconnecting the cable, some systems need to be initialized after the cable is reconnected. Refer to INITIALIZATION .**

3. **REMOVE FRONT DOOR INSIDE HANDLE BEZEL PLUG**
   a. Using a moulding remover, disengage the 3 claws and remove the front door inside handle bezel plug as shown in the illustration.

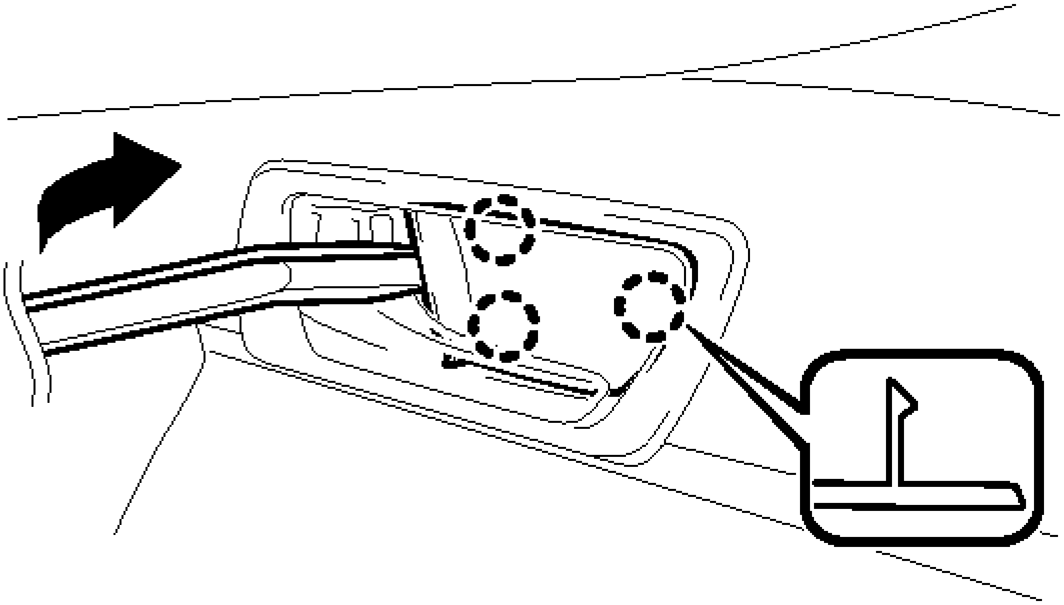

P

Fig. 29: Identifying Front Door Inside Handle Bezel Plug Claws
Courtesy of TOYOTA MOTOR SALES, U.S.A., INC.

4. **REMOVE FRONT DOOR LOWER FRAME BRACKET GARNISH**
    1. Disengage the 3 clips and remove the front door lower frame bracket garnish.

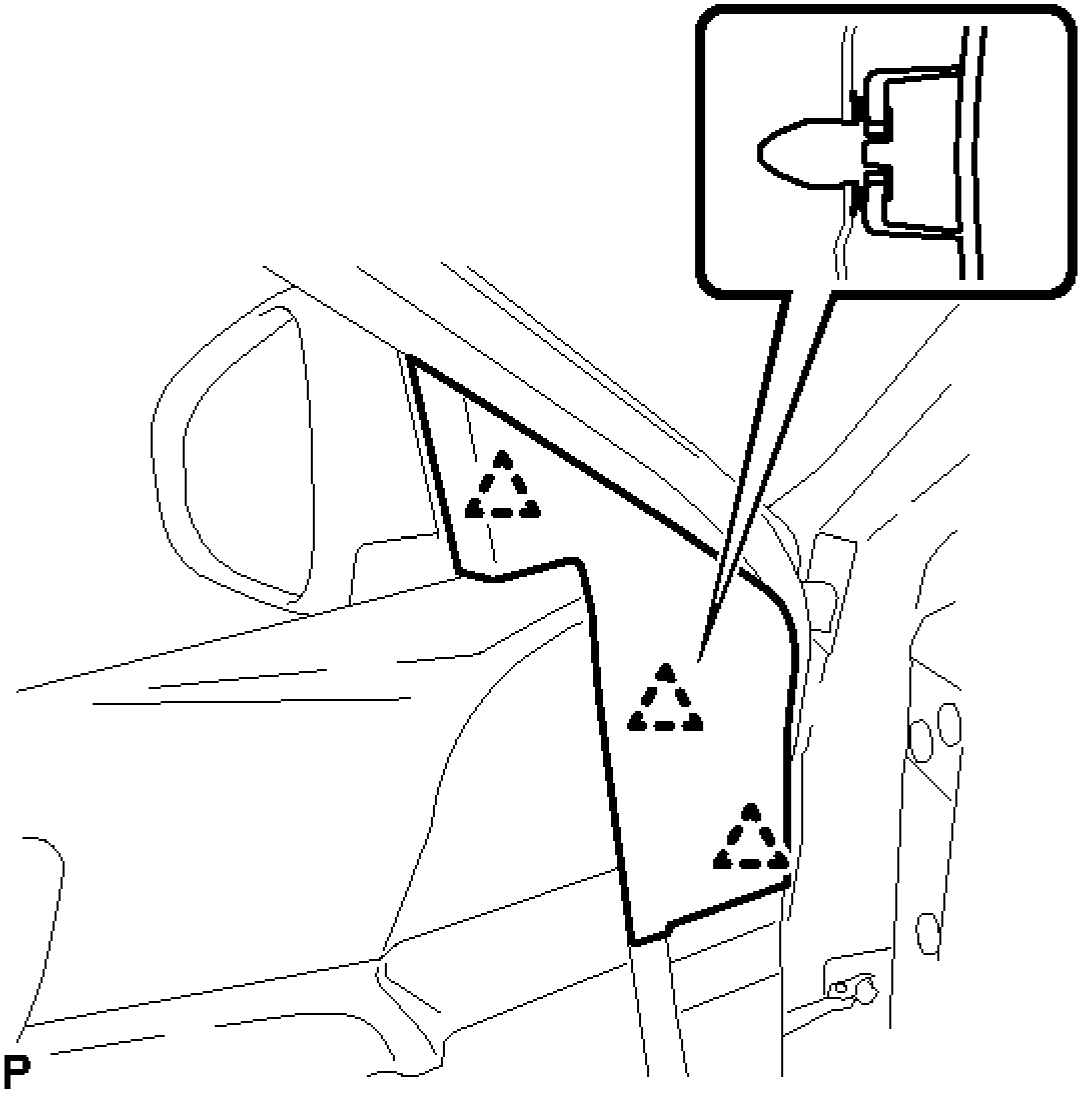

Fig. 30: Identifying Front Door Lower Frame Bracket Garnish Clips
Courtesy of TOYOTA MOTOR SALES, U.S.A., INC.

5. **REMOVE POWER WINDOW REGULATOR MASTER SWITCH ASSEMBLY WITH FRONT DOOR ARMREST BASE PANEL (for Driver Side)**
    1. Using a moulding remover, disengage the 2 clips, 5 claws and 4 guides as shown in the illustration.

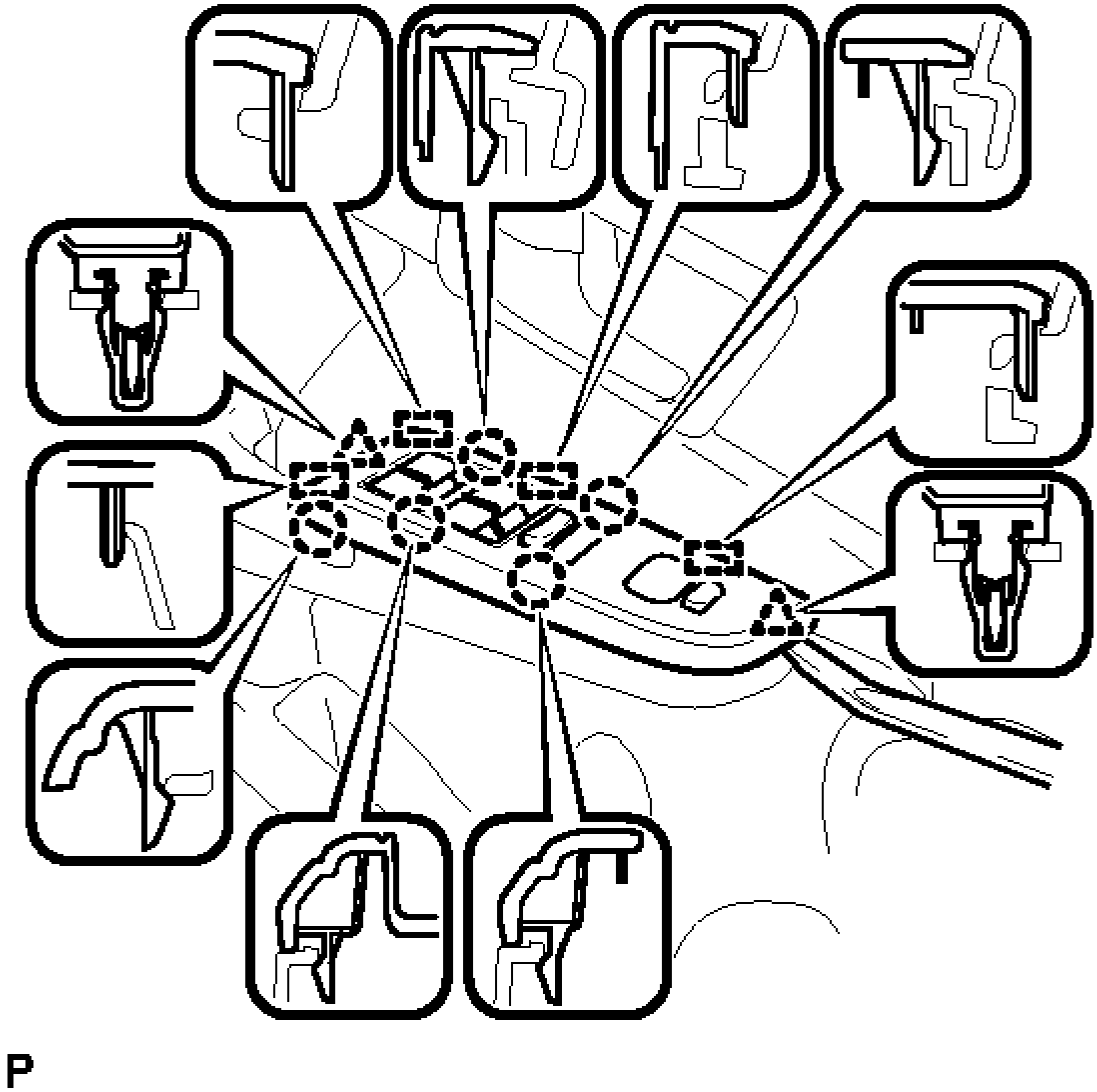

Fig. 31: Identifying Power Window Regulator Master Switch Clips, Claws And Guides (For Driver Side)
Courtesy of TOYOTA MOTOR SALES, U.S.A., INC.

- b. Disconnect each connector and remove the power window regulator master switch assembly with front door armrest base panel.

6. **REMOVE POWER WINDOW REGULATOR SWITCH ASSEMBLY WITH FRONT DOOR ARMREST BASE PANEL (for Front Passenger Side)**
   - a. Using a moulding remover, disengage the 2 clips, 5 claws and 4 guides as shown in the illustration.

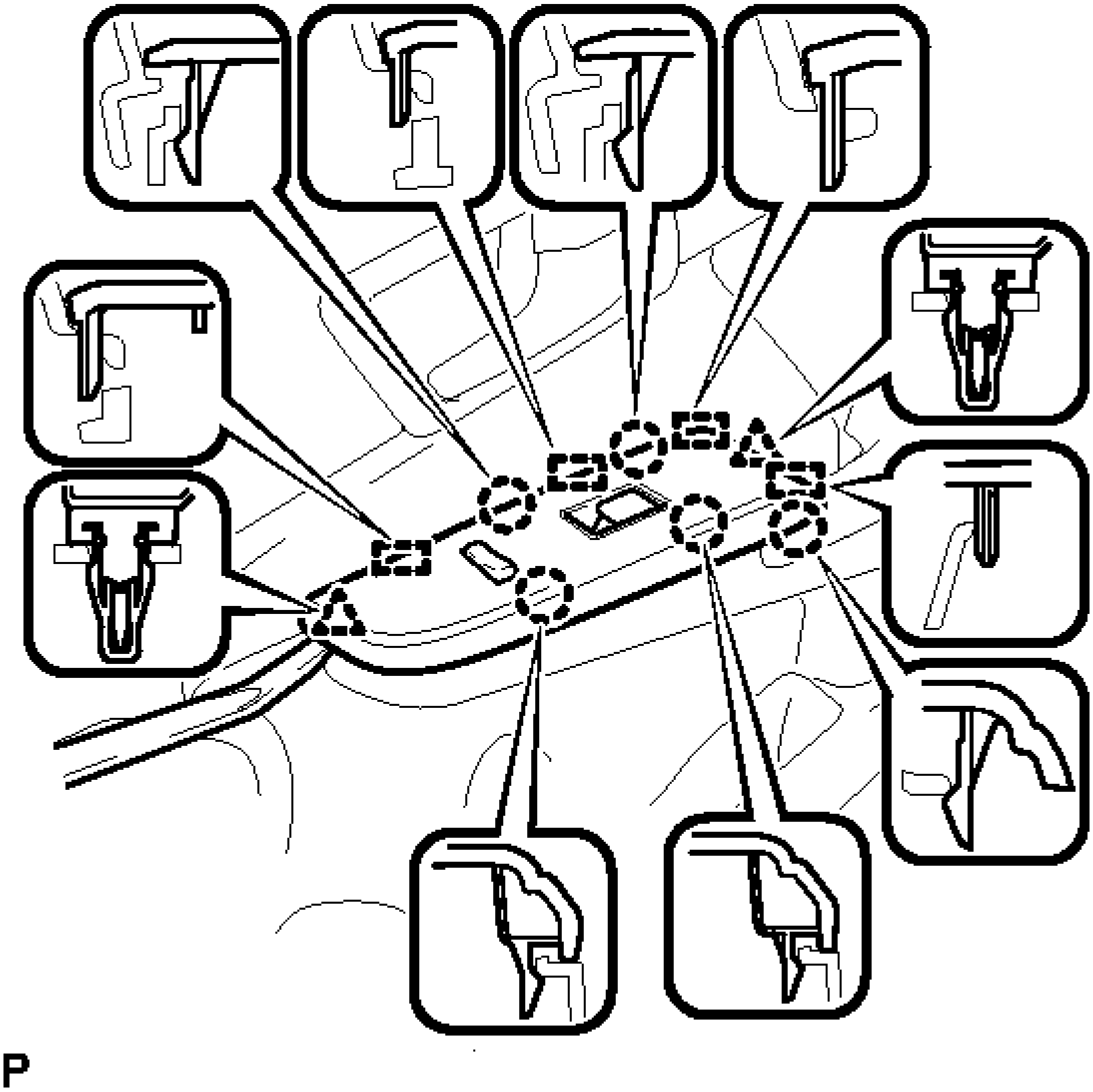

Fig. 32: Identifying Power Window Regulator Switch Clips, Claws And Guides (For Front Passenger Side)
Courtesy of TOYOTA MOTOR SALES, U.S.A., INC.

b. Disconnect each connector and remove the power window regulator switch assembly with front door armrest base panel.

7. **REMOVE FRONT ARMREST ASSEMBLY**

a. Using a moulding remover, disengage the 3 clips, 7 claws and 2 guides and remove the front armrest assembly.

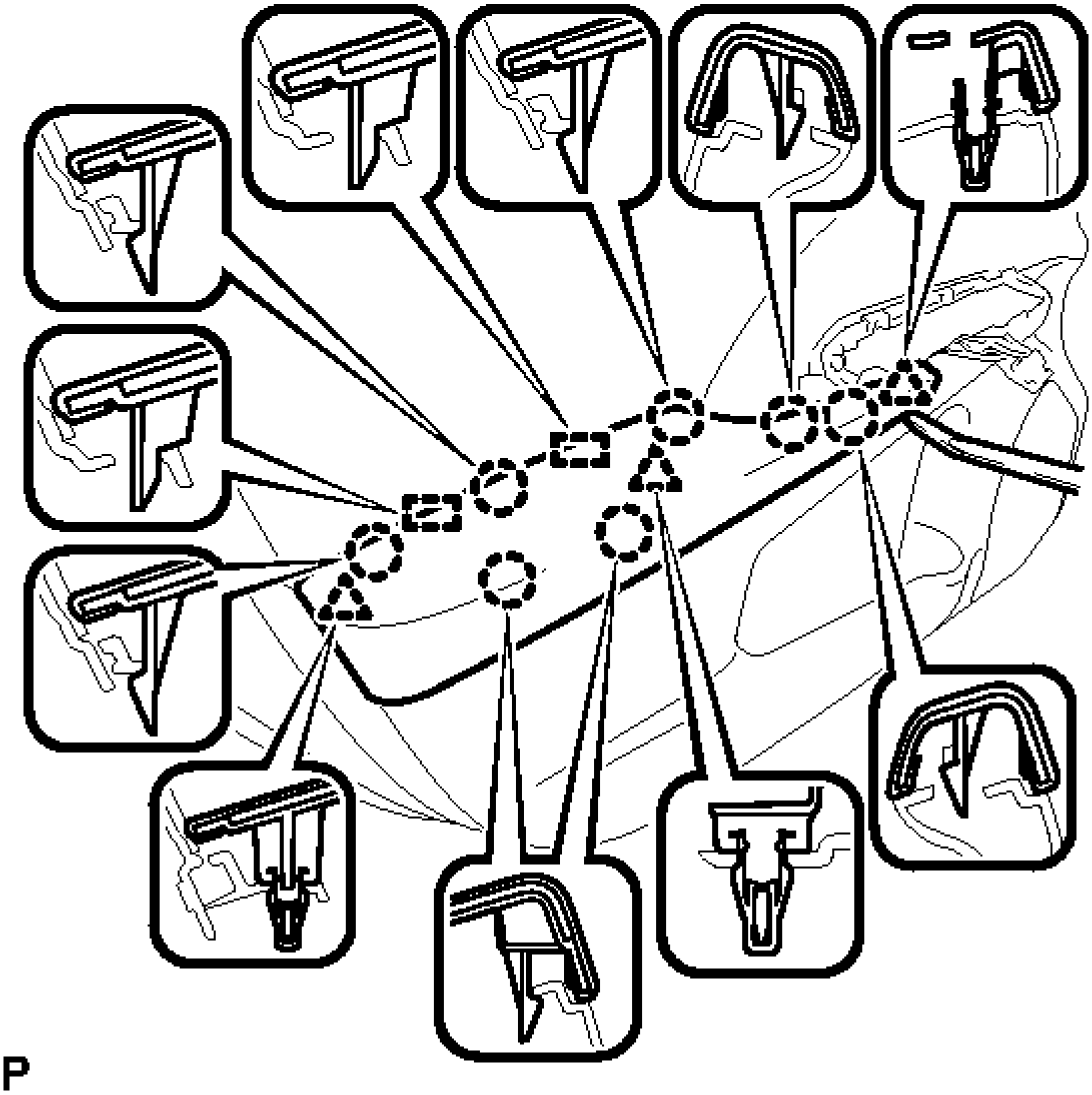

Fig. 33: Identifying Front Armrest Assembly Clips, Claws And Guides
Courtesy of TOYOTA MOTOR SALES, U.S.A., INC.

8. **REMOVE COURTESY LIGHT ASSEMBLY** . Refer to **REMOVAL - Step 1** .
9. **REMOVE FRONT DOOR TRIM BOARD SUB-ASSEMBLY**
    a. Put protective tape around the front door panel.

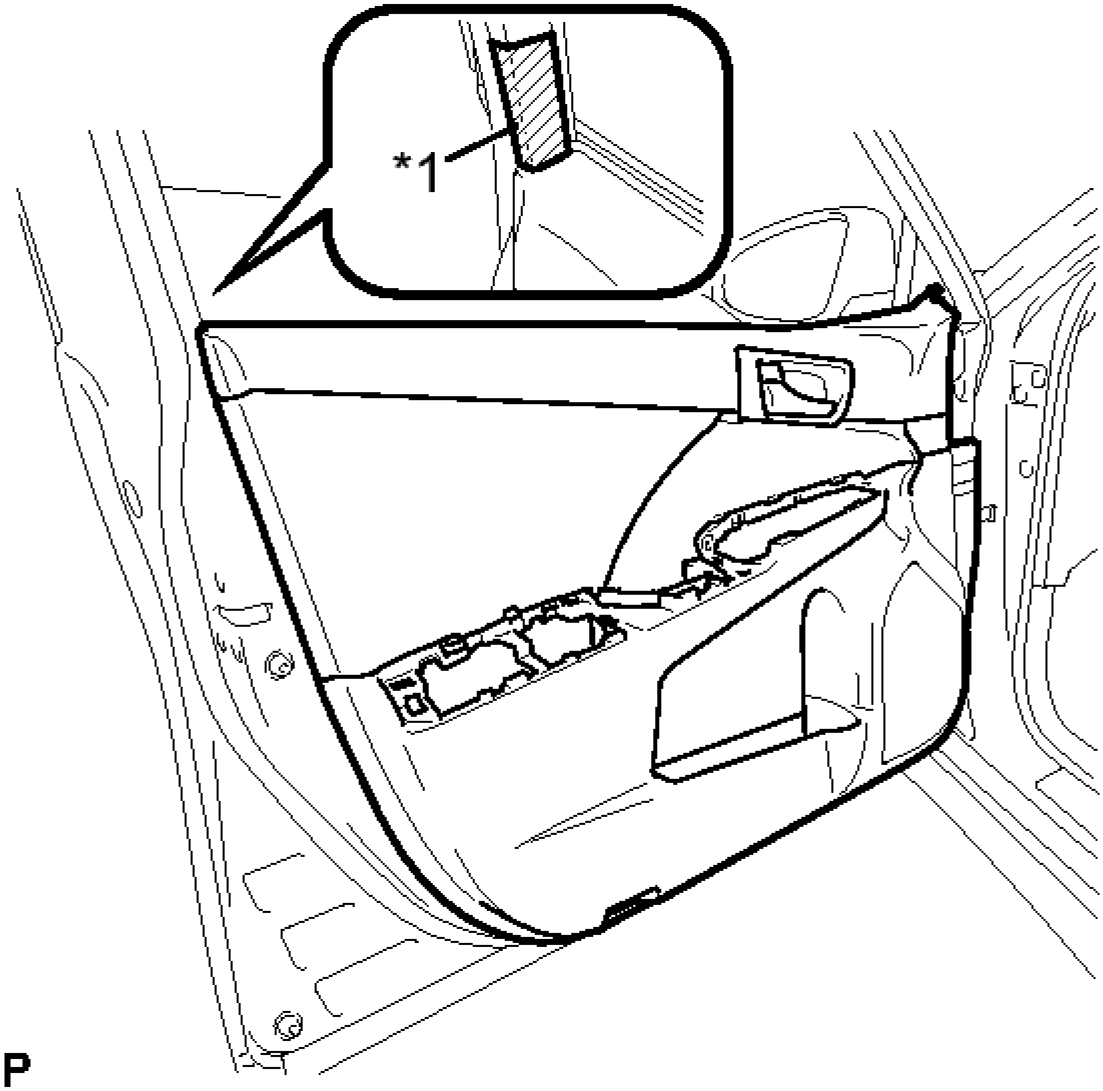

Fig. 34: Identifying Protective Tape Placement
Courtesy of TOYOTA MOTOR SALES, U.S.A., INC.

TEXT IN ILLUSTRATION

*1	Protective Tape

b. Remove the 3 screws.

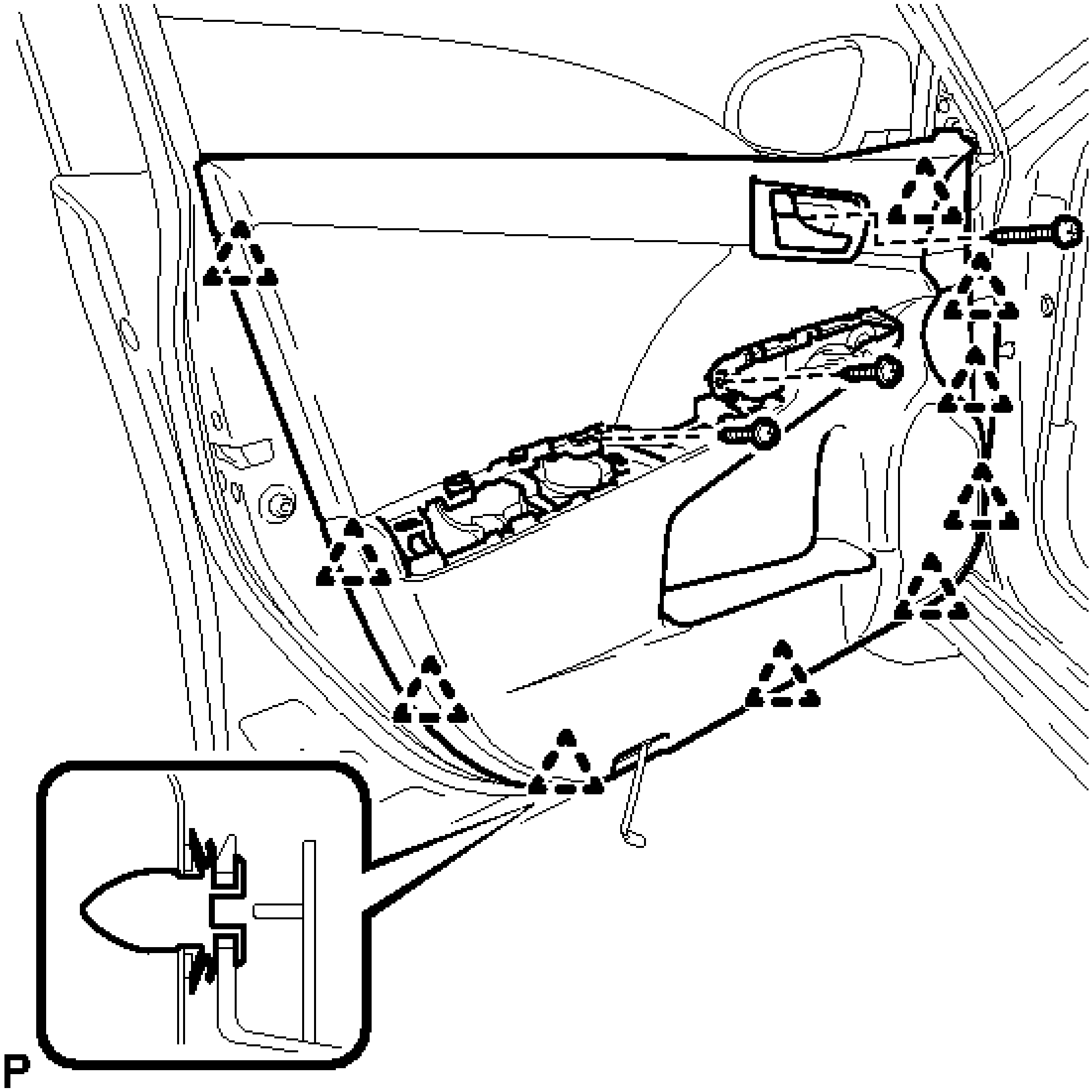

Fig. 35: Identifying Front Door Trim Board Screws And Clips
Courtesy of TOYOTA MOTOR SALES, U.S.A., INC.

c. Using a clip remover, disengage the 10 clips.
d. Pull out the front door trim board sub-assembly in the direction indicated by the arrow as shown in the illustration.

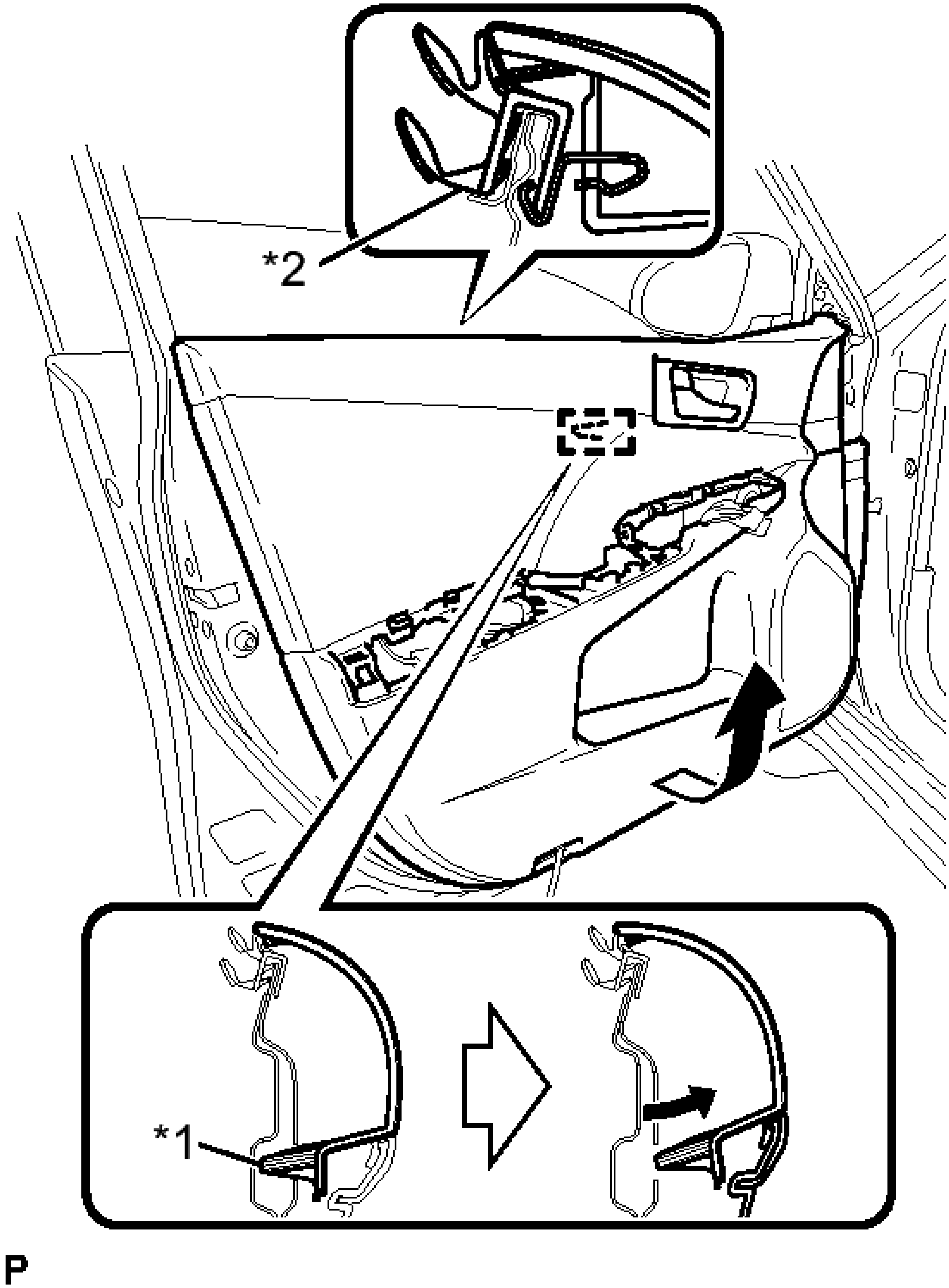

Fig. 36: Pulling Out Front Door Trim Board Sub-Assembly
Courtesy of TOYOTA MOTOR SALES, U.S.A., INC.

TEXT IN ILLUSTRATION

	Reference

*1	Boss
*2	Front Door Inner Glass Weatherstrip

e. Disengage the reference boss from the front door panel.

f. Raise the front door trim board sub-assembly to remove the front door trim board sub-assembly together with the front door inner glass weatherstrip.

g. Disconnect the front door lock remote control cable assembly and front door inside locking cable assembly.

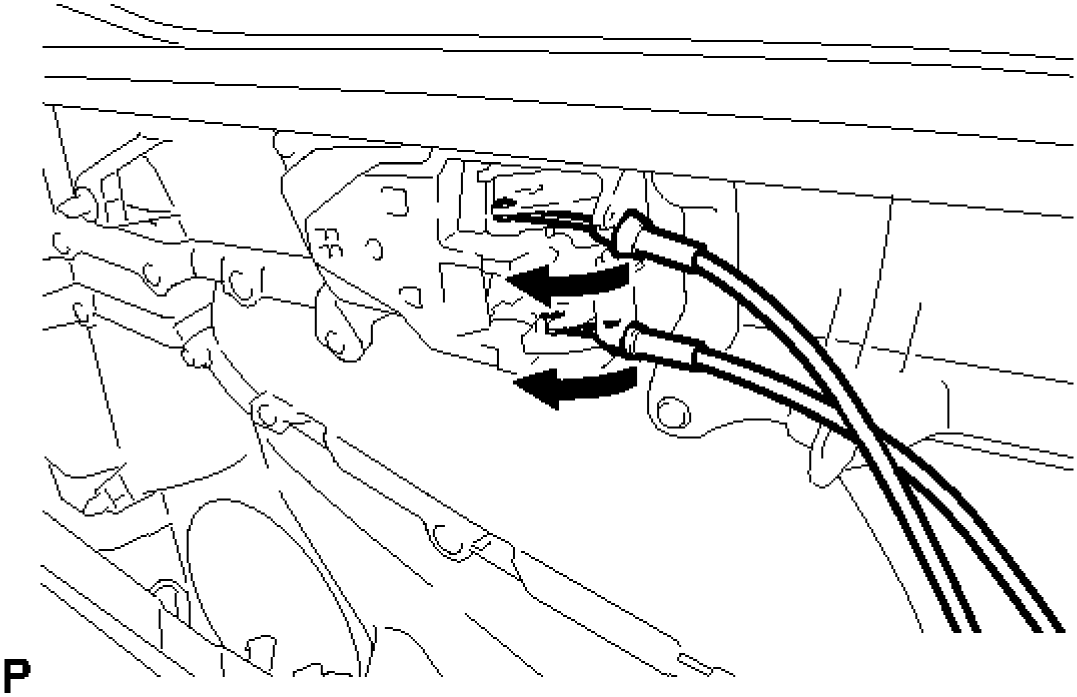

Fig. 37: Disconnecting Front Door Lock Remote Control And Inside Locking Cables
Courtesy of TOYOTA MOTOR SALES, U.S.A., INC.

10. **REMOVE FRONT DOOR INSIDE HANDLE SUB-ASSEMBLY**

a. Disengage the 2 claws and guides, and remove the front door inside handle sub-assembly.

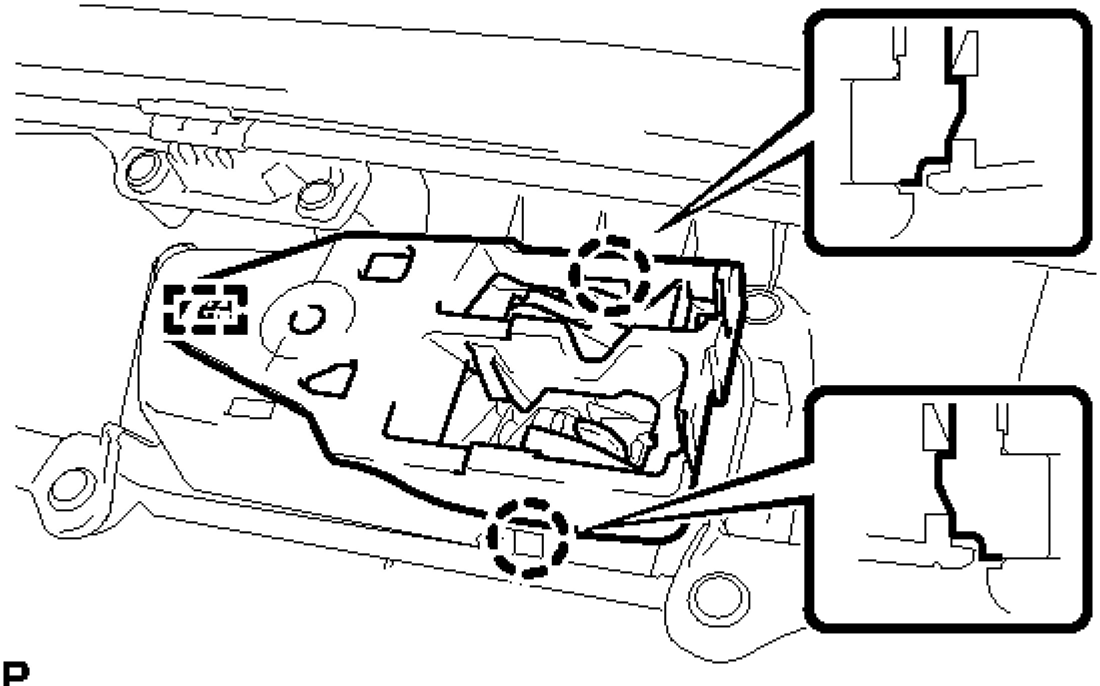

Fig. 38: Identifying Front Door Inside Handle Sub-Assembly Claws And Guides
Courtesy of TOYOTA MOTOR SALES, U.S.A., INC.

11. **REMOVE FRONT DOOR INNER GLASS WEATHERSTRIP**
    a. Using a screwdriver, disengage the 4 claws and remove the front door inner glass weatherstrip from the front door trim board sub-assembly as shown in the illustration.

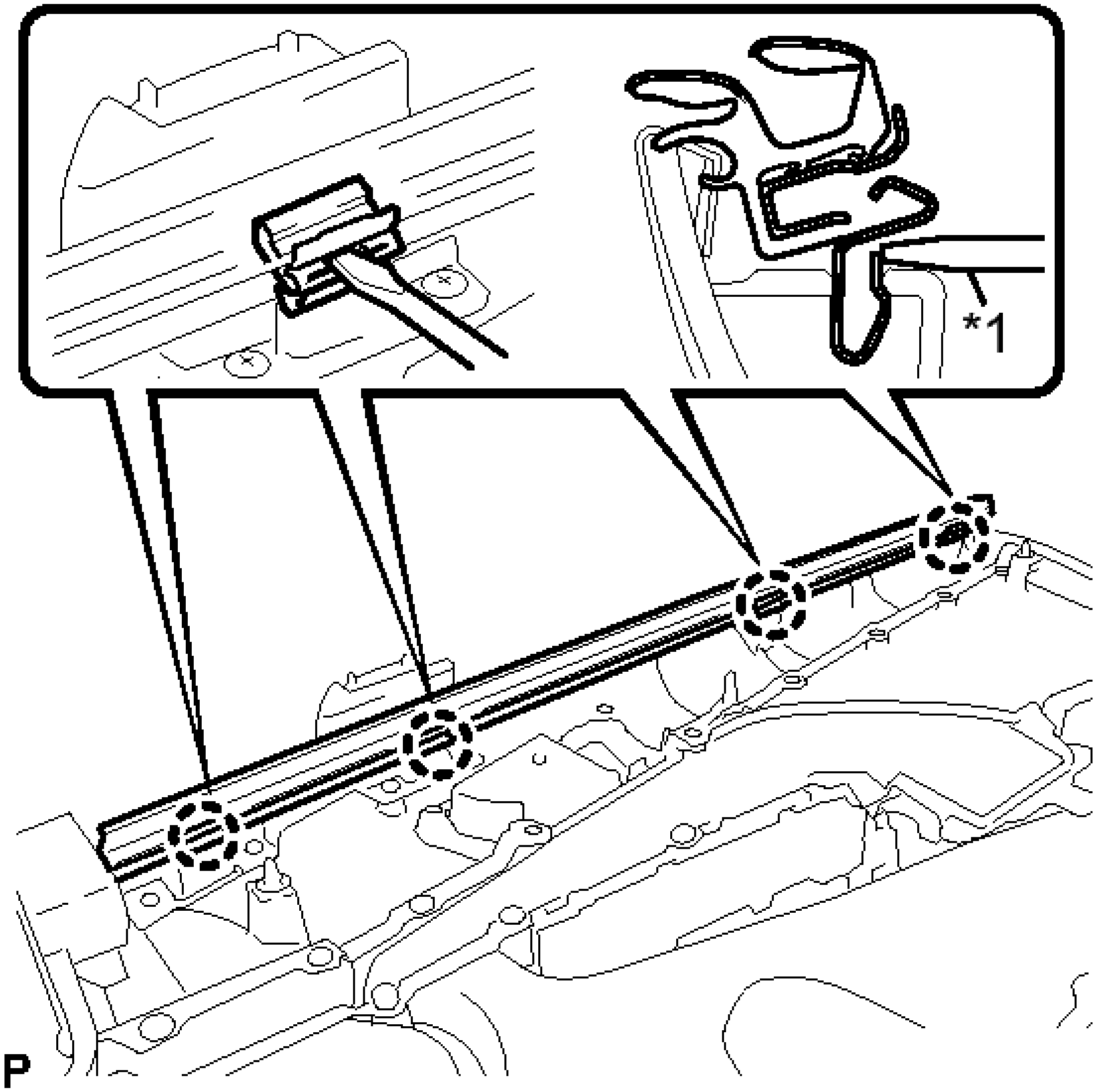

Fig. 39: Identifying Front Door Inner Glass Weatherstrip Claws
Courtesy of TOYOTA MOTOR SALES, U.S.A., INC.

TEXT IN ILLUSTRATION

*1	Screwdriver

12. **REMOVE DOOR SIDE AIRBAG SENSOR** . Refer to **REMOVAL - Step 10** .
13. **REMOVE FRONT NO. 1 SPEAKER ASSEMBLY** . Refer to **REMOVAL - Step 9** .
14. **REMOVE OUTER REAR VIEW MIRROR ASSEMBLY** . Refer to **REMOVAL - Step 9** .
15. **REMOVE FRONT DOOR SERVICE HOLE COVER**
    a. Remove the bolt.

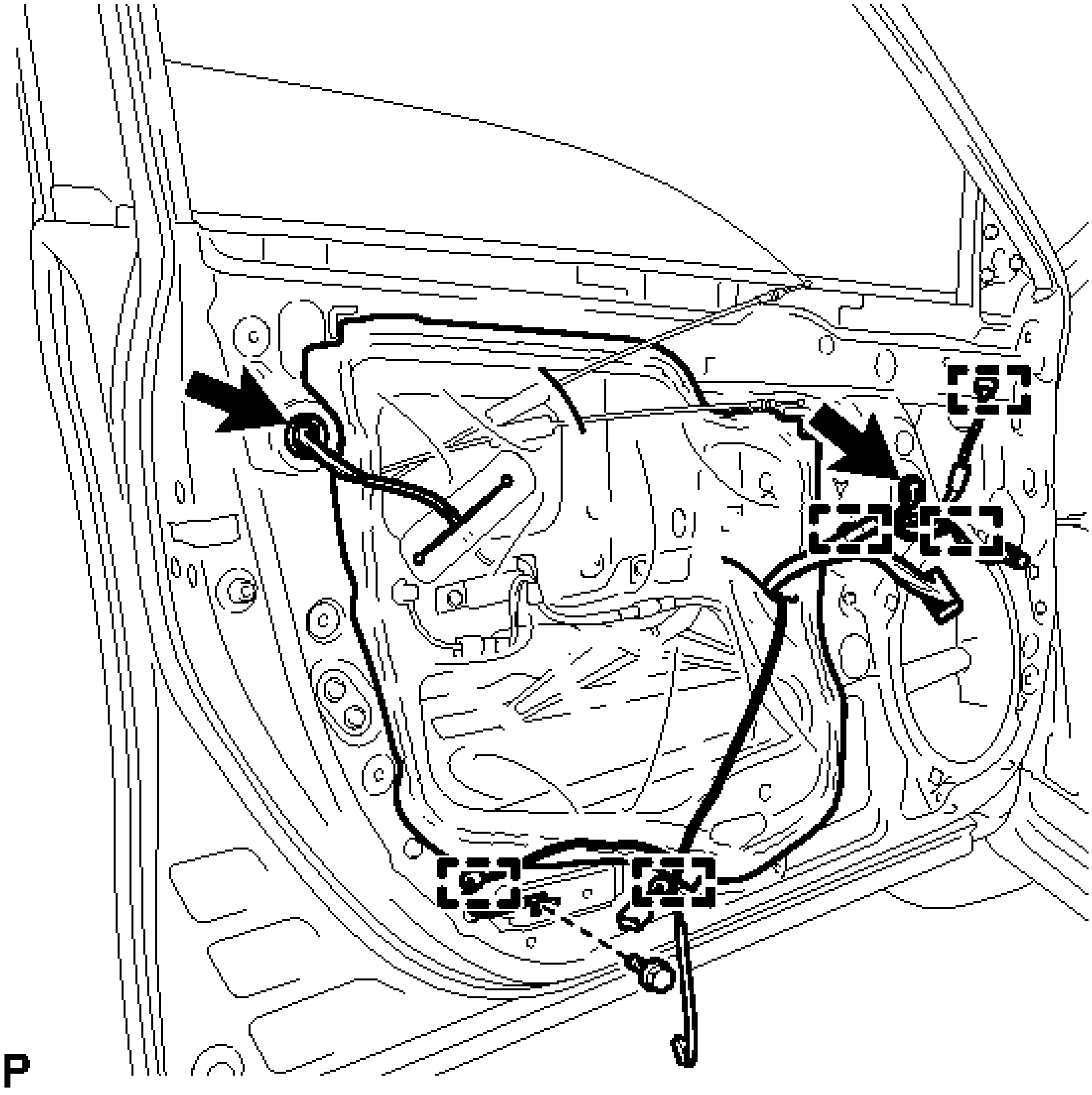

Fig. 40: Locating Front Door Service Hole Cover
Courtesy of TOYOTA MOTOR SALES, U.S.A., INC.

b. Disconnect each connector.
c. Disengage the 5 clamps.
d. Remove the front door service hole cover.

HINT:

Remove any remaining butyl tape from the door.

16. **REMOVE FRONT DOOR GLASS SUB-ASSEMBLY**

a. Remove the grommet.

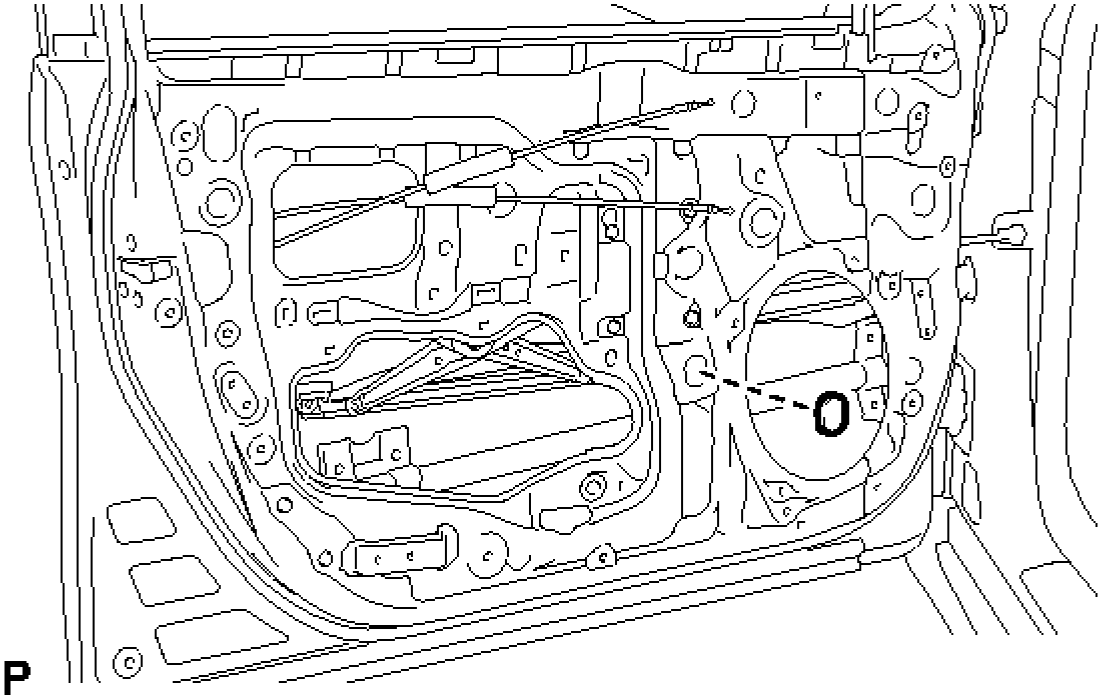

Fig. 41: Identifying Front Door Grommet
Courtesy of TOYOTA MOTOR SALES, U.S.A., INC.

b. Connect the cable to the negative (-) battery terminal.
c. Connect the power window regulator master switch assembly and move the front door glass sub-assembly so that the door glass bolts can be seen.
d. Disconnect the cable from the negative (-) battery terminal.

WARNING: **Wait at least 90 seconds after disconnecting the cable from the negative (-) battery terminal to disable the SRS system.**

NOTE: **When disconnecting the cable, some systems need to be initialized after the cable is reconnected. Refer to INITIALIZATION .**

e. Disconnect the power window regulator master switch assembly.
f. Remove the 2 bolts.

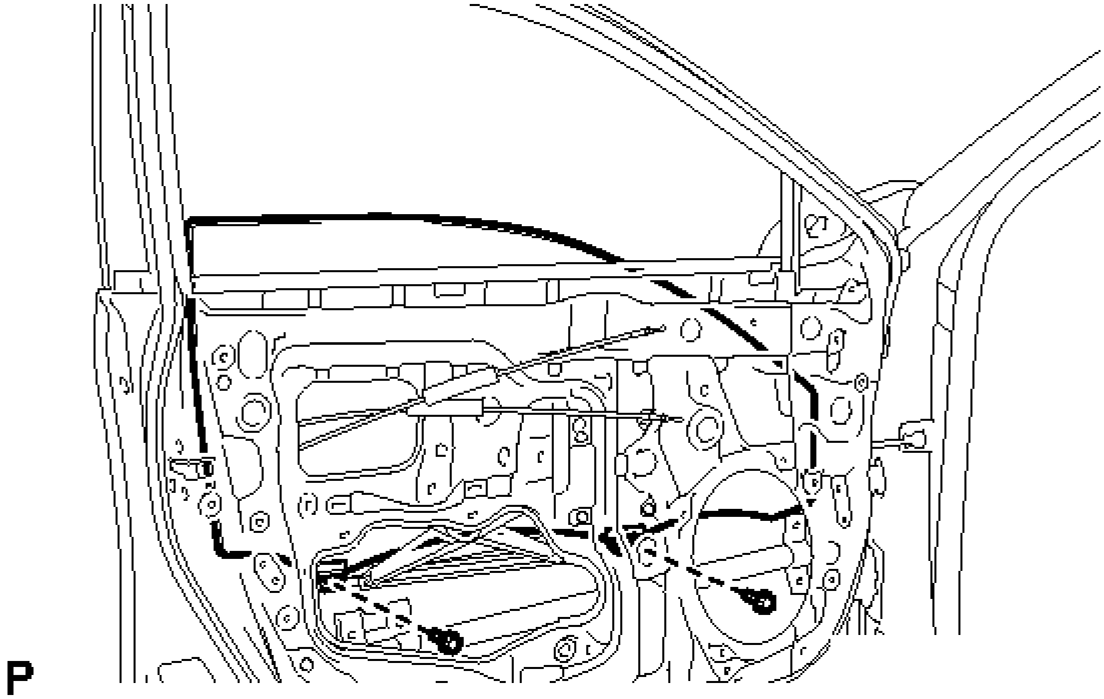

Fig. 42: Identifying Front Door Glass Bolts
Courtesy of TOYOTA MOTOR SALES, U.S.A., INC.

NOTE: After the bolts are removed, do not allow the door glass to fall.

g. Remove the front door glass sub-assembly as indicated by the arrows, in the order shown in the illustration.

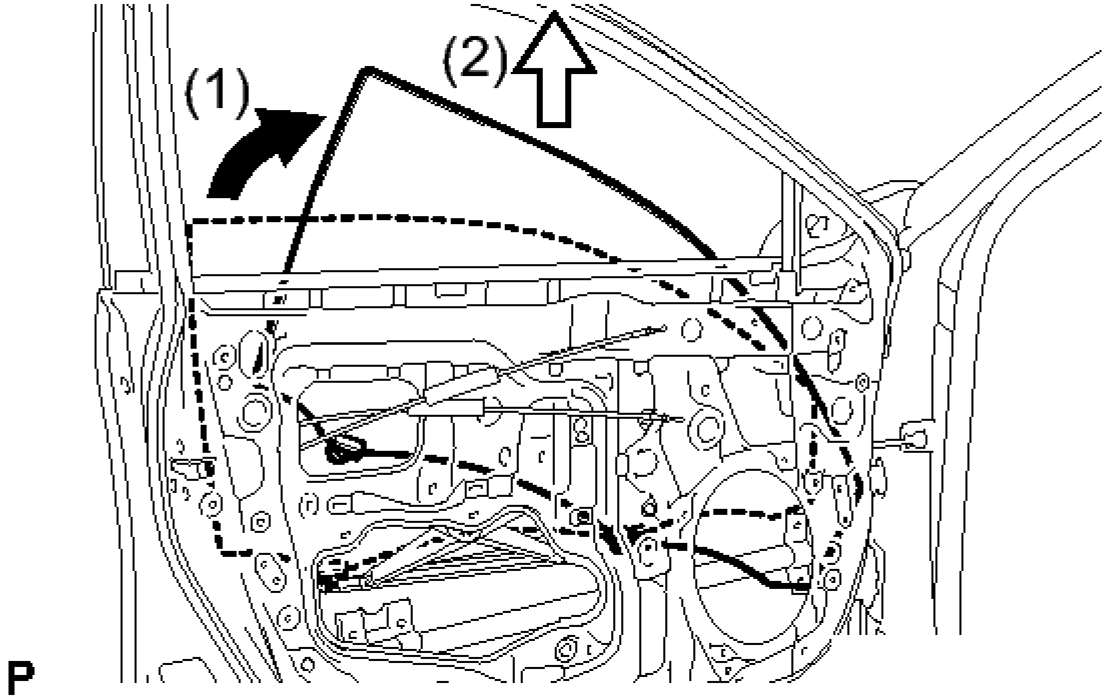

Fig. 43: Removing The Front Door Glass
Courtesy of TOYOTA MOTOR SALES, U.S.A., INC.

NOTE: **Do not damage the door glass.**

17. **REMOVE FRONT DOOR WINDOW REGULATOR ASSEMBLY**
    a. Loosen the temporary bolt.

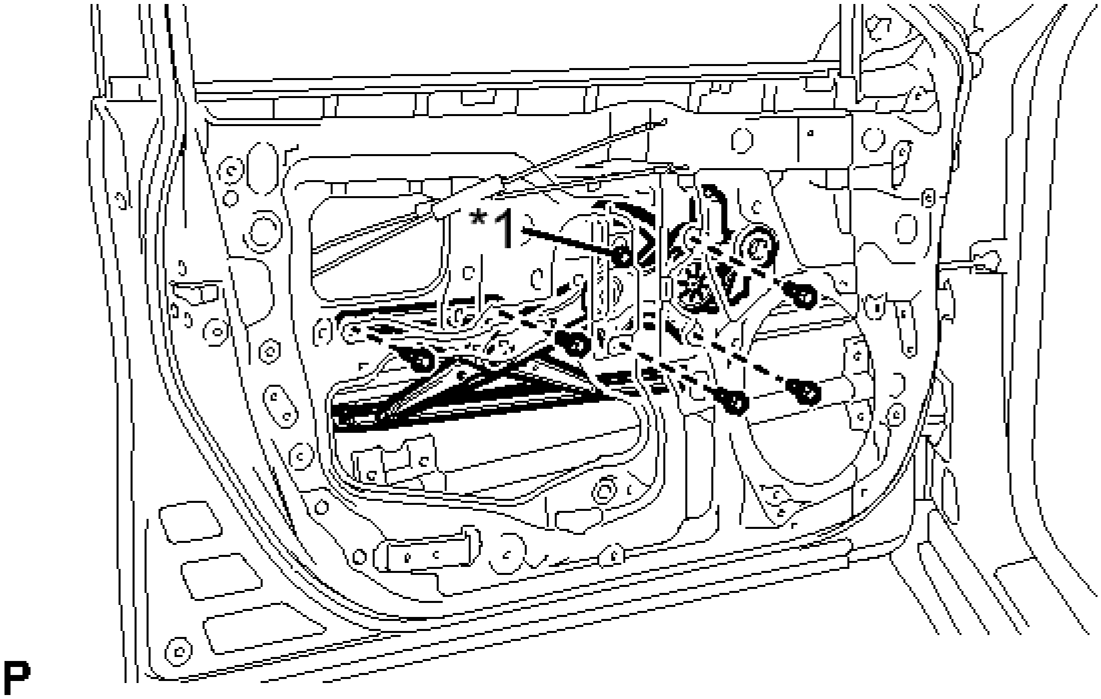

Fig. 44: Identifying Front Door Window Regulator Temporary Bolt And Assembly Bolts
Courtesy of TOYOTA MOTOR SALES, U.S.A., INC.

TEXT IN ILLUSTRATION

*1	Temporary Bolt

NOTE: **Do not remove the temporary bolt. If the temporary bolt is removed, the front door window regulator may fall and cause damage.**

b. Remove the 5 bolts.

c. Remove the front door window regulator assembly.

d. Remove the temporary bolt from the front door window regulator assembly.

18. **REMOVE FRONT POWER WINDOW REGULATOR MOTOR ASSEMBLY**

    a. Using a T25 "TORX" socket wrench, remove the 3 screws and front power window regulator motor assembly.

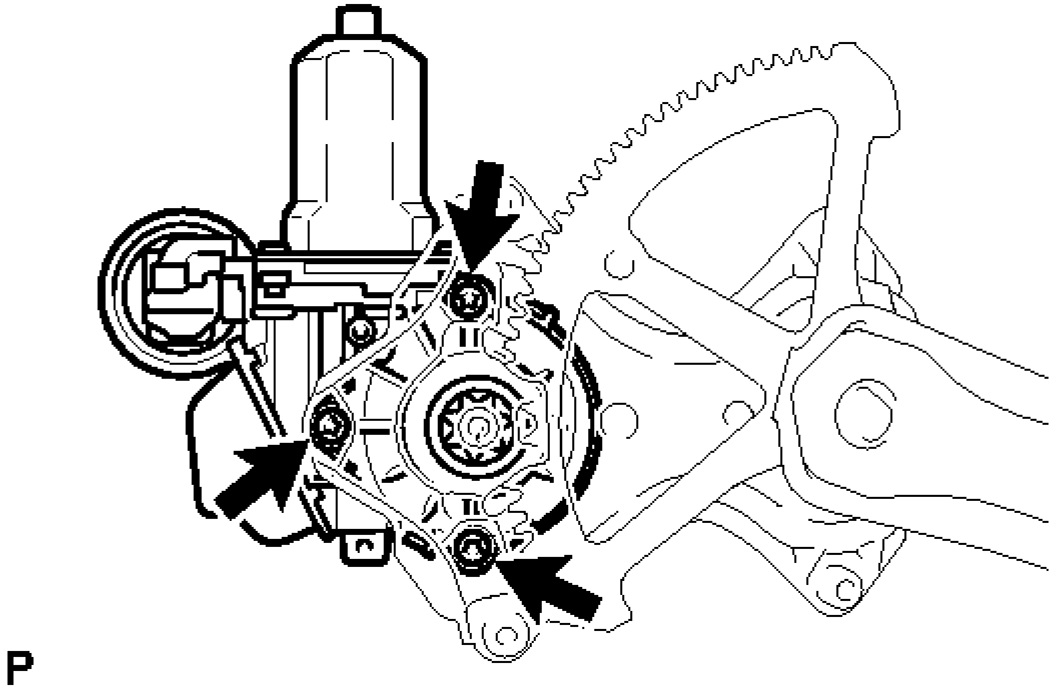

Fig. 45: Identifying Front Power Window Regulator Motor Screws
Courtesy of TOYOTA MOTOR SALES, U.S.A., INC.

19. **REMOVE NO. 2 FRONT DOOR STIFFENER CUSHION**
    a. Remove the 2 bolts.

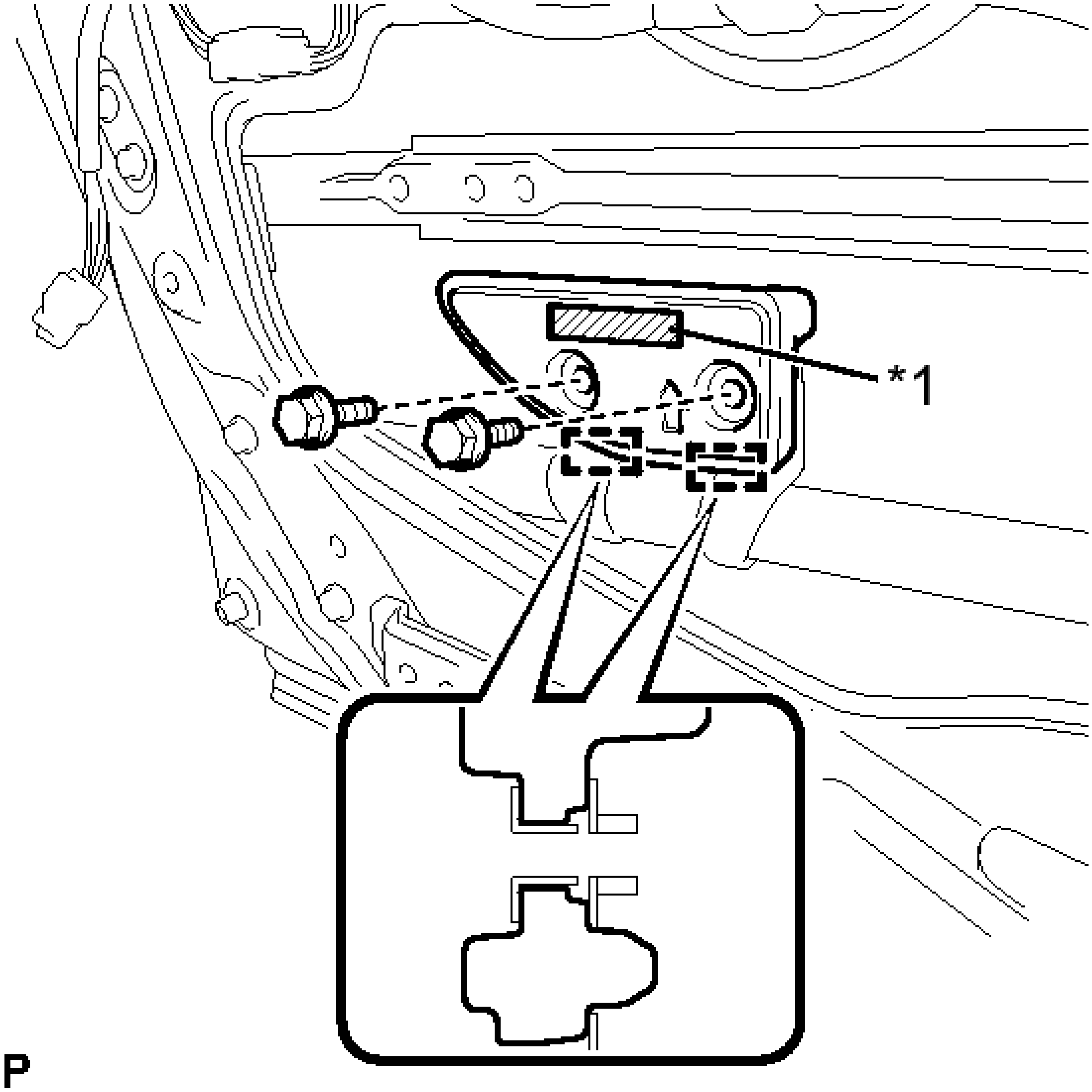

Fig. 46: Identifying No. 2 Front Door Stiffener Cushion Bolts
Courtesy of TOYOTA MOTOR SALES, U.S.A., INC.

TEXT IN ILLUSTRATION

*1	Double-sided Tape

b. Disengage the 2 guides and remove the No. 2 front door stiffener cushion.

20. **REMOVE FRONT DOOR GLASS RUN**

a. Remove the front door glass run.

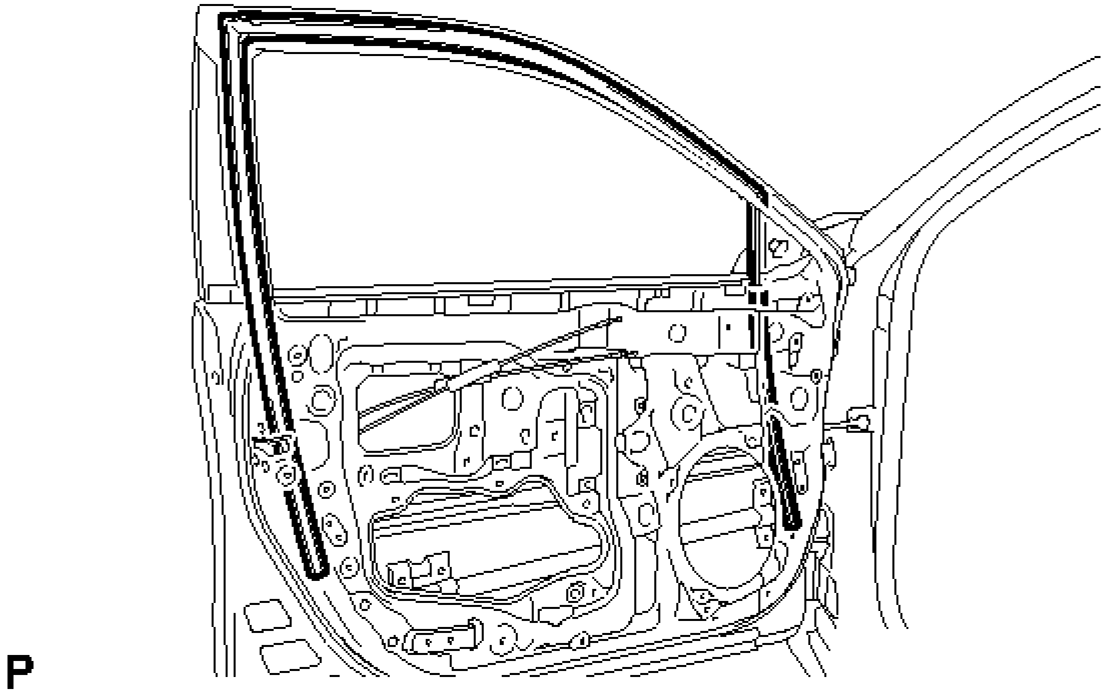

Fig. 47: Identifying Front Door Glass Run
Courtesy of TOYOTA MOTOR SALES, U.S.A., INC.

21. **REMOVE FRONT DOOR FRONT LOWER FRAME SUB-ASSEMBLY**
    a. Remove the 2 bolts.

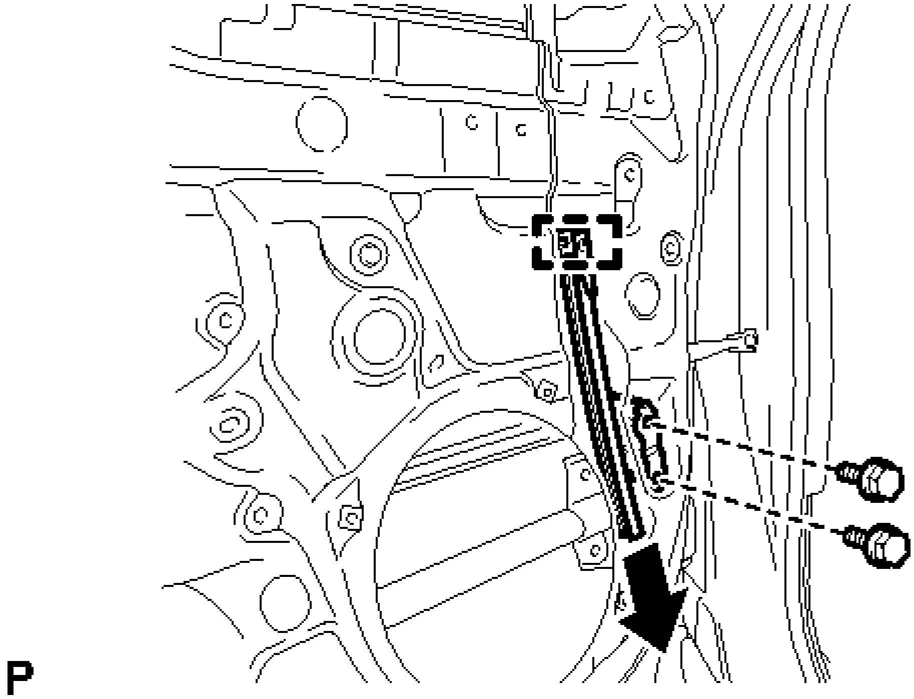

Fig. 48: Identifying Front Door Front Lower Frame Bolts

Courtesy of TOYOTA MOTOR SALES, U.S.A., INC.

b. Disengage the guide and remove the front door front lower frame sub-assembly as shown in the illustration.

22. **REMOVE FRONT DOOR REAR LOWER FRAME SUB-ASSEMBLY**
    a. Remove the 2 bolts.

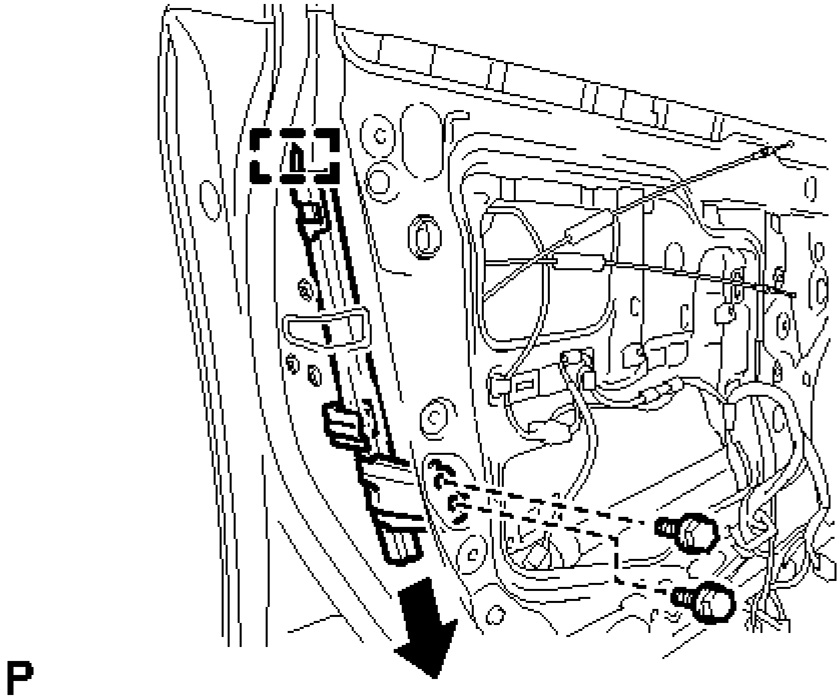

Fig. 49: Identifying Front Door Rear Lower Frame Bolts
Courtesy of TOYOTA MOTOR SALES, U.S.A., INC.

b. Disengage the guide and remove the front door rear lower frame sub-assembly as shown in the illustration.

23. **REMOVE FRONT DOOR OUTSIDE HANDLE COVER WITH LOCK CYLINDER ASSEMBLY (for Driver Side)**
    a. Remove the hole plug.

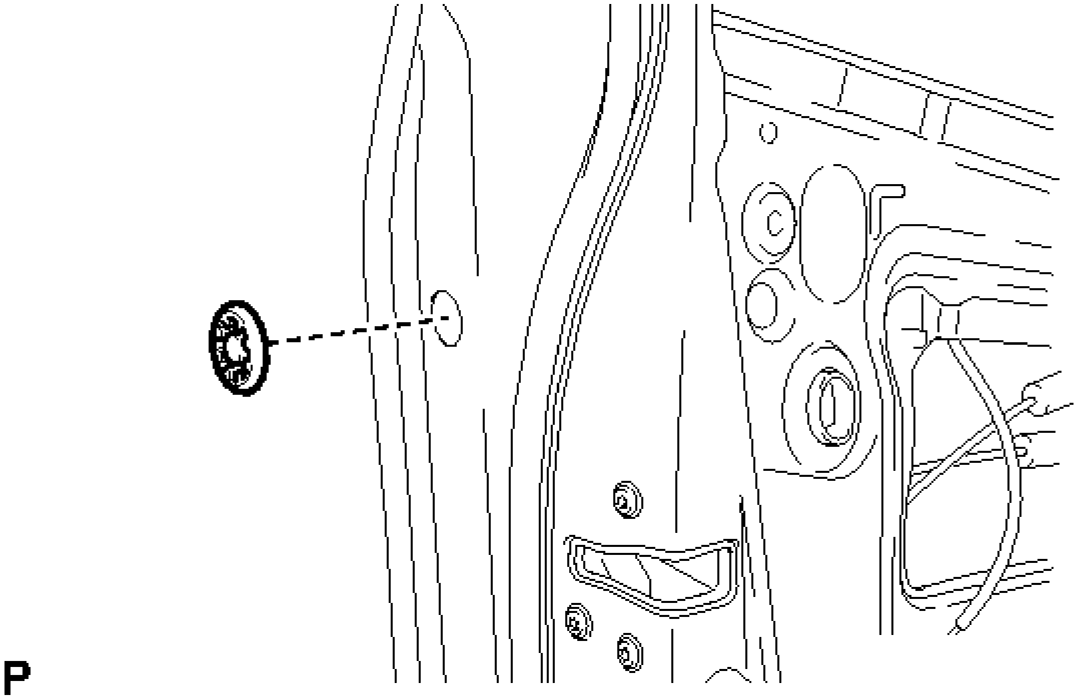

Fig. 50: Identifying Front Door Hole Plug
Courtesy of TOYOTA MOTOR SALES, U.S.A., INC.

b. Using a T30 "TORX" socket wrench, loosen the screw and remove the front door outside handle cover with lock cylinder assembly.

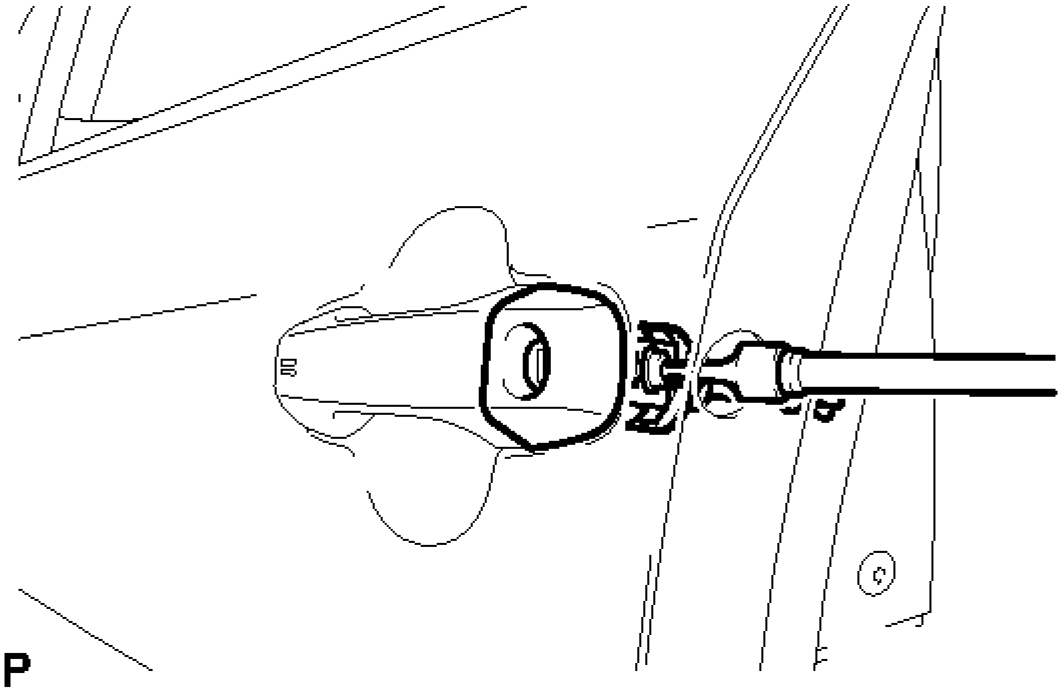

Fig. 51: Identifying Front Door Outside Handle Cover w/ Lock Cylinder

Courtesy of TOYOTA MOTOR SALES, U.S.A., INC.

HINT:

The screw cannot be removed because it is integrated into the front door outside handle frame sub-assembly.

24. **REMOVE FRONT DOOR OUTSIDE HANDLE COVER WITH LOCK CYLINDER ASSEMBLY (for Front Passenger Side)**
    a. w/ Front Door Lock Cylinder:

    HINT:

    Use the same procedure for front passenger side and driver side.

25. **REMOVE FRONT DOOR OUTSIDE HANDLE COVER (for Driver Side)**
    a. Using a screwdriver, disengage the claw and 2 guides, and remove the front door outside handle cover as shown in the illustration.

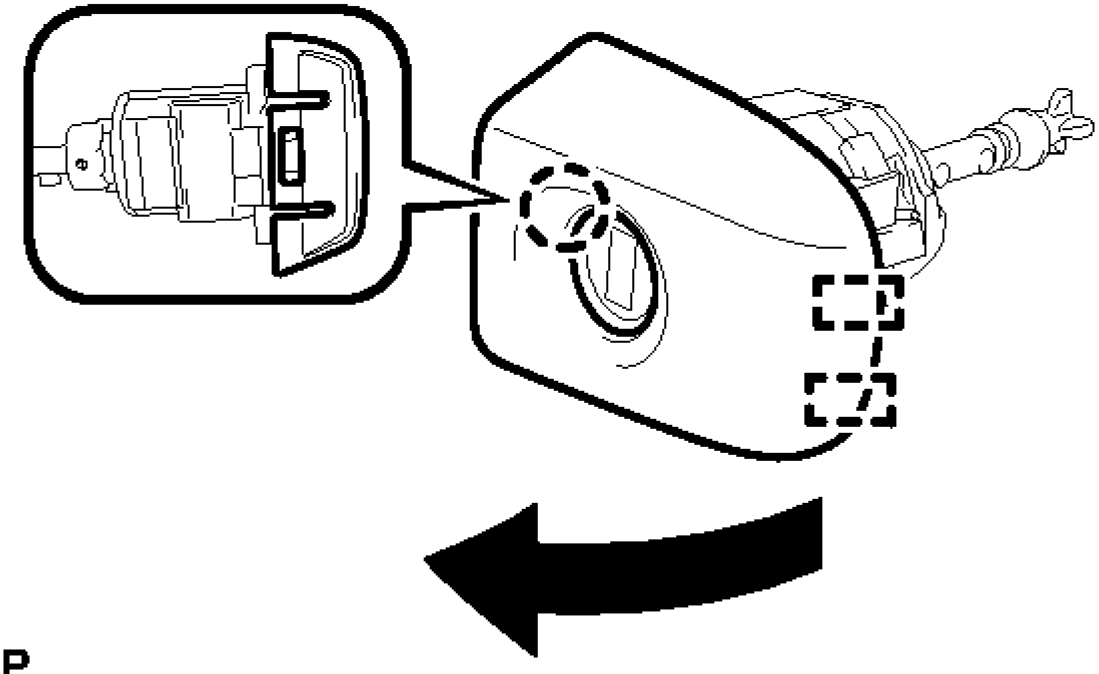

P

Fig. 52: Removing Front Door Outside Handle Cover
Courtesy of TOYOTA MOTOR SALES, U.S.A., INC.

26. **REMOVE FRONT DOOR OUTSIDE HANDLE COVER (for Front Passenger Side)**
    a. w/ Front Door Lock Cylinder:

    HINT:

Use the same procedure for the front passenger side and the driver side.

b. w/o Front Door Lock Cylinder:
    1. Remove the hole plug.

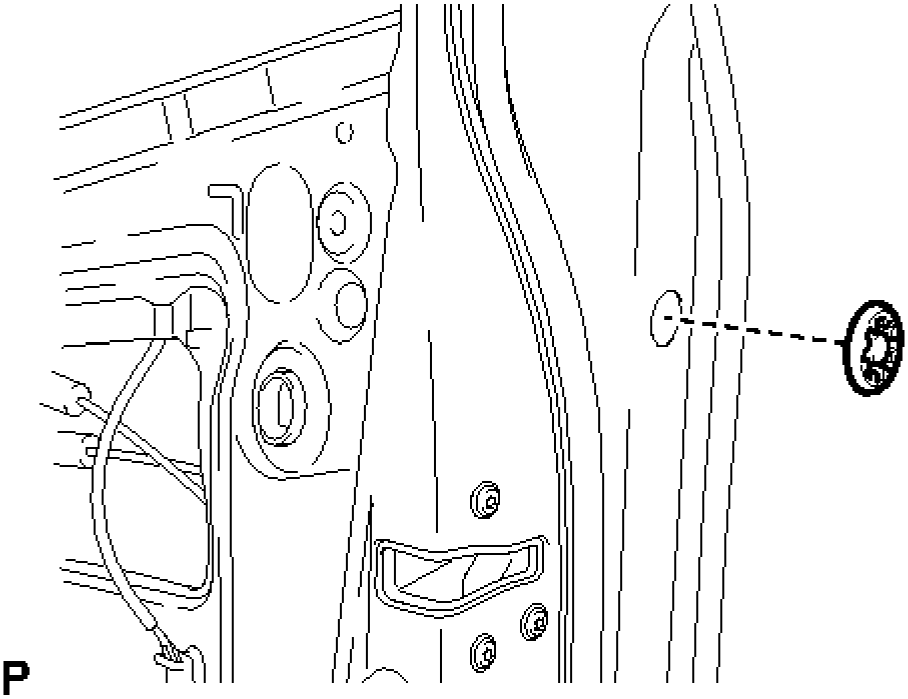

Fig. 53: Identifying Front Door Hole Plug
Courtesy of TOYOTA MOTOR SALES, U.S.A., INC.

    2. Using a T30 "TORX" socket wrench, loosen the screw and remove the front door outside handle cover.

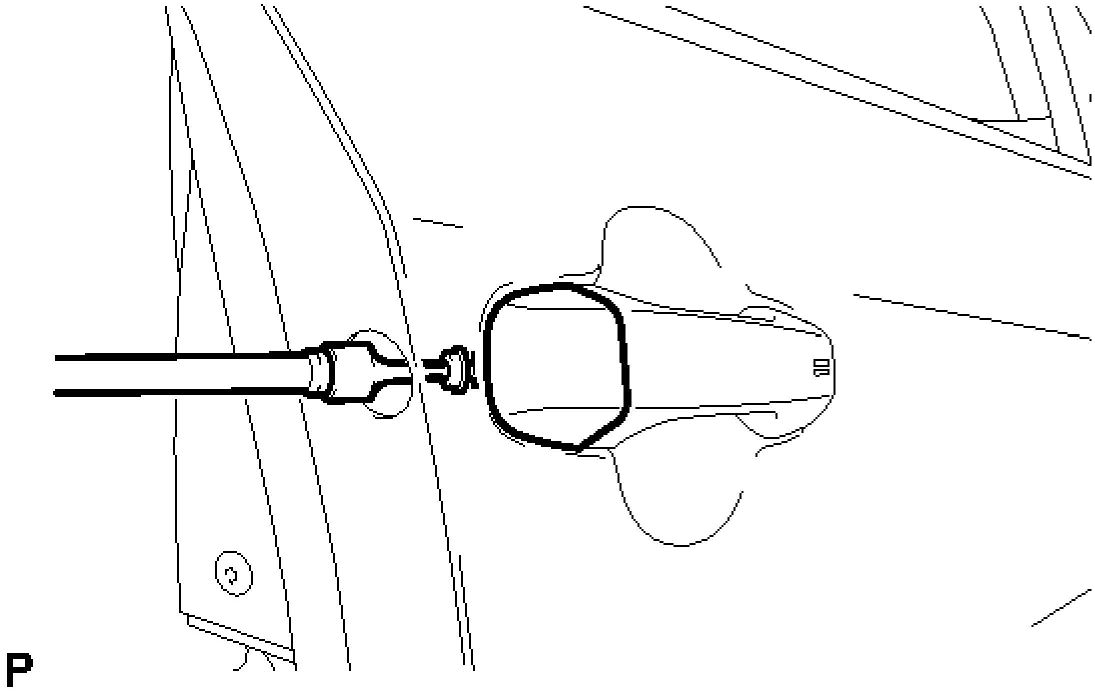

Fig. 54: Identifying Front Door Outside Handle Cover w/o Front Door Lock Cylinder
Courtesy of TOYOTA MOTOR SALES, U.S.A., INC.

HINT:

The screw cannot be removed because it is integrated into the front door outside handle frame sub-assembly.

27. **REMOVE FRONT DOOR OUTSIDE HANDLE ASSEMBLY**
    a. w/ Smart Key System:
        1. Disengage the 2 claws.
        2. Using a screwdriver, disconnect the connector.

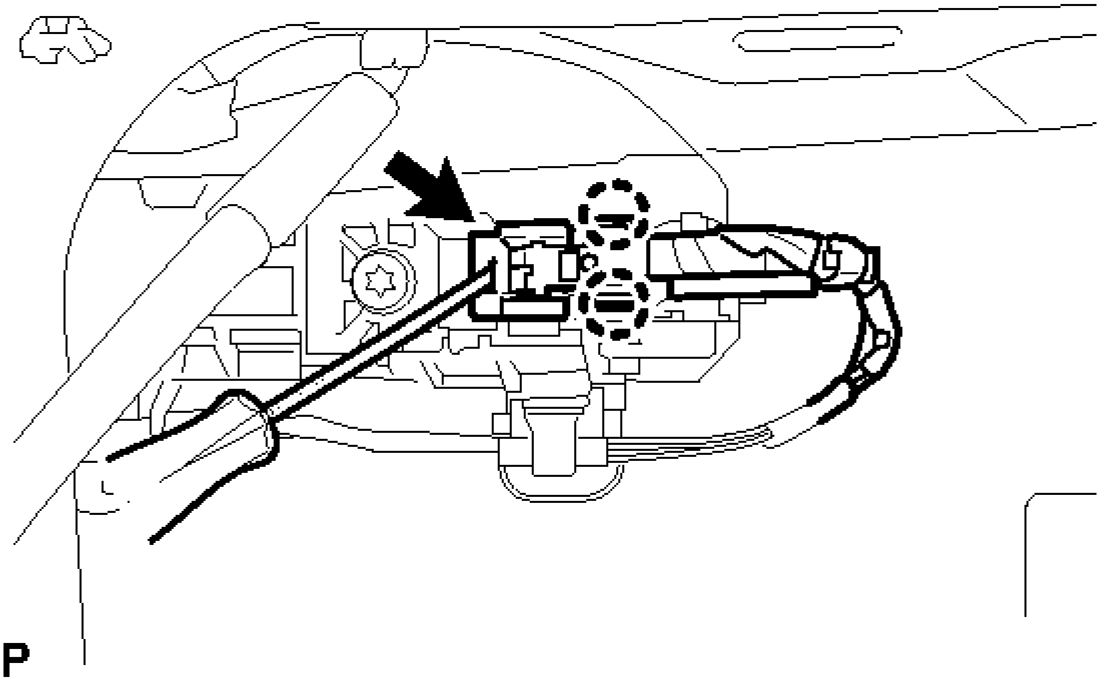

Fig. 55: Identifying Front Door Outside Handle Connector
Courtesy of TOYOTA MOTOR SALES, U.S.A., INC.

b. Remove the front door outside handle assembly as shown in the illustration.

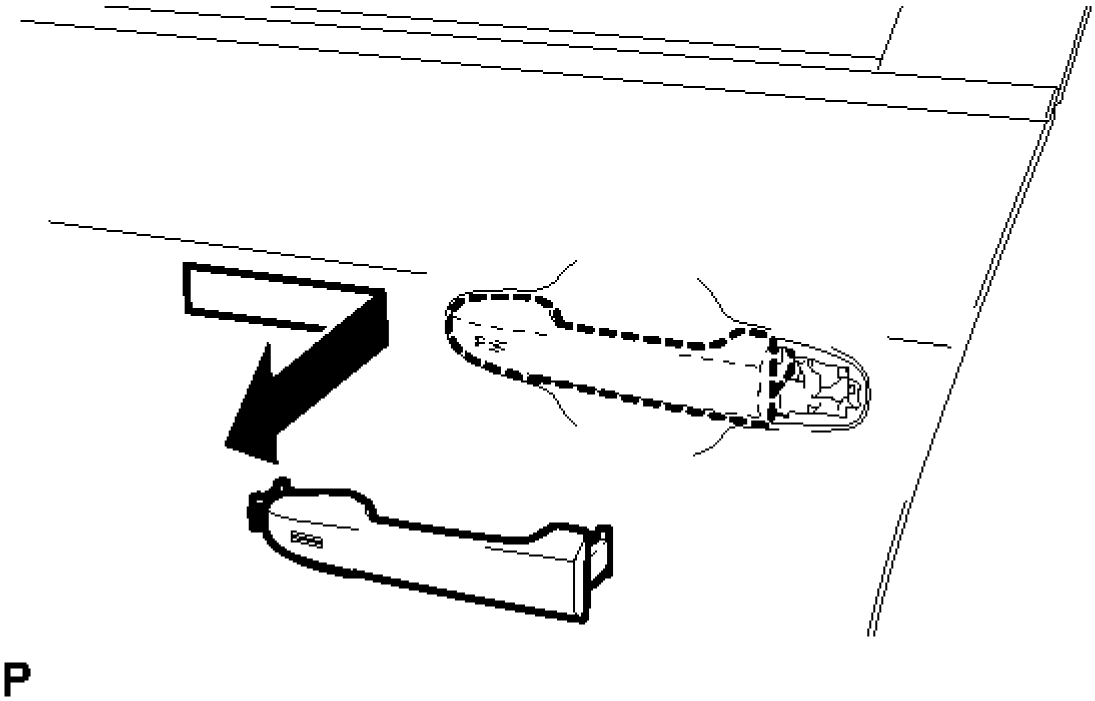

Fig. 56: Removing Front Door Outside Handle
Courtesy of TOYOTA MOTOR SALES, U.S.A., INC.

28. **REMOVE FRONT DOOR FRONT OUTSIDE HANDLE PAD**

a. Disengage the 3 claws and remove the front door front outside handle pad.

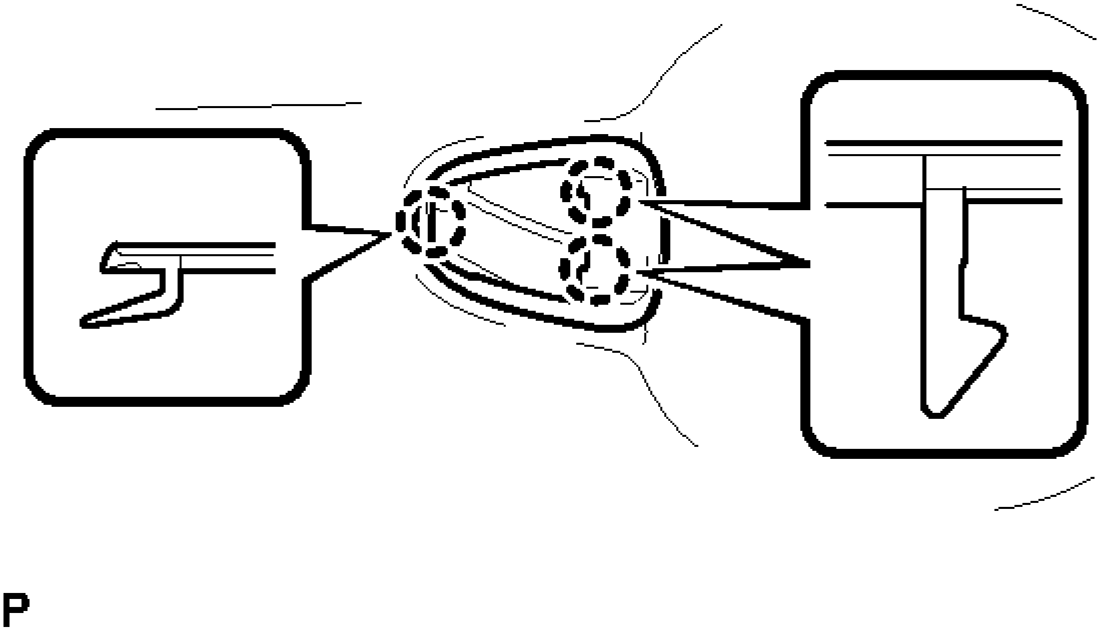

Fig. 57: Identifying Front Door Front Outside Handle Pad Claws
Courtesy of TOYOTA MOTOR SALES, U.S.A., INC.

29. **REMOVE FRONT DOOR REAR OUTSIDE HANDLE PAD**

a. Disengage the 2 claws and remove the front door rear outside handle pad.

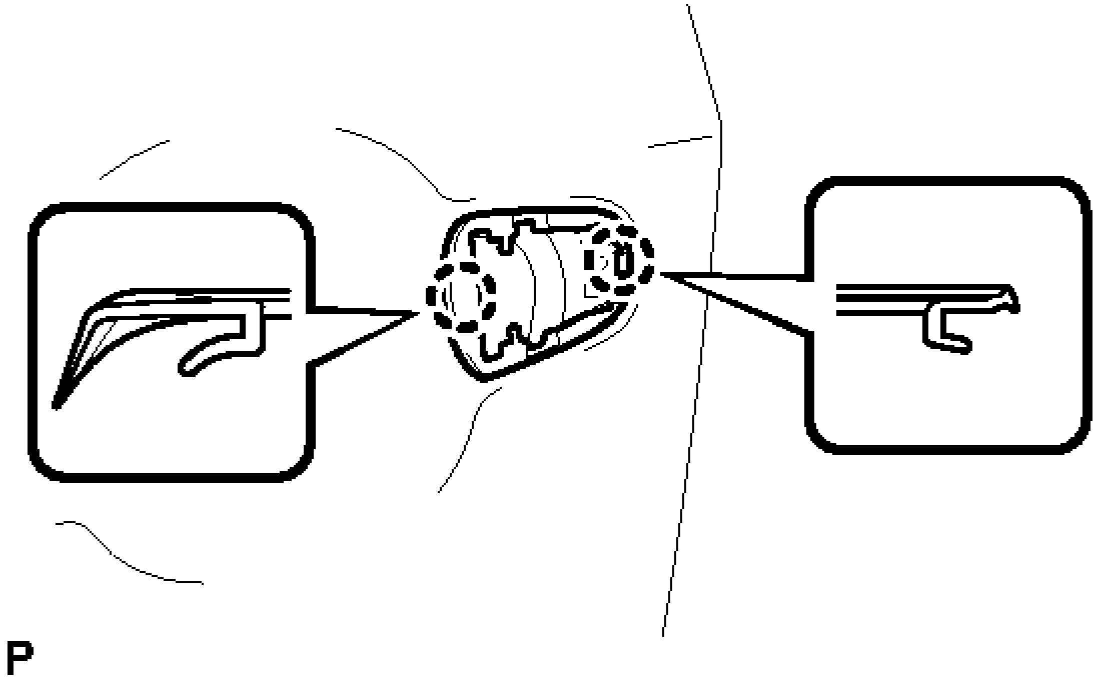

Fig. 58: Identifying Front Door Rear Outside Handle Pad Claws
Courtesy of TOYOTA MOTOR SALES, U.S.A., INC.

30. **REMOVE FRONT DOOR LOCK WITH MOTOR ASSEMBLY**
    a. Using a T30 "TORX" socket wrench, remove the 3 screws.

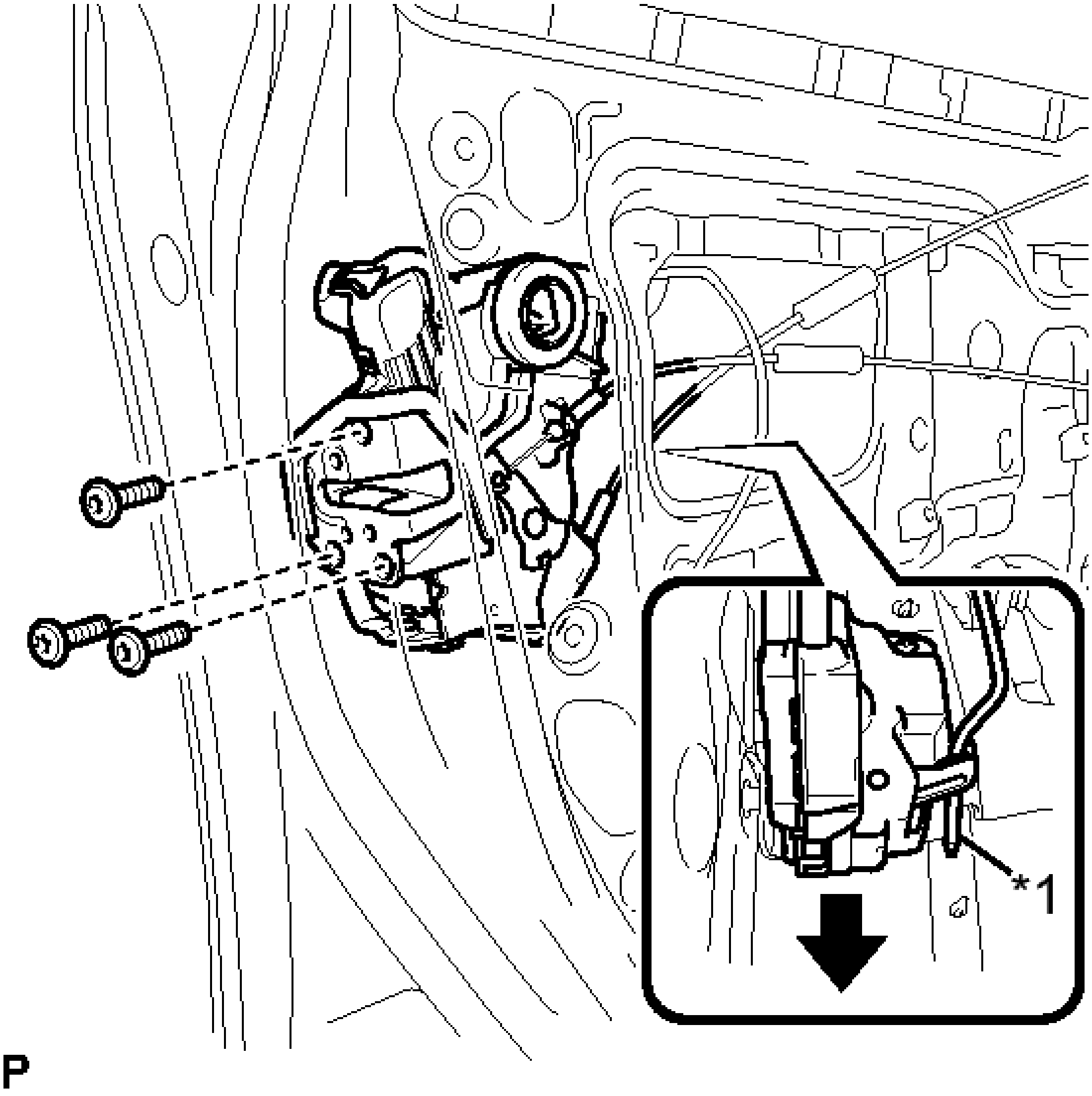

Fig. 59: Identifying Front Door Lock With Motor Assembly Screws
Courtesy of TOYOTA MOTOR SALES, U.S.A., INC.

TEXT IN ILLUSTRATION

*1	Front Door Lock Open Rod

b. Slide the front door lock with motor assembly downward, and remove the front door lock with motor assembly and cables as a unit.
c. When reusing the front door lock with motor assembly:
    1. Remove the door lock wiring harness seal from the front door lock with motor assembly.

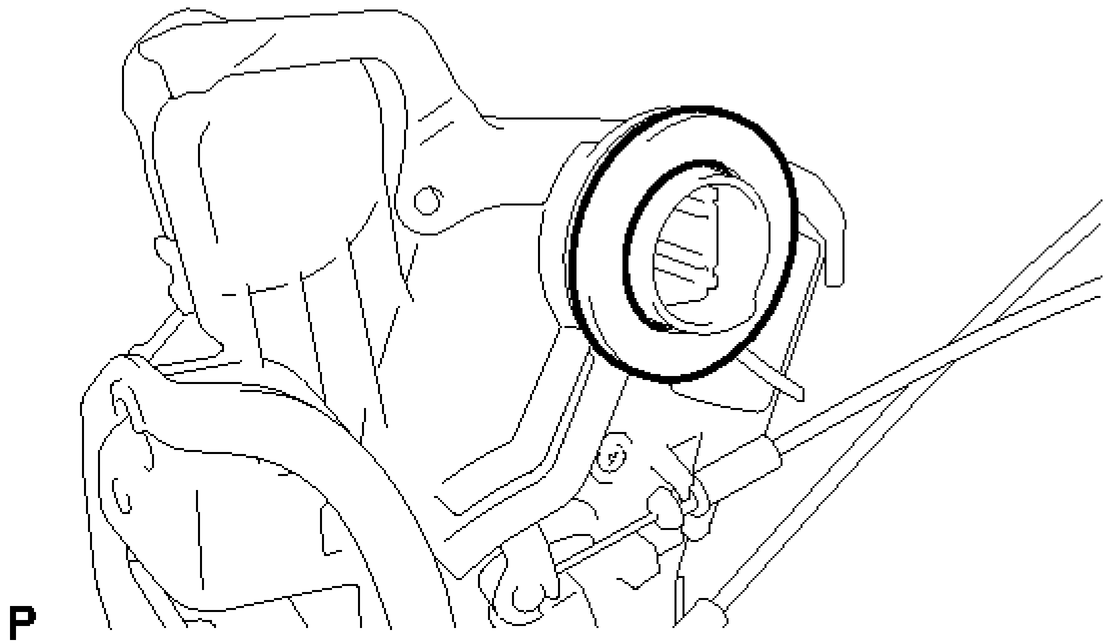

Fig. 60: Identifying Door Lock Wiring Harness Seal
Courtesy of TOYOTA MOTOR SALES, U.S.A., INC.

31. **REMOVE FRONT DOOR LOCK REMOTE CONTROL CABLE ASSEMBLY**
    a. Remove the front door lock remote control cable assembly.

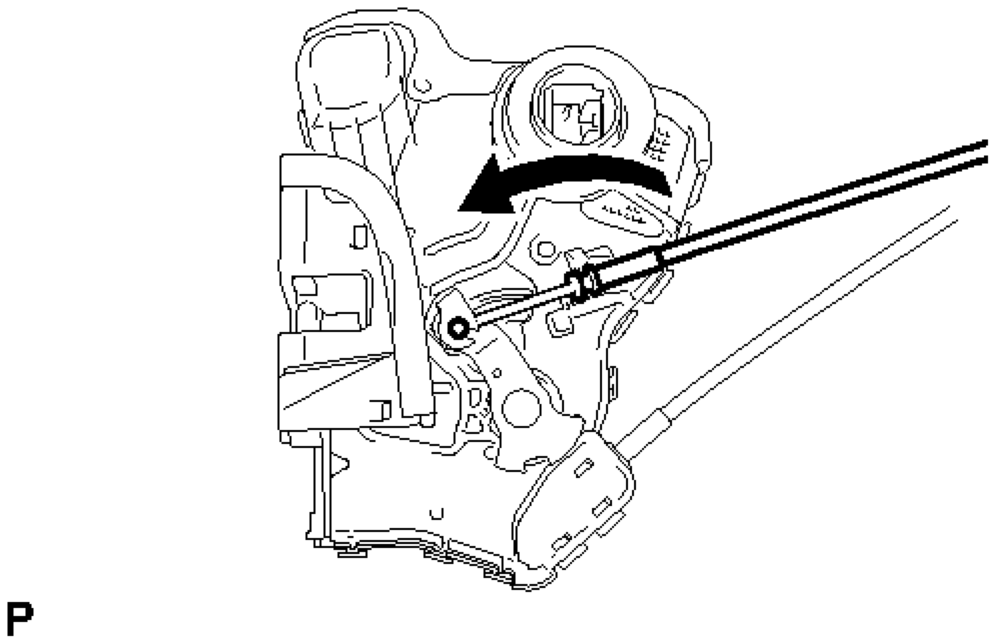

Fig. 61: Removing Front Door Lock Remote Control Cable

Courtesy of TOYOTA MOTOR SALES, U.S.A., INC.

32. REMOVE FRONT DOOR INSIDE LOCKING CABLE ASSEMBLY

a. Using a screwdriver, disengage the 3 claws.

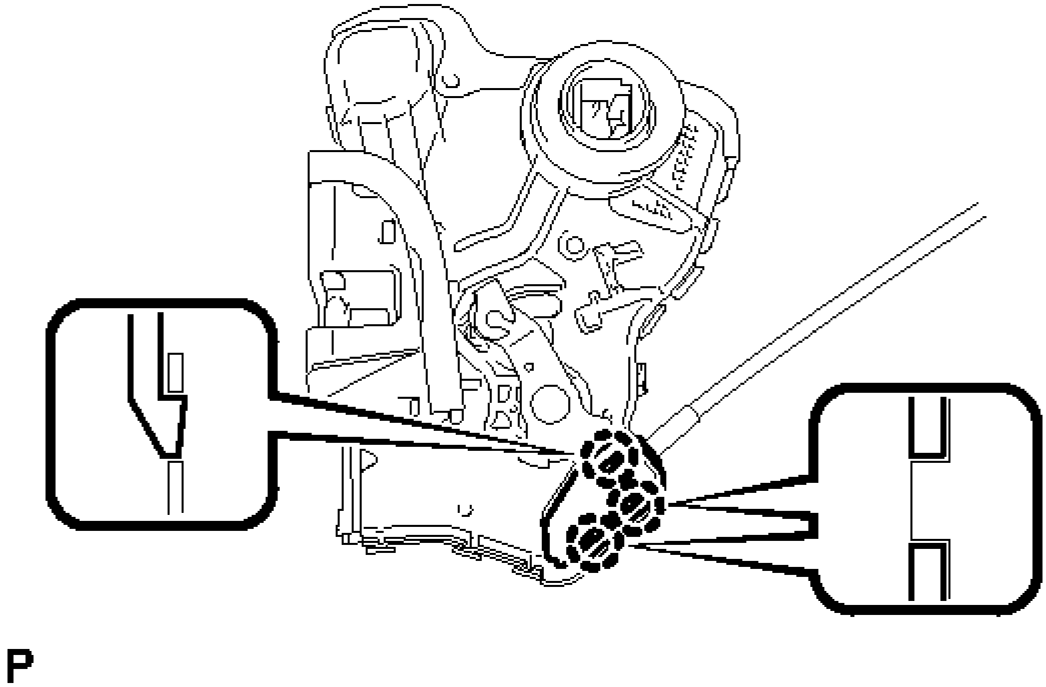

Fig. 62: Identifying Front Door Inside Locking Cable Claws
Courtesy of TOYOTA MOTOR SALES, U.S.A., INC.

b. Remove the front door inside locking cable assembly.

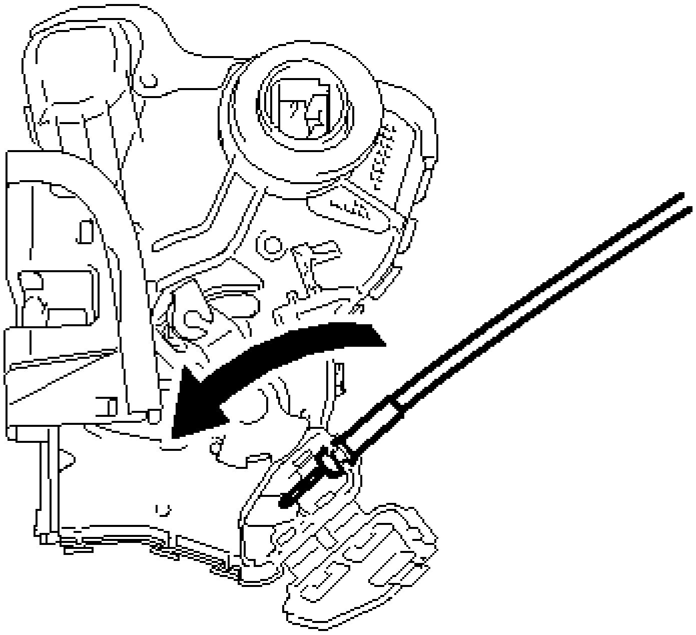

Fig. 63: Removing Front Door Inside Locking Cable
Courtesy of TOYOTA MOTOR SALES, U.S.A., INC.

33. **REMOVE FRONT DOOR OUTSIDE HANDLE FRAME SUB-ASSEMBLY**
    a. w/ Smart Key System:
        1. Disconnect the connector.

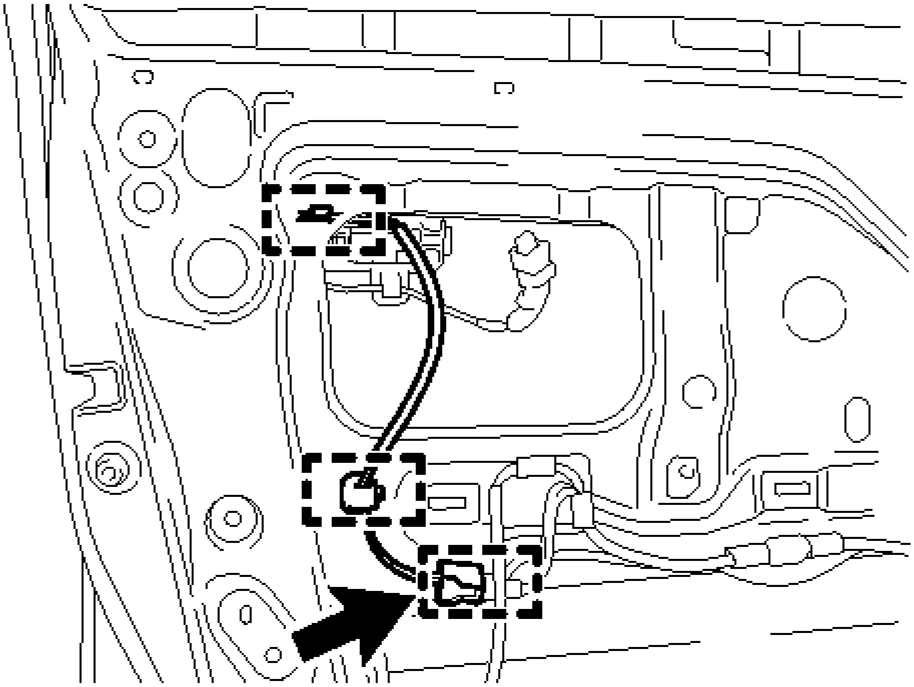

Fig. 64: Identifying Connector And Clamps
Courtesy of TOYOTA MOTOR SALES, U.S.A., INC.

2. Disengage the 3 clamps.

b. Using a T30 "TORX" socket wrench, remove the screw and door handle nut.

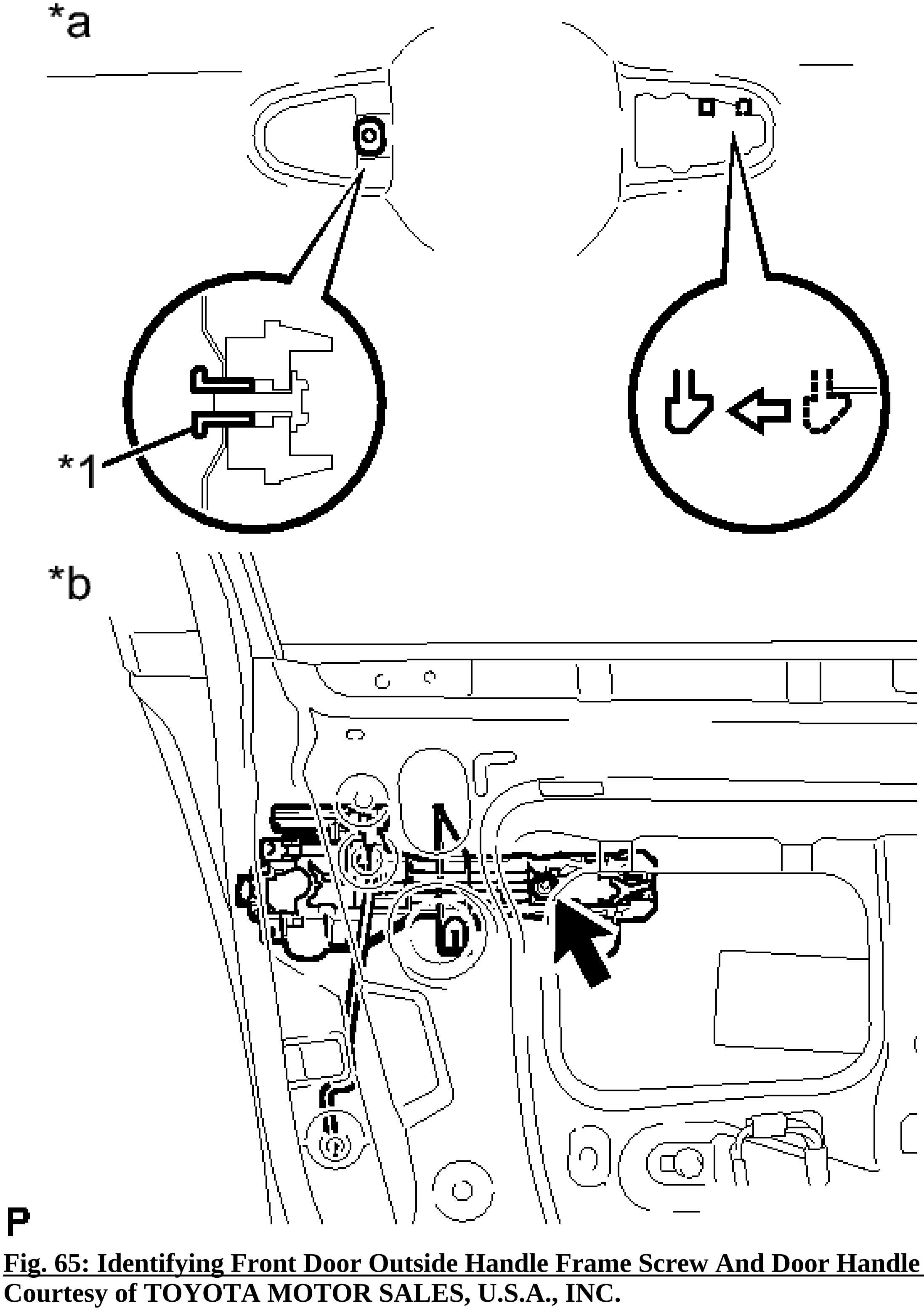

Fig. 65: Identifying Front Door Outside Handle Frame Screw And Door Handle Nut
Courtesy of TOYOTA MOTOR SALES, U.S.A., INC.

TEXT IN ILLUSTRATION

	Door

*1	Handle Nut
*a	Outside
*b	Inside

c. Slide the front door outside handle frame sub-assembly to disengage the claw of the front door outside handle frame sub-assembly, and then remove it.

34. **REMOVE FRONT DOOR WIRE (w/ Smart Key System)**

a. Disengage the 3 clamps and remove the front door wire.

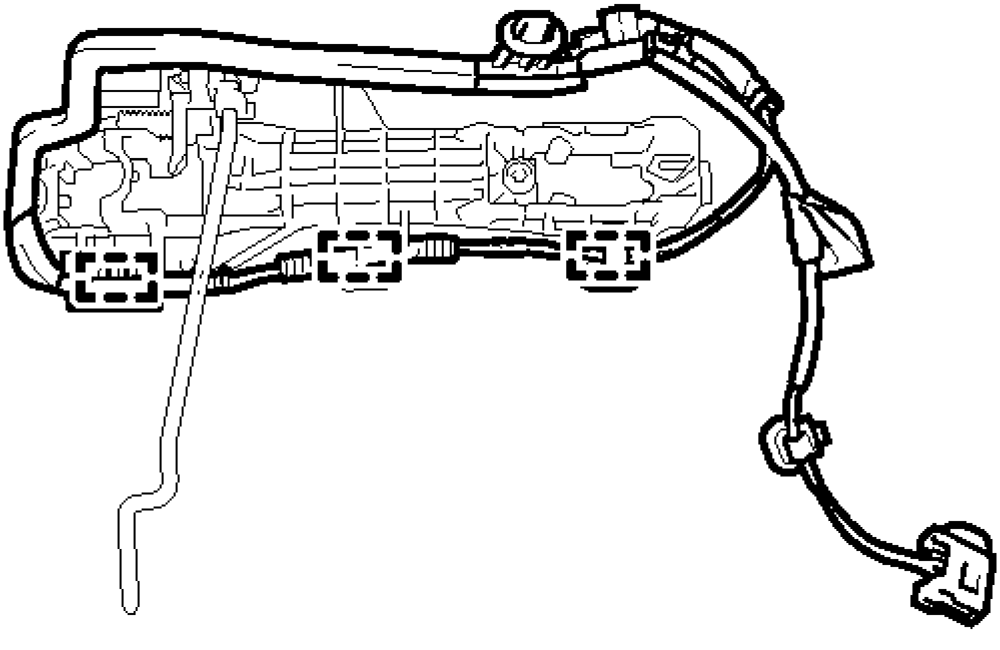

Fig. 66: Identifying Front Door Wire Clamps
Courtesy of TOYOTA MOTOR SALES, U.S.A., INC.

35. **REMOVE FRONT DOOR LOCK OPEN ROD**

a. Remove the front door lock open rod as indicated by the arrows, in the order shown in the illustration.

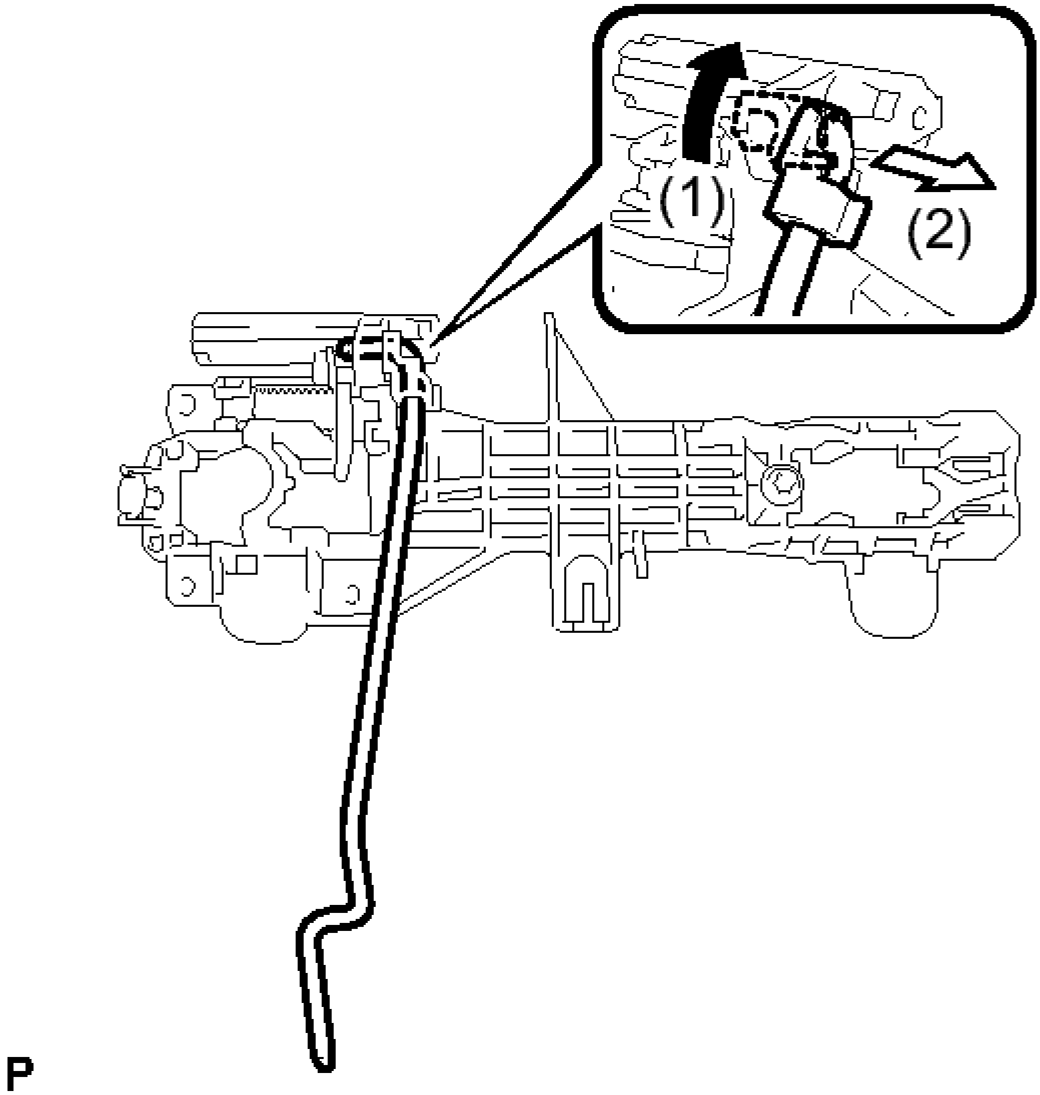

Fig. 67: Removing Front Door Lock Open Rod
Courtesy of TOYOTA MOTOR SALES, U.S.A., INC.

36. **REMOVE FRONT DOOR CHECK ASSEMBLY**
    a. Remove the 3 bolts and front door check assembly.

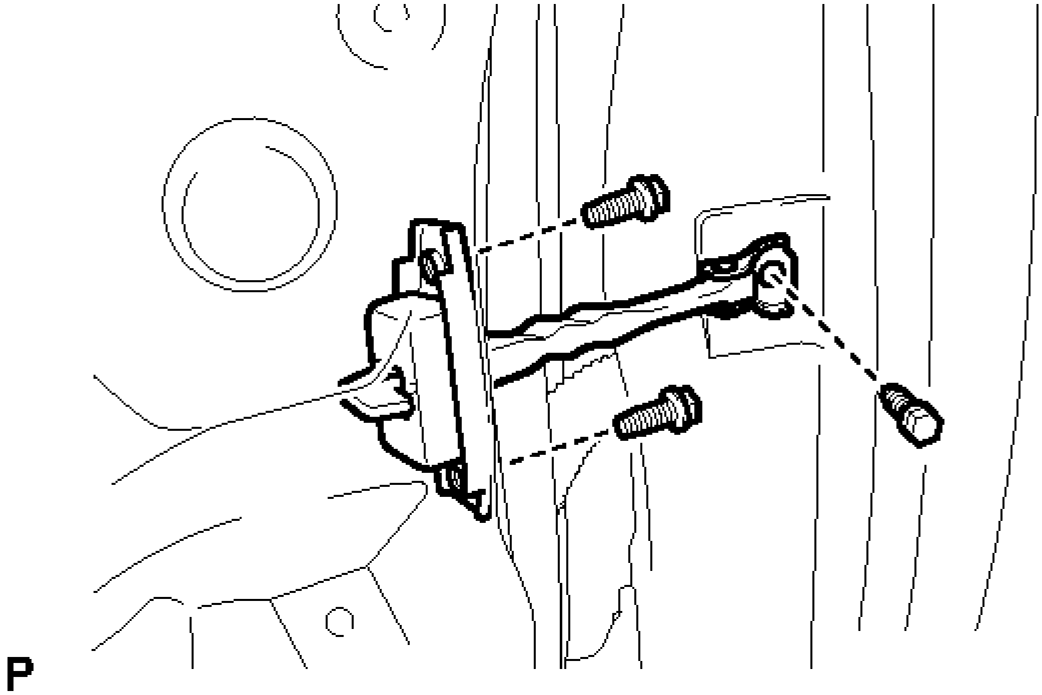

Fig. 68: Identifying Front Door Check Bolts
Courtesy of TOYOTA MOTOR SALES, U.S.A., INC.

37. **REMOVE FRONT DOOR WEATHERSTRIP**
    a. Using a clip remover, disengage the 19 clips and remove the front door weatherstrip.

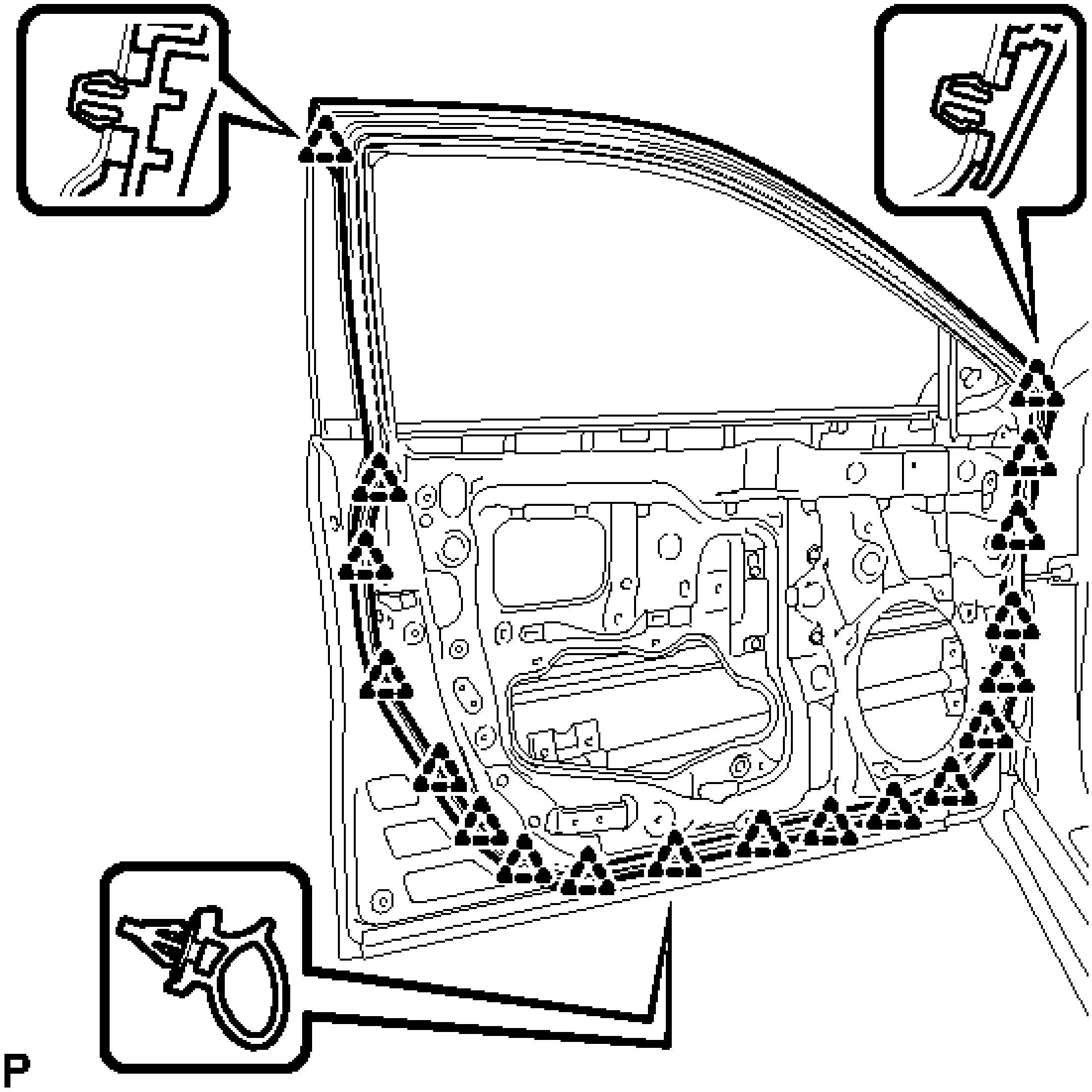

Fig. 69: Identifying Front Door Weatherstrip Clips
Courtesy of TOYOTA MOTOR SALES, U.S.A., INC.

38. **REMOVE DOOR FRAME GARNISH**
    a. Disengage the clip and remove the door frame garnish.

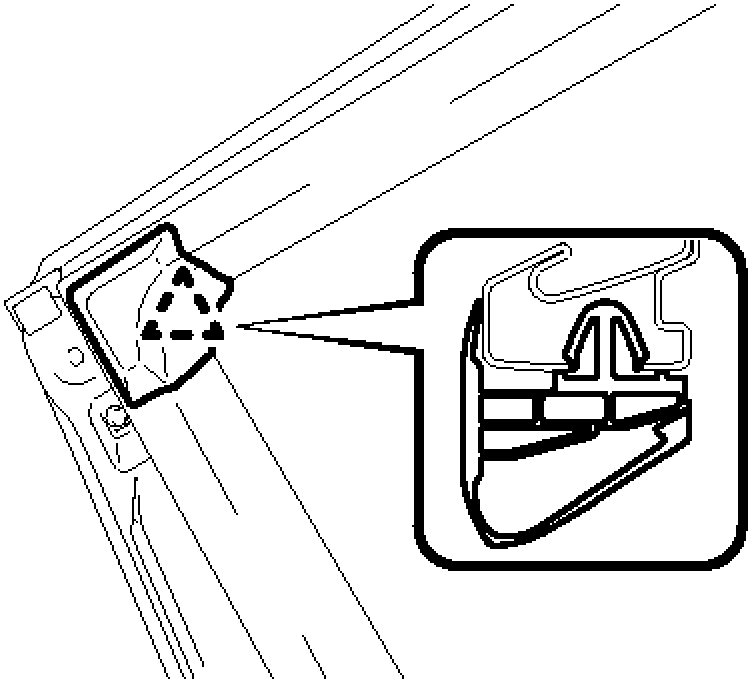

Fig. 70: Identifying Door Frame Garnish Clip
Courtesy of TOYOTA MOTOR SALES, U.S.A., INC.

HINT:

This garnish needs to be replaced with a new one because the clip will break when removing it.

39. **REMOVE FRONT DOOR NO. 2 WEATHERSTRIP**
    a. Using a clip remover, disengage the 8 clips and remove the front door No. 2 weatherstrip.

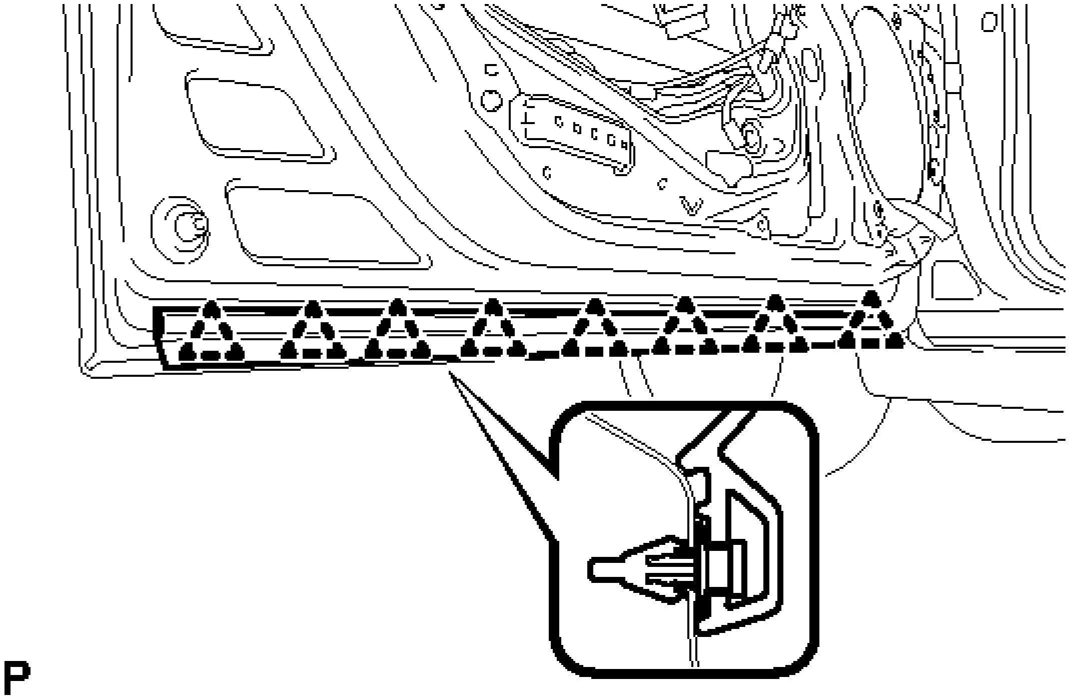

Fig. 71: Identifying Front Door No. 2 Weatherstrip Clips
Courtesy of TOYOTA MOTOR SALES, U.S.A., INC.

40. **REMOVE FRONT DOOR PANEL CUSHION**
    a. Disengage the 2 claws and remove the 2 front door panel cushions.

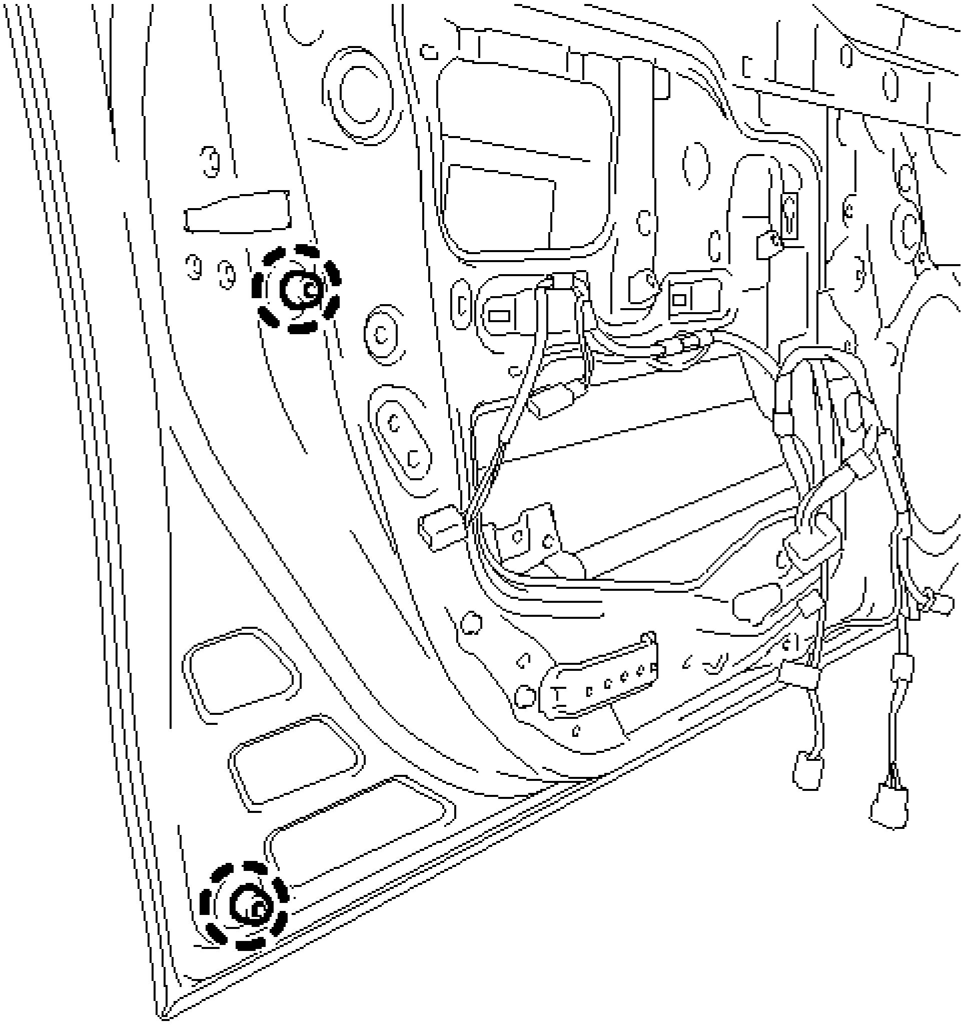

Fig. 72: Identifying Front Door Panel Cushions
Courtesy of TOYOTA MOTOR SALES, U.S.A., INC.

41. **REMOVE DOOR DUST PROOF SEAL**
    a. Remove the door dust proof seal.

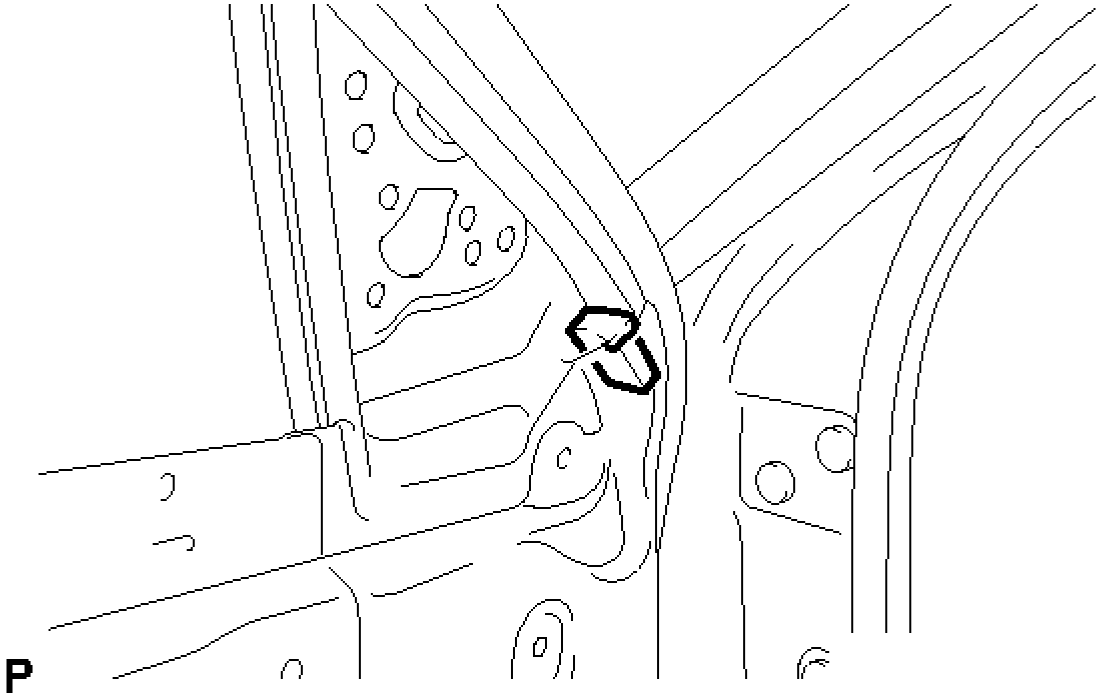

Fig. 73: Identifying Door Dust Proof Seal
Courtesy of TOYOTA MOTOR SALES, U.S.A., INC.

42. **REMOVE FRONT DOOR BELT MOULDING ASSEMBLY** . Refer to **REMOVAL - Step 7** .
43. **REMOVE FRONT DOOR REAR WINDOW FRAME MOULDING** . Refer to **REMOVAL - Step 11** .
44. **REMOVE FRONT DOOR UPPER WINDOW FRAME MOULDING** . Refer to **REMOVAL - Step 12** .
45. **REMOVE FRONT DOOR STRIPE** . Refer to **REMOVAL - Step 11** .
46. **REMOVE FRONT DOOR LOWER OUTSIDE STRIPE** . Refer to **REMOVAL - Step 12** .

ADJUSTMENT

ADJUSTMENT

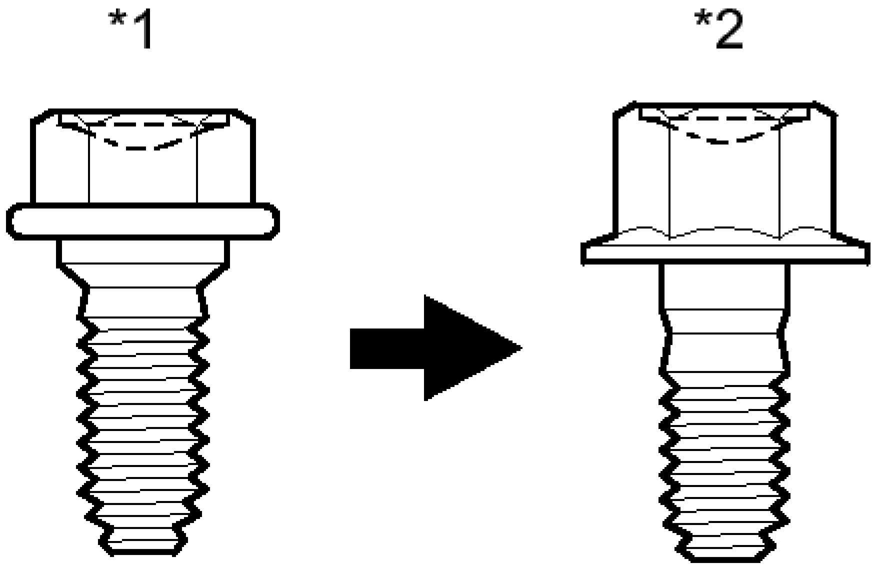

Fig. 74: Identifying Centering Bolt And Standard Bolt
Courtesy of TOYOTA MOTOR SALES, U.S.A., INC.

TEXT IN ILLUSTRATION

*1	Centering Bolt
*2	Standard Bolt

HINT:

- Use the same procedure for the RH side and LH side.
- The procedure listed below is for the LH side.
- Centering bolts are used to mount the door hinge to the vehicle body and door. The door cannot be adjusted with the centering bolts installed. Substitute the centering bolts with standard bolts when making adjustments.
- Specified torque for standard bolts is shown in the standard bolt chart. Refer to **SPECIFIED TORQUE FOR STANDARD BOLTS** .

1. **INSPECT FRONT DOOR**
    a. Check that the clearance measurements of areas a through p are within each standard range.

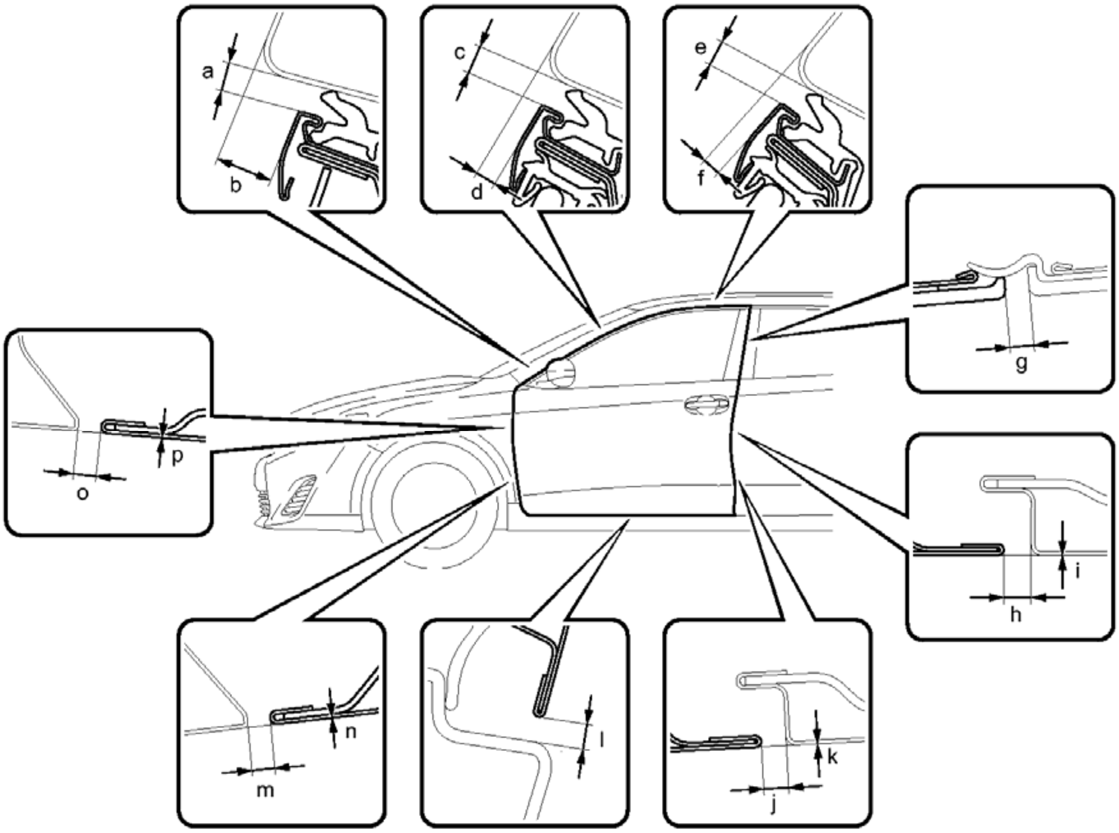

P

Fig. 75: Checking Front Door Clearance Measurements
Courtesy of TOYOTA MOTOR SALES, U.S.A., INC.

STANDARD CLEARANCE

Area	Measurement	Area	Measurement
a	3.35 to 6.35 mm (0.132 to 0.250 in.)	b	9.0 to 12.0 mm (0.354 to 0.472 in.)
c	3.35 to 6.35 mm (0.132 to 0.250 in.)	d	1.7 to 4.7 mm (0.0669 to 0.185 in.)
e	3.35 to 6.35 mm (0.132 to 0.250 in.)	f	1.0 to 4.0 mm (0.0394 to 0.157 in.)
g	2.3 to 6.3 mm (0.0906 to 0.248 in.)	h	2.96 to 4.64 mm (0.115 to 0.182 in.)

i	-0.84 to 0.84 mm (-0.0331 to 0.0331 in.)	j	2.96 to 4.64 mm (0.115 to 0.182 in.)
k	-0.84 to 0.84 mm (-0.0331 to 0.0331 in.)	l	2.9 to 7.1 mm (0.114 to 0.280 in.)
m	2.3 to 4.7 mm (0.0906 to 0.185 in.)	n	-1.2 to 1.2 mm (-0.0472 to 0.0472 in.)
o	2.3 to 4.7 mm (0.0906 to 0.185 in.)	p	-1.2 to 1.2 mm (-0.0472 to 0.0472 in.)

2. **REMOVE FRONT WHEEL**
3. **REMOVE FRONT WHEEL OPENING EXTENSION PAD**

   HINT:

   Use the same procedure for the RH side and LH side. Refer to **REMOVAL - Step 2** .

4. **REMOVE FRONT FENDER LINER**

   HINT:

   Use the same procedure for the RH side and LH side. Refer to **REMOVAL - Step 3** .

5. **REMOVE FRONT FENDER SEAL**
   a. Disengage the 3 clips and remove the front fender seal.

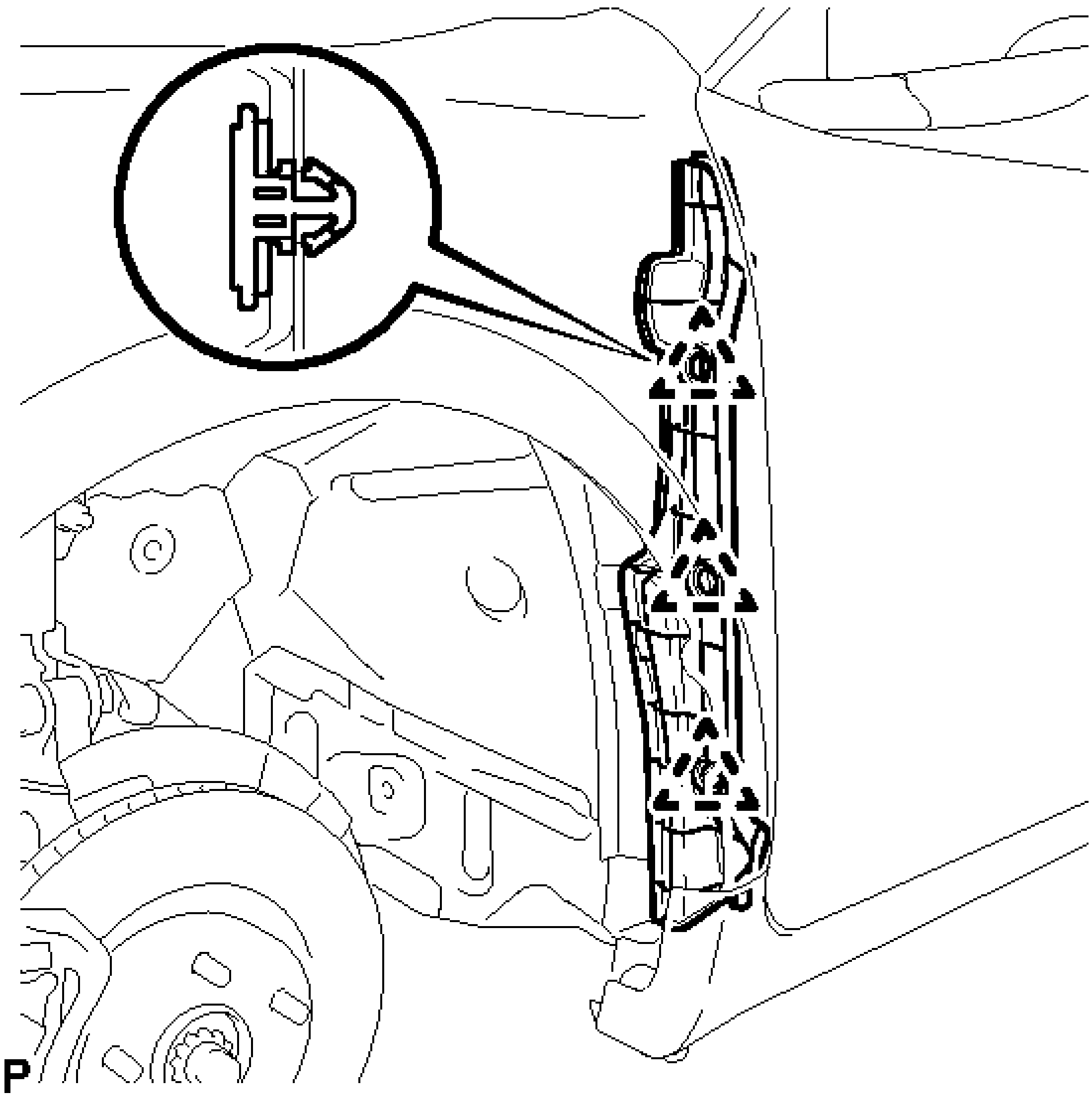

Fig. 76: Identifying Front Fender Seal Clips
Courtesy of TOYOTA MOTOR SALES, U.S.A., INC.

6. **ADJUST FRONT DOOR**

NOTE: Make sure that the turn the ignition switch off when adjusting door lock strikers.

a. Using SST, loosen the hinge bolts on the vehicle body and adjust the door position.
    - **SST: 09812-00010**

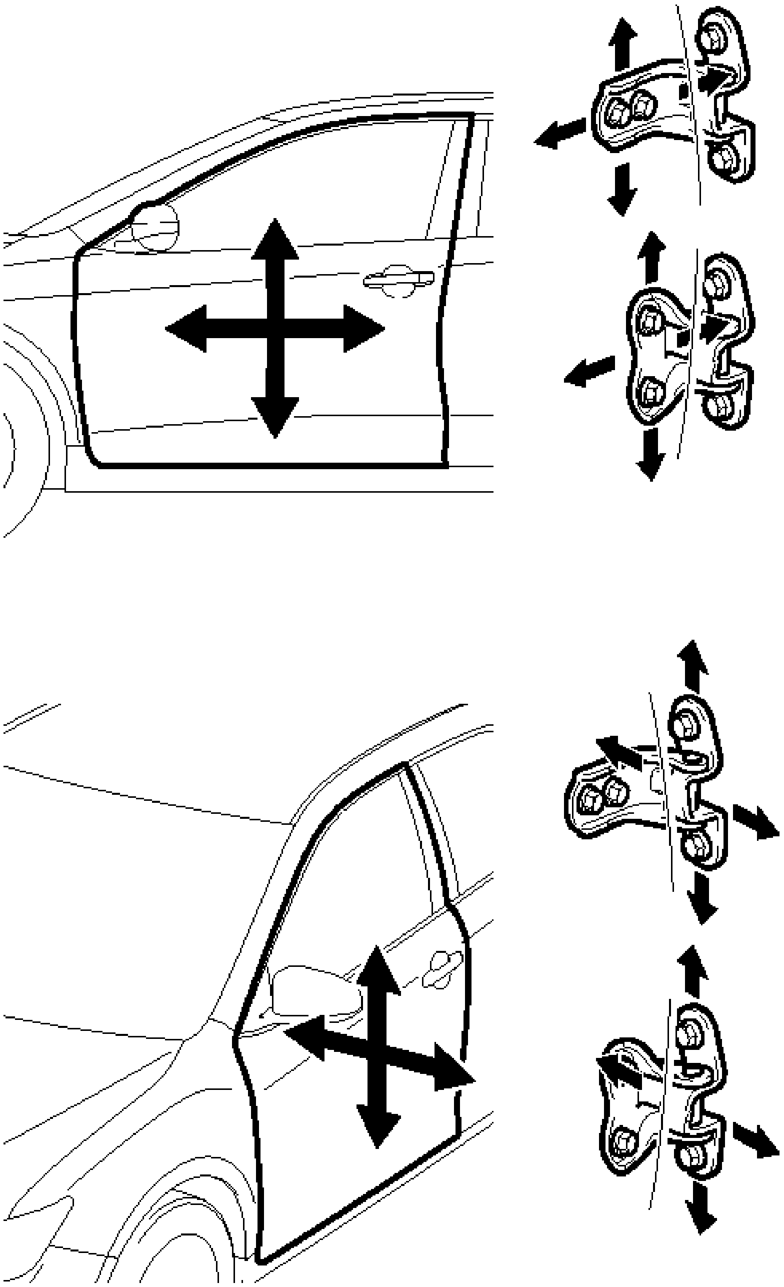

P

Fig. 77: Adjusting The Door Position
Courtesy of TOYOTA MOTOR SALES, U.S.A., INC.

b. Tighten the hinge bolts on the vehicle body after adjustment.

Torque: 26 N*m (265 kgf*cm, 19 ft.*lbf)

c. Loosen the hinge bolts on the door and adjust the door position.
d. Tighten the hinge bolts on the door after adjustment.

Torque: 26 N*m (265 kgf*cm, 19 ft.*lbf)

e. Using a T40 "TORX" socket wrench, slightly loosen the striker mounting screws.

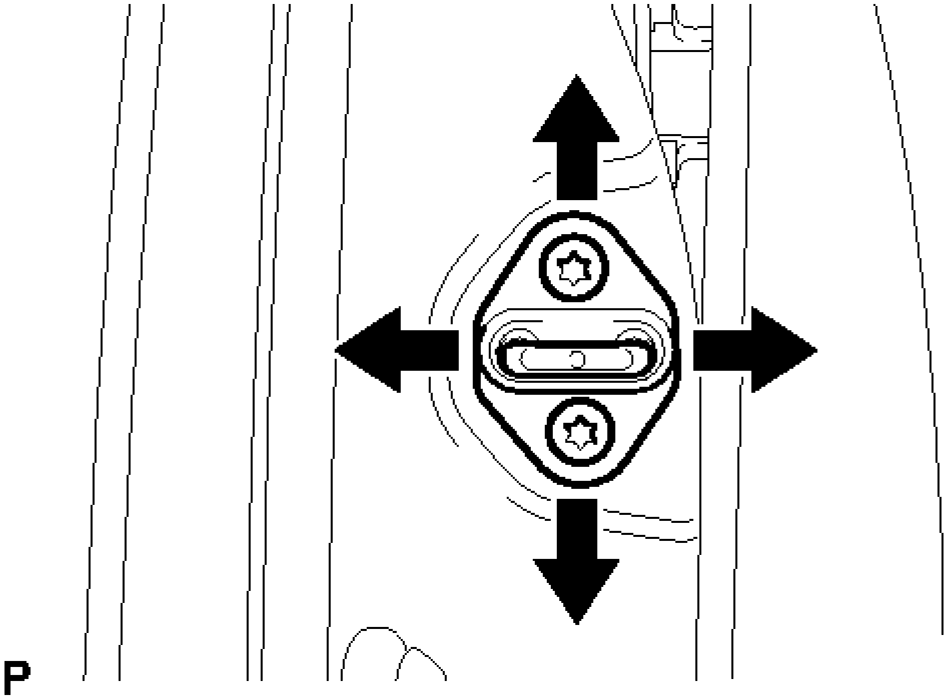

Fig. 78: Adjusting Door Striker
Courtesy of TOYOTA MOTOR SALES, U.S.A., INC.

f. Using a brass bar and a hammer, hit the striker to adjust its position.
g. Using a T40 "TORX" socket wrench, tighten the striker mounting screws after adjustment.

Torque: 23 N*m (235 kgf*cm, 17 ft.*lbf)

7. **INSTALL FRONT FENDER SEAL**
   a. Install the front fender seal with new 3 clips.

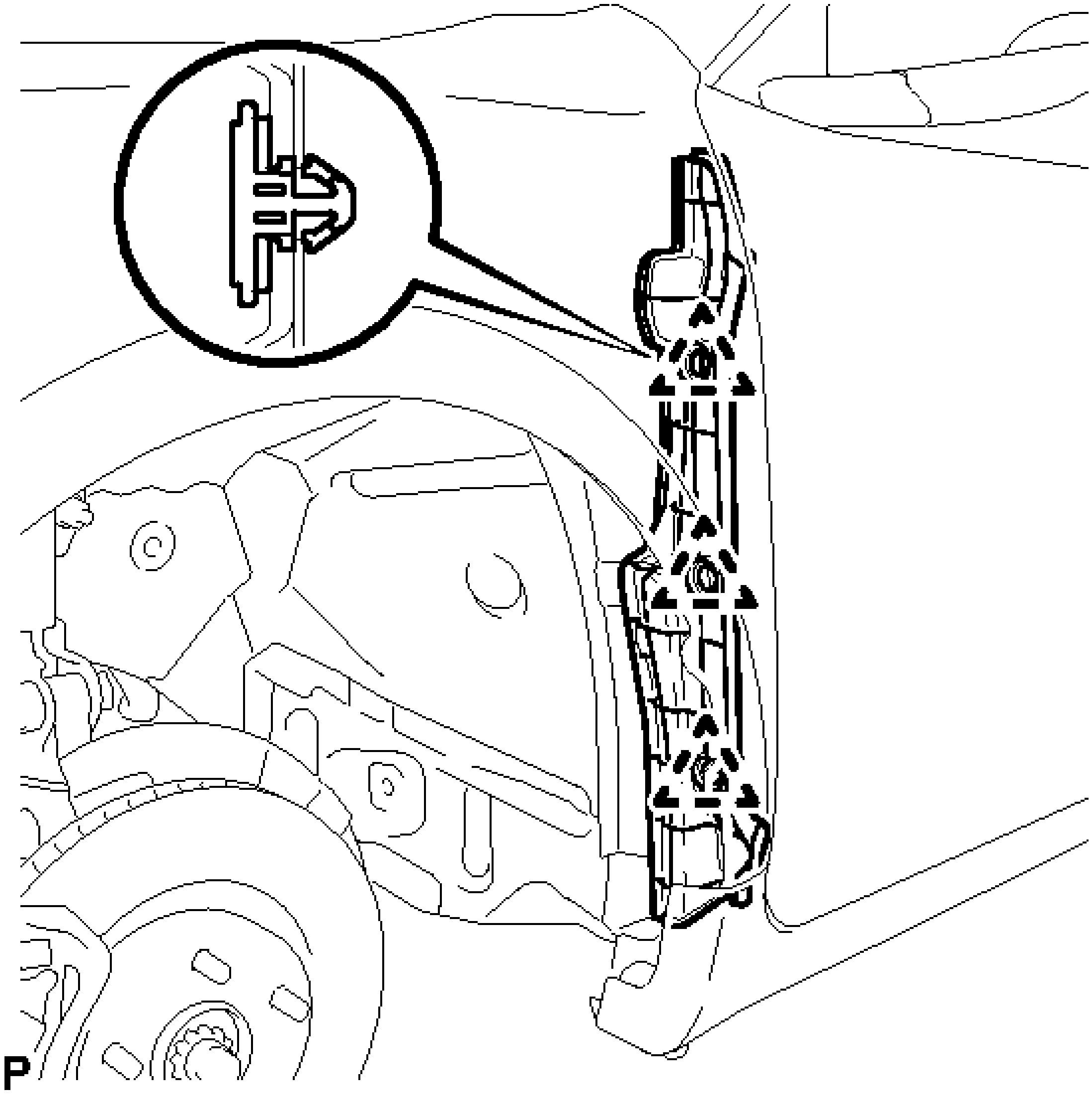

Fig. 79: Identifying Front Fender Seal Clips
Courtesy of TOYOTA MOTOR SALES, U.S.A., INC.

8. **INSTALL FRONT FENDER LINER**

   HINT:

   Use the same procedure for the RH side and LH side. Refer to **INSTALLATION - Step 3** .

9. **INSTALL FRONT WHEEL OPENING EXTENSION PAD**

   HINT:

   Use the same procedure for the RH side and LH side. Refer to **INSTALLATION - Step 4** .

10. **INSTALL FRONT WHEEL** . Refer to **INSTALLATION - Step 13** .

REASSEMBLY

REASSEMBLY

HINT:

- Use the same procedure for both the RH and LH sides.
- The procedure described below is for the LH side.

1. **PRECAUTION**

   NOTE: **After turning the ignition switch off, waiting time may be required before disconnecting the cable from the negative (-) battery terminal. Therefore, make sure to read the disconnecting the cable from the negative (-) battery terminal notices before proceeding with work. Refer to PRECAUTION .**

2. **REPAIR INSTRUCTION** . Refer to **INSTALLATION - Step 2** .
3. **INSTALL FRONT DOOR LOWER OUTSIDE STRIPE** . Refer to **INSTALLATION - Step 3** .
4. **INSTALL FRONT DOOR STRIPE** . Refer to **INSTALLATION - Step 4** .
5. **INSTALL FRONT DOOR UPPER WINDOW FRAME MOULDING** . Refer to **INSTALLATION - Step 2** .
6. **INSTALL FRONT DOOR REAR WINDOW FRAME MOULDING** . Refer to **INSTALLATION - Step 3** .
7. **INSTALL FRONT DOOR BELT MOULDING ASSEMBLY** . Refer to **INSTALLATION - Step 2** .
8. **INSTALL DOOR DUST PROOF SEAL**
   1. Install door dust proof seal.

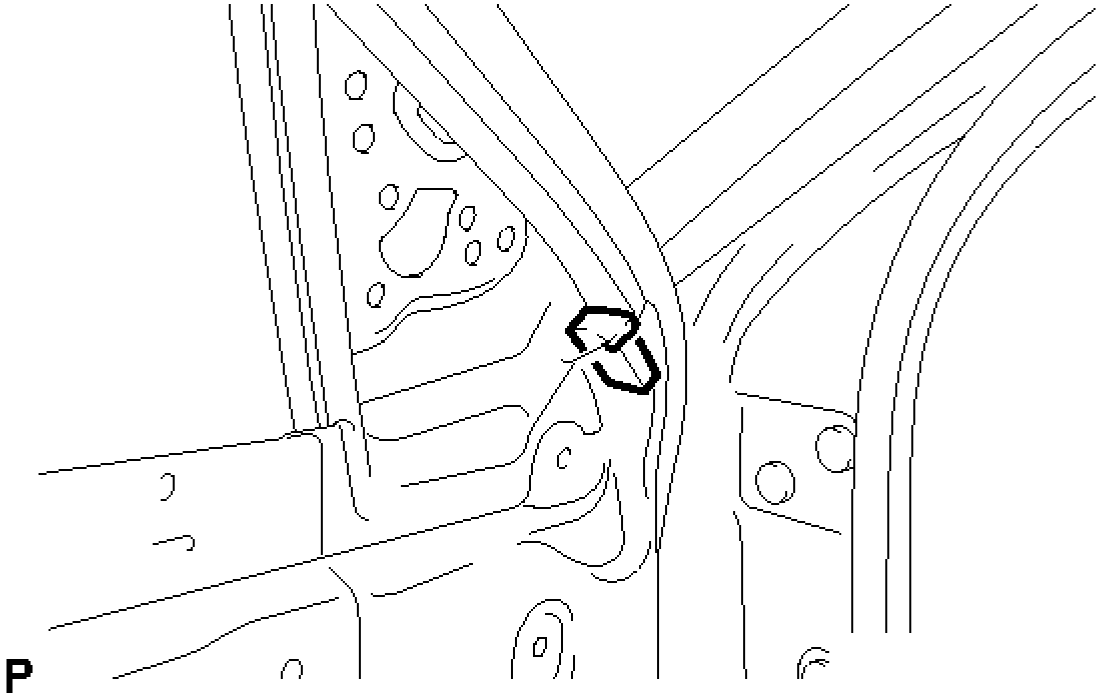

Fig. 80: Identifying Door Dust Proof Seal
Courtesy of TOYOTA MOTOR SALES, U.S.A., INC.

9. **INSTALL FRONT DOOR PANEL CUSHION**
    a. Engage the 2 claws to install 2 new front door panel cushions.

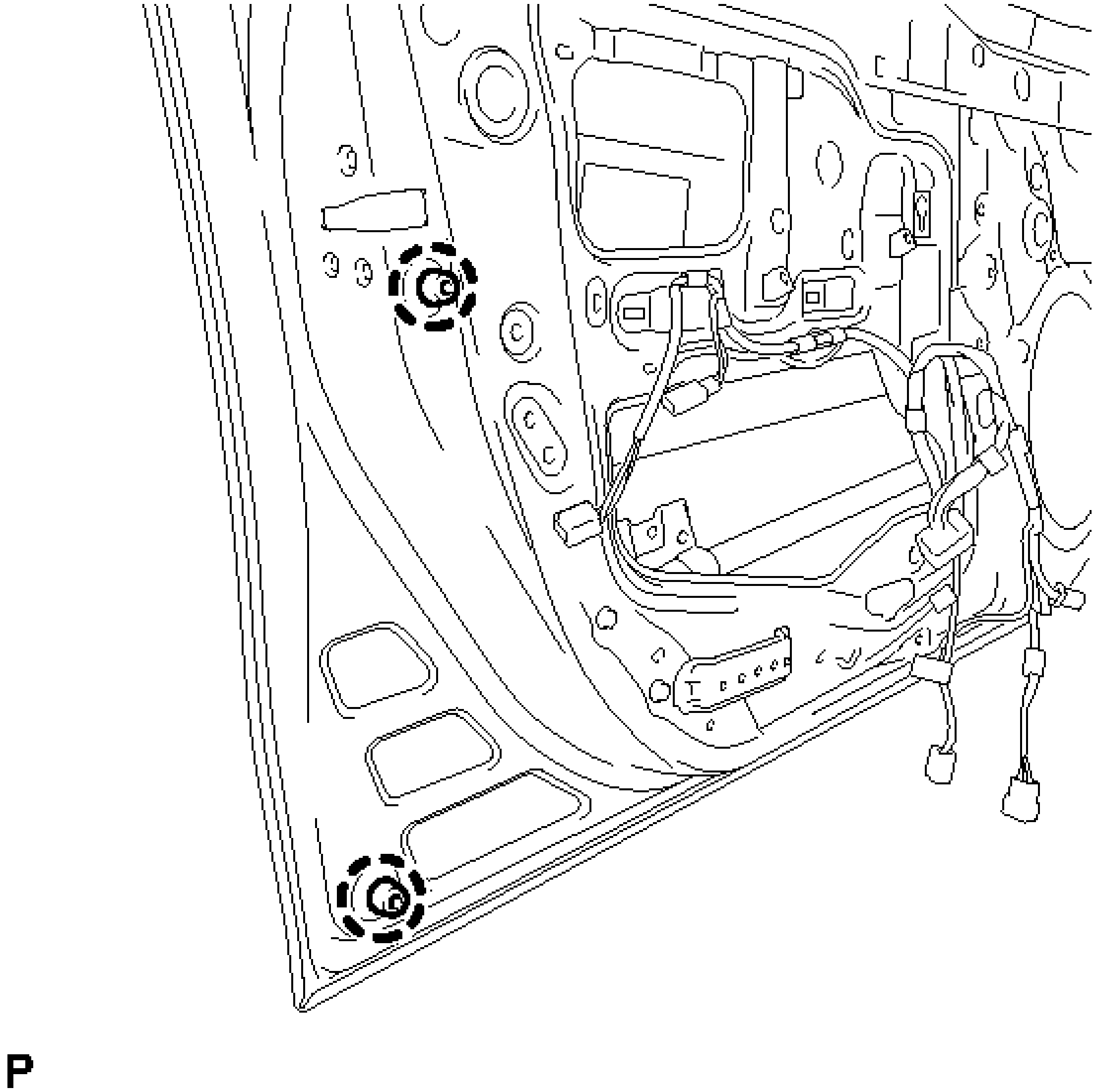

Fig. 81: Identifying Front Door Panel Cushions
Courtesy of TOYOTA MOTOR SALES, U.S.A., INC.

10. **INSTALL FRONT DOOR NO. 2 WEATHERSTRIP**
    a. Engage the 8 clips to install the front door No. 2 weatherstrip.

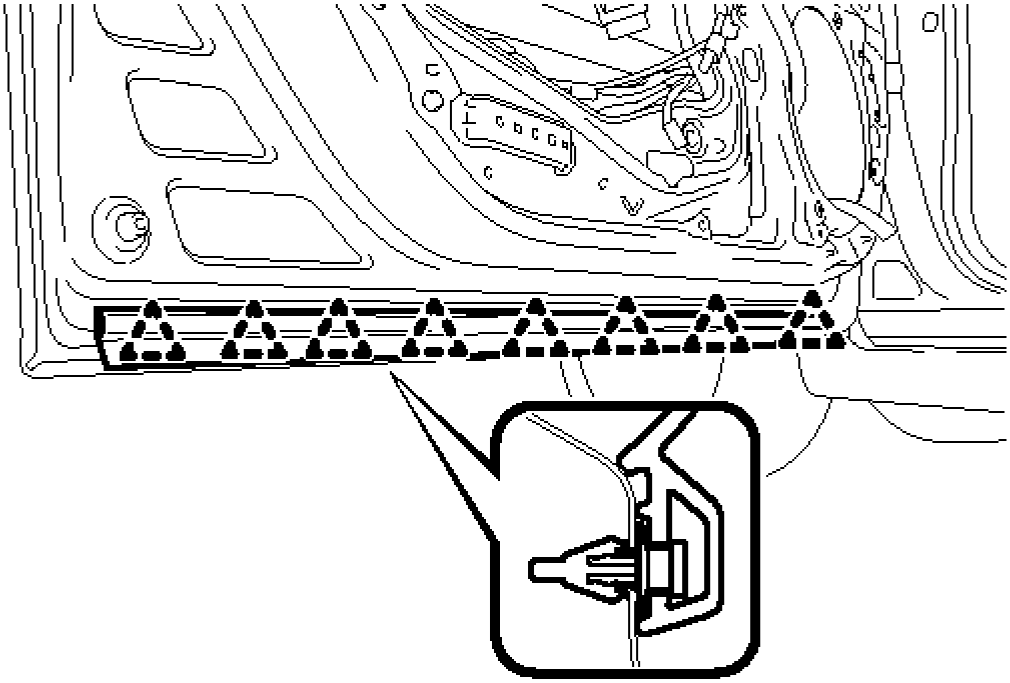

Fig. 82: Identifying Front Door No. 2 Weatherstrip Clips
Courtesy of TOYOTA MOTOR SALES, U.S.A., INC.

11. **INSTALL DOOR FRAME GARNISH**
    a. Engage the clip to install a new door frame garnish.

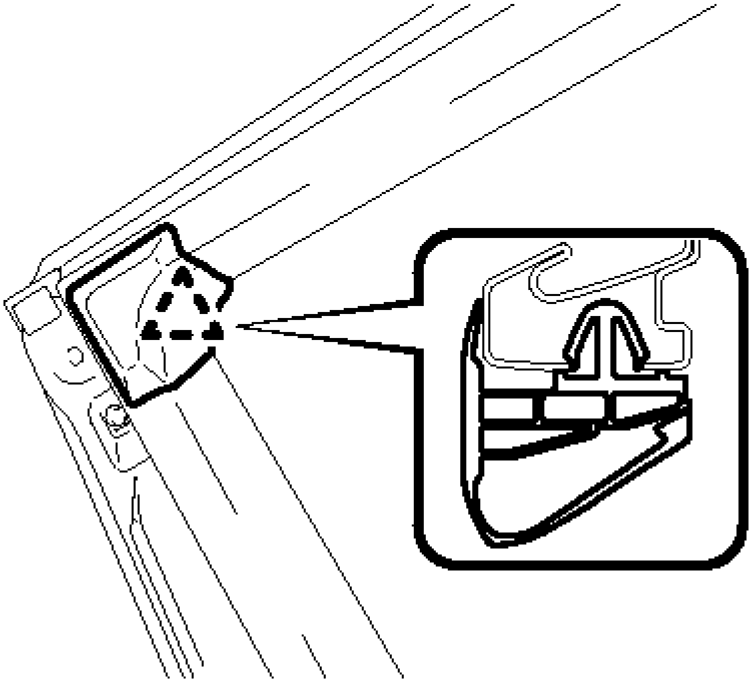

Fig. 83: Identifying Door Frame Garnish Clip

Courtesy of TOYOTA MOTOR SALES, U.S.A., INC.

12. **INSTALL FRONT DOOR WEATHERSTRIP**
    a. Engage the 19 clips and install the front door weatherstrip.

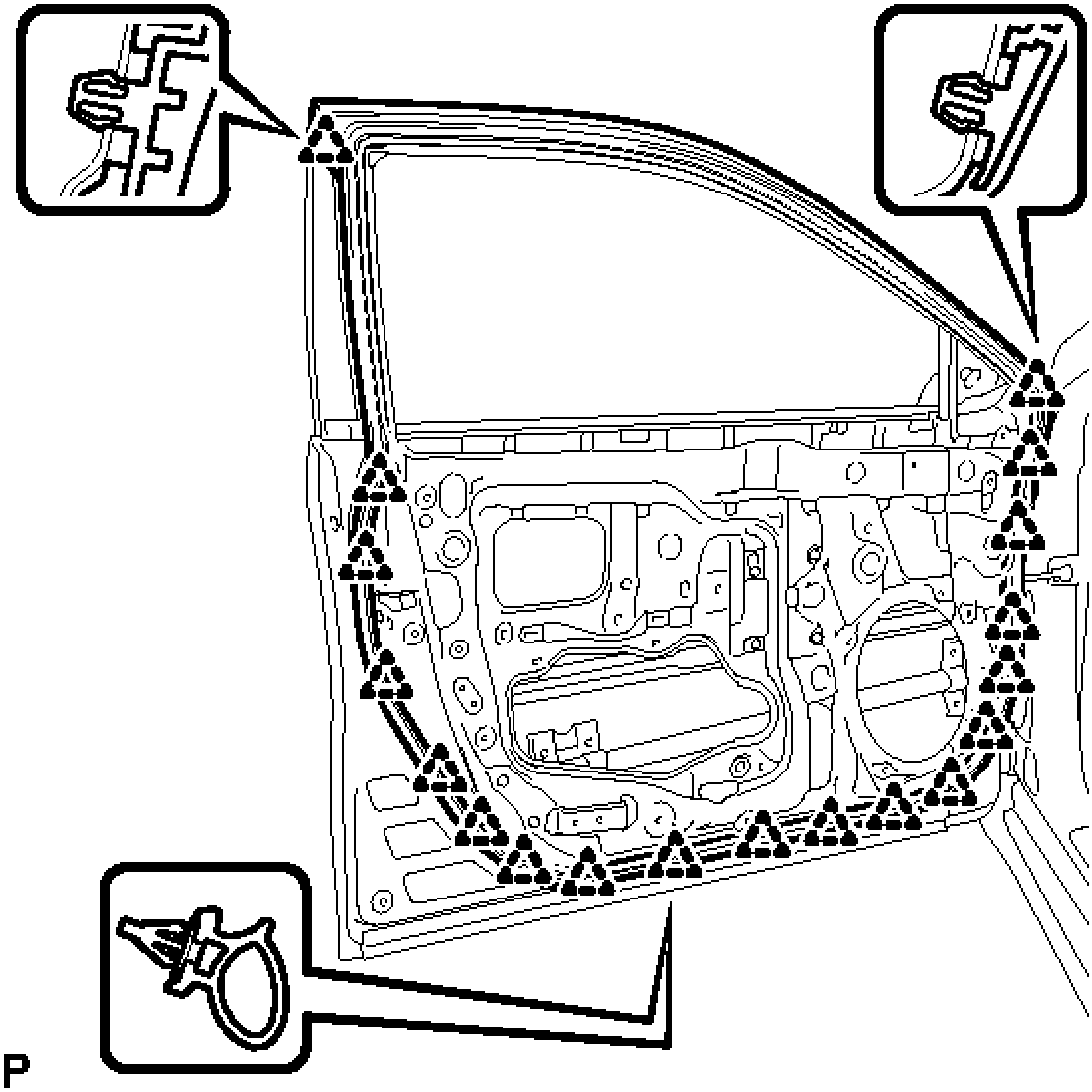

Fig. 84: Identifying Front Door Weatherstrip Clips
Courtesy of TOYOTA MOTOR SALES, U.S.A., INC.

13. **INSTALL FRONT DOOR CHECK ASSEMBLY**
    a. Apply MP grease to the sliding areas of the front door check assembly.
    b. Apply adhesive to the threads of the bolt.

    Adhesive

    Toyota Genuine Adhesive 1324, Three Bond 1324 or equivalent

c. Install the front door check assembly with the 3 bolts.

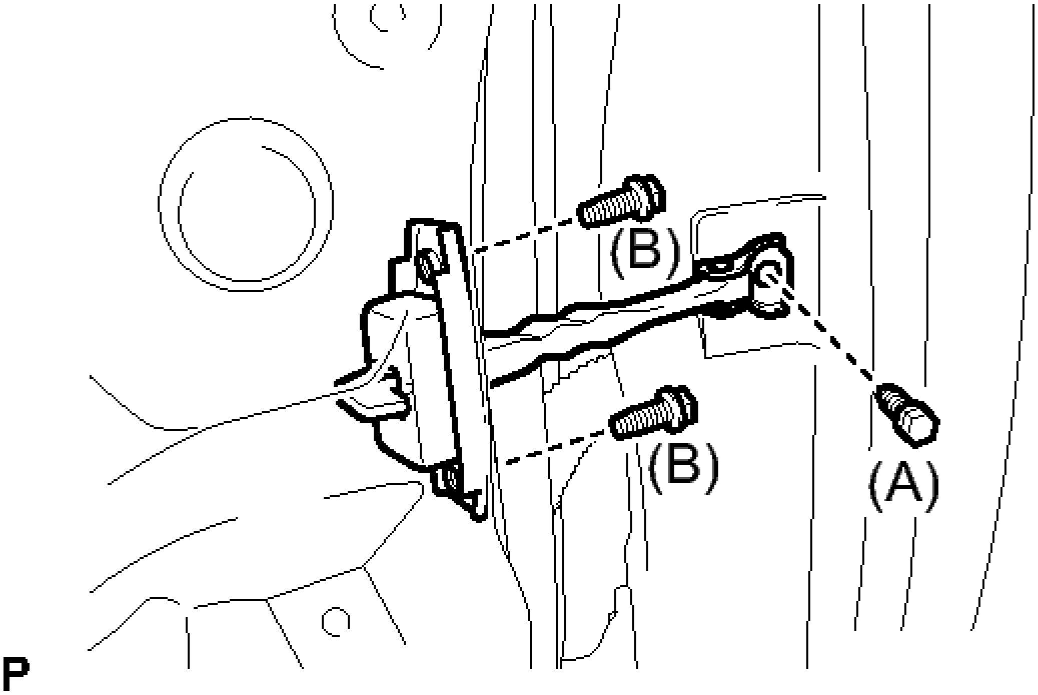

Fig. 85: Identifying Front Door Check Bolts
Courtesy of TOYOTA MOTOR SALES, U.S.A., INC.

Bolt (A)

Torque: 29 N*m (296 kgf*cm, 21 ft.*lbf)

Bolt (B)

Torque: 5.5 N*m (56 kgf*cm, 49 in.*lbf)

14. **INSTALL FRONT DOOR LOCK OPEN ROD**
    a. Install the front door lock open rod as indicated by the arrows, in the order shown in the illustration.

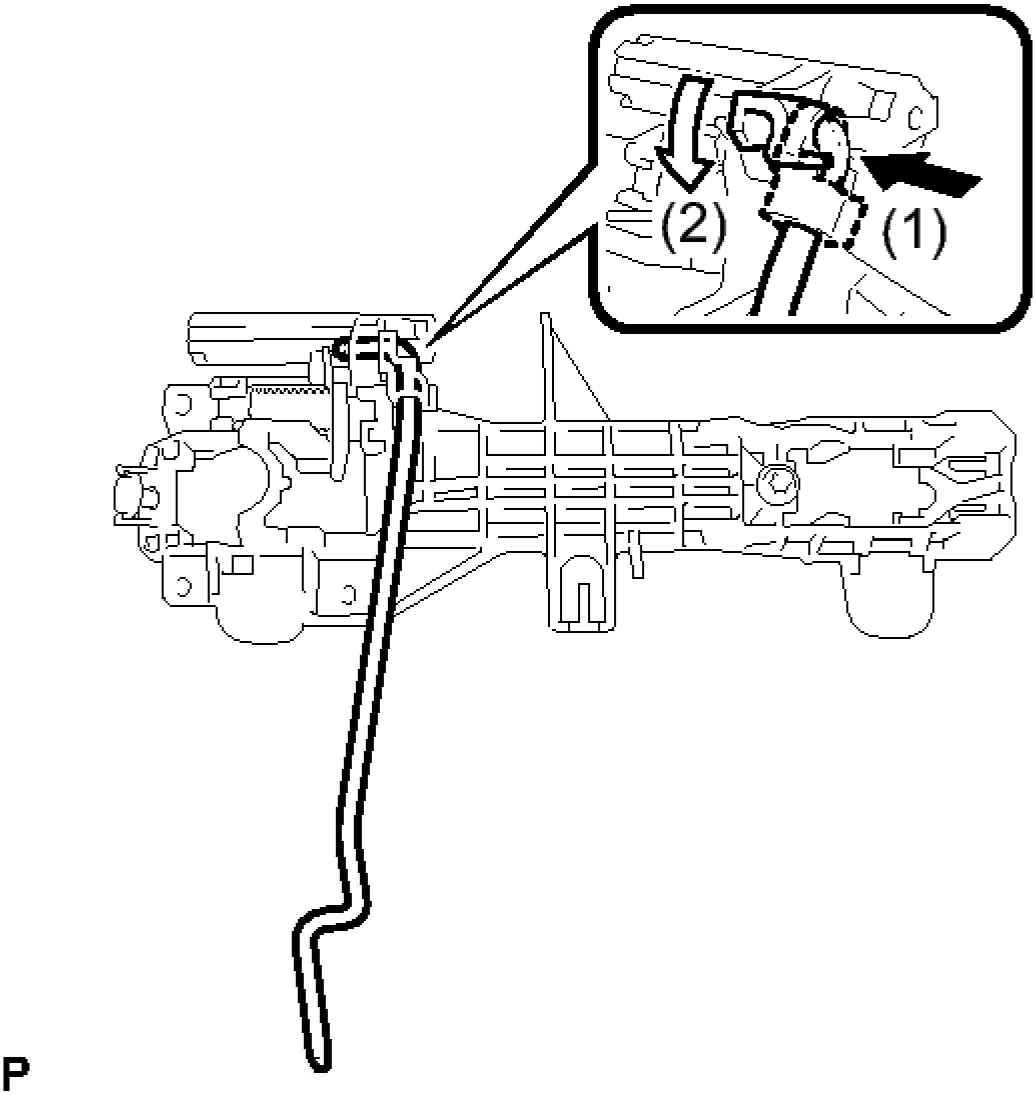

Fig. 86: Installing Front Door Lock Open Rod
Courtesy of TOYOTA MOTOR SALES, U.S.A., INC.

15. **INSTALL FRONT DOOR WIRE (w/ Smart Key System)**
    a. Engage the 3 clamps to install the front door wire.

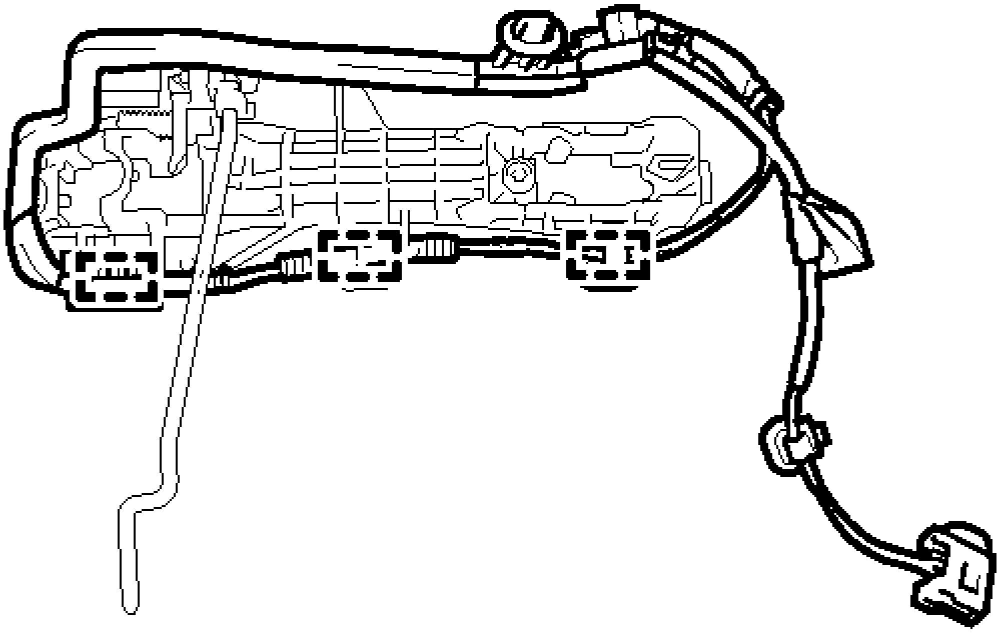

Fig. 87: Identifying Front Door Wire Clamps
Courtesy of TOYOTA MOTOR SALES, U.S.A., INC.

16. **INSTALL FRONT DOOR OUTSIDE HANDLE FRAME SUB-ASSEMBLY**
    a. Apply MP grease to the sliding parts on the front door outside handle frame sub-assembly.
    b. Engage the claw.

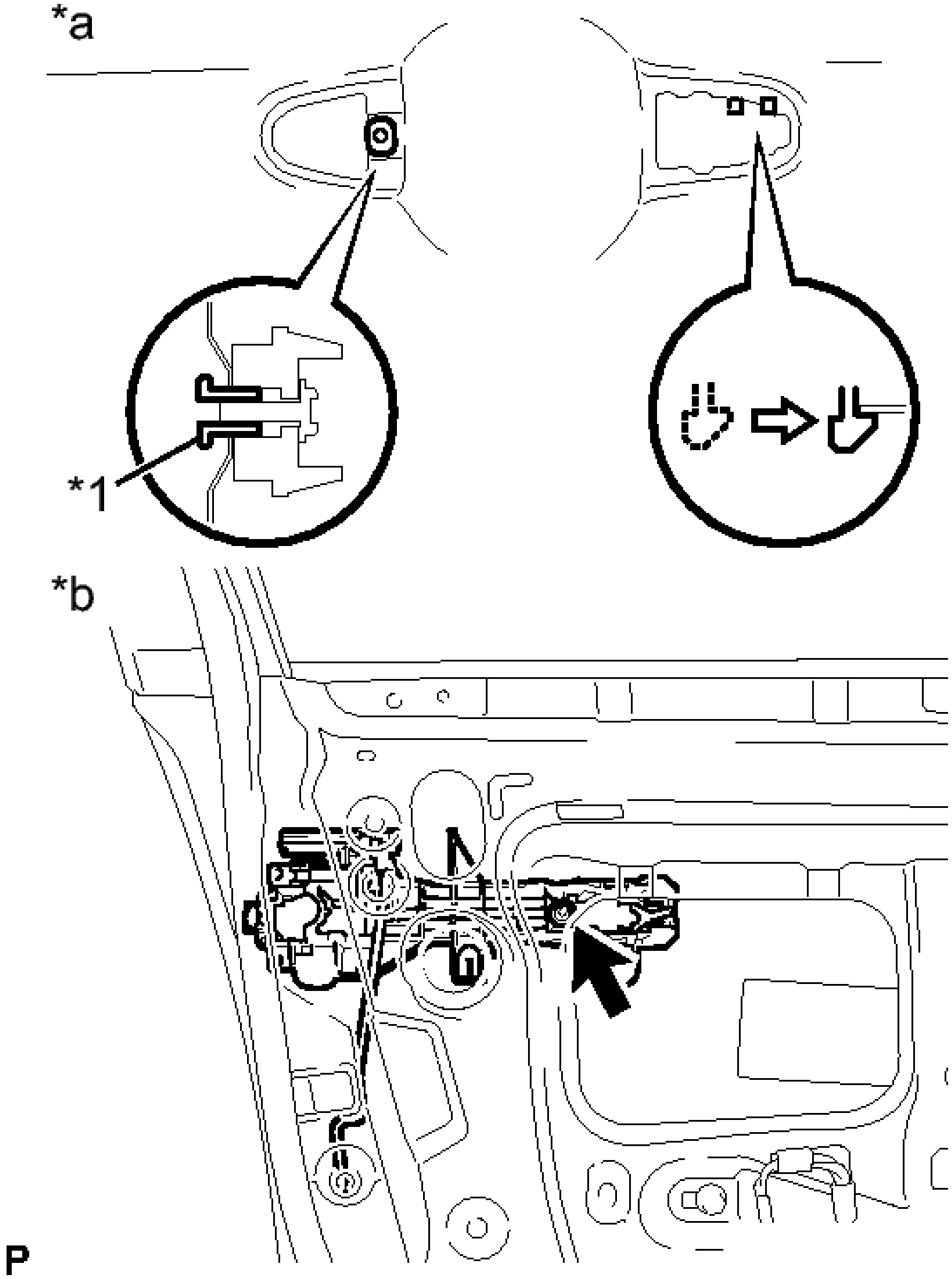

Fig. 88: Identifying Screw And Door Handle Nut
Courtesy of TOYOTA MOTOR SALES, U.S.A., INC.

TEXT IN ILLUSTRATION

	Door

*1	Handle Nut
*a	Outside
*b	Inside

c. Using a T30 "TORX" socket wrench, install the front door outside handle frame sub-assembly with the screw and door handle nut.

   Torque: 4.0 N*m (41 kgf*cm, 35 in.*lbf)

d. w/ Smart Key System:
   1. Engage the 3 clamps.

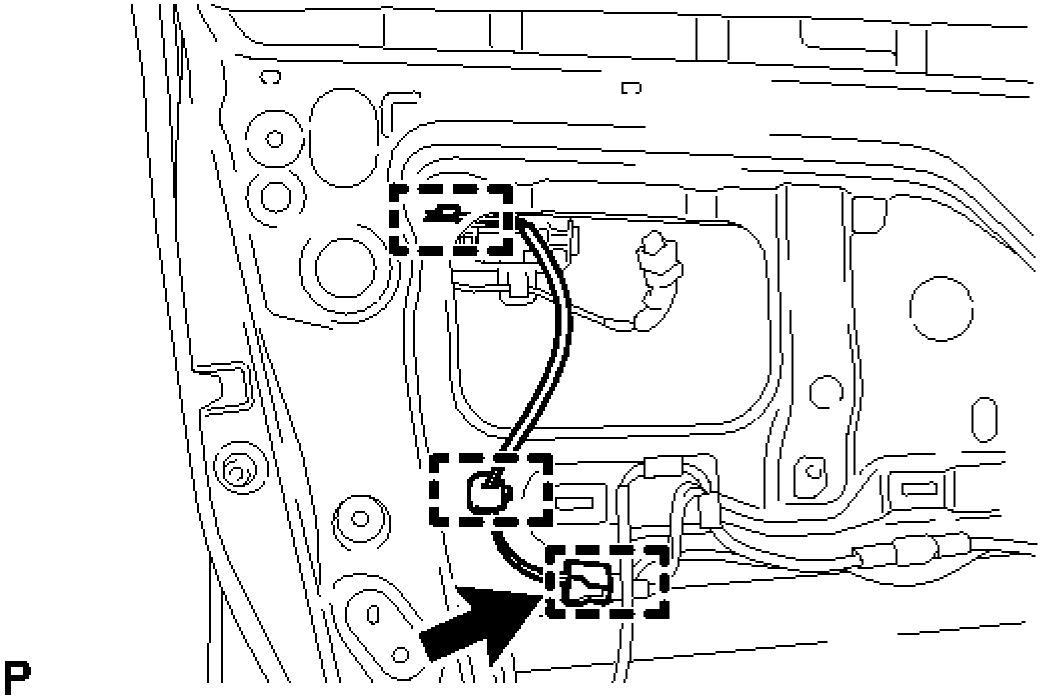

Fig. 89: Identifying Connector And Clamps
Courtesy of TOYOTA MOTOR SALES, U.S.A., INC.

   2. Connect the connector.

17. **INSTALL FRONT DOOR INSIDE LOCKING CABLE ASSEMBLY**
    a. Install the front door inside locking cable assembly.

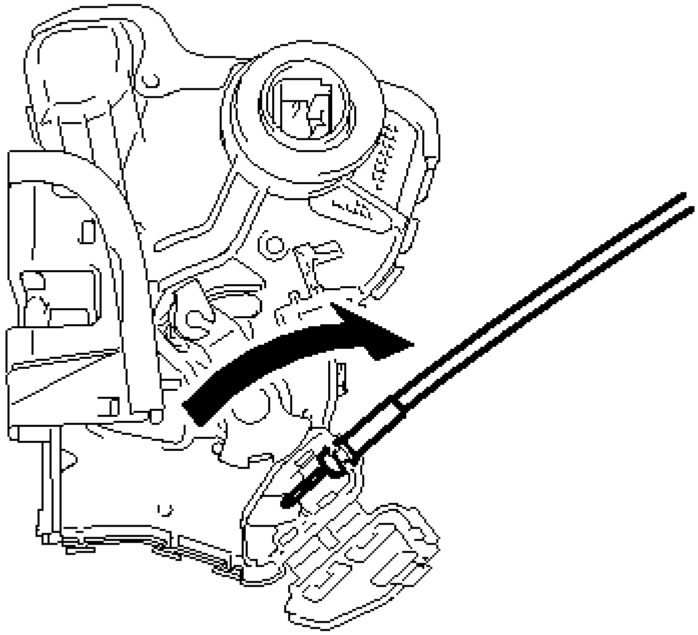

P

Fig. 90: Installing Front Door Inside Locking Cable
Courtesy of TOYOTA MOTOR SALES, U.S.A., INC.

b. Engage the 3 claws.

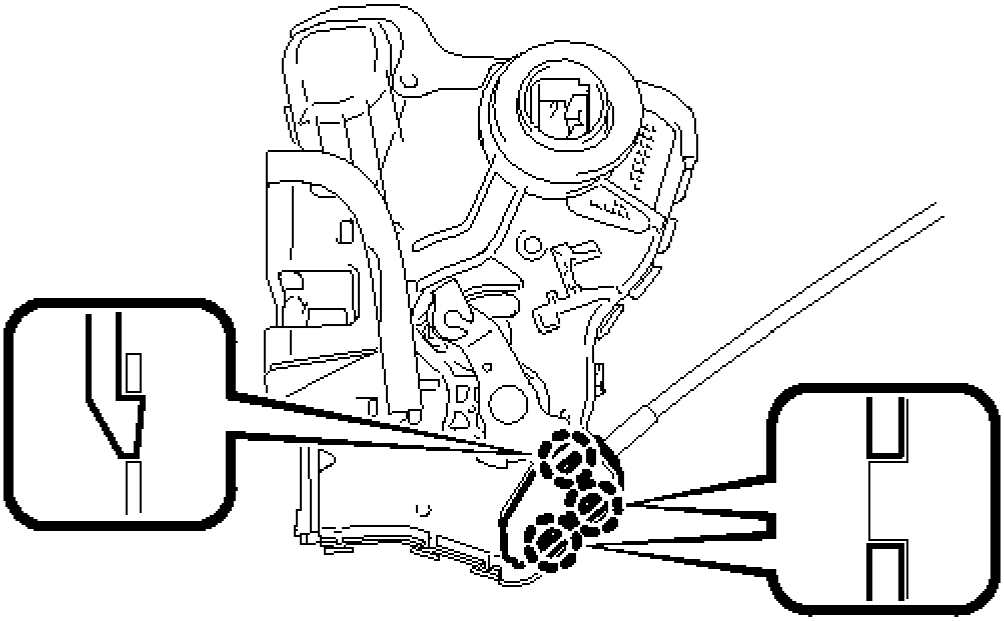

P

Fig. 91: Identifying Front Door Inside Locking Cable Claws
Courtesy of TOYOTA MOTOR SALES, U.S.A., INC.

18. **INSTALL FRONT DOOR LOCK REMOTE CONTROL CABLE ASSEMBLY**

a. Install the front door lock remote control cable assembly.

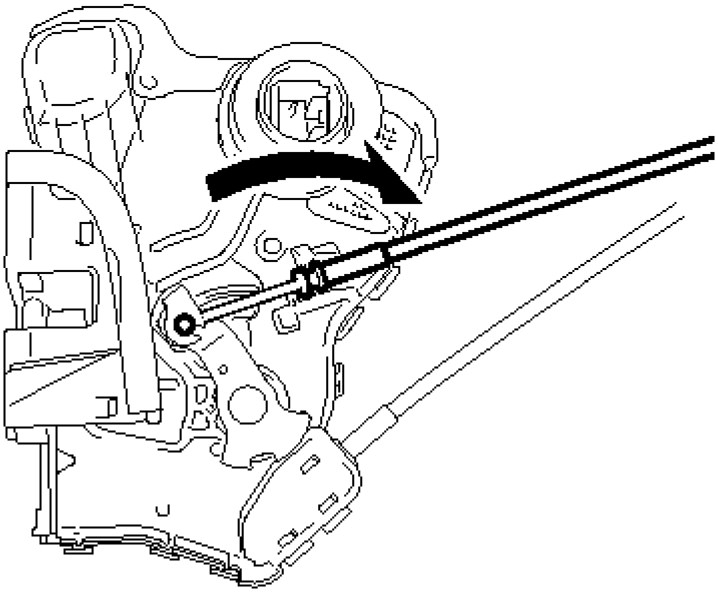

Fig. 92: Installing Front Door Lock Remote Control Cable
Courtesy of TOYOTA MOTOR SALES, U.S.A., INC.

19. **INSTALL FRONT DOOR LOCK WITH MOTOR ASSEMBLY**

NOTE:

- **When reusing the removed front door lock with motor assembly, replace the door lock wiring harness seal on the connector with a new one.**
- **Do not allow grease or dust to adhere to the door lock wiring harness seal surface of the connector.**
- **Reusing the door lock wiring harness seal or using a damaged door lock wiring harness seal may cause water intrusion. This may result in a malfunction of the front door lock with motor assembly.**

a. Apply MP grease to the sliding parts of the front door lock with motor assembly.

b. When reusing the front door lock with motor assembly:

    1. Install a new door lock wiring harness seal to the front door lock with motor assembly.

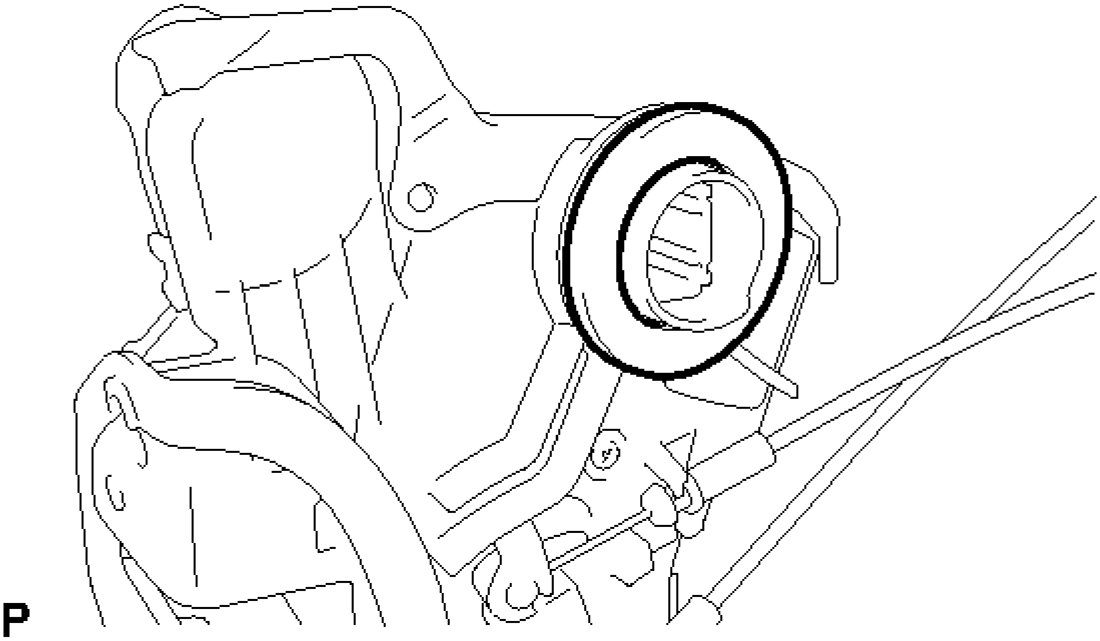

Fig. 93: Identifying Door Lock Wiring Harness Seal
Courtesy of TOYOTA MOTOR SALES, U.S.A., INC.

c. Insert the front door lock open rod to the front door lock with motor assembly.

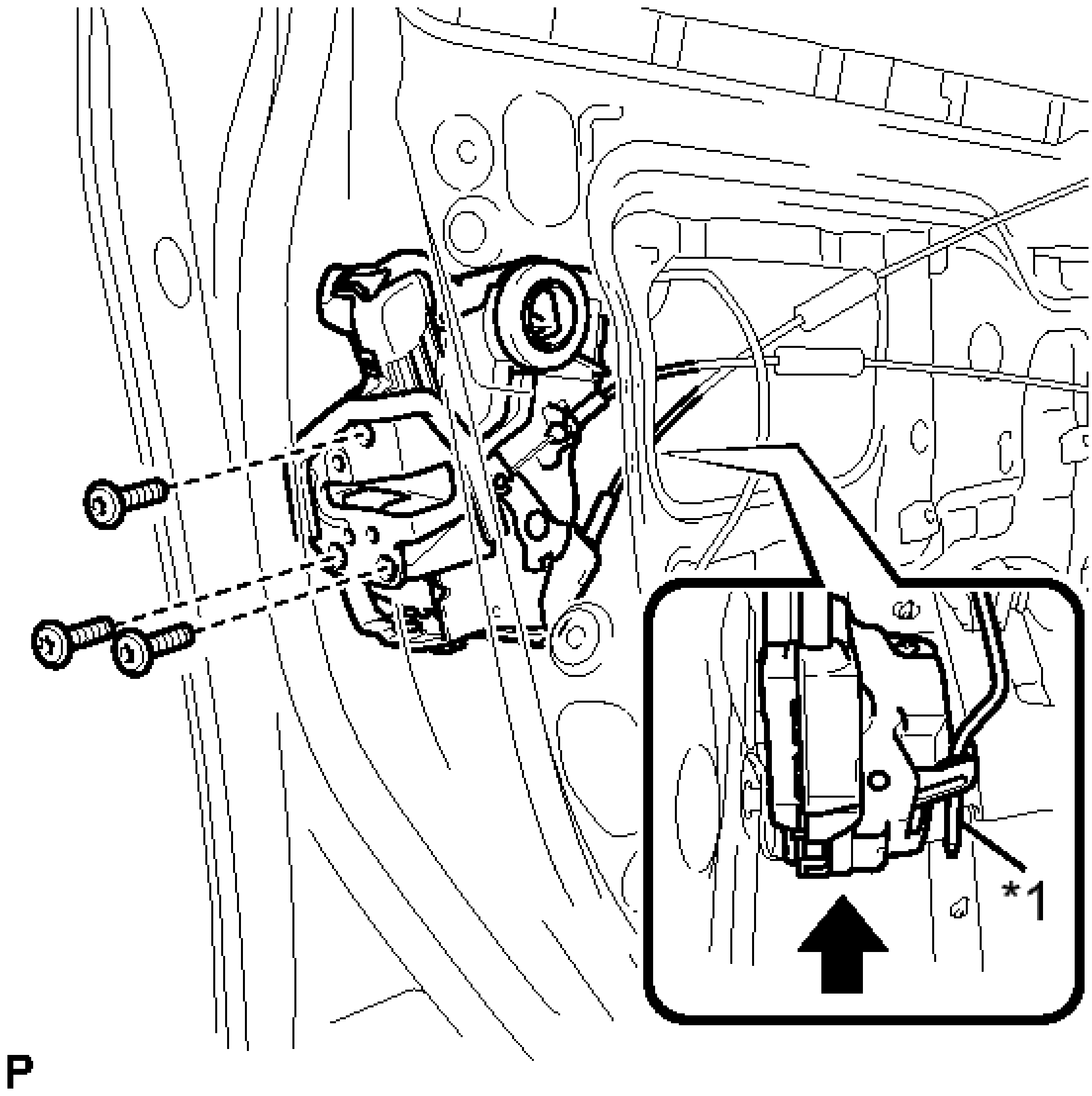

Fig. 94: Identifying Front Door Lock With Motor Assembly Screws
Courtesy of TOYOTA MOTOR SALES, U.S.A., INC.

TEXT IN ILLUSTRATION

*1	Front Door Lock Open Rod

d. Make sure that the front door lock open rod is securely connected to the front door lock with motor assembly.
e. Using a T30 "TORX" socket wrench, install the front door lock with motor assembly with the 3 screws.

Torque: 5.0 N*m (51 kgf*cm, 44 in.*lbf)

20. **INSTALL FRONT DOOR REAR OUTSIDE HANDLE PAD**

   a. Engage the 2 claws to install the front door rear outside handle pad.

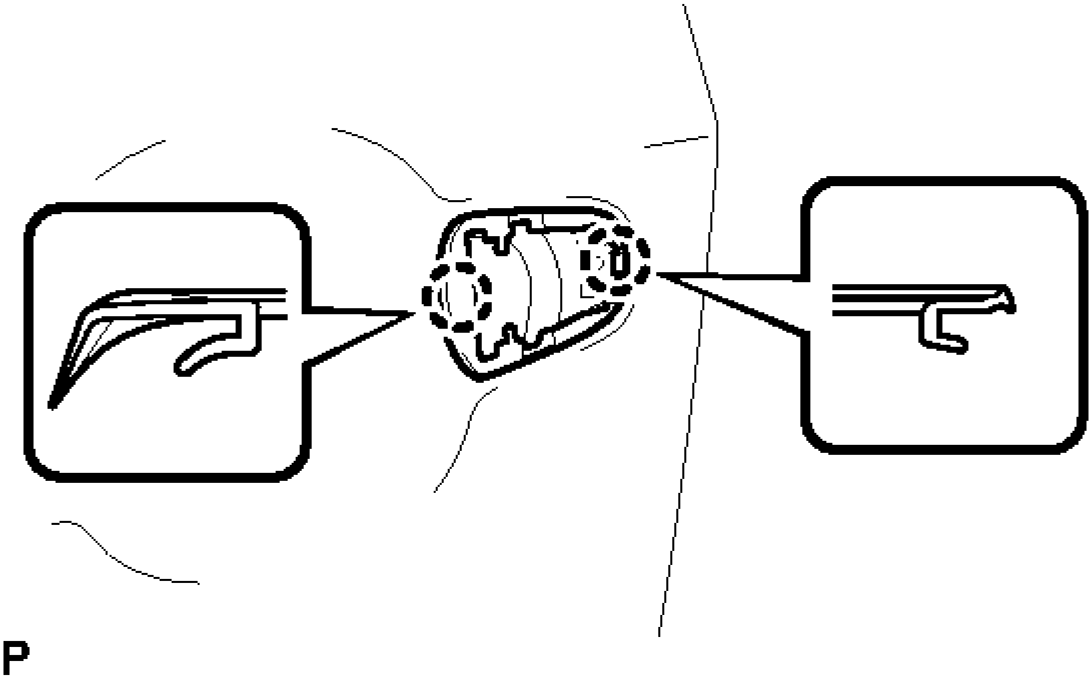

Fig. 95: Identifying Front Door Rear Outside Handle Pad Claws
Courtesy of TOYOTA MOTOR SALES, U.S.A., INC.

21. **INSTALL FRONT DOOR FRONT OUTSIDE HANDLE PAD**

   a. Engage the 3 claws to install the front door front outside handle pad.

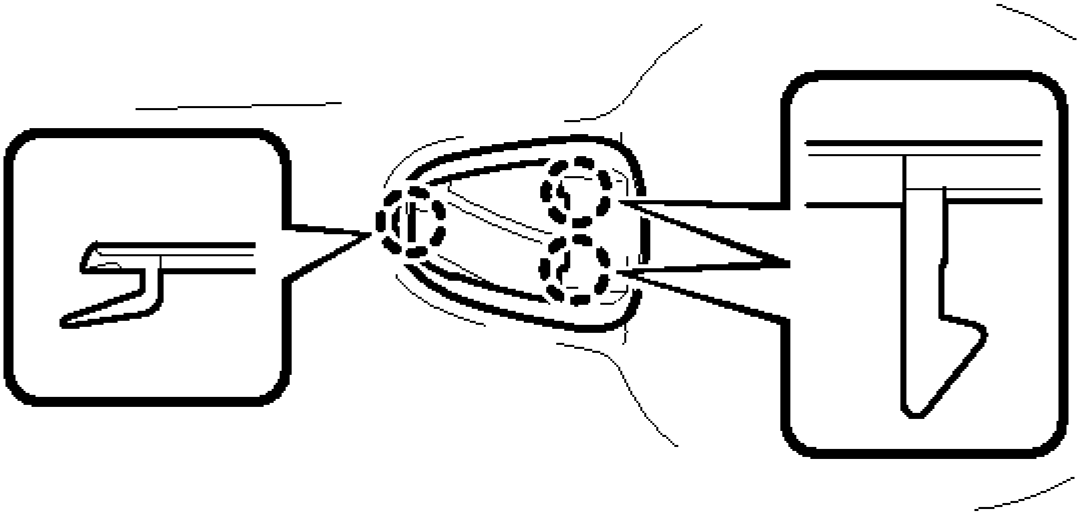

Fig. 96: Identifying Front Door Front Outside Handle Pad Claws
Courtesy of TOYOTA MOTOR SALES, U.S.A., INC.

22. **INSTALL FRONT DOOR OUTSIDE HANDLE ASSEMBLY**
    a. Insert the front end of the front door outside handle assembly into the front door outside handle frame.

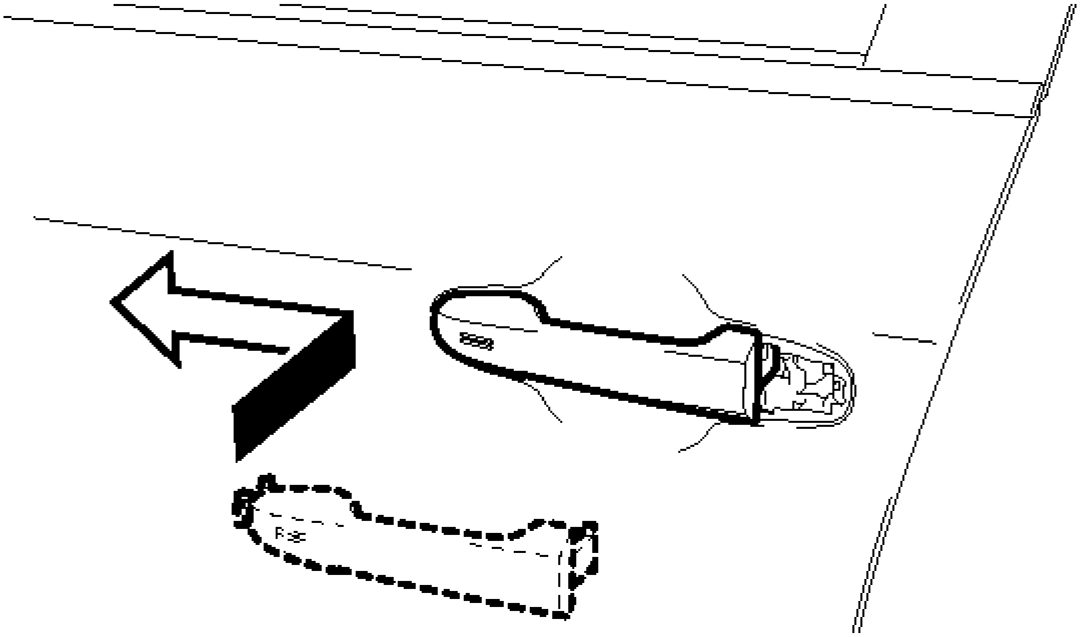

Fig. 97: Installing Front Door Outside Handle
Courtesy of TOYOTA MOTOR SALES, U.S.A., INC.

b. Insert the rear end of the front door outside handle assembly into the front door outside handle frame, then slide the front door outside handle assembly toward the front of the vehicle to install it.
c. w/ Smart Key System:
   1. Connect the connector.

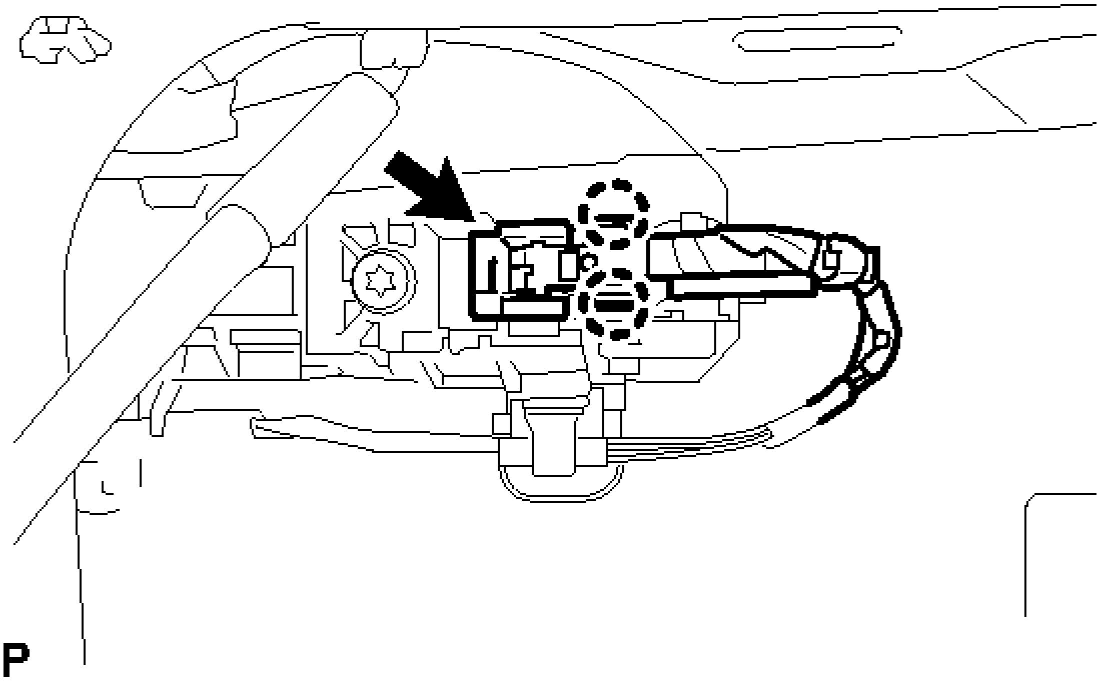

Fig. 98: Identifying Front Door Outside Handle Connector
Courtesy of TOYOTA MOTOR SALES, U.S.A., INC.

   2. Engage the 2 claws.

23. **INSTALL FRONT DOOR OUTSIDE HANDLE COVER (for Driver Side)**
   a. Engage the 2 guides and claw, and install the front door outside handle cover to the lock cylinder assembly as shown in the illustration.

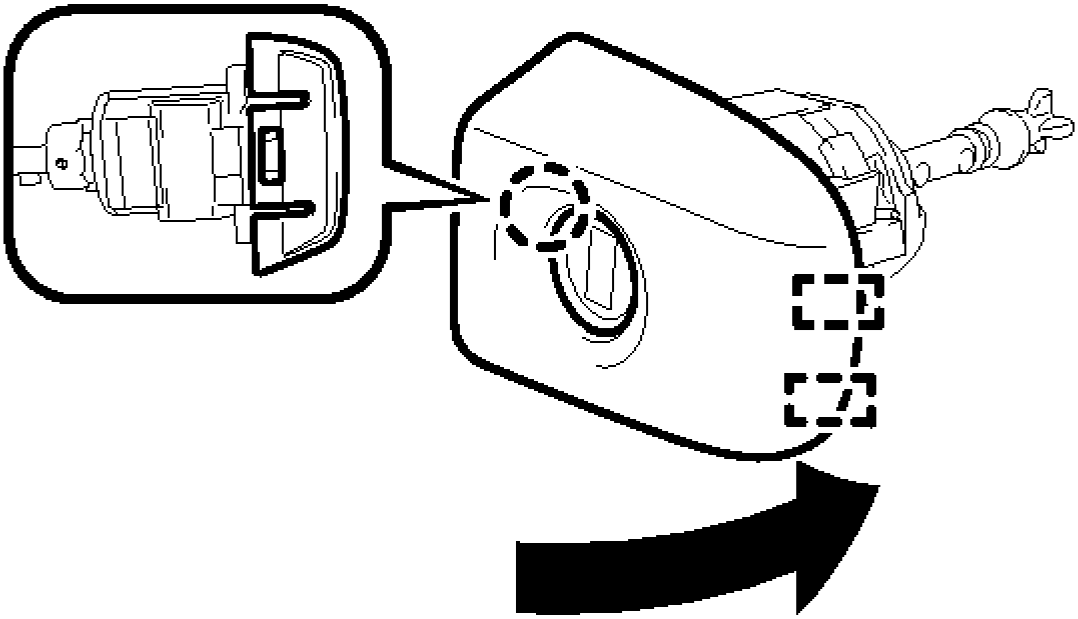

P

Fig. 99: Installing Front Door Outside Handle Cover
Courtesy of TOYOTA MOTOR SALES, U.S.A., INC.

24. **INSTALL FRONT DOOR OUTSIDE HANDLE COVER (for Front Passenger Side)**
    a. w/o Front Door Lock Cylinder:
        1. Using a T30 "TORX" socket wrench, install the front door outside handle cover with the screw.

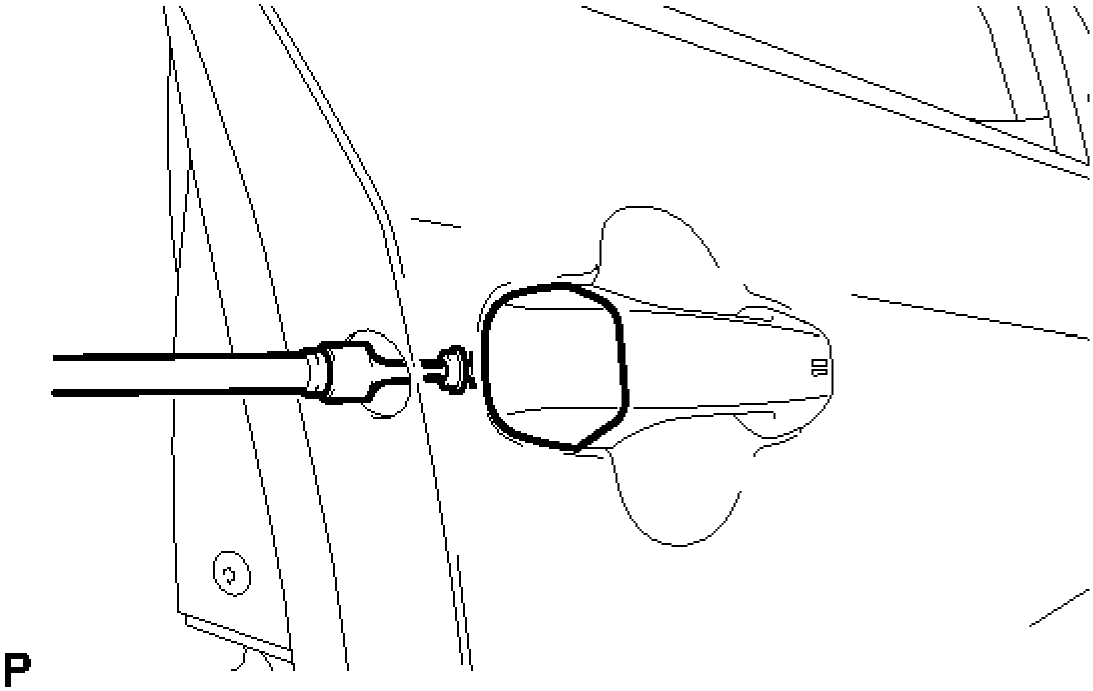

Fig. 100: Identifying Front Door Outside Handle Cover w/o Front Door Lock Cylinder
Courtesy of TOYOTA MOTOR SALES, U.S.A., INC.

Torque: 4.0 N*m (41 kgf*cm, 35 in.*lbf)

2. Install the hole plug.

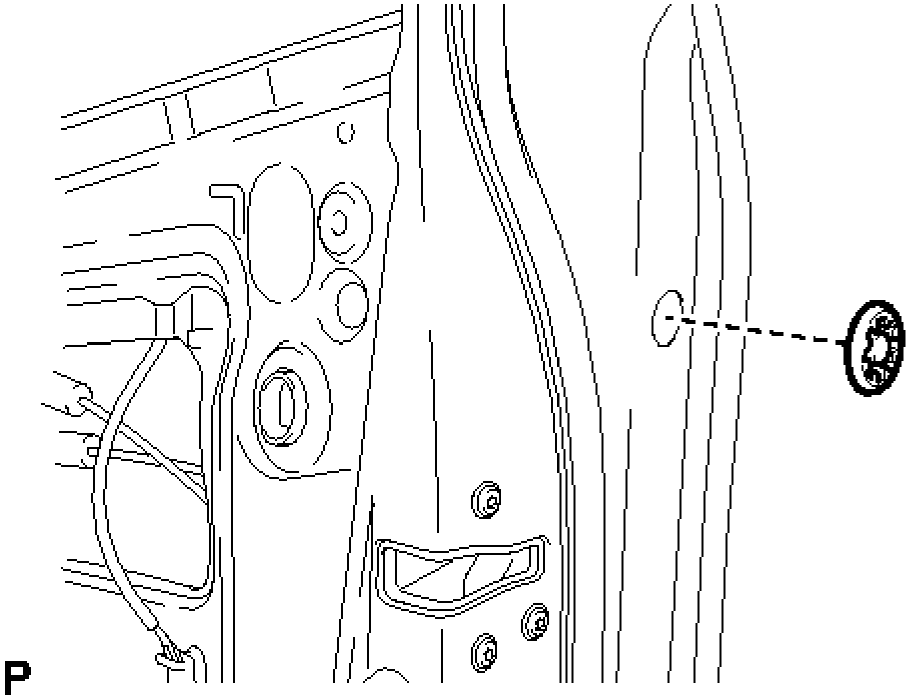

Fig. 101: Identifying Front Door Hole Plug
Courtesy of TOYOTA MOTOR SALES, U.S.A., INC.

b. w/ Front Door Lock Cylinder:

HINT:

Use the same procedures for the front passenger side and the driver side.

25. **INSTALL FRONT DOOR OUTSIDE HANDLE COVER WITH LOCK CYLINDER ASSEMBLY (for Driver Side)**

a. Using a T30 "TORX" socket wrench, install the front door outside handle cover with lock cylinder assembly with the screw.

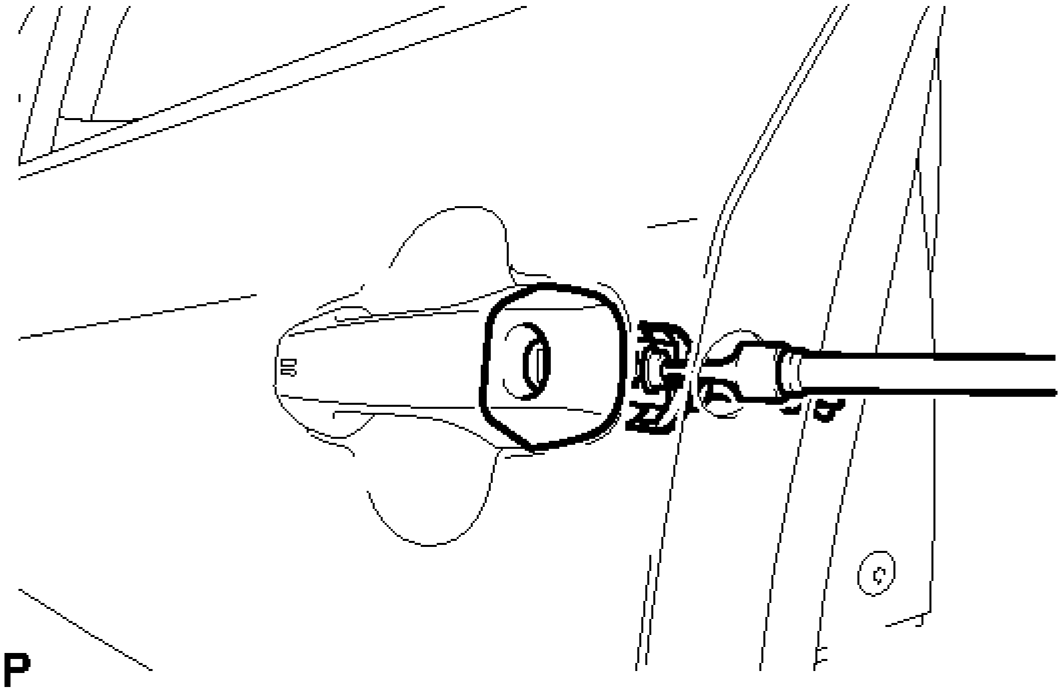

Fig. 102: Identifying Front Door Outside Handle Cover w/ Lock Cylinder
Courtesy of TOYOTA MOTOR SALES, U.S.A., INC.

Torque: 4.0 N*m (41 kgf*cm, 35 in.*lbf)

b. Install the hole plug.

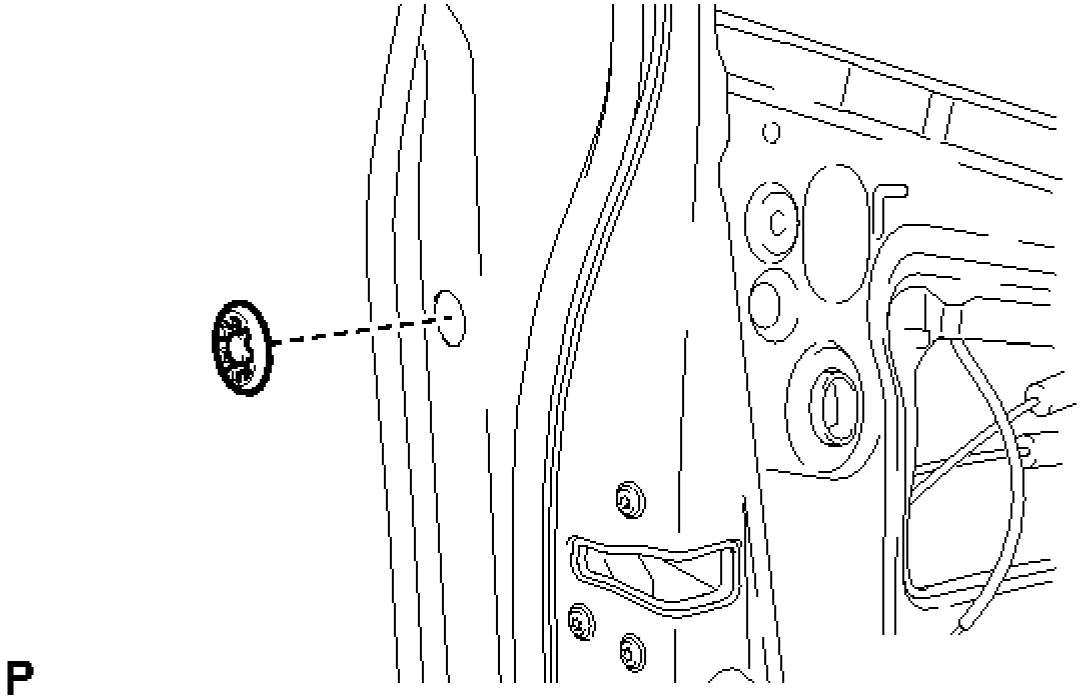

Fig. 103: Identifying Front Door Hole Plug
Courtesy of TOYOTA MOTOR SALES, U.S.A., INC.

26. **INSTALL FRONT DOOR OUTSIDE HANDLE COVER WITH LOCK CYLINDER ASSEMBLY (for Front Passenger Side)**
    a. w/ Front Door Lock Cylinder:

       HINT:

       Use the same procedures for the front passenger side and the driver side.

27. **INSTALL FRONT DOOR REAR LOWER FRAME SUB-ASSEMBLY**
    a. Engage the guide as shown in the illustration.

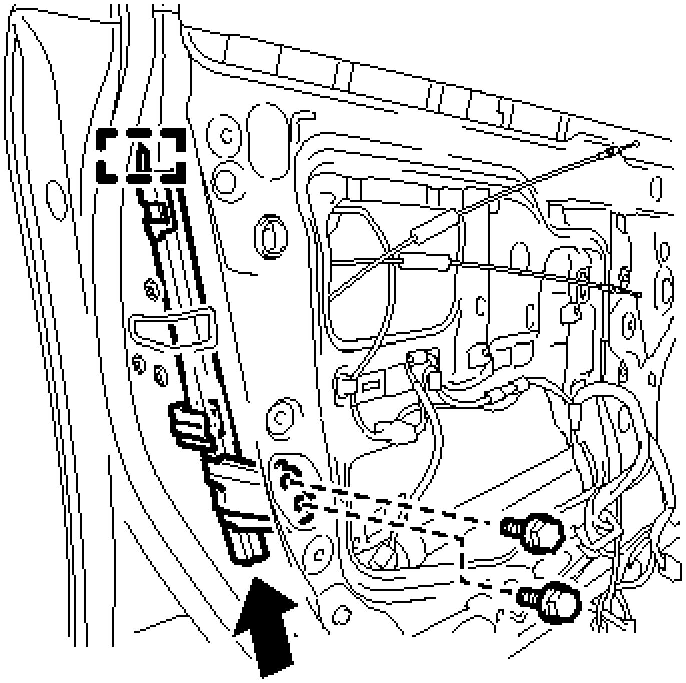

Fig. 104: Identifying Front Door Rear Lower Frame Bolts
Courtesy of TOYOTA MOTOR SALES, U.S.A., INC.

b. Install the front door rear lower frame sub-assembly with the 2 bolts.

28. **INSTALL FRONT DOOR FRONT LOWER FRAME SUB-ASSEMBLY**

a. Engage the guide as shown in the illustration.

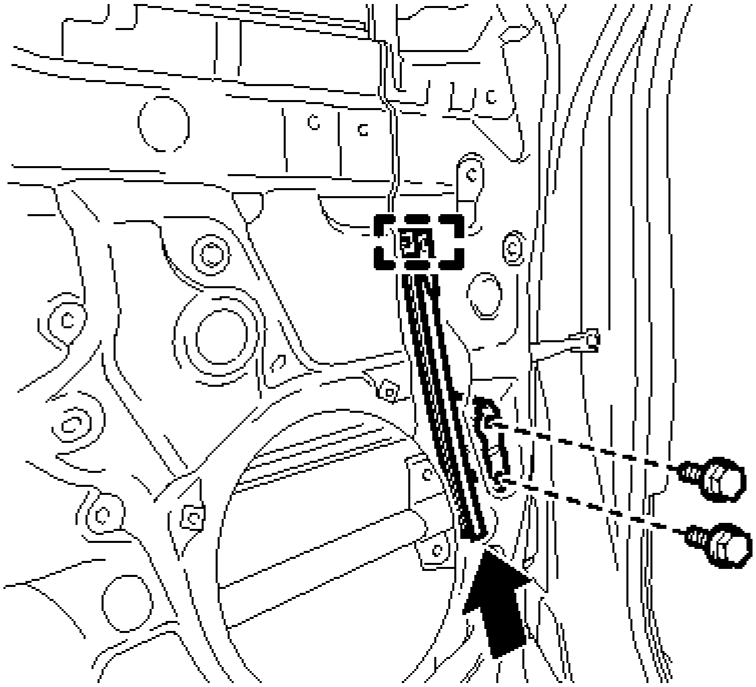

Fig. 105: Identifying Front Door Front Lower Frame Bolts
Courtesy of TOYOTA MOTOR SALES, U.S.A., INC.

b. Install the front door front lower frame sub-assembly with the 2 bolts.

29. **INSTALL FRONT DOOR GLASS RUN**
    a. Install the front door glass run.

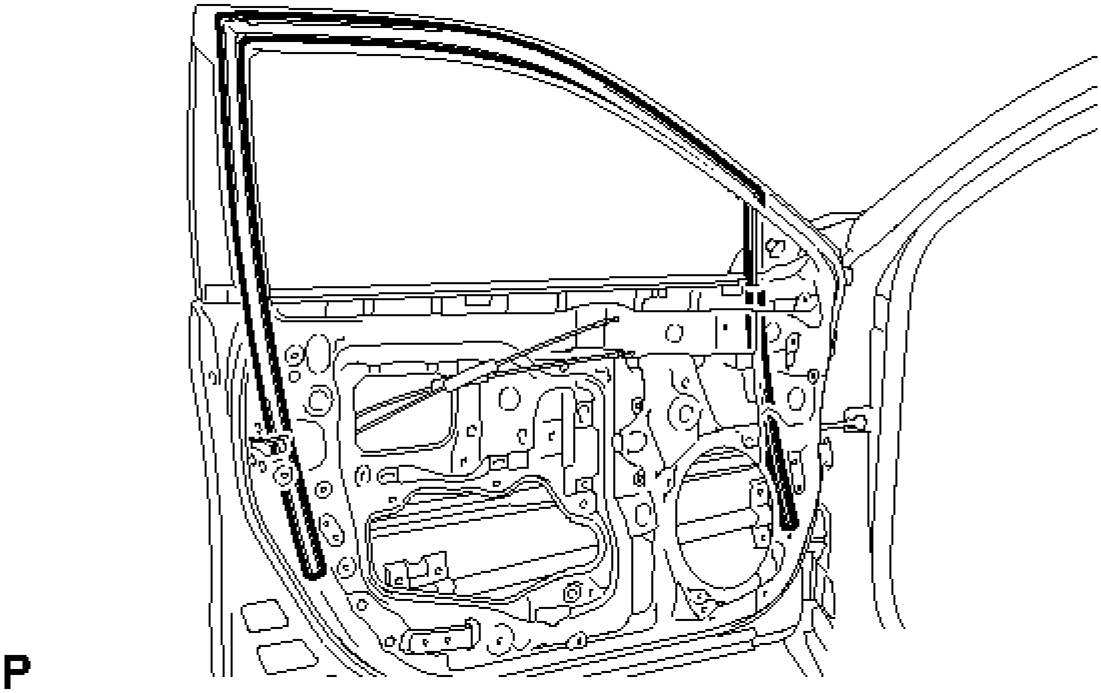

Fig. 106: Identifying Front Door Glass Run
Courtesy of TOYOTA MOTOR SALES, U.S.A., INC.

30. **INSTALL NO. 2 FRONT DOOR STIFFENER CUSHION**
    a. Clean the front door panel sub-assembly.
    b. Engage the 2 guides.

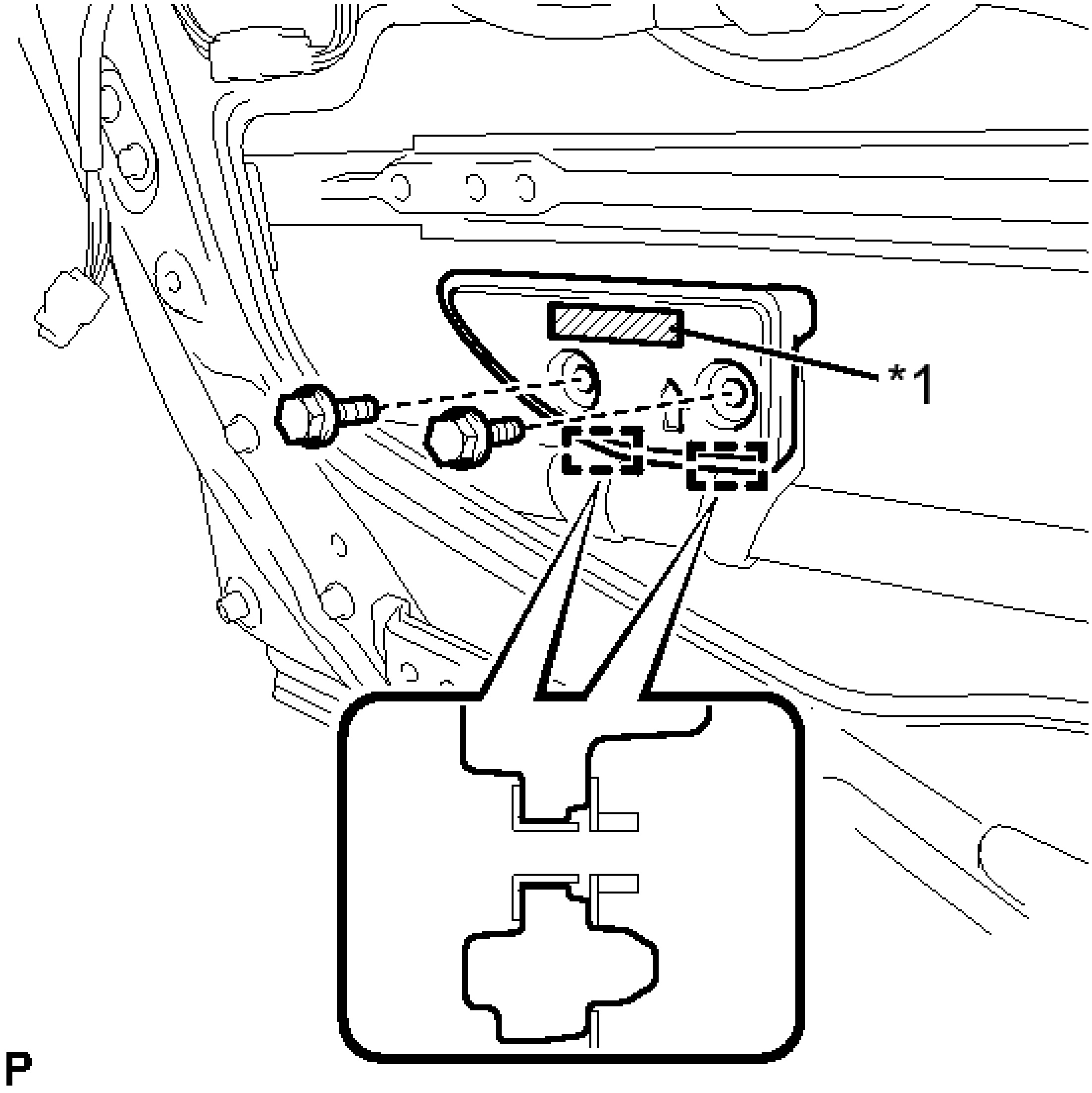

Fig. 107: Identifying No. 2 Front Door Stiffener Cushion Bolts
Courtesy of TOYOTA MOTOR SALES, U.S.A., INC.

TEXT IN ILLUSTRATION

*1	Double-sided Tape

c. Install a new No. 2 front door stiffener cushion with the 2 bolts.

31. **INSTALL FRONT POWER WINDOW REGULATOR MOTOR ASSEMBLY**

NOTE: The regulator arm must be below the intermediate position when installing the power window regulator motor.

a. Using a T25 "TORX" socket wrench, install the front power window regulator motor assembly with the 3 screws.

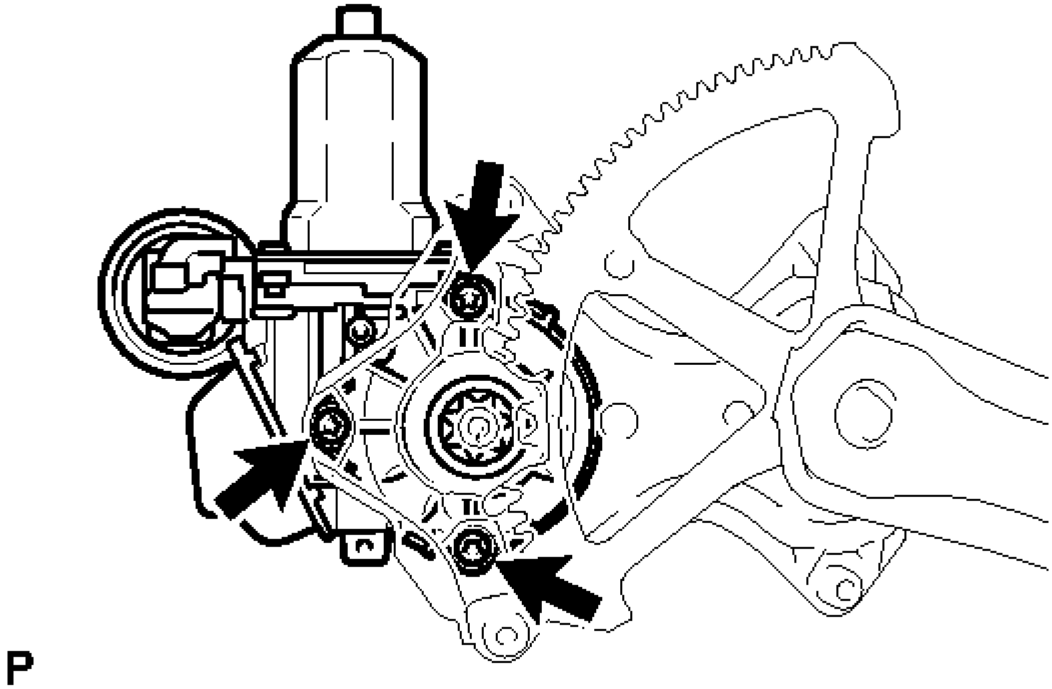

Fig. 108: Identifying Front Power Window Regulator Motor Screws
Courtesy of TOYOTA MOTOR SALES, U.S.A., INC.

Torque: 5.4 N*m (55 kgf*cm, 48 in.*lbf)

HINT:

A new front window regulator uses self-tapping screws to thread new installation holes when the self-tapping screws are inserted.

32. **INSTALL FRONT DOOR WINDOW REGULATOR ASSEMBLY**
    a. Apply MP grease to the sliding parts of the front door window regulator assembly.
    b. Install the temporary bolt to the front door window regulator assembly.
    c. Temporarily install the front door window regulator assembly.

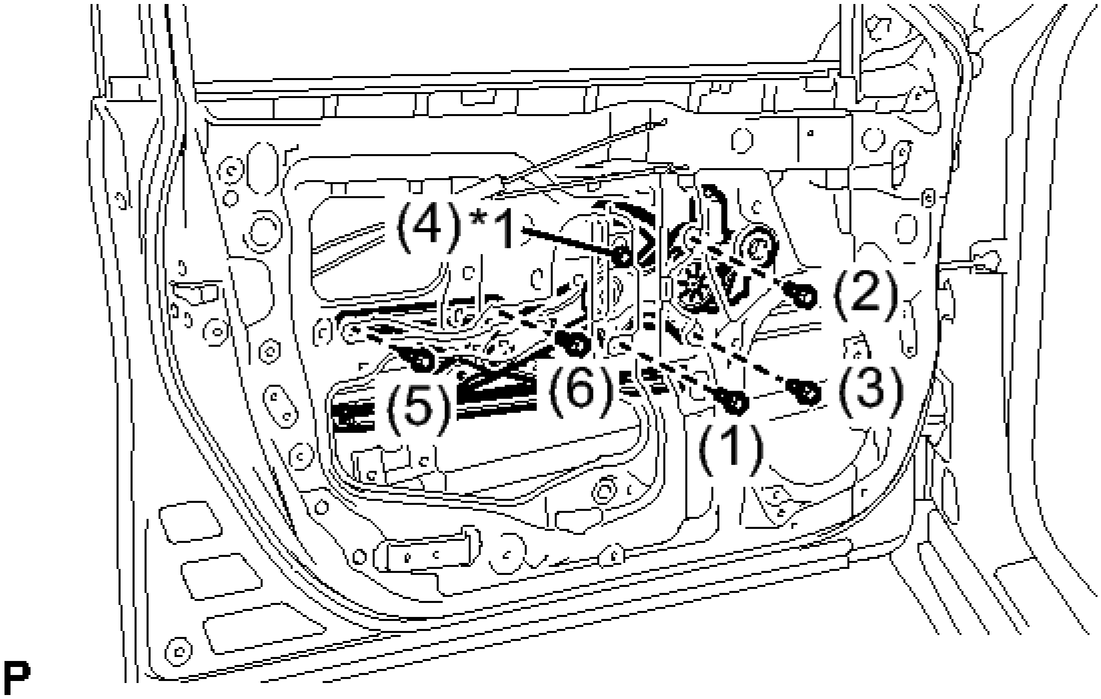

Fig. 109: Identifying Front Door Window Regulator Temporary Bolt And Assembly Tightening Sequence
Courtesy of TOYOTA MOTOR SALES, U.S.A., INC.

TEXT IN ILLUSTRATION

*1	Temporary Bolt

d. Tighten the temporary bolt and 5 bolts to install the front door window regulator assembly.

HINT:

Tighten the bolts in the order shown in the illustration.

Torque: 8.0 N*m (82 kgf*cm, 71 in.*lbf)

33. **INSTALL FRONT DOOR GLASS SUB-ASSEMBLY**
    a. Connect the cable to the negative (-) battery terminal.
    b. Connect the power window regulator master switch assembly and move the front door glass sub-assembly so that the door glass bolts can be seen.
    c. Disconnect the cable from the negative (-) battery terminal.

WARNING: **Wait at least 90 seconds after disconnecting the cable from the negative (-) battery terminal to disable the SRS system.**

NOTE: When disconnecting the cable, some systems need to be initialized after the cable is reconnected. Refer to INITIALIZATION .

d. Disconnect the power window regulator master switch assembly.

e. Insert the front door glass sub-assembly into the front door panel along the front door glass run as indicated by the arrows, in the order shown in the illustration.

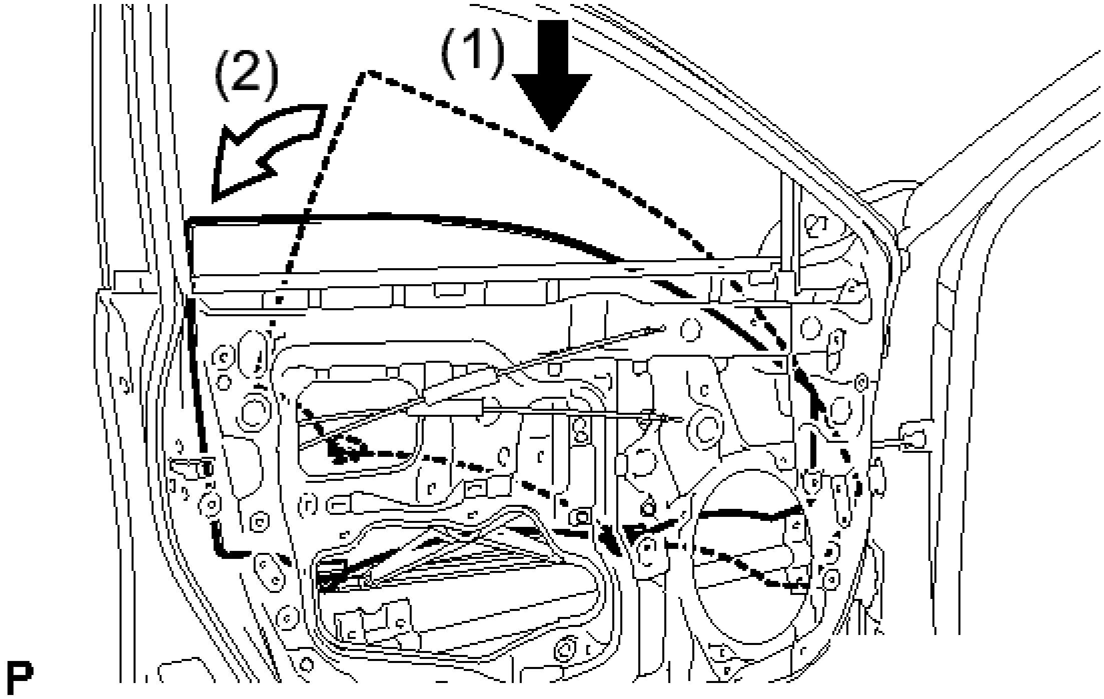

Fig. 110: Installing The Front Door Glass
Courtesy of TOYOTA MOTOR SALES, U.S.A., INC.

f. Install the front door glass sub-assembly with the 2 bolts.

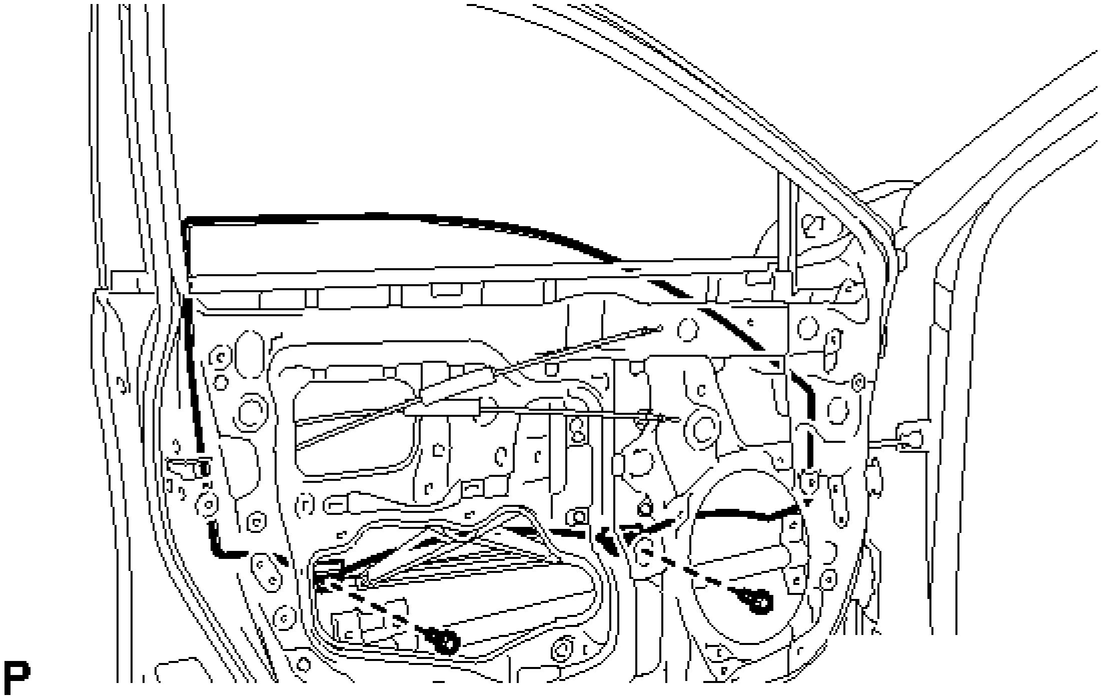

Fig. 111: Identifying Front Door Glass Bolts
Courtesy of TOYOTA MOTOR SALES, U.S.A., INC.

Torque: 8.0 N*m (82 kgf*cm, 71 in.*lbf)

g. Install the grommet.

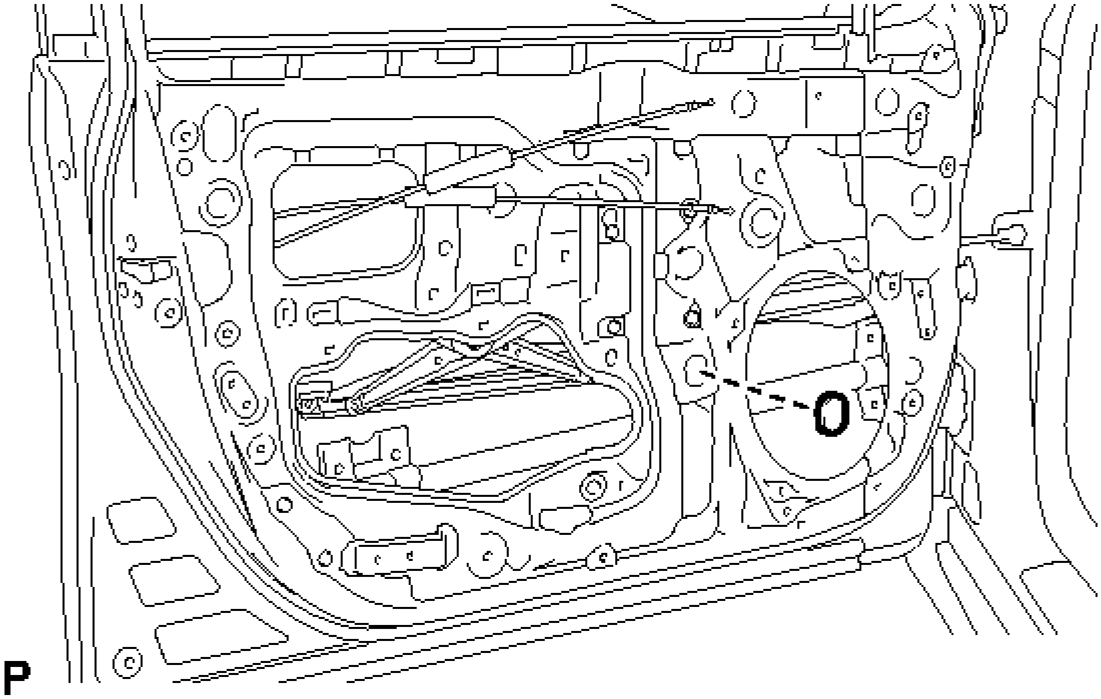

Fig. 112: Identifying Front Door Grommet
Courtesy of TOYOTA MOTOR SALES, U.S.A., INC.

34. **INSTALL FRONT DOOR SERVICE HOLE COVER**

  a. Apply new butyl tape to the front door panel.
  b. Pass the front door lock remote control cable assembly and front door inside locking cable assembly through a new front door service hole cover.

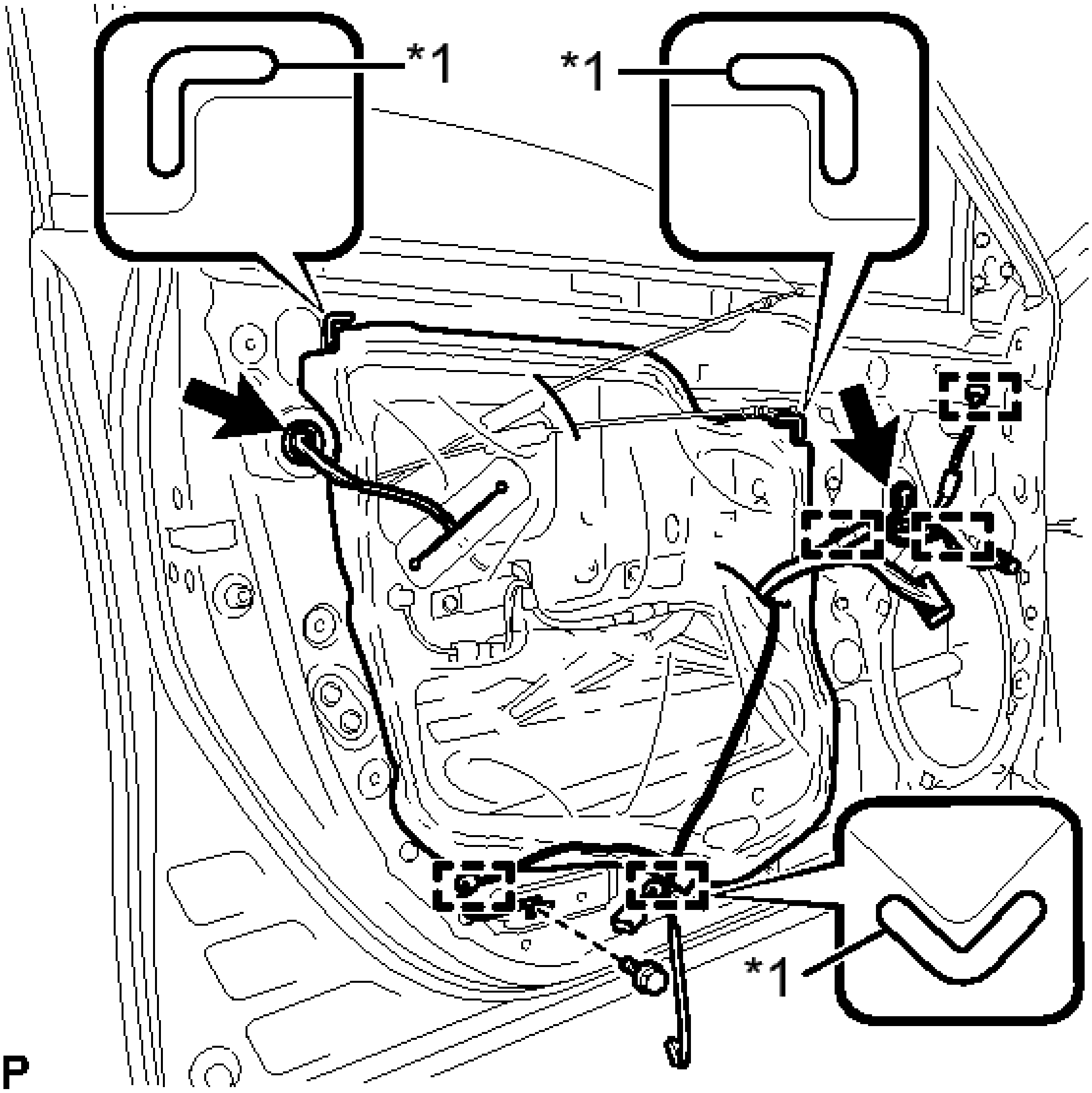

Fig. 113: Locating Front Door Service Hole Cover
Courtesy of TOYOTA MOTOR SALES, U.S.A., INC.

TEXT IN ILLUSTRATION

*1	Reference Point

c. Attach the front door service hole cover according to the reference points on the front door panel.

NOTE: **Securely install the front door service hole cover preventing wrinkles and air bubbles.**

d. Engage the 5 clamps.

e. Install the bolt.

Torque: 8.0 N*m (82 kgf*cm, 71 in.*lbf)

f. Connect each connector.

35. **INSTALL DOOR SIDE AIRBAG SENSOR** . Refer to **INSTALLATION - Step 1** .
36. **INSTALL OUTER REAR VIEW MIRROR ASSEMBLY** . Refer to **INSTALLATION - Step 1** .
37. **INSTALL FRONT NO. 1 SPEAKER ASSEMBLY** . Refer to **INSTALLATION - Step 1** .
38. **INSTALL FRONT DOOR INNER GLASS WEATHERSTRIP**

    a. Install the front door inner glass weatherstrip.

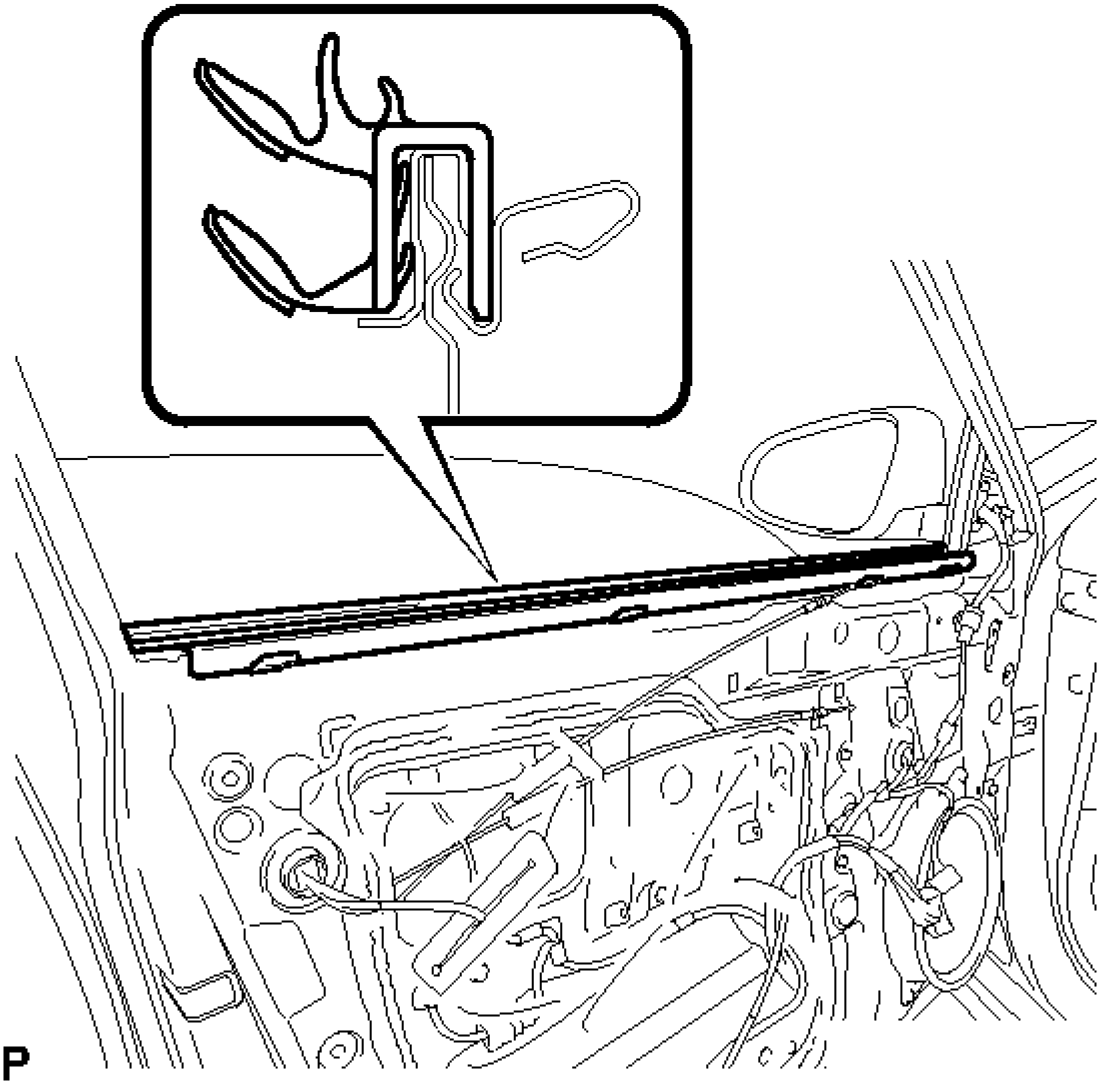

Fig. 114: Identifying Front Door Inner Glass Weatherstrip
Courtesy of TOYOTA MOTOR SALES, U.S.A., INC.

39. **INSTALL FRONT DOOR INSIDE HANDLE SUB-ASSEMBLY**
    a. Engage the 2 claws and guide, and install the front door inside handle sub-assembly to the front door trim board sub-assembly.

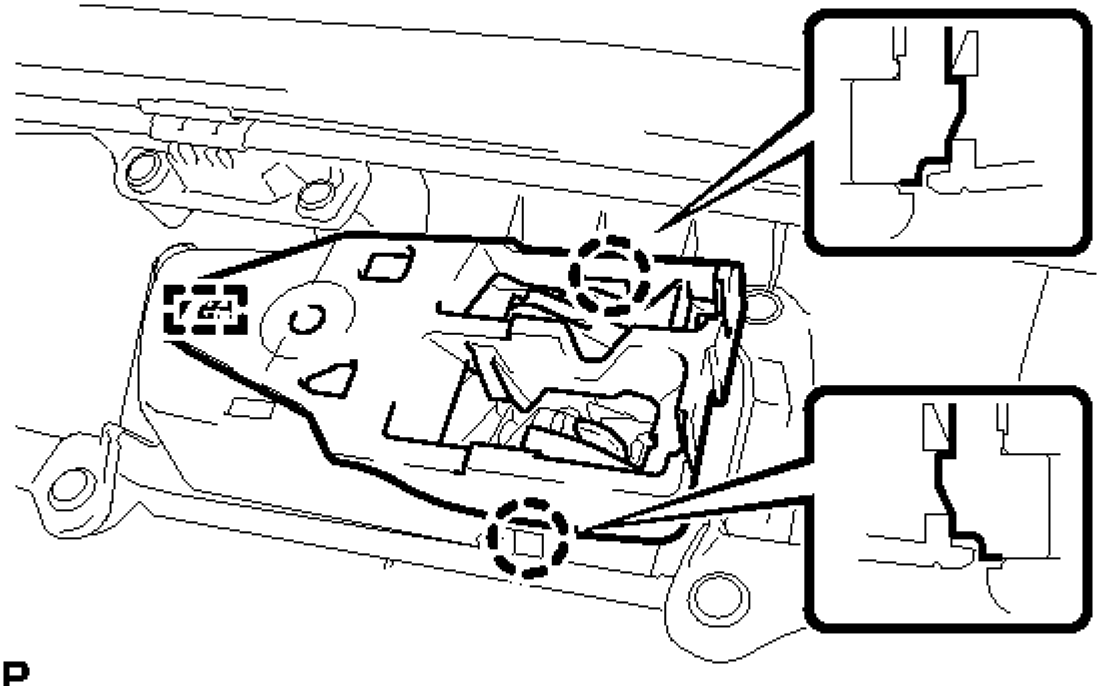

Fig. 115: Identifying Front Door Inside Handle Sub-Assembly Claws And Guides
Courtesy of TOYOTA MOTOR SALES, U.S.A., INC.

40. **INSTALL FRONT DOOR TRIM BOARD SUB-ASSEMBLY**
    a. Connect the front door lock remote control cable assembly and front door inside locking cable assembly.

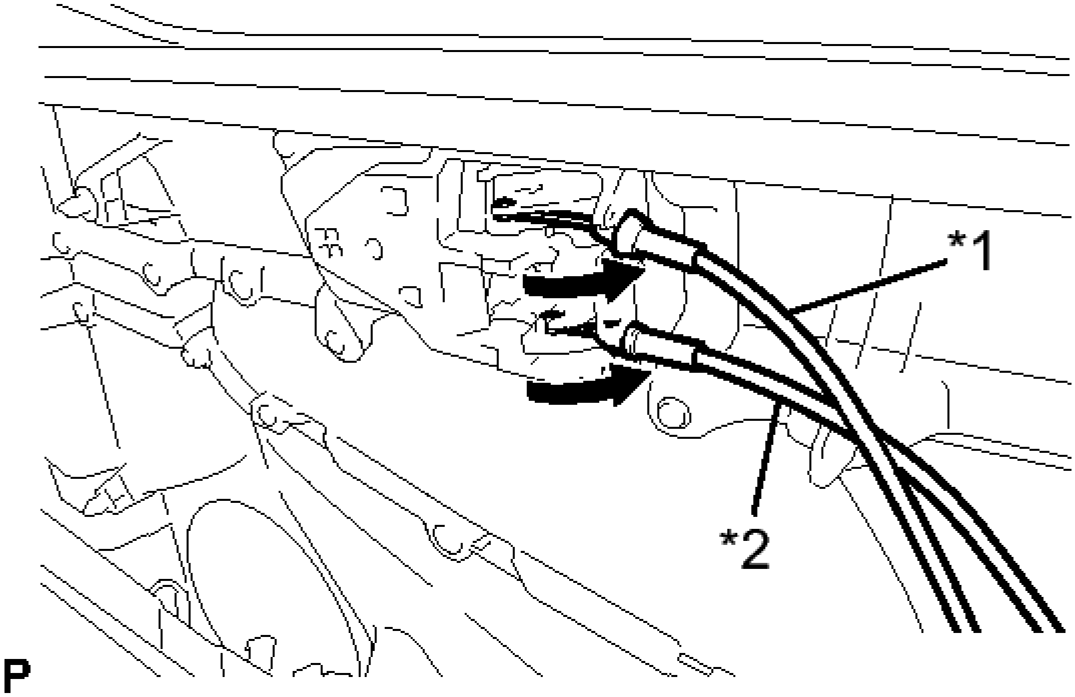

Fig. 116: Connecting Front Door Lock Remote Control And Inside Locking Cables
Courtesy of TOYOTA MOTOR SALES, U.S.A., INC.

TEXT IN ILLUSTRATION

*1	Front Door Inside Locking Cable Assembly
*2	Front Door Lock Remote Control Cable Assembly

b. Engage the front door trim board sub-assembly with the 4 claws and reference boss as shown in the illustration.

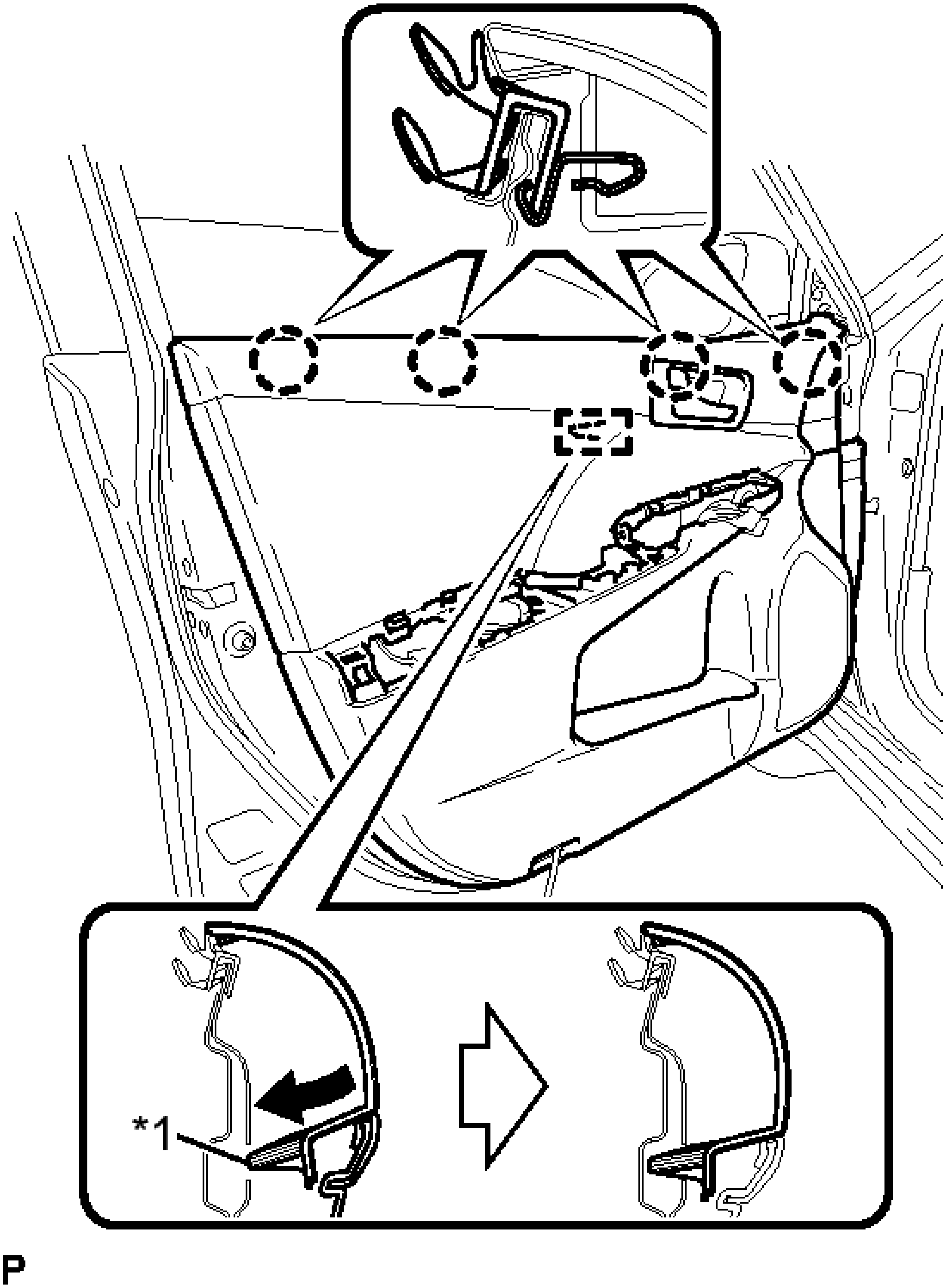

Fig. 117: Engaging Front Door Trim Board Sub-Assembly
Courtesy of TOYOTA MOTOR SALES, U.S.A., INC.

TEXT IN ILLUSTRATION

	Reference

*1	Boss

c. Engage the 10 clips and install to front door trim board sub-assembly.

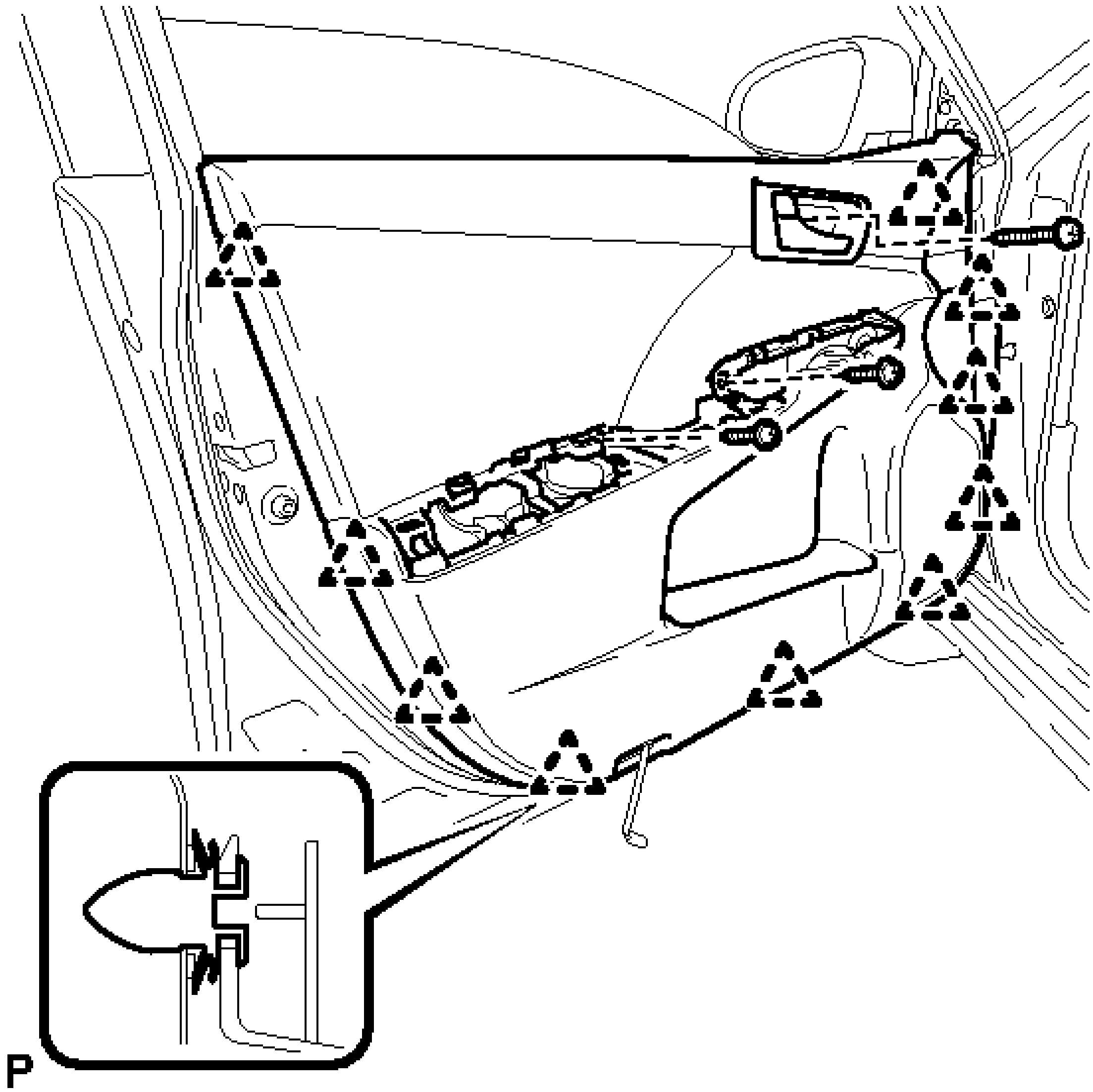

Fig. 118: Identifying Front Door Trim Board Screws And Clips
Courtesy of TOYOTA MOTOR SALES, U.S.A., INC.

d. Install the 3 screws.

e. If protective tape has been applied, remove it.

41. **INSTALL COURTESY LIGHT ASSEMBLY** . Refer to **INSTALLATION - Step 1** .
42. **INSTALL FRONT ARMREST ASSEMBLY**

a. Engage the 2 guides, 3 clips and 7 claws, and install the front armrest assembly.

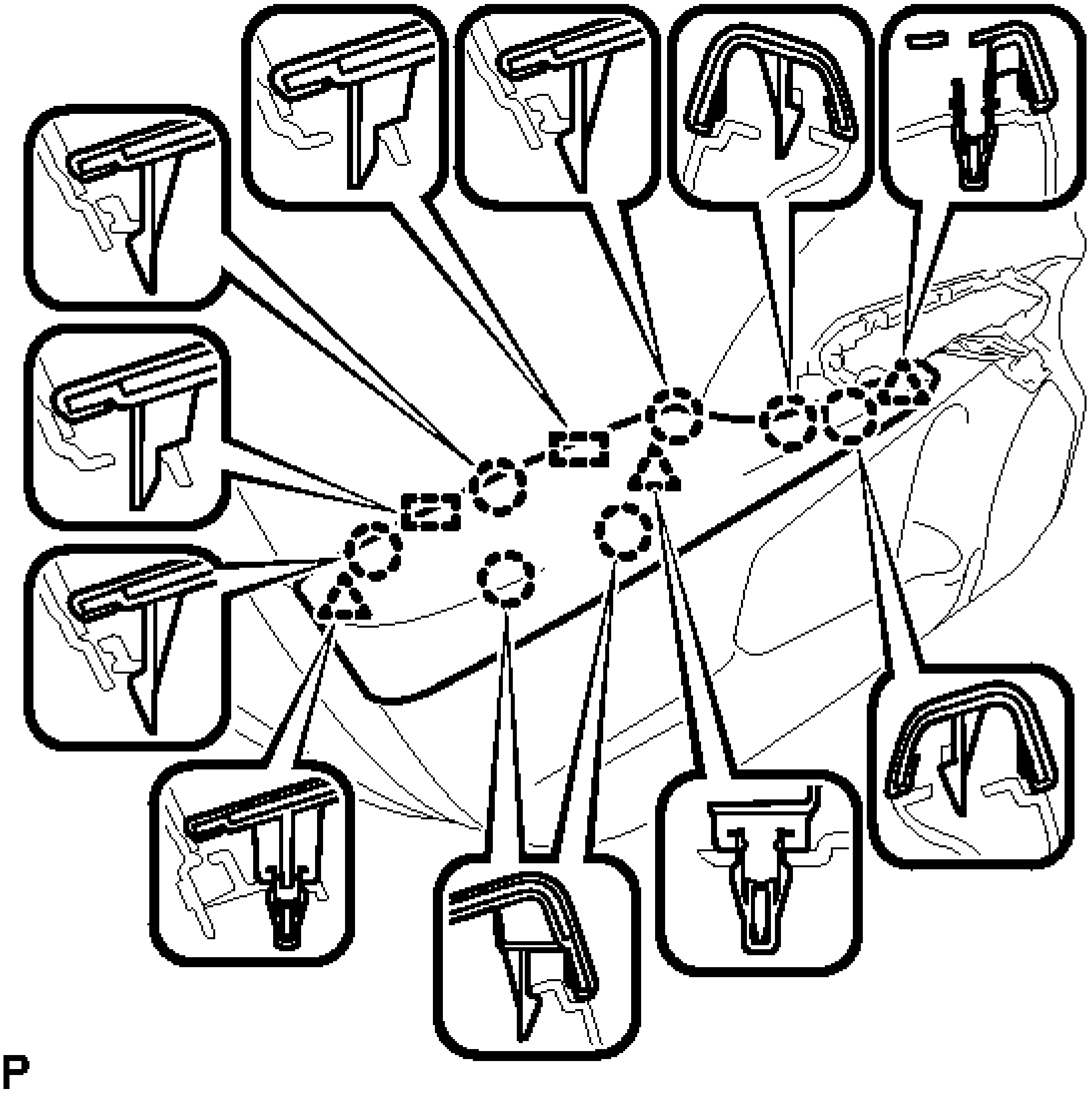

Fig. 119: Identifying Front Armrest Assembly Clips, Claws And Guides
Courtesy of TOYOTA MOTOR SALES, U.S.A., INC.

43. **INSTALL POWER WINDOW REGULATOR MASTER SWITCH ASSEMBLY WITH FRONT DOOR ARMREST BASE PANEL (for Driver Side)**
    a. Connect each connector.
    b. Engage the 4 guides, 2 clips and 5 claws, and install the power window regulator master switch assembly with front door armrest base panel.

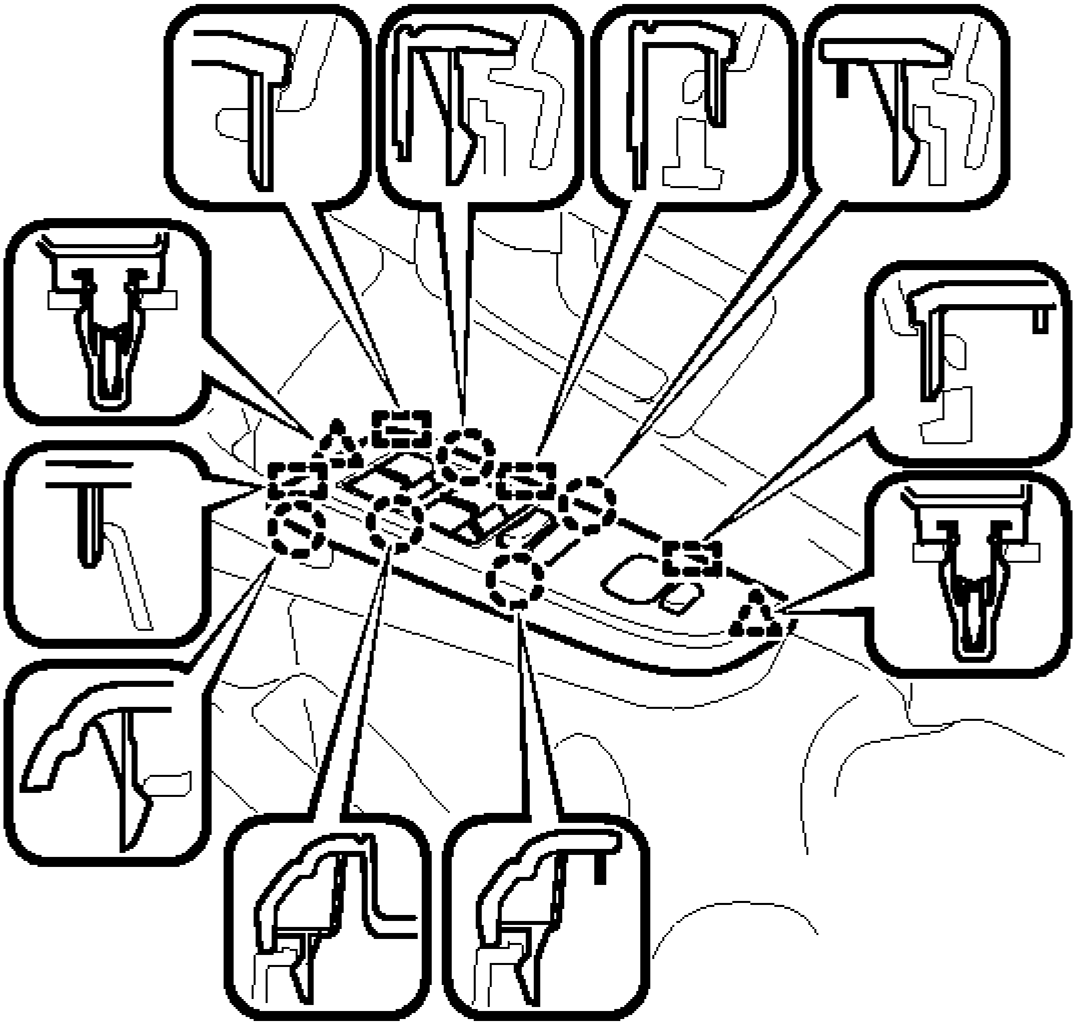

P

Fig. 120: Identifying Power Window Regulator Master Switch Clips, Claws And Guides (For Driver Side)
Courtesy of TOYOTA MOTOR SALES, U.S.A., INC.

44. **INSTALL POWER WINDOW REGULATOR SWITCH ASSEMBLY WITH FRONT DOOR ARMREST BASE PANEL (for Front Passenger Side)**
    a. Connect each connector.
    b. Engage the 4 guides, 2 clips and 5 claws, and install the power window regulator switch assembly with front door armrest base panel.

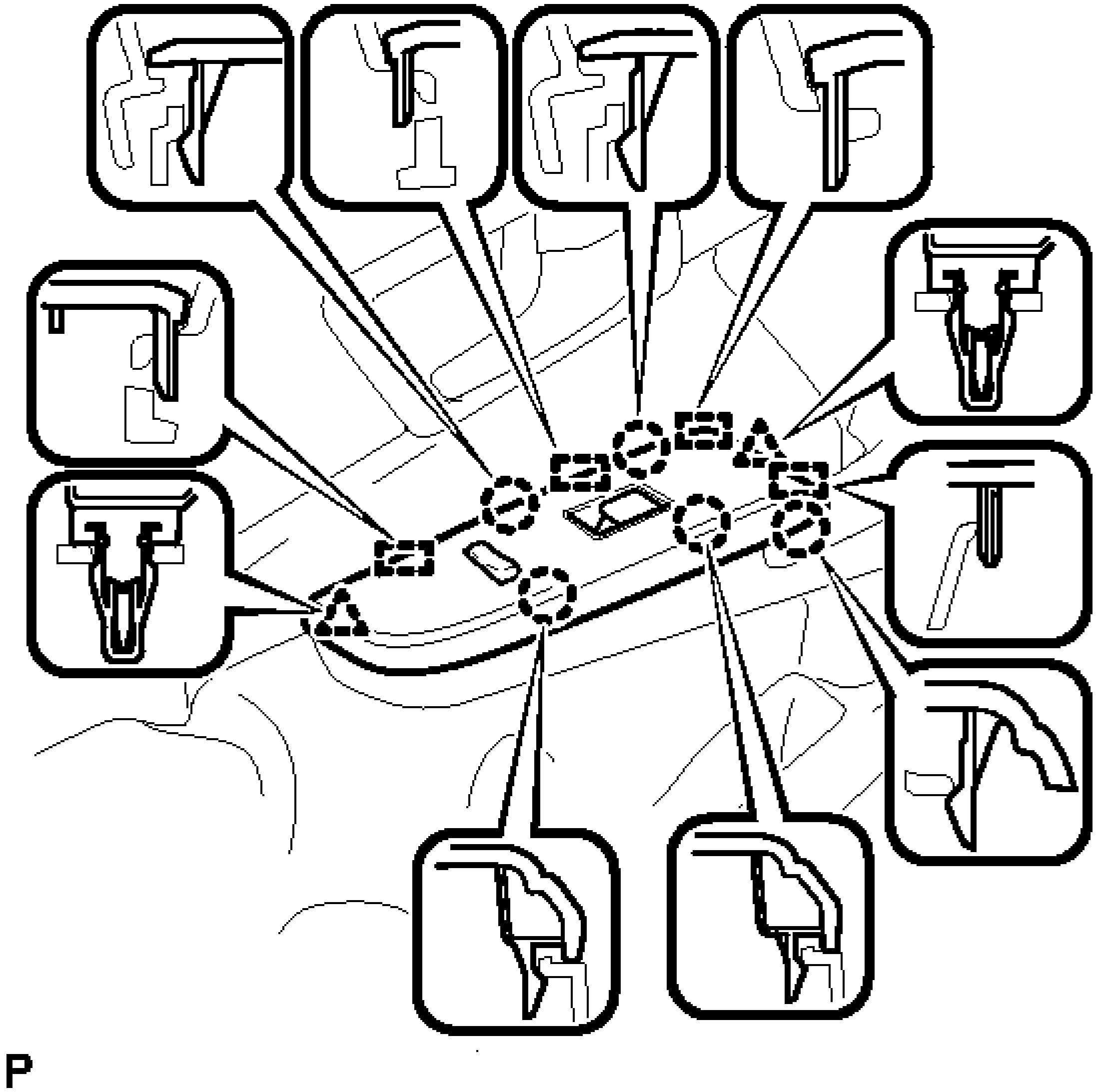

Fig. 121: Identifying Power Window Regulator Switch Clips, Claws And Guides (For Front Passenger Side)
Courtesy of TOYOTA MOTOR SALES, U.S.A., INC.

45. **INSTALL FRONT DOOR LOWER FRAME BRACKET GARNISH**
    a. Engage the 3 clips to install the front door lower frame bracket garnish.

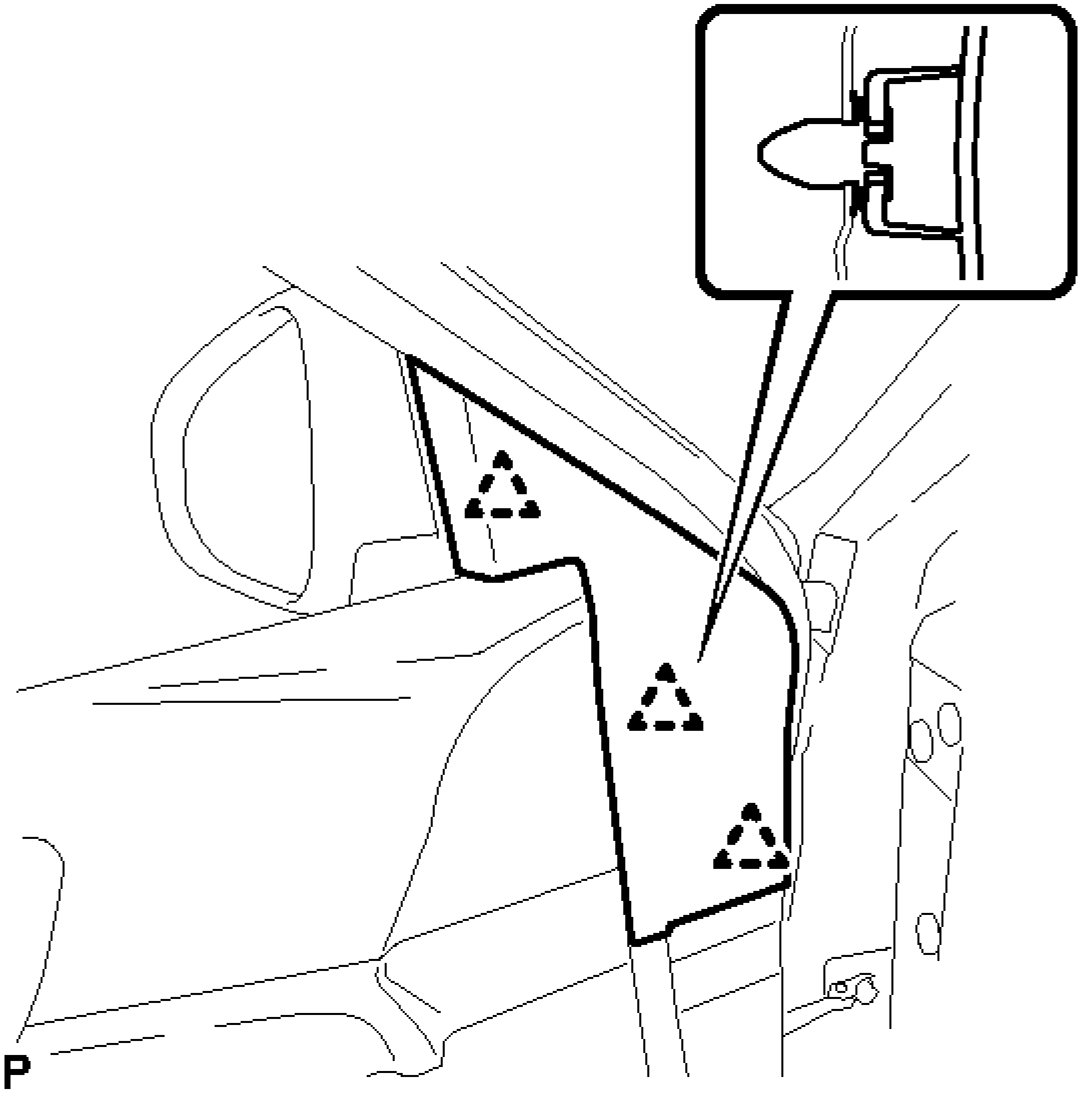

Fig. 122: Identifying Front Door Lower Frame Bracket Garnish Clips
Courtesy of TOYOTA MOTOR SALES, U.S.A., INC.

46. **INSTALL FRONT DOOR INSIDE HANDLE BEZEL PLUG**
    a. Engage the 3 claws to install the front door inside handle bezel plug.

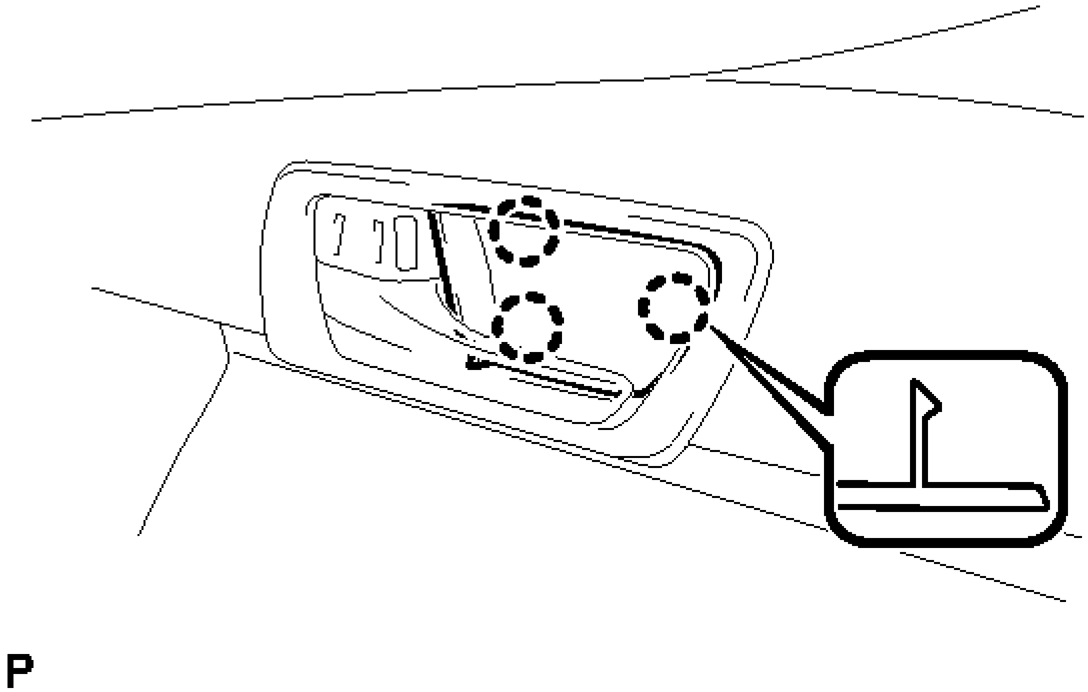

Fig. 123: Identifying Front Door Inside Handle Bezel Plug Claws
Courtesy of TOYOTA MOTOR SALES, U.S.A., INC.

47. **CONNECT CABLE TO NEGATIVE BATTERY TERMINAL**

    NOTE: **When disconnecting the cable, some systems need to be initialized after the cable is reconnected. Refer to INITIALIZATION .**

48. **INITIALIZE POWER WINDOW CONTROL SYSTEM (for Driver Side)**

    Refer to **INITIALIZATION** .

49. **INSPECT POWER WINDOW OPERATION**

    Refer to **OPERATION CHECK** .

50. **INSPECT SRS WARNING LIGHT**

    For Separate Type Yaw Rate Sensor: Refer to **DIAGNOSIS SYSTEM** .

    For Built-in Type Yaw Rate Sensor: Refer to **DIAGNOSIS SYSTEM** .

REAR DOOR

COMPONENTS

ILLUSTRATION

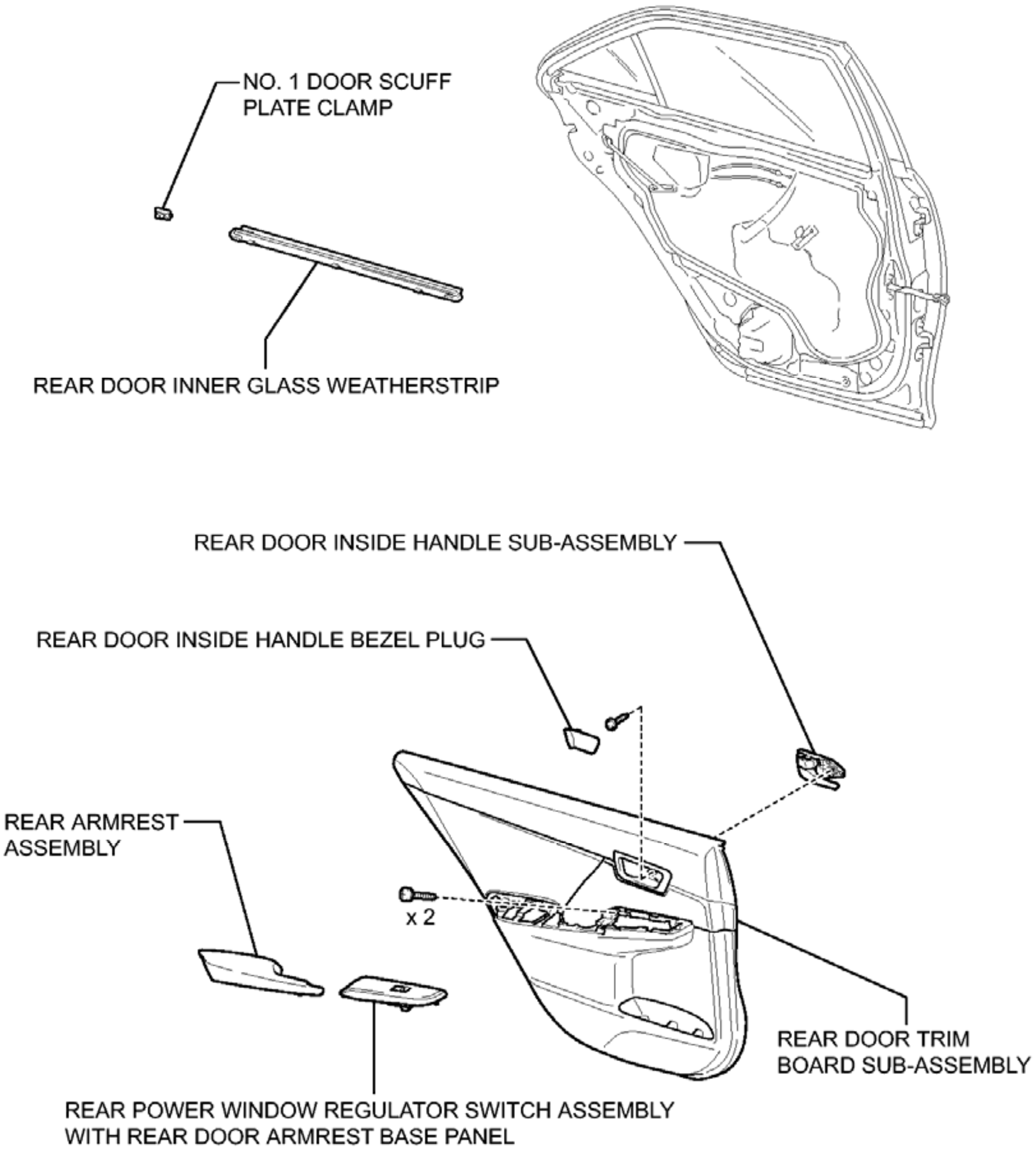
NO. 1 DOOR SCUFF PLATE CLAMP
REAR DOOR INNER GLASS WEATHERSTRIP
REAR DOOR INSIDE HANDLE SUB-ASSEMBLY
REAR DOOR INSIDE HANDLE BEZEL PLUG
REAR ARMREST ASSEMBLY
x 2
REAR DOOR TRIM BOARD SUB-ASSEMBLY
REAR POWER WINDOW REGULATOR SWITCH ASSEMBLY WITH REAR DOOR ARMREST BASE PANEL

P

Fig. 124: Identifying Rear Door Replacement Components (1 Of 4)
Courtesy of TOYOTA MOTOR SALES, U.S.A., INC.

ILLUSTRATION

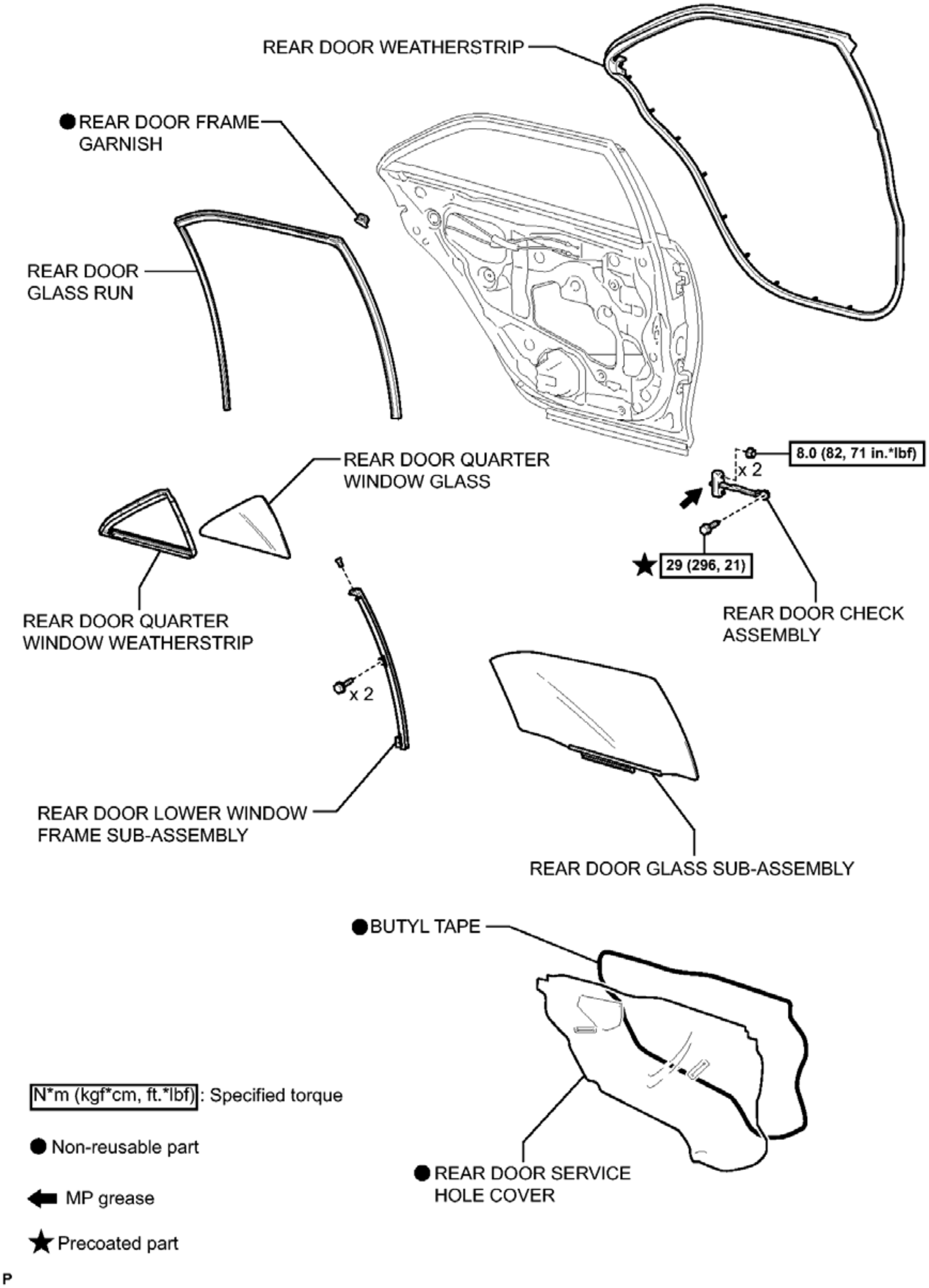
REAR DOOR WEATHERSTRIP
● REAR DOOR FRAME GARNISH
REAR DOOR GLASS RUN
REAR DOOR QUARTER WINDOW GLASS
8.0 (82, 71 in.*lbf)
x 2
★ 29 (296, 21)
REAR DOOR CHECK ASSEMBLY
REAR DOOR QUARTER WINDOW WEATHERSTRIP
x 2
REAR DOOR LOWER WINDOW FRAME SUB-ASSEMBLY
REAR DOOR GLASS SUB-ASSEMBLY
● BUTYL TAPE
N*m (kgf*cm, ft.*lbf) : Specified torque
● Non-reusable part
MP grease
★ Precoated part
● REAR DOOR SERVICE HOLE COVER
P

Fig. 125: Identifying Rear Door Replacement Components With Torque Specifications (2 Of 4)
Courtesy of TOYOTA MOTOR SALES, U.S.A., INC.

ILLUSTRATION

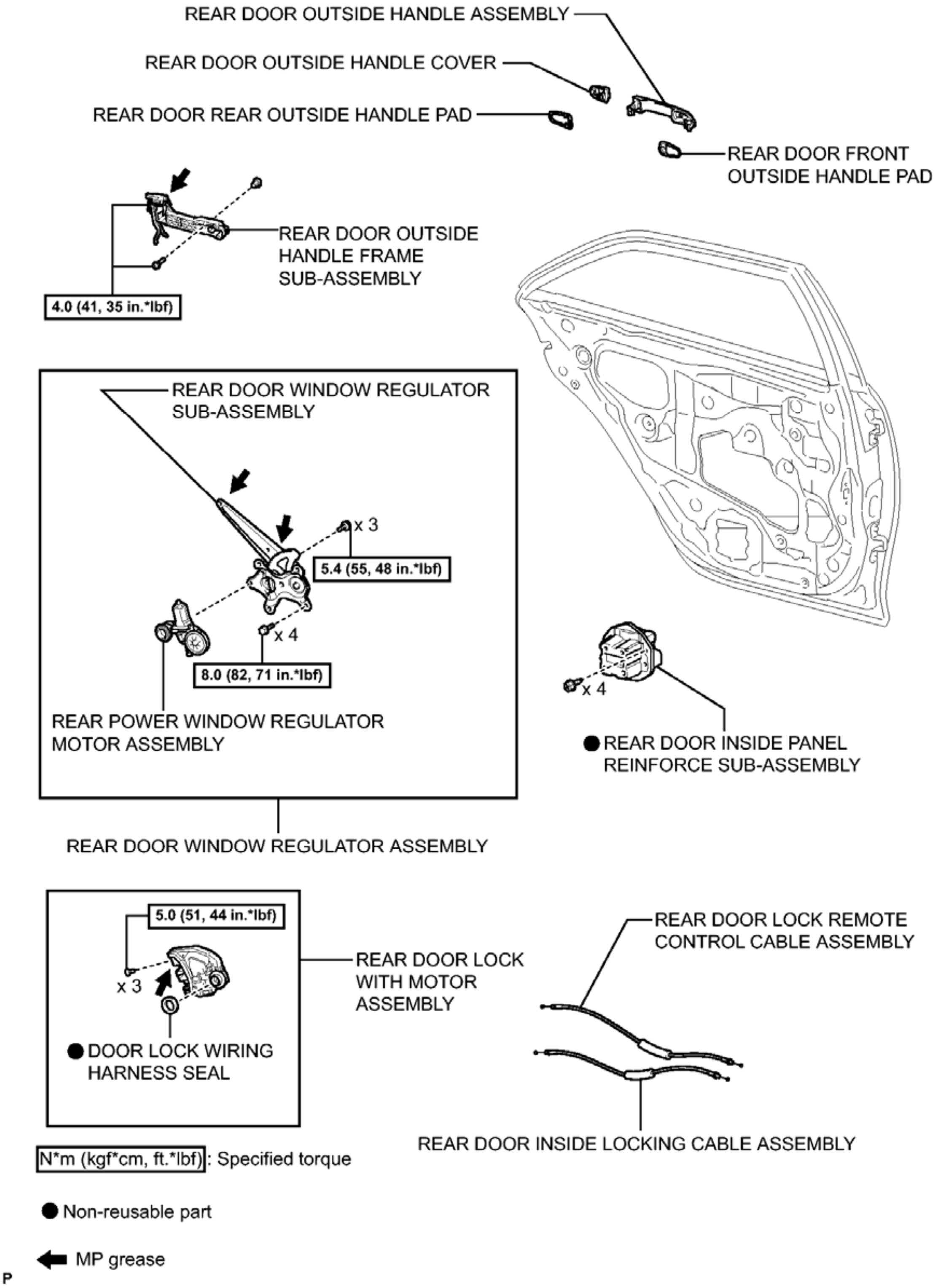
REAR DOOR OUTSIDE HANDLE ASSEMBLY
REAR DOOR OUTSIDE HANDLE COVER
REAR DOOR REAR OUTSIDE HANDLE PAD
REAR DOOR FRONT OUTSIDE HANDLE PAD
REAR DOOR OUTSIDE HANDLE FRAME SUB-ASSEMBLY
4.0 (41, 35 in.*lbf)
REAR DOOR WINDOW REGULATOR SUB-ASSEMBLY
x 3
5.4 (55, 48 in.*lbf)
x 4
8.0 (82, 71 in.*lbf)
REAR POWER WINDOW REGULATOR MOTOR ASSEMBLY
x 4
● REAR DOOR INSIDE PANEL REINFORCE SUB-ASSEMBLY
REAR DOOR WINDOW REGULATOR ASSEMBLY
5.0 (51, 44 in.*lbf)
x 3
REAR DOOR LOCK WITH MOTOR ASSEMBLY
● DOOR LOCK WIRING HARNESS SEAL
REAR DOOR LOCK REMOTE CONTROL CABLE ASSEMBLY
REAR DOOR INSIDE LOCKING CABLE ASSEMBLY
N*m (kgf*cm, ft.*lbf) : Specified torque
● Non-reusable part
MP grease
P

Fig. 126: Identifying Rear Door Replacement Components With Torque Specifications (3 Of 4)
Courtesy of TOYOTA MOTOR SALES, U.S.A., INC.

ILLUSTRATION

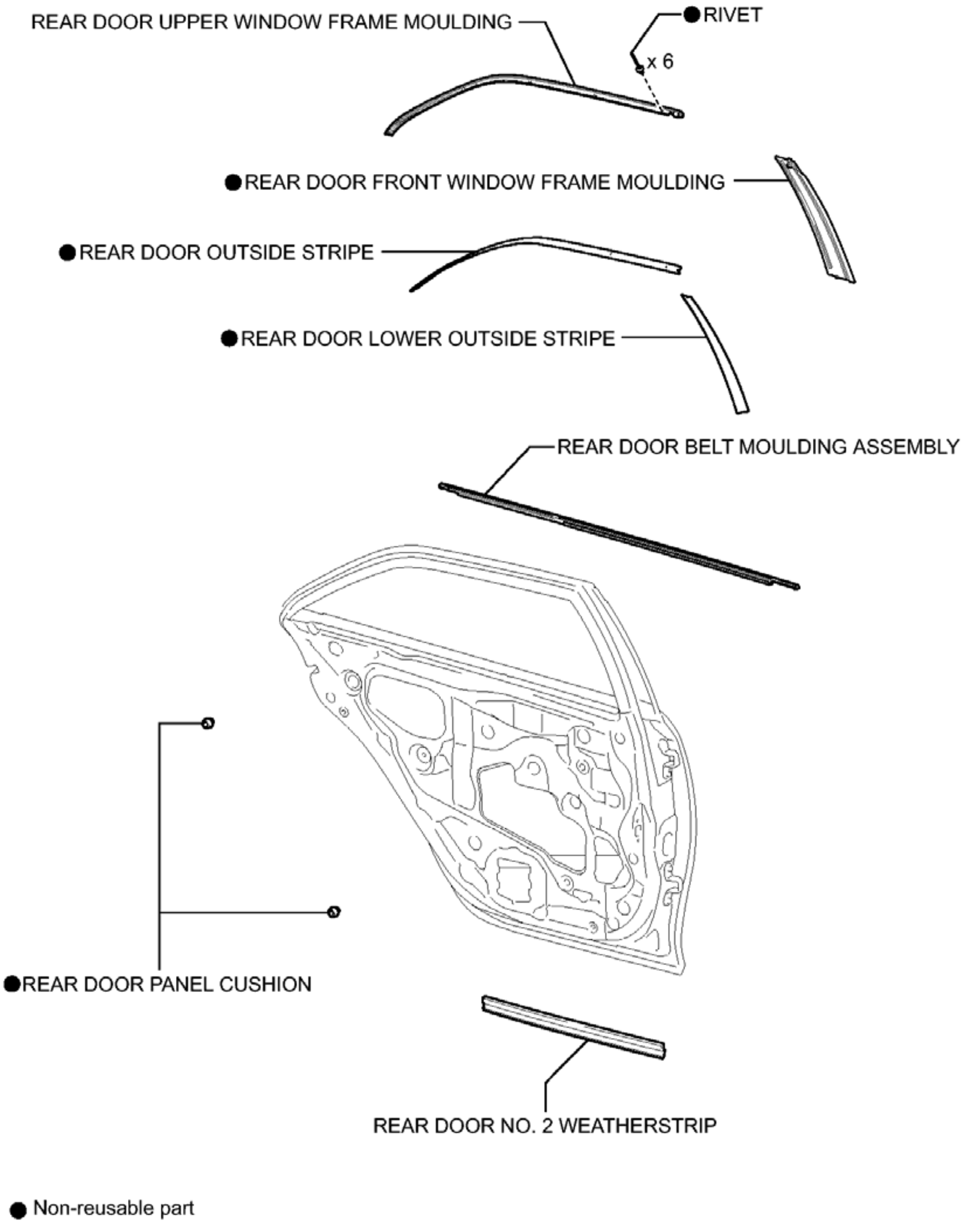
REAR DOOR UPPER WINDOW FRAME MOULDING
● RIVET
x 6
● REAR DOOR FRONT WINDOW FRAME MOULDING
● REAR DOOR OUTSIDE STRIPE
● REAR DOOR LOWER OUTSIDE STRIPE
REAR DOOR BELT MOULDING ASSEMBLY
● REAR DOOR PANEL CUSHION
REAR DOOR NO. 2 WEATHERSTRIP
● Non-reusable part
P

Fig. 127: Identifying Rear Door Replacement Components (4 Of 4)
Courtesy of TOYOTA MOTOR SALES, U.S.A., INC.

DISASSEMBLY

DISASSEMBLY

HINT:

- Use the same procedure for both the RH and LH sides.
- The procedure described below is for the LH side.

1. **PRECAUTION**

   NOTE: **After turning the ignition switch off, waiting time may be required before disconnecting the cable from the negative (-) battery terminal. Therefore, make sure to read the disconnecting the cable from the negative (-) battery terminal notices before proceeding with work. Refer to PRECAUTION .**

2. **DISCONNECT CABLE FROM NEGATIVE BATTERY TERMINAL**

   NOTE: **When disconnecting the cable, some systems need to be initialized after the cable is reconnected. Refer to INITIALIZATION .**

3. **REMOVE REAR DOOR INSIDE HANDLE BEZEL PLUG**
   a. Using a moulding remover, disengage the 3 claws and remove the rear door inside handle bezel plug as shown in the illustration.

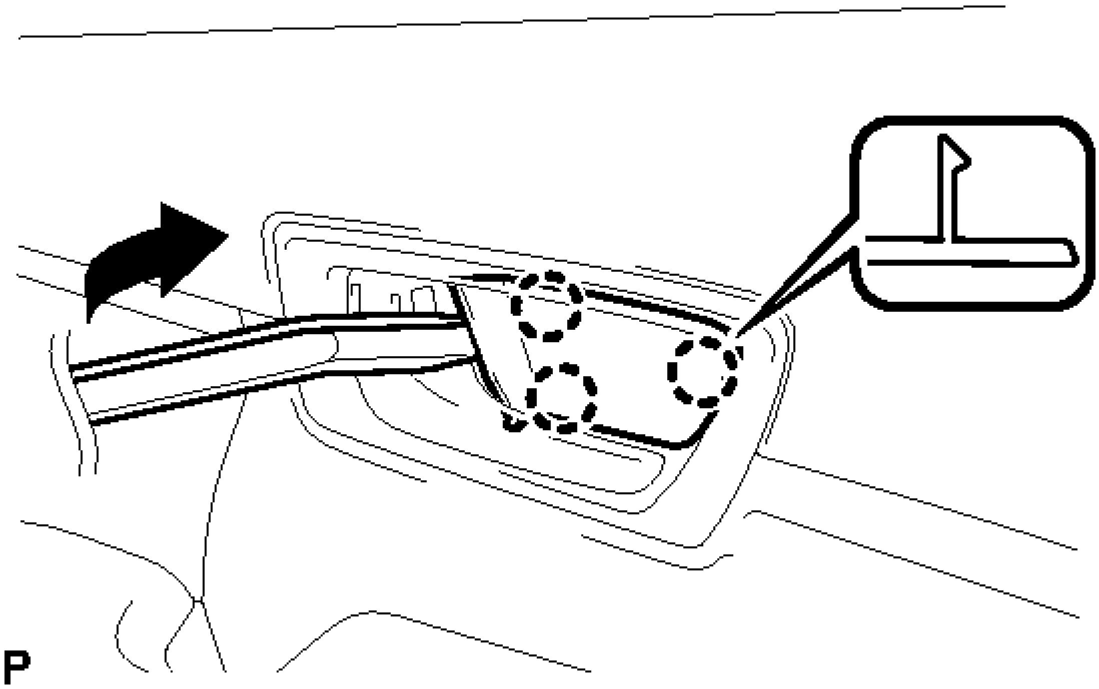

Fig. 128: Identifying Rear Door Inside Handle Bezel Plug Claws
Courtesy of TOYOTA MOTOR SALES, U.S.A., INC.

4. **REMOVE REAR POWER WINDOW REGULATOR SWITCH ASSEMBLY WITH REAR DOOR ARMREST BASE PANEL**
   a. Using a moulding remover, disengage the 2 clips, 5 claws and 4 guides as shown in the illustration.

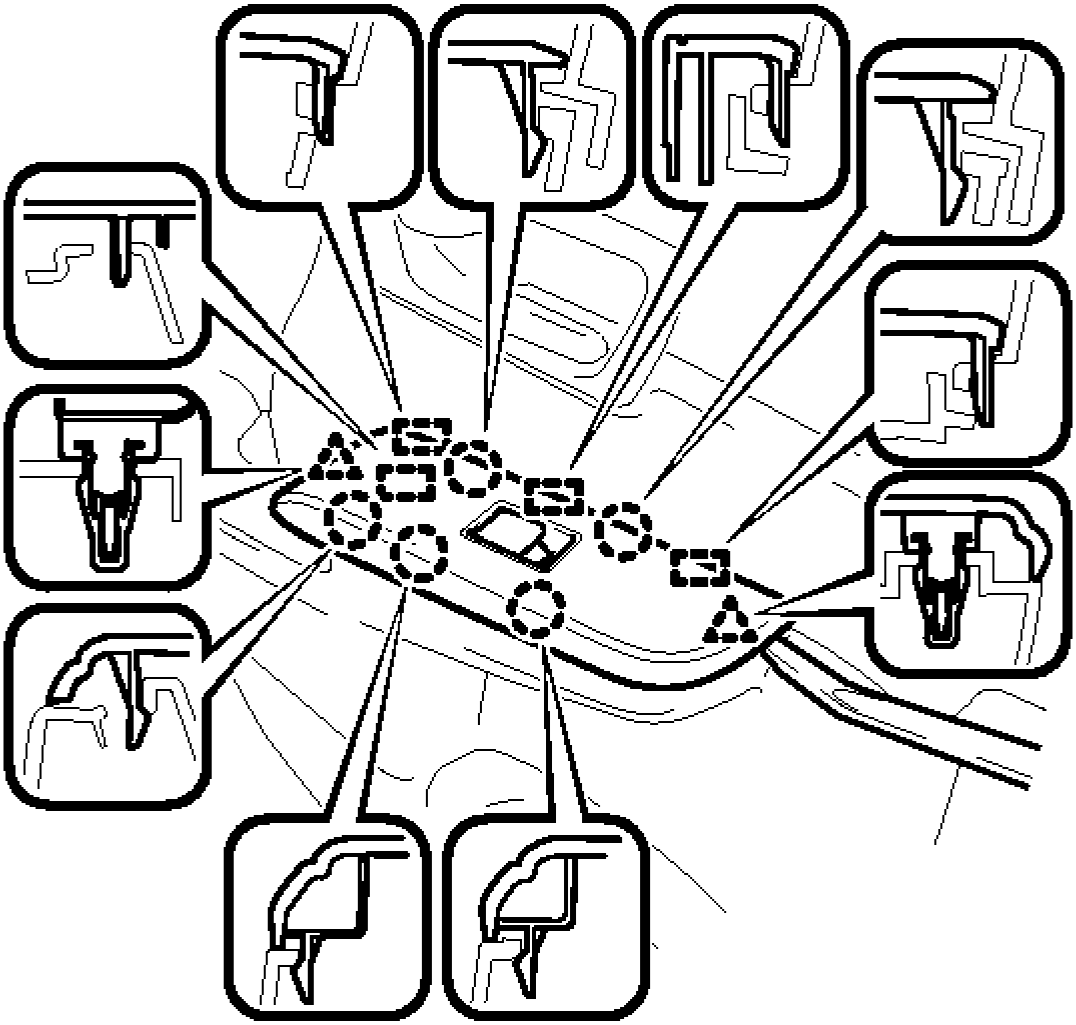

P

Fig. 129: Identifying Rear Power Window Regulator Switch Clips, Claws And Guides
Courtesy of TOYOTA MOTOR SALES, U.S.A., INC.

b. Disconnect the connector and remove the rear power window regulator switch assembly with rear door armrest base panel.

5. **REMOVE REAR ARMREST ASSEMBLY**

   a. Using a moulding remover, disengage the 3 clips, 7 claws and 2 guides and remove the rear armrest assembly.

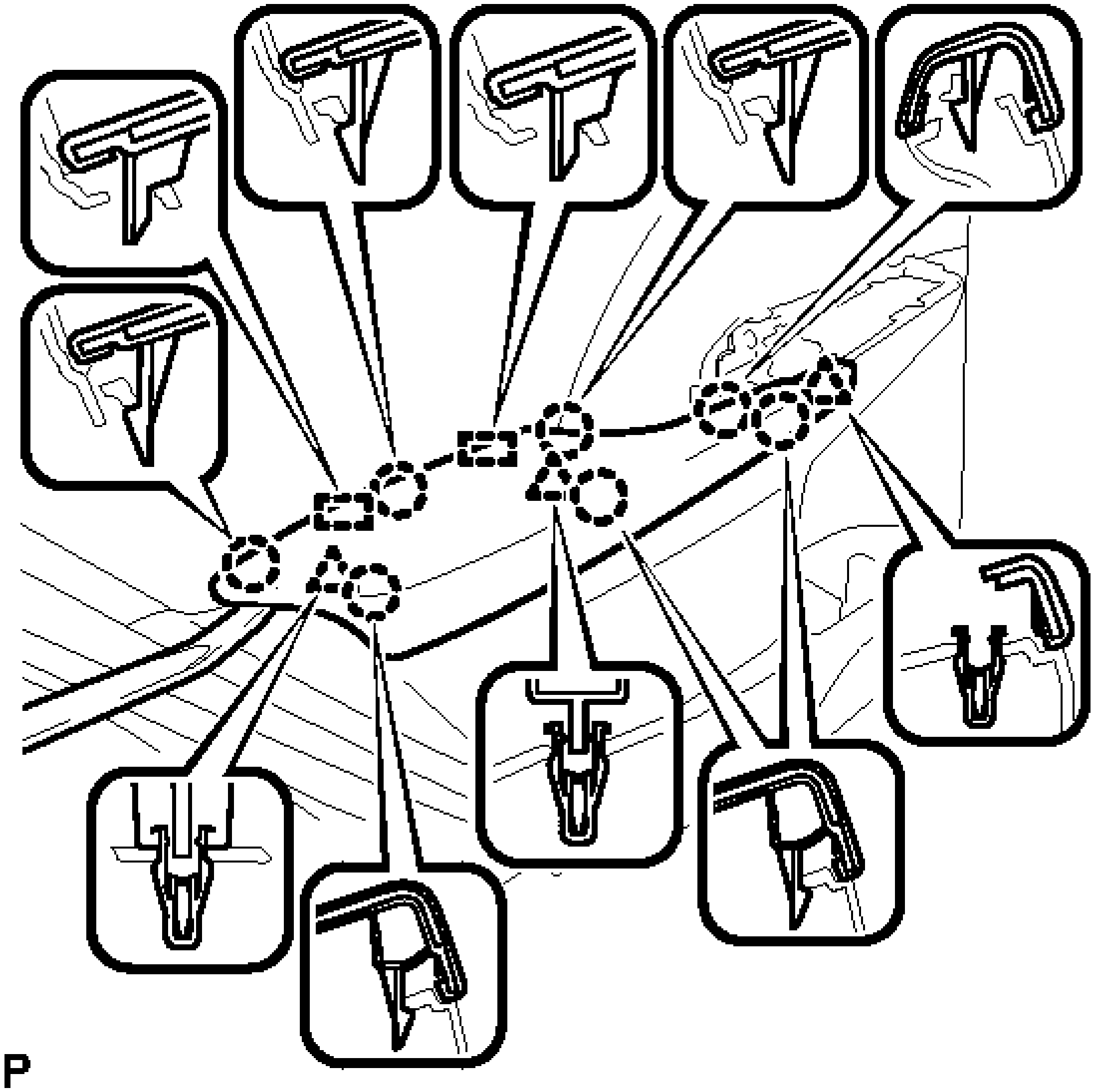

Fig. 130: Identifying Rear Armrest Clips, Claws And Guides
Courtesy of TOYOTA MOTOR SALES, U.S.A., INC.

6. **REMOVE REAR DOOR TRIM BOARD SUB-ASSEMBLY**
    a. Put protective tape around the rear door panel.

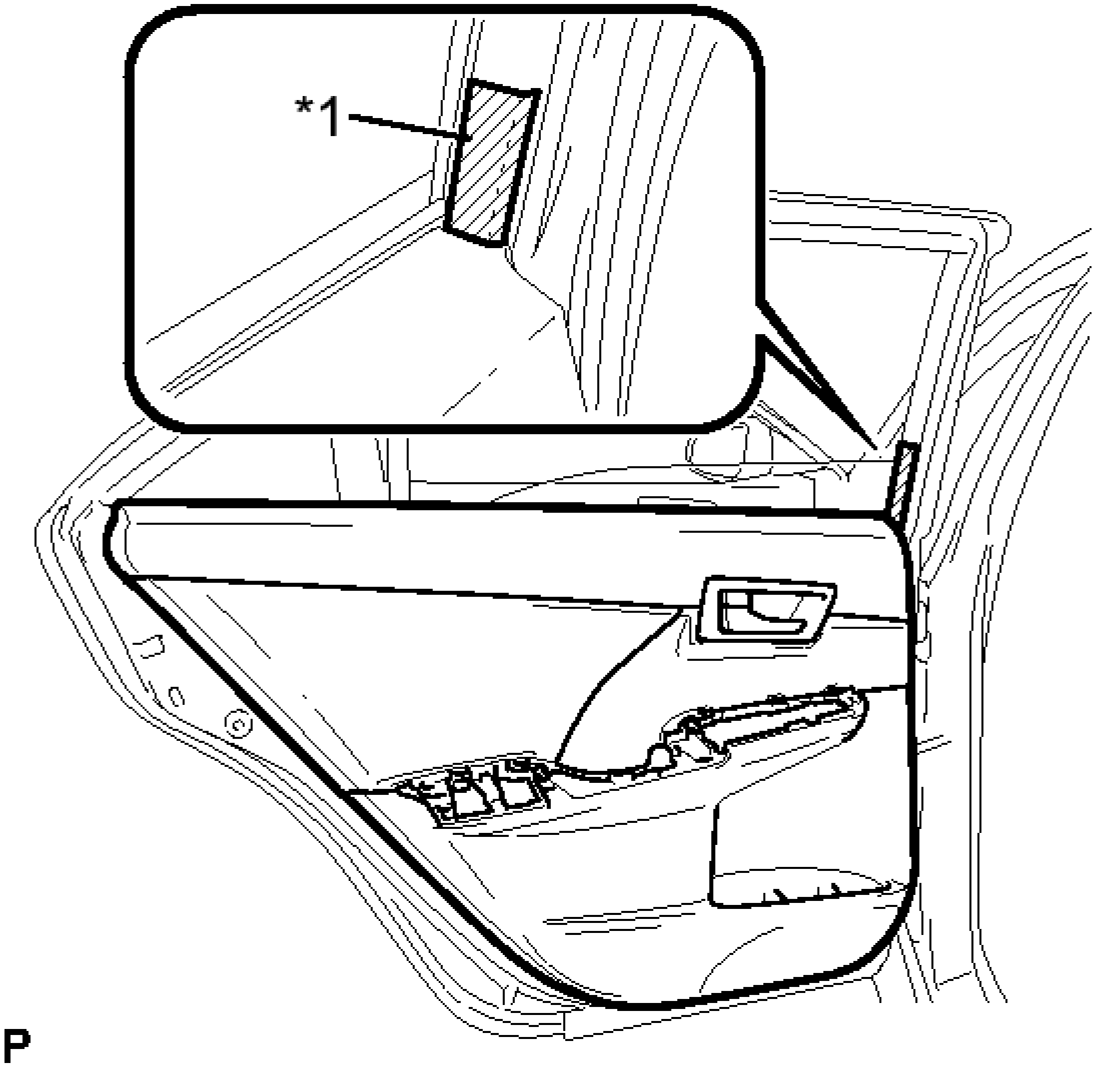

Fig. 131: Identifying Protective Tape Placement
Courtesy of TOYOTA MOTOR SALES, U.S.A., INC.

TEXT IN ILLUSTRATION

*1	Protective Tape

b. Remove the 3 screws.

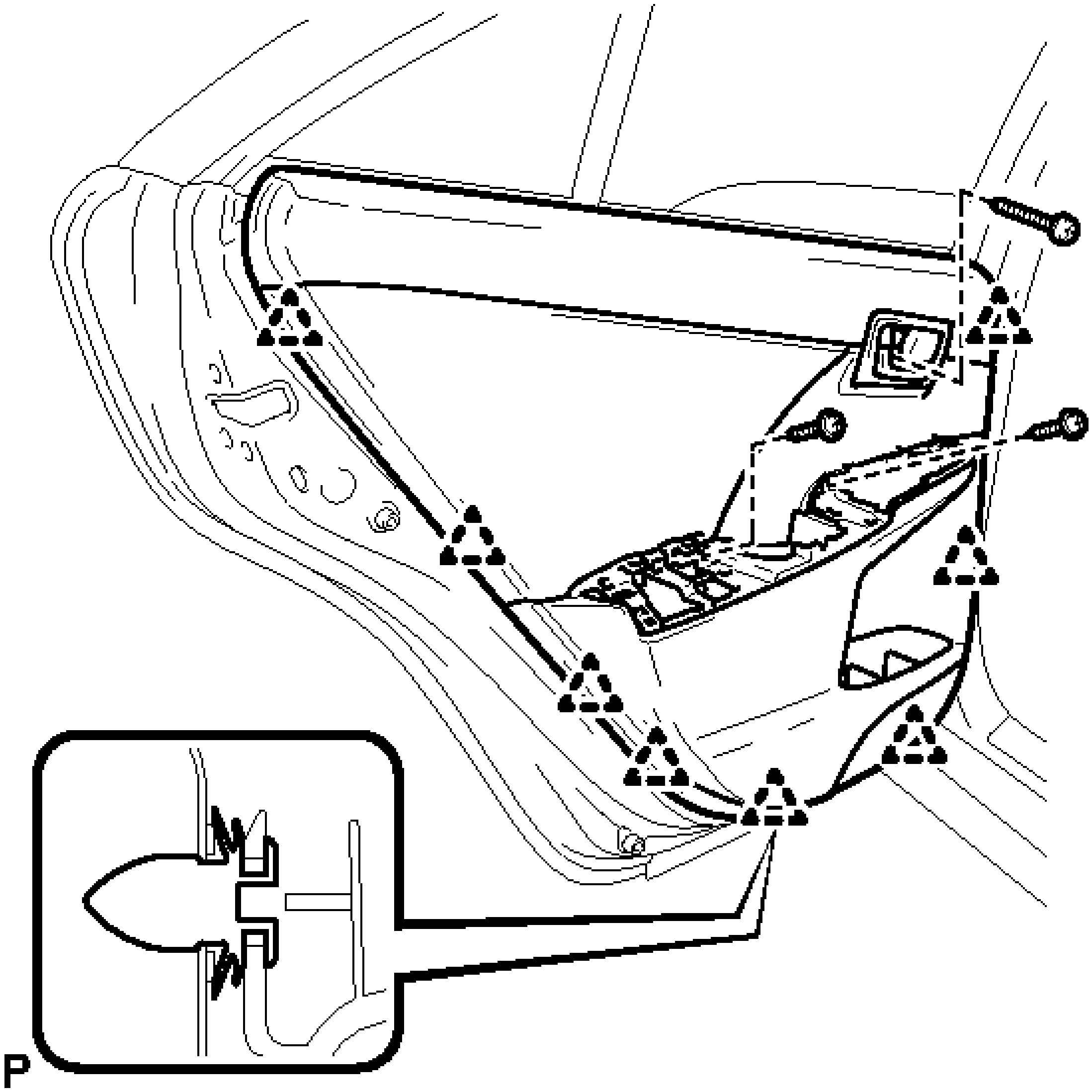

Fig. 132: Identifying Rear Door Trim Board Sub-Assembly Clips And Screws
Courtesy of TOYOTA MOTOR SALES, U.S.A., INC.

c. Using a clip remover, disengage the 8 clips.

d. Pull out the rear door trim board sub-assembly in the direction indicated by the arrow as shown in the illustration.

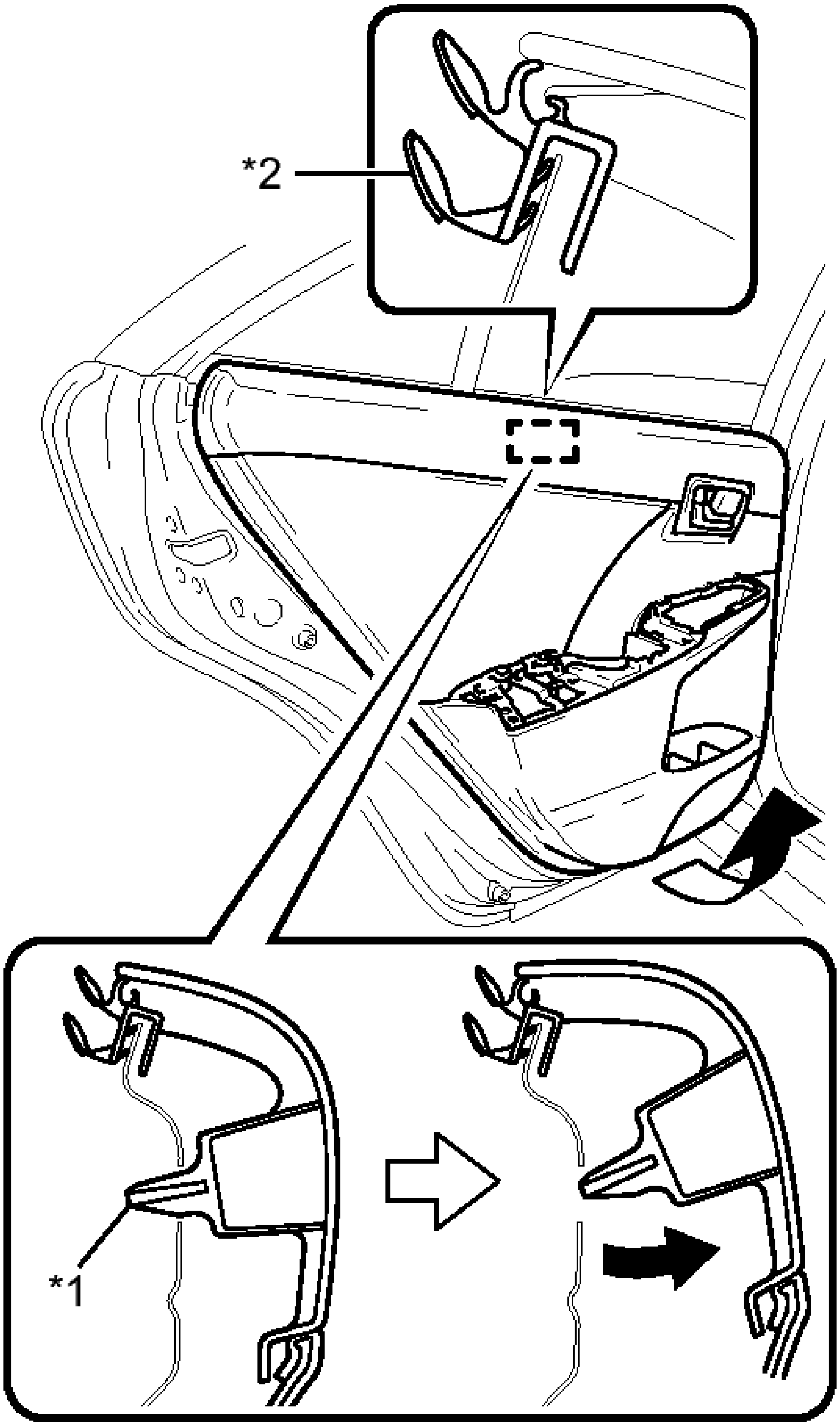

Fig. 133: Pulling Out Rear Door Trim Board Sub-Assembly
Courtesy of TOYOTA MOTOR SALES, U.S.A., INC.

TEXT IN ILLUSTRATION

*1	Reference Boss
*2	Rear Door Inner Glass Weatherstrip

e. Disengage the reference boss from the rear door panel.
f. Raise the rear door trim board sub-assembly to remove the rear door trim board sub-assembly together with the rear door inner glass weatherstrip.
g. Disconnect the rear door lock remote control cable assembly and rear door inside locking cable assembly.

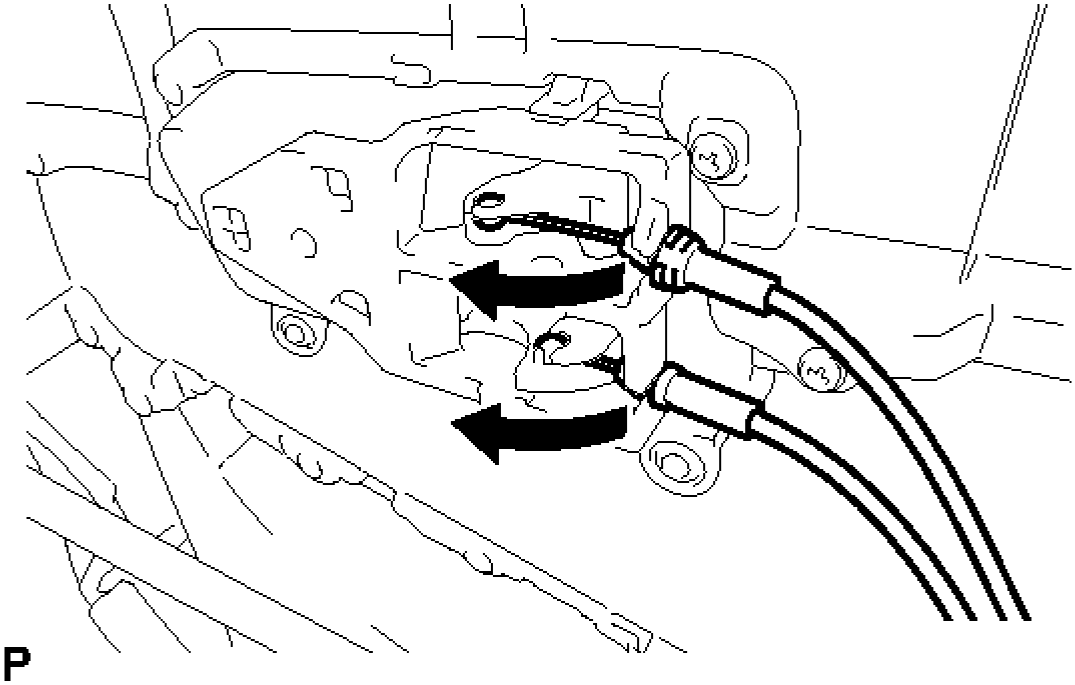

Fig. 134: Disconnecting Rear Door Lock Remote Control And Inside Locking Cables
Courtesy of TOYOTA MOTOR SALES, U.S.A., INC.

h. Using a screwdriver, disengage the claw and remove the No. 1 door scuff plate clamp from the rear door trim board sub-assembly as shown in the illustration.

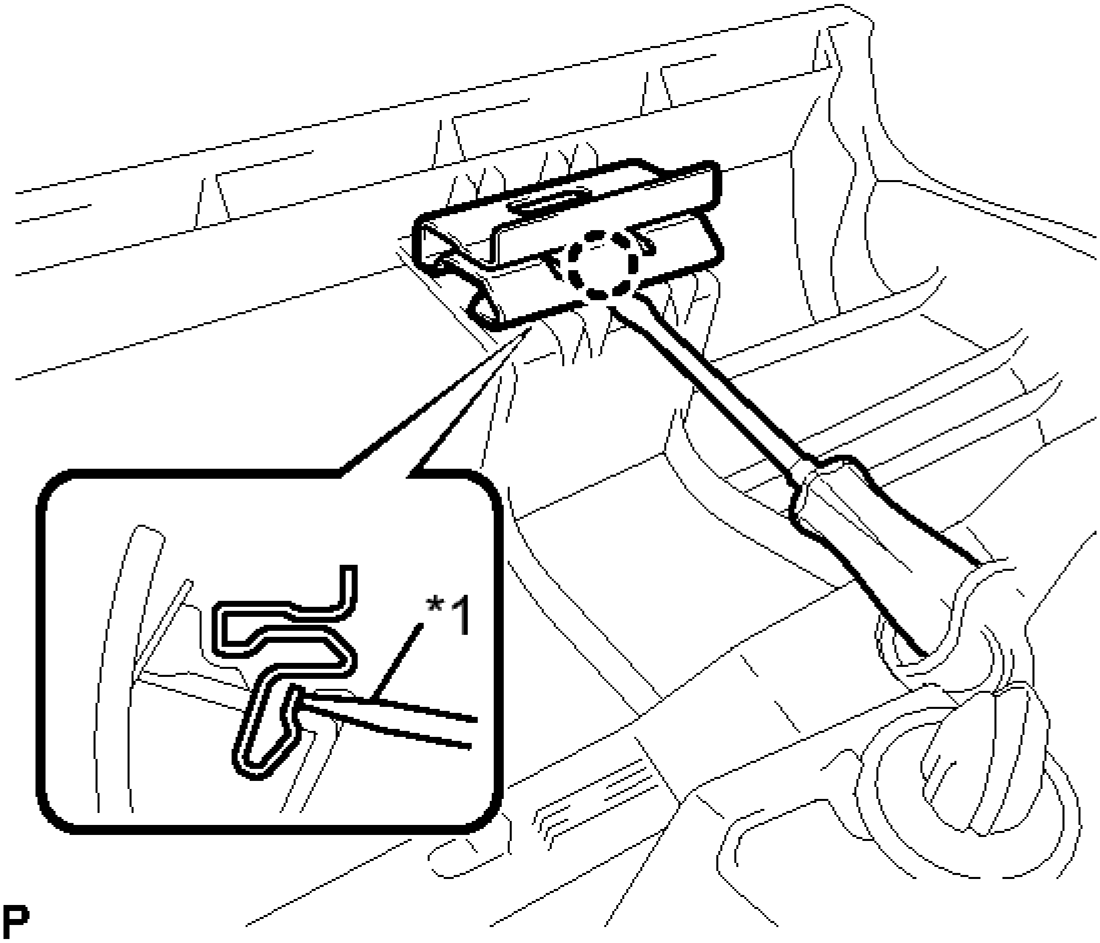

Fig. 135: Disengaging No. 1 Door Scuff Plate Clamp
Courtesy of TOYOTA MOTOR SALES, U.S.A., INC.

TEXT IN ILLUSTRATION

*1	Screwdriver

7. **REMOVE REAR DOOR INSIDE HANDLE SUB-ASSEMBLY**
    a. Disengage the 2 claws and guide, and remove the rear door inside handle sub-assembly.

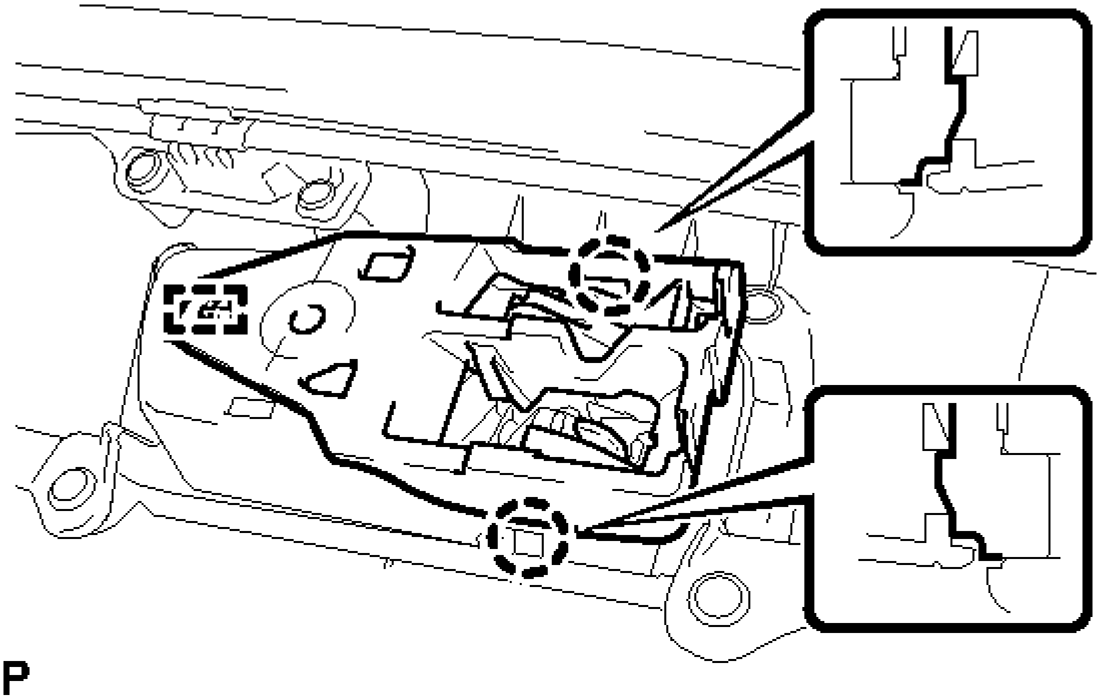

Fig. 136: Identifying Rear Door Inside Handle Sub-Assembly Claws And Guides
Courtesy of TOYOTA MOTOR SALES, U.S.A., INC.

8. **REMOVE REAR DOOR INNER GLASS WEATHERSTRIP**
    a. Using a screwdriver, disengage the 3 claws and remove the rear door inner glass weatherstrip from the rear door trim board sub-assembly as shown in the illustration.

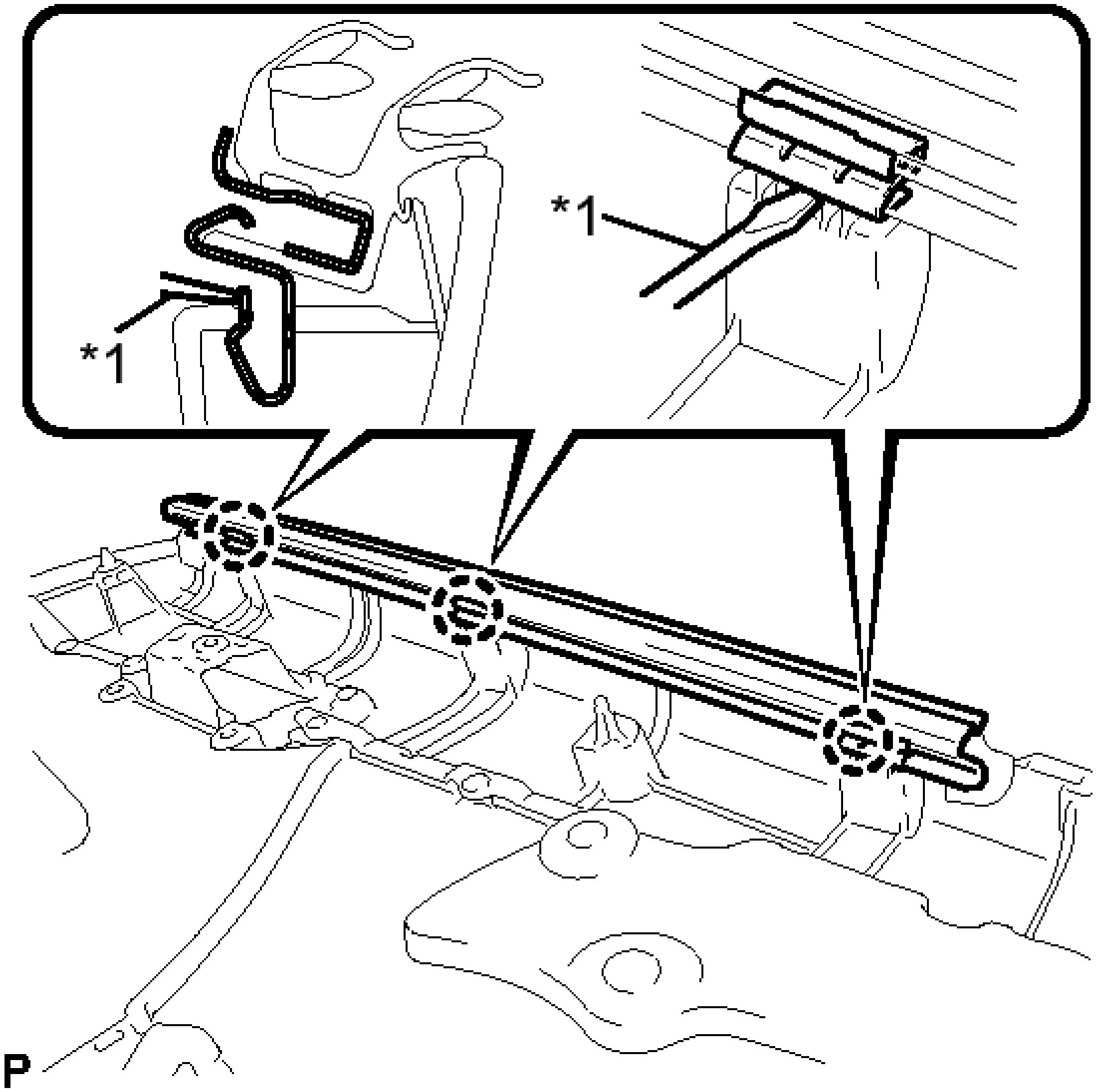

Fig. 137: Disengaging Rear Door Inner Glass Weatherstrip Claws
Courtesy of TOYOTA MOTOR SALES, U.S.A., INC.

TEXT IN ILLUSTRATION

*1	Screwdriver

9. **REMOVE REAR DOOR SERVICE HOLE COVER**
    a. Disconnect the connector and remove the rear door service hole cover.

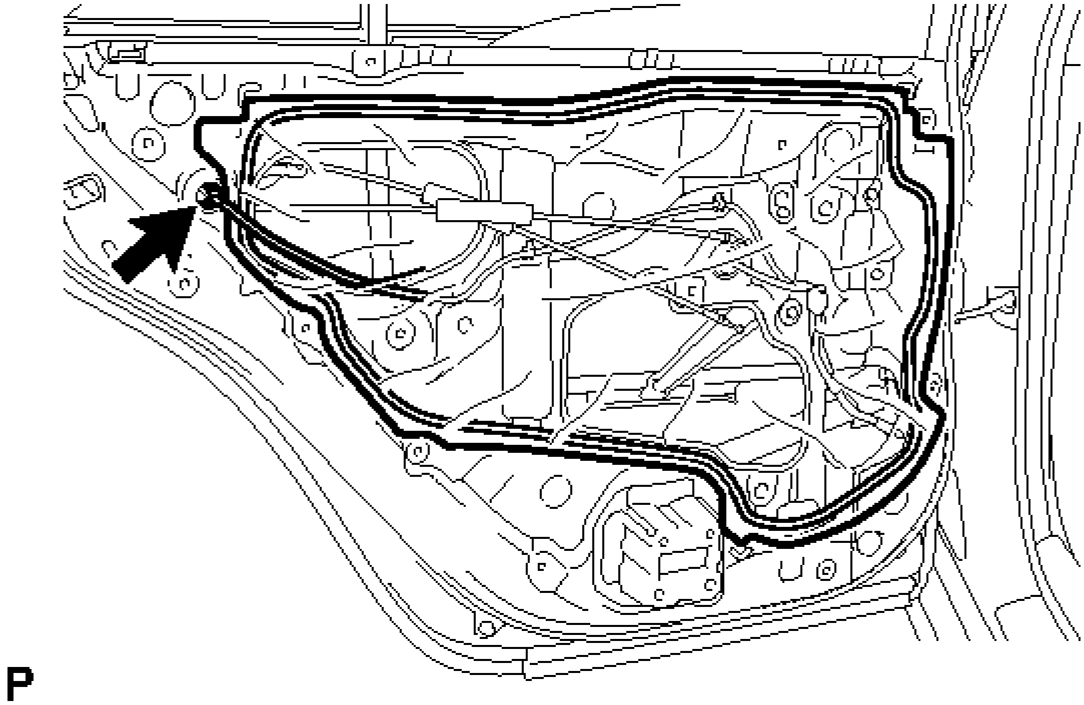

Fig. 138: Locating Rear Door Service Hole Cover
Courtesy of TOYOTA MOTOR SALES, U.S.A., INC.

HINT:

Remove any remaining butyl tape from the door.

10. **REMOVE REAR DOOR CHECK ASSEMBLY**
    a. Remove the bolt and 2 nuts, and rear door check assembly.

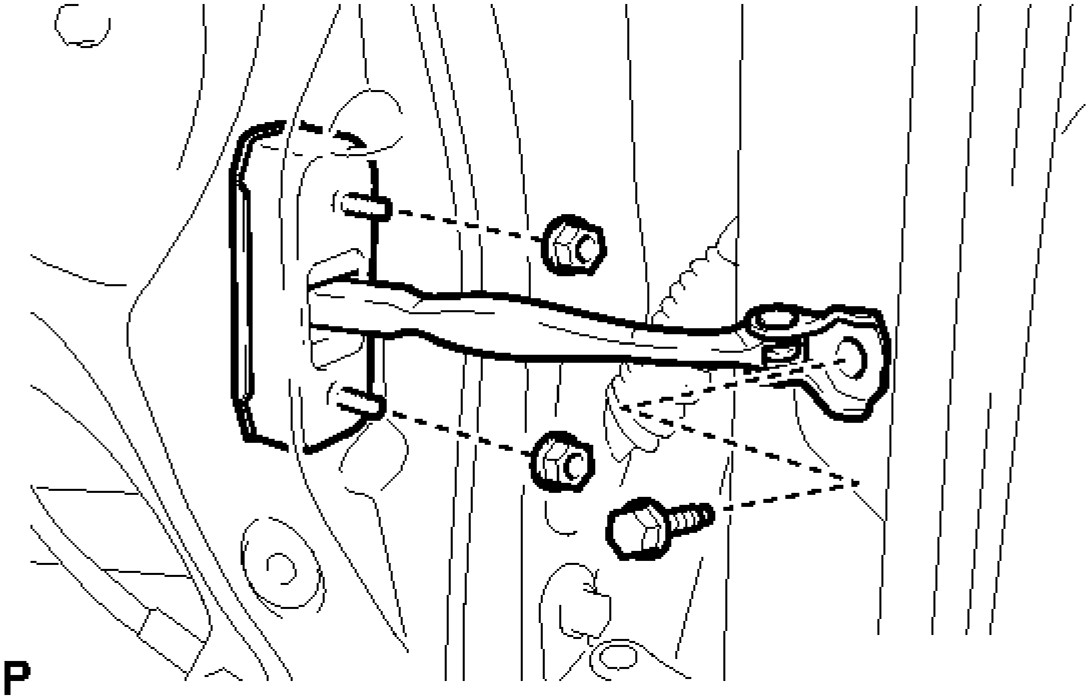

Fig. 139: Identifying Rear Door Check Bolts
Courtesy of TOYOTA MOTOR SALES, U.S.A., INC.

11. **REMOVE REAR DOOR WEATHERSTRIP**
    a. Using a clip remover, disengage the 20 clips and remove the rear door weatherstrip.

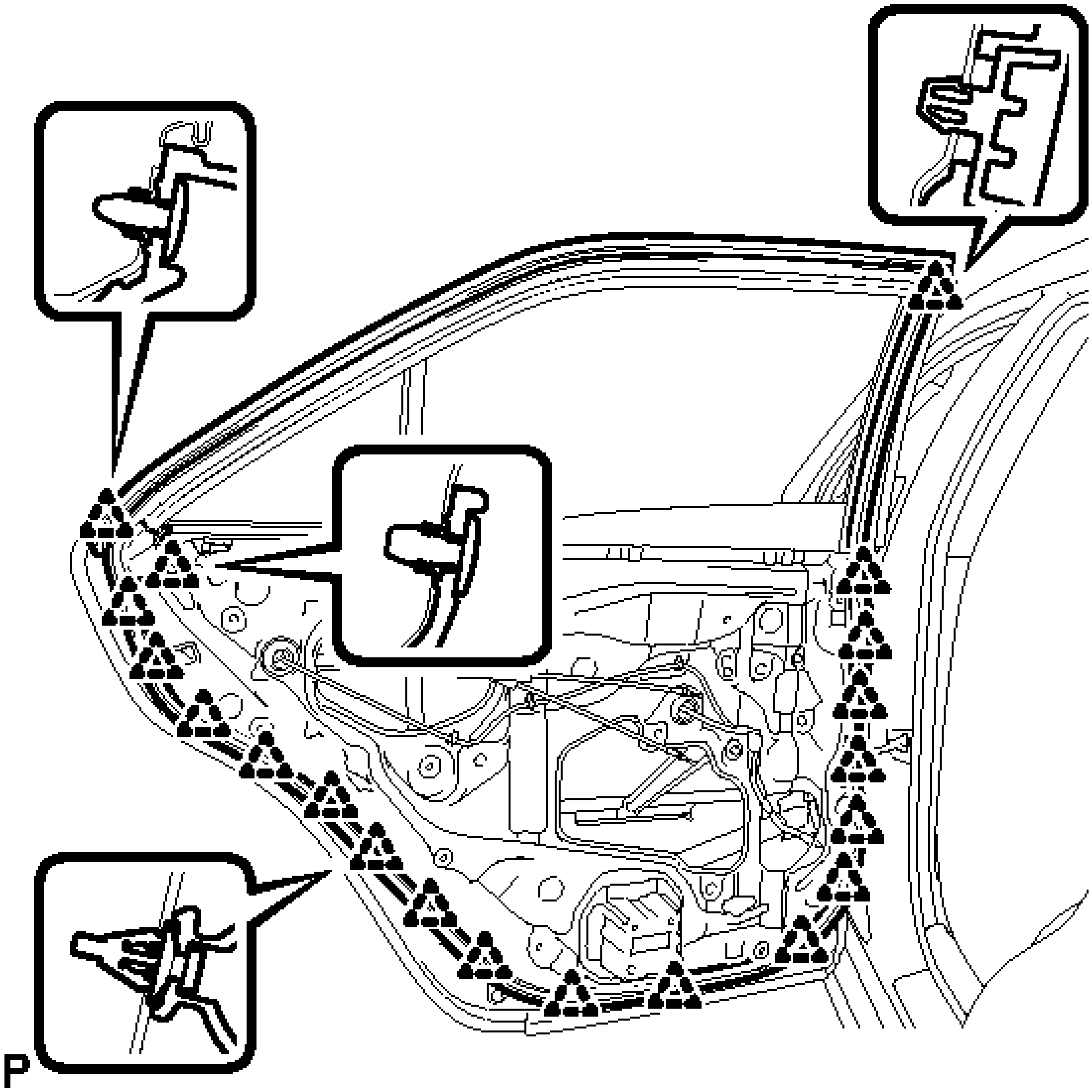

Fig. 140: Identifying Rear Door Weatherstrip Clips
Courtesy of TOYOTA MOTOR SALES, U.S.A., INC.

12. **REMOVE REAR DOOR GLASS RUN**
    a. Remove the rear door glass run.

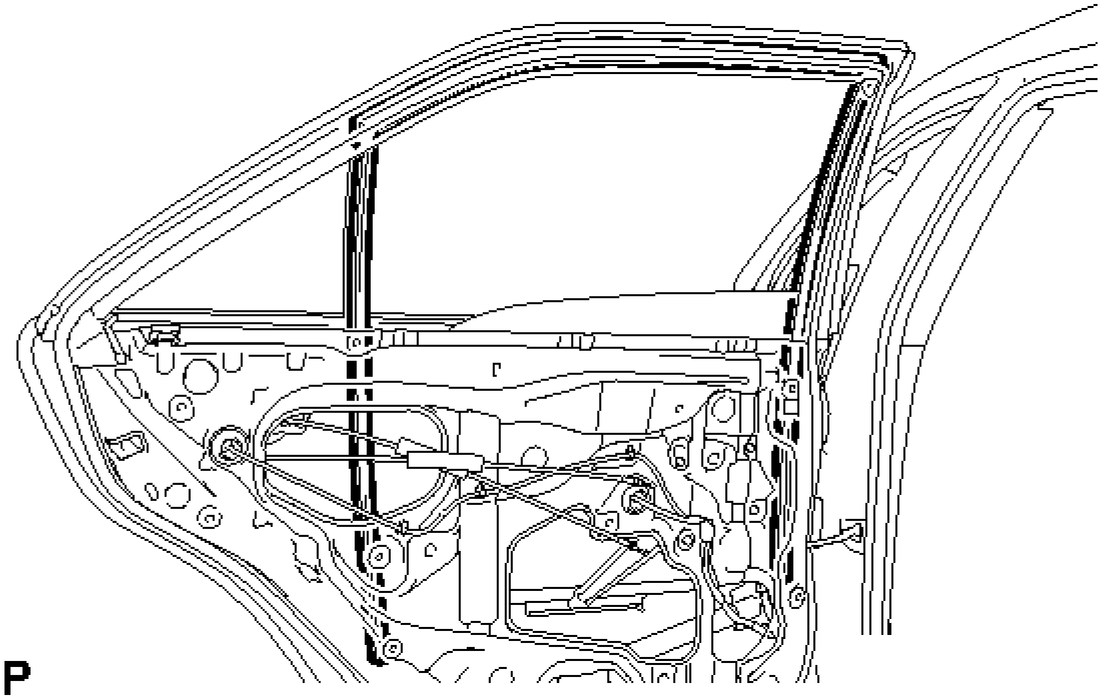

Fig. 141: Identifying Rear Door Glass Run
Courtesy of TOYOTA MOTOR SALES, U.S.A., INC.

13. **REMOVE REAR DOOR LOWER WINDOW FRAME SUB-ASSEMBLY**
    a. Remove the 2 bolts and screw, and rear door lower window frame sub-assembly.

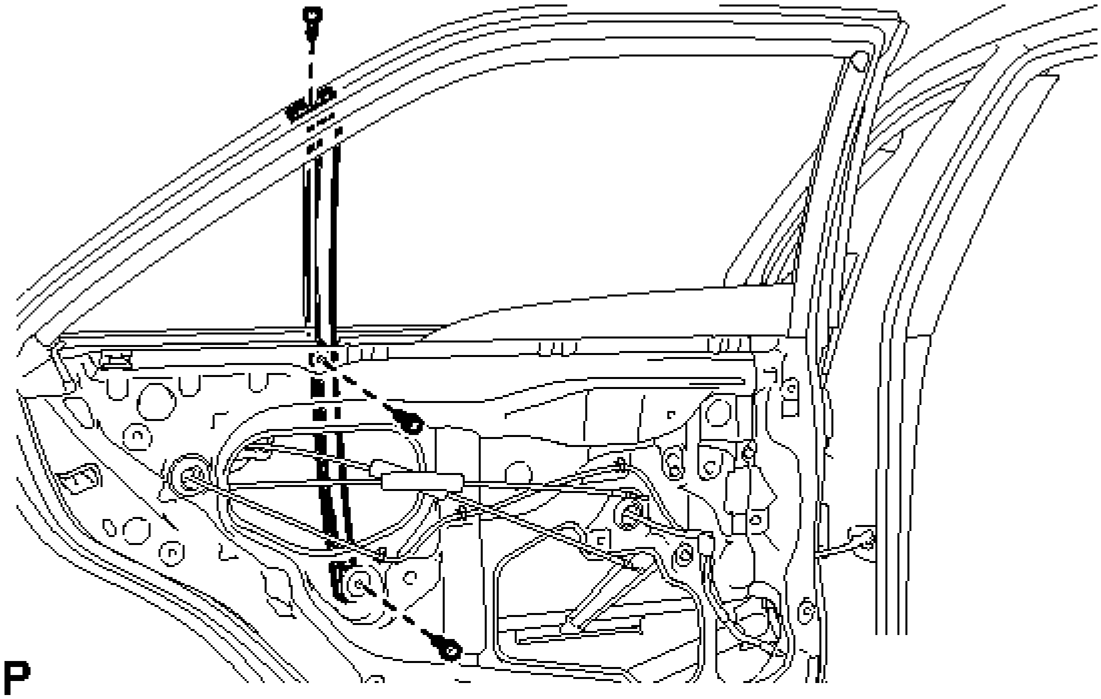

Fig. 142: Identifying Rear Door Lower Window Frame Bolts

Courtesy of TOYOTA MOTOR SALES, U.S.A., INC.

NOTE: **When the rear door lower window frame sub-assembly is removed, do not allow the rear door quarter window glass to fall.**

14. **REMOVE REAR DOOR QUARTER WINDOW GLASS**
    a. Remove the rear door quarter window glass with the rear door quarter window weatherstrip as shown in the illustration.

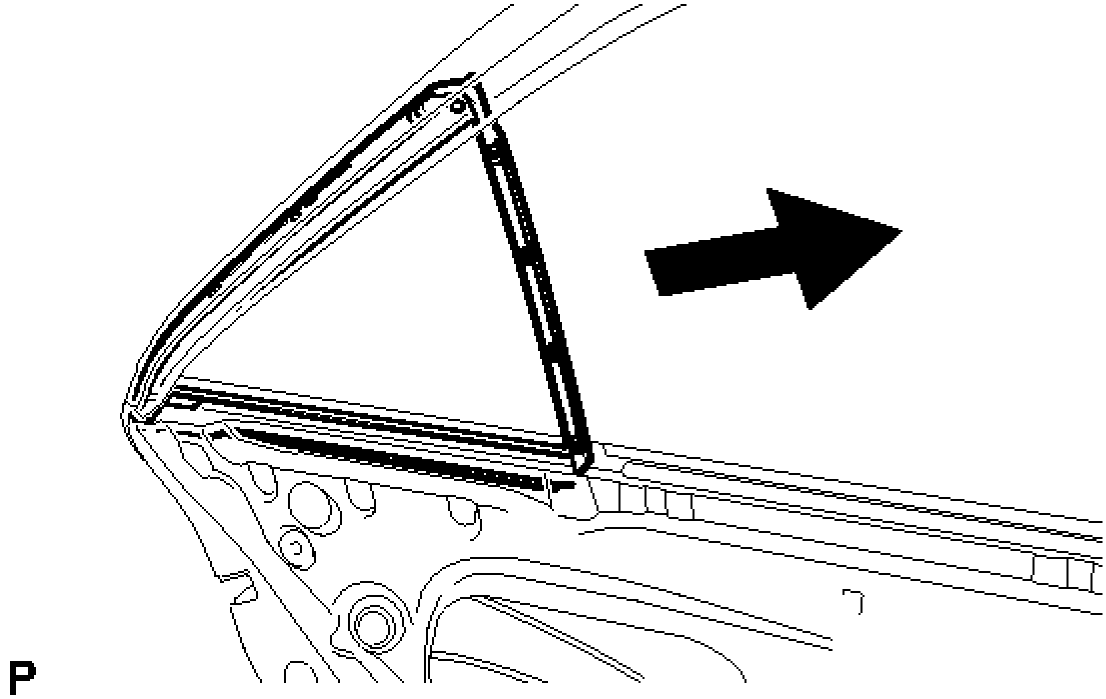

Fig. 143: Removing Rear Door Quarter Window Glass
Courtesy of TOYOTA MOTOR SALES, U.S.A., INC.

    b. Remove the rear door quarter window glass from the rear door quarter window weatherstrip.

15. **REMOVE REAR DOOR GLASS SUB-ASSEMBLY**
    a. Remove the rear door glass sub-assembly from the rear door window regulator sub-assembly as shown in the illustration.

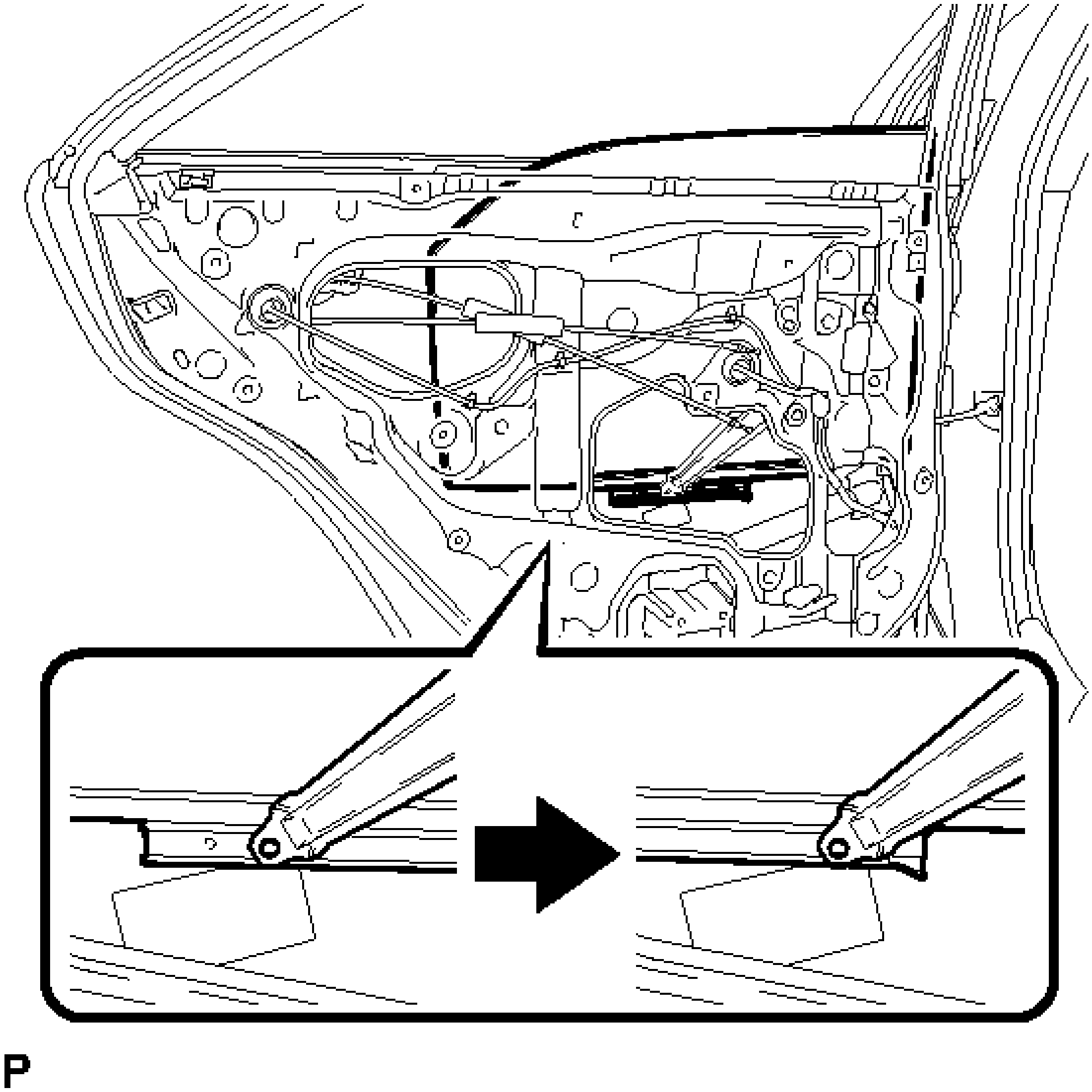

Fig. 144: Removing Rear Door Glass From Rear Door Window Regulator
Courtesy of TOYOTA MOTOR SALES, U.S.A., INC.

NOTE: **Do not damage the door glass.**

16. **REMOVE REAR DOOR FRAME GARNISH**
    a. Disengage the clip and remove the rear door frame garnish.

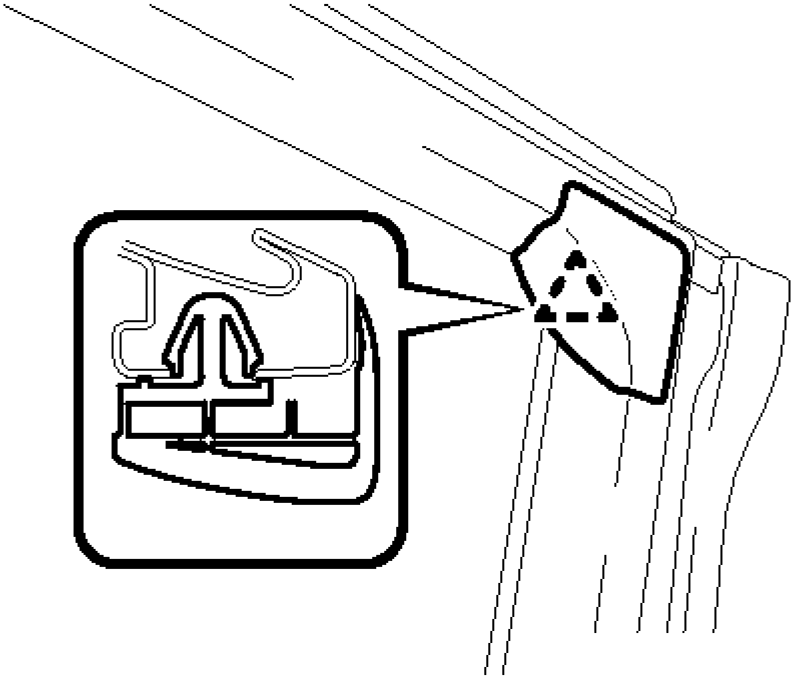

P

Fig. 145: Identifying Rear Door Frame Garnish Clip
Courtesy of TOYOTA MOTOR SALES, U.S.A., INC.

HINT:

This garnish needs to be replaced with a new one because the clip will break when removing it.

17. **REMOVE REAR DOOR INSIDE PANEL REINFORCE SUB-ASSEMBLY**
    a. Remove the 4 screws.

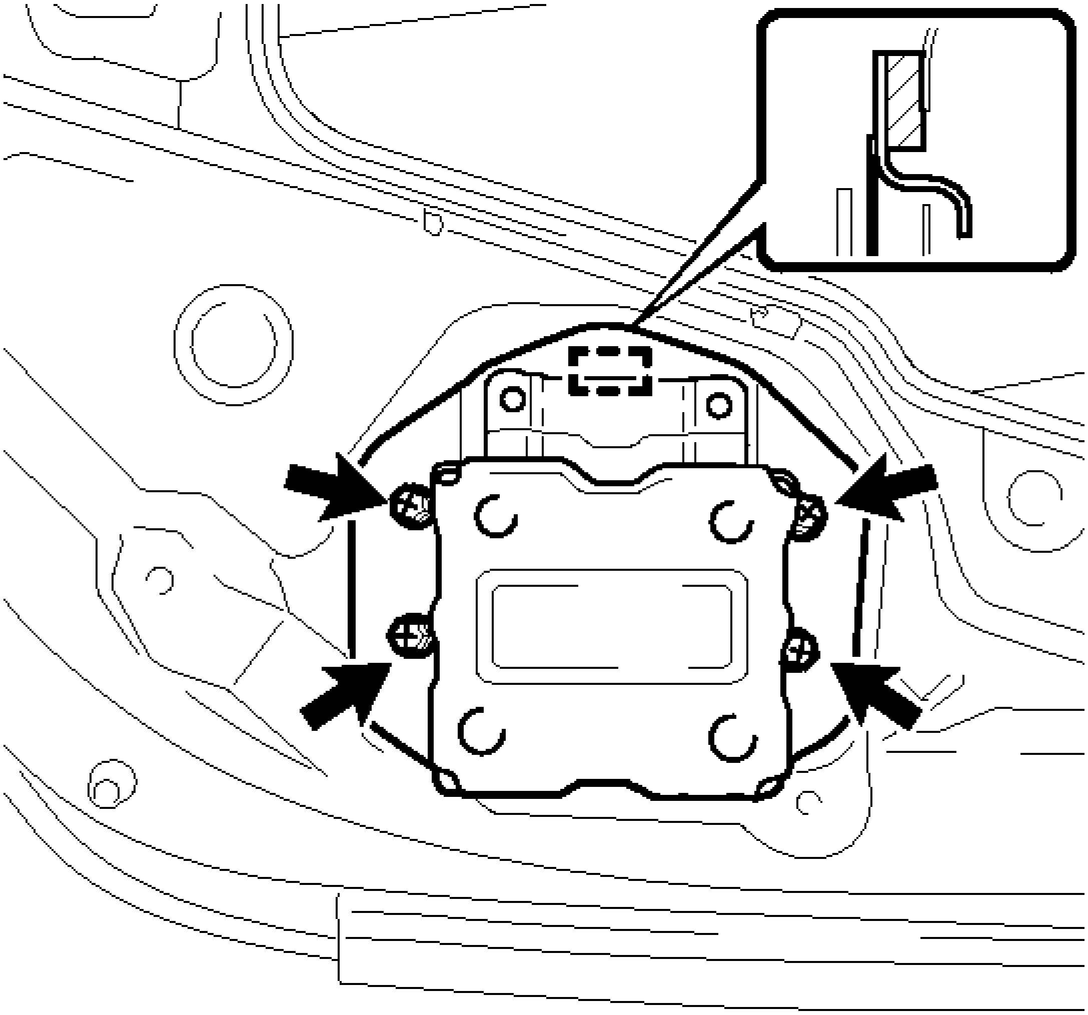

Fig. 146: Identifying Rear Door Inside Panel Reinforce Sub-Assembly Screws And Guide
Courtesy of TOYOTA MOTOR SALES, U.S.A., INC.

b. Disengage the guide and remove the rear door inside panel reinforce sub-assembly.

18. **REMOVE REAR DOOR WINDOW REGULATOR ASSEMBLY**

a. Disconnect the connector.

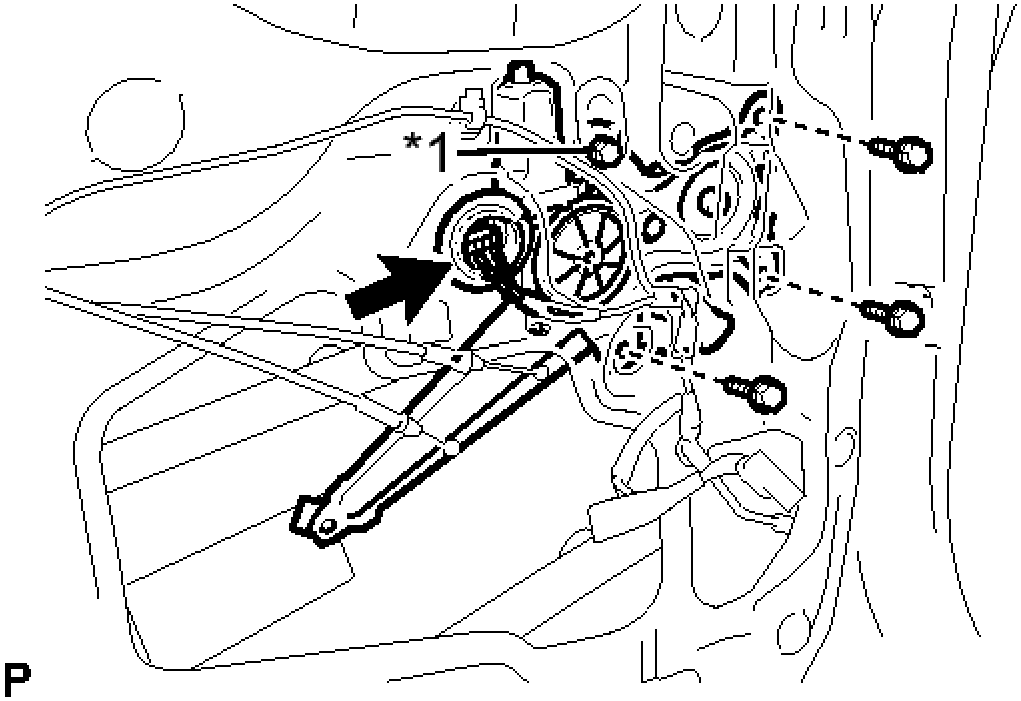

Fig. 147: Identifying Rear Door Window Regulator Temporary Bolt And Assembly Bolts
Courtesy of TOYOTA MOTOR SALES, U.S.A., INC.

TEXT IN ILLUSTRATION

*1	Temporary Bolt

b. Loosen the temporary bolt.

NOTE: Do not remove the temporary bolt. If the temporary bolt is removed, the rear door window regulator assembly may fall and cause damage.

c. Remove the 3 bolts.
d. Remove the rear door window regulator assembly.
e. Remove the temporary bolt from the rear door window regulator assembly.

19. **REMOVE REAR POWER WINDOW REGULATOR MOTOR ASSEMBLY**
    a. Using a T25 "TORX" socket wrench, remove the 3 screws and rear power window regulator motor assembly.

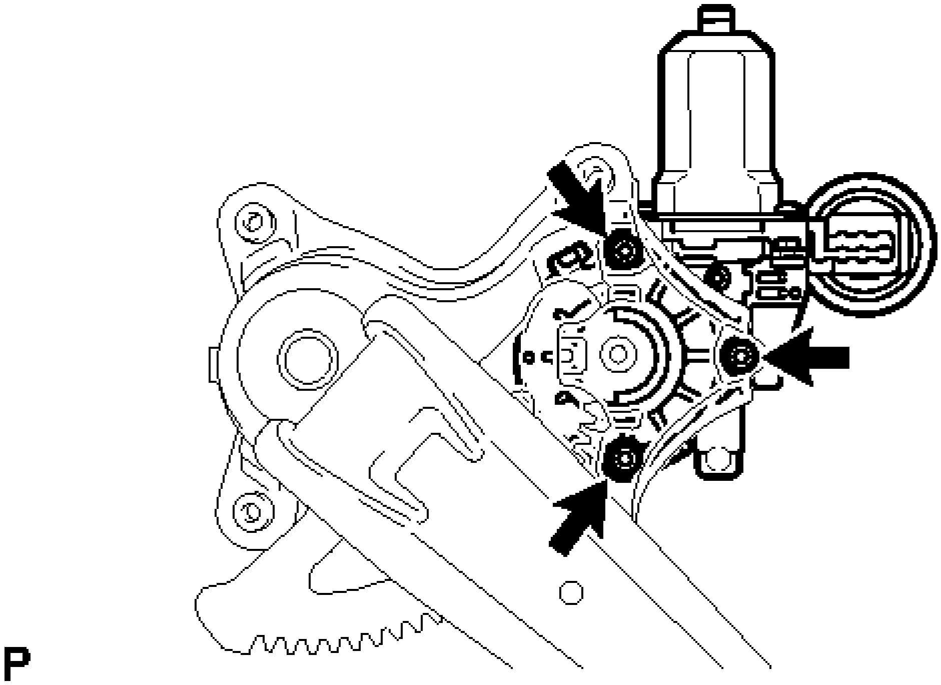

Fig. 148: Identifying Rear Power Window Regulator Motor Screws
Courtesy of TOYOTA MOTOR SALES, U.S.A., INC.

20. **REMOVE REAR DOOR LOCK WITH MOTOR ASSEMBLY**
    a. Using a T30 "TORX" socket wrench, remove the 3 screws.

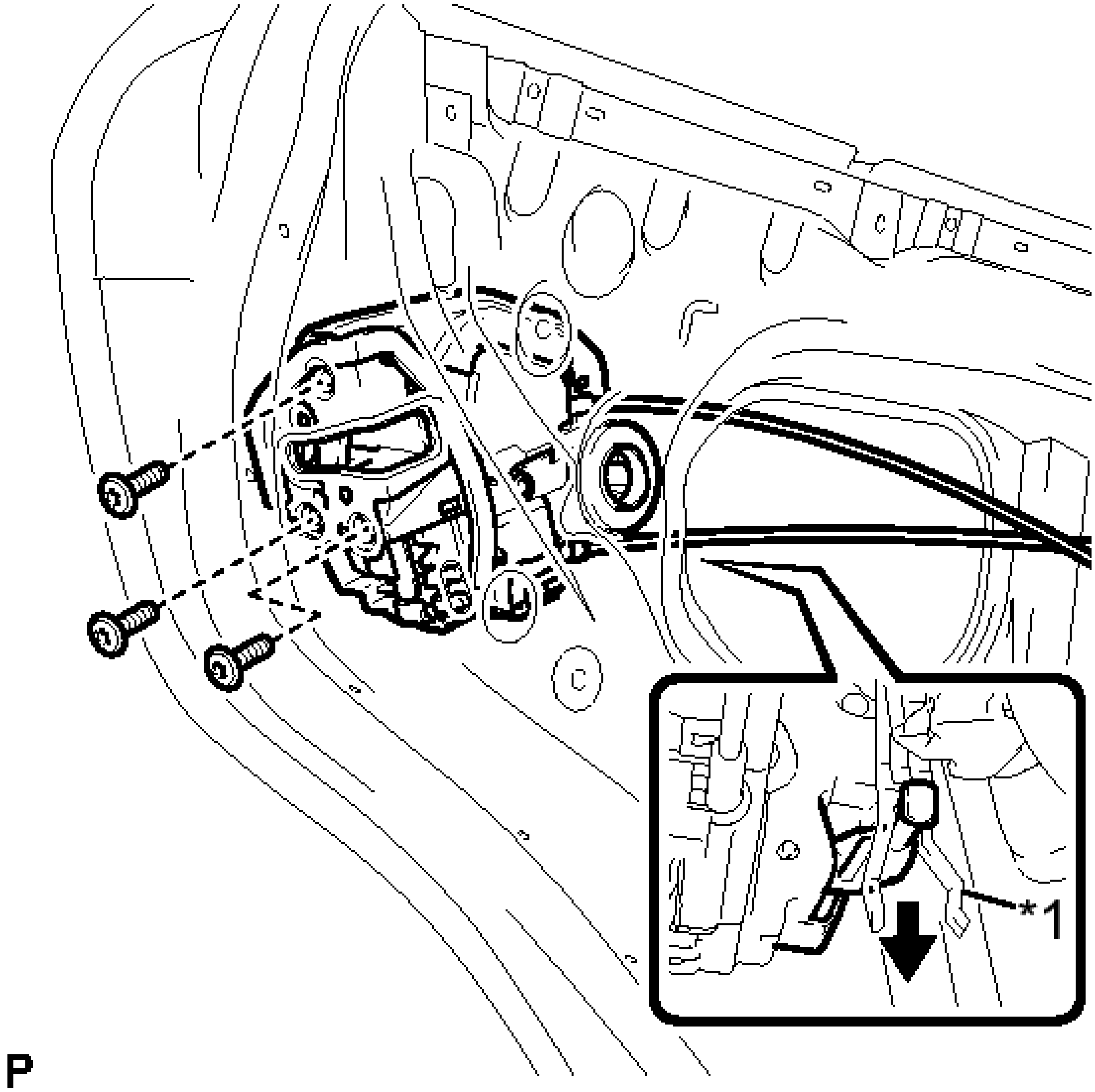

Fig. 149: Identifying Rear Door Lock With Motor Assembly Screws
Courtesy of TOYOTA MOTOR SALES, U.S.A., INC.

TEXT IN ILLUSTRATION

*1	Release Plate

b. Move the rear door lock with motor assembly downward and pull the release plate out of the rear door outside handle frame.
c. When reusing the rear door lock with motor assembly:
    1. Remove the door lock wiring harness seal from the rear door lock with motor assembly.

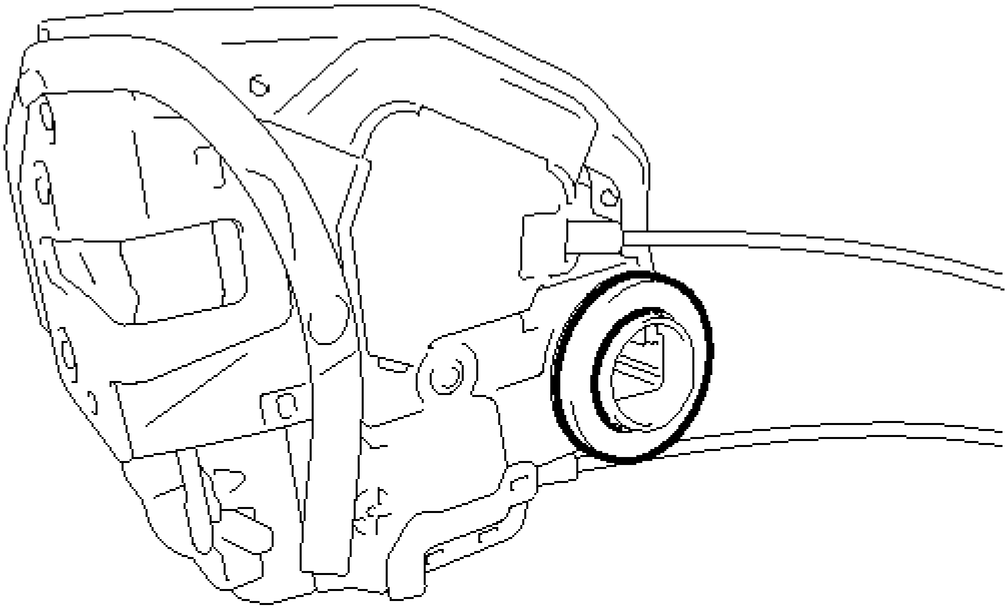

P

Fig. 150: Identifying Door Lock Wiring Harness Seal
Courtesy of TOYOTA MOTOR SALES, U.S.A., INC.

21. **REMOVE REAR DOOR LOCK REMOTE CONTROL CABLE ASSEMBLY**
    a. Using a screwdriver, disengage the claw.

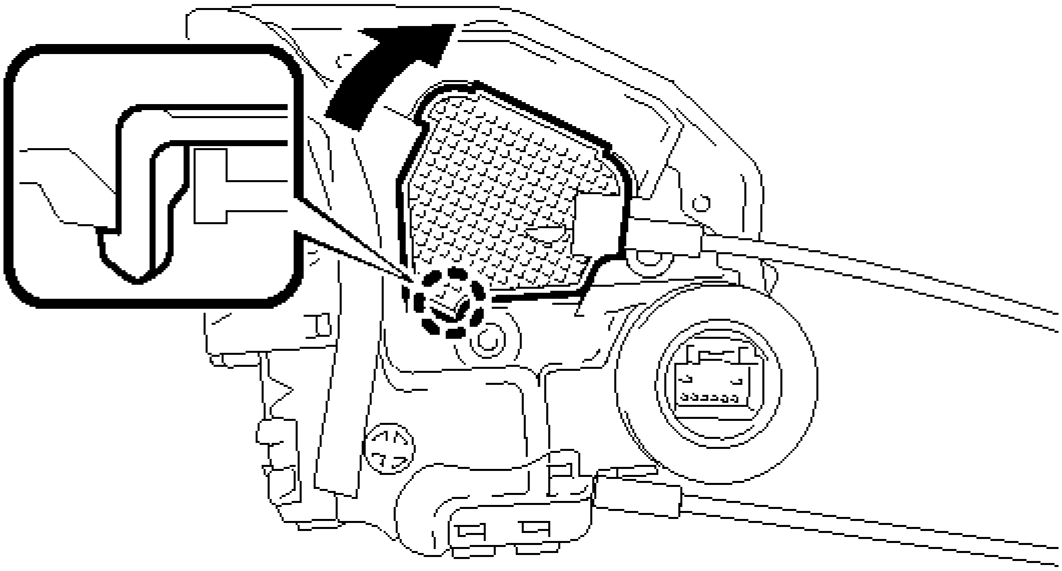

P

Fig. 151: Removing Rear Door Lock Remote Control Cable Cover Claw

Courtesy of TOYOTA MOTOR SALES, U.S.A., INC.

b. Remove the rear door lock remote control cable assembly.

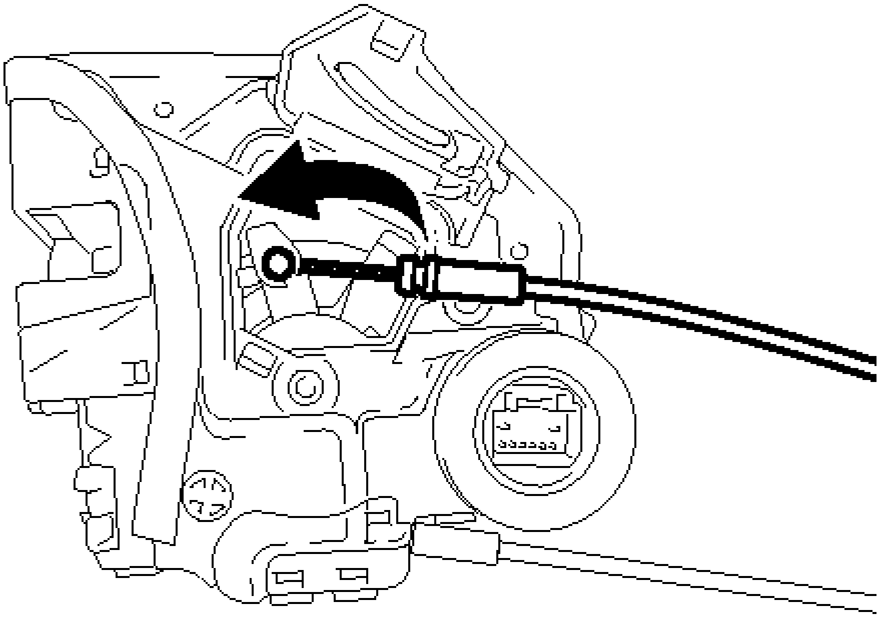

Fig. 152: Removing Rear Door Lock Remote Control Cable
Courtesy of TOYOTA MOTOR SALES, U.S.A., INC.

22. **REMOVE REAR DOOR INSIDE LOCKING CABLE ASSEMBLY**
    a. Using a screwdriver, disengage the 3 claws.

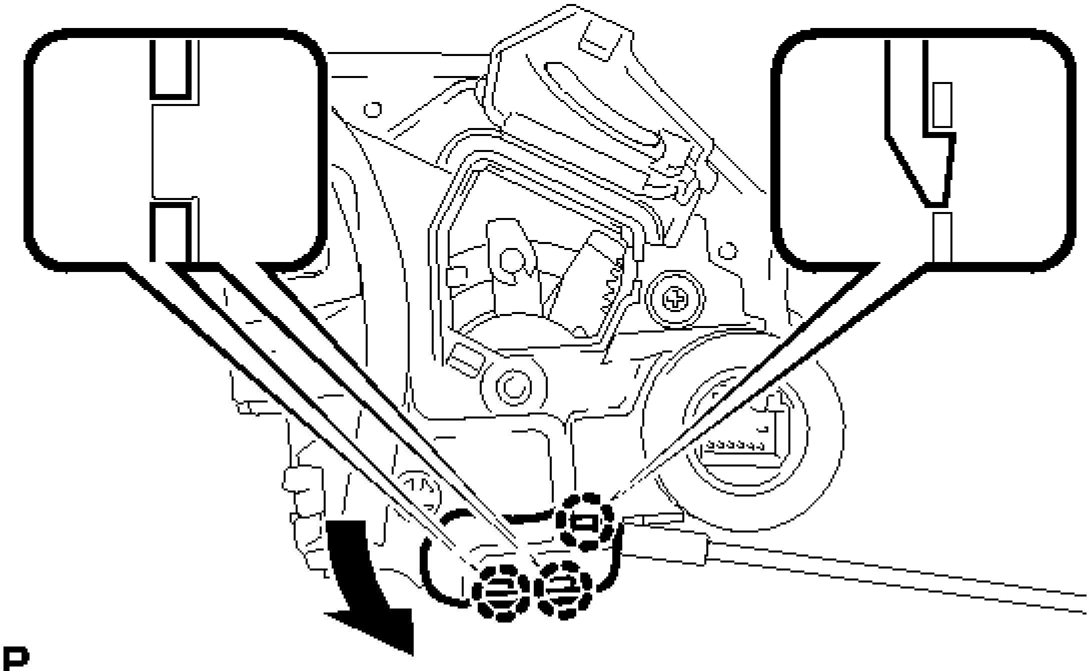

Fig. 153: Identifying Rear Door Inside Locking Cable Cover Claws
Courtesy of TOYOTA MOTOR SALES, U.S.A., INC.

b. Remove the rear door inside locking cable assembly.

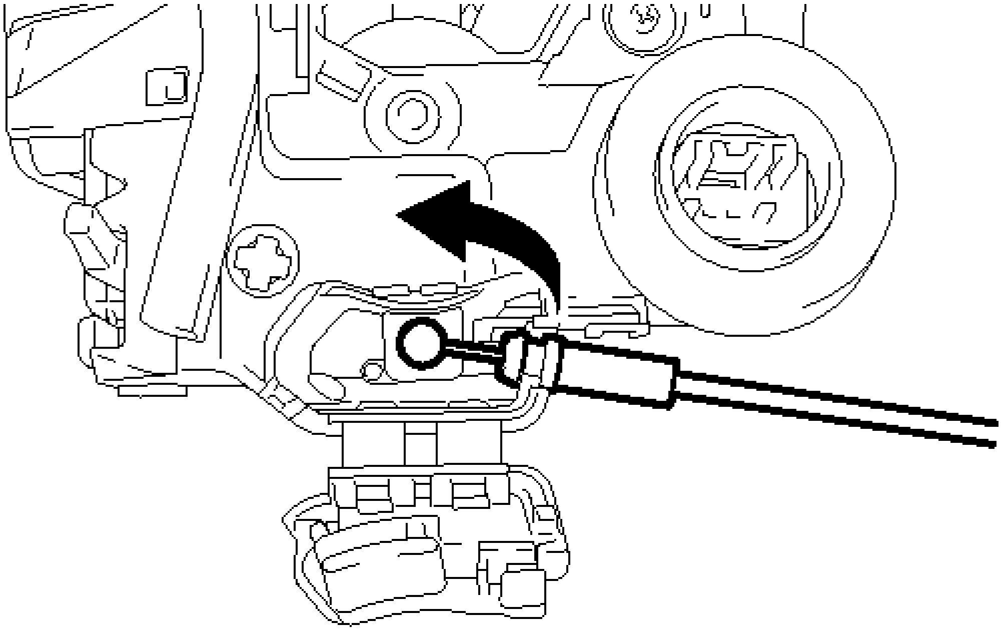

Fig. 154: Removing Rear Door Inside Locking Cable
Courtesy of TOYOTA MOTOR SALES, U.S.A., INC.

23. **REMOVE REAR DOOR OUTSIDE HANDLE COVER**

    a. Using a T30 "TORX" socket wrench, loosen the screw.

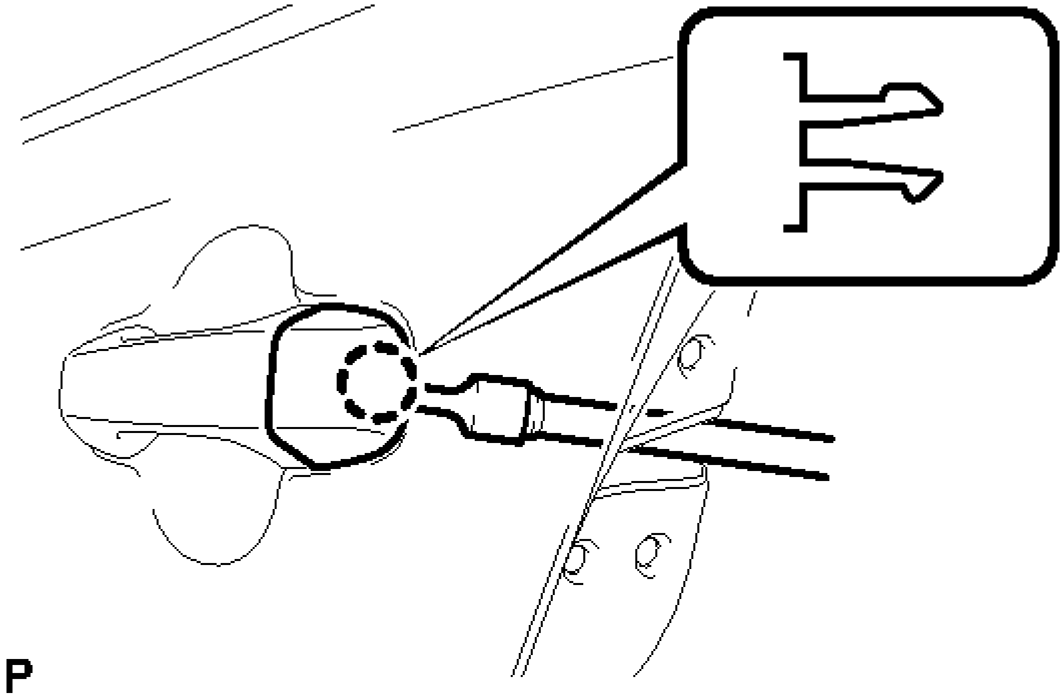

Fig. 155: Identifying Rear Door Outside Handle Cover Claw
Courtesy of TOYOTA MOTOR SALES, U.S.A., INC.

HINT:

The screw cannot be removed because it is integrated into the rear door outside handle frame sub-assembly.

    b. Disengage the claw and remove the rear door outside handle cover.

24. **REMOVE REAR DOOR OUTSIDE HANDLE ASSEMBLY**

    a. Pull and hold the release plate of the rear door outside handle frame sub-assembly as shown in the illustration.

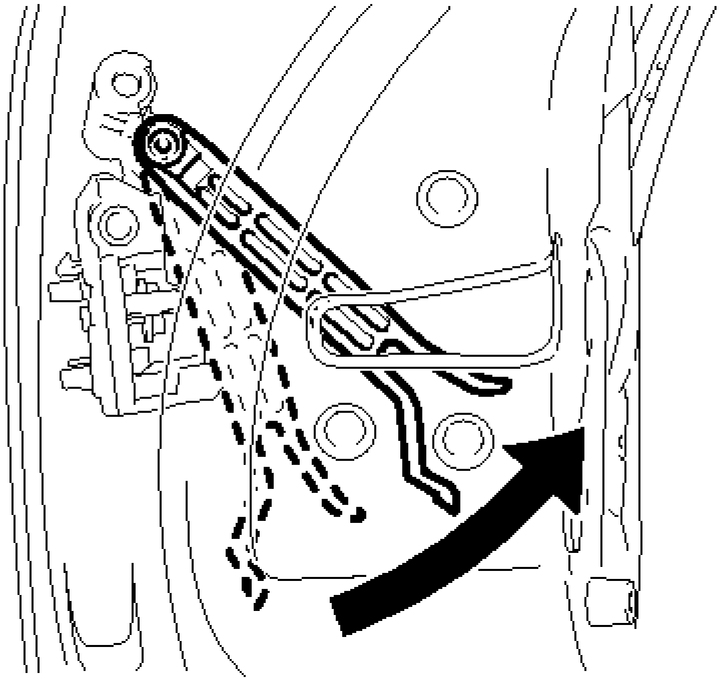

Fig. 156: Pulling Rear Door Outside Handle Frame Release Plate
Courtesy of TOYOTA MOTOR SALES, U.S.A., INC.

NOTE: The release plate may interfere with the rear door outside handle assembly and may be damaged when removing the rear door outside handle assembly, unless the release plate of the rear door outside handle frame sub-assembly is pulled and held.

b. Remove the rear door outside handle assembly as shown in the illustration.

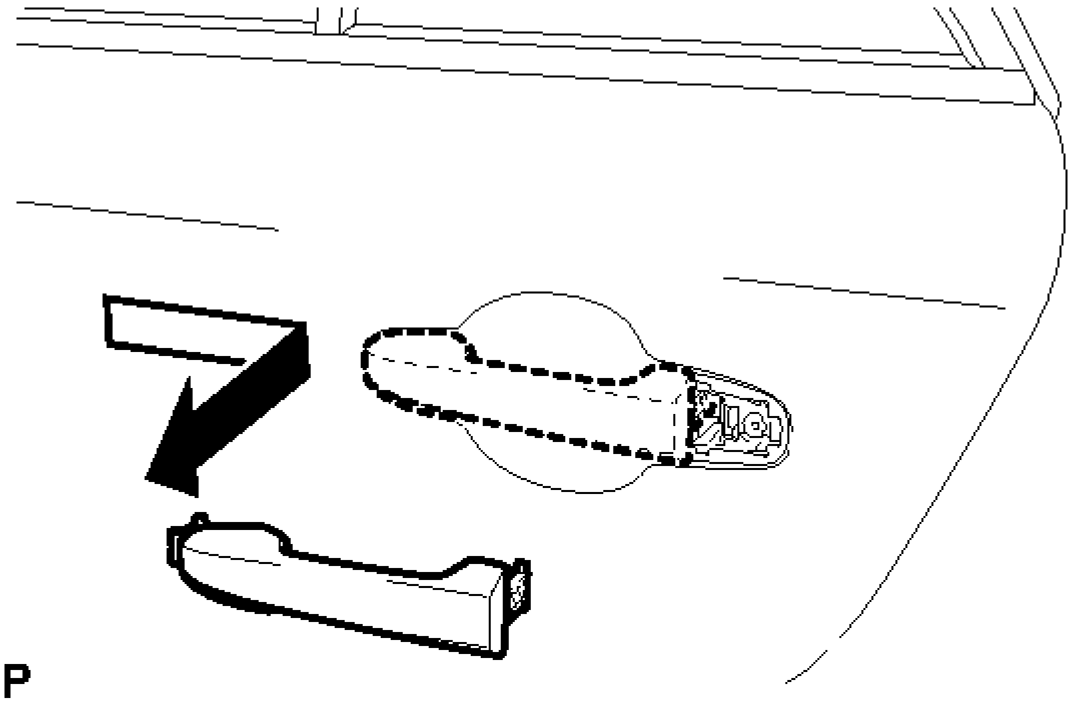

Fig. 157: Removing Rear Door Outside Handle
Courtesy of TOYOTA MOTOR SALES, U.S.A., INC.

25. **REMOVE REAR DOOR FRONT OUTSIDE HANDLE PAD**
    a. Disengage the 3 claws and remove the rear door front outside handle pad.

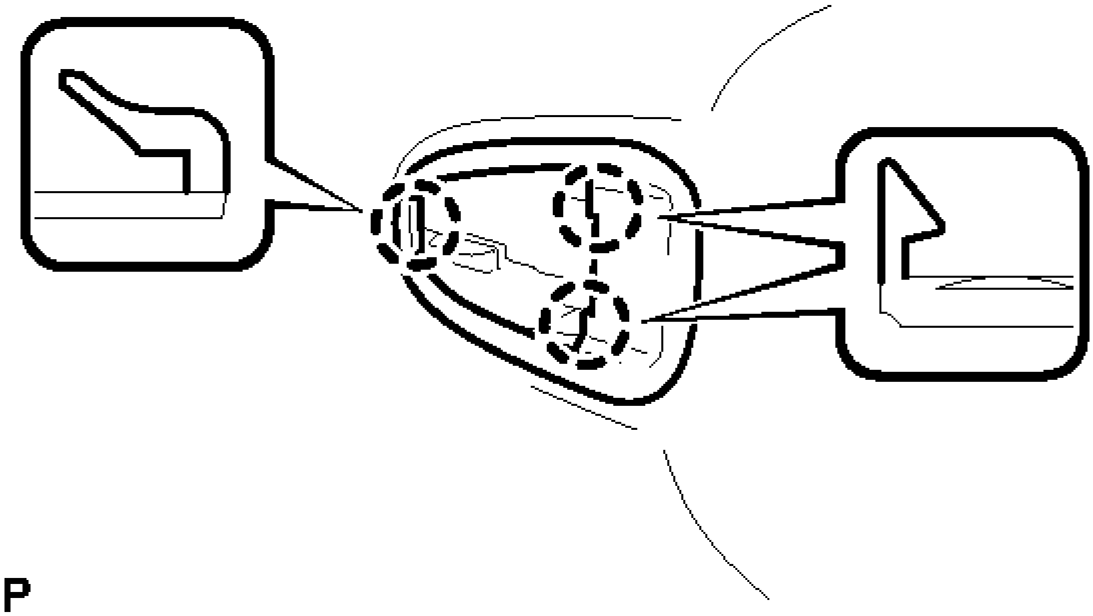

Fig. 158: Identifying Rear Door Front Outside Handle Pad Claws

Courtesy of TOYOTA MOTOR SALES, U.S.A., INC.

26. REMOVE REAR DOOR REAR OUTSIDE HANDLE PAD

a. Disengage the 2 claws and remove the rear door rear outside handle pad.

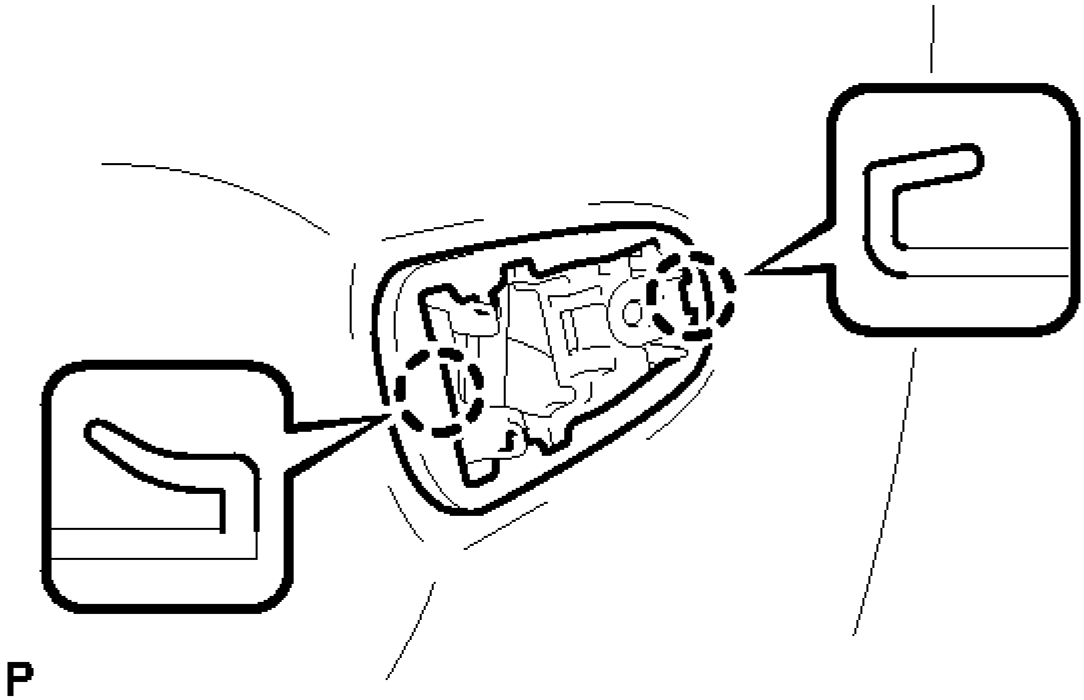

Fig. 159: Identifying Rear Door Rear Outside Handle Pad Claws
Courtesy of TOYOTA MOTOR SALES, U.S.A., INC.

27. REMOVE REAR DOOR OUTSIDE HANDLE FRAME SUB-ASSEMBLY

a. Using a T30 "TORX" socket wrench, remove the screw and door handle nut.

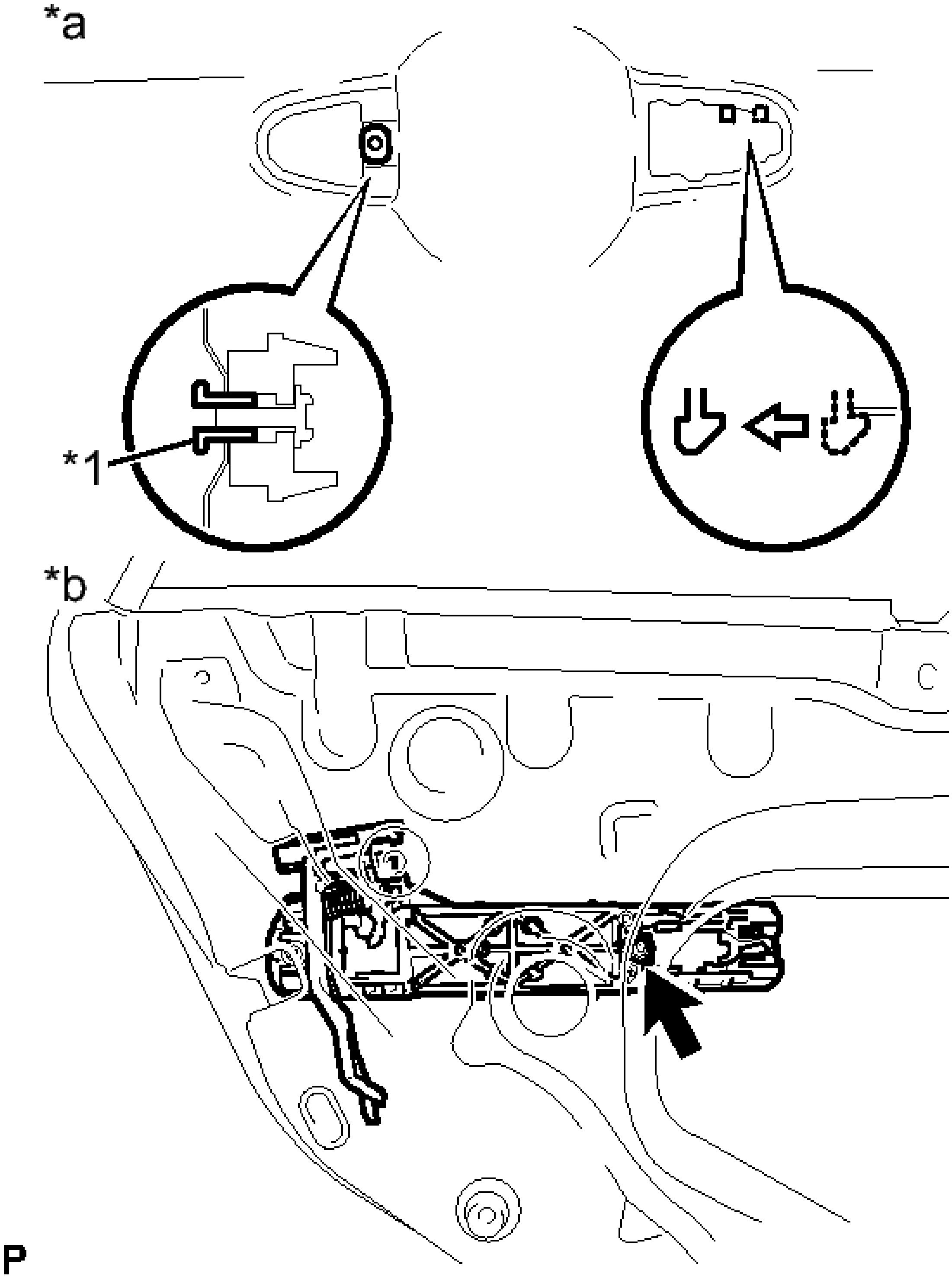

Fig. 160: Identifying Rear Door Outside Handle Frame Screw And Door Handle Nut
Courtesy of TOYOTA MOTOR SALES, U.S.A., INC.

TEXT IN ILLUSTRATION

	Door

*1	Handle Nut
*a	Outside
*b	Inside

b. Slide the rear door outside handle frame sub-assembly to disengage the claw of the rear door outside handle frame sub-assembly, and then remove it.

28. **REMOVE REAR DOOR NO. 2 WEATHERSTRIP**

a. Using a clip remover, disengage the 5 clips and remove the rear door No. 2 weatherstrip.

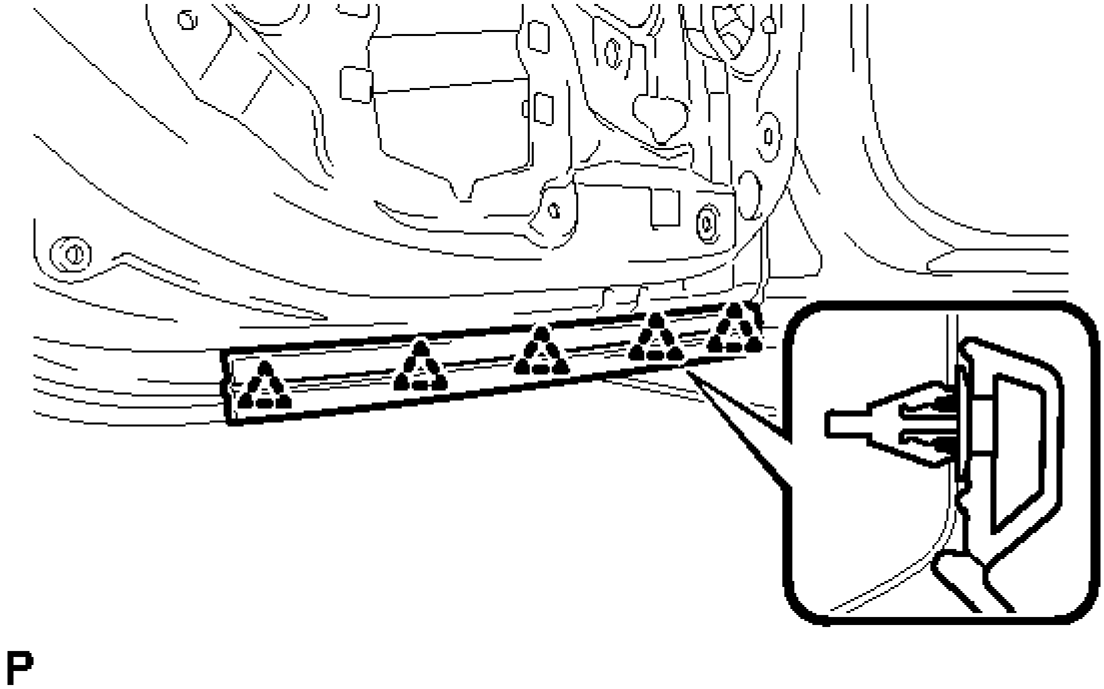

Fig. 161: Identifying Rear Door No. 2 Weatherstrip Clips
Courtesy of TOYOTA MOTOR SALES, U.S.A., INC.

29. **REMOVE REAR DOOR PANEL CUSHION**

a. Disengage the 2 claws and remove the 2 rear door panel cushions.

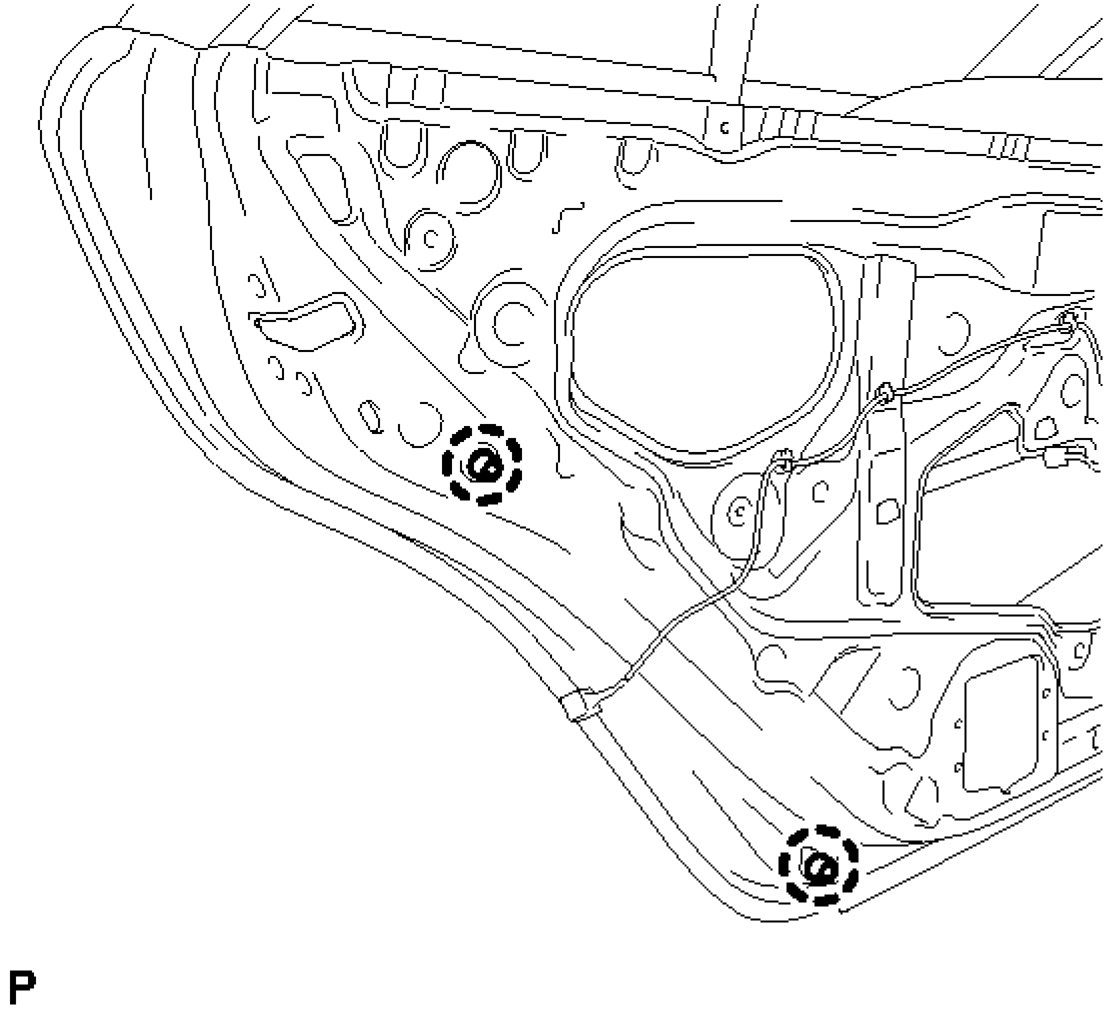

Fig. 162: Identifying Rear Door Panel Cushions
Courtesy of TOYOTA MOTOR SALES, U.S.A., INC.

30. **REMOVE REAR DOOR BELT MOULDING ASSEMBLY** . Refer to **REMOVAL - Step 15** .
31. **REMOVE REAR DOOR FRONT WINDOW FRAME MOULDING** . Refer to **REMOVAL - Step 16** .
32. **REMOVE REAR DOOR UPPER WINDOW FRAME MOULDING** . Refer to **REMOVAL - Step 17** .
33. **REMOVE REAR DOOR OUTSIDE STRIPE** . Refer to **REMOVAL - Step 16** .
34. **REMOVE REAR DOOR LOWER OUTSIDE STRIPE** . Refer to **REMOVAL - Step 17** .

ADJUSTMENT

ADJUSTMENT

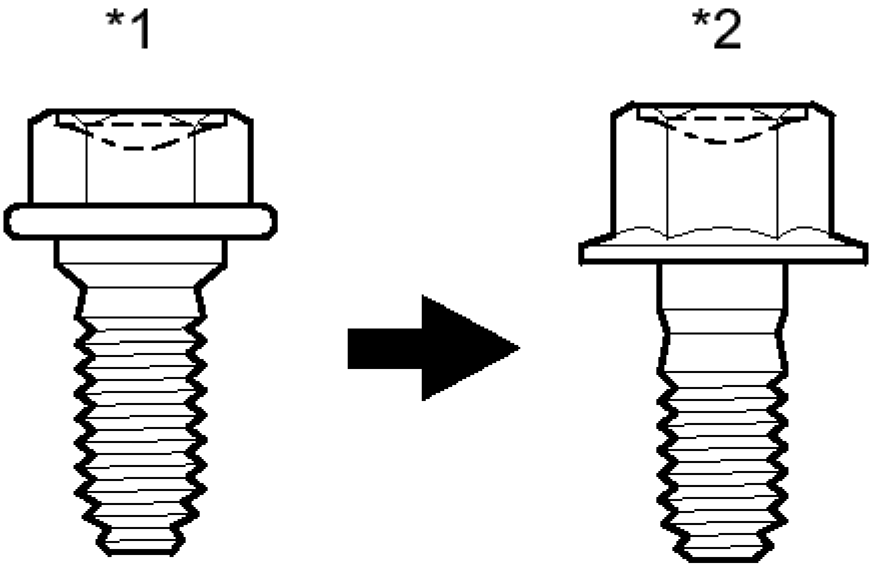

Fig. 163: Identifying Centering Bolt And Standard Bolt
Courtesy of TOYOTA MOTOR SALES, U.S.A., INC.

TEXT IN ILLUSTRATION

*1	Centering Bolt
*2	Standard Bolt

HINT:

- Use the same procedure for the RH side and LH side.
- The procedure listed below is for the LH side.
- Centering bolts are used to mount the door hinge to the vehicle body and door. The door cannot be adjusted with the centering bolts installed. Substitute the centering bolts with standard bolts when making adjustments.
- Specified torque for standard bolts is shown in the standard bolt chart. Refer to **SPECIFIED TORQUE FOR STANDARD BOLTS** .

1. **INSPECT REAR DOOR**
    a. Check that the clearance measurements of areas a through r are within each standard range.

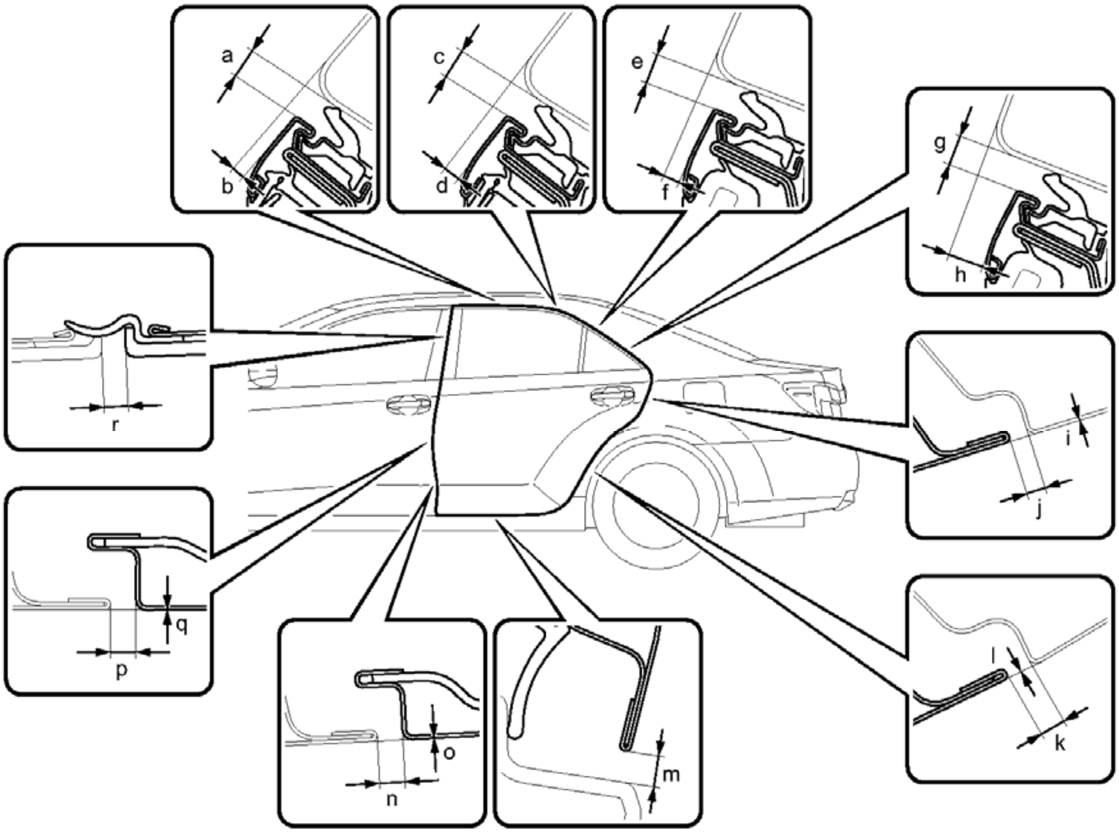

P

Fig. 164: Checking Rear Door Clearance Measurements
Courtesy of TOYOTA MOTOR SALES, U.S.A., INC.

STANDARD CLEARANCE

Area	Measurement	Area	Measurement
a	3.35 to 6.35 mm (0.132 to 0.250 in.)	b	0.6 to 3.6 mm (0.0236 to 0.142 in.)
c	3.35 to 6.35 mm (0.132 to 0.250 in.)	d	0.9 to 3.9 mm (0.0354 to 0.154 in.)
e	3.35 to 6.35 mm (0.132 to 0.250 in.)	f	1.5 to 4.5 mm (0.0591 to 0.177 in.)
g	3.35 to 6.35 mm (0.132 to 0.250 in.)	h	5.4 to 8.4 mm (0.213 to 0.331 in.)

i	-1.5 to 1.5 mm (-0.0591 to 0.0591 in.)	j	2.0 to 5.0 mm (0.0787 to 0.197 in.)
k	2.0 to 5.0 mm (0.0787 to 0.197 in.)	l	-1.5 to 1.5 mm (-0.0591 to 0.0591 in.)
m	2.9 to 7.1 mm (0.114 to 0.280 in.)	n	2.96 to 4.64 mm (0.115 to 0.182 in.)
o	-0.84 to 0.84 mm (-0.0331 to 0.0331 in.)	p	2.96 to 4.64 mm (0.115 to 0.182 in.)
q	-0.84 to 0.84 mm (-0.0331 to 0.0331 in.)	r	2.3 to 6.3 mm (0.0906 to 0.248 in.)

2. **ADJUST REAR DOOR**

NOTE: **Make sure that the turn the ignition switch off when adjusting door lock strikers.**

a. Using SST, loosen the hinge bolts on the vehicle body and adjust the door position.
    - **SST: 09812-00010**

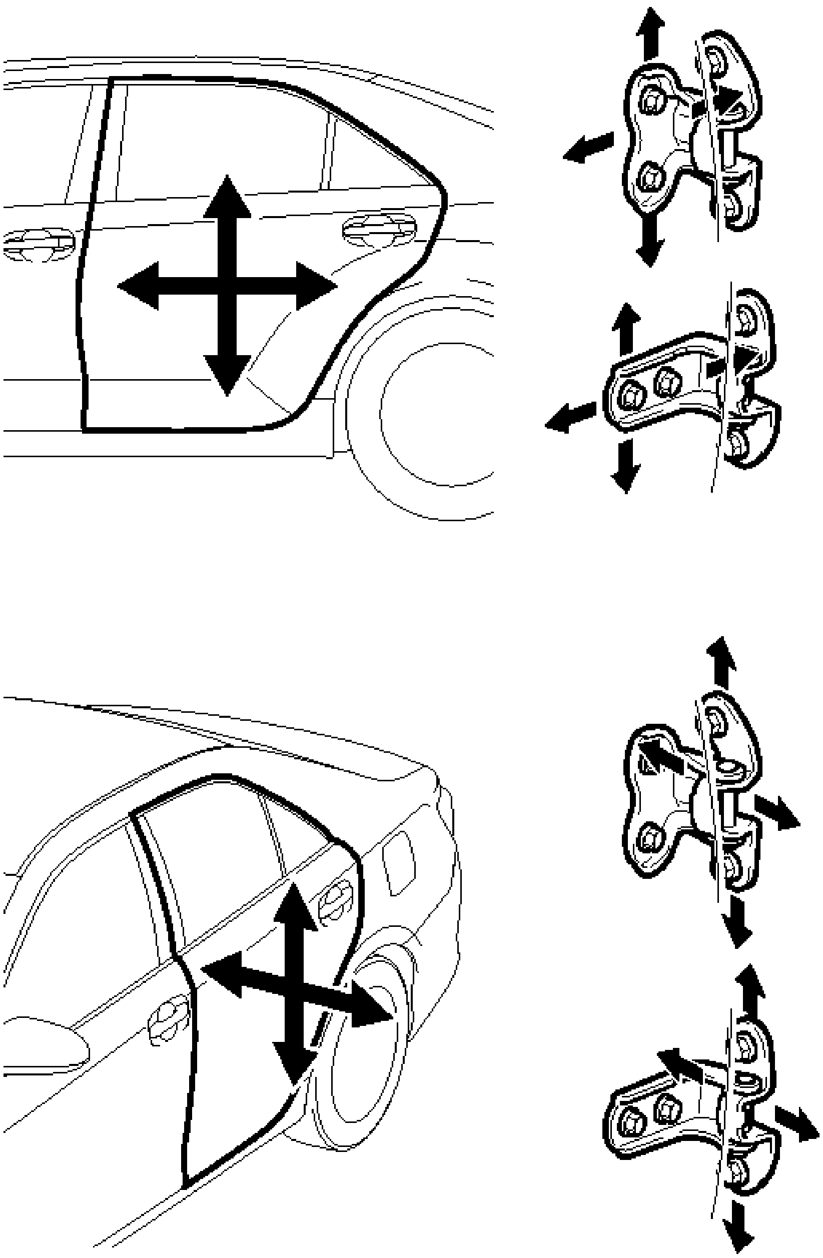

Fig. 165: Adjusting The Door Position
Courtesy of TOYOTA MOTOR SALES, U.S.A., INC.

b. Tighten the hinge bolts on the vehicle body after the adjustment.

Torque: 26 N*m (265 kgf*cm, 19 ft.*lbf)

c. Loosen the hinge bolts on the door and adjust the door position.
d. Tighten the hinge bolts on the door after the adjustment.

Torque: 26 N*m (265 kgf*cm, 19 ft.*lbf)

e. Using a T40 "TORX" socket wrench, slightly loosen the striker mounting screws.

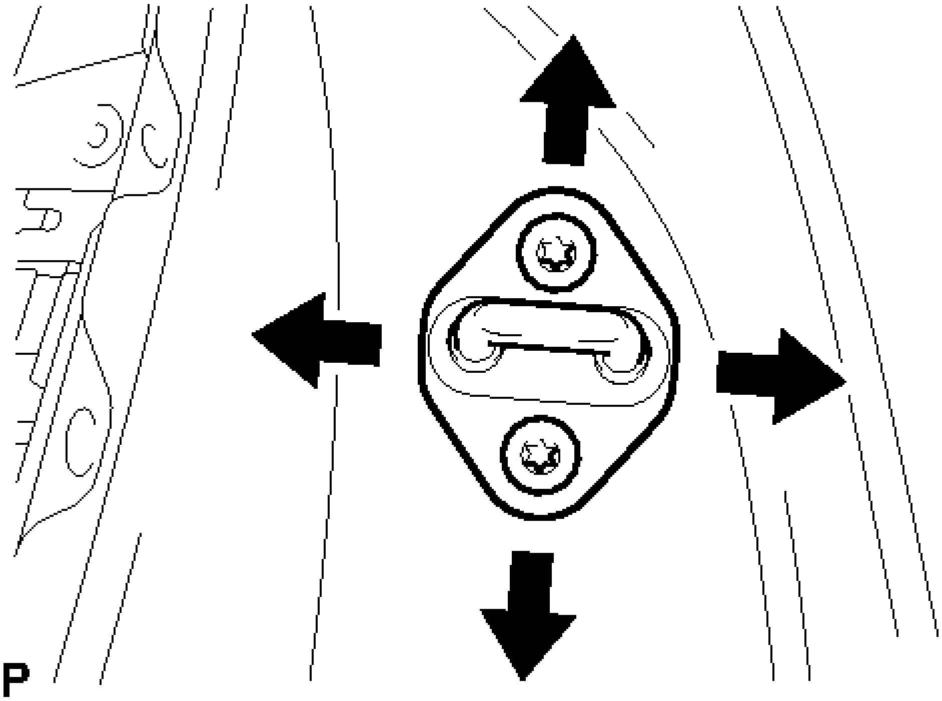

Fig. 166: Adjusting Door Striker
Courtesy of TOYOTA MOTOR SALES, U.S.A., INC.

f. Using a brass bar and a hammer, hit the striker to adjust its position.
g. Using a T40 "TORX" socket wrench, tighten the striker mounting screws after adjustment.

Torque: 23 N*m (235 kgf*cm, 17 ft.*lbf)

REASSEMBLY

REASSEMBLY

HINT:

- Use the same procedure for both the RH and LH sides.
- The procedure described below is for the LH side.

1. **REPAIR INSTRUCTION** . Refer to **INSTALLATION - Step 2** .

2. **INSTALL REAR DOOR LOWER OUTSIDE STRIPE** . Refer to **INSTALLATION - Step 2** .
3. **INSTALL REAR DOOR OUTSIDE STRIPE** . Refer to **INSTALLATION - Step 3** .
4. **INSTALL REAR DOOR UPPER WINDOW FRAME MOULDING** . Refer to **INSTALLATION - Step 1** .
5. **INSTALL REAR DOOR FRONT WINDOW FRAME MOULDING** . Refer to **INSTALLATION - Step 2** .
6. **INSTALL REAR DOOR BELT MOULDING ASSEMBLY** . Refer to **INSTALLATION - Step 1** .
7. **INSTALL REAR DOOR PANEL CUSHION**
    a. Engage the 2 claws to install 2 new rear door panel cushions.

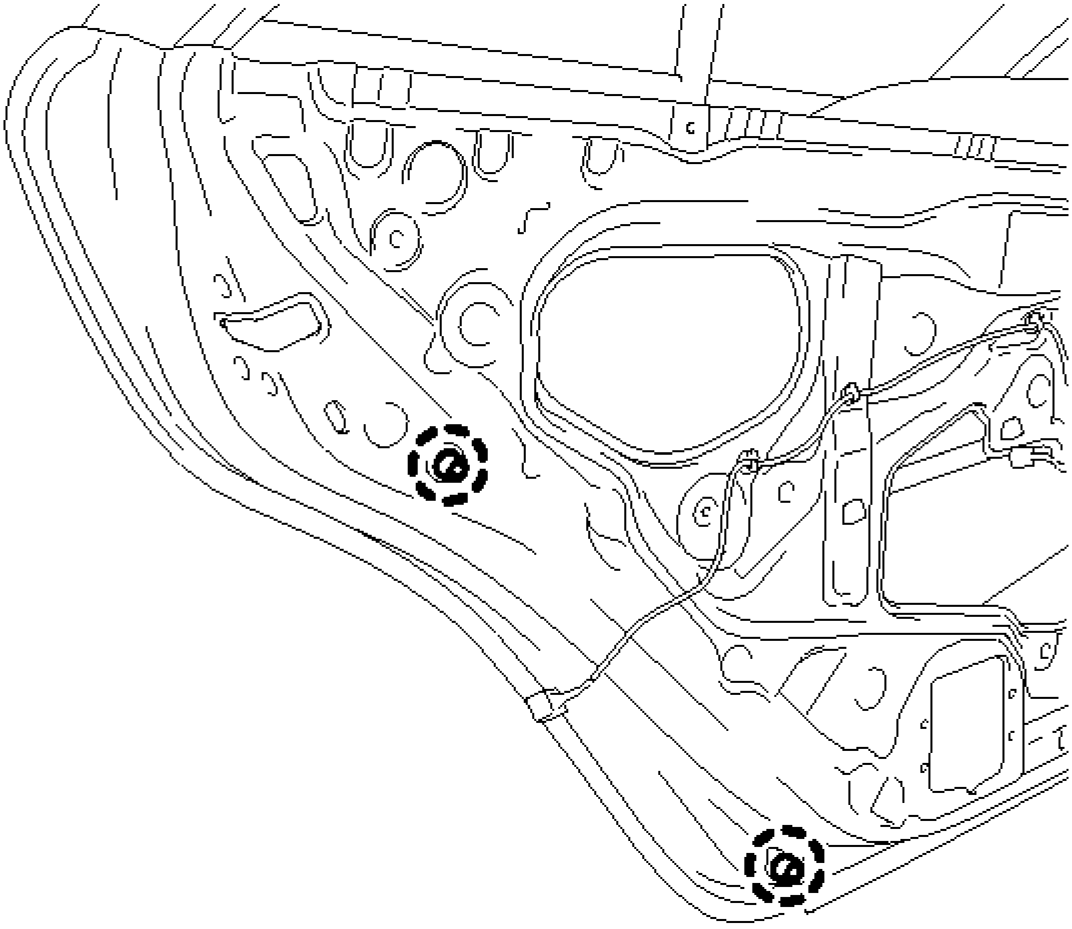

Fig. 167: Identifying Rear Door Panel Cushions
Courtesy of TOYOTA MOTOR SALES, U.S.A., INC.

8. **INSTALL REAR DOOR NO. 2 WEATHERSTRIP**

a. Engage the 5 clips to install the rear door No. 2 weatherstrip.

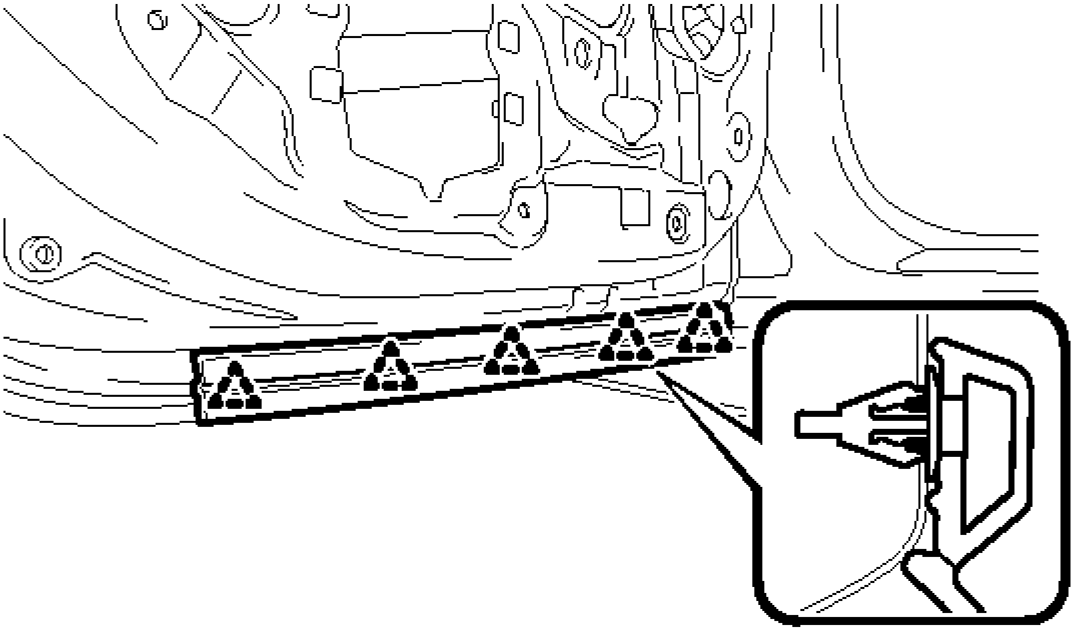

Fig. 168: Identifying Rear Door No. 2 Weatherstrip Clips
Courtesy of TOYOTA MOTOR SALES, U.S.A., INC.

9. **INSTALL REAR DOOR OUTSIDE HANDLE FRAME SUB-ASSEMBLY**
   a. Apply MP grease to the sliding parts of the rear door outside handle frame sub-assembly.
   b. Engage the claw.

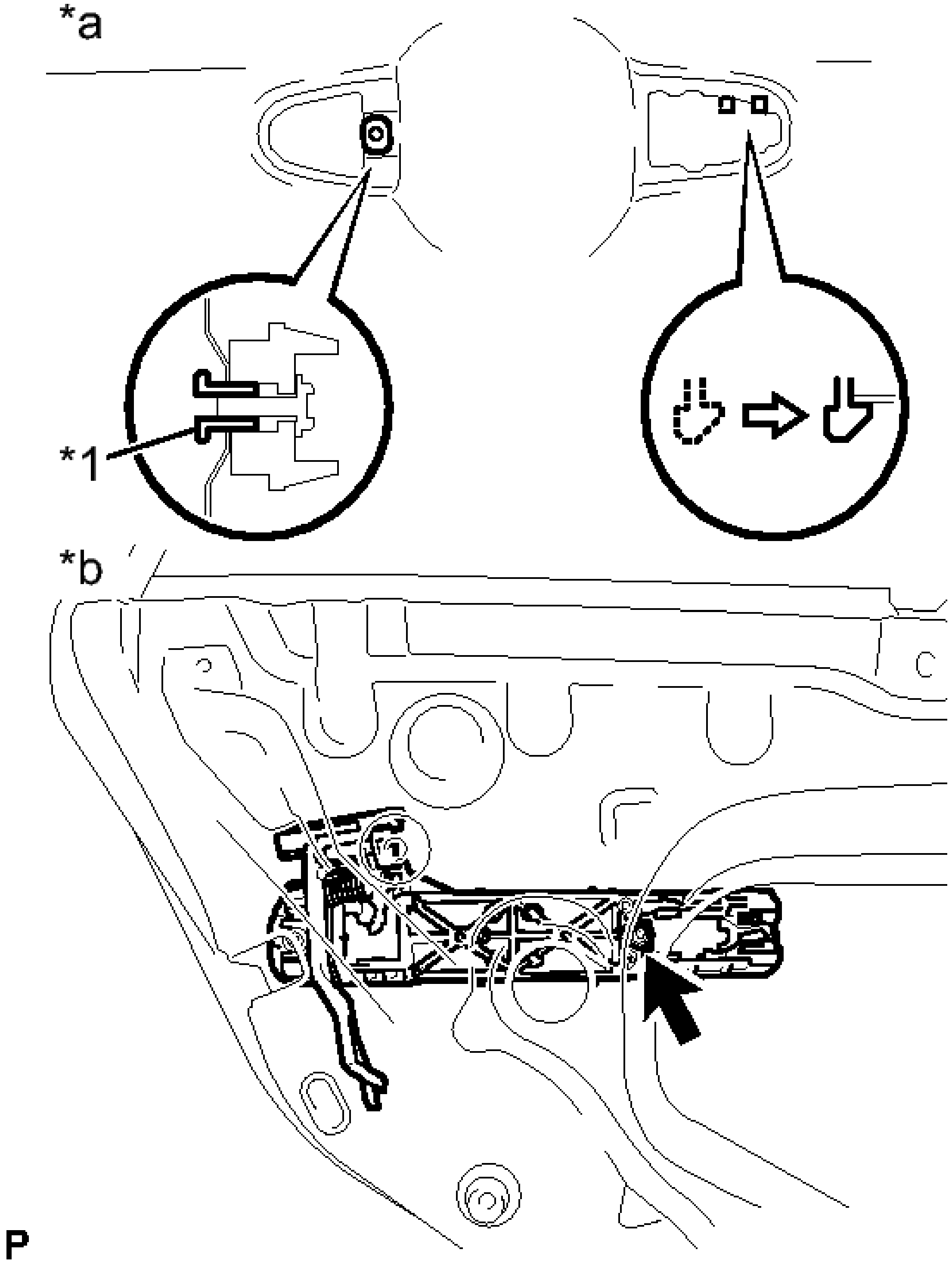

Fig. 169: Identifying Rear Door Outside Handle Frame Screw And Door Handle Nut
Courtesy of TOYOTA MOTOR SALES, U.S.A., INC.

TEXT IN ILLUSTRATION

	Door

*1	Handle Nut
*a	Outside
*b	Inside

c. Using a T30 "TORX" socket wrench, install the rear door outside handle frame sub-assembly with the screw and door handle nut.

Torque: 4.0 N*m (41 kgf*cm, 35 in.*lbf)

10. **INSTALL REAR DOOR REAR OUTSIDE HANDLE PAD**
    a. Engage the 2 claws to install the rear door rear outside handle pad.

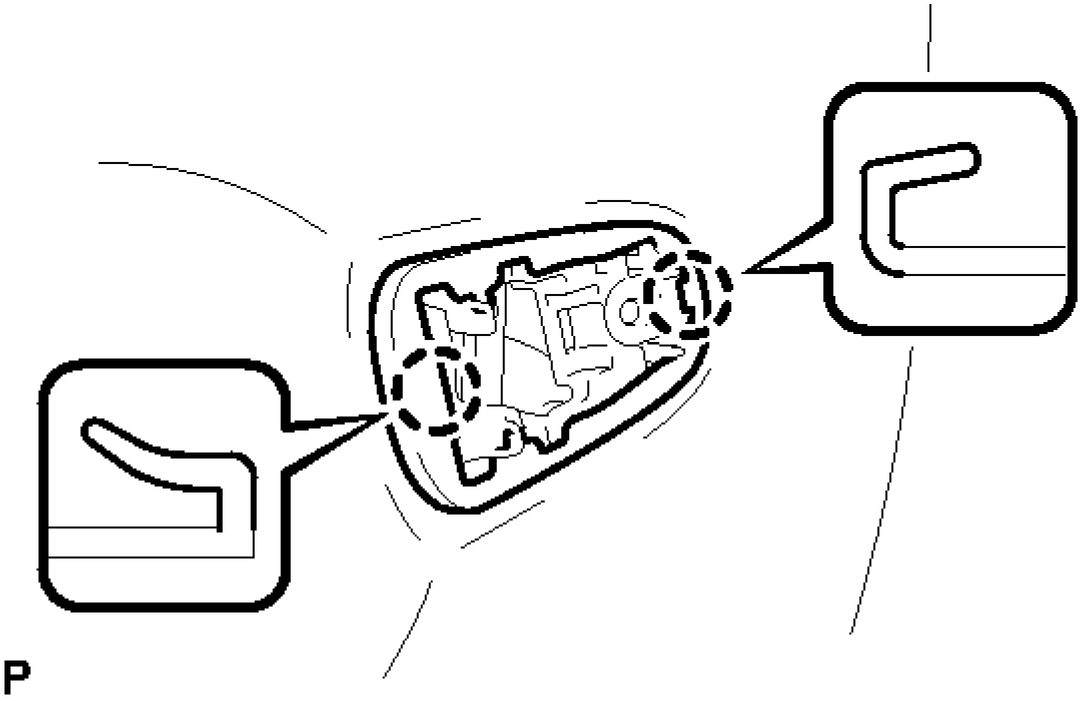

Fig. 170: Identifying Rear Door Rear Outside Handle Pad Claws
Courtesy of TOYOTA MOTOR SALES, U.S.A., INC.

11. **INSTALL REAR DOOR FRONT OUTSIDE HANDLE PAD**
    a. Engage the 3 claws to install the rear door front outside handle pad.

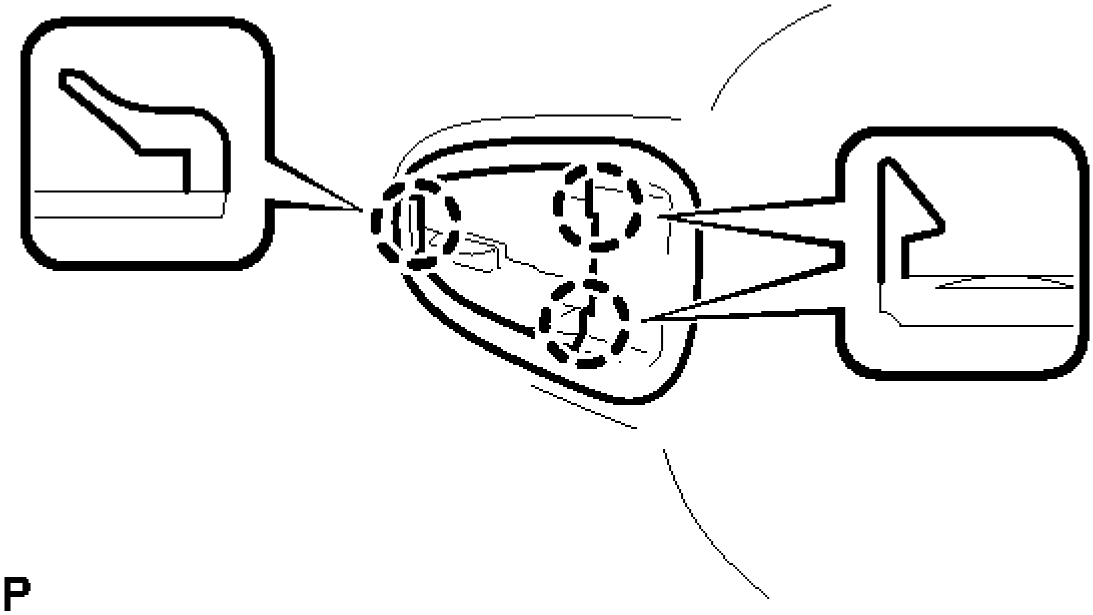

Fig. 171: Identifying Rear Door Front Outside Handle Pad Claws
Courtesy of TOYOTA MOTOR SALES, U.S.A., INC.

12. **INSTALL REAR DOOR OUTSIDE HANDLE ASSEMBLY**
    a. Insert the front end of the rear door outside handle assembly into the rear door outside handle frame.

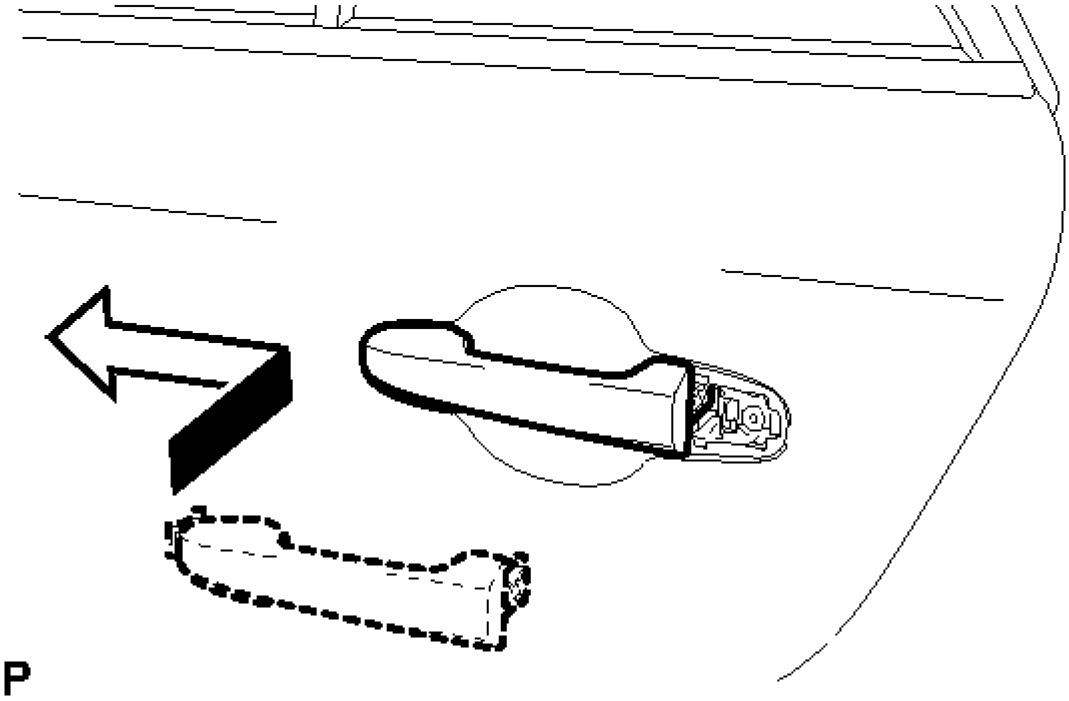

Fig. 172: Installing Rear Door Outside Handle
Courtesy of TOYOTA MOTOR SALES, U.S.A., INC.

NOTE: **If the bellcrank lever is not pulled and held when installing the outside handle, the bellcrank lever will interfere with the outside handle and the release plate will be damaged.**

b. Insert the rear end of the rear door outside handle assembly into the rear door outside handle frame. Next, slide the rear door outside handle assembly toward the front of the vehicle to install it.

13. **INSTALL REAR DOOR OUTSIDE HANDLE COVER**
    a. Engage the claw and install the rear door outside handle cover.

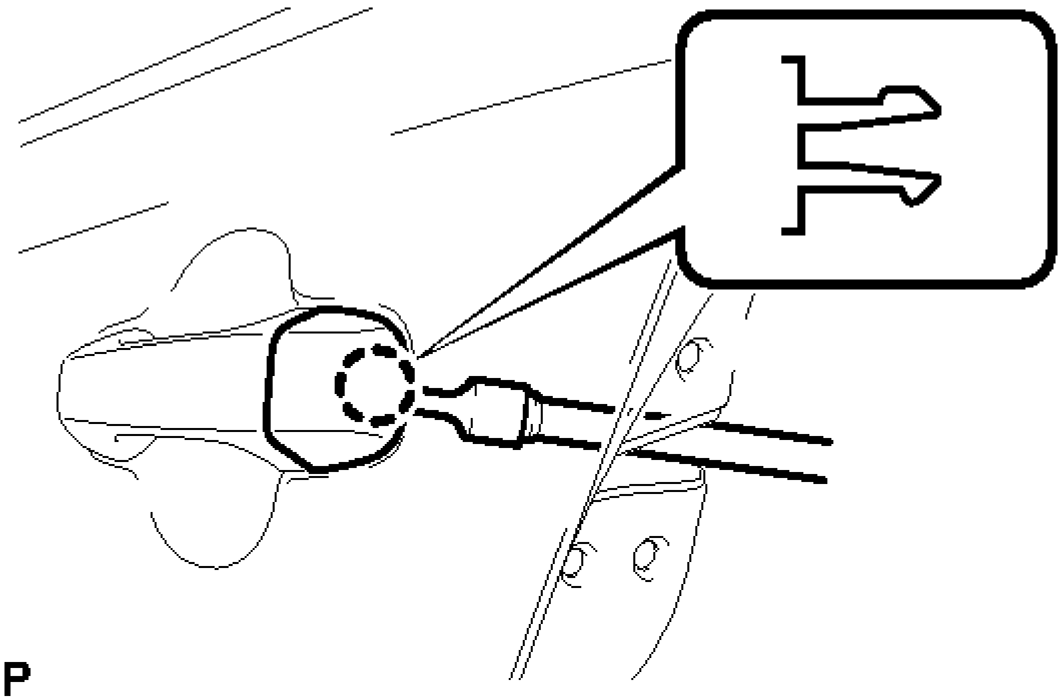

Fig. 173: Identifying Rear Door Outside Handle Cover Claw
Courtesy of TOYOTA MOTOR SALES, U.S.A., INC.

b. Using a T30 "TORX" socket wrench, install the rear door outside handle cover with the screw.

Torque: 4.0 N*m (41 kgf*cm, 35 in.*lbf)

14. **INSTALL REAR DOOR INSIDE LOCKING CABLE ASSEMBLY**
    a. Install the rear door inside locking cable assembly.

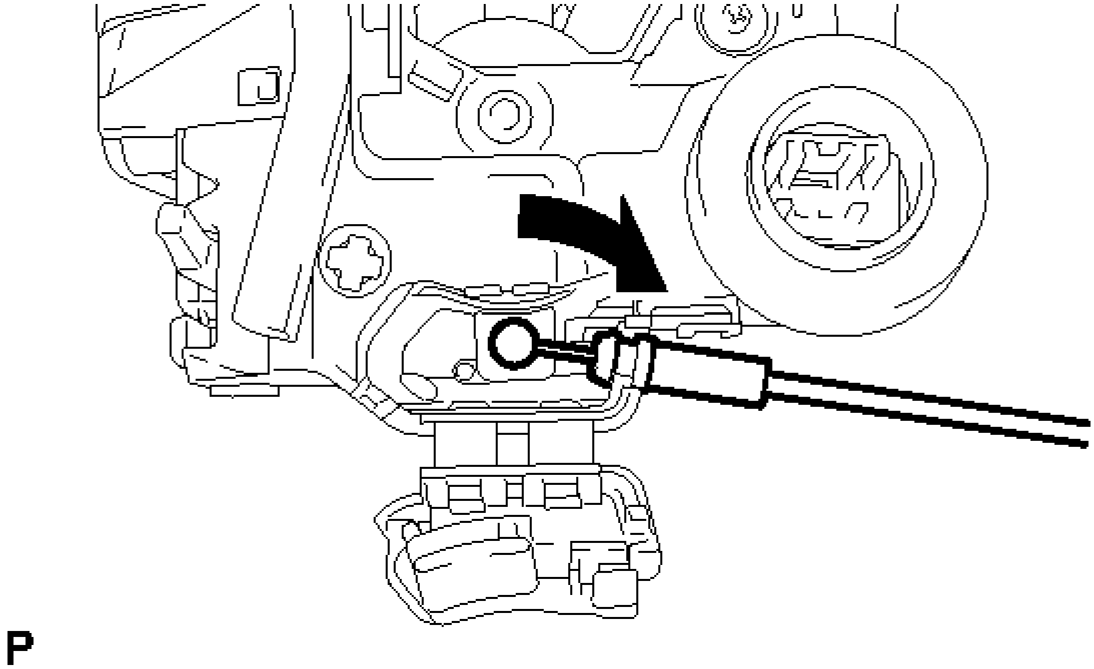

Fig. 174: Installing Rear Door Inside Locking Cable
Courtesy of TOYOTA MOTOR SALES, U.S.A., INC.

b. Engage the 3 claws.

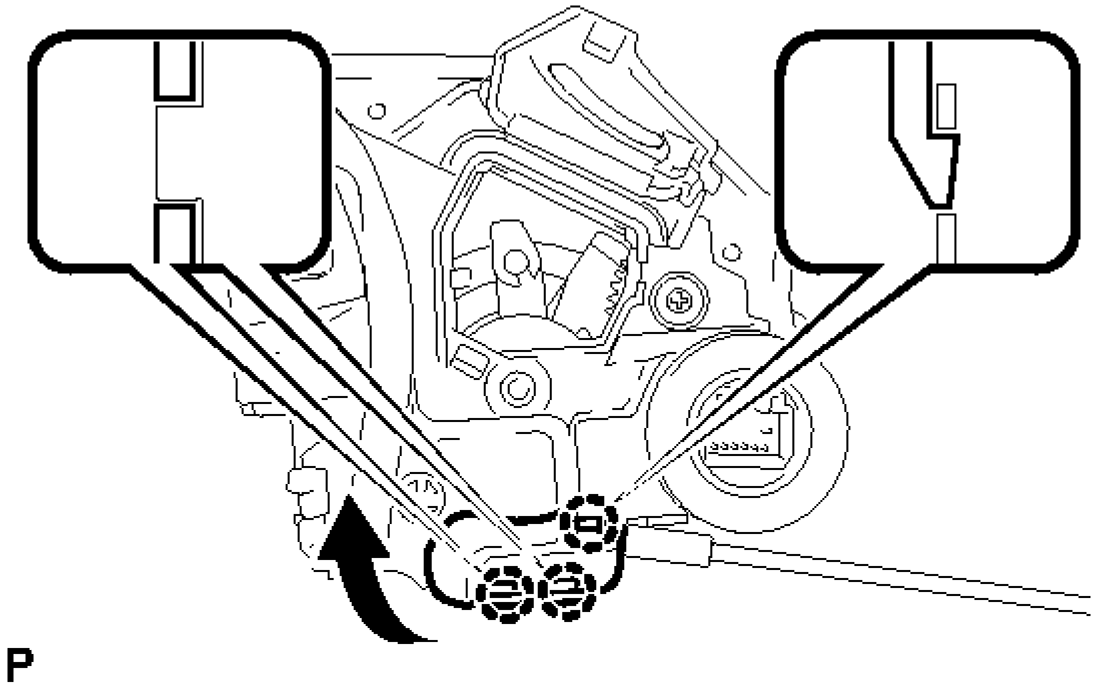

Fig. 175: Identifying Rear Door Inside Locking Cable Cover Claws
Courtesy of TOYOTA MOTOR SALES, U.S.A., INC.

15. **INSTALL REAR DOOR LOCK REMOTE CONTROL CABLE ASSEMBLY**

a. Install the rear door lock remote control cable assembly.

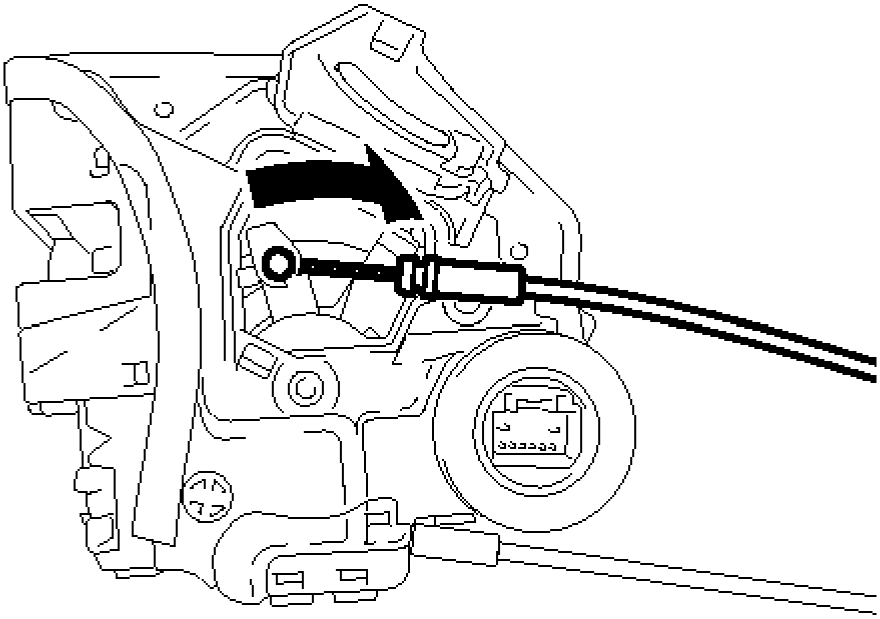

P

Fig. 176: Installing Rear Door Lock Remote Control Cable
Courtesy of TOYOTA MOTOR SALES, U.S.A., INC.

b. Engage the claw.

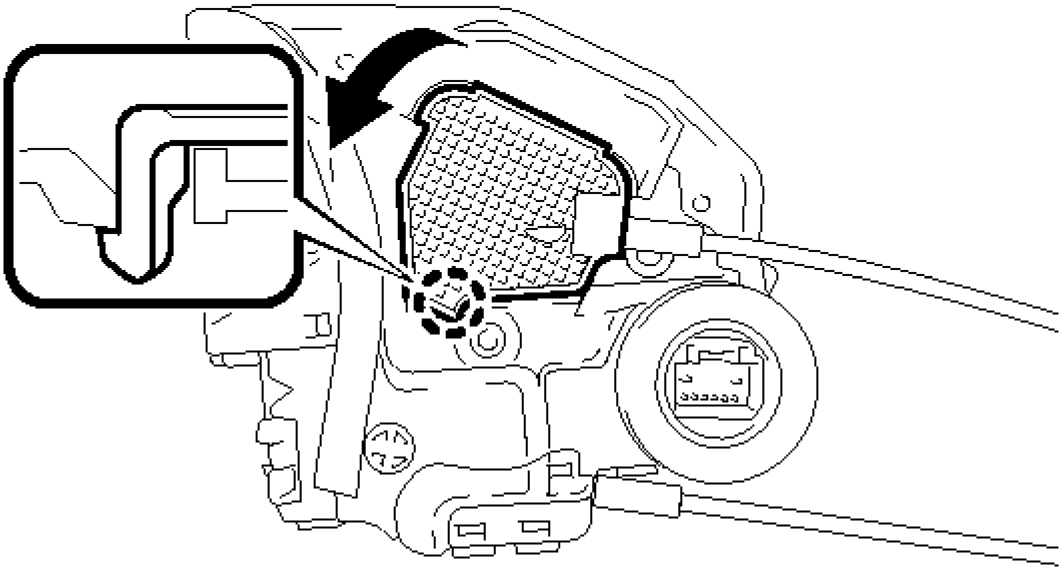

Fig. 177: Installing Rear Door Lock Remote Control Cable Cover Claw
Courtesy of TOYOTA MOTOR SALES, U.S.A., INC.

16. **INSTALL REAR DOOR LOCK WITH MOTOR ASSEMBLY**

NOTE:

- **When reusing the removed rear door lock with motor assembly, replace the door lock wiring harness seal on the connector with a new one.**
- **Do not allow grease or dust to adhere to the door lock wiring harness seal surface of the connector.**
- **Reusing the door lock wiring harness seal or using a damaged door lock wiring harness seal may cause water intrusion. This may result in a malfunction of the rear door lock with motor assembly.**

a. Apply MP grease to the sliding parts of the rear door lock with motor assembly.

b. When reusing the rear door lock with motor assembly:

    1. Install a new door lock wiring harness seal to the rear door lock with motor assembly.

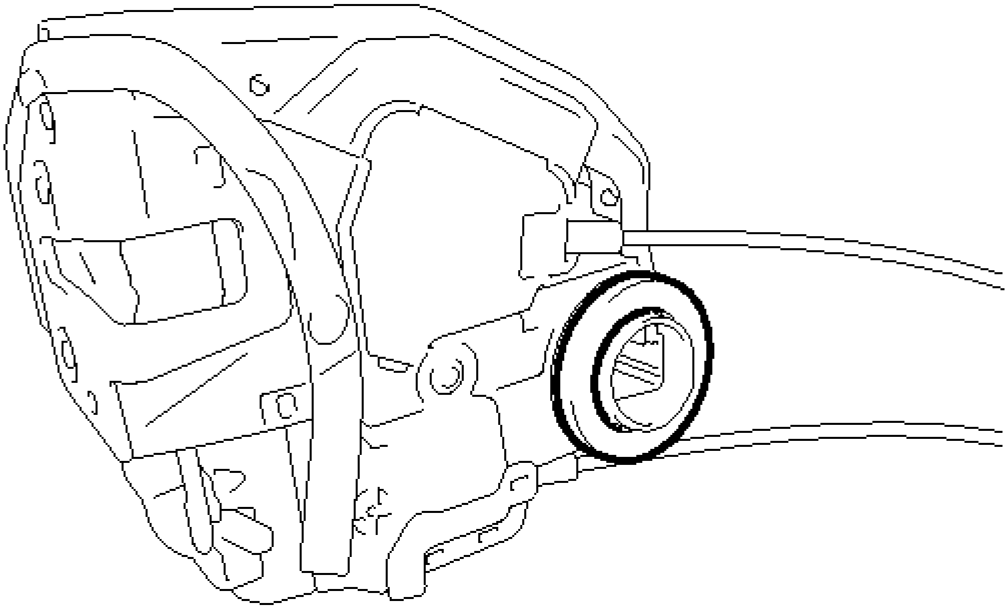

Fig. 178: Identifying Door Lock Wiring Harness Seal
Courtesy of TOYOTA MOTOR SALES, U.S.A., INC.

c. Insert the rear door lock with motor assembly to the rear door outside handle release plate, and set it to the rear door panel.

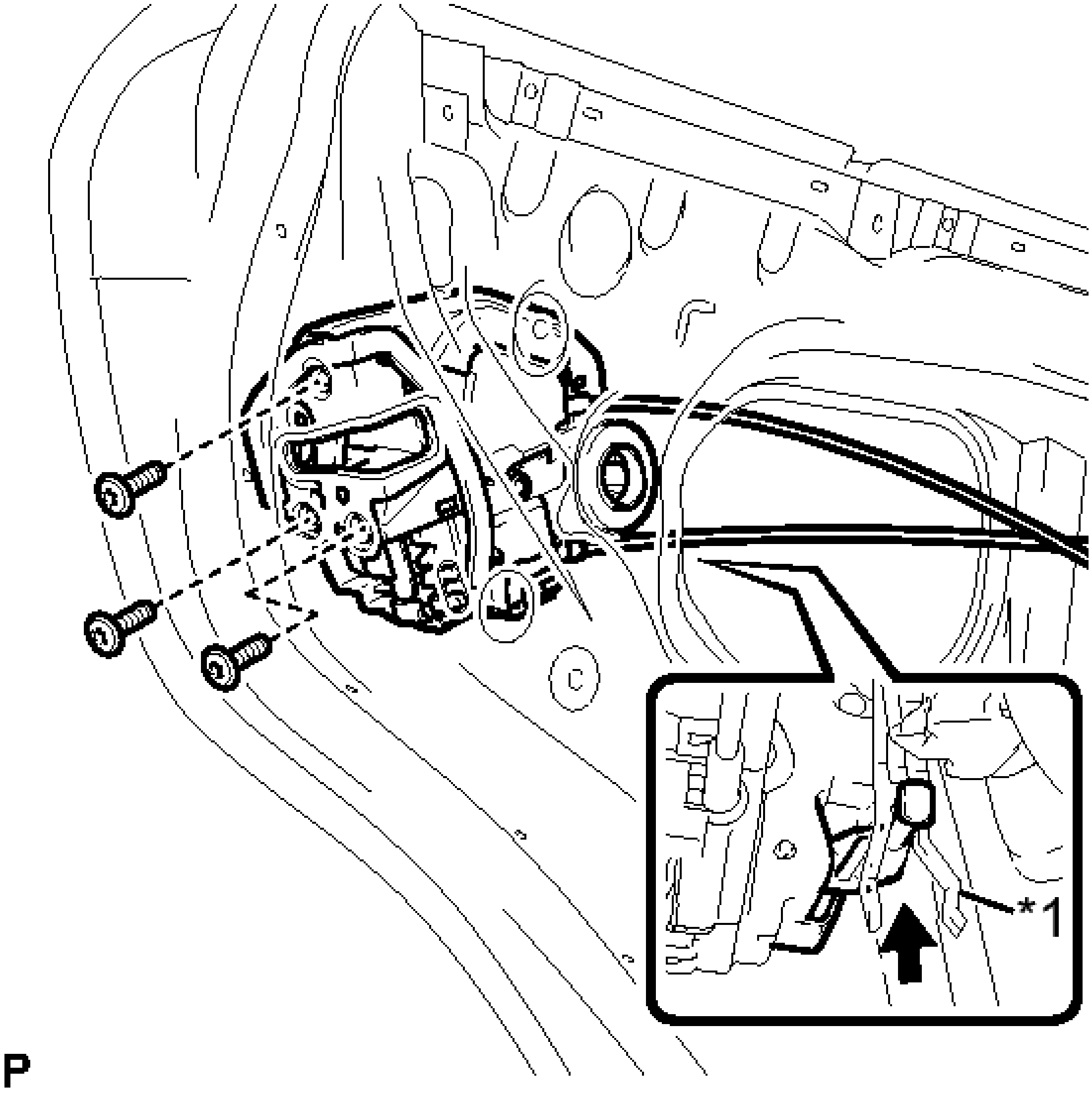

Fig. 179: Identifying Rear Door Lock With Motor Assembly Screws
Courtesy of TOYOTA MOTOR SALES, U.S.A., INC.

TEXT IN ILLUSTRATION

*1	Release Plate

d. Make sure that the rear door outside handle frame release plate is securely connected to the rear door lock with motor assembly.
e. Using a T30 "TORX" socket wrench, install the rear door lock with motor assembly with the 3 screws.

Torque: 5.0 N*m (51 kgf*cm, 44 in.*lbf)

17. **INSTALL REAR POWER WINDOW REGULATOR MOTOR ASSEMBLY**

NOTE: The regulator arm must be below the intermediate position when installing the rear power window regulator motor assembly.

a. Using a T25 "TORX" socket wrench, install the rear power window regulator motor assembly with the 3 screws.

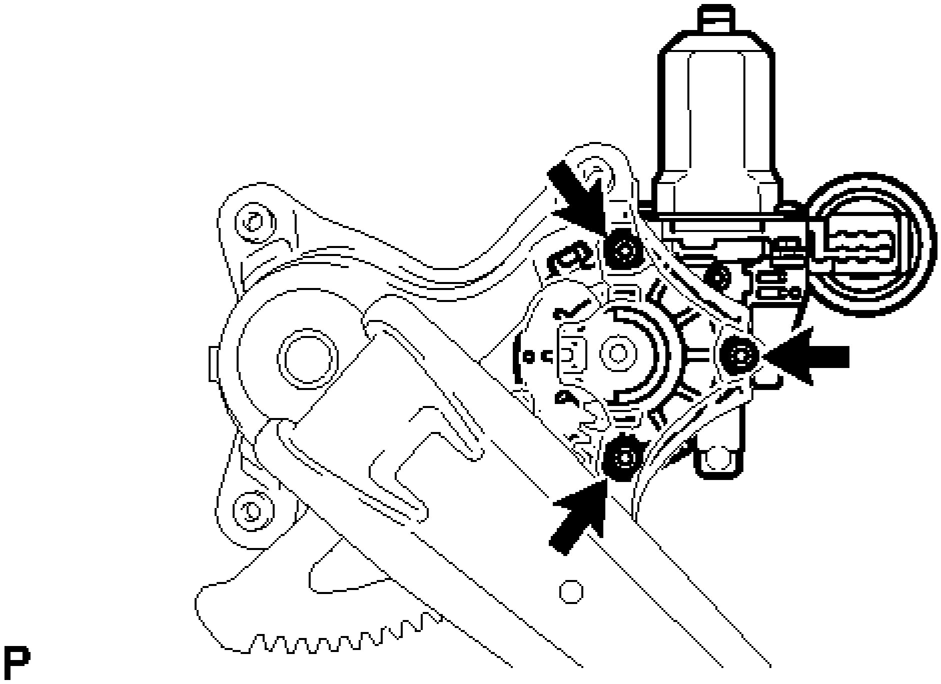

Fig. 180: Identifying Rear Power Window Regulator Motor Screws
Courtesy of TOYOTA MOTOR SALES, U.S.A., INC.

Torque: 5.4 N*m (55 kgf*cm, 48 in.*lbf)

HINT:

When replacing the rear window regulator, a new rear window regulator uses self-tapping screws to thread new installation holes when the self-tapping screws are inserted.

18. **INSTALL REAR DOOR WINDOW REGULATOR ASSEMBLY**
    a. Apply MP grease to the sliding parts of the rear door window regulator assembly.
    b. Install the temporary bolt to the rear door window regulator assembly.
    c. Temporarily install the rear door window regulator assembly.

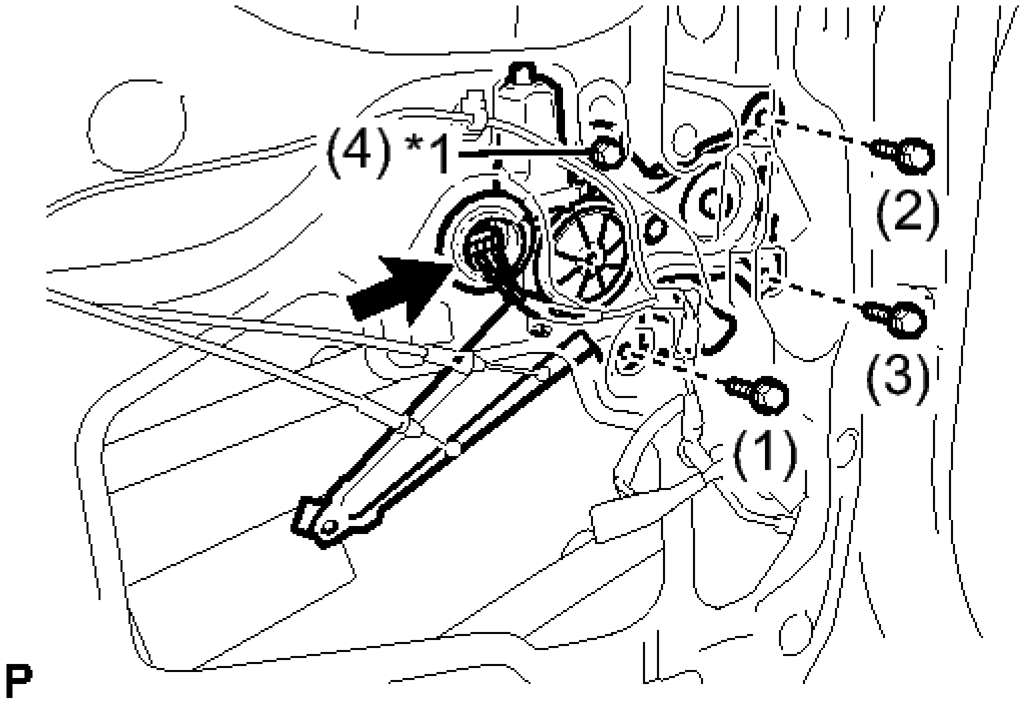

Fig. 181: Identifying Rear Door Window Regulator Temporary Bolt And Assembly Tightening Sequence
Courtesy of TOYOTA MOTOR SALES, U.S.A., INC.

TEXT IN ILLUSTRATION

*1	Temporary Bolt

d. Tighten the temporary bolt and 3 bolts to install the rear door window regulator assembly.

HINT:

Tighten the bolts in the order shown in the illustration.

Torque: 8.0 N*m (82 kgf*cm, 71 in.*lbf)

19. **INSTALL REAR DOOR INSIDE PANEL REINFORCE SUB-ASSEMBLY**
    a. Engage the guide.

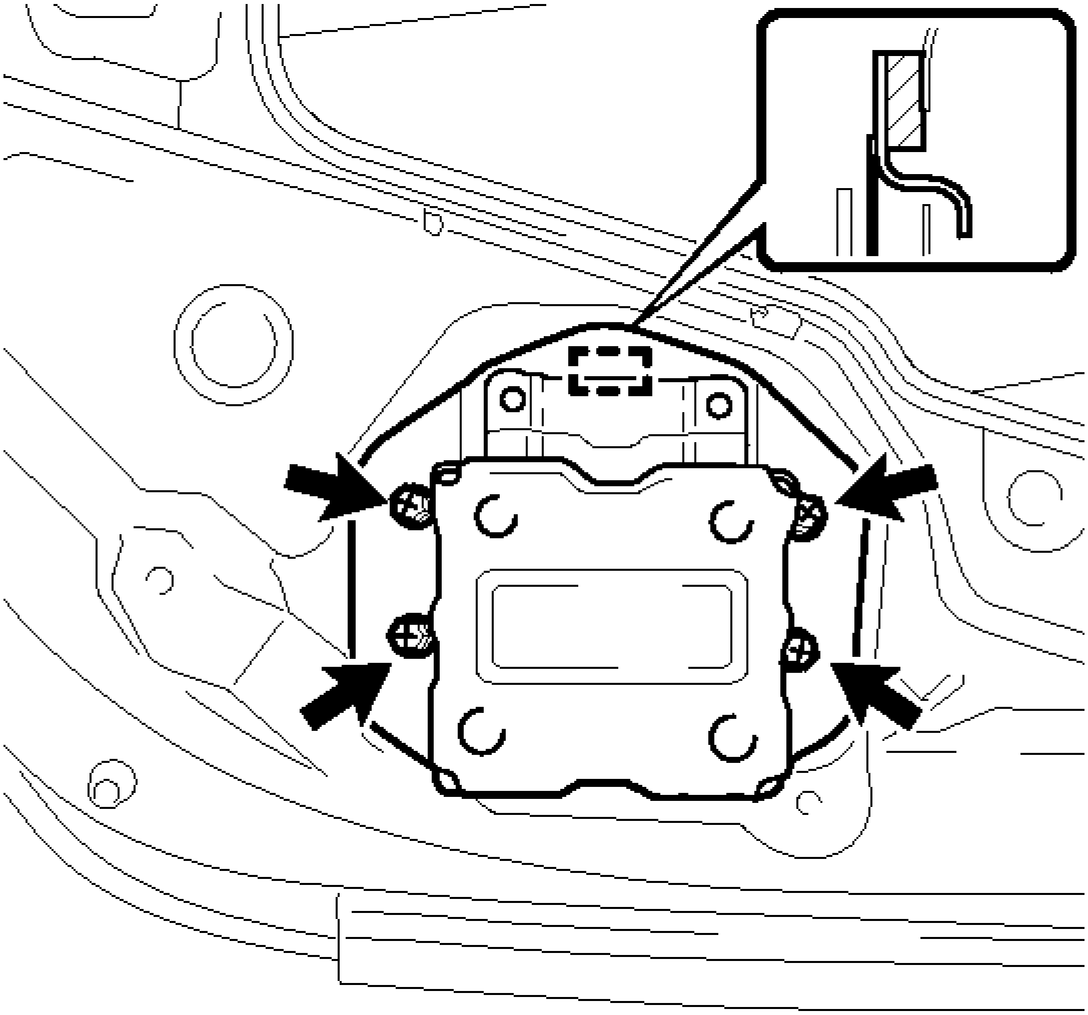

P

Fig. 182: Identifying Rear Door Inside Panel Reinforce Sub-Assembly Screws And Guide
Courtesy of TOYOTA MOTOR SALES, U.S.A., INC.

b. Install a new rear door inside panel reinforce sub-assembly with the 4 screws.

20. **INSTALL REAR DOOR FRAME GARNISH**

a. Engage the clip to install a new rear door frame garnish.

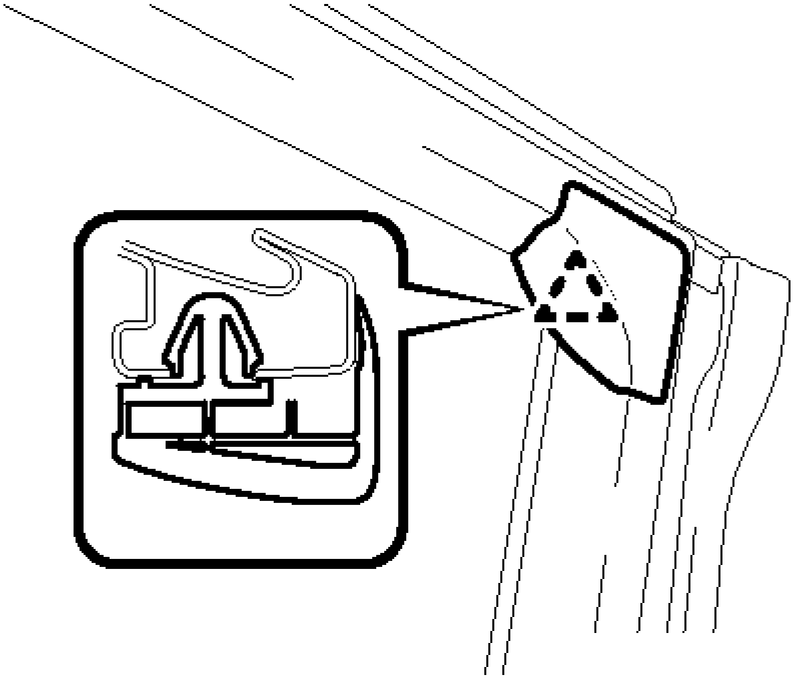

P

Fig. 183: Identifying Rear Door Frame Garnish Clip
Courtesy of TOYOTA MOTOR SALES, U.S.A., INC.

21. **INSTALL REAR DOOR GLASS SUB-ASSEMBLY**
    a. Slide the rear door glass sub-assembly to install it as shown in the illustration.

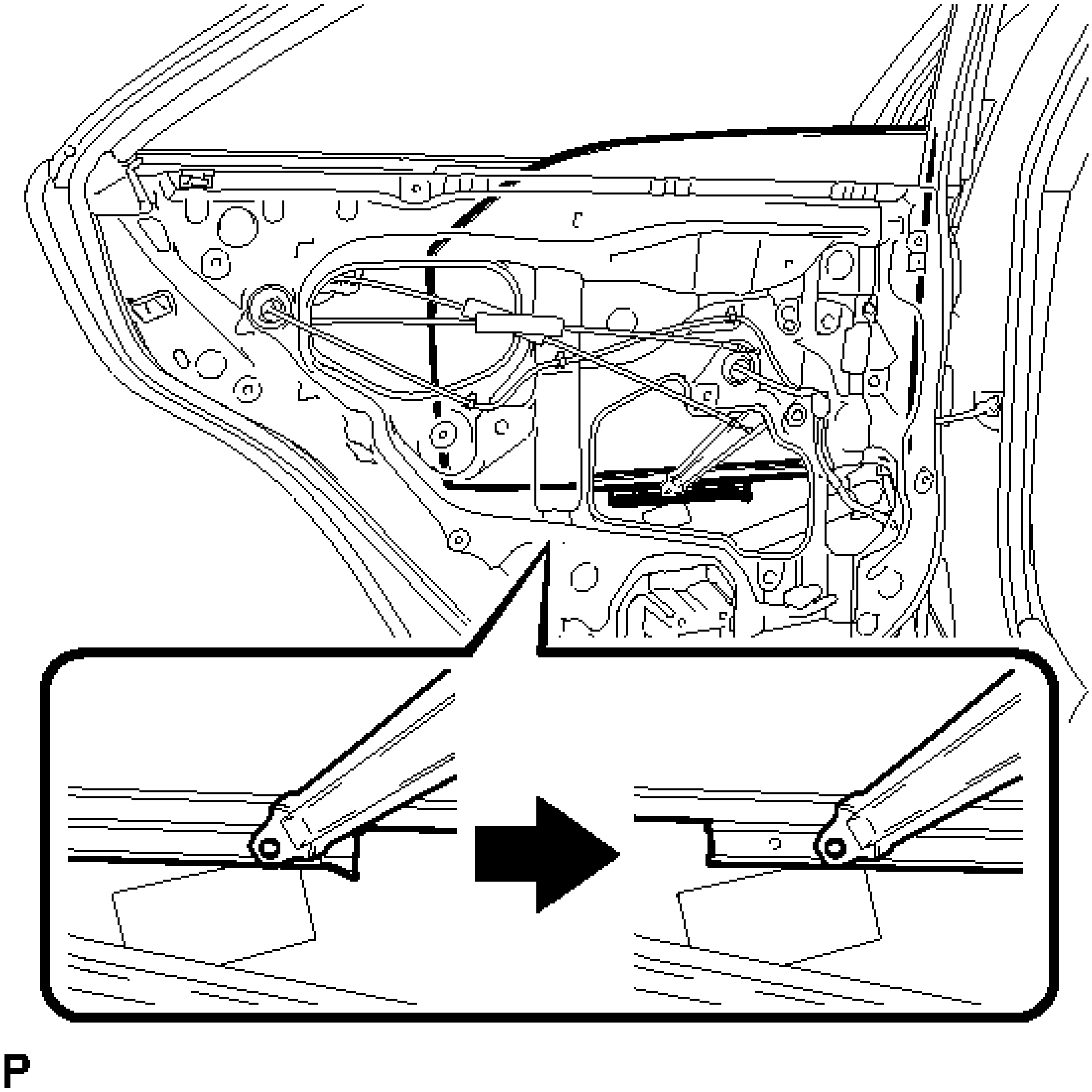

Fig. 184: Installing Rear Door Glass From Rear Door Window Regulator
Courtesy of TOYOTA MOTOR SALES, U.S.A., INC.

22. **INSTALL REAR DOOR QUARTER WINDOW GLASS**
    a. Install the rear door quarter window glass to the rear door quarter window weatherstrip.
    b. Install the rear door quarter window glass together with the rear door quarter window weatherstrip in the direction indicated by the arrow in the illustration.

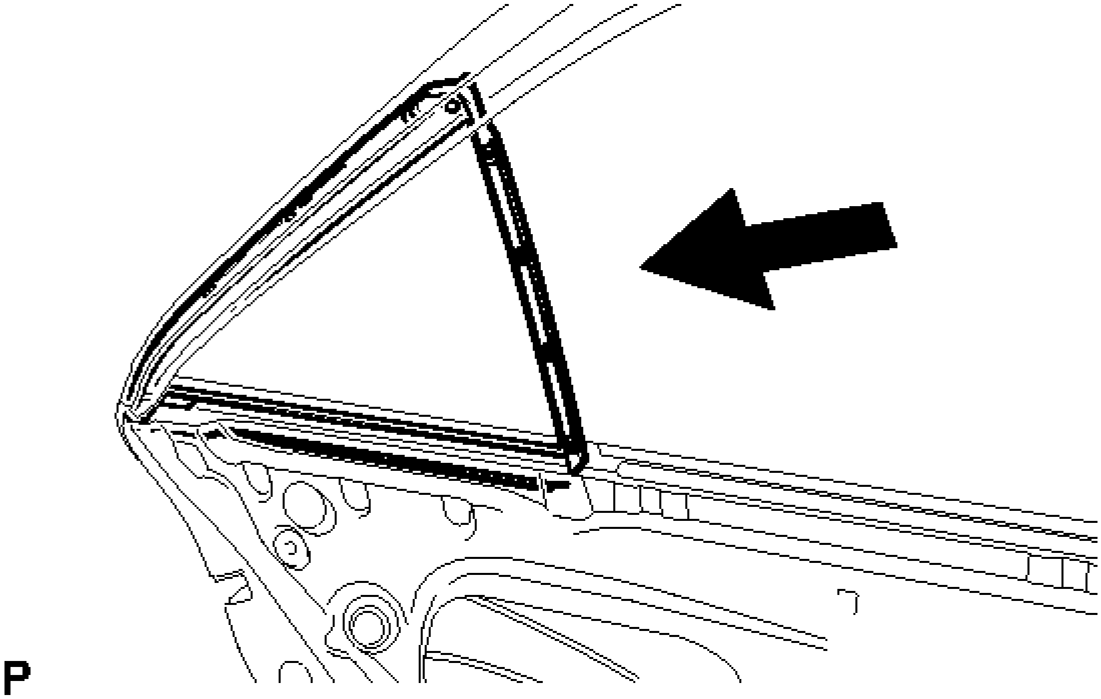

Fig. 185: Installing Rear Door Quarter Window Glass
Courtesy of TOYOTA MOTOR SALES, U.S.A., INC.

23. **INSTALL REAR DOOR LOWER WINDOW FRAME SUB-ASSEMBLY**
    a. Install the rear door lower window frame sub-assembly with the screw and 2 bolts.

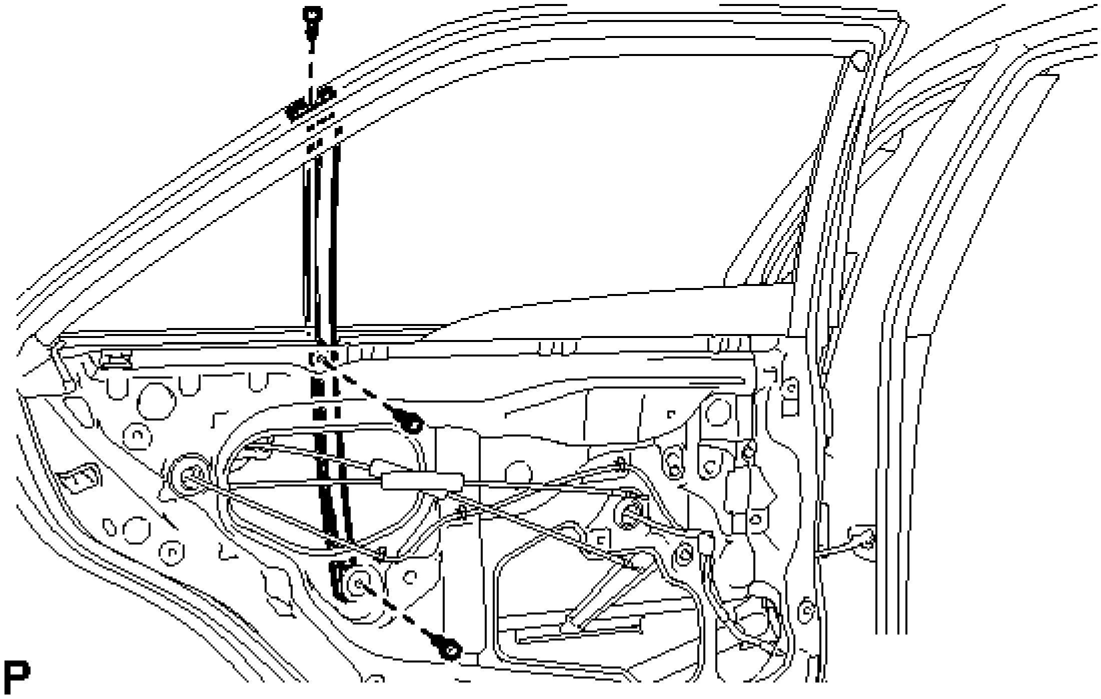

Fig. 186: Identifying Rear Door Lower Window Frame Bolts

Courtesy of TOYOTA MOTOR SALES, U.S.A., INC.

24. **INSTALL REAR DOOR GLASS RUN**
    a. Install the rear door glass run.

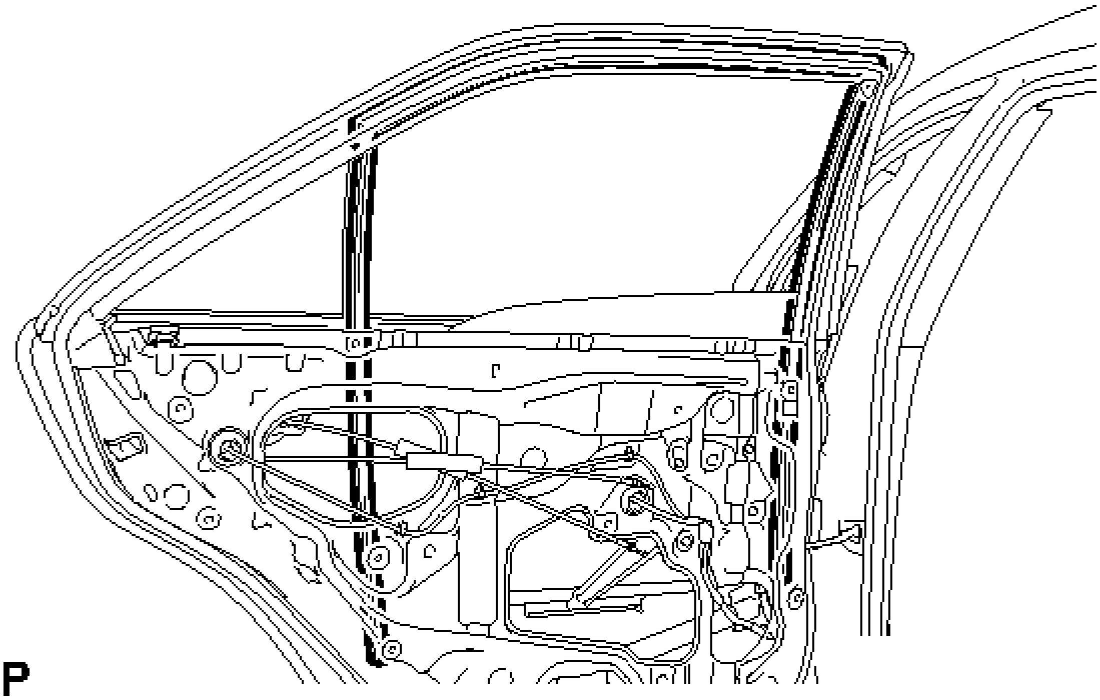

Fig. 187: Identifying Rear Door Glass Run
Courtesy of TOYOTA MOTOR SALES, U.S.A., INC.

25. **INSTALL REAR DOOR WEATHERSTRIP**
    a. Engage the 20 clips to install the rear door weatherstrip.

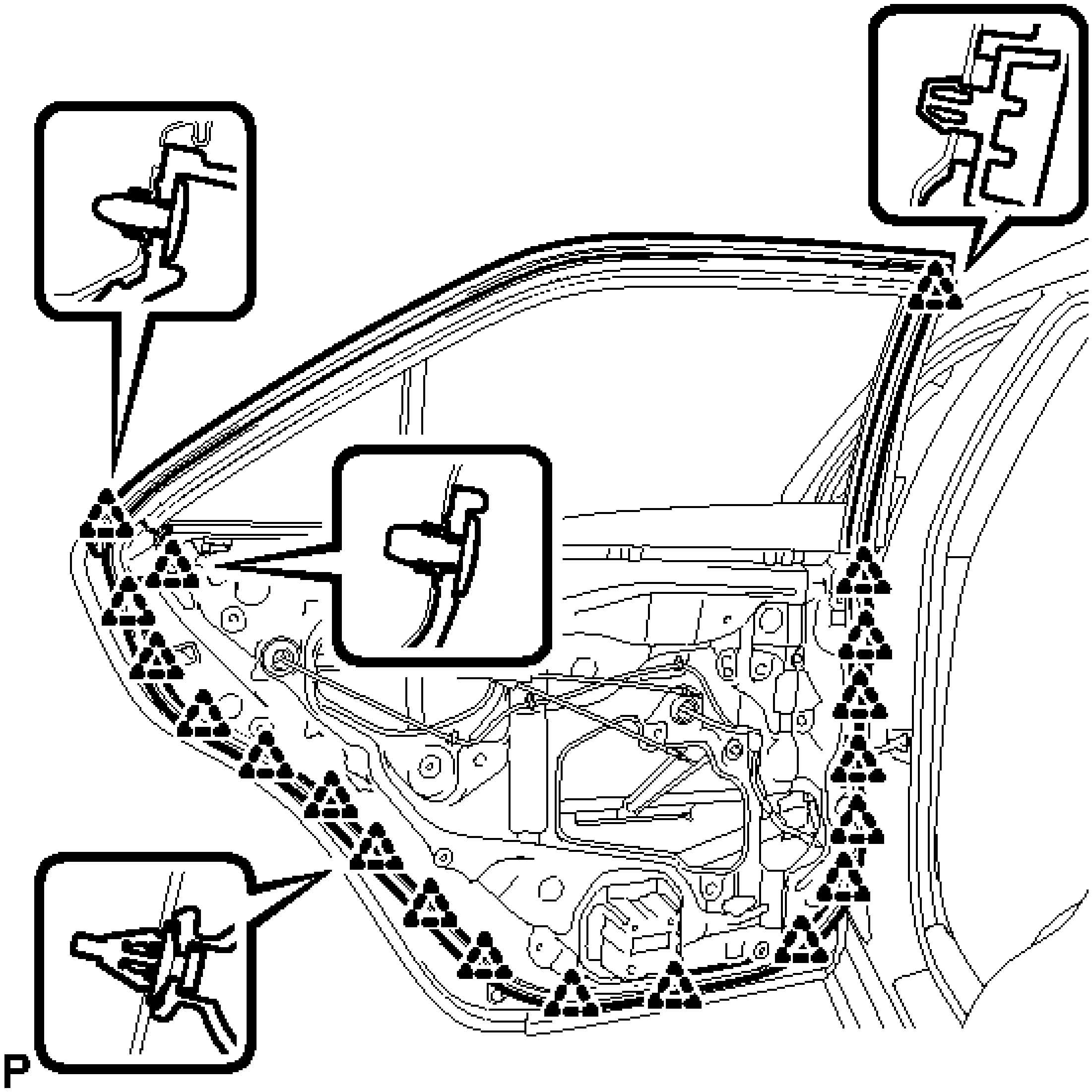

Fig. 188: Identifying Rear Door Weatherstrip Clips
Courtesy of TOYOTA MOTOR SALES, U.S.A., INC.

26. INSTALL REAR DOOR CHECK ASSEMBLY

a. Apply MP grease to the sliding parts of the rear door check assembly.
b. Apply adhesive to the threads of the bolt.

Adhesive

Toyota Genuine Adhesive 1324, Three Bond 1324 or equivalent

c. Install the rear door check assembly with the 2 nuts and bolt.

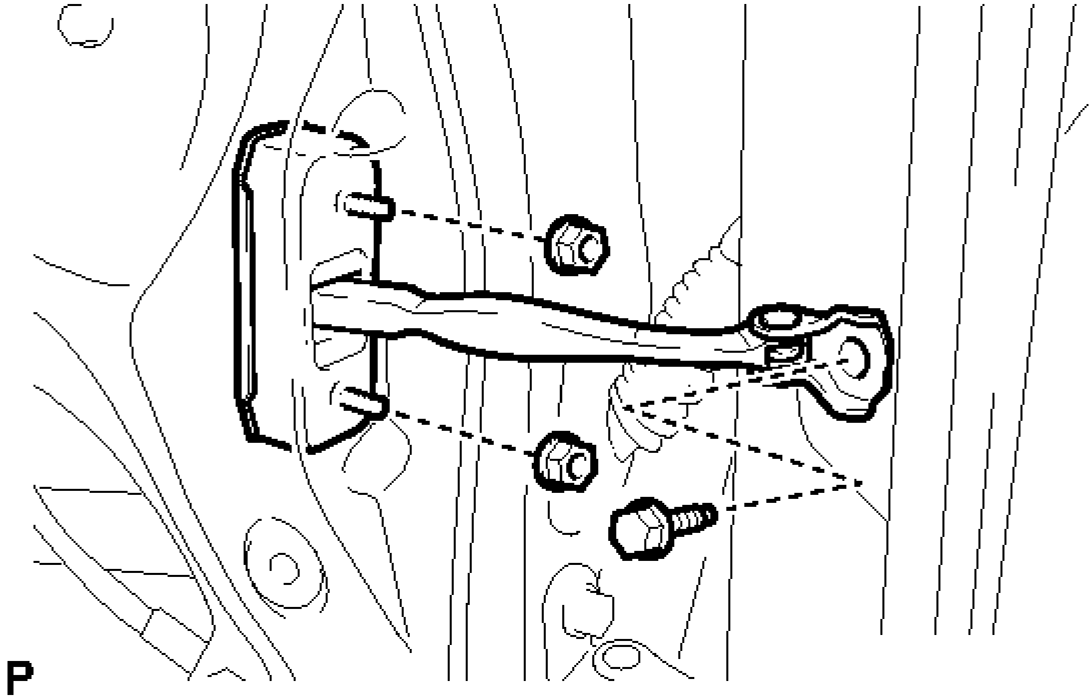

Fig. 189: Identifying Rear Door Check Bolts
Courtesy of TOYOTA MOTOR SALES, U.S.A., INC.

Bolt

Torque: 29 N*m (296 kgf*cm, 21 ft.*lbf)

Nut

Torque: 8.0 N*m (82 kgf*cm, 71 in.*lbf)

27. **INSTALL REAR DOOR SERVICE HOLE COVER**
    a. Apply new butyl tape to the rear door panel.
    b. Pass the rear door lock remote control cable assembly, rear door inside locking cable assembly and each connector through a new rear door service hole cover.

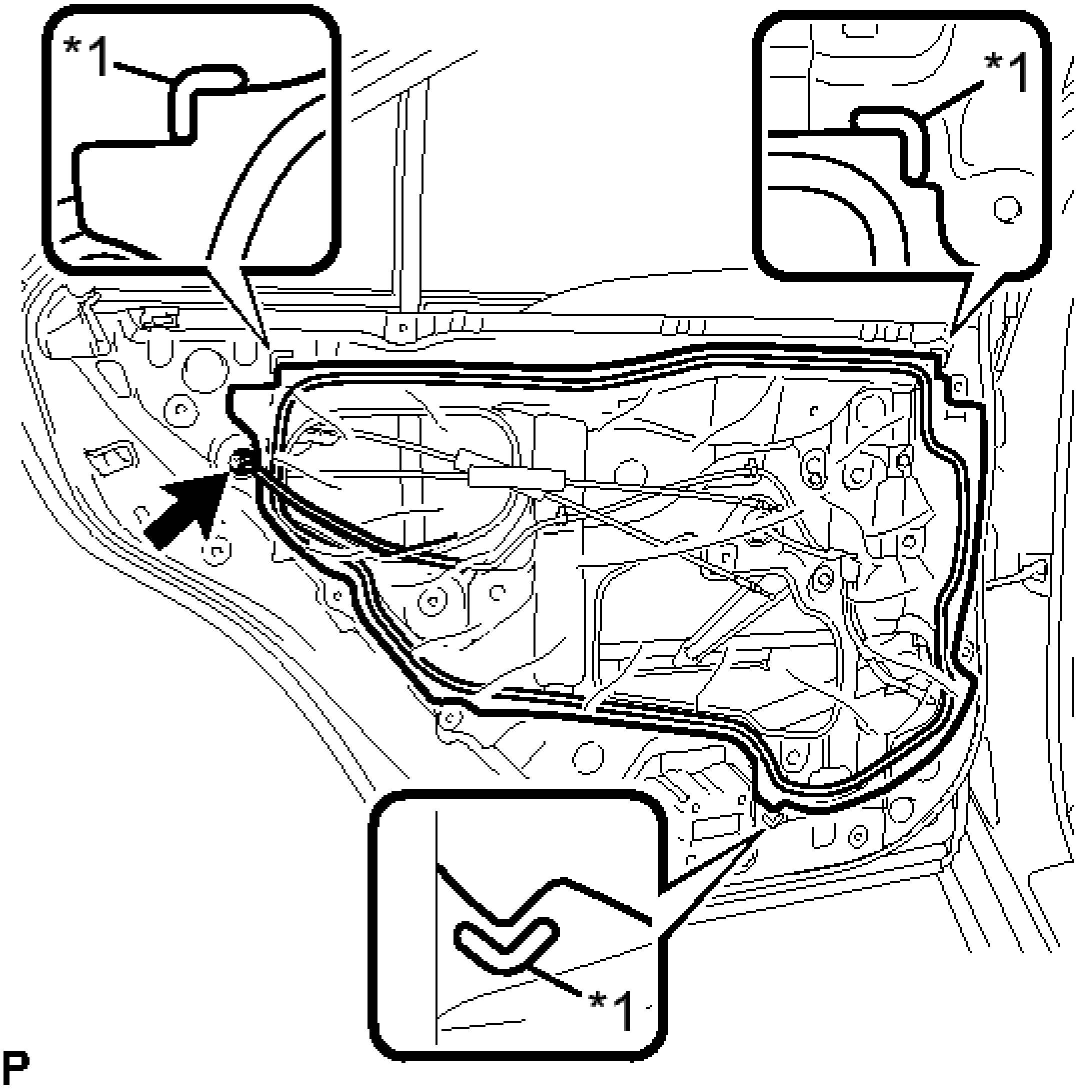

Fig. 190: Locating Rear Door Service Hole Cover
Courtesy of TOYOTA MOTOR SALES, U.S.A., INC.

TEXT IN ILLUSTRATION

*1	Reference Point

c. Attach the rear door service hole cover according to the reference points on the rear door panel.

NOTE: **Securely install the rear door service hole cover preventing wrinkles and air bubbles.**

d. Connect the connector.

28. **INSTALL REAR DOOR INNER GLASS WEATHERSTRIP**

a. Install the rear door inner glass weatherstrip.

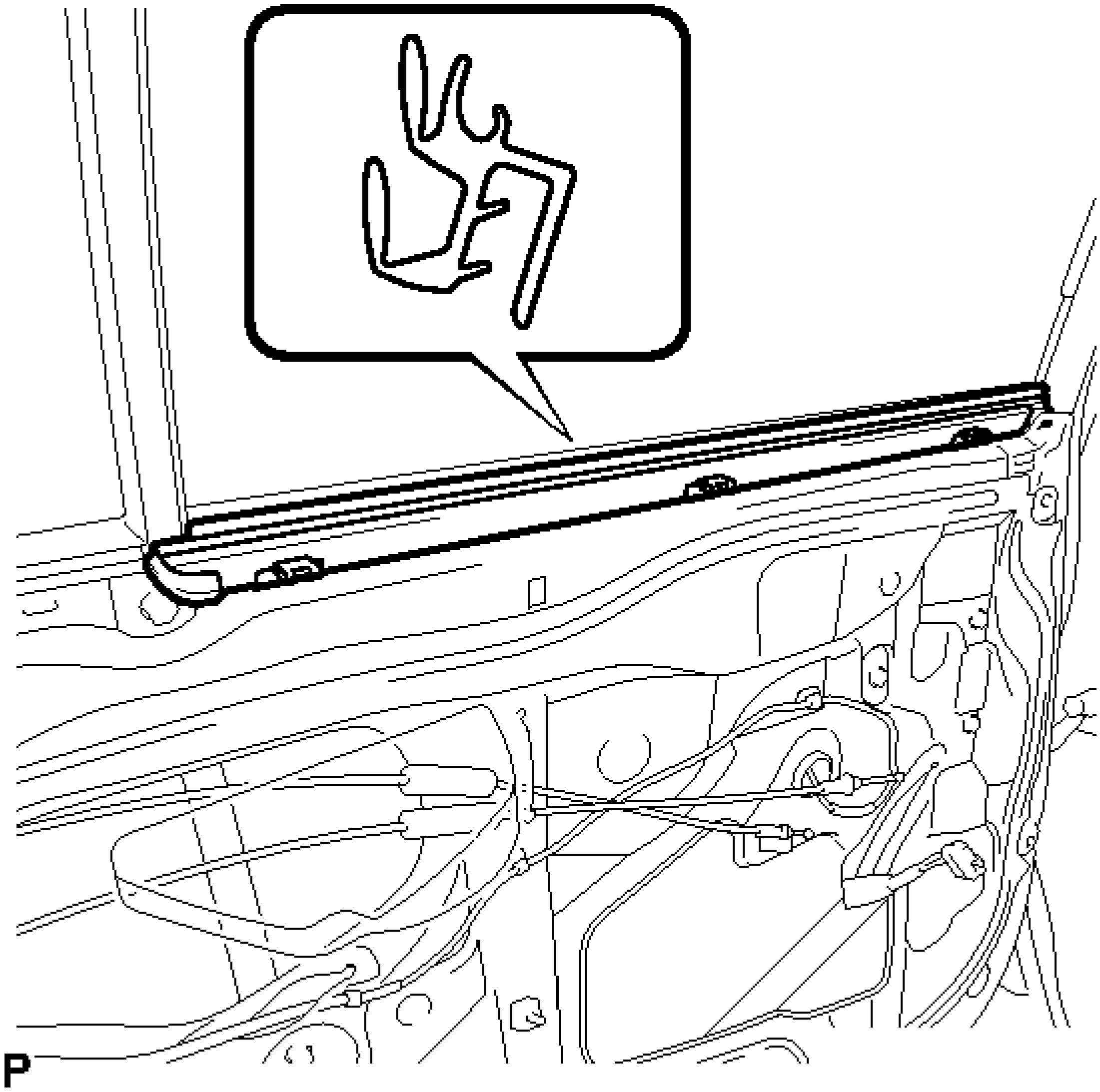

Fig. 191: Identifying Rear Door Inner Glass Weatherstrip
Courtesy of TOYOTA MOTOR SALES, U.S.A., INC.

29. **INSTALL REAR DOOR INSIDE HANDLE SUB-ASSEMBLY**
    a. Engage the guide and 2 claws to install the rear door inside handle sub-assembly to the rear door trim board sub-assembly.

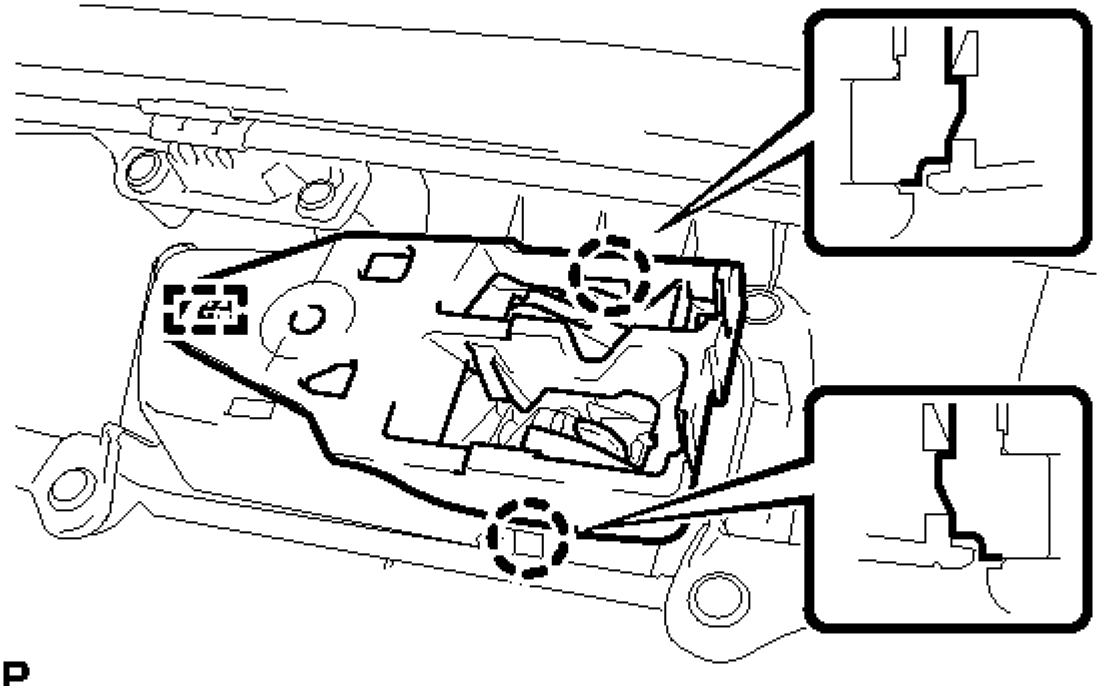

Fig. 192: Identifying Rear Door Inside Handle Sub-Assembly Claws And Guides
Courtesy of TOYOTA MOTOR SALES, U.S.A., INC.

30. **INSTALL REAR DOOR TRIM BOARD SUB-ASSEMBLY**
    a. Install the No. 1 door scuff plate clamp as shown in the illustration.

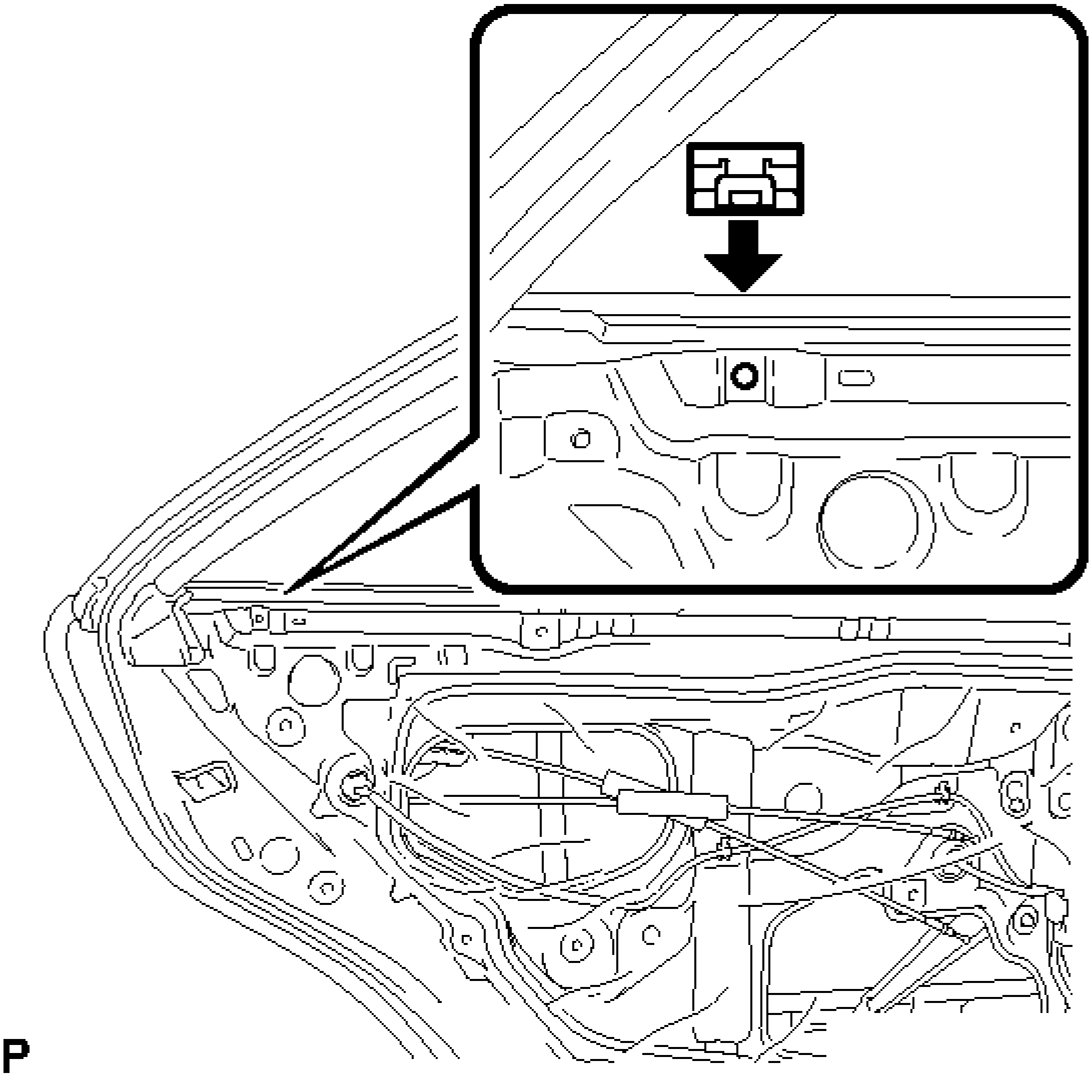

Fig. 193: Identifying No. 1 Door Scuff Plate Clamp
Courtesy of TOYOTA MOTOR SALES, U.S.A., INC.

b. Connect the rear door lock remote control cable assembly and rear door inside locking cable assembly.

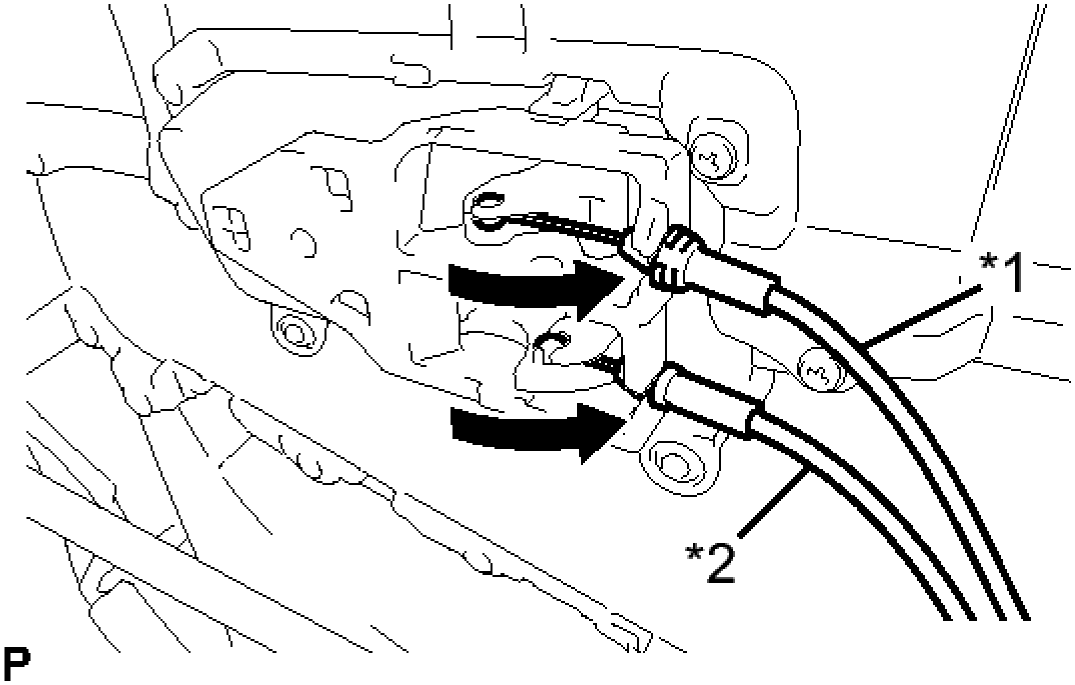

Fig. 194: Connecting Rear Door Lock Remote Control And Inside Locking Cables
Courtesy of TOYOTA MOTOR SALES, U.S.A., INC.

TEXT IN ILLUSTRATION

*1	Rear Door Inside Locking Cable Assembly
*2	Rear Door Lock Remote Control Cable Assembly

c. Engage the rear door trim board sub-assembly with the 4 claws and reference boss as shown in the illustration.

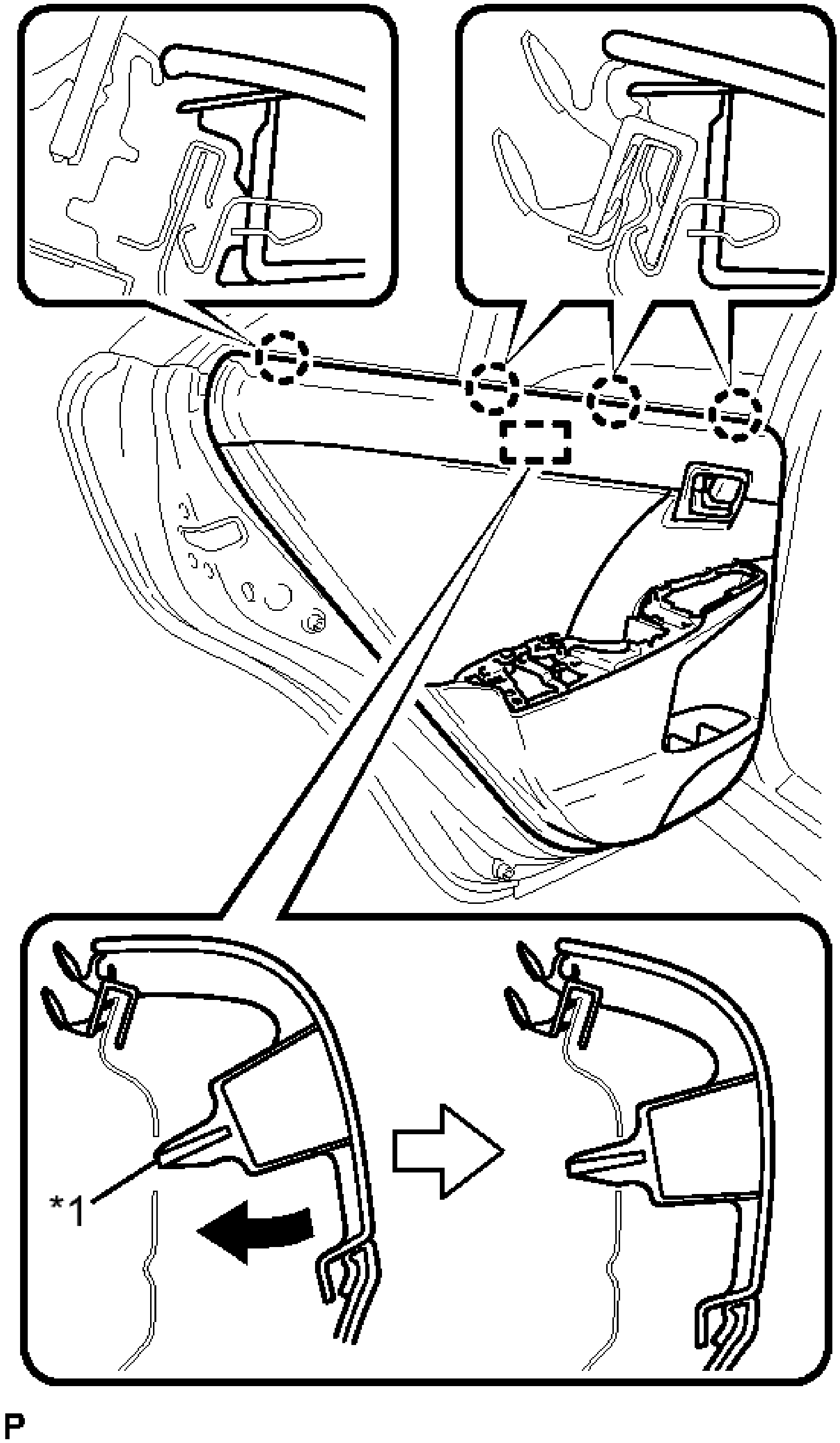

Fig. 195: Engaging Rear Door Trim Board Sub-Assembly
Courtesy of TOYOTA MOTOR SALES, U.S.A., INC.

TEXT IN ILLUSTRATION

*1	Reference Boss

d. Engage the 8 clips and install the rear door trim board sub-assembly.

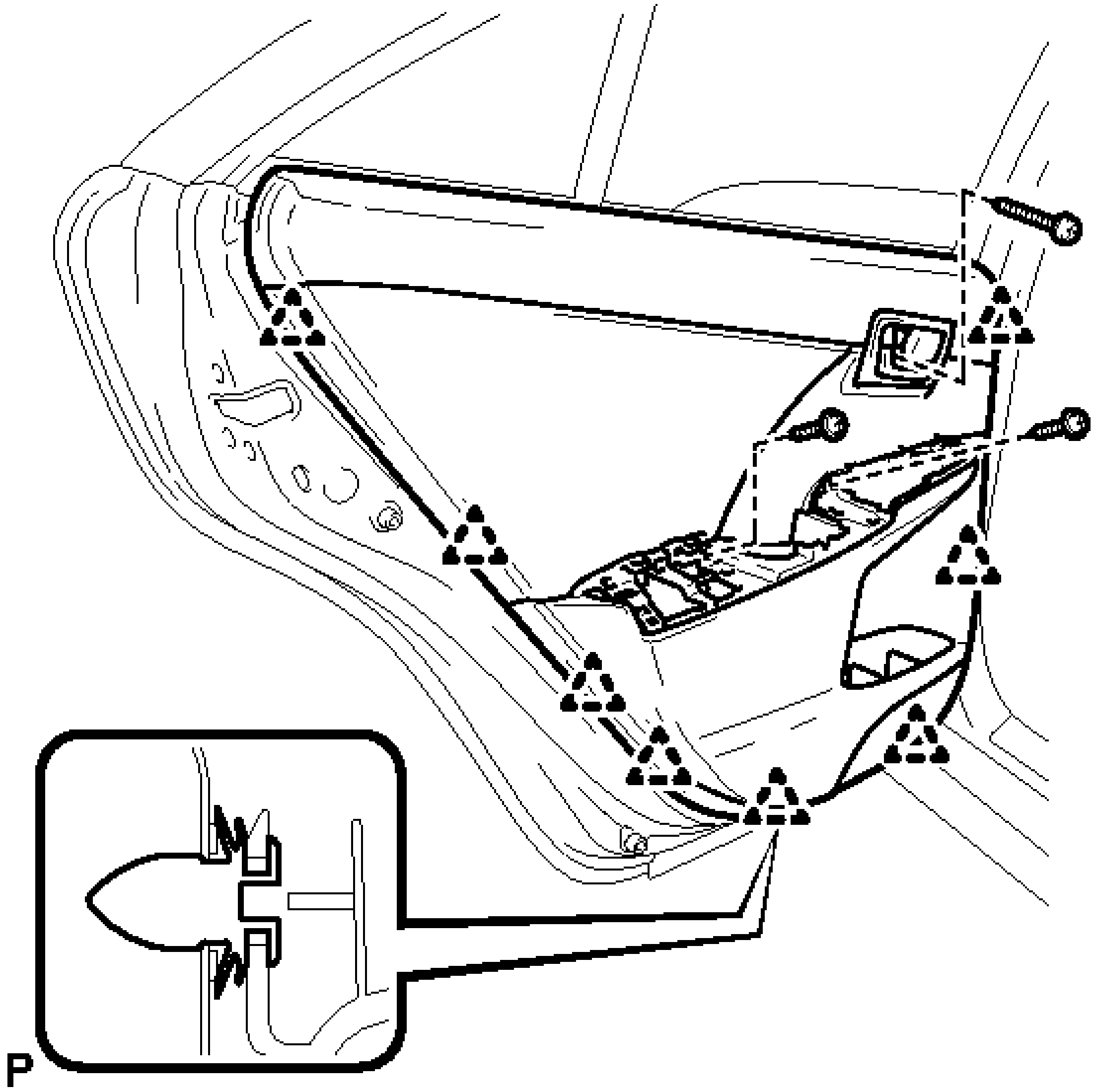

Fig. 196: Identifying Rear Door Trim Board Sub-Assembly Clips And Screws
Courtesy of TOYOTA MOTOR SALES, U.S.A., INC.

e. Install the 3 screws.

f. If protective tape has been applied, remove it.

31. **INSTALL REAR ARMREST ASSEMBLY**

a. Engage the 2 guides, 3 clips and 7 claws to install the rear armrest assembly.

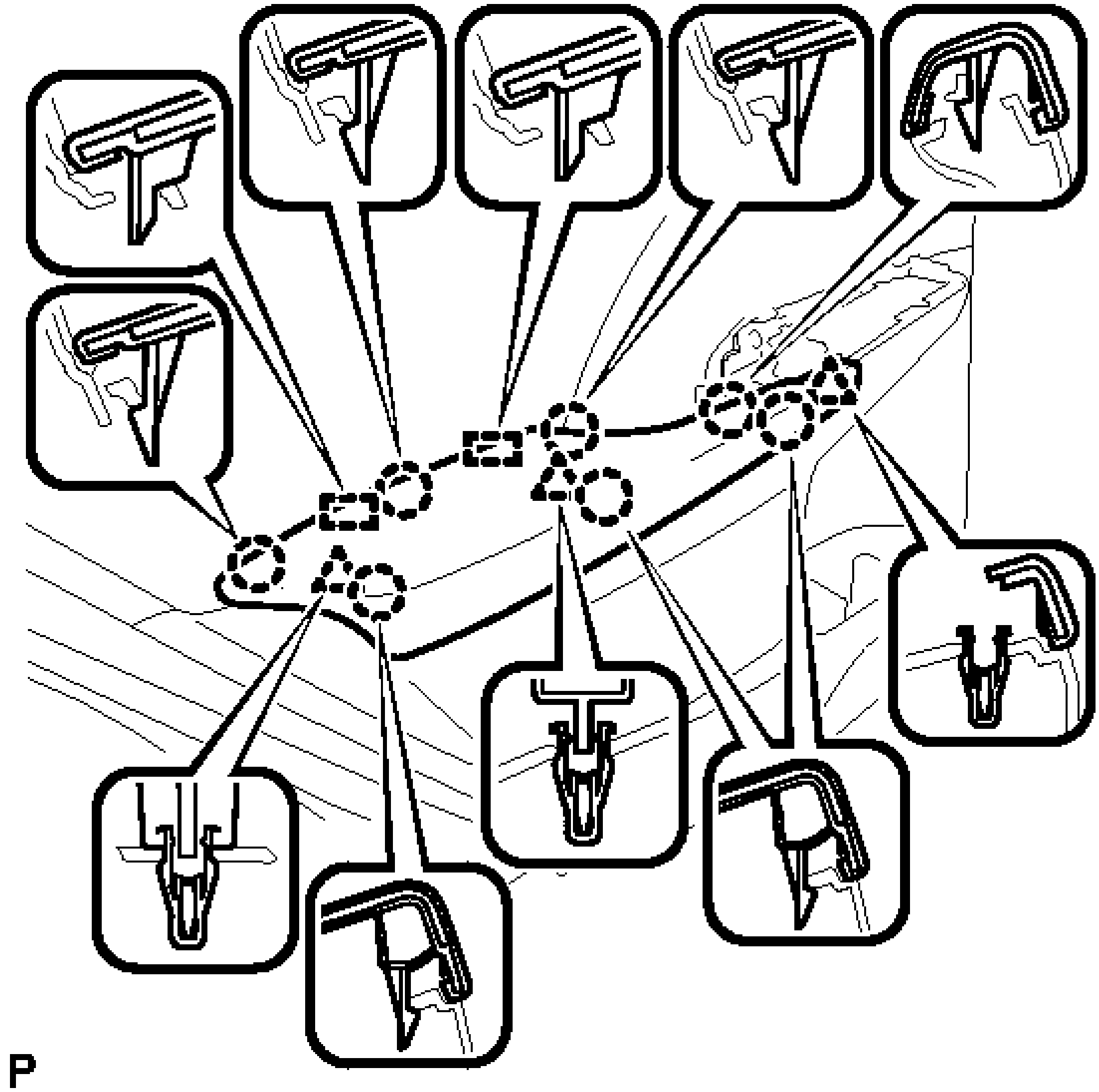

Fig. 197: Identifying Rear Armrest Clips, Claws And Guides
Courtesy of TOYOTA MOTOR SALES, U.S.A., INC.

32. **INSTALL REAR POWER WINDOW REGULATOR SWITCH ASSEMBLY WITH REAR DOOR ARMREST BASE PANEL**
    a. Connect the connector.
    b. Engage the 4 guides, 2 clips and 5 claws to install the rear power window regulator switch assembly with rear door armrest base panel.

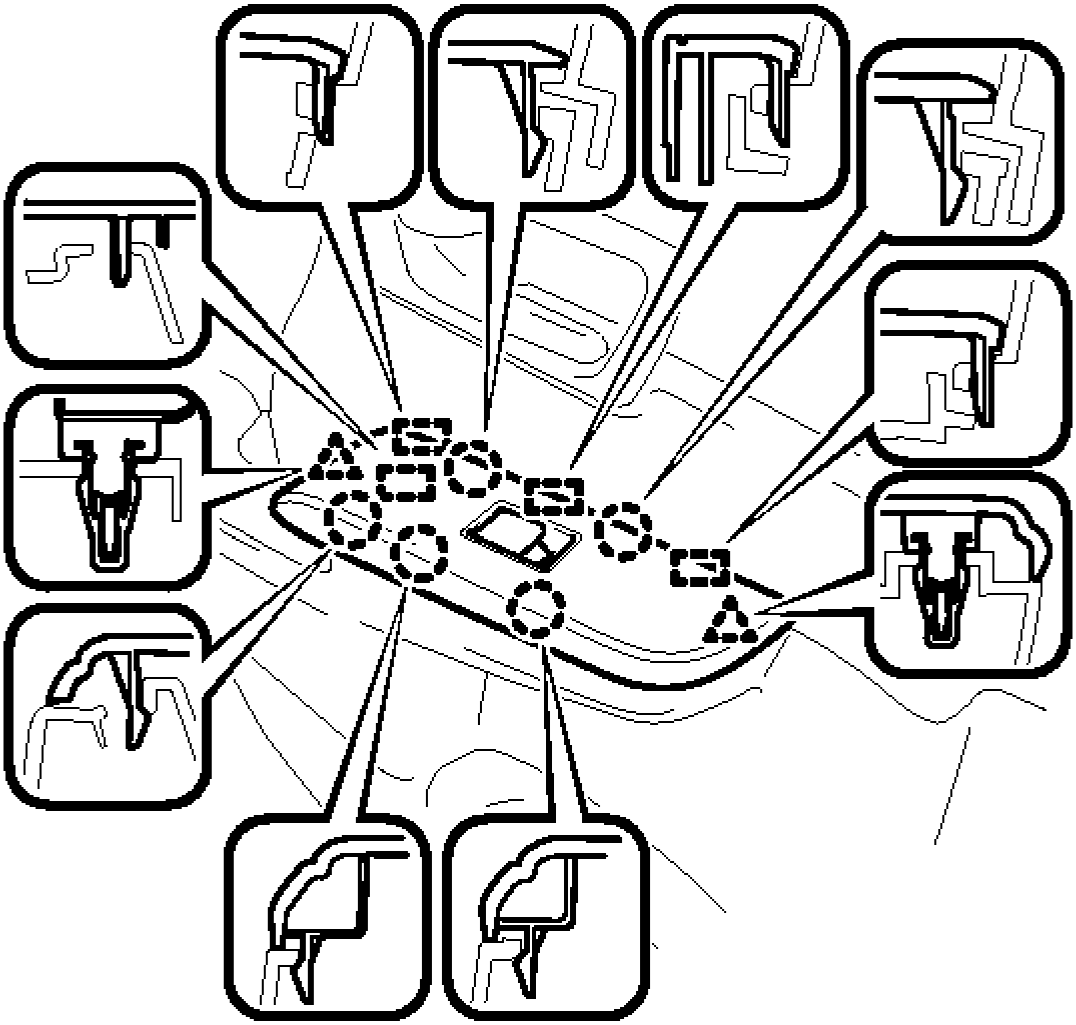

P

Fig. 198: Identifying Rear Power Window Regulator Switch Clips, Claws And Guides
Courtesy of TOYOTA MOTOR SALES, U.S.A., INC.

33. **INSTALL REAR DOOR INSIDE HANDLE BEZEL PLUG**
    a. Engage the 3 claws to install the rear door inside handle bezel plug.

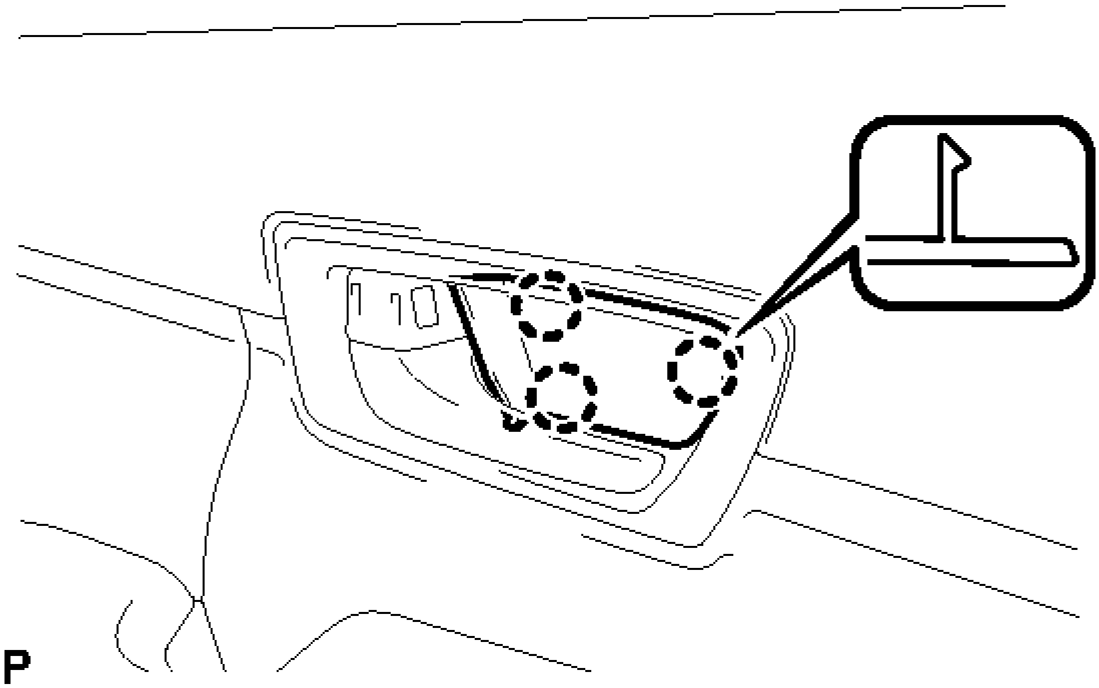

Fig. 199: Identifying Rear Door Inside Handle Bezel Plug Claws
Courtesy of TOYOTA MOTOR SALES, U.S.A., INC.

34. **CONNECT CABLE TO NEGATIVE BATTERY TERMINAL**

NOTE: **When disconnecting the cable, some systems need to be initialized after the cable is reconnected. Refer to INITIALIZATION .**

35. **INSPECT POWER WINDOW OPERATION**

Refer to **OPERATION CHECK** .

LUGGAGE COMPARTMENT DOOR

COMPONENTS

ILLUSTRATION

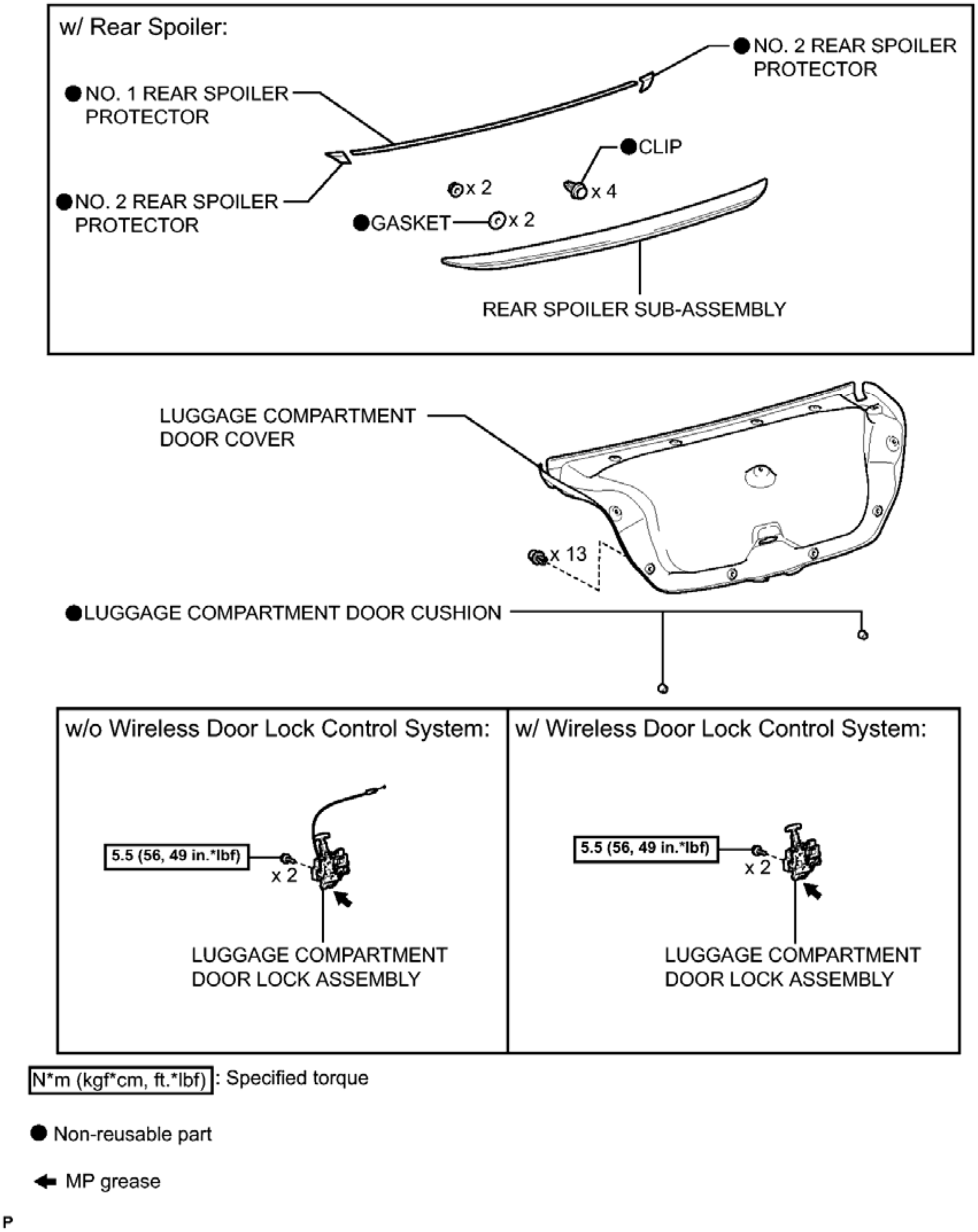
w/ Rear Spoiler:
● NO. 2 REAR SPOILER PROTECTOR
● NO. 1 REAR SPOILER PROTECTOR
● CLIP
x 2
x 4
● NO. 2 REAR SPOILER PROTECTOR
● GASKET
x 2
REAR SPOILER SUB-ASSEMBLY
LUGGAGE COMPARTMENT DOOR COVER
x 13
● LUGGAGE COMPARTMENT DOOR CUSHION
w/o Wireless Door Lock Control System:
w/ Wireless Door Lock Control System:
5.5 (56, 49 in.*lbf)
x 2
LUGGAGE COMPARTMENT DOOR LOCK ASSEMBLY
5.5 (56, 49 in.*lbf)
x 2
LUGGAGE COMPARTMENT DOOR LOCK ASSEMBLY
N*m (kgf*cm, ft.*lbf) : Specified torque
● Non-reusable part
MP grease
P

Fig. 200: Identifying Luggage Compartment Door Replacement Components With Torque Specifications (1 Of 2)
Courtesy of TOYOTA MOTOR SALES, U.S.A., INC.

ILLUSTRATION

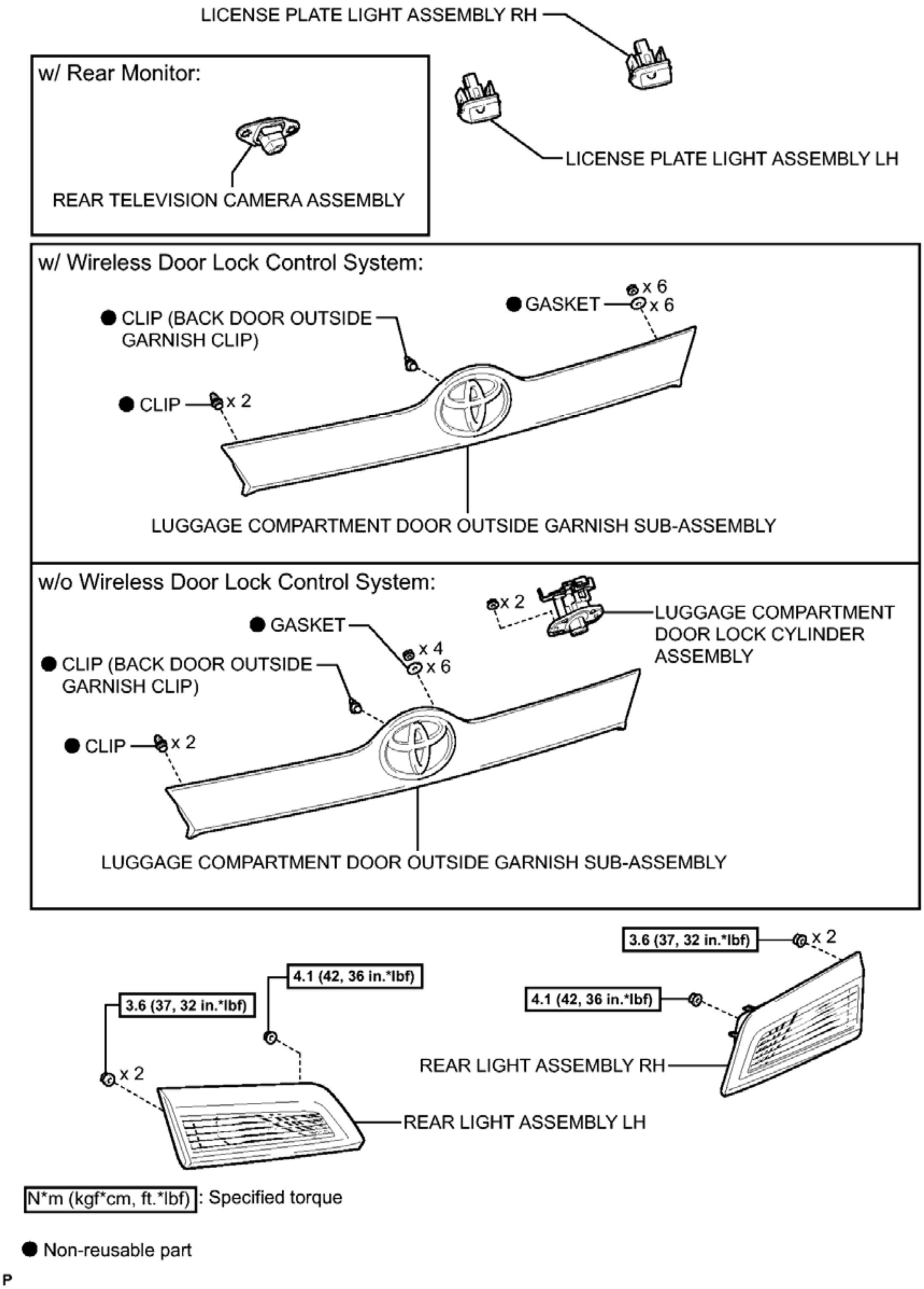
LICENSE PLATE LIGHT ASSEMBLY RH
w/ Rear Monitor:
REAR TELEVISION CAMERA ASSEMBLY
LICENSE PLATE LIGHT ASSEMBLY LH
w/ Wireless Door Lock Control System:
● GASKET
x 6
x 6
● CLIP (BACK DOOR OUTSIDE GARNISH CLIP)
● CLIP
x 2
LUGGAGE COMPARTMENT DOOR OUTSIDE GARNISH SUB-ASSEMBLY
w/o Wireless Door Lock Control System:
x 2
LUGGAGE COMPARTMENT DOOR LOCK CYLINDER ASSEMBLY
● GASKET
x 4
x 6
● CLIP (BACK DOOR OUTSIDE GARNISH CLIP)
● CLIP
x 2
LUGGAGE COMPARTMENT DOOR OUTSIDE GARNISH SUB-ASSEMBLY
3.6 (37, 32 in.*lbf)
x 2
4.1 (42, 36 in.*lbf)
REAR LIGHT ASSEMBLY RH
4.1 (42, 36 in.*lbf)
3.6 (37, 32 in.*lbf)
x 2
REAR LIGHT ASSEMBLY LH
N*m (kgf*cm, ft.*lbf) : Specified torque
● Non-reusable part
P

Fig. 201: Identifying Luggage Compartment Door Replacement Components With Torque Specifications (2 Of 2)
Courtesy of TOYOTA MOTOR SALES, U.S.A., INC.

DISASSEMBLY

DISASSEMBLY

1. **REMOVE LUGGAGE COMPARTMENT DOOR COVER**
   a. Remove the 13 clips and luggage compartment door cover.

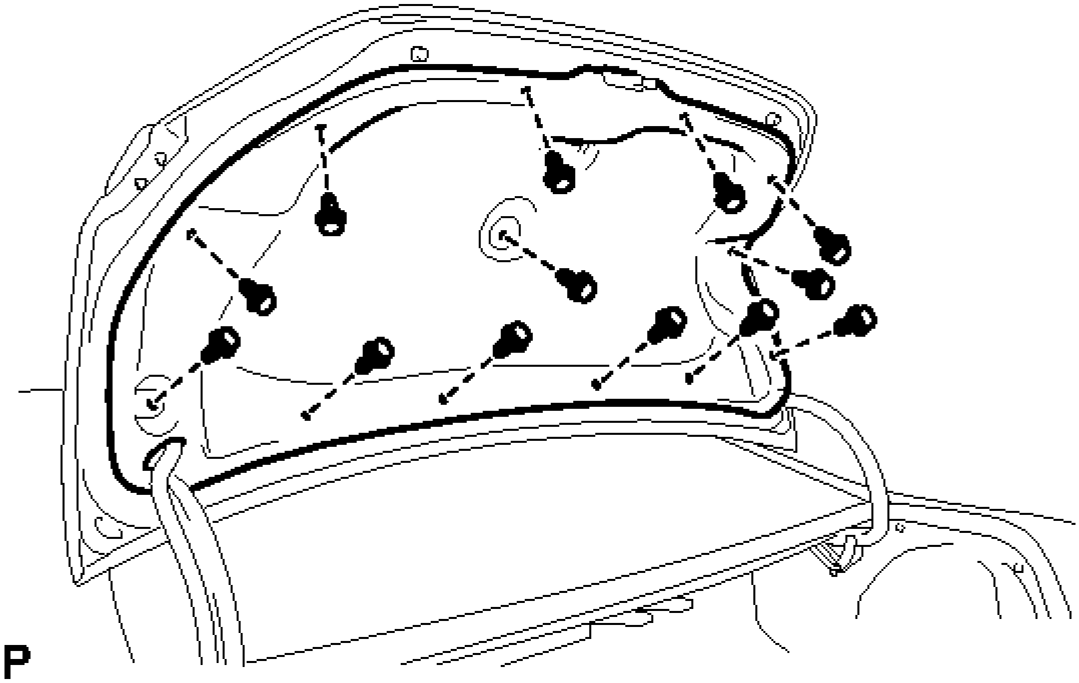

Fig. 202: Identifying Luggage Compartment Door Cover Clips
Courtesy of TOYOTA MOTOR SALES, U.S.A., INC.

2. **REMOVE LUGGAGE COMPARTMENT DOOR CUSHION**
   a. Disengage the 2 claws and remove the 2 luggage compartment door panel cushions.

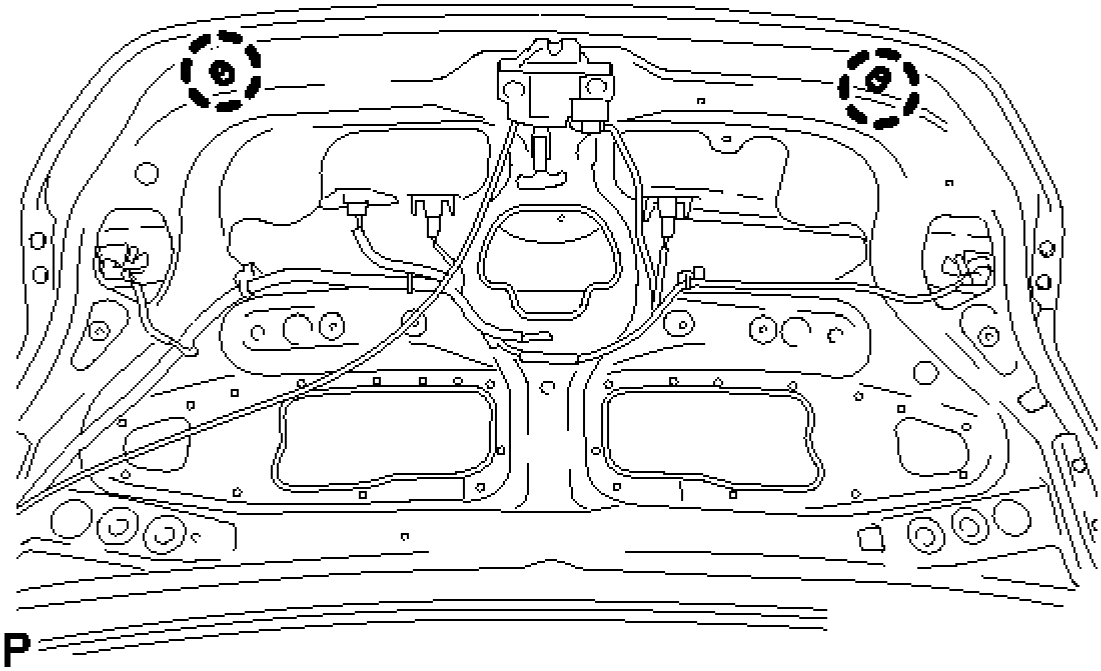

Fig. 203: Identifying Luggage Compartment Door Panel Cushions
Courtesy of TOYOTA MOTOR SALES, U.S.A., INC.

3. **REMOVE LUGGAGE COMPARTMENT DOOR LOCK ASSEMBLY (w/ Wireless Door Lock Control System)** . Refer to **REMOVAL - Step 2** .
4. **REMOVE LUGGAGE COMPARTMENT DOOR LOCK ASSEMBLY (w/o Wireless Door Lock Control System)** . Refer to **REMOVAL - Step 3** .
5. **REMOVE LUGGAGE COMPARTMENT DOOR LOCK CYLINDER ASSEMBLY (w/o Wireless Door Lock Control System)**
    1. Disconnect the luggage door lock control cable sub-assembly.

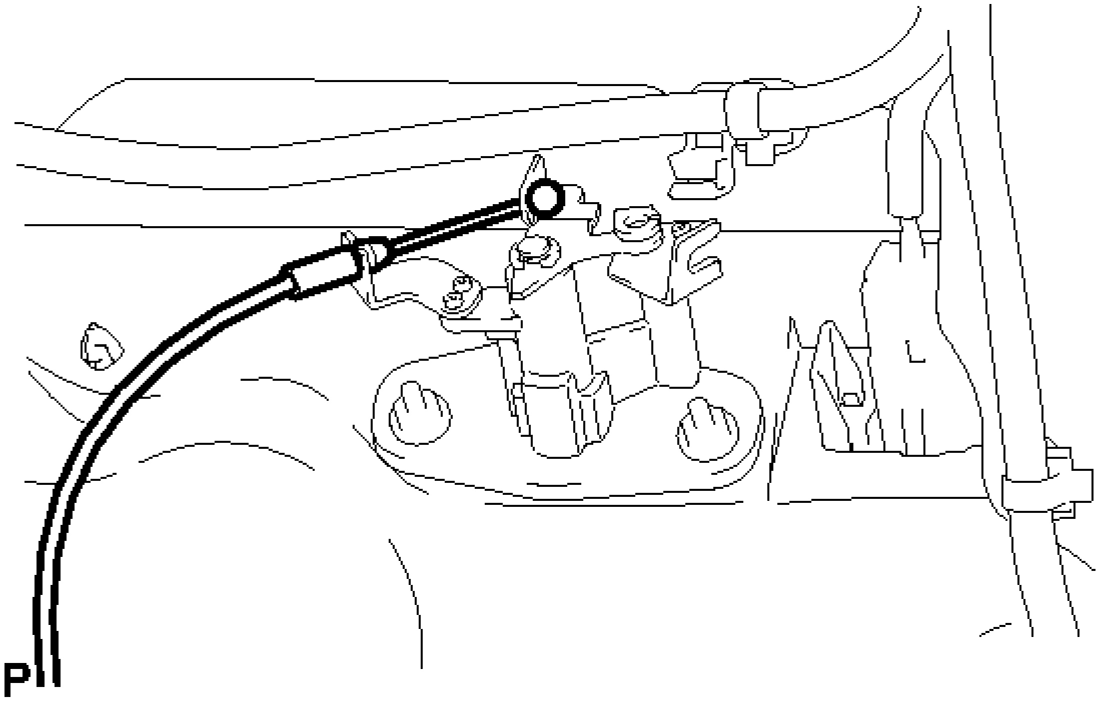

Fig. 204: Identifying Luggage Door Lock Control Cable
Courtesy of TOYOTA MOTOR SALES, U.S.A., INC.

b. Remove the 2 nuts and luggage compartment door lock cylinder assembly.

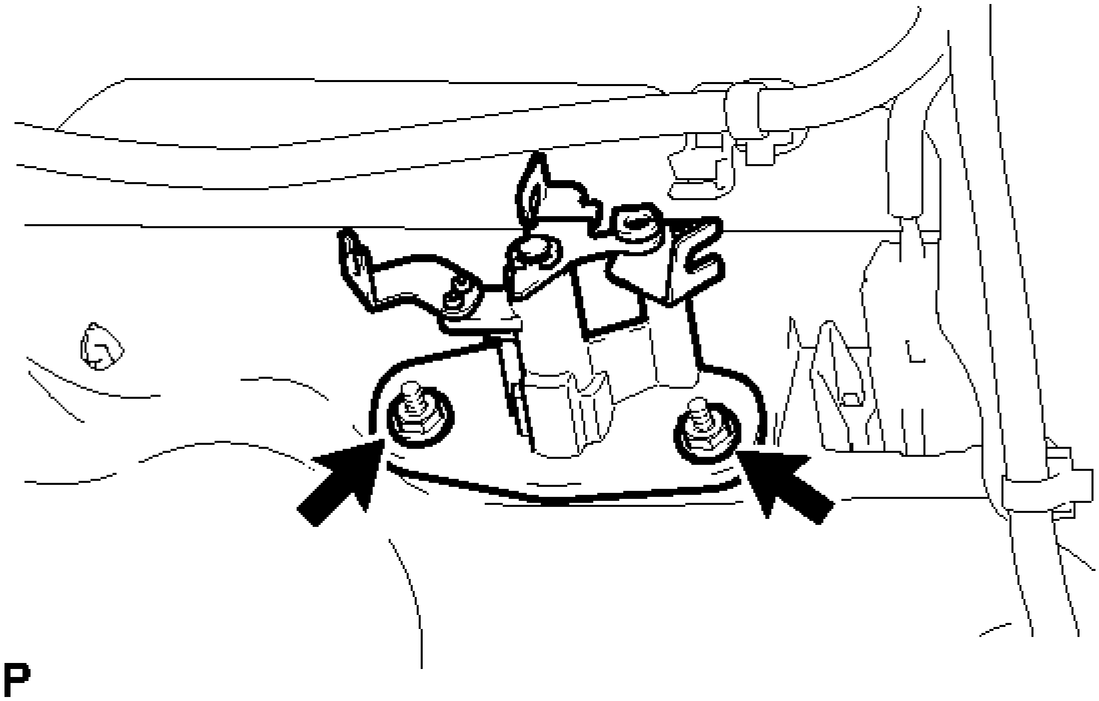

Fig. 205: Identifying Luggage Compartment Door Lock Cylinder Assembly Fasteners
Courtesy of TOYOTA MOTOR SALES, U.S.A., INC.

6. **REMOVE REAR SPOILER SUB-ASSEMBLY (w/ Rear Spoiler)** . Refer to **REMOVAL - Step 2** .
7. **REMOVE LUGGAGE COMPARTMENT DOOR OUTSIDE GARNISH SUB-ASSEMBLY** . Refer to **REMOVAL - Step 3** .
8. **REMOVE REAR TELEVISION CAMERA ASSEMBLY (w/ Rear Monitor)** . Refer to **REMOVAL - Step 2** .
9. **REMOVE LICENSE PLATE LIGHT ASSEMBLY LH** . Refer to **REMOVAL - Step 2** .
10. **REMOVE LICENSE PLATE LIGHT ASSEMBLY RH**

    HINT:

    Use the same procedure for the RH side and LH side.

11. **REMOVE REAR LIGHT ASSEMBLY LH** . Refer to **REMOVAL - Step 2** .
12. **REMOVE REAR LIGHT ASSEMBLY RH**

    HINT:

    Use the same procedure as for the LH side.

ADJUSTMENT

ADJUSTMENT

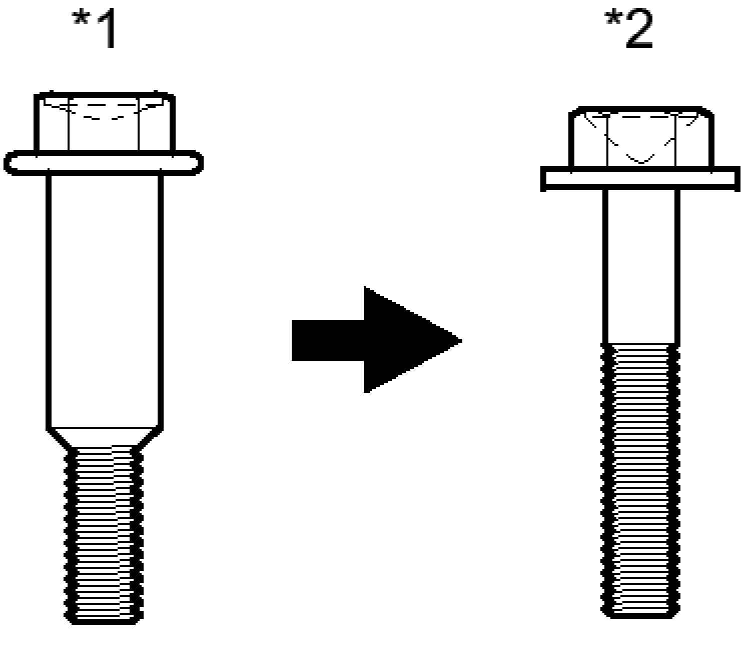

Fig. 206: Identifying Centering Bolt And Standard Bolt
Courtesy of TOYOTA MOTOR SALES, U.S.A., INC.

TEXT IN ILLUSTRATION

*1	Centering Bolt
*2	Standard Bolt

HINT:

- Centering bolts are used to mount the door hinge to the door. The door cannot be adjusted with the centering bolts installed. Substitute the centering bolts with standard bolts when making adjustments.
- Specified torque for standard bolts is shown in the standard bolt chart. Refer to **SPECIFIED TORQUE FOR STANDARD BOLTS** .

1. **REMOVE LUGGAGE COMPARTMENT DOOR COVER** . See step 1.
2. **REMOVE LUGGAGE COMPARTMENT FLOOR MAT** . See step 1.
3. **REMOVE BAGGAGE HOLDER NET (w/ Partition Net)** . See step 3.
4. **REMOVE REAR FLOOR FINISH PLATE** . See step 4.
5. **ADJUST LUGGAGE COMPARTMENT DOOR**
   a. Loosen the door side hinge bolts to adjust the door horizontally and vertically.

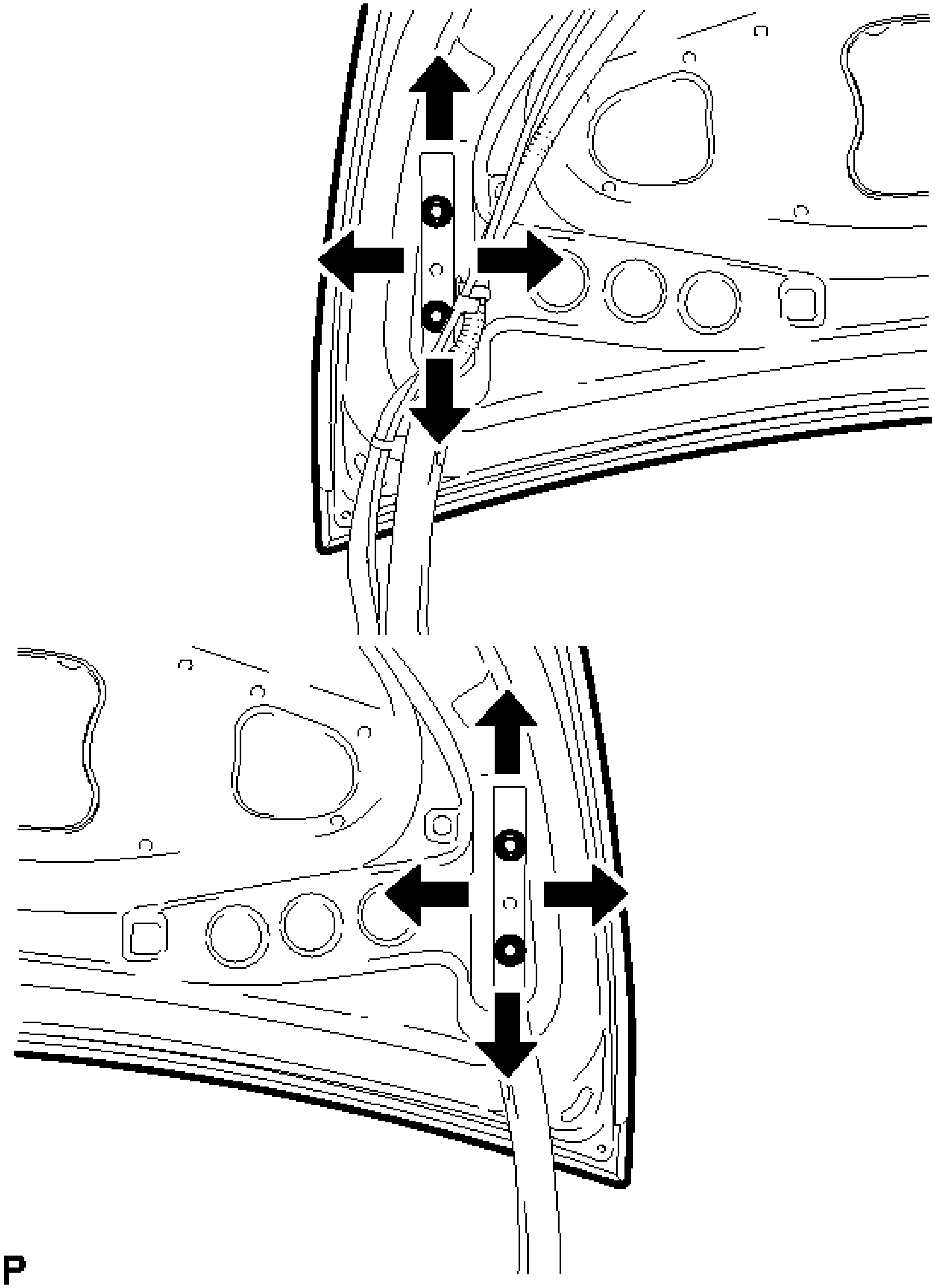

Fig. 207: Adjusting Luggage Compartment Door
Courtesy of TOYOTA MOTOR SALES, U.S.A., INC.

Torque: 7.5 N*m (77 kgf*cm, 66 in.*lbf)

b. Using a T40 "TORX" socket wrench, slightly loosen the striker mounting screws.

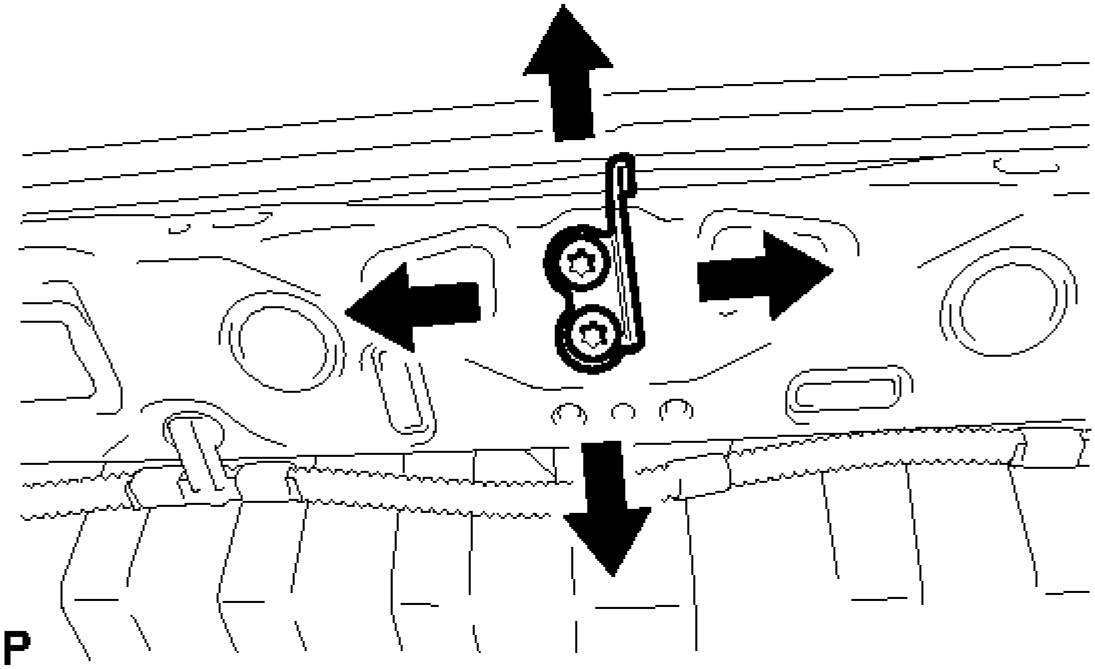

Fig. 208: Adjusting Luggage Compartment Door Striker
Courtesy of TOYOTA MOTOR SALES, U.S.A., INC.

c. Using a brass bar and a hammer, hit the striker to adjust its position.
d. Using a T40 "TORX" socket wrench, tighten the striker mounting screws after adjustment.

Torque: 23 N*m (235 kgf*cm, 17 ft.*lbf)

6. **INSTALL REAR FLOOR FINISH PLATE** . See step 9.
7. **INSTALL BAGGAGE HOLDER NET (w/ Partition Net)** . See step 10.
8. **INSTALL LUGGAGE COMPARTMENT FLOOR MAT** . See step 12.
9. **INSTALL LUGGAGE COMPARTMENT DOOR COVER** . See step 12.
10. **INSPECT LUGGAGE COMPARTMENT DOOR**
    a. Check that the clearance measurements of areas a through d are within each standard range.

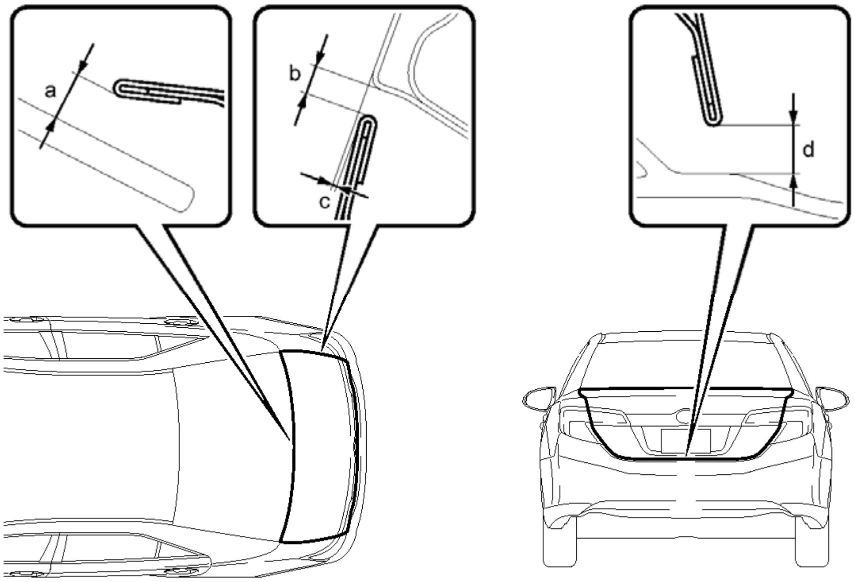

P

Fig. 209: Checking Luggage Compartment Door Clearance Measurements
Courtesy of TOYOTA MOTOR SALES, U.S.A., INC.

STANDARD CLEARANCE

Area	Measurement	Area	Measurement
a	6.4 mm (0.252 in.)	b	2.0 to 5.0 mm (0.0787 to 0.197 in.)
c	-1.0 to 2.0 mm (-0.0394 to 0.0787 in.)	d	3.85 to 7.85 mm (0.152 to 0.309 in.)

REASSEMBLY

REASSEMBLY

1. **INSTALL REAR LIGHT ASSEMBLY LH** . Refer to **INSTALLATION - Step 1** .
2. **INSTALL REAR LIGHT ASSEMBLY RH**

   HINT:

   Use the same procedure as for the LH side.

3. **INSTALL LICENSE PLATE LIGHT ASSEMBLY LH** . Refer to **INSTALLATION - Step 2** .
4. **INSTALL LICENSE PLATE LIGHT ASSEMBLY RH**

HINT:

Use the same procedure as for the LH side.

5. **INSTALL REAR TELEVISION CAMERA ASSEMBLY (w/ Rear Monitor)** . Refer to **INSTALLATION - Step 1** .
6. **INSTALL LUGGAGE COMPARTMENT DOOR OUTSIDE GARNISH SUB-ASSEMBLY** . Refer to **INSTALLATION - Step 5** .
7. **INSTALL REAR SPOILER SUB-ASSEMBLY (w/ Rear Spoiler)** . Refer to **INSTALLATION - Step 4** .
8. **INSTALL LUGGAGE COMPARTMENT DOOR LOCK CYLINDER ASSEMBLY (w/o Wireless Door Lock Control System)**
   a. Install the luggage compartment door lock cylinder assembly with the 2 nuts.

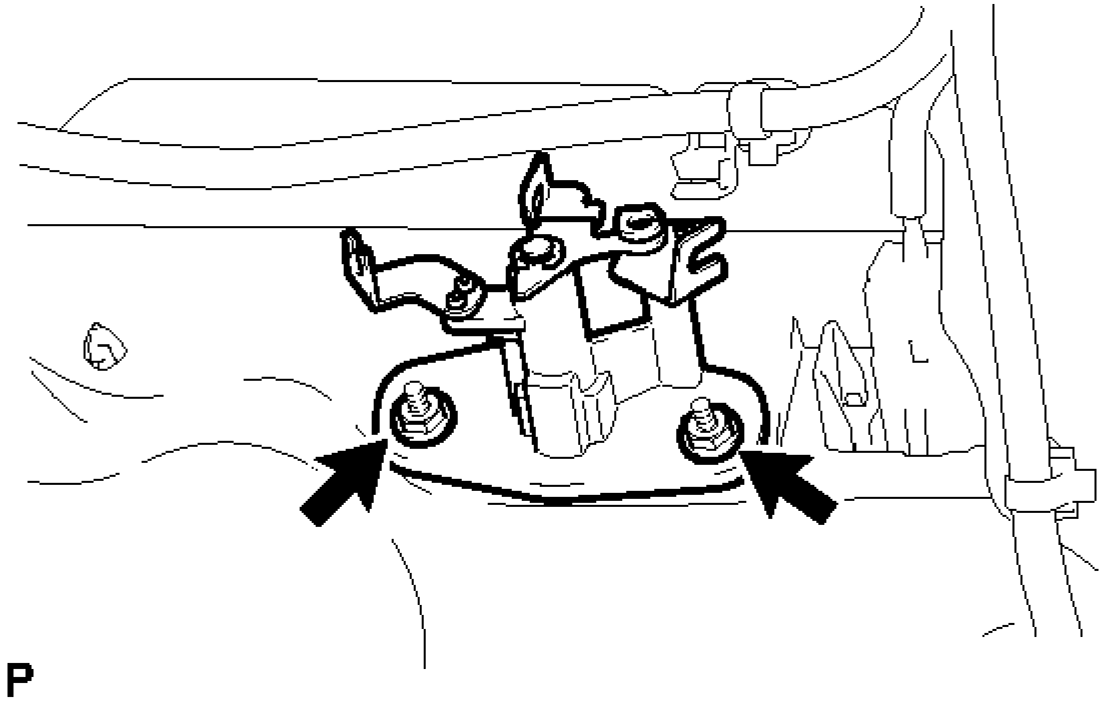

Fig. 210: Identifying Luggage Compartment Door Lock Cylinder Assembly Fasteners
Courtesy of TOYOTA MOTOR SALES, U.S.A., INC.

   b. Connect the luggage door lock control cable sub-assembly.

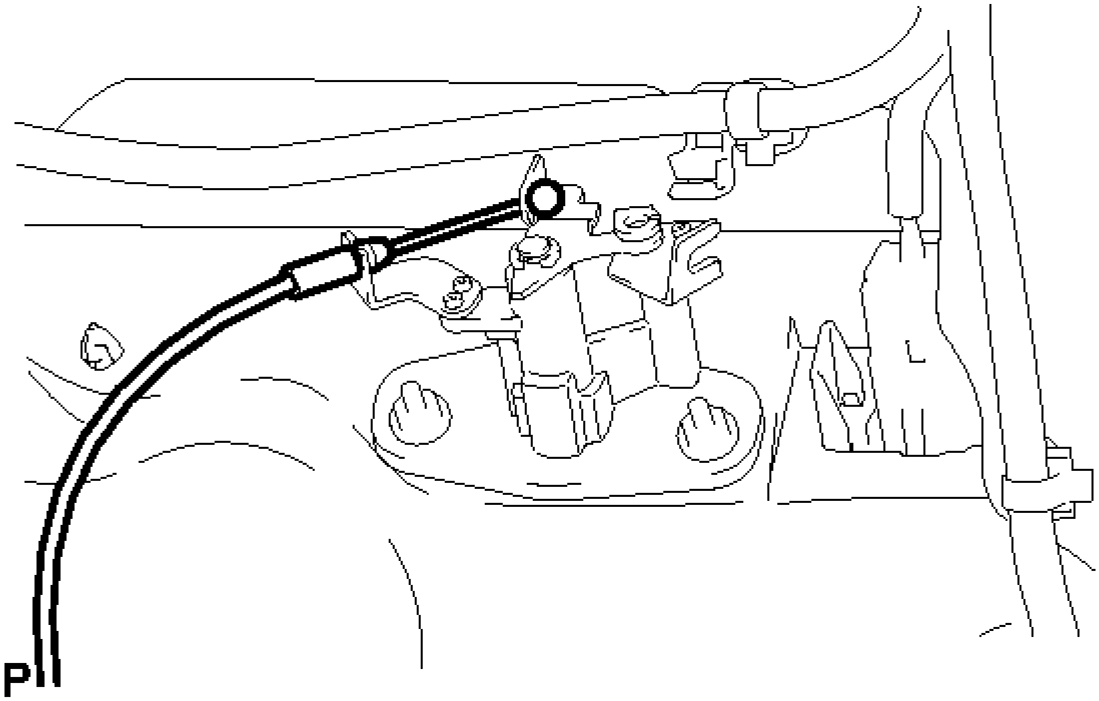

Fig. 211: Identifying Luggage Door Lock Control Cable
Courtesy of TOYOTA MOTOR SALES, U.S.A., INC.

9. **INSTALL LUGGAGE COMPARTMENT DOOR LOCK ASSEMBLY (w/ Wireless Door Lock Control System)** . Refer to **INSTALLATION - Step 1** .
10. **INSTALL LUGGAGE COMPARTMENT DOOR LOCK ASSEMBLY (w/o Wireless Door Lock Control System)** . Refer to **INSTALLATION - Step 3** .
11. **INSTALL LUGGAGE COMPARTMENT DOOR CUSHION**
    - a. Engage the 2 claws and install the 2 new luggage compartment door panel cushions.

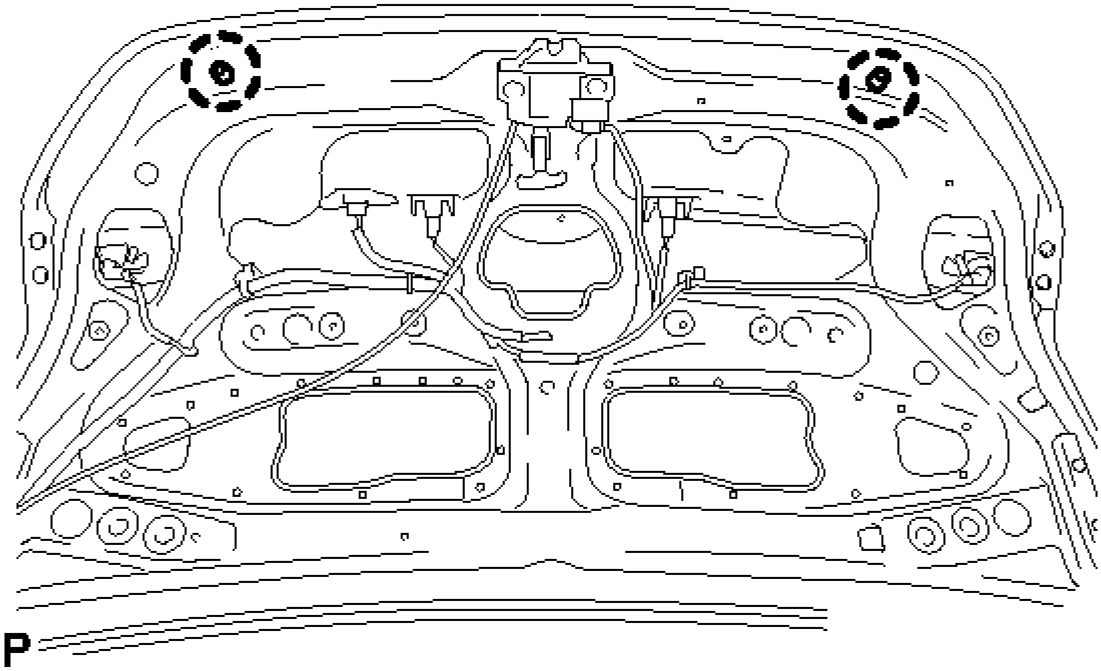

Fig. 212: Identifying Luggage Compartment Door Panel Cushions
Courtesy of TOYOTA MOTOR SALES, U.S.A., INC.

12. **INSTALL LUGGAGE COMPARTMENT DOOR COVER**
    a. Install the luggage compartment door cover with the 13 clips.

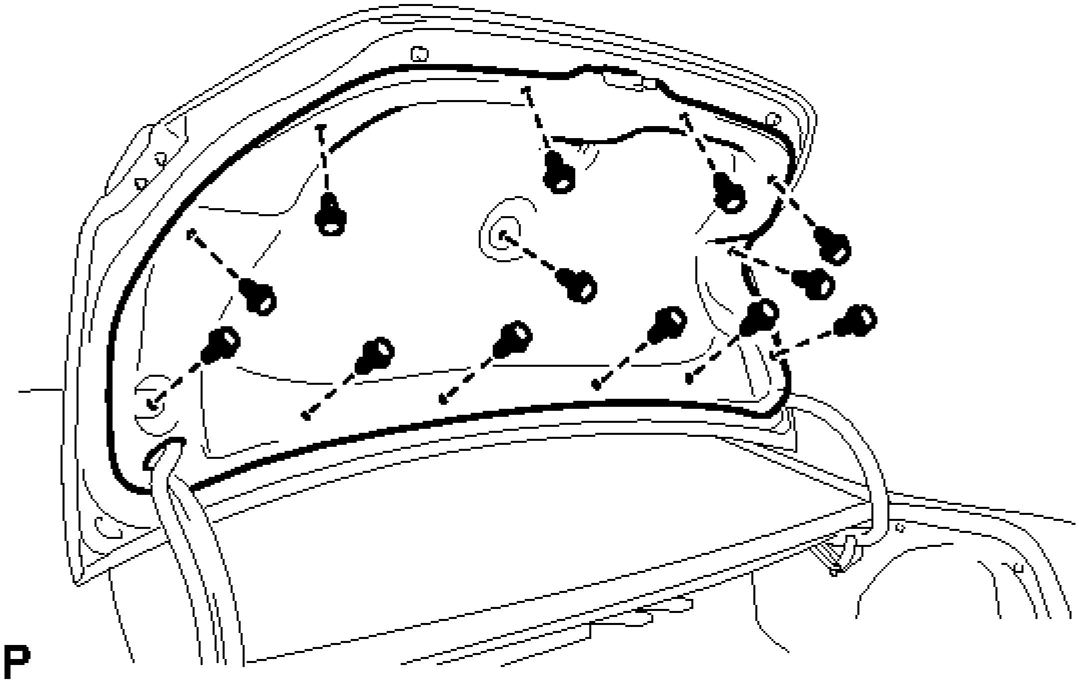

Fig. 213: Identifying Luggage Compartment Door Cover Clips

13. **ADJUST REAR TELEVISION CAMERA ASSEMBLY OPTICAL AXIS (w/ Parking Assist Monitor System)**

    Refer to **CALIBRATION** .

LUGGAGE DOOR HINGE TORSION BAR

COMPONENTS

ILLUSTRATION

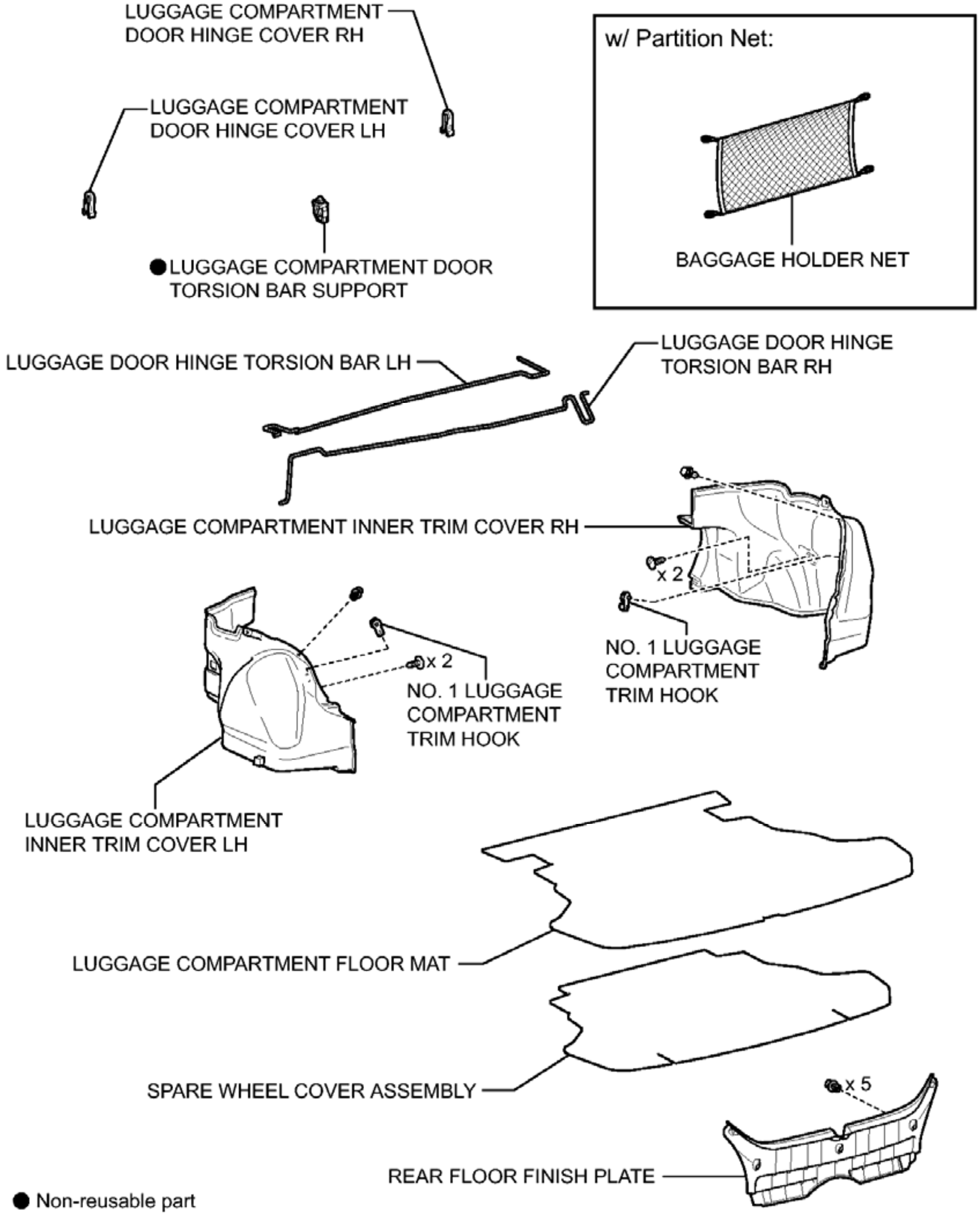
LUGGAGE COMPARTMENT DOOR HINGE COVER RH
LUGGAGE COMPARTMENT DOOR HINGE COVER LH
● LUGGAGE COMPARTMENT DOOR TORSION BAR SUPPORT
w/ Partition Net:
BAGGAGE HOLDER NET
LUGGAGE DOOR HINGE TORSION BAR LH
LUGGAGE DOOR HINGE TORSION BAR RH
LUGGAGE COMPARTMENT INNER TRIM COVER RH
x 2
NO. 1 LUGGAGE COMPARTMENT TRIM HOOK
x 2
NO. 1 LUGGAGE COMPARTMENT TRIM HOOK
LUGGAGE COMPARTMENT INNER TRIM COVER LH
LUGGAGE COMPARTMENT FLOOR MAT
SPARE WHEEL COVER ASSEMBLY
x 5
REAR FLOOR FINISH PLATE
● Non-reusable part
P

Fig. 214: Identifying Luggage Door Hinge Torsion Bar Replacement Components
Courtesy of TOYOTA MOTOR SALES, U.S.A., INC.

REMOVAL

REMOVAL

NOTE: **After installing the torsion bar, use your hand to open and close the luggage**

door. Make sure the luggage door can open and close smoothly.

1. **REMOVE LUGGAGE COMPARTMENT FLOOR MAT**
    a. Remove the luggage compartment floor mat.
2. **REMOVE SPARE WHEEL COVER ASSEMBLY**
    a. Remove the spare wheel cover assembly.
3. **REMOVE BAGGAGE HOLDER NET (w/ Partition Net)**
    a. Remove the baggage holder net.
4. **REMOVE REAR FLOOR FINISH PLATE**
    a. Remove the 5 clips.

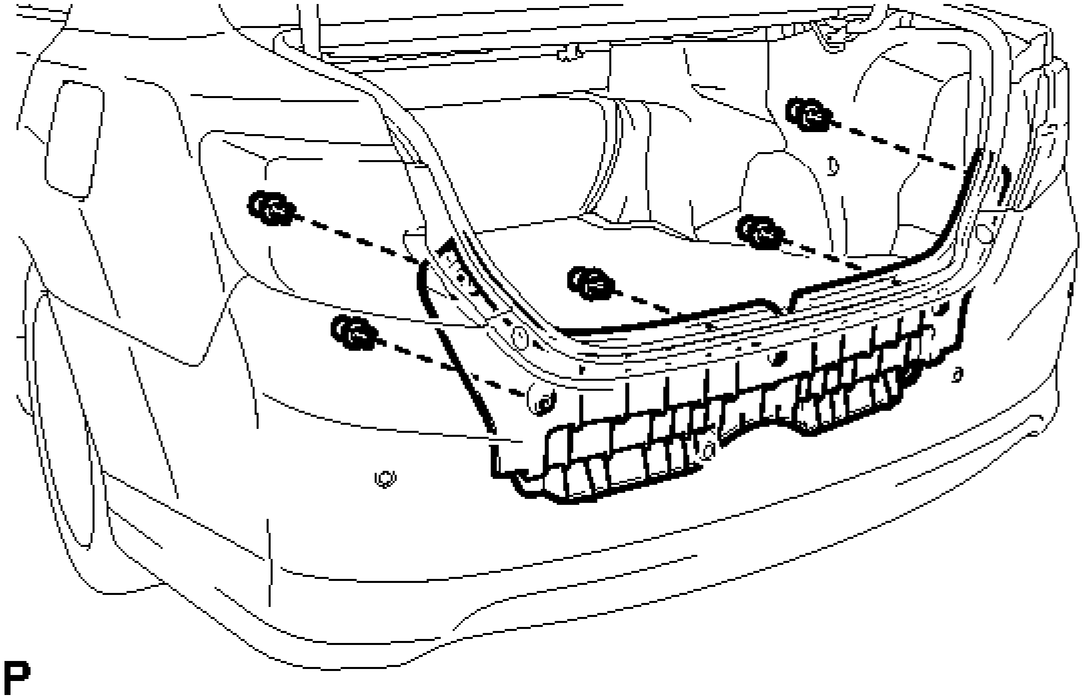

Fig. 215: Identifying Rear Floor Finish Plate Clips
Courtesy of TOYOTA MOTOR SALES, U.S.A., INC.

b. Disengage the 4 clips and remove the rear floor finish plate.

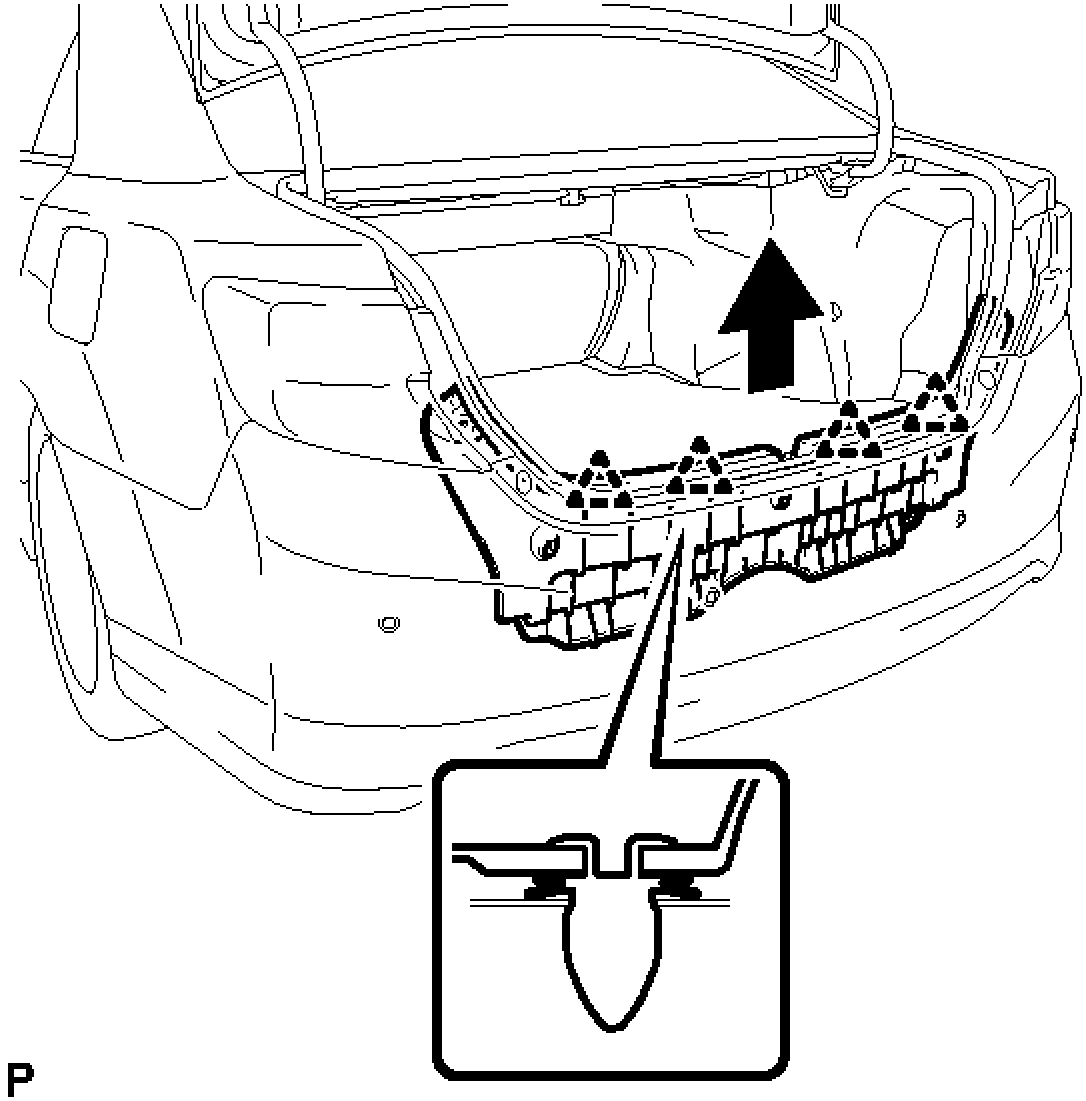

Fig. 216: Removing Rear Floor Finish Plate
Courtesy of TOYOTA MOTOR SALES, U.S.A., INC.

5. **REMOVE NO. 1 LUGGAGE COMPARTMENT TRIM HOOK**
   a. Push the 2 pins and remove the 2 No. 1 luggage compartment trim hooks.

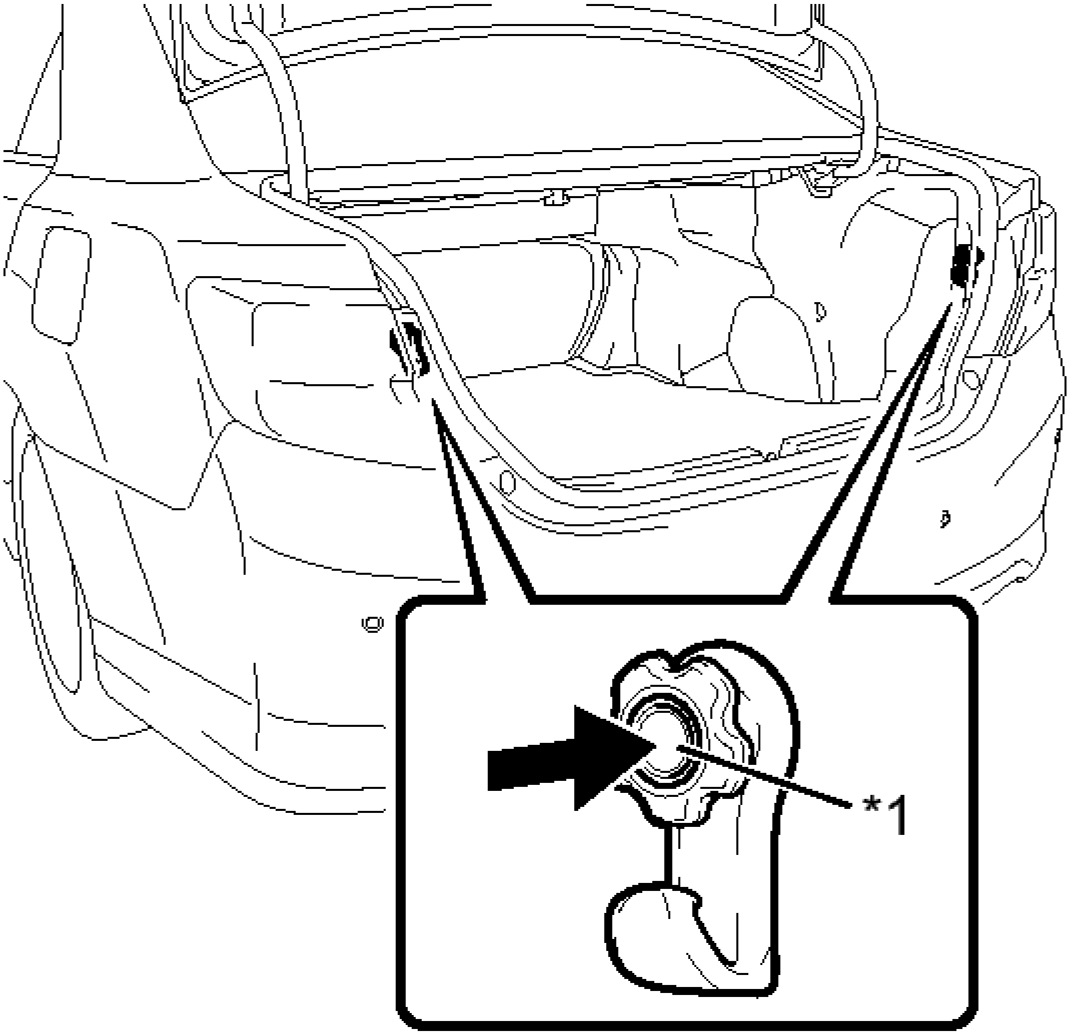

P

Fig. 217: Locating No. 1 Luggage Compartment Trim Hook Pins
Courtesy of TOYOTA MOTOR SALES, U.S.A., INC.

TEXT IN ILLUSTRATION

*1	Pin

6. **REMOVE LUGGAGE COMPARTMENT INNER TRIM COVER LH**
    a. Remove the clip <A>.

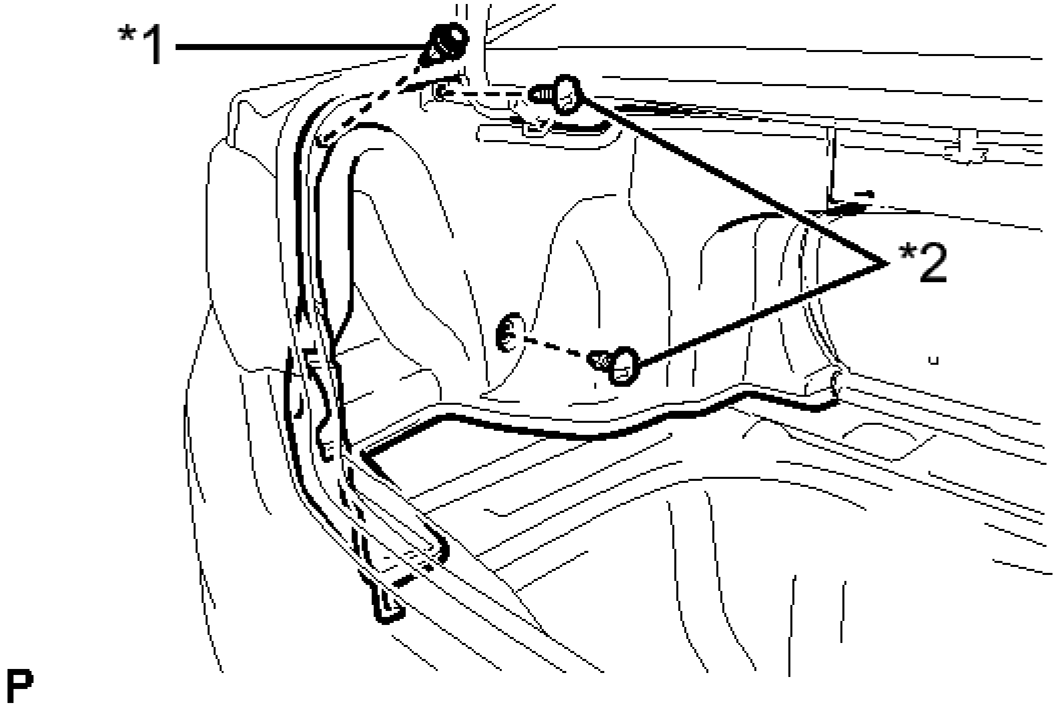

Fig. 218: Locating Luggage Compartment Inner Trim Cover LH Clips
Courtesy of TOYOTA MOTOR SALES, U.S.A., INC.

TEXT IN ILLUSTRATION

*1	Clip <A>
*2	Clip <B>

b. Remove the 2 clips <B>.
c. Disengage the fastener and remove the luggage compartment inner trim cover LH.

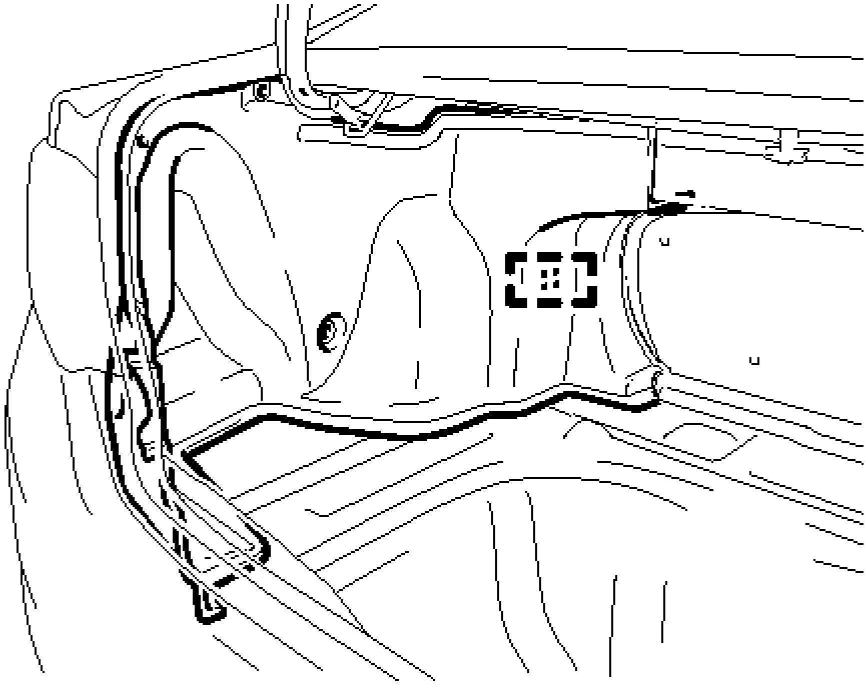

Fig. 219: Locating Luggage Compartment Inner Trim Cover LH Fastener
Courtesy of TOYOTA MOTOR SALES, U.S.A., INC.

7. **REMOVE LUGGAGE COMPARTMENT INNER TRIM COVER RH**
    a. Remove the clip <A>.

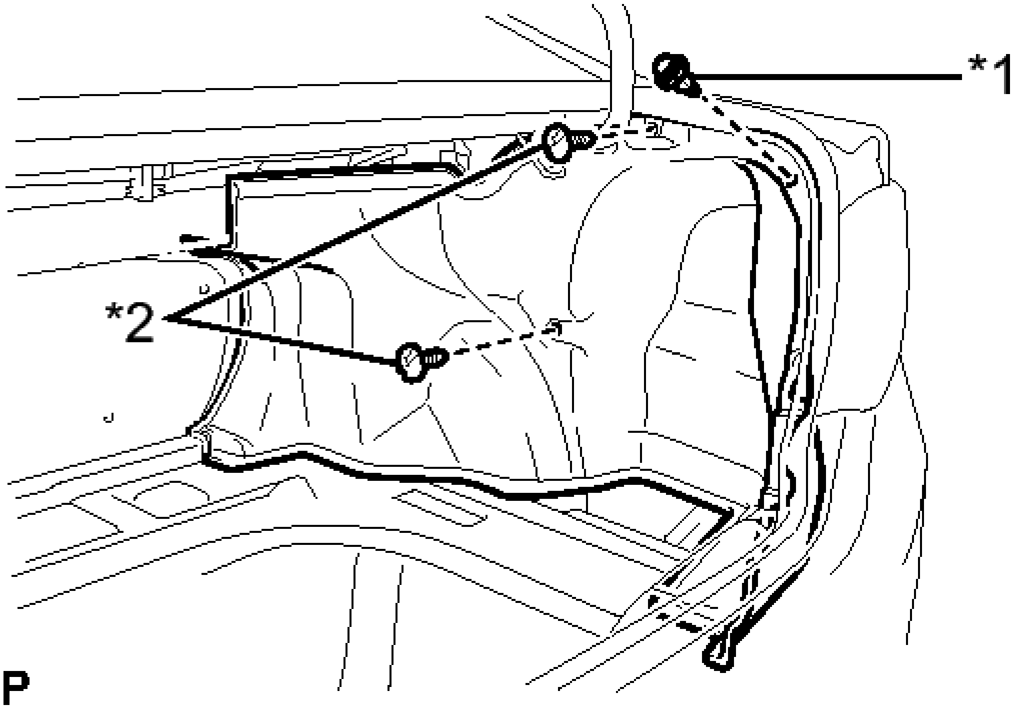

Fig. 220: Locating Luggage Compartment Inner Trim Cover RH Clips

Courtesy of TOYOTA MOTOR SALES, U.S.A., INC.

TEXT IN ILLUSTRATION

*1	Clip <A>
*2	Clip <B>

b. Remove the 2 clips <B>.
c. Disengage the fastener and remove the luggage compartment inner trim cover RH.

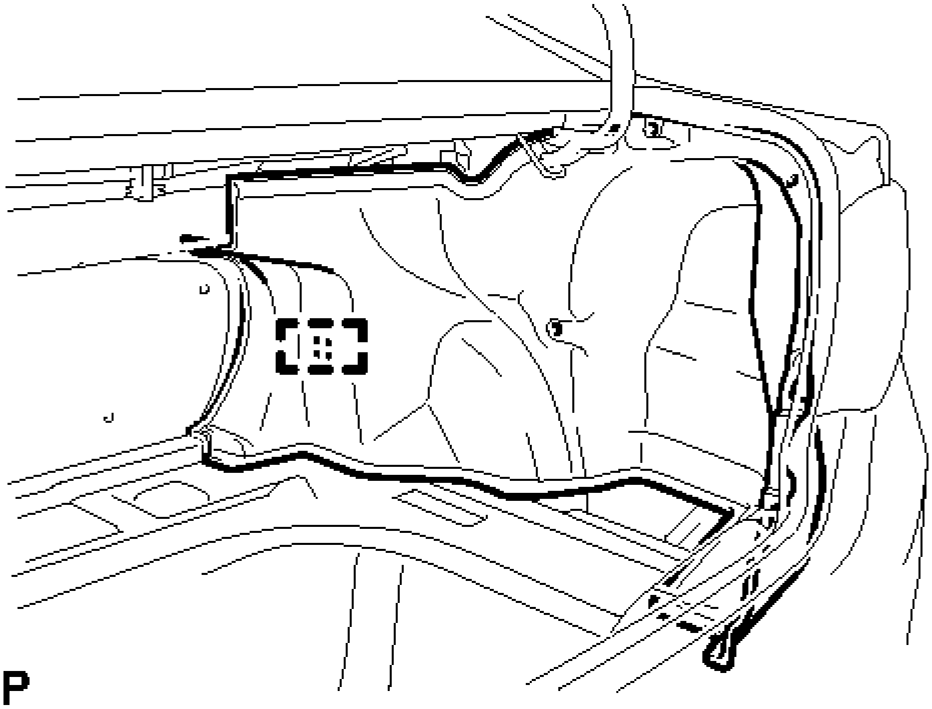

Fig. 221: Locating Luggage Compartment Inner Trim Cover RH Fastener
Courtesy of TOYOTA MOTOR SALES, U.S.A., INC.

8. **REMOVE LUGGAGE COMPARTMENT DOOR HINGE COVER LH**
    a. Disengage the 4 claws and remove the luggage compartment door hinge cover LH.

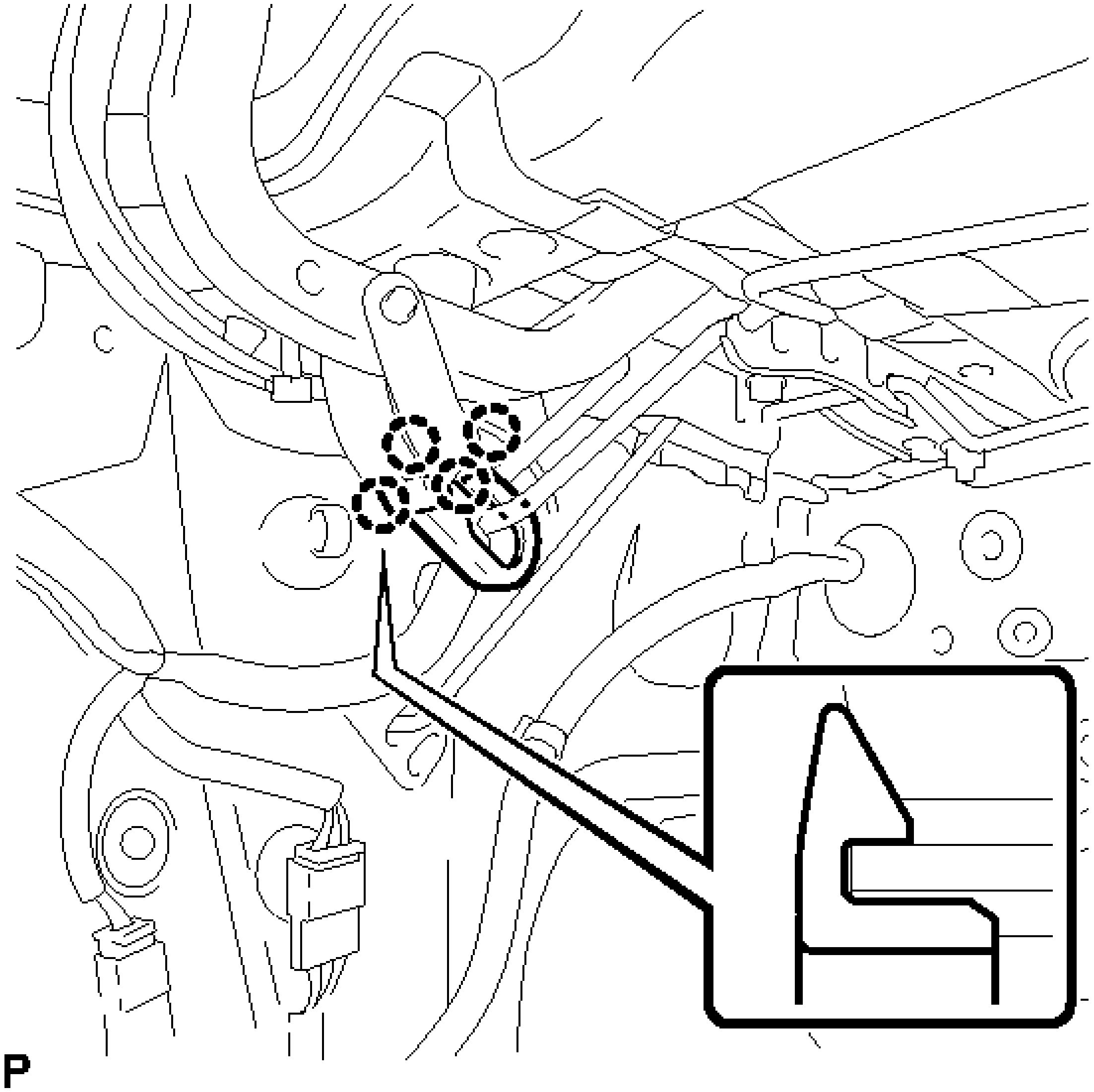

Fig. 222: Identifying Luggage Compartment Door Hinge Cover LH
Courtesy of TOYOTA MOTOR SALES, U.S.A., INC.

9. **REMOVE LUGGAGE COMPARTMENT DOOR HINGE COVER RH**

   HINT:

   Use the same procedure as for the LH side.

10. **REMOVE LUGGAGE DOOR HINGE TORSION BAR LH**
    a. Disengage the hook in the order indicated in the illustration and disconnect the rear seatback lock assembly LH (rear seat lock control cable LH).

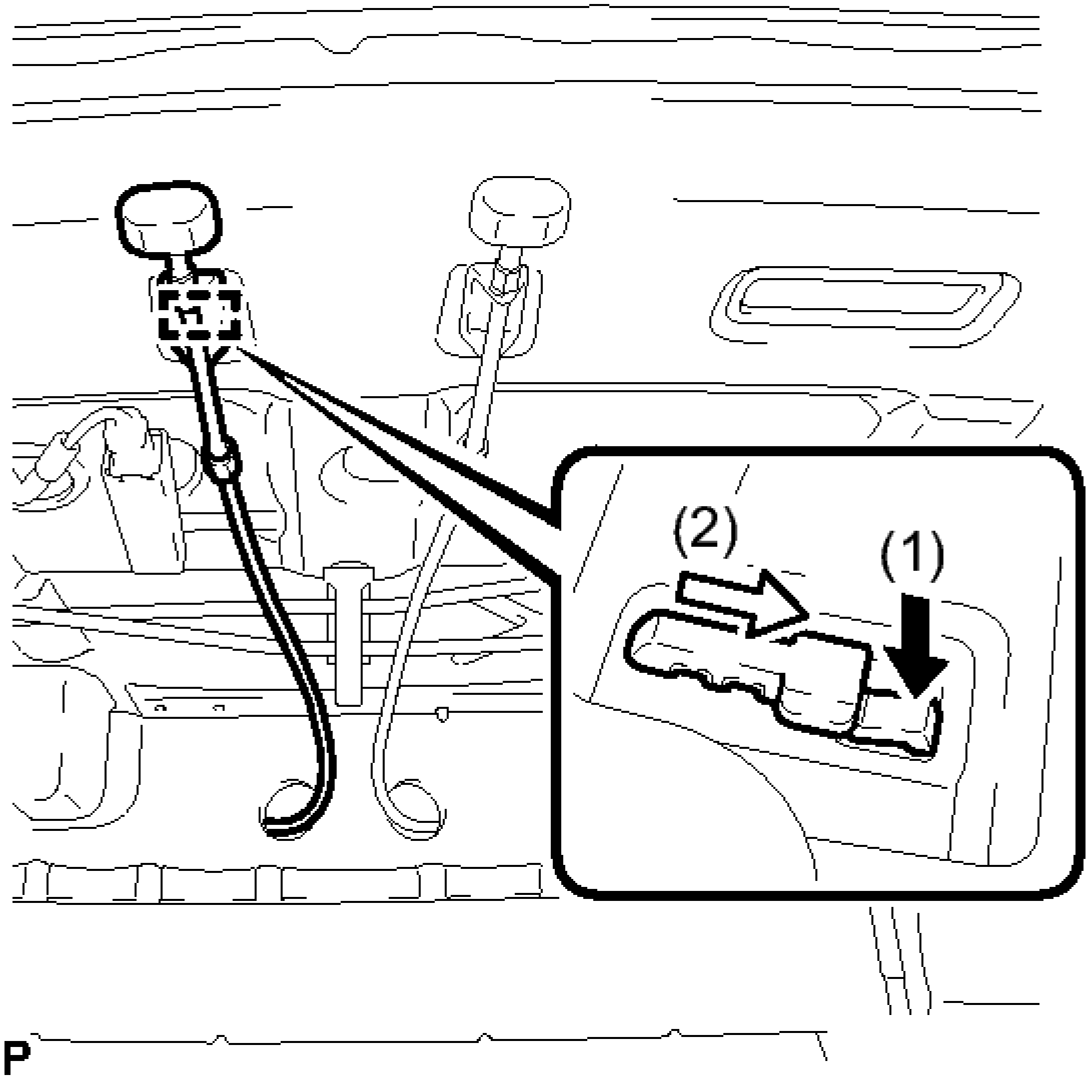

Fig. 223: Removing Luggage Door Hinge Torsion Bar LH
Courtesy of TOYOTA MOTOR SALES, U.S.A., INC.

HINT:

Use the same procedure as for the LH side and RH side.

b. Put protective tape around the luggage door hinge.

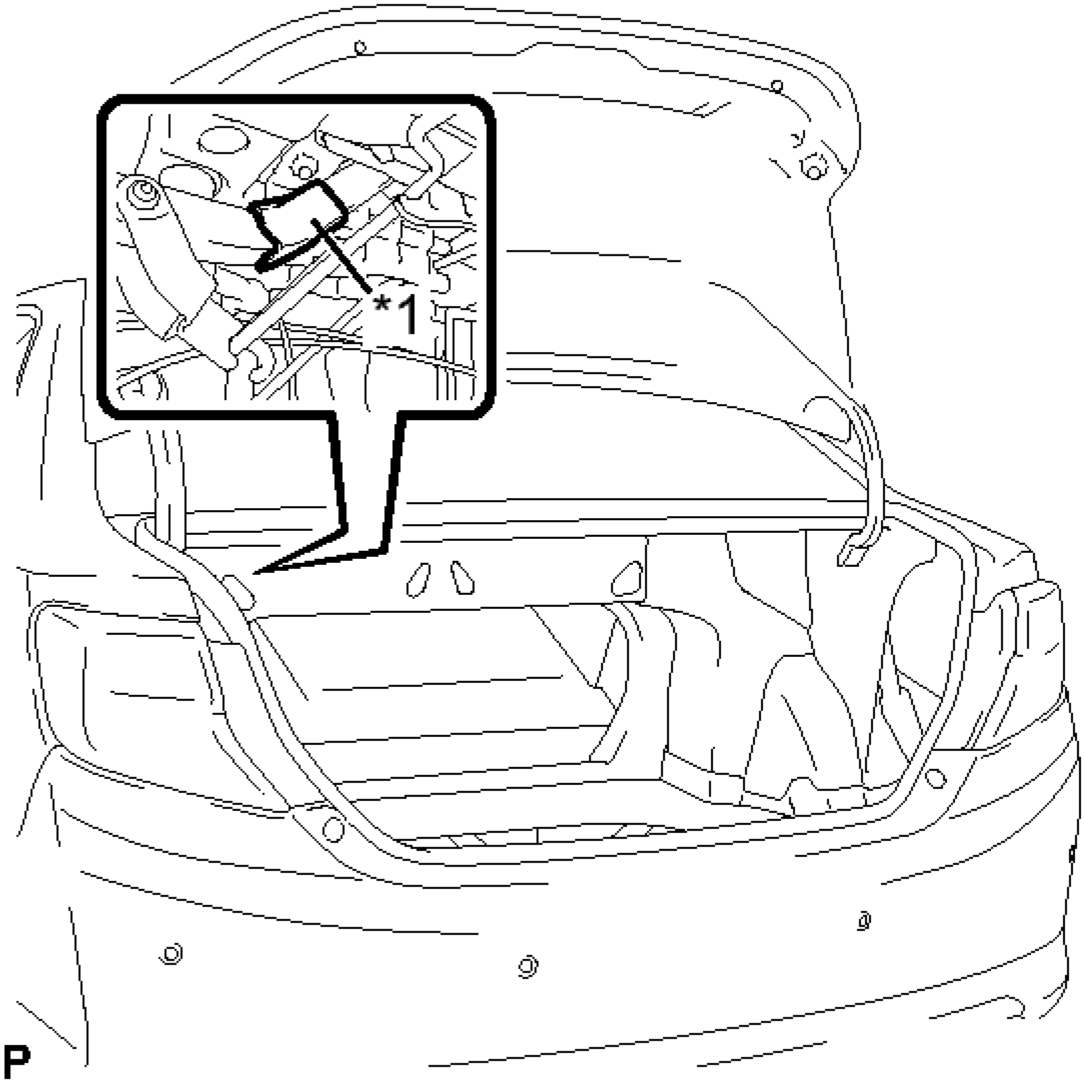

Fig. 224: Identifying Protective Tape Around Luggage Door Hinge LH
Courtesy of TOYOTA MOTOR SALES, U.S.A., INC.

TEXT IN ILLUSTRATION

*1	Protective Tape

c. Using SST, disconnect the luggage door hinge torsion bar LH from the luggage door hinge and the left side of the vehicle body as shown in the illustration.
    - **SST: 09804-24010**

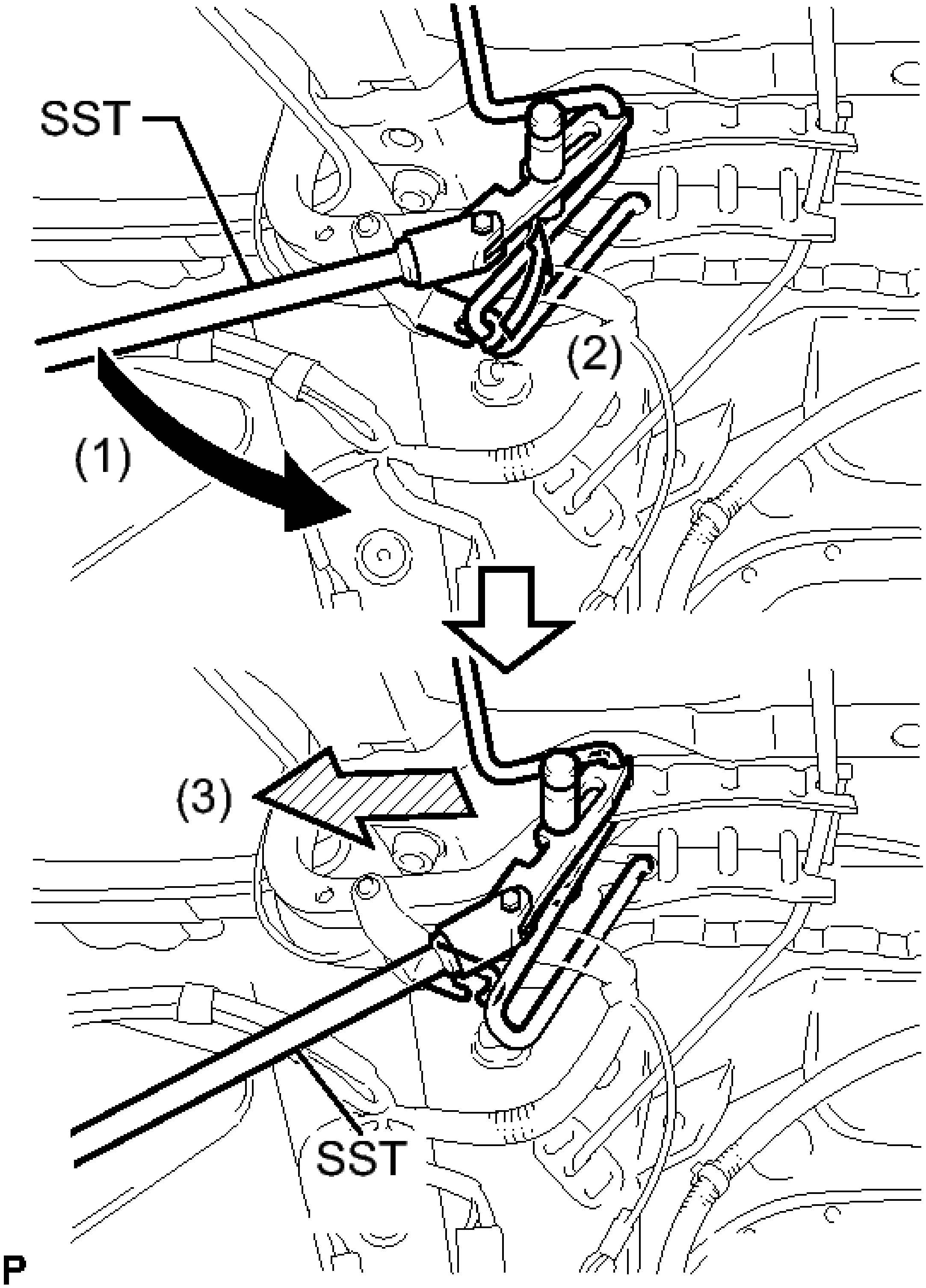

Fig. 225: Disconnecting Luggage Door Hinge Torsion Bar LH Using SST
Courtesy of TOYOTA MOTOR SALES, U.S.A., INC.

d. Disengage the 2 claws as shown in the illustration.

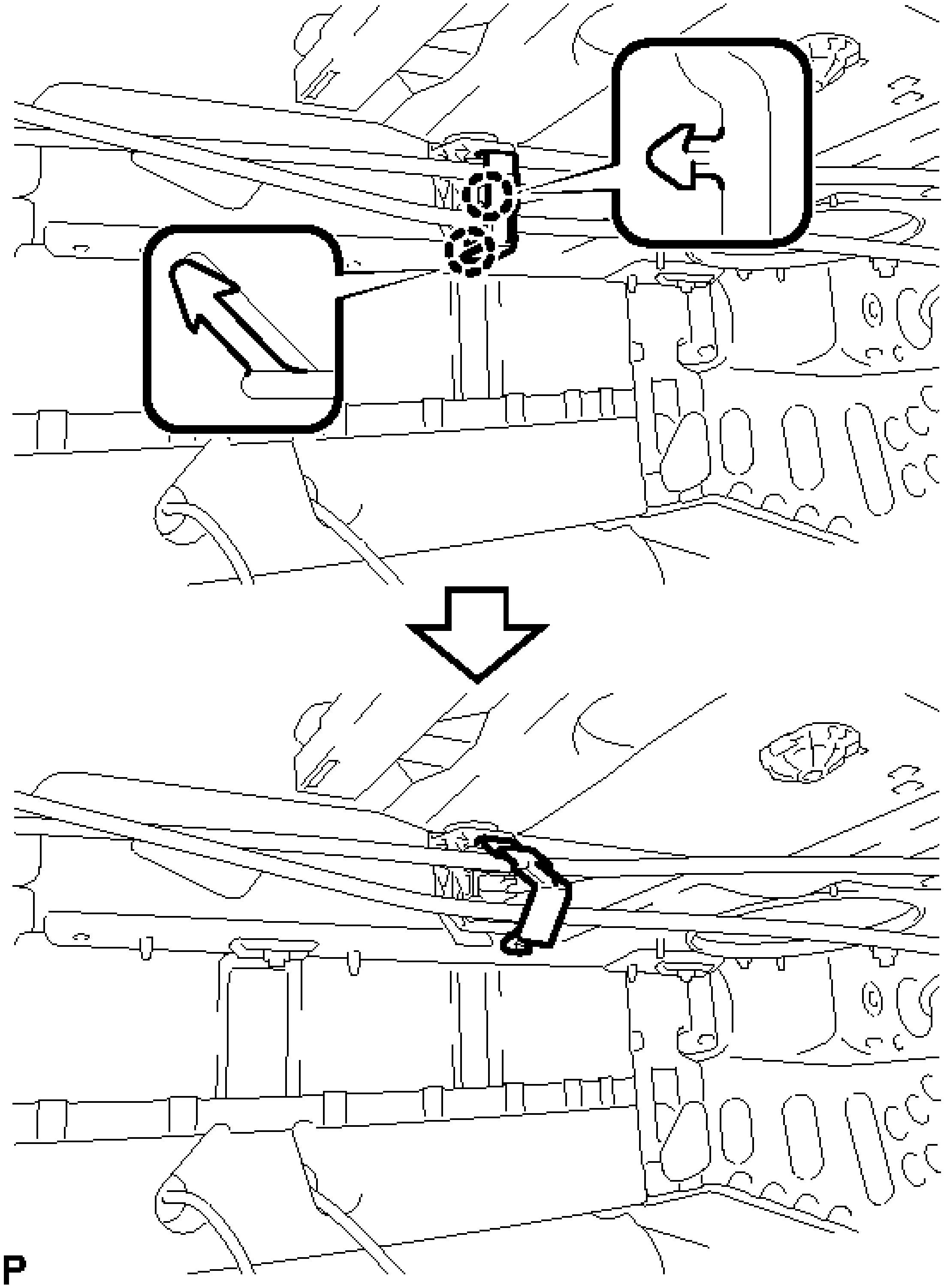

Fig. 226: Disengaging Luggage Door Hinge Torsion Bar LH Claws
Courtesy of TOYOTA MOTOR SALES, U.S.A., INC.

e. Disconnect the luggage door hinge torsion bar LH from the luggage compartment door torsion bar support as shown in the illustration.

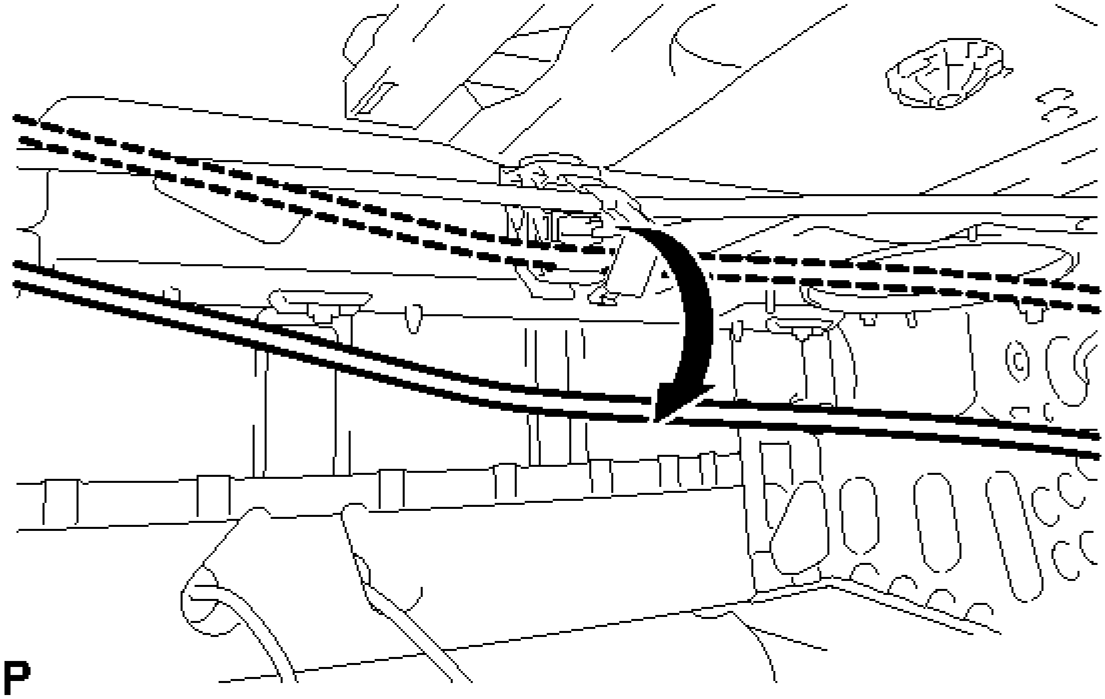

Fig. 227: Disconnecting Luggage Door Hinge Torsion Bar LH From Luggage Compartment Door Torsion Bar Support
Courtesy of TOYOTA MOTOR SALES, U.S.A., INC.

f. Remove the luggage door hinge torsion bar LH from the right side of the vehicle body as shown in the illustration.

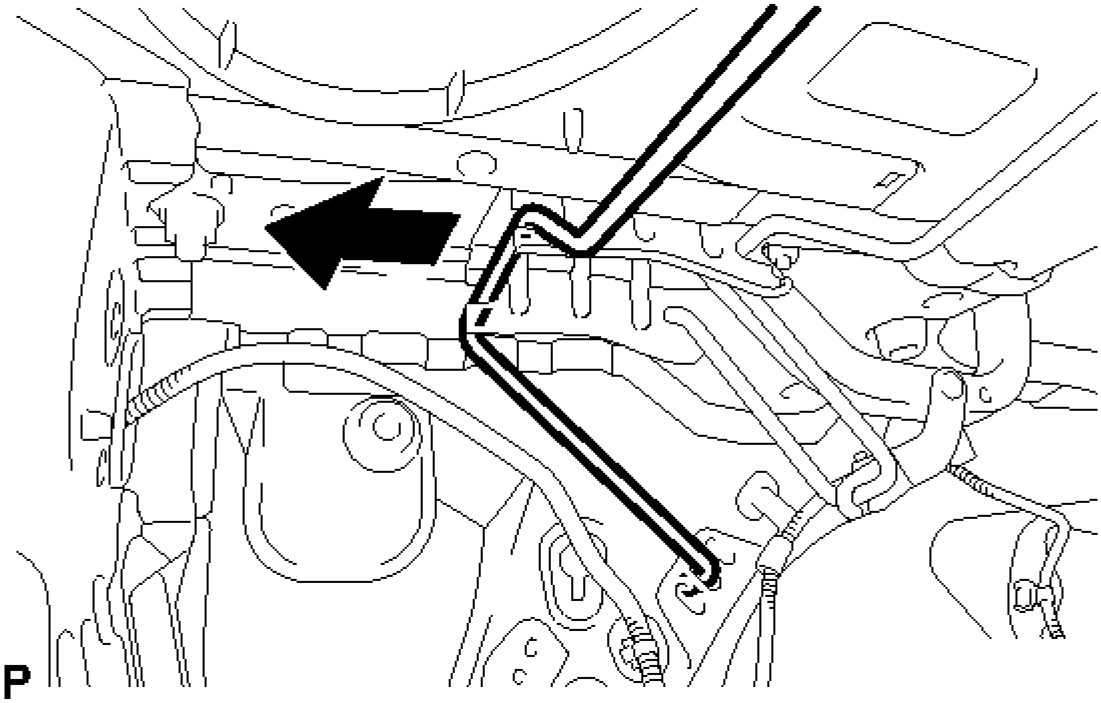

Fig. 228: Removing Luggage Door Hinge Torsion Bar LH
Courtesy of TOYOTA MOTOR SALES, U.S.A., INC.

11. **REMOVE LUGGAGE DOOR HINGE TORSION BAR RH**
    a. Put protective tape around the luggage door hinge.

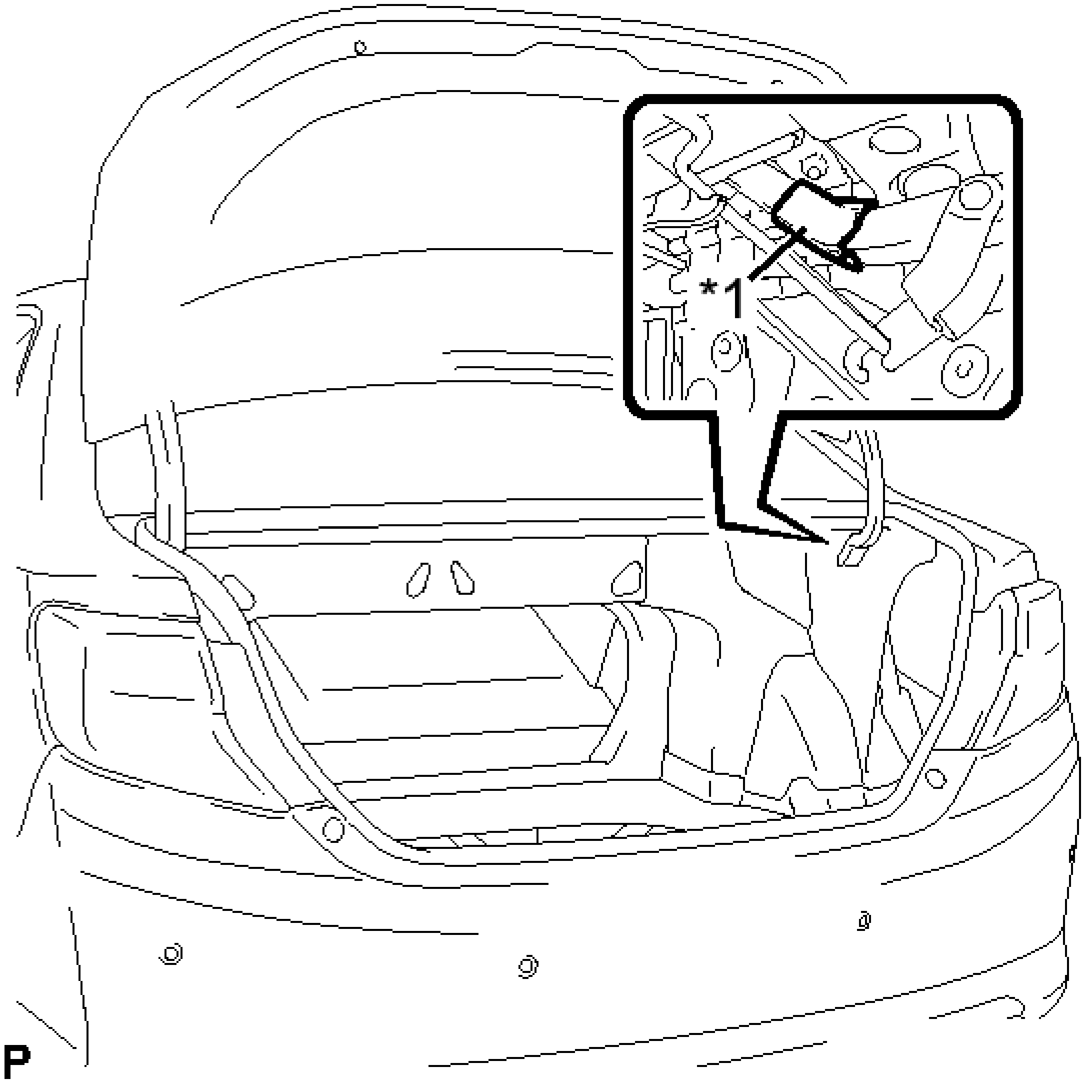

Fig. 229: Identifying Protective Tape Around Luggage Door Hinge RH
Courtesy of TOYOTA MOTOR SALES, U.S.A., INC.

TEXT IN ILLUSTRATION

*1	Protective Tape

    b. Using SST, disconnect the luggage door hinge torsion bar RH from the luggage door hinge and the right side of the vehicle body as shown in the illustration.

- **SST: 09804-24010**

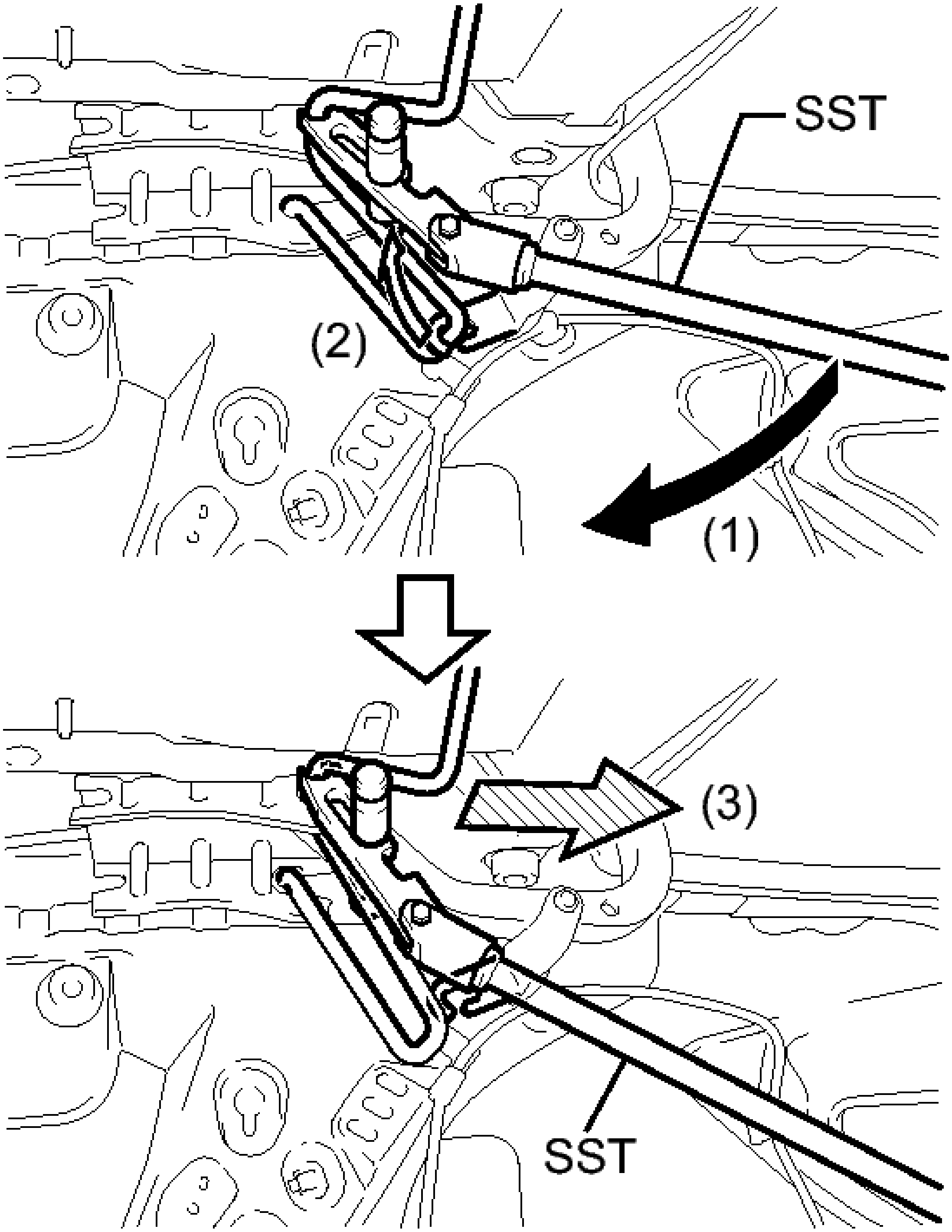

P

Fig. 230: Disconnecting Luggage Door Hinge Torsion Bar RH Using SST
Courtesy of TOYOTA MOTOR SALES, U.S.A., INC.

c. Disconnect the luggage door hinge torsion bar RH from the luggage compartment door torsion bar support as shown in the illustration.

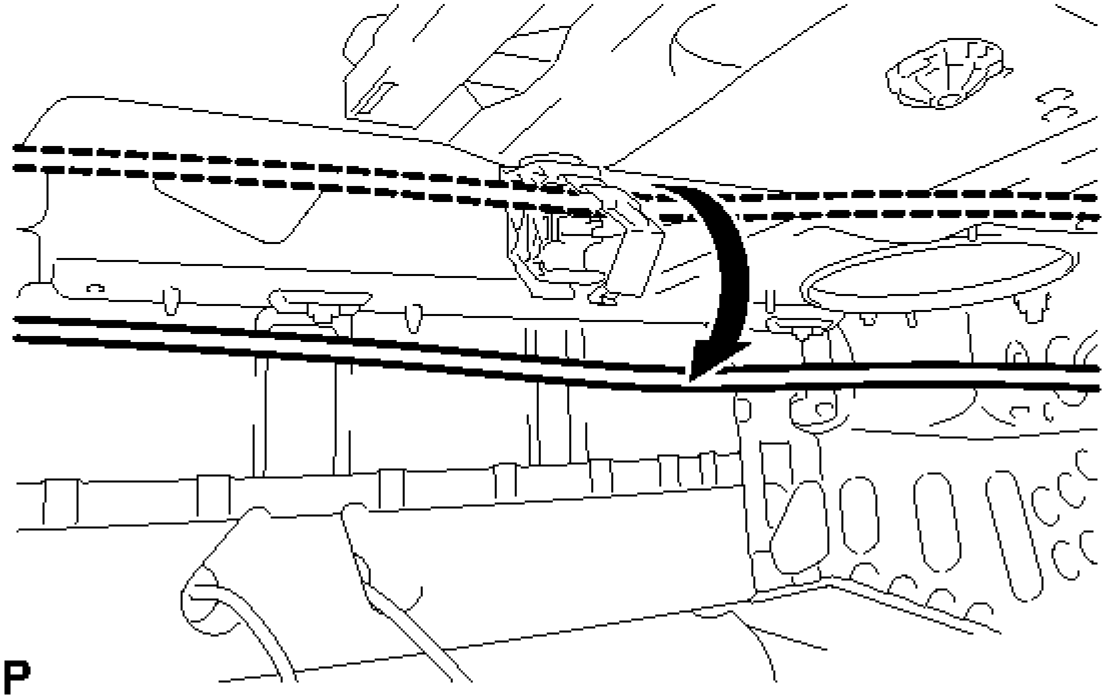

Fig. 231: Disconnecting Luggage Door Hinge Torsion Bar RH From Luggage Compartment Door Torsion Bar Support
Courtesy of TOYOTA MOTOR SALES, U.S.A., INC.

d. Remove the luggage door hinge torsion bar RH from the left side of the vehicle body as shown in the illustration.

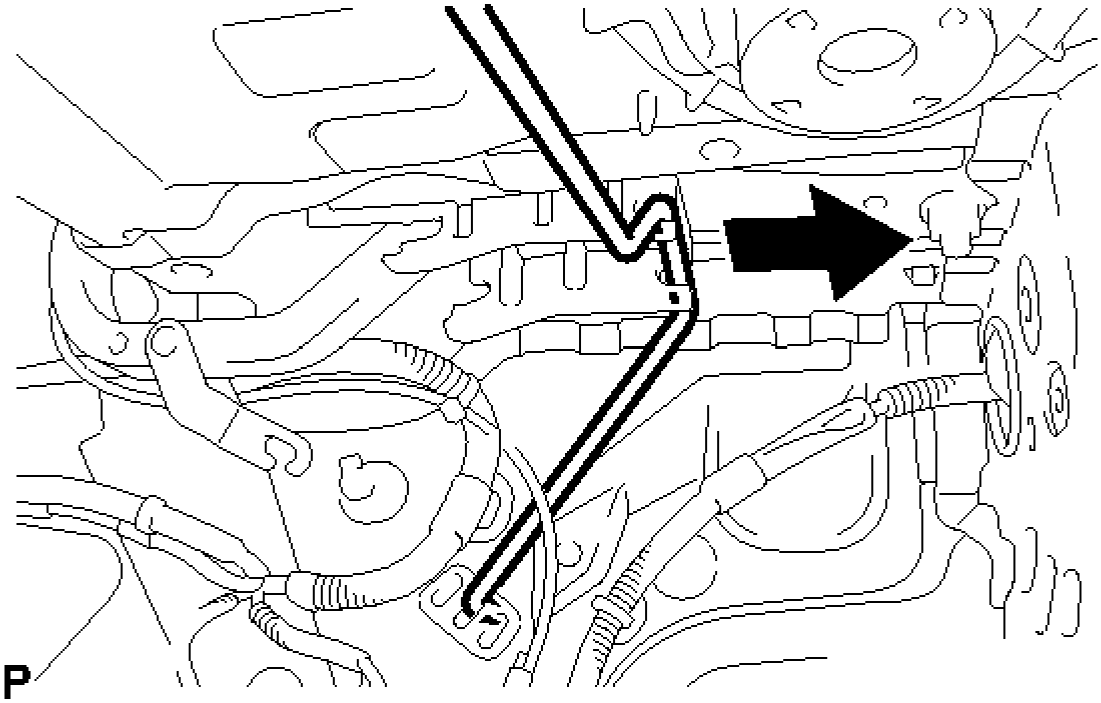

Fig. 232: Removing Luggage Door Hinge Torsion Bar RH
Courtesy of TOYOTA MOTOR SALES, U.S.A., INC.

12. **REMOVE LUGGAGE COMPARTMENT DOOR TORSION BAR SUPPORT**
    a. Remove the luggage compartment door torsion bar support as shown in the illustration.

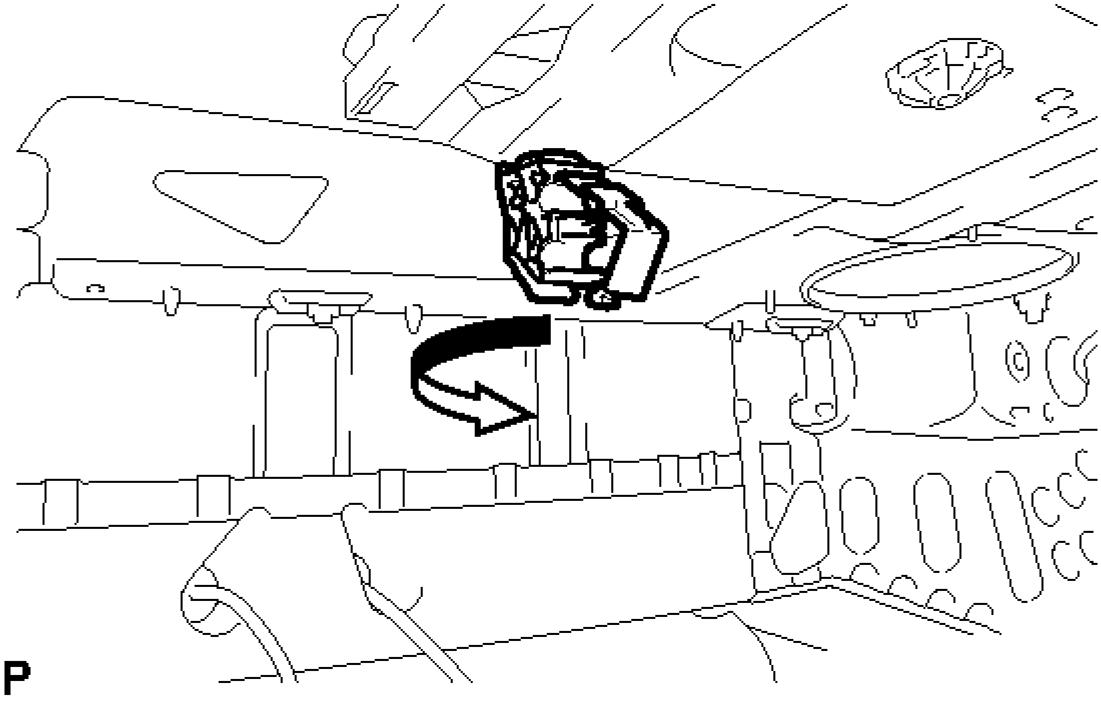

Fig. 233: Removing Luggage Compartment Door Torsion Bar Support

Courtesy of TOYOTA MOTOR SALES, U.S.A., INC.

NOTE: **Make sure to replace the luggage compartment door torsion bar support with a new one.**

INSTALLATION

INSTALLATION

NOTE: **After installing the torsion bar, use your hand to open and close the luggage door. Make sure the luggage door can open and close smoothly.**

1. **INSTALL LUGGAGE COMPARTMENT DOOR TORSION BAR SUPPORT**
    a. Install a new luggage compartment door torsion bar support as shown in the illustration.

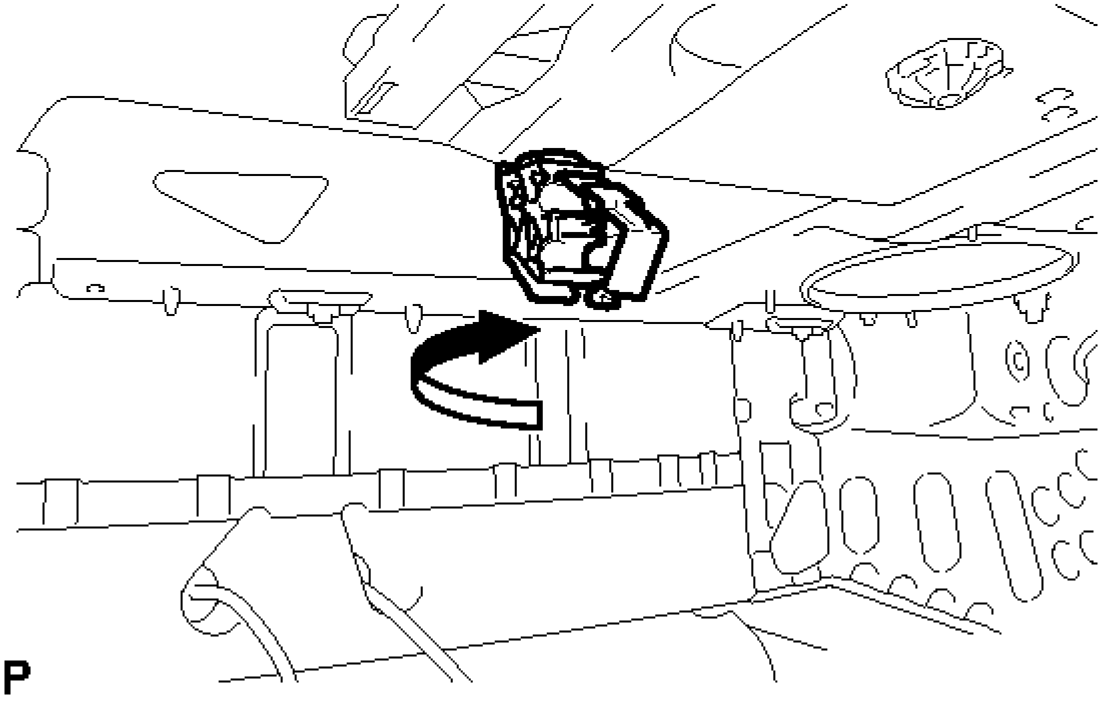

Fig. 234: Installing Luggage Compartment Door Torsion Bar Support
Courtesy of TOYOTA MOTOR SALES, U.S.A., INC.

2. **INSTALL LUGGAGE DOOR HINGE TORSION BAR RH**
    a. Check the identification mark on the luggage door hinge torsion bar RH.

    w/o Rear Spoiler

    Green

    w/ Rear Spoiler

Pink

b. Set the tip of the luggage door hinge torsion bar RH in the center installation hole. The upper and lower installation holes are used for adjustment.

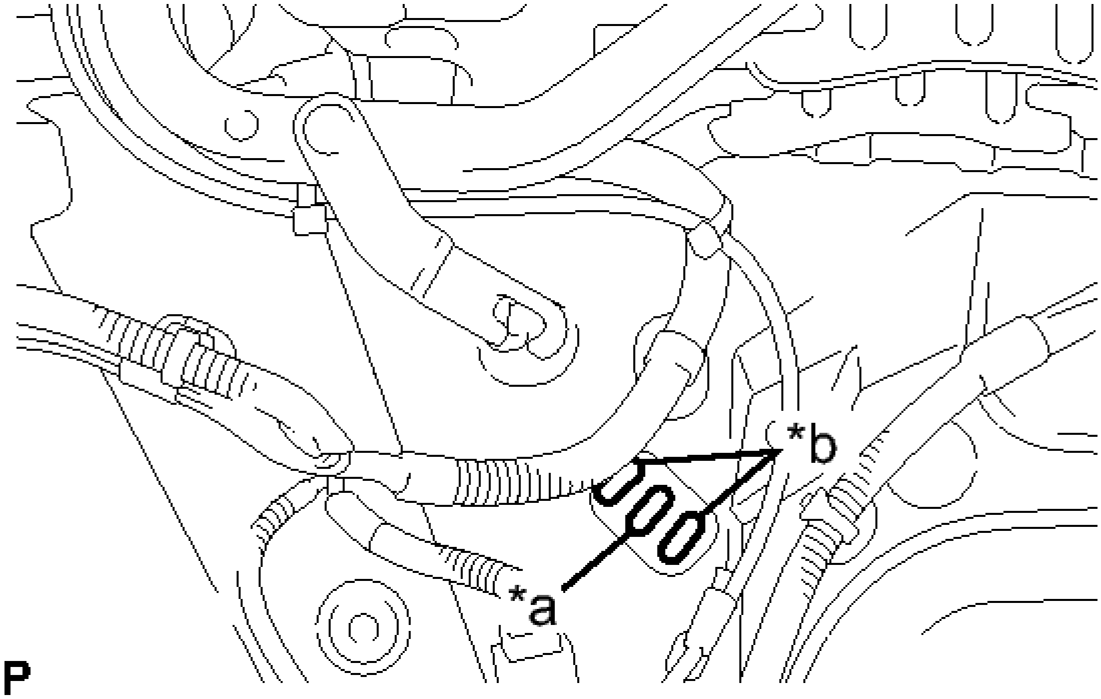

Fig. 235: Identifying Upper And Lower Installation Holes
Courtesy of TOYOTA MOTOR SALES, U.S.A., INC.

TEXT IN ILLUSTRATION

*a	Installation Hole
*b	Installation Hole (For Adjustment)

c. Connect the luggage door hinge torsion bar RH to the left side of the vehicle body as shown in the illustration.

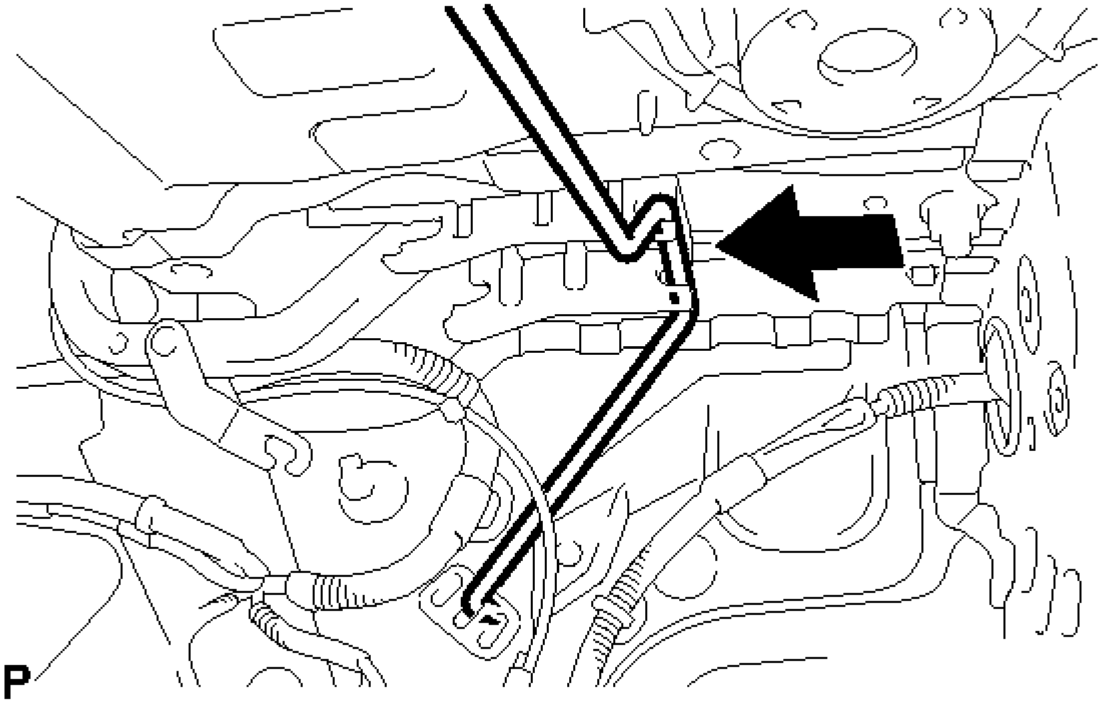

Fig. 236: Connecting Luggage Door Hinge Torsion Bar RH
Courtesy of TOYOTA MOTOR SALES, U.S.A., INC.

d. Connect the luggage door hinge torsion bar RH to the luggage compartment door torsion bar support as shown in the illustration.

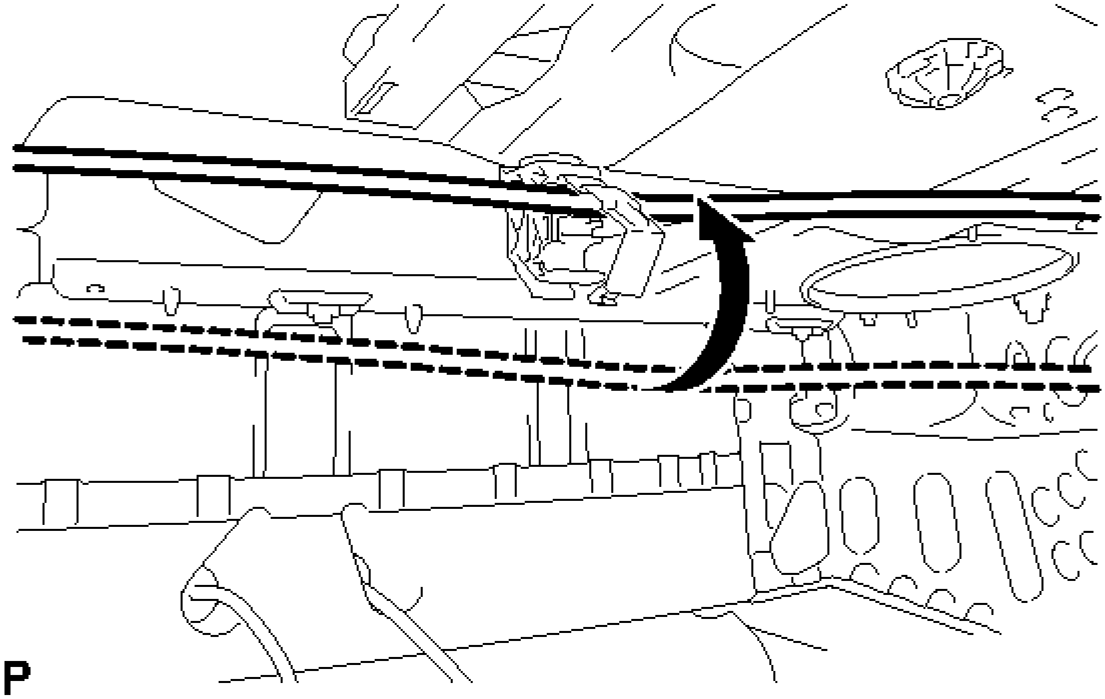

Fig. 237: Connecting Luggage Door Hinge Torsion Bar RH To Luggage Compartment Door

Torsion Bar Support
Courtesy of TOYOTA MOTOR SALES, U.S.A., INC.

e. Using SST, install the luggage door hinge torsion bar RH to the luggage door hinge and the right side of the vehicle body as shown in the illustration.
    - **SST: 09804-24010**

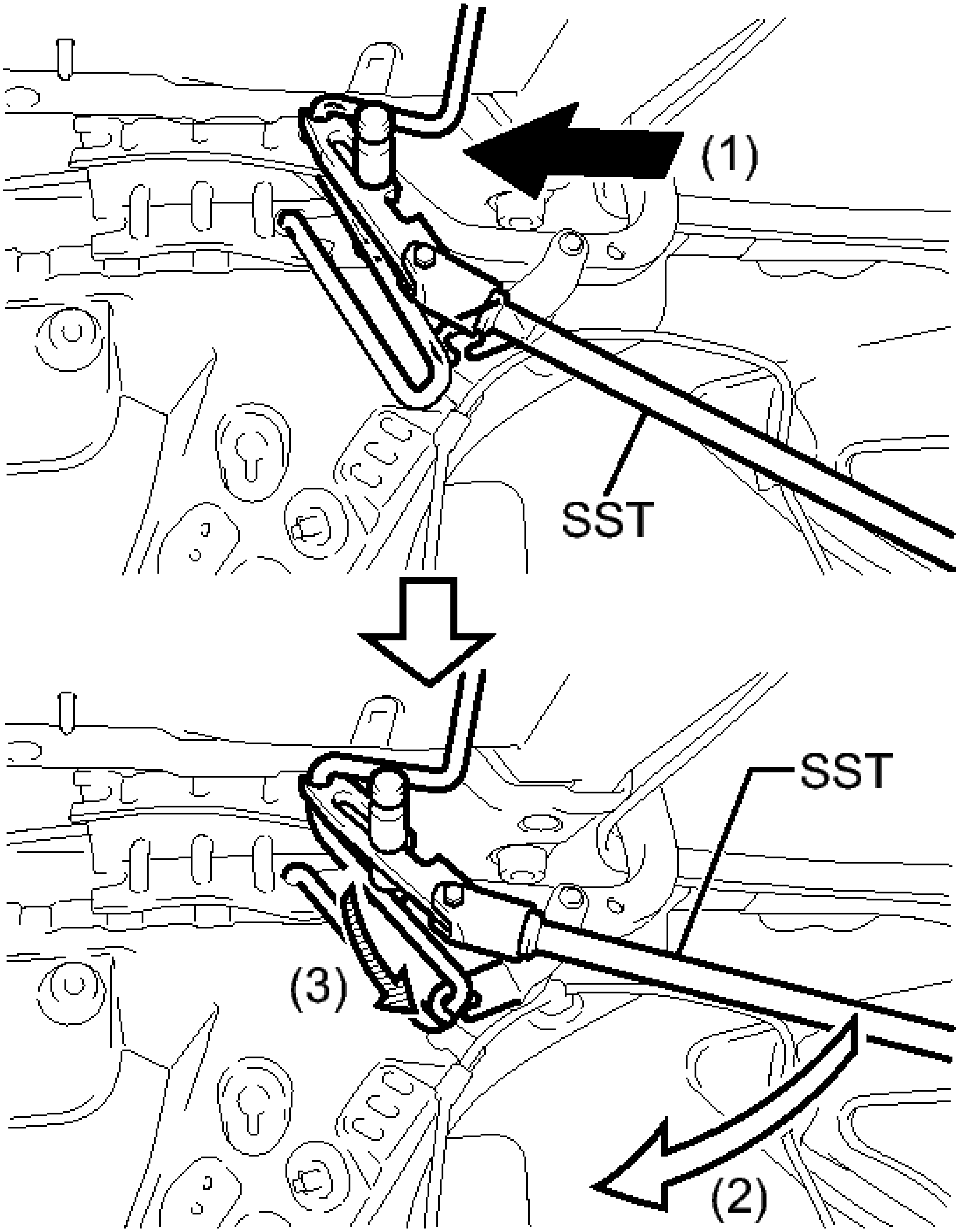

P

Fig. 238: Installing Luggage Door Hinge Torsion Bar RH Using SST
Courtesy of TOYOTA MOTOR SALES, U.S.A., INC.

f. Remove the protective tape.

3. **INSTALL LUGGAGE DOOR HINGE TORSION BAR LH**

a. Check the identification mark on the luggage door hinge torsion bar RH.

   w/o Rear Spoiler

   White

   w/ Rear Spoiler

   Yellow

b. Set the tip of the luggage door hinge torsion bar LH in the center installation hole. The upper and lower installation holes are used for adjustment.

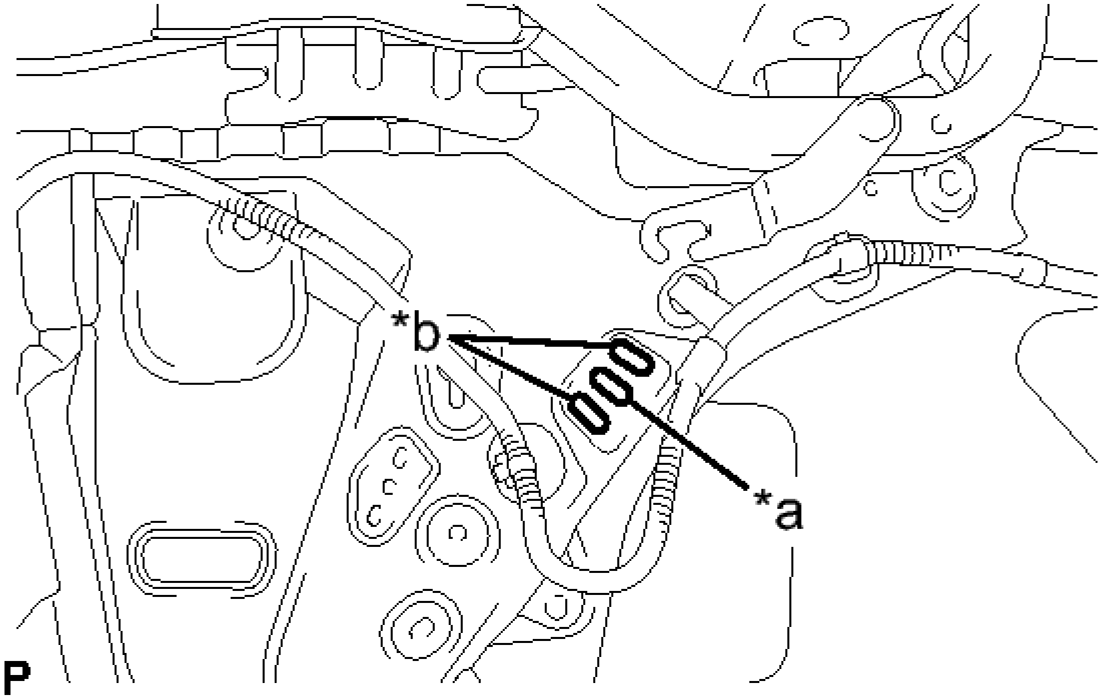

Fig. 239: Identifying Upper And Lower Installation Holes
Courtesy of TOYOTA MOTOR SALES, U.S.A., INC.

TEXT IN ILLUSTRATION

*a	Installation Hole
*b	Installation Hole (For Adjustment)

c. Connect the luggage door hinge torsion bar LH to the right side of the vehicle body as shown in the illustration.

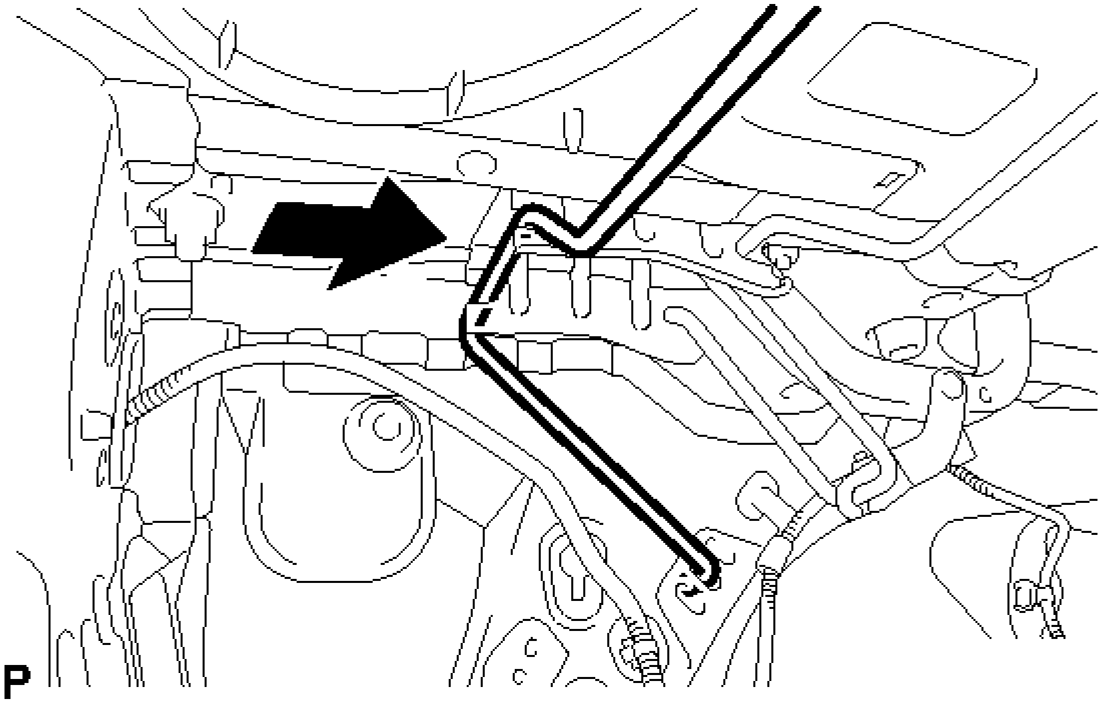

Fig. 240: Connecting Luggage Door Hinge Torsion Bar LH
Courtesy of TOYOTA MOTOR SALES, U.S.A., INC.

d. Connect the luggage door hinge torsion bar LH to the luggage compartment door torsion bar support as shown in the illustration.

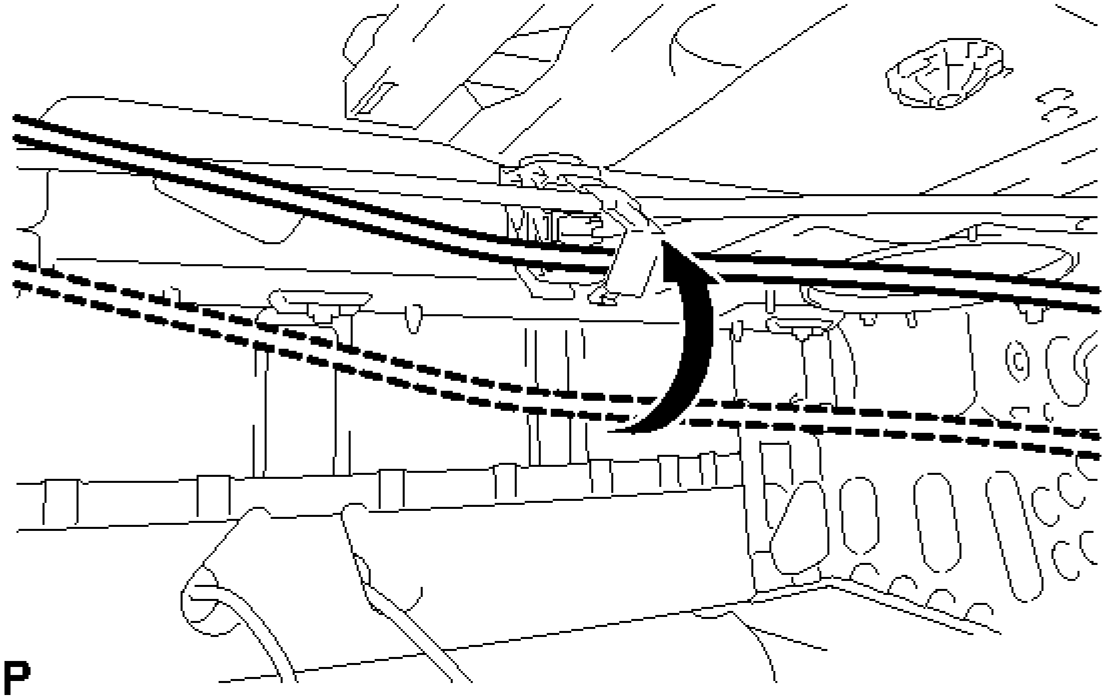

Fig. 241: Connecting Luggage Door Hinge Torsion Bar LH To Luggage Compartment Door

Torsion Bar Support
Courtesy of TOYOTA MOTOR SALES, U.S.A., INC.

e. Using SST, install the luggage door hinge torsion bar LH to the luggage door hinge and the left side of the vehicle body as shown in the illustration.
    - **SST: 09804-24010**

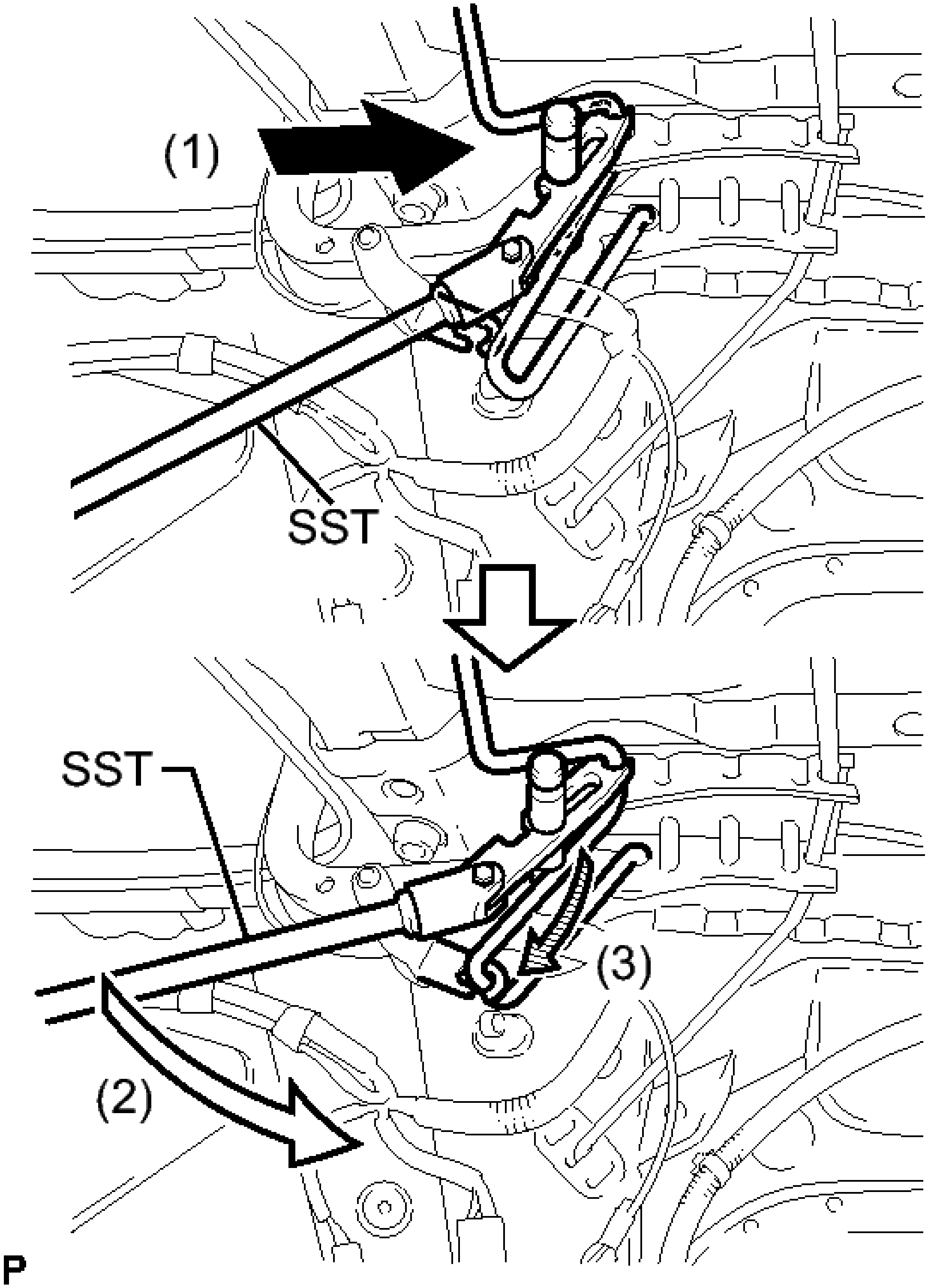

Fig. 242: Installing Luggage Door Hinge Torsion Bar LH Using SST
Courtesy of TOYOTA MOTOR SALES, U.S.A., INC.

f. Engage the 2 claws as shown in the illustration.

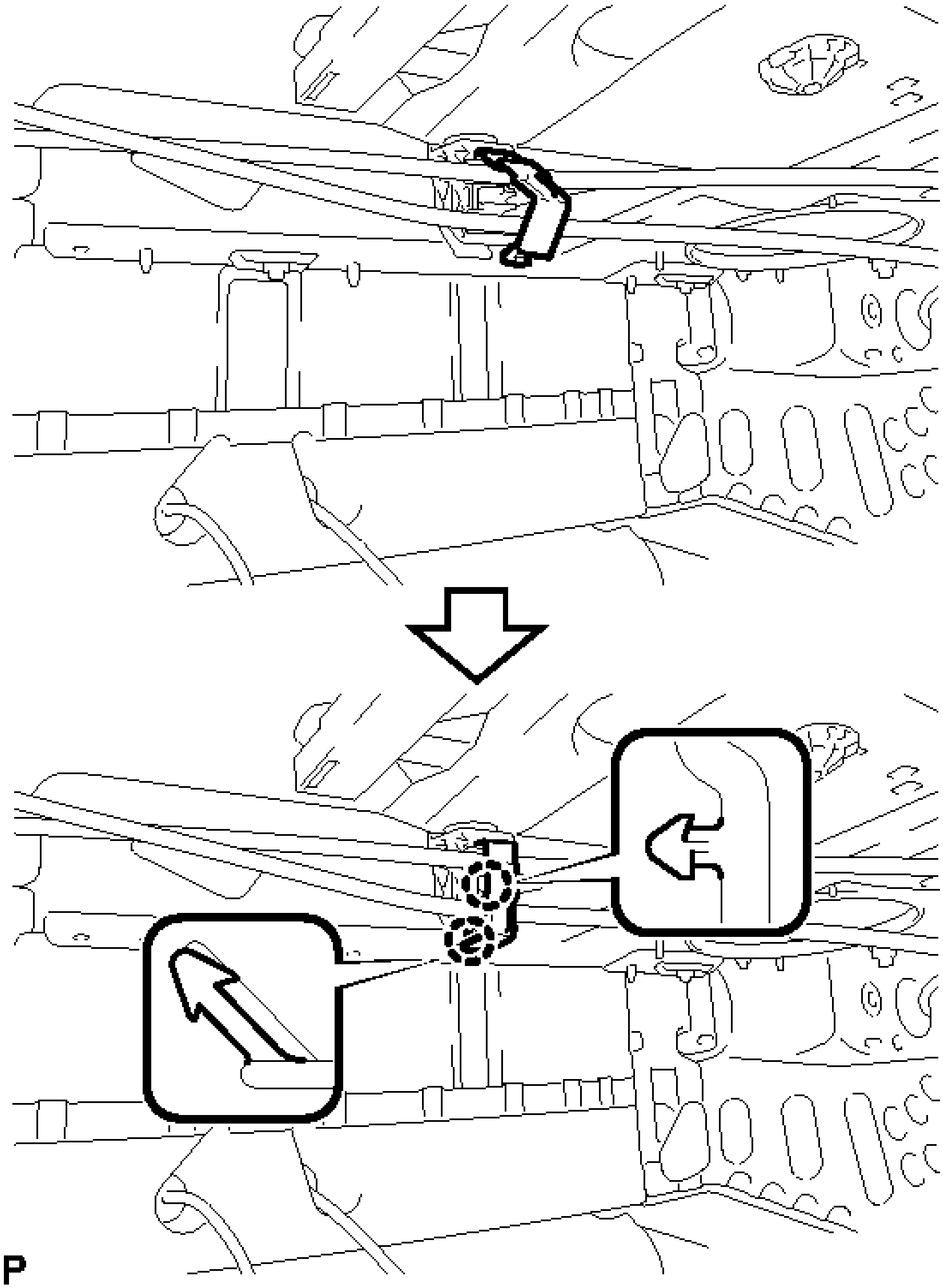

Fig. 243: Engaging Luggage Door Hinge Torsion Bar LH Claws
Courtesy of TOYOTA MOTOR SALES, U.S.A., INC.

g. Connect the rear seatback lock assembly LH (rear seat lock control cable LH) and engage the hook in the order indicated in the illustration.

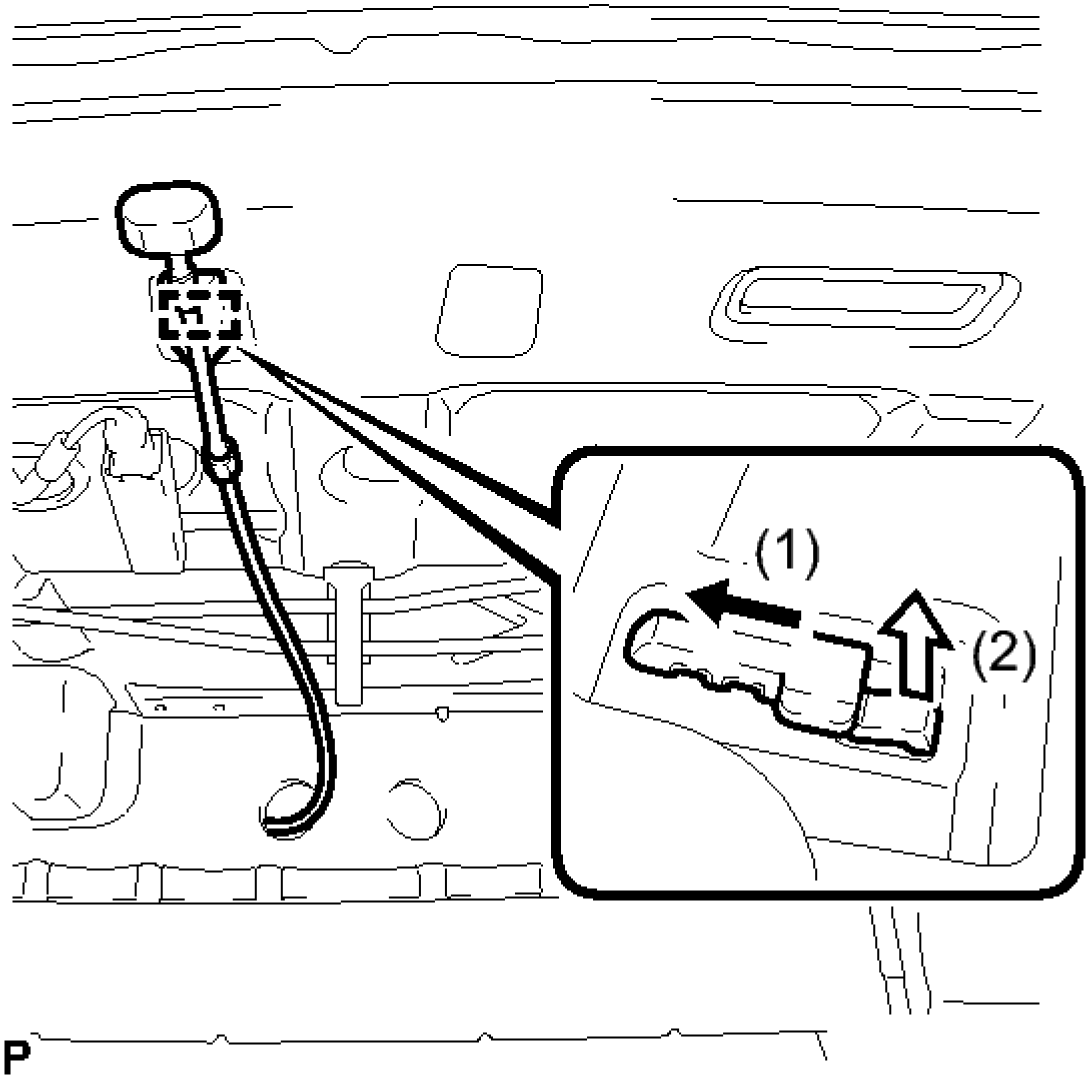

Fig. 244: Installing Luggage Door Hinge Torsion Bar LH
Courtesy of TOYOTA MOTOR SALES, U.S.A., INC.

HINT:

Use the same procedure as for the LH side and RH side.

h. Remove the protective tape.

4. **INSTALL LUGGAGE COMPARTMENT DOOR HINGE COVER LH**
   a. Engage the 4 claws and install the luggage compartment door hinge cover LH.
5. **INSTALL LUGGAGE COMPARTMENT DOOR HINGE COVER RH**

HINT:

Use the same procedure as for the LH side.

6. **INSTALL LUGGAGE COMPARTMENT INNER TRIM COVER LH**
    a. Install the clip <A>.

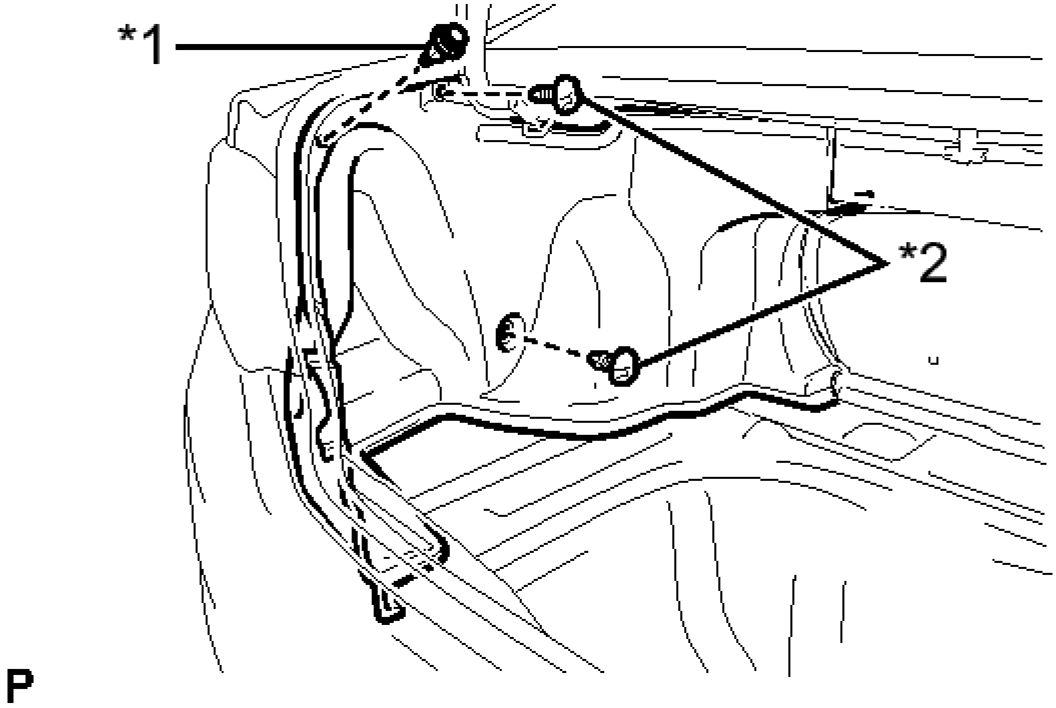

Fig. 245: Locating Luggage Compartment Inner Trim Cover LH Clips
Courtesy of TOYOTA MOTOR SALES, U.S.A., INC.

TEXT IN ILLUSTRATION

*1	Clip <A>
*2	Clip <B>

    b. Install the 2 clips <B>.
    c. Engage the fastener and install the luggage compartment inner trim cover LH.

7. **INSTALL LUGGAGE COMPARTMENT INNER TRIM COVER RH**
    a. Install the clip <A>.

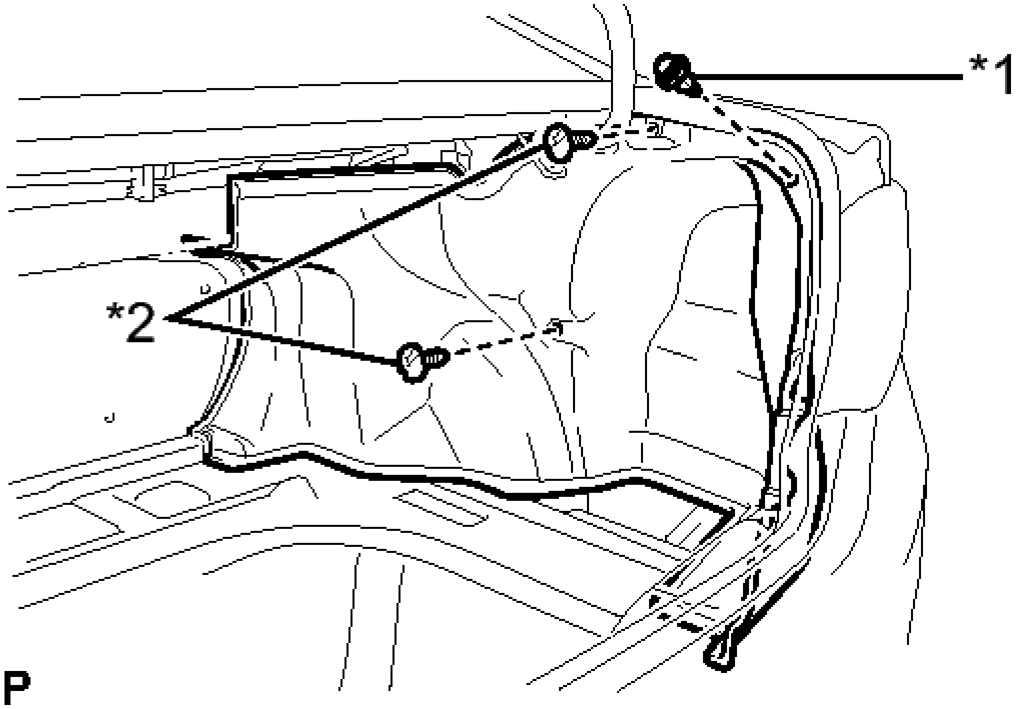

Fig. 246: Locating Luggage Compartment Inner Trim Cover RH Clips
Courtesy of TOYOTA MOTOR SALES, U.S.A., INC.

TEXT IN ILLUSTRATION

*1	Clip <A>
*2	Clip <B>

b. Install the 2 clips <B>.
c. Engage the fastener and install the luggage compartment inner trim cover RH.

8. **INSTALL NO. 1 LUGGAGE COMPARTMENT TRIM HOOK**
   a. Engage the 2 pins to install the 2 No. 1 luggage compartment trim hooks.

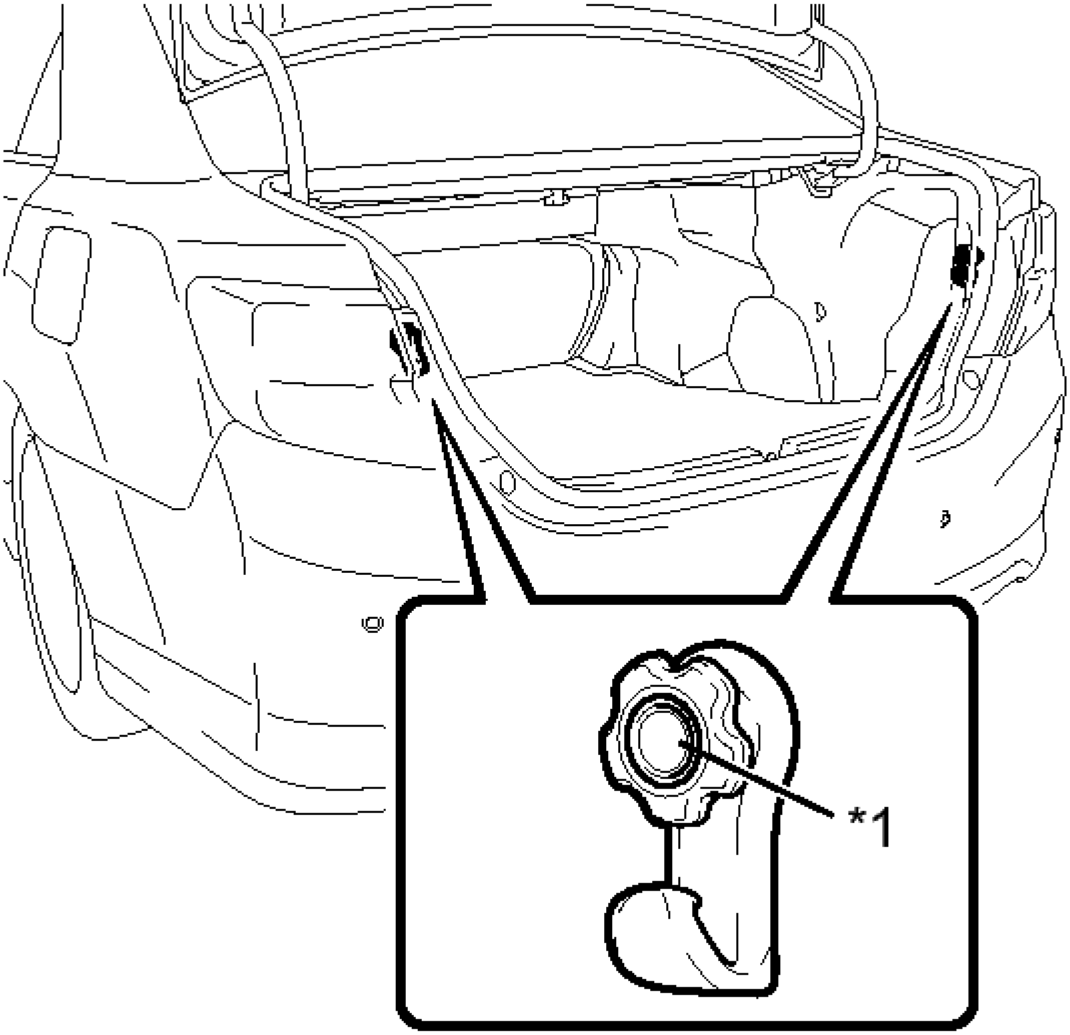

Fig. 247: Locating No. 1 Luggage Compartment Trim Hook Pins
Courtesy of TOYOTA MOTOR SALES, U.S.A., INC.

TEXT IN ILLUSTRATION

*1	Pin

9. **INSTALL REAR FLOOR FINISH PLATE**
    a. Engage the 4 clips and install the rear floor finish plate.

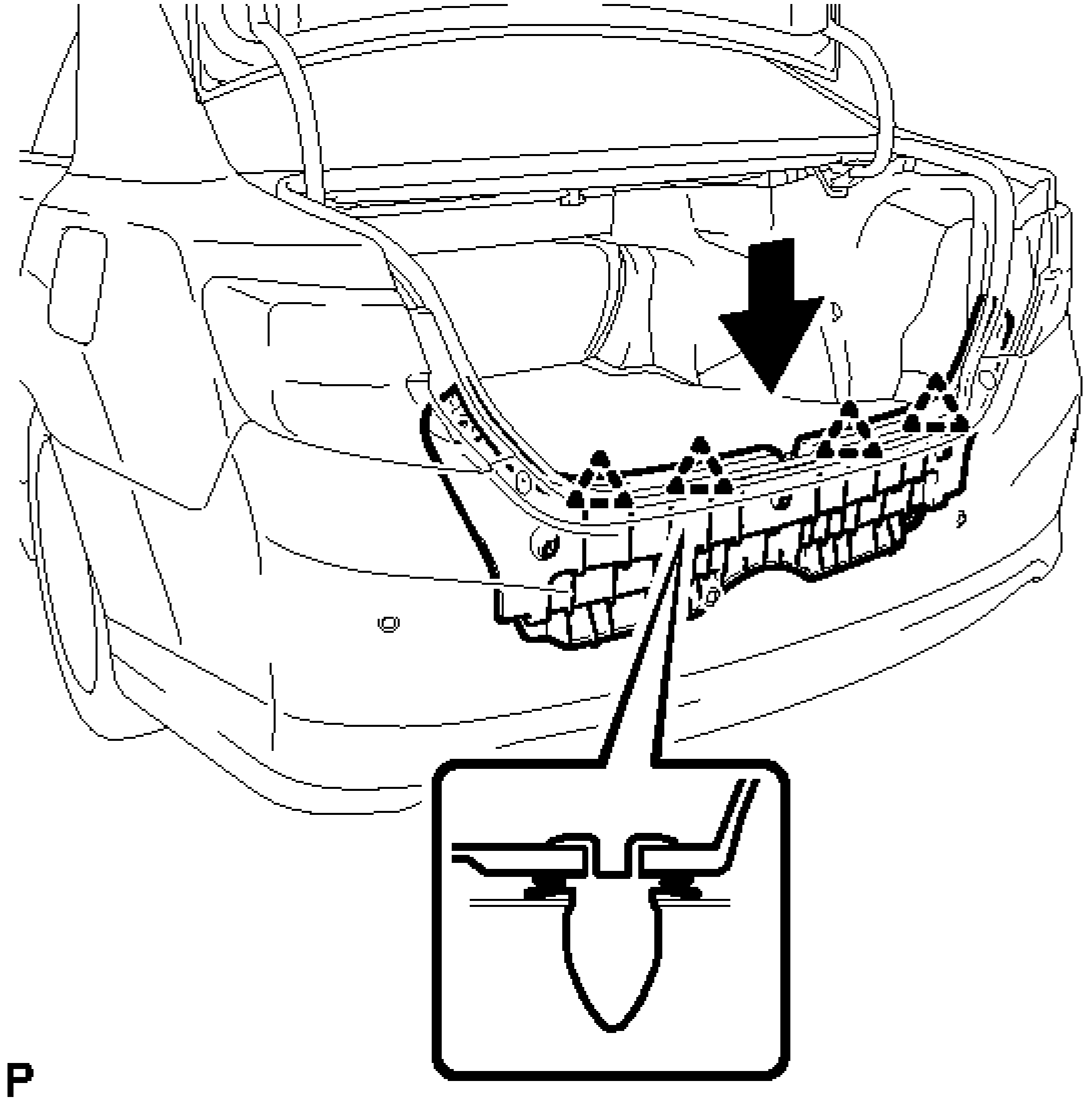

Fig. 248: Installing Rear Floor Finish Plate
Courtesy of TOYOTA MOTOR SALES, U.S.A., INC.

b. Install the 5 clips.

10. **INSTALL BAGGAGE HOLDER NET (w/ Partition Net)**
    a. Install the baggage holder net.
11. **INSTALL SPARE WHEEL COVER ASSEMBLY**
    a. Install the spare wheel cover assembly.
12. **INSTALL LUGGAGE COMPARTMENT FLOOR MAT**
    a. Install the luggage compartment floor mat.

LUGGAGE DOOR LOCK CONTROL CABLE ASSEMBLY

COMPONENTS

ILLUSTRATION

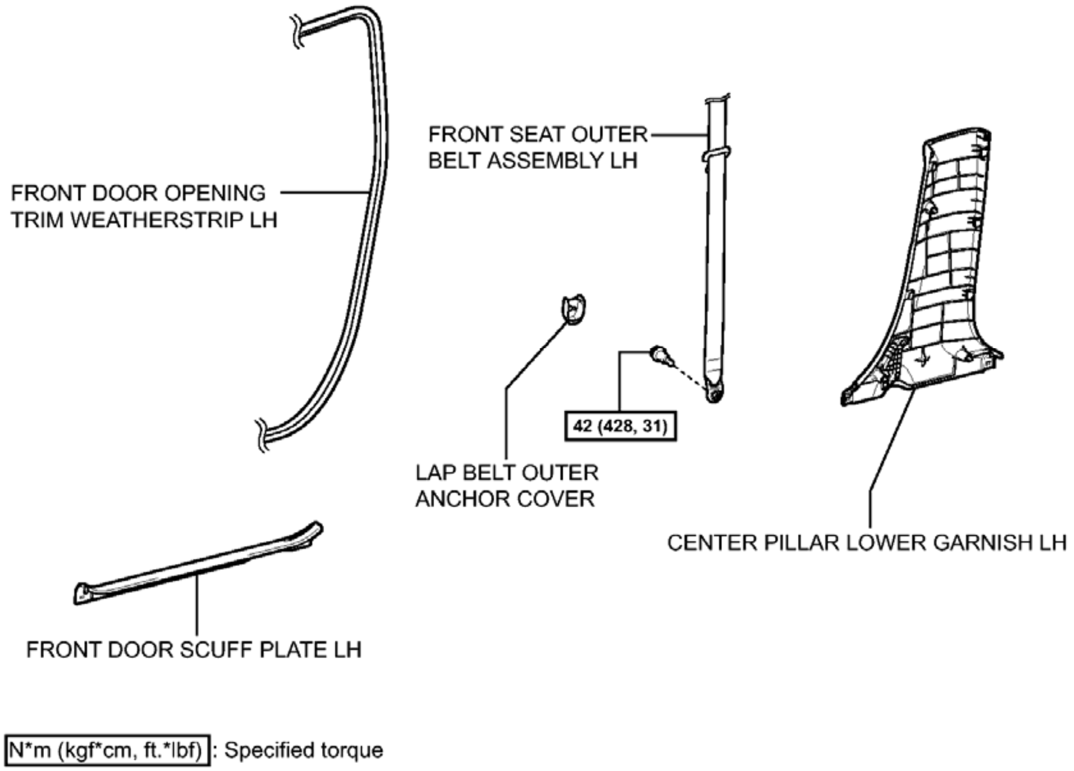
FRONT SEAT OUTER BELT ASSEMBLY LH
FRONT DOOR OPENING TRIM WEATHERSTRIP LH
42 (428, 31)
LAP BELT OUTER ANCHOR COVER
CENTER PILLAR LOWER GARNISH LH
FRONT DOOR SCUFF PLATE LH
N*m (kgf*cm, ft.*lbf) : Specified torque
P

Fig. 249: Identifying Luggage Door Lock Control Cable Assembly Replacement Components With Torque Specifications (1 Of 4)
Courtesy of TOYOTA MOTOR SALES, U.S.A., INC.

ILLUSTRATION

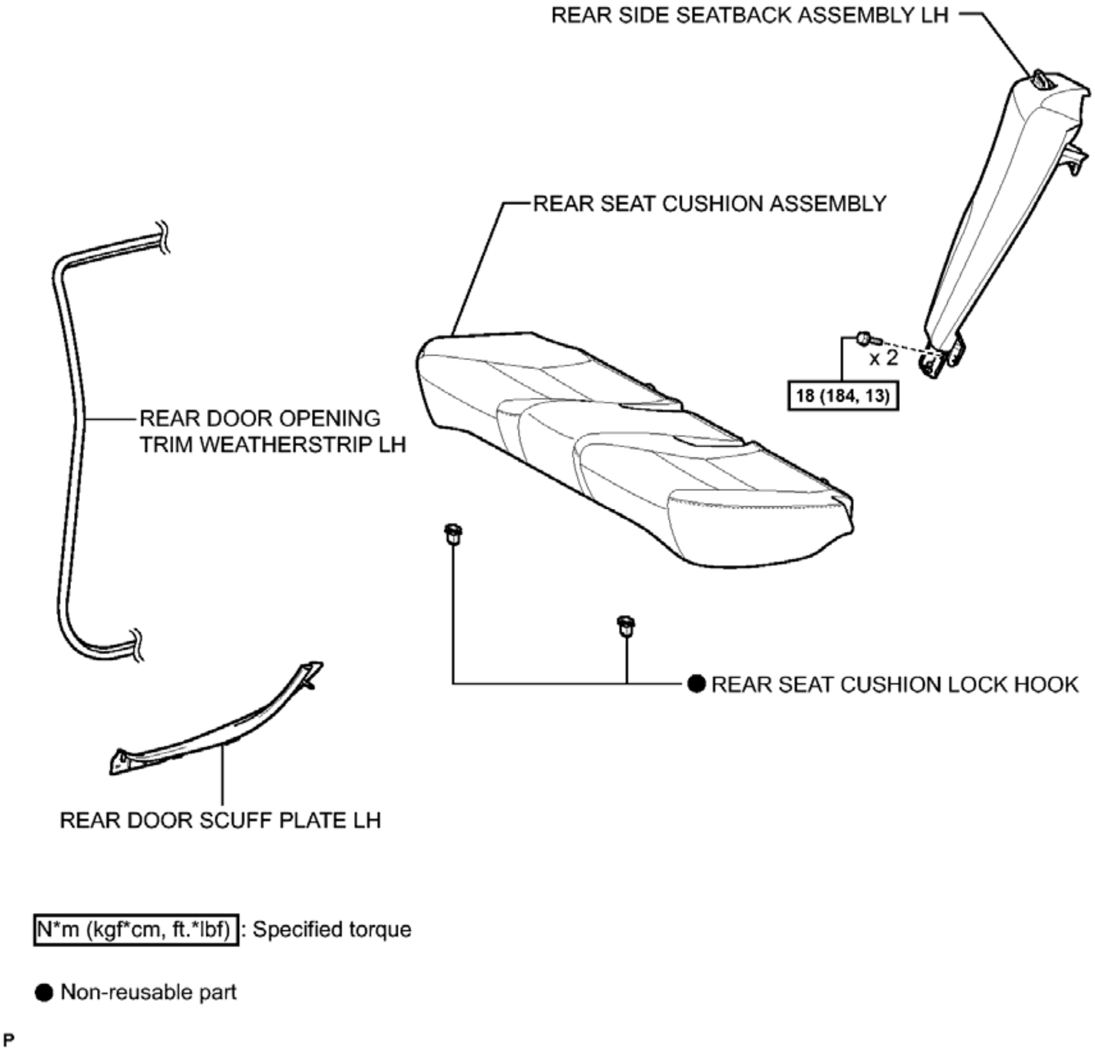
REAR SIDE SEATBACK ASSEMBLY LH
REAR SEAT CUSHION ASSEMBLY
x 2
18 (184, 13)
REAR DOOR OPENING TRIM WEATHERSTRIP LH
● REAR SEAT CUSHION LOCK HOOK
REAR DOOR SCUFF PLATE LH
N*m (kgf*cm, ft.*lbf) : Specified torque
● Non-reusable part
P

Fig. 250: Identifying Luggage Door Lock Control Cable Assembly Replacement Components With Torque Specifications (2 Of 4)
Courtesy of TOYOTA MOTOR SALES, U.S.A., INC.

ILLUSTRATION

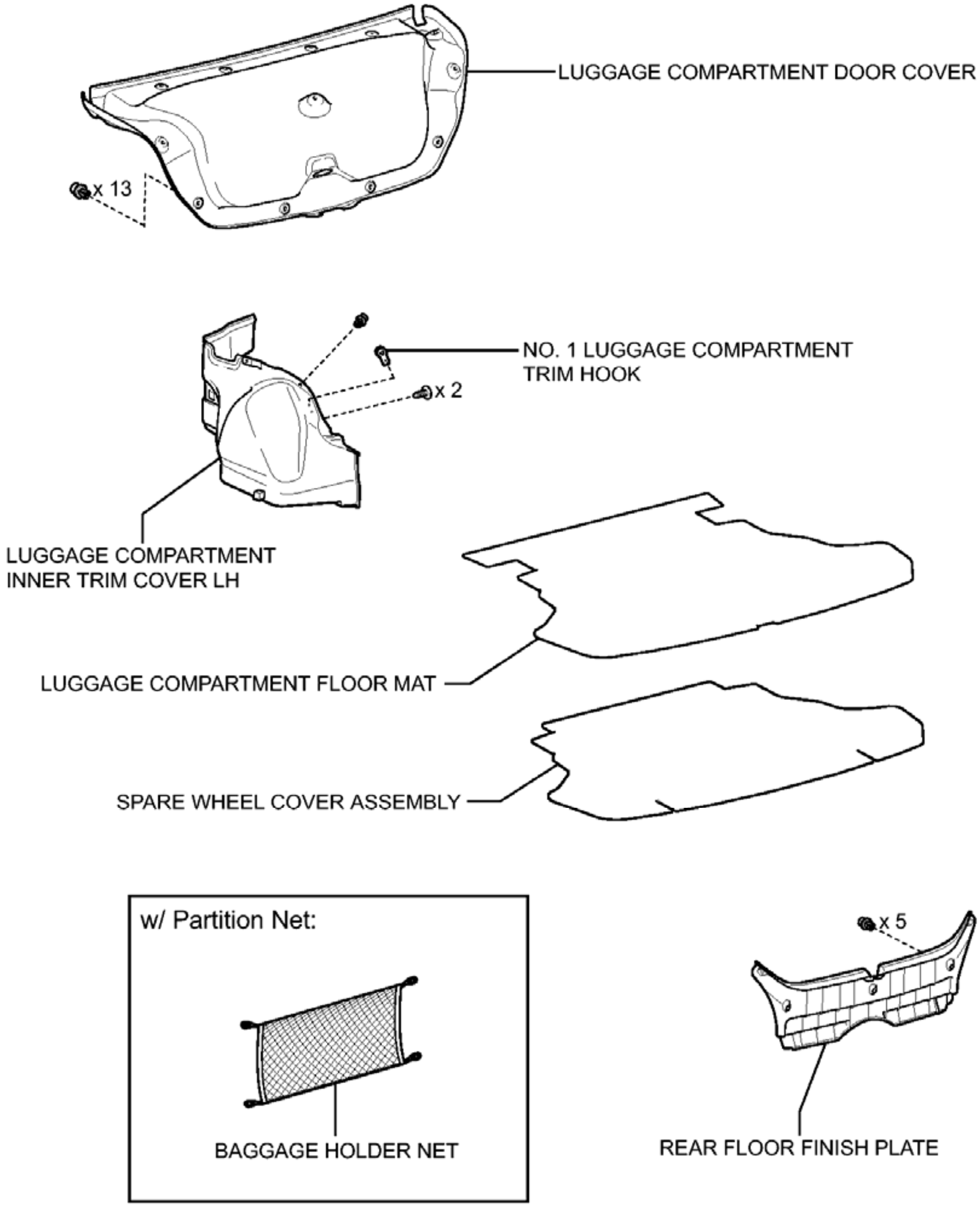
LUGGAGE COMPARTMENT DOOR COVER
x 13
NO. 1 LUGGAGE COMPARTMENT TRIM HOOK
x 2
LUGGAGE COMPARTMENT INNER TRIM COVER LH
LUGGAGE COMPARTMENT FLOOR MAT
SPARE WHEEL COVER ASSEMBLY
w/ Partition Net:
BAGGAGE HOLDER NET
x 5
REAR FLOOR FINISH PLATE
P

Fig. 251: Identifying Luggage Door Lock Control Cable Assembly Replacement Components (3 Of 4)
Courtesy of TOYOTA MOTOR SALES, U.S.A., INC.

ILLUSTRATION

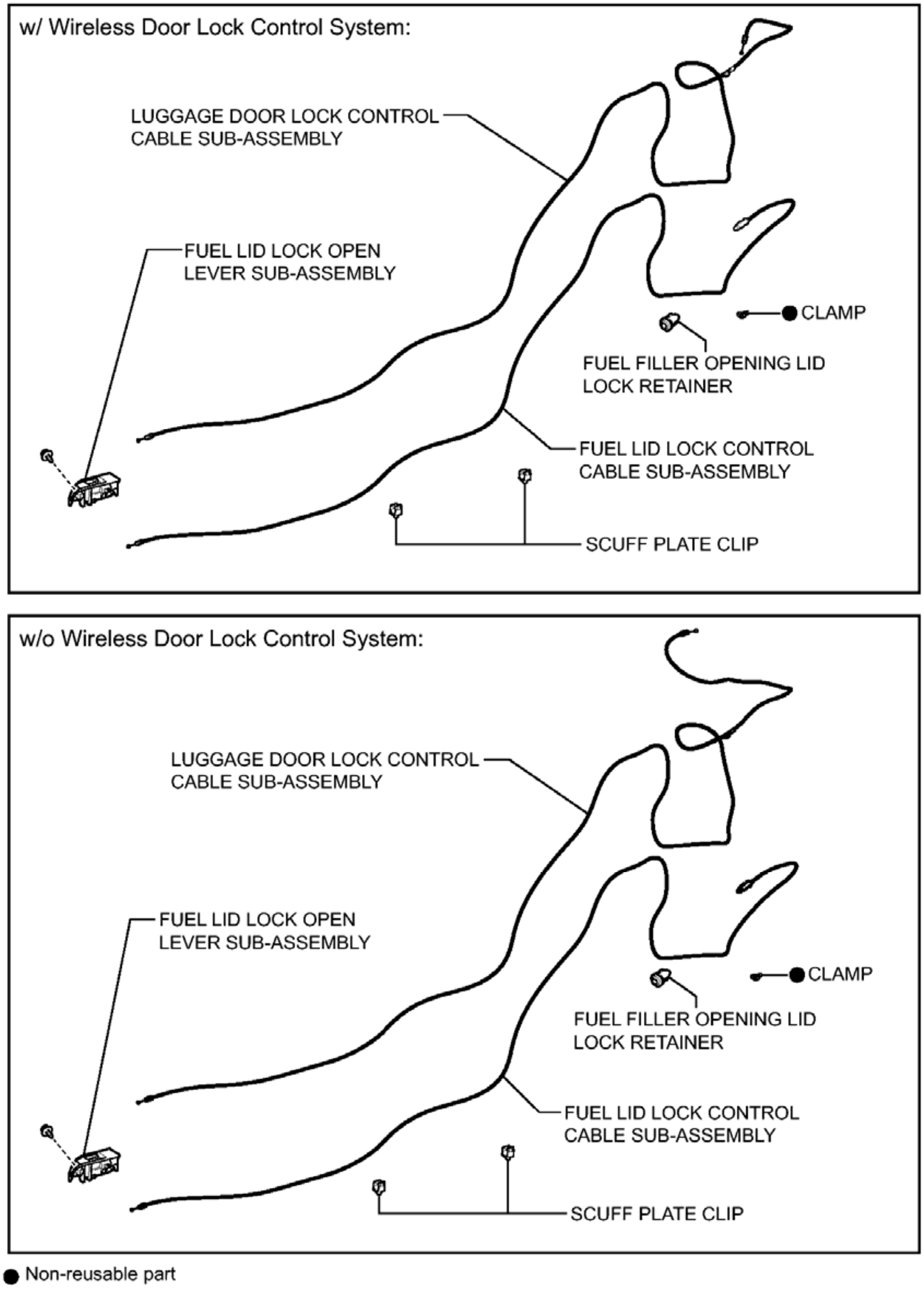
w/ Wireless Door Lock Control System:
LUGGAGE DOOR LOCK CONTROL CABLE SUB-ASSEMBLY
FUEL LID LOCK OPEN LEVER SUB-ASSEMBLY
CLAMP
FUEL FILLER OPENING LID LOCK RETAINER
FUEL LID LOCK CONTROL CABLE SUB-ASSEMBLY
SCUFF PLATE CLIP
w/o Wireless Door Lock Control System:
LUGGAGE DOOR LOCK CONTROL CABLE SUB-ASSEMBLY
FUEL LID LOCK OPEN LEVER SUB-ASSEMBLY
CLAMP
FUEL FILLER OPENING LID LOCK RETAINER
FUEL LID LOCK CONTROL CABLE SUB-ASSEMBLY
SCUFF PLATE CLIP
● Non-reusable part
P

Fig. 252: Identifying Luggage Door Lock Control Cable Assembly Replacement Components (4 Of 4)
Courtesy of TOYOTA MOTOR SALES, U.S.A., INC.

REMOVAL

REMOVAL

1. **PRECAUTION**

   NOTE: **After turning the ignition switch off, waiting time may be required before disconnecting the cable from the negative (-) battery terminal. Therefore, make sure to read the disconnecting the cable from the negative (-) battery terminal notices before proceeding with work. Refer to PRECAUTION .**

2. **DISCONNECT CABLE FROM NEGATIVE BATTERY TERMINAL**

   WARNING: **Wait at least 90 seconds after disconnecting the cable from the negative (-) battery terminal to disable the SRS system.**

   NOTE: **When disconnecting the cable, some systems need to be initialized after the cable is reconnected. Refer to INITIALIZATION .**

3. **REMOVE FRONT SEAT ASSEMBLY LH (for TMMK Made Manual Seat)**

   Refer to **REMOVAL** .

4. **REMOVE FRONT SEAT ASSEMBLY LH (for TMMK Made Power Seat)**

   Refer to **REMOVAL** .

5. **REMOVE FRONT SEAT ASSEMBLY LH (for SIA Made Manual Seat)**

   Refer to **REMOVAL** .

6. **REMOVE FRONT SEAT ASSEMBLY LH (for SIA Made Power Seat)**

   Refer to **REMOVAL** .

7. **REMOVE REAR SEAT CUSHION ASSEMBLY** . Refer to **REMOVAL - Step 3** .
8. **REMOVE REAR SEAT CUSHION LOCK HOOK** . Refer to **REMOVAL - Step 4** .
9. **REMOVE REAR SIDE SEATBACK ASSEMBLY LH** . Refer to **REMOVAL - Step 8** .
10. **REMOVE FRONT DOOR SCUFF PLATE LH** . Refer to **REMOVAL - Step 3** .
11. **DISCONNECT FRONT DOOR OPENING TRIM WEATHERSTRIP LH** . Refer to **REMOVAL - Step 4** .
12. **REMOVE REAR DOOR SCUFF PLATE LH** . Refer to **REMOVAL - Step 18** .
13. **DISCONNECT REAR DOOR OPENING TRIM WEATHERSTRIP LH** . Refer to **REMOVAL - Step 6** .
14. **REMOVE LAP BELT OUTER ANCHOR COVER** . Refer to **REMOVAL - Step 7** .
15. **DISCONNECT FRONT SEAT OUTER BELT ASSEMBLY LH** . Refer to **REMOVAL - Step 8** .

16. **REMOVE CENTER PILLAR LOWER GARNISH LH** . Refer to **REMOVAL - Step 22** .
17. **REMOVE LUGGAGE COMPARTMENT DOOR COVER** . See step 1.
18. **REMOVE LUGGAGE COMPARTMENT FLOOR MAT** . See step 1.
19. **REMOVE SPARE WHEEL COVER ASSEMBLY** . See step 2.
20. **REMOVE BAGGAGE HOLDER NET (w/ Partition Net)** . See step 3.
21. **REMOVE REAR FLOOR FINISH PLATE** . See step 4.
22. **REMOVE NO. 1 LUGGAGE COMPARTMENT TRIM HOOK**
    a. Push the pin and remove the No. 1 luggage compartment trim hook.

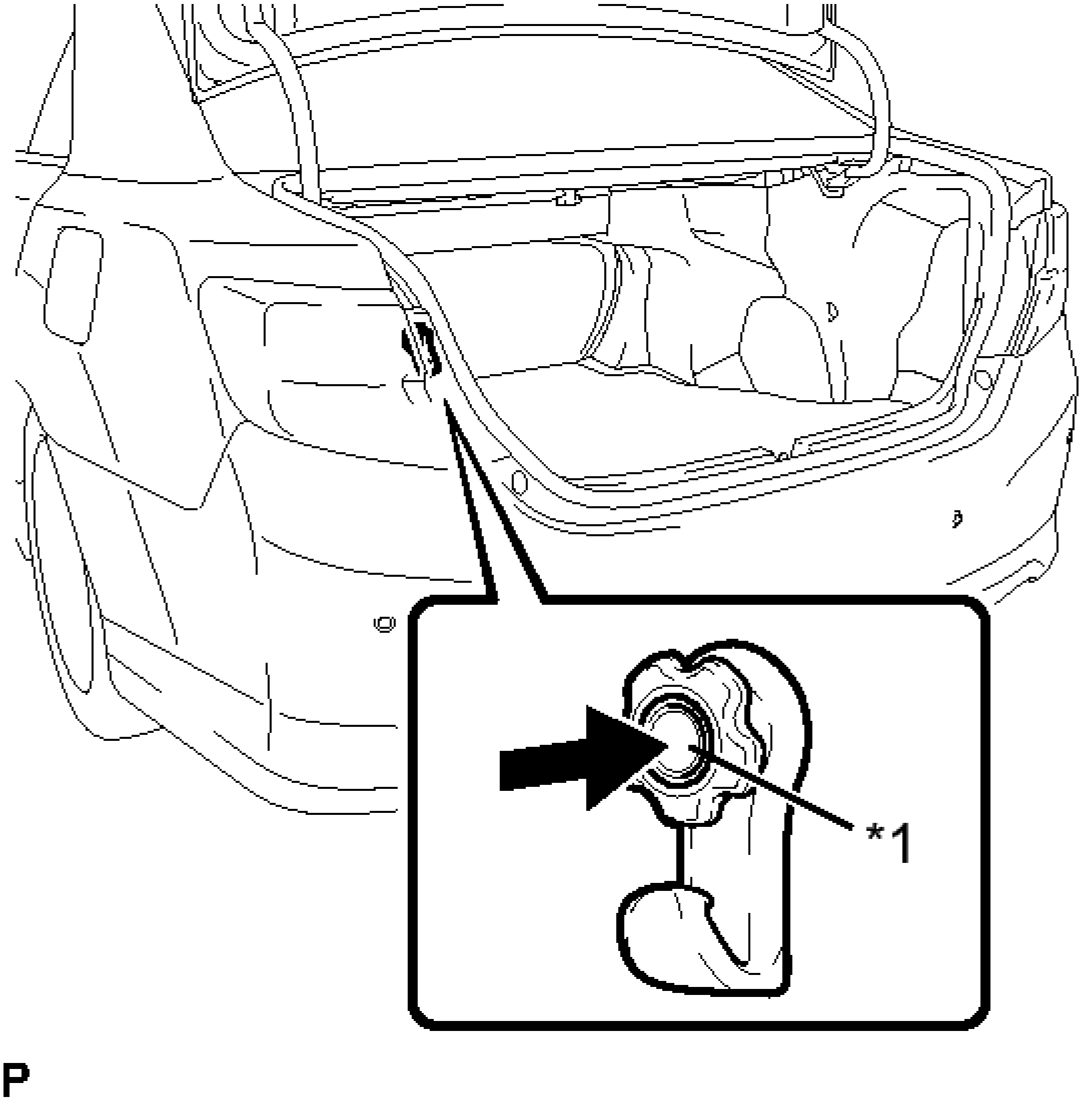

Fig. 253: Locating No. 1 Luggage Compartment Trim Hook Pin
Courtesy of TOYOTA MOTOR SALES, U.S.A., INC.

TEXT IN ILLUSTRATION

*1	Pin

23. **REMOVE LUGGAGE COMPARTMENT INNER TRIM COVER LH** . See step 6.

24. **REMOVE FUEL LID LOCK OPEN LEVER SUB-ASSEMBLY**

    a. Remove the screw.

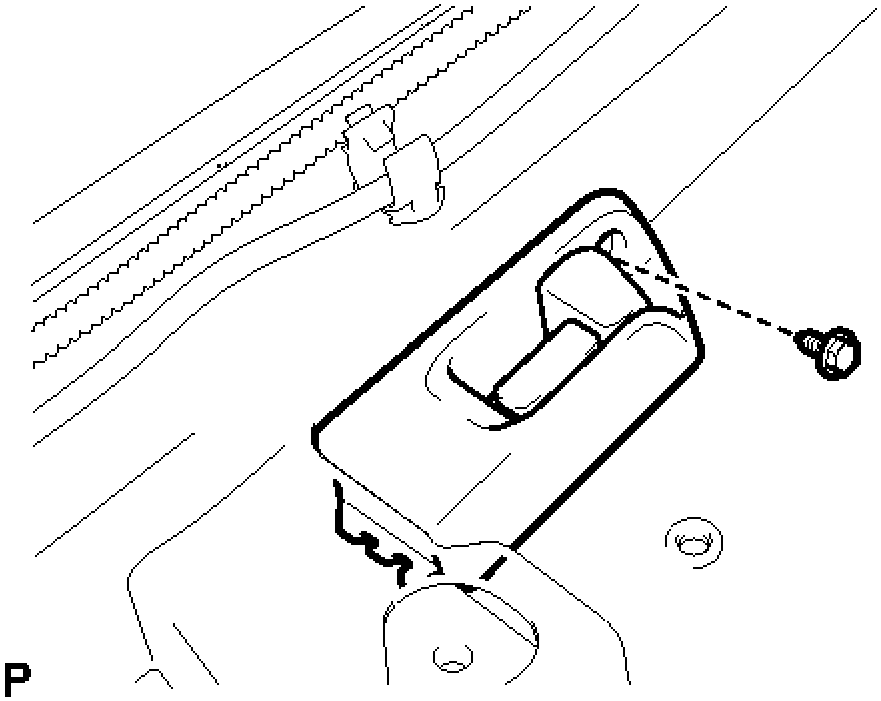

Fig. 254: Identifying Fuel Lid Lock Open Lever Screw
Courtesy of TOYOTA MOTOR SALES, U.S.A., INC.

    b. Disengage the guide and disconnect the fuel lid lock open lever sub-assembly as shown in the illustration.

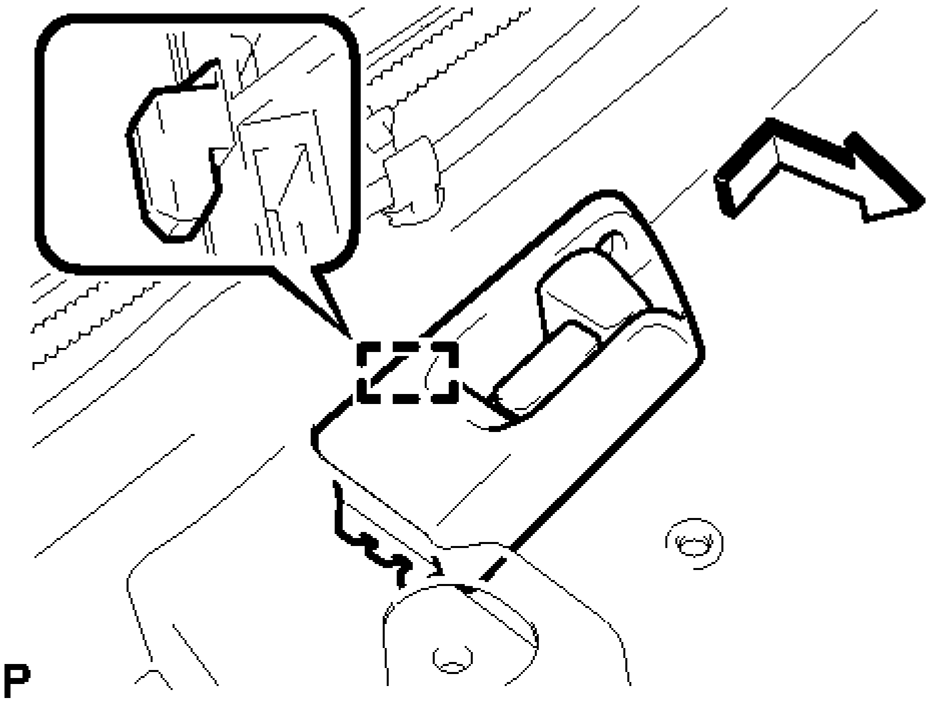

Fig. 255: Disengaging Fuel Lid Lock Open Lever Guide
Courtesy of TOYOTA MOTOR SALES, U.S.A., INC.

c. Disconnect the fuel lid lock control cable sub-assembly and luggage door lock control cable sub-assembly and remove the fuel lid lock open lever sub-assembly.

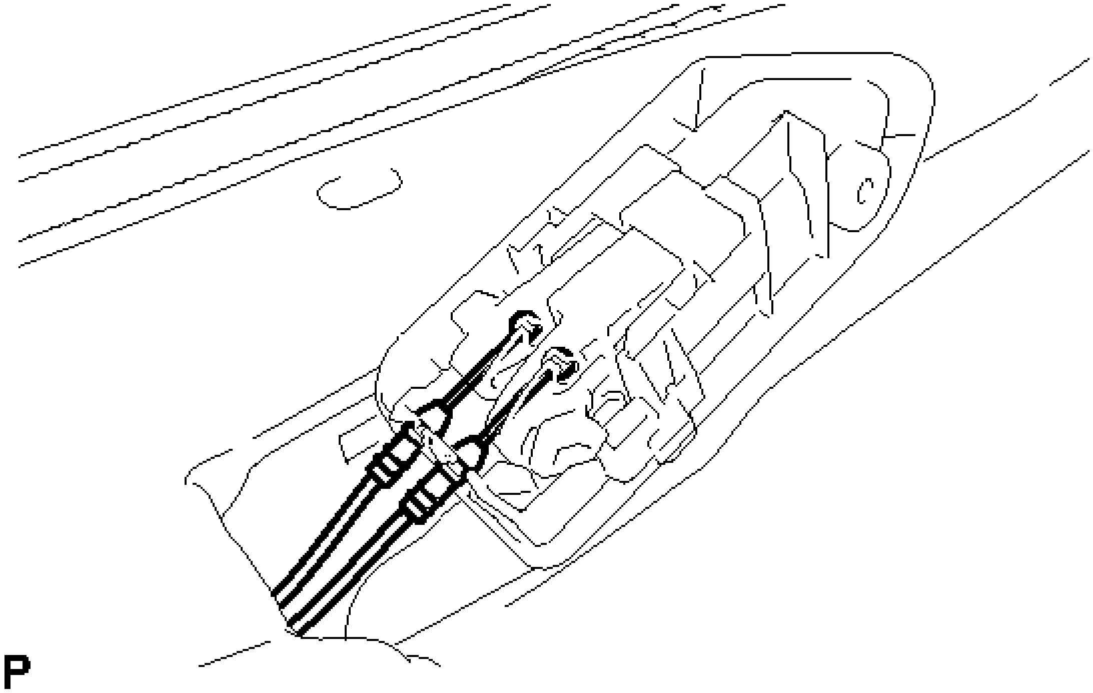

Fig. 256: Identifying Fuel Lid Lock And Luggage Door Lock Control Cables

Courtesy of TOYOTA MOTOR SALES, U.S.A., INC.

25. **REMOVE LUGGAGE DOOR LOCK CONTROL CABLE SUB-ASSEMBLY**
    a. Disengage the 2 clamps.

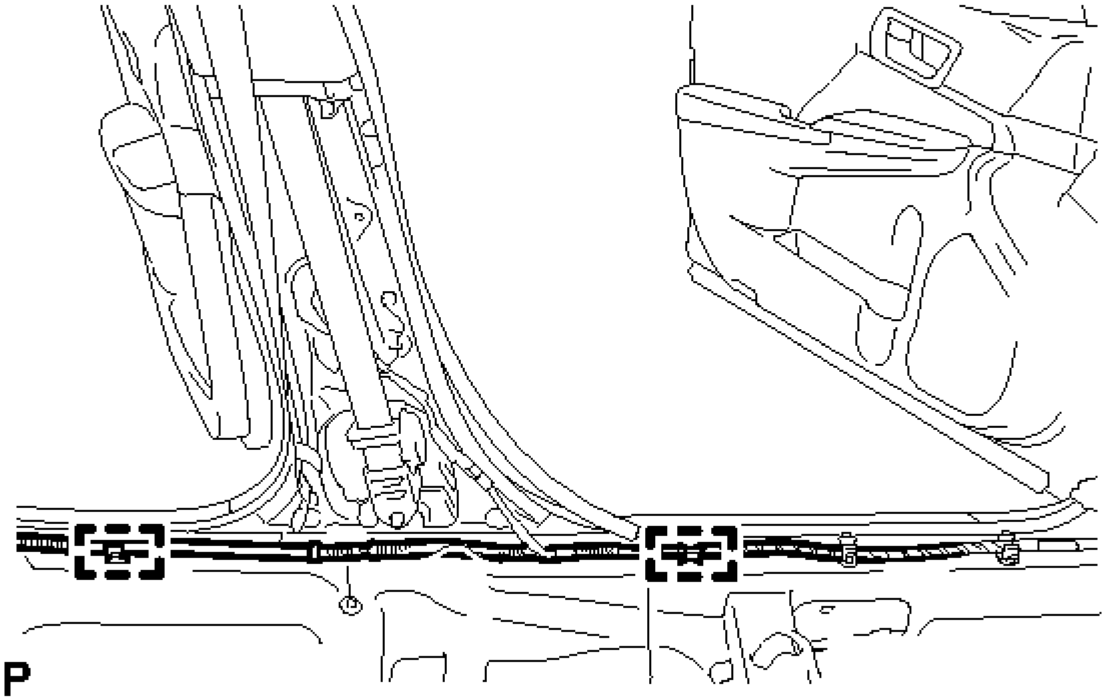

Fig. 257: Identifying Luggage Door Lock Control Cable Clamps
Courtesy of TOYOTA MOTOR SALES, U.S.A., INC.

    b. Using a clip remover, disengage the clamp and disconnect the wire harness.

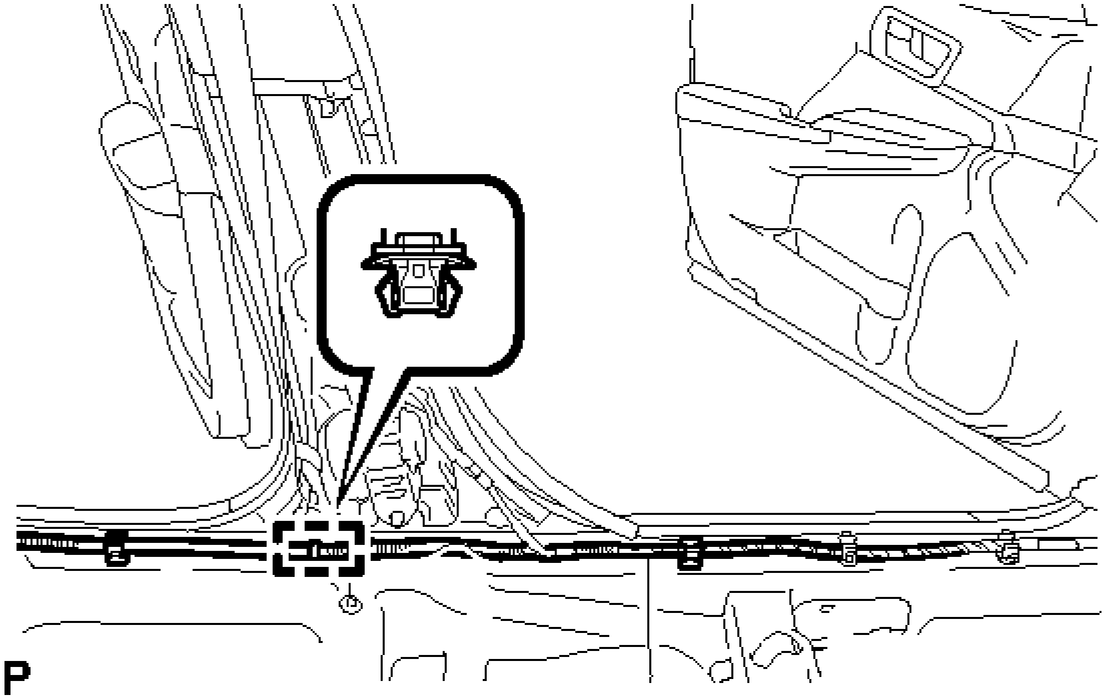

Fig. 258: Identifying Wire Harness Clamp
Courtesy of TOYOTA MOTOR SALES, U.S.A., INC.

c. Using a clip remover, disengage the 2 clamps and remove the 2 scuff plate clips.

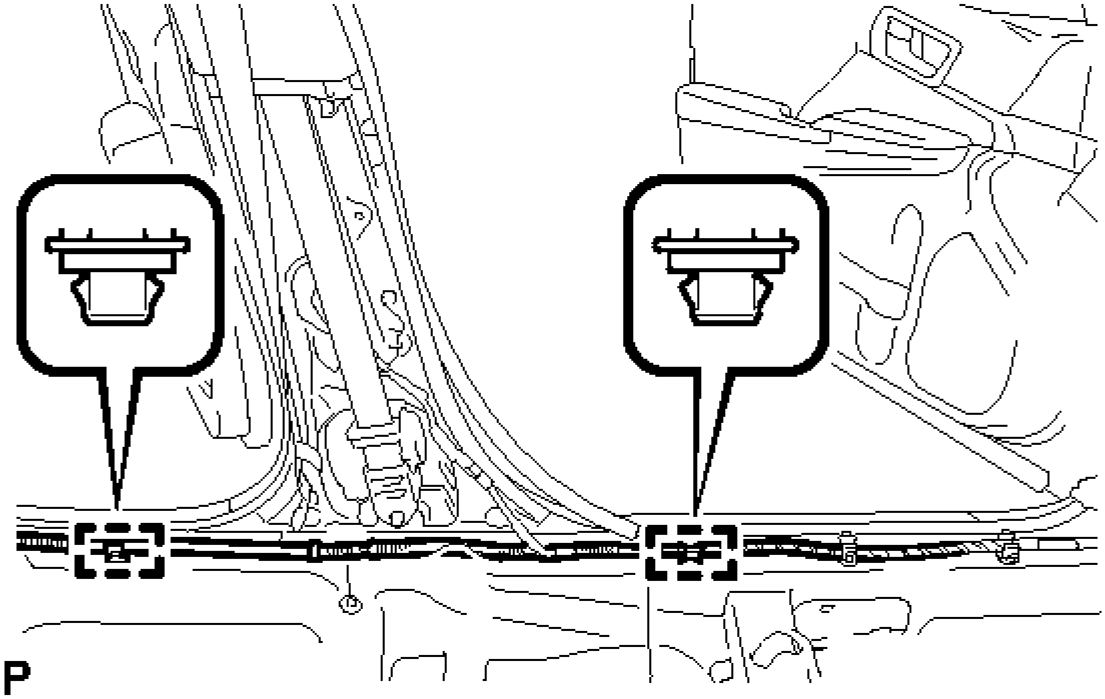

Fig. 259: Identifying Scuff Plate Clip Clamps
Courtesy of TOYOTA MOTOR SALES, U.S.A., INC.

d. Turn back the floor carpet so that the luggage door lock control cable sub-assembly and fuel lid lock control cable sub-assembly can be removed.

e. w/o Wireless Door Lock Control System:

    1. Disconnect the luggage door lock control cable sub-assembly.

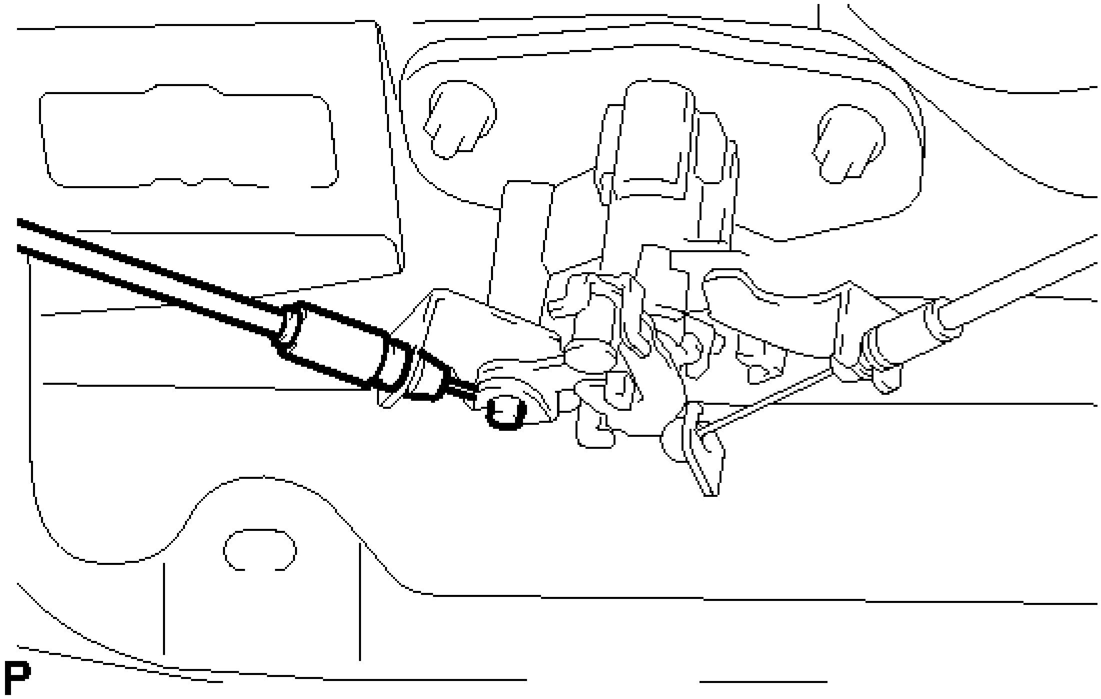

Fig. 260: Identifying Luggage Door Lock Control Cable w/o Wireless Door Lock Control System
Courtesy of TOYOTA MOTOR SALES, U.S.A., INC.

    2. Disengage the 3 clamps and disconnect luggage door lock control cable sub-assembly.

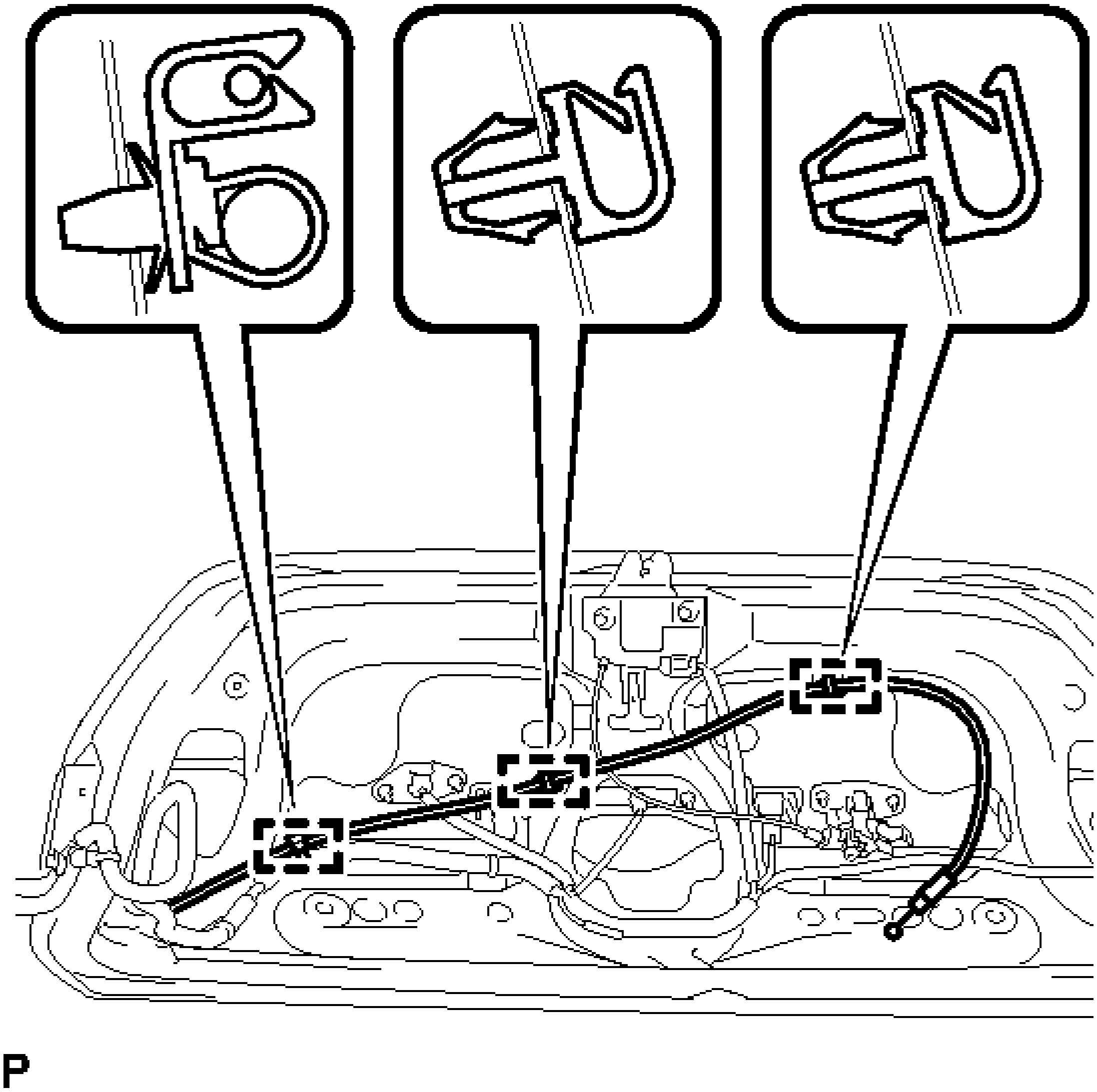

Fig. 261: Identifying Luggage Door Lock Control Cable Clamps w/o Wireless Door Lock Control System
Courtesy of TOYOTA MOTOR SALES, U.S.A., INC.

f. w/ Wireless Door Lock Control System:
    1. Disengage the guide as shown in the illustration.

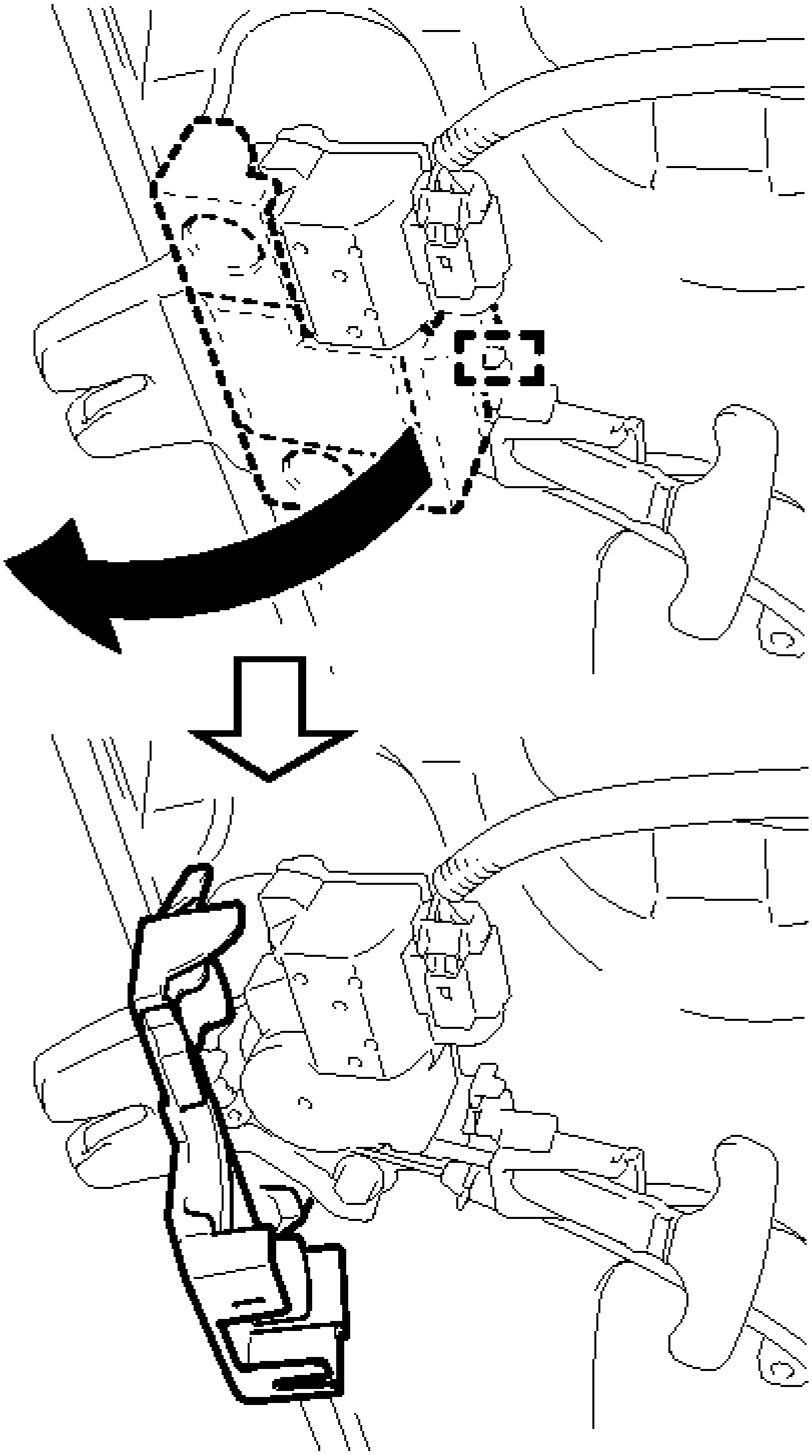

P

Fig. 262: Disconnecting Luggage Door Lock Cover w/ Wireless Door Lock Control System
Courtesy of TOYOTA MOTOR SALES, U.S.A., INC.

2. Disconnect the luggage door lock control cable sub-assembly.

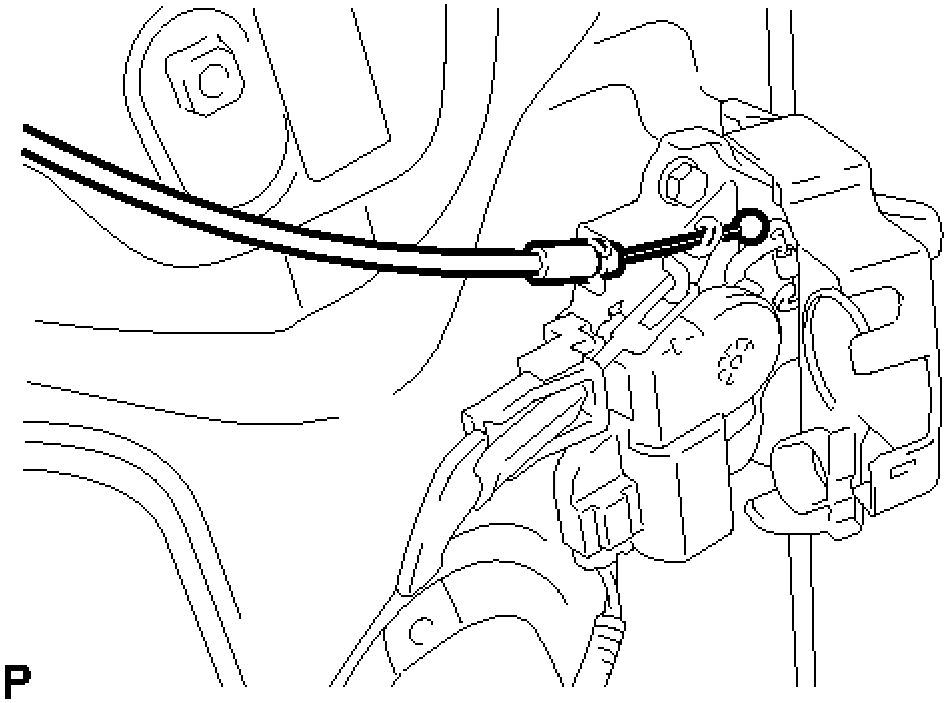

Fig. 263: Identifying Luggage Door Lock Control Cable w/ Wireless Door Lock Control System
Courtesy of TOYOTA MOTOR SALES, U.S.A., INC.

3. Disengage the clamp and disconnect the luggage door lock control cable sub-assembly.

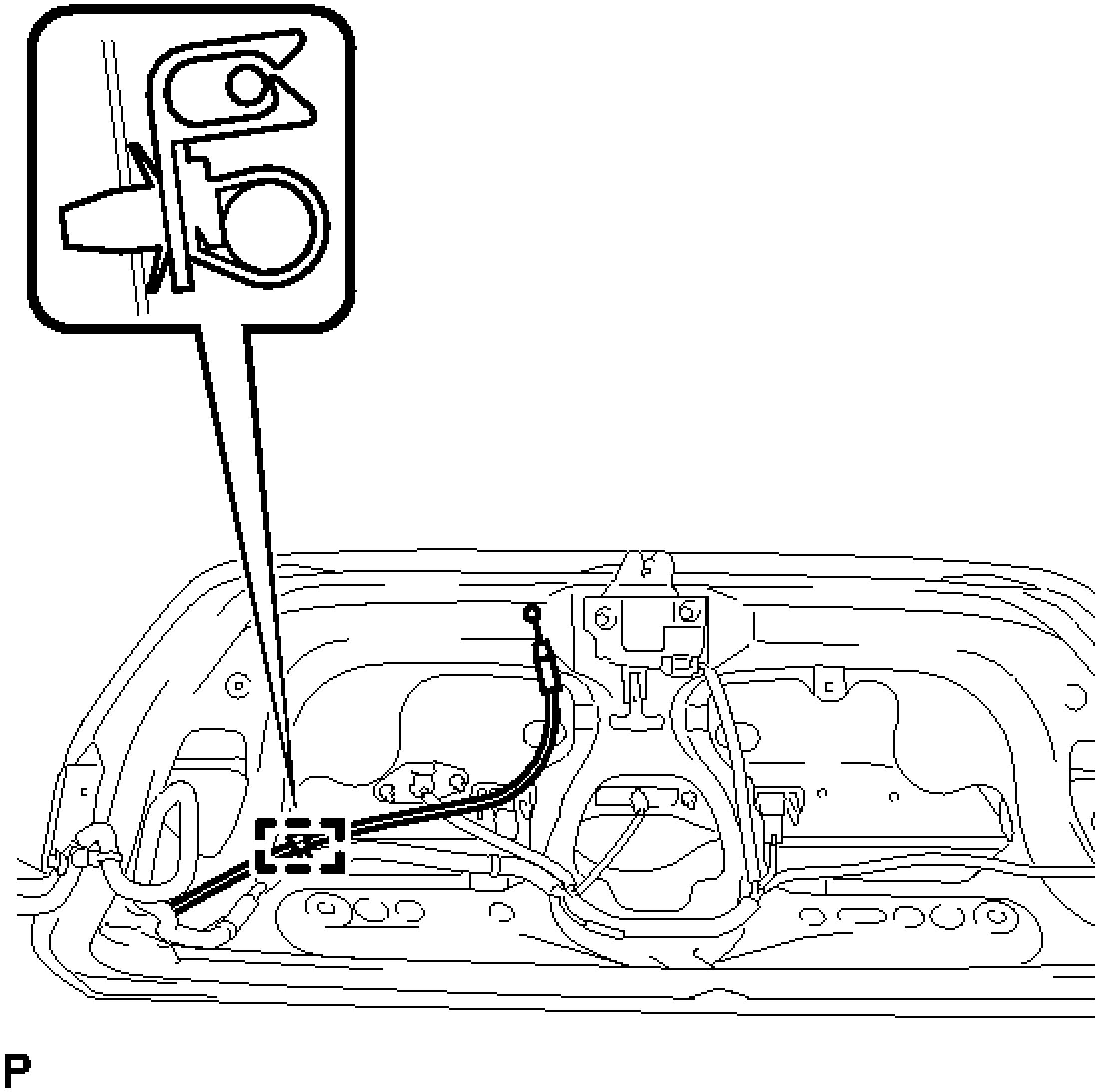

Fig. 264: Identifying Luggage Door Lock Control Cable Clamp w/ Wireless Door Lock Control System
Courtesy of TOYOTA MOTOR SALES, U.S.A., INC.

g. Rotate the fuel filler opening lid lock retainer as shown in the illustration to align the cutouts and the guides <A>, and then pull the fuel filler opening lid lock retainer.

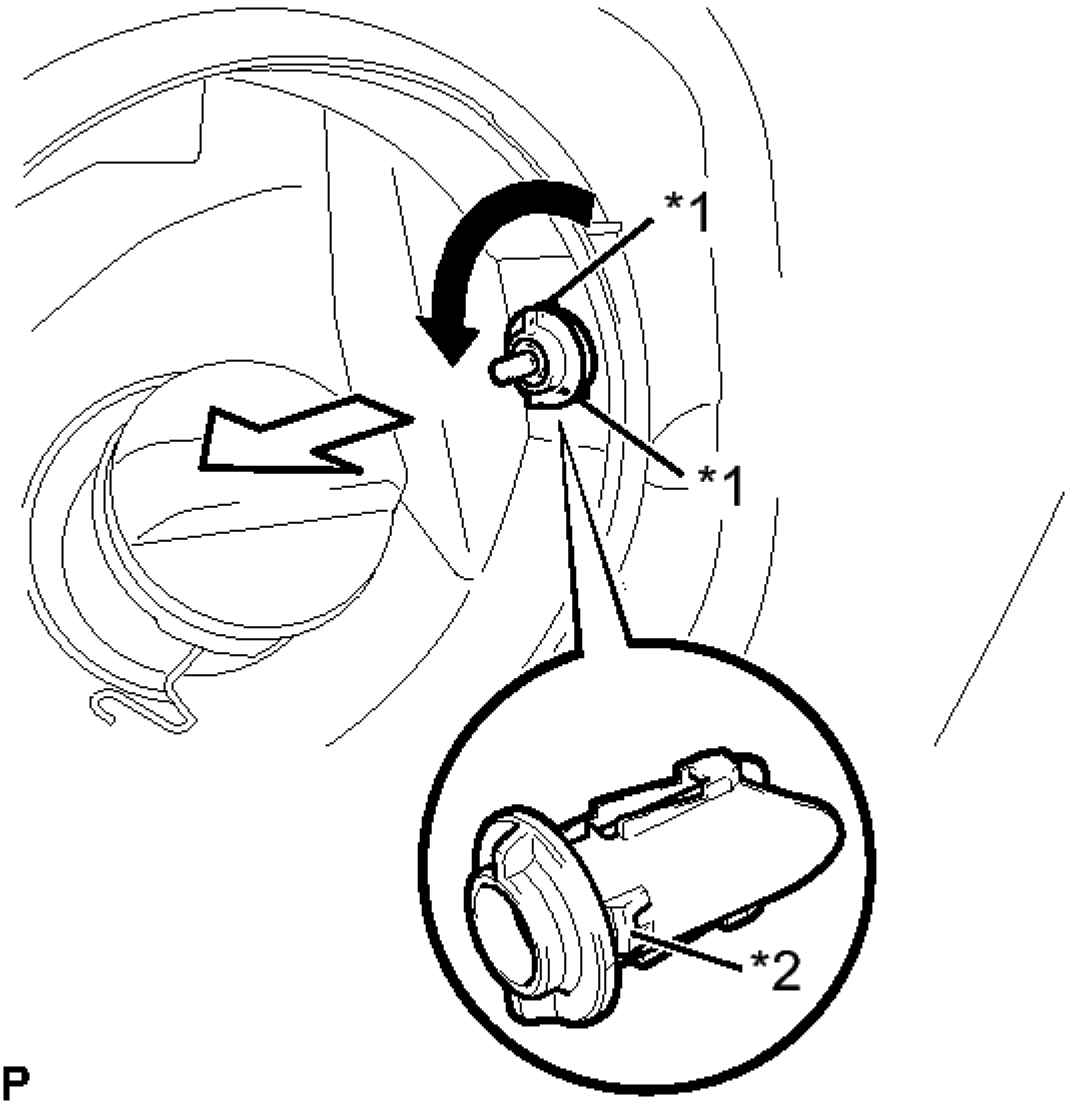

Fig. 265: Rotating Fuel Filler Opening Lid Lock Retainer
Courtesy of TOYOTA MOTOR SALES, U.S.A., INC.

TEXT IN ILLUSTRATION

*1	Cutout
*2	Guide <A>

h. Rotate the fuel filler opening lid lock retainer as shown in the illustration to align the cutouts and guides <B>, and then pull the fuel filler opening lid lock retainer.

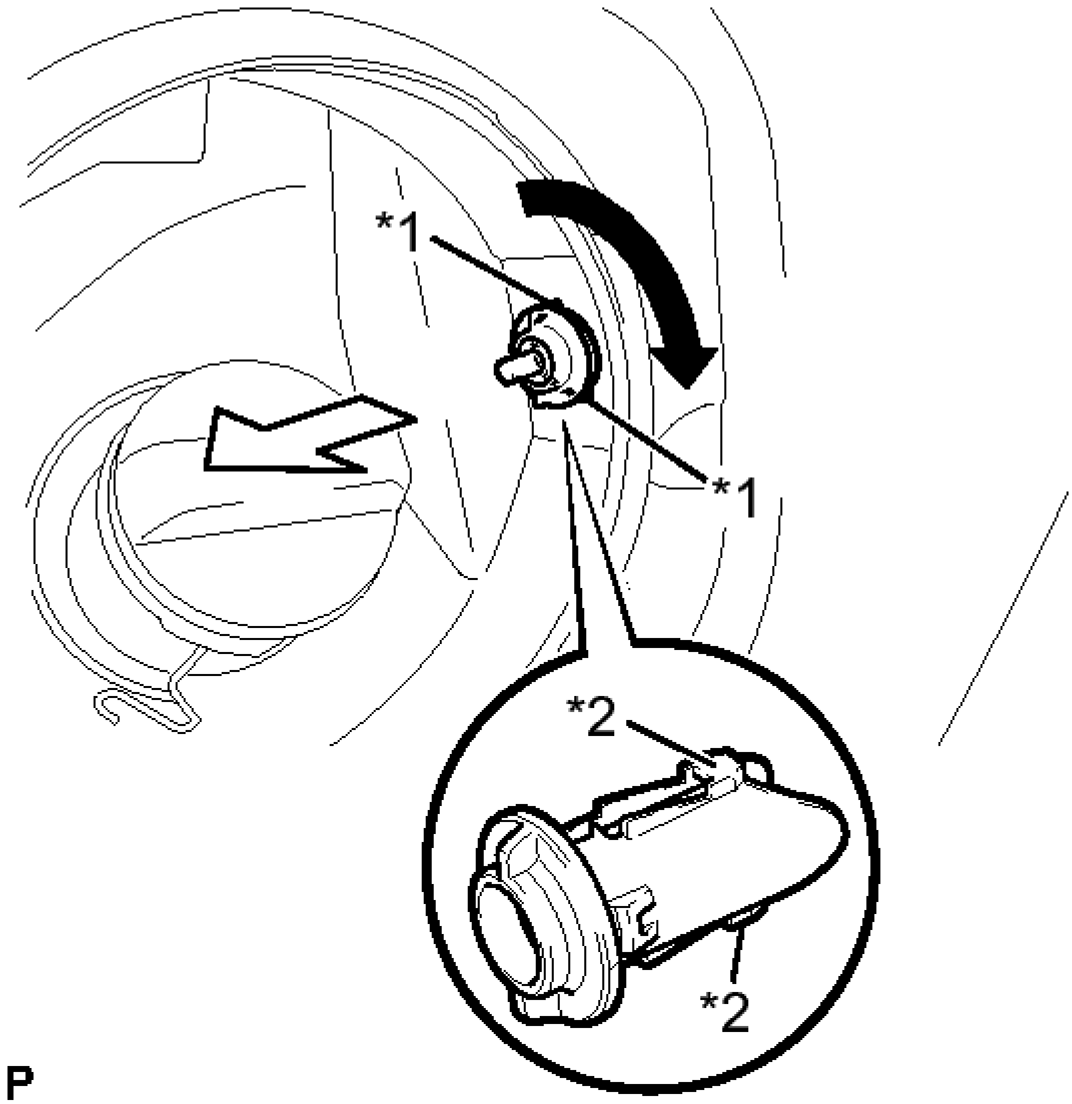

Fig. 266: Rotating Fuel Filler Opening Lid Lock Retainer
Courtesy of TOYOTA MOTOR SALES, U.S.A., INC.

TEXT IN ILLUSTRATION

*1	Cutout
*2	Guide <B>

i. Pull out the fuel filler opening lid lock retainer with both guides <B and C> aligned with the cutouts.

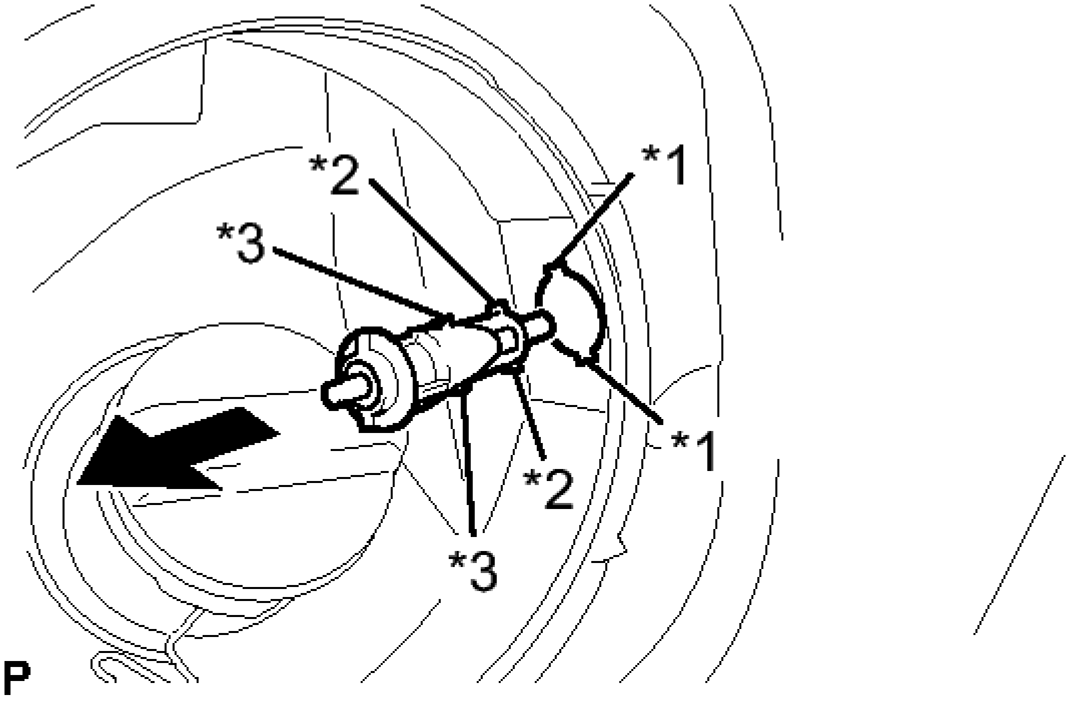

Fig. 267: Removing Fuel Filler Opening Lid Lock Retainer
Courtesy of TOYOTA MOTOR SALES, U.S.A., INC.

TEXT IN ILLUSTRATION

*1	Cutout
*2	Guide <C>
*3	Guide <B>

j. Disengage the 2 claws and remove the fuel filler opening lid lock retainer.

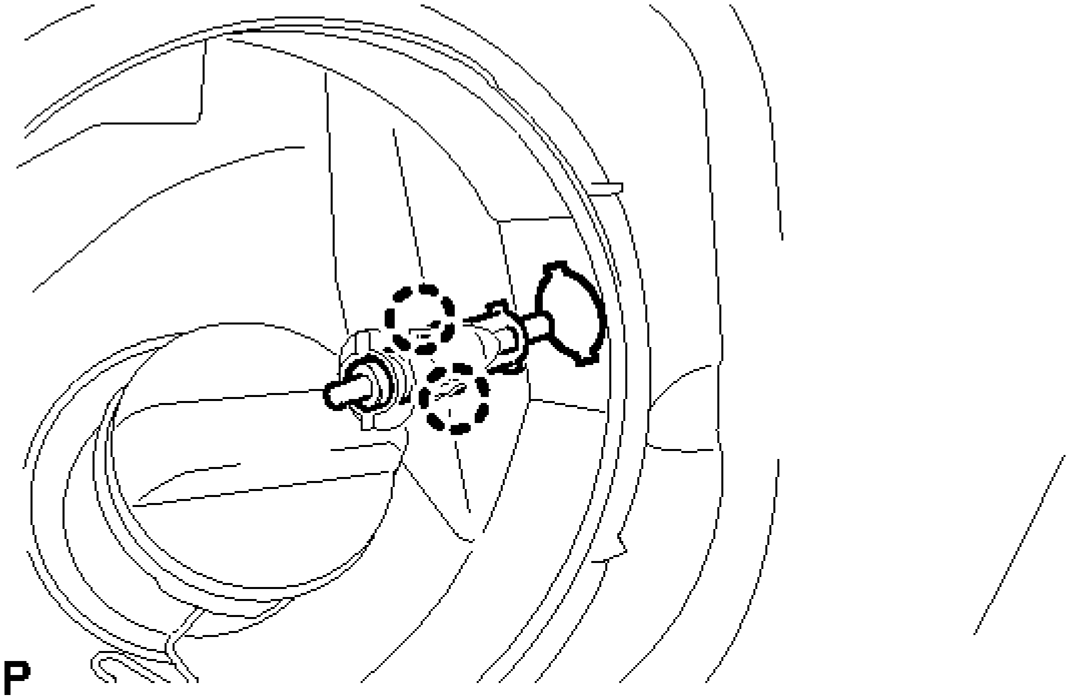

Fig. 268: Identifying Fuel Filler Opening Lid Lock Retainer Claws
Courtesy of TOYOTA MOTOR SALES, U.S.A., INC.

k. Disengage the 10 clamps and remove the fuel lid lock control cable sub-assembly and luggage door lock control cable sub-assembly.

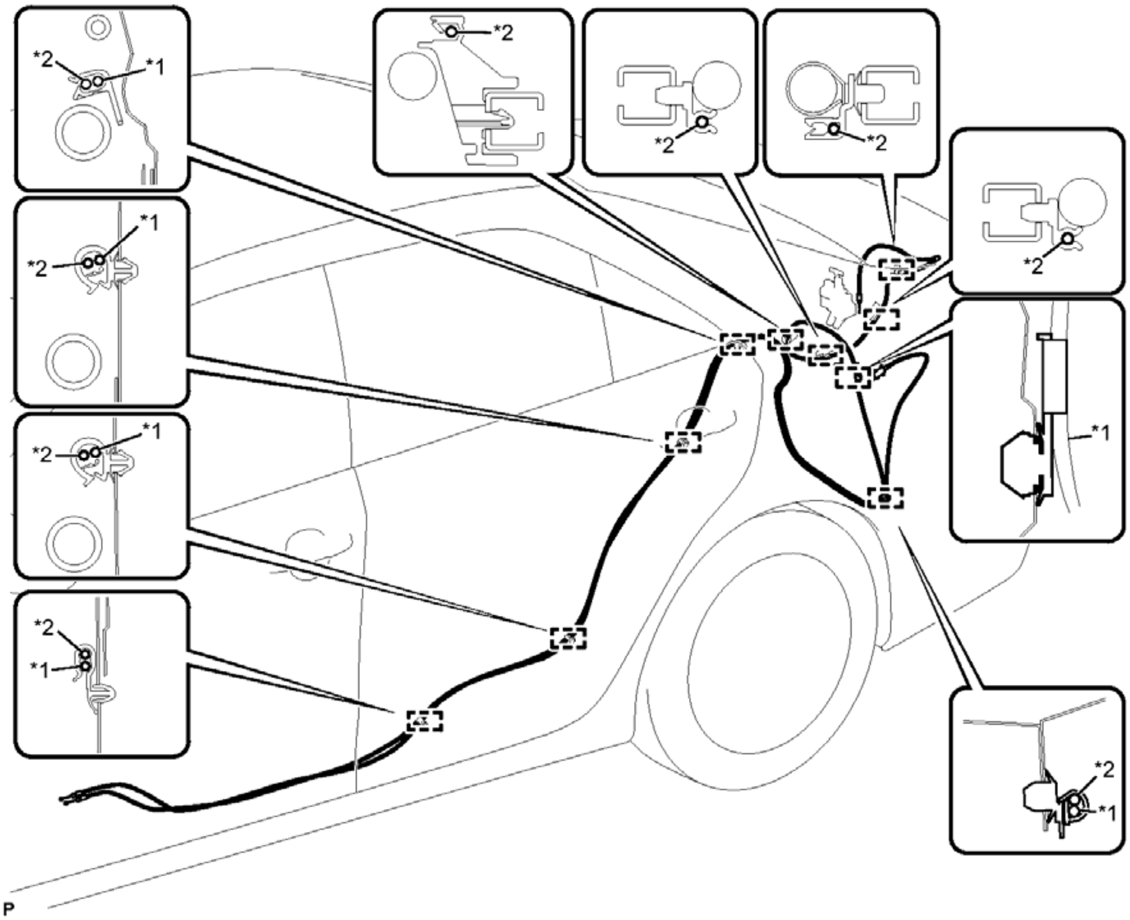

Fig. 269: Identifying Fuel Lid Lock Control Cable Clamps
Courtesy of TOYOTA MOTOR SALES, U.S.A., INC.

TEXT IN ILLUSTRATION

*1	Fuel Lid Lock Control Cable Sub-assembly	*2	Luggage Door Lock Control Cable Sub-assembly

l. Using a knife, cut off the clamp as shown in the illustration.

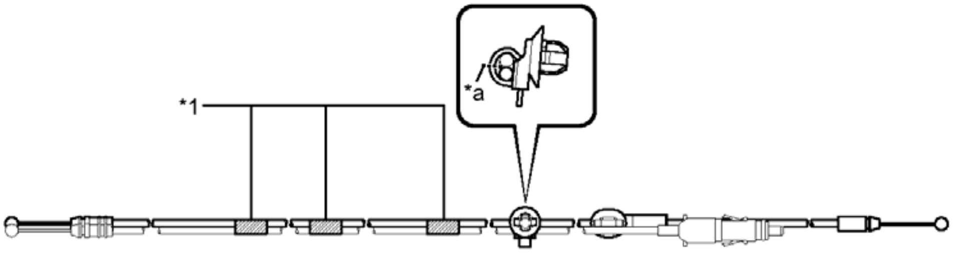

P

Fig. 270: Identifying Clamp To Be Cut
Courtesy of TOYOTA MOTOR SALES, U.S.A., INC.

TEXT IN ILLUSTRATION

*1	Tape	-	-
*a	Cut	-	-

NOTE: **Be careful not to damage the vehicle fuel lid lock control cable sub-assembly and luggage door lock control cable sub-assembly.**

m. Remove the clamp.
n. Remove the 3 pieces of tape and fuel lid lock control cable sub-assembly.

INSTALLATION

INSTALLATION

1. **INSTALL LUGGAGE DOOR LOCK CONTROL CABLE SUB-ASSEMBLY**
   a. Install the luggage door lock control cable sub-assembly to the fuel lid lock control cable sub-assembly with the new clamp (A) and the 3 pieces of tape as shown in the illustration.

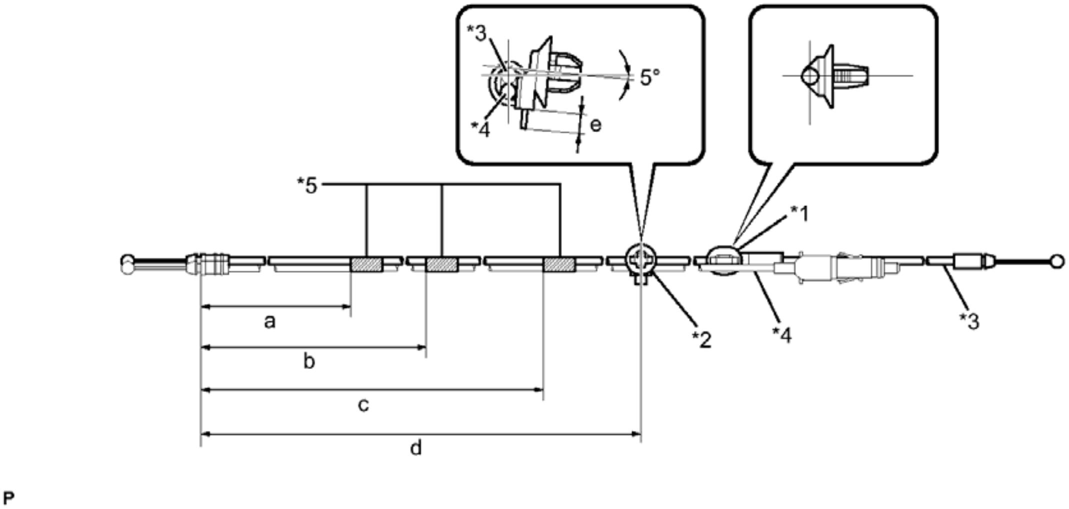

Fig. 271: Identifying Luggage Door Lock Control Cable Clamp And Tape
Courtesy of TOYOTA MOTOR SALES, U.S.A., INC.

TEXT IN ILLUSTRATION

*1	Clamp (A)	*2	Clamp
*3	Luggage Door Lock Control Cable Sub-assembly	*4	Fuel Lid Lock Control Cable Sub-assembly
*5	Tape	-	-

REFERENCE MEASUREMENT

Area	Measurement	Area	Measurement
a	295 to 305 mm (11.6 to 12.0 in.)	b	880 to 900 mm (2.29 to 2.95 ft.)
c	2090 to 2110 mm (6.86 to 6.92 ft.)	d	2970 to 2990 mm (8.86 to 9.81 ft.)
e	5.0 mm (0.197 in.) or less	-	-

NOTE:

- **Wrap tape around the designated position 1 to 3 times.**
- **Make sure that the fuel lid lock control cable sub-assembly and**

luggage door lock control cable sub-assembly are not kinked.

b. Engage the 10 clamps and install the fuel lid lock control cable sub-assembly and luggage door lock control cable sub-assembly.
c. Align the cutouts and guides, and then insert the fuel filler opening lid lock retainer.

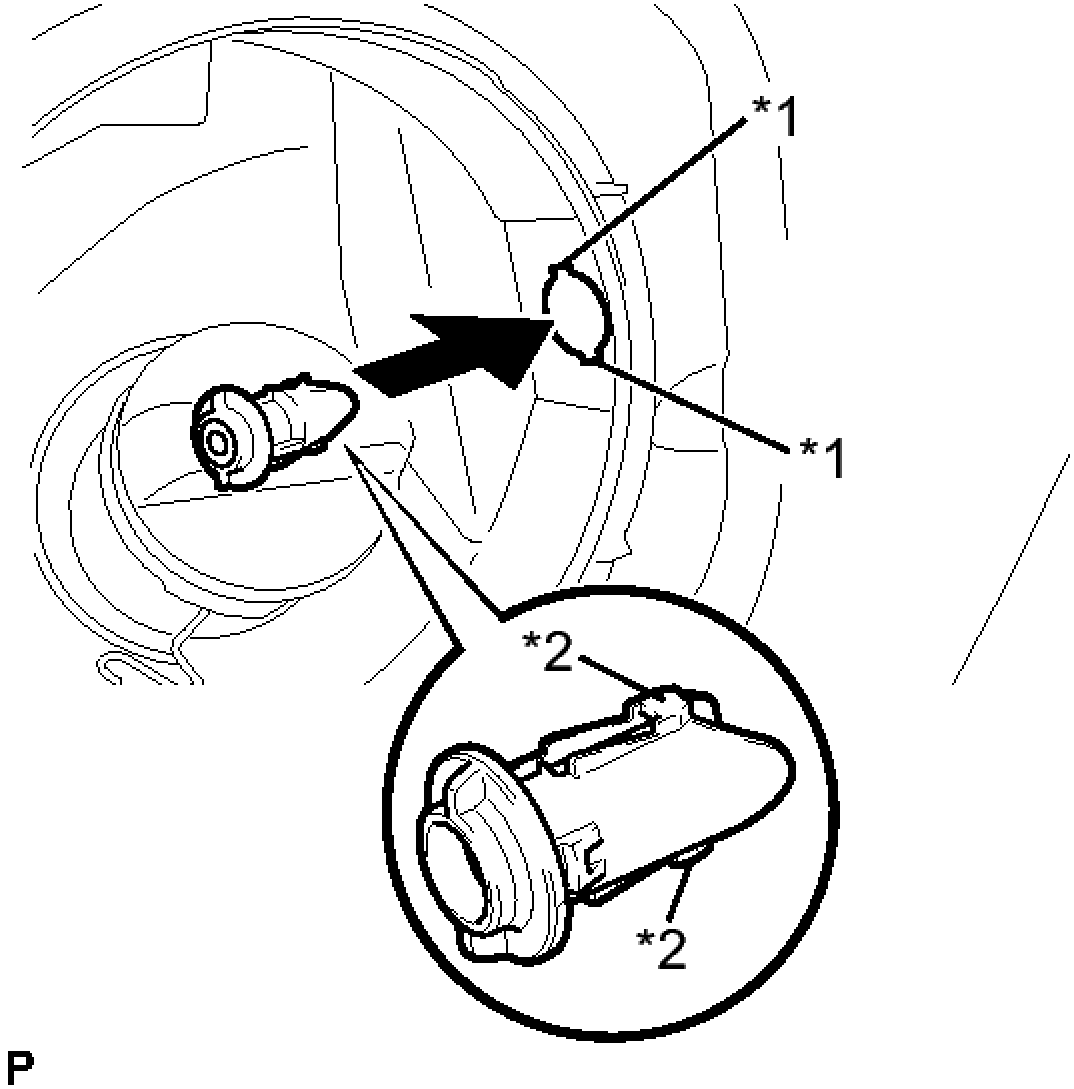

Fig. 272: Installing Fuel Filler Opening Lid Lock Retainer
Courtesy of TOYOTA MOTOR SALES, U.S.A., INC.

TEXT IN ILLUSTRATION

*1	Cutout
*2	Guide

d. Engage the 2 claws and install the fuel filler opening lid lock retainer.

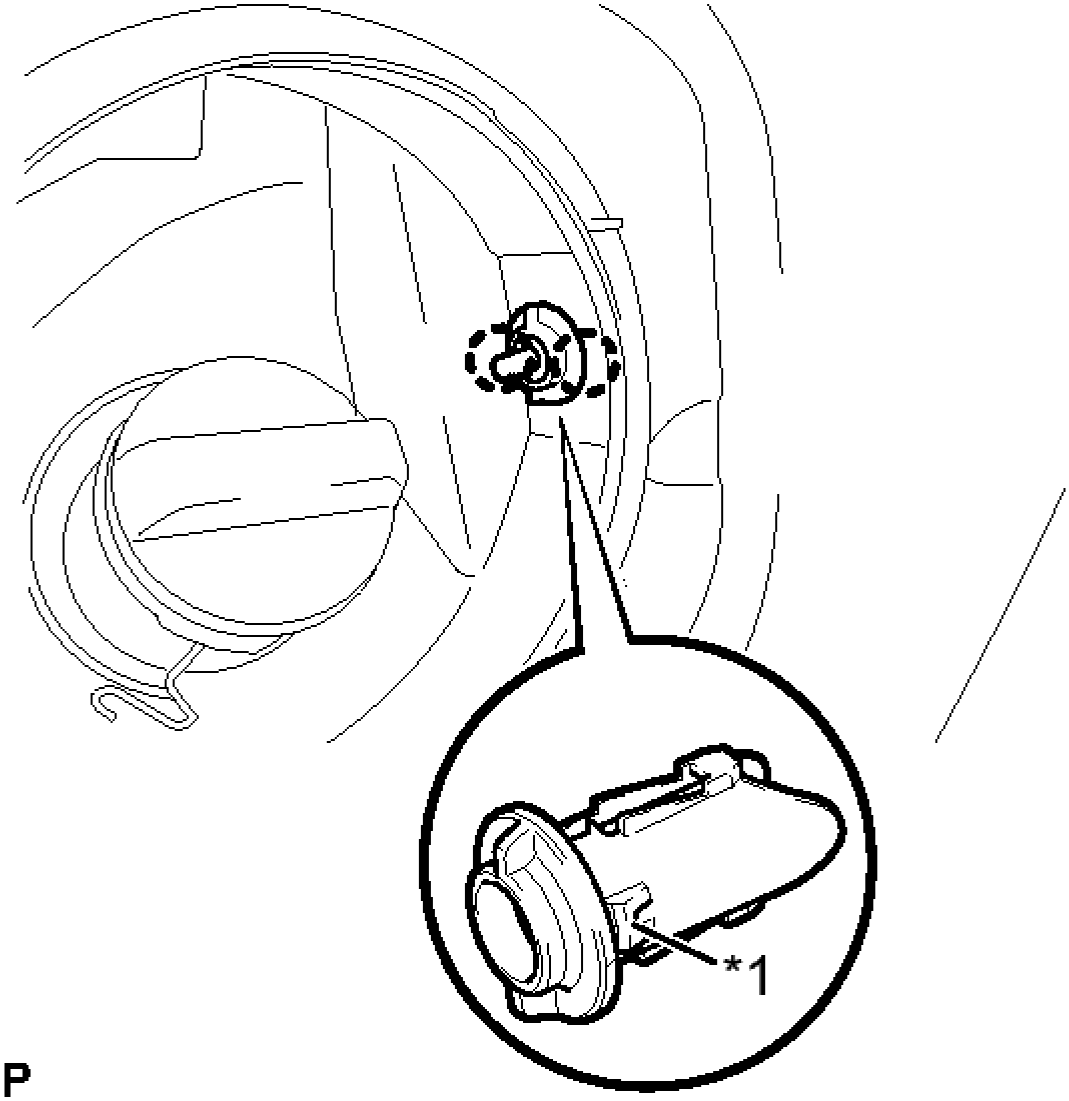

Fig. 273: Identifying Fuel Filler Opening Lid Lock Retainer Claws
Courtesy of TOYOTA MOTOR SALES, U.S.A., INC.

TEXT IN ILLUSTRATION

*1	Claw

e. Engage the 2 claws and install the fuel lid lock control cable sub-assembly.

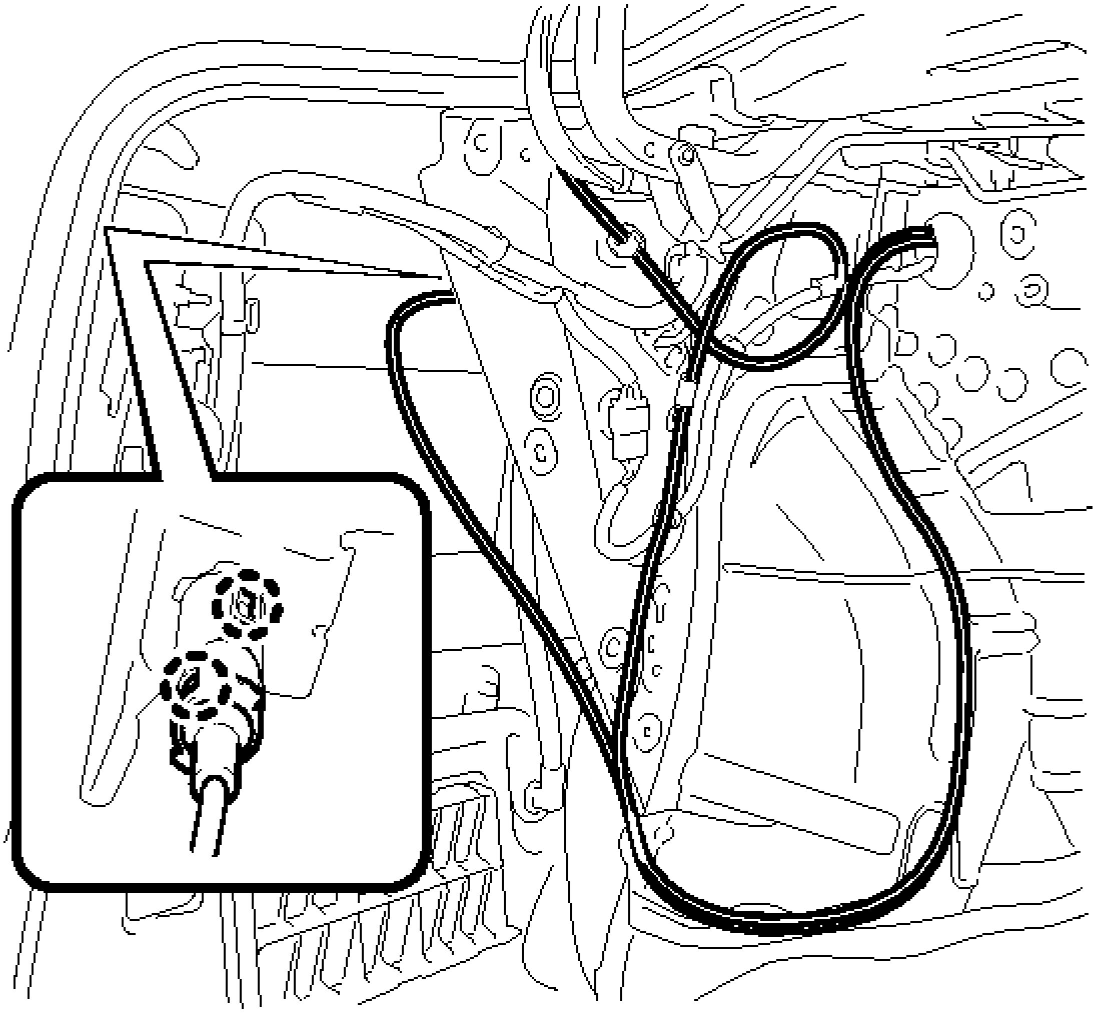

Fig. 274: Identifying Fuel Lid Lock Control Cable Claws
Courtesy of TOYOTA MOTOR SALES, U.S.A., INC.

f. w/ Wireless Door Lock Control System:
   1. Engage the clamp and connect the luggage door lock control cable sub-assembly.
   2. Connect the luggage door lock control cable sub-assembly.
   3. Engage the guide as shown in the illustration.

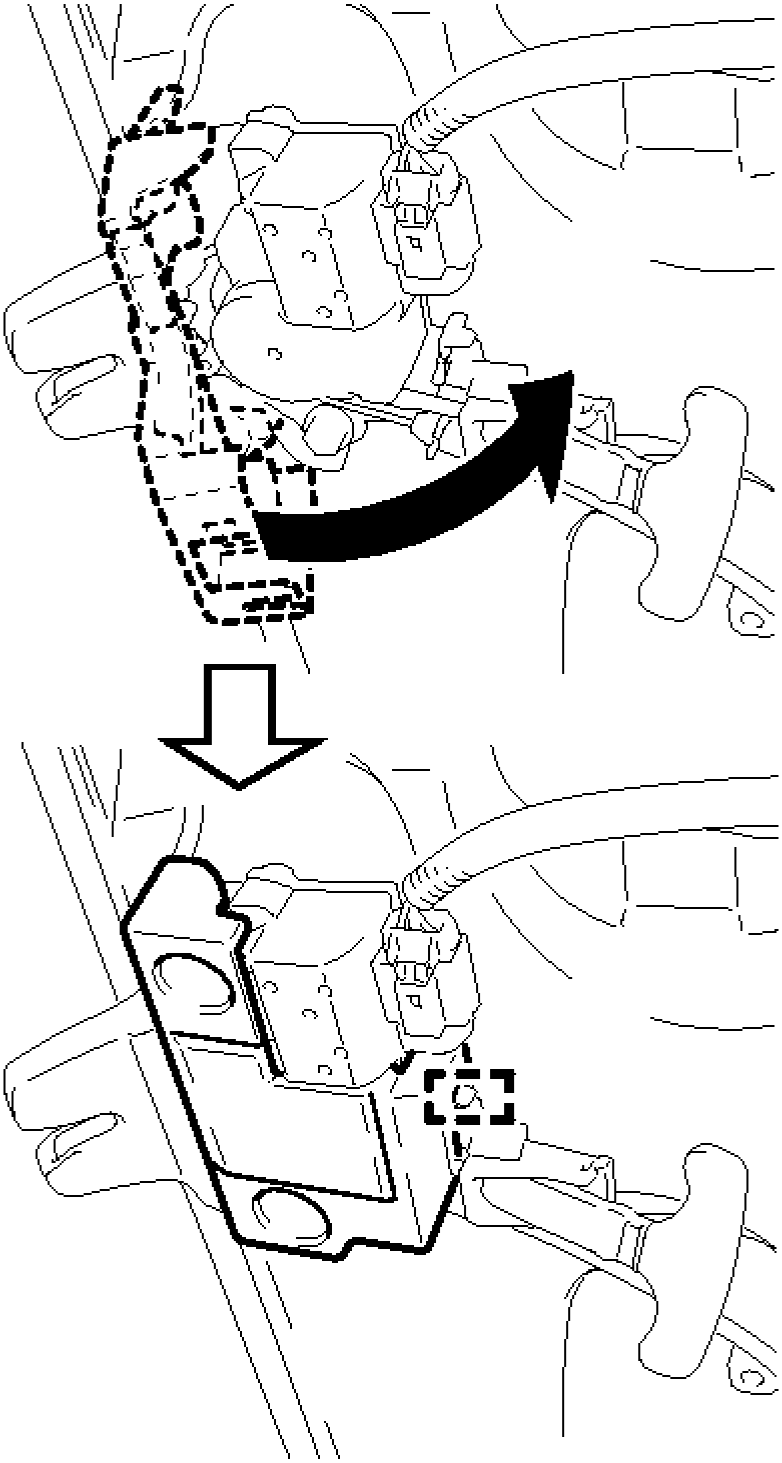

Fig. 275: Connecting Luggage Door Lock Control Cable Cover
Courtesy of TOYOTA MOTOR SALES, U.S.A., INC.

g. w/o Wireless Door Lock Control System:
    1. Engage the 3 clamps and connect the luggage door lock control cable sub-assembly.

    2. Connect the luggage door lock control cable sub-assembly to the luggage compartment door lock cylinder assembly

  h. Return the floor carpet to the original position.
  i. Engage the 2 clamps and install the 2 scuff plate clips.
  j. Engage the 3 clamps and connect the wire harness.

2. **INSTALL FUEL LID LOCK OPEN LEVER SUB-ASSEMBLY**
    a. Connect the fuel lid lock control cable sub-assembly and luggage door lock control cable sub-assembly to the fuel lid lock open lever sub-assembly.

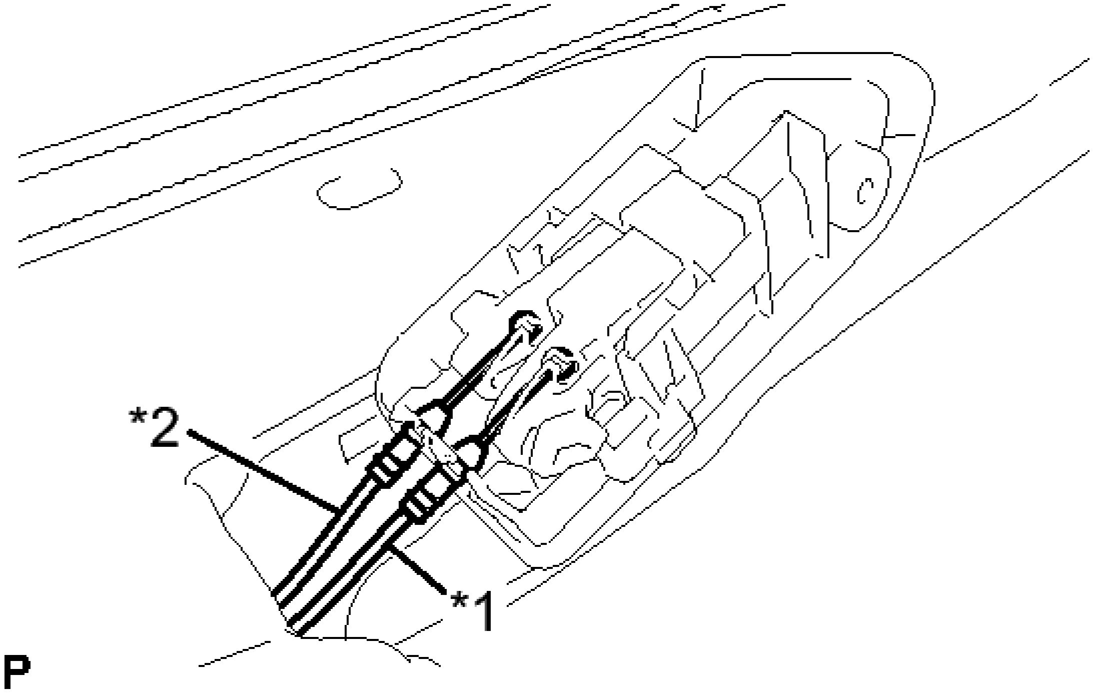

Fig. 276: Identifying Fuel Lid Lock And Luggage Door Lock Control Cables
Courtesy of TOYOTA MOTOR SALES, U.S.A., INC.

TEXT IN ILLUSTRATION

*1	Luggage Door Lock Control Cable Sub-assembly
*2	Fuel Lid Lock Control Cable Sub-assembly

b. Engage the guide and install the fuel lid lock open lever sub-assembly as shown in the illustration.

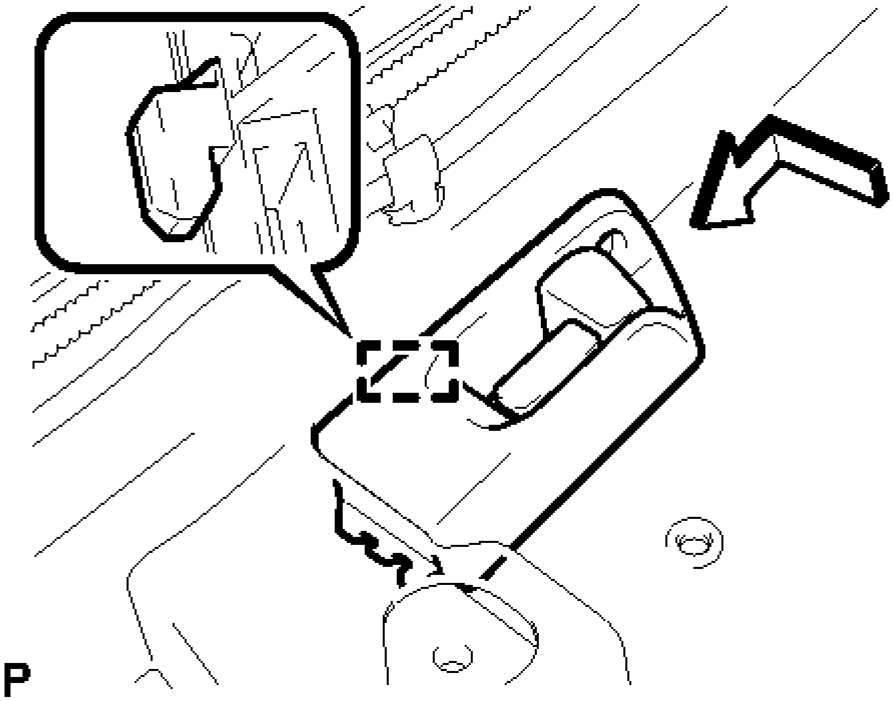

Fig. 277: Engaging Fuel Lid Lock Open Lever Guide
Courtesy of TOYOTA MOTOR SALES, U.S.A., INC.

c. Install the screw.

3. **INSTALL LUGGAGE COMPARTMENT INNER TRIM COVER LH** . See step 6.
4. **INSTALL NO. 1 LUGGAGE COMPARTMENT TRIM HOOK**
    a. Engage the pin to install the No. 1 luggage compartment trim hook.

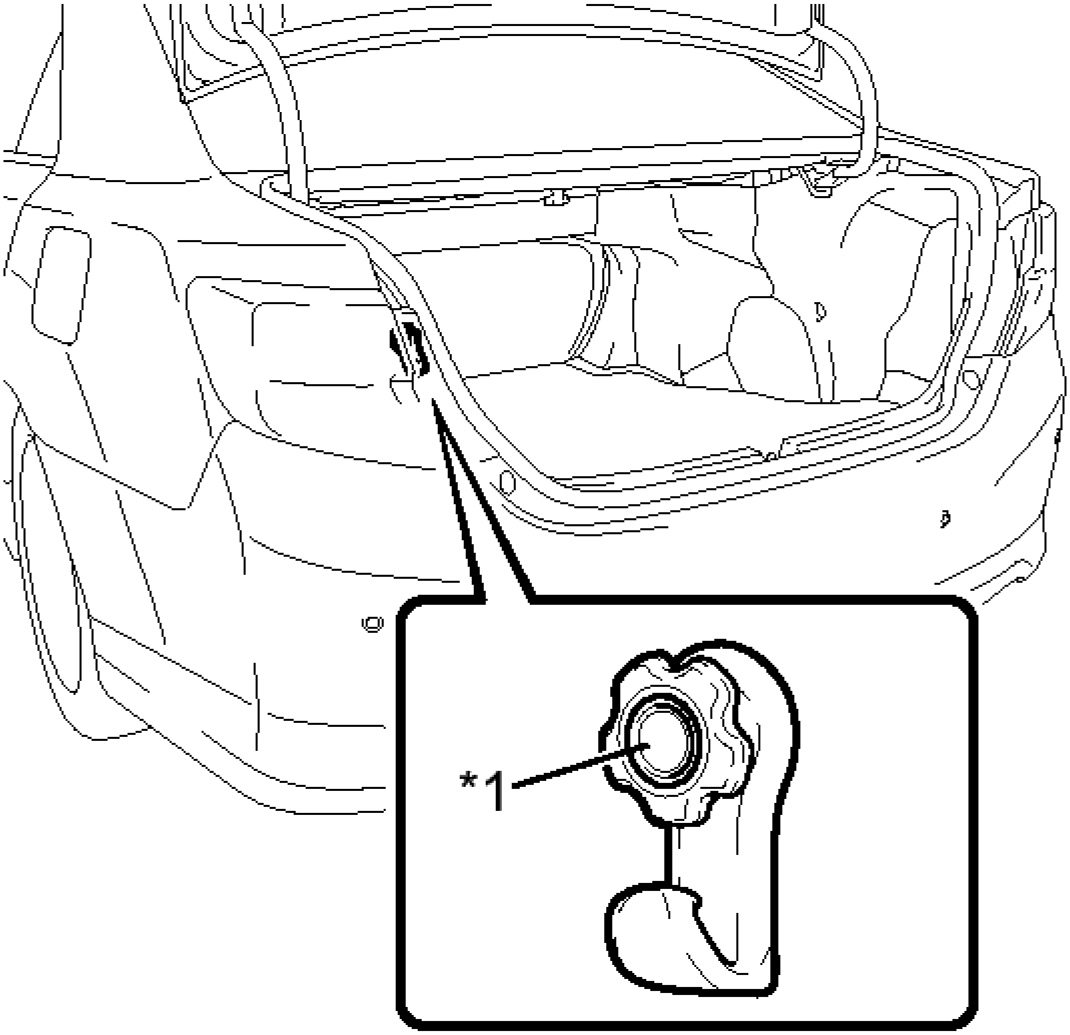

Fig. 278: Locating No. 1 Luggage Compartment Trim Hook Pin
Courtesy of TOYOTA MOTOR SALES, U.S.A., INC.

TEXT IN ILLUSTRATION

*1	Pin

5. **INSTALL REAR FLOOR FINISH PLATE** . See step 9.
6. **INSTALL BAGGAGE HOLDER NET (w/ Partition Net)** . See step 10.
7. **INSTALL SPARE WHEEL COVER ASSEMBLY** . See step 11.
8. **INSTALL LUGGAGE COMPARTMENT FLOOR MAT** . See step 12.
9. **INSTALL LUGGAGE COMPARTMENT DOOR COVER** . See step 12.
10. **INSTALL REAR SIDE SEATBACK ASSEMBLY LH** . Refer to **INSTALLATION - Step 2** .
11. **INSTALL CENTER PILLAR LOWER GARNISH LH** . Refer to **INSTALLATION - Step 22** .
12. **CONNECT FRONT SEAT OUTER BELT ASSEMBLY LH** . Refer to **INSTALLATION - Step 6** .

13. **INSTALL LAP BELT OUTER ANCHOR COVER** . Refer to **INSTALLATION - Step 7** .
14. **INSTALL REAR DOOR OPENING TRIM WEATHERSTRIP LH** . Refer to **INSTALLATION - Step 25** .
15. **INSTALL REAR DOOR SCUFF PLATE LH** . Refer to **INSTALLATION - Step 26** .
16. **INSTALL FRONT DOOR OPENING TRIM WEATHERSTRIP LH** . Refer to **INSTALLATION - Step 42** .
17. **INSTALL FRONT DOOR SCUFF PLATE LH** . Refer to **INSTALLATION - Step 44** .
18. **INSTALL REAR SEAT CUSHION LOCK HOOK** . Refer to **INSTALLATION - Step 6** .
19. **INSTALL REAR SEAT CUSHION ASSEMBLY** . Refer to **INSTALLATION - Step 7** .
20. **INSTALL FRONT SEAT ASSEMBLY LH (for TMMK Made Manual Seat)**

    Refer to **INSTALLATION** .

21. **INSTALL FRONT SEAT ASSEMBLY LH (for TMMK Made Power Seat)**

    Refer to **INSTALLATION** .

22. **INSTALL FRONT SEAT ASSEMBLY LH (for SIA Made Manual Seat)**

    Refer to **INSTALLATION** .

23. **INSTALL FRONT SEAT ASSEMBLY LH (for SIA Made Power Seat)**

    Refer to **INSTALLATION** .

24. **CONNECT CABLE TO NEGATIVE BATTERY TERMINAL**

    NOTE: **When disconnecting the cable, some systems need to be initialized after the cable is reconnected. Refer to INITIALIZATION .**

25. **INSPECT SRS WARNING LIGHT**

    For Separate Type Yaw Rate Sensor: Refer to **DIAGNOSIS SYSTEM** .

    For Built-in Type Yaw Rate Sensor: Refer to **DIAGNOSIS SYSTEM** .

LUGGAGE COMPARTMENT DOOR OPENER OUTER SWITCH

COMPONENTS

ILLUSTRATION

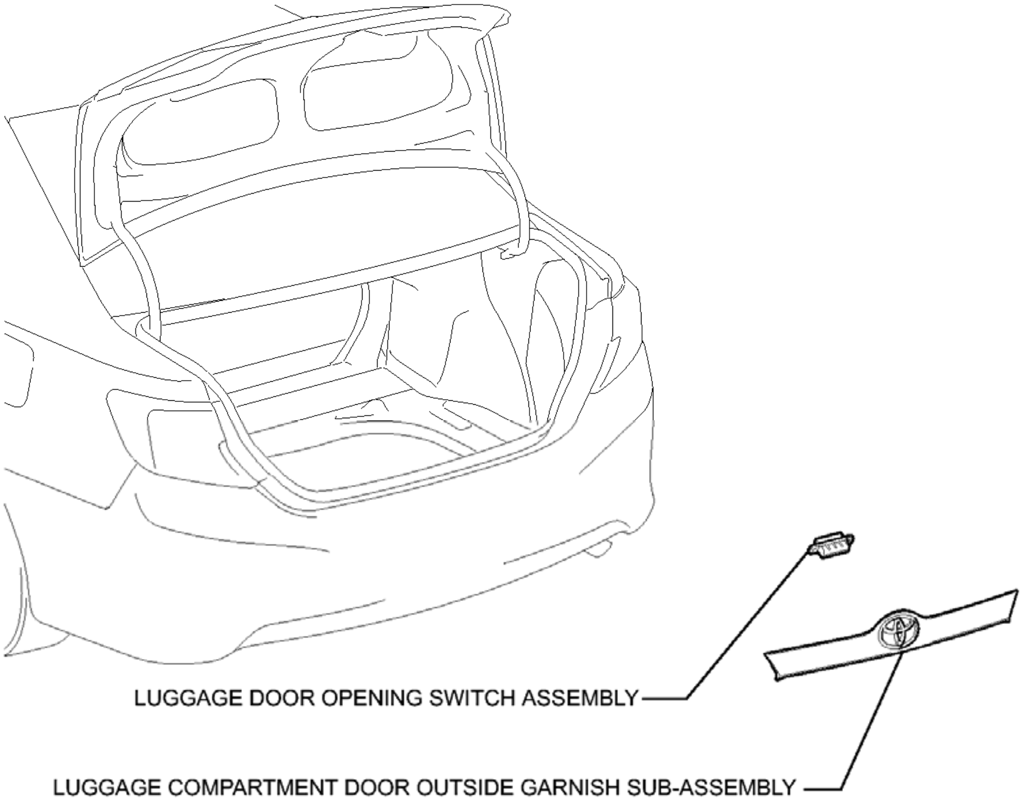
LUGGAGE DOOR OPENING SWITCH ASSEMBLY
LUGGAGE COMPARTMENT DOOR OUTSIDE GARNISH SUB-ASSEMBLY

P

Fig. 279: Identifying Luggage Compartment Door Opener Outer Switch Replacement Components
Courtesy of TOYOTA MOTOR SALES, U.S.A., INC.

REMOVAL

REMOVAL

1. **REMOVE LUGGAGE COMPARTMENT DOOR OUTSIDE GARNISH SUB-ASSEMBLY**

   Refer to **REMOVAL** .

2. **REMOVE LUGGAGE DOOR OPENING SWITCH ASSEMBLY**
   1. Remove the luggage door opening switch assembly.

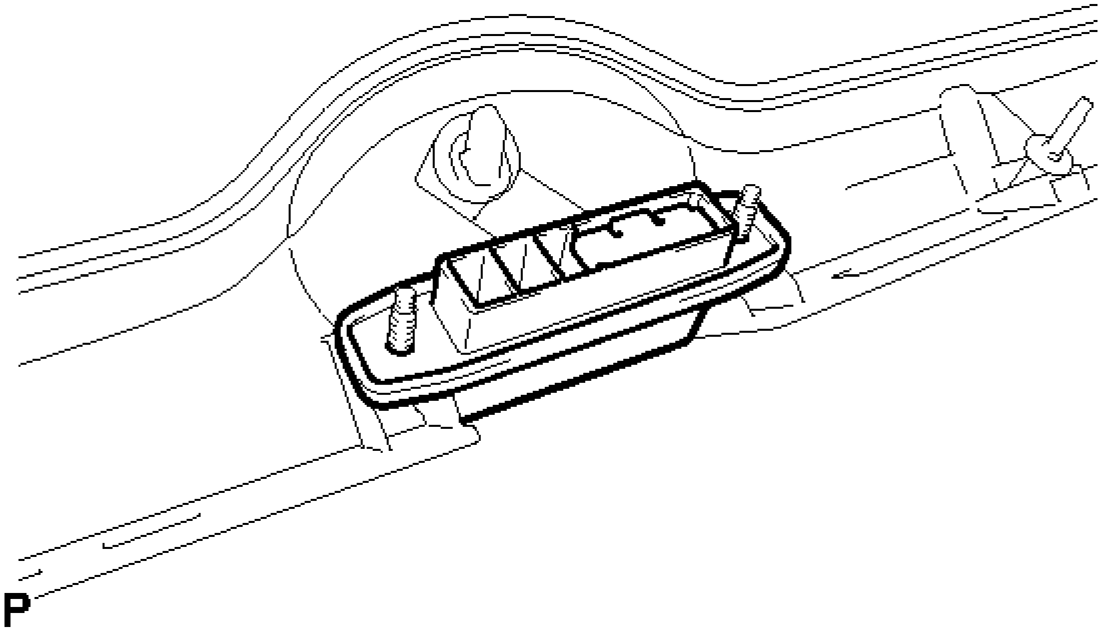

Fig. 280: Identifying Luggage Door Opening Switch
Courtesy of TOYOTA MOTOR SALES, U.S.A., INC.

INSPECTION

INSPECTION

1. **INSPECT LUGGAGE DOOR OPENING SWITCH ASSEMBLY**
    a. Measure the resistance according to the value(s) in the table below.

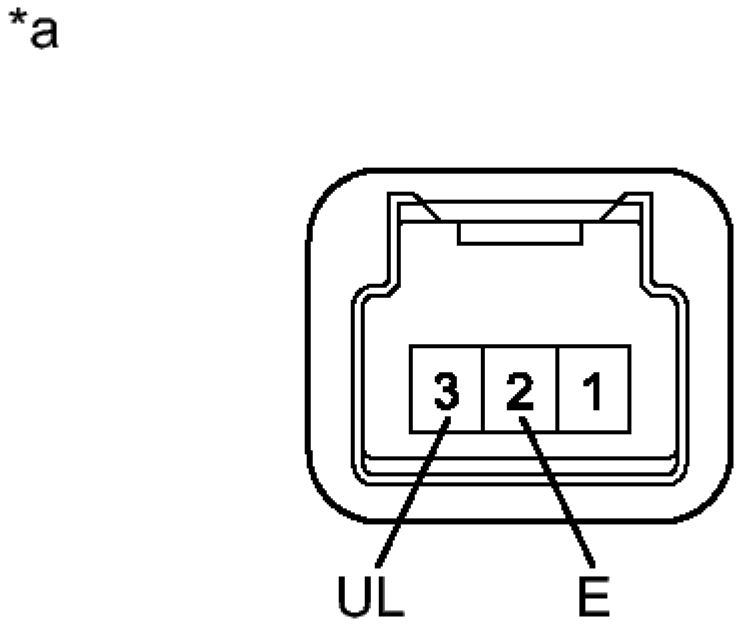

Fig. 281: Inspecting Luggage Door Opening Switch Assembly Connector Terminals
Courtesy of TOYOTA MOTOR SALES, U.S.A., INC.

Standard Resistance

Tester Connection	Switch Condition	Specified Condition
2 (E) - 3 (UL)	Luggage door opening switch assembly not pushed	10 kohms or higher
2 (E) - 3 (UL)	Luggage door opening switch assembly pushed	Below 1 ohms

TEXT IN ILLUSTRATION

*a	Component without harness connected (Luggage

	Door Opening Switch Assembly)

INSTALLATION

INSTALLATION

1. **INSTALL LUGGAGE DOOR OPENING SWITCH ASSEMBLY**
    a. Install the luggage door opening switch assembly.
2. **INSTALL LUGGAGE COMPARTMENT DOOR OUTSIDE GARNISH SUB-ASSEMBLY**

    Refer to **INSTALLATION** .

FUEL LID LOCK CONTROL CABLE ASSEMBLY

COMPONENTS

ILLUSTRATION

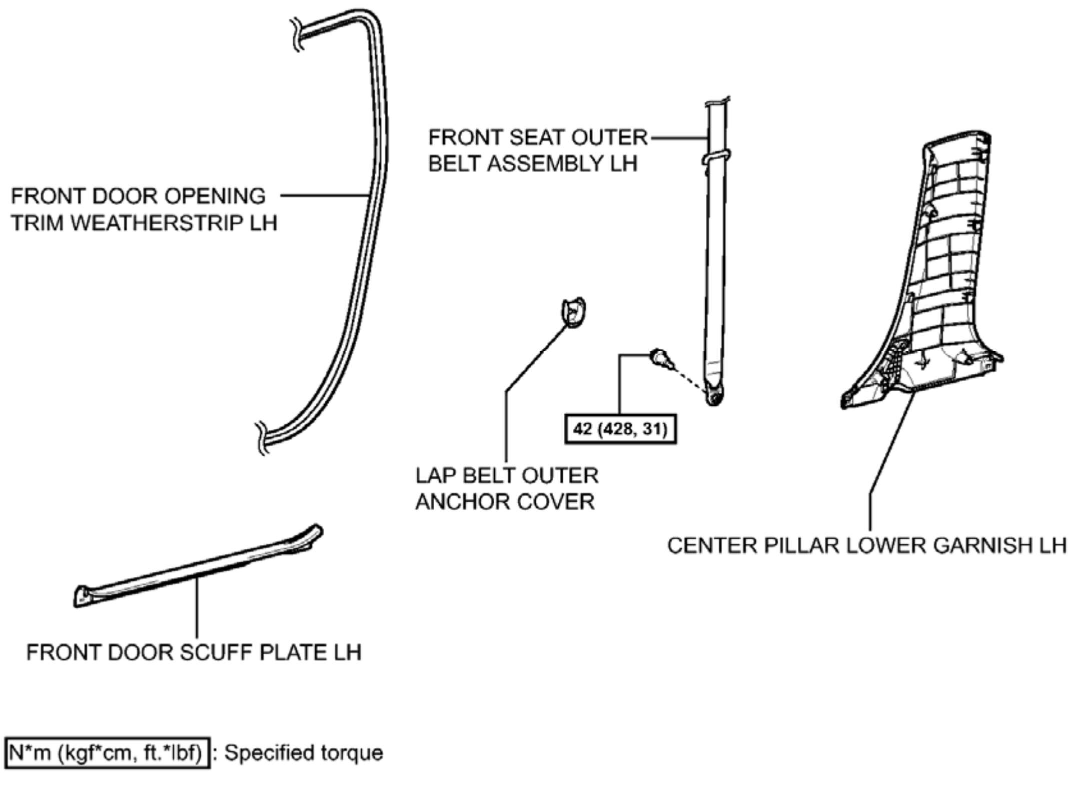
FRONT SEAT OUTER BELT ASSEMBLY LH
FRONT DOOR OPENING TRIM WEATHERSTRIP LH
42 (428, 31)
LAP BELT OUTER ANCHOR COVER
CENTER PILLAR LOWER GARNISH LH
FRONT DOOR SCUFF PLATE LH
N*m (kgf*cm, ft.*lbf) : Specified torque
P

Fig. 282: Identifying Fuel Lid Lock Control Cable Assembly Replacement Components With Torque Specifications (1 Of 4)
Courtesy of TOYOTA MOTOR SALES, U.S.A., INC.

ILLUSTRATION

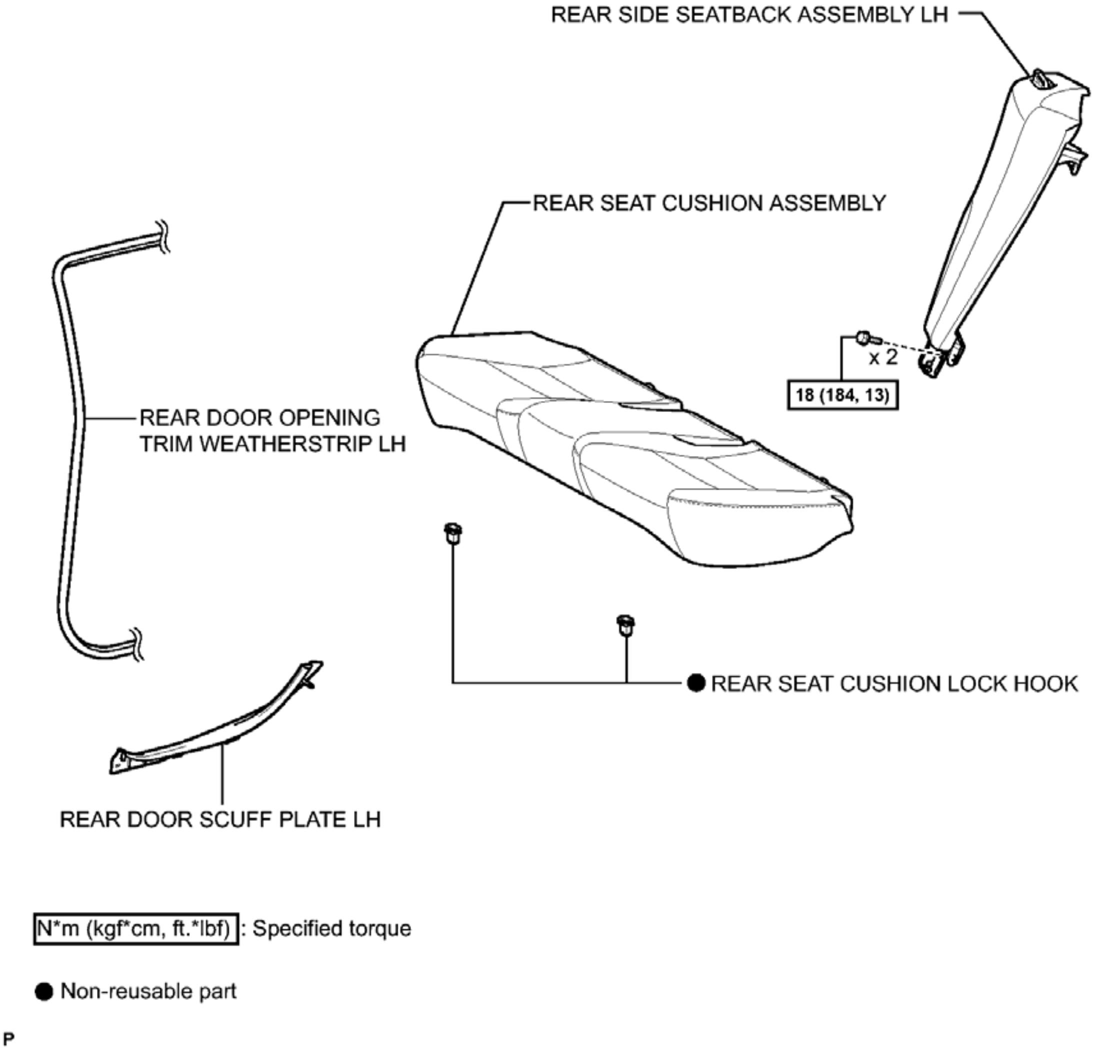
REAR SIDE SEATBACK ASSEMBLY LH
REAR SEAT CUSHION ASSEMBLY
x 2
18 (184, 13)
REAR DOOR OPENING TRIM WEATHERSTRIP LH
● REAR SEAT CUSHION LOCK HOOK
REAR DOOR SCUFF PLATE LH
N*m (kgf*cm, ft.*lbf) : Specified torque
● Non-reusable part
P

Fig. 283: Identifying Fuel Lid Lock Control Cable Assembly Replacement Components With Torque Specifications (2 Of 4)
Courtesy of TOYOTA MOTOR SALES, U.S.A., INC.

ILLUSTRATION

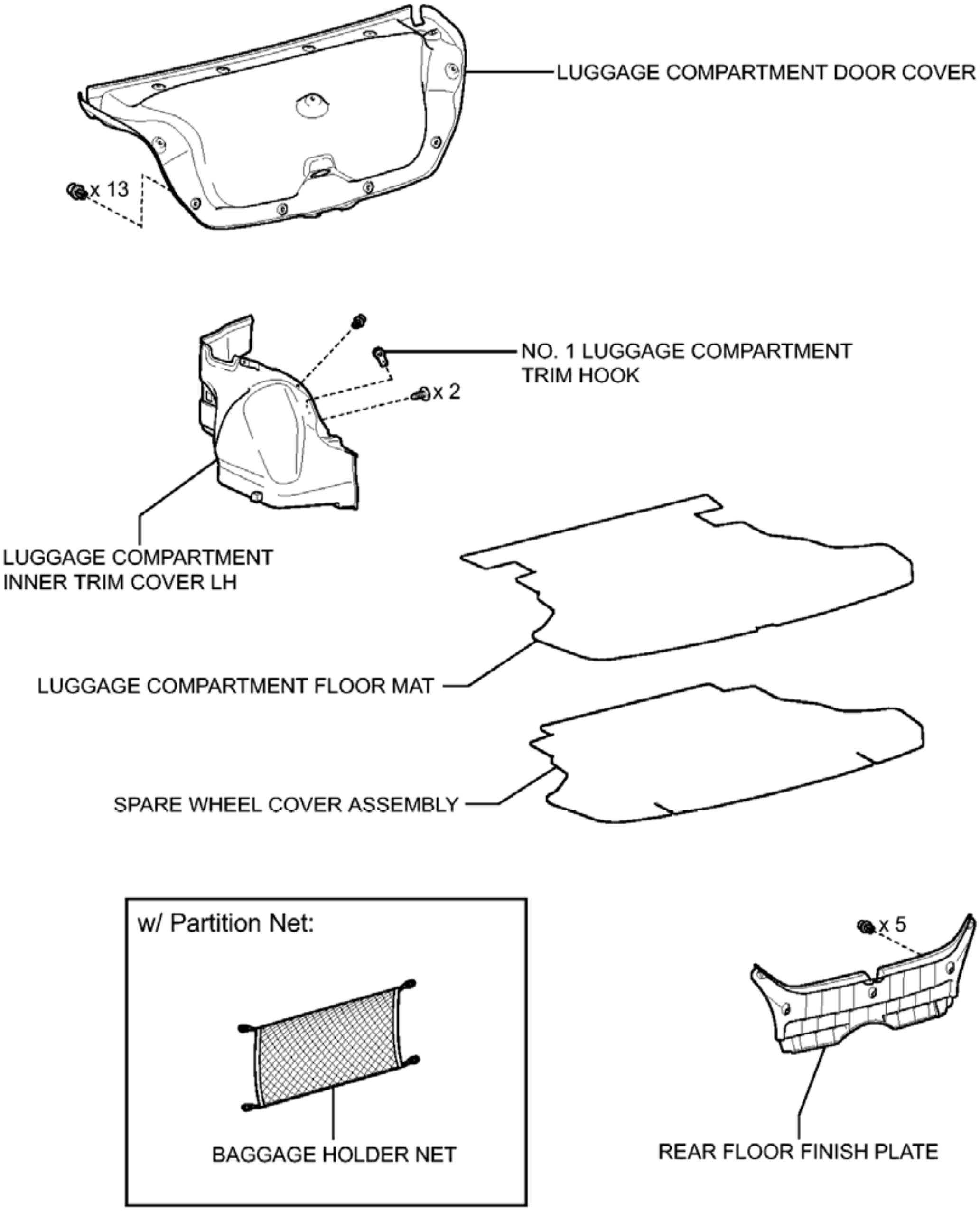
LUGGAGE COMPARTMENT DOOR COVER
x 13
NO. 1 LUGGAGE COMPARTMENT TRIM HOOK
x 2
LUGGAGE COMPARTMENT INNER TRIM COVER LH
LUGGAGE COMPARTMENT FLOOR MAT
SPARE WHEEL COVER ASSEMBLY
w/ Partition Net:
BAGGAGE HOLDER NET
x 5
REAR FLOOR FINISH PLATE

P

Fig. 284: Identifying Fuel Lid Lock Control Cable Assembly Replacement Components (3 Of 4)
Courtesy of TOYOTA MOTOR SALES, U.S.A., INC.

ILLUSTRATION

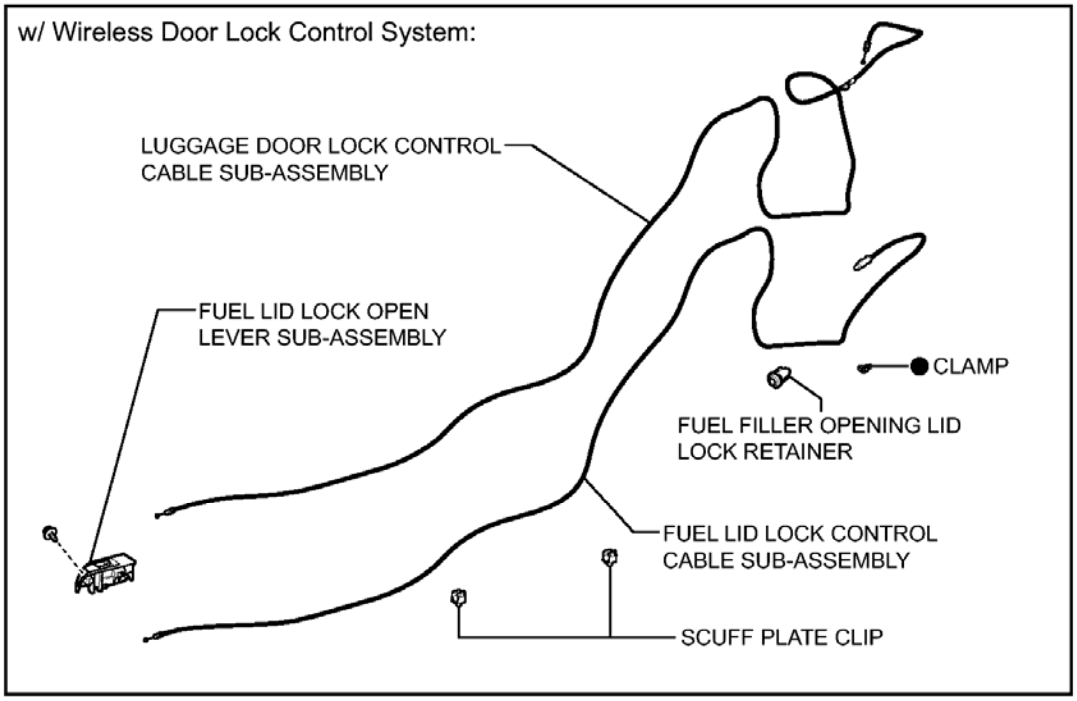
w/ Wireless Door Lock Control System:
LUGGAGE DOOR LOCK CONTROL CABLE SUB-ASSEMBLY
FUEL LID LOCK OPEN LEVER SUB-ASSEMBLY
CLAMP
FUEL FILLER OPENING LID LOCK RETAINER
FUEL LID LOCK CONTROL CABLE SUB-ASSEMBLY
SCUFF PLATE CLIP

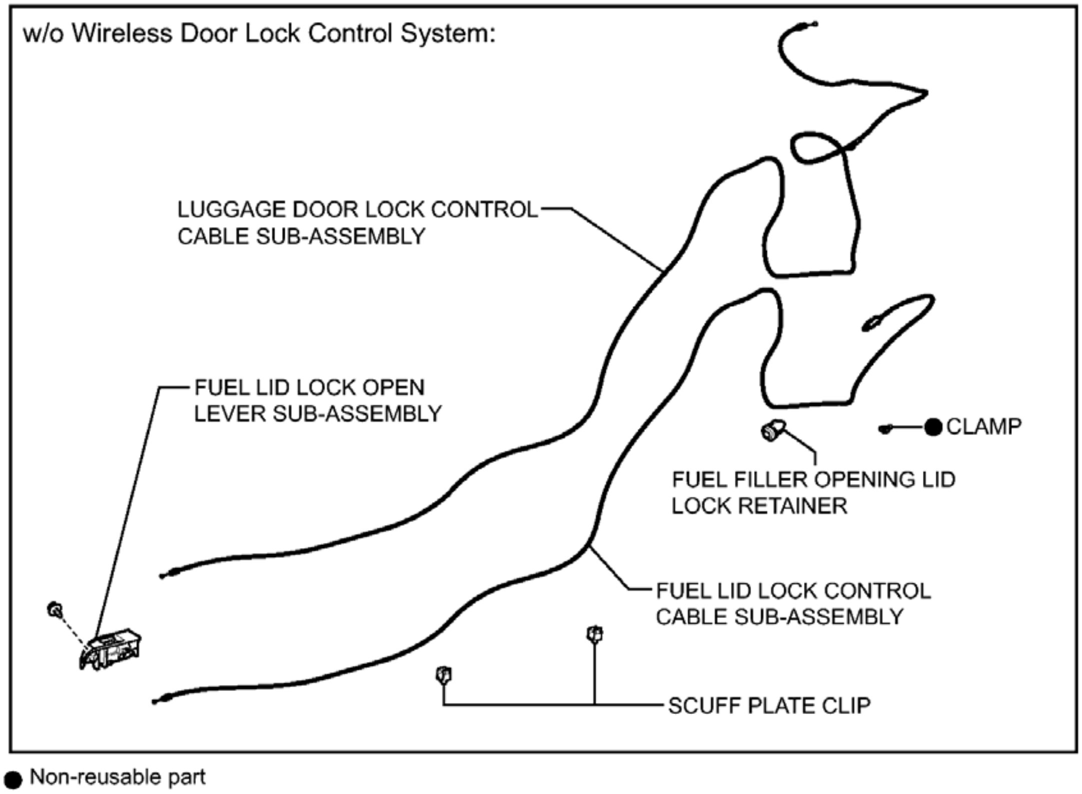
w/o Wireless Door Lock Control System:
LUGGAGE DOOR LOCK CONTROL CABLE SUB-ASSEMBLY
FUEL LID LOCK OPEN LEVER SUB-ASSEMBLY
CLAMP
FUEL FILLER OPENING LID LOCK RETAINER
FUEL LID LOCK CONTROL CABLE SUB-ASSEMBLY
SCUFF PLATE CLIP
● Non-reusable part
P

Fig. 285: Identifying Fuel Lid Lock Control Cable Assembly Replacement Components (4 Of 4)
Courtesy of TOYOTA MOTOR SALES, U.S.A., INC.

REMOVAL

REMOVAL

1. **PRECAUTION**

   NOTE: **After turning the ignition switch off, waiting time may be required before disconnecting the cable from the negative (-) battery terminal. Therefore, make sure to read the disconnecting the cable from the negative (-) battery terminal notices before proceeding with work. Refer to PRECAUTION .**

2. **DISCONNECT CABLE FROM NEGATIVE BATTERY TERMINAL**

   WARNING: **Wait at least 90 seconds after disconnecting the cable from the negative (-) battery terminal to disable the SRS system.**

   NOTE: **When disconnecting the cable, some systems need to be initialized after the cable is reconnected. Refer to INITIALIZATION .**

3. **REMOVE FRONT SEAT ASSEMBLY LH (for TMMK Made Manual Seat)**

   Refer to **REMOVAL** .

4. **REMOVE FRONT SEAT ASSEMBLY LH (for TMMK Made Power Seat)**

   Refer to **REMOVAL** .

5. **REMOVE FRONT SEAT ASSEMBLY LH (for SIA Made Manual Seat)**

   Refer to **REMOVAL** .

6. **REMOVE FRONT SEAT ASSEMBLY LH (for SIA Made Power Seat)**

   Refer to **REMOVAL** .

7. **REMOVE REAR SEAT CUSHION ASSEMBLY** . Refer to **REMOVAL - Step 3** .
8. **REMOVE REAR SEAT CUSHION LOCK HOOK** . Refer to **REMOVAL - Step 4** .
9. **REMOVE REAR SIDE SEATBACK ASSEMBLY LH** . Refer to **REMOVAL - Step 8** .
10. **REMOVE FRONT DOOR SCUFF PLATE LH** . Refer to **REMOVAL - Step 3** .
11. **DISCONNECT FRONT DOOR OPENING TRIM WEATHERSTRIP LH** . Refer to **REMOVAL - Step 4** .
12. **REMOVE REAR DOOR SCUFF PLATE LH** . Refer to **REMOVAL - Step 18** .
13. **DISCONNECT REAR DOOR OPENING TRIM WEATHERSTRIP LH** . Refer to **REMOVAL - Step 6** .
14. **REMOVE LAP BELT OUTER ANCHOR COVER** . Refer to **REMOVAL - Step 7** .
15. **DISCONNECT FRONT SEAT OUTER BELT ASSEMBLY LH** . Refer to **REMOVAL - Step 8** .

16. **REMOVE CENTER PILLAR LOWER GARNISH LH** . Refer to **REMOVAL - Step 22** .
17. **REMOVE LUGGAGE COMPARTMENT DOOR COVER** . See step 1.
18. **REMOVE LUGGAGE COMPARTMENT FLOOR MAT** . See step 1.
19. **REMOVE SPARE WHEEL COVER ASSEMBLY** . See step 2.
20. **REMOVE BAGGAGE HOLDER NET (w/ Partition Net)** . See step 3.
21. **REMOVE REAR FLOOR FINISH PLATE** . See step 4.
22. **REMOVE NO. 1 LUGGAGE COMPARTMENT TRIM HOOK** . See step 22.
23. **REMOVE LUGGAGE COMPARTMENT INNER TRIM COVER LH** . See step 6.
24. **REMOVE FUEL LID LOCK OPEN LEVER SUB-ASSEMBLY** . See step 24.
25. **REMOVE FUEL LID LOCK CONTROL CABLE SUB-ASSEMBLY**
    a. Disengage the 2 clamps.

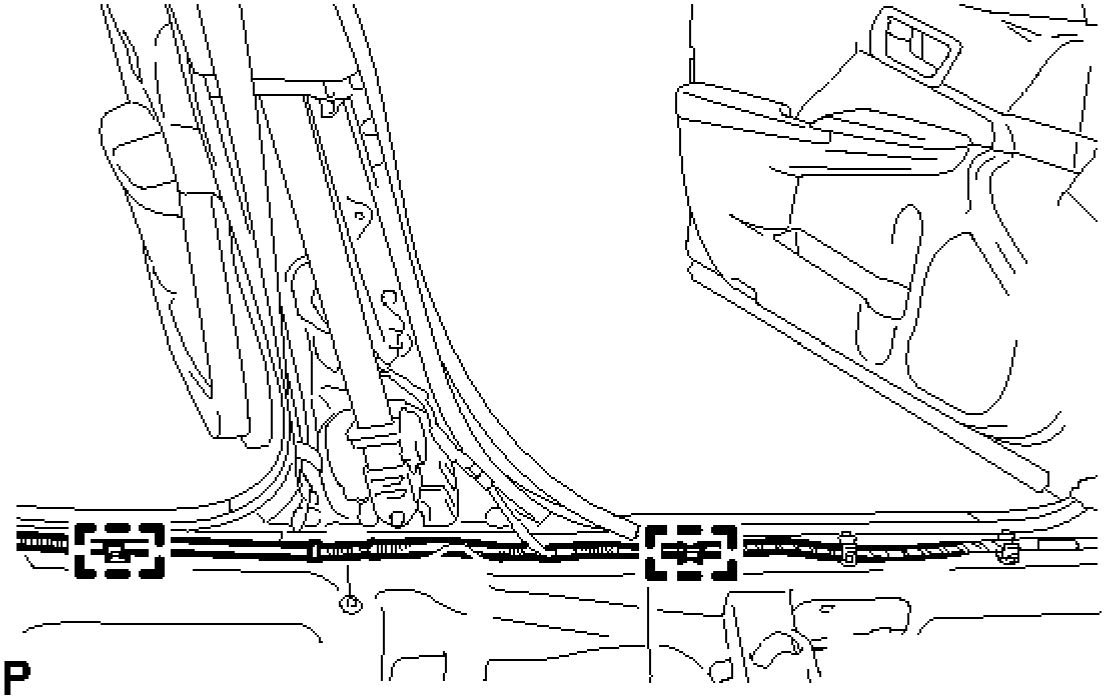

Fig. 286: Identifying Luggage Door Lock Control Cable Clamps
Courtesy of TOYOTA MOTOR SALES, U.S.A., INC.

    b. Using a clip remover, disengage the clamp and disconnect the wire harness.

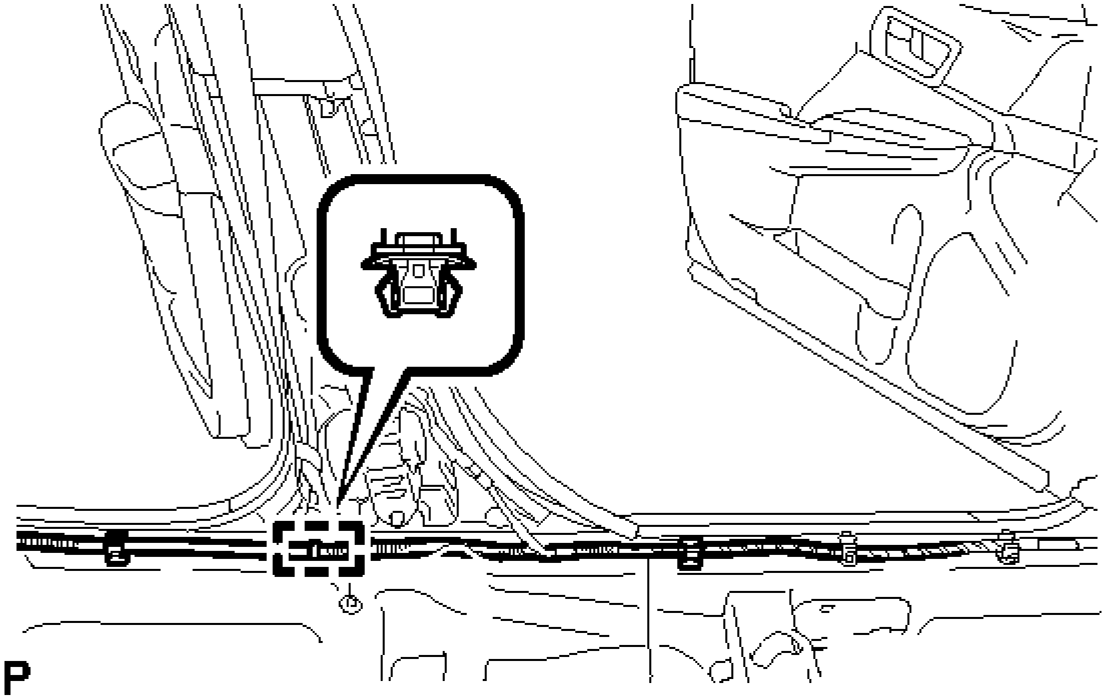

Fig. 287: Identifying Wire Harness Clamp
Courtesy of TOYOTA MOTOR SALES, U.S.A., INC.

c. Using a clip remover, disengage the 2 clamps and remove the 2 scuff plate clips.

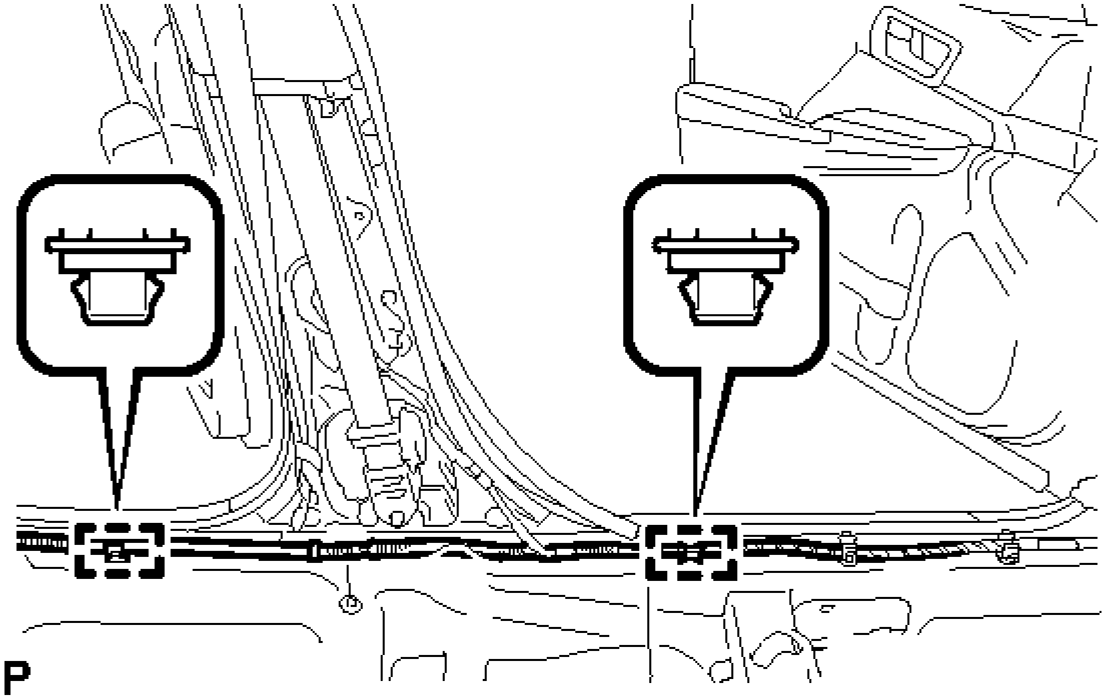

Fig. 288: Identifying Scuff Plate Clip Clamps
Courtesy of TOYOTA MOTOR SALES, U.S.A., INC.

d. Turn back the floor carpet so that the luggage door lock control cable sub-assembly and fuel lid lock control cable sub-assembly can be removed.

e. w/o Wireless Door Lock Control System:

   1. Disconnect the luggage door lock control cable sub-assembly.

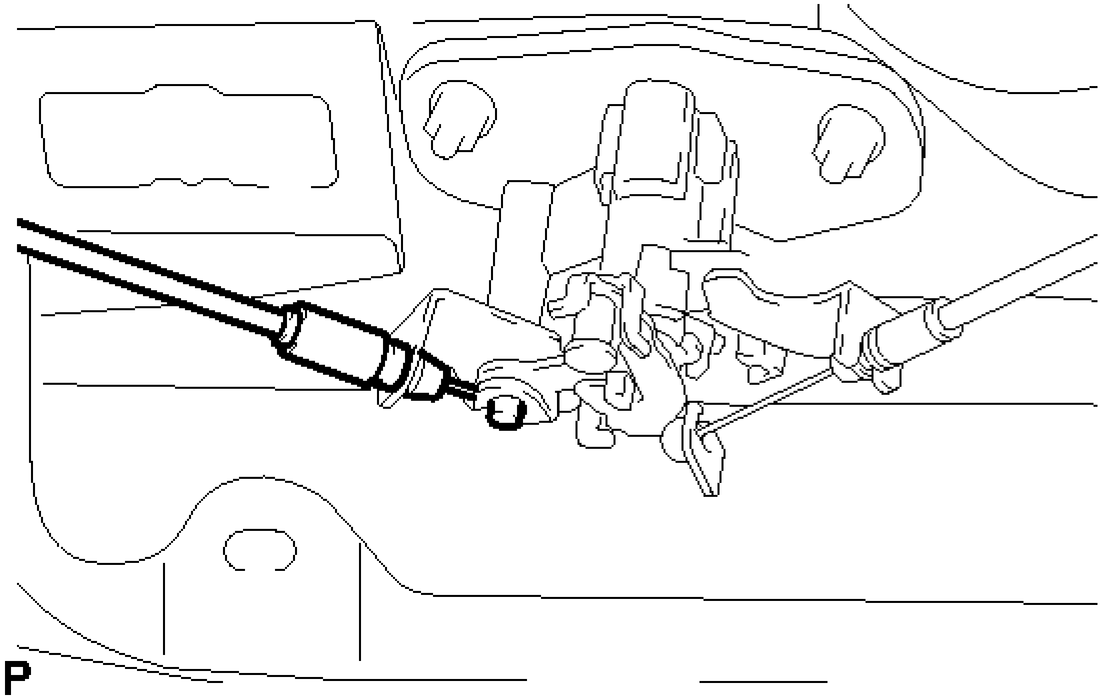

Fig. 289: Identifying Luggage Door Lock Control Cable w/o Wireless Door Lock Control System
Courtesy of TOYOTA MOTOR SALES, U.S.A., INC.

   2. Disengage the 3 clamps and disconnect the luggage door lock control cable sub-assembly.

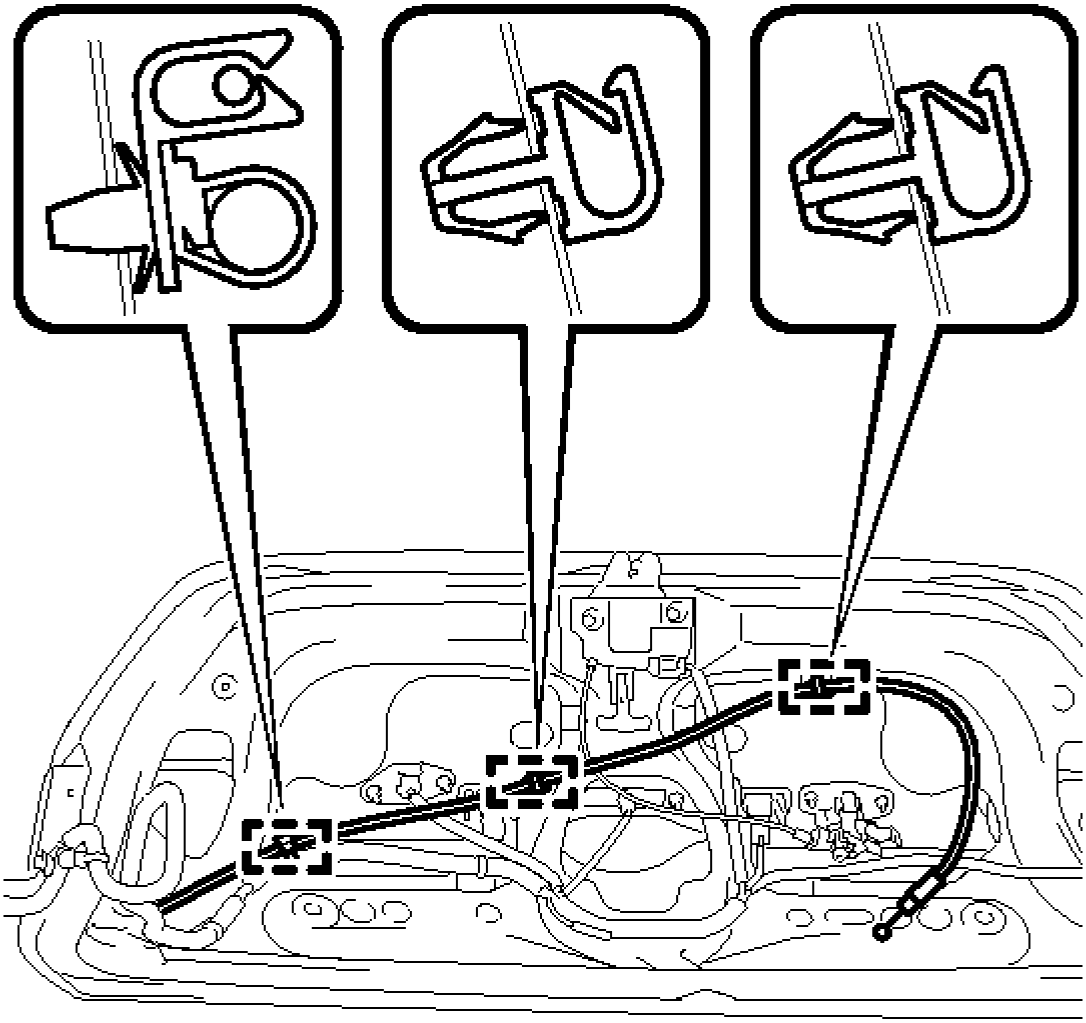

Fig. 290: Identifying Luggage Door Lock Control Cable Clamps w/o Wireless Door Lock Control System
Courtesy of TOYOTA MOTOR SALES, U.S.A., INC.

f. w/ Wireless Door Lock Control System:

   1. Disengage the guide as shown in the illustration.

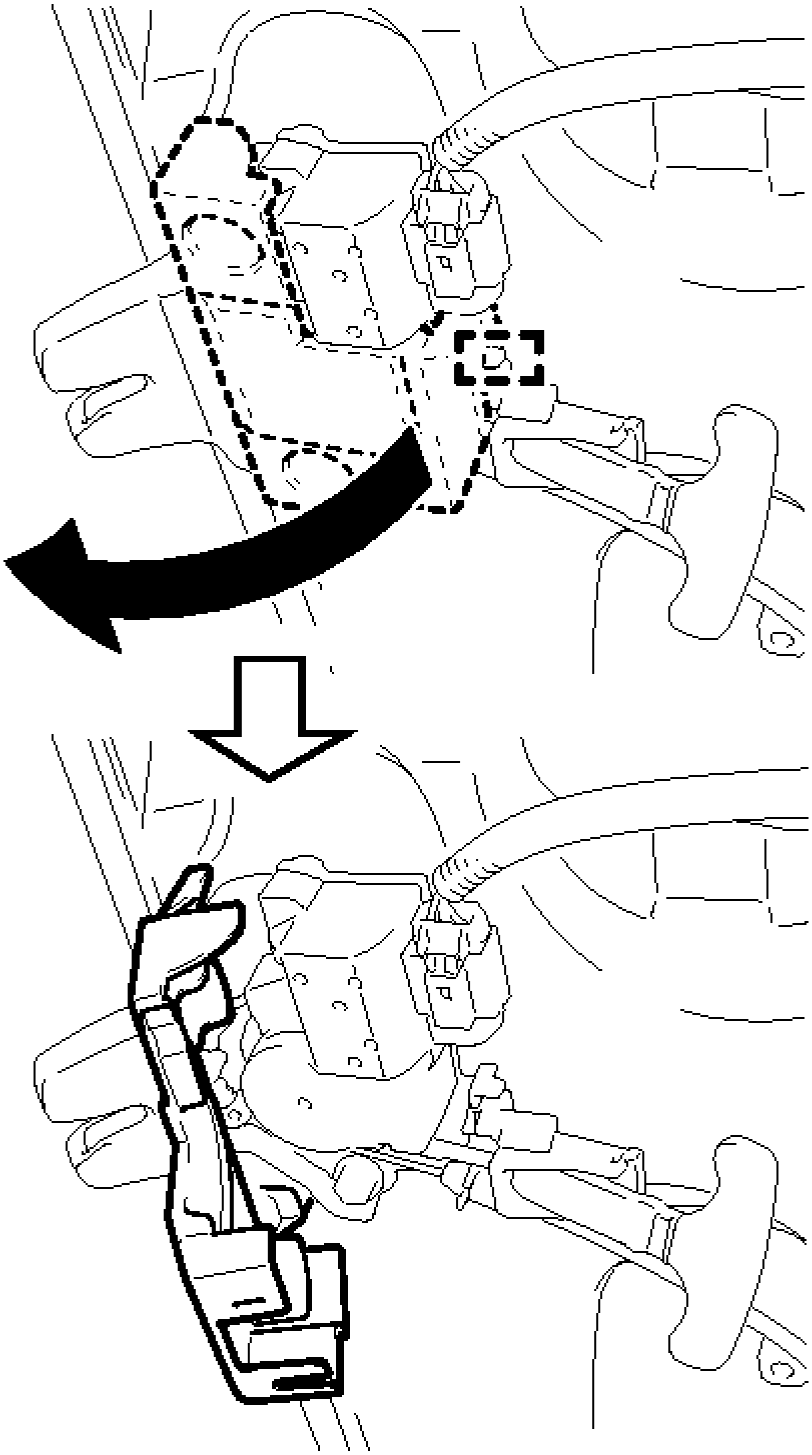

Fig. 291: Disconnecting Luggage Door Lock Cover w/ Wireless Door Lock Control System
Courtesy of TOYOTA MOTOR SALES, U.S.A., INC.

2. Disconnect the luggage door lock control cable sub-assembly.

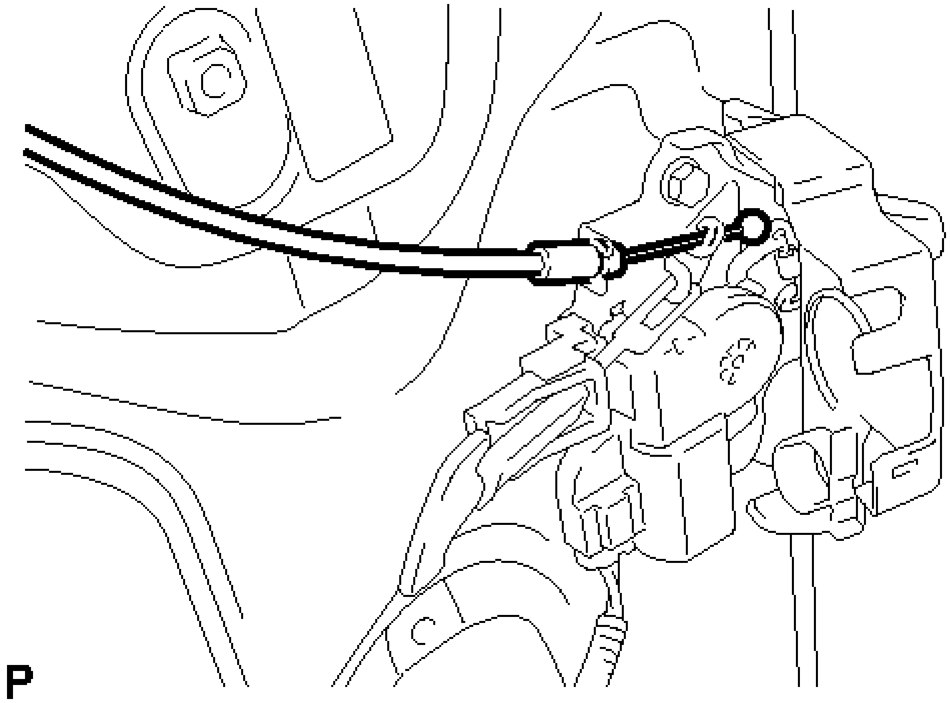

Fig. 292: Identifying Luggage Door Lock Control Cable w/ Wireless Door Lock Control System
Courtesy of TOYOTA MOTOR SALES, U.S.A., INC.

3. Disengage the clamp and disconnect the luggage door lock control cable sub-assembly.

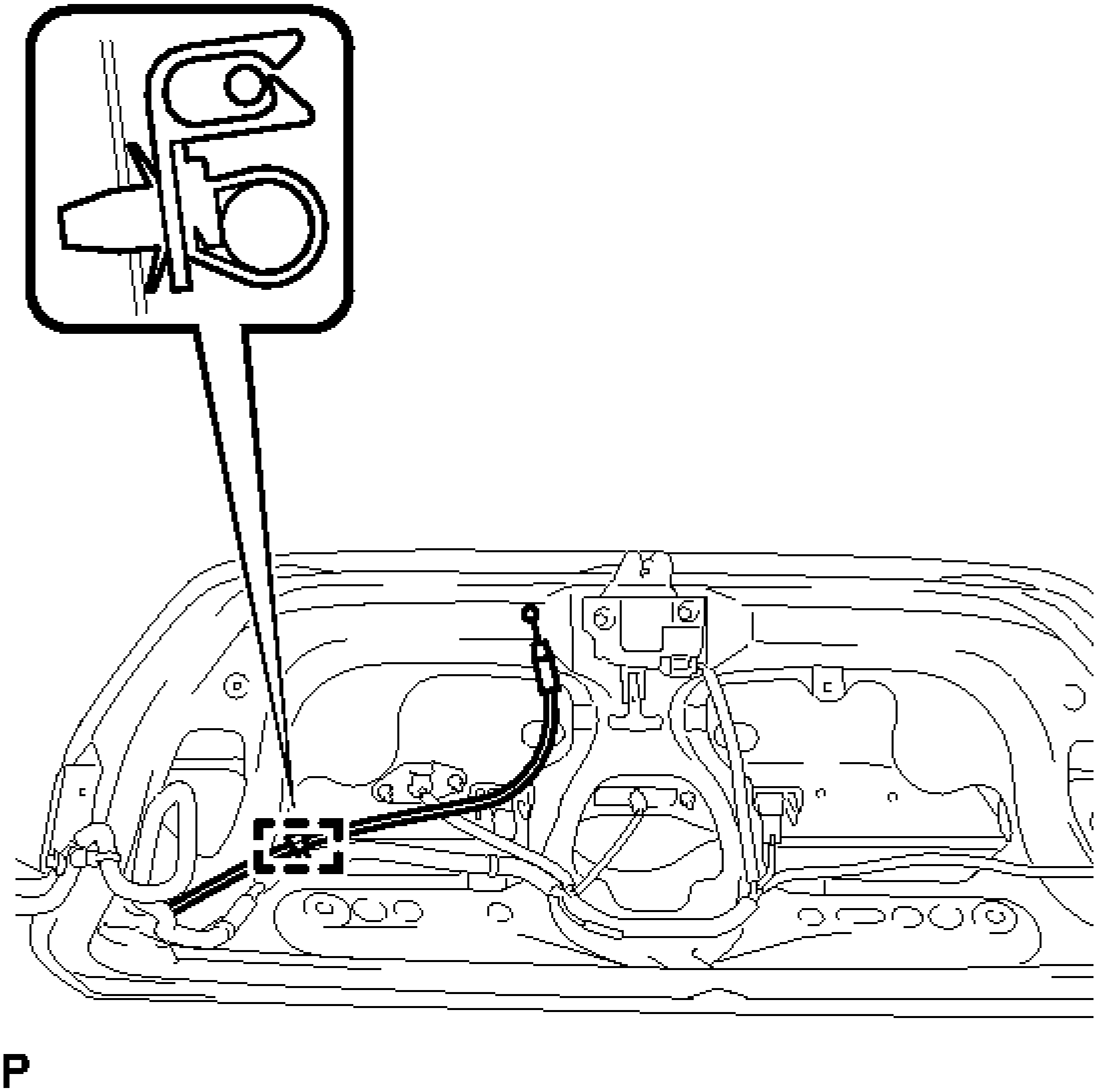

Fig. 293: Identifying Luggage Door Lock Control Cable Clamp w/ Wireless Door Lock Control System
Courtesy of TOYOTA MOTOR SALES, U.S.A., INC.

g. Rotate the fuel filler opening lid lock retainer as shown in the illustration to align the cutouts and the guides <A>, and then pull the fuel filler opening lid lock retainer.

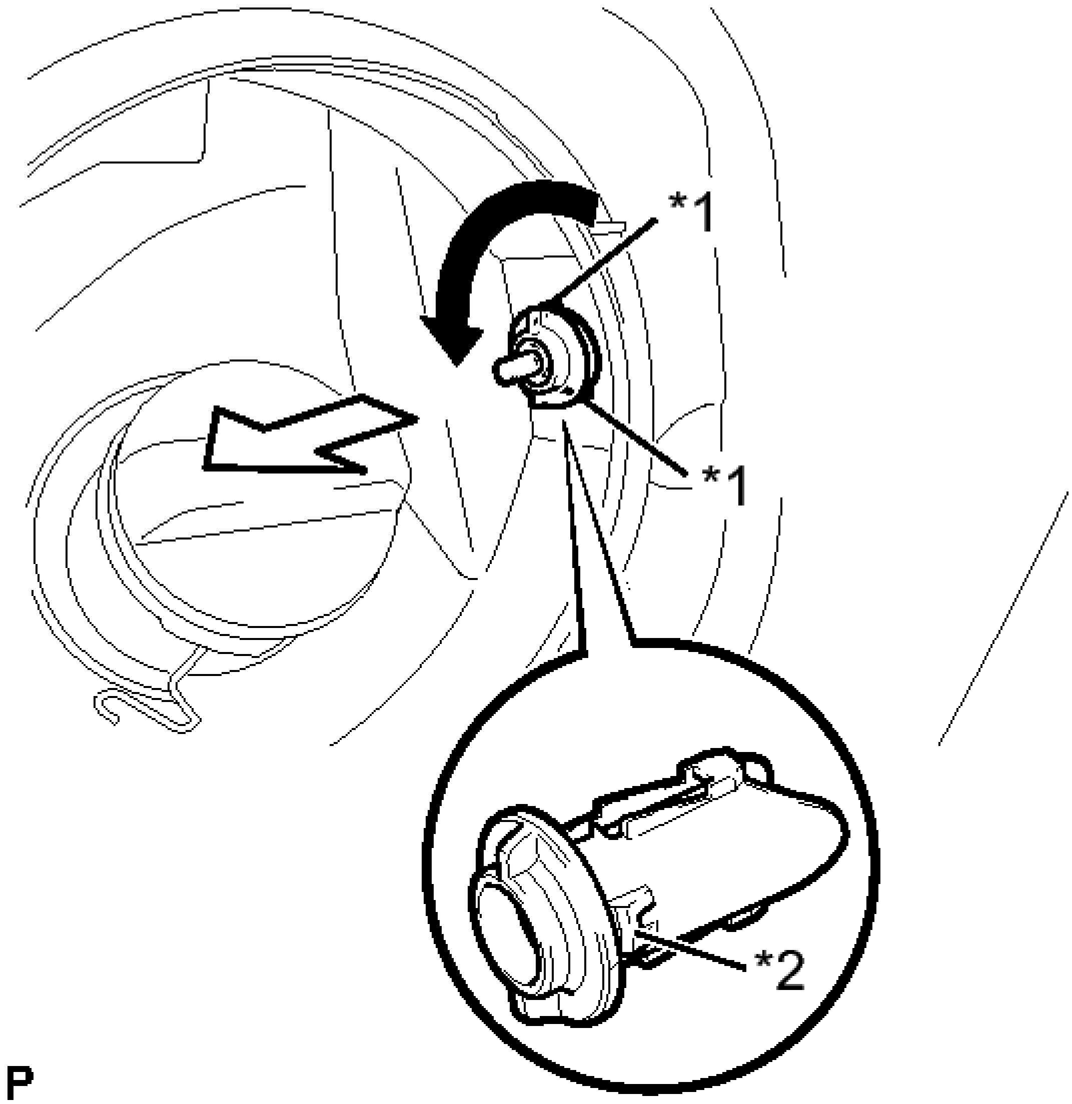

Fig. 294: Rotating Fuel Filler Opening Lid Lock Retainer
Courtesy of TOYOTA MOTOR SALES, U.S.A., INC.

TEXT IN ILLUSTRATION

*1	Cutout
*2	Guide <A>

h. Rotate the fuel filler opening lid lock retainer as shown in the illustration to align the cutouts and guides <B>, and then pull the fuel filler opening lid lock retainer.

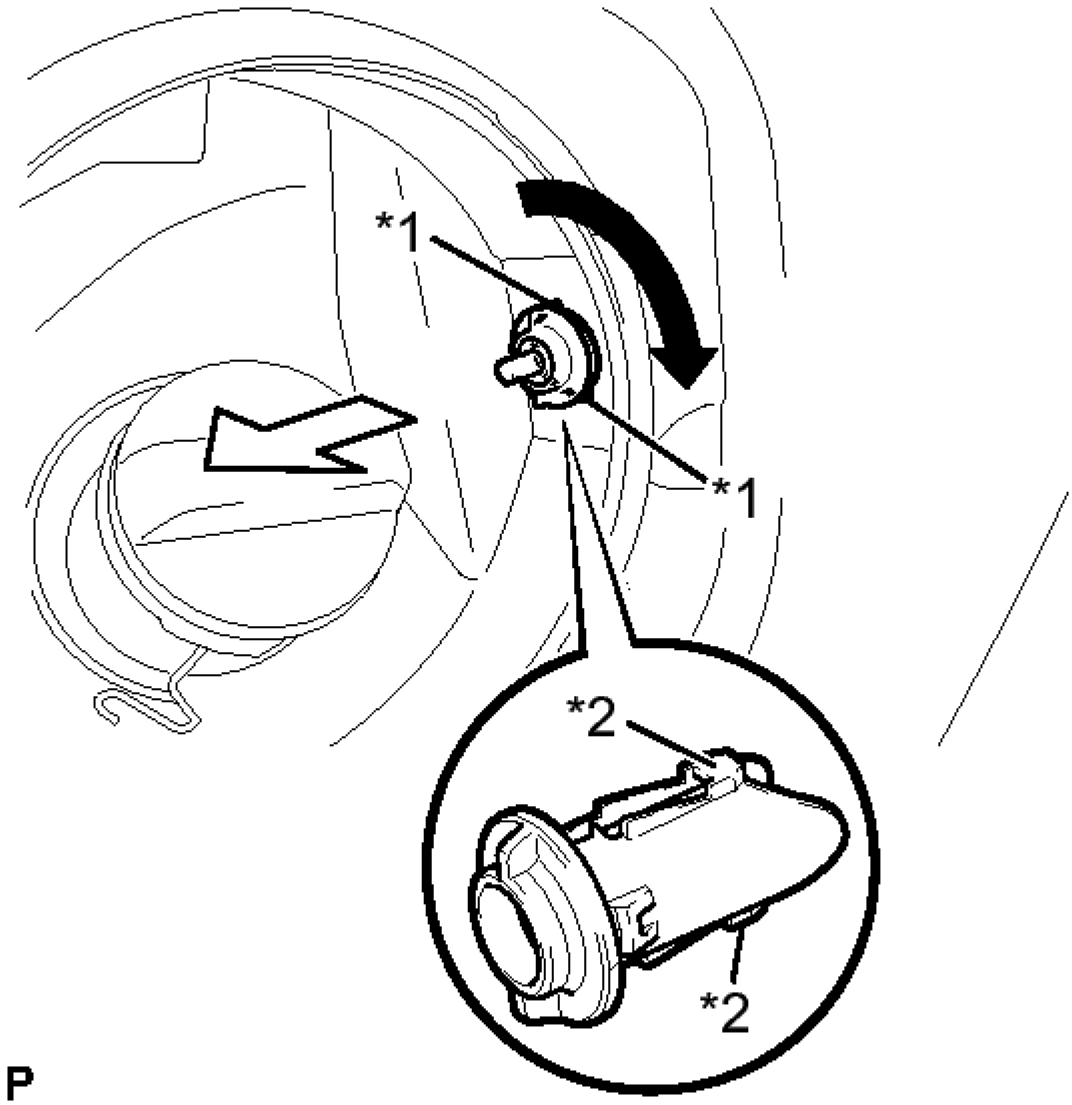

Fig. 295: Rotating Fuel Filler Opening Lid Lock Retainer
Courtesy of TOYOTA MOTOR SALES, U.S.A., INC.

TEXT IN ILLUSTRATION

*1	Cutout
*2	Guide <B>

i. Pull out the fuel filler opening lid lock retainer with both guides <B and C> aligned with the cutouts.

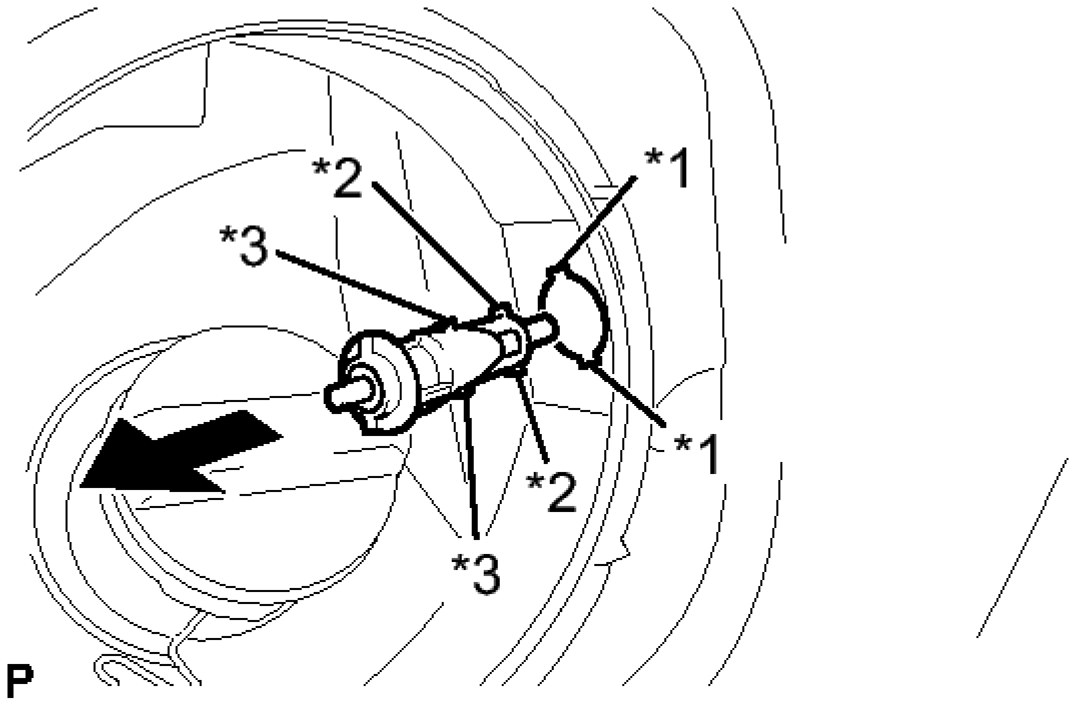

Fig. 296: Removing Fuel Filler Opening Lid Lock Retainer
Courtesy of TOYOTA MOTOR SALES, U.S.A., INC.

TEXT IN ILLUSTRATION

*1	Cutout
*2	Guide <C>
*3	Guide <B>

j. Disengage the 2 claws and remove the fuel filler opening lid lock retainer.

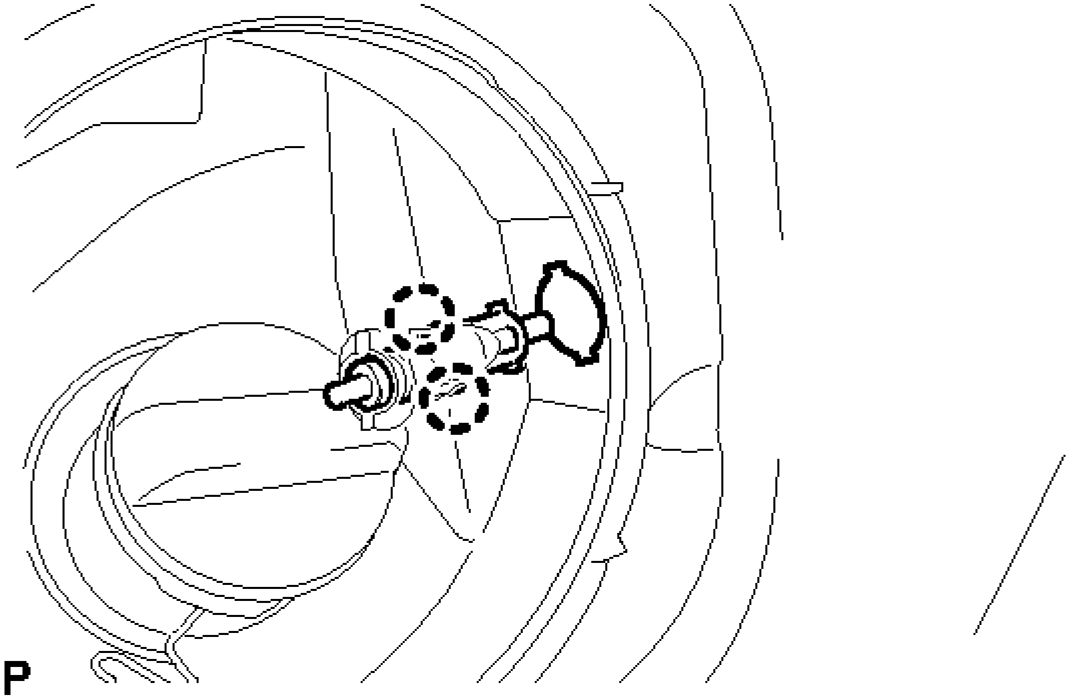

Fig. 297: Identifying Fuel Filler Opening Lid Lock Retainer Claws
Courtesy of TOYOTA MOTOR SALES, U.S.A., INC.

k. Disengage the 10 clamps and remove the fuel lid lock control cable sub-assembly and luggage door lock control cable sub-assembly.

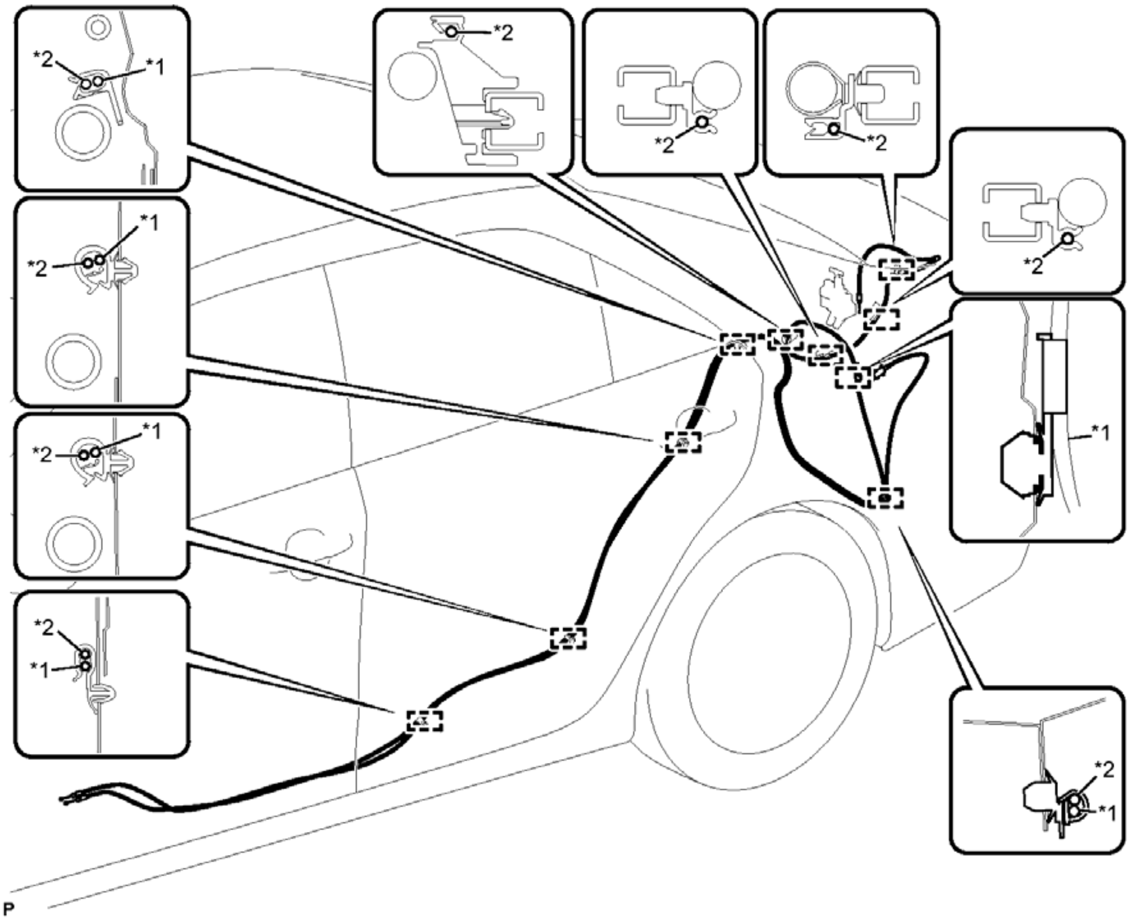

Fig. 298: Identifying Fuel Lid Lock Control Cable Clamps
Courtesy of TOYOTA MOTOR SALES, U.S.A., INC.

TEXT IN ILLUSTRATION

*1	Fuel Lid Lock Control Cable Sub-assembly	*2	Luggage Door Lock Control Cable Sub-assembly

l. Using a knife, cut off the clamp as shown in the illustration.

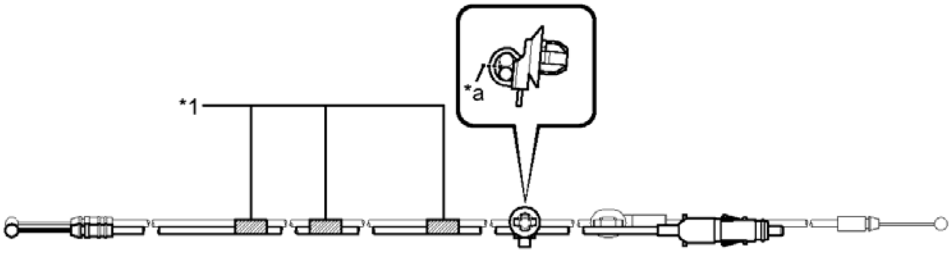

P

Fig. 299: Identifying Clamp To Be Cut
Courtesy of TOYOTA MOTOR SALES, U.S.A., INC.

TEXT IN ILLUSTRATION

*1	Tape	-	-
*a	Cut	-	-

NOTE: **Be careful not to damage the vehicle fuel lid lock control cable sub-assembly and luggage door lock control cable sub-assembly.**

m. Remove the clamp.
n. Remove the 3 pieces of tape and fuel lid lock control cable sub-assembly.

INSTALLATION

INSTALLATION

1. **INSTALL FUEL LID LOCK CONTROL CABLE SUB-ASSEMBLY**
    a. Install the fuel lid lock control cable sub-assembly to the luggage door lock control cable sub-assembly with the new clamp and the 3 pieces of tape as shown in the illustration.

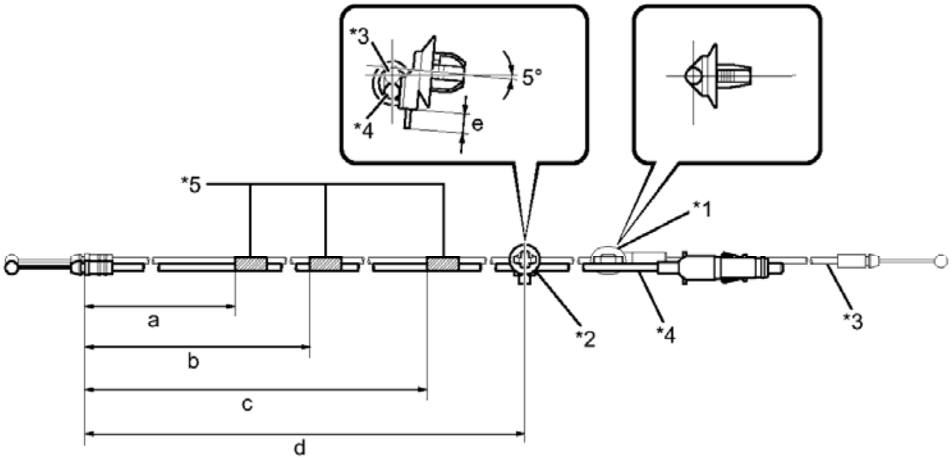

P

Fig. 300: Identifying Fuel Lid Lock Control Cable Clamp And Tape
Courtesy of TOYOTA MOTOR SALES, U.S.A., INC.

TEXT IN ILLUSTRATION

*1	Clamp (A)	*2	Clamp
*3	Luggage Door Lock Control Cable Sub-assembly	*4	Fuel Lid Lock Control Cable Sub-assembly
*5	Tape	-	-

REFERENCE MEASUREMENT

Area	Measurement	Area	Measurement
a	295 to 305 mm (11.6 to 12.0 in.)	b	880 to 900 mm (2.29 to 2.95 ft.)
c	2090 to 2110 mm (6.86 to 6.92 ft.)	d	2970 to 2990 mm (8.86 to 9.81 ft.)
e	5.0 mm (0.197 in.) or less	-	-

NOTE:

- **Wrap tape around the designated position 1 to 3 times.**
- **Make sure that the fuel lid lock control cable sub-assembly and**

luggage door lock control cable sub-assembly are not kinked.

b. Engage the 10 clamps and install the fuel lid lock control cable sub-assembly and luggage door lock control cable sub-assembly.
c. Align the cutouts and guides, and then insert the fuel filler opening lid lock retainer.

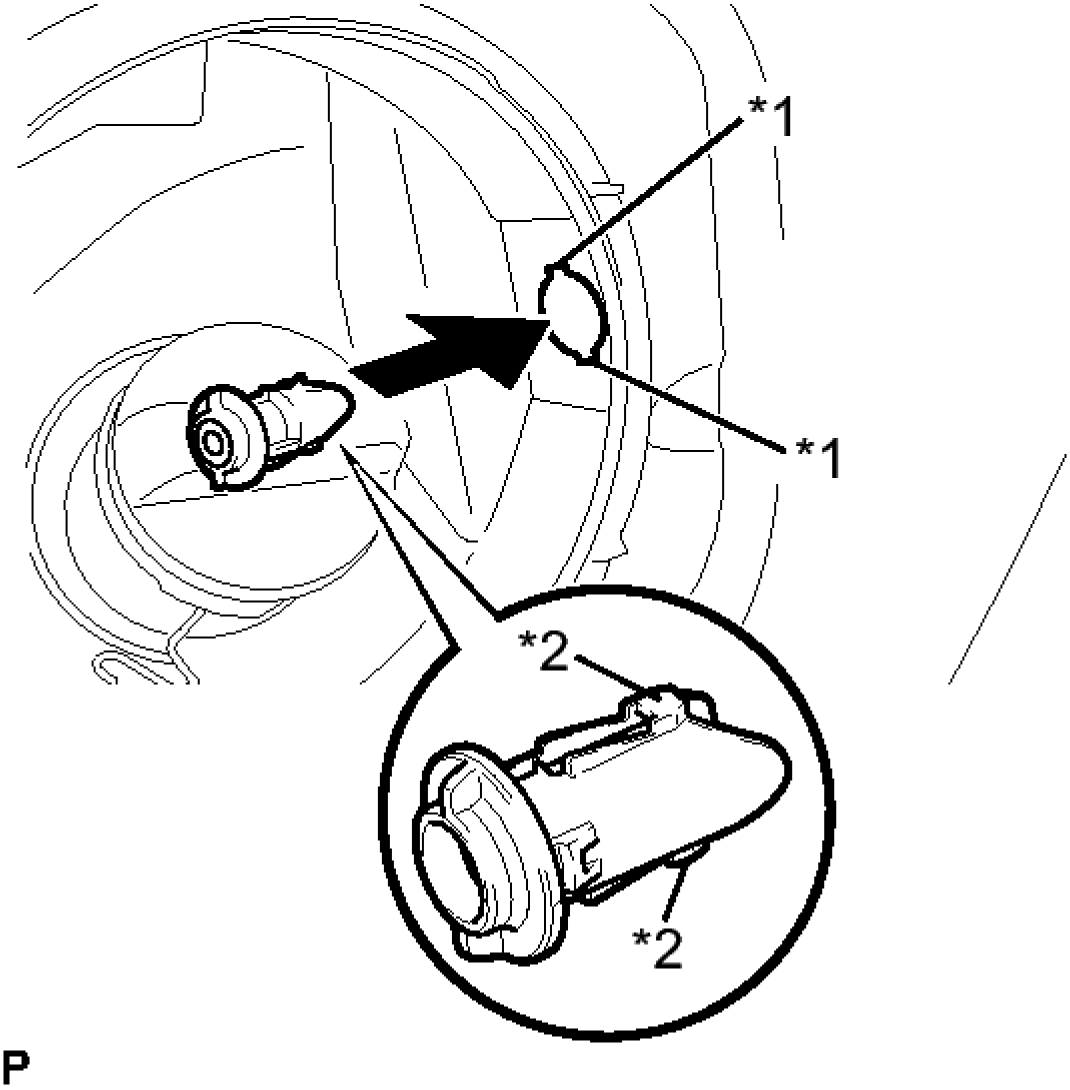

Fig. 301: Installing Fuel Filler Opening Lid Lock Retainer
Courtesy of TOYOTA MOTOR SALES, U.S.A., INC.

TEXT IN ILLUSTRATION

*1	Cutout
*2	Guide

d. Engage the 2 claws and install the fuel filler opening lid lock retainer.

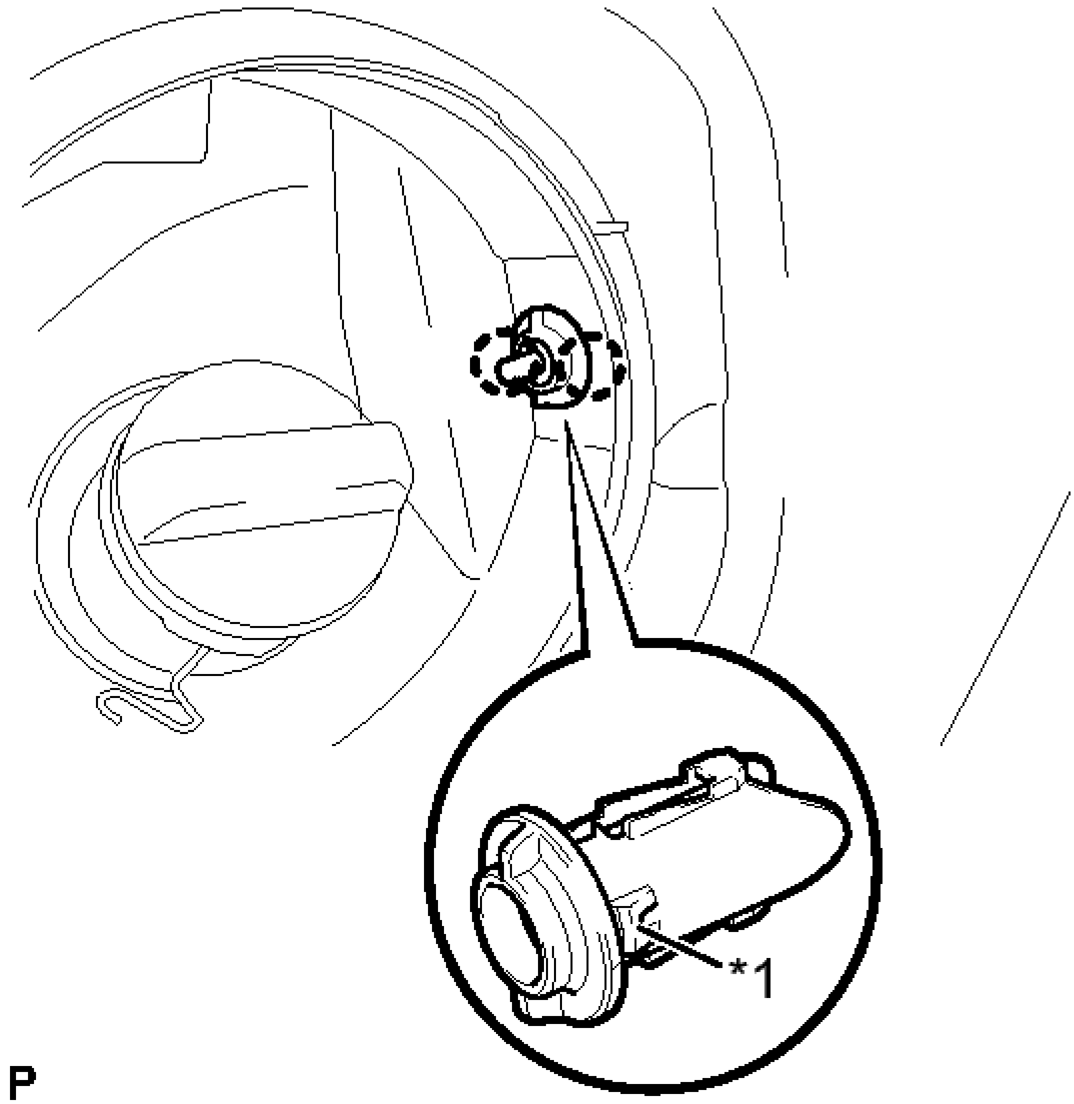

Fig. 302: Identifying Fuel Filler Opening Lid Lock Retainer Claws
Courtesy of TOYOTA MOTOR SALES, U.S.A., INC.

TEXT IN ILLUSTRATION

*1	Claw

e. Engage the 2 claws and install the fuel lid lock control cable sub-assembly.

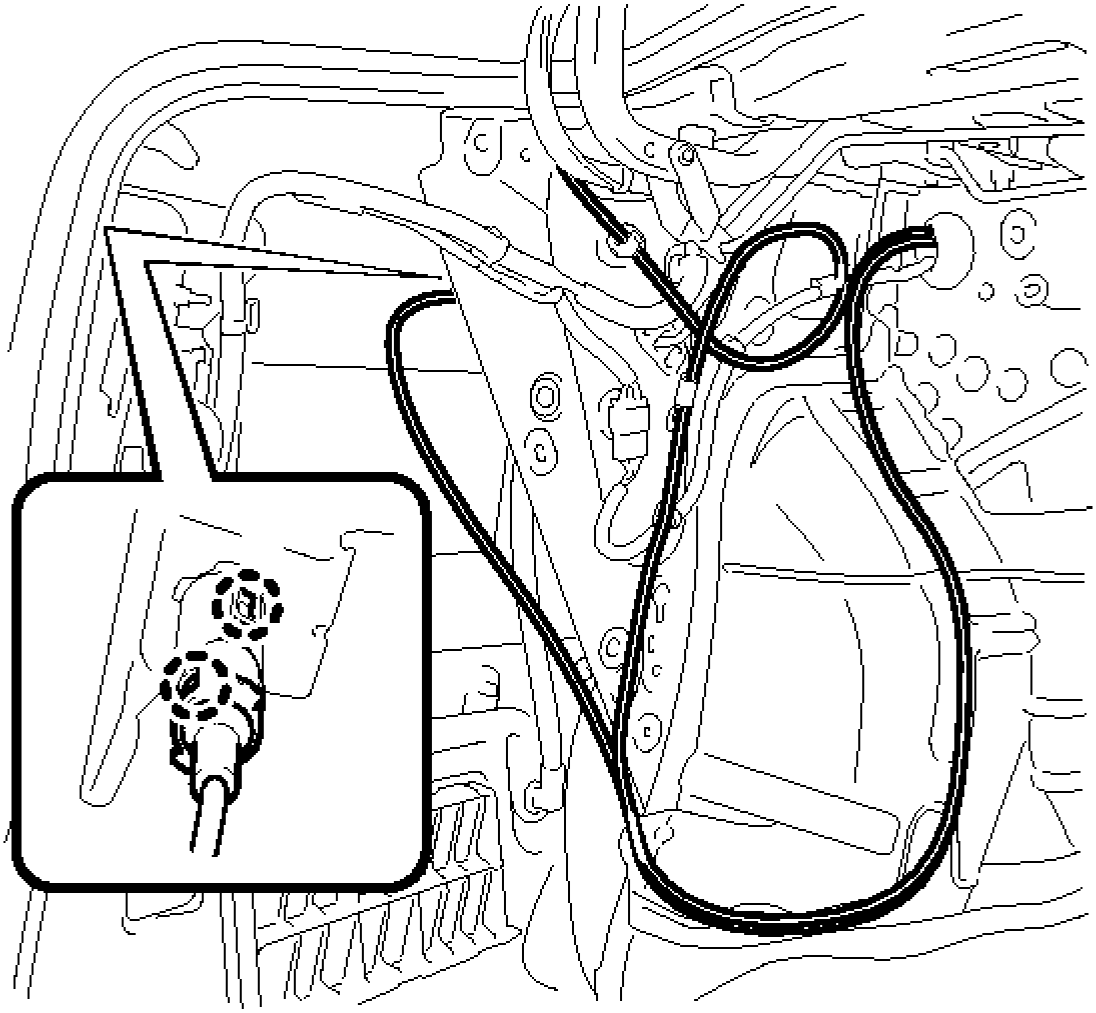

Fig. 303: Identifying Fuel Lid Lock Control Cable Claws
Courtesy of TOYOTA MOTOR SALES, U.S.A., INC.

f. w/ Wireless Door Lock Control System:
    1. Engage the clamp and connect the luggage door lock control cable sub-assembly.
    2. Connect the luggage door lock control cable sub-assembly.
    3. Engage the guide as shown in the illustration.

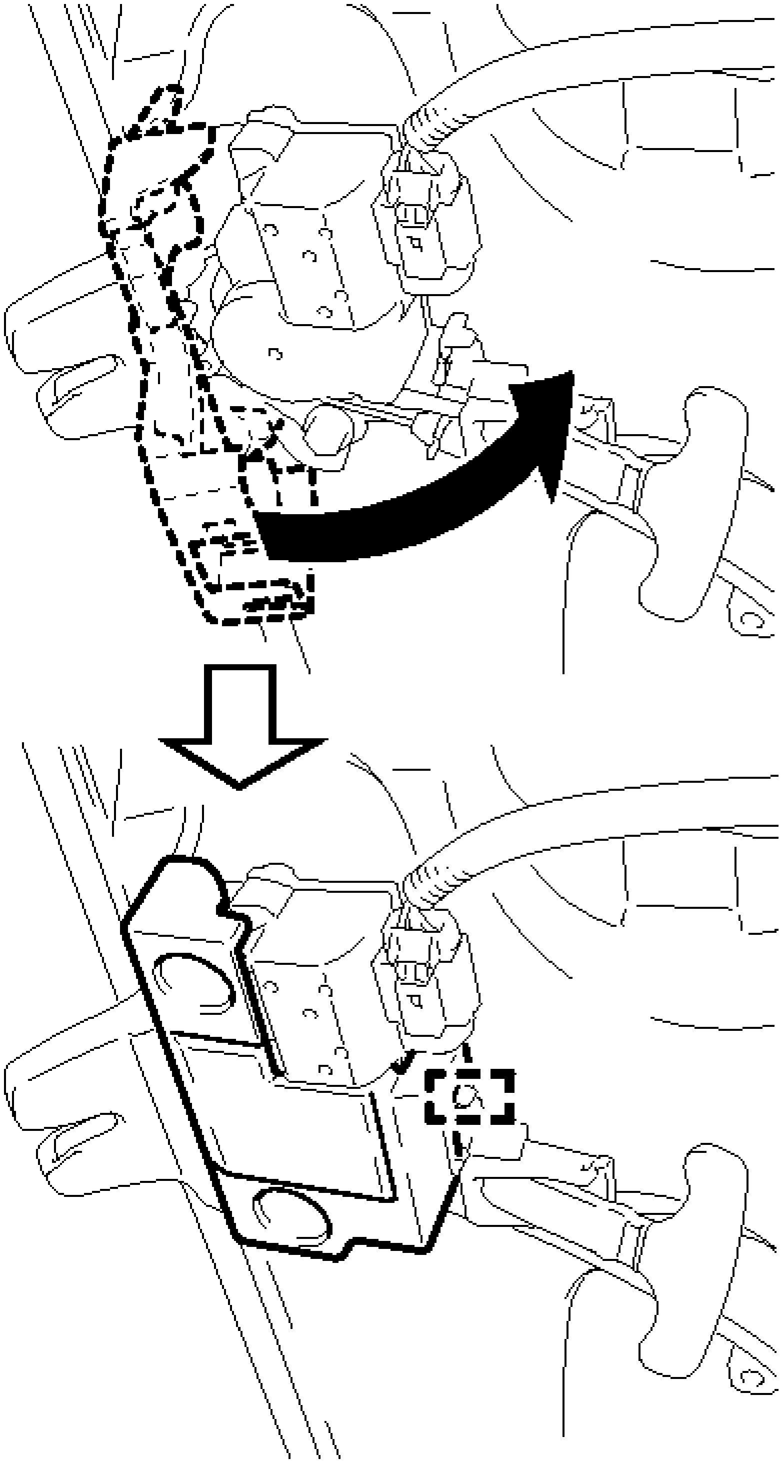

Fig. 304: Connecting Luggage Door Lock Control Cable Cover
Courtesy of TOYOTA MOTOR SALES, U.S.A., INC.

g. w/o Wireless Door Lock Control System:
    1. Engage the 3 clamps and connect the luggage door lock control cable sub-assembly.

        2. Connect the luggage door lock control cable sub-assembly to the luggage compartment door lock cylinder assembly
    h. Return the floor carpet to the original position.
    i. Engage the 2 clamps and install the 2 scuff plate clips.
    j. Engage the 3 clamps and connect the wire harness.
2. **INSTALL FUEL LID LOCK OPEN LEVER SUB-ASSEMBLY** . See step 2.
3. **INSTALL LUGGAGE COMPARTMENT INNER TRIM COVER LH** . See step 6.
4. **INSTALL NO. 1 LUGGAGE COMPARTMENT TRIM HOOK** . See step 4.
5. **INSTALL REAR FLOOR FINISH PLATE** . See step 9.
6. **INSTALL BAGGAGE HOLDER NET (w/ Partition Net)** . See step 10.
7. **INSTALL SPARE WHEEL COVER ASSEMBLY** . See step 11.
8. **INSTALL LUGGAGE COMPARTMENT FLOOR MAT** . See step 12.
9. **INSTALL LUGGAGE COMPARTMENT DOOR COVER** . See step 12.
10. **INSTALL REAR SIDE SEATBACK ASSEMBLY LH** . Refer to **INSTALLATION - Step 2** .
11. **INSTALL CENTER PILLAR LOWER GARNISH LH** . Refer to **INSTALLATION - Step 22** .
12. **CONNECT FRONT SEAT OUTER BELT ASSEMBLY LH** . Refer to **INSTALLATION - Step 6** .
13. **INSTALL LAP BELT OUTER ANCHOR COVER** . Refer to **INSTALLATION - Step 7** .
14. **INSTALL REAR DOOR OPENING TRIM WEATHERSTRIP LH** . Refer to **INSTALLATION - Step 25** .
15. **INSTALL REAR DOOR SCUFF PLATE LH** . Refer to **INSTALLATION - Step 26** .
16. **INSTALL FRONT DOOR OPENING TRIM WEATHERSTRIP LH** . Refer to **INSTALLATION - Step 42** .
17. **INSTALL FRONT DOOR SCUFF PLATE LH** . Refer to **INSTALLATION - Step 44** .
18. **INSTALL REAR SEAT CUSHION LOCK HOOK** . Refer to **INSTALLATION - Step 6** .
19. **INSTALL REAR SEAT CUSHION ASSEMBLY** . Refer to **INSTALLATION - Step 7** .
20. **INSTALL FRONT SEAT ASSEMBLY LH (for TMMK Made Manual Seat)**

    Refer to **INSTALLATION** .

21. **INSTALL FRONT SEAT ASSEMBLY LH (for TMMK Made Power Seat)**

    Refer to **INSTALLATION** .

22. **INSTALL FRONT SEAT ASSEMBLY LH (for SIA Made Manual Seat)**

    Refer to **INSTALLATION** .

23. **INSTALL FRONT SEAT ASSEMBLY LH (for SIA Made Power Seat)**

    Refer to **INSTALLATION** .

24. **CONNECT CABLE TO NEGATIVE BATTERY TERMINAL**

NOTE: **When disconnecting the cable, some systems need to be initialized after the cable is reconnected. Refer to INITIALIZATION .**

25. **INSPECT SRS WARNING LIGHT**

For Separate Type Yaw Rate Sensor: Refer to **DIAGNOSIS SYSTEM** .

For Built-in Type Yaw Rate Sensor: Refer to **DIAGNOSIS SYSTEM** .

AXLE SYSTEM

PROBLEM SYMPTOMS TABLE

PROBLEM SYMPTOMS TABLE

HINT:

Use the table below to help determine the cause of problem symptoms. If multiple suspected areas are listed, the potential causes of the symptoms are listed in order of probability in the "Suspected Area" column of the table. Check each symptom by checking the suspected areas in the order they are listed. Replace parts as necessary.

AXLE SYSTEM

Symptom	Suspected Area	See
Wander or pulls	Tires (worn or improperly inflated)	Refer to **INSPECTION**
	Front wheel alignment (incorrect)	Refer to **ADJUSTMENT**
	Rear wheel alignment (incorrect)	Refer to **ADJUSTMENT**
	Steering intermediate shaft (loose or worn)	Refer to **REMOVAL**
	Front axle hub bearings (loose or worn)	Refer to **ON-VEHICLE INSPECTION**
	Rear axle hub bearings (loose or worn)	Refer to **ON-VEHICLE INSPECTION**
	Steering gear (broken)	Refer to **REMOVAL**
	Suspension parts (worn out)	-
Front wheel shimmy	Tires (worn or improperly inflated)	Refer to **INSPECTION**
	Wheels (out of balance)	Refer to **INSPECTION**
	Front shock absorber (worn out)	Refer to **INSPECTION**
	Front wheel alignment (incorrect)	Refer to **ADJUSTMENT**
	Lower ball joint (worn)	Refer to **REMOVAL**
	Axle hub bearings (loose or worn)	Refer to **ON-VEHICLE INSPECTION**
	Steering intermediate shaft (loose or worn)	Refer to **REMOVAL**
	Steering gear (broken)	Refer to **REMOVAL**
	Tires (worn or improperly	

Rear wheel shimmy	inflated)	Refer to **INSPECTION**
	Wheels (out of balance)	Refer to **INSPECTION**
	Rear shock absorber (worn out)	Refer to **INSPECTION**
	Axle hub bearings (loose or worn)	Refer to **ON-VEHICLE INSPECTION**
	Rear wheel alignment (incorrect)	Refer to **ADJUSTMENT**

AXLE SYSTEM

PROBLEM SYMPTOMS TABLE

PROBLEM SYMPTOMS TABLE

HINT:

Use the table below to help determine the cause of problem symptoms. If multiple suspected areas are listed, the potential causes of the symptoms are listed in order of probability in the "Suspected Area" column of the table. Check each symptom by checking the suspected areas in the order they are listed. Replace parts as necessary.

AXLE SYSTEM

Symptom	Suspected Area	See
Wander or pulls	Tires (worn or improperly inflated)	Refer to **INSPECTION**
	Front wheel alignment (incorrect)	Refer to **ADJUSTMENT**
	Rear wheel alignment (incorrect)	Refer to **ADJUSTMENT**
	Steering intermediate shaft (loose or worn)	Refer to **REMOVAL**
	Front axle hub bearings (loose or worn)	Refer to **ON-VEHICLE INSPECTION**
	Rear axle hub bearings (loose or worn)	Refer to **ON-VEHICLE INSPECTION**
	Steering gear (broken)	Refer to **REMOVAL**
	Suspension parts (worn out)	-
Front wheel shimmy	Tires (worn or improperly inflated)	Refer to **INSPECTION**
	Wheels (out of balance)	Refer to **INSPECTION**
	Front shock absorber (worn out)	Refer to **INSPECTION**
	Front wheel alignment (incorrect)	Refer to **ADJUSTMENT**
	Lower ball joint (worn)	Refer to **REMOVAL**
	Axle hub bearings (loose or worn)	Refer to **ON-VEHICLE INSPECTION**
	Steering intermediate shaft (loose or worn)	Refer to **REMOVAL**
	Steering gear (broken)	Refer to **REMOVAL**
	Tires (worn or improperly	

Rear wheel shimmy	inflated)	Refer to **INSPECTION**
	Wheels (out of balance)	Refer to **INSPECTION**
	Rear shock absorber (worn out)	Refer to **INSPECTION**
	Axle hub bearings (loose or worn)	Refer to **ON-VEHICLE INSPECTION**
	Rear wheel alignment (incorrect)	Refer to **ADJUSTMENT**

FRONT DRIVE SHAFT ASSEMBLY

COMPONENTS

ILLUSTRATION

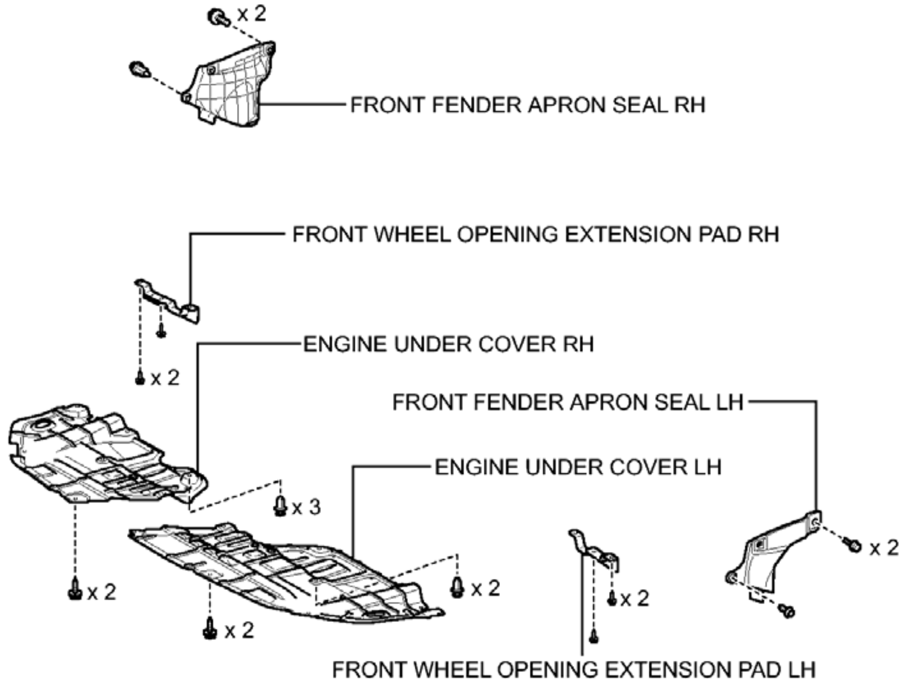
x 2
FRONT FENDER APRON SEAL RH
FRONT WHEEL OPENING EXTENSION PAD RH
x 2
ENGINE UNDER COVER RH
FRONT FENDER APRON SEAL LH
ENGINE UNDER COVER LH
x 3
x 2
x 2
x 2
x 2
x 2
x 2
FRONT WHEEL OPENING EXTENSION PAD LH
c

Fig. 1: Identifying Front Drive Shaft Assembly Replacement Components (1 Of 5)
Courtesy of TOYOTA MOTOR SALES, U.S.A., INC.

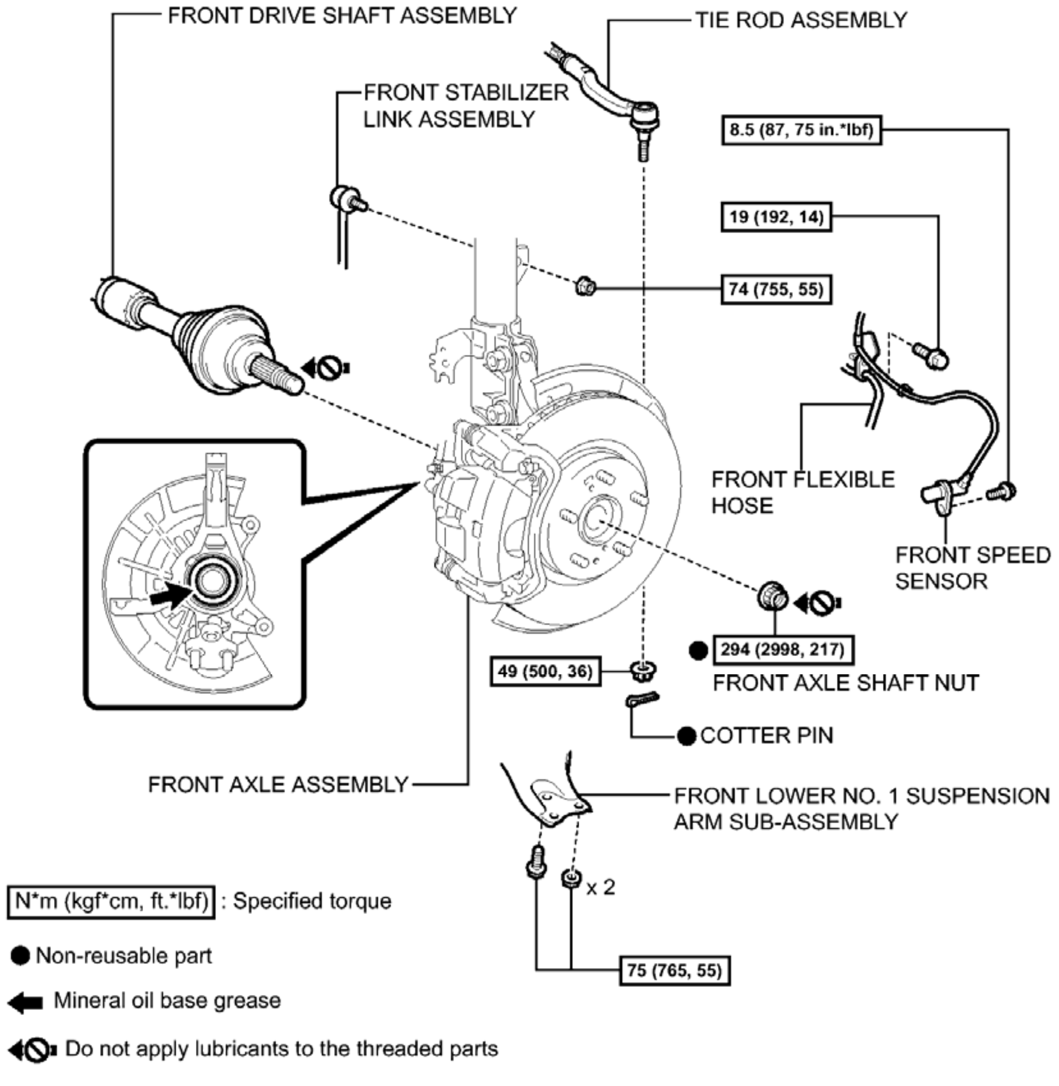
FRONT DRIVE SHAFT ASSEMBLY
TIE ROD ASSEMBLY
FRONT STABILIZER LINK ASSEMBLY
8.5 (87, 75 in.*lbf)
19 (192, 14)
74 (755, 55)
FRONT FLEXIBLE HOSE
FRONT SPEED SENSOR
● 294 (2998, 217)
FRONT AXLE SHAFT NUT
49 (500, 36)
● COTTER PIN
FRONT AXLE ASSEMBLY
FRONT LOWER NO. 1 SUSPENSION ARM SUB-ASSEMBLY
x 2
75 (765, 55)
N*m (kgf*cm, ft.*lbf) : Specified torque
● Non-reusable part
Mineral oil base grease
Do not apply lubricants to the threaded parts
c

Fig. 2: Identifying Front Drive Shaft Assembly Replacement Components With Torque Specifications (2 Of 5)

Courtesy of TOYOTA MOTOR SALES, U.S.A., INC.

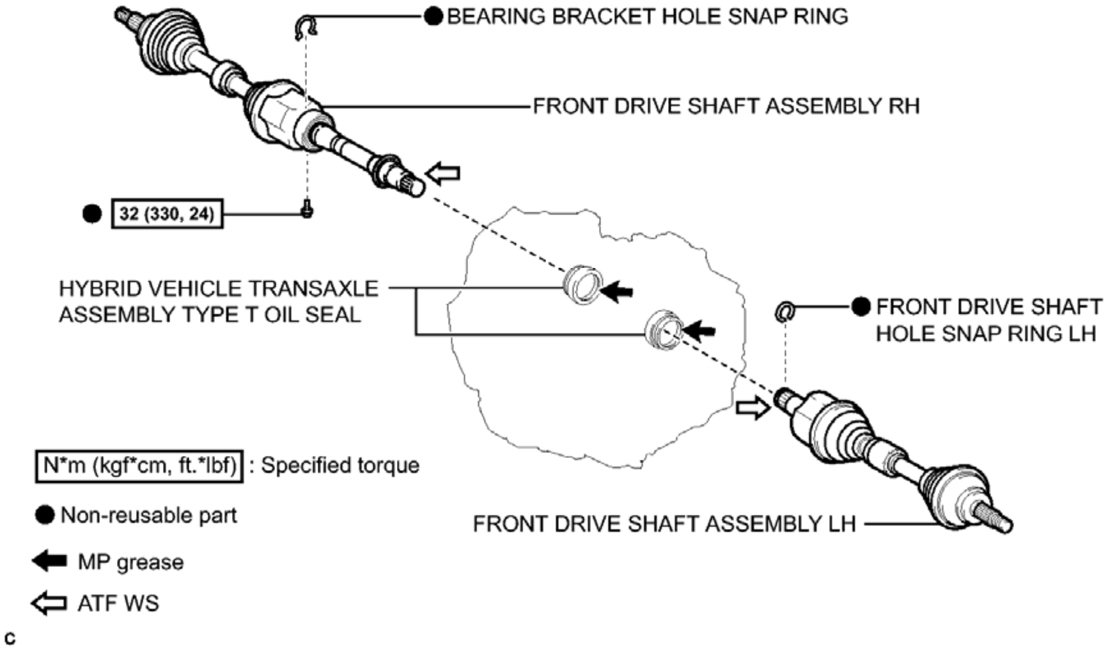
● BEARING BRACKET HOLE SNAP RING
FRONT DRIVE SHAFT ASSEMBLY RH
● 32 (330, 24)
HYBRID VEHICLE TRANSAXLE ASSEMBLY TYPE T OIL SEAL
● FRONT DRIVE SHAFT HOLE SNAP RING LH
FRONT DRIVE SHAFT ASSEMBLY LH
N*m (kgf*cm, ft.*lbf) : Specified torque
● Non-reusable part
⬅ MP grease
⇦ ATF WS
c

Fig. 3: Identifying Front Drive Shaft Assembly Replacement Components With Torque Specifications (3 Of 5)
Courtesy of TOYOTA MOTOR SALES, U.S.A., INC.

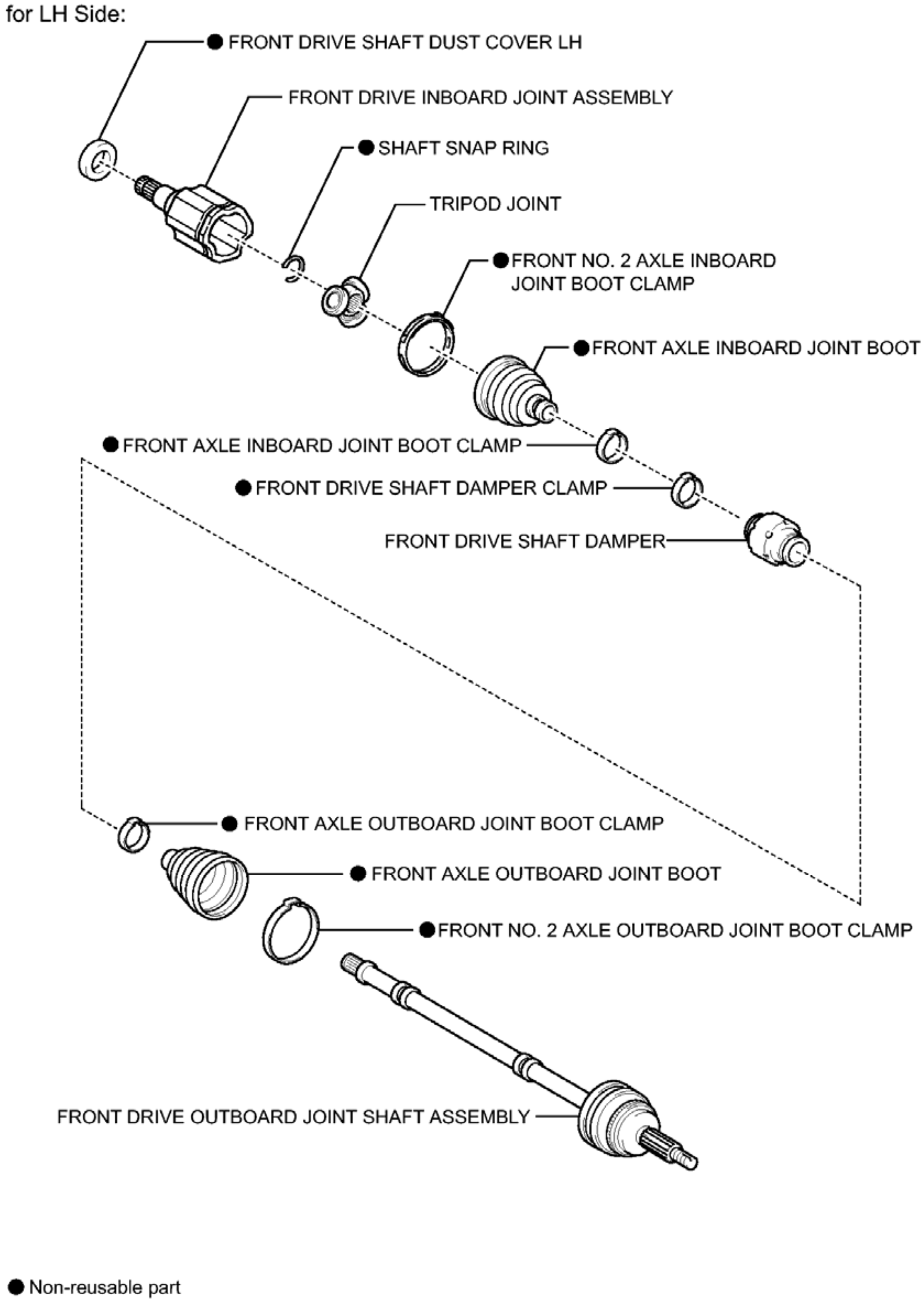
for LH Side:
● FRONT DRIVE SHAFT DUST COVER LH
FRONT DRIVE INBOARD JOINT ASSEMBLY
● SHAFT SNAP RING
TRIPOD JOINT
● FRONT NO. 2 AXLE INBOARD JOINT BOOT CLAMP
● FRONT AXLE INBOARD JOINT BOOT
● FRONT AXLE INBOARD JOINT BOOT CLAMP
● FRONT DRIVE SHAFT DAMPER CLAMP
FRONT DRIVE SHAFT DAMPER
● FRONT AXLE OUTBOARD JOINT BOOT CLAMP
● FRONT AXLE OUTBOARD JOINT BOOT
● FRONT NO. 2 AXLE OUTBOARD JOINT BOOT CLAMP
FRONT DRIVE OUTBOARD JOINT SHAFT ASSEMBLY
● Non-reusable part
c

Fig. 4: Identifying Front Drive Shaft Assembly Replacement Components (4 Of 5)
Courtesy of TOYOTA MOTOR SALES, U.S.A., INC.

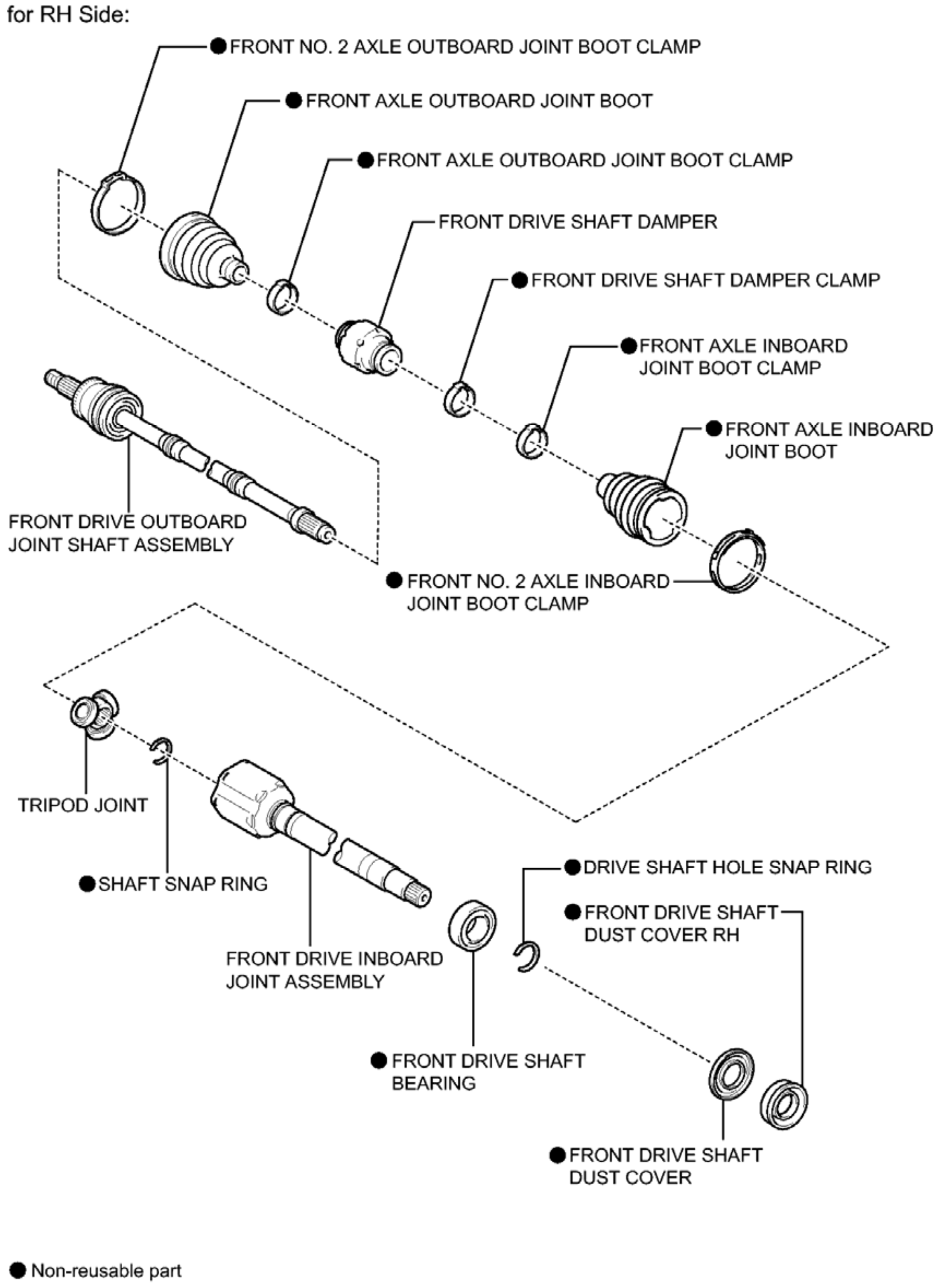
for RH Side:
● FRONT NO. 2 AXLE OUTBOARD JOINT BOOT CLAMP
● FRONT AXLE OUTBOARD JOINT BOOT
● FRONT AXLE OUTBOARD JOINT BOOT CLAMP
FRONT DRIVE SHAFT DAMPER
● FRONT DRIVE SHAFT DAMPER CLAMP
● FRONT AXLE INBOARD JOINT BOOT CLAMP
● FRONT AXLE INBOARD JOINT BOOT
FRONT DRIVE OUTBOARD JOINT SHAFT ASSEMBLY
● FRONT NO. 2 AXLE INBOARD JOINT BOOT CLAMP
TRIPOD JOINT
● SHAFT SNAP RING
FRONT DRIVE INBOARD JOINT ASSEMBLY
● DRIVE SHAFT HOLE SNAP RING
● FRONT DRIVE SHAFT DUST COVER RH
● FRONT DRIVE SHAFT BEARING
● FRONT DRIVE SHAFT DUST COVER
● Non-reusable part

c

Fig. 5: Identifying Front Drive Shaft Assembly Replacement Components (5 Of 5)
Courtesy of TOYOTA MOTOR SALES, U.S.A., INC.

REMOVAL

REMOVAL

HINT:

- Use the same procedure for the RH side and LH side.
- The procedure listed below is for the LH side.

1. **REMOVE FRONT WHEELS**
2. **REMOVE FRONT WHEEL OPENING EXTENSION PAD LH**
3. **REMOVE ENGINE UNDER COVER LH**
4. **REMOVE FRONT WHEEL OPENING EXTENSION PAD RH**
5. **REMOVE ENGINE UNDER COVER RH**
6. **REMOVE FRONT FENDER APRON SEAL LH**
7. **REMOVE FRONT FENDER APRON SEAL RH**
8. **DRAIN HYBRID TRANSAXLE FLUID** . Refer to **ADJUSTMENT - Step 1**
9. **REMOVE FRONT AXLE SHAFT NUT**
    a. Using SST and a hammer, release the staked part of the front axle shaft nut.

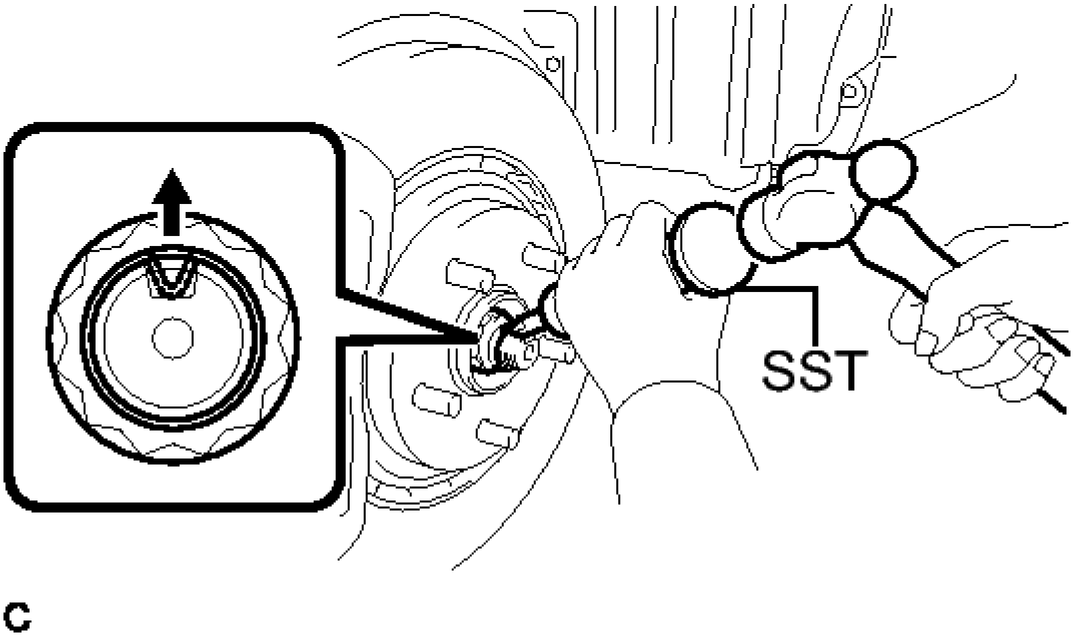

Fig. 6: Releasing Staked Part Of Front Axle Shaft Nut LH
Courtesy of TOYOTA MOTOR SALES, U.S.A., INC.

- **SST: 09930-00010**

NOTE: **Loosen the staked part of the nut completely, otherwise the threads of the drive shaft may be damaged.**

b. While applying the brakes, remove the front axle shaft nut.

10. **SEPARATE FRONT STABILIZER LINK ASSEMBLY** . Refer to **REMOVAL - Step 4**
11. **SEPARATE FRONT SPEED SENSOR** . Refer to **REMOVAL - Step 5**
12. **SEPARATE TIE ROD ASSEMBLY** . Refer to **REMOVAL - Step 5**
13. **SEPARATE FRONT LOWER NO. 1 SUSPENSION ARM SUB-ASSEMBLY** . Refer to **REMOVAL - Step 10**
14. **SEPARATE FRONT DRIVE SHAFT ASSEMBLY** . Refer to **REMOVAL - Step 9**
15. **REMOVE FRONT DRIVE SHAFT ASSEMBLY LH**

    a. Using SST, remove the front drive shaft assembly LH.

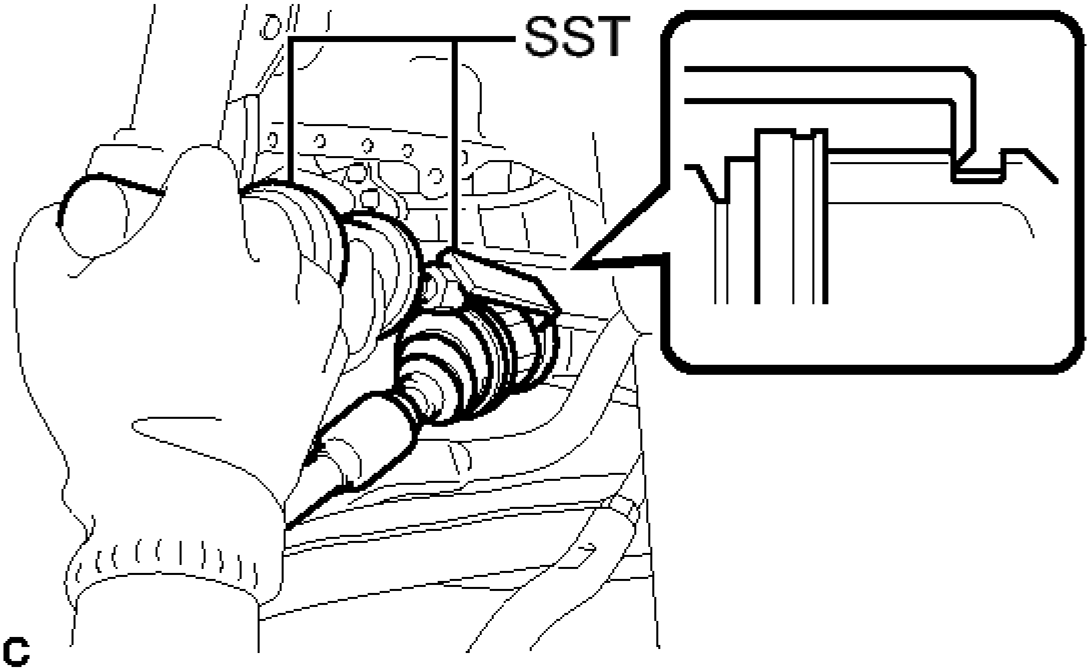

Fig. 7: Removing Front Drive Shaft Assembly LH
Courtesy of TOYOTA MOTOR SALES, U.S.A., INC.

- **SST: 09520-00031**
- **SST: 09520-01010**

NOTE:

- **Do not damage the hybrid vehicle transaxle assembly type T oil seal.**
- **Do not damage the front axle inboard joint boot.**
- **Do not drop the front drive shaft assembly LH.**

16. **REMOVE FRONT DRIVE SHAFT ASSEMBLY RH**

    a. Separate the bearing bracket hole snap ring from the drive shaft bearing bracket.

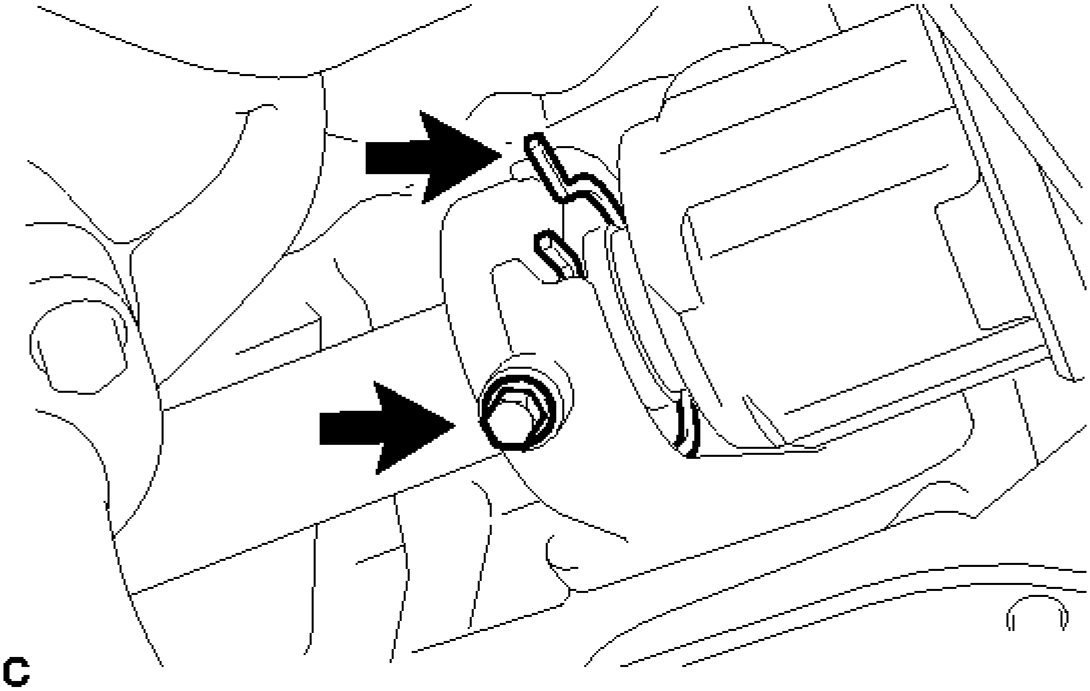

Fig. 8: Identifying Bearing Bracket Hole Snap Ring And Bolt
Courtesy of TOYOTA MOTOR SALES, U.S.A., INC.

b. Remove the bolt and front drive shaft assembly RH from the drive shaft bearing bracket.

NOTE:	- **Do not damage the hybrid vehicle transaxle assembly type T oil seal.** - **Do not damage the front axle inboard joint boot.** - **Do not drop the front drive shaft assembly RH.**

c. Remove the bearing bracket hole snap ring from the front drive shaft assembly RH.

17. **REMOVE FRONT DRIVE SHAFT HOLE SNAP RING LH**

a. Using a screwdriver, remove the front drive shaft hole snap ring LH.

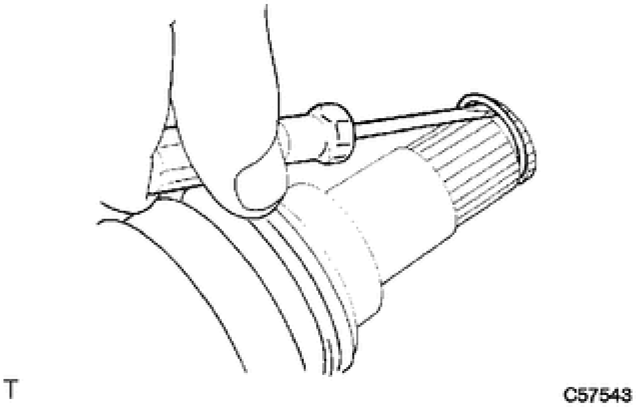

Fig. 9: Removing Snap Ring
Courtesy of TOYOTA MOTOR SALES, U.S.A., INC.

DISASSEMBLY

DISASSEMBLY

1. **REMOVE FRONT NO. 2 AXLE INBOARD JOINT BOOT CLAMP**
   a. Hold the drive shaft in a vise between aluminum plates.

      NOTE: Do not overtighten the vise.

   b. Using needle-nose pliers, remove the front No. 2 axle inboard joint boot clamp.

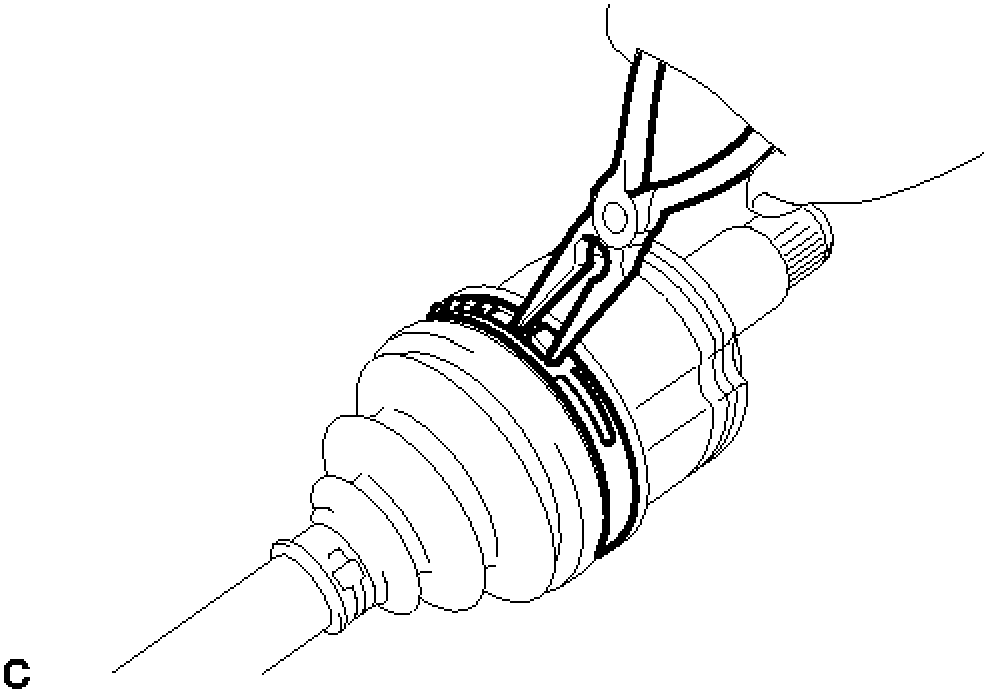

Fig. 10: Removing Front No. 2 Axle Inboard Joint Boot Clamp
Courtesy of TOYOTA MOTOR SALES, U.S.A., INC.

2. **REMOVE FRONT AXLE INBOARD JOINT BOOT CLAMP**
   a. Using pliers, remove the front axle inboard joint boot clamp.

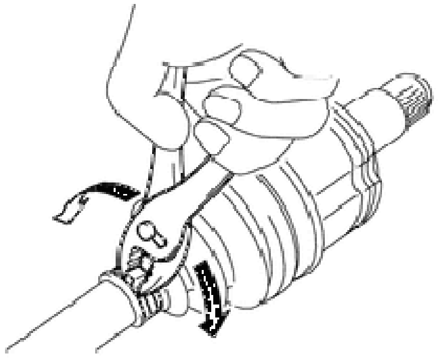

Fig. 11: Removing Front Axle Inboard Joint Boot Clamp
Courtesy of TOYOTA MOTOR SALES, U.S.A., INC.

3. **SEPARATE FRONT AXLE INBOARD JOINT BOOT**
   a. Separate the front axle inboard joint boot from the front drive inboard joint assembly.
4. **REMOVE FRONT DRIVE INBOARD JOINT ASSEMBLY**
   a. Remove the old grease from the front drive inboard joint assembly.
   b. Put matchmarks on the front drive inboard joint assembly and front drive outboard joint shaft assembly.

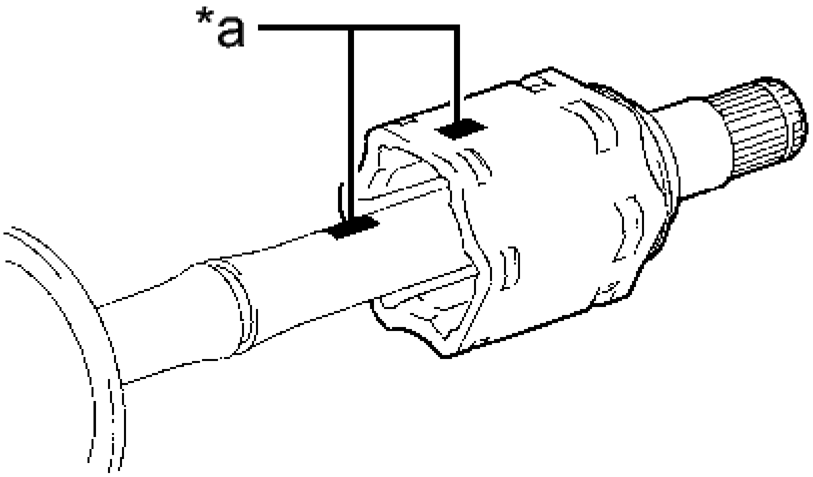

Fig. 12: Identifying Matchmarks On Front Drive Inboard Joint Assembly And Front Drive Outboard Joint Shaft Assembly
Courtesy of TOYOTA MOTOR SALES, U.S.A., INC.

TEXT IN ILLUSTRATION

*a	Matchmark

NOTE: **Do not use a punch for the marks.**

c. Remove the front drive inboard joint assembly from the front drive outboard joint shaft assembly.

d. Hold the drive shaft in a vise between aluminum plates.

NOTE: **Do not overtighten the vise.**

e. Using a snap ring expander, remove the shaft snap ring from the front drive outboard joint shaft assembly.

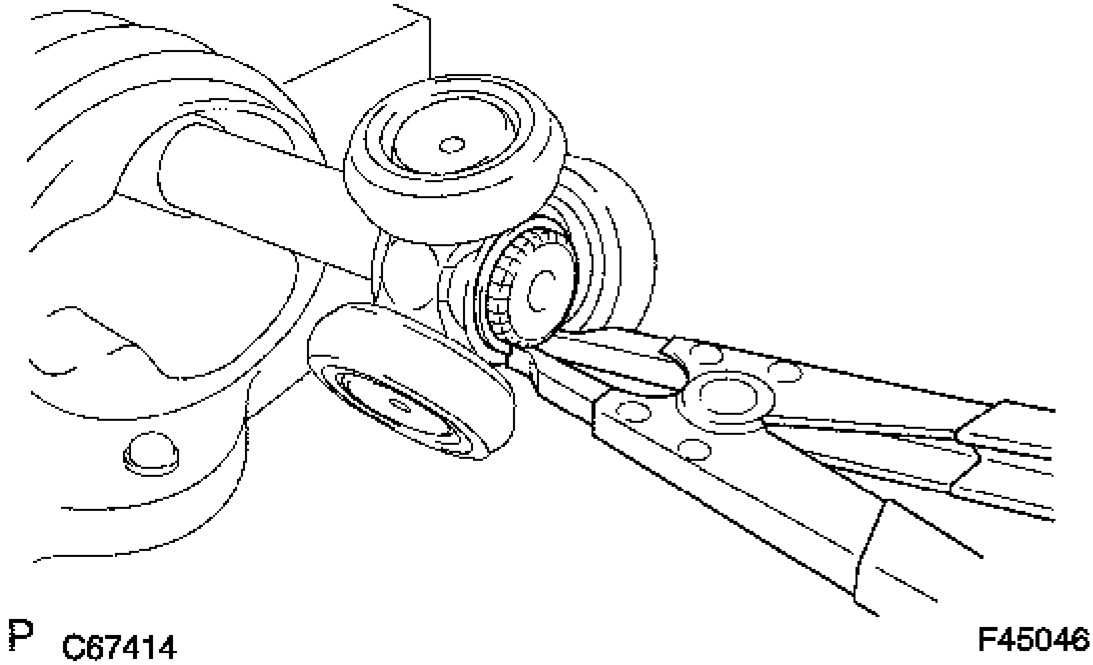

Fig. 13: Identifying Snap Ring
Courtesy of TOYOTA MOTOR SALES, U.S.A., INC.

f. Put matchmarks on the front drive outboard joint shaft assembly and tripod joint.

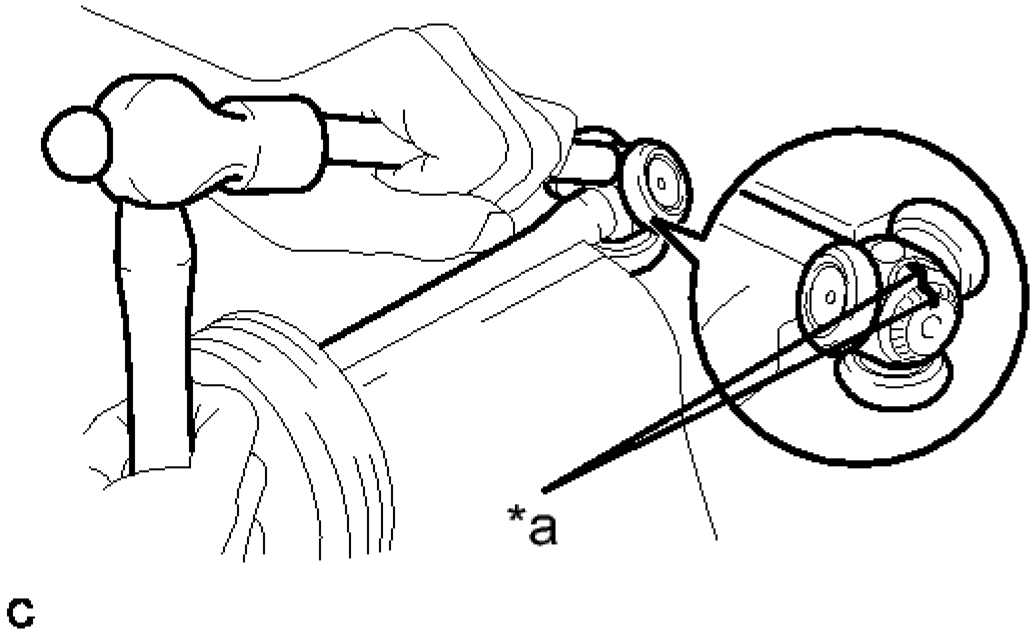

Fig. 14: Identifying Front Axle Outboard Joint Shaft Assembly And Tripod Joint Matchmark
Courtesy of TOYOTA MOTOR SALES, U.S.A., INC.

TEXT IN ILLUSTRATION

*a	Matchmark

NOTE: **Do not use a punch for the marks.**

g. Using a brass bar and a hammer, tap out the tripod joint from the front drive outboard joint shaft assembly.

NOTE:

- **Do not tap the rollers.**
- **Do not drop the tripod joint.**

5. **REMOVE FRONT AXLE INBOARD JOINT BOOT**
   a. Remove the front No. 2 axle inboard joint boot clamp, front axle inboard joint boot and front axle inboard joint boot clamp.
6. **REMOVE FRONT DRIVE SHAFT DAMPER**
   a. Using pliers, remove the front drive shaft damper clamp.

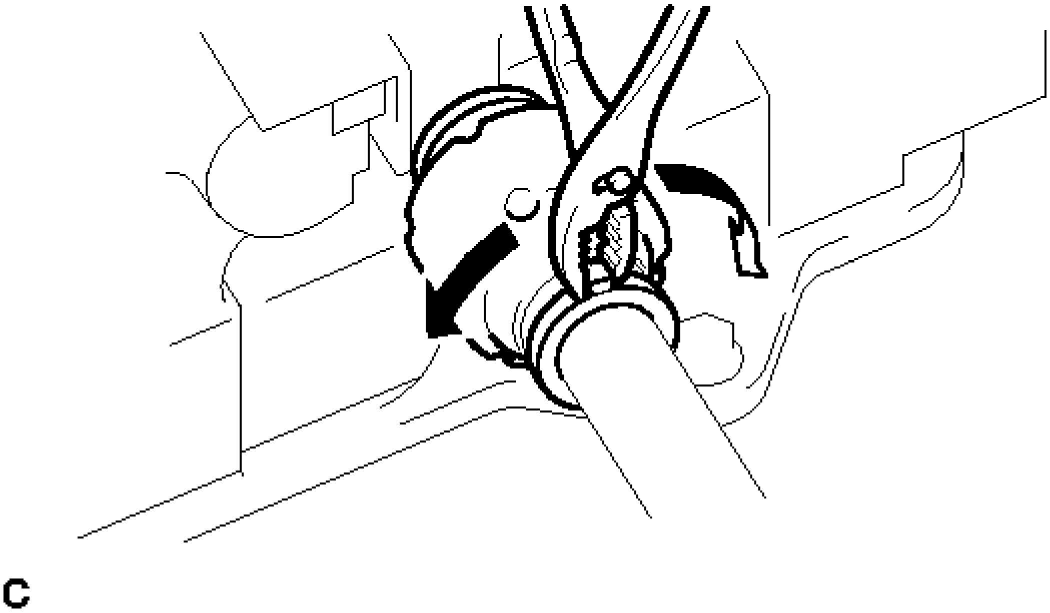

Fig. 15: Removing Front Drive Shaft Damper Clamp
Courtesy of TOYOTA MOTOR SALES, U.S.A., INC.

   b. Remove the front drive shaft damper.

7. **REMOVE FRONT NO. 2 AXLE OUTBOARD JOINT BOOT CLAMP**
   a. Using pliers, remove the front No. 2 axle outboard joint boot clamp.

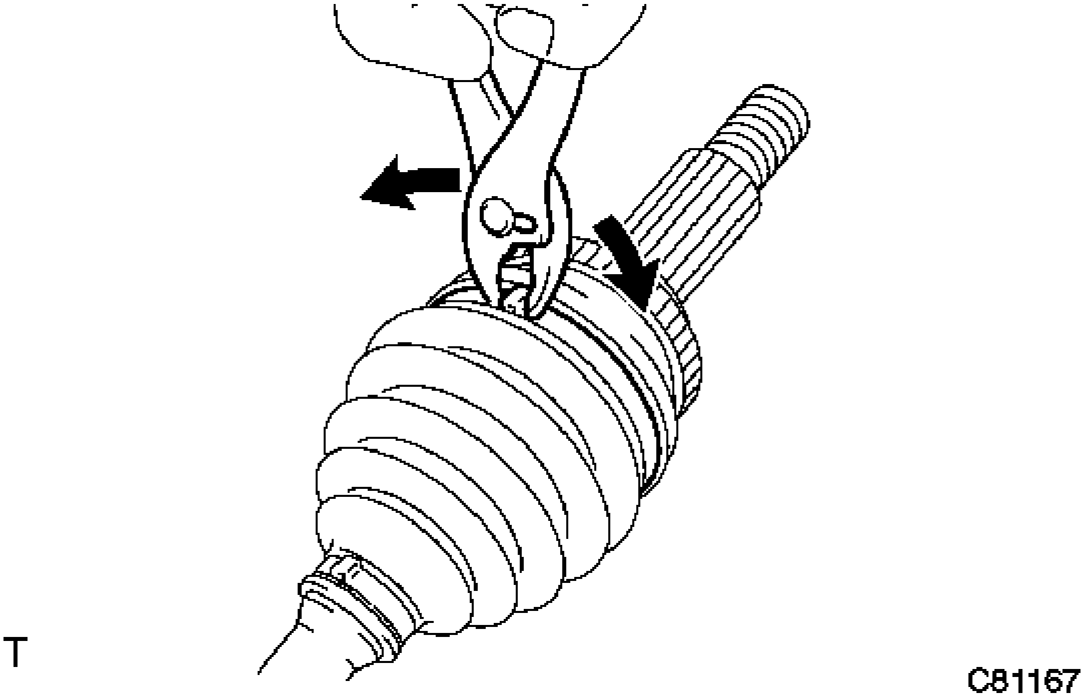

Fig. 16: Removing Outboard Joint Boot No. 2 Clamp
Courtesy of TOYOTA MOTOR SALES, U.S.A., INC.

8. **REMOVE FRONT AXLE OUTBOARD JOINT BOOT CLAMP**

   HINT:

   Perform the same procedure as for the front No. 2 axle outboard joint boot clamp.

9. **REMOVE FRONT AXLE OUTBOARD JOINT BOOT**
   a. Remove the front axle outboard joint boot clamp, front axle outboard joint boot and front No. 2 axle outboard joint boot clamp from the front drive outboard joint shaft assembly.
   b. Remove the grease from the outboard joint.
10. **REMOVE FRONT DRIVE SHAFT DUST COVER LH**
   a. Using SST and a press, remove the front drive shaft dust cover LH.

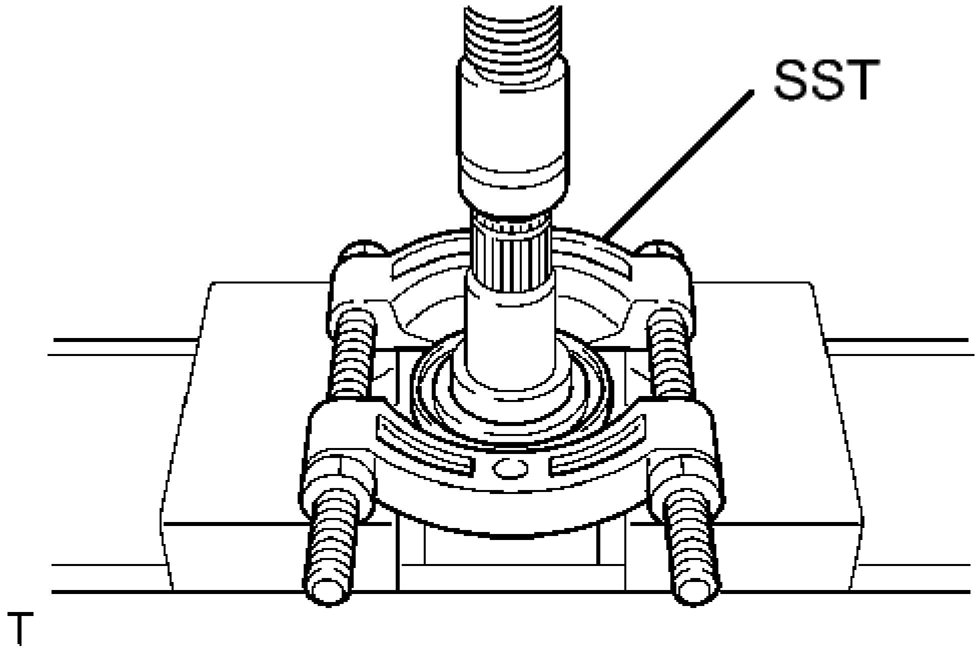

Fig. 17: Pressing Drive Shaft Dust Cover LH
Courtesy of TOYOTA MOTOR SALES, U.S.A., INC.

- **SST: 09950-00020**

NOTE:

- **Be careful not to drop the front drive inboard joint assembly.**
- **Do not overtighten SST.**

11. **REMOVE FRONT DRIVE SHAFT DUST COVER RH**
   a. Using a press, remove the front drive shaft dust cover RH.

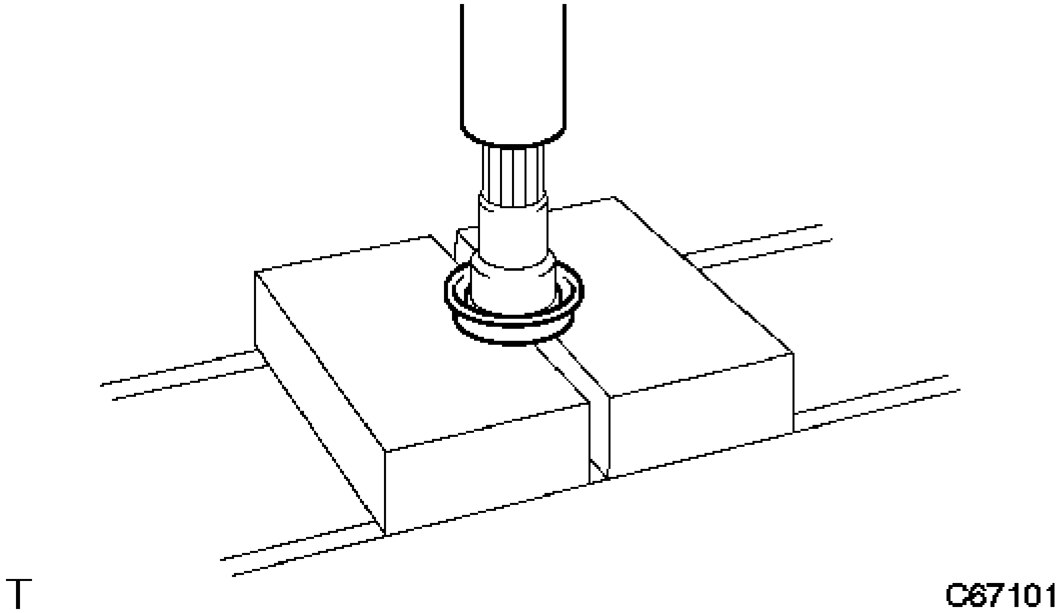

Fig. 18: Identifying Drive Shaft Dust Cover RH
Courtesy of TOYOTA MOTOR SALES, U.S.A., INC.

NOTE: Be careful not to drop the front drive inboard joint assembly.

12. **REMOVE FRONT DRIVE SHAFT DUST COVER (for RH Side)**
    a. Using SST and a press, remove the front drive shaft dust cover.

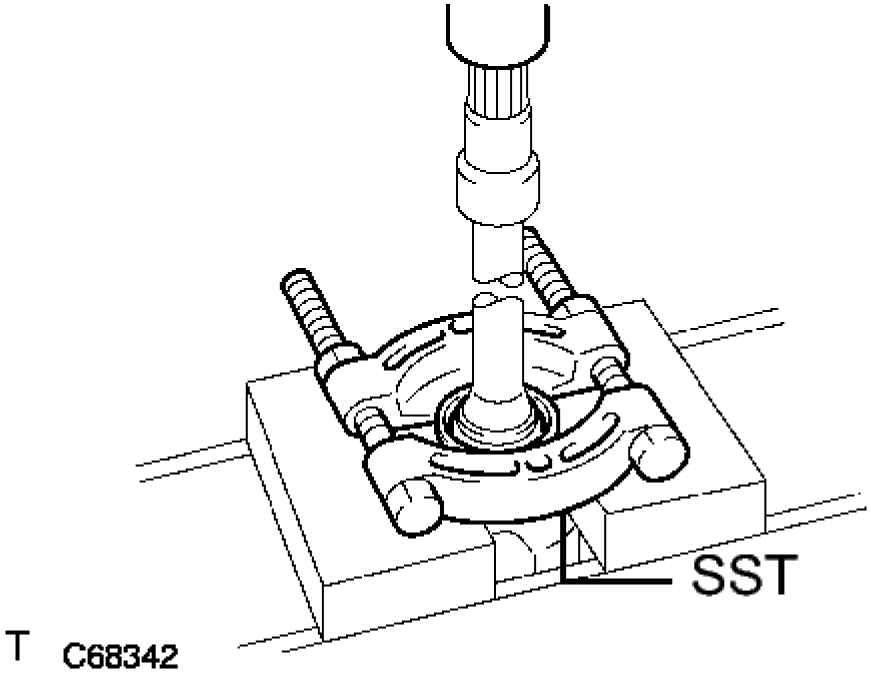

Fig. 19: Removing Drive Shaft Dust Cover
Courtesy of TOYOTA MOTOR SALES, U.S.A., INC.

- **SST: 09950-00020**

NOTE:

- **Be careful not to drop the front drive inboard joint assembly.**
- **Do not overtighten SST.**

13. **REMOVE FRONT DRIVE SHAFT BEARING (for RH Side)**
    a. Using a snap ring expander, remove the drive shaft hole snap ring.

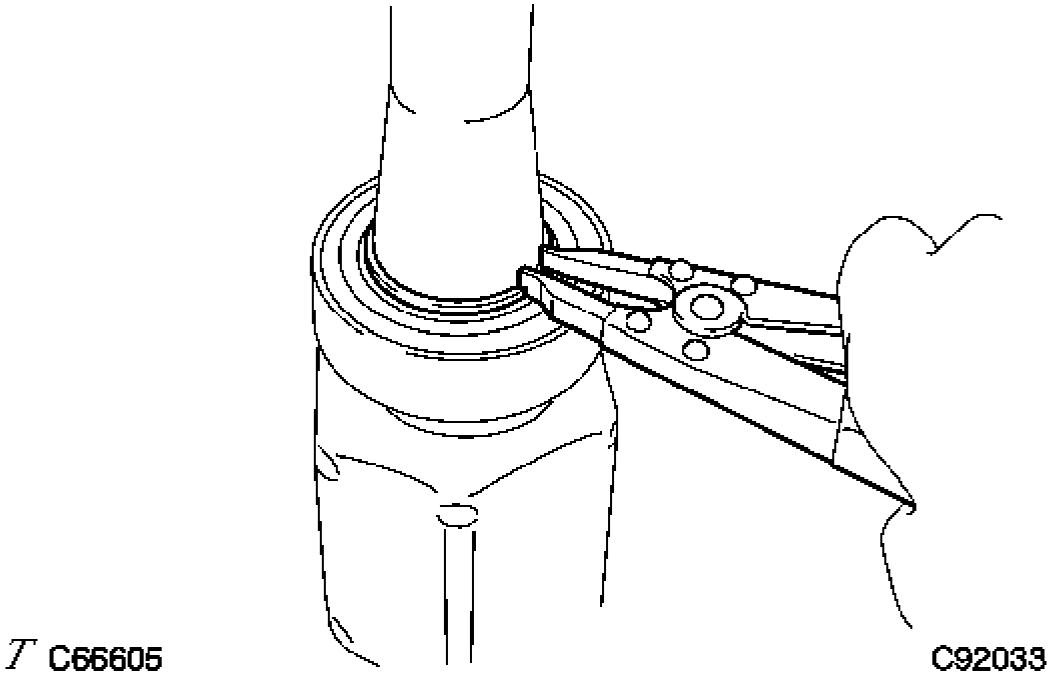

Fig. 20: Removing Drive Shaft Hole Snap Ring
Courtesy of TOYOTA MOTOR SALES, U.S.A., INC.

    b. Using SST and a press, remove the front drive shaft bearing.

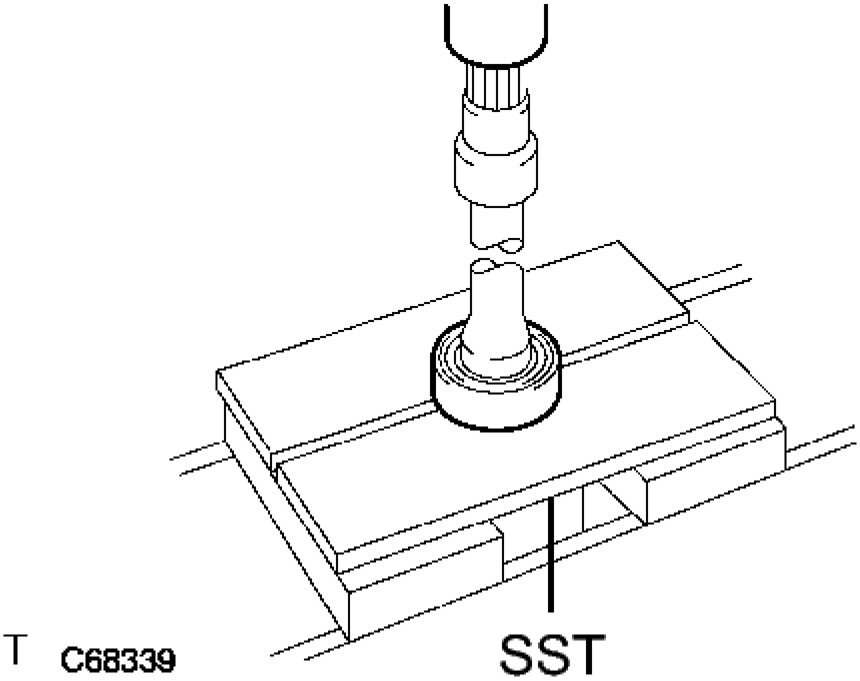

Fig. 21: Removing Bearing
Courtesy of TOYOTA MOTOR SALES, U.S.A., INC.

- **SST: 09527-10011**

NOTE: **Be careful not to drop the front drive inboard joint assembly.**

INSPECTION

INSPECTION

1. **INSPECT FRONT DRIVE SHAFT ASSEMBLY**
    a. Check that there is no excessive play in the radial direction of the outboard joint.

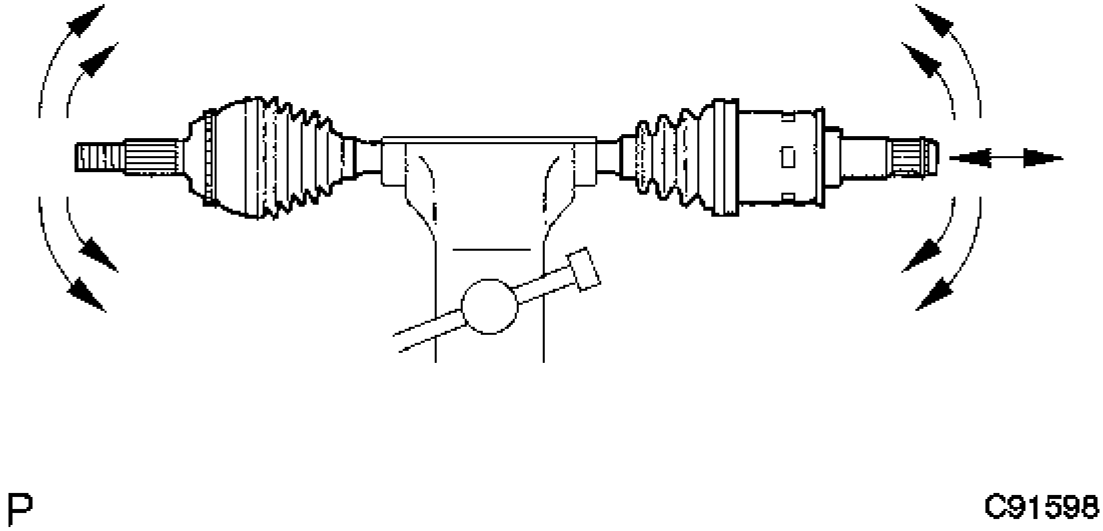

Fig. 22: Checking Excessive Play In Outboard Joint And Inboard Joint
Courtesy of TOYOTA MOTOR SALES, U.S.A., INC.

b. Check that the inboard joint slides smoothly in the thrust direction.
c. Check that there is no excessive play in the radial direction of the inboard joint.
d. Check the boots for damage.
e. Check whether the drive shaft dimensions (A) are within the following specifications.

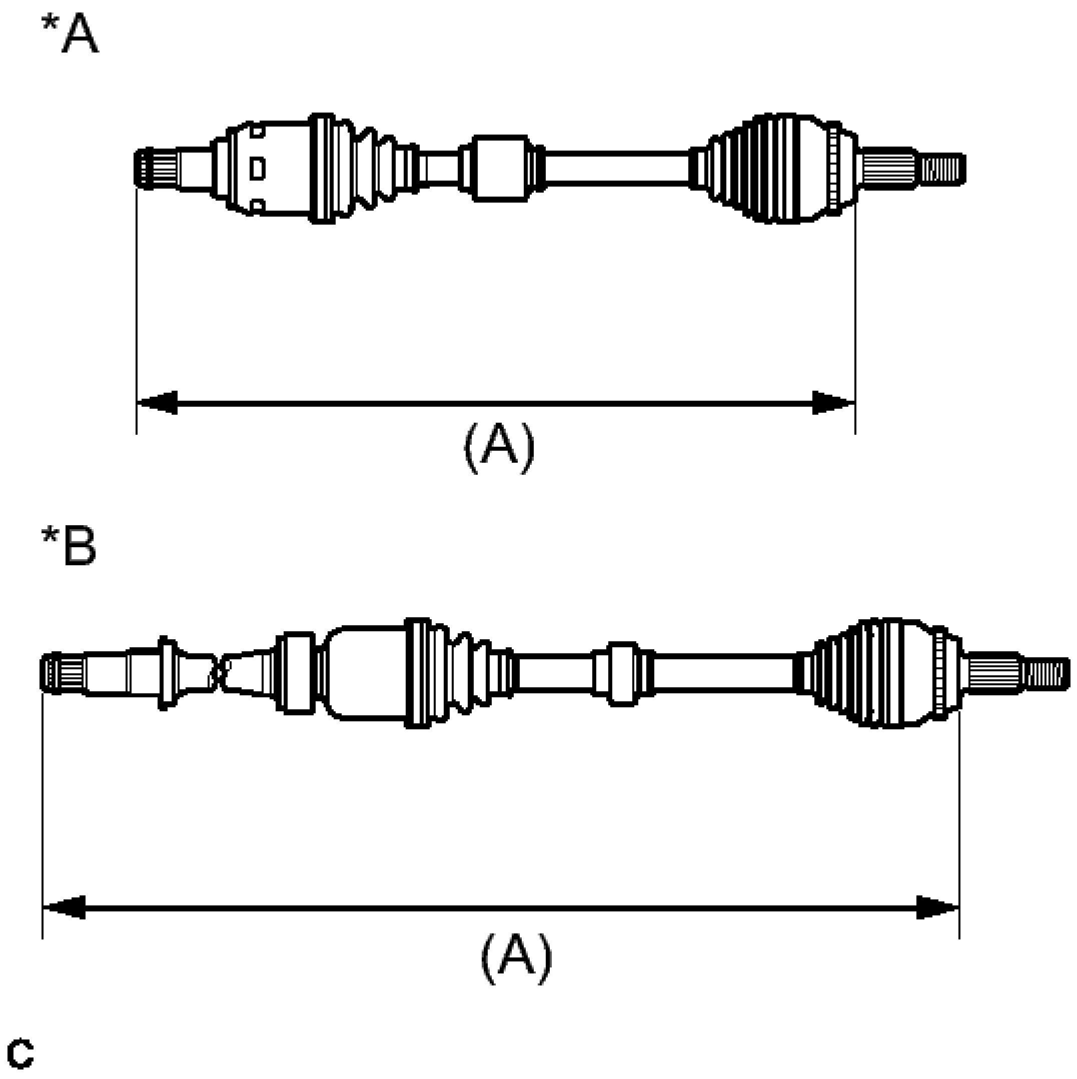

Fig. 23: Checking Drive Shaft Dimensions
Courtesy of TOYOTA MOTOR SALES, U.S.A., INC.

TEXT IN ILLUSTRATION

*A	LH Side
*B	RH Side

NOTE: **Keep the drive shaft assembly level during inspection.**

Dimension (A)

	Dimension (A)
LH Side	581.5 mm (1.90 ft.)

RH Side	914.9 mm (3.00 ft.)

REASSEMBLY

REASSEMBLY

1. **INSTALL FRONT DRIVE SHAFT BEARING (for RH Side)**
    a. Using SST, a steel plate and a press, install a new front drive shaft bearing.

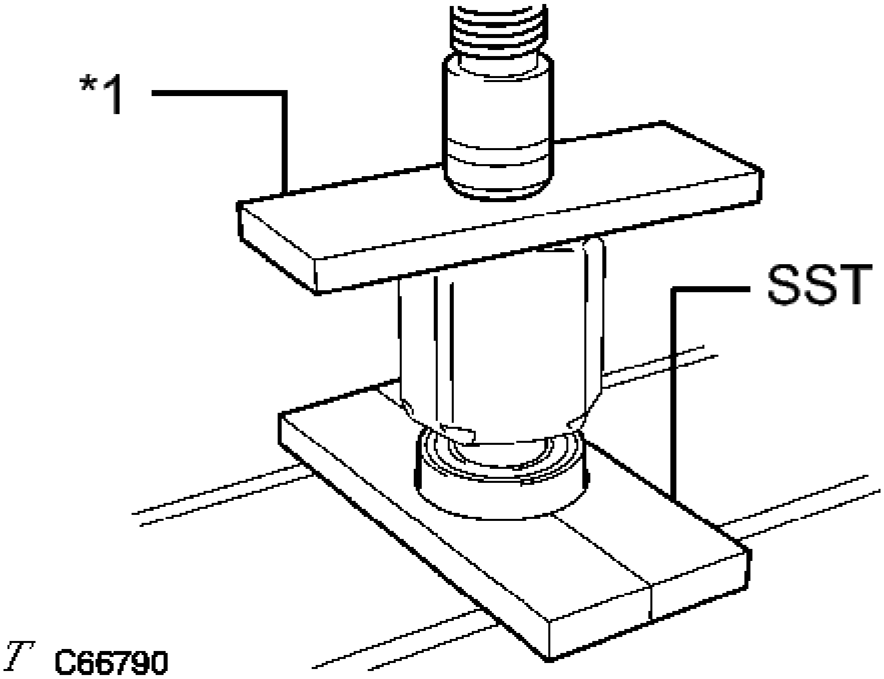

Fig. 24: Install A New Front Drive Shaft Bearing
Courtesy of TOYOTA MOTOR SALES, U.S.A., INC.

TEXT IN ILLUSTRATION

*1	Steel Plate

- **SST: 09527-10011**

NOTE: The bearing should be completely installed.

b. Using a snap ring expander, install a new drive shaft hole snap ring.

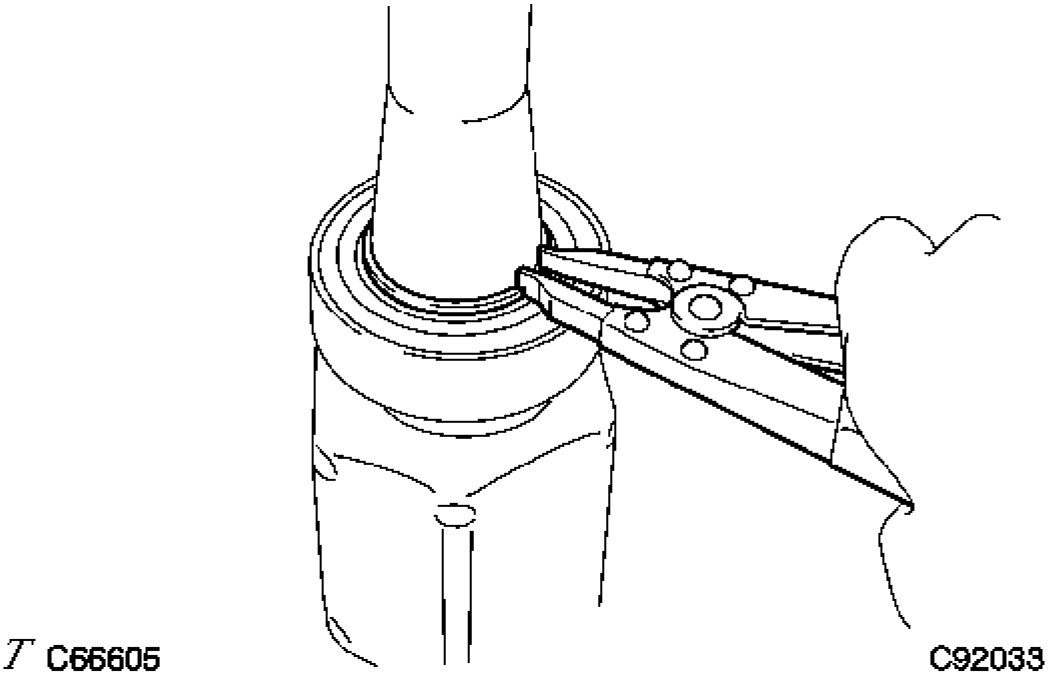

Fig. 25: Removing Drive Shaft Hole Snap Ring
Courtesy of TOYOTA MOTOR SALES, U.S.A., INC.

2. **INSTALL FRONT DRIVE SHAFT DUST COVER (for RH Side)**
    a. Using SST, a steel plate and a press, install a new front drive shaft dust cover.

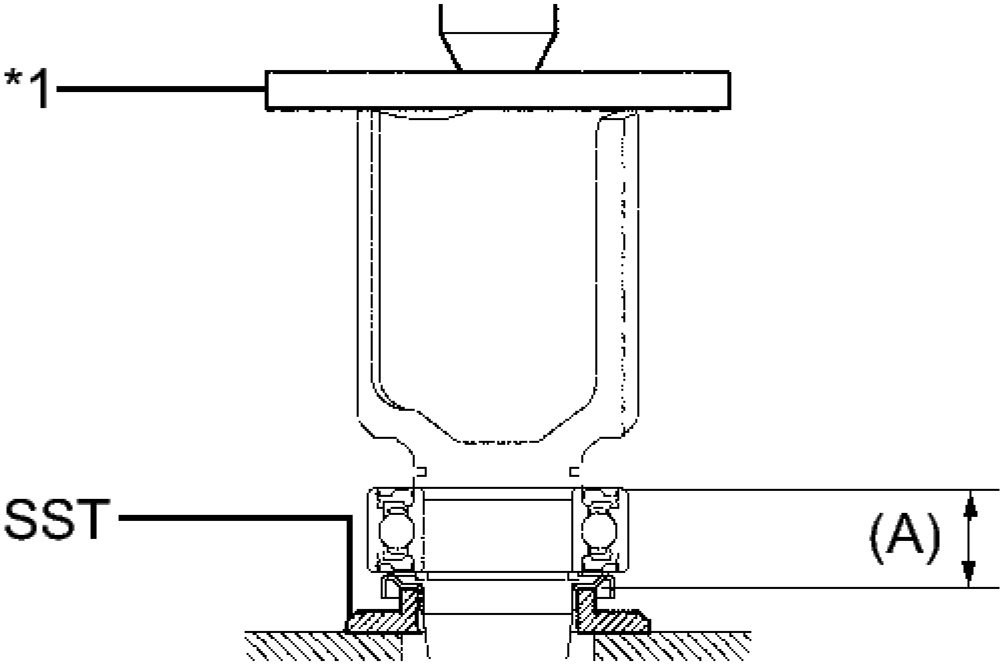

Fig. 26: Installing Front Drive Shaft Dust Cover (For RH Side)
Courtesy of TOYOTA MOTOR SALES, U.S.A., INC.

TEXT IN ILLUSTRATION

*1	Steel Plate

- **SST: 09726-40010**

Dimension (A)

26.6 to 27.6 mm (1.05 to 1.08 in.)

NOTE:

- **The dust cover should be completely installed.**
- **Be careful not to damage the front drive shaft dust cover.**

3. **INSTALL FRONT DRIVE SHAFT DUST COVER RH**
   a. Using a steel plate and a press, install a new front drive shaft dust cover RH until dimension (A) from the tip of the front drive inboard joint assembly to the front drive shaft dust cover RH meets the specification.

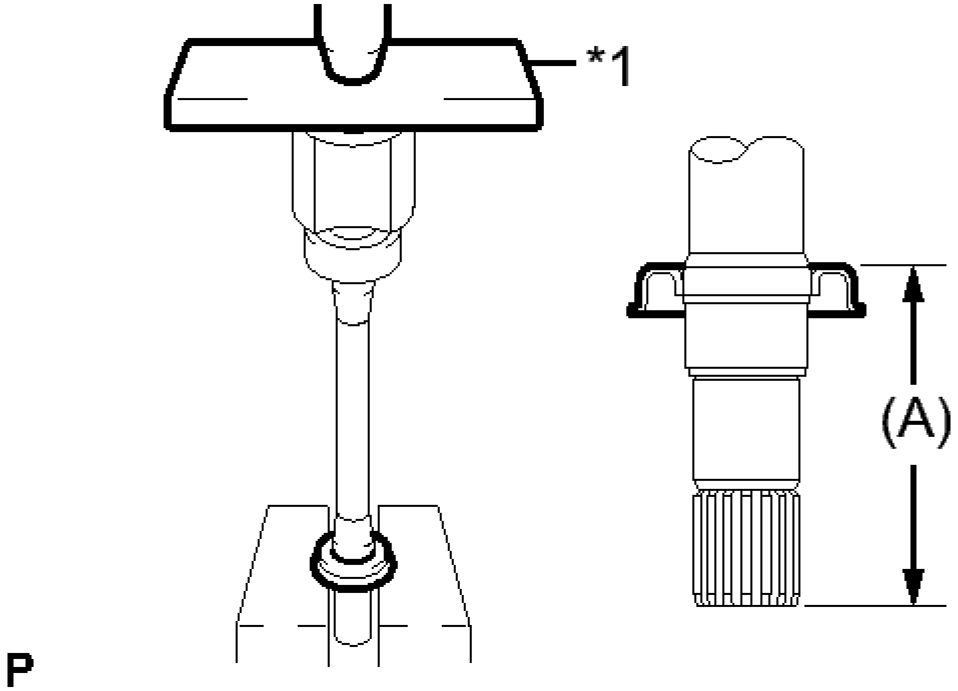

Fig. 27: Installing Front Drive Shaft Dust Cover To Proper Dimension
Courtesy of TOYOTA MOTOR SALES, U.S.A., INC.

TEXT IN ILLUSTRATION

*1	Steel Plate

Dimension (A)

110.0 to 111.0 mm (4.33 to 4.37 in.)

NOTE:

- **The dust cover should be completely installed.**
- **Be careful not to damage the front drive shaft dust cover RH.**

4. **INSTALL FRONT DRIVE SHAFT DUST COVER LH**
   a. Using a steel plate and a press, install a new front drive shaft dust cover LH.

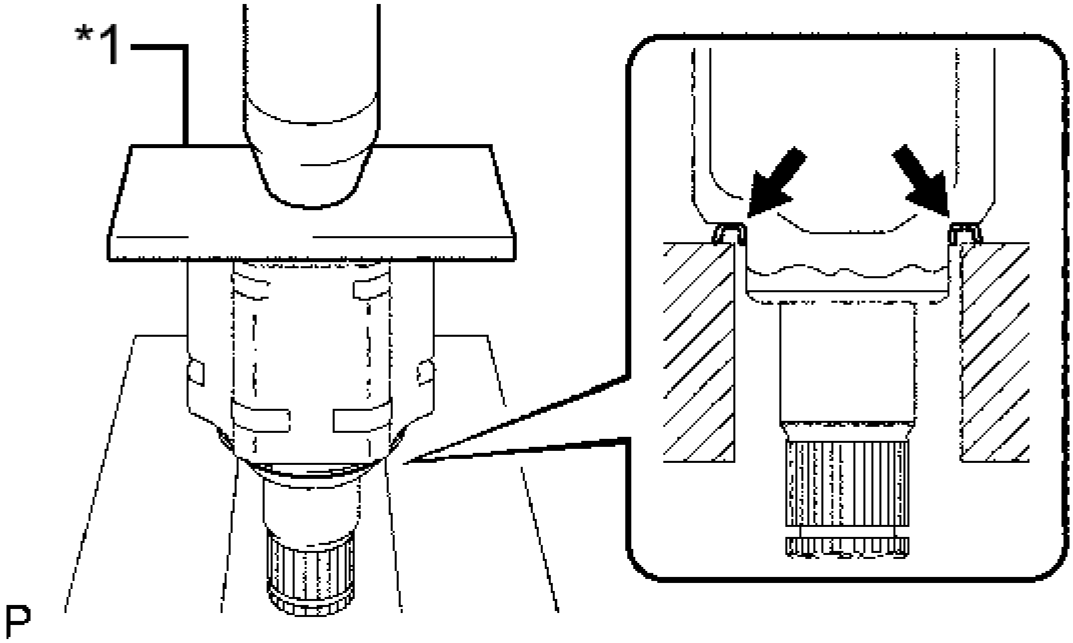

Fig. 28: Installing Front Drive Shaft Dust Cover LH
Courtesy of TOYOTA MOTOR SALES, U.S.A., INC.

TEXT IN ILLUSTRATION

*1	Steel Plate

NOTE:

- **The dust cover should be completely installed.**
- **Be careful not to damage the front drive shaft dust cover LH.**

5. **INSTALL FRONT AXLE OUTBOARD JOINT BOOT**
   a. Wrap the splines of the front drive outboard joint shaft assembly with protective tape to prevent the boot from being damaged.

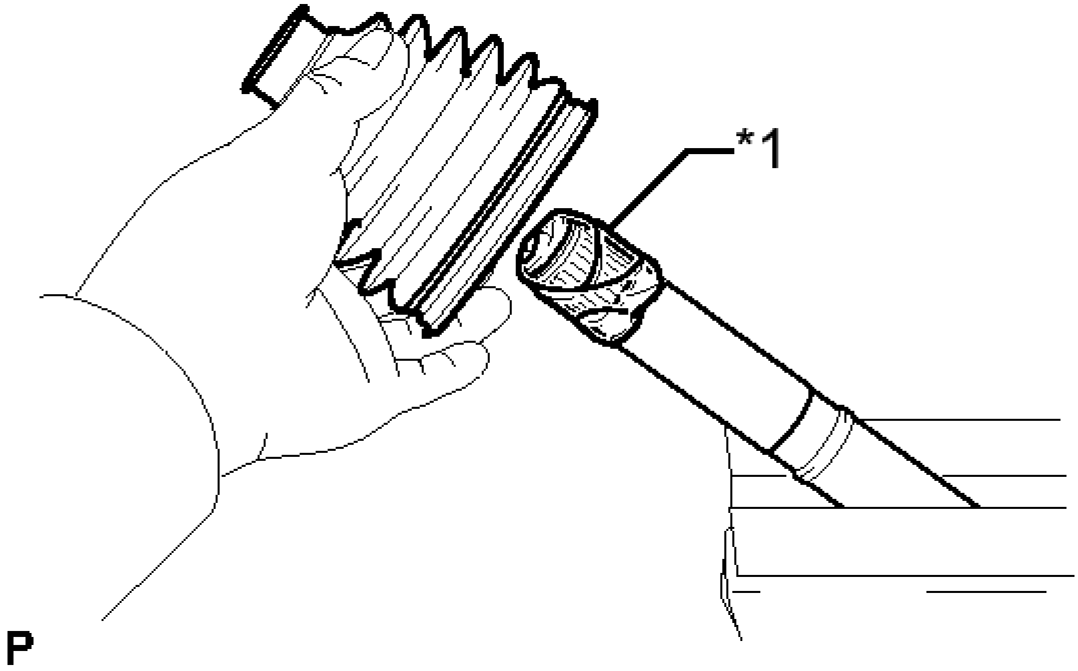

Fig. 29: Wrapping Spline Of Drive Shaft With Vinyl Tape
Courtesy of TOYOTA MOTOR SALES, U.S.A., INC.

TEXT IN ILLUSTRATION

*1	Protective Tape

b. Install new parts onto the front drive outboard joint shaft assembly in the following order:

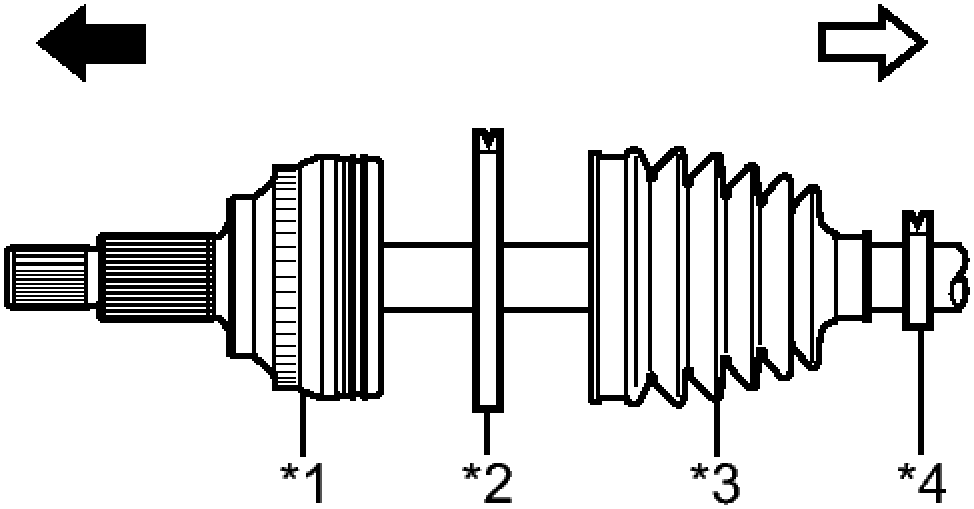

Fig. 30: Identifying Front Drive Outboard Joint Components
Courtesy of TOYOTA MOTOR SALES, U.S.A., INC.

TEXT IN ILLUSTRATION

*1	Front Drive Outboard Joint Shaft Assembly
*2	Front No. 2 Axle Outboard Joint Boot Clamp
*3	Front Axle Outboard Joint Boot
*4	Front Axle Outboard Joint Boot Clamp

	Outboard Joint Side
	Inboard Joint Side

1. Front No. 2 axle outboard joint boot clamp
2. Front axle outboard joint boot
3. Front axle outboard joint boot clamp

c. Pack the joint portion of the front drive outboard joint shaft assembly and front axle outboard joint boot with grease.

Standard grease capacity

164 to 184 g (5.78 to 6.48 oz.)

d. Install the front axle outboard joint boot onto the front drive outboard joint shaft assembly groove.

NOTE:

- **Do not allow grease to adhere to the boot clamp track of the outboard joint boot.**
- **Keep the inside of the outboard joint boot free of foreign matter.**

6. **INSTALL FRONT NO. 2 AXLE OUTBOARD JOINT BOOT CLAMP**

a. Hold the drive shaft in a vise between aluminum plates.

NOTE: **Do not overtighten the vise.**

b. Install the front No. 2 axle outboard joint boot clamp onto the front axle outboard joint boot.

c. Place SST onto the front No. 2 axle outboard joint boot clamp, press it against the boot and slightly tighten SST.

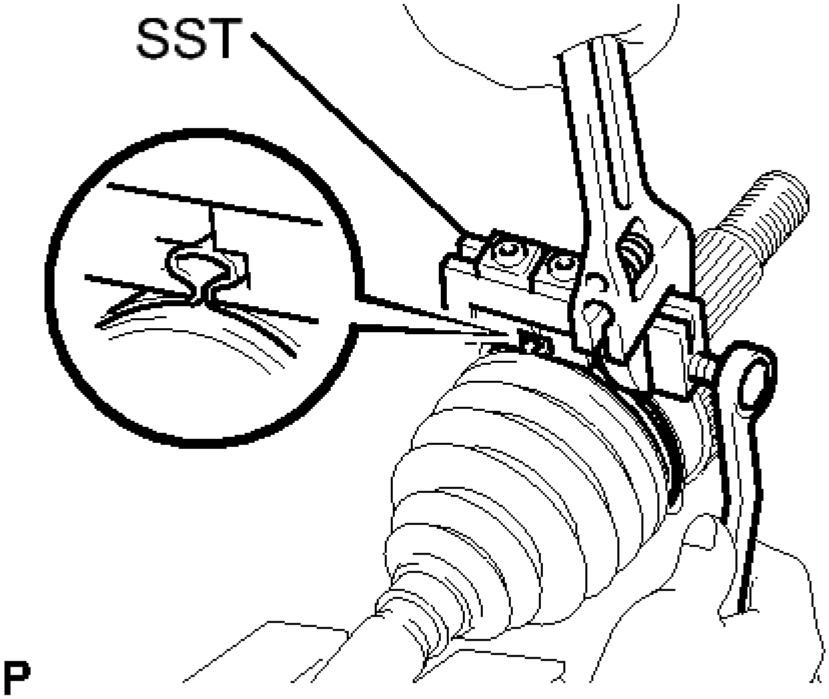

Fig. 31: Tightening No. 2 Front Axle Outboard Joint Boot Clamp
Courtesy of TOYOTA MOTOR SALES, U.S.A., INC.

- **SST: 09521-24010**

d. Tighten SST so that the front No. 2 axle outboard joint boot clamp is pinched.

NOTE: Do not overtighten SST.

e. Remove SST.
f. Using SST, measure the clearance of the front No. 2 axle outboard joint boot clamp.

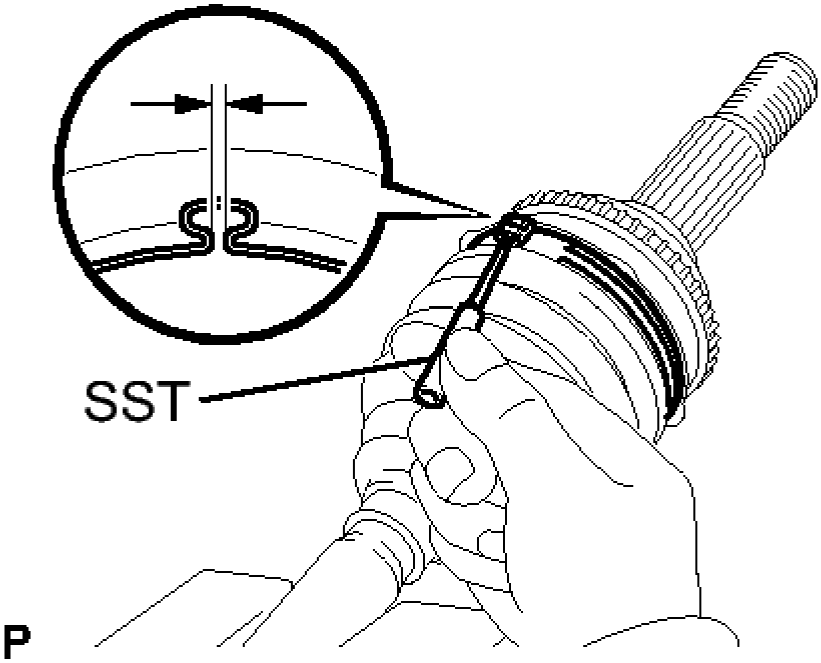

Fig. 32: Measuring Clearance Of Boot Clamp
Courtesy of TOYOTA MOTOR SALES, U.S.A., INC.

- **SST: 09240-00020**

Clearance

0.5 to 1.5 mm (0.0197 to 0.0591 in.)

If the clearance is outside the specified range, retighten SST.

7. **INSTALL FRONT AXLE OUTBOARD JOINT BOOT CLAMP**
    a. Install the front axle outboard joint boot clamp onto the front axle outboard joint boot.
    b. Place SST onto the front axle outboard joint boot clamp, press it against the boot and slightly tighten SST.

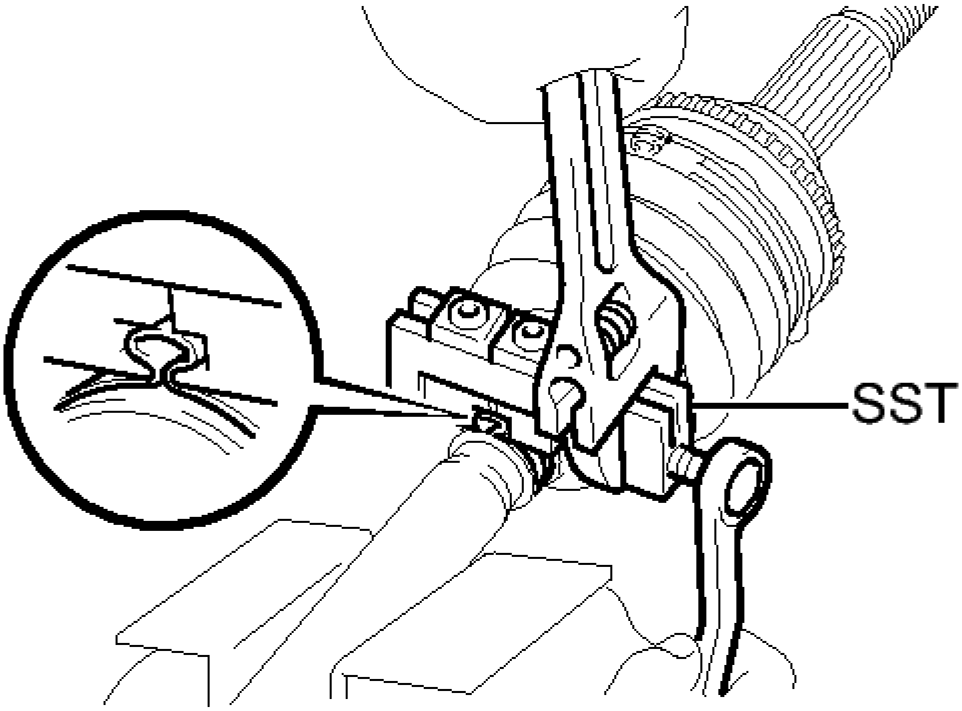

Fig. 33: Installing Front Axle Outboard Joint Boot Clamp
Courtesy of TOYOTA MOTOR SALES, U.S.A., INC.

- **SST: 09521-24010**

c. Tighten SST so that the front axle outboard joint boot clamp is pinched.

NOTE: **Do not overtighten SST.**

d. Remove SST.
e. Using SST, measure the clearance of the front axle outboard joint boot clamp.

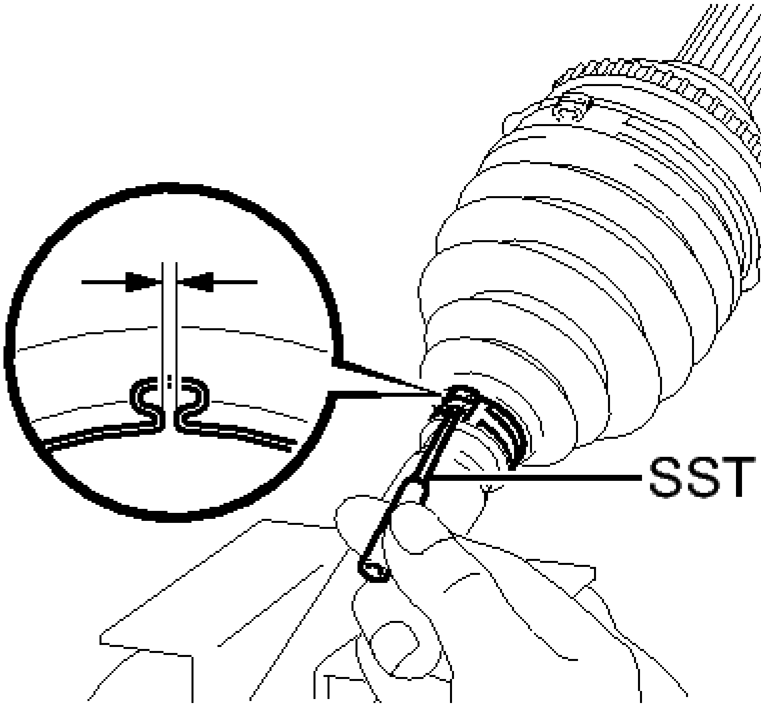

Fig. 34: Measuring Clearance Of Front Axle Outboard Joint Boot Clamp
Courtesy of TOYOTA MOTOR SALES, U.S.A., INC.

- **SST: 09240-00020**

Clearance

0.5 to 1.5 mm (0.0197 to 0.0591 in.)

If the clearance is outside the specified range, retighten SST.

8. **INSTALL FRONT DRIVE SHAFT DAMPER**
    a. Install the front drive shaft damper onto the front drive outboard joint shaft assembly.

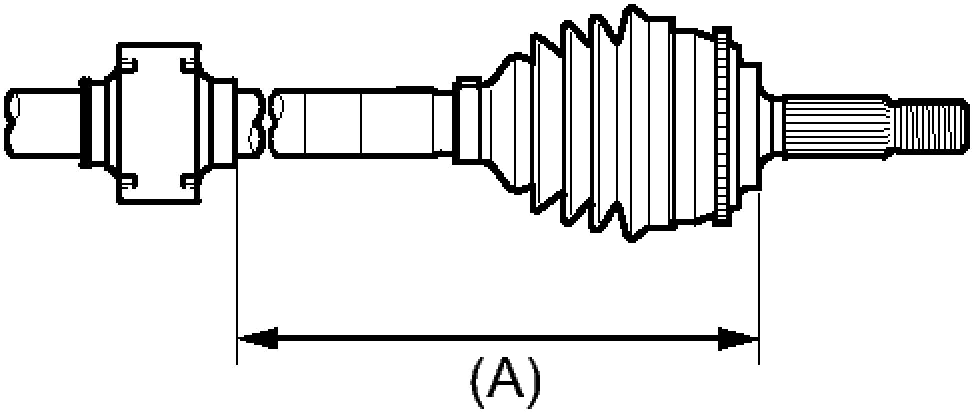

Fig. 35: Installing Front Drive Shaft Damper
Courtesy of TOYOTA MOTOR SALES, U.S.A., INC.

b. Set the dimension as specified below.

Dimension (A)

223.4 to 227.4 mm (8.80 to 8.95 in.)

c. Hold the drive shaft in a vise between aluminum plates.

NOTE: Do not overtighten the vise.

d. Install a new front drive shaft damper clamp onto the front drive shaft damper.

NOTE: Be sure to install the clamp in the correct position.

e. Place SST onto the front drive shaft damper clamp, press it against the boot and slightly tighten SST.

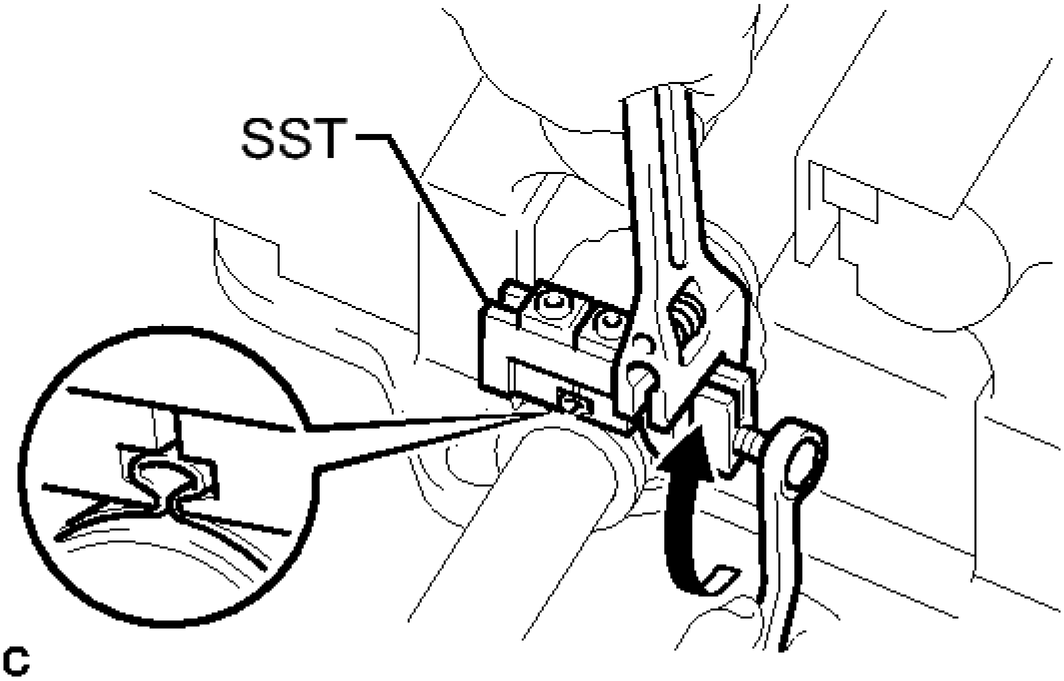

Fig. 36: Drive Shaft Damper Clamp
Courtesy of TOYOTA MOTOR SALES, U.S.A., INC.

- **SST: 09521-24010**

f. Tighten SST so that the front drive shaft damper clamp is pinched.

NOTE: **Do not overtighten SST.**

g. Remove SST.
h. Using SST, measure the clearance of the front drive shaft damper clamp.

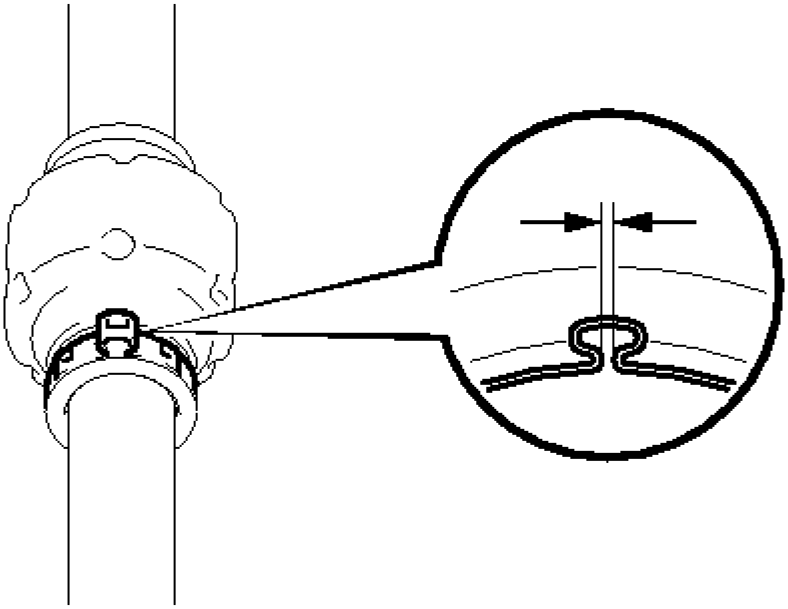

Fig. 37: Measuring Clearance Of Front Drive Shaft Damper Clamp
Courtesy of TOYOTA MOTOR SALES, U.S.A., INC.

- **SST: 09240-00020**

Clearance

0.5 to 1.5 mm (0.0197 to 0.0591 in.)

If the clearance is outside the specified range, retighten SST.

9. **INSTALL FRONT DRIVE INBOARD JOINT ASSEMBLY**
    a. Install new parts onto the front drive outboard joint shaft assembly in the following order:

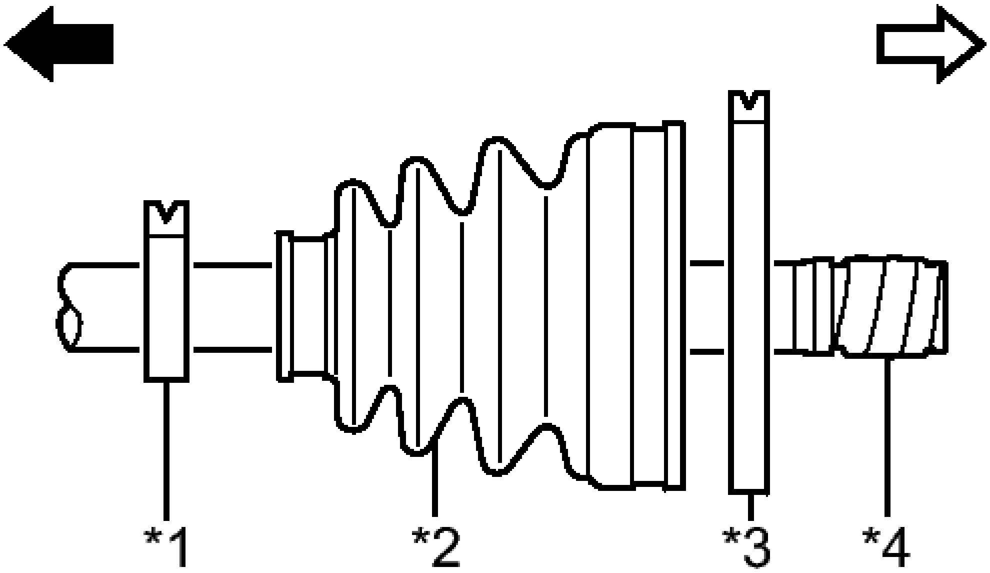

T

Fig. 38: Identifying Installation Order Of Front Axle Outboard Joint Shaft Assembly
Courtesy of TOYOTA MOTOR SALES, U.S.A., INC.

TEXT IN ILLUSTRATION

*1	Front Axle Inboard Joint Boot Clamp
*2	Front Axle Inboard Joint Boot
*3	Front No. 2 Axle Inboard Joint Boot Clamp
*4	Protective Tape
	Outboard Joint Side
	Inboard Joint Side

1. Front axle inboard joint boot clamp
2. Front axle inboard joint boot
3. Front No. 2 axle inboard joint boot clamp

b. Hold the drive shaft in a vise between aluminum plates.

NOTE: Do not overtighten the vise.

c. Remove the protective tape.
d. Align the matchmarks and install the tripod joint onto the front drive outboard joint shaft assembly.

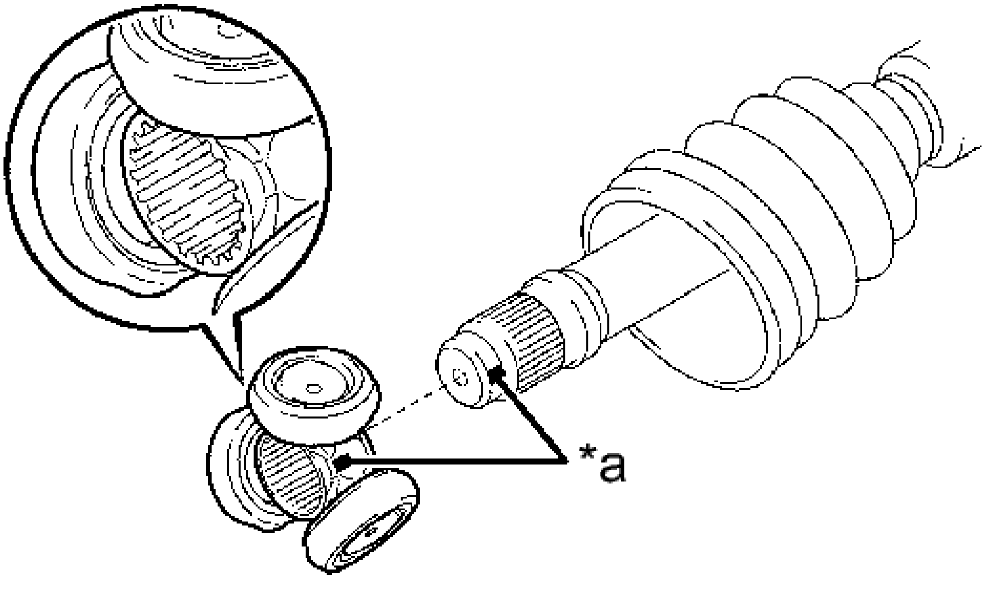

Fig. 39: Identifying Tripod Joint And Front Axle Outboard Joint Shaft Assembly Matchmark
Courtesy of TOYOTA MOTOR SALES, U.S.A., INC.

TEXT IN ILLUSTRATION

*a	Matchmark

e. Using a brass bar and a hammer, install the tripod joint to the front drive outboard joint shaft assembly.

NOTE:

- **Do not tap the rollers.**
- **Keep the tripod joint free of foreign matter.**

f. Using a snap ring expander, install a new shaft snap ring to the front drive outboard joint shaft assembly.

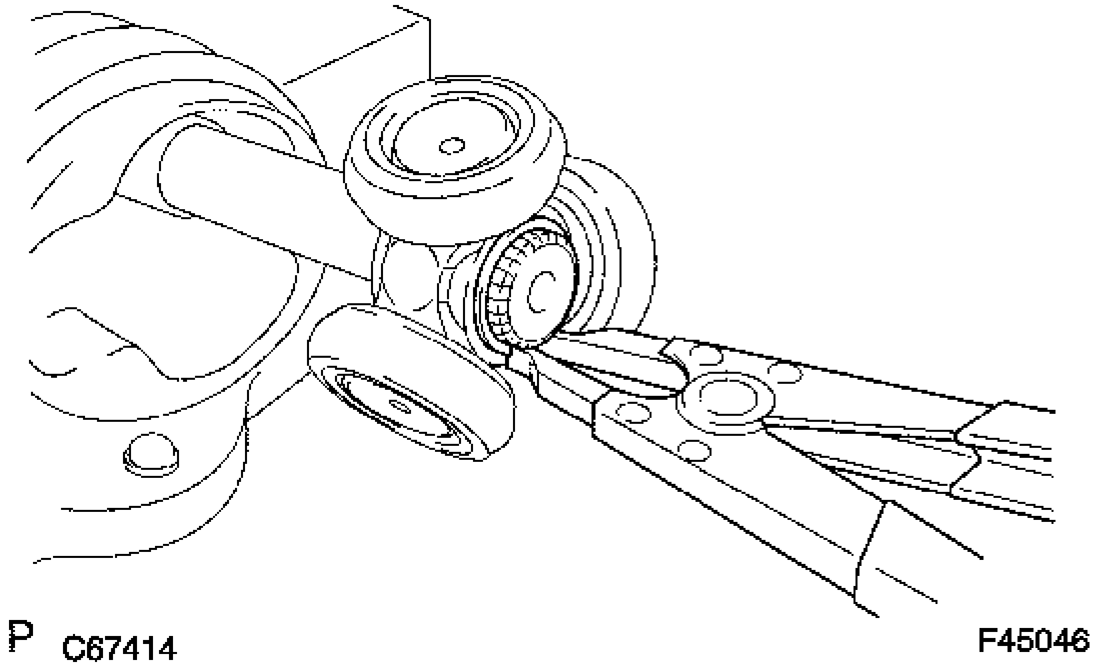

Fig. 40: Identifying Snap Ring
Courtesy of TOYOTA MOTOR SALES, U.S.A., INC.

g. Pack the front drive inboard joint assembly and front axle inboard boot with grease.

   Standard grease capacity

   135 to 155 g (4.76 to 5.46 oz.)

h. Align the matchmarks and install the front drive inboard joint assembly to the front drive outboard joint shaft assembly.

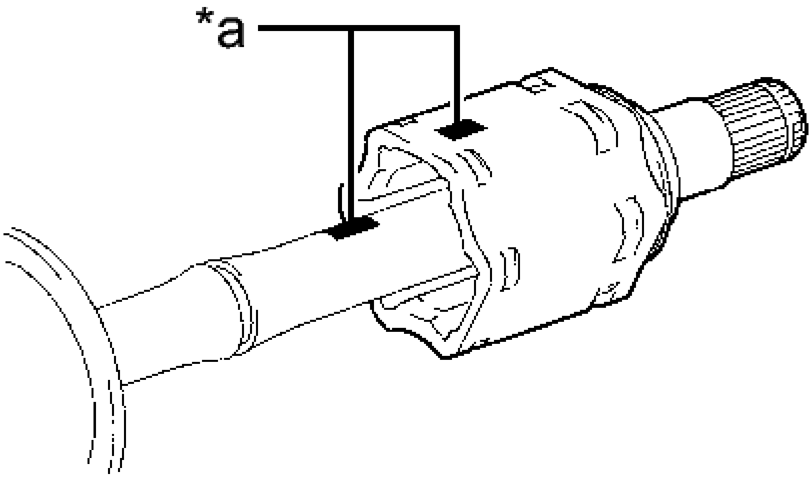

Fig. 41: Identifying Matchmarks On Front Drive Inboard Joint Assembly And Front Drive Outboard Joint Shaft Assembly
Courtesy of TOYOTA MOTOR SALES, U.S.A., INC.

TEXT IN ILLUSTRATION

*a	Matchmark

10. **INSTALL FRONT AXLE INBOARD JOINT BOOT**
    1. Install the front axle inboard joint boot to the front drive inboard joint assembly.
    2. Check whether the drive shaft dimensions (A) are within the following specifications.

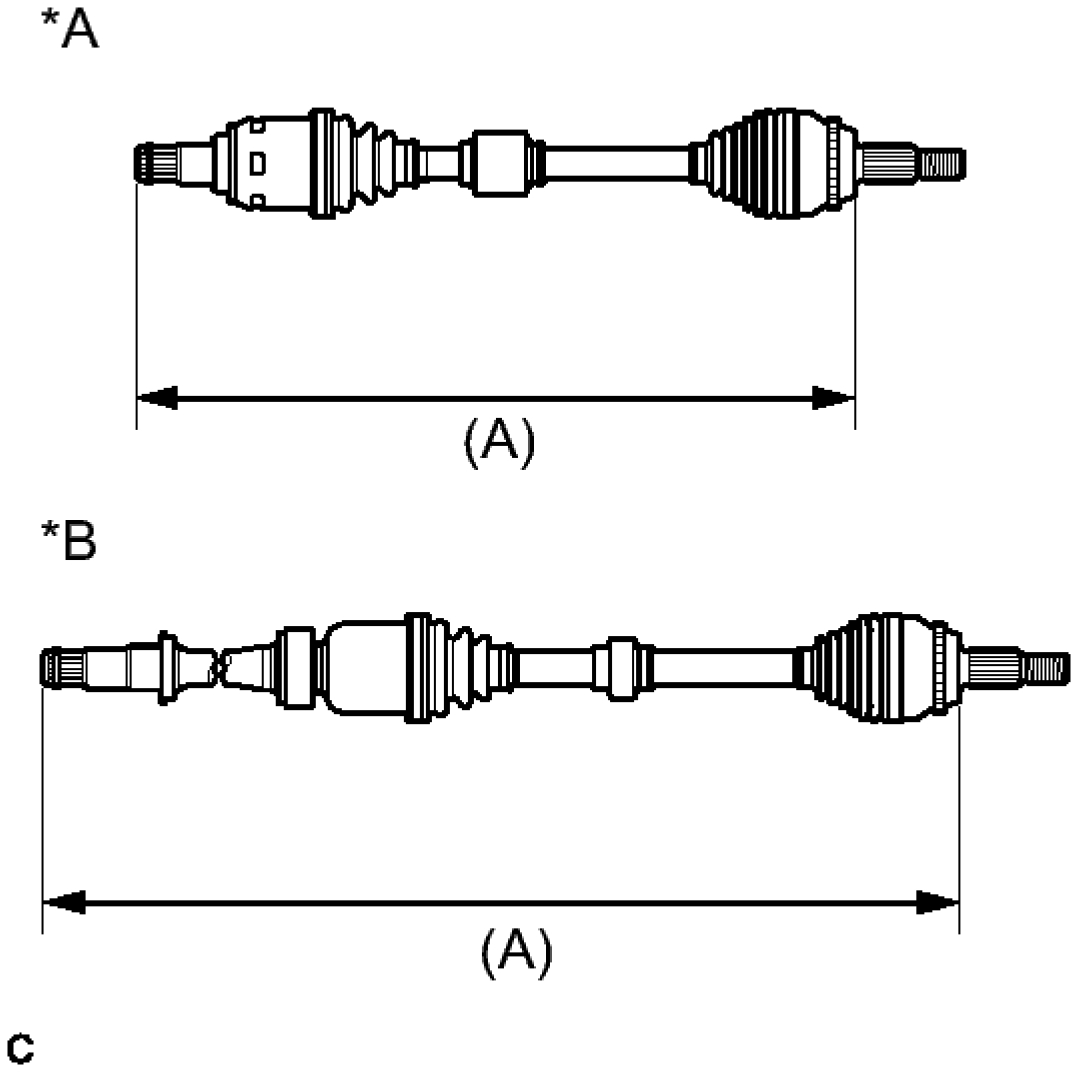

Fig. 42: Checking Drive Shaft Dimensions
Courtesy of TOYOTA MOTOR SALES, U.S.A., INC.

TEXT IN ILLUSTRATION

*A	LH Side
*B	RH Side

Dimension (A)

	Dimension (A)
LH Side	581.5 mm (1.90 ft.)
RH Side	914.9 mm (3.00 ft.)

11. **INSTALL FRONT AXLE INBOARD JOINT BOOT CLAMP**

   a. Hold the drive shaft in a vise between aluminum plates.

      NOTE: Do not overtighten the vise.

   b. Install the front axle inboard joint boot clamp onto the front axle inboard joint boot.

   c. Place SST onto the front axle inboard joint boot clamp, press it against the boot and slightly tighten SST.

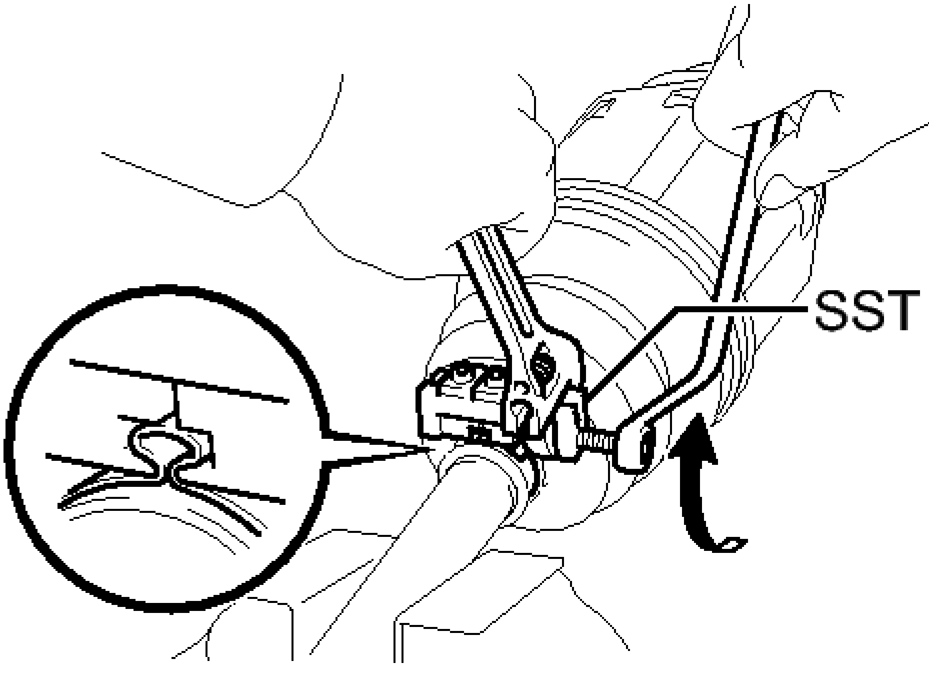

Fig. 43: Inboard Joint Boot Clamp
Courtesy of TOYOTA MOTOR SALES, U.S.A., INC.

- **SST: 09521-24010**

   d. Tighten SST so that the front axle inboard joint boot clamp is pinched.

      NOTE: Do not overtighten SST.

   e. Remove SST.

   f. Using SST, measure the clearance of the front axle inboard joint boot clamp.

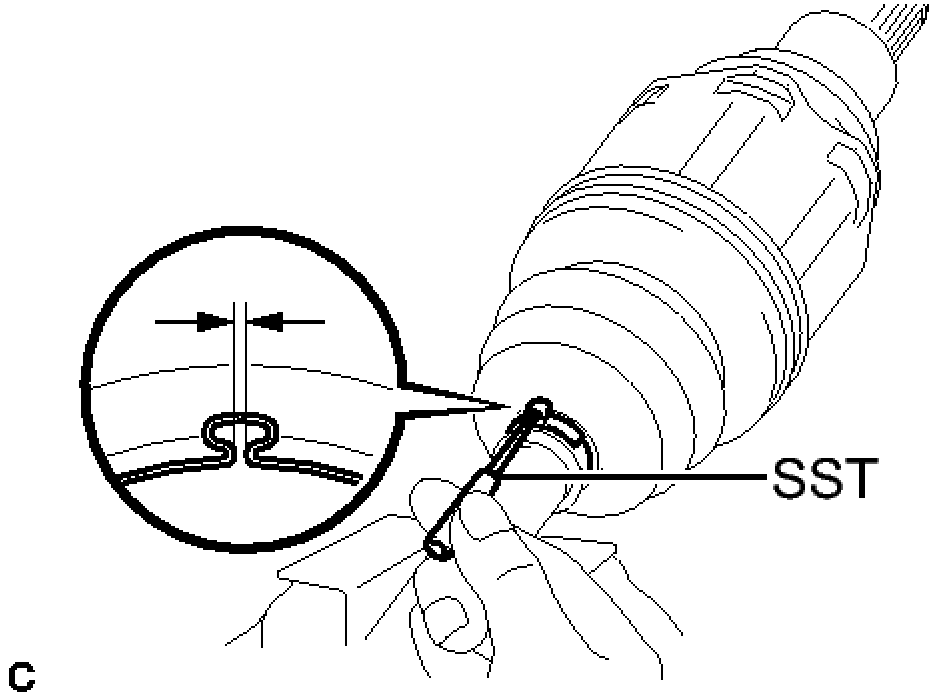

Fig. 44: Front Axle Inboard Joint Boot Clamp
Courtesy of TOYOTA MOTOR SALES, U.S.A., INC.

- **SST: 09240-00020**

Clearance

0.5 to 1.5 mm (0.0197 to 0.0591 in.)

If the clearance is outside the specified range, retighten SST.

12. **INSTALL FRONT NO. 2 AXLE INBOARD JOINT BOOT CLAMP**
    a. Install the front No. 2 axle inboard joint boot clamp onto the front axle inboard joint boot.
    b. Using needle nose pliers, install the front No. 2 axle inboard joint boot clamp.

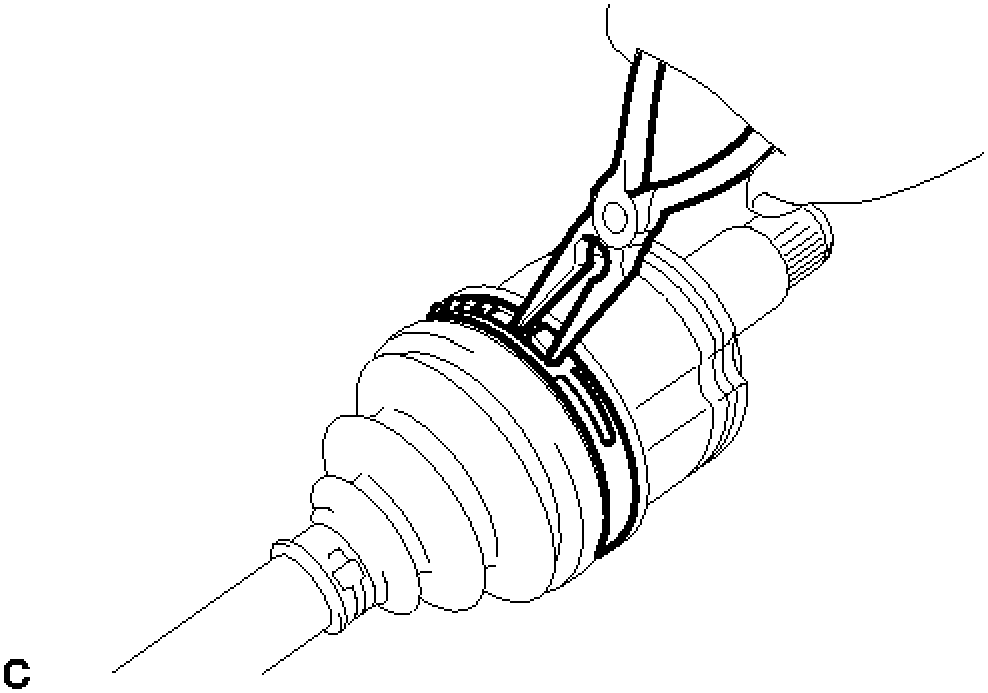

Fig. 45: Removing Front No. 2 Axle Inboard Joint Boot Clamp
Courtesy of TOYOTA MOTOR SALES, U.S.A., INC.

NOTE: Be careful not to damage the front axle inboard joint boot.

13. **INSTALL FRONT DRIVE SHAFT HOLE SNAP RING LH**
    a. Install a new front drive shaft hole snap ring LH.

NOTE: Face the end gap of the front drive shaft hole snap ring downward.

14. **INSPECT FRONT DRIVE SHAFT ASSEMBLY** See step 1

INSTALLATION

INSTALLATION

1. **INSTALL FRONT DRIVE SHAFT ASSEMBLY LH**
    a. Coat the spline of the front drive inboard joint assembly with ATF.
    b. Coat the lip of the hybrid vehicle transaxle assembly type T oil seal with MP grease.
    c. Align the inboard joint splines, and using a brass bar and a hammer, install the front drive shaft assembly LH.

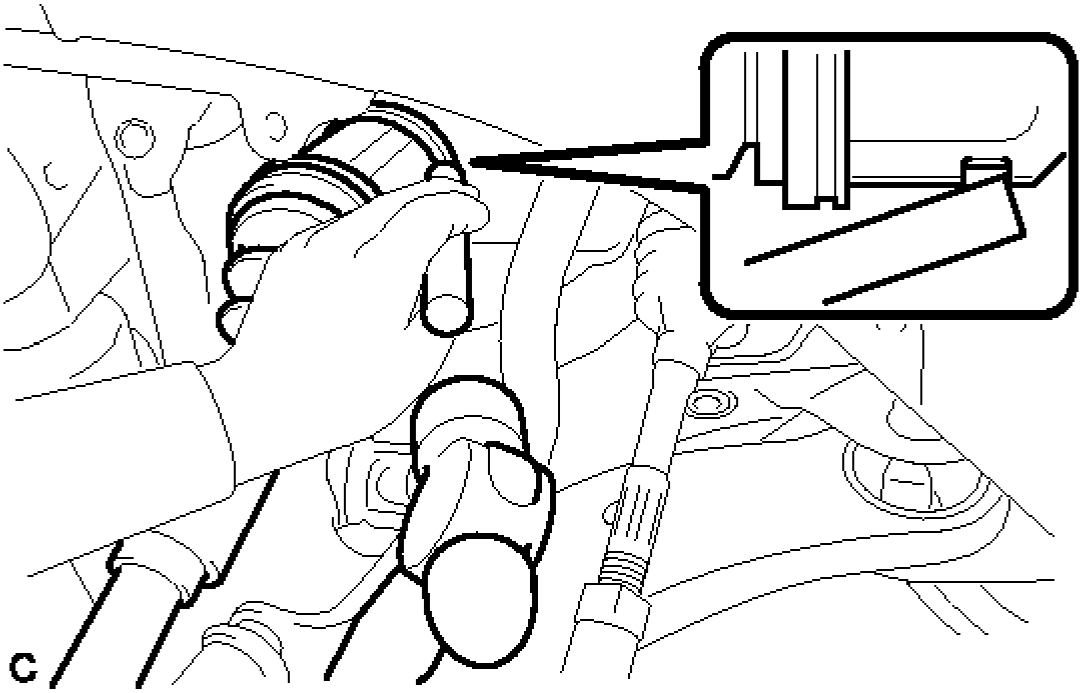

Fig. 46: Installing Drive Shaft Assembly LH With Brass Bar And Hammer
Courtesy of TOYOTA MOTOR SALES, U.S.A., INC.

NOTE:

- **Face the end gap of the front drive shaft hole snap ring LH downward.**
- **Do not damage the hybrid vehicle transaxle assembly type T oil seal.**
- **Do not damage the front axle inboard joint boot.**
- **Make sure to center the front drive shaft assembly LH during installation to prevent damage to the front drive shaft hole snap ring LH.**

HINT:

Confirm whether the drive shaft is securely driven in by checking the reaction force and sound.

d. Apply mineral oil base grease to the areas indicated by the arrows in the illustration on the front drive shaft assembly LH contact surface of the front axle hub bearing.

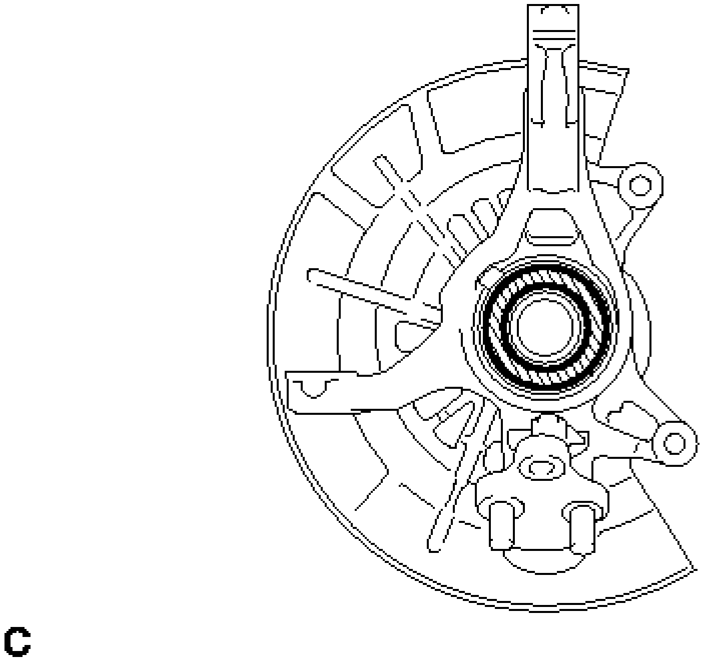

Fig. 47: Identifying Front Axle Hub Bearing Mineral Oil Base Grease Application Area
Courtesy of TOYOTA MOTOR SALES, U.S.A., INC.

TEXT IN ILLUSTRATION

	Mineral Oil Base Grease

HINT:

Apply 0.1 to 0.3 g (0.00353 to 0.0106 oz.) of mineral oil base grease to each area.

e. Align the matchmarks and install the front drive shaft assembly LH to the front axle hub sub-assembly.

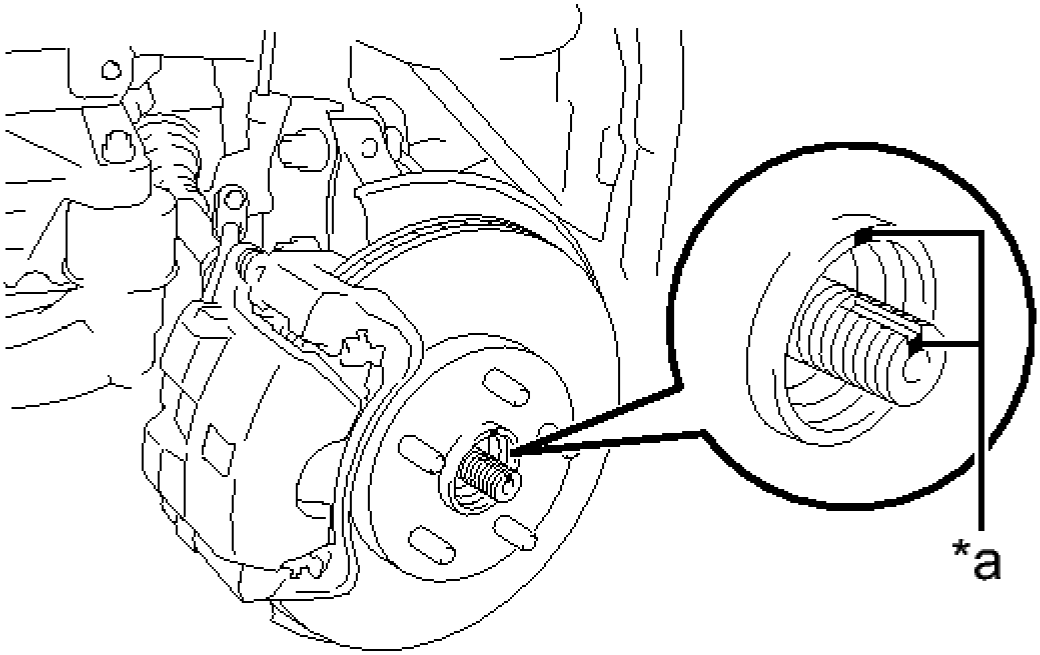

C

Fig. 48: Identifying Matchmarks On Front Drive Shaft Assembly LH To Front Axle Hub Sub-Assembly
Courtesy of TOYOTA MOTOR SALES, U.S.A., INC.

TEXT IN ILLUSTRATION

*a	Matchmark

NOTE: **Be careful not to damage the front axle outboard joint boot or speed sensor rotor.**

2. **INSTALL FRONT DRIVE SHAFT ASSEMBLY RH**
    a. Coat the spline of the front drive inboard joint assembly with ATF.
    b. Coat the lip of the hybrid vehicle transaxle assembly type T oil seal with MP grease.
    c. Install a new bearing bracket hole snap ring to the front drive shaft assembly RH.
    d. Install the front drive shaft assembly RH.

NOTE:

- **Do not damage the hybrid vehicle transaxle assembly type T oil seal.**
- **Do not damage the front axle inboard joint boot.**
- **When inserting the front drive shaft assembly RH, keep it level.**

    e. Install the bearing bracket hole snap ring and a new bolt.

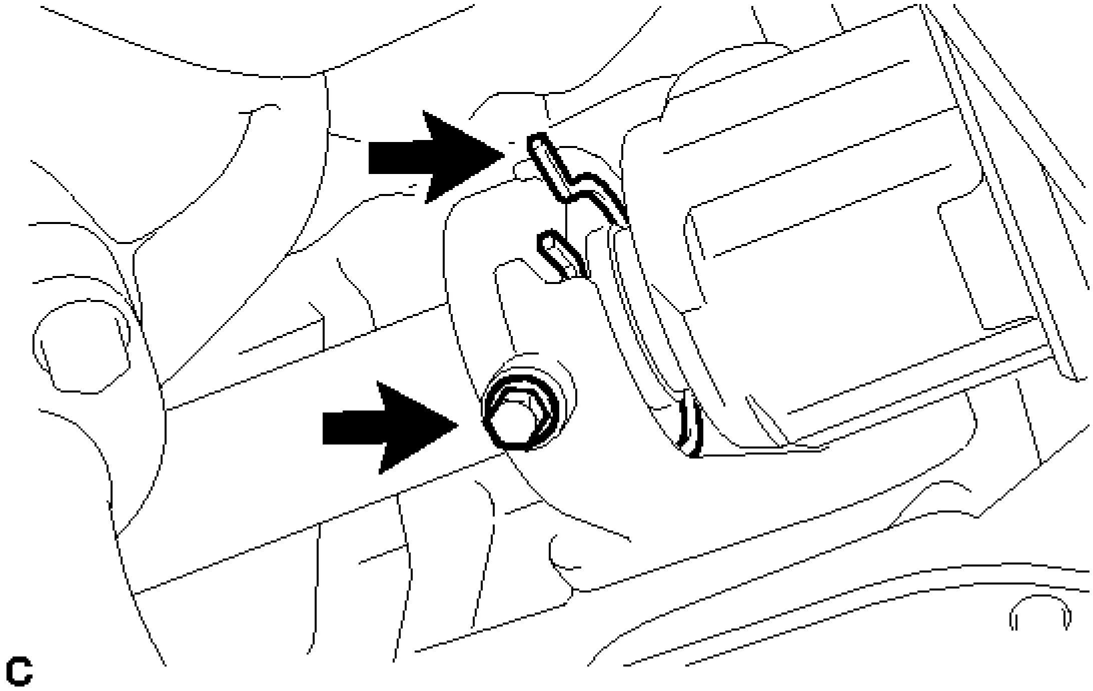

Fig. 49: Identifying Bearing Bracket Hole Snap Ring And Bolt
Courtesy of TOYOTA MOTOR SALES, U.S.A., INC.

Torque: 32 N*m (330 kgf*cm, 24 ft.*lbf)

f. Apply mineral oil base grease to the areas indicated by the arrows in the illustration on the front drive shaft assembly RH contact surface of the front axle hub bearing.

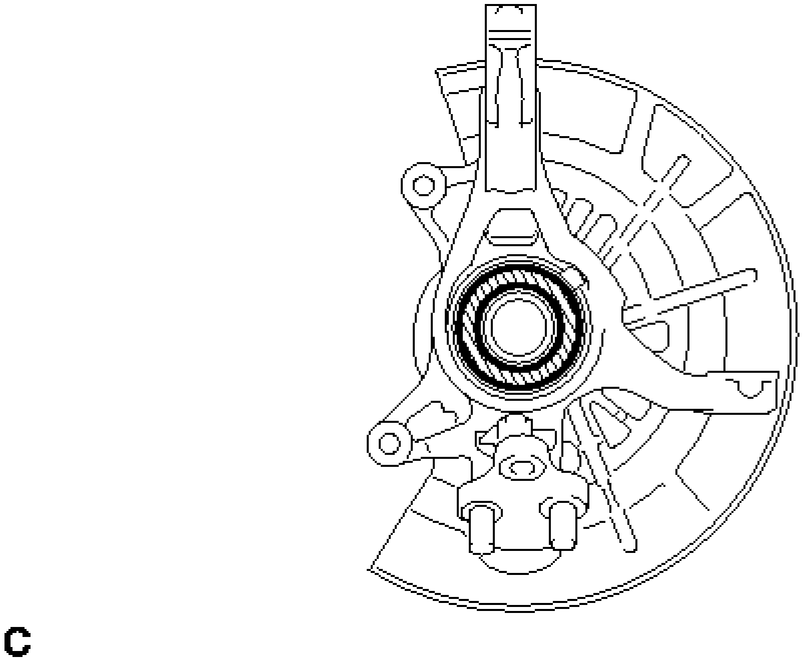

Fig. 50: Identifying Front Axle Hub Bearing Mineral Oil Base Grease Application Area
Courtesy of TOYOTA MOTOR SALES, U.S.A., INC.

TEXT IN ILLUSTRATION

	Mineral Oil Base Grease

HINT:

Apply 0.1 to 0.3 g (0.00353 to 0.0106 oz.) of mineral oil base grease to each area.

g. Align the matchmarks and install the front drive shaft assembly RH to the front axle hub sub-assembly.

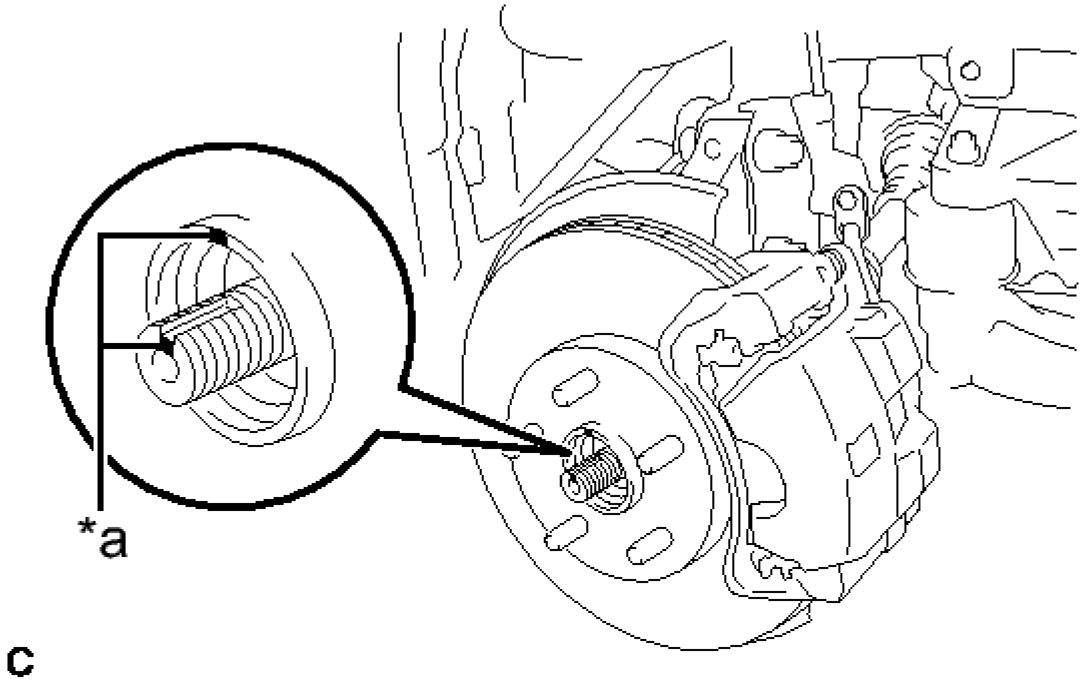

Fig. 51: Identifying Matchmarks On Front Drive Shaft Assembly RH To Front Axle Hub Sub-Assembly
Courtesy of TOYOTA MOTOR SALES, U.S.A., INC.

TEXT IN ILLUSTRATION

*a	Matchmark

NOTE: **Be careful not to damage the front axle outboard joint boot or speed sensor rotor.**

3. **CONNECT FRONT LOWER NO. 1 SUSPENSION ARM SUB-ASSEMBLY** . Refer to **INSTALLATION - Step 8**
4. **CONNECT TIE ROD ASSEMBLY** . Refer to **INSTALLATION - Step 8**
5. **INSTALL FRONT SPEED SENSOR** . Refer to **INSTALLATION - Step 19**
6. **INSTALL FRONT STABILIZER LINK ASSEMBLY** . Refer to **INSTALLATION - Step 10**
7. **INSTALL FRONT AXLE SHAFT NUT**
    a. Clean the threaded parts on the front drive shaft assembly and a new axle shaft nut using a non-residue solvent.

    NOTE:

    - **Be sure to perform this work even when using a new drive shaft.**
    - **Keep the threaded parts free of oil and foreign matter.**

    b. Using a socket wrench (30 mm), install the front axle shaft nut.

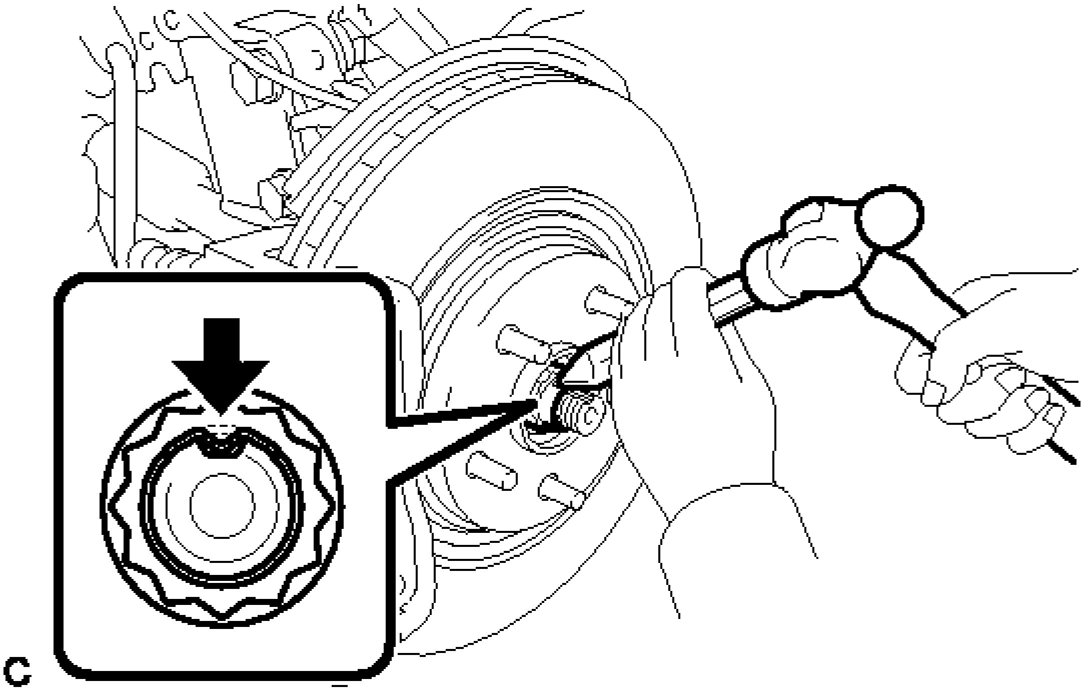

Fig. 52: Staking Front Axle Shaft Nut
Courtesy of TOYOTA MOTOR SALES, U.S.A., INC.

Torque: 294 N*m (2998 kgf*cm, 217 ft.*lbf)

    c. Using a chisel and a hammer, stake the front axle shaft nut.

8. **INSTALL FRONT WHEELS**

Torque: 103 N*m (1049 kgf*cm, 76 ft.*lbf)

9. **ADD HYBRID TRANSAXLE FLUID** . Refer to **ADJUSTMENT - Step 2**

10. **INSPECT HYBRID TRANSAXLE FLUID** . Refer to **ADJUSTMENT - Step 3**
11. **INSTALL FRONT FENDER APRON SEAL LH**
12. **INSTALL FRONT FENDER APRON SEAL RH**
13. **INSTALL ENGINE UNDER COVER LH**
14. **INSTALL FRONT WHEEL OPENING EXTENSION PAD LH**
15. **INSTALL ENGINE UNDER COVER RH**
16. **INSTALL FRONT WHEEL OPENING EXTENSION PAD RH**
17. **ADJUST FRONT WHEEL ALIGNMENT**

    Refer to **ADJUSTMENT**

18. **CHECK FOR SPEED SENSOR SIGNAL**

    Refer to **TEST MODE PROCEDURE**

FRONT DRIVE SHAFT ASSEMBLY (FOR 2AR-FE)

COMPONENTS

ILLUSTRATION

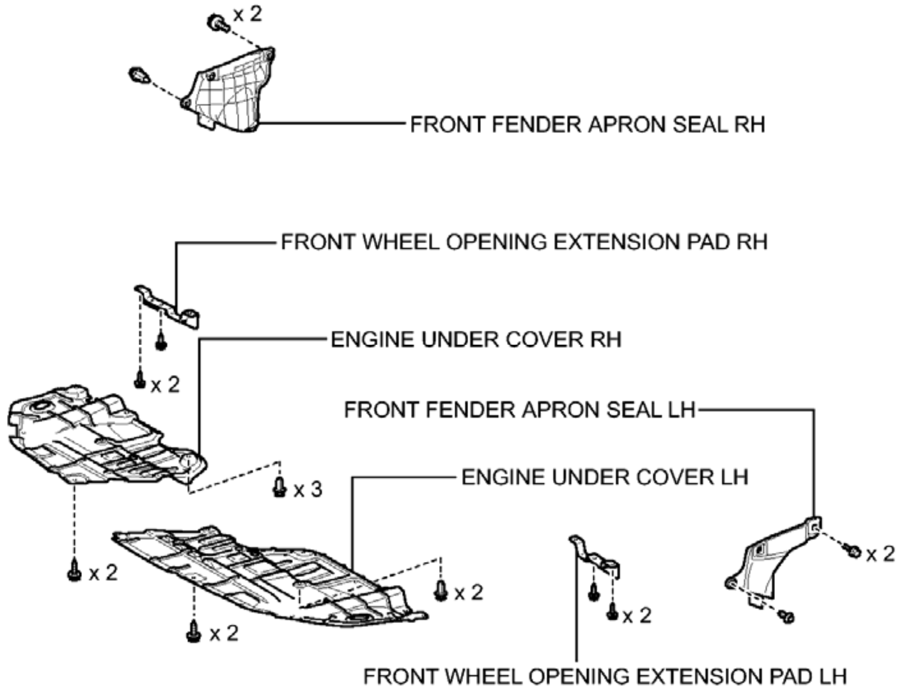
x 2
FRONT FENDER APRON SEAL RH
FRONT WHEEL OPENING EXTENSION PAD RH
ENGINE UNDER COVER RH
x 2
FRONT FENDER APRON SEAL LH
x 3
ENGINE UNDER COVER LH
x 2
x 2
x 2
x 2
x 2
x 2
FRONT WHEEL OPENING EXTENSION PAD LH

c

Fig. 1: Identifying Front Drive Shaft Assembly (For 2AR-FE) Replacement Components (1 Of 5)
Courtesy of TOYOTA MOTOR SALES, U.S.A., INC.

ILLUSTRATION

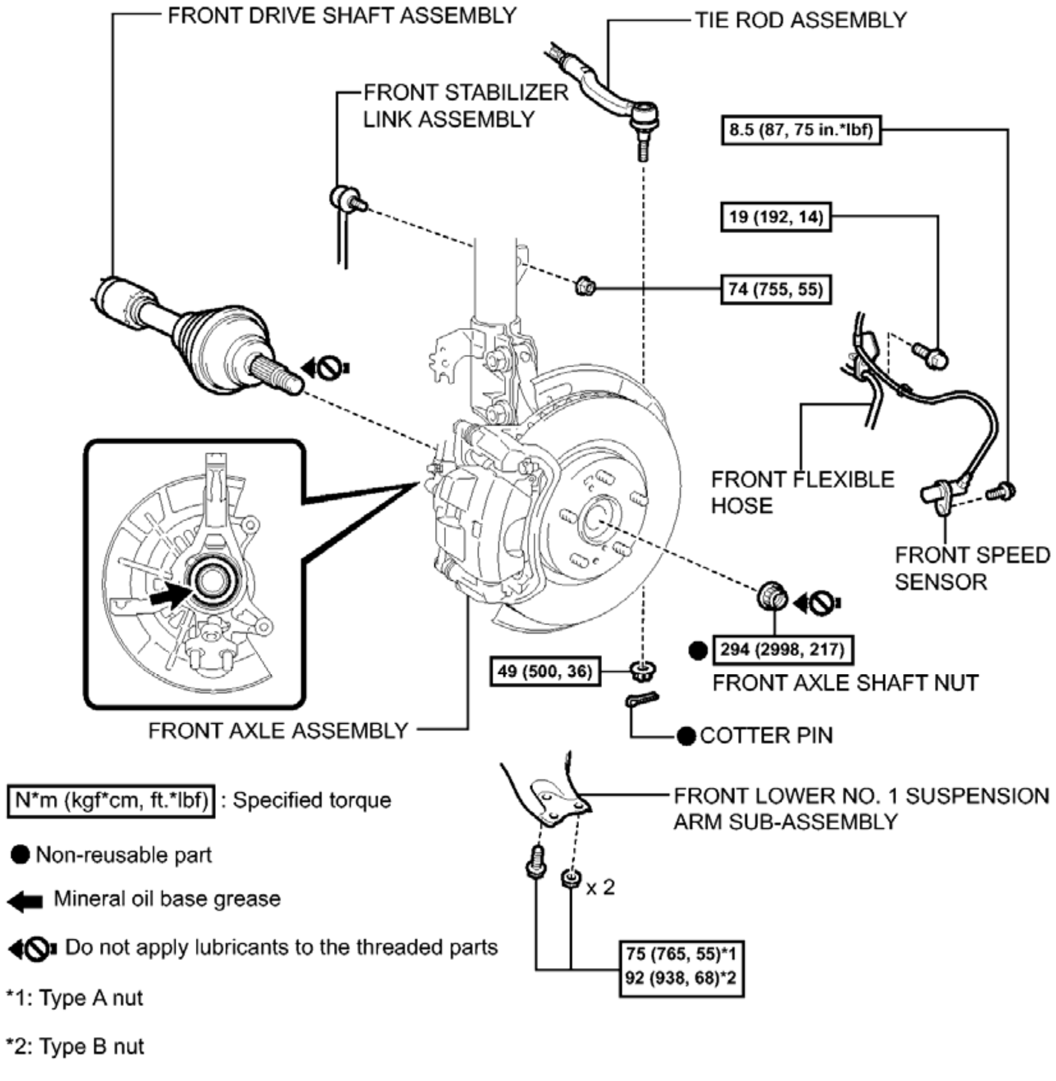
FRONT DRIVE SHAFT ASSEMBLY
TIE ROD ASSEMBLY
FRONT STABILIZER LINK ASSEMBLY
8.5 (87, 75 in.*lbf)
19 (192, 14)
74 (755, 55)
FRONT FLEXIBLE HOSE
FRONT SPEED SENSOR
● 294 (2998, 217)
FRONT AXLE SHAFT NUT
49 (500, 36)
●COTTER PIN
FRONT AXLE ASSEMBLY
FRONT LOWER NO. 1 SUSPENSION ARM SUB-ASSEMBLY
x 2
75 (765, 55)*1
92 (938, 68)*2
N*m (kgf*cm, ft.*lbf) : Specified torque
● Non-reusable part
Mineral oil base grease
Do not apply lubricants to the threaded parts
*1: Type A nut
*2: Type B nut
c

Fig. 2: Identifying Front Drive Shaft Assembly (For 2AR-FE) Replacement Components With Torque Specifications (2 Of 5)
Courtesy of TOYOTA MOTOR SALES, U.S.A., INC.

ILLUSTRATION

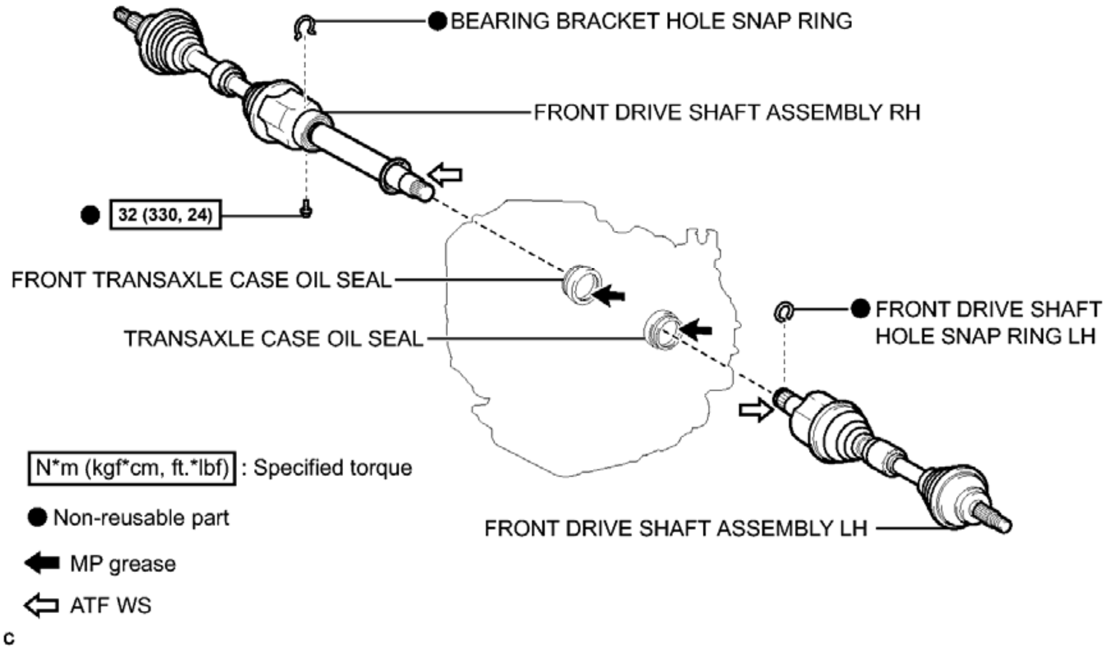
● BEARING BRACKET HOLE SNAP RING
FRONT DRIVE SHAFT ASSEMBLY RH
● 32 (330, 24)
FRONT TRANSAXLE CASE OIL SEAL
TRANSAXLE CASE OIL SEAL
● FRONT DRIVE SHAFT HOLE SNAP RING LH
FRONT DRIVE SHAFT ASSEMBLY LH
N*m (kgf*cm, ft.*lbf) : Specified torque
● Non-reusable part
MP grease
ATF WS
c

Fig. 3: Identifying Front Drive Shaft Assembly (For 2AR-FE) Replacement Components With Torque Specifications (3 Of 5)

Courtesy of TOYOTA MOTOR SALES, U.S.A., INC.

ILLUSTRATION

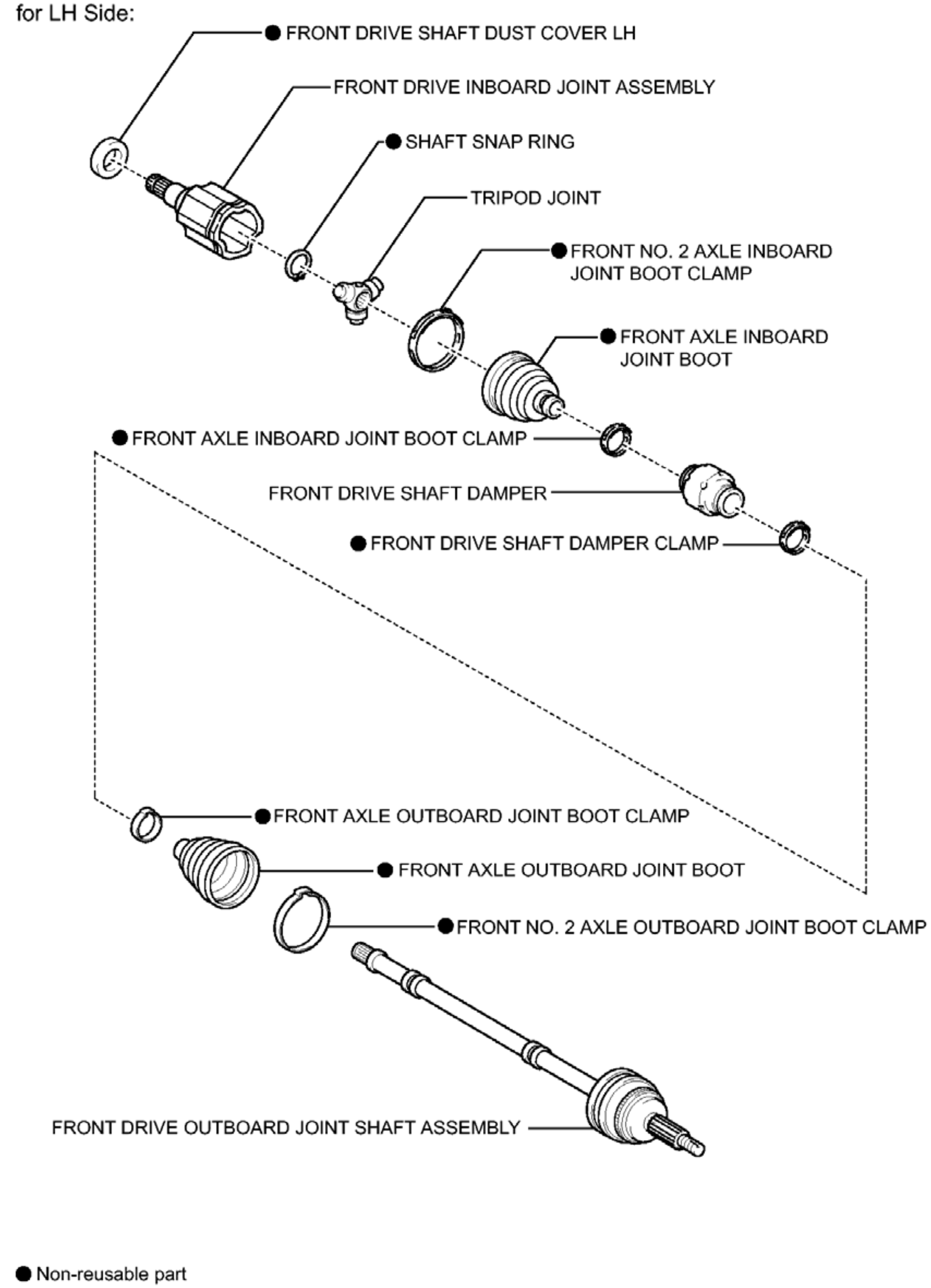

for LH Side:
● FRONT DRIVE SHAFT DUST COVER LH
FRONT DRIVE INBOARD JOINT ASSEMBLY
● SHAFT SNAP RING
TRIPOD JOINT
● FRONT NO. 2 AXLE INBOARD JOINT BOOT CLAMP
● FRONT AXLE INBOARD JOINT BOOT
● FRONT AXLE INBOARD JOINT BOOT CLAMP
FRONT DRIVE SHAFT DAMPER
● FRONT DRIVE SHAFT DAMPER CLAMP
● FRONT AXLE OUTBOARD JOINT BOOT CLAMP
● FRONT AXLE OUTBOARD JOINT BOOT
● FRONT NO. 2 AXLE OUTBOARD JOINT BOOT CLAMP
FRONT DRIVE OUTBOARD JOINT SHAFT ASSEMBLY
● Non-reusable part
c

Fig. 4: Identifying Front Drive Shaft Assembly (For 2AR-FE) Replacement Components (4 Of 5)
Courtesy of TOYOTA MOTOR SALES, U.S.A., INC.

ILLUSTRATION

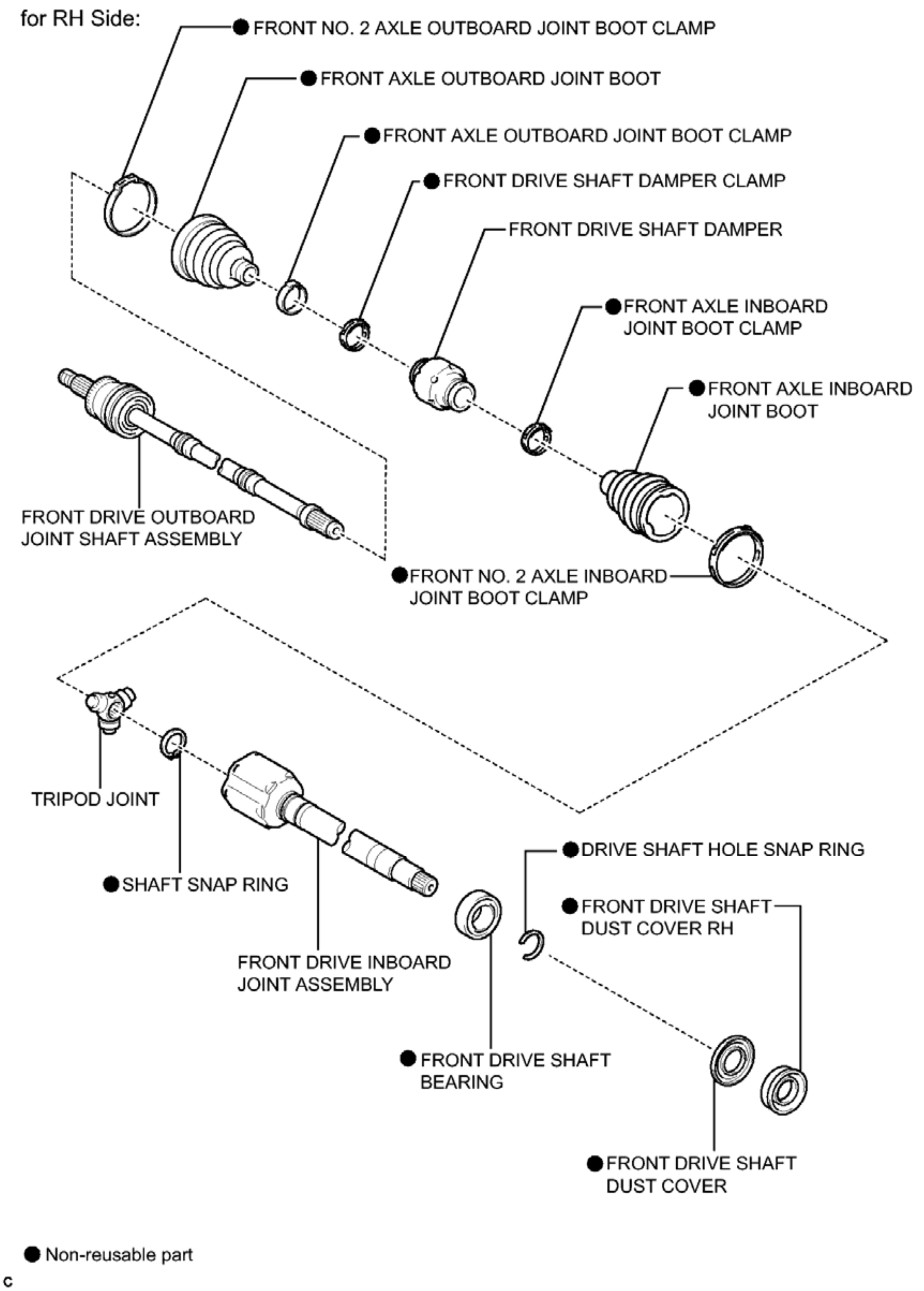
for RH Side:
● FRONT NO. 2 AXLE OUTBOARD JOINT BOOT CLAMP
● FRONT AXLE OUTBOARD JOINT BOOT
● FRONT AXLE OUTBOARD JOINT BOOT CLAMP
● FRONT DRIVE SHAFT DAMPER CLAMP
FRONT DRIVE SHAFT DAMPER
● FRONT AXLE INBOARD JOINT BOOT CLAMP
● FRONT AXLE INBOARD JOINT BOOT
FRONT DRIVE OUTBOARD JOINT SHAFT ASSEMBLY
● FRONT NO. 2 AXLE INBOARD JOINT BOOT CLAMP
TRIPOD JOINT
● SHAFT SNAP RING
● DRIVE SHAFT HOLE SNAP RING
● FRONT DRIVE SHAFT DUST COVER RH
FRONT DRIVE INBOARD JOINT ASSEMBLY
● FRONT DRIVE SHAFT BEARING
● FRONT DRIVE SHAFT DUST COVER
● Non-reusable part
c

Fig. 5: Identifying Front Drive Shaft Assembly (For 2AR-FE) Replacement Components (5 Of 5)
Courtesy of TOYOTA MOTOR SALES, U.S.A., INC.

REMOVAL

REMOVAL

HINT:

- Use the same procedure for the RH side and LH side.
- The procedure listed below is for the LH side.

1. **REMOVE FRONT WHEELS**
2. **REMOVE FRONT WHEEL OPENING EXTENSION PAD LH**
3. **REMOVE ENGINE UNDER COVER LH**
4. **REMOVE FRONT WHEEL OPENING EXTENSION PAD RH**
5. **REMOVE ENGINE UNDER COVER RH**
6. **REMOVE FRONT FENDER APRON SEAL LH**
7. **REMOVE FRONT FENDER APRON SEAL RH**
8. **DRAIN AUTOMATIC TRANSAXLE FLUID** . Refer to **REPLACEMENT - Step 1** .
9. **REMOVE FRONT AXLE SHAFT NUT**
   a. Using SST and a hammer, release the staked part of the front axle shaft nut.

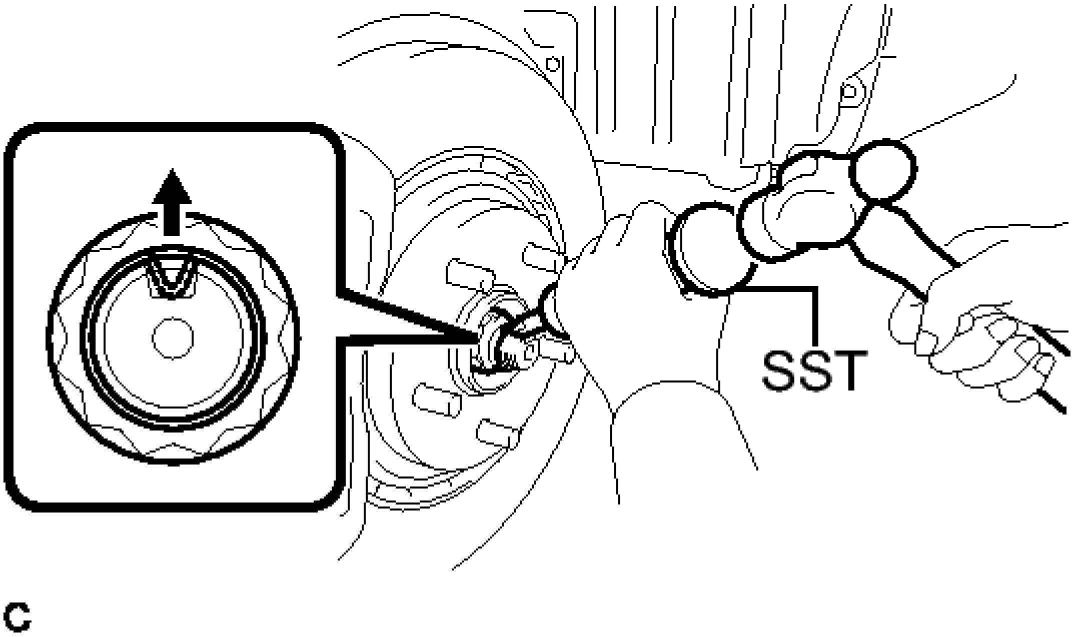

Fig. 6: Releasing Staked Part Of Front Axle Shaft Nut LH Using SST
Courtesy of TOYOTA MOTOR SALES, U.S.A., INC.

- **SST: 09930-00010**

NOTE: **Loosen the staked part of the nut completely, otherwise the threads of the drive shaft may be damaged.**

   b. While applying the brakes, remove the front axle shaft nut.

10. **SEPARATE FRONT STABILIZER LINK ASSEMBLY** . Refer to **REMOVAL - Step 4** .
11. **SEPARATE FRONT SPEED SENSOR** . Refer to **REMOVAL - Step 3** .
12. **SEPARATE TIE ROD ASSEMBLY** . Refer to **REMOVAL - Step 5** .
13. **SEPARATE FRONT LOWER NO. 1 SUSPENSION ARM SUB-ASSEMBLY** . Refer to **REMOVAL - Step 8** .
14. **SEPARATE FRONT DRIVE SHAFT ASSEMBLY** . Refer to **REMOVAL - Step 7** .
15. **REMOVE FRONT DRIVE SHAFT ASSEMBLY LH**
    a. Using SST, remove the front drive shaft assembly LH.

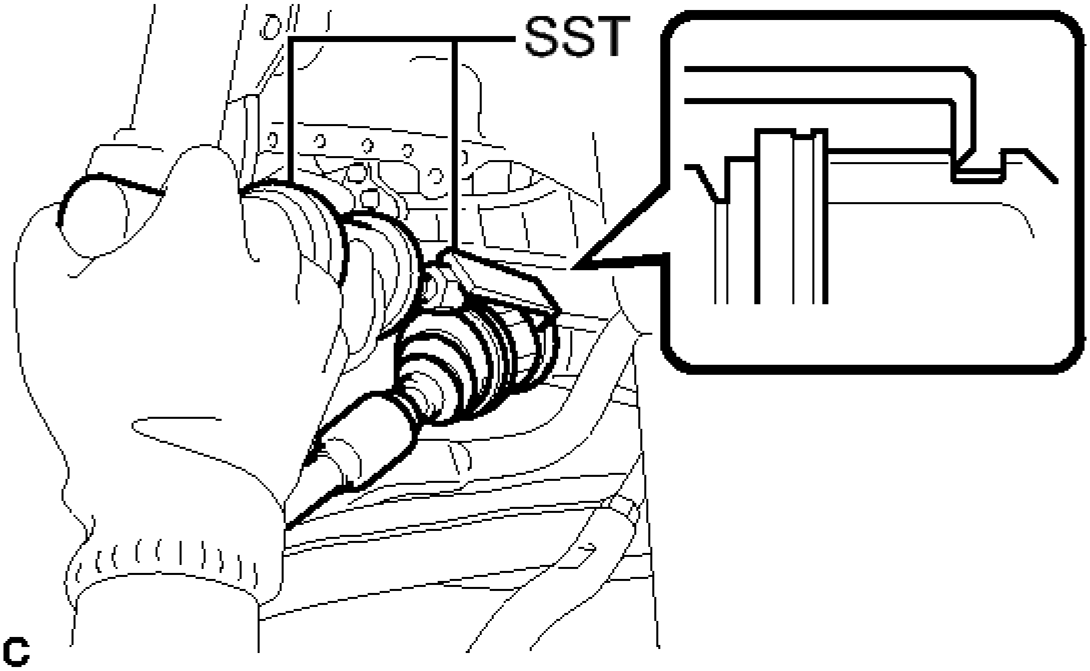

Fig. 7: Removing Front Drive Shaft Assembly LH Using SST
Courtesy of TOYOTA MOTOR SALES, U.S.A., INC.

- **SST: 09520-00031**
- **SST: 09520-01010**

NOTE:

- **Do not damage the transaxle case oil seal.**
- **Do not damage the front axle inboard joint boot.**
- **Do not drop the front drive shaft assembly LH.**

16. **REMOVE FRONT DRIVE SHAFT ASSEMBLY RH**
    a. Separate the bearing bracket hole snap ring from the drive shaft bearing bracket.

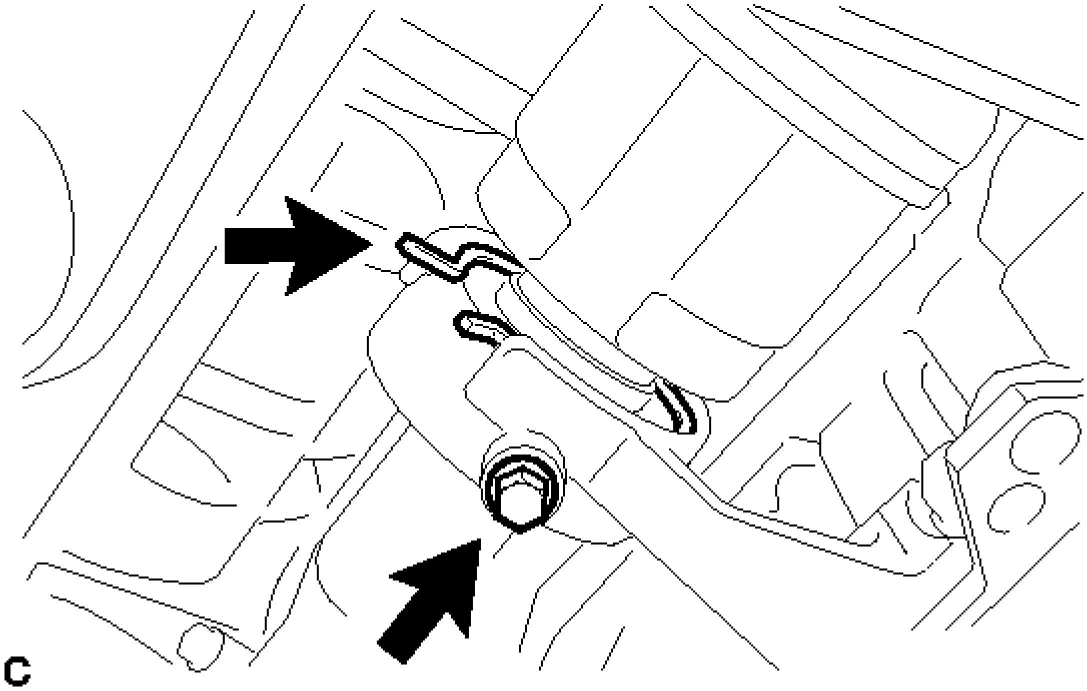

Fig. 8: Identifying Bearing Bracket Hole Snap Ring And Bolt
Courtesy of TOYOTA MOTOR SALES, U.S.A., INC.

b. Remove the bolt and front drive shaft assembly RH from the drive shaft bearing bracket.

NOTE:

- **Do not damage the front transaxle case oil seal.**
- **Do not damage the front axle inboard joint boot.**
- **Do not drop the front drive shaft assembly RH.**

c. Remove the bearing bracket hole snap ring from the front drive shaft assembly RH.

17. **REMOVE FRONT DRIVE SHAFT HOLE SNAP RING LH**

a. Using a screwdriver, remove the front drive shaft hole snap ring LH.

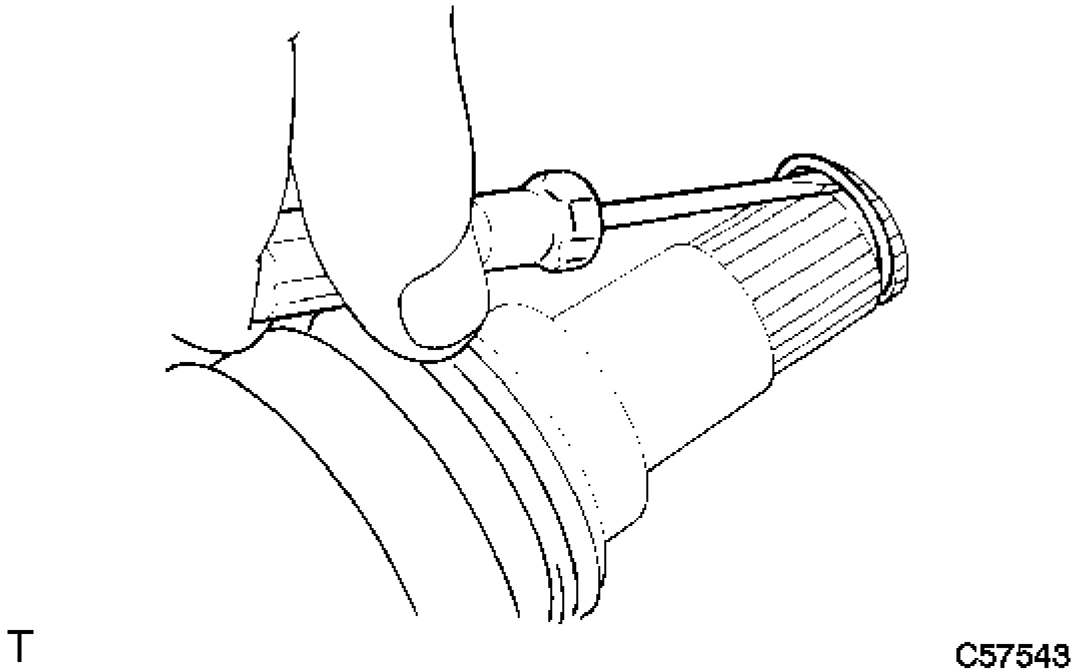

Fig. 9: Removing Snap Ring
Courtesy of TOYOTA MOTOR SALES, U.S.A., INC.

DISASSEMBLY

DISASSEMBLY

1. **REMOVE FRONT NO. 2 AXLE INBOARD JOINT BOOT CLAMP**
    a. Using needle-nose pliers, remove the front No. 2 axle inboard joint boot clamp.

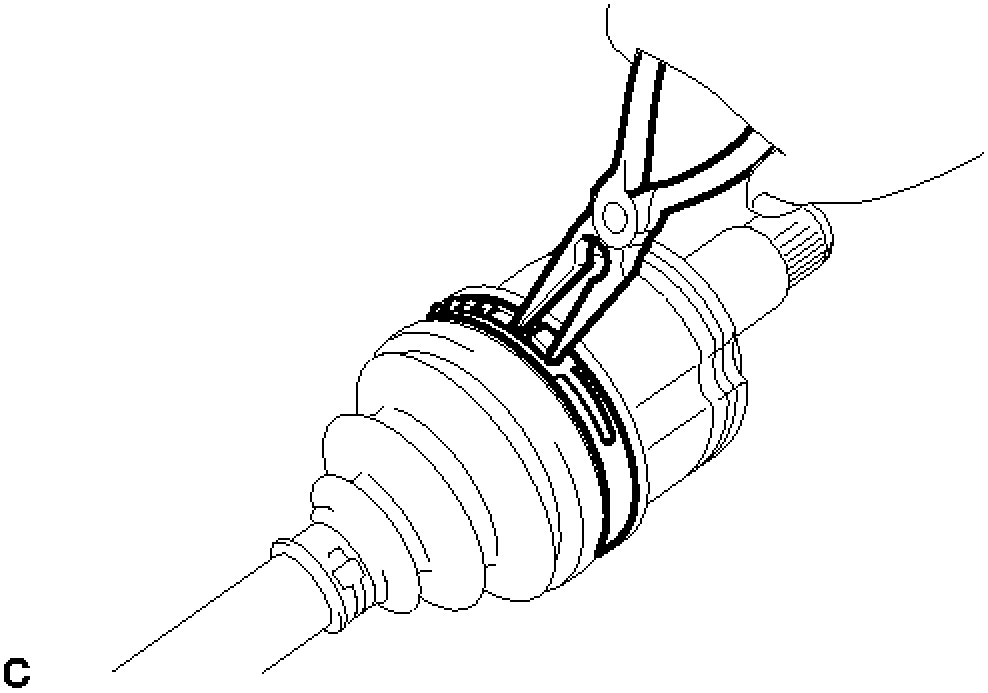

Fig. 10: Remove/Install Front No. 2 Axle Inboard Joint Boot Clamp
Courtesy of TOYOTA MOTOR SALES, U.S.A., INC.

2. **REMOVE FRONT AXLE INBOARD JOINT BOOT CLAMP**

   HINT:

   Perform the same procedure as for the front No. 2 axle inboard joint boot clamp.

3. **SEPARATE FRONT AXLE INBOARD JOINT BOOT**
   1. Separate the front axle inboard joint boot from the front drive inboard joint assembly.
4. **REMOVE FRONT DRIVE INBOARD JOINT ASSEMBLY**
   1. Remove the old grease from the front drive inboard joint assembly.
   2. Put matchmarks on the front drive inboard joint assembly and front drive outboard joint shaft assembly.

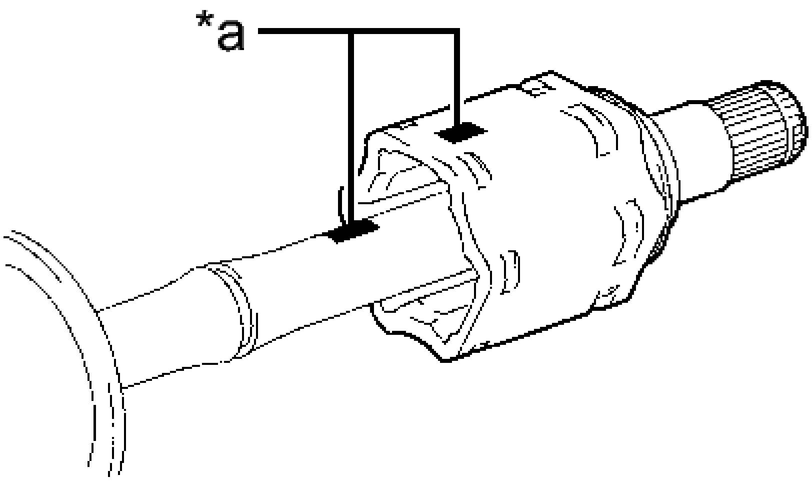

Fig. 11: Identifying Front Drive Inboard & Outboard Joint Shaft Assembly Matchmarks
Courtesy of TOYOTA MOTOR SALES, U.S.A., INC.

TEXT IN ILLUSTRATION

*a	Matchmark

NOTE: **Do not use a punch for the marks.**

c. Remove the front drive inboard joint assembly from the front drive outboard joint shaft assembly.
d. Hold the drive shaft in a vise between aluminum plates.

NOTE: **Do not overtighten the vise.**

e. Using a snap ring expander, remove the shaft snap ring from the front drive outboard joint shaft assembly.

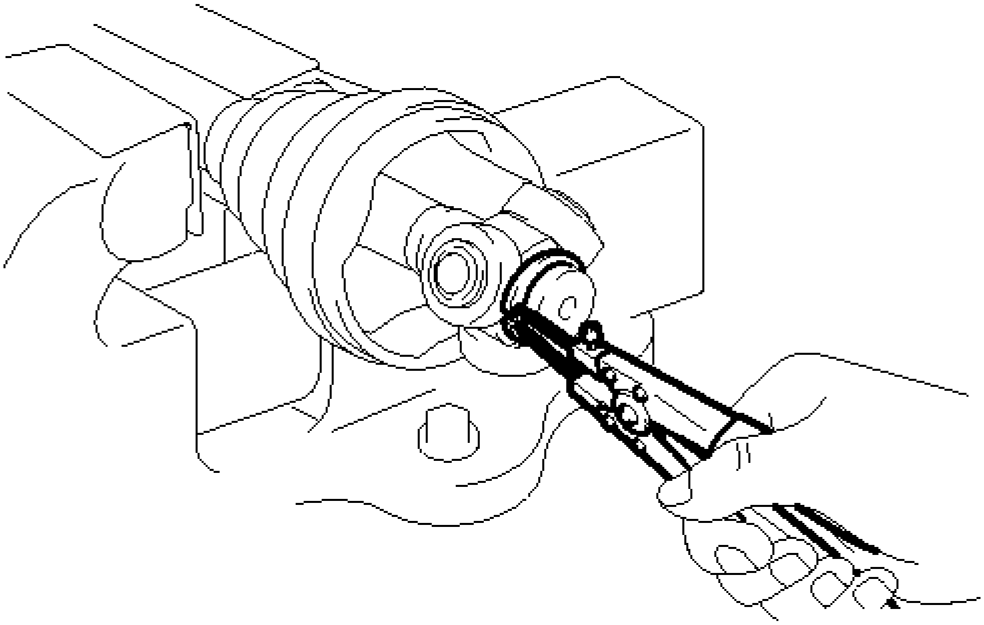

Fig. 12: Remove/Install Front Axle Outboard Joint Shaft Assembly Snap Ring
Courtesy of TOYOTA MOTOR SALES, U.S.A., INC.

f. Put matchmarks on the front drive outboard joint shaft assembly and tripod joint.

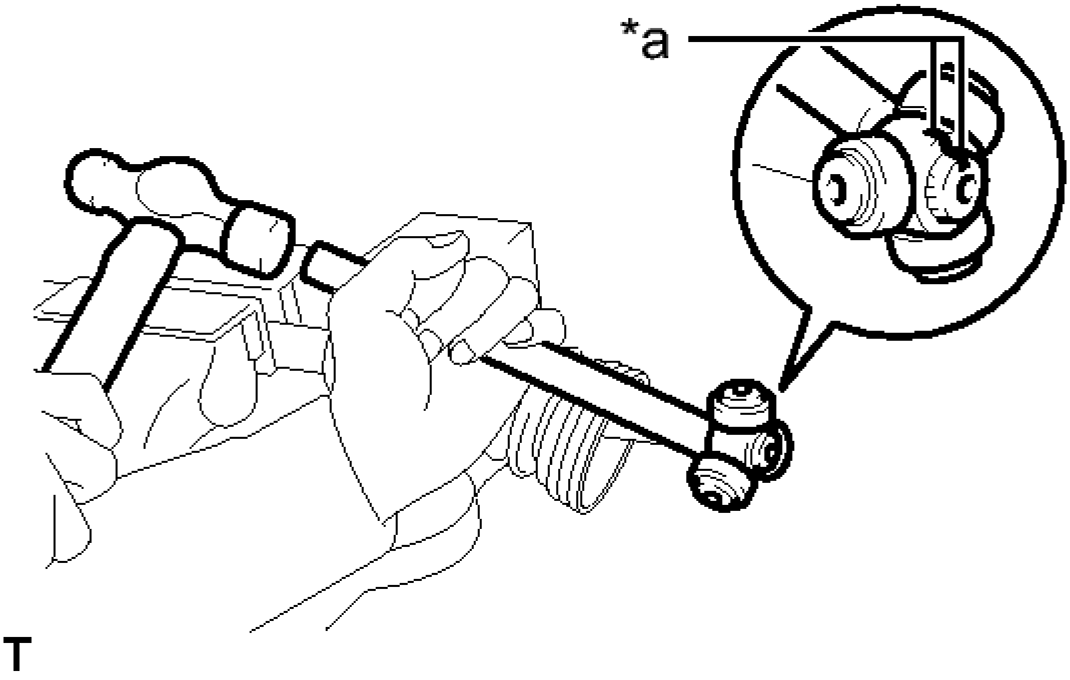

Fig. 13: Placing Matchmarks On Front Drive Outboard Joint Shaft Assembly And Tripod Joint

Courtesy of TOYOTA MOTOR SALES, U.S.A., INC.

TEXT IN ILLUSTRATION

*a	Matchmark

NOTE: **Do not use a punch for the marks.**

g. Using a brass bar and a hammer, tap out the tripod joint from the front drive outboard joint shaft assembly.

NOTE:

- **Do not tap the rollers.**
- **Do not drop the tripod joint.**

5. **REMOVE FRONT AXLE INBOARD JOINT BOOT**
    a. Remove the front No. 2 axle inboard joint boot clamp, front axle inboard joint boot and front axle inboard joint boot clamp.
6. **REMOVE FRONT DRIVE SHAFT DAMPER**
    a. Using needle-nose pliers, remove the front drive shaft damper clamp.

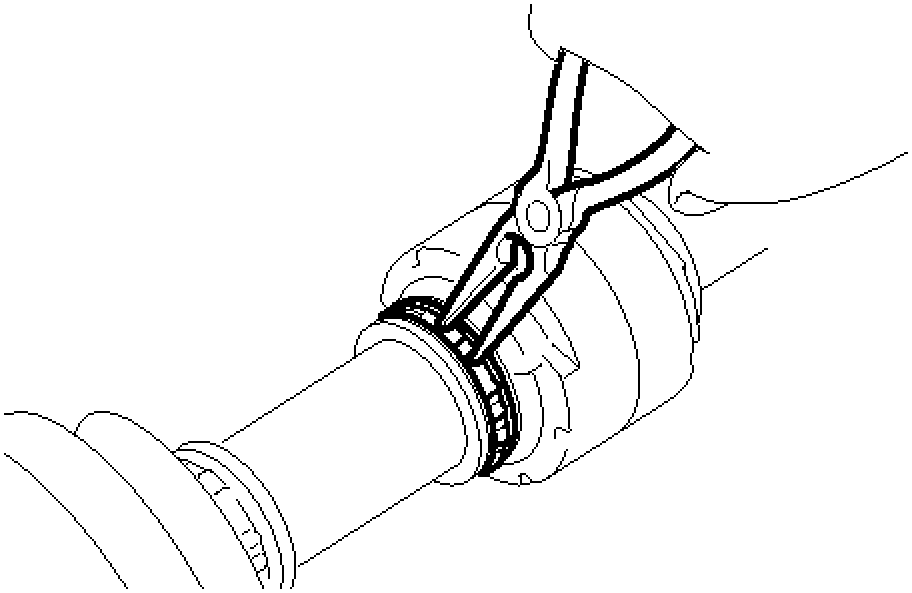

Fig. 14: Remove/Install Front Drive Shaft Damper Clamp
Courtesy of TOYOTA MOTOR SALES, U.S.A., INC.

    b. Remove the front drive shaft damper.
7. **REMOVE FRONT NO. 2 AXLE OUTBOARD JOINT BOOT CLAMP**
    a. Using pliers, remove the front No. 2 axle outboard joint boot clamp.

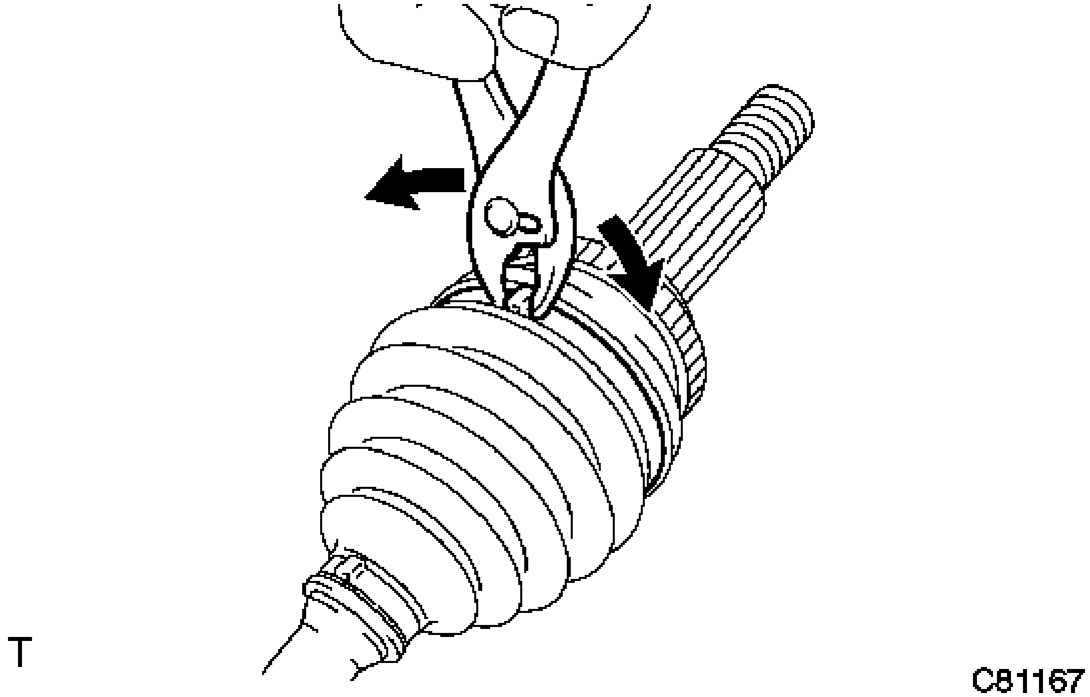

Fig. 15: Removing Outboard Joint Boot No. 2 Clamp
Courtesy of TOYOTA MOTOR SALES, U.S.A., INC.

8. **REMOVE FRONT AXLE OUTBOARD JOINT BOOT CLAMP**

   HINT:

   Perform the same procedure as for the front No. 2 axle outboard joint boot clamp.

9. **REMOVE FRONT AXLE OUTBOARD JOINT BOOT**
   a. Remove the front axle outboard joint boot clamp, front axle outboard joint boot and front No. 2 axle outboard joint boot clamp from the front drive outboard joint shaft assembly.
   b. Remove the grease from the outboard joint.
10. **REMOVE FRONT DRIVE SHAFT DUST COVER LH**
    a. Using SST and a press, remove the front drive shaft dust cover LH.

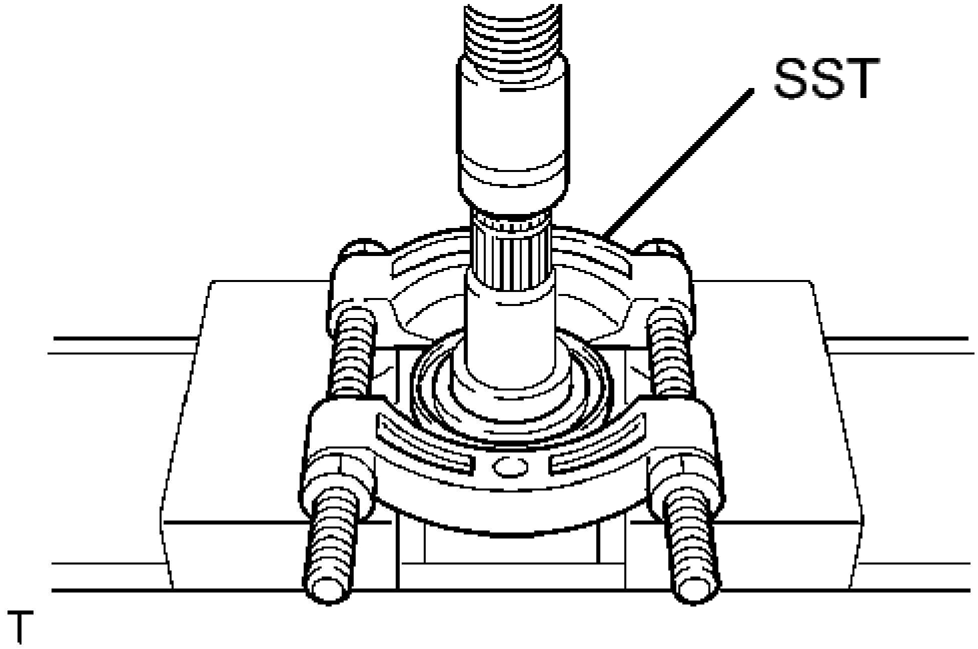

Fig. 16: Pressing Drive Shaft Dust Cover LH Using SST
Courtesy of TOYOTA MOTOR SALES, U.S.A., INC.

- **SST: 09950-00020**

NOTE:

- **Be careful not to drop the front drive inboard joint assembly.**
- **Do not overtighten SST.**

11. **REMOVE FRONT DRIVE SHAFT DUST COVER RH**
    a. Using a press, remove the front drive shaft dust cover RH.

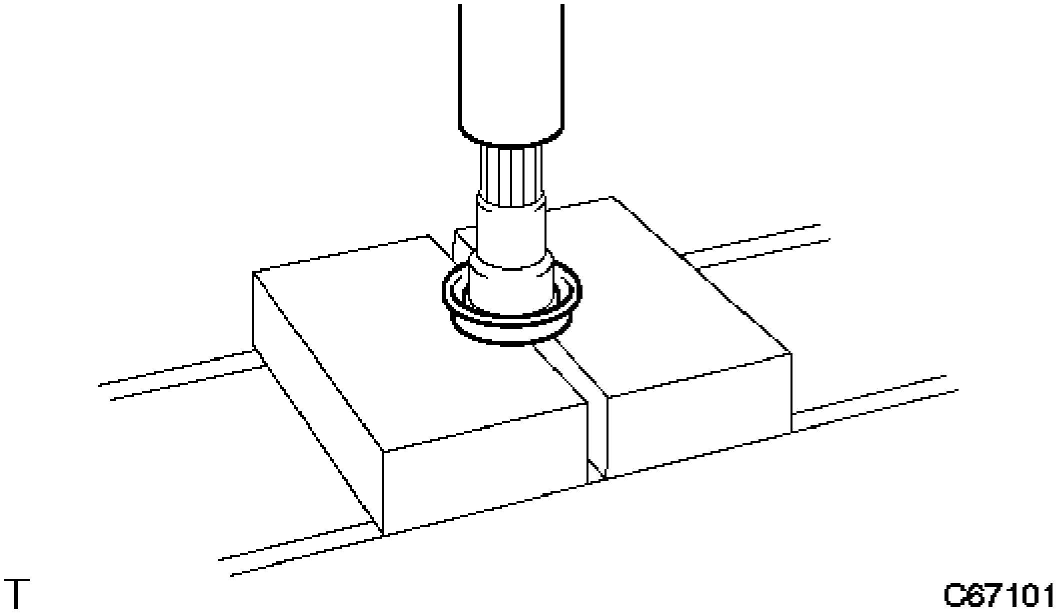

Fig. 17: Removing Drive Shaft Dust Cover RH Using Press
Courtesy of TOYOTA MOTOR SALES, U.S.A., INC.

NOTE: Be careful not to drop the front drive inboard joint assembly.

12. **REMOVE FRONT DRIVE SHAFT DUST COVER (for RH Side)**
    a. Using SST and a press, remove the front drive shaft dust cover.

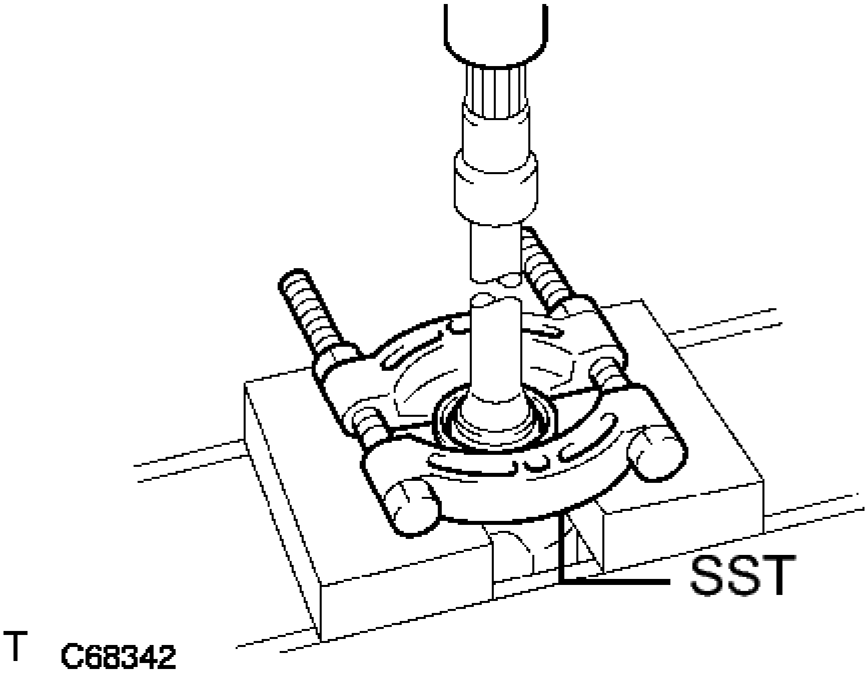

Fig. 18: Removing Drive Shaft Dust Cover Using SST
Courtesy of TOYOTA MOTOR SALES, U.S.A., INC.

- **SST: 09950-00020**

NOTE:

- **Be careful not to drop the front drive inboard joint assembly.**
- **Do not overtighten SST.**

13. **REMOVE FRONT DRIVE SHAFT BEARING (for RH Side)**
    a. Using a snap ring expander, remove the drive shaft hole snap ring.

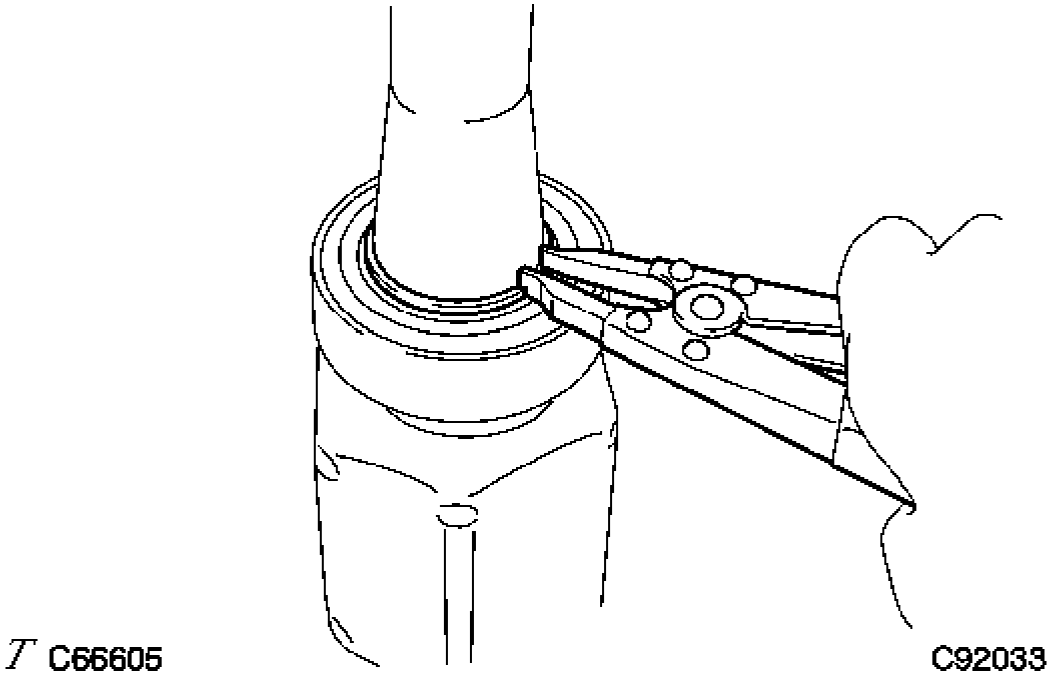

Fig. 19: Removing/Installing Drive Shaft Snap Ring
Courtesy of TOYOTA MOTOR SALES, U.S.A., INC.

b. Using SST and a press, remove the front drive shaft bearing.

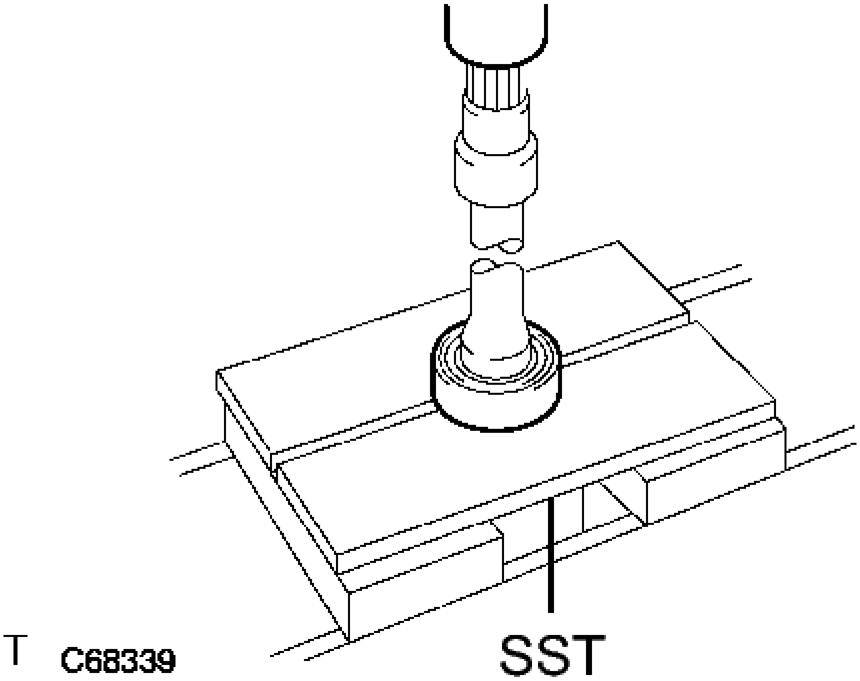

Fig. 20: Removing Bearing Using SST And Press
Courtesy of TOYOTA MOTOR SALES, U.S.A., INC.

- **SST: 09527-10011**

NOTE: **Be careful not to drop the front drive inboard joint assembly.**

INSPECTION

INSPECTION

1. **INSPECT FRONT DRIVE SHAFT ASSEMBLY**
    a. Check that there is no excessive play in the radial direction of the outboard joint.

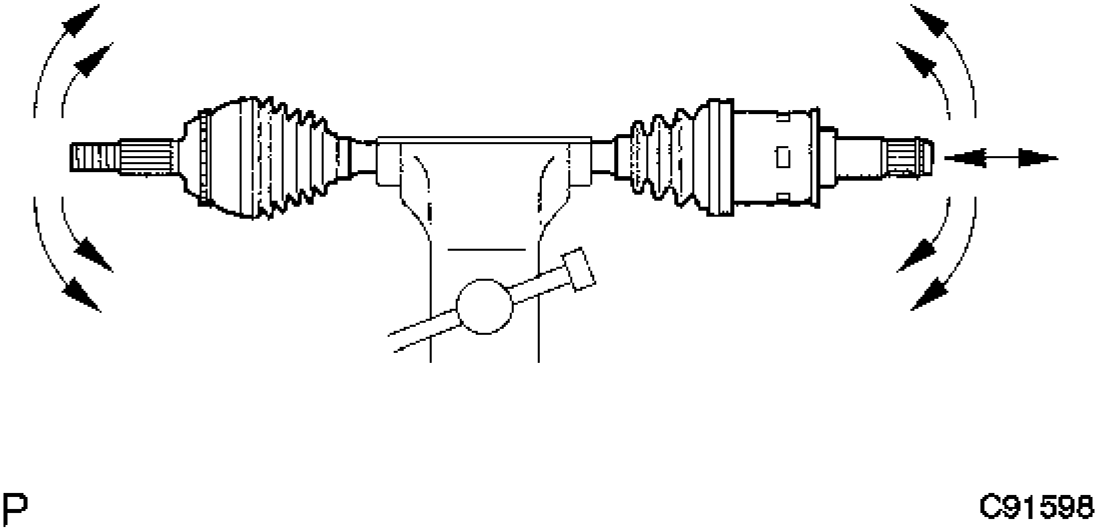

Fig. 21: Inspecting Front Drive Shaft Assembly
Courtesy of TOYOTA MOTOR SALES, U.S.A., INC.

b. Check that the inboard joint slides smoothly in the thrust direction.
c. Check that there is no excessive play in the radial direction of the inboard joint.
d. Check the boots for damage.
e. Check whether the drive shaft dimensions (A) are within the following specifications.

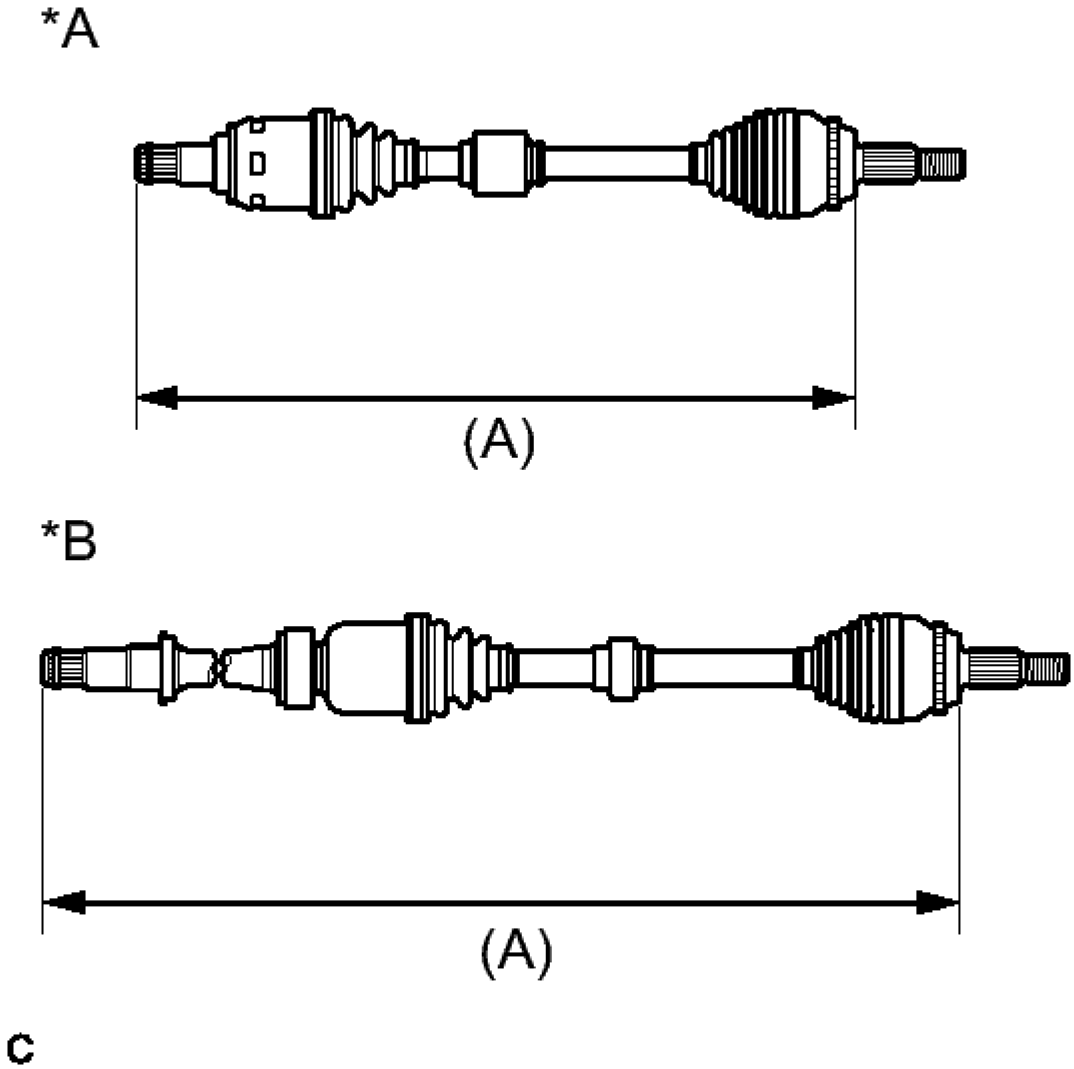

Fig. 22: Checking Drive Shaft Dimensions
Courtesy of TOYOTA MOTOR SALES, U.S.A., INC.

TEXT IN ILLUSTRATION

*A	LH Side
*B	RH Side

NOTE: **Keep the drive shaft assembly level during inspection.**

Dimension (A)

	Dimension (A)
LH Side	587.4 mm (1.93 ft.)

RH Side	906.6 mm (2.97 ft.)

REASSEMBLY

REASSEMBLY

1. **INSTALL FRONT DRIVE SHAFT BEARING (for RH Side)**
   a. Using SST, a steel plate and a press, install a new front drive shaft bearing.

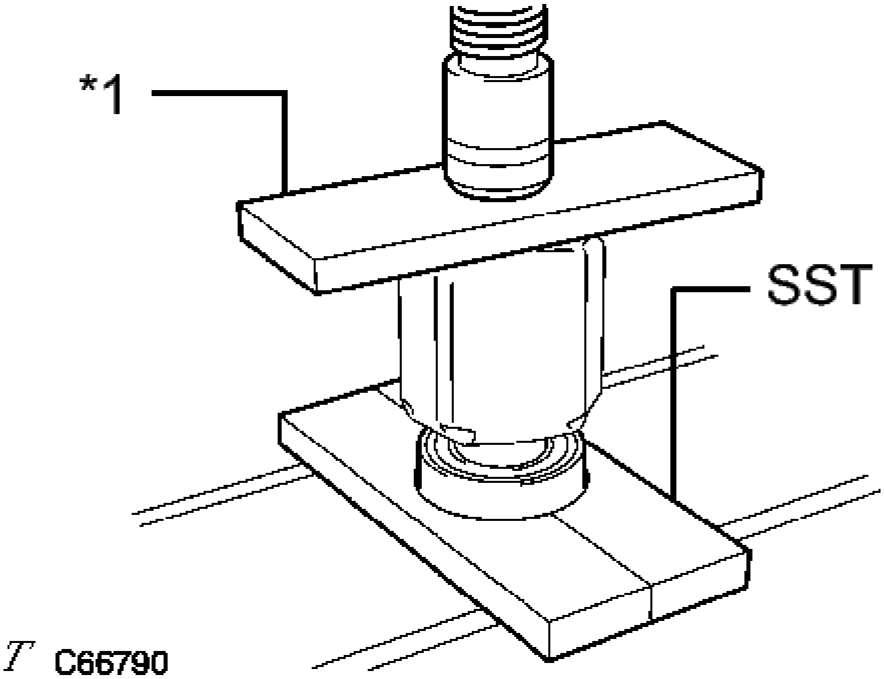

Fig. 23: Installing Front Drive Shaft Bearing (For RH Side) Using SST
Courtesy of TOYOTA MOTOR SALES, U.S.A., INC.

TEXT IN ILLUSTRATION

*1	Steel Plate

- **SST: 09527-10011**

NOTE: The bearing should be completely installed.

   b. Using a snap ring expander, install a new drive shaft hole snap ring.

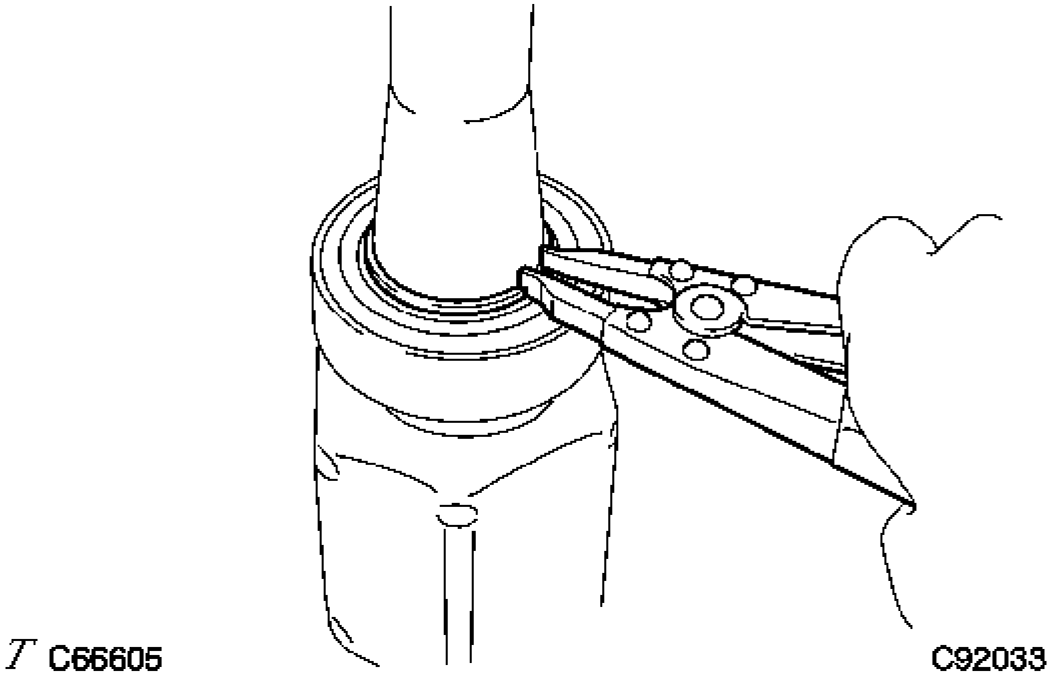

Fig. 24: Removing/Installing Drive Shaft Snap Ring
Courtesy of TOYOTA MOTOR SALES, U.S.A., INC.

2. **INSTALL FRONT DRIVE SHAFT DUST COVER (for RH Side)**
    a. Using SST, a steel plate and a press, install a new front drive shaft dust cover.

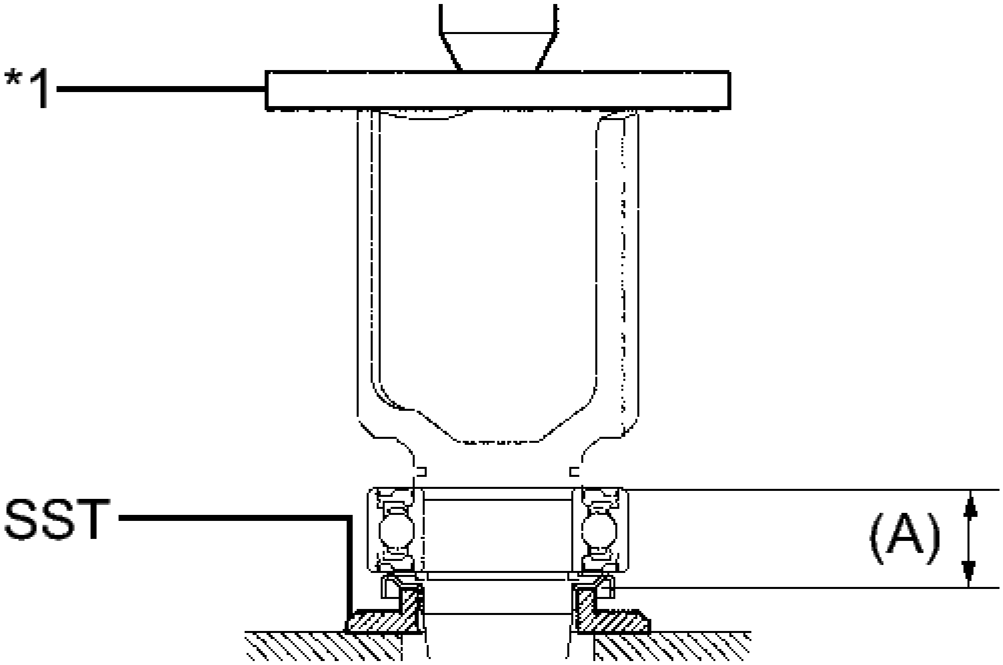

Fig. 25: Installing Front Drive Shaft Dust Cover (For RH Side) Using SST
Courtesy of TOYOTA MOTOR SALES, U.S.A., INC.

TEXT IN ILLUSTRATION

*1	Steel Plate

- **SST: 09726-40010**

Dimension (A)

26.6 to 27.6 mm (1.05 to 1.08 in.)

NOTE:

- **The dust cover should be completely installed.**
- **Be careful not to damage the front drive shaft dust cover.**

3. **INSTALL FRONT DRIVE SHAFT DUST COVER RH**
    a. Using a steel plate and a press, install a new front drive shaft dust cover RH until dimension (A) from the tip of the front drive inboard joint assembly to the front drive shaft dust cover RH meets the specification.

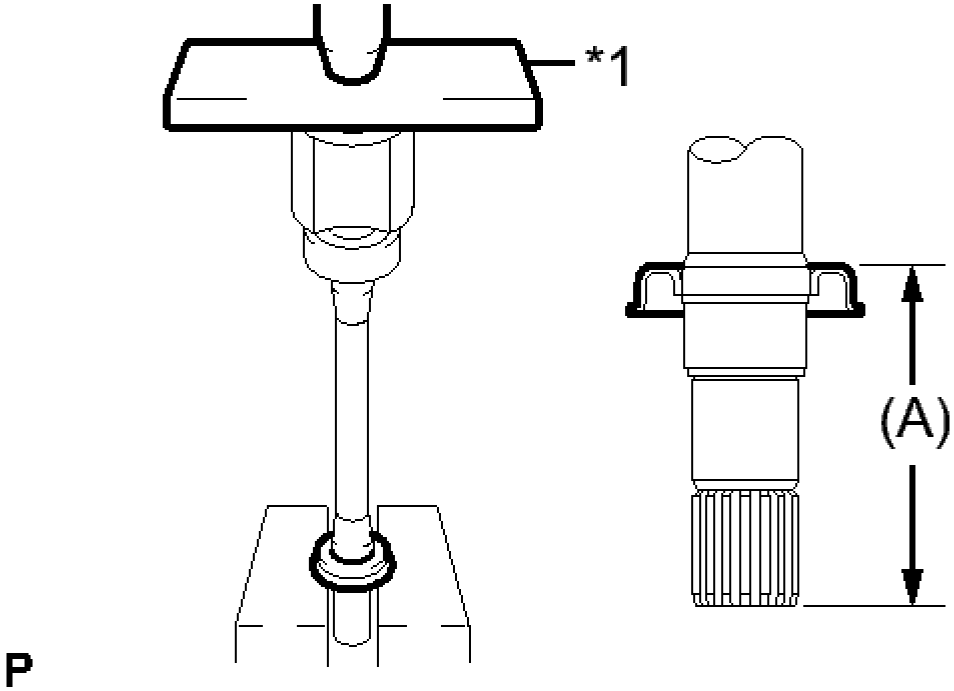

Fig. 26: Installing Front Drive Shaft Dust Cover RH
Courtesy of TOYOTA MOTOR SALES, U.S.A., INC.

TEXT IN ILLUSTRATION

*1	Steel Plate

Dimension (A)

110.0 to 111.0 mm (4.33 to 4.37 in.)

NOTE:

- **The dust cover should be completely installed.**
- **Be careful not to damage the front drive shaft dust cover RH.**

4. **INSTALL FRONT DRIVE SHAFT DUST COVER LH**
   a. Using a steel plate and a press, install a new front drive shaft dust cover LH.

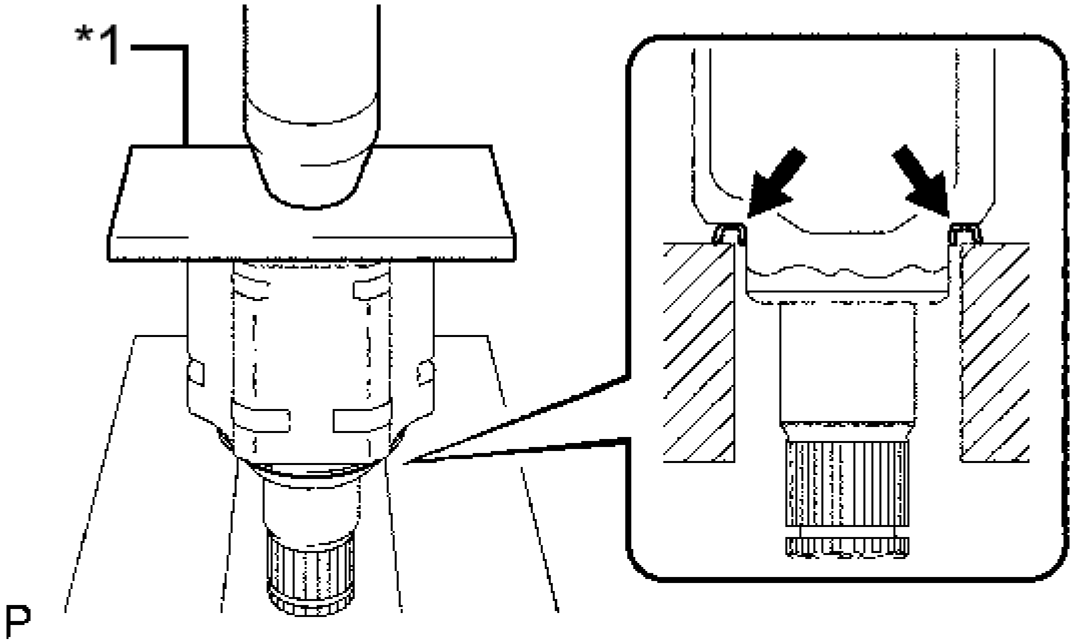

Fig. 27: Installing Front Drive Shaft Dust Cover LH
Courtesy of TOYOTA MOTOR SALES, U.S.A., INC.

TEXT IN ILLUSTRATION

*1	Steel Plate

NOTE:

- **The dust cover should be completely installed.**
- **Be careful not to damage the front drive shaft dust cover LH.**

5. **INSTALL FRONT AXLE OUTBOARD JOINT BOOT**
   a. Wrap the splines of the front drive outboard joint shaft assembly with protective tape to prevent the boot from being damaged.

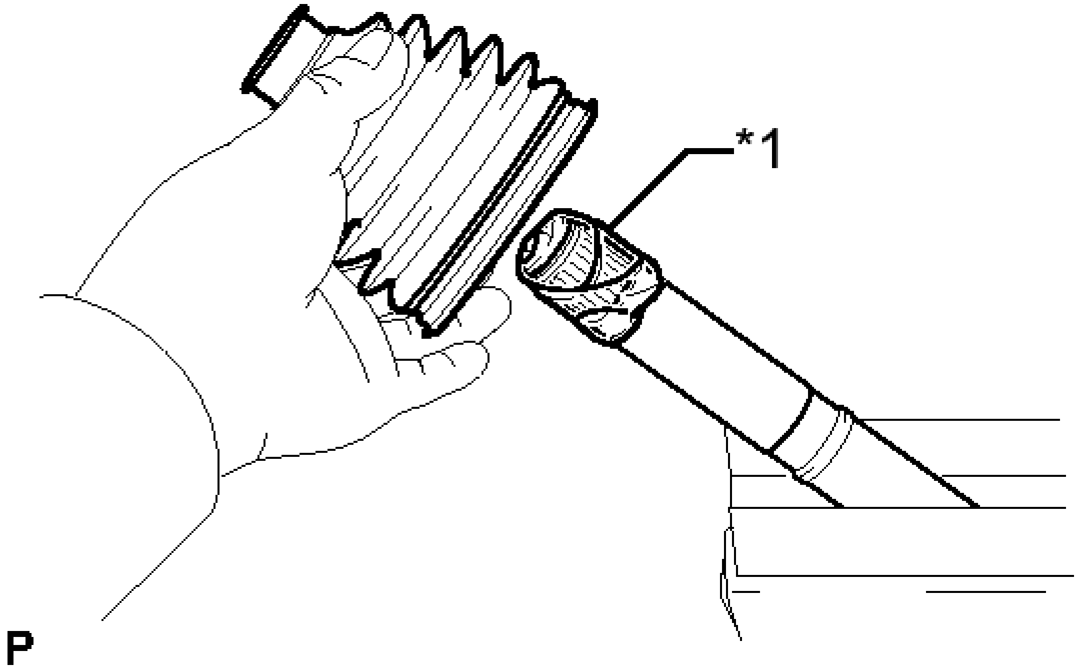

Fig. 28: Wrapping Spline Of Drive Shaft With Vinyl Tape
Courtesy of TOYOTA MOTOR SALES, U.S.A., INC.

TEXT IN ILLUSTRATION

*1	Protective Tape

b. Install new parts onto the front drive outboard joint shaft assembly in the following order:

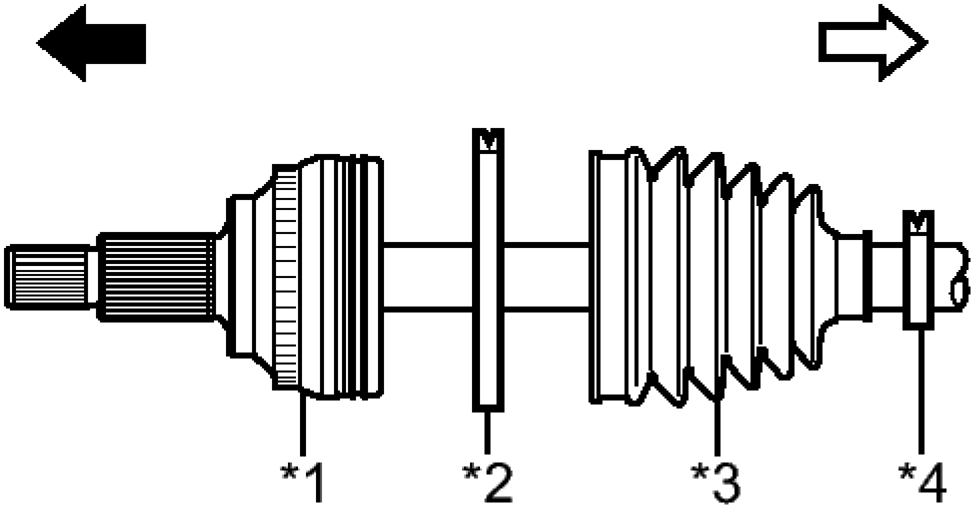

Fig. 29: Identifying Front Drive Outboard Joint Shaft Assembly Installation Sequence
Courtesy of TOYOTA MOTOR SALES, U.S.A., INC.

TEXT IN ILLUSTRATION

*1	Front Drive Outboard Joint Shaft Assembly
*2	Front No. 2 Axle Outboard Joint Boot Clamp
*3	Front Axle Outboard Joint Boot
*4	Front Axle Outboard Joint Boot Clamp

	Outboard Joint Side
	Inboard Joint Side

1. Front No. 2 axle outboard joint boot clamp
2. Front axle outboard joint boot
3. Front axle outboard joint boot clamp

c. Pack the joint portion of the front drive outboard joint shaft assembly and front axle outboard joint boot with grease.

Standard grease capacity

100 to 120 g (3.53 to 4.23 oz.)

d. Install the front axle outboard joint boot onto the front drive outboard joint shaft assembly groove.

NOTE:

- **Do not allow grease to adhere to the boot clamp track of the outboard joint boot.**
- **Keep the inside of the outboard joint boot free of foreign matter.**

6. **INSTALL FRONT NO. 2 AXLE OUTBOARD JOINT BOOT CLAMP**

a. Hold the drive shaft in a vise between aluminum plates.

NOTE: **Do not overtighten the vise.**

b. Install the front No. 2 axle outboard joint boot clamp onto the front axle outboard joint boot.

c. Place SST onto the front No. 2 axle outboard joint boot clamp, press it against the boot and slightly tighten SST.

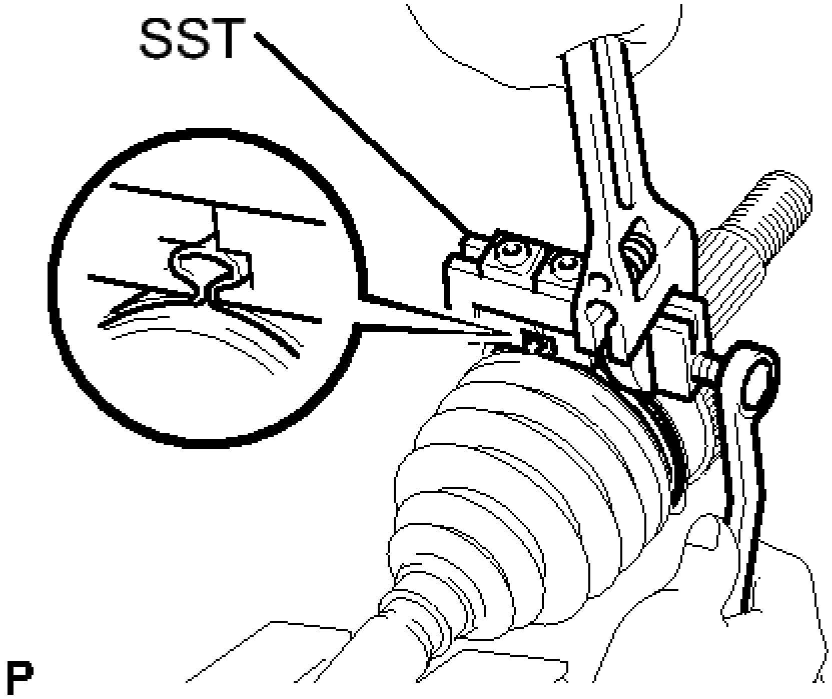

Fig. 30: Tightening No. 2 Front Axle Outboard Joint Boot Clamp Using SST
Courtesy of TOYOTA MOTOR SALES, U.S.A., INC.

- **SST: 09521-24010**

d. Tighten SST so that the front No. 2 axle outboard joint boot clamp is pinched.

NOTE: Do not overtighten SST.

e. Remove SST.
f. Using SST, measure the clearance of the front No. 2 axle outboard joint boot clamp.

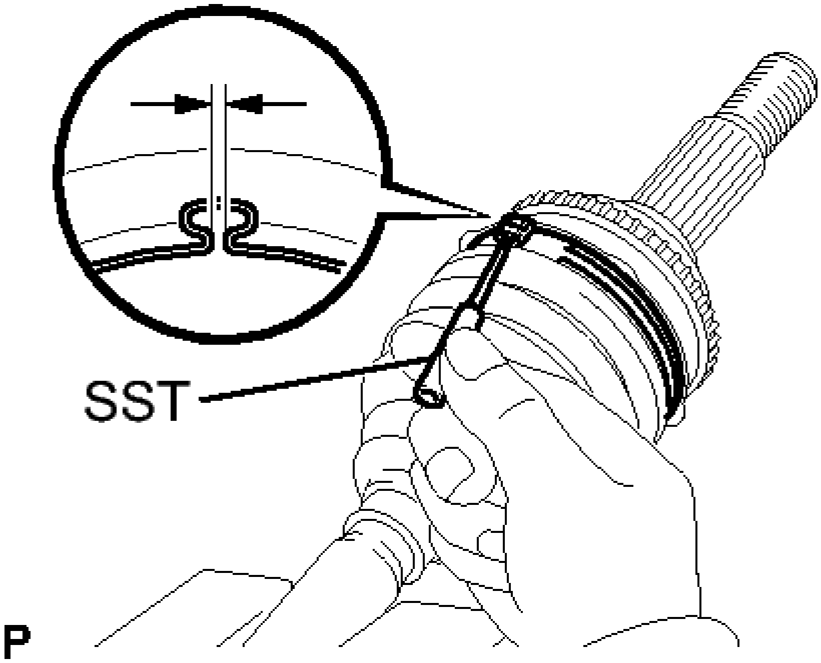

Fig. 31: Measuring Clearance Of Boot Clamp Using SST
Courtesy of TOYOTA MOTOR SALES, U.S.A., INC.

- **SST: 09240-00020**

Clearance

1.2 to 4.0 mm (0.0472 to 0.157 in.)

If the clearance is outside the specified range, retighten SST.

7. **INSTALL FRONT AXLE OUTBOARD JOINT BOOT CLAMP**
   a. Install the front axle outboard joint boot clamp onto the front axle outboard joint boot.
   b. Place SST onto the front axle outboard joint boot clamp, press it against the boot and slightly tighten SST.

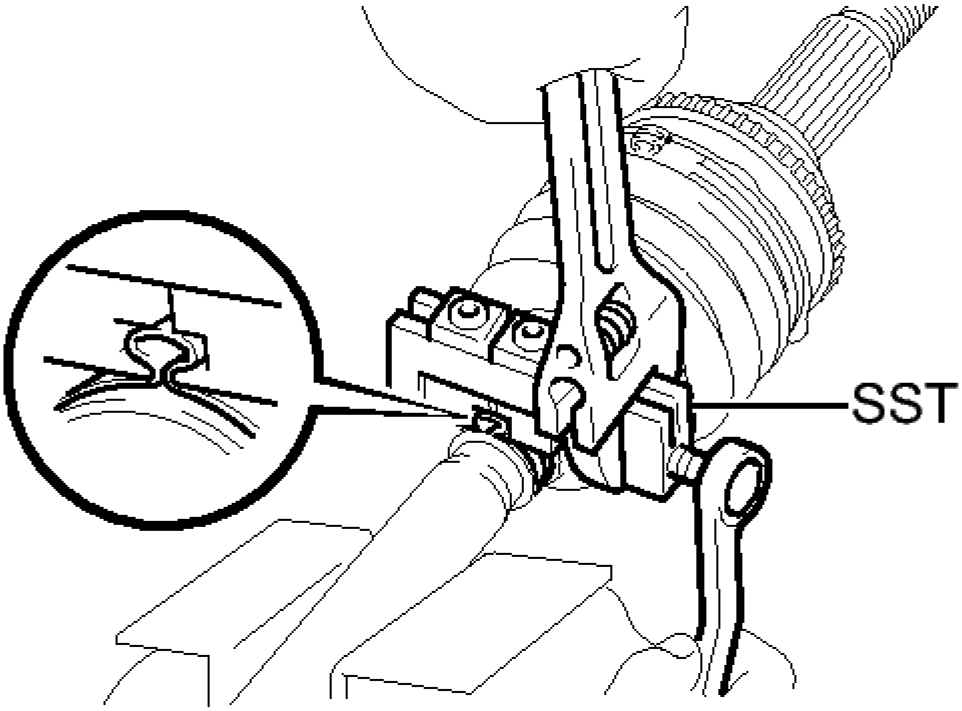

Fig. 32: Tightening Front Axle Outboard Joint Boot Clamp Using SST
Courtesy of TOYOTA MOTOR SALES, U.S.A., INC.

- **SST: 09521-24010**

c. Tighten SST so that the front axle outboard joint boot clamp is pinched.

NOTE: **Do not overtighten SST.**

d. Remove SST.
e. Using SST, measure the clearance of the front axle outboard joint boot clamp.

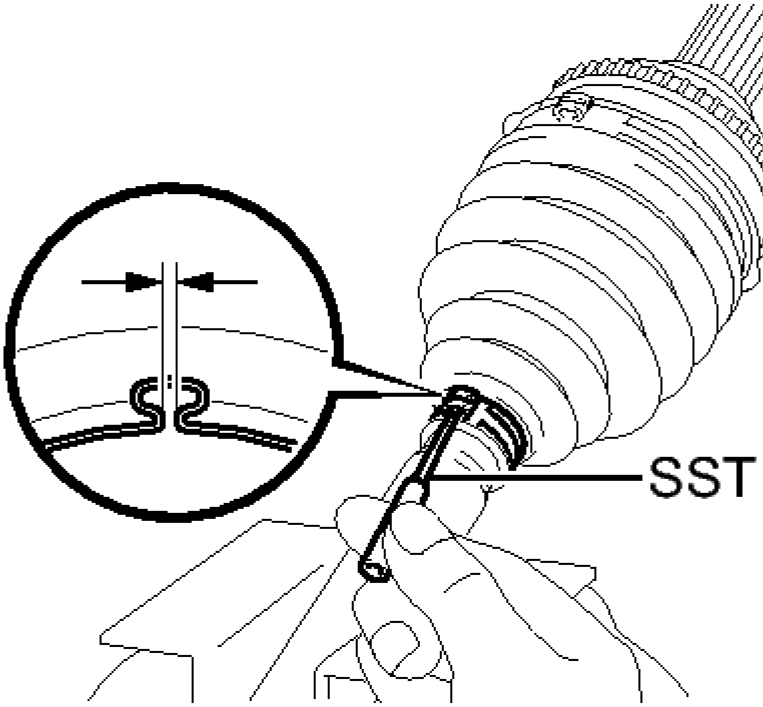

Fig. 33: Measuring Clearance Of Front Axle Outboard Joint Boot Clamp Using SST
Courtesy of TOYOTA MOTOR SALES, U.S.A., INC.

- **SST: 09240-00020**

Clearance

1.2 to 4.0 mm (0.0472 to 0.157 in.)

If the clearance is outside the specified range, retighten SST.

8. **INSTALL FRONT DRIVE SHAFT DAMPER**
    a. Install a new front drive shaft damper clamp onto the front drive outboard joint shaft assembly.
    b. Install the front drive shaft damper onto the front drive outboard joint shaft assembly.

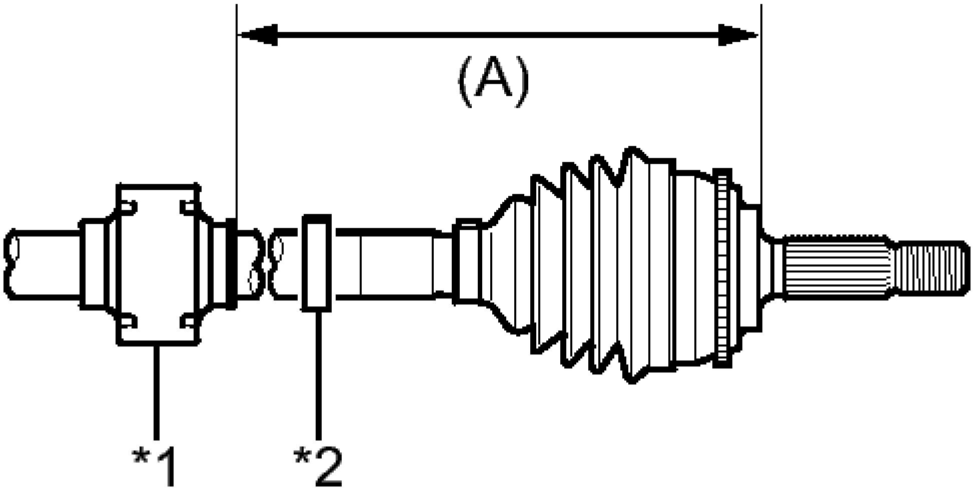

Fig. 34: Identifying Front Drive Shaft Damper Dimension
Courtesy of TOYOTA MOTOR SALES, U.S.A., INC.

TEXT IN ILLUSTRATION

*1	Front Drive Shaft Damper
*2	Front Drive Shaft Damper Clamp

c. Set the dimension as specified below.

Dimension (A)

223.4 to 227.4 mm (8.80 to 8.95 in.)

d. Install the front drive shaft damper clamp onto the front drive shaft damper.

NOTE: Be sure to install the clamp in the correct position.

e. Using needle nose pliers, install the front drive shaft damper clamp.

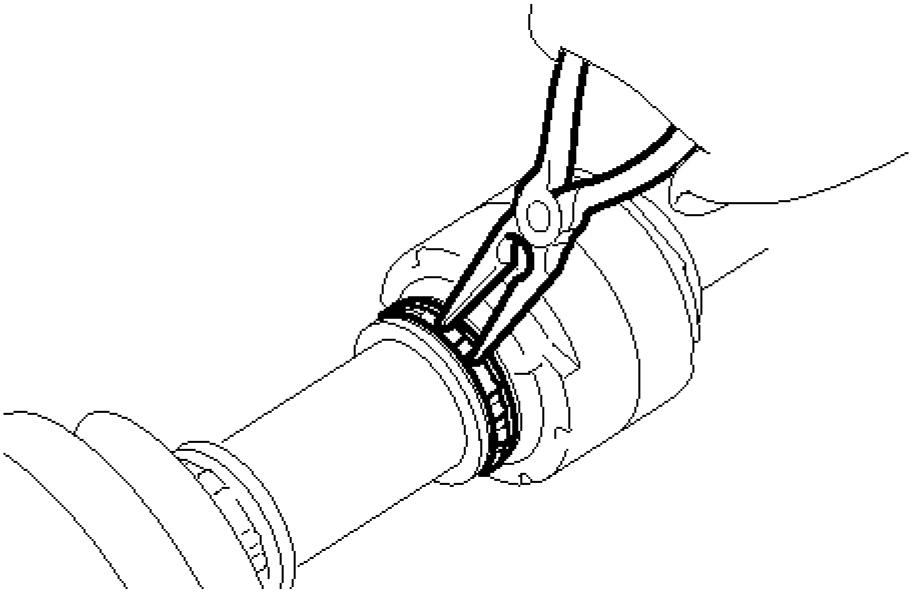

Fig. 35: Remove/Install Front Drive Shaft Damper Clamp
Courtesy of TOYOTA MOTOR SALES, U.S.A., INC.

9. **INSTALL FRONT DRIVE INBOARD JOINT ASSEMBLY**
    a. Install new parts onto the front drive outboard joint shaft assembly in the following order:

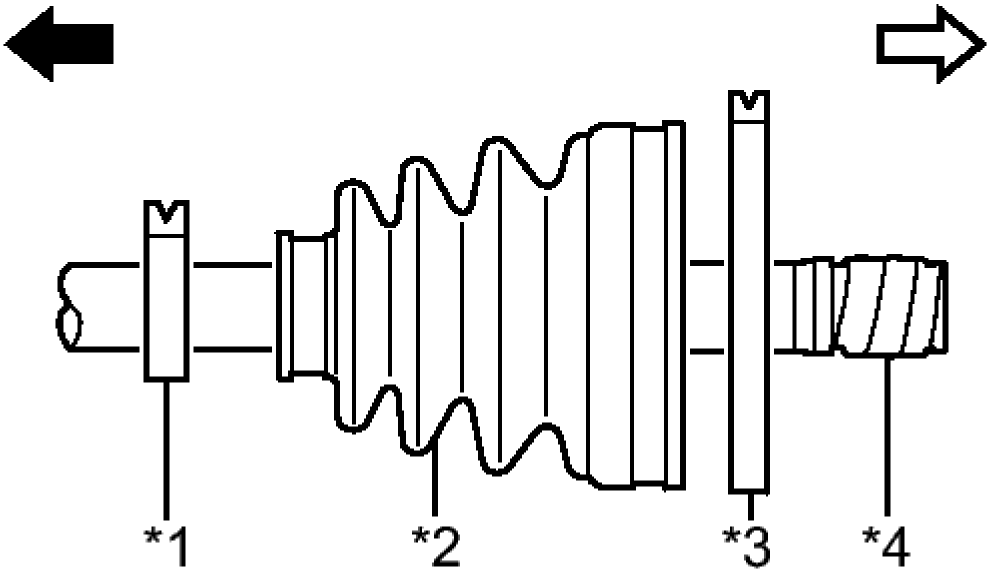

Fig. 36: Identifying Front Drive Inboard Joint Assembly Installation Sequence

Courtesy of TOYOTA MOTOR SALES, U.S.A., INC.

TEXT IN ILLUSTRATION

*1	Front Axle Inboard Joint Boot Clamp
*2	Front Axle Inboard Joint Boot
*3	Front No. 2 Axle Inboard Joint Boot Clamp
*4	Protective Tape
➡	Outboard Joint Side
⇨	Inboard Joint Side

1. Front axle inboard joint boot clamp
2. Front axle inboard joint boot
3. Front No. 2 axle inboard joint boot clamp

b. Hold the drive shaft in a vise between aluminum plates.

NOTE: Do not overtighten the vise.

c. Remove the protective tape.

d. Align the matchmarks and install the tripod joint onto the front drive outboard joint shaft assembly.

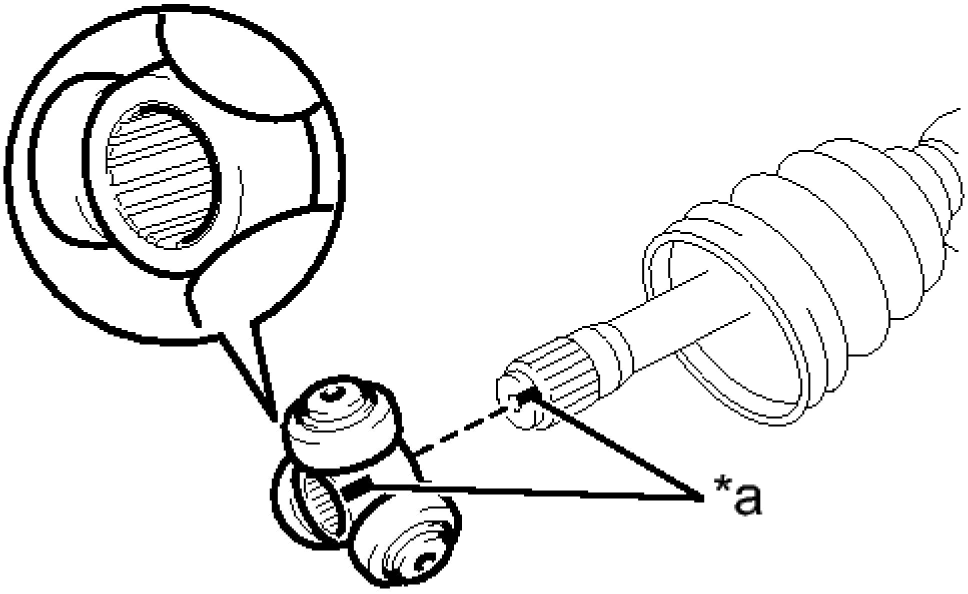

T

Fig. 37: Aligning Matchmarks And Installing Tripod Joint
Courtesy of TOYOTA MOTOR SALES, U.S.A., INC.

TEXT IN ILLUSTRATION

*a	Matchmark

e. Align the matchmarks placed before removal.
f. Using a brass bar and a hammer, install the tripod joint to the front drive outboard joint shaft assembly.

NOTE:

- **Do not tap the rollers.**
- **Keep the tripod joint free of foreign matter.**

g. Using a snap ring expander, install a new shaft snap ring to the front drive outboard joint shaft assembly.

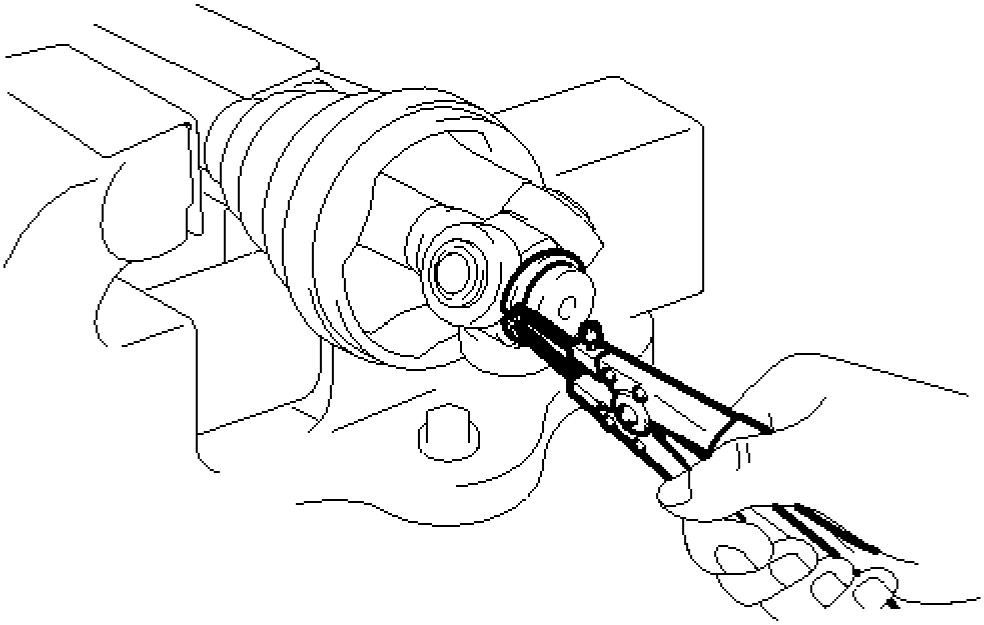

Fig. 38: Remove/Install Front Axle Outboard Joint Shaft Assembly Snap Ring
Courtesy of TOYOTA MOTOR SALES, U.S.A., INC.

h. Pack the front drive inboard joint assembly and front axle inboard boot with grease.

   Standard grease capacity (LH Side)

   150 to 170 g (5.29 to 5.99 oz.)

   Standard grease capacity (RH Side)

   155 to 175 g (5.47 to 6.17 oz.)

i. Align the matchmarks and install the front drive inboard joint assembly to the front drive outboard joint shaft assembly.

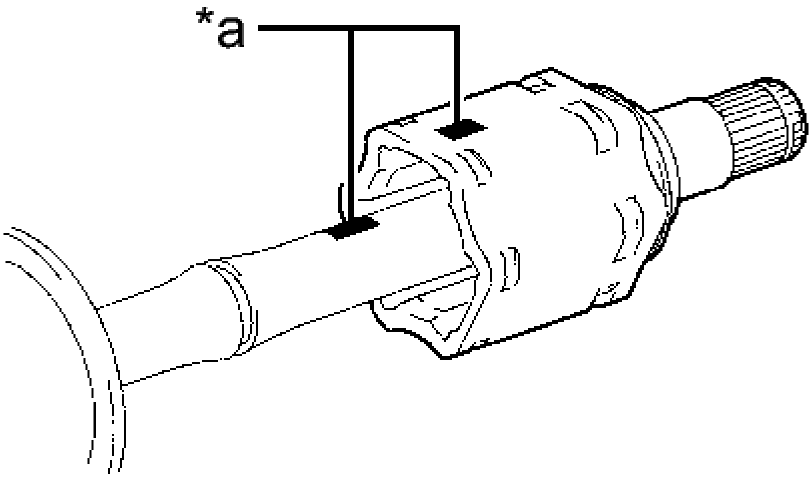

Fig. 39: Identifying Front Drive Inboard & Outboard Joint Shaft Assembly Matchmarks
Courtesy of TOYOTA MOTOR SALES, U.S.A., INC.

TEXT IN ILLUSTRATION

*a	Matchmark

10. **INSTALL FRONT AXLE INBOARD JOINT BOOT**
    a. Install the front axle inboard joint boot to the front drive inboard joint assembly.
    b. Check whether the drive shaft dimensions (A) are within the following specifications.

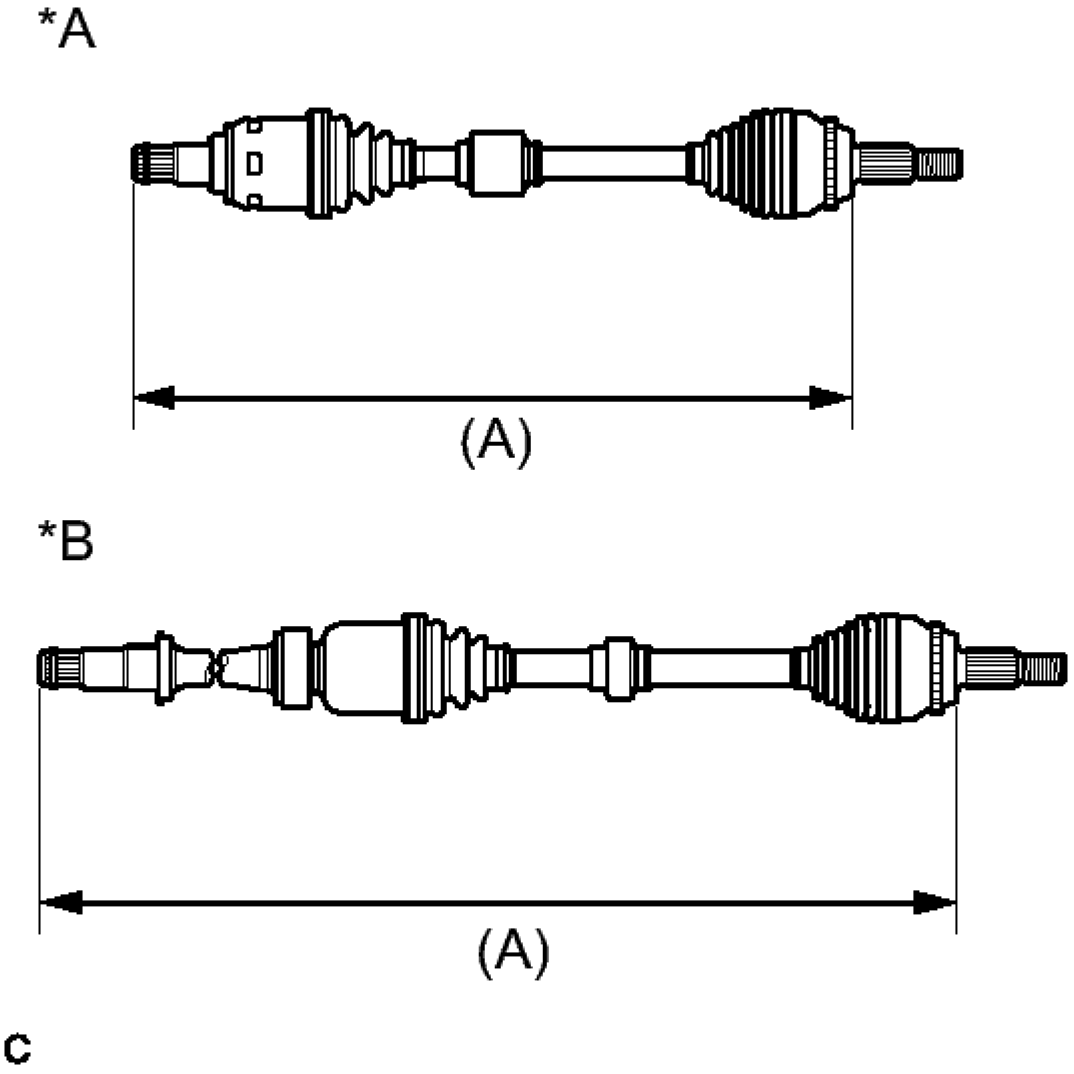

Fig. 40: Checking Drive Shaft Dimensions
Courtesy of TOYOTA MOTOR SALES, U.S.A., INC.

TEXT IN ILLUSTRATION

*A	LH Side
*B	RH Side

Dimension (A)

	Dimension (A)
LH Side	587.4 mm (1.93 ft.)
RH Side	906.6 mm (2.97 ft.)

11. **INSTALL FRONT AXLE INBOARD JOINT BOOT CLAMP**
    a. Install the front axle inboard joint boot clamp onto the front axle inboard joint boot.
    b. Using needle nose pliers, install the front axle inboard joint boot clamp.

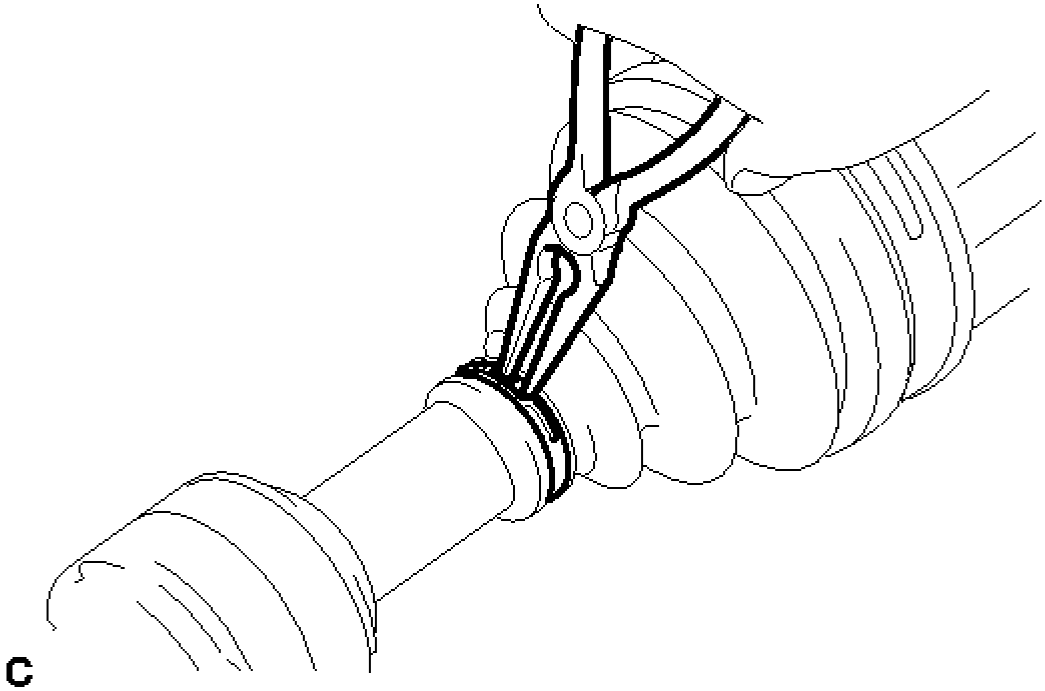

Fig. 41: Installing Front Axle Inboard Joint Boot Clamp
Courtesy of TOYOTA MOTOR SALES, U.S.A., INC.

NOTE: **Be careful not to damage the front axle inboard joint boot.**

12. **INSTALL FRONT NO. 2 AXLE INBOARD JOINT BOOT CLAMP**
    a. Install the front No. 2 axle inboard joint boot clamp onto the front axle inboard joint boot.
    b. Using needle nose pliers, install the front No. 2 axle inboard joint boot clamp.

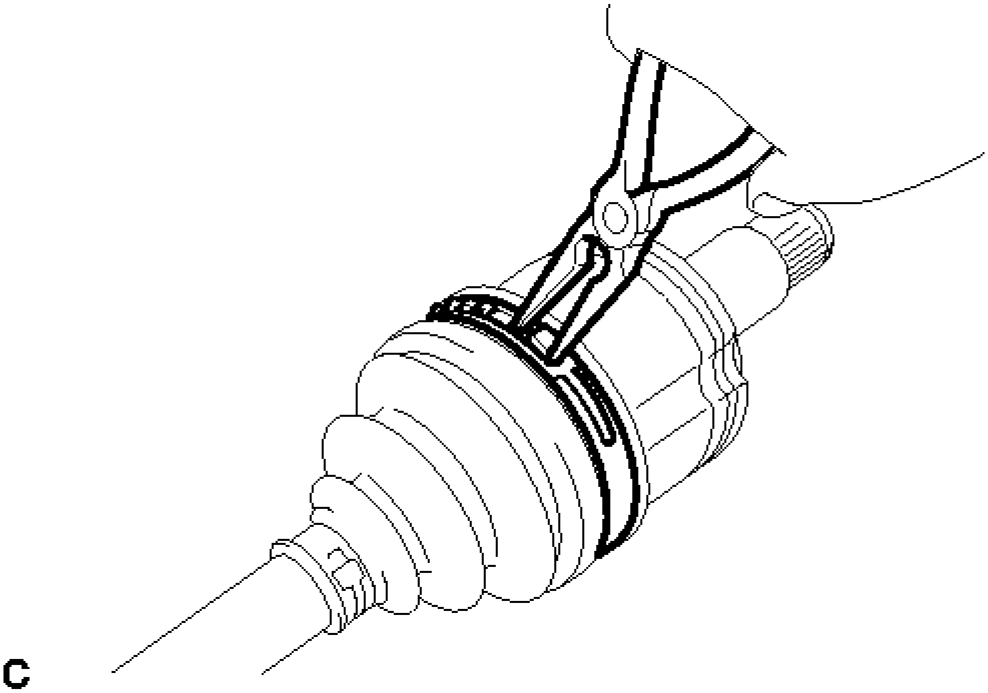

Fig. 42: Remove/Install Front No. 2 Axle Inboard Joint Boot Clamp
Courtesy of TOYOTA MOTOR SALES, U.S.A., INC.

NOTE: Be careful not to damage the front axle inboard joint boot.

13. **INSTALL FRONT DRIVE SHAFT HOLE SNAP RING LH**
    a. Install a new front drive shaft hole snap ring LH.

NOTE: Face the end gap of the front drive shaft hole snap ring downward.

14. **INSPECT FRONT DRIVE SHAFT ASSEMBLY** . See step 1.

INSTALLATION

INSTALLATION

1. **INSTALL FRONT DRIVE SHAFT ASSEMBLY LH**
    a. Coat the spline of the front drive inboard joint assembly with ATF.
    b. Coat the lip of the transaxle case oil seal with MP grease.
    c. Align the inboard joint splines, and using a brass bar and a hammer, install the front drive shaft assembly LH.

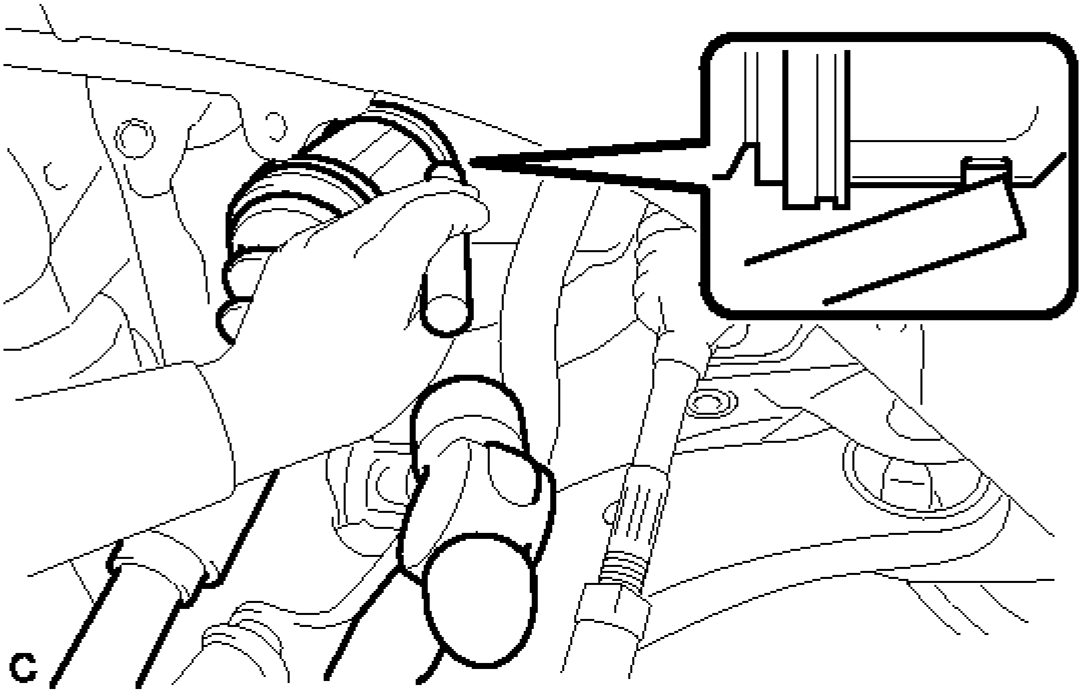

Fig. 43: Installing Drive Shaft Assembly LH With Brass Bar And Hammer
Courtesy of TOYOTA MOTOR SALES, U.S.A., INC.

NOTE:

- **Face the end gap of the front drive shaft hole snap ring LH downward.**
- **Do not damage the transaxle case oil seal.**
- **Do not damage the front axle inboard joint boot.**
- **Make sure to center the front drive shaft assembly LH during installation to prevent damage to the front drive shaft hole snap ring LH.**

HINT:

Confirm whether the drive shaft is securely driven in by checking the reaction force and sound.

d. Apply mineral oil base grease to the areas indicated by the arrows in the illustration on the front drive shaft assembly LH contact surface of the front axle hub bearing.

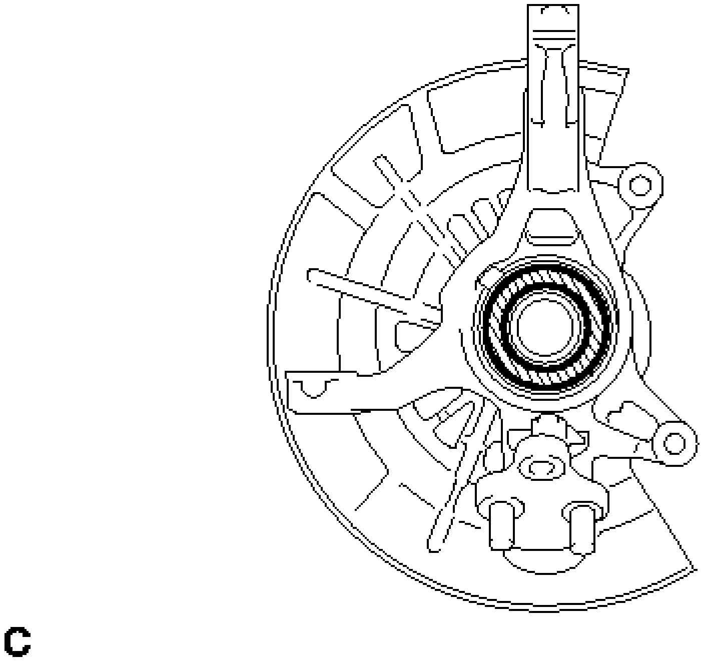

Fig. 44: Identifying Front Axle Hub Bearing Mineral Oil Base Grease Application Area
Courtesy of TOYOTA MOTOR SALES, U.S.A., INC.

TEXT IN ILLUSTRATION

	Mineral Oil Base Grease

HINT:

Apply 0.1 to 0.3 g (0.00353 to 0.0106 oz.) of mineral oil base grease to each area.

e. Align the matchmarks and install the front drive shaft assembly LH to the front axle hub sub-assembly.

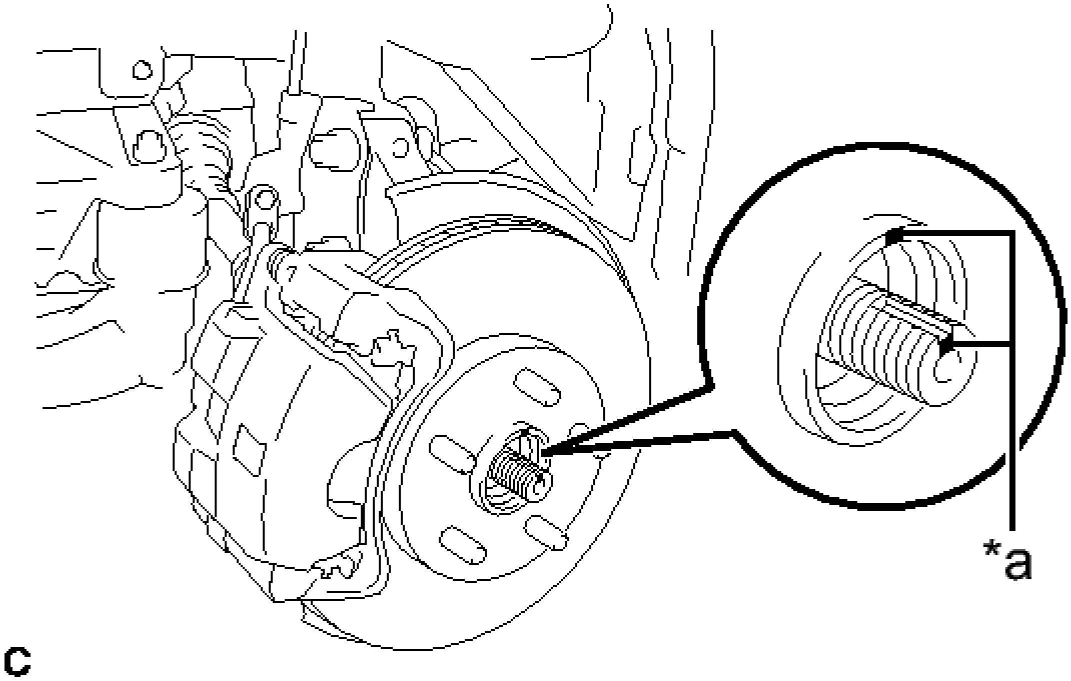

Fig. 45: Aligning Matchmarks To Front Drive Shaft Assembly LH To Front Axle Hub Sub-Assembly
Courtesy of TOYOTA MOTOR SALES, U.S.A., INC.

TEXT IN ILLUSTRATION

*a	Matchmark

NOTE: **Be careful not to damage the front axle outboard joint boot or speed sensor rotor.**

2. **INSTALL FRONT DRIVE SHAFT ASSEMBLY RH**
   a. Coat the spline of the front drive inboard joint assembly with ATF.
   b. Coat the lip of the front transaxle case oil seal with MP grease.
   c. Install a new bearing bracket hole snap ring to the front drive shaft assembly RH.
   d. Install the front drive shaft assembly RH.

NOTE:

- **Do not damage the front transaxle case oil seal.**
- **Do not damage the front axle inboard joint boot.**
- **When inserting the front drive shaft assembly RH, keep it level.**

   e. Install the bearing bracket hole snap ring and a new bolt.

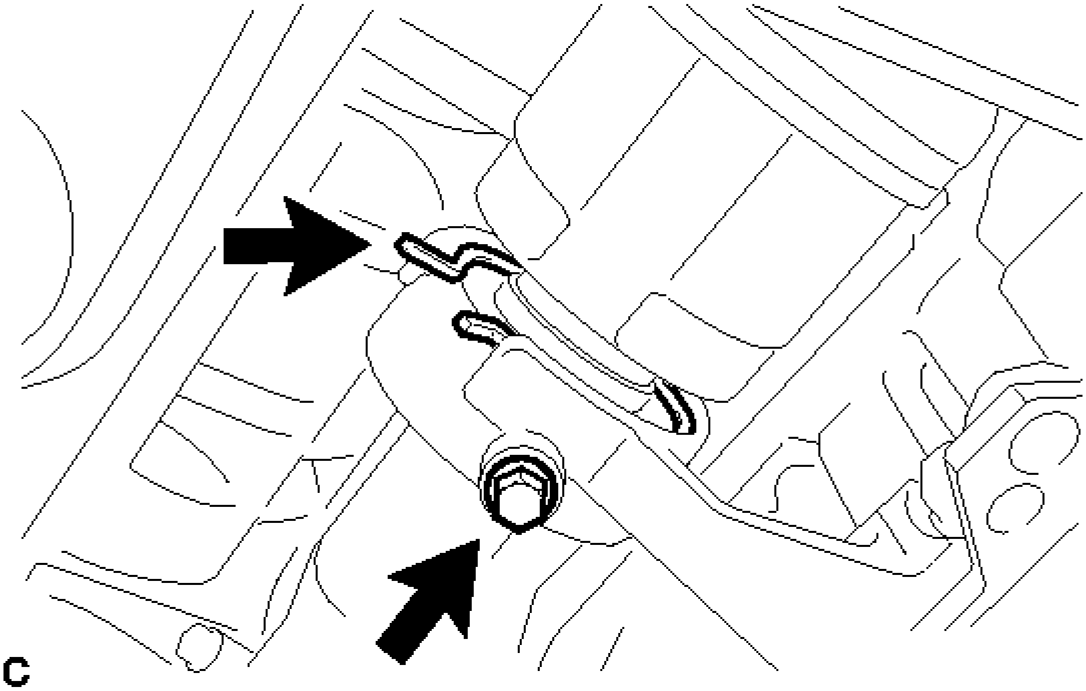

Fig. 46: Identifying Bearing Bracket Hole Snap Ring And Bolt
Courtesy of TOYOTA MOTOR SALES, U.S.A., INC.

Torque: 32 N*m (330 kgf*cm, 24 ft.*lbf)

f. Apply mineral oil base grease to the areas indicated by the arrows in the illustration on the front drive shaft assembly RH contact surface of the front axle hub bearing.

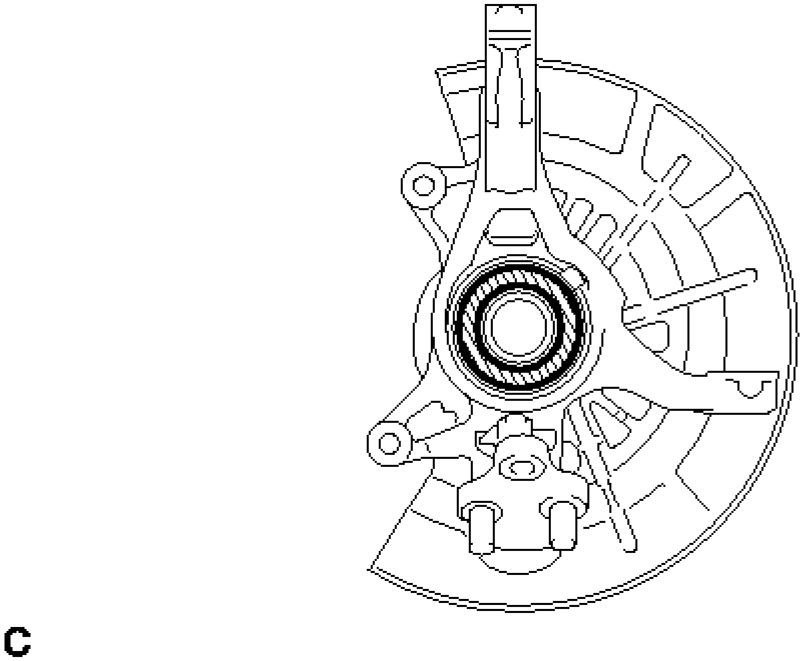

Fig. 47: Identifying Front Axle Hub Bearing Mineral Oil Base Grease Application Area
Courtesy of TOYOTA MOTOR SALES, U.S.A., INC.

TEXT IN ILLUSTRATION

	Mineral Oil Base Grease

HINT:

Apply 0.1 to 0.3 g (0.00353 to 0.0106 oz.) of mineral oil base grease to each area.

g. Align the matchmarks and install the front drive shaft assembly RH to the front axle hub sub-assembly.

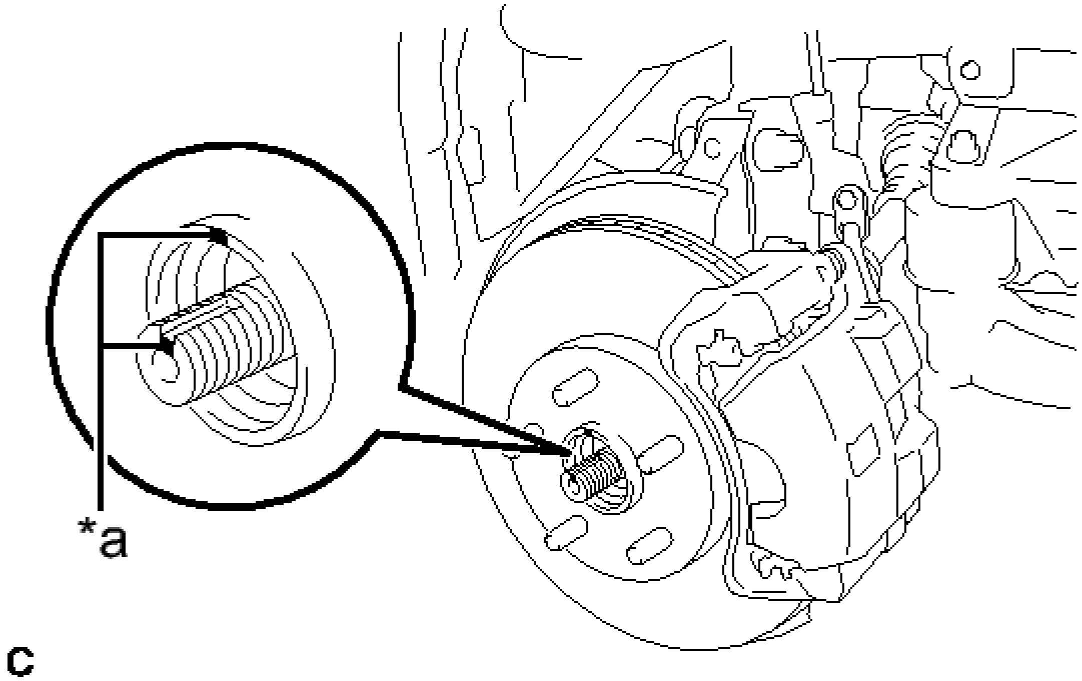

Fig. 48: Aligning Matchmarks To Front Drive Shaft Assembly RH To Front Axle Hub Sub-Assembly
Courtesy of TOYOTA MOTOR SALES, U.S.A., INC.

TEXT IN ILLUSTRATION

*a	Matchmark

NOTE: **Be careful not to damage the front axle outboard joint boot or speed sensor rotor.**

3. **CONNECT FRONT LOWER NO. 1 SUSPENSION ARM SUB-ASSEMBLY** . Refer to **INSTALLATION - Step 8** .
4. **CONNECT TIE ROD ASSEMBLY** . Refer to **INSTALLATION - Step 8** .
5. **INSTALL FRONT SPEED SENSOR** . Refer to **INSTALLATION - Step 19** .
6. **INSTALL FRONT STABILIZER LINK ASSEMBLY** . Refer to **INSTALLATION - Step 10** .
7. **INSTALL FRONT AXLE SHAFT NUT**
    a. Clean the threaded parts on the front drive shaft assembly and a new axle shaft nut using a non-residue solvent.

    NOTE:

    - **Be sure to perform this work even when using a new drive shaft.**
    - **Keep the threaded parts free of oil and foreign matter.**

    b. Using a socket wrench (30 mm), install the front axle shaft nut.

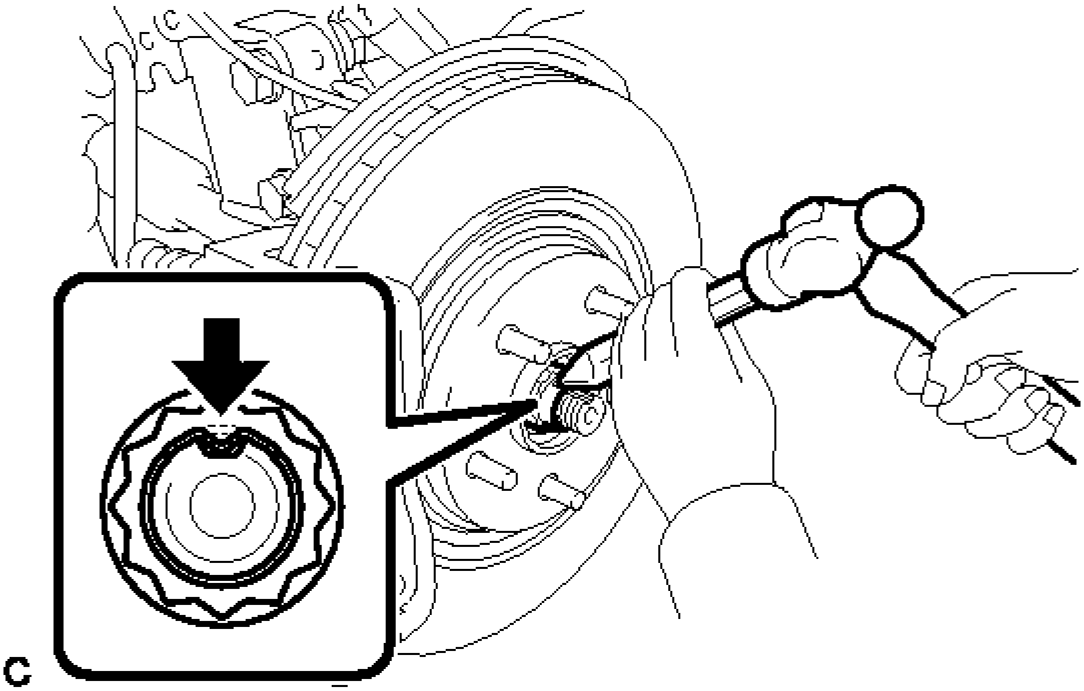

Fig. 49: Staking Front Axle Shaft Nut
Courtesy of TOYOTA MOTOR SALES, U.S.A., INC.

Torque: 294 N*m (2998 kgf*cm, 217 ft.*lbf)

    c. Using a chisel and hammer, stake the front axle shaft nut.

8. **INSTALL FRONT WHEELS**

    Torque: 103 N*m (1049 kgf*cm, 76 ft.*lbf)

9. **ADD AUTOMATIC TRANSAXLE FLUID**

Refer to **ADJUSTMENT** .

10. **INSTALL FRONT FENDER APRON SEAL LH**
11. **INSTALL FRONT FENDER APRON SEAL RH**
12. **INSTALL ENGINE UNDER COVER LH**
13. **INSTALL FRONT WHEEL OPENING EXTENSION PAD LH**
14. **INSTALL ENGINE UNDER COVER RH**
15. **INSTALL FRONT WHEEL OPENING EXTENSION PAD RH**
16. **ADJUST FRONT WHEEL ALIGNMENT**

    Refer to **ADJUSTMENT** .

17. **CHECK FOR SPEED SENSOR SIGNAL**

    Refer to **TEST MODE PROCEDURE** .

FRONT DRIVE SHAFT ASSEMBLY (FOR 2GR-FE)

COMPONENTS

ILLUSTRATION

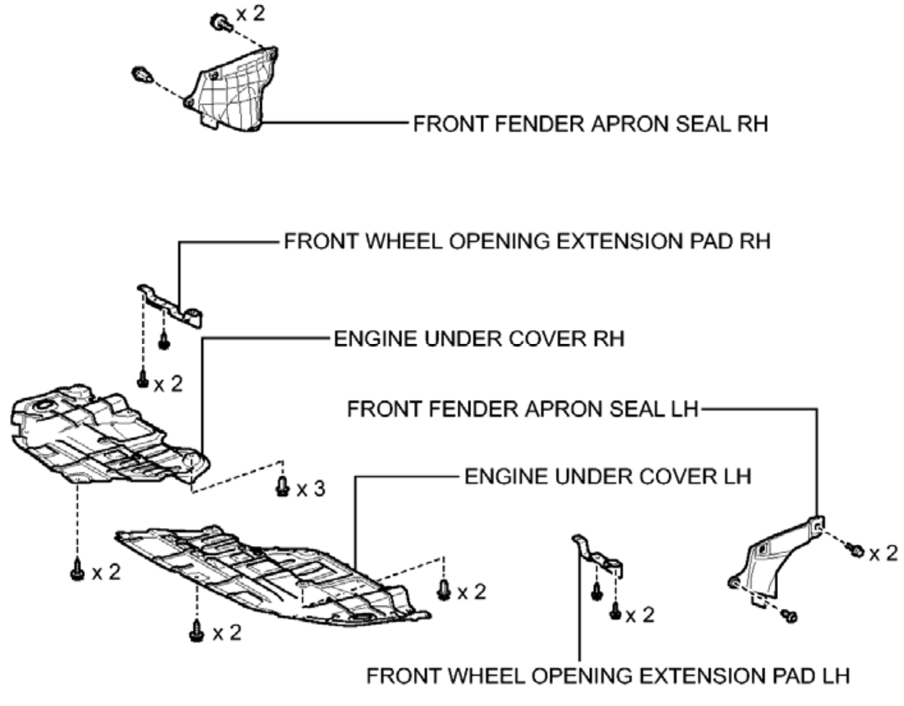
x 2
FRONT FENDER APRON SEAL RH
FRONT WHEEL OPENING EXTENSION PAD RH
ENGINE UNDER COVER RH
x 2
FRONT FENDER APRON SEAL LH
ENGINE UNDER COVER LH
x 3
x 2
x 2
x 2
x 2
x 2
FRONT WHEEL OPENING EXTENSION PAD LH

c

Fig. 50: Identifying Front Drive Shaft Assembly (For 2GR-FE) Replacement Components (1 Of 5)
Courtesy of TOYOTA MOTOR SALES, U.S.A., INC.

ILLUSTRATION

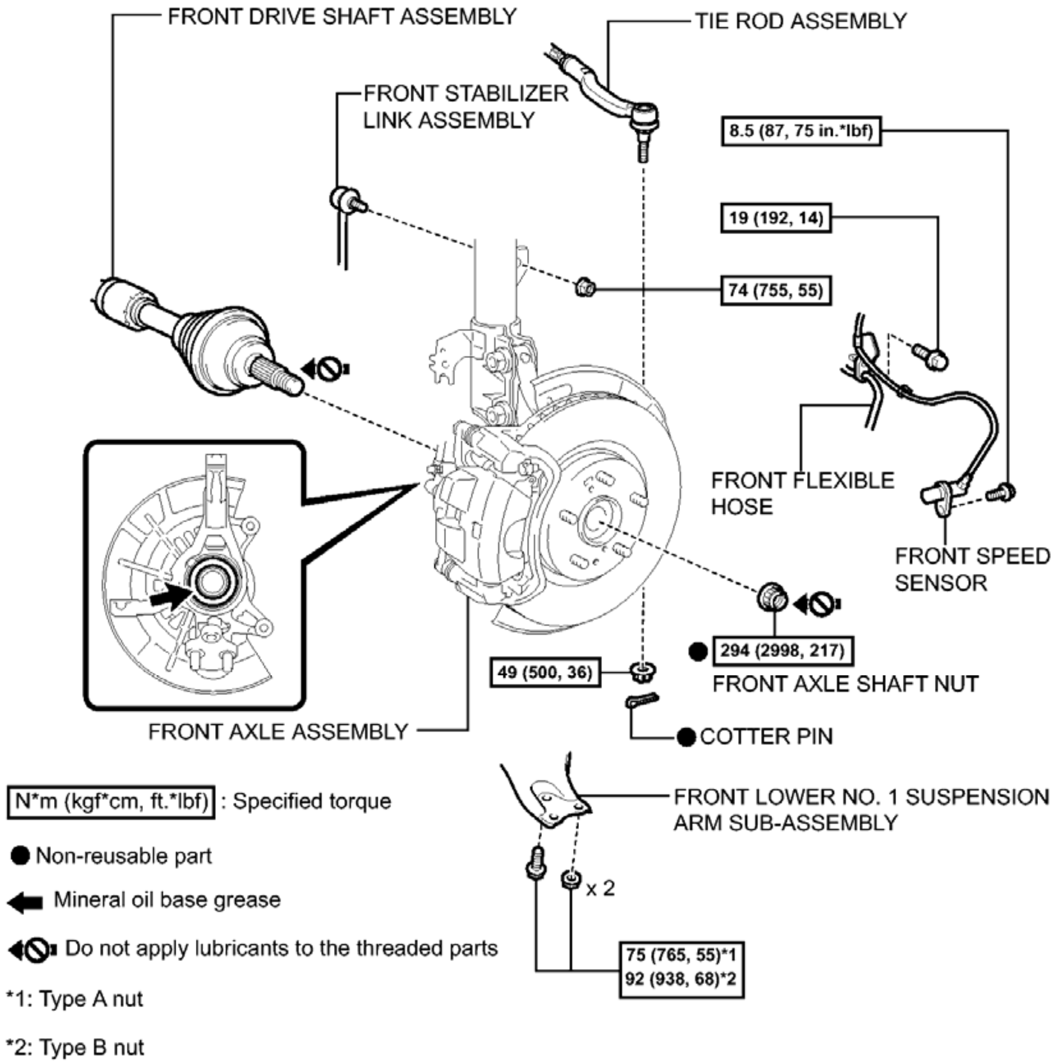
FRONT DRIVE SHAFT ASSEMBLY
TIE ROD ASSEMBLY
FRONT STABILIZER LINK ASSEMBLY
8.5 (87, 75 in.*lbf)
19 (192, 14)
74 (755, 55)
FRONT FLEXIBLE HOSE
FRONT SPEED SENSOR
● 294 (2998, 217)
FRONT AXLE SHAFT NUT
49 (500, 36)
●COTTER PIN
FRONT AXLE ASSEMBLY
FRONT LOWER NO. 1 SUSPENSION ARM SUB-ASSEMBLY
x 2
75 (765, 55)*1
92 (938, 68)*2
N*m (kgf*cm, ft.*lbf) : Specified torque
● Non-reusable part
Mineral oil base grease
Do not apply lubricants to the threaded parts
*1: Type A nut
*2: Type B nut

c

Fig. 51: Identifying Front Drive Shaft Assembly (For 2GR-FE) Replacement Components With Torque Specifications (2 Of 5)

Courtesy of TOYOTA MOTOR SALES, U.S.A., INC.

ILLUSTRATION

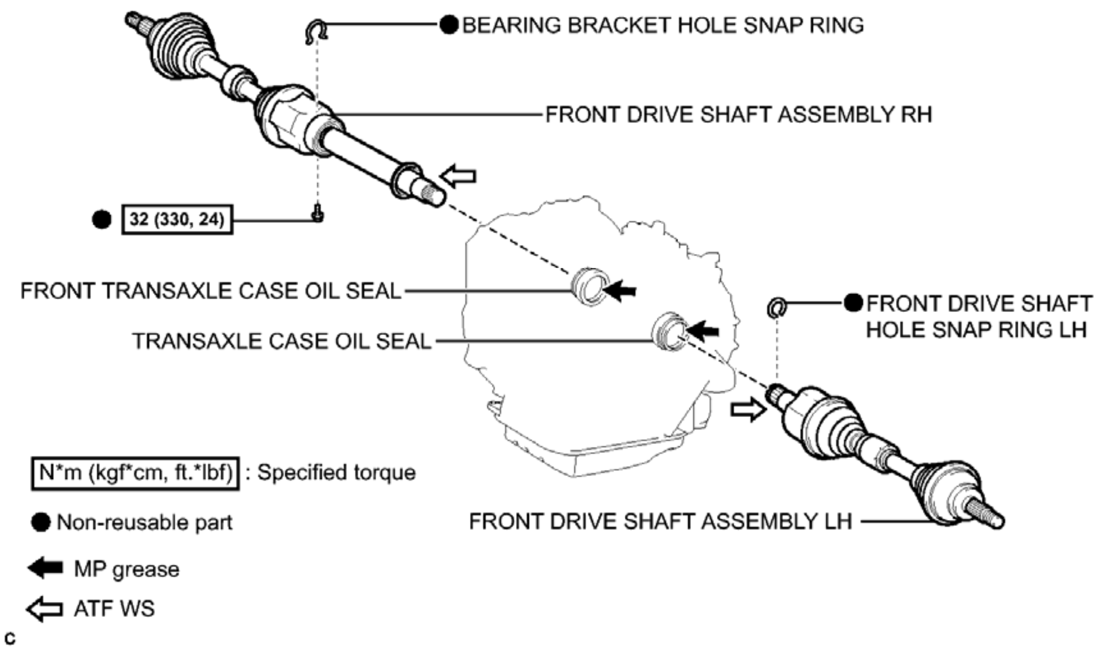
● BEARING BRACKET HOLE SNAP RING
FRONT DRIVE SHAFT ASSEMBLY RH
● 32 (330, 24)
FRONT TRANSAXLE CASE OIL SEAL
TRANSAXLE CASE OIL SEAL
● FRONT DRIVE SHAFT HOLE SNAP RING LH
N*m (kgf*cm, ft.*lbf) : Specified torque
● Non-reusable part
FRONT DRIVE SHAFT ASSEMBLY LH
⬅ MP grease
⇦ ATF WS
c

Fig. 52: Identifying Front Drive Shaft Assembly (For 2GR-FE) Replacement Components With Torque Specifications (3 Of 5)

Courtesy of TOYOTA MOTOR SALES, U.S.A., INC.

ILLUSTRATION

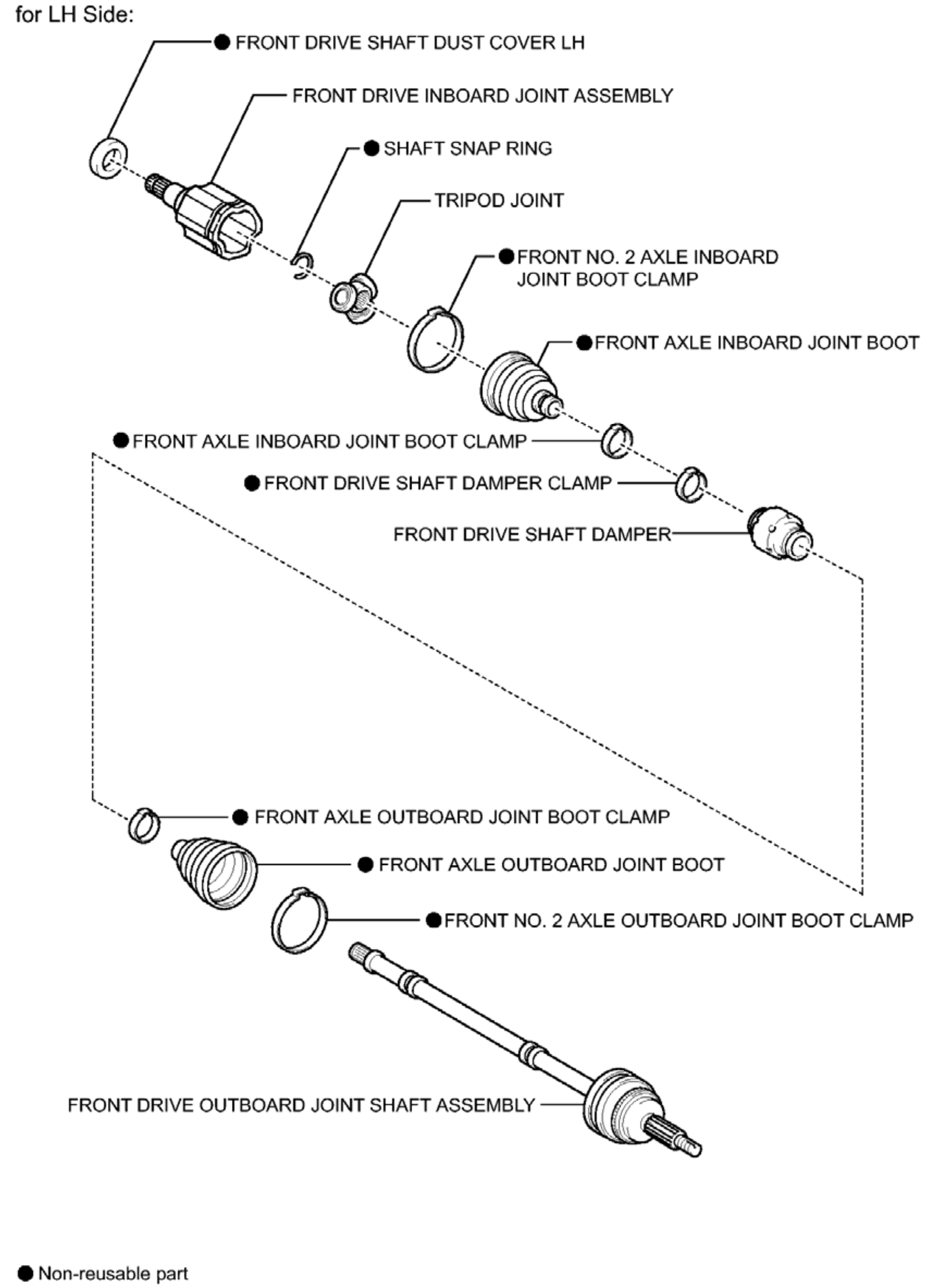
for LH Side:
● FRONT DRIVE SHAFT DUST COVER LH
FRONT DRIVE INBOARD JOINT ASSEMBLY
● SHAFT SNAP RING
TRIPOD JOINT
● FRONT NO. 2 AXLE INBOARD JOINT BOOT CLAMP
● FRONT AXLE INBOARD JOINT BOOT
● FRONT AXLE INBOARD JOINT BOOT CLAMP
● FRONT DRIVE SHAFT DAMPER CLAMP
FRONT DRIVE SHAFT DAMPER
● FRONT AXLE OUTBOARD JOINT BOOT CLAMP
● FRONT AXLE OUTBOARD JOINT BOOT
● FRONT NO. 2 AXLE OUTBOARD JOINT BOOT CLAMP
FRONT DRIVE OUTBOARD JOINT SHAFT ASSEMBLY
● Non-reusable part
c

Fig. 53: Identifying Front Drive Shaft Assembly (For 2GR-FE) Replacement Components (4 Of 5)
Courtesy of TOYOTA MOTOR SALES, U.S.A., INC.

ILLUSTRATION

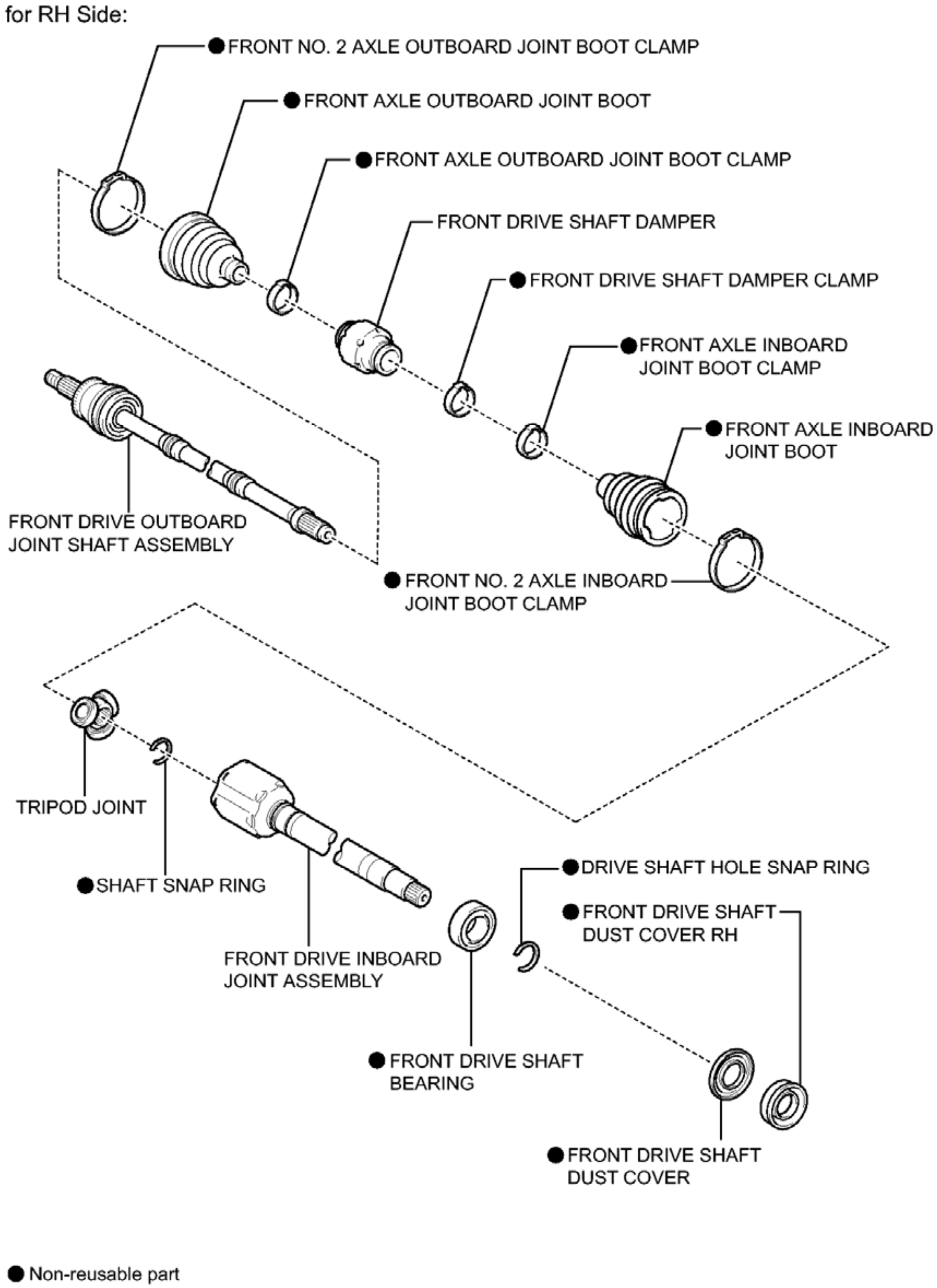
for RH Side:
● FRONT NO. 2 AXLE OUTBOARD JOINT BOOT CLAMP
● FRONT AXLE OUTBOARD JOINT BOOT
● FRONT AXLE OUTBOARD JOINT BOOT CLAMP
FRONT DRIVE SHAFT DAMPER
● FRONT DRIVE SHAFT DAMPER CLAMP
● FRONT AXLE INBOARD JOINT BOOT CLAMP
● FRONT AXLE INBOARD JOINT BOOT
FRONT DRIVE OUTBOARD JOINT SHAFT ASSEMBLY
● FRONT NO. 2 AXLE INBOARD JOINT BOOT CLAMP
TRIPOD JOINT
● SHAFT SNAP RING
FRONT DRIVE INBOARD JOINT ASSEMBLY
● DRIVE SHAFT HOLE SNAP RING
● FRONT DRIVE SHAFT DUST COVER RH
● FRONT DRIVE SHAFT BEARING
● FRONT DRIVE SHAFT DUST COVER
● Non-reusable part
c

Fig. 54: Identifying Front Drive Shaft Assembly (For 2GR-FE) Replacement Components (5 Of 5)
Courtesy of TOYOTA MOTOR SALES, U.S.A., INC.

REMOVAL

REMOVAL

HINT:

- Use the same procedure for the RH side and LH side.
- The procedure listed below is for the LH side.

1. **REMOVE FRONT WHEELS**
2. **REMOVE FRONT WHEEL OPENING EXTENSION PAD LH**
3. **REMOVE ENGINE UNDER COVER LH**
4. **REMOVE FRONT WHEEL OPENING EXTENSION PAD RH**
5. **REMOVE ENGINE UNDER COVER RH**
6. **REMOVE FRONT FENDER APRON SEAL LH**
7. **REMOVE FRONT FENDER APRON SEAL RH**
8. **DRAIN AUTOMATIC TRANSAXLE FLUID** . Refer to **REPLACEMENT - Step 1** .
9. **REMOVE FRONT AXLE SHAFT NUT**
   a. Using SST and a hammer, release the staked part of the front axle shaft nut.

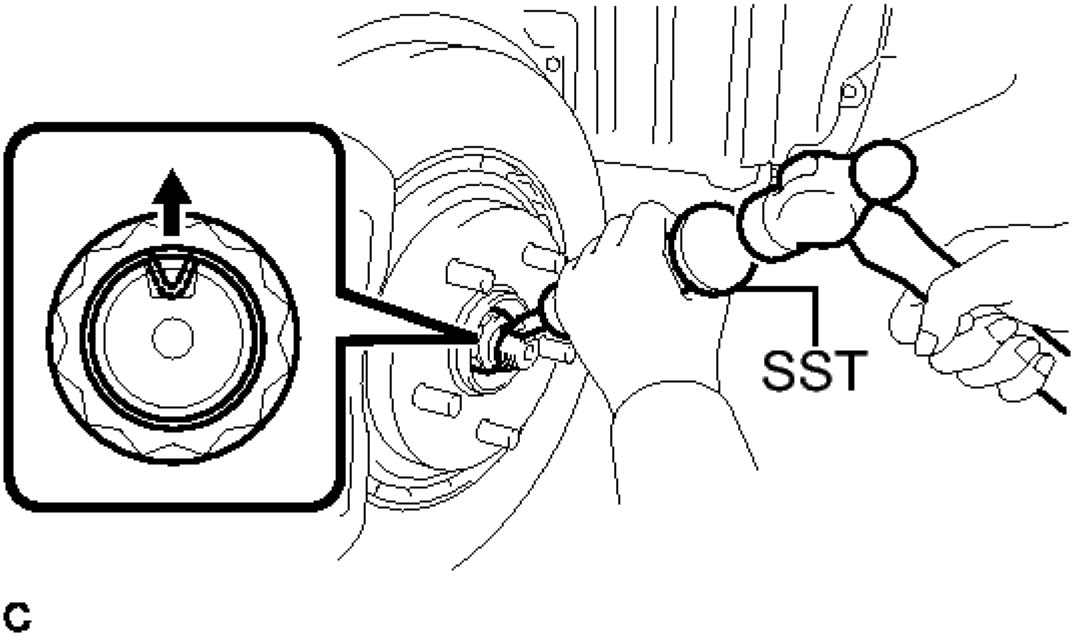

Fig. 55: Releasing Staked Part Of Front Axle Shaft Nut LH Using SST
Courtesy of TOYOTA MOTOR SALES, U.S.A., INC.

- **SST: 09930-00010**

NOTE: **Loosen the staked part of the nut completely, otherwise the threads of the drive shaft may be damaged.**

   b. While applying the brakes, remove the front axle shaft nut.

10. **SEPARATE FRONT STABILIZER LINK ASSEMBLY** . Refer to **REMOVAL - Step 4** .
11. **SEPARATE FRONT SPEED SENSOR** . Refer to **REMOVAL - Step 3** .
12. **SEPARATE TIE ROD ASSEMBLY** . Refer to **REMOVAL - Step 5** .
13. **SEPARATE FRONT LOWER NO. 1 SUSPENSION ARM SUB-ASSEMBLY** . Refer to **REMOVAL - Step 8** .
14. **SEPARATE FRONT DRIVE SHAFT ASSEMBLY** . Refer to **REMOVAL - Step 7** .
15. **REMOVE FRONT DRIVE SHAFT ASSEMBLY LH**
    a. Using SST, remove the front drive shaft assembly LH.

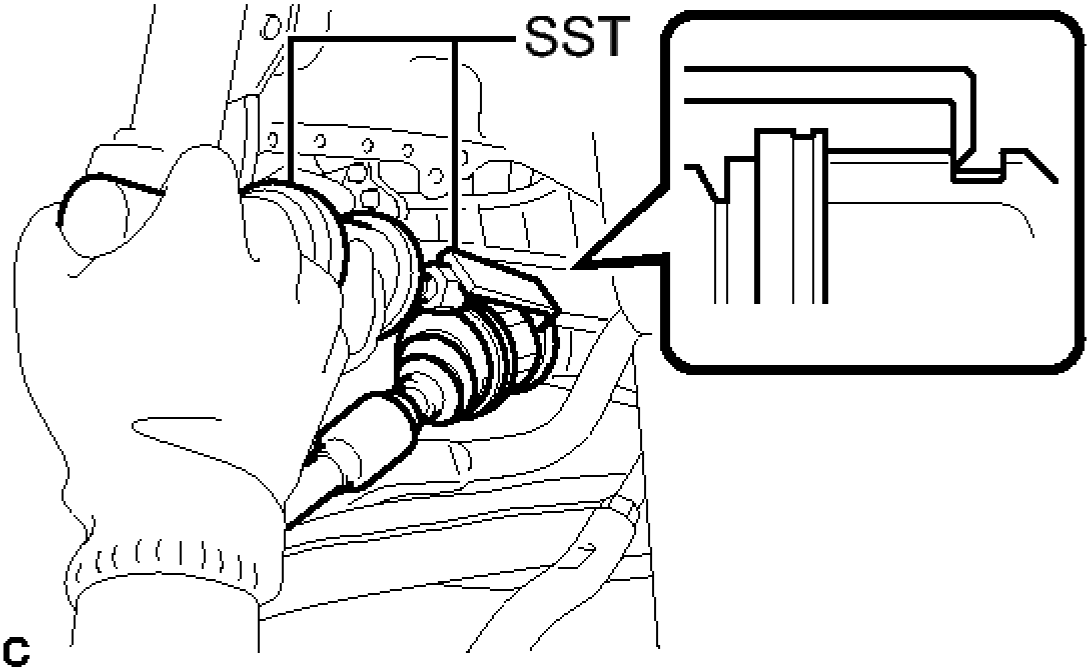

Fig. 56: Removing Front Drive Shaft Assembly LH Using SST
Courtesy of TOYOTA MOTOR SALES, U.S.A., INC.

- **SST: 09520-00031**
- **SST: 09520-01010**

NOTE:

- **Do not damage the transaxle case oil seal.**
- **Do not damage the front axle inboard joint boot.**
- **Do not drop the front drive shaft assembly LH.**

16. **REMOVE FRONT DRIVE SHAFT ASSEMBLY RH**
    a. Separate the bearing bracket hole snap ring from the drive shaft bearing bracket.

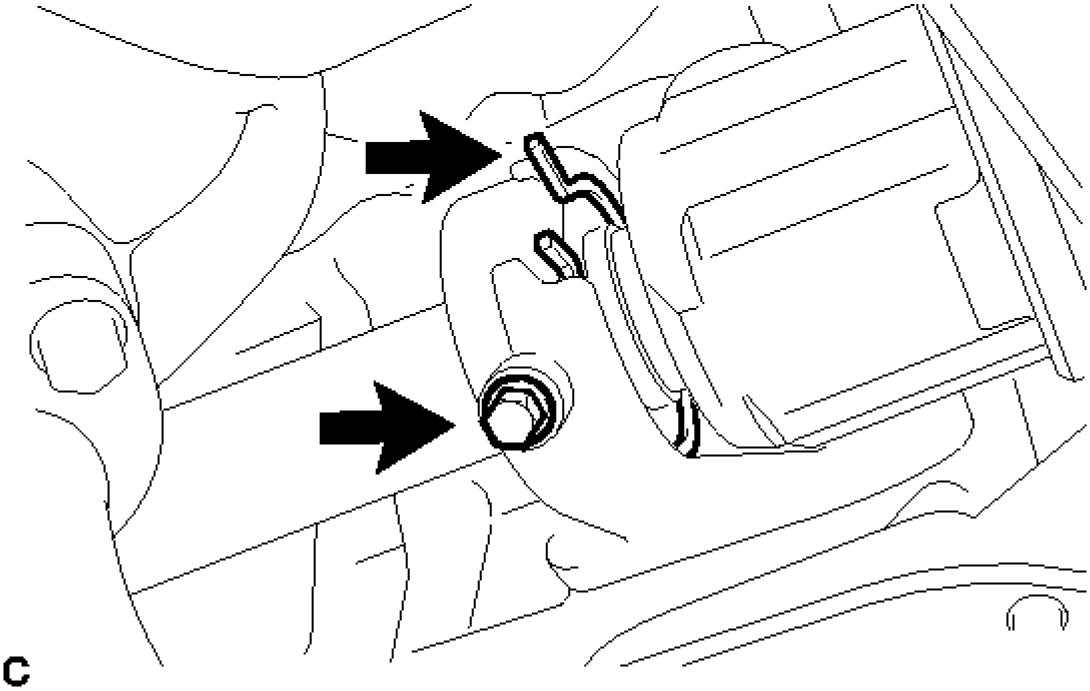

Fig. 57: Identifying Bearing Bracket Hole Snap Ring And Bolt
Courtesy of TOYOTA MOTOR SALES, U.S.A., INC.

b. Remove the bolt and front drive shaft assembly RH from the drive shaft bearing bracket.

NOTE:

- **Do not damage the front transaxle case oil seal.**
- **Do not damage the front axle inboard joint boot.**
- **Do not drop the front drive shaft assembly RH.**

c. Remove the bearing bracket hole snap ring from the front drive shaft assembly RH.

17. **REMOVE FRONT DRIVE SHAFT HOLE SNAP RING LH**

a. Using a screwdriver, remove the front drive shaft hole snap ring LH.

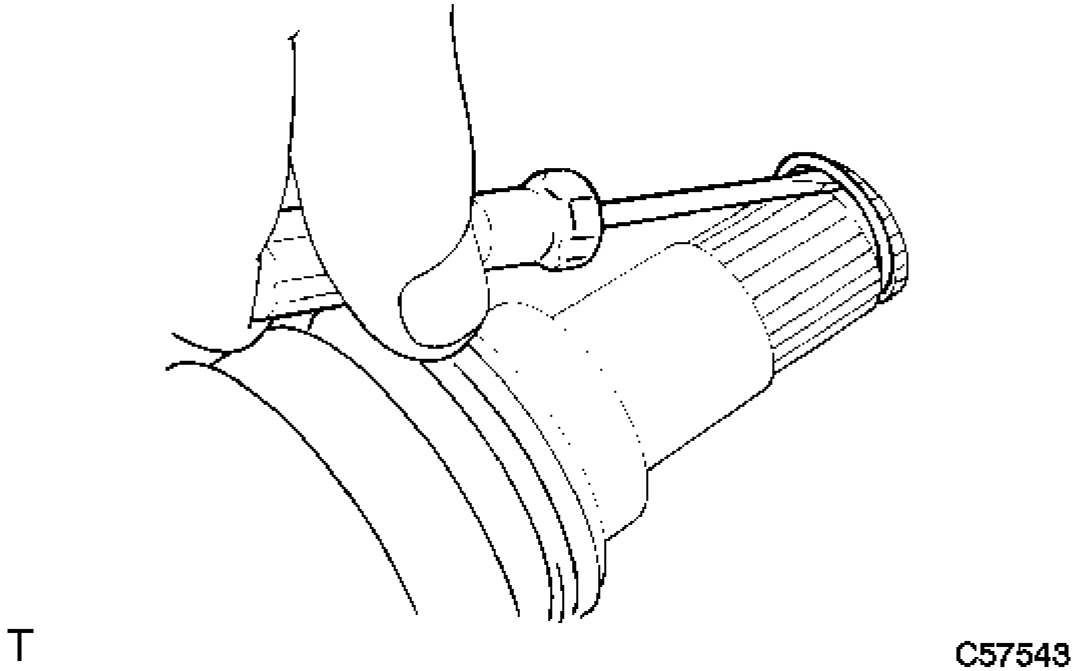

Fig. 58: Removing Snap Ring
Courtesy of TOYOTA MOTOR SALES, U.S.A., INC.

DISASSEMBLY

DISASSEMBLY

1. **REMOVE FRONT NO. 2 AXLE INBOARD JOINT BOOT CLAMP**
   1. Hold the drive shaft in a vise between aluminum plates.

      NOTE: Do not overtighten the vise.

   2. Using pliers, remove the front No. 2 axle inboard joint boot clamp.

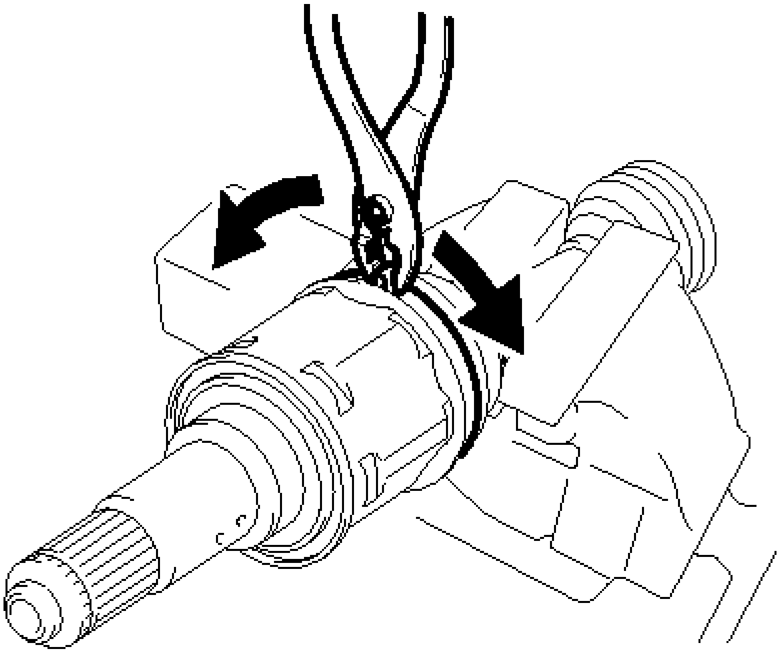

Fig. 59: Removing Inboard Joint Boot No. 2 Clamp
Courtesy of TOYOTA MOTOR SALES, U.S.A., INC.

2. **REMOVE FRONT AXLE INBOARD JOINT BOOT CLAMP**

   HINT:

   Perform the same procedure as for the front No. 2 axle inboard joint boot clamp.

3. **SEPARATE FRONT AXLE INBOARD JOINT BOOT**
   a. Separate the front axle inboard joint boot from the front drive inboard joint assembly.
4. **REMOVE FRONT DRIVE INBOARD JOINT ASSEMBLY**
   a. Remove the old grease from the front drive inboard joint assembly.
   b. Put matchmarks on the front drive inboard joint assembly and front drive outboard joint shaft assembly.

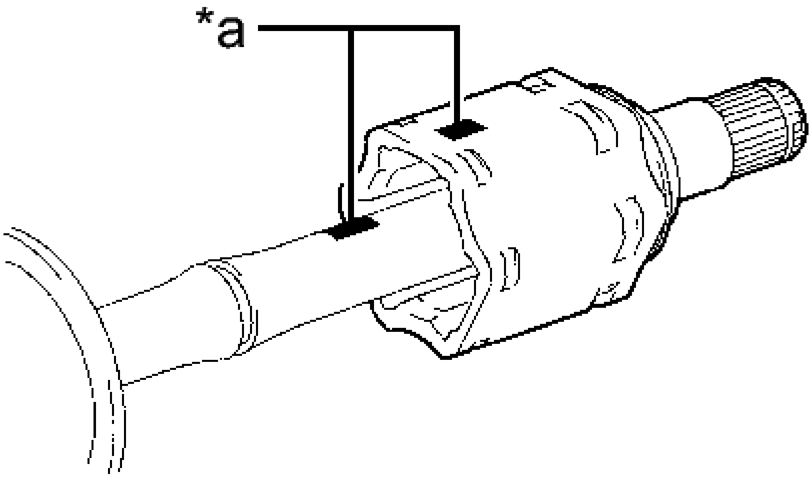

P C67413

Fig. 60: Identifying Matchmarks On Front Drive Inboard Joint Assembly And Front Drive Outboard Joint Shaft Assembly
Courtesy of TOYOTA MOTOR SALES, U.S.A., INC.

TEXT IN ILLUSTRATION

*a	Matchmark

NOTE: **Do not use a punch for the marks.**

c. Remove the front drive inboard joint assembly from the front drive outboard joint shaft assembly.
d. Hold the drive shaft in a vise between aluminum plates.

NOTE: **Do not overtighten the vise.**

e. Using a snap ring expander, remove the shaft snap ring from the front drive outboard joint shaft assembly.

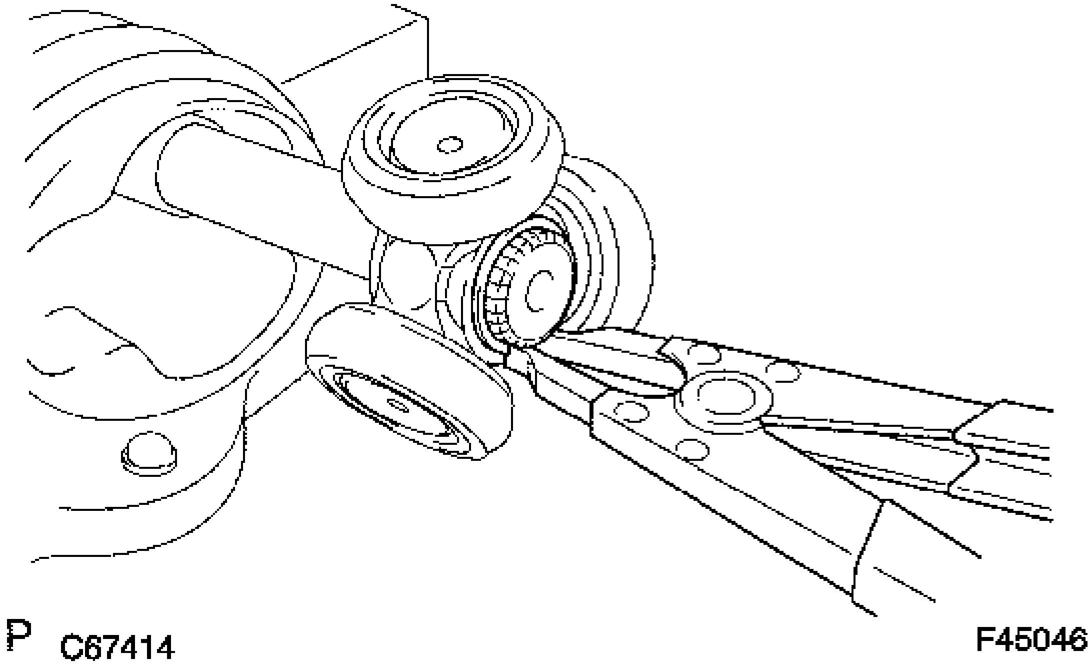

Fig. 61: Remove/Install Shaft Snap Ring Using Snap Ring Expander
Courtesy of TOYOTA MOTOR SALES, U.S.A., INC.

f. Put matchmarks on the front drive outboard joint shaft assembly and tripod joint.

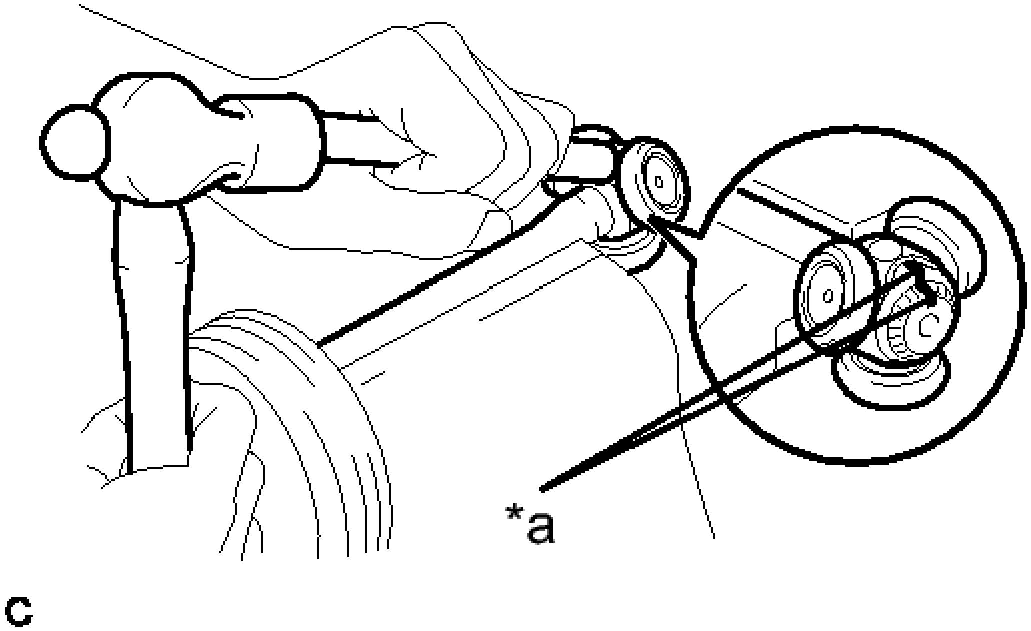

Fig. 62: Identifying Front Axle Outboard Joint Shaft Assembly And Tripod Joint Matchmark
Courtesy of TOYOTA MOTOR SALES, U.S.A., INC.

TEXT IN ILLUSTRATION

*a	Matchmark

NOTE: **Do not use a punch for the marks.**

g. Using a brass bar and a hammer, tap out the tripod joint from the front drive outboard joint shaft assembly.

NOTE:

- **Do not tap the rollers.**
- **Do not drop the tripod joint.**

5. **REMOVE FRONT AXLE INBOARD JOINT BOOT**
    a. Remove the front No. 2 axle inboard joint boot clamp, front axle inboard joint boot and front axle inboard joint boot clamp.
6. **REMOVE FRONT DRIVE SHAFT DAMPER**
    a. Using pliers, remove the front drive shaft damper clamp.

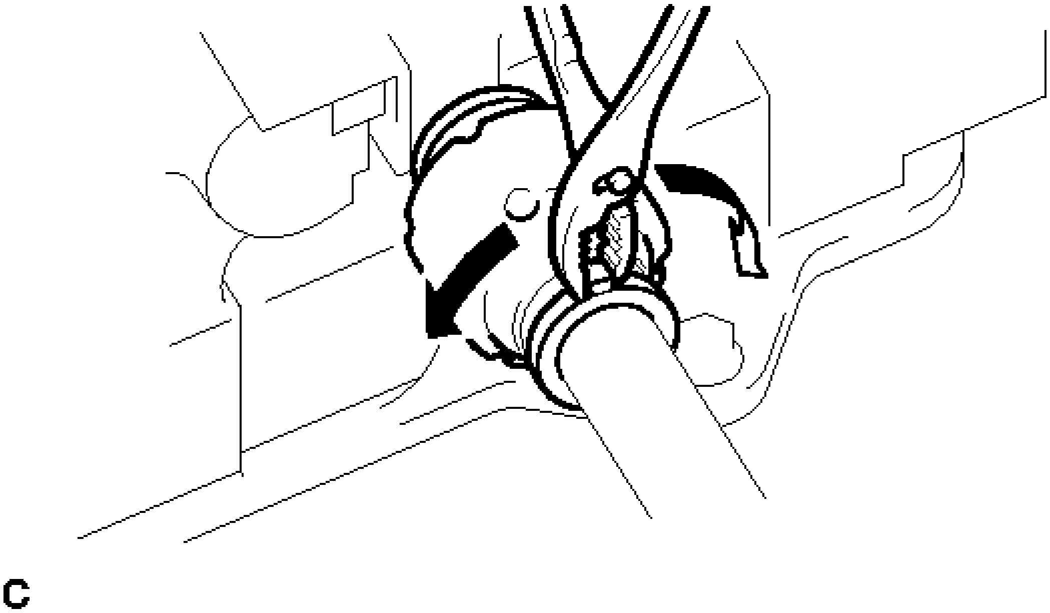

Fig. 63: Removing Front Drive Shaft Damper Clamp
Courtesy of TOYOTA MOTOR SALES, U.S.A., INC.

    b. Remove the front drive shaft damper.
7. **REMOVE FRONT NO. 2 AXLE OUTBOARD JOINT BOOT CLAMP**
    a. Using pliers, remove the front No. 2 axle outboard joint boot clamp.

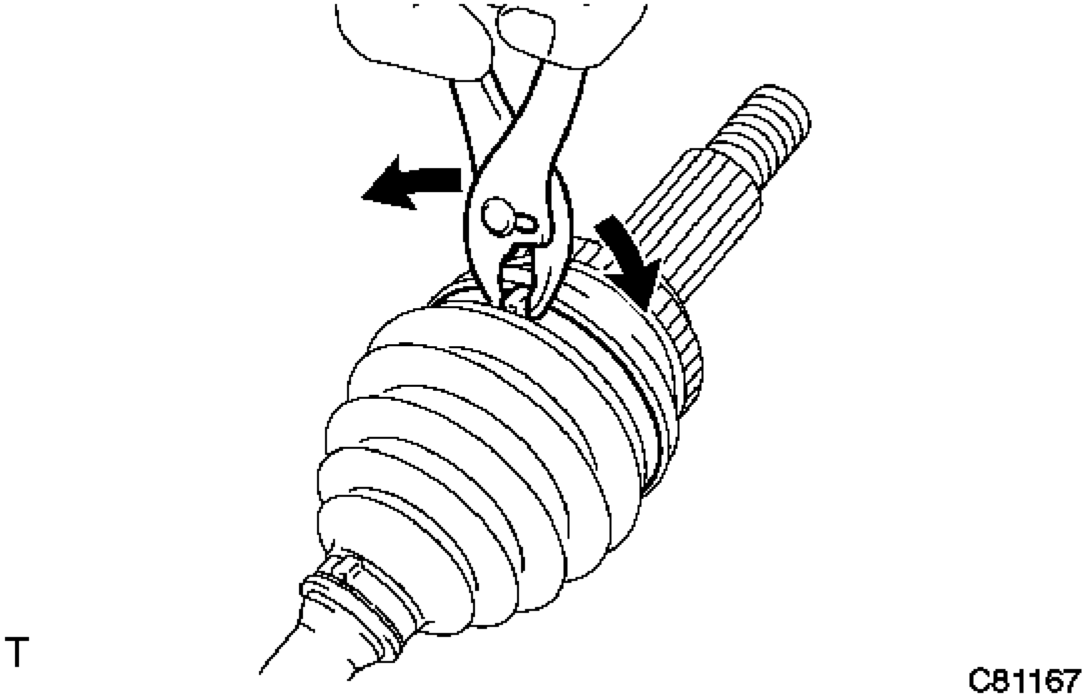

Fig. 64: Removing Outboard Joint Boot No. 2 Clamp
Courtesy of TOYOTA MOTOR SALES, U.S.A., INC.

8. **REMOVE FRONT AXLE OUTBOARD JOINT BOOT CLAMP**

   HINT:

   Perform the same procedure as for the front No. 2 axle outboard joint boot clamp.

9. **REMOVE FRONT AXLE OUTBOARD JOINT BOOT**
   a. Remove the front axle outboard joint boot clamp, front axle outboard joint boot and front No. 2 axle outboard joint boot clamp from the front drive outboard joint shaft assembly.
   b. Remove the grease from the outboard joint.
10. **REMOVE FRONT DRIVE SHAFT DUST COVER LH**
    a. Using SST and a press, remove the front drive shaft dust cover LH.

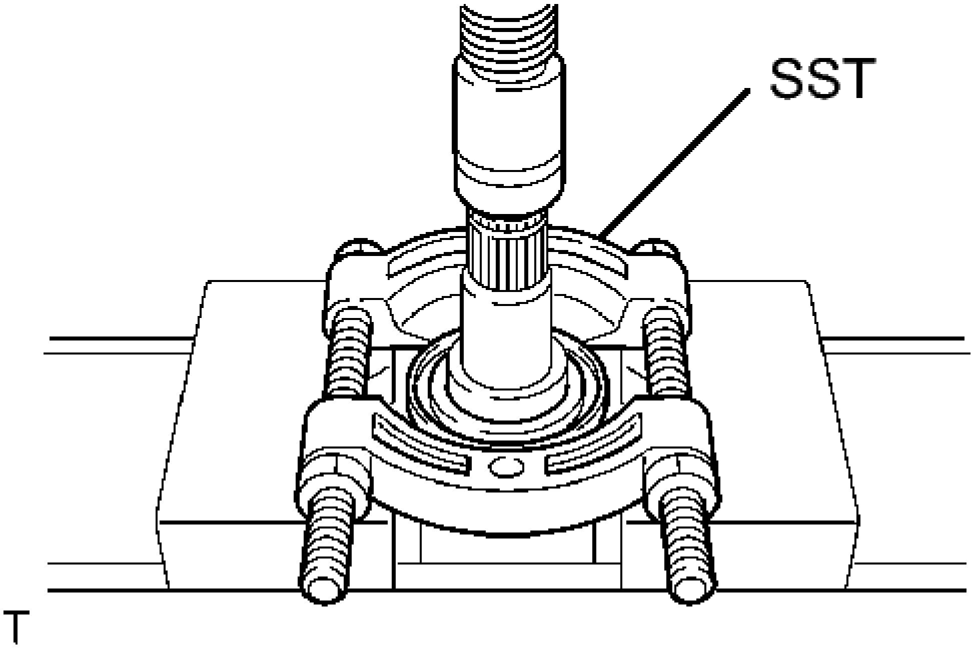

Fig. 65: Pressing Drive Shaft Dust Cover LH Using SST
Courtesy of TOYOTA MOTOR SALES, U.S.A., INC.

- **SST: 09950-00020**

NOTE:

- **Be careful not to drop the front drive inboard joint assembly.**
- **Do not overtighten SST.**

11. **REMOVE FRONT DRIVE SHAFT DUST COVER RH**
    a. Using a press, remove the front drive shaft dust cover RH.

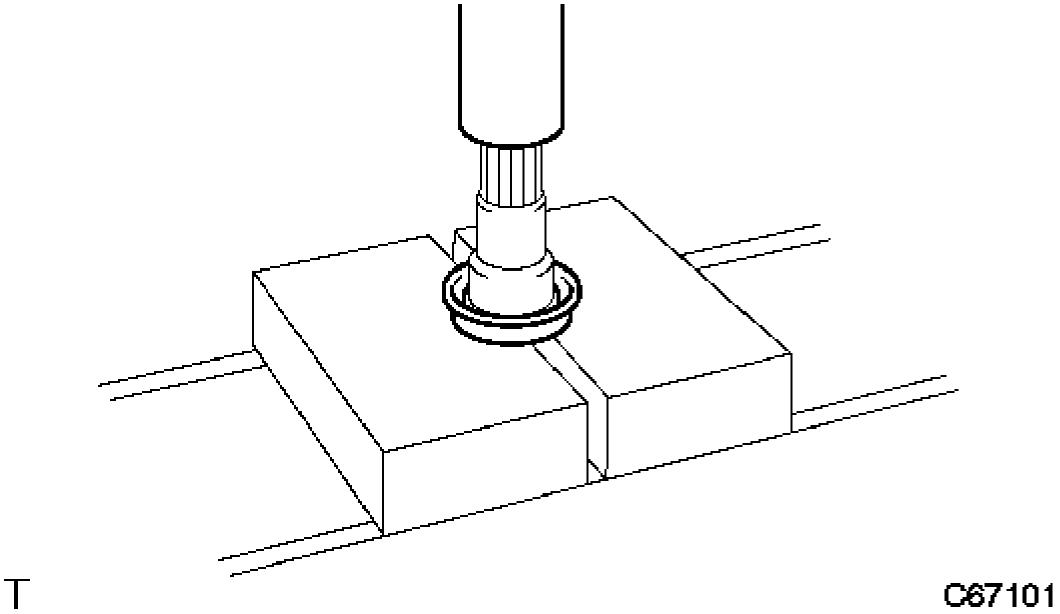

Fig. 66: Removing Drive Shaft Dust Cover RH Using Press
Courtesy of TOYOTA MOTOR SALES, U.S.A., INC.

NOTE: Be careful not to drop the front drive inboard joint assembly.

12. **REMOVE FRONT DRIVE SHAFT DUST COVER (for RH Side)**
    a. Using SST and a press, remove the front drive shaft dust cover.

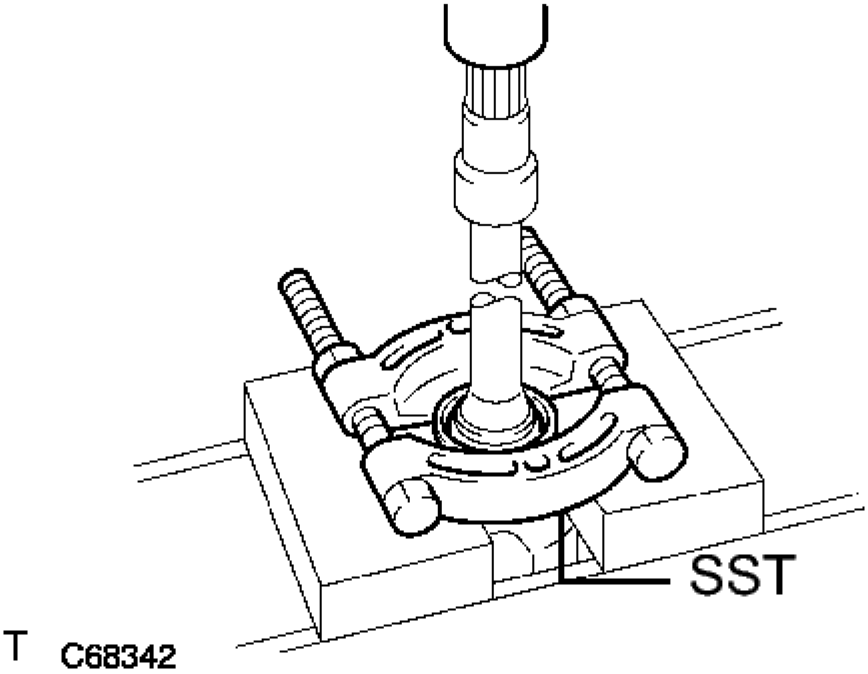

Fig. 67: Removing Drive Shaft Dust Cover Using SST
Courtesy of TOYOTA MOTOR SALES, U.S.A., INC.

- **SST: 09950-00020**

NOTE:

- **Be careful not to drop the front drive inboard joint assembly.**
- **Do not overtighten SST.**

13. **REMOVE FRONT DRIVE SHAFT BEARING (for RH Side)**
    a. Using a snap ring expander, remove the drive shaft hole snap ring.

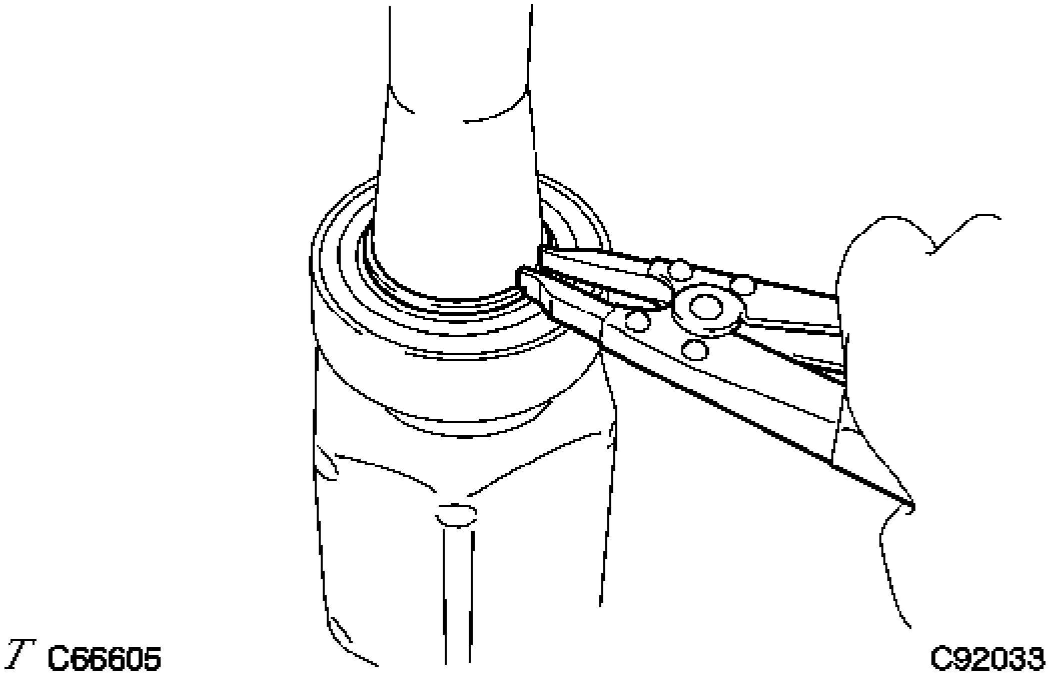

Fig. 68: Removing/Installing Drive Shaft Snap Ring
Courtesy of TOYOTA MOTOR SALES, U.S.A., INC.

    b. Using SST and a press, remove the front drive shaft bearing.

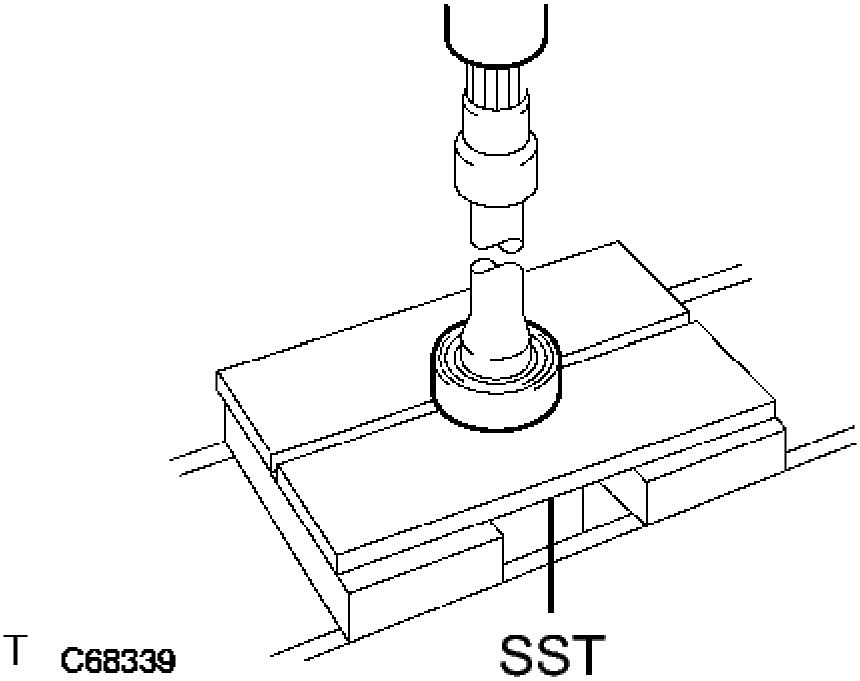

Fig. 69: Removing Bearing Using SST And Press
Courtesy of TOYOTA MOTOR SALES, U.S.A., INC.

- **SST: 09527-10011**

NOTE: **Be careful not to drop the front drive inboard joint assembly.**

INSPECTION

INSPECTION

1. **INSPECT FRONT DRIVE SHAFT ASSEMBLY**
   a. Check that there is no excessive play in the radial direction of the outboard joint.

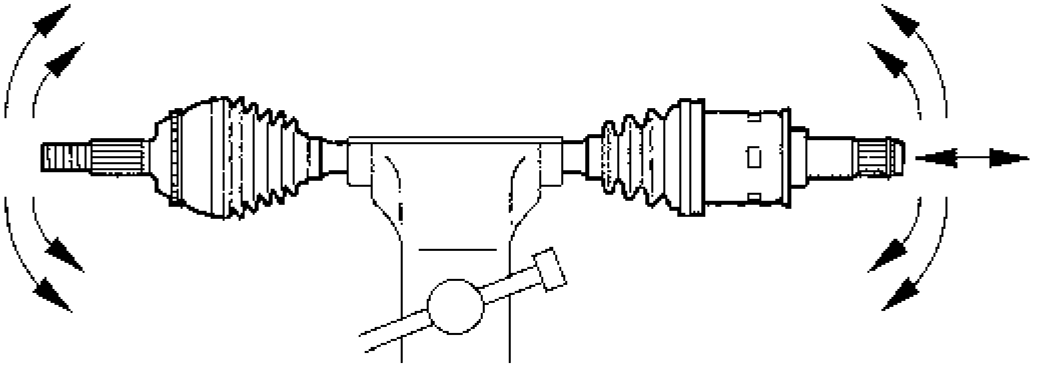

Fig. 70: Inspecting Front Drive Shaft Assembly
Courtesy of TOYOTA MOTOR SALES, U.S.A., INC.

b. Check that the inboard joint slides smoothly in the thrust direction.
c. Check that there is no excessive play in the radial direction of the inboard joint.
d. Check the boots for damage.
e. Check whether the drive shaft dimensions (A) are within the following specifications.

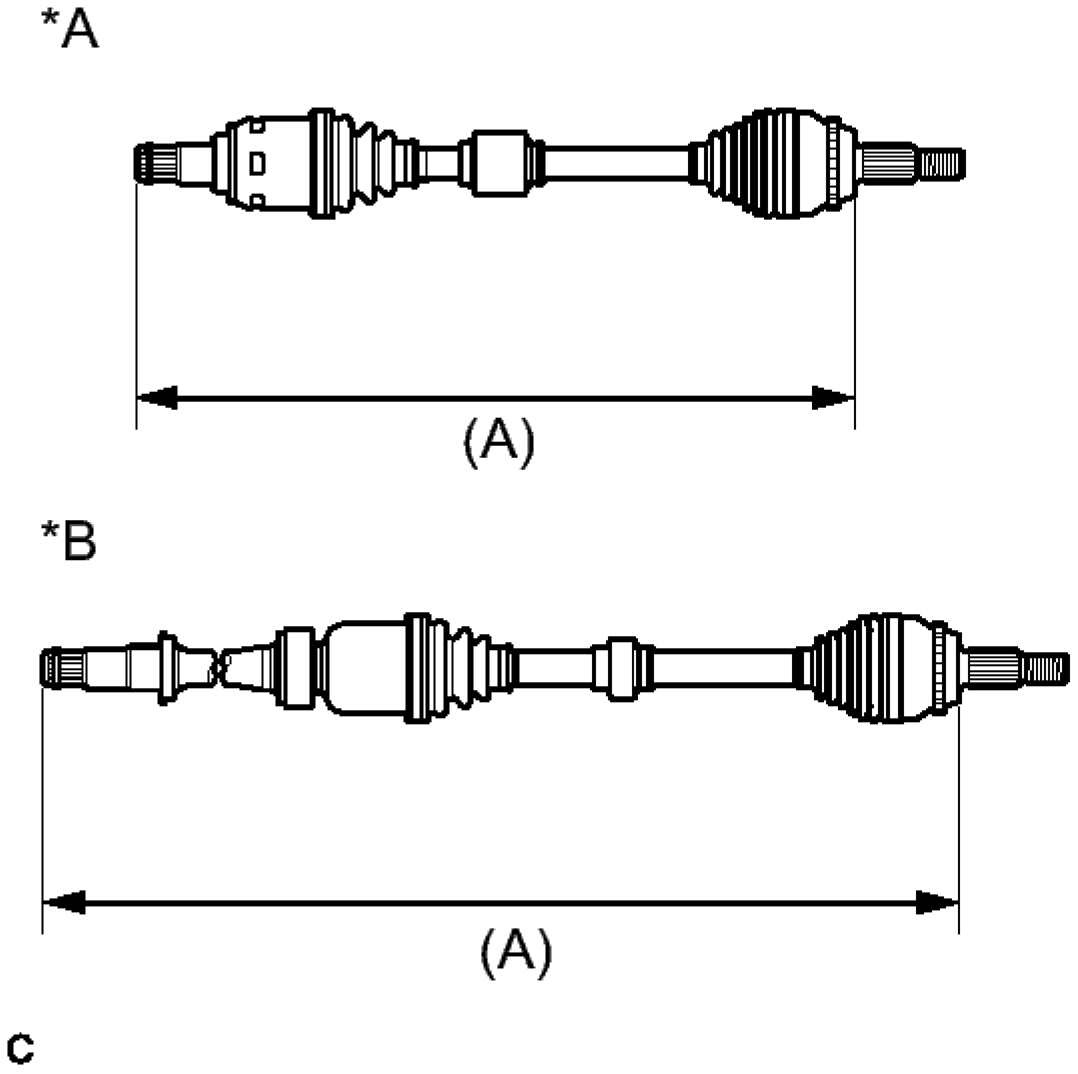

Fig. 71: Checking Drive Shaft Dimensions
Courtesy of TOYOTA MOTOR SALES, U.S.A., INC.

TEXT IN ILLUSTRATION

*A	LH Side
*B	RH Side

NOTE: Keep the drive shaft assembly level during inspection.

Dimension (A)

	Dimension (A)
LH Side	587.5 mm (1.93 ft.)

RH Side	906.4 mm (2.97 ft.)

REASSEMBLY

REASSEMBLY

1. **INSTALL FRONT DRIVE SHAFT BEARING (for RH Side)**
   a. Using SST, a steel plate and a press, install a new front drive shaft bearing.

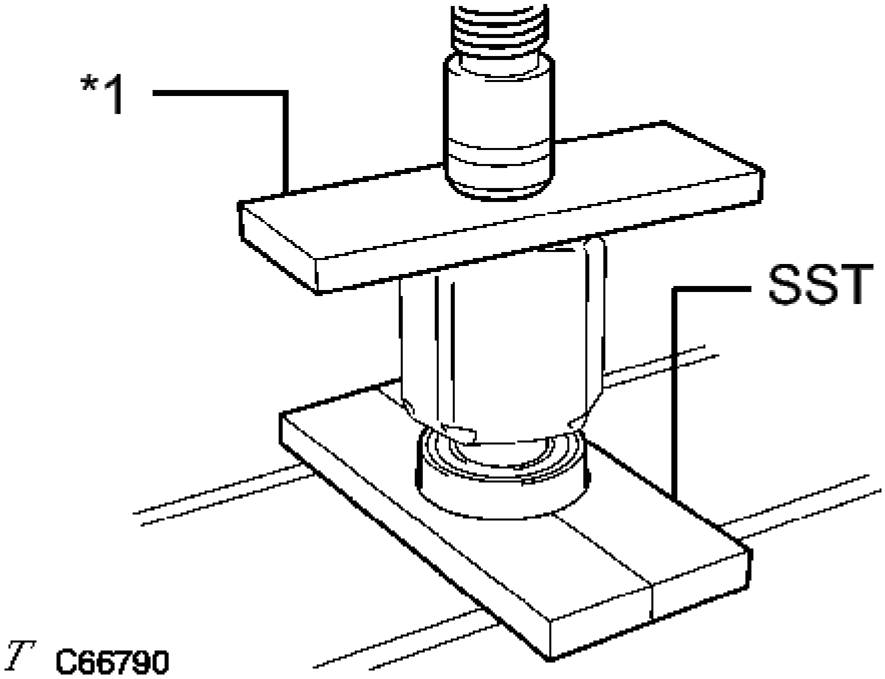

Fig. 72: Installing Front Drive Shaft Bearing (For RH Side) Using SST
Courtesy of TOYOTA MOTOR SALES, U.S.A., INC.

TEXT IN ILLUSTRATION

*1	Steel Plate

- **SST: 09527-10011**

NOTE: The bearing should be completely installed.

b. Using a snap ring expander, install a new drive shaft hole snap ring.

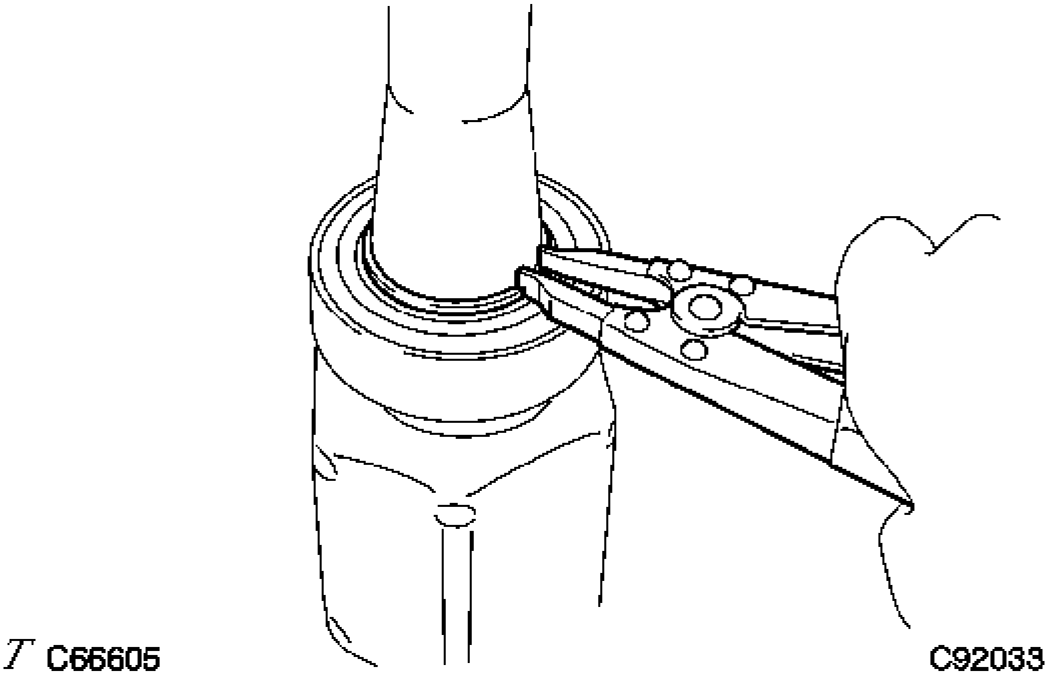

Fig. 73: Removing/Installing Drive Shaft Snap Ring
Courtesy of TOYOTA MOTOR SALES, U.S.A., INC.

2. **INSTALL FRONT DRIVE SHAFT DUST COVER (for RH Side)**
   1. Using SST, a steel plate and a press, install a new front drive shaft dust cover.

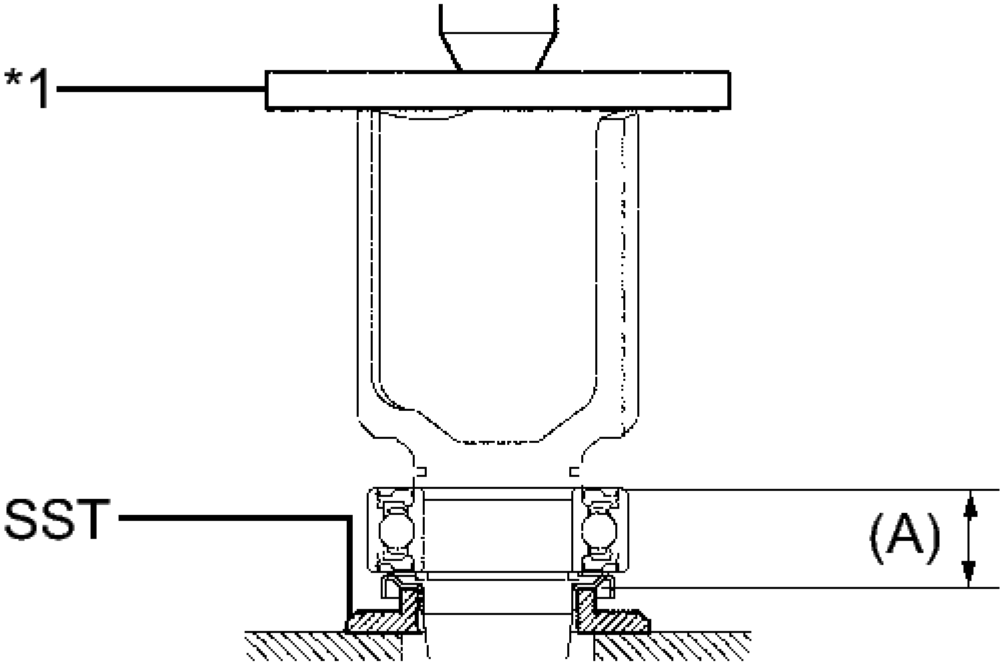

Fig. 74: Installing Front Drive Shaft Dust Cover (For RH Side) Using SST
Courtesy of TOYOTA MOTOR SALES, U.S.A., INC.

TEXT IN ILLUSTRATION

*1	Steel Plate

- **SST: 09726-40010**

Dimension (A)

26.6 to 27.6 mm (1.05 to 1.08 in.)

NOTE:

- **The dust cover should be completely installed.**
- **Be careful not to damage the front drive shaft dust cover.**

3. **INSTALL FRONT DRIVE SHAFT DUST COVER RH**
   a. Using a steel plate and a press, install a new front drive shaft dust cover RH until dimension (A) from the tip of the front drive inboard joint assembly to the front drive shaft dust cover RH meets the specification.

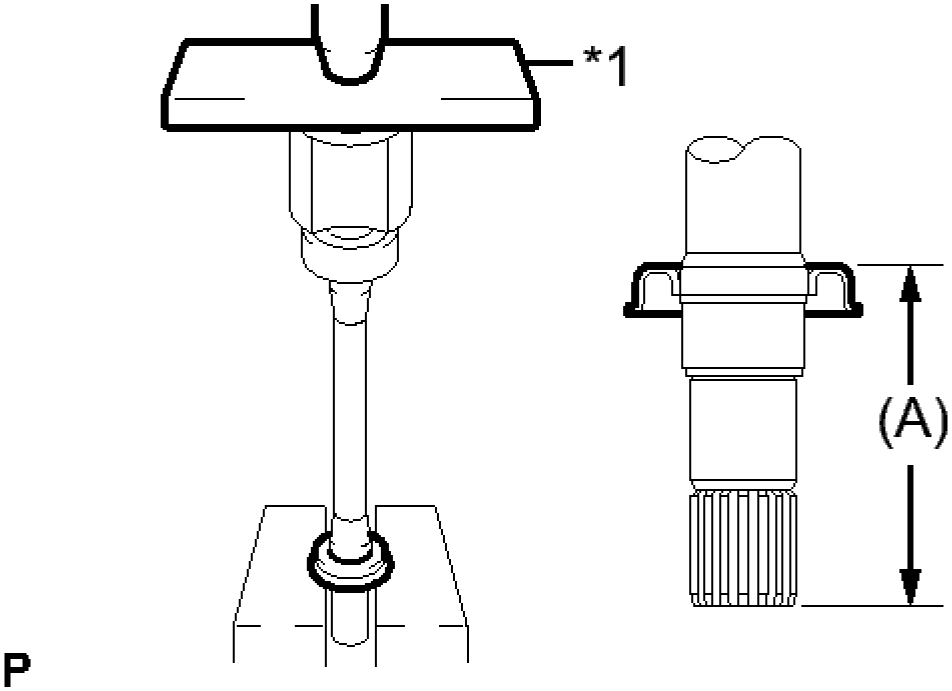

Fig. 75: Installing Front Drive Shaft Dust Cover RH
Courtesy of TOYOTA MOTOR SALES, U.S.A., INC.

TEXT IN ILLUSTRATION

*1	Steel Plate

Dimension (A)

110.0 to 111.0 mm (4.33 to 4.37 in.)

NOTE:

- **The dust cover should be completely installed.**
- **Be careful not to damage the front drive shaft dust cover RH.**

4. **INSTALL FRONT DRIVE SHAFT DUST COVER LH**
    a. Using a steel plate and a press, install a new front drive shaft dust cover LH.

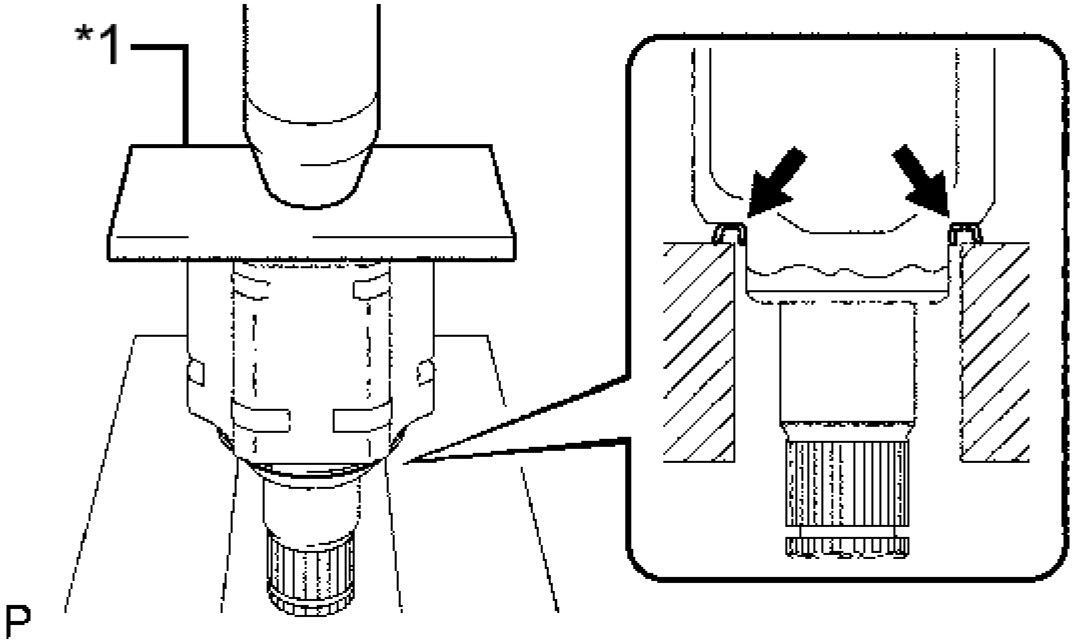

Fig. 76: Installing Front Drive Shaft Dust Cover LH
Courtesy of TOYOTA MOTOR SALES, U.S.A., INC.

TEXT IN ILLUSTRATION

*1	Steel Plate

NOTE:

- **The dust cover should be completely installed.**
- **Be careful not to damage the front drive shaft dust cover LH.**

5. **INSTALL FRONT AXLE OUTBOARD JOINT BOOT**
    a. Wrap the splines of the front drive outboard joint shaft assembly with protective tape to prevent the boot from being damaged.

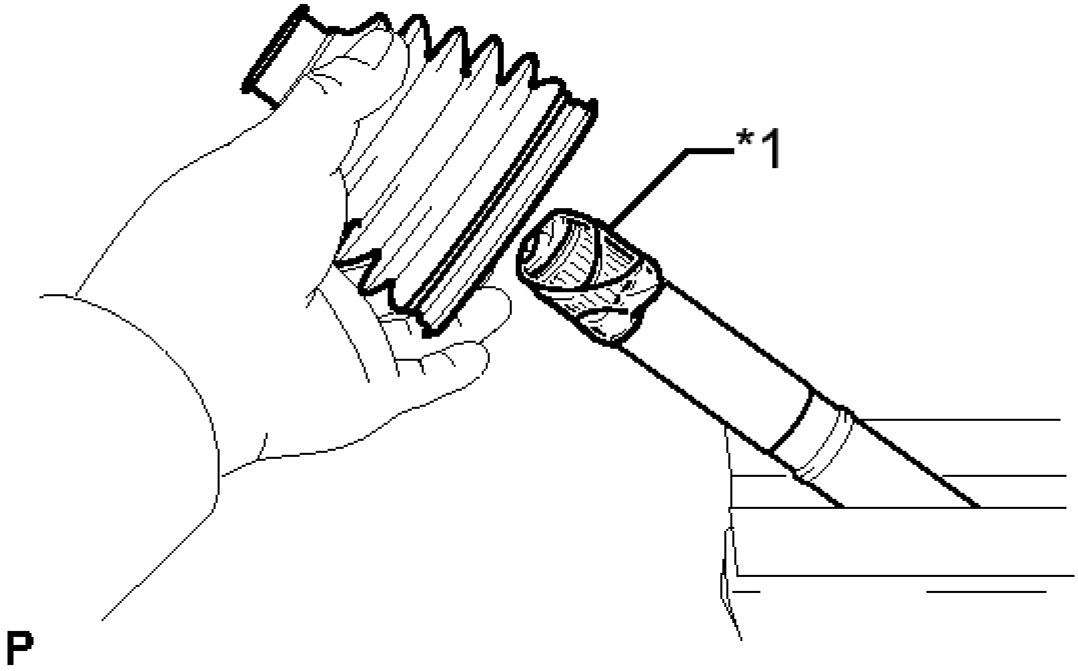

Fig. 77: Wrapping Spline Of Drive Shaft With Vinyl Tape
Courtesy of TOYOTA MOTOR SALES, U.S.A., INC.

TEXT IN ILLUSTRATION

*1	Protective Tape

b. Install new parts onto the front drive outboard joint shaft assembly in the following order:

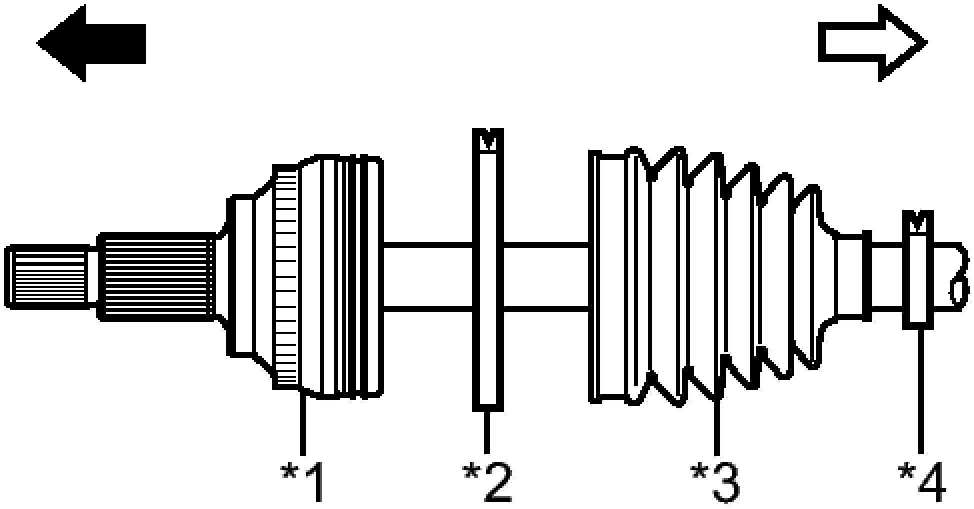

Fig. 78: Identifying Front Drive Outboard Joint Shaft Assembly Installation Sequence
Courtesy of TOYOTA MOTOR SALES, U.S.A., INC.

TEXT IN ILLUSTRATION

*1	Front Drive Outboard Joint Shaft Assembly
*2	Front No. 2 Axle Outboard Joint Boot Clamp
*3	Front Axle Outboard Joint Boot
*4	Front Axle Outboard Joint Boot Clamp

	Outboard Joint Side
	Inboard Joint Side

1. Front No. 2 axle outboard joint boot clamp
2. Front axle outboard joint boot
3. Front axle outboard joint boot clamp

c. Pack the joint portion of the front drive outboard joint shaft assembly and front axle outboard joint boot with grease.

Standard grease capacity

164 to 184 g (5.78 to 6.48 oz.)

d. Install the front axle outboard joint boot onto the front drive outboard joint shaft assembly groove.

NOTE:

- **Do not allow grease to adhere to the boot clamp track of the outboard joint boot.**
- **Keep the inside of the outboard joint boot free of foreign matter.**

6. **INSTALL FRONT NO. 2 AXLE OUTBOARD JOINT BOOT CLAMP**

a. Hold the drive shaft in a vise between aluminum plates.

NOTE: **Do not overtighten the vise.**

b. Install the front No. 2 axle outboard joint boot clamp onto the front axle outboard joint boot.

c. Place SST onto the front No. 2 axle outboard joint boot clamp, press it against the boot and slightly tighten SST.

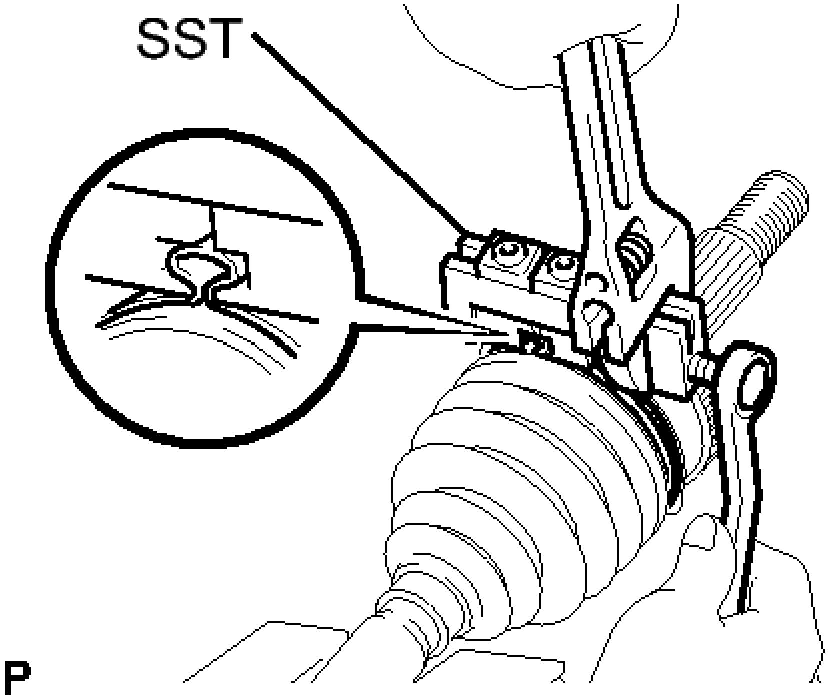

Fig. 79: Tightening No. 2 Front Axle Outboard Joint Boot Clamp Using SST
Courtesy of TOYOTA MOTOR SALES, U.S.A., INC.

- **SST: 09521-24010**

d. Tighten SST so that the front No. 2 axle outboard joint boot clamp is pinched.

NOTE: **Do not overtighten SST.**

e. Remove SST.
f. Using SST, measure the clearance of the front No. 2 axle outboard joint boot clamp.

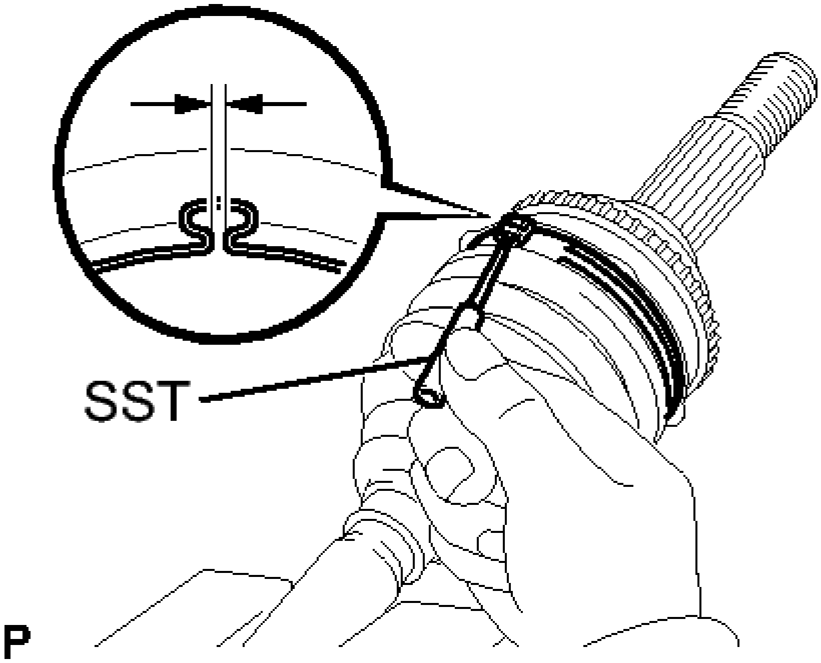

Fig. 80: Measuring Clearance Of Boot Clamp Using SST
Courtesy of TOYOTA MOTOR SALES, U.S.A., INC.

- **SST: 09240-00020**

Clearance

0.5 to 1.5 mm (0.0197 to 0.0591 in.)

If the clearance is outside the specified range, retighten SST.

7. **INSTALL FRONT AXLE OUTBOARD JOINT BOOT CLAMP**
    a. Install the front axle outboard joint boot clamp onto the front axle outboard joint boot.
    b. Place SST onto the front axle outboard joint boot clamp, press it against the boot and slightly tighten SST.

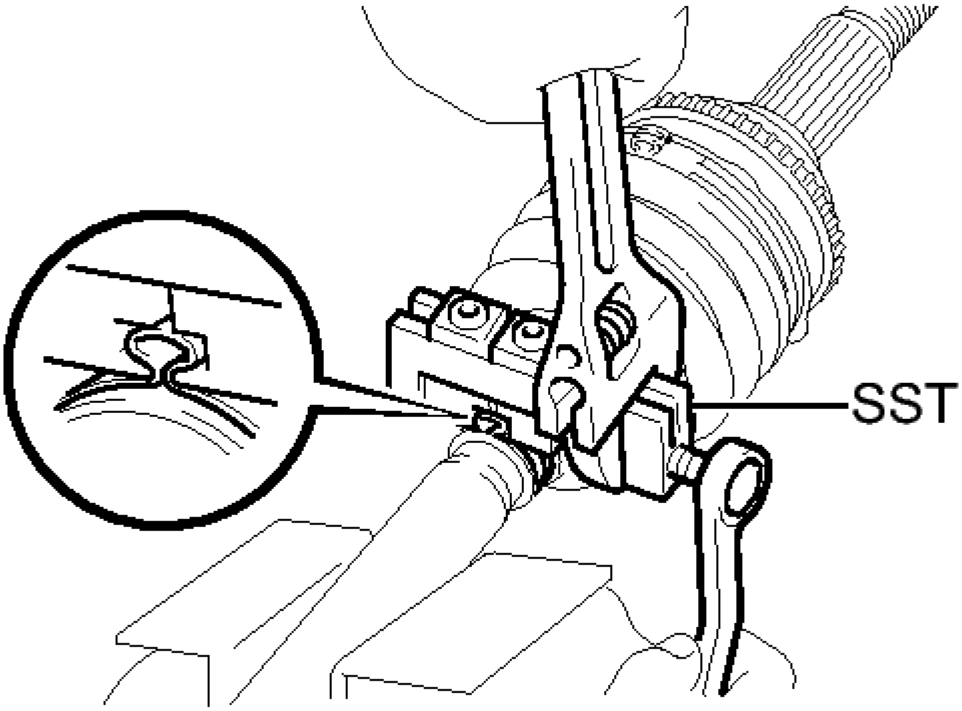

Fig. 81: Tightening Front Axle Outboard Joint Boot Clamp Using SST
Courtesy of TOYOTA MOTOR SALES, U.S.A., INC.

- **SST: 09521-24010**

c. Tighten SST so that the front axle outboard joint boot clamp is pinched.

NOTE: **Do not overtighten SST.**

d. Remove SST.
e. Using SST, measure the clearance of the front axle outboard joint boot clamp.

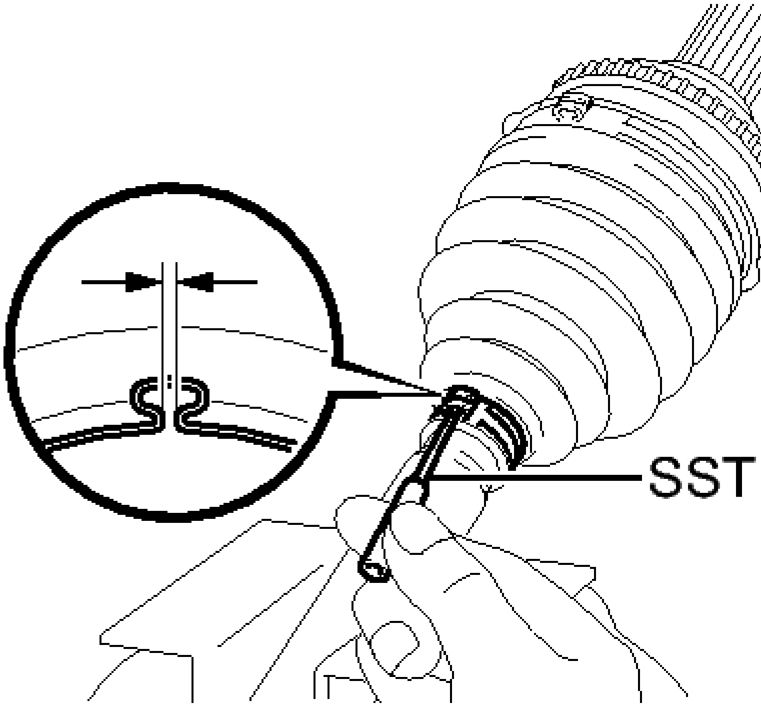

Fig. 82: Measuring Clearance Of Front Axle Outboard Joint Boot Clamp Using SST
Courtesy of TOYOTA MOTOR SALES, U.S.A., INC.

- **SST: 09240-00020**

Clearance

0.5 to 1.5 mm (0.0197 to 0.0591 in.)

If the clearance is outside the specified range, retighten SST.

8. **INSTALL FRONT DRIVE SHAFT DAMPER**
   a. Install the front drive shaft damper onto the front drive outboard joint shaft assembly.

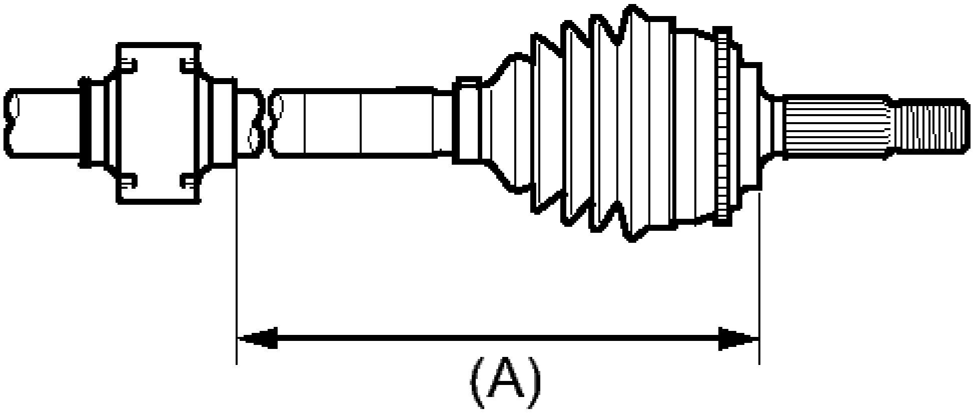

Fig. 83: Identifying Front Drive Shaft Damper Dimension
Courtesy of TOYOTA MOTOR SALES, U.S.A., INC.

b. Set the dimension as specified below.

Dimension (A)

228.0 to 232.0 mm (8.98 to 9.13 in.)

c. Hold the drive shaft in a vise between aluminum plates.

NOTE: **Do not overtighten the vise.**

d. Install a new front drive shaft damper clamp onto the front drive shaft damper.

NOTE: **Be sure to install the clamp in the correct position.**

e. Place SST onto the front drive shaft damper clamp, press it against the boot and slightly tighten SST.

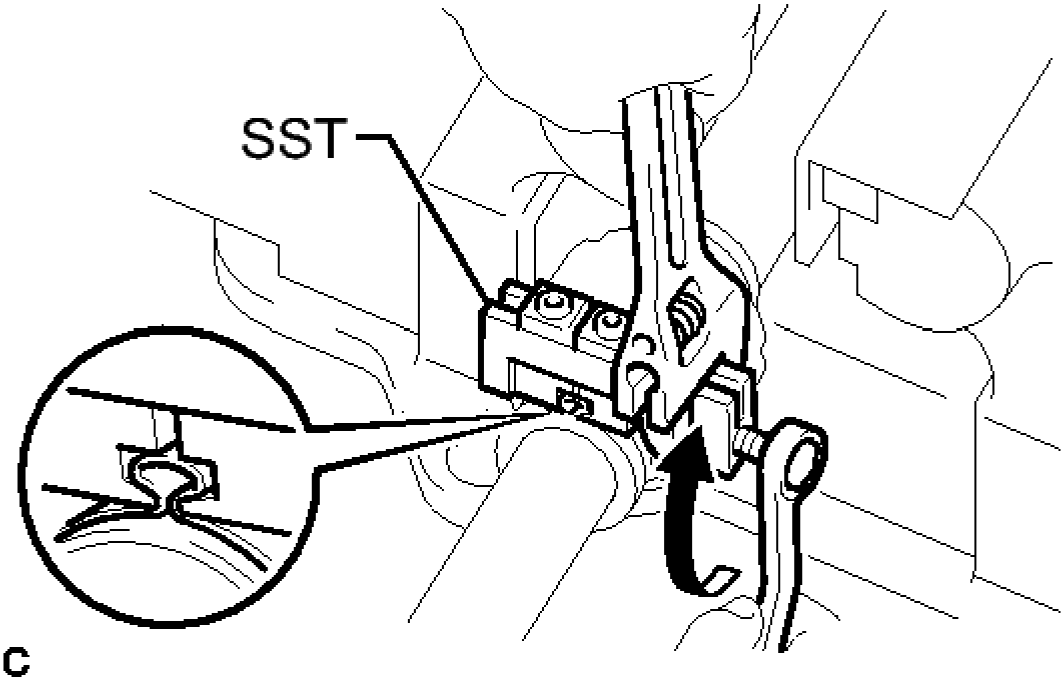

Fig. 84: Tightening Drive Shaft Damper Clamp Using SST
Courtesy of TOYOTA MOTOR SALES, U.S.A., INC.

- **SST: 09521-24010**

f. Tighten SST so that the front drive shaft damper clamp is pinched.

NOTE: Do not overtighten SST.

g. Remove SST.
h. Using SST, measure the clearance of the front drive shaft damper clamp.

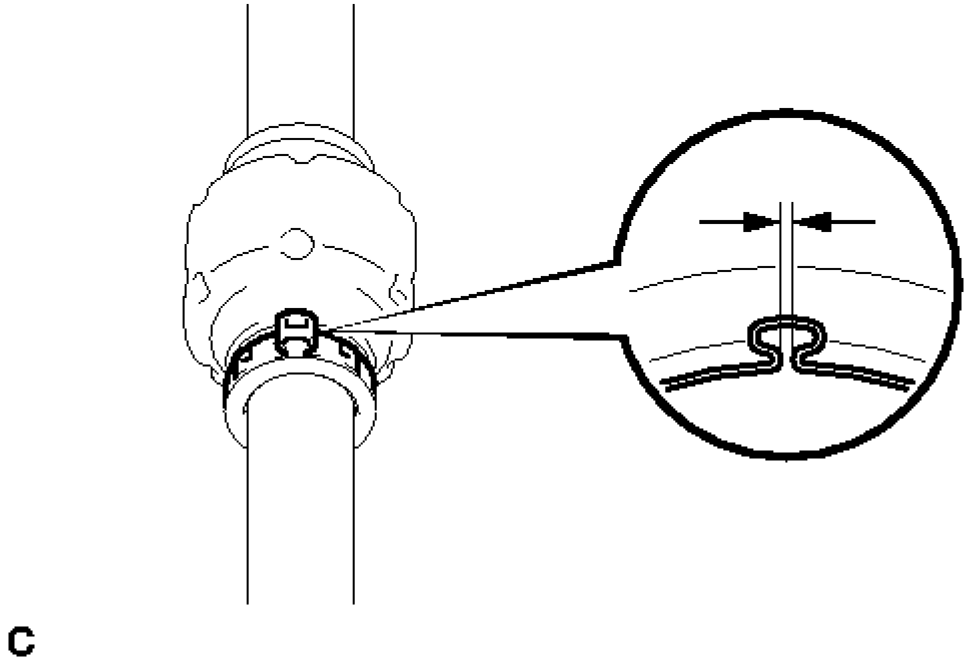

Fig. 85: Measuring Clearance Of Front Drive Shaft Damper Clamp
Courtesy of TOYOTA MOTOR SALES, U.S.A., INC.

- **SST: 09240-00020**

Clearance

0.5 to 1.5 mm (0.0197 to 0.0591 in.)

If the clearance is outside the specified range, retighten SST.

9. **INSTALL FRONT DRIVE INBOARD JOINT ASSEMBLY**
    a. Install new parts onto the front drive outboard joint shaft assembly in the following order:

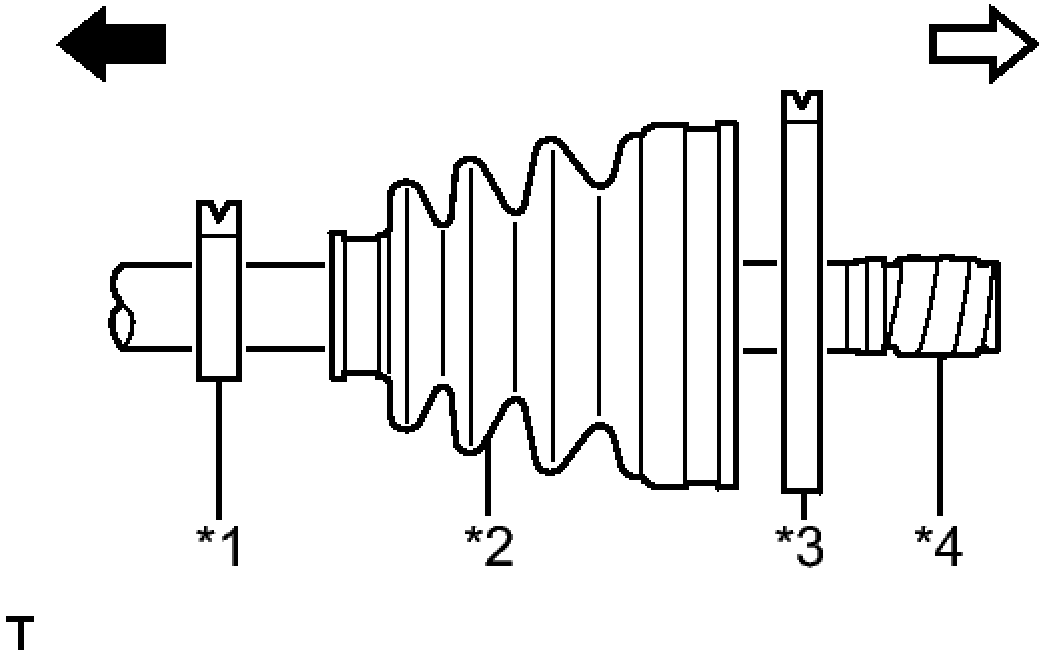

Fig. 86: Identifying Front Drive Inboard Joint Assembly Installation Sequence
Courtesy of TOYOTA MOTOR SALES, U.S.A., INC.

TEXT IN ILLUSTRATION

*1	Front Axle Inboard Joint Boot Clamp
*2	Front Axle Inboard Joint Boot
*3	Front No. 2 Axle Inboard Joint Boot Clamp
*4	Protective Tape
	Outboard Joint Side
	Inboard Joint Side

    1. Front axle inboard joint boot clamp
    2. Front axle inboard joint boot
    3. Front No. 2 axle inboard joint boot clamp
b. Hold the drive shaft in a vise between aluminum plates.

NOTE: **Do not overtighten the vise.**

c. Remove the protective tape.
d. Align the matchmarks and install the tripod joint onto the front drive outboard joint shaft assembly.

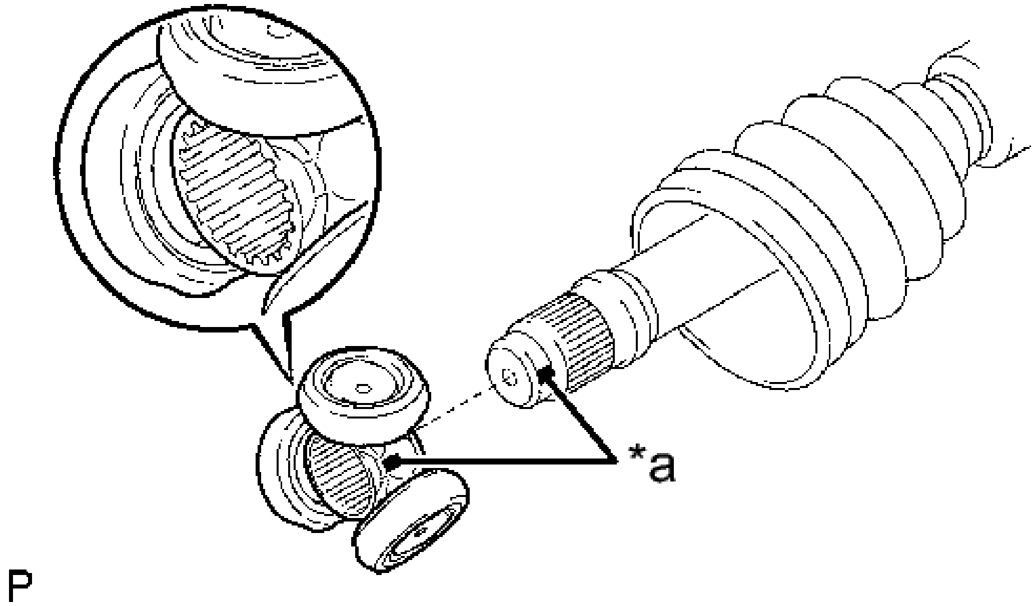

Fig. 87: Identifying Tripod Joint And Front Axle Outboard Joint Shaft Assembly Matchmark
Courtesy of TOYOTA MOTOR SALES, U.S.A., INC.

TEXT IN ILLUSTRATION

*a	Matchmark

e. Align the matchmarks placed before removal.
f. Using a brass bar and a hammer, install the tripod joint to the front drive outboard joint shaft assembly.

NOTE:

- **Do not tap the rollers.**
- **Keep the tripod joint free of foreign matter.**

g. Using a snap ring expander, install a new shaft snap ring to the front drive outboard joint shaft assembly.

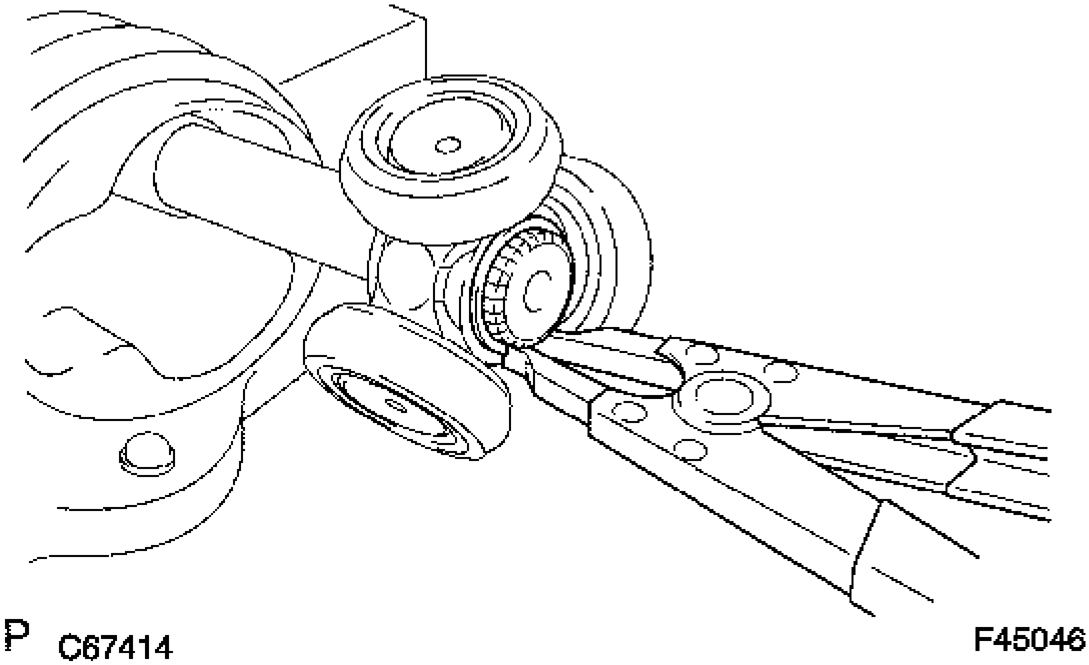

Fig. 88: Remove/Install Shaft Snap Ring Using Snap Ring Expander
Courtesy of TOYOTA MOTOR SALES, U.S.A., INC.

h. Pack the front drive inboard joint assembly and front axle inboard boot with grease.

   Standard grease capacity

   155 to 175 g (5.47 to 6.17 oz.)

i. Align the matchmarks and install the front drive inboard joint assembly to the front drive outboard joint shaft assembly.

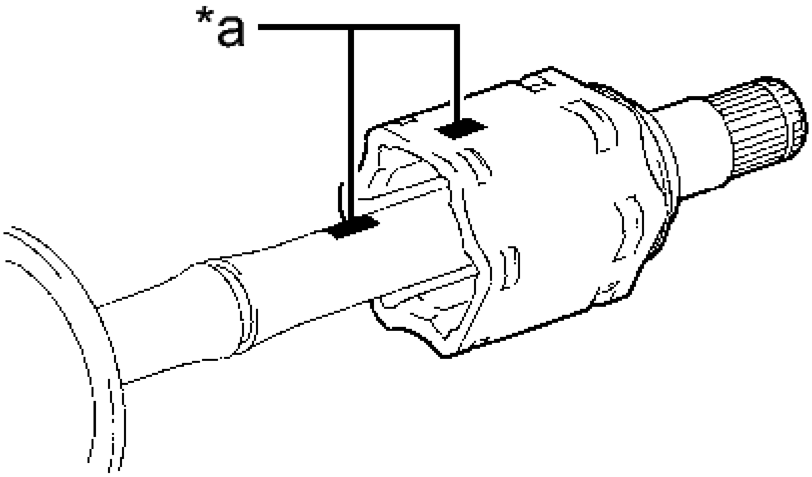

Fig. 89: Identifying Front Drive Inboard & Outboard Joint Shaft Assembly Matchmarks
Courtesy of TOYOTA MOTOR SALES, U.S.A., INC.

TEXT IN ILLUSTRATION

*a	Matchmark

10. **INSTALL FRONT AXLE INBOARD JOINT BOOT**
    1. Install the front axle inboard joint boot to the front drive inboard joint assembly.
    2. Check whether the drive shaft dimensions (A) are within the following specifications.

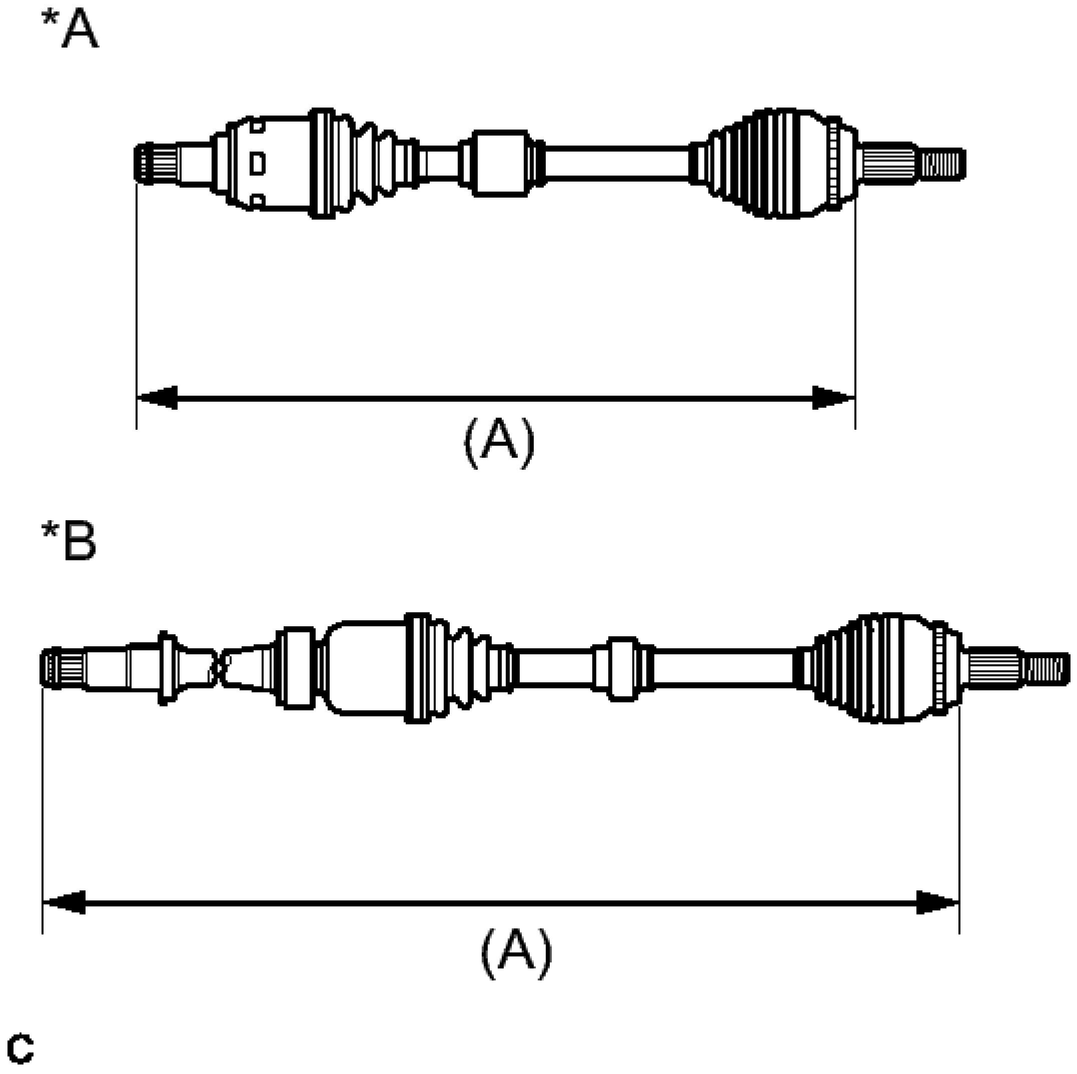

Fig. 90: Checking Drive Shaft Dimensions
Courtesy of TOYOTA MOTOR SALES, U.S.A., INC.

TEXT IN ILLUSTRATION

*A	LH Side
*B	RH Side

Dimension (A)

	Dimension (A)
LH Side	587.5 mm (1.93 ft.)
RH Side	906.4 mm (2.97 ft.)

11. **INSTALL FRONT AXLE INBOARD JOINT BOOT CLAMP**

a. Hold the drive shaft in a vise between aluminum plates.

NOTE: Do not overtighten the vise.

b. Install the front axle inboard joint boot clamp onto the front axle inboard joint boot.

c. Place SST onto the front axle inboard joint boot clamp, press it against the boot and slightly tighten SST.

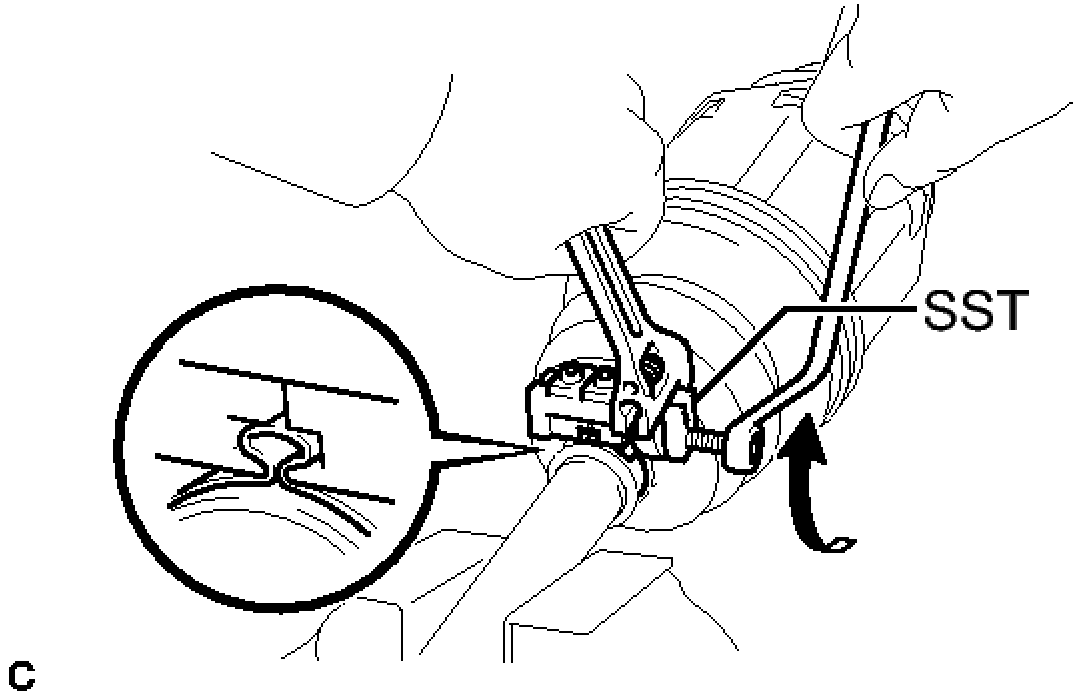

Fig. 91: Tightening Inboard Joint Boot Clamp Using SST
Courtesy of TOYOTA MOTOR SALES, U.S.A., INC.

- **SST: 09521-24010**

d. Tighten SST so that the front axle inboard joint boot clamp is pinched.

NOTE: Do not overtighten SST.

e. Remove SST.

f. Using SST, measure the clearance of the front axle inboard joint boot clamp.

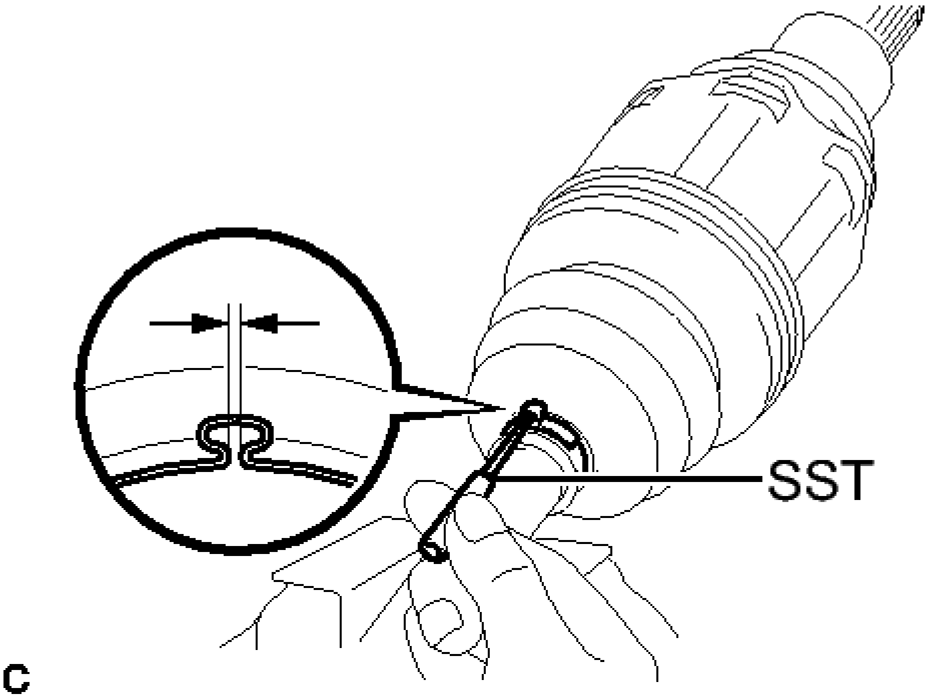

Fig. 92: Measuring Front Axle Inboard Joint Boot Clamp Using SST
Courtesy of TOYOTA MOTOR SALES, U.S.A., INC.

- **SST: 09240-00020**

Clearance

0.5 to 1.5 mm (0.0197 to 0.0591 in.)

If the clearance is outside the specified range, retighten SST.

12. **INSTALL FRONT NO. 2 AXLE INBOARD JOINT BOOT CLAMP**
    a. Install the front No. 2 axle inboard joint boot clamp onto the front axle inboard joint boot.
    b. Place SST onto the front No. 2 axle inboard joint boot clamp, press it against the boot and slightly tighten SST.

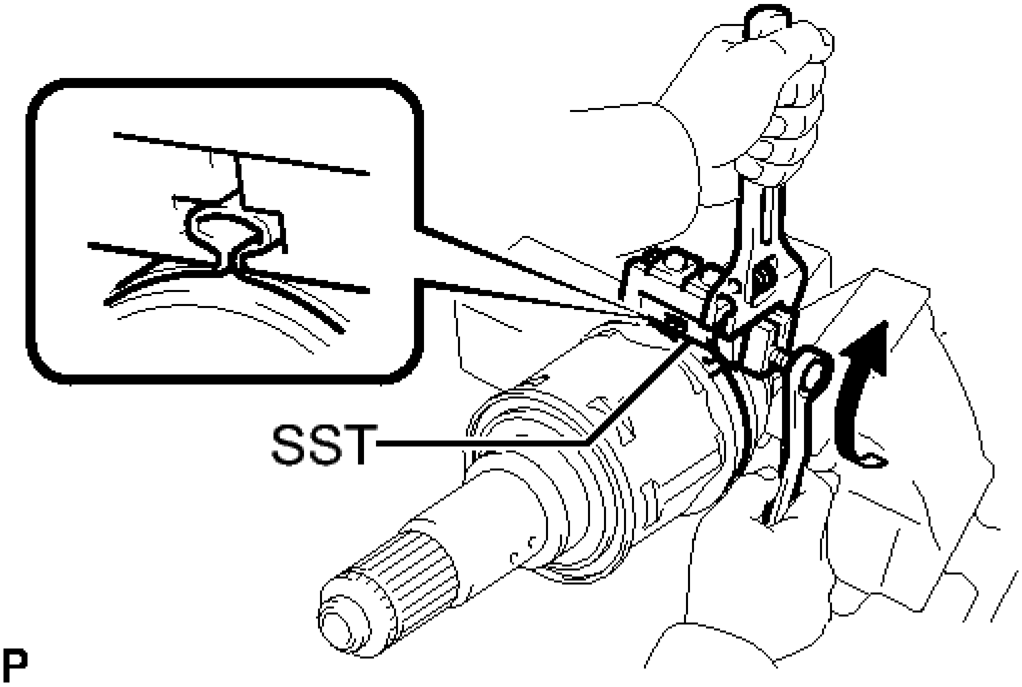

Fig. 93: Tightening No. 2 Front Axle Inboard Joint Boot Clamp Using SST
Courtesy of TOYOTA MOTOR SALES, U.S.A., INC.

- **SST: 09521-24010**

c. Tighten SST so that the front No. 2 axle inboard joint boot clamp is pinched.

NOTE: **Do not overtighten SST.**

d. Remove SST.
e. Using SST, measure the clearance of the front No. 2 axle inboard joint boot clamp.

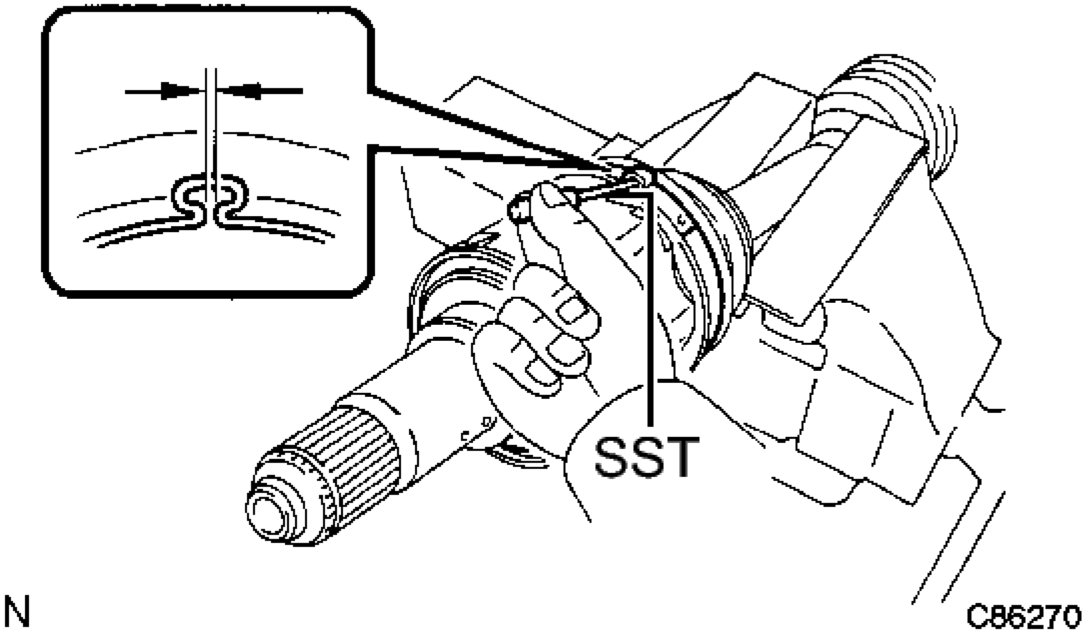

Fig. 94: Measuring Clearance Of No. 2 Front Axle Inboard Joint Boot Clamp Using SST
Courtesy of TOYOTA MOTOR SALES, U.S.A., INC.

- **SST: 09240-00020**

Clearance

0.5 to 1.5 mm (0.0197 to 0.0591 in.)

If the clearance is outside the specified range, retighten SST.

13. **INSTALL FRONT DRIVE SHAFT HOLE SNAP RING LH**
    a. Install a new front drive shaft hole snap ring LH.

    NOTE: Face the end gap of the front drive shaft hole snap ring downward.

14. **INSPECT FRONT DRIVE SHAFT ASSEMBLY** . See step 1.

INSTALLATION

INSTALLATION

1. **INSTALL FRONT DRIVE SHAFT ASSEMBLY LH**
    a. Coat the spline of the front drive inboard joint assembly with ATF.
    b. Coat the lip of the transaxle case oil seal with MP grease.
    c. Align the inboard joint splines, and using a brass bar and a hammer, install the front drive shaft assembly LH.

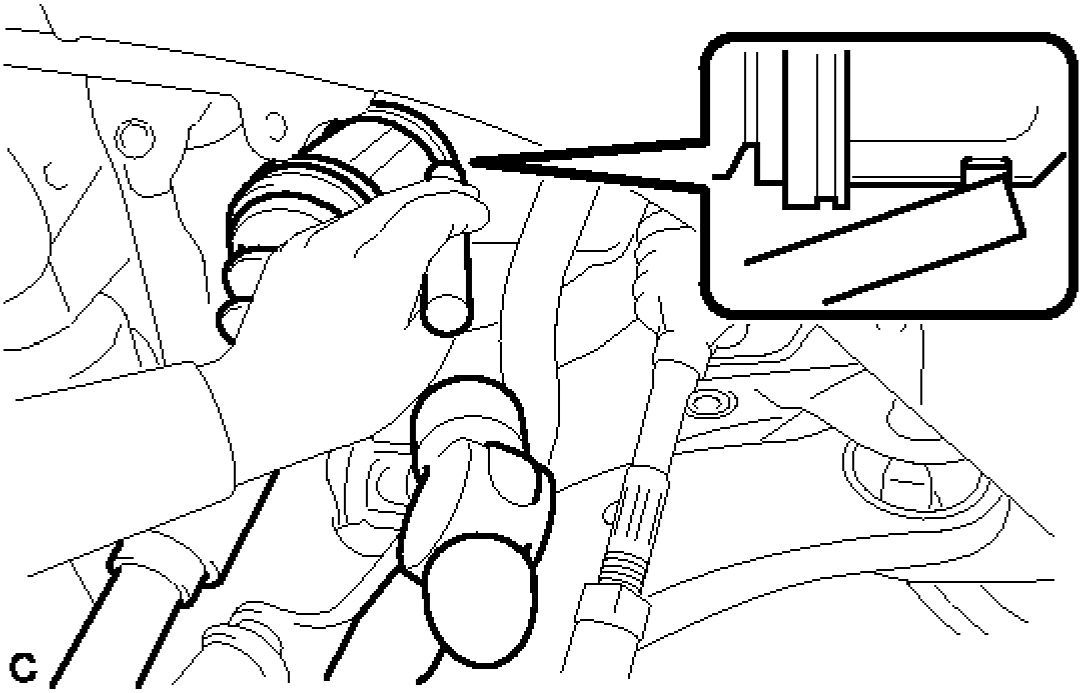

Fig. 95: Installing Drive Shaft Assembly LH With Brass Bar And Hammer
Courtesy of TOYOTA MOTOR SALES, U.S.A., INC.

NOTE:

- **Face the end gap of the front drive shaft hole snap ring LH downward.**
- **Do not damage the transaxle case oil seal.**
- **Do not damage the front axle inboard joint boot.**
- **Make sure to center the front drive shaft assembly LH during installation to prevent damage to the front drive shaft hole snap ring LH.**

HINT:

Confirm whether the drive shaft is securely driven in by checking the reaction force and sound.

d. Apply mineral oil base grease to the areas indicated by the arrows in the illustration on the front drive shaft assembly LH contact surface of the front axle hub bearing.

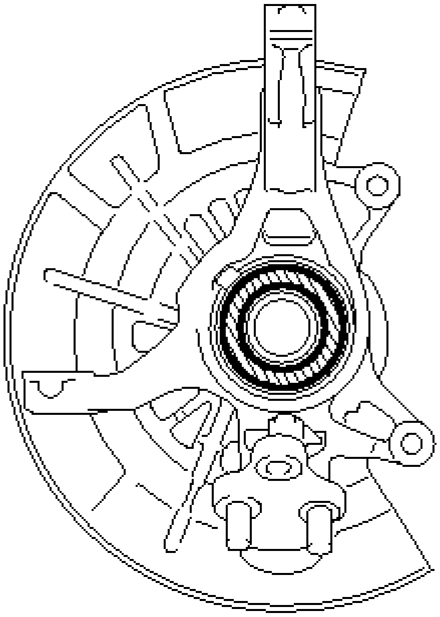

Fig. 96: Identifying Front Axle Hub Bearing Mineral Oil Base Grease Application Area
Courtesy of TOYOTA MOTOR SALES, U.S.A., INC.

TEXT IN ILLUSTRATION

	Mineral Oil Base Grease

HINT:

Apply 0.1 to 0.3 g (0.00353 to 0.0106 oz.) of mineral oil base grease to each area.

e. Align the matchmarks and install the front drive shaft assembly LH to the front axle hub sub-assembly.

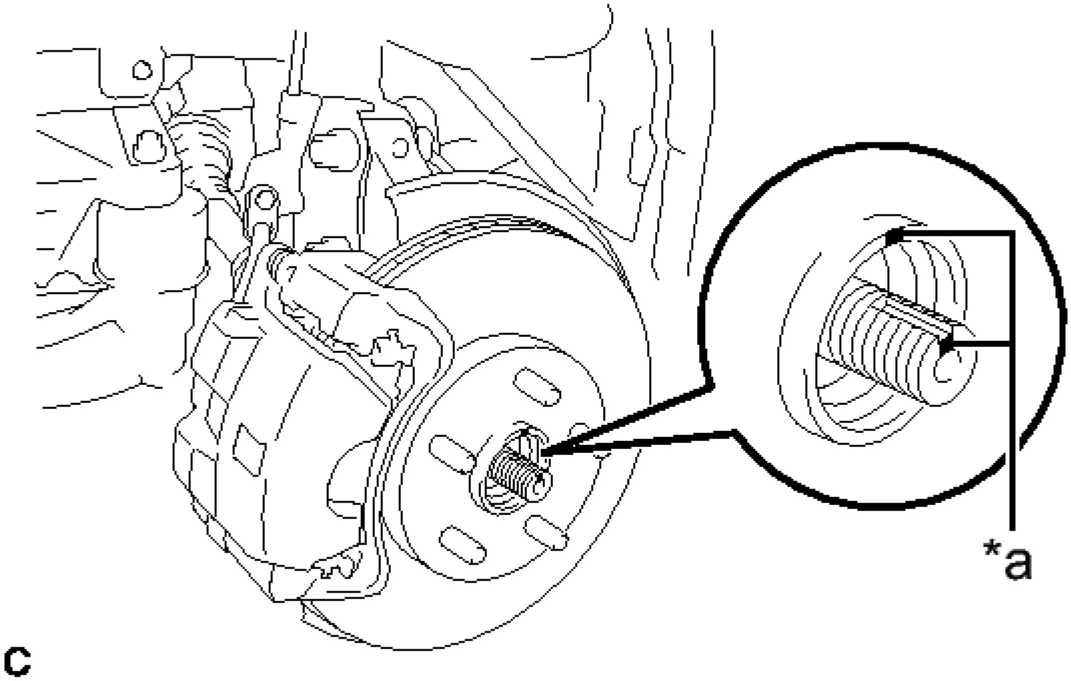

Fig. 97: Aligning Matchmarks To Front Drive Shaft Assembly LH To Front Axle Hub Sub-Assembly
Courtesy of TOYOTA MOTOR SALES, U.S.A., INC.

TEXT IN ILLUSTRATION

*a	Matchmark

NOTE: **Be careful not to damage the front axle outboard joint boot or speed sensor rotor.**

2. **INSTALL FRONT DRIVE SHAFT ASSEMBLY RH**
   a. Coat the spline of the front drive inboard joint assembly with ATF.
   b. Coat the lip of the front transaxle case oil seal with MP grease.
   c. Install a new bearing bracket hole snap ring to the front drive shaft assembly RH.
   d. Install the front drive shaft assembly RH.

NOTE:

- **Do not damage the front transaxle case oil seal.**
- **Do not damage the front axle inboard joint boot.**
- **When inserting the front drive shaft assembly RH, keep it level.**

   e. Install the bearing bracket hole snap ring and a new bolt.

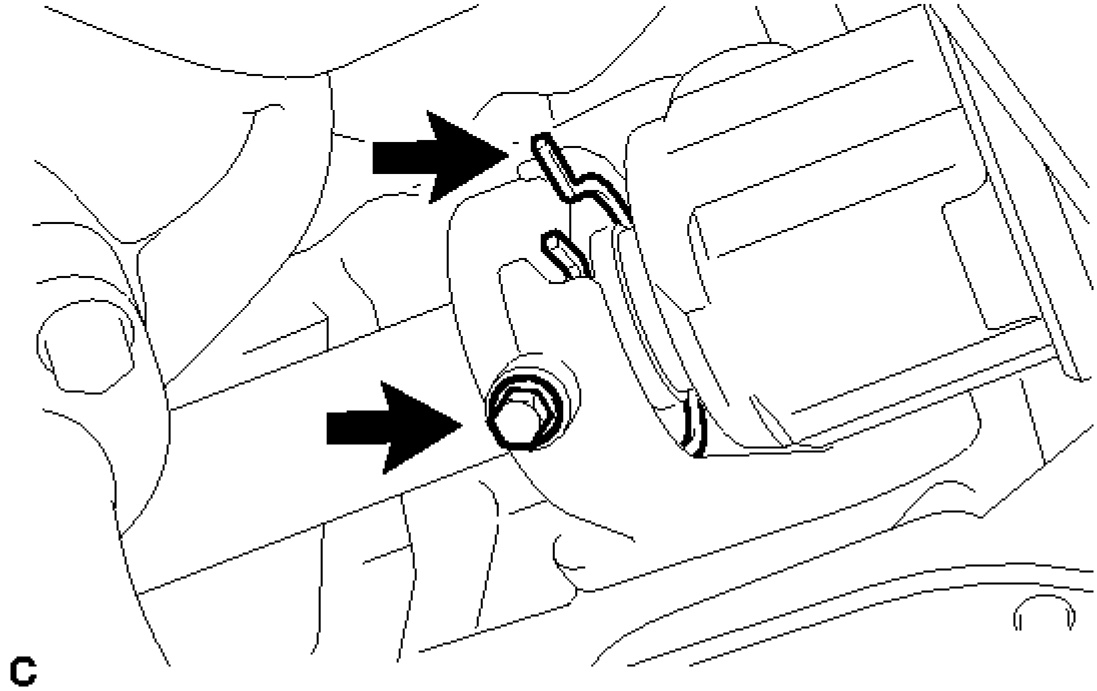

Fig. 98: Identifying Bearing Bracket Hole Snap Ring And Bolt
Courtesy of TOYOTA MOTOR SALES, U.S.A., INC.

Torque: 32 N*m (330 kgf*cm, 24 ft.*lbf)

f. Apply mineral oil base grease to the areas indicated by the arrows in the illustration on the front drive shaft assembly RH contact surface of the front axle hub bearing.

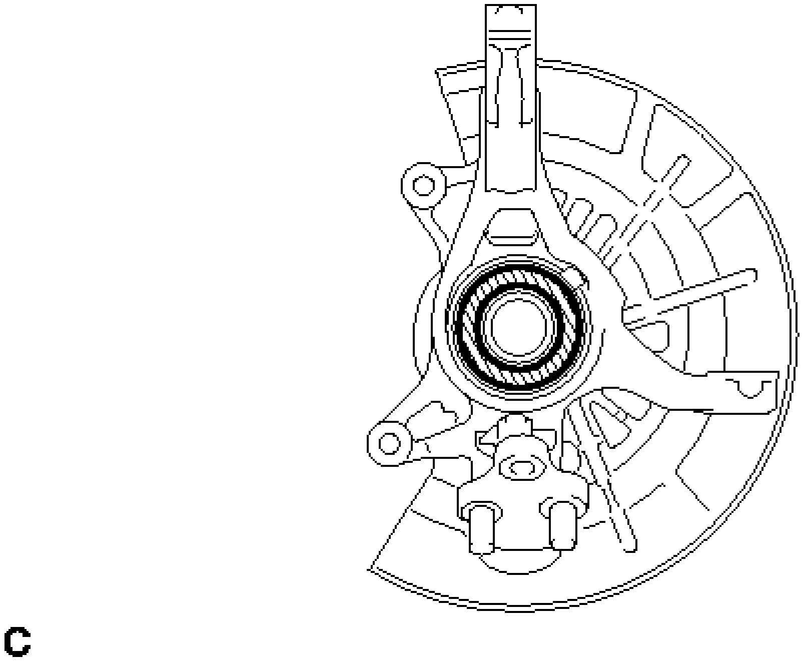

Fig. 99: Identifying Front Axle Hub Bearing Mineral Oil Base Grease Application Area
Courtesy of TOYOTA MOTOR SALES, U.S.A., INC.

TEXT IN ILLUSTRATION

	Mineral Oil Base Grease

HINT:

Apply 0.1 to 0.3 g (0.00353 to 0.0106 oz.) of mineral oil base grease to each area.

g. Align the matchmarks and install the front drive shaft assembly RH to the front axle hub sub-assembly.

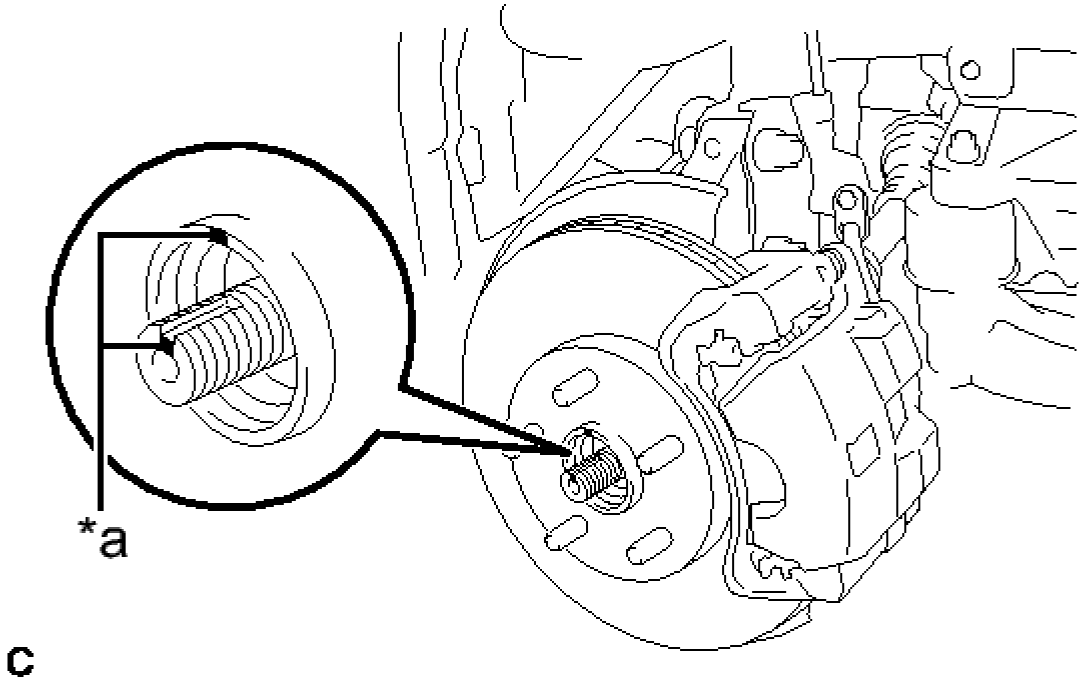

Fig. 100: Aligning Matchmarks To Front Drive Shaft Assembly RH To Front Axle Hub Sub-Assembly
Courtesy of TOYOTA MOTOR SALES, U.S.A., INC.

TEXT IN ILLUSTRATION

*a	Matchmark

NOTE: **Be careful not to damage the front axle outboard joint boot or speed sensor rotor.**

3. **CONNECT FRONT LOWER NO. 1 SUSPENSION ARM SUB-ASSEMBLY** . Refer to **INSTALLATION - Step 8** .
4. **CONNECT TIE ROD ASSEMBLY** . Refer to **INSTALLATION - Step 8** .
5. **INSTALL FRONT SPEED SENSOR** . Refer to **INSTALLATION - Step 19** .
6. **INSTALL FRONT STABILIZER LINK ASSEMBLY** . Refer to **INSTALLATION - Step 10** .
7. **INSTALL FRONT AXLE SHAFT NUT**
    a. Clean the threaded parts on the front drive shaft assembly and a new axle shaft nut using a non-residue solvent.

NOTE:

- **Be sure to perform this work even when using a new drive shaft.**
- **Keep the threaded parts free of oil and foreign matter.**

    b. Using a socket wrench (30 mm), install the front axle shaft nut.

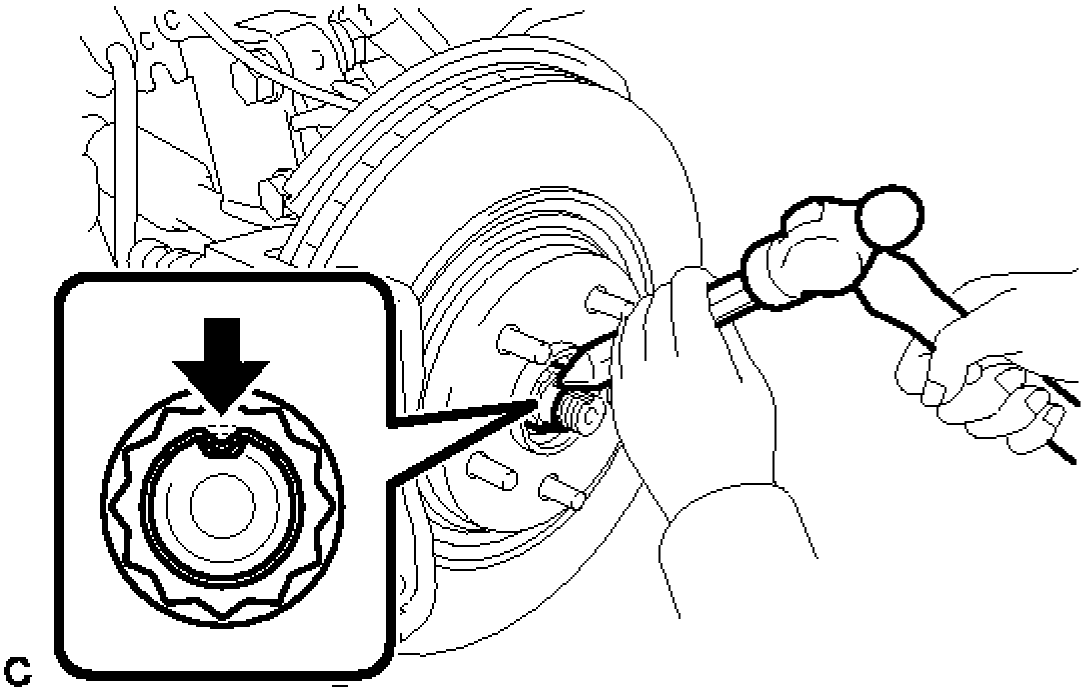

Fig. 101: Staking Front Axle Shaft Nut
Courtesy of TOYOTA MOTOR SALES, U.S.A., INC.

Torque: 294 N*m (2998 kgf*cm, 217 ft.*lbf)

    c. Using a chisel and a hammer, stake the front axle shaft nut.

8. **INSTALL FRONT WHEELS**

Torque: 103 N*m (1049 kgf*cm, 76 ft.*lbf)

9. **ADD AUTOMATIC TRANSAXLE FLUID**

Refer to **ADJUSTMENT** .

10. **INSTALL FRONT FENDER APRON SEAL LH**
11. **INSTALL FRONT FENDER APRON SEAL RH**
12. **INSTALL ENGINE UNDER COVER LH**
13. **INSTALL FRONT WHEEL OPENING EXTENSION PAD LH**
14. **INSTALL ENGINE UNDER COVER RH**
15. **INSTALL FRONT WHEEL OPENING EXTENSION PAD RH**
16. **ADJUST FRONT WHEEL ALIGNMENT**

    Refer to **ADJUSTMENT** .

17. **CHECK FOR SPEED SENSOR SIGNAL**

    Refer to **TEST MODE PROCEDURE** .

2012-2017 DTC

INDEX Camry

(Hybrid)

AUDIO / VIDEO DTCS

AUDIO AND VISUAL SYSTEM (FOR RADIO AND DISPLAY TYPE WITH INTUITIVE PARKING ASSIST SYSTEM)

AUDIO AND VISUAL SYSTEM (FOR RADIO AND DISPLAY TYPE WITH INTUITIVE PARKING ASSIST SYSTEM) DTC IDENTIFICATION

DTC Code	Description
B1579	Voice Recognition Microphone Disconnected
B1585	USB Media Malfunction
B15A0	LAN Master Malfunction
B15A3	Stereo Component Amplifier Malfunction
B15B0	Display Screen Malfunction
B15B3	Radio Tuner Malfunction
B15B5	DVD Changer Malfunction
B15B7	Bluetooth Module Malfunction
B15B8	Harddisk Malfunction
B15C3	Speaker Output Short
B15D3	Stereo Component Amplifier Disconnected
B15E7	Harddisk Reading/Writing Malfunction(Low Temperature)
B15E8	Harddisk Reading/Writing Malfunction(High Temperature)
B15F5	A/C ECU Vehicle Information Reading/Writing Processor Malfunction
B15F6	Main Body ECU Vehicle Information Reading/Writing Process Malfunction
B15F7	Certification ECU Vehicle Information Reading/Writing Process Malfunction
U0073	Sending Malfunction (Navigation to APGS)
U0100	Lost Communication with ECM / PCM "A"
U0129	Lost Communication with Brake System Control Module
U0140	Lost Communication with Body Control Module
U0155	Meter ECU Communication
U0293	Lost Communication with HV ECU

AUDIO AND VISUAL SYSTEM (FOR RADIO AND DISPLAY TYPE WITHOUT INTUITIVE PARKING ASSIST SYSTEM)

AUDIO AND VISUAL SYSTEM (FOR RADIO AND DISPLAY TYPE WITHOUT INTUITIVE PARKING ASSIST SYSTEM) DTC IDENTIFICATION

DTC Code	Description
B1551	HD Radio Tuner Malfunction
B1579	Voice Recognition Microphone Disconnected

B1585	USB Device Malfunction
B15A0	LAN Master Malfunction
B15A3	Stereo Component Amplifier Malfunction
B15B0	Display Screen Malfunction
B15B3	Radio Tuner Malfunction
B15B4	CD Changer Malfunction
B15B7	Bluetooth Module Malfunction
B15BA	XM Tuner Malfunction
B15C3	Speaker Output Short
B15D3	Stereo Component Amplifier Disconnected
B15F6	Main Body ECU Vehicle Information Reading/Writing Process Malfunction
B15FE	XM Tuner Antenna Disconnected
B15FF	XM Tuner Antenna Short
U0073	Sending Malfunction (Navigation to APGS)
U0100	Lost Communication with ECM / PCM "A"
U0129	Lost Communication with Brake System Control Module
U0140	Lost Communication with Body Control Module
U0155	Meter ECU Communication
U0293	Lost Communication with HV ECU

BRAKE CONTROL / DYNAMIC CONTROL SYSTEMS DTCS

ELECTRONICALLY CONTROLLED BRAKE SYSTEM

ABS DTC IDENTIFICATION

DTC Code	Description
42	Electronically Controlled Brake System Malfunction
C1235/35	Foreign Object is Attached on Tip of Front Speed Sensor RH
C1236/36	Foreign Object is Attached on Tip of Front Speed Sensor LH
C1238/38	Foreign Object is Attached on Tip of Rear Speed Sensor RH
C1239/39	Foreign Object is Attached on Tip of Rear Speed Sensor LH
C1243/43	Acceleration Sensor Stuck Malfunction
C1244/44	Open or Short in Acceleration Sensor Circuit
C1245/45	Acceleration Sensor Output Malfunction
C1336/98	Zero Point Calibration of Acceleration Sensor Undone
C1381/97	Acceleration Sensor Power Supply Voltage Malfunction
C1442/44	Invalid Data Received from Acceleration Sensor
C1464/31	Front Speed Sensor RH Circuit
C1465/32	Front Speed Sensor LH Circuit
C1466/33	Rear Speed Sensor RH Circuit
C1467/34	Rear Speed Sensor LH Circuit

U0124/95	Lost Communication with Lateral Acceleration Sensor Module

VSC DTC IDENTIFICATION

DTC Code	Description
43	ABS Control System Malfunction
45	Electronically Controlled Brake System Malfunction
C1210/36	Zero Point Calibration of Yaw Rate Sensor Undone
C1231/31	Steering Angle Sensor Circuit Malfunction
C1234/34	Yaw Rate Sensor Malfunction
C1290/66	Steering Angle Sensor Zero Point Malfunction
C1310/51	Malfunction in HV system
C1380/64	Stop Light Control Relay Malfunction
C1439/66	Steering Angle Sensor Initialization Incomplete
C1440/98	Unusual Bank Angle Detected
C1443/34	Invalid Data Received from Yaw Rate Sensor
C1445/66	Vehicle Driven with Steering Angle Sensor not Initialized
U0123/62	Lost Communication with Yaw Rate Sensor Module
U0126/63	Lost Communication with Steering Angle Sensor Module

ELECTRONICALLY CONTROLLED BRAKE SYSTEM DTC IDENTIFICATION

DTC Code	Description
36	ABS Control System Malfunction
C1202/68	Master Reservoir Level Malfunction
C1203/95	ECM Communication Circuit Malfunction
C1211/25	SLA Linear Solenoid
C1212/26	SLR Linear Solenoid
C1214/62	Hydraulic Control System Malfunction
C1225/31	SA1 Solenoid Circuit
C1226/32	SA2 Solenoid Circuit
C1227/33	SA3 Solenoid Circuit
C1228/34	STR Solenoid Circuit
C1242/42	Open in IG1 / IG2 Power Source Circuit
C1246/46	Master Cylinder Pressure Sensor Malfunction
C1247/47	Stroke Sensor Malfunction
C1249/49	Open in Stop Light Switch Circuit
C1252/52	Brake Booster Pump Motor on Time Abnormally Long
C1253/53	Pump Motor Relay Malfunction
C1256/56	Accumulator Low Pressure
C1257/57	Power Supply Drive Circuit
C1259/58	HV System Regenerative Malfunction
C1300	Skid Control ECU Malfunction

C1311/11	Open in Main Relay 1 Circuit
C1312/12	Short in Main Relay 1 Circuit
C1345/66	Linear Solenoid Valve Offset Learning Undone
C1352/21	FR Solenoid
C1353/23	RR Solenoid
C1356/22	FL Solenoid
C1357/24	RL Solenoid
C1364/61	Wheel Cylinder Pressure Sensor Malfunction
C1365/54	Accumulator Pressure Sensor Malfunction
C1368/67	Linear Solenoid Valve Offset Malfunction
C1391/69	Accumulator Leak Malfunction
C1392/48	Stroke Sensor Zero Point Calibration Undone
C1451/72	Motor Drive Permission Malfunction
U0073/94	Control Module Communication Bus OFF
U0293/59	Communication Error from HV ECU

ABS AND ELECTRONICALLY CONTROLLED BRAKE SYSTEM DTC IDENTIFICATION

DTC Code	**Description**
C1241/41	Low Battery Positive Voltage

ABS TEST MODE DTC IDENTIFICATION

DTC Code	**Description**
C1271/71	Low Output Signal of Front Speed Sensor RH (Test Mode DTC)
C1272/72	Low Output Signal of Front Speed Sensor LH (Test Mode DTC)
C1273/73	Low Output Signal of Rear Speed Sensor RH (Test Mode DTC)
C1274/74	Low Output Signal of Rear Speed Sensor LH (Test Mode DTC)
C1275/75	Abnormal Change in Output Signal of Front Speed Sensor RH (Test Mode DTC)
C1276/76	Abnormal Change in Output Signal of Front Speed Sensor LH (Test Mode DTC)
C1277/77	Abnormal Change in Output Signal of Rear Speed Sensor RH (Test Mode DTC)
C1278/78	Abnormal Change in Output Signal of Rear Speed Sensor LH (Test Mode DTC)
C1279/79	Acceleration Sensor Output Voltage Malfunction (Test Mode DTC)
C1281/81	Master Cylinder Pressure Sensor Output Malfunction (Test Mode DTC)

ELECTRONICALLY CONTROLLED BRAKE SYSTEM TEST MODE DTC IDENTIFICATION

DTC Code	**Description**
C1346/71	Stroke Sensor Zero Point Learning Malfunction (Test Mode DTC)

CELLULAR COMMUNICATION DTCS

SAFETY CONNECT SYSTEM

SAFETY CONNECT SYSTEM DTC IDENTIFICATION

DTC Code	Description
B1570	Manual (SOS) Switch Red Indicator Malfunction
B1571	Manual (SOS) Switch Green Indicator Malfunction
B1572	Telephone Microphone Error
B1573	Short in Telephone Antenna Circuit
B15CB	Telematics Transceiver Antenna Disconnected
B1583	GPS Signal Unreceived
B15A8	Telematics Transceiver Malfunction
B15C0	Short in GPS Antenna
B15C1	Open in GPS Antenna
B15C4	Airbag Signal Malfunction/Not Input
B15C5	Manual Button Malfunction
B15CC	Backup Battery Failure
B15EC	Backup Battery Degradation

CRUISE CONTROL DTCS

CRUISE CONTROL SYSTEM

CRUISE CONTROL SYSTEM DTC IDENTIFICATION

DTC Code	Description
P0571	Brake Switch "A" Circuit
P0575	Cruise Control Input Circuit
P1578	Brake System Malfunction
U0122	Lost Communication with Vehicle Dynamics Control Module

DOOR LOCK DTCS

WIRELESS DOOR LOCK CONTROL SYSTEM

WIRELESS DOOR LOCK CONTROL SYSTEM DTC IDENTIFICATION

DTC Code	Description
B1242	Wireless Door Lock Tuner Circuit Malfunction

ENGINE CONTROL DTCS

SFI SYSTEM

SFI SYSTEM DTC IDENTIFICATION

DTC Code	Description
P0010	Camshaft Position "A" Actuator Circuit (Bank 1)
P0011	Camshaft Position "A" - Timing Over-Advanced or System Performance (Bank 1)

P0012	Camshaft Position "A" - Timing Over-Retarded (Bank 1)
P0016	Crankshaft Position - Camshaft Position Correlation (Bank 1 Sensor A)
P0031	Oxygen (A/F) Sensor Heater Control Circuit Low (Bank 1 Sensor 1)
P0032	Oxygen (A/F) Sensor Heater Control Circuit High (Bank 1 Sensor 1)
P0037	Oxygen Sensor Heater Control Circuit Low (Bank 1 Sensor 2)
P0038	Oxygen Sensor Heater Control Circuit High (Bank 1 Sensor 2)
P0101	Mass Air Flow Circuit Range / Performance Problem
P0102	Mass or Volume Air Flow Circuit Low Input
P0103	Mass or Volume Air Flow Circuit High Input
P0106	Manifold Absolute Pressure / Barometric Pressure Circuit Range / Performance Problem
P0107	Manifold Absolute Pressure / Barometric Pressure Circuit Low Input
P0108	Manifold Absolute Pressure / Barometric Pressure Circuit High Input
P0111	Intake Air Temperature Sensor Gradient Too High
P0112	Intake Air Temperature Circuit Low Input
P0113	Intake Air Temperature Circuit High Input
P0115	Engine Coolant Temperature Circuit Malfunction
P0116	Engine Coolant Temperature Circuit Range / Performance Problem
P0117	Engine Coolant Temperature Circuit Low Input
P0118	Engine Coolant Temperature Circuit High Input
P011B	Engine Coolant Temperature / Intake Air Temperature Correlation
P0120	Throttle / Pedal Position Sensor / Switch "A" Circuit Malfunction
P0121	Throttle / Pedal Position Sensor / Switch "A" Circuit Range / Performance Problem
P0122	Throttle / Pedal Position Sensor / Switch "A" Circuit Low Input
P0123	Throttle / Pedal Position Sensor / Switch "A" Circuit High Input
P0125	Insufficient Coolant Temperature for Closed Loop Fuel Control
P0128	Coolant Thermostat (Coolant Temperature Below Thermostat Regulating Temperature)
P0136	Oxygen Sensor Circuit Malfunction (Bank 1 Sensor 2)
P0137	Oxygen Sensor Circuit Low Voltage (Bank 1 Sensor 2)
P0138	Oxygen Sensor Circuit High Voltage (Bank 1 Sensor 2)
P0139	Oxygen Sensor Circuit Slow Response (Bank 1 Sensor 2)
P0141	Oxygen Sensor Heater Circuit Malfunction (Bank 1 Sensor 2)
P014C	A/F Sensor Slow Response - Rich to Lean Bank 1 Sensor 1
P014D	A/F Sensor Slow Response - Lean to Rich Bank 1 Sensor 1
P015A	A/F Sensor Delayed Response - Rich to Lean Bank 1 Sensor 1
P015B	A/F Sensor Delayed Response - Lean to Rich Bank 1 Sensor 1
P0171	System Too Lean (Bank 1)
P0172	System Too Rich (Bank 1)
P0220	Throttle / Pedal Position Sensor / Switch "B" Circuit
P0222	Throttle / Pedal Position Sensor / Switch "B" Circuit Low Input

P0223	Throttle / Pedal Position Sensor / Switch "B" Circuit High Input
P0300	Random / Multiple Cylinder Misfire Detected
P0301	Cylinder 1 Misfire Detected
P0302	Cylinder 2 Misfire Detected
P0303	Cylinder 3 Misfire Detected
P0304	Cylinder 4 Misfire Detected
P0327	Knock Sensor 1 Circuit Low Input (Bank 1 or Single Sensor)
P0328	Knock Sensor 1 Circuit High Input (Bank 1 or Single Sensor)
P0335	Crankshaft Position Sensor "A" Circuit
P0340	Camshaft Position Sensor Circuit Malfunction
P0342	Camshaft Position Sensor "A" Circuit Low Input (Bank 1 or Single Sensor)
P0343	Camshaft Position Sensor "A" Circuit High Input (Bank 1 or Single Sensor)
P0351	Ignition Coil "A" Primary / Secondary Circuit
P0352	Ignition Coil "B" Primary / Secondary Circuit
P0353	Ignition Coil "C" Primary / Secondary Circuit
P0354	Ignition Coil "D" Primary / Secondary Circuit
P0401	Exhaust Gas Recirculation Flow Insufficient Detected
P0403	Exhaust Gas Recirculation Control Circuit
P0420	Catalyst System Efficiency Below Threshold (Bank 1)
P043E	Evaporative Emission System Leak Detection Reference Orifice Low Flow
P043F	Evaporative Emission System Reference Orifice High Flow
P0441	Evaporative Emission Control System Incorrect Purge Flow
P0451	Evaporative Emission Control System Pressure Sensor Range / Performance
P0452	Evaporative Emission Control System Pressure Sensor / Switch Low Input
P0453	Evaporative Emission Control System Pressure Sensor / Switch High Input
P0455	Evaporative Emission Control System Leak Detected (Gross Leak)
P0456	Evaporative Emission Control System Leak Detected (Very Small Leak)
P0505	Idle Control System Malfunction
P050A	Cold Start Idle Air Control System Performance
P050B	Cold Start Ignition Timing Performance
P0560	System Voltage
P0604	Random Access Memory (RAM)
P0606	ECM / PCM Processor
P0607	Control Module Performance
P060A	Internal Control Module Monitoring Processor Performance
P060B	Internal Control Module A/D Processing Performance
P060E	Internal Control Module Throttle Position Performance
P062F	Internal Control Module EEPROM Error
P0630	VIN not Programmed or Mismatch - ECM / PCM
P0657	Actuator Supply Voltage Circuit / Open
P101D	A/F Sensor Heater Circuit Performance Bank 1 Sensor 1 Stuck ON
P102D	

	O2 Sensor Heater Circuit Performance Bank 1 Sensor 2 Stuck ON
P106A	Evaporative Emission System Pressure Sensor - Manifold Absolute Pressure Correlation
P148F	Engine Coolant Pump Over Revolution
P1604	Startability Malfunction
P1605	Rough Idling
P2102	Throttle Actuator Control Motor Circuit Low
P2103	Throttle Actuator Control Motor Circuit High
P2109	Throttle / Pedal Position Sensor "A" Minimum Stop Performance
P2111	Throttle Actuator Control System - Stuck Open
P2112	Throttle Actuator Control System - Stuck Closed
P2118	Throttle Actuator Control Motor Current Range / Performance
P2119	Throttle Actuator Control Throttle Body Range / Performance
P2135	Throttle / Pedal Position Sensor / Switch "A" / "B" Voltage Correlation
P2195	Oxygen (A/F) Sensor Signal Stuck Lean (Bank 1 Sensor 1)
P2196	Oxygen (A/F) Sensor Signal Stuck Rich (Bank 1 Sensor 1)
P219A	Bank 1 Air-Fuel Ratio Imbalance
P2237	Oxygen (A/F) Sensor Pumping Current Circuit / Open (Bank 1 Sensor 1)
P2238	Oxygen (A/F) Sensor Pumping Current Circuit Low (Bank 1 Sensor 1)
P2239	Oxygen (A/F) Sensor Pumping Current Circuit High (Bank 1 Sensor 1)
P2252	Oxygen (A/F) Sensor Reference Ground Circuit Low (Bank 1 Sensor 1)
P2253	Oxygen (A/F) Sensor Reference Ground Circuit High (Bank 1 Sensor 1)
P2401	Evaporative Emission Leak Detection Pump Stuck OFF
P2402	Evaporative Emission Leak Detection Pump Stuck ON
P2419	Evaporative Emission System Switching Valve Control Circuit Low
P2420	Evaporative Emission System Switching Valve Control Circuit High
P2610	ECM / PCM Internal Engine Off Timer Performance
P261B	Engine Coolant Pump "B" Control Malfunction
P261C	Engine Coolant Pump "B" Control Circuit Low
P261D	Engine Coolant Pump "B" Control Circuit High
P3190	Poor Engine Power
P3191	Engine does not Start
P3193	Fuel Run Out
U0293	Lost Communication with HV ECU

HEATING / AIR CONDITIONING DTCS

AIR CONDITIONING SYSTEM

AIR CONDITIONING SYSTEM DTC IDENTIFICATION

DTC Code	**Description**
B1411/11	Room Temperature Sensor Circuit

B1412/12	Ambient Temperature Sensor Circuit
B1413/13	Evaporator Temperature Sensor Circuit
B1423/23	Pressure Sensor Circuit
B1441/41	Air Mix Damper Control Servo Motor Circuit (Passenger Side)
B1442/42	Air Inlet Damper Control Servo Motor Circuit
B1443/43	Air Outlet Damper Control Servo Motor Circuit
B1446/46	Air Mix Damper Control Servo Motor Circuit (Driver Side)
B1462/62	Room Humidity Sensor Circuit
B1471/71	A/C Inverter High Voltage Power Resource System Malfunction
B1472/72	A/C Inverter High Voltage Output System Malfunction
B1473/73	A/C Inverter Start-up Signal System Malfunction
B1474/74	A/C Inverter Malfunction
B1475/75	A/C Inverter Cooling / Heating System Malfunction
B1476/76	A/C Inverter Load System Malfunction
B1477/77	A/C Inverter Low Voltage Power Resource System Malfunction
B1497/97	BUS IC Communication Malfunction
B1498/98	Communication Malfunction (A/C Inverter Local)
B14A2	Driver Side Solar Sensor Short Circuit
B14A3	Front Passenger Side Solar Sensor Short Circuit
B14A8	Glass Temperature Sensor Circuit
B14A9	Glass Surroundings Temperature Sensor Circuit
B14B2	Lost Communication with Front Panel LIN
B14B8	Refrigerant Shortage
U0131	Lost Communication with Electric Power Steering ECU
U0142	Lost Communication with Main Body ECU
U0155	Lost Communication with Combination Meter
U0293	Lost Communication with HV ECU

HYBRID CONTROL SYSTEM DTC IDENTIFICATION

DTC Code	Description
P0AA6-611	Hybrid Battery Voltage System Isolation Fault

HYBRID / BATTERY CONTROL DTCS

HYBRID BATTERY SYSTEM

HYBRID BATTERY SYSTEM DTC IDENTIFICATION

DTC Code	Description
P0A7F-123	Hybrid Battery Pack Deterioration
P0A80-123	Replace Hybrid Battery Pack
P0A82-123	Hybrid Battery Pack Cooling Fan 1 Performance / Stuck OFF
P0A84-123	Hybrid Battery Pack Cooling Fan 1 Control Circuit Low

P0A85-123	Hybrid Battery Pack Cooling Fan 1 Control Circuit High
P0A95-123	High Voltage Fuse
P0A9C-123	Hybrid Battery Temperature Sensor "A" Range / Performance
P0A9D-123	Hybrid Battery Temperature Sensor "A" Circuit Low
P0A9E-123	Hybrid Battery Temperature Sensor "A" Circuit High
P0AAE-123	Hybrid Battery Pack Air Temperature Sensor "A" Circuit Low
P0AAF-123	Hybrid Battery Pack Air Temperature Sensor "A" Circuit High
P0ABF-123	Hybrid Battery Pack Current Sensor Circuit
P0AC0-123	Hybrid Battery Pack Current Sensor Circuit Range / Performance
P0AC1-123	Hybrid Battery Pack Current Sensor Circuit Low
P0AC2-123	Hybrid Battery Pack Current Sensor Circuit High
P0AC6-123	Hybrid Battery Temperature Sensor "B" Range / Performance
P0AC7-123	Hybrid Battery Temperature Sensor "B" Circuit Low
P0AC8-123	Hybrid Battery Temperature Sensor "B" Circuit High
P0ACB-123	Hybrid Battery Temperature Sensor "C" Range / Performance
P0ACC-123	Hybrid Battery Temperature Sensor "C" Circuit Low
P0ACD-123	Hybrid Battery Temperature Sensor "C" Circuit High
P0AFC-123	Hybrid Battery Pack Sensor Module
P0B3D-123	Hybrid Battery Voltage Sensor "A" Circuit Low
P0B42-123	Hybrid Battery Voltage Sensor "B" Circuit Low
P0B47-123	Hybrid Battery Voltage Sensor "C" Circuit Low
P0B4C-123	Hybrid Battery Voltage Sensor "D" Circuit Low
P0B51-123	Hybrid Battery Voltage Sensor "E" Circuit Low
P0B56-123	Hybrid Battery Voltage Sensor "F" Circuit Low
P0B5B-123	Hybrid Battery Voltage Sensor "G" Circuit Low
P0B60-123	Hybrid Battery Voltage Sensor "H" Circuit Low
P0B65-123	Hybrid Battery Voltage Sensor "I" Circuit Low
P0B6A-123	Hybrid Battery Voltage Sensor "J" Circuit Low
P0B6F-123	Hybrid Battery Voltage Sensor "K" Circuit Low
P0B74-123	Hybrid Battery Voltage Sensor "L" Circuit Low
P0B79-123	Hybrid Battery Voltage Sensor "M" Circuit Low
P0B7E-123	Hybrid Battery Voltage Sensor "N" Circuit Low
P0B83-123	Hybrid Battery Voltage Sensor "O" Circuit Low
P0B88-123	Hybrid Battery Voltage Sensor "P" Circuit Low
P0B8D-123	Hybrid Battery Voltage Sensor "Q" Circuit Low
P0B92-123	Hybrid Battery Voltage Sensor "R" Circuit Low
P3011-123	Battery Block 1 Becomes Weak
P3012-123	Battery Block 2 Becomes Weak
P3013-123	Battery Block 3 Becomes Weak
P3014-123	Battery Block 4 Becomes Weak
P3015-123	Battery Block 5 Becomes Weak
P3016-123	

	Battery Block 6 Becomes Weak
P3017-123	Battery Block 7 Becomes Weak
P3018-123	Battery Block 8 Becomes Weak
P3019-123	Battery Block 9 Becomes Weak
P3020-123	Battery Block 10 Becomes Weak
P3021-123	Battery Block 11 Becomes Weak
P3022-123	Battery Block 12 Becomes Weak
P3023-123	Battery Block 13 Becomes Weak
P3024-123	Battery Block 14 Becomes Weak
P3025-123	Battery Block 15 Becomes Weak
P3026-123	Battery Block 16 Becomes Weak
P3027-123	Battery Block 17 Becomes Weak
P3065-123	Hybrid Battery Temperature Sensor Range/Performance Stuck "A"
P308A-123	Hybrid Battery Voltage Sensor All Circuits Low
U029A-123	Lost Communication with Hybrid Battery Pack Sensor Module

HYBRID CONTROL SYSTEM

HYBRID CONTROL SYSTEM DTC IDENTIFICATION

DTC Code	Description
P0069-273	Manifold Absolute Pressure - Barometric Pressure Correlation
P0340-886	Camshaft Position Sensor "A" Circuit
P0343-747	Camshaft Position Sensor "A" Circuit High Input
P0516-769	Battery Temperature Sensor Circuit Low
P0517-770	Battery Temperature Sensor Circuit High
P060B-134	Internal Control Module A/D Processing Performance
P060B-135	Internal Control Module A/D Processing Performance
P060B-570	Internal Control Module A/D Processing Performance
P062F-143	Internal Control Module EEPROM Error
P062F-165	Internal Control Module EEPROM Error
P06A4-209	Sensor Reference Voltage "D" Circuit Low
P06A5-210	Sensor Reference Voltage "D" Circuit High
P0705-757	Transmission Range Sensor Circuit
P0705-758	Transmission Range Sensor Circuit
P0851-775	Park / Neutral Switch Input Circuit Low
P0A01-726	Motor Electronics Coolant Temperature Sensor Circuit Range / Performance
P0A02-719	Motor Electronics Coolant Temperature Sensor Circuit Low
P0A03-720	Motor Electronics Coolant Temperature Sensor Circuit High
P0A04-725	Motor Electronics Coolant Temperature Sensor Circuit Intermittent
P0A08-264	DC / DC Converter Status Circuit
P0A09-265	DC / DC Converter Status Circuit Low Input

P0A09-591	DC / DC Converter Status Circuit Low Input
P0A0D-350	High Voltage System Inter-Lock Circuit High
P0A0D-351	High Voltage System Inter-Lock Circuit High
P0A0F-204	Engine Failed to Start
P0A0F-205	Engine Failed to Start
P0A0F-206	Engine Failed to Start
P0A0F-238	Engine Failed to Start
P0A0F-524	Engine Failed to Start
P0A0F-525	Engine Failed to Start
P0A10-263	DC / DC Converter Status Circuit High Input
P0A10-592	DC / DC Converter Status Circuit High Input
P0A1A-151	Generator Control Module
P0A1A-155	Generator Control Module
P0A1A-156	Generator Control Module
P0A1A-166	Generator Control Module
P0A1A-200	Generator Control Module
P0A1A-658	Generator Control Module
P0A1A-659	Generator Control Module
P0A1A-791	Generator Control Module
P0A1A-792	Generator Control Module
P0A1A-793	Generator Control Module
P0A1B-163	Drive Motor "A" Control Module
P0A1B-164	Drive Motor "A" Control Module
P0A1B-168	Drive Motor "A" Control Module
P0A1B-192	Drive Motor "A" Control Module
P0A1B-193	Drive Motor "A" Control Module
P0A1B-198	Drive Motor "A" Control Module
P0A1B-511	Drive Motor "A" Control Module
P0A1B-512	Drive Motor "A" Control Module
P0A1B-661	Drive Motor "A" Control Module
P0A1B-786	Drive Motor "A" Control Module
P0A1B-794	Drive Motor "A" Control Module
P0A1B-795	Drive Motor "A" Control Module
P0A1B-796	Drive Motor "A" Control Module
P0A1D-144	Hybrid Powertrain Control Module
P0A1D-148	Hybrid Powertrain Control Module
P0A1D-162	Hybrid Powertrain Control Module
P0A1D-187	Hybrid Powertrain Control Module
P0A1D-721	Hybrid Powertrain Control Module
P0A1D-722	Hybrid Powertrain Control Module
P0A1D-723	Hybrid Powertrain Control Module
P0A1D-787	

	Hybrid Powertrain Control Module
P0A1D-818	Hybrid Powertrain Control Module
P0A1D-821	Hybrid Powertrain Control Module
P0A1D-822	Hybrid Powertrain Control Module
P0A1D-823	Hybrid Powertrain Control Module
P0A2B-250	Drive Motor "A" Temperature Sensor Circuit Range / Performance
P0A2C-247	Drive Motor "A" Temperature Sensor Circuit Low
P0A2D-249	Drive Motor "A" Temperature Sensor Circuit High
P0A2E-248	Drive Motor "A" Temperature Sensor Circuit Intermittent
P0A37-260	Generator Temperature Sensor Circuit Range / Performance
P0A38-257	Generator Temperature Sensor Circuit Low
P0A39-259	Generator Temperature Sensor Circuit High
P0A3A-258	Generator Temperature Sensor Circuit Intermittent
P0A3F-243	Drive Motor "A" Position Sensor Circuit
P0A40-500	Drive Motor "A" Position Sensor Circuit Range / Performance
P0A41-245	Drive Motor "A" Position Sensor Circuit Low
P0A4B-253	Generator Position Sensor Circuit
P0A4C-513	Generator Position Sensor Circuit Range / Performance
P0A4D-255	Generator Position Sensor Circuit Low
P0A51-174	Drive Motor "A" Current Sensor Circuit
P0A60-288	Drive Motor "A" Phase V Current
P0A60-290	Drive Motor "A" Phase V Current
P0A60-294	Drive Motor "A" Phase V Current
P0A60-501	Drive Motor "A" Phase V Current
P0A63-296	Drive Motor "A" Phase W Current
P0A63-298	Drive Motor "A" Phase W Current
P0A63-302	Drive Motor "A" Phase W Current
P0A63-502	Drive Motor "A" Phase W Current
P0A72-326	Generator Phase V Current
P0A72-328	Generator Phase V Current
P0A72-333	Generator Phase V Current
P0A72-515	Generator Phase V Current
P0A75-334	Generator Phase W Current
P0A75-336	Generator Phase W Current
P0A75-341	Generator Phase W Current
P0A75-516	Generator Phase W Current
P0A78-113	Drive Motor "A" Inverter Performance
P0A78-121	Drive Motor "A" Inverter Performance
P0A78-128	Drive Motor "A" Inverter Performance
P0A78-202	Drive Motor "A" Inverter Performance
P0A78-266	Drive Motor "A" Inverter Performance
P0A78-267	

	Drive Motor "A" Inverter Performance
P0A78-279	Drive Motor "A" Inverter Performance
P0A78-282	Drive Motor "A" Inverter Performance
P0A78-284	Drive Motor "A" Inverter Performance
P0A78-286	Drive Motor "A" Inverter Performance
P0A78-287	Drive Motor "A" Inverter Performance
P0A78-306	Drive Motor "A" Inverter Performance
P0A78-503	Drive Motor "A" Inverter Performance
P0A78-504	Drive Motor "A" Inverter Performance
P0A78-505	Drive Motor "A" Inverter Performance
P0A78-506	Drive Motor "A" Inverter Performance
P0A78-565	Drive Motor "A" Inverter Performance
P0A78-586	Drive Motor "A" Inverter Performance
P0A78-806	Drive Motor "A" Inverter Performance
P0A78-807	Drive Motor "A" Inverter Performance
P0A78-808	Drive Motor "A" Inverter Performance
P0A7A-122	Generator Inverter Performance
P0A7A-130	Generator Inverter Performance
P0A7A-203	Generator Inverter Performance
P0A7A-322	Generator Inverter Performance
P0A7A-324	Generator Inverter Performance
P0A7A-325	Generator Inverter Performance
P0A7A-344	Generator Inverter Performance
P0A7A-517	Generator Inverter Performance
P0A7A-518	Generator Inverter Performance
P0A7A-809	Generator Inverter Performance
P0A7A-810	Generator Inverter Performance
P0A7A-811	Generator Inverter Performance
P0A90-251	Drive Motor "A" Performance
P0A90-509	Drive Motor "A" Performance
P0A92-261	Hybrid Generator Performance
P0A92-521	Hybrid Generator Performance
P0A93-346	Inverter Cooling System Performance
P0A94-127	DC / DC Converter Performance
P0A94-172	DC / DC Converter Performance
P0A94-442	DC / DC Converter Performance
P0A94-547	DC / DC Converter Performance
P0A94-548	DC / DC Converter Performance
P0A94-549	DC / DC Converter Performance
P0A94-550	DC / DC Converter Performance
P0A94-553	DC / DC Converter Performance
P0A94-554	

	DC / DC Converter Performance
P0A94-555	DC / DC Converter Performance
P0A94-556	DC / DC Converter Performance
P0A94-557	DC / DC Converter Performance
P0A94-564	DC / DC Converter Performance
P0A94-585	DC / DC Converter Performance
P0A94-587	DC / DC Converter Performance
P0A94-589	DC / DC Converter Performance
P0A94-590	DC / DC Converter Performance
P0AA1-231	Hybrid Battery Positive Contactor Circuit Stuck Closed
P0AA1-233	Hybrid Battery Positive Contactor Circuit Stuck Closed
P0AA4-232	Hybrid Battery Negative Contactor Circuit Stuck Closed
P0AA6-526	Hybrid Battery Voltage System Isolation Fault
P0AA6-611	Hybrid Battery Voltage System Isolation Fault
P0AA6-612	Hybrid Battery Voltage System Isolation Fault
P0AA6-613	Hybrid Battery Voltage System Isolation Fault
P0AA6-614	Hybrid Battery Voltage System Isolation Fault
P0AA7-727	Hybrid Battery Voltage Isolation Sensor Circuit
P0AC0-817	Hybrid Battery Pack Current Sensor Circuit Range / Performance
P0ADB-227	Hybrid Battery Positive Contactor Control Circuit Low
P0ADC-226	Hybrid Battery Positive Contactor Control Circuit High
P0ADF-229	Hybrid Battery Negative Contactor Control Circuit Low
P0AE0-228	Hybrid Battery Negative Contactor Control Circuit High
P0AE2-773	Hybrid Battery Precharge Contactor Circuit Stuck Closed
P0AE6-225	Hybrid Battery Precharge Contactor Control Circuit Low
P0AE7-224	Hybrid Battery Precharge Contactor Control Circuit High
P0AEE-277	Motor Inverter Temperature Sensor "A" Circuit Range / Performance
P0AEF-275	Drive Motor Inverter Temperature Sensor "A" Circuit Low
P0AF0-274	Drive Motor Inverter Temperature Sensor "A" Circuit High
P0AF1-276	Drive Motor Inverter Temperature Sensor "A" Circuit Intermittent / Erratic
P0AFC-129	Hybrid Battery Pack Sensor Module
P0AFC-150	Hybrid Battery Pack Sensor Module
P0BCD-315	Generator Inverter Temperature Sensor Circuit Range / Performance
P0BCE-313	Generator Inverter Temperature Sensor Circuit Low
P0BCF-312	Generator Inverter Temperature Sensor Circuit High
P0BD0-314	Generator Inverter Temperature Sensor Circuit Intermittent / Erratic
P0C30-390	Hybrid Battery Pack State of Charge High
P0C39-626	DC / DC Converter Temperature Sensor "A" Range / Performance
P0C3A-621	DC / DC Converter Temperature Sensor "A" Low
P0C3B-622	DC / DC Converter Temperature Sensor "A" High
P0C3C-625	DC / DC Converter Temperature Sensor "A" Intermittent / Erratic
P0C3E-628	

	DC / DC Converter Temperature Sensor "B" Range / Performance
P0C3F-623	DC / DC Converter Temperature Sensor "B" Low
P0C40-624	DC / DC Converter Temperature Sensor "B" High
P0C41-627	DC / DC Converter Temperature Sensor "B" Intermittent / Erratic
P0C73-776	Motor Electronics Coolant Pump "A" Control Performance
P0C76-523	Hybrid Battery System Discharge Time Too Long
P1606-308	Collision has been detected or Collision Sensor Connection (Open)
P1606-317	Collision has been detected or Collision Sensor Connection (Open)
P2120-152	Throttle / Pedal Position Sensor / Switch "D" Circuit
P2121-106	Throttle / Pedal Position Sensor / Switch "D" Circuit Range / Performance
P2122-104	Throttle / Pedal Position Sensor / Switch "D" Circuit Low Input
P2123-105	Throttle / Pedal Position Sensor / Switch "D" Circuit High Input
P2125-153	Throttle / Pedal Position Sensor / Switch "E" Circuit
P2126-109	Throttle / Pedal Position Sensor / Switch "E" Circuit Range / Performance
P2127-107	Throttle / Pedal Position Sensor / Switch "E" Circuit Low Input
P2128-108	Throttle / Pedal Position Sensor / Switch "E" Circuit High Input
P2138-110	Throttle / Pedal Position Sensor / Switch "D" / "E" Voltage Correlation
P2138-154	Throttle / Pedal Position Sensor / Switch "D" / "E" Voltage Correlation
P2228-268	Barometric Pressure Sensor "A" Circuit Low
P2229-269	Barometric Pressure Sensor "A" Circuit High
P2511-149	HV CPU Power Relay Sense Circuit Intermittent No Continuity
P2532-772	Ignition Switch Run Position Circuit High
P3000-388	Battery Control System
P3000-389	Battery Control System
P3000-603	Battery Control System
P3004-131	High Voltage Power Resource
P3004-132	High Voltage Power Resource
P3004-133	High Voltage Power Resource
P3004-800	High Voltage Power Resource
P3004-801	High Voltage Power Resource
P3004-803	High Voltage Power Resource
P3107-213	Lost Communication with Airbag System Control Module
P3107-214	Lost Communication with Airbag System Control Module
P3107-215	Lost Communication with Airbag System Control Module
P3108-536	Lost Communication with A/C System Control Module
P3110-223	HV Main Relay
P3147-239	Transmission system
P3147-240	Transmission system
P3147-241	Transmission system
P3147-242	Transmission system
P314A-828	Inverter Coolant Pump Speed Signal
P321F-318	

	All HV Gate Blocking Range/Performance
P321F-319	Part of HV Gate Blocking Range/Performance
P324E-788	MG-ECU Power Relay Intermittent Circuit
U0100-211	Lost Communication with ECM / PCM "A"
U0100-212	Lost Communication with ECM / PCM "A"
U0100-530	Lost Communication with ECM / PCM "A"
U0110-159	Lost Communication with Drive Motor Control Module "A"
U0110-160	Lost Communication with Drive Motor Control Module "A"
U0110-656	Lost Communication with Drive Motor Control Module "A"
U0110-657	Lost Communication with Drive Motor Control Module "A"
U0129-220	Lost Communication with Brake System Control Module
U0129-222	Lost Communication with Brake System Control Module
U0129-527	Lost Communication with Brake System Control Module
U0129-528	Lost Communication with Brake System Control Module
U0140-146	Communication Error from Body ECU to HV ECU
U0151-763	Communication Error from Airbag ECU to HV ECU
U0164-594	Communication Error from A/C ECU to HV ECU
U0164-827	Communication Error from A/C ECU to HV ECU
U0424-537	Invalid Data Received from HVAC Control Module
U1107-436	Lost Communication with Power Management Module

LIGHTING (EXT) DTCS

AUTOMATIC HEADLIGHT BEAM LEVEL CONTROL SYSTEM

AUTOMATIC HEADLIGHT BEAM LEVEL CONTROL SYSTEM DTC IDENTIFICATION

DTC Code	**Description**
B2416	Height Control Sensor Malfunction
B241A	Rear Height Control Sensor
B2420	HL AutoLeveling ECU Failure
B2450	Initialization has not been Performed
B2451	Vehicle Specifications have not been Stored
B2452	Height Control Sensor Data Out of Range When Initializing
B2453	Variation Error

LIGHTING SYSTEM

LIGHTING SYSTEM DTC IDENTIFICATION

DTC Code	**Description**
B1244	Light Sensor Circuit Malfunction

METER / GAUGE / DISPLAY DTCS

METER / GAUGE SYSTEM

METER / GAUGE SYSTEM DTC IDENTIFICATION

DTC Code	Description
B1500	Fuel Sender Open Detected
B1507	Open in Turn Signal Circuit
B1508	Short in Turn Signal / Hazard Flasher Circuit
U0100	Lost Communication with ECM / PCM "A"
U0129	Lost Communication with Skid Control ECU
U0131	Lost Communication with Power Steering Control Module
U0142	Lost Communication with Main Body ECU
U0151	Lost Communication with Airbag ECU

NAVIGATION / MULTI INFO DISPLAY DTCS

NAVIGATION SYSTEM (FOR NAVIGATION RECEIVER TYPE)

NAVIGATION SYSTEM (FOR NAVIGATION RECEIVER TYPE) DTC IDENTIFICATION

DTC Code	Description
B1551	HD Radio Tuner Malfunction
B1579	Voice Recognition Microphone Disconnected
B1585	USB Media Malfunction
B15A0	LAN Master Malfunction
B15A3	Stereo Component Amplifier Malfunction
B15AD	Navigation Processor Malfunction
B15B0	Display Screen Malfunction
B15B3	Radio Tuner Malfunction
B15B5	DVD Changer Malfunction
B15B7	Bluetooth Module Malfunction
B15B8	Harddisk Malfunction
B15BA	XM Tuner Malfunction
B15C0	Short in GPS Antenna
B15C1	Open in GPS Antenna
B15C2	Speed Signal Malfunction
B15C3	Speaker Output Short
B15D3	Stereo Component Amplifier Disconnected
B15E7	Harddisk Reading/Writing Malfunction(Low Temperature)
B15E8	Harddisk Reading/Writing Malfunction(High Temperature)
B15F5	A/C ECU Vehicle Information Reading/Writing Processor Malfunction
B15F6	Main Body ECU Vehicle Information Reading/Writing Process Malfunction
B15F7	Certification ECU Vehicle Information Reading/Writing Process Malfunction
B15FE	XM Tuner Antenna Disconnected

B15FF	XM Tuner Antenna Short
U0073	Sending Malfunction (Navigation to APGS)
U0100	Lost Communication with ECM / PCM "A"
U0129	Lost Communication with Brake System Control Module
U0140	Lost Communication with Body Control Module
U0155	Meter ECU Communication
U0293	Lost Communication with HV ECU

NAVIGATION SYSTEM (FOR RADIO AND DISPLAY TYPE)

NAVIGATION SYSTEM (FOR RADIO AND DISPLAY TYPE) DTC IDENTIFICATION

DTC Code	Description
B1551	HD Radio Tuner Malfunction
B1552	Extension Module Malfunction
B156C	Extension Module Disconnected
B1579	Voice Recognition Microphone Disconnected
B157E	Bluetooth Antenna Disconnected
B1585	USB Device Malfunction
B158A	Extension Module Noise Adjustment Malfunction
B15A0	LAN Master Malfunction
B15A3	Stereo Component Amplifier Malfunction
B15B0	Display Screen Malfunction
B15B3	Radio Tuner Malfunction
B15B4	CD Changer Malfunction
B15B7	Bluetooth Module Malfunction
B15BA	XM Tuner Malfunction
B15C0	Short in GPS Antenna
B15C1	Open in GPS Antenna
B15C3	Speaker Output Short
B15D3	Stereo Component Amplifier Disconnected
B15F6	Main Body ECU Vehicle Information Reading/Writing Process Malfunction
B15FE	XM Tuner Antenna Disconnected
B15FF	XM Tuner Antenna Short
U0073	Sending Malfunction (Navigation to APGS)
U0100	Lost Communication with ECM / PCM "A"
U0129	Lost Communication with Brake System Control Module
U0140	Lost Communication with Body Control Module
U0155	Meter ECU Communication
U0293	Lost Communication with HV ECU

NETWORKING DTCS

CAN COMMUNICATION SYSTEM

SUB BUS 15 (MALFUNCTION OF SUB BUS 15) DTC IDENTIFICATION

DTC Code	Description
U0100	Lost Communication with ECM / PCM "A"
U0129	Lost Communication with Brake System Control Module
U0293	Lost Communication with HV ECU

SUB BUS 15 (OPEN IN SUB BUS BRANCH, COMMUNICATION STOP) DTC IDENTIFICATION

DTC Code	Description
U0129	Lost Communication with Brake System Control Module

SUB BUS 11 (POWER MANAGEMENT CONTROL ECU OUTPUT DTCS (TECHSTREAM DISPLAY: PM1 GATEWAY)) DTC IDENTIFICATION

DTC Code	Description
U0232	Lost Communication with Blind Spot Monitor Slave Module
U0233	Lost Communication with Blind Spot Monitor Master Module
U1002	Lost Communication with Gateway Module

LIN COMMUNICATION SYSTEM

MAIN BODY ECU (MULTIPLEX NETWORK BODY ECU) DTC IDENTIFICATION

DTC Code	Description
B126A	Remote Engine Starter ECU Communication Stop
B1273	Sliding Roof ECU Communication Stop
B2321	Driver Side Door ECU Communication Stop
B2325	LIN Communication Bus Malfunction

CERTIFICATION ECU (SMART KEY ECU ASSEMBLY) DTC IDENTIFICATION

DTC Code	Description
B2785	Communication Malfunction between ECUs Connected by LIN
B2786	No Response from Steering Lock ECU
B2789	No Response from ID BOX
B278C	Lost Communication with Power Source Control

POWER MANAGEMENT CONTROL ECU DTC IDENTIFICATION

DTC Code	Description
B2287	LIN Communication Master Malfunction

PARK ASSIST / MONITORING DTCS

BLIND SPOT MONITOR SYSTEM

BLIND SPOT MONITOR SYSTEM DTC IDENTIFICATION

DTC Code	Description
C1A45	Vehicle Speed Sensor
C1A47	Steering Angle Sensor
C1AB0	Short to +B in Outer Mirror Indicator(Master)
C1AB1	Short to +B in Outer Mirror Indicator(Slave)
C1AB2	Short to GND in Outer Mirror Indicator(Master)
C1AB3	Short to GND in Outer Mirror Indicator(Slave)
C1AB4	Open in Outer Mirror Indicator(Master)
C1AB5	Open in Outer Mirror Indicator(Slave)
C1AB6	Blind Spot Monitor Master Module
C1AB7	Blind Spot Monitor Slave Module
C1AB8	Destination Information Undefined
C1ABA	Blind Spot Monitor Slave Module Connection Incorrect
C1ABB	Blind Spot Monitor Master Module Beam Axis Inspection Incomplete
C1ABC	Blind Spot Monitor Slave Module Beam Axis Inspection Incomplete
U0126	Lost Communication with Steering Angle Sensor Module
U0129	Lost Communication with Brake System Control Module
U0142	Lost Communication with Body Control Module "B"
U0232	Lost Communication with Blind Spot Monitor Slave Module
U0233	Lost Communication with Blind Spot Monitor Master Module
U0293	Lost Communication with HV ECU
U1331	Software Incompatibility with Body Control Module "B"

INTUITIVE PARKING ASSIST SYSTEM

INTUITIVE PARKING ASSIST SYSTEM DTC IDENTIFICATION

DTC Code	Description
C1AE1	Front Left Sensor Malfunction
C1AE4	Front Right Sensor Malfunction
C1AE6	Rear Left Sensor Malfunction
C1AE7	Rear Left Center Sensor Malfunction
C1AE8	Rear Right Center Sensor Malfunction
C1AE9	Rear Right Sensor Malfunction
C1AEC	Front Sensor Communication Malfunction
C1AED	Rear Sensor Communication Malfunction
U0100	Lost Communication with ECM / PCM "A"
U0101	Lost Communication with TCM
U0142	Lost Communication with Body Control Module "B"
U0155	Lost Communication with Instrument Panel Cluster Control Module (Combination Meter)

PARKING ASSIST MONITOR SYSTEM

PARKING ASSIST MONITOR SYSTEM DTC IDENTIFICATION

DTC Code	**Description**
C1622	Open or Short Circuit in Back Camera Signal
C1625	Open or Short in Steering Angle Sensor +B
C1626	Steering Angle Sensor Failure
C1691	Back Camera Initialization Incomplete
C1694	Steering Angle Initialization Incomplete
U0126	Lost Communication with Steering Angle Sensor Module
U0140	Lost Communication with Body Control Module

POWER ASSIST SYSTEMS DTCS

POWER STEERING SYSTEM

POWER STEERING SYSTEM DTC IDENTIFICATION

DTC Code	**Description**
C1511/11	Torque Sensor 1 Malfunction
C1512/11	Torque Sensor 2 Malfunction
C1513/11	Torque Sensor Deviation Excessive
C1514/11	Torque Sensor Power Supply Voltage Malfunction
C1521/25	Short in Motor Circuit
C1524/24	Motor Circuit Malfunction
C1528/12	Motor Rotation Angle Sensor Malfunction
C1531/25	ECU Malfunction
C1532/25	ECU Malfunction
C1533/25	Temperature Sensor Circuit is Low or High
C1534/25	EEPROM Malfunction
C1541/13	Vehicle Speed Signal
C1551/25	IG Power Supply Voltage Malfunction
C1552/22	PIG Power Supply Voltage Malfunction
C1554/23	Power Supply Relay Failure
C1555/25	Motor Relay Welding Failure
C1581/26	Assist Map Number Un-Writing
C1582/26	Assist Map Number Mismatch
U0129/42	Lost Communication with Brake System Control Module
U0293/41	Lost Communication with Hybrid Control Module

SLIDING ROOF / DTCS

SLIDING ROOF SYSTEM

SLIDING ROOF SYSTEM DTC IDENTIFICATION

DTC Code	Description
B2341	Sensor (Motor) Failure
B2342	Switch Failure
B2343	Position Initialization Incomplete
B2344	Position Failure

STEERING COLUMN DTCS

STEERING LOCK SYSTEM

STEERING LOCK SYSTEM DTC IDENTIFICATION

DTC Code	Description
B2781	Open / Short in Steering Lock ECU
B2782	Power Source Control ECU Malfunction
B2788	IG2 Signal Malfunction

SUPPLEMENTAL RESTRAINT SYSTEMS DTCS

AIRBAG SYSTEM (FOR BUILT-IN TYPE YAW RATE SENSOR)

AIRBAG SYSTEM (FOR BUILT-IN TYPE YAW RATE SENSOR) DTC IDENTIFICATION

DTC Code	Description
B1000/31	Center Airbag Sensor Assembly Malfunction
B1610/13	Front Airbag Sensor RH Malfunction
B1612/83	Lost Communication with Front Airbag Sensor RH
B1613/83	Front Airbag Sensor RH Initialization Incomplete
B1615/14	Front Airbag Sensor LH Malfunction
B1617/84	Lost Communication with Front Airbag Sensor LH
B1618/84	Front Airbag Sensor LH Initialization Incomplete
B161A/8A	Lost Communication with Front Satellite Sensor Bus
B1620/21	Side Airbag Sensor RH Circuit Malfunction
B1622/81	Lost communication with Side Airbag Sensor RH
B1623/81	Side Airbag Sensor Assembly RH Initialization Incomplete
B1625/22	Side Airbag Sensor LH Circuit Malfunction
B1627/82	Lost communication with Side Airbag Sensor LH
B1628/82	Side Airbag Sensor Assembly LH Initialization Incomplete
B1630/23	Rear Airbag Sensor RH Circuit Malfunction
B1632/81	Lost Communication with Rear Airbag Sensor RH
B1633/81	Rear Airbag Sensor Assembly RH Initialization Incomplete
B1635/24	Rear Airbag Sensor LH Circuit Malfunction
B1637/82	Lost Communication with Rear Airbag Sensor LH

B1638/82	Rear Airbag Sensor Assembly LH Initialization Incomplete
B1642/81	Lost Communication with Side Satellite Sensor Bus RH
B1647/82	Lost Communication with Side Satellite Sensor Bus LH
B1650/32	Occupant Classification System Malfunction
B1656/38	Seat Belt Buckle Switch LH Circuit Malfunction
B1660/43	Passenger Airbag ON/OFF Indicator Circuit Malfunction
B1690/15	Door Side Airbag Sensor RH Malfunction
B1692/81	Lost Communication with Door Side Airbag Sensor RH
B1693/81	Door Side Airbag Sensor RH Initialization Incomplete
B1695/16	Door Side Airbag Sensor LH Malfunction
B1697/82	Lost Communication with Door Side Airbag Sensor LH
B1698/82	Door Side Airbag Sensor LH Initialization Incomplete
B1800/51	Short in Driver Side Squib Circuit
B1801/51	Open in Driver Side Squib Circuit
B1802/51	Short to GND in Driver Side Squib Circuit
B1803/51	Short to B+ in Driver Side Squib Circuit
B1805/52	Short in Front Passenger Side Squib Circuit
B1806/52	Open in Front Passenger Side Squib Circuit
B1807/52	Short to GND in Front Passenger Side Squib Circuit
B1808/52	Short to B+ in Front Passenger Side Squib Circuit
B1810/53	Short in Driver Side Squib 2nd Step Circuit
B1811/53	Open in Driver Side Squib 2nd Step Circuit
B1812/53	Short to GND in Driver Side Squib 2nd Step Circuit
B1813/53	Short to B+ in Driver Side Squib 2nd Step Circuit
B1815/54	Short in Front Passenger Side Squib 2nd Step Circuit
B1816/54	Open in Front Passenger Side Squib 2nd Step Circuit
B1817/54	Short to GND in Front Passenger Side Squib 2nd Step Circuit
B1818/54	Short to B+ in Front Passenger Side Squib 2nd Step Circuit
B1820/55	Short in Side Squib RH Circuit
B1821/55	Open in Side Squib RH Circuit
B1822/55	Short to GND in Side Squib RH Circuit
B1823/55	Short to B+ in Side Squib RH Circuit
B1825/56	Short in Side Squib LH Circuit
B1826/56	Open in Side Squib LH Circuit
B1827/56	Short to GND in Side Squib LH Circuit
B1828/56	Short to B+ in Side Squib LH Circuit
B1830/57	Short in Curtain Shield Squib RH Circuit
B1831/57	Open in Curtain Shield Squib RH Circuit
B1832/57	Short to GND in Curtain Shield Squib RH Circuit
B1833/57	Short to B+ in Curtain Shield Squib RH Circuit
B1835/58	Short in Curtain Shield Squib LH Circuit
B1836/58	

	Open in Curtain Shield Squib LH Circuit
B1837/58	Short to GND in Curtain Shield Squib LH Circuit
B1838/58	Short to B+ in Curtain Shield Squib LH Circuit
B1850/62	Short in Rear Side Squib RH Circuit
B1851/62	Open in Rear Side Squib RH Circuit
B1852/62	Short to GND in Rear Side Squib RH Circuit
B1853/62	Short to B+ in Rear Side Squib RH Circuit
B1855/63	Short in Rear Side Squib LH Circuit
B1856/63	Open in Rear Side Squib LH Circuit
B1857/63	Short to GND in Rear Side Squib LH Circuit
B1858/63	Short to B+ in Rear Side Squib LH Circuit
B1860/64	Short in Driver Side Knee Airbag Squib Circuit
B1861/64	Open in Driver Side Knee Airbag Squib Circuit
B1862/64	Short to GND in Driver Side Knee Airbag Squib Circuit
B1863/64	Short to B+ in Driver Side Knee Airbag Squib Circuit
B1865/65	Short in Front Passenger Side Knee Airbag Squib Circuit
B1866/65	Open in Front Passenger Side Knee Airbag Squib Circuit
B1867/65	Short to GND in Front Passenger Side Knee Airbag Squib Circuit
B1868/65	Short to B+ in Front Passenger Side Knee Airbag Squib Circuit
B1900/73	Short in Front Pretensioner Squib RH Circuit
B1901/73	Open in Front Pretensioner Squib RH Circuit
B1902/73	Short to GND in Front Pretensioner Squib RH Circuit
B1903/73	Short to B+ in Front Pretensioner Squib RH Circuit
B1905/74	Short in Front Pretensioner Squib LH Circuit
B1906/74	Open in Front Pretensioner Squib LH Circuit
B1907/74	Short to GND in Front Pretensioner Squib LH Circuit
B1908/74	Short to B+ in Front Pretensioner Squib LH Circuit

AIRBAG SYSTEM (FOR SEPARATE TYPE YAW RATE SENSOR)

AIRBAG SYSTEM (FOR SEPARATE TYPE YAW RATE SENSOR) DTC IDENTIFICATION

DTC Code	Description
B1000/31	Center Airbag Sensor Assembly Malfunction
B1603/83	Front Satellite Sensor Bus RH Initialization Incomplete
B1608/84	Front Satellite Sensor Bus LH Initialization Incomplete
B1610/13	Front Airbag Sensor RH Malfunction
B1612/83	Lost Communication with Front Airbag Sensor RH
B1613/83	Front Airbag Sensor RH Initialization Incomplete
B1615/14	Front Airbag Sensor LH Malfunction
B1617/84	Lost Communication with Front Airbag Sensor LH
B1618/84	Front Airbag Sensor LH Initialization Incomplete

B1620/21	Side Airbag Sensor RH Circuit Malfunction
B1622/81	Lost communication with Side Airbag Sensor RH
B1623/81	Side Airbag Sensor Assembly RH Initialization Incomplete
B1625/22	Side Airbag Sensor LH Circuit Malfunction
B1627/82	Lost communication with Side Airbag Sensor LH
B1628/82	Side Airbag Sensor Assembly LH Initialization Incomplete
B1630/23	Rear Airbag Sensor RH Circuit Malfunction
B1632/81	Lost Communication with Rear Airbag Sensor RH
B1633/81	Rear Airbag Sensor Assembly RH Initialization Incomplete
B1635/24	Rear Airbag Sensor LH Circuit Malfunction
B1637/82	Lost Communication with Rear Airbag Sensor LH
B1638/82	Rear Airbag Sensor Assembly LH Initialization Incomplete
B1642/81	Lost Communication with Side Satellite Sensor Bus RH
B1643/81	Side Satellite Sensor Bus RH Initialization Incomplete
B1647/82	Lost Communication with Side Satellite Sensor Bus LH
B1648/82	Side Satellite Sensor Bus LH Initialization Incomplete
B1650/32	Occupant Classification System Malfunction
B1656/38	Seat Belt Buckle Switch LH Circuit Malfunction
B1660/43	Passenger Airbag ON/OFF Indicator Circuit Malfunction
B1690/15	Door Side Airbag Sensor RH Malfunction
B1692/81	Lost Communication with Door Side Airbag Sensor RH
B1693/81	Door Side Airbag Sensor RH Initialization Incomplete
B1695/16	Door Side Airbag Sensor LH Malfunction
B1697/82	Lost Communication with Door Side Airbag Sensor LH
B1698/82	Door Side Airbag Sensor LH Initialization Incomplete
B1800/51	Short in Driver Side Squib Circuit
B1801/51	Open in Driver Side Squib Circuit
B1802/51	Short to GND in Driver Side Squib Circuit
B1803/51	Short to B+ in Driver Side Squib Circuit
B1805/52	Short in Front Passenger Side Squib Circuit
B1806/52	Open in Front Passenger Side Squib Circuit
B1807/52	Short to GND in Front Passenger Side Squib Circuit
B1808/52	Short to B+ in Front Passenger Side Squib Circuit
B1810/53	Short in Driver Side Squib 2nd Step Circuit
B1811/53	Open in Driver Side Squib 2nd Step Circuit
B1812/53	Short to GND in Driver Side Squib 2nd Step Circuit
B1813/53	Short to B+ in Driver Side Squib 2nd Step Circuit
B1815/54	Short in Front Passenger Side Squib 2nd Step Circuit
B1816/54	Open in Front Passenger Side Squib 2nd Step Circuit
B1817/54	Short to GND in Front Passenger Side Squib 2nd Step Circuit
B1818/54	Short to B+ in Front Passenger Side Squib 2nd Step Circuit
B1820/55	

	Short in Side Squib RH Circuit
B1821/55	Open in Side Squib RH Circuit
B1822/55	Short to GND in Side Squib RH Circuit
B1823/55	Short to B+ in Side Squib RH Circuit
B1825/56	Short in Side Squib LH Circuit
B1826/56	Open in Side Squib LH Circuit
B1827/56	Short to GND in Side Squib LH Circuit
B1828/56	Short to B+ in Side Squib LH Circuit
B1830/57	Short in Curtain Shield Squib RH Circuit
B1831/57	Open in Curtain Shield Squib RH Circuit
B1832/57	Short to GND in Curtain Shield Squib RH Circuit
B1833/57	Short to B+ in Curtain Shield Squib RH Circuit
B1835/58	Short in Curtain Shield Squib LH Circuit
B1836/58	Open in Curtain Shield Squib LH Circuit
B1837/58	Short to GND in Curtain Shield Squib LH Circuit
B1838/58	Short to B+ in Curtain Shield Squib LH Circuit
B1850/62	Short in Rear Side Squib RH Circuit
B1851/62	Open in Rear Side Squib RH Circuit
B1852/62	Short to GND in Rear Side Squib RH Circuit
B1853/62	Short to B+ in Rear Side Squib RH Circuit
B1855/63	Short in Rear Side Squib LH Circuit
B1856/63	Open in Rear Side Squib LH Circuit
B1857/63	Short to GND in Rear Side Squib LH Circuit
B1858/63	Short to B+ in Rear Side Squib LH Circuit
B1860/64	Short in Driver Side Knee Airbag Squib Circuit
B1861/64	Open in Driver Side Knee Airbag Squib Circuit
B1862/64	Short to GND in Driver Side Knee Airbag Squib Circuit
B1863/64	Short to B+ in Driver Side Knee Airbag Squib Circuit
B1865/65	Short in Front Passenger Side Knee Airbag Squib Circuit
B1866/65	Open in Front Passenger Side Knee Airbag Squib Circuit
B1867/65	Short to GND in Front Passenger Side Knee Airbag Squib Circuit
B1868/65	Short to B+ in Front Passenger Side Knee Airbag Squib Circuit
B1900/73	Short in Front Pretensioner Squib RH Circuit
B1901/73	Open in Front Pretensioner Squib RH Circuit
B1902/73	Short to GND in Front Pretensioner Squib RH Circuit
B1903/73	Short to B+ in Front Pretensioner Squib RH Circuit
B1905/74	Short in Front Pretensioner Squib LH Circuit
B1906/74	Open in Front Pretensioner Squib LH Circuit
B1907/74	Short to GND in Front Pretensioner Squib LH Circuit
B1908/74	Short to B+ in Front Pretensioner Squib LH Circuit

OCCUPANT CLASSIFICATION SYSTEM

OCCUPANT CLASSIFICATION SYSTEM DTC IDENTIFICATION

DTC Code	Description
B1771	Passenger Side Buckle Switch Circuit Malfunction
B1782	Rear Occupant Classification Sensor LH Circuit Malfunction
B1783	Rear Occupant Classification Sensor RH Circuit Malfunction
B1787	Rear Occupant Classification Sensor LH Collision Detection
B1788	Rear Occupant Classification Sensor RH Collision Detection
B1790	Center Airbag Sensor Assembly Communication Circuit Malfunction
B1793	Occupant Classification Sensor Power Supply Circuit Malfunction
B1794	Open in Occupant Classification ECU Battery Positive Line
B1795	Occupant Classification ECU Malfunction
B1796	Sleep Operation Failure of Occupant Classification ECU

THEFT DETERRENT / KEYLESS ENTRY DTCS

ENGINE IMMOBILISER SYSTEM

CERTIFICATION ECU (SMART KEY ECU ASSEMBLY) DTC IDENTIFICATION

DTC Code	Description
B2779	Engine Starter Communication Malfunction
B2784	Antenna Coil Open / Short
B278A	Short to GND in Immobiliser System Power Source Circuit
B278D	Malfunction of ID-BOX Recognition

POWER MANAGEMENT CONTROL ECU DTC IDENTIFICATION

DTC Code	Description
B2799	Engine Immobiliser System Malfunction
B279A	Theft Deterrent System Communication Line High Fixation
B279C	Theft Deterrent System Presence Detection

SMART KEY SYSTEM (FOR ENTRY FUNCTION)

SMART KEY SYSTEM (FOR ENTRY FUNCTION) DTC IDENTIFICATION

DTC Code	Description
B27A1	Open in Driver Side Electrical Antenna Circuit
B27A2	Open in Front Passenger Side Electrical Antenna Circuit
B27A5	Open in Front Floor Electrical Key Oscillator Circuit
B27A6	Open in Rear Floor Electrical Key Oscillator Circuit
B27A7	Open in Inside Luggage Compartment Electrical Key Oscillator Circuit
B27A8	Open in Outside Luggage Compartment Electrical Key Antenna Circuit

SMART KEY SYSTEM (FOR START FUNCTION)

SMART KEY SYSTEM (FOR START FUNCTION) DTC IDENTIFICATION

DTC Code	Description
B2271	Ignition Hold Monitor Malfunction
B2274	ACC Monitor Malfunction
B2275	STSW Monitor Malfunction
B2277	Detecting Vehicle Submersion
B2282	Vehicle Speed Signal Malfunction
B2283	Vehicle Speed Sensor Malfunction
B2284	Brake Signal Malfunction
B2285	Steering Lock Position Signal Circuit Malfunction
B2286	Runnable Signal Malfunction
U0100	Lost Communication with ECM
U0140	Lost Communication with Main Body ECU
U0142	Lost Communication with Main Body ECU
U0155	Lost Communication with Combination Meter
U0293	Lost Communication with HV ECU
U0293	Lost Communication with HV ECU

TIRE PRESSURE MONITORING DTCS

TIRE PRESSURE WARNING SYSTEM

TIRE PRESSURE WARNING ECU AND RECEIVER DTC IDENTIFICATION

DTC Code	Description
C2111/11	Transmitter ID1 Operation Stop
C2112/12	Transmitter ID2 Operation Stop
C2113/13	Transmitter ID3 Operation Stop
C2114/14	Transmitter ID4 Operation Stop
C2121/21	No Signal from Transmitter ID1
C2122/22	No Signal from Transmitter ID2
C2123/23	No Signal from Transmitter ID3
C2124/24	No Signal from Transmitter ID4
C2126/26	Transmitter ID not Received in Main Mode
C2141/41	Transmitter ID1 Error
C2142/42	Transmitter ID2 Error
C2143/43	Transmitter ID3 Error
C2144/44	Transmitter ID4 Error
C2171/71	Transmitter ID not Registered
C2176/76	Receiver Error
C2177/77	Initialization not Completed

C2179/79	Tire Pressure Monitor ECU Communication Stop
C2181/81	Transmitter ID1 not Received (Test Mode DTC)
C2182/82	Transmitter ID2 not Received (Test Mode DTC)
C2183/83	Transmitter ID3 not Received (Test Mode DTC)
C2184/84	Transmitter ID4 not Received (Test Mode DTC)
C2198/98	Initialization Switch (for Test Mode DTC)

MAIN BODY ECU (MULTIPLEX NETWORK BODY ECU) DTC IDENTIFICATION

DTC Code	Description
B1247	Tire Pressure Monitor Receiver Communication Stop

WINDOW / GLASS DTCS

POWER WINDOW CONTROL SYSTEM

POWER WINDOW CONTROL SYSTEM DTC IDENTIFICATION

DTC Code	Description
B2311	Power Window Motor Malfunction
B2312	Power Window Switch Malfunction
B2313	Glass Position Initialization Incomplete

2012-2017 DTC INDEX

Camry (Except Hybrid)

AUDIO / VIDEO DTCS

AUDIO AND VISUAL SYSTEM (FOR RADIO AND DISPLAY TYPE WITH INTUITIVE PARKING ASSIST SYSTEM)

AUDIO AND VISUAL SYSTEM (FOR RADIO AND DISPLAY TYPE WITH INTUITIVE PARKING ASSIST SYSTEM) DTC IDENTIFICATION

DTC Code	Description
B1579	Voice Recognition Microphone Disconnected
B1585	USB Media Malfunction
B15A0	LAN Master Malfunction
B15A3	Stereo Component Amplifier Malfunction
B15B0	Display Screen Malfunction
B15B3	Radio Tuner Malfunction
B15B5	DVD Changer Malfunction
B15B7	Bluetooth Module Malfunction
B15B8	Harddisk Malfunction
B15C3	Speaker Output Short
B15D3	Stereo Component Amplifier Disconnected
B15E7	Harddisk Reading/Writing Malfunction (Low Temperature)
B15E8	Harddisk Reading/Writing Malfunction (High Temperature)
B15F5	A/C ECU Vehicle Information Reading/Writing Processor Malfunction
B15F6	Main Body ECU Vehicle Information Reading/Writing Process Malfunction
B15F7	Certification ECU Vehicle Information Reading/Writing Process Malfunction
U0073	Sending Malfunction (Navigation to APGS)
U0100	Lost Communication with ECM
U0140	Lost Communication with Body Control Module
U0155	Meter ECU Communication

AUDIO AND VISUAL SYSTEM (FOR RADIO AND DISPLAY TYPE WITHOUT INTUITIVE PARKING ASSIST SYSTEM)

AUDIO AND VISUAL SYSTEM (FOR RADIO AND DISPLAY TYPE WITHOUT INTUITIVE PARKING ASSIST SYSTEM) DTC IDENTIFICATION

DTC Code	Description
B1551	HD Radio Tuner Malfunction
B1579	Voice Recognition Microphone Disconnected
B1585	USB Device Malfunction
B15A0	LAN Master Malfunction

B15A3	Stereo Component Amplifier Malfunction
B15B0	Display Screen Malfunction
B15B3	Radio Tuner Malfunction
B15B4	CD Changer Malfunction
B15B7	Bluetooth Module Malfunction
B15BA	XM Tuner Malfunction
B15C3	Speaker Output Short
B15D3	Stereo Component Amplifier Disconnected
B15F6	Main Body ECU Vehicle Information Reading/Writing Process Malfunction
B15FE	XM Tuner Antenna Disconnected
B15FF	XM Tuner Antenna Short
U0073	Sending Malfunction (Navigation to APGS)
U0100	Lost Communication with ECM
U0140	Lost Communication with Body Control Module
U0155	Meter ECU Communication

AUTOMATIC TRANSAXLE DTCS

AUTOMATIC TRANSAXLE SYSTEM (U660E)

AUTOMATIC TRANSAXLE SYSTEM DTC IDENTIFICATION

DTC Code	Description
P0500	Vehicle Speed Sensor "A"
P0560	System Voltage
P0617	Starter Relay Circuit High
P062F	Internal Control Module EEPROM Error
P0705	Transmission Range Sensor Circuit Malfunction (PRNDL Input)
P0711	Transmission Fluid Temperature Sensor "A" Performance
P0712	Transmission Fluid Temperature Sensor "A" Circuit Low Input
P0713	Transmission Fluid Temperature Sensor "A" Circuit High Input
P0715	Input / Turbine Speed Sensor Circuit Malfunction
P0717	Input Speed Sensor Circuit No Signal
P0724	Brake Switch "B" Circuit High
P0741	Torque Converter Clutch Solenoid Performance (Shift Solenoid Valve SL)
P0746	Pressure Control Solenoid "A" Performance (Shift Solenoid Valve SL1)
P0748	Pressure Control Solenoid "A" Electrical (Shift Solenoid Valve SL1)
P0776	Pressure Control Solenoid "B" Performance (Shift Solenoid Valve SL2)
P0778	Pressure Control Solenoid "B" Electrical (Shift Solenoid Valve SL2)
P0791	Intermediate Shaft Speed Sensor "A" Circuit
P0793	Intermediate Shaft Speed Sensor "A"
P0796	Pressure Control Solenoid "C" Performance (Shift Solenoid Valve SL3)

P0798	Pressure Control Solenoid "C" Electrical (Shift Solenoid Valve SL3)
P0989	Transmission Fluid Pressure Sensor / Switch "E" Circuit Low
P0990	Transmission Fluid Pressure Sensor / Switch "E" Circuit High
P2714	Pressure Control Solenoid "D" Performance (Shift Solenoid Valve SLT)
P2716	Pressure Control Solenoid "D" Electrical (Shift Solenoid Valve SLT)
P2757	Torque Converter Clutch Pressure Control Solenoid Performance (Shift Solenoid Valve SLU)
P2759	Torque Converter Clutch Pressure Control Solenoid Control Circuit Electrical (Shift Solenoid Valve SLU)
P2769	Short in Torque Converter Clutch Solenoid Circuit (Shift Solenoid Valve SL)
P2770	Open in Torque Converter Clutch Solenoid Circuit (Shift Solenoid Valve SL)
P2808	Pressure Control Solenoid "G" Performance (Shift Solenoid Valve SL4)
P2810	Pressure Control Solenoid "G" Electrical (Shift Solenoid Valve SL4)
U0100	Lost Communication with ECM / PCM "A"

AUTOMATIC TRANSAXLE SYSTEM (U760E)

AUTOMATIC TRANSAXLE SYSTEM DTC IDENTIFICATION

DTC Code	**Description**
P0705	Transmission Range Sensor Circuit Malfunction (PRNDL Input)
P0711	Transmission Fluid Temperature Sensor "A" Performance
P0712	Transmission Fluid Temperature Sensor "A" Circuit Low Input
P0713	Transmission Fluid Temperature Sensor "A" Circuit High Input
P0715	Input / Turbine Speed Sensor Circuit Malfunction
P0717	Input Speed Sensor Circuit No Signal
P0741	Torque Converter Clutch Solenoid Performance (Shift Solenoid Valve SL)
P0746	Pressure Control Solenoid "A" Performance (Shift Solenoid Valve SL1)
P0748	Pressure Control Solenoid "A" Electrical (Shift Solenoid Valve SL1)
P0776	Pressure Control Solenoid "B" Performance (Shift Solenoid Valve SL2)
P0778	Pressure Control Solenoid "B" Electrical (Shift Solenoid Valve SL2)
P0791	Intermediate Shaft Speed Sensor "A" Circuit
P0793	Intermediate Shaft Speed Sensor "A"
P0796	Pressure Control Solenoid "C" Performance (Shift Solenoid Valve SL3)
P0798	Pressure Control Solenoid "C" Electrical (Shift Solenoid Valve SL3)
P2714	Pressure Control Solenoid "D" Performance (Shift Solenoid Valve SLT)
P2716	Pressure Control Solenoid "D" Electrical (Shift Solenoid Valve SLT)
P2757	Torque Converter Clutch Pressure Control Solenoid Performance (Shift Solenoid Valve SLU)
P2759	Torque Converter Clutch Pressure Control Solenoid Control Circuit Electrical (Shift Solenoid Valve SLU)
P2769	Short in Torque Converter Clutch Solenoid Circuit (Shift Solenoid Valve SL)
P2770	Open in Torque Converter Clutch Solenoid Circuit (Shift Solenoid Valve SL)

P2808	Pressure Control Solenoid "G" Performance (Shift Solenoid Valve SL4)
P2810	Pressure Control Solenoid "G" Electrical (Shift Solenoid Valve SL4)
U0100	Lost Communication with ECM / PCM "A"

BRAKE CONTROL / DYNAMIC CONTROL SYSTEMS DTCS

VEHICLE STABILITY CONTROL SYSTEM

ABS DTC IDENTIFICATION

DTC Code	Description
C1225	SM Solenoid Circuit
C1226	SA2 Solenoid Circuit
C1227	SA3 Solenoid Circuit
C1228	STR Solenoid Circuit
C1237	Speed Sensor Rotor Faulty
C1241	Low Power Supply Voltage Malfunction
C1246	Master Cylinder Pressure Sensor Malfunction
C1249	Open in Stop Light Switch Circuit
C1300	Skid Control ECU Malfunction
C1330	Open in Front Speed Sensor RH
C1331	Open in Front Speed Sensor LH
C1332	Open in Rear Speed Sensor RH
C1333	Open in Rear Speed Sensor LH
C1417	High Power Supply Voltage Malfunction
C1425	Open in Stop Light Switch Circuit
C1426	Stop Light Switch OFF Stuck Malfunction
C1428	Motor Circuit Malfunction
C1429	Open or Short in Brake Pedal Load Sensing Switch
C1430	Brake Pedal Load Sensing Switch OFF Stuck Malfunction
C1431	Brake Pedal Load Sensing Switch ON Stuck Malfunction
C1464	Front Speed Sensor RH
C1465	Front Speed Sensor LH
C1466	Rear Speed Sensor RH
C1467	Rear Speed Sensor LH
C1468	SFR Solenoid Circuit
C1469	SFL Solenoid Circuit
C146A	SRR Solenoid Circuit
C146B	SRL Solenoid Circuit
C146C	Open in ABS Motor Relay Circuit
C146E	Open in ABS Solenoid Relay Circuit
U0073	Control Module Communication Bus OFF

VSC DTC IDENTIFICATION

DTC Code	Description
C1201	Engine Control System Malfunction
C1224	NE Signal
C1234	Yaw Rate Sensor
C1288	Error in Matching of ECUs
C1381	Acceleration Sensor Power Supply Voltage Malfunction
C1419	Acceleration Sensor Internal Circuit
C1420	Acceleration Sensor Malfunction
C1432	Steering Angle Sensor Power Source Voltage Malfunction
C1433	Steering Angle Sensor Internal Circuit
C1434	Steering Angle Sensor Output Malfunction
C1435	Yaw Rate Sensor Internal Circuit
C1436	Yaw Rate Sensor Malfunction
C1439	Steering Angle Sensor Initialization Incomplete
C1445	Vehicle Driven with Steering Angle Sensor not Initialized
C1472	Acceleration Sensor
U0100	Lost Communication with ECM / PCM
U0123	Lost Communication with Yaw Rate Sensor Module
U0126	Lost Communication with Steering Angle Sensor Module

ABS TEST MODE DTC IDENTIFICATION

DTC Code	Description
C1271	Low Output Signal of Front Speed Sensor RH (Test Mode DTC)
C1272	Low Output Signal of Front Speed Sensor LH (Test Mode DTC)
C1273	Low Output Signal of Rear Speed Sensor RH (Test Mode DTC)
C1274	Low Output Signal of Rear Speed Sensor LH (Test Mode DTC)
C1275	Abnormal Change in Output Signal of Front Speed Sensor RH (Test Mode DTC)
C1276	Abnormal Change in Output Signal of Front Speed Sensor LH (Test Mode DTC)
C1277	Abnormal Change in Output Signal of Rear Speed Sensor RH (Test Mode DTC)
C1278	Abnormal Change in Output Signal of Rear Speed Sensor LH (Test Mode DTC)
C1281	Master Cylinder Pressure Sensor Output Malfunction (Test Mode DTC)

CELLULAR COMMUNICATION DTCS

SAFETY CONNECT SYSTEM

SAFETY CONNECT SYSTEM DTC IDENTIFICATION

DTC Code	Description
B1570	Manual (SOS) Switch Red Indicator Malfunction
B1571	Manual (SOS) Switch Green Indicator Malfunction
B1572	Telephone Microphone Error

B1573	Short in Telephone Antenna Circuit
B15CB	Telematics Transceiver Antenna Disconnected
B1583	GPS Signal Unreceived
B15A8	Telematics Transceiver Malfunction
B15C0	Short in GPS Antenna
B15C1	Open in GPS Antenna
B15C4	Airbag Signal Malfunction/Not Input
B15C5	Manual Button Malfunction
B15CC	Backup Battery Failure
B15EC	Backup Battery Degradation

CRUISE CONTROL DTCS

CRUISE CONTROL SYSTEM

CRUISE CONTROL SYSTEM DTC IDENTIFICATION

DTC Code	Description
P0500	Vehicle Speed Sensor Malfunction
P0503	Vehicle Speed Sensor "A" Intermittent / Erratic / High
P0571	Brake Switch "A" Circuit
P0575	Cruise Control Input Circuit

DOOR LOCK DTCS

WIRELESS DOOR LOCK CONTROL SYSTEM (W/ SMART KEY SYSTEM)

WIRELESS DOOR LOCK CONTROL SYSTEM (W/ SMART KEY SYSTEM) DTC IDENTIFICATION

DTC Code	Description
B1242	Wireless Door Lock Tuner Circuit Malfunction

ENGINE CONTROL DTCS

SFI SYSTEM (2AR-FE)

SFI SYSTEM DTC IDENTIFICATION

DTC Code	Description
P0010	Camshaft Position "A" Actuator Circuit (Bank 1)
P0011	Camshaft Position "A" - Timing Over-Advanced or System Performance (Bank 1)
P0012	Camshaft Position "A" - Timing Over-Retarded (Bank 1)
P0013	Camshaft Position "B" Actuator Circuit / Open (Bank 1)
P0014	Camshaft Position "B" - Timing Over-Advanced or System Performance (Bank 1)

P0015	Camshaft Position "B" - Timing Over-Retarded (Bank 1)
P0016	Crankshaft Position - Camshaft Position Correlation (Bank 1 Sensor A)
P0017	Crankshaft Position - Camshaft Position Correlation (Bank 1 Sensor B)
P0031	Oxygen (A/F) Sensor Heater Control Circuit Low (Bank 1 Sensor 1)
P0032	Oxygen (A/F) Sensor Heater Control Circuit High (Bank 1 Sensor 1)
P0037	Oxygen Sensor Heater Control Circuit Low (Bank 1 Sensor 2)
P0038	Oxygen Sensor Heater Control Circuit High (Bank 1 Sensor 2)
P0101	Mass Air Flow Circuit Range / Performance Problem
P0102	Mass or Volume Air Flow Circuit Low Input
P0103	Mass or Volume Air Flow Circuit High Input
P0111	Intake Air Temperature Sensor Gradient Too High
P0112	Intake Air Temperature Circuit Low Input
P0113	Intake Air Temperature Circuit High Input
P0115	Engine Coolant Temperature Circuit Malfunction
P0116	Engine Coolant Temperature Circuit Range / Performance Problem
P0117	Engine Coolant Temperature Circuit Low Input
P0118	Engine Coolant Temperature Circuit High Input
P011B	Engine Coolant Temperature / Intake Air Temperature Correlation
P0120	Throttle / Pedal Position Sensor / Switch "A" Circuit Malfunction
P0121	Throttle / Pedal Position Sensor / Switch "A" Circuit Range / Performance Problem
P0122	Throttle / Pedal Position Sensor / Switch "A" Circuit Low Input
P0123	Throttle / Pedal Position Sensor / Switch "A" Circuit High Input
P0125	Insufficient Coolant Temperature for Closed Loop Fuel Control
P0128	Coolant Thermostat (Coolant Temperature Below Thermostat Regulating Temperature)
P0136	Oxygen Sensor Circuit Malfunction (Bank 1 Sensor 2)
P0137	Oxygen Sensor Circuit Low Voltage (Bank 1 Sensor 2)
P0138	Oxygen Sensor Circuit High Voltage (Bank 1 Sensor 2)
P0139	Oxygen Sensor Circuit Slow Response (Bank 1 Sensor 2)
P0141	Oxygen Sensor Heater Circuit Malfunction (Bank 1 Sensor 2)
P014C	A/F Sensor Slow Response - Rich to Lean Bank 1 Sensor 1
P014D	A/F Sensor Slow Response - Lean to Rich Bank 1 Sensor 1
P015A	A/F Sensor Delayed Response - Rich to Lean Bank 1 Sensor 1
P015B	A/F Sensor Delayed Response - Lean to Rich Bank 1 Sensor 1
P0171	System Too Lean (Bank 1)
P0172	System Too Rich (Bank 1)
P0220	Throttle / Pedal Position Sensor / Switch "B" Circuit
P0222	Throttle / Pedal Position Sensor / Switch "B" Circuit Low Input
P0223	Throttle / Pedal Position Sensor / Switch "B" Circuit High Input
P0300	Random / Multiple Cylinder Misfire Detected
P0301	Cylinder 1 Misfire Detected

P0302	Cylinder 2 Misfire Detected
P0303	Cylinder 3 Misfire Detected
P0304	Cylinder 4 Misfire Detected
P0327	Knock Sensor 1 Circuit Low Input (Bank 1 or Single Sensor)
P0328	Knock Sensor 1 Circuit High Input (Bank 1 or Single Sensor)
P0335	Crankshaft Position Sensor "A" Circuit
P0339	Crankshaft Position Sensor "A" Circuit Intermittent
P0340	Camshaft Position Sensor Circuit Malfunction
P0342	Camshaft Position Sensor "A" Circuit Low Input (Bank 1 or Single Sensor)
P0343	Camshaft Position Sensor "A" Circuit High Input (Bank 1 or Single Sensor)
P0351	Ignition Coil "A" Primary / Secondary Circuit
P0352	Ignition Coil "B" Primary / Secondary Circuit
P0353	Ignition Coil "C" Primary / Secondary Circuit
P0354	Ignition Coil "D" Primary / Secondary Circuit
P0365	Camshaft Position Sensor "B" Circuit (Bank 1)
P0367	Camshaft Position Sensor "B" Circuit Low Input (Bank 1)
P0368	Camshaft Position Sensor "B" Circuit High Input (Bank 1)
P0420	Catalyst System Efficiency Below Threshold (Bank 1)
P043E	Evaporative Emission System Leak Detection Reference Orifice Low Flow
P043F	Evaporative Emission System Reference Orifice High Flow
P0441	Evaporative Emission Control System Incorrect Purge Flow
P0451	Evaporative Emission Control System Pressure Sensor Range / Performance
P0452	Evaporative Emission Control System Pressure Sensor / Switch Low Input
P0453	Evaporative Emission Control System Pressure Sensor / Switch High Input
P0455	Evaporative Emission Control System Leak Detected (Gross Leak)
P0456	Evaporative Emission Control System Leak Detected (Very Small Leak)
P0500	Vehicle Speed Sensor "A"
P0504	Brake Switch "A" / "B" Correlation
P0505	Idle Control System Malfunction
P050A	Cold Start Idle Air Control System Performance
P050B	Cold Start Ignition Timing Performance
P0560	System Voltage
P0604	Random Access Memory (RAM)
P0606	ECM / PCM Processor
P0607	Control Module Performance
P060A	Internal Control Module Monitoring Processor Performance
P060B	Internal Control Module A/D Processing Performance
P060D	Internal Control Module Accelerator Pedal Position Performance
P060E	Internal Control Module Throttle Position Performance
P0617	Starter Relay Circuit High
P062F	Internal Control Module EEPROM Error
P0630	

	VIN not Programmed or Mismatch - ECM / PCM
P0657	Actuator Supply Voltage Circuit / Open
P0724	Brake Switch "B" Circuit High
P101D	A/F Sensor Heater Circuit Performance Bank 1 Sensor 1 Stuck ON
P102D	O2 Sensor Heater Circuit Performance Bank 1 Sensor 2 Stuck ON
P1603	Engine Stall History
P1604	Startability Malfunction
P1605	Rough Idling
P1607	Cruise Control Input Processor
P2004	Intake Manifold Runner Control Stuck Open (Bank 1)
P2006	Intake Manifold Runner Control Stuck Closed (Bank 1)
P2009	Intake Manifold Runner Control Circuit Low (Bank 1)
P2010	Intake Manifold Runner Control Circuit High (Bank 1)
P2014	Intake Manifold Runner Position Sensor / Switch Circuit (Bank 1)
P2016	Intake Manifold Runner Position Sensor / Switch Circuit Low (Bank 1)
P2017	Intake Manifold Runner Position Sensor / Switch Circuit High (Bank 1)
P2102	Throttle Actuator Control Motor Circuit Low
P2103	Throttle Actuator Control Motor Circuit High
P2109	Throttle / Pedal Position Sensor "A" Minimum Stop Performance
P2111	Throttle Actuator Control System - Stuck Open
P2112	Throttle Actuator Control System - Stuck Closed
P2118	Throttle Actuator Control Motor Current Range / Performance
P2119	Throttle Actuator Control Throttle Body Range / Performance
P2120	Throttle / Pedal Position Sensor / Switch "D" Circuit
P2121	Throttle / Pedal Position Sensor / Switch "D" Circuit Range / Performance
P2122	Throttle / Pedal Position Sensor / Switch "D" Circuit Low Input
P2123	Throttle / Pedal Position Sensor / Switch "D" Circuit High Input
P2125	Throttle / Pedal Position Sensor / Switch "E" Circuit
P2127	Throttle / Pedal Position Sensor / Switch "E" Circuit Low Input
P2128	Throttle / Pedal Position Sensor / Switch "E" Circuit High Input
P2135	Throttle / Pedal Position Sensor / Switch "A" / "B" Voltage Correlation
P2138	Throttle / Pedal Position Sensor / Switch "D" / "E" Voltage Correlation
P2195	Oxygen (A/F) Sensor Signal Stuck Lean (Bank 1 Sensor 1)
P2196	Oxygen (A/F) Sensor Signal Stuck Rich (Bank 1 Sensor 1)
P219A	Bank 1 Air-Fuel Ratio Imbalance
P2237	Oxygen (A/F) Sensor Pumping Current Circuit / Open (Bank 1 Sensor 1)
P2238	Oxygen (A/F) Sensor Pumping Current Circuit Low (Bank 1 Sensor 1)
P2239	Oxygen (A/F) Sensor Pumping Current Circuit High (Bank 1 Sensor 1)
P2252	Oxygen (A/F) Sensor Reference Ground Circuit Low (Bank 1 Sensor 1)
P2253	Oxygen (A/F) Sensor Reference Ground Circuit High (Bank 1 Sensor 1)
P2401	Evaporative Emission Leak Detection Pump Stuck OFF
P2402	

	Evaporative Emission Leak Detection Pump Stuck ON
P2419	Evaporative Emission System Switching Valve Control Circuit Low
P2420	Evaporative Emission System Switching Valve Control Circuit High
P2610	ECM / PCM Internal Engine Off Timer Performance
P2A00	A/F Sensor Circuit Slow Response (Bank 1 Sensor 1)
U0101	Lost Communication with TCM

SFI SYSTEM (2GR-FE)

SFI SYSTEM DTC IDENTIFICATION

DTC Code	Description
P0010	Camshaft Position "A" Actuator Circuit (Bank 1)
P0011	Camshaft Position "A" - Timing Over-Advanced or System Performance (Bank 1)
P0012	Camshaft Position "A" - Timing Over-Retarded (Bank 1)
P0013	Camshaft Position "B" Actuator Circuit / Open (Bank 1)
P0014	Camshaft Position "B" - Timing Over-Advanced or System Performance (Bank 1)
P0015	Camshaft Position "B" - Timing Over-Retarded (Bank 1)
P0016	Crankshaft Position - Camshaft Position Correlation (Bank 1 Sensor A)
P0017	Crankshaft Position - Camshaft Position Correlation (Bank 1 Sensor B)
P0018	Crankshaft Position - Camshaft Position Correlation (Bank 2 Sensor A)
P0019	Crankshaft Position - Camshaft Position Correlation (Bank 2 Sensor B)
P0020	Camshaft Position "A" Actuator Circuit (Bank 2)
P0021	Camshaft Position "A" - Timing Over-Advanced or System Performance (Bank 2)
P0022	Camshaft Position "A" - Timing Over-Retarded (Bank 2)
P0023	Camshaft Position "B" Actuator Circuit / Open (Bank 2)
P0024	Camshaft Position "B" - Timing Over-Advanced or System Performance (Bank 2)
P0025	Camshaft Position "B" - Timing Over-Retarded (Bank 2)
P0031	Oxygen (A/F) Sensor Heater Control Circuit Low (Bank 1 Sensor 1)
P0032	Oxygen (A/F) Sensor Heater Control Circuit High (Bank 1 Sensor 1)
P0037	Oxygen Sensor Heater Control Circuit Low (Bank 1 Sensor 2)
P0038	Oxygen Sensor Heater Control Circuit High (Bank 1 Sensor 2)
P0051	Oxygen (A/F) Sensor Heater Control Circuit Low (Bank 2 Sensor 1)
P0052	Oxygen (A/F) Sensor Heater Control Circuit High (Bank 2 Sensor 1)
P0057	Oxygen Sensor Heater Control Circuit Low (Bank 2 Sensor 2)
P0058	Oxygen Sensor Heater Control Circuit High (Bank 2 Sensor 2)
P0101	Mass Air Flow Circuit Range / Performance Problem
P0102	Mass or Volume Air Flow Circuit Low Input
P0103	Mass or Volume Air Flow Circuit High Input
P0111	Intake Air Temperature Sensor 1 Circuit Range / Performance
P0112	Intake Air Temperature Circuit Low Input
P0113	Intake Air Temperature Circuit High Input

P0115	Engine Coolant Temperature Circuit Malfunction
P0116	Engine Coolant Temperature Circuit Range / Performance Problem
P0117	Engine Coolant Temperature Circuit Low Input
P0118	Engine Coolant Temperature Circuit High Input
P011B	Engine Coolant Temperature / Intake Air Temperature Correlation
P0120	Throttle / Pedal Position Sensor / Switch "A" Circuit Malfunction
P0121	Throttle / Pedal Position Sensor / Switch "A" Circuit Range / Performance Problem
P0122	Throttle / Pedal Position Sensor / Switch "A" Circuit Low Input
P0123	Throttle / Pedal Position Sensor / Switch "A" Circuit High Input
P0125	Insufficient Coolant Temperature for Closed Loop Fuel Control
P0128	Coolant Thermostat (Coolant Temperature Below Thermostat Regulating Temperature)
P0136	Oxygen Sensor Circuit Malfunction (Bank 1 Sensor 2)
P0137	Oxygen Sensor Circuit Low Voltage (Bank 1 Sensor 2)
P0138	Oxygen Sensor Circuit High Voltage (Bank 1 Sensor 2)
P0139	Oxygen Sensor Circuit Slow Response (Bank 1 Sensor 2)
P0141	Oxygen Sensor Heater Circuit Malfunction (Bank 1 Sensor 2)
P014C	A/F Sensor Slow Response - Rich to Lean Bank 1 Sensor 1
P014D	A/F Sensor Slow Response - Lean to Rich Bank 1 Sensor 1
P014E	A/F Sensor Slow Response - Rich to Lean Bank 2 Sensor 1
P014F	A/F Sensor Slow Response - Lean to Rich Bank 2 Sensor 1
P0156	Oxygen Sensor Circuit Malfunction (Bank 2 Sensor 2)
P0157	Oxygen Sensor Circuit Low Voltage (Bank 2 Sensor 2)
P0158	Oxygen Sensor Circuit High Voltage (Bank 2 Sensor 2)
P0159	Oxygen Sensor Circuit Slow Response (Bank 2 Sensor 2)
P015A	A/F Sensor Delayed Response - Rich to Lean Bank 1 Sensor 1
P015B	A/F Sensor Delayed Response - Lean to Rich Bank 1 Sensor 1
P015C	A/F Sensor Delayed Response - Rich to Lean Bank 2 Sensor 1
P015D	A/F Sensor Delayed Response - Lean to Rich Bank 2 Sensor 1
P0161	Oxygen Sensor Heater Circuit Malfunction (Bank 2 Sensor 2)
P0171	System Too Lean (Bank 1)
P0172	System Too Rich (Bank 1)
P0174	System Too Lean (Bank 2)
P0175	System Too Rich (Bank 2)
P0220	Throttle / Pedal Position Sensor / Switch "B" Circuit
P0222	Throttle / Pedal Position Sensor / Switch "B" Circuit Low Input
P0223	Throttle / Pedal Position Sensor / Switch "B" Circuit High Input
P0300	Random / Multiple Cylinder Misfire Detected
P0301	Cylinder 1 Misfire Detected
P0302	Cylinder 2 Misfire Detected
P0303	Cylinder 3 Misfire Detected

P0304	Cylinder 4 Misfire Detected
P0305	Cylinder 5 Misfire Detected
P0306	Cylinder 6 Misfire Detected
P0327	Knock Sensor 1 Circuit Low Input (Bank 1 or Single Sensor)
P0328	Knock Sensor 1 Circuit High Input (Bank 1 or Single Sensor)
P0332	Knock Sensor 2 Circuit Low Input (Bank 2)
P0333	Knock Sensor 2 Circuit High Input (Bank 2)
P0335	Crankshaft Position Sensor "A" Circuit
P0339	Crankshaft Position Sensor "A" Circuit Intermittent
P0340	Camshaft Position Sensor Circuit Malfunction
P0342	Camshaft Position Sensor "A" Circuit Low Input (Bank 1 or Single Sensor)
P0343	Camshaft Position Sensor "A" Circuit High Input (Bank 1 or Single Sensor)
P0345	Camshaft Position Sensor "A" Circuit (Bank 2)
P0347	Camshaft Position Sensor "A" Circuit Low Input (Bank 2)
P0348	Camshaft Position Sensor "A" Circuit High Input (Bank 2)
P0351	Ignition Coil "A" Primary / Secondary Circuit
P0352	Ignition Coil "B" Primary / Secondary Circuit
P0353	Ignition Coil "C" Primary / Secondary Circuit
P0354	Ignition Coil "D" Primary / Secondary Circuit
P0355	Ignition Coil "E" Primary / Secondary Circuit
P0356	Ignition Coil "F" Primary / Secondary Circuit
P0365	Camshaft Position Sensor "B" Circuit (Bank 1)
P0367	Camshaft Position Sensor "B" Circuit Low Input (Bank 1)
P0368	Camshaft Position Sensor "B" Circuit High Input (Bank 1)
P0390	Camshaft Position Sensor "B" Circuit (Bank 2)
P0392	Camshaft Position Sensor "B" Circuit Low Input (Bank 2)
P0393	Camshaft Position Sensor "B" Circuit High Input (Bank 2)
P0420	Catalyst System Efficiency Below Threshold (Bank 1)
P0430	Catalyst System Efficiency Below Threshold (Bank 2)
P043E	Evaporative Emission System Leak Detection Reference Orifice Low Flow
P043F	Evaporative Emission System Reference Orifice High Flow
P0441	Evaporative Emission Control System Incorrect Purge Flow
P0443	Evaporative Emission Control System Purge Control Valve Circuit
P0451	Evaporative Emission Control System Pressure Sensor Range / Performance
P0452	Evaporative Emission Control System Pressure Sensor / Switch Low Input
P0453	Evaporative Emission Control System Pressure Sensor / Switch High Input
P0455	Evaporative Emission Control System Leak Detected (Gross Leak)
P0456	Evaporative Emission Control System Leak Detected (Very Small Leak)
P0500	Vehicle Speed Sensor "A"
P0504	Brake Switch "A" / "B" Correlation
P0505	Idle Control System Malfunction
P050A	

	Cold Start Idle Air Control System Performance
P050B	Cold Start Ignition Timing Performance
P0560	System Voltage
P0604	Internal Control Module Random Access Memory (RAM) Error
P0606	ECM / PCM Processor
P0607	Control Module Performance
P060A	Internal Control Module Monitoring Processor Performance
P060B	Internal Control Module A/D Processing Performance
P060D	Internal Control Module Accelerator Pedal Position Performance
P060E	Internal Control Module Throttle Position Performance
P0617	Starter Relay Circuit High
P062F	Internal Control Module EEPROM Error
P0630	VIN not Programmed or Mismatch - ECM / PCM
P0657	Actuator Supply Voltage Circuit / Open
P0705	Transmission Range Sensor Circuit Malfunction (PRNDL Input)
P0724	Brake Switch "B" Circuit High
P101D	A/F Sensor Heater Circuit Performance Bank 1 Sensor 1 Stuck ON
P102D	O2 Sensor Heater Circuit Performance Bank 1 Sensor 2 Stuck ON
P103D	A/F Sensor Heater Circuit Performance Bank 2 Sensor 1 Stuck ON
P105D	O2 Sensor Heater Circuit Performance Bank 2 Sensor 2 Stuck ON
P1603	Engine Stall History
P1604	Startability Malfunction
P1605	Rough Idling
P1607	Cruise Control Input Processor
P2102	Throttle Actuator Control Motor Circuit Low
P2103	Throttle Actuator Control Motor Circuit High
P2109	Throttle / Pedal Position Sensor "A" Minimum Stop Performance
P2111	Throttle Actuator Control System - Stuck Open
P2112	Throttle Actuator Control System - Stuck Closed
P2118	Throttle Actuator Control Motor Current Range / Performance
P2119	Throttle Actuator Control Throttle Body Range / Performance
P2120	Throttle / Pedal Position Sensor / Switch "D" Circuit
P2121	Throttle / Pedal Position Sensor / Switch "D" Circuit Range / Performance
P2122	Throttle / Pedal Position Sensor / Switch "D" Circuit Low Input
P2123	Throttle / Pedal Position Sensor / Switch "D" Circuit High Input
P2125	Throttle / Pedal Position Sensor / Switch "E" Circuit
P2127	Throttle / Pedal Position Sensor / Switch "E" Circuit Low Input
P2128	Throttle / Pedal Position Sensor / Switch "E" Circuit High Input
P2135	Throttle / Pedal Position Sensor / Switch "A" / "B" Voltage Correlation
P2138	Throttle / Pedal Position Sensor / Switch "D" / "E" Voltage Correlation
P2195	Oxygen (A/F) Sensor Signal Stuck Lean (Bank 1 Sensor 1)
P2196	

	Oxygen (A/F) Sensor Signal Stuck Rich (Bank 1 Sensor 1)
P2197	Oxygen (A/F) Sensor Signal Stuck Lean (Bank 2 Sensor 1)
P2198	Oxygen (A/F) Sensor Signal Stuck Rich (Bank 2 Sensor 1)
P219A	Bank 1 Air-Fuel Ratio Imbalance
P219B	Bank 2 Air-Fuel Ratio Imbalance
P2237	Oxygen (A/F) Sensor Pumping Current Circuit / Open (Bank 1 Sensor 1)
P2238	Oxygen (A/F) Sensor Pumping Current Circuit Low (Bank 1 Sensor 1)
P2239	Oxygen (A/F) Sensor Pumping Current Circuit High (Bank 1 Sensor 1)
P2240	Oxygen (A/F) Sensor Pumping Current Circuit / Open (Bank 2 Sensor 1)
P2241	Oxygen (A/F) Sensor Pumping Current Circuit Low (Bank 2 Sensor 1)
P2242	Oxygen (A/F) Sensor Pumping Current Circuit High (Bank 2 Sensor 1)
P2252	Oxygen (A/F) Sensor Reference Ground Circuit Low (Bank 1 Sensor 1)
P2253	Oxygen (A/F) Sensor Reference Ground Circuit High (Bank 1 Sensor 1)
P2255	Oxygen (A/F) Sensor Reference Ground Circuit Low (Bank 2 Sensor 1)
P2256	Oxygen (A/F) Sensor Reference Ground Circuit High (Bank 2 Sensor 1)
P2401	Evaporative Emission Leak Detection Pump Stuck OFF
P2402	Evaporative Emission Leak Detection Pump Stuck ON
P2419	Evaporative Emission System Switching Valve Control Circuit Low
P2420	Evaporative Emission System Switching Valve Control Circuit High
P2610	ECM / PCM Internal Engine Off Timer Performance
U0101	Lost Communication with TCM

HEATING / AIR CONDITIONING DTCS

AIR CONDITIONING SYSTEM (FOR AUTOMATIC AIR CONDITIONING SYSTEM)

AIR CONDITIONING SYSTEM (FOR AUTOMATIC AIR CONDITIONING SYSTEM) DTC IDENTIFICATION

DTC Code	Description
B1411	Room Temperature Sensor Circuit
B1412	Ambient Temperature Sensor Circuit
B1413	Evaporator Temperature Sensor Circuit
B1422	Compressor Lock Sensor Circuit
B1423	Pressure Sensor Circuit
B1441	Air Mix Damper Control Servo Motor Circuit (Passenger Side)
B1442	Air Inlet Damper Control Servo Motor Circuit
B1443	Air Outlet Damper Control Servo Motor Circuit
B1446	Air Mix Damper Control Servo Motor Circuit (Driver Side)
B1451	Compressor Solenoid Circuit
B1479	Flow Sensor Circuit
B1497	BUS IC Communication Malfunction
B14A2	Driver Side Solar Sensor Short Circuit

B14A3	Front Passenger Side Solar Sensor Short Circuit
B14B2	Lost Communication with Front Panel LIN
B14B8	Refrigerant Shortage
U0100	Lost Communication with ECM
U0131	Lost Communication with Electric Power Steering ECU
U0142	Lost Communication with Main Body ECU
U0155	Lost Communication with Combination Meter

AIR CONDITIONING SYSTEM (FOR MANUAL AIR CONDITIONING SYSTEM)

AIR CONDITIONING SYSTEM (FOR MANUAL AIR CONDITIONING SYSTEM) DTC IDENTIFICATION

DTC Code	Description
B1412	Ambient Temperature Sensor Circuit
B1413	Evaporator Temperature Sensor Circuit
B1422	Compressor Lock Sensor Circuit
B1423	Pressure Sensor Circuit
B1441	Air Mix Damper Control Servo Motor Circuit (Passenger Side)
B1442	Air Inlet Damper Control Servo Motor Circuit
B1443	Air Outlet Damper Control Servo Motor Circuit
B1451	Compressor Solenoid Circuit
B1479	Flow Sensor Circuit
B1497	Communication Malfunction (Bus Ic)
B14B2	Lost Communication with Front Panel LIN
B14B8	Refrigerant Shortage
U0100	Lost Communication with ECM
U0131	Lost Communication with Electric Power Steering ECU
U0142	Lost Communication with Main Body ECU
U0155	Lost Communication with Combination Meter

LIGHTING (EXT) DTCS

AUTOMATIC HEADLIGHT BEAM LEVEL CONTROL SYSTEM

AUTOMATIC HEADLIGHT BEAM LEVEL CONTROL SYSTEM DTC IDENTIFICATION

DTC Code	Description
B2416	Height Control Sensor Malfunction
B241A	Rear Height Control Sensor
B2420	HL AutoLeveling ECU Failure
B2450	Initialization has not been Performed
B2451	Vehicle Specifications have not been Stored
B2452	Height Control Sensor Data Out of Range When Initializing

B2453	Variation Error

LIGHTING SYSTEM

LIGHTING SYSTEM DTC IDENTIFICATION

DTC Code	Description
B1244	Light Sensor Circuit Malfunction

METER / GAUGE / DISPLAY DTCS

METER / GAUGE SYSTEM

METER / GAUGE SYSTEM DTC IDENTIFICATION

DTC Code	Description
B1500	Fuel Sender Open Detected
B1507	Open in Turn Signal Circuit
B1508	Short in Turn Signal / Hazard Flasher Circuit
U0100	Lost Communication with ECM / PCM "A"
U0129	Lost Communication with Skid Control ECU
U0131	Lost Communication with Power Steering Control Module
U0142	Lost Communication with Main Body ECU
U0151	Lost Communication with Airbag ECU

NAVIGATION / MULTI INFO DISPLAY DTCS

NAVIGATION SYSTEM (FOR NAVIGATION RECEIVER TYPE)

NAVIGATION SYSTEM (FOR NAVIGATION RECEIVER TYPE) DTC IDENTIFICATION

DTC Code	Description
B1551	HD Radio Tuner Malfunction
B1579	Voice Recognition Microphone Disconnected
B1585	USB Media Malfunction
B15A0	LAN Master Malfunction
B15A3	Stereo Component Amplifier Malfunction
B15AD	Navigation Processor Malfunction
B15B0	Display Screen Malfunction
B15B3	Radio Tuner Malfunction
B15B5	DVD Changer Malfunction
B15B7	Bluetooth Module Malfunction
B15B8	Harddisk Malfunction
B15BA	XM Tuner Malfunction
B15C0	Short in GPS Antenna

B15C1	Open in GPS Antenna
B15C2	Speed Signal Malfunction
B15C3	Speaker Output Short
B15D3	Stereo Component Amplifier Disconnected
B15E7	Harddisk Reading/Writing Malfunction (Low Temperature)
B15E8	Harddisk Reading/Writing Malfunction (High Temperature)
B15F5	A/C ECU Vehicle Information Reading/Writing Processor Malfunction
B15F6	Main Body ECU Vehicle Information Reading/Writing Process Malfunction
B15F7	Certification ECU Vehicle Information Reading/Writing Process Malfunction
B15FE	XM Tuner Antenna Disconnected
B15FF	XM Tuner Antenna Short
U0073	Sending Malfunction (Navigation to APGS)
U0100	Lost Communication with ECM
U0140	Lost Communication with Body Control Module
U0155	Meter ECU Communication

NAVIGATION SYSTEM (FOR RADIO AND DISPLAY TYPE)

NAVIGATION SYSTEM (FOR RADIO AND DISPLAY TYPE) DTC IDENTIFICATION

DTC Code	Description
B1551	HD Radio Tuner Malfunction
B1552	Extension Module Malfunction
B156C	Extension Module Disconnected
B1579	Voice Recognition Microphone Disconnected
B157E	Bluetooth Antenna Disconnected
B1585	USB Device Malfunction
B158A	Extension Module Noise Adjustment Malfunction
B15A0	LAN Master Malfunction
B15A3	Stereo Component Amplifier Malfunction
B15B0	Display Screen Malfunction
B15B3	Radio Tuner Malfunction
B15B4	CD Changer Malfunction
B15B7	Bluetooth Module Malfunction
B15BA	XM Tuner Malfunction
B15C0	Short in GPS Antenna
B15C1	Open in GPS Antenna
B15C3	Speaker Output Short
B15D3	Stereo Component Amplifier Disconnected
B15F6	Main Body ECU Vehicle Information Reading/Writing Process Malfunction
B15FE	XM Tuner Antenna Disconnected
B15FF	XM Tuner Antenna Short

U0073	Sending Malfunction (Navigation to APGS)
U0100	Lost Communication with ECM
U0140	Lost Communication with Body Control Module
U0155	Meter ECU Communication

NETWORKING DTCS

CAN COMMUNICATION SYSTEM

CAN COMMUNICATION SYSTEM DTC IDENTIFICATION

DTC Code	Description
U0232	Lost Communication with Blind Spot Monitor Slave Module
U0233	Lost Communication with Blind Spot Monitor Master Module
U1002	Lost Communication with Gateway Module

LIN COMMUNICATION SYSTEM

MAIN BODY ECU (MULTIPLEX NETWORK BODY ECU) DTC IDENTIFICATION

DTC Code	Description
B1273	Sliding Roof ECU Communication Stop
B2321	Driver Side Door ECU Communication Stop
B2325	LIN Communication Bus Malfunction

CERTIFICATION ECU (SMART KEY ECU ASSEMBLY) DTC IDENTIFICATION

DTC Code	Description
B2785	Communication Malfunction between ECUs Connected by LIN
B2786	No Response from Steering Lock ECU
B2789	No Response from ID BOX
B278C	Lost Communication with Power Source Control

PARK ASSIST / MONITORING DTCS

BLIND SPOT MONITOR SYSTEM

BLIND SPOT MONITOR SYSTEM DTC IDENTIFICATION

DTC Code	Description
C1A45	Vehicle Speed Sensor
C1A47	Steering Angle Sensor
C1AB0	Short to +B in Outer Mirror Indicator (Master)
C1AB1	Short to +B in Outer Mirror Indicator (Slave)
C1AB2	Short to GND in Outer Mirror Indicator (Master)
C1AB3	Short to GND in Outer Mirror Indicator (Slave)

C1AB4	Open in Outer Mirror Indicator (Master)
C1AB5	Open in Outer Mirror Indicator (Slave)
C1AB6	Blind Spot Monitor Master Module
C1AB7	Blind Spot Monitor Slave Module
C1AB8	Destination Information Undefined
C1ABA	Blind Spot Monitor Slave Module Connection Incorrect
C1ABB	Blind Spot Monitor Master Module Beam Axis Inspection Incomplete
C1ABC	Blind Spot Monitor Slave Module Beam Axis Inspection Incomplete
U0100	Lost Communication with ECM / PCM "A"
U0126	Lost Communication with Steering Angle Sensor Module
U0129	Lost Communication with Brake System Control Module
U0142	Lost Communication with Body Control Module "B"
U0232	Lost Communication with Blind Spot Monitor Slave Module
U0233	Lost Communication with Blind Spot Monitor Master Module
U1331	Software Incompatibility with Body Control Module "B"

INTUITIVE PARKING ASSIST SYSTEM

INTUITIVE PARKING ASSIST SYSTEM DTC IDENTIFICATION

DTC Code	Description
C1AE1	Front Left Sensor Malfunction
C1AE4	Front Right Sensor Malfunction
C1AE6	Rear Left Sensor Malfunction
C1AE7	Rear Left Center Sensor Malfunction
C1AE8	Rear Right Center Sensor Malfunction
C1AE9	Rear Right Sensor Malfunction
C1AEC	Front Sensor Communication Malfunction
C1AED	Rear Sensor Communication Malfunction
U0100	Lost Communication with ECM / PCM "A"
U0101	Lost Communication with TCM
U0142	Lost Communication with Body Control Module "B"
U0155	Lost Communication with Instrument Panel Cluster Control Module (Combination Meter)

PARKING ASSIST MONITOR SYSTEM

PARKING ASSIST MONITOR SYSTEM DTC IDENTIFICATION

DTC Code	Description
C1622	Open or Short Circuit in Back Camera Signal
C1625	Open or Short in Steering Angle Sensor +B
C1626	Steering Angle Sensor Failure
C1691	Back Camera Initialization Incomplete

C1694	Steering Angle Initialization Incomplete
U0126	Lost Communication with Steering Angle Sensor Module
U0140	Lost Communication with Body Control Module

POWER ASSIST SYSTEMS DTCS

POWER STEERING SYSTEM (FOR 2AR-FE WITH WIRELESS DOOR LOCK)

POWER STEERING SYSTEM (FOR 2AR-FE WITH WIRELESS DOOR LOCK) DTC IDENTIFICATION

DTC Code	Description
C1511	Torque Sensor Circuit Malfunction
C1512	Torque Sensor Circuit Malfunction
C1513	Torque Sensor Circuit Malfunction
C1514	Torque Sensor Power Supply Abnormal
C1515	Torque Sensor Zero Point Adjustment Undone
C1516	Torque Sensor Zero Point Adjustment Incomplete
C1517	Torque Hold Abnormal
C1521	Motor Circuit Malfunction
C1522	Motor Circuit Malfunction
C1523	Motor Circuit Malfunction
C1524	Motor Circuit Malfunction
C1528	Motor Rotation Angle Sensor Malfunction
C1531	ECU Malfunction
C1532	ECU Malfunction
C1533	ECU Malfunction
C1534	ECU Malfunction
C1541	Vehicle Speed Signal Malfunction
C1551	IG Power Supply Voltage Malfunction
C1552	PIG Power Supply Voltage Malfunction
C1554	Power Supply Relay Failure
C1555	Motor Relay Welding Failure
C1581	Assist Map Number Un-Writing
C1582	Assist Map Number Mismatch
U0100	Lost Communication with ECM / PCM "A"
U0129	Lost Communication with Brake System Control Module

POWER STEERING SYSTEM (FOR 2AR-FE WITHOUT WIRELESS DOOR LOCK)

POWER STEERING SYSTEM (FOR 2AR-FE WITHOUT WIRELESS DOOR LOCK) DTC IDENTIFICATION

DTC Code	Description

C1511	Torque Sensor Circuit Malfunction
C1512	Torque Sensor Circuit Malfunction
C1513	Torque Sensor Circuit Malfunction
C1514	Torque Sensor Power Supply Abnormal
C1515	Torque Sensor Zero Point Adjustment Undone
C1516	Torque Sensor Zero Point Adjustment Incomplete
C1517	Torque Hold Abnormal
C1524	Motor Circuit Malfunction
C1531	ECU Malfunction
C1532	ECU Malfunction
C1533	ECU Malfunction
C1534	ECU Malfunction
C1535	ECU Malfunction
C1541	Vehicle Speed Signal Malfunction
C1551	IG Power Supply Voltage Malfunction
C1552	PIG Power Supply Voltage Malfunction
C1554	Power Supply Relay Failure
C1555	Motor Relay Welding Failure
C1581	Assist Map Number Un-Writing
U0100	Lost Communication with ECM / PCM "A"
U0129	Lost Communication with Brake System Control Module

POWER STEERING SYSTEM (FOR 2GR-FE)

POWER STEERING SYSTEM (FOR 2GR-FE) DTC IDENTIFICATION

DTC Code	Description
C1511	Torque Sensor Circuit Malfunction
C1512	Torque Sensor Circuit Malfunction
C1513	Torque Sensor Circuit Malfunction
C1514	Torque Sensor Power Supply Abnormal
C1521	Motor Circuit Malfunction
C1524	Motor Circuit Malfunction
C1528	Motor Rotation Angle Sensor Malfunction
C1531	ECU Malfunction
C1532	ECU Malfunction
C1533	ECU Malfunction
C1534	ECU Malfunction
C1541	Vehicle Speed Signal Malfunction
C1551	IG Power Supply Voltage Malfunction
C1552	PIG Power Supply Voltage Malfunction
C1554	Power Supply Relay Failure

C1555	Motor Relay Welding Failure
C1581	Assist Map Number Un-Writing
C1582	Assist Map Number Mismatch
U0100	Lost Communication with ECM / PCM "A"
U0129	Lost Communication with Brake System Control Module

SLIDING ROOF DTCS

SLIDING ROOF SYSTEM

SLIDING ROOF SYSTEM DTC IDENTIFICATION

DTC Code	Description
B2341	Sensor (Motor) Failure
B2342	Switch Failure
B2343	Position Initialization Incomplete
B2344	Position Failure

STEERING COLUMN DTCS

STEERING LOCK SYSTEM

STEERING LOCK SYSTEM DIAGNOSTIC TROUBLE CODE (DTC) IDENTIFICATION

DTC Code	Description
B2781	Open / Short in Steering Lock ECU
B2782	Power Source Control ECU Malfunction
B2788	IG2 Signal Malfunction

SUPPLEMENTAL RESTRAINT SYSTEMS DTCS

AIRBAG SYSTEM (FOR BUILT-IN TYPE YAW RATE SENSOR)

AIRBAG SYSTEM (FOR BUILT-IN TYPE YAW RATE SENSOR) DTC IDENTIFICATION

DTC Code	Description
B1000	Center Airbag Sensor Assembly Malfunction
B1610	Front Airbag Sensor RH Malfunction
B1612	Lost Communication with Front Airbag Sensor RH
B1613	Front Airbag Sensor RH Initialization Incomplete
B1615	Front Airbag Sensor LH Malfunction
B1617	Lost Communication with Front Airbag Sensor LH
B1618	Front Airbag Sensor LH Initialization Incomplete
B161A	Lost Communication with Front Satellite Sensor Bus
B1620	Side Airbag Sensor RH Circuit Malfunction

B1622	Lost communication with Side Airbag Sensor RH
B1623	Side Airbag Sensor Assembly RH Initialization Incomplete
B1625	Side Airbag Sensor LH Circuit Malfunction
B1627	Lost communication with Side Airbag Sensor LH
B1628	Side Airbag Sensor Assembly LH Initialization Incomplete
B1630	Rear Airbag Sensor RH Circuit Malfunction
B1632	Lost Communication with Rear Airbag Sensor RH
B1633	Rear Airbag Sensor Assembly RH Initialization Incomplete
B1635	Rear Airbag Sensor LH Circuit Malfunction
B1637	Lost Communication with Rear Airbag Sensor LH
B1638	Rear Airbag Sensor Assembly LH Initialization Incomplete
B1642	Lost Communication with Side Satellite Sensor Bus RH
B1647	Lost Communication with Side Satellite Sensor Bus LH
B1650	Occupant Classification System Malfunction
B1656	Seat Belt Buckle Switch LH Circuit Malfunction
B1660	Passenger Airbag ON/OFF Indicator Circuit Malfunction
B1690	Door Side Airbag Sensor RH Malfunction
B1692	Lost Communication with Door Side Airbag Sensor RH
B1693	Door Side Airbag Sensor RH Initialization Incomplete
B1695	Door Side Airbag Sensor LH Malfunction
B1697	Lost Communication with Door Side Airbag Sensor LH
B1698	Door Side Airbag Sensor LH Initialization Incomplete
B1800	Short in Driver Side Squib Circuit
B1801	Open in Driver Side Squib Circuit
B1802	Short to GND in Driver Side Squib Circuit
B1803	Short to B+ in Driver Side Squib Circuit
B1805	Short in Front Passenger Side Squib Circuit
B1806	Open in Front Passenger Side Squib Circuit
B1807	Short to GND in Front Passenger Side Squib Circuit
B1808	Short to B+ in Front Passenger Side Squib Circuit
B1810	Short in Driver Side Squib 2nd Step Circuit
B1811	Open in Driver Side Squib 2nd Step Circuit
B1812	Short to GND in Driver Side Squib 2nd Step Circuit
B1813	Short to B+ in Driver Side Squib 2nd Step Circuit
B1815	Short in Front Passenger Side Squib 2nd Step Circuit
B1816	Open in Front Passenger Side Squib 2nd Step Circuit
B1817	Short to GND in Front Passenger Side Squib 2nd Step Circuit
B1818	Short to B+ in Front Passenger Side Squib 2nd Step Circuit
B1820	Short in Side Squib RH Circuit
B1821	Open in Side Squib RH Circuit
B1822	Short to GND in Side Squib RH Circuit
B1823	

	Short to B+ in Side Squib RH Circuit
B1825	Short in Side Squib LH Circuit
B1826	Open in Side Squib LH Circuit
B1827	Short to GND in Side Squib LH Circuit
B1828	Short to B+ in Side Squib LH Circuit
B1830	Short in Curtain Shield Squib RH Circuit
B1831	Open in Curtain Shield Squib RH Circuit
B1832	Short to GND in Curtain Shield Squib RH Circuit
B1833	Short to B+ in Curtain Shield Squib RH Circuit
B1835	Short in Curtain Shield Squib LH Circuit
B1836	Open in Curtain Shield Squib LH Circuit
B1837	Short to GND in Curtain Shield Squib LH Circuit
B1838	Short to B+ in Curtain Shield Squib LH Circuit
B1850	Short in Rear Side Squib RH Circuit
B1851	Open in Rear Side Squib RH Circuit
B1852	Short to GND in Rear Side Squib RH Circuit
B1853	Short to B+ in Rear Side Squib RH Circuit
B1855	Short in Rear Side Squib LH Circuit
B1856	Open in Rear Side Squib LH Circuit
B1857	Short to GND in Rear Side Squib LH Circuit
B1858	Short to B+ in Rear Side Squib LH Circuit
B1860	Short in Driver Side Knee Airbag Squib Circuit
B1861	Open in Driver Side Knee Airbag Squib Circuit
B1862	Short to GND in Driver Side Knee Airbag Squib Circuit
B1863	Short to B+ in Driver Side Knee Airbag Squib Circuit
B1865	Short in Front Passenger Side Knee Airbag Squib Circuit
B1866	Open in Front Passenger Side Knee Airbag Squib Circuit
B1867	Short to GND in Front Passenger Side Knee Airbag Squib Circuit
B1868	Short to B+ in Front Passenger Side Knee Airbag Squib Circuit
B1900	Short in Front Pretensioner Squib RH Circuit
B1901	Open in Front Pretensioner Squib RH Circuit
B1902	Short to GND in Front Pretensioner Squib RH Circuit
B1903	Short to B+ in Front Pretensioner Squib RH Circuit
B1905	Short in Front Pretensioner Squib LH Circuit
B1906	Open in Front Pretensioner Squib LH Circuit
B1907	Short to GND in Front Pretensioner Squib LH Circuit
B1908	Short to B+ in Front Pretensioner Squib LH Circuit

AIRBAG SYSTEM (FOR SEPARATE TYPE YAW RATE SENSOR)

AIRBAG SYSTEM (FOR SEPARATE TYPE YAW RATE SENSOR) DTC IDENTIFICATION

DTC Code	**Description**
B1000	Center Airbag Sensor Assembly Malfunction
B1603	Front Satellite Sensor Bus RH Initialization Incomplete
B1608	Front Satellite Sensor Bus LH Initialization Incomplete
B1610	Front Airbag Sensor RH Malfunction
B1612	Lost Communication with Front Airbag Sensor RH
B1613	Front Airbag Sensor RH Initialization Incomplete
B1615	Front Airbag Sensor LH Malfunction
B1617	Lost Communication with Front Airbag Sensor LH
B1618	Front Airbag Sensor LH Initialization Incomplete
B1620	Side Airbag Sensor RH Circuit Malfunction
B1622	Lost communication with Side Airbag Sensor RH
B1623	Side Airbag Sensor Assembly RH Initialization Incomplete
B1625	Side Airbag Sensor LH Circuit Malfunction
B1627	Lost communication with Side Airbag Sensor LH
B1628	Side Airbag Sensor Assembly LH Initialization Incomplete
B1630	Rear Airbag Sensor RH Circuit Malfunction
B1632	Lost Communication with Rear Airbag Sensor RH
B1633	Rear Airbag Sensor Assembly RH Initialization Incomplete
B1635	Rear Airbag Sensor LH Circuit Malfunction
B1637	Lost Communication with Rear Airbag Sensor LH
B1638	Rear Airbag Sensor Assembly LH Initialization Incomplete
B1642	Lost Communication with Side Satellite Sensor Bus RH
B1643	Side Satellite Sensor Bus RH Initialization Incomplete
B1647	Lost Communication with Side Satellite Sensor Bus LH
B1648	Side Satellite Sensor Bus LH Initialization Incomplete
B1650	Occupant Classification System Malfunction
B1656	Seat Belt Buckle Switch LH Circuit Malfunction
B1660	Passenger Airbag ON/OFF Indicator Circuit Malfunction
B1690	Door Side Airbag Sensor RH Malfunction
B1692	Lost Communication with Door Side Airbag Sensor RH
B1693	Door Side Airbag Sensor RH Initialization Incomplete
B1695	Door Side Airbag Sensor LH Malfunction
B1697	Lost Communication with Door Side Airbag Sensor LH
B1698	Door Side Airbag Sensor LH Initialization Incomplete
B1800	Short in Driver Side Squib Circuit
B1801	Open in Driver Side Squib Circuit
B1802	Short to GND in Driver Side Squib Circuit
B1803	Short to B+ in Driver Side Squib Circuit
B1805	Short in Front Passenger Side Squib Circuit
B1806	Open in Front Passenger Side Squib Circuit
B1807	

	Short to GND in Front Passenger Side Squib Circuit
B1808	Short to B+ in Front Passenger Side Squib Circuit
B1810	Short in Driver Side Squib 2nd Step Circuit
B1811	Open in Driver Side Squib 2nd Step Circuit
B1812	Short to GND in Driver Side Squib 2nd Step Circuit
B1813	Short to B+ in Driver Side Squib 2nd Step Circuit
B1815	Short in Front Passenger Side Squib 2nd Step Circuit
B1816	Open in Front Passenger Side Squib 2nd Step Circuit
B1817	Short to GND in Front Passenger Side Squib 2nd Step Circuit
B1818	Short to B+ in Front Passenger Side Squib 2nd Step Circuit
B1820	Short in Side Squib RH Circuit
B1821	Open in Side Squib RH Circuit
B1822	Short to GND in Side Squib RH Circuit
B1823	Short to B+ in Side Squib RH Circuit
B1825	Short in Side Squib LH Circuit
B1826	Open in Side Squib LH Circuit
B1827	Short to GND in Side Squib LH Circuit
B1828	Short to B+ in Side Squib LH Circuit
B1830	Short in Curtain Shield Squib RH Circuit
B1831	Open in Curtain Shield Squib RH Circuit
B1832	Short to GND in Curtain Shield Squib RH Circuit
B1833	Short to B+ in Curtain Shield Squib RH Circuit
B1835	Short in Curtain Shield Squib LH Circuit
B1836	Open in Curtain Shield Squib LH Circuit
B1837	Short to GND in Curtain Shield Squib LH Circuit
B1838	Short to B+ in Curtain Shield Squib LH Circuit
B1850	Short in Rear Side Squib RH Circuit
B1851	Open in Rear Side Squib RH Circuit
B1852	Short to GND in Rear Side Squib RH Circuit
B1853	Short to B+ in Rear Side Squib RH Circuit
B1855	Short in Rear Side Squib LH Circuit
B1856	Open in Rear Side Squib LH Circuit
B1857	Short to GND in Rear Side Squib LH Circuit
B1858	Short to B+ in Rear Side Squib LH Circuit
B1860	Short in Driver Side Knee Airbag Squib Circuit
B1861	Open in Driver Side Knee Airbag Squib Circuit
B1862	Short to GND in Driver Side Knee Airbag Squib Circuit
B1863	Short to B+ in Driver Side Knee Airbag Squib Circuit
B1865	Short in Front Passenger Side Knee Airbag Squib Circuit
B1866	Open in Front Passenger Side Knee Airbag Squib Circuit
B1867	Short to GND in Front Passenger Side Knee Airbag Squib Circuit
B1868	

	Short to B+ in Front Passenger Side Knee Airbag Squib Circuit
B1900	Short in Front Pretensioner Squib RH Circuit
B1901	Open in Front Pretensioner Squib RH Circuit
B1902	Short to GND in Front Pretensioner Squib RH Circuit
B1903	Short to B+ in Front Pretensioner Squib RH Circuit
B1905	Short in Front Pretensioner Squib LH Circuit
B1906	Open in Front Pretensioner Squib LH Circuit
B1907	Short to GND in Front Pretensioner Squib LH Circuit
B1908	Short to B+ in Front Pretensioner Squib LH Circuit

OCCUPANT CLASSIFICATION SYSTEM

OCCUPANT CLASSIFICATION SYSTEM DTC IDENTIFICATION

DTC Code	Description
B1771	Passenger Side Buckle Switch Circuit Malfunction
B1782	Rear Occupant Classification Sensor LH Circuit Malfunction
B1783	Rear Occupant Classification Sensor RH Circuit Malfunction
B1787	Rear Occupant Classification Sensor LH Collision Detection
B1788	Rear Occupant Classification Sensor RH Collision Detection
B1790	Center Airbag Sensor Assembly Communication Circuit Malfunction
B1793	Occupant Classification Sensor Power Supply Circuit Malfunction
B1794	Open in Occupant Classification ECU Battery Positive Line
B1795	Occupant Classification ECU Malfunction
B1796	Sleep Operation Failure of Occupant Classification ECU

THEFT DETERRENT / KEYLESS ENTRY DTCS

ENGINE IMMOBILISER SYSTEM (W/ SMART KEY SYSTEM)

CERTIFICATION ECU (SMART KEY ECU ASSEMBLY) DTC IDENTIFICATION

DTC Code	Description
B2784	Antenna Coil Open / Short
B278A	Short to GND in Immobiliser System Power Source Circuit
B278D	Malfunction of ID-BOX Recognition

ECM DTC IDENTIFICATION

DTC Code	Description
B2799	Engine Immobiliser System Malfunction
B279A	Theft Deterrent System Communication Line High Fixation
B279C	Theft Deterrent System Presence Detection

ENGINE IMMOBILISER SYSTEM (W/O SMART KEY SYSTEM)

TRANSPONDER KEY ECU ASSEMBLY DTC IDENTIFICATION

DTC Code	Description
B2780	Push Switch / Key Unlock Warning Switch Malfunction
B2784	Antenna Coil Open / Short
B2793	Transponder Chip Malfunction
B2794	Unmatched Encryption Code
B2795	Unmatched Key Code
B2796	No Communication in Immobiliser System
B2797	Communication Malfunction No. 1
B2798	Communication Malfunction No. 2

ECM DTC IDENTIFICATION

DTC Code	Description
B2799	Engine Immobiliser System Malfunction
B279A	Theft Deterrent System Communication Line High Fixation
B279C	Theft Deterrent System Presence Detection

REMOTE ENGINE STARTER SYSTEM

MAIN BODY ECU (MULTIPLEX NETWORK BODY ECU) DTC IDENTIFICATION

DTC Code	Description
B126A	Remote Engine Starter ECU Communication Stop

REMOTE ENGINE STARTER ECU DTC IDENTIFICATION

DTC Code	Description
B2334	Remote Engine Starter ECU Internal Relay
B2335	Lost Communication with Immobiliser System
B2336	Immobiliser Communication ID Unmatched

CERTIFICATION ECU (SMART KEY ECU ASSEMBLY) DTC IDENTIFICATION

DTC Code	Description
B2779	Engine Starter Communication Malfunction

SMART KEY SYSTEM (FOR ENTRY FUNCTION)

SMART KEY SYSTEM (FOR ENTRY FUNCTION) DTC IDENTIFICATION

DTC Code	Description
B27A1	Open in Driver Side Electrical Antenna Circuit
B27A2	Open in Front Passenger Side Electrical Antenna Circuit
B27A5	Open in Front Floor Electrical Key Oscillator Circuit
B27A6	Open in Rear Floor Electrical Key Oscillator Circuit
B27A7	Open in Inside Luggage Compartment Electrical Key Oscillator Circuit

B27A8	Open in Outside Luggage Compartment Electrical Key Antenna Circuit

SMART KEY SYSTEM (FOR START FUNCTION)

SMART KEY SYSTEM (FOR START FUNCTION) DTC IDENTIFICATION

DTC Code	Description
B2271	Ignition Hold Monitor Malfunction
B2274	ACC Monitor Malfunction
B2277	Detecting Vehicle Submersion
B2282	Vehicle Speed Signal Malfunction
B2283	Vehicle Speed Sensor Malfunction
B2284	Brake Signal Malfunction
B2285	Steering Lock Position Signal Circuit Malfunction
B2286	Runnable Signal Malfunction
P0335	Crankshaft Position Sensor Circuit Malfunction (NE Signal)
U0100	Lost Communication with ECM / PCM
U0140	Lost Communication with Main Body ECU
U0142	Lost Communication with Main Body ECU
U0155	Lost Communication with Combination Meter

TIRE PRESSURE MONITORING DTCS

TIRE PRESSURE WARNING SYSTEM

TIRE PRESSURE WARNING ECU AND RECEIVER DTC IDENTIFICATION

DTC Code	Description
C2111	Transmitter ID1 Operation Stop
C2112	Transmitter ID2 Operation Stop
C2113	Transmitter ID3 Operation Stop
C2114	Transmitter ID4 Operation Stop
C2121	No Signal from Transmitter ID1
C2122	No Signal from Transmitter ID2
C2123	No Signal from Transmitter ID3
C2124	No Signal from Transmitter ID4
C2126	Transmitter ID not Received in Main Mode
C2141	Transmitter ID1 Error
C2142	Transmitter ID2 Error
C2143	Transmitter ID3 Error
C2144	Transmitter ID4 Error
C2171	Transmitter ID not Registered
C2176	Receiver Error
C2177	Initialization not Completed

C2179	Tire Pressure Monitor ECU Communication Stop
C2181	Transmitter ID1 not Received (Test Mode DTC)
C2182	Transmitter ID2 not Received (Test Mode DTC)
C2183	Transmitter ID3 not Received (Test Mode DTC)
C2184	Transmitter ID4 not Received (Test Mode DTC)
C2198	Initialization Switch (for Test Mode DTC)

MAIN BODY ECU (MULTIPLEX NETWORK BODY ECU) DTC IDENTIFICATION

DTC Code	Description
B1247	Tire Pressure Monitor Receiver Communication Stop

WINDOW / GLASS DTCS

POWER WINDOW CONTROL SYSTEM

POWER WINDOW CONTROL SYSTEM DTC IDENTIFICATION

DTC Code	Description
B2311	Power Window Motor Malfunction
B2312	Power Window Switch Malfunction
B2313	Glass Position Initialization Incomplete

2012-2017 ENGINE PERFORMANCE

Emission Control System (Service Information) - Camry (2AR-FE)

CANISTER

COMPONENTS

ILLUSTRATION

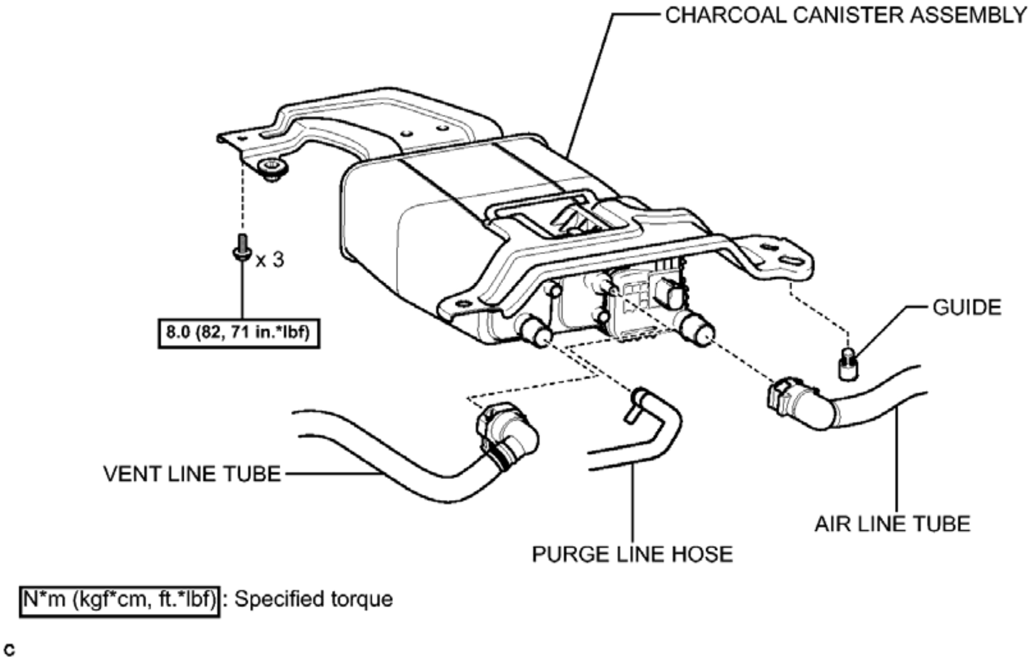
CHARCOAL CANISTER ASSEMBLY
x 3
8.0 (82, 71 in.*lbf)
GUIDE
VENT LINE TUBE
PURGE LINE HOSE
AIR LINE TUBE
N*m (kgf*cm, ft.*lbf): Specified torque
c

Fig. 1: Identifying Canister Replacement Components With Torque Specifications (1 Of 2)
Courtesy of TOYOTA MOTOR SALES, U.S.A., INC.

ILLUSTRATION

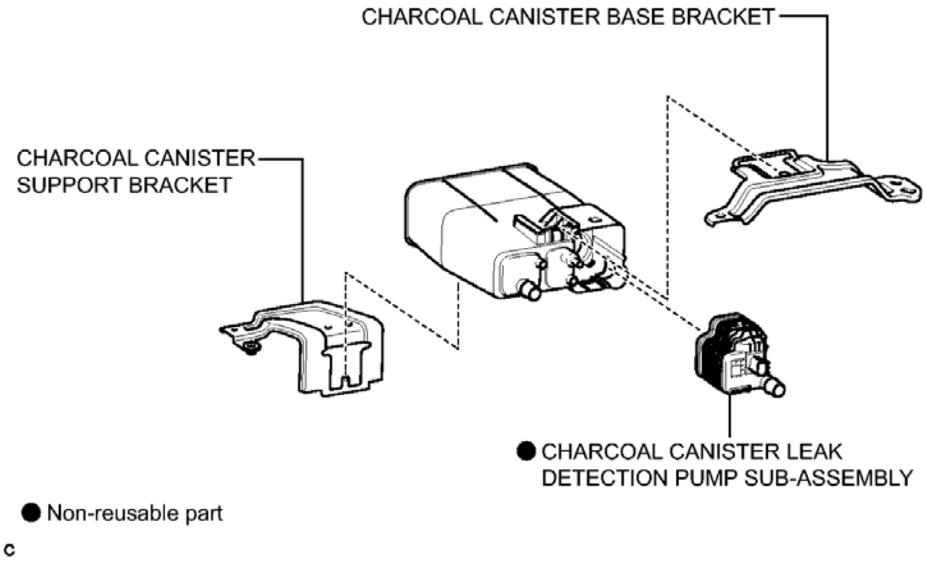
CHARCOAL CANISTER BASE BRACKET
CHARCOAL CANISTER SUPPORT BRACKET
● CHARCOAL CANISTER LEAK DETECTION PUMP SUB-ASSEMBLY
● Non-reusable part
c

Fig. 2: Identifying Canister Replacement Components With Torque Specifications (2 Of 2)
Courtesy of TOYOTA MOTOR SALES, U.S.A., INC.

REMOVAL

REMOVAL

1. **REMOVE FUEL TANK ASSEMBLY**

   Refer to **REMOVAL**

2. **REMOVE CHARCOAL CANISTER ASSEMBLY**
   1. Disconnect the purge line hose.

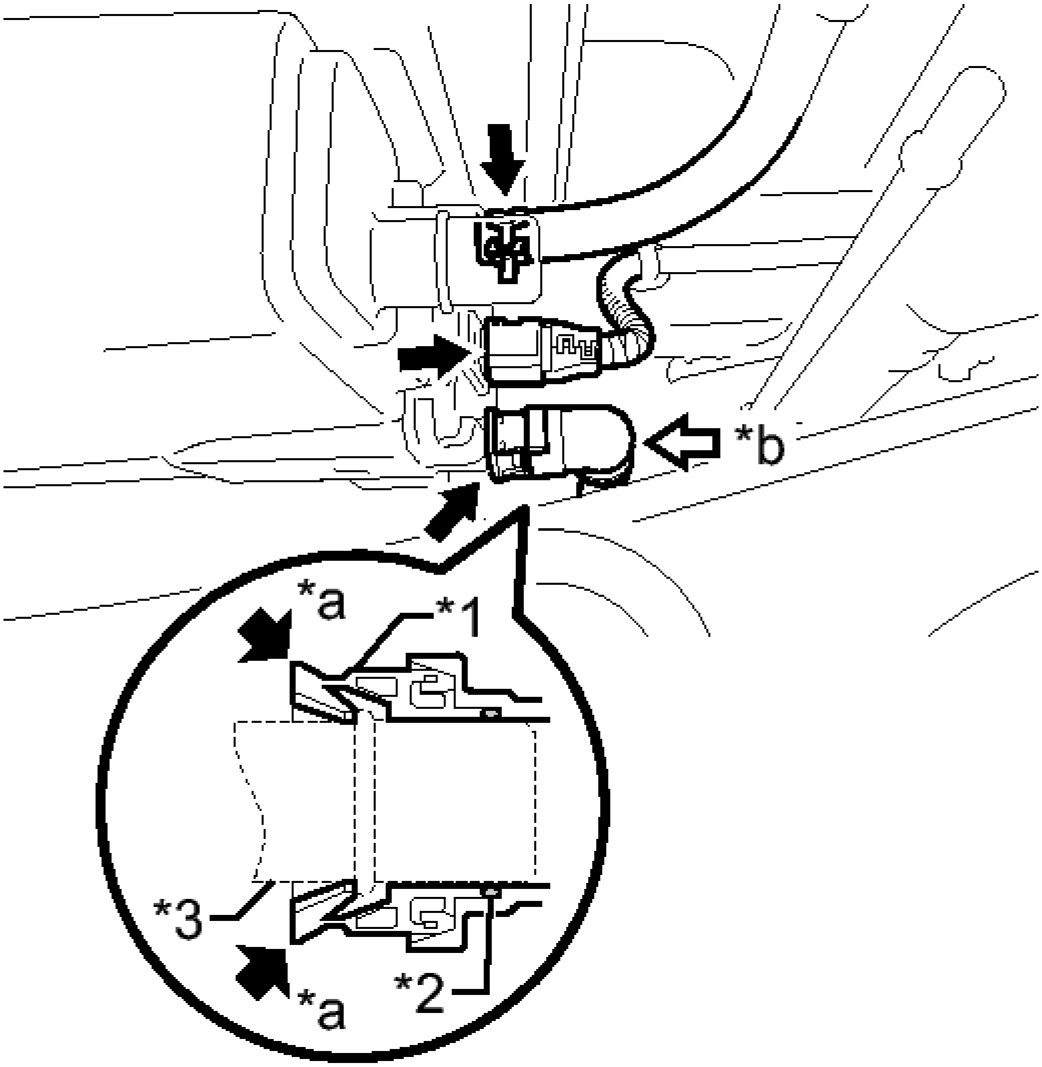

Fig. 3: Identifying Charcoal Canister Assembly Components
Courtesy of TOYOTA MOTOR SALES, U.S.A., INC.

b. Disconnect the connector from the charcoal canister leak detection pump sub-assembly.
c. Disconnect the air line tube.

TEXT IN ILLUSTRATION

*1	Tube Connector
*2	O-ring
*3	Pipe (charcoal canister leak detection

	pump sub-assembly)
*a	Pinch
*b	Push

NOTE:

- **Remove any dirt or foreign matter on the tube connector before performing this work.**
- **Do not allow any scratches or foreign matter to get on the parts when disconnecting them as the tube connector has an O-ring that seals the pipe.**
- **Perform this work by hand. Do not use any tools.**
- **Do not forcibly bend, twist or turn the air line tube.**
- **Protect the disconnected parts by covering them with plastic bags after disconnecting the air line tube.**
- **If the tube connector and pipe are stuck, push and pull on them to release.**

1. Push the air line tube firmly toward the charcoal canister side.
2. Pinch the air line tube as shown in the illustration.
3. Pull out the air line tube.

d. Remove the 3 bolts and guide.

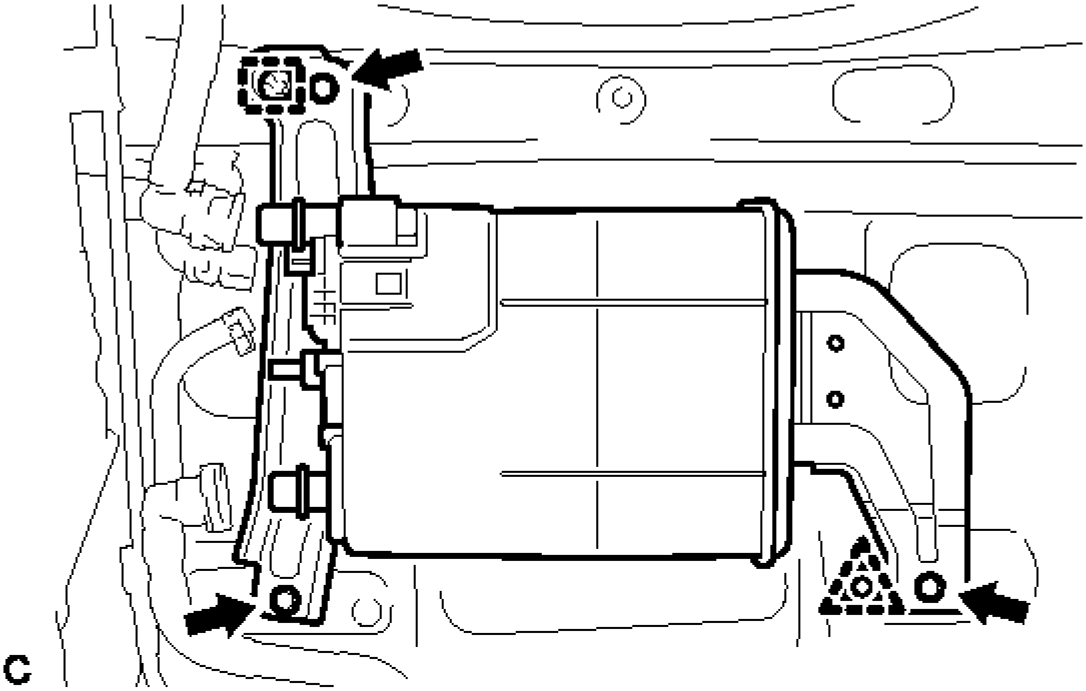

Fig. 4: Identifying Charcoal Canister Assembly Bolts And Guide

Courtesy of TOYOTA MOTOR SALES, U.S.A., INC.

e. Separate the clip from the body to remove the charcoal canister assembly.

3. **REMOVE CHARCOAL CANISTER BASE BRACKET**
   a. Disengage the claw and remove the charcoal canister base bracket.

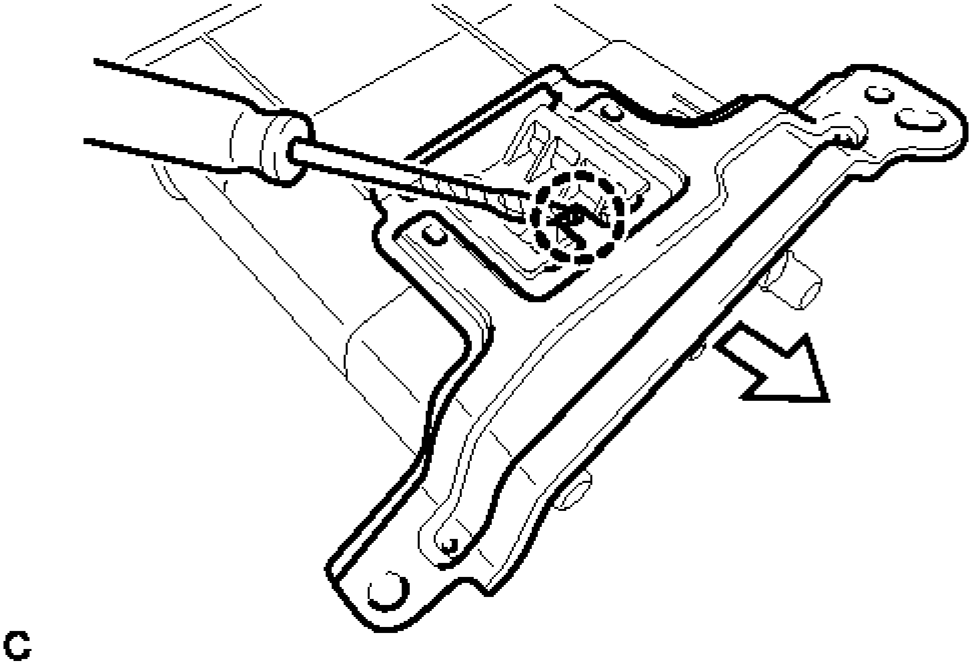

Fig. 5: Removing Charcoal Canister Base Bracket Claw
Courtesy of TOYOTA MOTOR SALES, U.S.A., INC.

4. **REMOVE CHARCOAL CANISTER SUPPORT BRACKET**
   a. Disengage the claw and remove the charcoal canister support bracket.

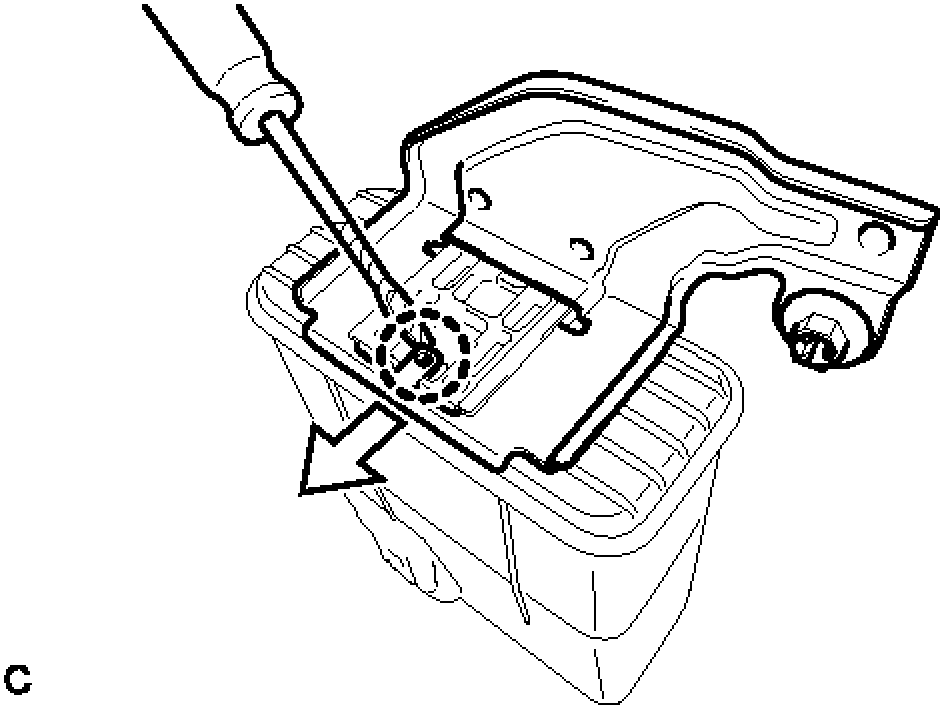

Fig. 6: Removing Charcoal Canister Support Bracket Claw
Courtesy of TOYOTA MOTOR SALES, U.S.A., INC.

5. **REMOVE CHARCOAL CANISTER LEAK DETECTION PUMP SUB-ASSEMBLY**
   a. Before removing the charcoal canister leak detection pump sub-assembly, clean the canister by blowing air into it to ensure that the canister is free of foreign matter.

NOTE:

- **Make sure to clean the canister using only air.**
- **Do not use gasoline, thinners or solvents.**

   b. While disengaging the 2 claws as shown in the illustration, push the charcoal canister leak detection pump sub-assembly upwards using a screwdriver to remove it.

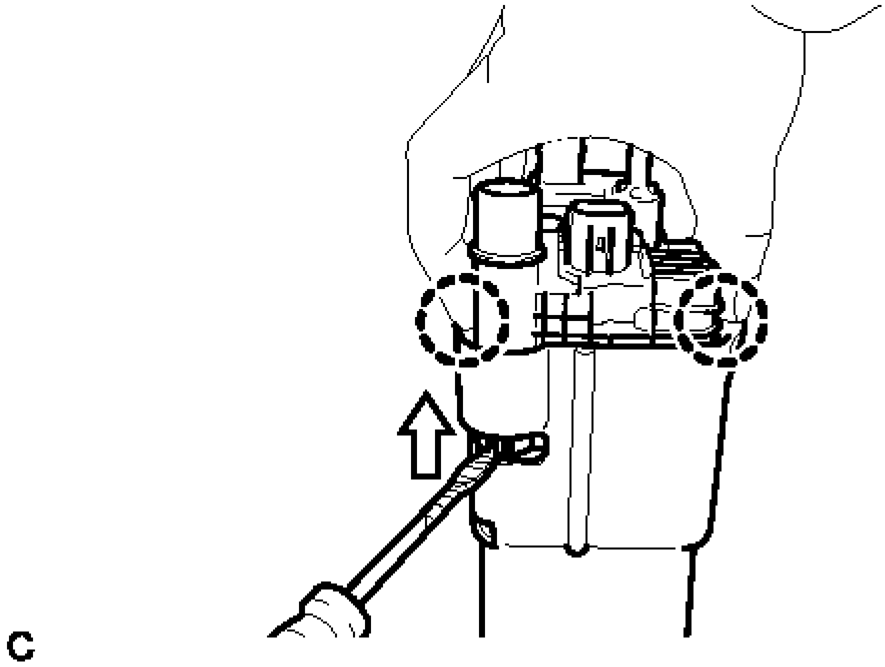

Fig. 7: Identifying Charcoal Canister Leak Detection Pump Sub-Assembly Claws
Courtesy of TOYOTA MOTOR SALES, U.S.A., INC.

c. Check if the canister contains foreign matter such as mud or water.
   1. Visually check that the inside of the canister is free of foreign matter.

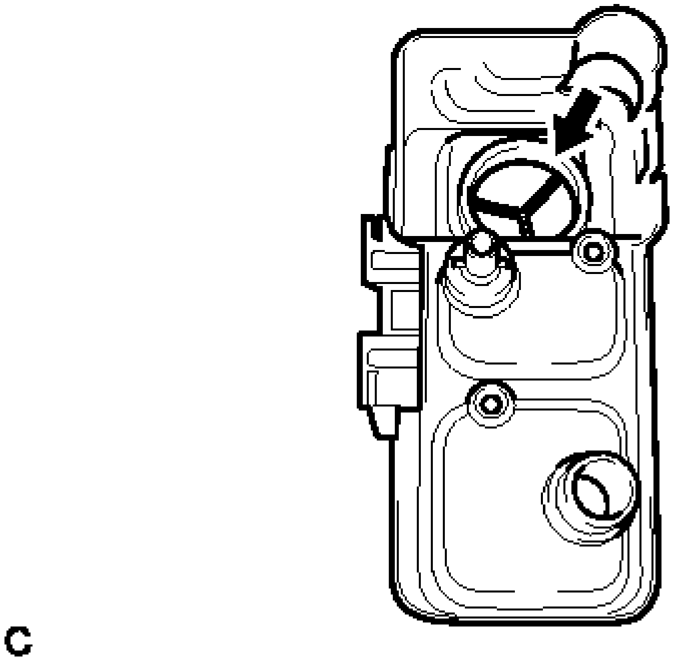

Fig. 8: Identifying Canister Contains Foreign Matter

Courtesy of TOYOTA MOTOR SALES, U.S.A., INC.

2. Hold the canister upside down to make sure that the canister is free of foreign matter.

   If the canister contains foreign matter, replace the canister.

INSPECTION

INSPECTION

1. **INSPECT CHARCOAL CANISTER ASSEMBLY**
   a. Visually check the charcoal canister assembly.
      1. Visually check the charcoal canister assembly for cracks or damage.

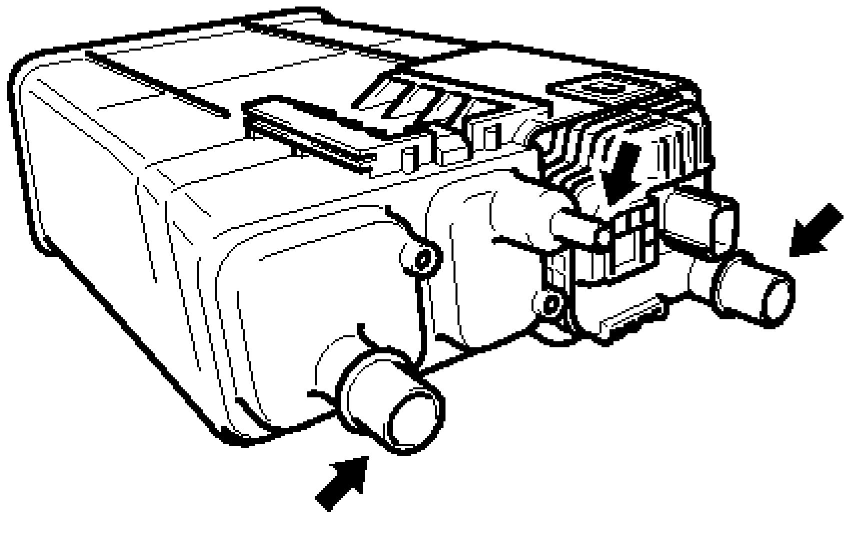

Fig. 9: Identifying Charcoal Canister Assembly For Cracks Or Damage
Courtesy of TOYOTA MOTOR SALES, U.S.A., INC.

If cracks or damage are found, replace the charcoal canister assembly.

   b. Check canister operation.
      1. With the purge port closed, blow 5 kPa (0.1 kgf/cm^2 , 0.7 psi) of air into the vent line port, and check that air flows from the air line port.

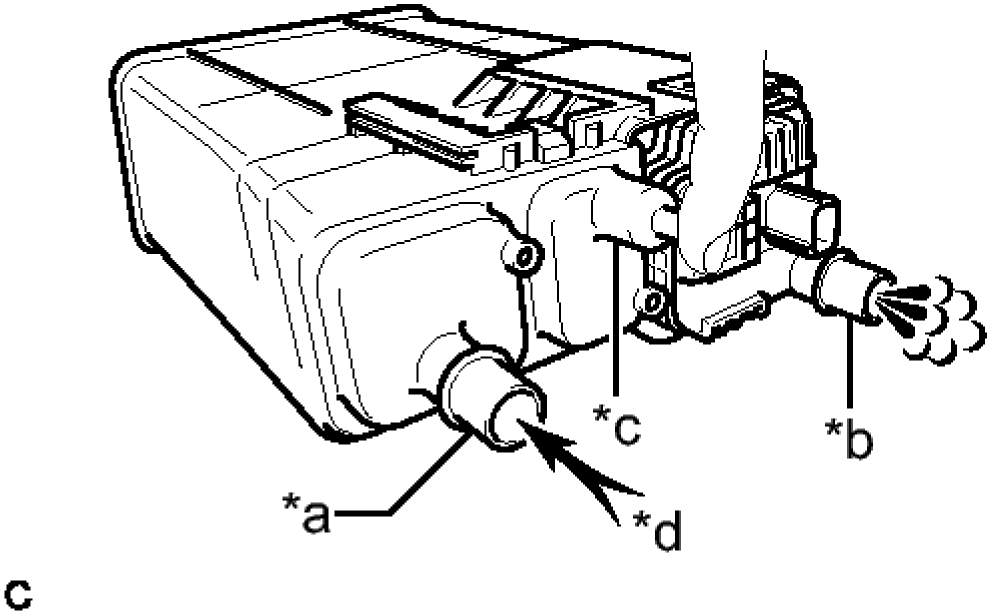

Fig. 10: Identifying Air Flows From Air Line Port
Courtesy of TOYOTA MOTOR SALES, U.S.A., INC.

TEXT IN ILLUSTRATION

*a	Vent Line Port
*b	Air Line Port
*c	Purge Line Port
*d	Air

If the result is not as specified, replace the charcoal canister assembly.

2. With the vent port closed, blow 5 kPa (0.1 kgf/cm^2 , 0.7 psi) of air into the air line port, and check that air flows from the purge line port.

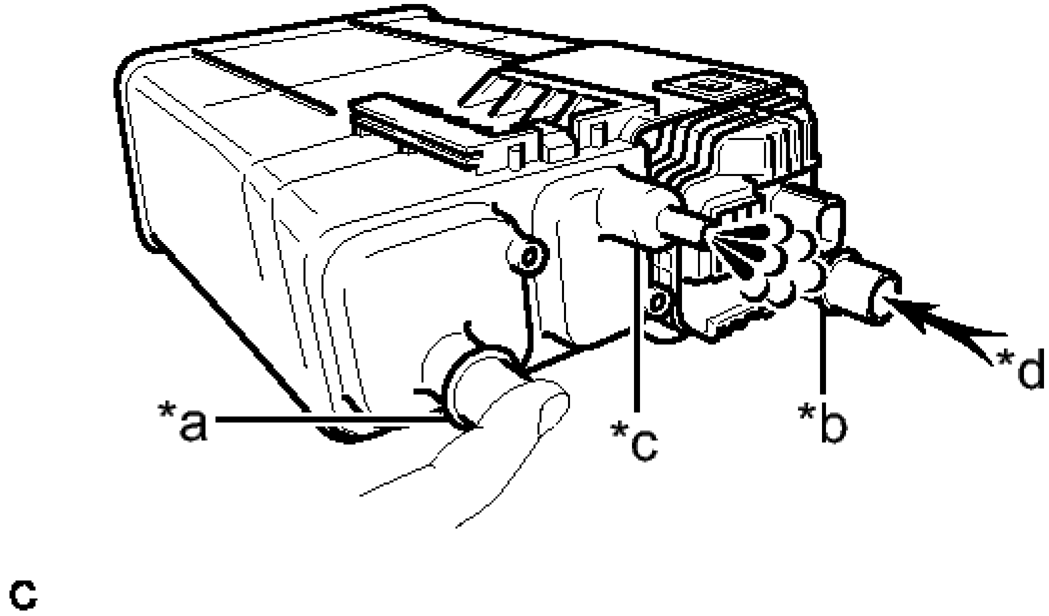

Fig. 11: Identifying Air Flows From Purge Line Port
Courtesy of TOYOTA MOTOR SALES, U.S.A., INC.

TEXT IN ILLUSTRATION

*a	Vent Line Port
*b	Air Line Port
*c	Purge Line Port
*d	Air

If the result is not as specified, replace the charcoal canister assembly.

c. Check for air leaks.
    1. Connect a pressure gauge to the vent line port of the charcoal canister assembly.

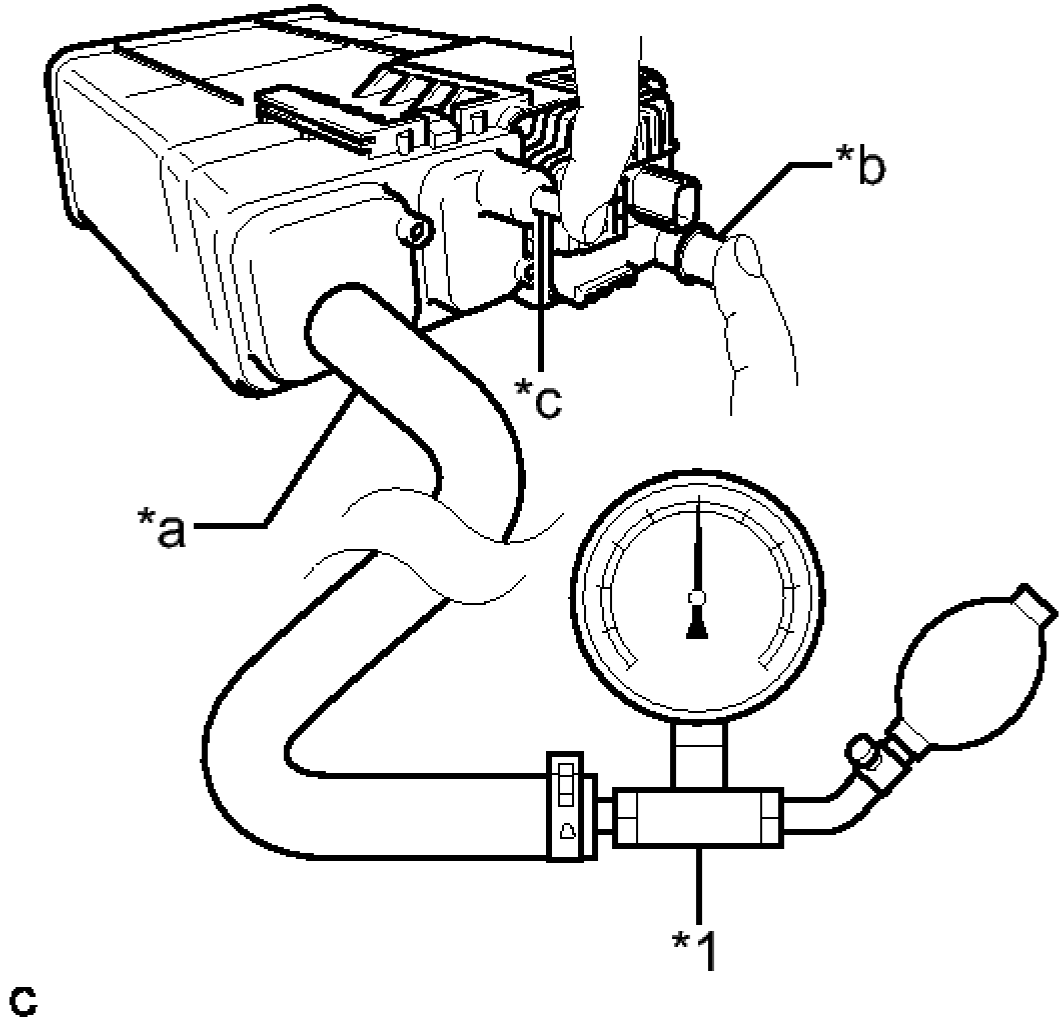

Fig. 12: Connecting Pressure Gauge To Vent Line Port

Courtesy of TOYOTA MOTOR SALES, U.S.A., INC.

TEXT IN ILLUSTRATION

*1	Pressure Gauge
*a	Vent Line Port
*b	Air Line Port
*c	Purge Line Port

2. With the purge line port and the air line port closed, apply 20 kPa (150 mmHg, 5.91 in.Hg) of pressurized air into the vent line port, then confirm that pressure is retained for 1 minute.

   If the result is not as specified, replace the charcoal canister assembly.

d. Check the charcoal canister leak detection pump sub-assembly.
   1. Connect a positive (+) lead from the battery to terminal 5 and a negative (-) lead to terminal 1.

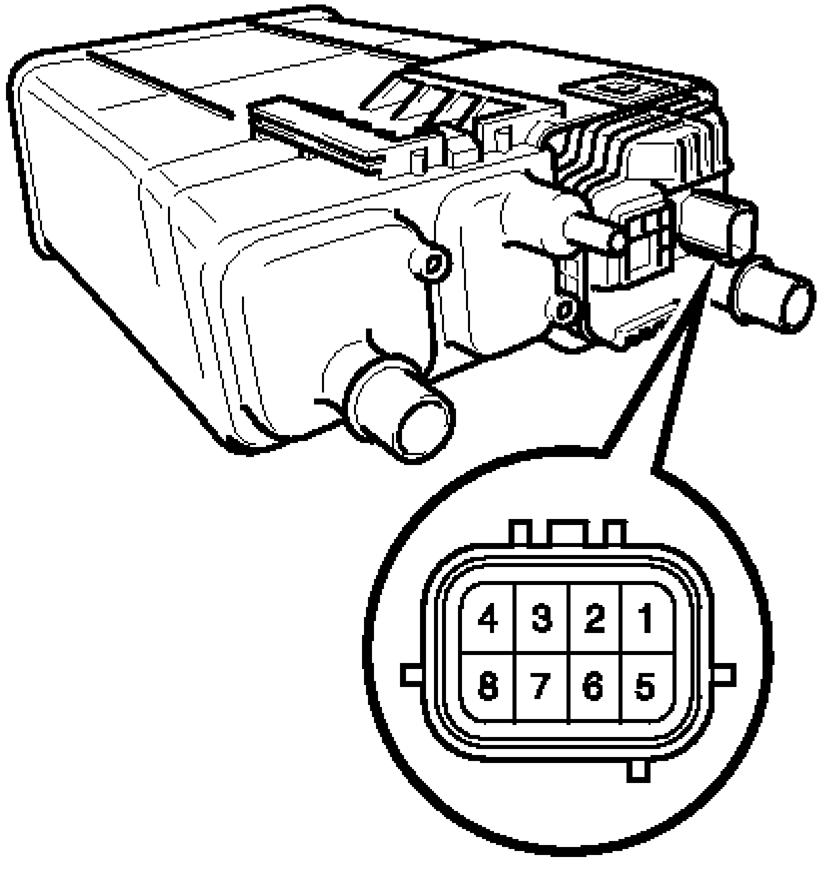

Fig. 13: Identifying Charcoal Canister Leak Detection Pump Sub-Assembly
Courtesy of TOYOTA MOTOR SALES, U.S.A., INC.

   2. Check that a clicking sound is heard from the charcoal canister leak detection pump sub-assembly.

      If the result is not as specified, replace the charcoal canister leak detection pump sub-

assembly.

INSTALLATION

INSTALLATION

1. **INSTALL CHARCOAL CANISTER LEAK DETECTION PUMP SUB-ASSEMBLY**
   a. Engage the 2 claws to install a new charcoal canister leak detection pump sub-assembly to the canister.

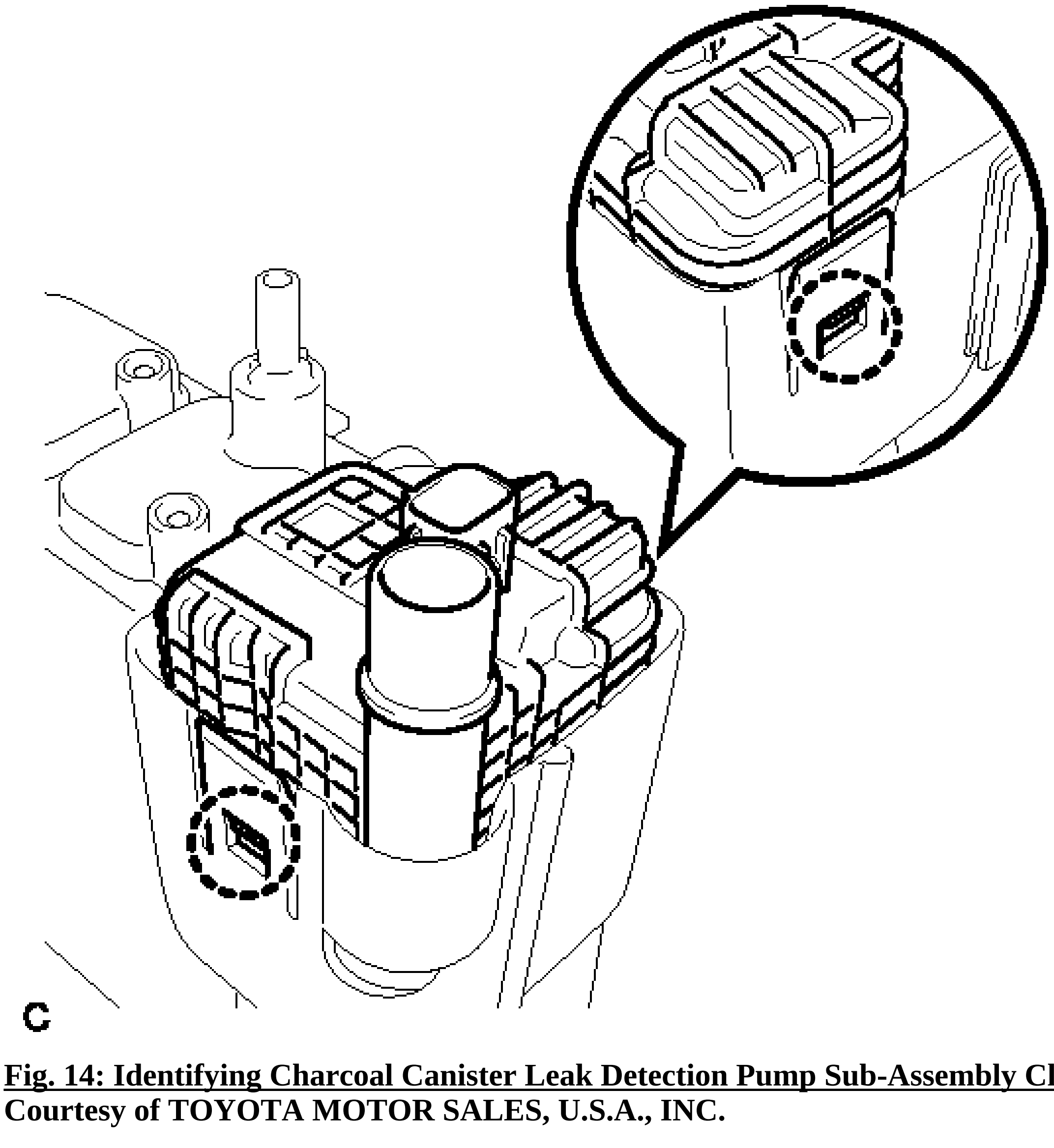

Fig. 14: Identifying Charcoal Canister Leak Detection Pump Sub-Assembly Claws
Courtesy of TOYOTA MOTOR SALES, U.S.A., INC.

NOTE:

- **Do not allow foreign matter such as grease, oil or water to adhere to the O-rings.**

- **Ensure that the claws are engaged properly.**

2. **INSTALL CHARCOAL CANISTER SUPPORT BRACKET**
    a. Engage the claw to install the charcoal canister support bracket.
3. **INSTALL CHARCOAL CANISTER BASE BRACKET**
    a. Engage the claw to install the charcoal canister base bracket.
4. **INSTALL CHARCOAL CANISTER ASSEMBLY**
    a. Connect the clip to install the charcoal canister assembly.
    b. Install the 3 bolts and guide.

    Torque: 8.0 N*m (82 kgf*cm, 71 in.*lbf)

    c. Connect the air line tube.

    NOTE:

    - **Check that there are no scratches or foreign matter around the connected part of the tube connector and pipe before performing this work.**
    - **After connecting the air line tube, check that the air line tube is securely connected by pulling on the tube connector and the charcoal canister.**

    d. Connect the purge line hose.
    e. Connect the connector to the charcoal canister leak detection pump sub-assembly.
5. **INSTALL FUEL TANK ASSEMBLY**

    Refer to **INSTALLATION**

PURGE VALVE

COMPONENTS

ILLUSTRATION

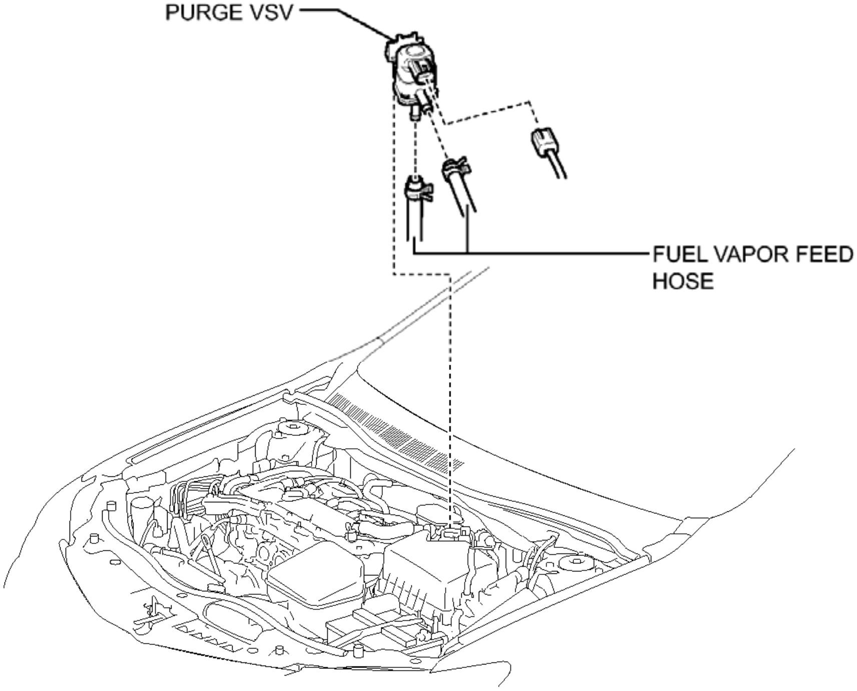
PURGE VSV
FUEL VAPOR FEED HOSE

Fig. 15: Identifying Purge Valve Replacement Components
Courtesy of TOYOTA MOTOR SALES, U.S.A., INC.

REMOVAL

REMOVAL

1. **REMOVE PURGE VSV**
    a. Disconnect the connector and 2 fuel vapor feed hoses.

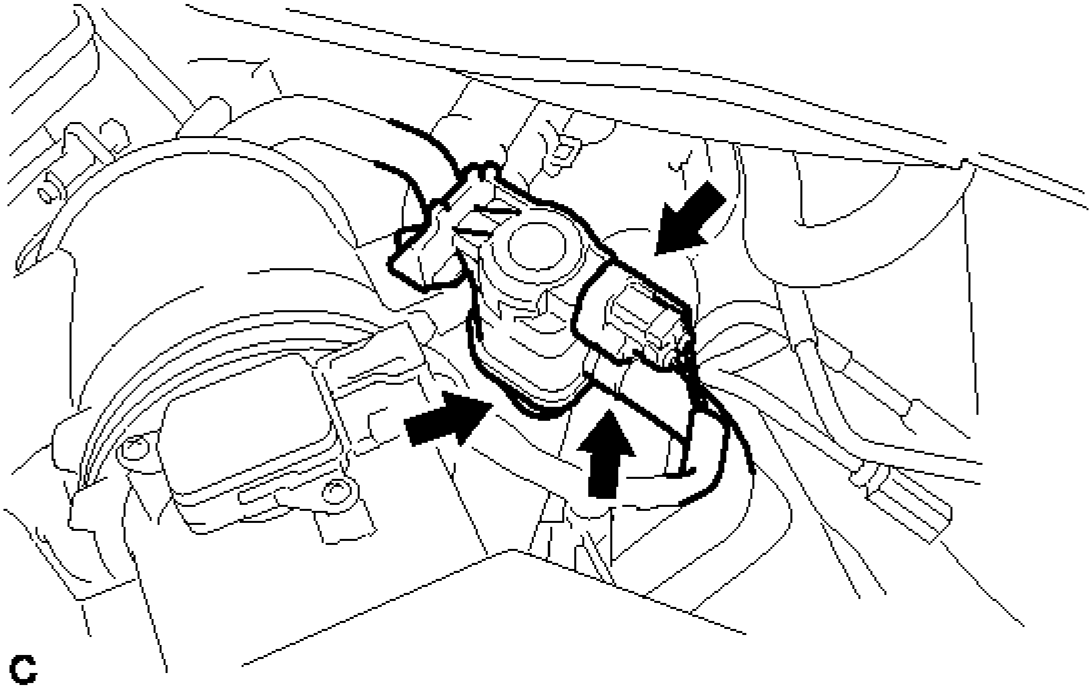

Fig. 16: Identifying Purge VSV Connector And Fuel Vapor Feed Hoses
Courtesy of TOYOTA MOTOR SALES, U.S.A., INC.

b. Remove the purge VSV.

INSPECTION

INSPECTION

1. **INSPECT PURGE VSV**
   a. Measure the resistance according to the value(s) in the table below.

   Standard Resistance

Tester Connection	Condition	Specified Condition
1 - 2	20°C (68° F)	23 to 26 ohms

   If the result is not as specified, replace the purge VSV.

   b. Apply battery voltage between the terminals of the purge VSV and check that the following occurs when blowing air into port E.

   OK

Measurement Condition	Specified Condition
Battery voltage applied between terminals 1 and 2	Air flows from port F.
Battery voltage not applied between terminals 1 and 2	Air does not flow.

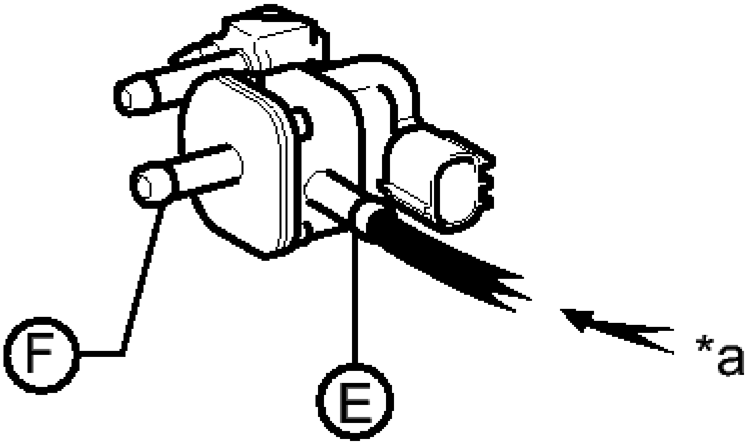

T

Fig. 17: Inspecting Purge VSV
Courtesy of TOYOTA MOTOR SALES, U.S.A., INC.

TEXT IN ILLUSTRATION

*a	Air

If the result is not as specified, replace the purge VSV.

INSTALLATION

INSTALLATION

1. **INSTALL PURGE VSV**
    1. Install the purge VSV.
    2. Connect the connector and 2 fuel vapor feed hoses.

FUEL TANK CAP

INSPECTION

INSPECTION

1. **INSPECT FUEL TANK CAP ASSEMBLY**
    1. Visually check that the cap and gasket are not deformed or damaged.

       If the result is not as specified, replace the fuel tank cap assembly.

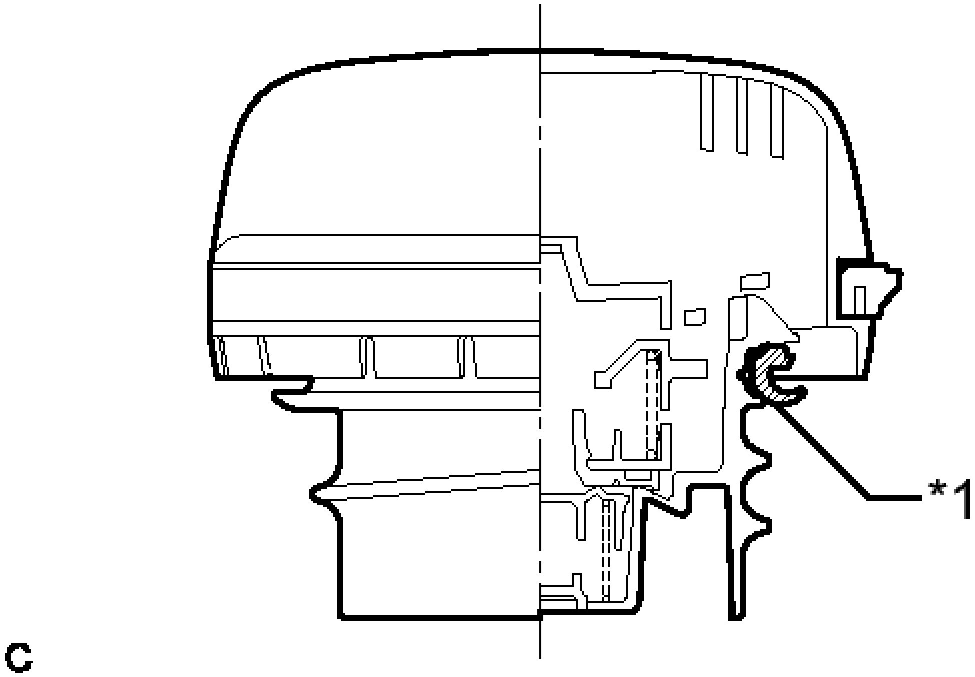

Fig. 18: Inspecting Fuel Tank Cap Assembly Gasket
Courtesy of TOYOTA MOTOR SALES, U.S.A., INC.

TEXT IN ILLUSTRATION

*1	Gasket

PCV VALVE

COMPONENTS

ILLUSTRATION

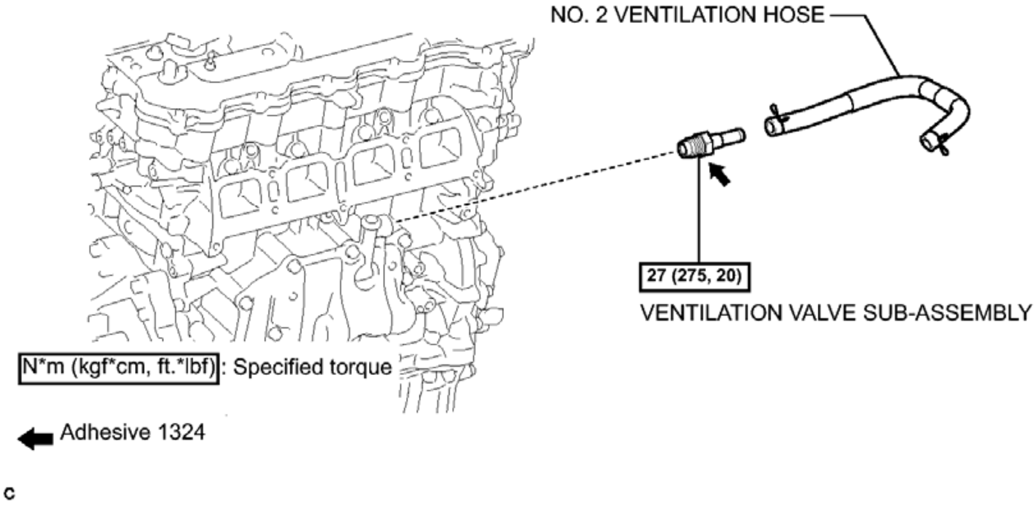
NO. 2 VENTILATION HOSE
27 (275, 20)
VENTILATION VALVE SUB-ASSEMBLY
N*m (kgf*cm, ft.*lbf): Specified torque
Adhesive 1324
C

Fig. 19: Identifying PCV Valve Replacement Components With Torque Specifications
Courtesy of TOYOTA MOTOR SALES, U.S.A., INC.

REMOVAL

REMOVAL

1. **REMOVE INTAKE MANIFOLD**

   Refer to **REMOVAL**

2. **REMOVE VENTILATION VALVE SUB-ASSEMBLY**
   a. Disconnect the No. 2 ventilation hose from the ventilation valve sub-assembly.

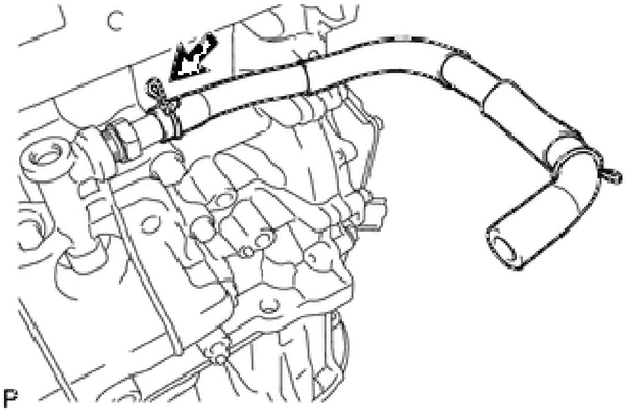

Fig. 20: Locating No. 2 Ventilation Hose
Courtesy of TOYOTA MOTOR SALES, U.S.A., INC.

   b. Using a 19 mm deep socket wrench, remove the ventilation valve sub-assembly.

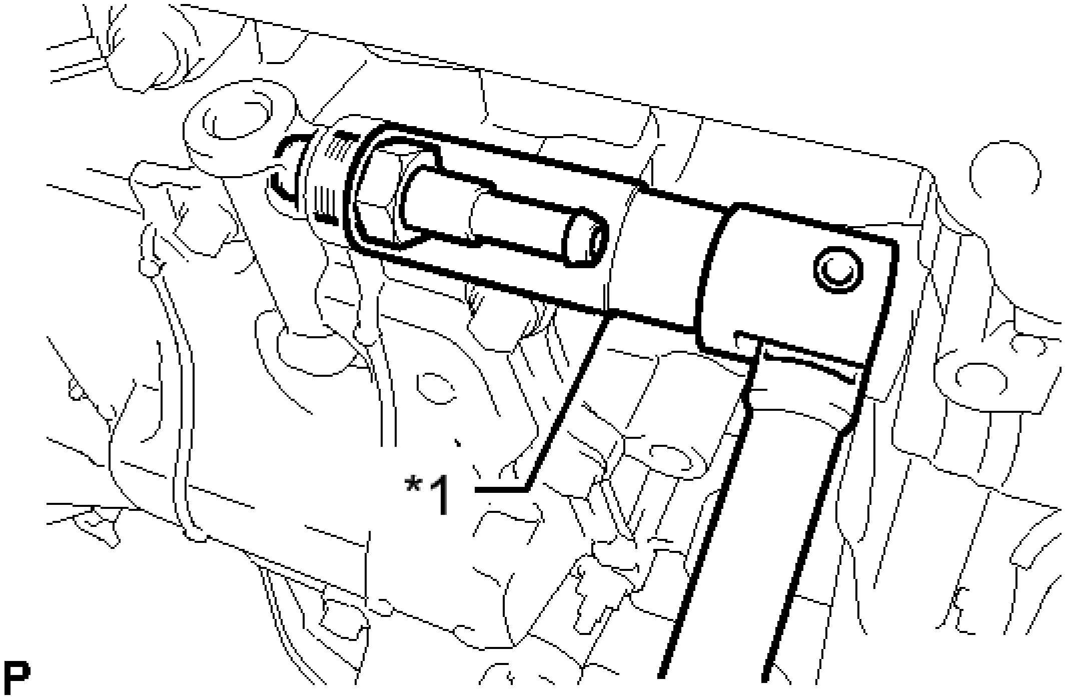

Fig. 21: Identifying Ventilation Valve
Courtesy of TOYOTA MOTOR SALES, U.S.A., INC.

TEXT IN ILLUSTRATION

*1	19 mm Deep Socket Wrench

INSPECTION

INSPECTION

1. **INSPECT VENTILATION VALVE SUB-ASSEMBLY**
    a. Install a clean hose to the ventilation valve sub-assembly.
    b. Check ventilation valve sub-assembly operation.
        1. Blow air into the cylinder block side, and check that air passes through easily.

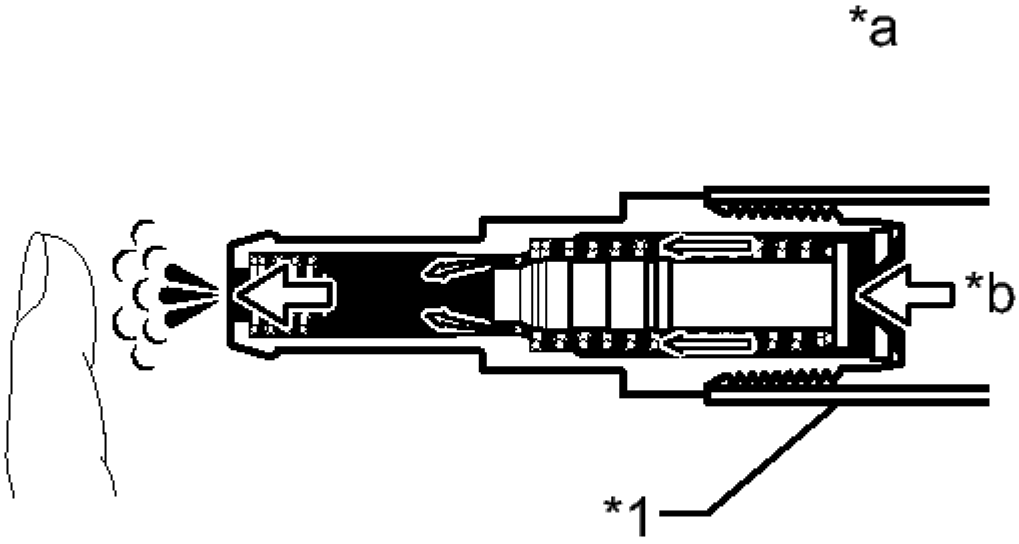

P

Fig. 22: Identifying Air Passes Through Easily
Courtesy of TOYOTA MOTOR SALES, U.S.A., INC.

TEXT IN ILLUSTRATION

*1	Clean Hose
*a	Cylinder Block Side
*b	Air

WARNING: **Do not suck air through the valve.**

Petroleum substances inside the valve are hazardous to your health.

If the result is not as specified, replace the ventilation valve sub-assembly.

2. Blow air into the intake manifold side, and check that air passes through with difficulty.

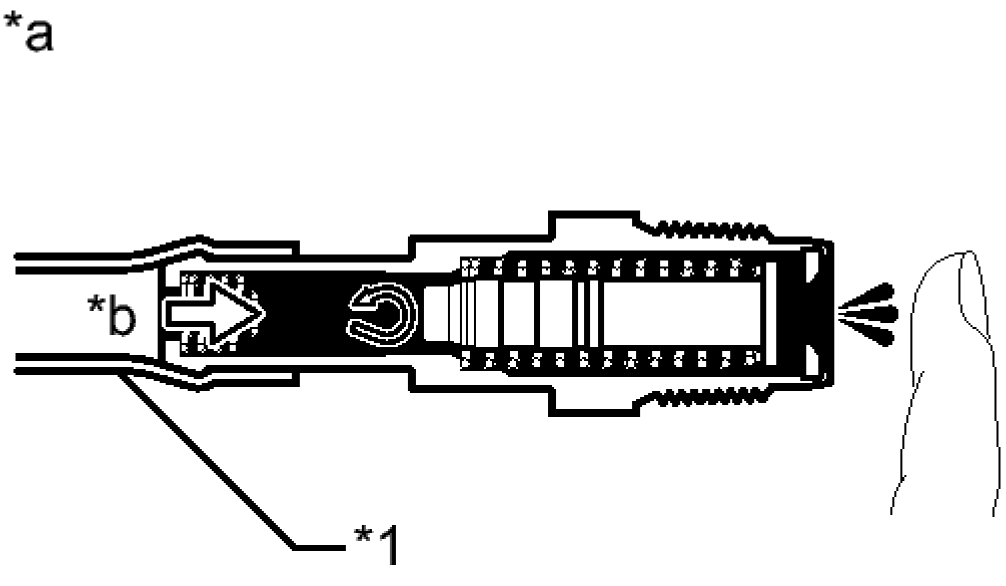

Fig. 23: Identifying Air Passes Through With Difficulty
Courtesy of TOYOTA MOTOR SALES, U.S.A., INC.

TEXT IN ILLUSTRATION

*1	Clean Hose
*a	Intake Manifold Side
*b	Air

WARNING: **Do not suck air through the valve.**

Petroleum substances inside the valve are hazardous to your health.

If the result is not as specified, replace the ventilation valve sub-assembly.

c. Remove the clean hose from the ventilation valve sub-assembly.

INSTALLATION

INSTALLATION

1. **INSTALL VENTILATION VALVE SUB-ASSEMBLY**
    a. Apply adhesive to 2 or 3 threads of the ventilation valve sub-assembly.

Adhesive

Toyota genuine adhesive 1324, three bond 1324 or equivalent

b. Using a 19 mm deep socket wrench, install the ventilation valve sub-assembly.

Torque: 27 N*m (275 kgf*cm, 20 ft.*lbf)

c. Connect the No. 2 ventilation hose to the ventilation valve sub-assembly.

2. **INSTALL INTAKE MANIFOLD**

Refer to **INSTALLATION**

2012-2017 ENGINE PERFORMANCE

Emission Control System (Service Information) - Camry (2GR-FE)

CANISTER

COMPONENTS

ILLUSTRATION

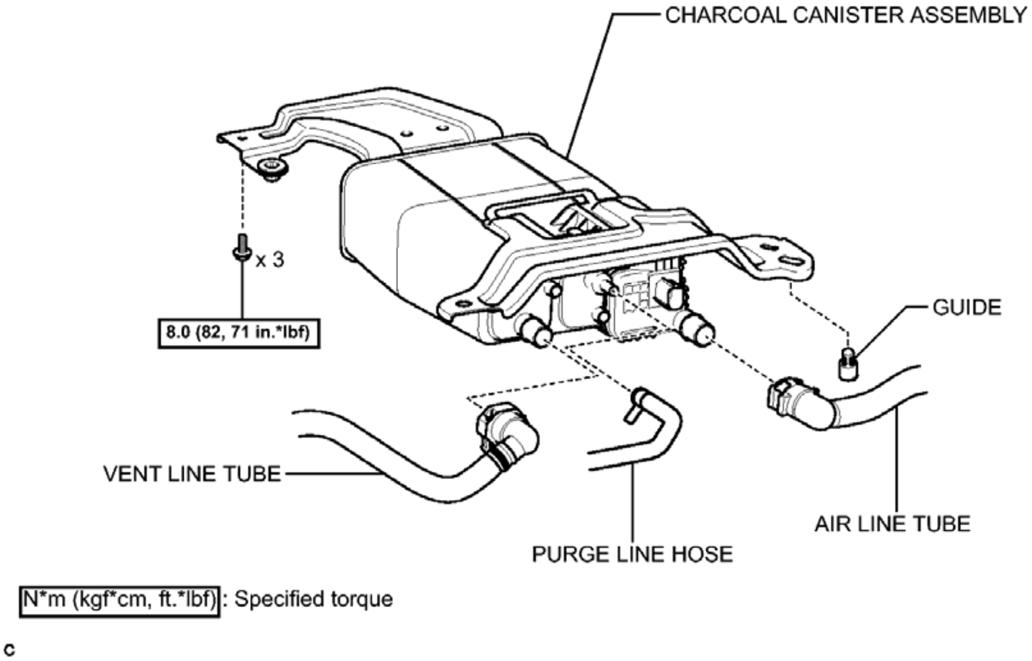
CHARCOAL CANISTER ASSEMBLY
x 3
8.0 (82, 71 in.*lbf)
GUIDE
VENT LINE TUBE
AIR LINE TUBE
PURGE LINE HOSE
N*m (kgf*cm, ft.*lbf): Specified torque
c

Fig. 1: Identifying Canister Replacement Components With Torque Specifications (1 Of 2)
Courtesy of TOYOTA MOTOR SALES, U.S.A., INC.

ILLUSTRATION

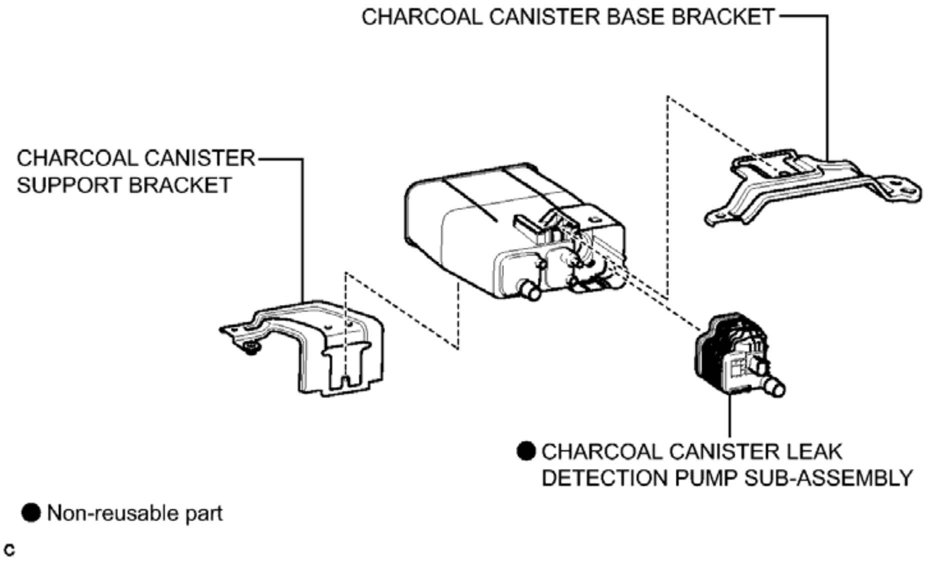
CHARCOAL CANISTER BASE BRACKET
CHARCOAL CANISTER SUPPORT BRACKET
● CHARCOAL CANISTER LEAK DETECTION PUMP SUB-ASSEMBLY
● Non-reusable part
c

Fig. 2: Identifying Canister Replacement Components With Torque Specifications (2 Of 2)
Courtesy of TOYOTA MOTOR SALES, U.S.A., INC.

REMOVAL

REMOVAL

1. **REMOVE FUEL TANK ASSEMBLY**

   Refer to **REMOVAL**

2. **REMOVE CHARCOAL CANISTER ASSEMBLY**
   a. Disconnect the purge line hose.

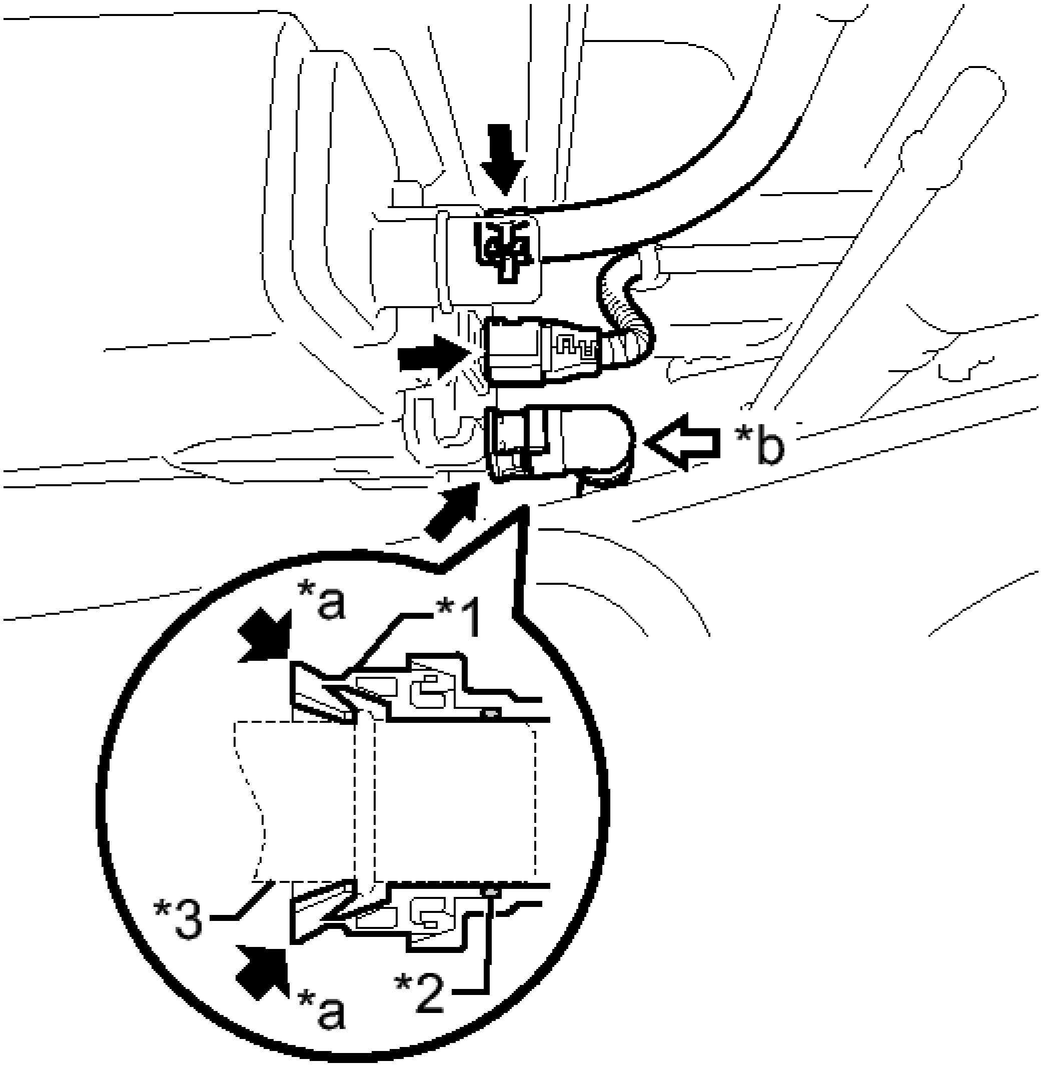

Fig. 3: Identifying Charcoal Canister Assembly Components
Courtesy of TOYOTA MOTOR SALES, U.S.A., INC.

b. Disconnect the connector from the charcoal canister leak detection pump sub-assembly.
c. Disconnect the air line tube.

TEXT IN ILLUSTRATION

*1	Tube Connector
*2	O-ring
*3	Pipe (charcoal canister leak detection

	pump sub-assembly)
*a	Pinch
*b	Push

NOTE:

- **Remove any dirt or foreign matter on the tube connector before performing this work.**
- **Do not allow any scratches or foreign matter to get on the parts when disconnecting them as the tube connector has an O-ring that seals the pipe.**
- **Perform this work by hand. Do not use any tools.**
- **Do not forcibly bend, twist or turn the air line tube.**
- **Protect the disconnected parts by covering them with plastic bags after disconnecting the air line tube.**
- **If the tube connector and pipe are stuck, push and pull on them to release.**

    1. Push the air line tube firmly toward the charcoal canister side.
    2. Pinch the air line tube as shown in the illustration.
    3. Pull out the air line tube.

d. Remove the 3 bolts and guide.

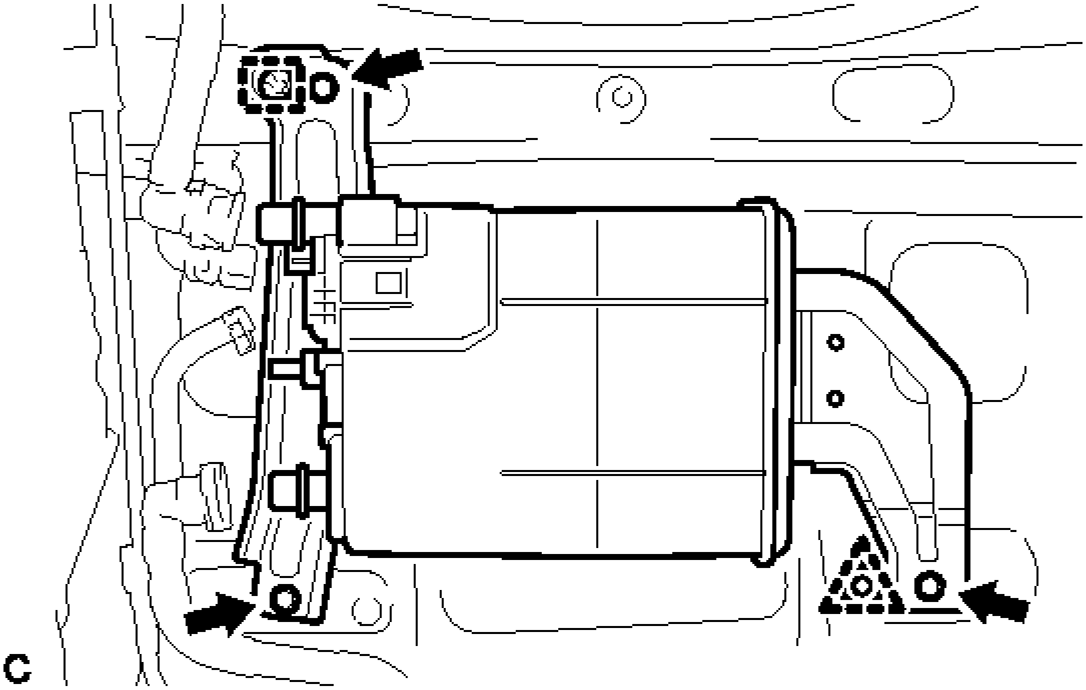

Fig. 4: Identifying Charcoal Canister Assembly Bolts And Guide

Courtesy of TOYOTA MOTOR SALES, U.S.A., INC.

e. Separate the clip from the body to remove the charcoal canister assembly.

3. **REMOVE CHARCOAL CANISTER BASE BRACKET**
   a. Disengage the claw and remove the charcoal canister base bracket.

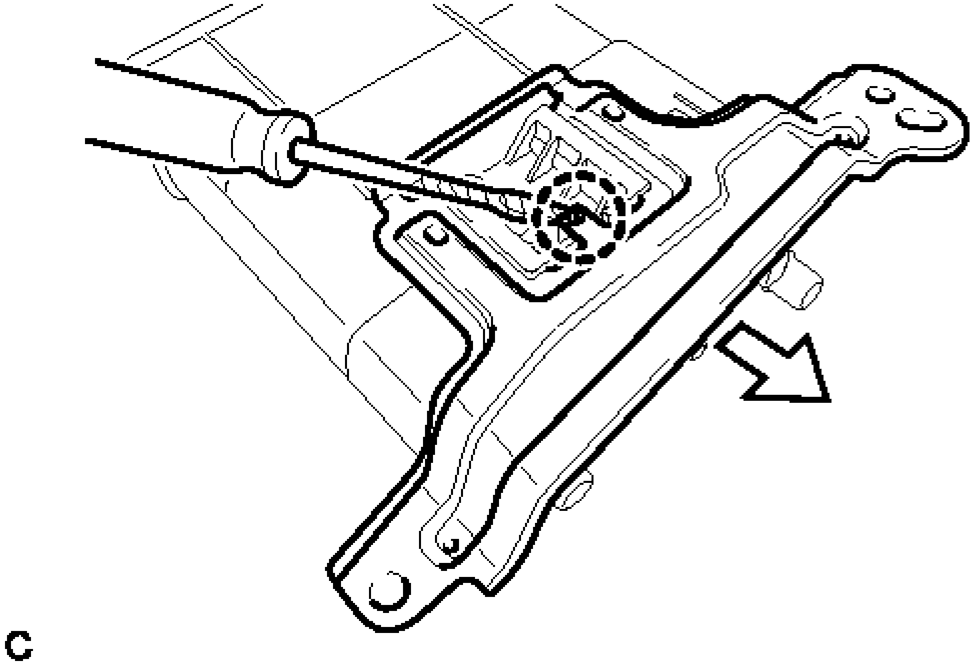

Fig. 5: Removing Charcoal Canister Base Bracket Claw
Courtesy of TOYOTA MOTOR SALES, U.S.A., INC.

4. **REMOVE CHARCOAL CANISTER SUPPORT BRACKET**
   a. Disengage the claw and remove the charcoal canister support bracket.

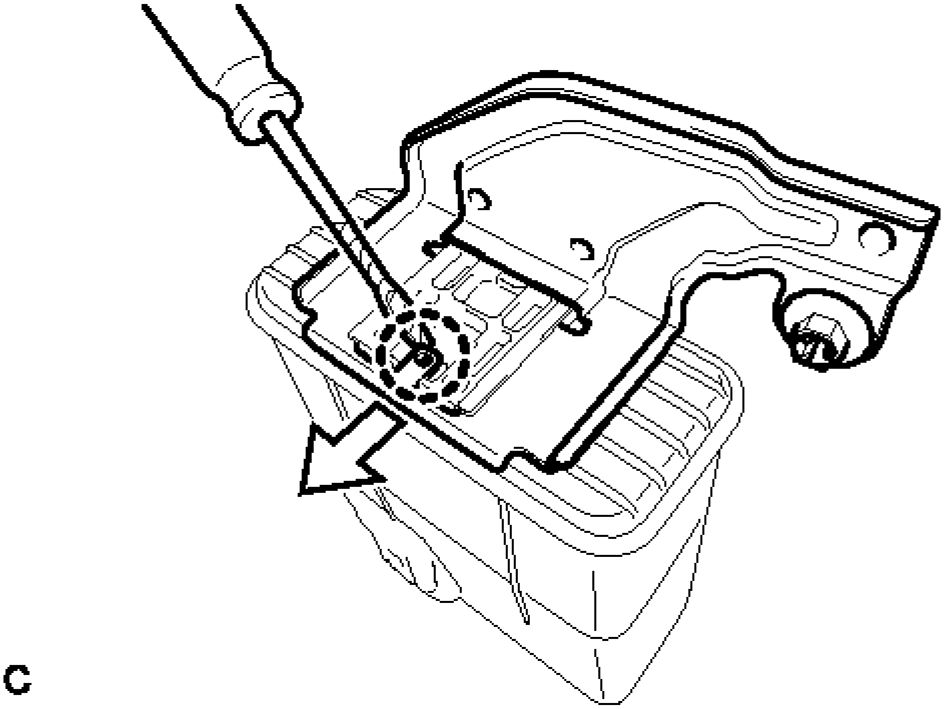

Fig. 6: Removing Charcoal Canister Support Bracket Claw
Courtesy of TOYOTA MOTOR SALES, U.S.A., INC.

5. **REMOVE CHARCOAL CANISTER LEAK DETECTION PUMP SUB-ASSEMBLY**
    a. Before removing the charcoal canister leak detection pump sub-assembly, clean the canister by blowing air into it to ensure that the canister is free of foreign matter.

NOTE:

- **Make sure to clean the canister using only air.**
- **Do not use gasoline, thinners or solvents.**

    b. While disengaging the 2 claws as shown in the illustration, push the charcoal canister leak detection pump sub-assembly upwards using a screwdriver to remove it.

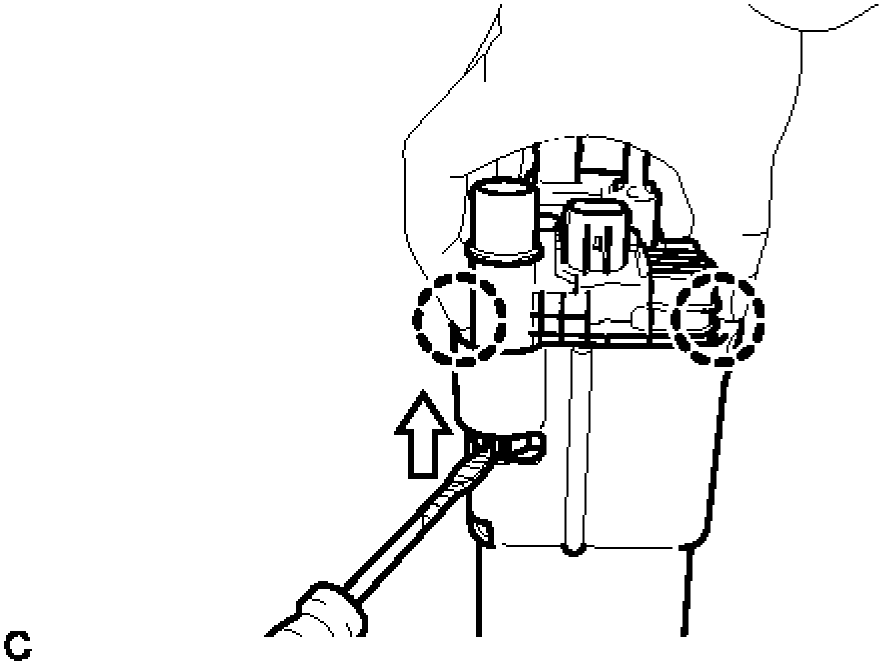

Fig. 7: Identifying Charcoal Canister Leak Detection Pump Sub-Assembly Claws
Courtesy of TOYOTA MOTOR SALES, U.S.A., INC.

c. Check if the canister contains foreign matter such as mud or water.
   1. Visually check that the inside of the canister is free of foreign matter.

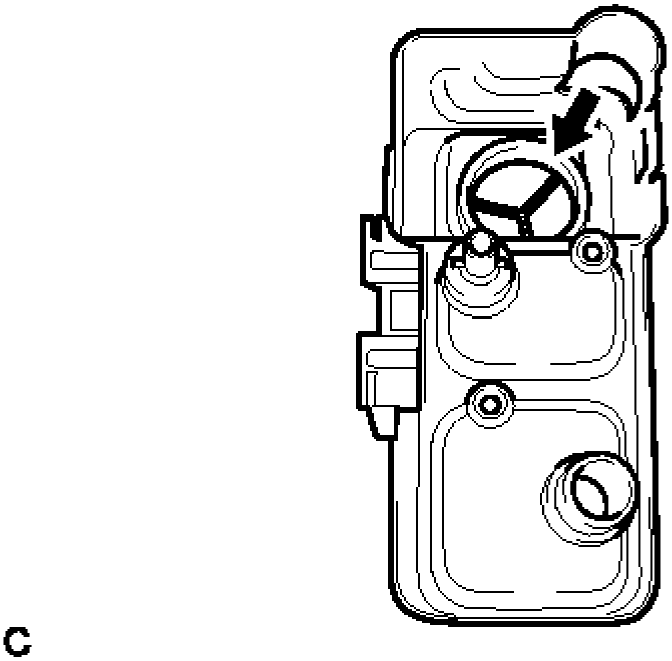

Fig. 8: Identifying Canister Contains Foreign Matter

Courtesy of TOYOTA MOTOR SALES, U.S.A., INC.

2. Hold the canister upside down to make sure that the canister is free of foreign matter.

   If the canister contains foreign matter, replace the canister.

INSPECTION

INSPECTION

1. **INSPECT CHARCOAL CANISTER ASSEMBLY**
   a. Visually check the charcoal canister assembly.
      1. Visually check the charcoal canister assembly for cracks or damage.

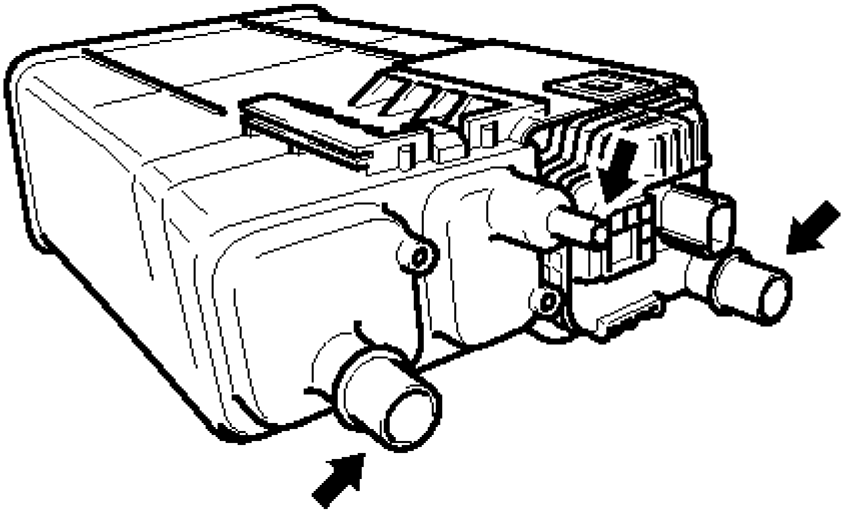

Fig. 9: Identifying Charcoal Canister Assembly For Cracks Or Damage
Courtesy of TOYOTA MOTOR SALES, U.S.A., INC.

If cracks or damage are found, replace the charcoal canister assembly.

   b. Check canister operation.
      1. With the purge port closed, blow 5 kPa (0.1 kgf/cm^2 , 0.7 psi) of air into the vent line port, and check that air flows from the air line port.

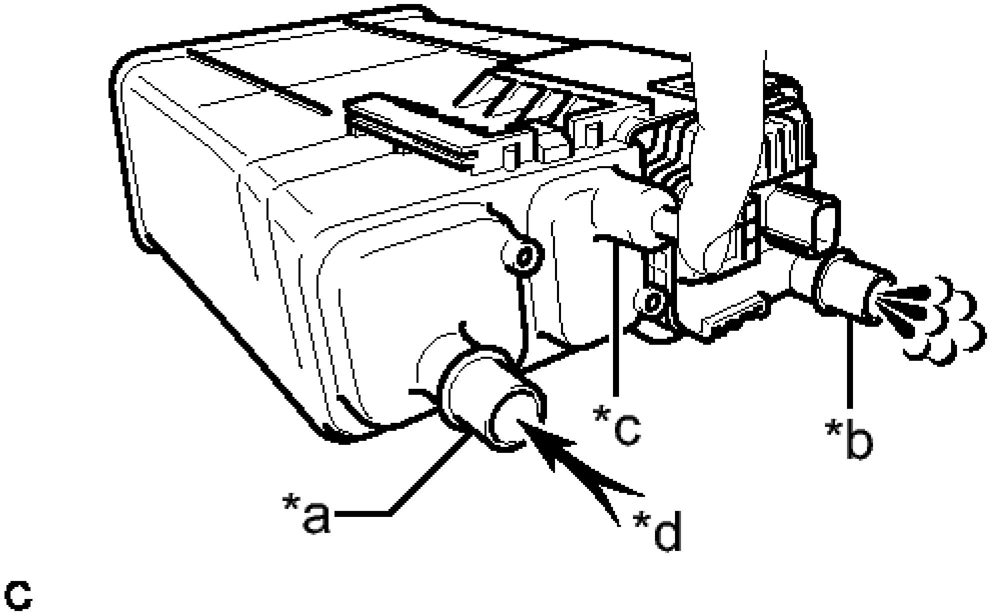

Fig. 10: Identifying Air Flows From Air Line Port
Courtesy of TOYOTA MOTOR SALES, U.S.A., INC.

TEXT IN ILLUSTRATION

*a	Vent Line Port
*b	Air Line Port
*c	Purge Line Port
*d	Air

If the result is not as specified, replace the charcoal canister assembly.

2. With the vent port closed, blow 5 kPa (0.1 kgf/cm^2 , 0.7 psi) of air into the air line port, and check that air flows from the purge line port.

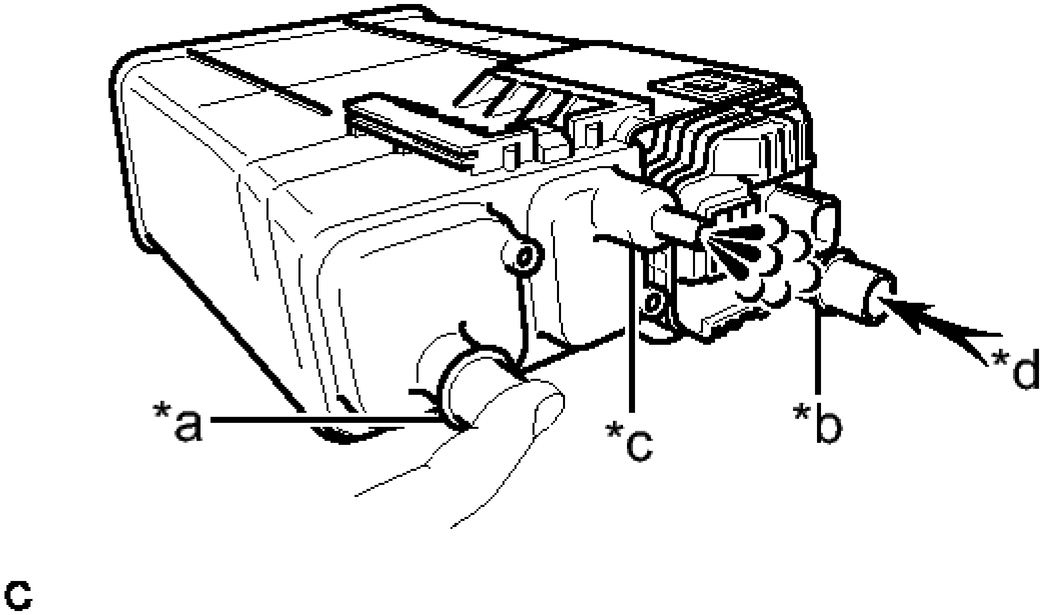

Fig. 11: Identifying Air Flows From Purge Line Port
Courtesy of TOYOTA MOTOR SALES, U.S.A., INC.

TEXT IN ILLUSTRATION

*a	Vent Line Port
*b	Air Line Port
*c	Purge Line Port
*d	Air

If the result is not as specified, replace the charcoal canister assembly.

c. Check for air leaks.
    1. Connect a pressure gauge to the vent line port of the charcoal canister assembly.

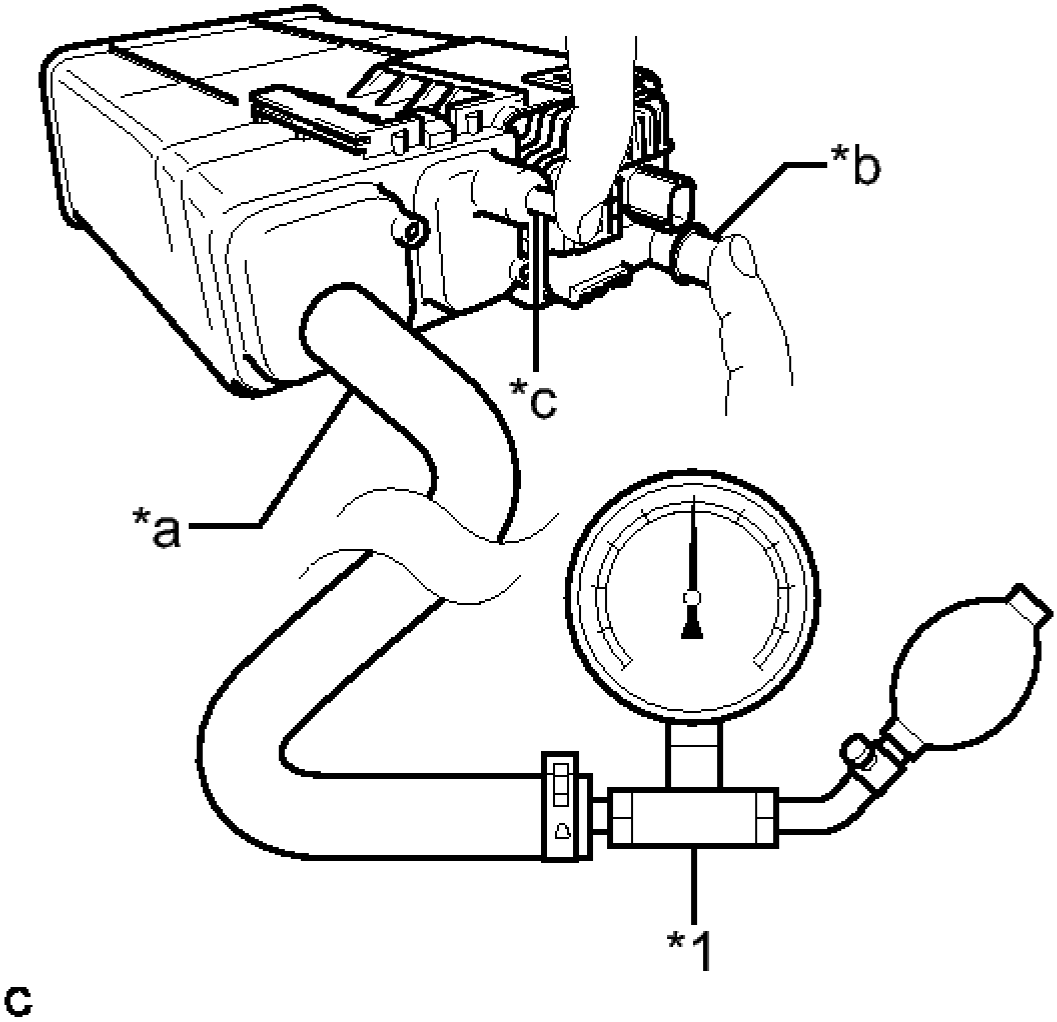

Fig. 12: Connecting Pressure Gauge To Vent Line Port
Courtesy of TOYOTA MOTOR SALES, U.S.A., INC.

TEXT IN ILLUSTRATION

*1	Pressure Gauge
*a	Vent Line Port
*b	Air Line Port
*c	Purge Line Port

2. With the purge line port and the air line port closed, apply 20 kPa (150 mmHg, 5.91 in.Hg) of pressurized air into the vent line port, then confirm that pressure is retained for 1 minute.

   If the result is not as specified, replace the charcoal canister assembly.

d. Check the charcoal canister leak detection pump sub-assembly.
   1. Connect a positive (+) lead from the battery to terminal 5 and a negative (-) lead to terminal 1.

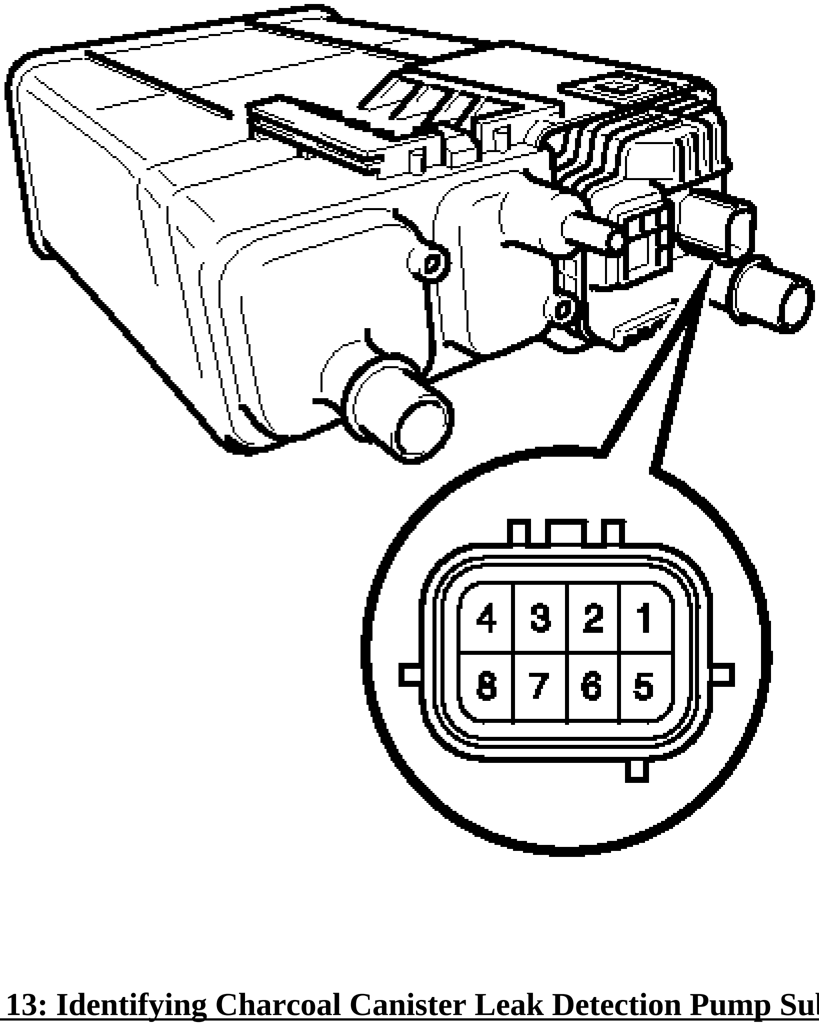

Fig. 13: Identifying Charcoal Canister Leak Detection Pump Sub-Assembly
Courtesy of TOYOTA MOTOR SALES, U.S.A., INC.

   2. Check that a clicking sound is heard from the charcoal canister leak detection pump sub-assembly.

      If the result is not as specified, replace the charcoal canister leak detection pump sub-

assembly.

INSTALLATION

INSTALLATION

1. **INSTALL CHARCOAL CANISTER LEAK DETECTION PUMP SUB-ASSEMBLY**
    a. Engage the 2 claws to install a new charcoal canister leak detection pump sub-assembly to the canister.

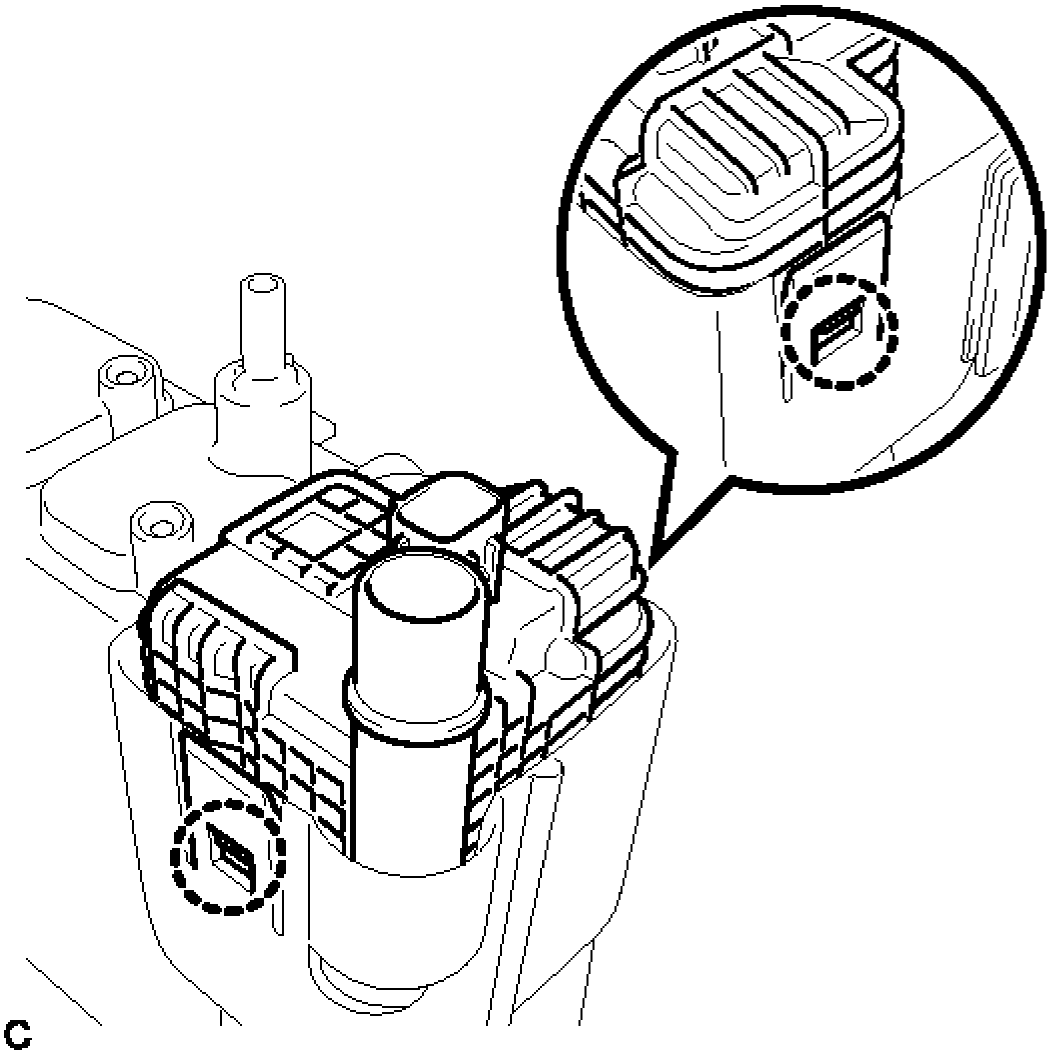

Fig. 14: Identifying Charcoal Canister Leak Detection Pump Sub-Assembly Claws
Courtesy of TOYOTA MOTOR SALES, U.S.A., INC.

NOTE:

- **Do not allow foreign matter such as grease, oil or water to adhere to the O-rings.**

- **Ensure that the claws are engaged properly.**

2. **INSTALL CHARCOAL CANISTER SUPPORT BRACKET**
    a. Engage the claw to install the charcoal canister support bracket.
3. **INSTALL CHARCOAL CANISTER BASE BRACKET**
    a. Engage the claw to install the charcoal canister base bracket.
4. **INSTALL CHARCOAL CANISTER ASSEMBLY**
    a. Connect the clip to install the charcoal canister assembly.
    b. Install the 3 bolts and guide.

    Torque: 8.0 N*m (82 kgf*cm, 71 in.*lbf)

    c. Connect the air line tube.

    NOTE:

    - **Check that there are no scratches or foreign matter around the connected part of the tube connector and pipe before performing this work.**
    - **After connecting the air line tube, check that the air line tube is securely connected by pulling on the tube connector and the charcoal canister.**

    d. Connect the purge line hose.
    e. Connect the connector to the charcoal canister leak detection pump sub-assembly.
5. **INSTALL FUEL TANK ASSEMBLY**

    Refer to **INSTALLATION**

PURGE VALVE

COMPONENTS

ILLUSTRATION

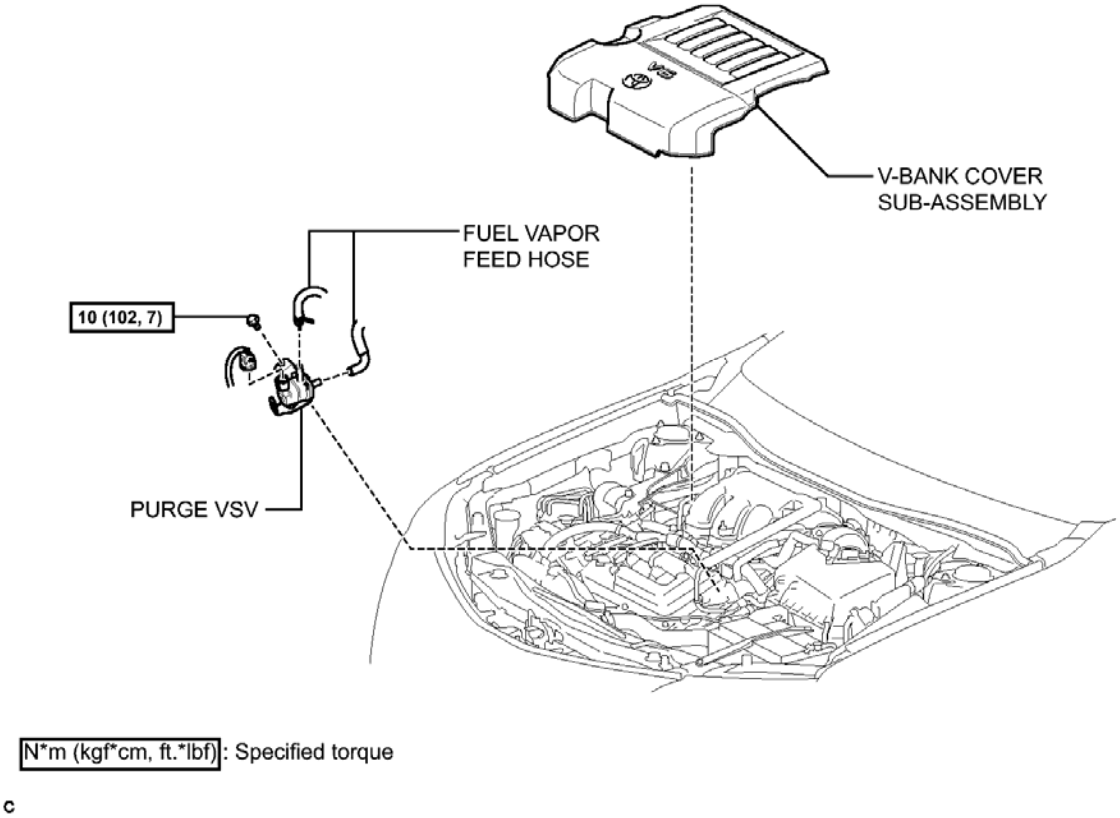
V-BANK COVER
SUB-ASSEMBLY
FUEL VAPOR
FEED HOSE
10 (102, 7)
PURGE VSV
N*m (kgf*cm, ft.*lbf): Specified torque
c

Fig. 15: Identifying Purge Valve Replacement Components With Torque Specifications
Courtesy of TOYOTA MOTOR SALES, U.S.A., INC.

REMOVAL

REMOVAL

1. **REMOVE V-BANK COVER SUB-ASSEMBLY** . Refer to **REMOVAL - Step 17**
2. **REMOVE PURGE VSV**
    a. Disconnect the connector and wire harness clamp.

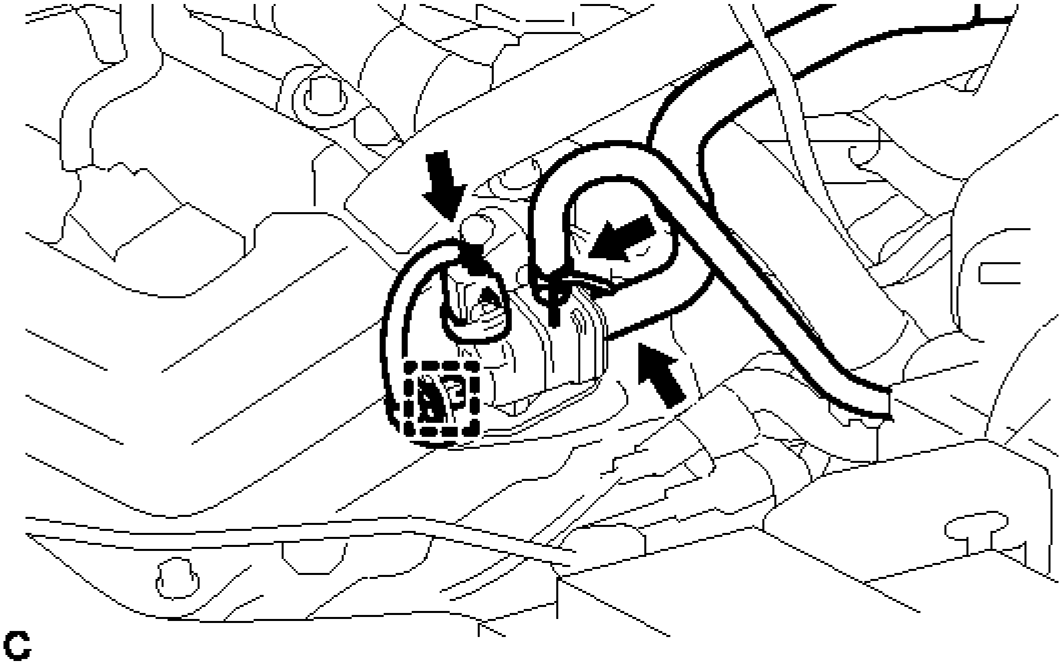

Fig. 16: Identifying Purge VSV Connector And Wire Harness Clamp
Courtesy of TOYOTA MOTOR SALES, U.S.A., INC.

b. Disconnect the 2 fuel vapor feed hoses.
c. Remove the bolt and purge VSV.

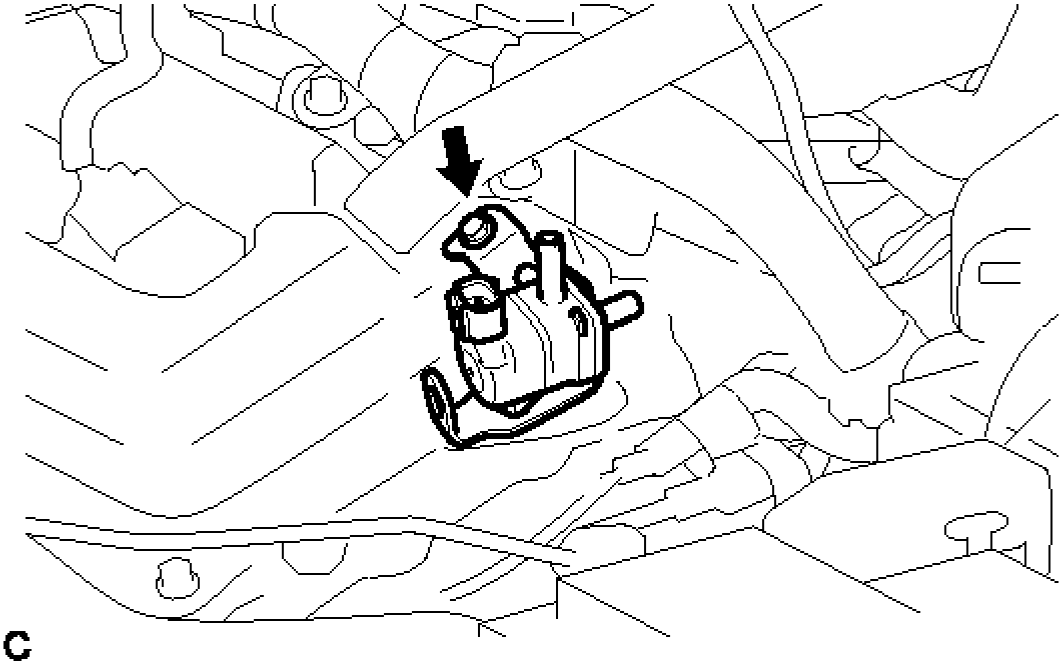

Fig. 17: Identifying Purge VSV Bolt

Courtesy of TOYOTA MOTOR SALES, U.S.A., INC.

INSPECTION

INSPECTION

1. **INSPECT PURGE VSV**
    a. Measure the resistance according to the value(s) in the table below.

    Standard Resistance

Tester Connection	Condition	Specified Condition
1 - 2	20°C (68°F)	23 to 26 ohms

    If the result is not as specified, replace the purge VSV.

    b. Apply battery voltage between the terminals of the purge VSV and check that the following occurs when blowing air into port E.

    OK

Measurement Condition	Specified Condition
Battery voltage applied between terminals 1 and 2	Air flows from port F
Battery voltage not applied between terminals 1 and 2	Air does not flow

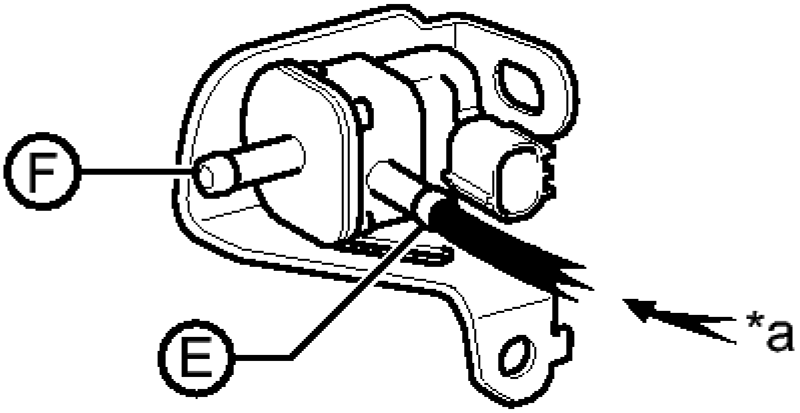

C

Fig. 18: Identifying Air
Courtesy of TOYOTA MOTOR SALES, U.S.A., INC.

TEXT IN ILLUSTRATION

*a	Air

If the result is not as specified, replace the purge VSV.

INSTALLATION

INSTALLATION

1. **INSTALL PURGE VSV**
    a. Install the purge VSV with the bolt.

    Torque: 10 N*m (102 kgf*cm, 7 ft.*lbf)

    b. Connect the 2 fuel vapor feed hoses.
    c. Connect the wire harness clamp and connector.
2. **INSTALL V-BANK COVER SUB-ASSEMBLY** . Refer to **INSTALLATION - Step 82**

FUEL TANK CAP

INSPECTION

INSPECTION

1. **INSPECT FUEL TANK CAP ASSEMBLY**
   1. Visually check that the cap and gasket are not deformed or damaged.

      If the result is not as specified, replace the fuel tank cap assembly.

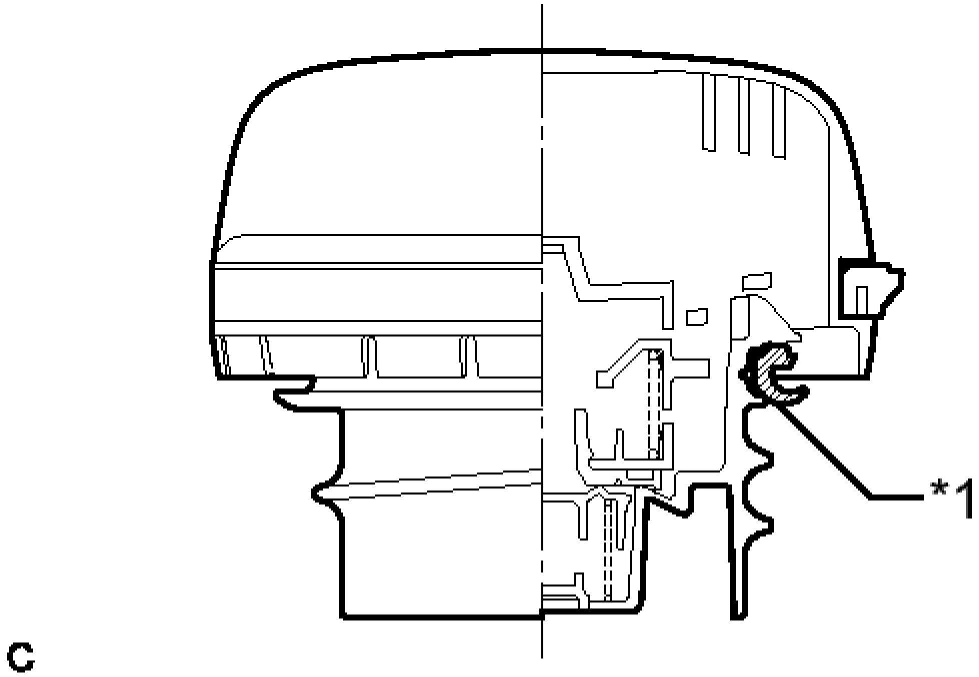

Fig. 19: Inspecting Fuel Tank Cap Assembly Gasket
Courtesy of TOYOTA MOTOR SALES, U.S.A., INC.

TEXT IN ILLUSTRATION

*1	Gasket

PCV VALVE

COMPONENTS

ILLUSTRATION

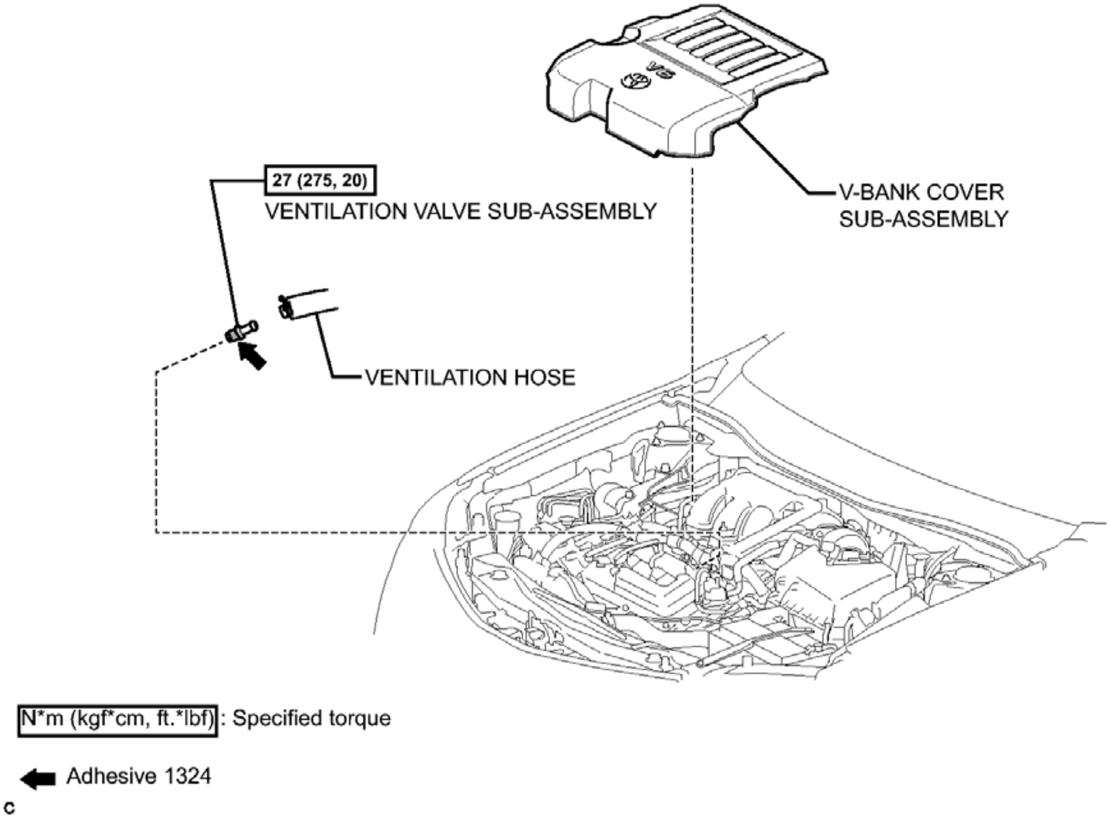
V6
27 (275, 20)
VENTILATION VALVE SUB-ASSEMBLY
V-BANK COVER
SUB-ASSEMBLY
VENTILATION HOSE
N*m (kgf*cm, ft.*lbf) : Specified torque
Adhesive 1324
c

Fig. 20: Identifying PCV Valve Replacement Components With Torque Specifications
Courtesy of TOYOTA MOTOR SALES, U.S.A., INC.

REMOVAL

REMOVAL

1. **REMOVE V-BANK COVER SUB-ASSEMBLY** . Refer to **REMOVAL - Step 17**
2. **REMOVE VENTILATION VALVE SUB-ASSEMBLY**
   a. Disconnect the ventilation hose from the ventilation valve sub-assembly.

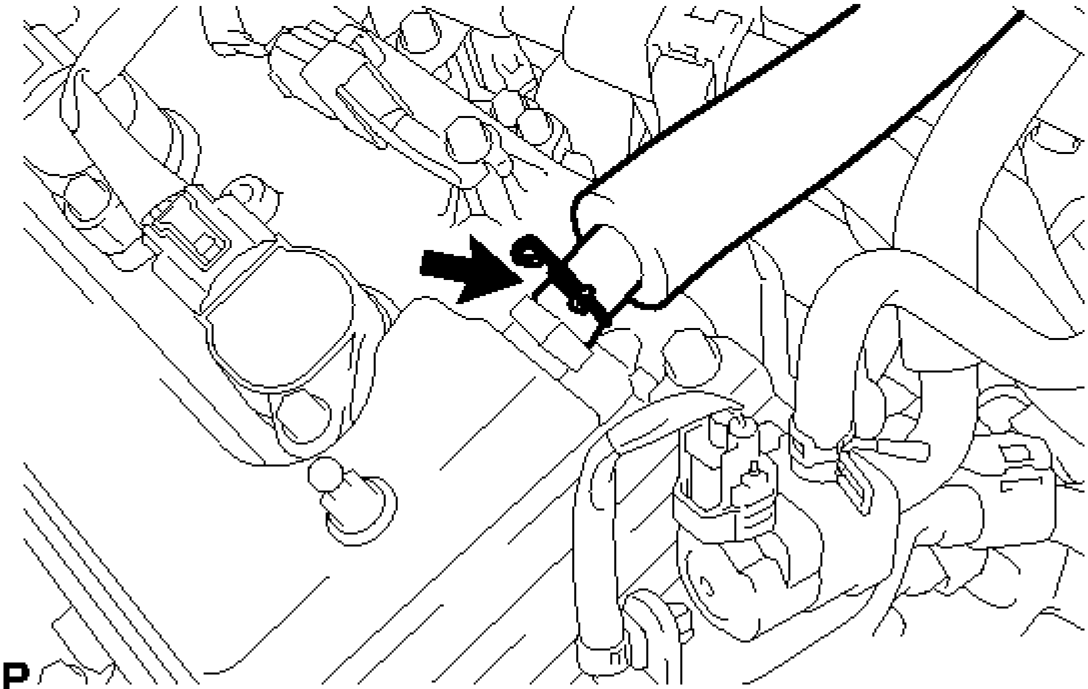

Fig. 21: Identifying Ventilation Hose
Courtesy of TOYOTA MOTOR SALES, U.S.A., INC.

b. Using a 19 mm deep socket wrench, remove the ventilation valve sub-assembly.

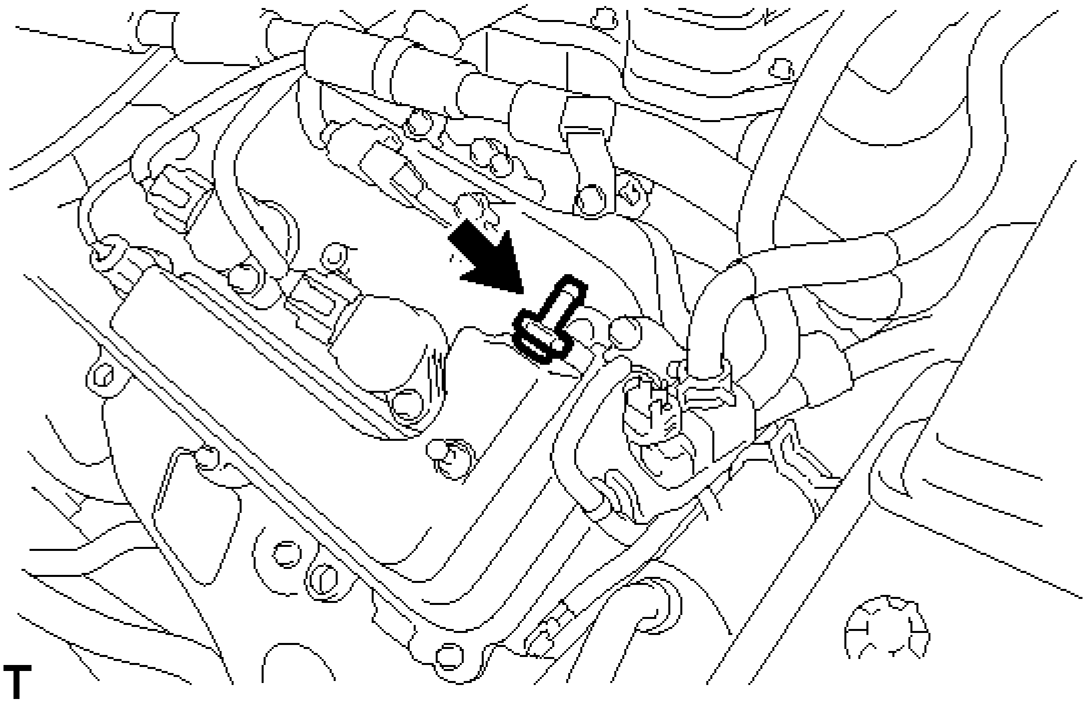

Fig. 22: Locating Ventilation Valve Sub-Assembly
Courtesy of TOYOTA MOTOR SALES, U.S.A., INC.

INSPECTION

INSPECTION

1. **INSPECT VENTILATION VALVE SUB-ASSEMBLY**
    a. Install a clean hose to the ventilation valve sub-assembly.
    b. Check ventilation valve sub-assembly operation.
        1. Blow air into the cylinder head cover side, and check that air passes through easily.

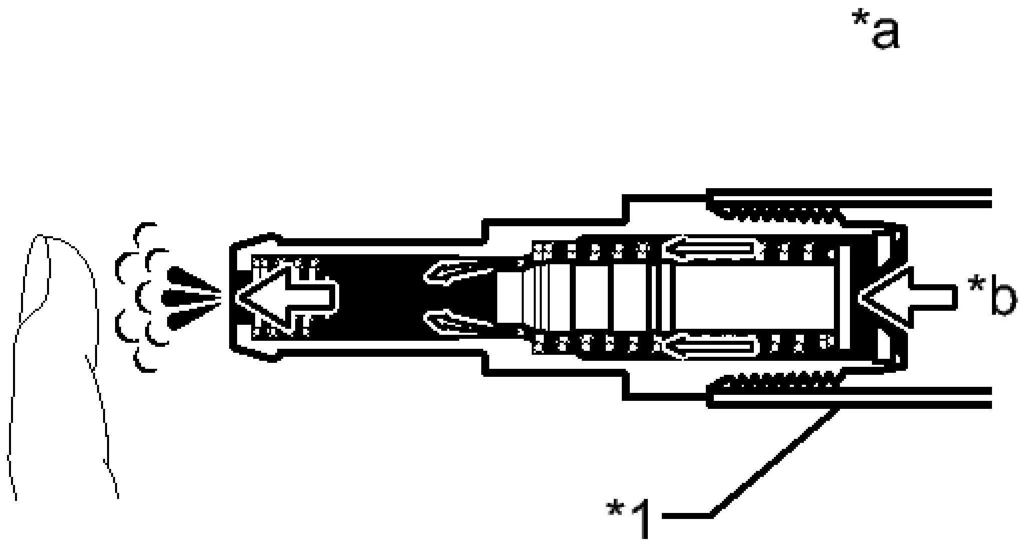

Fig. 23: Identifying Air Passes Through Easily
Courtesy of TOYOTA MOTOR SALES, U.S.A., INC.

TEXT IN ILLUSTRATION

*1	Clean Hose
*a	Cylinder Head Cover Side
*b	Air

WARNING: **Do not suck air through the valve.**

Petroleum substances inside the valve are hazardous to your health.

If the result is not as specified, replace the ventilation valve sub-assembly.

2. Blow air into the intake air surge tank side, and check that air passes through with difficulty.

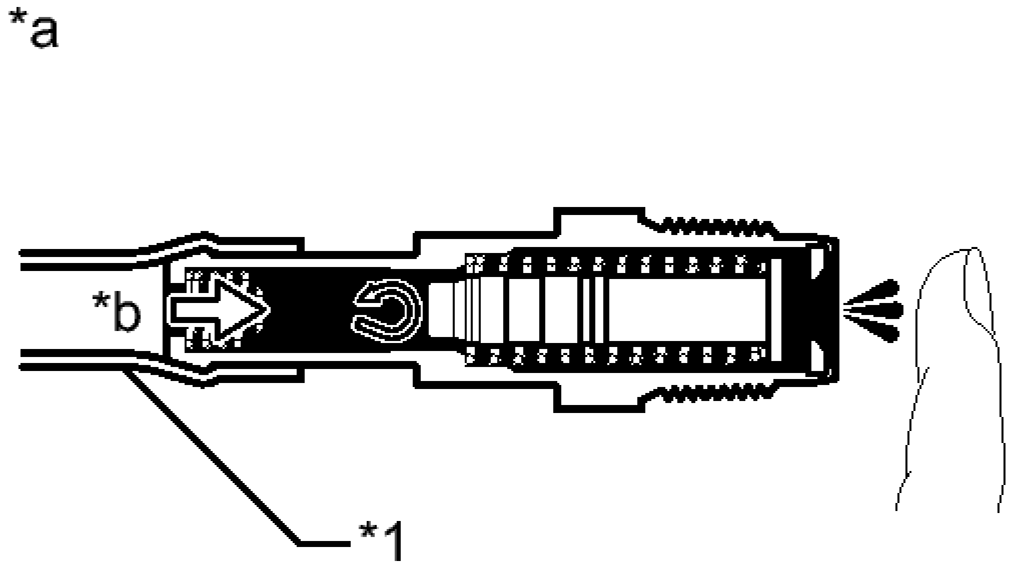

Fig. 24: Identifying Air Passes Through With Difficulty
Courtesy of TOYOTA MOTOR SALES, U.S.A., INC.

TEXT IN ILLUSTRATION

*1	Clean Hose
*a	Intake Air Surge Tank Side
*b	Air

WARNING: **Do not suck air through the valve.**

Petroleum substances inside the valve are hazardous to your health.

If the result is not as specified, replace the ventilation valve sub-assembly.

c. Remove the clean hose from the ventilation valve sub-assembly.

INSTALLATION

INSTALLATION

1. **INSTALL VENTILATION VALVE SUB-ASSEMBLY**
    a. Apply adhesive to 2 or 3 threads of the ventilation valve sub-assembly.

       Adhesive

       Toyota genuine adhesive 1324, three bond 1324 or equivalent

    b. Using a 19 mm deep socket wrench, install the ventilation valve sub-assembly.

       Torque: 27 N*m (275 kgf*cm, 20 ft.*lbf)

    c. Connect the ventilation hose to the ventilation valve sub-assembly.
2. **INSTALL V-BANK COVER SUB-ASSEMBLY** . Refer to **INSTALLATION - Step 82**

EGR VALVE

COMPONENTS

ILLUSTRATION

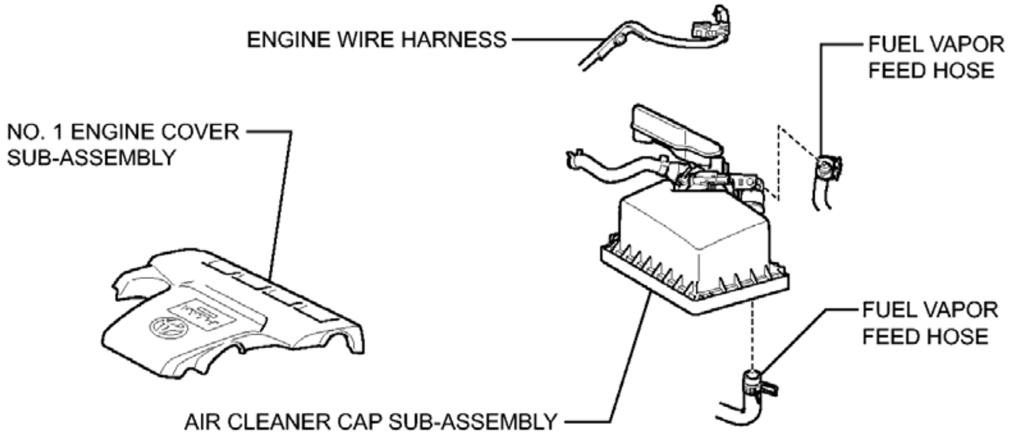
ENGINE WIRE HARNESS
FUEL VAPOR FEED HOSE
NO. 1 ENGINE COVER SUB-ASSEMBLY
FUEL VAPOR FEED HOSE
AIR CLEANER CAP SUB-ASSEMBLY

Fig. 1: Identifying EGR Valve Replacement Components (1 Of 2)
Courtesy of TOYOTA MOTOR SALES, U.S.A., INC.

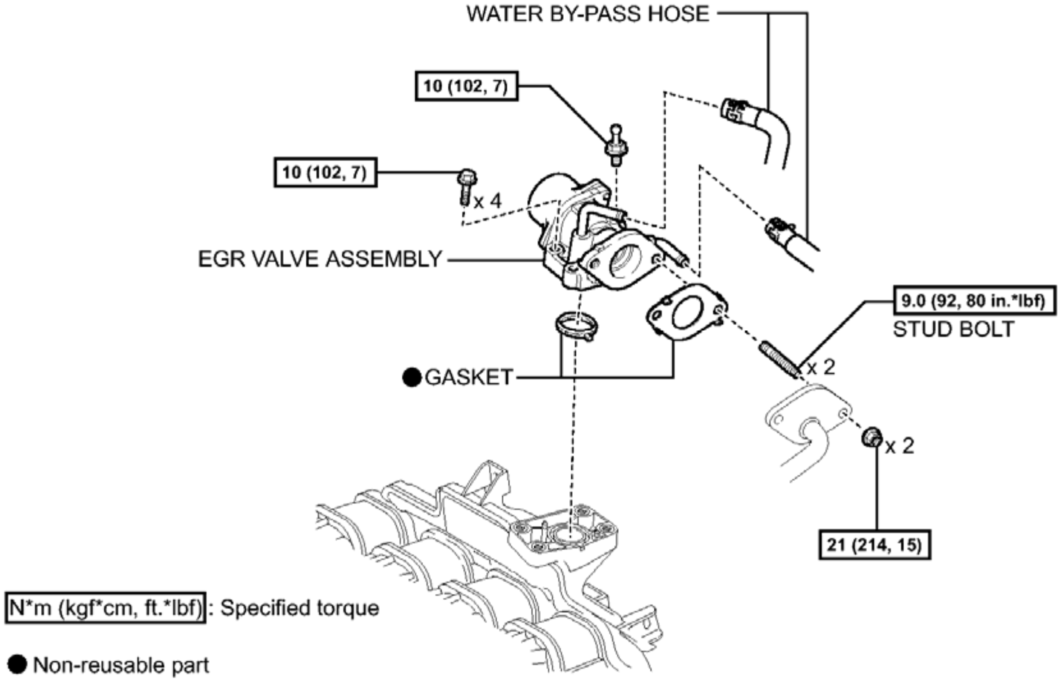
WATER BY-PASS HOSE
10 (102, 7)
10 (102, 7)
x 4
EGR VALVE ASSEMBLY
9.0 (92, 80 in.*lbf)
STUD BOLT
●GASKET
x 2
x 2
21 (214, 15)
N*m (kgf*cm, ft.*lbf): Specified torque
● Non-reusable part

Fig. 2: Identifying EGR Valve Replacement Components With Torque Specifications (2 Of 2)
Courtesy of TOYOTA MOTOR SALES, U.S.A., INC.

REMOVAL

REMOVAL

1. **DRAIN COOLANT (for Engine)** . Refer to **REPLACEMENT - Step 1**
2. **REMOVE NO. 1 ENGINE COVER SUB-ASSEMBLY** . Refer to **REMOVAL - Step 25**
3. **REMOVE AIR CLEANER CAP SUB-ASSEMBLY** . Refer to **REMOVAL - Step 3**
4. **REMOVE EGR VALVE ASSEMBLY**
    a. Disconnect the connector.

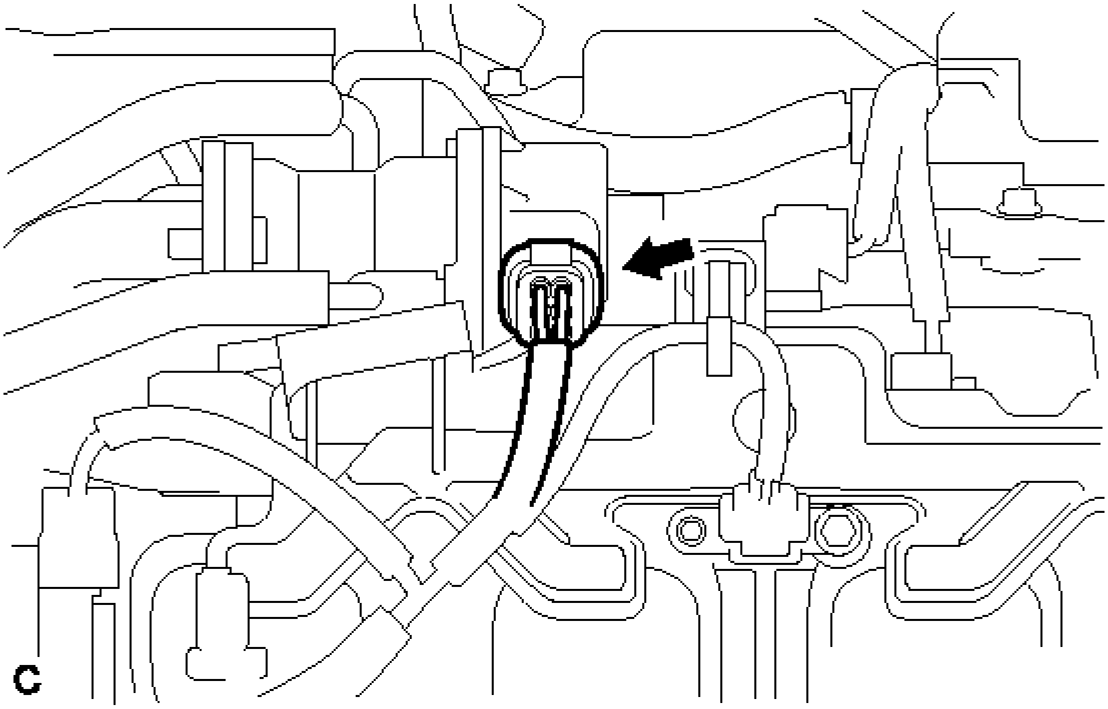

Fig. 3: Identifying EGR Valve Connector
Courtesy of TOYOTA MOTOR SALES, U.S.A., INC.

b. Disconnect the 2 water by-pass hoses.

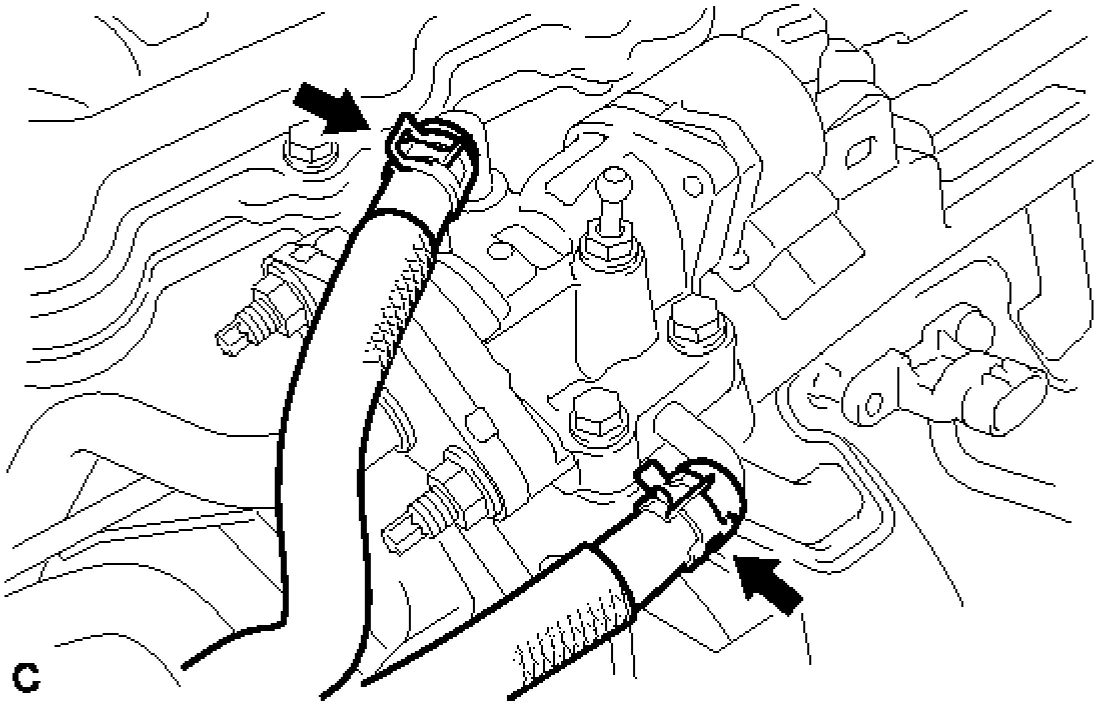

Fig. 4: Identifying Water By-Pass Hoses
Courtesy of TOYOTA MOTOR SALES, U.S.A., INC.

c. Using a 10 mm deep socket wrench, remove the bolt.

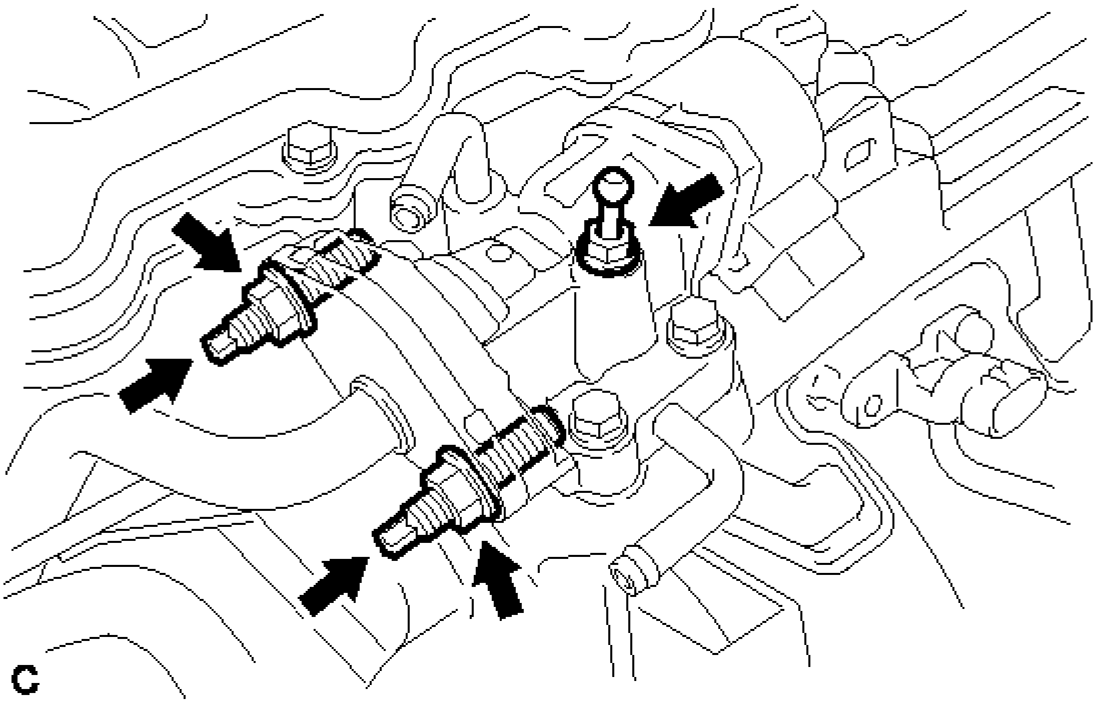

Fig. 5: Identifying EGR Tube Stud Bolts And Nuts
Courtesy of TOYOTA MOTOR SALES, U.S.A., INC.

d. Using a 12 mm deep socket wrench, remove the 2 nuts.
e. Using an E8 "TORX" socket wrench, remove the 2 stud bolts.
f. Remove the 4 bolts and EGR valve assembly.

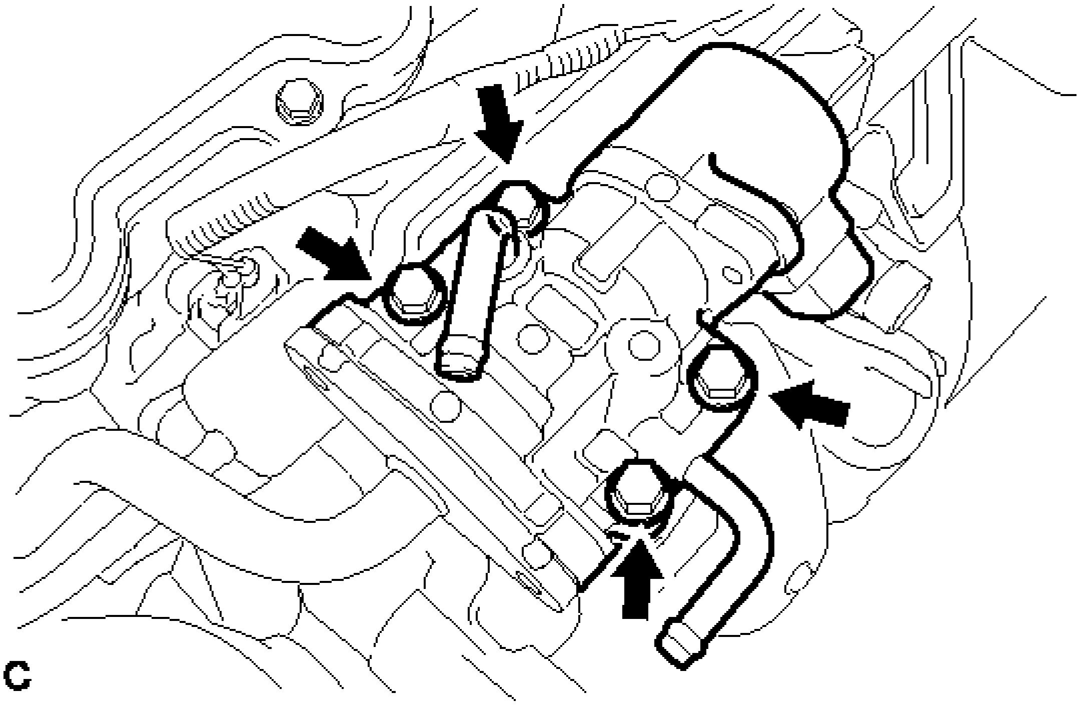

Fig. 6: Identifying EGR Valve Assembly Bolts
Courtesy of TOYOTA MOTOR SALES, U.S.A., INC.

g. Remove the 2 gaskets.

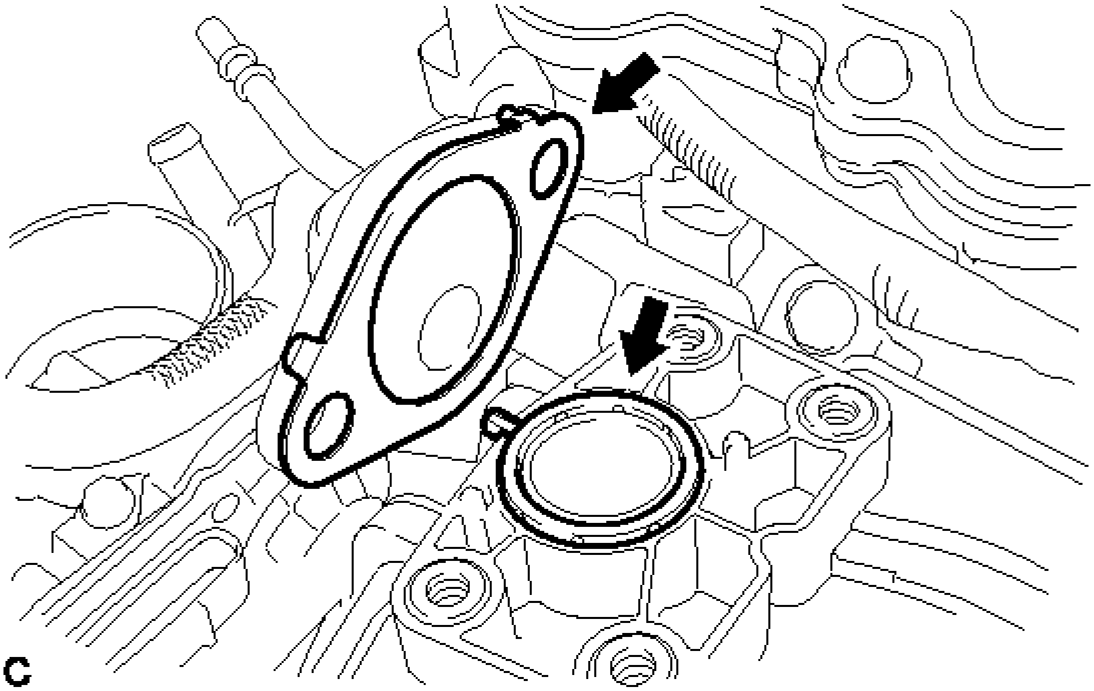

Fig. 7: Identifying EGR Valve Gaskets
Courtesy of TOYOTA MOTOR SALES, U.S.A., INC.

INSPECTION

INSPECTION

1. **INSPECT EGR VALVE ASSEMBLY**
   a. Measure the resistance according to the value(s) in the table below.

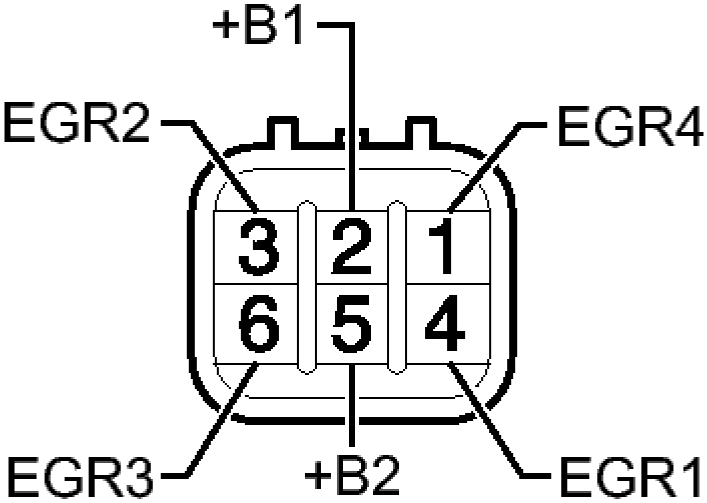

Fig. 8: EGR Valve Assembly Connector End View
Courtesy of TOYOTA MOTOR SALES, U.S.A., INC.

Standard Resistance

Tester Connection	Condition	Specified Condition
5 (+B2) - 4 (EGR1)	20°C (68°F)	18 to 22 ohms
5 (+B2) - 6 (EGR3)	20°C (68°F)	18 to 22 ohms
2 (+B1) - 1 (EGR4)	20°C (68°F)	18 to 22 ohms
2 (+B1) - 3 (EGR2)	20°C (68°F)	18 to 22 ohms

If the result is not as specified, replace the EGR valve assembly.

INSTALLATION

INSTALLATION

1. **INSTALL EGR VALVE ASSEMBLY**

   HINT:

   After replacing the EGR valve assembly, perform the "Inspection After Repairs". Refer to **INITIALIZATION** .

   a. Install 2 new gaskets.
   b. Temporarily install the EGR valve assembly with the 4 bolts.
   c. Using an E8 "TORX" socket wrench, install the 2 stud bolts.

      Torque: 9.0 N*m (92 kgf*cm, 80 in.*lbf)

   d. Temporarily install the 2 nuts.
   e. Tighten the 4 bolts.

      Torque: 10 N*m (102 kgf*cm, 7 ft.*lbf)

   f. Using a 12 mm deep socket wrench, tighten the 2 nuts.

      Torque: 21 N*m (214 kgf*cm, 15 ft.*lbf)

   g. Using a 10 mm deep socket wrench, install the bolt.

      Torque: 10 N*m (102 kgf*cm, 7 ft.*lbf)

   h. Connect the 2 water by-pass hoses.
   i. Connect the connector.
2. **INSTALL AIR CLEANER CAP SUB-ASSEMBLY** . Refer to **INSTALLATION - Step 2**
3. **INSTALL NO. 1 ENGINE COVER SUB-ASSEMBLY** . Refer to **INSTALLATION - Step 86**
4. **ADD COOLANT (for Engine)** . Refer to **REPLACEMENT - Step 2**
5. **INSPECT FOR COOLANT LEAK (for Engine)** . Refer to **ON-VEHICLE INSPECTION - Step 1**

EGR COOLER

COMPONENTS

ILLUSTRATION

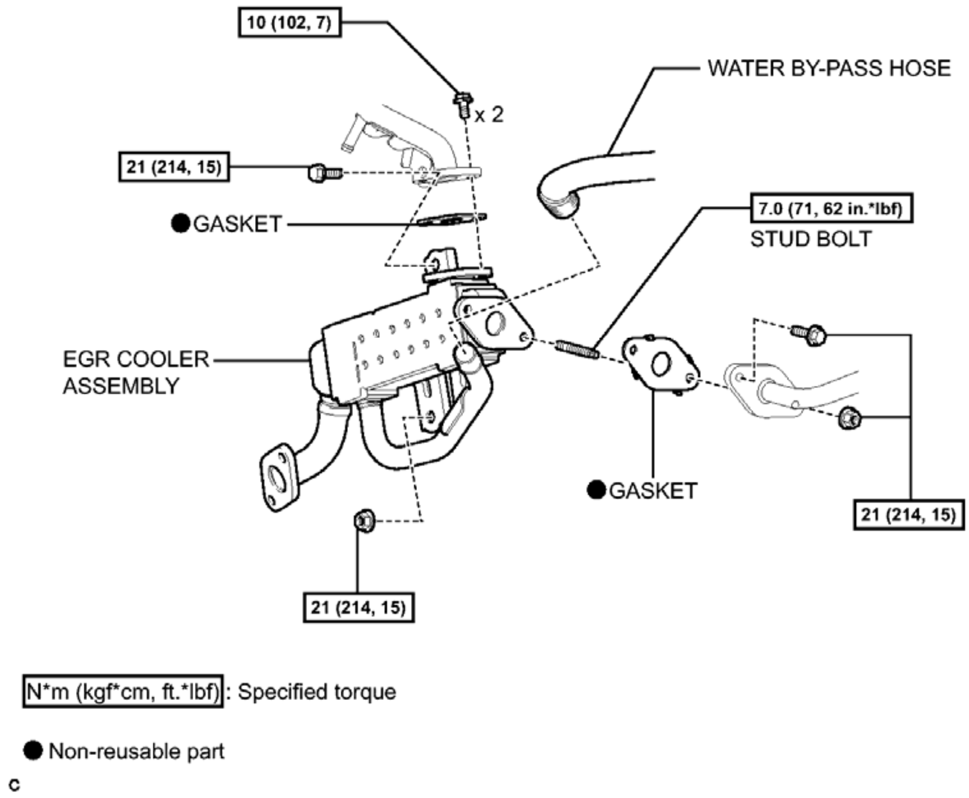
10 (102, 7)
x 2
WATER BY-PASS HOSE
21 (214, 15)
● GASKET
7.0 (71, 62 in.*lbf)
STUD BOLT
EGR COOLER ASSEMBLY
● GASKET
21 (214, 15)
21 (214, 15)
N*m (kgf*cm, ft.*lbf): Specified torque
● Non-reusable part
c

Fig. 9: Identifying EGR Cooler Replacement Components With Torque Specifications
Courtesy of TOYOTA MOTOR SALES, U.S.A., INC.

REMOVAL

REMOVAL

1. **REMOVE EXHAUST MANIFOLD CONVERTER SUB-ASSEMBLY**

   Refer to **REMOVAL**

2. **REMOVE EGR COOLER ASSEMBLY**
   a. Disconnect the water by-pass hose.

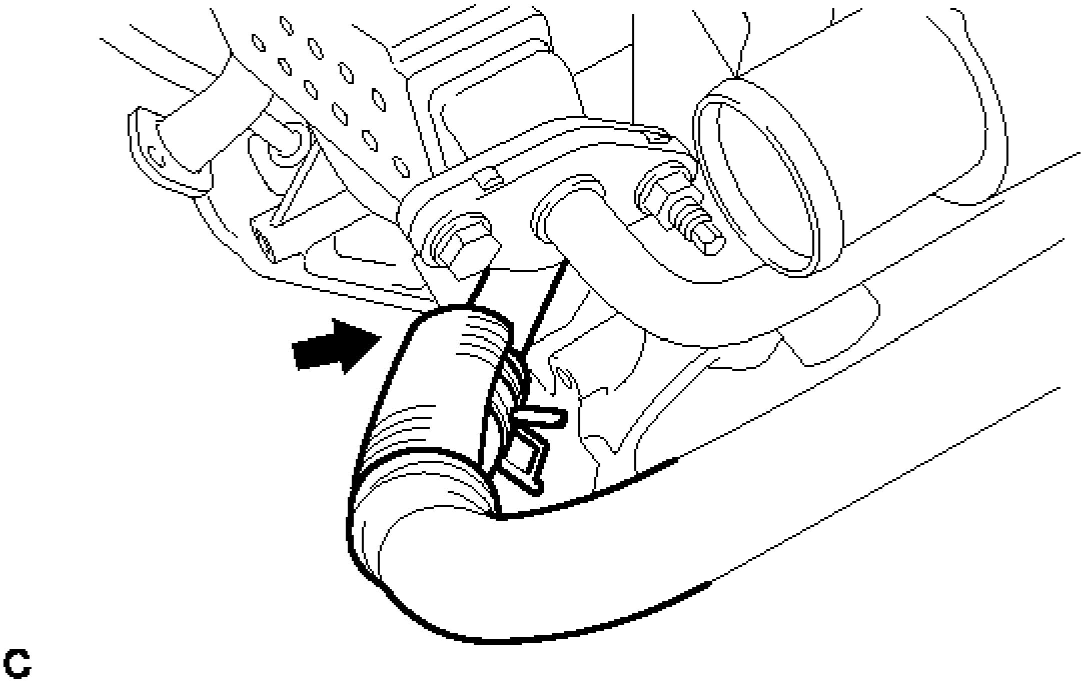

Fig. 10: Disconnecting Water By-Pass Hose
Courtesy of TOYOTA MOTOR SALES, U.S.A., INC.

b. Remove the bolt and nut.

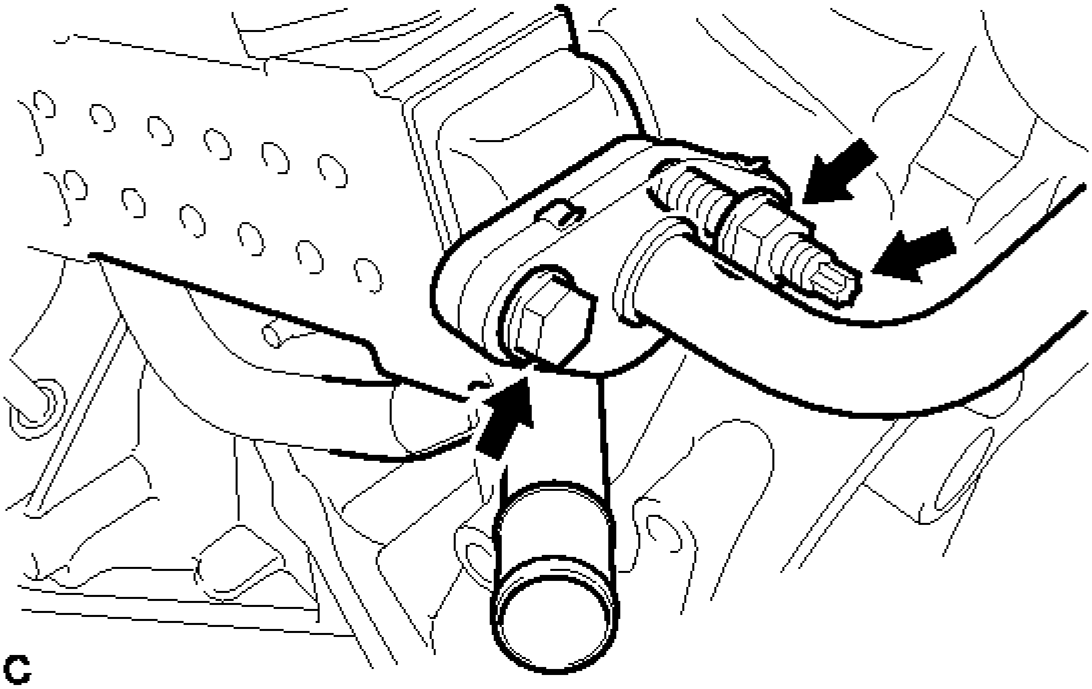

Fig. 11: Identifying EGR Cooler Tube Bolt, Nut And Stud Bolt
Courtesy of TOYOTA MOTOR SALES, U.S.A., INC.

c. Using an E8 "TORX" socket wrench, remove the stud bolt.
d. Remove the 2 bolts.

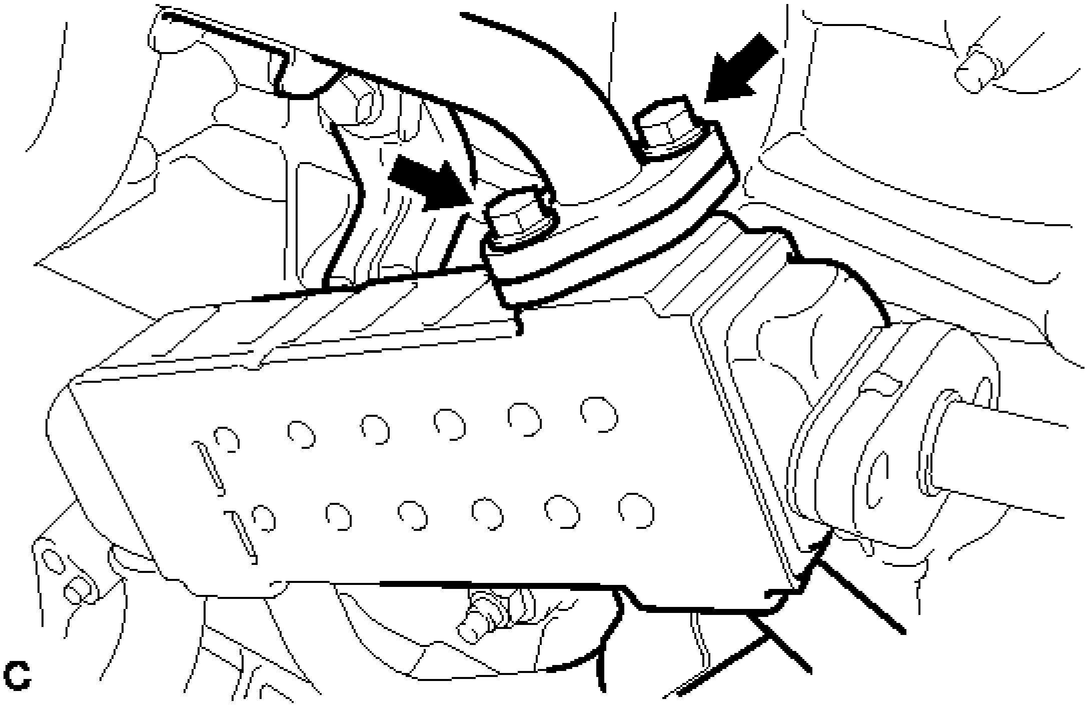

Fig. 12: Identifying EGR Cooler Tube Bolts
Courtesy of TOYOTA MOTOR SALES, U.S.A., INC.

e. Remove the bolt, nut, EGR cooler and 2 gaskets.

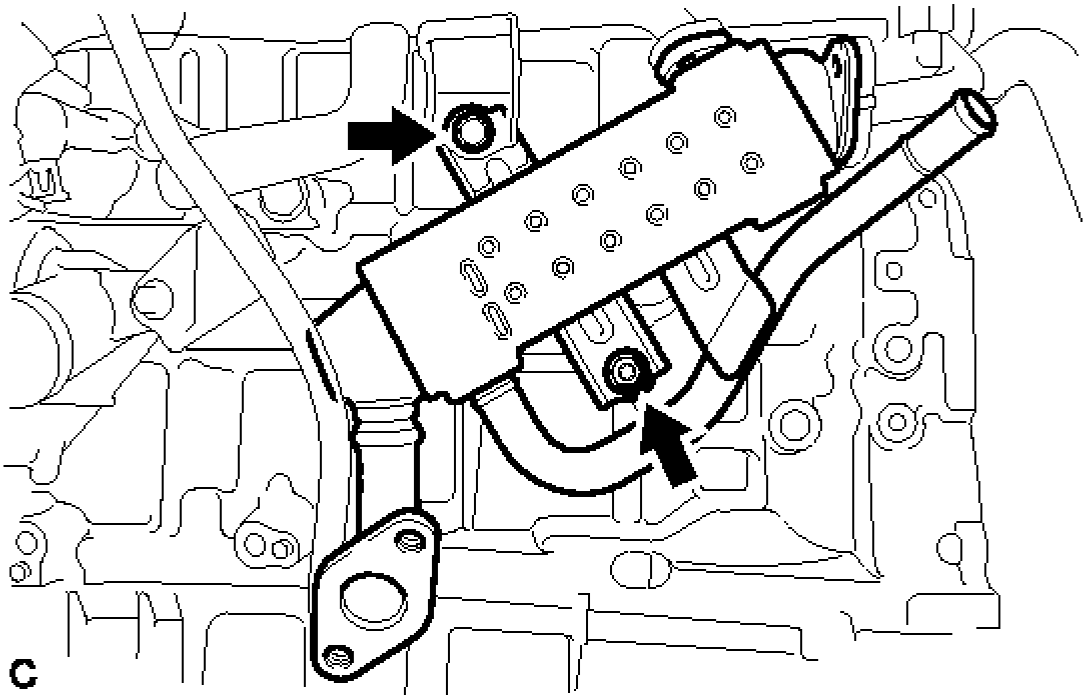

Fig. 13: Identifying EGR Cooler Bolt And Nut
Courtesy of TOYOTA MOTOR SALES, U.S.A., INC.

INSTALLATION

INSTALLATION

1. **INSTALL EGR COOLER ASSEMBLY**
   a. Temporarily install 2 new gaskets and the EGR cooler assembly with the bolt (A) and nut (A).

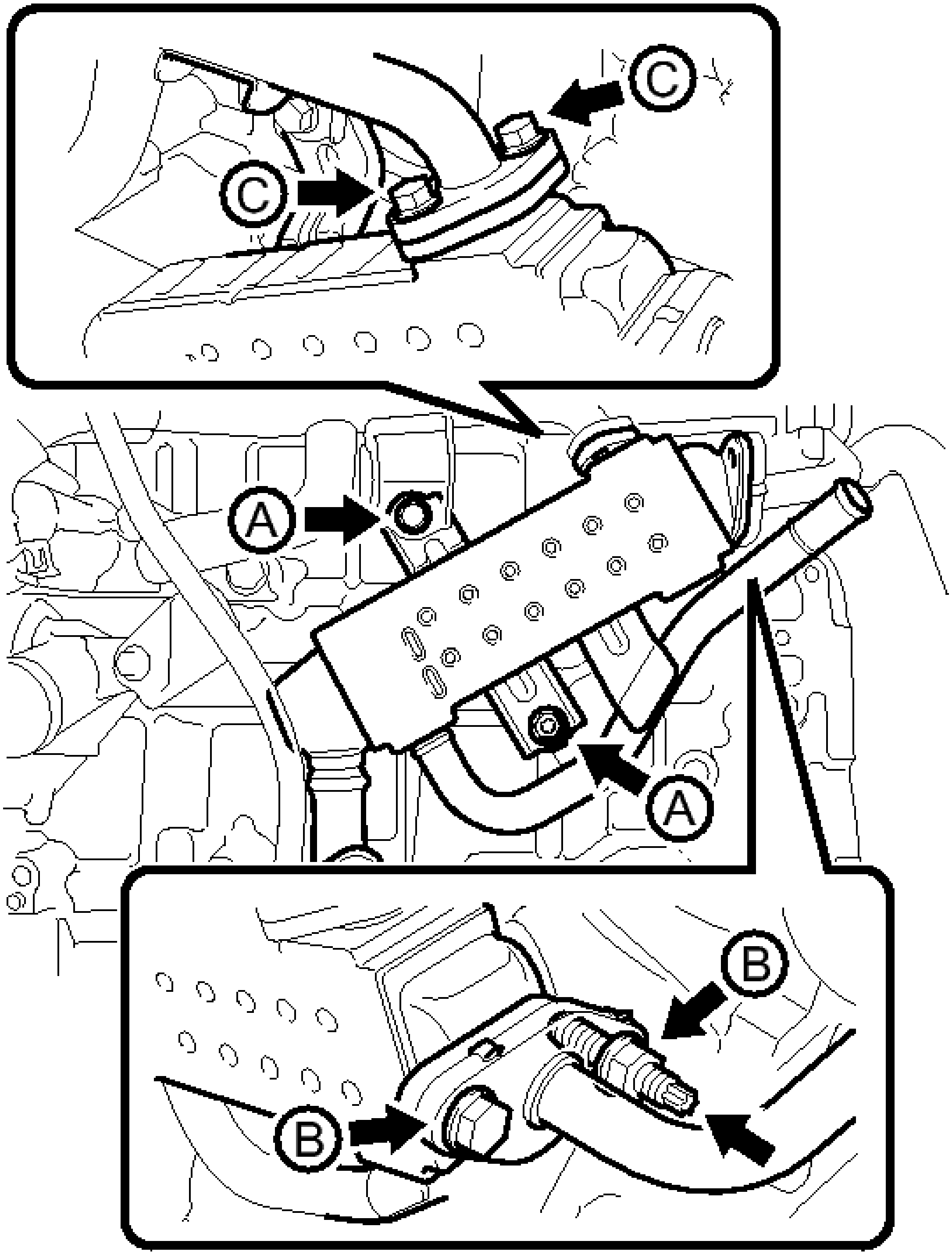

Fig. 14: Identifying EGR Cooler Assembly Bolts And Nuts
Courtesy of TOYOTA MOTOR SALES, U.S.A., INC.

b. Using an E8 "TORX" socket wrench, install the stud bolt.

Torque: 7.0 N*m (71 kgf*cm, 62 in.*lbf)

c. Temporarily install the bolt (B) and nut (B).
d. Temporarily install the 2 bolts (C).
e. Tighten the 4 bolts and 2 nuts.

Bolt (A) and Nut (A)

Torque: 21 N*m (214 kgf*cm, 15 ft.*lbf)

Bolt (B) and Nut (B)

Torque: 21 N*m (214 kgf*cm, 15 ft.*lbf)

Bolt (C)

Torque: 10 N*m (102 kgf*cm, 7 ft.*lbf)

NOTE: **Make sure that all installation surfaces of the EGR cooler assembly are in even contact when tightening the bolts and nuts.**

f. Connect the water by-pass hose.

2. **INSTALL EXHAUST MANIFOLD CONVERTER SUB-ASSEMBLY**

Refer to **INSTALLATION**

VACUUM SENSOR

COMPONENTS

ILLUSTRATION

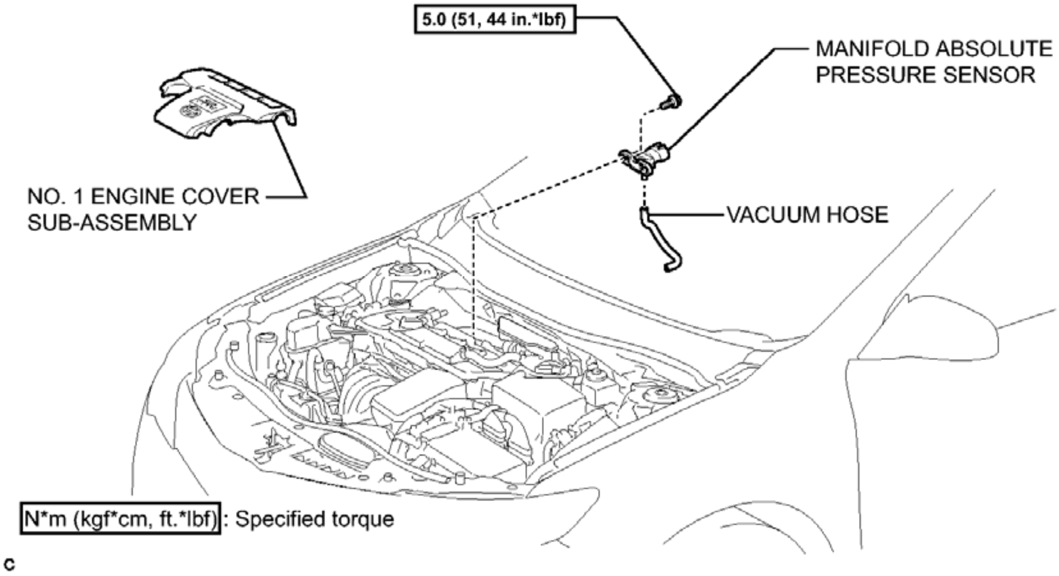
5.0 (51, 44 in.*lbf)
MANIFOLD ABSOLUTE PRESSURE SENSOR
NO. 1 ENGINE COVER SUB-ASSEMBLY
VACUUM HOSE
N*m (kgf*cm, ft.*lbf): Specified torque
c

Fig. 15: Identifying Vacuum Sensor Replacement Components With Torque Specifications
Courtesy of TOYOTA MOTOR SALES, U.S.A., INC.

REMOVAL

REMOVAL

1. **REMOVE NO. 1 ENGINE COVER SUB-ASSEMBLY** . Refer to **REMOVAL - Step 25**
2. **REMOVE MANIFOLD ABSOLUTE PRESSURE SENSOR**
   a. Disconnect the connector.

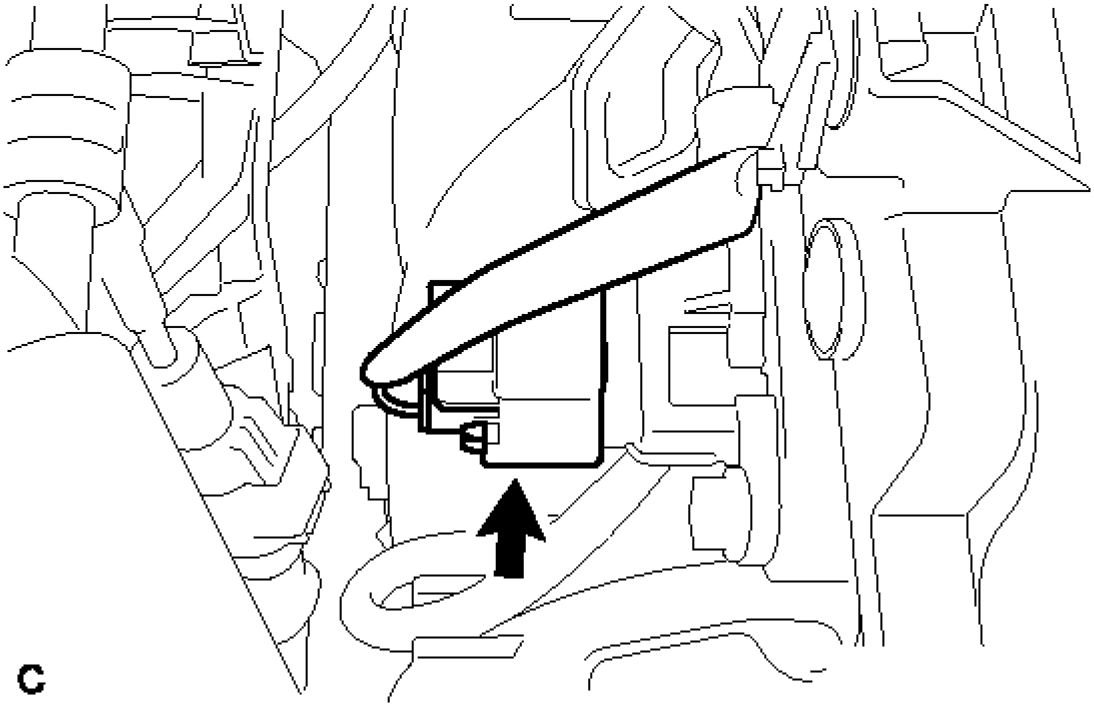

Fig. 16: Identifying Manifold Absolute Pressure Sensor Connector
Courtesy of TOYOTA MOTOR SALES, U.S.A., INC.

b. Disconnect the vacuum hose.

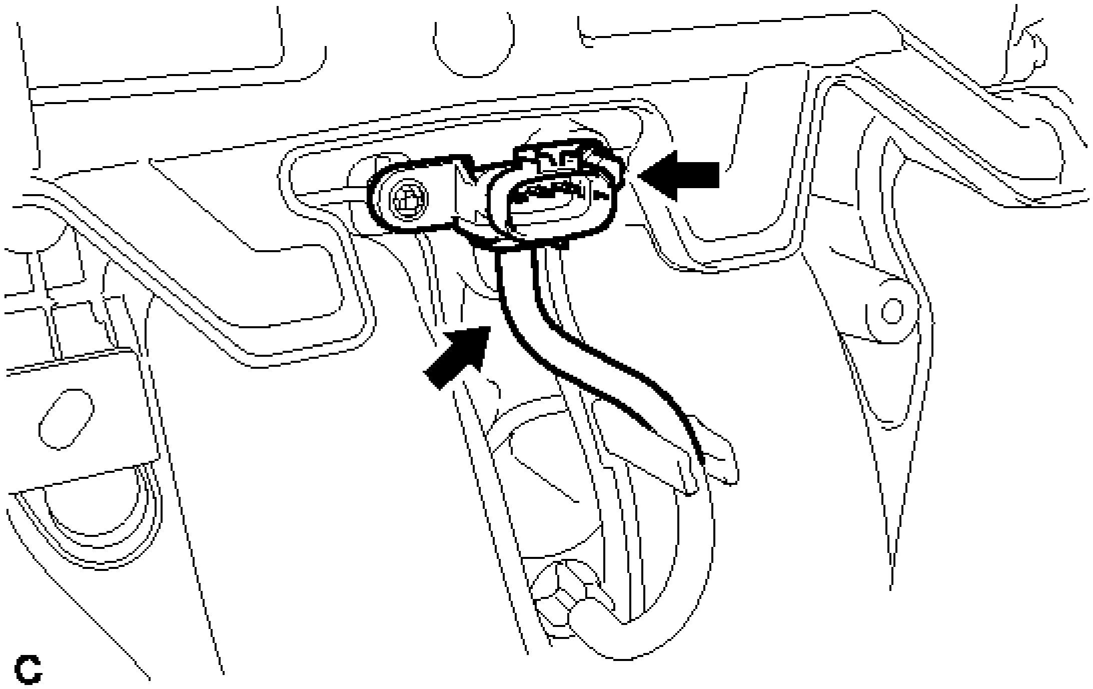

Fig. 17: Identifying Manifold Absolute Pressure Sensor Vacuum Hose And Bolt
Courtesy of TOYOTA MOTOR SALES, U.S.A., INC.

c. Remove the bolt and manifold absolute pressure sensor.

INSTALLATION

INSTALLATION

1. **INSTALL MANIFOLD ABSOLUTE PRESSURE SENSOR**
   a. Install the manifold absolute pressure sensor with the bolt.

      Torque: 5.0 N*m (51 kgf*cm, 44 in.*lbf)

   b. Connect the vacuum hose and connector.
2. **INSTALL NO. 1 ENGINE COVER SUB-ASSEMBLY** . Refer to **INSTALLATION - Step 86**

CANISTER

COMPONENTS

ILLUSTRATION

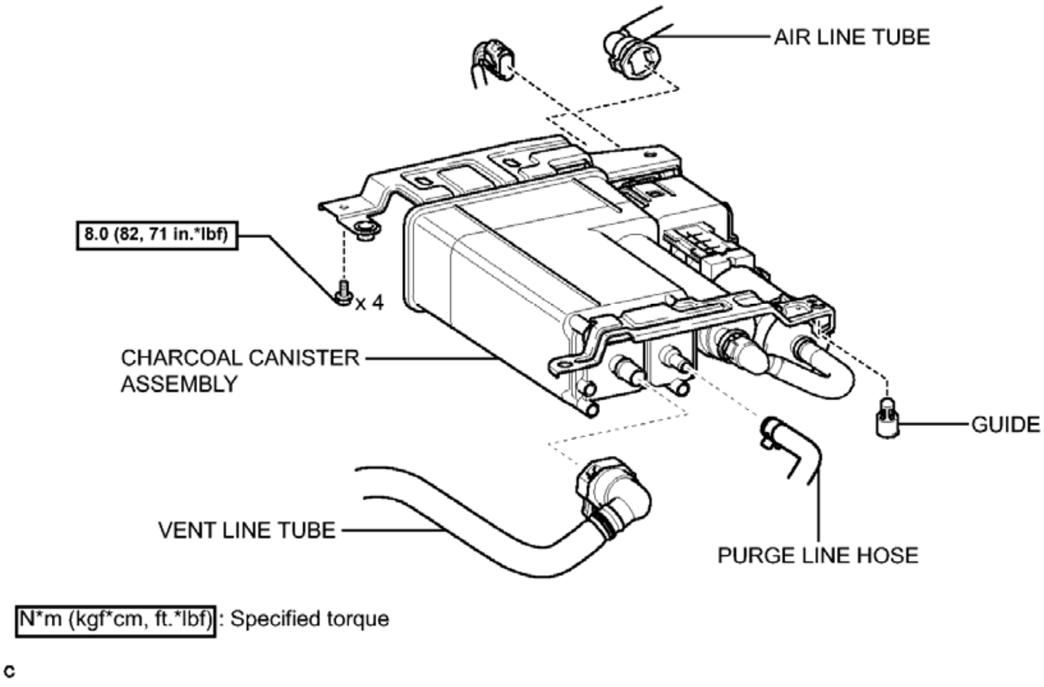
AIR LINE TUBE
8.0 (82, 71 in.*lbf)
x 4
CHARCOAL CANISTER ASSEMBLY
GUIDE
VENT LINE TUBE
PURGE LINE HOSE
N*m (kgf*cm, ft.*lbf) : Specified torque
c

Fig. 18: Identifying Canister Replacement Components With Torque Specifications (1 Of 2)
Courtesy of TOYOTA MOTOR SALES, U.S.A., INC.

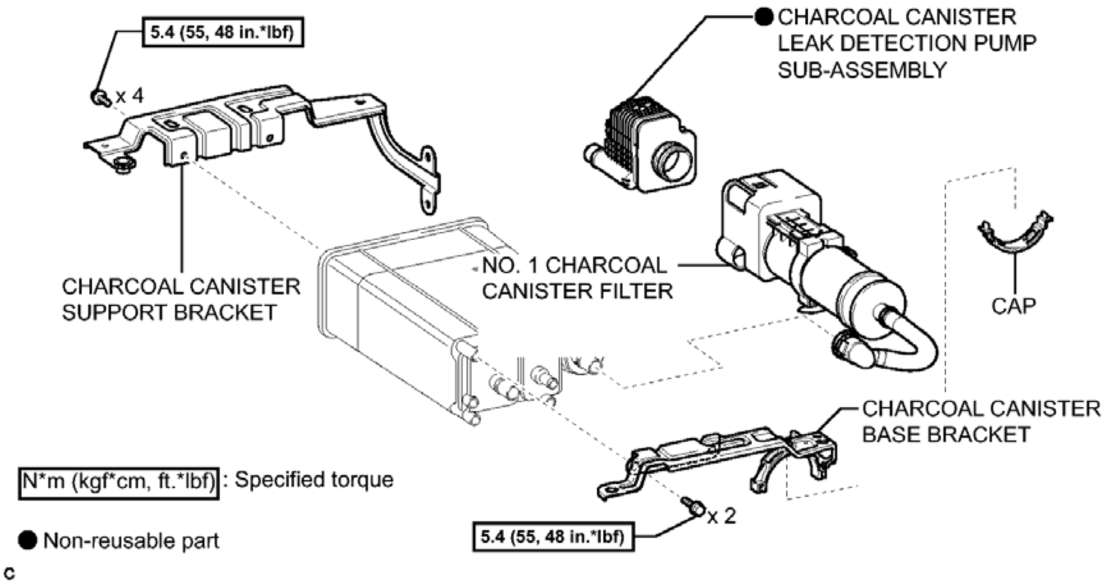
5.4 (55, 48 in.*lbf)
x 4
CHARCOAL CANISTER LEAK DETECTION PUMP SUB-ASSEMBLY
NO. 1 CHARCOAL CANISTER FILTER
CHARCOAL CANISTER SUPPORT BRACKET
CAP
CHARCOAL CANISTER BASE BRACKET
N*m (kgf*cm, ft.*lbf) : Specified torque
x 2
5.4 (55, 48 in.*lbf)
● Non-reusable part
c

Fig. 19: Identifying Canister Replacement Components With Torque Specifications (2 Of 2)
Courtesy of TOYOTA MOTOR SALES, U.S.A., INC.

REMOVAL

REMOVAL

1. **REMOVE FUEL TANK ASSEMBLY**

   Refer to **REMOVAL**

2. **REMOVE CHARCOAL CANISTER ASSEMBLY**
   a. Disconnect the connector from the charcoal canister leak detection pump sub-assembly.

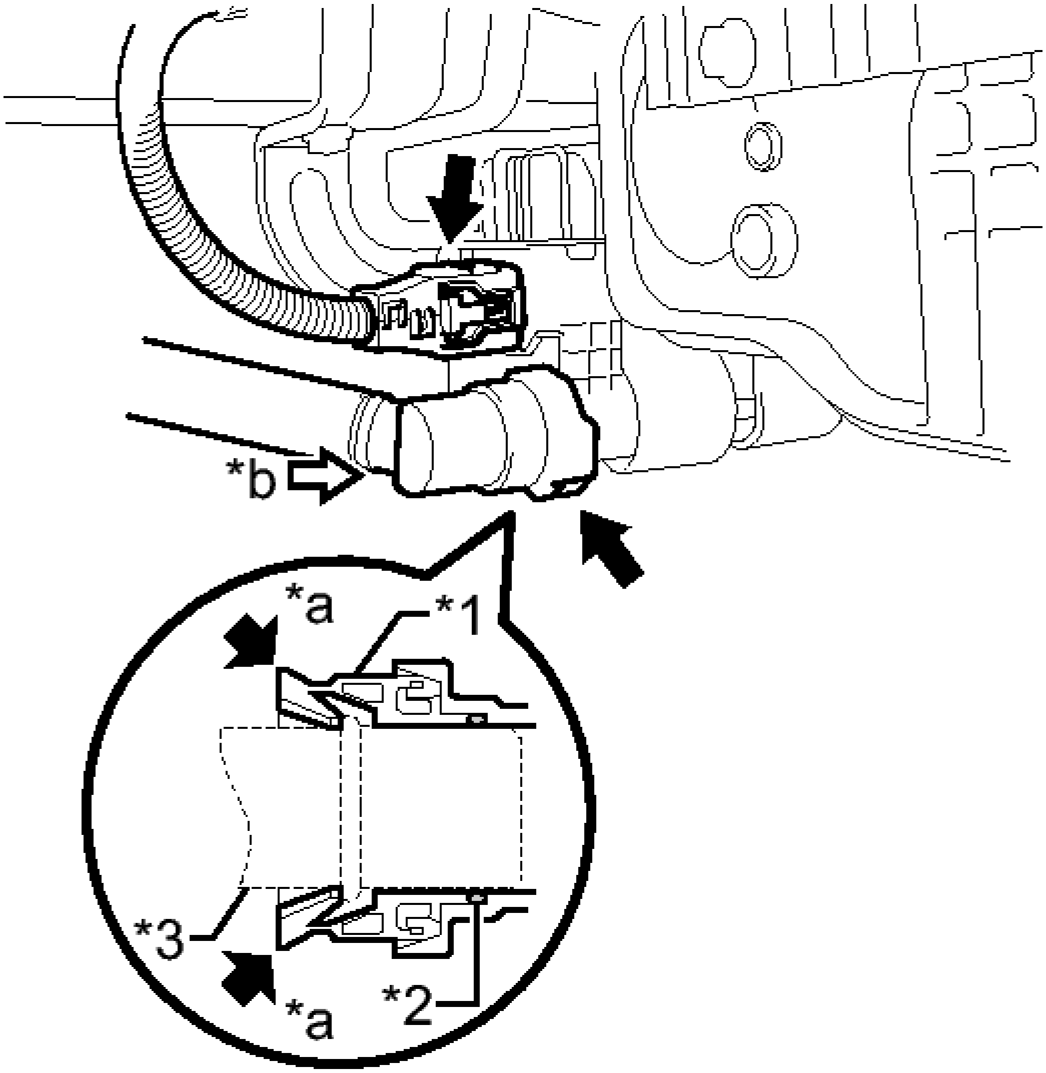

Fig. 20: Identifying Charcoal Canister Leak Detection Pump Connector
Courtesy of TOYOTA MOTOR SALES, U.S.A., INC.

b. Disconnect the air line tube.

TEXT IN ILLUSTRATION

*1	Tube Connector
*2	O-ring
*3	Pipe (charcoal canister leak detection pump sub-

	assembly)
*a	Pinch
*b	Push

NOTE:

- **Remove any dirt or foreign matter on the tube connector before performing this work.**
- **Do not allow any scratches or foreign matter to get on the parts when disconnecting them as the tube connector has an O-ring that seals the pipe.**
- **Perform this work by hand. Do not use any tools.**
- **Do not forcibly bend, twist or turn the air line tube.**
- **Protect the disconnected parts by covering them with plastic bags after disconnecting the air line tube.**
- **If the tube connector and pipe are stuck, push and pull on them to release.**

  1. Push the air line tube firmly toward the charcoal canister side.
  2. Pinch the air line tube as shown in the illustration.
  3. Pull out the air line tube.

c. Disconnect the 2 tube clamps.

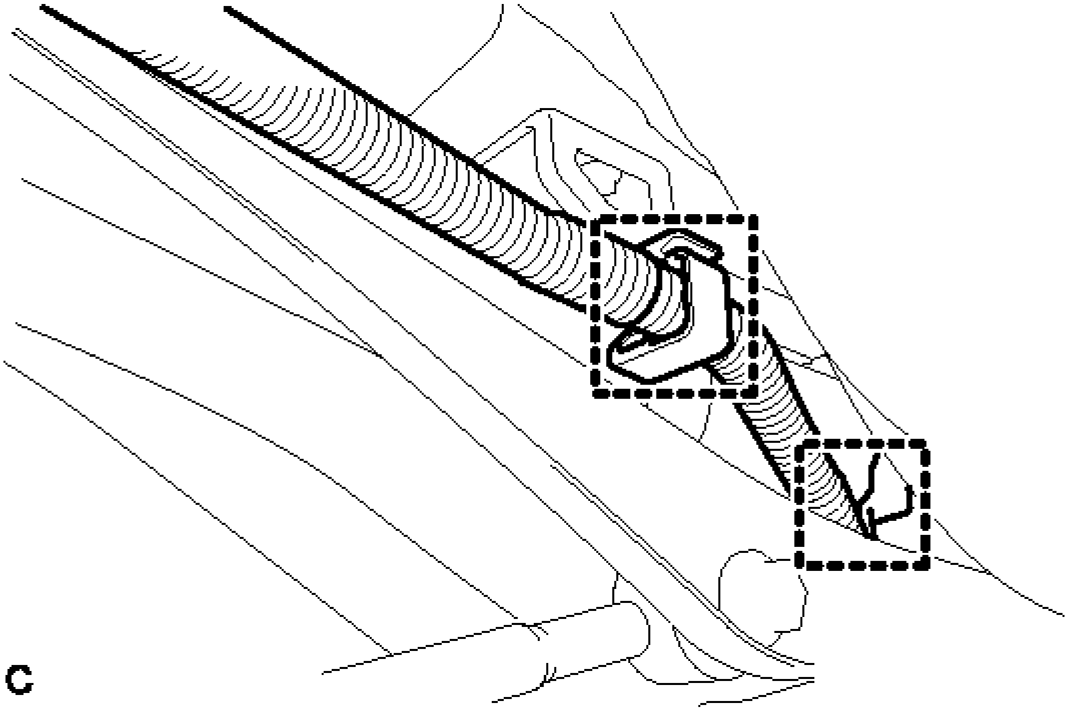

Fig. 21: Identifying Air Line Tube Clamps
Courtesy of TOYOTA MOTOR SALES, U.S.A., INC.

d. Disconnect the purge line hose.

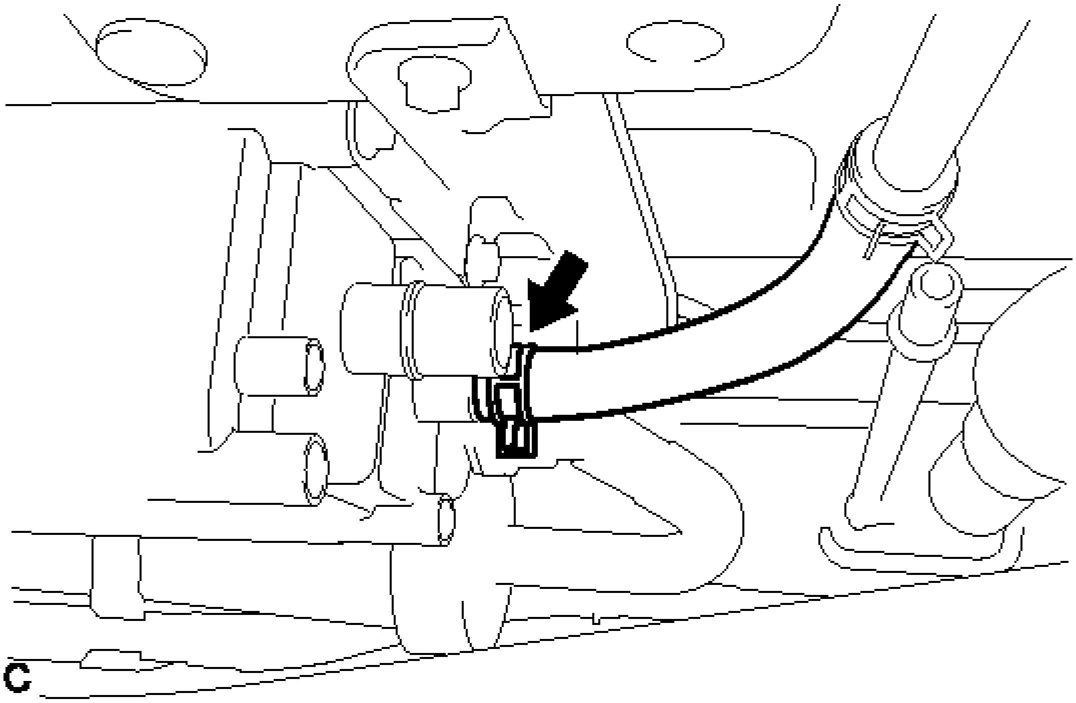

Fig. 22: Disconnecting Purge Line Hose
Courtesy of TOYOTA MOTOR SALES, U.S.A., INC.

e. Remove the 4 bolts and guide.

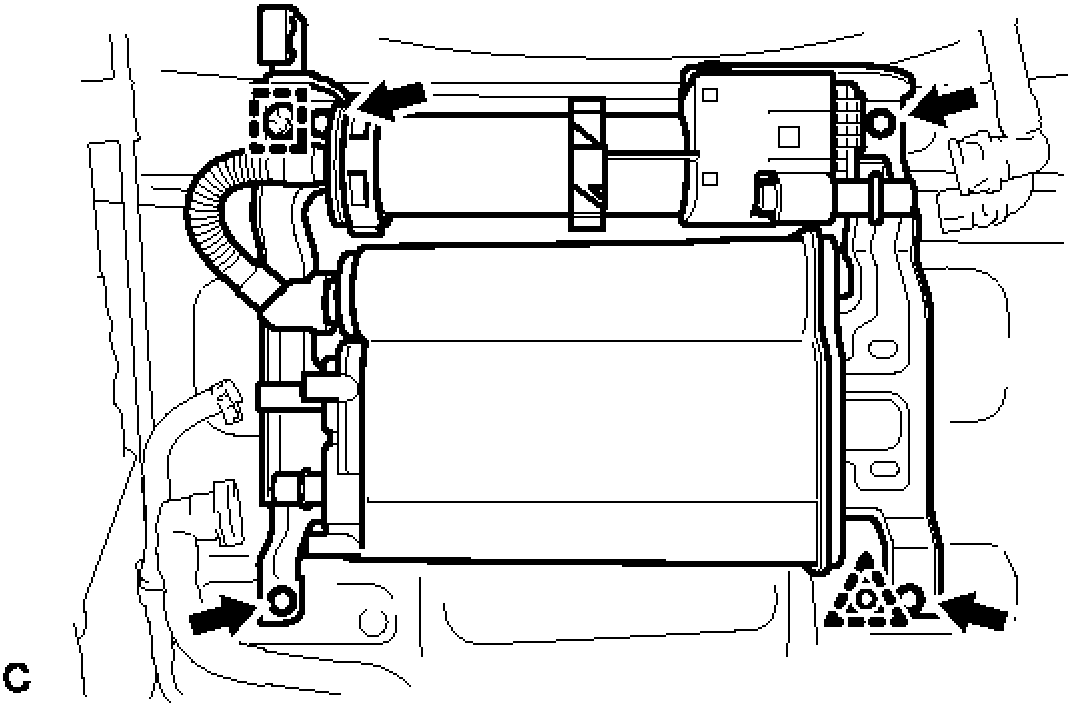

Fig. 23: Identifying Charcoal Canister Assembly Bolts And Guide
Courtesy of TOYOTA MOTOR SALES, U.S.A., INC.

f. Separate the clip from the body to remove the charcoal canister assembly.

3. **REMOVE CHARCOAL CANISTER SUPPORT BRACKET**
   a. Remove the 4 bolts and charcoal canister support bracket.

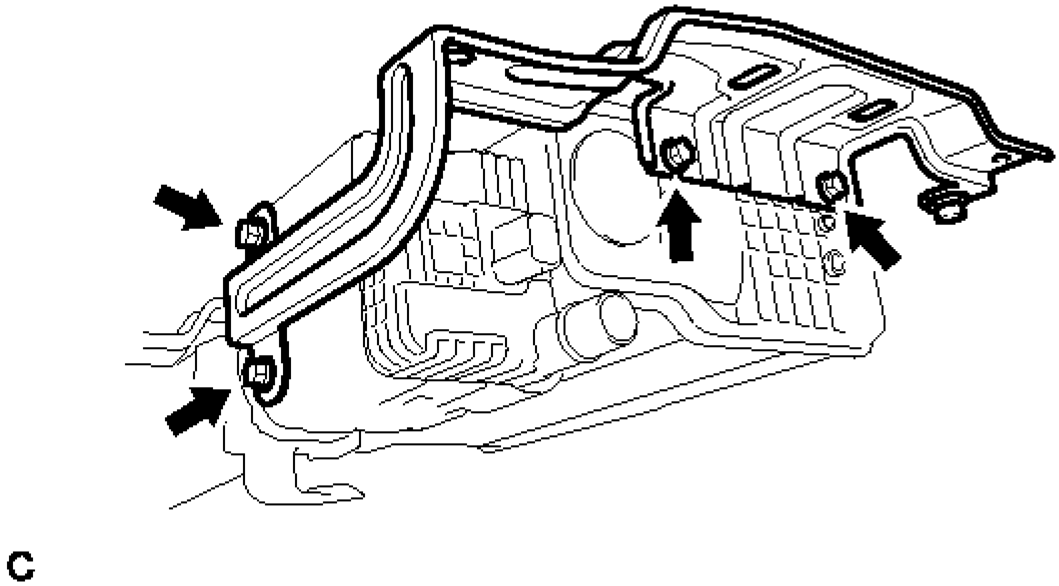

Fig. 24: Identifying Charcoal Canister Support Bracket Bolts
Courtesy of TOYOTA MOTOR SALES, U.S.A., INC.

4. **REMOVE NO. 1 CHARCOAL CANISTER FILTER**
   a. Disengage the 2 claws and remove the cap.

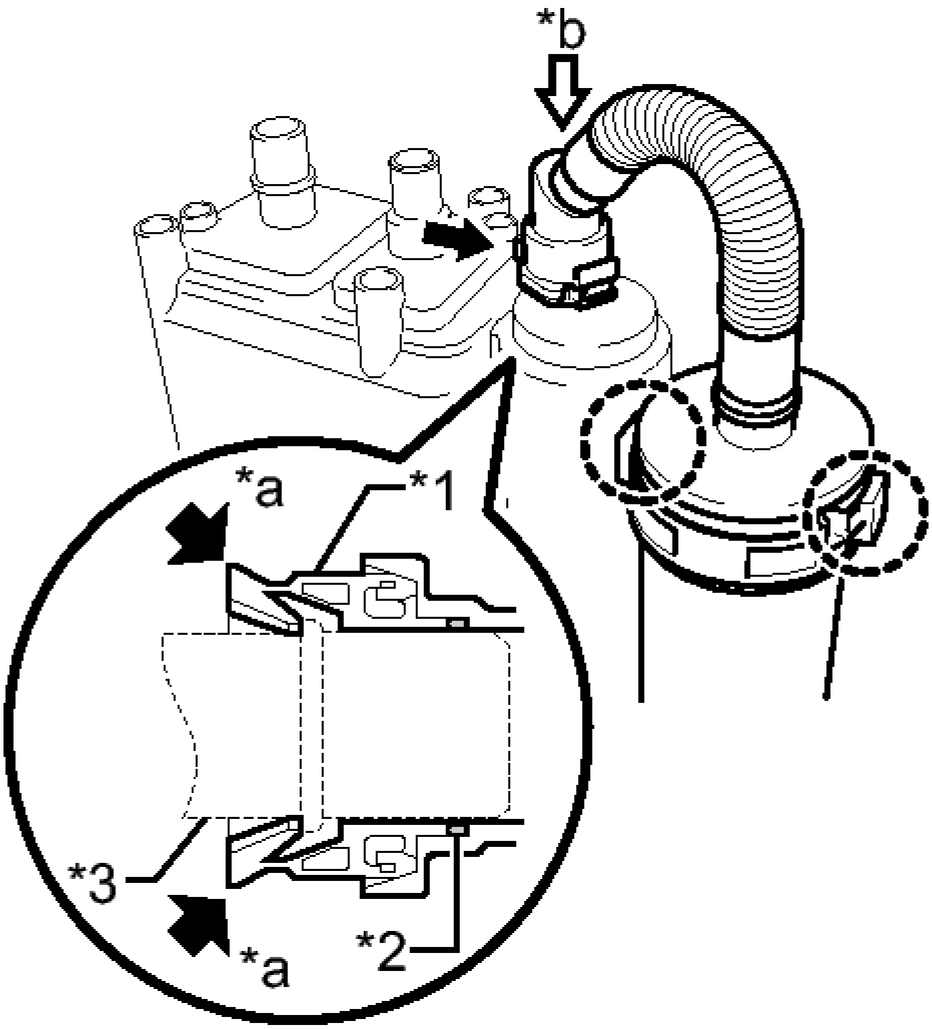

Fig. 25: Identifying No. 1 Charcoal Canister Filter Cap And Vent Hose Connectors
Courtesy of TOYOTA MOTOR SALES, U.S.A., INC.

b. Disconnect the vent hose.

TEXT IN ILLUSTRATION

*1	Tube Connector
*2	O-ring
*3	Pipe (charcoal canister assembly)
*a	Pinch
*b	Push

NOTE:

- **Remove any dirt or foreign matter on the tube connector before performing this work.**
- **Do not allow any scratches or foreign matter to get on the parts when disconnecting them as the tube connector has an O-ring that seals the pipe.**
- **Perform this work by hand. Do not use any tools.**
- **Do not forcibly bend, twist or turn the vent hose.**
- **Protect the disconnected parts by covering them with plastic bags after disconnecting the vent hose.**
- **If the tube connector and pipe are stuck, push and pull on them to release.**

1. Push the vent hose firmly toward the charcoal canister side.
2. Pinch the vent hose as shown in the illustration.
3. Pull out the vent hose.

5. **REMOVE CHARCOAL CANISTER BASE BRACKET**
    a. Remove the 2 bolts and charcoal canister base bracket.

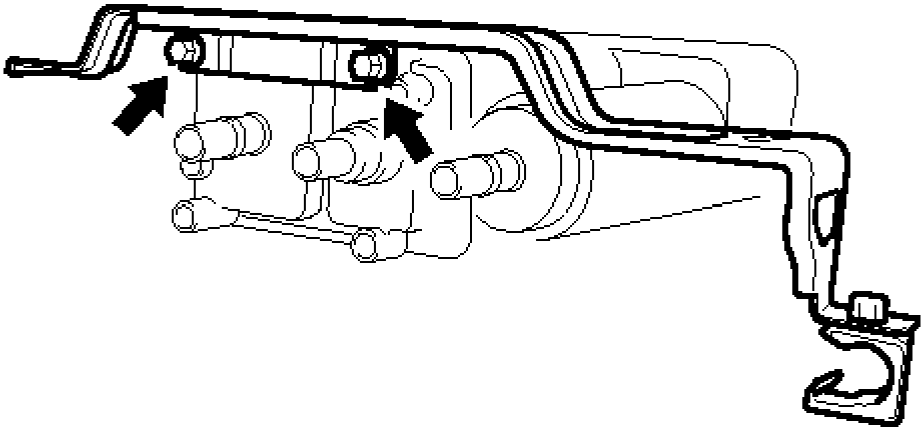

Fig. 26: Identifying Charcoal Canister Base Bracket Bolts
Courtesy of TOYOTA MOTOR SALES, U.S.A., INC.

6. **REMOVE CHARCOAL CANISTER LEAK DETECTION PUMP SUB-ASSEMBLY**
    a. Before removing the charcoal canister leak detection pump sub-assembly, clean the canister by blowing air into it to ensure that the canister is free of foreign matter.

NOTE:

- **Make sure to clean the canister using only air.**
- **Do not use gasoline, thinners or solvents.**

b. While disengaging the 2 claws as shown in the illustration, push the charcoal canister leak detection pump sub-assembly upwards using a screwdriver to remove it.

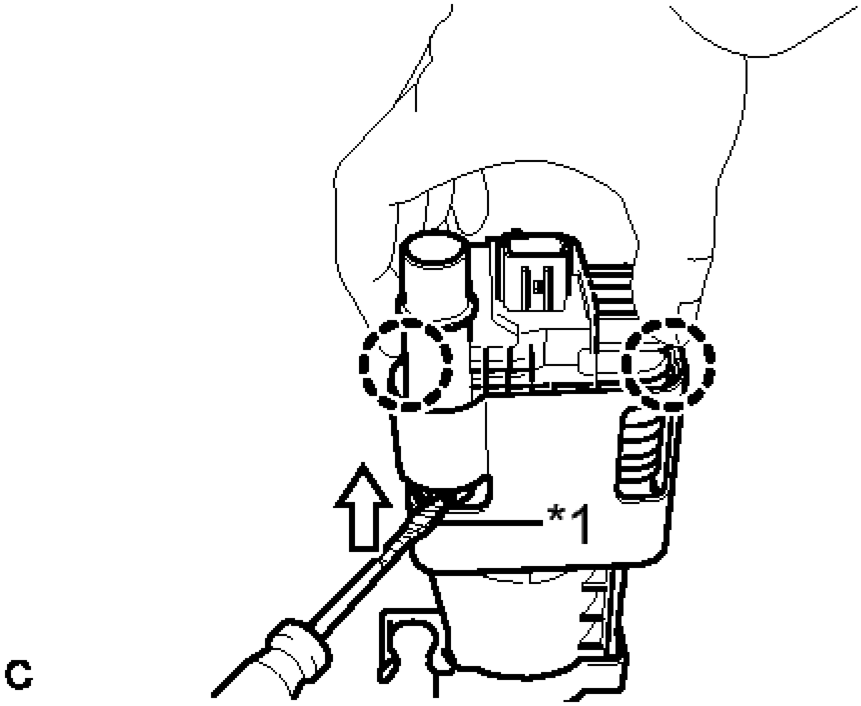

Fig. 27: Removing Charcoal Canister Leak Detection Pump Sub-Assembly
Courtesy of TOYOTA MOTOR SALES, U.S.A., INC.

TEXT IN ILLUSTRATION

*1	Protective Tape

HINT:

Tape the screwdriver tip before use.

c. Check if the canister contains foreign matter such as mud or water.
   1. Visually check that the inside of the canister is free of foreign matter.

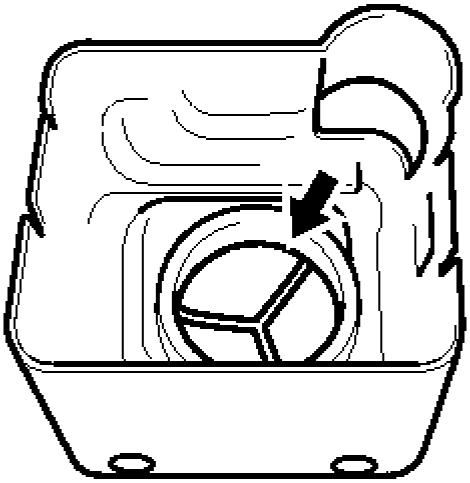

Fig. 28: Canister Is Free Of Foreign Matter
Courtesy of TOYOTA MOTOR SALES, U.S.A., INC.

2. Hold the canister upside down to make sure that the canister is free of foreign matter.

   If the canister contains foreign matter, replace the canister.

INSPECTION

INSPECTION

1. **INSPECT CHARCOAL CANISTER ASSEMBLY**
    a. Visually check the charcoal canister assembly.
        1. Visually check the charcoal canister assembly for cracks or damage.

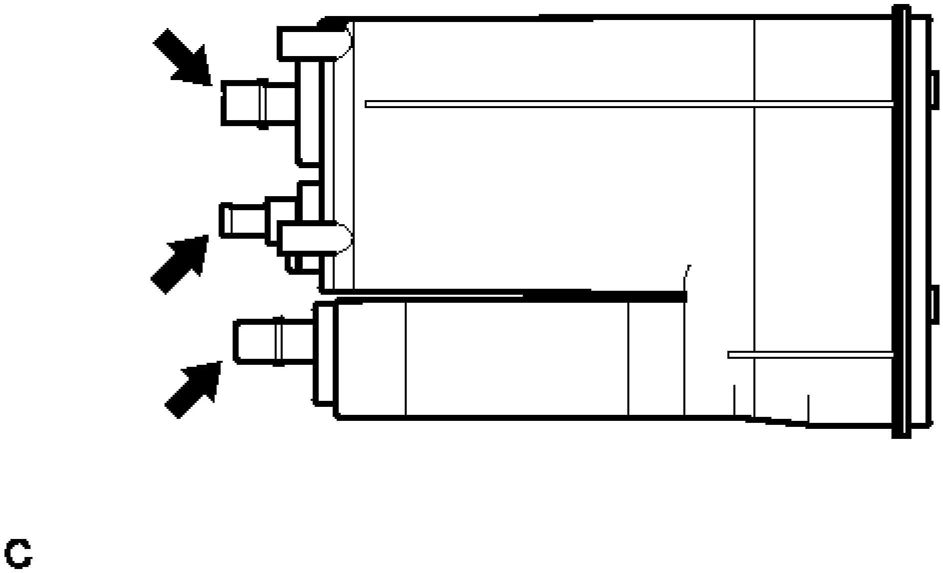

Fig. 29: Inspecting Charcoal Canister Assembly
Courtesy of TOYOTA MOTOR SALES, U.S.A., INC.

If cracks or damage are found, replace the charcoal canister assembly.

b. Check canister operation.

   1. With port C closed, blow 5 kPa (0.1 kgf/cm^2 , 0.7 psi) of air into port A, and check that air flows from port B.

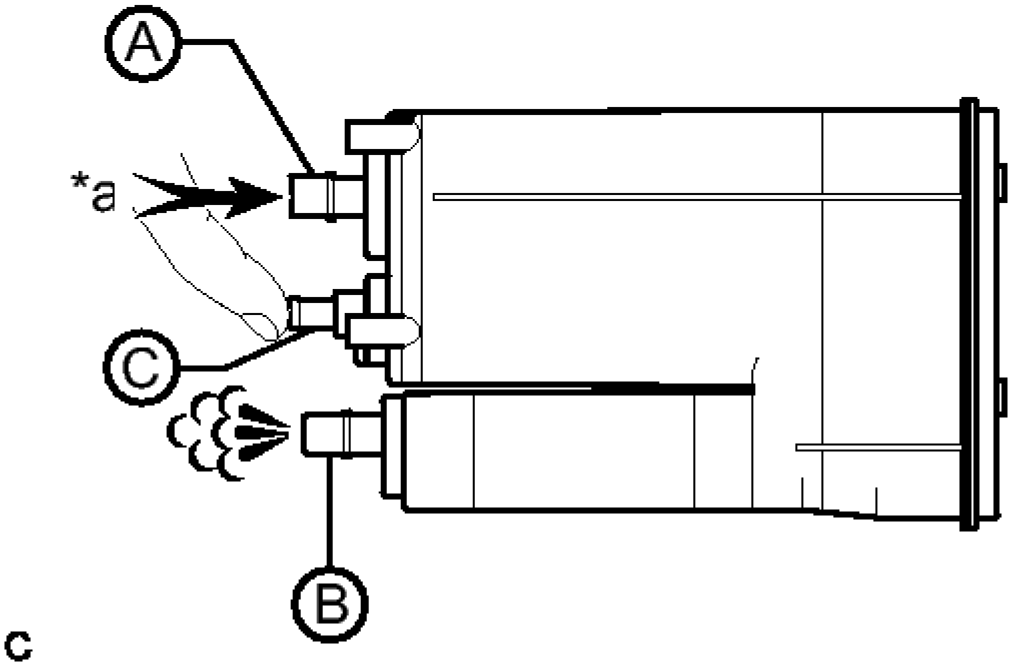

Fig. 30: Checking Canister Operation
Courtesy of TOYOTA MOTOR SALES, U.S.A., INC.

TEXT IN ILLUSTRATION

*a	Air

If the result is not as specified, replace the charcoal canister assembly.

2. With port A closed, blow 5 kPa (0.1 kgf/cm^2 , 0.7 psi) of air into port B, and check that air flows from port C.

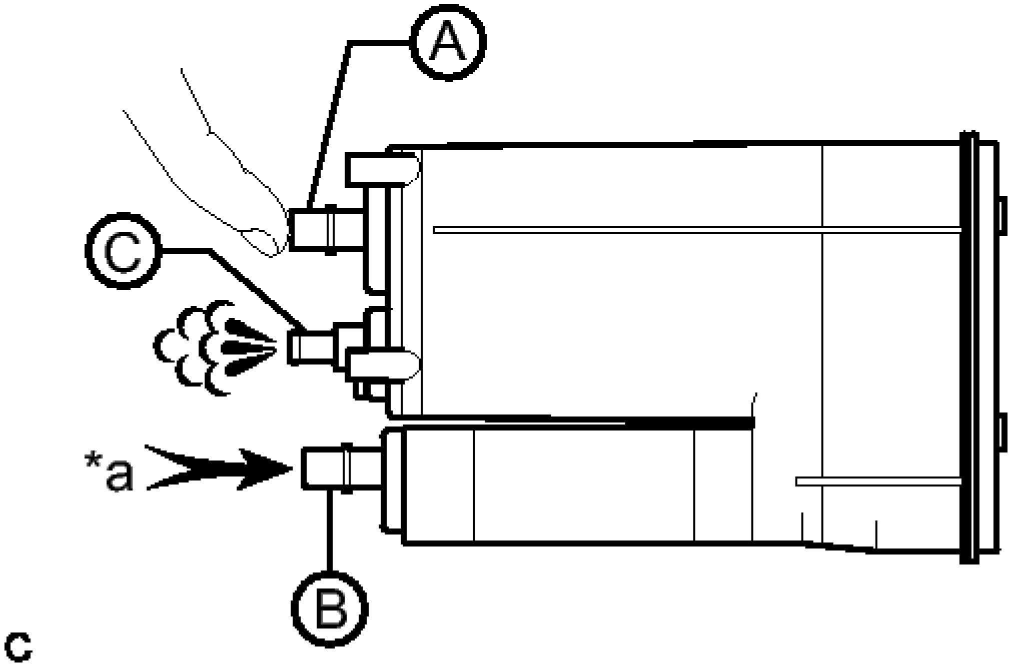

Fig. 31: Checking Canister Operation
Courtesy of TOYOTA MOTOR SALES, U.S.A., INC.

TEXT IN ILLUSTRATION

*a	Air

If the result is not as specified, replace the charcoal canister assembly.

c. Check for air leaks.
   1. Connect a pressure gauge to port A of the charcoal canister assembly.

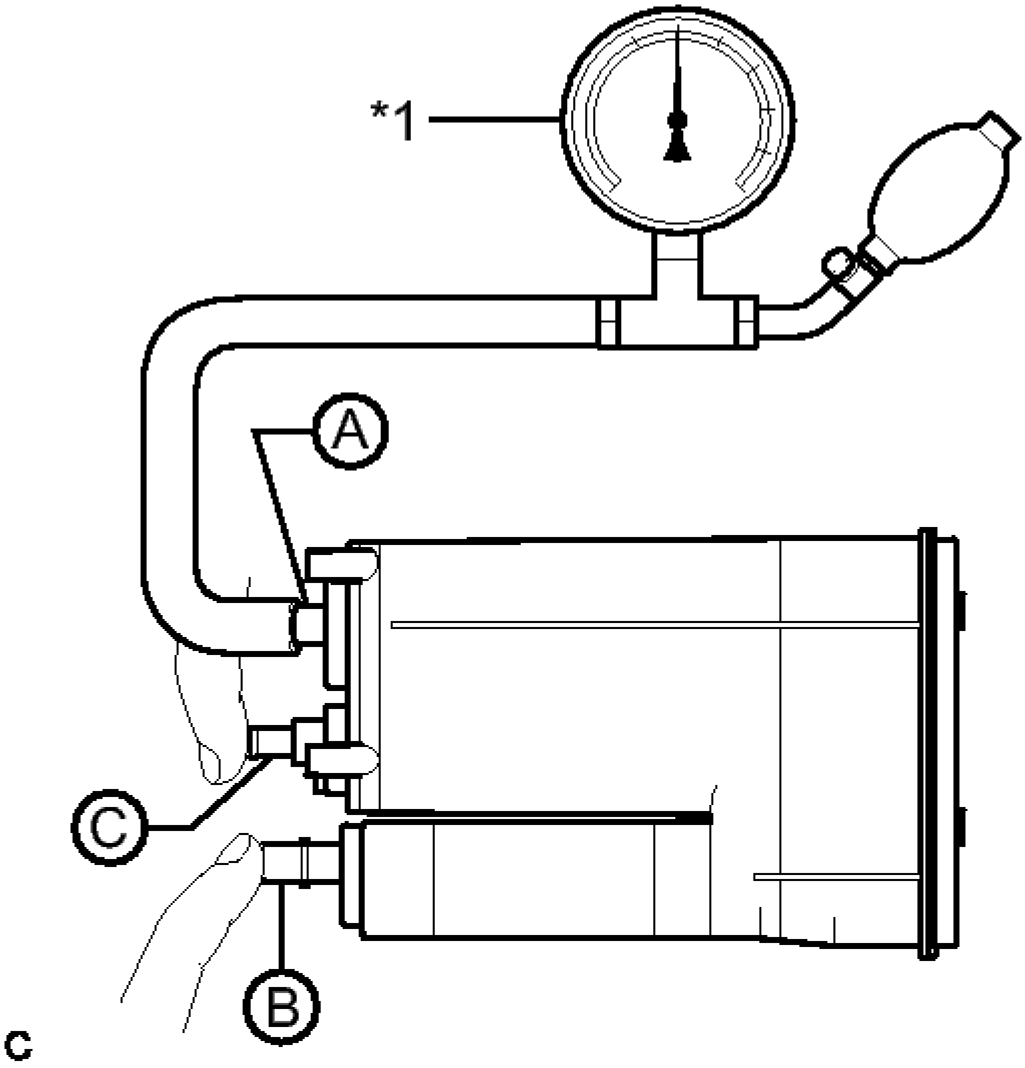

Fig. 32: Checking Charcoal Canister Assembly For Air Leaks
Courtesy of TOYOTA MOTOR SALES, U.S.A., INC.

TEXT IN ILLUSTRATION

*1	Pressure Gauge

2. With port C and port B closed, apply 20 kPa (150 mmHg, 5.91 in.Hg) of pressurized air into port A, then confirm that pressure is retained for 1 minute.

   If the result is not as specified, replace the charcoal canister assembly.

2. **INSPECT NO. 1 CHARCOAL CANISTER FILTER**
   a. Visually check the No. 1 charcoal canister filter.
      1. Visually check the No. 1 charcoal canister filter for cracks or damage.

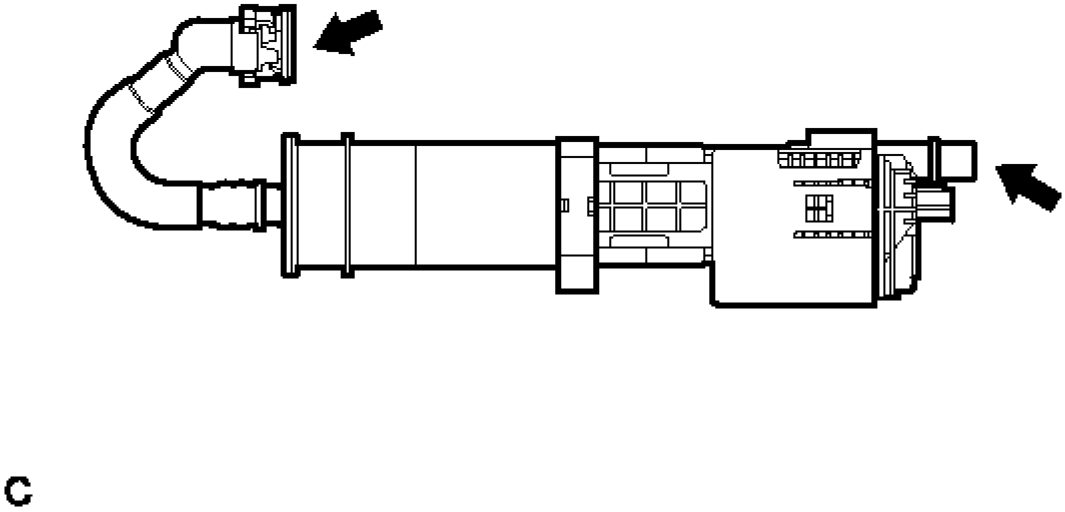

Fig. 33: Inspecting No. 1 Charcoal Canister Filter
Courtesy of TOYOTA MOTOR SALES, U.S.A., INC.

If cracks or damage are found, replace the No. 1 charcoal canister filter.

b. Check canister operation.
   1. Blow 5 kPa (0.1 kgf/cm^2 , 0.7 psi) of air into port A, and check that air flows from port B.

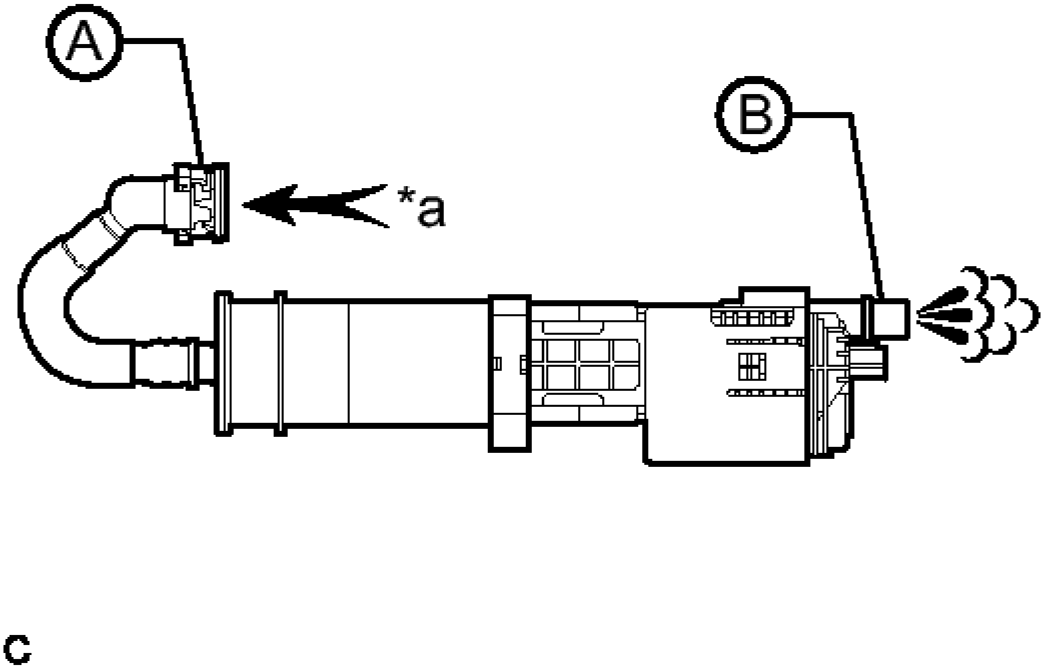

Fig. 34: Checking No. 1 Charcoal Canister Filter Operation
Courtesy of TOYOTA MOTOR SALES, U.S.A., INC.

TEXT IN ILLUSTRATION

*a	Air

If the result is not as specified, replace the No. 1 charcoal canister filter.

c. Check for air leaks.
   1. Connect a pressure gauge to port A of the No. 1 charcoal canister filter.

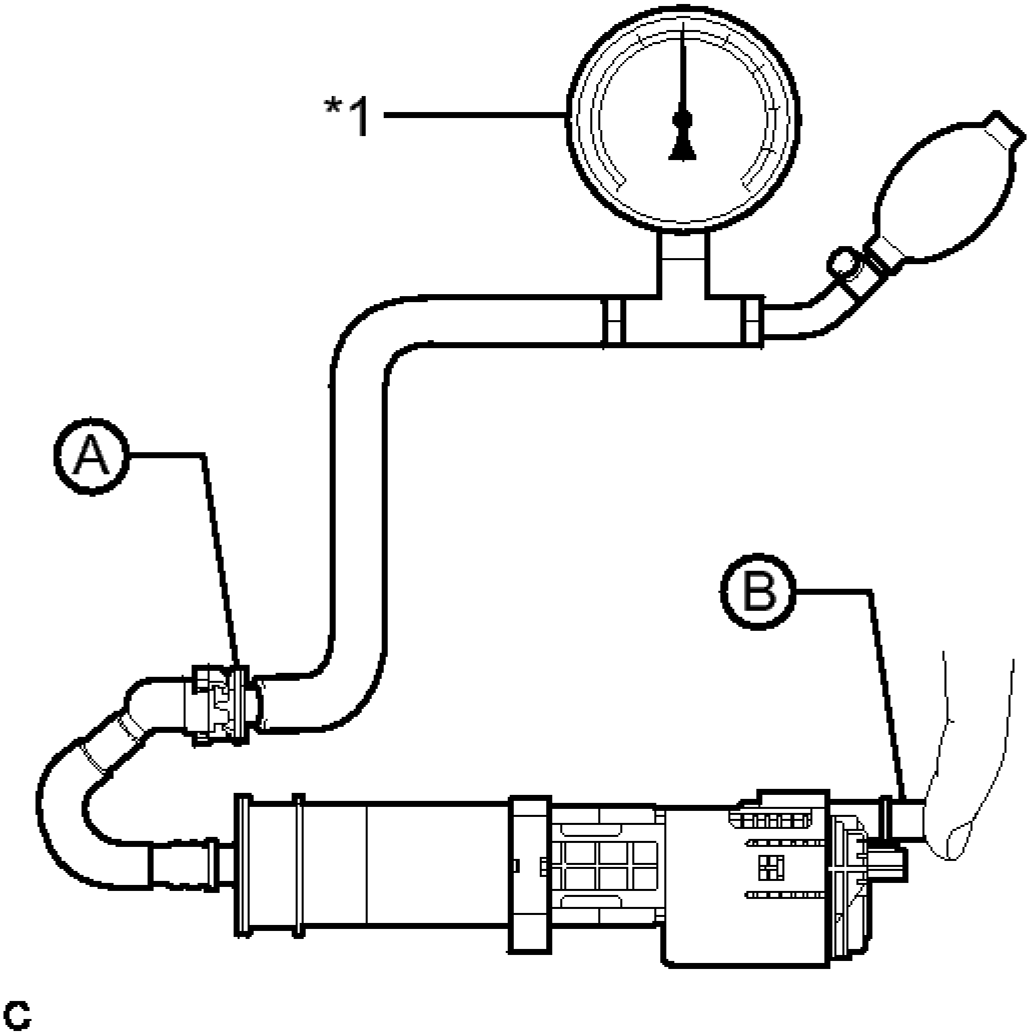

Fig. 35: Checking No. 1 Charcoal Canister Filter For Air Leaks
Courtesy of TOYOTA MOTOR SALES, U.S.A., INC.

TEXT IN ILLUSTRATION

*1	Pressure Gauge

2. With port B closed, apply 20 kPa (150 mmHg, 5.91 in.Hg) of pressurized air into port A, then confirm that pressure is retained for 1 minute.

   If the result is not as specified, replace the No. 1 charcoal canister filter.

d. Check the charcoal canister leak detection pump sub-assembly.

   1. Connect a positive (+) lead from the auxiliary battery to terminal 5 and a negative (-) lead to terminal 1.

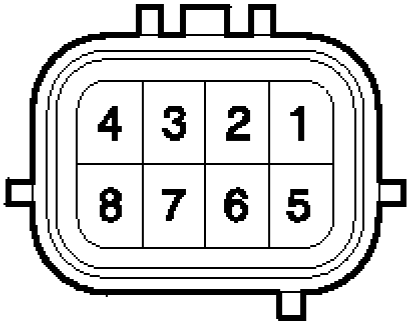

Fig. 36: Charcoal Canister Leak Detection Pump Sub-Assembly
Courtesy of TOYOTA MOTOR SALES, U.S.A., INC.

2. Check that a clicking sound is heard from the leak detection pump.

   If the result is not as specified, replace the charcoal canister leak detection pump sub-assembly.

INSTALLATION

INSTALLATION

1. **INSTALL CHARCOAL CANISTER LEAK DETECTION PUMP SUB-ASSEMBLY**
   a. Engage the 2 claws to install a new charcoal canister leak detection pump sub-assembly to the canister.

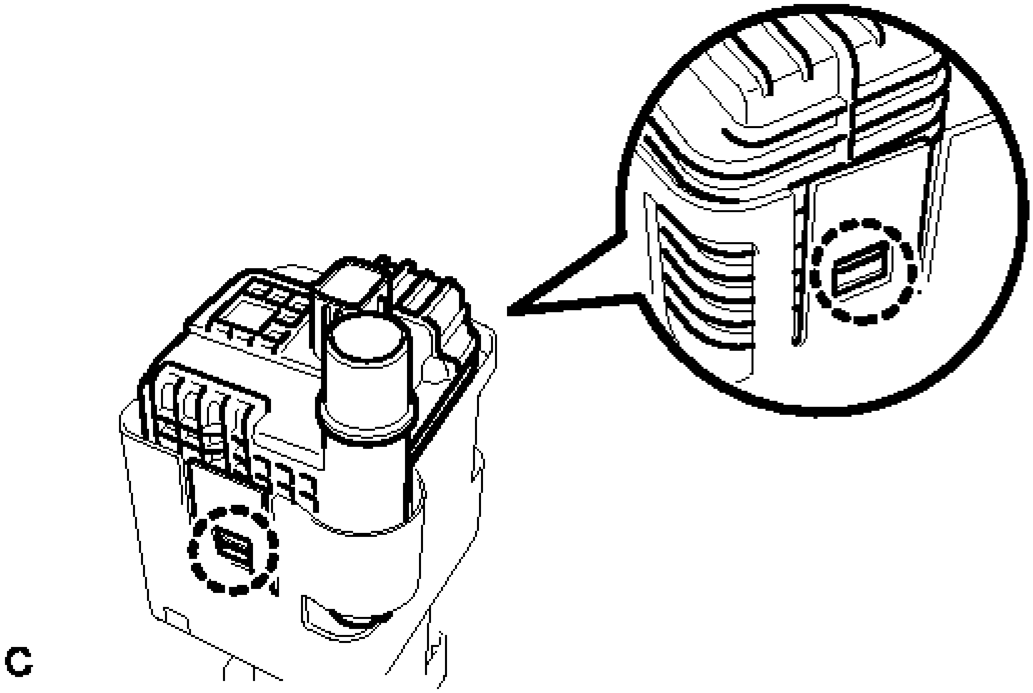

Fig. 37: Identifying Charcoal Canister Leak Detection Pump Claws
Courtesy of TOYOTA MOTOR SALES, U.S.A., INC.

NOTE:

- **Do not allow foreign matter such as grease, oil or water to adhere to the O-rings.**
- **Ensure that the claws are engaged properly.**

2. **INSTALL CHARCOAL CANISTER BASE BRACKET**
   a. Install the charcoal canister base bracket with the 2 bolts.

   Torque: 5.4 N*m (55 kgf*cm, 48 in.*lbf)

3. **INSTALL NO. 1 CHARCOAL CANISTER FILTER**
   a. Connect the vent hose.

   NOTE:

   - **Check that there are no scratches or foreign matter around the connected part of the tube connector and pipe before performing this work.**
   - **After connecting the vent hose, check that the vent hose is securely connected by pulling on the tube connector and the charcoal canister.**

   b. Engage the 2 claws to install the cap.
4. **INSTALL CHARCOAL CANISTER SUPPORT BRACKET**
   a. Install the charcoal canister support bracket with the 4 bolts.

Torque: 5.4 N*m (55 kgf*cm, 48 in.*lbf)

5. **INSTALL CHARCOAL CANISTER ASSEMBLY**
   a. Connect the clip to install the charcoal canister assembly.
   b. Install the 4 bolts and guide.

   Torque: 8.0 N*m (82 kgf*cm, 71 in.*lbf)

   c. Connect the purge line hose.
   d. Connect the 2 tube clamps.
   e. Connect the air line tube.

NOTE:	
	- **Check that there are no scratches or foreign matter around the connected part of the tube connector and pipe before performing this work.** - **After connecting the air line tube, check that the air line tube is securely connected by pulling on the tube connector and the charcoal canister.**

   f. Connect the connector to the charcoal canister leak detection pump sub-assembly.
6. **INSTALL FUEL TANK ASSEMBLY**

   Refer to **INSTALLATION**

PURGE VALVE

COMPONENTS

ILLUSTRATION

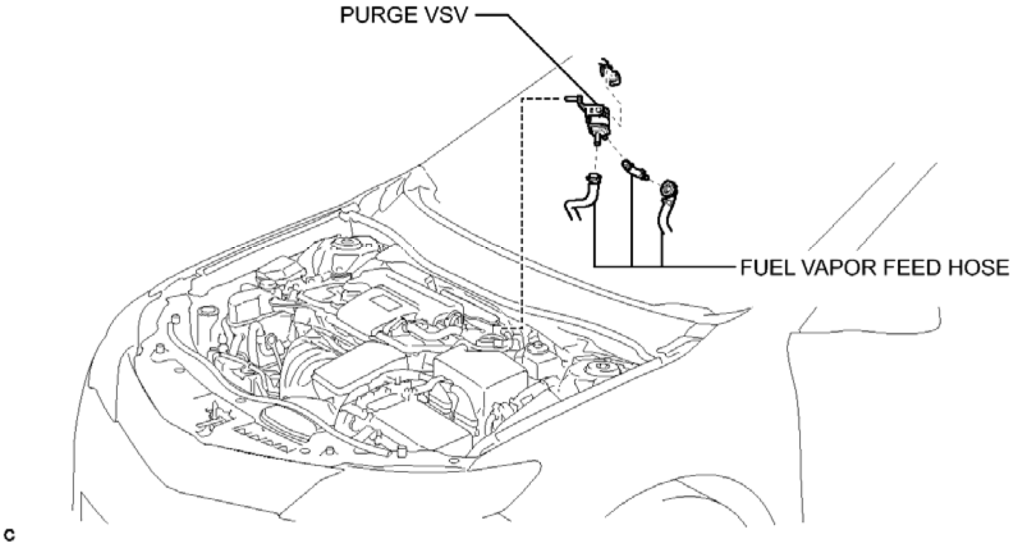
PURGE VSV
FUEL VAPOR FEED HOSE
C

Fig. 38: Identifying Purge Valve Replacement Components
Courtesy of TOYOTA MOTOR SALES, U.S.A., INC.

REMOVAL

REMOVAL

1. **REMOVE PURGE VSV**
   a. Disconnect the connector and wire harness clamp.

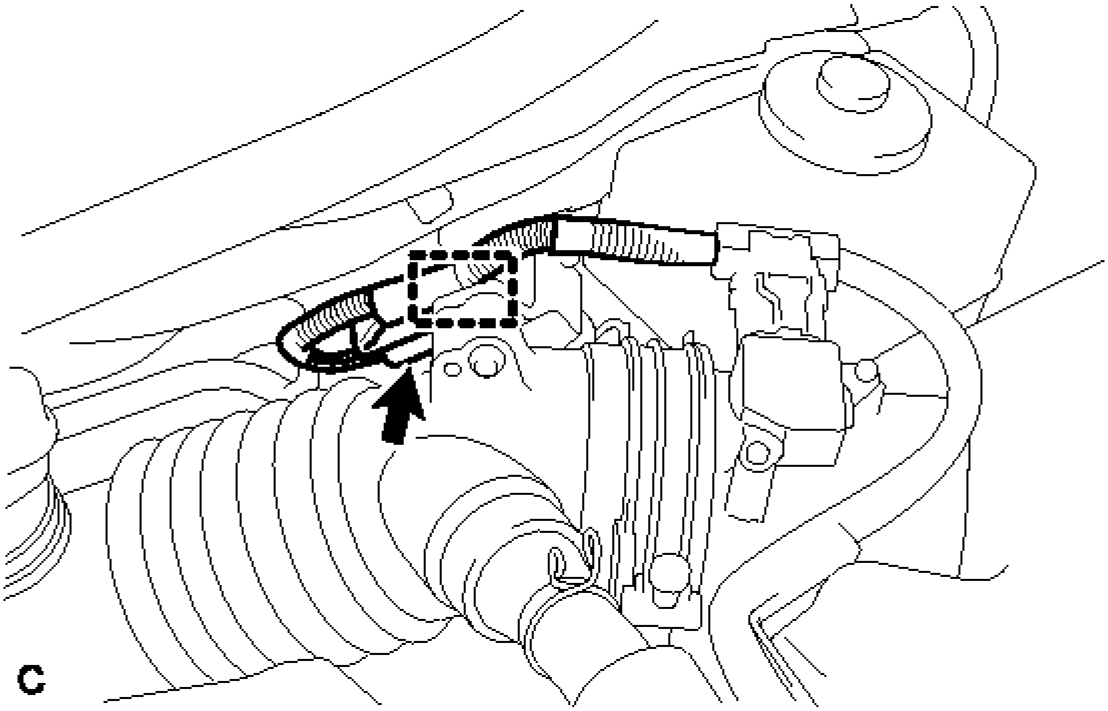

Fig. 39: Identifying Purge VSV Connector And Clamp
Courtesy of TOYOTA MOTOR SALES, U.S.A., INC.

b. Disconnect the 2 fuel vapor feed hoses.

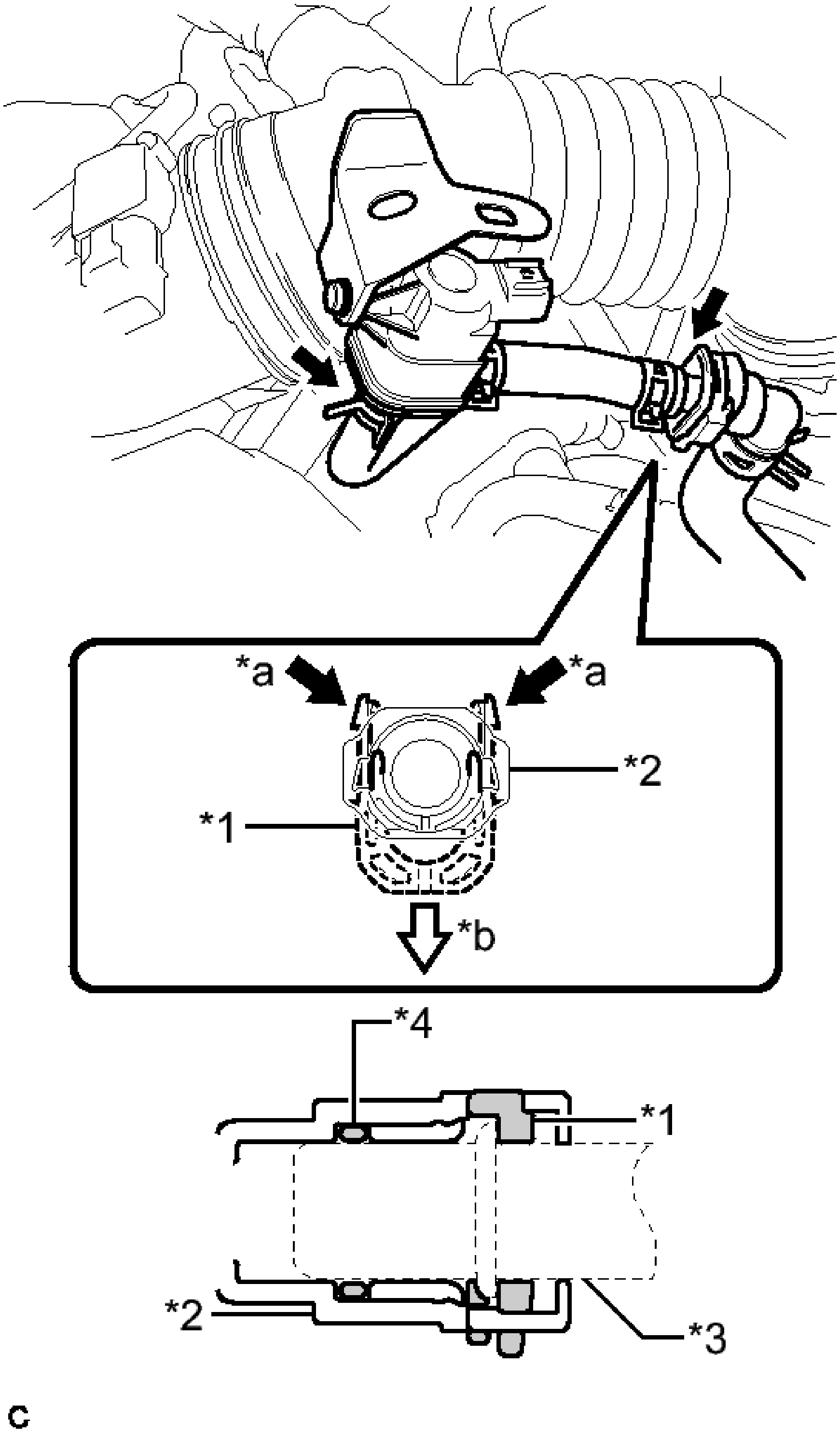

Fig. 40: Identifying Fuel Vapor Feed Hoses
Courtesy of TOYOTA MOTOR SALES, U.S.A., INC.

TEXT IN ILLUSTRATION

*1	Retainer
*2	Fuel Tube Connector
*3	Pipe
*4	O-ring
*a	Pinch
*b	Pull

NOTE:

- **Remove any dirt or foreign matter on the fuel tube connector before performing this work.**
- **Do not allow any scratches or foreign matter to get on the parts when disconnecting them as the fuel tube connector has an O-ring that seals the pipe.**
- **Perform this work by hand. Do not use any tools.**
- **Protect the disconnected parts by covering them with plastic bags after disconnecting each fuel vapor feed hose.**

c. Remove the purge VSV from the No. 1 air cleaner hose.
d. Remove the fuel vapor feed hose from the purge VSV.

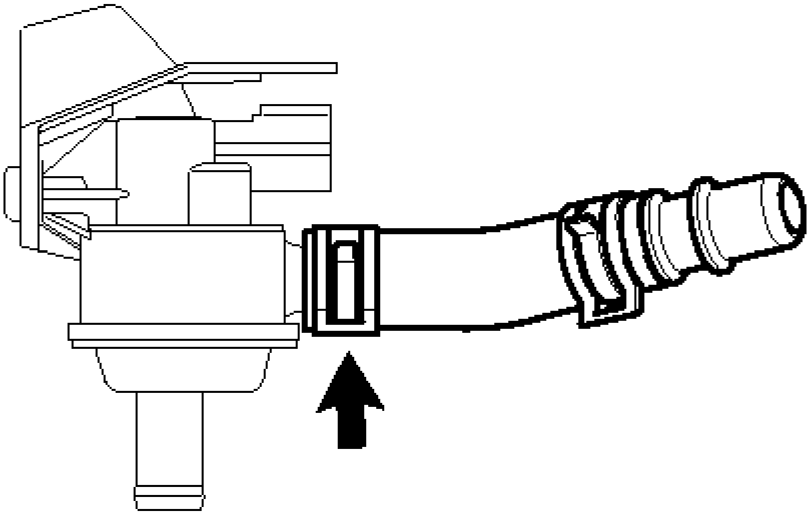

C

Fig. 41: Removing Fuel Vapor Feed Hose From Purge VSV

Courtesy of TOYOTA MOTOR SALES, U.S.A., INC.

INSPECTION

INSPECTION

1. **INSPECT PURGE VSV**
    a. Measure the resistance according to the value(s) in the table below.

    Standard Resistance

Tester Connection	Condition	Specified Condition
1 - 2	20°C (68°F)	23 to 26 ohms

    If the result is not as specified, replace the purge VSV.

    b. Apply auxiliary battery voltage between the terminals of the purge VSV and check that the following occurs when blowing air into port E.

    OK

Measurement Condition	Specified Condition
Auxiliary battery voltage applied between terminals 1 and 2	Air flows from port F
Auxiliary battery voltage not applied between terminals 1 and 2	Air does not flow

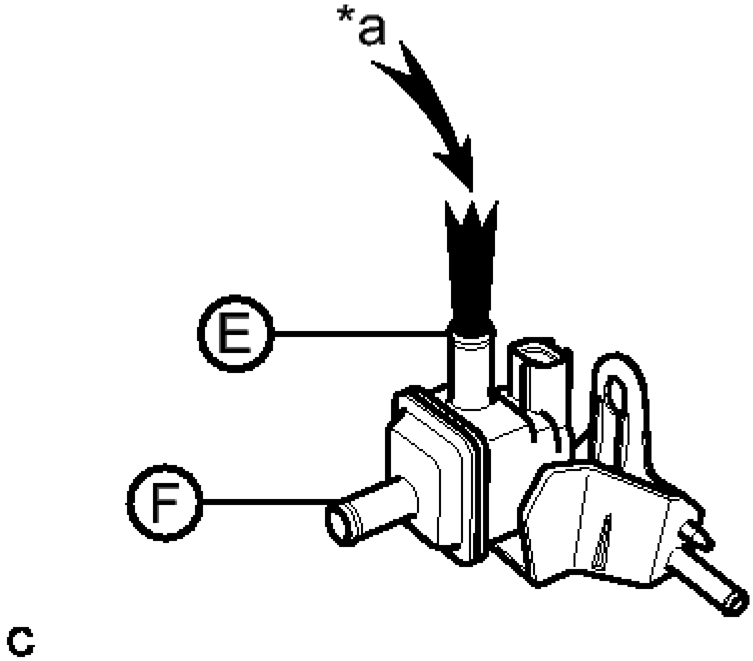

Fig. 42: Checking Air Flow Of Purge VSV
Courtesy of TOYOTA MOTOR SALES, U.S.A., INC.

TEXT IN ILLUSTRATION

*a	Air

If the result is not as specified, replace the purge VSV.

INSTALLATION

INSTALLATION

1. **INSTALL PURGE VSV**
    a. Install the fuel vapor feed hose to the purge VSV.
    b. Install the purge VSV to the No. 1 air cleaner hose.
    c. Connect the 2 fuel vapor feed hoses.

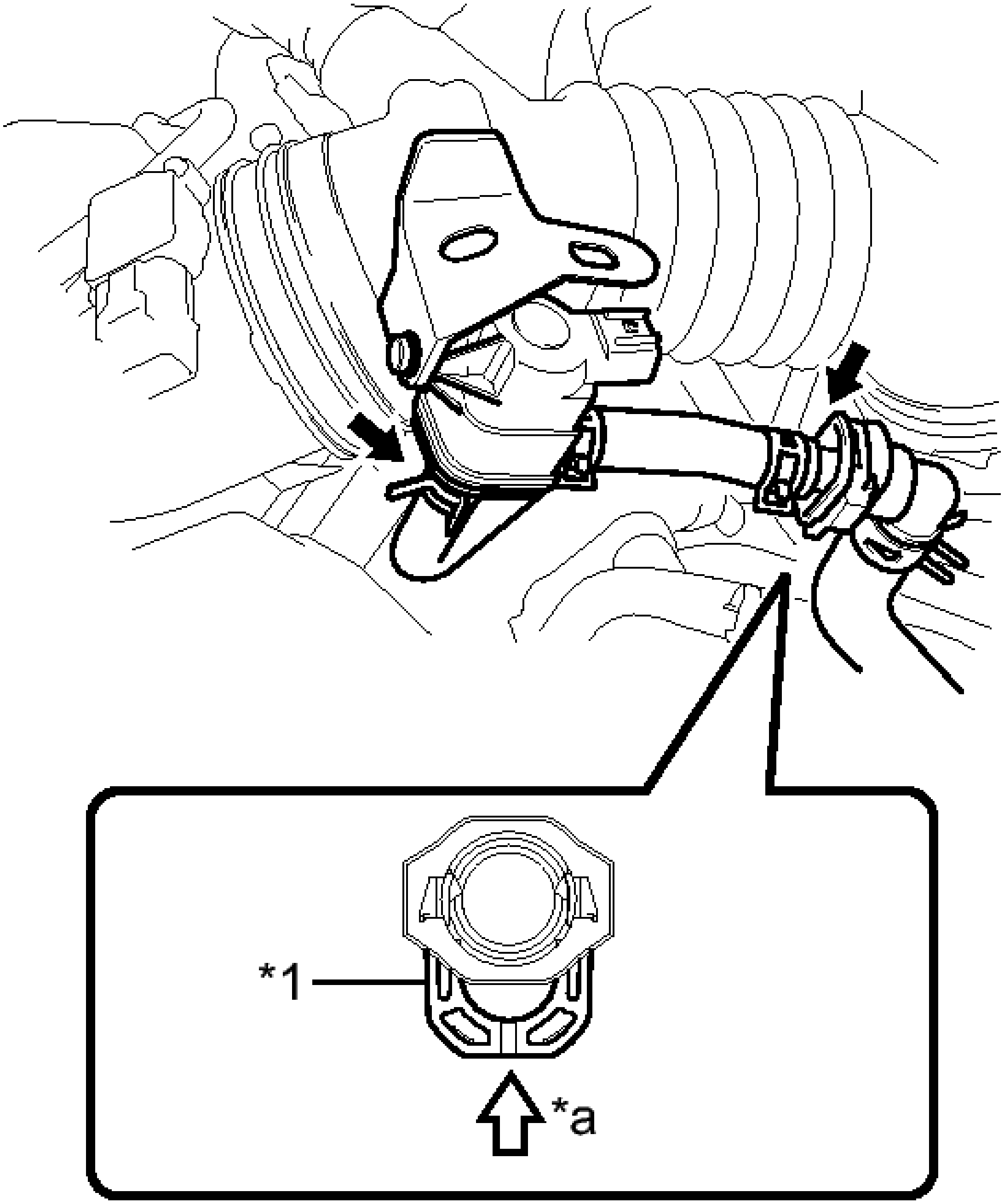

Fig. 43: Connecting Fuel Vapor Feed Hoses
Courtesy of TOYOTA MOTOR SALES, U.S.A., INC.

TEXT IN ILLUSTRATION

*1	Retainer

*a	Push

NOTE:

- **Check that there are no scratches or foreign matter around the connected part of the fuel tube connector and pipe before performing this work.**
- **Connect the quick connector and push the retainer in until the retainer makes a "click" sound to lock the claws of the retainer.**
- **After connecting the fuel vapor feed hose to the fuel tube connector, check that the fuel vapor feed hose is securely connected by pulling on the fuel tube connector and the fuel vapor feed hose.**

d. Connect the wire harness clamp and connector.

FUEL TANK CAP

INSPECTION

INSPECTION

1. **INSPECT FUEL TANK CAP ASSEMBLY**
   a. Visually check that the cap and gasket are not deformed or damaged.

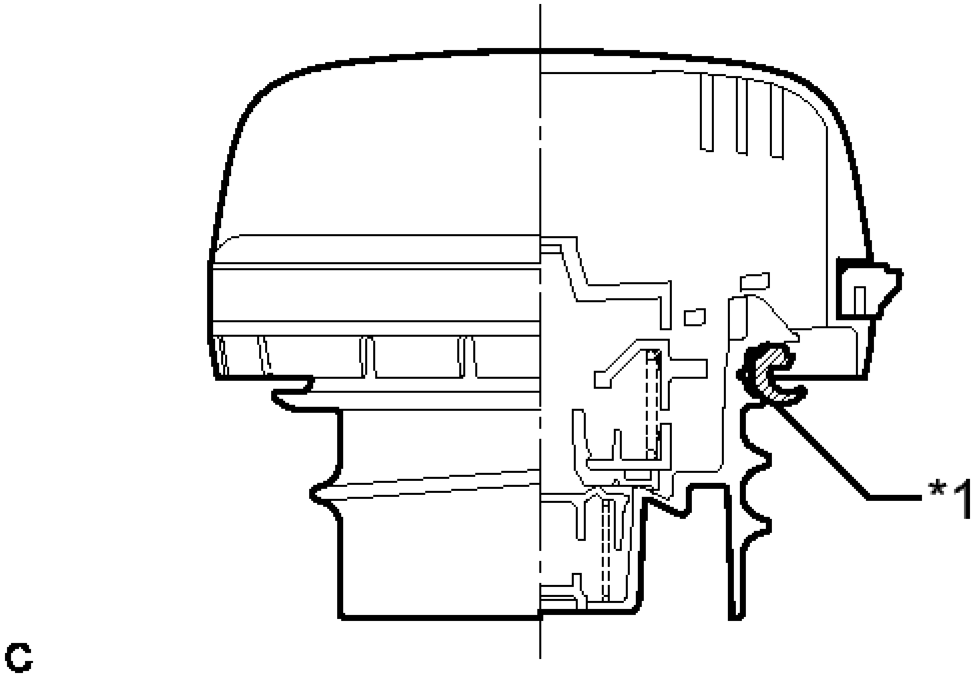

Fig. 44: Identifying Fuel Tank Cap Gasket
Courtesy of TOYOTA MOTOR SALES, U.S.A., INC.

TEXT IN ILLUSTRATION

*1	Gasket

If the result is not as specified, replace the fuel tank cap assembly.

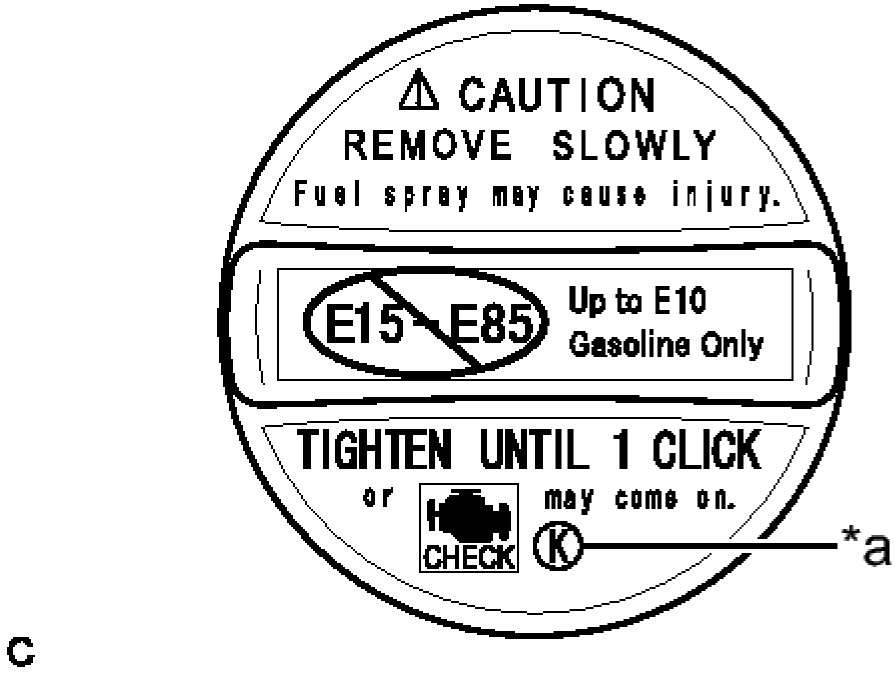
CAUTION
REMOVE SLOWLY
Fuel spray may cause injury.
E15 - E85
Up to E10
Gasoline Only
TIGHTEN UNTIL 1 CLICK
or
CHECK
may come on.
K
*a
C

Fig. 45: Identifying Fuel Tank Cap ID Mark
Courtesy of TOYOTA MOTOR SALES, U.S.A., INC.

TEXT IN ILLUSTRATION

*a	ID Mark

NOTE: **Confirm that ID mark K is printed on the replacement fuel tank cap.**

PCV VALVE

COMPONENTS

ILLUSTRATION

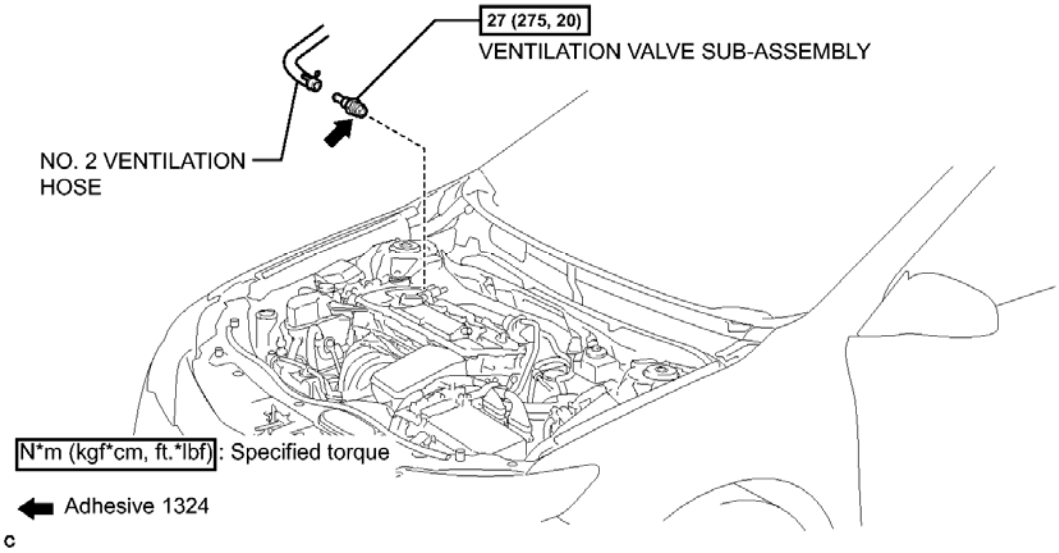
27 (275, 20)
VENTILATION VALVE SUB-ASSEMBLY
NO. 2 VENTILATION HOSE
N*m (kgf*cm, ft.*lbf): Specified torque
Adhesive 1324
C

Fig. 46: Identifying PCV Valve Replacement Components With Torque Specifications
Courtesy of TOYOTA MOTOR SALES, U.S.A., INC.

REMOVAL

REMOVAL

1. **REMOVE INTAKE MANIFOLD**

   Refer to **REMOVAL**

2. **REMOVE VENTILATION VALVE SUB-ASSEMBLY**
   a. Remove the No. 2 ventilation hose.

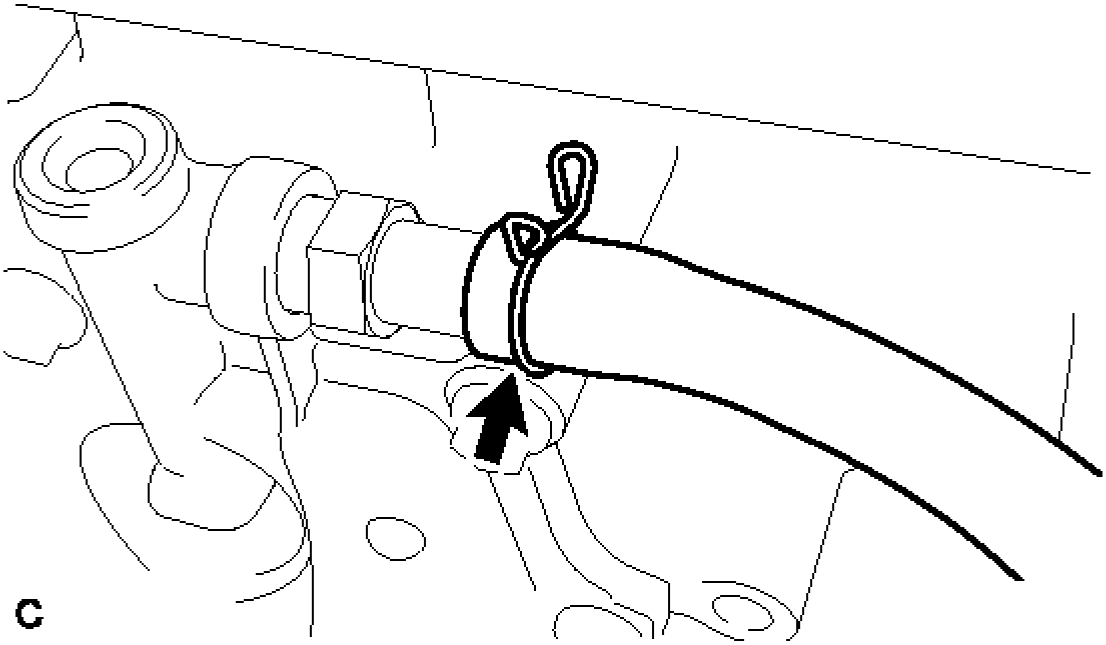

Fig. 47: Removing No. 2 Ventilation Hose
Courtesy of TOYOTA MOTOR SALES, U.S.A., INC.

b. Using a 19 mm deep socket wrench, remove the ventilation valve sub-assembly.

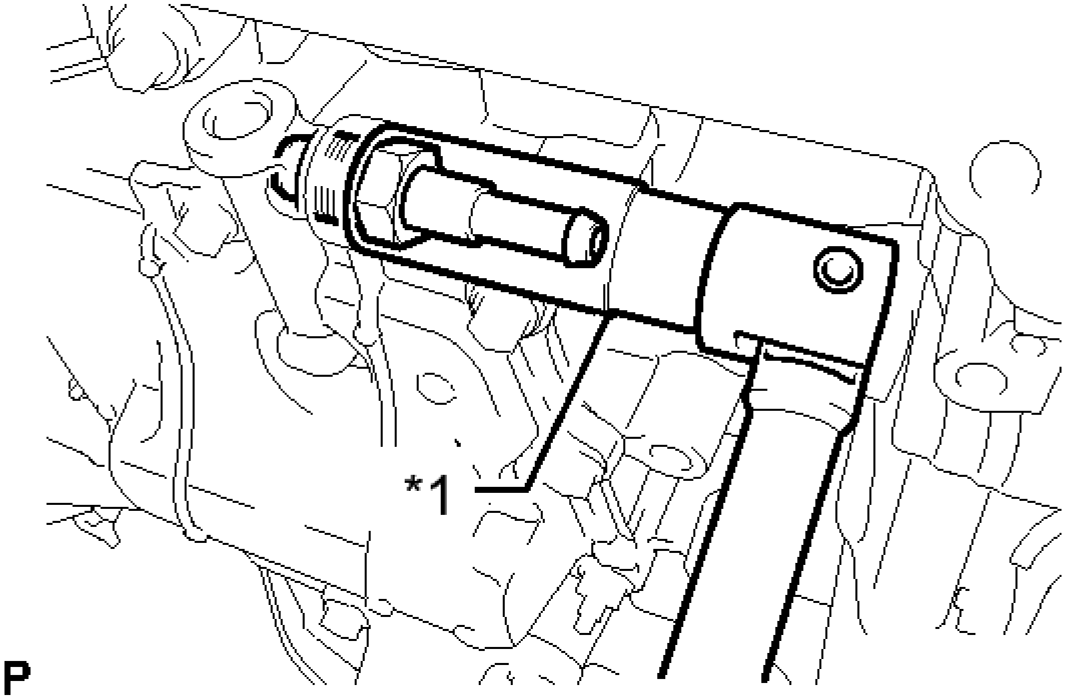

Fig. 48: Identifying Ventilation Valve
Courtesy of TOYOTA MOTOR SALES, U.S.A., INC.

TEXT IN ILLUSTRATION

*1	19 mm Deep Socket Wrench

INSPECTION

INSPECTION

1. **INSPECT VENTILATION VALVE SUB-ASSEMBLY**
   a. Install a clean hose to the ventilation valve sub-assembly.
   b. Check ventilation valve sub-assembly operation.
      1. Blow air into the cylinder block side, and check that air passes through easily.

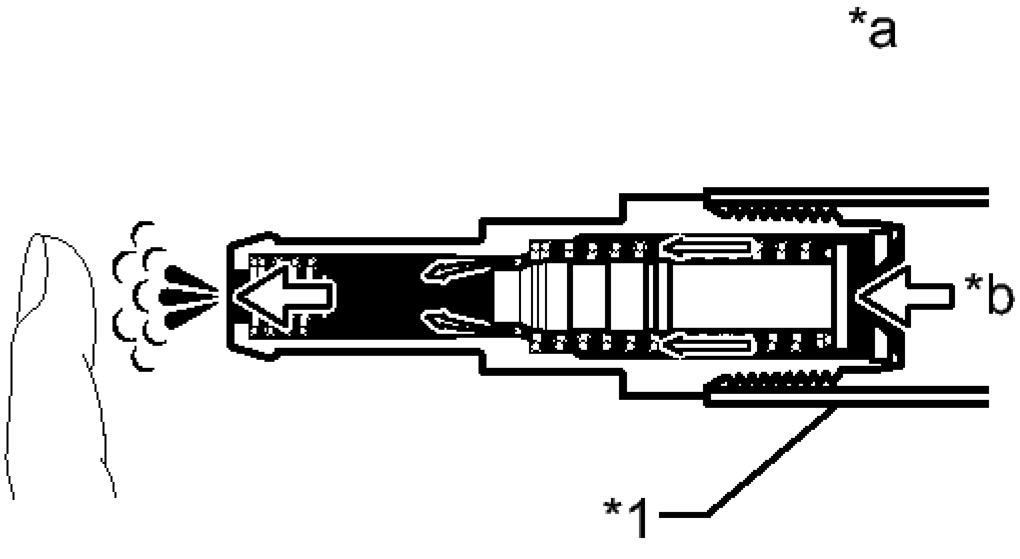

Fig. 49: Inspecting Ventilation Valve Sub-Assembly
Courtesy of TOYOTA MOTOR SALES, U.S.A., INC.

TEXT IN ILLUSTRATION

*1	Clean Hose
*a	Cylinder Block Side
*b	Air

WARNING: **Do not suck air through the valve.**

Petroleum substances inside the valve are hazardous to your health.

If the result is not as specified, replace the ventilation valve sub-assembly.

2. Blow air into the intake manifold side, and check that air passes through with difficulty.

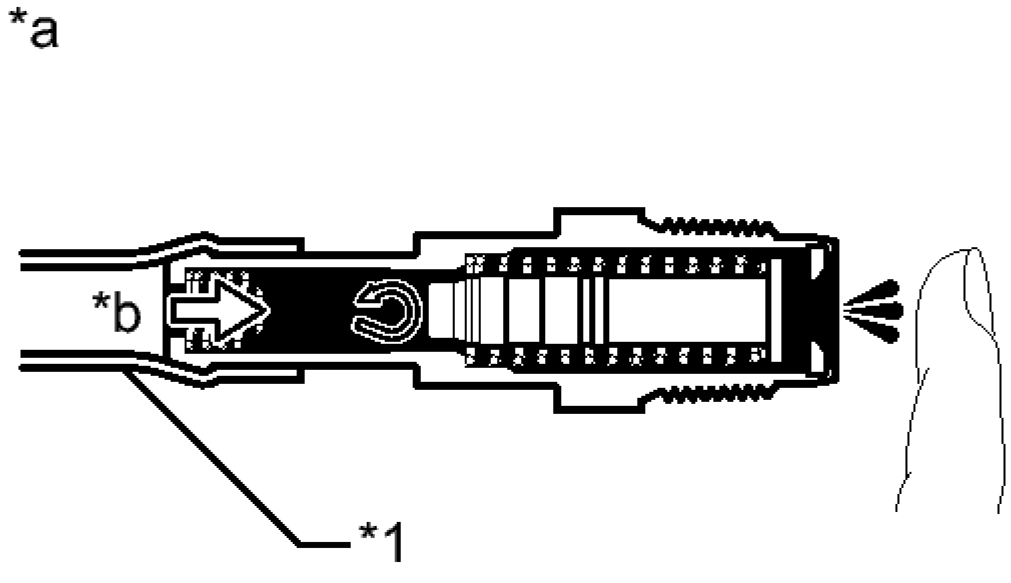

Fig. 50: Inspecting Ventilation Valve Sub-Assembly
Courtesy of TOYOTA MOTOR SALES, U.S.A., INC.

TEXT IN ILLUSTRATION

*1	Clean Hose
*a	Intake Manifold Side
*b	Air

WARNING: **Do not suck air through the valve.**

Petroleum substances inside the valve are hazardous to your health.

If the result is not as specified, replace the ventilation valve sub-assembly.

c. Remove the clean hose from the ventilation valve sub-assembly.

INSTALLATION

INSTALLATION

1. **INSTALL VENTILATION VALVE SUB-ASSEMBLY**
    a. Apply adhesive to 2 or 3 threads of the ventilation valve sub-assembly.

    Adhesive

    Toyota genuine adhesive 1324, three bond 1324 or equivalent

    b. Using a 19 mm deep socket wrench, install the ventilation valve sub-assembly.

    Torque: 27 N*m (275 kgf*cm, 20 ft.*lbf)

    c. Install the No. 2 ventilation hose.
2. **INSTALL INTAKE MANIFOLD**

    Refer to **INSTALLATION**

CAMSHAFT OIL CONTROL VALVE

COMPONENTS

ILLUSTRATION

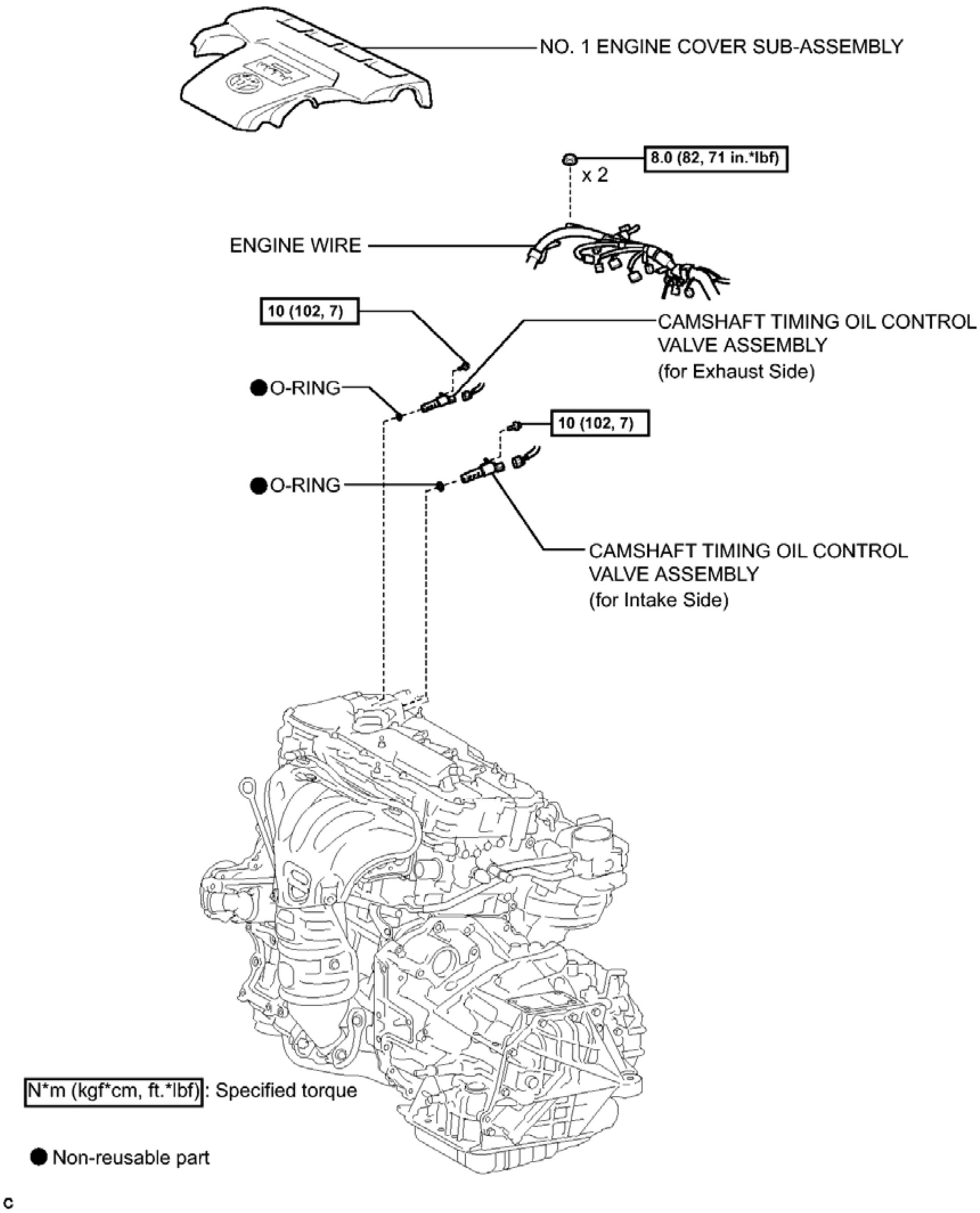
NO. 1 ENGINE COVER SUB-ASSEMBLY
8.0 (82, 71 in.*lbf)
x 2
ENGINE WIRE
10 (102, 7)
CAMSHAFT TIMING OIL CONTROL VALVE ASSEMBLY (for Exhaust Side)
● O-RING
10 (102, 7)
● O-RING
CAMSHAFT TIMING OIL CONTROL VALVE ASSEMBLY (for Intake Side)
N*m (kgf*cm, ft.*lbf): Specified torque
● Non-reusable part
c

Fig. 1: Identifying Camshaft Oil Control Valve Replacement Components With Torque Specifications
Courtesy of TOYOTA MOTOR SALES, U.S.A., INC.

ON-VEHICLE INSPECTION

ON-VEHICLE INSPECTION

1. **INSPECT CAMSHAFT TIMING OIL CONTROL VALVE ASSEMBLY**

a. Connect the Techstream to the DLC3.
b. Start the engine.
c. Turn the Techstream on.
d. Turn the A/C switch on.
e. Inspect the camshaft timing oil control valve assembly (for intake camshaft).
    1. Enter the following menus: Powertrain / Engine and ECT / Active Test / Control the VVT Linear (Bank 1).
    2. Check the engine speed while operating the camshaft timing oil control valve assembly (for intake camshaft) using the Techstream.

Standard Condition

Tester Operation	**Specified Condition**
0%	Normal engine speed
100%	Engine idles roughly or stalls

HINT:

If the result is not acceptable, cool the engine (engine coolant temperature is 50°C (122°F) or less) and perform the Active Test again.

f. Inspect the camshaft timing oil control valve assembly (for exhaust camshaft).
    1. Enter the following menus: Powertrain / Engine and ECT / Active Test / Control the VVT Exhaust Linear (Bank 1).
    2. Check the engine speed while operating the camshaft timing oil control valve assembly (for exhaust camshaft) using the Techstream.

Standard Condition

Tester Operation	**Specified Condition**
0%	Normal engine speed
100%	Engine idles roughly or stalls

HINT:

If the result is not acceptable, cool the engine (engine coolant temperature is 50°C (122°F) or less) and perform the Active Test again.

REMOVAL

REMOVAL

1. **REMOVE NO. 1 ENGINE COVER SUB-ASSEMBLY** . Refer to **REMOVAL - Step 18**
2. **SEPARATE ENGINE WIRE**
    a. Remove the 2 nuts and separate the engine wire.

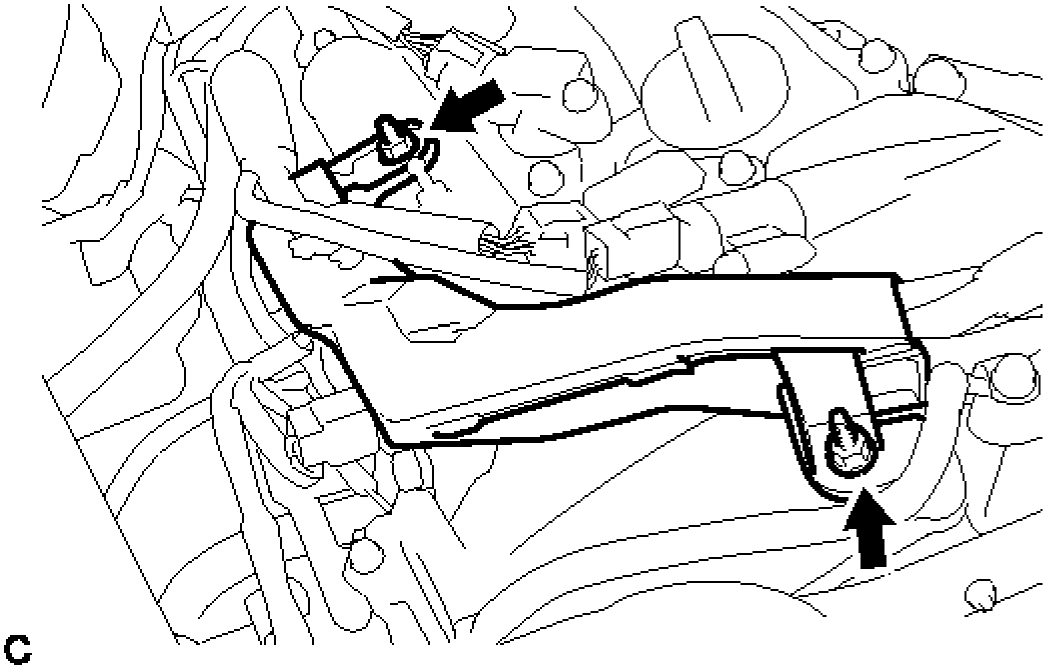

Fig. 2: Identifying Engine Cover Nuts
Courtesy of TOYOTA MOTOR SALES, U.S.A., INC.

3. **REMOVE CAMSHAFT TIMING OIL CONTROL VALVE ASSEMBLY**
    a. Camshaft timing oil control valve assembly (for exhaust side)
        1. Disconnect the oil control valve connector.

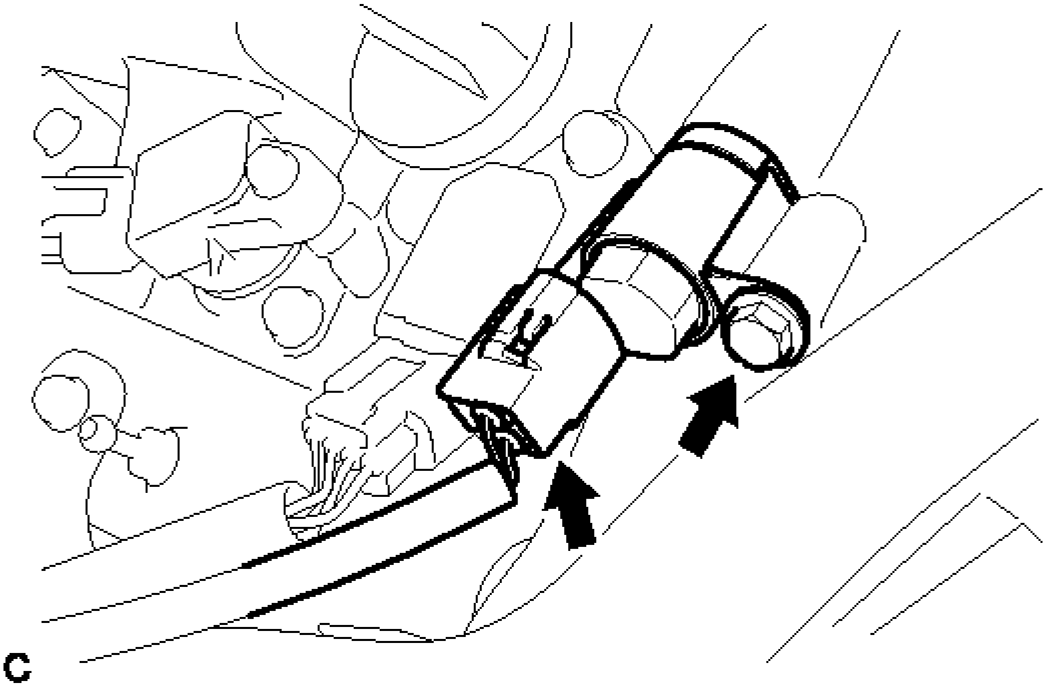

Fig. 3: Identifying Oil Control Valve Connector
Courtesy of TOYOTA MOTOR SALES, U.S.A., INC.

2. Remove the bolt and oil control valve.
3. Remove the O-ring from the oil control valve.

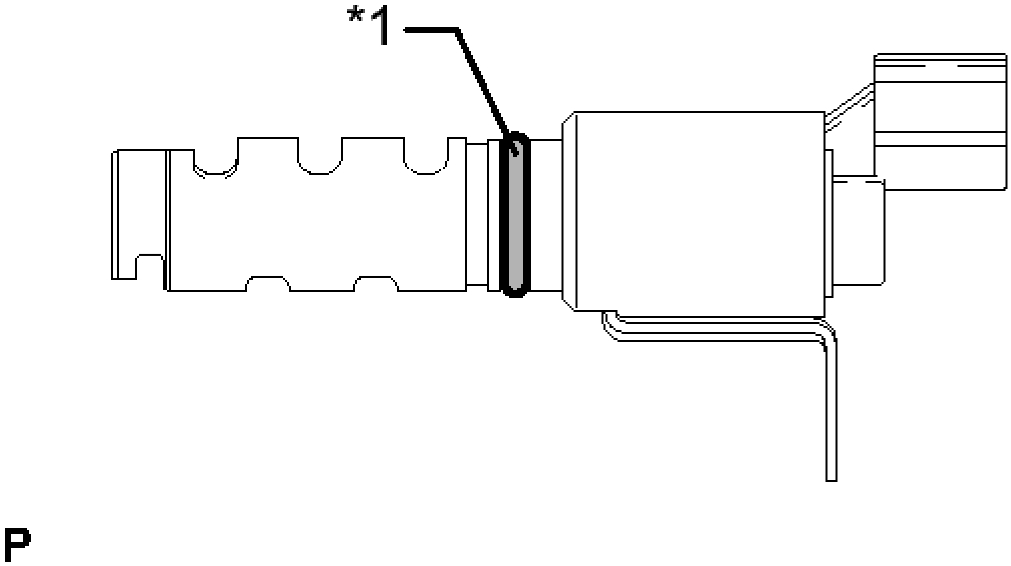

Fig. 4: Identifying O-Ring

Courtesy of TOYOTA MOTOR SALES, U.S.A., INC.

TEXT IN ILLUSTRATION

*1	O-ring

b. Camshaft timing oil control valve assembly (for intake side)
   1. Disconnect the oil control valve connector.

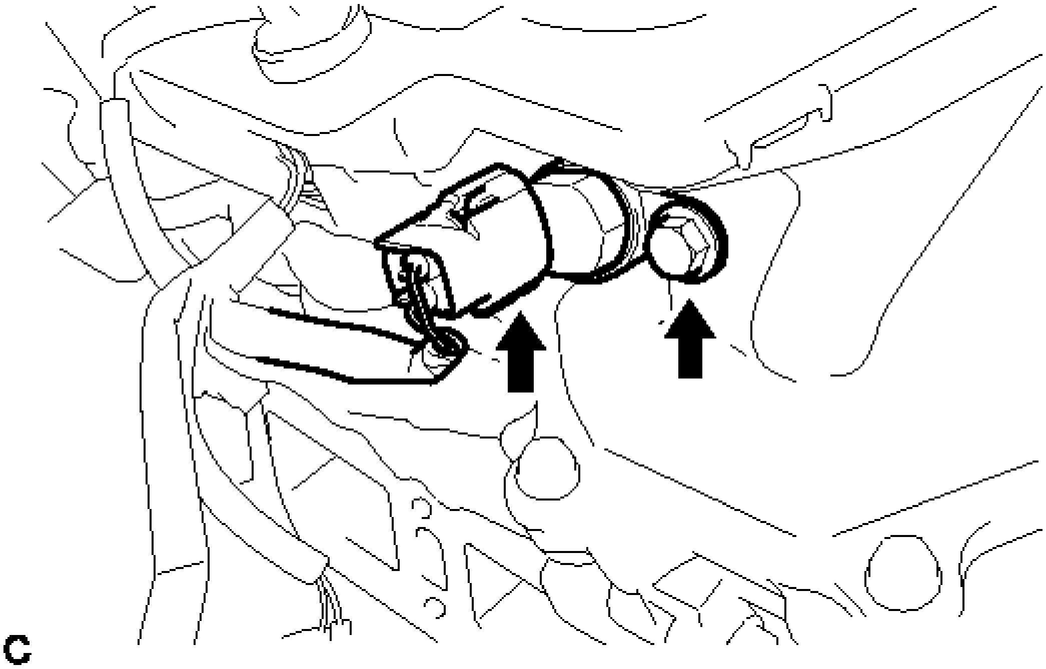

Fig. 5: Identifying Oil Control Valve Connector
Courtesy of TOYOTA MOTOR SALES, U.S.A., INC.

   2. Remove the bolt and oil control valve.
   3. Remove the O-ring from the oil control valve.

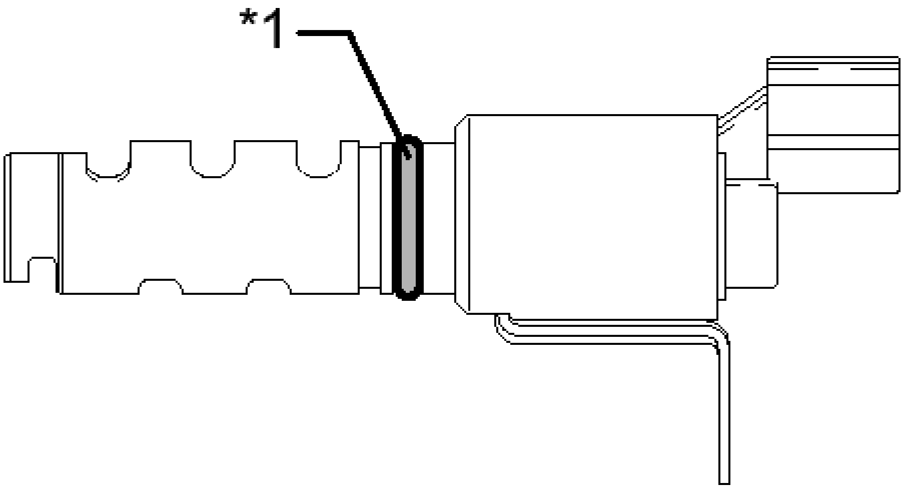

P

Fig. 6: Identifying O-Ring
Courtesy of TOYOTA MOTOR SALES, U.S.A., INC.

TEXT IN ILLUSTRATION

*1	O-ring

INSPECTION

INSPECTION

HINT:

Use the same procedure for the intake side and exhaust side.

1. **INSPECT CAMSHAFT TIMING OIL CONTROL VALVE ASSEMBLY**
    a. Measure the resistance according to the value(s) in the table below.

        Standard Resistance

Tester Connection	Condition	Specified Condition
1 - 2	20°C (68°F)	6.9 to 7.9 ohms

        If the result is not as specified, replace the oil control valve assembly.

b. Connect a positive (+) lead from the battery to terminal 1 and a negative (-) lead to terminal 2, and check the movement of the valve.

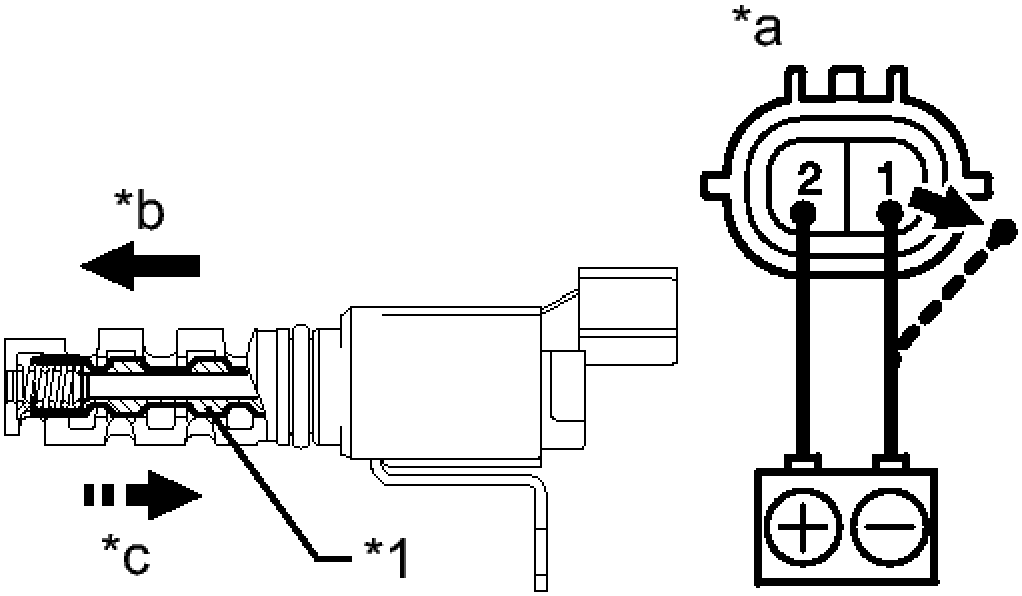

Fig. 7: Identifying Oil Control Valve Connector Terminals
Courtesy of TOYOTA MOTOR SALES, U.S.A., INC.

TEXT IN ILLUSTRATION

*1	Valve
*a	Component without harness connected (Camshaft Timing Oil Control Valve)
*b	When applied
*c	When cut off

OK

Condition	Specified Condition
Battery	Valve

positive (+) voltage is applied	moves in left arrow direction shown in illustration
Battery positive (+) voltage is cut off	Valve moves in right arrow direction shown in illustration

NOTE: **Confirm that the valve moves freely and does not stick in any position.**

If necessary, replace the camshaft timing oil control valve assembly.

HINT:

Accumulation of foreign matter can cause minor pressure leaks. Minor pressure leaks will cause the camshaft to advance or retard, and this will cause a DTC to be set.

INSTALLATION

INSTALLATION

1. **INSTALL CAMSHAFT TIMING OIL CONTROL VALVE ASSEMBLY**
    a. Camshaft timing oil control valve assembly (for exhaust side)
        1. Apply a light coat of engine oil to a new O-ring, and install it to the oil control valve.

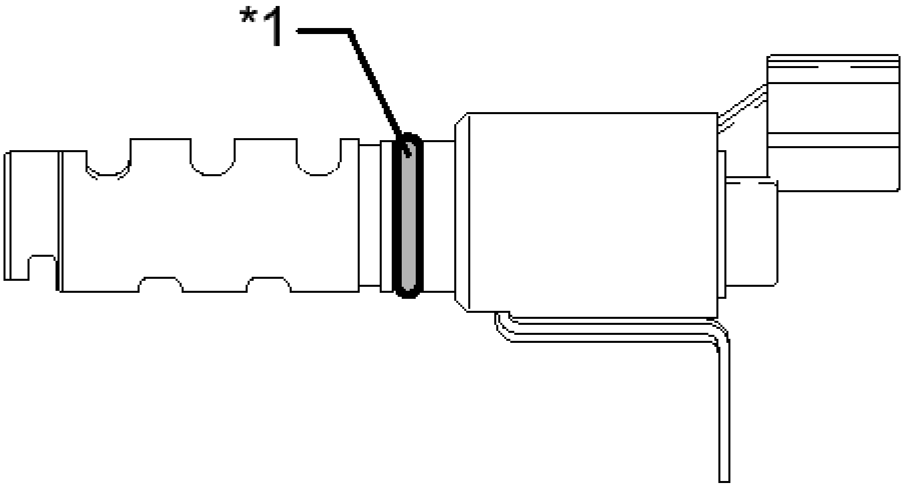

Fig. 8: Identifying O-Ring
Courtesy of TOYOTA MOTOR SALES, U.S.A., INC.

TEXT IN ILLUSTRATION

*1	New O-ring

2. Install the oil control valve with the bolt.

   Torque: 10 N*m (102 kgf*cm, 7 ft.*lbf)

   NOTE:

   - **Do not allow foreign matter to contact the oil seal face of the oil control valve (connecting surface with the cylinder head cover).**
   - **Be careful that the O-ring is not cracked or moved out of place when installing the oil control valve.**

3. Connect the oil control valve connector.

b. Camshaft timing oil control valve assembly (for intake side)

1. Apply a light coat of engine oil to a new O-ring, and install it to the oil control valve.

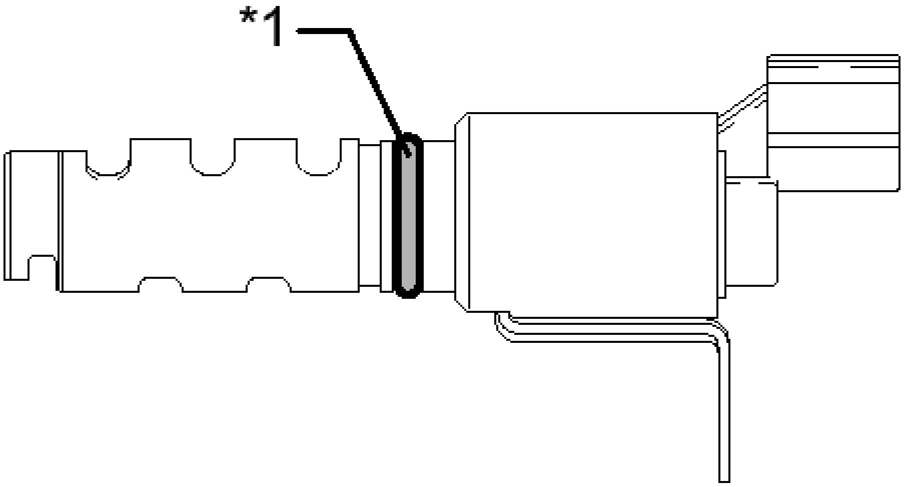

Fig. 9: Identifying O-Ring
Courtesy of TOYOTA MOTOR SALES, U.S.A., INC.

TEXT IN ILLUSTRATION

*1	New O-ring

2. Install the oil control valve with the bolt.

   Torque: 10 N*m (102 kgf*cm, 7 ft.*lbf)

   NOTE:

   - **Do not allow foreign matter to contact the oil seal face of the oil control valve (connecting surface with cylinder head cover).**
   - **Be careful that the O-ring is not cracked or moved out of place when installing the oil control valve.**

3. Connect the oil control valve connector.

2. **INSTALL ENGINE WIRE**
   a. Install the engine wire with the 2 nuts.

   Torque: 8.0 N*m (82 kgf*cm, 71 in.*lbf)

3. **INSPECT FOR OIL LEAK**

4. **INSTALL NO. 1 ENGINE COVER SUB-ASSEMBLY** . Refer to **INSTALLATION - Step 68**

THROTTLE BODY

COMPONENTS

ILLUSTRATION

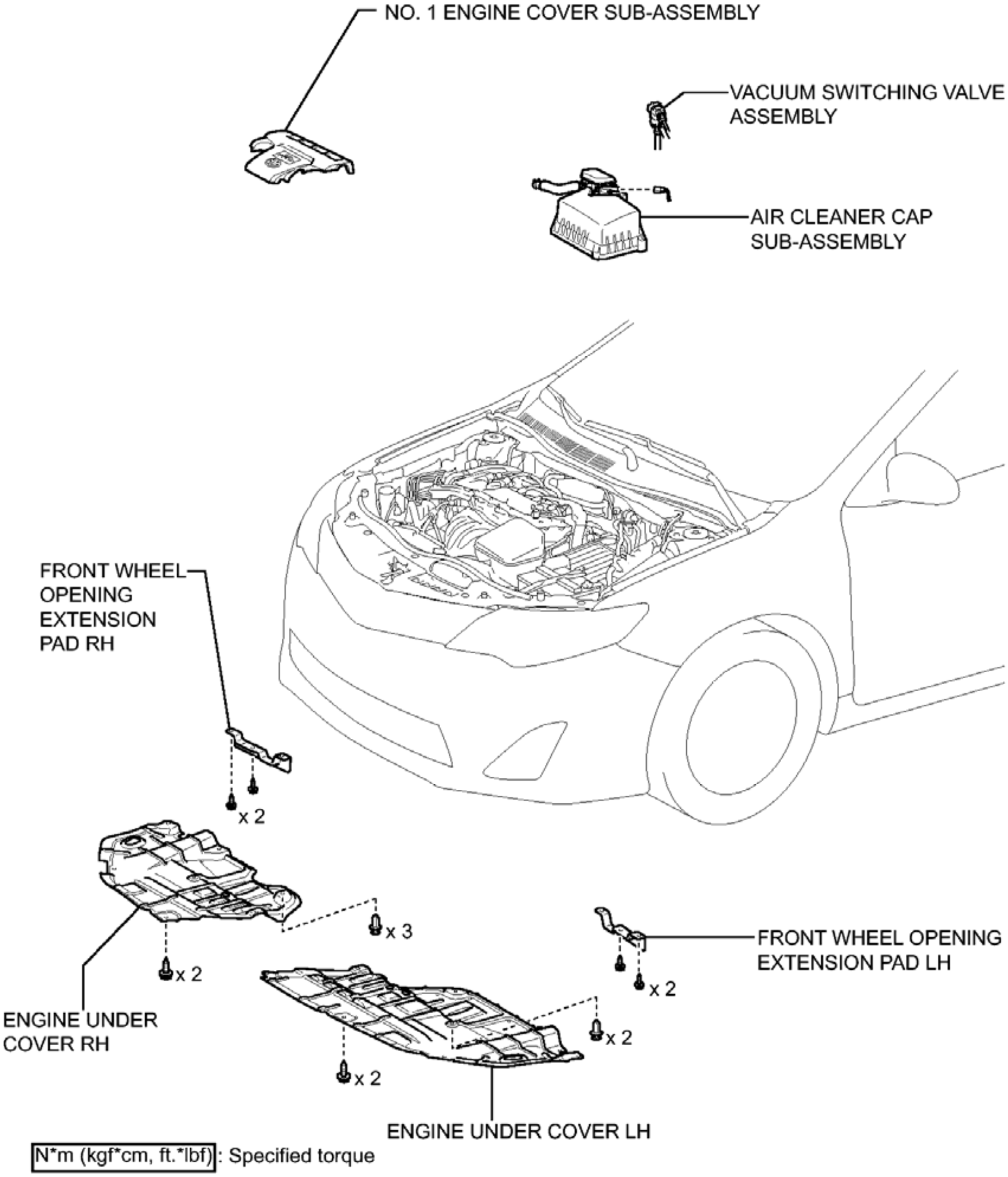
NO. 1 ENGINE COVER SUB-ASSEMBLY
VACUUM SWITCHING VALVE ASSEMBLY
AIR CLEANER CAP SUB-ASSEMBLY
FRONT WHEEL OPENING EXTENSION PAD RH
x 2
x 3
x 2
ENGINE UNDER COVER RH
FRONT WHEEL OPENING EXTENSION PAD LH
x 2
x 2
x 2
ENGINE UNDER COVER LH
N*m (kgf*cm, ft.*lbf) : Specified torque

c

Fig. 10: Identifying Intake Manifold Replacement Components With Torque Specifications (1 of 2)
Courtesy of TOYOTA MOTOR SALES, U.S.A., INC.

ILLUSTRATION

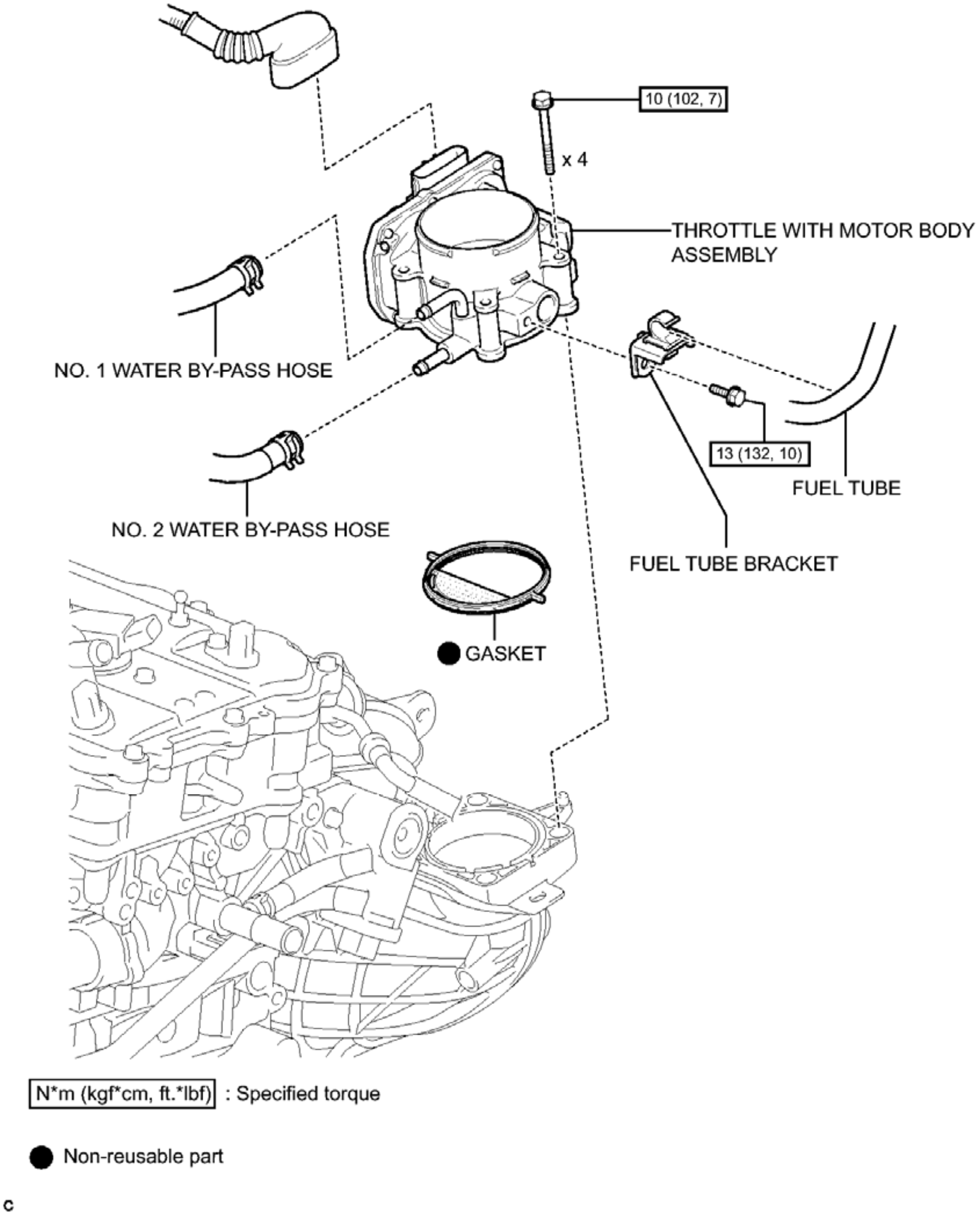
10 (102, 7)
x 4
THROTTLE WITH MOTOR BODY ASSEMBLY
NO. 1 WATER BY-PASS HOSE
13 (132, 10)
FUEL TUBE
NO. 2 WATER BY-PASS HOSE
FUEL TUBE BRACKET
● GASKET
N*m (kgf*cm, ft.*lbf) : Specified torque
● Non-reusable part
c

Fig. 11: Identifying Engine Unit Replacement Components With Torque Specifications (1 Of 11)
Courtesy of TOYOTA MOTOR SALES, U.S.A., INC.

ON-VEHICLE INSPECTION

ON-VEHICLE INSPECTION

1. **CHECK THROTTLE WITH MOTOR BODY ASSEMBLY**
    1. Check the throttle control motor operating sound.
        1. Turn the ignition switch to ON.
        2. When depressing the accelerator pedal, check the operating sound of the running motor. Make sure that no friction noises are emitted from the motor.

           If friction noises exist, replace the throttle with motor body assembly.
    2. Check the throttle position sensor.
        1. Connect the Techstream to the DLC3.
        2. Turn the ignition switch to ON.
        3. Turn the Techstream on.
        4. Perform the "Inspection After Repair" . Refer to **INITIALIZATION** .
        5. Enter the following menus: Powertrain / Engine and ECT / Data List / Gas Throttle / Throttle Sensor Position.
        6. Depress the accelerator pedal. When the throttle valve is fully opened, check that the value of "Throttle Sensor Position" is within the specification.

           Standard throttle valve opening percentage

           60% or more

           NOTE: **When checking the standard throttle valve opening percentage, make sure that the shift lever is in N.**

           If the percentage is less than 60%, replace the throttle with motor body assembly.

REMOVAL

REMOVAL

1. **REMOVE FRONT WHEEL OPENING EXTENSION PAD RH**
2. **REMOVE FRONT WHEEL OPENING EXTENSION PAD LH**
3. **REMOVE ENGINE UNDER COVER LH**
4. **REMOVE ENGINE UNDER COVER RH**
5. **DRAIN ENGINE COOLANT** . Refer to **REPLACEMENT - Step 1**
6. **REMOVE NO. 1 ENGINE COVER SUB-ASSEMBLY** . Refer to **REMOVAL - Step 18**
7. **REMOVE AIR CLEANER CAP SUB-ASSEMBLY**
    1. Disconnect the vacuum switching valve assembly from the air cleaner hose.

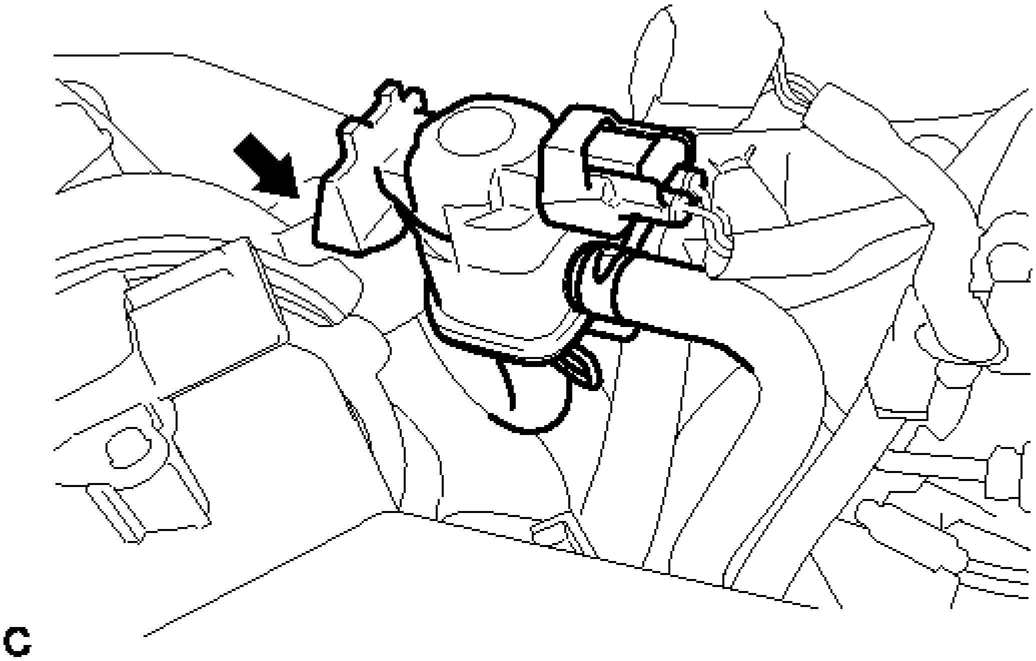

Fig. 12: Identifying Vacuum Switching Valve
Courtesy of TOYOTA MOTOR SALES, U.S.A., INC.

b. Disconnect the mass air flow meter connector and 2 wire harness clamps from the air cleaner cap sub-assembly.

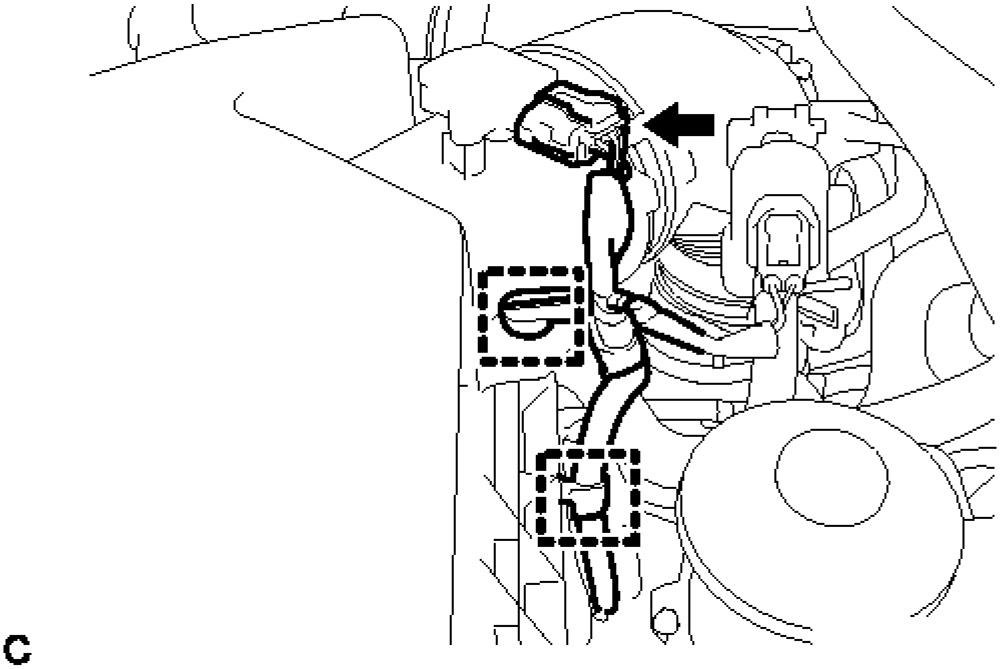

Fig. 13: Identifying Mass Air Flow Meter Connector

Courtesy of TOYOTA MOTOR SALES, U.S.A., INC.

c. Separate the fuel vapor feed hose from the air cleaner hose.

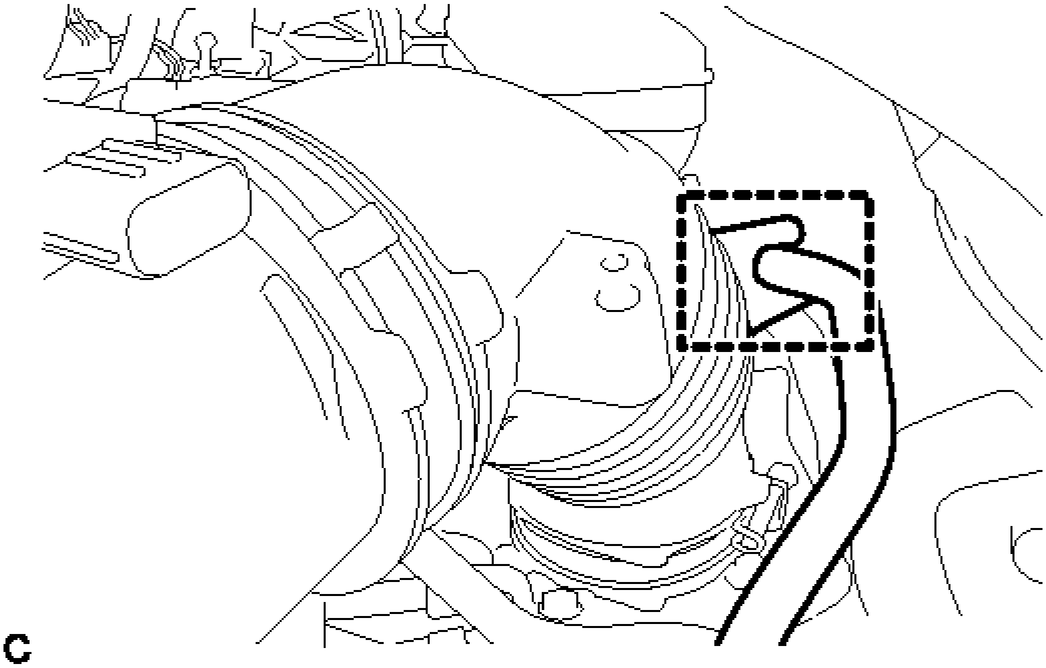

Fig. 14: Identifying Fuel Vapor Feed Hose
Courtesy of TOYOTA MOTOR SALES, U.S.A., INC.

d. Disconnect the ventilation hose from the cylinder head cover.

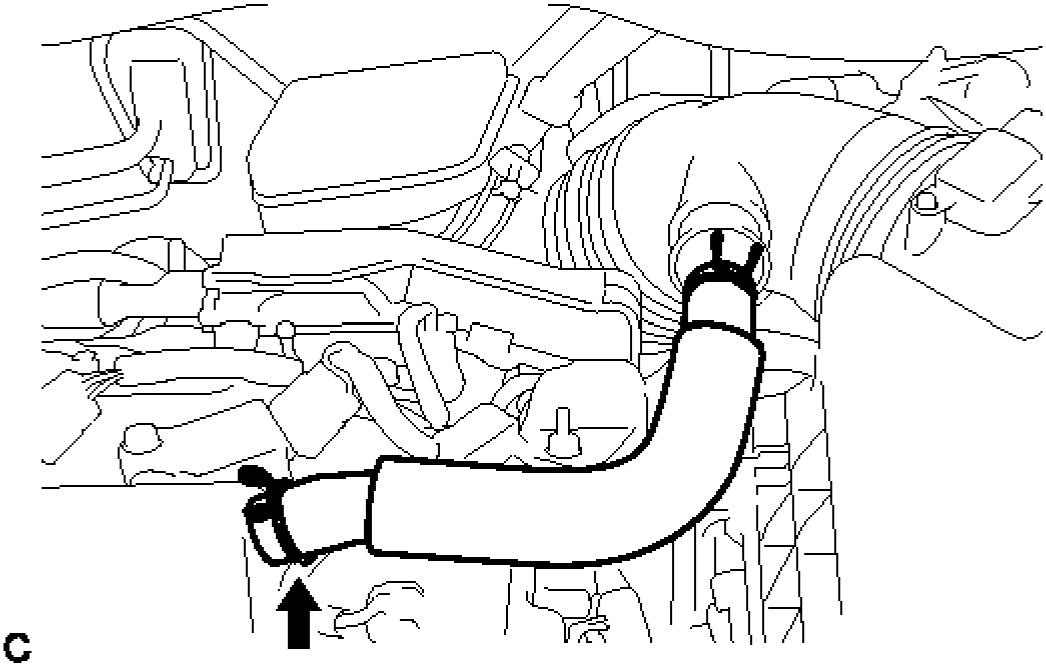

Fig. 15: Identifying Ventilation Hose
Courtesy of TOYOTA MOTOR SALES, U.S.A., INC.

e. Loosen the hose clamp and disconnect the air cleaner hose from the throttle with motor body assembly.

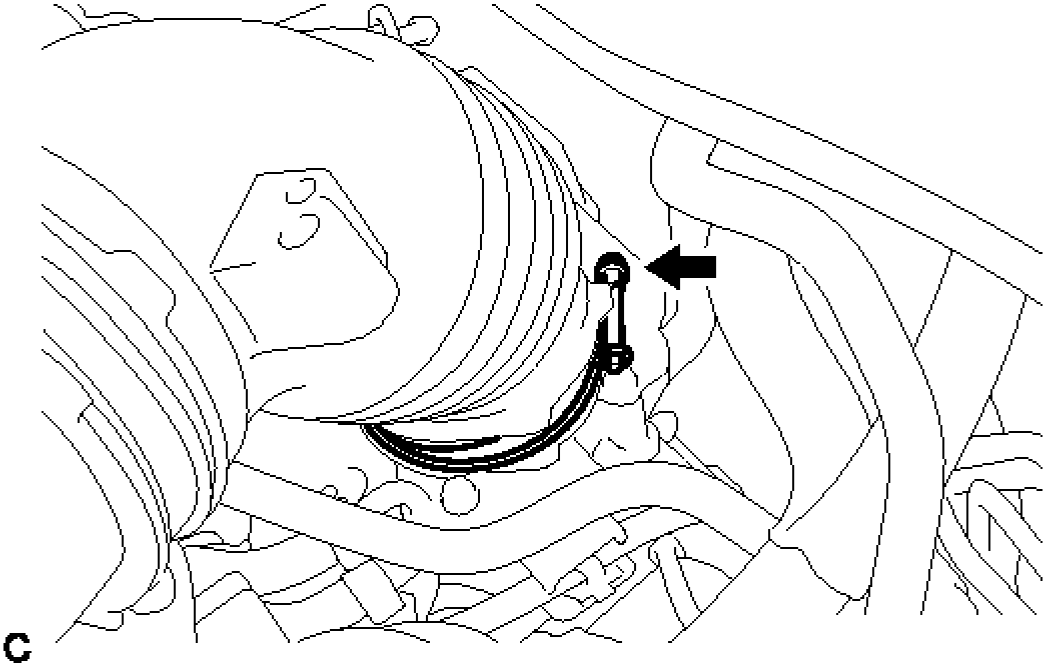

Fig. 16: Identifying Hose Clamp

Courtesy of TOYOTA MOTOR SALES, U.S.A., INC.

f. Release the 2 clamps and remove the air cleaner cap sub-assembly.

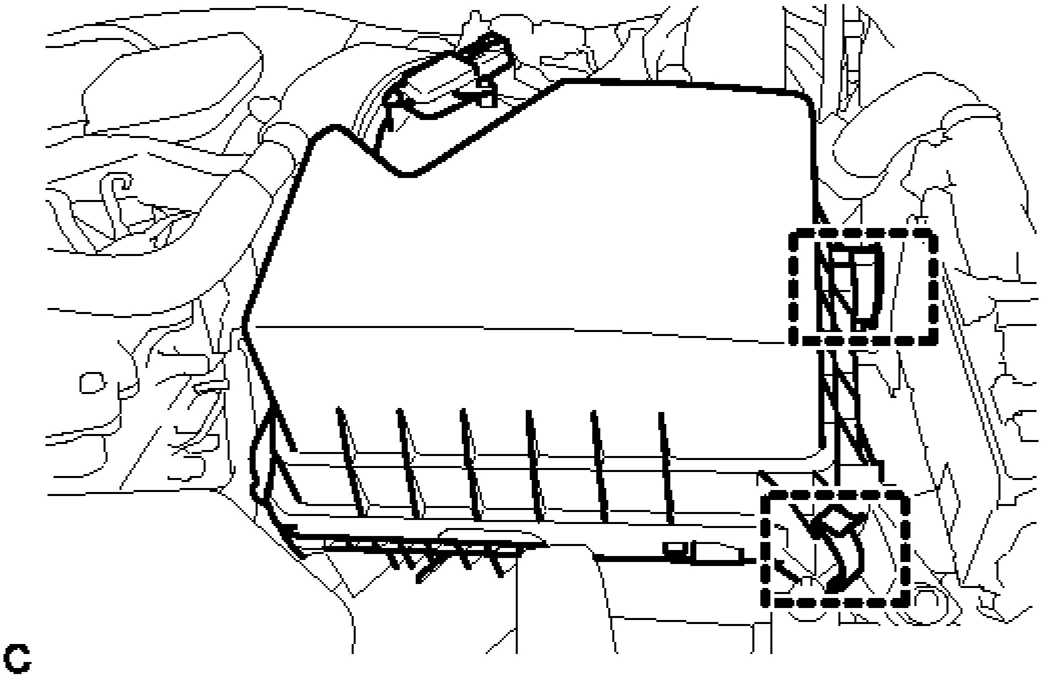

Fig. 17: Identifying Air Cleaner Sub-Assembly Clamps
Courtesy of TOYOTA MOTOR SALES, U.S.A., INC.

8. **REMOVE THROTTLE WITH MOTOR BODY ASSEMBLY**
   a. Disconnect the fuel tube from the clamp.

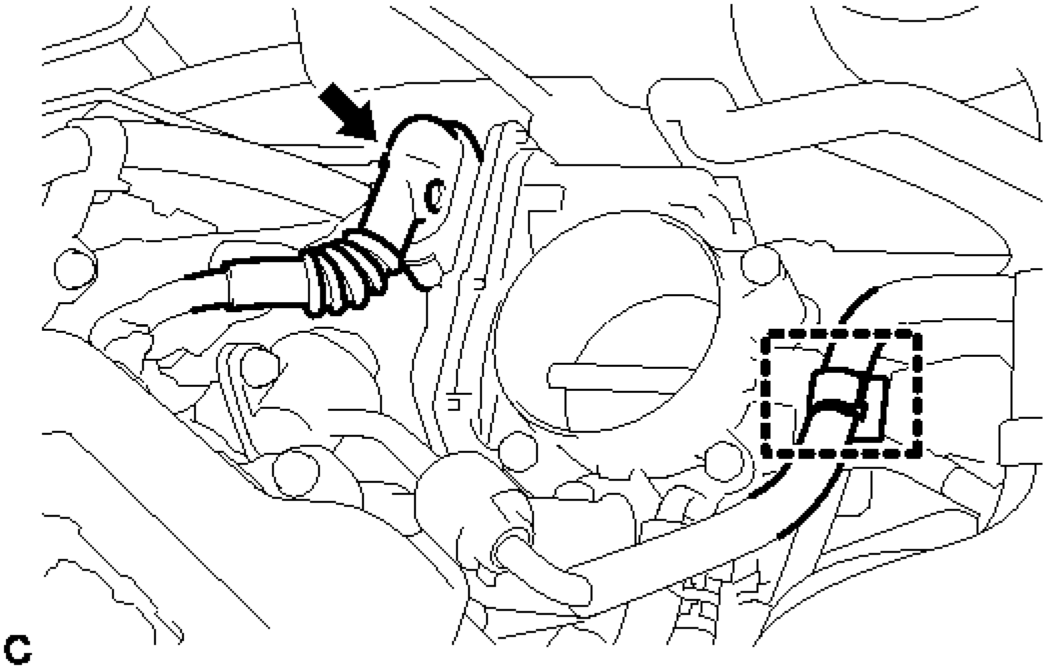

Fig. 18: Identifying Throttle Body Connector
Courtesy of TOYOTA MOTOR SALES, U.S.A., INC.

b. Disconnect the throttle body connector.
c. Disconnect the water by-pass hose from the throttle with motor body assembly.

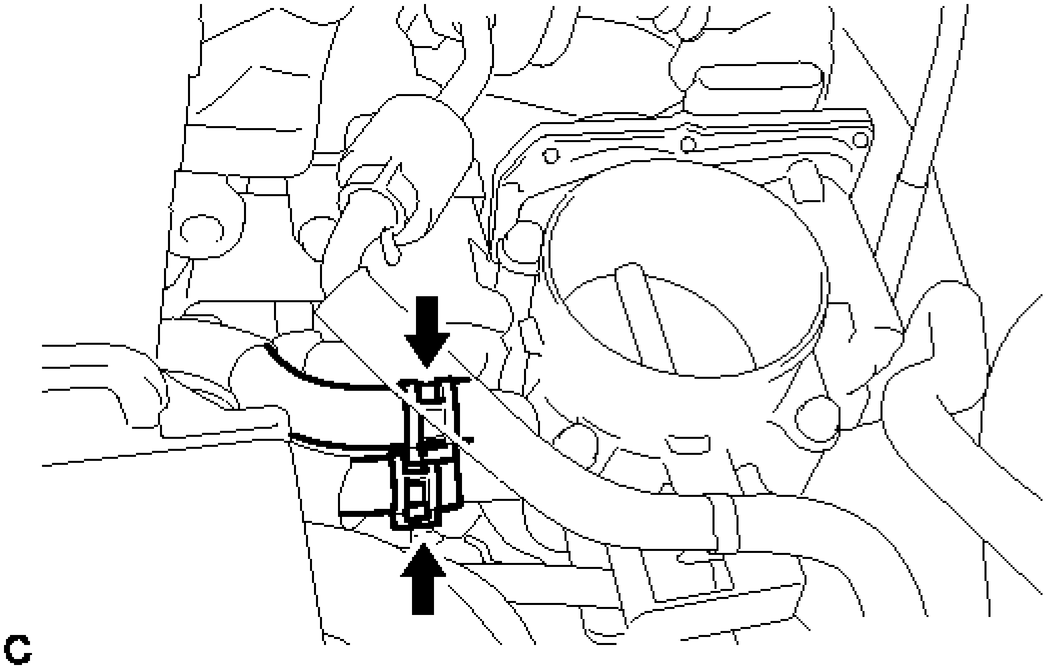

Fig. 19: Identifying Water By-pass Hoses

Courtesy of TOYOTA MOTOR SALES, U.S.A., INC.

d. Disconnect the No. 2 water by-pass hose from the throttle with motor body assembly.
e. Remove the 4 bolts and throttle with motor body assembly with fuel tube bracket.

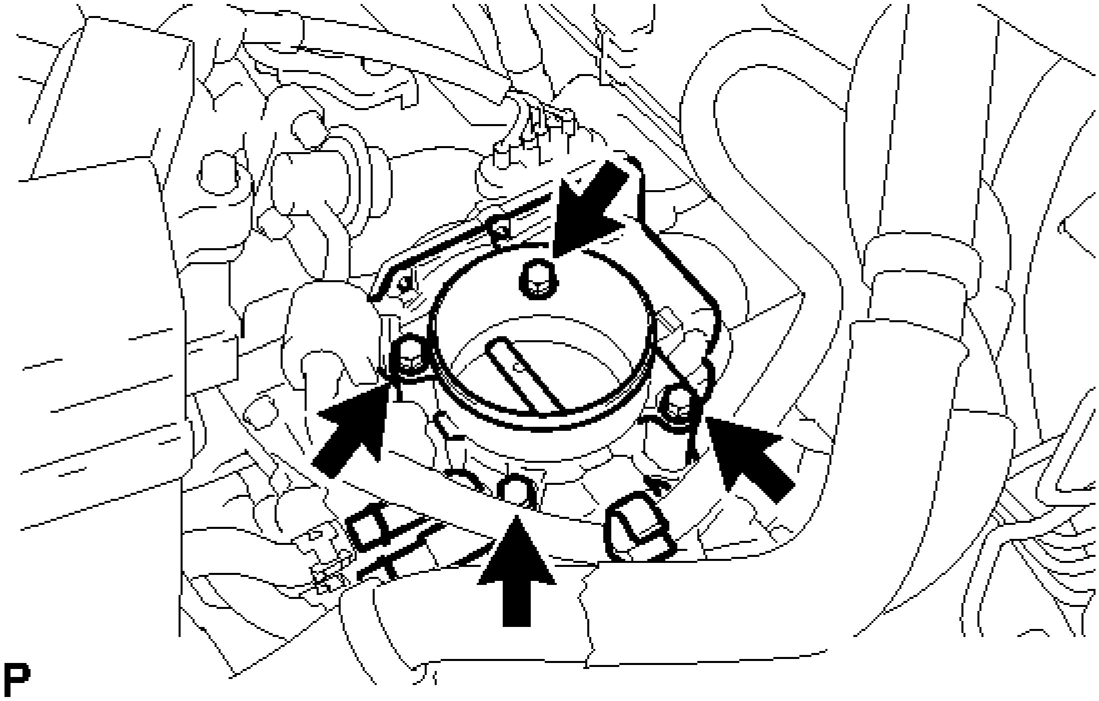

Fig. 20: Locating Bolts And Throttle Body
Courtesy of TOYOTA MOTOR SALES, U.S.A., INC.

f. Remove the bolt and fuel tube bracket.

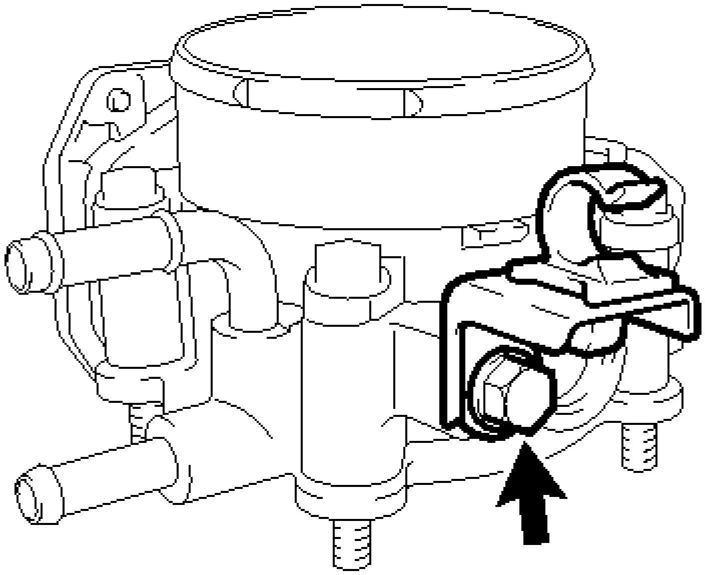

Fig. 21: Locating Bolt And Fuel Tube Bracket
Courtesy of TOYOTA MOTOR SALES, U.S.A., INC.

g. Remove the gasket from the intake manifold.

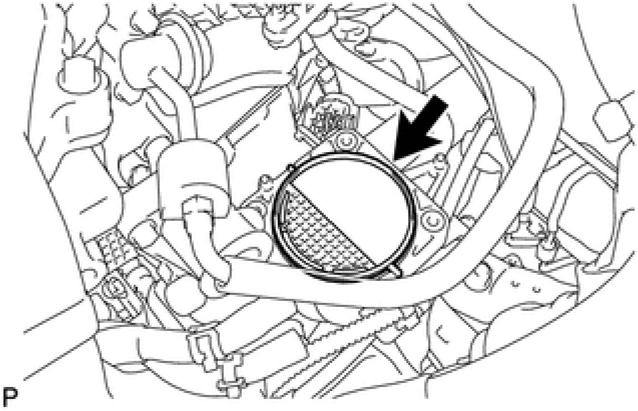

Fig. 22: Locating Gasket
Courtesy of TOYOTA MOTOR SALES, U.S.A., INC.

INSPECTION

INSPECTION

1. **INSPECT THROTTLE WITH MOTOR BODY ASSEMBLY**
   a. Check that the throttle valve opens and closes smoothly.
   b. Check that there is no sludge accumulated around the throttle with motor body assembly.

c. Measure the resistance according to the value(s) in the table below.

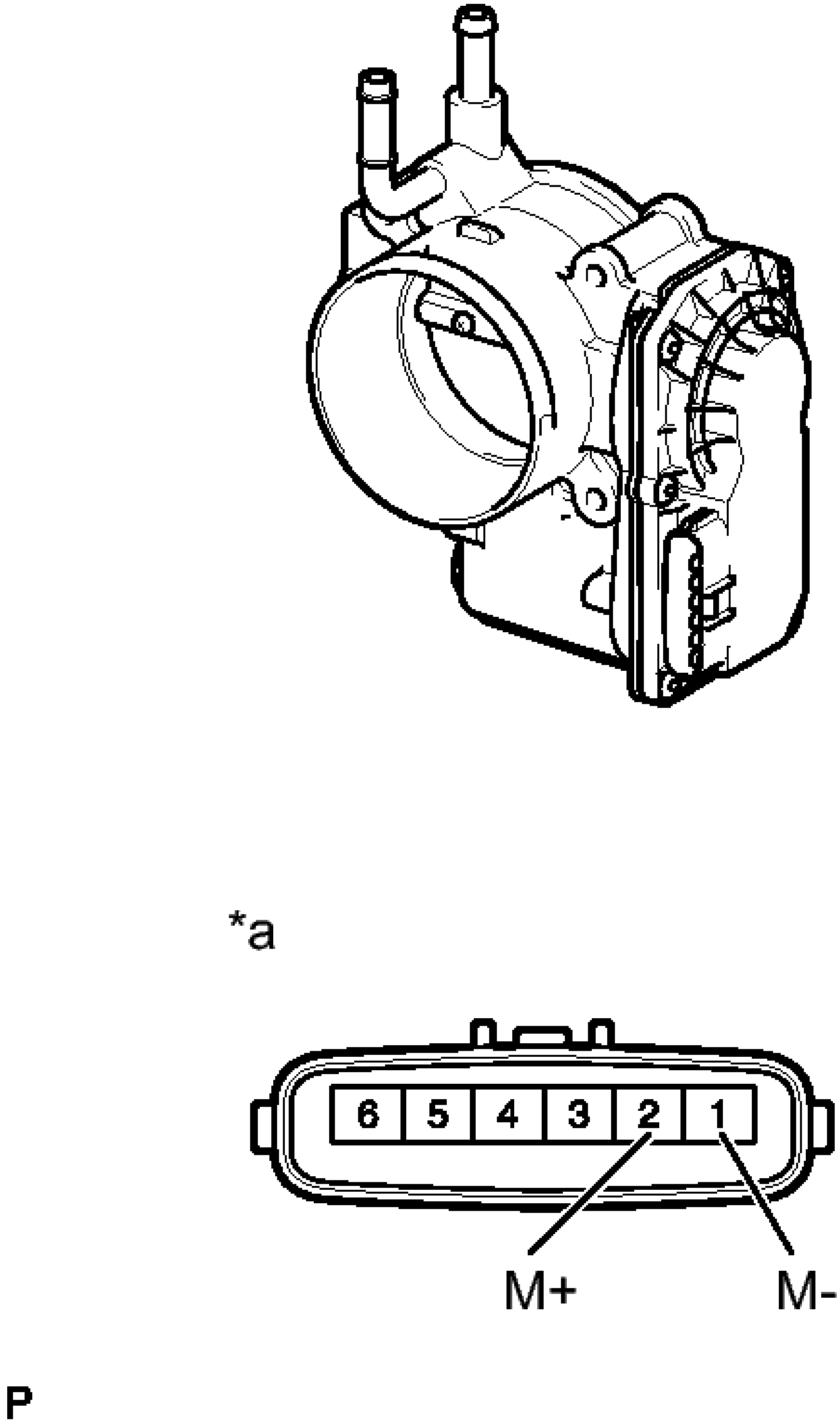

Fig. 23: Inspecting Throttle Body Assembly
Courtesy of TOYOTA MOTOR SALES, U.S.A., INC.

Standard Resistance

Tester Connection	Condition	Specified Condition
1 (M-) - 2 (M+)	20°C (68° F)	0.3 to 100 ohms

TEXT IN ILLUSTRATION

*a	Component without harness connected: (Throttle with Motor Body Assembly)

If the result is not as specified, replace the throttle with motor body assembly.

INSTALLATION

INSTALLATION

1. **INSTALL THROTTLE WITH MOTOR BODY ASSEMBLY**
    a. Install a new gasket to the intake manifold.
    b. Install the fuel tube bracket with the bolt.

    Torque: 13 N*m (132 kgf*cm, 10 ft.*lbf)

    c. Install the throttle with motor body assembly with the 4 bolts.

    Torque: 10 N*m (102 kgf*cm, 7 ft.*lbf)

    d. Connect the throttle body connector.
    e. Connect the fuel tube to the clamp.
    f. Connect the No. 2 water by-pass hose to the throttle with motor body assembly.
    g. Connect the water by-pass hose to the throttle with motor body assembly.
2. **INSTALL AIR CLEANER CAP SUB-ASSEMBLY**
    a. Install the air cleaner cap sub-assembly with the 2 clamps.
    b. Install the air cleaner hose with the hose clamp.
    c. Connect the ventilation hose to the cylinder head cover.
    d. Install the fuel vapor feed hose to the air cleaner hose.
    e. Connect the mass air flow meter connector and 2 wire harness clamps to the air cleaner cap sub-assembly.

f. Connect the vacuum switching valve assembly to the air cleaner hose.

3. **ADD ENGINE COOLANT** . Refer to **REPLACEMENT - Step 2**
4. **INSPECT FOR COOLANT LEAK** . Refer to **ON-VEHICLE INSPECTION - Step 1**
5. **INSTALL NO. 1 ENGINE COVER SUB-ASSEMBLY** . Refer to **INSTALLATION - Step 68**
6. **INSTALL ENGINE UNDER COVER RH**
7. **INSTALL ENGINE UNDER COVER LH**
8. **INSTALL FRONT WHEEL OPENING EXTENSION PAD RH**
9. **INSTALL FRONT WHEEL OPENING EXTENSION PAD LH**
10. **PERFORM INITIALIZATION**

NOTE:

- **Be sure to perform this procedure after reassembling the throttle with motor body assembly or removing and reinstalling any throttle body component.**
- **Perform the following procedure after replacing the throttle with motor body assembly or any throttle body components. The following procedure should also be performed if the throttle body is cleaned.**

a. Turn the ignition switch to ON without operating the accelerator pedal.

NOTE: **If the accelerator pedal is operated, perform the above step again.**

b. Connect the Techstream to the DLC3 and clear the DTCs . Refer to **DTC CHECK / CLEAR** .

c. Perform the "Inspection After Repair" . Refer to **INITIALIZATION** .

d. Start the engine and check that the MIL is not illuminated. After the engine is warmed up, check that the idle speed is within the specified range when the A/C is switched off.

Standard

Condition	Engine Idle Speed
A/C switched off	610 to 710 rpm

NOTE:

- **Be sure to perform this step with all accessories off.**
- **Make sure that the shift lever is in N.**

e. Enter the following menus: Powertrain / Engine and ECT / Data List / Gas Throttle / Throttle Sensor Position. Fully depress the accelerator pedal and check that the value is 60% or more.

f. Perform a road test and confirm that there are no abnormalities.

ECM

COMPONENTS

ILLUSTRATION

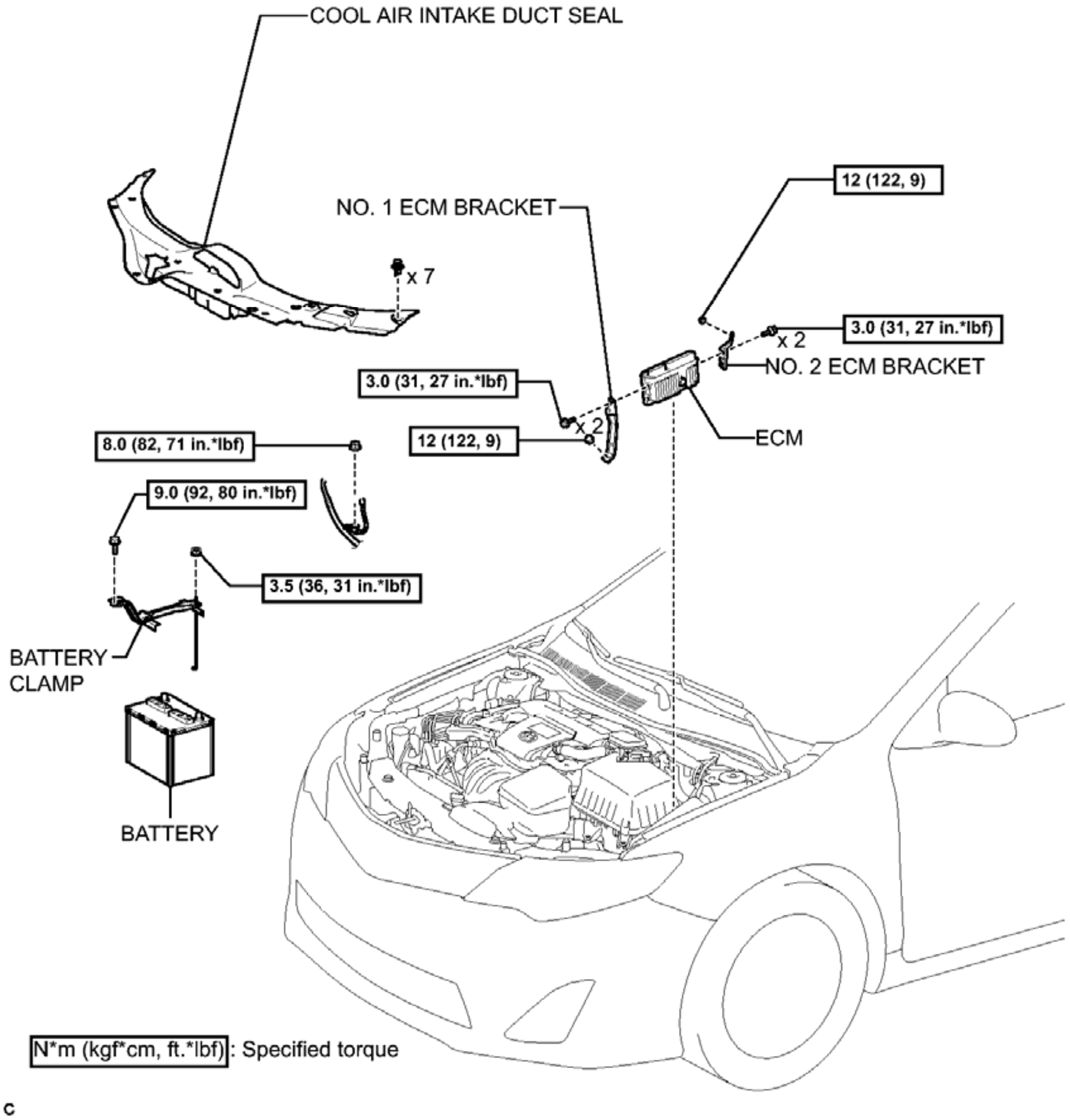
COOL AIR INTAKE DUCT SEAL
NO. 1 ECM BRACKET
x 7
12 (122, 9)
3.0 (31, 27 in.*lbf)
x 2
NO. 2 ECM BRACKET
3.0 (31, 27 in.*lbf)
x 2
12 (122, 9)
ECM
8.0 (82, 71 in.*lbf)
9.0 (92, 80 in.*lbf)
3.5 (36, 31 in.*lbf)
BATTERY CLAMP
BATTERY
N*m (kgf*cm, ft.*lbf): Specified torque
c

Fig. 24: Identifying ECM Replacement Components With Torque Specifications
Courtesy of TOYOTA MOTOR SALES, U.S.A., INC.

REMOVAL

REMOVAL

NOTE: **Perform the Vehicle Identification Number (VIN) registration when replacing the ECM . Refer to REGISTRATION .**

HINT:

When removing only the ECM, it is not necessary to remove the cool air intake duct seal and battery.

REMOVAL

1. **DISCONNECT CABLE FROM NEGATIVE BATTERY TERMINAL**

   NOTE: **When disconnecting the cable, some systems need to be initialized after the cable is reconnected . Refer to INITIALIZATION .**

2. **REMOVE COOL AIR INTAKE DUCT SEAL** . Refer to **REMOVAL - Step 1**
3. **REMOVE BATTERY** . Refer to **REMOVAL - Step 23**
4. **REMOVE ECM**
   a. Disconnect the 2 ECM connectors.

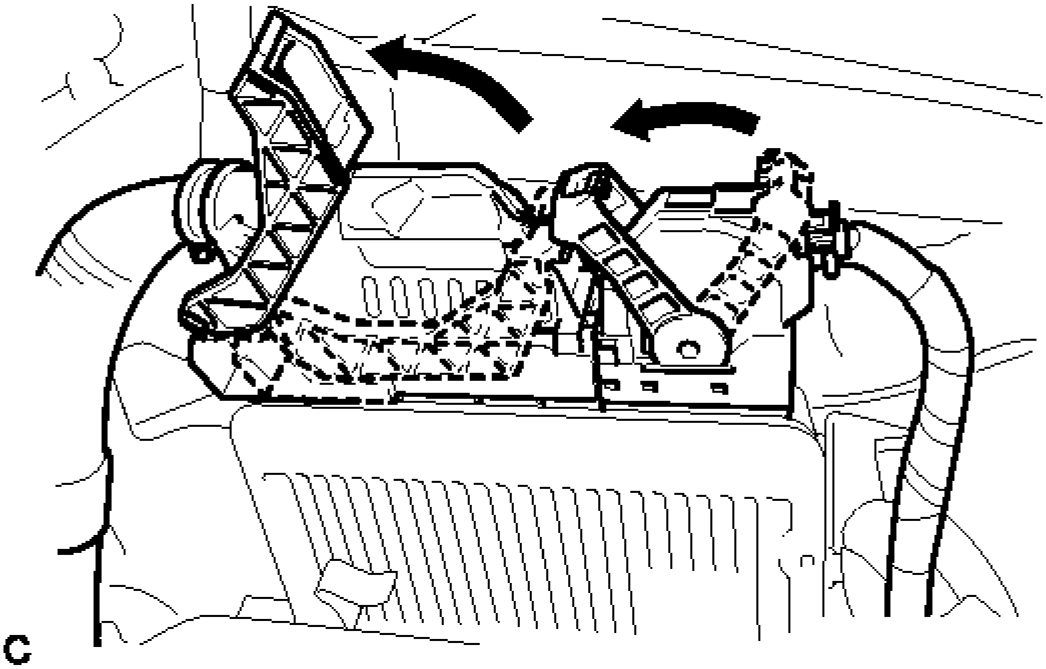

Fig. 25: Raising ECM Connector Levers
Courtesy of TOYOTA MOTOR SALES, U.S.A., INC.

1. Push in the locks on the 2 levers, raise the levers, and disconnect the 2 ECM connectors.

   NOTE: **After disconnecting the connectors, make sure that dirt, water or other foreign matter does not contact the connecting part of**

the connectors.

b. Remove the nut.

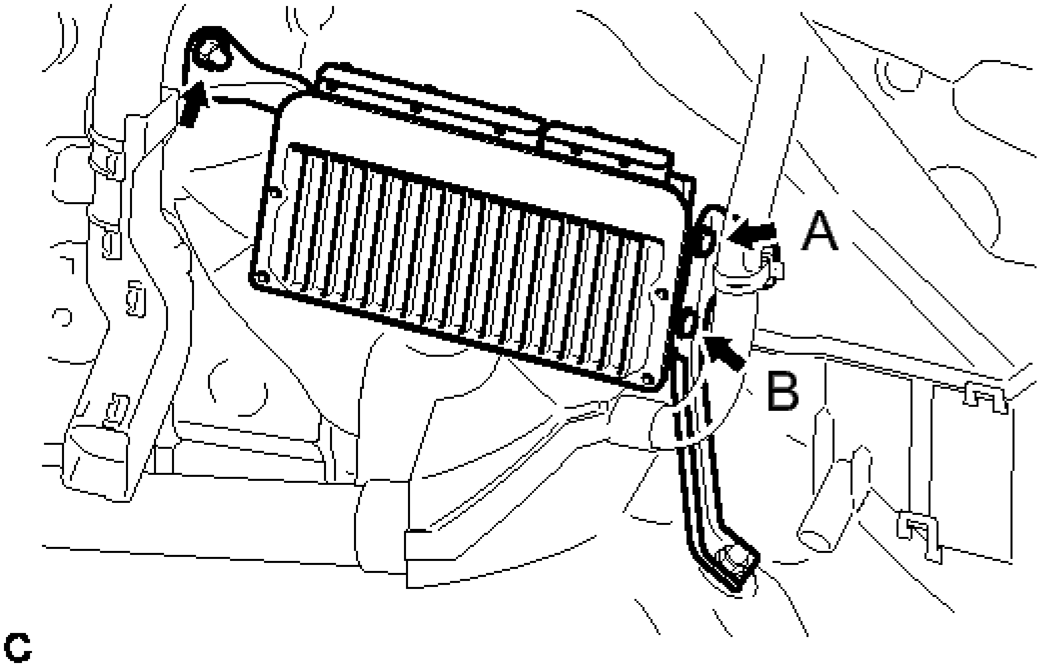

Fig. 26: Identifying ECM Screw, Nut And Bracket
Courtesy of TOYOTA MOTOR SALES, U.S.A., INC.

c. Remove the screw (A).
d. Loosen the screw (B) and remove the ECM.
e. Remove the screw (B).
f. Remove the 2 screws and No. 2 ECM bracket.

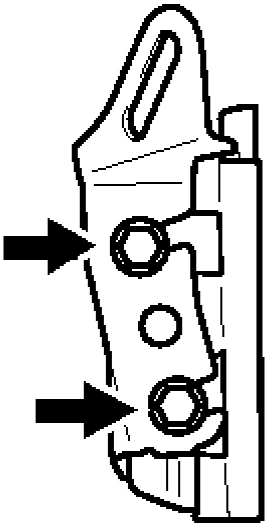

Fig. 27: Identifying No. 2 ECM Screws And Bracket
Courtesy of TOYOTA MOTOR SALES, U.S.A., INC.

5. **REMOVE NO. 1 ECM BRACKET**
   a. Remove the nut.

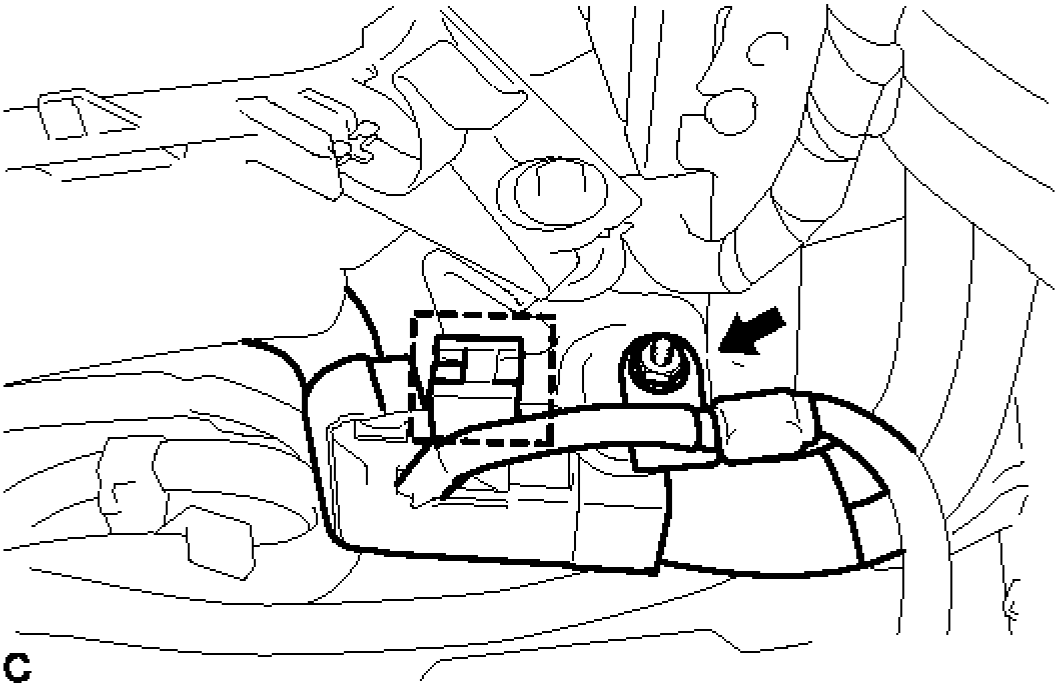

Fig. 28: Identifying No. 1 ECM Bracket Nut

Courtesy of TOYOTA MOTOR SALES, U.S.A., INC.

b. Disconnect the wire harness clamp.
c. Disconnect the wire harness clamp.

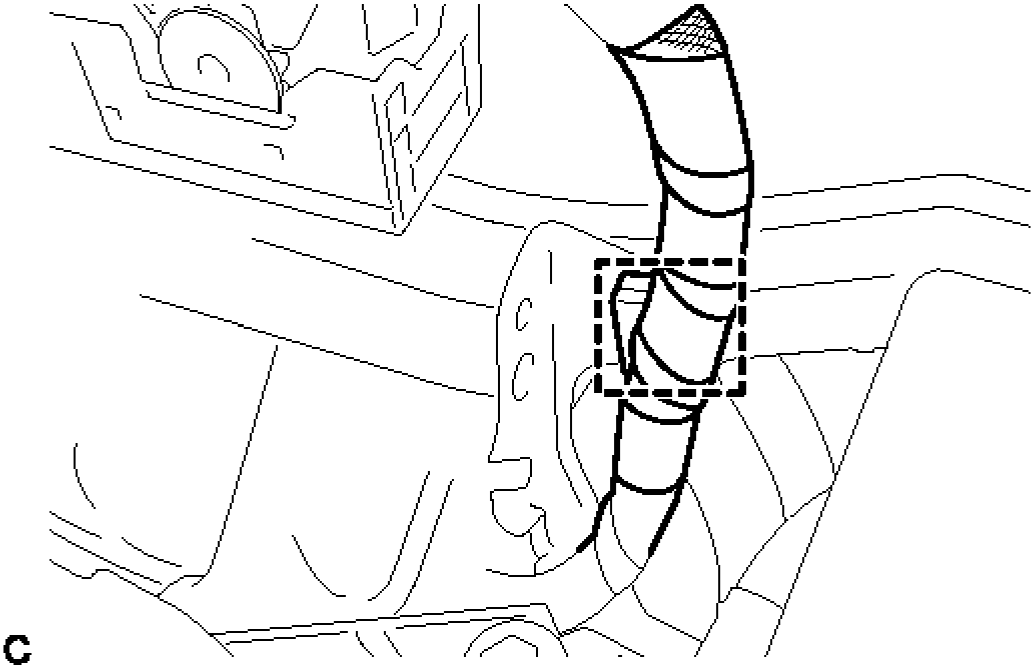

Fig. 29: Identifying Wire Harness Clamp
Courtesy of TOYOTA MOTOR SALES, U.S.A., INC.

d. Remove the nut and No. 1 ECM bracket.

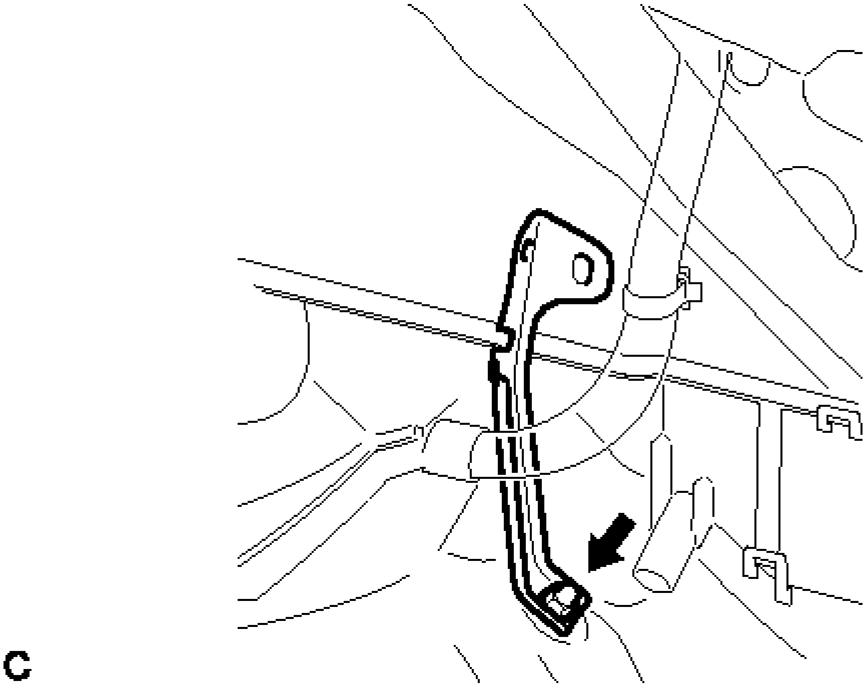

Fig. 30: Identifying No. 1 ECM Bracket Nut
Courtesy of TOYOTA MOTOR SALES, U.S.A., INC.

INSTALLATION

INSTALLATION

1. **INSTALL NO. 1 ECM BRACKET**
    a. Install the No. 1 ECM bracket with the nut.

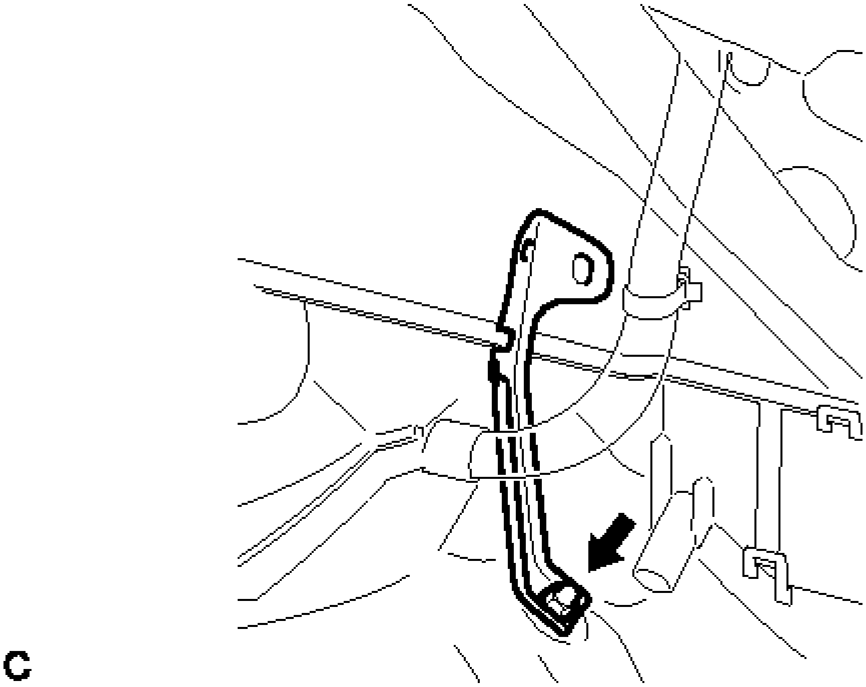

Fig. 31: Identifying No. 1 ECM Bracket Nut
Courtesy of TOYOTA MOTOR SALES, U.S.A., INC.

Torque: 12 N*m (122 kgf*cm, 9 ft.*lbf)

b. Connect the wire harness clamp.

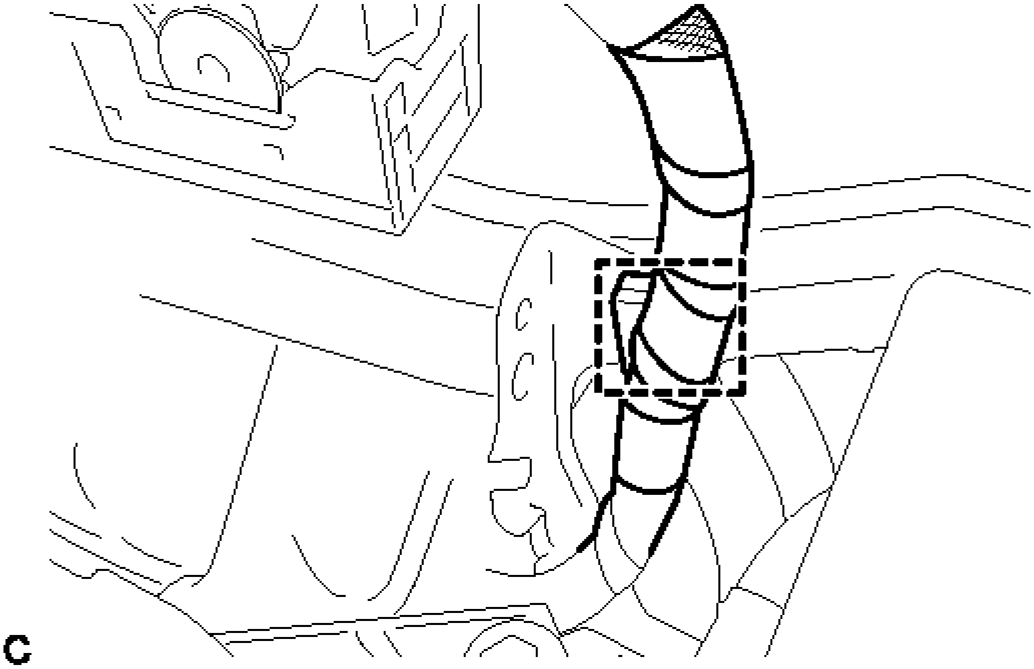

Fig. 32: Identifying Wire Harness Clamp
Courtesy of TOYOTA MOTOR SALES, U.S.A., INC.

c. Connect the wire harness clamp.

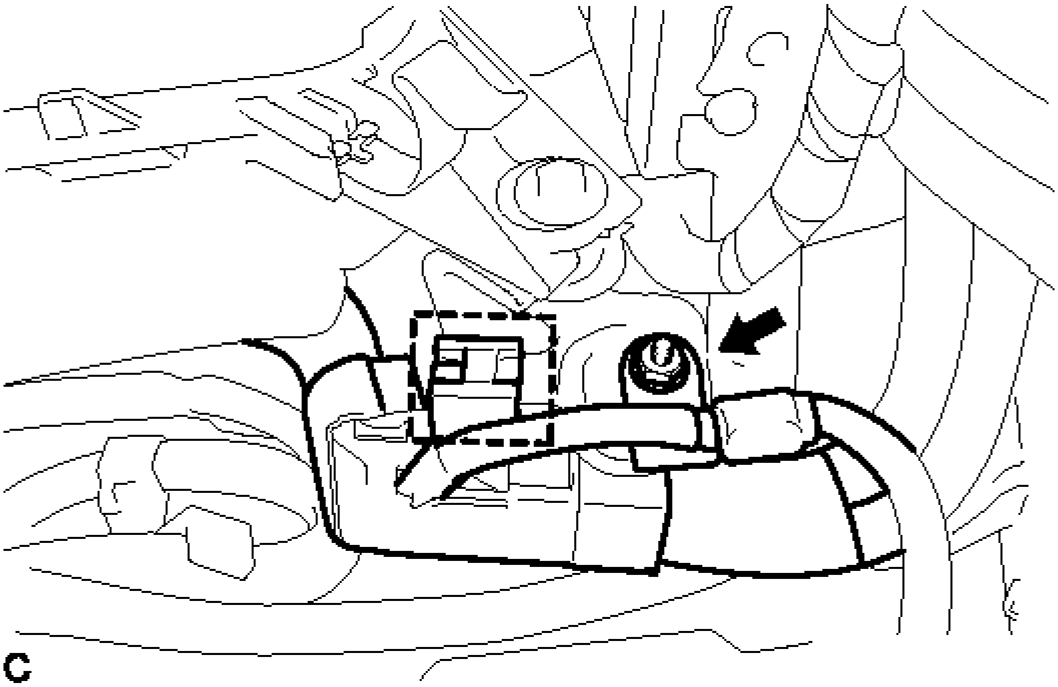

Fig. 33: Identifying No. 1 ECM Bracket Nut
Courtesy of TOYOTA MOTOR SALES, U.S.A., INC.

d. Install the nut.

Torque: 8.0 N*m (82 kgf*cm, 71 in.*lbf)

2. **INSTALL ECM**
   a. Install the No. 2 ECM bracket to the ECM with the 2 screws.

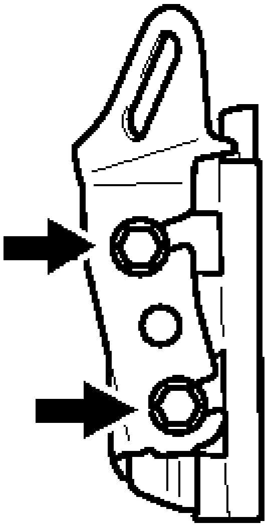

Fig. 34: Identifying No. 2 ECM Screws And Bracket
Courtesy of TOYOTA MOTOR SALES, U.S.A., INC.

Torque: 3.0 N*m (31 kgf*cm, 27 in.*lbf)

b. Temporarily install the screw (B).
c. Install the ECM with the nut.

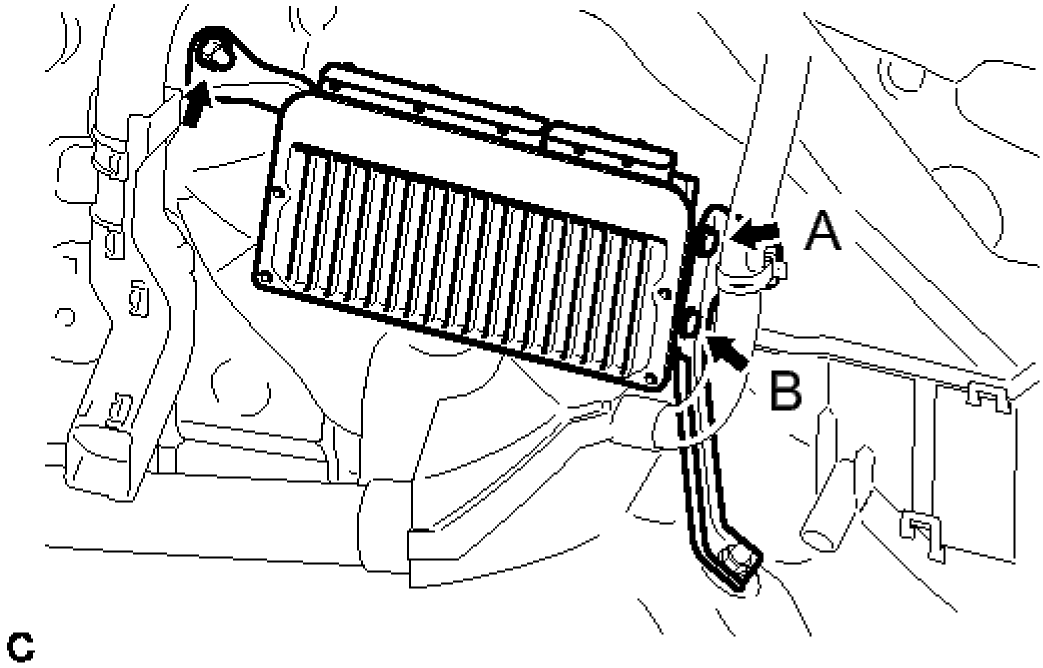

Fig. 35: Identifying ECM Screw, Nut And Bracket
Courtesy of TOYOTA MOTOR SALES, U.S.A., INC.

Torque: 12 N*m (122 kgf*cm, 9 ft.*lbf)

d. Install the screw (A).

Torque: 3.0 N*m (31 kgf*cm, 27 in.*lbf)

e. Tighten the screw (B).

Torque: 3.0 N*m (31 kgf*cm, 27 in.*lbf)

f. Connect the 2 ECM connectors and lower the 2 levers.

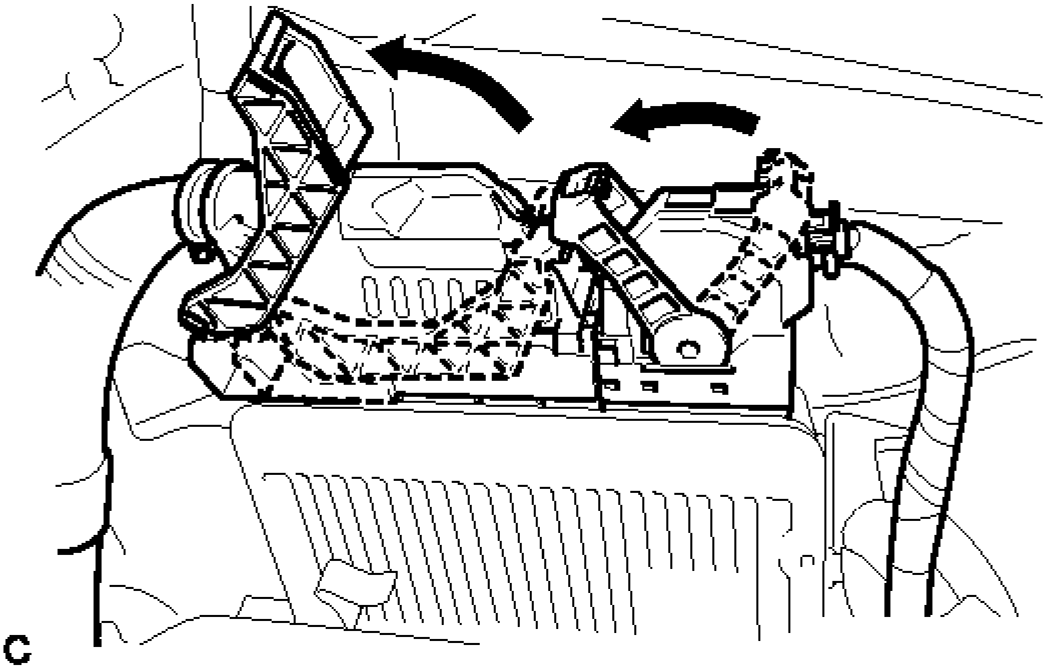

Fig. 36: Raising ECM Connector Levers
Courtesy of TOYOTA MOTOR SALES, U.S.A., INC.

NOTE:

- **When connecting the connectors, make sure that dirt, water or other foreign matter does not become stuck between the connectors and other part.**
- **Make sure that the 2 levers are securely locked.**

g. Connect the 2 wire harness clamps.

3. **INSTALL BATTERY** . Refer to **INSTALLATION - Step 49**
4. **INSTALL COOL AIR INTAKE DUCT SEAL** . Refer to **INSTALLATION - Step 4**
5. **CONNECT CABLE TO NEGATIVE BATTERY TERMINAL**

NOTE: **When disconnecting the cable, some systems need to be initialized after the cable is reconnected . Refer to INITIALIZATION .**

6. **PERFORM INITIALIZATION**

Refer to **PRECAUTION**

ACCELERATOR PEDAL

COMPONENTS

ILLUSTRATION

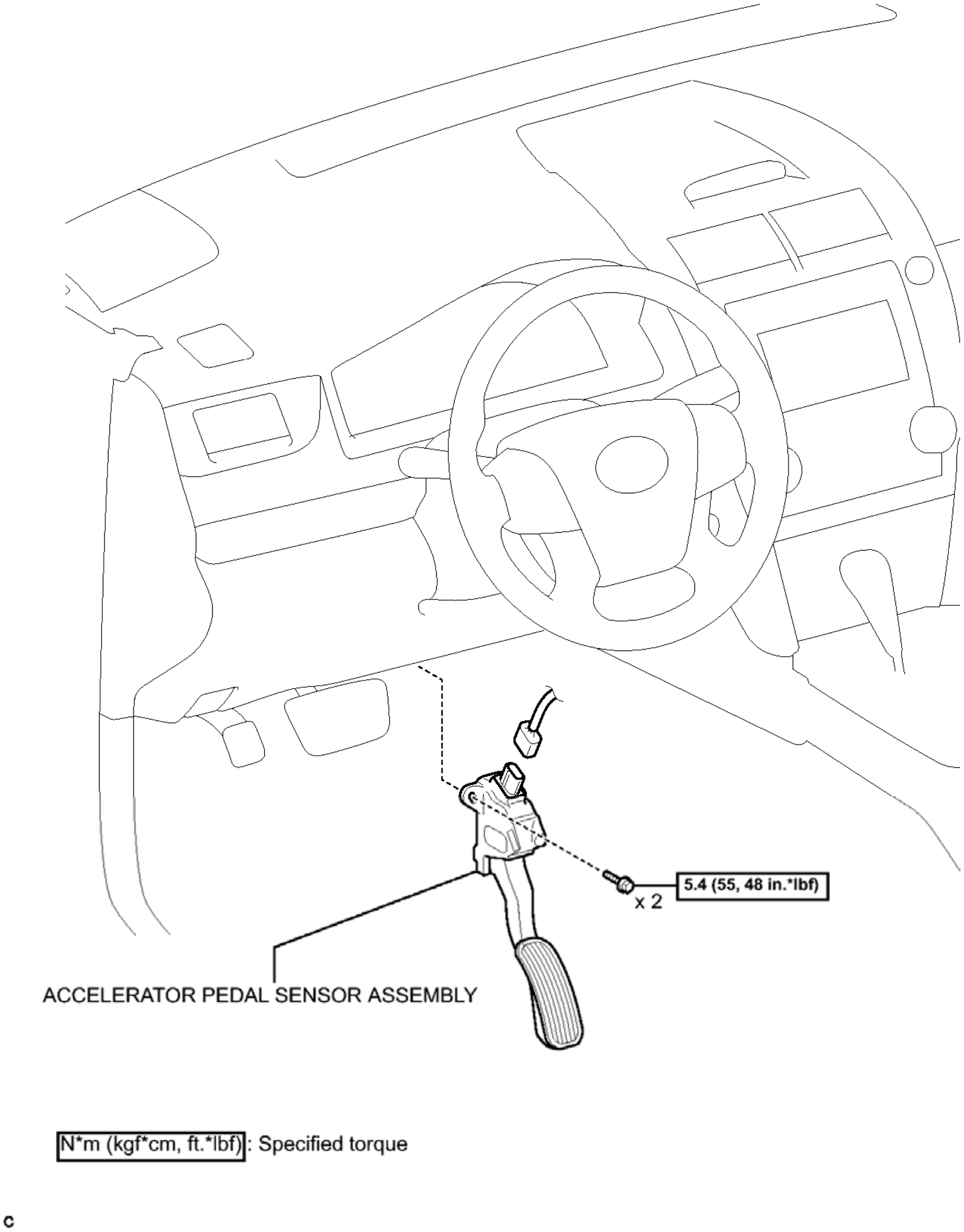
5.4 (55, 48 in.*lbf)
x 2
ACCELERATOR PEDAL SENSOR ASSEMBLY
N*m (kgf*cm, ft.*lbf): Specified torque
c

Fig. 37: Identifying Accelerator Pedal Replacement Components With Torque Specifications
Courtesy of TOYOTA MOTOR SALES, U.S.A., INC.

ON-VEHICLE INSPECTION

ON-VEHICLE INSPECTION

1. **CHECK ACCELERATOR PEDAL SENSOR ASSEMBLY**

a. Measure the voltage.
    1. Connect the Techstream to the DLC3.
    2. Turn the ignition switch to ON.
    3. Turn the Techstream on.
    4. Enter the following menus: Powertrain / Engine and ECT / Data List / Gas Throttle / Accel Sensor Out No. 1 and Accel Sensor Out No. 2.
    5. Read the value displayed on the Techstream.

Standard Voltage

Accelerator Pedal Operation	**Accel Sensor Out No. 1**	**Accel Sensor Out No. 2**
Fully Released	0.5 to 1.1 V	1.2 to 2.0 V
Fully Depressed	2.6 to 4.5 V	3.4 to 4.98 V

If the result is not as specified, check the accelerator pedal sensor assembly, wire harness or ECM.

REMOVAL

REMOVAL

1. **REMOVE ACCELERATOR PEDAL SENSOR ASSEMBLY**

NOTE:

- **Avoid physical shock to the accelerator pedal assembly.**
- **Do not disassemble the accelerator pedal assembly.**

a. Disconnect the accelerator pedal sensor connector.

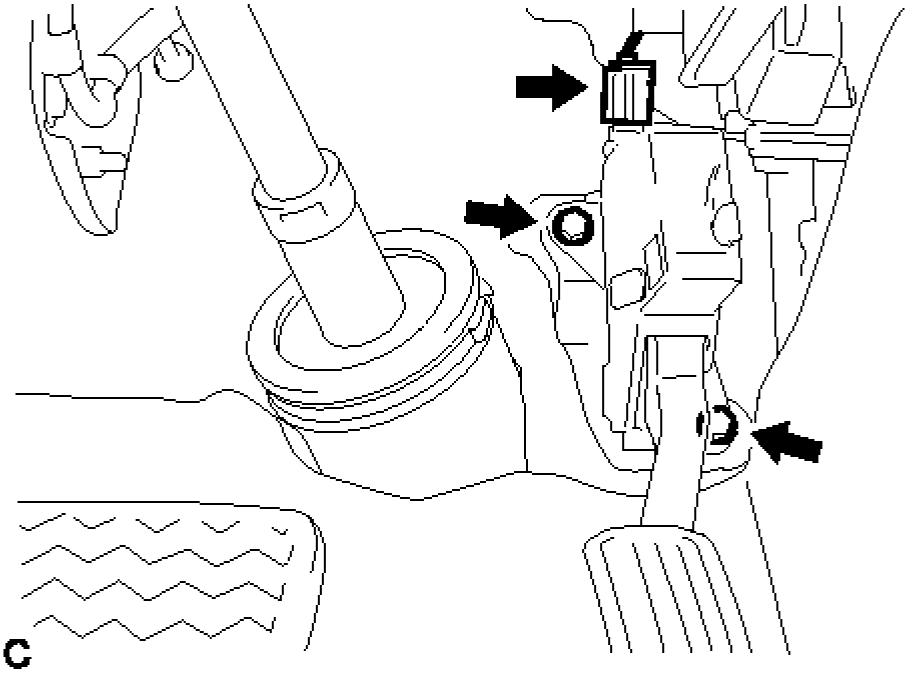

Fig. 38: Identifying Accelerator Pedal Sensor Assembly Connector And Bolts
Courtesy of TOYOTA MOTOR SALES, U.S.A., INC.

b. Remove the 2 bolts and accelerator pedal sensor assembly.

INSTALLATION

INSTALLATION

1. **INSTALL ACCELERATOR PEDAL SENSOR ASSEMBLY**

NOTE:

- **Avoid physical shock to the accelerator pedal assembly.**
- **Do not disassemble the accelerator pedal assembly.**

a. Temporarily install the accelerator pedal sensor assembly with the 2 bolts.
b. Tighten the 2 bolts in the order shown in the illustration.

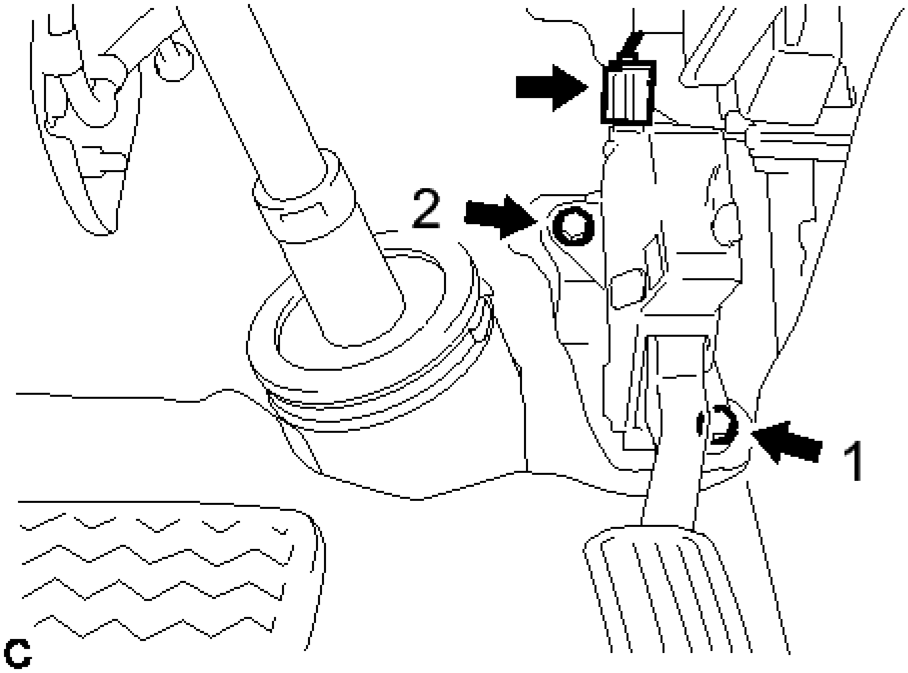

Fig. 39: Identifying Bolt Tightening Order
Courtesy of TOYOTA MOTOR SALES, U.S.A., INC.

Torque: 5.4 N*m (55 kgf*cm, 48 in.*lbf)

c. Connect the accelerator pedal connector.

MASS AIR FLOW METER

COMPONENTS

ILLUSTRATION

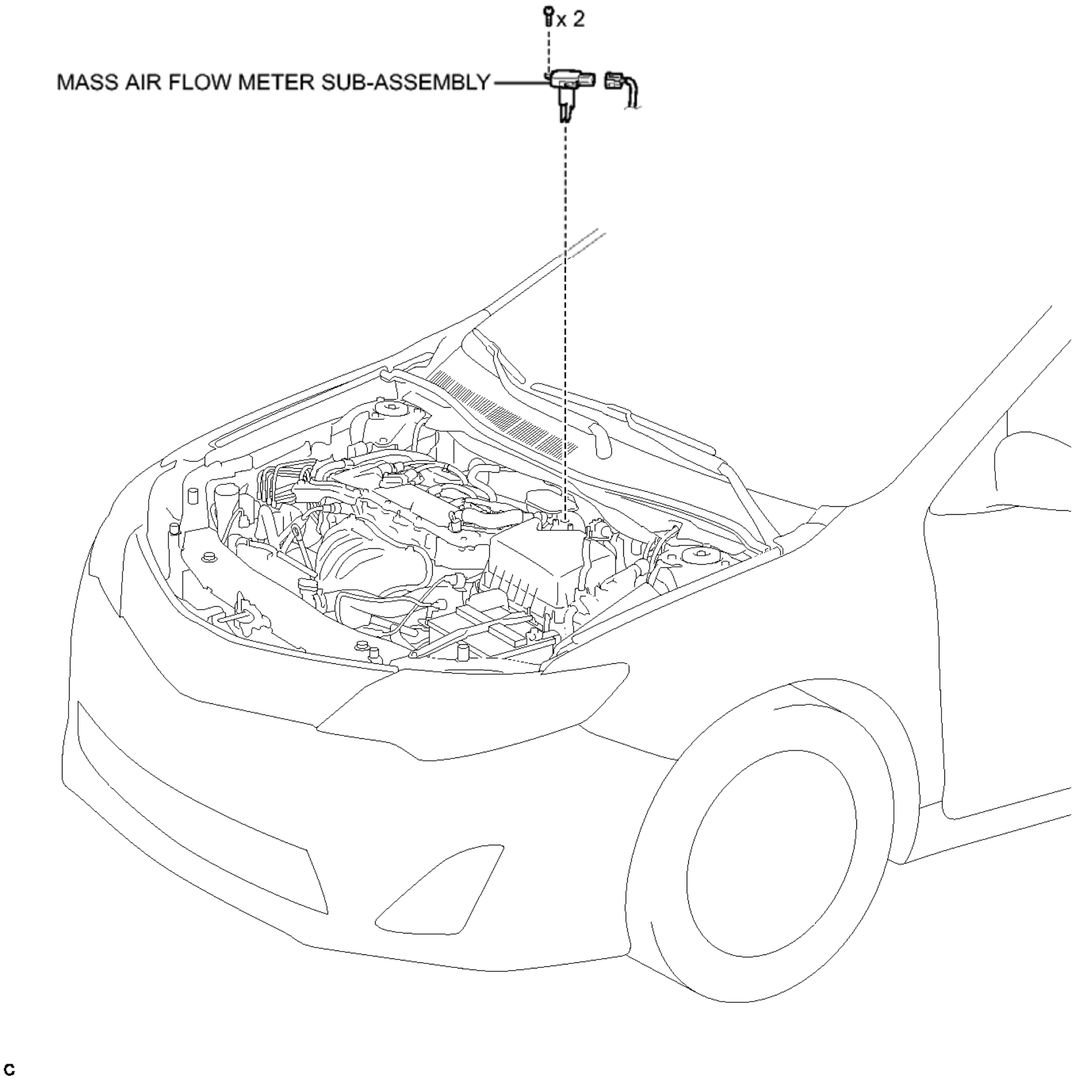

Fig. 40: Identifying Mass Air Flow Meter Replacement Components
Courtesy of TOYOTA MOTOR SALES, U.S.A., INC.

ON-VEHICLE INSPECTION

ON-VEHICLE INSPECTION

NOTE:

- **Perform the mass air flow meter inspection according to the procedure below.**
- **Only replace the mass air flow meter when the mass air flow value in the Data List (with the engine stopped) is not within the normal operating range or there is foreign matter on the mass air flow meter platinum hot**

wire (heater).

1. **INSPECT MASS AIR FLOW METER SUB-ASSEMBLY**

NOTE:

- **Perform the inspection with the vehicle indoors and on a level surface.**
- **Perform the inspection of the mass air flow meter while it is installed to the air cleaner case (installed to the vehicle).**
- **During the test, do not use an exhaust air duct to perform suction on the exhaust pipe.**

a. Connect the Techstream to the DLC3.
b. Turn the ignition switch to ON (do not run the engine).
c. Turn the Techstream on.
d. Enter the following menus: Powertrain / Engine and ECT / Data List / Primary / MAF.
e. Wait 30 seconds, and read the values on the Techstream.

Standard

Item	Condition	Specified Condition
MAF	• Engine not running • 30 seconds after turning ignition switch to ON	Less than 0.47g/sec.

If the result is not as specified, replace the mass air flow meter sub-assembly.

If the result is as specified, inspect the mass air flow meter sub-assembly . Refer to **INSPECTION**.

REMOVAL

REMOVAL

1. **REMOVE MASS AIR FLOW METER SUB-ASSEMBLY**
   a. Disconnect the mass air flow meter connector.

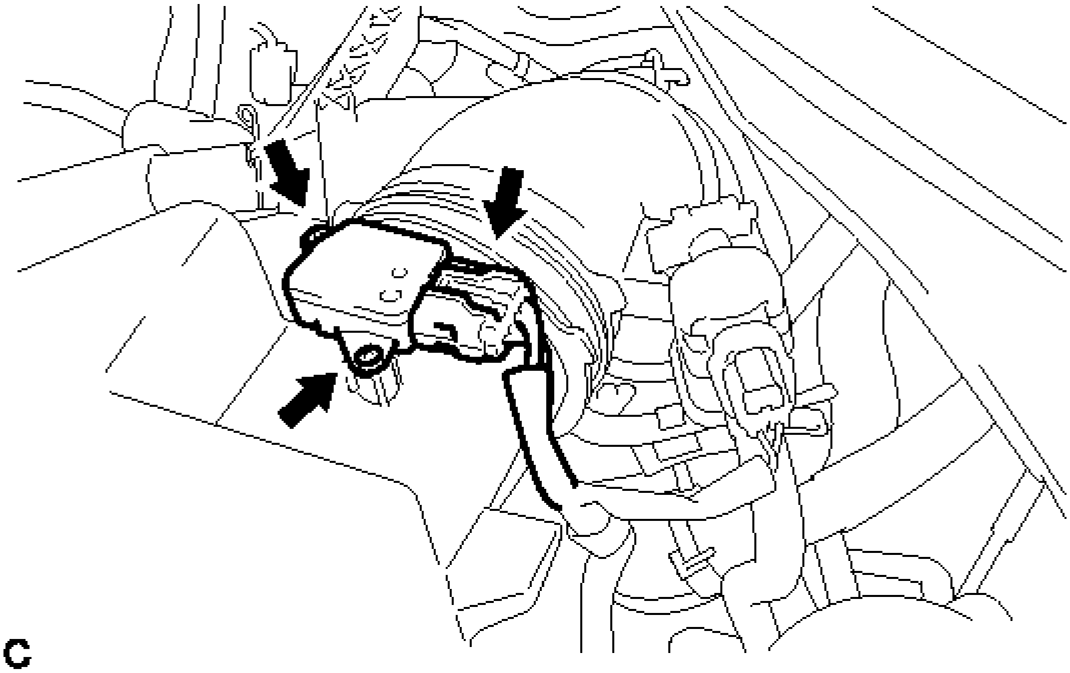

Fig. 41: Identifying Mass Air Flow Meter Connector
Courtesy of TOYOTA MOTOR SALES, U.S.A., INC.

b. Remove the 2 screws and mass air flow meter sub-assembly.

INSPECTION

INSPECTION

1. **INSPECT MASS AIR FLOW METER SUB-ASSEMBLY**
    a. Perform a visual check for any foreign matter on the platinum hot wire (heater) of the mass air flow meter sub-assembly shown in the illustration.

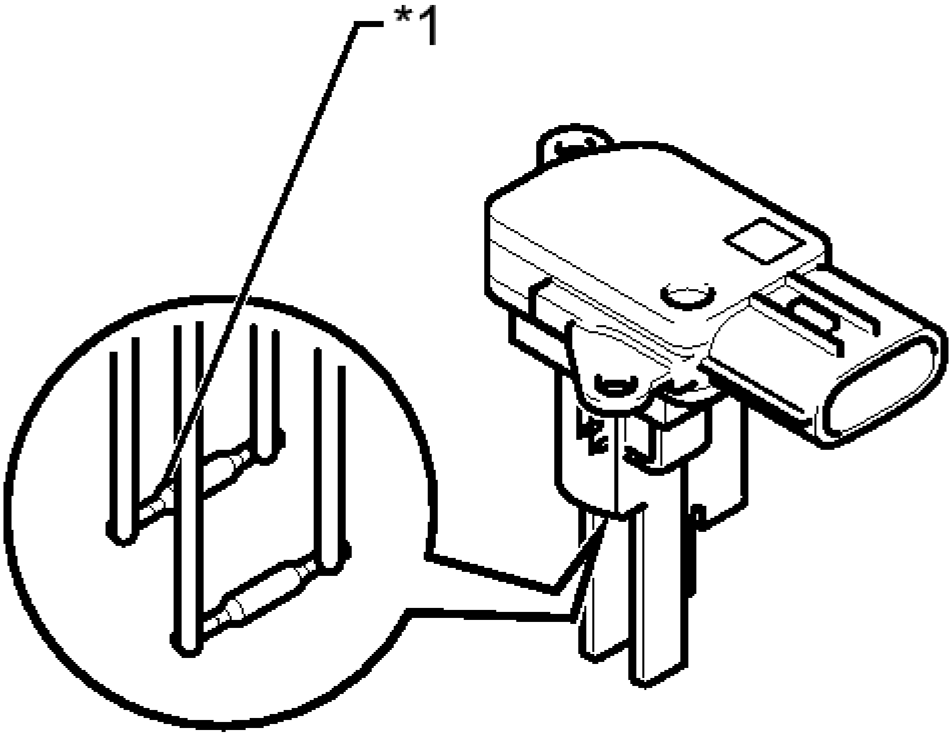

Fig. 42: Identifying Mass Air Flow Meter Platinum Hot Wire
Courtesy of TOYOTA MOTOR SALES, U.S.A., INC.

TEXT IN ILLUSTRATION

*1	Platinum Hot Wire (Heater)

OK

There is no foreign matter.

b. Check the intake air temperature sensor (built into the mass air flow meter sub-assembly).
    1. Measure the resistance according to the value(s) in the table below.

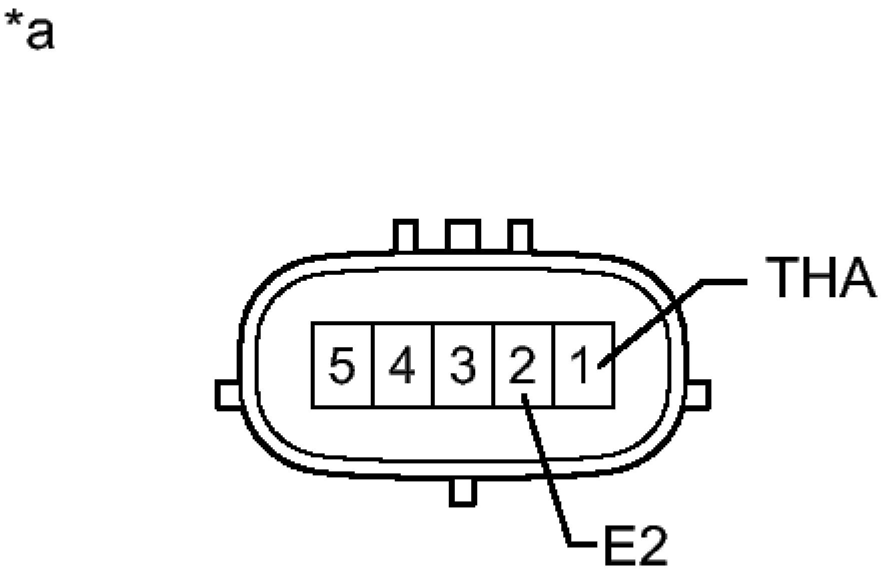

Fig. 43: Identifying Mass Air Flow Meter Connector Terminals
Courtesy of TOYOTA MOTOR SALES, U.S.A., INC.

TEXT IN ILLUSTRATION

*a	Component without harness connected (Mass Air Flow Meter Sub-assembly)

Standard Resistance

Tester Connection	Condition	Specified Condition
1 (THA) - 2 (E2)	-20°C (-4°F)	13.6 to 18.4 kohms
1 (THA) - 2 (E2)	20°C (68°F)	2.21 to 2.69 kohms
1 (THA) - 2 (E2)	60°C (140°F)	0.49 to 0.67 kohms

If the result is not as specified, replace the mass air flow meter sub-assembly.

INSTALLATION

INSTALLATION

HINT:

Perform "Inspection After Repair" after replacing the mass air flow meter sub-assembly . Refer to **INITIALIZATION** .

1. **INSTALL MASS AIR FLOW METER SUB-ASSEMBLY**
    a. Install the mass air flow meter sub-assembly with the 2 screws.

    NOTE: **Make sure that the O-ring is not cracked or jammed when installing the mass air flow meter.**

    HINT:

    Perform "Inspection After Repair" after replacing the mass air flow meter sub-assembly . Refer to **INITIALIZATION** .

    b. Connect the mass air flow meter connector.

CAMSHAFT POSITION SENSOR

COMPONENTS

ILLUSTRATION

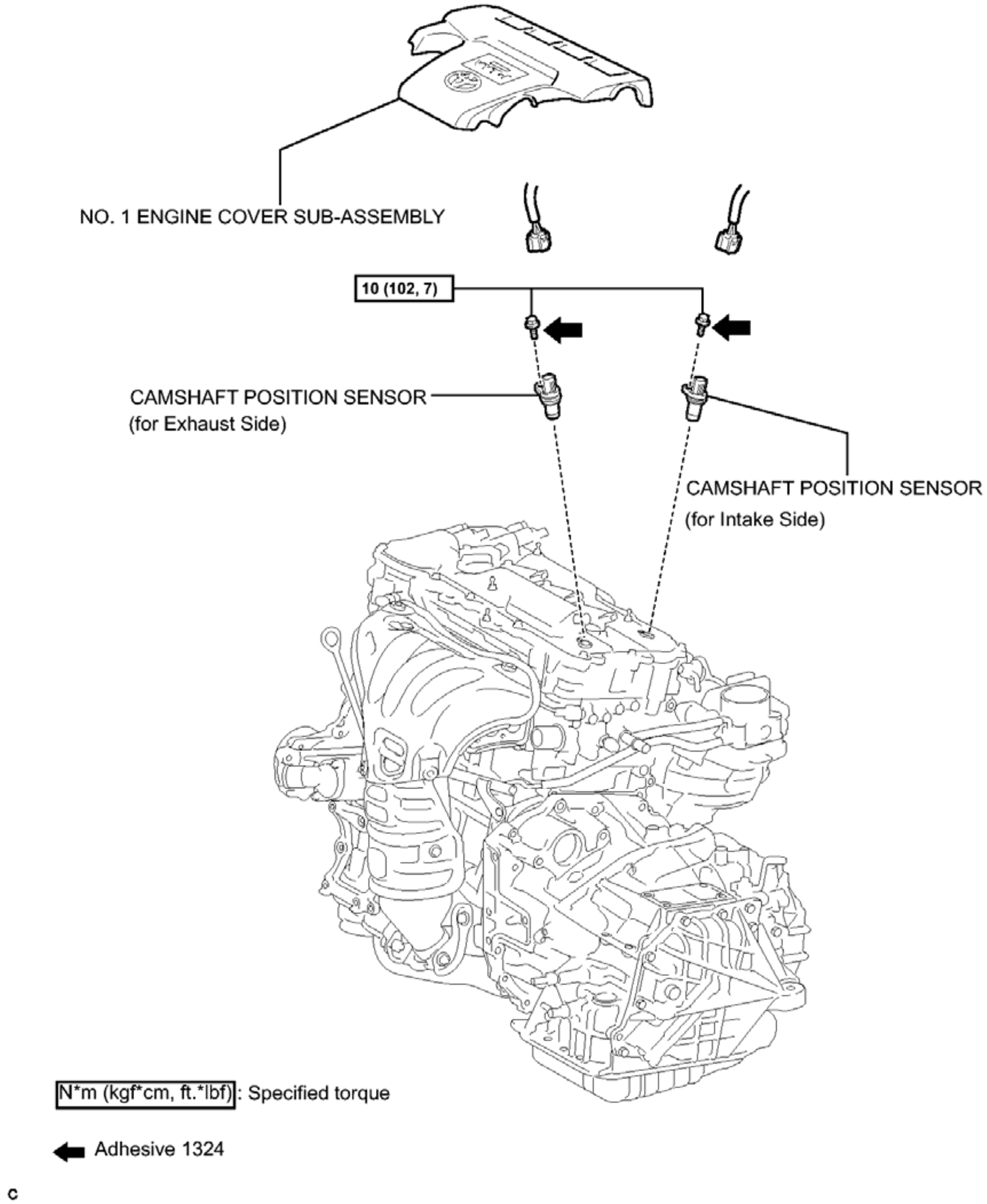
NO. 1 ENGINE COVER SUB-ASSEMBLY
10 (102, 7)
CAMSHAFT POSITION SENSOR (for Exhaust Side)
CAMSHAFT POSITION SENSOR (for Intake Side)
N*m (kgf*cm, ft.*lbf): Specified torque
Adhesive 1324
c

Fig. 44: Identifying Camshaft Position Sensor Replacement Components With Torque Specifications
Courtesy of TOYOTA MOTOR SALES, U.S.A., INC.

REMOVAL

REMOVAL

1. **REMOVE NO. 1 ENGINE COVER SUB-ASSEMBLY** . Refer to **REMOVAL - Step 18**

2. **REMOVE CAMSHAFT POSITION SENSOR**
    a. Camshaft position sensor (for Exhaust Side)
        1. Disconnect the sensor connector.

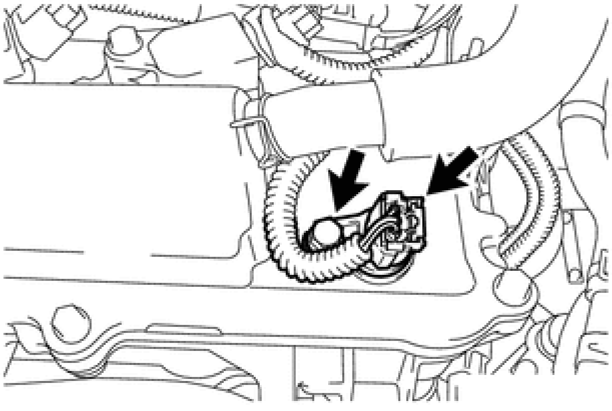

Fig. 45: Locating Bolt And Sensor
Courtesy of TOYOTA MOTOR SALES, U.S.A., INC.

        2. Remove the bolt and sensor.
    b. Camshaft position sensor (for Intake Side)
        1. Disconnect the sensor connector.

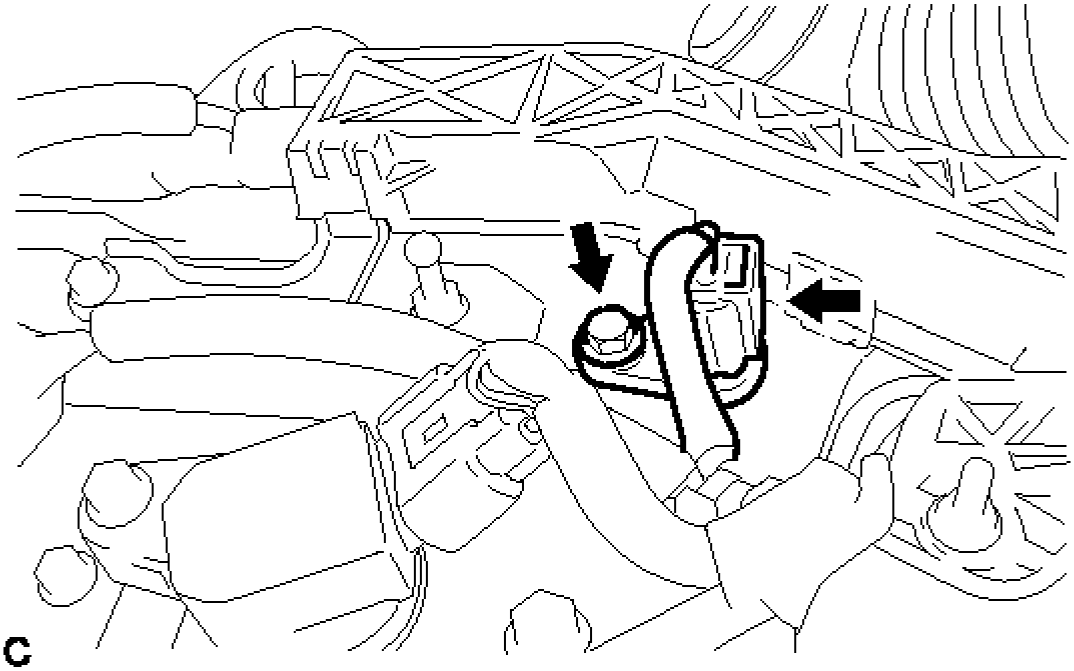

Fig. 46: Identifying Bolt And Sensor
Courtesy of TOYOTA MOTOR SALES, U.S.A., INC.

2. Remove the bolt and sensor.

INSTALLATION

INSTALLATION

1. **INSTALL CAMSHAFT POSITION SENSOR**
    a. Camshaft position sensor (for Intake Side)
        1. Clean and degrease the threads of the bolt for the camshaft position sensor.
        2. Apply a light coat of engine oil to the O-ring of the sensor.

NOTE: **Make sure that the O-ring is not cracked or does not jump out of position during installation.**

3. Apply adhesive to 2 or 3 threads of the bolt.

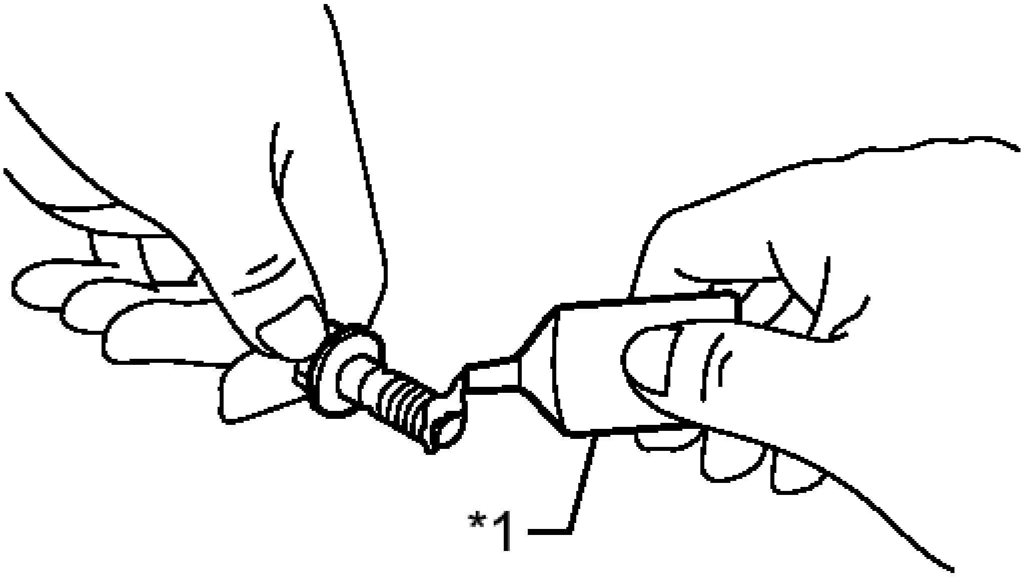

Fig. 47: Applying Adhesive To Bolt
Courtesy of TOYOTA MOTOR SALES, U.S.A., INC.

TEXT IN ILLUSTRATION

*1	Adhesive

Adhesive

Toyota Genuine Adhesive 1324, Three Bond 1324 or equivalent.

4. Install the sensor with the bolt.

   Torque: 10 N*m (102 kgf*cm, 7 ft.*lbf)

5. Connect the sensor connector.

b. Camshaft position sensor (for Exhaust Side)

1. Clean and degrease the threads of the bolt for the camshaft position sensor.
2. Apply a light coat of engine oil to the O-ring of the sensor.

   NOTE: **Make sure that the O-ring is not cracked or does not jump out of position during installation.**

3. Apply adhesive to 2 or 3 threads of the bolt.

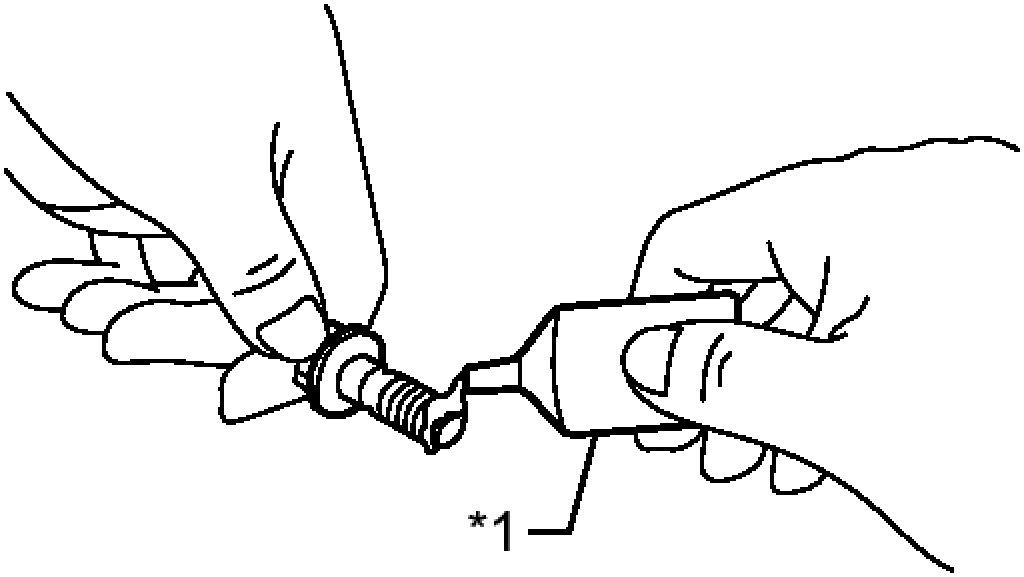

Fig. 48: Applying Adhesive To Bolt
Courtesy of TOYOTA MOTOR SALES, U.S.A., INC.

TEXT IN ILLUSTRATION

*1	Adhesive

Adhesive

Toyota Genuine Adhesive 1324, Three Bond 1324 or equivalent.

4. Install the sensor with the bolt.

Torque: 10 N*m (102 kgf*cm, 7 ft.*lbf)

    5. Connect the sensor connector.

2. **INSPECT FOR OIL LEAK**
3. **INSTALL NO. 1 ENGINE COVER SUB-ASSEMBLY** . Refer to **INSTALLATION - Step 68**

CRANKSHAFT POSITION SENSOR

COMPONENTS

ILLUSTRATION

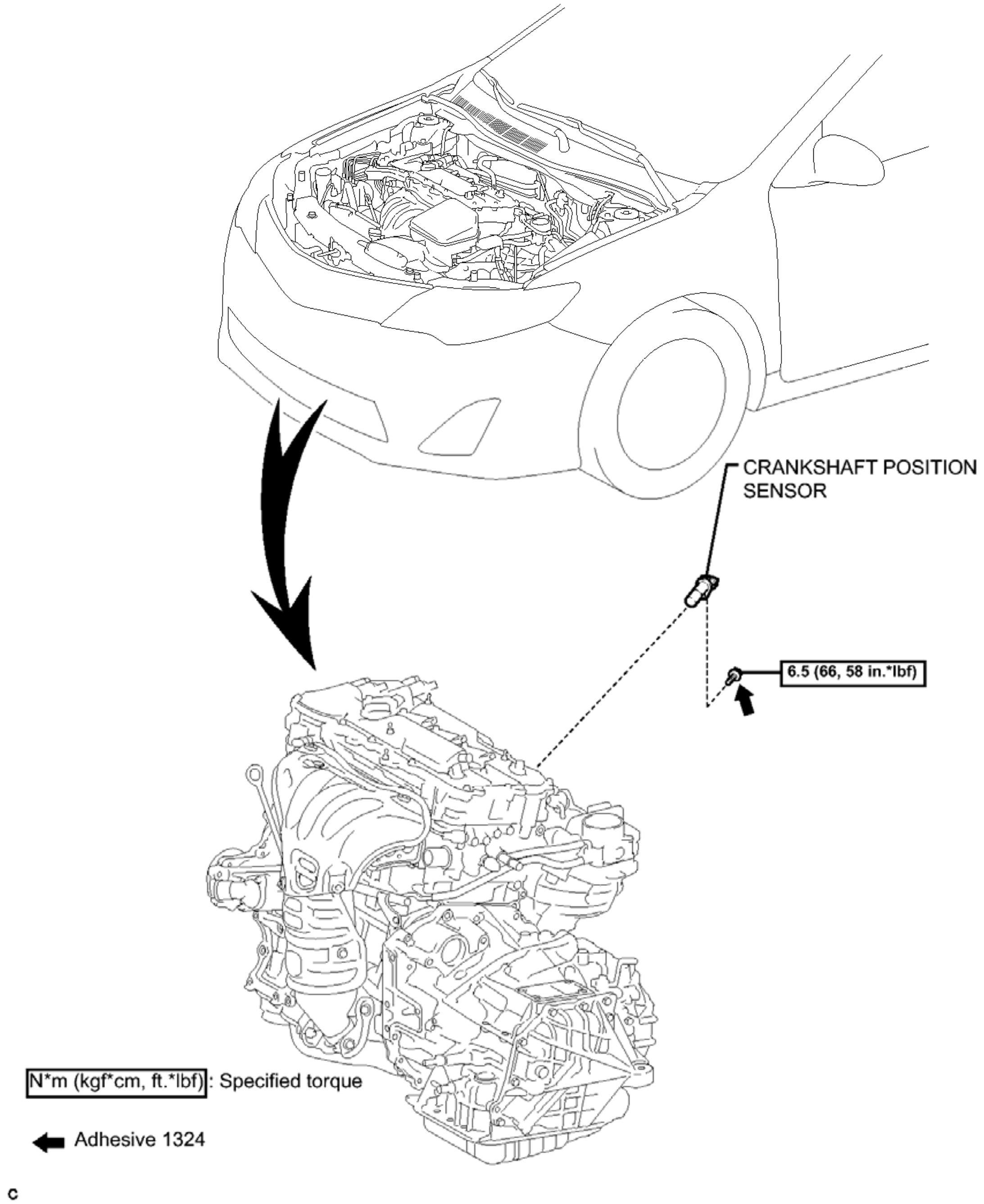
CRANKSHAFT POSITION SENSOR
6.5 (66, 58 in.*lbf)
N*m (kgf*cm, ft.*lbf): Specified torque
Adhesive 1324
C

Fig. 49: Identifying Crankshaft Position Sensor Replacement Components With Torque Specifications
Courtesy of TOYOTA MOTOR SALES, U.S.A., INC.

REMOVAL

REMOVAL

1. **REMOVE CRANKSHAFT POSITION SENSOR**

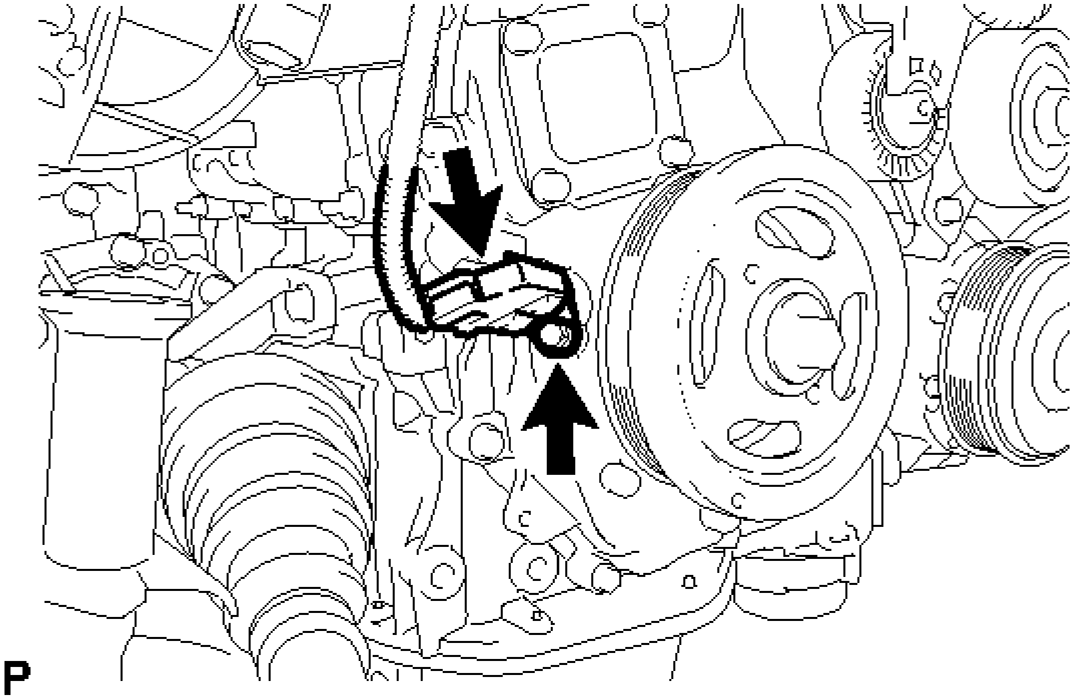

Fig. 50: Locating Bolt And Sensor
Courtesy of TOYOTA MOTOR SALES, U.S.A., INC.

a. Disconnect the sensor connector.
b. Remove the bolt and sensor.

INSPECTION

INSPECTION

1. **INSPECT CRANKSHAFT POSITION SENSOR**
   a. Measure the resistance according to the value(s) in the table below.

Standard Resistance

Tester Connection	Condition	Specified Condition
1 - 2	Cold	1630 to 2740 ohms
	Hot	2065 to 3225 ohms

HINT:

In the table above, the terms "Cold" and "Hot" refer to the temperature of the coils. "Cold" means approximately -10 to 50°C (14 to 122°F). "Hot" means approximately 50 to 100°C (122 to 212°F).

If the result is not as specified, replace the crankshaft position sensor.

INSTALLATION

INSTALLATION

1. **INSTALL CRANKSHAFT POSITION SENSOR**
   a. Clean and degrease the threads of the bolt for the crankshaft position sensor.
   b. Apply a light coat of engine oil to the O-ring of the sensor.

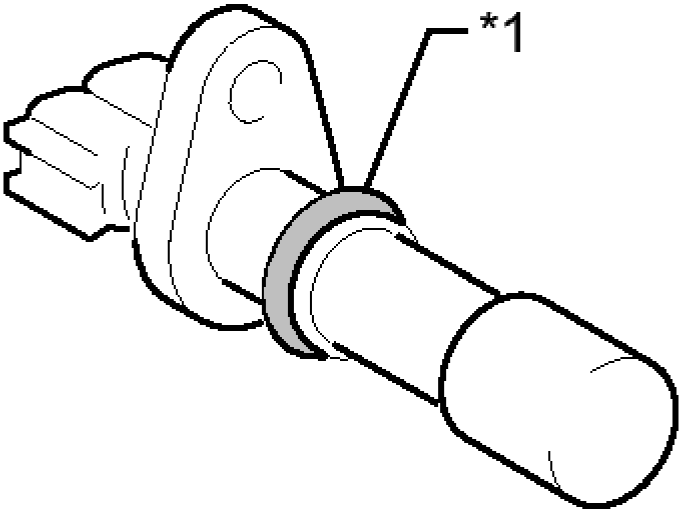

Fig. 51: Identifying Crankshaft Position Sensor O-Ring
Courtesy of TOYOTA MOTOR SALES, U.S.A., INC.

TEXT IN ILLUSTRATION

*1	O-ring

   c. Apply adhesive to 2 or 3 threads of the bolt.

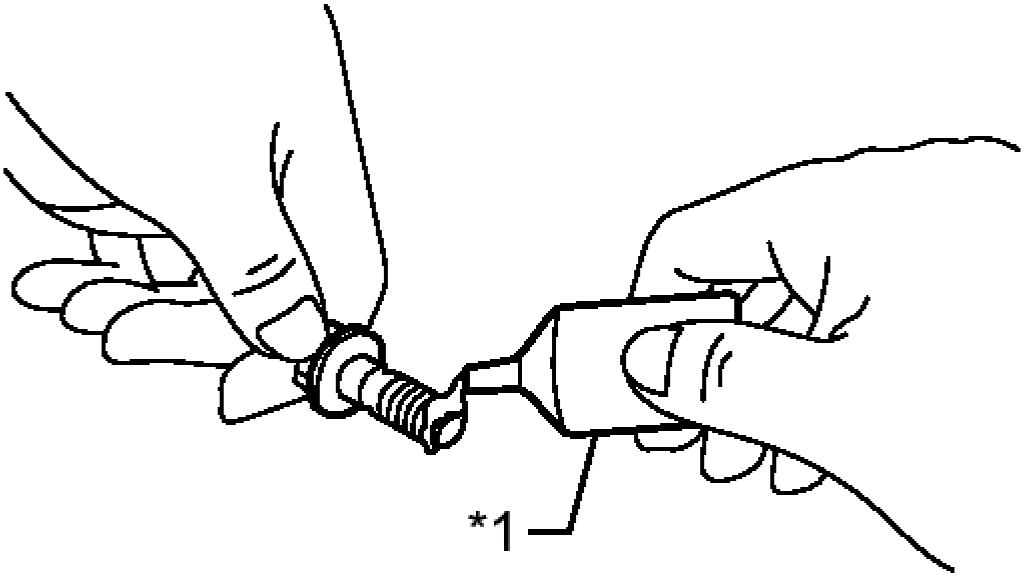

Fig. 52: Applying Adhesive To Bolt
Courtesy of TOYOTA MOTOR SALES, U.S.A., INC.

TEXT IN ILLUSTRATION

*1	Adhesive

Adhesive

Toyota Genuine Adhesive 1324, Three Bond 1324 or equivalent.

d. Install the sensor with the bolt.

Torque: 6.5 N*m (66 kgf*cm, 58 in.*lbf)

NOTE: **Make sure that the O-ring is not cracked or does not jump out of position during installation.**

e. Connect the sensor connector.

2. **INSPECT FOR OIL LEAK**

IGNITION COIL AND SPARK PLUG

COMPONENTS

ILLUSTRATION

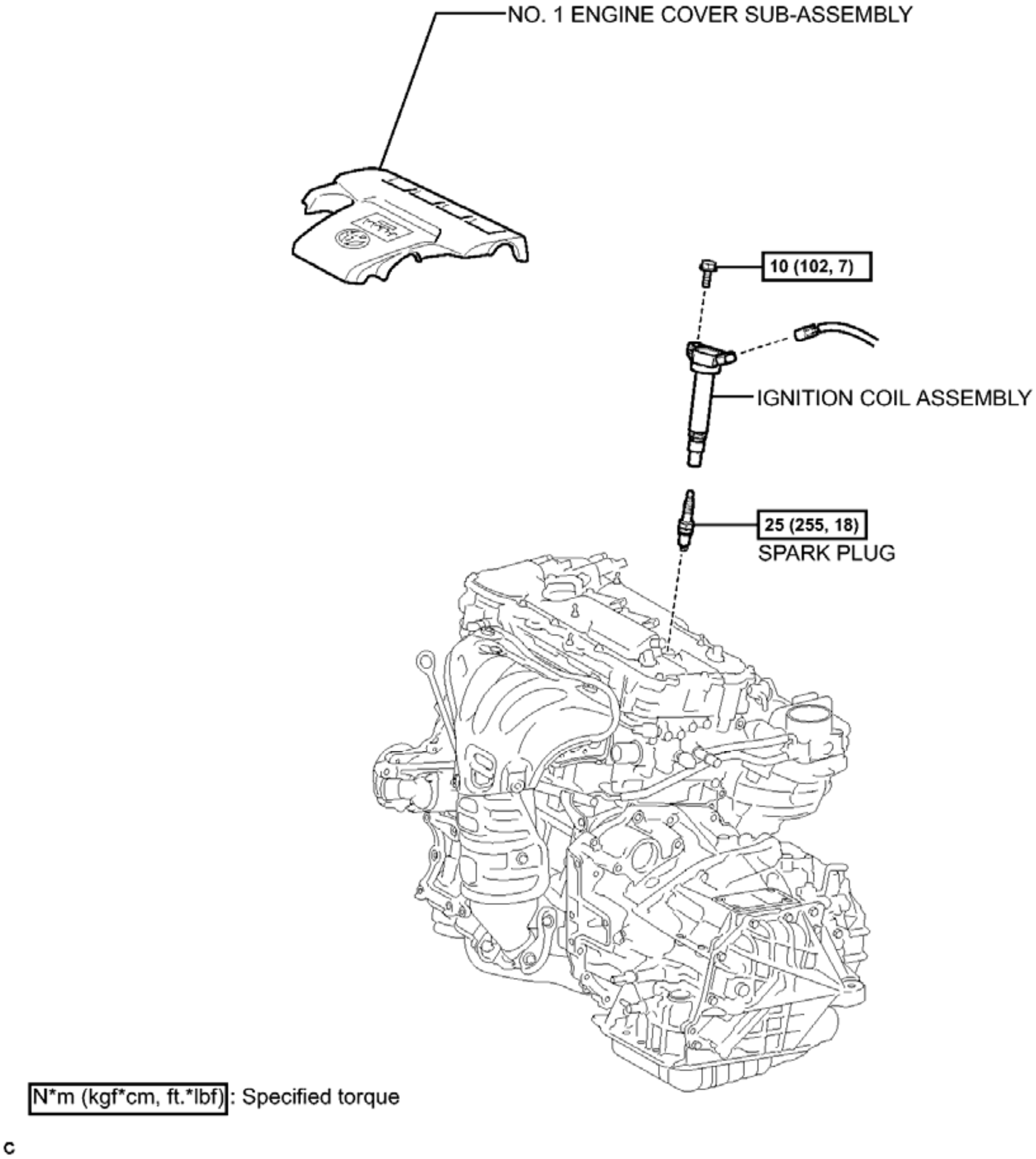
NO. 1 ENGINE COVER SUB-ASSEMBLY
10 (102, 7)
IGNITION COIL ASSEMBLY
25 (255, 18)
SPARK PLUG
N*m (kgf*cm, ft.*lbf): Specified torque
C

Fig. 53: Identifying Ignition Coil And Spark Plug Replacement Components With Torque Specifications
Courtesy of TOYOTA MOTOR SALES, U.S.A., INC.

REMOVAL

REMOVAL

1. **REMOVE NO. 1 ENGINE COVER SUB-ASSEMBLY** . Refer to **REMOVAL - Step 18**
2. **REMOVE IGNITION COIL ASSEMBLY**
   a. Disconnect the 4 ignition coil assembly connectors.
   b. Remove the 4 bolts and 4 ignition coil assemblies.

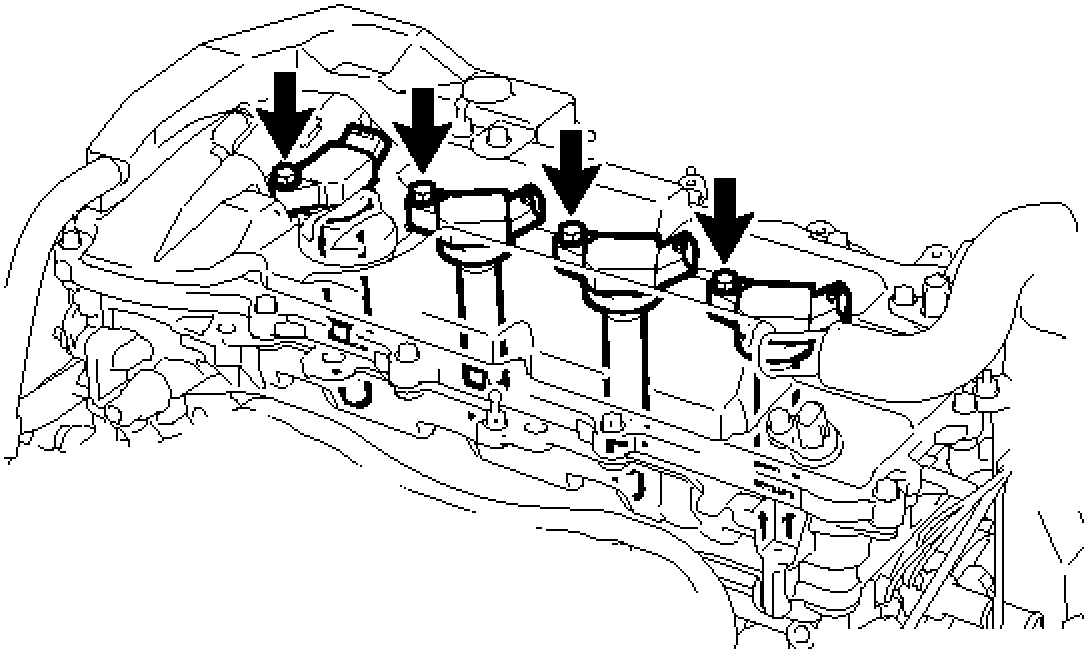

Fig. 54: Locating Bolts And Ignition Coil Assemblies
Courtesy of TOYOTA MOTOR SALES, U.S.A., INC.

3. **REMOVE SPARK PLUG**
   a. Using a spark plug wrench, remove the 4 spark plugs.

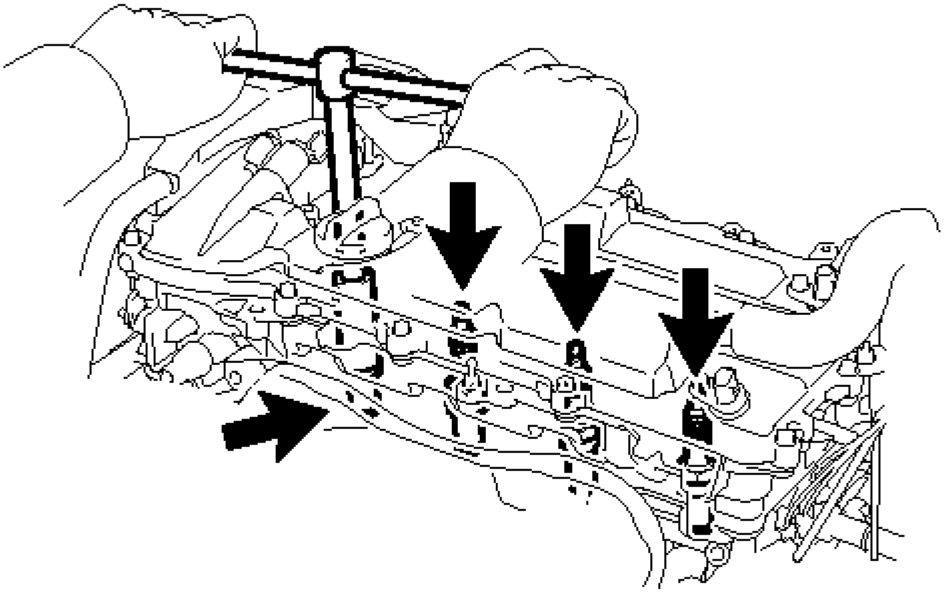

P

Fig. 55: Installing Spark Plug

Courtesy of TOYOTA MOTOR SALES, U.S.A., INC.

INSTALLATION

INSTALLATION

HINT:

Perform "Inspection After Repair" after replacing the spark plug and ignition coil assembly . Refer to **INITIALIZATION** .

1. **INSTALL SPARK PLUG**
    1. Using a spark plug wrench, install the 4 spark plugs.

        Torque: 25 N*m (255 kgf*cm, 18 ft.*lbf)

        HINT:

        Perform "Inspection After Repair" after replacing the spark plug . Refer to **INITIALIZATION** .

2. **INSTALL IGNITION COIL ASSEMBLY**
    1. Install the 4 ignition coil assemblies with the 4 bolts.

        Torque: 10 N*m (102 kgf*cm, 7 ft.*lbf)

        HINT:

        Perform "Inspection After Repair" after replacing the ignition coil assembly . Refer to **INITIALIZATION** .

    2. Connect the 4 ignition coil assembly connectors.
3. **INSTALL NO. 1 ENGINE COVER SUB-ASSEMBLY** . Refer to **INSTALLATION - Step 68**

ENGINE COOLANT TEMPERATURE SENSOR

COMPONENTS

ILLUSTRATION

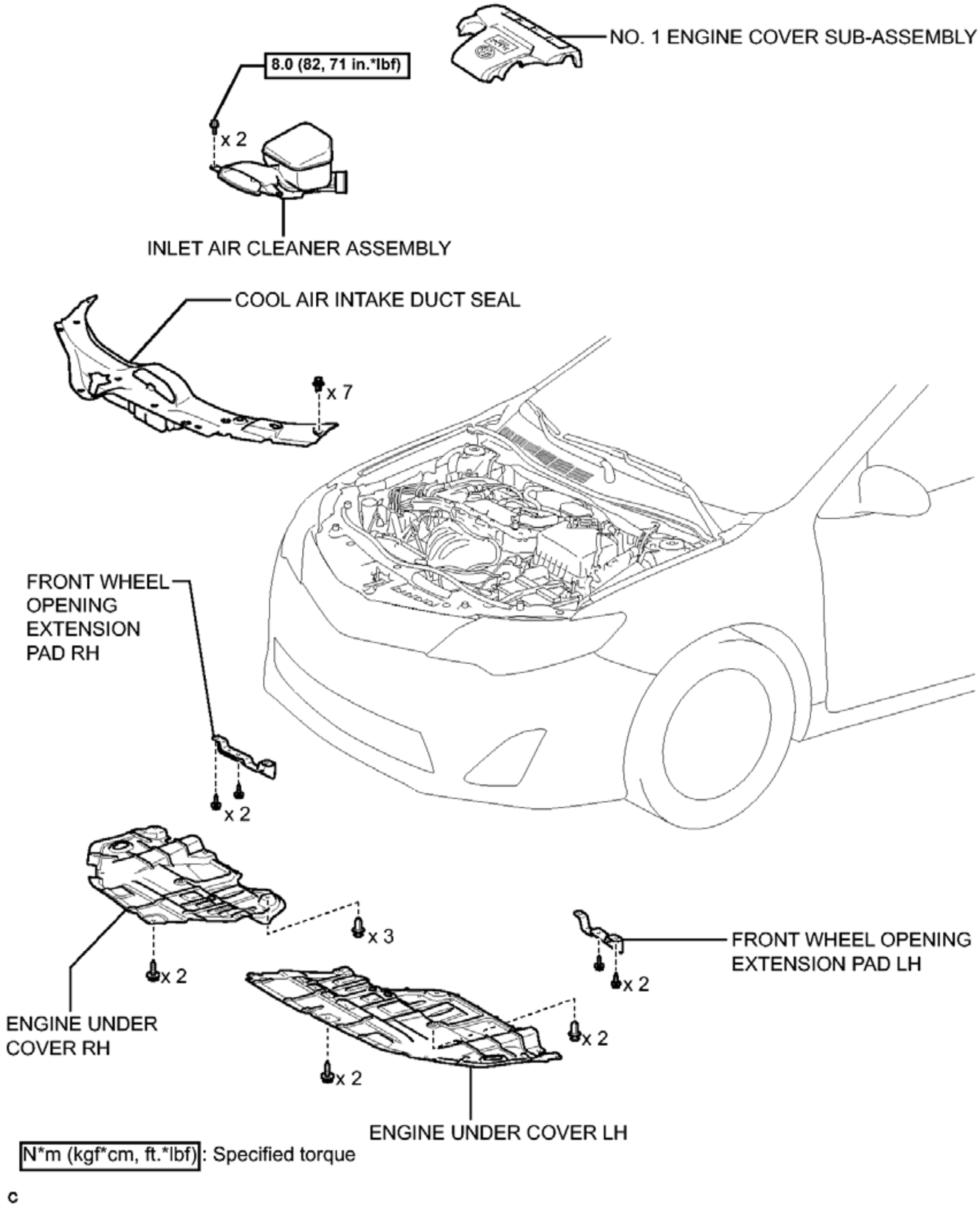
NO. 1 ENGINE COVER SUB-ASSEMBLY
8.0 (82, 71 in.*lbf)
x 2
INLET AIR CLEANER ASSEMBLY
COOL AIR INTAKE DUCT SEAL
x 7
FRONT WHEEL OPENING EXTENSION PAD RH
x 2
x 3
FRONT WHEEL OPENING EXTENSION PAD LH
x 2
x 2
ENGINE UNDER COVER RH
x 2
x 2
ENGINE UNDER COVER LH
N*m (kgf*cm, ft.*lbf): Specified torque
c

Fig. 56: Identifying Engine Coolant Temperature Sensor Replacement Components With Torque Specifications (1 Of 2)

Courtesy of TOYOTA MOTOR SALES, U.S.A., INC.

ILLUSTRATION

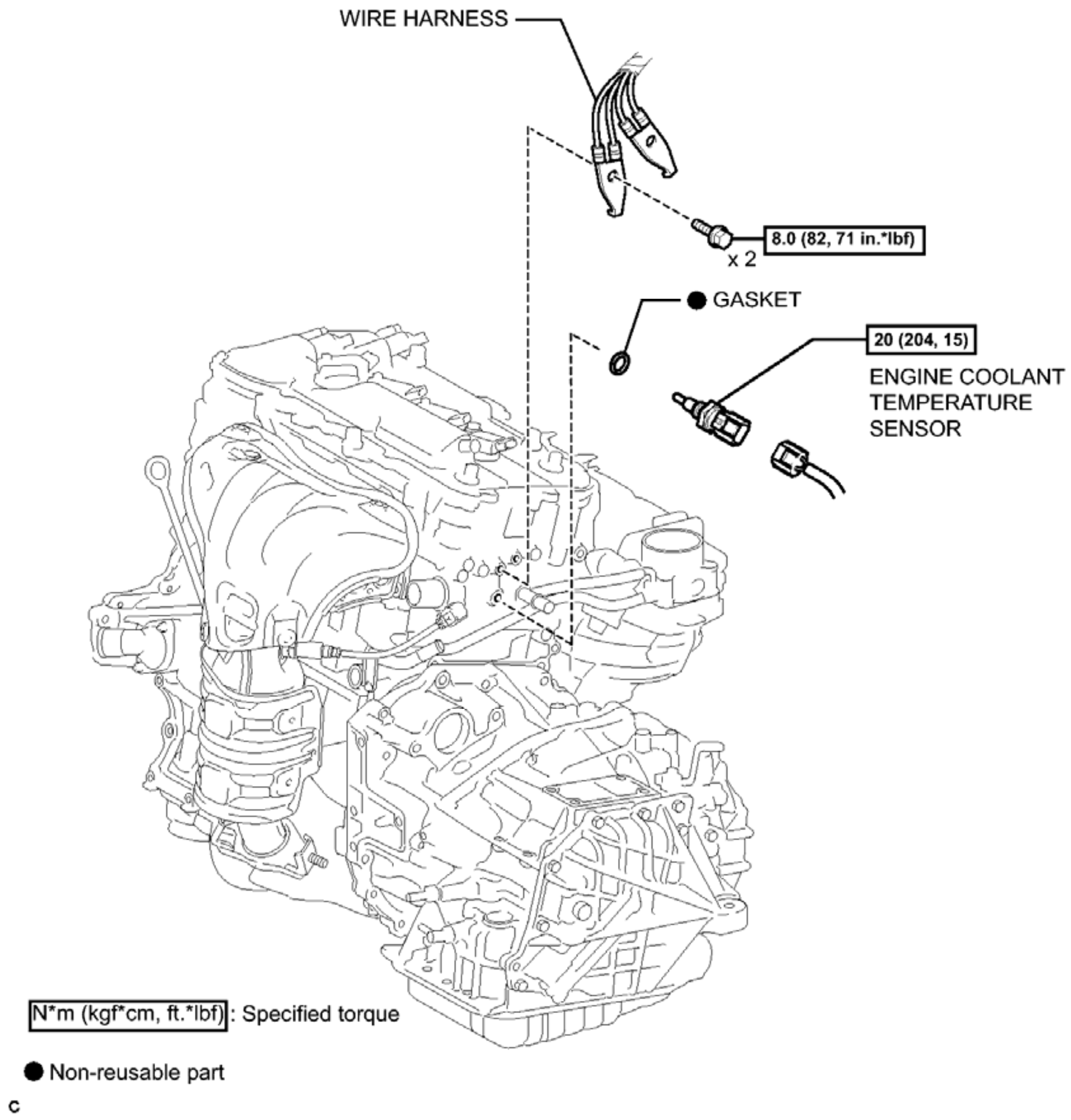
WIRE HARNESS
8.0 (82, 71 in.*lbf)
x 2
● GASKET
20 (204, 15)
ENGINE COOLANT TEMPERATURE SENSOR
N*m (kgf*cm, ft.*lbf): Specified torque
● Non-reusable part
c

Fig. 57: Identifying Engine Coolant Temperature Sensor Replacement Components With Torque Specifications (2 Of 2)
Courtesy of TOYOTA MOTOR SALES, U.S.A., INC.

REMOVAL

REMOVAL

1. **REMOVE FRONT WHEEL OPENING EXTENSION PAD RH**
2. **REMOVE FRONT WHEEL OPENING EXTENSION PAD LH**
3. **REMOVE ENGINE UNDER COVER LH**
4. **REMOVE ENGINE UNDER COVER RH**

5. **DRAIN ENGINE COOLANT** . Refer to **REPLACEMENT - Step 1**
6. **REMOVE NO. 1 ENGINE COVER SUB-ASSEMBLY** . Refer to **REMOVAL - Step 18**
7. **REMOVE COOL AIR INTAKE DUCT SEAL** . Refer to **REMOVAL - Step 1**
8. **REMOVE INLET AIR CLEANER ASSEMBLY** . Refer to **REMOVAL - Step 19**
9. **REMOVE ENGINE COOLANT TEMPERATURE SENSOR**
    a. Disconnect the engine coolant temperature sensor connector.

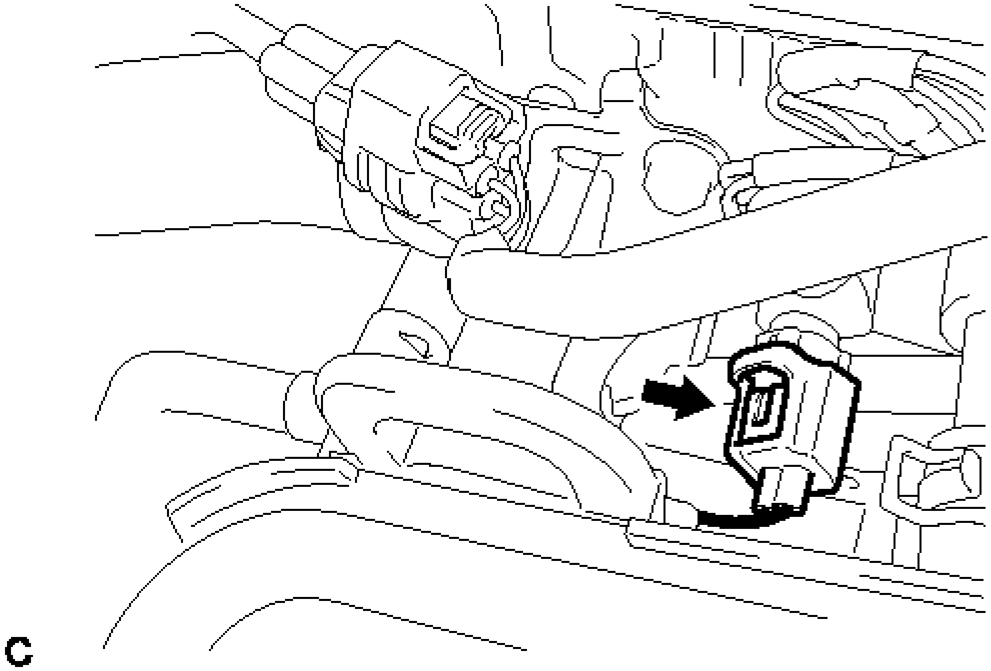

Fig. 58: Identifying Engine Coolant Temperature Sensor
Courtesy of TOYOTA MOTOR SALES, U.S.A., INC.

    b. Remove the 2 bolts and disconnect the wire harness.

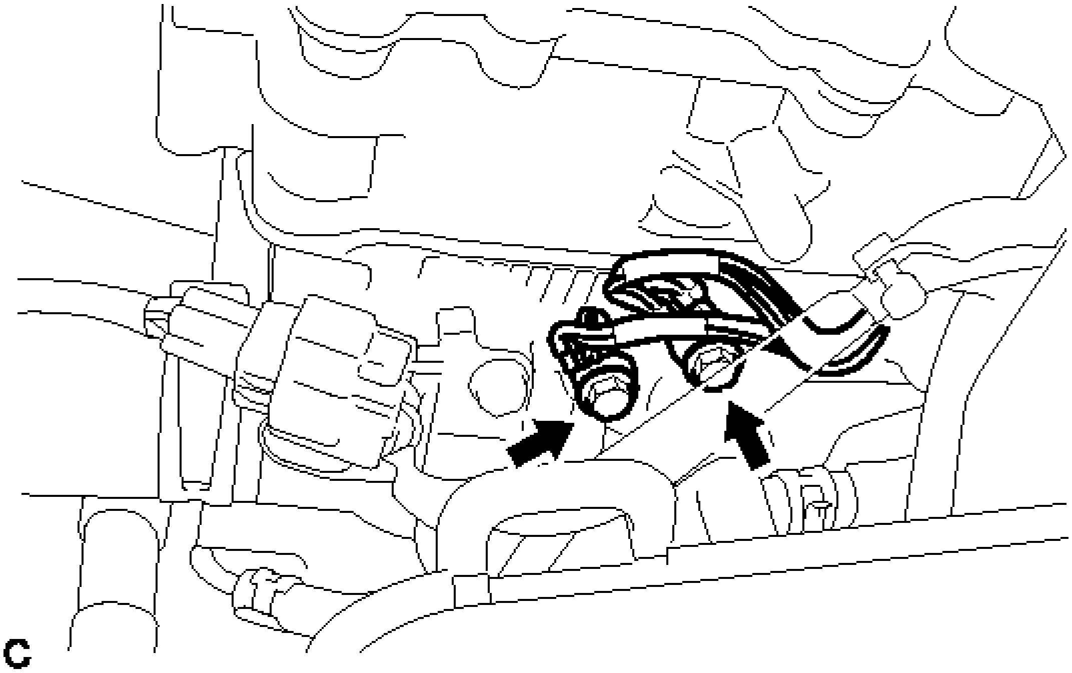

Fig. 59: Identifying Bolts
Courtesy of TOYOTA MOTOR SALES, U.S.A., INC.

c. Using a 19 mm ball joint lock nut wrench, remove the engine coolant temperature sensor.

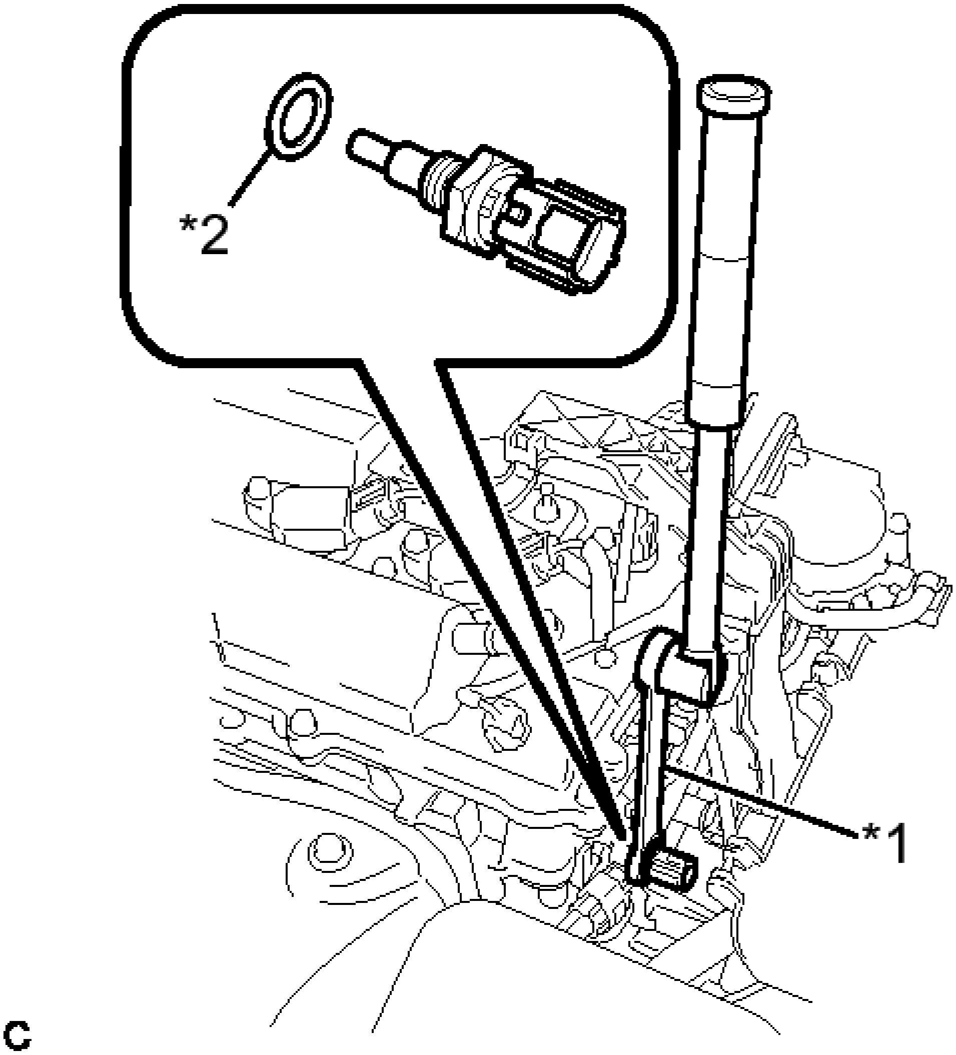

Fig. 60: Removing Engine Coolant Temperature Sensor
Courtesy of TOYOTA MOTOR SALES, U.S.A., INC.

TEXT IN ILLUSTRATION

*1	Ball Joint Lock Nut Wrench
*2	Gasket

d. Remove the gasket from the engine coolant temperature sensor.

INSPECTION

INSPECTION

1. **INSPECT ENGINE COOLANT TEMPERATURE SENSOR**

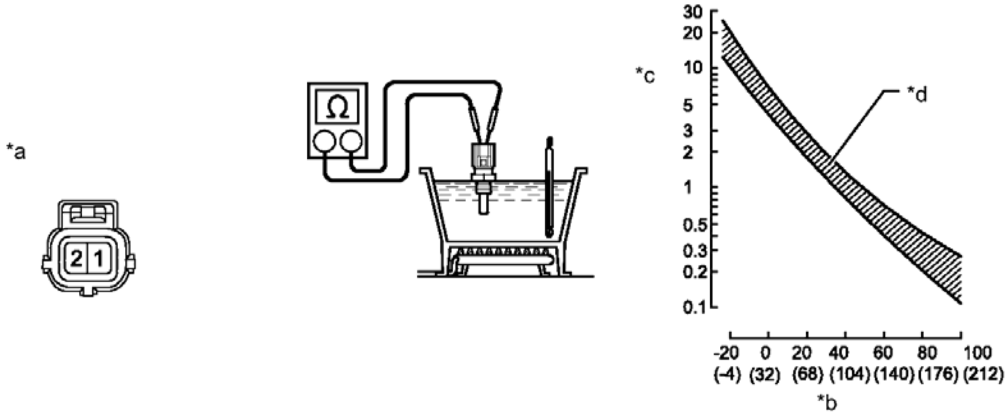

Fig. 61: Inspecting Engine Coolant Temperature Sensor With Graph
Courtesy of TOYOTA MOTOR SALES, U.S.A., INC.

TEXT IN ILLUSTRATION

*a	Component without harness connected (Engine Coolant Temperature Sensor)	*b	Temperature °C (°F)
*c	Resistance ohms	*d	Acceptable

a. Partially immerse the sensor in water and warm up the water.
b. Measure the resistance according to the value(s) in the table below.

Standard Resistance

Tester Connection	Condition	Specified Condition
1 - 2	20°C (68°F)	2.32 to 2.59 kohms
1 - 2	80°C (176°F)	0.310 to 0.326 kohms

NOTE: **When checking the sensor in water, keep the terminals dry. After the check, wipe the sensor dry.**

If the result is not as specified, replace the engine coolant temperature sensor.

INSTALLATION

INSTALLATION

HINT:

Perform "Inspection After Repair" after replacing the engine coolant temperature sensor . Refer to **INITIALIZATION** .

1. **INSTALL ENGINE COOLANT TEMPERATURE SENSOR**
    a. Install a new gasket to the engine coolant temperature sensor.
    b. Using a 19 mm ball joint lock nut wrench, install the engine coolant temperature sensor.

    Torque: 20 N*m (204 kgf*cm, 15 ft.*lbf)

    NOTE: **Use the torque value compensation formula to calculate the torque value for use when a torque wrench is combined with a tool such as a ball joint lock nut wrench . Refer to PRECAUTION .**

    HINT:

    Perform "Inspection After Repair" after replacing the engine coolant temperature sensor . Refer to **INITIALIZATION** .

    c. Connect the engine coolant temperature sensor connector.
    d. Install the wire harness with the 2 bolts.

    Torque: 8.0 N*m (82 kgf*cm, 71 in.*lbf)

2. **INSTALL INLET AIR CLEANER ASSEMBLY** . Refer to **INSTALLATION - Step 53**
3. **INSTALL COOL AIR INTAKE DUCT SEAL** . Refer to **INSTALLATION - Step 4**
4. **ADD ENGINE COOLANT** . Refer to **REPLACEMENT - Step 2**
5. **INSPECT FOR COOLANT LEAK** . Refer to **ON-VEHICLE INSPECTION - Step 1**
6. **INSTALL NO. 1 ENGINE COVER SUB-ASSEMBLY** . Refer to **INSTALLATION - Step 68**
7. **INSTALL ENGINE UNDER COVER RH**
8. **INSTALL ENGINE UNDER COVER LH**
9. **INSTALL FRONT WHEEL OPENING EXTENSION PAD LH**
10. **INSTALL FRONT WHEEL OPENING EXTENSION PAD RH**

KNOCK SENSOR

COMPONENTS

ILLUSTRATION

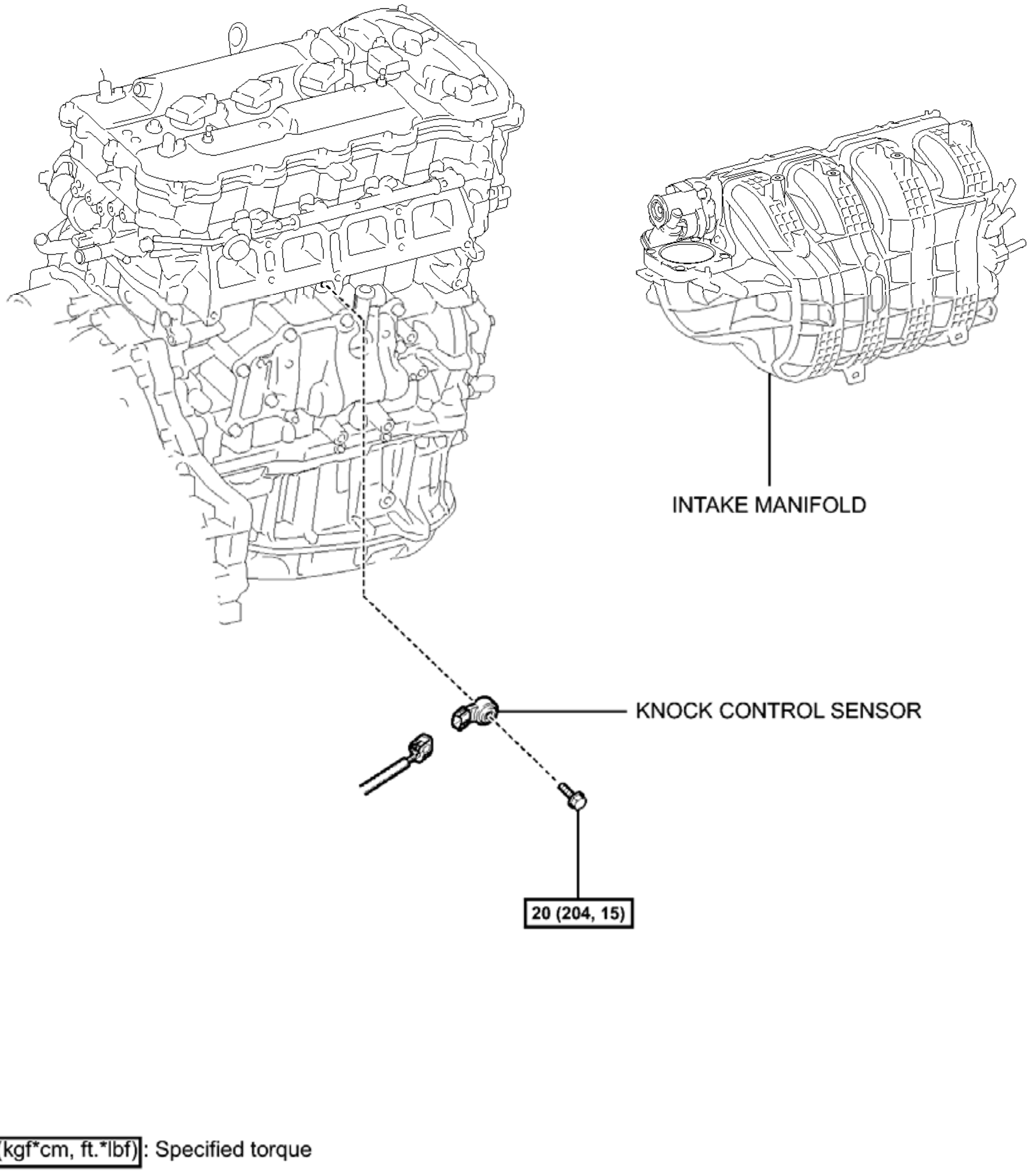
INTAKE MANIFOLD
KNOCK CONTROL SENSOR
20 (204, 15)
N*m (kgf*cm, ft.*lbf): Specified torque
c

Fig. 62: Identifying Knock Sensor Replacement Components With Torque Specifications
Courtesy of TOYOTA MOTOR SALES, U.S.A., INC.

REMOVAL

REMOVAL

1. **REMOVE INTAKE MANIFOLD**

   Refer to **REMOVAL**

2. **REMOVE KNOCK CONTROL SENSOR**
   a. Disconnect the sensor connector.

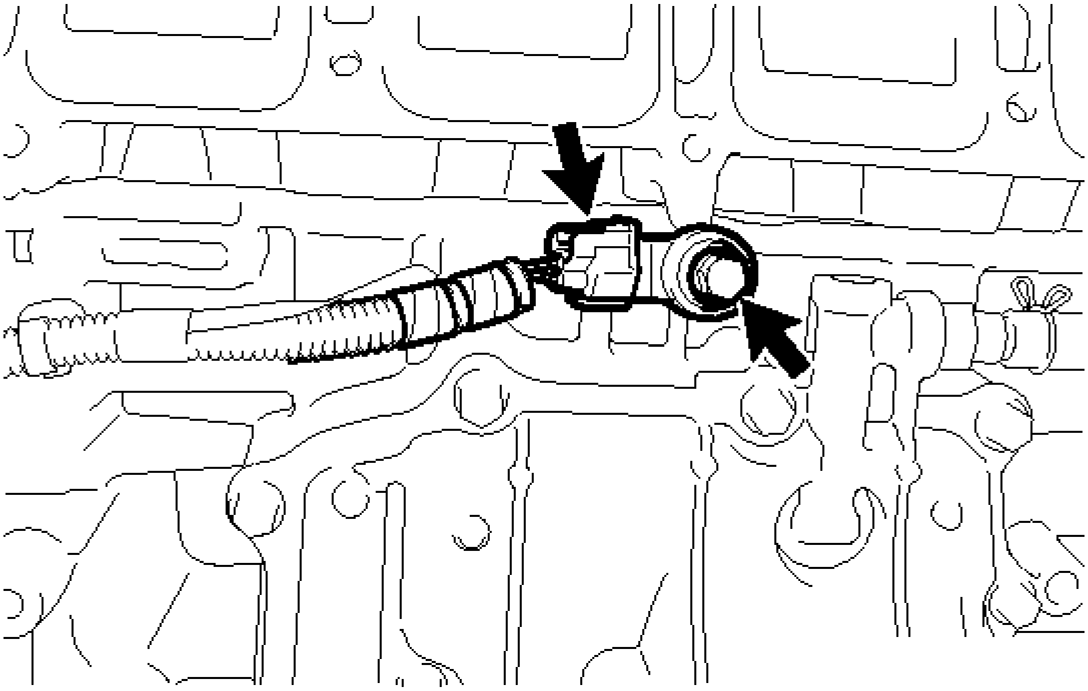

Fig. 63: Locating Bolt And Sensor
Courtesy of TOYOTA MOTOR SALES, U.S.A., INC.

   b. Remove the bolt and knock control sensor.

INSPECTION

INSPECTION

1. **INSPECT KNOCK CONTROL SENSOR**
   a. Measure the resistance according to the value(s) in the table below.

   Standard Resistance

Tester Connection	Condition	Specified Condition
1 - 2	20°C (68° F)	120 to 280 kohms

If the result is not as specified, replace the knock control sensor.

INSTALLATION

INSTALLATION

Perform "Inspection After Repair" after replacing the knock control sensor . Refer to **INITIALIZATION** .

1. **INSTALL KNOCK CONTROL SENSOR**
   a. Install the sensor with the bolt so that the sensor is angled as shown in the illustration.

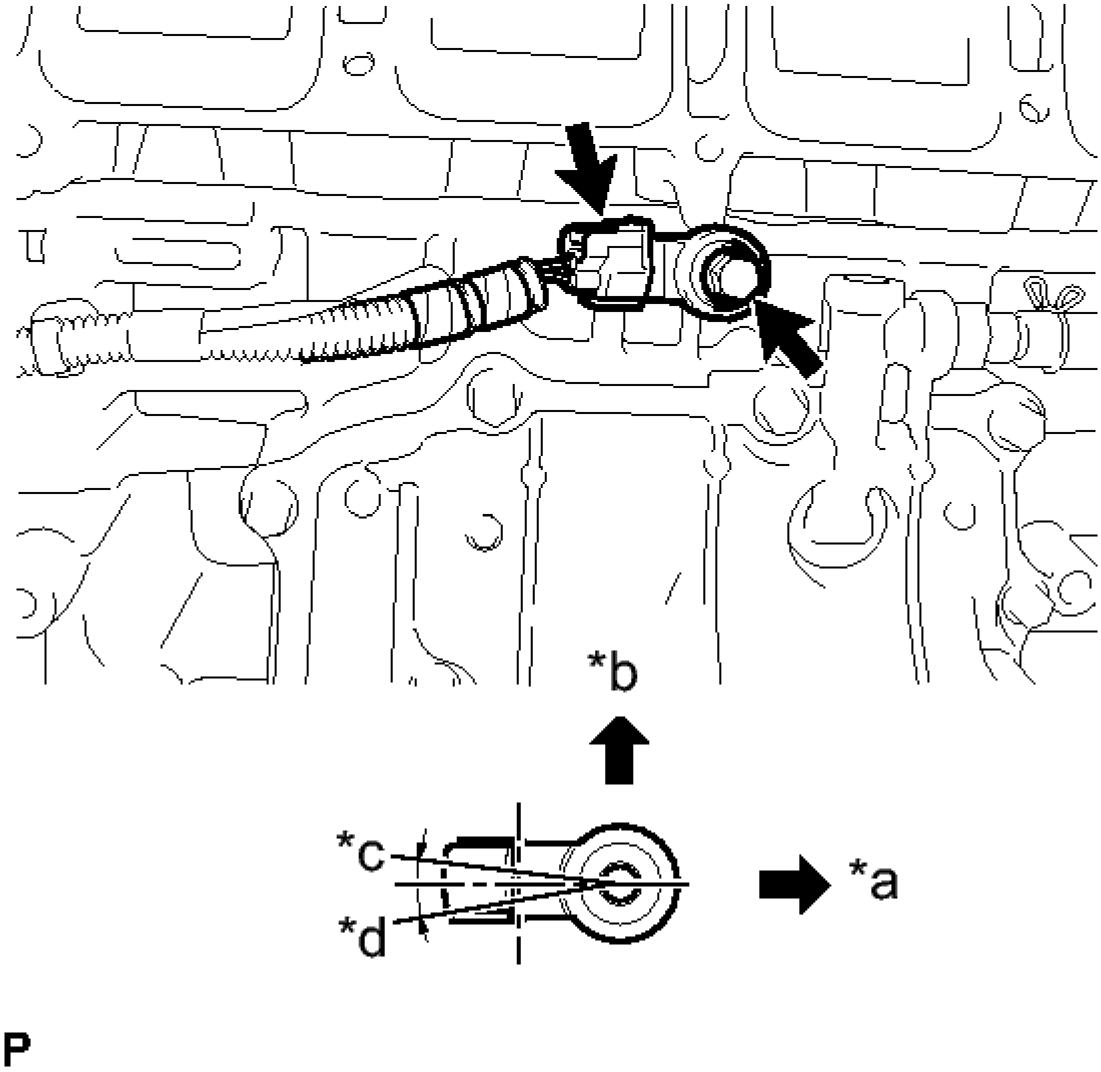

Fig. 64: Identifying Knock Control Sensor
Courtesy of TOYOTA MOTOR SALES, U.S.A., INC.

Torque: 20 N*m (204 kgf*cm, 15 ft.*lbf)

TEXT IN ILLUSTRATION

*a	Front of Engine
*b	Up
*c	7°
*d	10°

NOTE: **The acceptable installation angle of the sensor is between 7° upward and 10° downward from the horizontal position.**

HINT:

Perform "Inspection After Repair" after replacing the knock control sensor . Refer to **INITIALIZATION**

b. Connect the sensor connector.

2. **INSTALL INTAKE MANIFOLD**

   Refer to **INSTALLATION**

AIR FUEL RATIO SENSOR

COMPONENTS

ILLUSTRATION

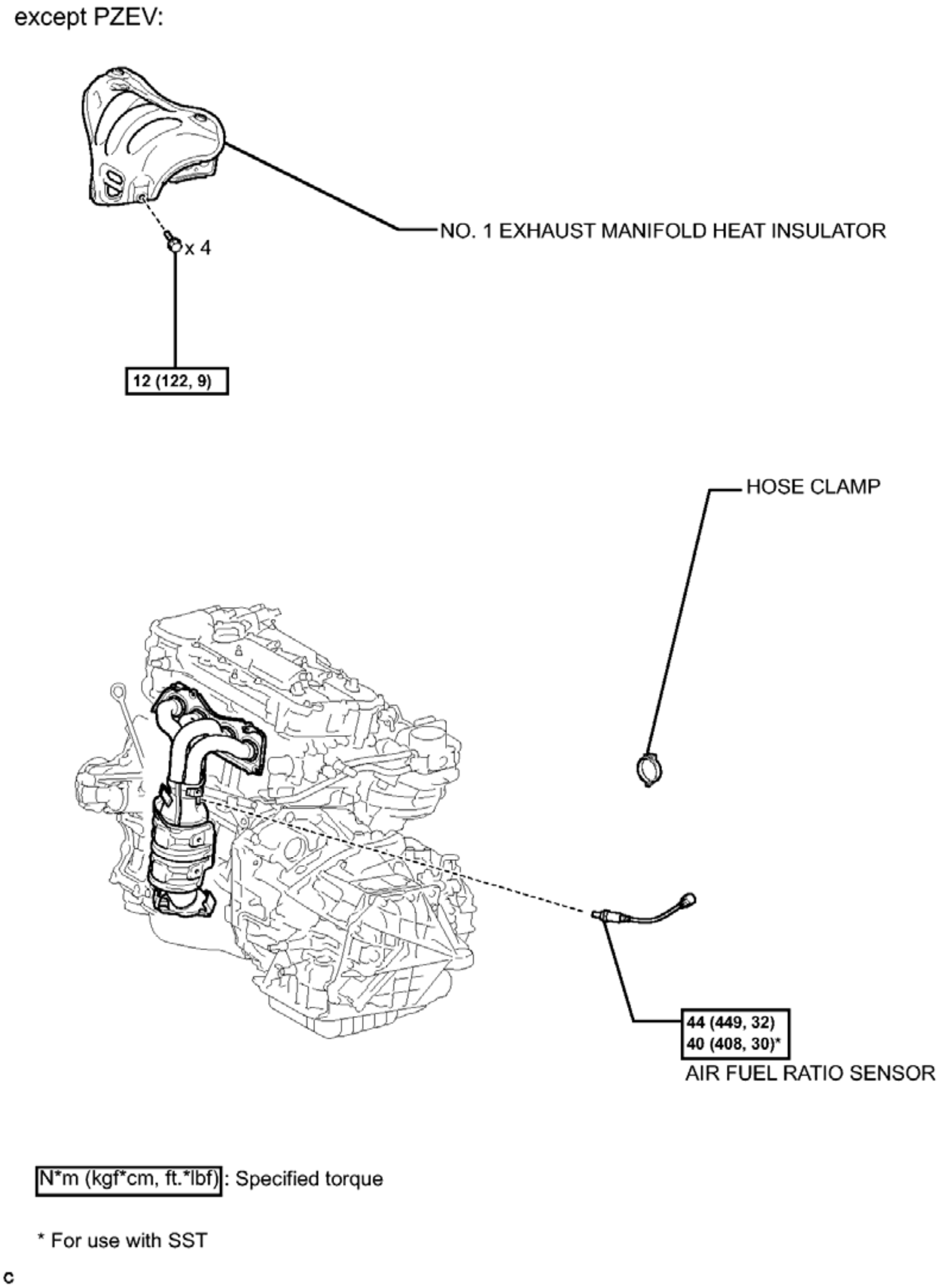
except PZEV:
NO. 1 EXHAUST MANIFOLD HEAT INSULATOR
x 4
12 (122, 9)
HOSE CLAMP
44 (449, 32)
40 (408, 30)*
AIR FUEL RATIO SENSOR
N*m (kgf*cm, ft.*lbf): Specified torque
* For use with SST
c

Fig. 65: Identifying Air Fuel Ratio Sensor Replacement Components With Torque Specifications (1 Of 2)
Courtesy of TOYOTA MOTOR SALES, U.S.A., INC.

ILLUSTRATION

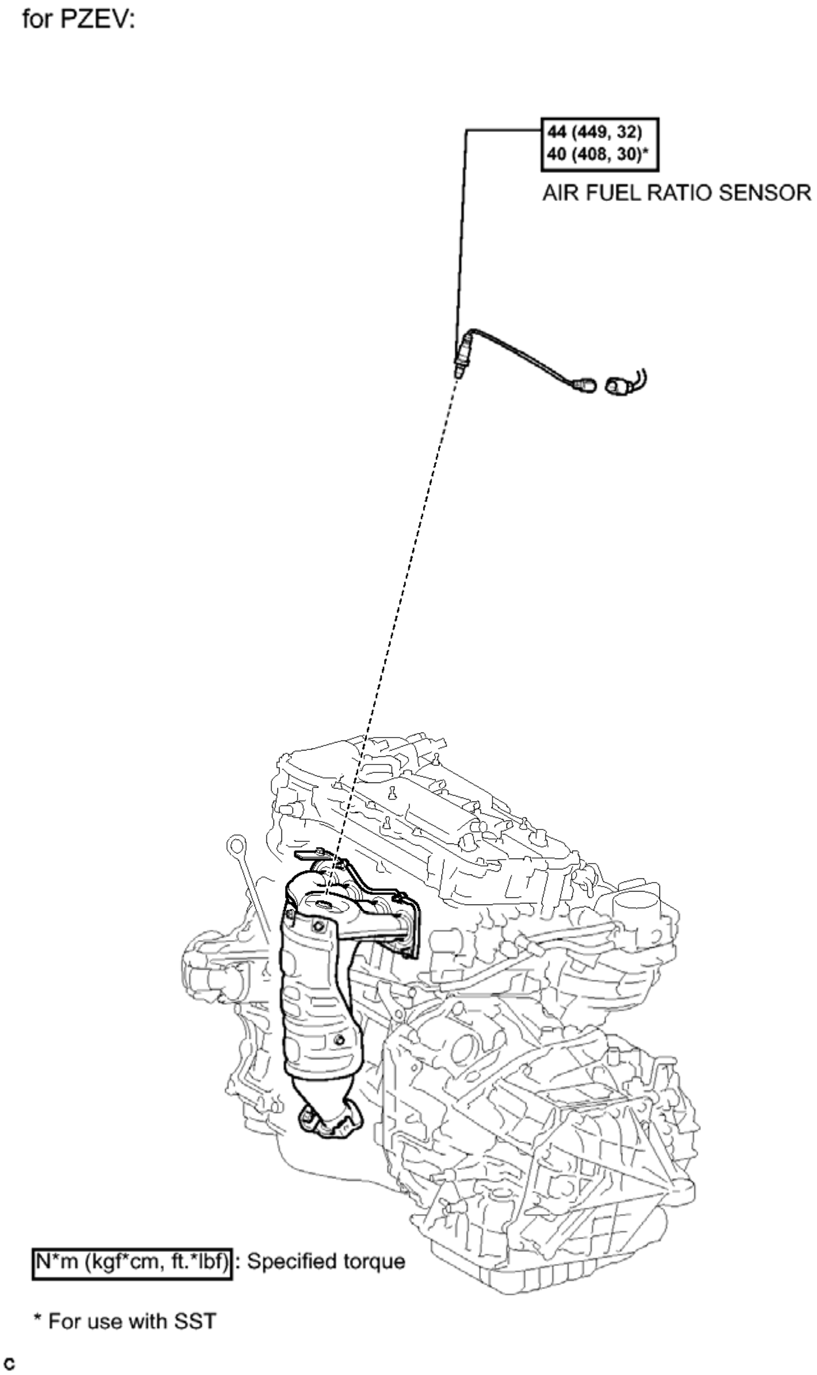
for PZEV:
44 (449, 32)
40 (408, 30)*
AIR FUEL RATIO SENSOR
N*m (kgf*cm, ft.*lbf) : Specified torque
* For use with SST
c

Fig. 66: Identifying Air Fuel Ratio Sensor Replacement Components With Torque Specifications (2 Of 2)
Courtesy of TOYOTA MOTOR SALES, U.S.A., INC.

REMOVAL

REMOVAL

1. **REMOVE NO. 1 EXHAUST MANIFOLD HEAT INSULATOR (except PZEV)** . Refer to **REMOVAL - Step 8**

2. **REMOVE AIR FUEL RATIO SENSOR (except PZEV)**
   a. Remove the hose clamp.

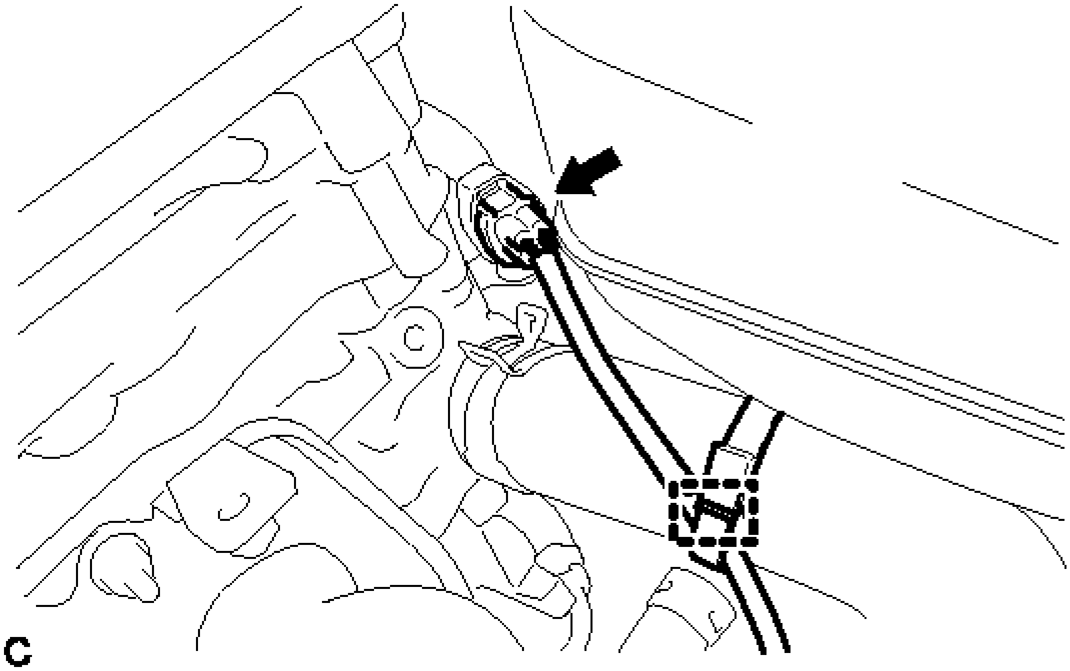

Fig. 67: Identifying Air Fuel Ratio Sensor Connector And Clamp
Courtesy of TOYOTA MOTOR SALES, U.S.A., INC.

   b. Disconnect the air fuel ratio sensor connector.
   c. Using SST, remove the air fuel ratio sensor from the exhaust manifold.

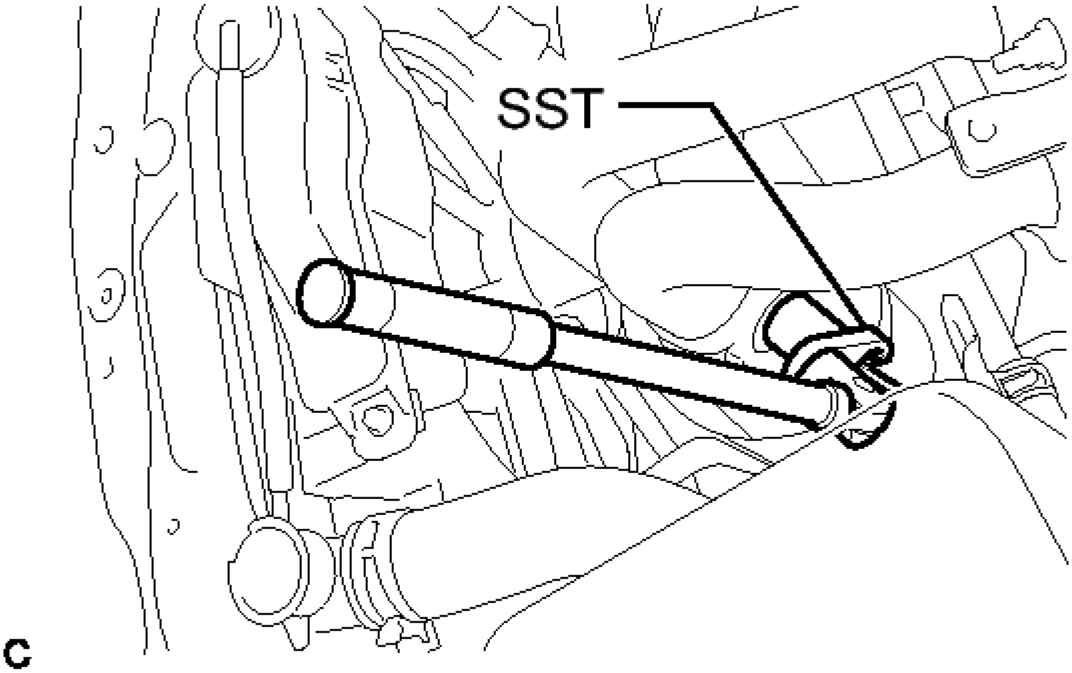

Fig. 68: Removing Air Fuel Ratio Sensor
Courtesy of TOYOTA MOTOR SALES, U.S.A., INC.

- **SST: 09224-00010**

3. **REMOVE AIR FUEL RATIO SENSOR (for PZEV)**
    a. Disconnect the air fuel ratio sensor connector.

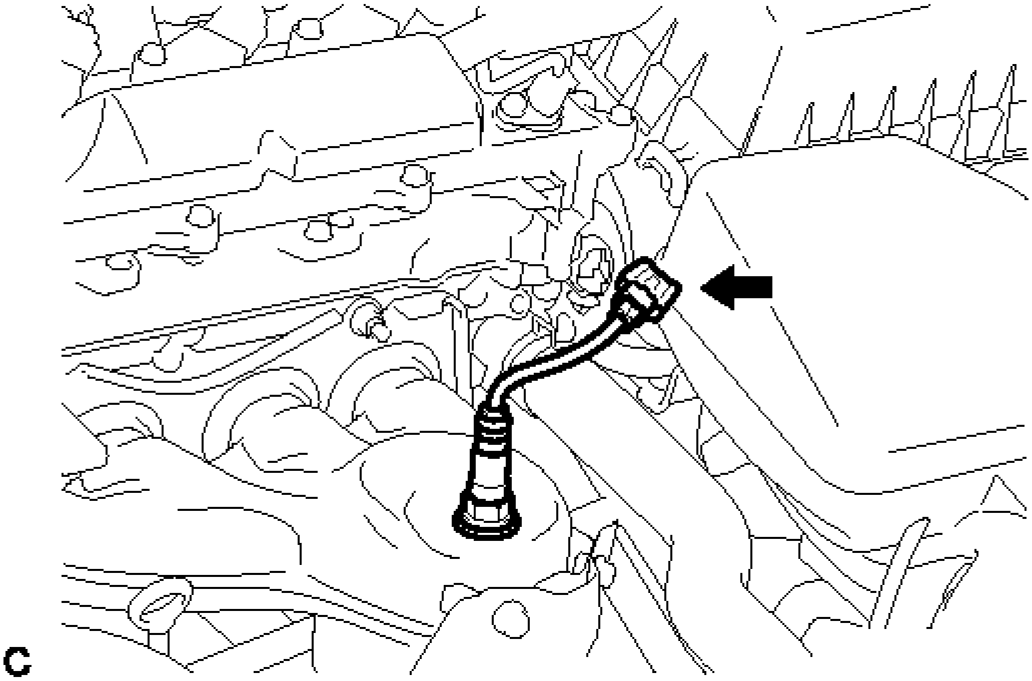

Fig. 69: Identifying Air Fuel Ratio Sensor Connector
Courtesy of TOYOTA MOTOR SALES, U.S.A., INC.

b. Using SST, remove the air fuel ratio sensor from the exhaust manifold.

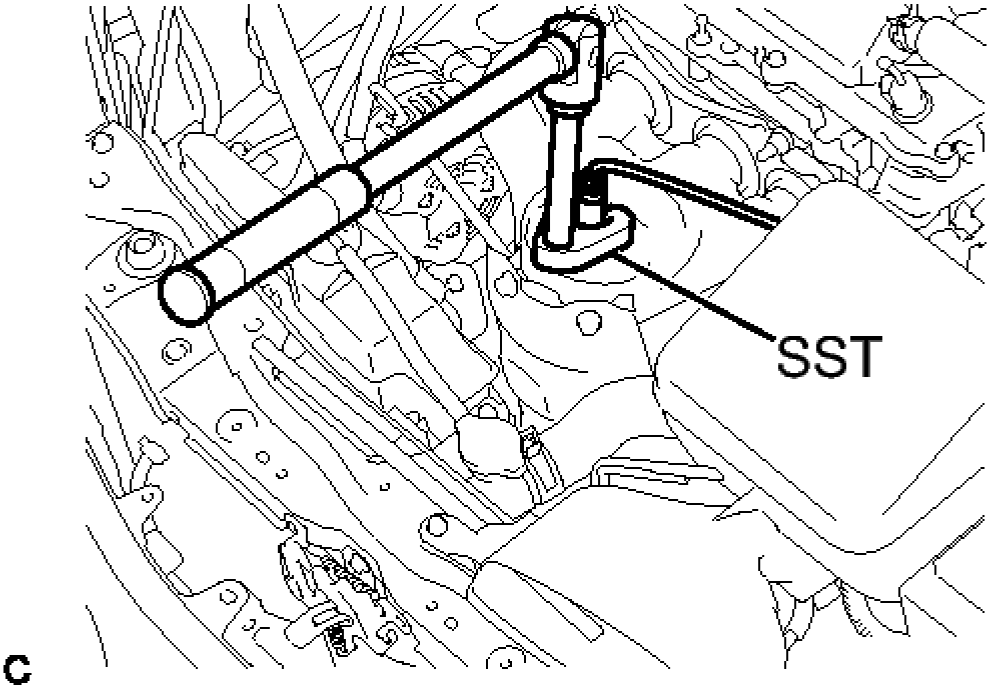

Fig. 70: Removing Air Fuel Ratio Sensor
Courtesy of TOYOTA MOTOR SALES, U.S.A., INC.

- **SST: 09224-00010**

INSPECTION

INSPECTION

1. **INSPECT AIR FUEL RATIO SENSOR**
    a. Measure the resistance according to the value(s) in the table below.

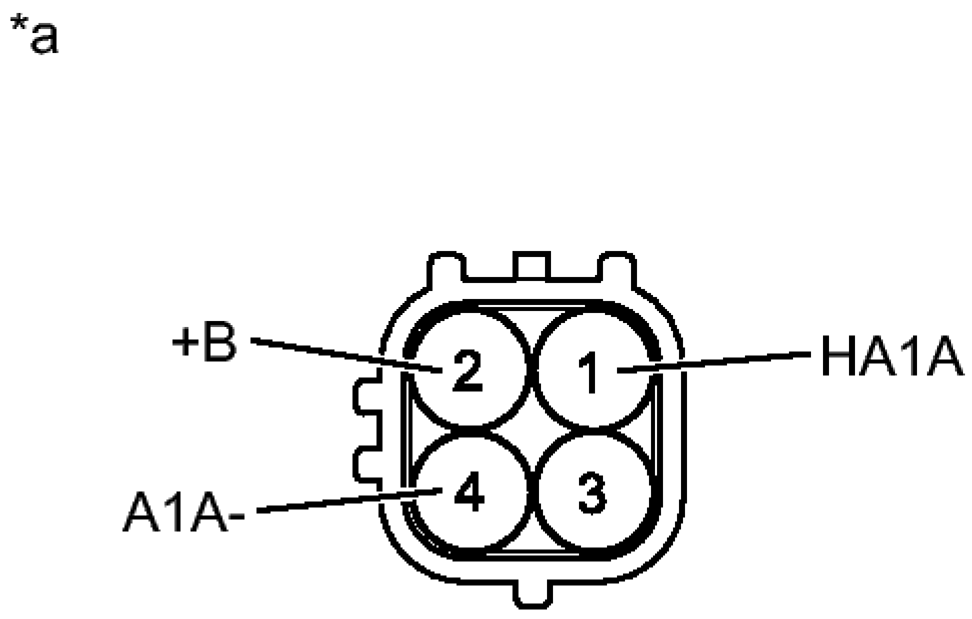

Fig. 71: Identifying Air Fuel Ratio Sensor Connector Terminals
Courtesy of TOYOTA MOTOR SALES, U.S.A., INC.

Standard Resistance

Tester Connection	Condition	Specified Condition
1 (HA1A) - 2 (+B)	20°C (68°F)	1.6 to 3.2 ohms
1 (HA1A) - 4 (A1A-)	Always	10 kohms or higher

TEXT IN ILLUSTRATION

*a	Component without harness connected: (Air Fuel Ratio Sensor)

If the result is not as specified, replace the air fuel ratio sensor.

INSTALLATION

INSTALLATION

HINT:

Perform "Inspection After Repair" after replacing the air fuel ratio sensor . Refer to **INITIALIZATION** .

1. **INSTALL AIR FUEL RATIO SENSOR (for PZEV)**
    a. Using SST, install the air fuel ratio sensor to the exhaust manifold.

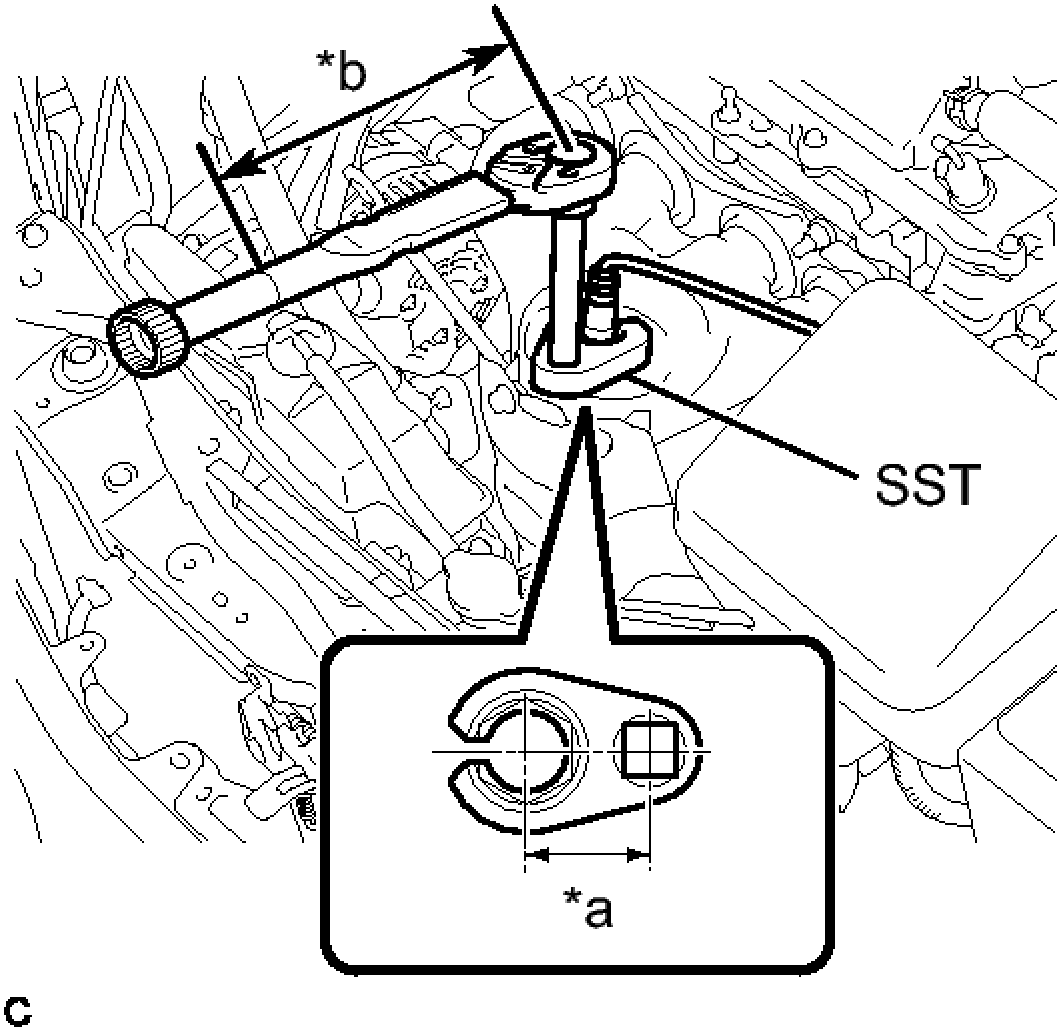

Fig. 72: Installing Air Fuel Ratio Sensor
Courtesy of TOYOTA MOTOR SALES, U.S.A., INC.

TEXT IN ILLUSTRATION

*a	Fulcrum Length 30 mm
*b	Fulcrum Length

	300 mm

- **SST: 09224-00010**

without SST

Torque: 44 N*m (449 kgf*cm, 32 ft.*lbf)

with SST

Torque: 40 N*m (408 kgf*cm, 30 ft.*lbf)

NOTE:

- **The "with SST" torque value is effective when using SST with a fulcrum length of 30 mm (1.18 in.) and a torque wrench with a fulcrum length of 300 mm (11.81 in.) . Refer to PRECAUTION .**
- **The "with SST" torque value is effective when SST is parallel to the torque wrench.**

HINT:

Perform "Inspection After Repair" after replacing the air fuel ratio sensor . Refer to **INITIALIZATION** .

b. Connect the air fuel ratio sensor connector.

2. **INSTALL AIR FUEL RATIO SENSOR (except PZEV)**
   a. Using SST, install the air fuel ratio sensor to the exhaust manifold.

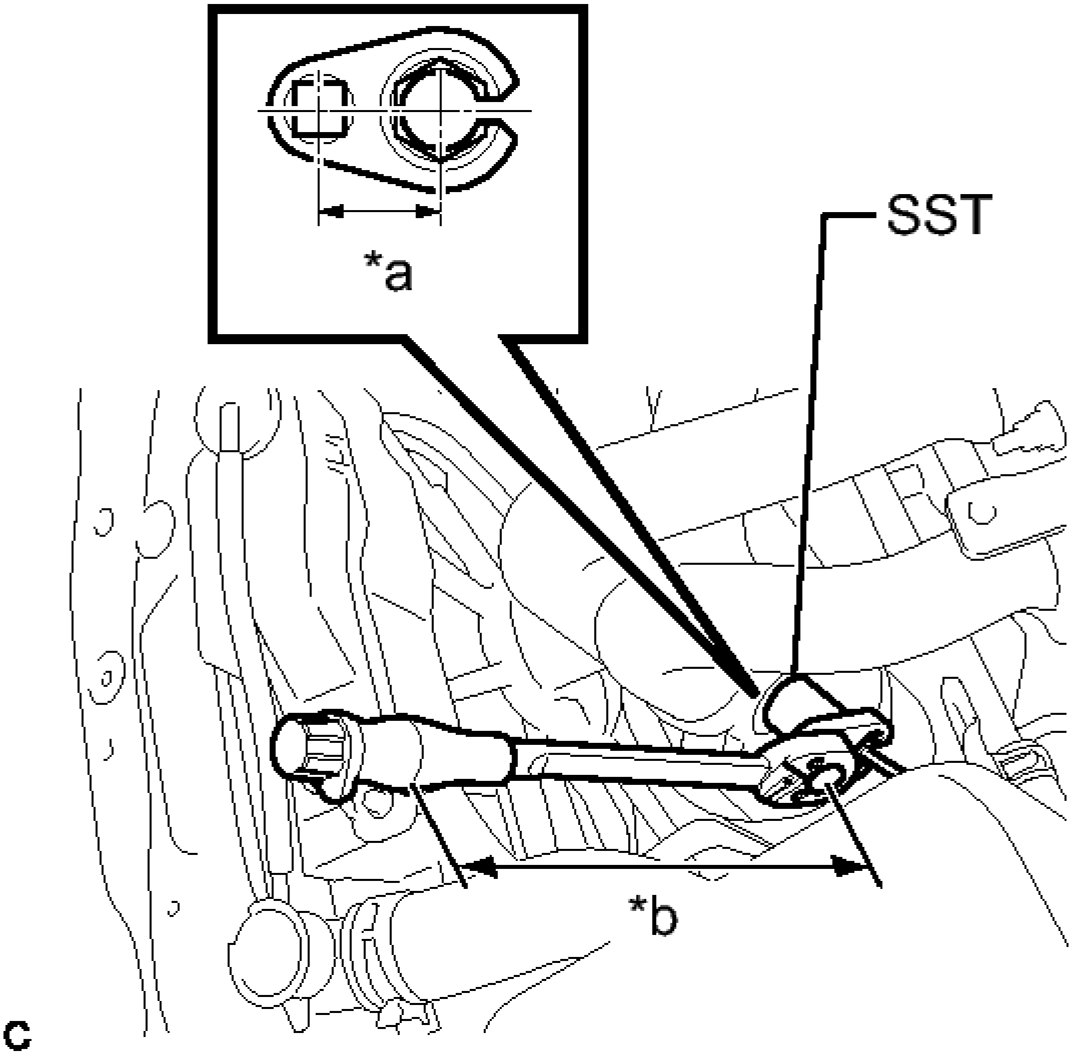

Fig. 73: Installing Air Fuel Ratio Sensor
Courtesy of TOYOTA MOTOR SALES, U.S.A., INC.

TEXT IN ILLUSTRATION

*a	Fulcrum Length 30 mm
*b	Fulcrum Length 300 mm

- **SST: 09224-00010**

without SST

Torque: 44 N*m (449 kgf*cm, 32 ft.*lbf)

with SST

Torque: 40 N*m (408 kgf*cm, 30 ft.*lbf)

NOTE:	- **The "with SST" torque value is effective when using SST with a fulcrum length of 30 mm (1.18 in.) and a torque wrench with a fulcrum length of 300 mm (11.81 in.) . Refer to PRECAUTION .** - **The "with SST" torque value is effective when SST is parallel to the torque wrench.**

HINT:

Perform "Inspection After Repair" after replacing the air fuel ratio sensor . Refer to **INITIALIZATION** .

b. Connect the air fuel ratio sensor connector.
c. Install the hose clamp.

3. **INSPECT FOR EXHAUST GAS LEAK**
4. **INSTALL NO. 1 EXHAUST MANIFOLD HEAT INSULATOR (except PZEV)** . Refer to **INSTALLATION - Step 4**

HEATED OXYGEN SENSOR

COMPONENTS

ILLUSTRATION

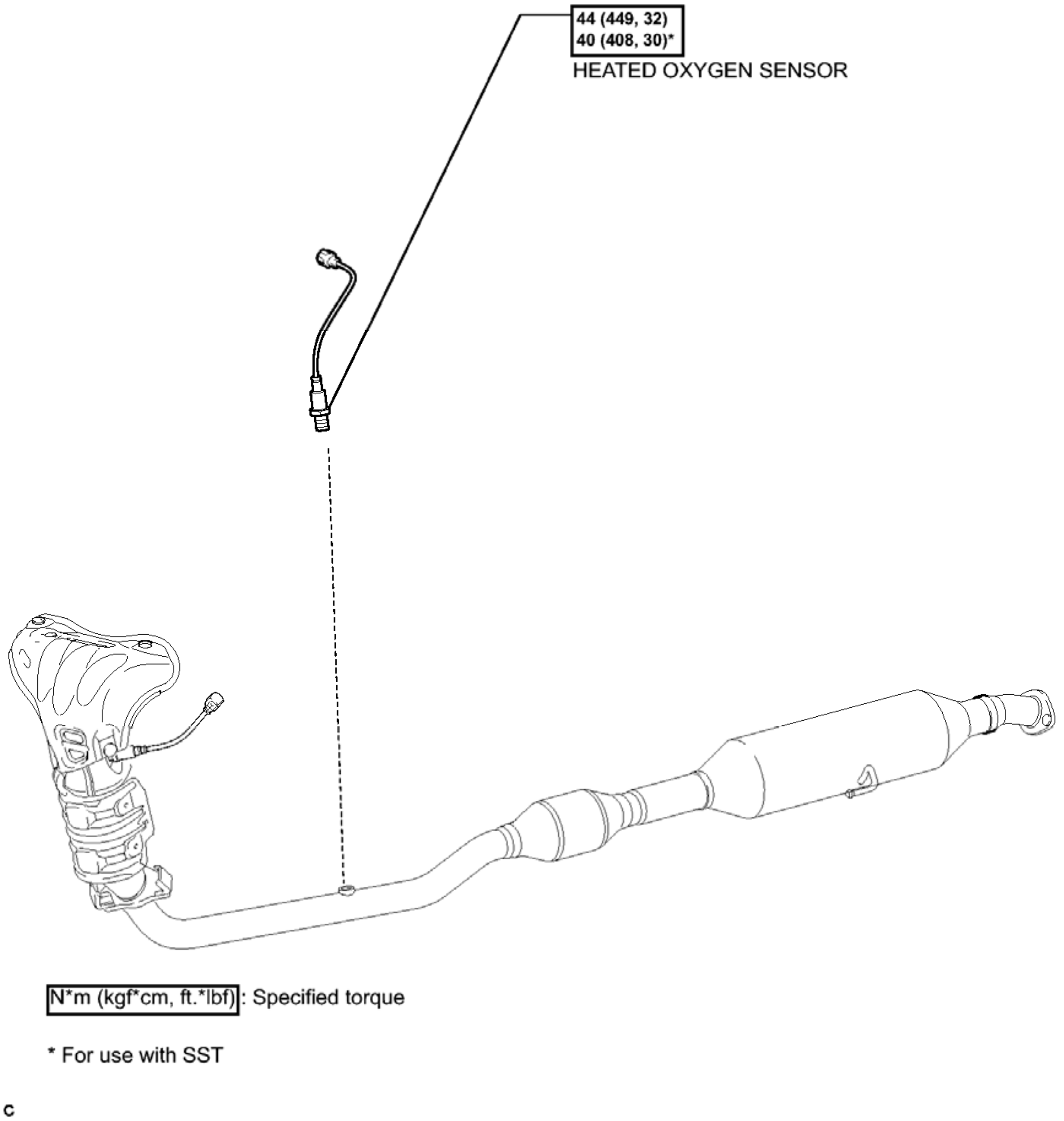
44 (449, 32)
40 (408, 30)*
HEATED OXYGEN SENSOR
N*m (kgf*cm, ft.*lbf): Specified torque
* For use with SST
C

Fig. 74: Identifying Heated Oxygen Sensor Replacement Components With Torque Specifications
Courtesy of TOYOTA MOTOR SALES, U.S.A., INC.

REMOVAL

REMOVAL

1. **REMOVE HEATED OXYGEN SENSOR**
    a. Disconnect the heated oxygen sensor connector.

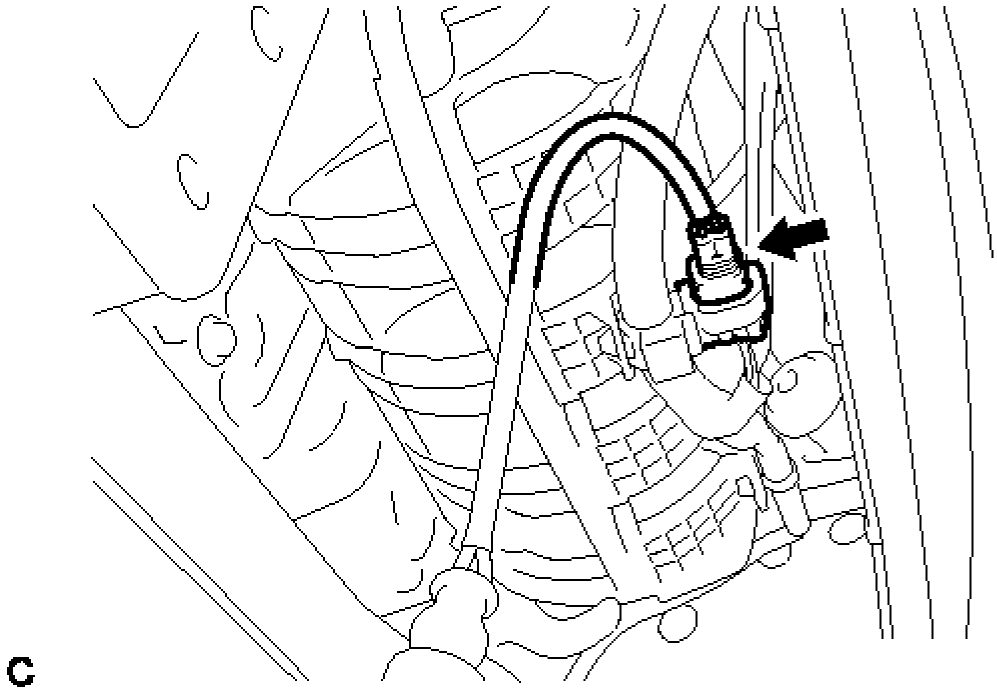

Fig. 75: Identifying Heated Oxygen Sensor Connector
Courtesy of TOYOTA MOTOR SALES, U.S.A., INC.

b. Using SST, remove the heated oxygen sensor from the front exhaust pipe.

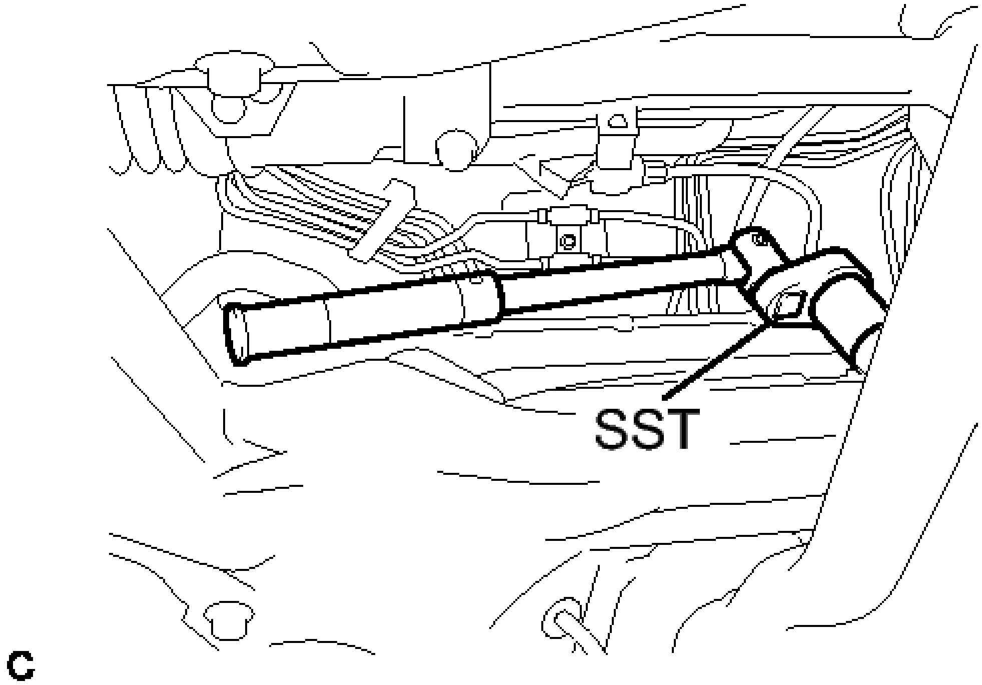

Fig. 76: Removing Heated Oxygen Sensor
Courtesy of TOYOTA MOTOR SALES, U.S.A., INC.

- **SST: 09224-00010**

INSPECTION

INSPECTION

1. **INSPECT OXYGEN SENSOR**
    a. Measure the resistance according to the value(s) in the table below.

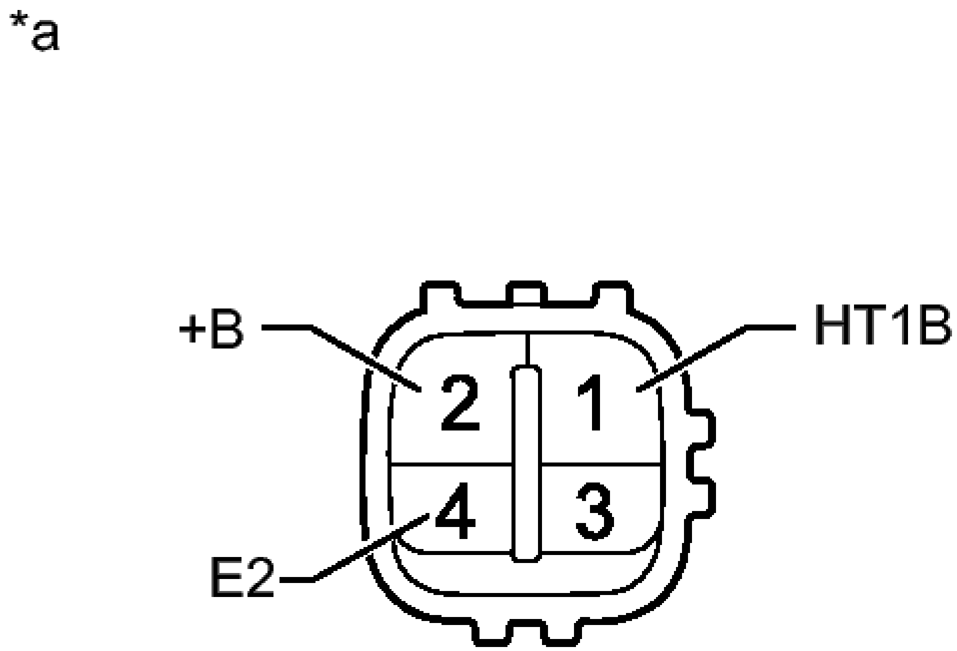

Fig. 77: Identifying Heated Oxygen Sensor Connector Terminals
Courtesy of TOYOTA MOTOR SALES, U.S.A., INC.

Standard Resistance

Tester Connection	Condition	Specified Condition
1 (HT1B) - 2 (+B)	20°C (68°F)	11 to 16 ohms
1 (HT1B) - 4 (E2)	Always	10 kohms or higher

TEXT IN ILLUSTRATION

*a	Component without harness connected

	(Oxygen Sensor)

If the result is not as specified, replace the oxygen sensor.

INSTALLATION

INSTALLATION

1. **INSTALL HEATED OXYGEN SENSOR**
    a. Using SST, install the heated oxygen sensor to the front exhaust pipe.

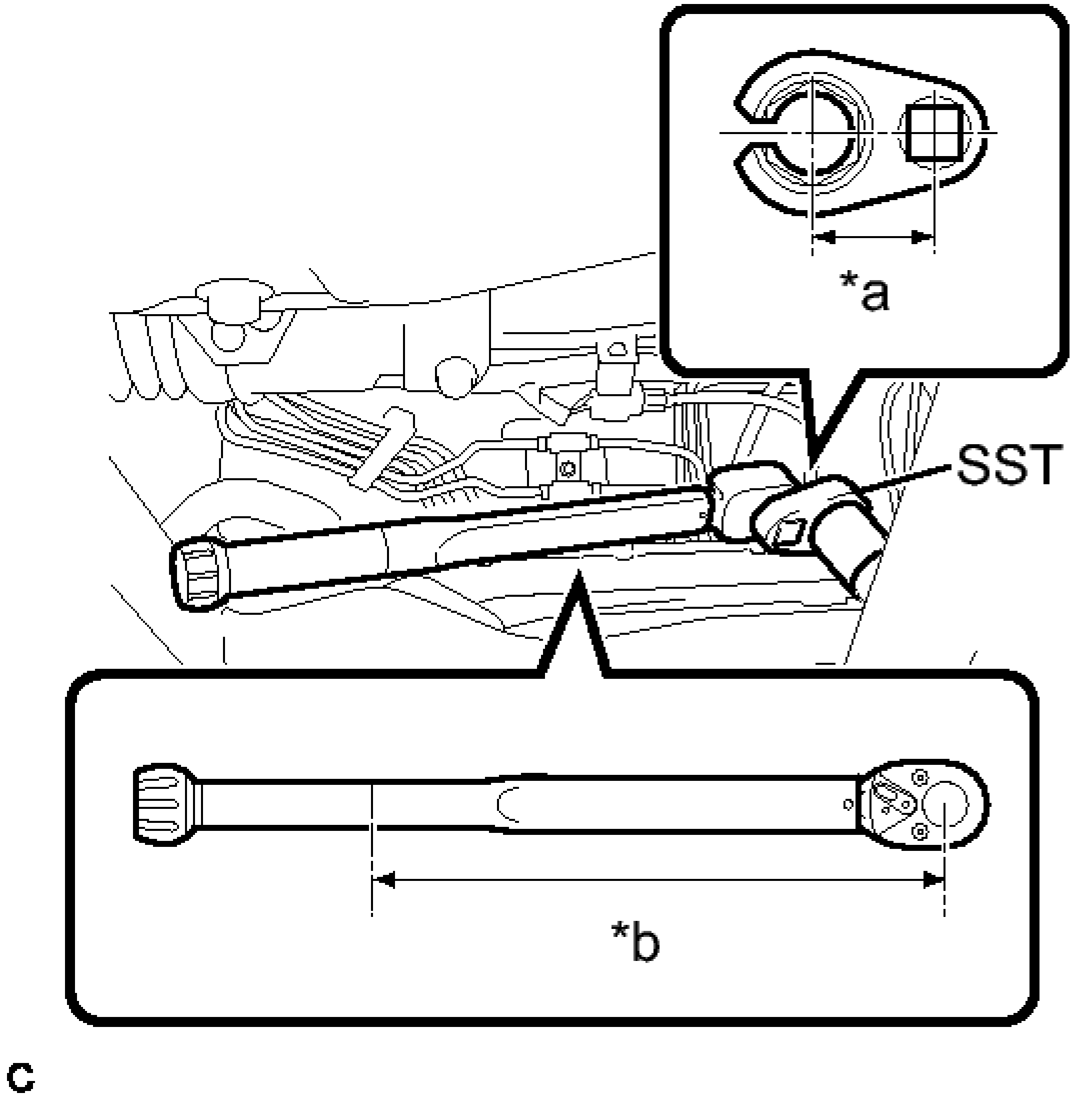

Fig. 78: Installing Heated Oxygen Sensor
Courtesy of TOYOTA MOTOR SALES, U.S.A., INC.

TEXT IN ILLUSTRATION

*a	Fulcrum Length 30 mm
*b	Fulcrum Length 300 mm

- **SST: 09224-00010**

without SST

Torque: 44 N*m (449 kgf*cm, 32 ft.*lbf)

with SST

Torque: 40 N*m (408 kgf*cm, 30 ft.*lbf)

NOTE:

- **The "with SST" torque value is effective when using SST with a fulcrum length of 30 mm (1.18 in.) and a torque wrench with a fulcrum length of 300 mm (11.81 in.) . Refer to PRECAUTION**
- **The "with SST" torque value is effective when SST is parallel to the torque wrench.**

b. Connect the heated oxygen sensor connector.

2. **INSPECT FOR EXHAUST GAS LEAK**

INTEGRATION RELAY

COMPONENTS

ILLUSTRATION

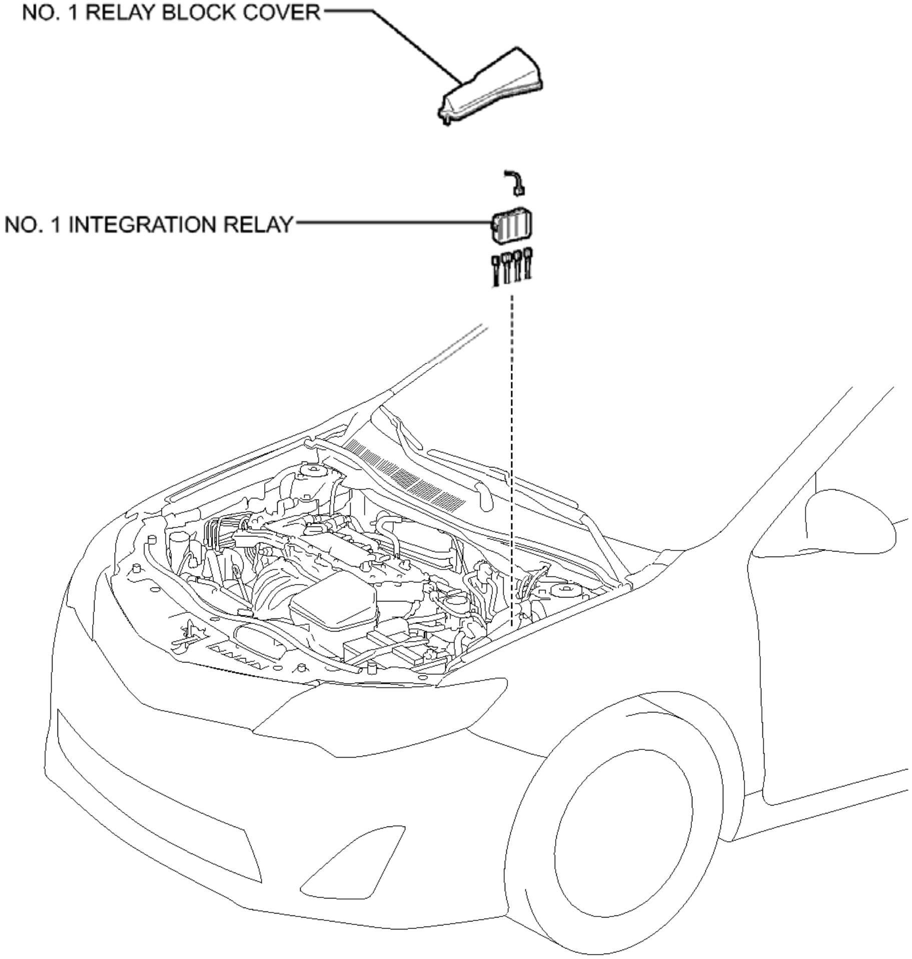
NO. 1 RELAY BLOCK COVER
NO. 1 INTEGRATION RELAY

C

Fig. 79: Identifying Integration Relay Replacement Components With Torque Specifications
Courtesy of TOYOTA MOTOR SALES, U.S.A., INC.

REMOVAL

REMOVAL

1. **REMOVE NO. 1 RELAY BLOCK COVER**
2. **REMOVE NO. 1 INTEGRATION RELAY**
    a. Disconnect the connector.

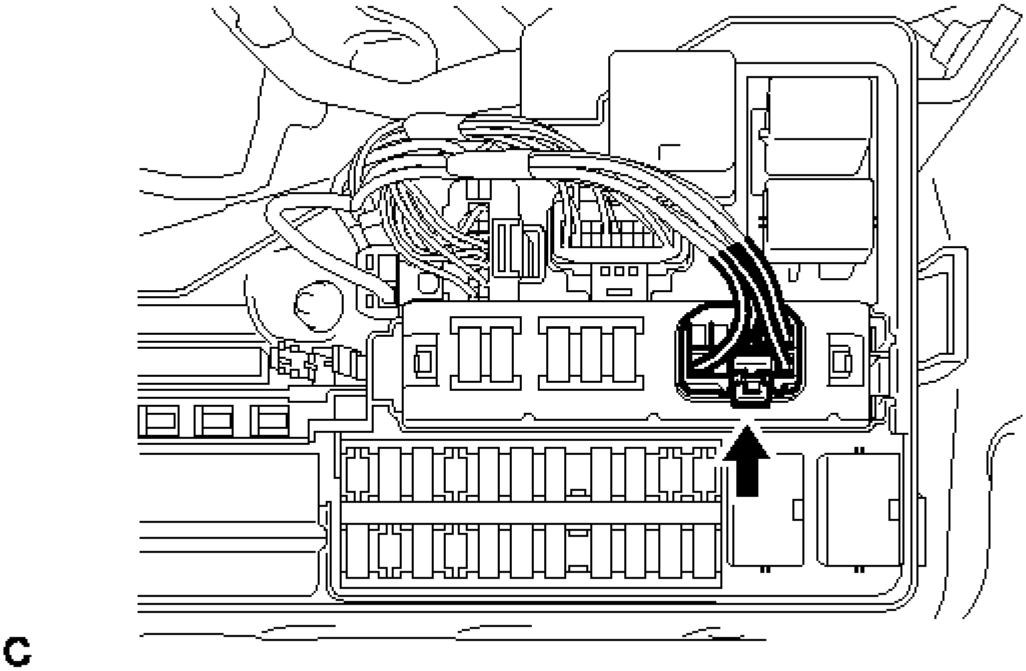

Fig. 80: Identifying No. 1 Integration Relay Connector
Courtesy of TOYOTA MOTOR SALES, U.S.A., INC.

b. Using a screwdriver with its tip wrapped in protective tape, disengage the 2 claws and disconnect the No. 1 integration relay.

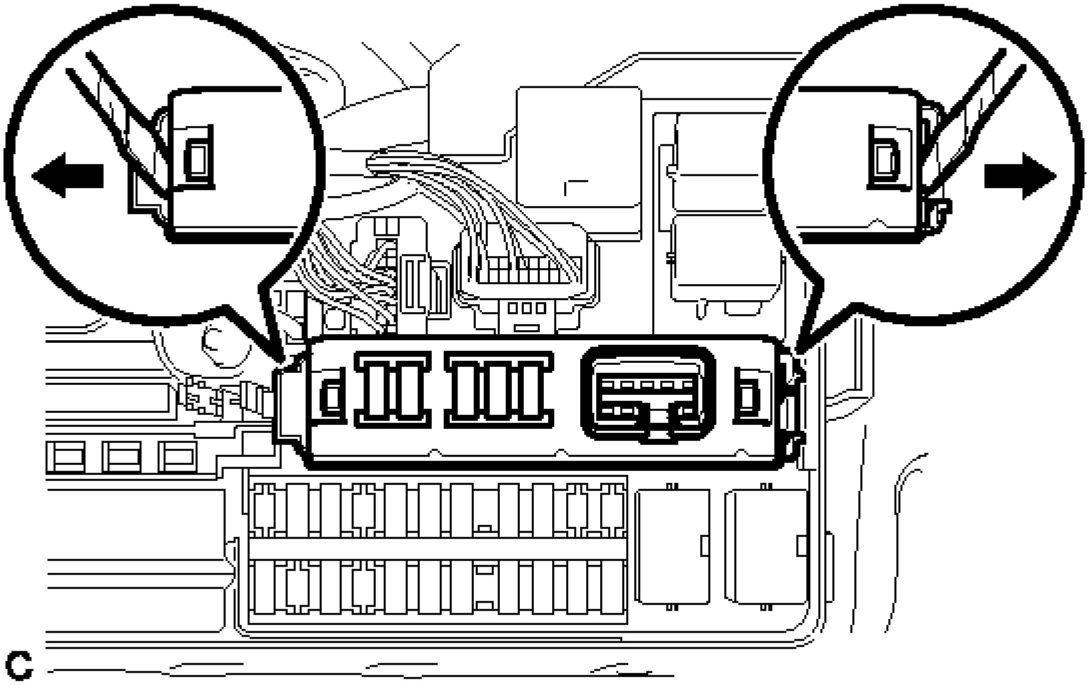

Fig. 81: Identifying No. 1 Integration Relay Claws

Courtesy of TOYOTA MOTOR SALES, U.S.A., INC.

c. Disconnect the 4 connectors and remove the No. 1 integration relay.

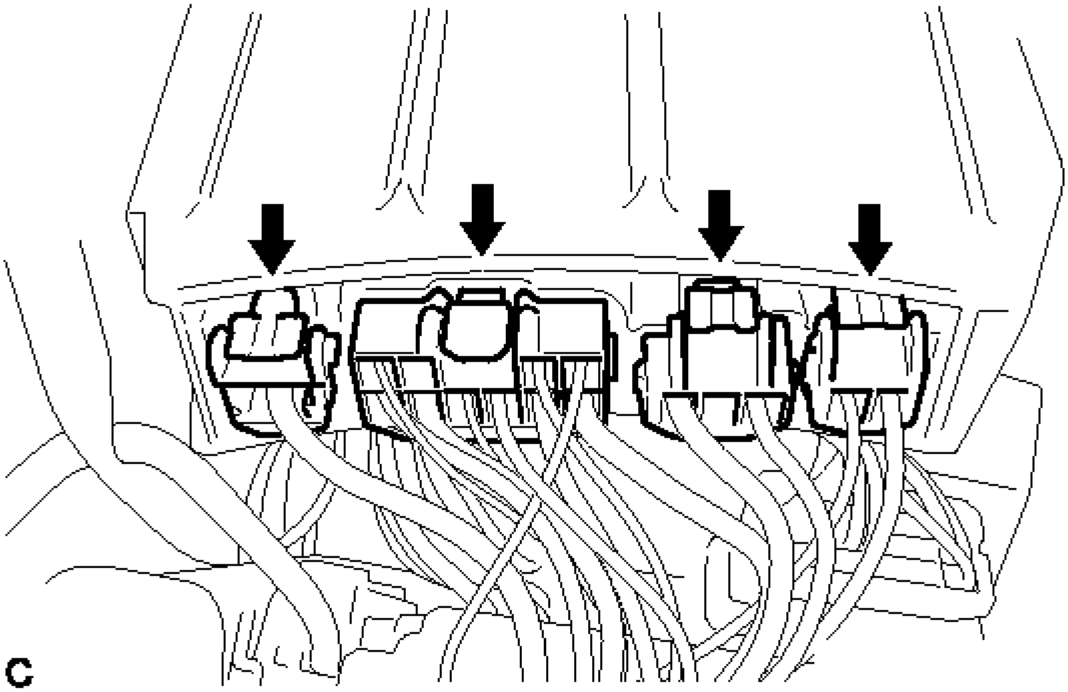

Fig. 82: Identifying No. 1 Integration Relay Connectors
Courtesy of TOYOTA MOTOR SALES, U.S.A., INC.

INSPECTION

INSPECTION

1. **INSPECT NO. 1 INTEGRATION RELAY**

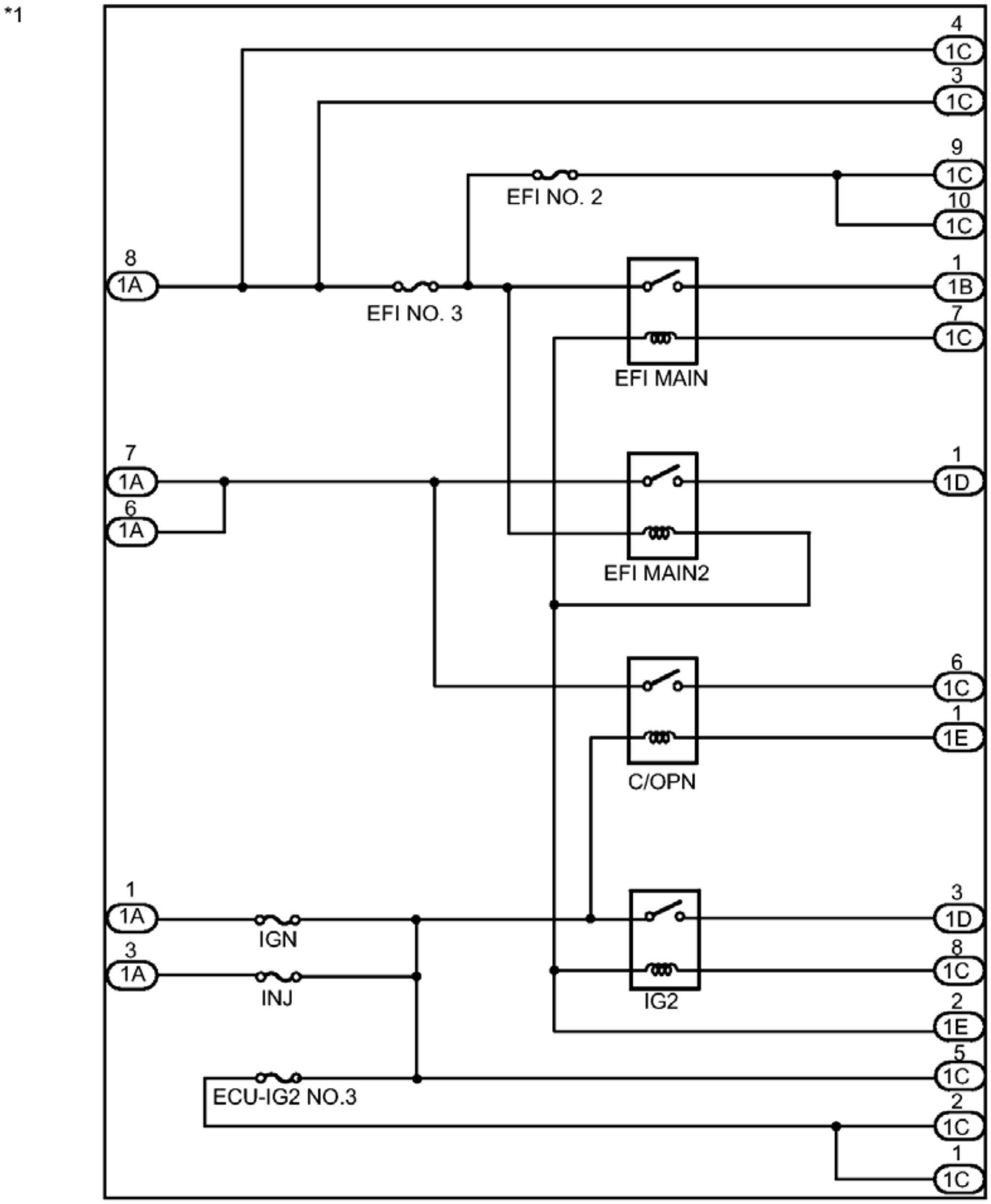
*1
4
1C
3
1C
9
1C
EFI NO. 2
10
1C
8
1A
EFI NO. 3
1
1B
7
1C
EFI MAIN
7
1A
6
1A
1
1D
EFI MAIN2
6
1C
1
1E
C/OPN
1
1A
IGN
3
1A
INJ
3
1D
8
1C
IG2
2
1E
5
1C
ECU-IG2 NO.3
2
1C
1
1C

Fig. 83: No. 1 Integration Relay - Wiring Diagram
Courtesy of TOYOTA MOTOR SALES, U.S.A., INC.

TEXT IN ILLUSTRATION

*1	No. 1 Integration Relay	-	-

a. EFI MAIN RELAY:
    1. Measure the resistance according to the value(s) in the table below.

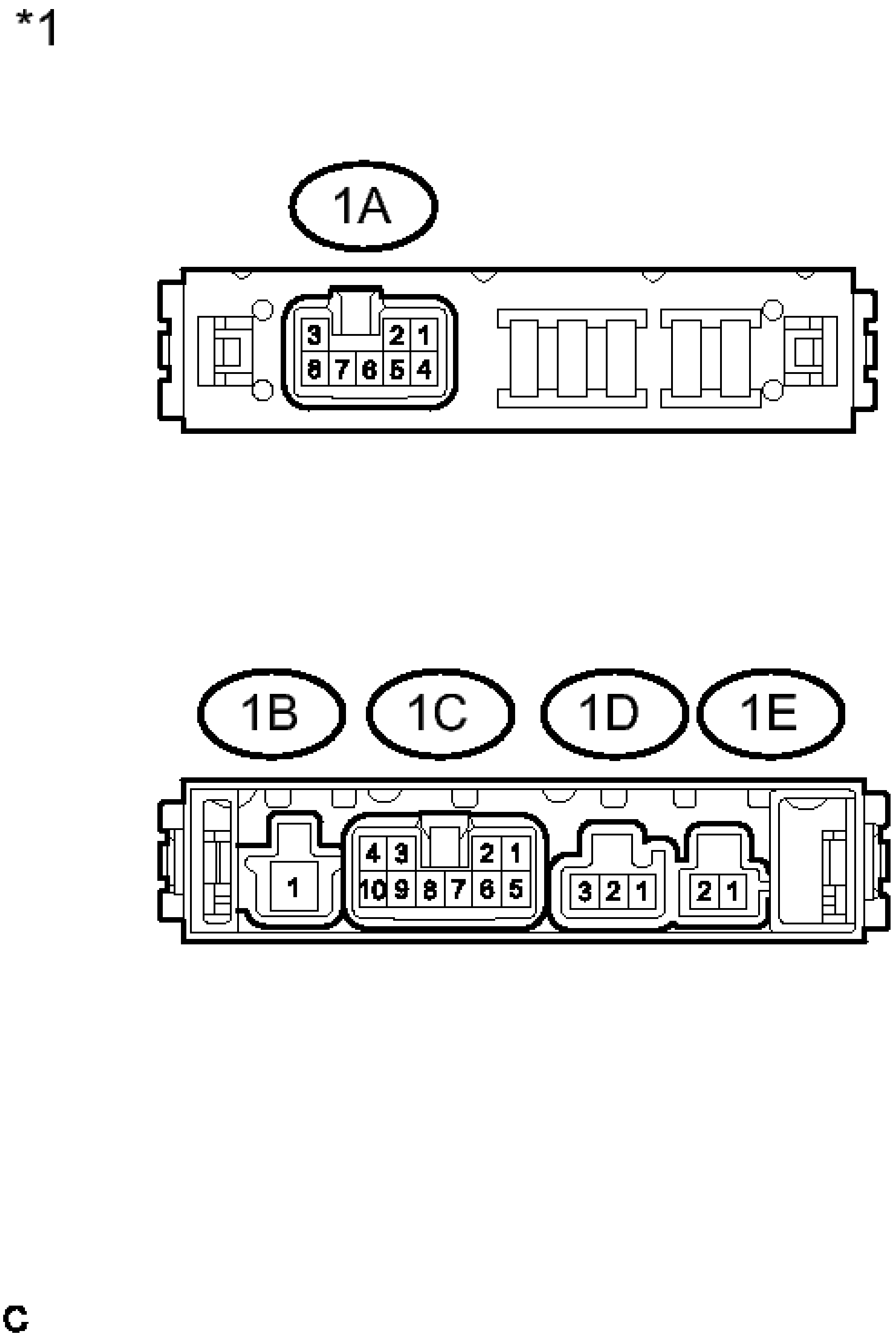
*1
1A
3 2 1
8 7 6 5 4
1B
1C
1D
1E
1
4 3 2 1
10 9 8 7 6 5
3 2 1
2 1
C

Fig. 84: Identifying IG2 Relay Connector Terminal Identification
Courtesy of TOYOTA MOTOR SALES, U.S.A., INC.

TEXT IN ILLUSTRATION

	No. 1

*1	Integration Relay

Standard Resistance

Tester Connection	Condition	Specified Condition
No. 1 integration relay 1B-1 - No. 1 integration relay 1A-8	Battery voltage is not applied between terminals 1C-7 and 1E-2	10 kohms or higher
No. 1 integration relay 1B-1 - No. 1 integration relay 1A-8	Battery voltage is applied between terminals 1C-7 and 1E-2	Below 1 ohms
No. 1 integration relay 1B-1 - No. 1 integration relay 1C-3		
No. 1 integration relay 1B-1 - No. 1 integration relay 1C-4		
No. 1 integration relay 1B-1 - No. 1 integration relay 1C-9		
No. 1 integration relay 1B-1 - No. 1 integration relay 1C-10		

If the resistance is not as specified, replace the No. 1 integration relay.

b. EFI MAIN2 RELAY:
    1. Measure the resistance according to the value(s) in the table below.

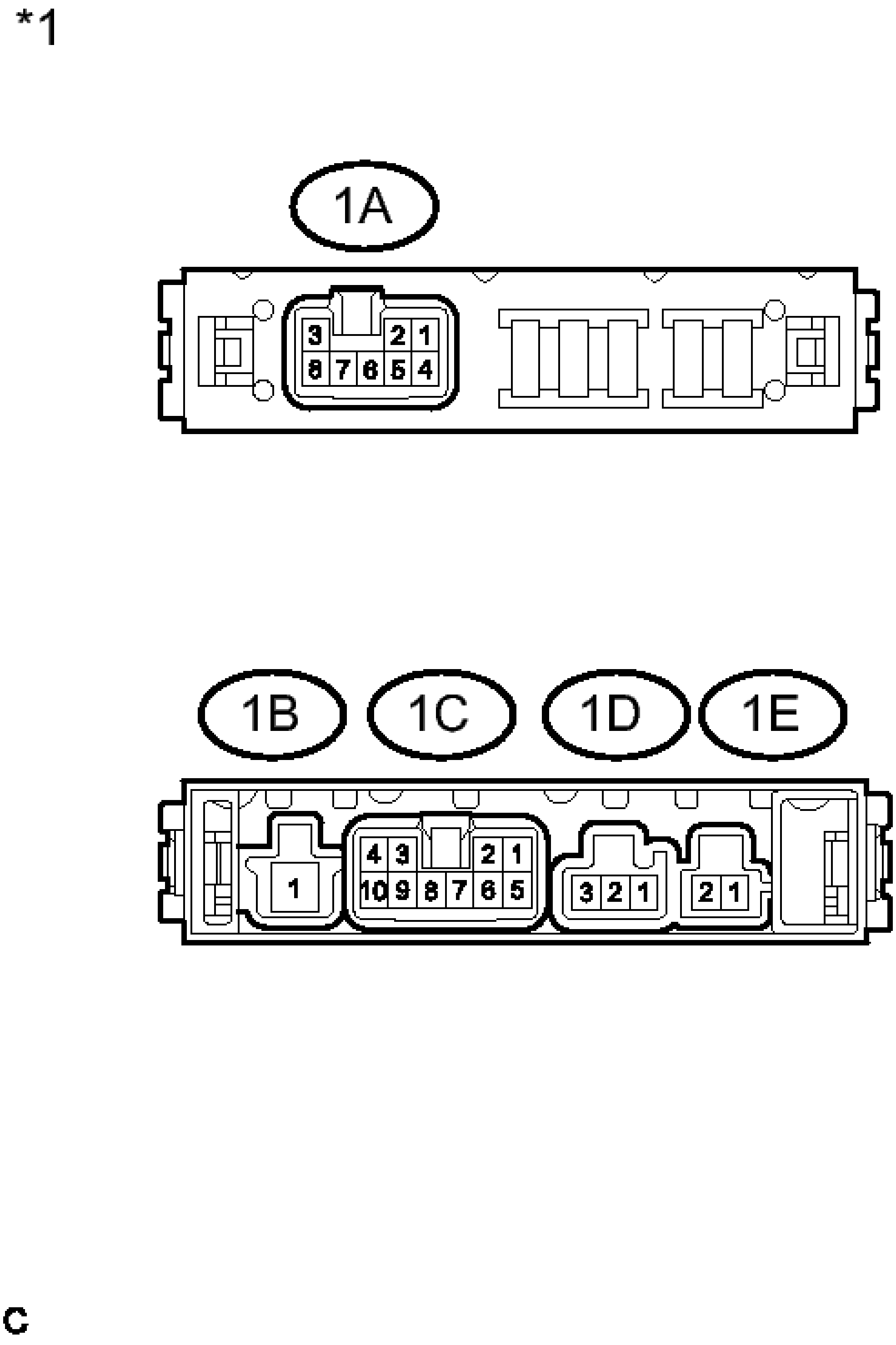
*1
1A
3 2 1
8 7 6 5 4
1B
1C
1D
1E
1
4 3 2 1
10 9 8 7 6 5
3 2 1
2 1
C

Fig. 85: Identifying IG2 Relay Connector Terminal Identification
Courtesy of TOYOTA MOTOR SALES, U.S.A., INC.

TEXT IN ILLUSTRATION

*1	No. 1 Integration Relay

Standard Resistance

Tester Connection	Condition	Specified Condition
No. 1 integration relay 1A-6 - No. 1 integration relay 1D-1	Battery voltage is not applied between terminals 1A-8 and 1E-2	10 kohms or higher
No. 1 integration relay 1A-6 - No. 1 integration relay 1D-1	Battery voltage is applied between terminals 1A-8 and 1E-2	Below 1 ohms
No. 1 integration relay 1A-7 - No. 1 integration relay 1D-1		

If the resistance is not as specified, replace the No. 1 integration relay.

c. IG2 RELAY:
   1. Measure the resistance according to the value(s) in the table below.

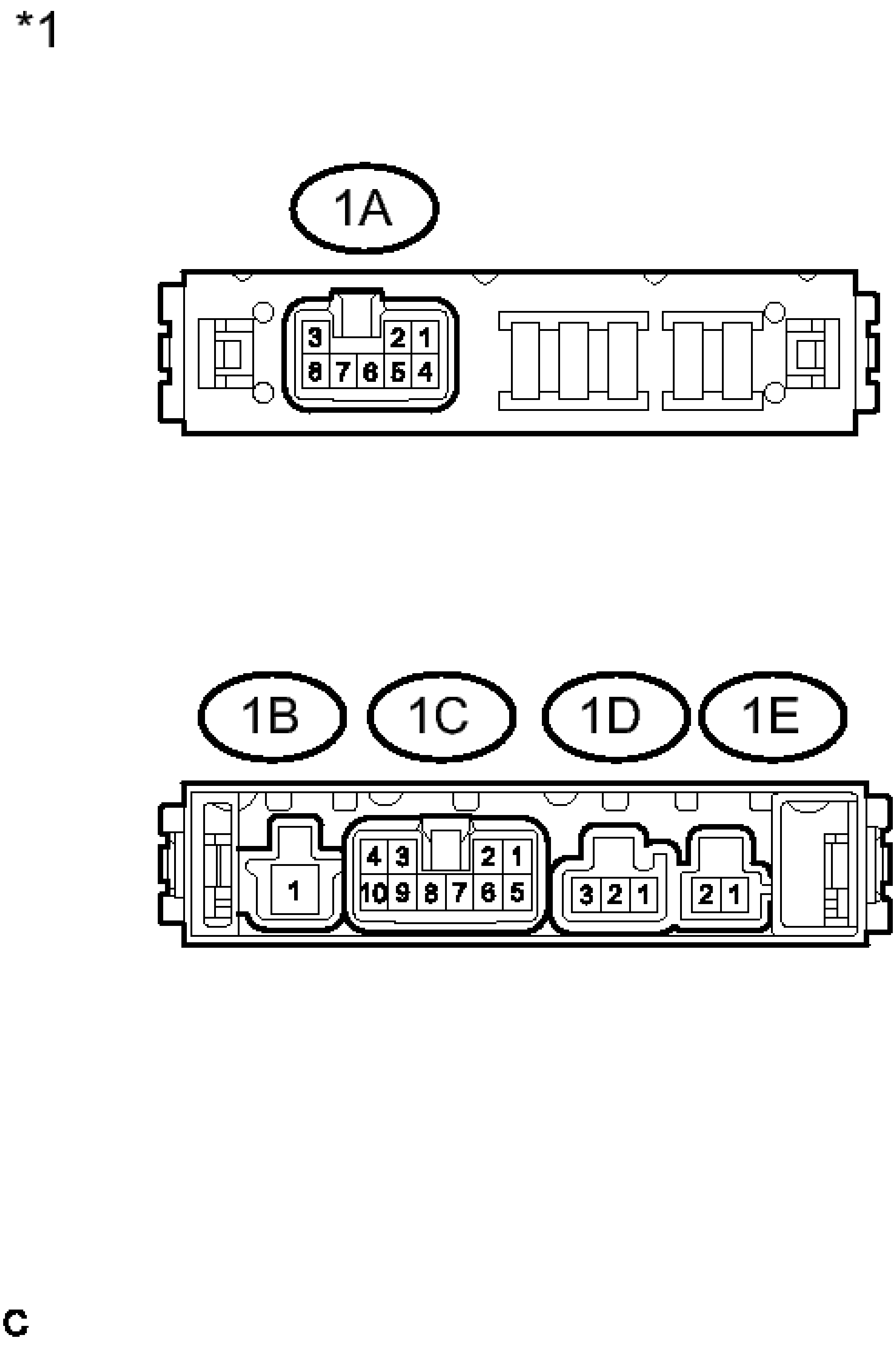
*1
1A
3 2 1
8 7 6 5 4
1B
1C
1D
1E
1
4 3 2 1
10 9 8 7 6 5
3 2 1
2 1
C

Fig. 86: Identifying IG2 Relay Connector Terminal Identification

Courtesy of TOYOTA MOTOR SALES, U.S.A., INC.

TEXT IN ILLUSTRATION

	No. 1

*1	Integration Relay

Standard Resistance

Tester Connection	Condition	Specified Condition
No. 1 integration relay 1A-1 - No. 1 integration relay 1D-3	Battery voltage is not applied between terminals 1C-8 and 1E-2	10 kohms or higher
No. 1 integration relay 1A-1 - No. 1 integration relay 1D-3	Battery voltage is applied between terminals 1C-8 and 1E-2	Below 1 ohms
No. 1 integration relay 1A-3 - No. 1 integration relay 1D-3		
No. 1 integration relay 1C-1 - No. 1 integration relay 1D-3		
No. 1 integration relay 1C-2 - No. 1 integration relay 1D-3		
No. 1 integration relay 1C-5 - No. 1 integration relay 1D-3		

If the resistance is not as specified, replace the No. 1 integration relay.

d. C/OPN RELAY:
   1. Measure the resistance according to the value(s) in the table below.

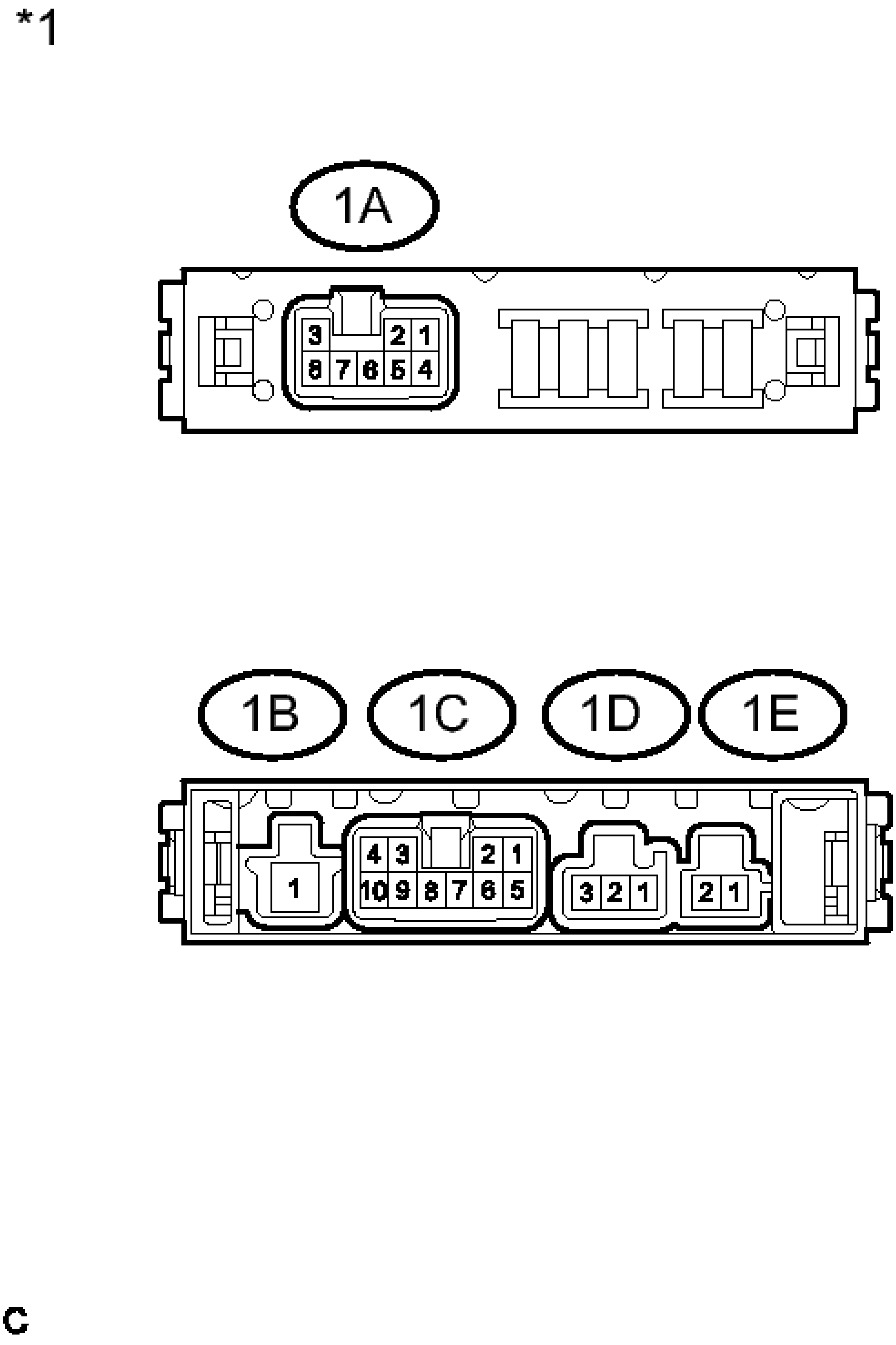
*1
1A
3
2 1
8 7 6 5 4
1B
1C
1D
1E
1
4 3
2 1
10 9 8 7 6 5
3 2 1
2 1
C

Fig. 87: Identifying IG2 Relay Connector Terminal Identification
Courtesy of TOYOTA MOTOR SALES, U.S.A., INC.

TEXT IN ILLUSTRATION

*1	No. 1 Integration Relay

Standard Resistance

Tester Connection	Condition	Specified Condition
No. 1 integration relay 1A-6 - No. 1 integration relay 1D-1	Battery voltage is not applied between terminals 1A-1 and 1E-1	10 kohms or higher
No. 1 integration relay 1A-6 - No. 1 integration relay 1D-1	Battery voltage is applied between terminals 1A-1 and 1E-1	Below 1 ohms
No. 1 integration relay 1A-7 - No. 1 integration relay 1D-1		

If the resistance is not as specified, replace the No. 1 integration relay.

INSTALLATION

INSTALLATION

1. **INSTALL NO. 1 INTEGRATION RELAY**
    a. Connect the 4 connectors.
    b. Attach the No. 1 integration relay to the engine room relay block.
    c. Connect the connector.
2. **INSTALL NO. 1 RELAY BLOCK COVER**

CAMSHAFT OIL CONTROL VALVE

COMPONENTS

ILLUSTRATION

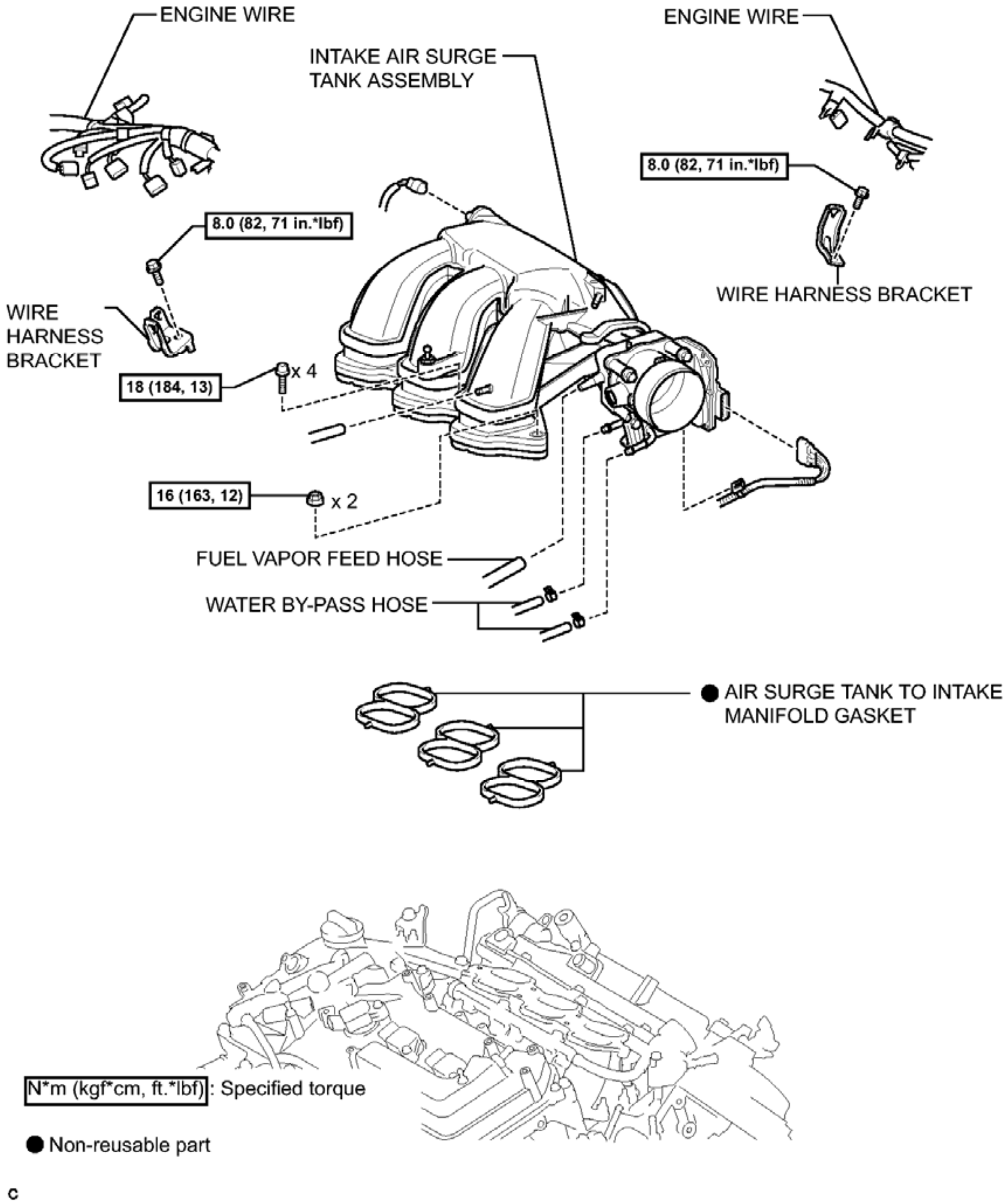
ENGINE WIRE
INTAKE AIR SURGE TANK ASSEMBLY
ENGINE WIRE
8.0 (82, 71 in.*lbf)
8.0 (82, 71 in.*lbf)
WIRE HARNESS BRACKET
WIRE HARNESS BRACKET
18 (184, 13)
x 4
16 (163, 12)
x 2
FUEL VAPOR FEED HOSE
WATER BY-PASS HOSE
● AIR SURGE TANK TO INTAKE MANIFOLD GASKET
N*m (kgf*cm, ft.*lbf): Specified torque
● Non-reusable part
c

Fig. 1: Identifying Camshaft Oil Control Valve Replacement Components With Torque Specifications (1 Of 2)

Courtesy of TOYOTA MOTOR SALES, U.S.A., INC.

ILLUSTRATION

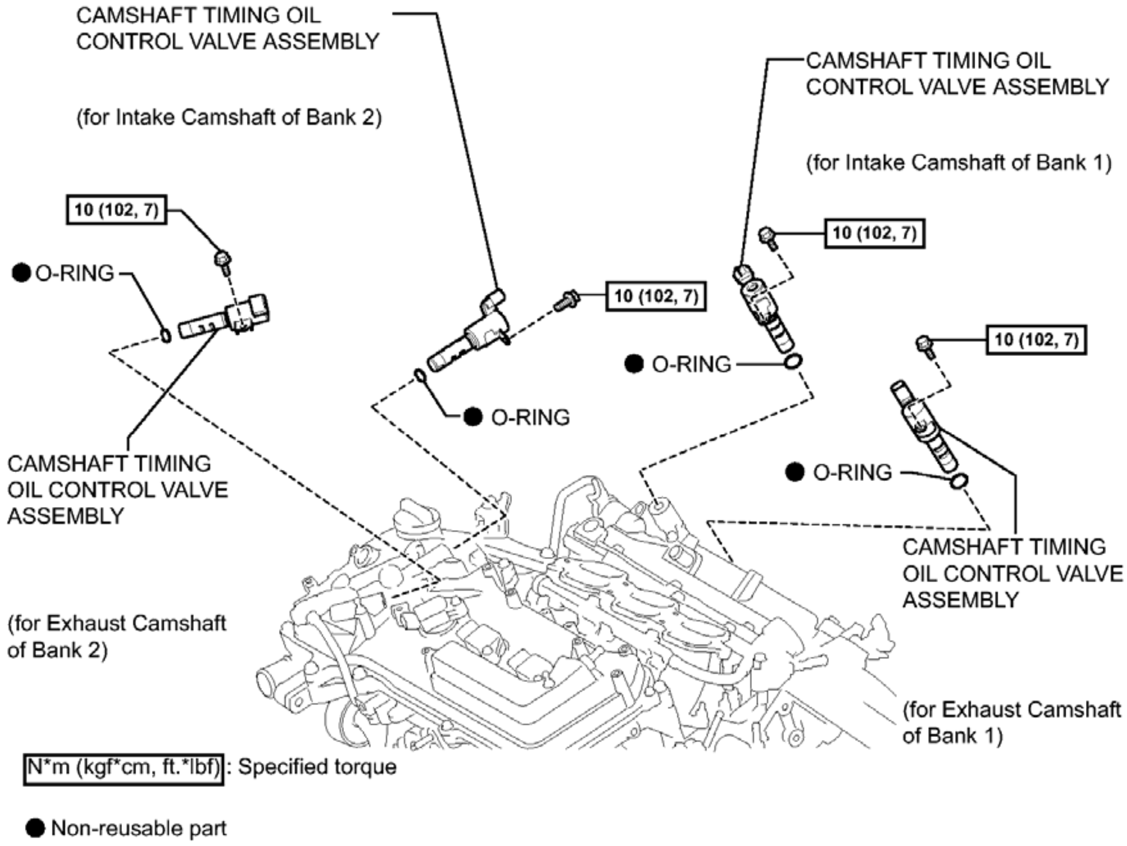
CAMSHAFT TIMING OIL CONTROL VALVE ASSEMBLY
(for Intake Camshaft of Bank 2)
CAMSHAFT TIMING OIL CONTROL VALVE ASSEMBLY
(for Intake Camshaft of Bank 1)
10 (102, 7)
● O-RING
10 (102, 7)
10 (102, 7)
● O-RING
10 (102, 7)
● O-RING
● O-RING
CAMSHAFT TIMING OIL CONTROL VALVE ASSEMBLY
(for Exhaust Camshaft of Bank 2)
CAMSHAFT TIMING OIL CONTROL VALVE ASSEMBLY
(for Exhaust Camshaft of Bank 1)
N*m (kgf*cm, ft.*lbf): Specified torque
● Non-reusable part

Fig. 2: Identifying Camshaft Oil Control Valve Replacement Components With Torque Specifications (2 Of 2)
Courtesy of TOYOTA MOTOR SALES, U.S.A., INC.

ON-VEHICLE INSPECTION

ON-VEHICLE INSPECTION

1. **INSPECT CAMSHAFT TIMING OIL CONTROL VALVE ASSEMBLY**
    a. Connect the Techstream to the DLC3.
    b. Start the engine.
    c. Turn the Techstream on.
    d. Turn the A/C switch on.
    e. Inspect the oil control valve assembly (for intake camshaft).
        1. Enter the following menus: Powertrain / Engine / Active Test / Control the VVT Linear (Bank 1).
        2. Check the engine speed while operating the camshaft timing oil control valve assembly (for intake camshaft) using the Techstream.

            Standard Condition

Techstream Operation	**Engine Condition**
0%	Normal engine speed
100%	Engine idles roughly or stalls

If the operation is not as specified, check the oil control valve assembly, wire harness and ECM.

3. Enter the following menus: Powertrain / Engine / Active Test / Control the VVT Linear (Bank 2).
4. Check the engine speed while operating the camshaft timing oil control valve assembly (for intake camshaft) using the Techstream.

   Standard Condition

Techstream Operation	**Engine Condition**
0%	Normal engine speed
100%	Engine idles roughly or stalls

If the operation is not as specified, check the oil control valve assembly, wire harness and ECM.

f. Inspect the oil control valve assembly (for exhaust camshaft).
   1. Enter the following menus: Powertrain / Engine / Active Test / Control the VVT Exhaust Linear (Bank 1).
   2. Check the engine speed while operating the camshaft timing oil control valve assembly (for exhaust camshaft) using the Techstream.

      Standard Condition

Techstream Operation	**Engine Condition**
0%	Normal engine

	speed
100%	Engine idles roughly or stalls

If the operation is not as specified, check the oil control valve assembly, wire harness and ECM.

3. Enter the following menus: Powertrain / Engine / Active Test / Control the VVT Exhaust Linear (Bank 2).
4. Check the engine speed while operating the camshaft timing oil control valve assembly (for exhaust camshaft) using the Techstream.

   Standard Condition

Techstream Operation	Engine Condition
0%	Normal engine speed
100%	Engine idles roughly or stalls

   If the operation is not as specified, check the oil control valve assembly, wire harness and ECM.

REMOVAL

REMOVAL

1. **REMOVE INTAKE AIR SURGE TANK ASSEMBLY**

   Refer to **REMOVAL** .

2. **DISCONNECT ENGINE WIRE**
   a. Disconnect the 3 wire harness clamps.

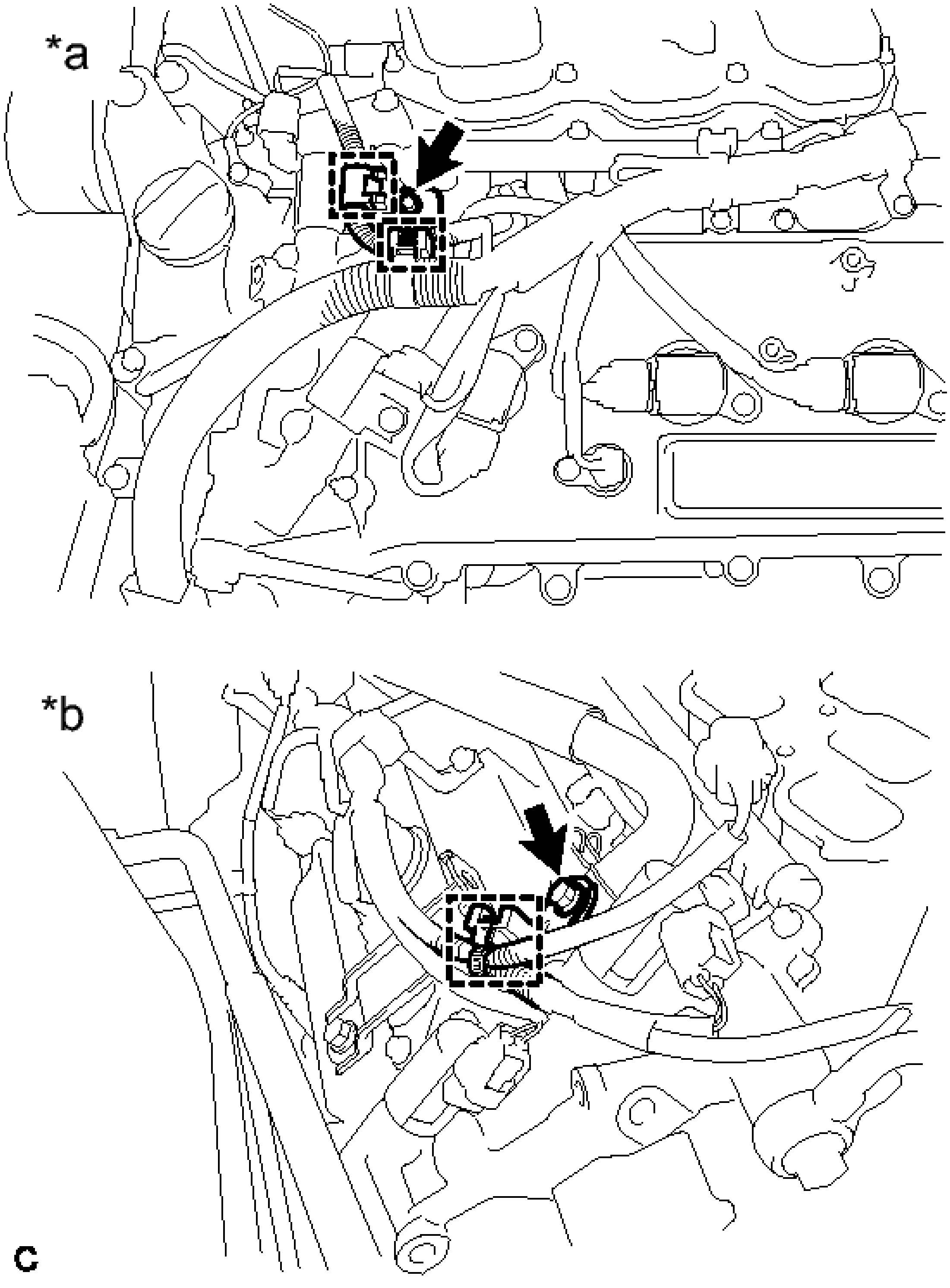

Fig. 3: Identifying Wire Harness Clamps
Courtesy of TOYOTA MOTOR SALES, U.S.A., INC.

TEXT IN ILLUSTRATION

	for

*a	Bank 2
*b	for Bank 1

b. Remove the 2 bolts and 2 wire harness brackets.

3. **REMOVE CAMSHAFT TIMING OIL CONTROL VALVE ASSEMBLY**
   a. Disconnect the 4 oil control valve connectors.
   b. Remove the 4 bolts and 4 oil control valves.

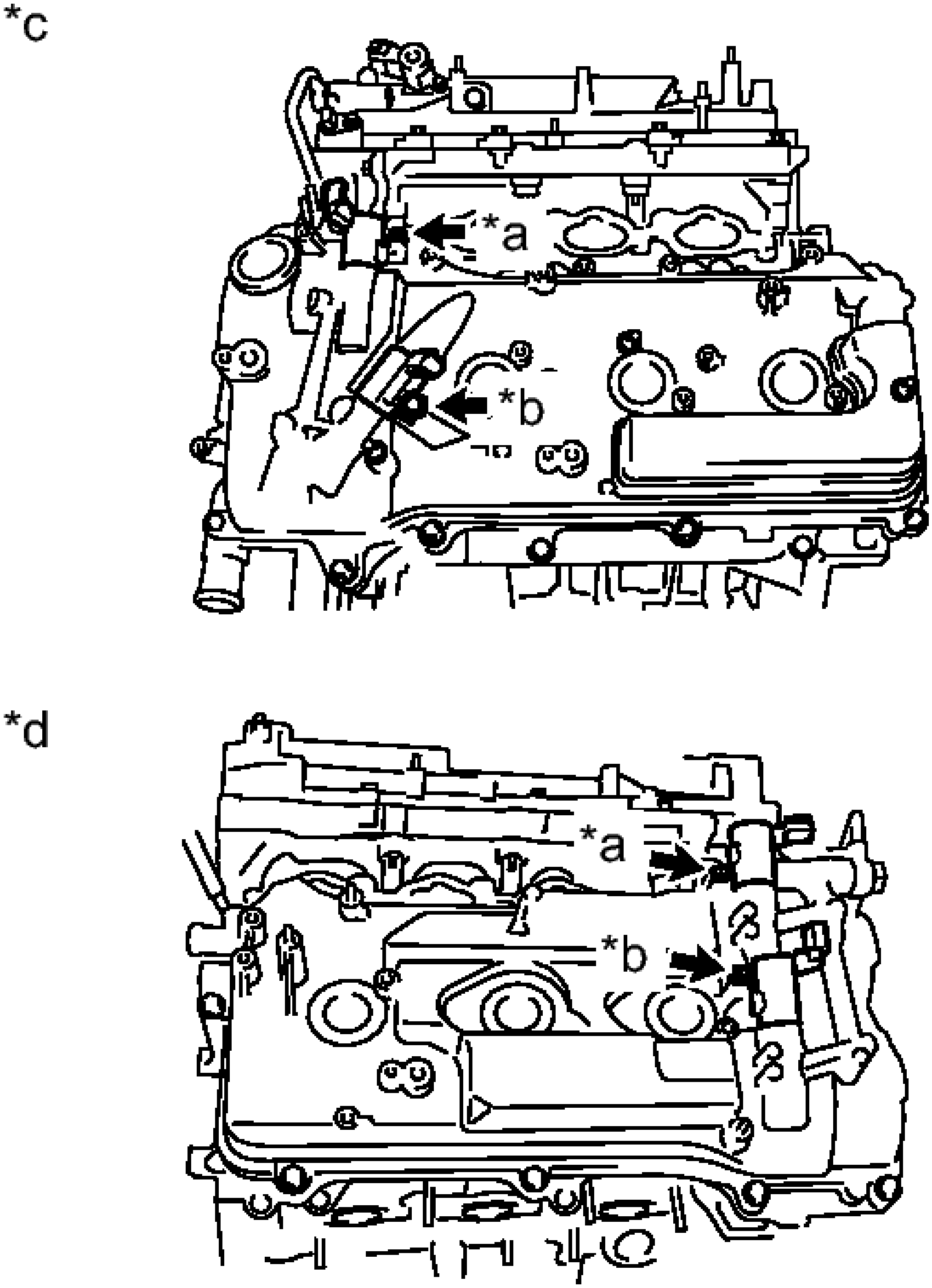

Fig. 4: Identifying Oil Control Valves, Connectors And Bolts
Courtesy of TOYOTA MOTOR SALES, U.S.A., INC.

TEXT IN ILLUSTRATION

	for

*a	Intake Side
*b	for Exhaust Side
*c	for Bank 2
*d	for Bank 1

c. Remove the O-ring from each oil control valve.

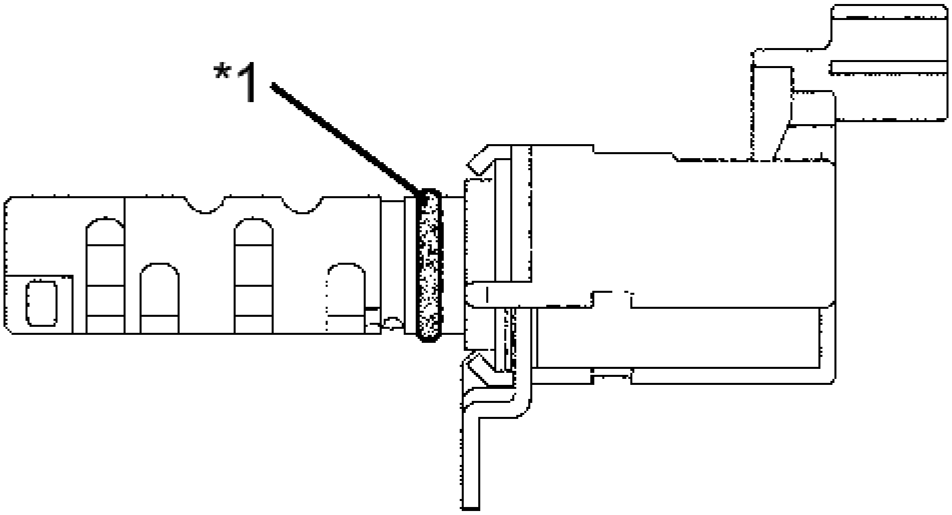

Fig. 5: Identifying Oil Control Valve O-Ring
Courtesy of TOYOTA MOTOR SALES, U.S.A., INC.

TEXT IN ILLUSTRATION

*1	O-ring

INSPECTION

INSPECTION

1. **INSPECT CAMSHAFT TIMING OIL CONTROL VALVE ASSEMBLY**
    a. Measure the resistance according to the value(s) in the table below.

    Standard Resistance

Tester Connection	Specified Condition
1 - 2	6.9 to 7.9 ohms at 20°C (68° F)

If the result is not as specified, replace the oil control valve assembly.

b. Check the operation.

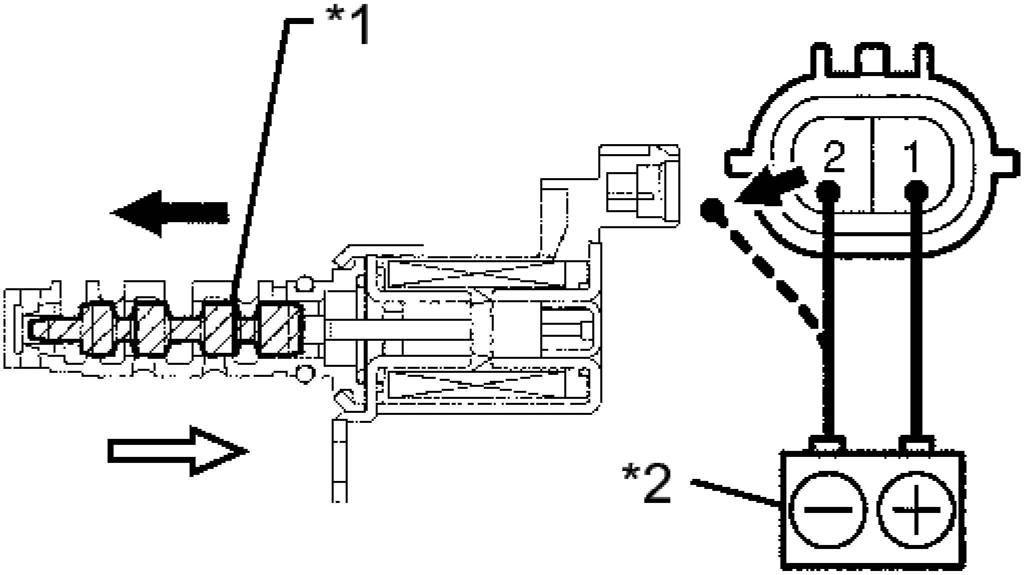

Fig. 6: Connecting Battery Positive (+) Lead To Terminal 1 And Negative (-) Lead To Terminal 2
Courtesy of TOYOTA MOTOR SALES, U.S.A., INC.

TEXT IN ILLUSTRATION

*1	Spool Valve
*2	Battery

1. Connect a battery positive (+) lead to terminal 1 and negative (-) lead to terminal 2, and check the movement of the spool valve.

   OK

Condition	Specified Condition

Battery voltage is applied	Valve moves in black arrow direction shown in illustration
Battery voltage is not applied	Valve moves in white arrow direction shown in illustration

If the result is not as specified, replace the oil control valve.

NOTE: **Accumulation of foreign matter can cause minor pressure leaks. Minor pressure leaks in the intake side oil control valve will cause the intake camshaft to advance. Minor pressure leaks in the exhaust side oil control valve will cause the exhaust camshaft to retard. The inappropriate camshaft timing that results from these leaks will cause a DTC to be set.**

INSTALLATION

INSTALLATION

1. **INSTALL CAMSHAFT TIMING OIL CONTROL VALVE ASSEMBLY**
   a. Apply a light coat of engine oil to 4 new O-rings and install them to the 4 camshaft timing oil control valve assemblies.

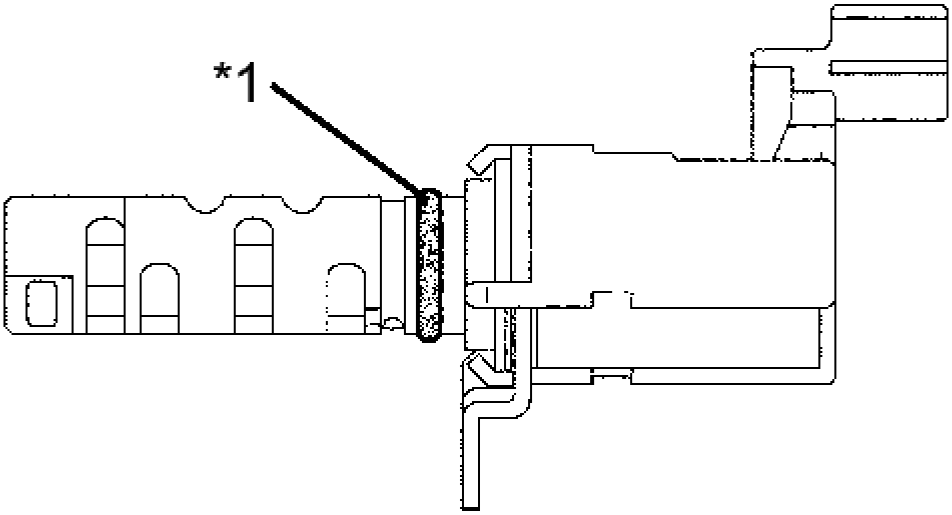

Fig. 7: Identifying Oil Control Valve O-Ring
Courtesy of TOYOTA MOTOR SALES, U.S.A., INC.

TEXT IN ILLUSTRATION

*1	New O-ring

b. Install the 4 oil control valves with the 4 bolts.

   Torque: 10 N*m (102 kgf*cm, 7 ft.*lbf)

   NOTE: Make sure that each O-ring is not cracked or does not jump out of position during installation.

c. Connect the 4 oil control valve connectors.

2. **CONNECT ENGINE WIRE**
   a. Install the 2 wire harness brackets with the 2 bolts.

      Torque: 8.0 N*m (82 kgf*cm, 71 in.*lbf)

   b. Connect the 3 wire harness clamps.
3. **INSTALL INTAKE AIR SURGE TANK ASSEMBLY**

   Refer to **INSTALLATION** .

THROTTLE BODY

COMPONENTS

ILLUSTRATION

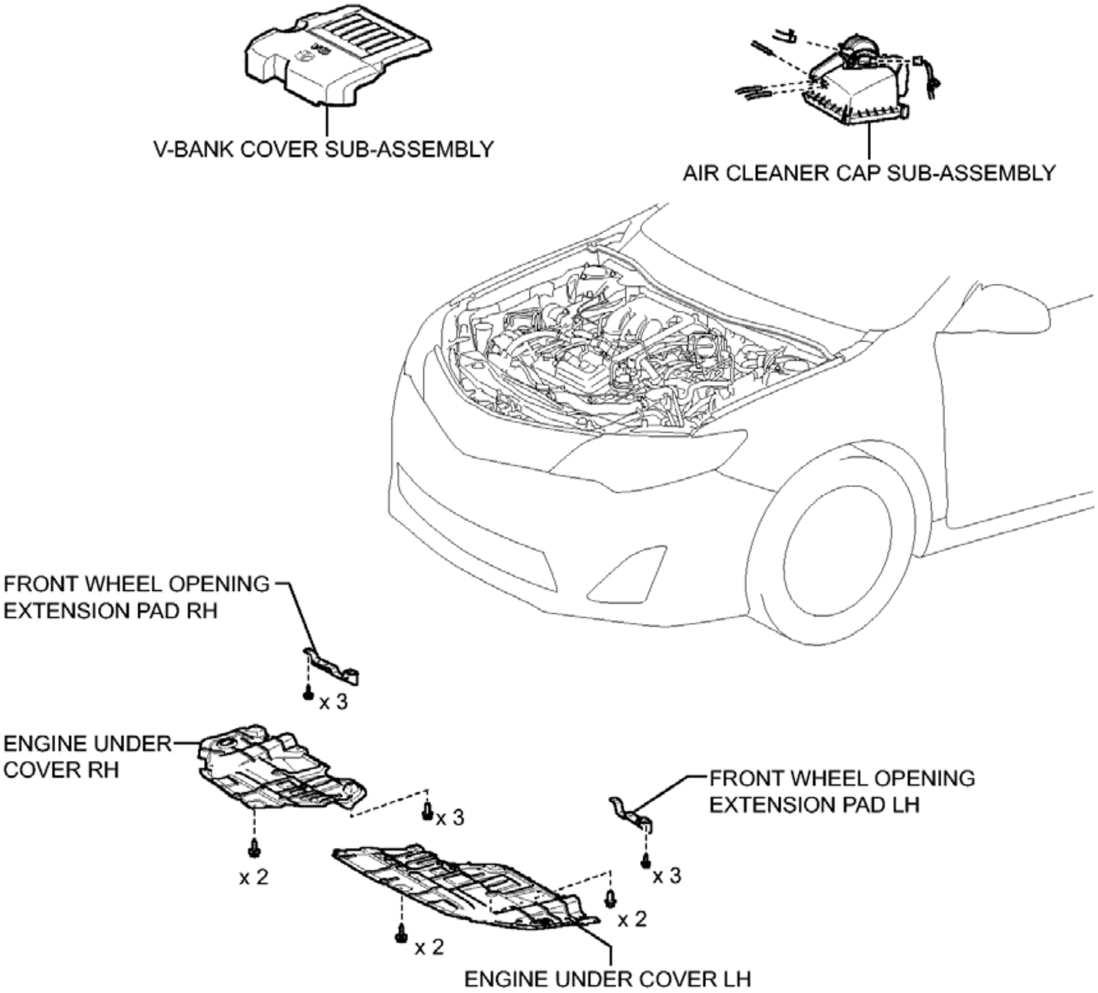
V-BANK COVER SUB-ASSEMBLY
AIR CLEANER CAP SUB-ASSEMBLY
FRONT WHEEL OPENING EXTENSION PAD RH
x 3
ENGINE UNDER COVER RH
x 3
x 2
FRONT WHEEL OPENING EXTENSION PAD LH
x 3
x 2
x 2
ENGINE UNDER COVER LH

Fig. 8: Identifying Throttle Body Replacement Components With Torque Specifications (1 Of 2)
Courtesy of TOYOTA MOTOR SALES, U.S.A., INC.

ILLUSTRATION

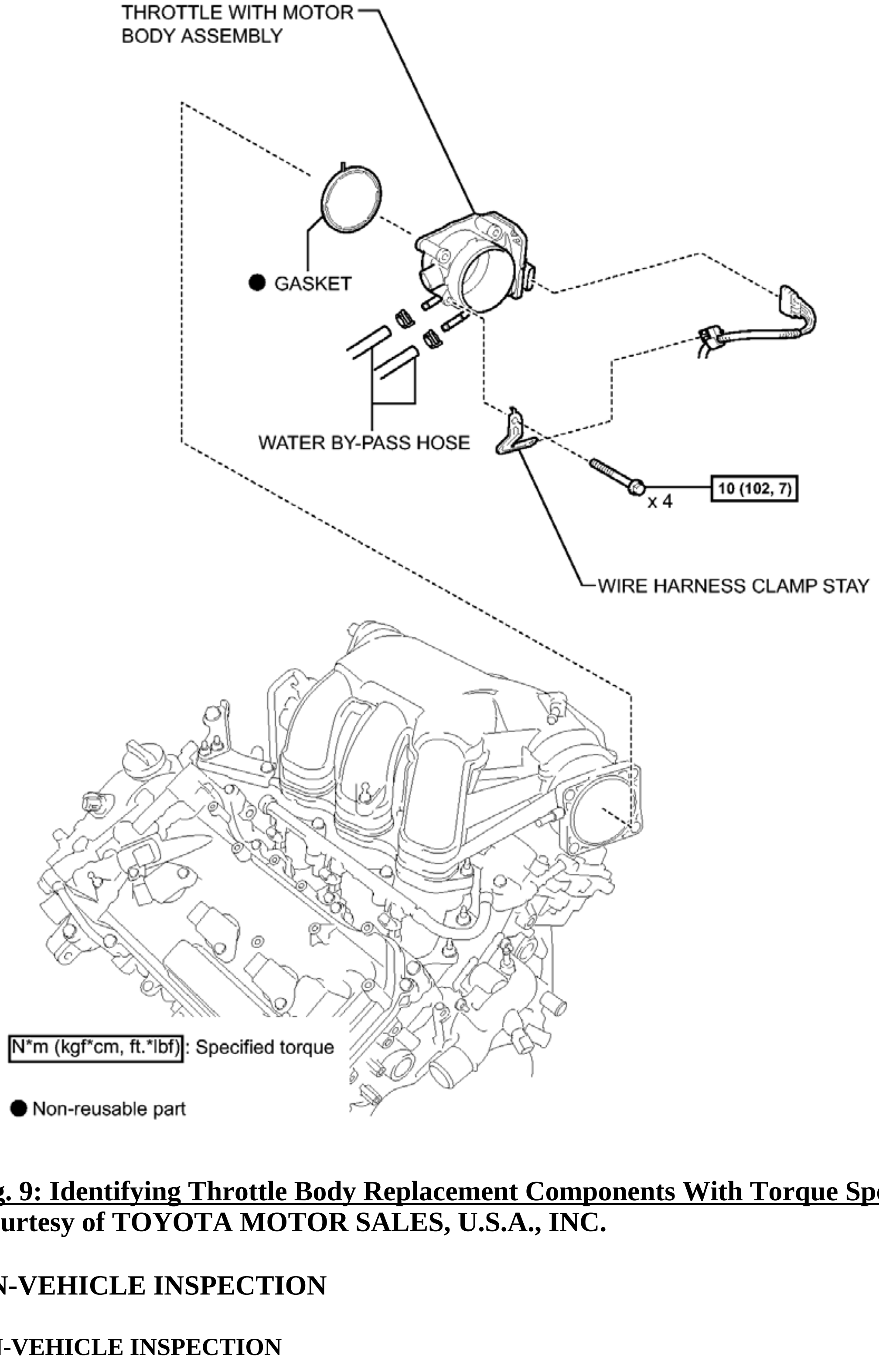
THROTTLE WITH MOTOR BODY ASSEMBLY
● GASKET
WATER BY-PASS HOSE
x 4
10 (102, 7)
WIRE HARNESS CLAMP STAY
N*m (kgf*cm, ft.*lbf) : Specified torque
● Non-reusable part

c

Fig. 9: Identifying Throttle Body Replacement Components With Torque Specifications (2 Of 2)
Courtesy of TOYOTA MOTOR SALES, U.S.A., INC.

ON-VEHICLE INSPECTION

ON-VEHICLE INSPECTION

1. **INSPECT THROTTLE WITH MOTOR BODY ASSEMBLY**

a. Check the throttle control motor operating sound.
    1. Turn the engine switch on (IG).
    2. When depressing the accelerator pedal, check the operating sound of the motor. Make sure that no friction noises are emitted from the motor.

       If friction noise exists, replace the throttle with motor body assembly.

b. Check the throttle position sensor.
    1. Connect the Techstream to the DLC3.
    2. Turn the engine switch on (IG).
    3. Turn the Techstream on.
    4. Enter the following menus: Powertrain / Engine / Data List / Gas Throttle / Throttle Sensor Position.
    5. Depress the accelerator pedal. When the throttle valve is fully open, check that the Throttle Sensor Position value is within the specification.

       Standard Throttle Valve Opening Percentage

Tester Display	Specified Condition
Throttle Sensor Position	60% or more

NOTE:

- **When checking the throttle valve opening percentage, the shift lever should be in neutral.**
- **Fully depress the accelerator pedal.**

If the percentage is less than 60%, replace the throttle with motor body assembly.

REMOVAL

REMOVAL

1. **REMOVE FRONT WHEEL OPENING EXTENSION PAD RH**
2. **REMOVE ENGINE UNDER COVER RH**
3. **REMOVE FRONT WHEEL OPENING EXTENSION PAD LH**
4. **REMOVE ENGINE UNDER COVER LH**
5. **DRAIN ENGINE COOLANT** . Refer to **REPLACEMENT - Step 1**
6. **REMOVE V-BANK COVER SUB-ASSEMBLY** . Refer to **REMOVAL - Step 17**
7. **REMOVE AIR CLEANER CAP SUB-ASSEMBLY**
    a. Disconnect the mass air flow meter connector and wire harness clamp.

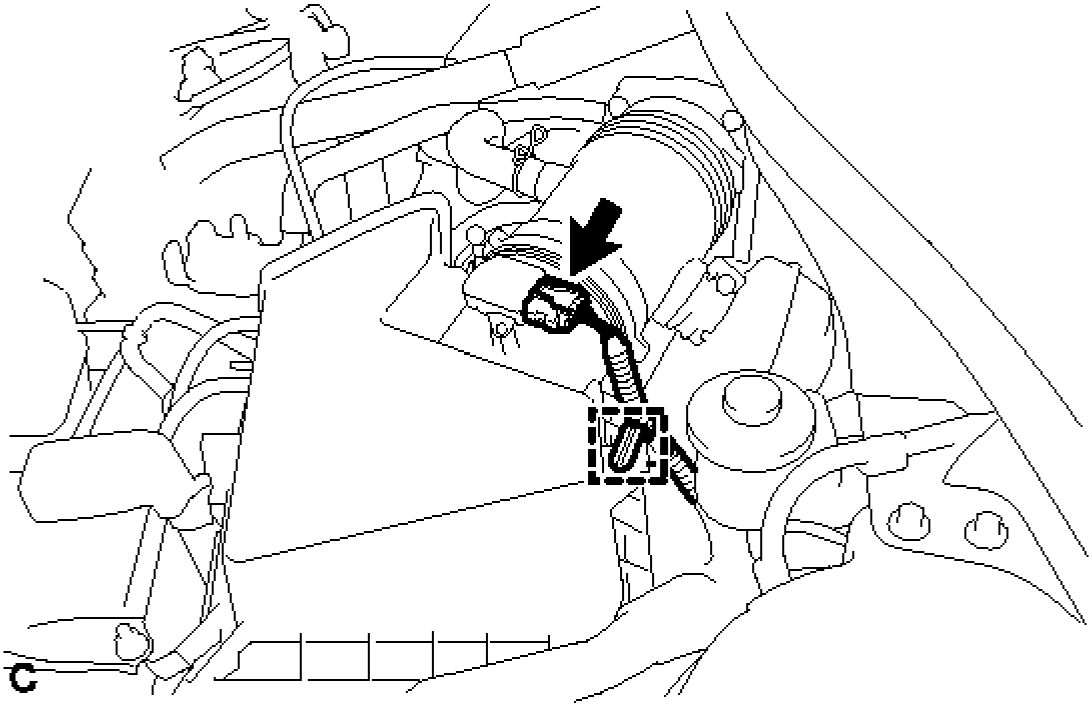

Fig. 10: Identifying Mass Air Flow Meter Connector And Wire Harness Clamp
Courtesy of TOYOTA MOTOR SALES, U.S.A., INC.

b. Disconnect the 3 hoses.

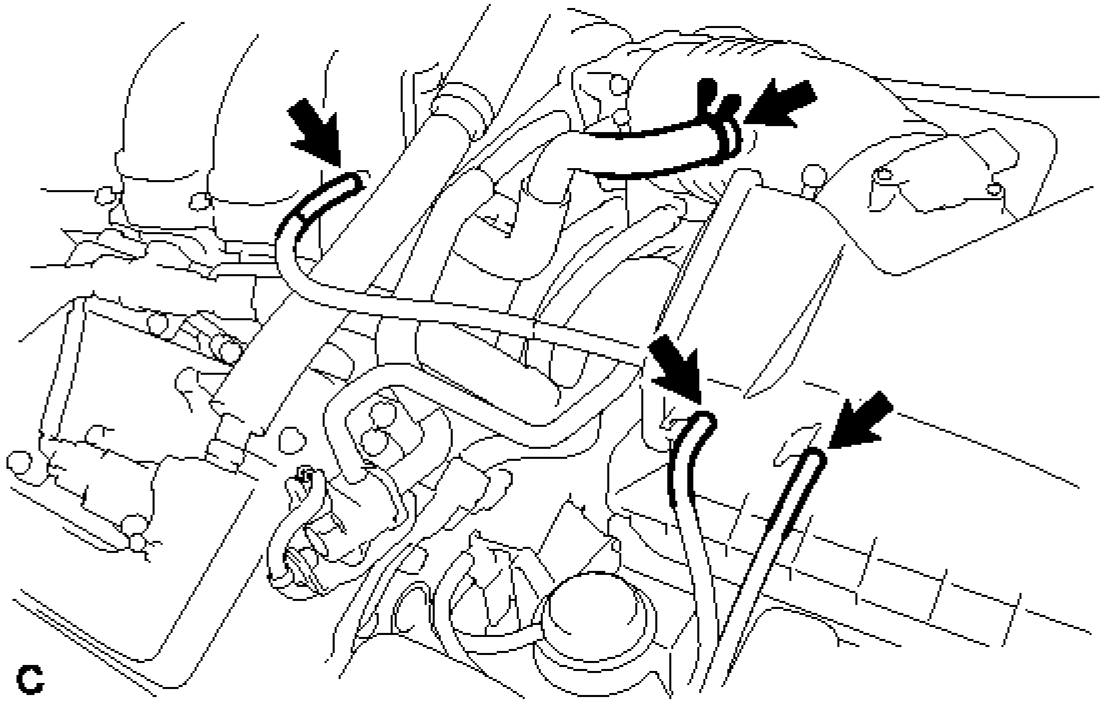

Fig. 11: Identifying Air Cleaner Cap Hoses
Courtesy of TOYOTA MOTOR SALES, U.S.A., INC.

c. Separate the ventilation hose.

d. Loosen the hose clamp and separate the air cleaner cap sub-assembly from the throttle with motor body assembly.

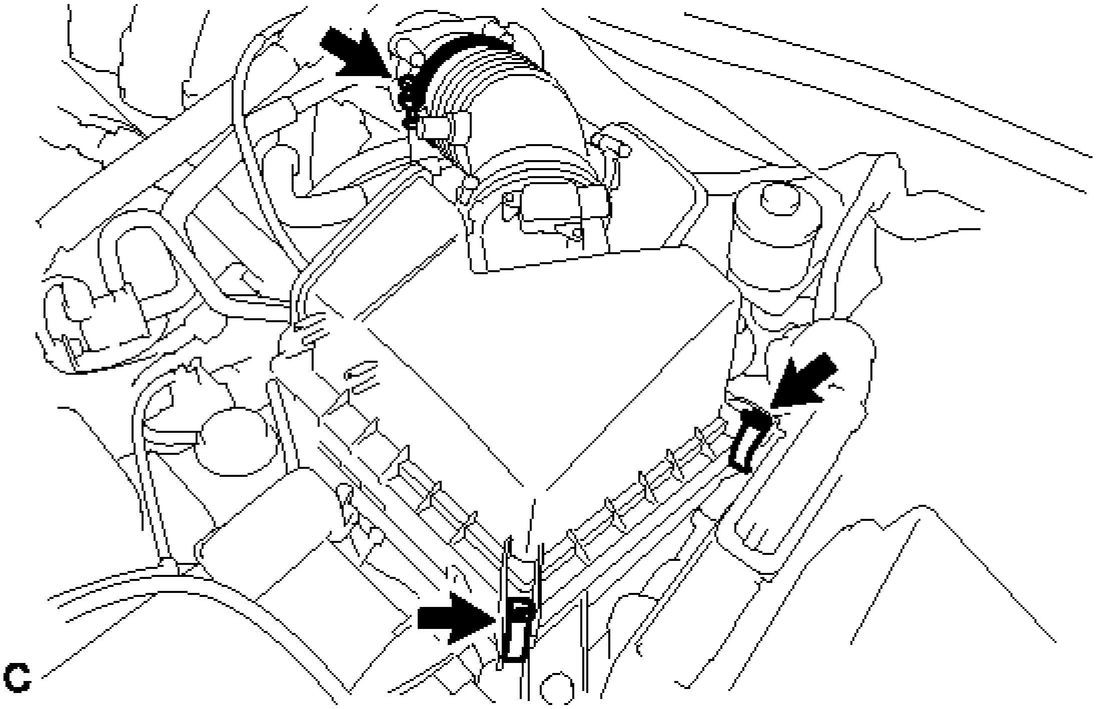

Fig. 12: Identifying Air Cleaner Cap Sub-Assembly Hose Clamp And Ventilation Hose
Courtesy of TOYOTA MOTOR SALES, U.S.A., INC.

e. Release the 2 clamps and remove the air cleaner cap with hose.

8. **REMOVE THROTTLE WITH MOTOR BODY ASSEMBLY**
   a. Disconnect the 2 water by-pass hoses from the throttle with motor body assembly.

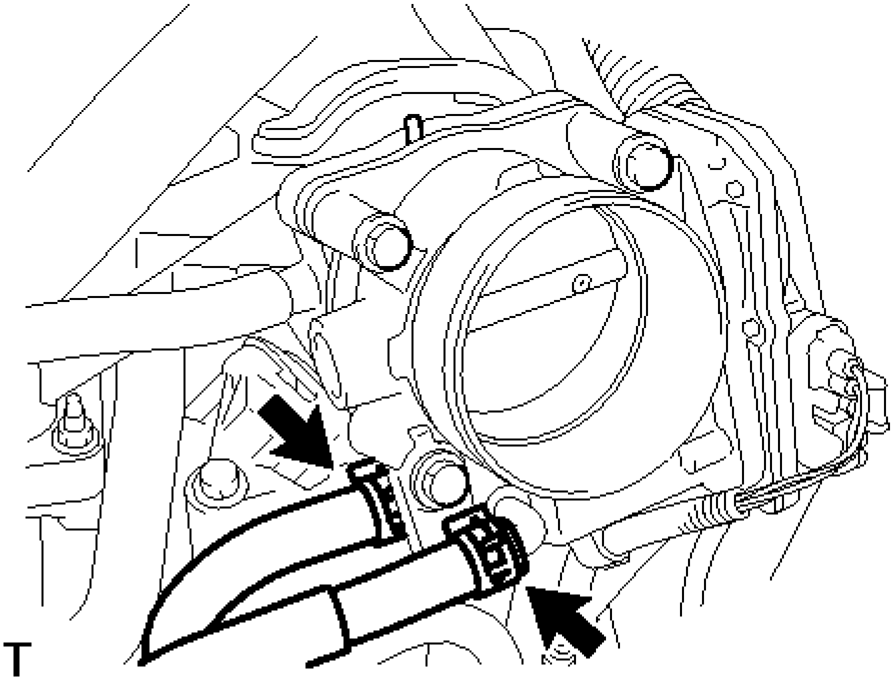

Fig. 13: Locating Water By-Pass Hoses
Courtesy of TOYOTA MOTOR SALES, U.S.A., INC.

b. Disconnect the throttle body connector and wire harness clamp.

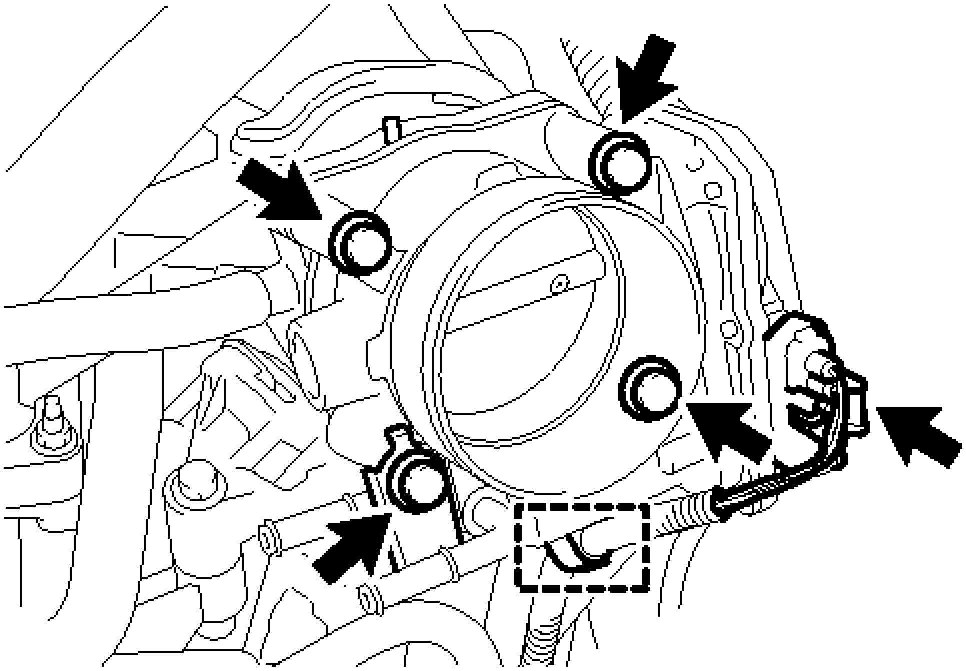

Fig. 14: Locating Bolts, Throttle Body And Wire Harness Clamp Stay
Courtesy of TOYOTA MOTOR SALES, U.S.A., INC.

c. Remove the 4 bolts, throttle with motor body assembly and wire harness clamp stay.
d. Remove the gasket from the intake air surge tank assembly.

INSPECTION

INSPECTION

1. **INSPECT THROTTLE BODY**
   a. Measure the resistance according to the value(s) in the table below.

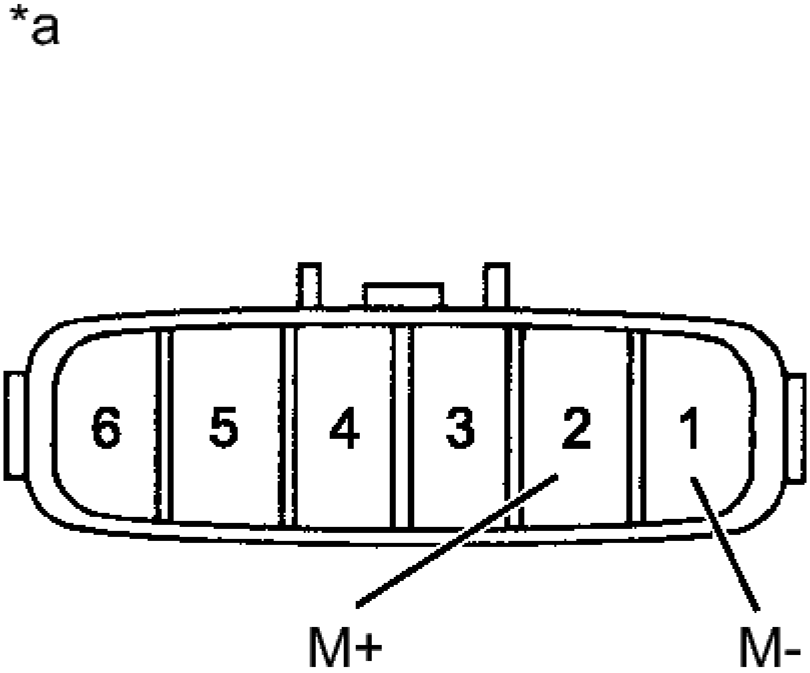

Fig. 15: Identifying Throttle Body Connector Terminal Identification
Courtesy of TOYOTA MOTOR SALES, U.S.A., INC.

Standard Resistance

Tester Connection	Condition	Specified Condition
1 (M-) - 2 (M+)	20°C (68°F)	0.3 to 100 ohms

TEXT IN ILLUSTRATION

*a	Component without harness connected (Throttle body)

If the result is not as specified, replace the throttle body.

INSTALLATION

INSTALLATION

1. **INSTALL THROTTLE WITH MOTOR BODY ASSEMBLY**
   a. Install a new gasket to the intake air surge tank assembly.

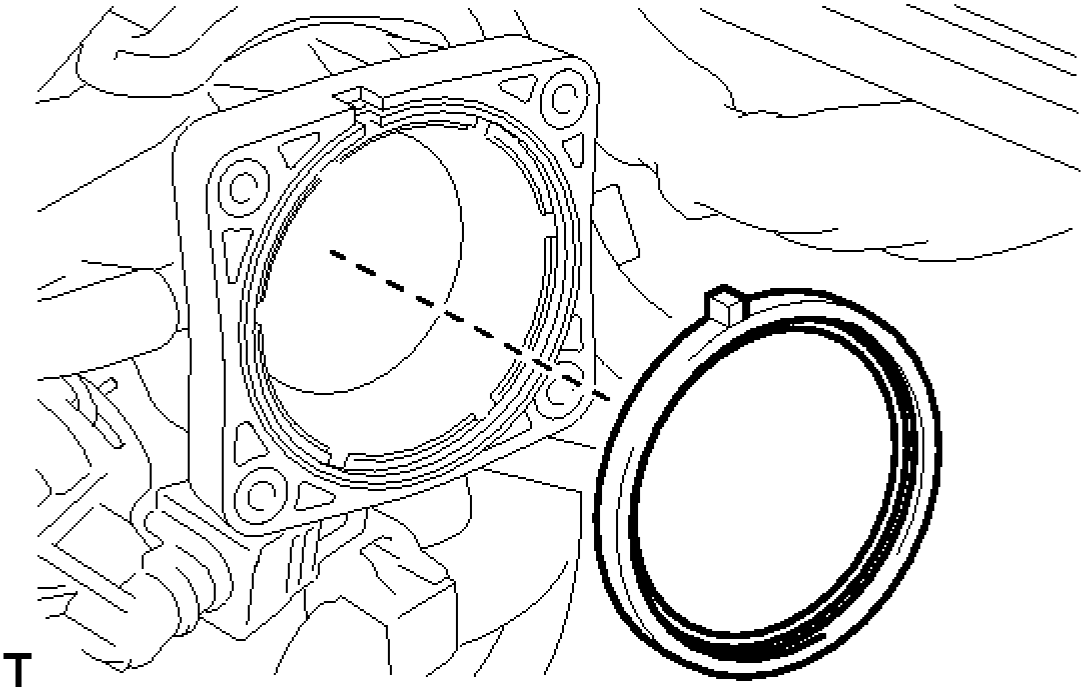

Fig. 16: Locating Intake Air Surge Tank Assembly Gasket
Courtesy of TOYOTA MOTOR SALES, U.S.A., INC.

   b. Install the throttle with motor body assembly and wire harness clamp stay to the intake air surge tank assembly with the 4 bolts.

Torque: 10 N*m (102 kgf*cm, 7 ft.*lbf)

c. Connect the throttle body connector and wire harness clamp.
d. Connect the 2 water by-pass hoses to the throttle with motor body assembly.

2. **INSTALL AIR CLEANER CAP SUB-ASSEMBLY**
    a. Connect the air cleaner cap sub-assembly to the throttle with motor body assembly with the hose clamp.
    b. Install the air cleaner cap with hose to the air cleaner case with the 2 clamps.
    c. Connect the wire harness clamp and mass air flow meter connector.
    d. Connect the 3 hoses.
    e. Connect the ventilation hose.
    f. Connect the mass air flow meter connector and wire harness clamp.
3. **ADD ENGINE COOLANT** . Refer to **REPLACEMENT - Step 2**
4. **INSPECT FOR COOLANT LEAK** . Refer to **ON-VEHICLE INSPECTION - Step 1**
5. **INSTALL V-BANK COVER SUB-ASSEMBLY** . Refer to **INSTALLATION - Step 82**
6. **INSTALL ENGINE UNDER COVER RH**
7. **INSTALL FRONT WHEEL OPENING EXTENSION PAD RH**
8. **INSTALL ENGINE UNDER COVER LH**
9. **INSTALL FRONT WHEEL OPENING EXTENSION PAD LH**
10. **PERFORM INITIALIZATION**

NOTE:

- **Be sure to perform this procedure after reassembling the throttle with motor body assembly or removing and reinstalling any throttle body component.**
- **Perform the following procedure after replacing the throttle with motor body assembly or any throttle body components. The following procedure should also be performed if the throttle body is cleaned.**

a. Turn the engine switch on (IG) without operating the accelerator pedal.

NOTE: **If the accelerator pedal is operated, perform the above steps again.**

b. Connect the Techstream to the DLC3 and clear the DTCs. Refer to **DTC CHECK / CLEAR** .
c. Perform the "Inspection After Repair". Refer to **INITIALIZATION** .
d. Start the engine and check that the MIL is not illuminated. After the engine is warmed up, check that the idle speed is within the specified range when the A/C is switched off.

Standard

	Engine

Condition	Idle Speed
A/C switched off	600 to 700 rpm

NOTE:

- **Be sure to perform this step with all accessories off.**
- **Make sure that the shift lever is in neutral.**

e. Enter the following menus: Powertrain / Engine / Data List / Throttle Sensor Position. Fully depress the accelerator pedal and check that the value is 60% or more.

f. Perform a road test and confirm that there are no abnormalities.

VACUUM SWITCHING VALVE (FOR ENGINE MOUNTING)

COMPONENTS

ILLUSTRATION

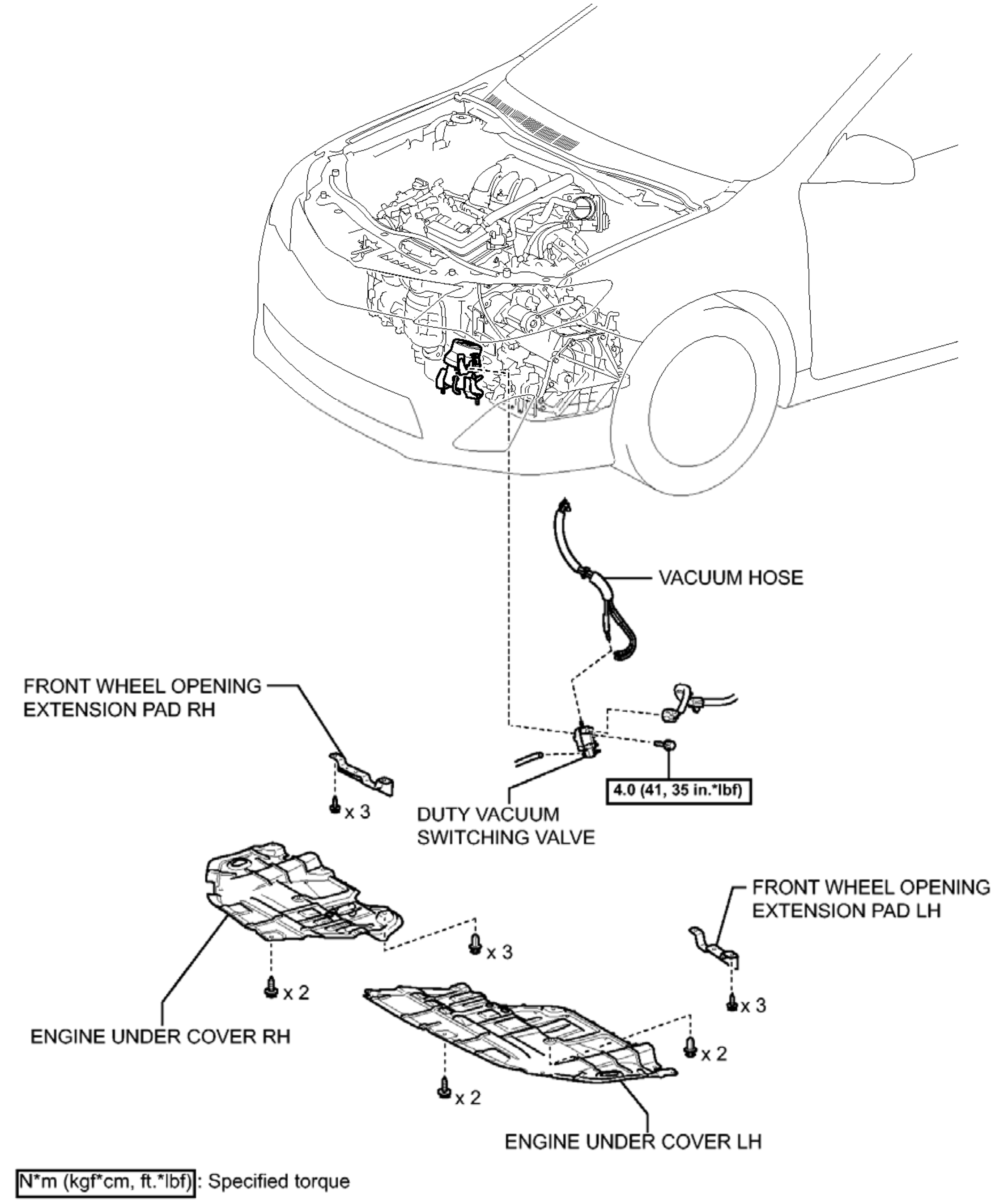
VACUUM HOSE
FRONT WHEEL OPENING EXTENSION PAD RH
x 3
4.0 (41, 35 in.*lbf)
DUTY VACUUM SWITCHING VALVE
FRONT WHEEL OPENING EXTENSION PAD LH
x 3
x 2
x 3
ENGINE UNDER COVER RH
x 2
x 2
ENGINE UNDER COVER LH
N*m (kgf*cm, ft.*lbf): Specified torque
C

Fig. 17: Identifying Vacuum Switching Valve Replacement Components With Torque Specifications (For Engine Mounting)
Courtesy of TOYOTA MOTOR SALES, U.S.A., INC.

REMOVAL

REMOVAL

1. **PRECAUTION**

NOTE: **After turning the engine switch off, waiting time may be required before disconnecting the cable from the negative (-) battery terminal. Therefore, make sure to read the disconnecting the cable from the negative (-) battery terminal notices before proceeding with work. Refer to PRECAUTION .**

2. **REMOVE FRONT WHEEL OPENING EXTENSION PAD RH**
3. **REMOVE ENGINE UNDER COVER RH**
4. **REMOVE FRONT WHEEL OPENING EXTENSION PAD LH**
5. **REMOVE ENGINE UNDER COVER LH**
6. **DISCONNECT CABLE FROM NEGATIVE BATTERY TERMINAL**

NOTE: **When disconnecting the cable, some systems need to be initialized after the cable is reconnected. Refer to INITIALIZATION .**

7. **REMOVE DUTY VACUUM SWITCHING VALVE**
   a. Disconnect the 2 vacuum hoses from the duty vacuum switching valve.

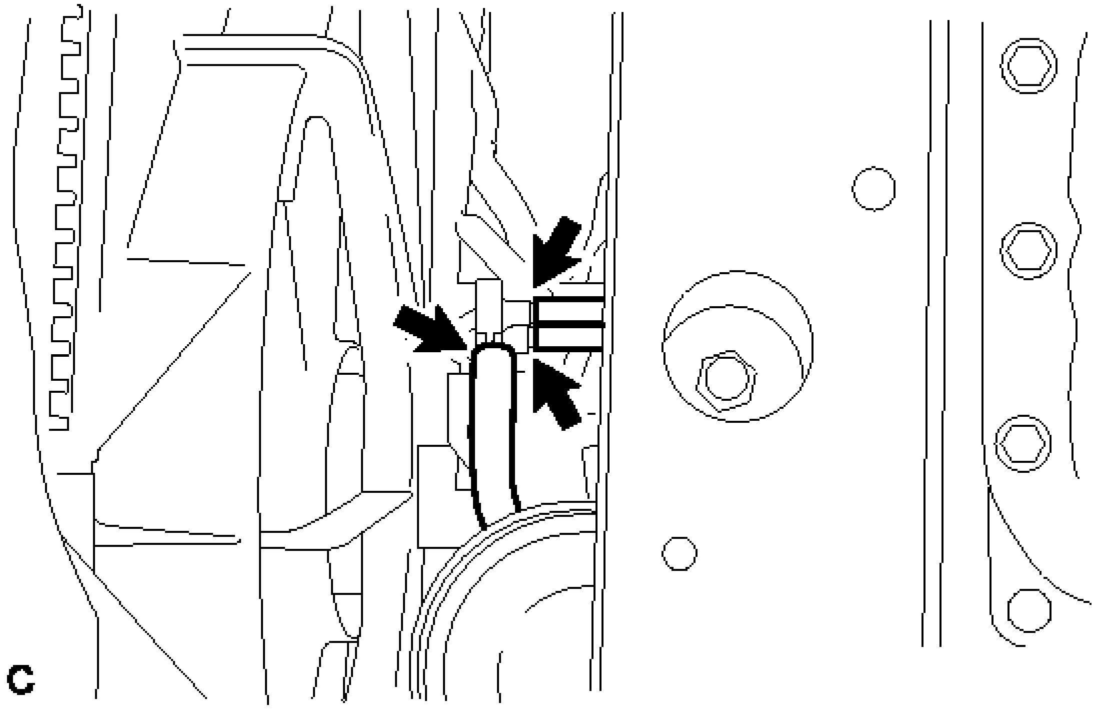

Fig. 18: Identifying Duty Vacuum Switching Valve Vacuum Hoses
Courtesy of TOYOTA MOTOR SALES, U.S.A., INC.

   b. Disconnect the hose.
   c. Remove the bolt and disconnect the duty vacuum switching valve connector.

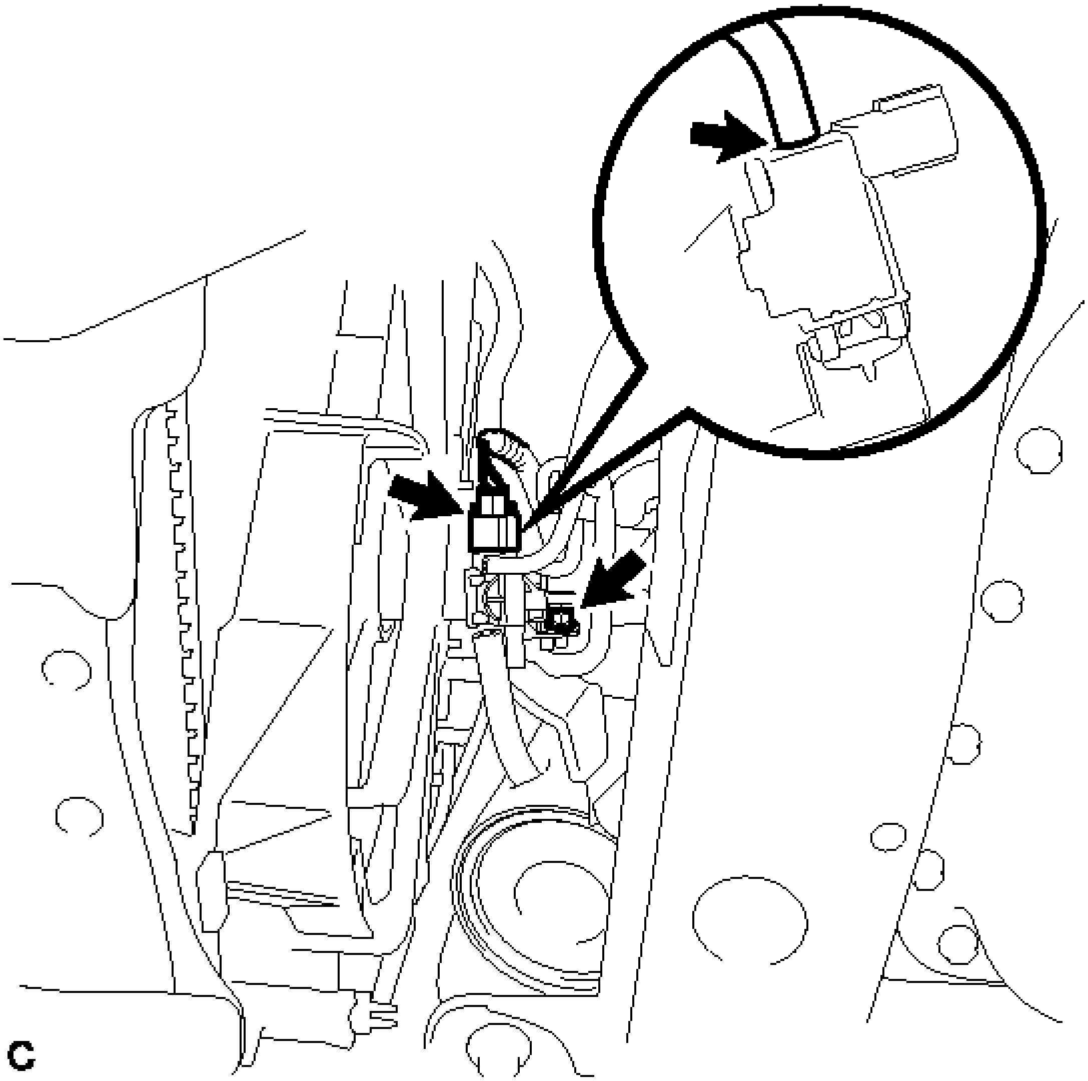

Fig. 19: Identifying Duty Vacuum Switching Valve Connector And Hose
Courtesy of TOYOTA MOTOR SALES, U.S.A., INC.

d. Disconnect the vacuum hose to remove the duty vacuum switching valve.

INSPECTION

INSPECTION

1. **INSPECT DUTY VACUUM SWITCHING VALVE (OPERATION)**
   a. Check the operation of the duty vacuum switching valve when positive battery voltage is applied to its terminals.

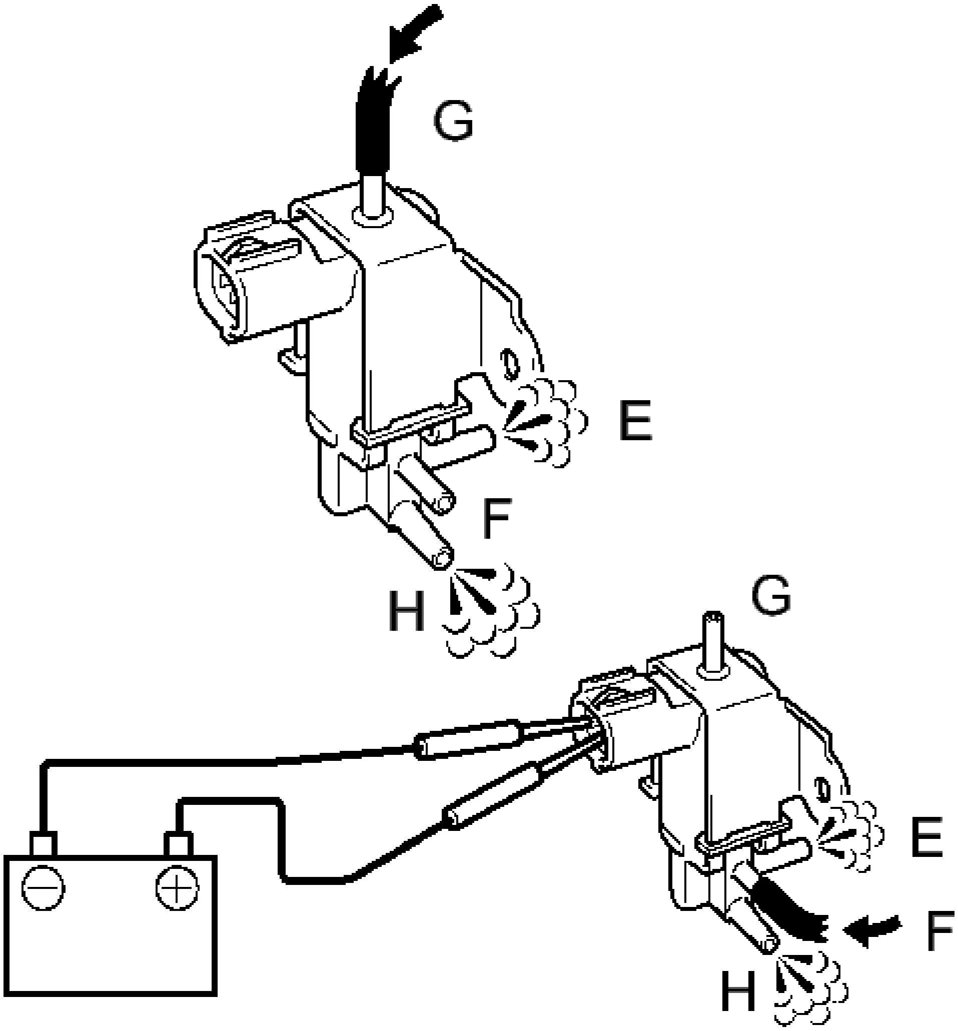

Fig. 20: Inspecting Duty Vacuum Switching Valve Operation
Courtesy of TOYOTA MOTOR SALES, U.S.A., INC.

Standard Condition

Condition	Specified Condition
Battery voltage is not applied	The air from pipe G is flowing out through pipes E and H.
	The air

Battery voltage is applied	from pipe F is flowing out through pipes E and H.

If the result is not as specified, replace the duty vacuum switching valve.

2. **INSPECT DUTY VACUUM SWITCHING VALVE (RESISTANCE)**
   1. Measure the resistance according to the value(s) in the table below.

      Standard Resistance

Tester Connection	Condition	Specified Condition
1 - 2	20°C (68°F)	19 to 21 ohms

      If the resistance is not as specified, replace the duty vacuum switching valve.

INSTALLATION

INSTALLATION

1. **INSTALL DUTY VACUUM SWITCHING VALVE**
   1. Connect the vacuum hose and vacuum switching valve connector.

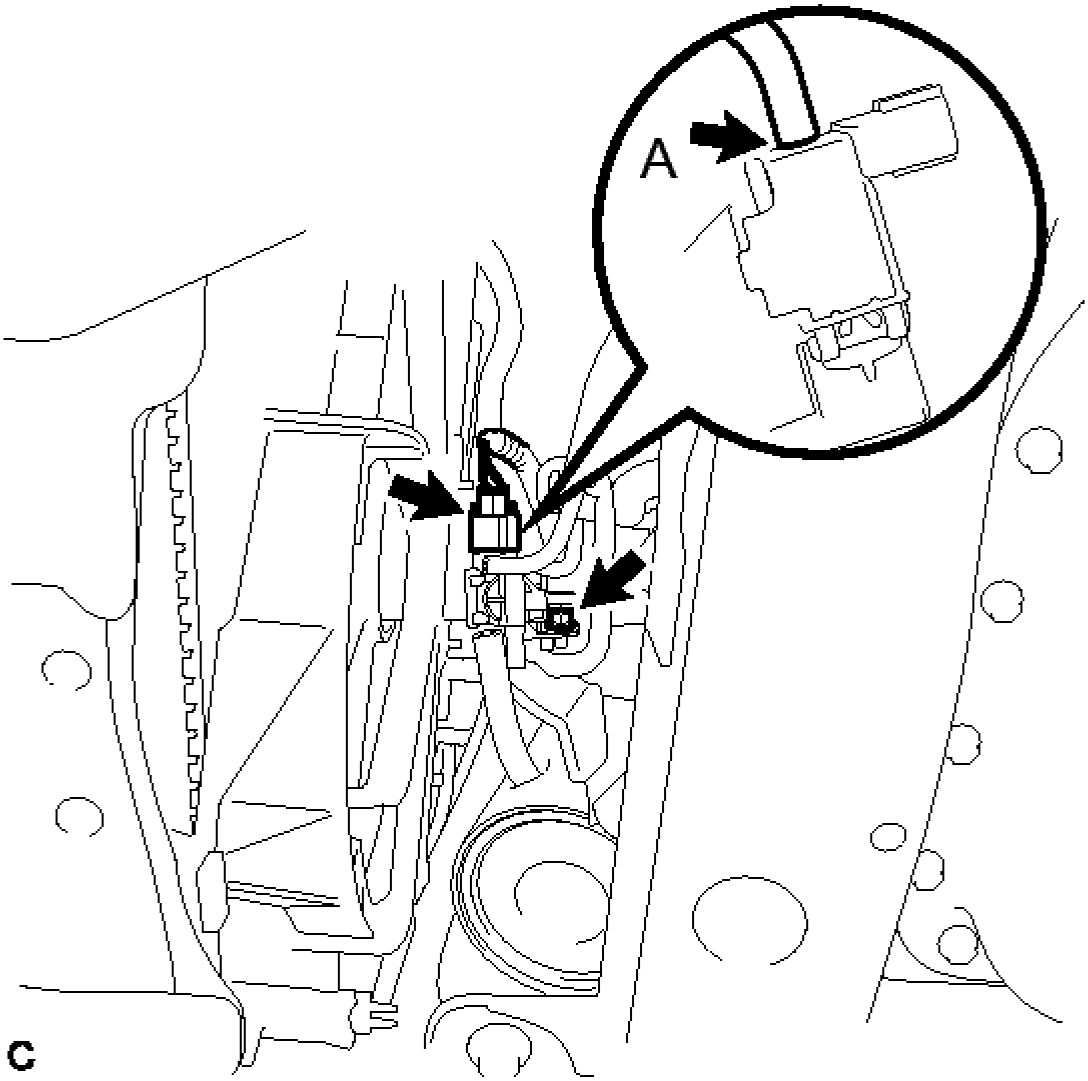

Fig. 21: Identifying Duty Vacuum Hose And Vacuum Switch Valve Connector
Courtesy of TOYOTA MOTOR SALES, U.S.A., INC.

b. Install the duty vacuum switching valve with the bolt.

HINT:

Hose A: Large hose

Torque: 4.0 N*m (41 kgf*cm, 35 in.*lbf)

c. Connect the 2 vacuum hoses to the duty vacuum switching valve.

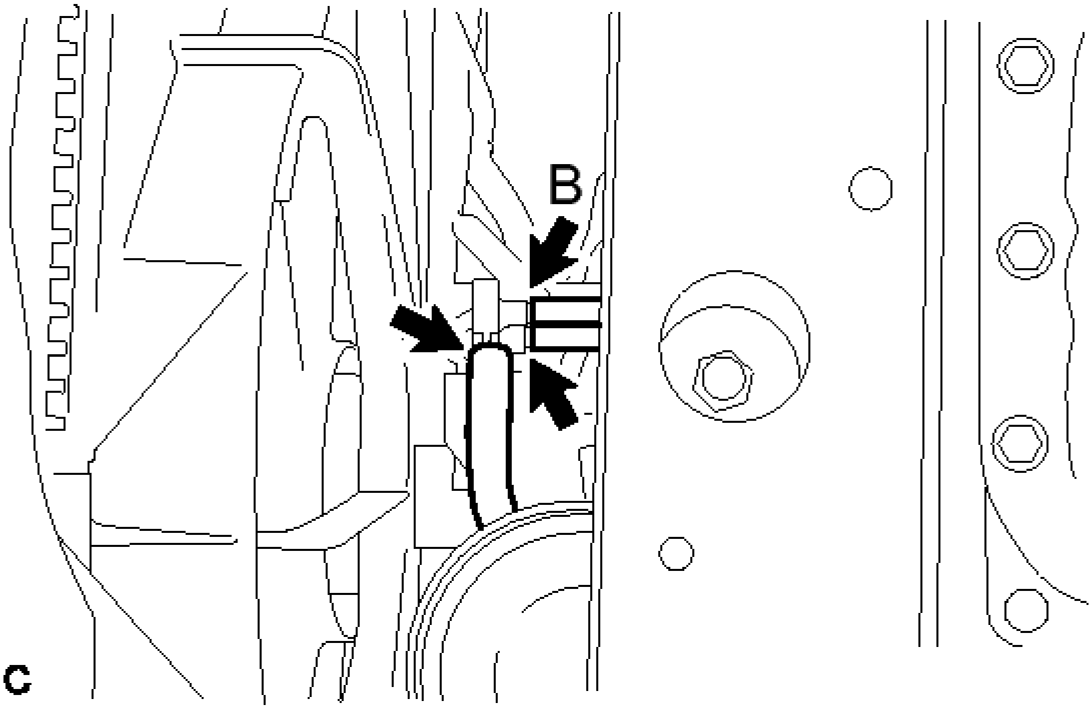

Fig. 22: Identifying Vacuum Hoses
Courtesy of TOYOTA MOTOR SALES, U.S.A., INC.

HINT:

Hose B: Dummy hose (not used for ventilation, the other end is plugged)

d. Connect the hose.

2. **CONNECT CABLE TO NEGATIVE BATTERY TERMINAL**

NOTE: **When disconnecting the cable, some systems need to be initialized after the cable is reconnected. Refer to INITIALIZATION .**

3. **INSTALL ENGINE UNDER COVER LH**
4. **INSTALL FRONT WHEEL OPENING EXTENSION PAD LH**
5. **INSTALL ENGINE UNDER COVER RH**
6. **INSTALL FRONT WHEEL OPENING EXTENSION PAD RH**

ACTIVE CONTROL ENGINE MOUNT

COMPONENTS

ILLUSTRATION

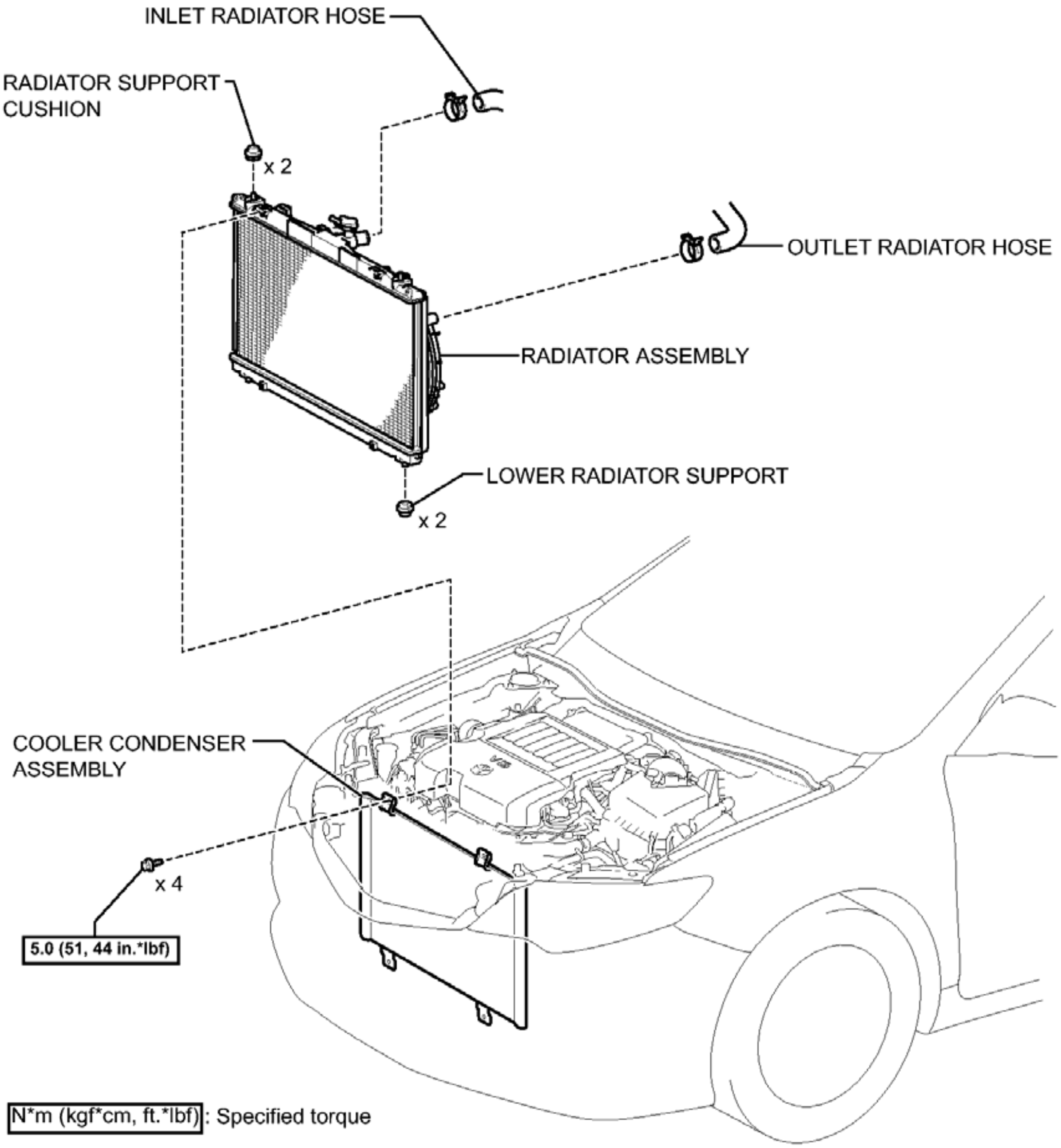
INLET RADIATOR HOSE
RADIATOR SUPPORT CUSHION
x 2
OUTLET RADIATOR HOSE
RADIATOR ASSEMBLY
LOWER RADIATOR SUPPORT
x 2
COOLER CONDENSER ASSEMBLY
x 4
5.0 (51, 44 in.*lbf)
N*m (kgf*cm, ft.*lbf) : Specified torque

Fig. 23: Identifying Active Control Engine Mount Replacement Components With Torque Specifications (1 Of 2)
Courtesy of TOYOTA MOTOR SALES, U.S.A., INC.

ILLUSTRATION

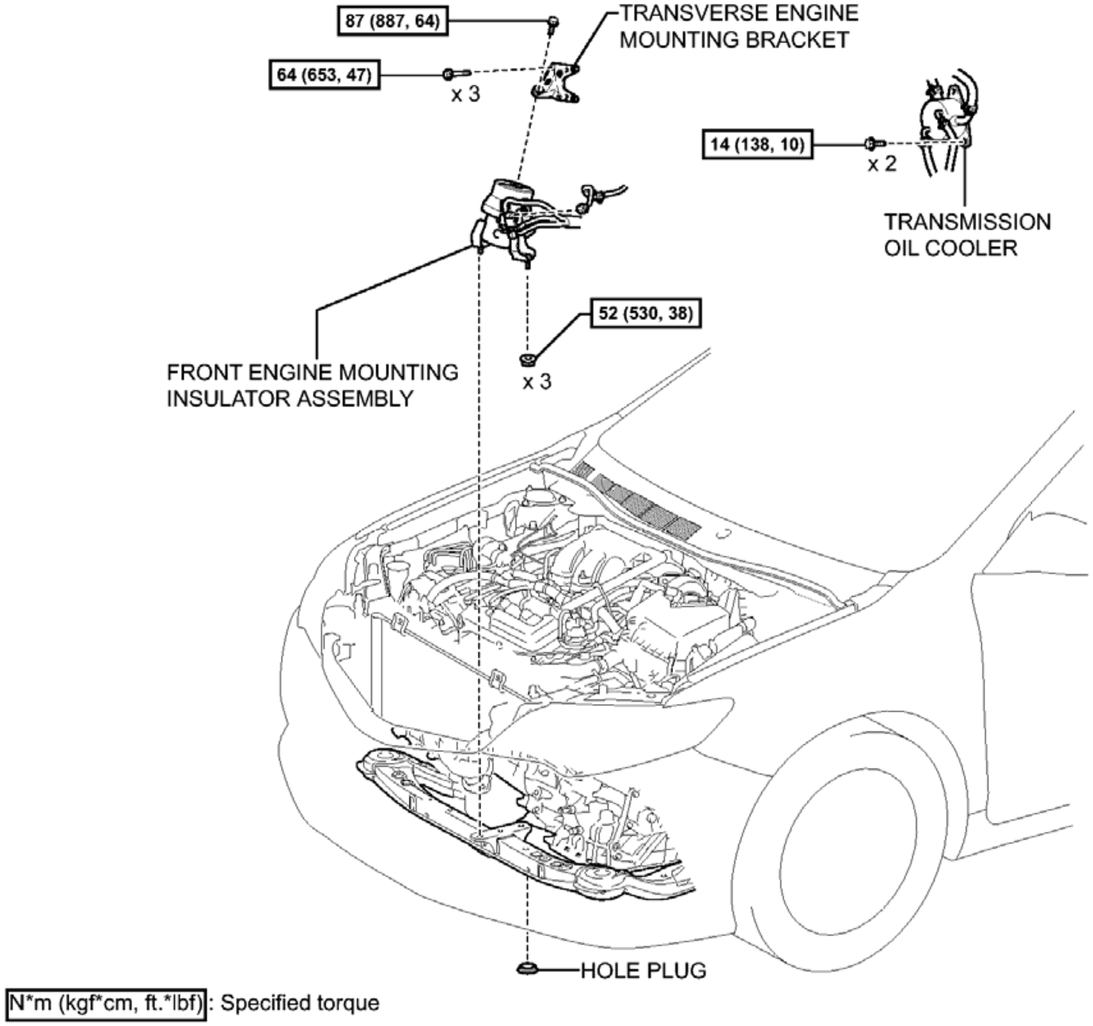
87 (887, 64)
TRANSVERSE ENGINE MOUNTING BRACKET
64 (653, 47)
x 3
14 (138, 10)
x 2
TRANSMISSION OIL COOLER
52 (530, 38)
FRONT ENGINE MOUNTING INSULATOR ASSEMBLY
x 3
HOLE PLUG
N*m (kgf*cm, ft.*lbf): Specified torque

Fig. 24: Identifying Active Control Engine Mount Replacement Components With Torque Specifications (2 Of 2)
Courtesy of TOYOTA MOTOR SALES, U.S.A., INC.

ON-VEHICLE INSPECTION

ON-VEHICLE INSPECTION

1. **INSPECT FRONT ENGINE MOUNTING INSULATOR ASSEMBLY**
    a. Check the operation.
        1. Connect the Techstream to DLC3.
        2. Turn the engine switch on (IG).
        3. Turn the Techstream on.
        4. Enter the following menus: Powertrain / Engine / Active Test / Control the ACM Inhibit.

Tester	Test	Control	Diagnostic

Display	Part	Range	Note
Control the ACM Inhibit	ACM	ON / OFF	Test is possible while engine is idling

5. Check if the front engine mounting insulator assembly operates in accordance with tester operation.

   Result

Condition	Specified Condition
"Control the ACM Inhibit" is OFF	The engine does not move (insulator operation is normal).
"Control the ACM Inhibit" is ON	The engine moves in accordance with insulator operation.

   HINT:

   While "Control the ACM Inhibit" is ON, the front engine mounting insulator assembly operates repeatedly.

b. Inspect for vacuum leaks.
   1. Disconnect the vacuum hose from the front engine mounting insulator assembly.
   2. Using a vacuum pump, apply vacuum of 80 kPa (600 mmHg, 25 in.Hg) and wait for 1 minute.

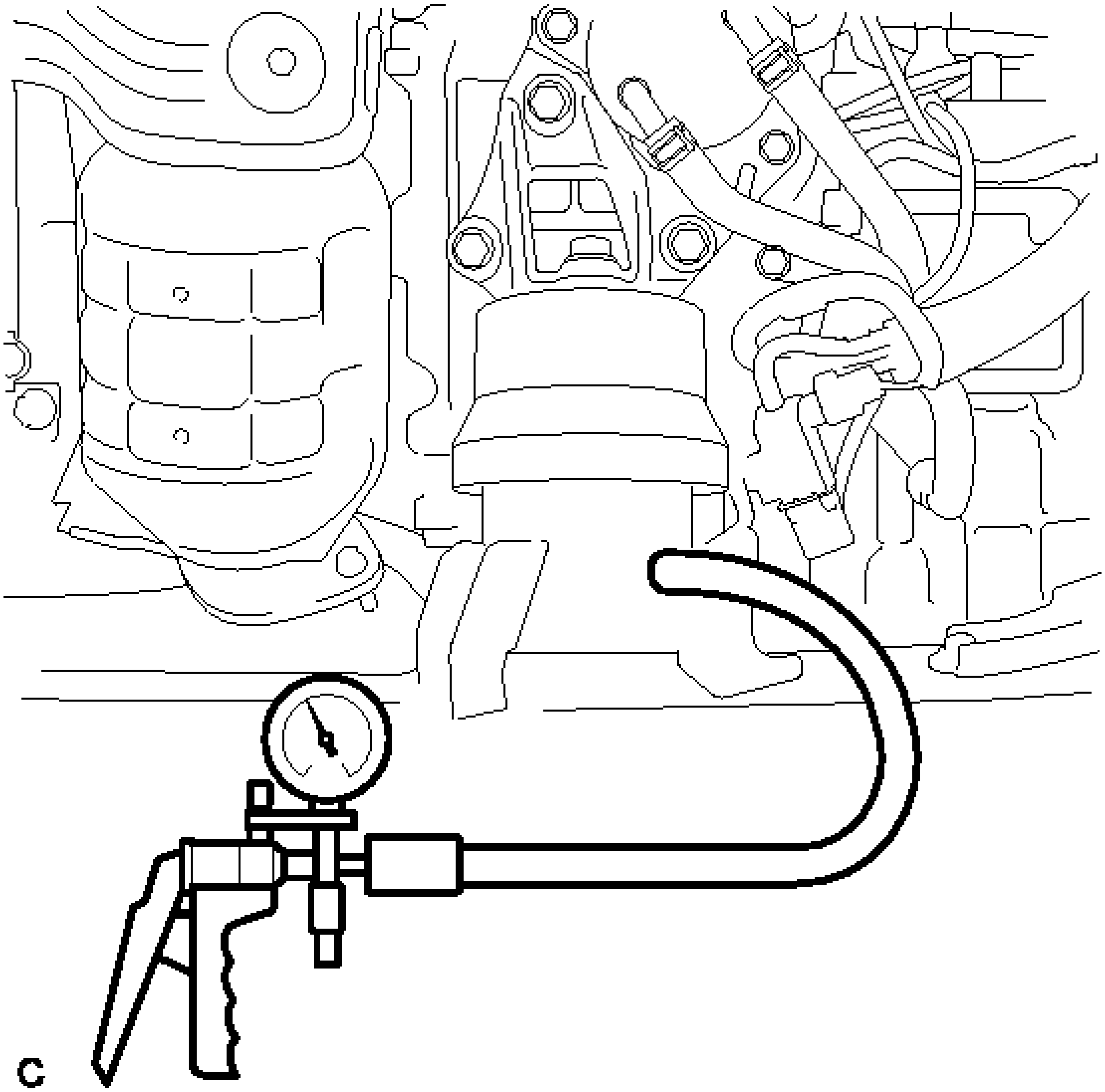

Fig. 25: Inspecting For Vacuum Leaks Using Vacuum Pump
Courtesy of TOYOTA MOTOR SALES, U.S.A., INC.

3. Check that there is no change in the needle movement of the vacuum pump gauge.

   OK

   Vacuum pressure holds.

4. Check that there is no fluid leakage caused by a break in the diaphragm.
5. Reconnect the vacuum hose.

REMOVAL

REMOVAL

1. **REMOVE RADIATOR ASSEMBLY**

   Refer to **REMOVAL** .

2. **REMOVE TRANSVERSE ENGINE MOUNTING BRACKET**

   HINT:

   Securely support the automatic transaxle using a jack.

   a. Remove the 2 bolts and separate the transmission oil cooler.

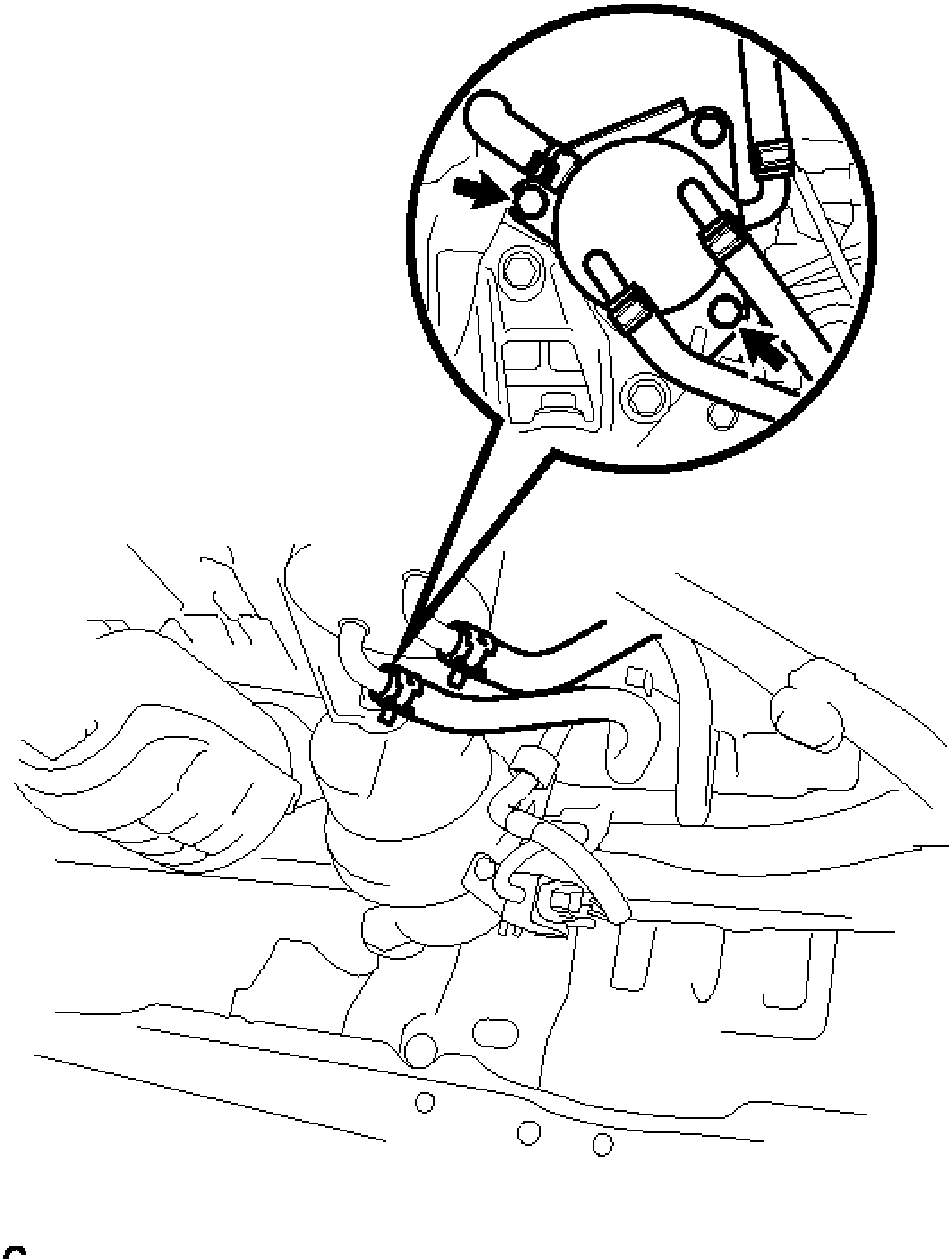

Fig. 26: Identifying Transmission Oil Cooler Boots
Courtesy of TOYOTA MOTOR SALES, U.S.A., INC.

b. Remove the 4 bolts and transverse engine mounting bracket.

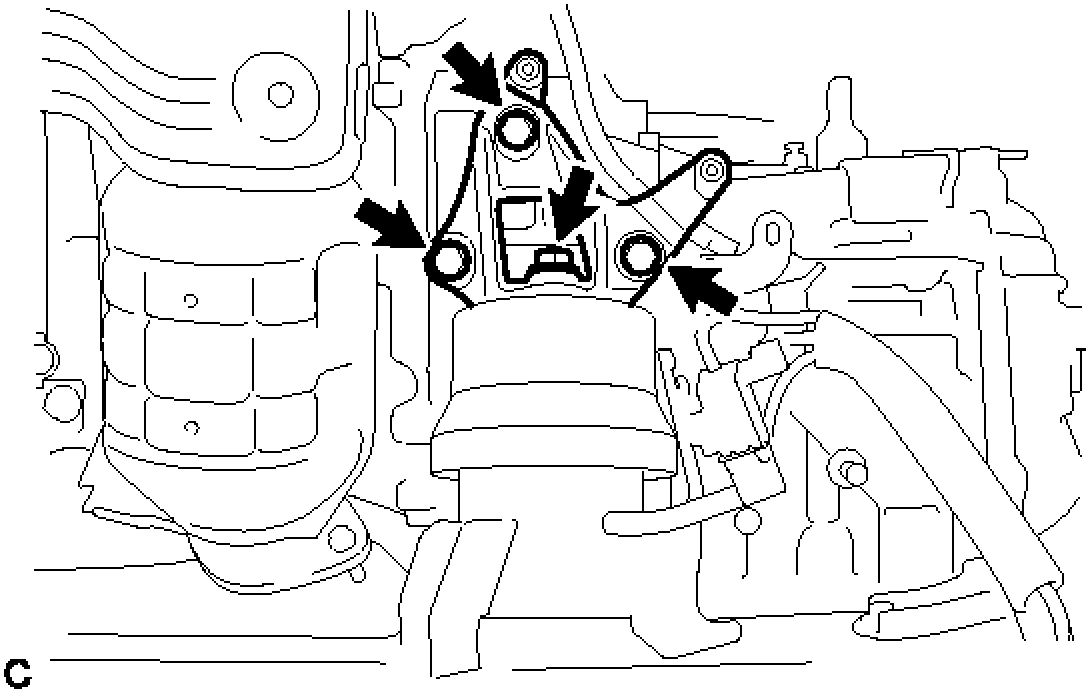

Fig. 27: Identifying Engine Mounting Bracket Bolts
Courtesy of TOYOTA MOTOR SALES, U.S.A., INC.

3. **REMOVE FRONT ENGINE MOUNTING INSULATOR ASSEMBLY**
   a. Disconnect the duty vacuum switching valve connector and 2 clamps.

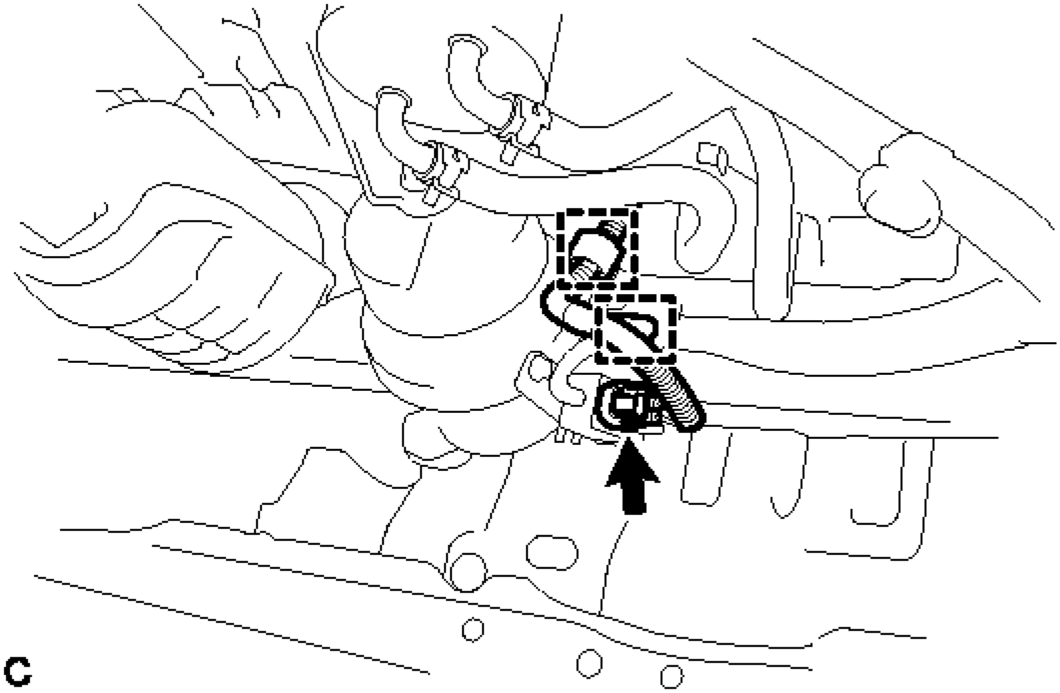

Fig. 28: Identifying Duty Vacuum Switching Valve Connector And Clamps

Courtesy of TOYOTA MOTOR SALES, U.S.A., INC.

b. Remove the hole plug.
c. Remove the 3 nuts and front engine mounting insulator assembly.

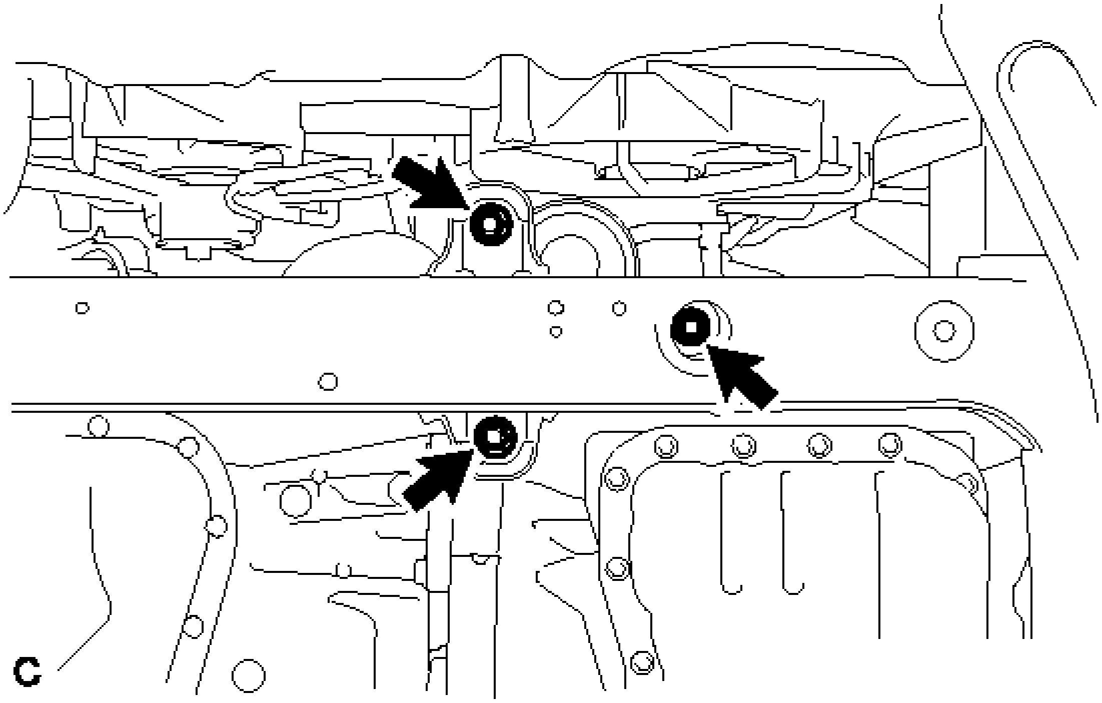

Fig. 29: Identifying Front Engine Mounting Insulator Assembly Nuts
Courtesy of TOYOTA MOTOR SALES, U.S.A., INC.

INSTALLATION

INSTALLATION

1. **INSTALL FRONT ENGINE MOUNTING INSULATOR ASSEMBLY**
    a. Install the front engine mounting insulator assembly with the 3 nuts.

    Torque: 52 N*m (530 kgf*cm, 38 ft.*lbf)

    b. Install the hole plug.
    c. Connect the duty vacuum switching valve connector and 2 clamps.
2. **INSTALL TRANSVERSE ENGINE MOUNTING BRACKET**
    a. Install the transverse engine mounting bracket with the 4 bolts.

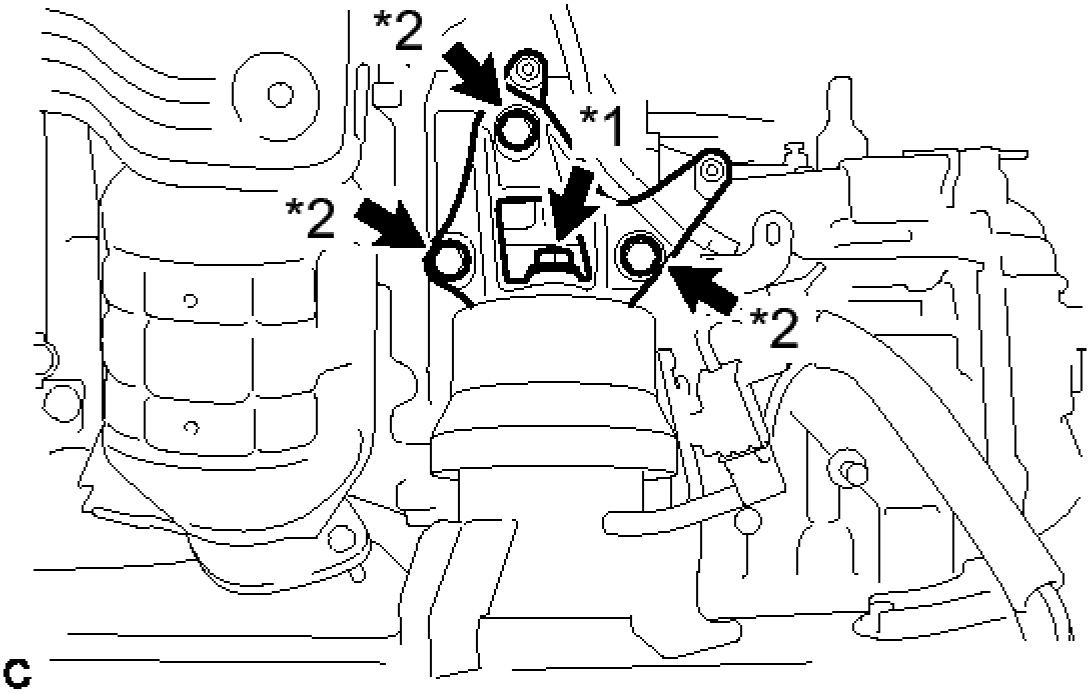

Fig. 30: Identifying Transverse Engine Mounting Bracket Bolts
Courtesy of TOYOTA MOTOR SALES, U.S.A., INC.

TEXT IN ILLUSTRATION

*1	Bolt A
*2	Bolt B

Bolt A

Torque: 87 N*m (887 kgf*cm, 64 ft.*lbf)

Bolt B

Torque: 64 N*m (653 kgf*cm, 47 ft.*lbf)

b. Install the transmission oil cooler with the 2 bolts.

Torque: 14 N*m (138 kgf*cm, 10 ft.*lbf)

3. **INSTALL RADIATOR ASSEMBLY**

Refer to **INSTALLATION** .

ECM

COMPONENTS

ILLUSTRATION

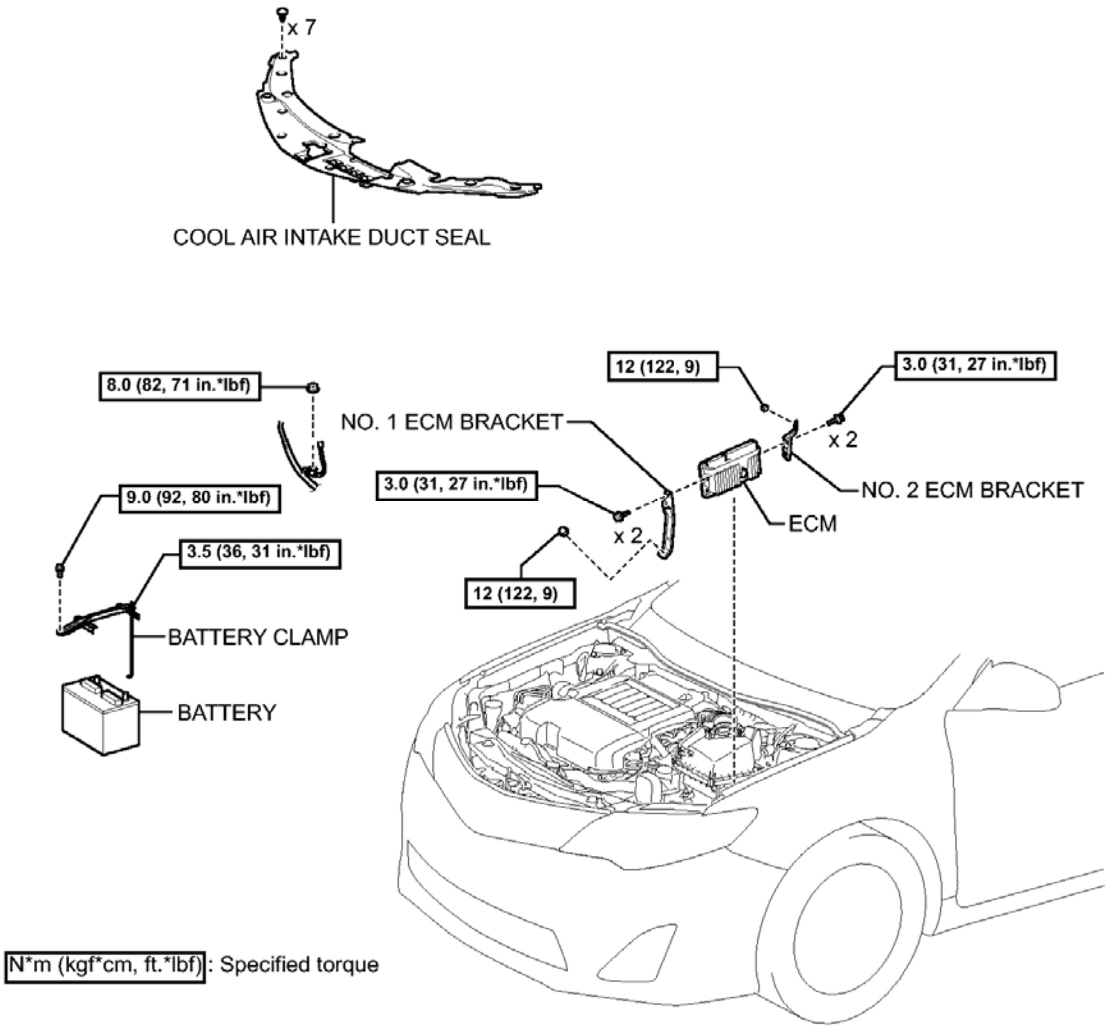
x 7
COOL AIR INTAKE DUCT SEAL
8.0 (82, 71 in.*lbf)
12 (122, 9)
3.0 (31, 27 in.*lbf)
NO. 1 ECM BRACKET
x 2
NO. 2 ECM BRACKET
3.0 (31, 27 in.*lbf)
9.0 (92, 80 in.*lbf)
x 2
ECM
3.5 (36, 31 in.*lbf)
12 (122, 9)
BATTERY CLAMP
BATTERY
N*m (kgf*cm, ft.*lbf) : Specified torque

Fig. 31: Identifying ECM Replacement Components With Torque Specifications
Courtesy of TOYOTA MOTOR SALES, U.S.A., INC.

REMOVAL

REMOVAL

NOTE: **Perform the Vehicle Identification Number (VIN) registration when replacing the ECM. Refer to REGISTRATION .**

HINT:

When removing only the ECM, it is not necessary to remove the cool air intake duct seal and battery.

REMOVAL

1. **DISCONNECT CABLE FROM NEGATIVE BATTERY TERMINAL**

   NOTE: When disconnecting the cable, some systems need to be initialized after the cable is reconnected. Refer to INITIALIZATION .

2. **REMOVE COOL AIR INTAKE DUCT SEAL** . Refer to **REMOVAL - Step 1**
3. **REMOVE BATTERY** . Refer to **REMOVAL - Step 22**
4. **REMOVE ECM**
   a. Disconnect the 2 ECM connectors.

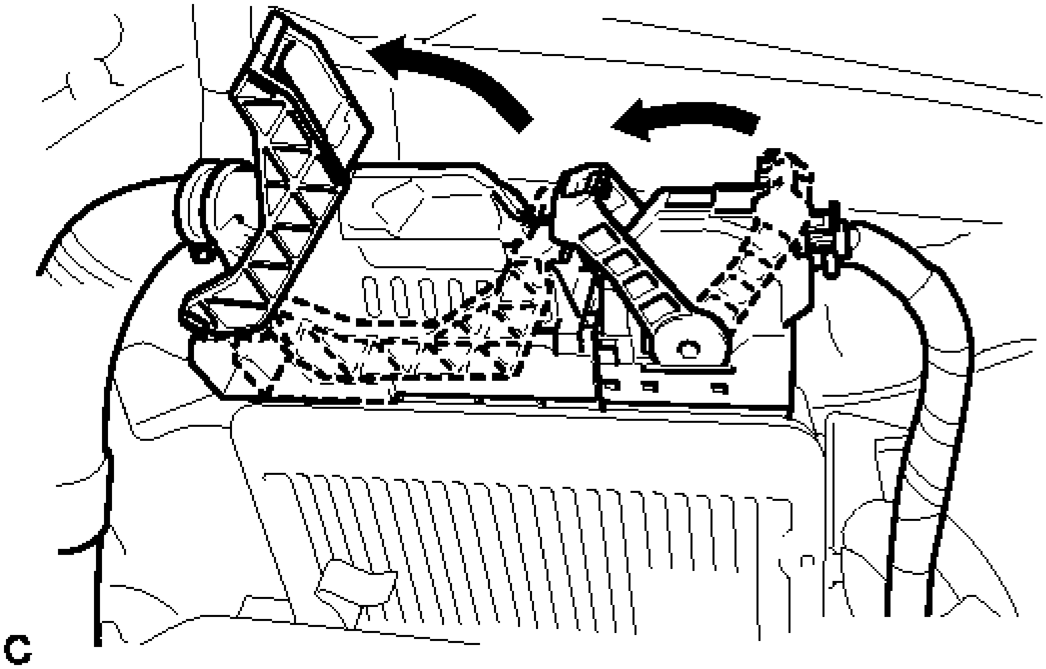

Fig. 32: Raising ECM Connector Levers
Courtesy of TOYOTA MOTOR SALES, U.S.A., INC.

1. Push in the locks on the 2 levers, raise the levers, and disconnect the 2 ECM connectors.

   NOTE: After disconnecting the connectors, make sure that dirt, water or other foreign matter does not contact the connecting part of the connectors.

b. Remove the nut.

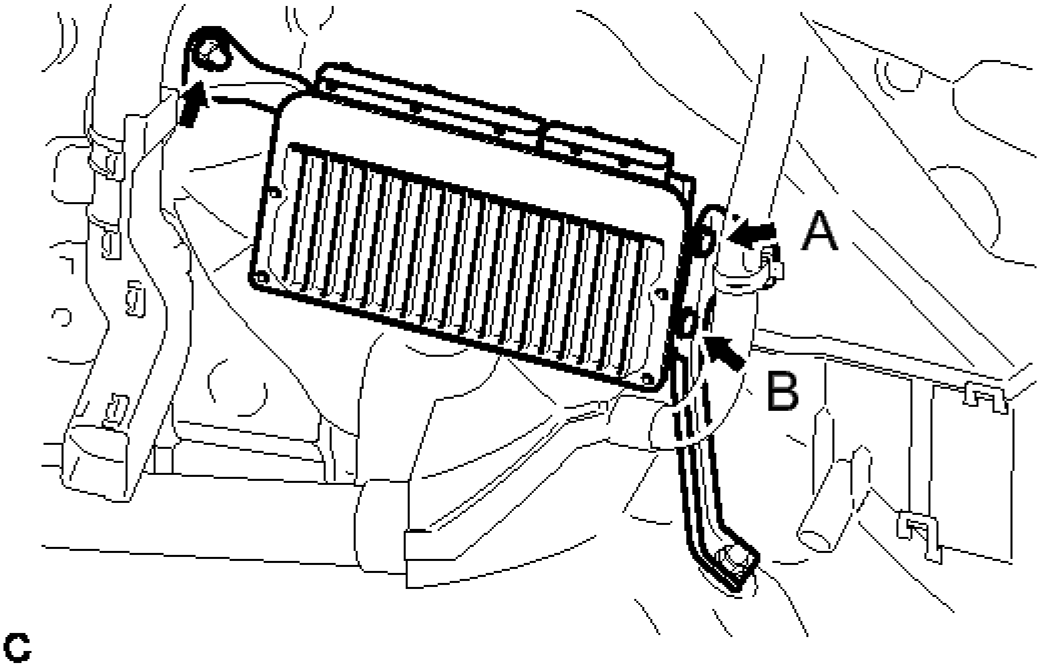

Fig. 33: Identifying ECM Screw, Nut And Bracket
Courtesy of TOYOTA MOTOR SALES, U.S.A., INC.

c. Remove the screw (A).
d. Loosen the screw (B) and remove the ECM.
e. Remove the screw (B).
f. Remove the 2 screws and No. 2 ECM bracket.

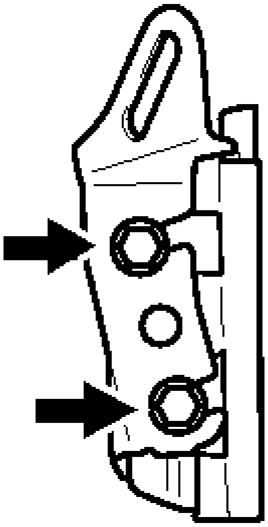

Fig. 34: Identifying No. 2 ECM Screws And Bracket
Courtesy of TOYOTA MOTOR SALES, U.S.A., INC.

5. **REMOVE NO. 1 ECM BRACKET**
   a. Remove the nut.

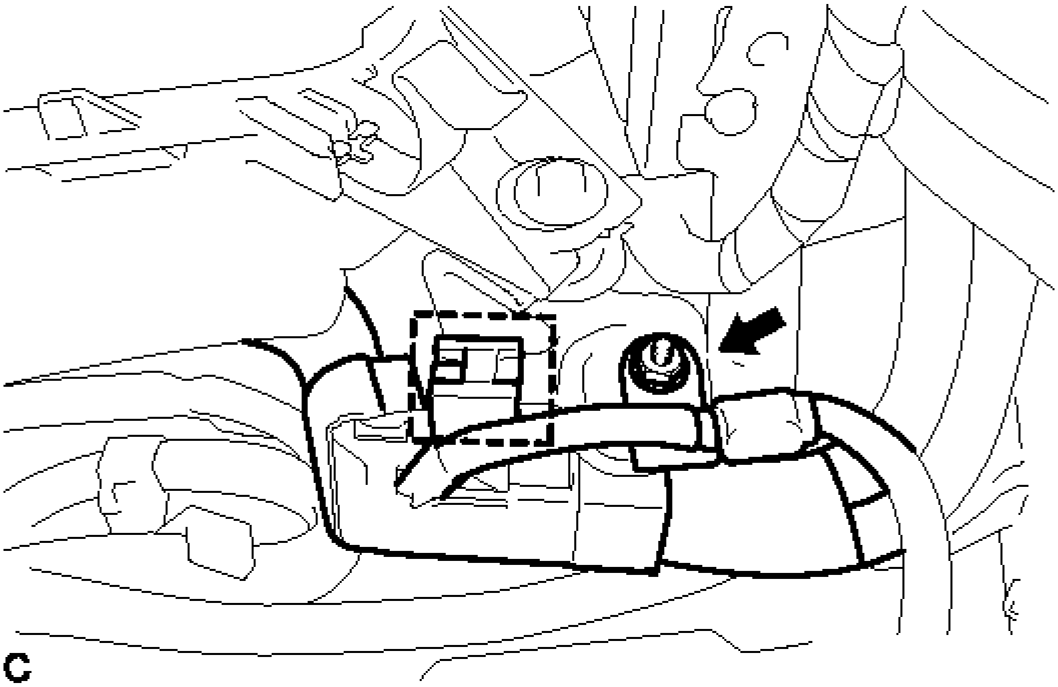

Fig. 35: Identifying No. 1 ECM Bracket Nut

Courtesy of TOYOTA MOTOR SALES, U.S.A., INC.

b. Disconnect the wire harness clamp.
c. Disconnect the wire harness clamp.

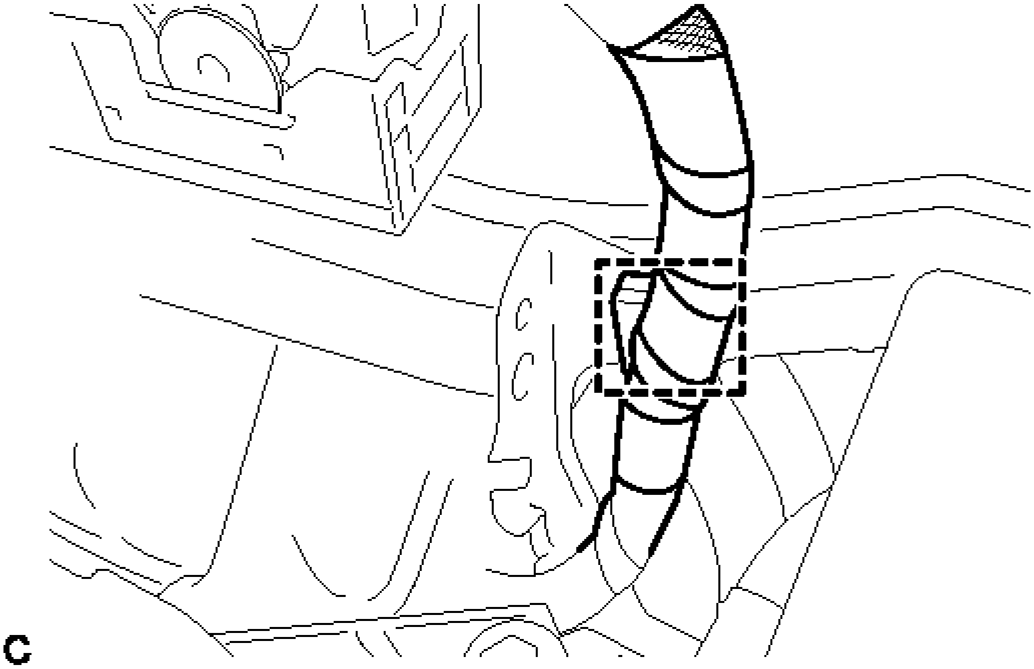

Fig. 36: Identifying Wire Harness Clamp
Courtesy of TOYOTA MOTOR SALES, U.S.A., INC.

d. Remove the nut and No. 1 ECM bracket.

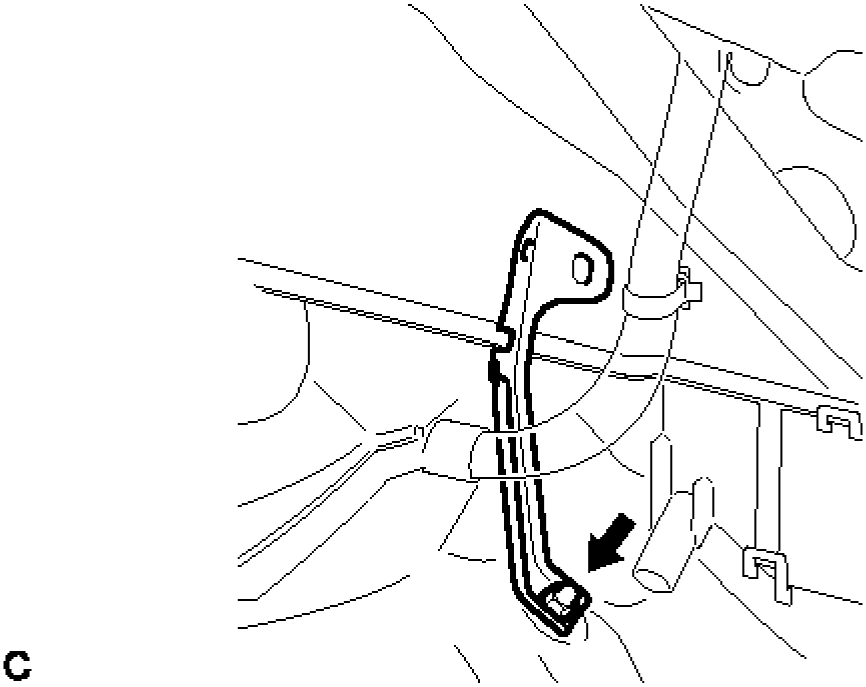

Fig. 37: Identifying No. 1 ECM Bracket Nut
Courtesy of TOYOTA MOTOR SALES, U.S.A., INC.

INSTALLATION

INSTALLATION

1. **INSTALL NO. 1 ECM BRACKET**
    1. Install the No. 1 ECM bracket with the nut.

       Torque: 12 N*m (122 kgf*cm, 9 ft.*lbf)

    2. Connect the 2 wire harness clamps.
    3. Install the nut.

       Torque: 8.0 N*m (82 kgf*cm, 71 in.*lbf)

2. **INSTALL ECM**
    1. Install the No. 2 ECM bracket to the ECM with the 2 screws.

       Torque: 3.0 N*m (31 kgf*cm, 27 in.*lbf)

    2. Temporarily install the screw (B).
    3. Install the ECM with the nut.

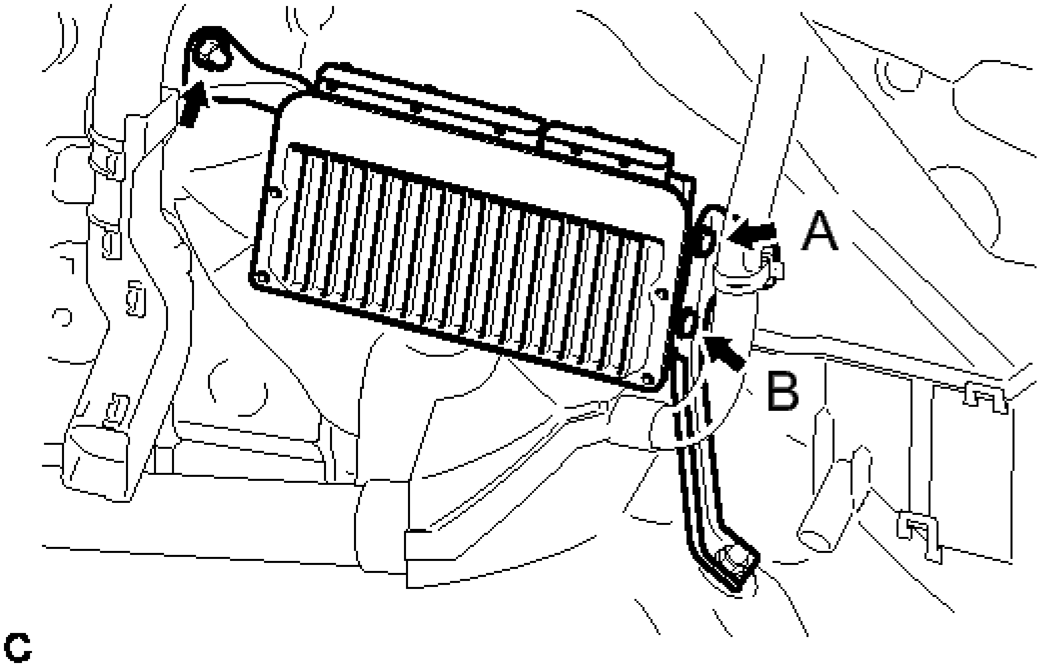

Fig. 38: Identifying ECM Screw, Nut And Bracket
Courtesy of TOYOTA MOTOR SALES, U.S.A., INC.

Torque: 12 N*m (122 kgf*cm, 9 ft.*lbf)

d. Install the screw (A).

Torque: 3.0 N*m (31 kgf*cm, 27 in.*lbf)

e. Tighten the screw (B).

Torque: 3.0 N*m (31 kgf*cm, 27 in.*lbf)

f. Connect the 2 ECM connectors and lower the 2 levers.

NOTE:

- **When connecting the connectors, make sure that dirt, water or other foreign matter does not become stuck between the connectors and other part.**
- **Make sure that the 2 levers are securely locked.**

3. **INSTALL BATTERY** . Refer to **INSTALLATION - Step 55**
4. **INSTALL COOL AIR INTAKE DUCT SEAL** . Refer to **INSTALLATION - Step 4**
5. **CONNECT CABLE TO NEGATIVE BATTERY TERMINAL**

NOTE: **When disconnecting the cable, some systems need to be initialized after the cable is reconnected. Refer to INITIALIZATION .**

6. **PERFORM INITIALIZATION**

   Refer to **PRECAUTION** .

ACCELERATOR PEDAL

COMPONENTS

ILLUSTRATION

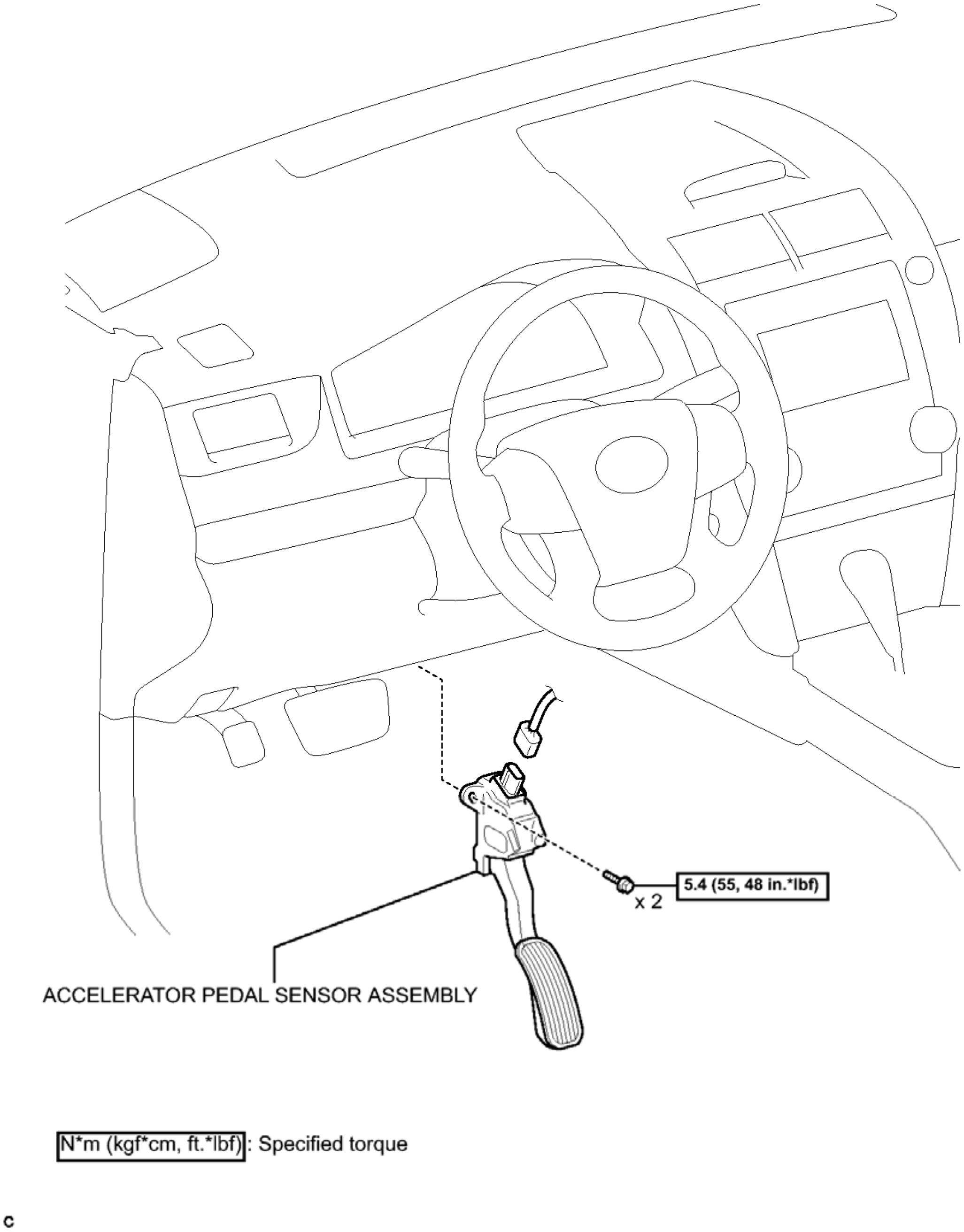
5.4 (55, 48 in.*lbf)
x 2
ACCELERATOR PEDAL SENSOR ASSEMBLY
N*m (kgf*cm, ft.*lbf): Specified torque
c

Fig. 39: Identifying Acceleration Replacement Components With Torque Specifications
Courtesy of TOYOTA MOTOR SALES, U.S.A., INC.

ON-VEHICLE INSPECTION

ON-VEHICLE INSPECTION

1. **INSPECT ACCELERATOR PEDAL SENSOR ASSEMBLY**

a. Connect the Techstream to the DLC3.

b. Turn the engine switch on (IG).

c. Turn the Techstream on.

d. Enter the following menus: Powertrain / Engine / Data List / All Data / Accel Sensor Out No. 1 and Accel Sensor Out No. 2.

e. Read the values displayed on the Techstream.

Standard Voltage

Accelerator Pedal Operation	**Accel Sensor Out No. 1**	**Accel Sensor Out No. 2**
Released	0.5 to 1.1 V	1.2 to 2.0 V
Depressed	2.6 to 4.5 V	3.4 to 4.98 V

If the result is not as specified, check the accelerator pedal sensor assembly, wire harness or ECM.

REMOVAL

REMOVAL

1. **REMOVE ACCELERATOR PEDAL SENSOR ASSEMBLY**

NOTE:

- **Avoid physical shock to the accelerator pedal sensor assembly.**
- **Do not disassemble the accelerator pedal sensor assembly.**

a. Disconnect the accelerator pedal sensor assembly connector.

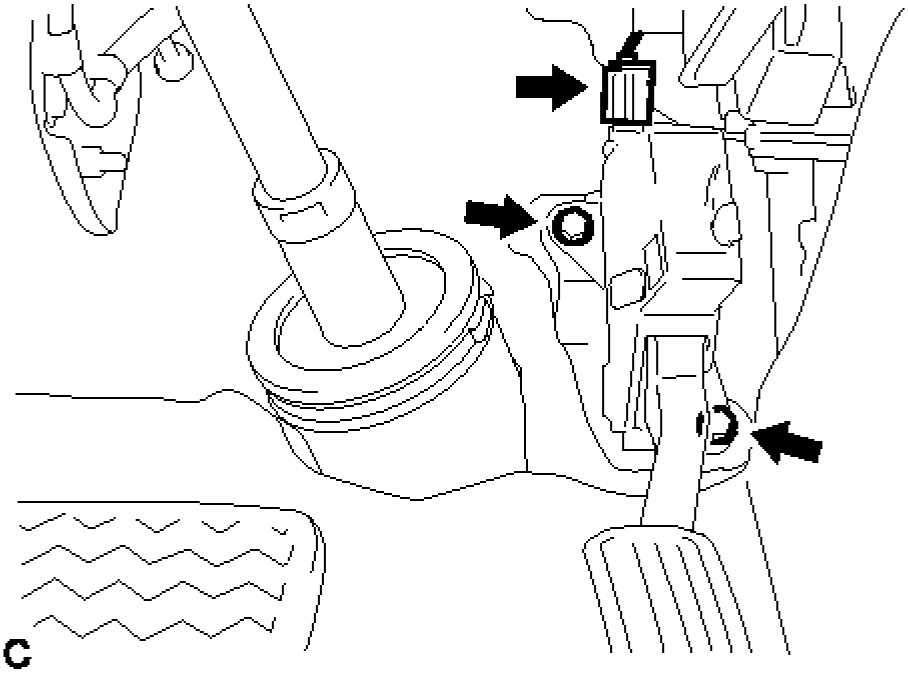

Fig. 40: Identifying Accelerator Pedal Sensor Assembly Connector And Bolts
Courtesy of TOYOTA MOTOR SALES, U.S.A., INC.

b. Remove the 2 bolts and accelerator pedal sensor assembly.

INSTALLATION

INSTALLATION

1. **INSTALL ACCELERATOR PEDAL SENSOR ASSEMBLY**

NOTE:

- **Avoid physical shock to the accelerator pedal sensor assembly.**
- **Do not disassemble the accelerator pedal sensor assembly.**

a. Temporarily install the accelerator pedal sensor assembly with the 2 bolts.

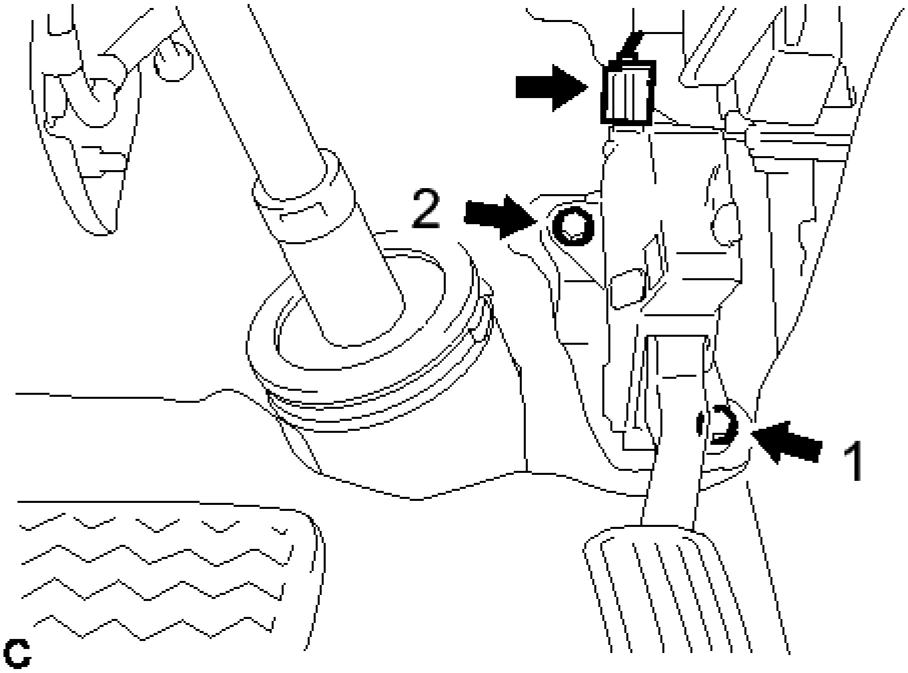

Fig. 41: Identifying Accelerator Pedal Sensor Assembly Bolts
Courtesy of TOYOTA MOTOR SALES, U.S.A., INC.

b. Tighten the 2 bolts in the order shown in the illustration.

Torque: 5.4 N*m (55 kgf*cm, 48 in.*lbf)

c. Connect the accelerator pedal sensor assembly connector.

MASS AIR FLOW METER

COMPONENTS

ILLUSTRATION

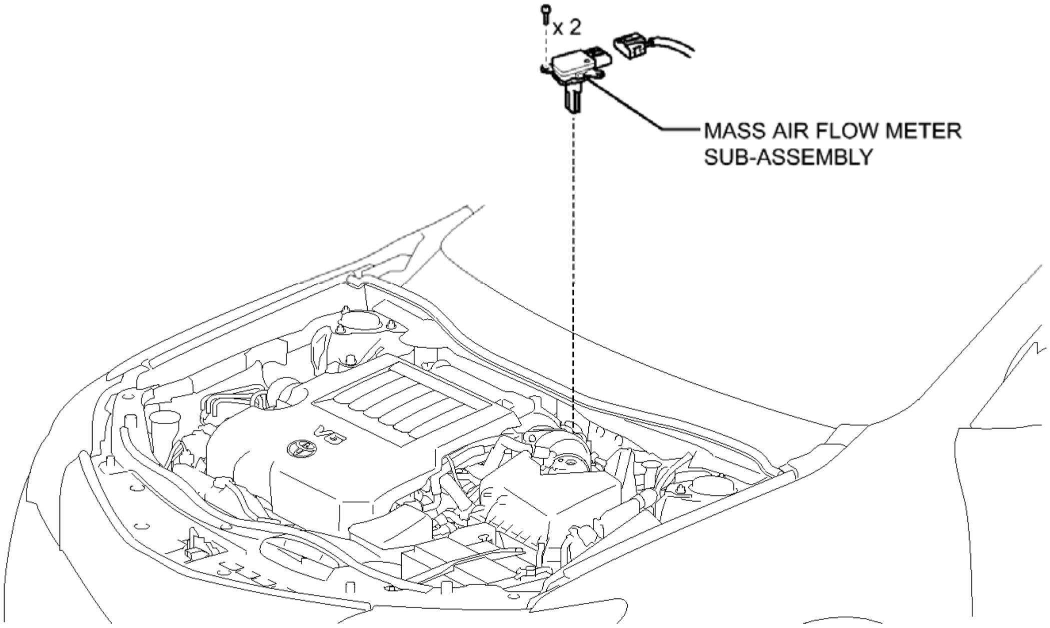

Fig. 42: Identifying Mass Air Flow Meter Replacement Components
Courtesy of TOYOTA MOTOR SALES, U.S.A., INC.

ON-VEHICLE INSPECTION

ON-VEHICLE INSPECTION

NOTE:

- **Perform the MAF meter inspection according to the following procedure.**
- **Only replace the MAF meter when the MAF value in the Data List (with the engine stopped) is not within the normal operating range or there is foreign matter on the MAF meter platinum hot wire (heater).**

1. **INSPECT MASS AIR FLOW METER**
   a. Read the values using the Techstream (MAF).

   NOTE:

   - **Perform the inspection with the vehicle indoors and on a level surface.**
   - **Perform the inspection of the MAF meter while it is installed to the air cleaner case (installed to the vehicle).**
   - **During the test, do not use an exhaust air duct on the exhaust**

pipe.

1. Connect the Techstream to the DLC3.
2. Turn the engine switch on (IG) (do not run the engine).
3. Enter the following menus: Powertrain / Engine / Data List / Primary / MAF.
4. Wait for 30 seconds, and read the values on the Techstream.

Standard Condition

Tester Display	Condition	Specified Condition
MAF	• Engine not running • 30 seconds after engine switch turned on (IG)	0.49 g/sec. or less

If the result is not as specified, replace the MAF meter.

If the result is within the specified range, remove and inspect the MAF meter See step 1.

REMOVAL

REMOVAL

1. **REMOVE MASS AIR FLOW METER SUB-ASSEMBLY**
    a. Separate the mass air flow meter connector.

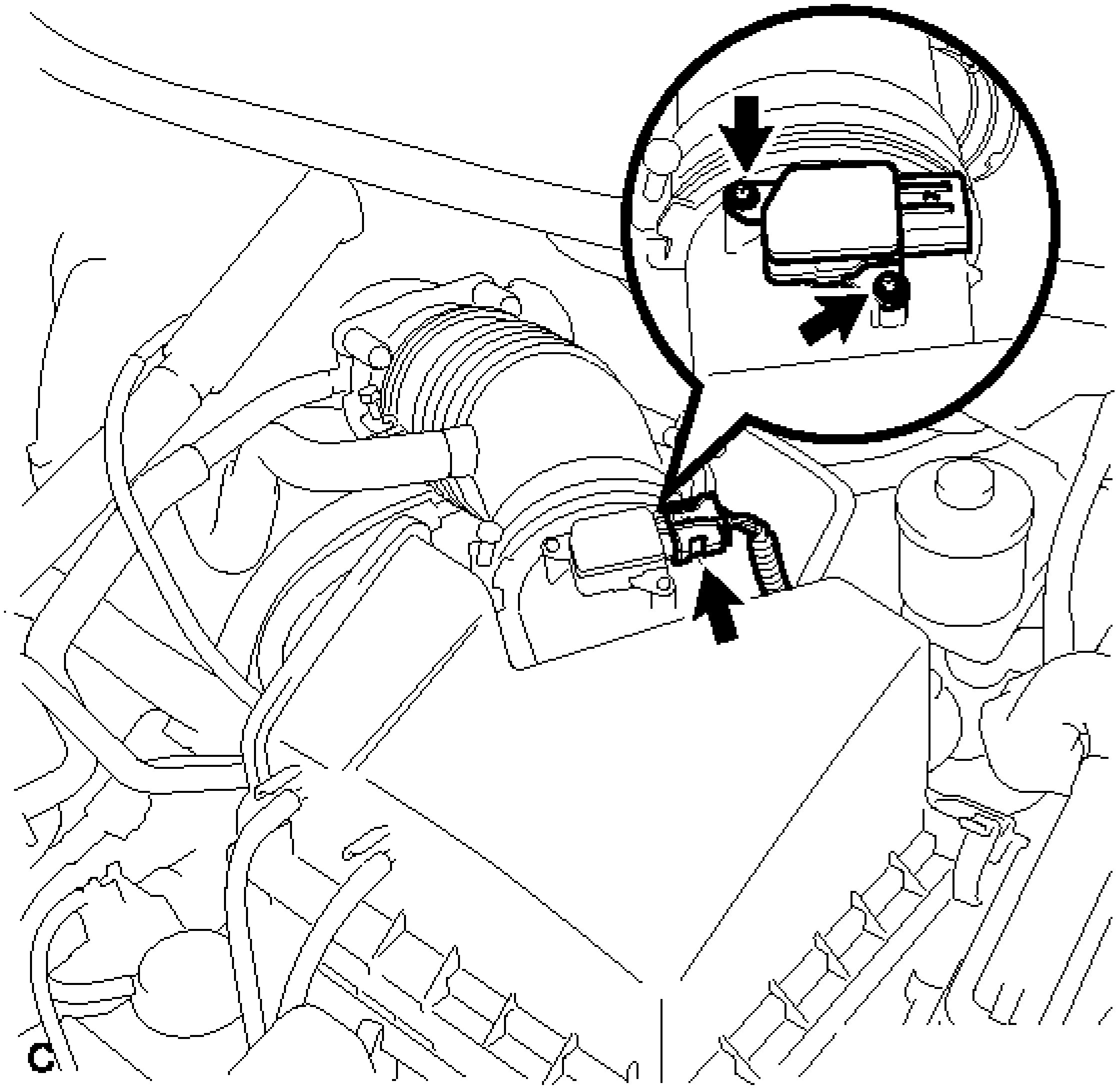

Fig. 43: Identifying Mass Air Flow Meter Connector And Screws
Courtesy of TOYOTA MOTOR SALES, U.S.A., INC.

b. Remove the 2 screws and mass air flow meter.

INSPECTION

INSPECTION

1. **INSPECT MASS AIR FLOW METER SUB-ASSEMBLY**
   a. Perform a visual check for any foreign matter on the platinum hot wire (heater) of the mass air flow meter shown in the illustration.

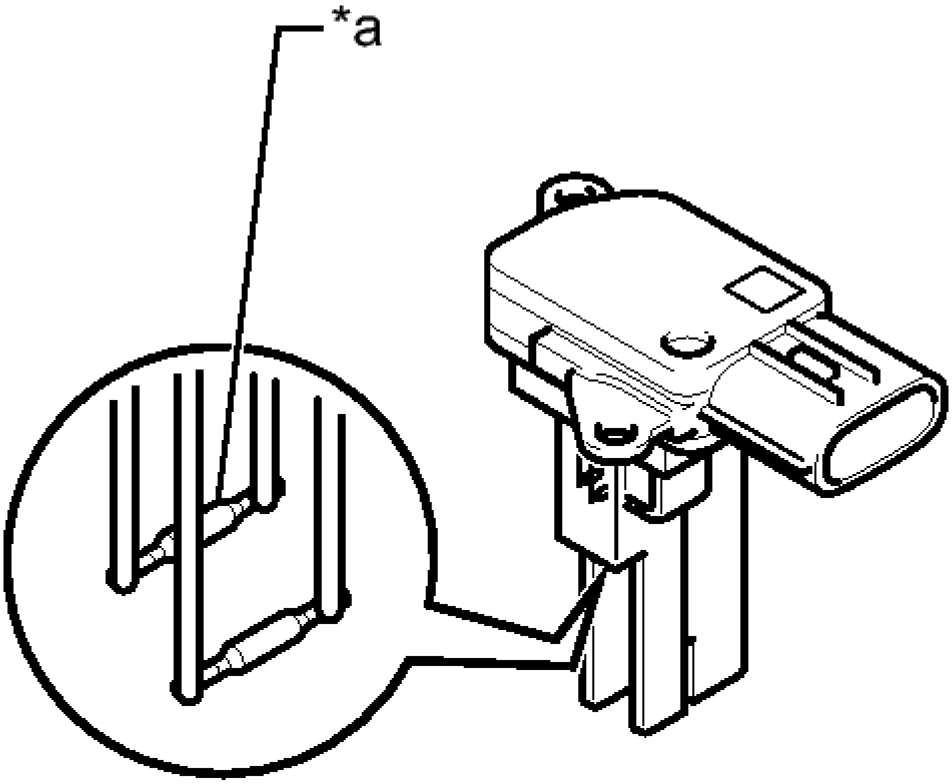

Fig. 44: Identifying Platinum Hot Wire (Heater)
Courtesy of TOYOTA MOTOR SALES, U.S.A., INC.

TEXT IN ILLUSTRATION

*a	Platinum Hot Wire (Heater)

OK

There is no foreign matter.

If the result is not as specified, replace the mass air flow meter.

b. Measure the resistance according to the value(s) in the table below.

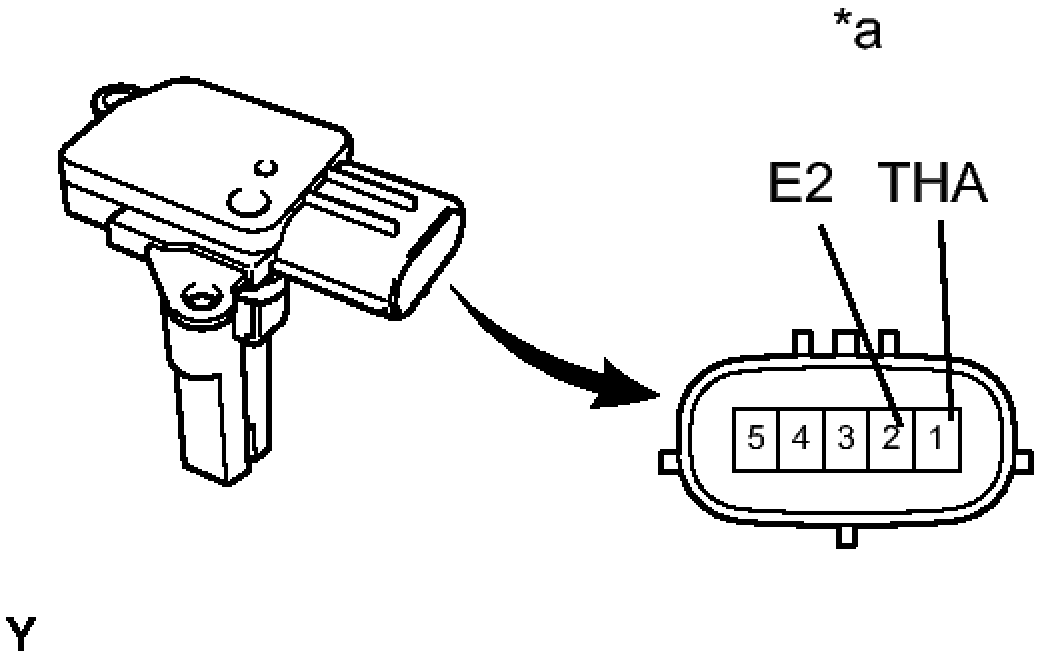

Fig. 45: Identifying Mass Air Flow Meter Sub-Assembly Connector Terminal Identification
Courtesy of TOYOTA MOTOR SALES, U.S.A., INC.

Standard Resistance

Tester Connection	Condition	Specified Condition
1 (THA) - 2 (E2)	-20°C (-4°F)	13.6 to 18.4 kohms
1 (THA) - 2 (E2)	20°C (68°F)	2.21 to 2.69 kohms
1 (THA) - 2 (E2)	60°C (140°F)	0.49 to 0.67 kohms

TEXT IN ILLUSTRATION

*a	Component without harness connected (Mass Air Flow Meter)

If the result is not as specified, replace the mass air flow meter.

INSTALLATION

INSTALLATION

HINT:

Perform "Inspection After Repair" after replacing the mass air flow meter sub-assembly. Refer to **INITIALIZATION** .

1. **INSTALL MASS AIR FLOW METER SUB-ASSEMBLY**
    a. Install the mass air flow meter with the 2 screws.

    NOTE: **Make sure that the O-ring is not cracked or does not jump out of position during installation.**

    HINT:

    Perform "Inspection After Repair" after replacing the mass air flow meter sub-assembly. Refer to **INITIALIZATION** .

    b. Connect the mass air flow meter connector.

CAMSHAFT POSITION SENSOR

COMPONENTS

ILLUSTRATION

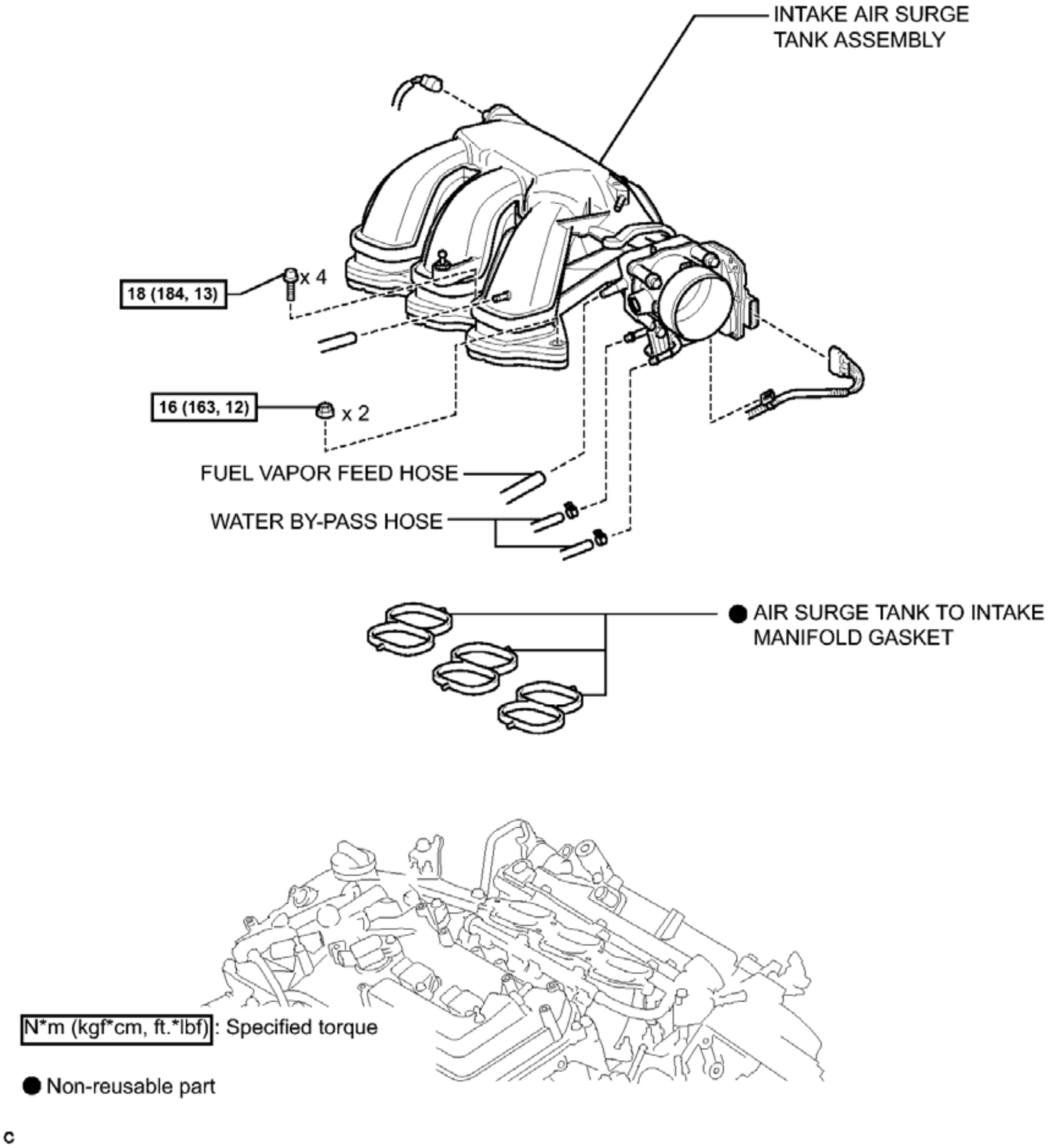
INTAKE AIR SURGE TANK ASSEMBLY
18 (184, 13)
x 4
16 (163, 12)
x 2
FUEL VAPOR FEED HOSE
WATER BY-PASS HOSE
● AIR SURGE TANK TO INTAKE MANIFOLD GASKET
N*m (kgf*cm, ft.*lbf): Specified torque
● Non-reusable part
c

Fig. 46: Identifying Camshaft Position Sensor Replacement Components With Torque Specifications (1 Of 2)
Courtesy of TOYOTA MOTOR SALES, U.S.A., INC.

ILLUSTRATION

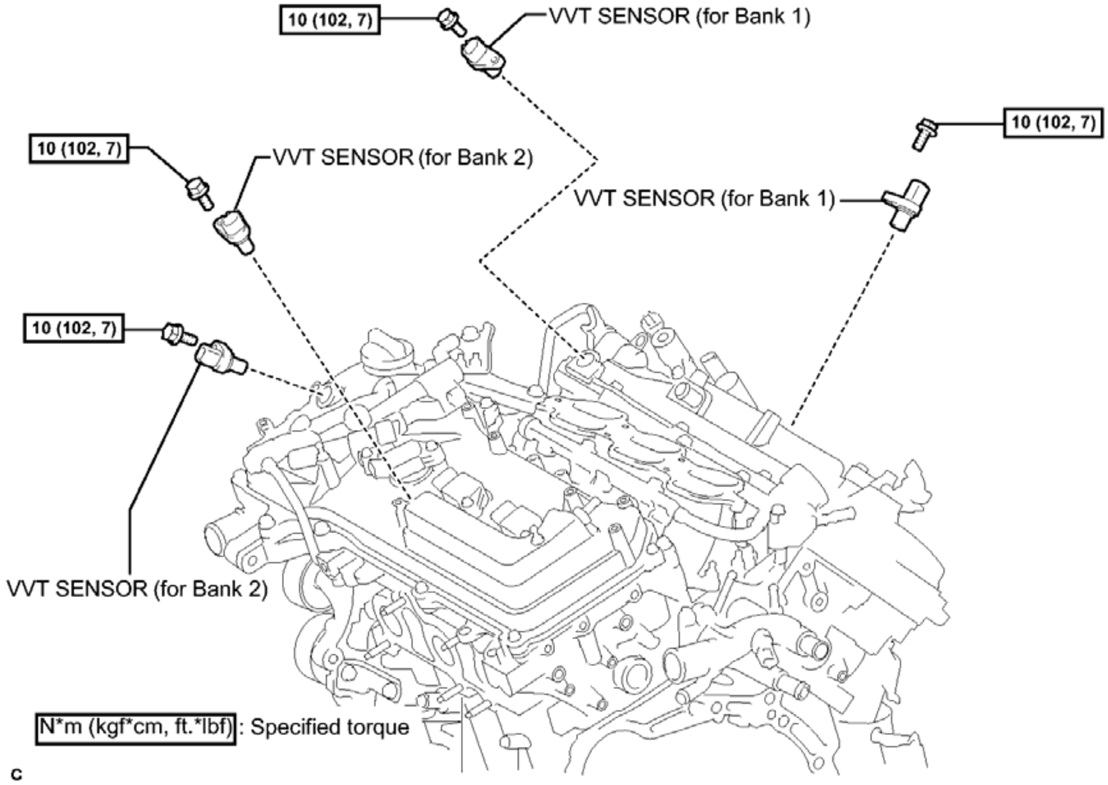
10 (102, 7)
VVT SENSOR (for Bank 1)
10 (102, 7)
VVT SENSOR (for Bank 2)
10 (102, 7)
VVT SENSOR (for Bank 1)
10 (102, 7)
VVT SENSOR (for Bank 2)
N*m (kgf*cm, ft.*lbf) : Specified torque
C

Fig. 47: Identifying Camshaft Position Sensor Replacement Components With Torque Specifications (2 Of 2)
Courtesy of TOYOTA MOTOR SALES, U.S.A., INC.

REMOVAL

REMOVAL

1. **REMOVE INTAKE AIR SURGE TANK ASSEMBLY**

   Refer to **REMOVAL** .

2. **REMOVE VVT SENSOR**
   1. Disconnect the 4 sensor connectors.
   2. Remove the 4 bolts and 4 sensors.

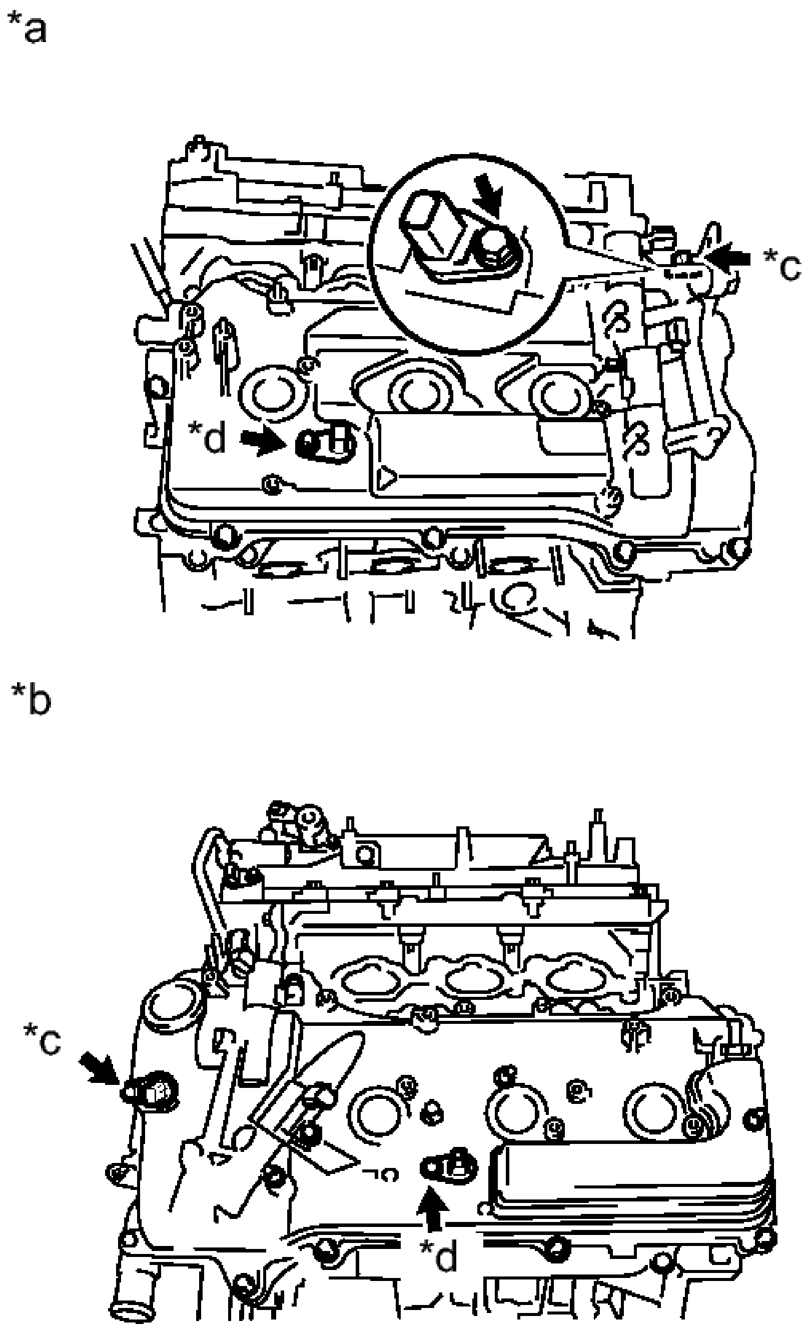

Fig. 48: Identifying VVT Sensor Connectors, Sensors And Bolts
Courtesy of TOYOTA MOTOR SALES, U.S.A., INC.

TEXT IN ILLUSTRATION

*a	for Bank 1
*b	for Bank 2
*c	for Intake Side
*d	for Exhaust Side

INSTALLATION

INSTALLATION

1. **INSTALL VVT SENSOR**
    a. Install the 4 sensors with the 4 bolts.

    Torque: 10 N*m (102 kgf*cm, 7 ft.*lbf)

    b. Connect the 4 sensor connectors.
2. **INSTALL INTAKE AIR SURGE TANK ASSEMBLY**

    Refer to **INSTALLATION** .

CRANKSHAFT POSITION SENSOR

COMPONENTS

ILLUSTRATION

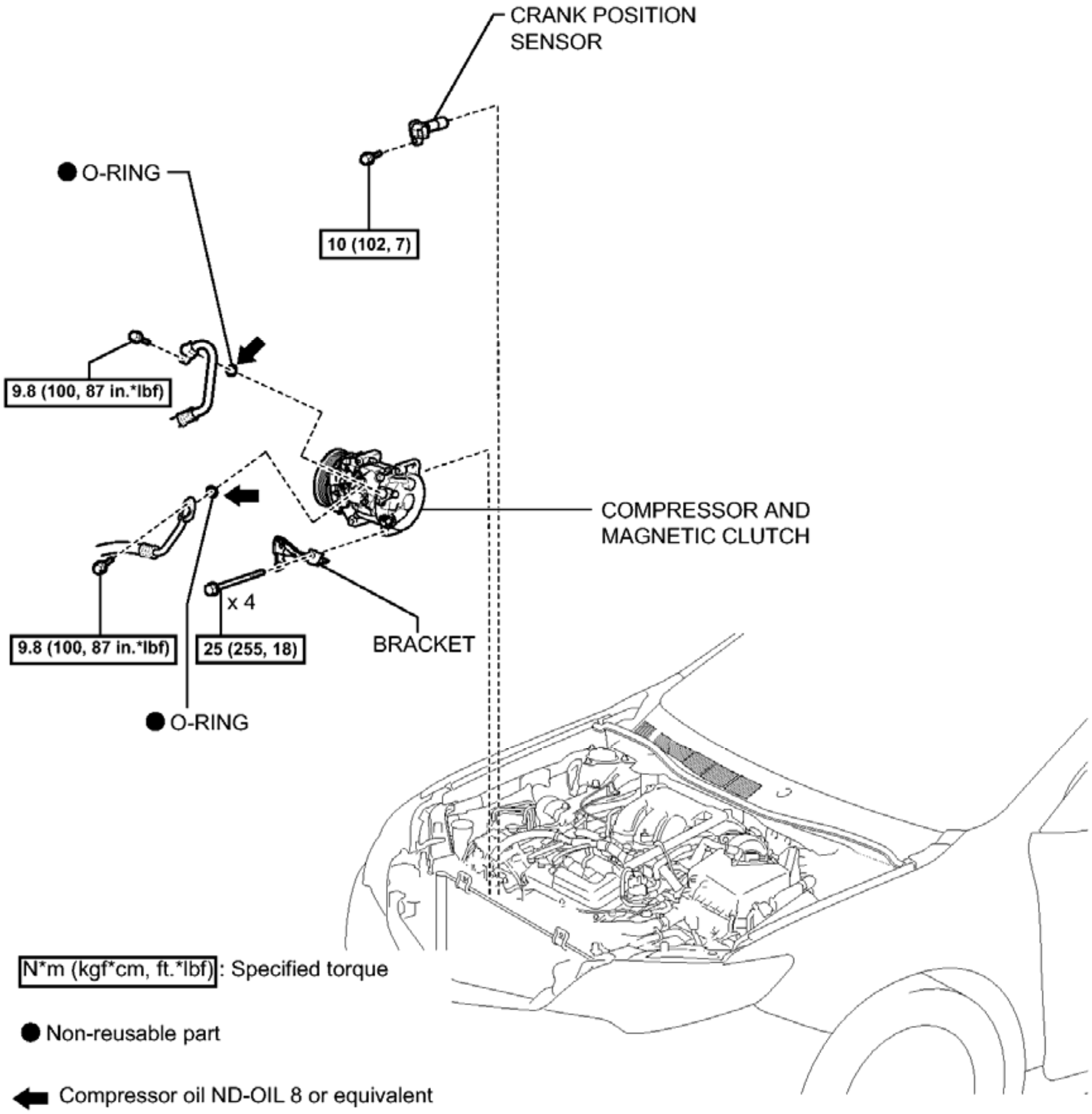
CRANK POSITION SENSOR
● O-RING
10 (102, 7)
9.8 (100, 87 in.*lbf)
COMPRESSOR AND MAGNETIC CLUTCH
x 4
9.8 (100, 87 in.*lbf)
25 (255, 18)
BRACKET
● O-RING
N*m (kgf*cm, ft.*lbf) : Specified torque
● Non-reusable part
Compressor oil ND-OIL 8 or equivalent

Fig. 49: Identifying Crankshaft Position Sensor Replacement Components With Torque Specifications
Courtesy of TOYOTA MOTOR SALES, U.S.A., INC.

REMOVAL

REMOVAL

1. **REMOVE COMPRESSOR AND MAGNETIC CLUTCH**
    a. Remove the compressor and magnetic clutch. Refer to **REMOVAL** .
2. **REMOVE CRANK POSITION SENSOR**
    a. Disconnect the crank position sensor connector.

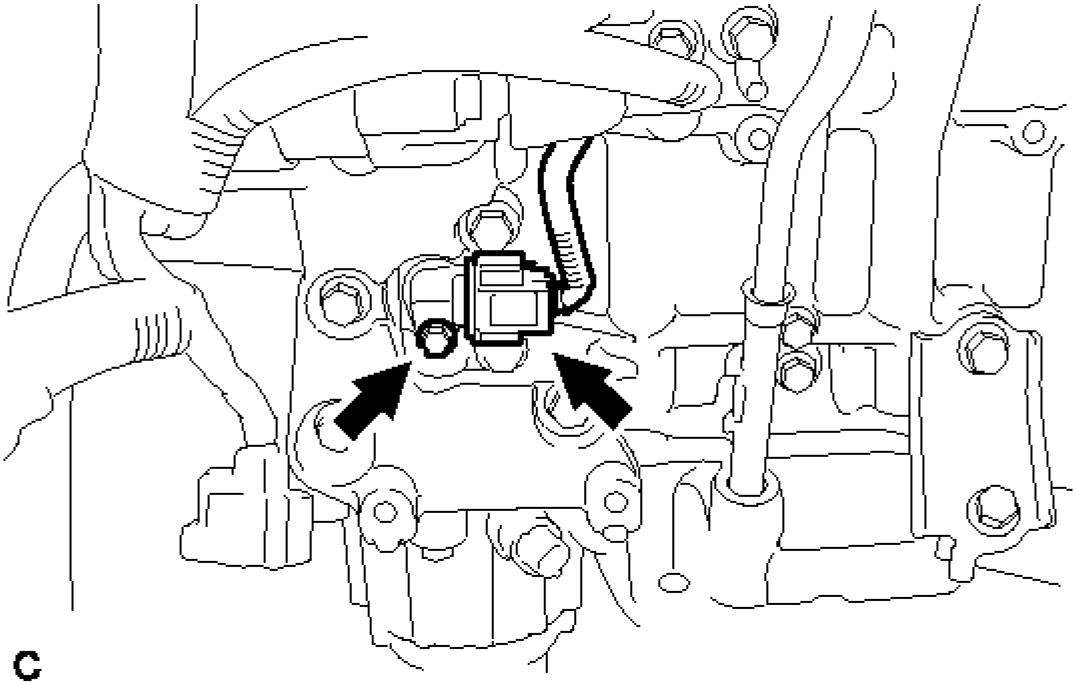

Fig. 50: Locating Crank Position Sensor Connector And Bolt
Courtesy of TOYOTA MOTOR SALES, U.S.A., INC.

b. Remove the bolt and crank position sensor.

INSPECTION

INSPECTION

1. **INSPECT CRANK POSITION SENSOR**
    a. Measure the resistance according to the value(s) in the table below.

    Standard Resistance

Temperature	Specified Condition
Cold	1630 to 2740 ohms
Hot	2065 to 3225 ohms

    HINT:

    "Cold" and "Hot" mean the temperature of the coils themselves. "Cold" is from -10 to 50°C (14 to 122 °F) and "Hot" is from 50 to 100°C (122 to 212°F).

If the resistance is not as specified, replace the crank position sensor.

INSTALLATION

INSTALLATION

1. **INSTALL CRANK POSITION SENSOR**
    a. Apply a light coat of engine oil to the O-ring on the crank position sensor.

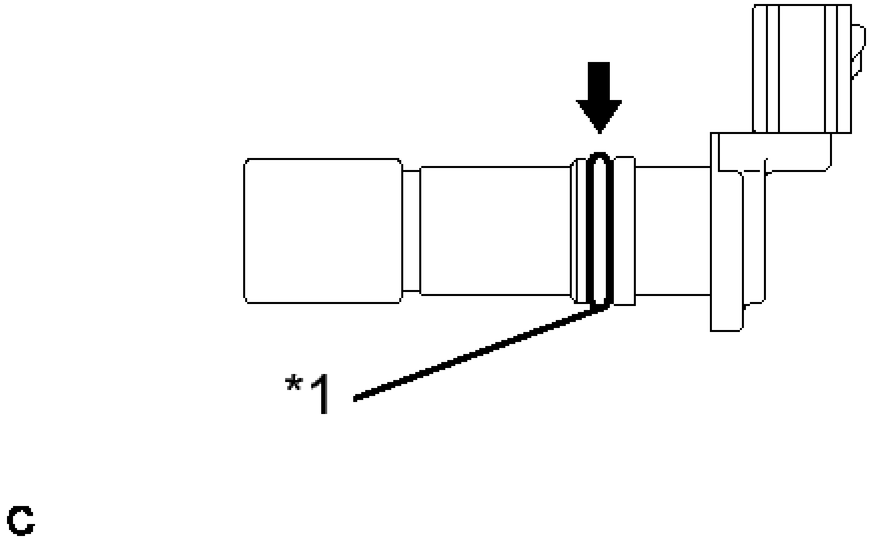

Fig. 51: Locating Crank Position Sensor O-Ring
Courtesy of TOYOTA MOTOR SALES, U.S.A., INC.

TEXT IN ILLUSTRATION

*1	O-ring

    b. Install the crank position sensor with the bolt.

    Torque: 10 N*m (102 kgf*cm, 7 ft.*lbf)

    c. Connect the crank position sensor connector.
2. **INSTALL COMPRESSOR AND MAGNETIC CLUTCH**
    a. Install the compressor and magnetic clutch. Refer to **INSTALLATION** .

IGNITION COIL AND SPARK PLUG

COMPONENTS

ILLUSTRATION

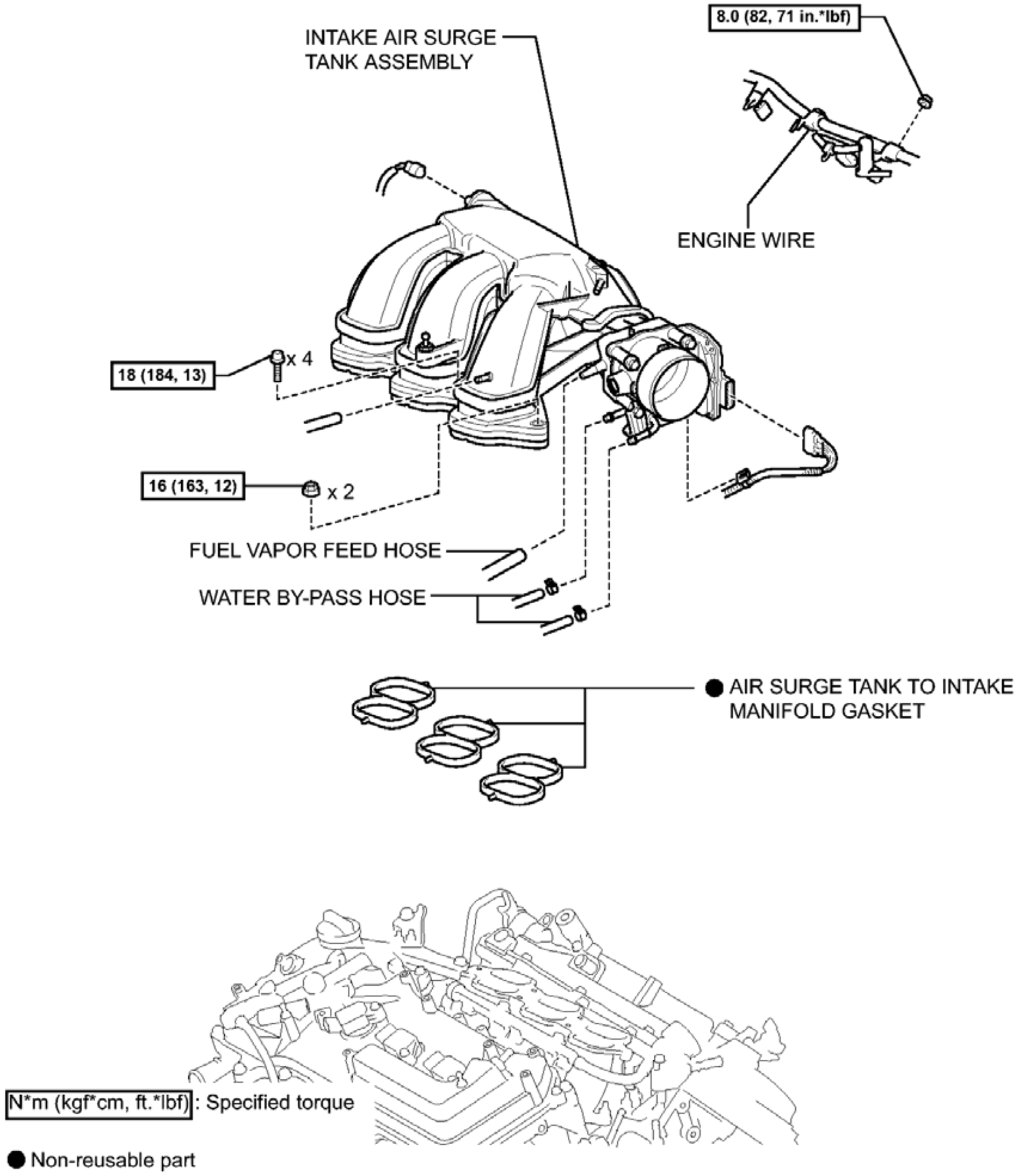
8.0 (82, 71 in.*lbf)
INTAKE AIR SURGE TANK ASSEMBLY
ENGINE WIRE
18 (184, 13)
x 4
16 (163, 12)
x 2
FUEL VAPOR FEED HOSE
WATER BY-PASS HOSE
● AIR SURGE TANK TO INTAKE MANIFOLD GASKET
N*m (kgf*cm, ft.*lbf) : Specified torque
● Non-reusable part

Fig. 52: Identifying Ignition Coil And Spark Plug Replacement Components With Torque Specifications (1 Of 2)
Courtesy of TOYOTA MOTOR SALES, U.S.A., INC.

ILLUSTRATION

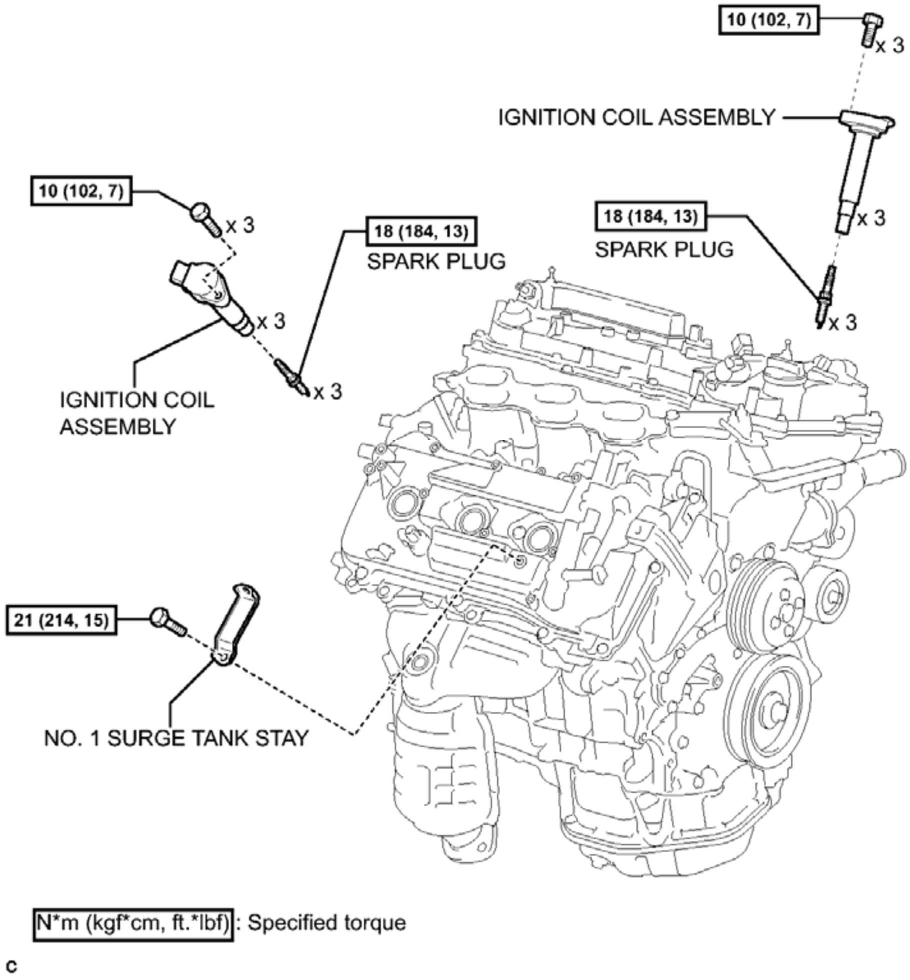
10 (102, 7)
x 3
IGNITION COIL ASSEMBLY
10 (102, 7)
x 3
18 (184, 13)
SPARK PLUG
18 (184, 13)
SPARK PLUG
x 3
x 3
x 3
x 3
IGNITION COIL ASSEMBLY
21 (214, 15)
NO. 1 SURGE TANK STAY
N*m (kgf*cm, ft.*lbf): Specified torque
c

Fig. 53: Identifying Ignition Coil And Spark Plug Replacement Components With Torque Specifications (2 Of 2)
Courtesy of TOYOTA MOTOR SALES, U.S.A., INC.

REMOVAL

REMOVAL

1. **REMOVE INTAKE AIR SURGE TANK ASSEMBLY**

   Refer to **REMOVAL** .

2. **REMOVE NO. 1 SURGE TANK STAY** . Refer to **REMOVAL - Step 3**
3. **REMOVE IGNITION COIL ASSEMBLY**
   1. Remove the nut.

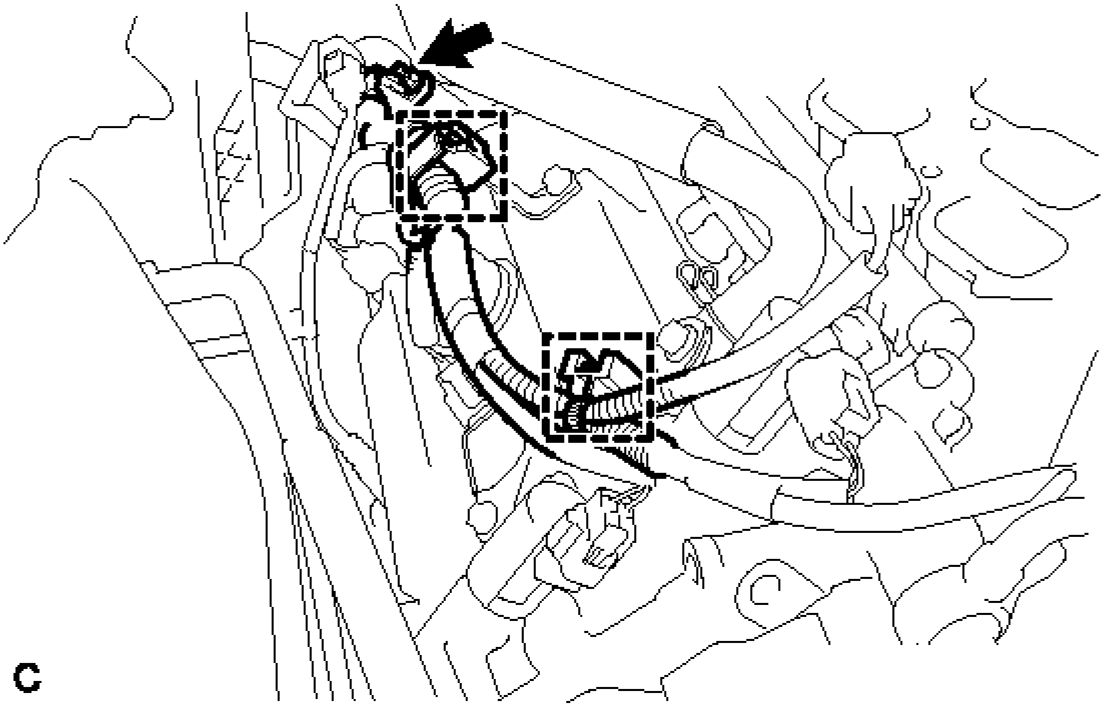

Fig. 54: Identifying Ignition Coil Nut
Courtesy of TOYOTA MOTOR SALES, U.S.A., INC.

b. Disconnect the 2 harness clamps.
c. Disconnect the 6 ignition coil connectors.

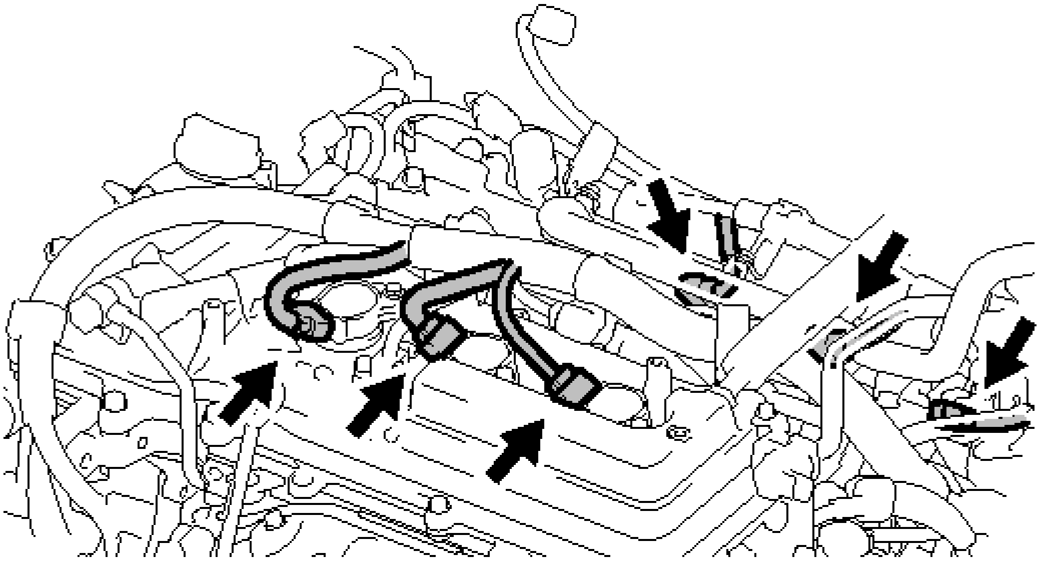

Fig. 55: Locating Ignition Coil Connectors

Courtesy of TOYOTA MOTOR SALES, U.S.A., INC.

d. Remove the 6 bolts and 6 ignition coils.

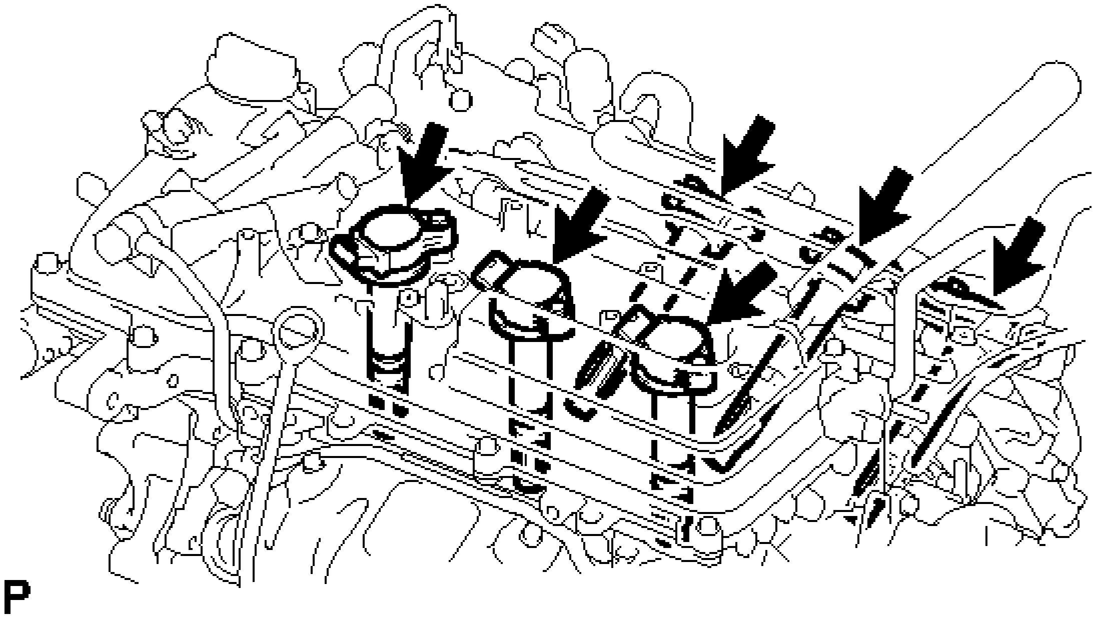

Fig. 56: Installing Ignition Coils
Courtesy of TOYOTA MOTOR SALES, U.S.A., INC.

4. **REMOVE SPARK PLUG**
    a. Remove the 6 spark plugs.

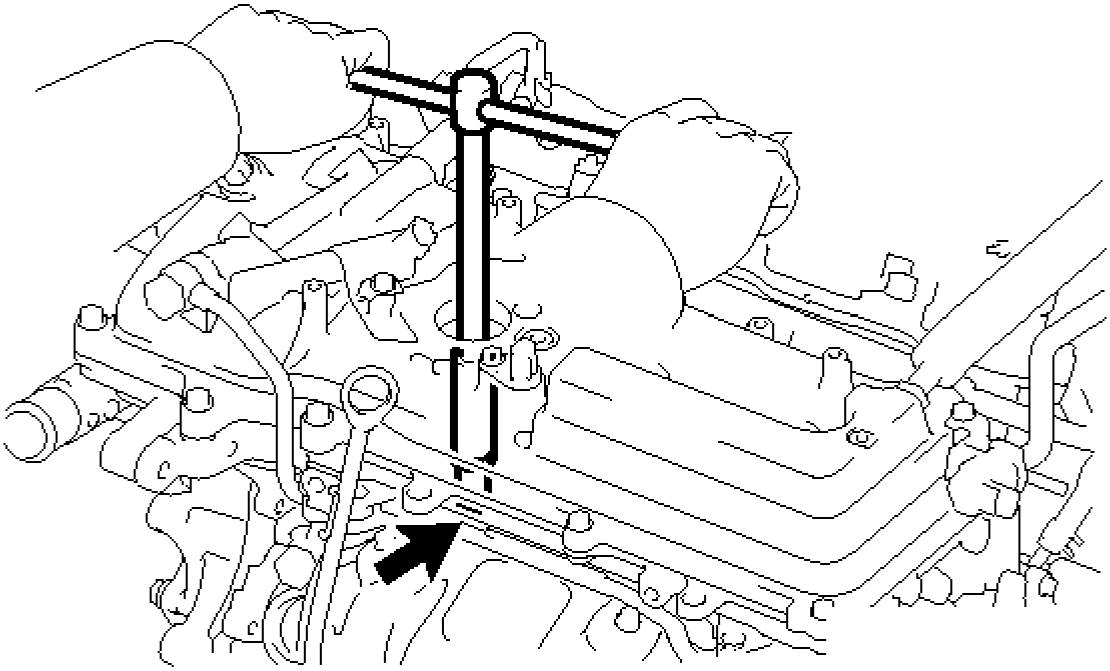

Fig. 57: Locating Spark Plugs
Courtesy of TOYOTA MOTOR SALES, U.S.A., INC.

INSTALLATION

INSTALLATION

HINT:

Perform "Inspection After Repair" after replacing the spark plug and ignition coil assembly. Refer to **INITIALIZATION** .

1. **INSTALL SPARK PLUG**
    a. Install the 6 spark plugs.

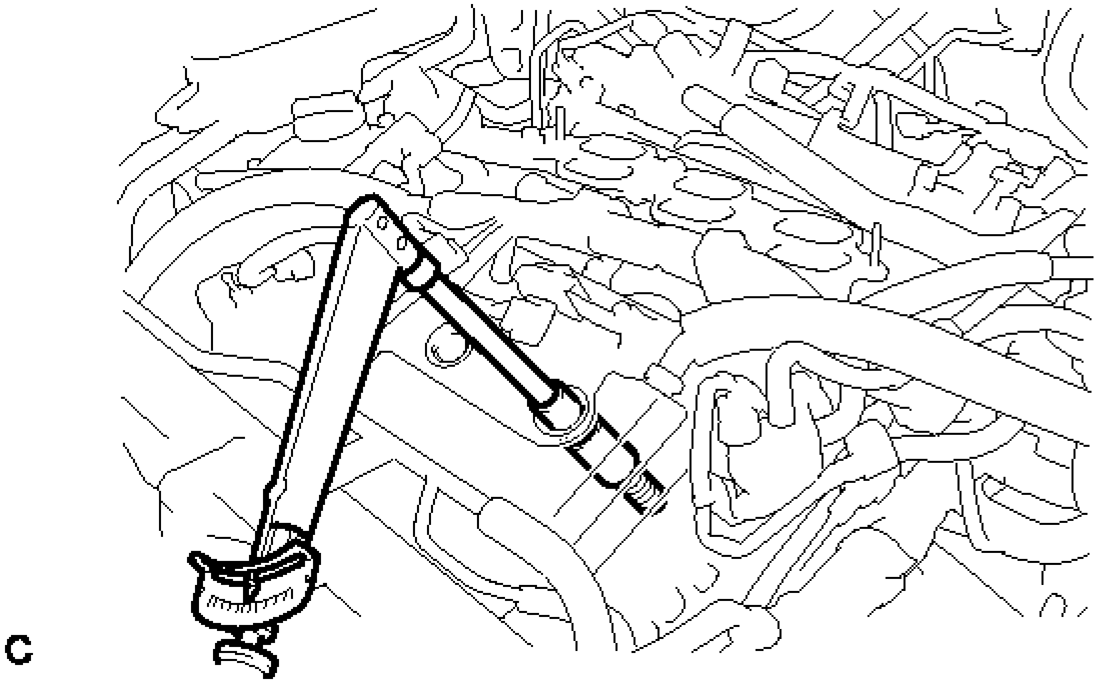

Fig. 58: Installing Spark Plugs
Courtesy of TOYOTA MOTOR SALES, U.S.A., INC.

Torque: 18 N*m (184 kgf*cm, 13 ft.*lbf)

HINT:

Perform "Inspection After Repair" after replacing the spark plug. Refer to **INITIALIZATION** .

2. **INSTALL IGNITION COIL ASSEMBLY**
   1. Install the 6 ignition coils with the 6 bolts.

      Torque: 10 N*m (102 kgf*cm, 7 ft.*lbf)

      HINT:

      Perform "Inspection After Repair" after replacing the ignition coil assembly. Refer to **INITIALIZATION** .

   2. Connect the 6 ignition coil connectors.
   3. Connect the 2 wire harness clamps.
   4. Install the nut.

      Torque: 8.0 N*m (82 kgf*cm, 71 in.*lbf)

3. **INSTALL NO. 1 SURGE TANK STAY** . Refer to **INSTALLATION - Step 18**

4. **INSTALL INTAKE AIR SURGE TANK ASSEMBLY**

   Refer to **INSTALLATION** .

ENGINE COOLANT TEMPERATURE SENSOR

COMPONENTS

ILLUSTRATION

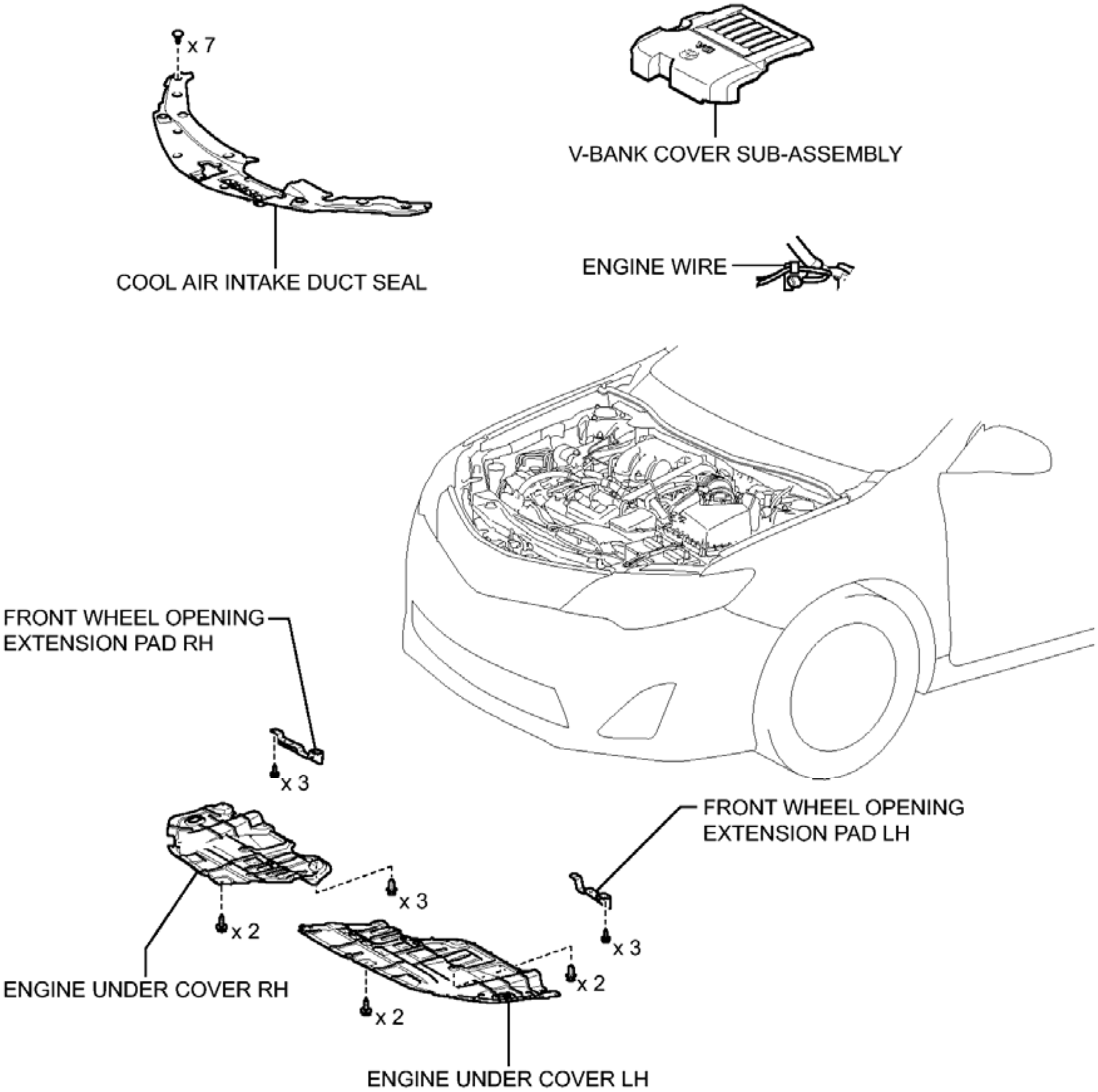
x 7
V-BANK COVER SUB-ASSEMBLY
COOL AIR INTAKE DUCT SEAL
ENGINE WIRE
FRONT WHEEL OPENING EXTENSION PAD RH
x 3
FRONT WHEEL OPENING EXTENSION PAD LH
x 3
x 2
x 3
ENGINE UNDER COVER RH
x 2
x 2
ENGINE UNDER COVER LH

Fig. 59: Identifying Engine Coolant Temperature Sensor Replacement Components With Torque Specifications (1 Of 2)

Courtesy of TOYOTA MOTOR SALES, U.S.A., INC.

ILLUSTRATION

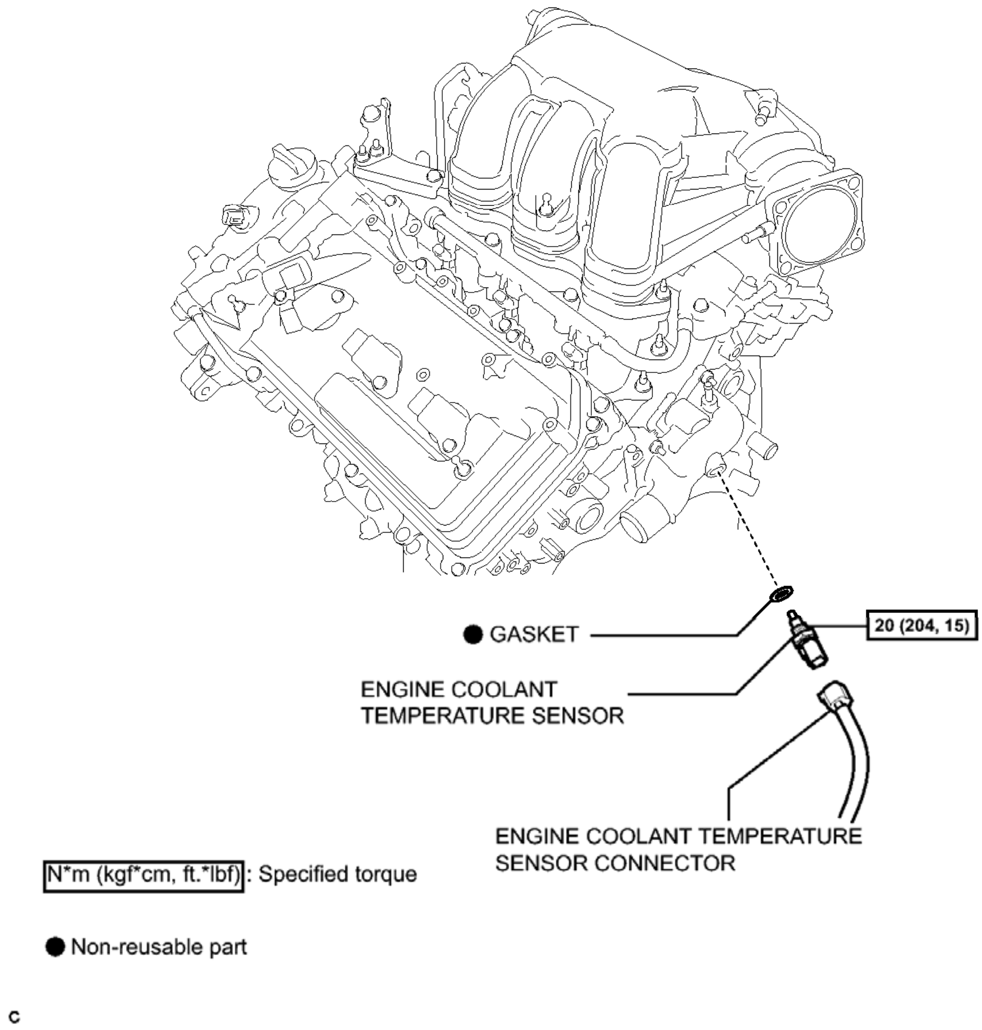
● GASKET
20 (204, 15)
ENGINE COOLANT TEMPERATURE SENSOR
ENGINE COOLANT TEMPERATURE SENSOR CONNECTOR
N*m (kgf*cm, ft.*lbf) : Specified torque
● Non-reusable part
c

Fig. 60: Identifying Engine Coolant Temperature Sensor Replacement Components With Torque Specifications (2 Of 2)
Courtesy of TOYOTA MOTOR SALES, U.S.A., INC.

REMOVAL

REMOVAL

1. **REMOVE FRONT WHEEL OPENING EXTENSION PAD LH**

2. **REMOVE ENGINE UNDER COVER LH**
3. **REMOVE FRONT WHEEL OPENING EXTENSION PAD RH**
4. **REMOVE ENGINE UNDER COVER RH**
5. **DRAIN ENGINE COOLANT** . Refer to **REPLACEMENT - Step 1**
6. **REMOVE COOL AIR INTAKE DUCT SEAL** . Refer to **REMOVAL - Step 1**
7. **REMOVE V-BANK COVER SUB-ASSEMBLY** . Refer to **REMOVAL - Step 17**
8. **REMOVE ENGINE COOLANT TEMPERATURE SENSOR**
    a. Disconnect the 2 engine wire clamps.

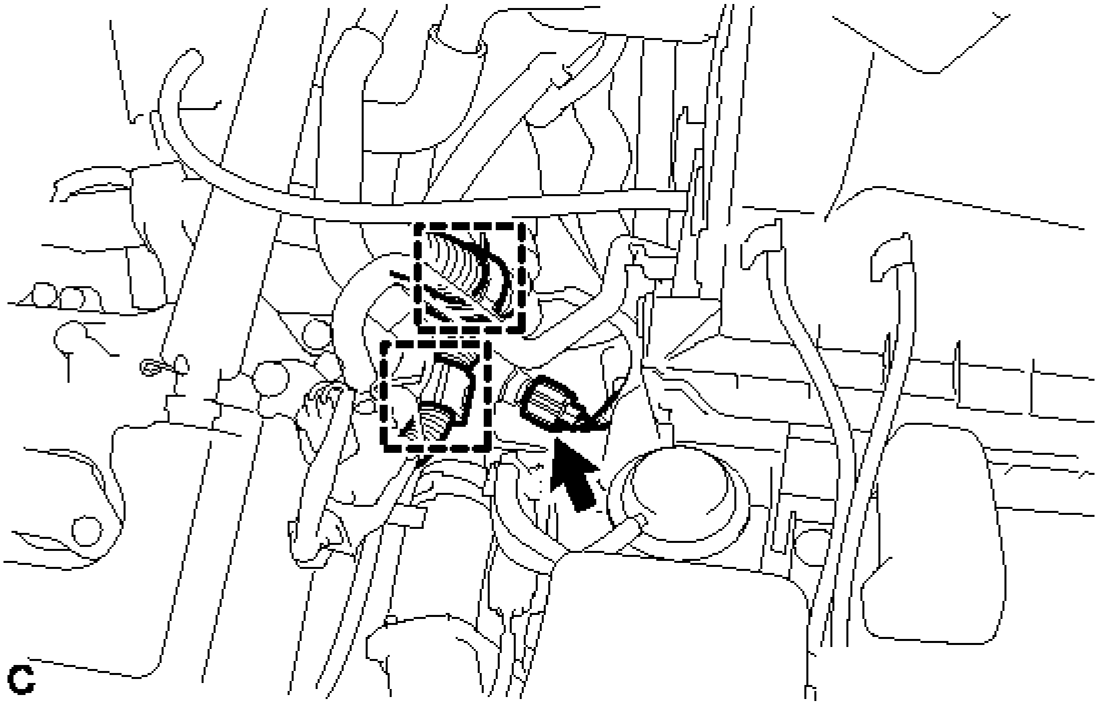

Fig. 61: Identifying Engine Coolant Temperature Sensor Engine Wire Clamps
Courtesy of TOYOTA MOTOR SALES, U.S.A., INC.

    b. Disconnect the engine coolant temperature sensor connector.
    c. Using a 19 mm ball joint lock nut wrench, remove the engine coolant temperature sensor.

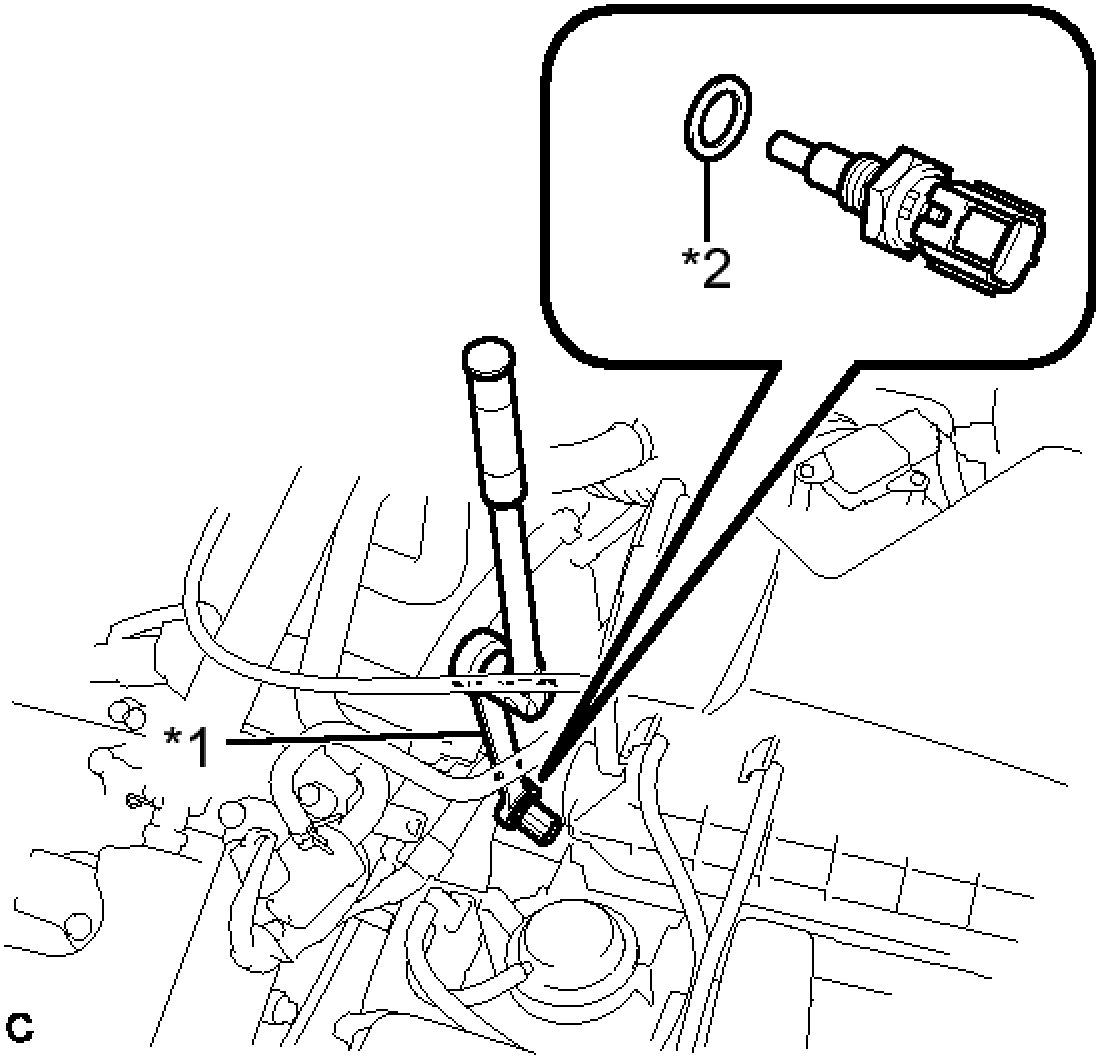

Fig. 62: Identifying Ball Joint Lock Nut Wrench And Gasket
Courtesy of TOYOTA MOTOR SALES, U.S.A., INC.

TEXT IN ILLUSTRATION

*1	Ball Joint Lock Nut Wrench
*2	Gasket

d. Remove the gasket from the engine coolant temperature sensor.

INSPECTION

INSPECTION

1. **INSPECT ENGINE COOLANT TEMPERATURE SENSOR**
    a. Measure the resistance according to the value(s) in the table below.

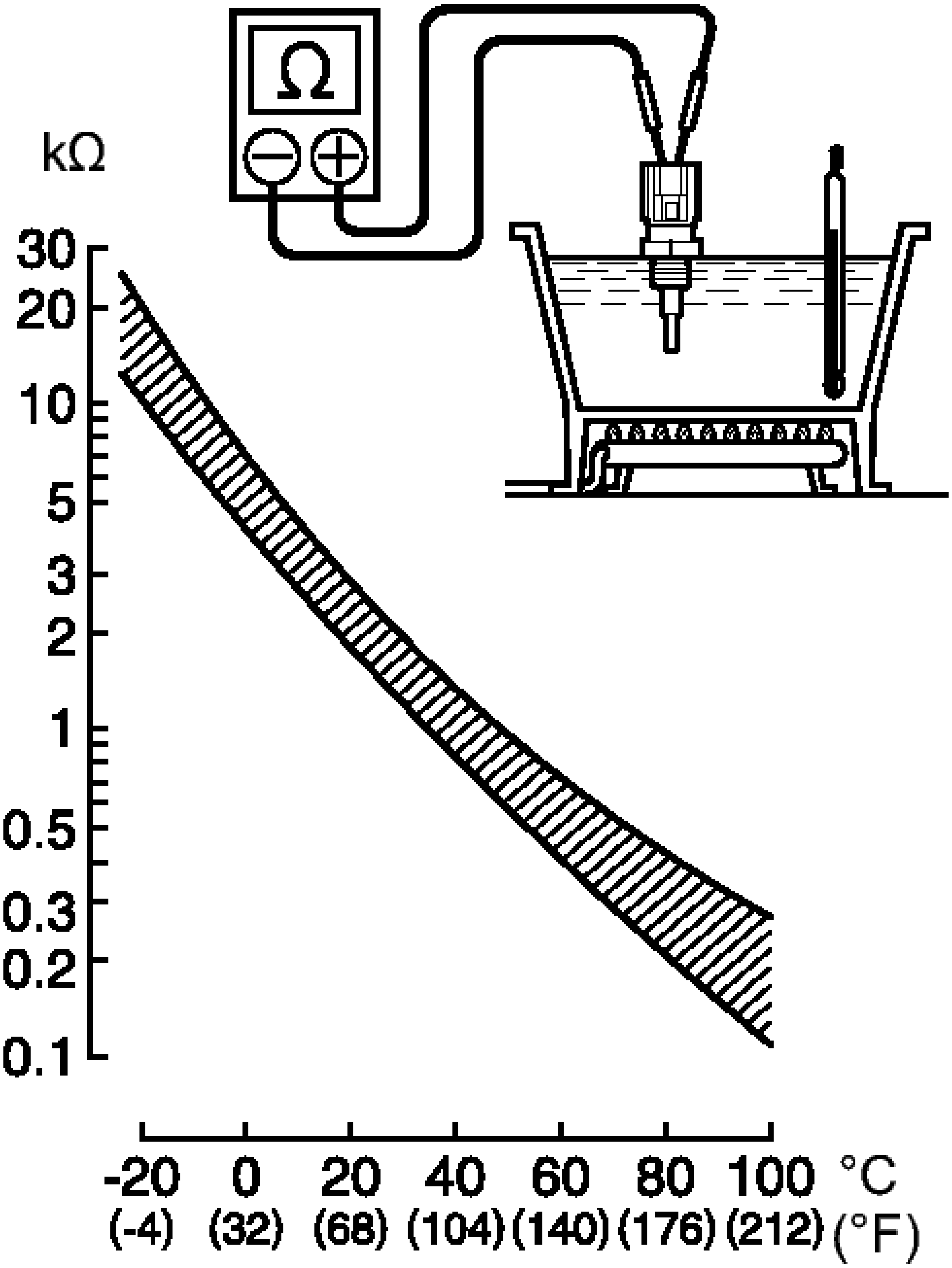

Fig. 63: Inspecting Engine Coolant Temperature Sensor
Courtesy of TOYOTA MOTOR SALES, U.S.A., INC.

Standard Resistance

Tester Connection	Condition	Specified Condition
1 (E2) - 2 (THW)	20°C (68°F)	2.32 to 2.59 kohms
1 (E2) - 2 (THW)	80°C (176°F)	0.310 to 0.326 kohms

NOTE: **If checking the sensor in water, be careful not to allow water to contact the terminals. After checking, wipe the water off the sensor.**

If the result is not as specified, replace the engine coolant temperature sensor.

INSTALLATION

INSTALLATION

HINT:

Perform "Inspection After Repair" after replacing the engine coolant temperature sensor. Refer to **INITIALIZATION** .

1. **INSTALL ENGINE COOLANT TEMPERATURE SENSOR**
    a. Install a new gasket onto the engine coolant temperature sensor.
    b. Install the engine coolant temperature sensor.

    Torque: 20 N*m (204 kgf*cm, 15 ft.*lbf)

    NOTE: **Use the torque value compensation formula to calculate the torque value for use when a torque wrench is combined with a tool such as a ball joint lock nut wrench. Refer to PRECAUTION .**

    HINT:

    Perform "Inspection After Repair" after replacing the engine coolant temperature sensor. Refer to **INITIALIZATION** .

    c. Connect the engine coolant temperature sensor connector.
    d. Connect the 2 engine wire clamps.
2. **ADD ENGINE COOLANT** . Refer to **REPLACEMENT - Step 2**
3. **INSPECT FOR COOLANT LEAK** . Refer to **ON-VEHICLE INSPECTION - Step 1**
4. **INSTALL COOL AIR INTAKE DUCT SEAL** . Refer to **INSTALLATION - Step 4**

5. **INSTALL V-BANK COVER SUB-ASSEMBLY** . Refer to **INSTALLATION - Step 82**
6. **INSTALL ENGINE UNDER COVER RH**
7. **INSTALL FRONT WHEEL OPENING EXTENSION PAD RH**
8. **INSTALL ENGINE UNDER COVER LH**
9. **INSTALL FRONT WHEEL OPENING EXTENSION PAD LH**

KNOCK SENSOR

COMPONENTS

ILLUSTRATION

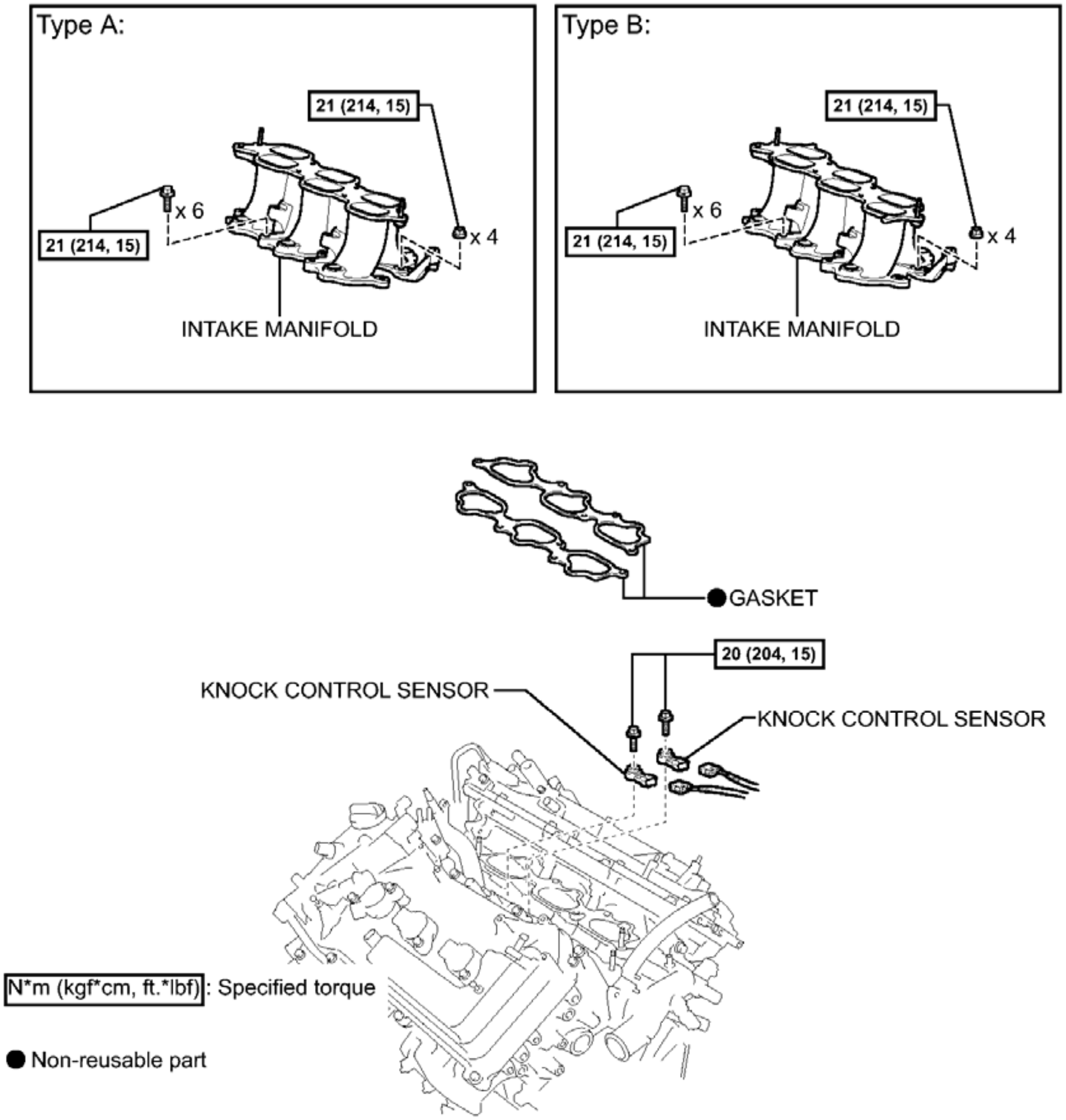
Type A:
21 (214, 15)
21 (214, 15)
x 6
x 4
INTAKE MANIFOLD
Type B:
21 (214, 15)
21 (214, 15)
x 6
x 4
INTAKE MANIFOLD
GASKET
20 (204, 15)
KNOCK CONTROL SENSOR
KNOCK CONTROL SENSOR
N*m (kgf*cm, ft.*lbf) : Specified torque
● Non-reusable part

Fig. 64: Identifying Knock Sensor Replacement Components With Torque Specifications
Courtesy of TOYOTA MOTOR SALES, U.S.A., INC.

REMOVAL

REMOVAL

1. **REMOVE INTAKE MANIFOLD**

   Refer to **REMOVAL** .

2. **REMOVE KNOCK CONTROL SENSOR**
   a. Disconnect the 2 knock control sensor connectors.

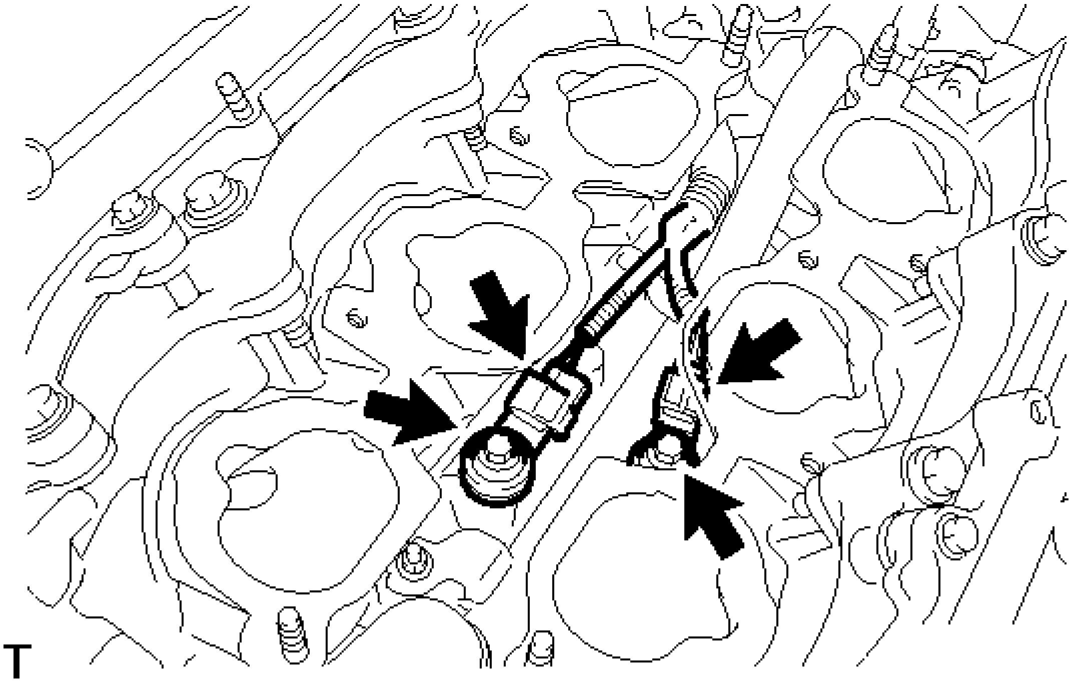

Fig. 65: Locating Knock Control Sensor Connectors And Bolts
Courtesy of TOYOTA MOTOR SALES, U.S.A., INC.

   b. Remove the 2 bolts and 2 knock control sensors.

INSPECTION

INSPECTION

1. **INSPECT KNOCK CONTROL SENSOR**
   a. Measure the resistance according to the value(s) in the table below.

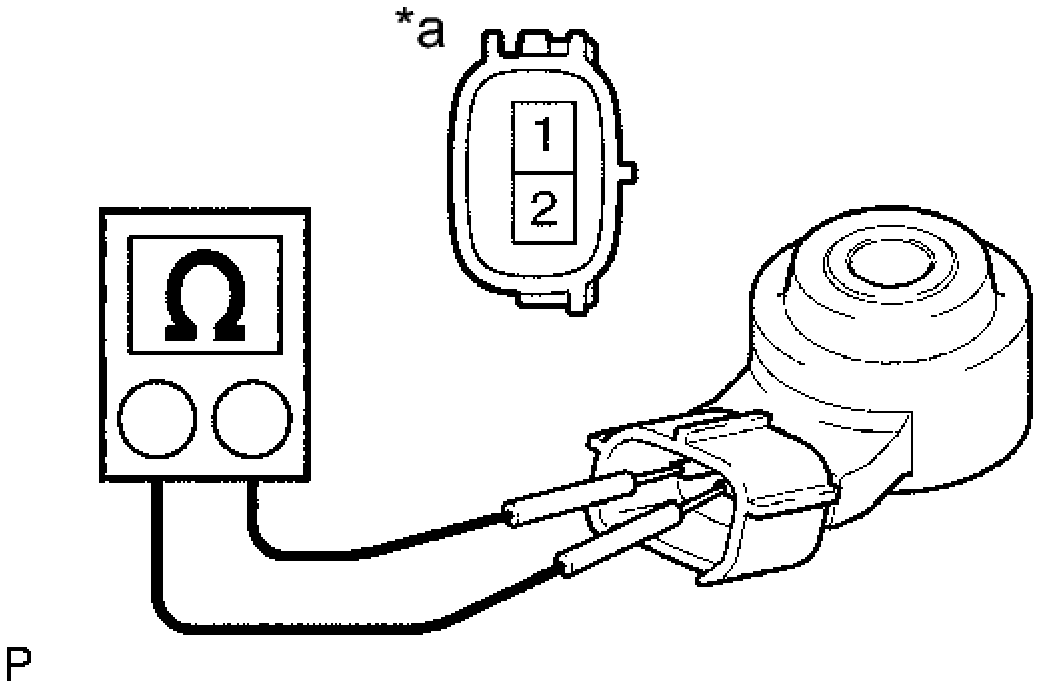

Fig. 66: Measuring Resistance Between Knock Control Sensor
Courtesy of TOYOTA MOTOR SALES, U.S.A., INC.

TEXT IN ILLUSTRATION

*a	Component without harness connected (Knock Control Sensor)

Standard Resistance

Tester Connection	Condition	Specified Condition
1 (Ground) - 2 (Output)	20°C (68° F)	120 to 280 kohms

If the result is not as specified, replace the knock control sensor.

INSTALLATION

INSTALLATION

1. **INSTALL KNOCK CONTROL SENSOR**
    a. Install the 2 knock control sensors with the 2 bolts as shown in the illustration.

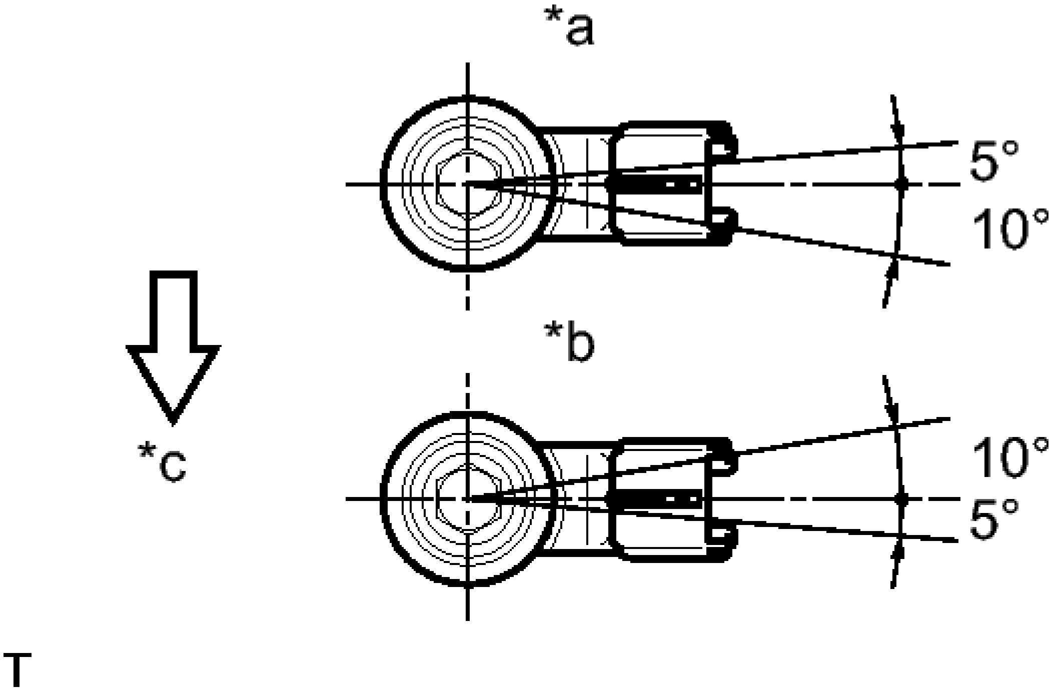

Fig. 67: Identifying Knock Control Sensor Bolts
Courtesy of TOYOTA MOTOR SALES, U.S.A., INC.

Torque: 20 N*m (204 kgf*cm, 15 ft.*lbf)

TEXT IN ILLUSTRATION

*a	for Bank 1
*b	for Bank 2
*c	Front of Vehicle

NOTE: **Make sure that each knock control sensor is in the correct position.**

b. Connect the 2 knock control sensor connectors.

2. **INSTALL INTAKE MANIFOLD**

Refer to **INSTALLATION** .

AIR FUEL RATIO SENSOR

COMPONENTS

ILLUSTRATION

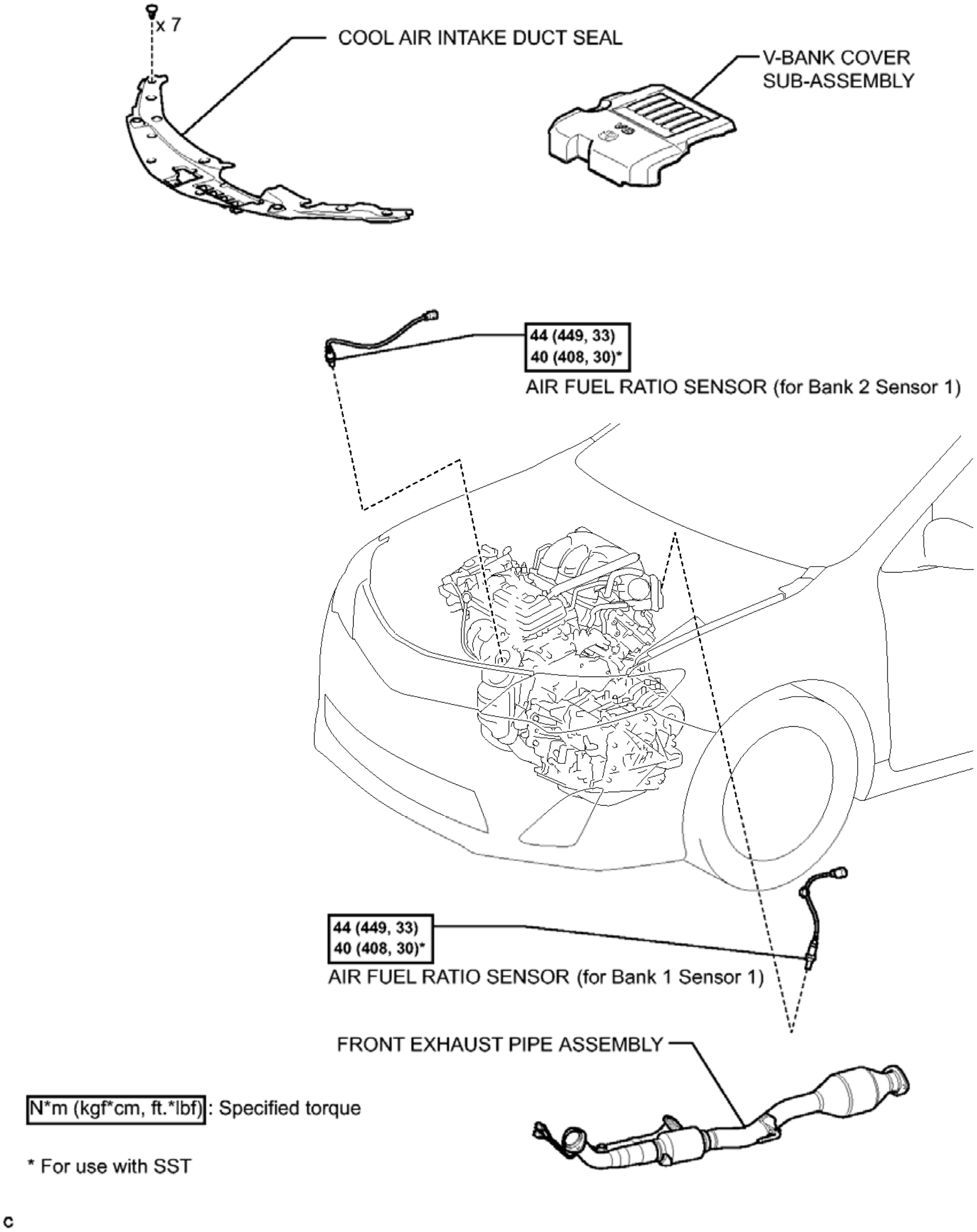
x 7
COOL AIR INTAKE DUCT SEAL
V-BANK COVER SUB-ASSEMBLY
44 (449, 33)
40 (408, 30)*
AIR FUEL RATIO SENSOR (for Bank 2 Sensor 1)
44 (449, 33)
40 (408, 30)*
AIR FUEL RATIO SENSOR (for Bank 1 Sensor 1)
FRONT EXHAUST PIPE ASSEMBLY
N*m (kgf*cm, ft.*lbf) : Specified torque
* For use with SST
c

Fig. 68: Identifying Air Fuel Ratio Sensor Replacement Components With Torque Specifications
Courtesy of TOYOTA MOTOR SALES, U.S.A., INC.

REMOVAL

REMOVAL

1. **REMOVE COOL AIR INTAKE DUCT SEAL** . Refer to **REMOVAL - Step 1**

2. **REMOVE V-BANK COVER SUB-ASSEMBLY** . Refer to **REMOVAL - Step 17**
3. **REMOVE AIR FUEL RATIO SENSOR (for Bank 2 Sensor 1)**
    a. Disconnect the air fuel ratio sensor connector.

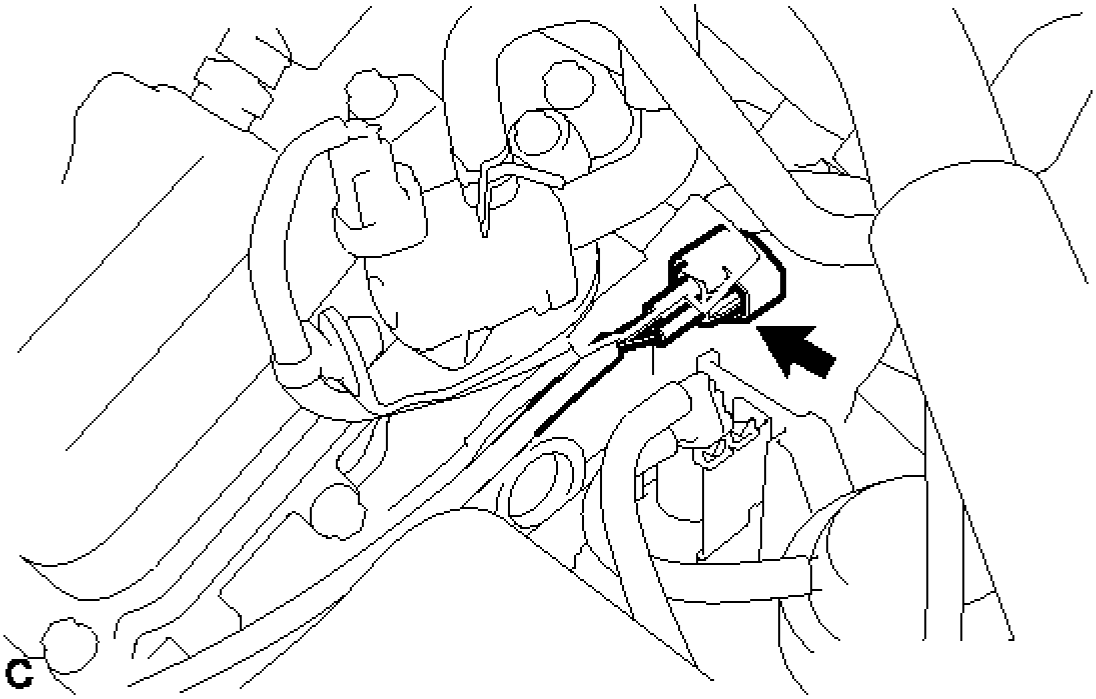

Fig. 69: Identifying Air Fuel Ratio Sensor Connector
Courtesy of TOYOTA MOTOR SALES, U.S.A., INC.

    b. Separate the wire harness clamp.

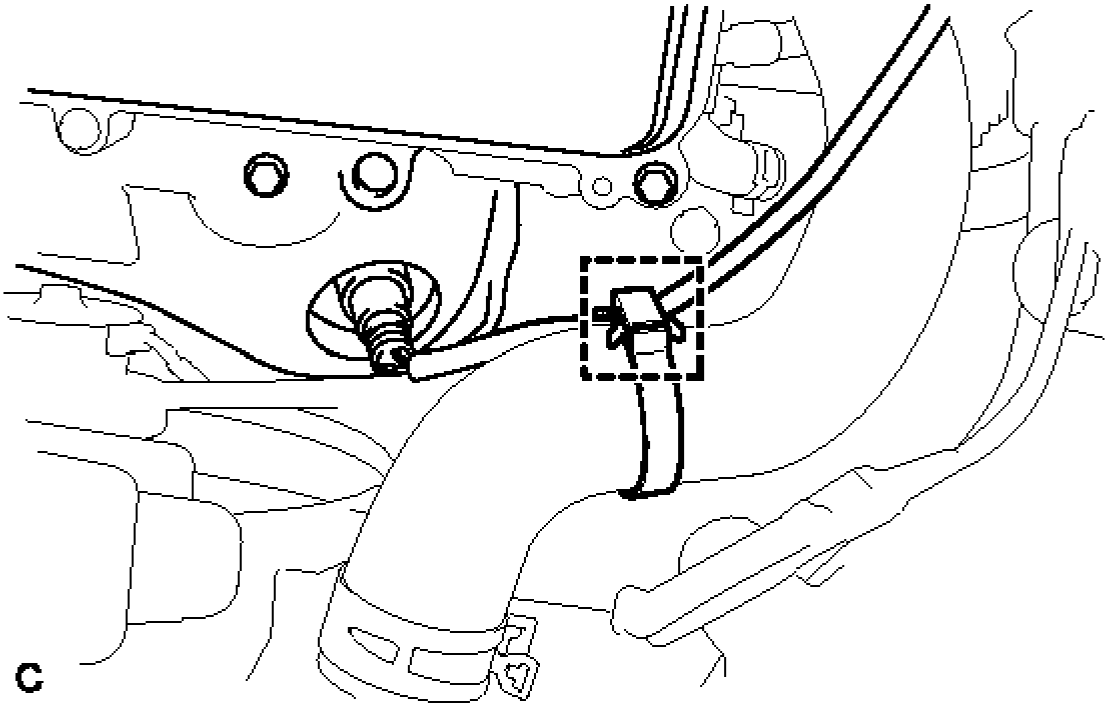

Fig. 70: Identifying Harness Clamp
Courtesy of TOYOTA MOTOR SALES, U.S.A., INC.

c. Using SST, remove the air fuel ratio sensor from the exhaust manifold LH.

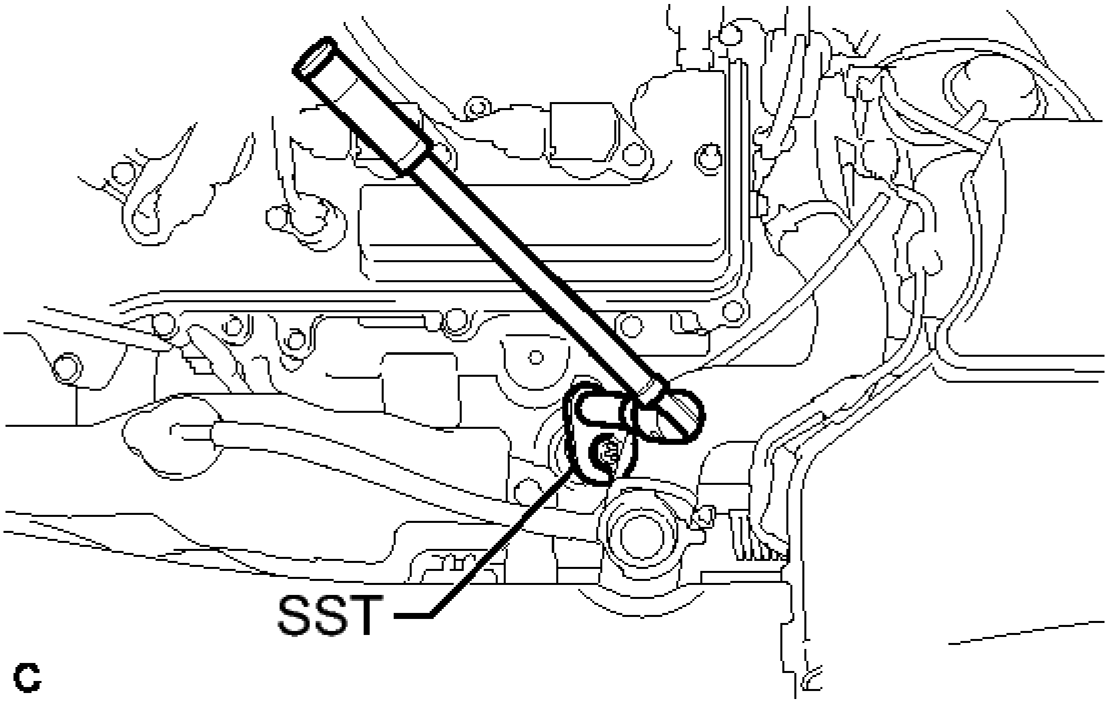

Fig. 71: Removing Air Fuel Ratio Sensor Using SST
Courtesy of TOYOTA MOTOR SALES, U.S.A., INC.

- **SST: 09224-00010**

4. **REMOVE FRONT EXHAUST PIPE ASSEMBLY**

   Refer to **REMOVAL** .

5. **REMOVE AIR FUEL RATIO SENSOR (for Bank 1 Sensor 1)**
   1. Disconnect the air fuel ratio sensor connector.

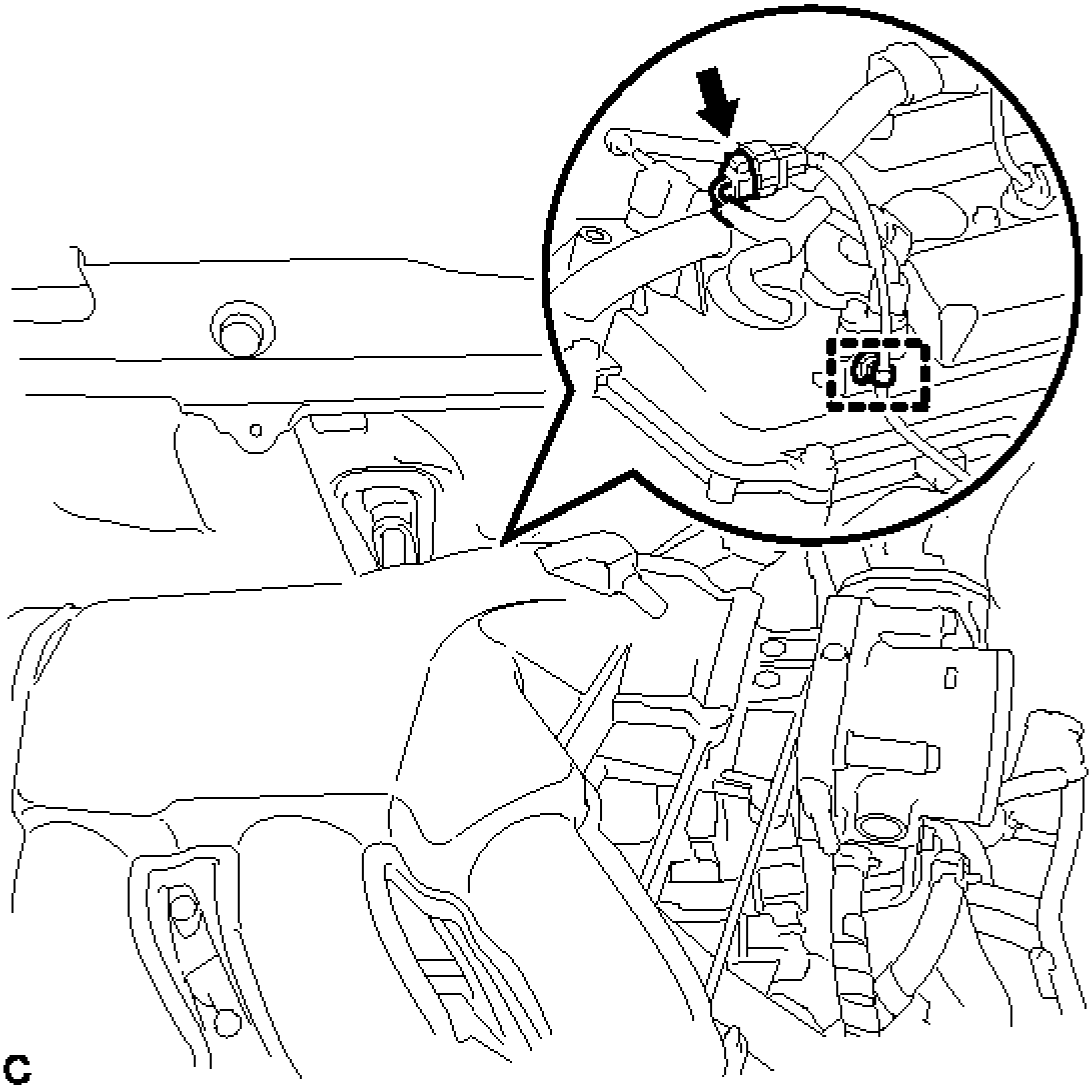

Fig. 72: Identifying Air Fuel Ratio Sensor Connector
Courtesy of TOYOTA MOTOR SALES, U.S.A., INC.

   2. Disconnect the harness clamp.
   3. Using SST, remove the air fuel ratio sensor from the exhaust manifold RH.

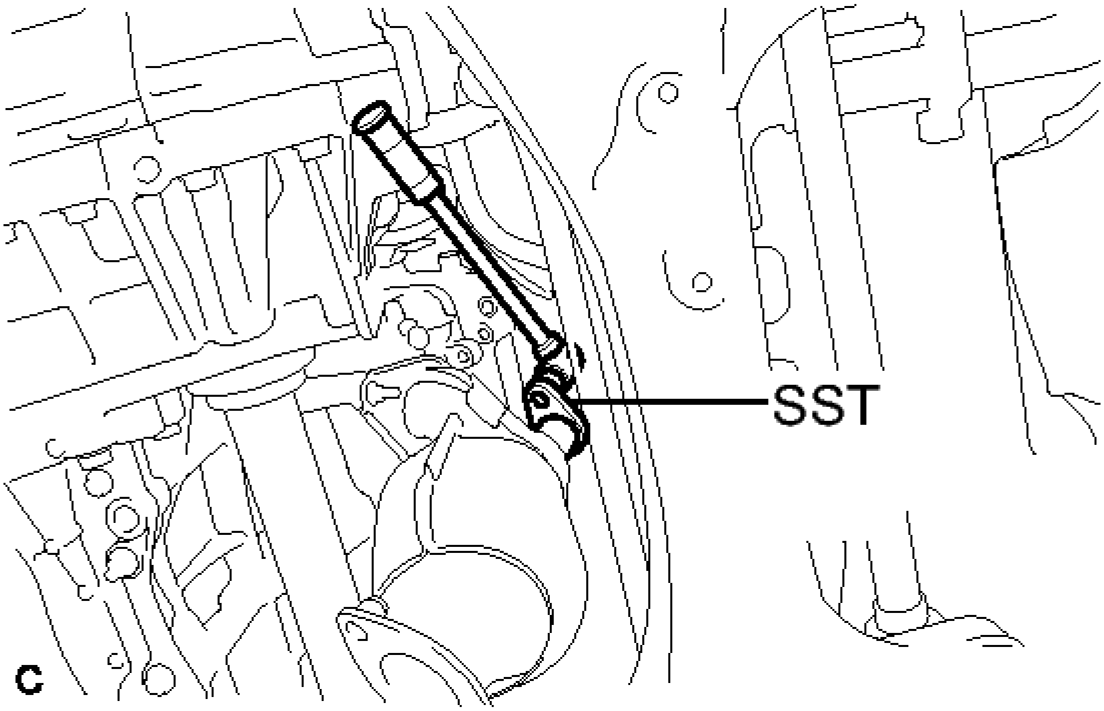

Fig. 73: Removing Air Fuel Ratio Sensor Using SST
Courtesy of TOYOTA MOTOR SALES, U.S.A., INC.

- **SST: 09224-00010**

INSPECTION

INSPECTION

1. **INSPECT AIR FUEL RATIO SENSOR (for Bank 1)**
    a. Measure the resistance according to the value(s) in the table below.

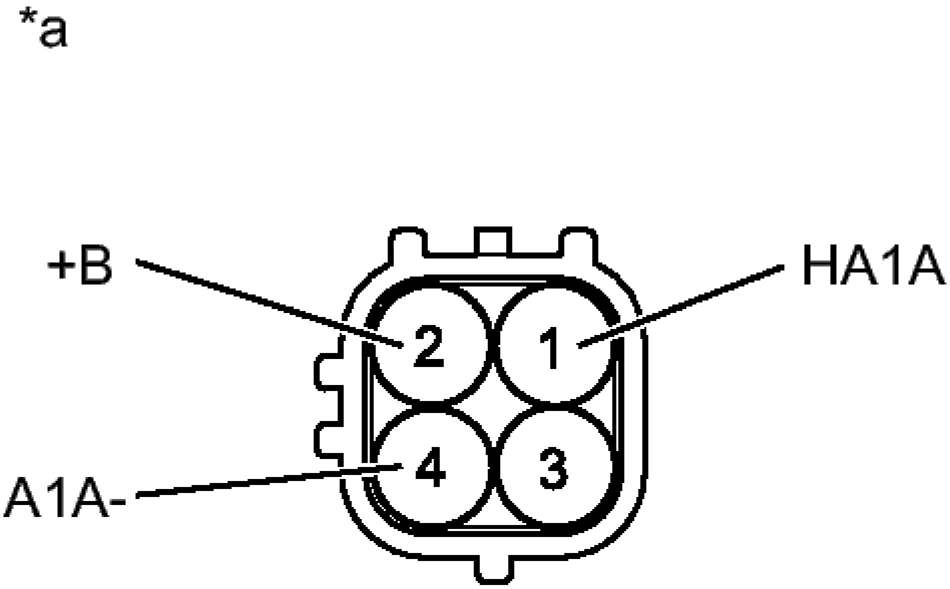

Fig. 74: Identifying Air Fuel Ratio Sensor Connector Terminal Identification
Courtesy of TOYOTA MOTOR SALES, U.S.A., INC.

Standard Resistance

Tester Connection	Condition	Specified Condition
1 (HA1A) - 2 (+B)	20°C (68° F)	1.6 to 3.2 ohms
1 (HA1A) - 4 (A1A-)	-	10 kohms or higher

TEXT IN ILLUSTRATION

*a	Component without harness connected (Air Fuel Ratio Sensor)

If the result is not as specified, replace the air fuel ratio sensor.

2. **INSPECT AIR FUEL RATIO SENSOR (for Bank 2)**
    a. Measure the resistance according to the value(s) in the table below.

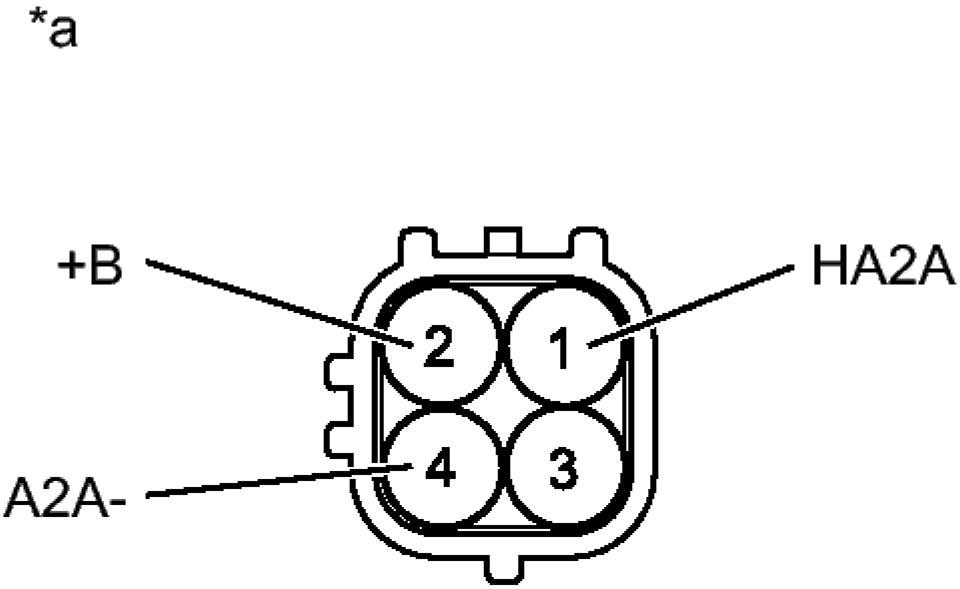

Fig. 75: Identifying Air Fuel Ratio Sensor Connector Terminal Identification
Courtesy of TOYOTA MOTOR SALES, U.S.A., INC.

Standard Resistance

Tester Connection	Condition	Specified Condition
1 (HA2A) - 2 (+B)	20°C (68° F)	1.6 to 3.2 ohms
1 (HA2A) - 4 (A2A-)	-	10 kohms or higher

TEXT IN ILLUSTRATION

*a	Component without harness connected (Air Fuel Ratio Sensor)

If the result is not as specified, replace the air fuel ratio sensor.

INSTALLATION

INSTALLATION

HINT:

Perform "Inspection After Repair" after replacing the air fuel ratio sensor. Refer to **INITIALIZATION** .

1. **INSTALL AIR FUEL RATIO SENSOR (for Bank 1 Sensor 1)**
   a. Using SST, install the air fuel ratio sensor to the exhaust manifold RH.

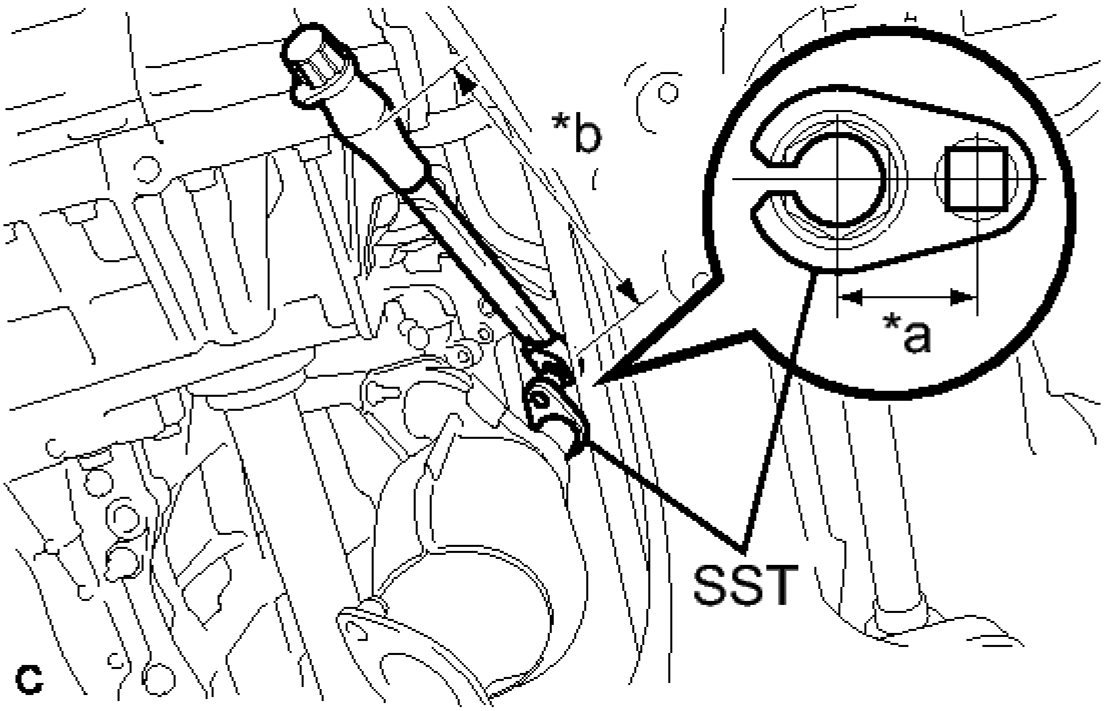

Fig. 76: Identifying Fulcrum Length
Courtesy of TOYOTA MOTOR SALES, U.S.A., INC.

TEXT IN ILLUSTRATION

*a	Fulcrum Length 30 mm (1.18 in.)
*b	Fulcrum Length 180 mm (7.09 in.)

- **SST: 09224-00010**

without SST

Torque: 44 N*m (449 kgf*cm, 33 ft.*lbf)

with SST

Torque: 40 N*m (408 kgf*cm, 30 ft.*lbf)

NOTE:

- **The "with SST" torque value is effective when using SST with a fulcrum length of 30 mm (1.18 in.) and a torque wrench with a fulcrum length of 180 mm (7.09 in.). Refer to PRECAUTION .**
- **The "with SST" torque value is effective when SST is parallel to the torque wrench.**

HINT:

Perform "Inspection After Repair" after replacing the air fuel ratio sensor. Refer to **INITIALIZATION** .

b. Connect the harness clamp.
c. Connect the air fuel ratio sensor connector.

2. **INSTALL FRONT EXHAUST PIPE ASSEMBLY**

   Refer to **INSTALLATION** .

3. **INSTALL AIR FUEL RATIO SENSOR (for Bank 2 Sensor 1)**
   a. Using SST, install the air fuel ratio sensor to the exhaust manifold LH.

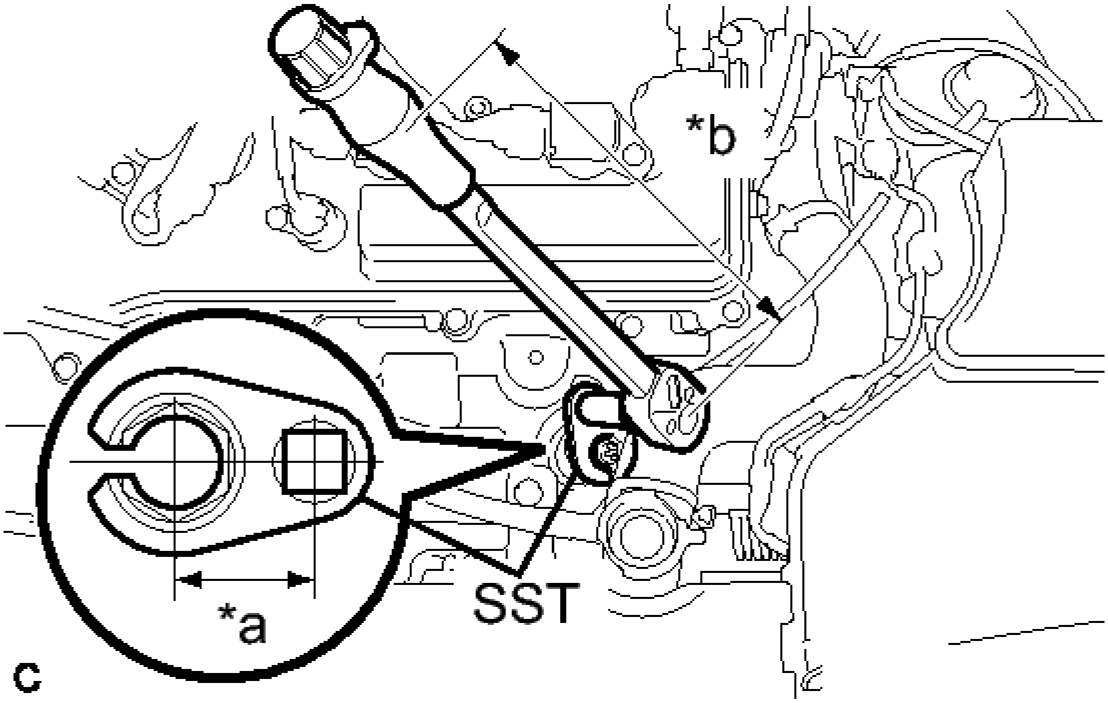

Fig. 77: Identifying Fulcrum Length
Courtesy of TOYOTA MOTOR SALES, U.S.A., INC.

TEXT IN ILLUSTRATION

*a	Fulcrum Length 30 mm (1.18 in.)
*b	Fulcrum Length 180 mm (7.09 in.)

- **SST: 09224-00010**

without SST

Torque: 44 N*m (449 kgf*cm, 33 ft.*lbf)

with SST

Torque: 40 N*m (408 kgf*cm, 30 ft.*lbf)

NOTE:

- **The "with SST" torque value is effective when using SST with a fulcrum length of 30 mm (1.18 in.) and a torque wrench with a fulcrum length of 180 mm (7.09 in.). Refer to PRECAUTION .**
- **The "with SST" torque value is effective when SST is parallel to the torque wrench.**

HINT:

Perform "Inspection After Repair" after replacing the air fuel ratio sensor. Refer to **INITIALIZATION** .

b. Connect the air fuel ratio sensor connector.
c. Install the wire harness clamp.

4. **INSPECT FOR EXHAUST GAS LEAK**
5. **INSTALL V-BANK COVER SUB-ASSEMBLY** . Refer to **INSTALLATION - Step 82**
6. **INSTALL COOL AIR INTAKE DUCT SEAL** . Refer to **INSTALLATION - Step 4**

HEATED OXYGEN SENSOR

COMPONENTS

ILLUSTRATION

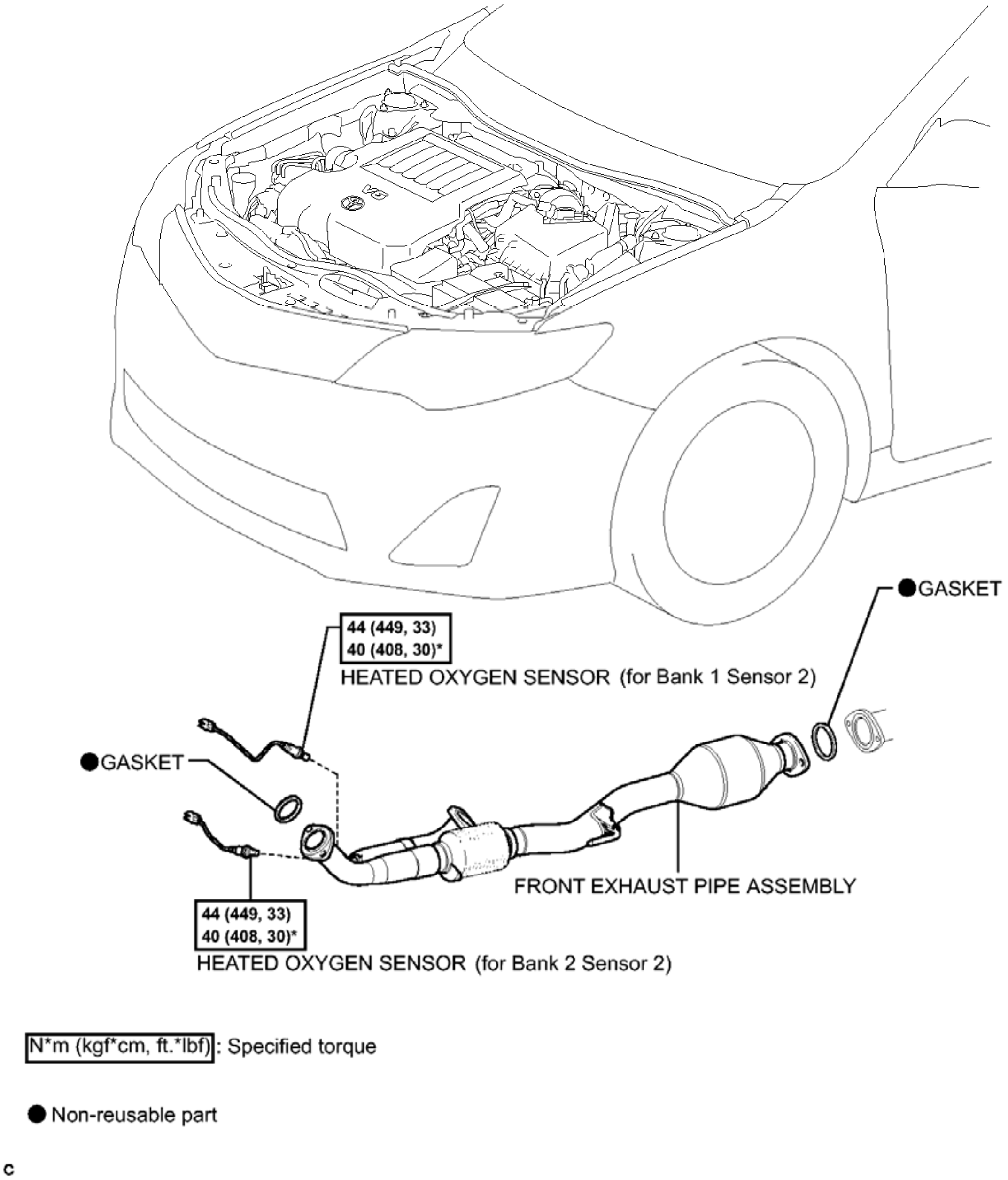
●GASKET
44 (449, 33)
40 (408, 30)*
HEATED OXYGEN SENSOR (for Bank 1 Sensor 2)
●GASKET
FRONT EXHAUST PIPE ASSEMBLY
44 (449, 33)
40 (408, 30)*
HEATED OXYGEN SENSOR (for Bank 2 Sensor 2)
N*m (kgf*cm, ft.*lbf): Specified torque
● Non-reusable part
c

Fig. 78: Identifying Heated Oxygen Sensor Replacement Components With Torque Specifications
Courtesy of TOYOTA MOTOR SALES, U.S.A., INC.

REMOVAL

REMOVAL

1. **REMOVE FRONT EXHAUST PIPE ASSEMBLY**

Refer to **REMOVAL** .

2. **REMOVE HEATED OXYGEN SENSOR (for Bank 1 Sensor 2)**
    a. Using SST, remove the heated oxygen sensor from the front exhaust pipe sub-assembly.

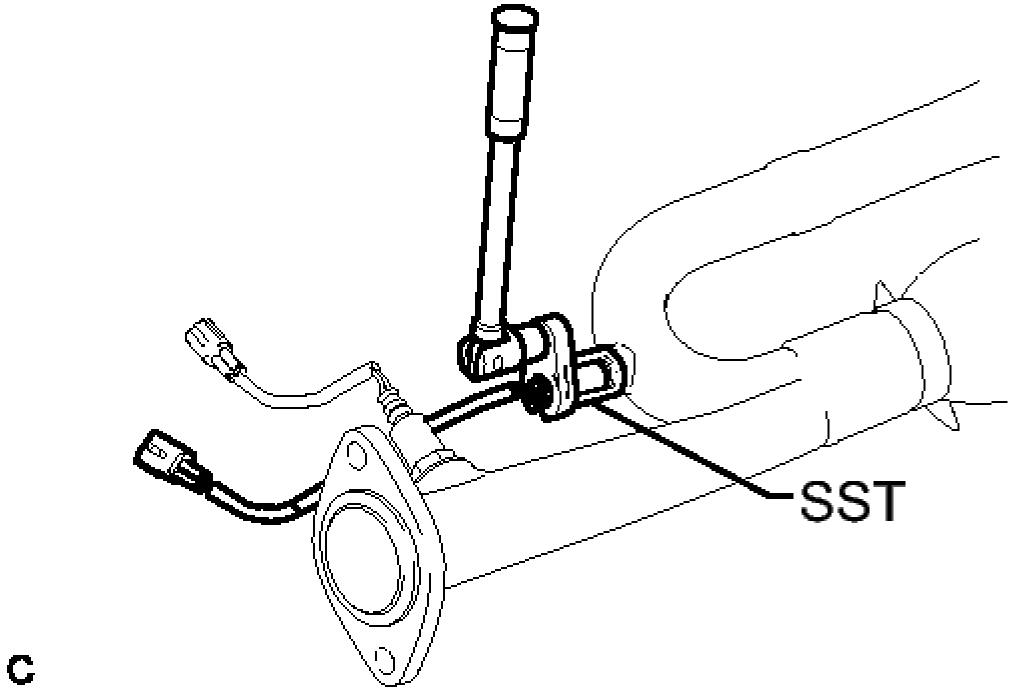

Fig. 79: Identifying Heated Oxygen Sensor And SST
Courtesy of TOYOTA MOTOR SALES, U.S.A., INC.

- **SST: 09224-00010**

3. **REMOVE HEATED OXYGEN SENSOR (for Bank 2 Sensor 2)**
    a. Using SST, remove the heated oxygen sensor from the front exhaust pipe assembly.

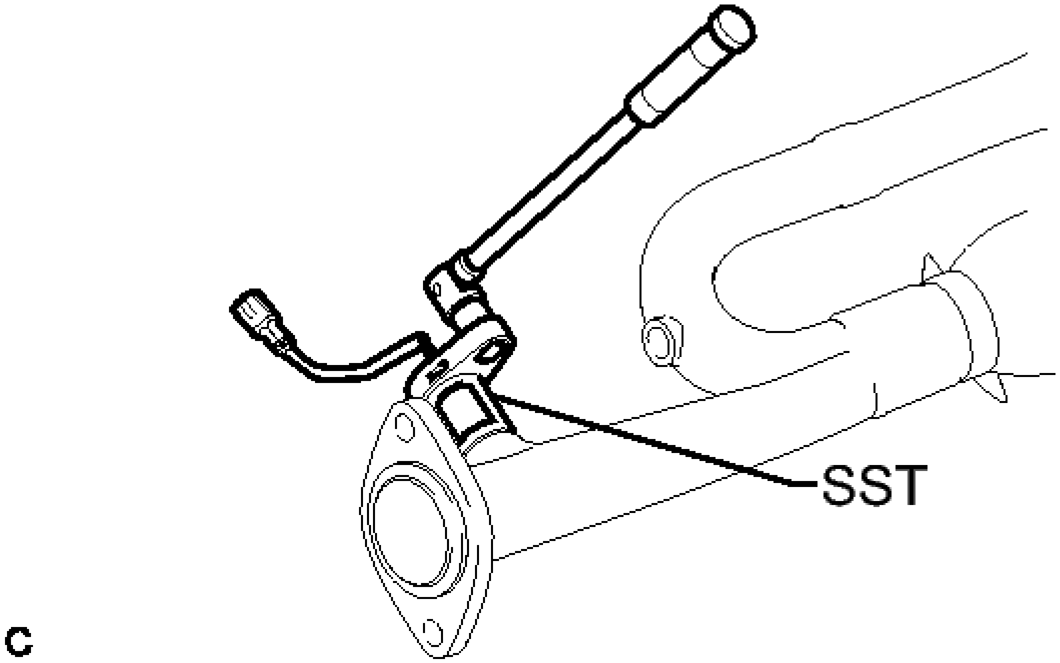

Fig. 80: Identifying Heated Oxygen Sensor And SST
Courtesy of TOYOTA MOTOR SALES, U.S.A., INC.

- **SST: 09224-00010**

INSPECTION

INSPECTION

1. **INSPECT HEATED OXYGEN SENSOR (for Bank 1 Sensor 2)**
    a. Measure the resistance according to the value(s) in the table below.

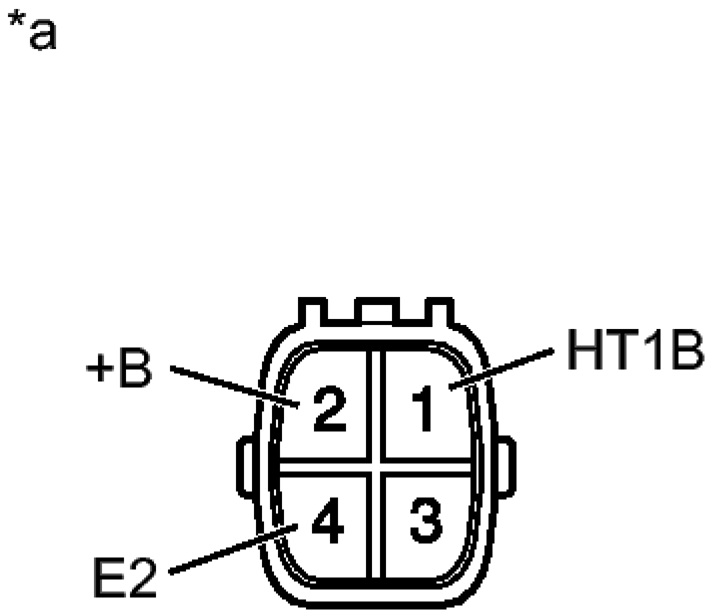

Fig. 81: Identifying Heated Oxygen Sensor Connector Terminal Identification
Courtesy of TOYOTA MOTOR SALES, U.S.A., INC.

Standard Resistance

Tester Connection	Condition	Specified Condition
1 (HT1B) - 2 (+B)	20°C (68°F)	11 to 16 ohms
1 (HT1B) - 4 (E2)	-	10 kohms or higher

TEXT IN ILLUSTRATION

*a	Component without harness connected (Heated Oxygen Sensor)

If the resistance is not as specified, replace the heated oxygen sensor.

2. **INSPECT HEATED OXYGEN SENSOR (for Bank 2 Sensor 2)**
    a. Measure the resistance according to the value(s) in the table below.

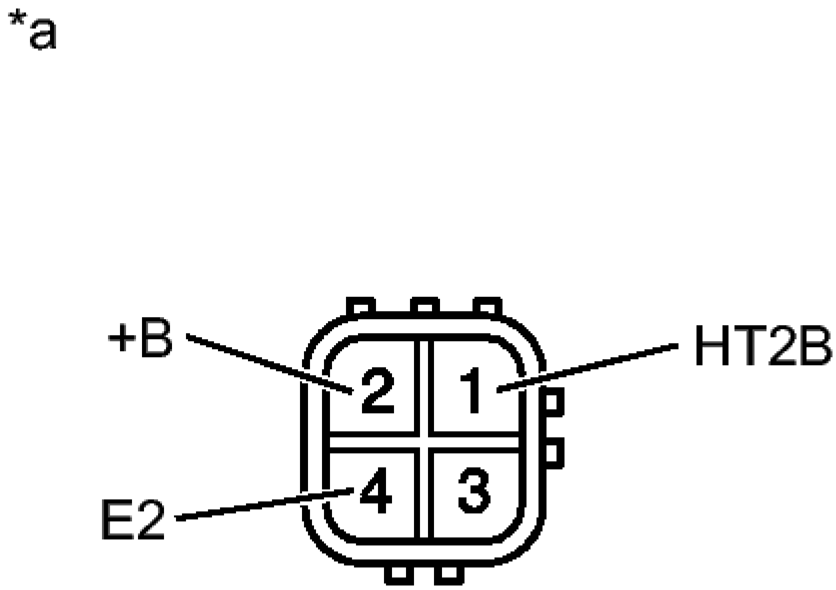

Fig. 82: Inspect No. 2 Oxygen Sensor (For Bank 2 Sensor 2)
Courtesy of TOYOTA MOTOR SALES, U.S.A., INC.

Standard Resistance

Tester Connection	Condition	Specified Condition
1 (HT2B) - 2 (+B)	20°C (68° F)	11 to 16 ohms
1 (HT2B) - 4 (E2)	-	10 kohms or higher

TEXT IN ILLUSTRATION

*a	Component without harness connected (Heated Oxygen Sensor)

If the resistance is not as specified, replace the heated oxygen sensor.

INSTALLATION

INSTALLATION

1. **INSTALL HEATED OXYGEN SENSOR (for Bank 2 Sensor 2)**
    a. Using SST, install the heated oxygen sensor to the front exhaust pipe assembly.

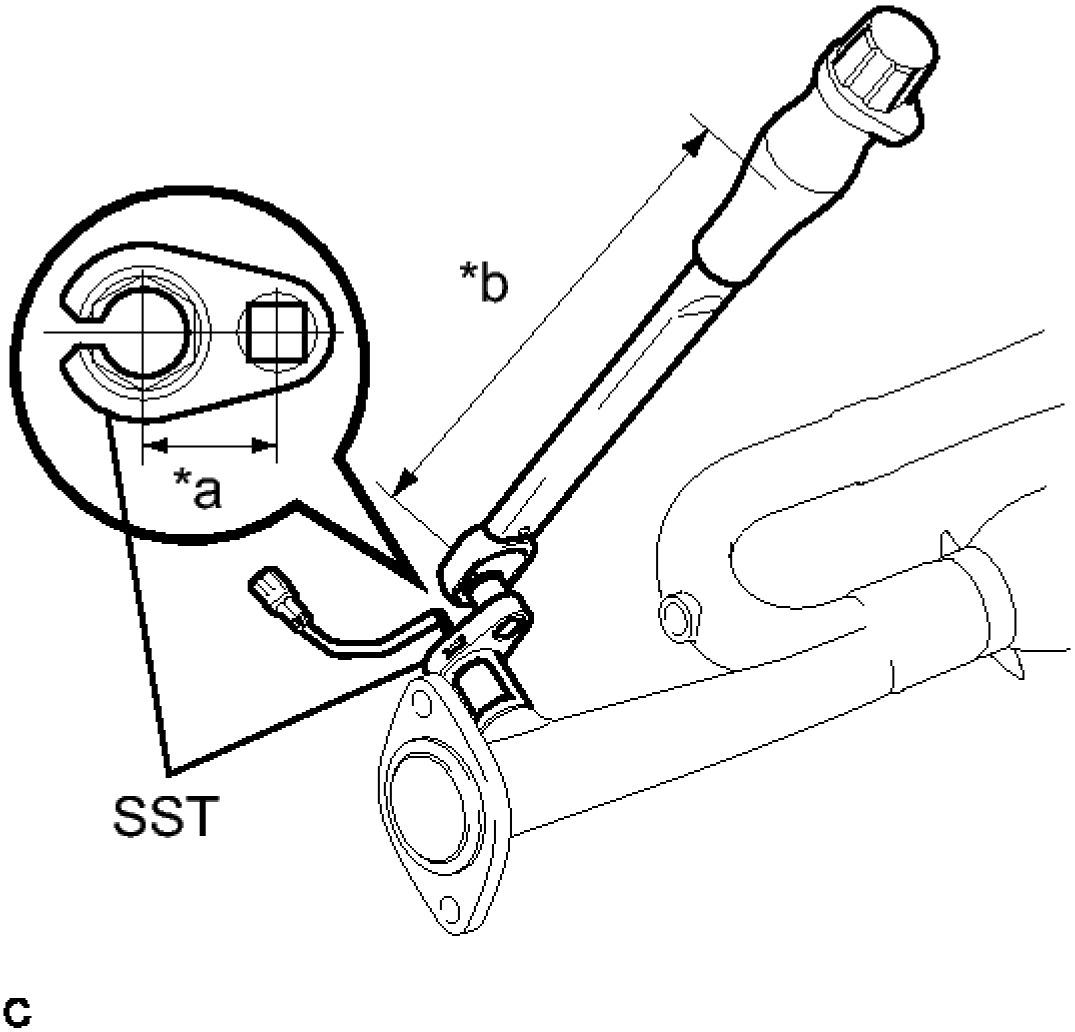

Fig. 83: Identifying Heated Oxygen Sensor And SST
Courtesy of TOYOTA MOTOR SALES, U.S.A., INC.

TEXT IN ILLUSTRATION

*a	Fulcrum Length 30 mm (1.18 in.)
*b	Fulcrum Length 180 mm

	(7.09 in.)

- **SST: 09224-00010**

without SST

Torque: 44 N*m (449 kgf*cm, 33 ft.*lbf)

with SST

Torque: 40 N*m (408 kgf*cm, 30 ft.*lbf)

NOTE:

- **The "with SST" torque value is effective when using SST with a fulcrum length of 30 mm (1.18 in.) and a torque wrench with a fulcrum length of 180 mm (7.09 in.). Refer to PRECAUTION .**
- **The "with SST" torque value is effective when SST is parallel to the torque wrench.**

2. **INSTALL HEATED OXYGEN SENSOR (for Bank 1 Sensor 2)**
    a. Using SST, install the heated oxygen sensor to the center exhaust pipe assembly.

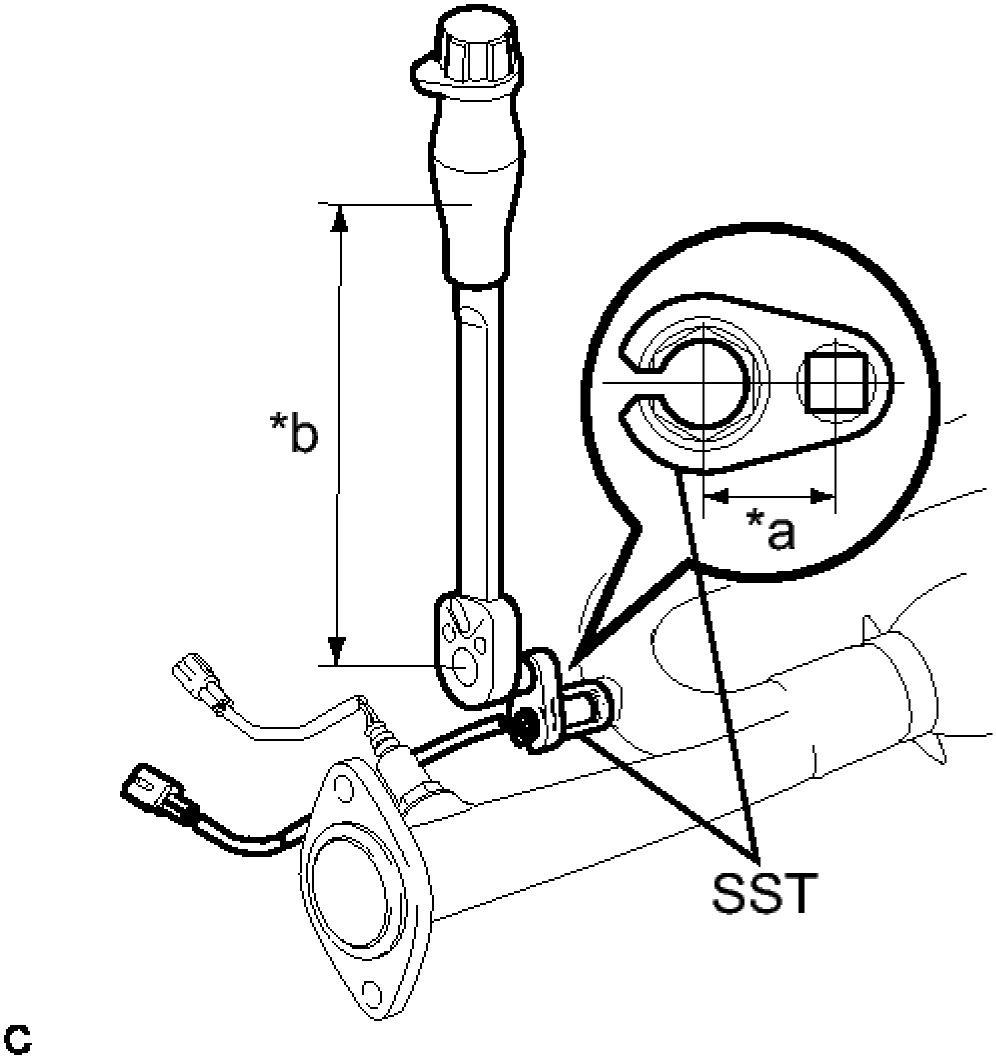

Fig. 84: Identifying Fulcrum Length
Courtesy of TOYOTA MOTOR SALES, U.S.A., INC.

TEXT IN ILLUSTRATION

*a	Fulcrum Length 30 mm (1.18 in.)
*b	Fulcrum Length 180 mm (7.09 in.)

- **SST: 09224-00010**

without SST

Torque: 44 N*m (449 kgf*cm, 33 ft.*lbf)

with SST

Torque: 40 N*m (408 kgf*cm, 30 ft.*lbf)

NOTE:

- **The "with SST" torque value is effective when using SST with a fulcrum length of 30 mm (1.18 in.) and a torque wrench with a fulcrum length of 180 mm (7.09 in.). Refer to PRECAUTION .**
- **The "with SST" torque value is effective when SST is parallel to the torque wrench.**

3. **INSTALL FRONT EXHAUST PIPE ASSEMBLY**

   Refer to **INSTALLATION** .

INTEGRATION RELAY

COMPONENTS

ILLUSTRATION

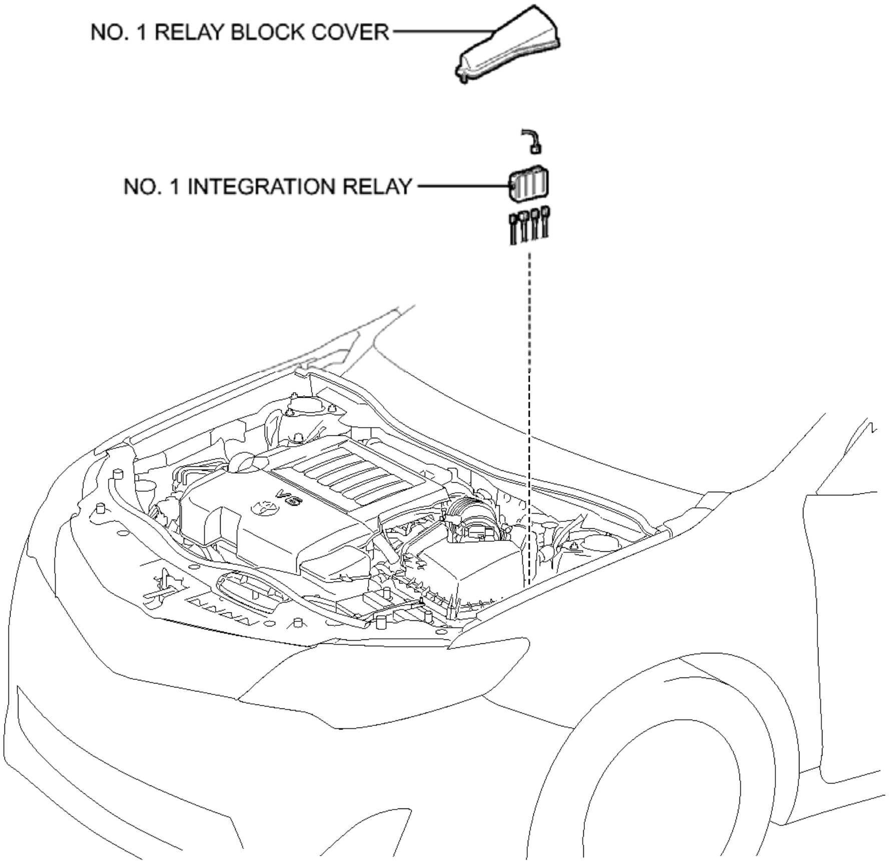
NO. 1 RELAY BLOCK COVER
NO. 1 INTEGRATION RELAY
V6

Fig. 85: Identifying Integration Relay Replacement Components
Courtesy of TOYOTA MOTOR SALES, U.S.A., INC.

REMOVAL

REMOVAL

1. **REMOVE NO. 1 RELAY BLOCK COVER**
2. **REMOVE NO. 1 INTEGRATION RELAY**
    a. Disconnect the connector.

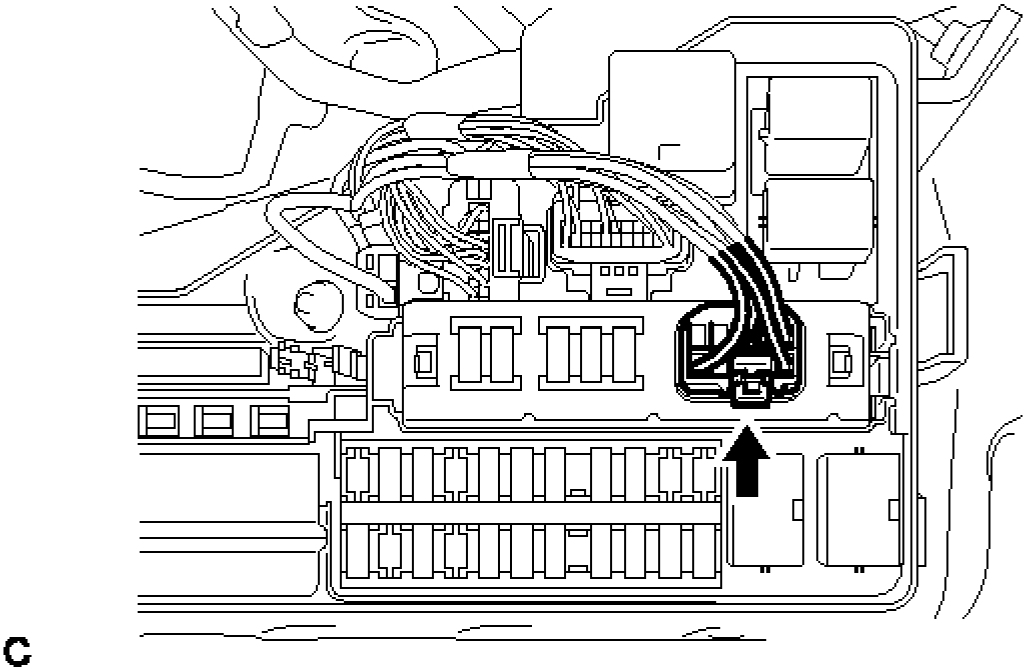

Fig. 86: Identifying No. 1 Integration Relay Connector
Courtesy of TOYOTA MOTOR SALES, U.S.A., INC.

b. Using a screwdriver with its tip wrapped in protective tape, disengage the 2 claws and disconnect the No. 1 integration relay.

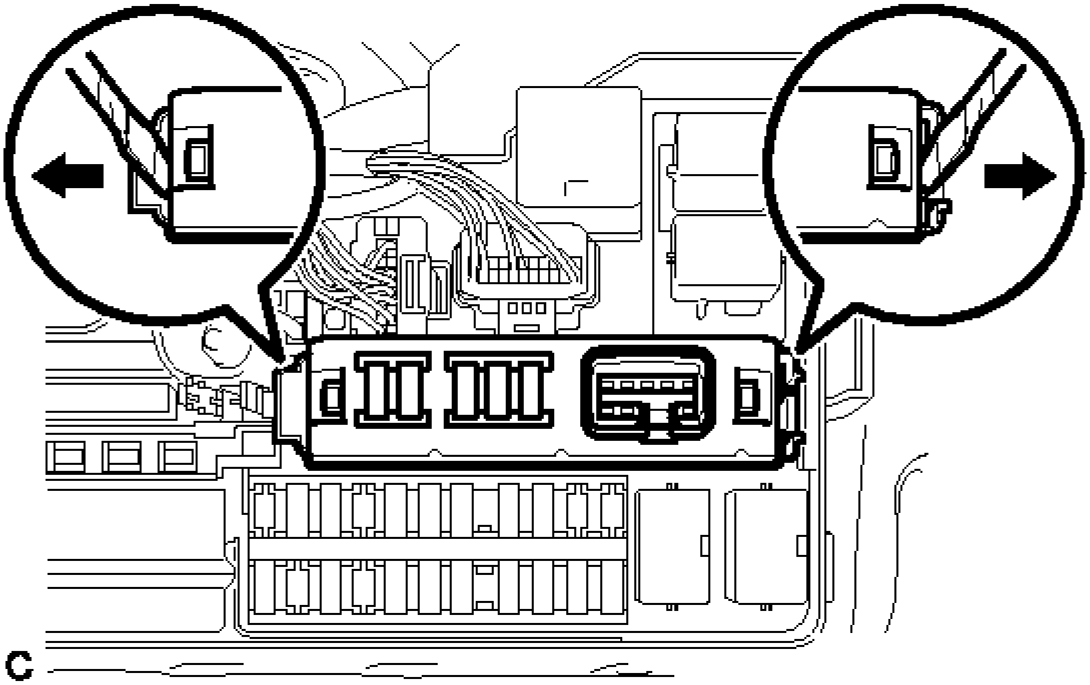

Fig. 87: Identifying No. 1 Integration Relay Claws

Courtesy of TOYOTA MOTOR SALES, U.S.A., INC.

c. Disconnect the 4 connectors and remove the No. 1 integration relay.

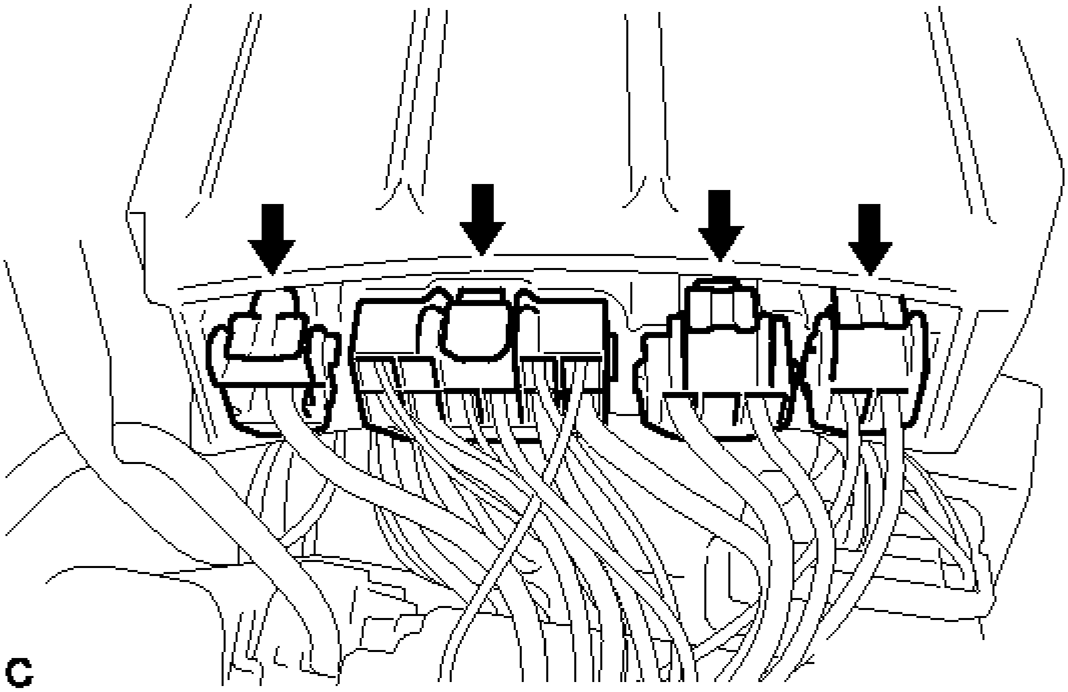

Fig. 88: Identifying No. 1 Integration Relay Connectors
Courtesy of TOYOTA MOTOR SALES, U.S.A., INC.

INSPECTION

INSPECTION

1. **INSPECT NO. 1 INTEGRATION RELAY**

*1

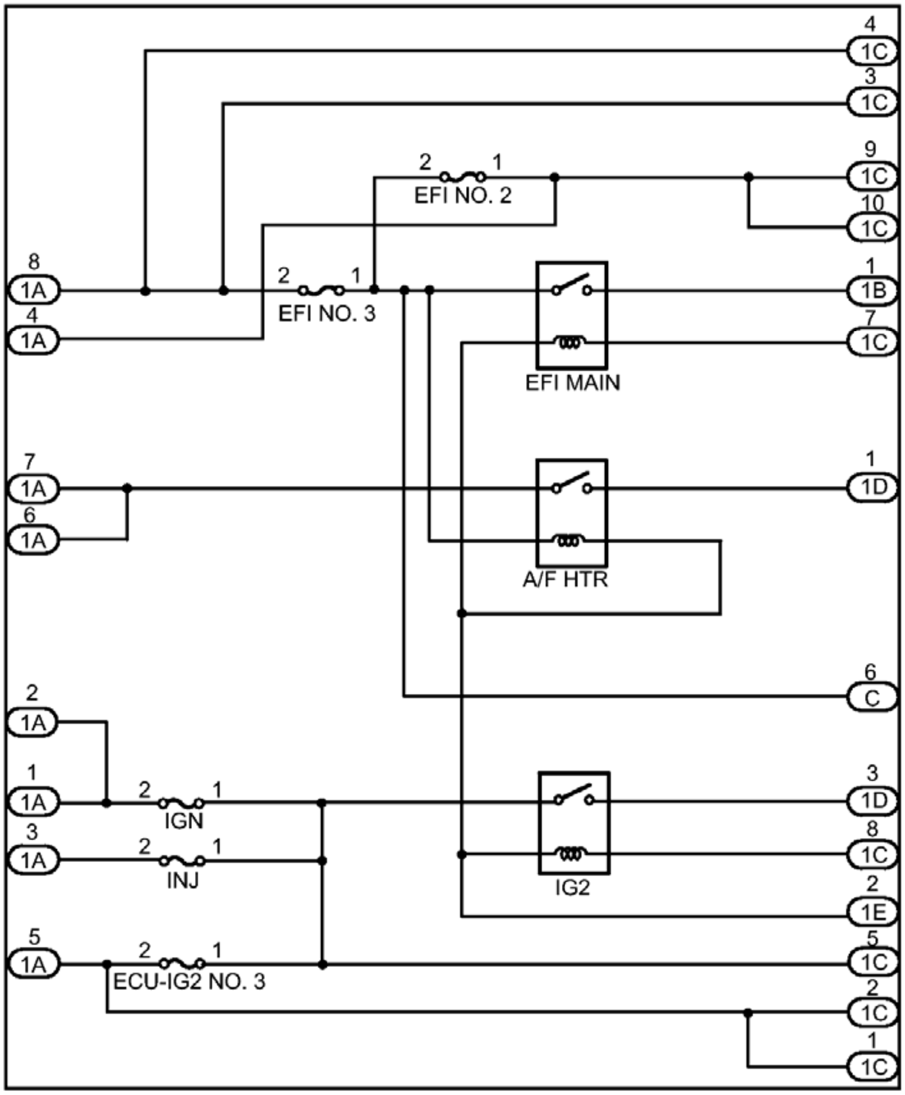
4
1C
3
1C
2
1
EFI NO. 2
9
1C
10
1C
8
1A
4
1A
2
1
EFI NO. 3
1
1B
7
1C
EFI MAIN
7
1A
6
1A
1
1D
A/F HTR
6
C
2
1A
1
1A
3
1A
2
1
IGN
2
1
INJ
3
1D
8
1C
IG2
2
1E
5
1A
2
1
ECU-IG2 NO. 3
5
1C
2
1C
1
1C

Fig. 89: Identifying No. 1 Integration Relay Wiring Diagram
Courtesy of TOYOTA MOTOR SALES, U.S.A., INC.

TEXT IN ILLUSTRATION

*1	No. 1 Integration Relay	-	-

a. EFI MAIN RELAY:
   1. Measure the resistance according to the value(s) in the table below.

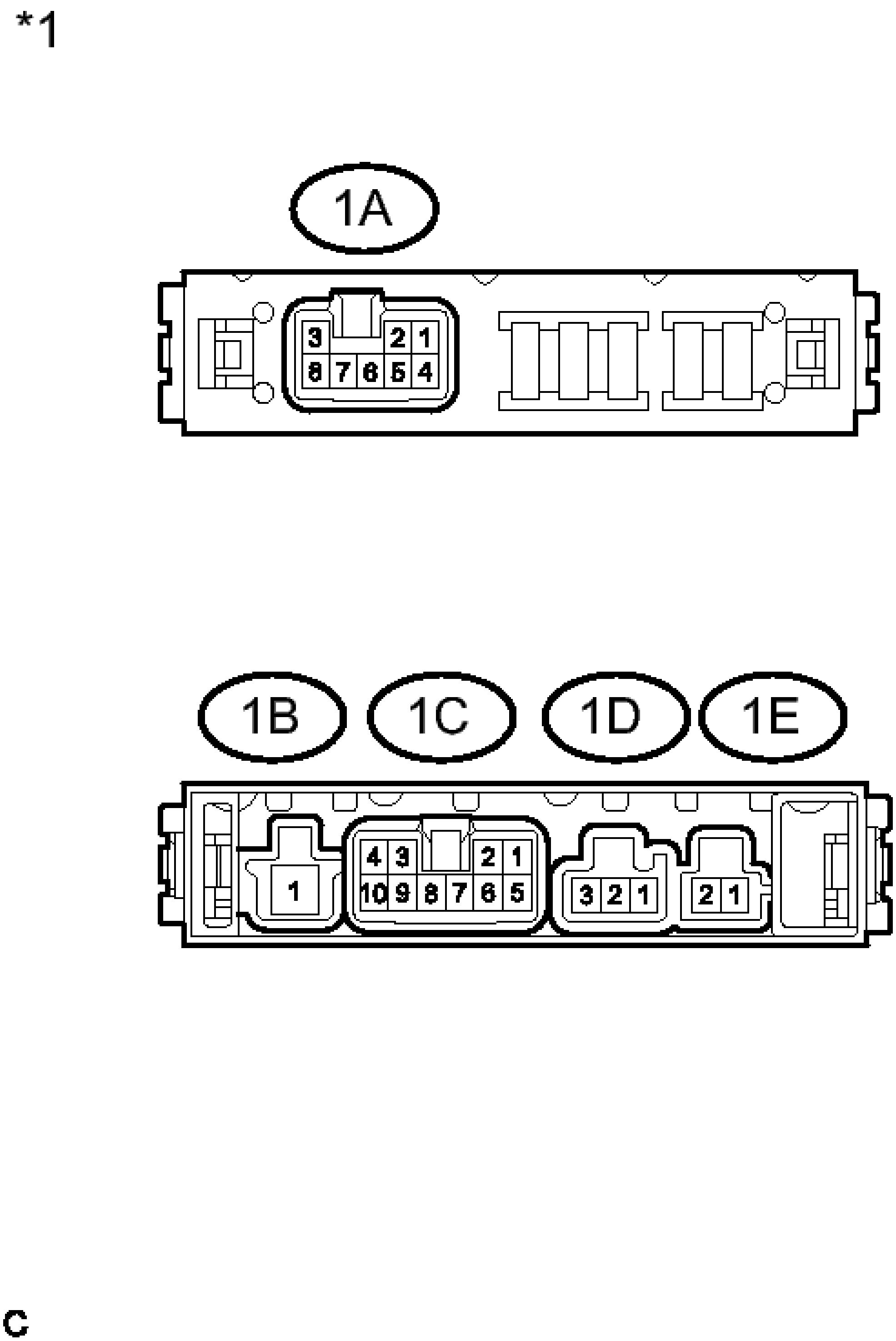
*1
1A
3 2 1
8 7 6 5 4
1B
1C
1D
1E
1
4 3 2 1
10 9 8 7 6 5
3 2 1
2 1
C

Fig. 90: Identifying EFI Main Relay Connector Terminal Identification
Courtesy of TOYOTA MOTOR SALES, U.S.A., INC.

Standard Resistance

Tester Connection	**Condition**	**Specified Condition**
No. 1 integration relay 1B-1 - No. 1 integration relay 1A-8	Battery voltage is not applied between terminals 1C-7 and 1E-2	10 kohms or higher
No. 1 integration relay 1B-1 - No. 1 integration relay 1A-8	Battery voltage is applied between terminals 1C-7 and 1E-2	Below 1 ohms
No. 1 integration relay 1B-1 - No. 1 integration relay 1C-3		
No. 1 integration relay 1B-1 - No. 1 integration relay 1C-4		
No. 1 integration relay 1B-1 - No. 1 integration relay 1C-6		
No. 1 integration relay 1B-1 - No. 1 integration relay 1C-9		
No. 1 integration relay 1B-1 - No. 1 integration relay 1C-10		

TEXT IN ILLUSTRATION

*1	No. 1 Integration Relay

If the resistance is not as specified, replace the No. 1 integration relay.

b. A/F HTR RELAY:

1. Measure the resistance according to the value(s) in the table below.

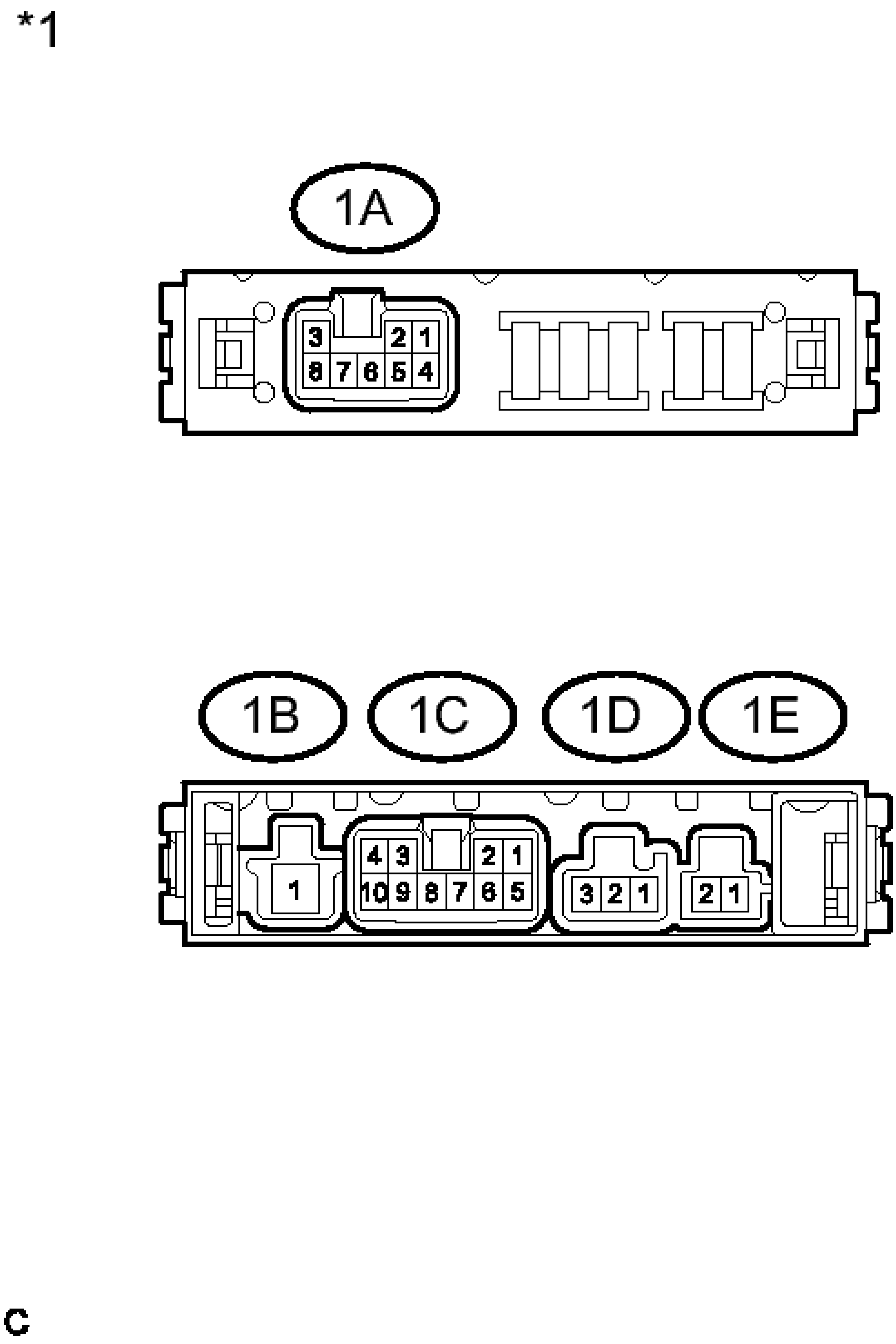
*1
1A
3 2 1
8 7 6 5 4
1B
1C
1D
1E
1
4 3 2 1
10 9 8 7 6 5
3 2 1
2 1
C

Fig. 91: Identifying A/F HTR Relay Connector Terminal Identification
Courtesy of TOYOTA MOTOR SALES, U.S.A., INC.

Standard Resistance

Tester Connection	Condition	Specified Condition
No. 1 integration relay 1A-6 - No. 1 integration relay 1D-1	Battery voltage is not applied between terminals 1A-8 and 1E-2	10 kohms or higher
No. 1 integration relay 1A-6 - No. 1 integration relay 1D-1	Battery voltage is applied between terminals 1A-8 and 1E-2	Below 1 ohms
No. 1 integration relay 1A-7 - No. 1 integration relay 1D-1		

TEXT IN ILLUSTRATION

*1	No. 1 Integration Relay

If the resistance is not as specified, replace the No. 1 integration relay.

c. IG2 RELAY:
   1. Measure the resistance according to the value(s) in the table below.

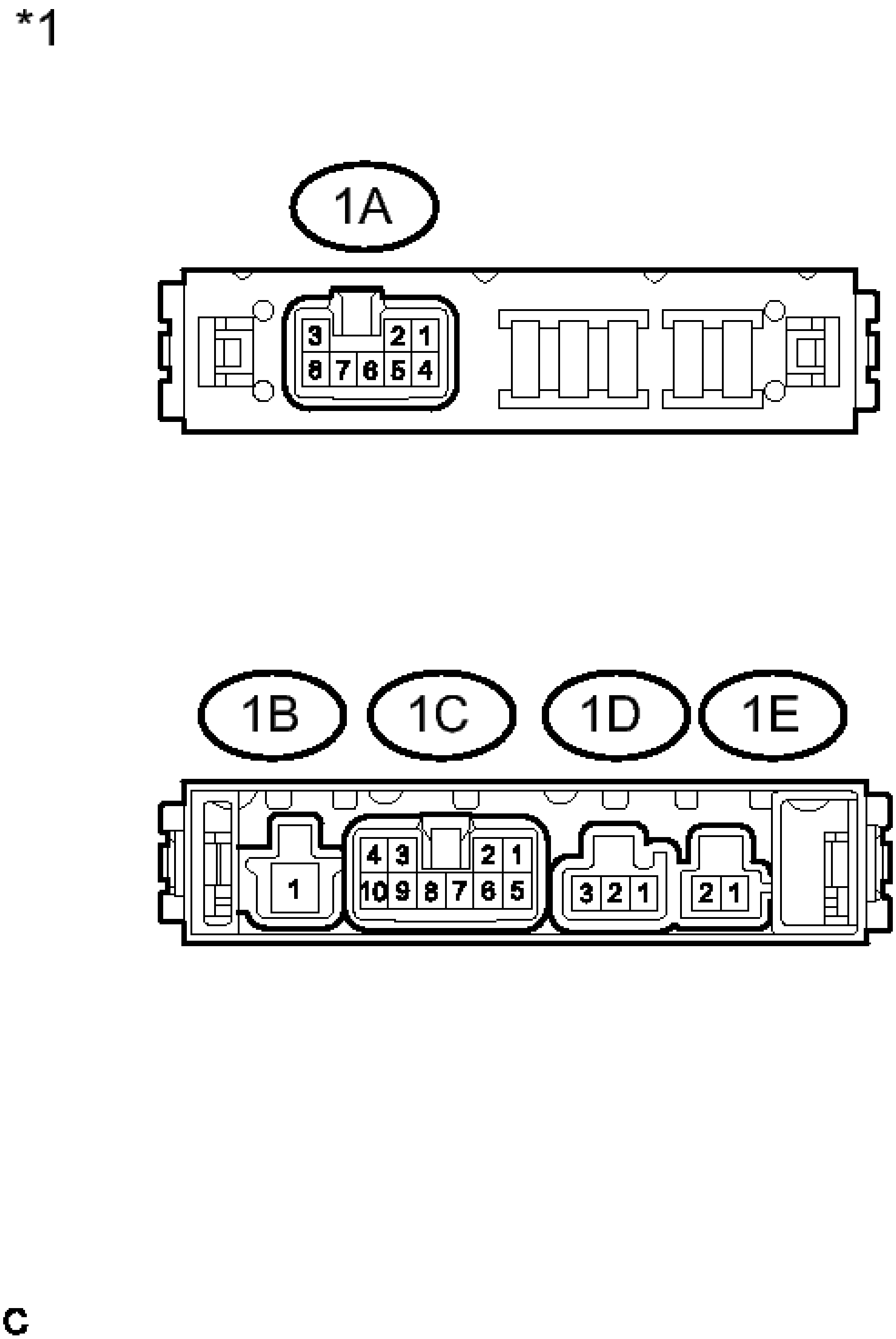
*1
1A
3 2 1
8 7 6 5 4
1B
1C
1D
1E
1
4 3 2 1
10 9 8 7 6 5
3 2 1
2 1
C

Fig. 92: Identifying IG2 Relay Connector Terminal Identification
Courtesy of TOYOTA MOTOR SALES, U.S.A., INC.

Standard Resistance

Tester Connection	**Condition**	**Specified Condition**
No. 1 integration relay 1A-1 - No. 1 integration relay 1D-3	Battery voltage is not applied between terminals 1C-8 and 1E-2	10 kohms or higher
No. 1 integration relay 1A-1 - No. 1 integration relay 1D-3	Battery voltage is applied between terminals 1C-8 and 1E-2	Below 1 ohms
No. 1 integration relay 1A-3 - No. 1 integration relay 1D-3		
No. 1 integration relay 1A-5 - No. 1 integration relay 1D-3		
No. 1 integration relay 1C-1 - No. 1 integration relay 1D-3		
No. 1 integration relay 1C-2 - No. 1 integration relay 1D-3		
No. 1 integration relay 1C-5 - No. 1 integration relay 1D-3		

TEXT IN ILLUSTRATION

*1	No. 1 Integration Relay

If the resistance is not as specified, replace the No. 1 integration relay.

INSTALLATION

INSTALLATION

1. **INSTALL NO. 1 INTEGRATION RELAY**
    a. Connect the 4 connectors.
    b. Install the No. 1 integration relay to the engine room relay block and junction block assembly.
    c. Connect the connector.
2. **INSTALL NO. 1 RELAY BLOCK COVER**

2012-2017 ENGINE PERFORMANCE

Engine Control System (Service Information) (Hybrid)

CAMSHAFT OIL CONTROL VALVE

COMPONENTS

ILLUSTRATION

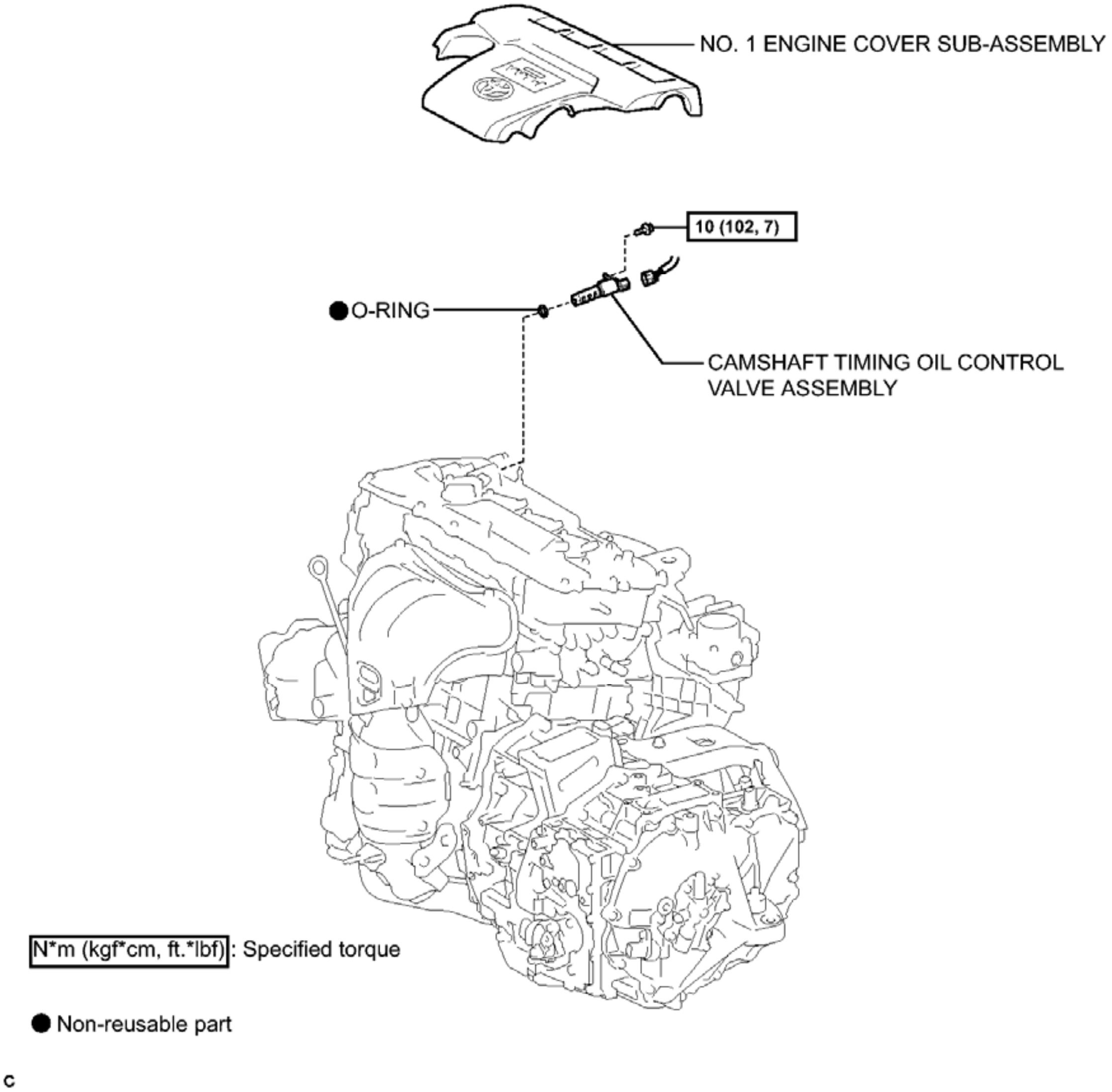
NO. 1 ENGINE COVER SUB-ASSEMBLY
10 (102, 7)
● O-RING
CAMSHAFT TIMING OIL CONTROL VALVE ASSEMBLY
N*m (kgf*cm, ft.*lbf) : Specified torque
● Non-reusable part
c

Fig. 1: Identifying Camshaft Oil Control Valve Replacement Components With Torque Specifications
Courtesy of TOYOTA MOTOR SALES, U.S.A., INC.

ON-VEHICLE INSPECTION

ON-VEHICLE INSPECTION

1. **INSPECT CAMSHAFT TIMING OIL CONTROL VALVE ASSEMBLY**
    a. Connect the tester to the DLC3.
    b. Start the engine.
    c. Turn the tester on.
    d. Turn the A/C switch on.
    e. Inspect the camshaft timing oil control valve assembly.
        1. Enter the following menus: Powertrain / Engine and ECT / Active Test / Control the VVT Linear (Bank 1).
        2. Check the engine speed while operating the camshaft timing oil control valve assembly using the tester.

           Standard Condition

Tester Operation	Specified Condition
0%	Normal engine speed
100%	Engine idles roughly or stalls

           HINT:

           If the result is not acceptable, cool the engine (engine coolant temperature is 50°C (122°F) or less) and perform the Active Test again.

REMOVAL

REMOVAL

1. **REMOVE NO. 1 ENGINE COVER SUB-ASSEMBLY** . Refer to **REMOVAL - Step 25**
2. **REMOVE CAMSHAFT TIMING OIL CONTROL VALVE ASSEMBLY**
    a. Disconnect the oil control valve connector.

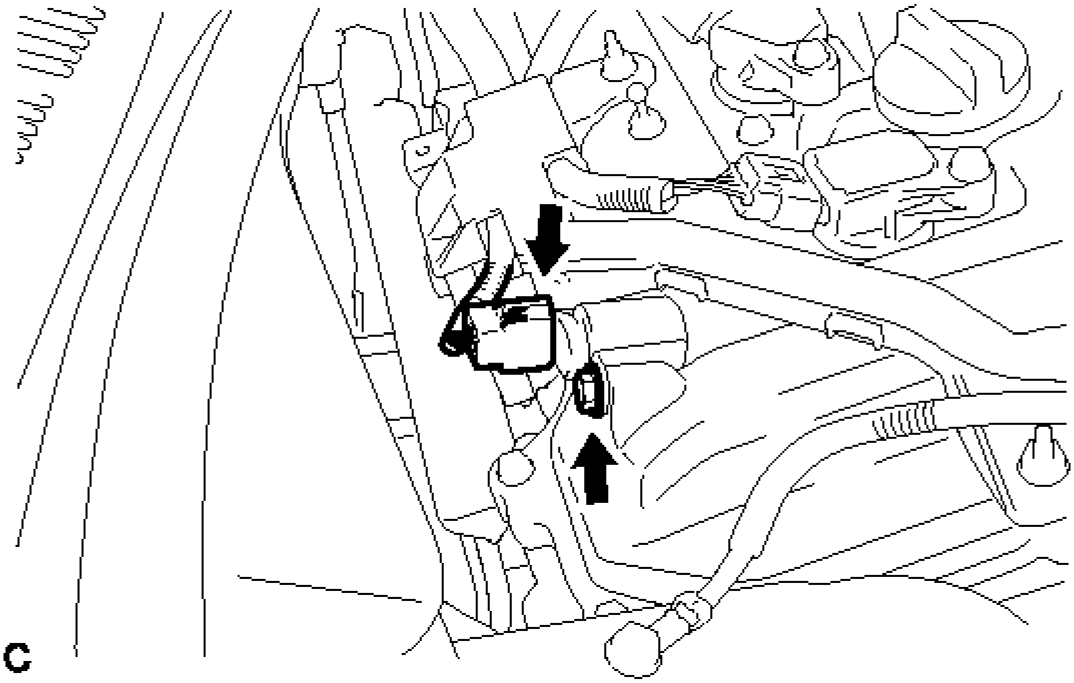

Fig. 2: Identifying Oil Control Valve Connector And Bolt
Courtesy of TOYOTA MOTOR SALES, U.S.A., INC.

b. Remove the bolt and oil control valve.
c. Remove the O-ring from the oil control valve.

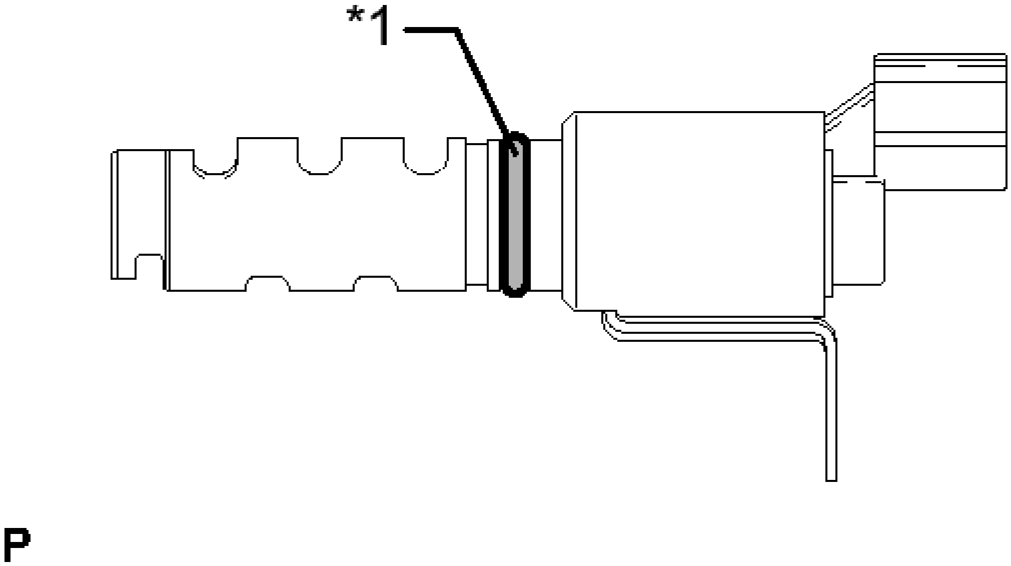

Fig. 3: Identifying O-Ring

Courtesy of TOYOTA MOTOR SALES, U.S.A., INC.

TEXT IN ILLUSTRATION

*1	O-ring

INSPECTION

INSPECTION

1. **INSPECT CAMSHAFT TIMING OIL CONTROL VALVE ASSEMBLY**
    1. Measure the resistance according to the value(s) in the table below.

        Standard Resistance

Tester Connection	Condition	Specified Condition
1 - 2	20°C (68° F)	6.9 to 7.9 ohms

        If the result is not as specified, replace the oil control valve assembly.

    2. Connect a positive (+) lead from the battery to terminal 1 and a negative (-) lead to terminal 2, and check the movement of the valve.

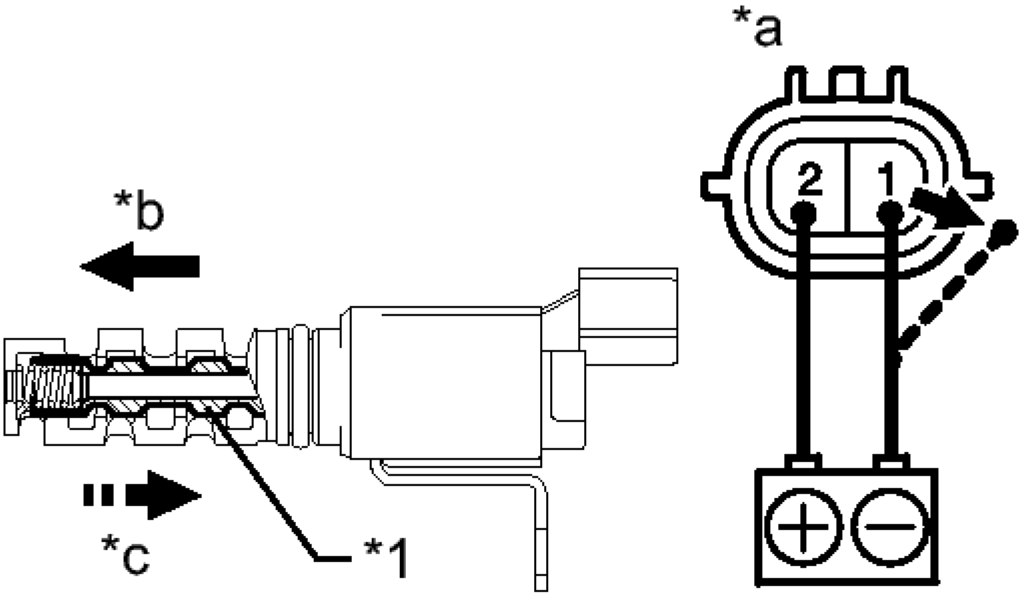

Fig. 4: Identifying Oil Control Valve Connector Terminals

Courtesy of TOYOTA MOTOR SALES, U.S.A., INC.

TEXT IN ILLUSTRATION

*1	Valve
*a	Component without harness connected (Camshaft Timing Oil Control Valve)
*b	When applied
*c	When cut off

OK

Condition	**Specified Condition**
Auxiliary battery positive (+) voltage is applied	Valve moves in left arrow direction shown in illustration
Auxiliary battery positive (+) voltage is cut off	Valve moves in right arrow direction shown in illustration

NOTE: **Confirm that the valve moves freely and does not stick in any position.**

If necessary, replace the camshaft timing oil control valve assembly.

HINT:

Accumulation of foreign matter can cause minor pressure leaks. Minor pressure leaks will cause the camshaft to advance or retard, and this will cause a DTC to be set.

INSTALLATION

INSTALLATION

1. **INSTALL CAMSHAFT TIMING OIL CONTROL VALVE ASSEMBLY**
    a. Apply a light coat of engine oil to a new O-ring, and install it to the oil control valve.

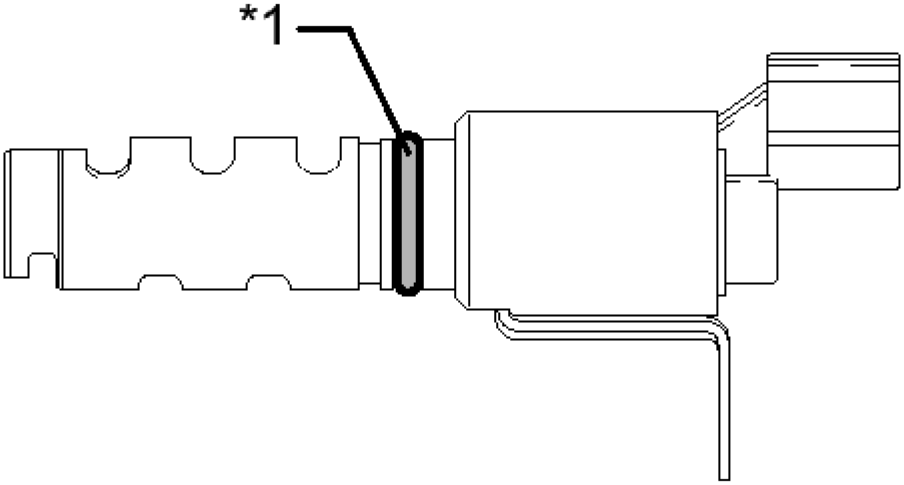

P

Fig. 5: Identifying O-Ring
Courtesy of TOYOTA MOTOR SALES, U.S.A., INC.

TEXT IN ILLUSTRATION

*1	New O-ring

    b. Install the oil control valve with the bolt.

Torque: 10 N*m (102 kgf*cm, 7 ft.*lbf)

NOTE:

- **Do not allow foreign matter to contact the oil seal face of the oil control valve (connecting surface with cylinder head cover).**
- **Be careful that the O-ring is not cracked or moved out of place when installing the oil control valve.**

    c. Connect the oil control valve connector.

2. **INSPECT FOR OIL LEAK**
3. **INSTALL NO. 1 ENGINE COVER SUB-ASSEMBLY** . Refer to **INSTALLATION - Step 86**

THROTTLE BODY

COMPONENTS

ILLUSTRATION

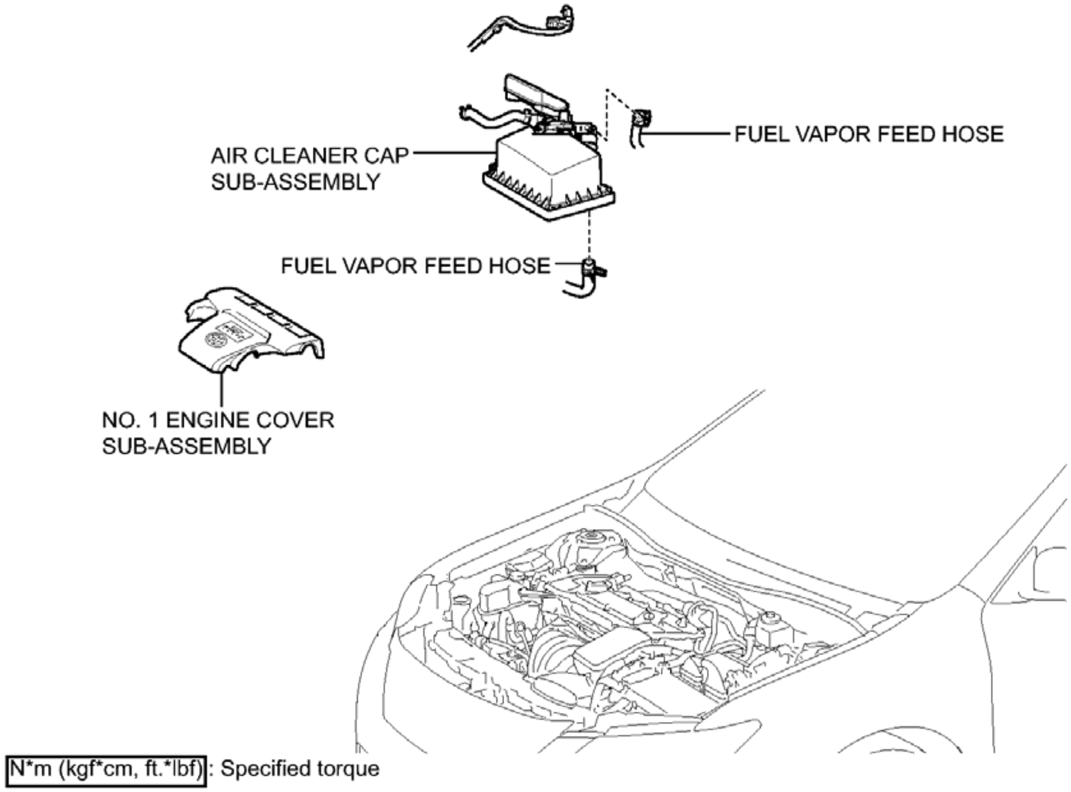
FUEL VAPOR FEED HOSE
AIR CLEANER CAP SUB-ASSEMBLY
FUEL VAPOR FEED HOSE
NO. 1 ENGINE COVER SUB-ASSEMBLY
N*m (kgf*cm, ft.*lbf) : Specified torque

Fig. 6: Identifying Throttle Body Replacement Components With Torque Specifications (1 Of 2)
Courtesy of TOYOTA MOTOR SALES, U.S.A., INC.

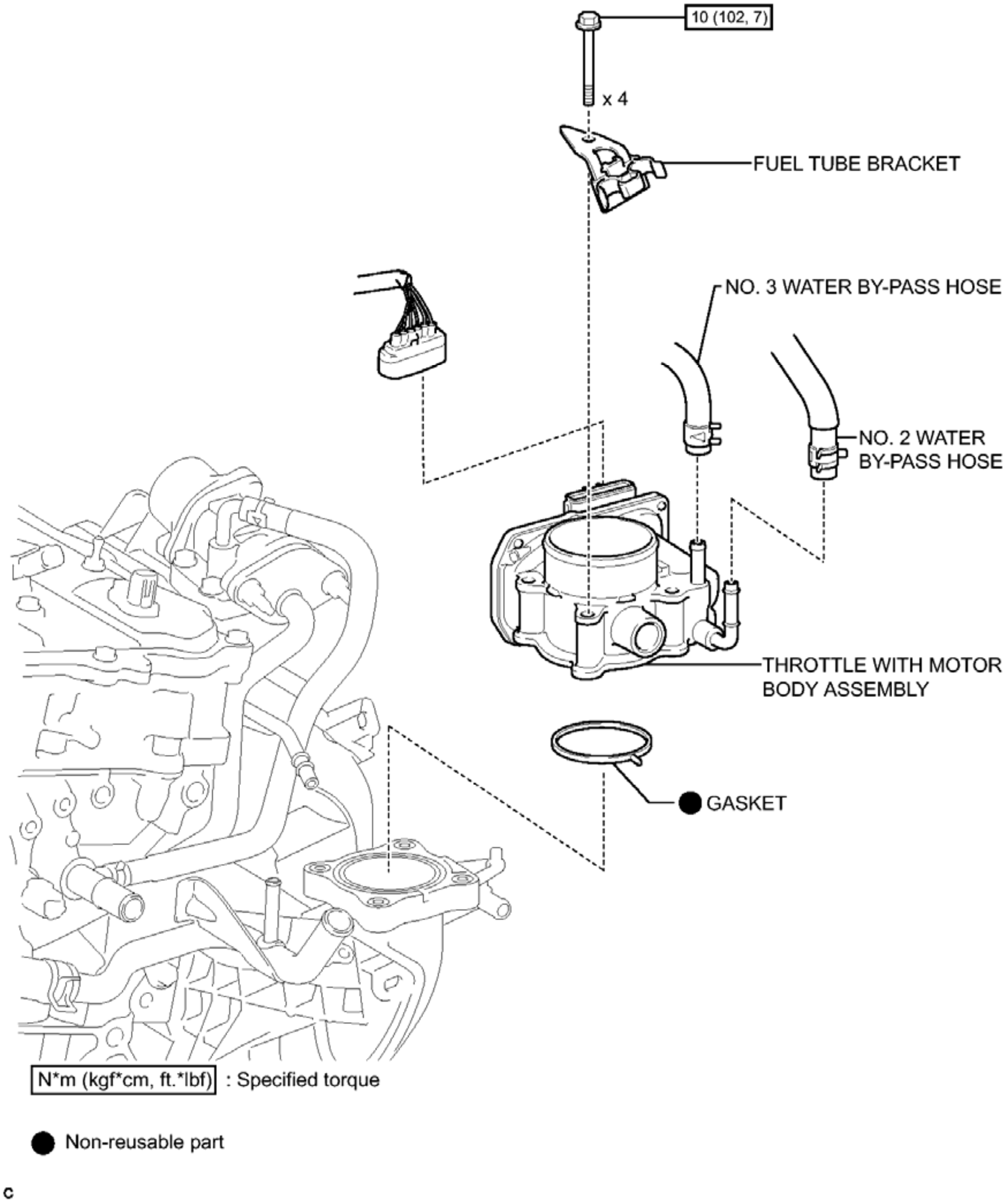
10 (102, 7)
x 4
FUEL TUBE BRACKET
NO. 3 WATER BY-PASS HOSE
NO. 2 WATER BY-PASS HOSE
THROTTLE WITH MOTOR BODY ASSEMBLY
● GASKET
N*m (kgf*cm, ft.*lbf) : Specified torque
● Non-reusable part
c

Fig. 7: Identifying Throttle Body Replacement Components With Torque Specifications (2 Of 2)
Courtesy of TOYOTA MOTOR SALES, U.S.A., INC.

ON-VEHICLE INSPECTION

ON-VEHICLE INSPECTION

1. **CHECK THROTTLE WITH MOTOR BODY ASSEMBLY**

a. Check the throttle control motor operating sound.
   1. Turn the power switch on (IG).
   2. When depressing the accelerator pedal, check the operating sound of the running motor. Make sure that no friction noises are emitted from the motor.

      If friction noises exist, replace the throttle with motor body assembly.

b. Check the throttle position sensor.
   1. Connect the tester to the DLC3.
   2. Turn the power switch on (IG).
   3. Turn the tester on.
   4. Perform the "Inspection After Repair". Refer to **INITIALIZATION** .
   5. Enter the following menus: Powertrain / Engine and ECT / Data List / All Data / Throttle Sensor Position.
   6. Depress the accelerator pedal. When the throttle valve is fully opened, check that the value of "Throttle Sensor Position" is within the specification.

      Standard throttle valve opening percentage

      60% or more

      NOTE: **When checking the standard throttle valve opening percentage, make sure that the shift lever is in N.**

      If the percentage is less than 60%, replace the throttle with motor body assembly.

REMOVAL

REMOVAL

1. **DRAIN COOLANT (for Engine)** . Refer to **REPLACEMENT - Step 1**
2. **REMOVE NO. 1 ENGINE COVER SUB-ASSEMBLY** . Refer to **REMOVAL - Step 25**
3. **REMOVE AIR CLEANER CAP SUB-ASSEMBLY**
   a. Disconnect the mass air flow meter connector and wire harness clamp from the air cleaner cap sub-assembly.

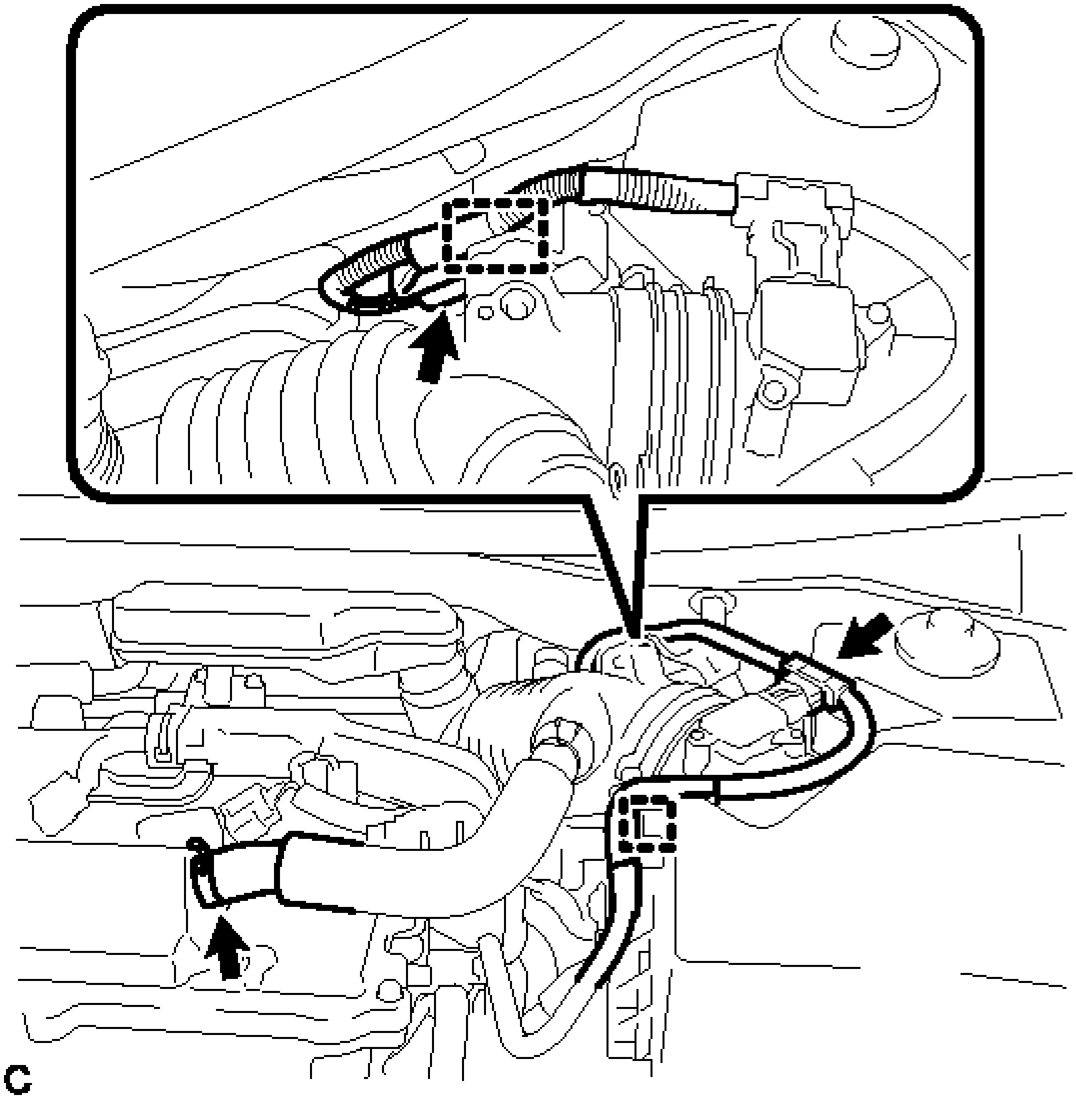

Fig. 8: Identifying Mass Air Flow Meter Connector And Wire Harness Clamp
Courtesy of TOYOTA MOTOR SALES, U.S.A., INC.

b. Disconnect the ventilation hose from the cylinder head cover.
c. Disconnect the connector and wire harness clamp.
d. Release the 2 clamps and remove the air cleaner cap sub-assembly.

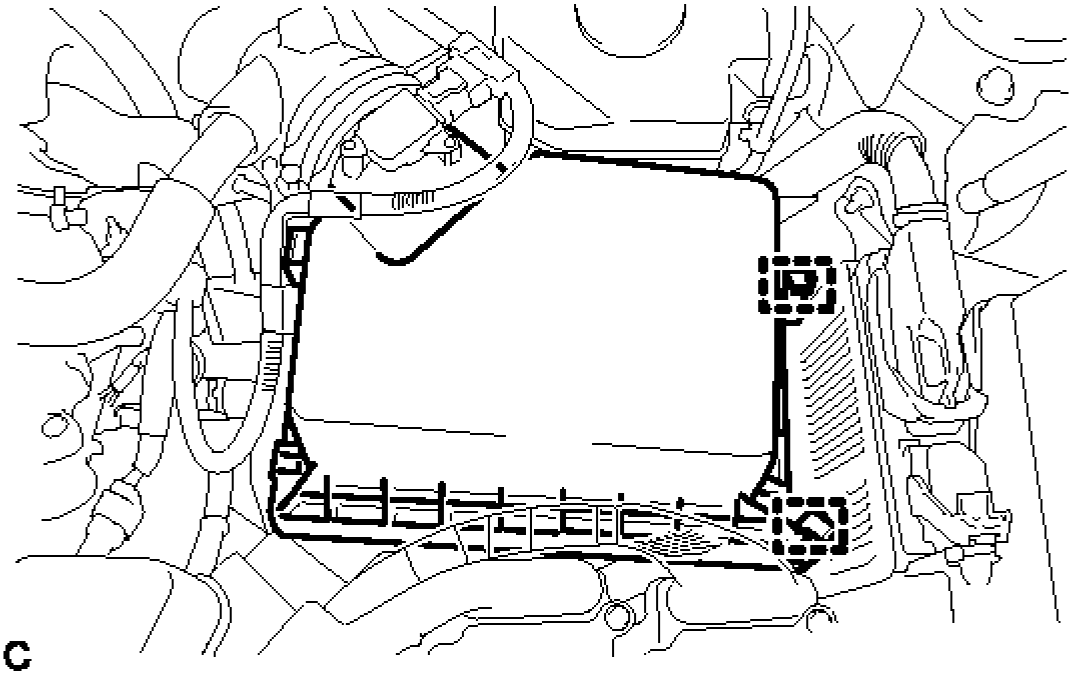

Fig. 9: Identifying Air Cleaner Cap Clamps
Courtesy of TOYOTA MOTOR SALES, U.S.A., INC.

e. Disconnect the 2 fuel vapor feed hoses.

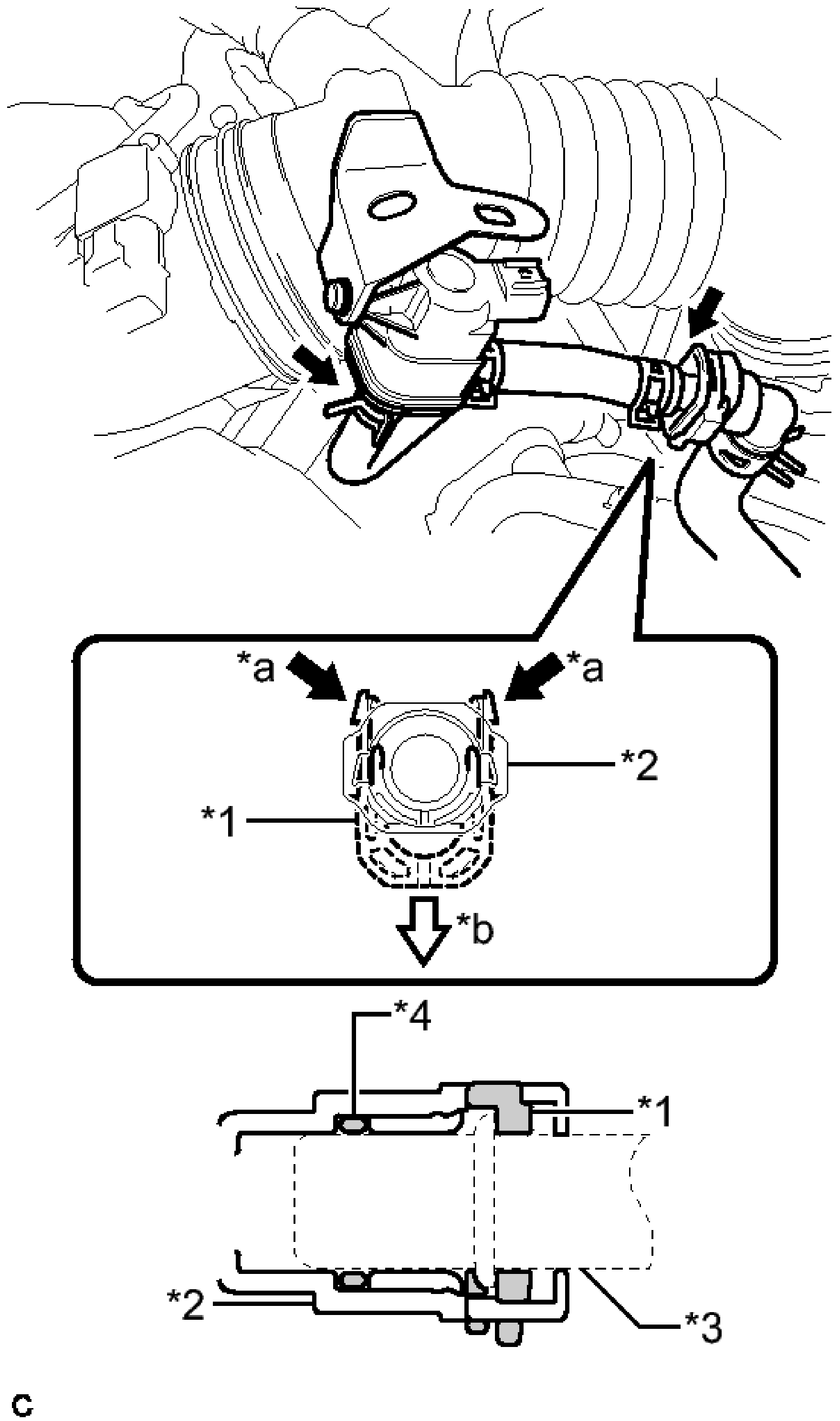
*a
*a
*2
*1
*b
*4
*1
*2
*3
C

Fig. 10: Disconnecting Fuel Vapor Feed Hoses
Courtesy of TOYOTA MOTOR SALES, U.S.A., INC.

TEXT IN ILLUSTRATION

*1	Retainer
*2	Fuel Tube Connector
*3	Pipe
*4	O-ring
*a	Pinch
*b	Pull

NOTE:

- **Remove any dirt or foreign matter on the fuel tube connector before performing this work.**
- **Do not allow any scratches or foreign matter to get on the parts when disconnecting them as the fuel tube connector has an O-ring that seals the pipe.**
- **Perform this work by hand. Do not use any tools.**
- **Protect the disconnected parts by covering them with plastic bags after disconnecting each fuel vapor feed hose.**

f. Loosen the hose clamp and disconnect the air cleaner hose from the throttle with motor body assembly.

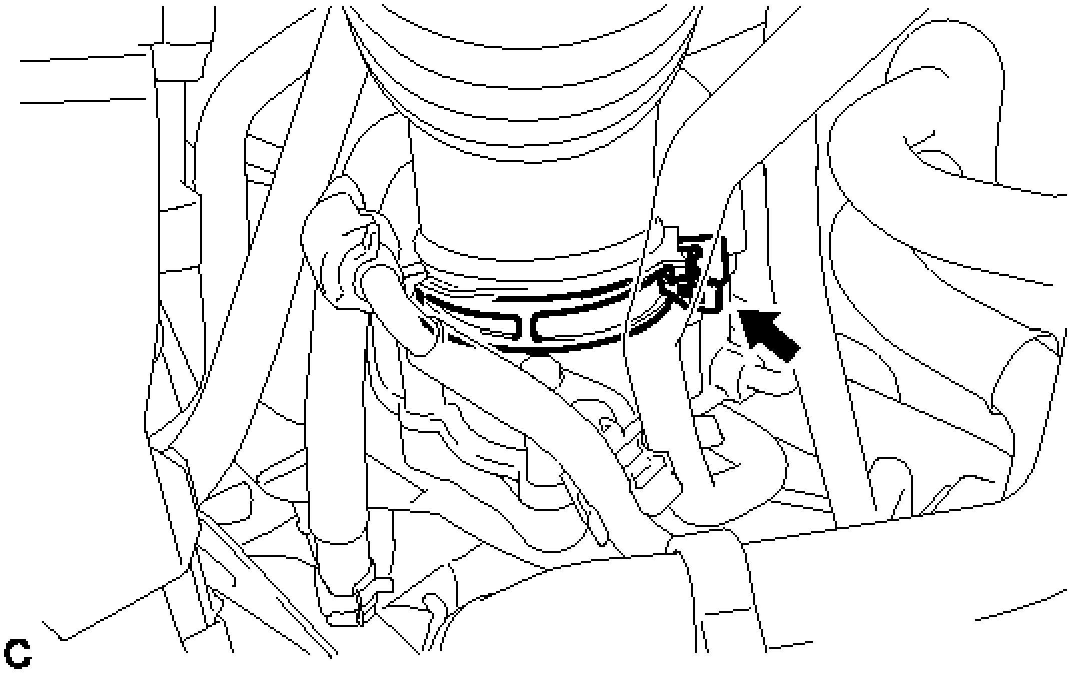

Fig. 11: Identifying Air Cleaner Hose Hose Clamp
Courtesy of TOYOTA MOTOR SALES, U.S.A., INC.

4. **REMOVE THROTTLE WITH MOTOR BODY ASSEMBLY**
   a. Disconnect the 2 hoses.

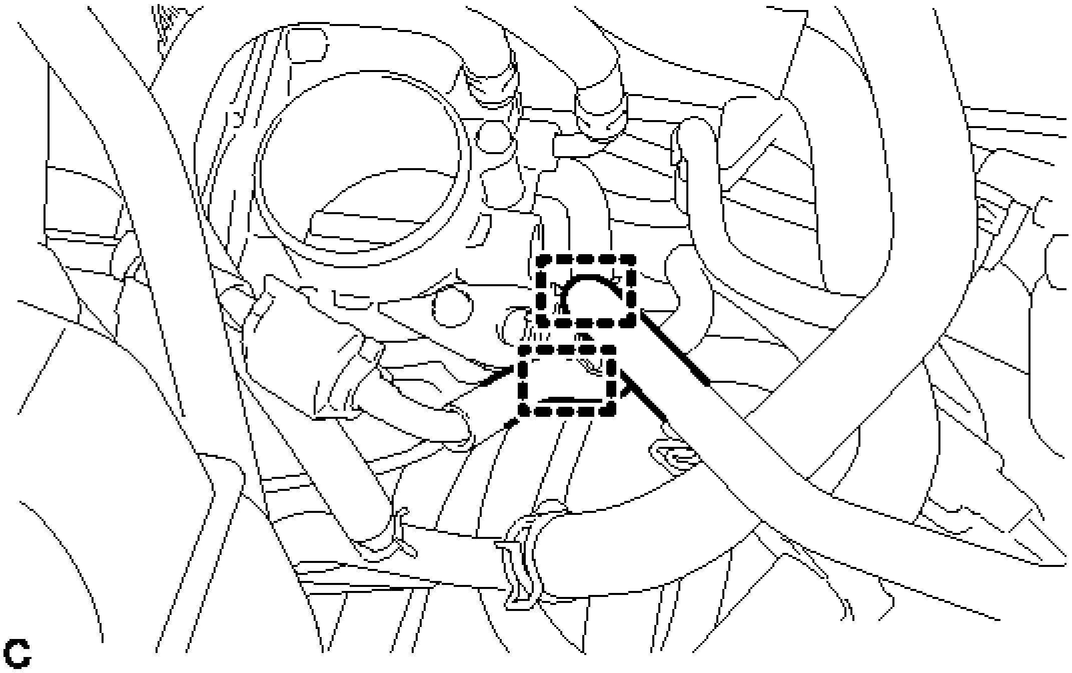

Fig. 12: Identifying Throttle Body Hoses
Courtesy of TOYOTA MOTOR SALES, U.S.A., INC.

b. Disconnect the throttle body connector.

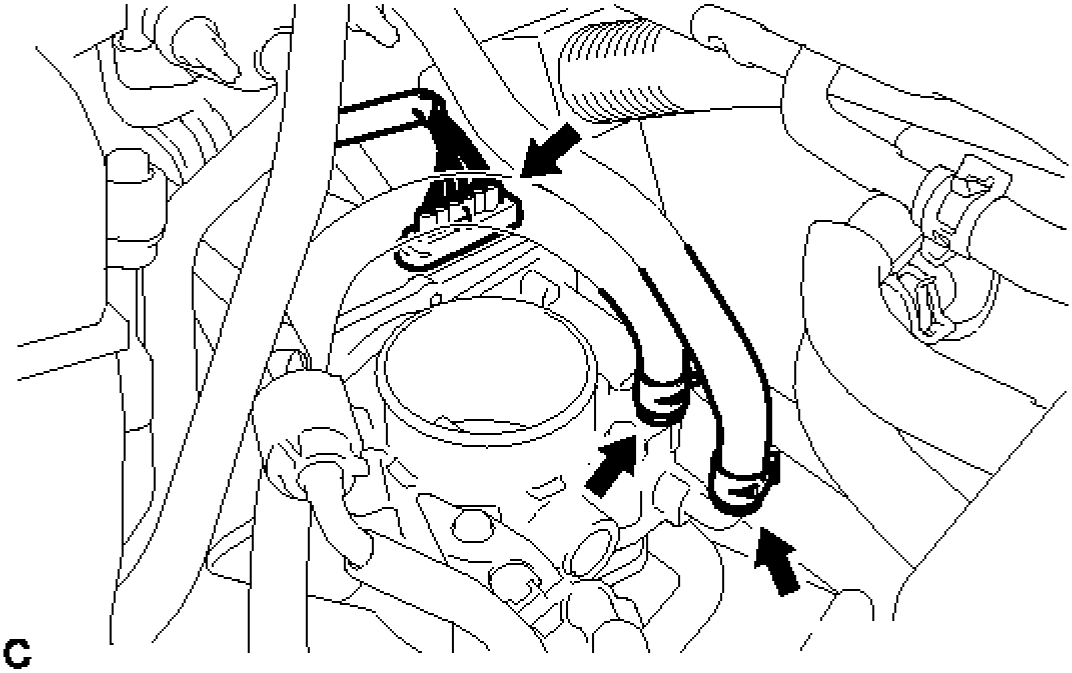

Fig. 13: Identifying Throttle Body Connector And Water By-Pass Hoses
Courtesy of TOYOTA MOTOR SALES, U.S.A., INC.

c. Disconnect the 2 water by-pass hoses from the throttle with motor body assembly.
d. Remove the 4 bolts and the throttle body with fuel tube bracket.

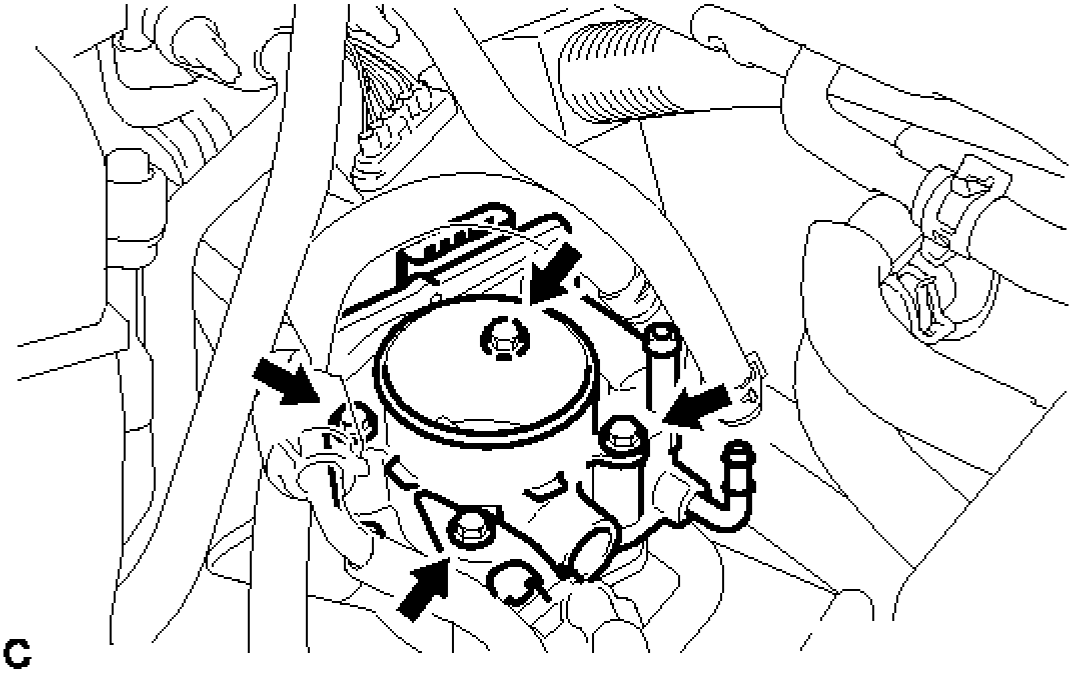

Fig. 14: Identifying Throttle Body Bolts
Courtesy of TOYOTA MOTOR SALES, U.S.A., INC.

e. Remove the gasket from the intake manifold.

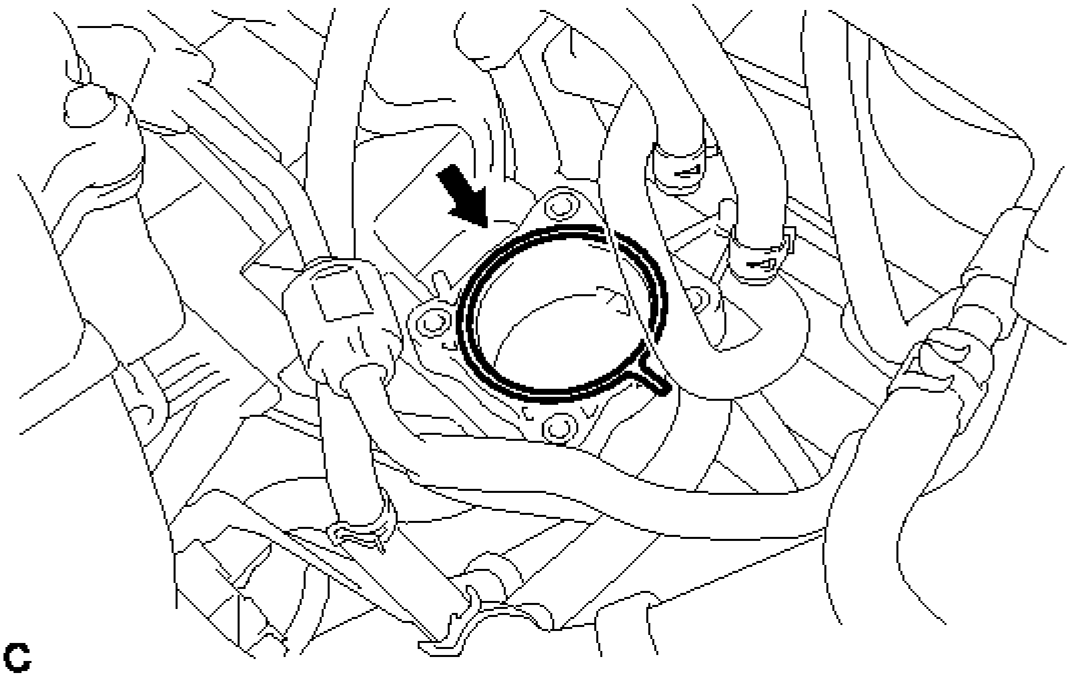

Fig. 15: Identifying Throttle Body Gasket
Courtesy of TOYOTA MOTOR SALES, U.S.A., INC.

INSPECTION

INSPECTION

1. **INSPECT THROTTLE WITH MOTOR BODY ASSEMBLY**
    a. Check that the throttle valve opens and closes smoothly.
    b. Check that there is no sludge accumulated around the throttle with motor body assembly.
    c. Measure the resistance according to the value(s) in the table below.

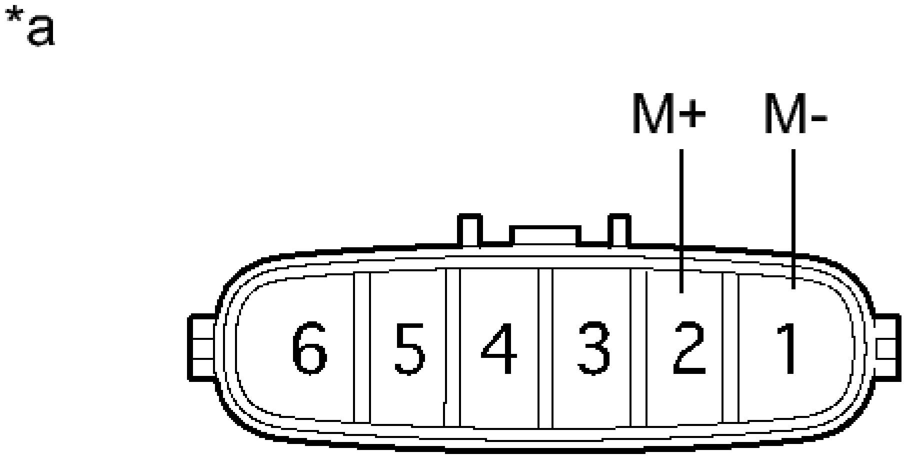

Fig. 16: Identifying Resistance Between Terminals
Courtesy of TOYOTA MOTOR SALES, U.S.A., INC.

Standard Resistance

Tester Connection	Condition	Specified Condition
1 (M-) - 2 (M+)	20°C (68°F)	0.3 to 100 ohms

TEXT IN ILLUSTRATION

*a	Component without harness connected: (Throttle with Motor Body Assembly)

If the result is not as specified, replace the throttle with motor body assembly.

INSTALLATION

INSTALLATION

1. **INSTALL THROTTLE WITH MOTOR BODY ASSEMBLY**

    a. Install a new gasket to the intake manifold.
    b. Install the throttle with motor body assembly with the 4 bolts.

       Torque: 10 N*m (102 kgf*cm, 7 ft.*lbf)

    c. Connect the throttle body connector.
    d. Connect the 2 water by-pass hoses to the throttle with motor body assembly.
    e. Connect the 2 hoses.

2. **INSTALL AIR CLEANER CAP SUB-ASSEMBLY**
    a. Install the air cleaner hose with the hose clamp.
    b. Connect the 2 fuel vapor feed hoses.

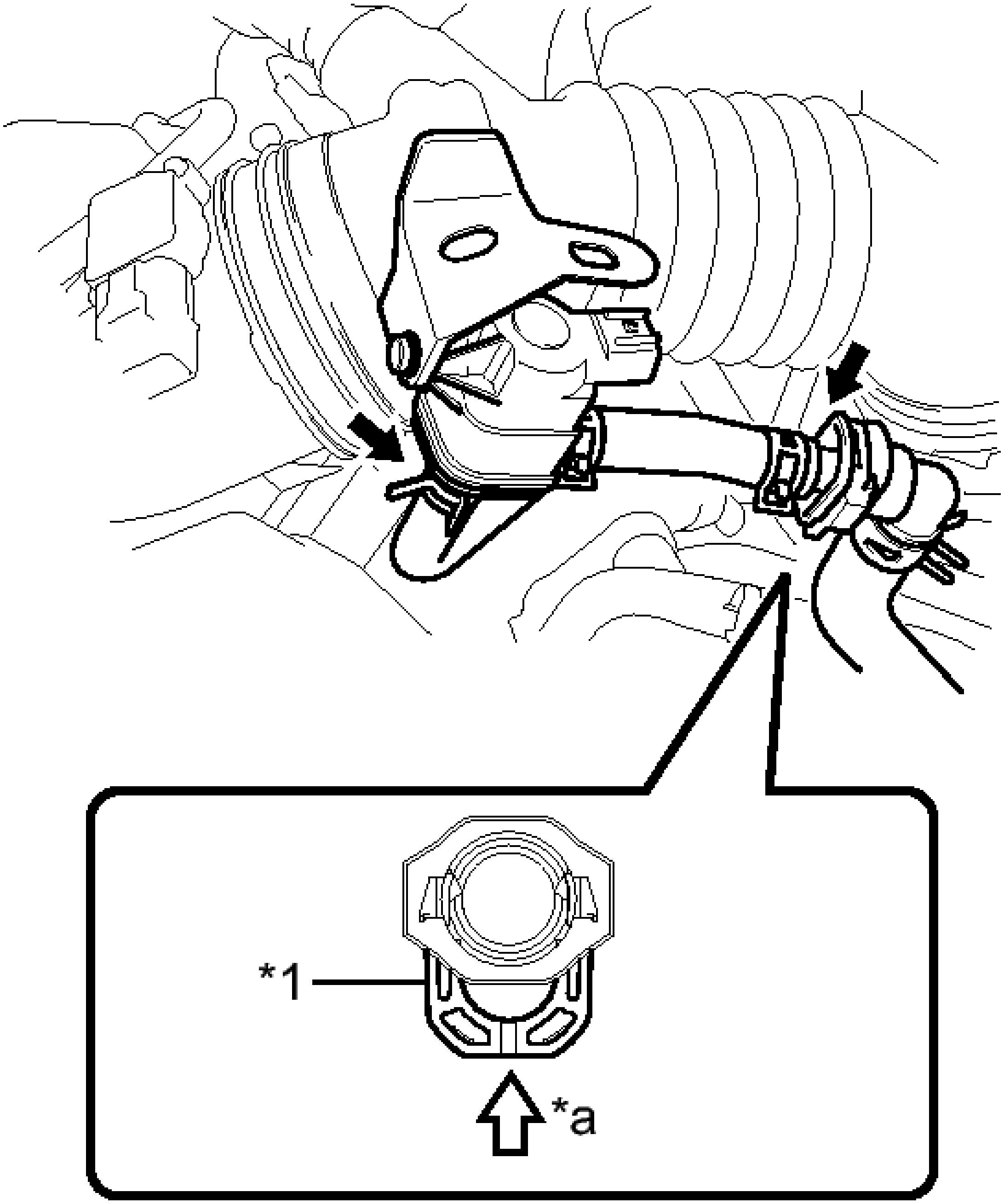

Fig. 17: Connecting Fuel Vapor Feed Hoses
Courtesy of TOYOTA MOTOR SALES, U.S.A., INC.

TEXT IN ILLUSTRATION

*1	Retainer

*a	Push

NOTE:

- **Check that there are no scratches or foreign matter around the connected part of the fuel tube connector and pipe before performing this work.**
- **Connect the quick connector and push the retainer in until the retainer makes a "click" sound to lock the claws of the retainer.**
- **After connecting the fuel vapor feed hose to the fuel tube connector, check that the fuel vapor feed hose is securely connected by pulling on the fuel tube connector and the fuel vapor feed hose.**

c. Connect the 2 hinges of the air cleaner cap subassembly.

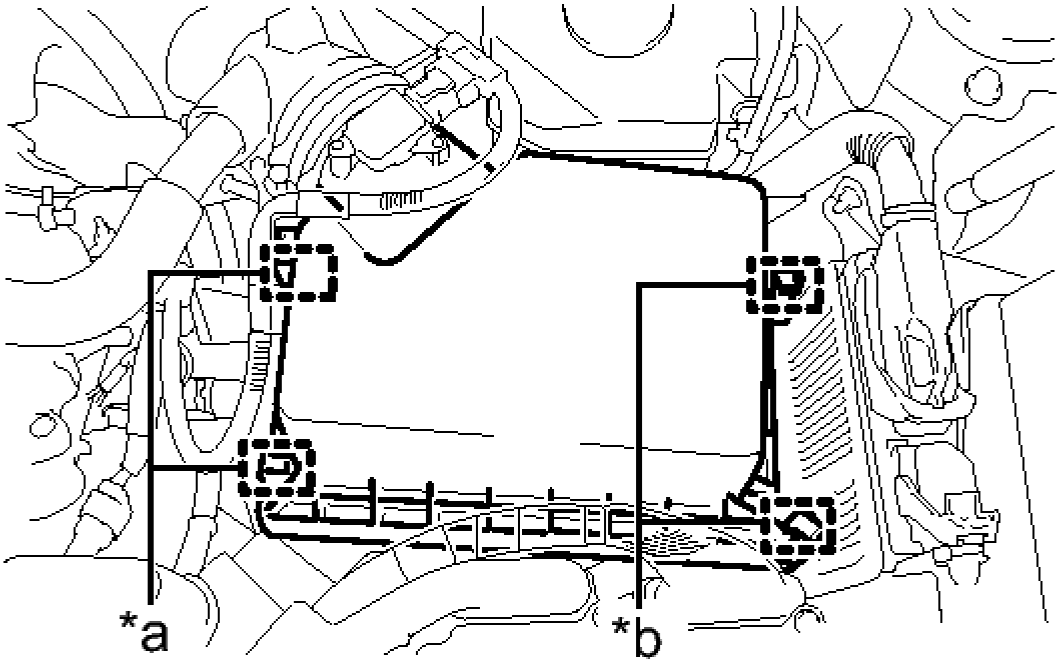

Fig. 18: Identifying Air Cleaner Cap Hinges
Courtesy of TOYOTA MOTOR SALES, U.S.A., INC.

TEXT IN ILLUSTRATION

*a	Hinge
*b	Clamp

d. Install the air cleaner cap sub-assembly with the 2 clamps.
e. Connect the wire harness clamp and connector.
f. Connect the ventilation hose to the cylinder head cover.
g. Connect the mass air flow meter connector and wire harness clamp to the air cleaner cap sub-

assembly.

3. **ADD COOLANT (for Engine)** . Refer to **REPLACEMENT - Step 2**
4. **INSPECT FOR COOLANT LEAK (for Engine)** . Refer to **ON-VEHICLE INSPECTION - Step 1**
5. **INSTALL NO. 1 ENGINE COVER SUB-ASSEMBLY** . Refer to **INSTALLATION - Step 86**
6. **PERFORM INITIALIZATION**

NOTE:

- **Be sure to perform this procedure after reassembling the throttle with motor body assembly or removing and reinstalling any throttle body components.**
- **Perform the following procedure after replacing the throttle with motor body assembly or any throttle body components. The following procedure should also be performed if the throttle body is cleaned.**

a. Turn the power switch on (IG) without operating the accelerator pedal.

NOTE: **If the accelerator pedal is operated, perform the above step again.**

b. Connect the tester to the DLC3 and clear the DTCs. Refer to **DTC CHECK / CLEAR** .
c. Perform the "Inspection After Repair". Refer to **INITIALIZATION** .
d. Start the engine and check that the MIL is not illuminated. After the engine is warmed up, check that the idle speed is within the specified range when the A/C is switched off.

Standard

Condition	Engine Idle Speed
A/C switched off	900 to 1050 RPM

NOTE:

- **Be sure to perform this step with all accessories off.**
- **Make sure that the shift lever is in N.**

e. Enter the following menus: Powertrain / Engine and ECT / Data List / All Data /Throttle Sensor Position. Fully depress the accelerator pedal and check that the value is 60% or more.
f. Perform a road test and confirm that there are no abnormalities.

ECM

COMPONENTS

ILLUSTRATION

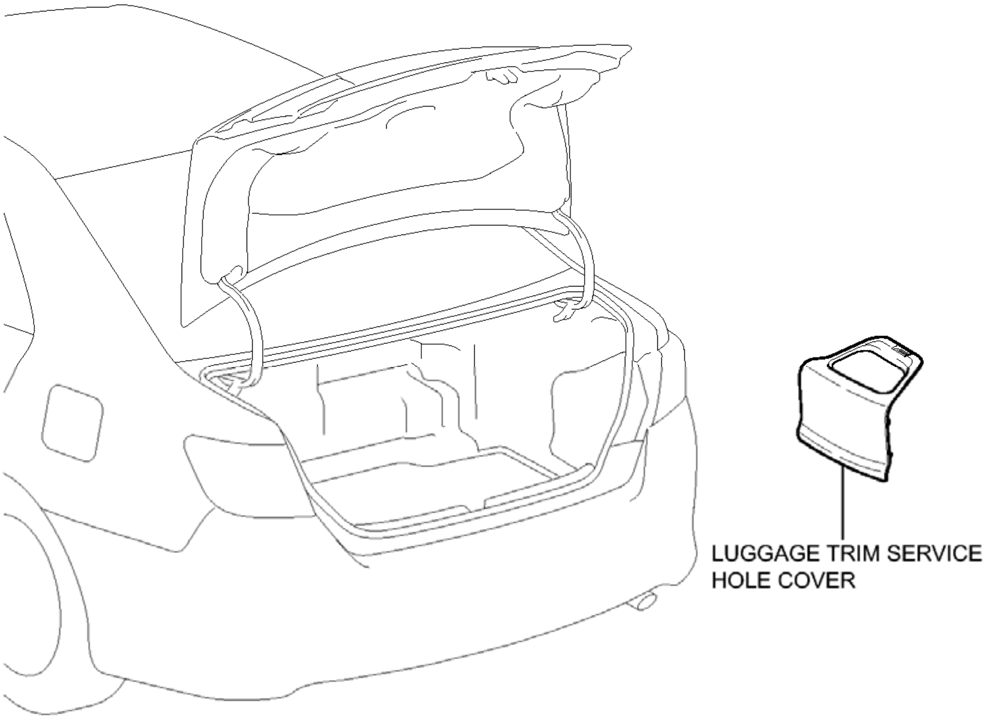
LUGGAGE TRIM SERVICE
HOLE COVER

P

Fig. 19: Identifying ECM Replacement Components (1 Of 2)
Courtesy of TOYOTA MOTOR SALES, U.S.A., INC.

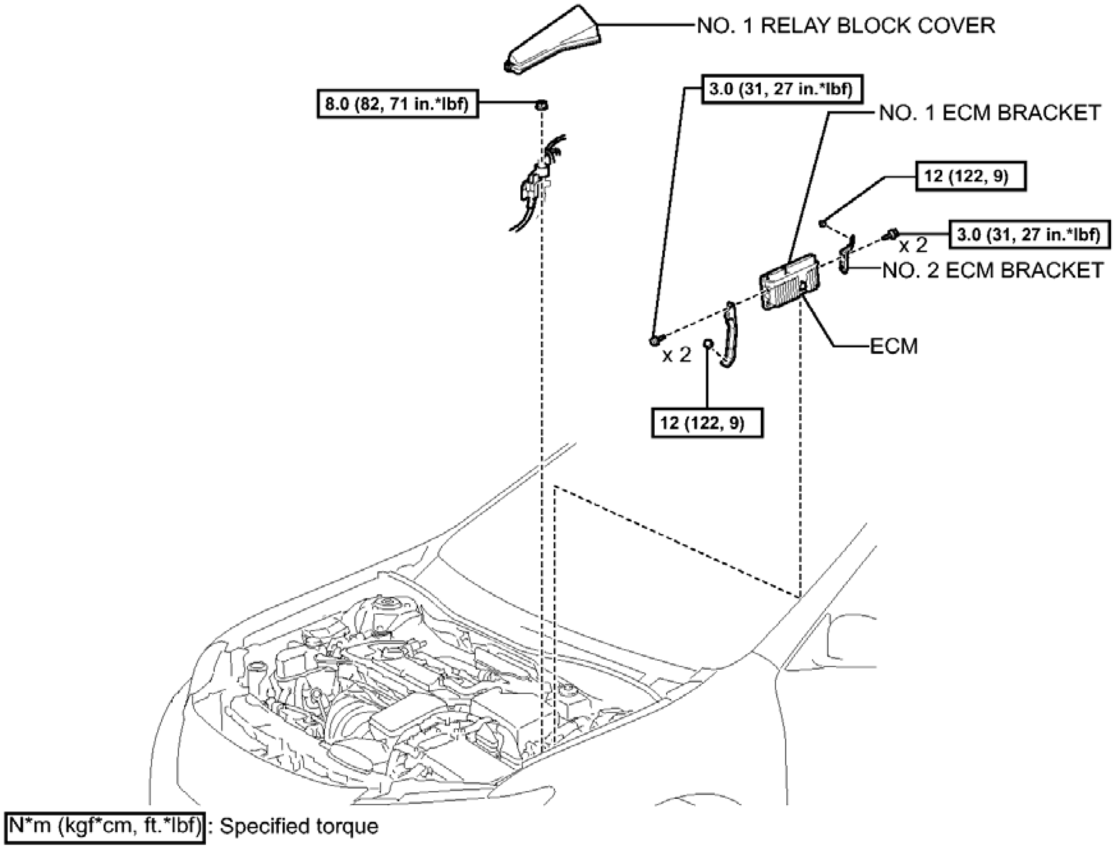
NO. 1 RELAY BLOCK COVER
8.0 (82, 71 in.*lbf)
3.0 (31, 27 in.*lbf)
NO. 1 ECM BRACKET
12 (122, 9)
3.0 (31, 27 in.*lbf)
x 2
NO. 2 ECM BRACKET
ECM
x 2
12 (122, 9)
N*m (kgf*cm, ft.*lbf): Specified torque

Fig. 20: Identifying ECM Replacement Components With Torque Specifications (2 Of 2)
Courtesy of TOYOTA MOTOR SALES, U.S.A., INC.

REMOVAL

REMOVAL

1. **REMOVE LUGGAGE TRIM SERVICE HOLE COVER** . Refer to REMOVAL - Step 2
2. **DISCONNECT CABLE FROM NEGATIVE AUXILIARY BATTERY TERMINAL**

   NOTE: When disconnecting the cable, some systems need to be initialized after the cable is reconnected. Refer to INITIALIZATION .

3. **REMOVE ECM**
   a. Disconnect the 2 ECM connectors.

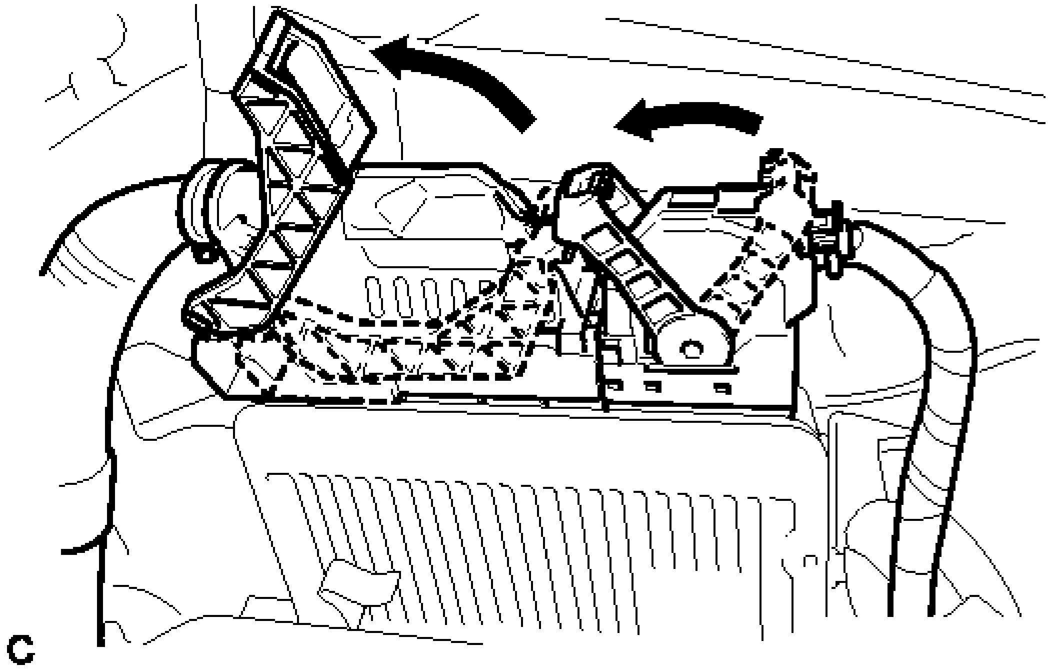

Fig. 21: Raising ECM Connector Levers
Courtesy of TOYOTA MOTOR SALES, U.S.A., INC.

1. Push in the locks on the 2 levers, raise the levers, and disconnect the 2 ECM connectors.

NOTE: **After disconnecting the connectors, make sure that dirt, water or other foreign matter does not contact the connecting part of the connectors.**

b. Remove the nut.

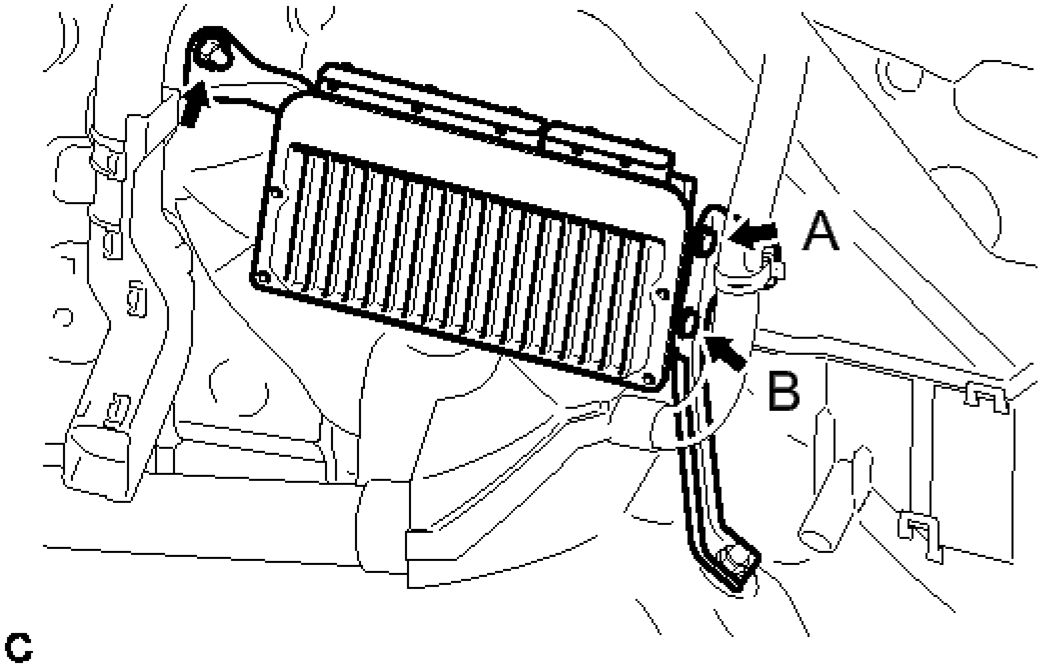

Fig. 22: Identifying ECM Screw, Nut And Bracket
Courtesy of TOYOTA MOTOR SALES, U.S.A., INC.

c. Remove the screw (A).
d. Loosen the screw (B) and remove the ECM.
e. Remove the screw (B).
f. Remove the 2 screws and No. 2 ECM bracket.

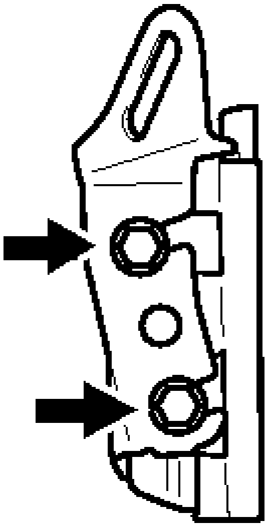

Fig. 23: Identifying No. 2 ECM Screws And Bracket
Courtesy of TOYOTA MOTOR SALES, U.S.A., INC.

4. **REMOVE NO. 1 RELAY BLOCK COVER**
5. **REMOVE NO. 1 ECM BRACKET**
   a. Remove the nut.

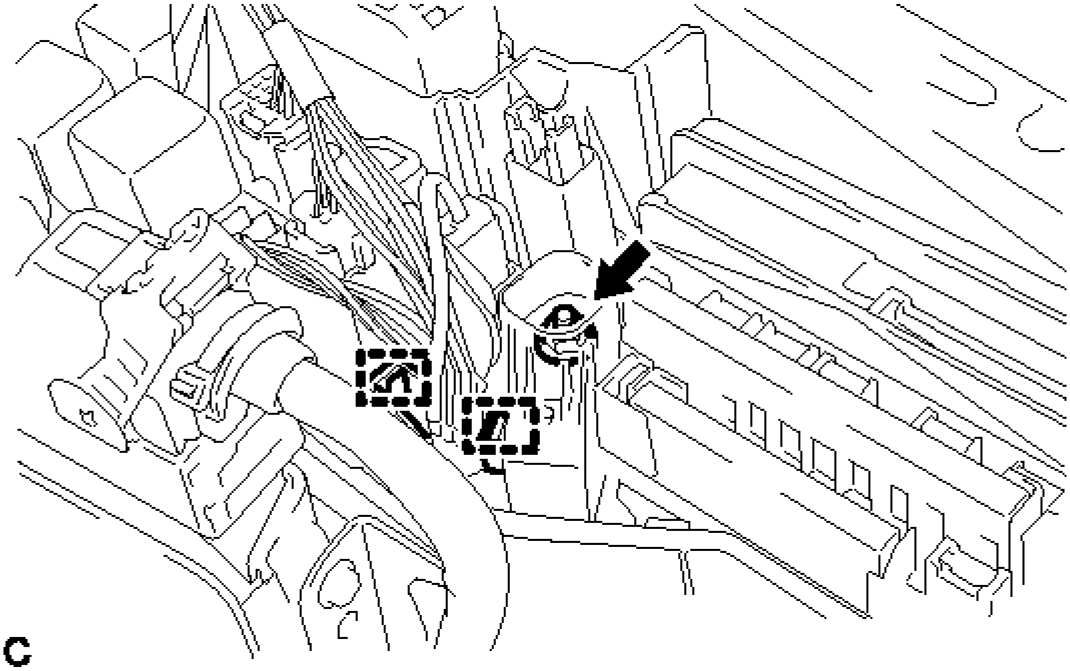

Fig. 24: Identifying NO. 1 ECM Bracket Nut And Wire Harness Clamps
Courtesy of TOYOTA MOTOR SALES, U.S.A., INC.

b. Release the 2 clamps and disconnect the wire harness.
c. Disconnect the wire harness clamp.

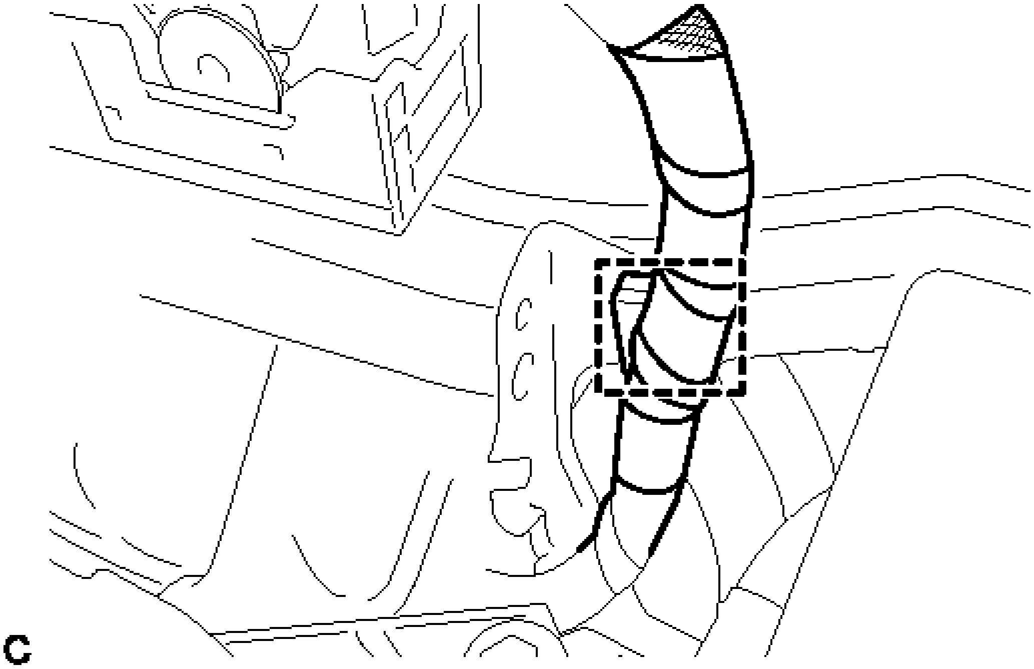

Fig. 25: Identifying ECM Wire Harness Clamp
Courtesy of TOYOTA MOTOR SALES, U.S.A., INC.

d. Remove the nut and No. 1 ECM bracket.

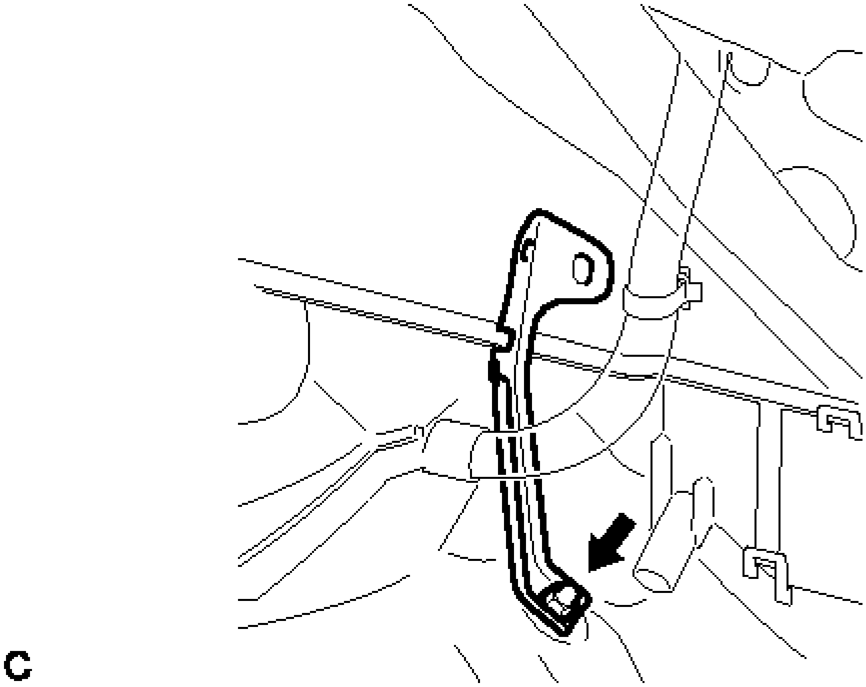

Fig. 26: Identifying No. 1 ECM Bracket And Nut
Courtesy of TOYOTA MOTOR SALES, U.S.A., INC.

INSTALLATION

INSTALLATION

1. **INSTALL NO. 1 ECM BRACKET**
    1. Install the No. 1 ECM bracket with the nut.

       Torque: 12 N*m (122 kgf*cm, 9 ft.*lbf)

    2. Connect the wire harness clamp.
    3. Install the wire harness and 2 clamps.
    4. Install the nut.
2. **INSTALL NO. 1 RELAY BLOCK COVER**
3. **INSTALL ECM**
    1. Install the No. 2 ECM brackets to the ECM with the 2 screws.

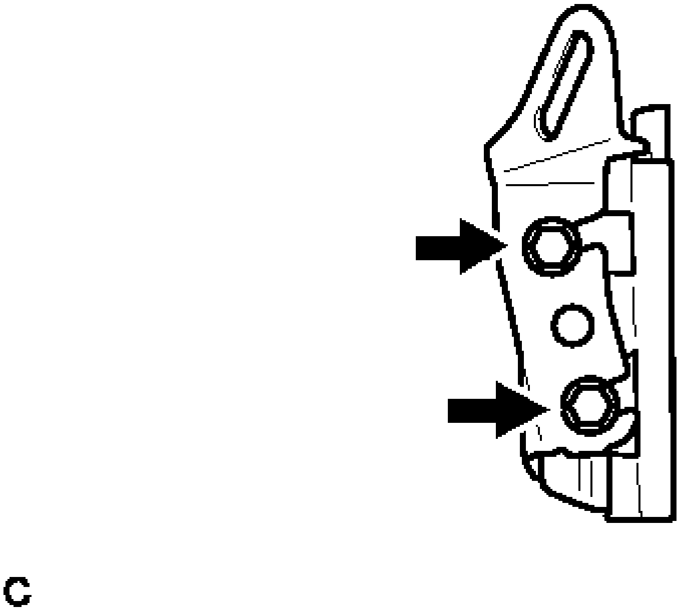

Fig. 27: Identifying No. 2 ECM Screws And Bracket
Courtesy of TOYOTA MOTOR SALES, U.S.A., INC.

Torque: 3.0 N*m (31 kgf*cm, 27 in.*lbf)

b. Temporarily install the screw (B).
c. Install the ECM with the nut.

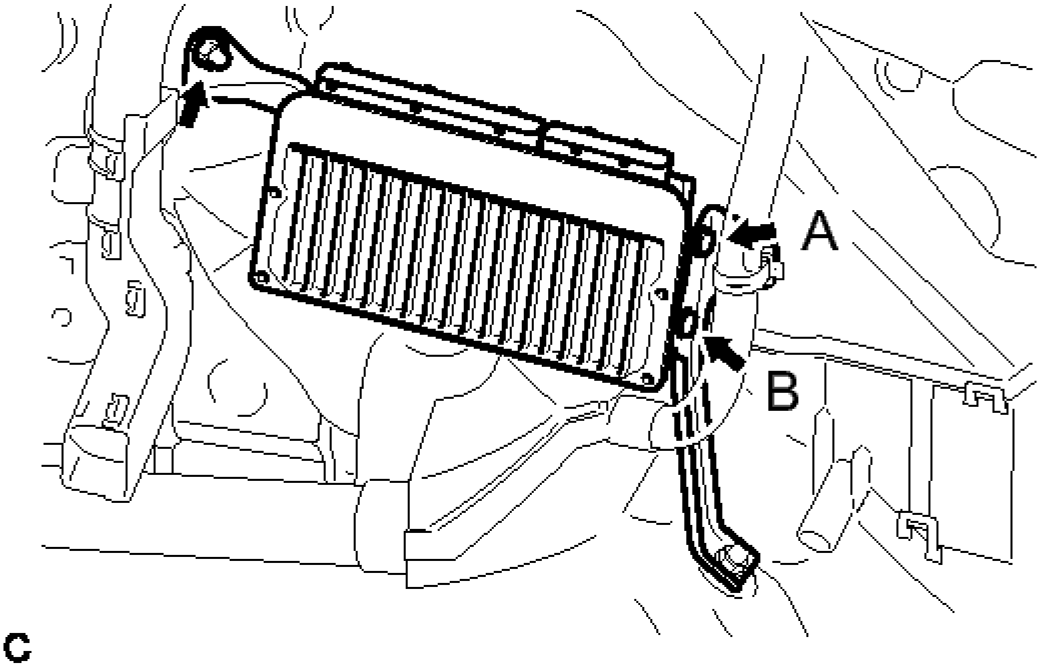

Fig. 28: Identifying ECM Screw, Nut And Bracket
Courtesy of TOYOTA MOTOR SALES, U.S.A., INC.

Torque: 12 N*m (122 kgf*cm, 9 ft.*lbf)

d. Install the screw (A).

Torque: 3.0 N*m (31 kgf*cm, 27 in.*lbf)

e. Tighten the screw (B).

Torque: 3.0 N*m (31 kgf*cm, 27 in.*lbf)

f. Connect the 2 ECM connectors and lower the 2 levers.

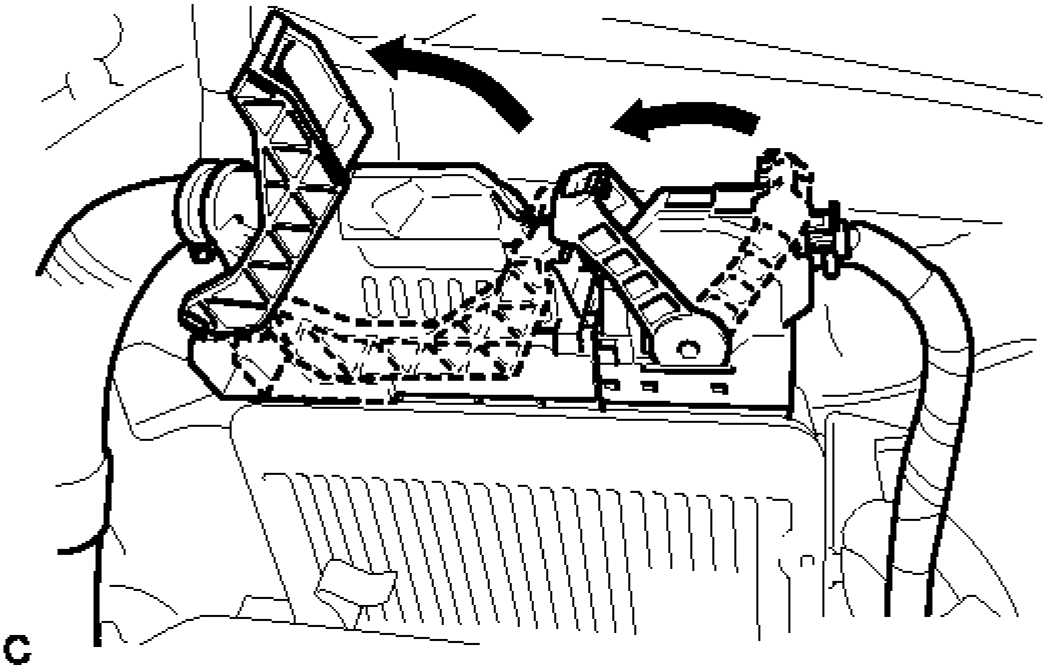

Fig. 29: Lowering ECM Connector Levers In Reverse Way Shown In Picture
Courtesy of TOYOTA MOTOR SALES, U.S.A., INC.

NOTE:	**When connecting the connectors, make sure that dirt, water or other foreign matter does not become stuck between the connectors and other part.** **Make sure that the 2 levers are securely locked.**

g. Connect the 2 wire harness clamps.

4. **CONNECT CABLE TO NEGATIVE AUXILIARY BATTERY TERMINAL**

NOTE:	**When disconnecting the cable, some systems need to be initialized after the cable is reconnected. Refer to INITIALIZATION .**

5. **INSTALL LUGGAGE TRIM SERVICE HOLE COVER** . Refer to **INSTALLATION - Step 3**
6. **PERFORM INITIALIZATION**

   Refer to **PRECAUTION**

MASS AIR FLOW METER

COMPONENTS

ILLUSTRATION

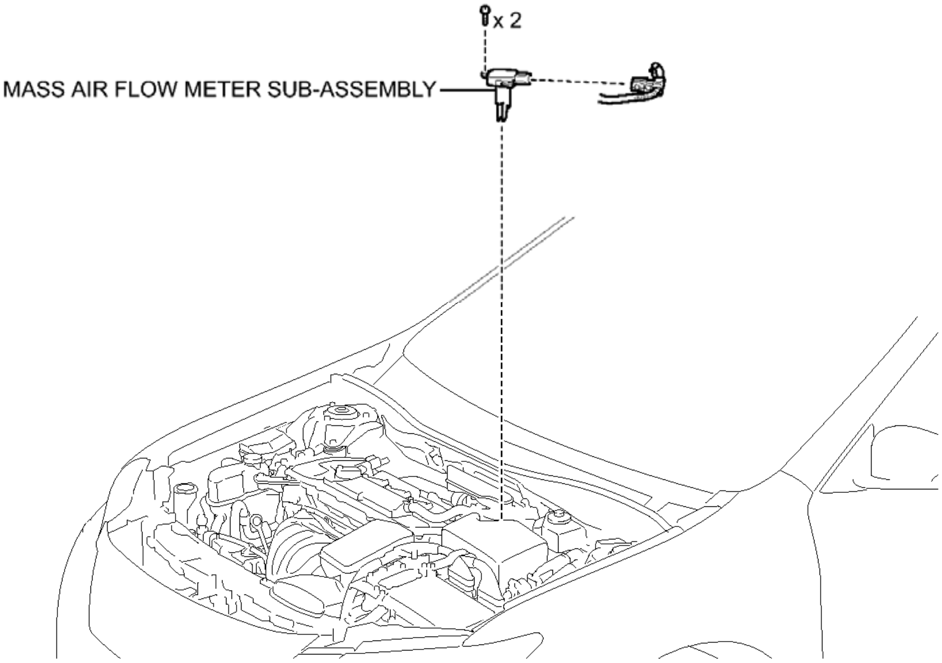

Fig. 30: Identifying Mass Air Flow Meter Replacement Components
Courtesy of TOYOTA MOTOR SALES, U.S.A., INC.

ON-VEHICLE INSPECTION

ON-VEHICLE INSPECTION

NOTE:

- **Perform the mass air flow meter inspection according to the procedure below.**
- **Only replace the mass air flow meter when the mass air flow value in the Data List (with the engine stopped) is not within the normal operating range or there is foreign matter on the mass air flow meter platinum hot wire (heater).**

1. **INSPECT MASS AIR FLOW METER SUB-ASSEMBLY**

   NOTE:

   - **Perform the inspection with the vehicle indoors and on a level surface.**
   - **Perform the inspection of the mass air flow meter while it is installed to the air cleaner case (installed to the vehicle).**

- **During the test, do not use an exhaust air duct to perform suction on the exhaust pipe.**

a. Connect the Techstream to the DLC3.
b. Turn the power switch on (IG) (do not run the engine).
c. Turn the tester on.
d. Enter the following menus: Powertrain / Engine and ECT / Data List / All Data / MAF.
e. Wait 30 seconds, and read the values on the tester.

Standard

Item	**Condition**	**Specified Condition**
MAF	• Engine not running • 30 seconds after turning power switch on (IG)	0.50g/sec. or less

If the result is not as specified, replace the mass air flow meter sub-assembly.

If the result is as specified, inspect the mass air flow meter sub-assembly. Refer to **INSPECTION**.

REMOVAL

REMOVAL

1. **REMOVE MASS AIR FLOW METER SUB-ASSEMBLY**
   a. Disconnect the mass air flow meter connector.

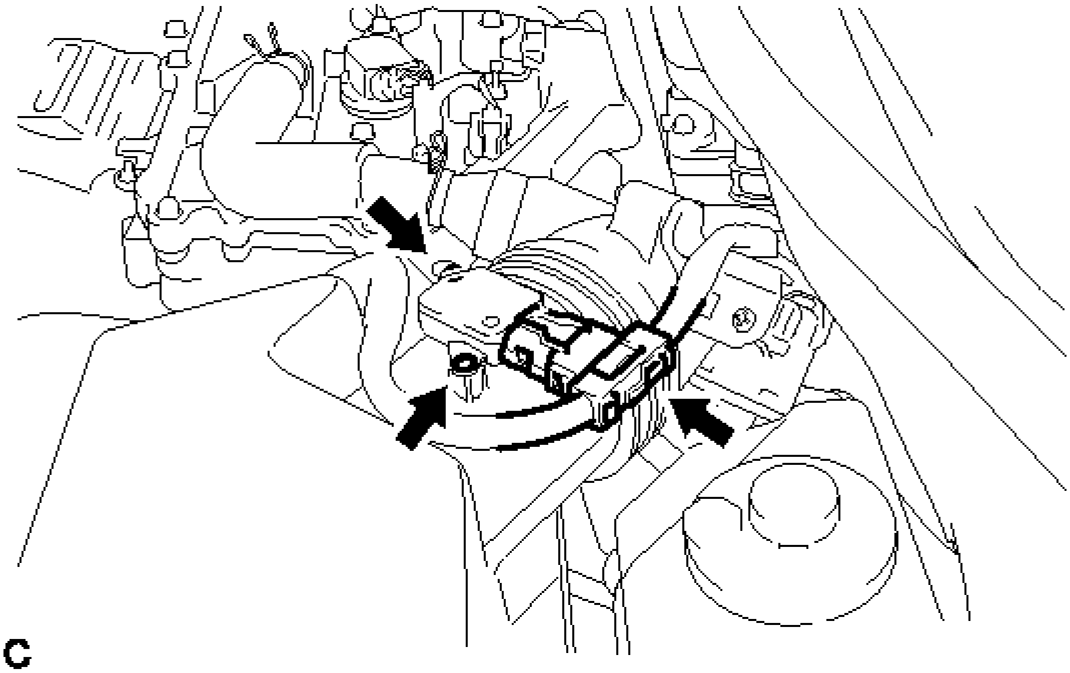

Fig. 31: Identifying Mass Air Flow Meter Connector
Courtesy of TOYOTA MOTOR SALES, U.S.A., INC.

b. Remove the 2 screws and mass air flow meter sub-assembly.

INSPECTION

INSPECTION

1. **INSPECT MASS AIR FLOW METER SUB-ASSEMBLY**
    a. Perform a visual check for any foreign matter on the platinum hot wire (heater) of the mass air flow meter sub-assembly shown in the illustration.

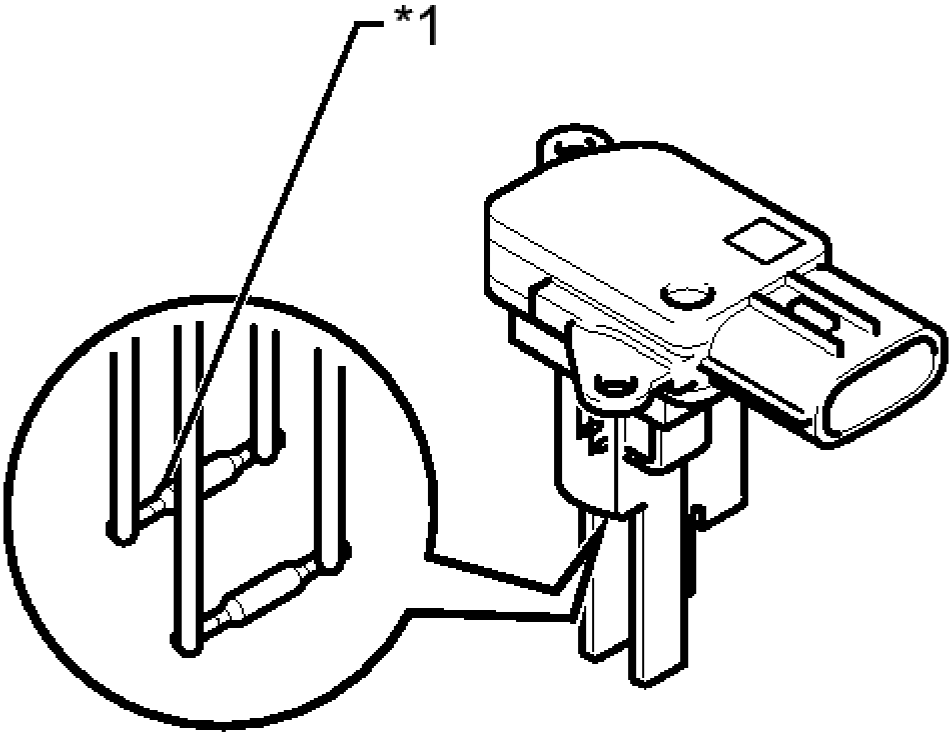

Fig. 32: Identifying Mass Air Flow Meter Platinum Hot Wire
Courtesy of TOYOTA MOTOR SALES, U.S.A., INC.

TEXT IN ILLUSTRATION

*1	Platinum Hot Wire (Heater)

OK

There is no foreign matter.

b. Check the intake air temperature sensor (built into the mass air flow meter sub-assembly).
    1. Measure the resistance according to the value(s) in the table below.

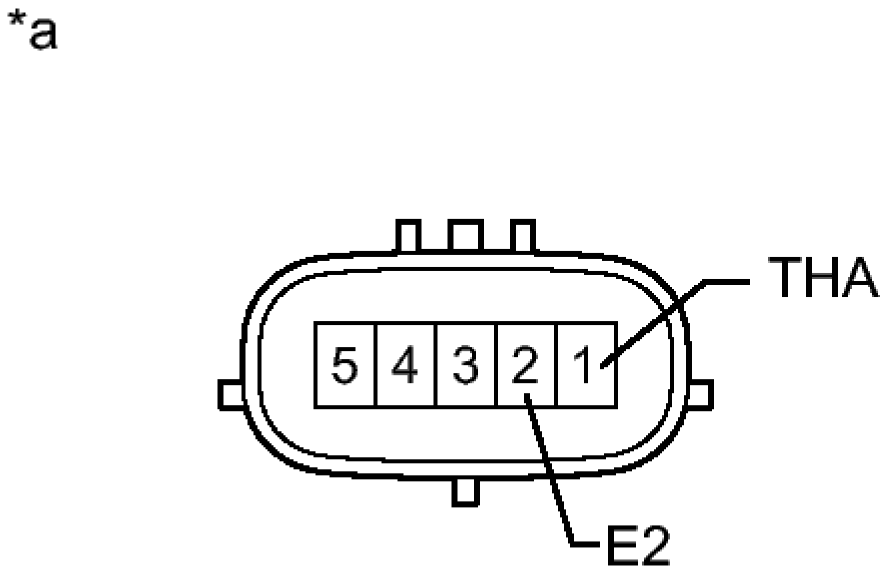

Fig. 33: Identifying Mass Air Flow Meter Connector Terminals
Courtesy of TOYOTA MOTOR SALES, U.S.A., INC.

Standard Resistance

Tester Connection	Condition	Specified Condition
1 (THA) - 2 (E2)	-20°C (-4°F)	13.6 to 18.4 kohms
1 (THA) - 2 (E2)	20°C (68°F)	2.21 to 2.69 kohms
1 (THA) - 2 (E2)	60°C (140°F)	0.49 to 0.67 kohms

TEXT IN ILLUSTRATION

*a	Component without harness connected (Mass Air Flow Meter Sub-assembly)

If the result is not as specified, replace the mass air flow meter sub-assembly.

INSTALLATION

INSTALLATION

1. **INSTALL MASS AIR FLOW METER SUB-ASSEMBLY**
    a. Install the mass air flow meter sub-assembly with the 2 screws.

    NOTE: **Make sure that the O-ring is not cracked or jammed when installing the mass air flow meter.**

    HINT:

    Perform "Inspection After Repair" after replacing the mass air flow meter sub-assembly. Refer to **INITIALIZATION** .

    b. Connect the mass air flow meter connector.

CAMSHAFT POSITION SENSOR

COMPONENTS

ILLUSTRATION

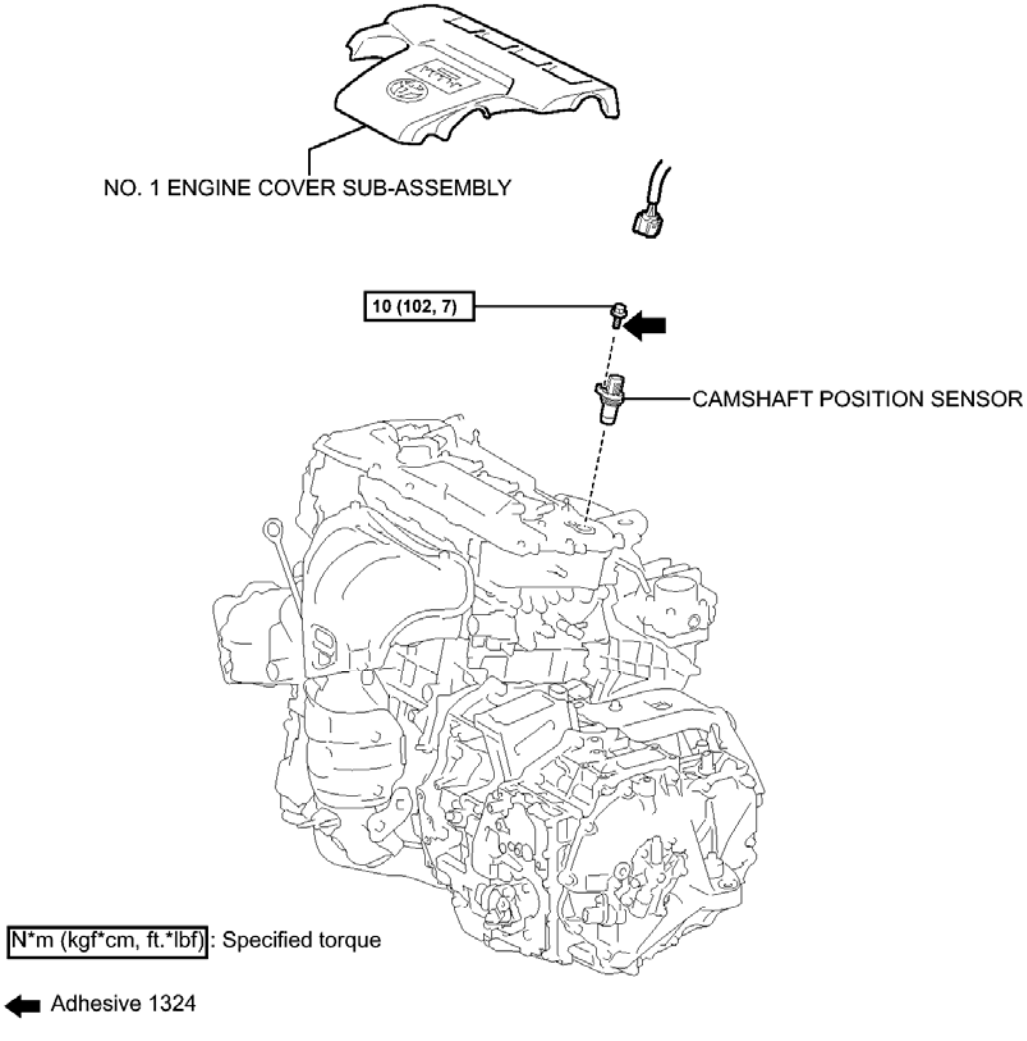
NO. 1 ENGINE COVER SUB-ASSEMBLY
10 (102, 7)
CAMSHAFT POSITION SENSOR
N*m (kgf*cm, ft.*lbf): Specified torque
Adhesive 1324
c

Fig. 34: Identifying Camshaft Position Sensor Replacement Components With Torque Specifications
Courtesy of TOYOTA MOTOR SALES, U.S.A., INC.

REMOVAL

REMOVAL

1. **REMOVE NO. 1 ENGINE COVER SUB-ASSEMBLY** . Refer to **REMOVAL - Step 25**
2. **REMOVE CAMSHAFT POSITION SENSOR**
    a. Disconnect the sensor connector.

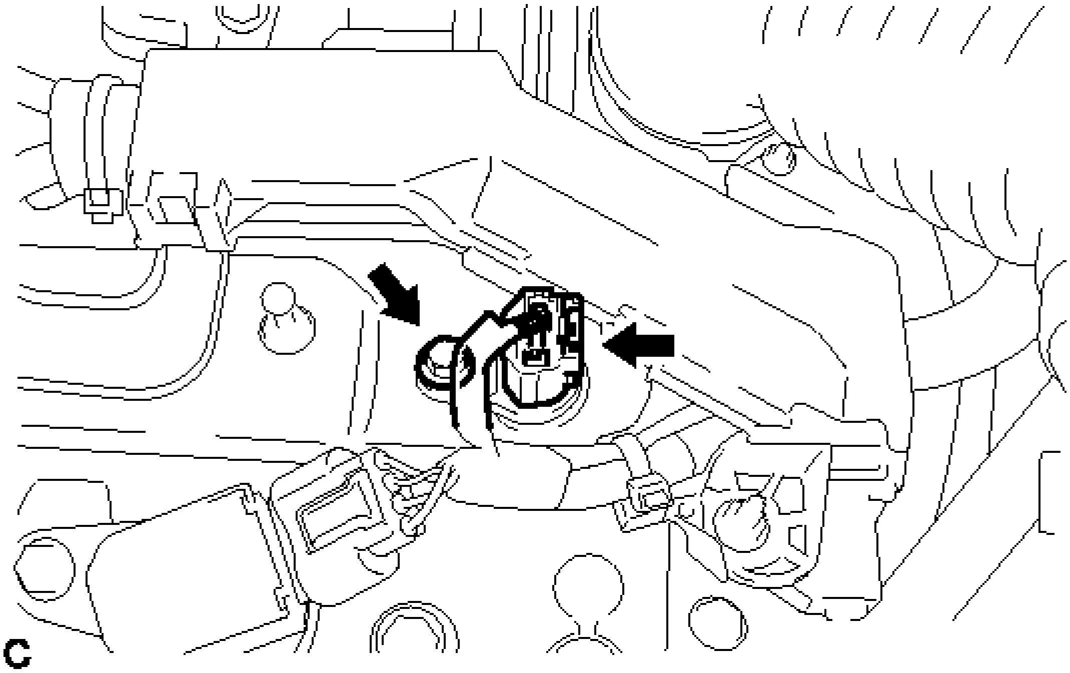

Fig. 35: Identifying Camshaft Position Sensor Connector And Bolt
Courtesy of TOYOTA MOTOR SALES, U.S.A., INC.

b. Remove the bolt and sensor.

INSTALLATION

INSTALLATION

1. **INSTALL CAMSHAFT POSITION SENSOR**
    a. Clean and degrease the threads of the bolt for the camshaft position sensor.
    b. Apply a light coat of engine oil to the O-ring of the sensor.

NOTE: Make sure that the O-ring is not cracked or does not jump out of position during installation.

c. Apply adhesive to 2 or 3 threads of the bolt.

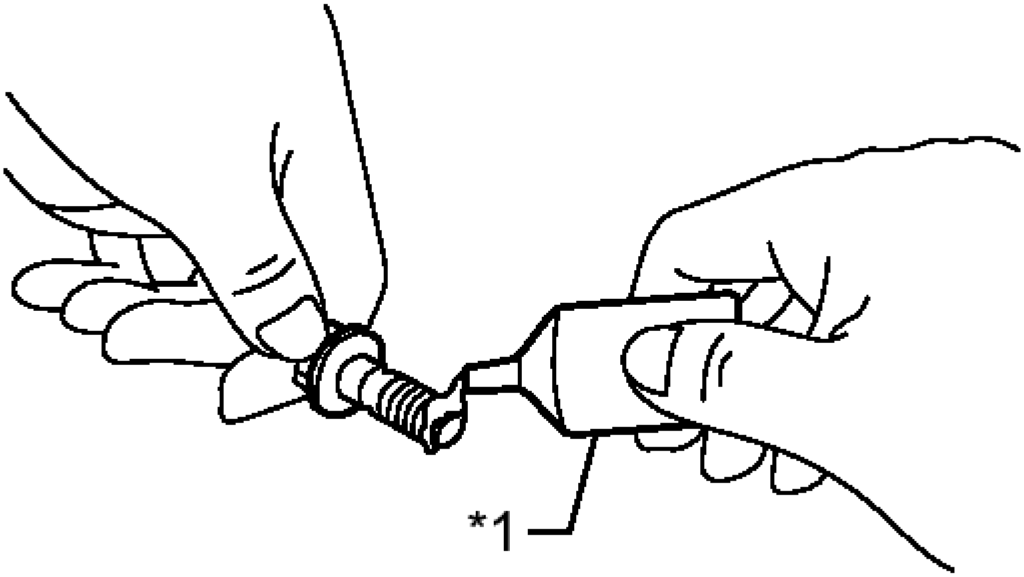

Fig. 36: Applying Adhesive To Bolt
Courtesy of TOYOTA MOTOR SALES, U.S.A., INC.

TEXT IN ILLUSTRATION

*1	Adhesive

Adhesive

Toyota Genuine Adhesive 1324, Three Bond 1324 or equivalent.

d. Install the sensor with the bolt.

Torque: 10 N*m (102 kgf*cm, 7 ft.*lbf)

e. Connect the sensor connector.

2. **INSPECT FOR OIL LEAK**
3. **INSTALL NO. 1 ENGINE COVER SUB-ASSEMBLY** . Refer to **INSTALLATION - Step 86**

CRANKSHAFT POSITION SENSOR

COMPONENTS

ILLUSTRATION

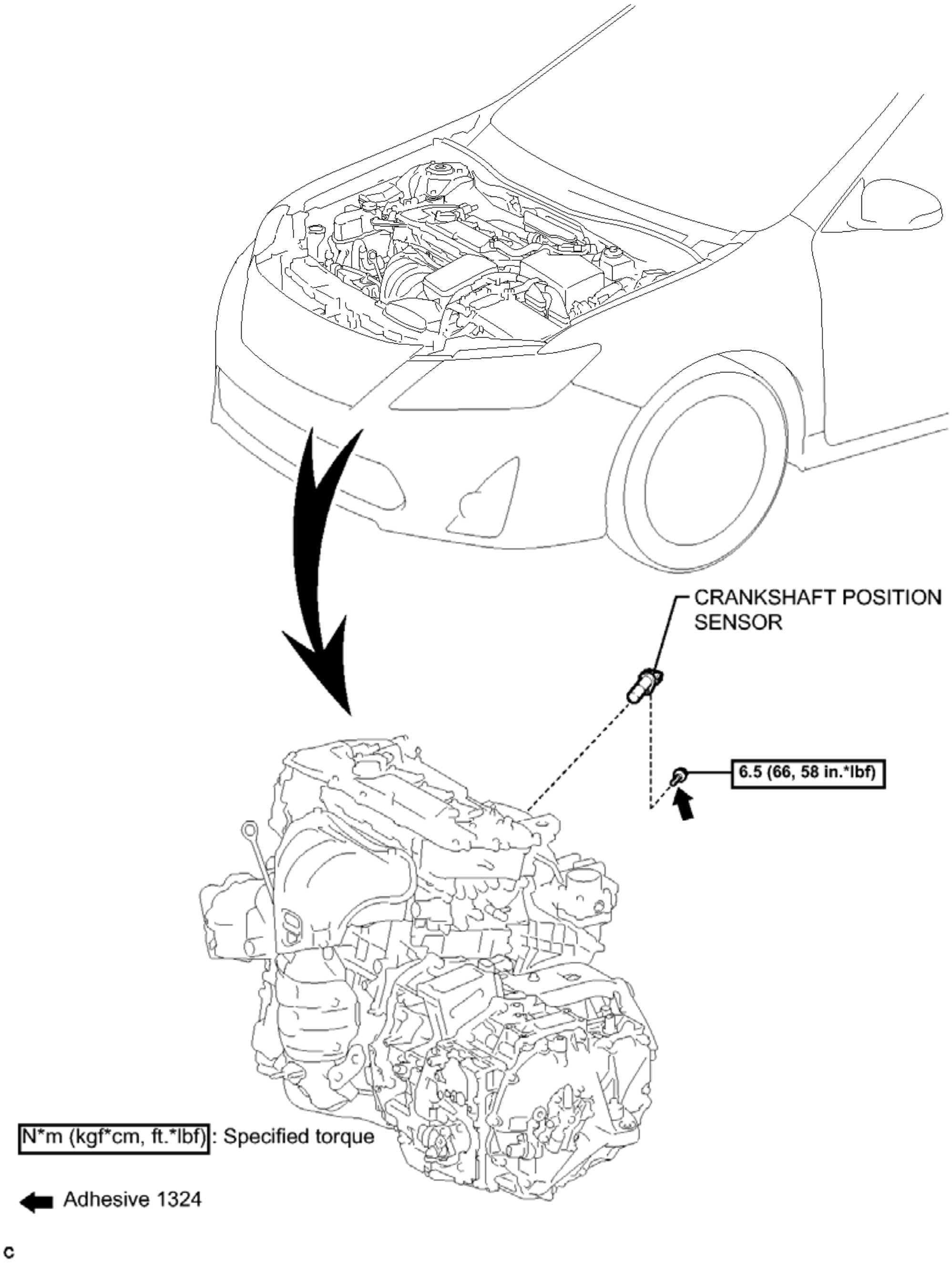
CRANKSHAFT POSITION SENSOR
6.5 (66, 58 in.*lbf)
N*m (kgf*cm, ft.*lbf): Specified torque
Adhesive 1324
c

Fig. 37: Identifying Crankshaft Position Sensor Replacement Components With Torque Specifications
Courtesy of TOYOTA MOTOR SALES, U.S.A., INC.

REMOVAL

REMOVAL

1. **REMOVE CRANKSHAFT POSITION SENSOR**

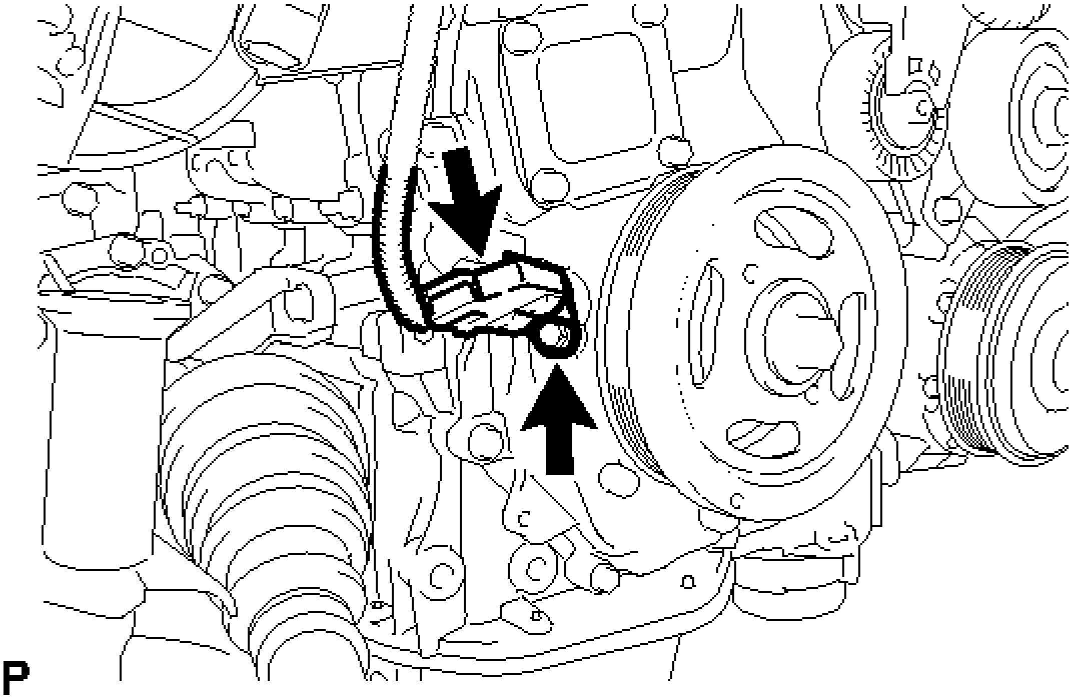

Fig. 38: Locating Bolt And Sensor
Courtesy of TOYOTA MOTOR SALES, U.S.A., INC.

a. Disconnect the sensor connector.
b. Remove the bolt and sensor.

INSPECTION

INSPECTION

1. **INSPECT CRANKSHAFT POSITION SENSOR**
    a. Measure the resistance according to the value(s) in the table below.

Standard Resistance

Tester Connection	Condition	Specified Condition
1 - 2	Cold	1630 to 2740 ohms
	Hot	2065 to 3225 ohms

HINT:

In the table above, the terms "Cold" and "Hot" refer to the temperature of the coils. "Cold" means approximately -10 to 50°C (14 to 122°F). "Hot" means approximately 50 to 100°C (122 to 212°F).

If the result is not as specified, replace the crankshaft position sensor.

INSTALLATION

INSTALLATION

1. **INSTALL CRANKSHAFT POSITION SENSOR**
    a. Clean and degrease the threads of the bolt for the crankshaft position sensor.
    b. Apply a light coat of engine oil to the O-ring of the sensor.

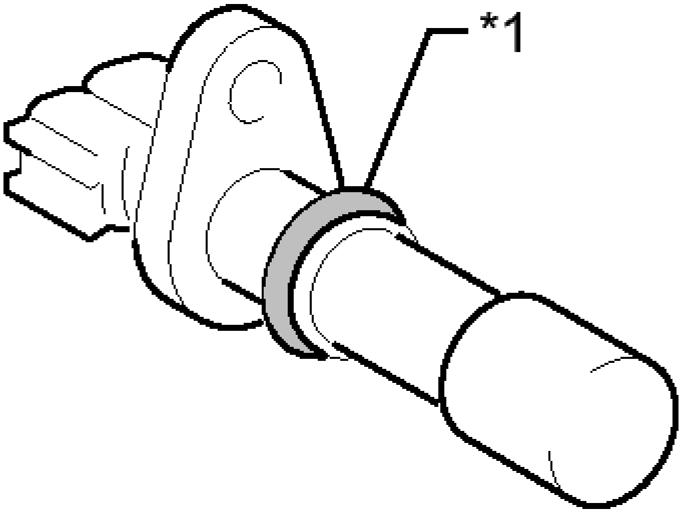

Fig. 39: Identifying Crankshaft Position Sensor O-Ring
Courtesy of TOYOTA MOTOR SALES, U.S.A., INC.

TEXT IN ILLUSTRATION

*1	O-ring

    c. Apply adhesive to 2 or 3 threads of the bolt.

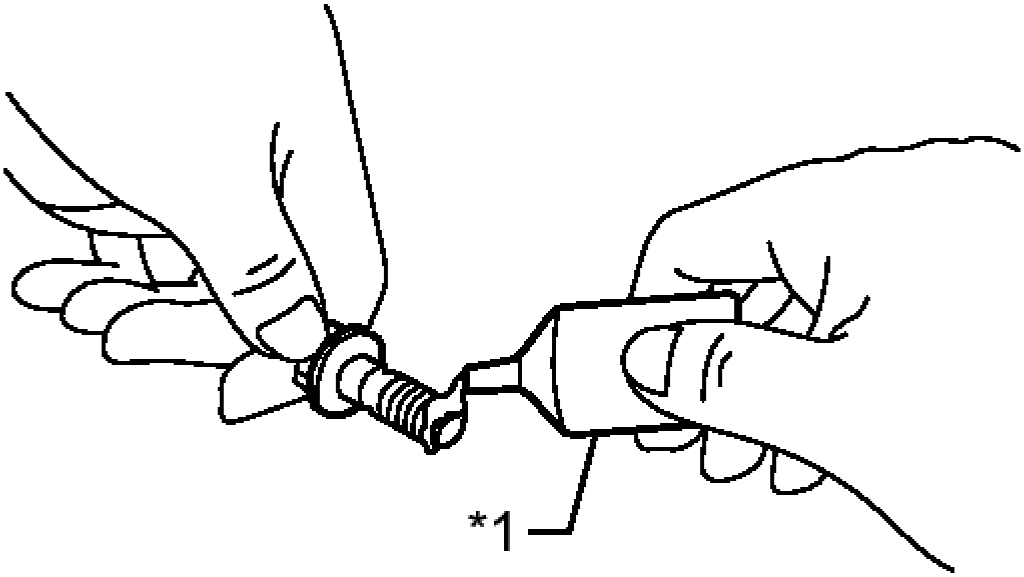

Fig. 40: Applying Adhesive To Bolt
Courtesy of TOYOTA MOTOR SALES, U.S.A., INC.

TEXT IN ILLUSTRATION

*1	Adhesive

Adhesive

Toyota Genuine Adhesive 1324, Three Bond 1324 or equivalent.

d. Install the sensor with the bolt.

Torque: 6.5 N*m (66 kgf*cm, 58 in.*lbf)

NOTE: **Make sure that the O-ring is not cracked or does not jump out of position during installation.**

e. Connect the sensor connector.

2. **INSPECT FOR OIL LEAK**

IGNITION COIL AND SPARK PLUG

COMPONENTS

ILLUSTRATION

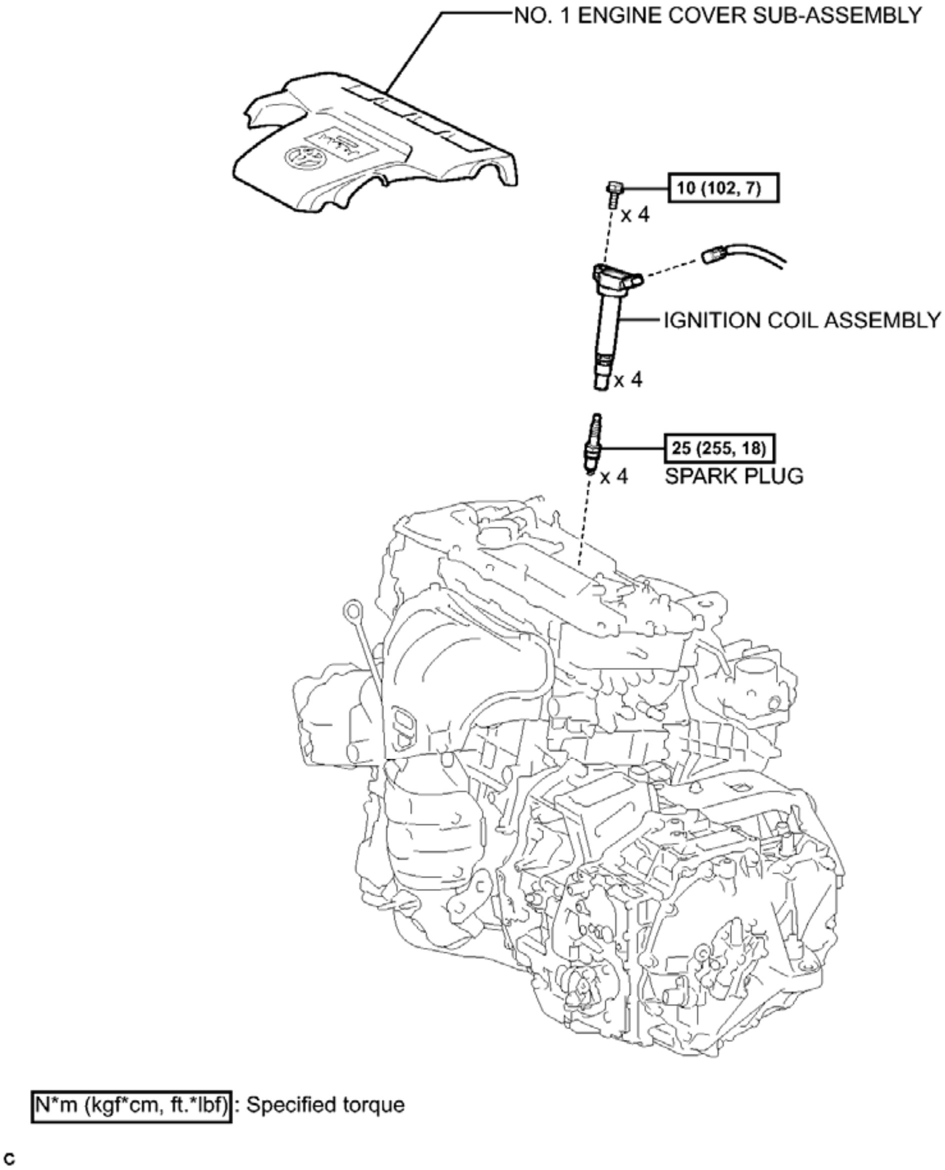
NO. 1 ENGINE COVER SUB-ASSEMBLY
10 (102, 7)
x 4
IGNITION COIL ASSEMBLY
x 4
25 (255, 18)
x 4
SPARK PLUG
N*m (kgf*cm, ft.*lbf): Specified torque
C

Fig. 41: Identifying Ignition Coil And Spark Plug Replacement Components With Torque Specifications
Courtesy of TOYOTA MOTOR SALES, U.S.A., INC.

REMOVAL

REMOVAL

1. **REMOVE NO. 1 ENGINE COVER SUB-ASSEMBLY** . Refer to **REMOVAL - Step 25**
2. **REMOVE IGNITION COIL ASSEMBLY**
    a. Disconnect the 4 ignition coil assembly connectors.

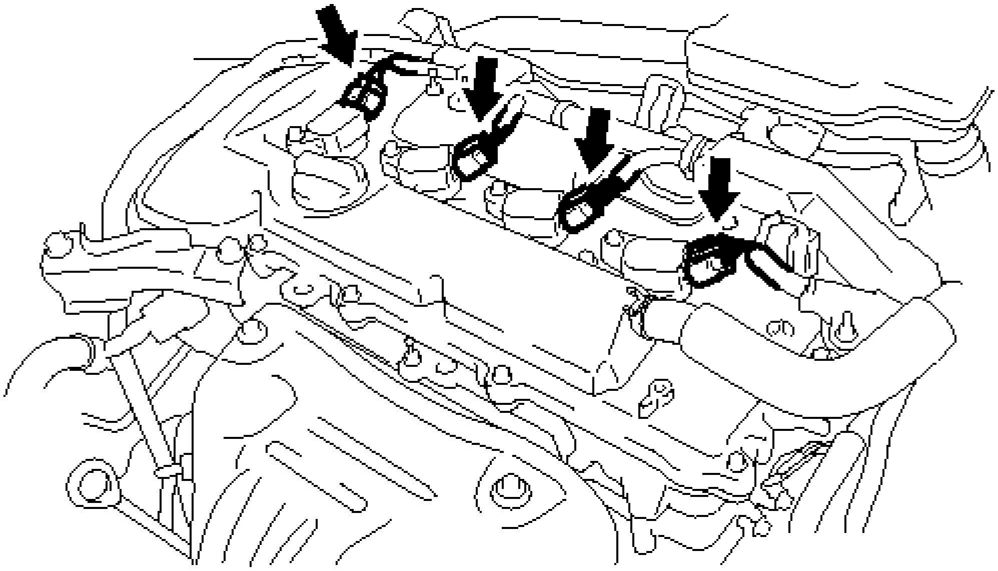

Fig. 42: Identifying Ignition Coil Assembly Connectors
Courtesy of TOYOTA MOTOR SALES, U.S.A., INC.

b. Remove the 4 bolts and 4 ignition coil assemblies.

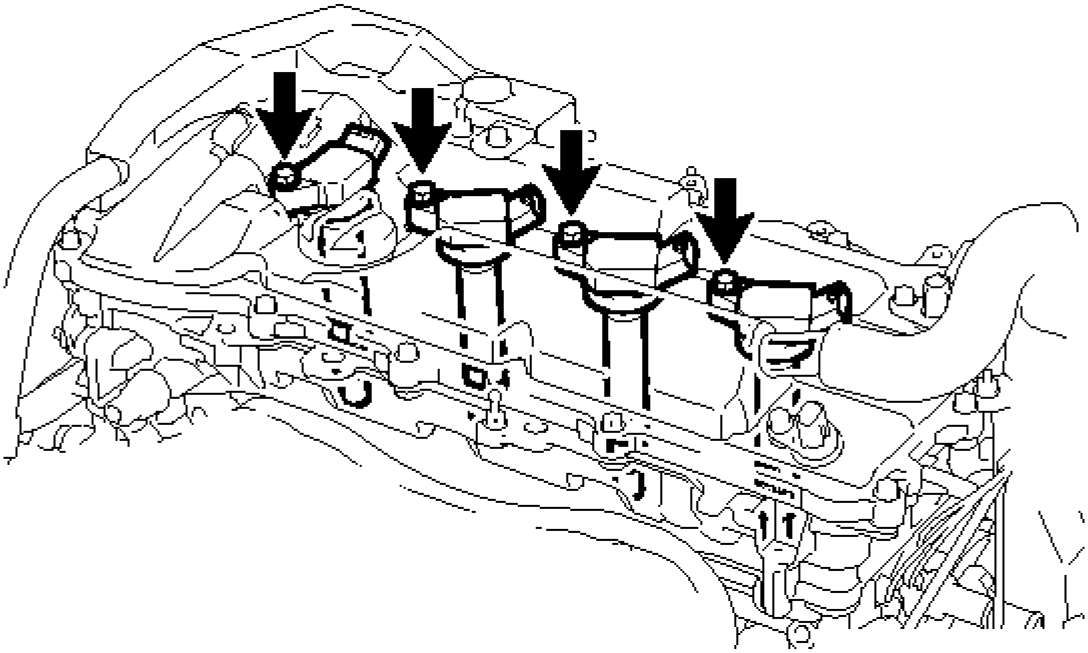

Fig. 43: Locating Bolts And Ignition Coil Assemblies
Courtesy of TOYOTA MOTOR SALES, U.S.A., INC.

3. **REMOVE SPARK PLUG**
   a. Using a spark plug wrench, remove the 4 spark plugs.

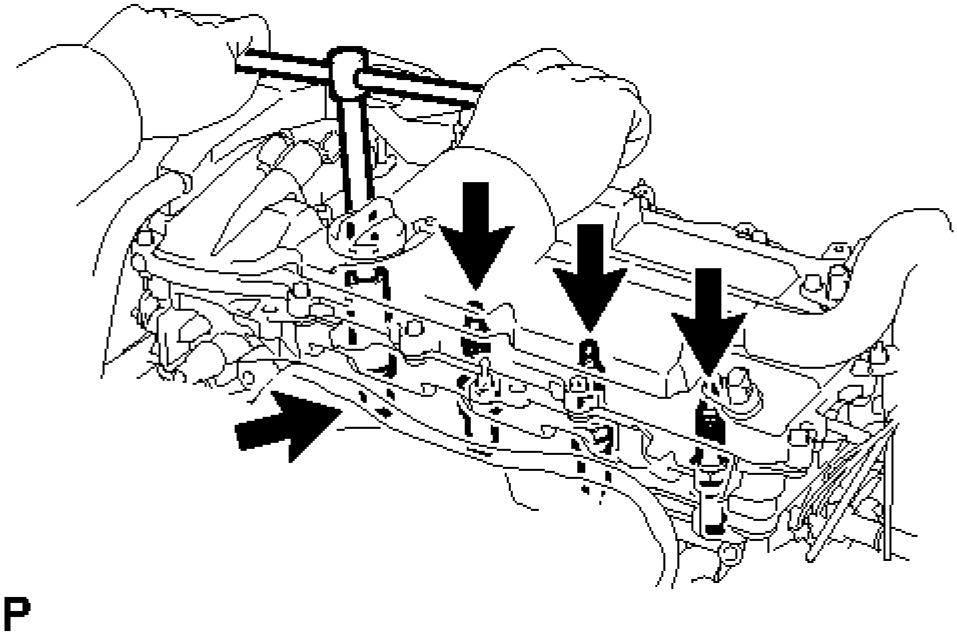

Fig. 44: Installing Spark Plug
Courtesy of TOYOTA MOTOR SALES, U.S.A., INC.

INSTALLATION

INSTALLATION

1. **INSTALL SPARK PLUG**
   a. Using a spark plug wrench, install the 4 spark plugs.

      Torque: 25 N*m (255 kgf*cm, 18 ft.*lbf)

      HINT:

      Perform "Inspection After Repair" after replacing the spark plug. Refer to **INITIALIZATION** .

2. **INSTALL IGNITION COIL ASSEMBLY**
   a. Install the 4 ignition coil assemblies with the 4 bolts.

      Torque: 10 N*m (102 kgf*cm, 7 ft.*lbf)

      HINT:

Perform "Inspection After Repair" after replacing the ignition coil assembly. Refer to **INITIALIZATION** .

b. Connect the 4 ignition coil assembly connectors.

3. **INSTALL NO. 1 ENGINE COVER SUB-ASSEMBLY** . Refer to **INSTALLATION - Step 86**

ENGINE COOLANT TEMPERATURE SENSOR

COMPONENTS

ILLUSTRATION

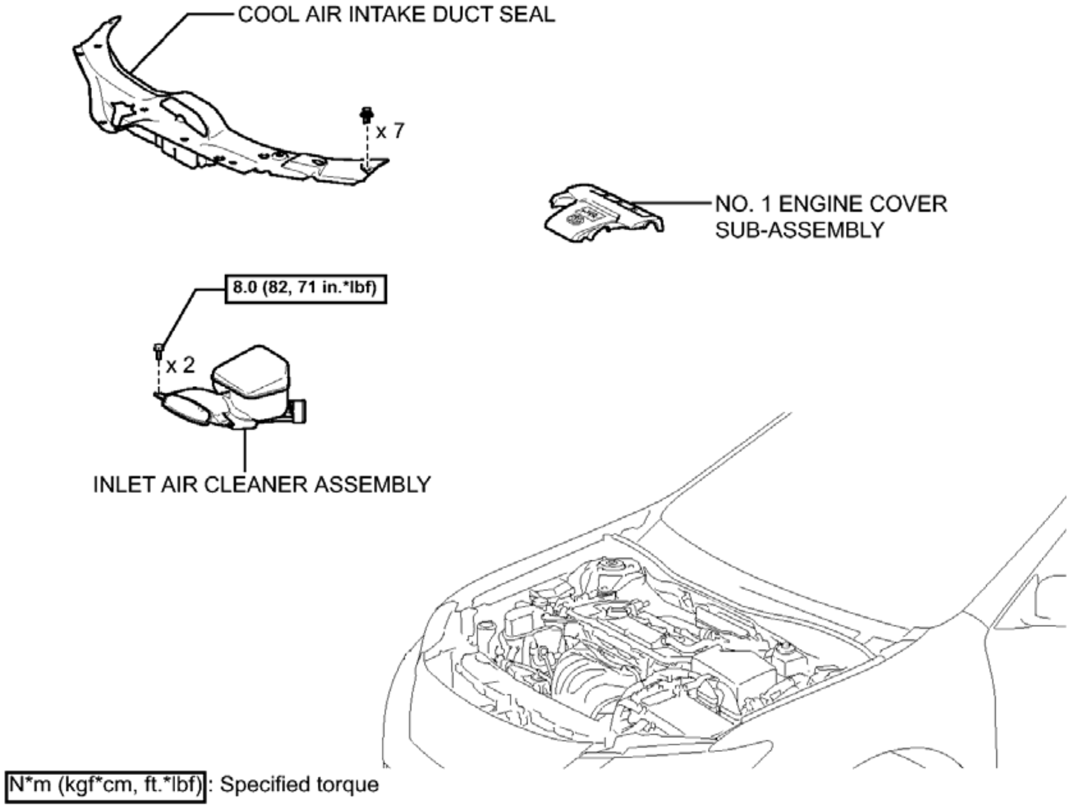
COOL AIR INTAKE DUCT SEAL
x 7
NO. 1 ENGINE COVER SUB-ASSEMBLY
8.0 (82, 71 in.*lbf)
x 2
INLET AIR CLEANER ASSEMBLY
N*m (kgf*cm, ft.*lbf): Specified torque

Fig. 45: Identifying Engine Coolant Temperature Sensor Replacement Components With Torque Specifications (1 Of 2)
Courtesy of TOYOTA MOTOR SALES, U.S.A., INC.

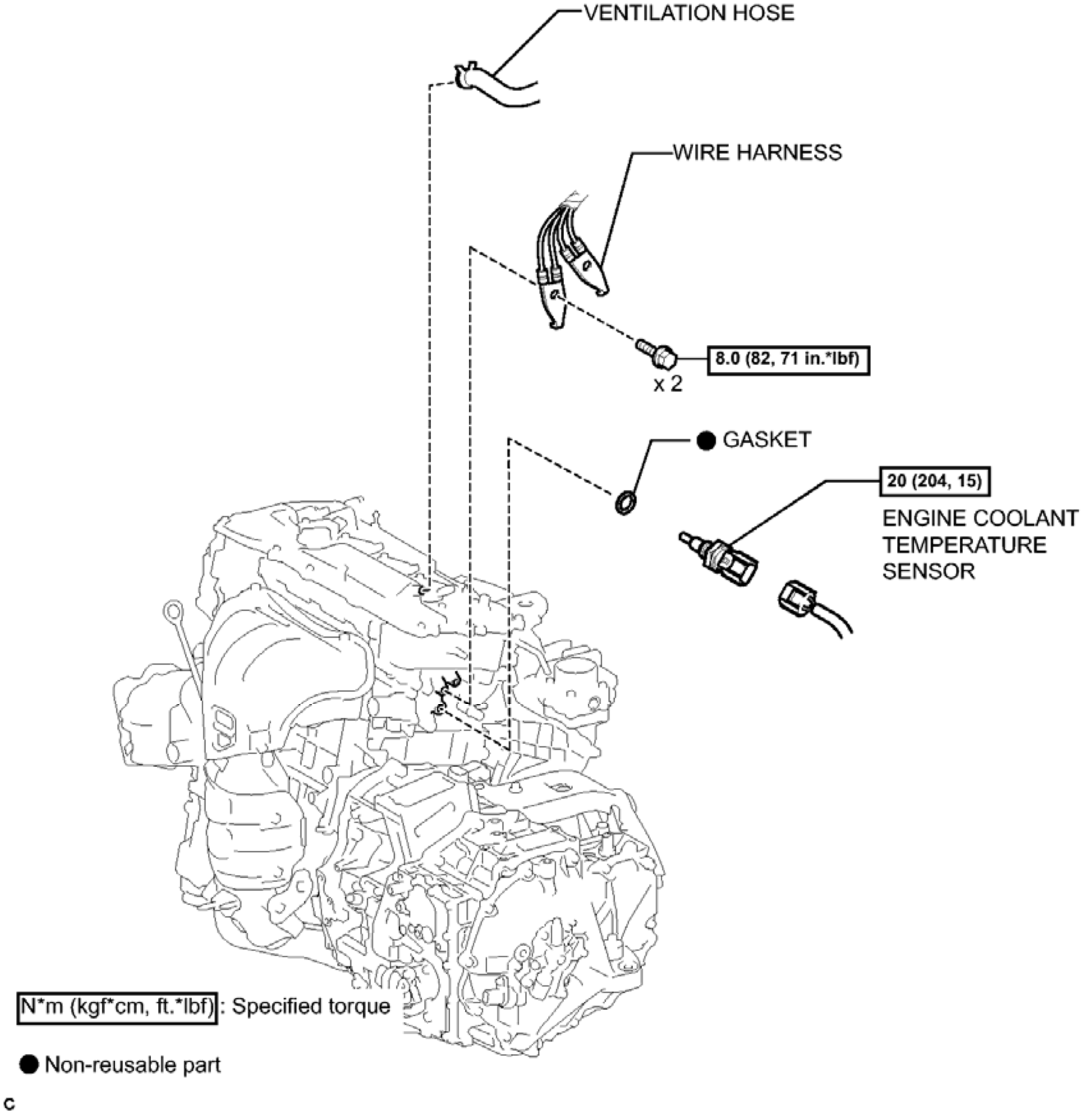
VENTILATION HOSE
WIRE HARNESS
8.0 (82, 71 in.*lbf)
x 2
● GASKET
20 (204, 15)
ENGINE COOLANT TEMPERATURE SENSOR
N*m (kgf*cm, ft.*lbf) : Specified torque
● Non-reusable part
C

Fig. 46: Identifying Engine Coolant Temperature Sensor Replacement Components With Torque Specifications (2 Of 2)
Courtesy of TOYOTA MOTOR SALES, U.S.A., INC.

REMOVAL

REMOVAL

1. **DRAIN COOLANT (for Engine)** . Refer to **REPLACEMENT - Step 1**
2. **REMOVE NO. 1 ENGINE COVER SUB-ASSEMBLY** . Refer to **REMOVAL - Step 25**
3. **REMOVE COOL AIR INTAKE DUCT SEAL** . Refer to **REMOVAL - Step 1**
4. **REMOVE INLET AIR CLEANER ASSEMBLY** . Refer to **REMOVAL - Step 30**

5. **REMOVE ENGINE COOLANT TEMPERATURE SENSOR**
    a. Disconnect the ventilation hose from the cylinder head cover.

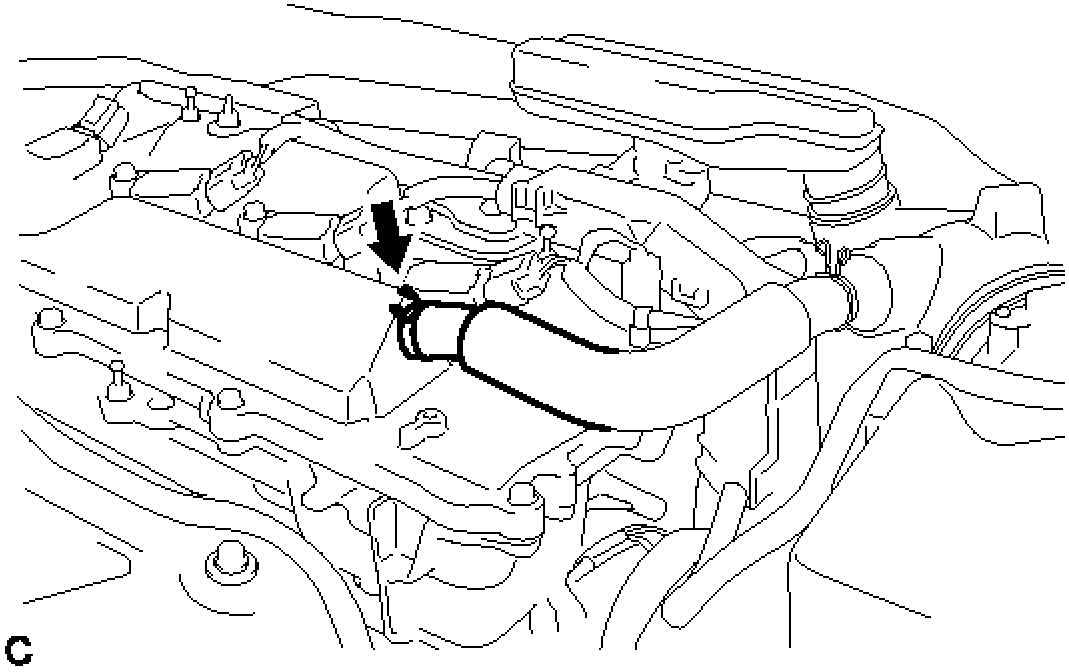

Fig. 47: Identifying Cylinder Head Cover Ventilation Hose
Courtesy of TOYOTA MOTOR SALES, U.S.A., INC.

    b. Disconnect the engine coolant temperature sensor connector.

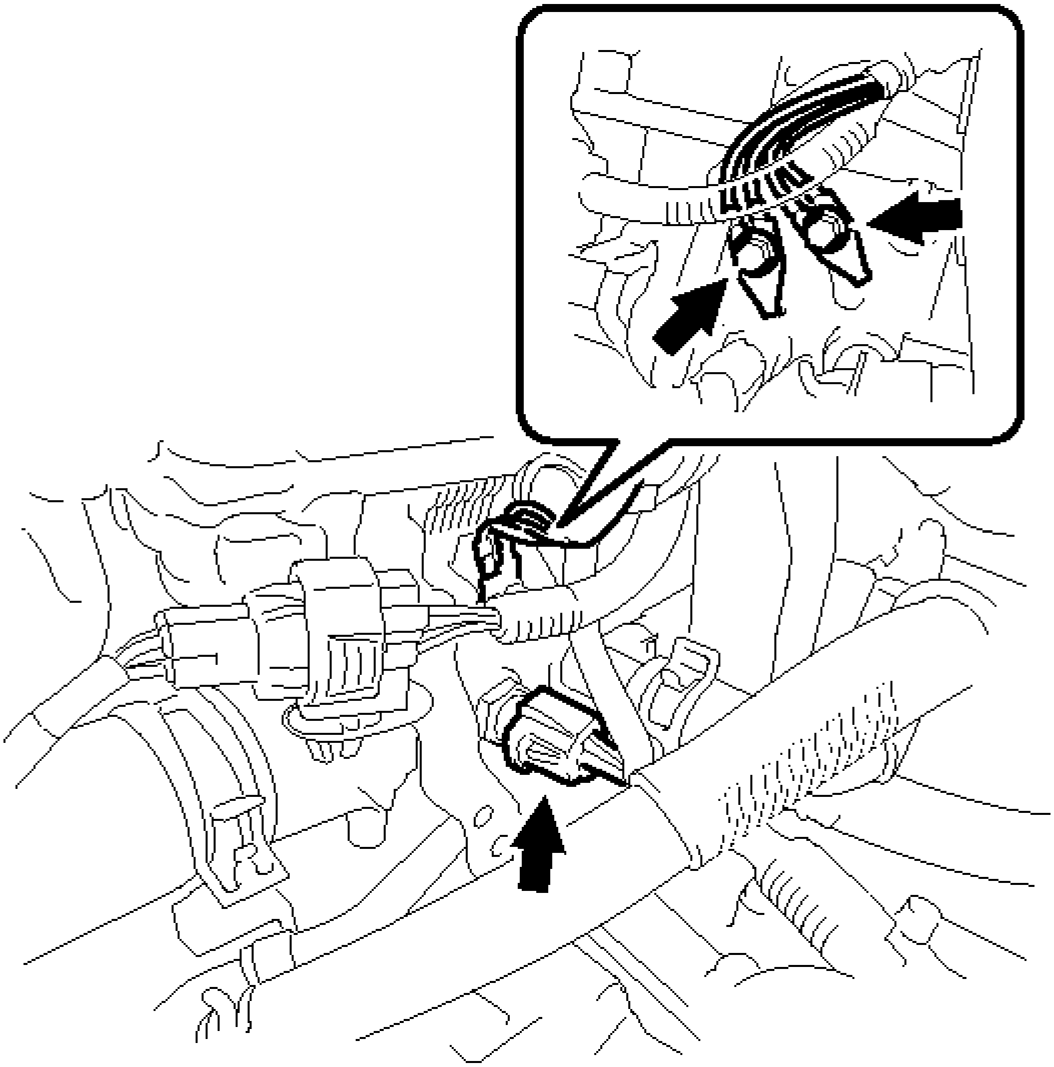

Fig. 48: Identifying Engine Coolant Temperature Sensor Connector And Bolts
Courtesy of TOYOTA MOTOR SALES, U.S.A., INC.

c. Remove the 2 bolts and disconnect the wire harness.
d. Using a 19 mm ball joint lock nut wrench, remove the engine coolant temperature sensor.

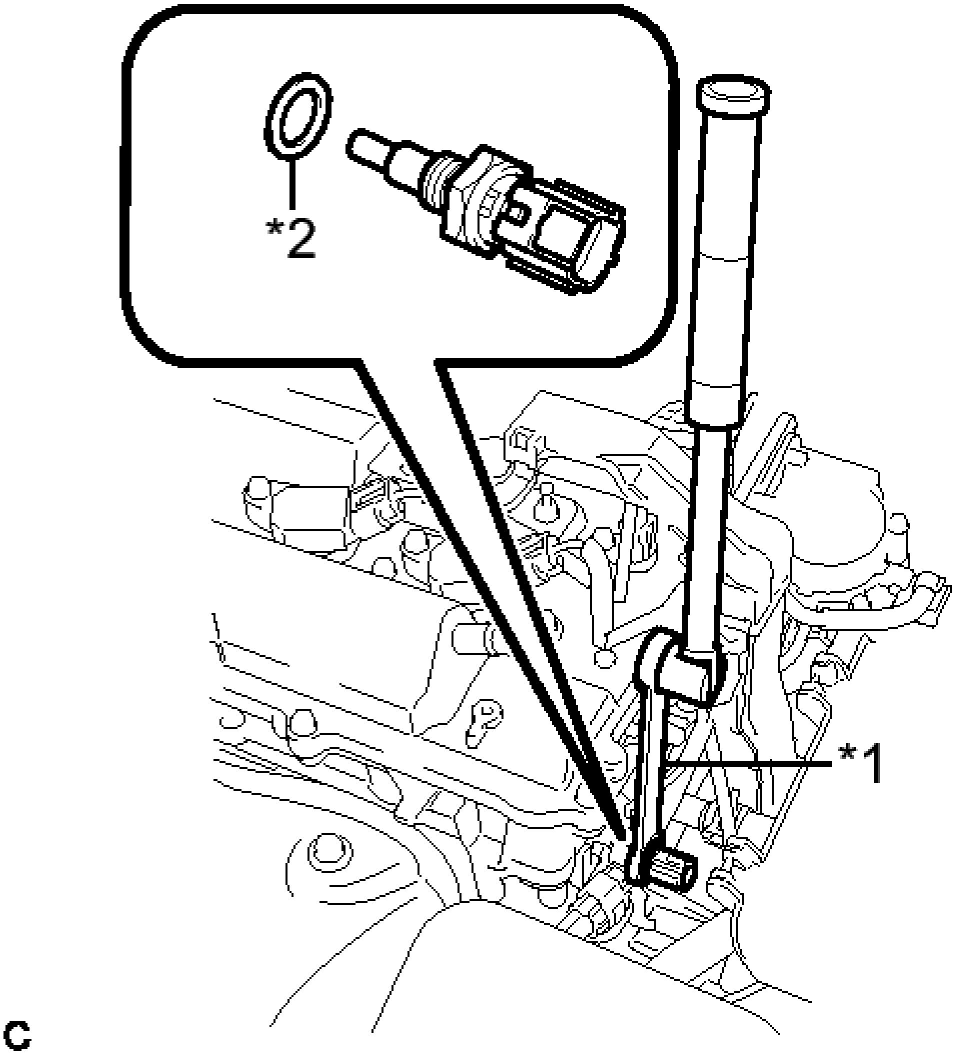

Fig. 49: Removing Engine Coolant Temperature Sensor
Courtesy of TOYOTA MOTOR SALES, U.S.A., INC.

TEXT IN ILLUSTRATION

*1	Ball Joint Lock Nut Wrench
*2	Gasket

e. Remove the gasket from the engine coolant temperature sensor.

INSPECTION

INSPECTION

1. **INSPECT ENGINE COOLANT TEMPERATURE SENSOR**

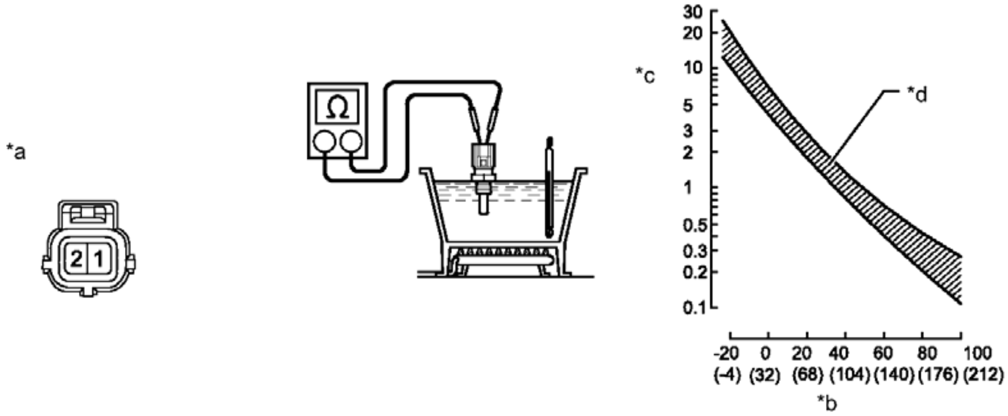

Fig. 50: Inspecting Engine Coolant Temperature Sensor With Graph
Courtesy of TOYOTA MOTOR SALES, U.S.A., INC.

TEXT IN ILLUSTRATION

*a	Component without harness connected (Engine Coolant Temperature Sensor)	*b	Temperature °C (°F)
*c	Resistance ohms	*d	Acceptable

a. Partially immerse the sensor in water and warm up the water.
b. Measure the resistance according to the value(s) in the table below.

Standard Resistance

Tester Connection	Condition	Specified Condition
1 - 2	20°C (68°F)	2.32 to 2.59 kohms
1 - 2	80°C (176°F)	0.310 to 0.326 kohms

NOTE: **When checking the sensor in water, keep the terminals dry. After the check, wipe the sensor dry.**

If the result is not as specified, replace the engine coolant temperature sensor.

INSTALLATION

INSTALLATION

1. **INSTALL ENGINE COOLANT TEMPERATURE SENSOR**
    a. Install a new gasket to the engine coolant temperature sensor.
    b. Using a 19 mm ball joint lock nut wrench, install the engine coolant temperature sensor.

    Torque: 20 N*m (204 kgf*cm, 15 ft.*lbf)

    NOTE: **Use the torque value compensation formula to calculate the torque value for use when a torque wrench is combined with a tool such as a ball joint lock nut wrench. Refer to PRECAUTION .**

    HINT:

    Perform "Inspection After Repair" after replacing the engine coolant temperature sensor. Refer to **INITIALIZATION** .

    c. Connect the engine coolant temperature sensor connector.
    d. Install the wire harness with the 2 bolts.

    Torque: 8.0 N*m (82 kgf*cm, 71 in.*lbf)

    e. Connect the ventilation hose to the cylinder head cover.
2. **INSTALL INLET AIR CLEANER ASSEMBLY** . Refer to **INSTALLATION - Step 63**
3. **INSTALL COOL AIR INTAKE DUCT SEAL** . Refer to **INSTALLATION - Step 4**
4. **ADD COOLANT (for Engine)** . Refer to **REPLACEMENT - Step 2**
5. **INSPECT FOR COOLANT LEAK (for Engine)** . Refer to **ON-VEHICLE INSPECTION - Step 1**
6. **INSTALL NO. 1 ENGINE COVER SUB-ASSEMBLY** . Refer to **INSTALLATION - Step 86**

KNOCK SENSOR

COMPONENTS

ILLUSTRATION

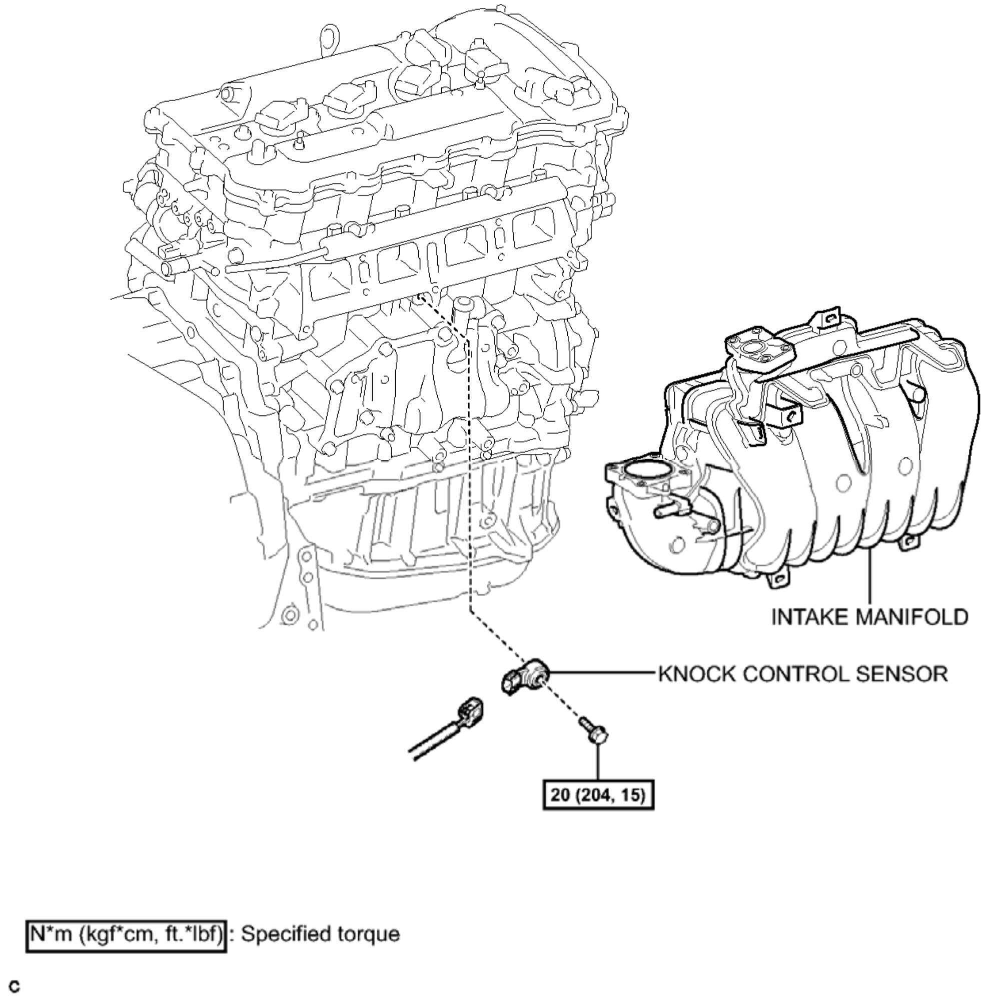
INTAKE MANIFOLD
KNOCK CONTROL SENSOR
20 (204, 15)
N*m (kgf*cm, ft.*lbf): Specified torque
c

Fig. 51: Identifying Knock Sensor Replacement Components With Torque Specifications
Courtesy of TOYOTA MOTOR SALES, U.S.A., INC.

REMOVAL

REMOVAL

1. **REMOVE INTAKE MANIFOLD**

   Refer to **REMOVAL**

2. **REMOVE KNOCK CONTROL SENSOR**
   1. Disconnect the sensor connector.

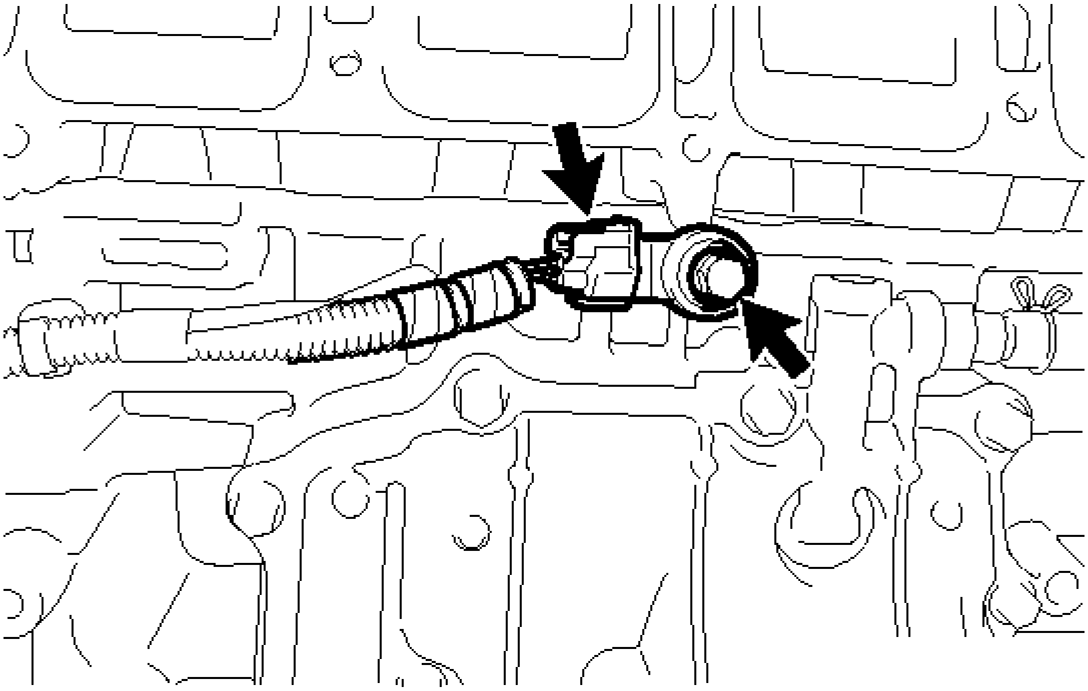

Fig. 52: Locating Bolt And Sensor
Courtesy of TOYOTA MOTOR SALES, U.S.A., INC.

b. Remove the bolt and knock control sensor.

INSPECTION

INSPECTION

1. **INSPECT KNOCK CONTROL SENSOR**
    a. Measure the resistance according to the value(s) in the table below.

    Standard Resistance

Tester Connection	Condition	Specified Condition
1 - 2	20°C (68° F)	120 to 280 kohms

    If the result is not as specified, replace the knock control sensor.

INSTALLATION

INSTALLATION

1. **INSTALL KNOCK CONTROL SENSOR**
    a. Install the sensor with the bolt so that the sensor is angled as shown in the illustration.

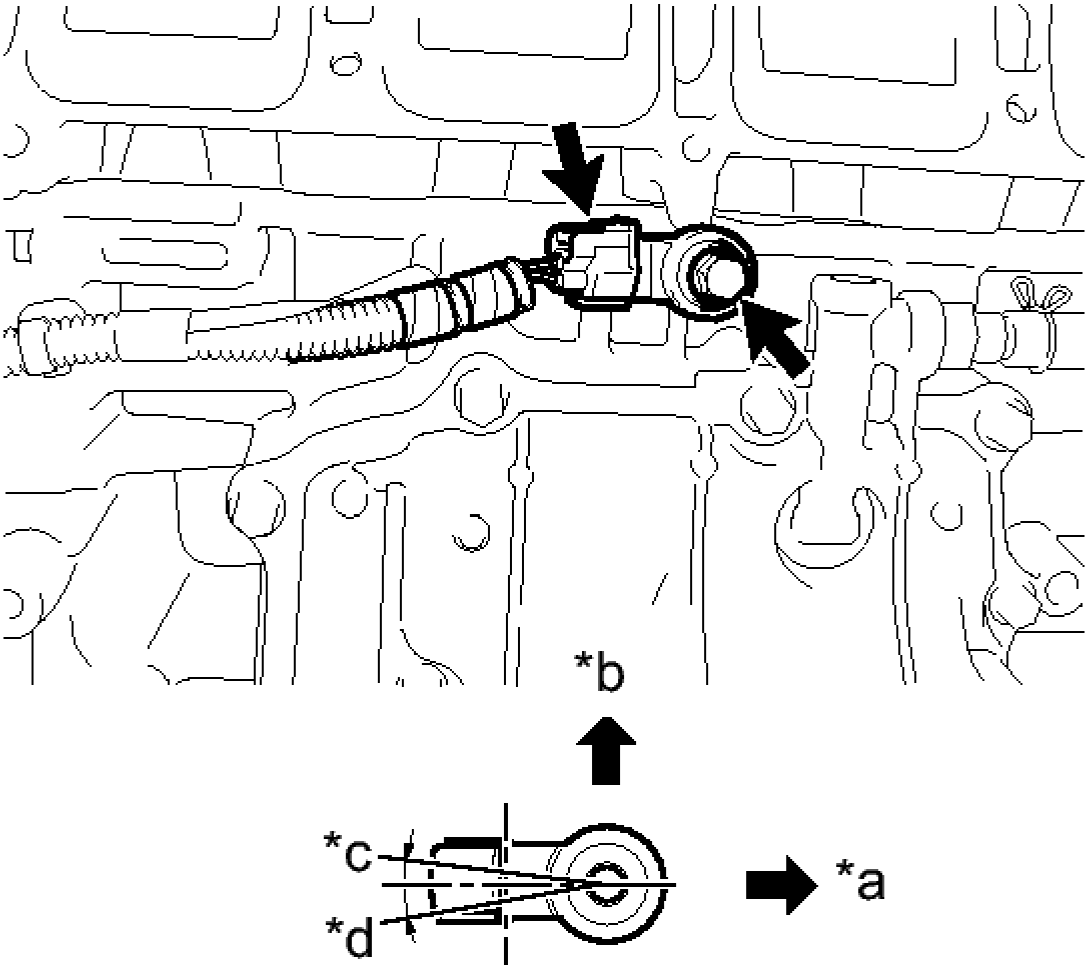

P

Fig. 53: Identifying Knock Control Sensor
Courtesy of TOYOTA MOTOR SALES, U.S.A., INC.

Torque: 20 N*m (204 kgf*cm, 15 ft.*lbf)

TEXT IN ILLUSTRATION

*a	Front of Engine
*b	Up
*c	7°
*d	10°

NOTE: **The acceptable installation angle of the sensor is between 7° upward and 10° downward from the horizontal position.**

HINT:

Perform "Inspection After Repair" after replacing the knock control sensor. Refer to **INITIALIZATION**

b. Connect the sensor connector.

2. **INSTALL INTAKE MANIFOLD**

   Refer to **INSTALLATION**

AIR FUEL RATIO SENSOR

COMPONENTS

ILLUSTRATION

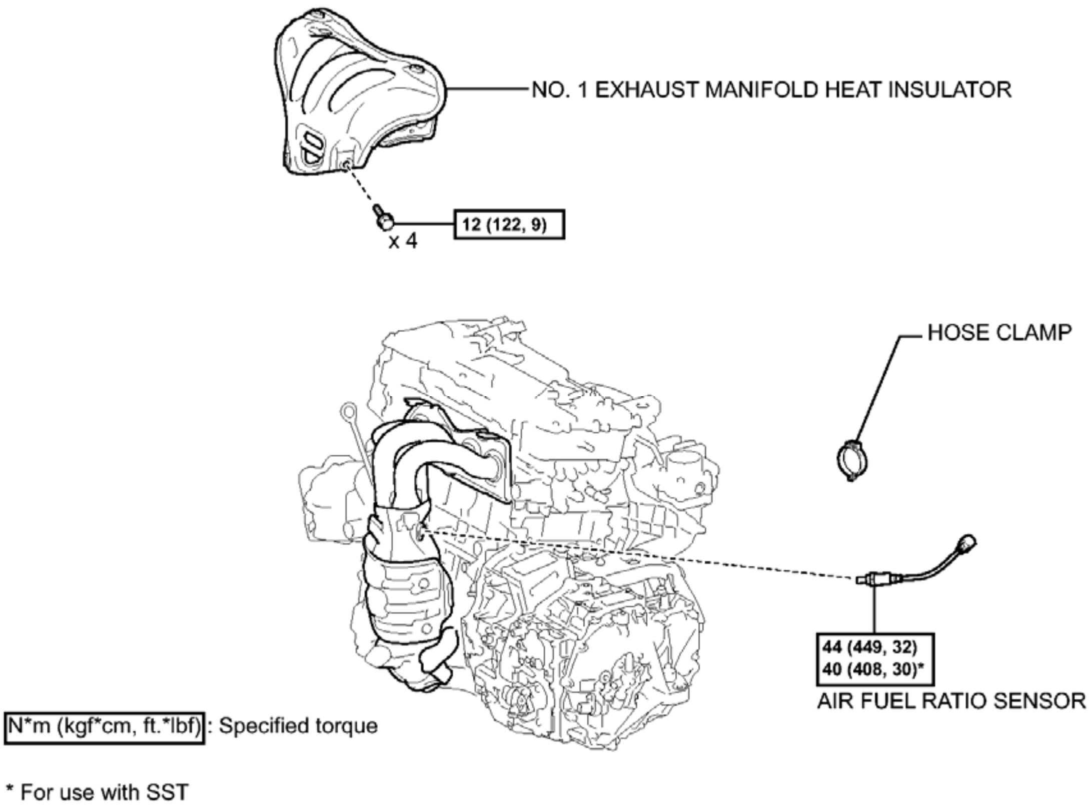
NO. 1 EXHAUST MANIFOLD HEAT INSULATOR
12 (122, 9)
x 4
HOSE CLAMP
44 (449, 32)
40 (408, 30)*
AIR FUEL RATIO SENSOR
N*m (kgf*cm, ft.*lbf): Specified torque
* For use with SST

Fig. 54: Identifying Air Fuel Ratio Sensor Replacement Components With Torque Specifications
Courtesy of TOYOTA MOTOR SALES, U.S.A., INC.

REMOVAL

REMOVAL

1. **REMOVE NO. 1 EXHAUST MANIFOLD HEAT INSULATOR** . Refer to **REMOVAL - Step 6**
2. **REMOVE AIR FUEL RATIO SENSOR**
    a. Remove the hose clamp.

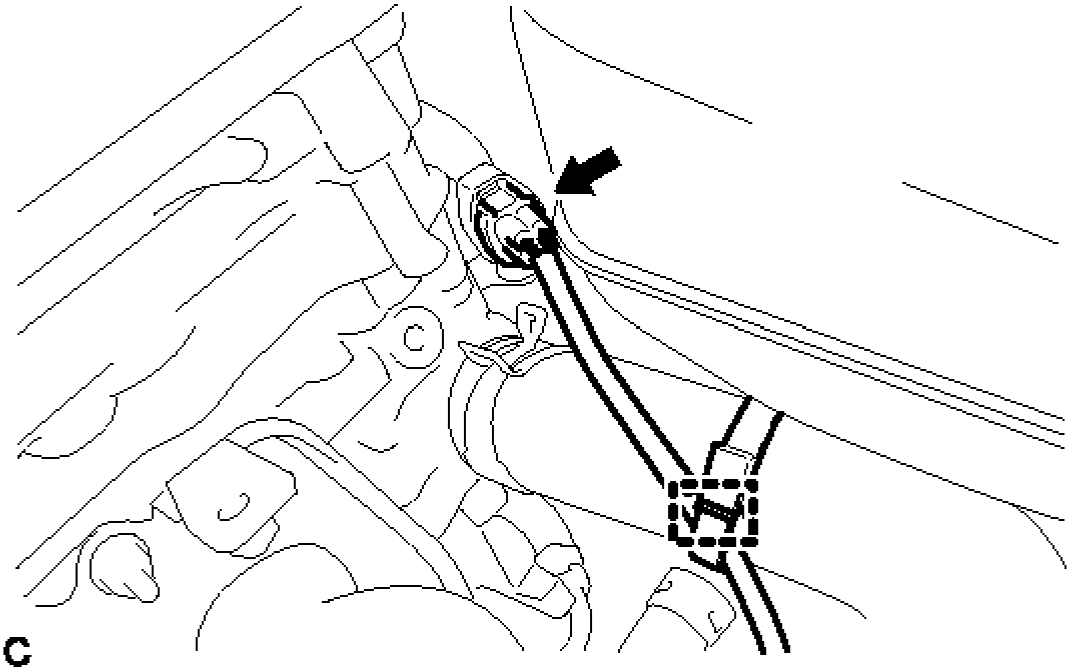

Fig. 55: Identifying Air Fuel Ratio Sensor Connector And Clamp
Courtesy of TOYOTA MOTOR SALES, U.S.A., INC.

    b. Disconnect the air fuel ratio sensor connector.
    c. Using SST, remove the air fuel ratio sensor from the exhaust manifold.

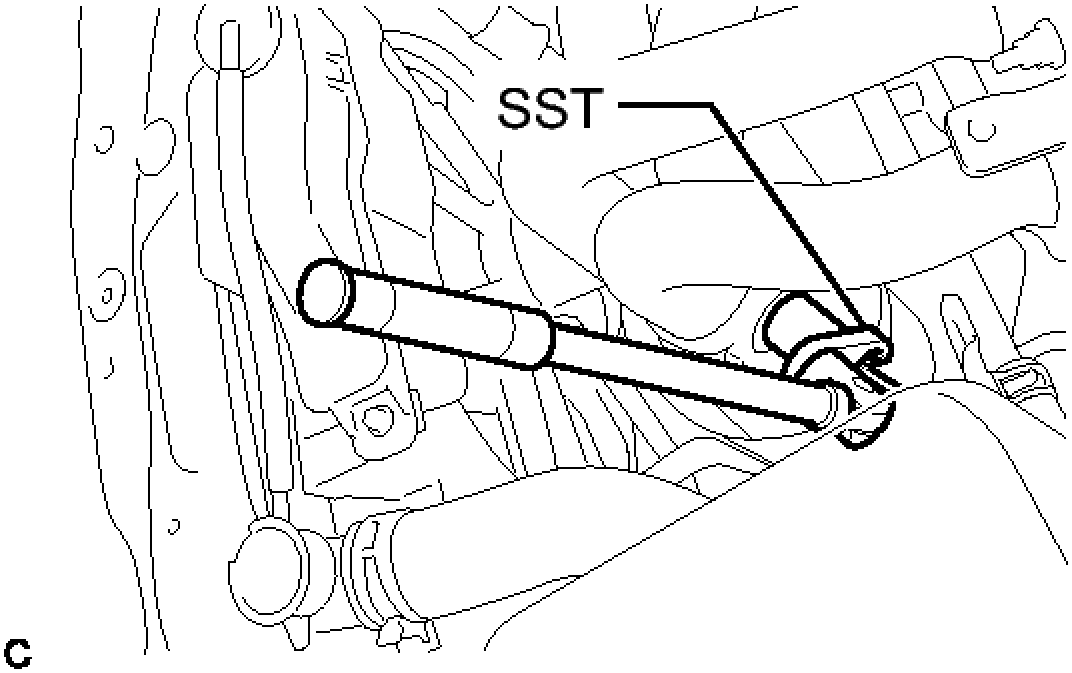

Fig. 56: Removing Air Fuel Ratio Sensor
Courtesy of TOYOTA MOTOR SALES, U.S.A., INC.

- **SST: 09224-00010**

INSPECTION

INSPECTION

1. **INSPECT AIR FUEL RATIO SENSOR**
    a. Measure the resistance according to the value(s) in the table below.

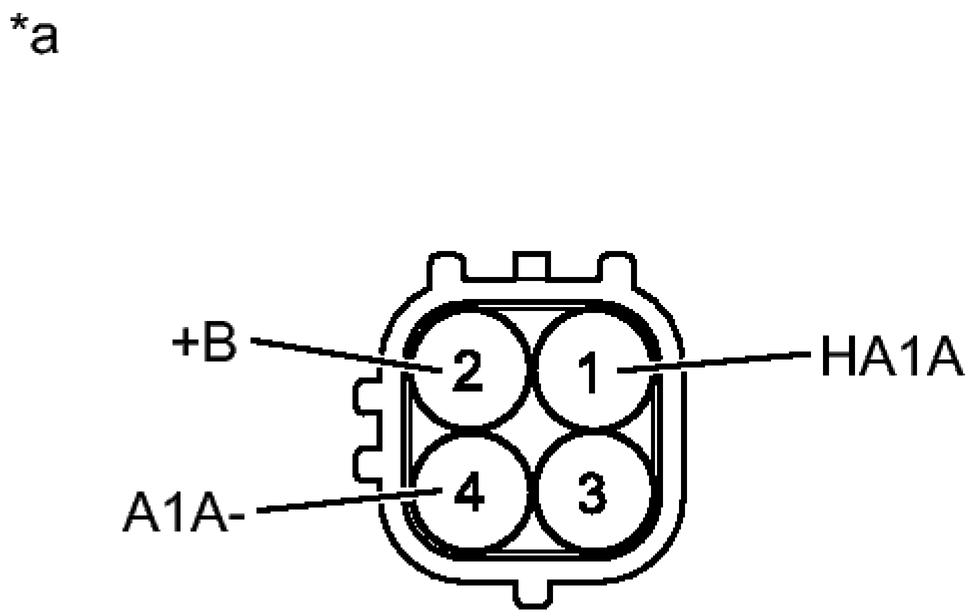

Fig. 57: Identifying Air Fuel Ratio Sensor Connector Terminals
Courtesy of TOYOTA MOTOR SALES, U.S.A., INC.

Standard Resistance

Tester Connection	Condition	Specified Condition
1 (HA1A) - 2 (+B)	20°C (68°F)	1.6 to 3.2 ohms
1 (HA1A) - 4 (A1A-)	Always	10 kohms or higher

TEXT IN ILLUSTRATION

*a	Component without harness connected: (Air Fuel Ratio Sensor)

If the result is not as specified, replace the air fuel ratio sensor.

INSTALLATION

INSTALLATION

1. **INSTALL AIR FUEL RATIO SENSOR**
    a. Using SST, install the air fuel ratio sensor to the exhaust manifold.

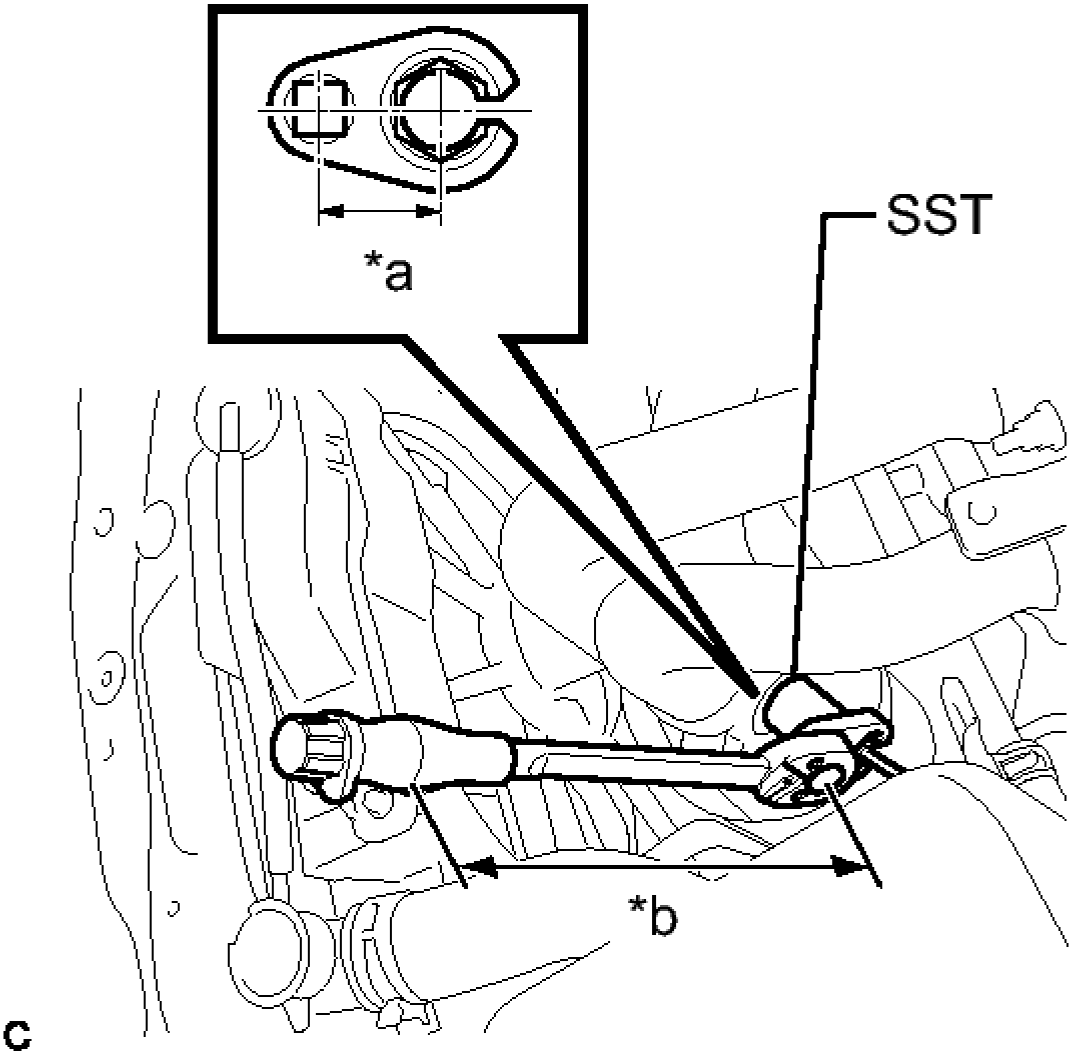

Fig. 58: Installing Air Fuel Ratio Sensor
Courtesy of TOYOTA MOTOR SALES, U.S.A., INC.

TEXT IN ILLUSTRATION

*a	Fulcrum Length 30 mm
*b	Fulcrum Length 300 mm

- **SST: 09224-00010**

without SST

Torque: 44 N*m (449 kgf*cm, 32 ft.*lbf)

with SST

Torque: 40 N*m (408 kgf*cm, 30 ft.*lbf)

NOTE:

- **The "with SST" torque value is effective when using SST with a fulcrum length of 30 mm (1.18 in.) and a torque wrench with a fulcrum length of 300 mm (11.81 in.). Refer to PRECAUTION .**
- **The "with SST" torque value is effective when SST is parallel to the torque wrench.**

HINT:

Perform "Inspection After Repair" after replacing the air fuel ratio sensor. Refer to **INITIALIZATION** .

b. Connect the air fuel ratio sensor connector.

c. Install the hose clamp.

2. **INSPECT FOR EXHAUST GAS LEAK**
3. **INSTALL NO. 1 EXHAUST MANIFOLD HEAT INSULATOR** . Refer to **INSTALLATION - Step 8**

HEATED OXYGEN SENSOR

COMPONENTS

ILLUSTRATION

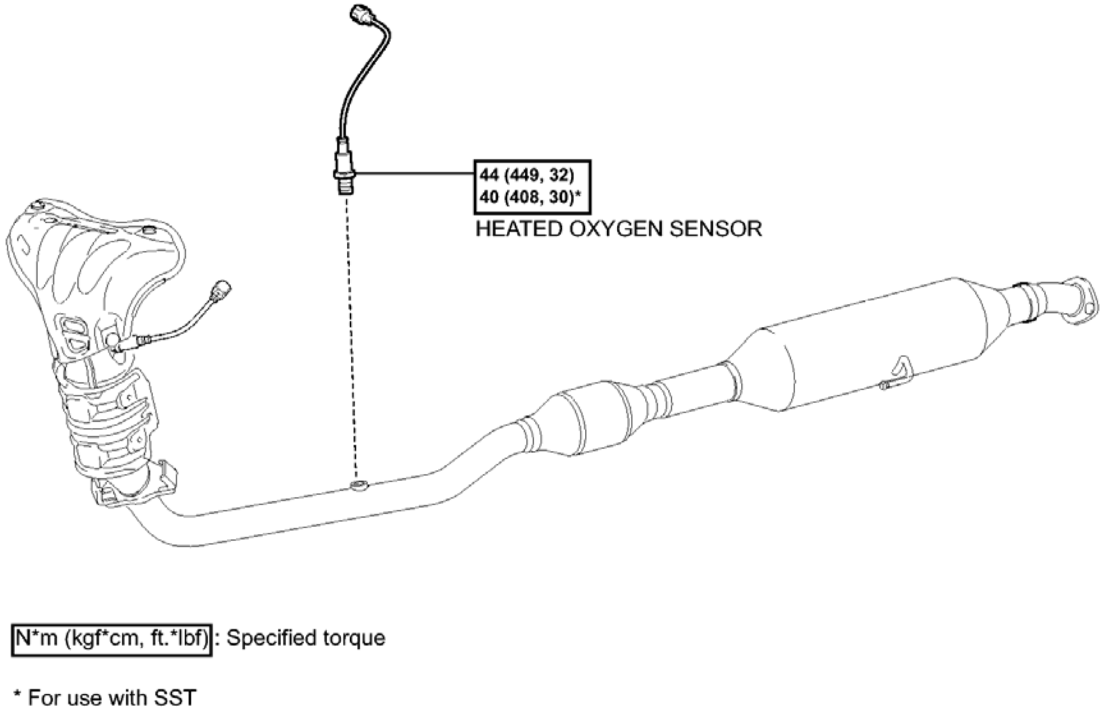
44 (449, 32)
40 (408, 30)*
HEATED OXYGEN SENSOR
N*m (kgf*cm, ft.*lbf): Specified torque
* For use with SST

Fig. 59: Identifying Heated Oxygen Sensor Replacement Components With Torque Specifications
Courtesy of TOYOTA MOTOR SALES, U.S.A., INC.

REMOVAL

REMOVAL

1. **REMOVE HEATED OXYGEN SENSOR**
    a. Disconnect the heated oxygen sensor connector.

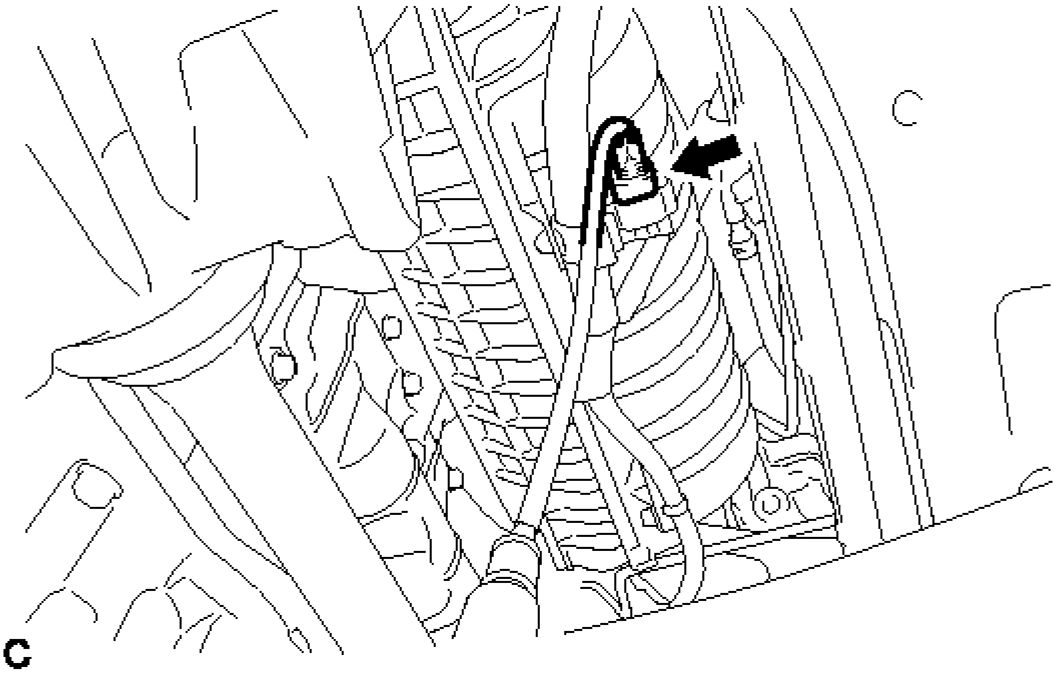

Fig. 60: Identifying Heated Oxygen Sensor Connector Terminals
Courtesy of TOYOTA MOTOR SALES, U.S.A., INC.

b. Using SST, remove the heated oxygen sensor from the front exhaust pipe.

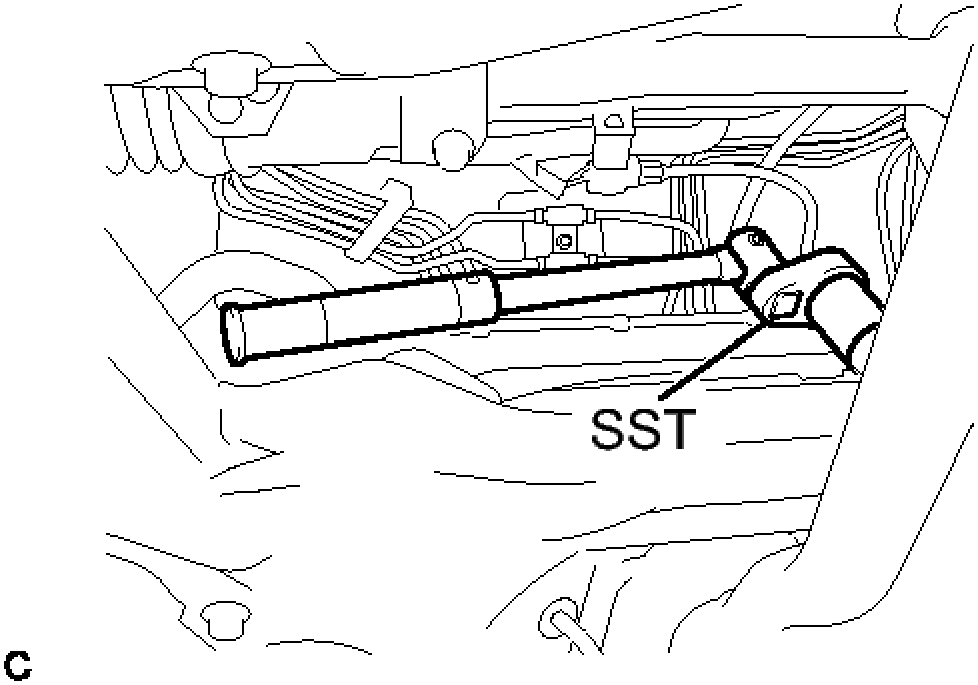

Fig. 61: Removing Heated Oxygen Sensor
Courtesy of TOYOTA MOTOR SALES, U.S.A., INC.

- **SST: 09224-00010**

INSPECTION

INSPECTION

1. **INSPECT HEATED OXYGEN SENSOR**
    1. Measure the resistance according to the value(s) in the table below.

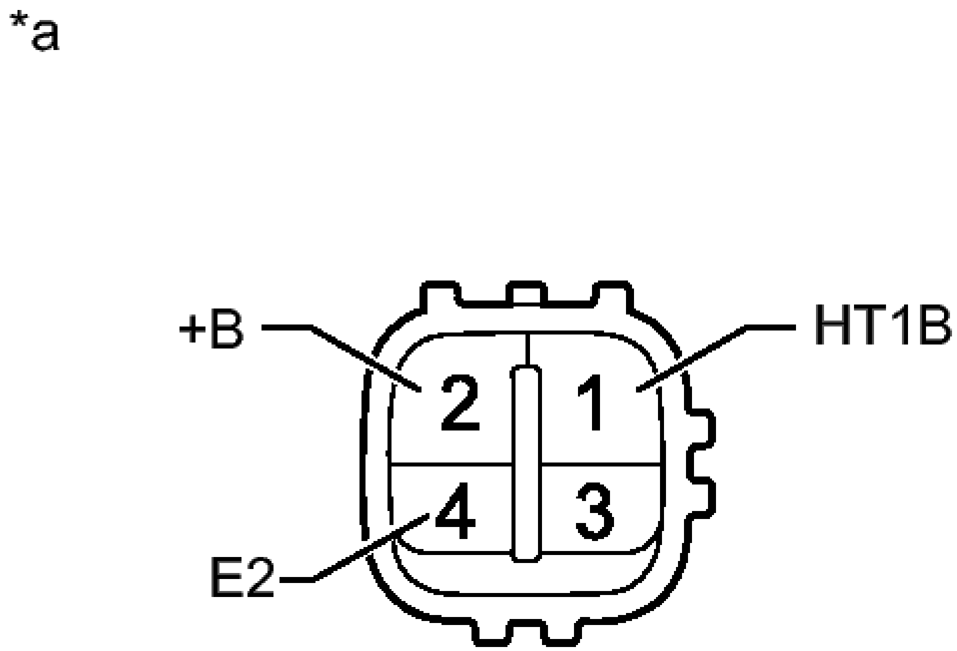

Fig. 62: Identifying Heated Oxygen Sensor Connector Terminals
Courtesy of TOYOTA MOTOR SALES, U.S.A., INC.

Standard Resistance

Tester Connection	Condition	Specified Condition
1 (HT1B) - 2 (+B)	20°C (68°F)	11 to 16 ohms
1 (HT1B) - 4 (E2)	Always	10 kohms or higher

TEXT IN ILLUSTRATION

*a	Component without harness connected

	(Heated Oxygen Sensor)

If the result is not as specified, replace the heated oxygen sensor.

INSTALLATION

INSTALLATION

1. **INSTALL HEATED OXYGEN SENSOR**
    a. Using SST, install the heated oxygen sensor to the front exhaust pipe.

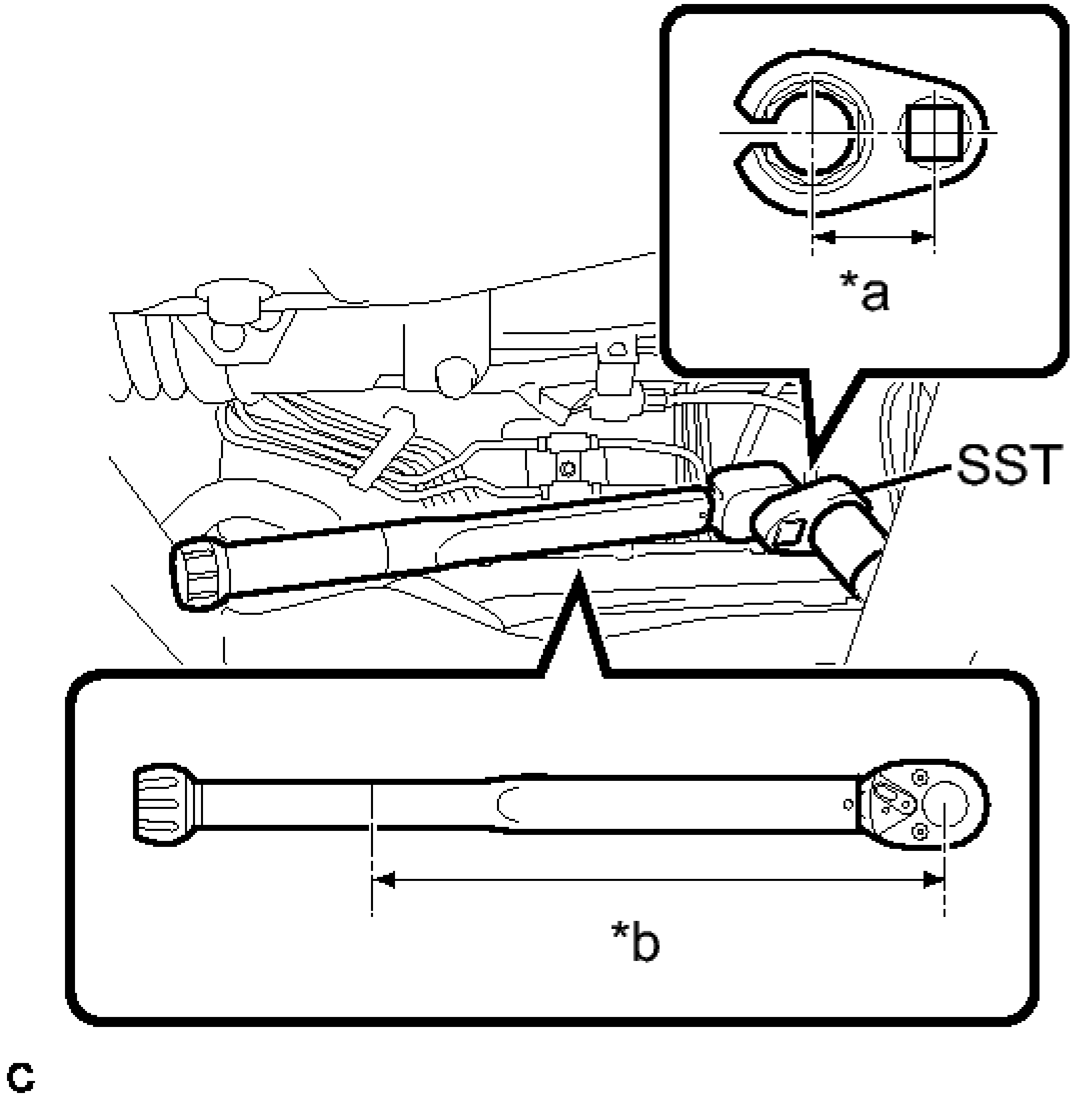

Fig. 63: Installing Heated Oxygen Sensor
Courtesy of TOYOTA MOTOR SALES, U.S.A., INC.

TEXT IN ILLUSTRATION

*a	Fulcrum Length 30 mm
*b	Fulcrum Length 300 mm

- **SST: 09224-00010**

without SST

Torque: 44 N*m (449 kgf*cm, 32 ft.*lbf)

with SST

Torque: 40 N*m (408 kgf*cm, 30 ft.*lbf)

NOTE:

- **The "with SST" torque value is effective when using SST with a fulcrum length of 30 mm (1.18 in.) and a torque wrench with a fulcrum length of 300 mm (11.81 in.). Refer to PRECAUTION**
- **The "with SST" torque value is effective when SST is parallel to the torque wrench.**

b. Connect the heated oxygen sensor connector.

2. **INSPECT FOR EXHAUST GAS LEAK**

INTEGRATION RELAY

COMPONENTS

ILLUSTRATION

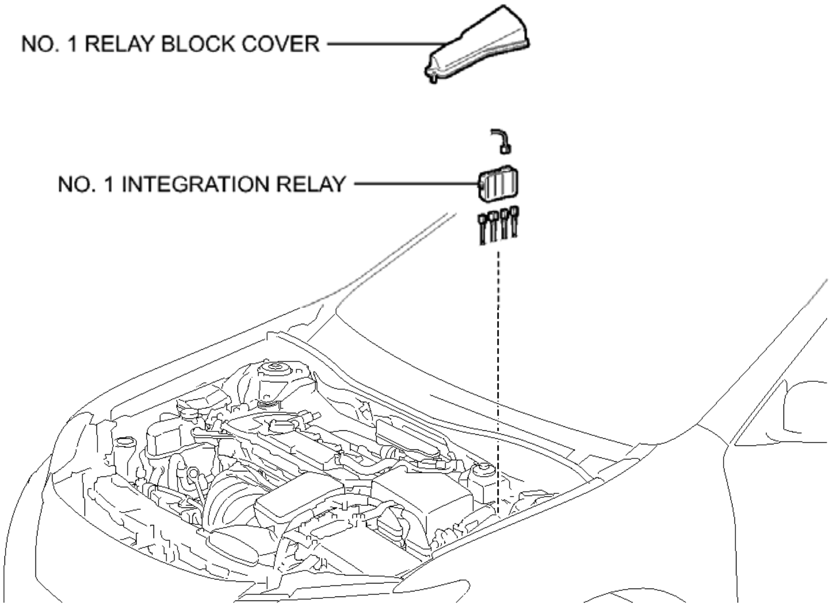
NO. 1 RELAY BLOCK COVER
NO. 1 INTEGRATION RELAY

C

Fig. 64: Identifying Integration Relay Replacement Components
Courtesy of TOYOTA MOTOR SALES, U.S.A., INC.

REMOVAL

REMOVAL

1. **REMOVE NO. 1 RELAY BLOCK COVER**
2. **REMOVE NO. 1 INTEGRATION RELAY**
    a. Disconnect the connector.

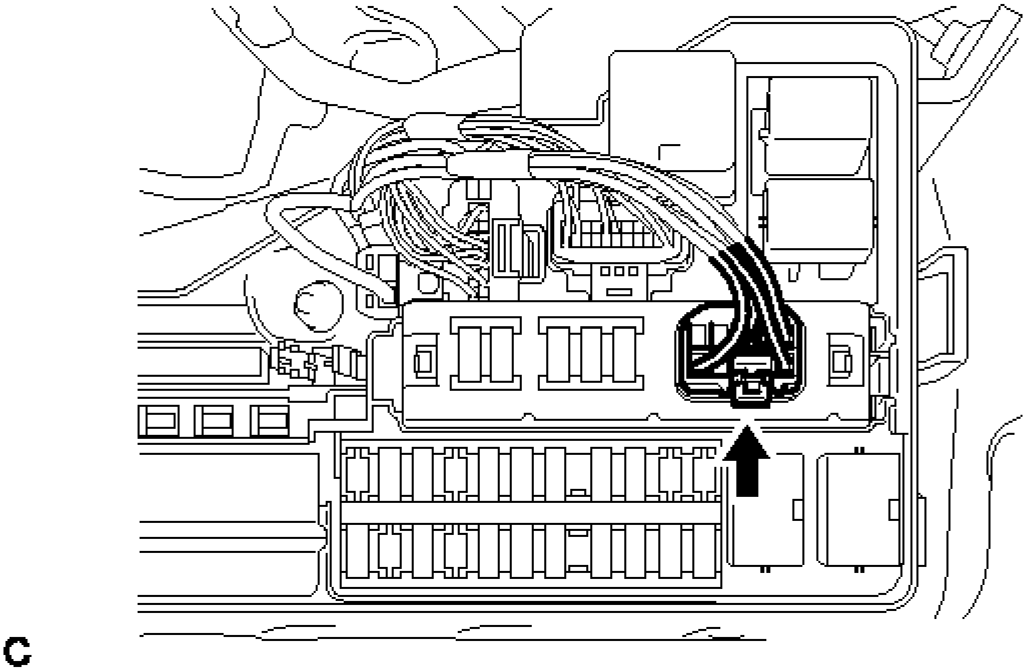

Fig. 65: Identifying No. 1 Integration Relay Connector
Courtesy of TOYOTA MOTOR SALES, U.S.A., INC.

b. Using a screwdriver with its tip wrapped in protective tape, disengage the 2 claws and disconnect the No. 1 integration relay.

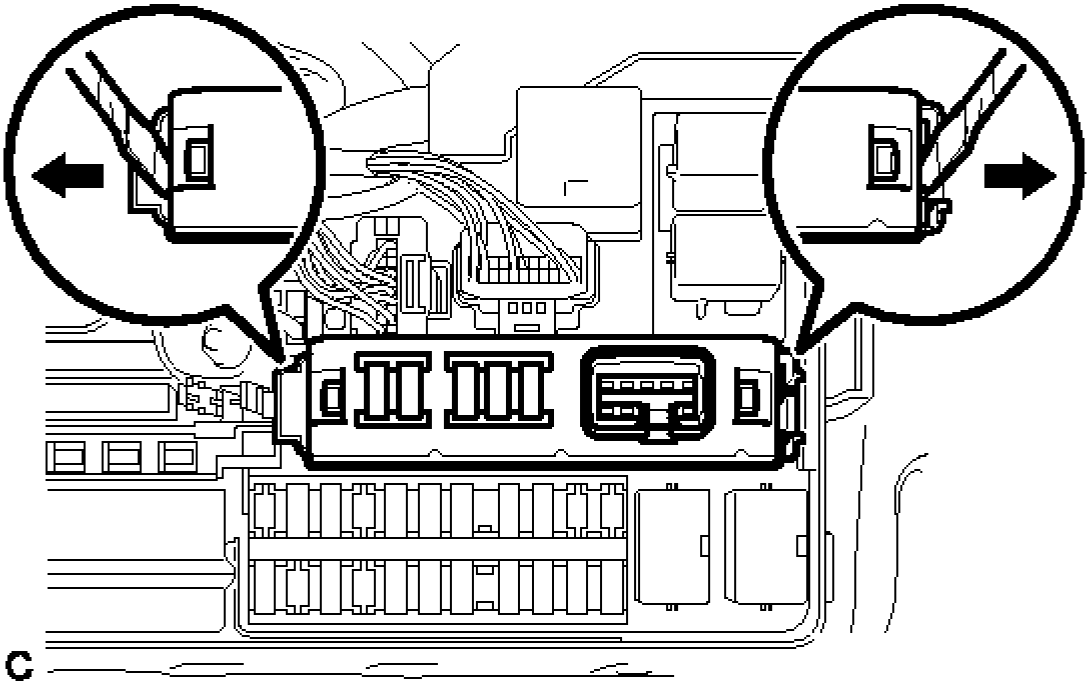

Fig. 66: Disconnecting No. 1 Integration Relay

Courtesy of TOYOTA MOTOR SALES, U.S.A., INC.

c. Disconnect the 4 connectors and remove the No. 1 integration relay.

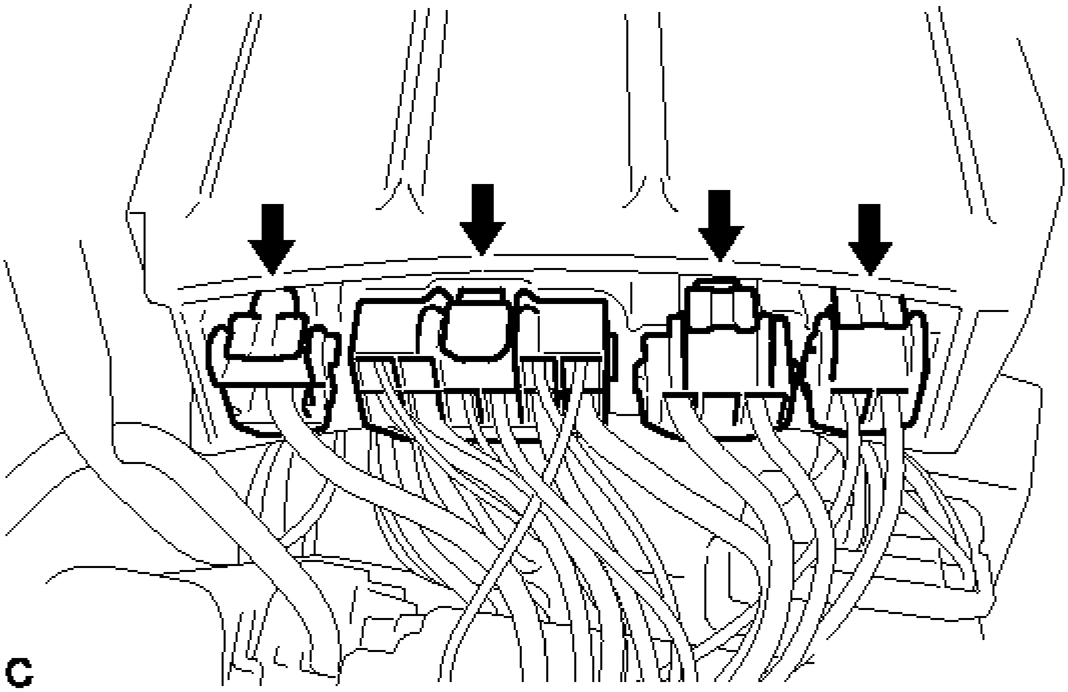

Fig. 67: Identifying No. 1 Integration Relay Connectors
Courtesy of TOYOTA MOTOR SALES, U.S.A., INC.

INSPECTION

INSPECTION

1. **INSPECT NO. 1 INTEGRATION RELAY**

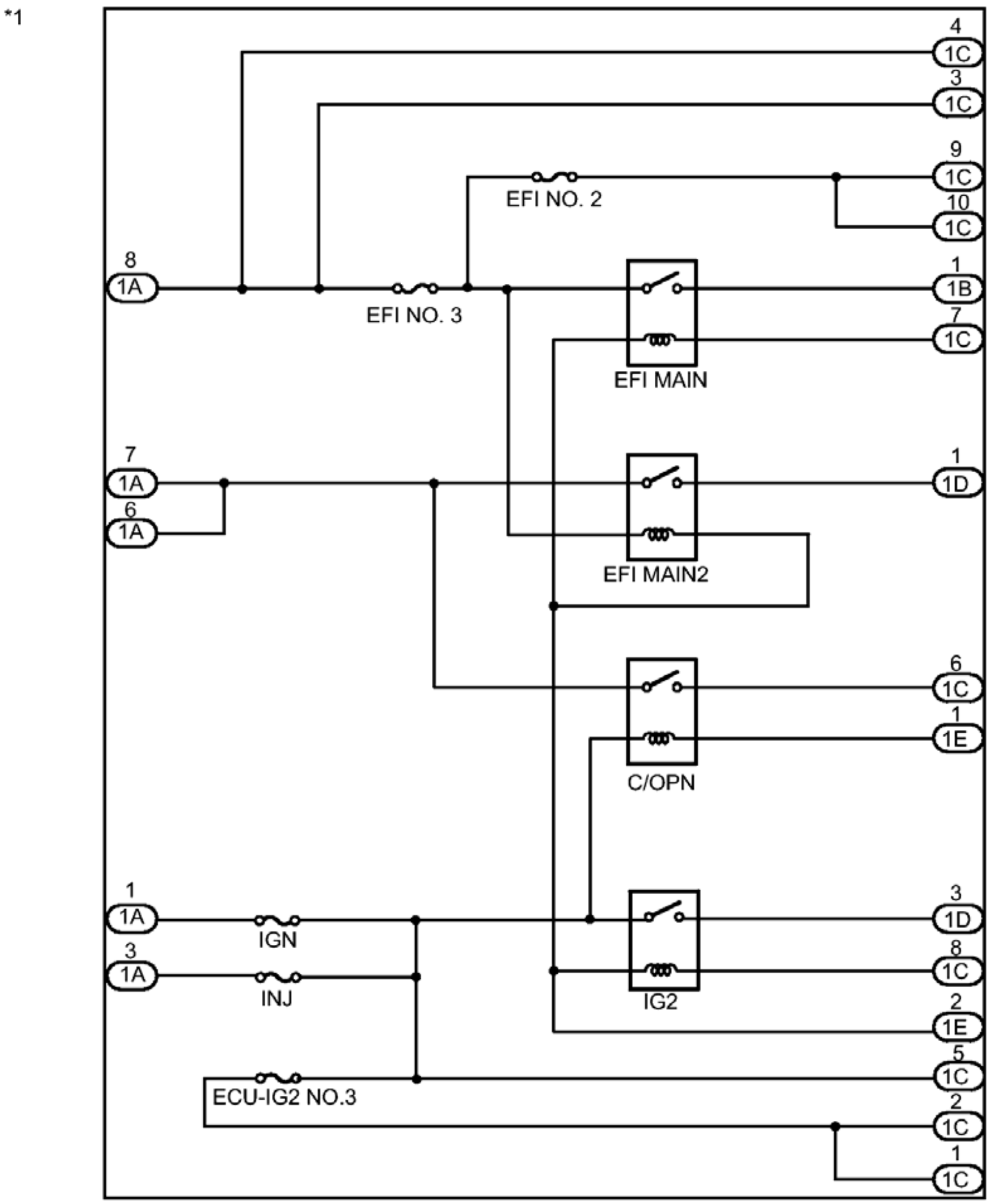
*1
4
1C
3
1C
9
1C
10
1C
EFI NO. 2
8
1A
EFI NO. 3
1
1B
7
1C
EFI MAIN
7
1A
6
1A
1
1D
EFI MAIN2
6
1C
1
1E
C/OPN
1
1A
3
1A
IGN
INJ
3
1D
8
1C
IG2
2
1E
5
1C
ECU-IG2 NO.3
2
1C
1
1C

Fig. 68: No. 1 Integration Relay - Wiring Diagram
Courtesy of TOYOTA MOTOR SALES, U.S.A., INC.

TEXT IN ILLUSTRATION

*1	No. 1 Integration Relay	-	-

a. EFI MAIN RELAY:
   1. Measure the resistance according to the value(s) in the table below.

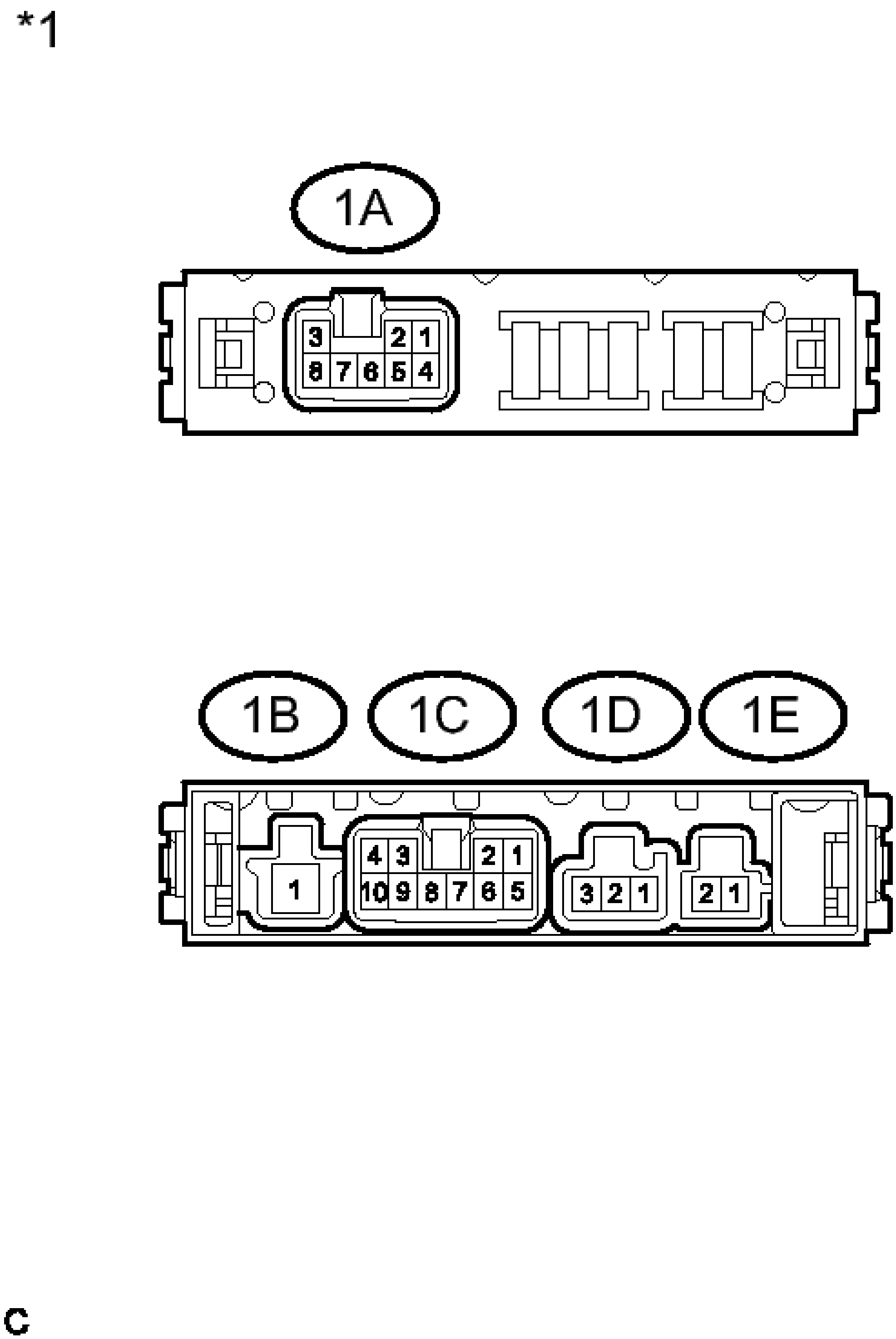
*1
1A
3 2 1
8 7 6 5 4
1B
1C
1D
1E
1
4 3 2 1
10 9 8 7 6 5
3 2 1
2 1
C

Fig. 69: Identifying No. 1 Integration Relay Connector Terminals
Courtesy of TOYOTA MOTOR SALES, U.S.A., INC.

TEXT IN ILLUSTRATION

	No. 1

*1	Integration Relay

Standard Resistance

Tester Connection	**Condition**	**Specified Condition**
No. 1 integration relay 1B-1 - No. 1 integration relay 1A-8	Auxiliary battery voltage is not applied between terminals 1C-7 and 1E-2	10 kohms or higher
No. 1 integration relay 1B-1 - No. 1 integration relay 1A-8	Auxiliary battery voltage is applied between terminals 1C-7 and 1E-2	Below 1 ohms
No. 1 integration relay 1B-1 - No. 1 integration relay 1C-3		
No. 1 integration relay 1B-1 - No. 1 integration relay 1C-4		
No. 1 integration relay 1B-1 - No. 1 integration relay 1C-9		
No. 1 integration relay 1B-1 - No. 1 integration relay 1C-10		

If the resistance is not as specified, replace the No. 1 integration relay.

b. EFI MAIN2 RELAY:
   1. Measure the resistance according to the value(s) in the table below.

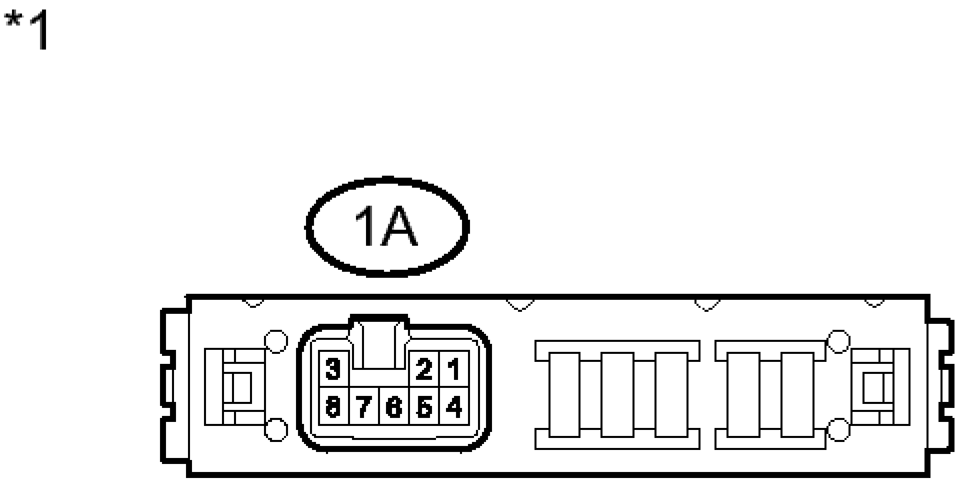
*1
1A
3 2 1
8 7 6 5 4

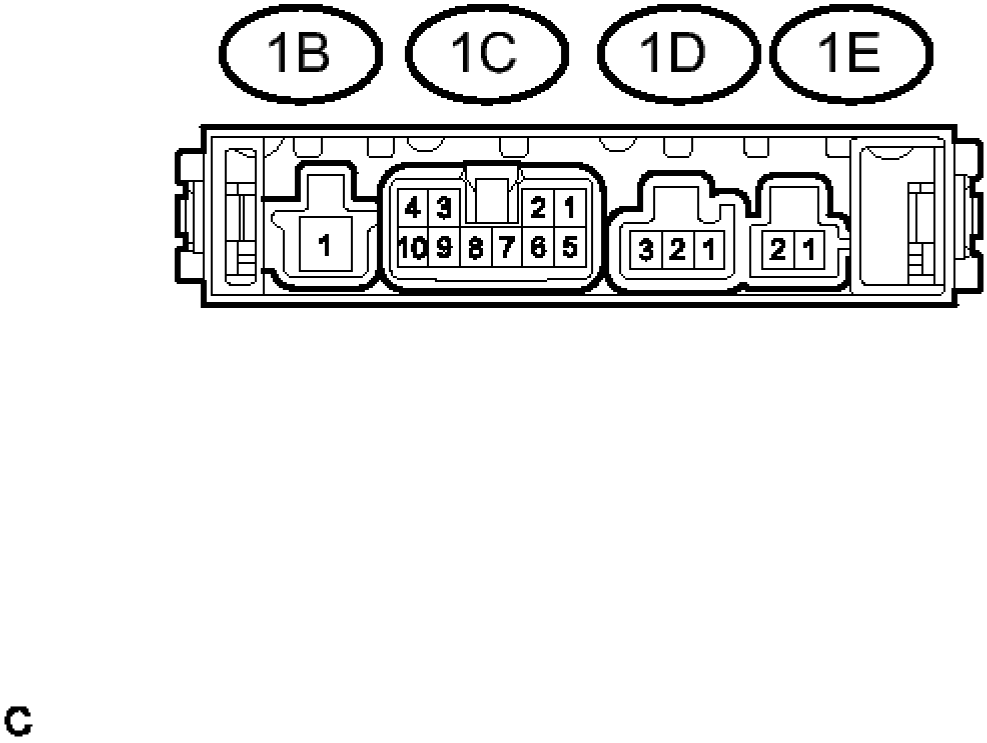
1B
1C
1D
1E
1
4 3 2 1
10 9 8 7 6 5
3 2 1
2 1
C

Fig. 70: Identifying No. 1 Integration Relay Connector Terminals
Courtesy of TOYOTA MOTOR SALES, U.S.A., INC.

TEXT IN ILLUSTRATION

*1	No. 1 Integration Relay

Standard Resistance

Tester Connection	Condition	Specified Condition
No. 1 integration relay 1A-6 - No. 1 integration relay 1D-1	Auxiliary battery voltage is not applied between terminals 1A-8 and 1E-2	10 kohms or higher
No. 1 integration relay 1A-6 - No. 1 integration relay 1D-1	Auxiliary battery voltage is applied between terminals 1A-8 and 1E-2	Below 1 ohms
No. 1 integration relay 1A-7 - No. 1 integration relay 1D-1		

If the resistance is not as specified, replace the No. 1 integration relay.

c. IG2 RELAY:

1. Measure the resistance according to the value(s) in the table below.

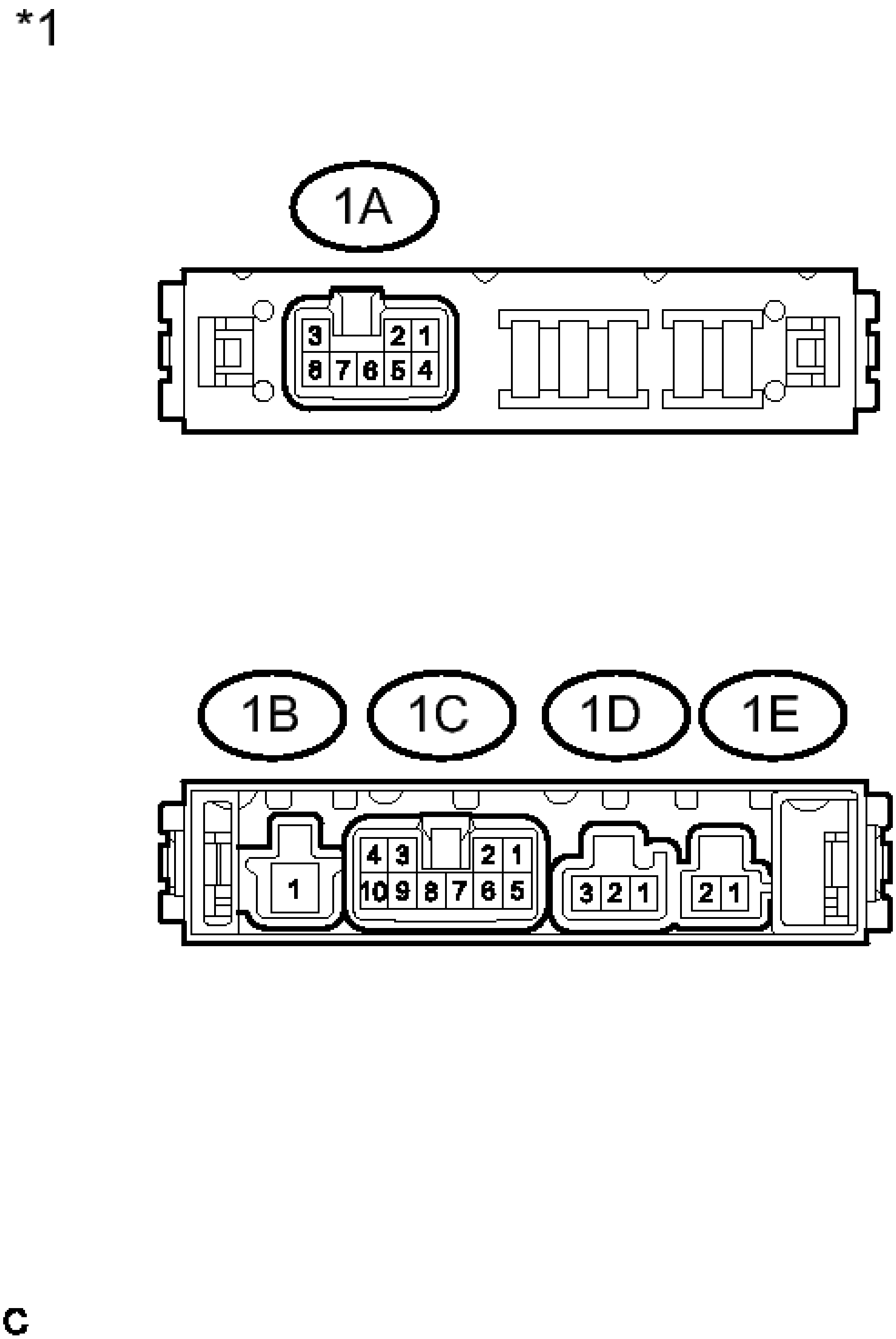
*1
1A
3
2
1
8
7
6
5
4
1B
1C
1D
1E
1
4
3
2
1
10
9
8
7
6
5
3
2
1
2
1
C

Fig. 71: Identifying No. 1 Integration Relay Connector Terminals
Courtesy of TOYOTA MOTOR SALES, U.S.A., INC.

TEXT IN ILLUSTRATION

	No. 1

*1	Integration Relay

Standard Resistance

Tester Connection	Condition	Specified Condition
No. 1 integration relay 1A-1 - No. 1 integration relay 1D-3	Auxiliary battery voltage is not applied between terminals 1C-8 and 1E-2	10 kohms or higher
No. 1 integration relay 1A-1 - No. 1 integration relay 1D-3	Auxiliary battery voltage is applied between terminals 1C-8 and 1E-2	Below 1 ohms
No. 1 integration relay 1A-3 - No. 1 integration relay 1D-3		
No. 1 integration relay 1C-1 - No. 1 integration relay 1D-3		
No. 1 integration relay 1C-2 - No. 1 integration relay 1D-3		
No. 1 integration relay 1C-5 - No. 1 integration relay 1D-3		

If the resistance is not as specified, replace the No. 1 integration relay.

d. C/OPN RELAY:
   1. Measure the resistance according to the value(s) in the table below.

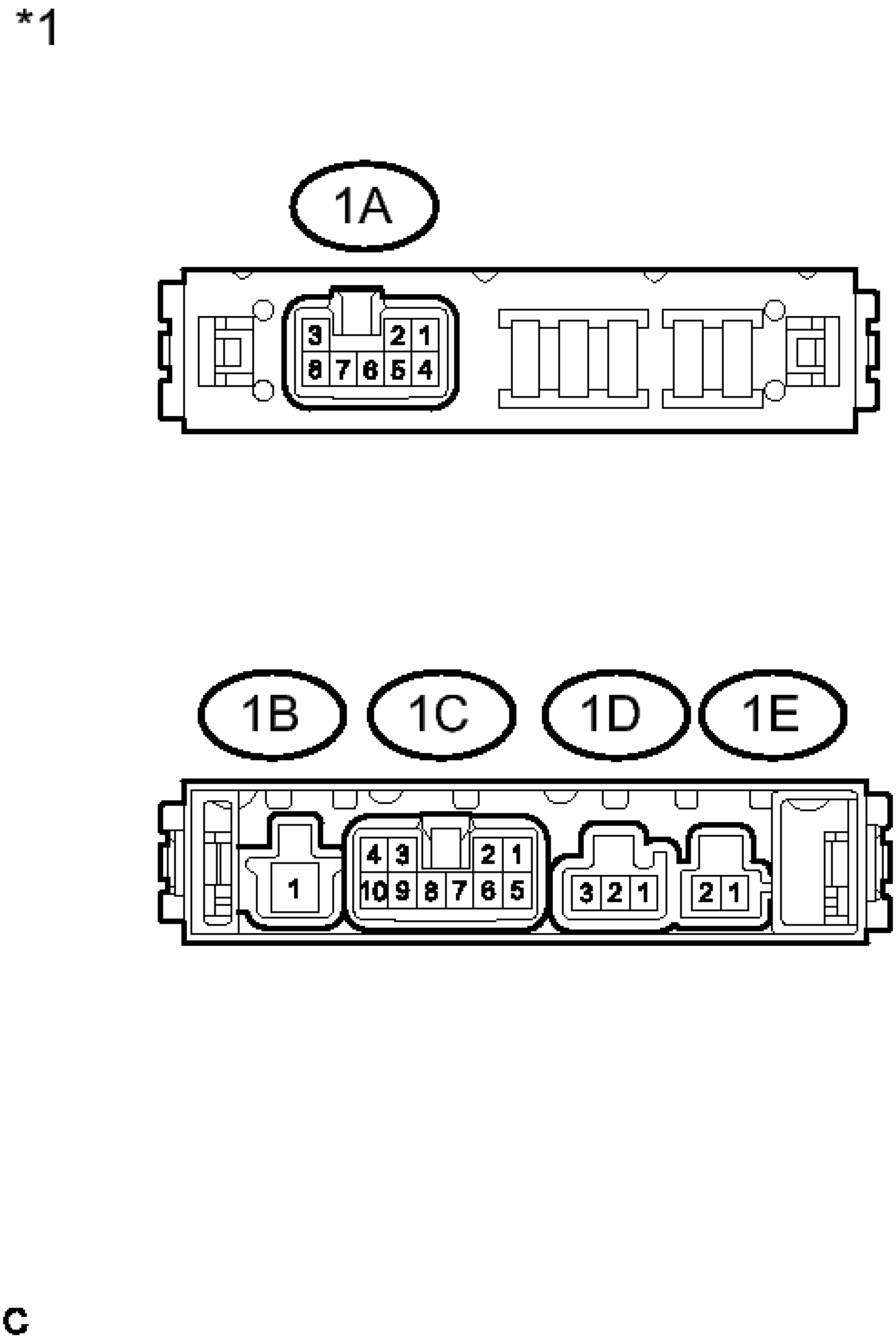
*1
1A
3 2 1
8 7 6 5 4
1B
1C
1D
1E
1
4 3 2 1
10 9 8 7 6 5
3 2 1
2 1
C

Fig. 72: Identifying No. 1 Integration Relay Connector Terminals
Courtesy of TOYOTA MOTOR SALES, U.S.A., INC.

TEXT IN ILLUSTRATION

*1	No. 1 Integration Relay

Standard Resistance

Tester Connection	Condition	Specified Condition
No. 1 integration relay 1A-6 - No. 1 integration relay 1D-1	Auxiliary battery voltage is not applied between terminals 1A-1 and 1E-1	10 kohms or higher
No. 1 integration relay 1A-6 - No. 1 integration relay 1D-1	Auxiliary battery voltage is applied between terminals 1A-1 and 1E-1	Below 1 ohms
No. 1 integration relay 1A-7 - No. 1 integration relay 1D-1		

If the resistance is not as specified, replace the No. 1 integration relay.

INSTALLATION

INSTALLATION

1. **INSTALL NO. 1 INTEGRATION RELAY**
    a. Connect the 4 connectors.
    b. Attach the No. 1 integration relay to the engine room relay block.
    c. Connect the connector.
2. **INSTALL NO. 1 RELAY BLOCK COVER**

COOLANT

REPLACEMENT

REPLACEMENT

1. **DRAIN ENGINE COOLANT**

NOTE: **Do not remove the radiator cap sub-assembly or radiator drain cock plug while the engine and radiator are still hot. Pressurized, hot engine coolant and steam may be released and cause serious burns.**

   a. Loosen the radiator drain cock plug.
   b. Remove the radiator cap sub-assembly.

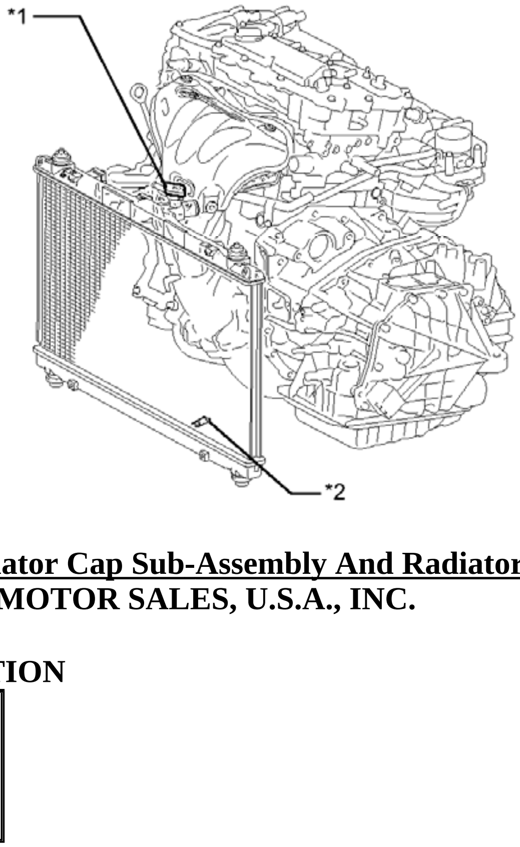

Fig. 1: Identifying Radiator Cap Sub-Assembly And Radiator Drain Cock Plug
Courtesy of TOYOTA MOTOR SALES, U.S.A., INC.

TEXT IN ILLUSTRATION

*1	Radiator Cap Sub-assembly	*2	Radiator Drain Cock Plug

HINT:

Collect the coolant in a container and dispose of it according to the regulations in your area.

2. **ADD ENGINE COOLANT**
   a. Tighten the radiator drain cock plug by hand.
   b. Slowly fill the radiator with TOYOTA Super Long Life Coolant (SLLC).

      NOTE: Never use water as a substitute for engine coolant.

      Specified capacity

      7.3 liters (7.7 US qts, 6.4 lmp. qts)

      HINT:

      TOYOTA vehicles are filled with TOYOTA SLLC at the factory. In order to avoid damage to the engine cooling system and other technical problems, only use TOYOTA SLLC or similar high quality ethylene glycol based non-silicate, non-amine, non-nitrite, non-borate coolant with long-life hybrid organic acid technology (coolant with long-life hybrid organic acid technology is a combination of low phosphates and organic acids).

   c. Slowly pour coolant into the radiator reserve tank assembly until it reaches the full line.
   d. Squeeze the No. 1 and No. 2 radiator hoses several times by hand, and then check the level of the coolant.

      If the coolant level is low, add coolant.

   e. Install the radiator cap sub-assembly and reserve tank cap.
   f. Bleed air from the cooling system.

      NOTE:
      - **Before starting the engine, turn the A/C switch off.**
      - **Adjust the heater control to the maximum hot setting.**
      - **Adjust the blower speed to the low setting.**

      1. Warm up the engine until the thermostat opens. While the thermostat is open, circulate the coolant for several minutes.

         HINT:

         The thermostat open timing can be confirmed by squeezing the No. 2 radiator hose by hand, and sensing vibrations when the engine coolant starts to flow inside the hose.

      2. Maintain the engine speed at 2500 to 3000 rpm.
      3. Squeeze the No. 1 and No. 2 radiator hoses several times by hand to bleed air.

WARNING: When squeezing the radiator hoses:

- **Wear protective gloves.**
- **Be careful as the radiator hoses are hot.**
- **Keep your hands away from the cooling fans.**

NOTE:

- **Make sure that the radiator reserve tank assembly still has some coolant in it.**
- **If the coolant temperature gauge indicates an excessive temperature, turn off the engine and let it cool.**
- **If there is not enough coolant, the engine may overheat or be seriously damaged.**
- **If the radiator reserve tank assembly does not have enough coolant, perform the following: 1) stop the engine, 2) wait until the coolant has cooled down, and 3) add coolant until the reserve tank assembly is filled to the full line.**

g. Stop the engine and wait until the engine coolant cools down.

h. Add engine coolant to the full line on the radiator reserve tank assembly.

3. **INSPECT FOR COOLANT LEAK** . Refer to **ON-VEHICLE INSPECTION - Step 1**

WATER PUMP

COMPONENTS

ILLUSTRATION

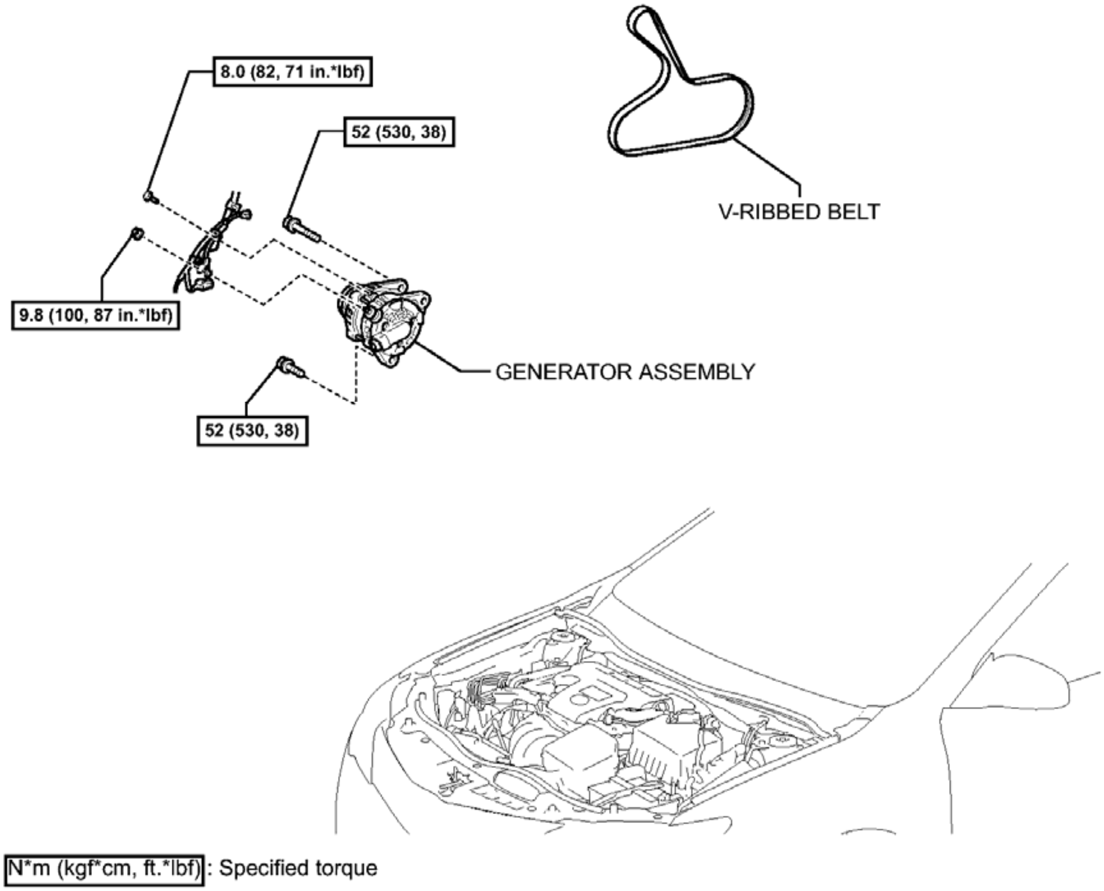
8.0 (82, 71 in.*lbf)
52 (530, 38)
V-RIBBED BELT
9.8 (100, 87 in.*lbf)
GENERATOR ASSEMBLY
52 (530, 38)
N*m (kgf*cm, ft.*lbf): Specified torque

Fig. 2: Identifying Water Pump Replacement Components With Torque Specifications (1 Of 2)
Courtesy of TOYOTA MOTOR SALES, U.S.A., INC.

ILLUSTRATION

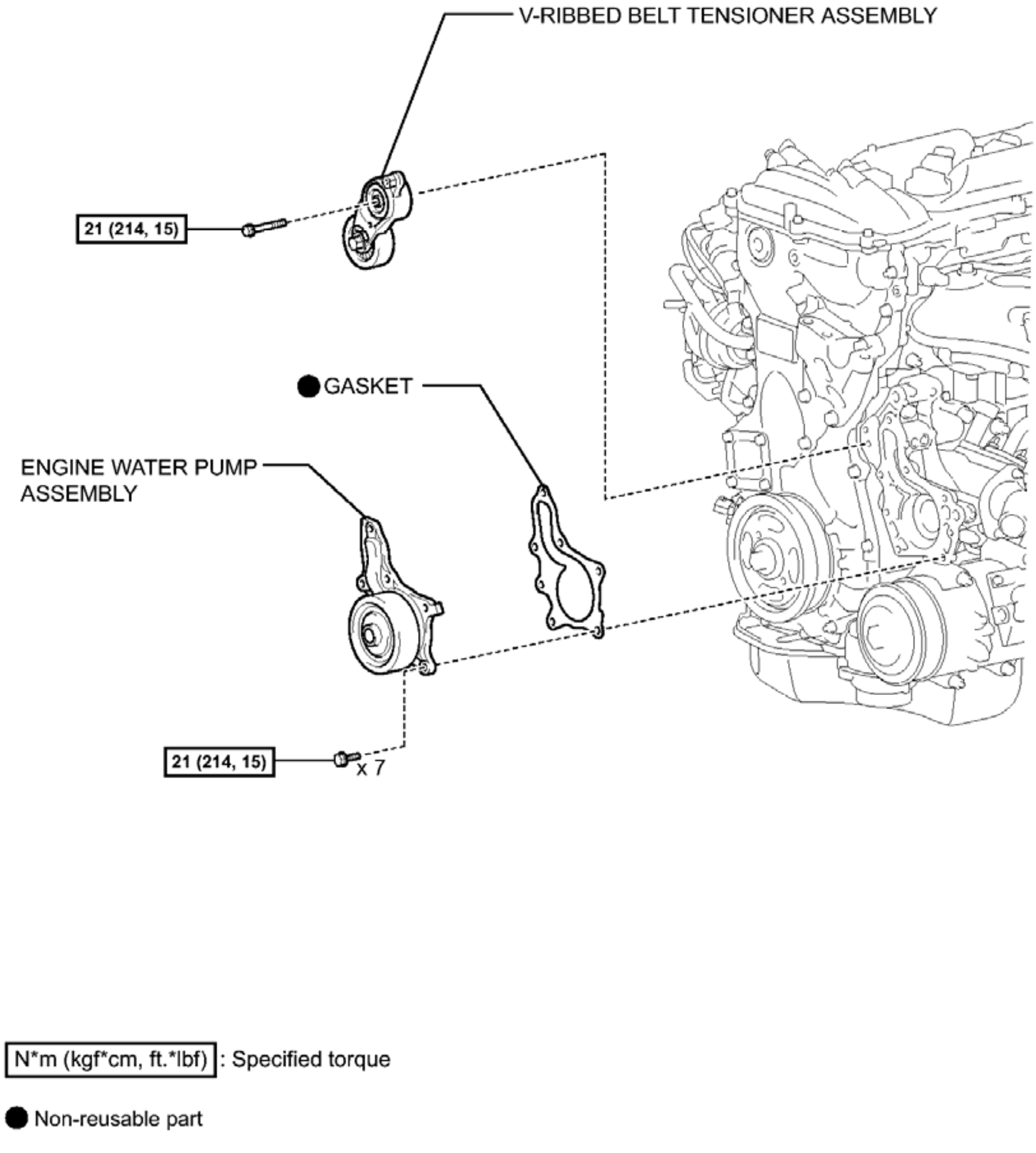
V-RIBBED BELT TENSIONER ASSEMBLY
21 (214, 15)
GASKET
ENGINE WATER PUMP ASSEMBLY
21 (214, 15)
x 7
N*m (kgf*cm, ft.*lbf) : Specified torque
Non-reusable part
P

Fig. 3: Identifying Water Pump Replacement Components With Torque Specifications (2 Of 2)
Courtesy of TOYOTA MOTOR SALES, U.S.A., INC.

ON-VEHICLE INSPECTION

ON-VEHICLE INSPECTION

1. **REMOVE V-RIBBED BELT**

Refer to **REMOVAL**

2. **INSPECT ENGINE WATER PUMP ASSEMBLY**
    a. Visually check the drain hole for coolant leakage.

       If leakage is found, replace the engine water pump assembly.

    b. Turn the pulley and check that the engine water pump bearing moves smoothly without making a clicking noise.

       If the bearing does not move smoothly, replace the engine water pump assembly.

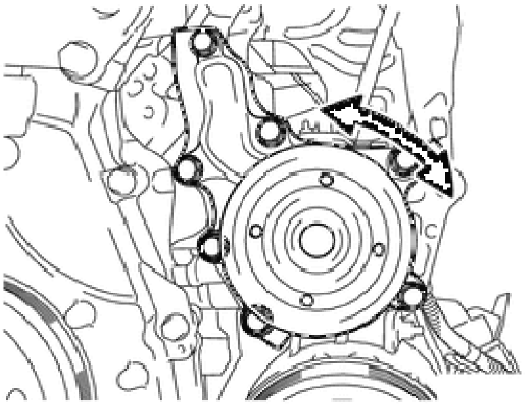

Fig. 4: Checking Water Pump Bearing
Courtesy of TOYOTA MOTOR SALES, U.S.A., INC.

3. **INSTALL V-RIBBED BELT**

   Refer to **INSTALLATION**

REMOVAL

REMOVAL

1. **DRAIN ENGINE COOLANT** See step 1
2. **REMOVE V-RIBBED BELT**

   Refer to **REMOVAL**

3. **REMOVE GENERATOR ASSEMBLY**

   Refer to **REMOVAL**

4. **REMOVE V-RIBBED BELT TENSIONER ASSEMBLY** . Refer to **DISASSEMBLY - Step 13**
5. **REMOVE ENGINE WATER PUMP ASSEMBLY**

a. Remove the 7 bolts, engine water pump and gasket.

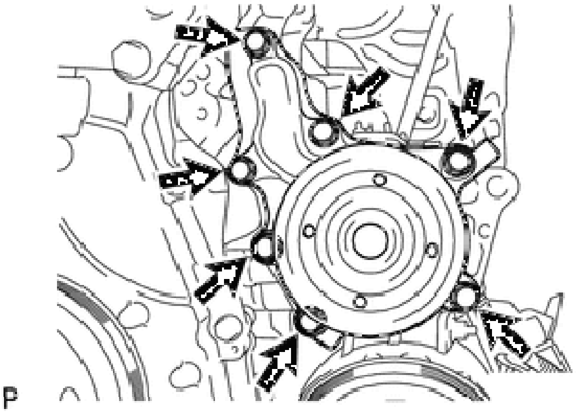

Fig. 5: Locating Bolts And Water Pump
Courtesy of TOYOTA MOTOR SALES, U.S.A., INC.

INSTALLATION

INSTALLATION

1. **INSTALL ENGINE WATER PUMP ASSEMBLY**
    a. Install a new gasket and the engine water pump with the 7 bolts.

    Torque: 21 N*m (214 kgf*cm, 15 ft.*lbf)

2. **INSTALL V-RIBBED BELT TENSIONER ASSEMBLY** . Refer to **REASSEMBLY - Step 48**
3. **INSTALL GENERATOR ASSEMBLY**

    Refer to **INSTALLATION**

4. **INSTALL V-RIBBED BELT**

    Refer to **INSTALLATION**

5. **ADD ENGINE COOLANT** See step 2
6. **INSPECT FOR COOLANT LEAK** . Refer to **ON-VEHICLE INSPECTION - Step 1**

THERMOSTAT

COMPONENTS

ILLUSTRATION

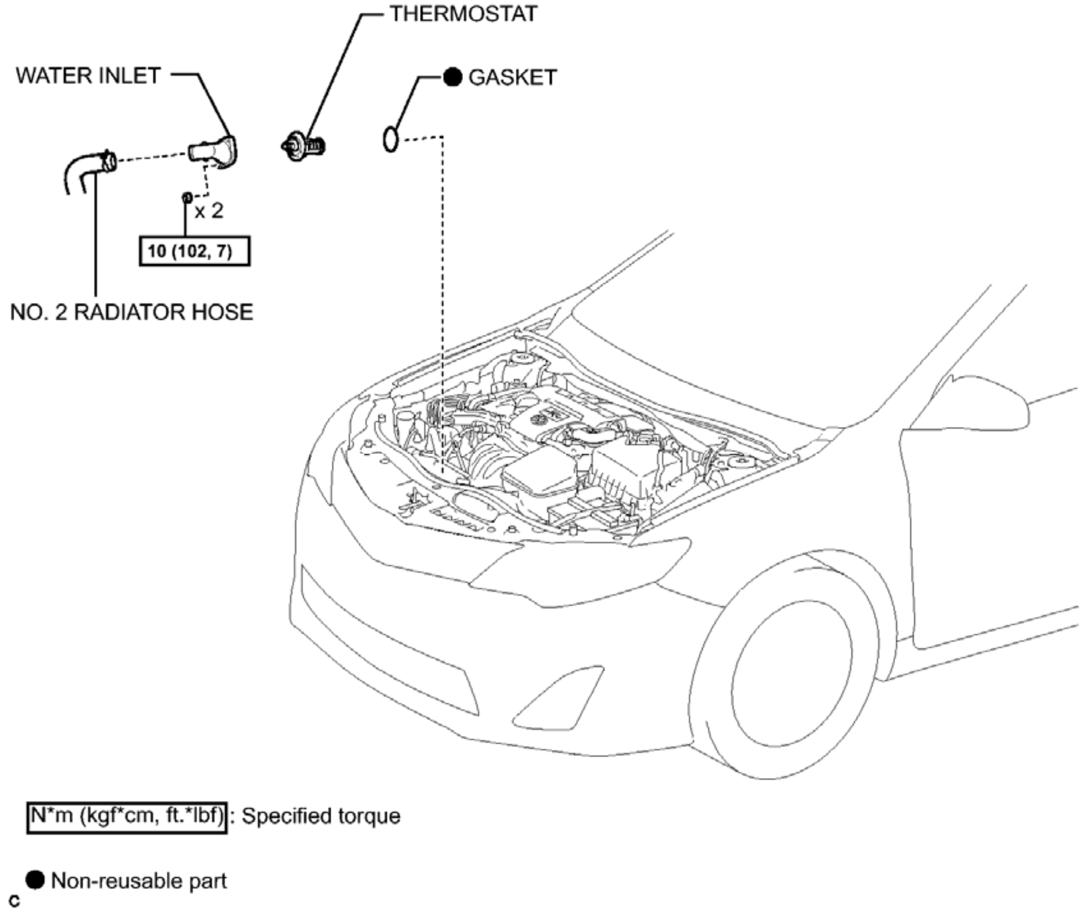
THERMOSTAT
WATER INLET
GASKET
x 2
10 (102, 7)
NO. 2 RADIATOR HOSE
N*m (kgf*cm, ft.*lbf): Specified torque
● Non-reusable part
c

Fig. 6: Identifying Thermostat Replacement Components With Torque Specifications
Courtesy of TOYOTA MOTOR SALES, U.S.A., INC.

REMOVAL

REMOVAL

1. **DRAIN ENGINE COOLANT** See step 1
2. **DISCONNECT NO. 2 RADIATOR HOSE** . Refer to **REMOVAL - Step 25**
3. **REMOVE WATER INLET**
    a. Remove the 2 nuts and water inlet.

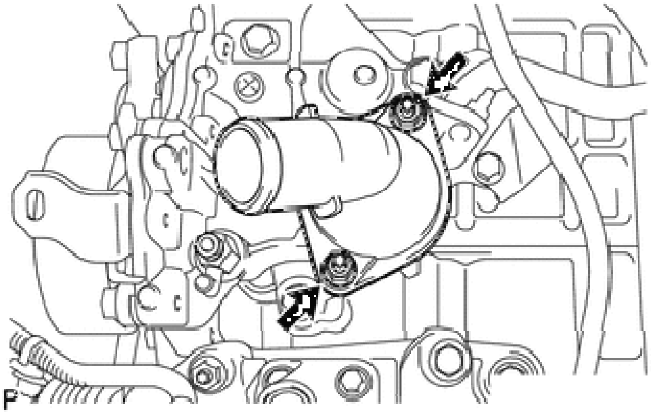

Fig. 7: Locating Water Inlet Nuts
Courtesy of TOYOTA MOTOR SALES, U.S.A., INC.

4. **REMOVE THERMOSTAT**
    a. Remove the thermostat.
    b. Remove the gasket from the thermostat.

INSPECTION

INSPECTION

1. **INSPECT THERMOSTAT**

    HINT:

    The valve opening temperature is inscribed on the thermostat.

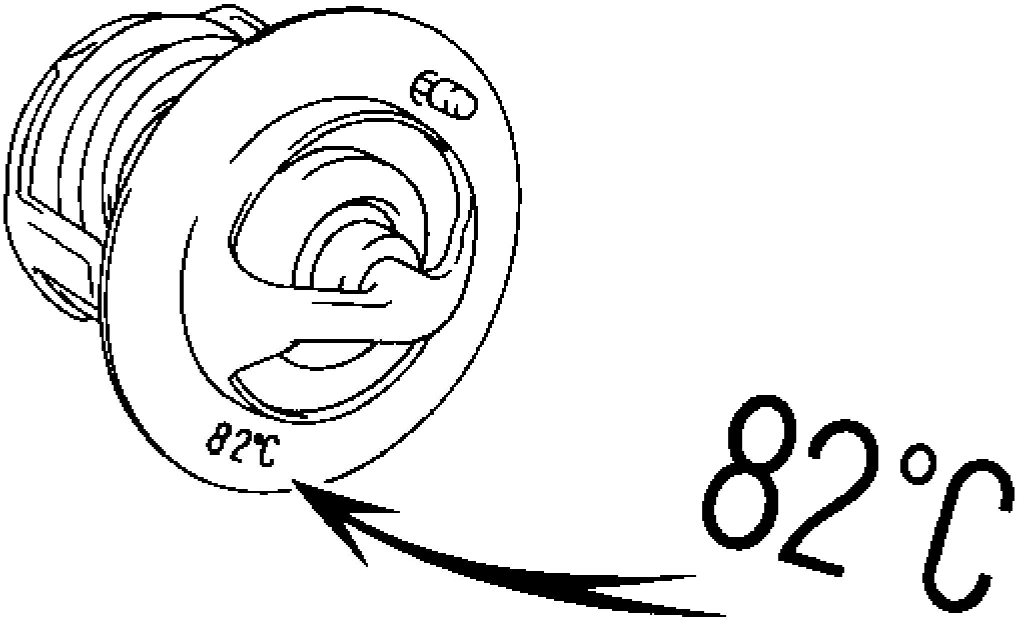

Fig. 8: Identifying Valve Opening Temperature
Courtesy of TOYOTA MOTOR SALES, U.S.A., INC.

a. Immerse the thermostat in water, and then gradually heat the water.

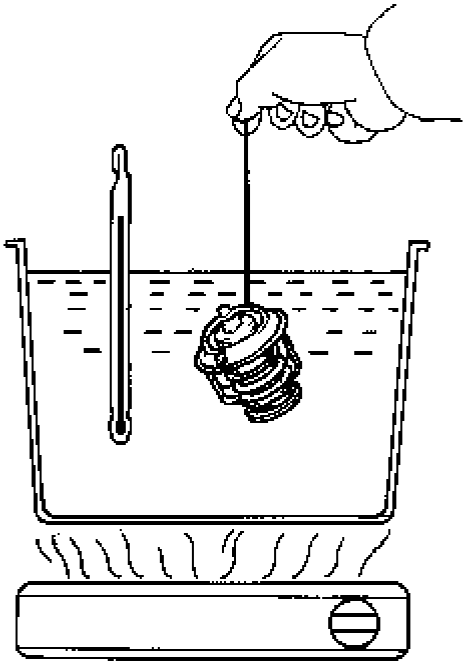

Fig. 9: Checking Valve Opening Temperature Of Thermostat
Courtesy of TOYOTA MOTOR SALES, U.S.A., INC.

b. Check that the valve of the thermostat opens at the specified temperature.

   Standard valve opening temperature

   80 to 84°C (176 to 183°F)

   If the valve does not open as specified, replace the thermostat.

c. Check the valve lift.

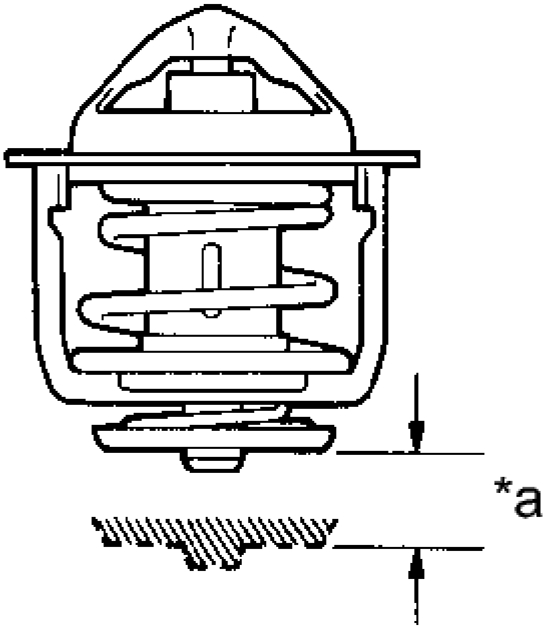

Fig. 10: Identifying Valve Lift
Courtesy of TOYOTA MOTOR SALES, U.S.A., INC.

TEXT IN ILLUSTRATION

*a	Valve Lift

   Standard valve lift

   10 mm (0.394 in.) or more at 95°C (203°F)

   If the valve lift is not as specified, replace the thermostat.

d. Check that the valve is fully closed when the thermostat is at a low temperature (below 77°C (171°F)).

   If the valve is not fully closed, replace the thermostat.

INSTALLATION

INSTALLATION

1. **INSTALL THERMOSTAT**
    a. Install a new gasket to the thermostat.
    b. Install the thermostat with the jiggle valve facing upward.

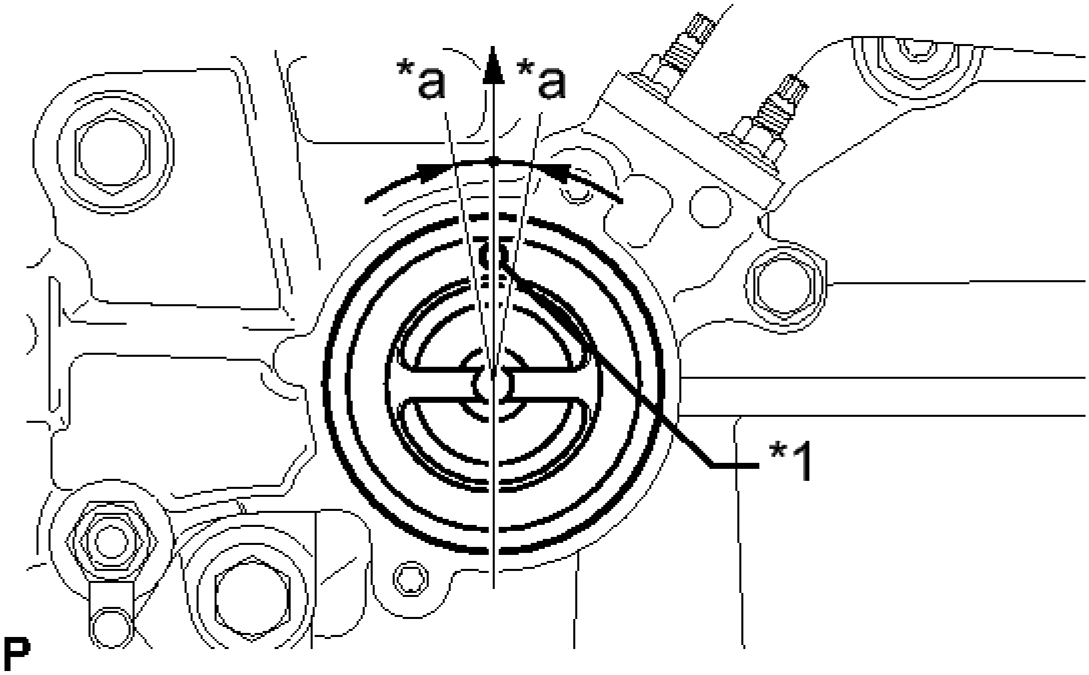

Fig. 11: Identifying Jiggle Valve
Courtesy of TOYOTA MOTOR SALES, U.S.A., INC.

TEXT IN ILLUSTRATION

*1	Jiggle valve
*a	10°

HINT:

The jiggle valve may be set to within 10° on either side of the prescribed position.

2. **INSTALL WATER INLET**
    a. Install the water inlet with the 2 nuts.

    Torque: 10 N*m (102 kgf*cm, 7 ft.*lbf)

3. **CONNECT NO. 2 RADIATOR HOSE** . Refer to **INSTALLATION - Step 48**

4. **ADD ENGINE COOLANT** See step 2
5. **INSPECT FOR COOLANT LEAK** . Refer to **ON-VEHICLE INSPECTION - Step 1**

COOLING FAN MOTOR

COMPONENTS

ILLUSTRATION

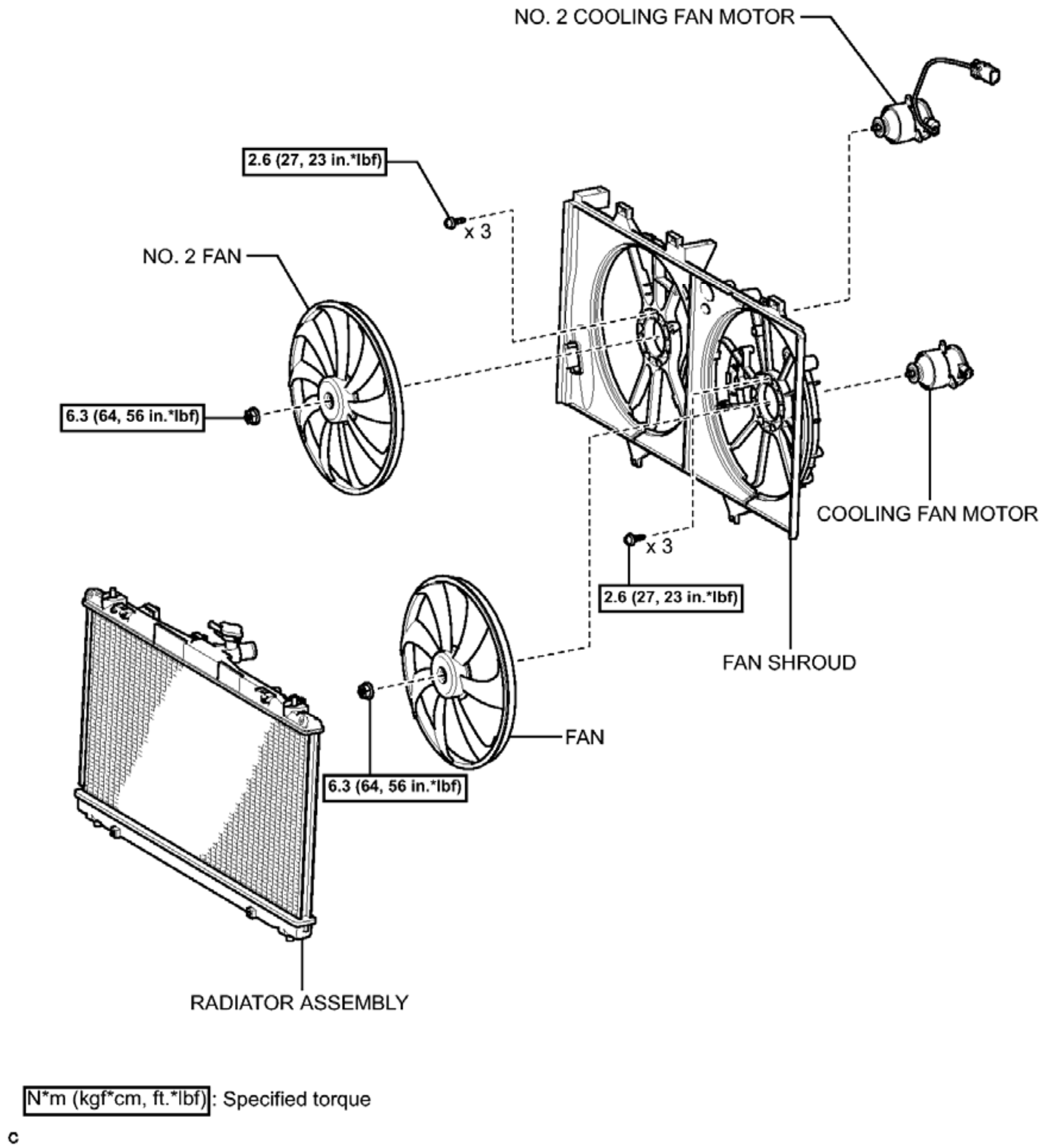
NO. 2 COOLING FAN MOTOR
2.6 (27, 23 in.*lbf)
x 3
NO. 2 FAN
6.3 (64, 56 in.*lbf)
COOLING FAN MOTOR
x 3
2.6 (27, 23 in.*lbf)
FAN SHROUD
FAN
6.3 (64, 56 in.*lbf)
RADIATOR ASSEMBLY
N*m (kgf*cm, ft.*lbf): Specified torque
c

Fig. 12: Identifying Cooling Fan Motor Replacement Components With Torque Specifications
Courtesy of TOYOTA MOTOR SALES, U.S.A., INC.

ON-VEHICLE INSPECTION

ON-VEHICLE INSPECTION

1. **COOLING FAN MOTOR**

a. Check that the motor operates smoothly when the battery is connected to the fan motor connector.

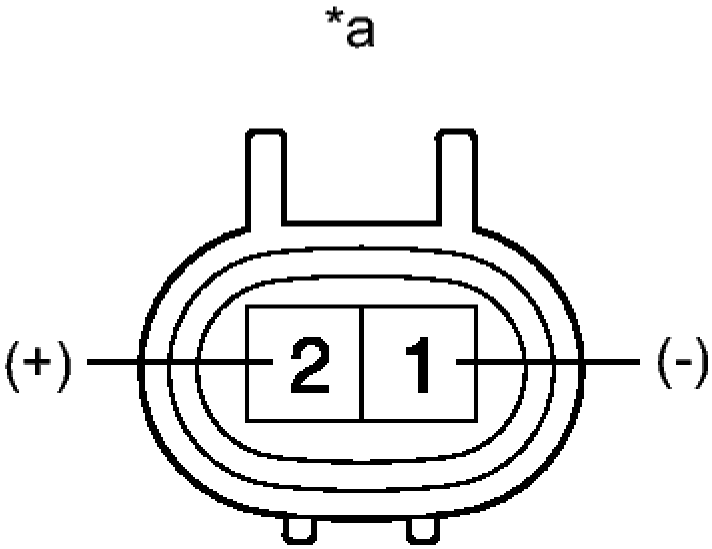

Fig. 13: Identifying Fan Motor Connector
Courtesy of TOYOTA MOTOR SALES, U.S.A., INC.

TEXT IN ILLUSTRATION

*a	Component without harness connected (Cooling Fan Motor)

b. Measure the current while the motor is operating.

Standard Current

Item	Condition	Specified Condition
Cooling fan motor	Battery voltage applied at 20°C (68°F)	5.8 to 7.4 A

If the result is not as specified, replace the cooling fan motor.

2. **NO. 2 COOLING FAN MOTOR**
    a. Check that the motor operates smoothly when the battery is connected to the fan motor connector.

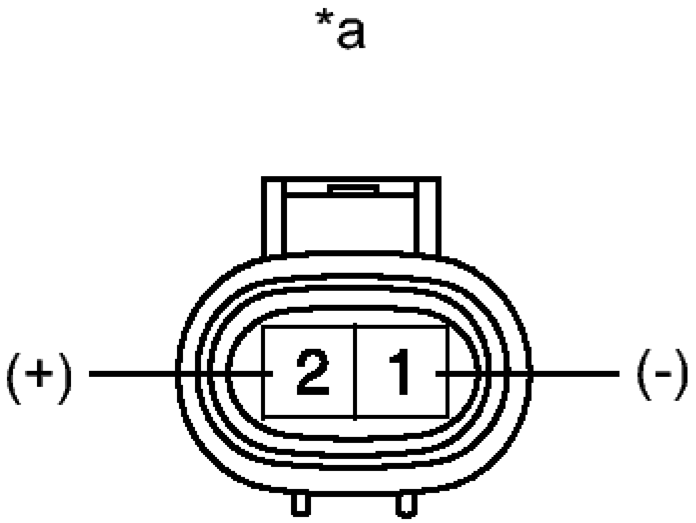

Fig. 14: Identifying No. 2 Cooling Fan Motor Connector
Courtesy of TOYOTA MOTOR SALES, U.S.A., INC.

TEXT IN ILLUSTRATION

*a	Component without harness connected (No. 2 Cooling Fan Motor)

    b. Measure the current while the motor is operating.

Standard Current

Item	Condition	Specified Condition
No. 2 Cooling fan motor	Battery voltage applied at 20°C (68°F)	5.8 to 7.4 A

If the result is not as specified, replace the No. 2 cooling fan motor.

REMOVAL

REMOVAL

1. **REMOVE RADIATOR ASSEMBLY**

   Refer to **REMOVAL**

2. **REMOVE FAN**
   a. Remove the nut and fan.

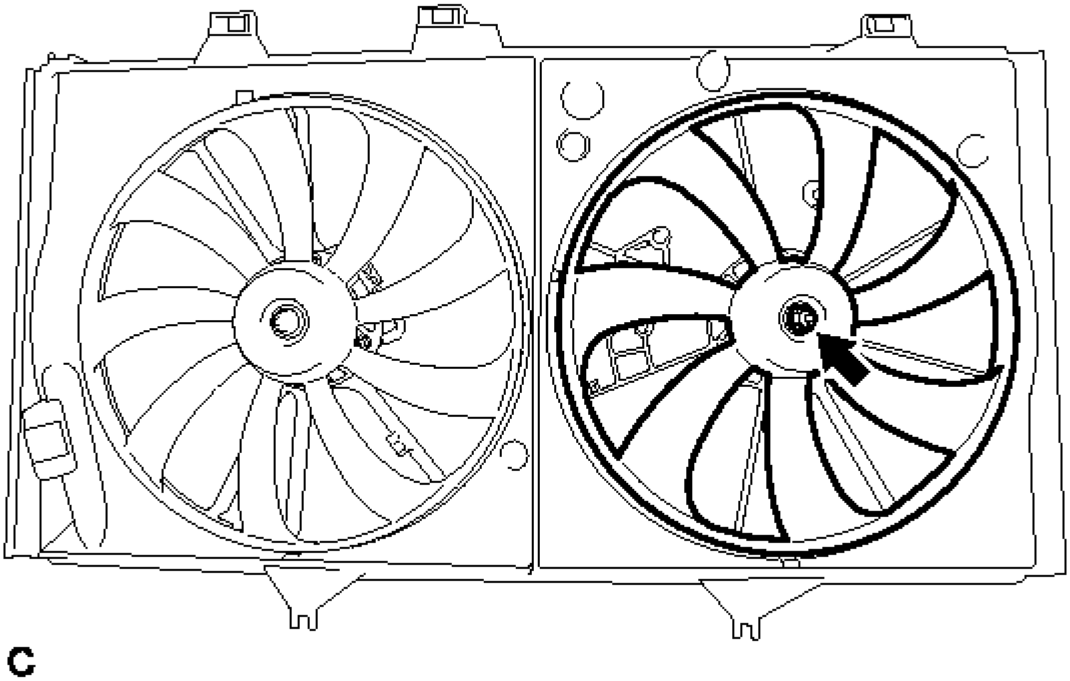

Fig. 15: Identifying Fan And Nut
Courtesy of TOYOTA MOTOR SALES, U.S.A., INC.

3. **REMOVE NO. 2 FAN**
   a. Remove the nut and No. 2 fan.

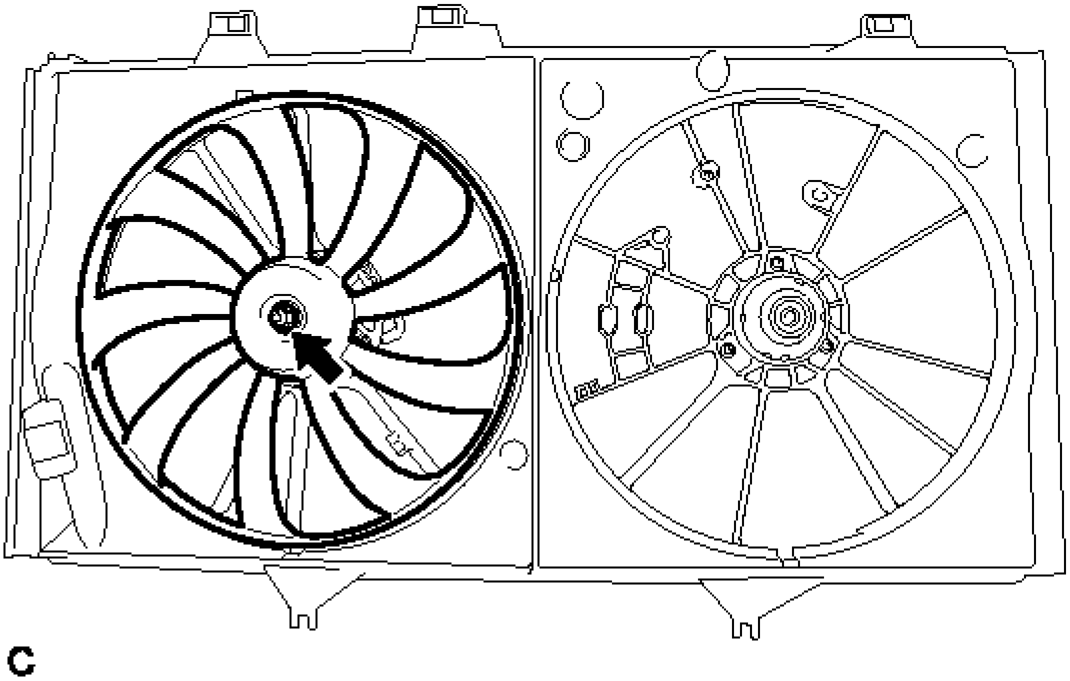

Fig. 16: Identifying No. 2 Fan And Nut
Courtesy of TOYOTA MOTOR SALES, U.S.A., INC.

4. **REMOVE COOLING FAN MOTOR**
    a. Remove the 3 screws and cooling fan motor.

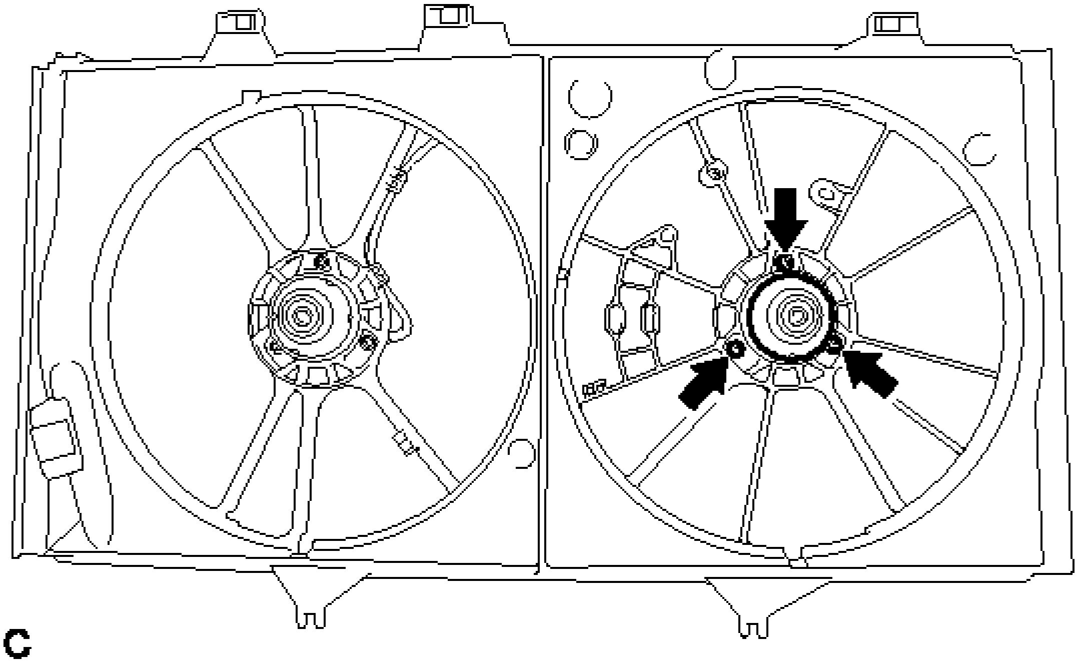

Fig. 17: Identifying Cooling Fan Motor Screws

Courtesy of TOYOTA MOTOR SALES, U.S.A., INC.

5. **REMOVE NO. 2 COOLING FAN MOTOR**
    a. Disconnect the 4 clamps.

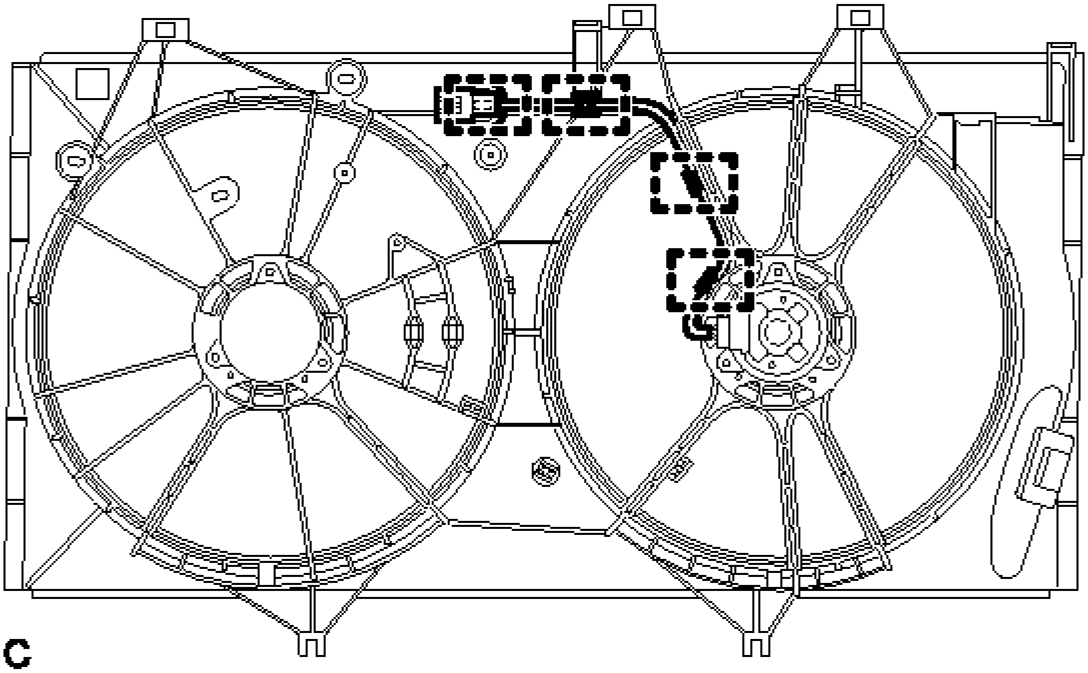

Fig. 18: Identifying No. Cooling Fan Motor Clamps
Courtesy of TOYOTA MOTOR SALES, U.S.A., INC.

    b. Remove the 3 screws and No. 2 cooling fan motor.

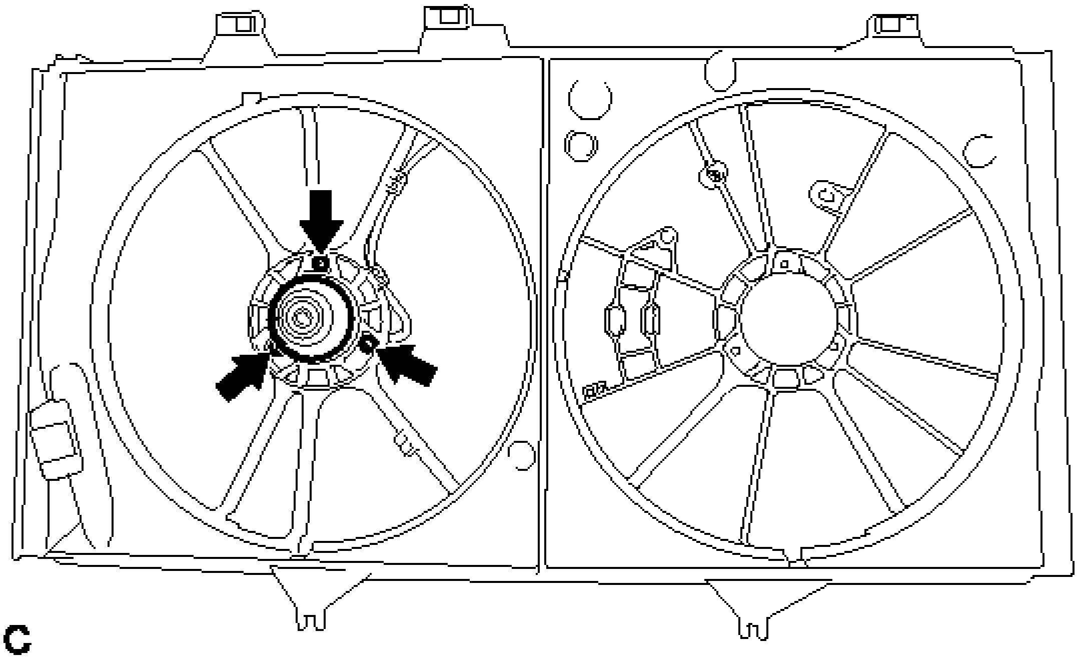

Fig. 19: Identifying No. 2 Cooling Fan Motor Screws
Courtesy of TOYOTA MOTOR SALES, U.S.A., INC.

INSTALLATION

INSTALLATION

1. **INSTALL NO. 2 COOLING FAN MOTOR**
   a. Install the No. 2 cooling fan motor with the 3 screws.

      Torque: 2.6 N*m (27 kgf*cm, 23 in.*lbf)

   b. Connect the 4 clamps.
2. **INSTALL COOLING FAN MOTOR**
   a. Install the cooling fan motor with the 3 screws.

      Torque: 2.6 N*m (27 kgf*cm, 23 in.*lbf)

3. **INSTALL NO. 2 FAN**
   a. Install the No. 2 fan with the nut.

      Torque: 6.3 N*m (64 kgf*cm, 56 in.*lbf)

4. **INSTALL FAN**
   a. Install the fan with the nut.

Torque: 6.3 N*m (64 kgf*cm, 56 in.*lbf)

5. **INSTALL RADIATOR ASSEMBLY**

   Refer to **INSTALLATION**

RADIATOR

COMPONENTS

ILLUSTRATION

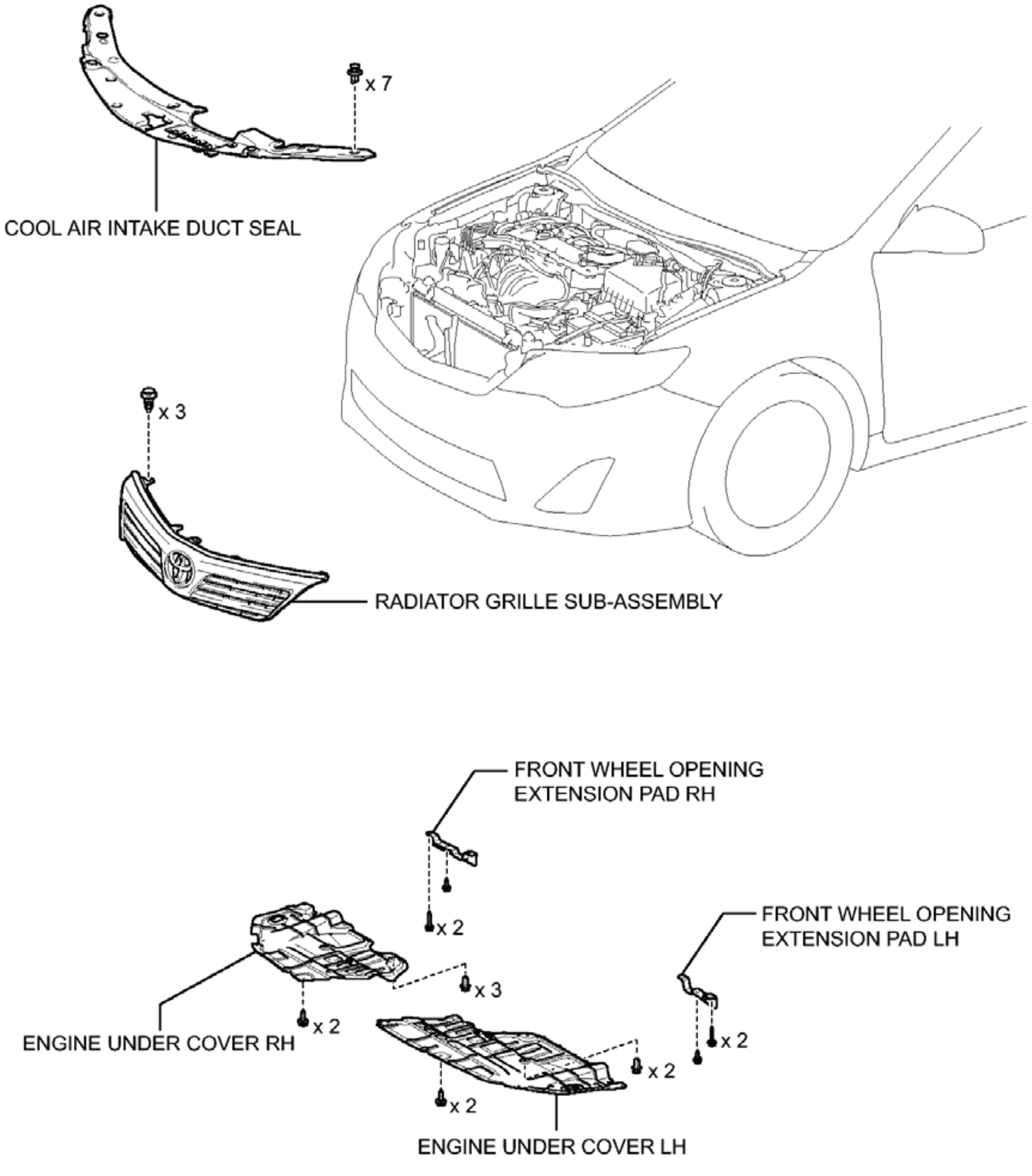
x 7
COOL AIR INTAKE DUCT SEAL
x 3
RADIATOR GRILLE SUB-ASSEMBLY
FRONT WHEEL OPENING EXTENSION PAD RH
x 2
FRONT WHEEL OPENING EXTENSION PAD LH
x 3
x 2
ENGINE UNDER COVER RH
x 2
x 2
x 2
ENGINE UNDER COVER LH

Fig. 20: Identifying Radiator Replacement Components With Torque Specifications (1 Of 3)
Courtesy of TOYOTA MOTOR SALES, U.S.A., INC.

ILLUSTRATION

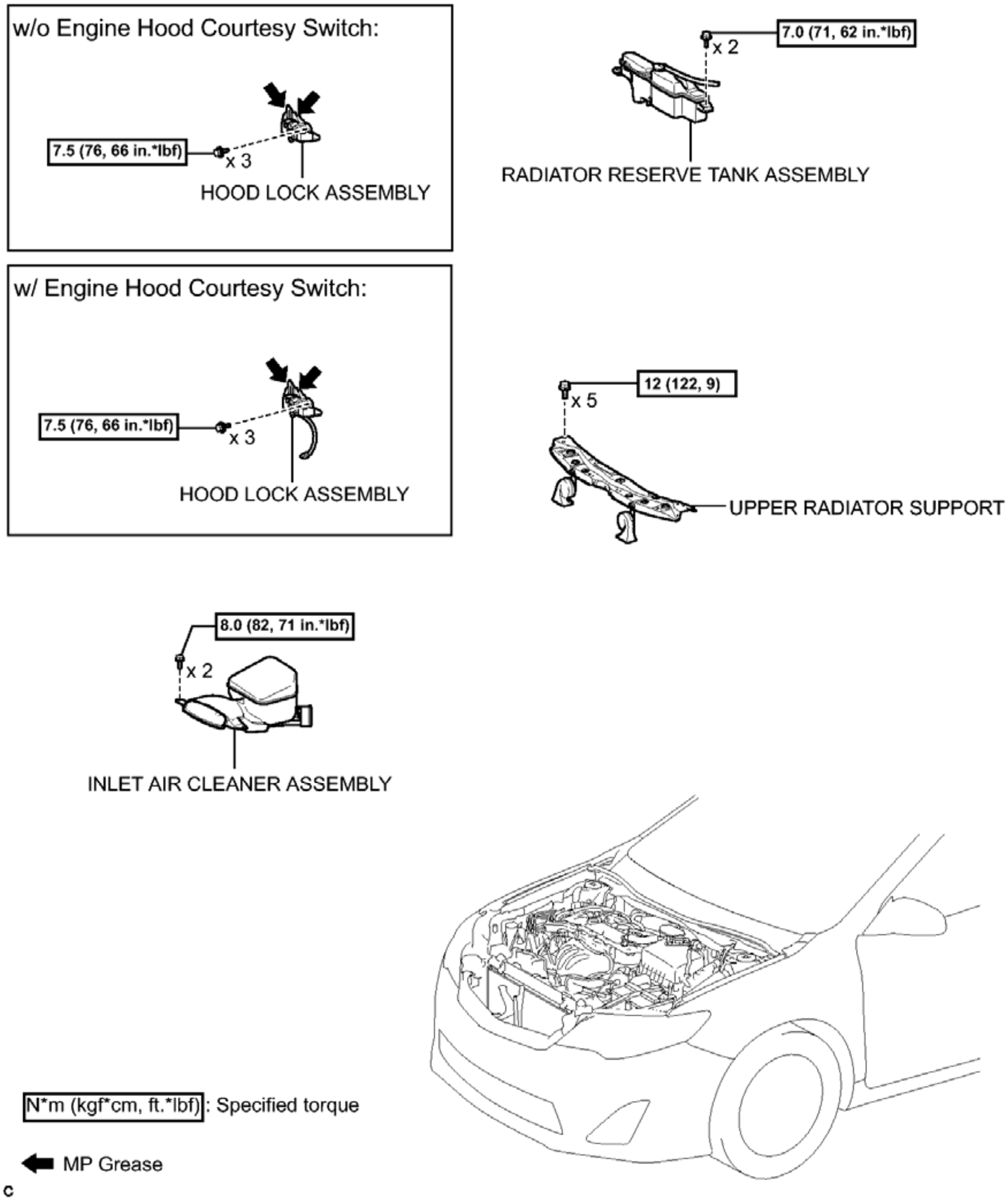
w/o Engine Hood Courtesy Switch:
7.5 (76, 66 in.*lbf)
x 3
HOOD LOCK ASSEMBLY
w/ Engine Hood Courtesy Switch:
7.5 (76, 66 in.*lbf)
x 3
HOOD LOCK ASSEMBLY
7.0 (71, 62 in.*lbf)
x 2
RADIATOR RESERVE TANK ASSEMBLY
12 (122, 9)
x 5
UPPER RADIATOR SUPPORT
8.0 (82, 71 in.*lbf)
x 2
INLET AIR CLEANER ASSEMBLY
N*m (kgf*cm, ft.*lbf): Specified torque
MP Grease
c

Fig. 21: Identifying Radiator Replacement Components With Torque Specifications (2 Of 3)
Courtesy of TOYOTA MOTOR SALES, U.S.A., INC.

ILLUSTRATION

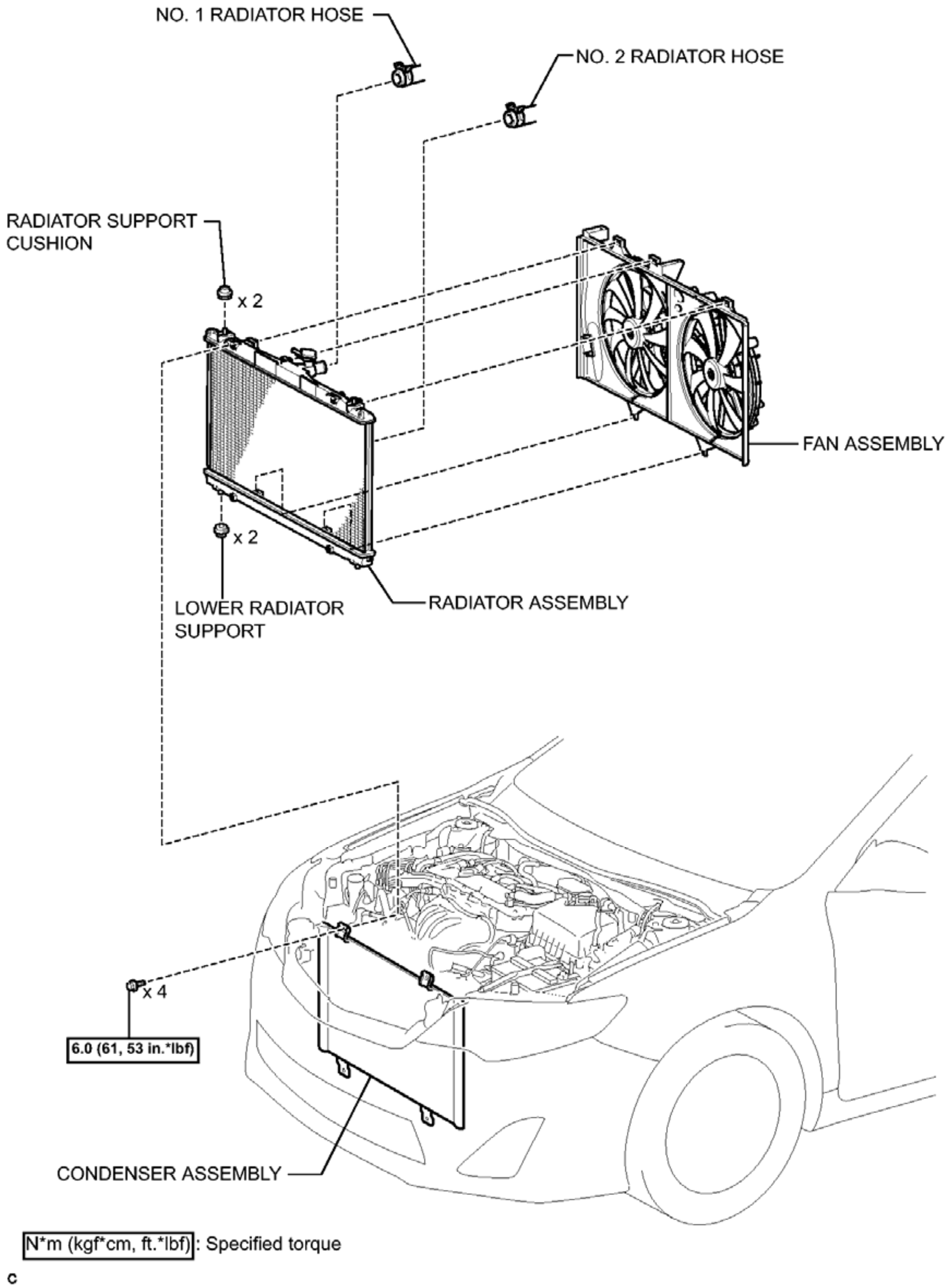
NO. 1 RADIATOR HOSE
NO. 2 RADIATOR HOSE
RADIATOR SUPPORT CUSHION
x 2
FAN ASSEMBLY
x 2
LOWER RADIATOR SUPPORT
RADIATOR ASSEMBLY
x 4
6.0 (61, 53 in.*lbf)
CONDENSER ASSEMBLY
N*m (kgf*cm, ft.*lbf): Specified torque
c

Fig. 22: Identifying Radiator Replacement Components With Torque Specifications (3 Of 3)
Courtesy of TOYOTA MOTOR SALES, U.S.A., INC.

ON-VEHICLE INSPECTION

ON-VEHICLE INSPECTION

1. **CHECK RADIATOR CAP SUB-ASSEMBLY**
    a. Measure the valve opening pressure.

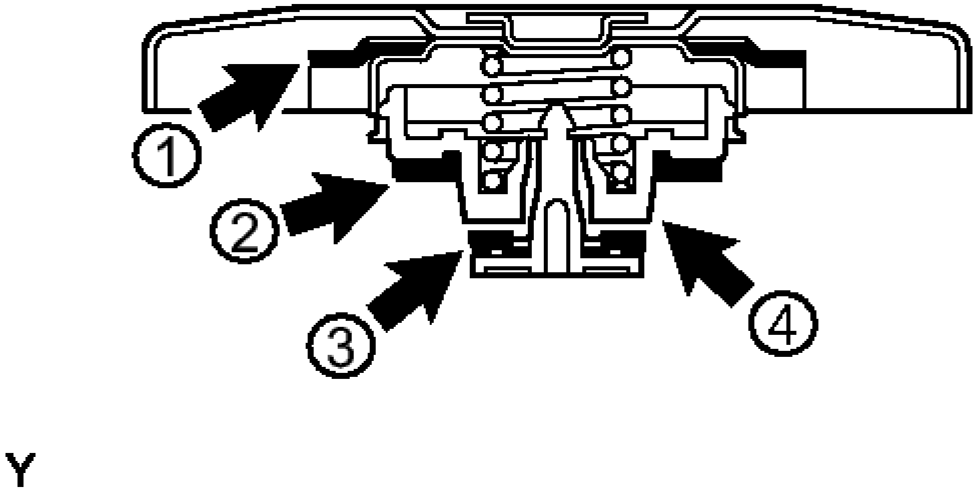

Fig. 23: Locating Rubber Packings 1, 2, 3 And 4
Courtesy of TOYOTA MOTOR SALES, U.S.A., INC.

1. If there are water stains or foreign matter on rubber packings 1, 2 or 3, clean the part(s) with water and finger scouring.
2. Check that rubber packings 1, 2 and 3 are not deformed, cracked or swollen.
3. Check that 3 and 4 are not stuck together.
4. Apply engine coolant to rubber packings 2 and 3 before using the radiator cap tester.
5. When using the cap tester, tilt it upward 30° or more.
6. Pump the cap tester several times, and check the maximum pressure*1.

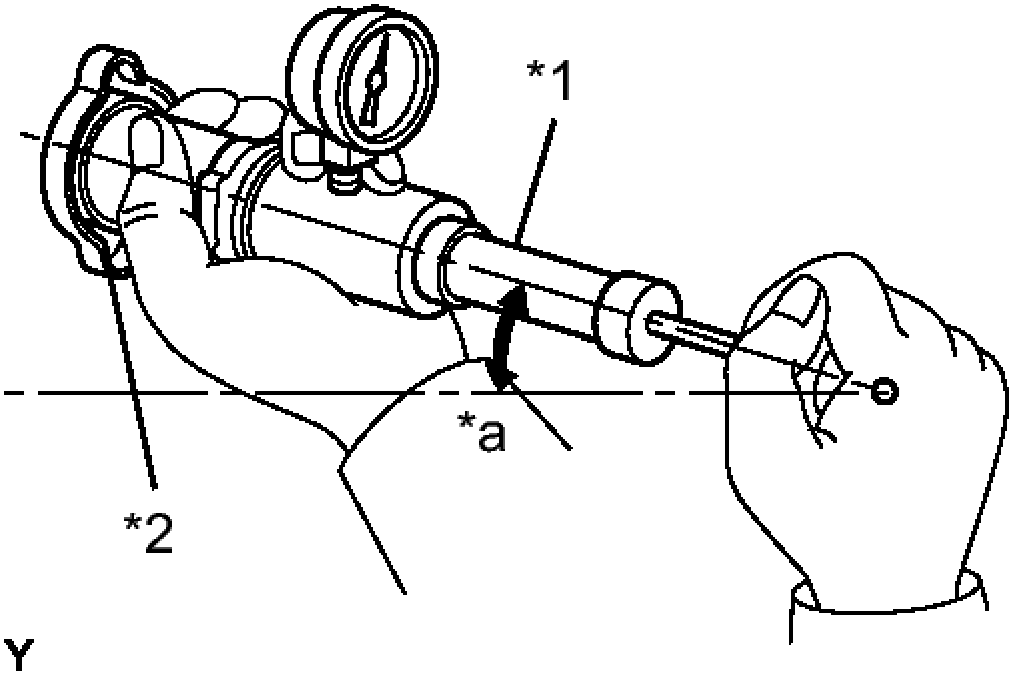

Fig. 24: Identifying Radiator Cap Tester And Radiator Cap Sub-Assembly
Courtesy of TOYOTA MOTOR SALES, U.S.A., INC.

TEXT IN ILLUSTRATION

*1	Radiator Cap Tester
*2	Radiator Cap Sub-assembly
*a	30° or more

Pumping speed

1 pump every second

*1: Even if the cap cannot maintain the maximum pressure, it is not a defect.

Judgment Criterion

Item	Specified Condition
Standard	93.3 to 122.7 kPa (0.95 to

value (for brand-new cap)	1.25 kgf/cm^2 , 13.5 to 17.8 psi)
Minimum standard value (for used cap)	78.5 kPa (0.8 kgf/cm^2 , 11.4 psi)

If the maximum pressure is less than the specified pressure for the minimum standard value, replace the radiator cap sub-assembly.

REMOVAL

REMOVAL

1. **PRECAUTION**

   NOTE: After turning the ignition switch off, waiting time may be required before disconnecting the cable from the negative (-) battery terminal. Therefore, make sure to read the disconnecting the cable from the negative (-) battery terminal notice before proceeding with work. Refer to PRECAUTION .

2. **DRAIN ENGINE COOLANT** See step 1
3. **REMOVE FRONT WHEEL OPENING EXTENSION PAD RH**
4. **REMOVE FRONT WHEEL OPENING EXTENSION PAD LH**
5. **REMOVE ENGINE UNDER COVER RH**
6. **REMOVE ENGINE UNDER COVER LH**
7. **DISCONNECT CABLE FROM NEGATIVE BATTERY TERMINAL**

   NOTE: When disconnecting the cable, some systems need to be initialized after the cable is reconnected. Refer to INITIALIZATION .

8. **REMOVE COOL AIR INTAKE DUCT SEAL** . Refer to **REMOVAL - Step 1**
9. **REMOVE INLET AIR CLEANER ASSEMBLY** . Refer to **REMOVAL - Step 19**
10. **REMOVE RADIATOR GRILLE SUB-ASSEMBLY** . Refer to **REMOVAL - Step 2**
11. **REMOVE RADIATOR RESERVE TANK ASSEMBLY**
    1. Disconnect the radiator reserve tank hose.

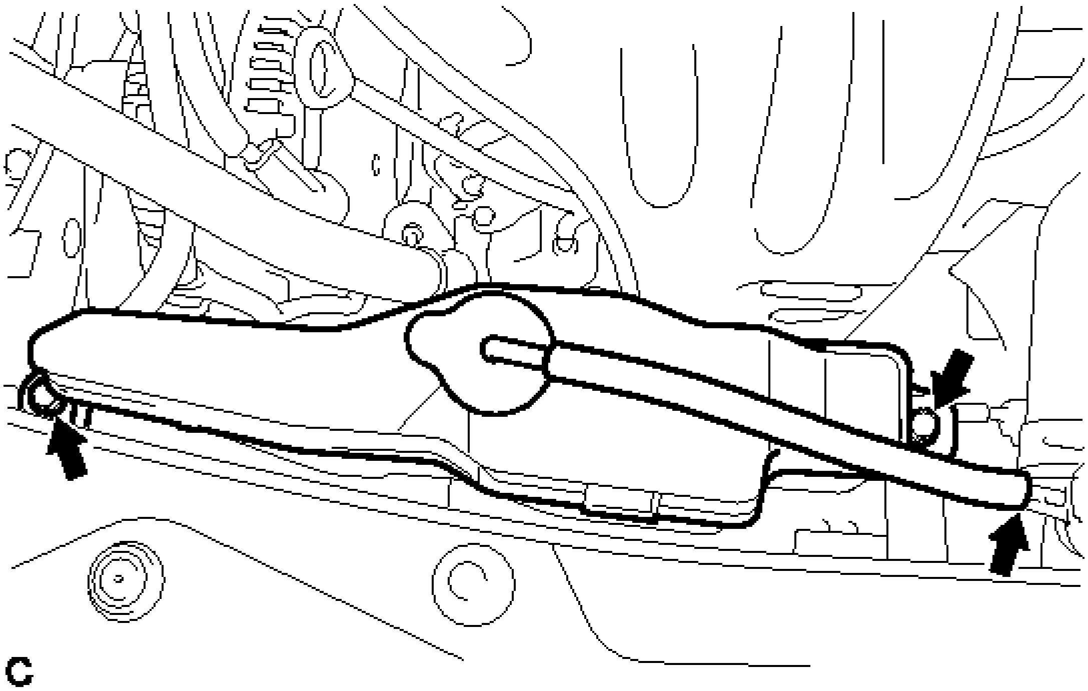

Fig. 25: Identifying Radiator Reserve Tank Assembly
Courtesy of TOYOTA MOTOR SALES, U.S.A., INC.

b. Remove the 2 bolts and radiator reserve tank assembly.

12. **DISCONNECT NO. 1 RADIATOR HOSE**

a. Disconnect the No. 1 radiator hose.

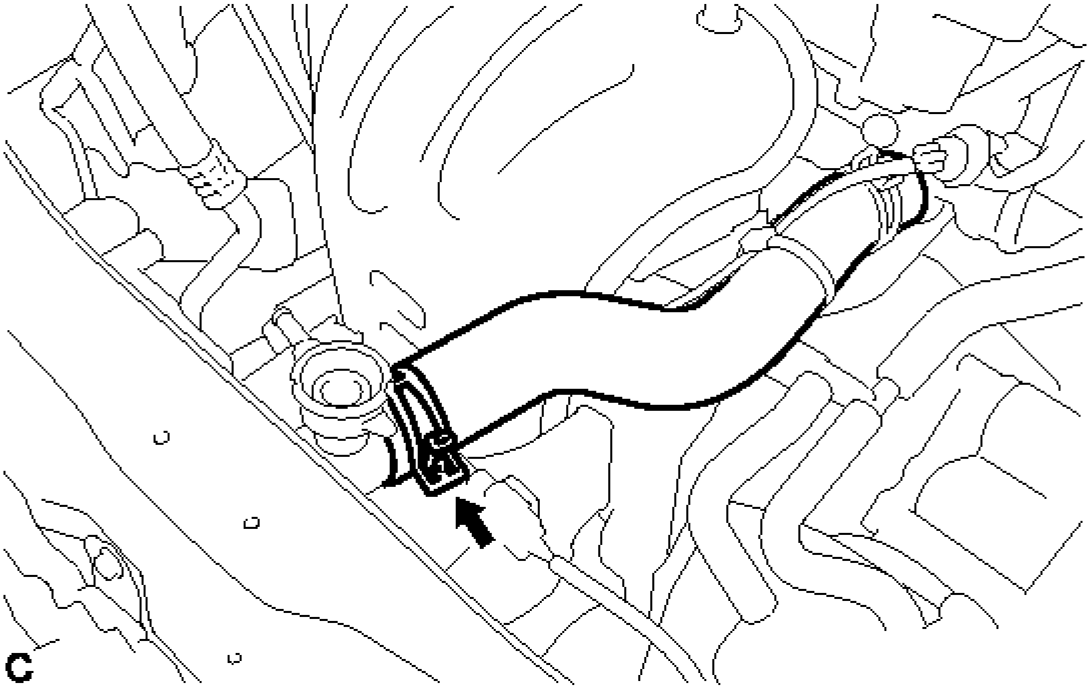

Fig. 26: Identifying No. 1 Radiator Hose
Courtesy of TOYOTA MOTOR SALES, U.S.A., INC.

13. **DISCONNECT NO. 2 RADIATOR HOSE**
    a. Disconnect the No. 2 radiator hose and clamp.

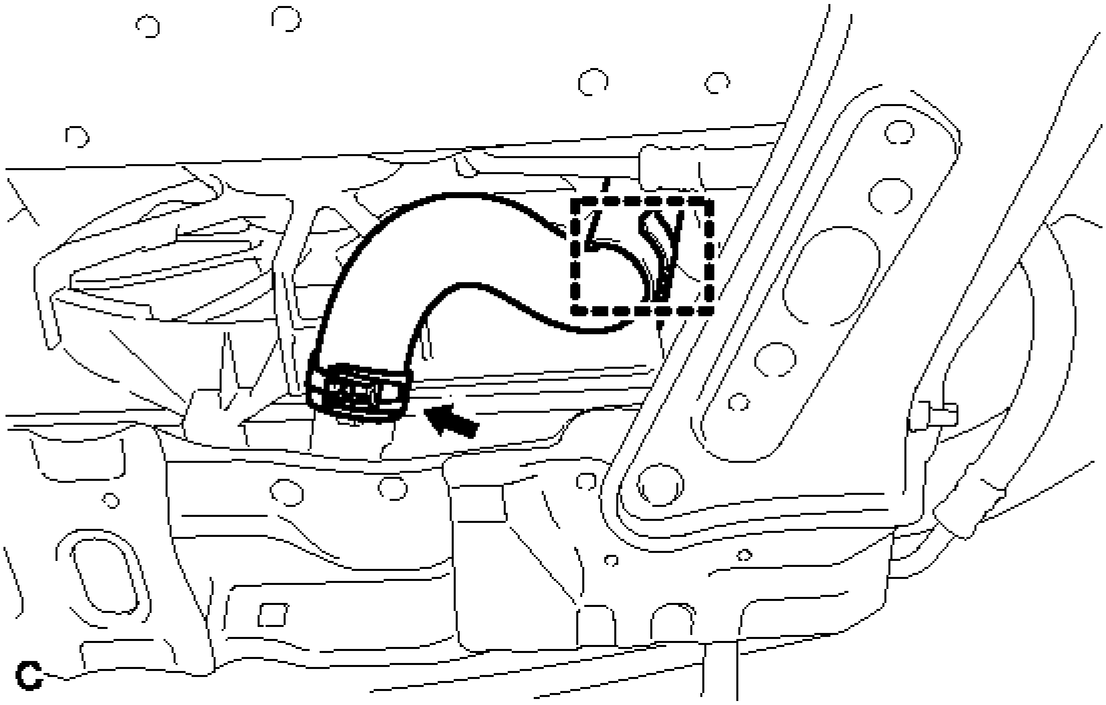

Fig. 27: Identifying No. 2 Radiator Hose And Clamp
Courtesy of TOYOTA MOTOR SALES, U.S.A., INC.

14. **REMOVE HOOD LOCK ASSEMBLY** . Refer to **REMOVAL - Step 9**
15. **REMOVE UPPER RADIATOR SUPPORT**
    a. Disconnect the 2 connectors.

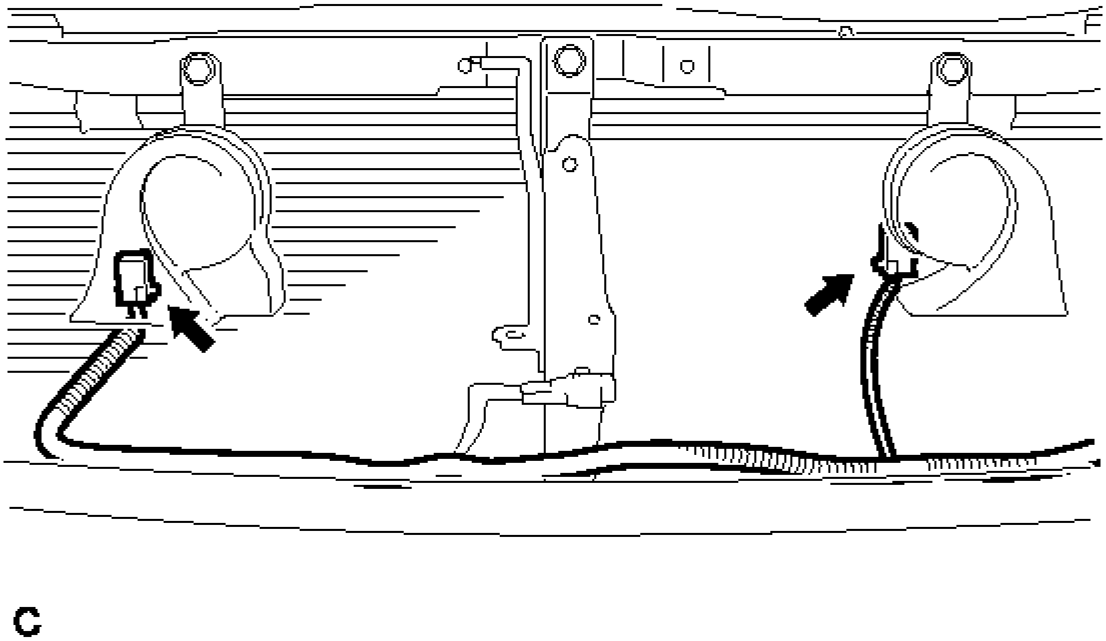

Fig. 28: Identifying Upper Radiator Support Connectors
Courtesy of TOYOTA MOTOR SALES, U.S.A., INC.

b. Disconnect the hood lock control cable clamp and remove the 5 bolts and upper radiator support.

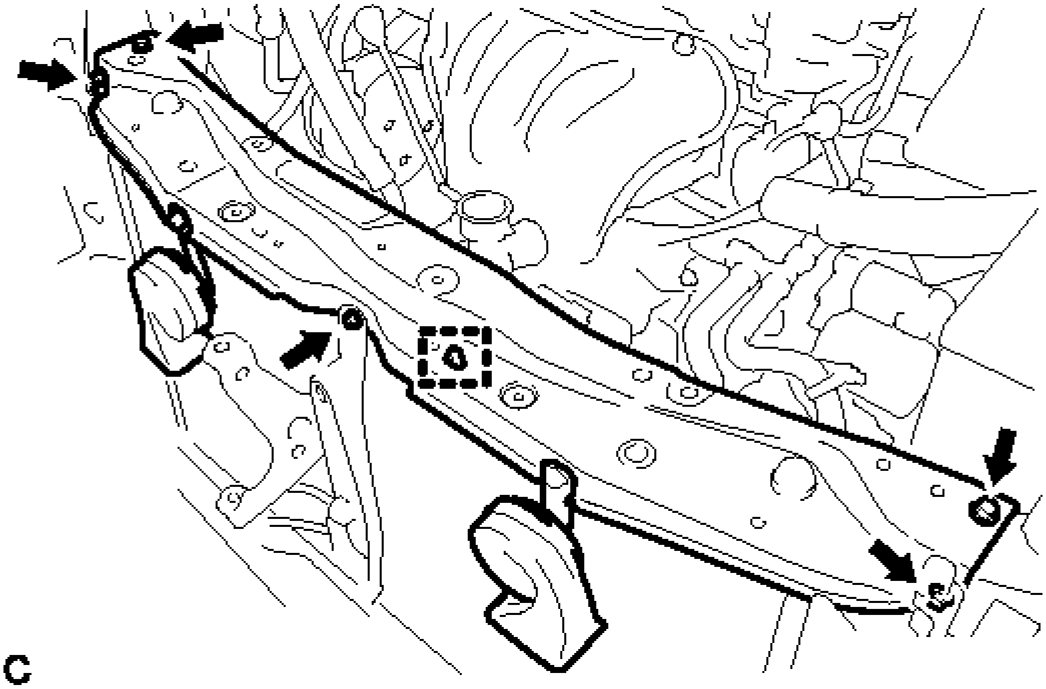

Fig. 29: Identifying Upper Radiator Support Hood Lock Control Cable Clamp, Bolts And Support Cushions

Courtesy of TOYOTA MOTOR SALES, U.S.A., INC.

c. Remove the 2 radiator support cushions.

16. **REMOVE RADIATOR ASSEMBLY**

a. Disconnect the 2 clamps and 2 connectors.

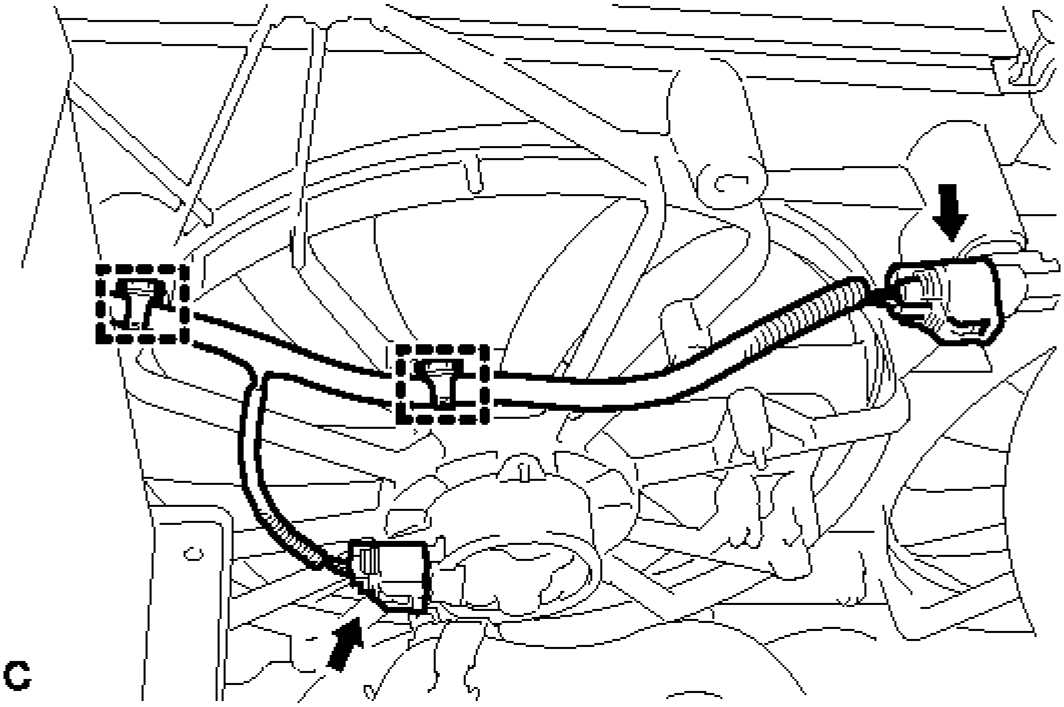

Fig. 30: Identifying Radiator Assembly Connector And Clamps
Courtesy of TOYOTA MOTOR SALES, U.S.A., INC.

b. Remove the 4 bolts and separate the condenser assembly from the radiator assembly.

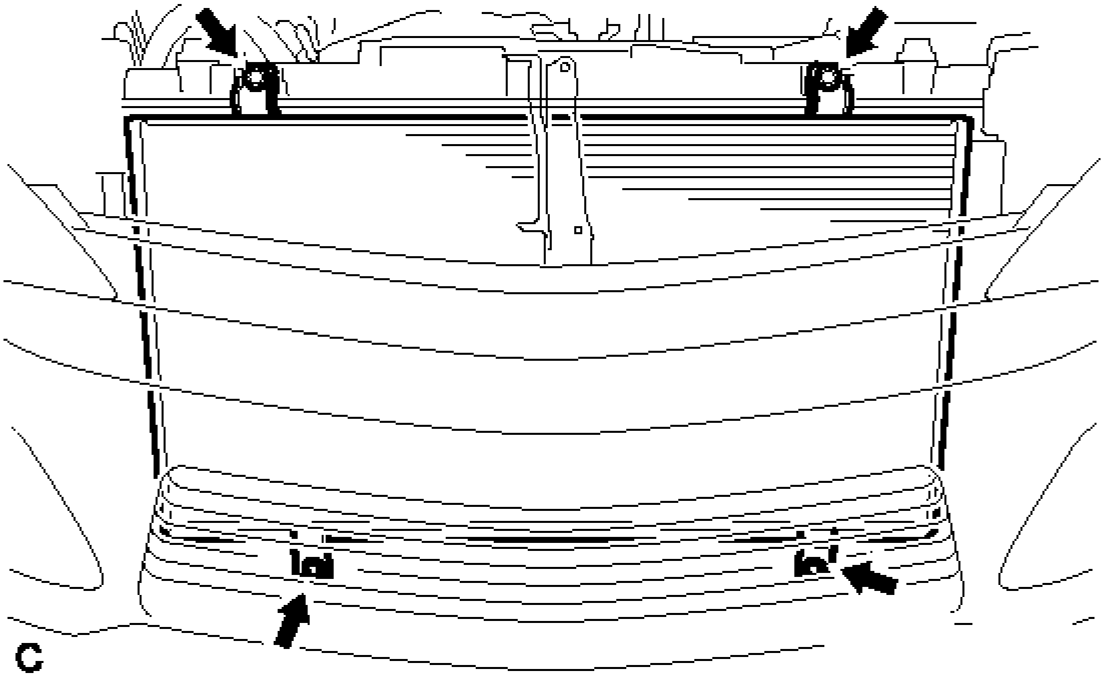

Fig. 31: Identifying Bolts
Courtesy of TOYOTA MOTOR SALES, U.S.A., INC.

c. Remove the radiator assembly with fan assembly.

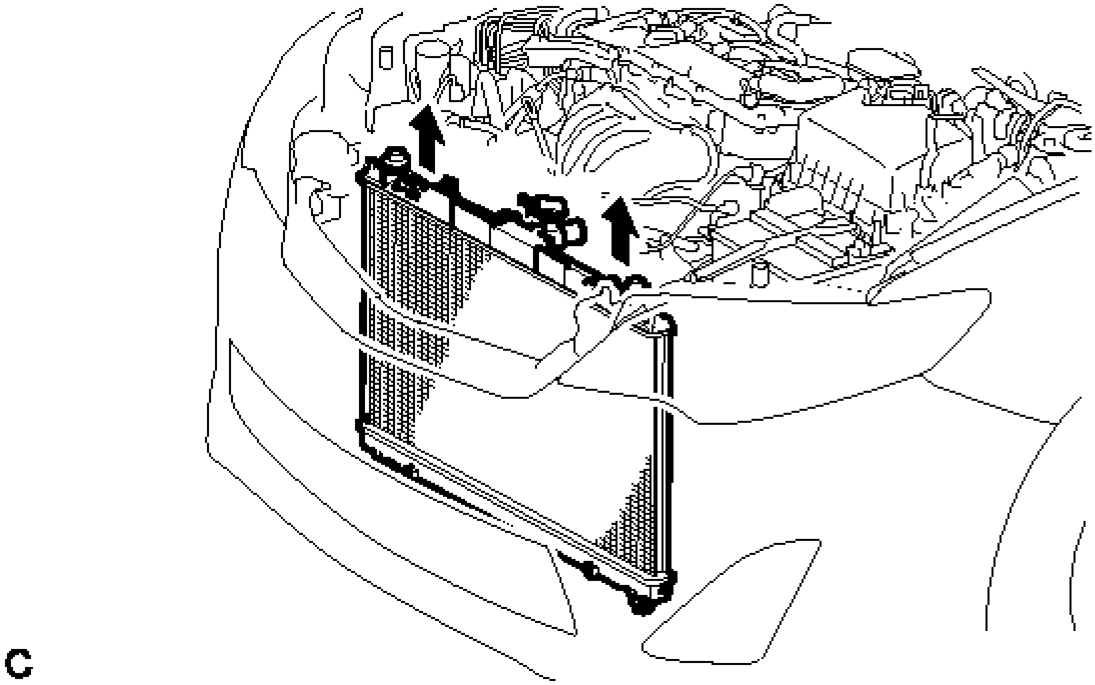

Fig. 32: Removing Radiator Assembly With Fan Assembly
Courtesy of TOYOTA MOTOR SALES, U.S.A., INC.

NOTE: **Do not apply any excessive force to the cooler condenser assembly or pipe when removing the radiator assembly.**

d. Remove the 2 lower radiator supports.
e. Release the 3 claws and lift the fan assembly from the radiator.

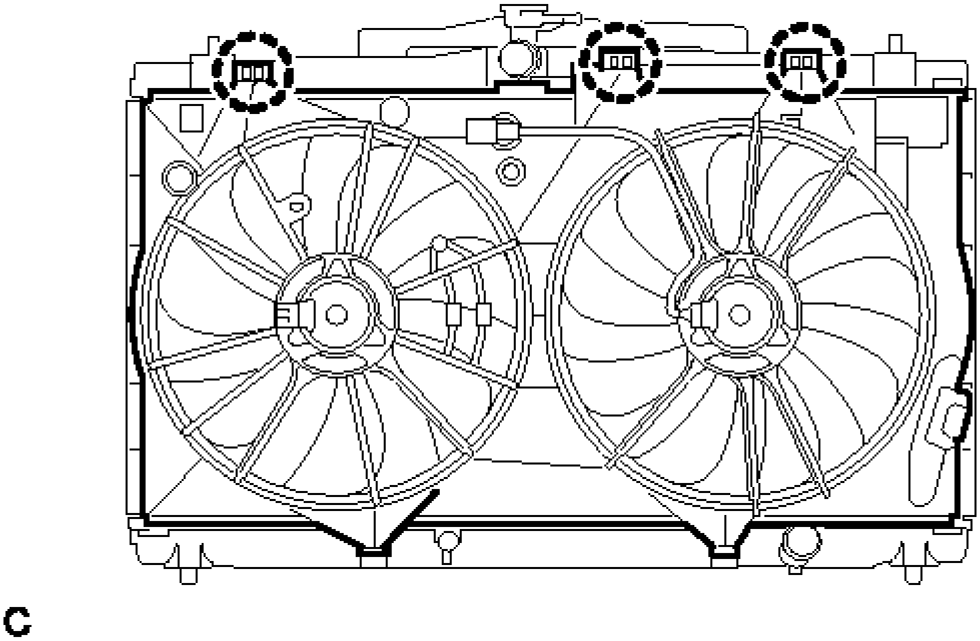

Fig. 33: Identifying Fan Assembly Claws
Courtesy of TOYOTA MOTOR SALES, U.S.A., INC.

INSTALLATION

INSTALLATION

1. **INSTALL RADIATOR ASSEMBLY**
    a. Install the fan assembly to the radiator with the 2 guides at the bottom and 3 claws on the top.

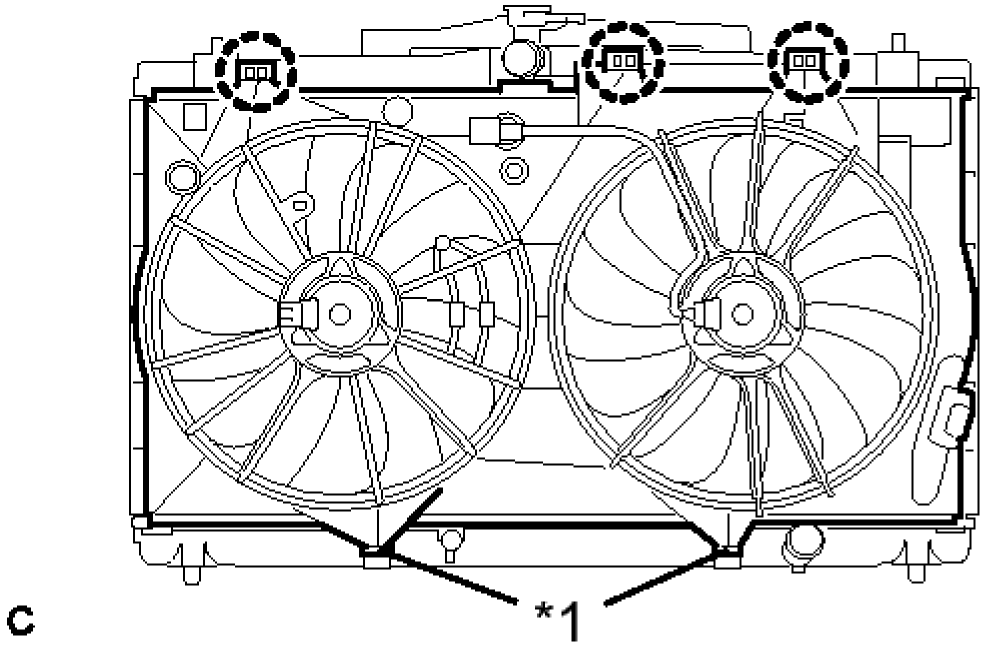

Fig. 34: Identifying Fan Assembly Guides And Claws
Courtesy of TOYOTA MOTOR SALES, U.S.A., INC.

TEXT IN ILLUSTRATION

*1	Guide

b. Install the 2 lower radiator supports to the radiator assembly.
c. Install the radiator with fan assembly.

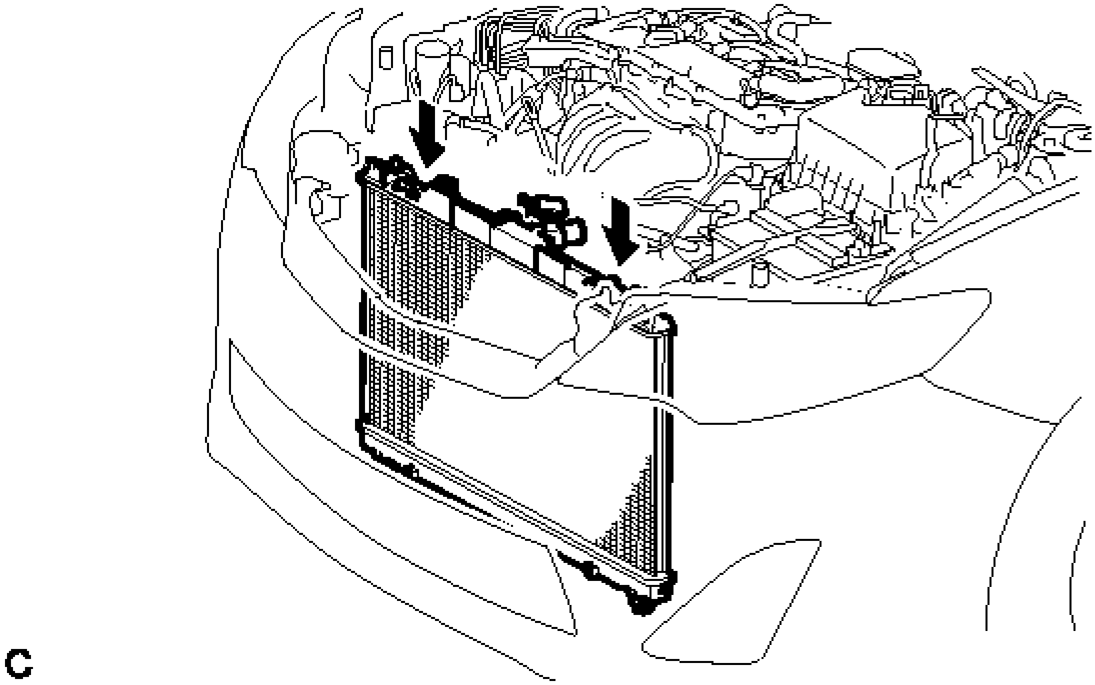

Fig. 35: Installing Radiator With Fan Assembly
Courtesy of TOYOTA MOTOR SALES, U.S.A., INC.

NOTE: **Do not apply any excessive force to the cooler condenser assembly or pipe when installing the radiator assembly.**

d. Install the condenser assembly with the 4 bolts.

Torque: 6.0 N*m (61 kgf*cm, 53 in.*lbf)

e. Connect the 2 connectors and the 2 clamps.

2. **INSTALL UPPER RADIATOR SUPPORT**
    a. Install the 2 radiator support cushions to the radiator assembly.
    b. Install the upper radiator support with the 5 bolts and connect the hood lock control cable clamp to the upper radiator support.

    Torque: 12 N*m (122 kgf*cm, 9 ft.*lbf)

    c. Connect the 2 connectors.
3. **INSTALL HOOD LOCK ASSEMBLY** . Refer to **INSTALLATION - Step 2**
4. **CONNECT NO. 2 RADIATOR HOSE**
    a. Connect the No. 2 radiator hose and clamp.
5. **CONNECT NO. 1 RADIATOR HOSE**
    a. Connect the No. 1 radiator hose.
6. **INSTALL RADIATOR RESERVE TANK ASSEMBLY**

   a. Install the radiator reserve tank with the 2 bolts.

      Torque: 7.0 N*m (71 kgf*cm, 62 in.*lbf)

   b. Connect the radiator reserve tank hose.

7. **INSTALL RADIATOR GRILLE SUB-ASSEMBLY** . Refer to **INSTALLATION - Step 3**
8. **INSTALL INLET AIR CLEANER ASSEMBLY** . Refer to **INSTALLATION - Step 53**
9. **CONNECT CABLE TO NEGATIVE BATTERY TERMINAL**

   NOTE: When disconnecting the cable, some systems need to be initialized after the cable is reconnected. Refer to INITIALIZATION .

10. **ADD ENGINE COOLANT** See step 2
11. **INSPECT FOR COOLANT LEAK** . Refer to **ON-VEHICLE INSPECTION - Step 1**
12. **INSTALL COOL AIR INTAKE DUCT SEAL** . Refer to **INSTALLATION - Step 4**
13. **INSTALL ENGINE UNDER COVER LH**
14. **INSTALL ENGINE UNDER COVER RH**
15. **INSTALL FRONT WHEEL OPENING EXTENSION PAD LH**
16. **INSTALL FRONT WHEEL OPENING EXTENSION PAD RH**

RELAY

ON-VEHICLE INSPECTION

ON-VEHICLE INSPECTION

1. **INSPECT FAN RELAY**
   a. Measure the resistance according to the value(s) in the table below.

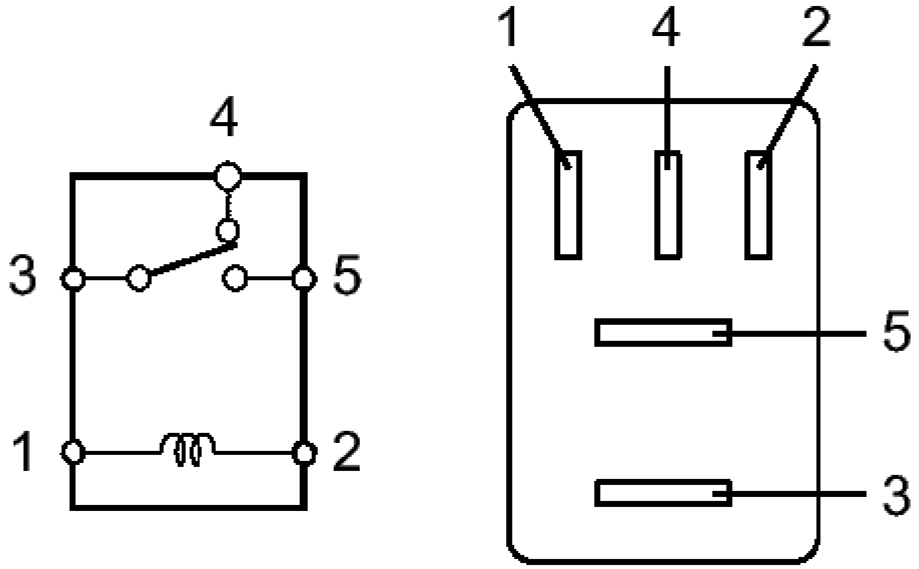

Fig. 36: Identifying Fan Relay
Courtesy of TOYOTA MOTOR SALES, U.S.A., INC.

Standard Resistance

Tester Connection	Condition	Specified Condition
3 - 4	Battery voltage not applied between terminals 1 and 2	Below 1 ohms
3 - 5	Battery voltage not applied between terminals 1 and 2	10 kohms or higher
3 - 4	Battery voltage applied between terminals 1 and 2	10 kohms or higher

3 - 5	Battery voltage applied between terminals 1 and 2	Below 1 ohms

If the result is not as specified, replace the relay.

2012-2017 ENGINE

Engine Cooling System (Service Information) - Camry (2GR-FE)

COOLANT

REPLACEMENT

REPLACEMENT

1. **DRAIN ENGINE COOLANT**

NOTE: **Do not remove the radiator cap sub-assembly, cylinder block drain cock plugs and radiator drain cock plug while the engine and radiator are still hot. Pressurized, hot engine coolant and steam may be released and cause serious burns.**

   a. Loosen the radiator drain cock plug.
   b. Loosen the 2 cylinder block drain cock plugs.
   c. Remove the radiator cap sub-assembly.

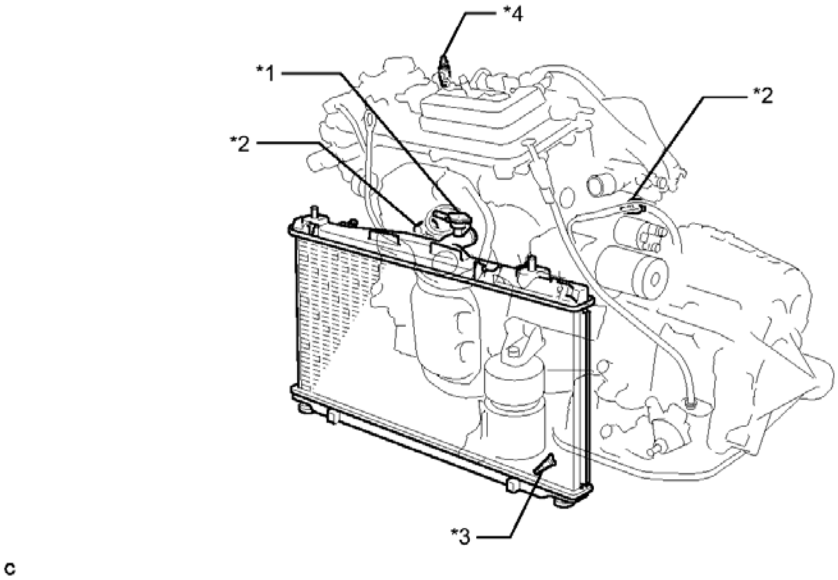

Fig. 1: Identifying Radiator Cap Sub-Assembly, Cylinder Block Drain Cock Plug And Radiator Drain Cock Plug
Courtesy of TOYOTA MOTOR SALES, U.S.A., INC.

TEXT IN ILLUSTRATION

*1	Radiator Cap Sub-	*2	Cylinder Block Drain

	assembly		Cock Plug
*3	Radiator Drain Cock Plug	*4	Air Drain Cock Plug

HINT:

Collect the coolant in a container and dispose of it according to the regulations in your area.

2. **ADD ENGINE COOLANT**
   1. Tighten the radiator drain cock plug by hand.
   2. Close the 2 cylinder block drain cock plugs.

      Torque: 13 N*m (130 kgf*cm, 9 ft.*lbf)

   3. Loosen the air drain cock plug on the water inlet housing.
   4. Add TOYOTA Super Long Life Coolant (SLLC) to the radiator inlet opening until coolant overflows from the air drain cock hole. Then tighten the air drain cock plug to the water inlet housing.

      Torque: 13 N*m (130 kgf*cm, 9 ft.*lbf)

   5. Slowly fill the radiator with TOYOTA Super Long Life Coolant (SLLC).

      Specified capacity

      9.1 liters (9.6 US qts, 8.0 lmp. qts)

      HINT:

      TOYOTA vehicles are filled with TOYOTA SLLC at the factory. In order to avoid damage to the engine cooling system and other technical problems, only use TOYOTA SLLC or similar high quality ethylene glycol based non-silicate, non-amine, non-nitrite, non-borate coolant with long-life hybrid organic acid technology (coolant with long-life hybrid organic acid technology is a combination of low phosphates and organic acids).

   6. Slowly pour coolant into the radiator reserve tank assembly until it reaches the full line.
   7. Squeeze the inlet and outlet radiator hoses several times by hand, and then check the level of the coolant.

      If the coolant level is low, add coolant.

   8. Install the radiator cap sub-assembly and reserve tank cap.
   9. Bleed air from the cooling system.

NOTE:

- **Before starting the engine, turn the A/C switch off.**
- **Adjust the heater control to the maximum hot setting.**
- **Adjust the blower speed to the low setting.**

1. Warm up the engine until the thermostat opens. While the thermostat is open, circulate the coolant for several minutes.

   HINT:

   The thermostat open timing can be confirmed by squeezing the outlet radiator hose by hand, and sensing vibrations when the engine coolant starts to flow inside the hose.

2. Maintain the engine speed at 2500 to 3000 rpm.
3. Squeeze the inlet and outlet radiator hoses several times by hand to bleed air.

WARNING: **When squeezing the radiator hoses:**

- **Wear protective gloves.**
- **Be careful as the radiator hoses are hot.**
- **Keep your hands away from the radiator fans.**

NOTE:

- **Make sure that the radiator reserve tank assembly still has some coolant in it.**
- **If the coolant temperature gauge indicates an excessive temperature, turn off the engine and let it cool.**
- **If there is not enough coolant, the engine may overheat or be seriously damaged.**
- **If the radiator reserve tank assembly does not have enough coolant, perform the following: 1) stop the engine, 2) wait until the coolant has cooled down, and 3) add coolant until the reserve tank assembly is filled to the full line.**

j. Stop the engine, and wait until the engine coolant cools down.

k. Add engine coolant to the full line on the radiator reserve tank assembly.

3. **INSPECT FOR COOLANT LEAK** . Refer to **ON-VEHICLE INSPECTION - Step 1**

WATER PUMP

COMPONENTS

ILLUSTRATION

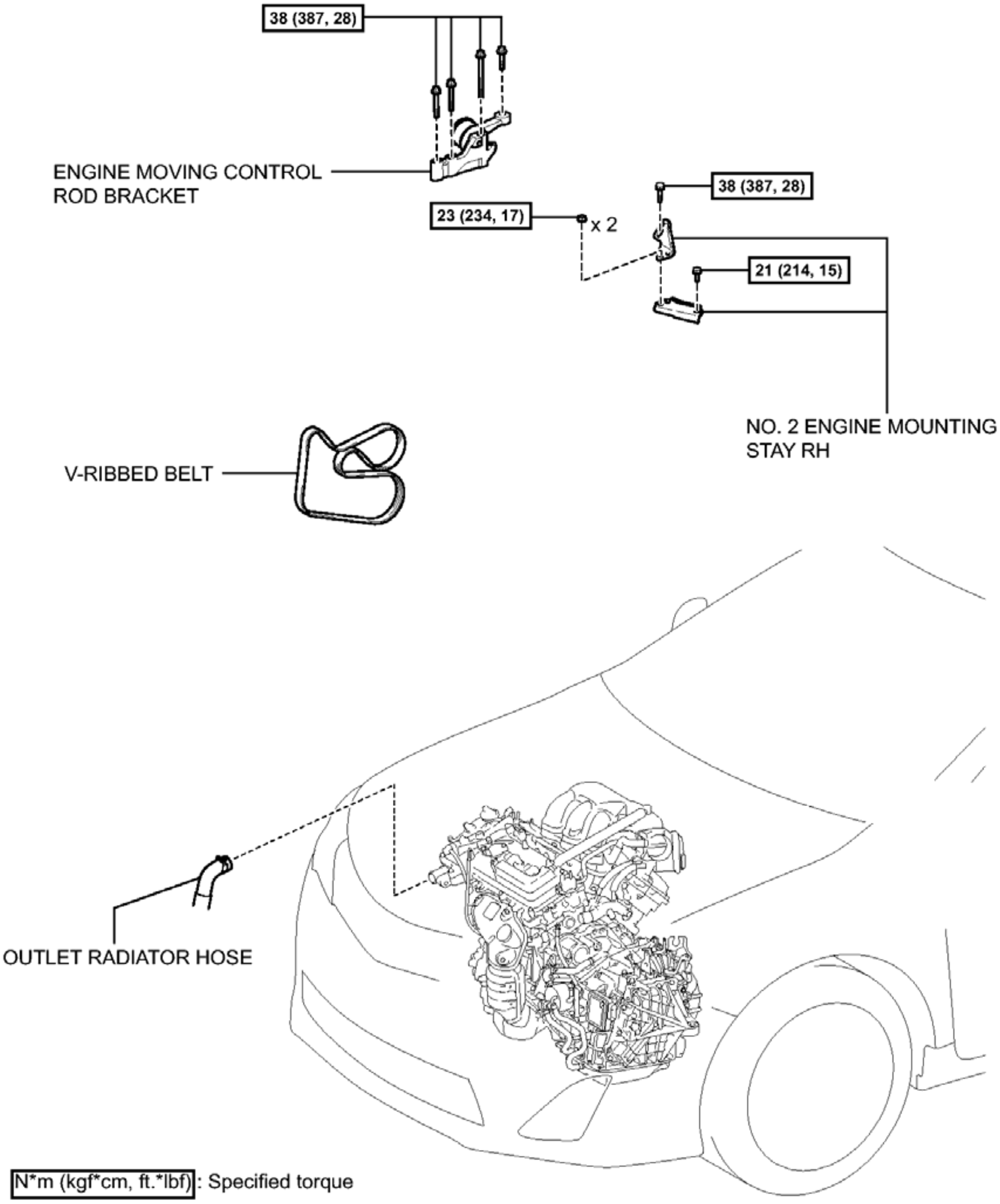
38 (387, 28)
ENGINE MOVING CONTROL ROD BRACKET
38 (387, 28)
23 (234, 17)
x 2
21 (214, 15)
NO. 2 ENGINE MOUNTING STAY RH
V-RIBBED BELT
OUTLET RADIATOR HOSE
N*m (kgf*cm, ft.*lbf): Specified torque

Fig. 2: Identifying Water Pump Replacement Components With Torque Specifications (1 Of 2)
Courtesy of TOYOTA MOTOR SALES, U.S.A., INC.

ILLUSTRATION

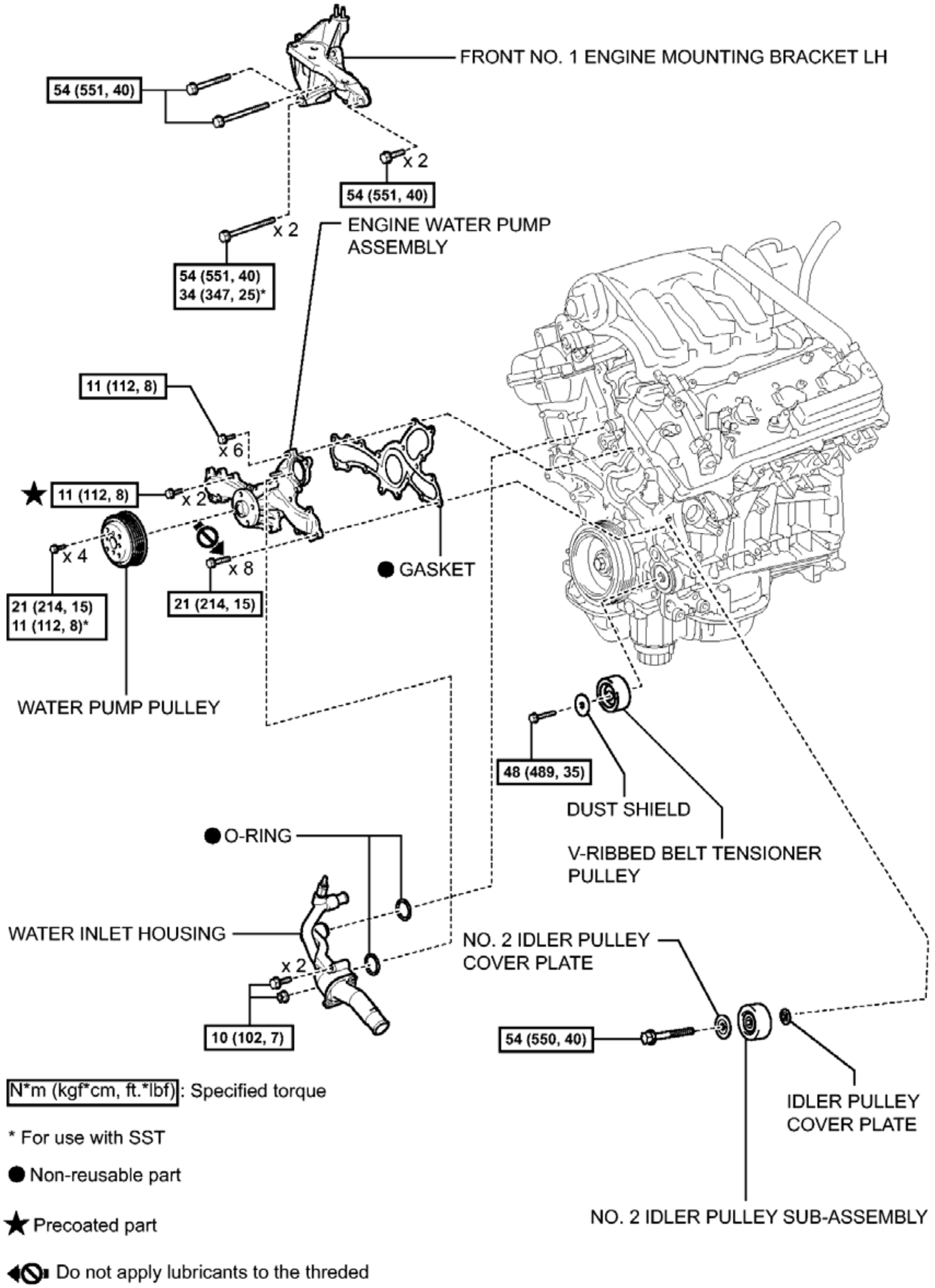
FRONT NO. 1 ENGINE MOUNTING BRACKET LH
54 (551, 40)
x 2
54 (551, 40)
x 2
54 (551, 40)
34 (347, 25)*
ENGINE WATER PUMP ASSEMBLY
11 (112, 8)
x 6
11 (112, 8)
x 2
x 4
x 8
GASKET
21 (214, 15)
11 (112, 8)*
21 (214, 15)
WATER PUMP PULLEY
48 (489, 35)
DUST SHIELD
V-RIBBED BELT TENSIONER PULLEY
O-RING
WATER INLET HOUSING
x 2
10 (102, 7)
NO. 2 IDLER PULLEY COVER PLATE
54 (550, 40)
IDLER PULLEY COVER PLATE
NO. 2 IDLER PULLEY SUB-ASSEMBLY
N*m (kgf*cm, ft.*lbf) : Specified torque
* For use with SST
● Non-reusable part
★ Precoated part
Do not apply lubricants to the threded

Fig. 3: Identifying Water Pump Replacement Components With Torque Specifications (2 Of 2)
Courtesy of TOYOTA MOTOR SALES, U.S.A., INC.

ON-VEHICLE INSPECTION

ON-VEHICLE INSPECTION

1. **INSPECT FOR COOLANT LEAK**

   HINT:

   - Before performing this inspection, check that there is no coolant leaking from any parts other than the engine water pump assembly. If there are leaks, inspect those areas.
   - Perform this inspection when the engine is cold.

   a. Visually inspect the engine compartment for the following conditions:

      1. There is a large amount of coolant in the engine compartment or on the underside of the hood near the V-ribbed belt.
      2. Liquid coolant is dripping from around the engine water pump assembly.
      3. The coolant level in the reserve tank assembly is below the low line and there are traces of leakage around the engine water pump assembly.

         If any of the above conditions exist, replace the engine water pump assembly.

         If none of the above conditions exist, perform the following inspection (inspection of the area around the engine water pump assembly).

   b. Remove the V-ribbed belt. Refer to **REMOVAL** .

   c. Separate the water pump pulley See step 11.

      HINT:

      Move the water pump pulley so that the drain plug can be reached.

   d. Inspect the area around the engine water pump assembly.

      HINT:

      Check for deposits around the drain plug of the engine water pump assembly.

      1. Press a piece of paper towel against the drain plug or deposits on the lip of the drain plug and check that the paper towel is not wet.

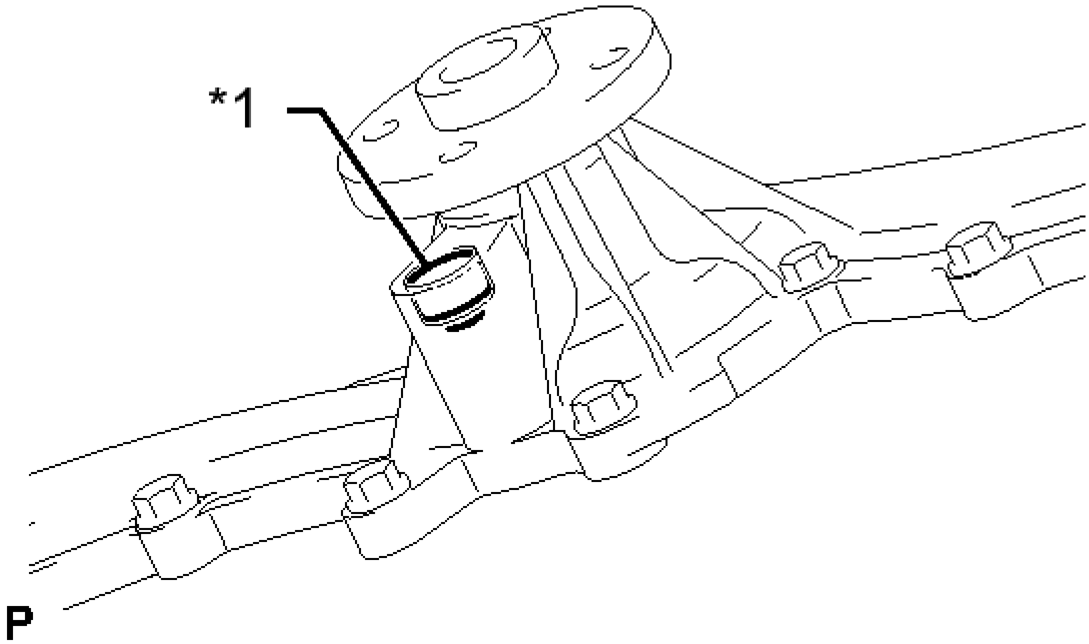

Fig. 4: Identifying Drain Plug
Courtesy of TOYOTA MOTOR SALES, U.S.A., INC.

TEXT IN ILLUSTRATION

*1	Drain Plug

If the paper towel is wet, replace the engine water pump assembly.

If the paper towel is not wet, thoroughly clean the area around the engine water pump assembly.

e. Install the water pump pulley See step 2.

2. **INSPECT ENGINE WATER PUMP ASSEMBLY**
    a. Turn the pulley and check that the water pump bearing moves smoothly and quietly.

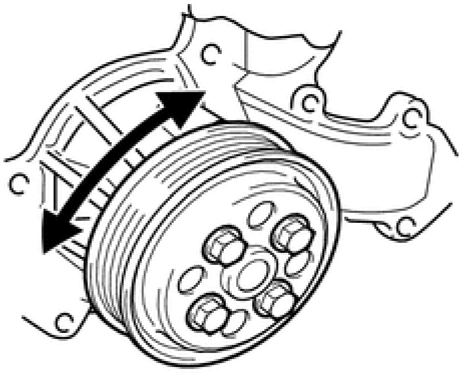

Fig. 5: Inspecting Engine Water Pump Assembly
Courtesy of TOYOTA MOTOR SALES, U.S.A., INC.

If necessary, replace the engine water pump assembly.

b. Install the V-ribbed belt. Refer to **INSTALLATION** .

REMOVAL

REMOVAL

1. **REMOVE V-RIBBED BELT**

   Refer to **REMOVAL**

2. **DRAIN ENGINE COOLANT** See step 1
3. **DISCONNECT OUTLET RADIATOR HOSE** . Refer to **REMOVAL - Step 32**
4. **REMOVE NO. 2 ENGINE MOUNTING STAY RH (for Engine Mounting stay Side)** . Refer to **REMOVAL - Step 25**
5. **REMOVE NO. 2 ENGINE MOUNTING STAY RH (for Intake Manifold Side)** . Refer to **REMOVAL - Step 6**
6. **REMOVE ENGINE MOVING CONTROL ROD BRACKET** . Refer to **REMOVAL - Step 26**
7. **REMOVE FRONT NO. 1 ENGINE MOUNTING BRACKET LH**
   a. Using SST, remove the bolt.

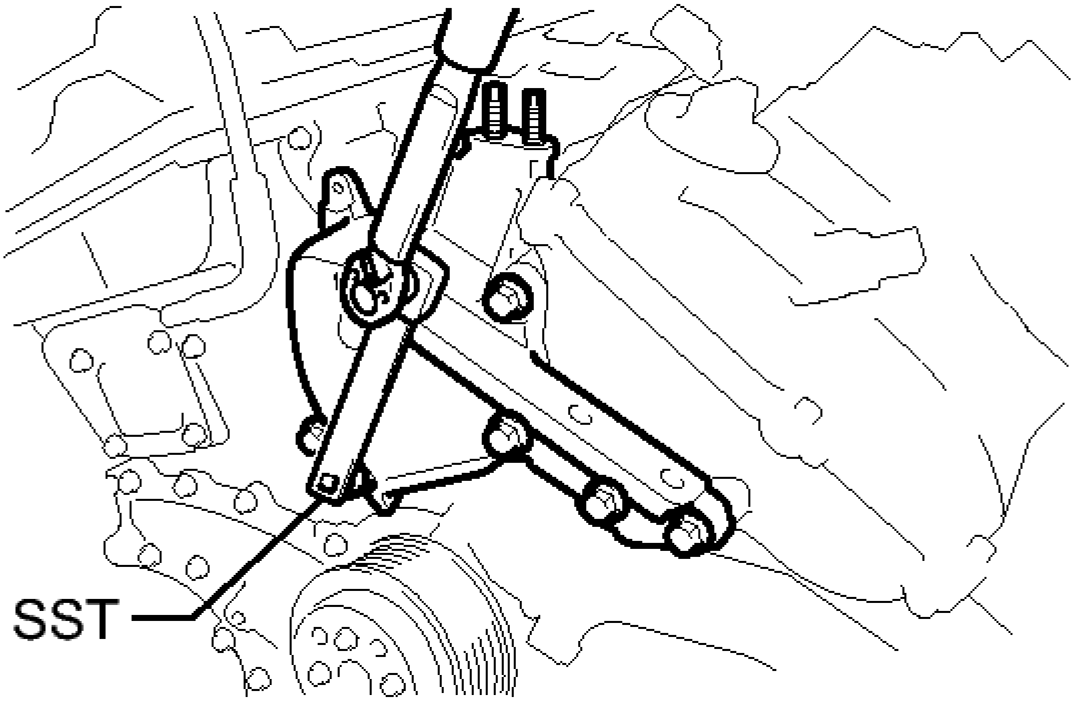

Fig. 6: Identifying SST
Courtesy of TOYOTA MOTOR SALES, U.S.A., INC.

- **SST: 09961-00950**

HINT:

There is not enough clearance to completely remove the bolt from the front No. 1 engine mounting bracket LH. Remove the front No. 1 engine mounting bracket LH together with the bolt.

b. Remove the 5 bolts and front No. 1 engine mounting bracket LH.

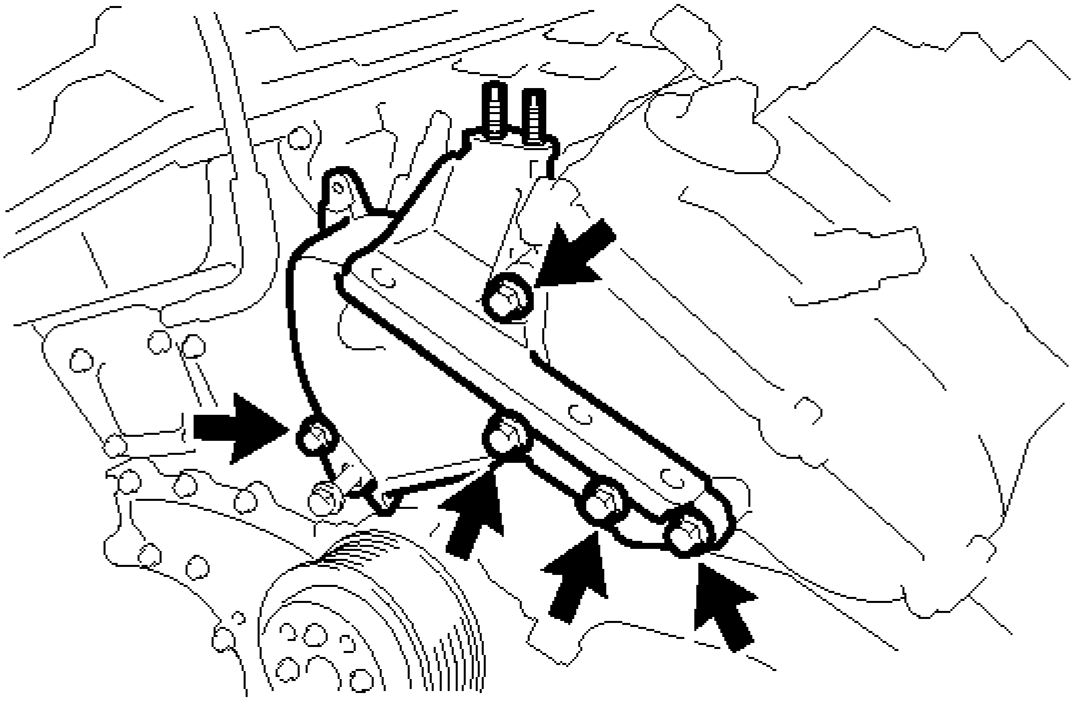

Fig. 7: Identifying No. 1 Engine Mounting Bracket Bolts LH
Courtesy of TOYOTA MOTOR SALES, U.S.A., INC.

8. **REMOVE NO. 2 IDLER PULLEY SUB-ASSEMBLY** . Refer to **REMOVAL - Step 16**
9. **REMOVE V-RIBBED BELT TENSIONER PULLEY**
    a. Remove the 5 mm bi-hexagon wrench.
    b. Remove the bolt and V-ribbed belt tensioner pulley and dust shield.

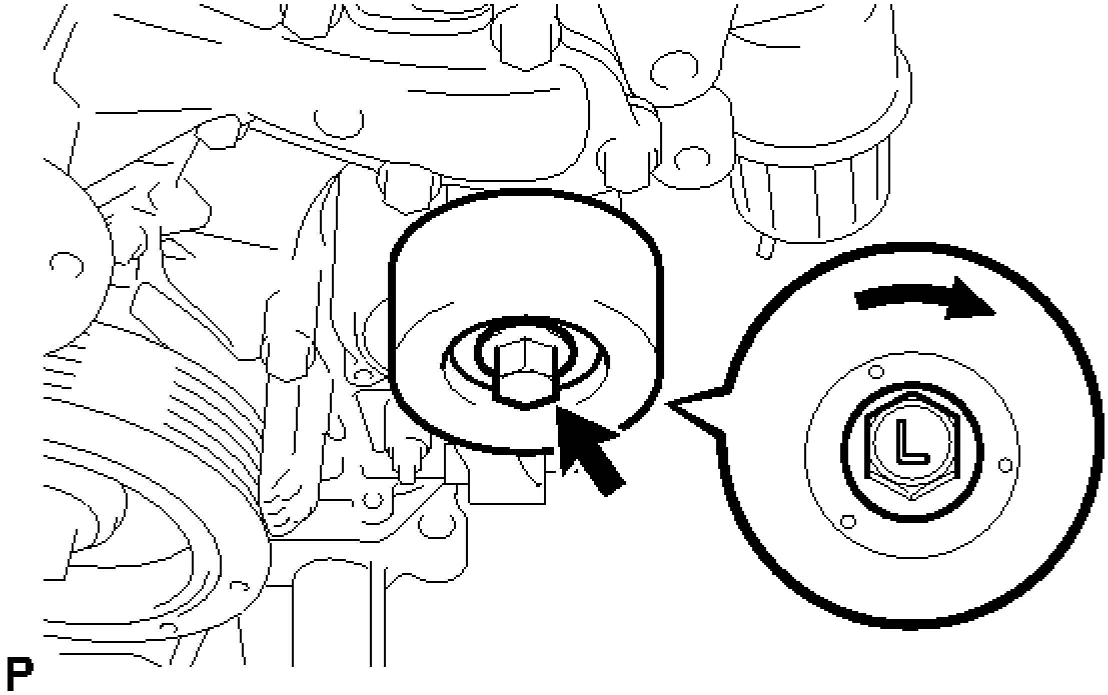

Fig. 8: Locating Idler Pulley Bolt
Courtesy of TOYOTA MOTOR SALES, U.S.A., INC.

NOTE:

- **Do not turn the bolt labeled "L" counterclockwise.**
- **Store the V-ribbed belt tensioner pulley so that the bearing does not get damaged.**

10. **REMOVE WATER INLET HOUSING**
    a. Disconnect the water hose.

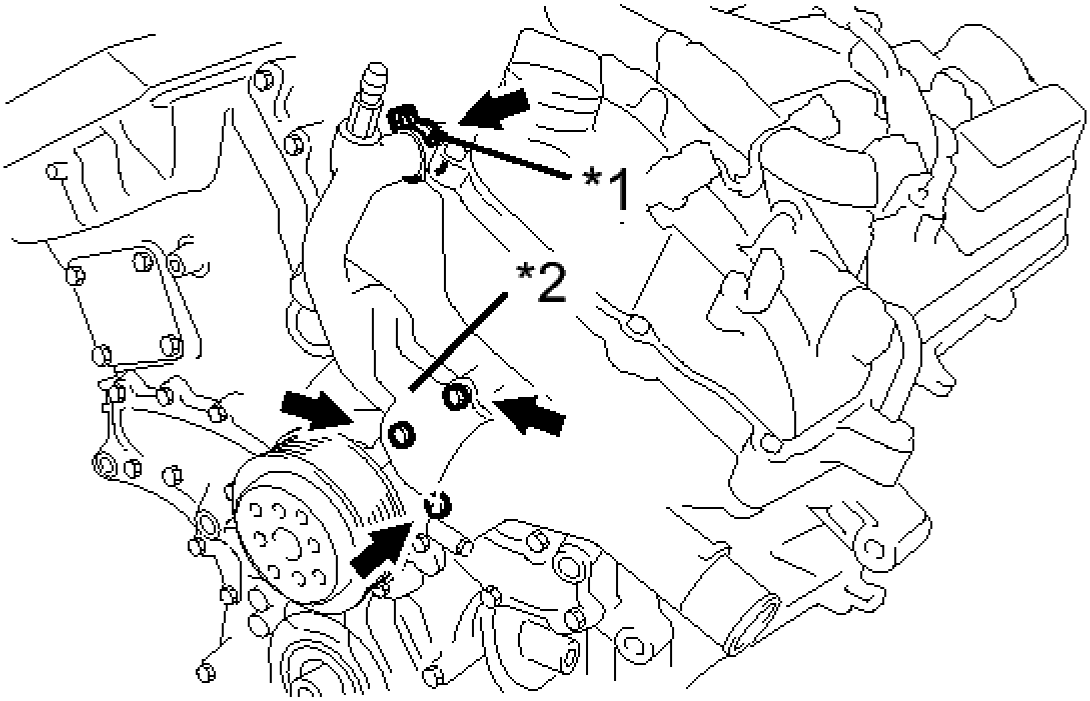

Fig. 9: Identifying Water Hose And Water Inlet Housing
Courtesy of TOYOTA MOTOR SALES, U.S.A., INC.

TEXT IN ILLUSTRATION

*1	Water hose
*2	Water Inlet housing

b. Remove the 2 bolts, nut and water inlet housing.
c. Remove the 2 O-rings.

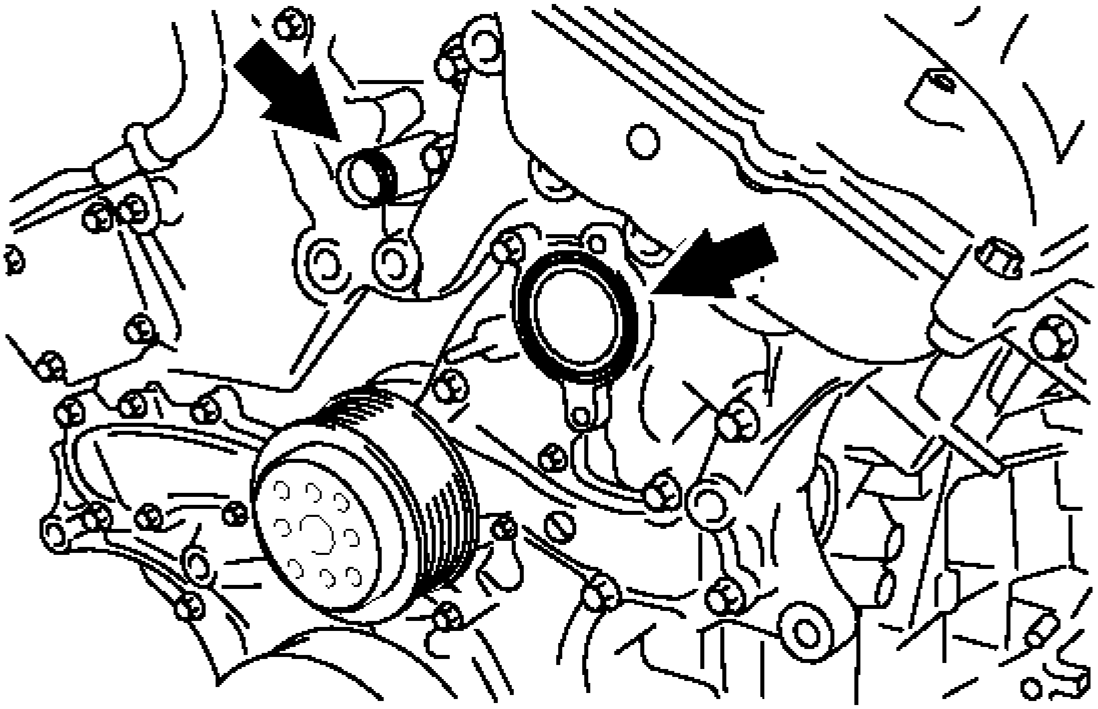

Fig. 10: Identifying O-Rings
Courtesy of TOYOTA MOTOR SALES, U.S.A., INC.

11. **SEPARATE WATER PUMP PULLEY**
    1. Using SST, hold the water pump pulley.

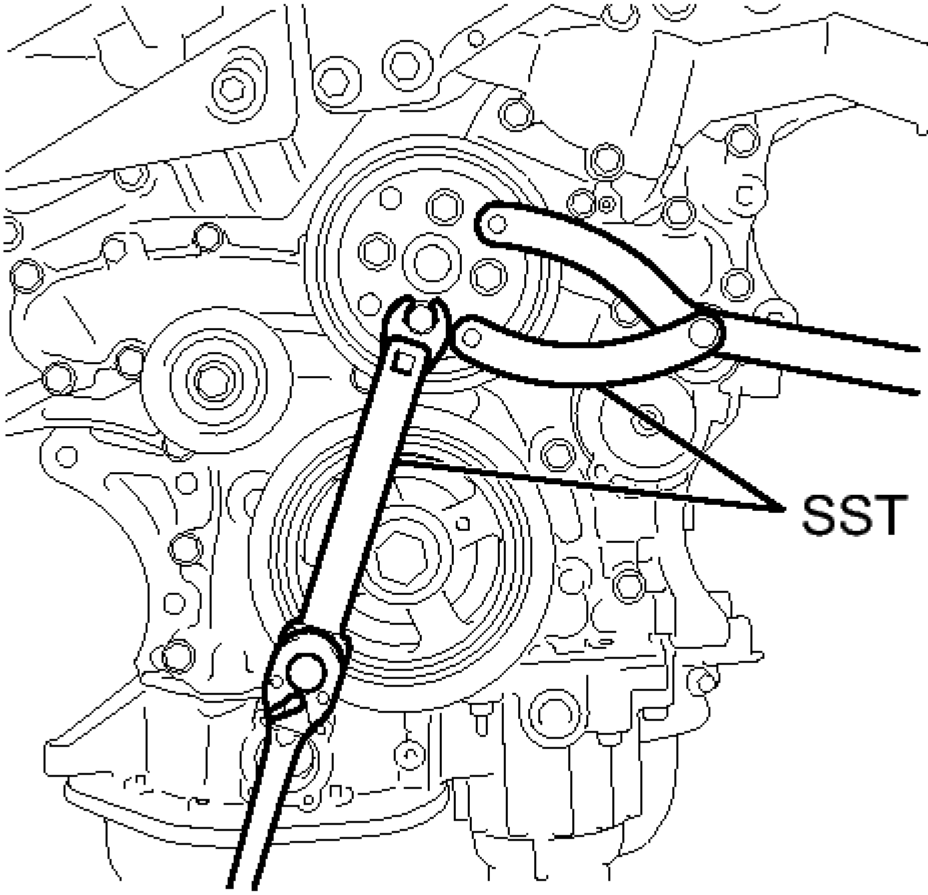

Fig. 11: Identifying Water Pump Pulley And SST
Courtesy of TOYOTA MOTOR SALES, U.S.A., INC.

- **SST: 09960-10010**
  09962-01000
  09963-00700

b. Using SST and union nut wrench, remove the 4 bolts and separate the water pump pulley from the engine water pump.
  - **SST: 09961-00950**

HINT:

There is not enough clearance to completely remove the water pump pulley from the water pump shaft. Remove the water pump pulley together with the engine water pump.

12. **REMOVE ENGINE WATER PUMP ASSEMBLY**
    a. Remove the 16 bolts, engine water pump assembly, water pump pulley and gasket.

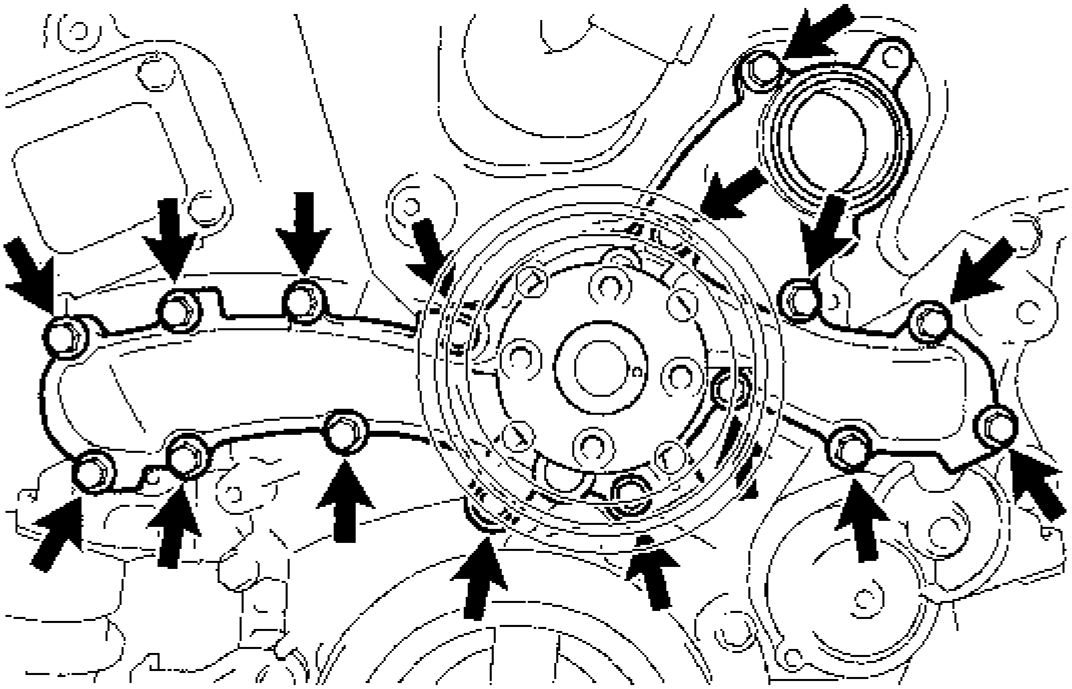

Fig. 12: Identifying Engine Water Pump Assembly Bolts
Courtesy of TOYOTA MOTOR SALES, U.S.A., INC.

INSTALLATION

INSTALLATION

1. **INSTALL ENGINE WATER PUMP ASSEMBLY**
    a. Install a new gasket and the engine water pump assembly together with the water pump pulley with the 16 bolts.

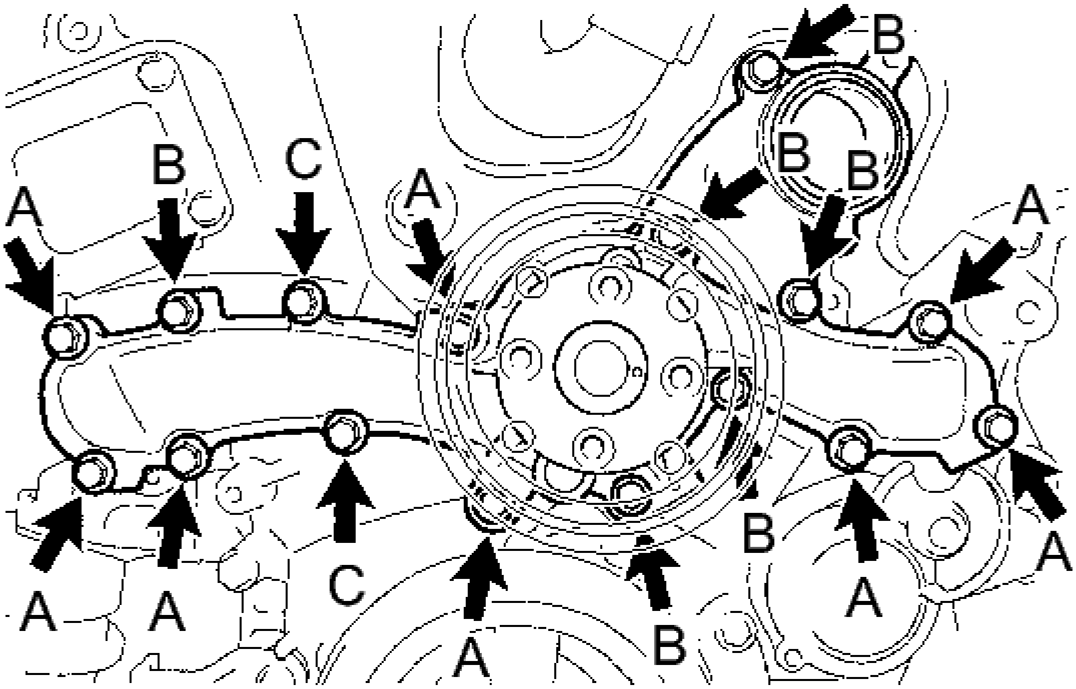

Fig. 13: Identifying Engine Water Pump Assembly Bolts
Courtesy of TOYOTA MOTOR SALES, U.S.A., INC.

Bolt A

Torque: 21 N*m (214 kgf*cm, 15 ft.*lbf)

Bolt B and C

Torque: 11 N*m (112 kgf*cm, 8 ft.*lbf)

NOTE:

- **Make sure that there is no oil on the threads of bolts A.**
- **Be sure to replace 2 bolts C with new ones or reuse them after applying adhesive 1344.**

  Adhesive

  Toyota Genuine Adhesive 1344, Three Bond 1344 or equivalent

2. **INSTALL WATER PUMP PULLEY**
   a. Temporarily install the water pump pulley with the 4 bolts.
   b. Using SST, hold the water pump pulley.

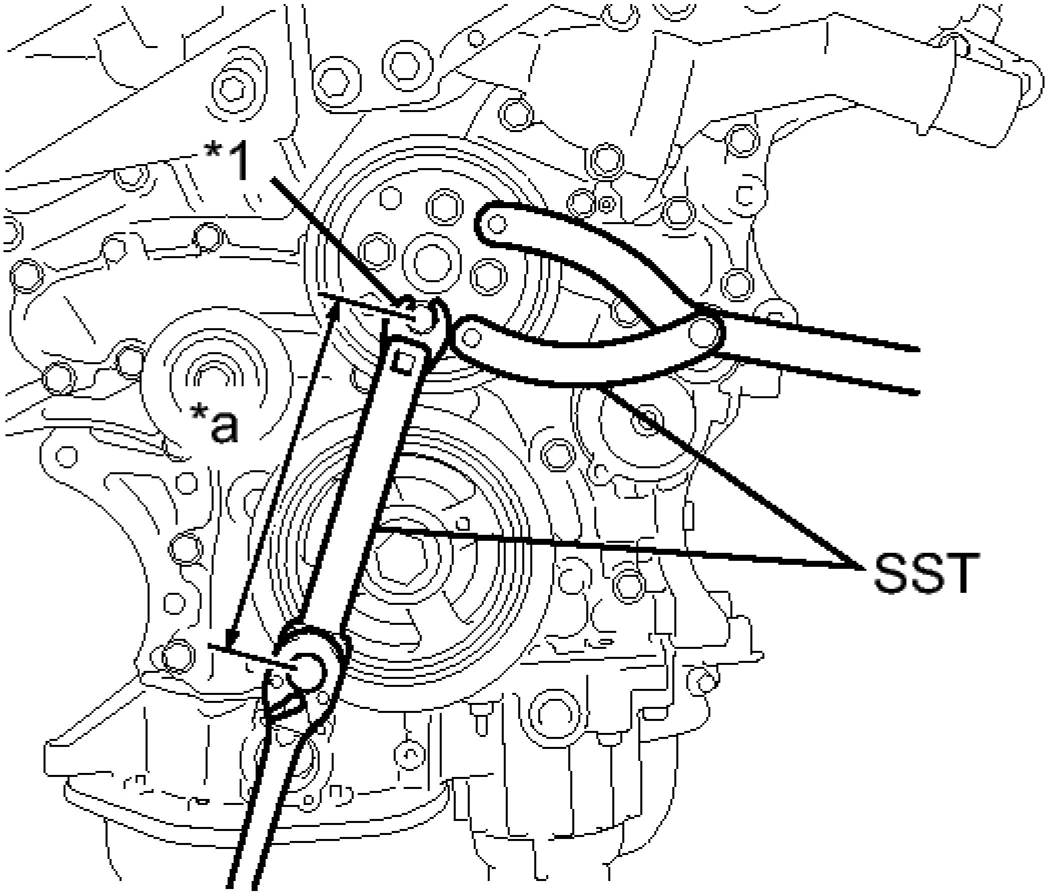

Fig. 14: Identifying Water Pump Pulley And SST
Courtesy of TOYOTA MOTOR SALES, U.S.A., INC.

- **SST: 09960-10010**
  09962-01000
  09963-00700

TEXT IN ILLUSTRATION

*1	Union Nut Wrench
*a	170 mm

c. Using SST and union nut wrench, tighten the 4 bolts.

- **SST: 09961-00950**

without SST

Torque: 21 N*m (214 kgf*cm, 15 ft.*lbf)

with SST

Torque: 11 N*m (112 kgf*cm, 8 ft.*lbf)

NOTE:

- **The "with SST" torque value is effective when using SST with a fulcrum length of 170 mm (6.69 in.) and a torque wrench with a fulcrum length of 180 mm (7.09 in.). Refer to PRECAUTION .**
- **The "with SST" torque value is effective when SST is parallel to the torque wrench.**

3. **INSTALL WATER INLET HOUSING**
   a. Install 2 new O-rings.
   b. Install the water inlet housing with the 2 bolts and nut.

   Torque: 10 N*m (102 kgf*cm, 7 ft.*lbf)

   NOTE: **Be careful not to allow the O-ring to get caught between the parts.**

   c. Connect the water hose.
4. **INSTALL V-RIBBED BELT TENSIONER PULLEY**
   a. Install the V-ribbed belt tensioner pulley and dust shield with the bolt.

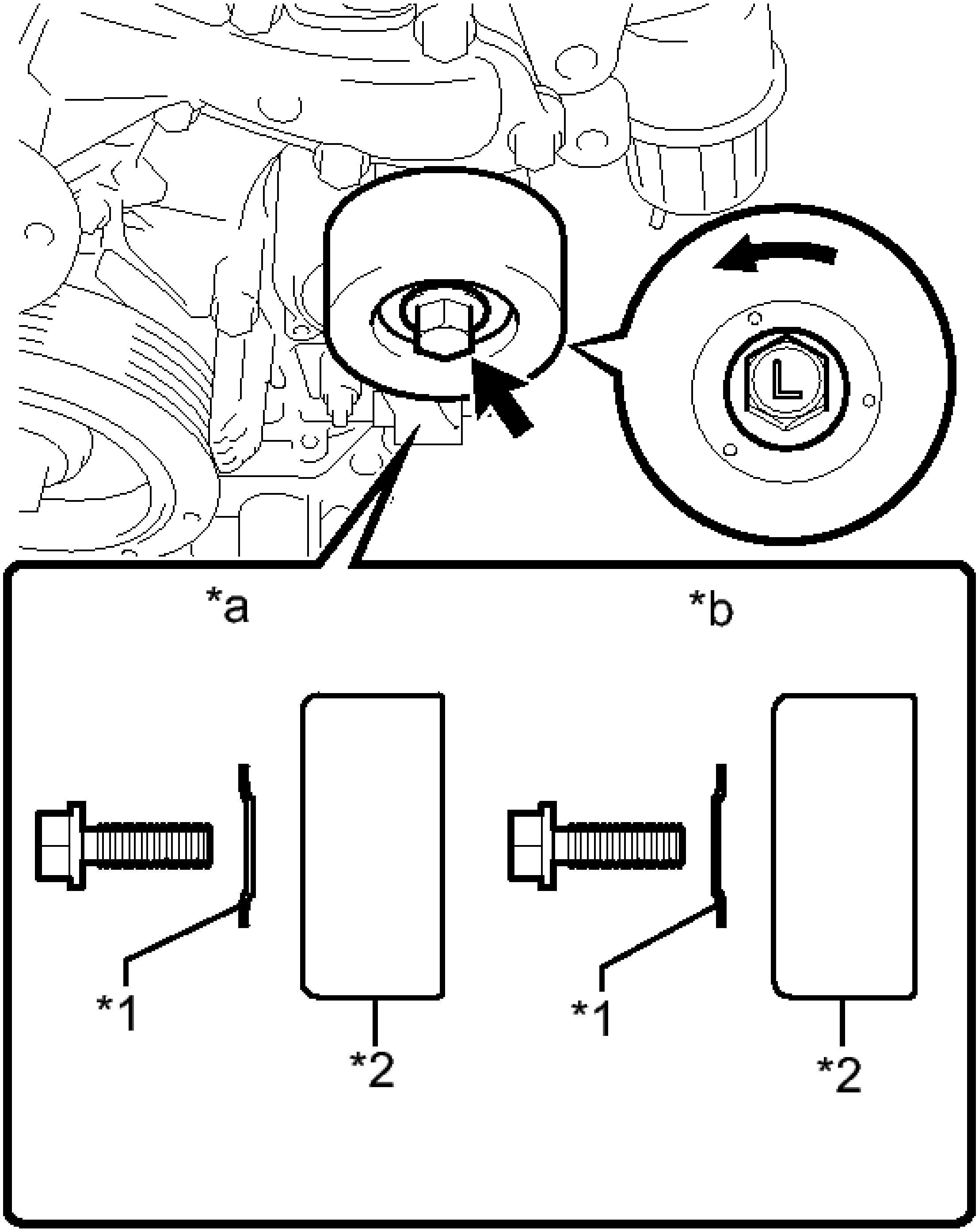

Fig. 15: Identifying V-Ribbed Belt Tensioner Pulley And Dust Shield With Bolt
Courtesy of TOYOTA MOTOR SALES, U.S.A., INC.

TEXT IN ILLUSTRATION

	Dust

*1	Shield
*2	Pulley
*a	Correct
*b	Incorrect

NOTE:

- **Be careful when tightening the bolt because its thread is left-handed.**
- **Install the dust shield in the direction shown in the illustration. Failure to do so may cause looseness.**
- **Make sure to use the removed bolt. (Do not use another bolt even if it is the same size.)**

Torque: 48 N*m (489 kgf*cm, 35 ft.*lbf)

b. Install the 5 mm bi-hexagon wrench.

5. **INSTALL NO. 2 IDLER PULLEY SUB-ASSEMBLY** . Refer to **INSTALLATION - Step 7**
6. **INSTALL FRONT NO. 1 ENGINE MOUNTING BRACKET LH**

a. Temporarily install the front No. 1 engine mounting bracket LH with the 6 bolts.

b. Fully tighten the 5 bolts.

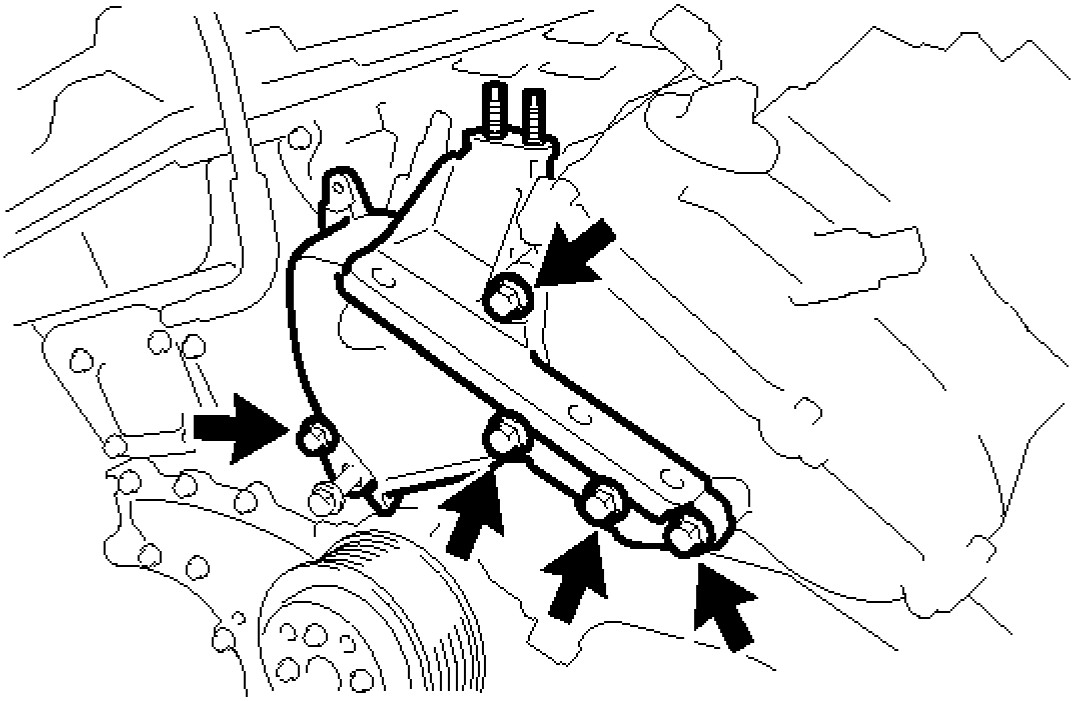

Fig. 16: Identifying Front No. 1 Engine Mounting Bracket Bolts LH
Courtesy of TOYOTA MOTOR SALES, U.S.A., INC.

Torque: 54 N*m (551 kgf*cm, 40 ft.*lbf)

c. Using SST, fully tighten the bolt.

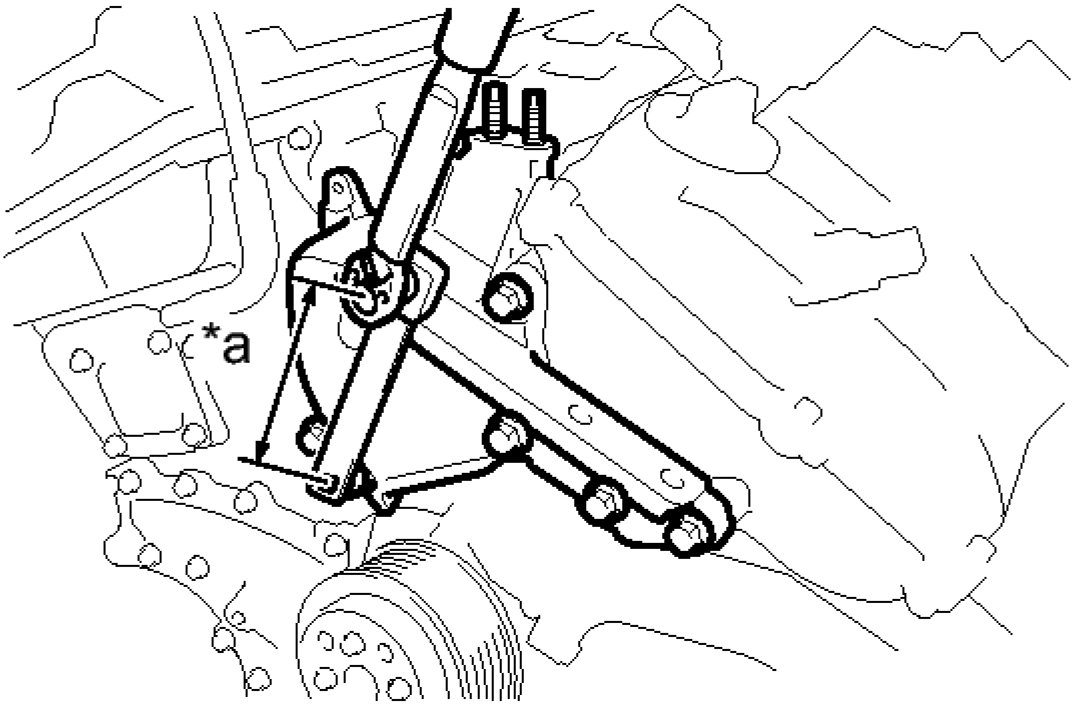

Fig. 17: Tightening Bolt With SST
Courtesy of TOYOTA MOTOR SALES, U.S.A., INC.

- **SST: 09961-00950**

TEXT IN ILLUSTRATION

*a	150 mm

without SST

Torque: 54 N*m (551 kgf*cm, 40 ft.*lbf)

with SST

Torque: 34 N*m (347 kgf*cm, 25 ft.*lbf)

NOTE:

- **The "with SST" torque value is effective when using SST with a fulcrum length of 150 mm (5.905 in.) and a torque wrench with a fulcrum length of 260 mm (10.23 in.). Refer to PRECAUTION .**
- **The "with SST" torque value is effective when SST is parallel to the torque wrench.**

7. **INSTALL ENGINE MOVING CONTROL ROD BRACKET** . Refer to **INSTALLATION - Step 51**

8. **INSTALL NO. 2 ENGINE MOUNTING STAY RH (for Intake Manifold Side)** . Refer to **INSTALLATION - Step 16**
9. **INSTALL NO. 2 ENGINE MOUNTING STAY RH (for Engine Mounting stay Side)** . Refer to **INSTALLATION - Step 52**
10. **CONNECT OUTLET RADIATOR HOSE** . Refer to **INSTALLATION - Step 45**
11. **INSTALL V-RIBBED BELT**

    Refer to **INSTALLATION**

12. **ADD ENGINE COOLANT** See step 2
13. **INSPECT FOR COOLANT LEAK** . Refer to **ON-VEHICLE INSPECTION - Step 1**

THERMOSTAT

COMPONENTS

ILLUSTRATION

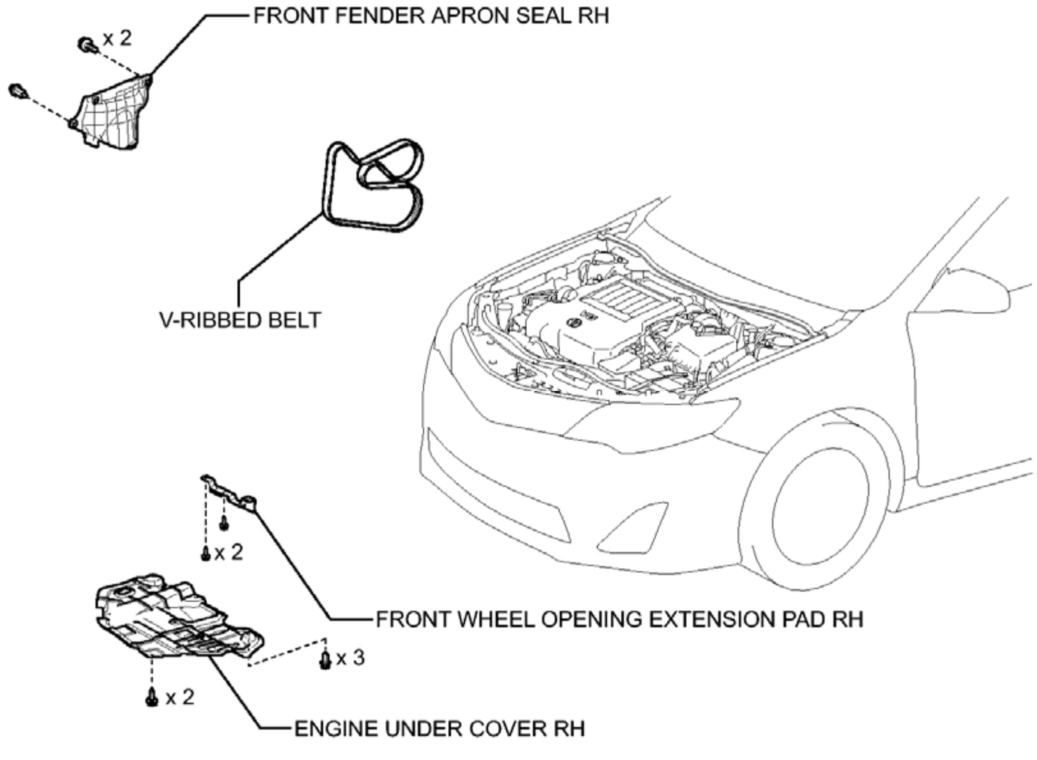
FRONT FENDER APRON SEAL RH
x 2
V-RIBBED BELT
x 2
FRONT WHEEL OPENING EXTENSION PAD RH
x 3
x 2
ENGINE UNDER COVER RH
c

Fig. 18: Identifying Thermostat Replacement Components With Torque Specifications (1 Of 2)
Courtesy of TOYOTA MOTOR SALES, U.S.A., INC.

ILLUSTRATION

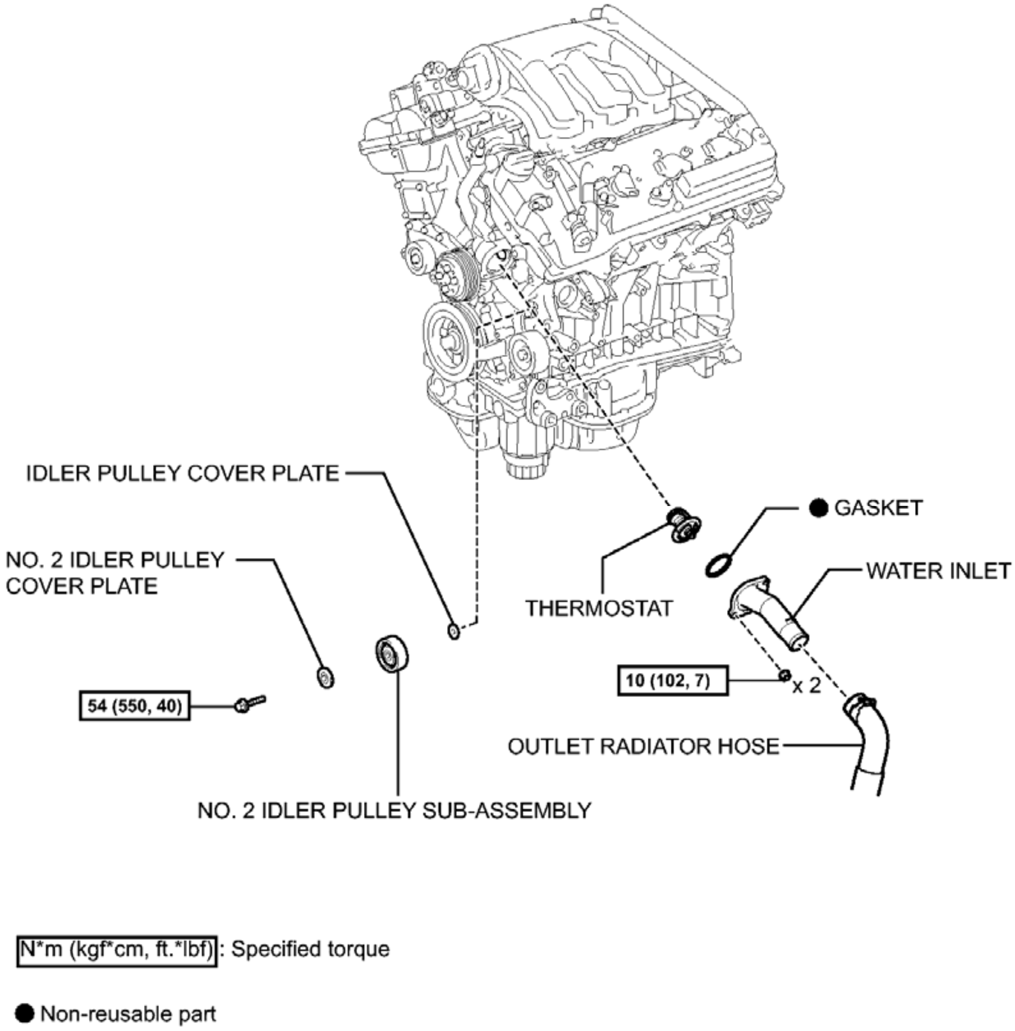
IDLER PULLEY COVER PLATE
NO. 2 IDLER PULLEY COVER PLATE
54 (550, 40)
NO. 2 IDLER PULLEY SUB-ASSEMBLY
GASKET
THERMOSTAT
WATER INLET
10 (102, 7)
x 2
OUTLET RADIATOR HOSE
N*m (kgf*cm, ft.*lbf): Specified torque
Non-reusable part

Fig. 19: Identifying Thermostat Replacement Components With Torque Specifications (2 Of 2)
Courtesy of TOYOTA MOTOR SALES, U.S.A., INC.

REMOVAL

REMOVAL

1. **DRAIN ENGINE COOLANT** See step 1
2. **REMOVE V-RIBBED BELT**

   Refer to **REMOVAL**

3. **REMOVE NO. 2 IDLER PULLEY SUB-ASSEMBLY** . Refer to **REMOVAL - Step 16**
4. **DISCONNECT OUTLET RADIATOR HOSE** . Refer to **REMOVAL - Step 32**
5. **REMOVE WATER INLET**

a. Remove the 2 nuts and water inlet.

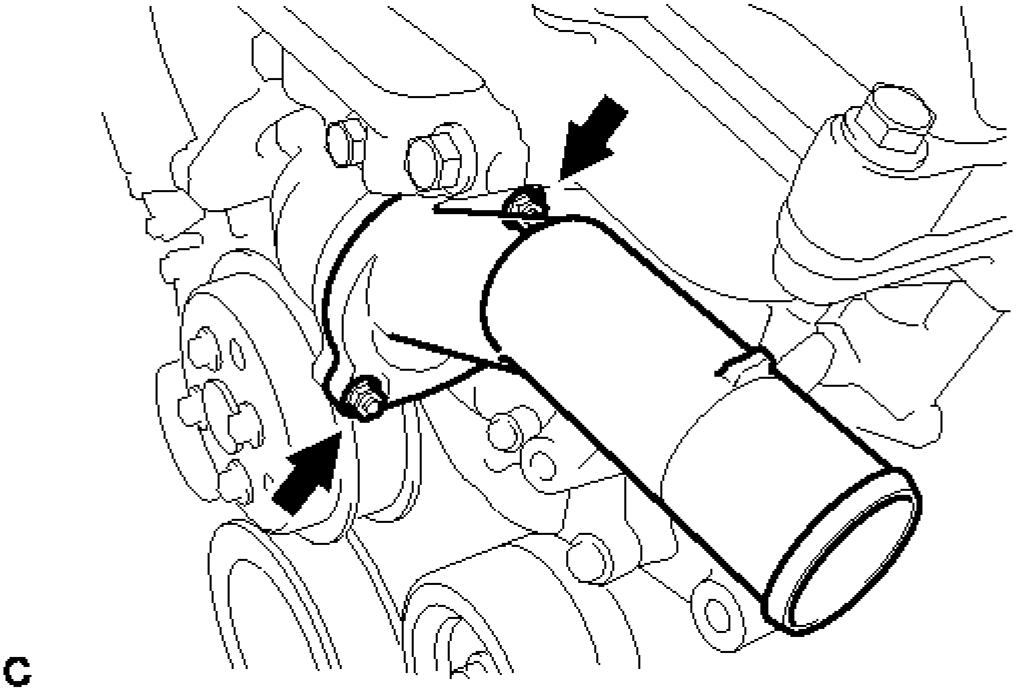

Fig. 20: Locating Water Inlet And Nuts
Courtesy of TOYOTA MOTOR SALES, U.S.A., INC.

6. **REMOVE THERMOSTAT**
    a. Remove the thermostat from the water inlet housing.
    b. Remove the gasket from the thermostat.

INSPECTION

INSPECTION

1. **INSPECT THERMOSTAT**

    HINT:

    The valve opening temperature is inscribed on the thermostat.

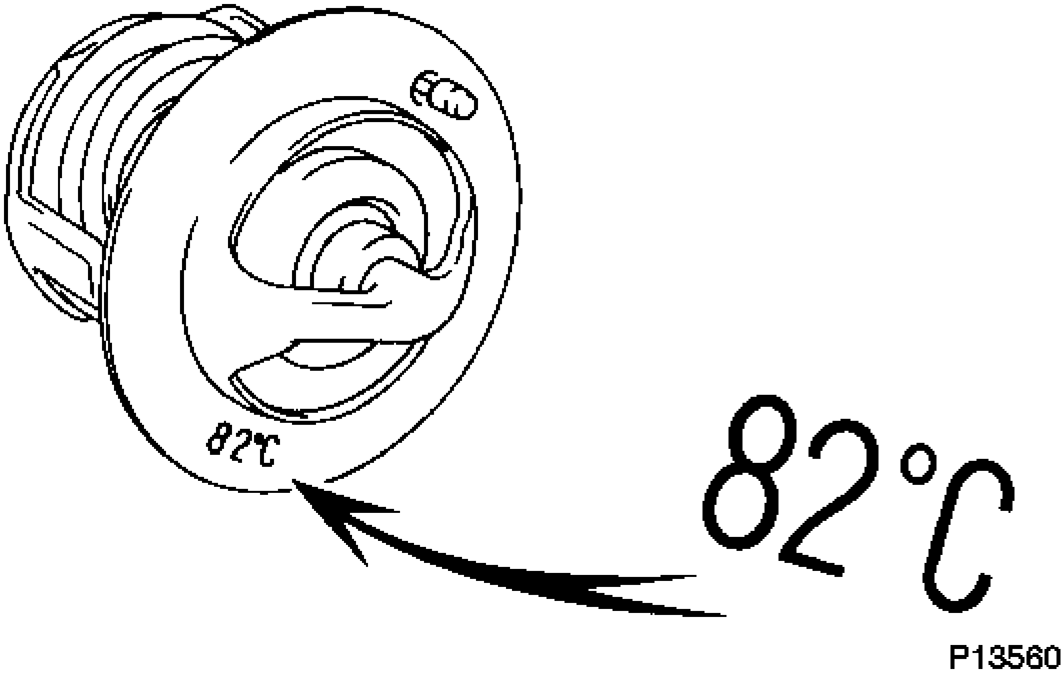

Fig. 21: Identifying Temperature Mark On Thermostat
Courtesy of TOYOTA MOTOR SALES, U.S.A., INC.

a. Immerse the thermostat in water, and then gradually heat the water.

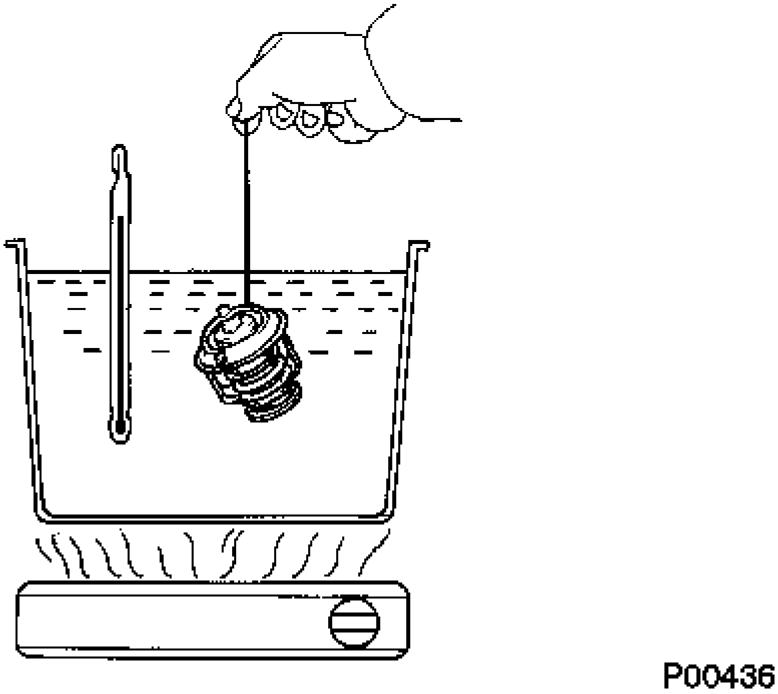

Fig. 22: Checking Valve Opening Temperature
Courtesy of TOYOTA MOTOR SALES, U.S.A., INC.

b. Check that the valve of the thermostat opens at the specified temperature.

   Valve opening temperature

   80 to 84°C (176 to 183°F)

   If the valve does not open as specified, replace the thermostat.

c. Check the valve lift.

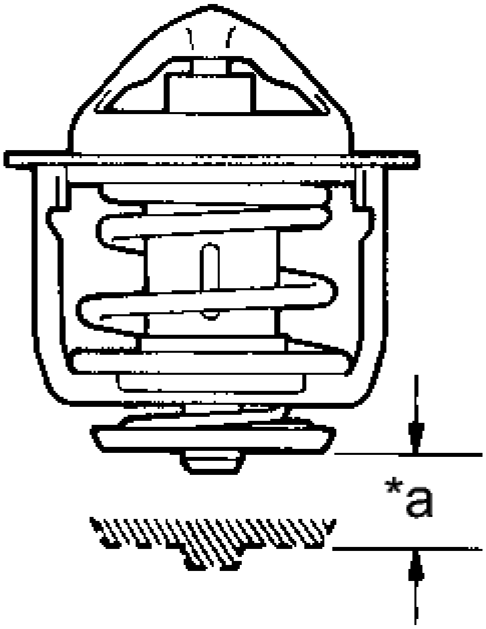

Fig. 23: Identifying Valve Lift
Courtesy of TOYOTA MOTOR SALES, U.S.A., INC.

TEXT IN ILLUSTRATION

*a	Valve Lift

   Valve lift

   7.7 mm (0.3031 in.) or more at 95°C (203°F)

   If the valve lift is not as specified, replace the thermostat.

d. Check that the valve is fully closed when the thermostat is at low temperatures (below 40°C (104°F)).

   If it is not fully closed, replace the thermostat.

INSTALLATION

INSTALLATION

1. **INSTALL THERMOSTAT**
    a. Install a new gasket to the thermostat.
    b. Install the thermostat with the jiggle valve facing up.

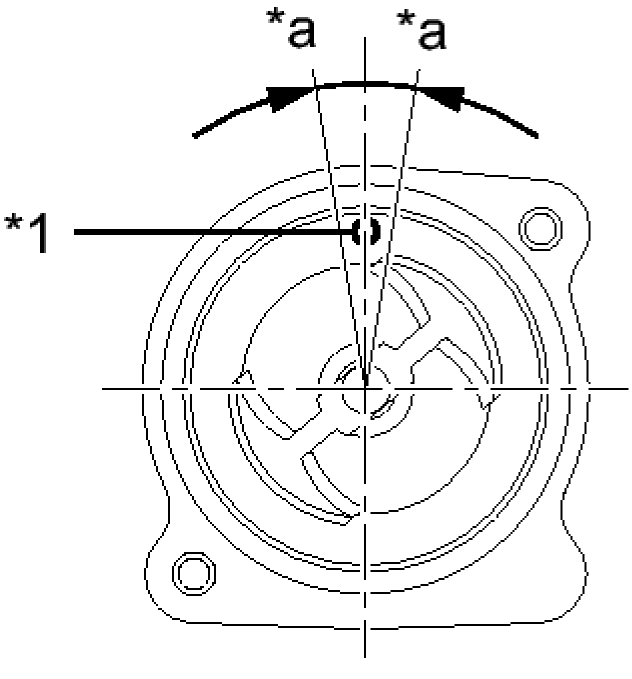

Fig. 24: Identifying Jiggle Valve
Courtesy of TOYOTA MOTOR SALES, U.S.A., INC.

TEXT IN ILLUSTRATION

*1	Jiggle valve
*a	10°

HINT:

The jiggle valve may be set within 10° on either side of the prescribed position.

2. **INSTALL WATER INLET**
    a. Install the water inlet with the 2 nuts.

    Torque: 10 N*m (102 kgf*cm, 7 ft.*lbf)

3. **CONNECT OUTLET RADIATOR HOSE** . Refer to **INSTALLATION - Step 45**

4. **INSTALL NO. 2 IDLER PULLEY SUB-ASSEMBLY** . Refer to **INSTALLATION - Step 7**
5. **INSTALL V-RIBBED BELT**

   Refer to **INSTALLATION**

6. **ADD ENGINE COOLANT** See step 2
7. **INSPECT FOR COOLANT LEAK** . Refer to **ON-VEHICLE INSPECTION - Step 1**

COOLING FAN MOTOR

COMPONENTS

ILLUSTRATION

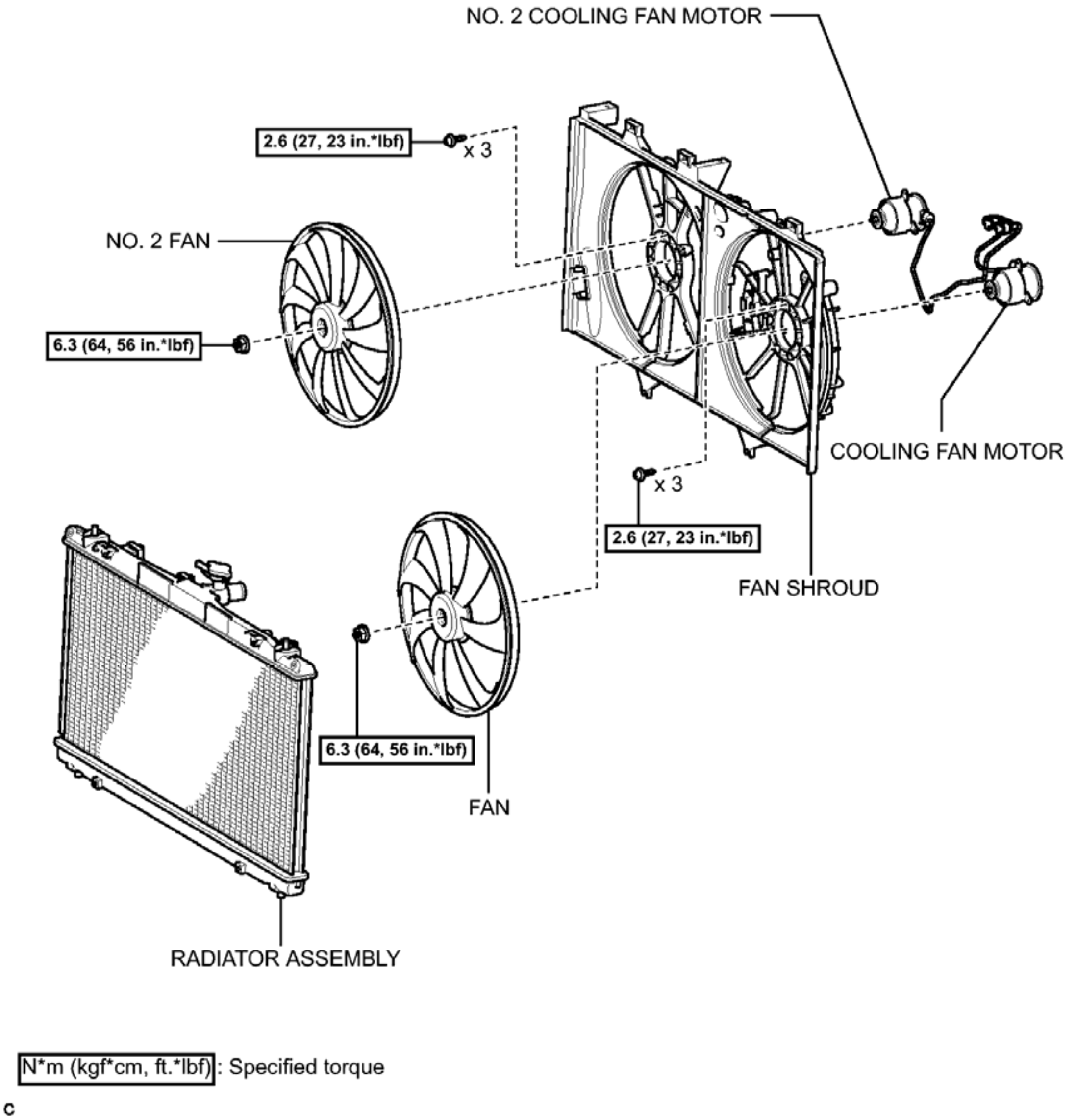
NO. 2 COOLING FAN MOTOR
2.6 (27, 23 in.*lbf)
x 3
NO. 2 FAN
6.3 (64, 56 in.*lbf)
COOLING FAN MOTOR
x 3
2.6 (27, 23 in.*lbf)
FAN SHROUD
6.3 (64, 56 in.*lbf)
FAN
RADIATOR ASSEMBLY
N*m (kgf*cm, ft.*lbf): Specified torque
c

Fig. 25: Identifying Cooling Fan Motor Replacement Components With Torque Specifications
Courtesy of TOYOTA MOTOR SALES, U.S.A., INC.

ON-VEHICLE INSPECTION

ON-VEHICLE INSPECTION

1. **CHECK COOLING FAN MOTOR**

a. Check that the motor operates smoothly when the battery is connected to the fan motor connector.

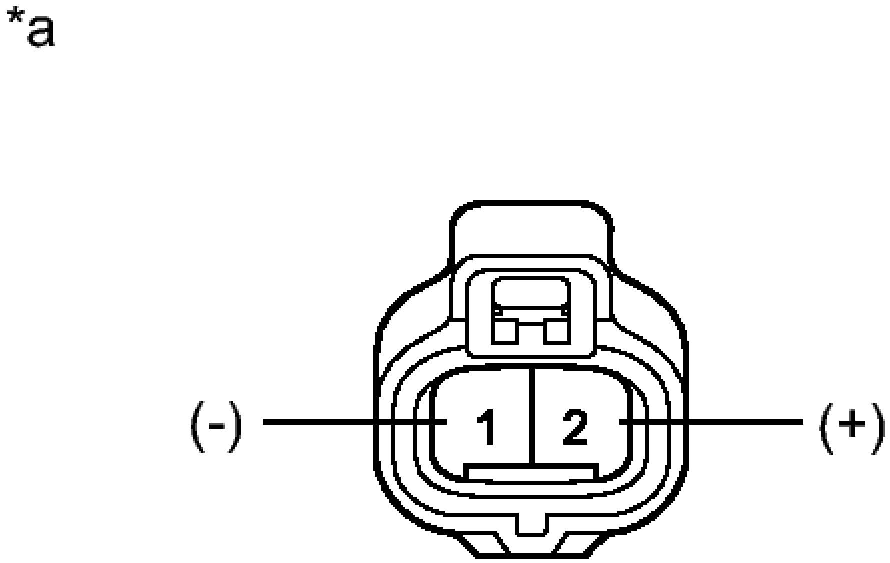

Fig. 26: Cooling Fan Motor Connector Terminal Identification
Courtesy of TOYOTA MOTOR SALES, U.S.A., INC.

TEXT IN ILLUSTRATION

*a	Component without harness connected (Cooling Fan Motor)

b. Measure the current while the motor is operating.

Standard Current

Item	Condition	Specified Condition
Cooling fan motor	Battery voltage applied at 20°C (68°F)	7.3 to 9.3 A

If the result is not as specified, replace the cooling fan motor.

2. **CHECK NO. 2 COOLING FAN MOTOR**
   a. Check that the motor operates smoothly when the battery is connected to the fan motor connector.

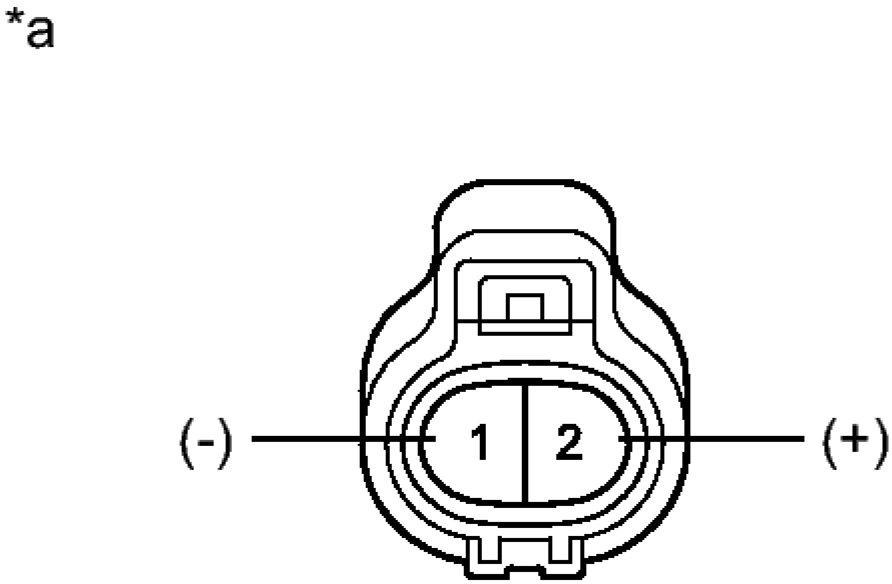

Fig. 27: No. 2 Cooling Fan Motor Connector Terminal Identification
Courtesy of TOYOTA MOTOR SALES, U.S.A., INC.

TEXT IN ILLUSTRATION

*a	Component without harness connected (No. 2 Cooling Fan Motor)

   b. Measure the current while the motor is operating.

Standard Current

Item	Condition	Specified Condition
No. 2 Cooling fan motor	Battery voltage applied at 20°C (68°F)	7.3 to 9.3 A

If the result is not as specified, replace the No. 2 cooling fan motor.

REMOVAL

REMOVAL

1. **REMOVE RADIATOR ASSEMBLY**

   Refer to **REMOVAL**

2. **REMOVE FAN**
   a. Remove the nut and fan.

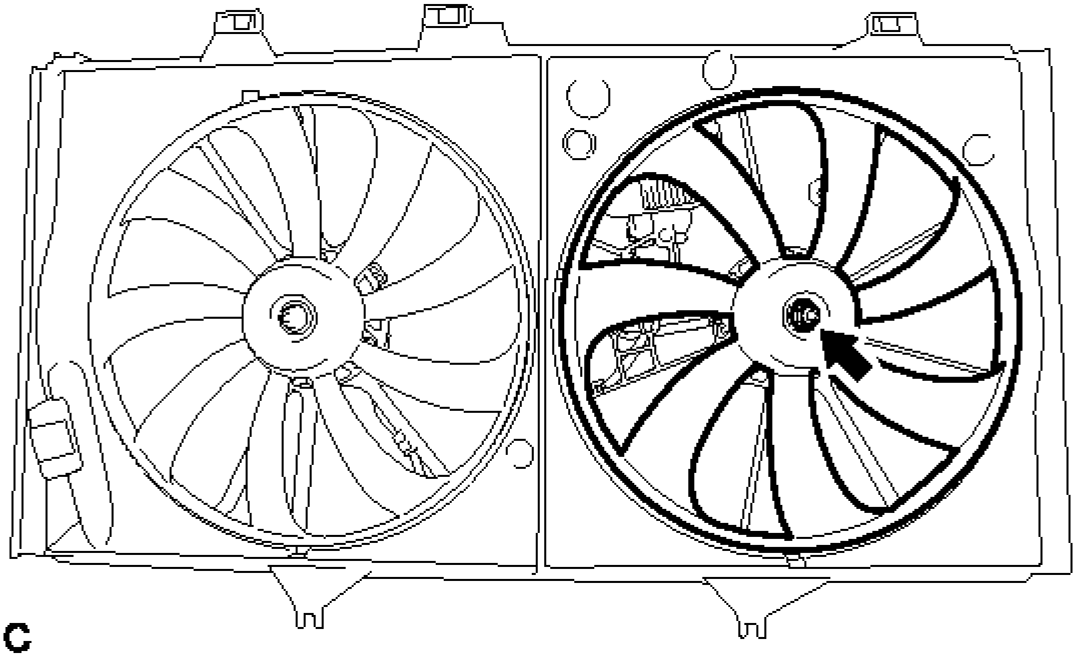

Fig. 28: Identifying Fan Nut
Courtesy of TOYOTA MOTOR SALES, U.S.A., INC.

3. **REMOVE NO. 2 FAN**
   a. Remove the nut and No. 2 fan.

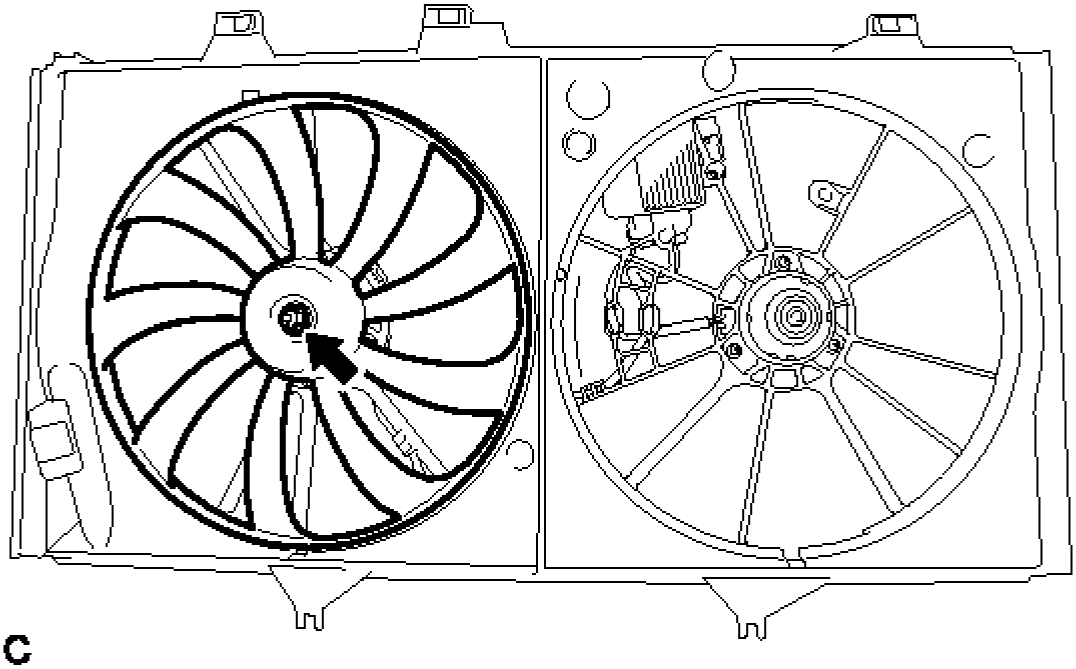

Fig. 29: Identifying No. 2 Fan Nut
Courtesy of TOYOTA MOTOR SALES, U.S.A., INC.

4. **REMOVE COOLING FAN MOTOR**
   a. Disconnect the clamp and connector.

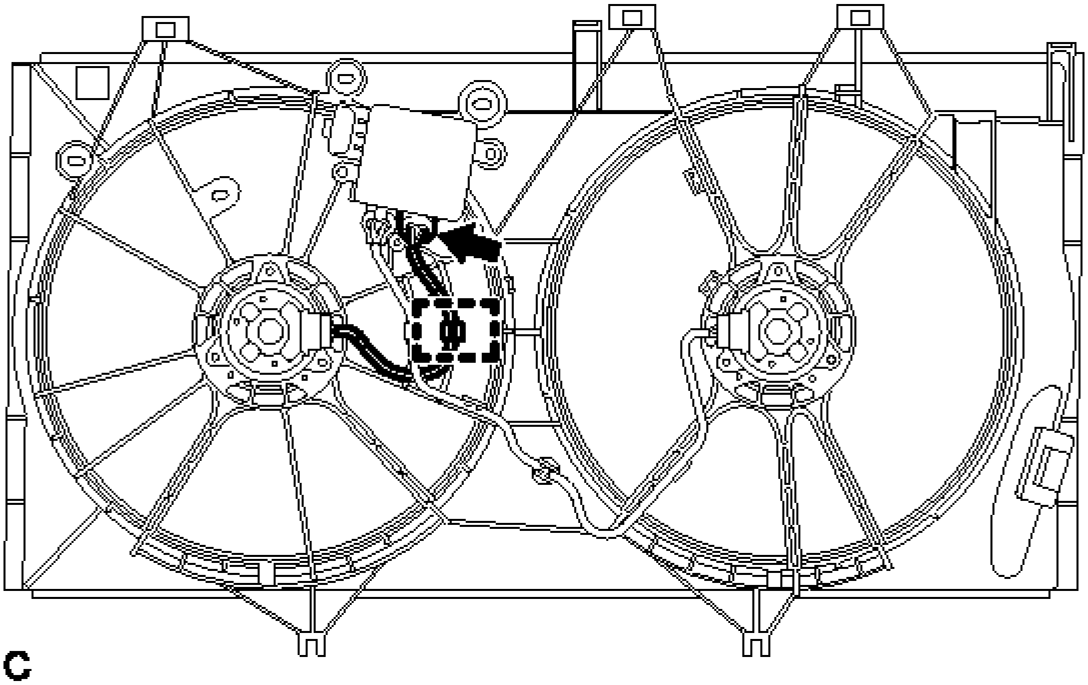

Fig. 30: Identifying Cooling Fan Motor Clamp And Connector

Courtesy of TOYOTA MOTOR SALES, U.S.A., INC.

b. Remove the 3 screws and cooling fan motor.

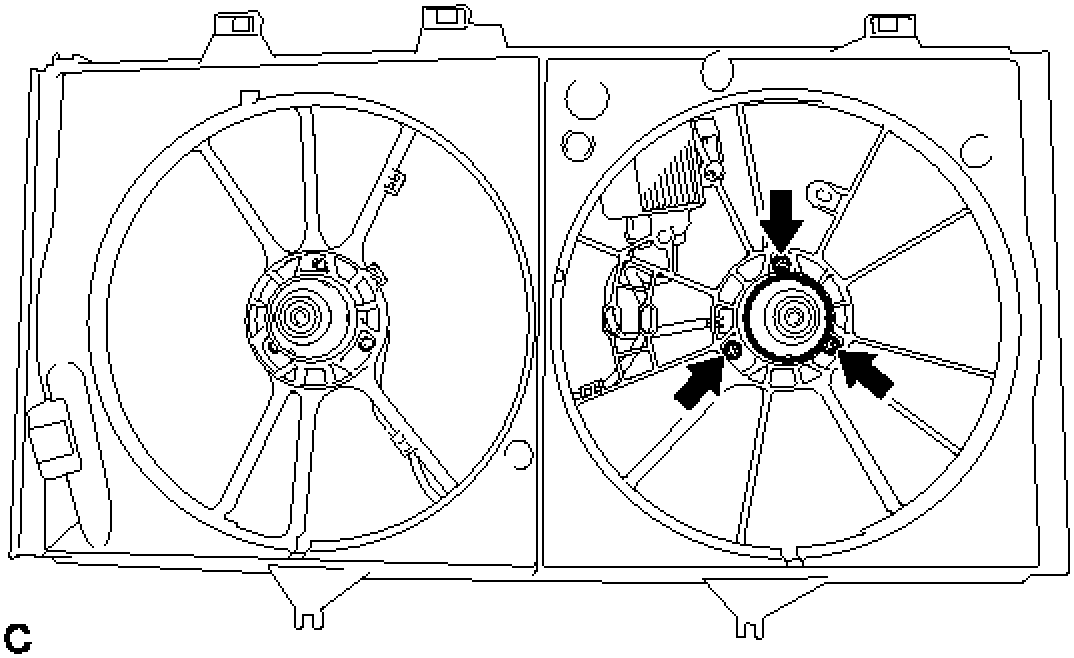

Fig. 31: Identifying Cooling Fan Motor Screws
Courtesy of TOYOTA MOTOR SALES, U.S.A., INC.

5. **REMOVE NO. 2 COOLING FAN MOTOR**
    a. Disconnect the 4 clamps and connector.

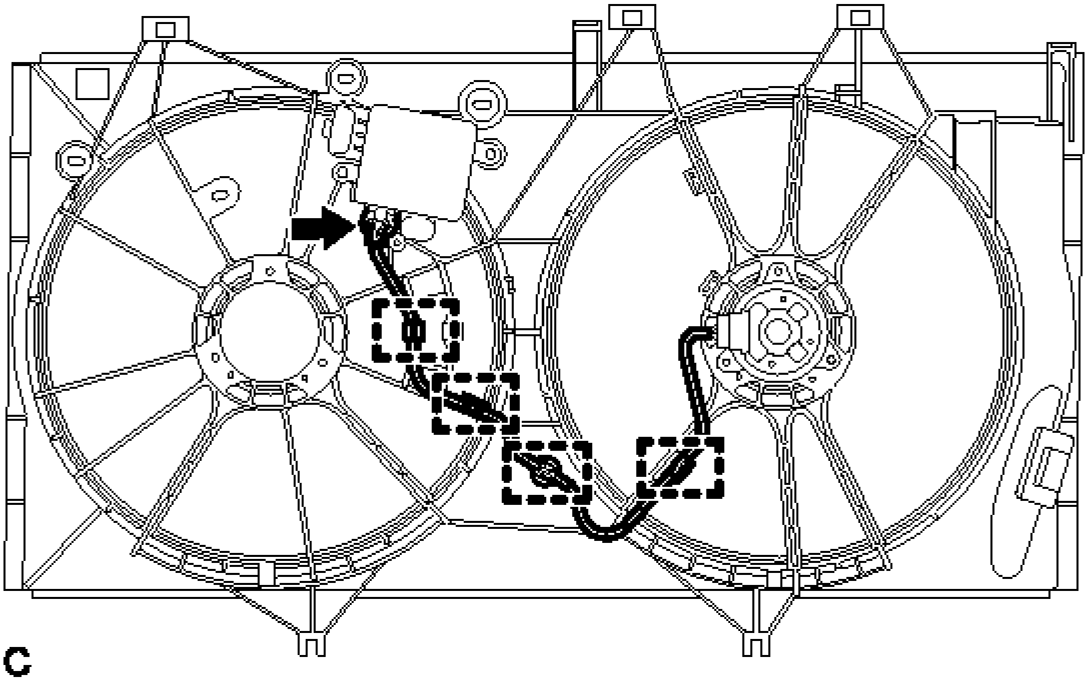

Fig. 32: Identifying No. 2 Cooling Fan Motor Clamps And Connector
Courtesy of TOYOTA MOTOR SALES, U.S.A., INC.

b. Remove the 3 screws and No. 2 cooling fan motor.

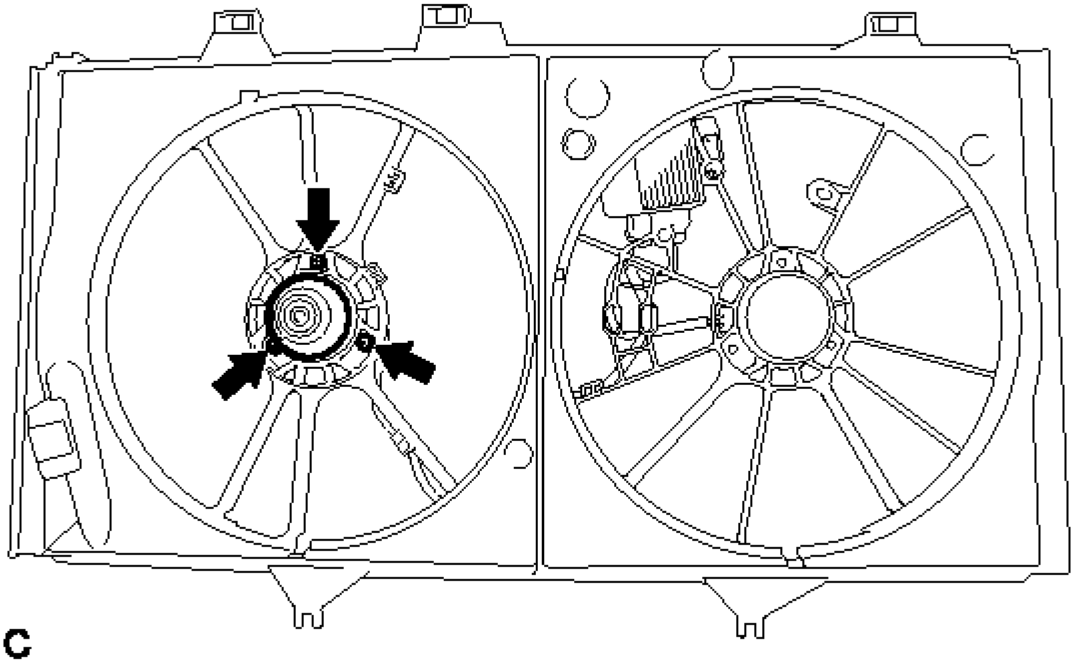

Fig. 33: Identifying No. 2 Cooling Fan Motor Screws
Courtesy of TOYOTA MOTOR SALES, U.S.A., INC.

INSTALLATION

INSTALLATION

1. **INSTALL NO. 2 COOLING FAN MOTOR**
    a. Install the No. 2 cooling fan motor with the 3 screws.

        Torque: 2.6 N*m (27 kgf*cm, 23 in.*lbf)

    b. Connect the 4 clamps and connector.
2. **INSTALL COOLING FAN MOTOR**
    a. Install the cooling fan motor with the 3 screws.

        Torque: 2.6 N*m (27 kgf*cm, 23 in.*lbf)

    b. Connect the clamp and connector.
3. **INSTALL NO. 2 FAN**
    a. Install the No. 2 fan with the nut.

        Torque: 6.3 N*m (64 kgf*cm, 56 in.*lbf)

4. **INSTALL FAN**
    a. Install the fan with the nut.

        Torque: 6.3 N*m (64 kgf*cm, 56 in.*lbf)

5. **INSTALL RADIATOR ASSEMBLY**

    Refer to **INSTALLATION**

COOLING FAN ECU

ON-VEHICLE INSPECTION

ON-VEHICLE INSPECTION

1. **INSPECT COOLING FAN ECU**
    a. Put the vehicle in the following conditions:
        1. The engine switch is off.
        2. The coolant temperature is less than 92°C (198°F).
        3. The battery voltage is between 11 to 14 V.
        4. The A/C switch is off.
    b. Connect the pickup of a clamp-on ammeter over one of the two wires for the cooling fan motor.
    c. Turn the engine switch on (IG) and wait for approximately 10 seconds. Check that the fan stops.

d. Start the engine. Check that the fan stops with the engine idling.

 HINT:

 - Make sure that the radiator engine coolant temperature is less than 92°C (198°F).
 - Turn the A/C switch off.

e. Check that the fan operates when the A/C switch is turned on.

 Standard Current

Item	Specified Condition
Cooling fan motor	14.2 to 20.2 A
No. 2 cooling fan motor	7.5 to 11.5 A

 HINT:

 The coolant temperature is less than 92°C (198°F).

f. Check that the fan operates when the engine coolant temperature sensor connector is disconnected.

 Standard Current

Item	Specified Condition
Cooling fan motor	14.2 to 20.2 A
No. 2 cooling fan motor	7.5 to 11.5 A

g. After the engine is warmed up, check that the fan operates as shown in the illustration.

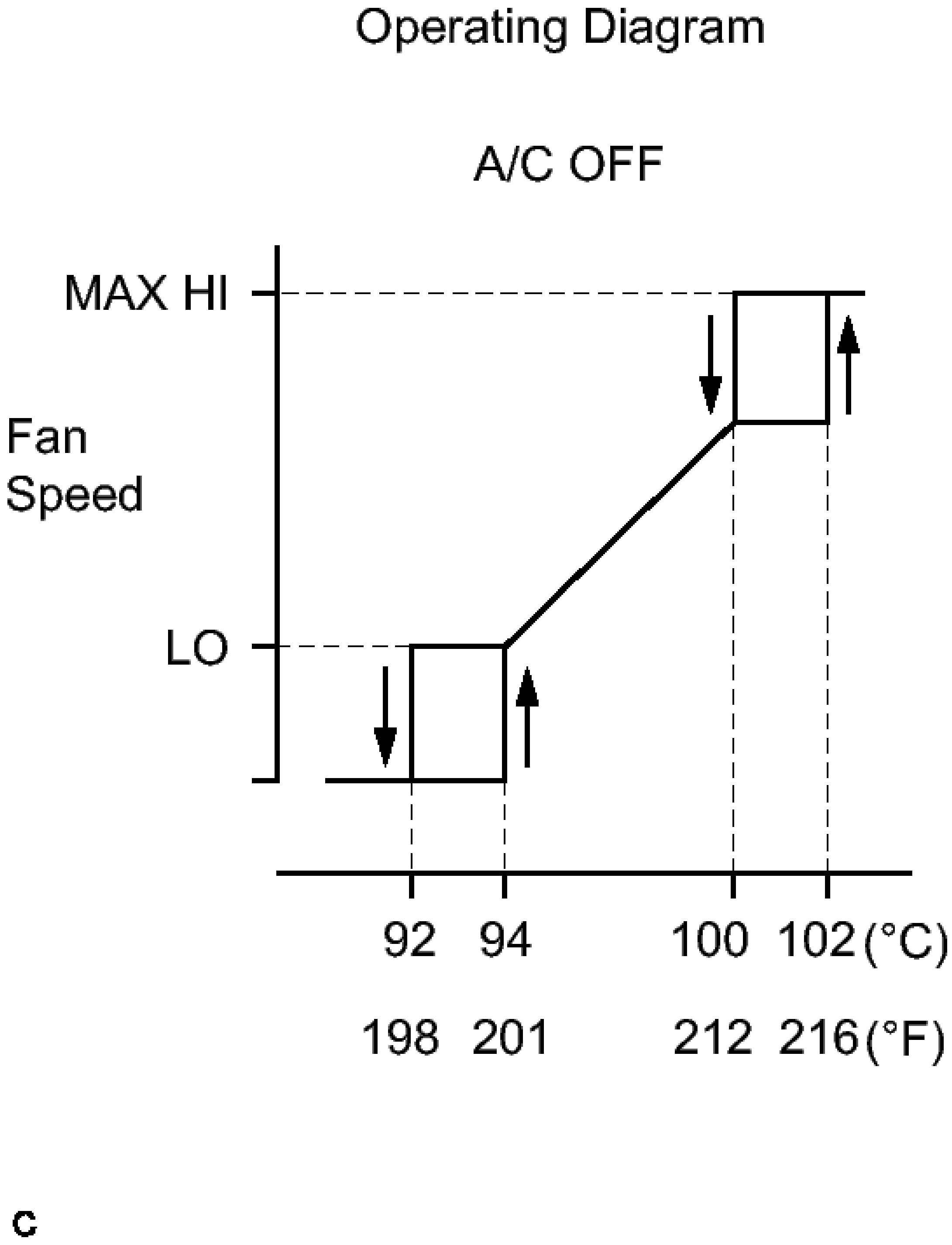

Fig. 34: Identifying Fan Operation Diagram
Courtesy of TOYOTA MOTOR SALES, U.S.A., INC.

HINT:

- The coolant temperature at which the fan starts operating is approximately 94°C (201°F).
- This system can also be checked using the Techstream.
- Select the following menu items: Powertrain / Engine / Data List / Coolant Temp.

RADIATOR

COMPONENTS

ILLUSTRATION

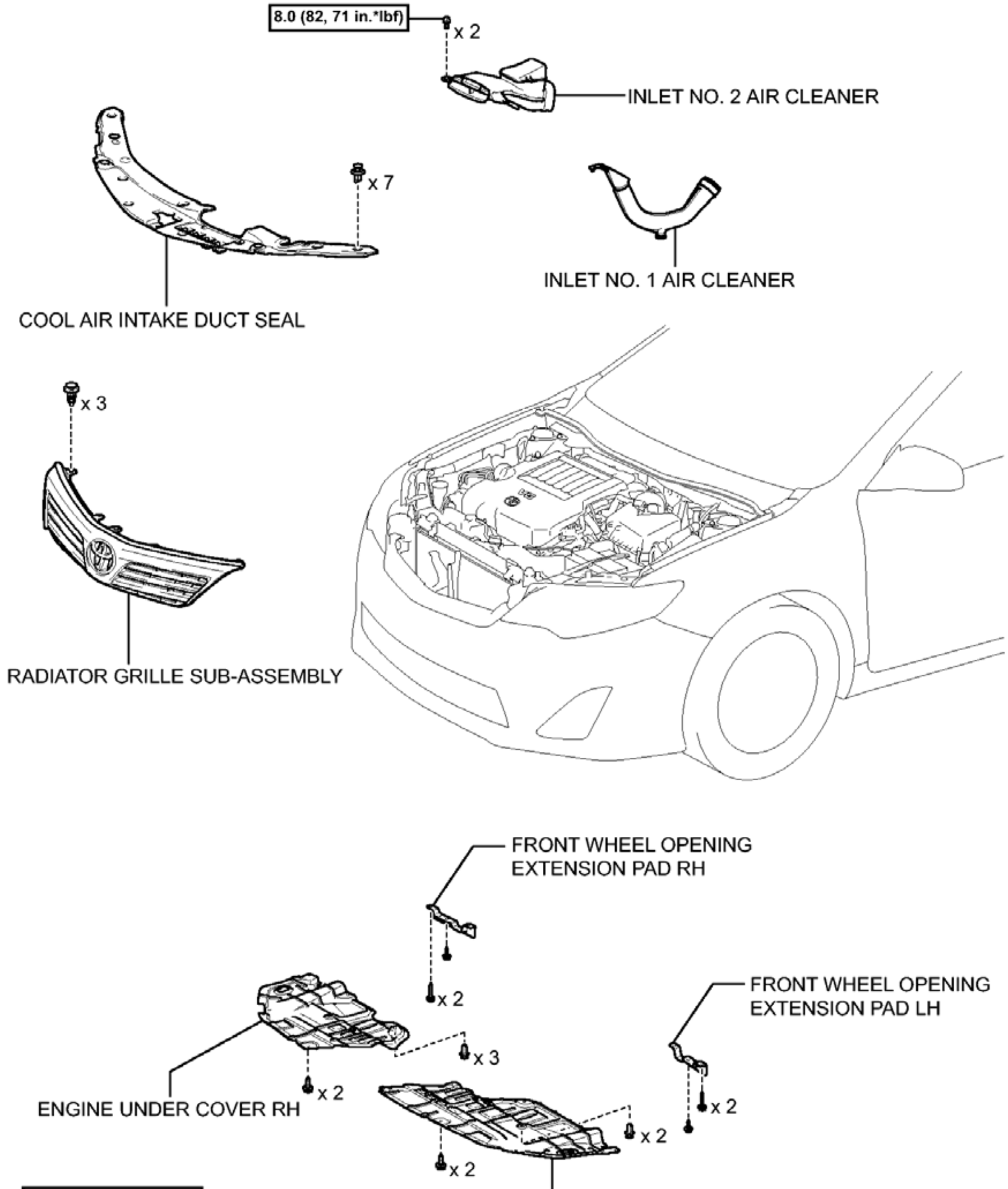
8.0 (82, 71 in.*lbf)
x 2
INLET NO. 2 AIR CLEANER
x 7
INLET NO. 1 AIR CLEANER
COOL AIR INTAKE DUCT SEAL
x 3
RADIATOR GRILLE SUB-ASSEMBLY
FRONT WHEEL OPENING EXTENSION PAD RH
x 2
FRONT WHEEL OPENING EXTENSION PAD LH
x 3
x 2
ENGINE UNDER COVER RH
x 2
x 2
x 2
N*m (kgf*cm, ft.*lbf) : Specified torque
ENGINE UNDER COVER LH

Fig. 35: Identifying Radiator Replacement Components With Torque Specifications (1 Of 3)
Courtesy of TOYOTA MOTOR SALES, U.S.A., INC.

ILLUSTRATION

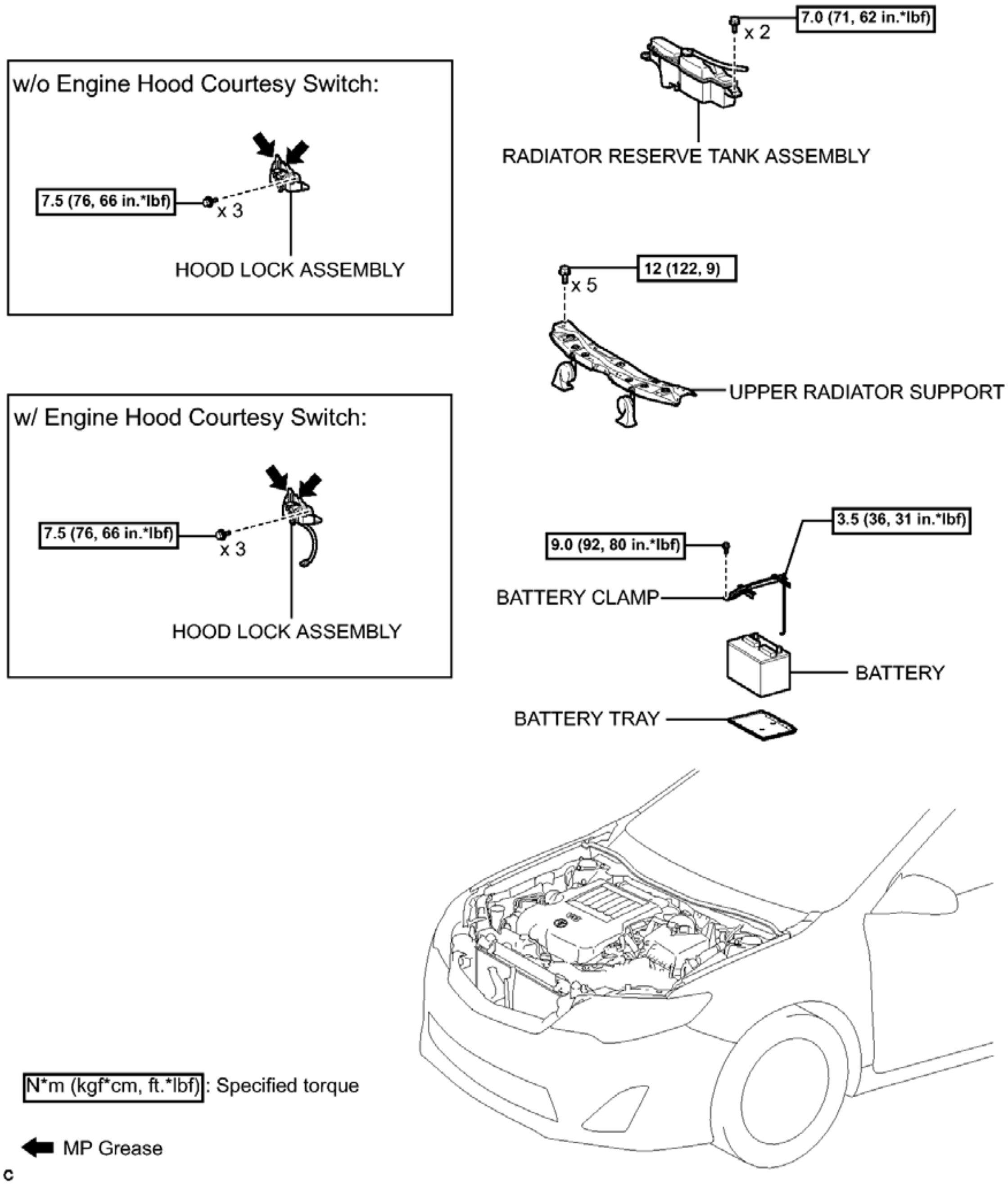
7.0 (71, 62 in.*lbf)
x 2
RADIATOR RESERVE TANK ASSEMBLY
w/o Engine Hood Courtesy Switch:
7.5 (76, 66 in.*lbf)
x 3
HOOD LOCK ASSEMBLY
12 (122, 9)
x 5
UPPER RADIATOR SUPPORT
w/ Engine Hood Courtesy Switch:
7.5 (76, 66 in.*lbf)
x 3
HOOD LOCK ASSEMBLY
3.5 (36, 31 in.*lbf)
9.0 (92, 80 in.*lbf)
BATTERY CLAMP
BATTERY
BATTERY TRAY
N*m (kgf*cm, ft.*lbf): Specified torque
MP Grease
c

Fig. 36: Identifying Radiator Replacement Components With Torque Specifications (2 Of 3)
Courtesy of TOYOTA MOTOR SALES, U.S.A., INC.

ILLUSTRATION

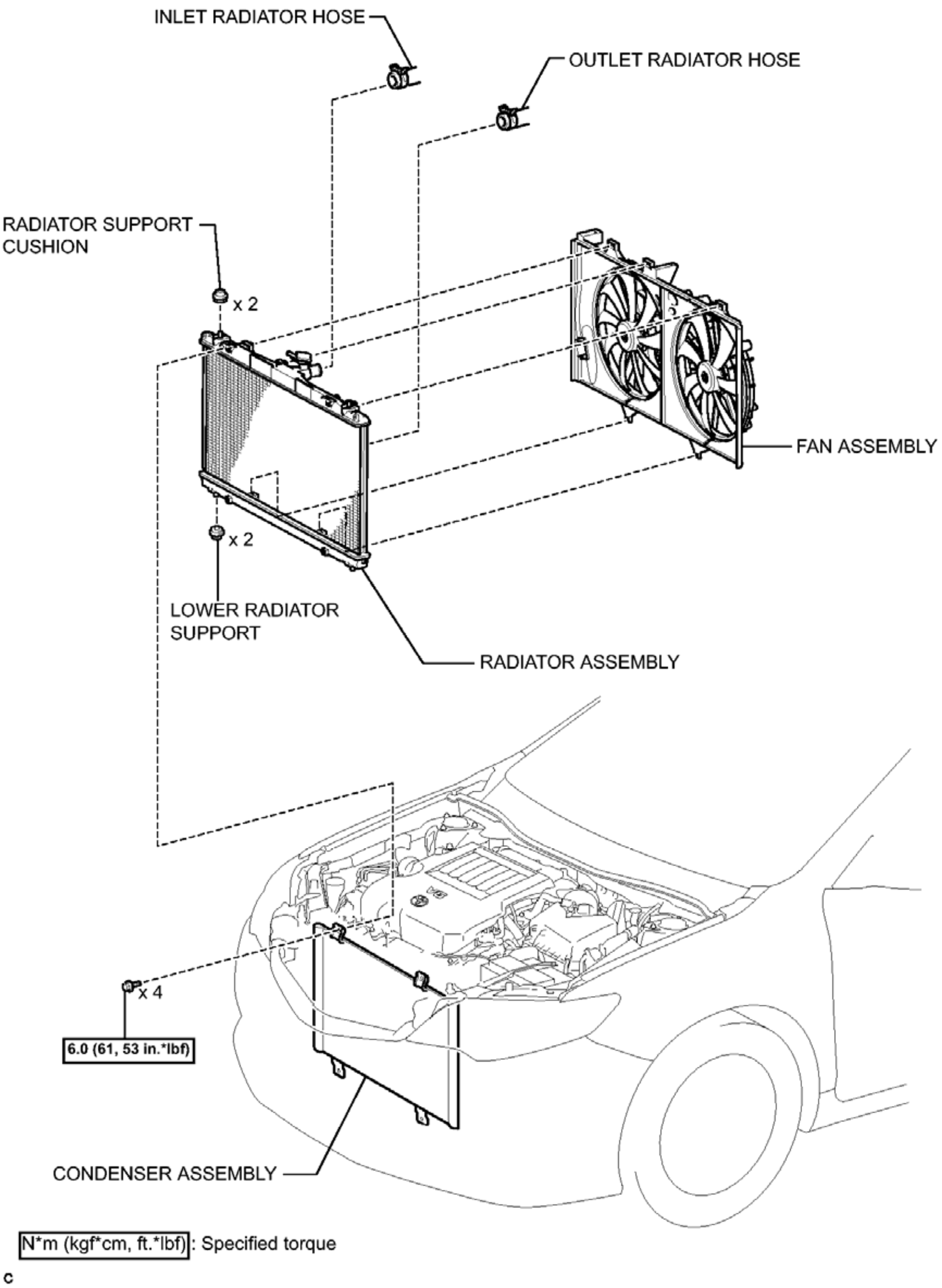
INLET RADIATOR HOSE
OUTLET RADIATOR HOSE
RADIATOR SUPPORT CUSHION
x 2
FAN ASSEMBLY
x 2
LOWER RADIATOR SUPPORT
RADIATOR ASSEMBLY
x 4
6.0 (61, 53 in.*lbf)
CONDENSER ASSEMBLY
N*m (kgf*cm, ft.*lbf): Specified torque
c

Fig. 37: Identifying Radiator Replacement Components With Torque Specifications (3 Of 3)
Courtesy of TOYOTA MOTOR SALES, U.S.A., INC.

ON-VEHICLE INSPECTION

ON-VEHICLE INSPECTION

1. **CHECK RADIATOR CAP SUB-ASSEMBLY**
    a. Measure the valve opening pressure.

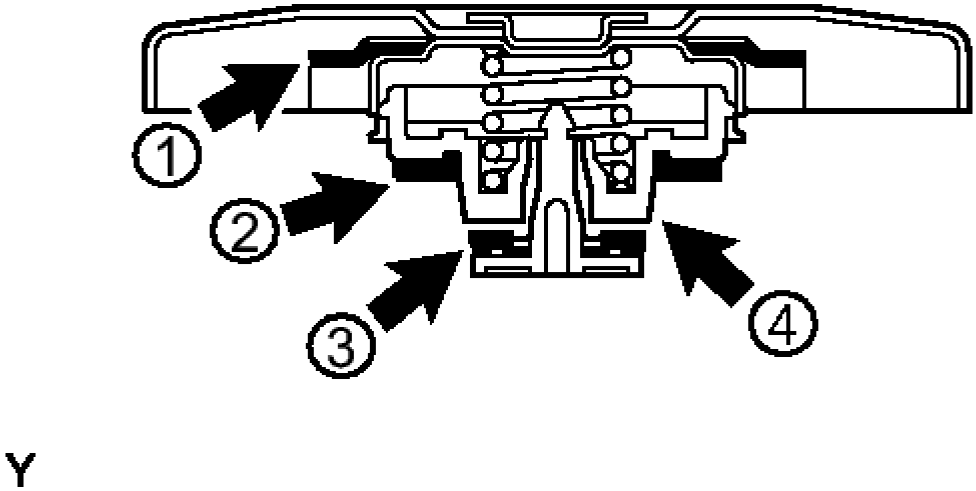

Fig. 38: Locating Rubber Packings 1, 2, 3 And 4
Courtesy of TOYOTA MOTOR SALES, U.S.A., INC.

1. If there are water stains or foreign matter on rubber packings 1, 2 or 3, clean the part(s) with water and finger scouring.
2. Check that rubber packings 1, 2 and 3 are not deformed, cracked or swollen.
3. Check that 3 and 4 are not stuck together.
4. Apply engine coolant to rubber packings 2 and 3 before using the radiator cap tester.
5. When using the cap tester, tilt it upward 30° or more.
6. Pump the cap tester several times, and check the maximum pressure *1.

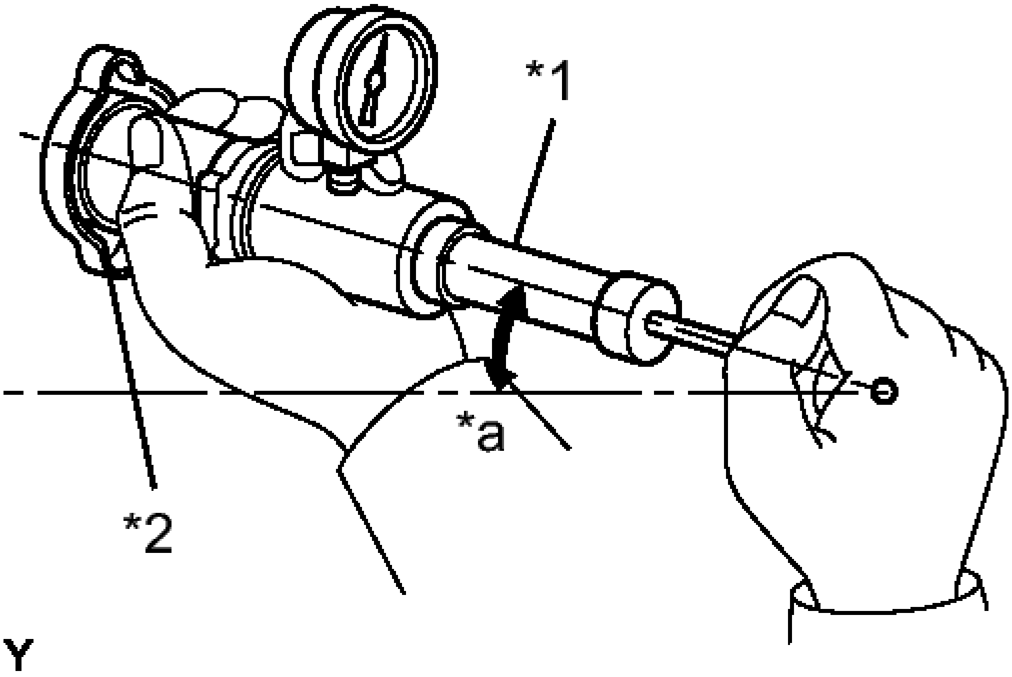

Fig. 39: Identifying Radiator Cap Tester And Radiator Cap Sub-Assembly
Courtesy of TOYOTA MOTOR SALES, U.S.A., INC.

TEXT IN ILLUSTRATION

*1	Radiator Cap Tester
*2	Radiator Cap Sub-assembly
*a	30° or more

Pumping speed

1 pump every second

*1: Even if the cap cannot maintain the maximum pressure, it is not a defect.

Judgment Criteria

Item	Specified Condition
Standard	93.3 to 122.7 kPa (0.95 to

value (for brand-new cap)	1.25 kgf/cm^2 , 13.5 to 17.8 psi)
Minimum standard value (for used cap)	78.5 kPa (0.8 kgf/cm^2 , 11.4 psi)

If the maximum pressure is less than the specified pressure for the minimum standard value, replace the radiator cap sub-assembly.

REMOVAL

REMOVAL

1. **PRECAUTION**

   NOTE: After turning the engine switch off, waiting time may be required before disconnecting the cable from the negative (-) battery terminal. Therefore, make sure to read the disconnecting the cable from the negative (-) battery terminal notice before proceeding with work. Refer to PRECAUTION .

2. **DRAIN ENGINE COOLANT** See step 1
3. **REMOVE FRONT WHEEL OPENING EXTENSION PAD RH**
4. **REMOVE FRONT WHEEL OPENING EXTENSION PAD LH**
5. **REMOVE ENGINE UNDER COVER RH**
6. **REMOVE ENGINE UNDER COVER LH**
7. **DISCONNECT CABLE FROM NEGATIVE BATTERY TERMINAL**

   NOTE: When disconnecting the cable, some systems need to be initialized after the cable is reconnected. Refer to INITIALIZATION .

8. **REMOVE BATTERY** . Refer to **REMOVAL - Step 22**
9. **REMOVE COOL AIR INTAKE DUCT SEAL** . Refer to **REMOVAL - Step 1**
10. **REMOVE INLET NO. 2 AIR CLEANER** . Refer to **REMOVAL - Step 18**
11. **REMOVE INLET NO. 1 AIR CLEANER** . Refer to **REMOVAL - Step 23**
12. **REMOVE RADIATOR GRILLE SUB-ASSEMBLY** . Refer to **REMOVAL - Step 2**
13. **REMOVE RADIATOR RESERVE TANK ASSEMBLY**
    a. Disconnect the radiator reserve tank hose.

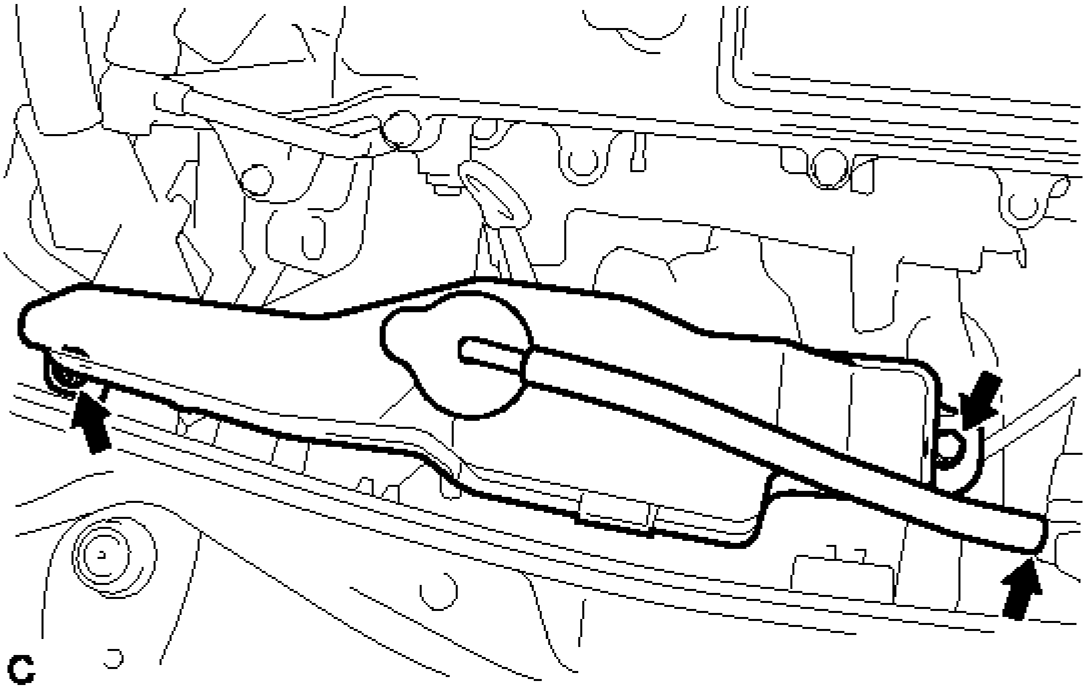

Fig. 40: Identifying Radiator Reserve Tank Hose And Bolts
Courtesy of TOYOTA MOTOR SALES, U.S.A., INC.

b. Remove the 2 bolts and radiator reserve tank assembly.

14. **DISCONNECT INLET RADIATOR HOSE**

a. Disconnect the inlet radiator hose.

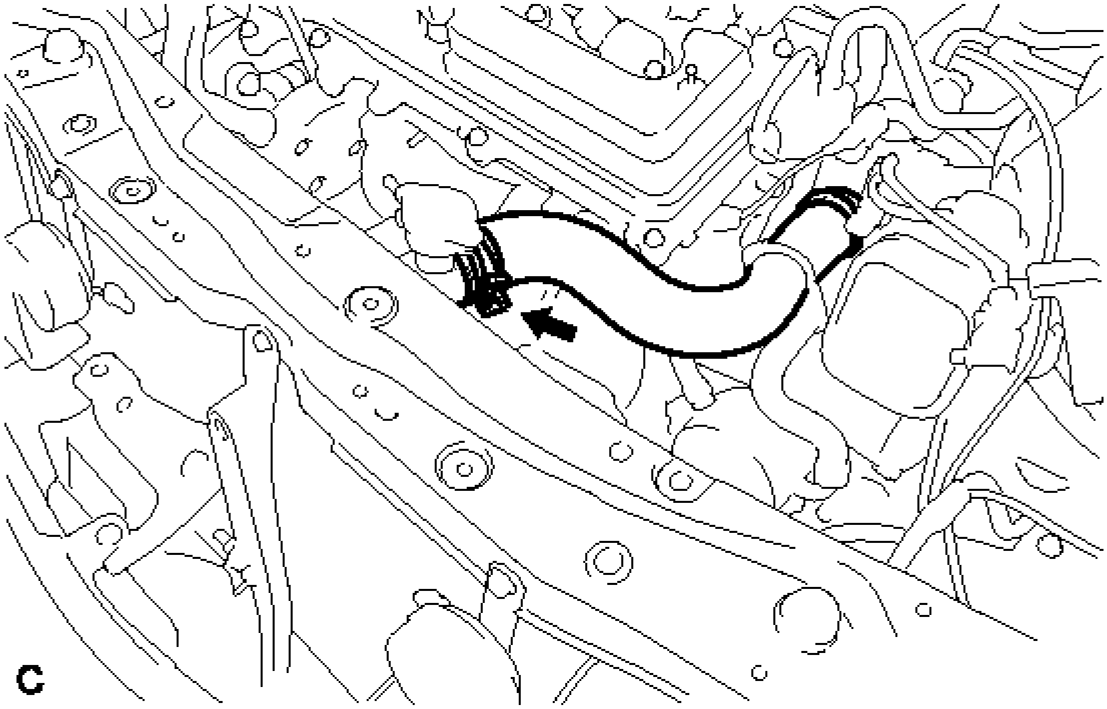

Fig. 41: Identifying Inlet Radiator Hose
Courtesy of TOYOTA MOTOR SALES, U.S.A., INC.

15. **DISCONNECT OUTLET RADIATOR HOSE**
    a. Disconnect the outlet radiator hose and clamp.

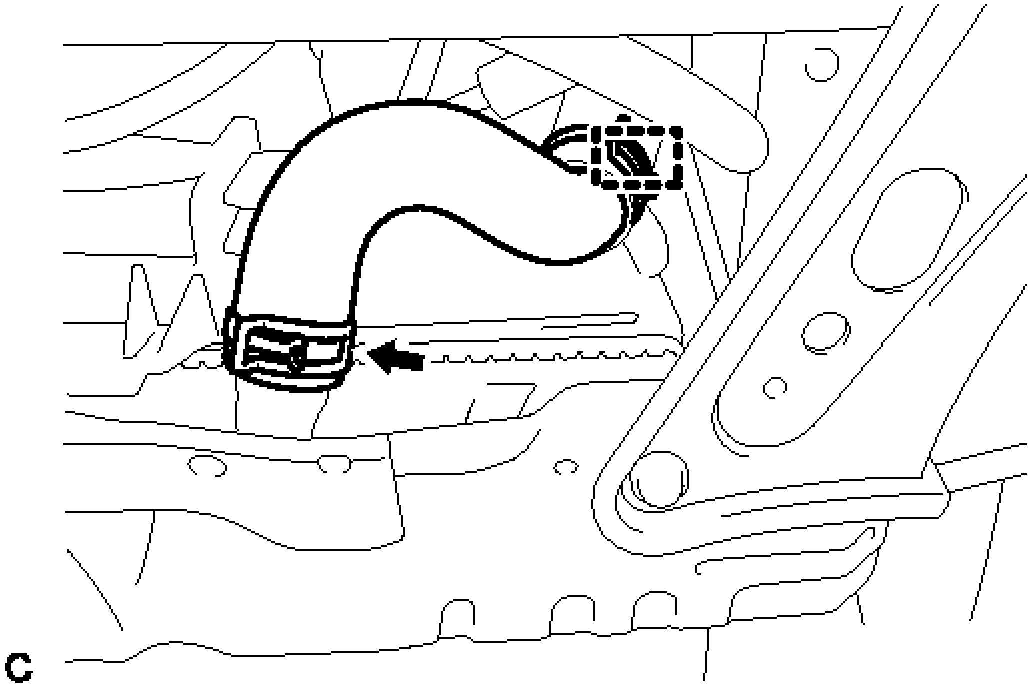

Fig. 42: Identifying Outlet Radiator Hose And Clamp
Courtesy of TOYOTA MOTOR SALES, U.S.A., INC.

16. **REMOVE HOOD LOCK ASSEMBLY** . Refer to **REMOVAL - Step 9**
17. **REMOVE UPPER RADIATOR SUPPORT**
    a. Disconnect the 2 connectors.

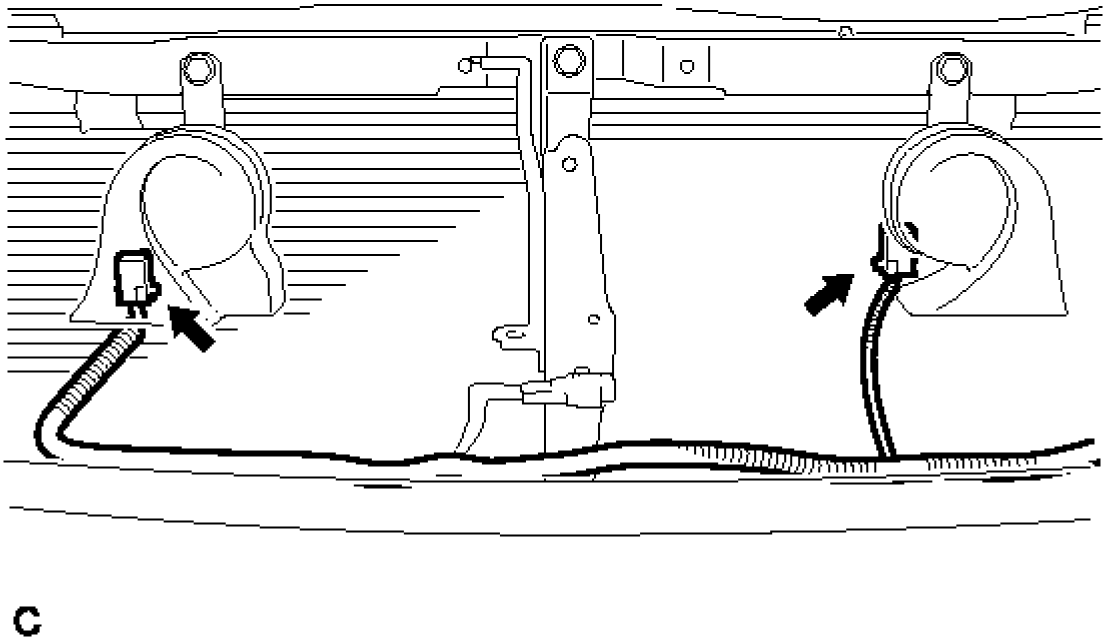

Fig. 43: Identifying Upper Radiator Support Connectors
Courtesy of TOYOTA MOTOR SALES, U.S.A., INC.

b. Disconnect the hood lock control cable clamp and remove the 5 bolts and upper radiator support.

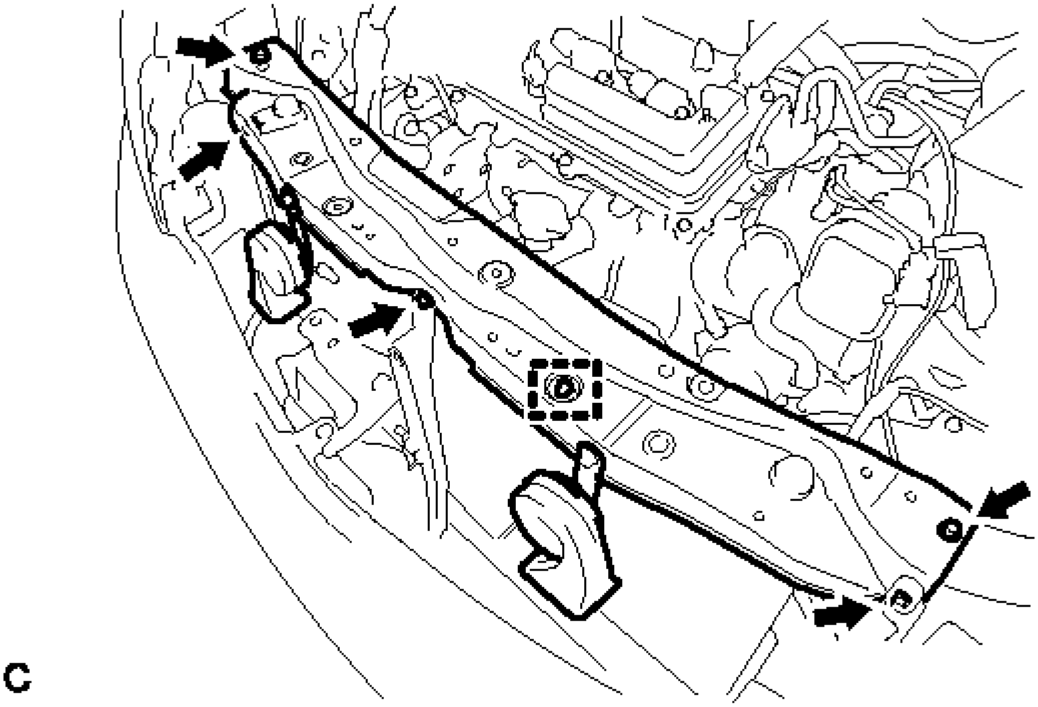

Fig. 44: Identifying Hood Lock Control Cable Clamp And Upper Radiator Support Bolts
Courtesy of TOYOTA MOTOR SALES, U.S.A., INC.

c. Remove the 2 radiator support cushions from the radiator assembly.

18. **REMOVE RADIATOR ASSEMBLY**

a. Disconnect the 3 clamps and connector.

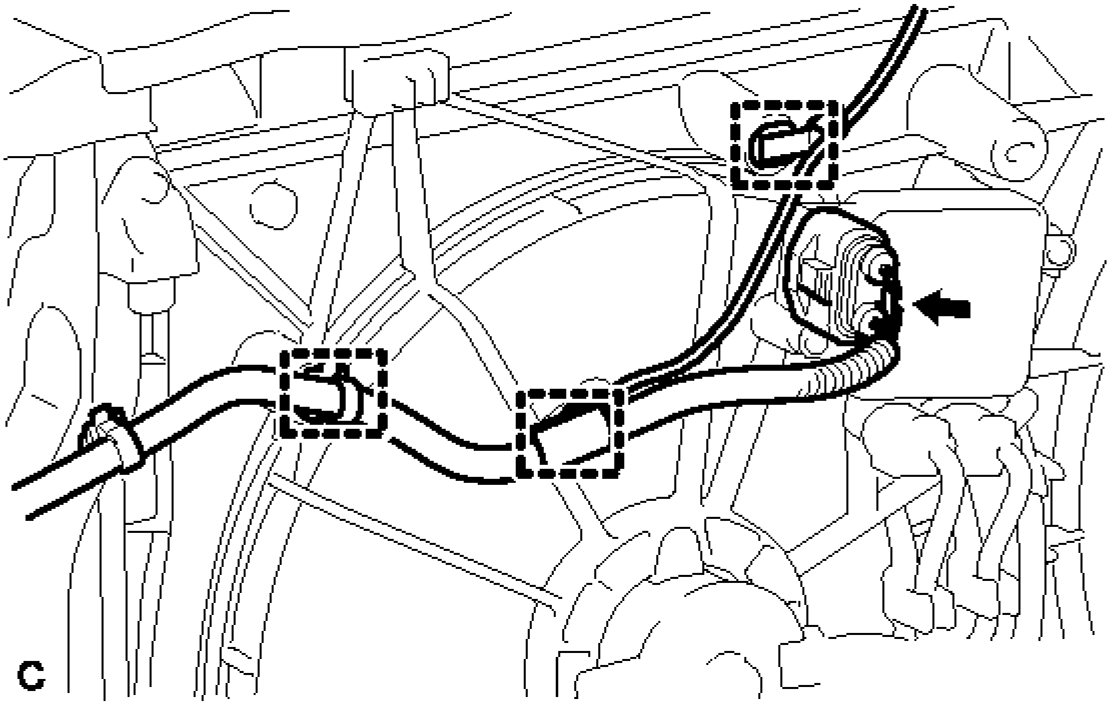

Fig. 45: Identifying Radiator Connector And Clamps
Courtesy of TOYOTA MOTOR SALES, U.S.A., INC.

b. Remove the 4 bolts and separate the condenser assembly from the radiator assembly.

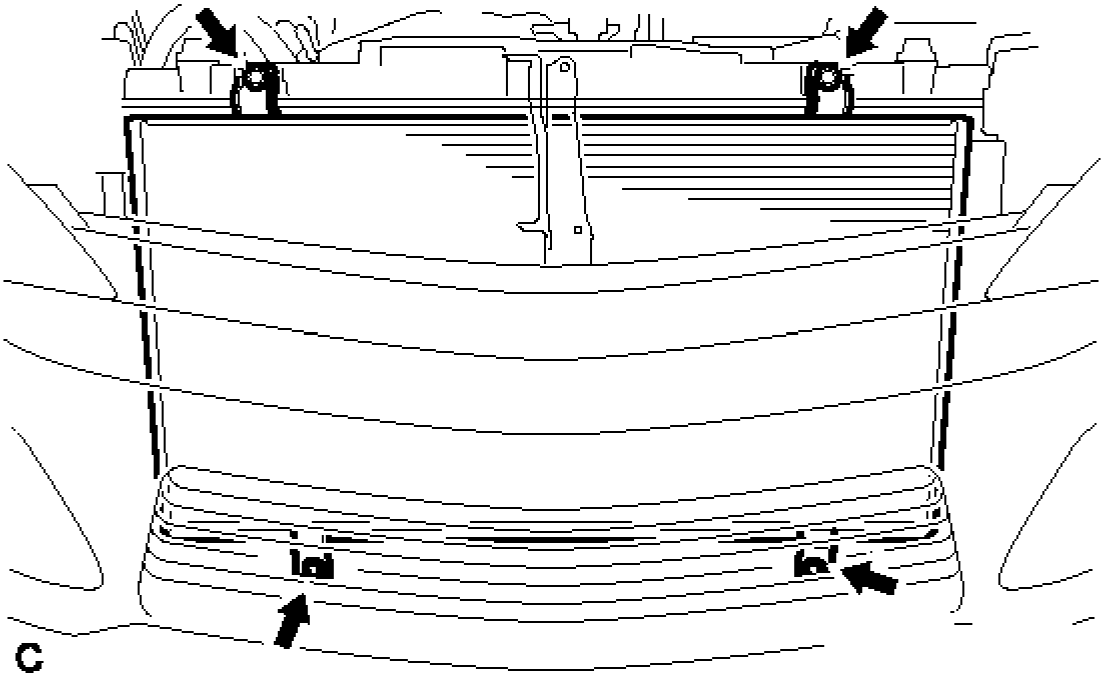

Fig. 46: Identifying Bolts
Courtesy of TOYOTA MOTOR SALES, U.S.A., INC.

c. Remove the radiator assembly with fan assembly.

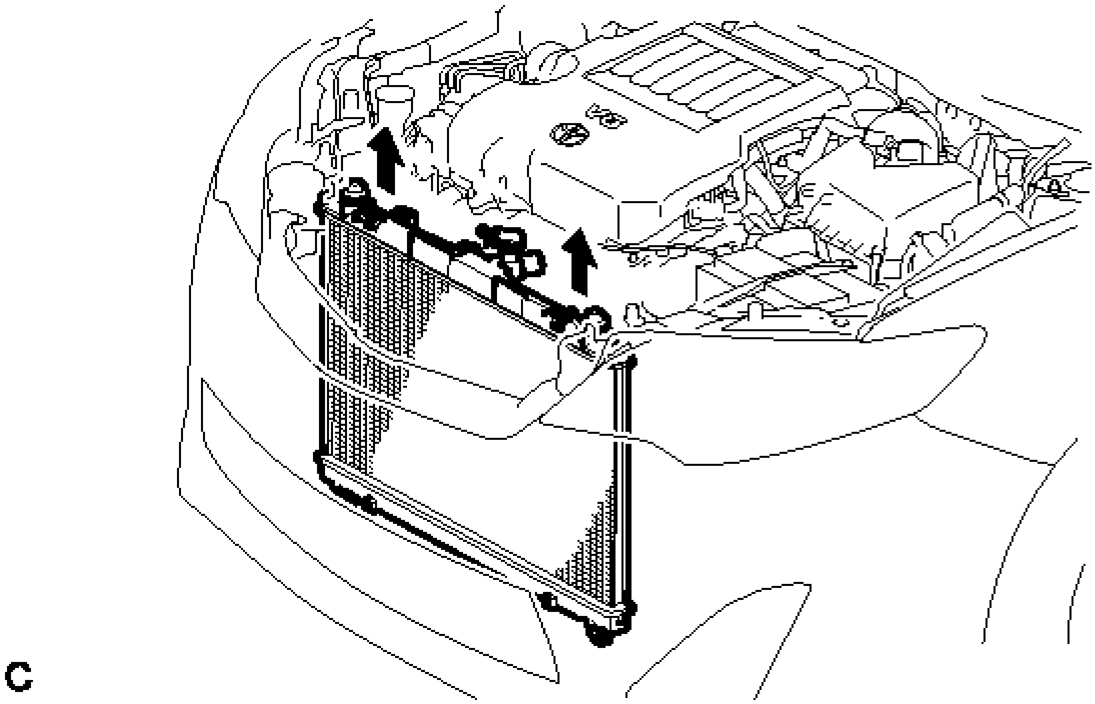

Fig. 47: Identifying Radiator Assembly With Fan Assembly
Courtesy of TOYOTA MOTOR SALES, U.S.A., INC.

NOTE: **Do not apply any excessive force to the cooler condenser assembly or pipe when removing the radiator assembly.**

d. Remove the 2 lower radiator supports from the radiator assembly.
e. Release the 3 claws and lift the fan assembly from the radiator.

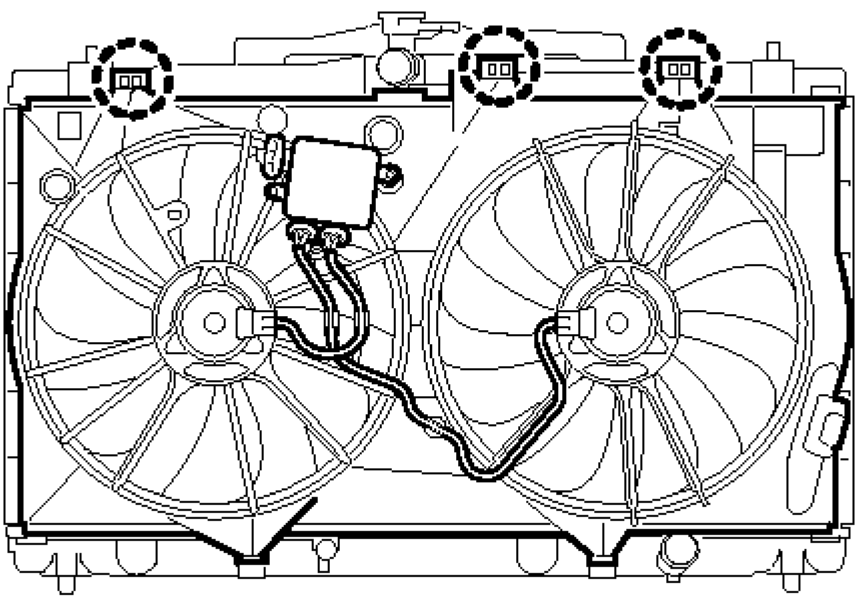

Fig. 48: Identifying Fan Assembly Claws
Courtesy of TOYOTA MOTOR SALES, U.S.A., INC.

INSTALLATION

INSTALLATION

1. **INSTALL RADIATOR ASSEMBLY**
   a. Install the fan assembly to the radiator with the 2 guides at the bottom and 3 claws on the top.

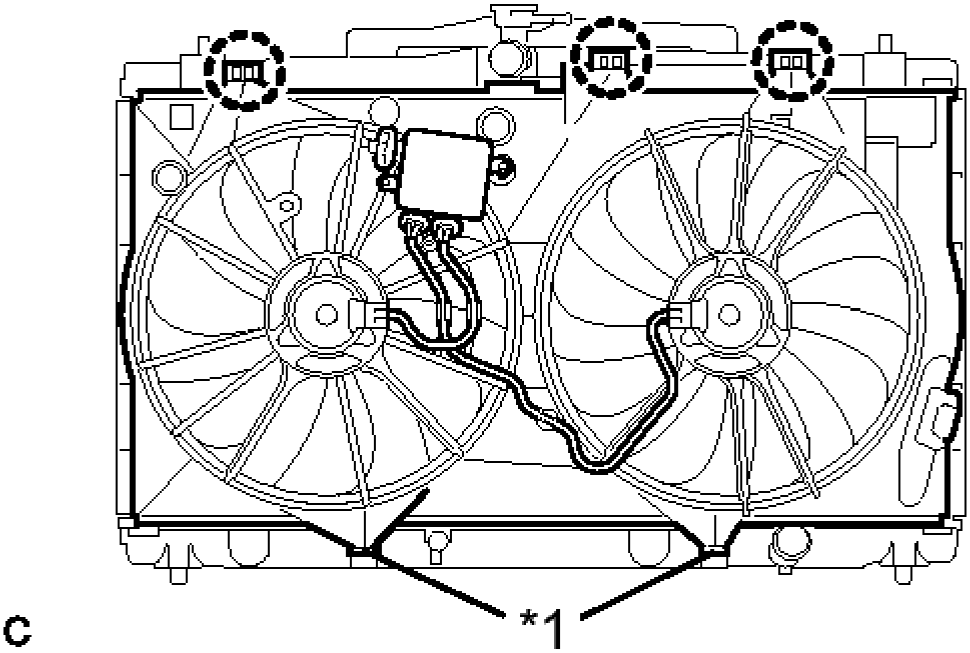

Fig. 49: Identifying Fan Assembly Guides And Claws
Courtesy of TOYOTA MOTOR SALES, U.S.A., INC.

TEXT IN ILLUSTRATION

*1	Guide

b. Install the 2 lower radiator supports to the radiator assembly.
c. Install the radiator with fan assembly.

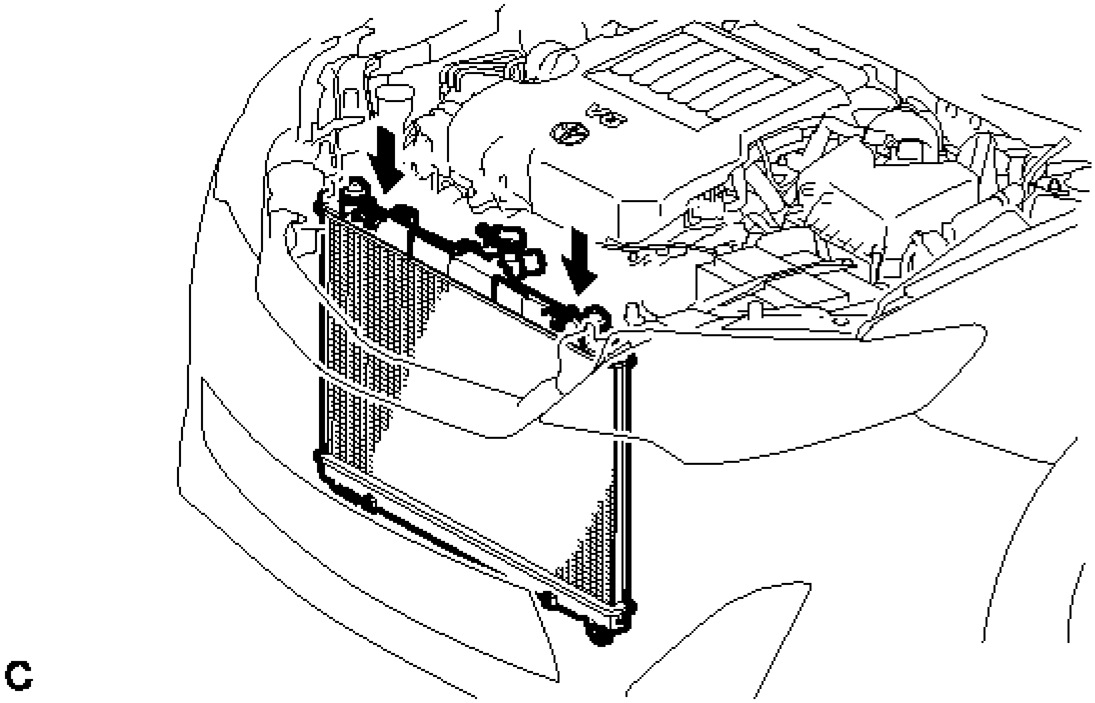

Fig. 50: Identifying Radiator Fan Assembly
Courtesy of TOYOTA MOTOR SALES, U.S.A., INC.

NOTE: Do not apply any excessive force to the cooler condenser assembly or pipe when installing the radiator assembly.

d. Install the condenser assembly with the 4 bolts.

Torque: 6.0 N*m (61 kgf*cm, 53 in.*lbf)

e. Connect the 3 clamps and connector.

2. **INSTALL UPPER RADIATOR SUPPORT**
   a. Install the 2 radiator support cushions to the radiator assembly.
   b. Install the upper radiator support with the 5 bolts and connect the hood lock control cable clamp to the upper radiator support.

   Torque: 12 N*m (122 kgf*cm, 9 ft.*lbf)

   c. Connect the 2 connectors.
3. **INSTALL HOOD LOCK ASSEMBLY** . Refer to **INSTALLATION - Step 2**
4. **CONNECT OUTLET RADIATOR HOSE**
   a. Connect the outlet radiator hose and clamp.
5. **CONNECT INLET RADIATOR HOSE**
   a. Connect the inlet radiator hose.
6. **INSTALL RADIATOR RESERVE TANK ASSEMBLY**

   a. Install the radiator reserve tank with the 2 bolts.

      Torque: 7.0 N*m (71 kgf*cm, 62 in.*lbf)

   b. Connect the radiator reserve tank hose.

7. **INSTALL RADIATOR GRILLE SUB-ASSEMBLY** . Refer to **INSTALLATION - Step 3**
8. **INSTALL INLET NO. 1 AIR CLEANER** . Refer to **INSTALLATION - Step 54**
9. **INSTALL INLET NO. 2 AIR CLEANER** . Refer to **INSTALLATION - Step 59**
10. **INSTALL BATTERY** . Refer to **INSTALLATION - Step 55**
11. **CONNECT CABLE TO NEGATIVE BATTERY TERMINAL**

    NOTE: **When disconnecting the cable, some systems need to be initialized after the cable is reconnected. Refer to INITIALIZATION .**

12. **ADD ENGINE COOLANT** See step 2
13. **INSPECT FOR COOLANT LEAK** . Refer to **ON-VEHICLE INSPECTION - Step 1**
14. **INSTALL COOL AIR INTAKE DUCT SEAL** . Refer to **INSTALLATION - Step 4**
15. **INSTALL ENGINE UNDER COVER LH**
16. **INSTALL ENGINE UNDER COVER RH**
17. **INSTALL FRONT WHEEL OPENING EXTENSION PAD LH**
18. **INSTALL FRONT WHEEL OPENING EXTENSION PAD RH**

RELAY

ON-VEHICLE INSPECTION

ON-VEHICLE INSPECTION

1. **INSPECT FAN RELAY**
   a. Measure the resistance according to the value(s) in the table below.

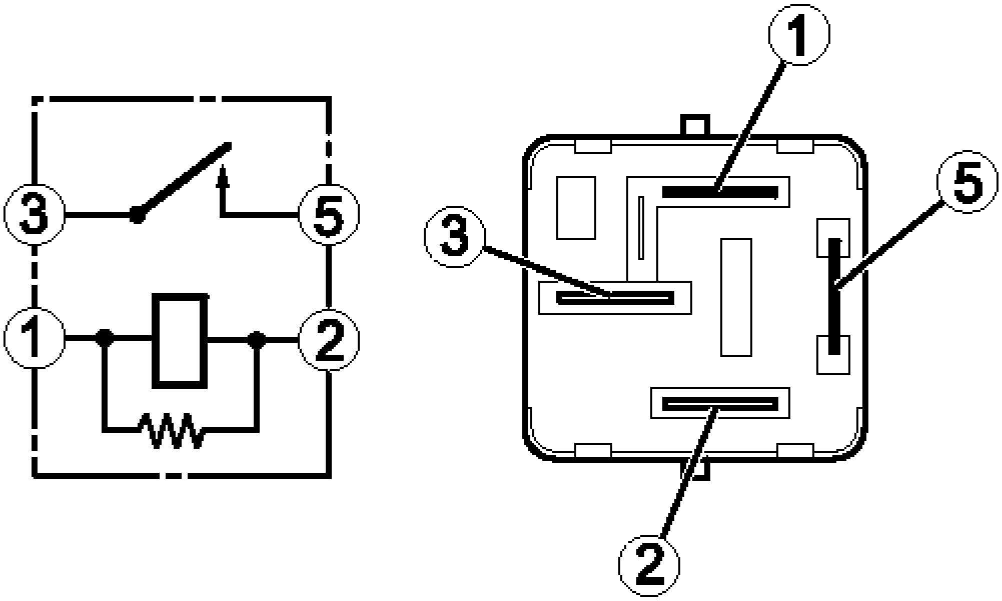

Fig. 51: Fan Relay
Courtesy of TOYOTA MOTOR SALES, U.S.A., INC.

Standard Resistance

Tester Connection	Condition	Specified Condition
3 - 5	Battery voltage is not applied between terminals 1 and 2	10 kohms or higher
3 - 5	Apply battery voltage between terminals 1 and 2	Below 1 ohms

If the result is not as specified, replace the relay.

2012-2017 ENGINE

Engine Cooling System (Service Information) (Hybrid)

COOLANT (FOR ENGINE)

REPLACEMENT

REPLACEMENT

1. **DRAIN COOLANT (for Engine)**

NOTE: **Do not remove the radiator cap sub-assembly or radiator drain cock plug while the engine and radiator are still hot. Pressurized, hot engine coolant and steam may be released and cause serious burns.**

a. Loosen the radiator drain cock plug.
b. Remove the radiator cap sub-assembly.

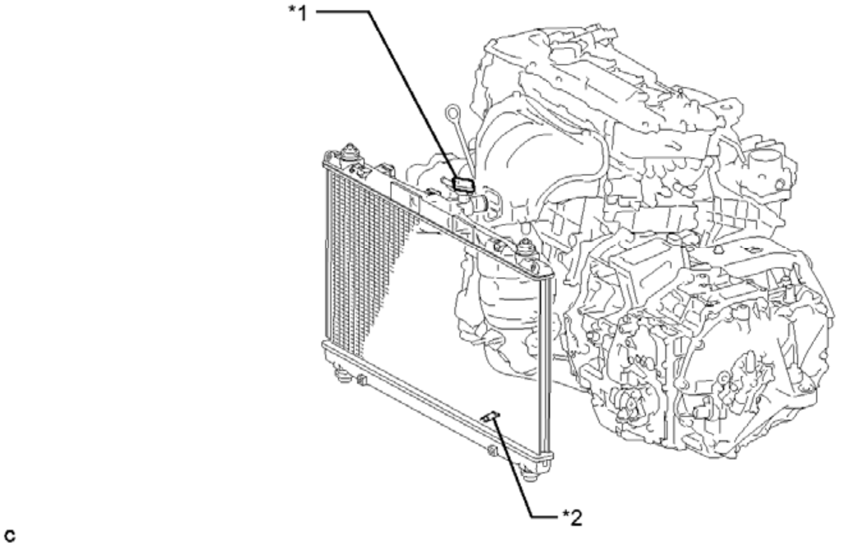

Fig. 1: Identifying Radiator Drain Cock Plug And Radiator Cap Sub-Assembly
Courtesy of TOYOTA MOTOR SALES, U.S.A., INC.

TEXT IN ILLUSTRATION

*1	Radiator Cap Sub-assembly	*2	Radiator Drain Cock Plug

HINT:

Collect the coolant in a container and dispose of it according to the regulations in your area.

2. **ADD COOLANT (for Engine)**
   a. Tighten the radiator drain cock plug by hand.
   b. Slowly fill the radiator with TOYOTA Super Long Life Coolant (SLLC).

Item	Capacity
Engine coolant	7.2 liters (7.6 US qts, 6.3 Imp. qts)

NOTE: **Never use water as a substitute for engine coolant.**

HINT:

TOYOTA vehicles are filled with TOYOTA SLLC at the factory. In order to avoid damage to the engine cooling system and other technical problems, only use TOYOTA SLLC or similar high quality ethylene glycol based non-silicate, non-amine, non-nitrite, non-borate coolant with long-life hybrid organic acid technology (coolant with long-life hybrid organic acid technology is a combination of low phosphates and organic acids).

   c. Slowly pour coolant into the radiator reserve tank assembly until it reaches the full line.
   d. Squeeze the No. 1 and No. 2 radiator hoses several times by hand, and then check the level of the coolant.

If the coolant level is low, add coolant.

   e. Install the radiator cap sub-assembly and reserve tank cap.
   f. Put the engine in inspection mode. Refer to **INSPECTION MODE PROCEDURE** .
   g. Bleed air from the cooling system.

NOTE:

- **Before starting the engine, turn the A/C switch off.**
- **Adjust the heater control to the maximum hot setting.**
- **Adjust the blower speed to the low setting.**

1. Warm up the engine until the thermostat opens. While the thermostat is open, circulate the coolant for several minutes.

   HINT:

   The thermostat open timing can be confirmed by squeezing the No. 2 radiator hose by hand, and sensing vibrations when the engine coolant starts to flow inside the hose.

2. Squeeze the No. 1 and No. 2 radiator hoses several times by hand to bleed air.

WARNING: **When squeezing the radiator hoses:**

- **Wear protective gloves.**
- **Be careful as the radiator hoses are hot.**
- **Keep your hands away from the cooling fans.**

NOTE:

- **Make sure that the radiator reserve tank assembly still has some coolant in it.**
- **If the coolant temperature gauge indicates an excessive temperature, turn off the engine and let it cool.**
- **If there is not enough coolant, the engine may overheat or be seriously damaged.**
- **If the radiator reserve tank assembly does not have enough coolant, perform the following: 1) stop the engine, 2) wait until the coolant has cooled down, and 3) add coolant until the reserve tank assembly is filled to the full line.**

h. Stop the engine and wait until the engine coolant cools down.

i. Add engine coolant to the full line on the radiator reserve tank assembly.

3. **INSPECT FOR COOLANT LEAK (for Engine)** . Refer to **ON-VEHICLE INSPECTION - Step 1**

WATER PUMP

COMPONENTS

ILLUSTRATION

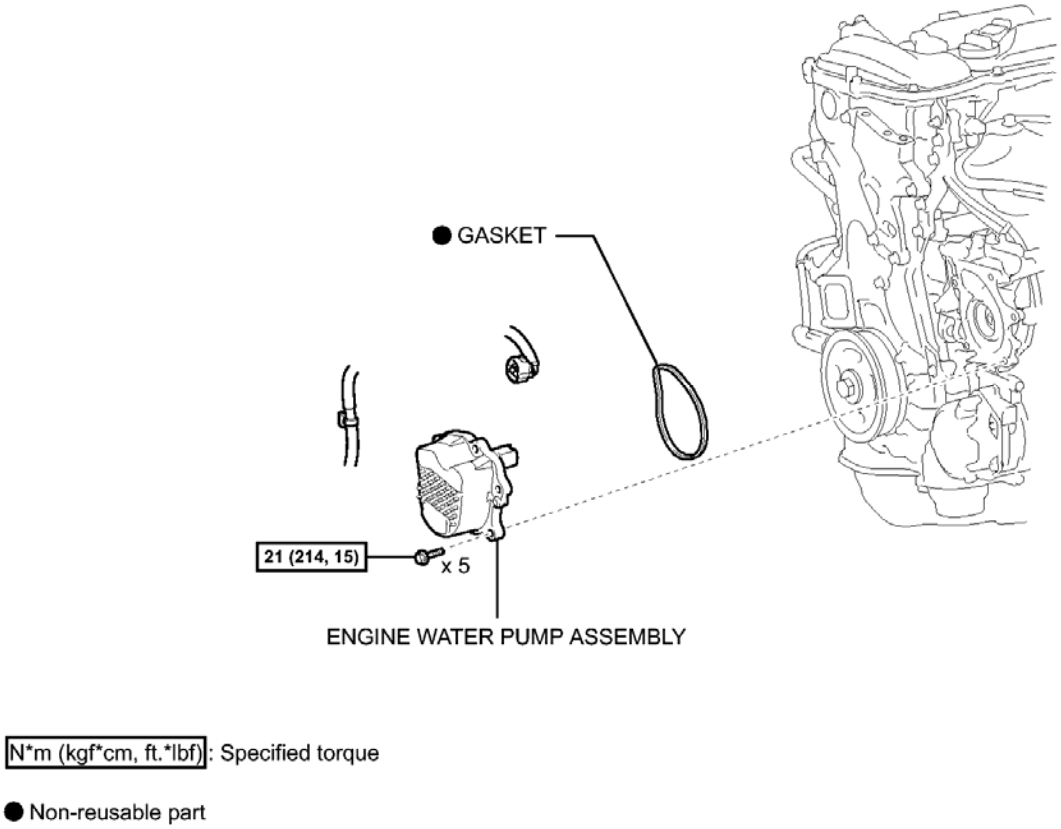
● GASKET
21 (214, 15)
x 5
ENGINE WATER PUMP ASSEMBLY
N*m (kgf*cm, ft.*lbf): Specified torque
● Non-reusable part

Fig. 2: Identifying Water Pump Replacement Components With Torque Specifications
Courtesy of TOYOTA MOTOR SALES, U.S.A., INC.

REMOVAL

REMOVAL

1. **DRAIN COOLANT (for Engine)** See step 1
2. **REMOVE ENGINE WATER PUMP ASSEMBLY**
    a. Disconnect the clamp.

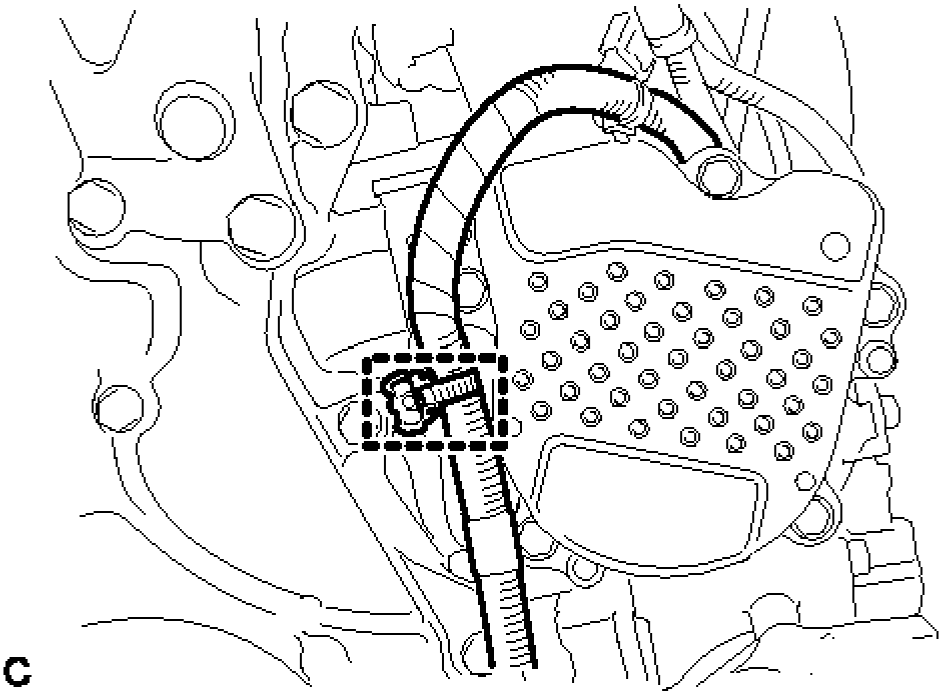

Fig. 3: Identifying Clamp
Courtesy of TOYOTA MOTOR SALES, U.S.A., INC.

b. Disconnect the connector from the engine water pump assembly.

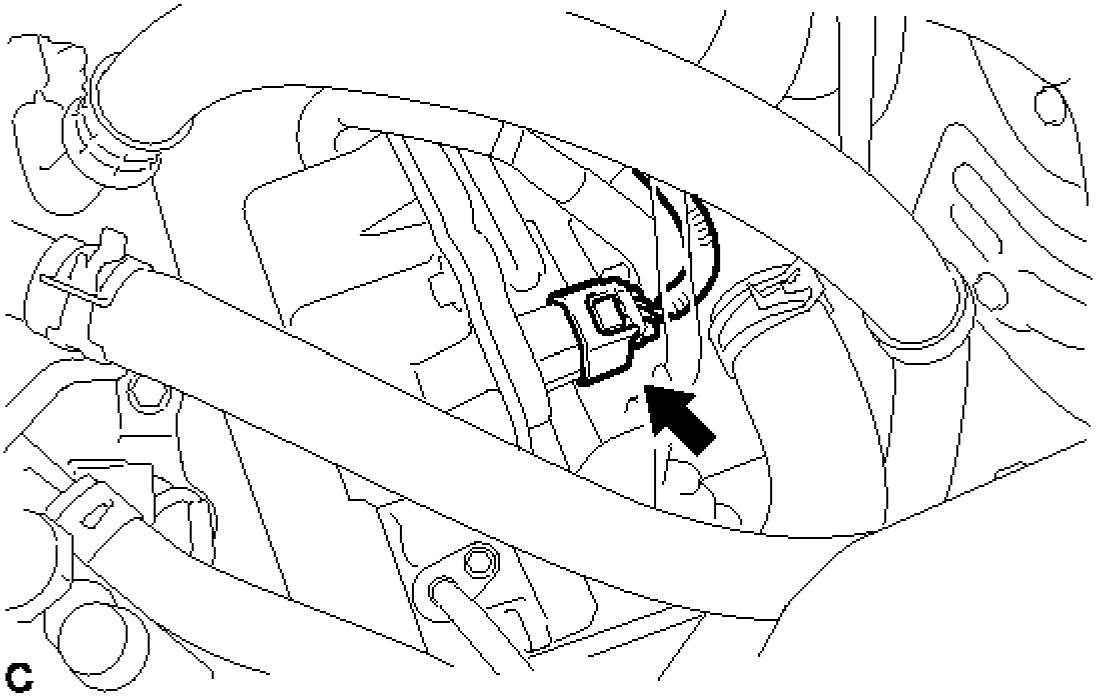

Fig. 4: Identifying Water Pump Connector
Courtesy of TOYOTA MOTOR SALES, U.S.A., INC.

c. Remove the 5 bolts and engine water pump assembly.

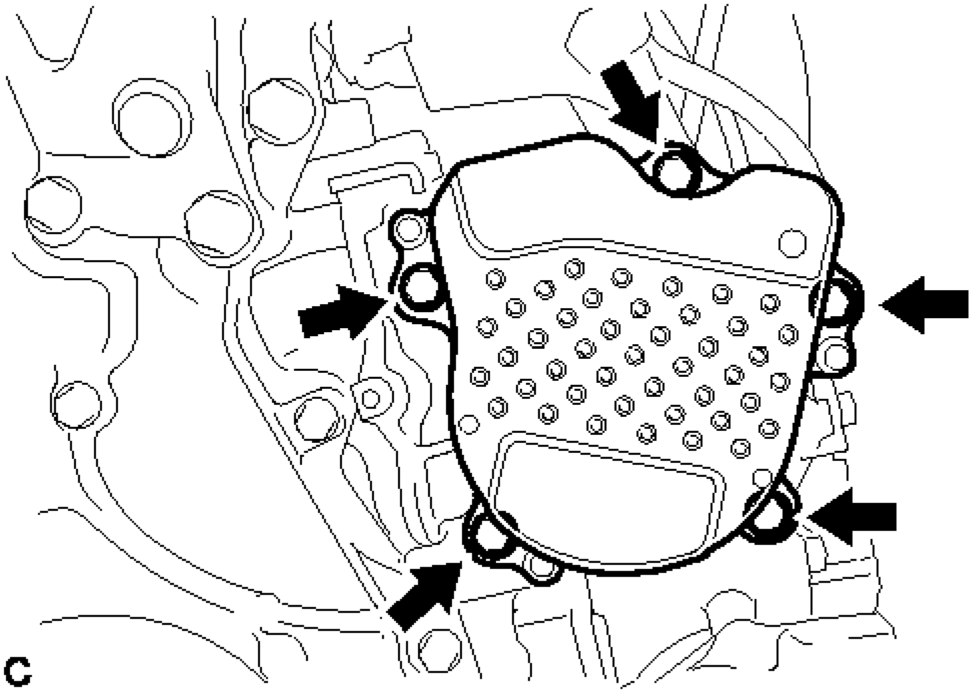

Fig. 5: Identifying Water Pump Bolts
Courtesy of TOYOTA MOTOR SALES, U.S.A., INC.

d. Remove the gasket from the engine water pump assembly.

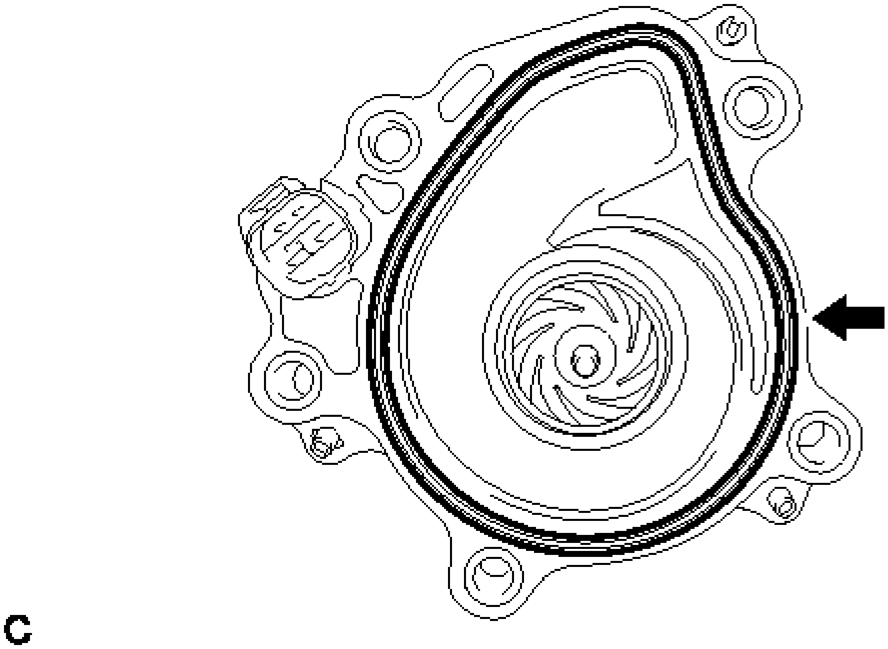

Fig. 6: Identifying Water Pump Gasket
Courtesy of TOYOTA MOTOR SALES, U.S.A., INC.

INSTALLATION

INSTALLATION

1. **INSTALL ENGINE WATER PUMP ASSEMBLY**
    a. Install a new gasket to the engine water pump assembly.

       HINT:

       Be sure to clean the contact surfaces.

    b. Install the engine water pump assembly with the 5 bolts.

       Torque: 21 N*m (214 kgf*cm, 15 ft.*lbf)

    c. Connect the connector to the engine water pump assembly.
    d. Connect the clamp.
2. **ADD COOLANT (for Engine)** See step 2
3. **INSPECT FOR COOLANT LEAK (for Engine)** . Refer to **ON-VEHICLE INSPECTION - Step 1**

THERMOSTAT

COMPONENTS

ILLUSTRATION

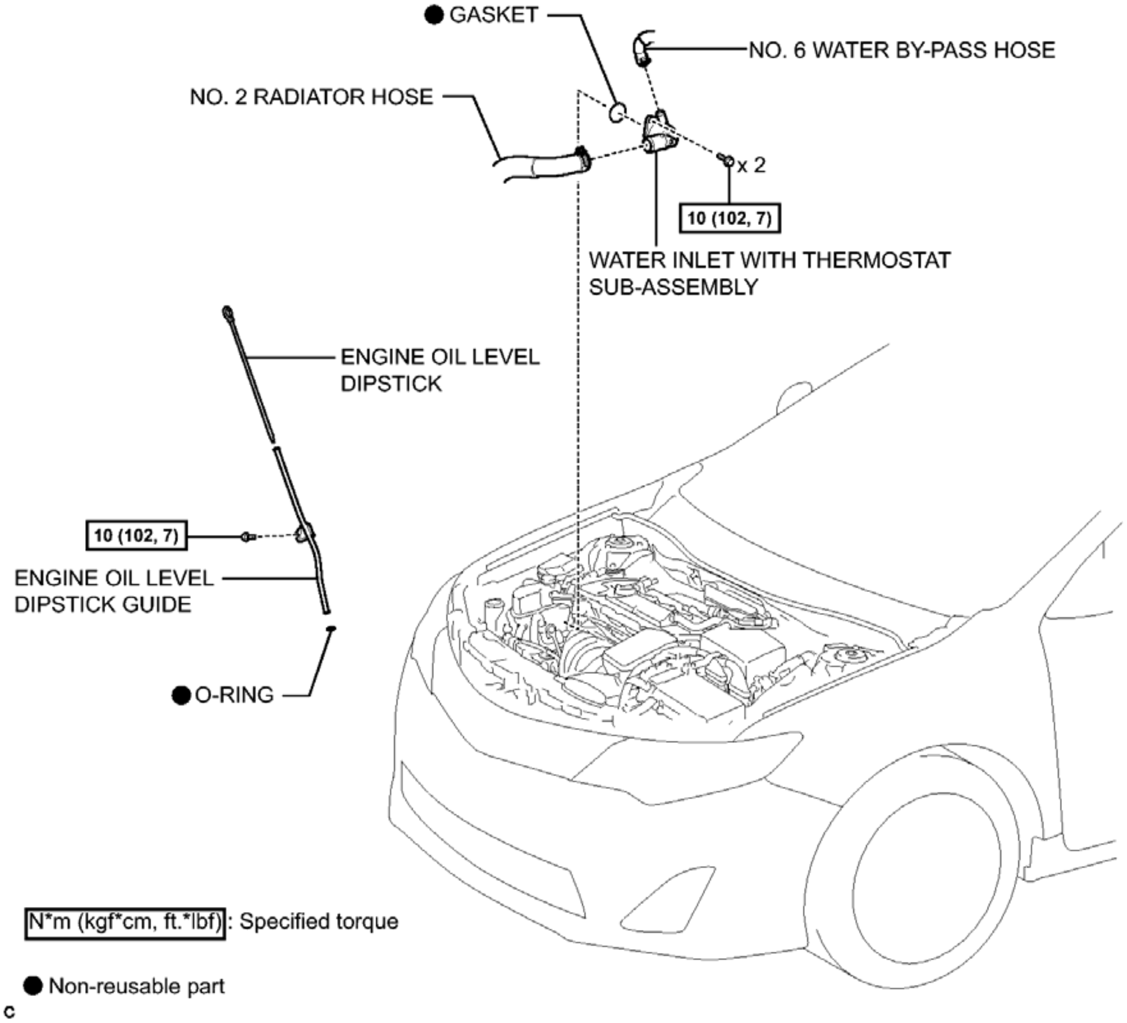
● GASKET
NO. 6 WATER BY-PASS HOSE
NO. 2 RADIATOR HOSE
x 2
10 (102, 7)
WATER INLET WITH THERMOSTAT SUB-ASSEMBLY
ENGINE OIL LEVEL DIPSTICK
10 (102, 7)
ENGINE OIL LEVEL DIPSTICK GUIDE
● O-RING
N*m (kgf*cm, ft.*lbf): Specified torque
● Non-reusable part
c

Fig. 7: Identifying Thermostat Replacement Components With Torque Specifications
Courtesy of TOYOTA MOTOR SALES, U.S.A., INC.

REMOVAL

REMOVAL

1. **DRAIN COOLANT (for Engine)** See step 1
2. **REMOVE ENGINE OIL LEVEL DIPSTICK GUIDE** . Refer to **REMOVAL - Step 2**
3. **DISCONNECT NO. 2 RADIATOR HOSE** . Refer to **REMOVAL - Step 64**
4. **DISCONNECT NO. 6 WATER BY-PASS HOSE**
   a. Disconnect the No. 6 water by-pass hose.

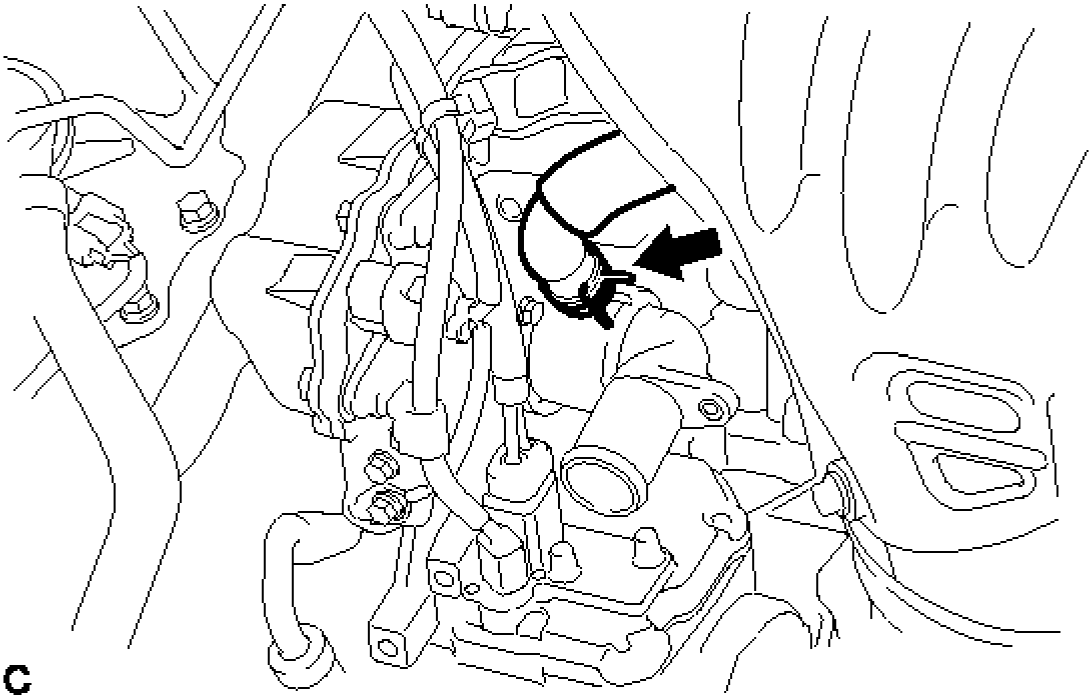

Fig. 8: Identifying No. 6 Water By-Pass Hose
Courtesy of TOYOTA MOTOR SALES, U.S.A., INC.

5. **REMOVE WATER INLET WITH THERMOSTAT SUB-ASSEMBLY**
   1. Remove the 2 bolts and water inlet with thermostat sub-assembly.

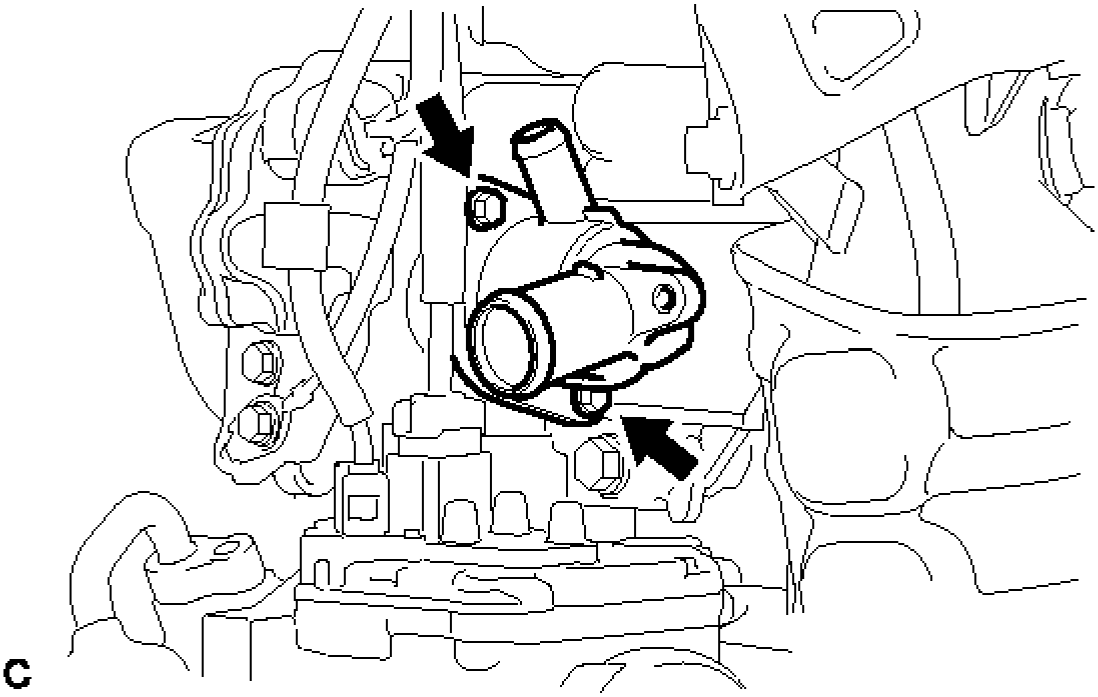

Fig. 9: Identifying Water Inlet Bolts

Courtesy of TOYOTA MOTOR SALES, U.S.A., INC.

b. Remove the gasket from the water inlet with thermostat sub-assembly.

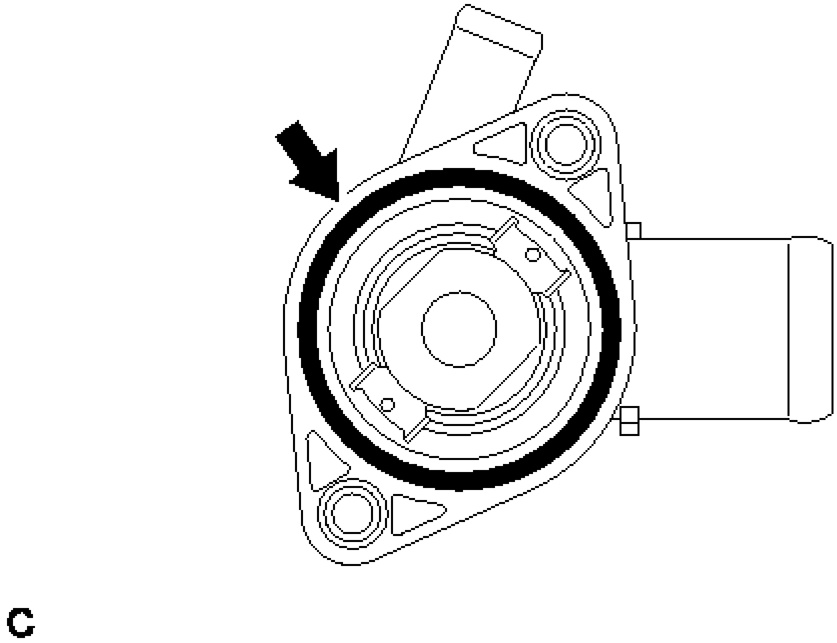

Fig. 10: Identifying Water Inlet Gasket
Courtesy of TOYOTA MOTOR SALES, U.S.A., INC.

INSPECTION

INSPECTION

1. **INSPECT WATER INLET WITH THERMOSTAT SUB-ASSEMBLY**

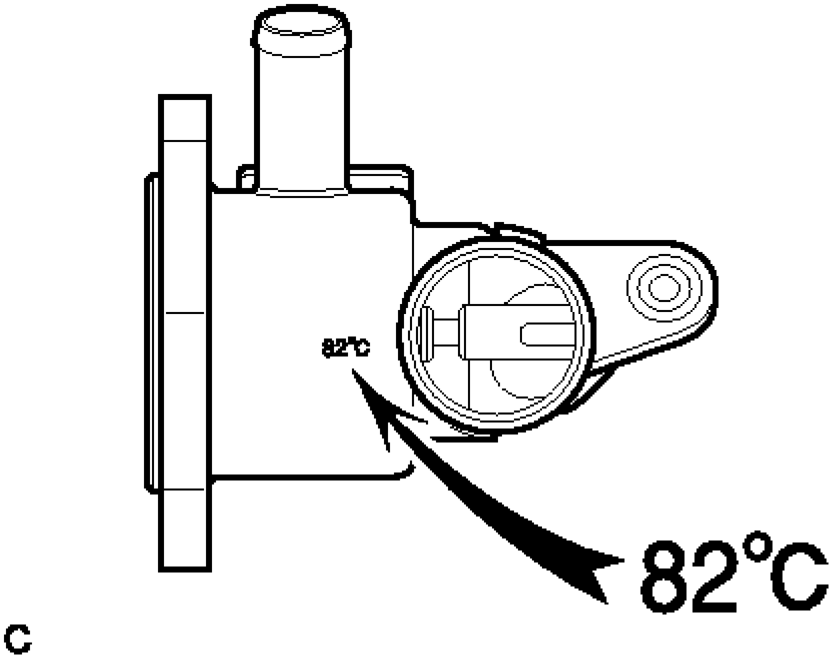

Fig. 11: Identifying Valve Opening Temperature
Courtesy of TOYOTA MOTOR SALES, U.S.A., INC.

HINT:

The valve opening temperature is inscribed on the water inlet with thermostat sub-assembly.

a. Immerse the water inlet with thermostat sub-assembly in water and then gradually heat the water.
b. Check the valve opening temperature of the water inlet with thermostat sub-assembly.

   Valve opening temperature

   80 to 84°C (176 to 183°F)

   HINT:

   If the valve opening temperature is not as specified, replace the water inlet with thermostat sub-assembly.

c. Check the valve lift.

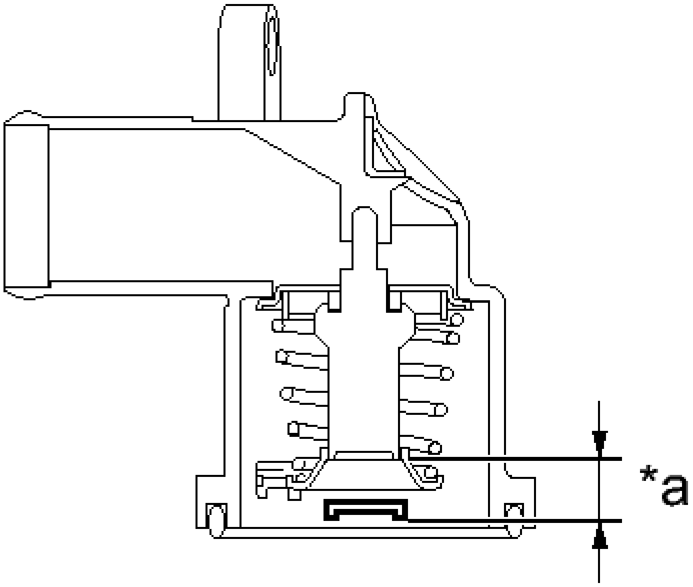

C

Fig. 12: Checking The Valve Lift
Courtesy of TOYOTA MOTOR SALES, U.S.A., INC.

TEXT IN ILLUSTRATION

*a	Valve Lift

Valve lift

10 to 11.3 mm (0.394 to 0.445 in.) at 95°C (203°F)

HINT:

If the valve lift is not as specified, replace the water inlet with thermostat sub-assembly.

d. Check that the valve is fully closed when the water inlet with thermostat sub-assembly is at low temperatures (below 77°C (171°F)).

HINT:

If it is not fully closed, replace the water inlet with thermostat sub-assembly.

INSTALLATION

INSTALLATION

1. **INSTALL WATER INLET WITH THERMOSTAT SUB-ASSEMBLY**

    a. Install a new gasket on the water inlet with thermostat sub-assembly.
    b. Install the water inlet with thermostat sub-assembly with the 2 bolts.

    Torque: 10 N*m (102 kgf*cm, 7 ft.*lbf)

2. **CONNECT NO. 6 WATER BY-PASS HOSE**
    a. Connect the No. 6 water by-pass hose.
3. **CONNECT NO. 2 RADIATOR HOSE** . Refer to **INSTALLATION - Step 40**
4. **INSTALL ENGINE OIL LEVEL DIPSTICK GUIDE** . Refer to **INSTALLATION - Step 19**
5. **ADD COOLANT (for Engine)** See step 2
6. **INSPECT FOR COOLANT LEAK (for Engine)** . Refer to **ON-VEHICLE INSPECTION - Step 1**

COOLING FAN MOTOR

COMPONENTS

ILLUSTRATION

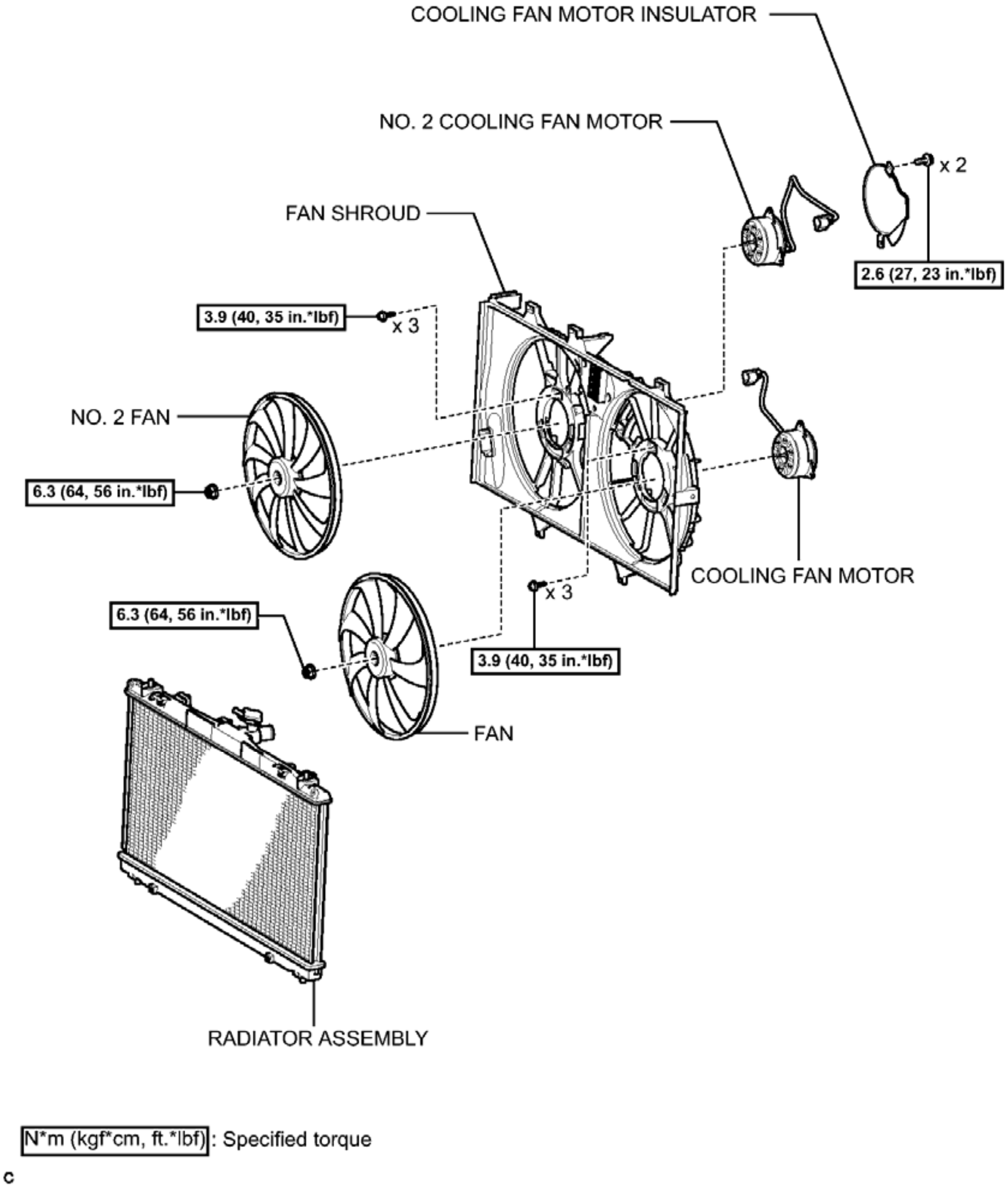
COOLING FAN MOTOR INSULATOR
NO. 2 COOLING FAN MOTOR
x 2
FAN SHROUD
2.6 (27, 23 in.*lbf)
3.9 (40, 35 in.*lbf)
x 3
NO. 2 FAN
6.3 (64, 56 in.*lbf)
COOLING FAN MOTOR
x 3
6.3 (64, 56 in.*lbf)
3.9 (40, 35 in.*lbf)
FAN
RADIATOR ASSEMBLY
N*m (kgf*cm, ft.*lbf): Specified torque
c

Fig. 13: Identifying Cooling Fan Motor Replacement Components With Torque Specifications
Courtesy of TOYOTA MOTOR SALES, U.S.A., INC.

ON-VEHICLE INSPECTION

ON-VEHICLE INSPECTION

1. **CHECK COOLING FAN MOTOR**

a. Check that the motor operates smoothly when the auxiliary battery is connected to the fan motor connector.

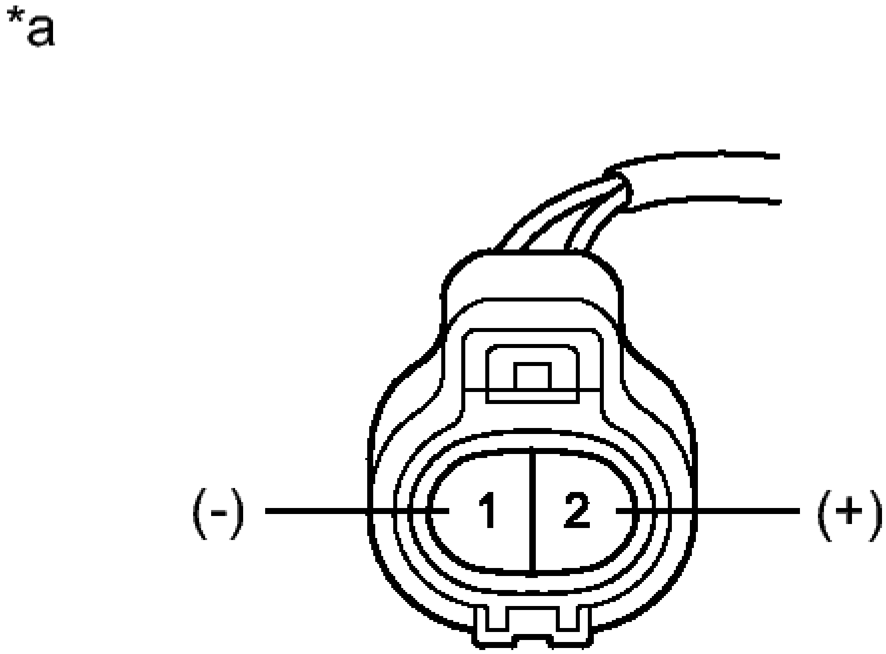

Fig. 14: Identifying Cooling Fan Motor Connector Terminals
Courtesy of TOYOTA MOTOR SALES, U.S.A., INC.

TEXT IN ILLUSTRATION

*a	Component without harness connected (Cooling Fan Motor)

b. Measure the current while the motor is operating.

Standard Current

Item	Condition	Specified Condition
Cooling fan motor	Auxiliary battery voltage applied at 20°C (68°F)	10.6 to 16.6 A

If the result is not as specified, replace the cooling fan motor.

2. **CHECK NO. 2 COOLING FAN MOTOR**
   a. Check that the motor operates smoothly when the auxiliary battery is connected to the fan motor connector.

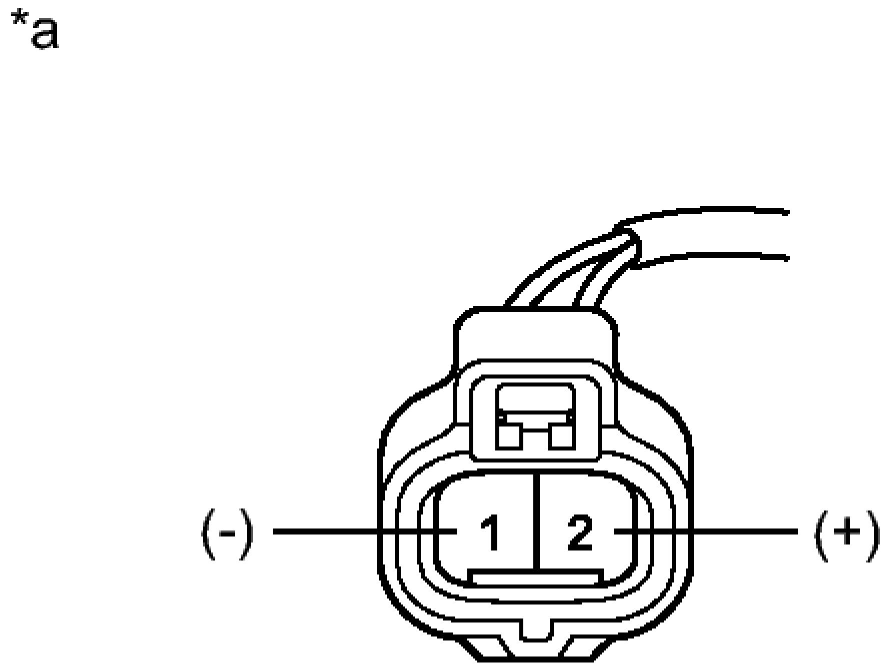

Fig. 15: Identifying No. 2 Cooling Fan Motor Connector Terminals
Courtesy of TOYOTA MOTOR SALES, U.S.A., INC.

TEXT IN ILLUSTRATION

*a	Component without harness connected (No. 2 Cooling Fan Motor)

   b. Measure the current while the motor is operating.

Standard Current

Item	Condition	Specified Condition
No. 2	Auxiliary battery	

Cooling fan motor	voltage applied at 20°C (68° F)	10.6 to 16.6 A

If the result is not as specified, replace the No. 2 cooling fan motor.

REMOVAL

REMOVAL

1. **REMOVE RADIATOR ASSEMBLY**

   Refer to **REMOVAL**

2. **REMOVE COOLING FAN MOTOR INSULATOR**
   1. Remove the 2 bolts and cooling fan motor insulator.

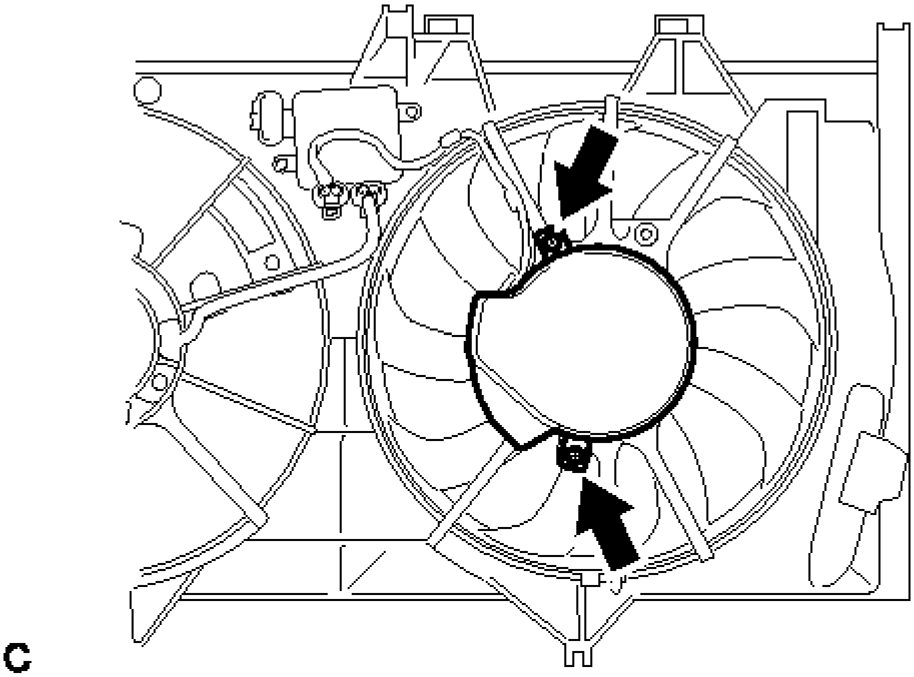

Fig. 16: Identifying Cooling Fan Motor Insulator Bolts
Courtesy of TOYOTA MOTOR SALES, U.S.A., INC.

3. **REMOVE FAN**
   1. Remove the nut and fan.

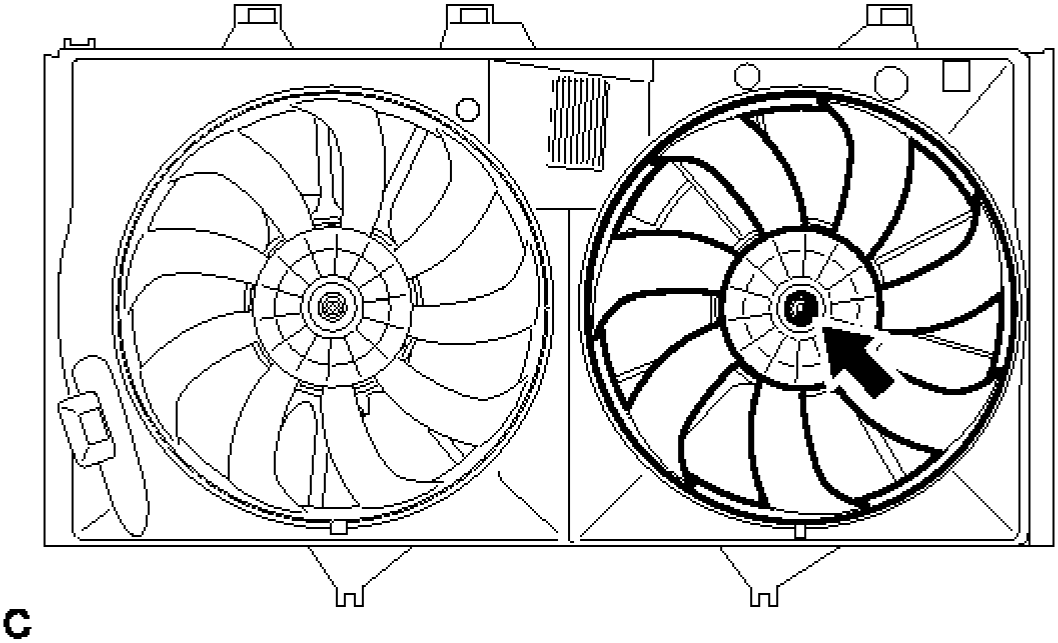

Fig. 17: Identifying Nut And Fan
Courtesy of TOYOTA MOTOR SALES, U.S.A., INC.

4. **REMOVE NO. 2 FAN**
    a. Remove the nut and No. 2 fan.

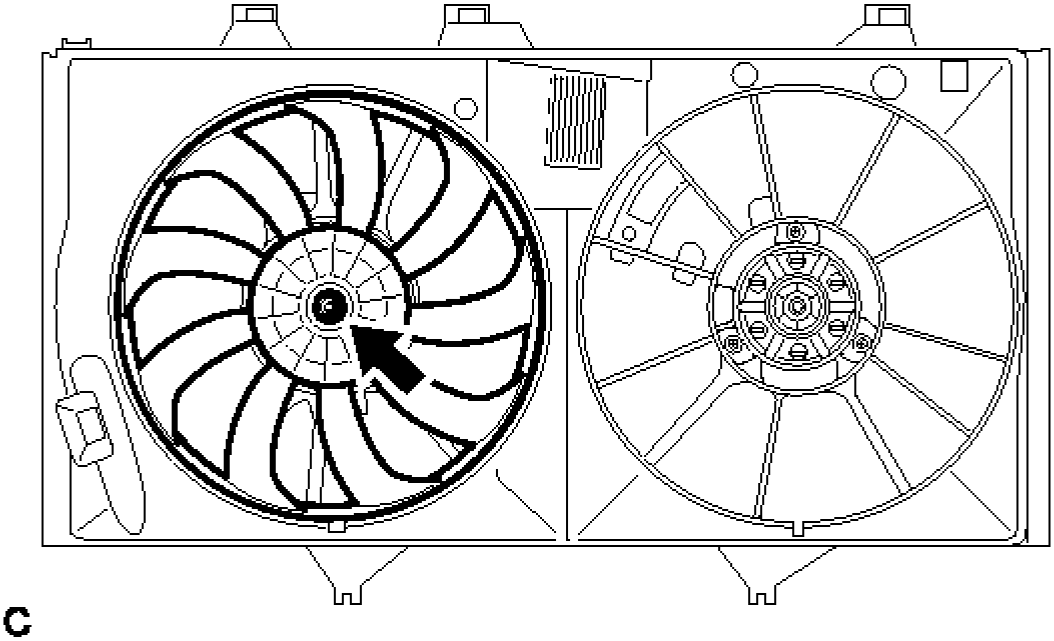

Fig. 18: Identifying Nut And No. 2 Fan

Courtesy of TOYOTA MOTOR SALES, U.S.A., INC.

5. **REMOVE COOLING FAN MOTOR**
   a. Disconnect the 2 clamps and connector.

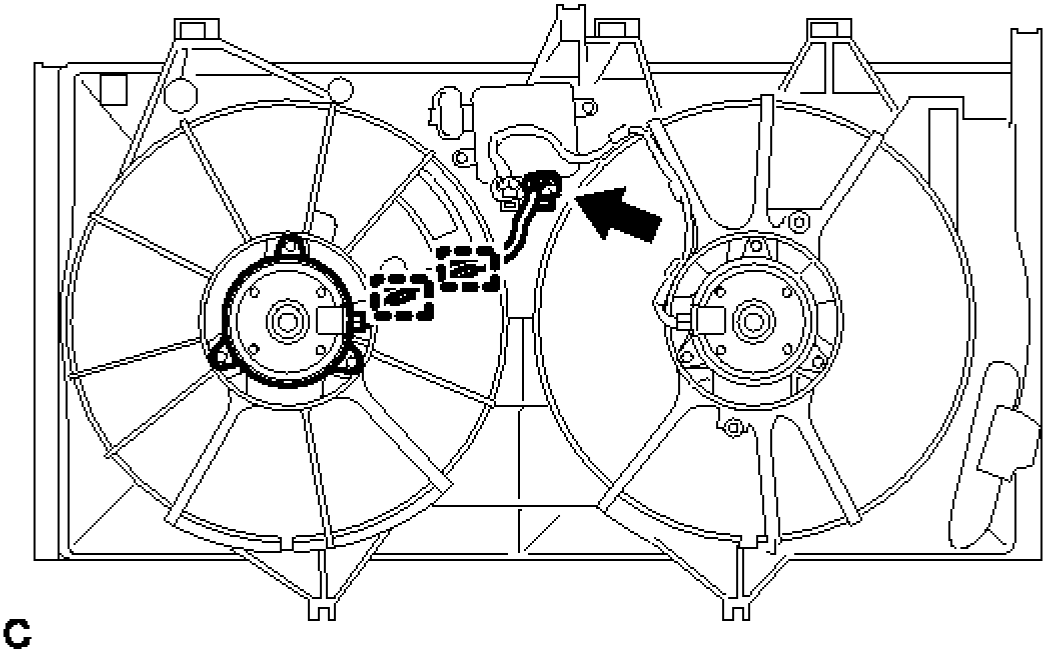

Fig. 19: Identifying Cooling Fan Motor Clamps And Connector
Courtesy of TOYOTA MOTOR SALES, U.S.A., INC.

   b. Remove the 3 screws and cooling fan motor.

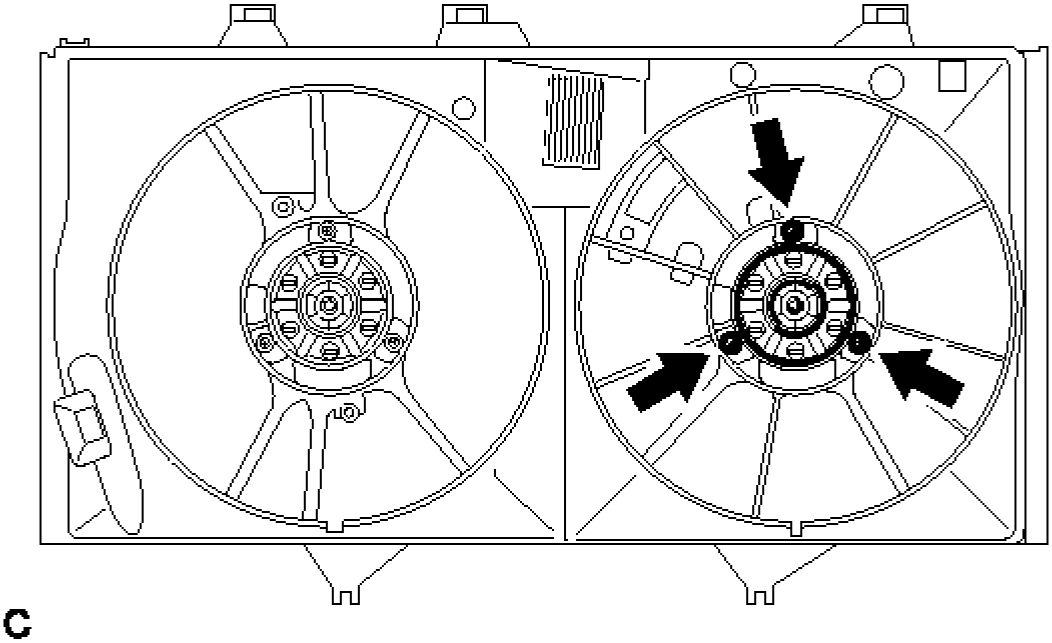

Fig. 20: Identifying Cooling Fan Motor Screws
Courtesy of TOYOTA MOTOR SALES, U.S.A., INC.

6. **REMOVE NO. 2 COOLING FAN MOTOR**
    a. Disconnect the 3 clamps and connector.

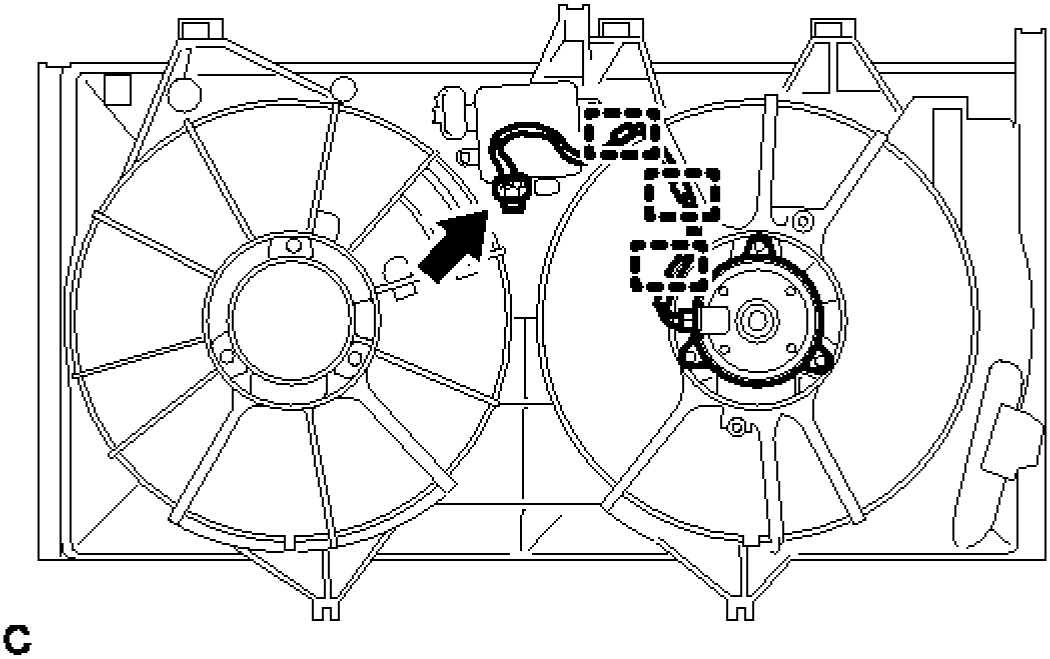

Fig. 21: Identifying NO. 2 Cooling Fan Motor Clamps And Connector

Courtesy of TOYOTA MOTOR SALES, U.S.A., INC.

b. Remove the 3 screws and No. 2 cooling fan motor.

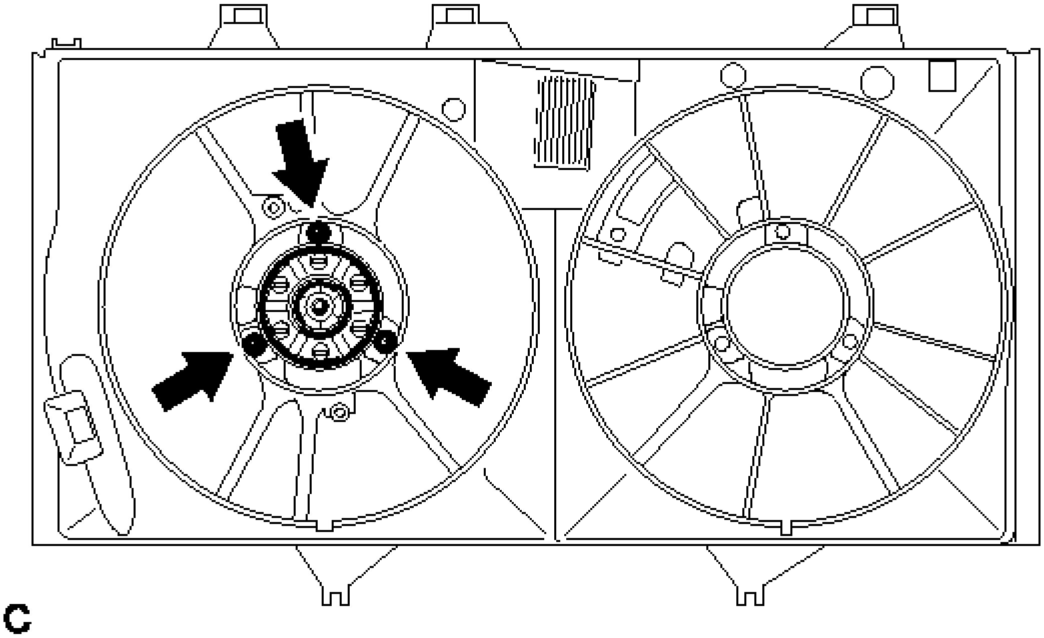

Fig. 22: Identifying NO. 2 Cooling Fan Motor Screws
Courtesy of TOYOTA MOTOR SALES, U.S.A., INC.

INSTALLATION

INSTALLATION

1. **INSTALL NO. 2 COOLING FAN MOTOR**
   a. Install the No. 2 cooling fan motor with the 3 screws.

      Torque: 3.9 N*m (40 kgf*cm, 35 in.*lbf)

   b. Connect the 3 clamps and connector.
2. **INSTALL COOLING FAN MOTOR**
   a. Install the cooling fan motor with the 3 screws.

      Torque: 3.9 N*m (40 kgf*cm, 35 in.*lbf)

   b. Connect the 2 clamps and connector.
3. **INSTALL NO. 2 FAN**
   a. Install the No. 2 fan with the nut.

Torque: 6.3 N*m (64 kgf*cm, 56 in.*lbf)

4. **INSTALL FAN**
    a. Install the fan with the nut.

    Torque: 6.3 N*m (64 kgf*cm, 56 in.*lbf)

5. **INSTALL COOLING FAN MOTOR INSULATOR**
    a. Install the cooling fan motor insulator with the 2 bolts.

    Torque: 2.6 N*m (27 kgf*cm, 23 in.*lbf)

6. **INSTALL RADIATOR ASSEMBLY**

    Refer to **INSTALLATION**

COOLING FAN ECU

ON-VEHICLE INSPECTION

ON-VEHICLE INSPECTION

1. **INSPECT COOLING FAN ECU**
    a. Put the vehicle in the following conditions:
        1. The power switch is off.
        2. The coolant temperature is less than 92°C (198°F).
        3. The auxiliary battery voltage is between 11 to 14 V.
        4. The A/C switch is off.
    b. Connect the pickup of a clamp-on ammeter over one of the two wires for the cooling fan motor.
    c. Turn the power switch on (IG) and wait for approximately 10 seconds. Check that the fan stops.
    d. Start the engine. Check that the fan stops with the engine idling.

    HINT:

    - Make sure that the radiator engine coolant temperature is less than 92°C (198°F).
    - Turn the A/C switch off.

    e. Check that the fan operates when the A/C switch is turned on.

    Standard Current

Item	Specified Condition
Cooling	10.6 to

fan motor	16.6 A
No. 2 cooling fan motor	10.6 to 16.6 A

HINT:

The coolant temperature is less than 92°C (198°F).

f. Check that the fan operates when the engine coolant temperature sensor connector is disconnected.

Standard Current

Item	Specified Condition
Cooling fan motor	10.6 to 16.6 A
No. 2 cooling fan motor	10.6 to 16.6 A

g. After the engine is warmed up, check that the fan operates as shown in the illustration.

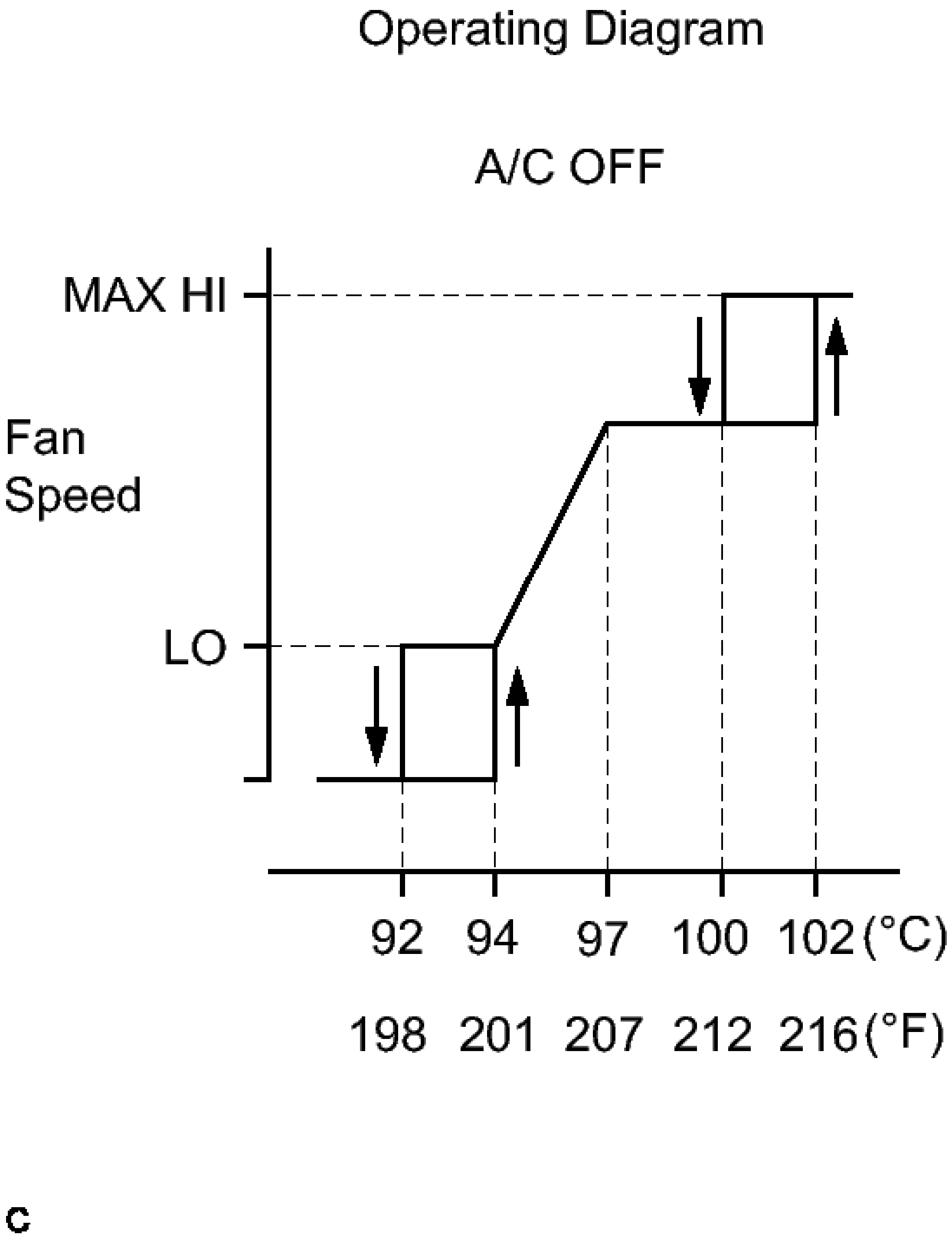

Fig. 23: Checking Fan Operation
Courtesy of TOYOTA MOTOR SALES, U.S.A., INC.

HINT:

- The coolant temperature at which the fan starts operating is approximately 94°C (201°F).
- This system can also be checked using the Techstream.
- Select the following menu items: Powertrain / Engine and ECT / Data List / All Data / Coolant Temp.

RADIATOR

COMPONENTS

ILLUSTRATION

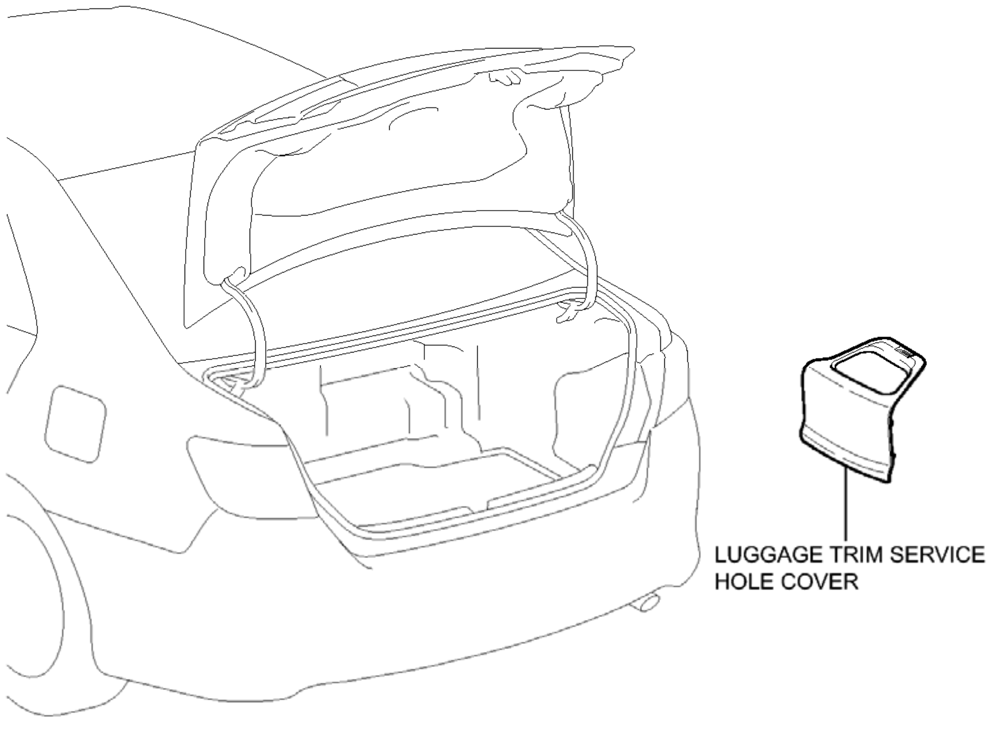

Fig. 24: Identifying Radiator Replacement Components (1 Of 4)
Courtesy of TOYOTA MOTOR SALES, U.S.A., INC.

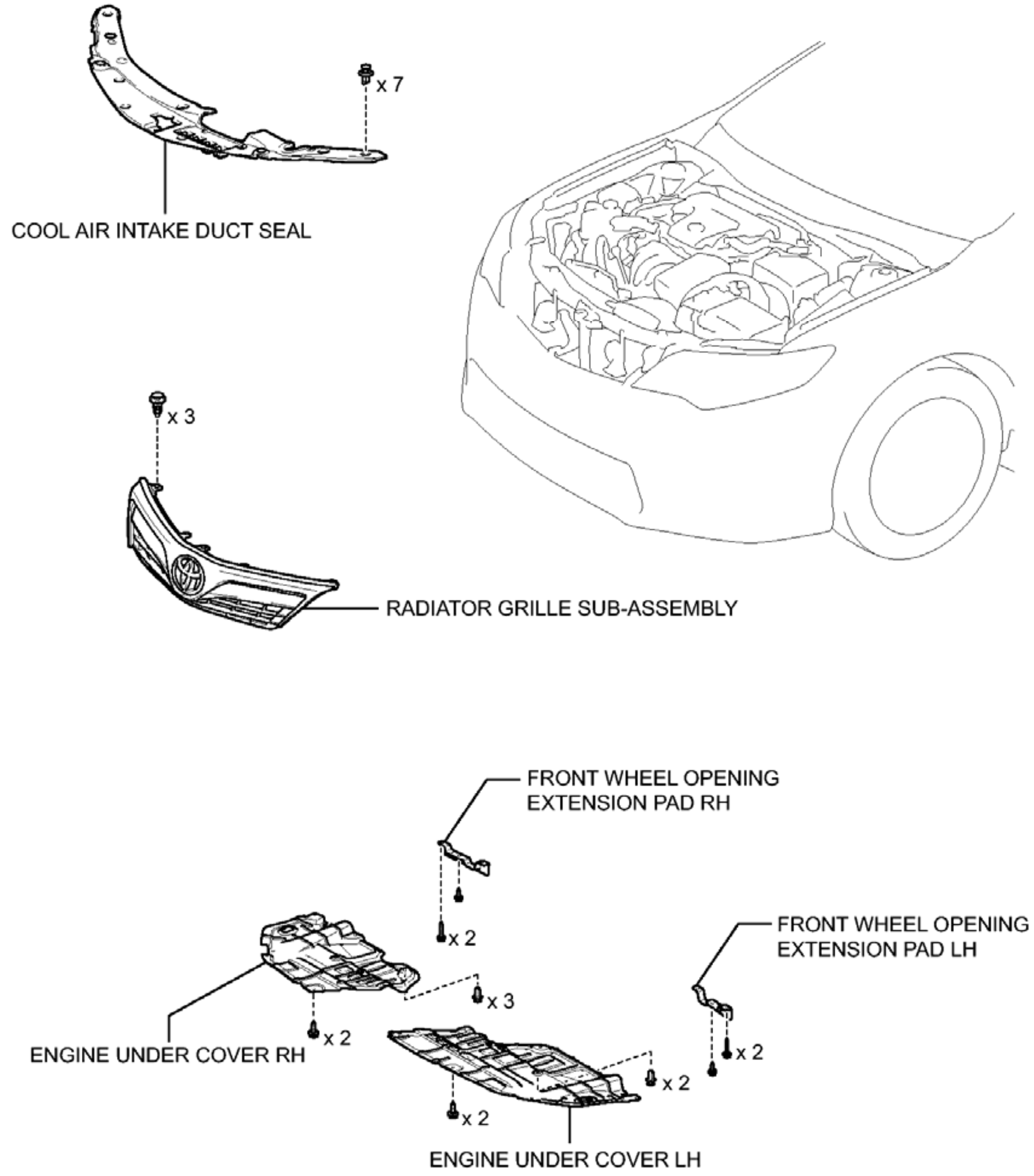
x 7
COOL AIR INTAKE DUCT SEAL
x 3
RADIATOR GRILLE SUB-ASSEMBLY
FRONT WHEEL OPENING EXTENSION PAD RH
x 2
FRONT WHEEL OPENING EXTENSION PAD LH
x 3
ENGINE UNDER COVER RH
x 2
x 2
x 2
x 2
ENGINE UNDER COVER LH

Fig. 25: Identifying Radiator Replacement Components (2 Of 4)
Courtesy of TOYOTA MOTOR SALES, U.S.A., INC.

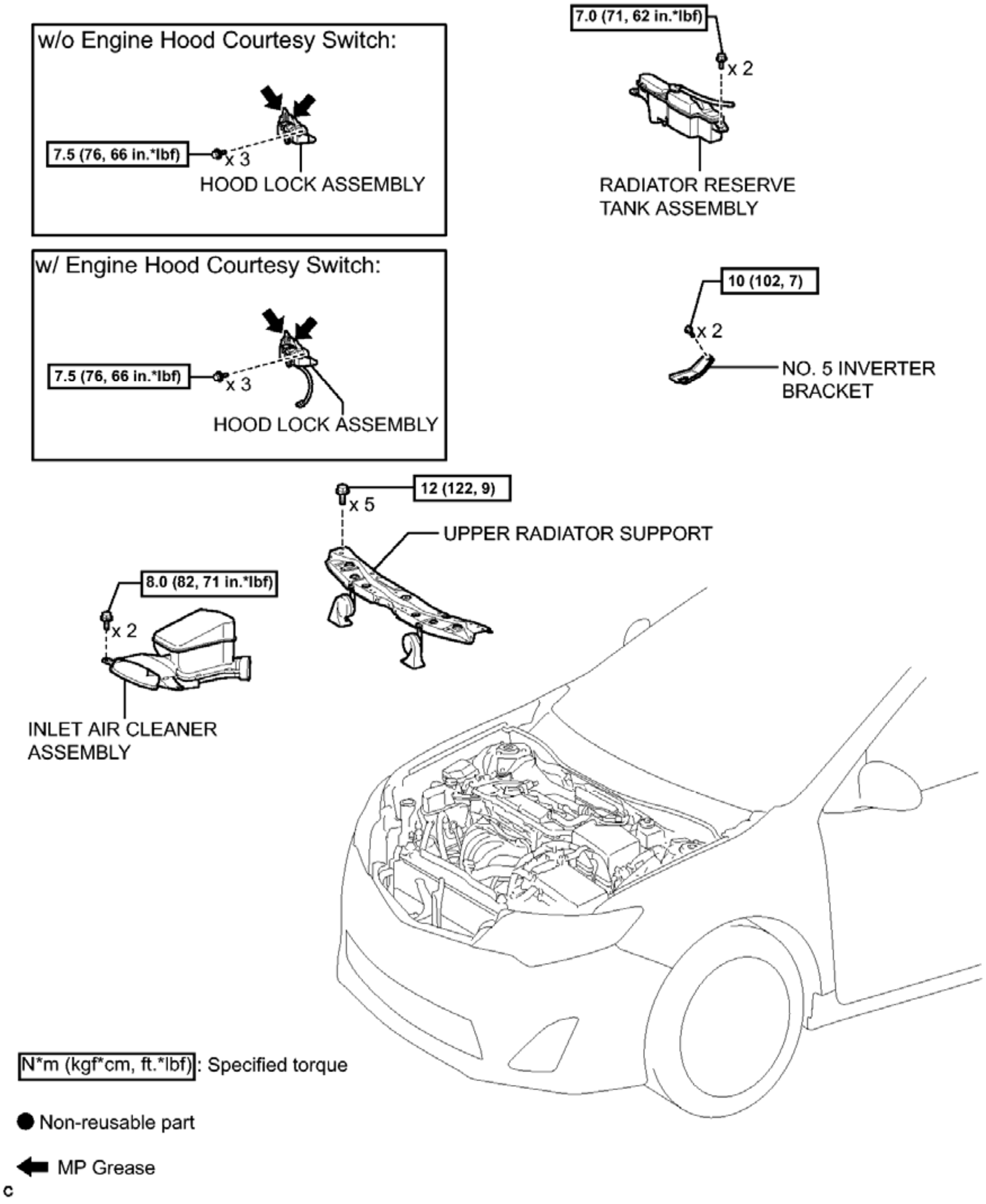
w/o Engine Hood Courtesy Switch:
7.5 (76, 66 in.*lbf)
x 3
HOOD LOCK ASSEMBLY
w/ Engine Hood Courtesy Switch:
7.5 (76, 66 in.*lbf)
x 3
HOOD LOCK ASSEMBLY
7.0 (71, 62 in.*lbf)
x 2
RADIATOR RESERVE TANK ASSEMBLY
10 (102, 7)
x 2
NO. 5 INVERTER BRACKET
12 (122, 9)
x 5
UPPER RADIATOR SUPPORT
8.0 (82, 71 in.*lbf)
x 2
INLET AIR CLEANER ASSEMBLY
N*m (kgf*cm, ft.*lbf): Specified torque
● Non-reusable part
MP Grease
c

Fig. 26: Identifying Radiator Replacement Components With Torque Specifications (3 Of 4)
Courtesy of TOYOTA MOTOR SALES, U.S.A., INC.

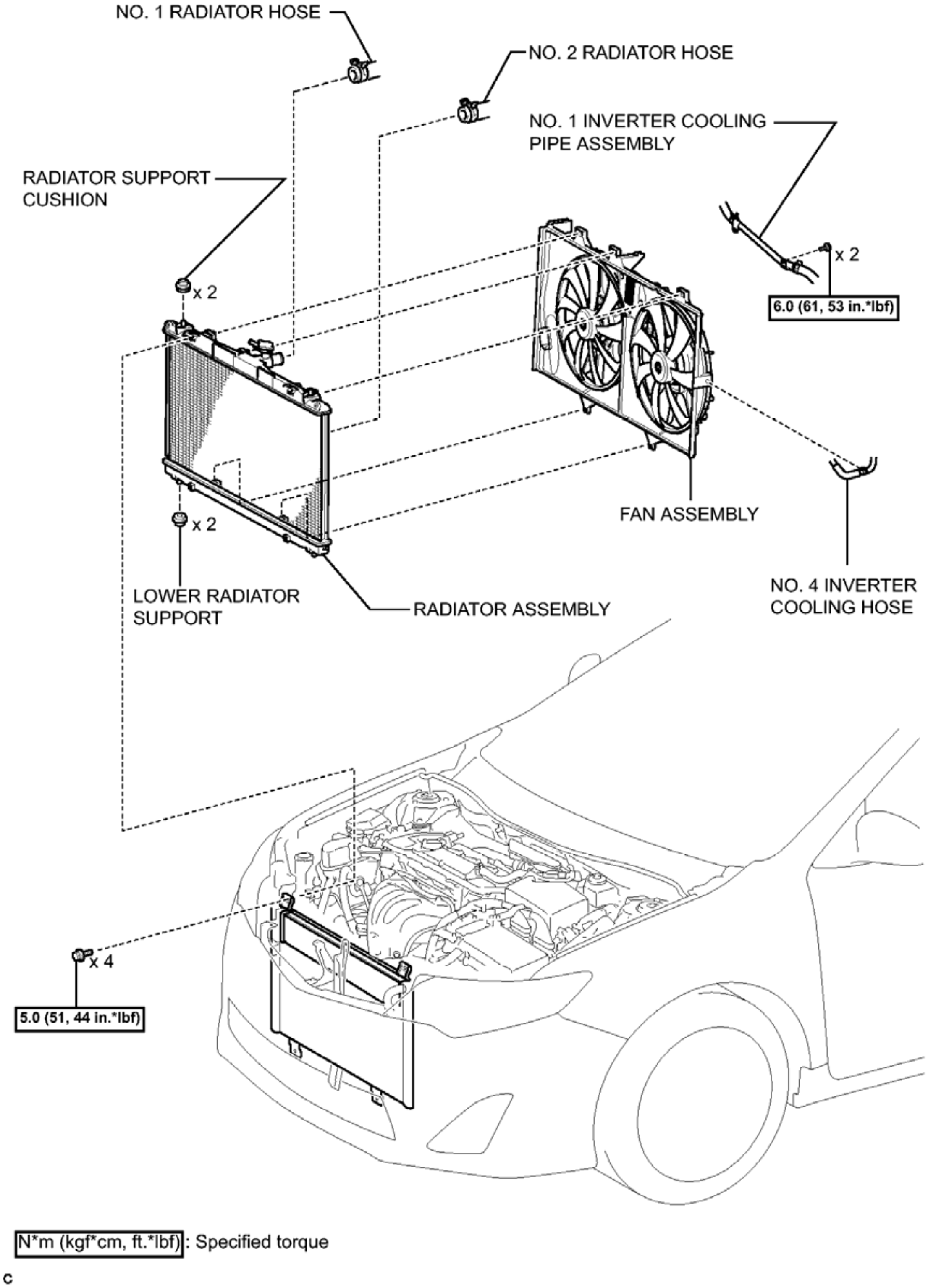
NO. 1 RADIATOR HOSE
NO. 2 RADIATOR HOSE
NO. 1 INVERTER COOLING PIPE ASSEMBLY
RADIATOR SUPPORT CUSHION
x 2
x 2
6.0 (61, 53 in.*lbf)
FAN ASSEMBLY
x 2
LOWER RADIATOR SUPPORT
RADIATOR ASSEMBLY
NO. 4 INVERTER COOLING HOSE
x 4
5.0 (51, 44 in.*lbf)
N*m (kgf*cm, ft.*lbf): Specified torque
c

Fig. 27: Identifying Radiator Replacement Components With Torque Specifications (4 Of 4)
Courtesy of TOYOTA MOTOR SALES, U.S.A., INC.

ON-VEHICLE INSPECTION

ON-VEHICLE INSPECTION

1. **CHECK RADIATOR CAP SUB-ASSEMBLY**
    a. Measure the valve opening pressure.

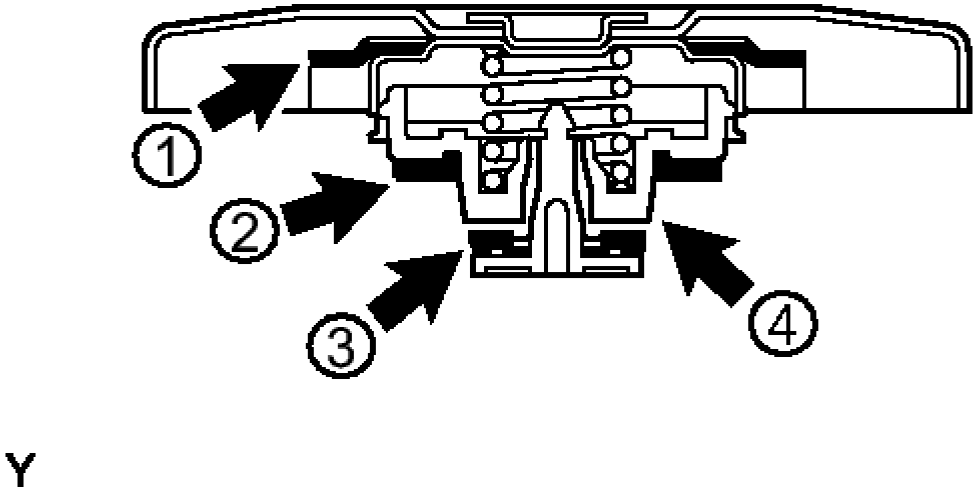

Fig. 28: Locating Rubber Packings 1, 2, 3 And 4
Courtesy of TOYOTA MOTOR SALES, U.S.A., INC.

1. If there are water stains or foreign matter on rubber packings 1, 2 or 3, clean the part(s) with water and finger scouring.
2. Check that rubber packings 1, 2 and 3 are not deformed, cracked or swollen.
3. Check that 3 and 4 are not stuck together.
4. Apply engine coolant to rubber packings 2 and 3 before using the radiator cap tester.
5. When using the cap tester, tilt it upward 30° or more.
6. Pump the cap tester several times, and check the maximum pressure*1.

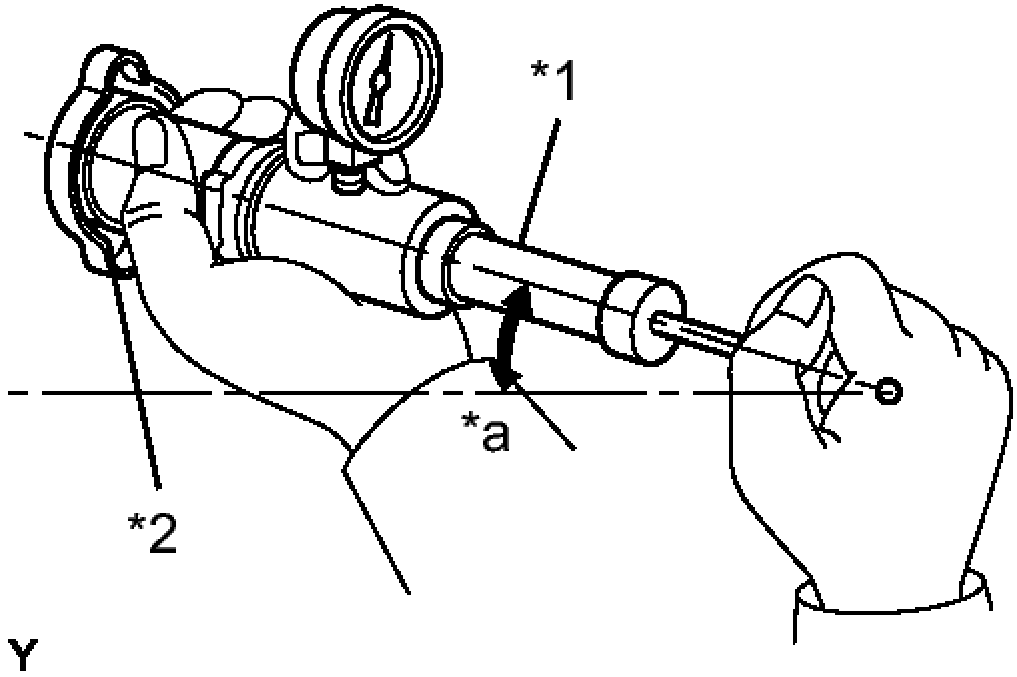

Fig. 29: Cap Tester & Maximum Pressure
Courtesy of TOYOTA MOTOR SALES, U.S.A., INC.

TEXT IN ILLUSTRATION

*1	Radiator Cap Tester
*2	Radiator Cap Sub-assembly
*a	30° or more

Pumping speed

1 pump every second

*1: Even if the cap cannot maintain the maximum pressure, it is not a defect.

Judgment Criterion

Item	Specified Condition
Standard value	93.3 to 122.7 kPa (1.0 to 1.3

(for brand-new cap)	kgf/cm^2 , 13.5 to 18.0 psi)
Minimum standard value (for used cap)	78.5 kPa (0.8 kgf/cm^2 , 11.4 psi)

If the maximum pressure is less than the specified pressure for the minimum standard value, replace the radiator cap sub-assembly.

REMOVAL

REMOVAL

1. **PRECAUTION**

   NOTE: **After turning the power switch off, waiting time may be required before disconnecting the cable from the negative (-) auxiliary battery terminal. Therefore, make sure to read the disconnecting the cable from the negative (-) auxiliary battery terminal notice before proceeding with work. Refer to PRECAUTION .**

2. **DRAIN COOLANT (for Engine)** See step 1
3. **REMOVE FRONT WHEEL OPENING EXTENSION PAD RH**
4. **REMOVE FRONT WHEEL OPENING EXTENSION PAD LH**
5. **REMOVE ENGINE UNDER COVER RH**
6. **REMOVE ENGINE UNDER COVER LH**
7. **REMOVE LUGGAGE TRIM SERVICE HOLE COVER** . Refer to **REMOVAL - Step 2**
8. **DISCONNECT CABLE FROM NEGATIVE AUXILIARY BATTERY TERMINAL**

   NOTE: **When disconnecting the cable, some systems need to be initialized after the cable is reconnected. Refer to INITIALIZATION .**

9. **REMOVE COOL AIR INTAKE DUCT SEAL** . Refer to **REMOVAL - Step 1**
10. **REMOVE INLET AIR CLEANER ASSEMBLY** . Refer to **REMOVAL - Step 30**
11. **REMOVE RADIATOR GRILLE SUB-ASSEMBLY** . Refer to **REMOVAL - Step 2**
12. **REMOVE NO. 5 INVERTER BRACKET** . Refer to **REMOVAL - Step 12**
13. **REMOVE RADIATOR RESERVE TANK ASSEMBLY**
    a. Disconnect the radiator reserve tank hose.

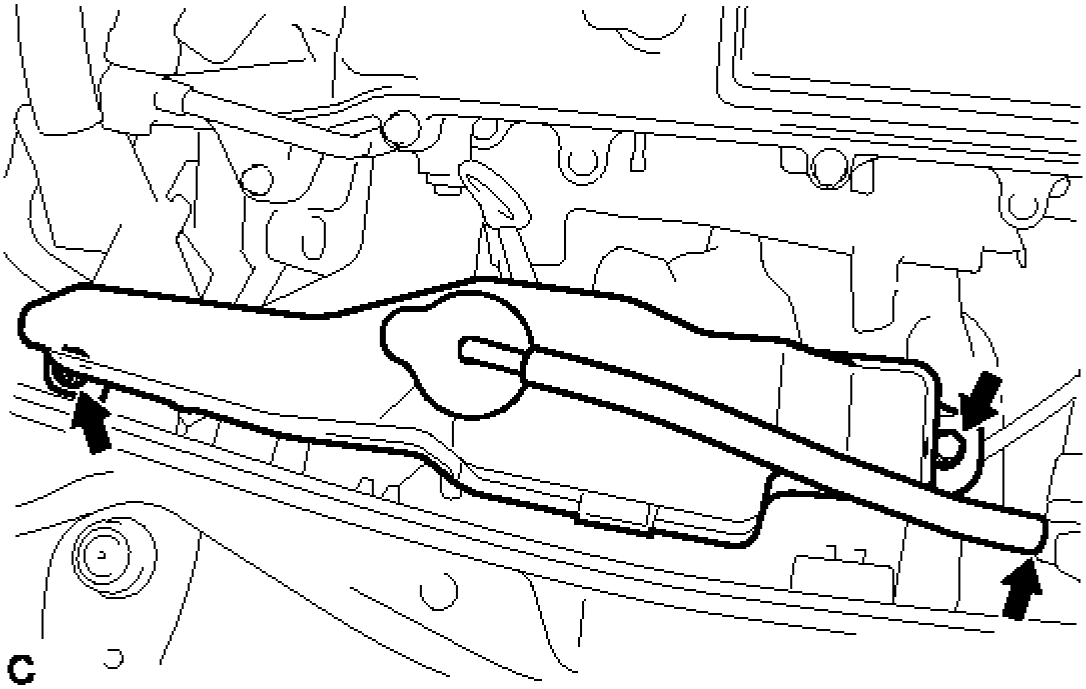

Fig. 30: Identifying Radiator Reserve Tank Hose And Bolts
Courtesy of TOYOTA MOTOR SALES, U.S.A., INC.

b. Remove the 2 bolts and radiator reserve tank assembly.

14. **DISCONNECT NO. 1 RADIATOR HOSE**

a. Disconnect the No. 1 radiator hose.

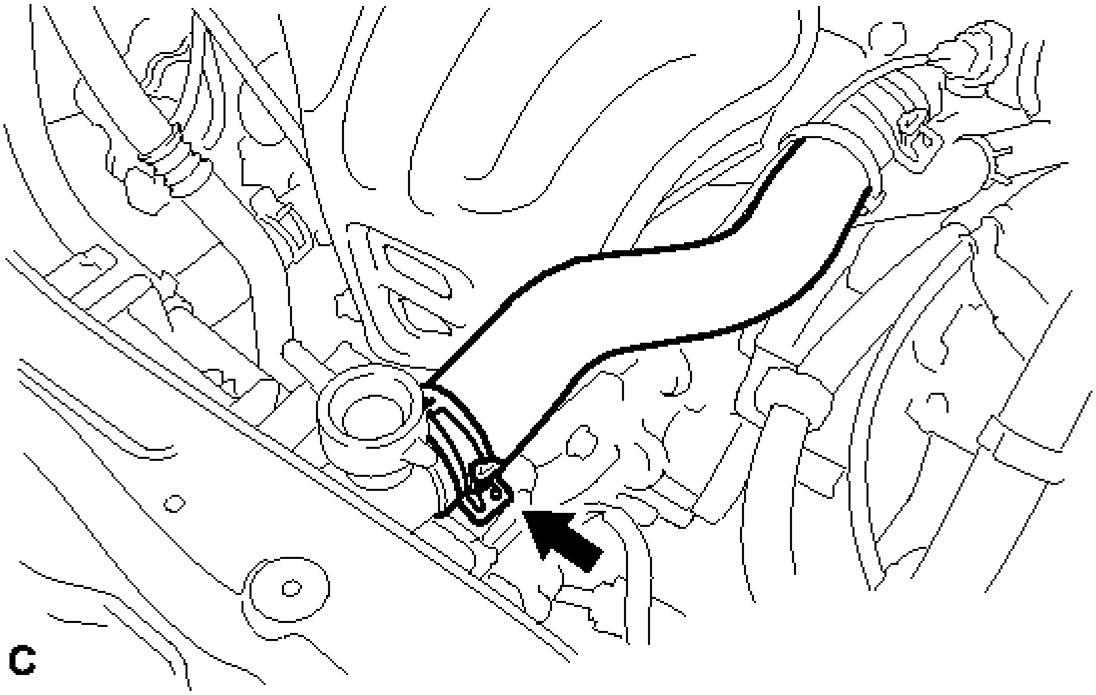

Fig. 31: Disconnecting No. 1 Radiator Hose
Courtesy of TOYOTA MOTOR SALES, U.S.A., INC.

15. **DISCONNECT NO. 2 RADIATOR HOSE**
    a. Disconnect the No. 2 radiator hose and clamp.

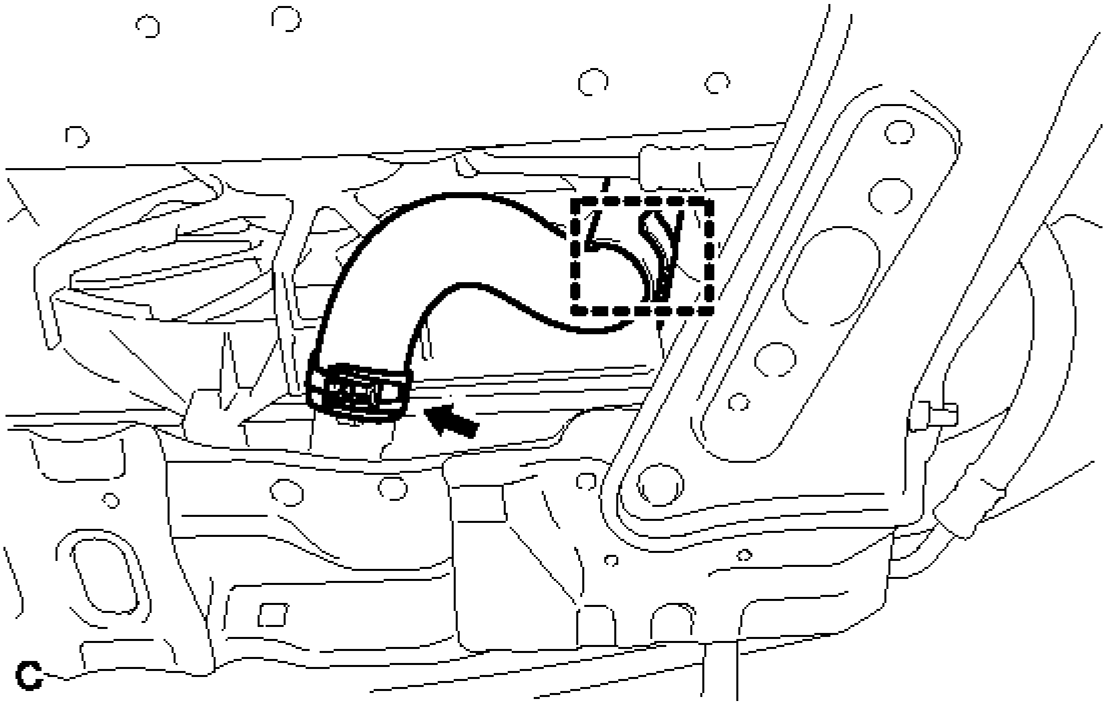

Fig. 32: Disconnecting No. 2 Radiator Hose
Courtesy of TOYOTA MOTOR SALES, U.S.A., INC.

16. **DISCONNECT NO. 1 INVERTER COOLING PIPE ASSEMBLY**
    a. Remove the 2 bolts and disconnect the No. 1 inverter cooling pipe assembly.

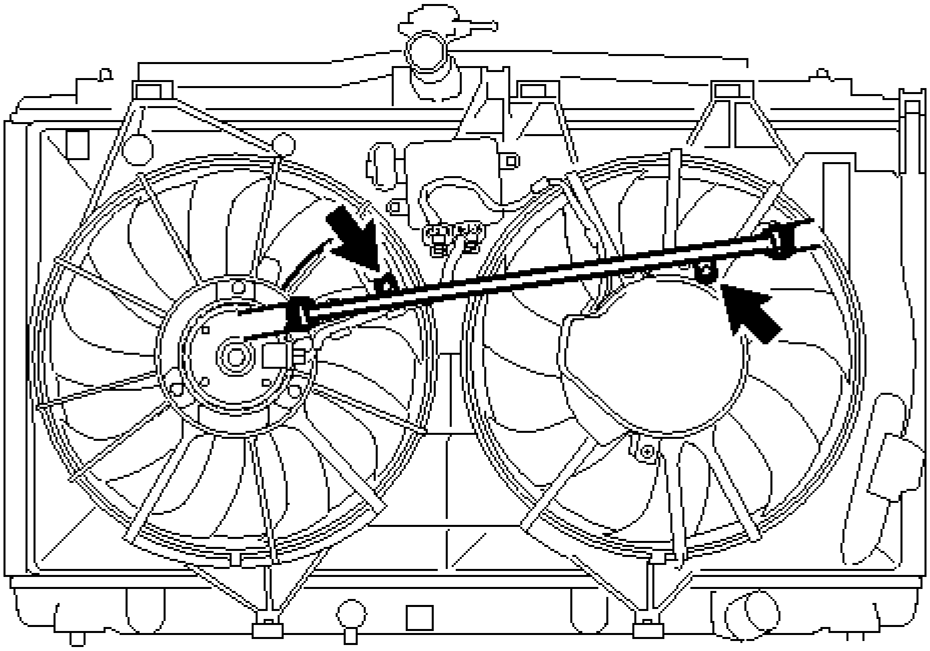

Fig. 33: Identifying No. 1 Inverter Cooling Pipe Bolts
Courtesy of TOYOTA MOTOR SALES, U.S.A., INC.

17. **REMOVE HOOD LOCK ASSEMBLY** . Refer to **REMOVAL - Step 9**
18. **REMOVE UPPER RADIATOR SUPPORT**
    a. Disconnect the 2 connectors.

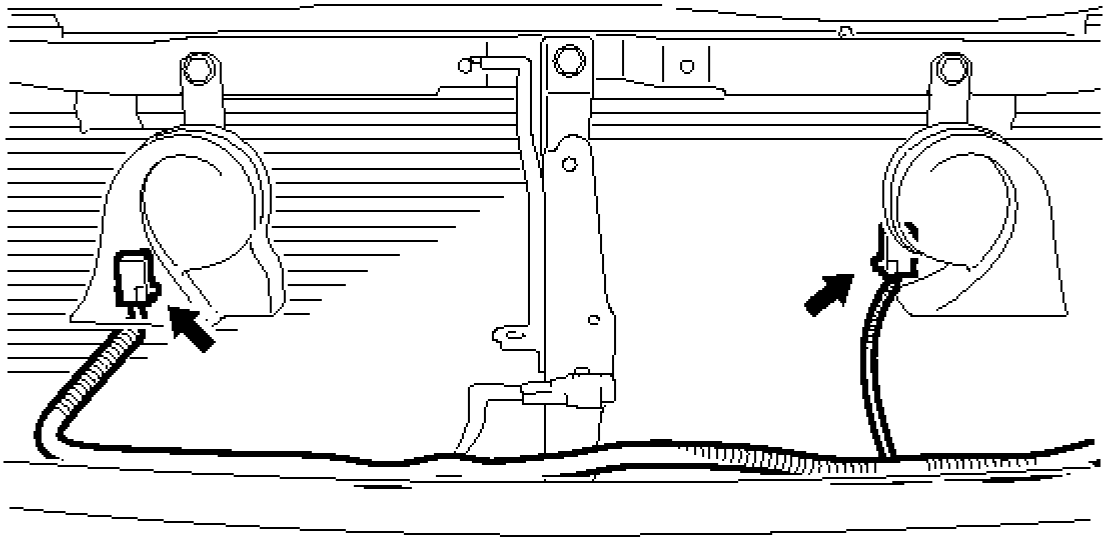

Fig. 34: Identifying Horn Connectors
Courtesy of TOYOTA MOTOR SALES, U.S.A., INC.

b. Disconnect the hood lock control cable clamp and remove the 5 bolts and upper radiator support.

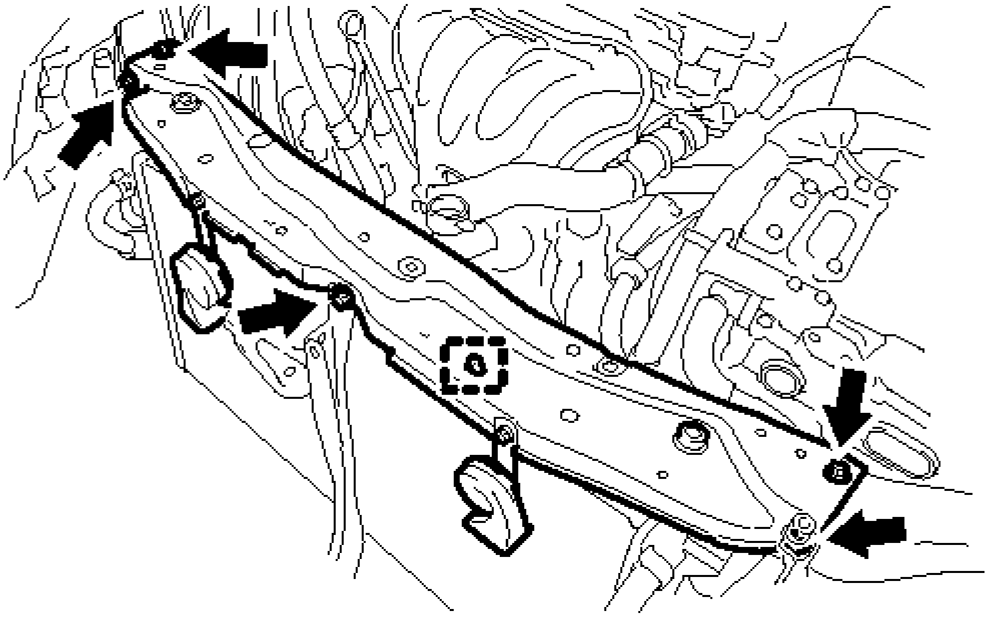

Fig. 35: Identifying Upper Radiator Support Bolts
Courtesy of TOYOTA MOTOR SALES, U.S.A., INC.

c. Remove the 2 radiator support cushions.

19. **REMOVE RADIATOR ASSEMBLY**
    a. Disconnect the 2 clamps.

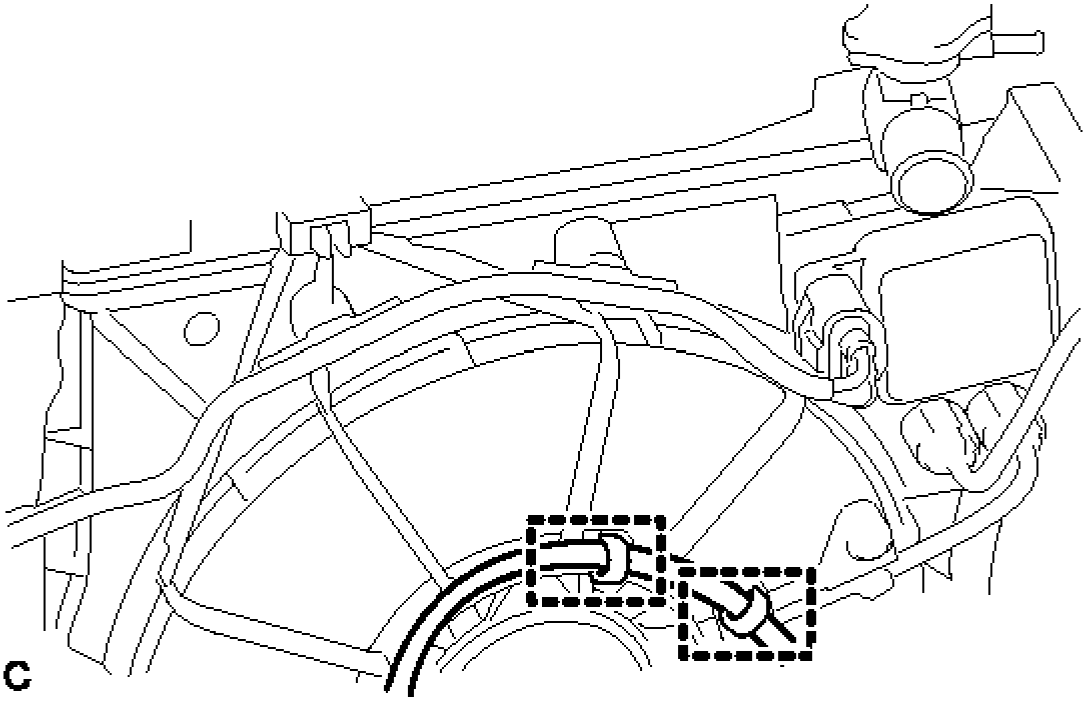

Fig. 36: Identifying Clamps
Courtesy of TOYOTA MOTOR SALES, U.S.A., INC.

b. Disconnect the 2 clamps and connector.

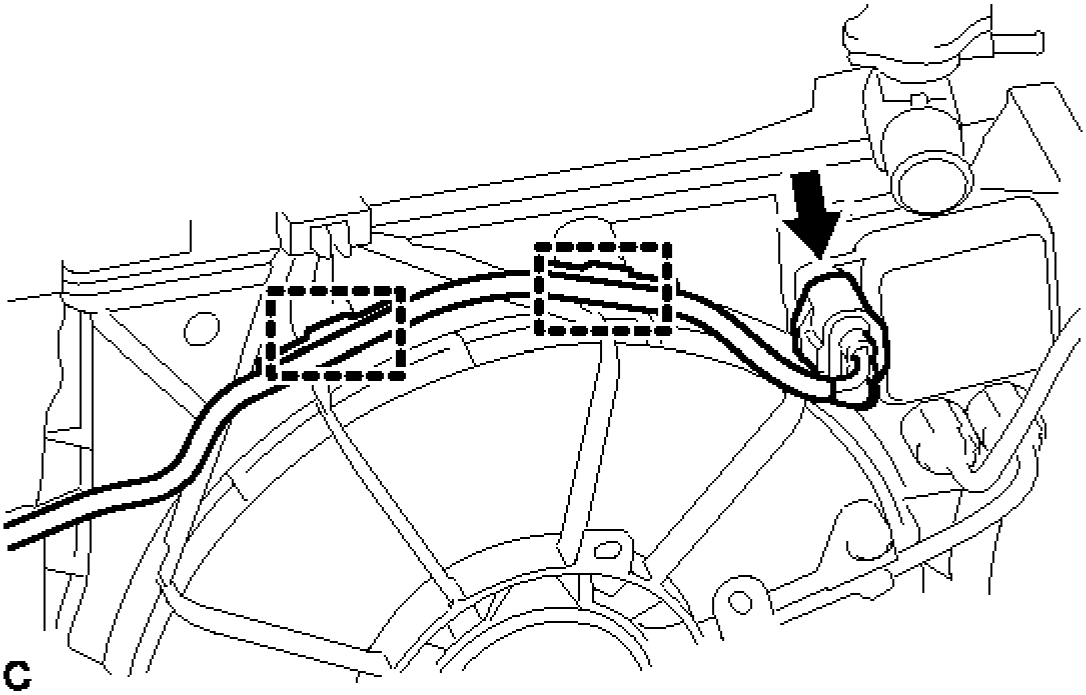

Fig. 37: Identifying Radiator Clamps And Connector
Courtesy of TOYOTA MOTOR SALES, U.S.A., INC.

c. Disconnect the clamp and No. 4 inverter cooling hose.

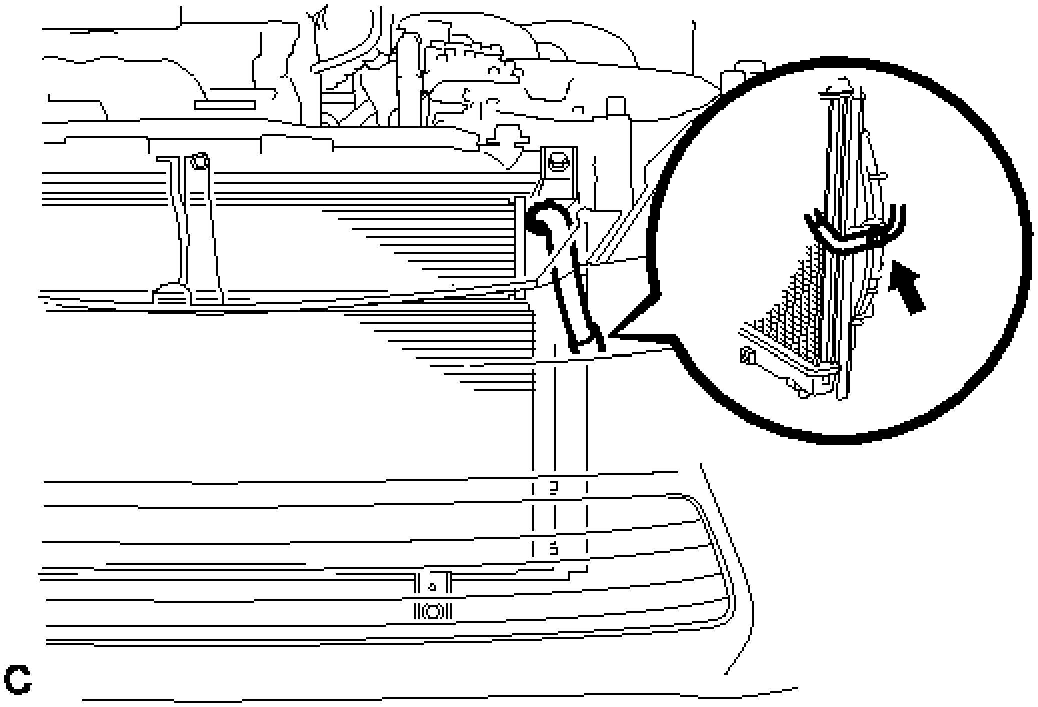

Fig. 38: Identifying No. 4 Inverter Cooling Hose Clamp
Courtesy of TOYOTA MOTOR SALES, U.S.A., INC.

d. Remove the 4 bolts and separate the condenser assembly from the radiator assembly (for inverter coolant).

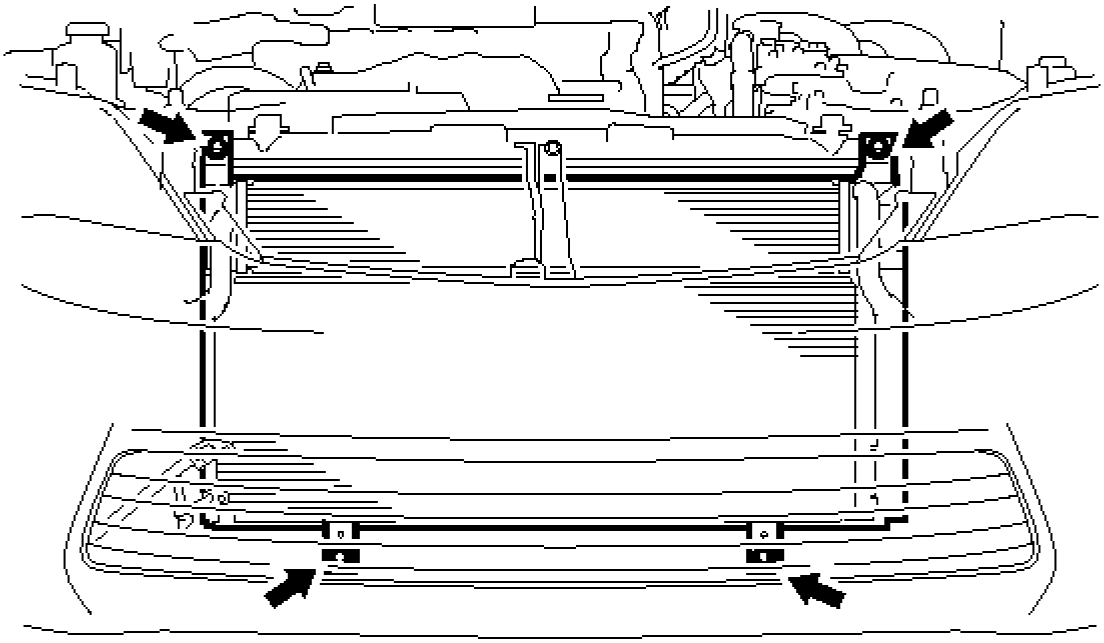

Fig. 39: Identifying Condenser Assembly Bolts
Courtesy of TOYOTA MOTOR SALES, U.S.A., INC.

e. Remove the radiator assembly with the fan assembly.

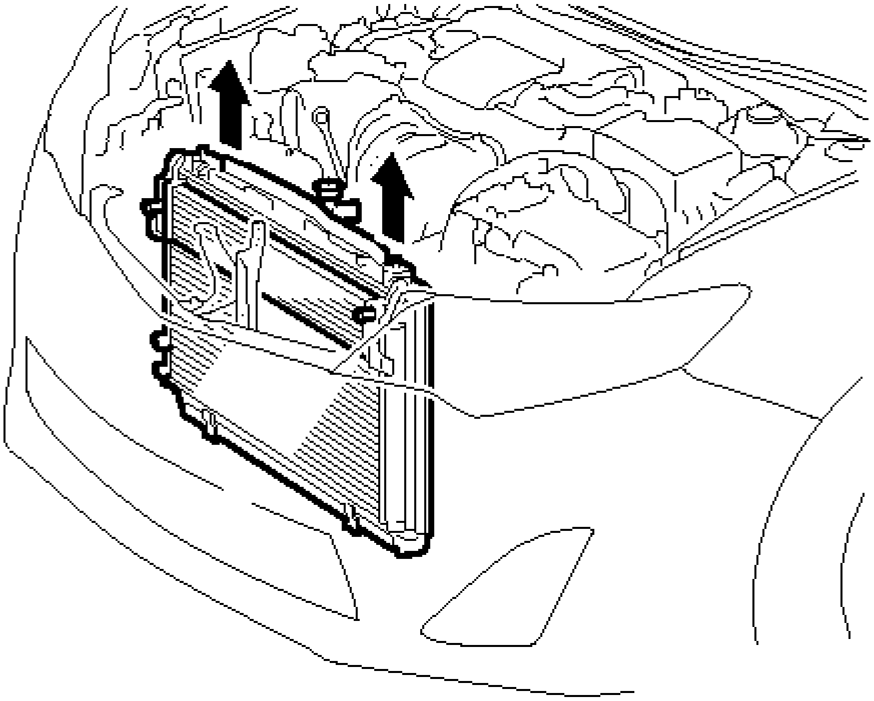

Fig. 40: Removing The Radiator Assembly
Courtesy of TOYOTA MOTOR SALES, U.S.A., INC.

NOTE: **Do not apply any excessive force to the radiator assembly (for inverter coolant), cooler condenser assembly or pipe when removing the radiator assembly.**

f. Remove the 2 lower radiator supports.

g. Release the 3 claws and lift the fan assembly from the radiator.

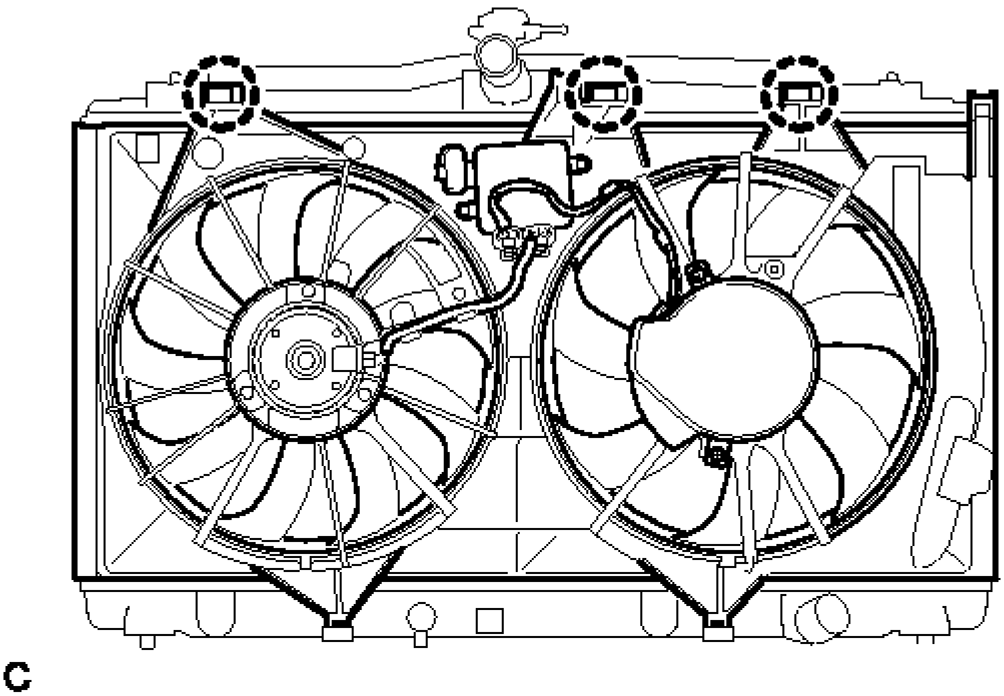

Fig. 41: Identifying Fan Assembly Claws
Courtesy of TOYOTA MOTOR SALES, U.S.A., INC.

INSTALLATION

INSTALLATION

1. **INSTALL RADIATOR ASSEMBLY**
    a. Install the fan assembly to the radiator with the 2 guides at the bottom and 3 claws on the top.

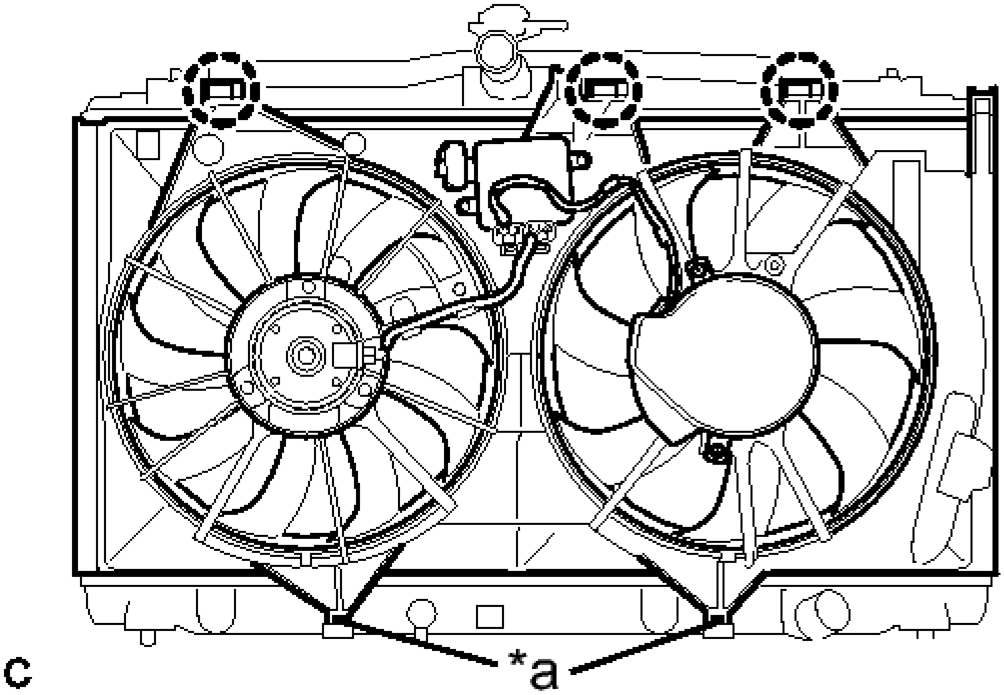

Fig. 42: Identifying Fan Assembly Bottom Guides
Courtesy of TOYOTA MOTOR SALES, U.S.A., INC.

TEXT IN ILLUSTRATION

*a	Guide

b. Install the 2 lower radiator supports to the radiator assembly.
c. Install the radiator with fan assembly.

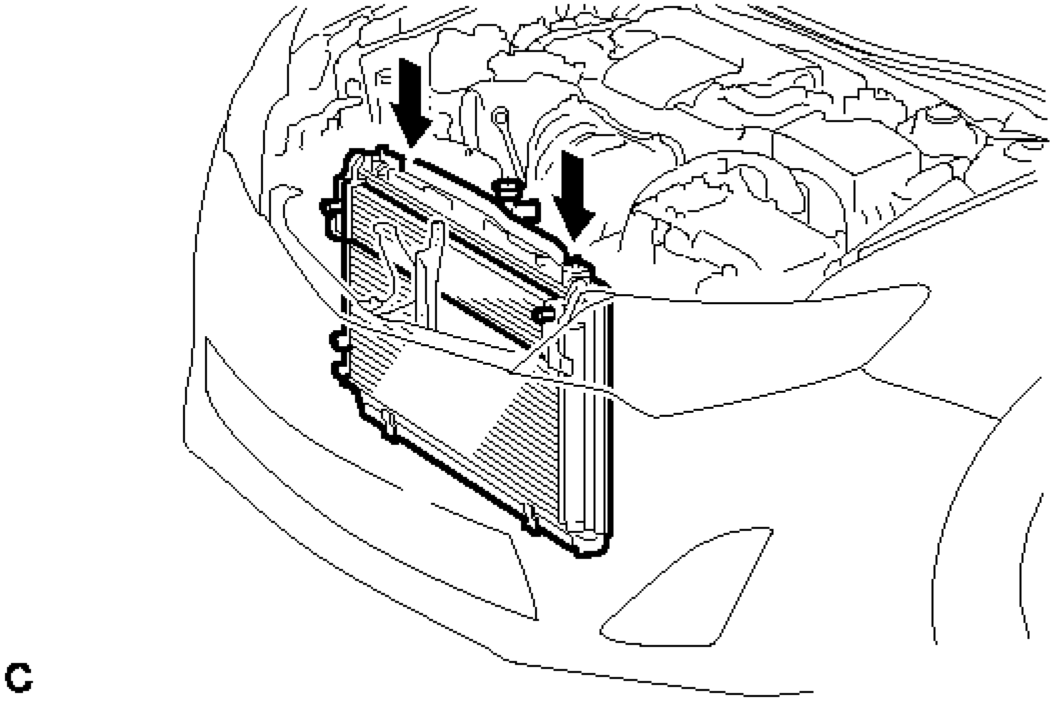

Fig. 43: Installing The Radiator Assembly
Courtesy of TOYOTA MOTOR SALES, U.S.A., INC.

NOTE: **Do not apply any excessive force to the radiator assembly (for inverter coolant), cooler condenser assembly or pipe when installing the radiator assembly.**

d. Install the radiator with fan assembly to the condenser assembly and radiator assembly (for inverter coolant) with the 4 bolts.

   Torque: 5.0 N*m (51 kgf*cm, 44 in.*lbf)

e. Connect the No. 4 inverter cooling hose with the clamp.
f. Connect the connector and the 2 clamps.
g. Connect the 2 clamps.

2. **INSTALL UPPER RADIATOR SUPPORT**
   a. Install the 2 radiator support cushions to the radiator assembly.
   b. Install the upper radiator support with the 5 bolts and connect the hood lock control cable clamp to the upper radiator support.

      Torque: 12 N*m (122 kgf*cm, 9 ft.*lbf)

   c. Connect the 2 connectors.
3. **INSTALL HOOD LOCK ASSEMBLY** . Refer to **INSTALLATION - Step 2**
4. **CONNECT NO. 1 INVERTER COOLING PIPE ASSEMBLY**

a. Temporarily install the bolt A.

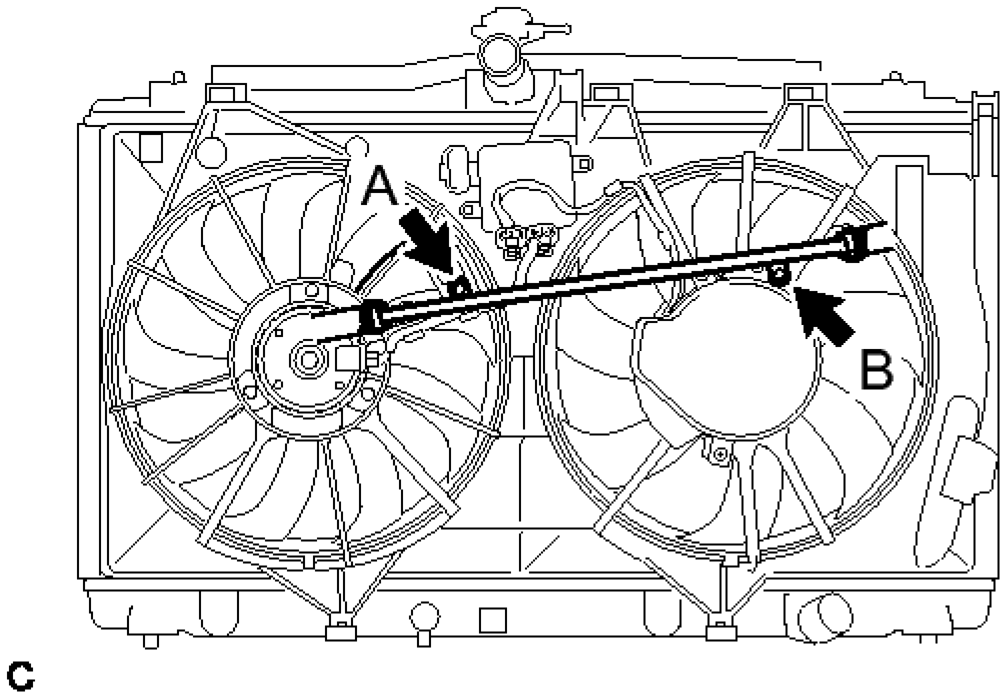

Fig. 44: Identifying No. 1 Inverter Cooling Pipe Bolts
Courtesy of TOYOTA MOTOR SALES, U.S.A., INC.

b. Install the bolt B.

Torque: 6.0 N*m (61 kgf*cm, 53 in.*lbf)

c. Fully tighten the bolt A.

Torque: 6.0 N*m (61 kgf*cm, 53 in.*lbf)

5. **CONNECT NO. 2 RADIATOR HOSE**
   a. Connect the No. 2 radiator hose and clamp.
6. **CONNECT NO. 1 RADIATOR HOSE**
   a. Connect the No. 1 radiator hose.
7. **INSTALL RADIATOR RESERVE TANK ASSEMBLY**
   a. Install the radiator reserve tank with the 2 bolts.

   Torque: 7.0 N*m (71 kgf*cm, 62 in.*lbf)

   b. Connect the radiator reserve tank hose.
8. **INSTALL NO. 5 INVERTER BRACKET** . Refer to **INSTALLATION - Step 26**
9. **INSTALL INLET AIR CLEANER ASSEMBLY** . Refer to **INSTALLATION - Step 63**

10. **INSTALL RADIATOR GRILLE SUB-ASSEMBLY** . Refer to **INSTALLATION - Step 3**
11. **CONNECT CABLE TO NEGATIVE AUXILIARY BATTERY TERMINAL**

NOTE: **When disconnecting the cable, some systems need to be initialized after the cable is reconnected. Refer to INITIALIZATION .**

12. **INSTALL LUGGAGE TRIM SERVICE HOLE COVER** . Refer to **INSTALLATION - Step 3**
13. **ADD COOLANT (for Engine)** See step 2
14. **INSPECT FOR COOLANT LEAK (for Engine)** . Refer to **ON-VEHICLE INSPECTION - Step 1**
15. **INSTALL COOL AIR INTAKE DUCT SEAL** . Refer to **INSTALLATION - Step 4**
16. **INSTALL ENGINE UNDER COVER LH**
17. **INSTALL ENGINE UNDER COVER RH**
18. **INSTALL FRONT WHEEL OPENING EXTENSION PAD LH**
19. **INSTALL FRONT WHEEL OPENING EXTENSION PAD RH**

RELAY

ON-VEHICLE INSPECTION

ON-VEHICLE INSPECTION

1. **INSPECT FAN RELAY**
   a. Measure the resistance according to the value(s) in the table below.

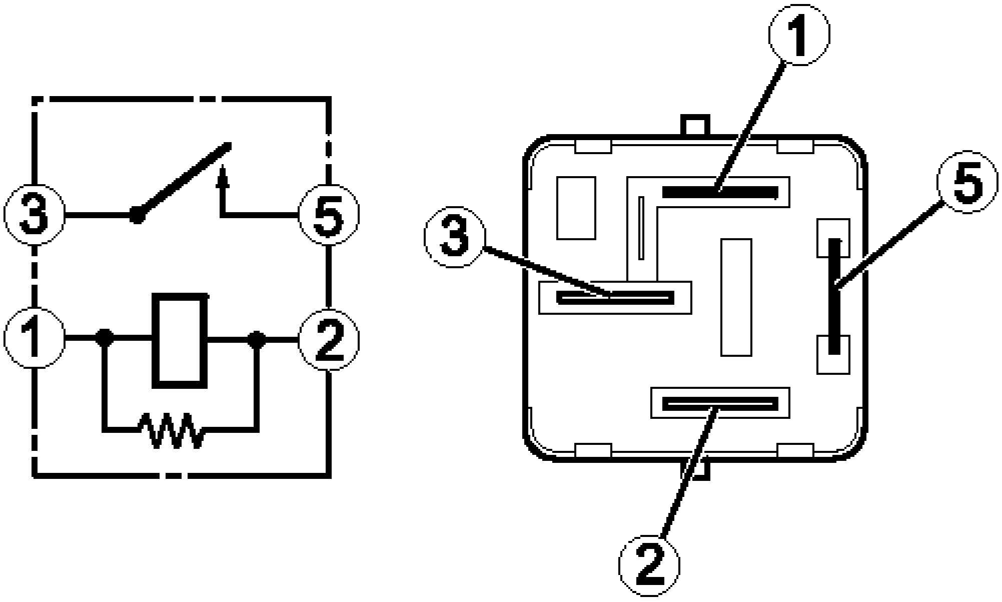

Fig. 45: Fan Relay
Courtesy of TOYOTA MOTOR SALES, U.S.A., INC.

Standard Resistance

Tester Connection	Condition	Specified Condition
3 - 5	Auxiliary battery voltage is not applied between terminals 1 and 2	10 kohms or higher
3 - 5	Auxiliary battery voltage is applied between terminals 1 and 2	Below 1 ohms

If the result is not as specified, replace the relay.

2012-2017 ENGINE

Engine Intake System (Inspection) - Camry (2GR-FE)

INTAKE SYSTEM

PARTS LOCATION

ILLUSTRATION

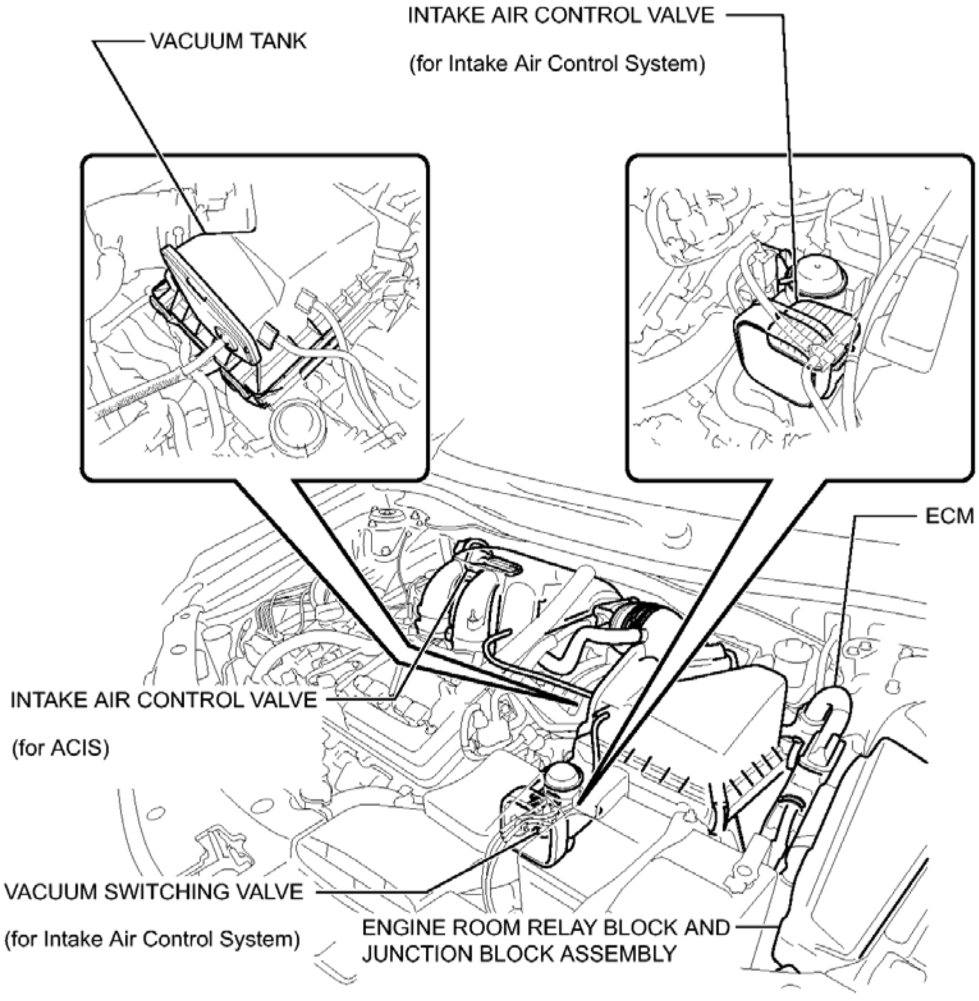
VACUUM TANK
INTAKE AIR CONTROL VALVE
(for Intake Air Control System)
ECM
INTAKE AIR CONTROL VALVE
(for ACIS)
VACUUM SWITCHING VALVE
(for Intake Air Control System)
ENGINE ROOM RELAY BLOCK AND
JUNCTION BLOCK ASSEMBLY

c

Fig. 1: Identifying Engine Intake System Components Location
Courtesy of TOYOTA MOTOR SALES, U.S.A., INC.

SYSTEM DIAGRAM

SYSTEM DIAGRAM

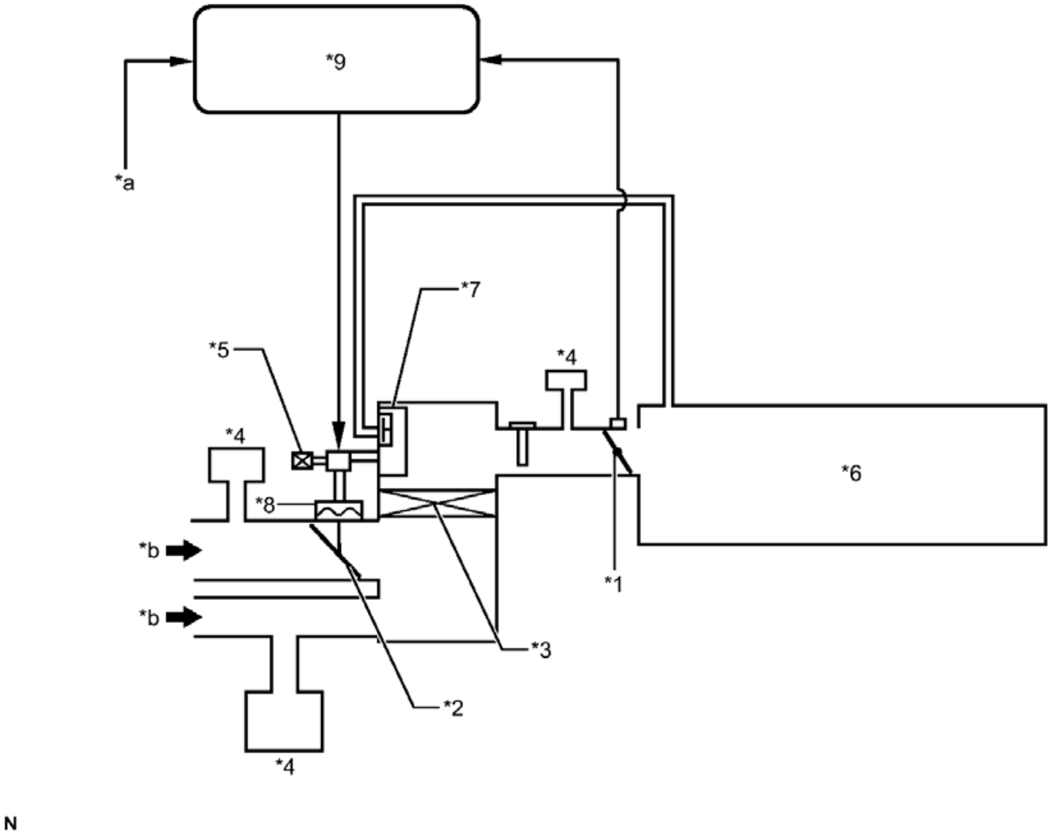

Fig. 2: Identifying Engine Intake System Diagram (1 Of 2)
Courtesy of TOYOTA MOTOR SALES, U.S.A., INC.

TEXT IN ILLUSTRATION

*1	Throttle Valve	*2	Intake Air Control Valve (for Intake Air Control System)
*3	Air Cleaner Element	*4	Resonator
*5	Vacuum Switching Valve (for Intake Air Control System)	*6	Intake Air Surge Tank

*7	Vacuum Tank	*8	Diaphragm Chamber
*9	ECM	-	-
*a	Engine Speed Signal	*b	Air

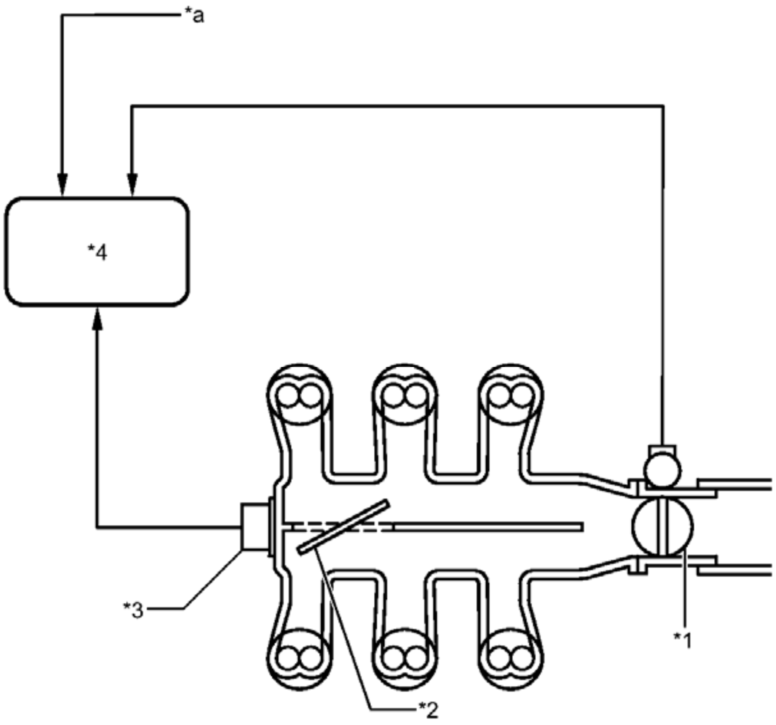

N

Fig. 3: Identifying Engine Intake System Diagram (2 Of 2)
Courtesy of TOYOTA MOTOR SALES, U.S.A., INC.

TEXT IN ILLUSTRATION

*1	Throttle Valve	*2	Intake Air Control Valve (for ACIS)
*3	Actuator	*4	ECM
*a	Engine Speed Signal	-	-

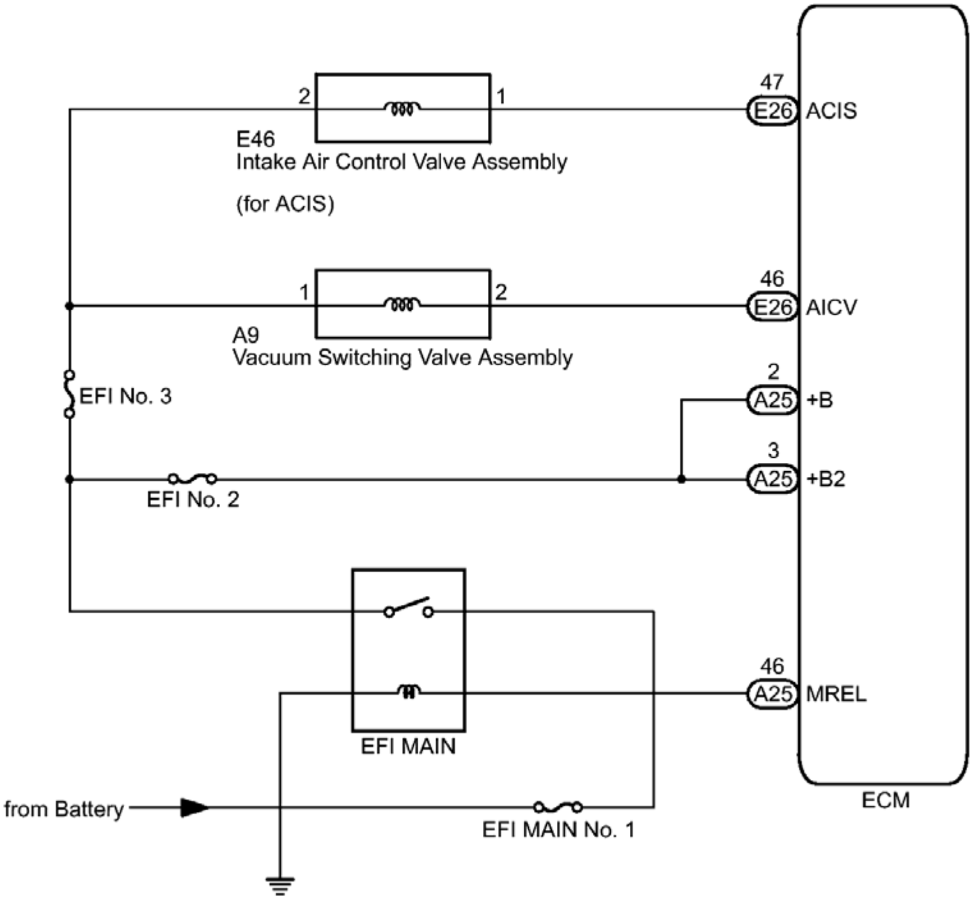
2
1
47
E26
ACIS
E46
Intake Air Control Valve Assembly
(for ACIS)
1
2
46
E26
AICV
A9
Vacuum Switching Valve Assembly
2
A25
+B
EFI No. 3
3
A25
+B2
EFI No. 2
46
A25
MREL
EFI MAIN
ECM
from Battery
EFI MAIN No. 1

Fig. 4: Identifying Engine Intake System Wiring Diagram
Courtesy of TOYOTA MOTOR SALES, U.S.A., INC.

ON-VEHICLE INSPECTION

ON-VEHICLE INSPECTION

1. **INSPECT INTAKE SYSTEM**
    a. Check that there are no vacuum leaks at the points shown in the illustration.

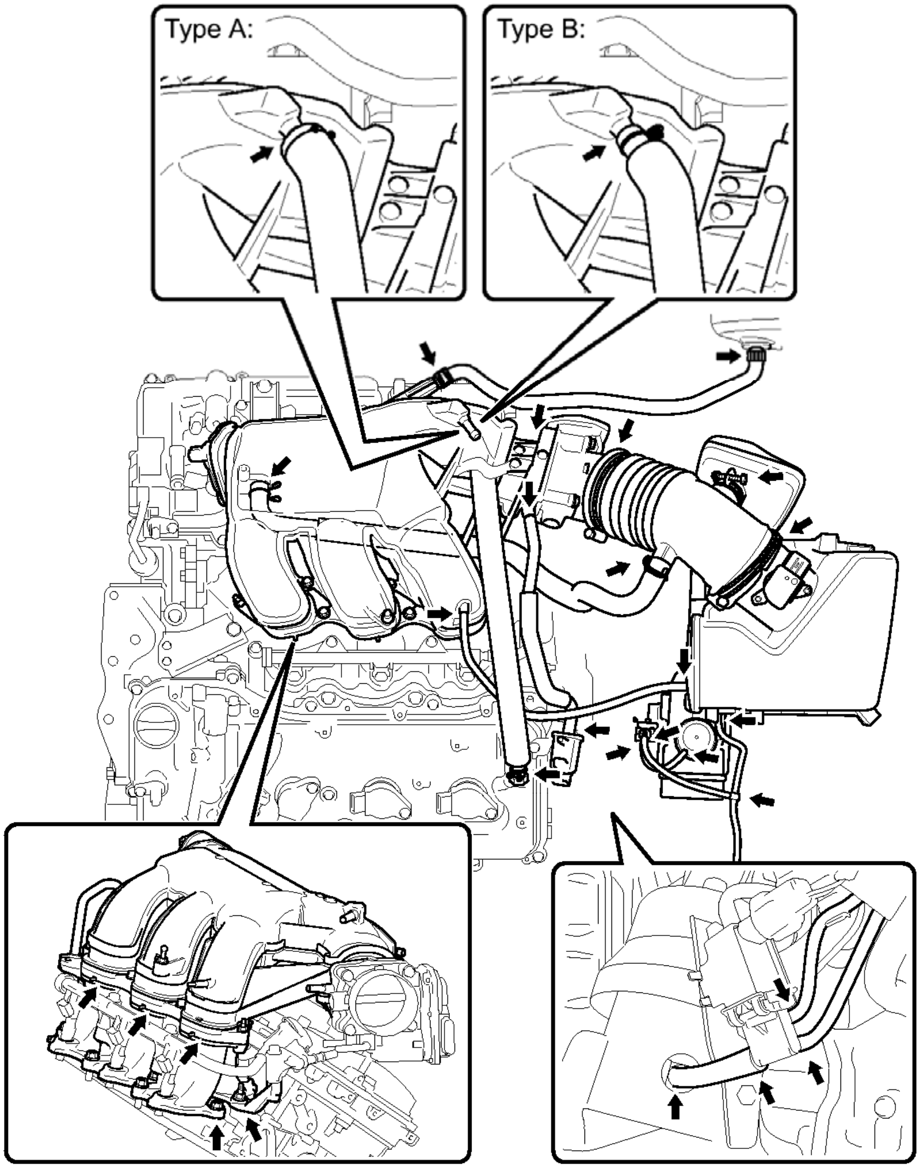

c

Fig. 5: Inspecting Intake System For Vacuum Leaks
Courtesy of TOYOTA MOTOR SALES, U.S.A., INC.

HINT:

Perform "Inspection After Repair" after repairing air leaks in the intake system. Refer to **INITIALIZATION** .

2012-2017 ENGINE

Engine Intake System (Inspection) (Hybrid)

INTAKE SYSTEM

ON-VEHICLE INSPECTION

ON-VEHICLE INSPECTION

1. **INSPECT INTAKE SYSTEM**
    a. Check that there are no vacuum leaks at the points shown in the illustration.

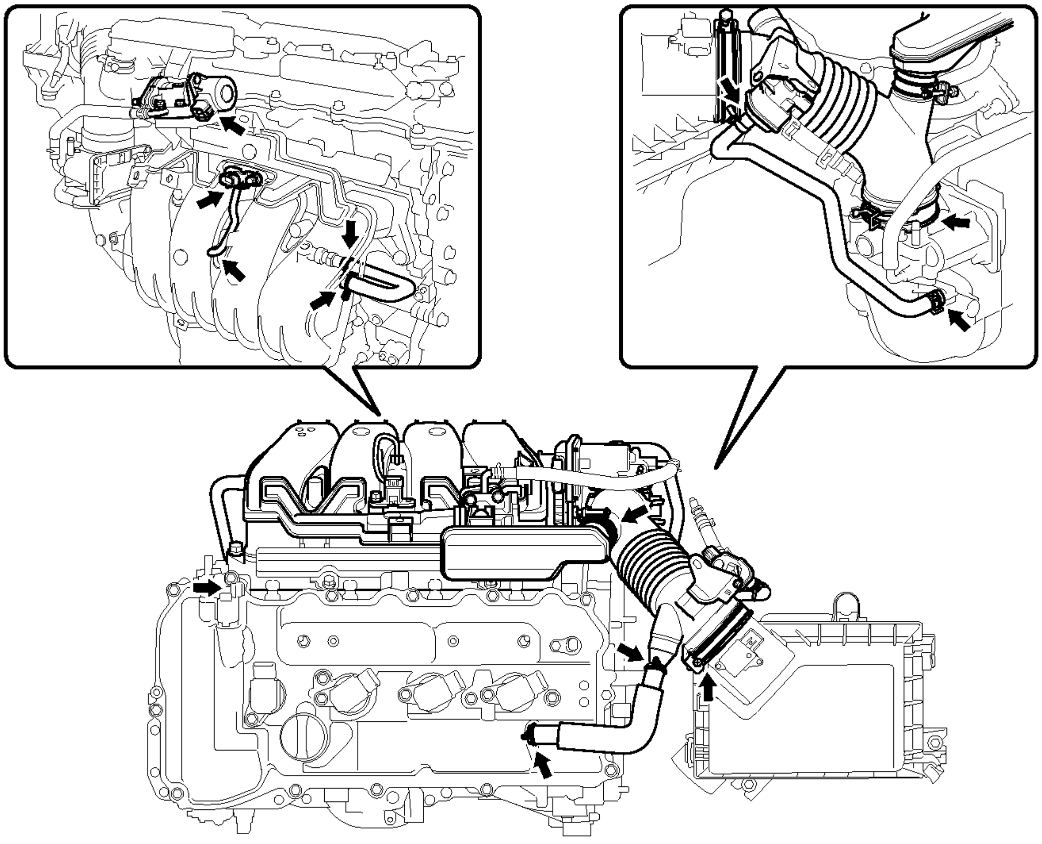

Fig. 1: Identifying Intake System Check Points
Courtesy of TOYOTA MOTOR SALES, U.S.A., INC.

HINT:

Perform "Inspection After Repair" after repairing air leaks in the intake system. Refer to **INITIALIZATION** .

ENGINE

ON-VEHICLE INSPECTION

ON-VEHICLE INSPECTION

1. **INSPECT ENGINE COOLANT**

   Refer to **ON-VEHICLE INSPECTION**

2. **INSPECT ENGINE OIL**

   Refer to **ON-VEHICLE INSPECTION**

3. **INSPECT BATTERY**

   Refer to **ON-VEHICLE INSPECTION**

4. **INSPECT AIR CLEANER FILTER ELEMENT SUB-ASSEMBLY**
   a. Remove the air cleaner filter element sub-assembly.
   b. Visually check that the air cleaner filter element sub-assembly is not excessively damaged or oily. If necessary, replace the air cleaner filter element sub-assembly.

      HINT:

      - If there is any dirt or a blockage in the air cleaner filter element sub-assembly, clean it with compressed air.
      - If any dirt or a blockage remains even after cleaning the air cleaner filter element sub-assembly with compressed air, replace it.

   c. Install the air cleaner filter element sub-assembly.
5. **INSPECT SPARK PLUG**

   Refer to **ON-VEHICLE INSPECTION**

6. **INSPECT VALVE LASH ADJUSTER ASSEMBLY NOISE**
   a. Rev up the engine several times. Check that the engine does not emit unusual noises.

      If unusual noises occur, warm up the engine and idle it for over 30 minutes. Then perform the inspection above again.

      If any defects or problems are found during the inspection above, perform a lash adjuster inspection. See step 2.

7. **INSPECT IGNITION TIMING**
    a. Warm up and stop the engine.
    b. When using the Techstream:
        1. Connect the Techstream to the DLC3.

           NOTE: When checking the ignition timing, the transmission should be in neutral.

        2. Start the engine and idle it.
        3. Turn the Techstream main switch on.
        4. Enter the following menus: Powertrain / Engine / Data List / IGN Advance.

           Standard ignition timing

           BTDC 5 to 15 deg. at idle

           HINT:

           Refer to the Techstream operator's manual for further details.

           If the ignition timing is not as specified, check the valve timing.

        5. Check that the ignition timing advances immediately when the engine speed is increased.
        6. Enter the following menus: Powertrain / Engine / Active Test / Connect the TC and TE1 / ON.
        7. Monitor IGN Advance of the Data List.

           Standard ignition timing

           BTDC 8 to 12 deg. at idle

           HINT:

           Refer to the Techstream operator's manual for further details.

           If the ignition timing is not as specified, check the valve timing.

        8. Enter the following menus: Connect the TC and TE1 / OFF.
        9. Turn the ignition switch off.
        10. Disconnect the Techstream from the DLC3.
    c. When not using the Techstream:
        1. Remove the No. 1 engine cover sub-assembly.
        2. Pull out the wire harness as shown in the illustration.

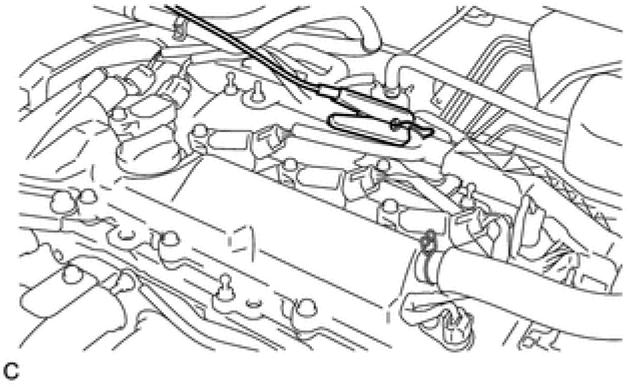

Fig. 1: Connecting Clip Of Timing Light To Wire Harness
Courtesy of TOYOTA MOTOR SALES, U.S.A., INC.

3. Connect the clip of a timing light to the wire harness.

NOTE: **Use a timing light that detects primary signals.**

4. Using SST, connect terminals 13 (TC) and 4 (CG) of the DLC3.

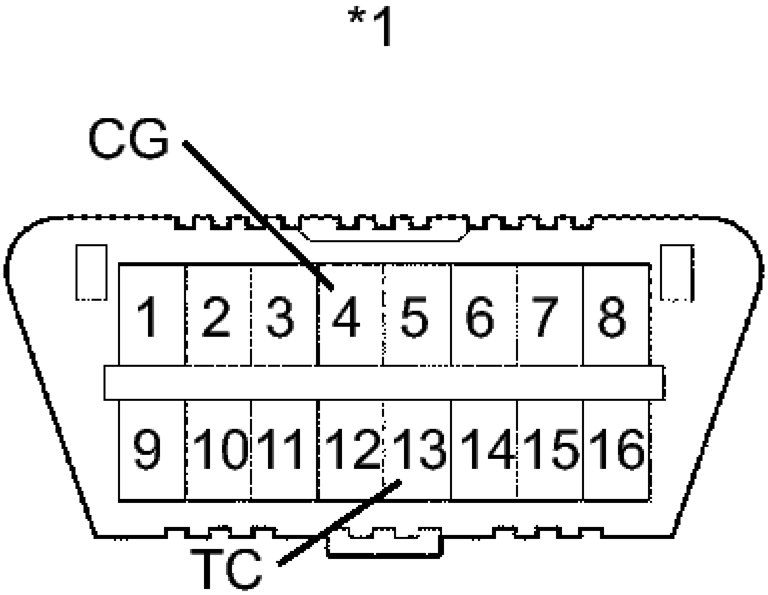

Fig. 2: Identifying DLC3 Connector Terminals Identification
Courtesy of TOYOTA MOTOR SALES, U.S.A., INC.

TEXT IN ILLUSTRATION

*1	DLC3

        - **SST: 09843-18040**

NOTE:

- **Confirm the terminal numbers before connecting them. Connecting the wrong terminals can damage the engine.**
- **When checking the ignition timing, the transmission should be in neutral.**

    5. Using a timing light, check the ignition timing.

       Standard ignition timing

       8 to 12° BTDC at idle

    6. Remove SST from the DLC3.
    7. Check the ignition timing.

       Standard ignition timing

       5 to 15° BTDC at idle

       If the ignition timing is not as specified, check the valve timing.

    8. Check that the ignition timing advances immediately when the engine speed is increased.
    9. Disconnect the timing light from the engine.
    10. Install the No. 1 engine cover sub-assembly.

8. **INSPECT ENGINE IDLE SPEED**
    a. Warm up and stop the engine.
    b. When using the Techstream:
        1. Connect the Techstream to the DLC3.

NOTE:

- **Switch off all accessories and the A/C before connecting the Techstream.**
- **When checking the idle speed, the transmission should be in neutral.**

        2. Race the engine at 2500 rpm for approximately 90 seconds.
        3. Turn the Techstream main switch on.
        4. Enter the following menus: Powertrain / Engine / Data List / Engine Speed.

           Standard idle speed

           610 to 710 rpm

HINT:

Refer to the Techstream operator's manual for further details.

If the idle speed is not as specified, check the air intake system.

5. Disconnect the Techstream from the DLC3.

c. When not using the Techstream:

  1. Using SST, connect a tachometer probe to terminal 9 (TAC) of the DLC3.

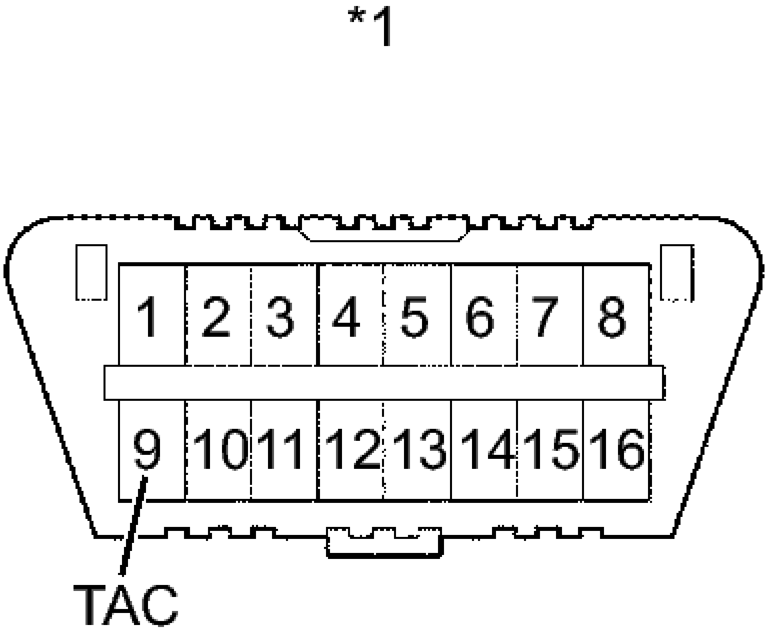

Fig. 3: Identifying DLC3 Connector Terminals Identification
Courtesy of TOYOTA MOTOR SALES, U.S.A., INC.

TEXT IN ILLUSTRATION

*1	DLC3

- **SST: 09843-18030**

NOTE:

- **Confirm the terminals before connecting them. Connecting the wrong terminals may result in damage to electrical components.**
- **Turn all electrical systems and the A/C off.**
- **Inspect the idle speed with the cooling fans off.**
- **When checking the idle speed, the transaxle should be in neutral.**

2. Race the engine at 2500 rpm for approximately 90 seconds.
3. Check the idle speed.

   Standard idle speed

   610 to 710 rpm

   If the speed is not as specified, check the air intake system.

4. Disconnect the tachometer probe from the DLC3.

9. **INSPECT COMPRESSION**
   1. Warm up and stop the engine.
   2. Check for DTCs. Refer to **DTC CHECK / CLEAR** .
   3. Remove the 4 spark plugs. Refer to **REMOVAL - Step 3** .
   4. Disconnect the 4 fuel injector connectors.
   5. Insert a compression gauge into the spark plug hole.

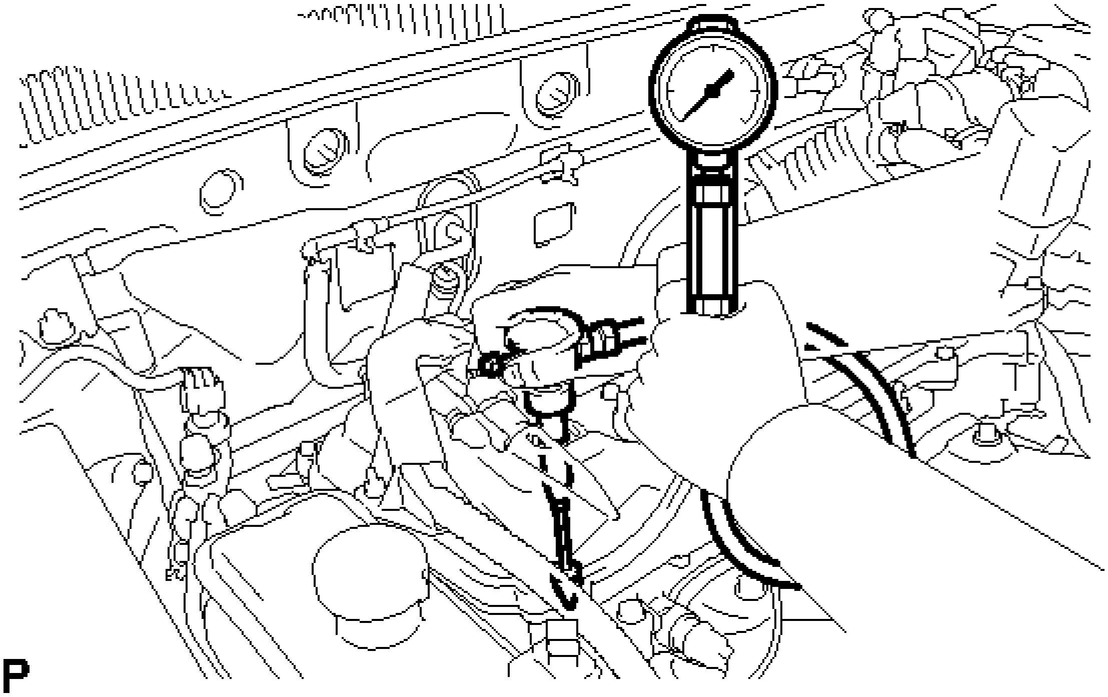

Fig. 4: Measuring Compression Pressure
Courtesy of TOYOTA MOTOR SALES, U.S.A., INC.

f. Fully open the throttle.
g. While cranking the engine, measure the compression pressure.

Standard compression pressure

1450 kPa (14.8 kgf/cm^2 , 210 psi)

Minimum pressure

980 kPa (10.0 kgf/cm^2 , 142 psi)

Difference between each cylinder

100 kPa (1.0 kgf/cm^2 , 15 psi)

HINT:

Always use a fully charged battery to obtain an engine speed of 250 rpm or more.

h. If the cylinder compression is low in one or more cylinders, pour a small amount of engine oil into the cylinder with low compression through its spark plug hole. Then inspect the cylinder compression pressure again.

   HINT:

   - If adding oil helps boost the compression, it is likely that the piston rings and/or cylinder bore is worn or damaged.
   - If the pressure stays low, a valve may be stuck or seated improperly, or there may be leakage in the gasket.

i. Connect the 4 fuel injector connectors.
j. Install the 4 spark plugs. Refer to **INSTALLATION - Step 1** .
k. Clear the DTCs. Refer to **DTC CHECK / CLEAR** .

10. **INSPECT CO/HC**

    HINT:

    This check determines whether or not the idle CO/HC complies with regulations.

    a. Start the engine.
    b. Keep the engine speed at 2500 rpm for approximately 180 seconds.
    c. Insert the CO/HC meter testing probe at least 40 cm (1.31 ft.) into the tailpipe during idling.
    d. Immediately check CO/HC concentration at idle and 2500 rpm.

    HINT:

    - When performing the 2 mode (2500 rpm and idle) test, follow the measurement order prescribed by the applicable local regulations.
    - If the CO/HC concentration does not comply with regulations, troubleshoot in the order given below.

1. Check the DTCs. Refer to **DTC CHECK / CLEAR** .
2. See the table below for possible causes, and then inspect and correct the applicable causes if necessary.

CO	HC	Symptom	Causes
Normal	High	Rough idle	1. Faulty ignition • Incorrect timing • Plugs are contaminated or shorted, or gaps are defective 2. Leaky intake and exhaust valves 3. Leaky cylinder
Low	High	Rough idle (Fluctuating HC reading)	1. Vacuum leaks • PCV hose • Intake manifold • Throttle body • Brake booster line 2. Lean mixture causing misfire
High	High	Rough idle (Black smoke from exhaust)	1. Restricted air filter 2. Faulty SFI system • Faulty pressure • Defective ECT sensor • Faulty ECM • Faulty injector • Faulty throttle position sensor

				- Faulty MAF sensor

DRIVE BELT

COMPONENTS

ILLUSTRATION

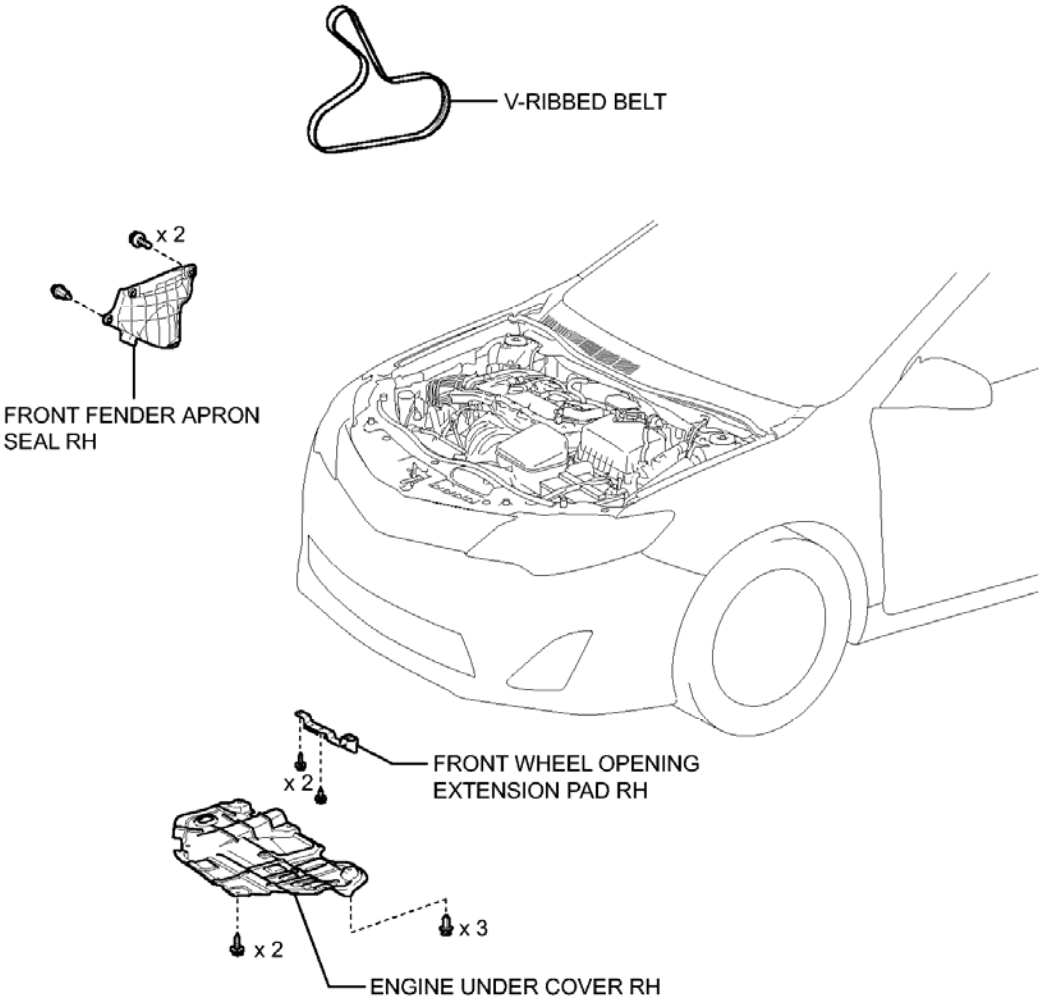
V-RIBBED BELT
x 2
FRONT FENDER APRON SEAL RH
FRONT WHEEL OPENING EXTENSION PAD RH
x 2
x 3
x 2
ENGINE UNDER COVER RH

c

Fig. 5: Identifying Drive Belt Replacement Components
Courtesy of TOYOTA MOTOR SALES, U.S.A., INC.

ON-VEHICLE INSPECTION

ON-VEHICLE INSPECTION

1. **INSPECT V-RIBBED BELT**
   1. Check the belt for wear, cracks or other signs of damage.

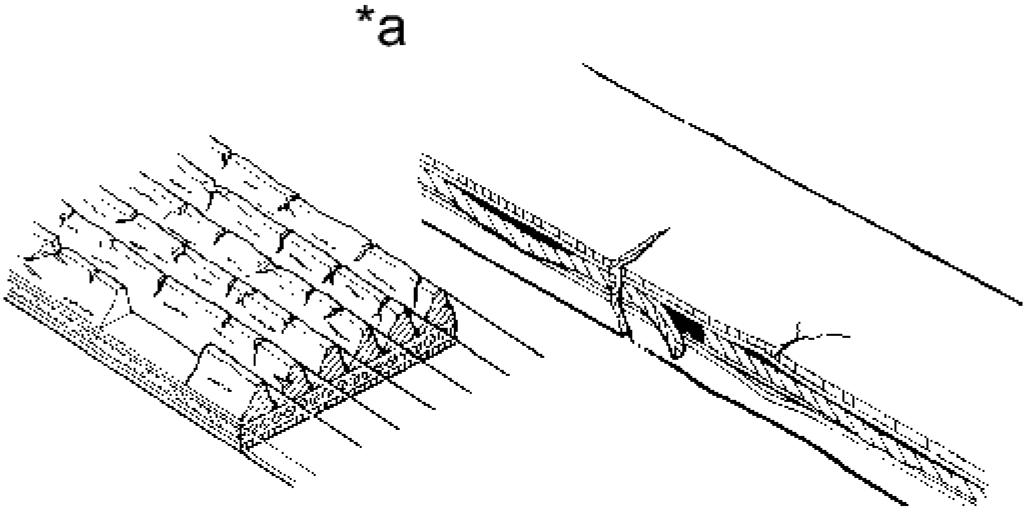

Fig. 6: Inspecting V-Ribbed Belt
Courtesy of TOYOTA MOTOR SALES, U.S.A., INC.

TEXT IN ILLUSTRATION

*a	INCORRECT

If any of the following defects is found, replace the V-ribbed belt.

- The belt is cracked.
- The belt is worn out to the extent that the cords are exposed.
- The belt has chunks missing from the ribs.

b. Check that the belt fits properly in the ribbed grooves.

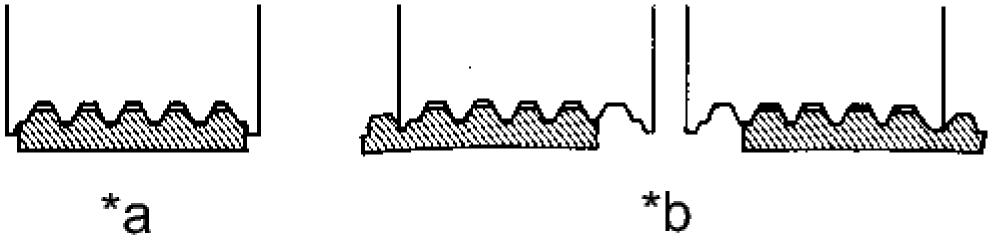

Fig. 7: Checking V Belt For Proper Installation
Courtesy of TOYOTA MOTOR SALES, U.S.A., INC.

TEXT IN ILLUSTRATION

*a	CORRECT
*b	INCORRECT

HINT:

Check with your hand to confirm that the belt has not slipped out of the groove on the bottom of the pulley. If it has slipped out, replace the V-ribbed belt. Install a new V-ribbed belt correctly.

2. **INSPECT V-RIBBED BELT TENSIONER ASSEMBLY**
    a. Check that nothing gets caught in the tensioner by turning it clockwise and counterclockwise.

       If a malfunction exists, replace the V-ribbed belt tensioner.

REMOVAL

REMOVAL

REMOVAL

1. **REMOVE FRONT WHEEL RH**
2. **REMOVE FRONT WHEEL OPENING EXTENSION PAD RH**
3. **REMOVE ENGINE UNDER COVER RH**
4. **REMOVE FRONT FENDER APRON SEAL RH**

5. **REMOVE V-RIBBED BELT**
    a. Attach a wrench to the hexagonal portion of the belt tensioner as shown in the illustration, rotate the belt tensioner clockwise, and remove the V-ribbed belt.

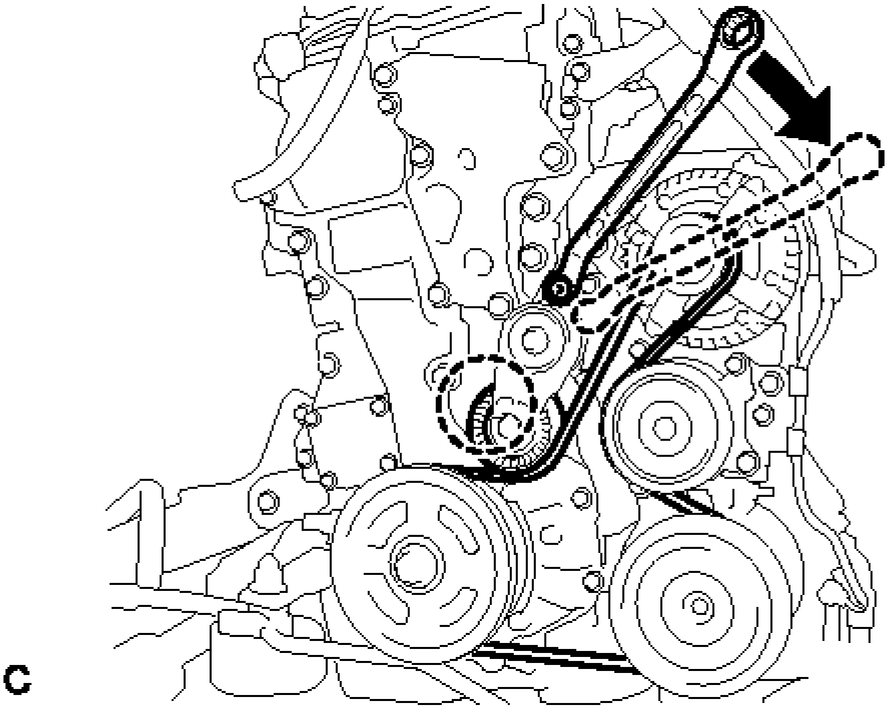

Fig. 8: Removing V-Ribbed Belt
Courtesy of TOYOTA MOTOR SALES, U.S.A., INC.

INSTALLATION

INSTALLATION

INSTALLATION

1. **INSTALL V-RIBBED BELT**
    a. Set the V-ribbed belt onto each part as shown in the illustration except the water pump pulley.

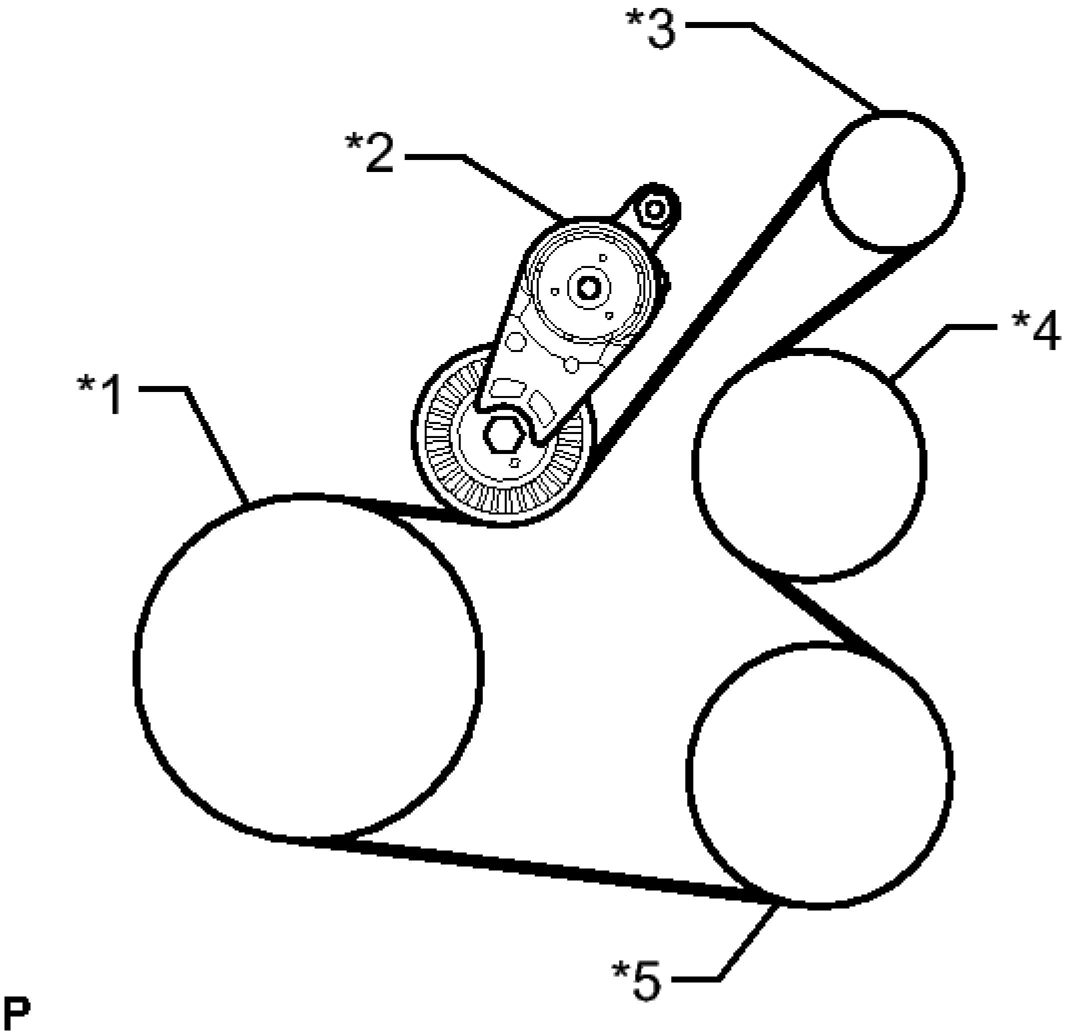

Fig. 9: Identifying V-Ribbed Belt Routing Diagram
Courtesy of TOYOTA MOTOR SALES, U.S.A., INC.

TEXT IN ILLUSTRATION

*1	Crankshaft
*2	Tensioner
*3	Generator
*4	Water Pump
*5	Cooler Compressor

b. Loosen the V-ribbed belt by turning the belt tensioner clockwise.

c. Set the V-ribbed belt onto the water pump pulley.

NOTE: Make sure that the belt is attached to each pulley. In particular, make sure that the belt is securely fitted into the grooves of the crankshaft pulley.

2. **INSTALL FRONT FENDER APRON SEAL RH**
3. **INSTALL ENGINE UNDER COVER RH**
4. **INSTALL FRONT WHEEL OPENING EXTENSION PAD RH**
5. **INSTALL FRONT WHEEL RH**

Torque: 103 N*m (1049 kgf*cm, 76 ft.*lbf)

CAMSHAFT

COMPONENTS

ILLUSTRATION

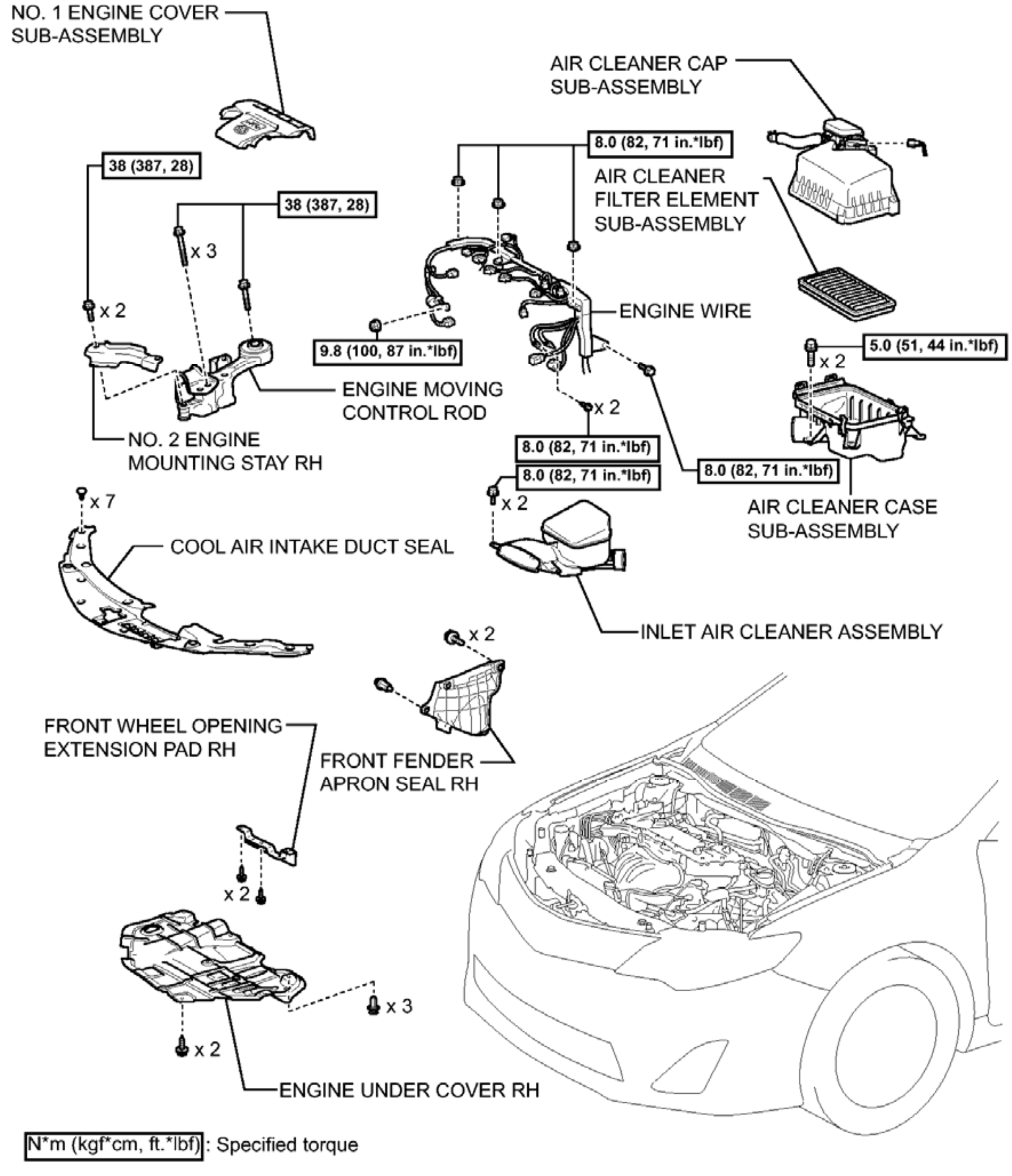
NO. 1 ENGINE COVER SUB-ASSEMBLY
AIR CLEANER CAP SUB-ASSEMBLY
38 (387, 28)
8.0 (82, 71 in.*lbf)
38 (387, 28)
AIR CLEANER FILTER ELEMENT SUB-ASSEMBLY
x 3
x 2
ENGINE WIRE
9.8 (100, 87 in.*lbf)
5.0 (51, 44 in.*lbf)
x 2
ENGINE MOVING CONTROL ROD
x 2
NO. 2 ENGINE MOUNTING STAY RH
8.0 (82, 71 in.*lbf)
8.0 (82, 71 in.*lbf)
8.0 (82, 71 in.*lbf)
x 7
x 2
AIR CLEANER CASE SUB-ASSEMBLY
COOL AIR INTAKE DUCT SEAL
INLET AIR CLEANER ASSEMBLY
x 2
FRONT WHEEL OPENING EXTENSION PAD RH
FRONT FENDER APRON SEAL RH
x 2
x 3
x 2
ENGINE UNDER COVER RH
N*m (kgf*cm, ft.*lbf) : Specified torque
c

Fig. 10: Identifying Camshaft Replacement Components With Torque Specifications (1 Of 2)
Courtesy of TOYOTA MOTOR SALES, U.S.A., INC.

ILLUSTRATION

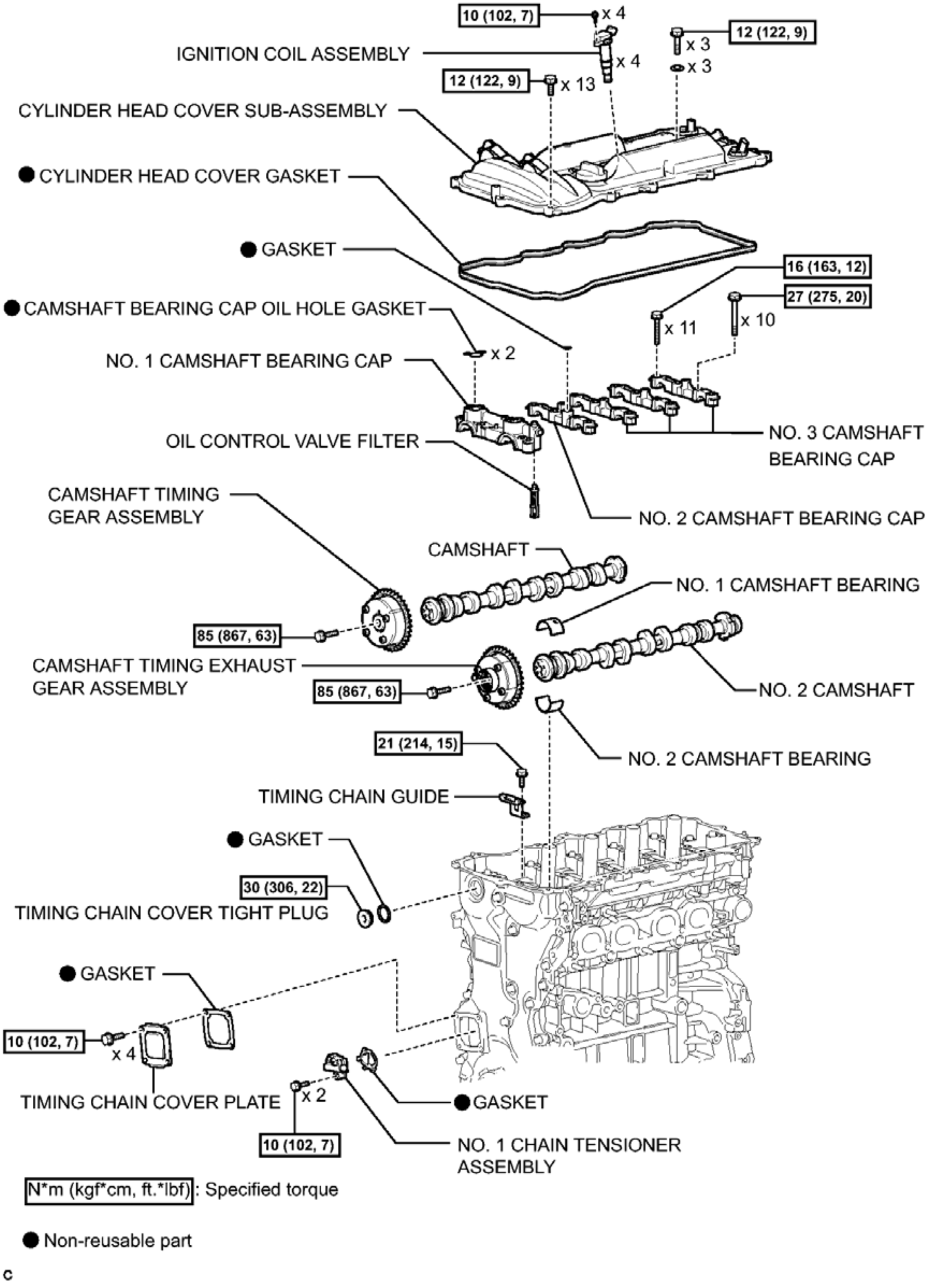
10 (102, 7)
x 4
12 (122, 9)
x 3
IGNITION COIL ASSEMBLY
x 4
x 3
12 (122, 9)
x 13
CYLINDER HEAD COVER SUB-ASSEMBLY
● CYLINDER HEAD COVER GASKET
● GASKET
16 (163, 12)
27 (275, 20)
● CAMSHAFT BEARING CAP OIL HOLE GASKET
x 11
x 10
x 2
NO. 1 CAMSHAFT BEARING CAP
OIL CONTROL VALVE FILTER
NO. 3 CAMSHAFT BEARING CAP
CAMSHAFT TIMING GEAR ASSEMBLY
NO. 2 CAMSHAFT BEARING CAP
CAMSHAFT
NO. 1 CAMSHAFT BEARING
85 (867, 63)
CAMSHAFT TIMING EXHAUST GEAR ASSEMBLY
85 (867, 63)
NO. 2 CAMSHAFT
NO. 2 CAMSHAFT BEARING
21 (214, 15)
TIMING CHAIN GUIDE
● GASKET
30 (306, 22)
TIMING CHAIN COVER TIGHT PLUG
● GASKET
10 (102, 7)
x 4
TIMING CHAIN COVER PLATE
x 2
● GASKET
10 (102, 7)
NO. 1 CHAIN TENSIONER ASSEMBLY
N*m (kgf*cm, ft.*lbf): Specified torque
● Non-reusable part
c

Fig. 11: Identifying Camshaft Replacement Components With Torque Specifications (2 Of 2)
Courtesy of TOYOTA MOTOR SALES, U.S.A., INC.

REMOVAL

REMOVAL

1. **DISCONNECT CABLE FROM NEGATIVE BATTERY TERMINAL**

   NOTE: When disconnecting the cable, some systems need to be initialized after the cable is reconnected. Refer to INITIALIZATION .

2. **REMOVE FRONT WHEEL RH**
3. **REMOVE FRONT WHEEL OPENING EXTENSION PAD RH**
4. **REMOVE ENGINE UNDER COVER RH**
5. **REMOVE FRONT FENDER APRON SEAL RH**
6. **REMOVE COOL AIR INTAKE DUCT SEAL** . Refer to **REMOVAL - Step 1**
7. **REMOVE NO. 1 ENGINE COVER SUB-ASSEMBLY** See step 18
8. **REMOVE INLET AIR CLEANER ASSEMBLY** See step 19
9. **REMOVE AIR CLEANER CAP SUB-ASSEMBLY** . Refer to **REMOVAL - Step 7**
10. **REMOVE AIR CLEANER FILTER ELEMENT SUB-ASSEMBLY** See step 21
11. **REMOVE AIR CLEANER CASE SUB-ASSEMBLY** See step 22
12. **REMOVE NO. 2 ENGINE MOUNTING STAY RH** See step 32
13. **REMOVE ENGINE MOVING CONTROL ROD** See step 34
14. **DISCONNECT ENGINE WIRE**
    a. Disconnect the connectors and clamps.

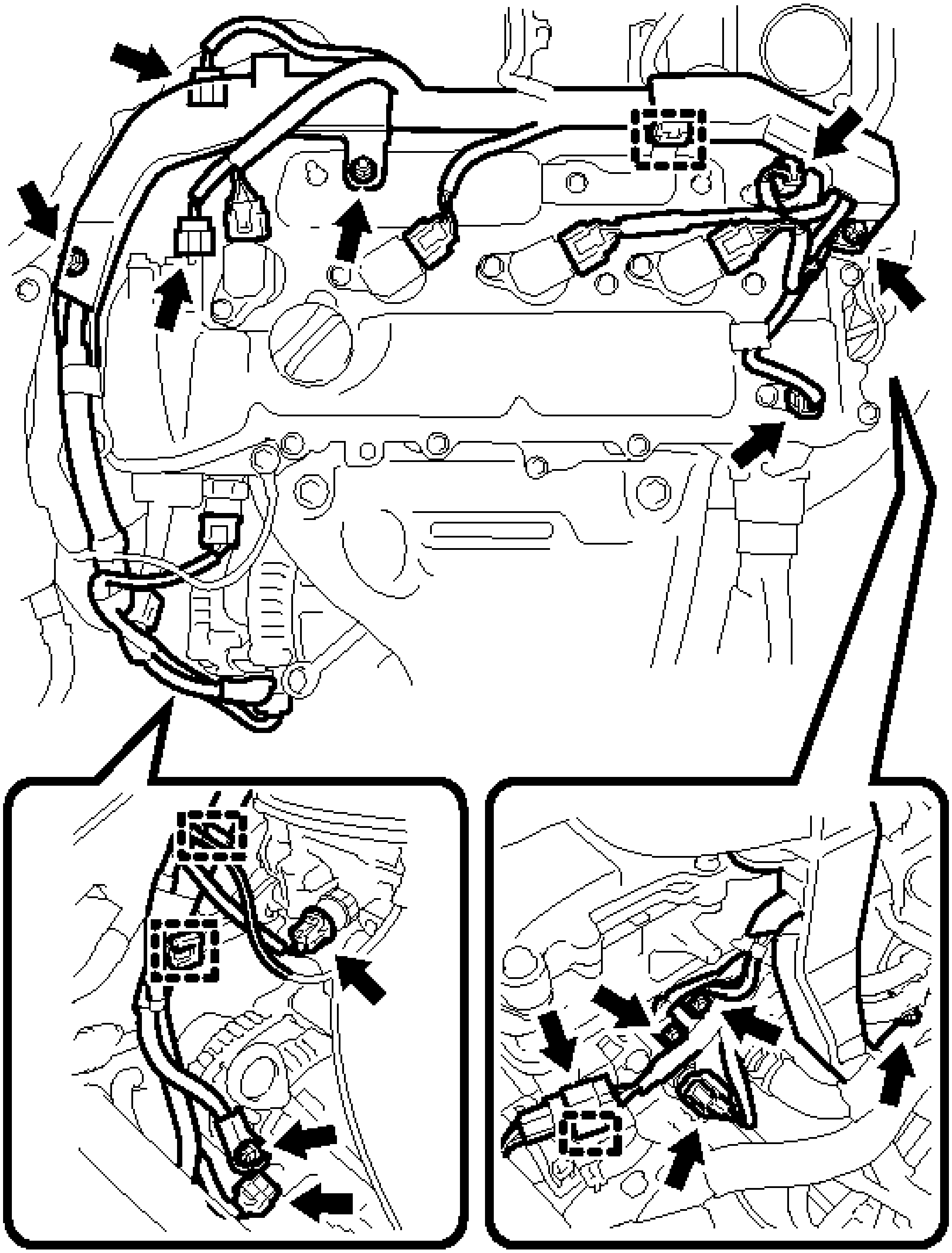

Fig. 12: Identifying Connectors, Clamp, Bolts And Nuts
Courtesy of TOYOTA MOTOR SALES, U.S.A., INC.

b. Remove the bolts and nuts and disconnect the engine wire from the engine.

15. **REMOVE IGNITION COIL ASSEMBLY** . Refer to **REMOVAL - Step 2**

16. **REMOVE CYLINDER HEAD COVER SUB-ASSEMBLY** . Refer to **REMOVAL - Step 4**

17. **SET NO. 1 CYLINDER TO TDC/COMPRESSION**

    a. Turn the crankshaft pulley until its timing notch (groove) and the timing mark "0" of the timing chain cover are aligned.

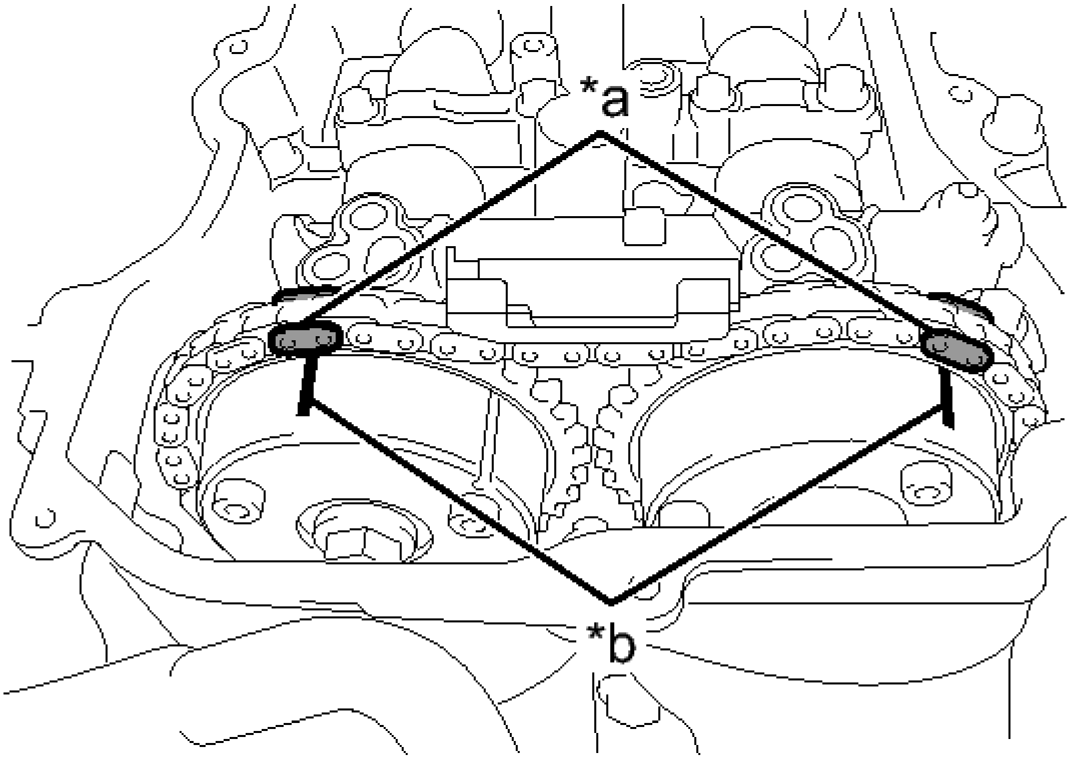

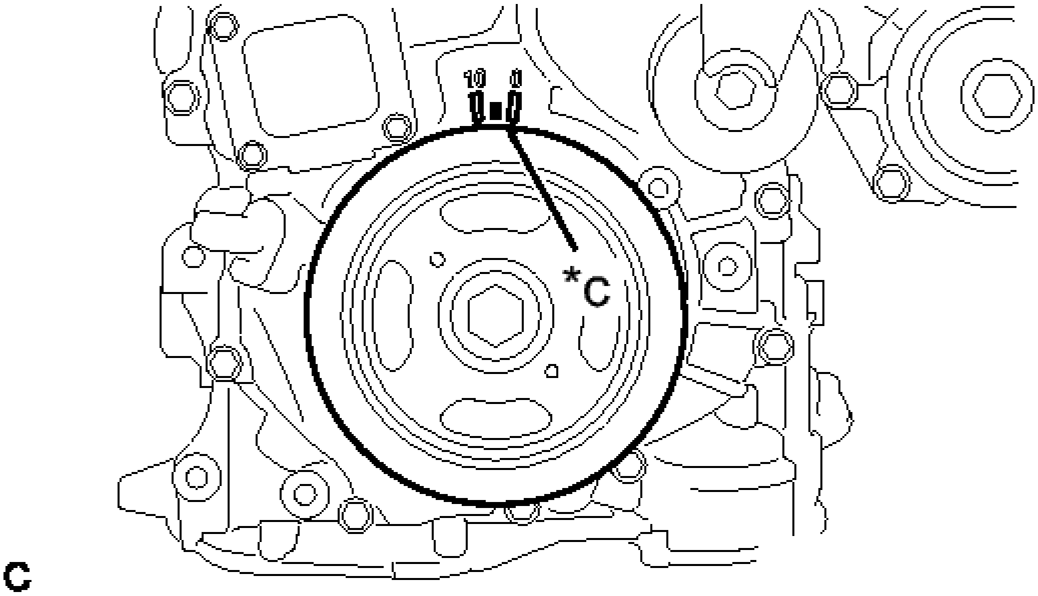

Fig. 13: Setting No. 1 Cylinder To TDC/Compression
Courtesy of TOYOTA MOTOR SALES, U.S.A., INC.

TEXT IN ILLUSTRATION

*a	Paint Mark
*b	Timing Mark
*c	Timing Notch

b. Check that each timing mark of the camshaft timing gear assembly and camshaft timing exhaust gear assembly are aligned with each timing mark located as shown in the illustration. If not, turn the crankshaft 1 revolution (360°) to align the timing marks as shown in the illustration.

c. Place paint marks on the chain in alignment with the timing marks on the camshaft timing gear assembly and camshaft timing exhaust gear assembly.

18. **REMOVE TIMING CHAIN COVER PLATE**

a. Remove the 4 bolts, timing chain cover plate and gasket.

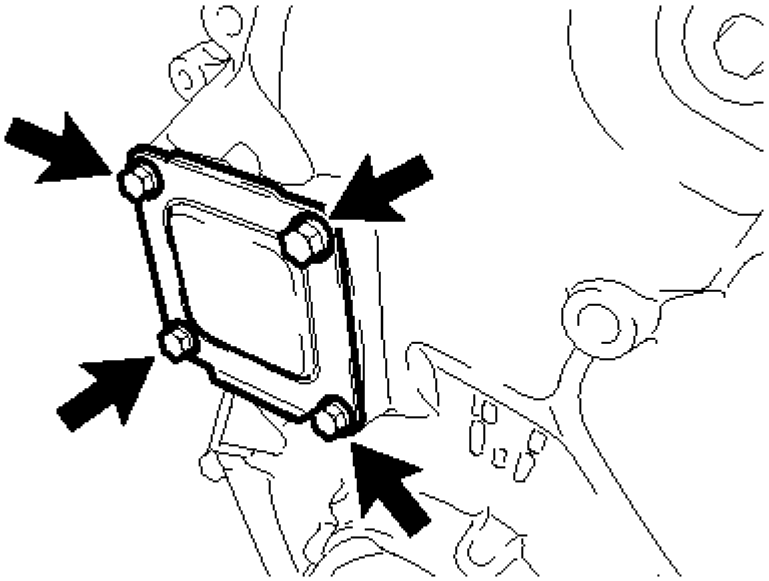

P

Fig. 14: Locating Timing Chain Cover Plate Bolts
Courtesy of TOYOTA MOTOR SALES, U.S.A., INC.

19. **REMOVE NO. 1 CHAIN TENSIONER ASSEMBLY**

a. Turn the crankshaft approximately 10° clockwise.

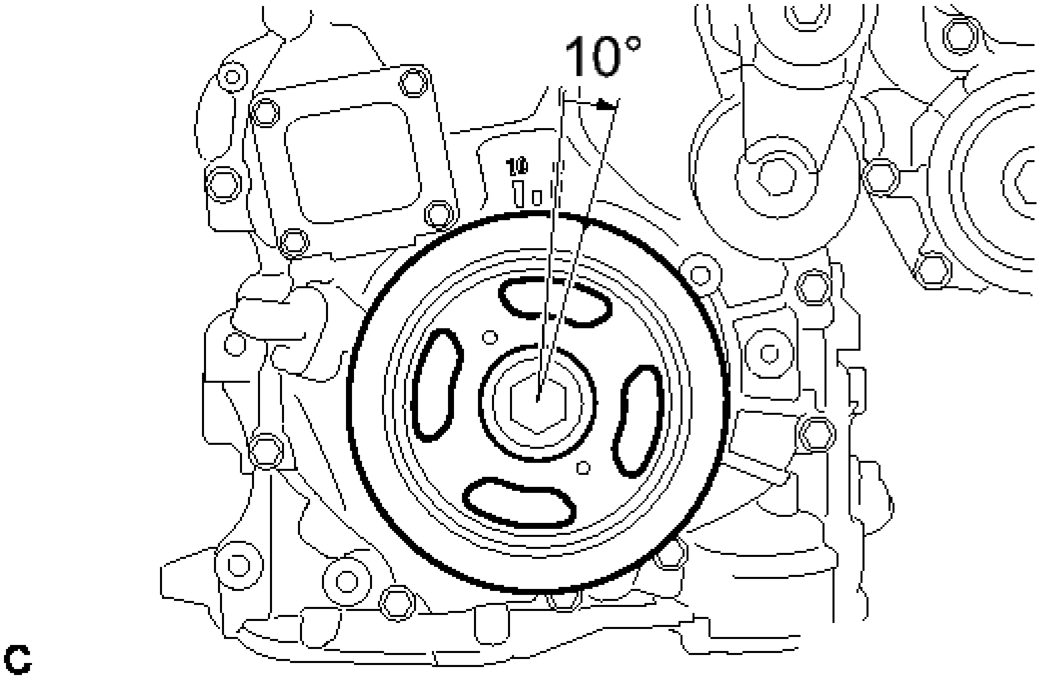

Fig. 15: View Of Turning Crankshaft 10Degrees Clockwise
Courtesy of TOYOTA MOTOR SALES, U.S.A., INC.

b. Turn the crankshaft approximately 10° counterclockwise.

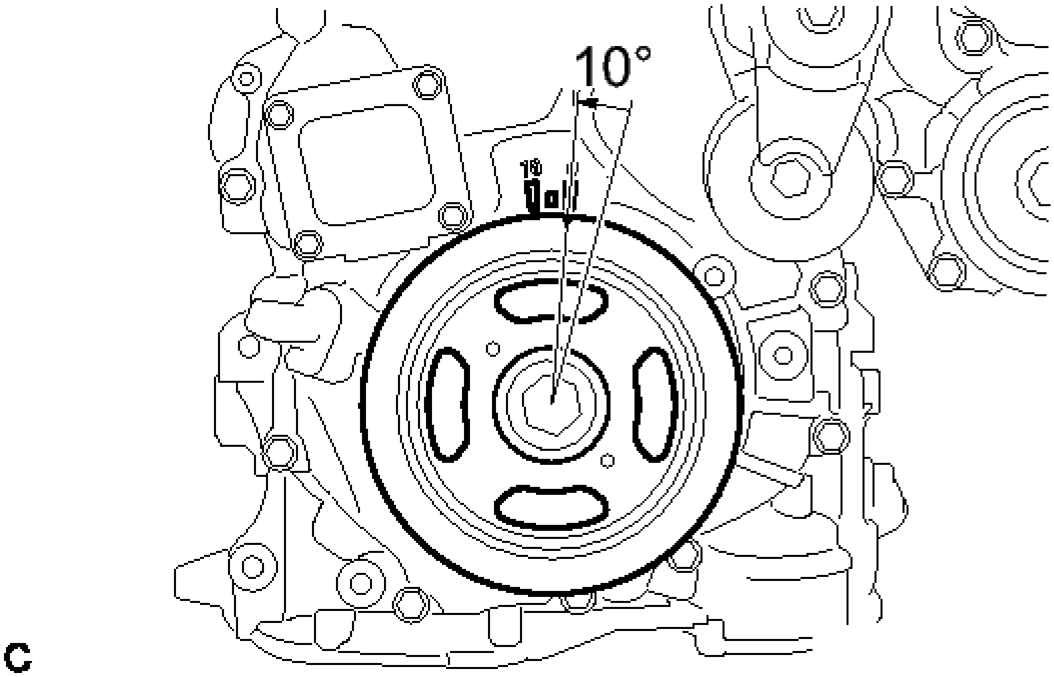

Fig. 16: Turning Crankshaft Approximately 10° Counterclockwise
Courtesy of TOYOTA MOTOR SALES, U.S.A., INC.

c. Align the holes of the stopper plate and tensioner, and insert a pin into the stopper plate hole to lock the tensioner.

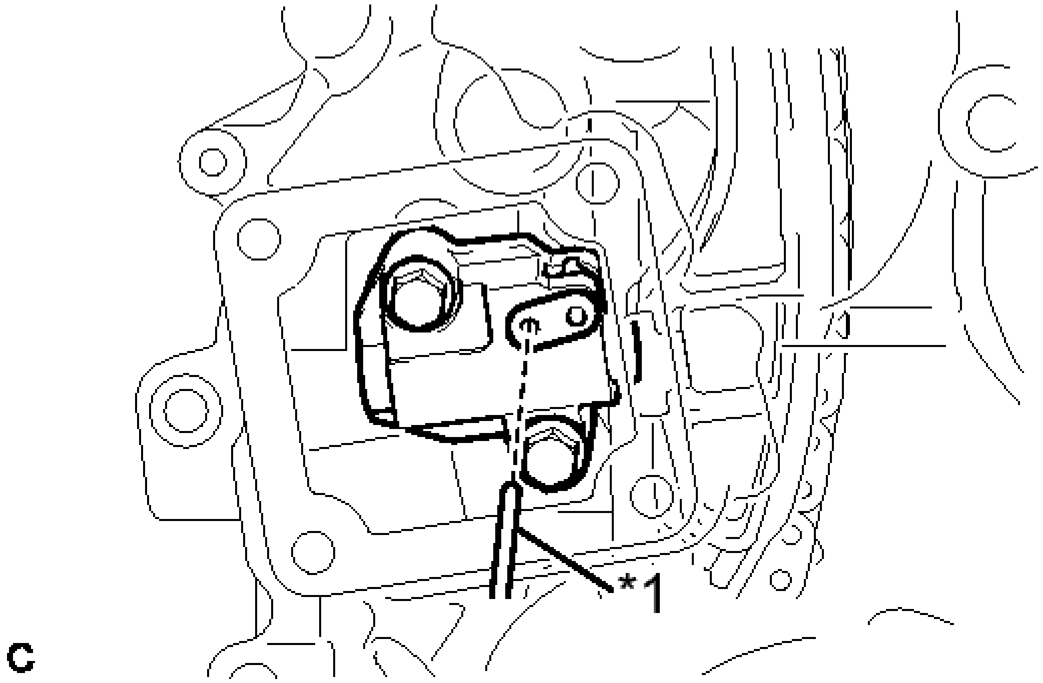

Fig. 17: Aligning Holes Of Stopper Plate & Tensioner
Courtesy of TOYOTA MOTOR SALES, U.S.A., INC.

TEXT IN ILLUSTRATION

*1	Pin

d. Turn the crankshaft approximately 10° clockwise.

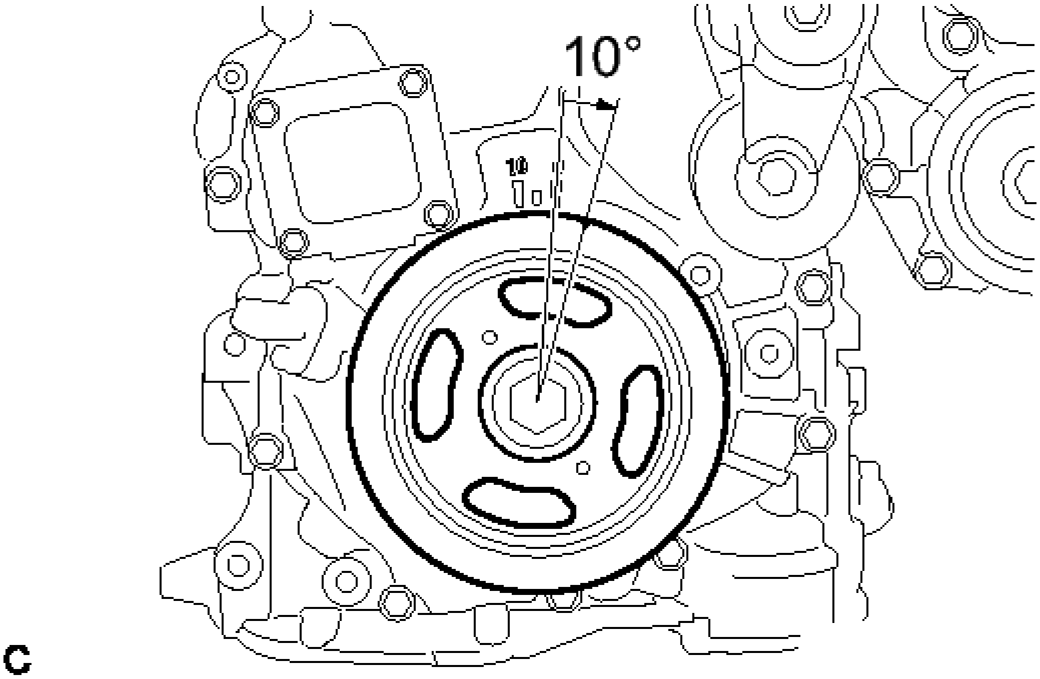

Fig. 18: View Of Turning Crankshaft 10° Clockwise
Courtesy of TOYOTA MOTOR SALES, U.S.A., INC.

e. Remove the 2 bolts, chain tensioner and gasket.

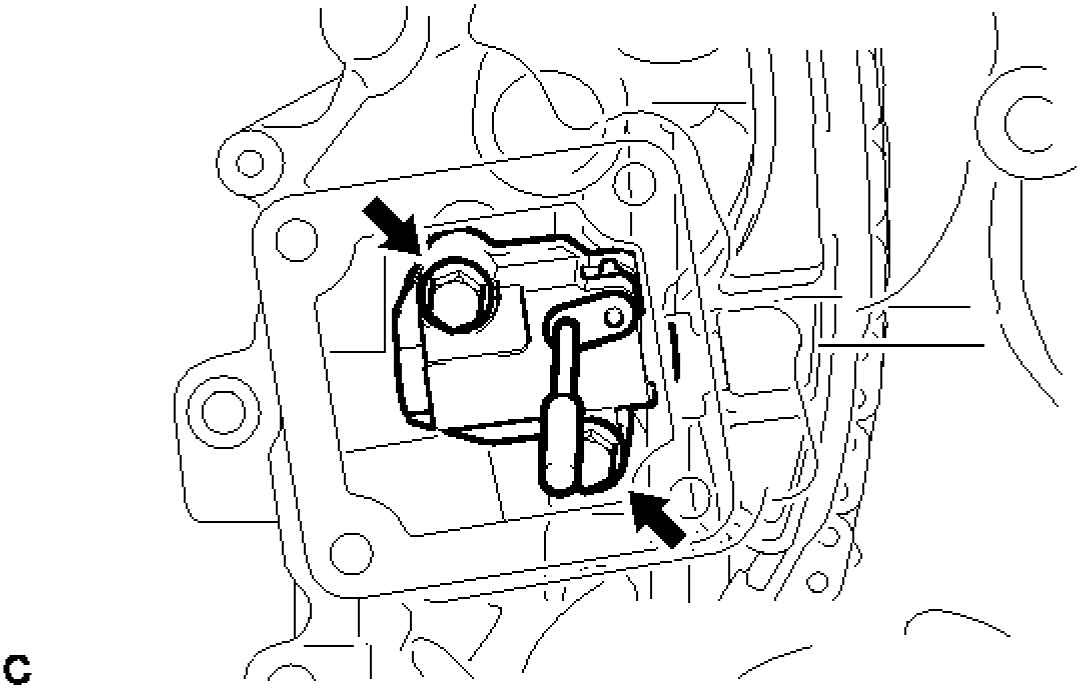

Fig. 19: No. 1 Chain Tensioner Assembly Bolts
Courtesy of TOYOTA MOTOR SALES, U.S.A., INC.

NOTE: **Make sure not to drop the gasket inside the timing chain cover.**

f. Turn the crankshaft approximately 10° counterclockwise.

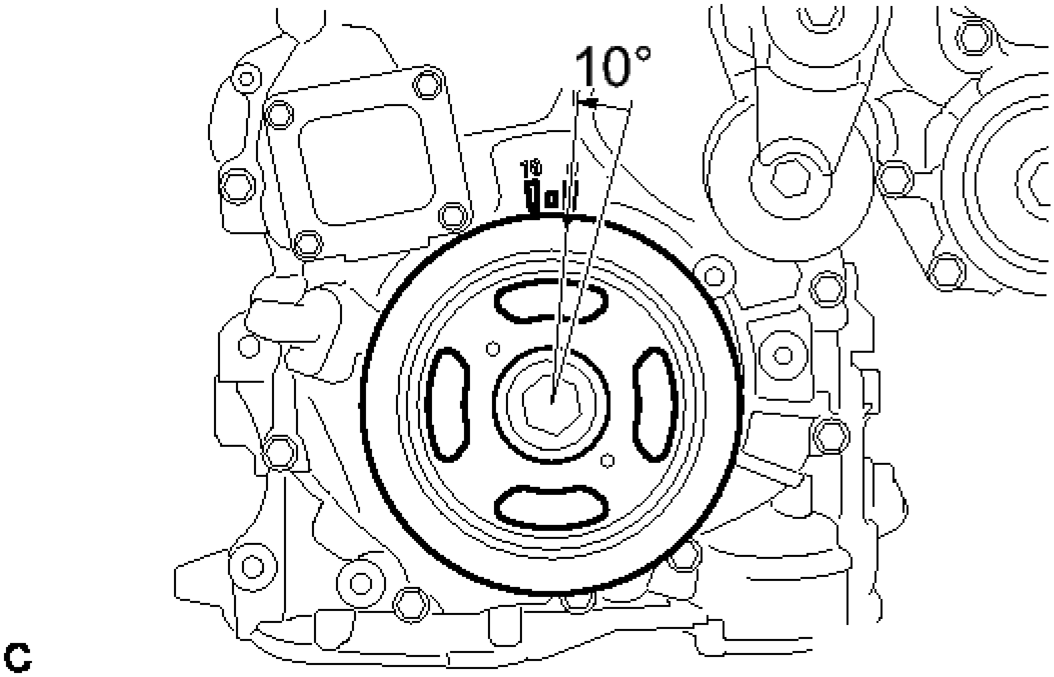

Fig. 20: Turning Crankshaft Approximately 10° Counterclockwise
Courtesy of TOYOTA MOTOR SALES, U.S.A., INC.

20. **REMOVE TIMING CHAIN GUIDE** See step 13
21. **REMOVE TIMING CHAIN COVER TIGHT PLUG** See step 21
22. **REMOVE CAMSHAFT TIMING GEAR ASSEMBLY**
    a. Hold the hexagonal portion of the camshaft with a wrench and remove the bolt from the camshaft.

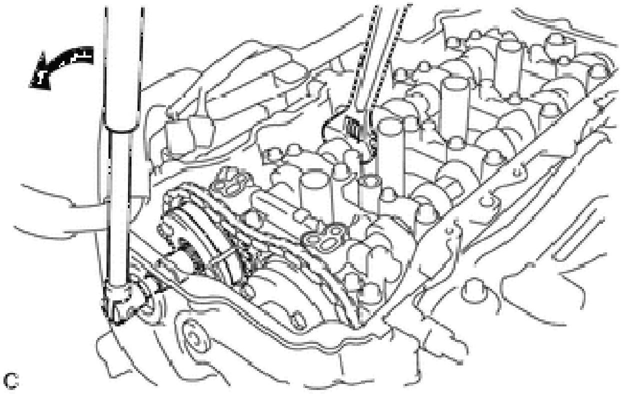

Fig. 21: Removing Camshaft Timing Gear Assembly Bolt
Courtesy of TOYOTA MOTOR SALES, U.S.A., INC.

NOTE: Be careful not to damage the cylinder head or spark plug tube with the wrench.

b. Separate the camshaft timing gear assembly from the camshaft.

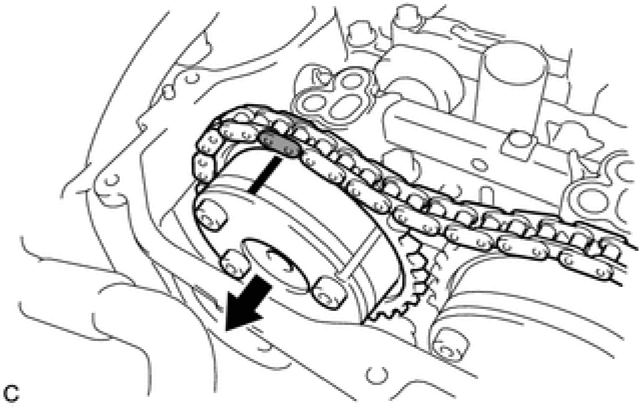

Fig. 22: Identifying Camshaft Timing Gear Assembly
Courtesy of TOYOTA MOTOR SALES, U.S.A., INC.

c. Remove the timing chain from the camshaft timing gear assembly, and turn the camshaft timing gear assembly approximately 180°.

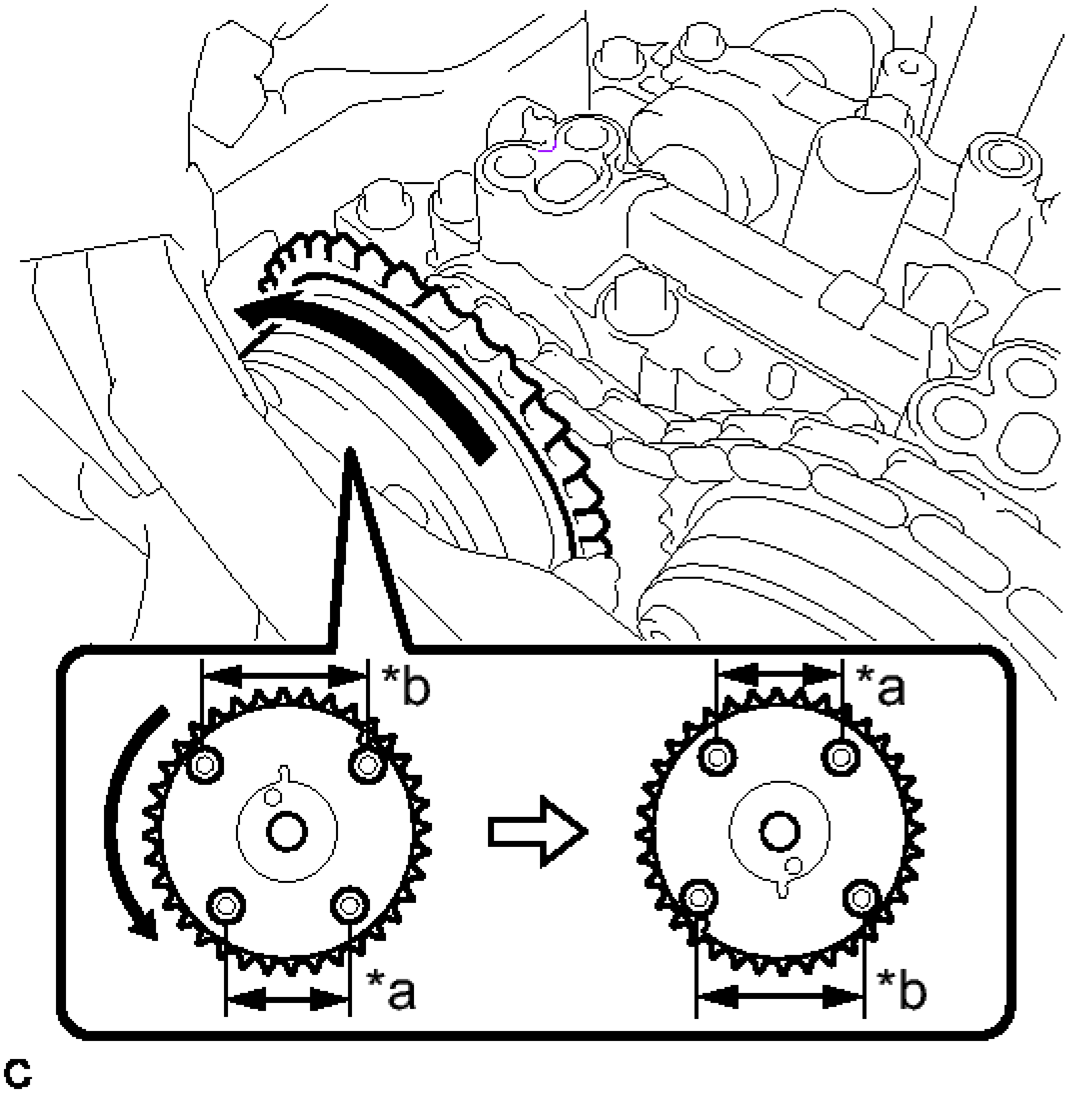

Fig. 23: Removing Timing Chain From Camshaft Timing Gear Assembly & Turn Camshaft Timing Gear Assembly Approximately 180 Degrees
Courtesy of TOYOTA MOTOR SALES, U.S.A., INC.

TEXT IN ILLUSTRATION

*a	Narrow
*b	Wide

d. Remove the camshaft timing gear assembly.

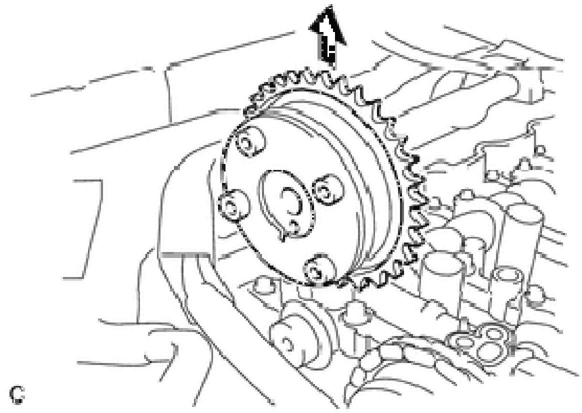

Fig. 24: Identifying Camshaft Timing Gear Assembly
Courtesy of TOYOTA MOTOR SALES, U.S.A., INC.

NOTE: **Do not disassemble the camshaft timing gear assembly.**

23. **REMOVE CAMSHAFT BEARING CAP**
   a. Using several steps, remove the 11 bearing cap bolts in the sequence shown in the illustration.

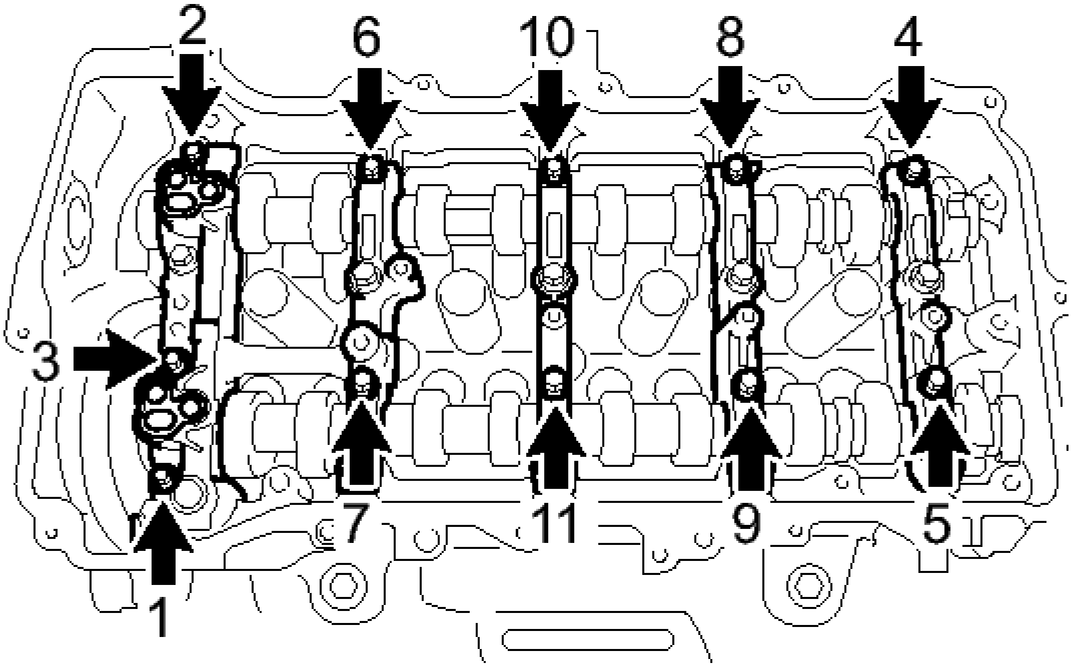

Fig. 25: Identifying 11 Bearing Cap Bolts
Courtesy of TOYOTA MOTOR SALES, U.S.A., INC.

   b. Using several steps, remove the 10 bearing cap bolts in the sequence shown in the illustration.

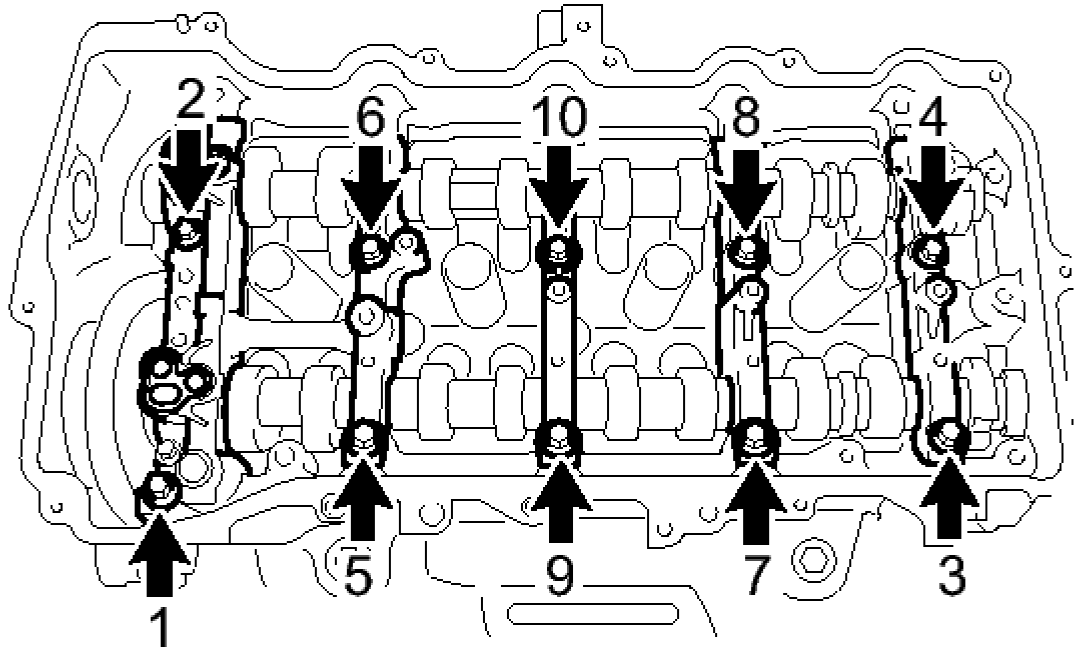

Fig. 26: Identifying 10 Bearing Cap Bolt Loosening Sequence (Second Step)
Courtesy of TOYOTA MOTOR SALES, U.S.A., INC.

c. Remove the 5 bearing caps.

HINT:

Arrange the removed parts in the correct order.

24. **REMOVE CAMSHAFT**

a. Remove the camshaft from the camshaft housing sub-assembly.

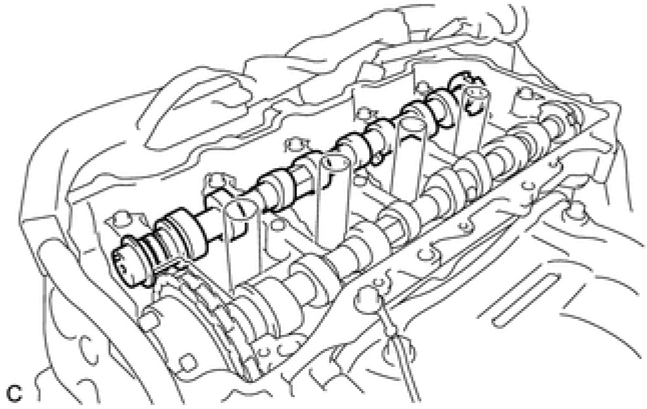

Fig. 27: Identifying Camshaft
Courtesy of TOYOTA MOTOR SALES, U.S.A., INC.

25. **REMOVE NO. 2 CAMSHAFT**

a. Hold up the chain and remove the No. 2 camshaft from the camshaft housing sub-assembly.

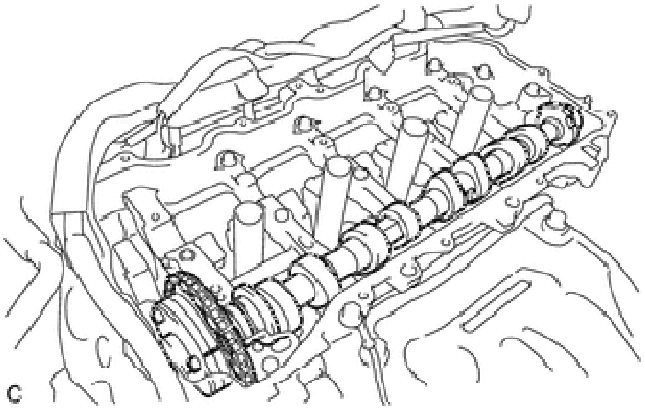

Fig. 28: Identifying No. 2 Camshaft
Courtesy of TOYOTA MOTOR SALES, U.S.A., INC.

b. Suspend the chain with a string or equivalent as shown in the illustration.

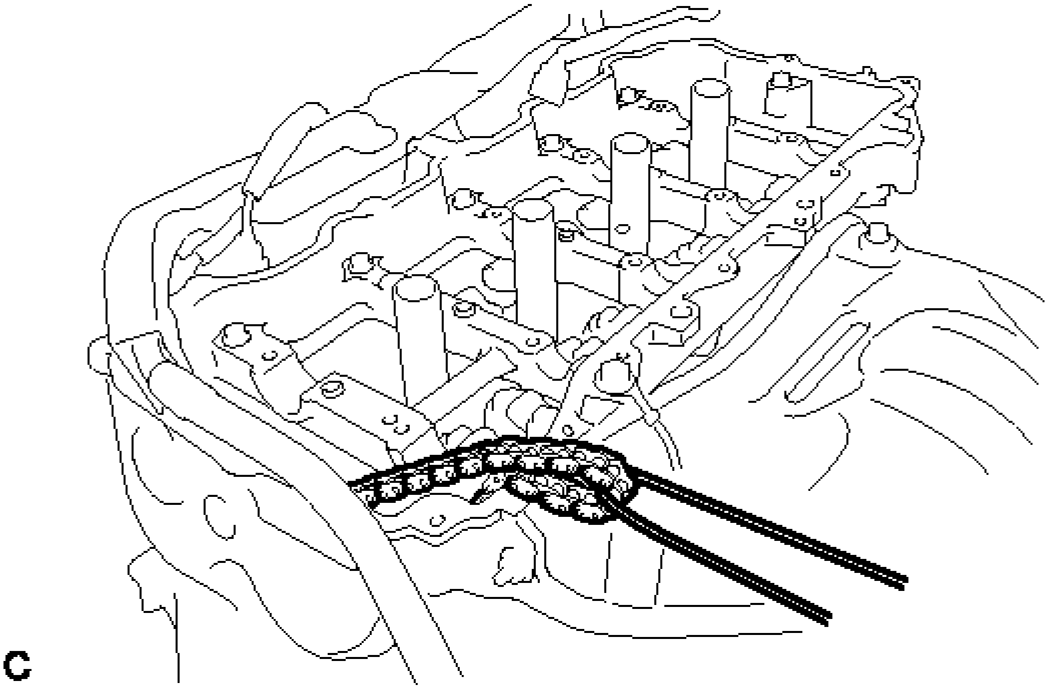

Fig. 29: Suspending Chain With A String Or Equivalent
Courtesy of TOYOTA MOTOR SALES, U.S.A., INC.

NOTE: Be careful not to drop the chain inside the timing chain cover.

26. **REMOVE CAMSHAFT TIMING EXHAUST GEAR ASSEMBLY**

a. Remove the flange bolt and camshaft timing exhaust gear assembly.

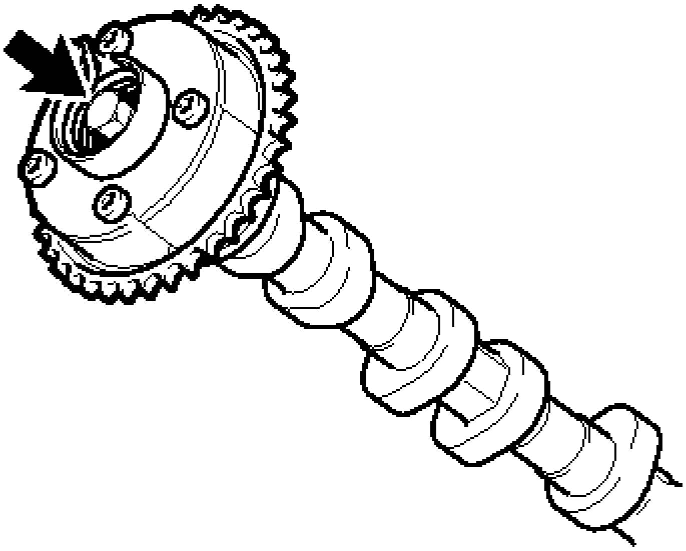

Fig. 30: Locating Camshaft Timing Exhaust Gear Assembly & Flange Bolt
Courtesy of TOYOTA MOTOR SALES, U.S.A., INC.

NOTE: Do not disassemble the camshaft timing exhaust gear assembly.

27. **REMOVE OIL CONTROL VALVE FILTER** See step 35
28. **REMOVE NO. 1 CAMSHAFT BEARING** See step 37
29. **REMOVE NO. 2 CAMSHAFT BEARING** See step 38

INSTALLATION

INSTALLATION

HINT:

Perform "Inspection After Repair" after replacing the camshaft, No. 2 camshaft, camshaft timing gear assembly or camshaft timing exhaust gear assembly. Refer to **INITIALIZATION** .

1. **INSTALL NO. 2 CAMSHAFT BEARING** See step 18
2. **INSTALL NO. 1 CAMSHAFT BEARING** See step 17
3. **INSTALL OIL CONTROL VALVE FILTER** See step 19
4. **INSTALL CAMSHAFT TIMING EXHAUST GEAR ASSEMBLY**
    a. Align and attach the knock pin of the No. 2 camshaft with the pin hole of the camshaft timing

exhaust gear assembly.

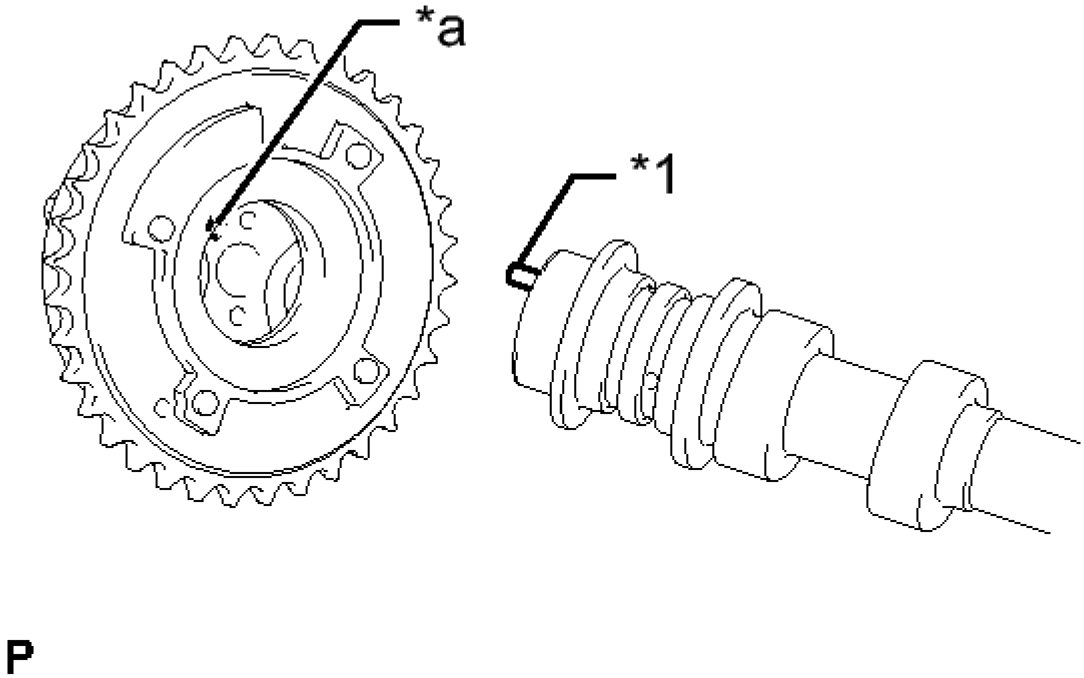

Fig. 31: Identifying Knock Pin And Knock Pin Hole
Courtesy of TOYOTA MOTOR SALES, U.S.A., INC.

TEXT IN ILLUSTRATION

*1	Knock Pin
*a	Knock Pin Hole

b. Check that there is no clearance between the camshaft timing exhaust gear assembly and camshaft flange.

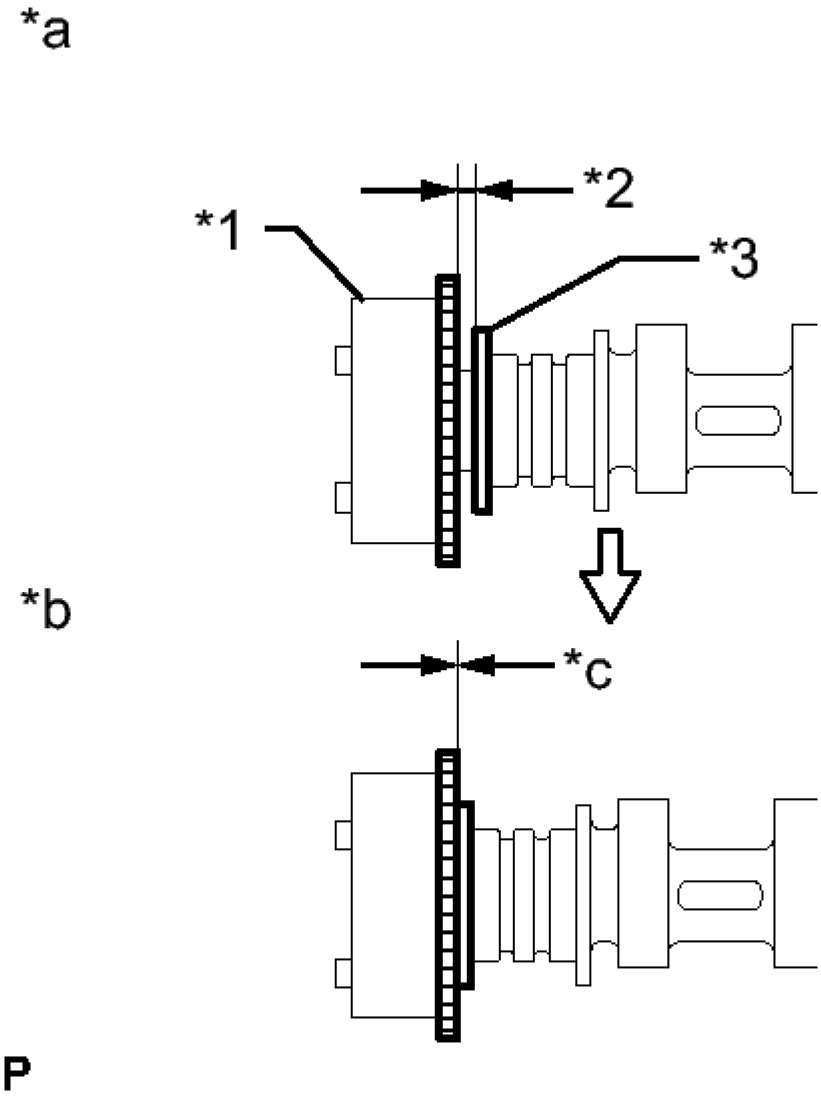

Fig. 32: Checking Clearance Between Camshaft Timing Gear And Camshaft Flange
Courtesy of TOYOTA MOTOR SALES, U.S.A., INC.

TEXT IN ILLUSTRATION

*1	Camshaft Timing Exhaust Gear Assembly
*2	Clearance
*3	Camshaft Flange
*a	INCORRECT
*b	CORRECT
*c	No Clearance

c. Fix the camshaft timing exhaust gear assembly with the bolt.

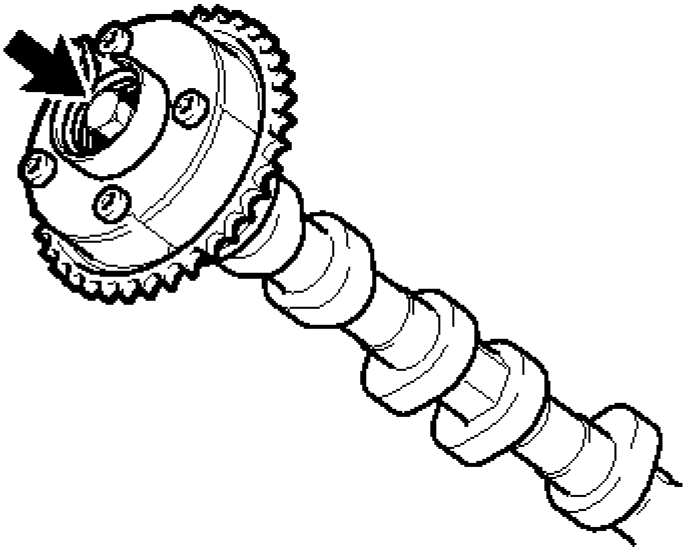

Fig. 33: Locating Camshaft Timing Exhaust Gear Assembly & Flange Bolt
Courtesy of TOYOTA MOTOR SALES, U.S.A., INC.

Torque: 85 N*m (867 kgf*cm, 63 ft.*lbf)

NOTE: **Do not disassemble the camshaft timing exhaust gear assembly.**

HINT:

Perform "Inspection After Repair" after replacing the camshaft timing exhaust gear assembly. Refer to **INITIALIZATION** .

5. **SET TDC/COMPRESSION**
    a. Turn the crankshaft pulley until its timing notch (groove) and the timing mark "0" of the timing chain cover are aligned.

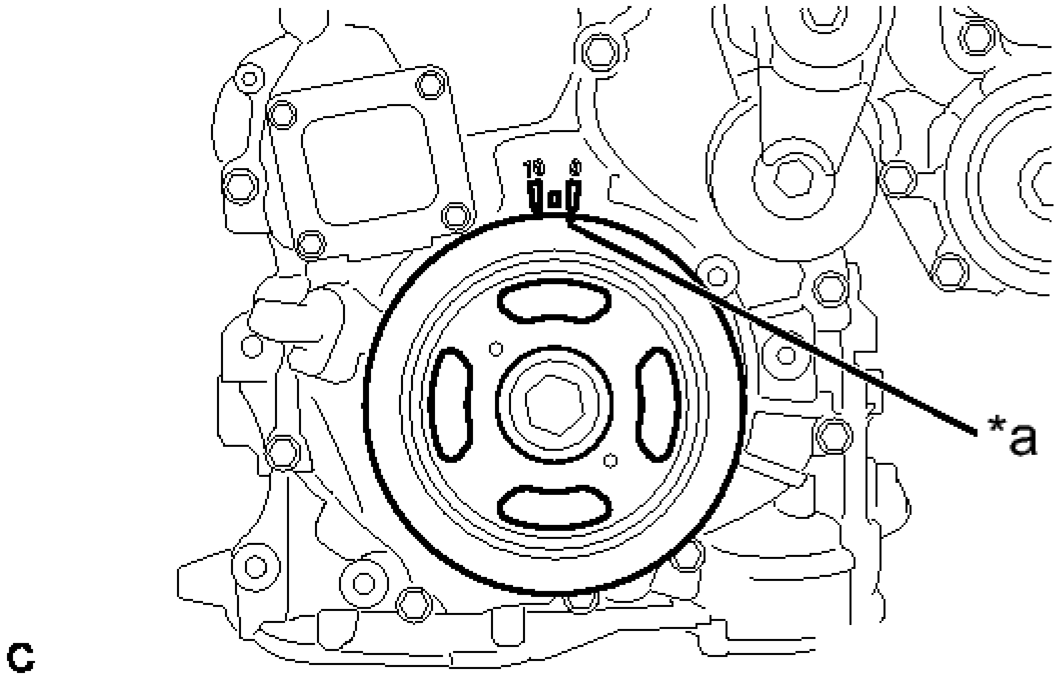

Fig. 34: Setting TDC/Compression
Courtesy of TOYOTA MOTOR SALES, U.S.A., INC.

TEXT IN ILLUSTRATION

*a	Timing Notch

6. **INSTALL NO. 2 CAMSHAFT**
    a. Make sure that the valve rocker arms are installed as shown in the illustration.

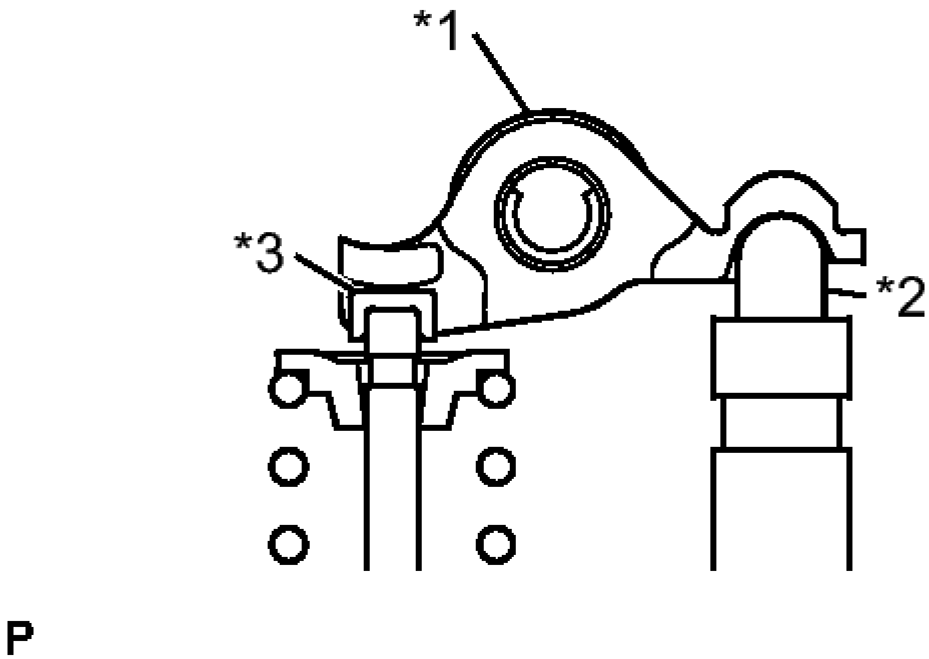

Fig. 35: Identifying Valve Rocker Arms
Courtesy of TOYOTA MOTOR SALES, U.S.A., INC.

TEXT IN ILLUSTRATION

*1	Valve Rocker Arm
*2	Valve Lash Adjuster
*3	Valve Stem Cap

b. Clean the camshaft journals.
c. Apply a light coat of engine oil to the camshaft journals, camshaft housings and bearing caps.
d. Hold up the chain and align the timing mark and the paint mark, and install the camshaft.

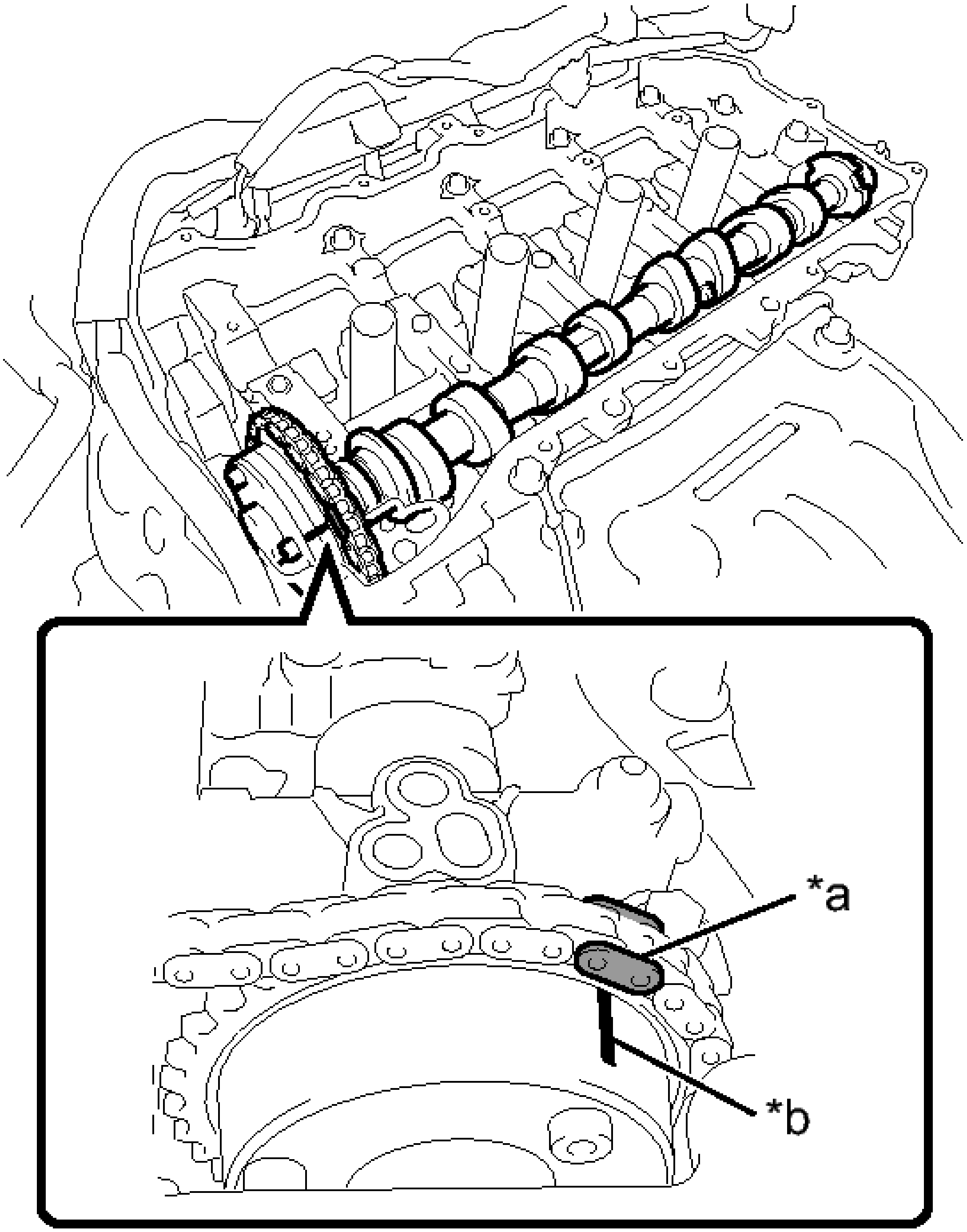

Fig. 36: Aligning Timing Mark And Paint Mark
Courtesy of TOYOTA MOTOR SALES, U.S.A., INC.

TEXT IN ILLUSTRATION

	Paint

*a	Mark
*b	Timing Mark

HINT:

Perform "Inspection After Repair" after replacing the No. 2 camshaft. Refer to **INITIALIZATION** .

7. **INSTALL CAMSHAFT**
    a. Make sure that the valve rocker arms are installed as shown in the illustration.

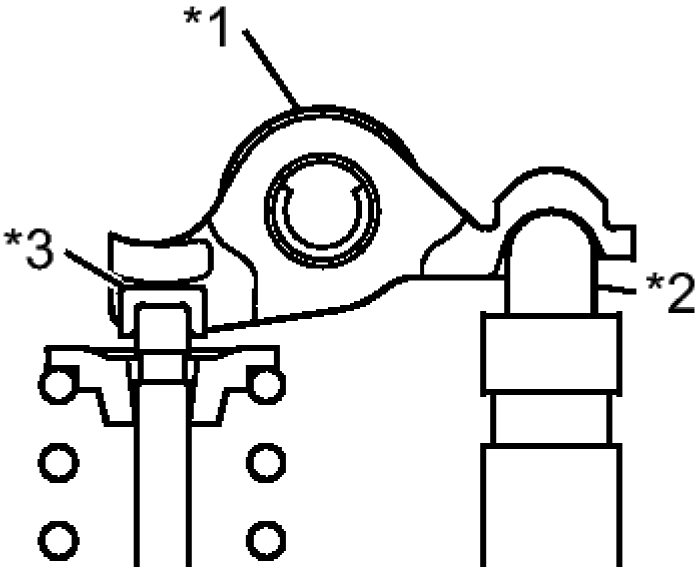

P

Fig. 37: Identifying Valve Rocker Arms
Courtesy of TOYOTA MOTOR SALES, U.S.A., INC.

TEXT IN ILLUSTRATION

*1	Valve Rocker Arm
*2	Valve Lash Adjuster
*3	Valve Stem Cap

b. Clean the camshaft journals.
c. Apply a light coat of engine oil to the camshaft journals, camshaft housings and bearing caps.
d. Install the camshaft to the camshaft housing as shown in the illustration.

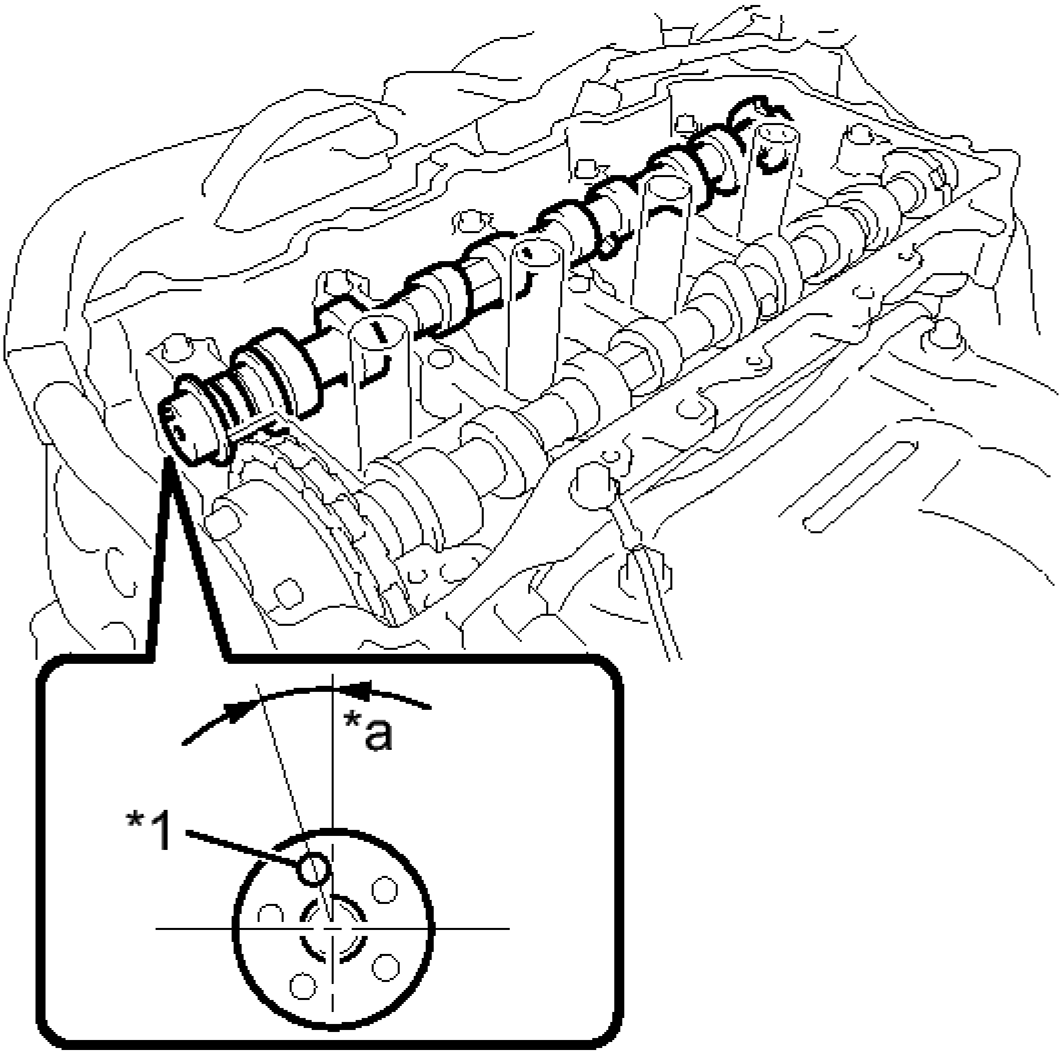

Fig. 38: Identifying Camshaft Housing
Courtesy of TOYOTA MOTOR SALES, U.S.A., INC.

TEXT IN ILLUSTRATION

*1	Knock Pin
*a	Approximately 17°

HINT:

Perform "Inspection After Repair" after replacing the camshaft. Refer to **INITIALIZATION** .

8. **INSTALL CAMSHAFT BEARING CAP**
   a. Confirm the marks and numbers on the camshaft bearing caps and place them in their proper positions and directions.

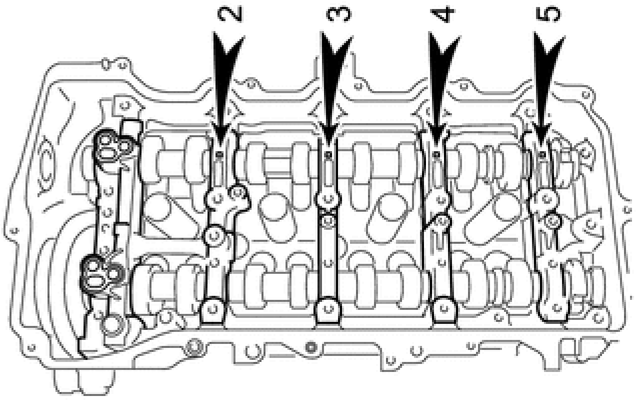

Fig. 39: Identifying Camshaft Bearing Caps
Courtesy of TOYOTA MOTOR SALES, U.S.A., INC.

   b. Using several steps, uniformly tighten the 10 bolts in the sequence shown in the illustration.

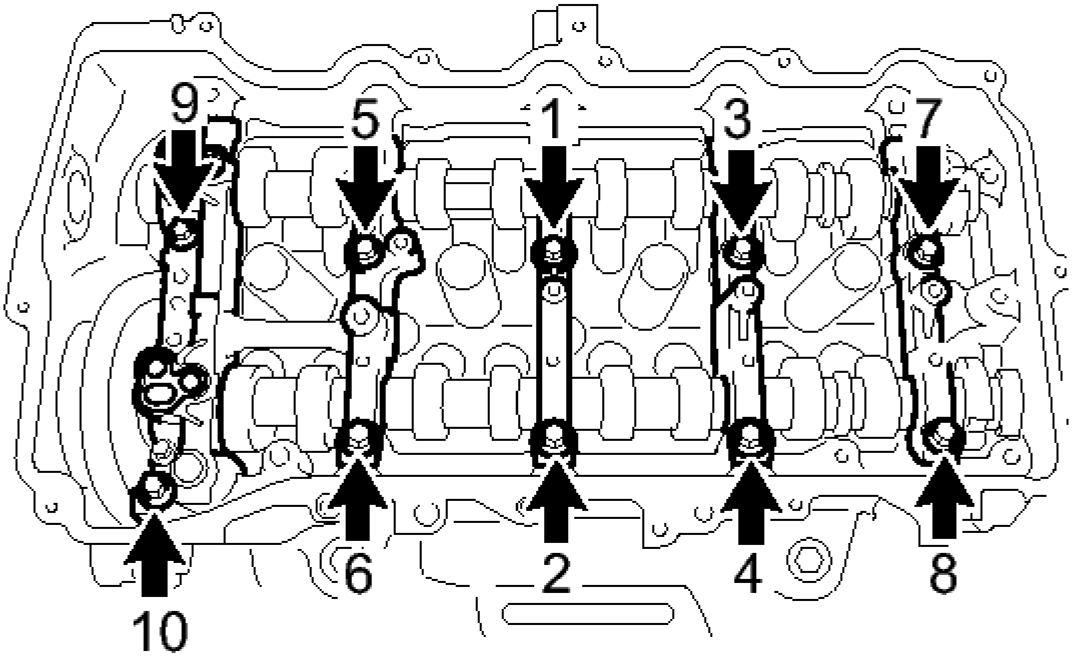

Fig. 40: Tightening 10 Bolts In The Sequence
Courtesy of TOYOTA MOTOR SALES, U.S.A., INC.

Torque: 27 N*m (275 kgf*cm, 20 ft.*lbf)

   c. Using several steps, uniformly tighten the 11 bolts in the sequence shown in the illustration.

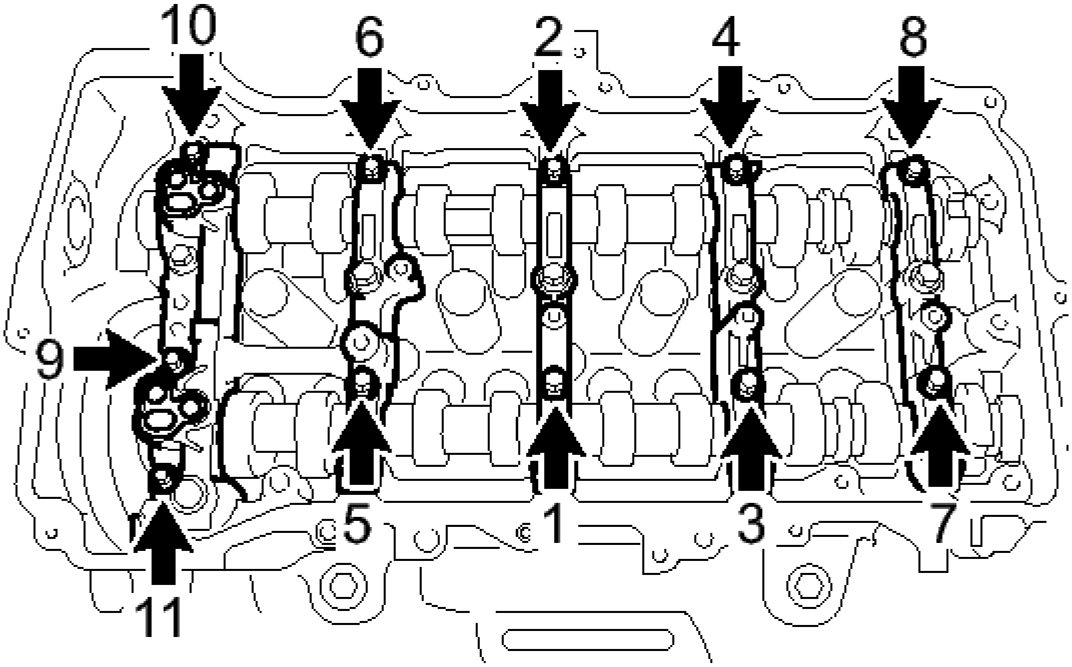

Fig. 41: Tightening 11 Bolts In Sequence
Courtesy of TOYOTA MOTOR SALES, U.S.A., INC.

Torque: 16 N*m (163 kgf*cm, 12 ft.*lbf)

d. Check the torque of each bolt again.

9. **INSTALL CAMSHAFT TIMING GEAR ASSEMBLY**
   a. Check the camshaft timing gear position.

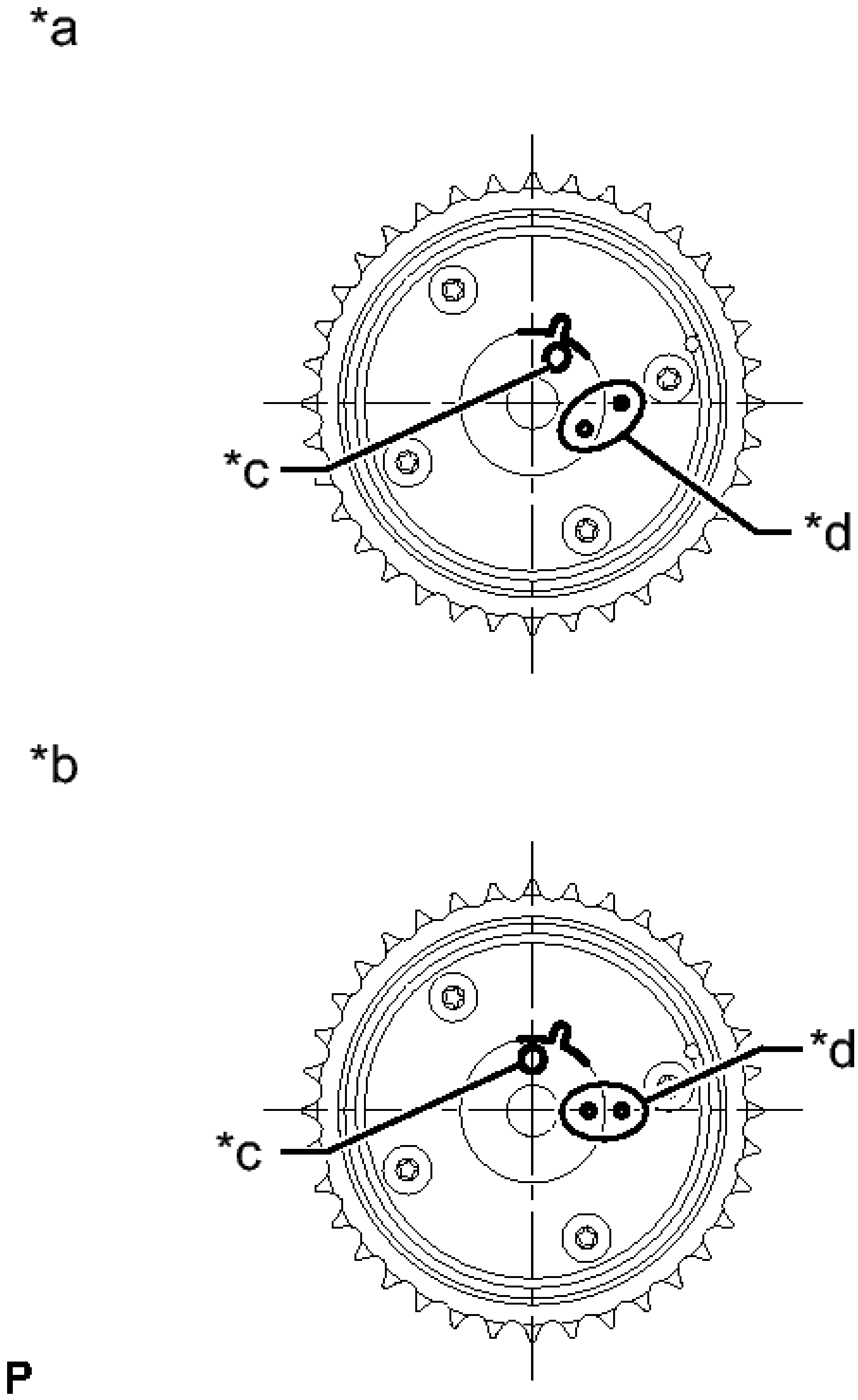

Fig. 42: Identifying Camshaft Timing Gear Position
Courtesy of TOYOTA MOTOR SALES, U.S.A., INC.

TEXT IN ILLUSTRATION

	Advanced

*a	Position
*b	Retarded Position
*c	Knock Pin Hole
*d	Alignment Mark

NOTE:

- **If the camshaft timing gear is set to the advanced position, do not let the camshaft timing gear rotate clockwise during installation.**
- **If the camshaft timing gear has rotated to the most retarded position, make sure to release the lock pin and set the camshaft timing gear to the most advanced position before tightening the camshaft timing gear.**

b. Install the camshaft timing gear assembly as shown in the illustration.

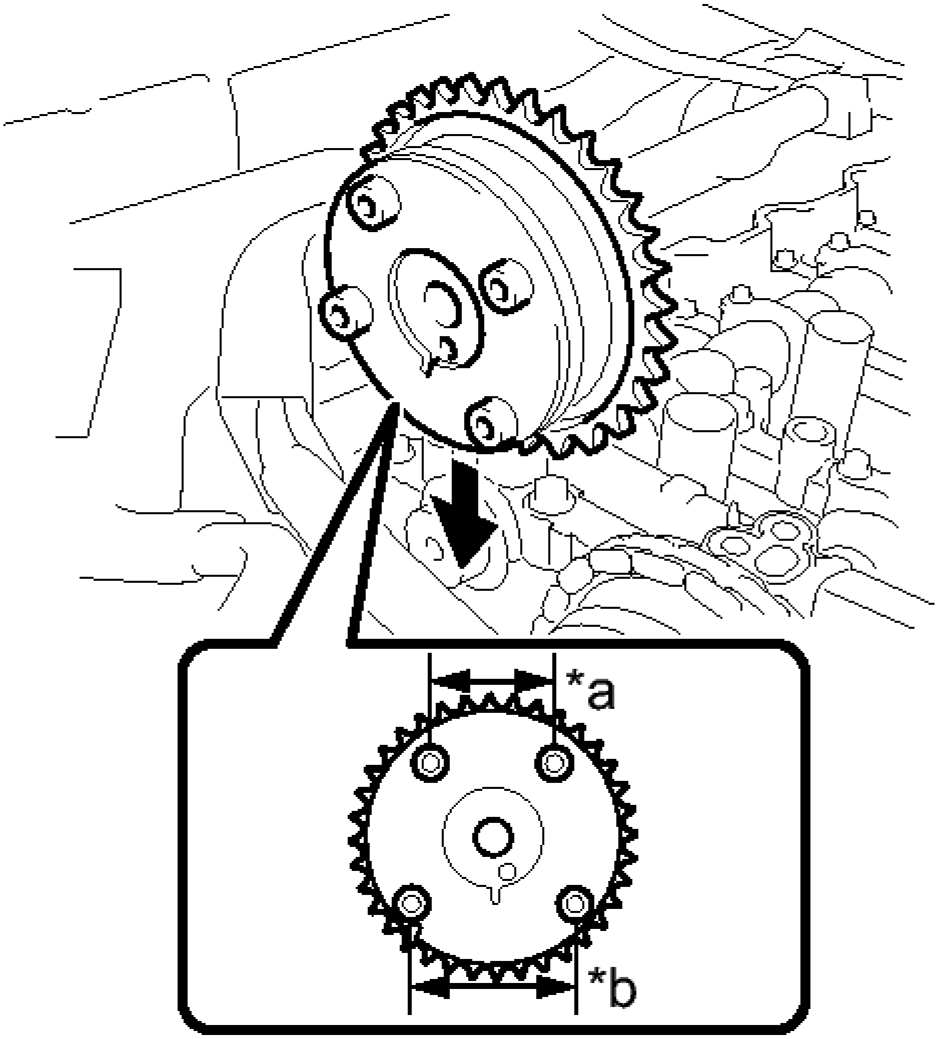

Fig. 43: Identifying Camshaft Timing Gear Assembly
Courtesy of TOYOTA MOTOR SALES, U.S.A., INC.

TEXT IN ILLUSTRATION

*a	Narrow
*b	Wide

c. Turn the camshaft timing gear assembly approximately 180° counterclockwise.

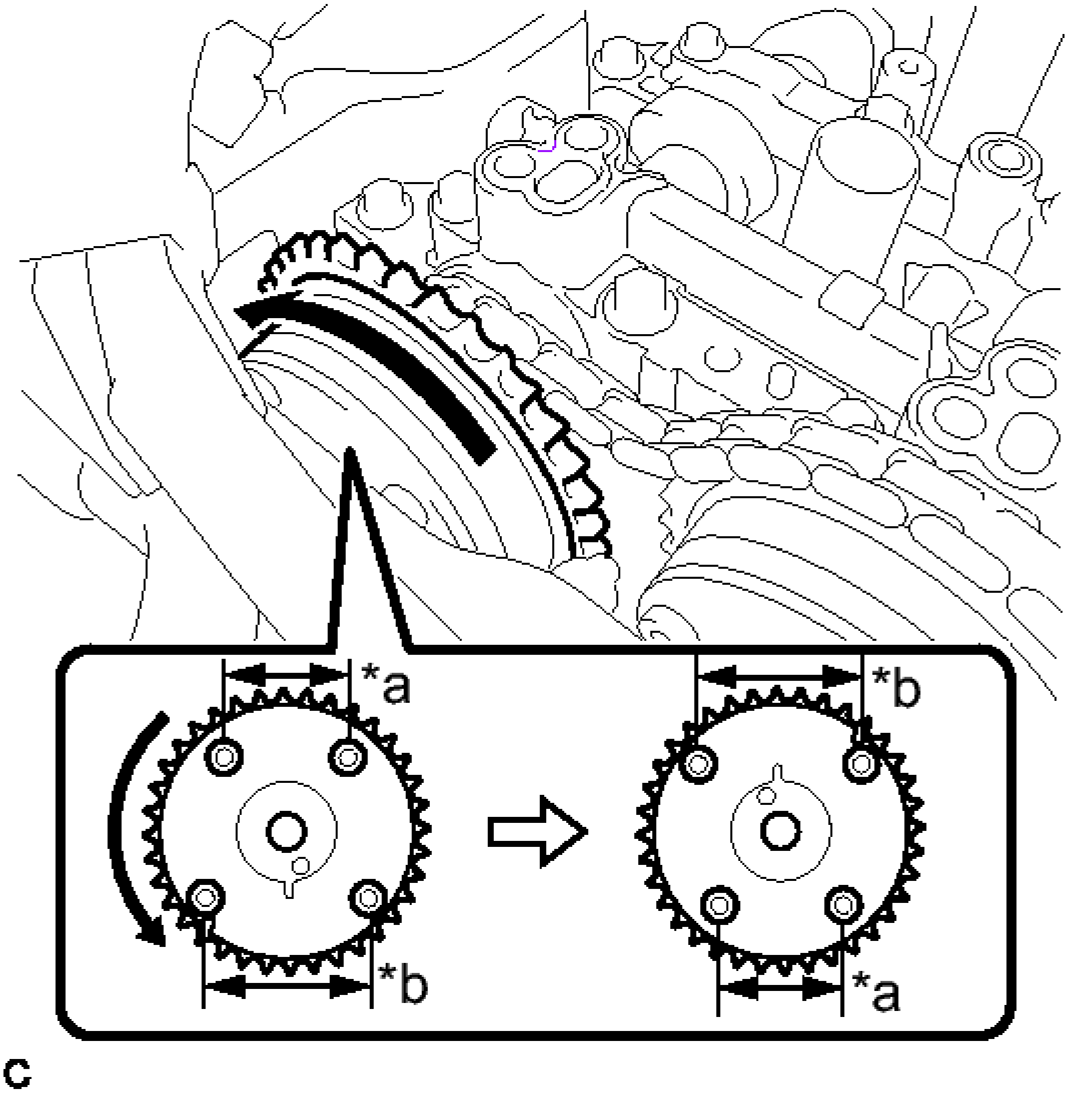

Fig. 44: Turning Camshaft Timing Gear Approximately 180° Counterclockwise
Courtesy of TOYOTA MOTOR SALES, U.S.A., INC.

TEXT IN ILLUSTRATION

*a	Narrow
*b	Wide

d. Align the paint mark with the timing mark to install the chain.

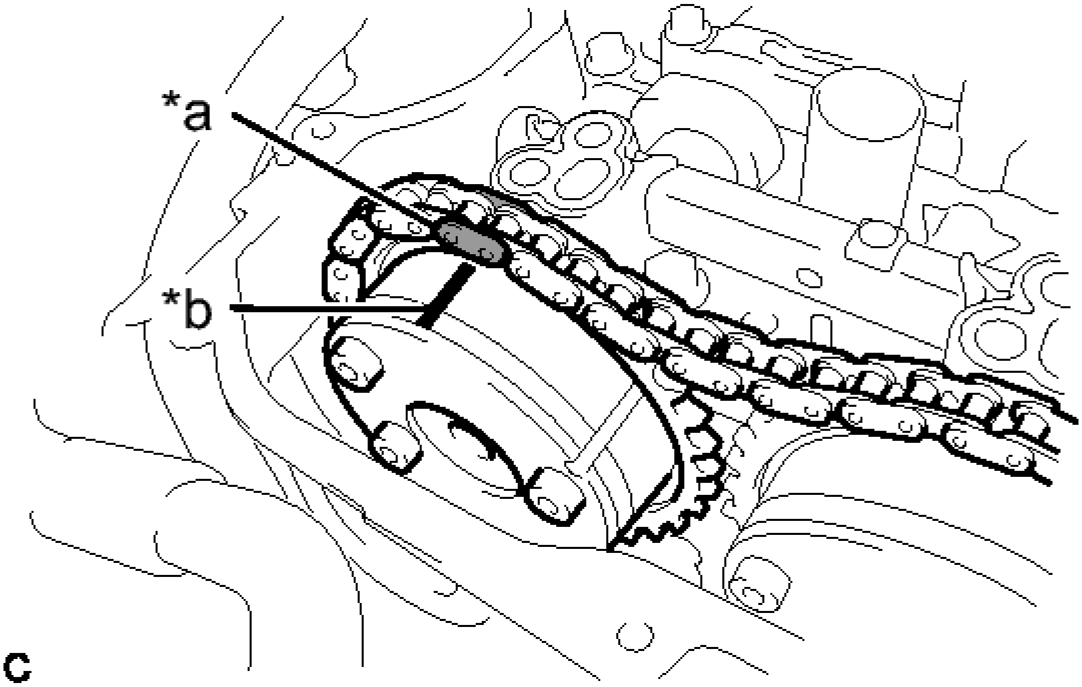

Fig. 45: Aligning Paint Mark And Timing Mark
Courtesy of TOYOTA MOTOR SALES, U.S.A., INC.

TEXT IN ILLUSTRATION

*a	Paint Mark
*b	Timing Mark

e. Align and attach the knock pin of the No. 1 camshaft with the pin hole of the camshaft timing gear.

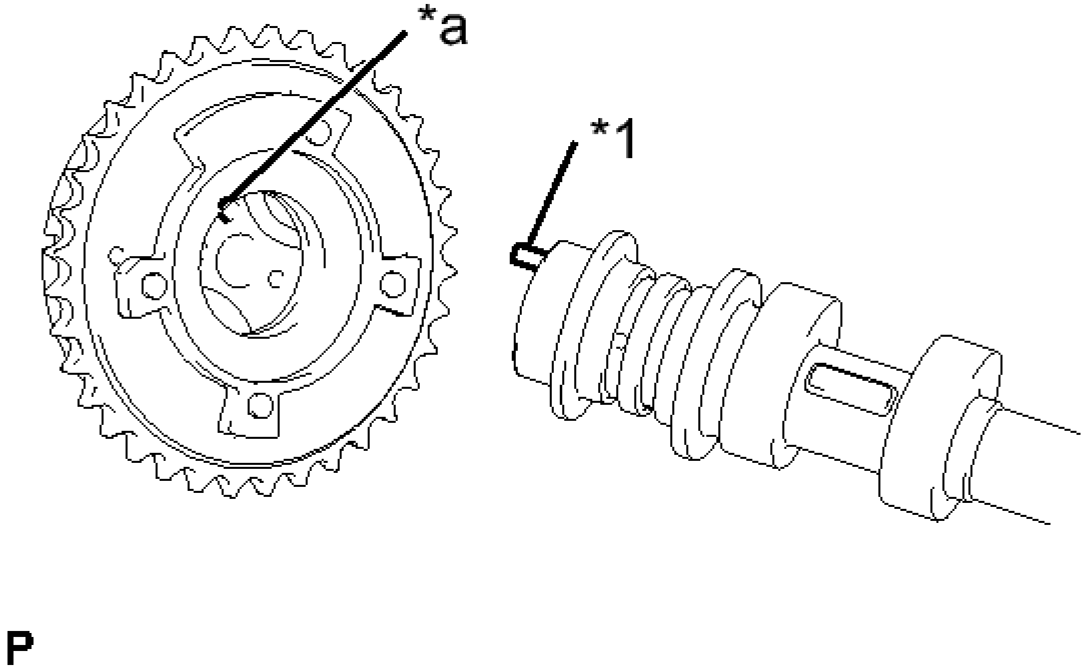

Fig. 46: Identifying No. 1 Camshaft Knock Pin & Camshaft Timing Gear Knock Pin Hole
Courtesy of TOYOTA MOTOR SALES, U.S.A., INC.

TEXT IN ILLUSTRATION

*1	Knock Pin
*a	Knock Pin Hole

f. Check that there is no clearance between the camshaft timing gear and camshaft flange.

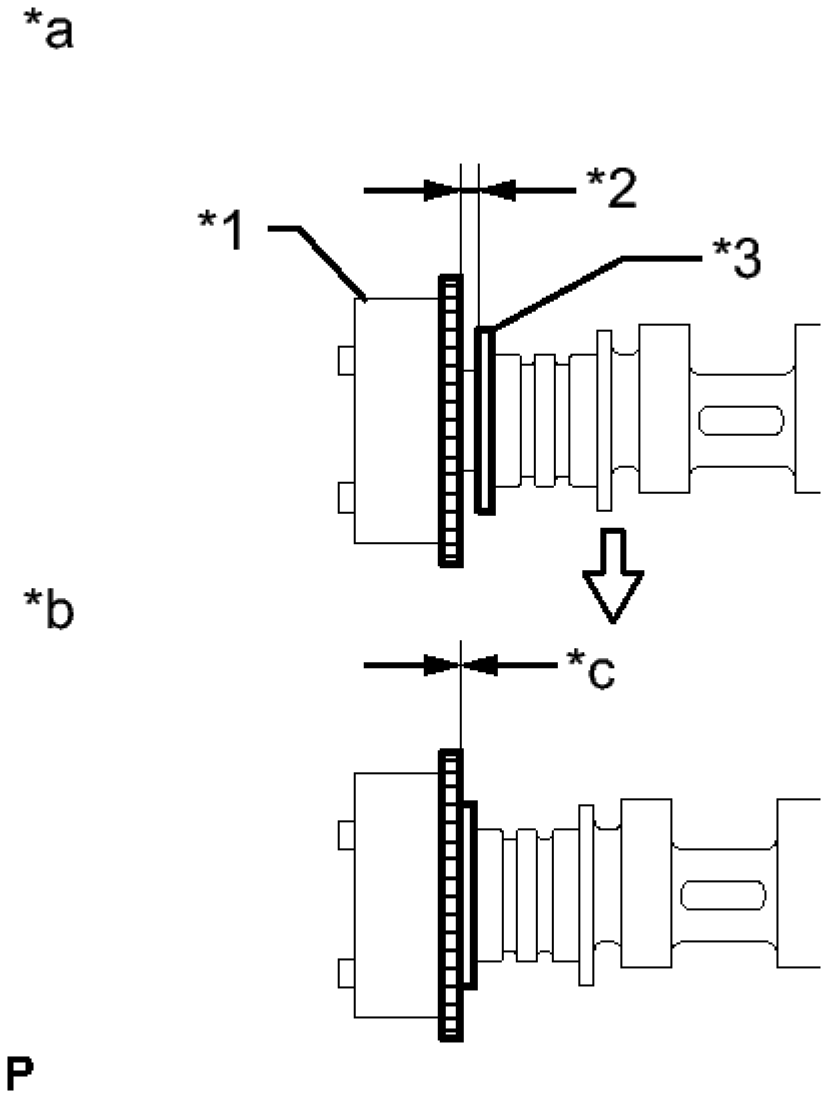

Fig. 47: Checking Clearance Between Camshaft Timing Gear And Camshaft Flange
Courtesy of TOYOTA MOTOR SALES, U.S.A., INC.

TEXT IN ILLUSTRATION

*1	Camshaft Timing Gear
*2	Clearance
*3	Camshaft Flange
*a	INCORRECT
*b	CORRECT
*c	No Clearance

g. Secure the camshaft in place by hand, and then install the installation bolt of the camshaft timing gear assembly by hand.

NOTE: **Do not use any tools to install the bolt. If the bolt is installed using a tool, the lock pin will be damaged.**

h. If the lock pin has not been released, release it.

1. After cleaning and degreasing the intake side VVT oil hole on the No. 1 camshaft bearing cap, completely seal the oil hole with adhesive tape or equivalent as shown in the illustration to prevent air from leaking.

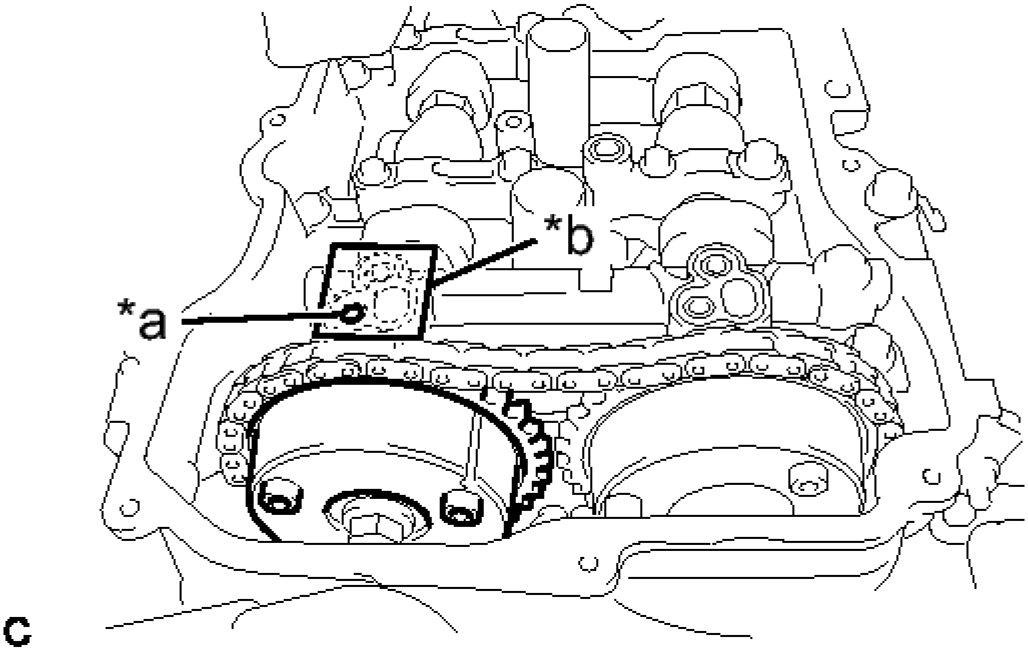

Fig. 48: Identifying Seal Oil Hole With Adhesive Tape
Courtesy of TOYOTA MOTOR SALES, U.S.A., INC.

TEXT IN ILLUSTRATION

*a	Make a Hole
*b	Adhesive Tape Sealing Area

NOTE: **Be sure to seal the oil hole completely because air leaks due to insufficient sealing will prevent the lock pin from being released.**

2. Make a hole in the adhesive tape covering the oil hole as shown in the illustration. (Procedure A)
3. Apply approximately 200 kPa (2.0 kgf/ cm^2 , 29 psi) of air pressure to the hole made in

procedure A to release the lock pin.

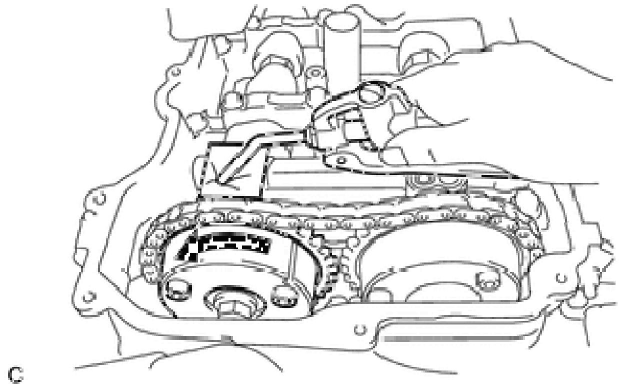

Fig. 49: Applying Air Pressure To Hole To Release Lock Pin
Courtesy of TOYOTA MOTOR SALES, U.S.A., INC.

NOTE:

- **If air leaks out, reattach the adhesive tape.**
- **Cover the oil hole with a piece of cloth when applying air pressure to prevent oil from spraying.**

4. Forcibly turn the camshaft timing gear in the advance direction (counterclockwise).

   HINT:

   Depending on the air pressure applied, the camshaft timing gear may turn in the advance direction without assistance by hand.

5. Remove the adhesive tape from the No. 1 camshaft bearing cap.

i. Using a wrench to hold the hexagonal portion of the No. 1 camshaft, install the bolt.

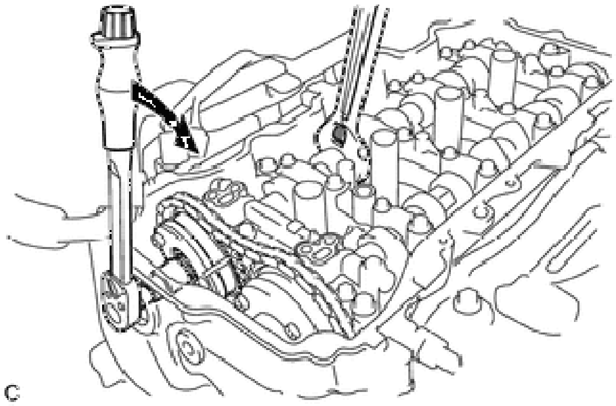

Fig. 50: Installing No. 1 Camshaft Bolt Using A Wrench
Courtesy of TOYOTA MOTOR SALES, U.S.A., INC.

Torque: 85 N*m (867 kgf*cm, 63 ft.*lbf)

NOTE: **Be careful not to damage the cylinder head or spark plug tube with the wrench.**

j. Check that each matchmark of the camshaft timing gear and camshaft timing exhaust gear are aligned with each matchmark located as shown in the illustration.

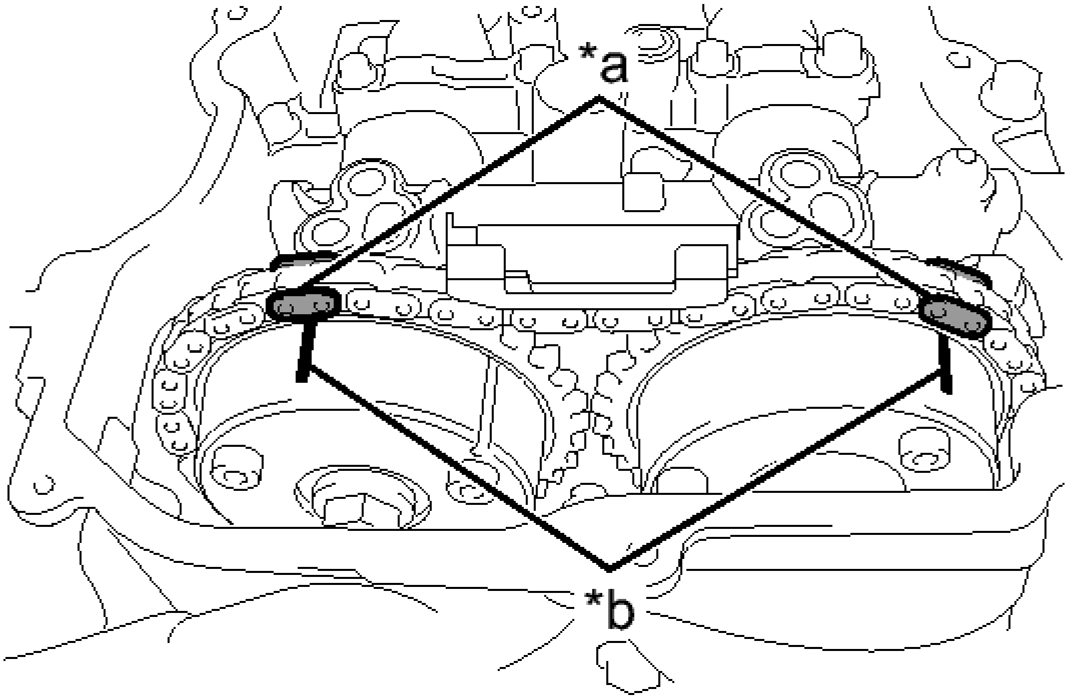

Fig. 51: Aligning Paint Mark And Timing Mark With Camshaft Timing Gear And Camshaft Timing Exhaust Gear
Courtesy of TOYOTA MOTOR SALES, U.S.A., INC.

TEXT IN ILLUSTRATION

*a	Paint Mark
*b	Timing Mark

HINT:

Perform "Inspection After Repair" after replacing the camshaft timing gear assembly. Refer to **INITIALIZATION** .

10. **ADD ENGINE OIL** See step 17
11. **INSTALL TIMING CHAIN GUIDE** See step 23
12. **INSTALL NO. 1 CHAIN TENSIONER ASSEMBLY**

a. Turn the crankshaft approximately 10° clockwise.

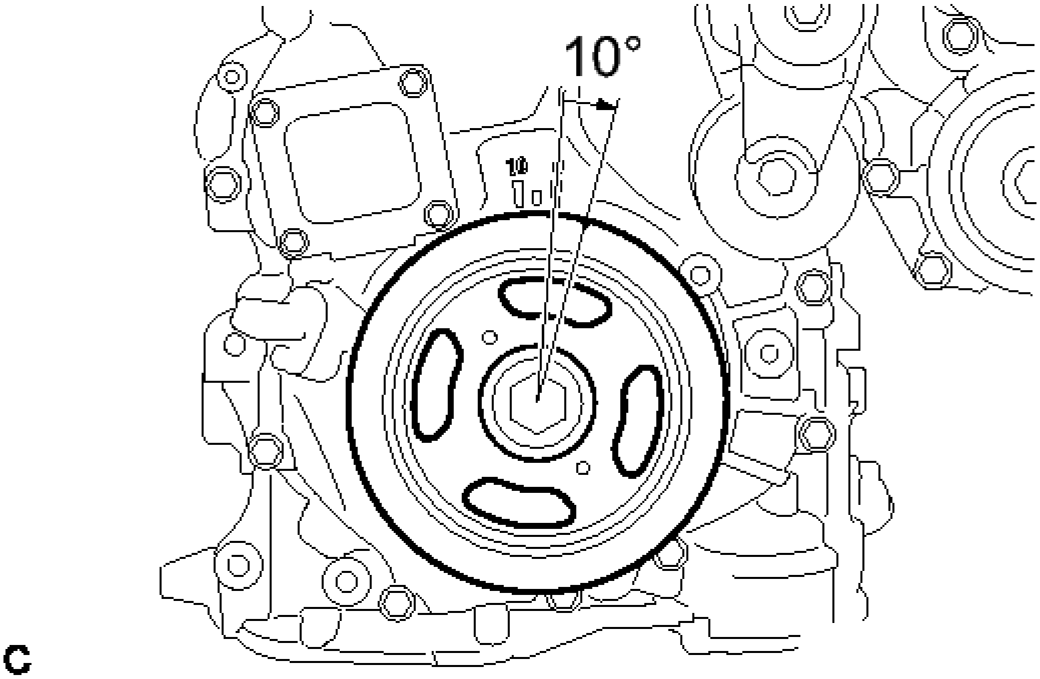

Fig. 52: View Of Turning Crankshaft 10° Clockwise
Courtesy of TOYOTA MOTOR SALES, U.S.A., INC.

b. Install a new gasket and the chain tensioner with the 2 bolts.

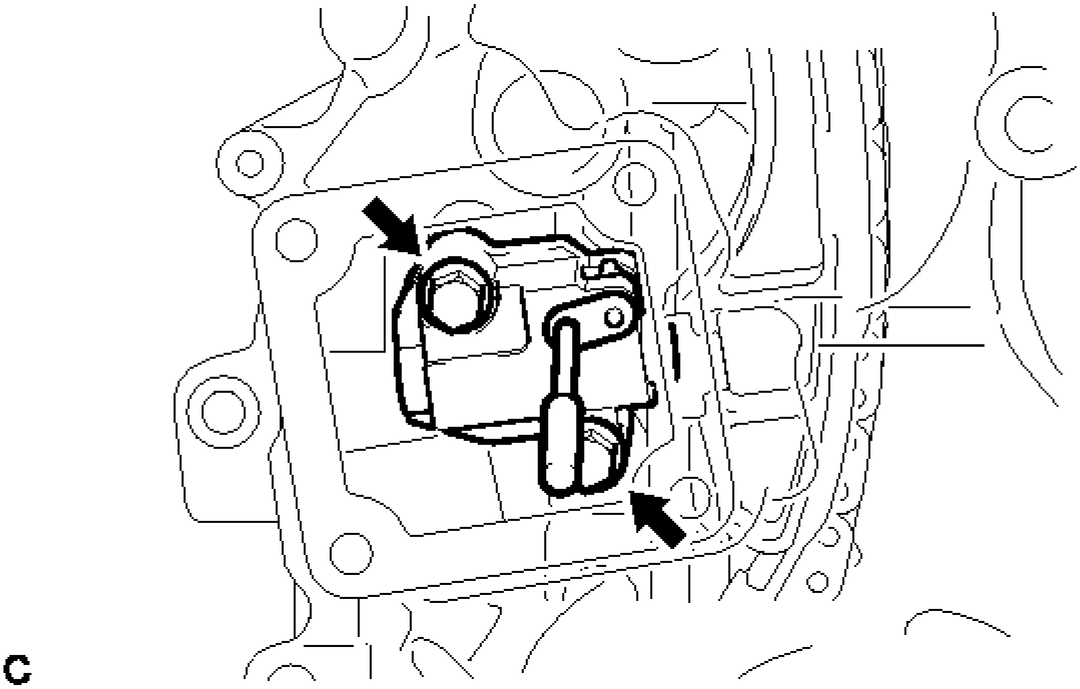

Fig. 53: No. 1 Chain Tensioner Assembly Bolts
Courtesy of TOYOTA MOTOR SALES, U.S.A., INC.

Torque: 10 N*m (102 kgf*cm, 7 ft.*lbf)

NOTE: Make sure not to drop the gasket inside the timing chain cover.

c. Remove the pin from the stopper plate.

13. **CHECK NO. 1 CYLINDER TO TDC/COMPRESSION**

a. Turn the crankshaft pulley until its timing notch (groove) and the timing mark "0" of the timing chain cover are aligned.

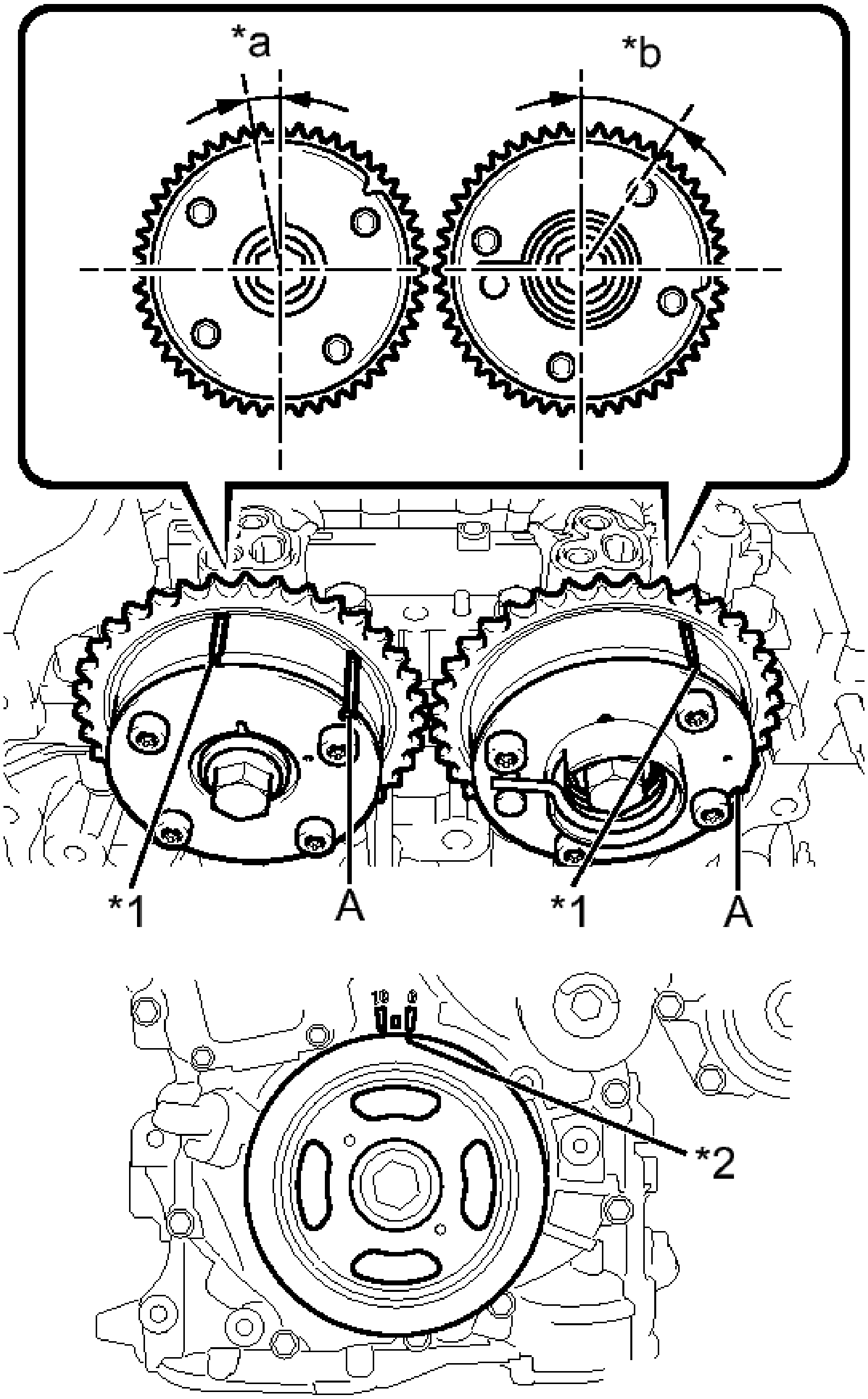
*a
*b
*1
A
*1
A
10
0
*2

Fig. 54: Setting No. 1 Cylinder To TDC/Compression
Courtesy of TOYOTA MOTOR SALES, U.S.A., INC.

TEXT IN ILLUSTRATION

*1	Timing Mark
*2	Timing Notch
*a	Approximately 7°
*b	Approximately 32°

b. Check that the timing marks of the camshaft timing gears are as shown in the illustration. If not, turn the crankshaft 1 revolution (360°) to align the timing marks as shown in the illustration.

   HINT:

   "A" is not a timing mark.

14. **INSTALL TIMING CHAIN COVER PLATE**
    a. Install a new gasket and the timing chain cover plate with the 4 bolts.

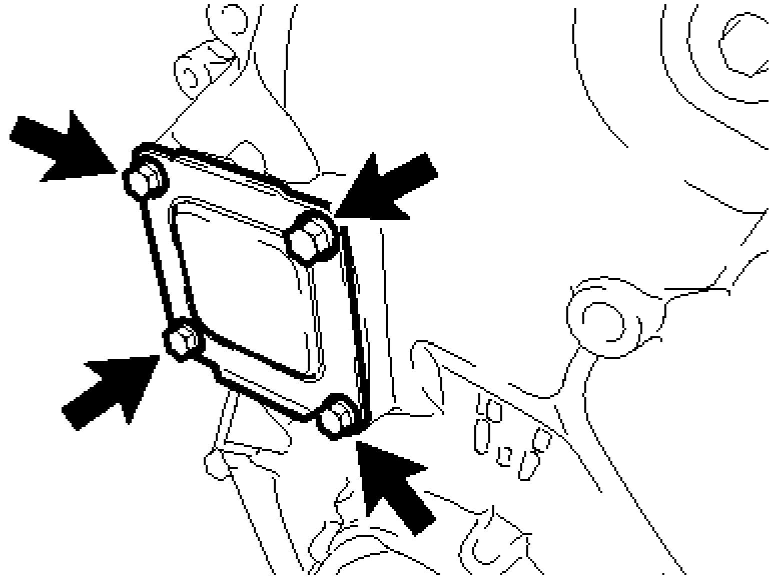

P

Fig. 55: Locating Timing Chain Cover Plate Bolts
Courtesy of TOYOTA MOTOR SALES, U.S.A., INC.

Torque: 10 N*m (102 kgf*cm, 7 ft.*lbf)

15. **INSTALL TIMING CHAIN COVER TIGHT PLUG** See step 38
16. **INSTALL CYLINDER HEAD COVER SUB-ASSEMBLY** See step 43
17. **INSTALL IGNITION COIL ASSEMBLY** . Refer to **INSTALLATION - Step 2**
18. **CONNECT ENGINE WIRE**

a. Install the engine wire to the engine with the bolts and nuts.

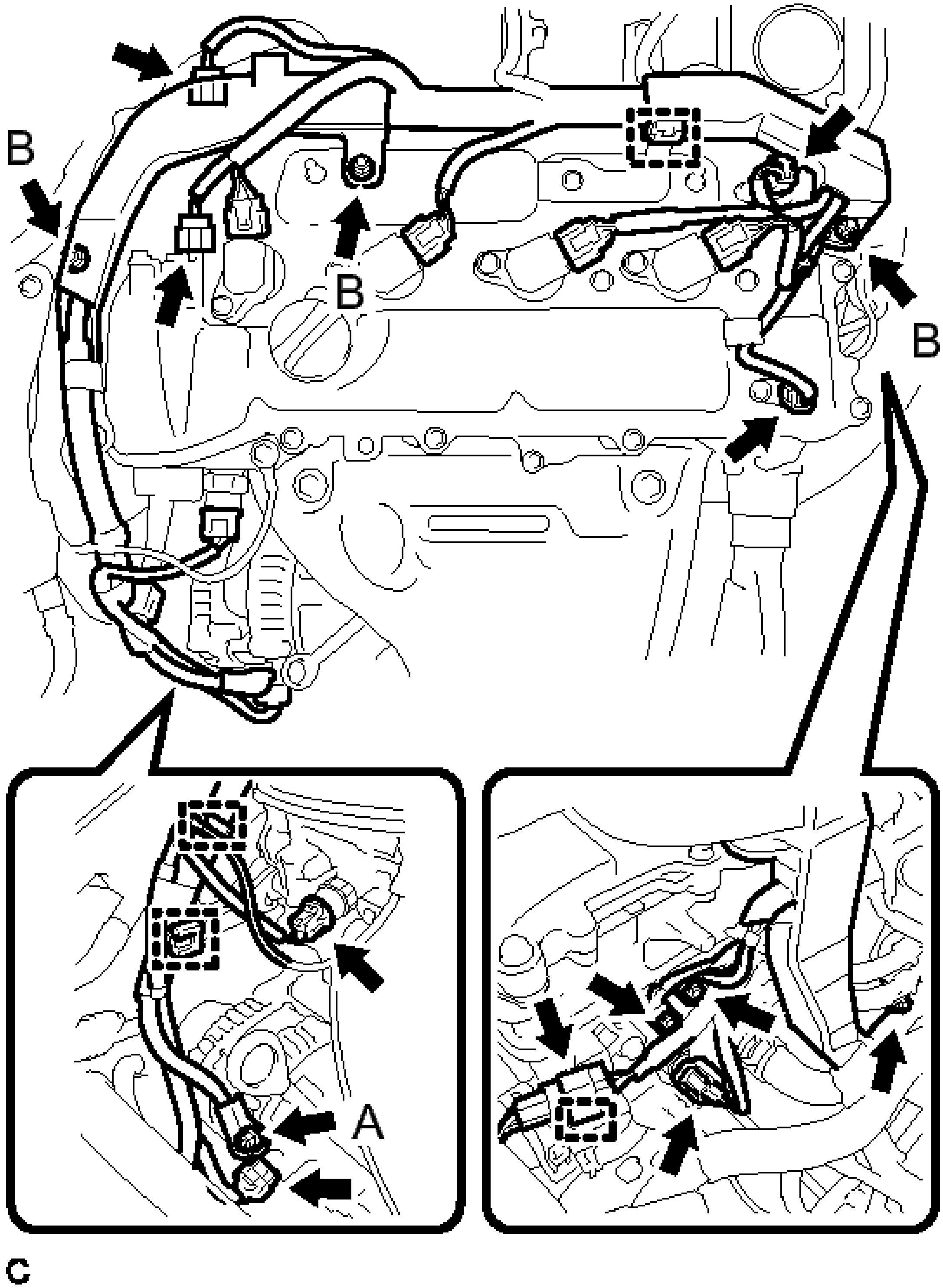

Fig. 56: Identifying Bolts And Nuts
Courtesy of TOYOTA MOTOR SALES, U.S.A., INC.

Nut A

Torque: 9.8 N*m (100 kgf*cm, 87 in.*lbf)

Nut B

Torque: 8.0 N*m (82 kgf*cm, 71 in.*lbf)

Bolt

Torque: 8.0 N*m (82 kgf*cm, 71 in.*lbf)

b. Connect the connectors and clamps.

19. **INSTALL ENGINE MOVING CONTROL ROD** See step 38
20. **INSTALL NO. 2 ENGINE MOUNTING STAY RH** See step 40
21. **INSTALL AIR CLEANER CASE SUB-ASSEMBLY** See step 50
22. **INSTALL AIR CLEANER FILTER ELEMENT SUB-ASSEMBLY** See step 51
23. **INSTALL AIR CLEANER CAP SUB-ASSEMBLY** . Refer to **INSTALLATION - Step 2**
24. **INSTALL INLET AIR CLEANER ASSEMBLY** See step 53
25. **CONNECT CABLE TO NEGATIVE BATTERY TERMINAL**
    a. Connect the negative (-) battery terminal.

Torque: 6.9 N*m (70 kgf*cm, 61 in.*lbf)

NOTE: **When disconnecting the cable, some systems need to be initialized after the cable is reconnected. Refer to INITIALIZATION .**

26. **INSPECT FOR OIL LEAK**
27. **INSTALL FRONT FENDER APRON SEAL RH**
28. **INSTALL ENGINE UNDER COVER RH**
29. **INSTALL FRONT WHEEL OPENING EXTENSION PAD RH**
30. **INSTALL NO. 1 ENGINE COVER SUB-ASSEMBLY** See step 68
31. **INSTALL COOL AIR INTAKE DUCT SEAL** . Refer to **INSTALLATION - Step 4**
32. **INSTALL FRONT WHEEL RH**

CYLINDER HEAD GASKET

COMPONENTS

ILLUSTRATION

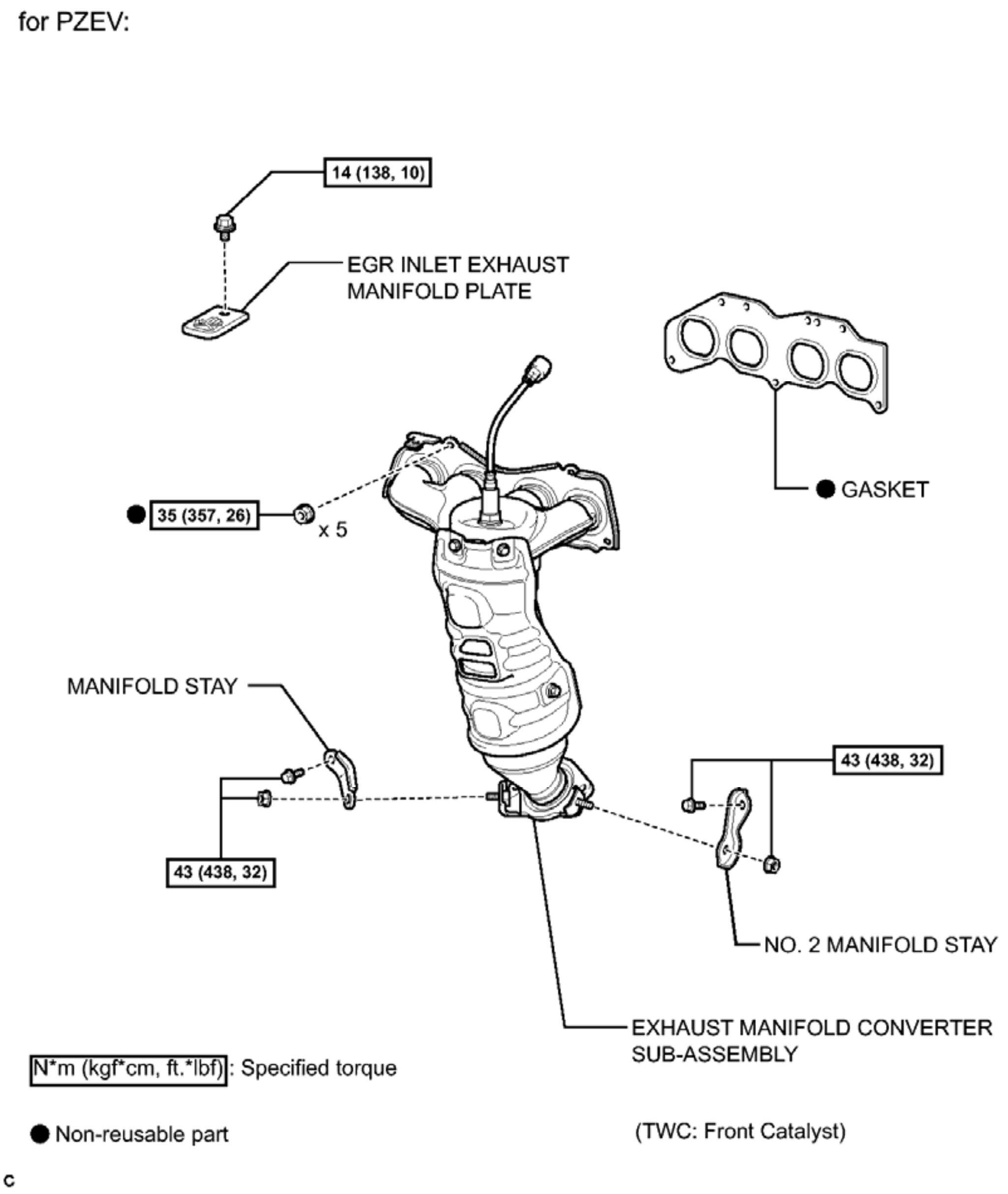
for PZEV:
14 (138, 10)
EGR INLET EXHAUST MANIFOLD PLATE
● GASKET
● 35 (357, 26)
x 5
MANIFOLD STAY
43 (438, 32)
43 (438, 32)
NO. 2 MANIFOLD STAY
EXHAUST MANIFOLD CONVERTER SUB-ASSEMBLY
N*m (kgf*cm, ft.*lbf): Specified torque
● Non-reusable part
(TWC: Front Catalyst)
c

Fig. 57: Identifying Cylinder Head Gasket Replacement Components With Torque Specifications (1 Of 7)
Courtesy of TOYOTA MOTOR SALES, U.S.A., INC.

ILLUSTRATION

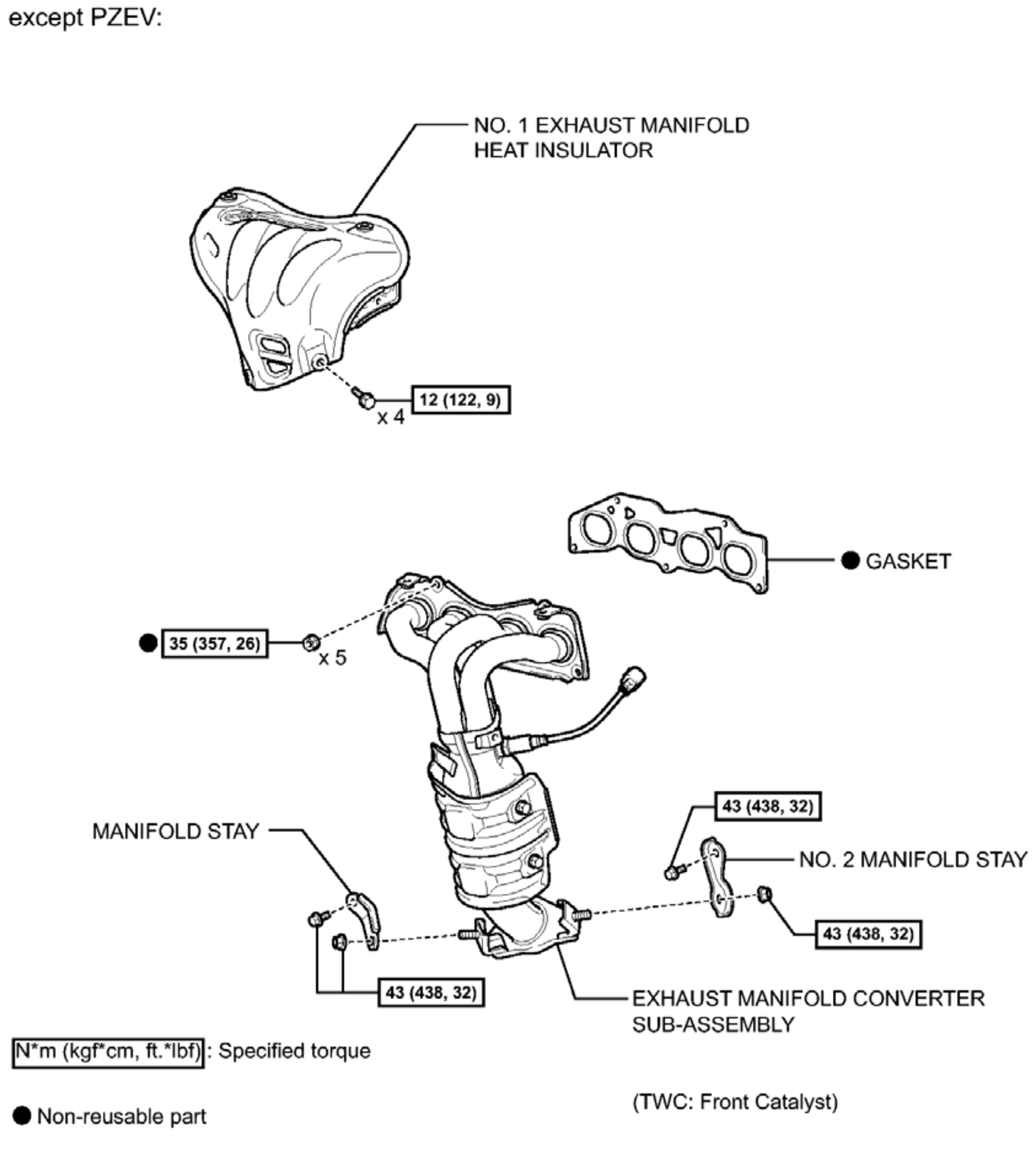
except PZEV:
NO. 1 EXHAUST MANIFOLD HEAT INSULATOR
12 (122, 9)
x 4
● GASKET
● 35 (357, 26)
x 5
43 (438, 32)
MANIFOLD STAY
NO. 2 MANIFOLD STAY
43 (438, 32)
43 (438, 32)
EXHAUST MANIFOLD CONVERTER SUB-ASSEMBLY
N*m (kgf*cm, ft.*lbf) : Specified torque
(TWC: Front Catalyst)
● Non-reusable part
c

Fig. 58: Identifying Cylinder Head Gasket Replacement Components With Torque Specifications (2 Of 7)
Courtesy of TOYOTA MOTOR SALES, U.S.A., INC.

ILLUSTRATION

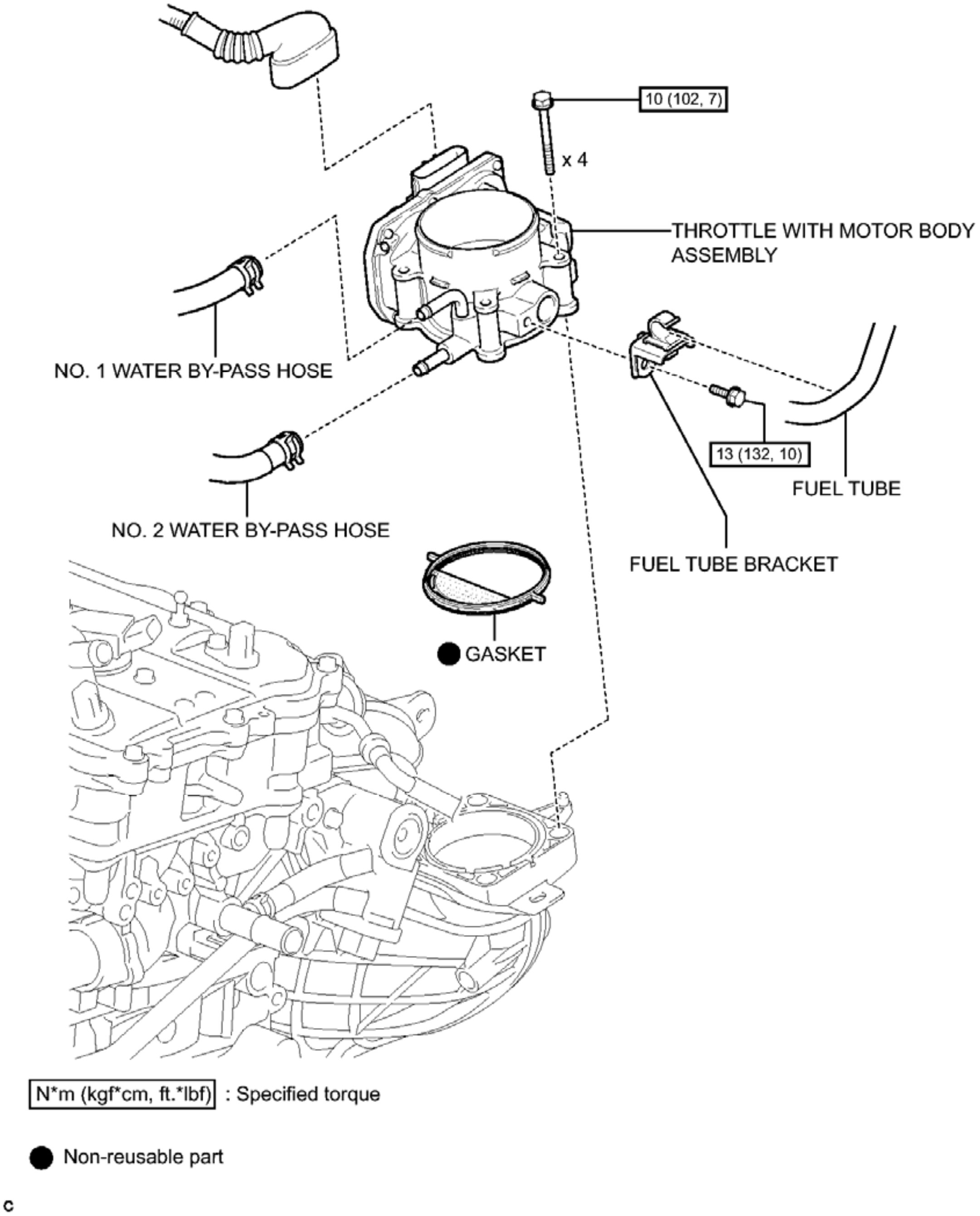
10 (102, 7)
x 4
THROTTLE WITH MOTOR BODY ASSEMBLY
NO. 1 WATER BY-PASS HOSE
13 (132, 10)
FUEL TUBE
NO. 2 WATER BY-PASS HOSE
FUEL TUBE BRACKET
● GASKET
N*m (kgf*cm, ft.*lbf) : Specified torque
● Non-reusable part
c

Fig. 59: Identifying Cylinder Head Gasket Replacement Components With Torque Specifications (3 Of 7)
Courtesy of TOYOTA MOTOR SALES, U.S.A., INC.

ILLUSTRATION

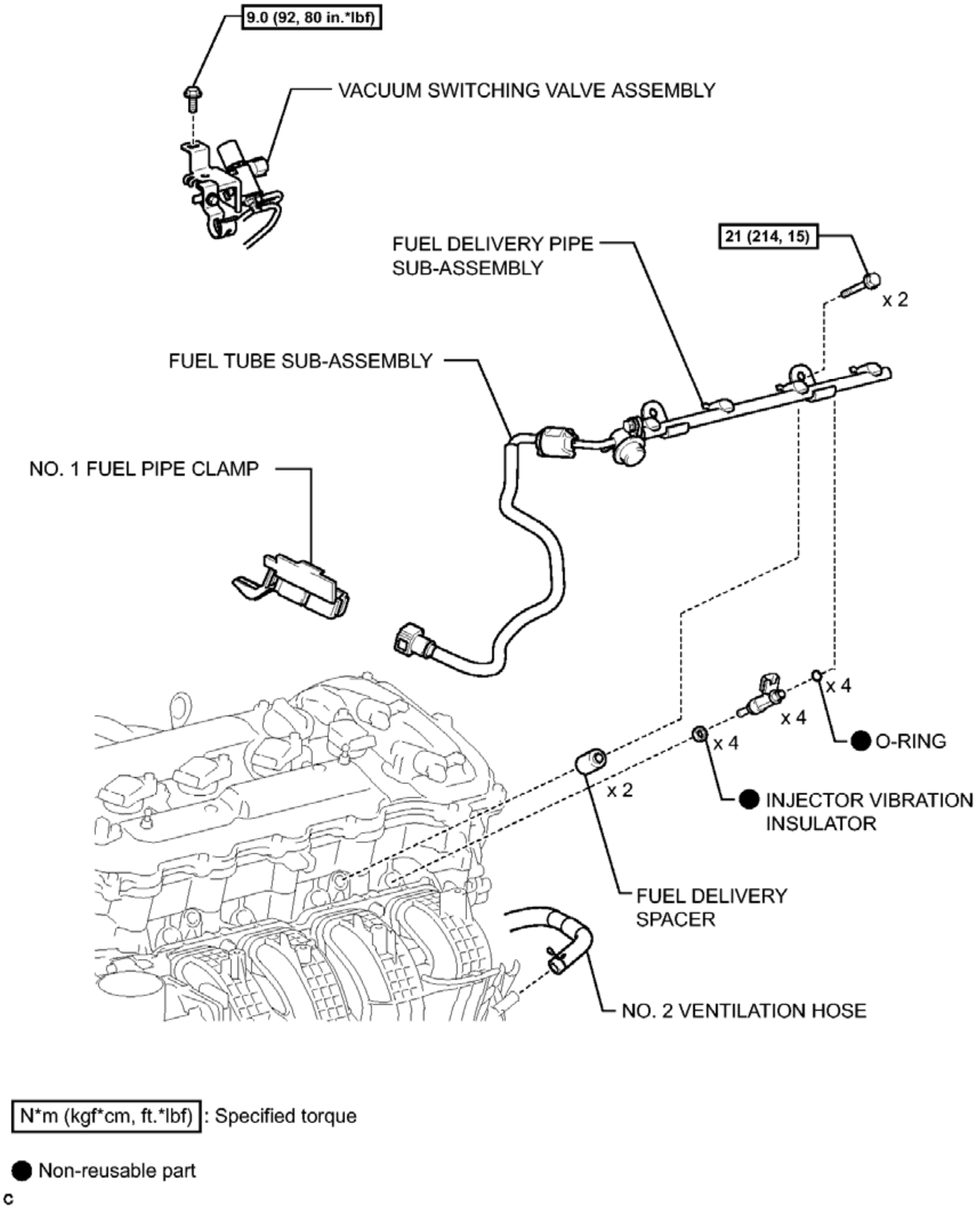
9.0 (92, 80 in.*lbf)
VACUUM SWITCHING VALVE ASSEMBLY
FUEL DELIVERY PIPE SUB-ASSEMBLY
21 (214, 15)
x 2
FUEL TUBE SUB-ASSEMBLY
NO. 1 FUEL PIPE CLAMP
x 4
x 4
● O-RING
x 4
● INJECTOR VIBRATION INSULATOR
x 2
FUEL DELIVERY SPACER
NO. 2 VENTILATION HOSE
N*m (kgf*cm, ft.*lbf) : Specified torque
● Non-reusable part
c

Fig. 60: Identifying Cylinder Head Gasket Replacement Components With Torque Specifications (4 Of 7)
Courtesy of TOYOTA MOTOR SALES, U.S.A., INC.

ILLUSTRATION

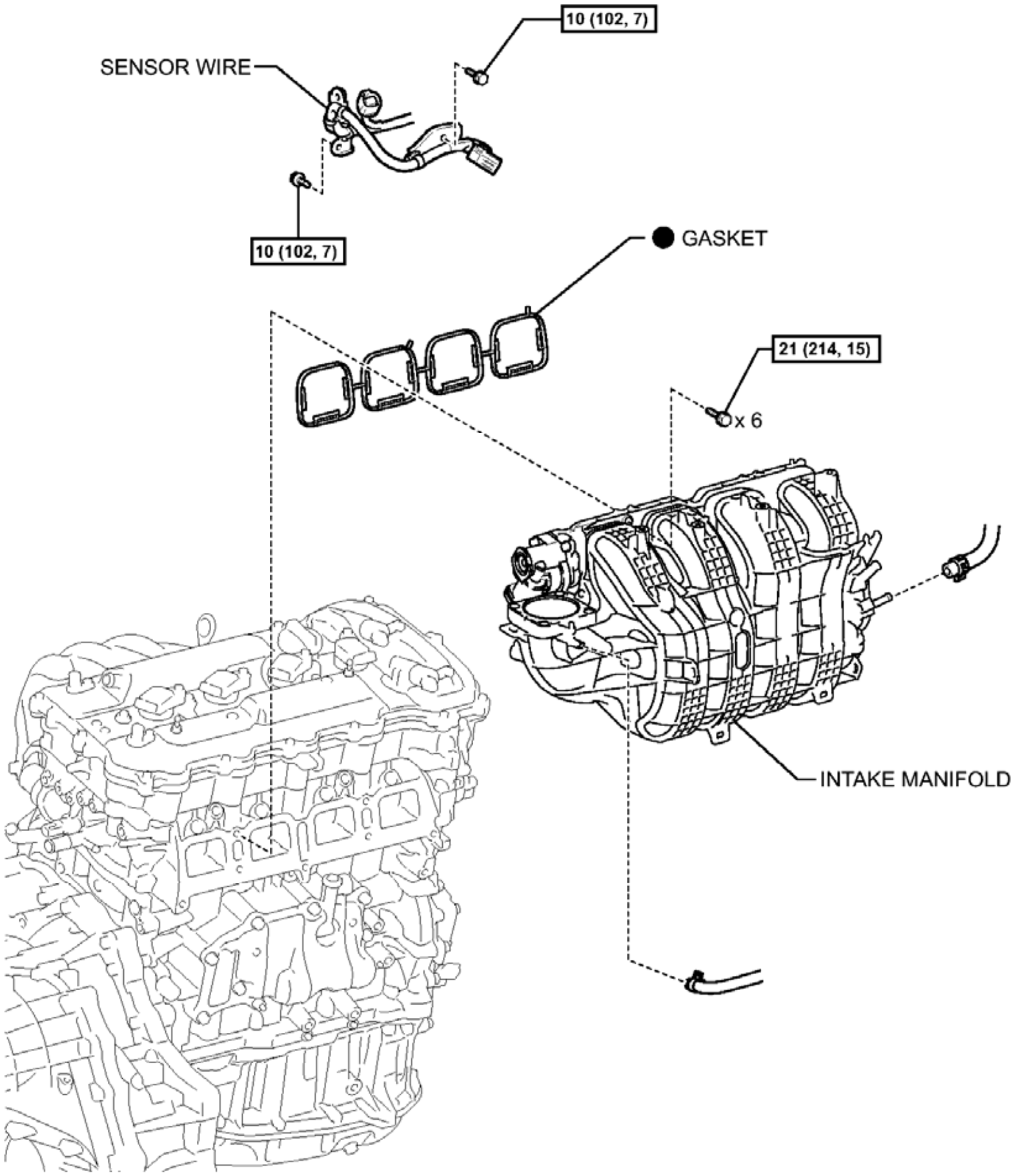
10 (102, 7)
SENSOR WIRE
10 (102, 7)
GASKET
21 (214, 15)
x 6
INTAKE MANIFOLD

N*m (kgf*cm, ft.*lbf) : Specified torque

● Non-reusable part

Fig. 61: Identifying Cylinder Head Gasket Replacement Components With Torque Specifications (5 Of 7)
Courtesy of TOYOTA MOTOR SALES, U.S.A., INC.

ILLUSTRATION

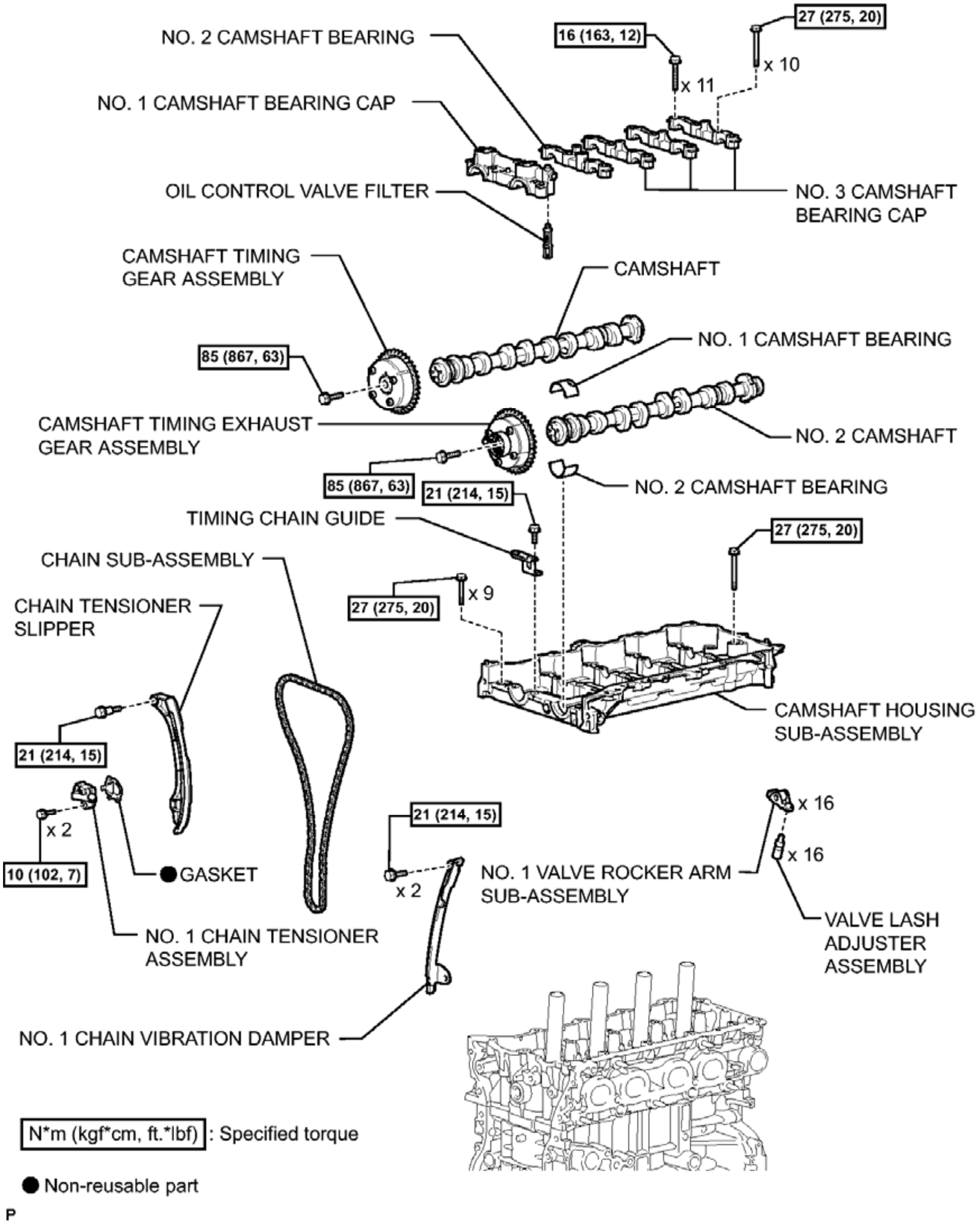
NO. 2 CAMSHAFT BEARING
16 (163, 12)
27 (275, 20)
x 10
x 11
NO. 1 CAMSHAFT BEARING CAP
OIL CONTROL VALVE FILTER
NO. 3 CAMSHAFT BEARING CAP
CAMSHAFT TIMING GEAR ASSEMBLY
CAMSHAFT
85 (867, 63)
NO. 1 CAMSHAFT BEARING
CAMSHAFT TIMING EXHAUST GEAR ASSEMBLY
NO. 2 CAMSHAFT
85 (867, 63)
21 (214, 15)
NO. 2 CAMSHAFT BEARING
TIMING CHAIN GUIDE
27 (275, 20)
CHAIN SUB-ASSEMBLY
x 9
27 (275, 20)
CHAIN TENSIONER SLIPPER
CAMSHAFT HOUSING SUB-ASSEMBLY
21 (214, 15)
x 16
21 (214, 15)
x 2
x 16
10 (102, 7)
GASKET
x 2
NO. 1 VALVE ROCKER ARM SUB-ASSEMBLY
VALVE LASH ADJUSTER ASSEMBLY
NO. 1 CHAIN TENSIONER ASSEMBLY
NO. 1 CHAIN VIBRATION DAMPER
N*m (kgf*cm, ft.*lbf) : Specified torque
● Non-reusable part
P

Fig. 62: Identifying Cylinder Head Gasket Replacement Components With Torque Specifications (6 Of 7)
Courtesy of TOYOTA MOTOR SALES, U.S.A., INC.

ILLUSTRATION

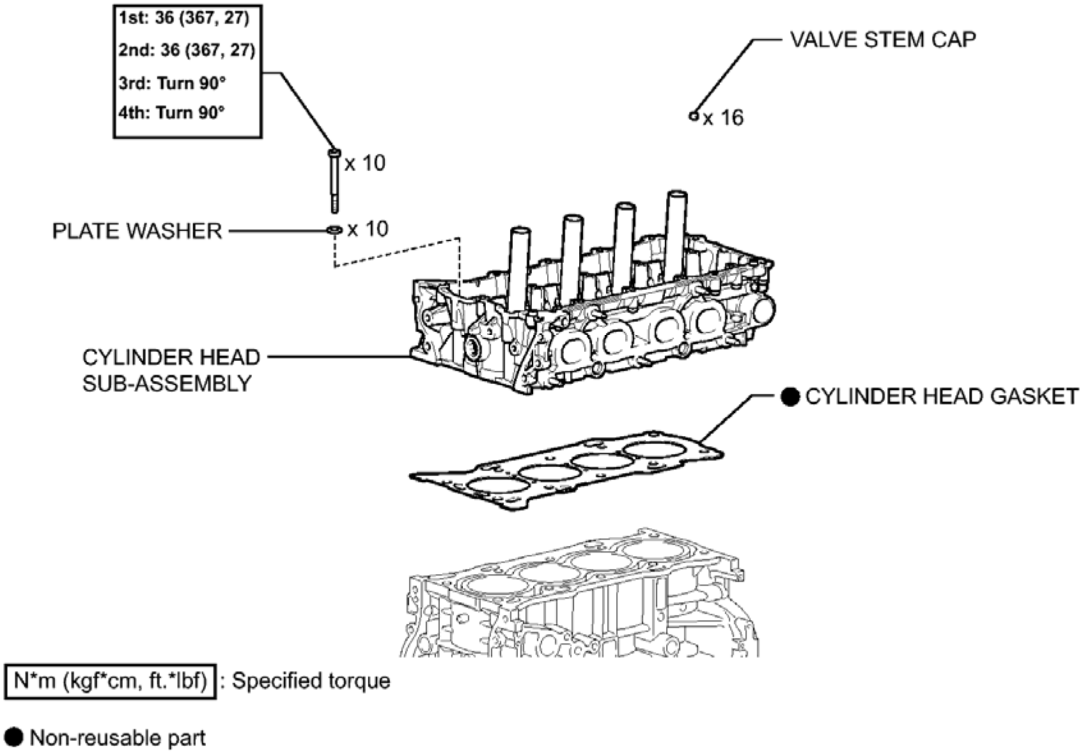
1st: 36 (367, 27)
2nd: 36 (367, 27)
3rd: Turn 90°
4th: Turn 90°
VALVE STEM CAP
x 16
x 10
PLATE WASHER
x 10
CYLINDER HEAD SUB-ASSEMBLY
● CYLINDER HEAD GASKET
N*m (kgf*cm, ft.*lbf) : Specified torque
● Non-reusable part

Fig. 63: Identifying Cylinder Head Gasket Replacement Components With Torque Specifications (7 Of 7)
Courtesy of TOYOTA MOTOR SALES, U.S.A., INC.

REMOVAL

REMOVAL

1. **REMOVE TIMING CHAIN COVER SUB-ASSEMBLY**

   Refer to **REMOVAL - Step 9**

2. **REMOVE MANIFOLD STAY** . Refer to **REMOVAL - Step 6**
3. **REMOVE NO. 2 MANIFOLD STAY** . Refer to **REMOVAL - Step 7**
4. **REMOVE EGR INLET EXHAUST MANIFOLD PLATE (for PZEV)** . Refer to **REMOVAL - Step 9**
5. **REMOVE NO. 1 EXHAUST MANIFOLD HEAT INSULATOR (except PZEV)** . Refer to **REMOVAL - Step 8**
6. **REMOVE EXHAUST MANIFOLD CONVERTER SUB-ASSEMBLY** . Refer to **REMOVAL - Step 11**
7. **REMOVE THROTTLE WITH MOTOR BODY ASSEMBLY** . Refer to **REMOVAL - Step 6**

8. **REMOVE VACUUM SWITCHING VALVE ASSEMBLY (for ACIS)** . Refer to **REMOVAL - Step 7**
9. **REMOVE FUEL DELIVERY PIPE SUB-ASSEMBLY** . Refer to **REMOVAL - Step 9**
10. **DISCONNECT NO. 2 VENTILATION HOSE** . Refer to **REMOVAL - Step 8**
11. **REMOVE INTAKE MANIFOLD** . Refer to **REMOVAL - Step 12**
12. **SET NO. 1 CYLINDER TO TDC/COMPRESSION**
    1. Temporarily install the crankshaft pulley bolt.

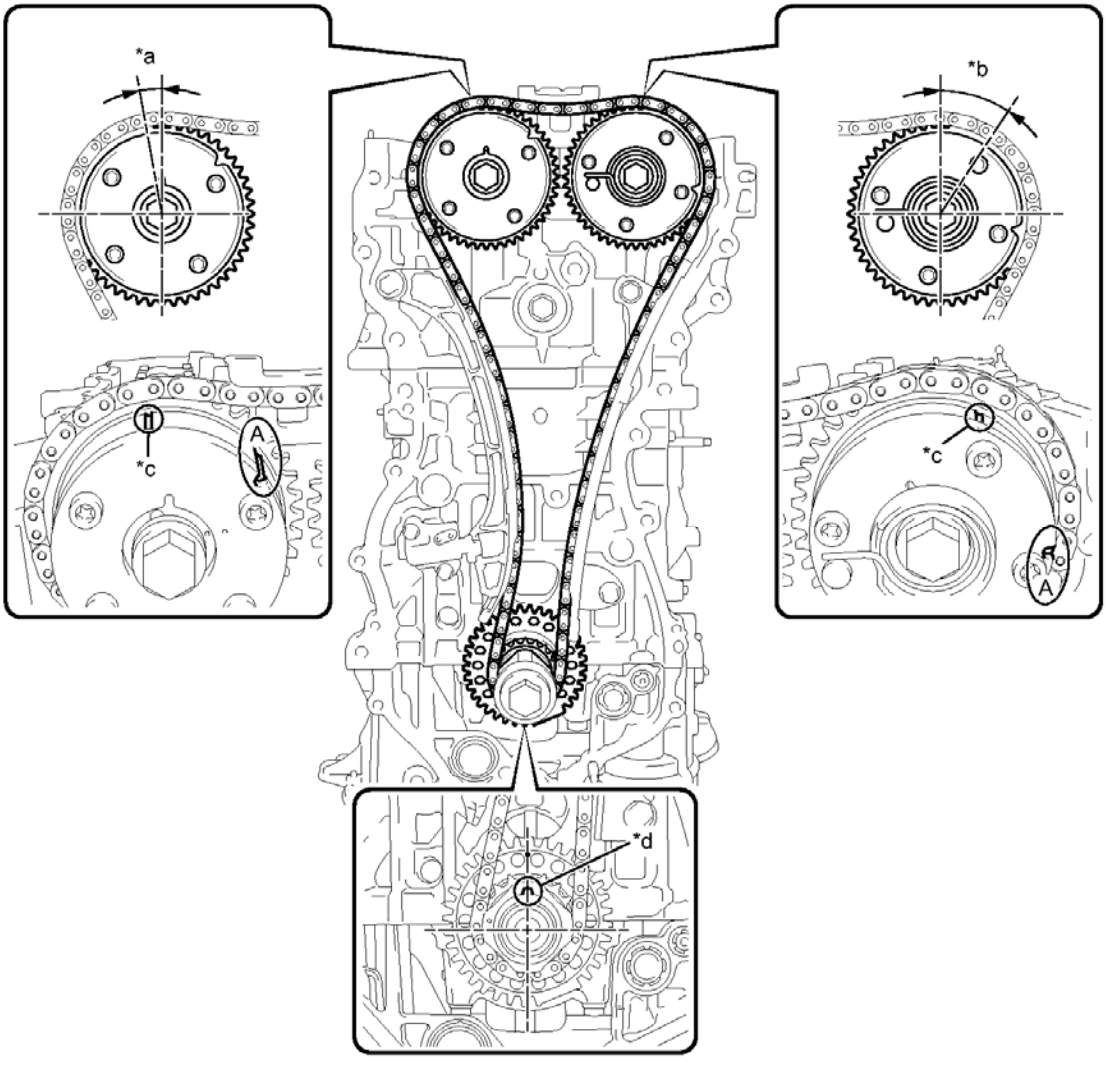

Fig. 64: Identifying Crankshaft & Camshaft Timing Gear Timing Marks
Courtesy of TOYOTA MOTOR SALES, U.S.A., INC.

TEXT IN ILLUSTRATION

*a	Approximately 7°	*b	Approximately 32°
*c	Timing Mark	*d	Key

HINT:

"A" is not a timing mark.

b. Rotate the crankshaft clockwise so that the timing marks on the crankshaft timing gear and camshaft timing gears are as shown in the illustration.

HINT:

If the timing marks do not align, rotate the crankshaft clockwise again and align the timing marks.

c. Remove the crankshaft pulley bolt.

13. **REMOVE TIMING CHAIN GUIDE**
    a. Remove the bolt and timing chain guide.

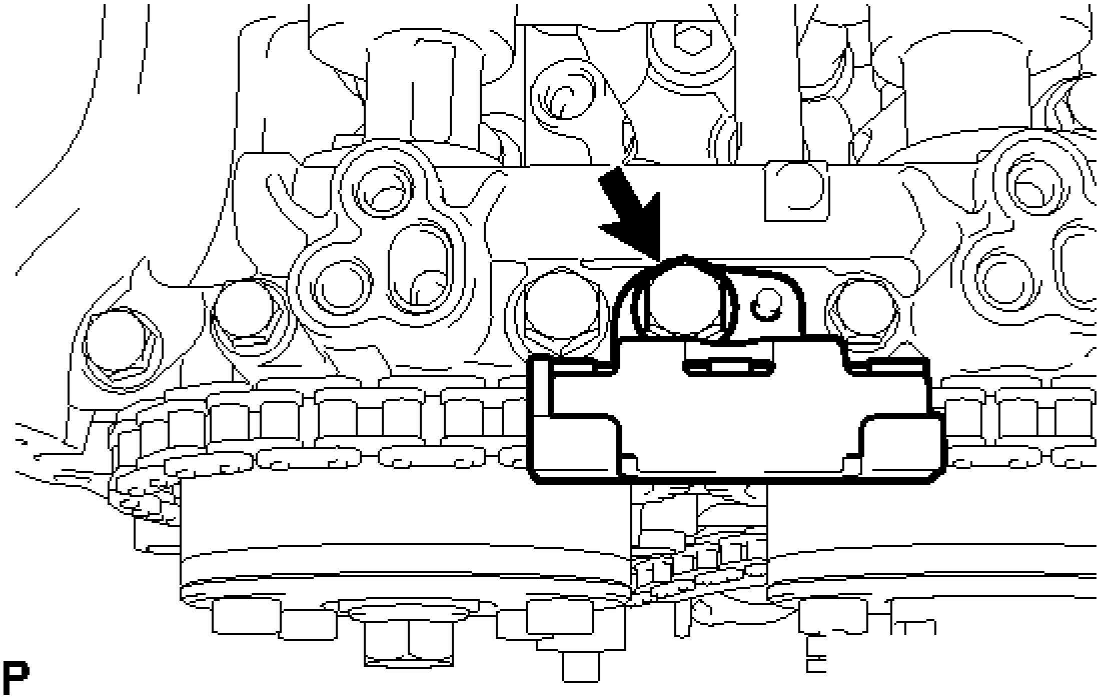

Fig. 65: Locating Timing Chain Guide Bolt
Courtesy of TOYOTA MOTOR SALES, U.S.A., INC.

14. **REMOVE NO. 1 CHAIN TENSIONER ASSEMBLY**
    a. Allow the plunger to extend slightly, and then rotate the stopper plate counterclockwise to release the lock. Once the lock is released, push the plunger into the tensioner.

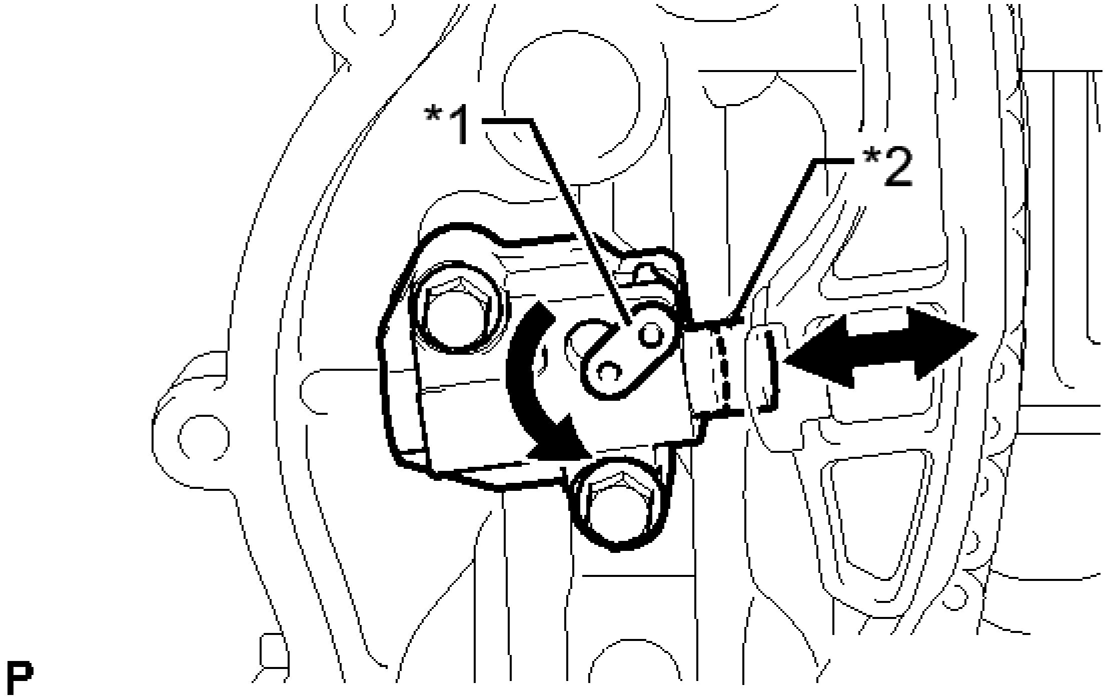

Fig. 66: Identifying Stopper Plate And Plunger
Courtesy of TOYOTA MOTOR SALES, U.S.A., INC.

TEXT IN ILLUSTRATION

*1	Stopper Plate
*2	Plunger

b. Move the stopper plate clockwise to set the lock, and insert a pin into the stopper plate hole.

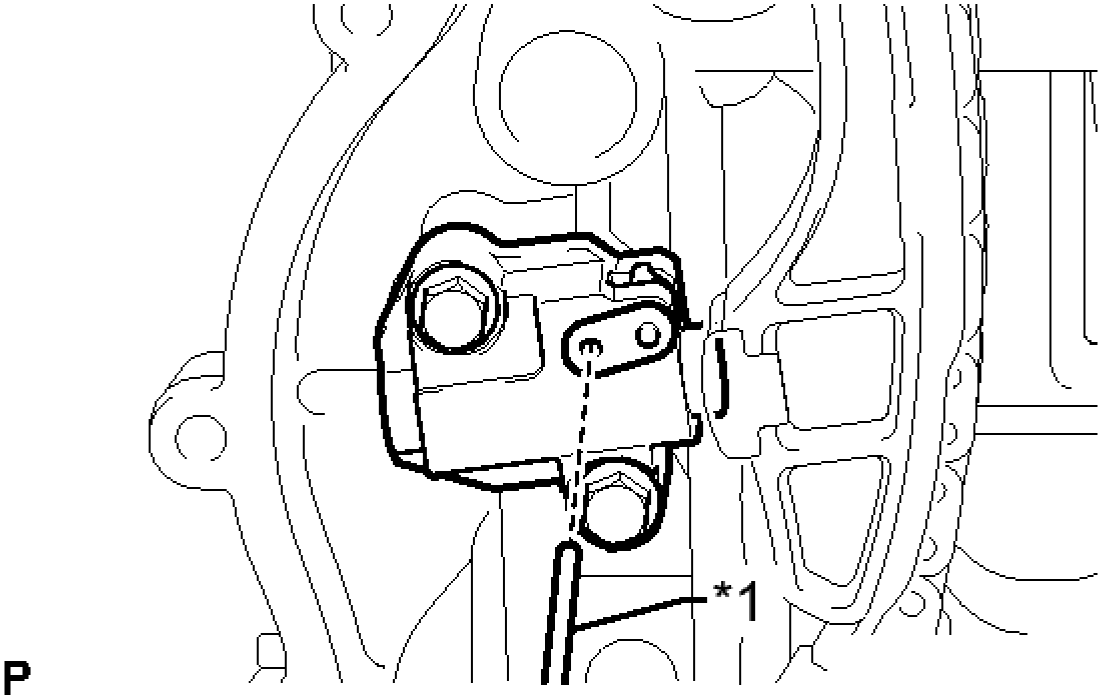

Fig. 67: Insert Pin Into Stopper Plate Hole
Courtesy of TOYOTA MOTOR SALES, U.S.A., INC.

TEXT IN ILLUSTRATION

*1	Pin

c. Remove the 2 bolts, chain tensioner and gasket.

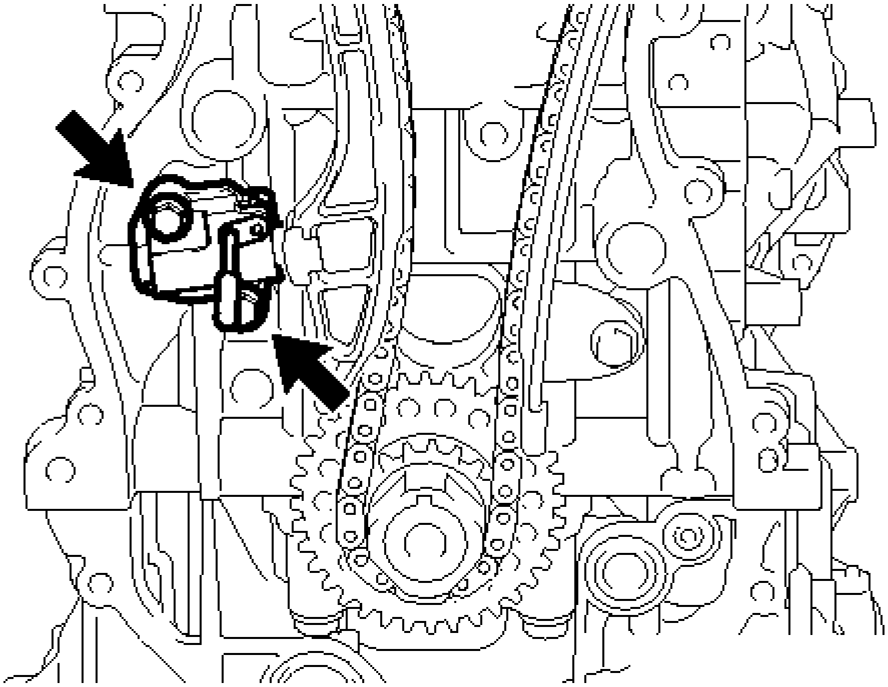

Fig. 68: Locating Chain Tensioner Bolts
Courtesy of TOYOTA MOTOR SALES, U.S.A., INC.

15. **REMOVE CHAIN TENSIONER SLIPPER**
    a. Remove the bolt and chain tensioner slipper.

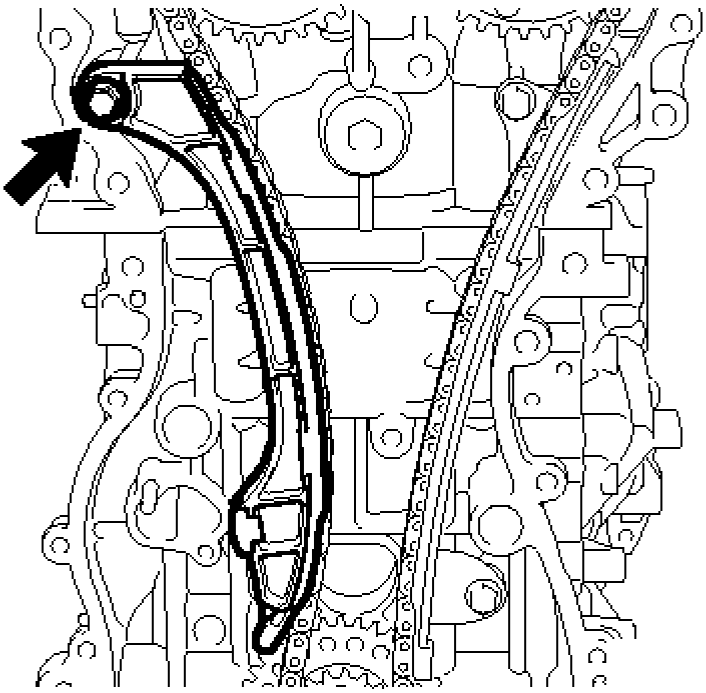

Fig. 69: Locating Bolt And Chain Tensioner Slipper

Courtesy of TOYOTA MOTOR SALES, U.S.A., INC.

16. **REMOVE CHAIN SUB-ASSEMBLY**
    1. Remove the chain sub-assembly.
17. **REMOVE NO. 1 CHAIN VIBRATION DAMPER**
    1. Remove the 2 bolts and chain vibration damper.

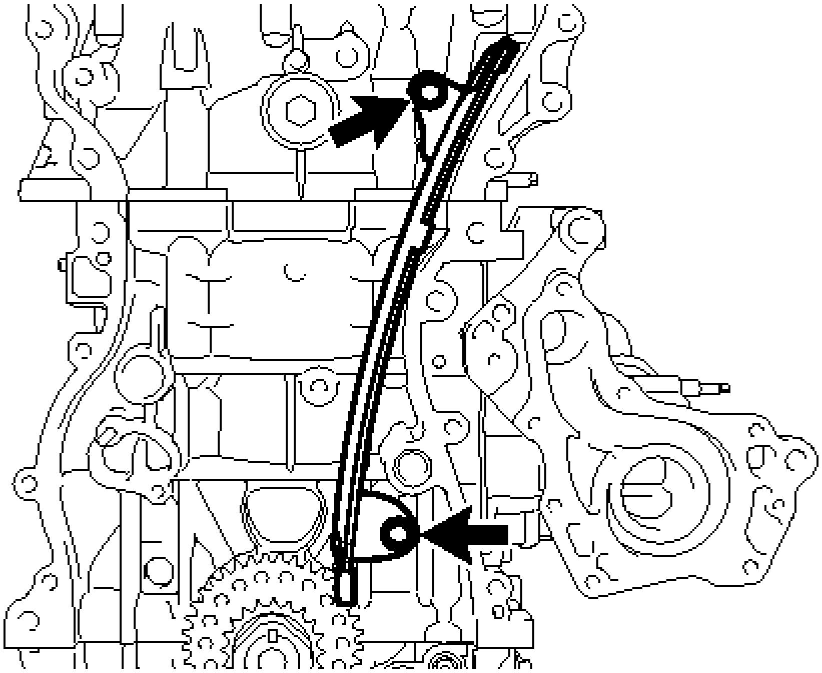

Fig. 70: Locating Chain Vibration Damper Bolts
Courtesy of TOYOTA MOTOR SALES, U.S.A., INC.

18. **REMOVE CAMSHAFT TIMING GEAR ASSEMBLY**
    1. Hold the hexagonal portion of the camshaft with a wrench and remove the bolt and camshaft timing gear assembly.

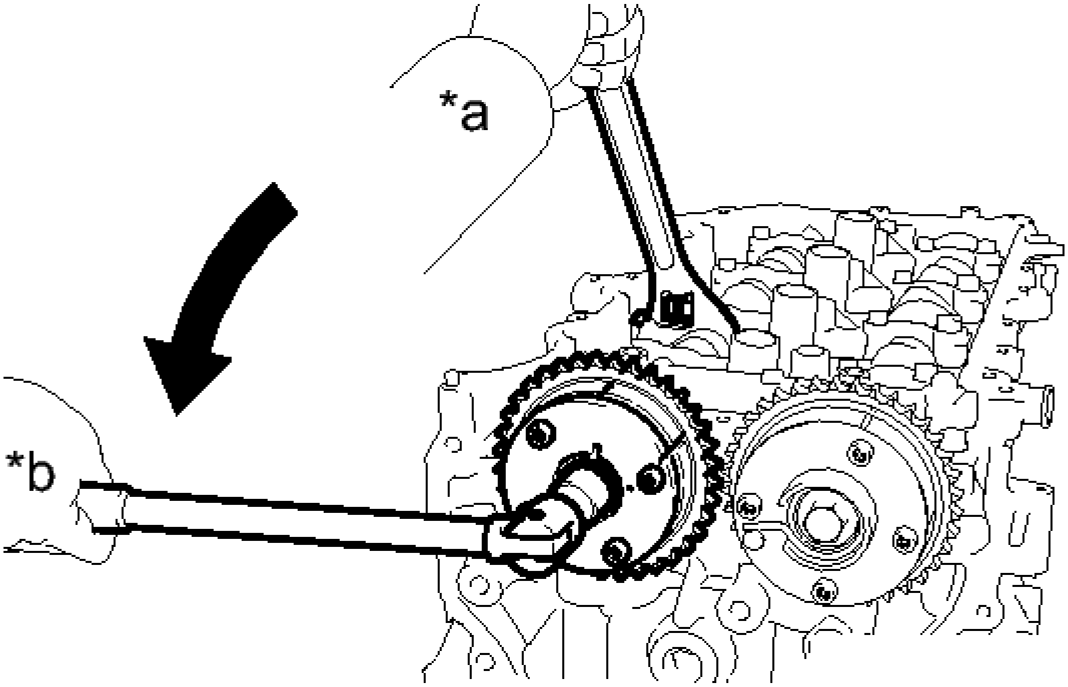

Fig. 71: Removing Camshaft Timing Gear Assembly
Courtesy of TOYOTA MOTOR SALES, U.S.A., INC.

TEXT IN ILLUSTRATION

*a	Hold
*b	Turn

NOTE:

- **Be careful not to damage the cylinder head sub-assembly or spark plug tube with the wrench.**
- **Do not disassemble the camshaft timing gear assembly.**

19. **REMOVE CAMSHAFT TIMING EXHAUST GEAR ASSEMBLY**
    a. Hold the hexagonal portion of the camshaft with a wrench and remove the bolt and camshaft timing exhaust gear assembly.

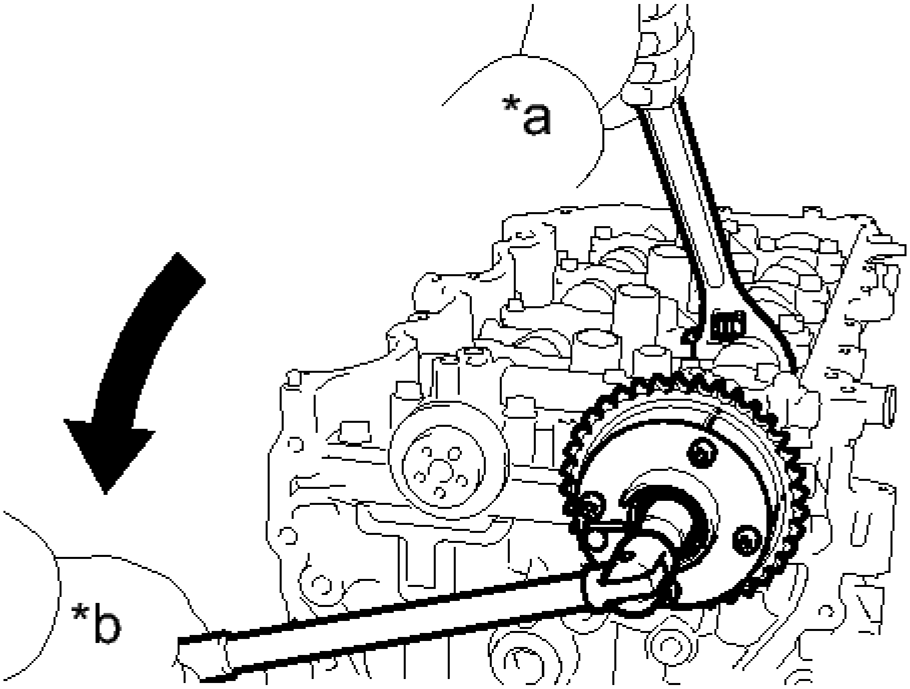

Fig. 72: Removing Camshaft Timing Exhaust Gear Assembly
Courtesy of TOYOTA MOTOR SALES, U.S.A., INC.

TEXT IN ILLUSTRATION

*a	Hold
*b	Turn

NOTE:

- **Be careful not to damage the cylinder head sub-assembly or spark plug tube with the wrench.**
- **Do not disassemble the camshaft timing exhaust gear assembly.**

20. **REMOVE CAMSHAFT HOUSING SUB-ASSEMBLY**
    a. Uniformly loosen and remove the 20 bearing cap bolts in the sequence shown in the illustration.

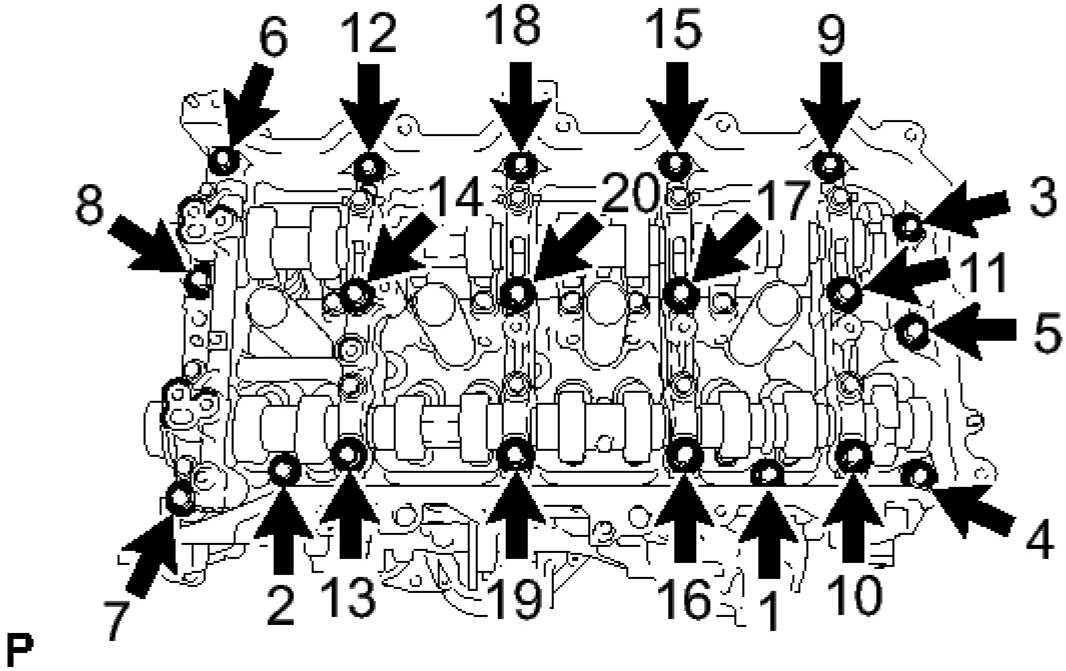

Fig. 73: Identifying Bearing Cap Bolts Loosening Sequence
Courtesy of TOYOTA MOTOR SALES, U.S.A., INC.

b. Remove the camshaft housing by prying between the cylinder head sub-assembly and camshaft housing sub-assembly with a screwdriver.

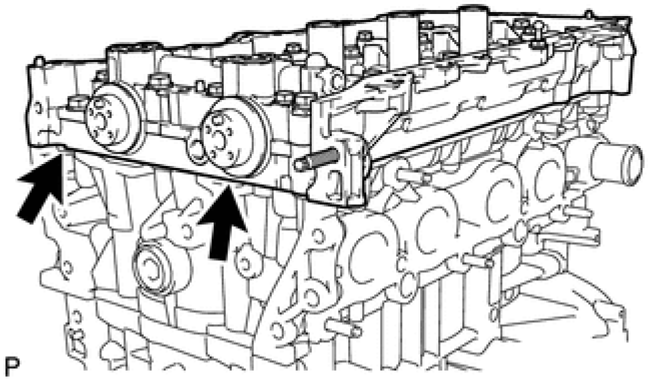

Fig. 74: Locating Contact Surfaces Of Cylinder Head And Camshaft Housing
Courtesy of TOYOTA MOTOR SALES, U.S.A., INC.

HINT:

Tape the screwdriver tip before use.

NOTE: **Be careful not to damage the contact surfaces of the cylinder head and camshaft housing sub-assembly.**

21. **REMOVE CAMSHAFT BEARING CAP**
    a. Remove the 11 bearing cap bolts in the sequence shown in the illustration.

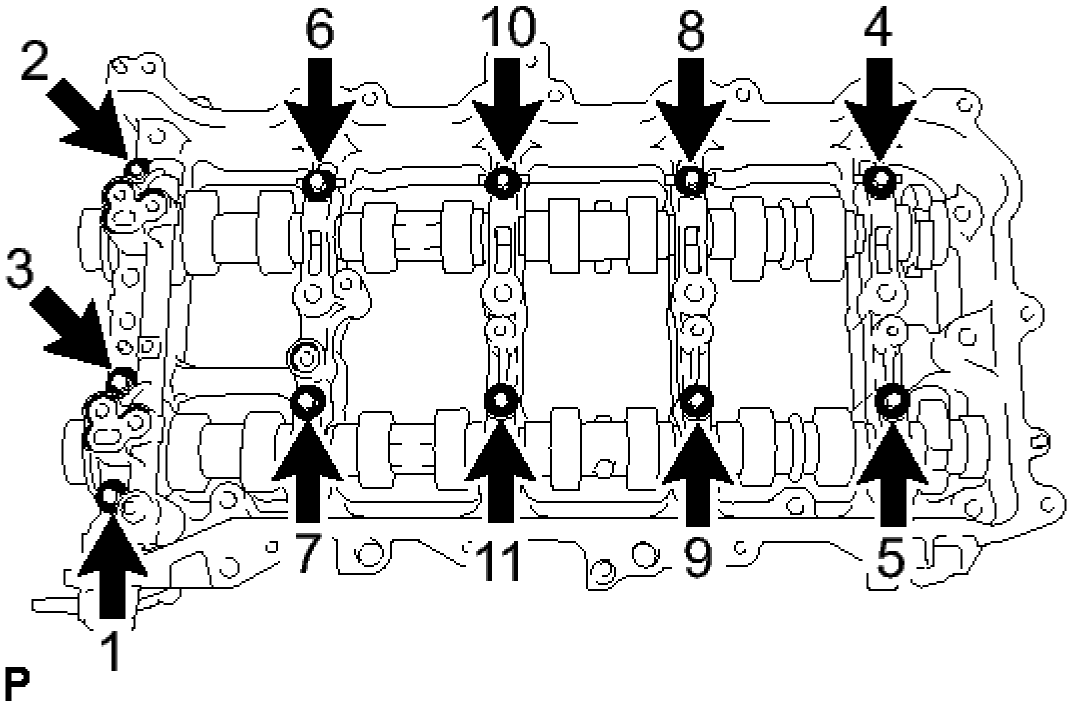

Fig. 75: Identifying Bearing Cap Bolts Loosening Sequence
Courtesy of TOYOTA MOTOR SALES, U.S.A., INC.

    b. Remove the 5 bearing caps.

HINT:

Arrange the removed parts in the correct order.

22. **REMOVE OIL CONTROL VALVE FILTER** See step 35
23. **REMOVE NO. 1 CAMSHAFT BEARING** See step 37
24. **REMOVE CAMSHAFT**
    a. Remove the camshaft and No. 2 camshaft.
25. **REMOVE NO. 2 CAMSHAFT BEARING** See step 38
26. **REMOVE NO. 1 VALVE ROCKER ARM SUB-ASSEMBLY**
    a. Remove the 16 valve rocker arms from the cylinder head sub-assembly.

HINT:

Arrange the removed parts in the correct order.

27. **REMOVE VALVE LASH ADJUSTER ASSEMBLY**

a. Remove the 16 valve lash adjusters from the cylinder head sub-assembly.

HINT:

Arrange the removed parts in the correct order.

28. **REMOVE VALVE STEM CAP**

a. Remove the 16 valve stem caps from the cylinder head sub-assembly.

HINT:

Arrange the removed parts in the correct order.

29. **REMOVE CYLINDER HEAD SUB-ASSEMBLY**

a. Using a 10 mm bi-hexagon wrench, uniformly loosen the 10 bolts in the sequence shown in the illustration. Remove the 10 cylinder head bolts and plate washers.

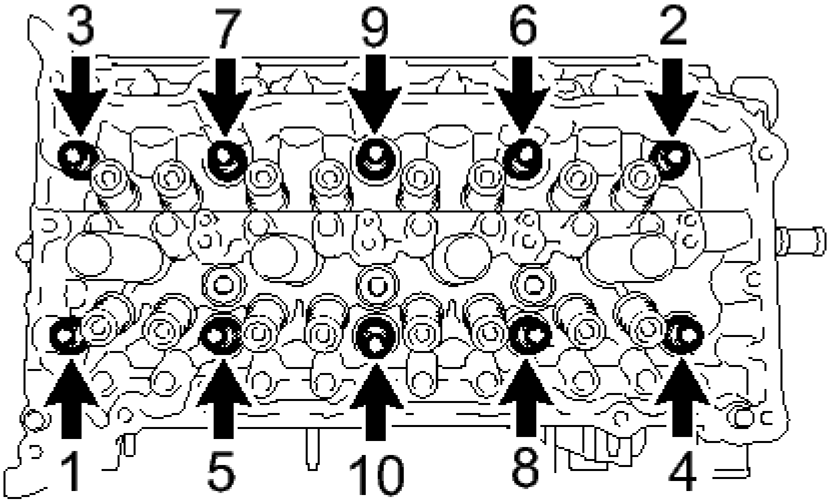

P

Fig. 76: Identifying Bolts Loosening Sequence
Courtesy of TOYOTA MOTOR SALES, U.S.A., INC.

HINT:

Be sure to keep the removed parts separate for each installation position.

NOTE:

- **Be careful not to drop washers into the cylinder head sub-assembly.**

- **Head warpage or cracking could result from removing bolts in the incorrect order.**

  b. Remove the cylinder head sub-assembly.

30. **REMOVE CYLINDER HEAD GASKET**
    a. Remove the cylinder head gasket from the cylinder block.

INSTALLATION

INSTALLATION

HINT:

Perform "Inspection After Repair" after replacing the cylinder head sub-assembly. Refer to **INITIALIZATION** .

1. **INSPECT CYLINDER HEAD BOLT** See step 17
2. **INSPECT CYLINDER HEAD SUB-ASSEMBLY** See step 1
3. **INSTALL CYLINDER HEAD GASKET**
    a. Clean the cylinder block and cylinder head with solvent.

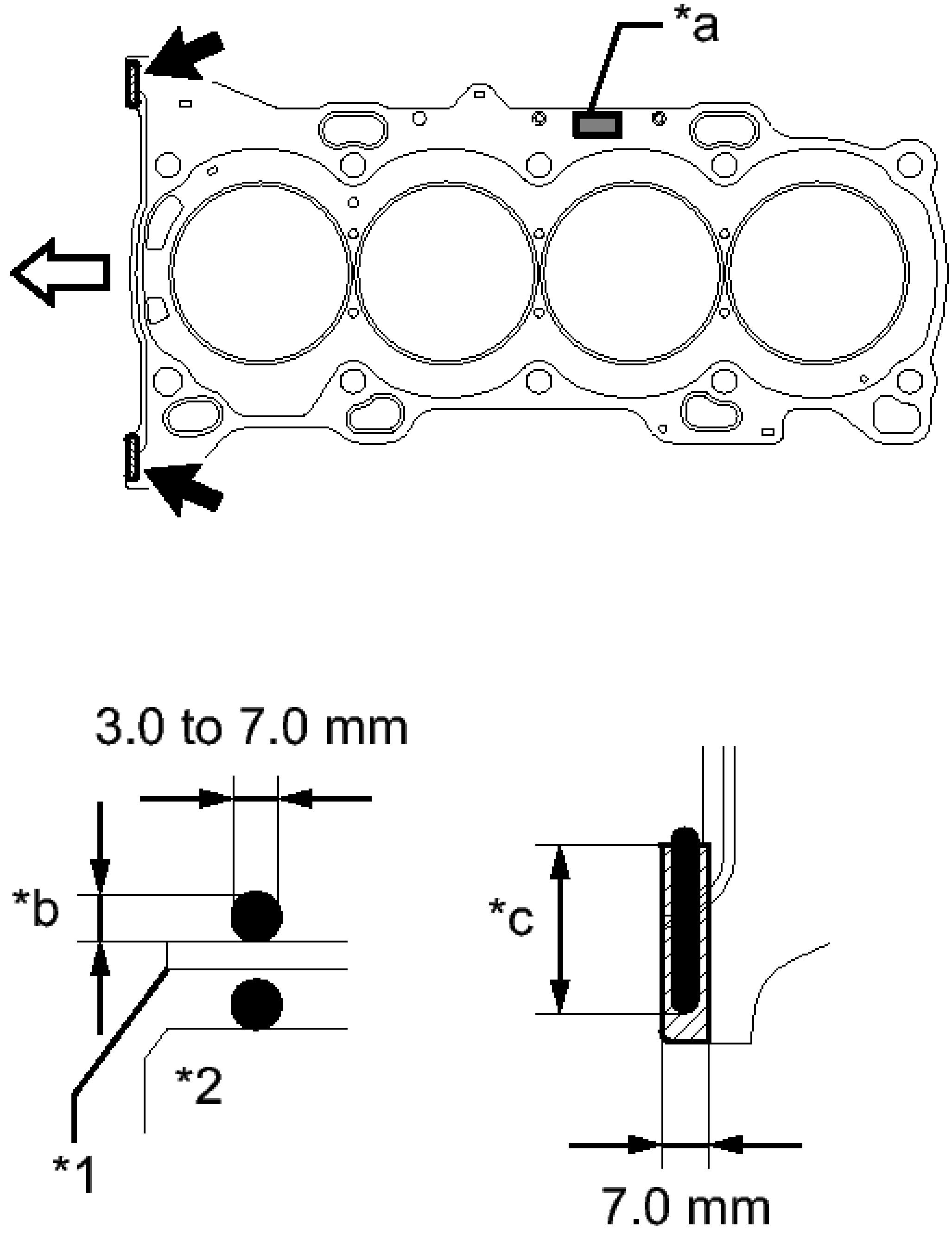
*a
3.0 to 7.0 mm
*b
*c
*2
*1
7.0 mm

Fig. 77: Identifying Cylinder Block And Cylinder Head Gasket
Courtesy of TOYOTA MOTOR SALES, U.S.A., INC.

TEXT IN ILLUSTRATION

	Cylinder

*1	Head Gasket
*2	Cylinder Block
*a	Lot No.
*b	3.0 mm or more
*c	20 mm or more
	Seal Packing
	Front

b. Apply a continuous line of seal packing to a new cylinder head gasket as shown in the illustration.

Seal packing

Toyota Genuine Seal Packing Black, Three Bond 1207B or equivalent

Standard seal dimension

3.0 to 7.0 mm (0.118 to 0.276 in.) wide and 3.0 mm (0.118 in.) thick

HINT:

Apply at least 20 mm (0.787 in.) of seal packing from the inside edge of the protrusion of the cylinder block.

NOTE:

- **Remove any oil from the contact surface.**
- **Install the cylinder head gasket within 3 minutes and tighten the bolts within 15 minutes after applying seal packing.**

c. Place a new cylinder head gasket on the cylinder block surface with the front face of the Lot No. stamp facing upward.

NOTE: **Pay attention to the installation direction.**

4. **INSTALL CYLINDER HEAD SUB-ASSEMBLY**

HINT:

The cylinder head bolts are tightened in 4 progressive steps.

a. Place the cylinder head on the cylinder block.

NOTE:

- **Ensure that no oil is on the mounting surface of the cylinder head sub-assembly.**
- **Place the cylinder head on the cylinder block gently in order not to damage the gasket with the bottom part of the head.**

b. Install the plate washers to the cylinder head bolts.
c. Apply a light coat of engine oil to the threads and under the heads of the cylinder head bolts.
d. Step 1:
    1. Using a 10 mm bi-hexagon wrench, install and uniformly tighten the 10 cylinder head bolts in several steps, in the sequence shown in the illustration.

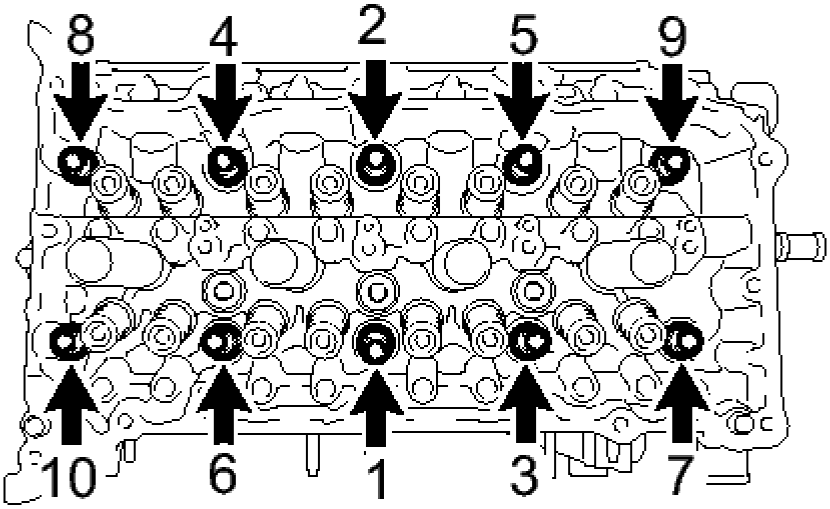

P

Fig. 78: Identifying Cylinder Head Bolts Tightening Sequence
Courtesy of TOYOTA MOTOR SALES, U.S.A., INC.

Torque: 36 N*m (367 kgf*cm, 27 ft.*lbf)

NOTE: **Do not drop the plate washer for the cylinder head bolt into the cylinder head sub-assembly.**

e. Step 2:
    1. Tighten the cylinder head bolts again in the sequence shown in the illustration to make sure that they are tightened to the specified torque.

Torque: 36 N*m (367 kgf*cm, 27 ft.*lbf)

f. Step 3:
   1. Mark each cylinder head bolt head with paint as shown in the illustration.

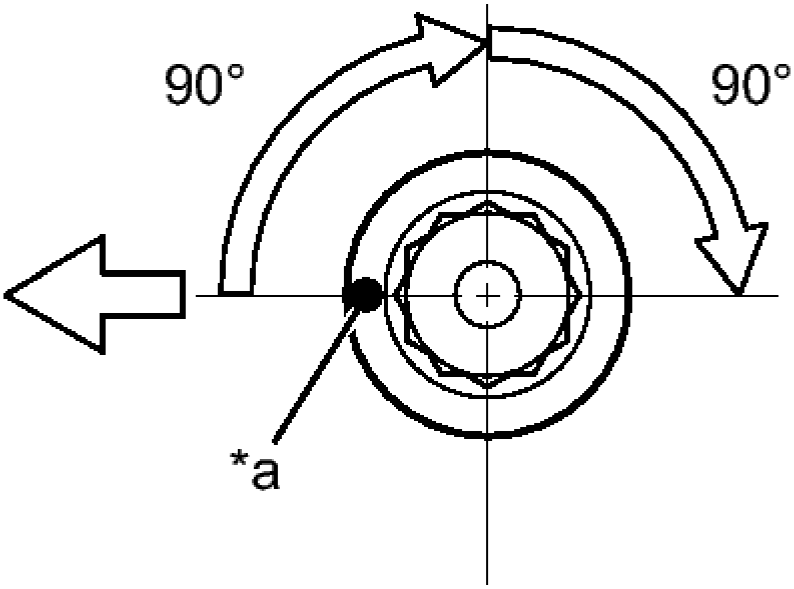

P

Fig. 79: Identifying Paint Mark On Cylinder Head Bolt
Courtesy of TOYOTA MOTOR SALES, U.S.A., INC.

TEXT IN ILLUSTRATION

	Front
*a	Painted Mark

   2. Tighten the cylinder head bolts 90° in the sequence shown in step 1.

g. Step 4:
   1. Tighten the cylinder head bolts another 90° in the sequence shown in step 1.
   2. Check that the paint marks are now facing rearward.

NOTE:

- **Do not apply oil for at least 2 hours after installation.**
- **Do not start the engine for at least 2 hours after installation.**
- **After installation, if the seal packing has seeped out, wipe it off.**

HINT:

Perform "Inspection After Repair" after replacing the cylinder head sub-assembly. Refer to **INITIALIZATION** .

5. **INSTALL VALVE STEM CAP**
    a. Apply a light coat of engine oil to the valve stem ends.
    b. Install the 16 valve stem caps to the cylinder head.

NOTE: Do not drop the valve stem caps into the cylinder head.

6. **SET CAMSHAFT TIMING GEAR ASSEMBLY**

HINT:

When installing the camshaft timing gear, release the lock pin and set the camshaft timing gear to the advanced position before installation.

a. Check the camshaft timing gear position.

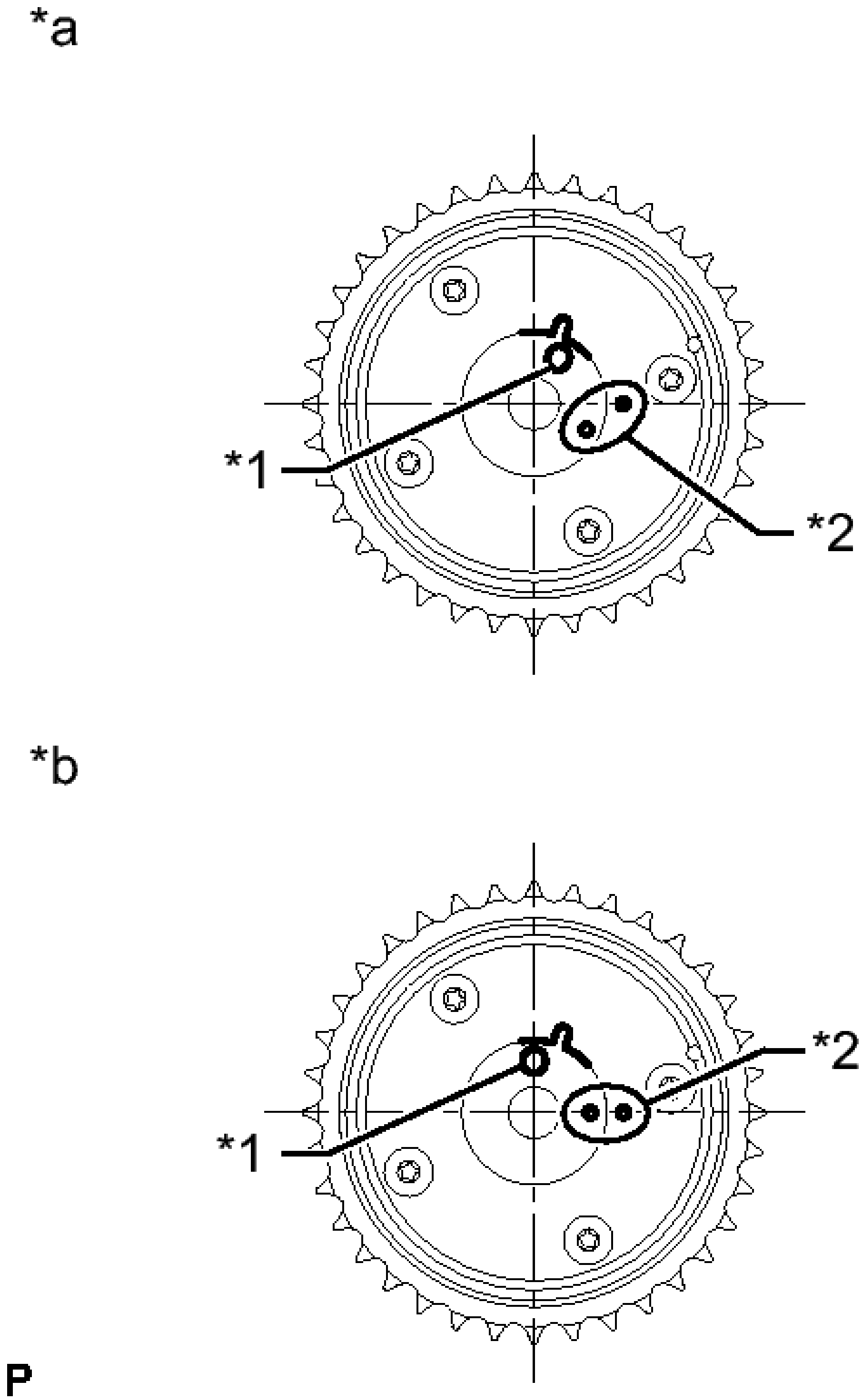

Fig. 80: Identifying Camshaft Timing Gear Position
Courtesy of TOYOTA MOTOR SALES, U.S.A., INC.

TEXT IN ILLUSTRATION

	Knock Pin

*1	Hole
*2	Alignment Mark
*a	Advanced Position:
*b	Retarded Position:

NOTE: **If the camshaft timing gear is set to the advanced position, do not let the camshaft timing gear rotate clockwise during installation.**

If the camshaft timing gear rotates to the retarded position, release the lock pin and set the camshaft timing gear to the advanced position.

b. Align and attach the knock pin of the camshaft with the pin hole of the camshaft timing gear assembly.

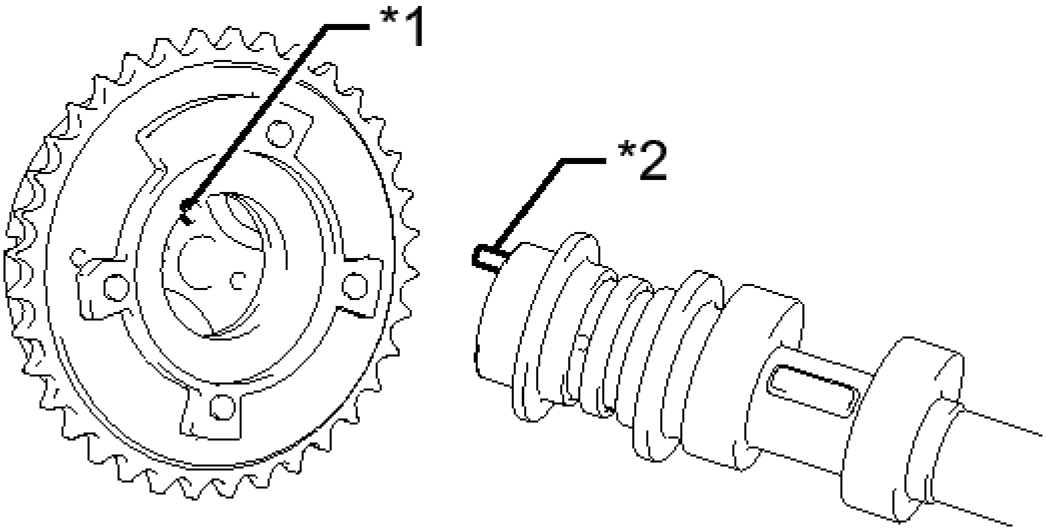

P

Fig. 81: Identifying Pin Hole And Knock Pin
Courtesy of TOYOTA MOTOR SALES, U.S.A., INC.

TEXT IN ILLUSTRATION

*1	Pin Hole
*2	Knock Pin

c. Check that there is no clearance between the camshaft timing gear assembly and camshaft flange.

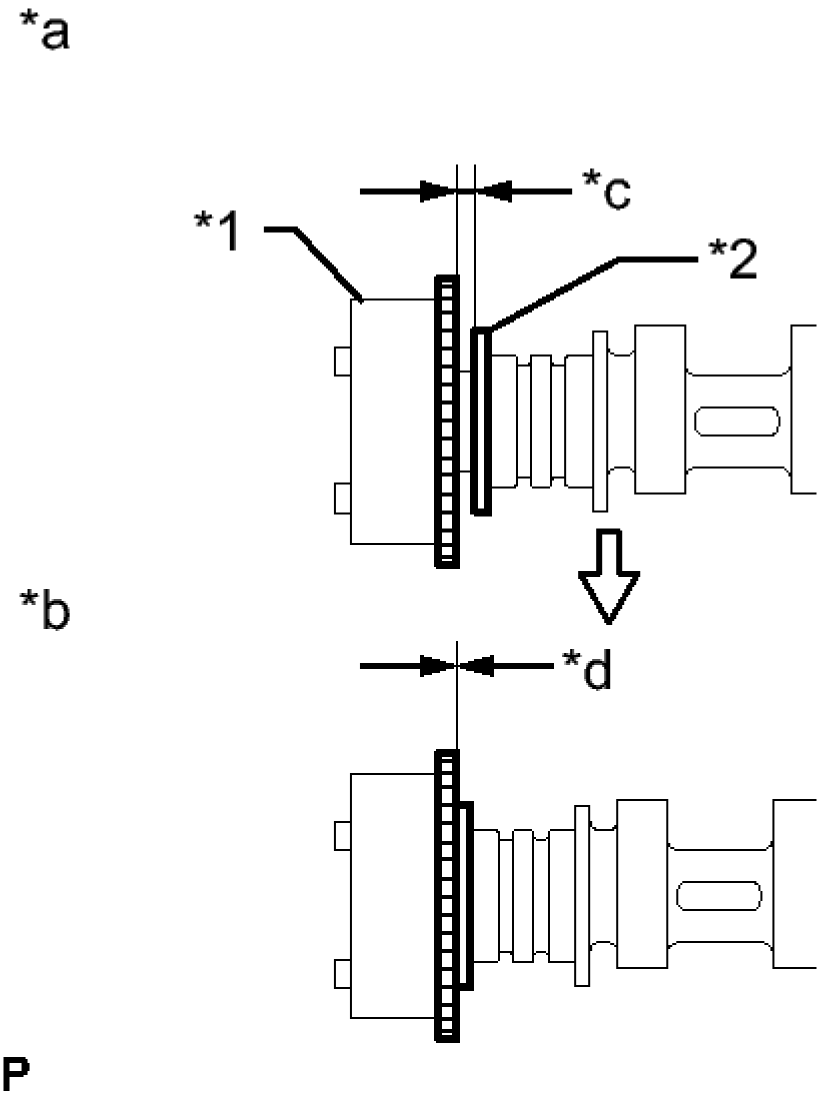

Fig. 82: Identifying No Clearance Between Camshaft Timing Exhaust Gear And Camshaft Flange
Courtesy of TOYOTA MOTOR SALES, U.S.A., INC.

TEXT IN ILLUSTRATION

*1	Camshaft Timing Gear Assembly
*2	Flange
*a	INCORRECT
*b	CORRECT
*c	Clearance
*d	No Clearance

d. Secure the camshaft in place by hand, and then install the installation bolt of the camshaft timing gear by hand.

NOTE: **Do not use any tools to install the bolt. If the bolt is installed using a tool, the lock pin will be damaged.**

e. Release the lock pin.

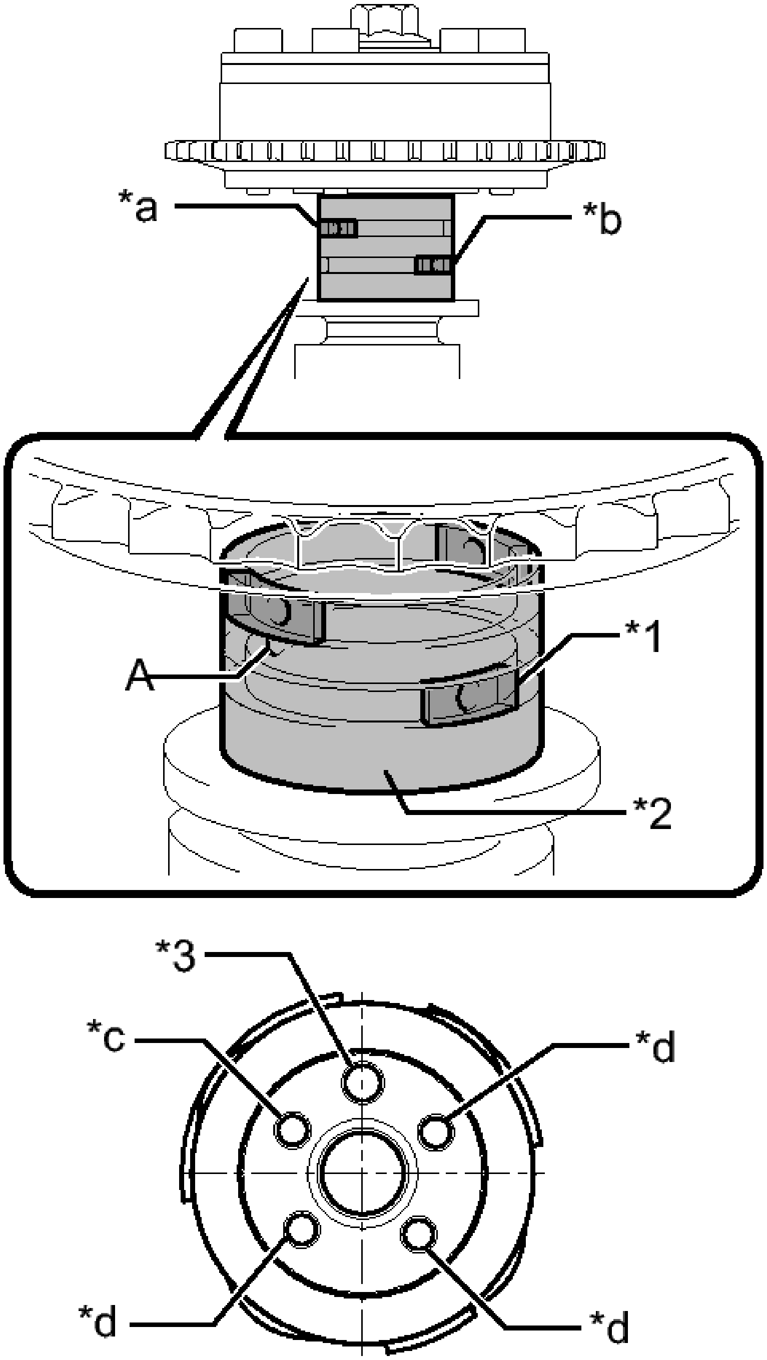

P

Fig. 83: Identifying Rubber, Vinyl Tape, Knock Pin, Retard Side Path And Advance Side Path

Courtesy of TOYOTA MOTOR SALES, U.S.A., INC.

TEXT IN ILLUSTRATION

*1	Rubber
*2	Vinyl Tape
*3	Knock Pin
*a	Retard Side Path
*b	Advance Side Path
*c	Open
*d	Close

1. Clean the camshaft journal with non-residue solvent.
2. Cover the 4 oil paths of the cam journal with vinyl tape as shown in the illustration.

   HINT:

   There are 4 oil paths in the grooves of the camshaft. Plug three of the paths with pieces of rubber.

3. Open a hole at port A shown in the illustration.
4. While applying approximately 200 kPa (2.0 kgf/ cm^2 , 29 psi) of air pressure to the oil path, forcibly turn the camshaft timing gear assembly in the advance direction (counterclockwise).

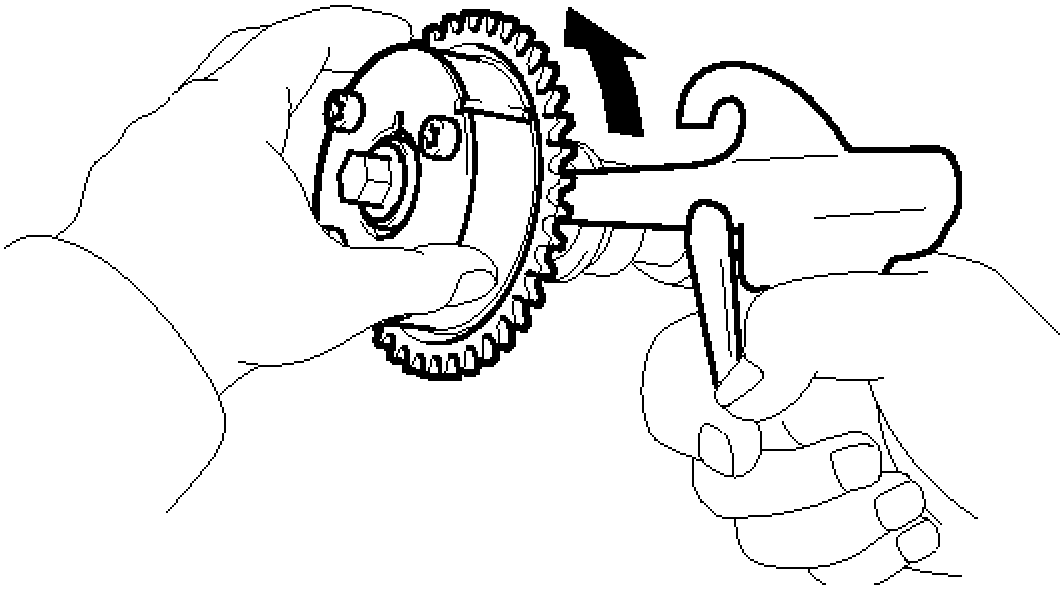

P

Fig. 84: Turning Camshaft Timing Gear Assembly
Courtesy of TOYOTA MOTOR SALES, U.S.A., INC.

WARNING: **Cover the paths with a piece of cloth when applying pressure to keep oil from splashing.**

NOTE: **Do not allow the camshaft timing gear assembly to lock. If it locks, release the lock pin again.**

HINT:

- The camshaft timing gear assembly may be turned in the advance direction without applying any force.
- If enough air pressure cannot be applied because of air leakage from the port, releasing the lock pin may be difficult.

5. Remove the vinyl tape and rubber pieces from the camshaft.

f. Remove the bolt and camshaft timing gear.

NOTE: **Do not allow the camshaft timing gear assembly to lock. If it locks, release the lock pin again.**

7. **INSTALL VALVE LASH ADJUSTER ASSEMBLY**
   a. Inspect the valve lash adjuster before installing it. See step 2.
   b. Install the 16 lash adjusters to the cylinder head.

NOTE: **Install the lash adjuster to the same place it was removed from.**

8. **INSTALL NO. 1 VALVE ROCKER ARM SUB-ASSEMBLY**
   a. Apply engine oil to the lash adjuster tips and valve stem caps.

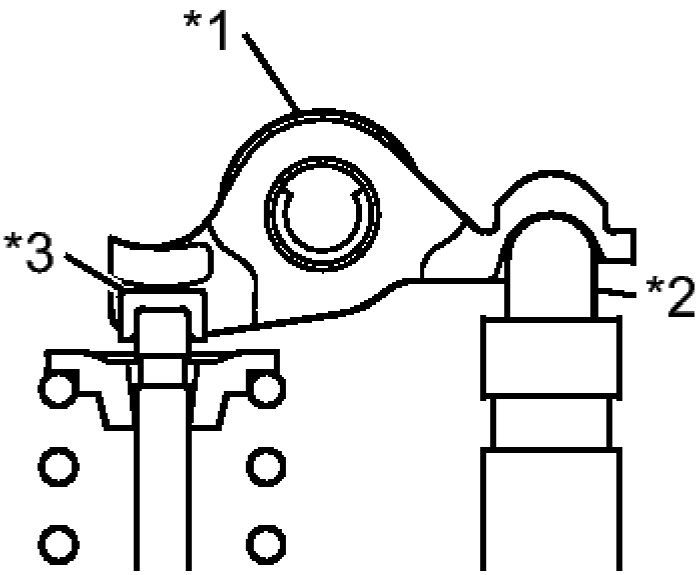

P

Fig. 85: Identifying Valve Rocker Arms

Courtesy of TOYOTA MOTOR SALES, U.S.A., INC.

TEXT IN ILLUSTRATION

*1	Valve Rocker Arm
*2	Valve Lash Adjuster
*3	Valve Stem Cap

b. Install the 16 valve rocker arms as shown in the illustration.

9. **INSTALL NO. 2 CAMSHAFT BEARING** See step 18
10. **INSTALL NO. 1 CAMSHAFT BEARING** See step 17
11. **INSTALL OIL CONTROL VALVE FILTER** See step 19
12. **INSTALL CAMSHAFT**
    a. Clean the camshaft journals, camshaft housing and bearing caps.
    b. Apply a light coat of engine oil to the camshaft journal, camshaft housing and bearing caps.
    c. Install the camshaft and No. 2 camshaft to the camshaft housing.

    HINT:

Perform "Inspection After Repair" after replacing the camshaft or No. 2 camshaft. Refer to **INITIALIZATION** .

13. **INSTALL CAMSHAFT BEARING CAP**
    a. Confirm the marks and numbers on the camshaft bearing caps and place them in their proper positions and directions.

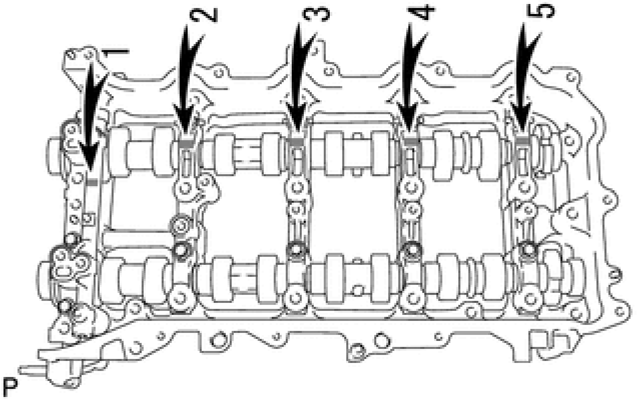

Fig. 86: Identifying Camshaft Bearing Caps Positions
Courtesy of TOYOTA MOTOR SALES, U.S.A., INC.

    b. Install the 11 bolts in the order shown in the illustration.

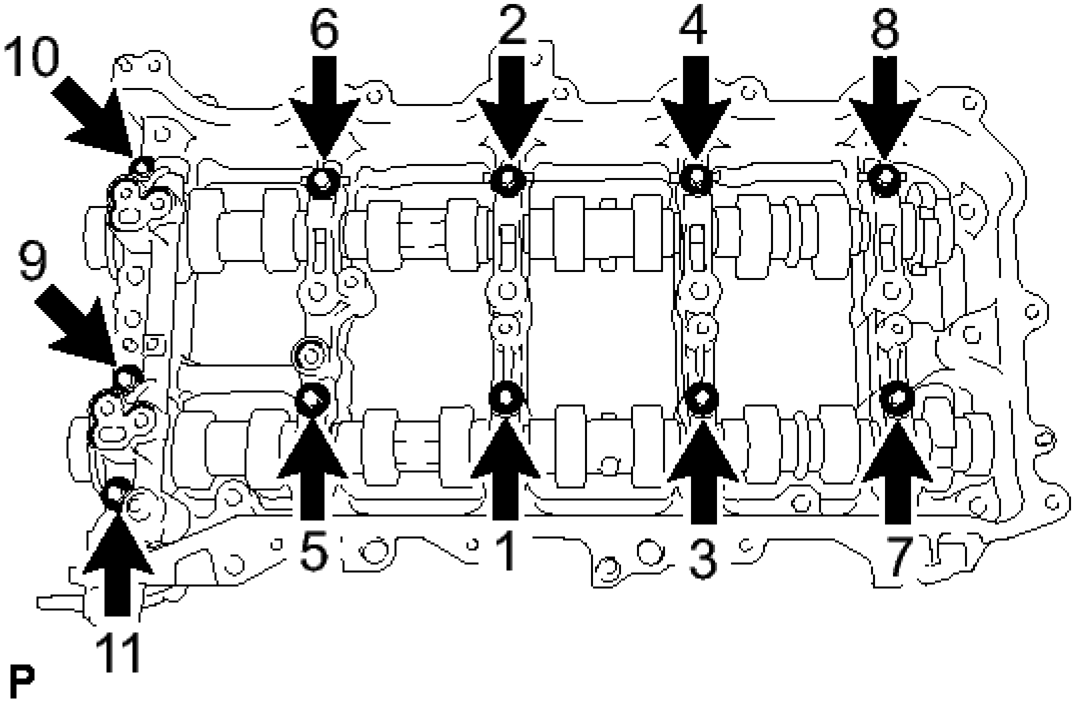

Fig. 87: Identifying Camshaft Bearing Caps Bolts Tightening Sequence
Courtesy of TOYOTA MOTOR SALES, U.S.A., INC.

Torque: 16 N*m (163 kgf*cm, 12 ft.*lbf)

NOTE: **Make sure that the camshaft rotates smoothly after installing the bearing caps.**

14. **INSTALL CAMSHAFT HOUSING SUB-ASSEMBLY**

    a. Check that the valve rocker arms are installed as shown in the illustration.

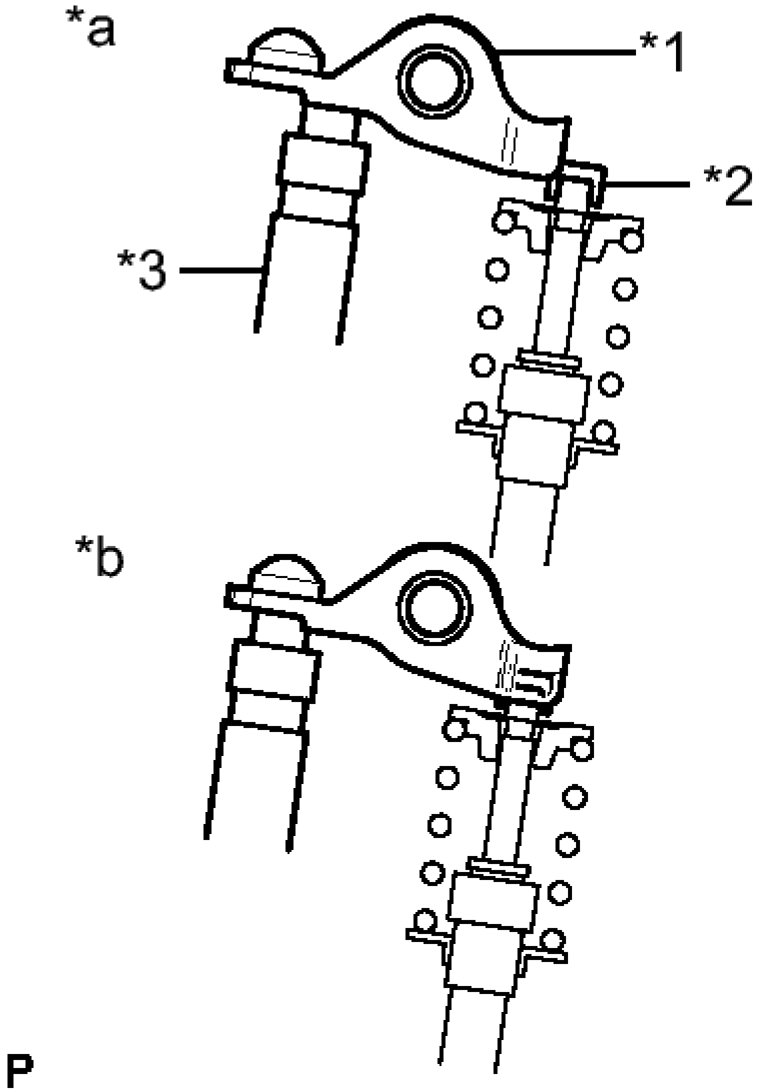

Fig. 88: Identifying Valve Rocker Arm Installation
Courtesy of TOYOTA MOTOR SALES, U.S.A., INC.

TEXT IN ILLUSTRATION

*1	Valve Rocker Arm
*2	Valve Stem

	Cap
*3	Valve Lash Adjuster
*a	INCORRECT
*b	CORRECT

b. Apply seal packing in a continuous line as shown in the illustration.

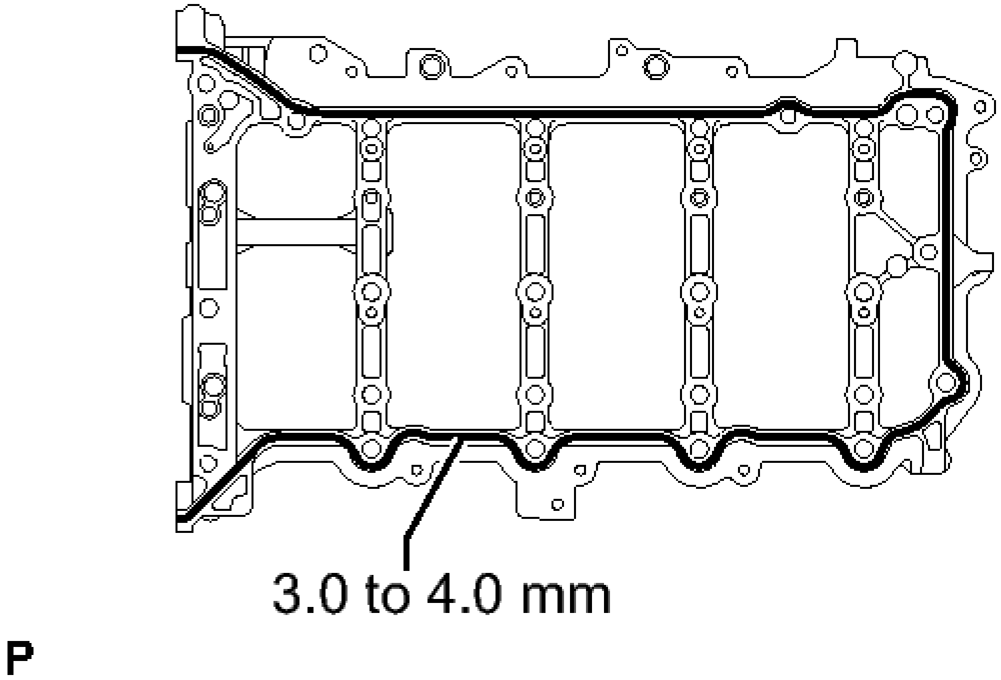

Fig. 89: Identifying Seal Diameter
Courtesy of TOYOTA MOTOR SALES, U.S.A., INC.

Seal packing

Toyota Genuine Seal Packing Black, Three Bond 1207B or equivalent

Standard seal diameter

3.0 to 4.0 mm (0.118 to 0.157 in.)

NOTE:

- **Remove any oil from the contact surface.**
- **Install the camshaft housing within 3 minutes and tighten the bolts within 10 minutes after applying seal packing.**

c. Position the knock pin of the camshaft and No. 2 camshaft as shown in the illustration.

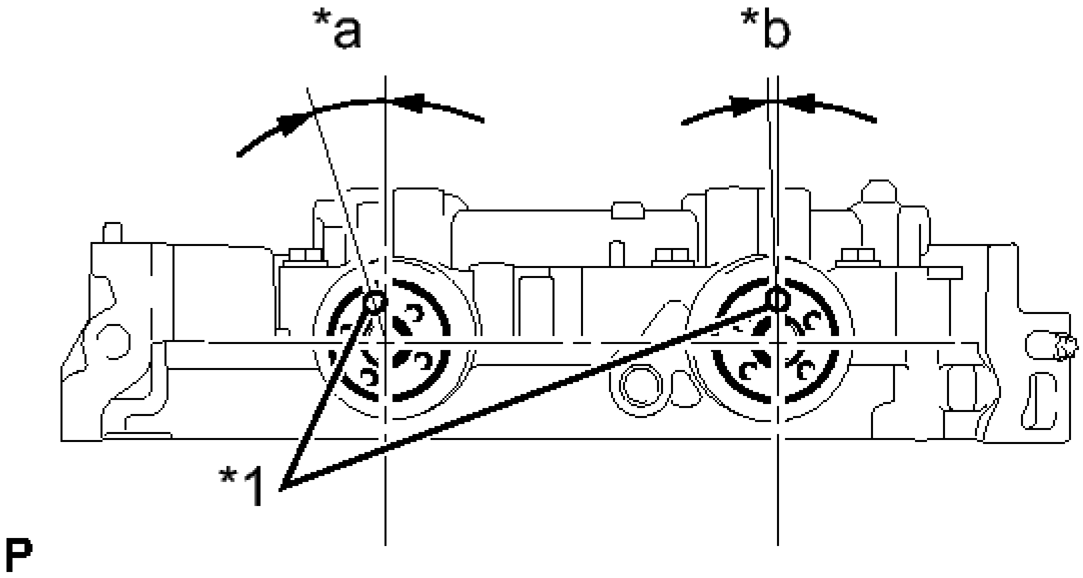

Fig. 90: Identifying No. 1 & No. 2 Camshaft Knock Pin Positions
Courtesy of TOYOTA MOTOR SALES, U.S.A., INC.

TEXT IN ILLUSTRATION

*1	Knock Pin
*a	Approximately 17°
*b	Approximately 2°

d. Install the camshaft housing, and then install the 20 bolts in the order shown in the illustration.

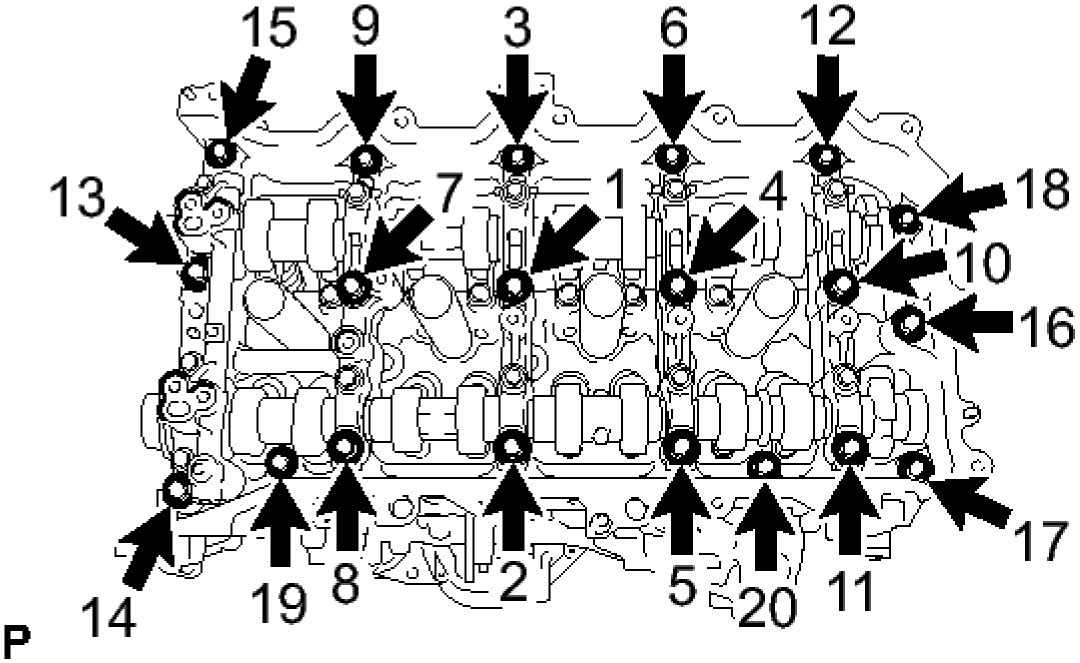

Fig. 91: Identifying Camshaft Housing Bolts Tightening Sequence
Courtesy of TOYOTA MOTOR SALES, U.S.A., INC.

Torque: 27 N*m (275 kgf*cm, 20 ft.*lbf)

NOTE:

- **Do not apply oil for at least 2 hours after the installation.**
- **Do not start the engine for at least 2 hours after the installation.**
- **Thoroughly wipe clean any seal packing.**

15. **INSTALL CAMSHAFT TIMING GEAR ASSEMBLY**
    a. Check the camshaft timing gear position.

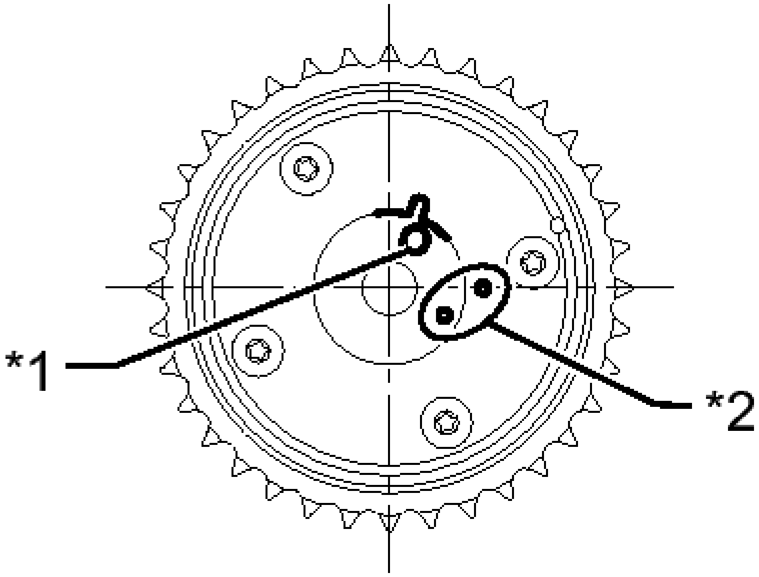

Fig. 92: Identifying Camshaft Timing Gear Position
Courtesy of TOYOTA MOTOR SALES, U.S.A., INC.

TEXT IN ILLUSTRATION

*1	Knock Pin Hole
*2	Alignment Mark

If the camshaft timing gear is not set to the advanced position, release the lock pin and reset the camshaft timing gear (Refer to the "Set Camshaft Timing Gear Assembly" procedures" in step 6).

b. Align and attach the knock pin of the camshaft with the pin hole of the camshaft timing gear assembly.

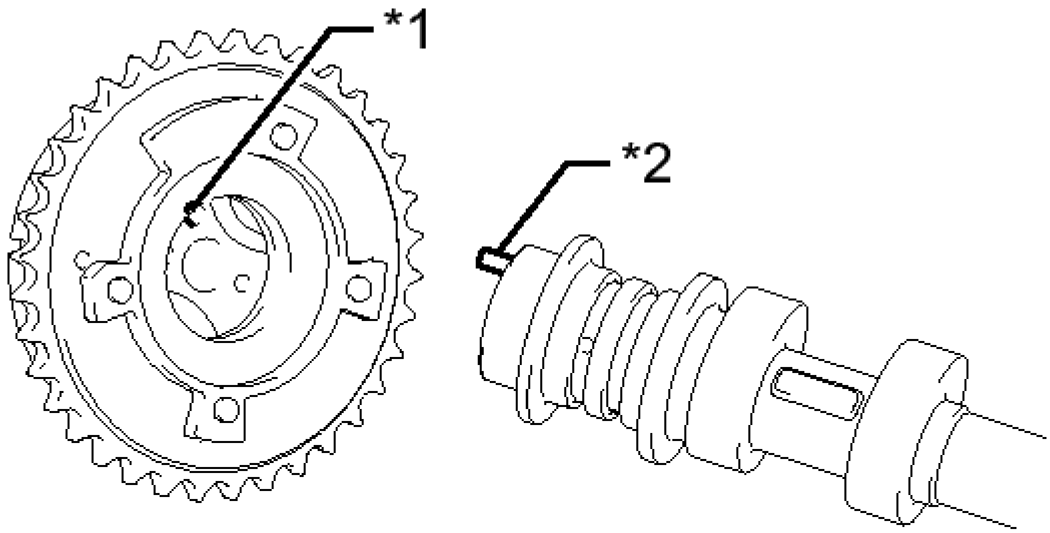

Fig. 93: Identifying Pin Hole And Knock Pin
Courtesy of TOYOTA MOTOR SALES, U.S.A., INC.

TEXT IN ILLUSTRATION

*1	Pin Hole
*2	Knock Pin

c. Check that there is no clearance between the camshaft timing gear and camshaft flange.

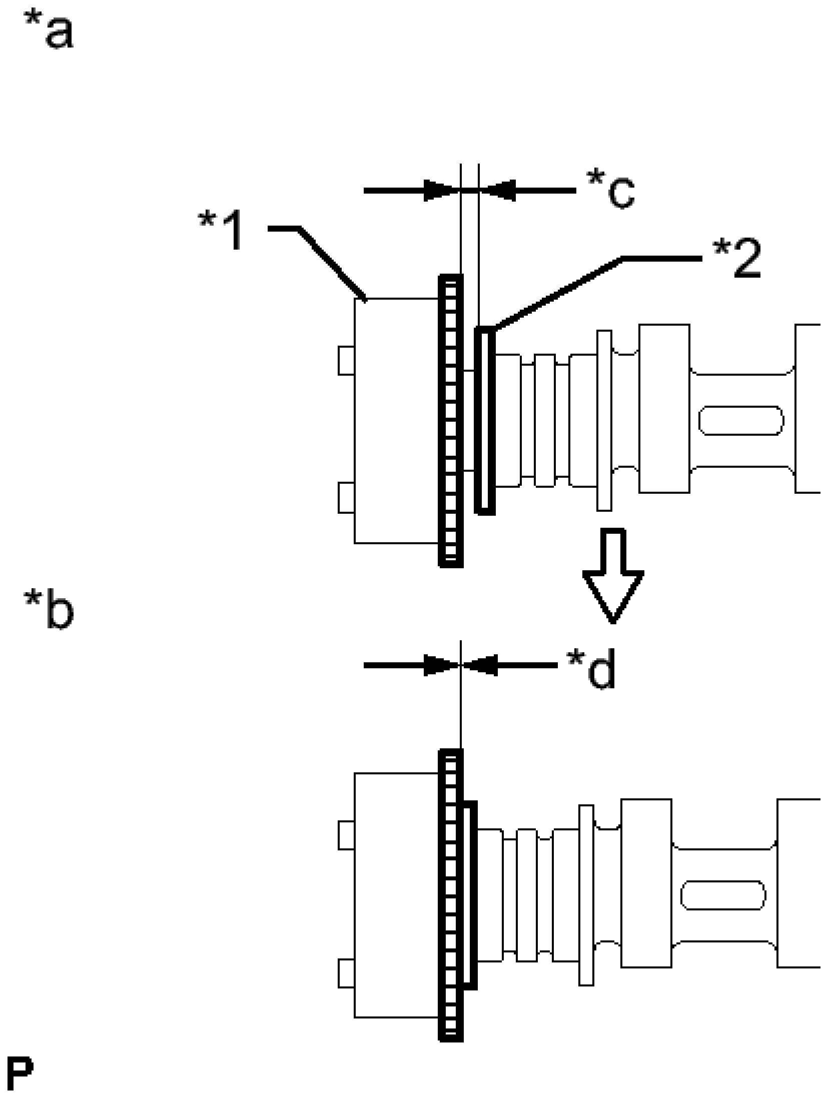

Fig. 94: Identifying No Clearance Between Camshaft Timing Exhaust Gear And Camshaft Flange
Courtesy of TOYOTA MOTOR SALES, U.S.A., INC.

TEXT IN ILLUSTRATION

*1	Camshaft Timing Gear
*2	Flange
*a	INCORRECT
*b	CORRECT
*c	Clearance
*d	No Clearance

d. Using a wrench to hold the hexagonal portion of the camshaft, install the bolt.

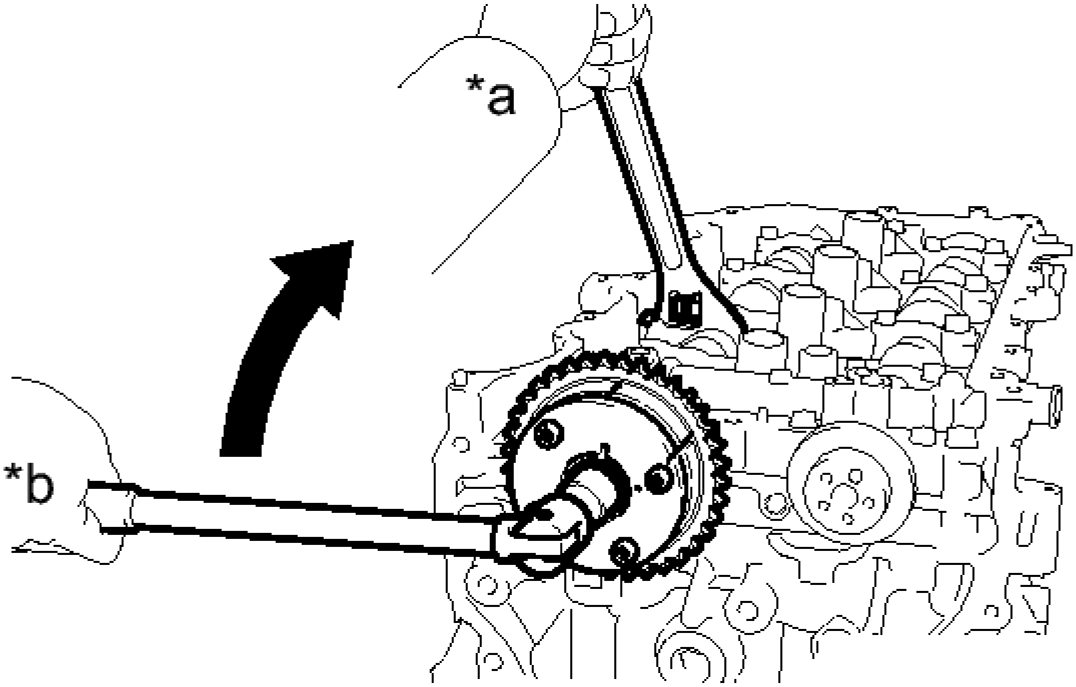

Fig. 95: Installing Camshaft Bolt Using Hexagonal
Courtesy of TOYOTA MOTOR SALES, U.S.A., INC.

TEXT IN ILLUSTRATION

*a	Hold
*b	Turn

Torque: 85 N*m (867 kgf*cm, 63 ft.*lbf)

NOTE:

- **Be careful not to damage the cylinder head or spark plug tube with the wrench.**
- **Do not disassemble the camshaft timing gear assembly.**

HINT:

Perform "Inspection After Repair" after replacing the camshaft timing gear assembly. Refer to **INITIALIZATION** .

16. **INSTALL CAMSHAFT TIMING EXHAUST GEAR ASSEMBLY**
    a. Align and attach the knock pin of the No. 2 camshaft with the pin hole of the camshaft timing exhaust gear assembly.

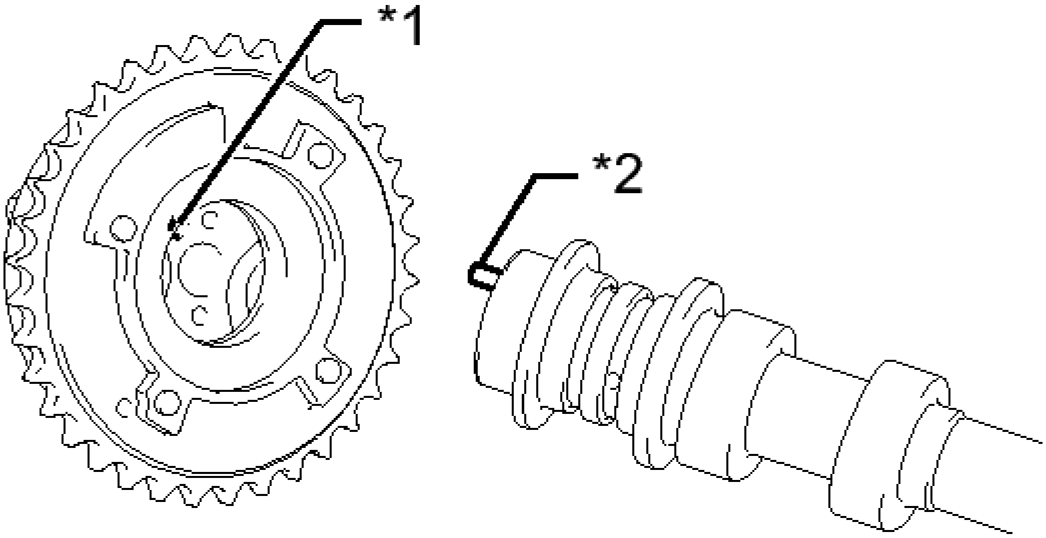

Fig. 96: Identifying Pin Hole And Knock Pin
Courtesy of TOYOTA MOTOR SALES, U.S.A., INC.

TEXT IN ILLUSTRATION

*1	Pin Hole
*2	Knock Pin

b. Check that there is no clearance between the camshaft timing exhaust gear and camshaft flange.

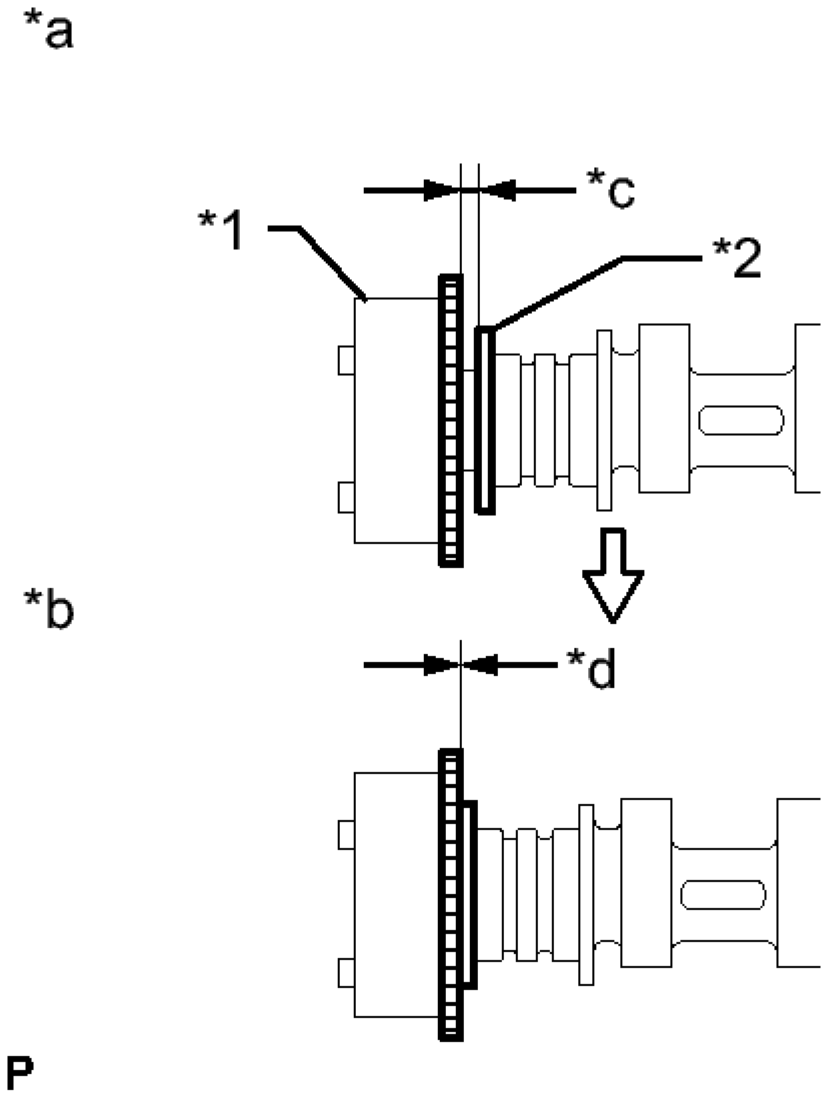

Fig. 97: Identifying No Clearance Between Camshaft Timing Exhaust Gear And Camshaft Flange
Courtesy of TOYOTA MOTOR SALES, U.S.A., INC.

TEXT IN ILLUSTRATION

*1	Camshaft Timing Exhaust Gear
*2	Flange
*a	INCORRECT
*b	CORRECT
*c	Clearance
*d	No Clearance

c. Using a wrench to hold the hexagonal portion of the No. 2 camshaft, install the bolt.

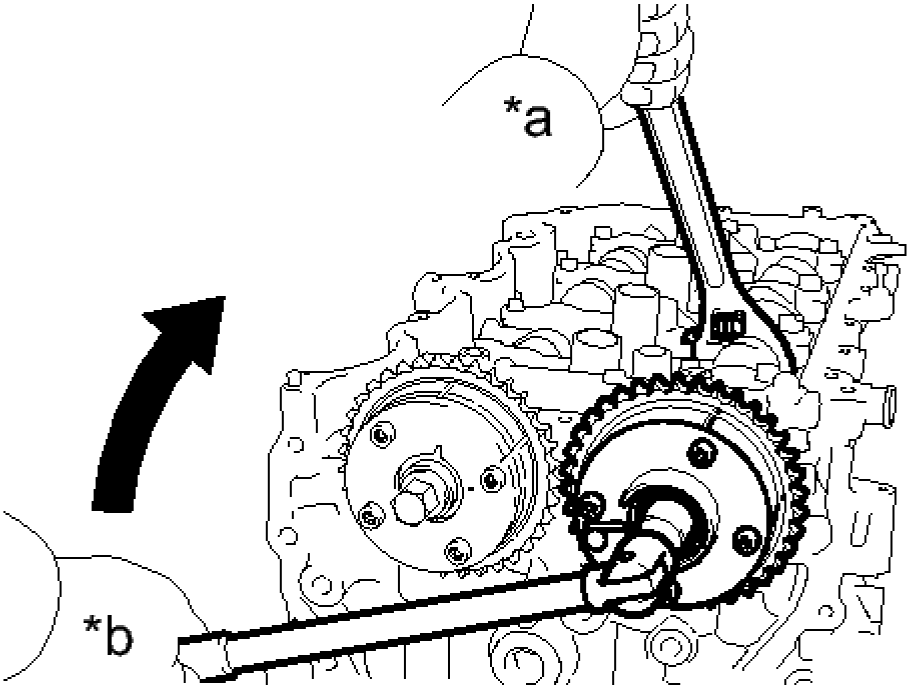

Fig. 98: Installing No. 2 Camshaft Bolt Using Hexagonal
Courtesy of TOYOTA MOTOR SALES, U.S.A., INC.

TEXT IN ILLUSTRATION

*a	Hold
*b	Turn

Torque: 85 N*m (867 kgf*cm, 63 ft.*lbf)

NOTE:

- **Be careful not to damage the cylinder head or spark plug tube with the wrench.**
- **Do not disassemble the camshaft timing exhaust gear assembly.**

HINT:

Perform "Inspection After Repair" after replacing the camshaft timing exhaust gear assembly. Refer to **INITIALIZATION** .

17. **ADD ENGINE OIL**
    a. Add 50 cc (3.1 cu. in) of engine oil into the oil hole shown in the illustration.

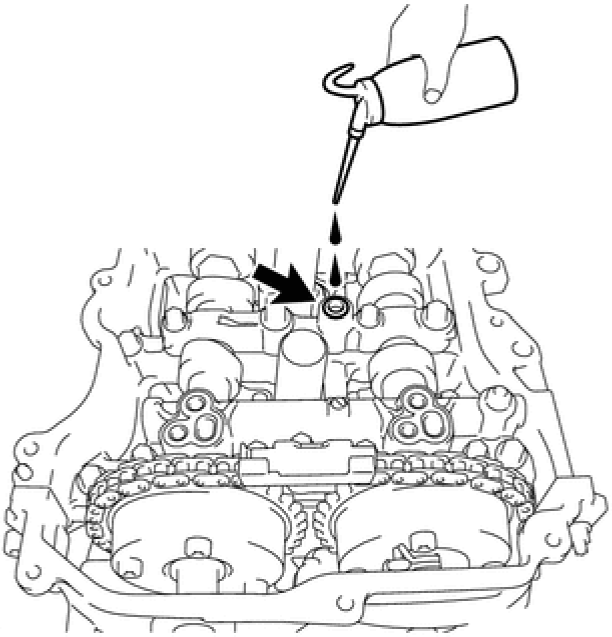

Fig. 99: Adding Engine Oil Into Oil Hole
Courtesy of TOYOTA MOTOR SALES, U.S.A., INC.

NOTE:	- **Oil must be added if the lash adjusters were removed.** - **Make sure that the low pressure chamber and oil paths of the lash adjusters are full of engine oil.**

18. **SET NO. 1 CYLINDER TO TDC/COMPRESSION**
    a. Temporarily install the crankshaft pulley bolt.

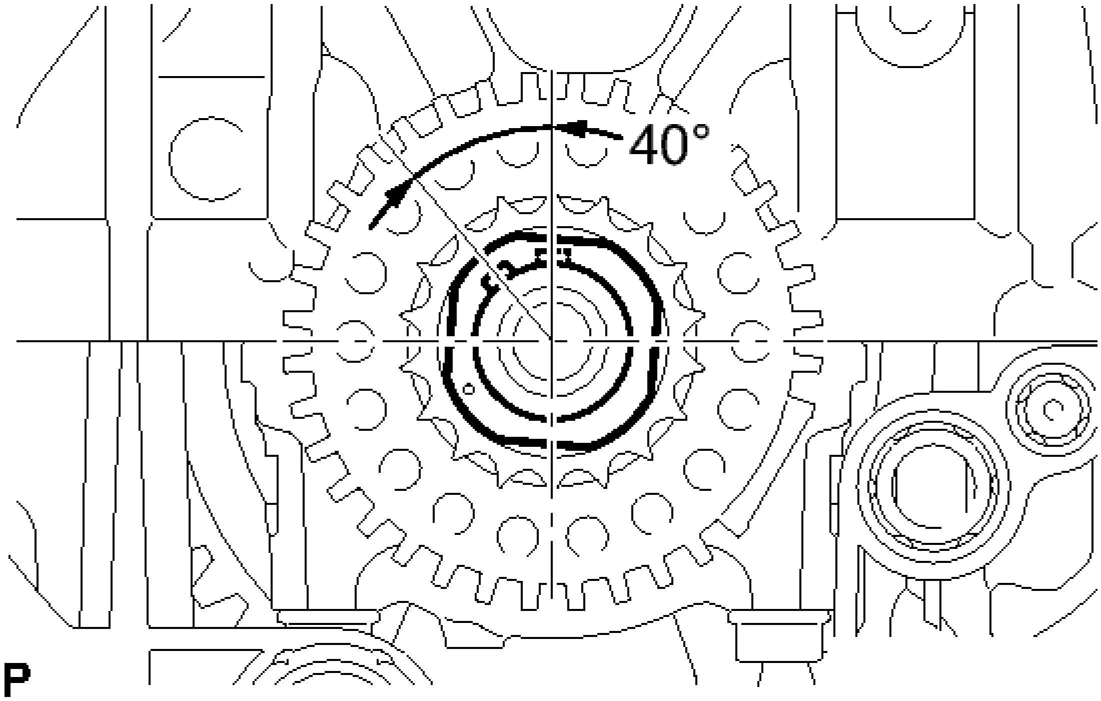

Fig. 100: Identifying Crankshaft Pulley Key Position
Courtesy of TOYOTA MOTOR SALES, U.S.A., INC.

b. Rotate the crankshaft 40° counterclockwise to position the crankshaft pulley key as shown in the illustration.
c. Check that the timing marks of the camshaft timing gears are as shown in the illustration.

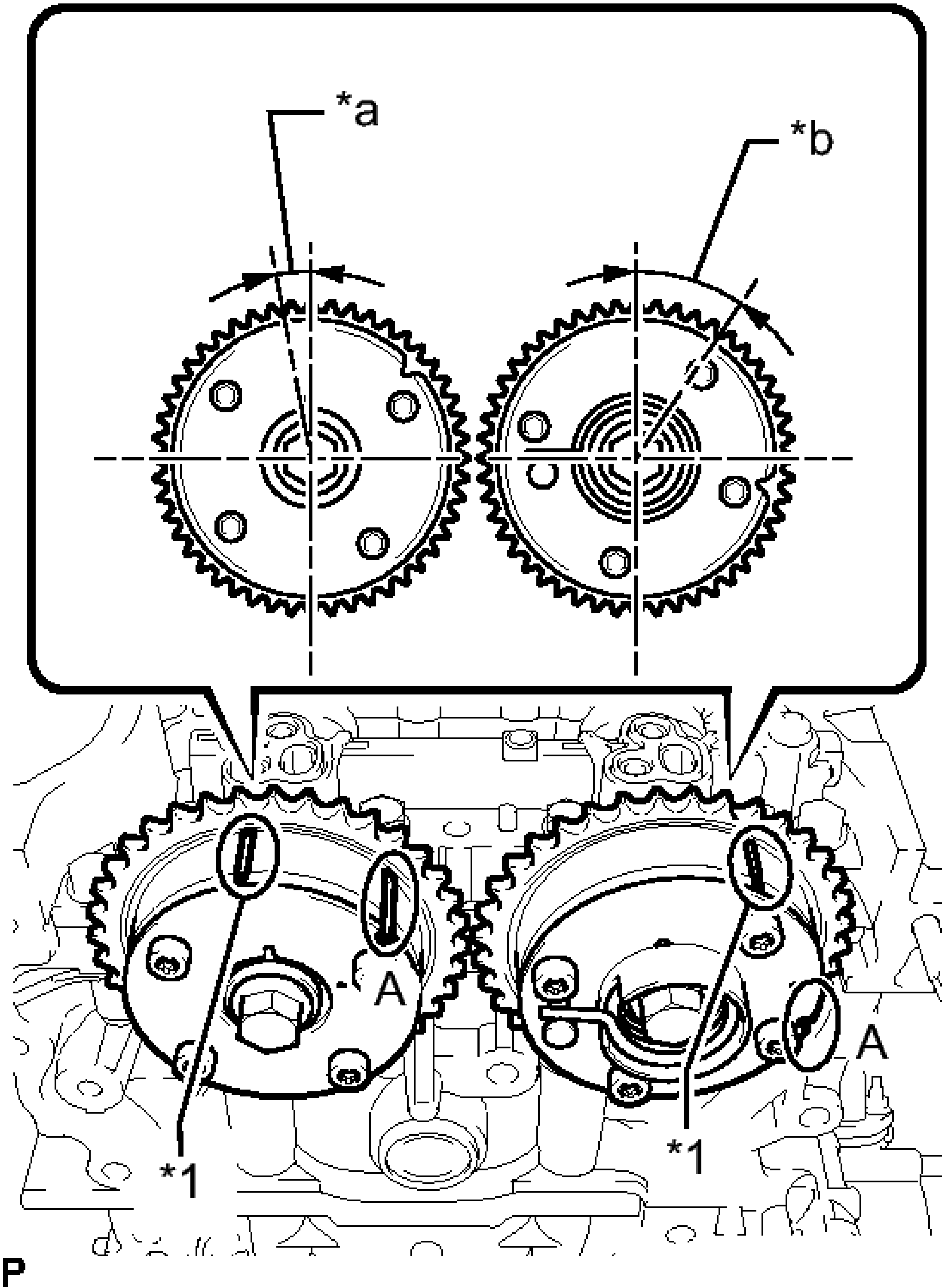

Fig. 101: Camshaft Timing Gear Marks
Courtesy of TOYOTA MOTOR SALES, U.S.A., INC.

TEXT IN ILLUSTRATION

*1	Timing Mark

*a	Approximately 7°
*b	Approximately 32°

HINT:

"A" is not a timing mark.

19. **INSTALL NO. 1 CHAIN VIBRATION DAMPER**
    a. Install the chain vibration damper with the 2 bolts.

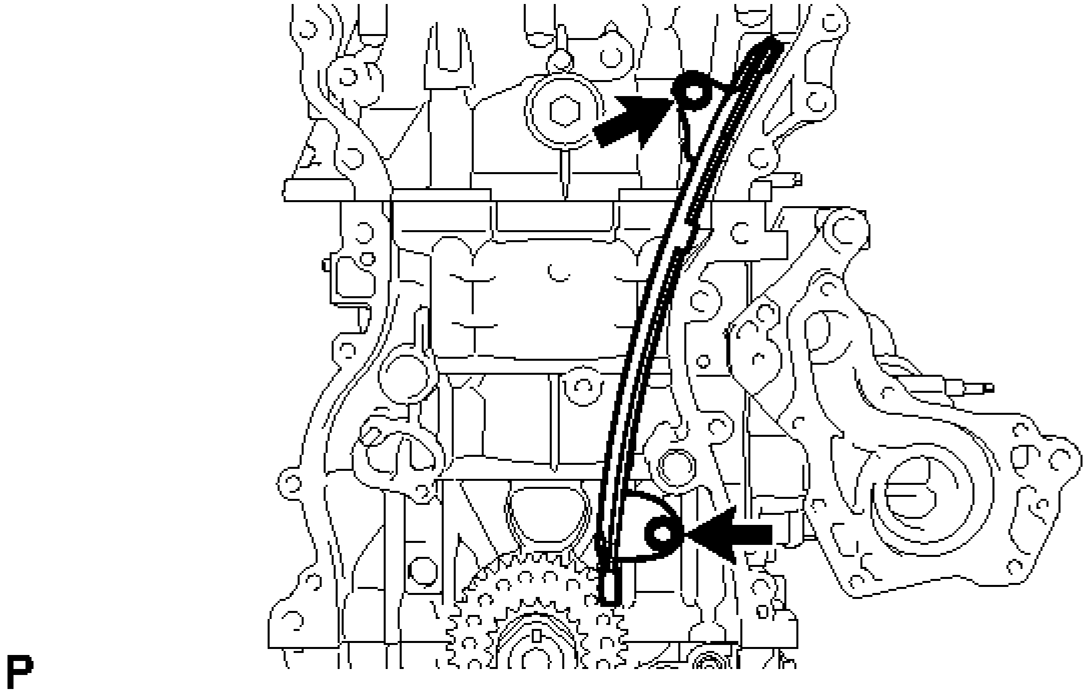

Fig. 102: Locating Chain Vibration Damper Bolts
Courtesy of TOYOTA MOTOR SALES, U.S.A., INC.

Torque: 21 N*m (214 kgf*cm, 15 ft.*lbf)

20. **INSTALL CHAIN SUB-ASSEMBLY**
    a. Place the chain onto the camshaft timing gears and crankshaft timing sprocket.

    HINT:

    - Make sure the mark plate of the chain faces away from the engine.
    - It is not necessary to install the chain to the teeth of the gears and sprocket.

    b. Align the mark plate (yellow or gold) of the chain with the timing mark of the camshaft timing exhaust gear and install the chain to the camshaft timing exhaust gear.

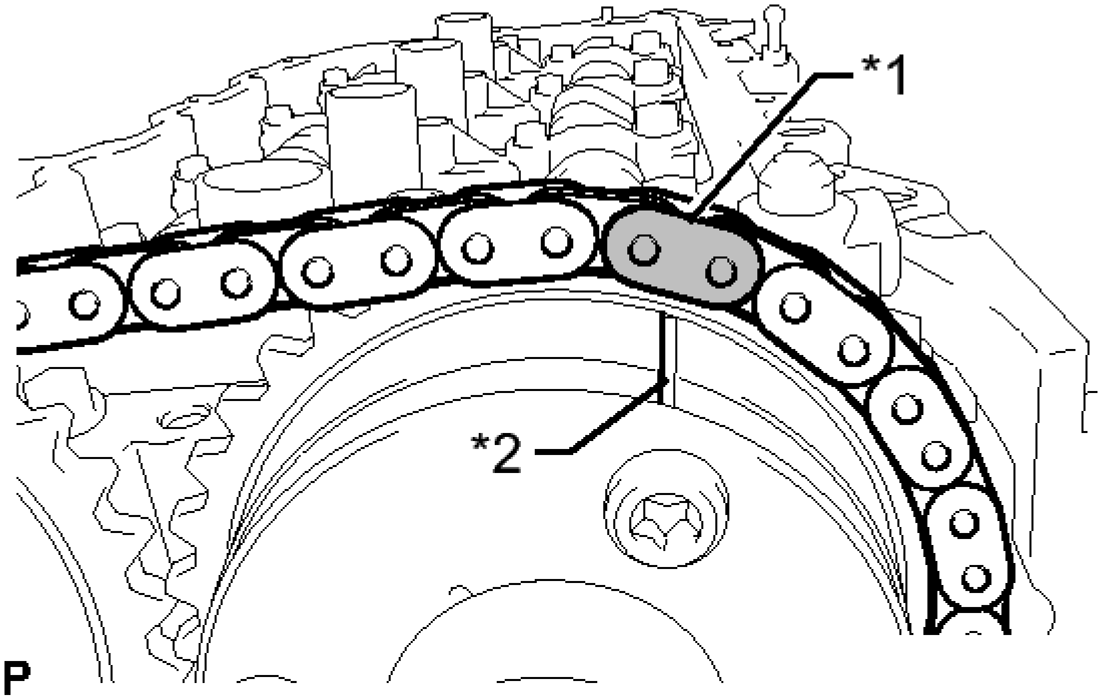

Fig. 103: Identifying Mark Plate And Timing Mark
Courtesy of TOYOTA MOTOR SALES, U.S.A., INC.

TEXT IN ILLUSTRATION

*1	Mark Plate
*2	Timing Mark

c. Align the mark plate (pink or gold) of the chain with the timing mark of the crankshaft timing sprocket and install the chain to the crankshaft timing sprocket.

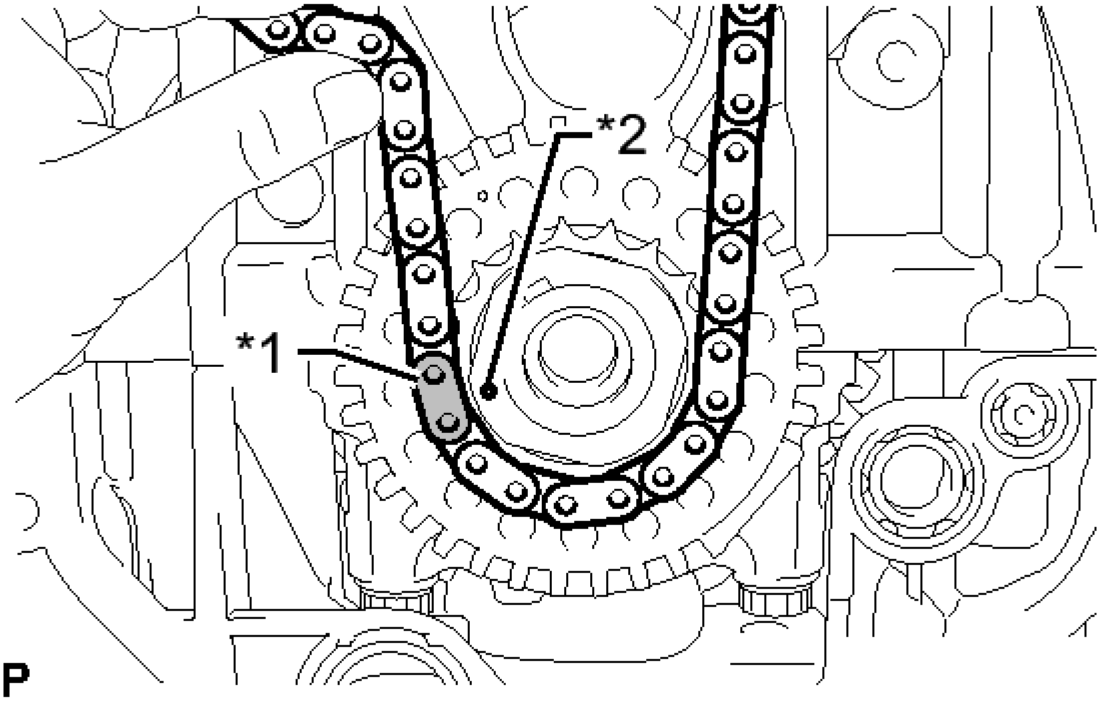

Fig. 104: Installing Chain
Courtesy of TOYOTA MOTOR SALES, U.S.A., INC.

TEXT IN ILLUSTRATION

*1	Mark Plate
*2	Timing Mark

d. Tie a string above the crankshaft timing sprocket so that the chain is secure.

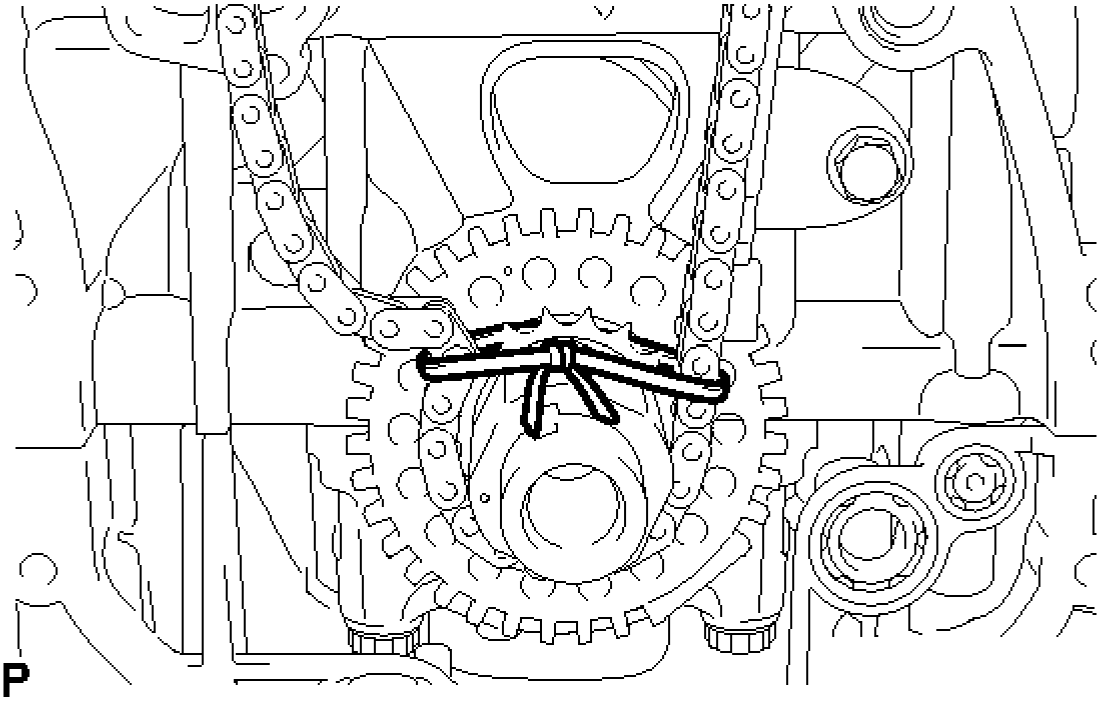

Fig. 105: Tying String Above Crankshaft Timing Sprocket
Courtesy of TOYOTA MOTOR SALES, U.S.A., INC.

e. Using the hexagonal portion of the intake camshaft, rotate the intake camshaft counterclockwise with a wrench, align the timing mark of the camshaft timing gear with the mark plate (yellow or gold) of the chain and install the chain to the camshaft timing gear.

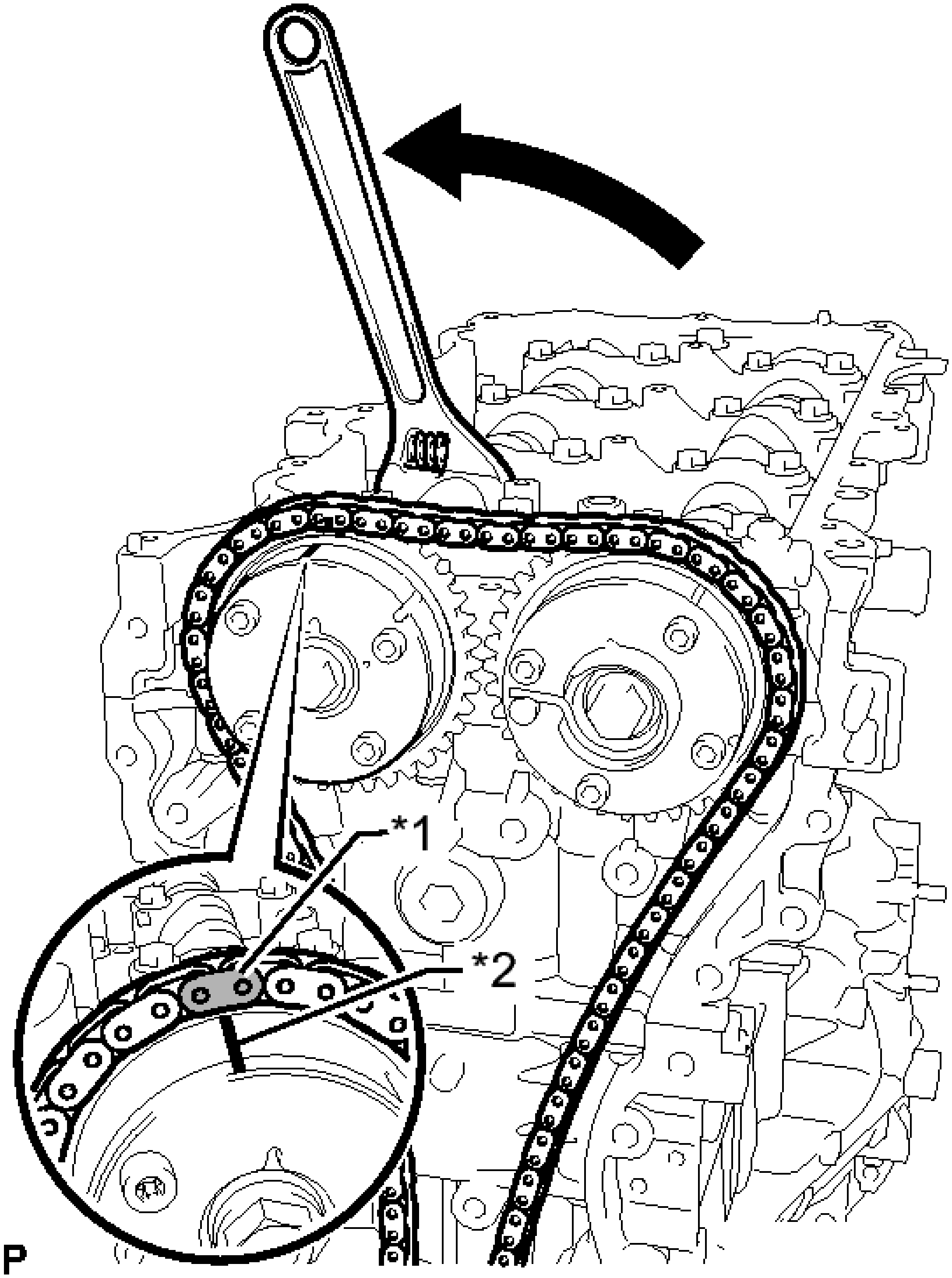

Fig. 106: Rotating Intake Camshaft Counterclockwise With Wrench
Courtesy of TOYOTA MOTOR SALES, U.S.A., INC.

TEXT IN ILLUSTRATION

	Mark

*1	Plate
*2	Timing Mark

HINT:

Hold the intake camshaft in place with a wrench until the chain tensioner is installed.

f. Remove the string above the crankshaft timing sprocket, rotate the crankshaft clockwise, and loosen the chain so that the chain tensioner slipper can be installed.

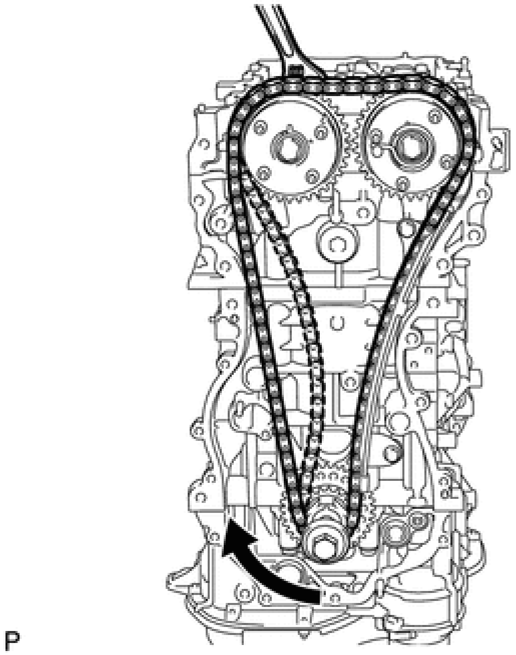

Fig. 107: Rotating Crankshaft
Courtesy of TOYOTA MOTOR SALES, U.S.A., INC.

NOTE: **Make sure the chain is secure.**

21. **INSTALL CHAIN TENSIONER SLIPPER**
    a. Install the chain tensioner slipper with the bolt.

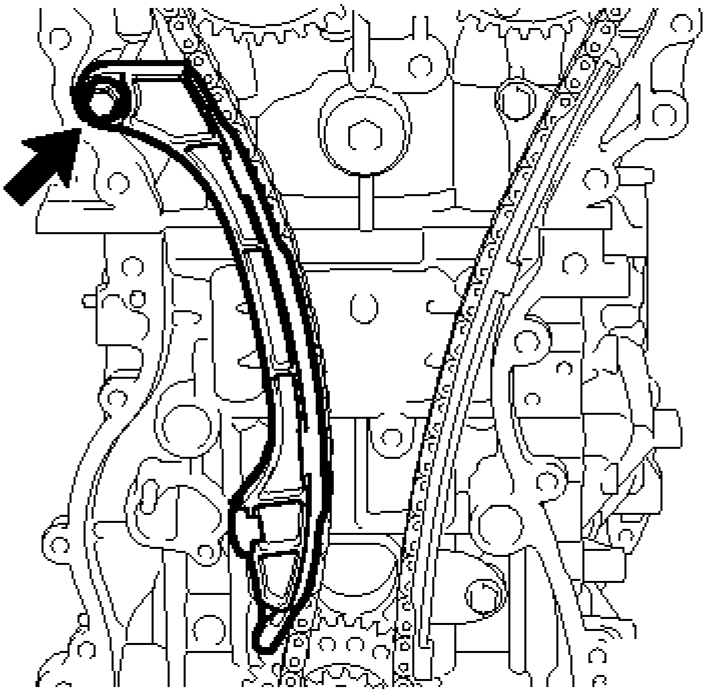

Fig. 108: Locating Bolt And Chain Tensioner Slipper
Courtesy of TOYOTA MOTOR SALES, U.S.A., INC.

Torque: 21 N*m (214 kgf*cm, 15 ft.*lbf)

22. **INSTALL NO. 1 CHAIN TENSIONER ASSEMBLY**
    a. Install a new gasket and the chain tensioner with the 2 bolts.

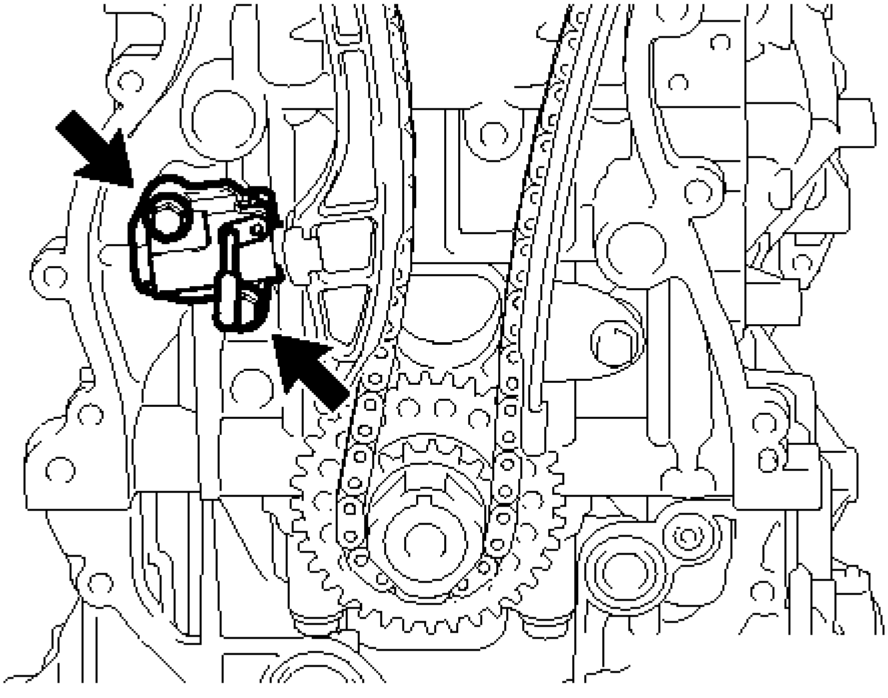

Fig. 109: Locating Chain Tensioner Bolts
Courtesy of TOYOTA MOTOR SALES, U.S.A., INC.

Torque: 10 N*m (102 kgf*cm, 7 ft.*lbf)

b. Remove the pin from the stopper plate.

23. **INSTALL TIMING CHAIN GUIDE**

    a. Install the timing chain guide with the bolt.

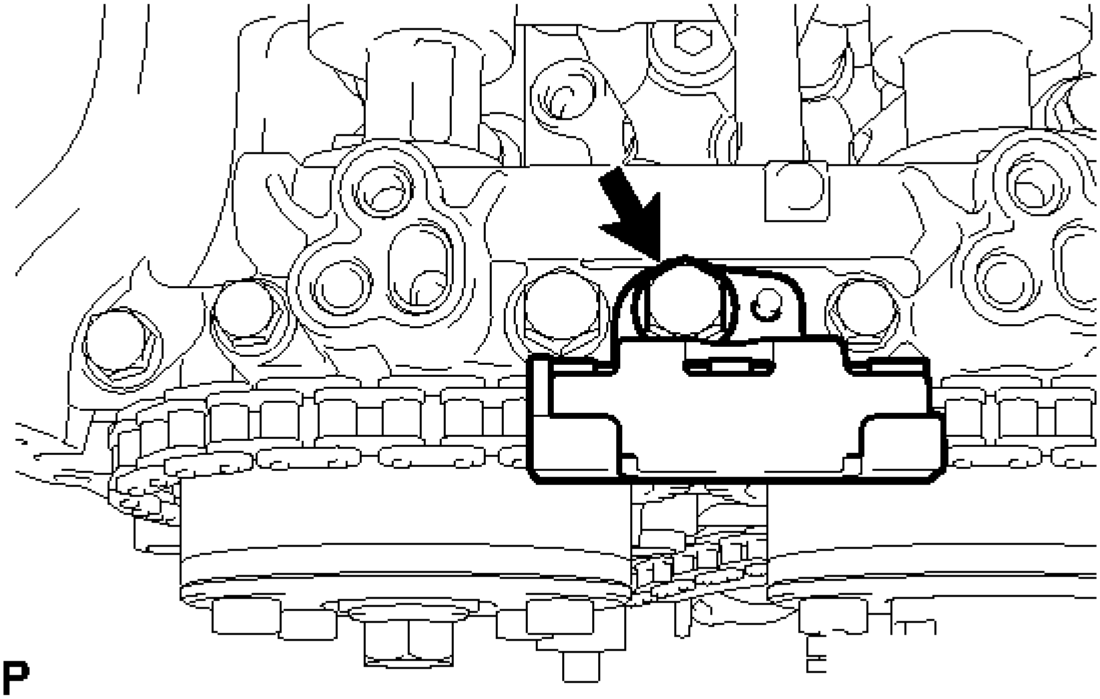

Fig. 110: Locating Timing Chain Guide Bolt
Courtesy of TOYOTA MOTOR SALES, U.S.A., INC.

Torque: 21 N*m (214 kgf*cm, 15 ft.*lbf)

24. **CHECK NO. 1 CYLINDER AT TDC/COMPRESSION**
    a. Temporarily install the crankshaft pulley bolt.

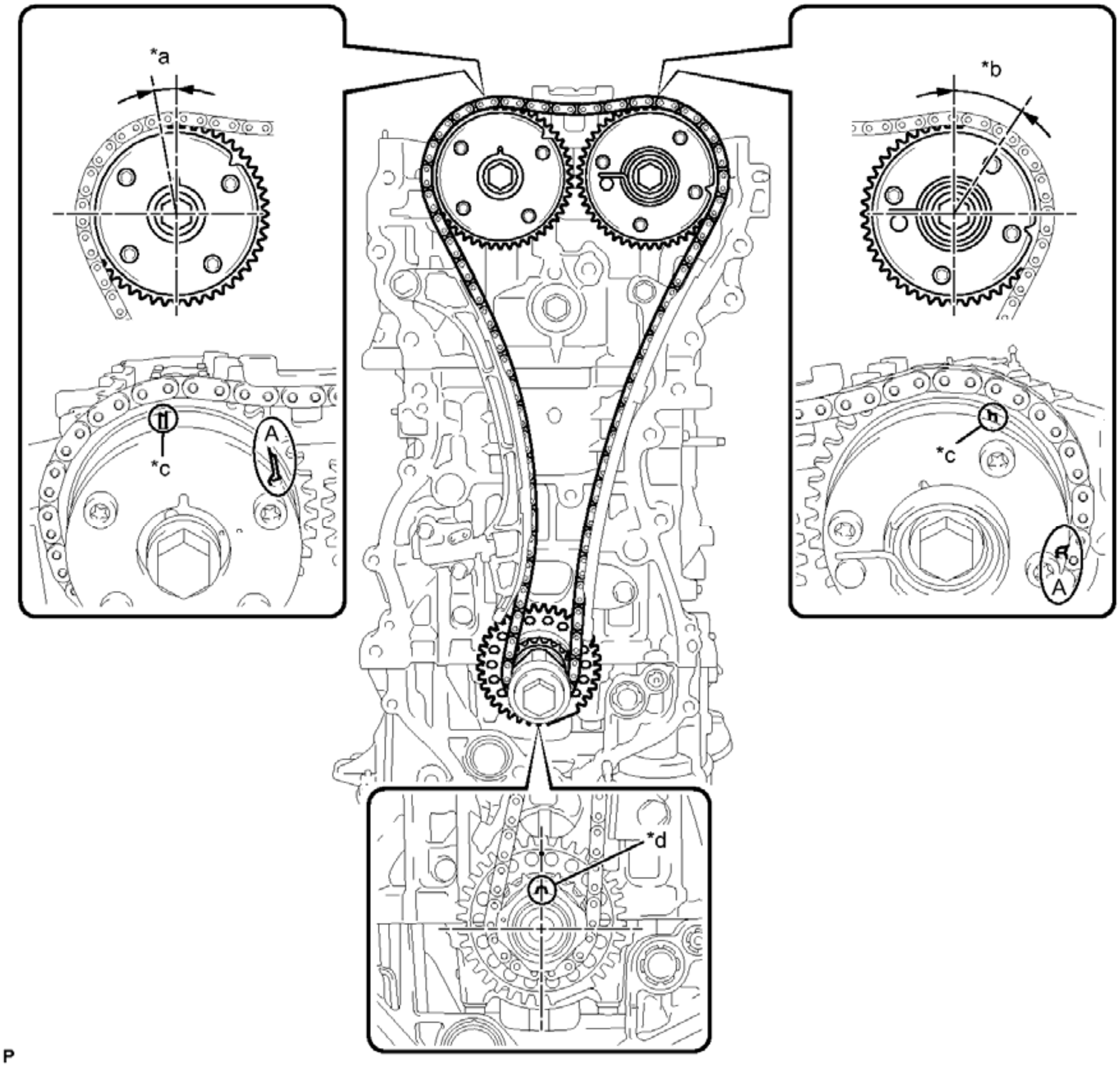

Fig. 111: Identifying Crankshaft & Camshaft Timing Gear Timing Marks
Courtesy of TOYOTA MOTOR SALES, U.S.A., INC.

TEXT IN ILLUSTRATION

*a	Approximately 7°	*b	Approximately 32°
*c	Timing Mark	*d	Key

b. Rotate the crankshaft clockwise, and check that the timing marks on the crankshaft timing sprocket and camshaft timing gears are as shown in the illustration.

   HINT:

   "A" is not a timing mark.

c. Remove the crankshaft pulley bolt.

25. **INSTALL INTAKE MANIFOLD** . Refer to **INSTALLATION - Step 1**

26. **CONNECT NO. 2 VENTILATION HOSE** . Refer to **INSTALLATION - Step 5**
27. **INSTALL FUEL DELIVERY PIPE SUB-ASSEMBLY** . Refer to **INSTALLATION - Step 2**
28. **INSTALL VACUUM SWITCHING VALVE ASSEMBLY (for ACIS)** . Refer to **INSTALLATION - Step 6**
29. **INSTALL THROTTLE WITH MOTOR BODY ASSEMBLY** . Refer to **INSTALLATION - Step 7**
30. **INSTALL EXHAUST MANIFOLD CONVERTER SUB-ASSEMBLY** . Refer to **INSTALLATION - Step 3**
31. **INSTALL EGR INLET EXHAUST MANIFOLD PLATE (for PZEV)** . Refer to **INSTALLATION - Step 5**
32. **INSTALL NO. 1 EXHAUST MANIFOLD HEAT INSULATOR (except PZEV)** . Refer to **INSTALLATION - Step 4**
33. **INSTALL NO. 2 MANIFOLD STAY** . Refer to **INSTALLATION - Step 6**
34. **INSTALL MANIFOLD STAY** . Refer to **INSTALLATION - Step 7**
35. **INSTALL TIMING CHAIN COVER SUB-ASSEMBLY**

    Refer to **INSTALLATION - Step 1**

FRONT CRANKSHAFT OIL SEAL

COMPONENTS

ILLUSTRATION

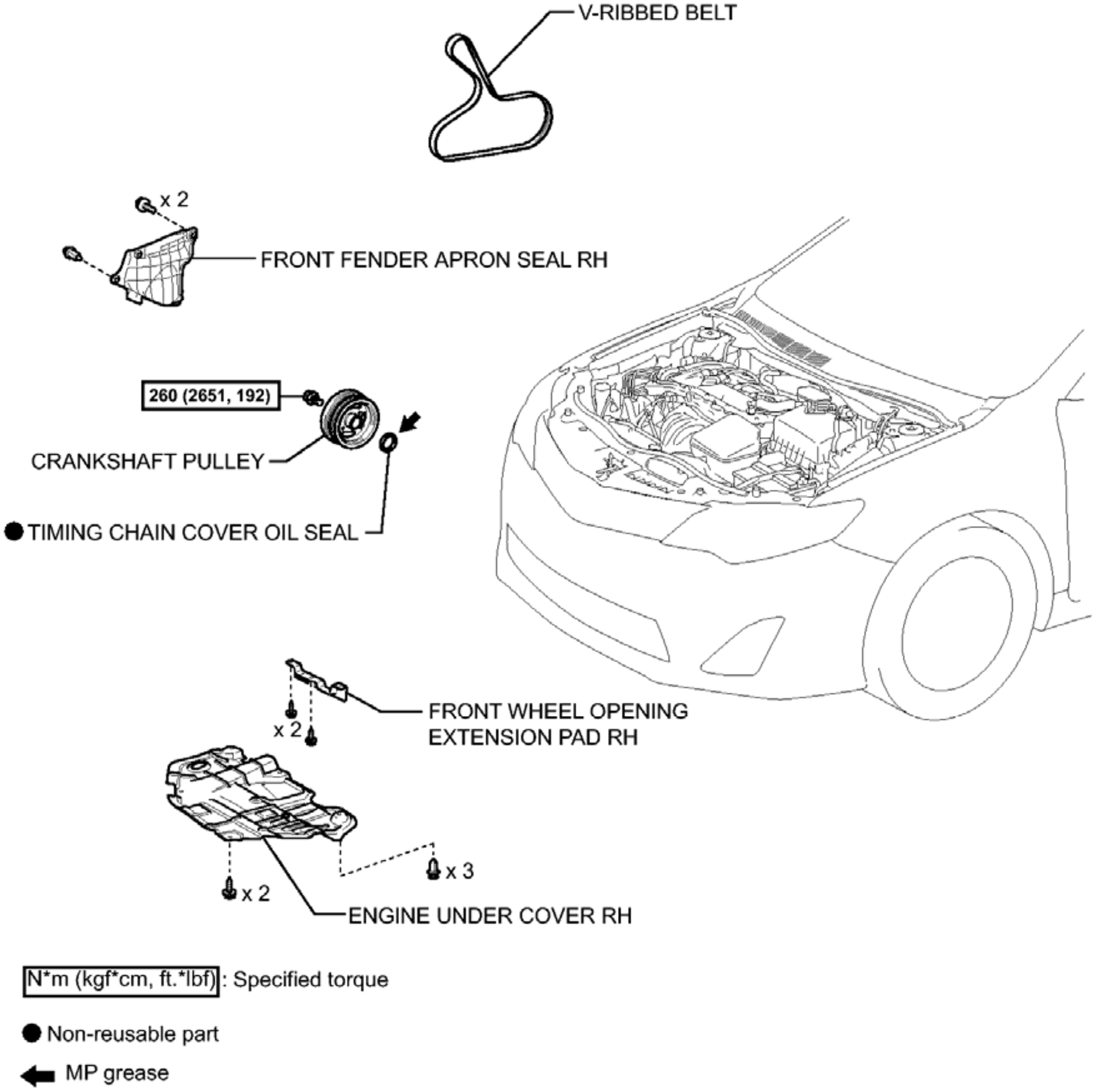
V-RIBBED BELT
x 2
FRONT FENDER APRON SEAL RH
260 (2651, 192)
CRANKSHAFT PULLEY
● TIMING CHAIN COVER OIL SEAL
FRONT WHEEL OPENING EXTENSION PAD RH
x 2
x 3
x 2
ENGINE UNDER COVER RH
N*m (kgf*cm, ft.*lbf) : Specified torque
● Non-reusable part
MP grease

Fig. 112: Identifying Front Crankshaft Oil Seal Replacement Components With Torque Specifications
Courtesy of TOYOTA MOTOR SALES, U.S.A., INC.

REMOVAL

REMOVAL

1. **REMOVE FRONT WHEEL RH**
2. **REMOVE FRONT WHEEL OPENING EXTENSION PAD RH**
3. **REMOVE ENGINE UNDER COVER RH**
4. **REMOVE FRONT FENDER APRON SEAL RH**
5. **REMOVE V-RIBBED BELT** See step 5

6. **REMOVE CRANKSHAFT PULLEY**

   a. Using SST, hold the crankshaft pulley and loosen the pulley bolt. Further loosen the bolt until 2 or 3 threads are screwed into the crankshaft.

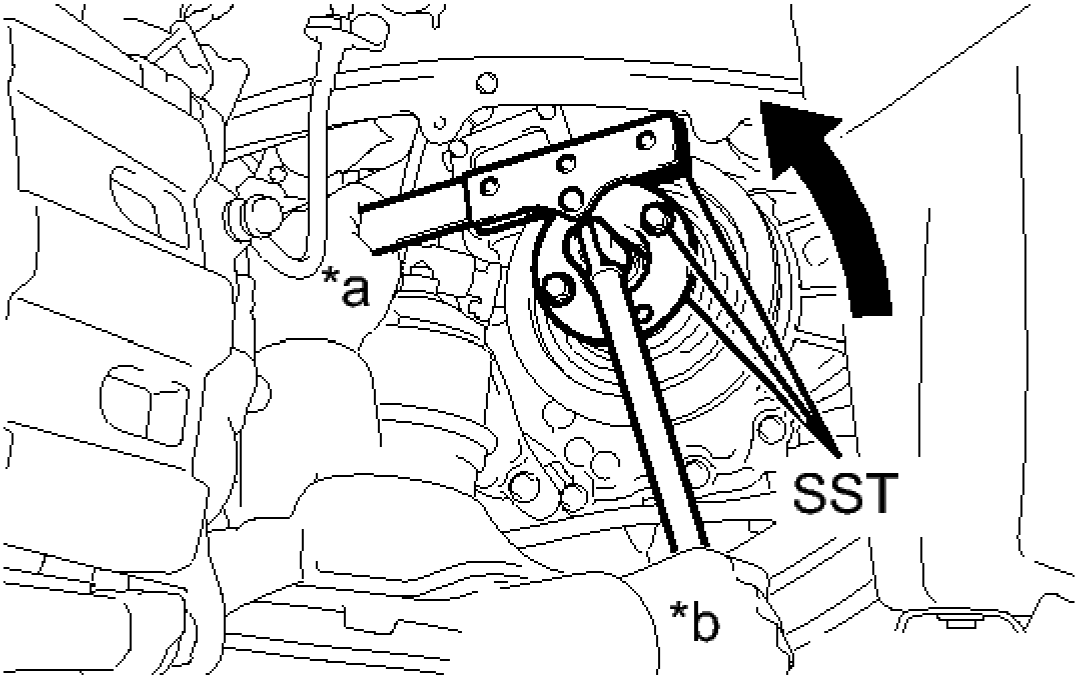

Fig. 113: Removing Crankshaft Pulley
Courtesy of TOYOTA MOTOR SALES, U.S.A., INC.

TEXT IN ILLUSTRATION

*a	Hold
*b	Turn

- **SST: 09213-54015**
- **SST: 09330-00021**
- **SST: 91551-80650**

   b. Using SST and the pulley bolt, remove the crankshaft pulley.

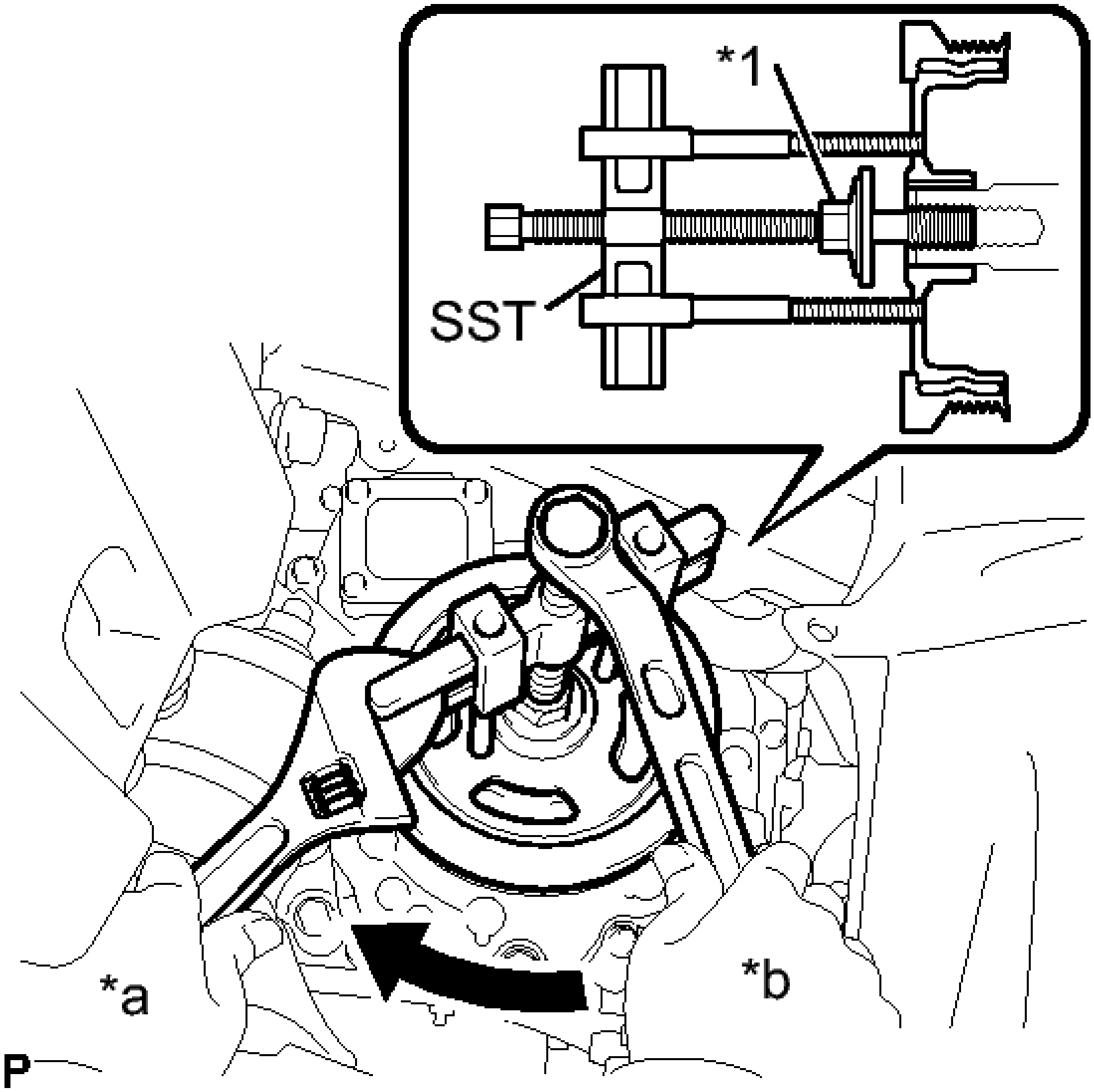

Fig. 114: Removing Crankshaft Pulley Using SST & Pulley Bolt
Courtesy of TOYOTA MOTOR SALES, U.S.A., INC.

TEXT IN ILLUSTRATION

*1	Pulley Bolt
*a	Hold
*b	Turn

- **SST: 09950-50013**

  09951-05010

  09952-05010

  09953-05020

  09954-05011

HINT:

Apply a lubricant to the threads and end of SST.

7. **REMOVE TIMING CHAIN COVER OIL SEAL**
    a. Using a screwdriver, pry out the oil seal.

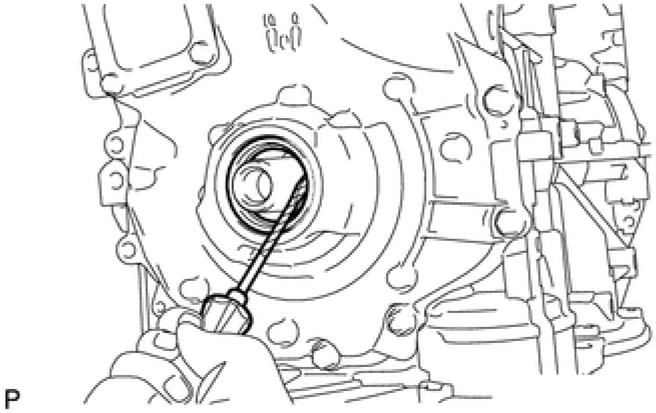

Fig. 115: Prying Out Oil Seal
Courtesy of TOYOTA MOTOR SALES, U.S.A., INC.

HINT:

Tape the screwdriver tip before use.

NOTE: **Do not damage the surface of the oil seal press fit hole or the crankshaft.**

INSTALLATION

INSTALLATION

1. **INSTALL TIMING CHAIN COVER OIL SEAL**
    a. Apply MP grease to the lip of a new oil seal.

NOTE:

- **Do not allow foreign matter to contact the lip of the oil seal.**
- **Do not allow MP grease to contact the dust seal.**

    b. Using SST and a hammer, tap in the oil seal until its surface is flush with the timing chain cover edge.

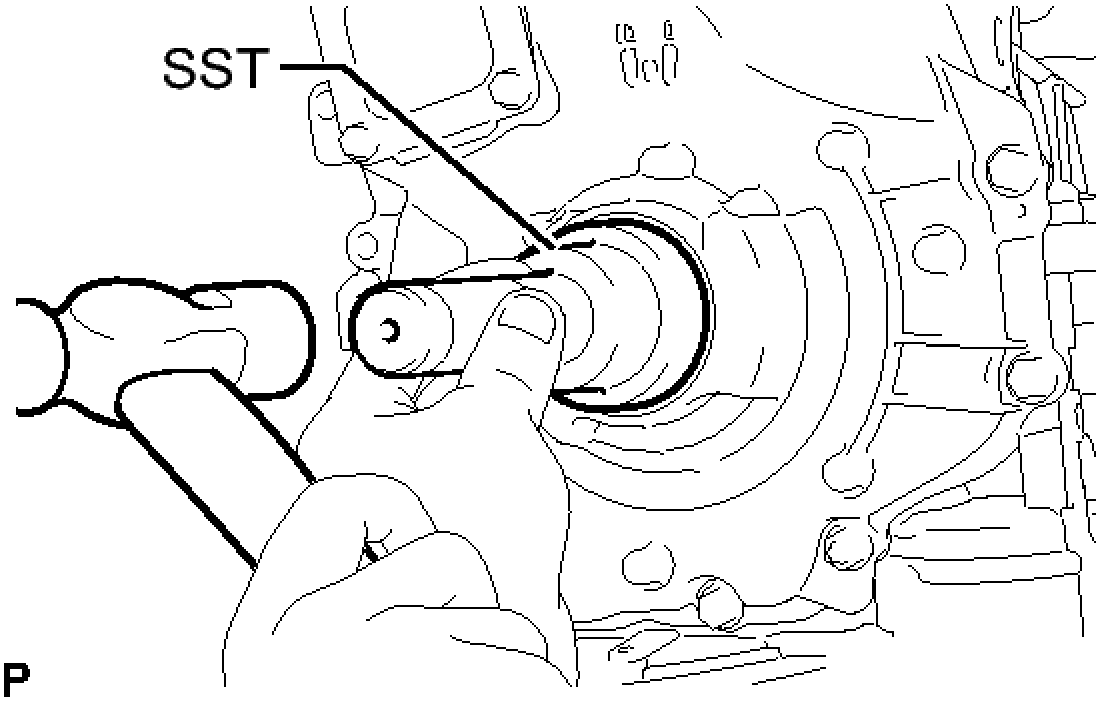

Fig. 116: Installing Oil Seal Using SST
Courtesy of TOYOTA MOTOR SALES, U.S.A., INC.

- **SST: 09223-22010**

NOTE:

- **Keep the lip of the oil seal free from foreign matter.**
- **Do not tap in the oil seal at an angle.**

2. **INSTALL CRANKSHAFT PULLEY**
    a. Align the pulley set key with the key groove of the crankshaft pulley.
    b. Using SST, hold the crankshaft pulley and install the pulley bolt.

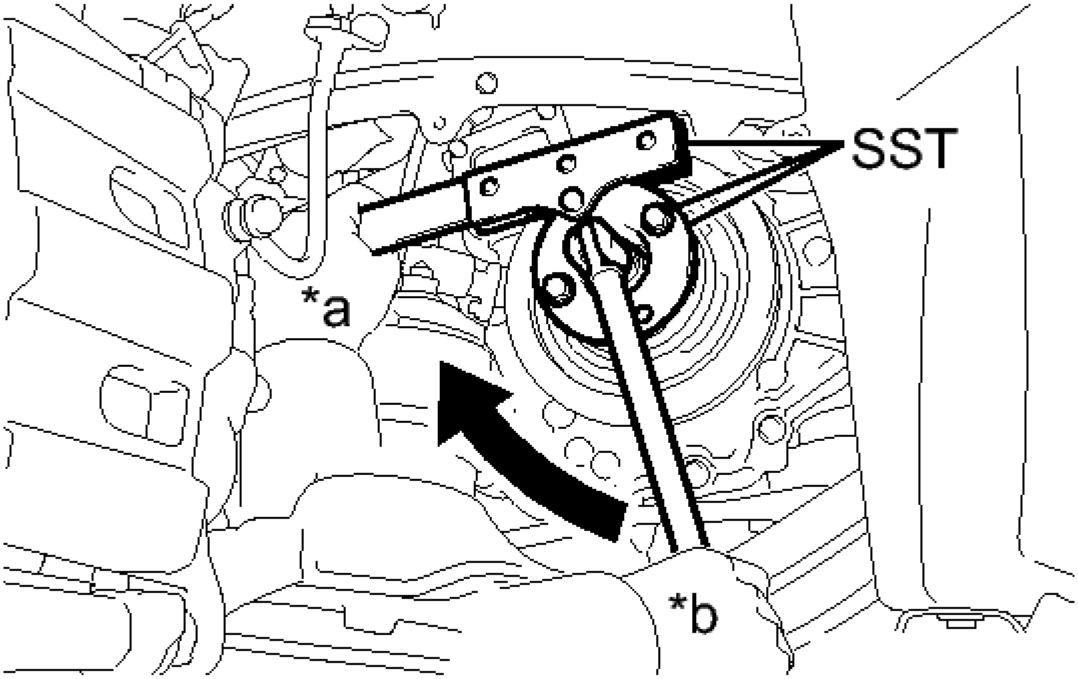

Fig. 117: Installing Crankshaft Pulley
Courtesy of TOYOTA MOTOR SALES, U.S.A., INC.

TEXT IN ILLUSTRATION

*a	Hold
*b	Turn

- **SST: 09213-54015**
- **SST: 09330-00021**
- **SST: 91551-80650**

Torque: 260 N*m (2651 kgf*cm, 192 ft.*lbf)

3. **INSTALL V-RIBBED BELT** See step 1
4. **INSTALL FRONT FENDER APRON SEAL RH**
5. **INSTALL ENGINE UNDER COVER RH**
6. **INSTALL FRONT WHEEL OPENING EXTENSION PAD RH**
7. **INSTALL FRONT WHEEL RH**

   Torque: 103 N*m (1049 kgf*cm, 76 ft.*lbf)

REAR CRANKSHAFT OIL SEAL

COMPONENTS

ILLUSTRATION

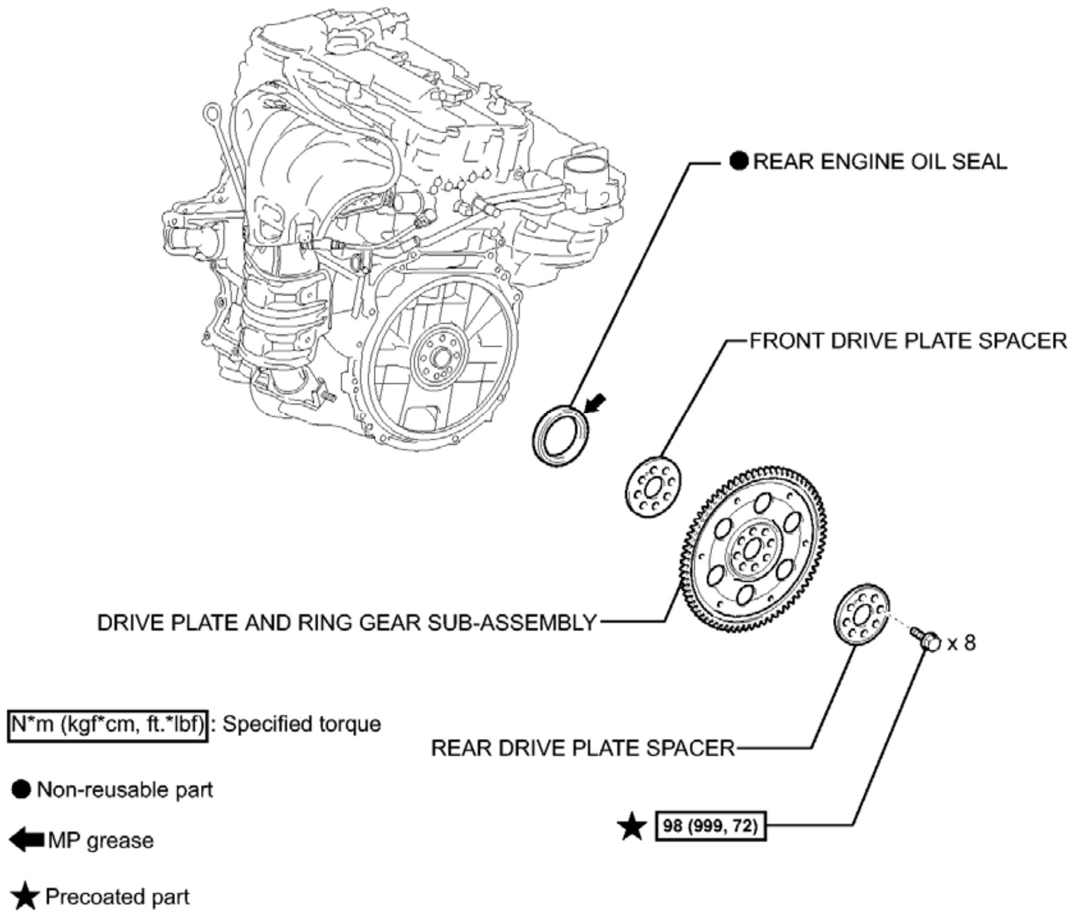
● REAR ENGINE OIL SEAL
FRONT DRIVE PLATE SPACER
DRIVE PLATE AND RING GEAR SUB-ASSEMBLY
x 8
REAR DRIVE PLATE SPACER
★ 98 (999, 72)
N*m (kgf*cm, ft.*lbf) : Specified torque
● Non-reusable part
MP grease
★ Precoated part

Fig. 118: Identifying Rear Crankshaft Oil Seal Replacement Components With Torque Specifications
Courtesy of TOYOTA MOTOR SALES, U.S.A., INC.

REMOVAL

REMOVAL

1. **REMOVE AUTOMATIC TRANSAXLE ASSEMBLY**

   Refer to **REMOVAL**

2. **REMOVE DRIVE PLATE AND RING GEAR SUB-ASSEMBLY**
   a. Using SST, hold the crankshaft pulley.

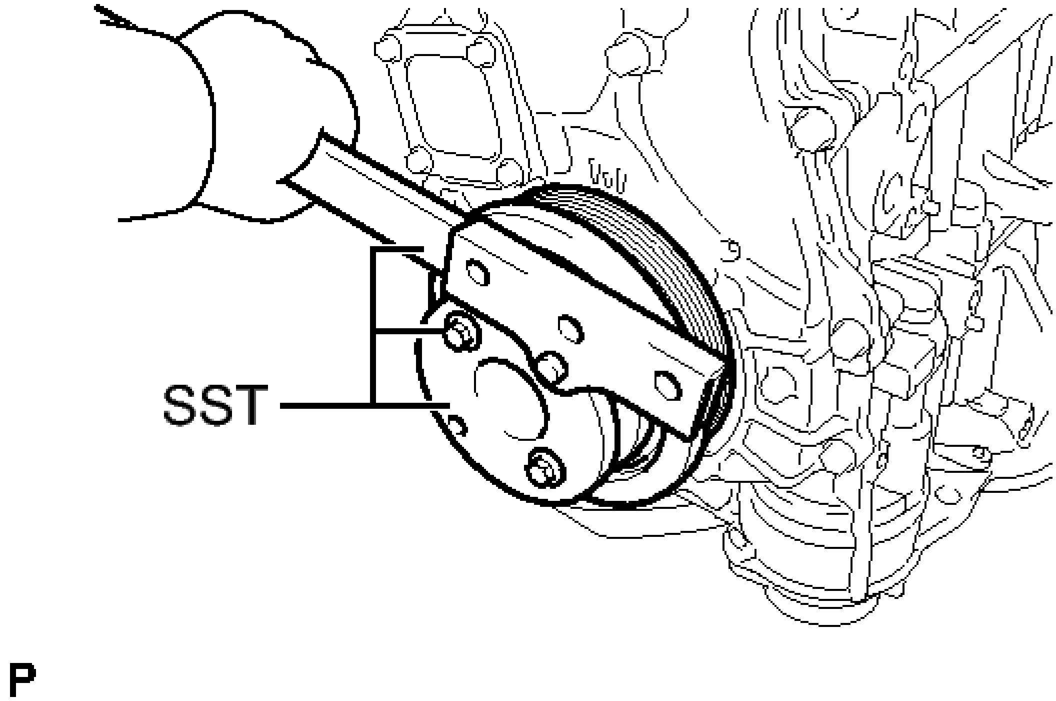

Fig. 119: Identifying SST
Courtesy of TOYOTA MOTOR SALES, U.S.A., INC.

- **SST: 09213-54015**
- **SST: 09330-00021**
- **SST: 91551-80650**

b. Remove the 8 bolts, front drive plate spacer, drive plate and ring gear sub-assembly, and rear drive plate spacer.

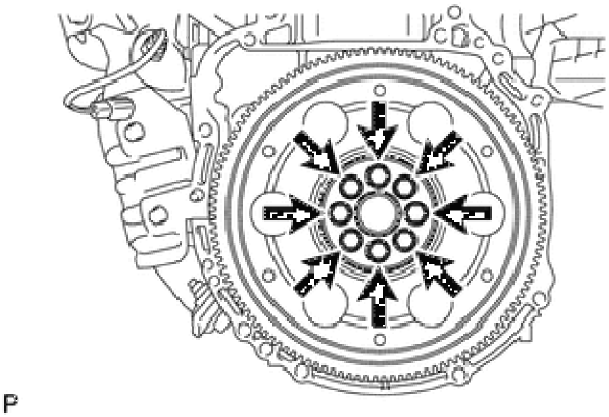

Fig. 120: Locating Drive Plate And Ring Gear Sub-Assembly Bolts
Courtesy of TOYOTA MOTOR SALES, U.S.A., INC.

3. **REMOVE REAR ENGINE OIL SEAL**

a. Using a knife, cut off the lip of the oil seal.

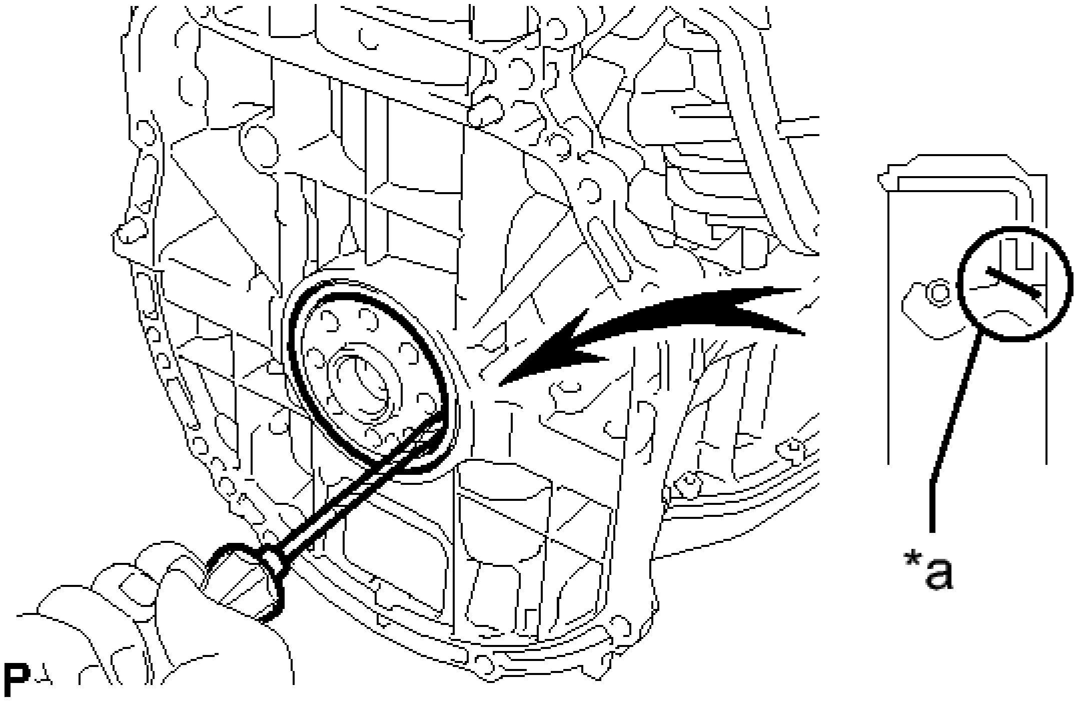

Fig. 121: Removing Oil Seal
Courtesy of TOYOTA MOTOR SALES, U.S.A., INC.

TEXT IN ILLUSTRATION

*a	Cut Position

b. Using a screwdriver, pry out the oil seal.

HINT:

Tape the screwdriver tip before use.

NOTE: **Do not damage the surface of the oil seal press fit hole or the crankshaft.**

INSTALLATION

INSTALLATION

1. **INSTALL REAR ENGINE OIL SEAL**
    a. Apply MP grease to the lip of a new oil seal.

NOTE:

- **Do not allow foreign matter to contact the lip of the oil seal.**
- **Do not allow MP grease to contact the dust seal.**

b. Using SST and a hammer, tap in the oil seal until its surface is flush with the edges of the cylinder block and crankcase.

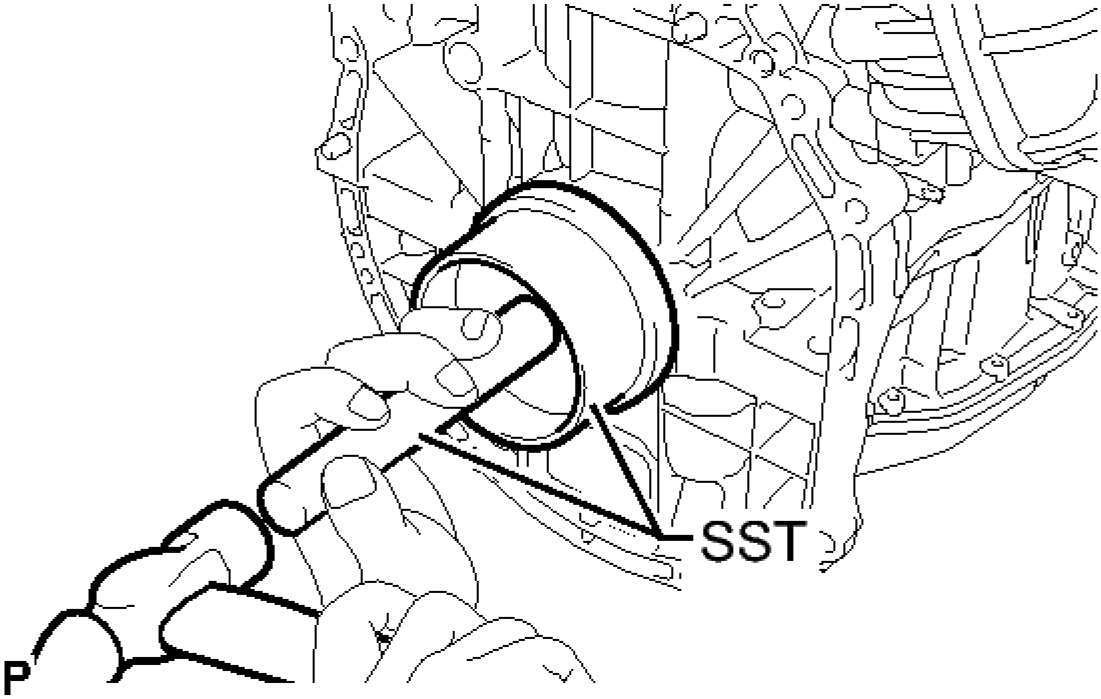

Fig. 122: Installing Rear Engine Oil Seal
Courtesy of TOYOTA MOTOR SALES, U.S.A., INC.

- **SST: 09223-15030**
- **SST: 09950-70010**
  09951-07150

NOTE:

- **Keep the lip of the oil seal free from foreign matter.**
- **Do not tap in the oil seal at an angle.**

2. **INSTALL DRIVE PLATE AND RING GEAR SUB-ASSEMBLY**
   a. Using SST, hold the crankshaft.

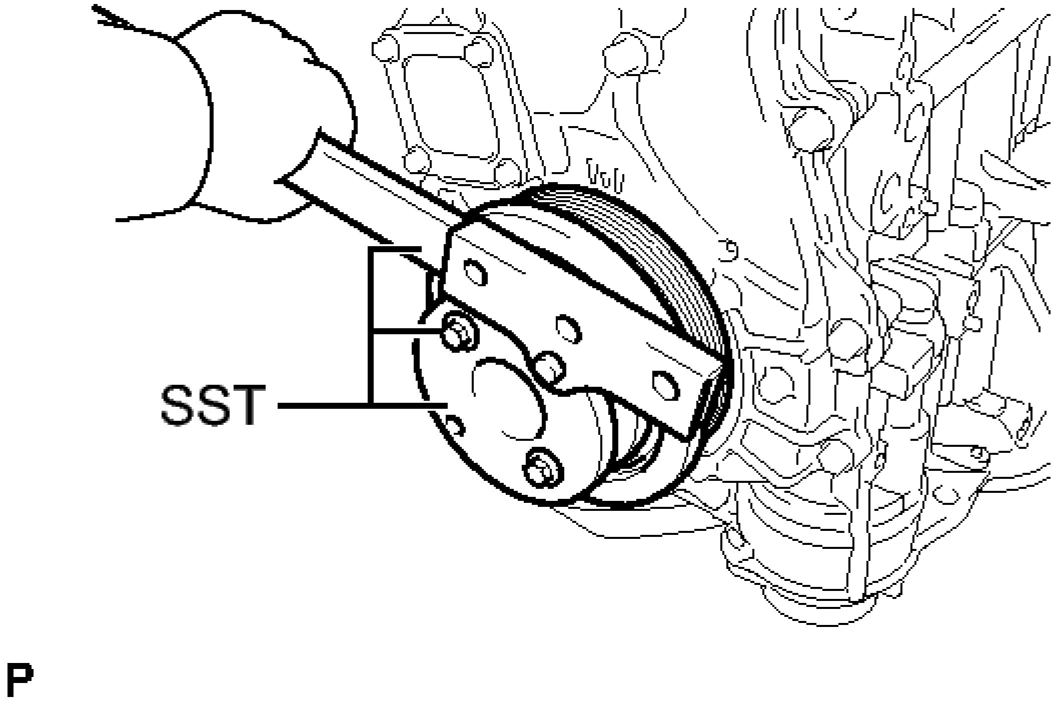

Fig. 123: Identifying SST
Courtesy of TOYOTA MOTOR SALES, U.S.A., INC.

- **SST: 09213-54015**
- **SST: 91551-80650**
- **SST: 09330-00021**

b. Clean the bolts and their installation holes.

c. Install the front drive plate spacer.

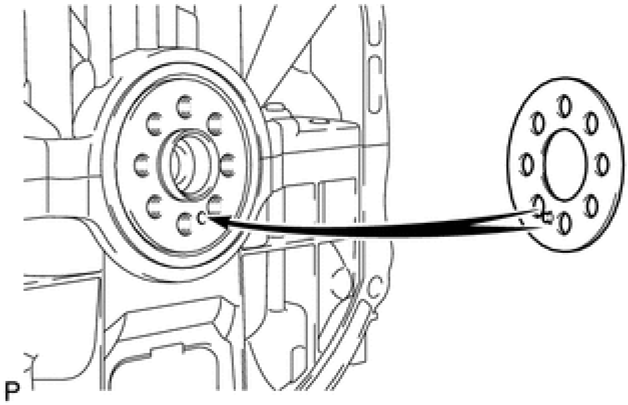

Fig. 124: Aligning Pin Of Front Drive Plate Spacer With Pin Hole Of Crankshaft
Courtesy of TOYOTA MOTOR SALES, U.S.A., INC.

HINT:

Align the pin of the front drive plate spacer with the pin hole of the crankshaft.

d. Install the drive plate and rear drive plate spacer onto the crankshaft.

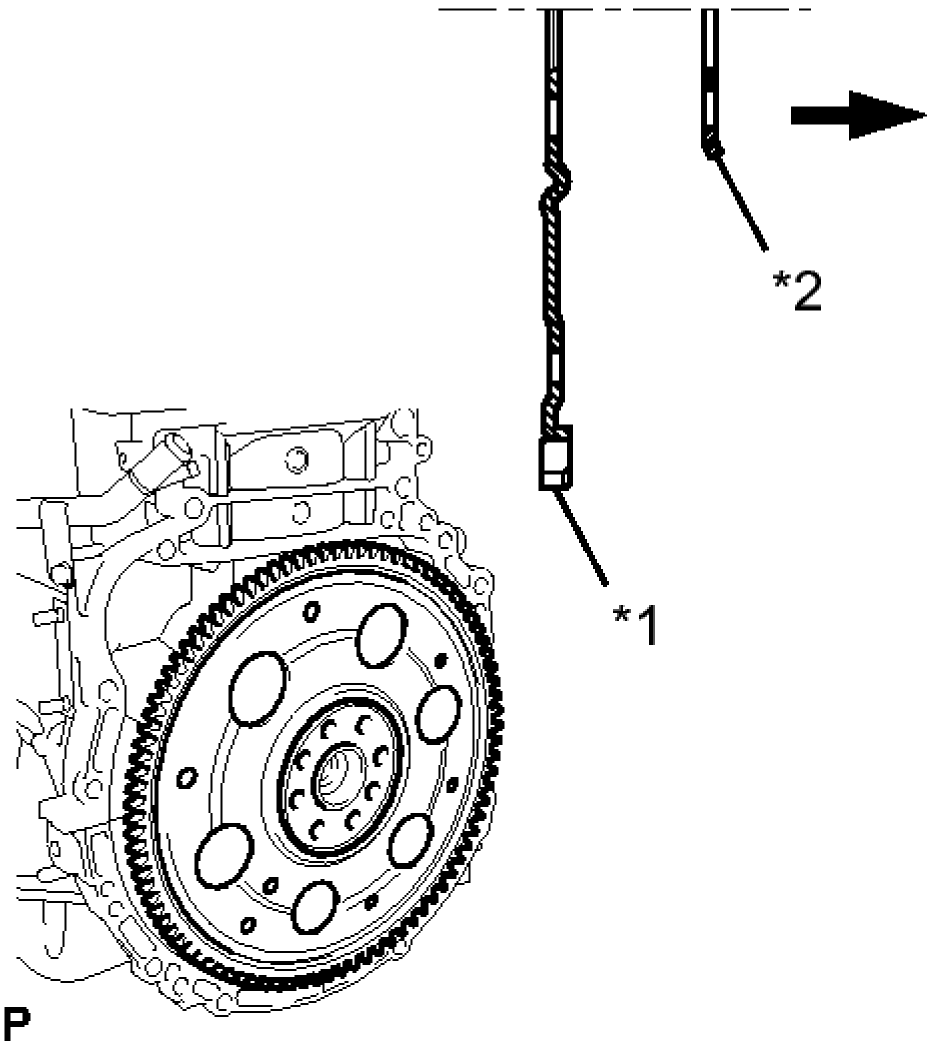

Fig. 125: Identifying Drive Plate And Rear Drive Plate Spacer
Courtesy of TOYOTA MOTOR SALES, U.S.A., INC.

TEXT IN ILLUSTRATION

*1	Drive Plate
*2	Rear Drive Plate Spacer
→	Transaxle Side

e. Apply a few drops of adhesive to 2 or 3 threads at the tip of each of the 8 bolts.

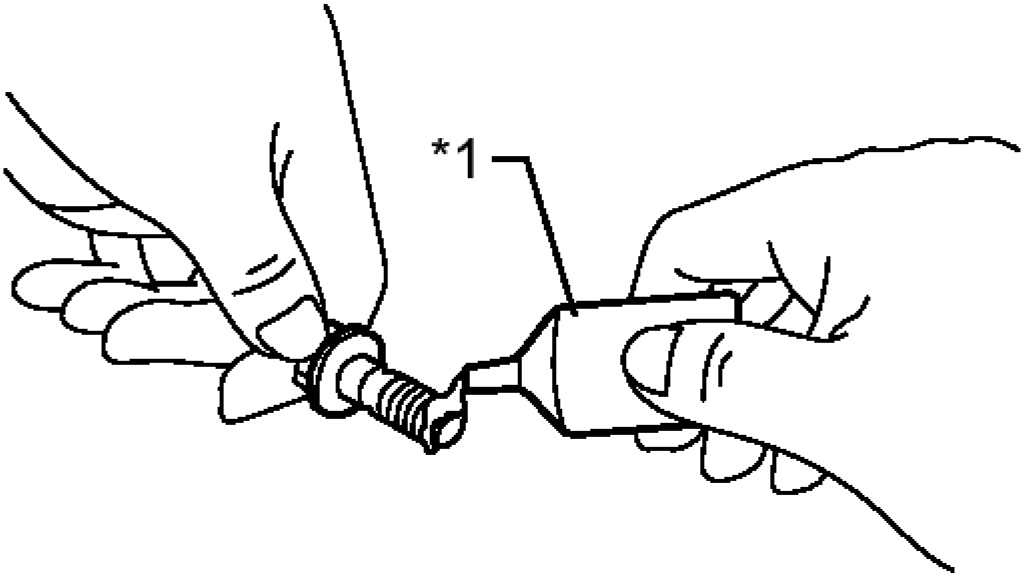

Fig. 126: Apply Adhesive To End Threads Of Bolts
Courtesy of TOYOTA MOTOR SALES, U.S.A., INC.

TEXT IN ILLUSTRATION

*1	Adhesive

Adhesive

Toyota Genuine Adhesive 1324, Three Bond 1324 or equivalent

f. Install and uniformly tighten the 8 bolts in the sequence shown in the illustration.

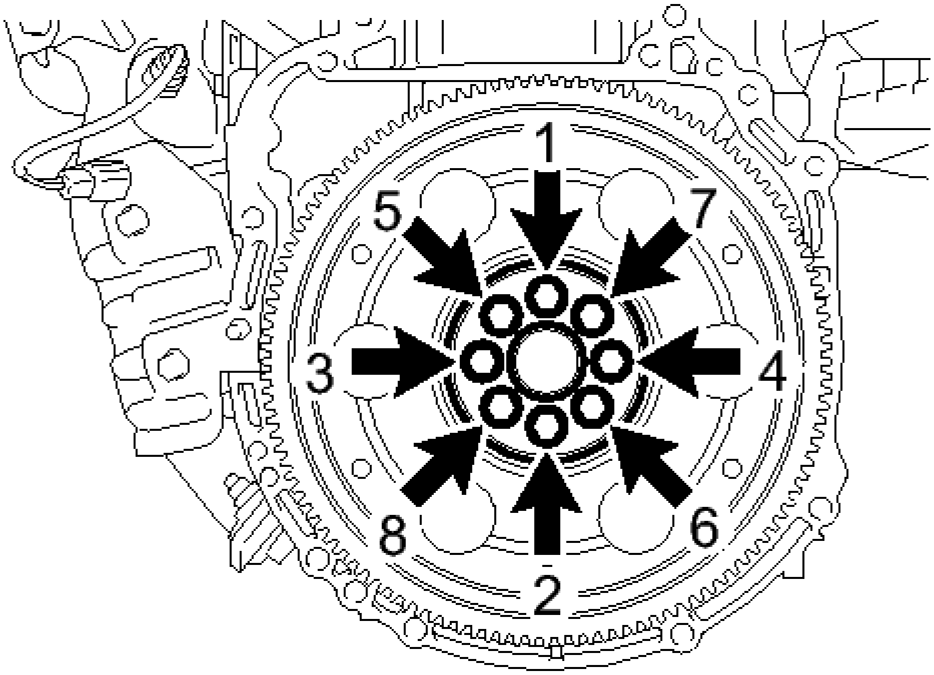

P

Fig. 127: Identifying Bolts Tightening Sequence
Courtesy of TOYOTA MOTOR SALES, U.S.A., INC.

Torque: 98 N*m (999 kgf*cm, 72 ft.*lbf)

NOTE: **Do not start the engine for at least an hour after installing the drive plate.**

3. **INSTALL AUTOMATIC TRANSAXLE ASSEMBLY**

   Refer to **INSTALLATION**

ENGINE ASSEMBLY

COMPONENTS

ILLUSTRATION

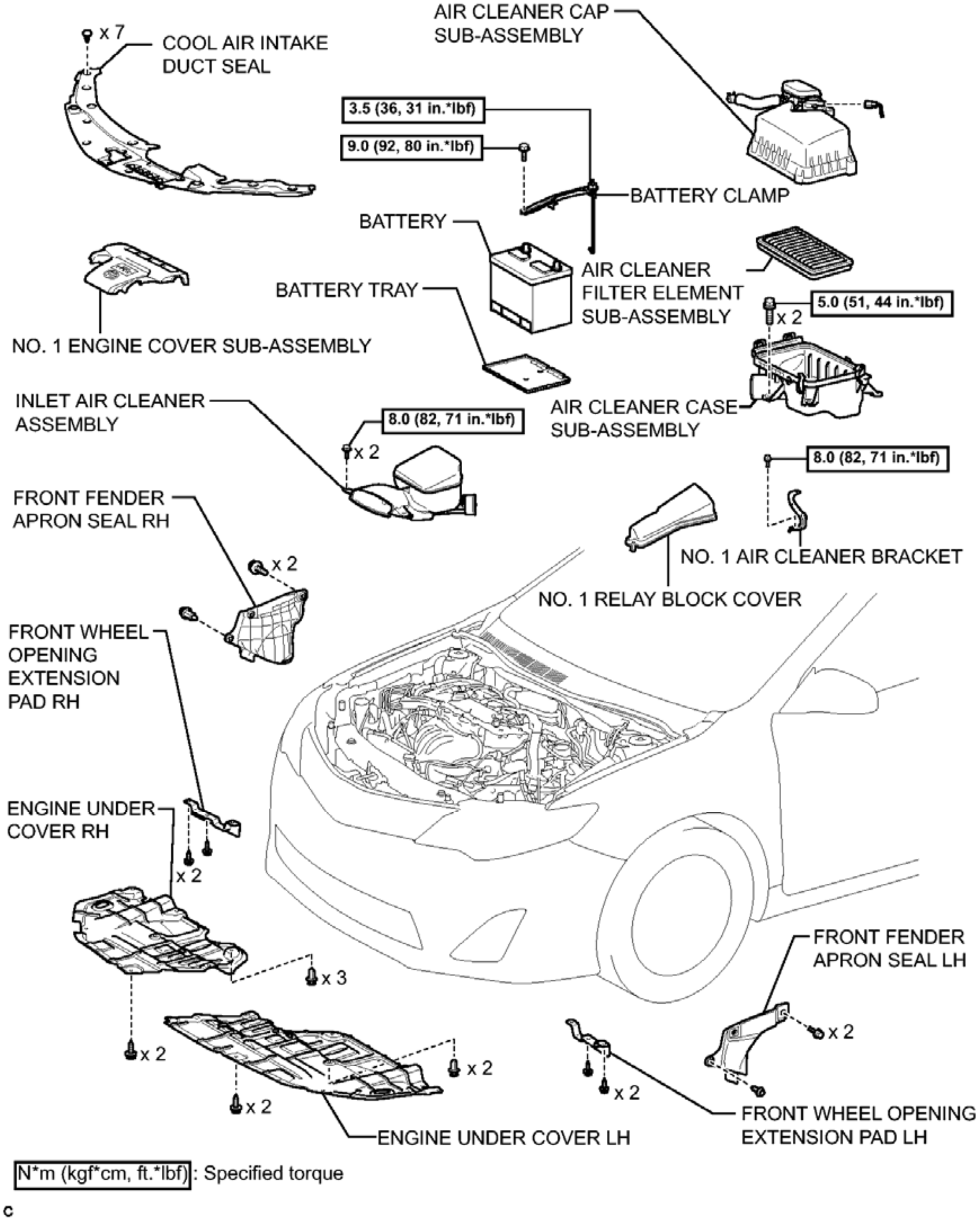
AIR CLEANER CAP SUB-ASSEMBLY
x 7
COOL AIR INTAKE DUCT SEAL
3.5 (36, 31 in.*lbf)
9.0 (92, 80 in.*lbf)
BATTERY CLAMP
BATTERY
AIR CLEANER FILTER ELEMENT SUB-ASSEMBLY
BATTERY TRAY
5.0 (51, 44 in.*lbf)
x 2
NO. 1 ENGINE COVER SUB-ASSEMBLY
INLET AIR CLEANER ASSEMBLY
8.0 (82, 71 in.*lbf)
x 2
AIR CLEANER CASE SUB-ASSEMBLY
8.0 (82, 71 in.*lbf)
FRONT FENDER APRON SEAL RH
NO. 1 AIR CLEANER BRACKET
x 2
NO. 1 RELAY BLOCK COVER
FRONT WHEEL OPENING EXTENSION PAD RH
ENGINE UNDER COVER RH
x 2
x 3
FRONT FENDER APRON SEAL LH
x 2
x 2
x 2
x 2
x 2
ENGINE UNDER COVER LH
FRONT WHEEL OPENING EXTENSION PAD LH
N*m (kgf*cm, ft.*lbf): Specified torque
c

Fig. 128: Identifying Engine Assembly Replacement Components With Torque Specifications (1 Of 6)
Courtesy of TOYOTA MOTOR SALES, U.S.A., INC.

ILLUSTRATION

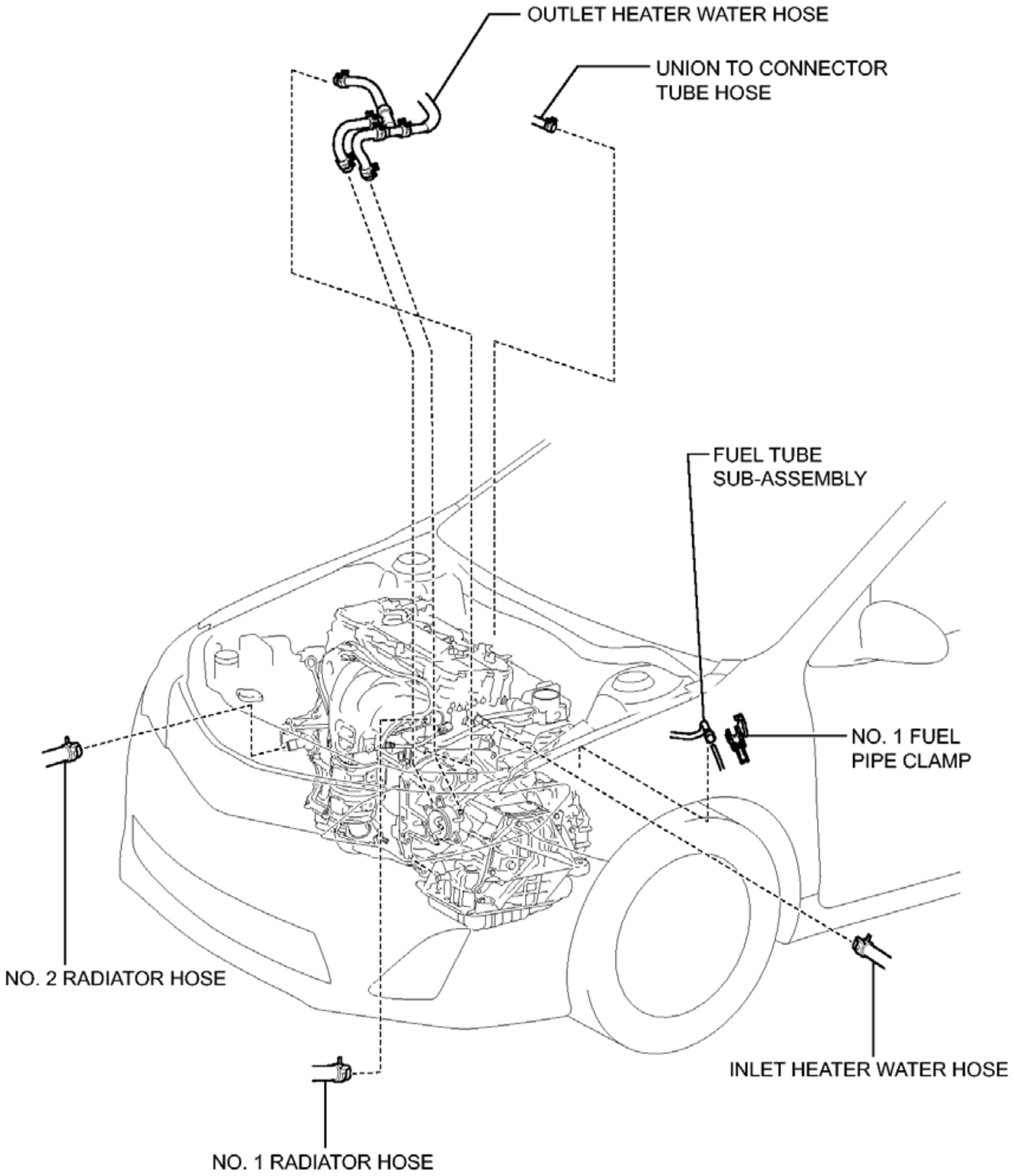
OUTLET HEATER WATER HOSE
UNION TO CONNECTOR TUBE HOSE
FUEL TUBE SUB-ASSEMBLY
NO. 1 FUEL PIPE CLAMP
NO. 2 RADIATOR HOSE
INLET HEATER WATER HOSE
NO. 1 RADIATOR HOSE

c

Fig. 129: Identifying Engine Assembly Replacement Components With Torque Specifications (2 Of 6)
Courtesy of TOYOTA MOTOR SALES, U.S.A., INC.

ILLUSTRATION

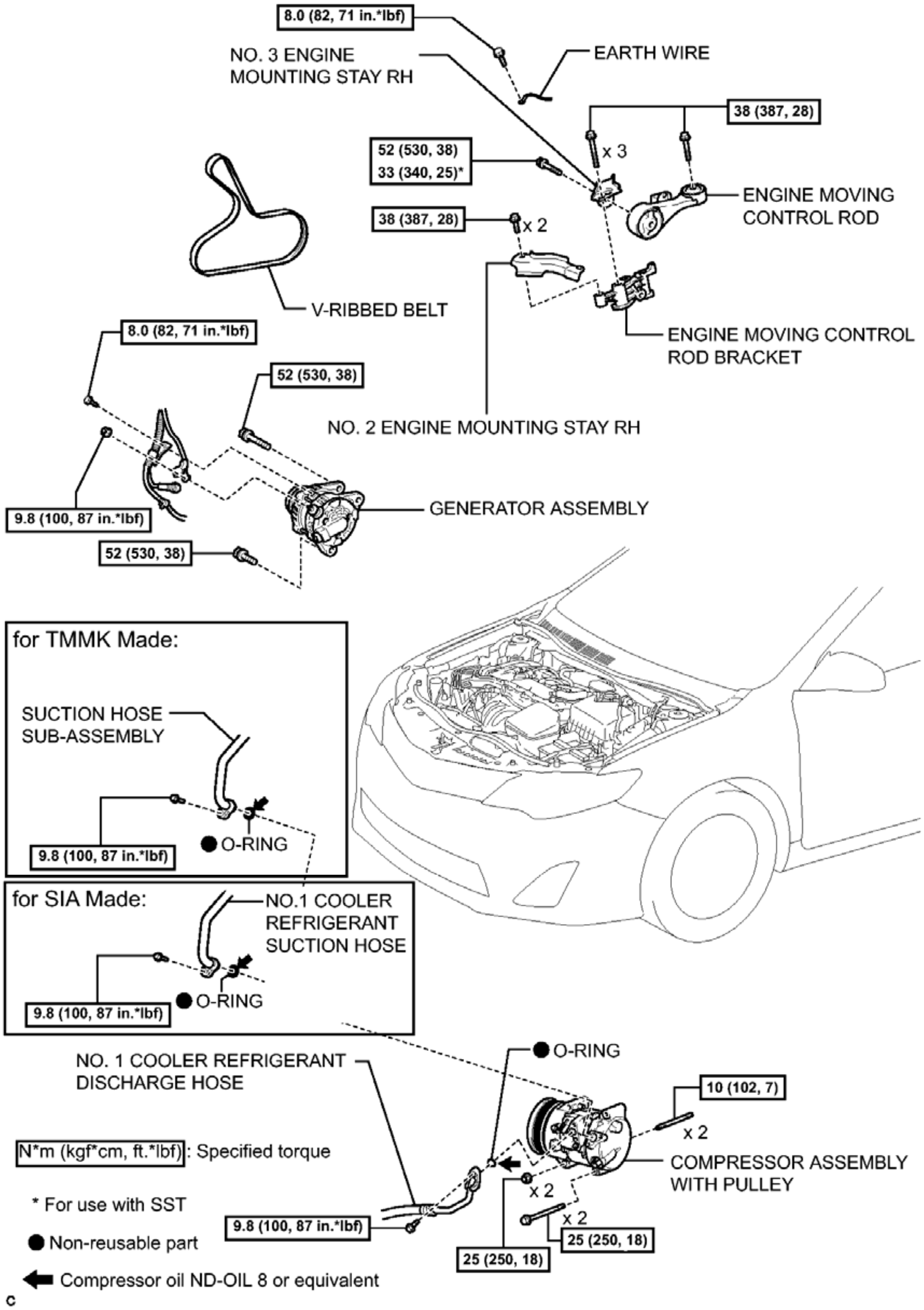
8.0 (82, 71 in.*lbf)
NO. 3 ENGINE MOUNTING STAY RH
EARTH WIRE
38 (387, 28)
52 (530, 38)
33 (340, 25)*
x 3
ENGINE MOVING CONTROL ROD
38 (387, 28)
x 2
V-RIBBED BELT
ENGINE MOVING CONTROL ROD BRACKET
8.0 (82, 71 in.*lbf)
52 (530, 38)
NO. 2 ENGINE MOUNTING STAY RH
9.8 (100, 87 in.*lbf)
GENERATOR ASSEMBLY
52 (530, 38)
for TMMK Made:
SUCTION HOSE SUB-ASSEMBLY
9.8 (100, 87 in.*lbf)
● O-RING
for SIA Made:
NO.1 COOLER REFRIGERANT SUCTION HOSE
9.8 (100, 87 in.*lbf)
● O-RING
NO. 1 COOLER REFRIGERANT DISCHARGE HOSE
● O-RING
10 (102, 7)
x 2
COMPRESSOR ASSEMBLY WITH PULLEY
x 2
x 2
9.8 (100, 87 in.*lbf)
25 (250, 18)
25 (250, 18)
N*m (kgf*cm, ft.*lbf): Specified torque
* For use with SST
● Non-reusable part
Compressor oil ND-OIL 8 or equivalent
c

Fig. 130: Identifying Engine Assembly Replacement Components With Torque Specifications (3 Of 6)
Courtesy of TOYOTA MOTOR SALES, U.S.A., INC.

ILLUSTRATION

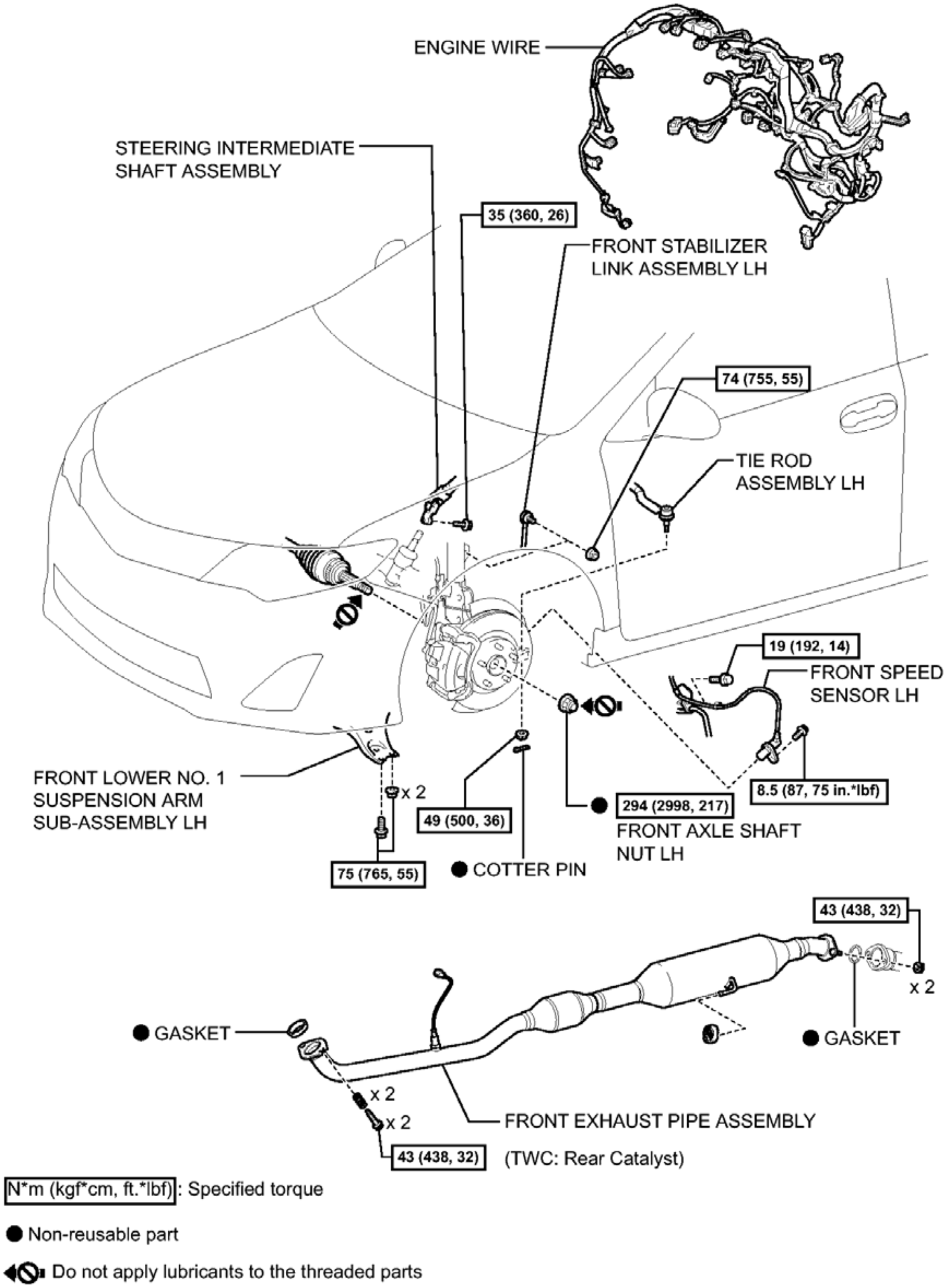
ENGINE WIRE
STEERING INTERMEDIATE SHAFT ASSEMBLY
35 (360, 26)
FRONT STABILIZER LINK ASSEMBLY LH
74 (755, 55)
TIE ROD ASSEMBLY LH
19 (192, 14)
FRONT SPEED SENSOR LH
8.5 (87, 75 in.*lbf)
● 294 (2998, 217)
FRONT AXLE SHAFT NUT LH
FRONT LOWER NO. 1 SUSPENSION ARM SUB-ASSEMBLY LH
x 2
49 (500, 36)
75 (765, 55)
● COTTER PIN
43 (438, 32)
x 2
● GASKET
● GASKET
x 2
x 2
FRONT EXHAUST PIPE ASSEMBLY
43 (438, 32)
(TWC: Rear Catalyst)
N*m (kgf*cm, ft.*lbf): Specified torque
● Non-reusable part
Do not apply lubricants to the threaded parts

Fig. 131: Identifying Engine Assembly Replacement Components With Torque Specifications (4 Of 6)
Courtesy of TOYOTA MOTOR SALES, U.S.A., INC.

ILLUSTRATION

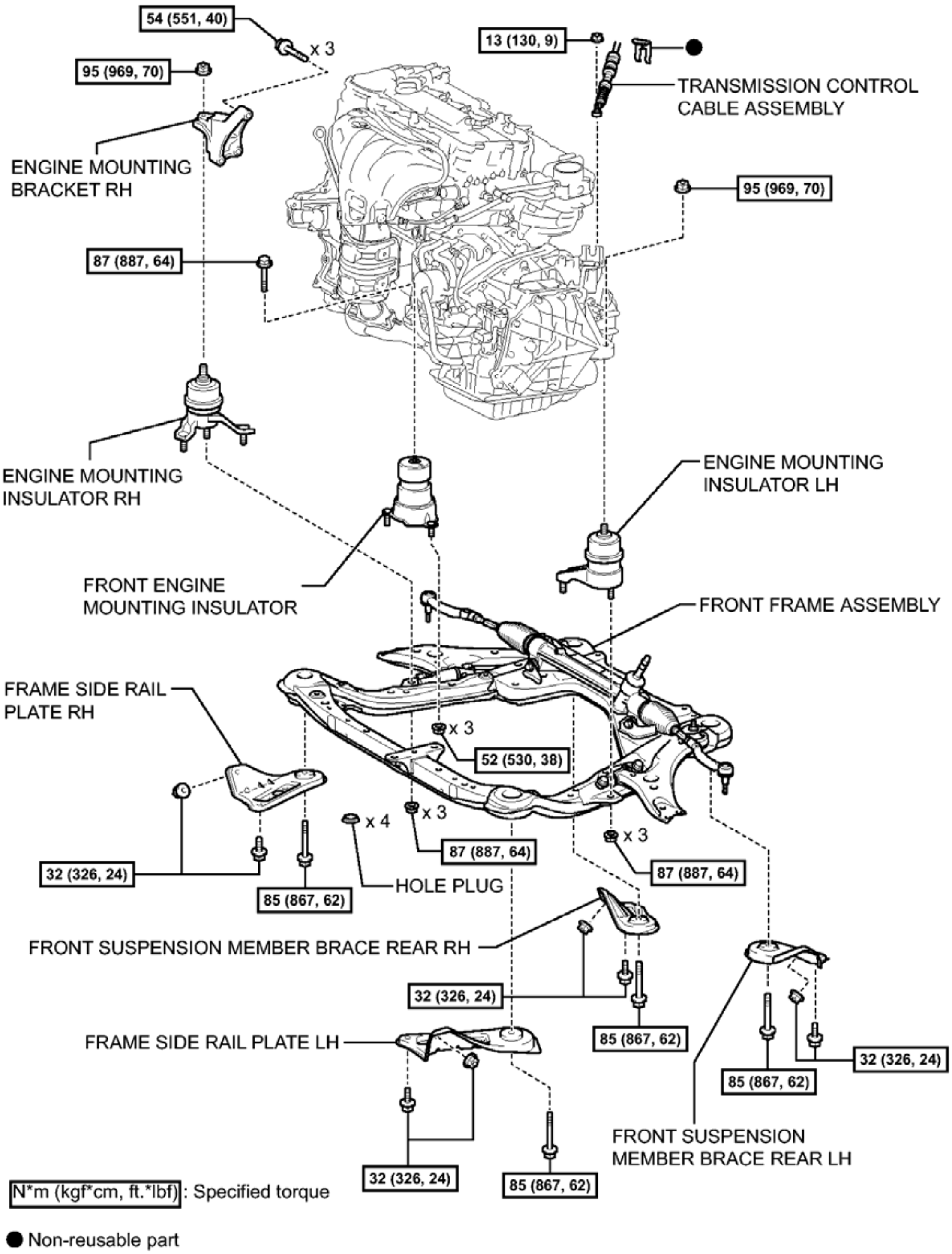
54 (551, 40)
x 3
95 (969, 70)
13 (130, 9)
TRANSMISSION CONTROL CABLE ASSEMBLY
ENGINE MOUNTING BRACKET RH
95 (969, 70)
87 (887, 64)
ENGINE MOUNTING INSULATOR RH
ENGINE MOUNTING INSULATOR LH
FRONT ENGINE MOUNTING INSULATOR
FRONT FRAME ASSEMBLY
FRAME SIDE RAIL PLATE RH
x 3
52 (530, 38)
x 3
x 4
87 (887, 64)
x 3
87 (887, 64)
32 (326, 24)
85 (867, 62)
HOLE PLUG
FRONT SUSPENSION MEMBER BRACE REAR RH
32 (326, 24)
85 (867, 62)
FRAME SIDE RAIL PLATE LH
85 (867, 62)
32 (326, 24)
FRONT SUSPENSION MEMBER BRACE REAR LH
32 (326, 24)
85 (867, 62)
N*m (kgf*cm, ft.*lbf) : Specified torque
● Non-reusable part

Fig. 132: Identifying Engine Assembly Replacement Components With Torque Specifications (5 Of 6)
Courtesy of TOYOTA MOTOR SALES, U.S.A., INC.

ILLUSTRATION

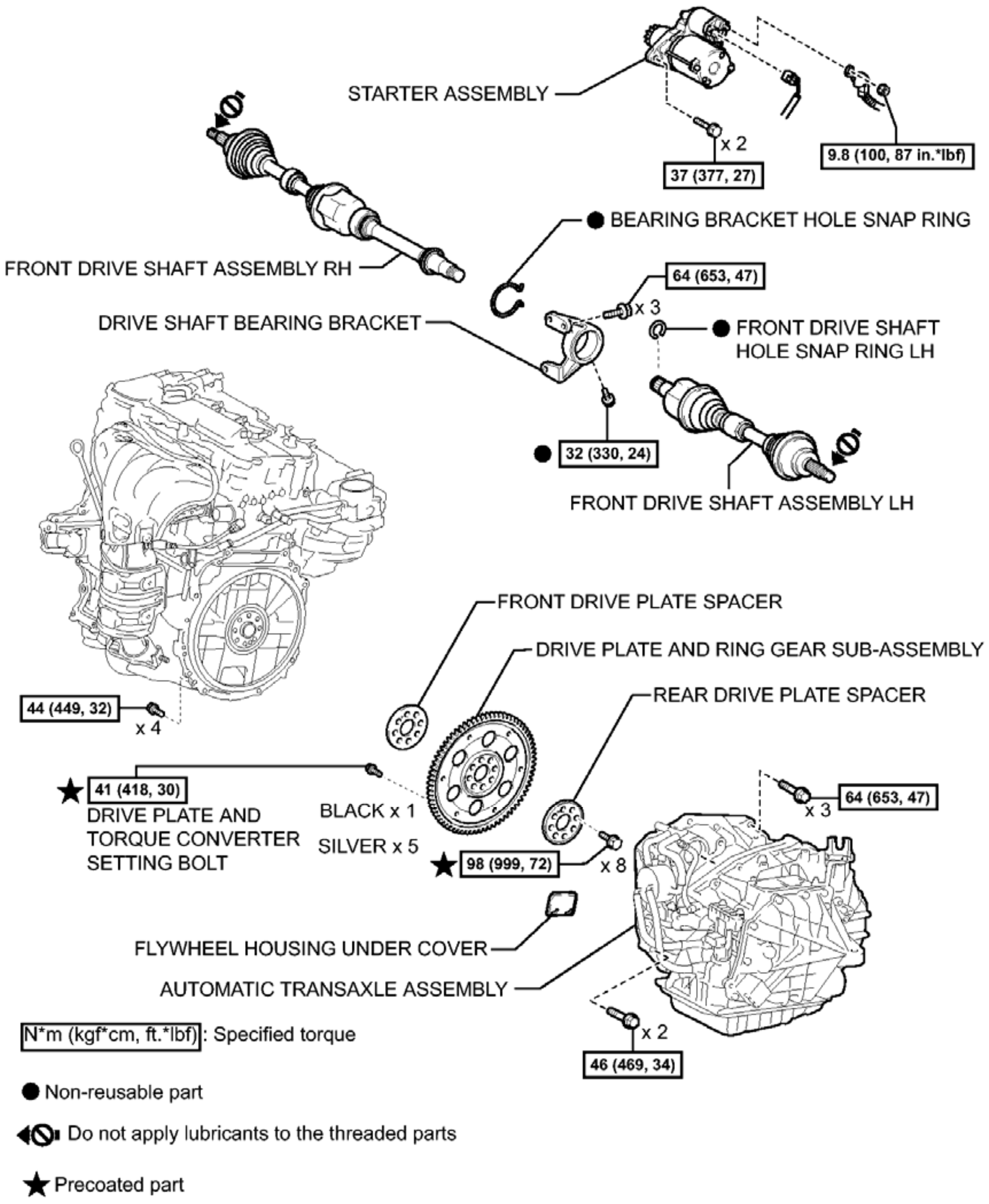
STARTER ASSEMBLY
x 2
37 (377, 27)
9.8 (100, 87 in.*lbf)
● BEARING BRACKET HOLE SNAP RING
FRONT DRIVE SHAFT ASSEMBLY RH
64 (653, 47)
x 3
DRIVE SHAFT BEARING BRACKET
● FRONT DRIVE SHAFT HOLE SNAP RING LH
● 32 (330, 24)
FRONT DRIVE SHAFT ASSEMBLY LH
FRONT DRIVE PLATE SPACER
DRIVE PLATE AND RING GEAR SUB-ASSEMBLY
REAR DRIVE PLATE SPACER
44 (449, 32)
x 4
★ 41 (418, 30)
DRIVE PLATE AND TORQUE CONVERTER SETTING BOLT
BLACK x 1
SILVER x 5
★ 98 (999, 72)
x 8
64 (653, 47)
x 3
FLYWHEEL HOUSING UNDER COVER
AUTOMATIC TRANSAXLE ASSEMBLY
x 2
46 (469, 34)
N*m (kgf*cm, ft.*lbf): Specified torque
● Non-reusable part
Do not apply lubricants to the threaded parts
★ Precoated part

Fig. 133: Identifying Engine Assembly Replacement Components With Torque Specifications (6 Of 6)
Courtesy of TOYOTA MOTOR SALES, U.S.A., INC.

REMOVAL

REMOVAL

1. **PRECAUTION**

WARNING: **The engine assembly with transmission is very heavy. Be sure to follow the procedure described in the repair manual, or the engine lifter may suddenly drop.**

NOTE: **After turning the ignition switch off, waiting time may be required before disconnecting the cable from the negative (-) battery terminal. Therefore, make sure to read the disconnecting the cable from the negative (-) battery terminal notices before proceeding with work. Refer to PRECAUTION .**

2. **RECOVER REFRIGERANT FROM REFRIGERATION SYSTEM** . Refer to **REPLACEMENT - Step 1**
3. **DISCHARGE FUEL SYSTEM PRESSURE**

   Refer to **PRECAUTION**

4. **PLACE FRONT WHEELS FACING STRAIGHT AHEAD**
5. **SECURE STEERING WHEEL**
6. **REMOVE FRONT WHEELS**
7. **DISCONNECT CABLE FROM NEGATIVE BATTERY TERMINAL**

NOTE: **When disconnecting the cable, some systems need to be initialized after the cable is reconnected. Refer to INITIALIZATION .**

8. **REMOVE FRONT WHEEL OPENING EXTENSION PAD LH**
9. **REMOVE ENGINE UNDER COVER LH**
10. **REMOVE FRONT WHEEL OPENING EXTENSION PAD RH**
11. **REMOVE ENGINE UNDER COVER RH**
12. **REMOVE FRONT FENDER APRON SEAL LH**
13. **REMOVE FRONT FENDER APRON SEAL RH**
14. **DRAIN ENGINE OIL** . Refer to **REPLACEMENT - Step 1**
15. **DRAIN ENGINE COOLANT** . Refer to **REPLACEMENT - Step 1**
16. **DRAIN AUTOMATIC TRANSAXLE FLUID** . Refer to **REPLACEMENT - Step 1**
17. **REMOVE COOL AIR INTAKE DUCT SEAL** . Refer to **REMOVAL - Step 1**
18. **REMOVE NO. 1 ENGINE COVER SUB-ASSEMBLY**
    a. Lift the rear of the engine cover to detach the cover from the 2 pins, and then lift the front of the engine cover to detach the cover from the pin and remove the engine cover.

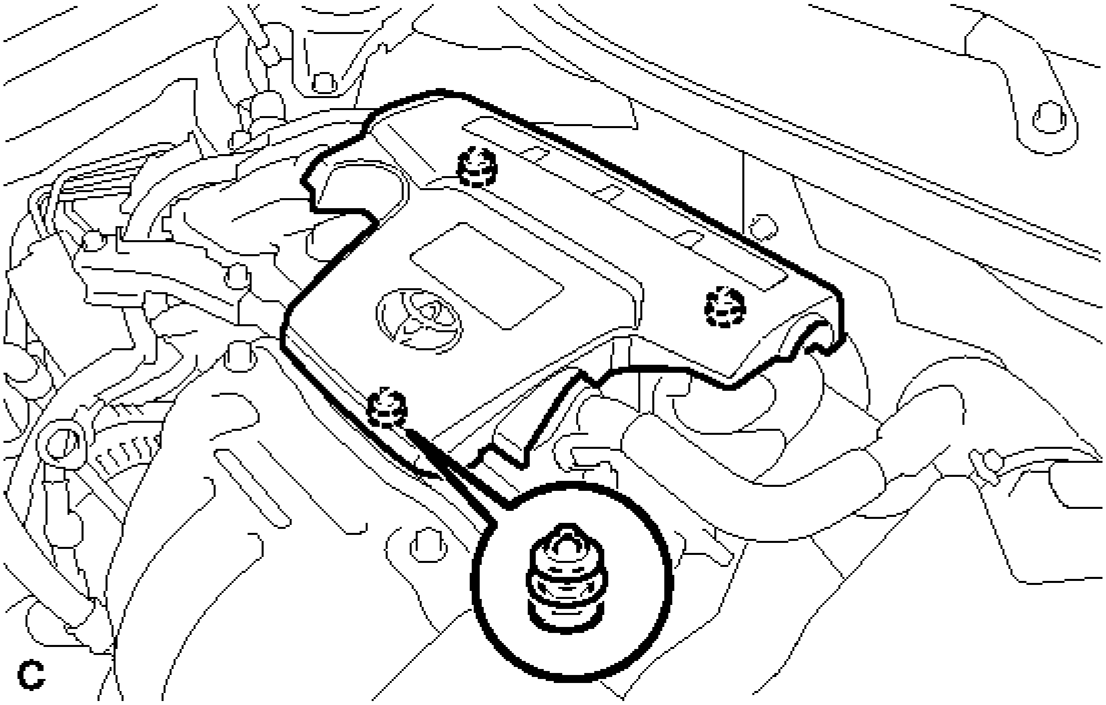

Fig. 134: Identifying No. 1 Engine Cover Sub-Assembly
Courtesy of TOYOTA MOTOR SALES, U.S.A., INC.

NOTE: **Attempting to disengage both front and rear clips at the same time may cause the No. 1 engine cover sub-assembly to break.**

19. **REMOVE INLET AIR CLEANER ASSEMBLY**
    a. Remove the 2 bolts and inlet air cleaner assembly.

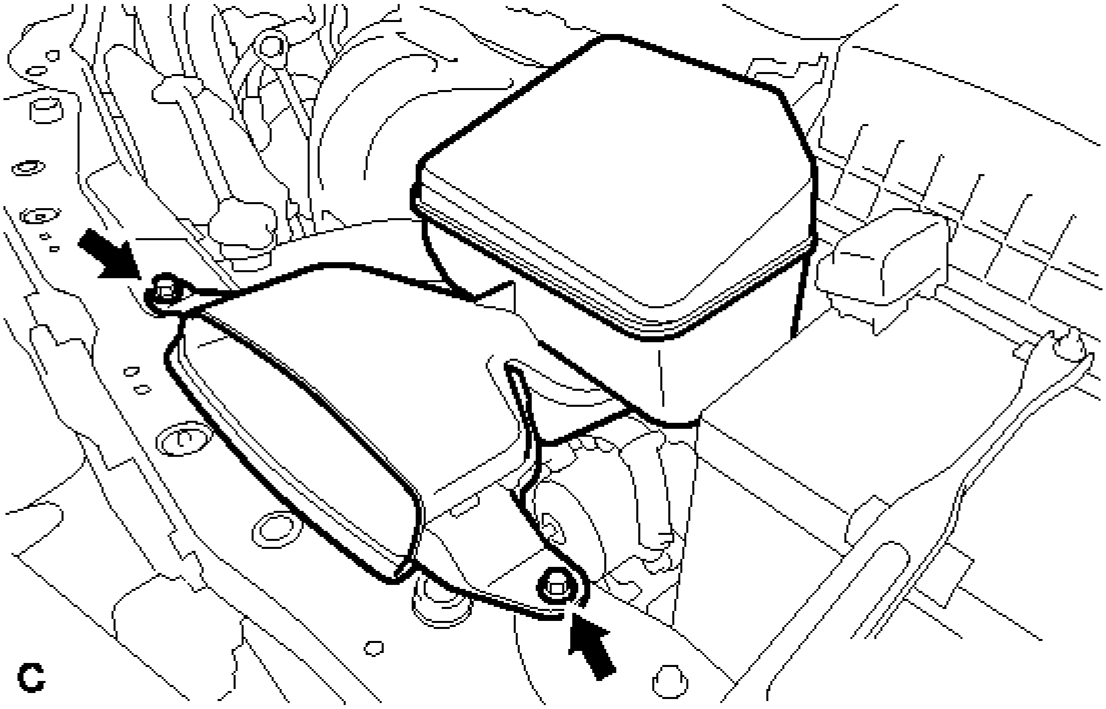

Fig. 135: Identifying Inlet Air Cleaner Assembly Bolts
Courtesy of TOYOTA MOTOR SALES, U.S.A., INC.

20. **REMOVE AIR CLEANER CAP SUB-ASSEMBLY** . Refer to **REMOVAL - Step 7**
21. **REMOVE AIR CLEANER FILTER ELEMENT SUB-ASSEMBLY**
    a. Remove the air cleaner filter element sub-assembly.
22. **REMOVE AIR CLEANER CASE SUB-ASSEMBLY**
    a. Disconnect the wire harness clamp.

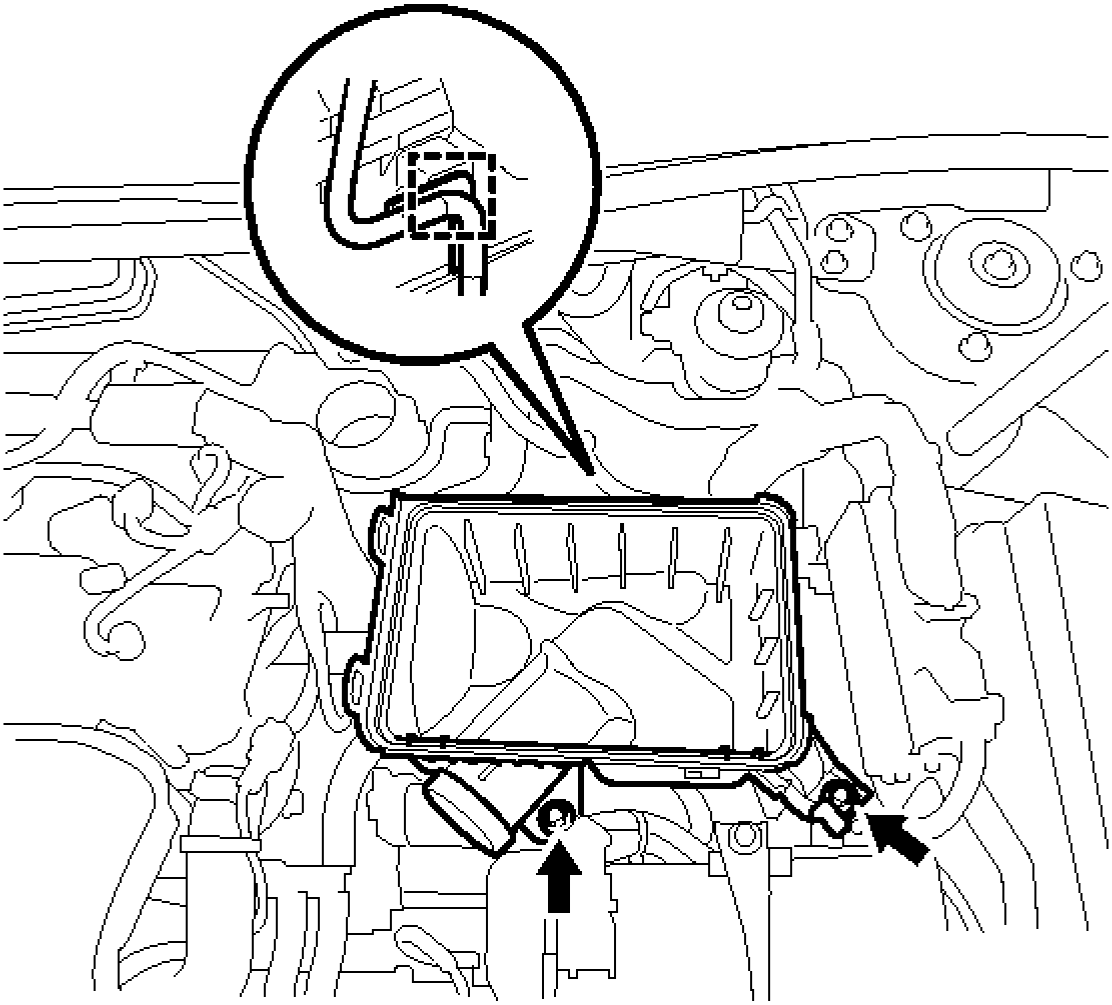

Fig. 136: Identifying Air Cleaner Case Sub-Assembly Bolts
Courtesy of TOYOTA MOTOR SALES, U.S.A., INC.

b. Remove the 2 bolts and air cleaner case sub-assembly.

23. **REMOVE BATTERY**
    a. Loosen the nut, and separate the positive (+) battery terminal.

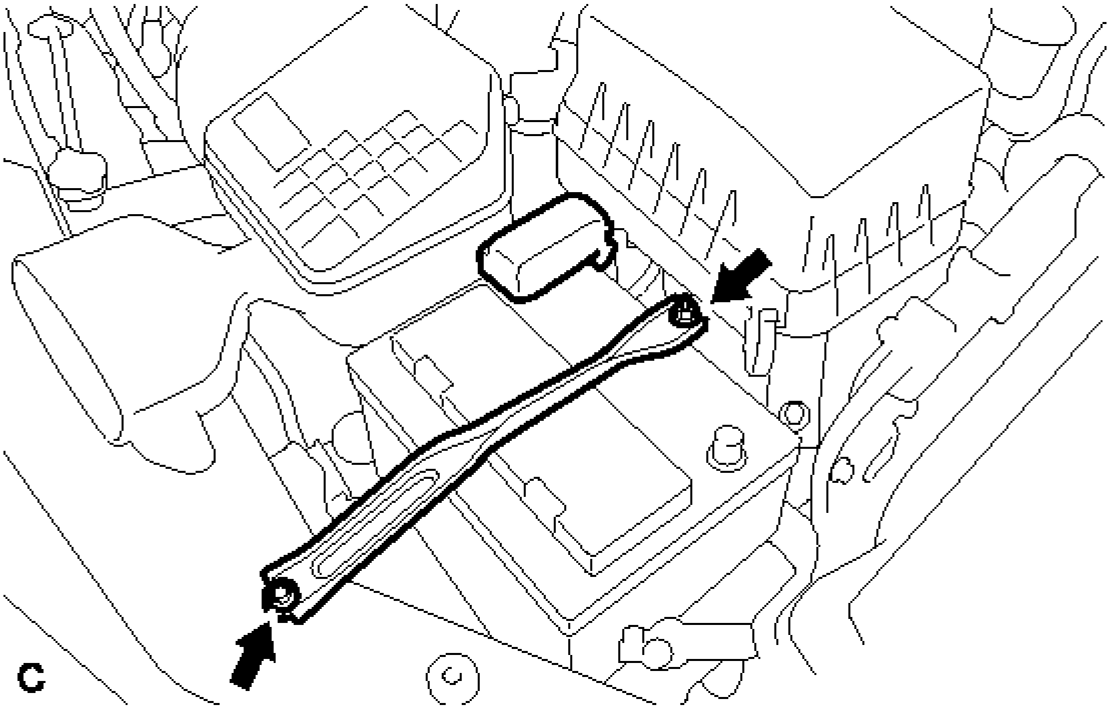

Fig. 137: Identifying Battery Clamp, Bolt And Nut
Courtesy of TOYOTA MOTOR SALES, U.S.A., INC.

b. Loosen the nut, and remove the bolt and battery clamp.
c. Remove the battery and battery tray.

24. **DISCONNECT NO. 1 RADIATOR HOSE**
    a. Remove the hose clamp to separate the air fuel ratio sensor wire from the No. 1 radiator hose.

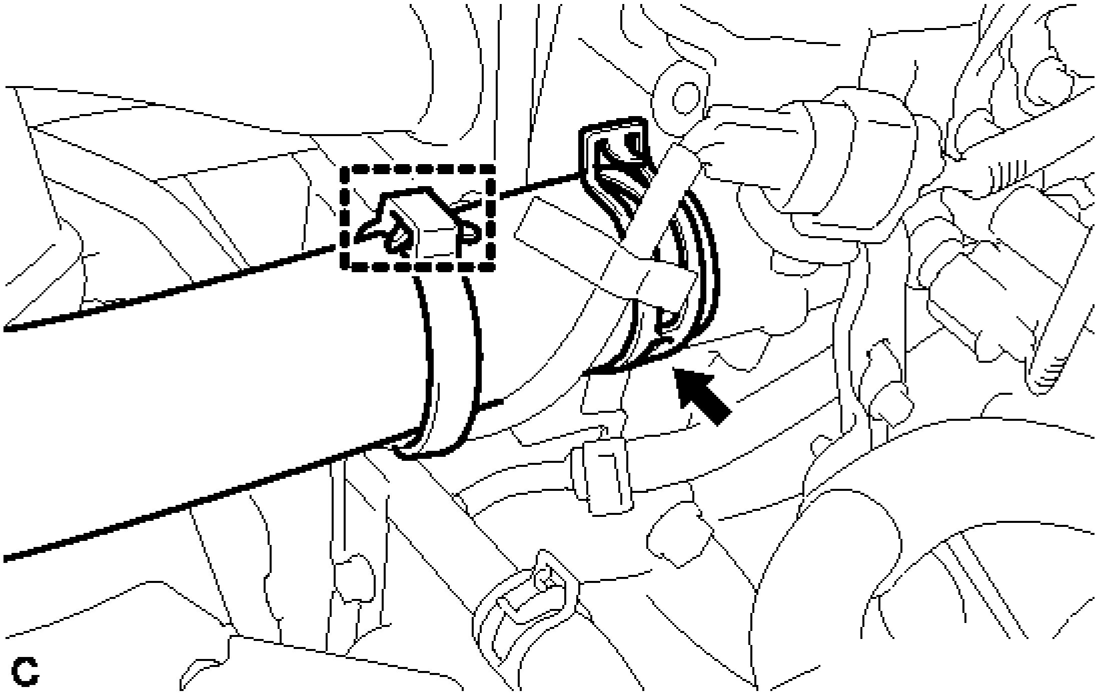

Fig. 138: Identifying Hose Clamp
Courtesy of TOYOTA MOTOR SALES, U.S.A., INC.

b. Disconnect the No. 1 radiator hose.

25. **DISCONNECT NO. 2 RADIATOR HOSE**
    a. Disconnect the No. 2 radiator hose.

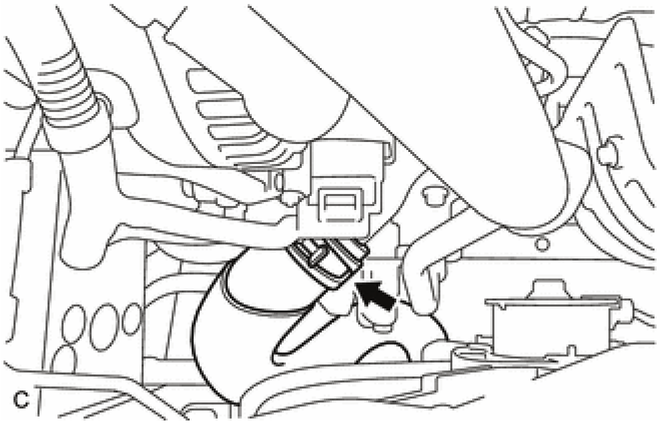

Fig. 139: Identifying No. 2 Radiator Hose
Courtesy of TOYOTA MOTOR SALES, U.S.A., INC.

26. **DISCONNECT INLET HEATER WATER HOSE**
    a. Disconnect the inlet heater water hose.

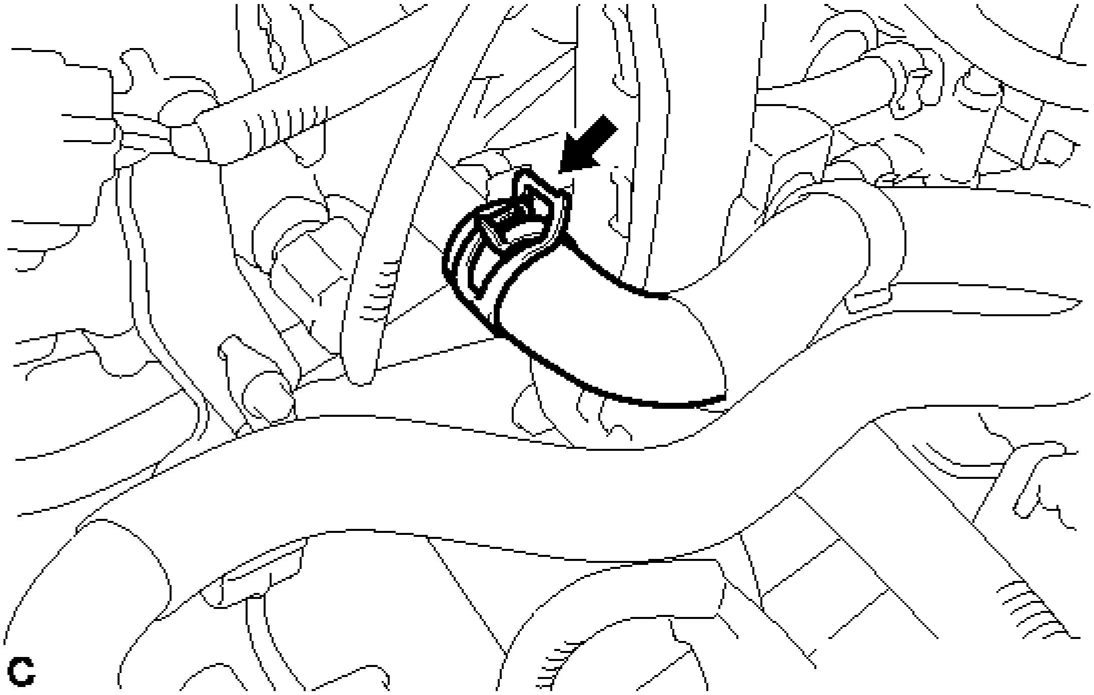

Fig. 140: Identifying Inlet Heater Water Hose
Courtesy of TOYOTA MOTOR SALES, U.S.A., INC.

27. **DISCONNECT OUTLET HEATER WATER HOSE**
    a. Disconnect the 3 outlet heater water hoses.

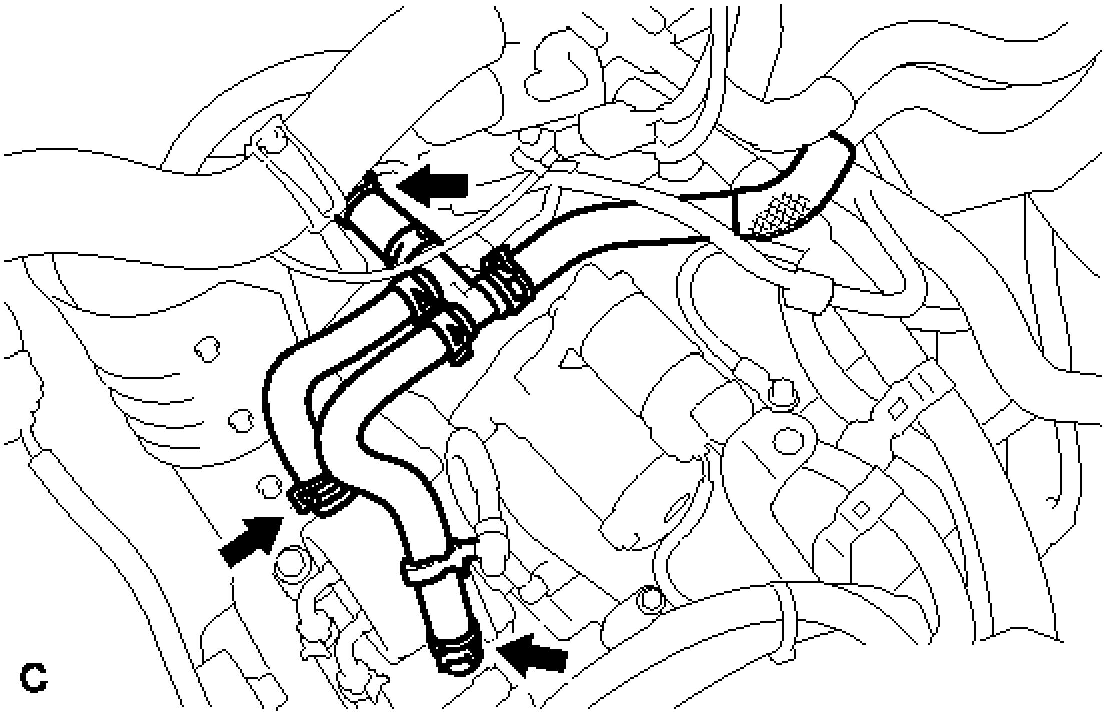

Fig. 141: Identifying Outlet Heater Water Hoses

Courtesy of TOYOTA MOTOR SALES, U.S.A., INC.

28. **REMOVE STARTER ASSEMBLY** . Refer to **REMOVAL - Step 10**
29. **DISCONNECT ENGINE WIRE**
    a. Remove the No. 1 relay block cover.
    b. Remove the 2 nuts and disconnect the wire clamp.

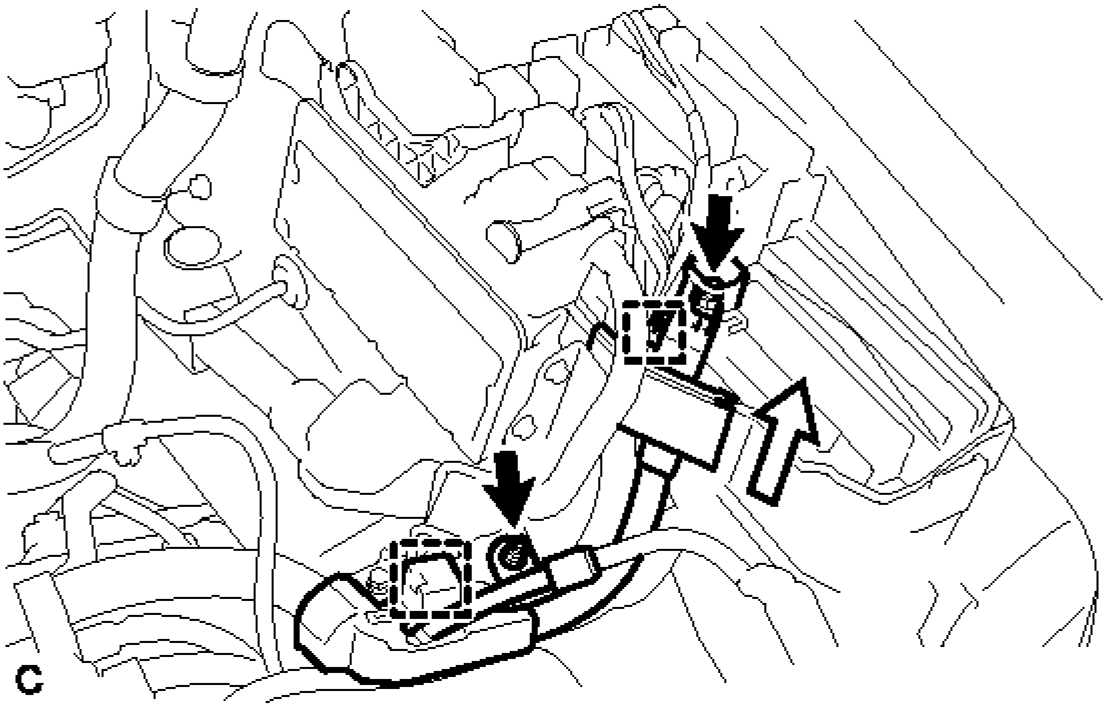

Fig. 142: Disconnecting Wire Clamp And Nuts
Courtesy of TOYOTA MOTOR SALES, U.S.A., INC.

    c. Using a screwdriver, unlock the claw and separate the engine wire from the engine room relay block.
    d. Disconnect the 4 connectors.

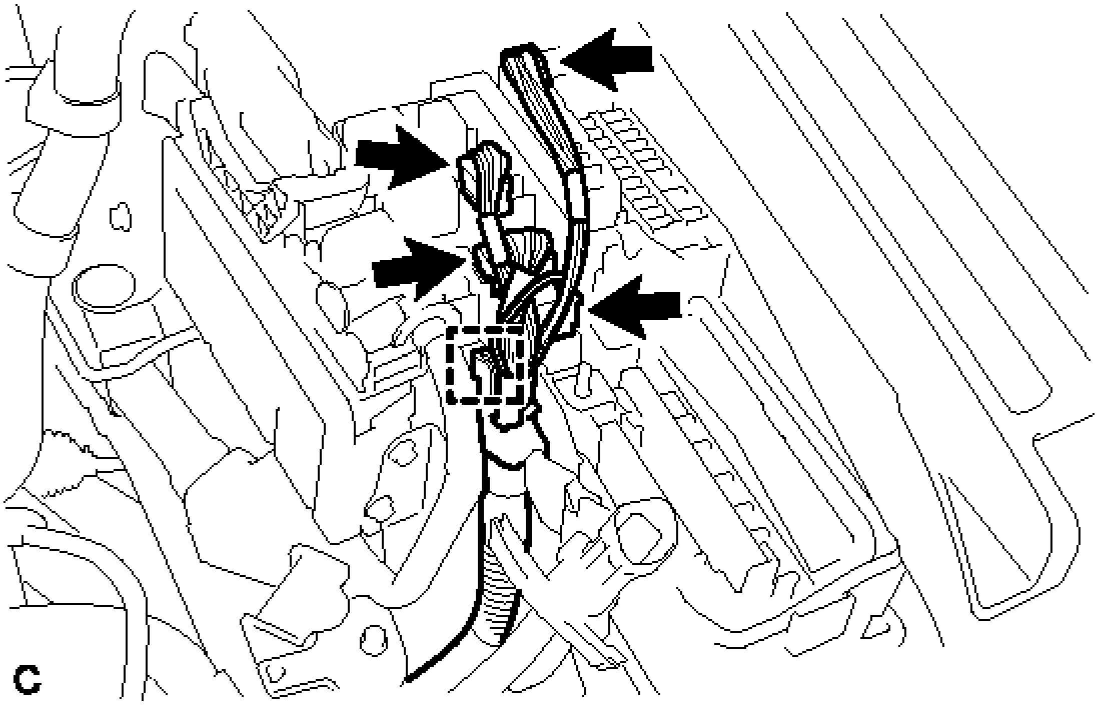

Fig. 143: Identifying Connectors
Courtesy of TOYOTA MOTOR SALES, U.S.A., INC.

e. Using a screwdriver, unlock the claw and separate the engine wire from the engine room relay block.
f. Pull up the lever to disconnect the ECM connector.

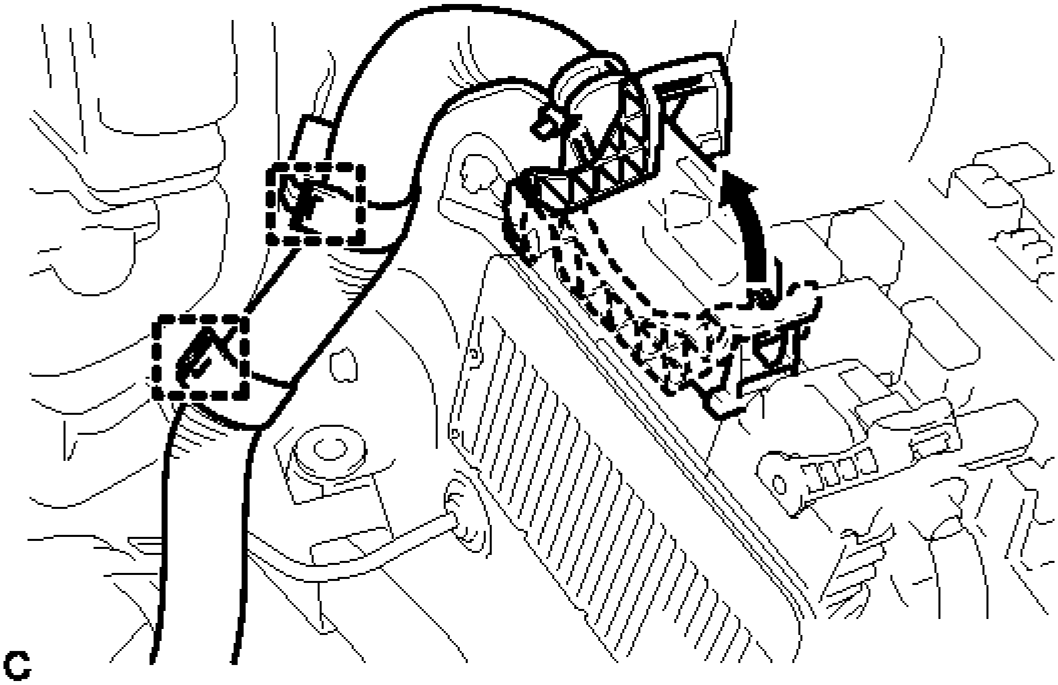

Fig. 144: Identifying ECM Connector And Wire Clamps
Courtesy of TOYOTA MOTOR SALES, U.S.A., INC.

g. Disconnect the 2 wire clamps.

30. **DISCONNECT NO. 1 AIR CLEANER BRACKET**

a. Disconnect the 2 wire clamps.

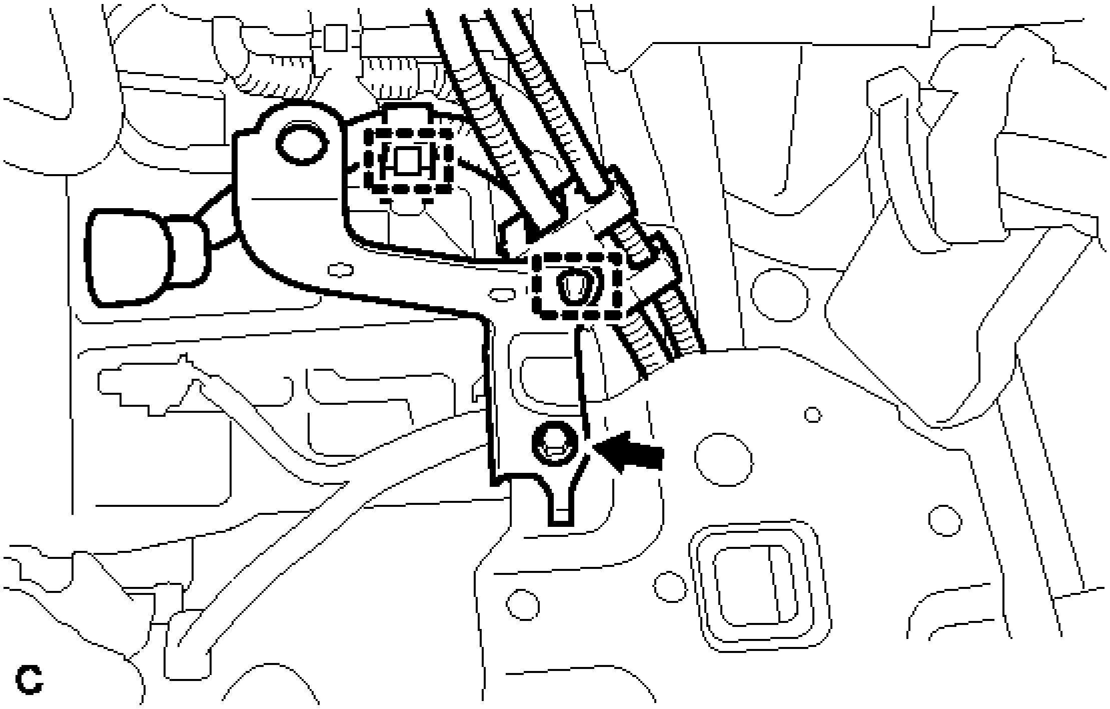

Fig. 145: Identifying No. 1 Air Cleaner Bracket And Bolt
Courtesy of TOYOTA MOTOR SALES, U.S.A., INC.

b. Remove the bolt and No. 1 air cleaner bracket.

31. **DISCONNECT TRANSMISSION CONTROL CABLE ASSEMBLY**

a. Remove the nut and disconnect the transmission control cable from the control shaft lever.

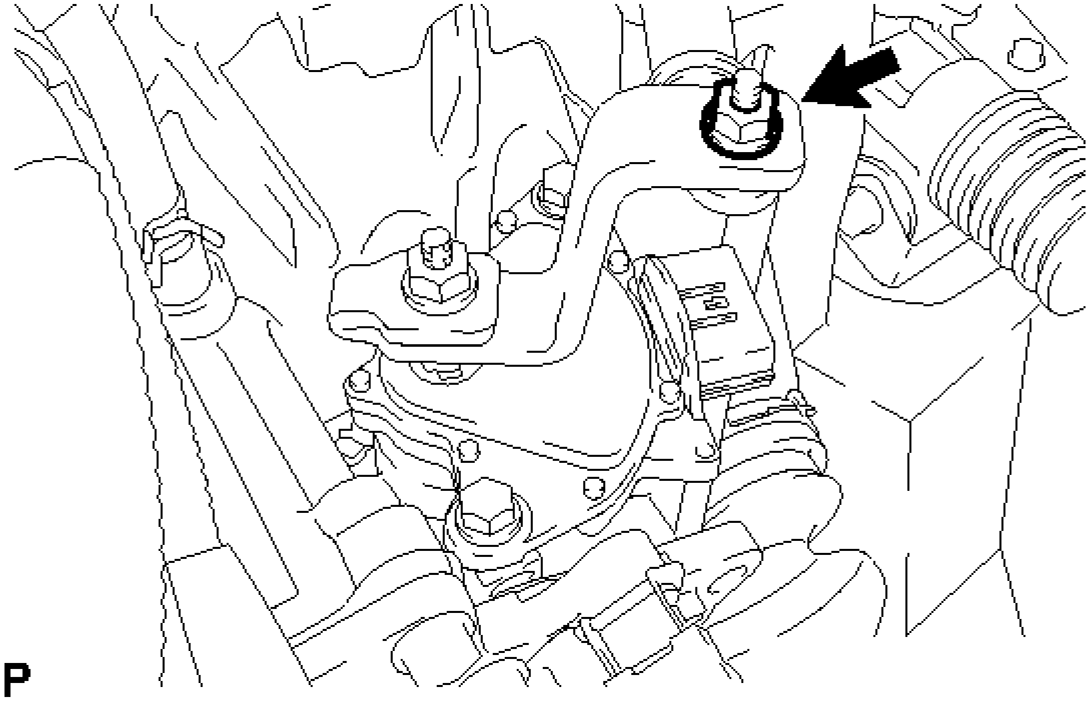

Fig. 146: Locating Transmission Control Cable Nut
Courtesy of TOYOTA MOTOR SALES, U.S.A., INC.

b. Remove the clip and disconnect the transmission control cable assembly from the No. 1 control cable bracket.

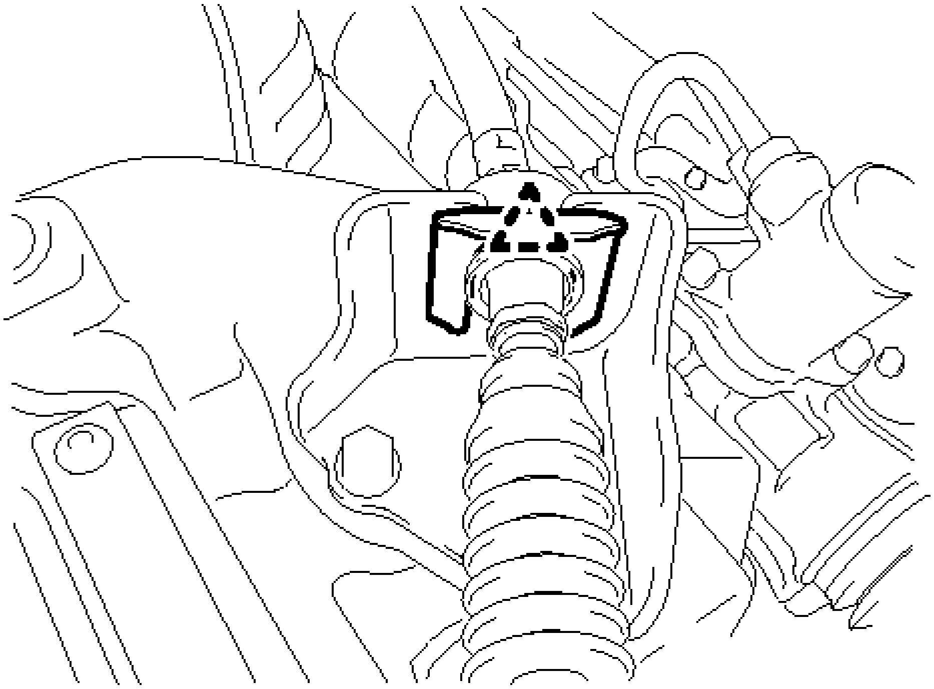

Fig. 147: Remove The Clip From The Transmission Cable Bracket

Courtesy of TOYOTA MOTOR SALES, U.S.A., INC.

32. **REMOVE NO. 2 ENGINE MOUNTING STAY RH**
    a. Remove the 2 bolts and No. 2 engine mounting stay RH.

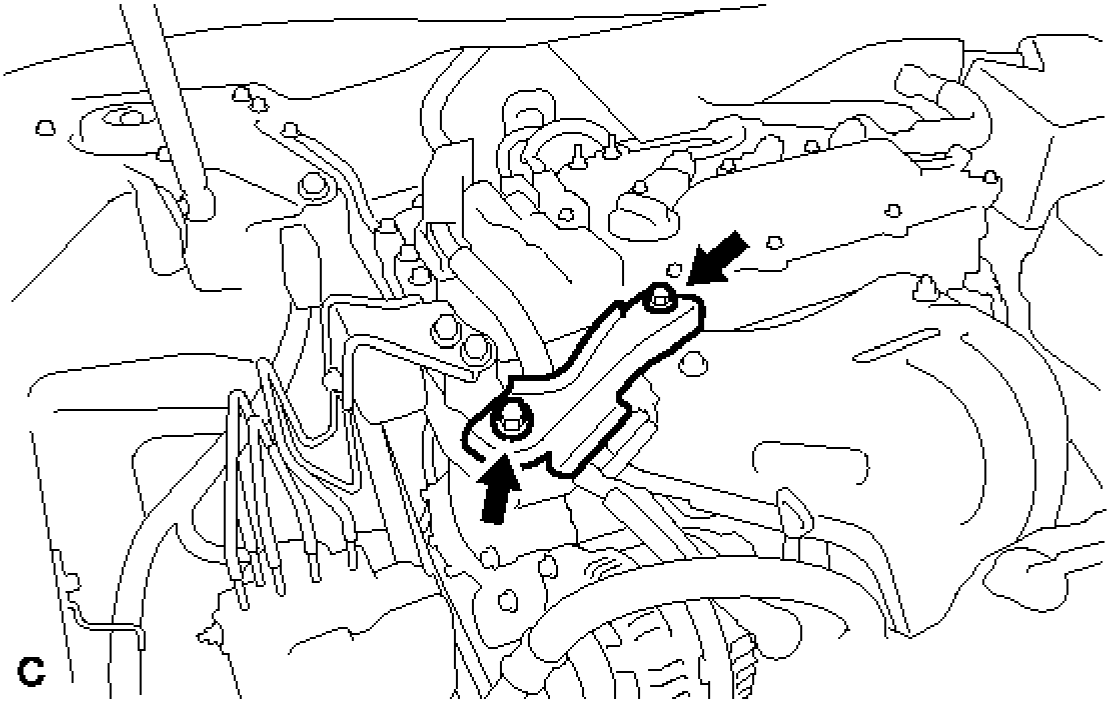

Fig. 148: Identifying No. 2 Engine Mounting Stay Bolts RH
Courtesy of TOYOTA MOTOR SALES, U.S.A., INC.

33. **SEPARATE EARTH WIRE**
    a. Remove the bolt and separate the earth wire from the engine moving control rod bracket.

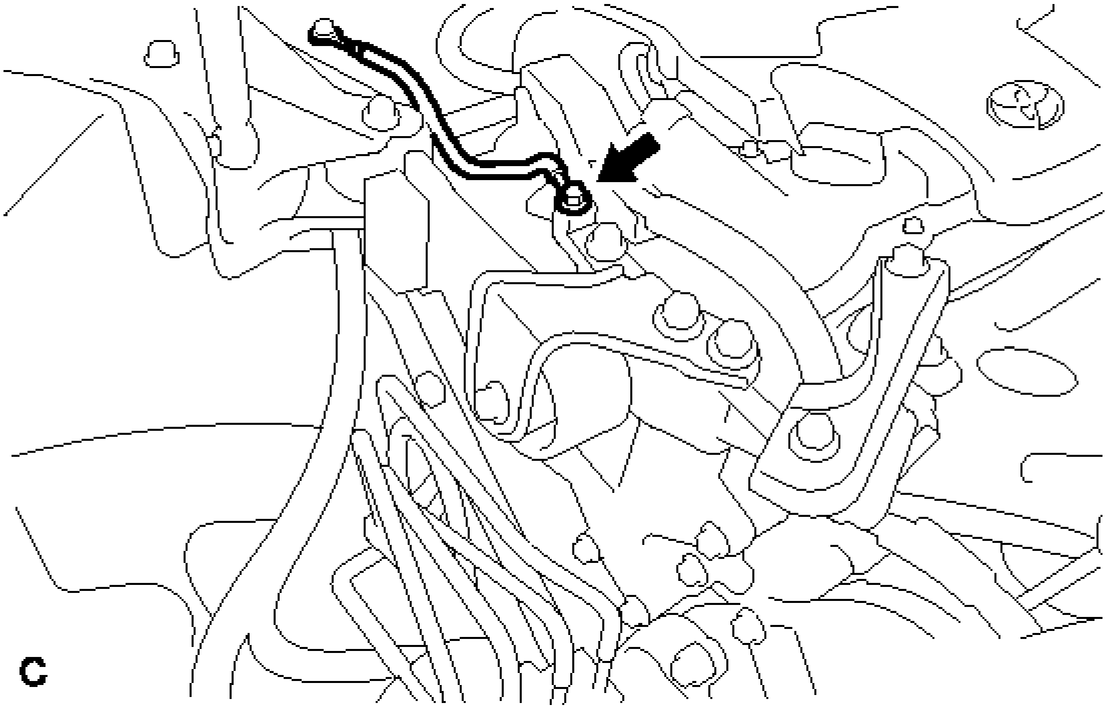

Fig. 149: Identifying Earth Wire
Courtesy of TOYOTA MOTOR SALES, U.S.A., INC.

34. **REMOVE ENGINE MOVING CONTROL ROD BRACKET**
    a. Remove the 4 bolts and engine moving control rod bracket.

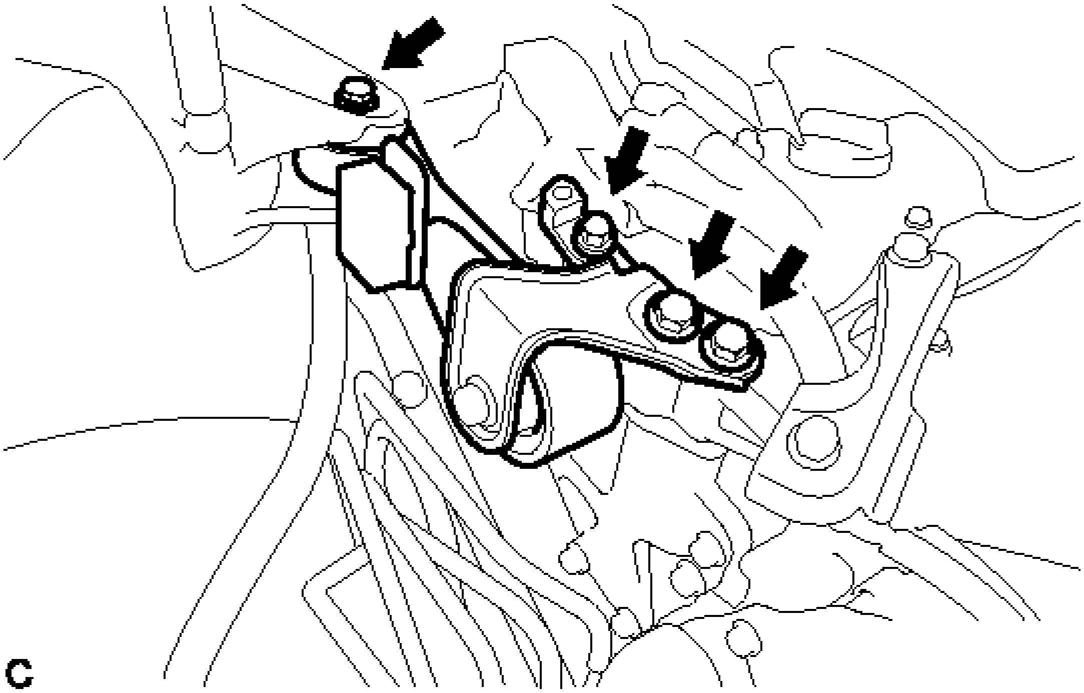

Fig. 150: Identifying Engine Moving Control Rod Bracket And Bolts

Courtesy of TOYOTA MOTOR SALES, U.S.A., INC.

35. **REMOVE ENGINE MOVING CONTROL ROD**
    a. Remove the bolt and engine moving control rod from the engine moving control rod bracket.

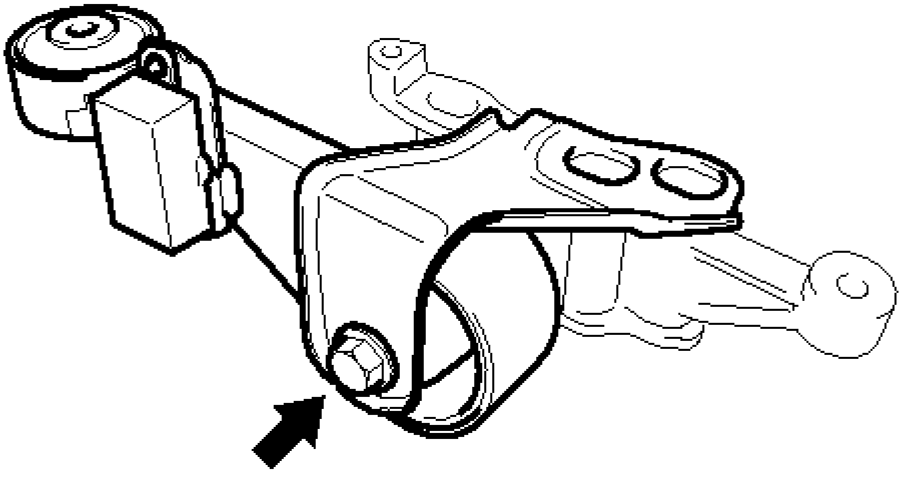

Fig. 151: Identifying Engine Moving Control Rod Bolt
Courtesy of TOYOTA MOTOR SALES, U.S.A., INC.

HINT:

Perform this procedure only when replacement of the engine moving control rod is necessary.

36. **DISCONNECT UNION TO CONNECTOR TUBE HOSE**
    a. Disconnect the union to connector tube hose.

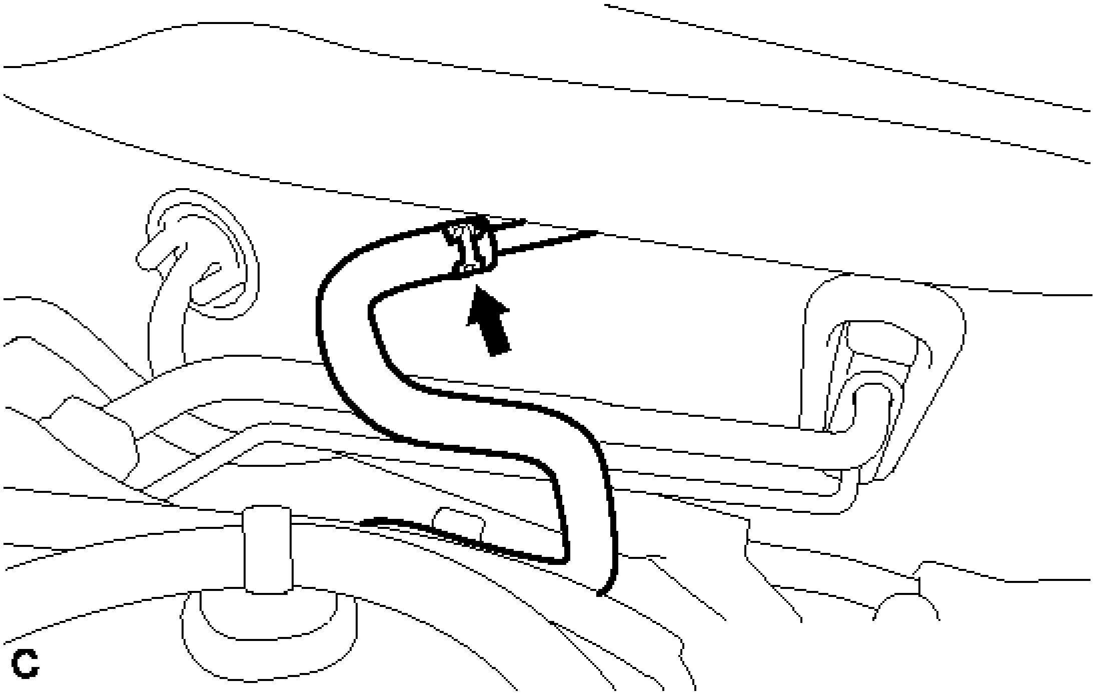

Fig. 152: Identifying Union And Connector Tube Hose
Courtesy of TOYOTA MOTOR SALES, U.S.A., INC.

37. **DISCONNECT NO. 1 COOLER REFRIGERANT DISCHARGE HOSE** . Refer to **REMOVAL - Step 5**
38. **DISCONNECT SUCTION HOSE SUB-ASSEMBLY (for TMMK Made)** . Refer to **REMOVAL - Step 6**
39. **DISCONNECT NO. 1 COOLER REFRIGERANT SUCTION HOSE (for SIA Made)** . Refer to **REMOVAL - Step 7**
40. **DISCONNECT FUEL TUBE SUB-ASSEMBLY**
    a. Release the claw and remove the No. 1 fuel pipe clamp.

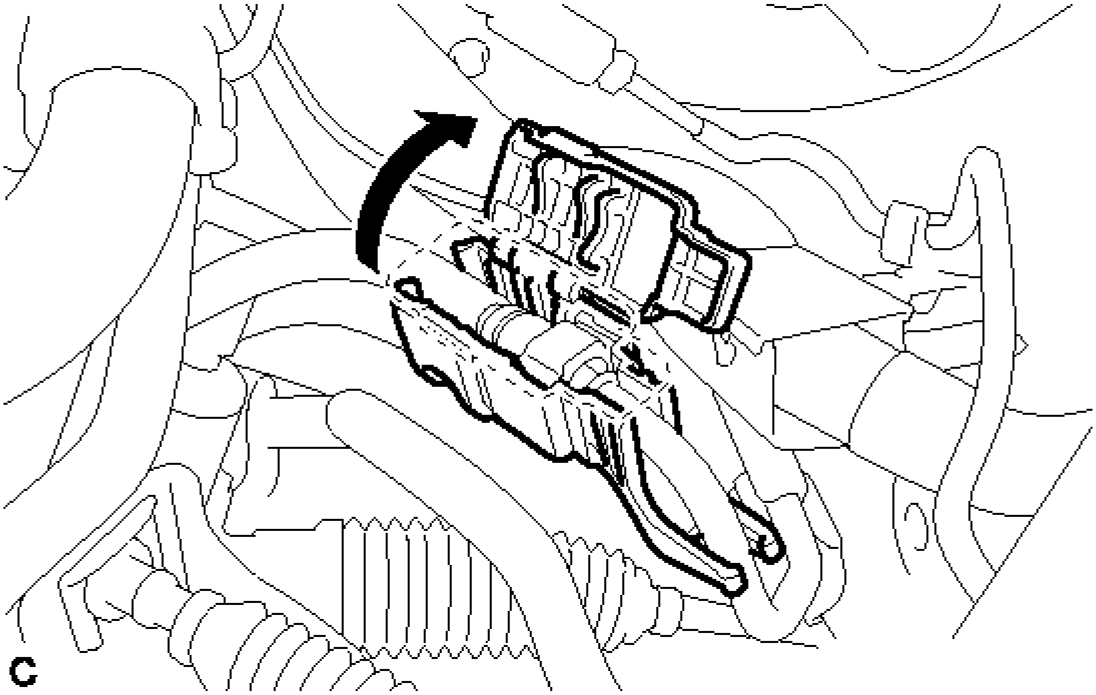

Fig. 153: Removing No. 1 Fuel Pipe Clamp
Courtesy of TOYOTA MOTOR SALES, U.S.A., INC.

b. Pinch the fuel tube connector and then pull out the fuel main tube.

NOTE:	- **Check for dirt and foreign objects on the pipe and around the connector. Clean if necessary and then disconnect the connector.** - **Disconnect the connector by hand.** - **Do not bend, fold or rotate the nylon tube.** - **If the pipe and connector are stuck together, push and pull the connector until it becomes free.** - **Put the pipe and connector ends in vinyl bags to prevent damage and contamination.**

41. **REMOVE FRONT EXHAUST PIPE ASSEMBLY** . Refer to **REMOVAL - Step 4**
42. **REMOVE FRONT AXLE SHAFT NUT LH** . Refer to **REMOVAL - Step 9**
43. **REMOVE FRONT AXLE SHAFT NUT RH**

    HINT:

    Use the same procedure described for the LH side.

44. **SEPARATE FRONT STABILIZER LINK ASSEMBLY LH** . Refer to **REMOVAL - Step 4**
45. **SEPARATE FRONT STABILIZER LINK ASSEMBLY RH**

HINT:

Use the same procedure described for the LH side.

46. **SEPARATE FRONT SPEED SENSOR LH** . Refer to **REMOVAL - Step 3**
47. **SEPARATE FRONT SPEED SENSOR RH**

    HINT:

    Use the same procedure described for the LH side.

48. **SEPARATE TIE ROD ASSEMBLY LH** . Refer to **REMOVAL - Step 5**
49. **SEPARATE TIE ROD ASSEMBLY RH**

    HINT:

    Use the same procedure described for the LH side.

50. **SEPARATE FRONT LOWER NO. 1 SUSPENSION ARM SUB-ASSEMBLY LH** . Refer to **REMOVAL - Step 8**
51. **SEPARATE FRONT LOWER NO. 1 SUSPENSION ARM SUB-ASSEMBLY RH**

    HINT:

    Use the same procedure described for the LH side.

52. **SEPARATE FRONT AXLE ASSEMBLY LH** . Refer to **REMOVAL - Step 7**
53. **SEPARATE FRONT AXLE ASSEMBLY RH**

    HINT:

    Use the same procedure described for the LH side.

54. **SEPARATE STEERING INTERMEDIATE SHAFT ASSEMBLY** . Refer to **REMOVAL - Step 4**
55. **REMOVE FLYWHEEL HOUSING UNDER COVER**
    a. Remove the flywheel housing under cover.

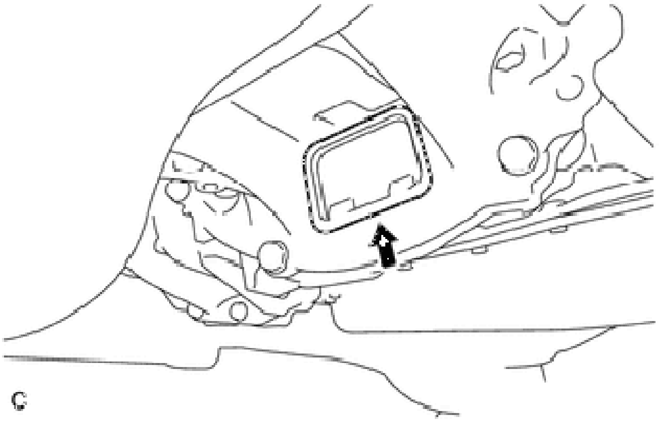

Fig. 154: Locating Flywheel Housing Under Cover
Courtesy of TOYOTA MOTOR SALES, U.S.A., INC.

56. **REMOVE DRIVE PLATE AND TORQUE CONVERTER SETTING BOLT**
    a. Turn the crankshaft to gain access to the removal locations of the 6 torque converter setting bolts and remove each bolt while holding the crankshaft pulley bolt with a wrench.

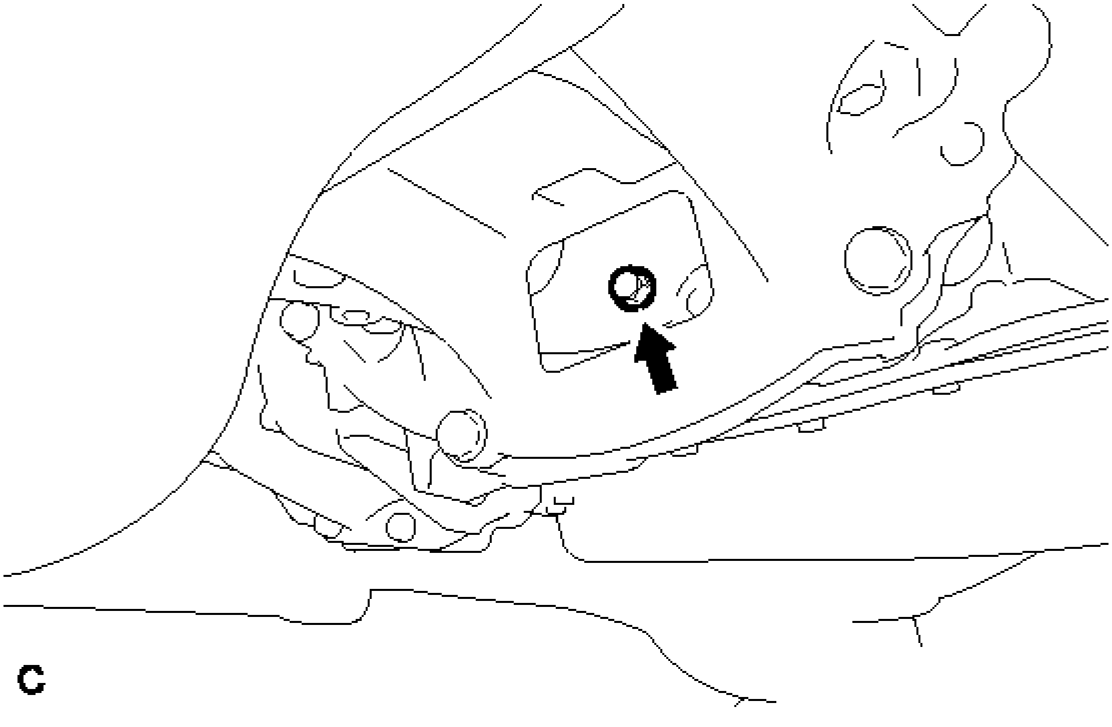

Fig. 155: Locating Torque Converter Clutch Setting Bolt
Courtesy of TOYOTA MOTOR SALES, U.S.A., INC.

57. **REMOVE ENGINE ASSEMBLY WITH TRANSAXLE**
    a. Set the engine lifter.

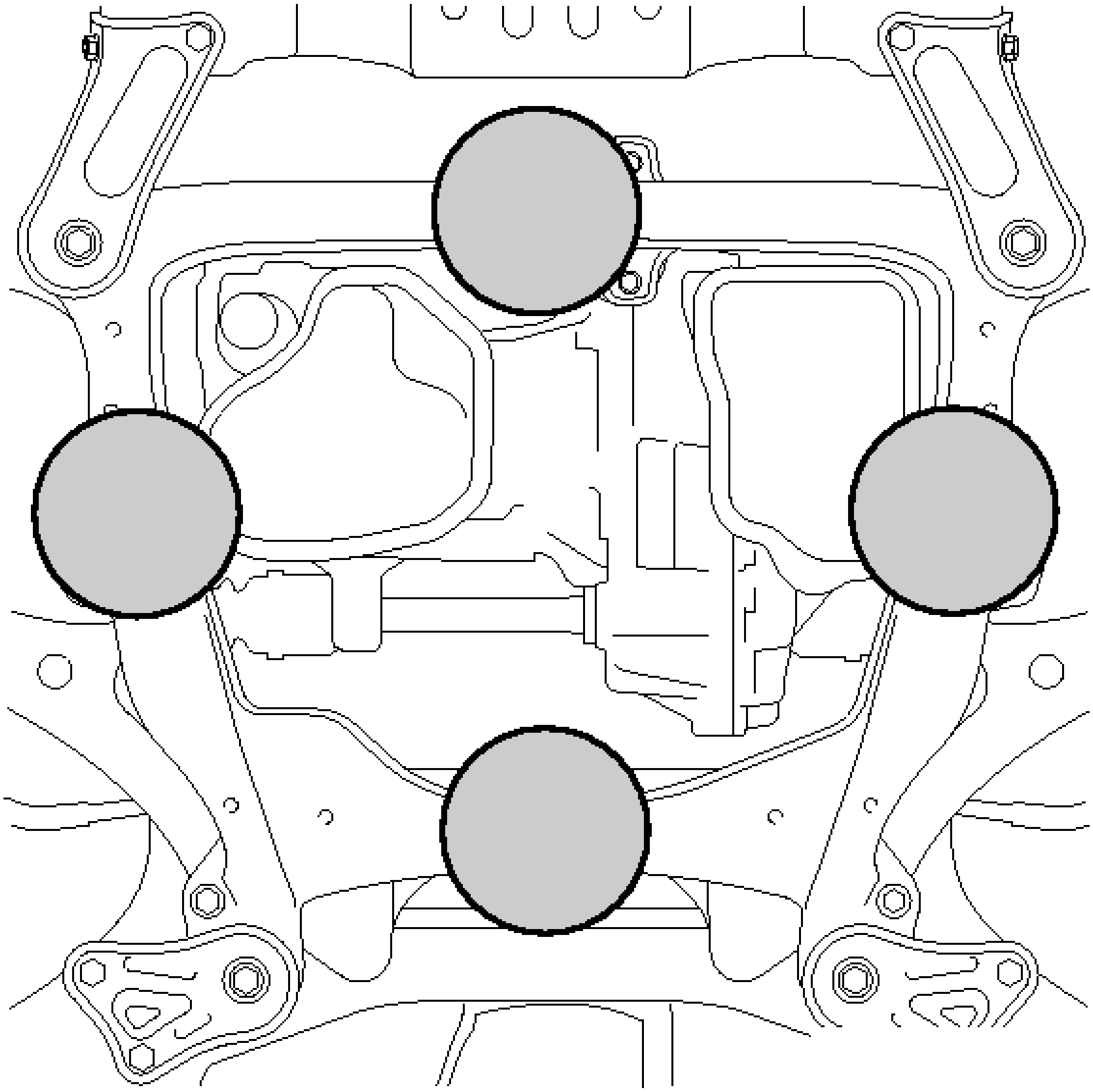

Fig. 156: Identifying Engine Lifter Points
Courtesy of TOYOTA MOTOR SALES, U.S.A., INC.

TEXT IN ILLUSTRATION

	Attachment Installation Position

NOTE:

- **Install a height adjustment attachment and plate lift attachment onto the engine assembly with transaxle.**
- **Securely support the engine assembly to prevent it from turning upside down until it is secured to an engine stand.**
- **To prevent the oil pan from deforming, do not place any attachments onto the oil pan of the engine assembly with transaxle.**

- **Servicing an engine assembly while it is hanging is dangerous. This can be done only when installing/removing the engine assembly to/from an engine stand.**
- **Do not perform any procedure while the engine assembly is suspended because doing so may cause the engine assembly to drop, resulting in injury. However, the engine assembly needs to be suspended when it is installed or removed from an engine stand.**

b. Remove the 4 bolts, 2 nuts, and frame side rail plate RH and LH.

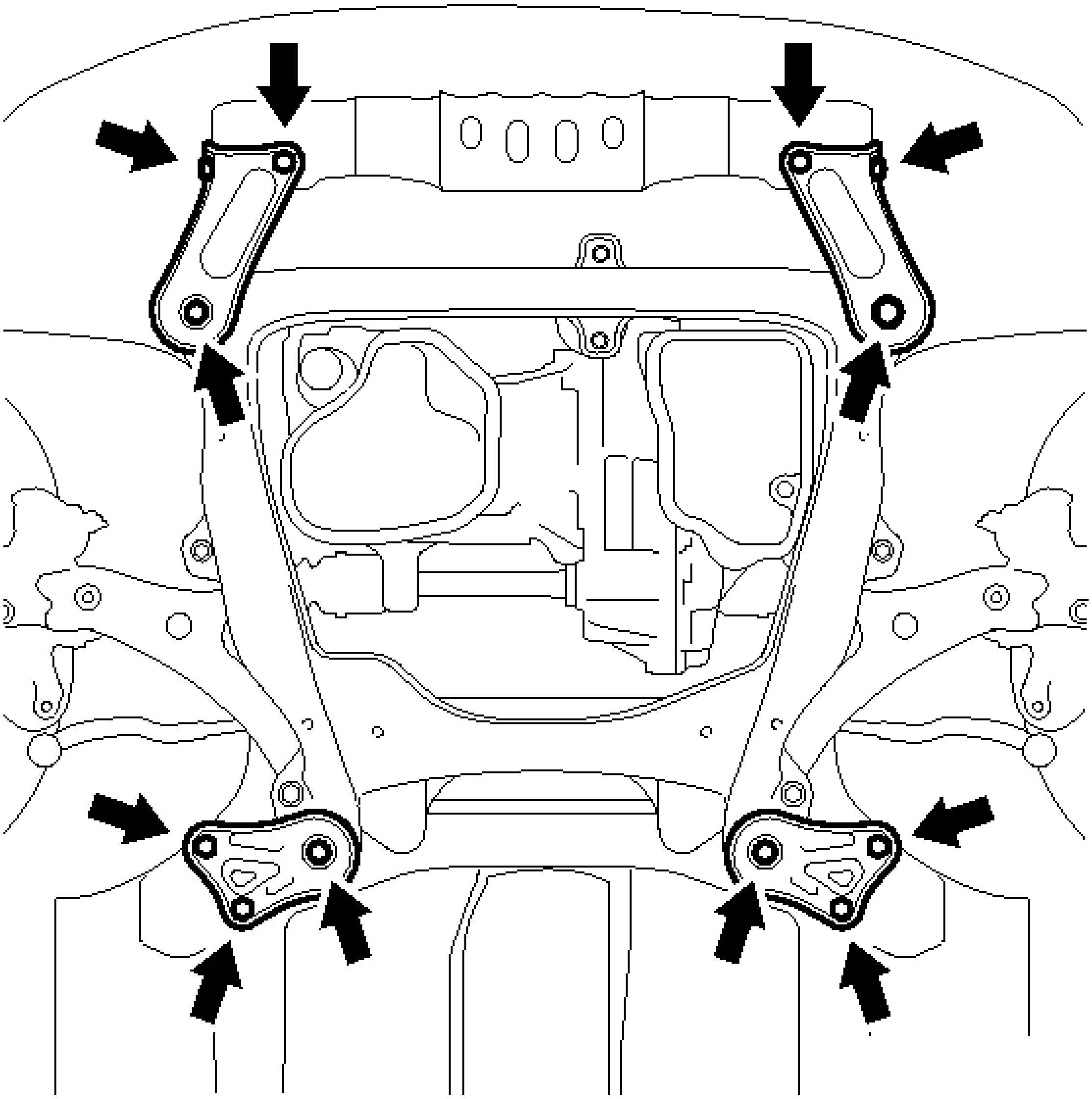

Fig. 157: Identifying Frame Side Rail Plate Bolts And Nuts
Courtesy of TOYOTA MOTOR SALES, U.S.A., INC.

c. Remove the 4 bolts, 2 nuts, and front suspension member brace rear RH and LH.

d. Operate the engine lifter and remove the engine assembly from the vehicle.

NOTE:

- **Make sure that the engine is clear of all wiring and hoses.**
- **While lowering the engine from the vehicle, do not allow it to contact the vehicle.**

e. Install engine hangers See step 20.

58. **REMOVE ENGINE WIRE**
    a. Remove the engine wire from the engine with transaxle.
59. **REMOVE V-RIBBED BELT** See step 5
60. **REMOVE COMPRESSOR ASSEMBLY WITH PULLEY** . Refer to **REMOVAL - Step 8**
61. **REMOVE GENERATOR ASSEMBLY** . Refer to **REMOVAL - Step 4**
62. **REMOVE FRONT DRIVE SHAFT ASSEMBLY LH** . Refer to **REMOVAL - Step 15**
63. **REMOVE FRONT DRIVE SHAFT HOLE SNAP RING LH** . Refer to **REMOVAL - Step 17**
64. **REMOVE FRONT DRIVE SHAFT ASSEMBLY RH** . Refer to **REMOVAL - Step 16**
65. **REMOVE FRONT FRAME ASSEMBLY**
    a. Remove the nut and separate the engine mounting insulator LH.

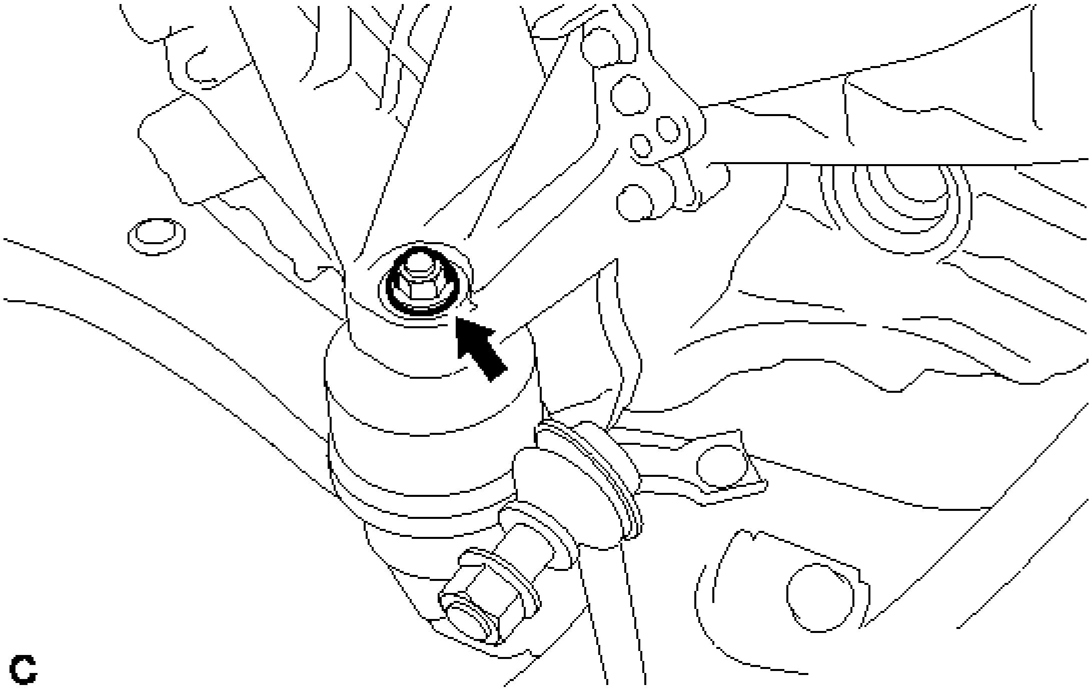

Fig. 158: Identifying Engine Mounting Insulator Nut LH
Courtesy of TOYOTA MOTOR SALES, U.S.A., INC.

b. Remove the bolt and separate the front engine mounting insulator.

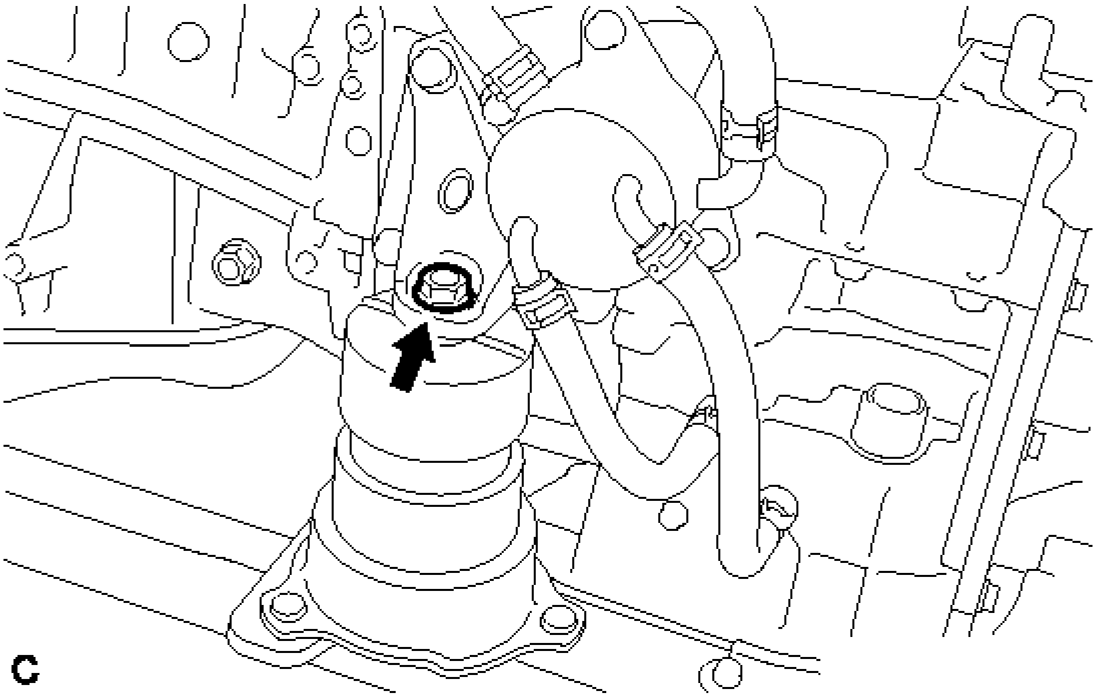

Fig. 159: Identifying Front Engine Mounting Insulator Bolt
Courtesy of TOYOTA MOTOR SALES, U.S.A., INC.

c. Remove the nut and separate the engine mounting insulator RH.

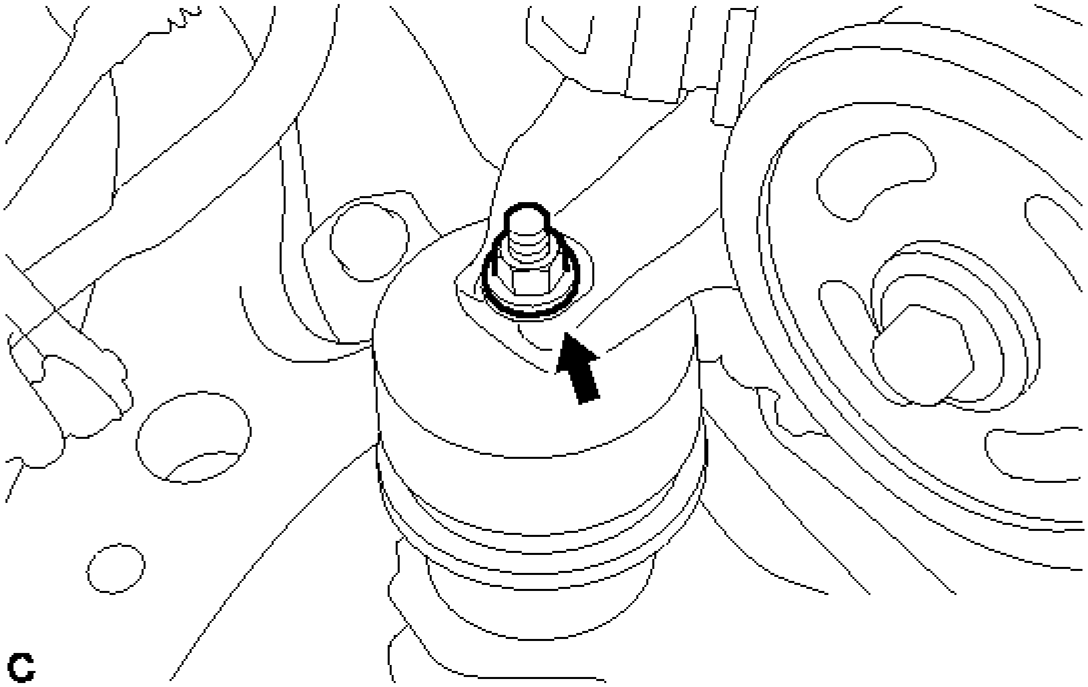

Fig. 160: Identifying Engine Mounting Insulator Nut
Courtesy of TOYOTA MOTOR SALES, U.S.A., INC.

d. Remove the front frame assembly.

e. Using a height adjustable attachment and plate lift attachment, place the engine assembly on a flat level surface.

NOTE:

- **Using a height adjustable attachment and plate lift attachment, place the engine assembly with transaxle horizontally.**
- **To prevent the oil pan from deforming, do not place any attachments onto the oil pan of the engine assembly with transaxle.**
- **Using an engine sling device and engine lift, secure the engine assembly before service.**

66. REMOVE FRONT ENGINE MOUNTING INSULATOR

a. Remove the 3 nuts and front engine mounting insulator.

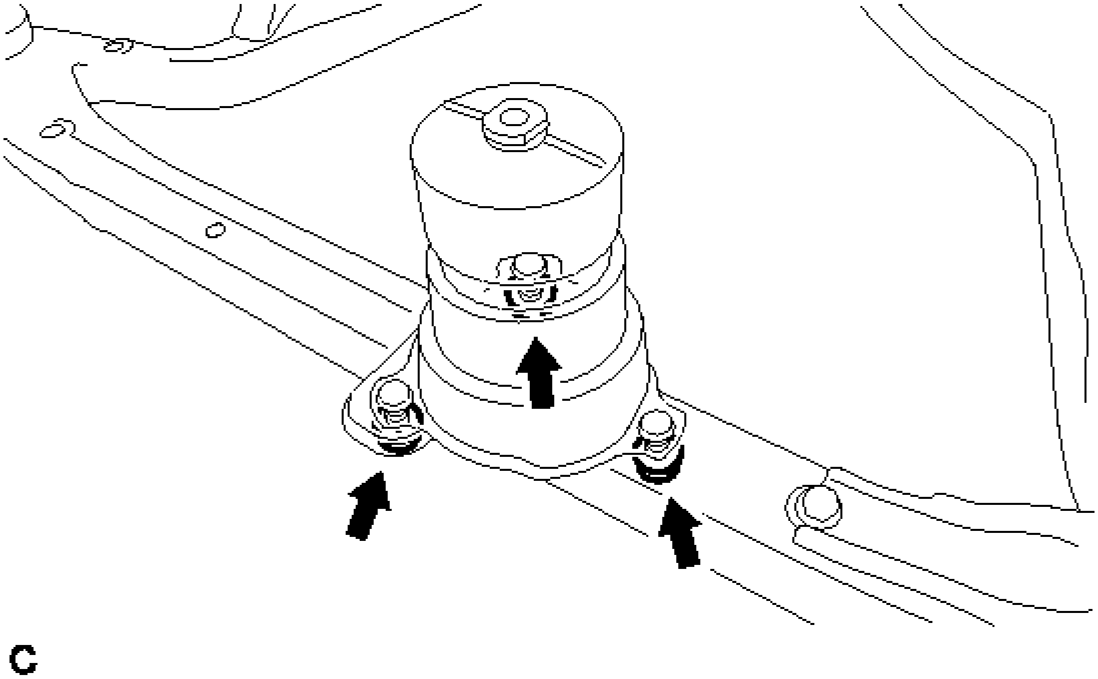

Fig. 161: Identifying Engine Mounting Insulator Nuts
Courtesy of TOYOTA MOTOR SALES, U.S.A., INC.

HINT:

Perform this procedure only when replacement of the front engine mounting insulator is necessary.

67. REMOVE ENGINE MOUNTING INSULATOR LH

a. Remove the 2 hole plugs from the front frame assembly.

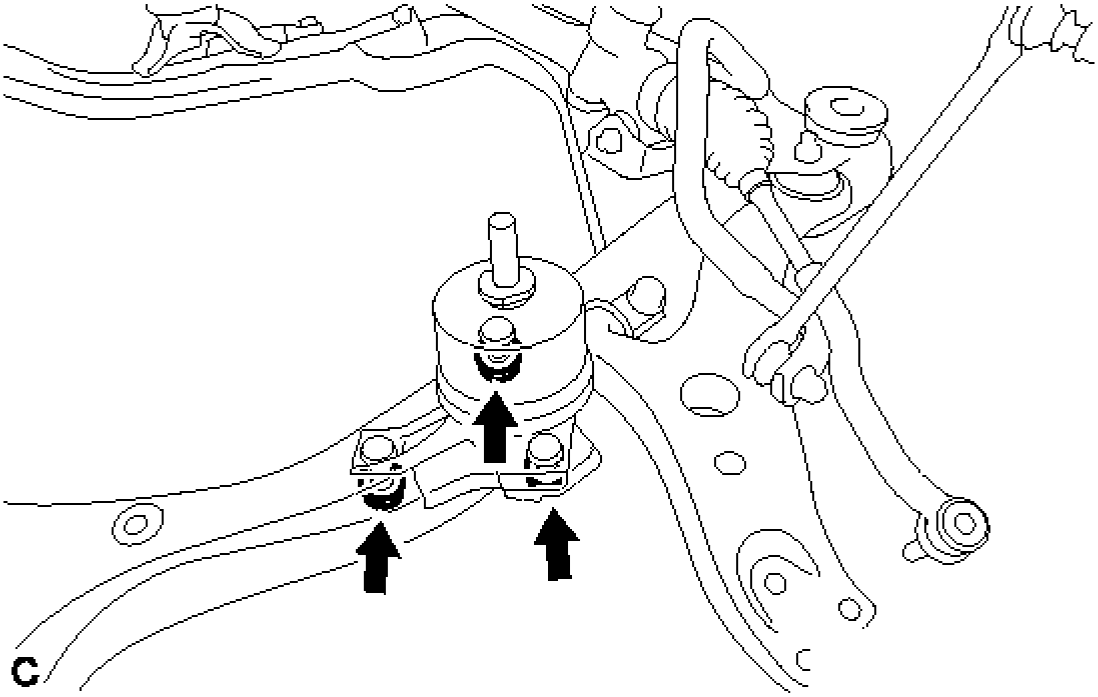

Fig. 162: Front Frame Assembly Hole Plugs
Courtesy of TOYOTA MOTOR SALES, U.S.A., INC.

b. Remove the 3 nuts and engine mounting insulator LH.

HINT:

Perform this procedure only when replacement of the engine mounting insulator LH is necessary.

68. REMOVE ENGINE MOUNTING INSULATOR RH

a. Remove the 2 hole plugs from the front frame assembly.

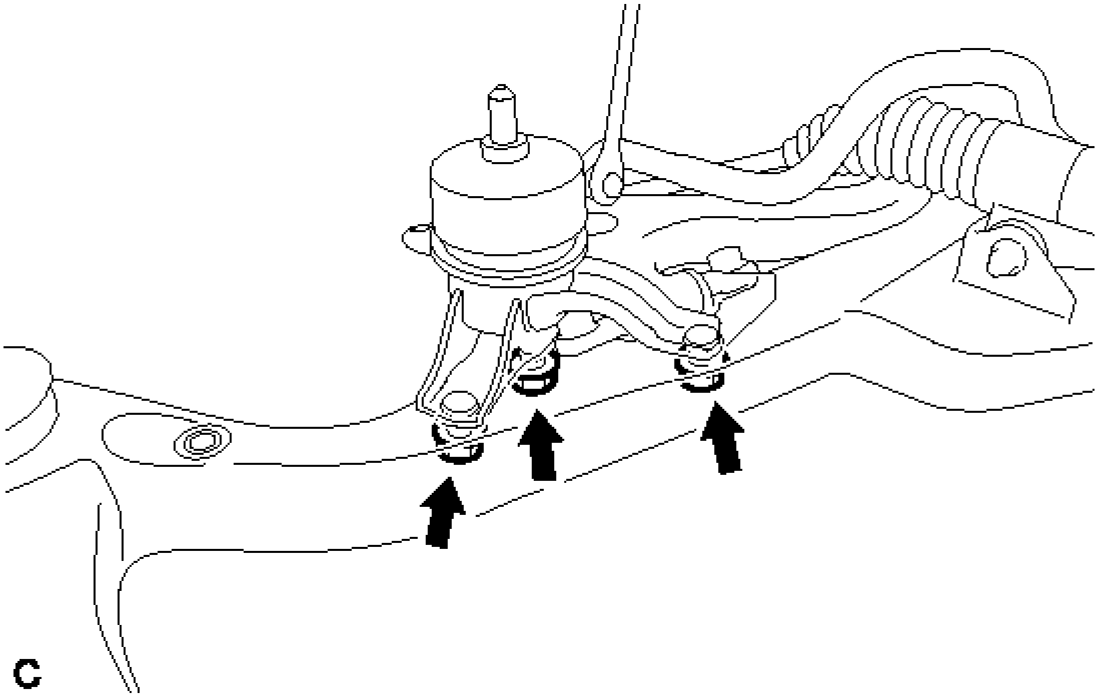

Fig. 163: Identifying Front Frame Assembly Hole Plugs
Courtesy of TOYOTA MOTOR SALES, U.S.A., INC.

b. Remove the 3 nuts and engine mounting insulator RH.

HINT:

Perform this procedure only when replacement of the engine mounting insulator RH is necessary.

69. **REMOVE DRIVE SHAFT BEARING BRACKET**
    a. Remove the 3 bolts and drive shaft bearing bracket.

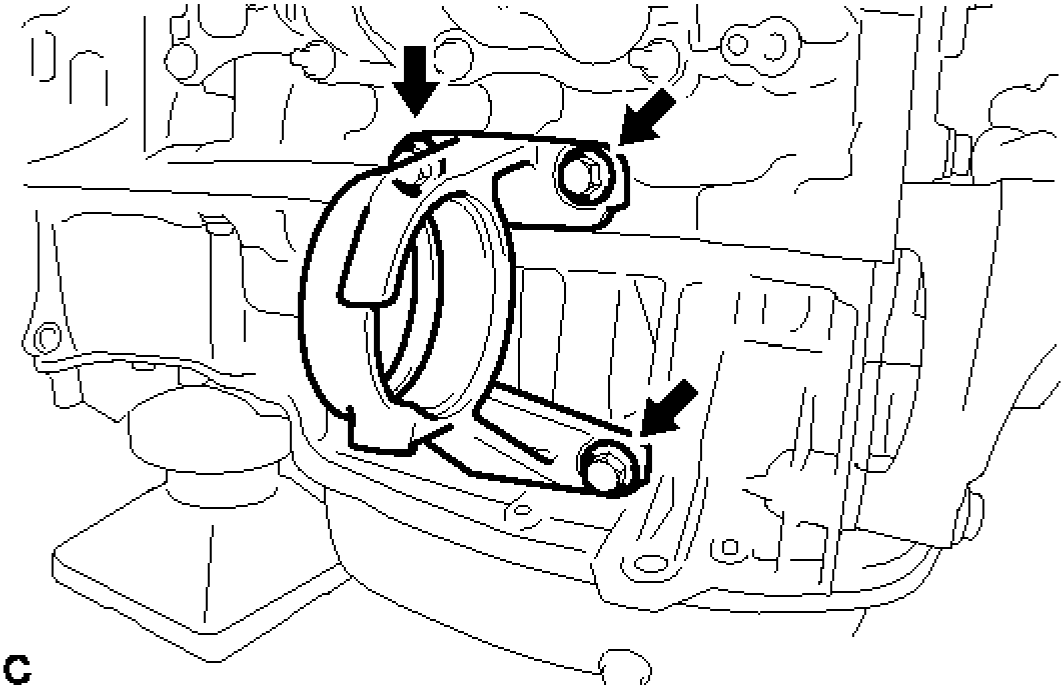

Fig. 164: Locating Drive Shaft Bearing Bracket Bolts
Courtesy of TOYOTA MOTOR SALES, U.S.A., INC.

70. **REMOVE ENGINE MOUNTING BRACKET RH**
    a. Remove the 3 bolts and engine mounting bracket RH.

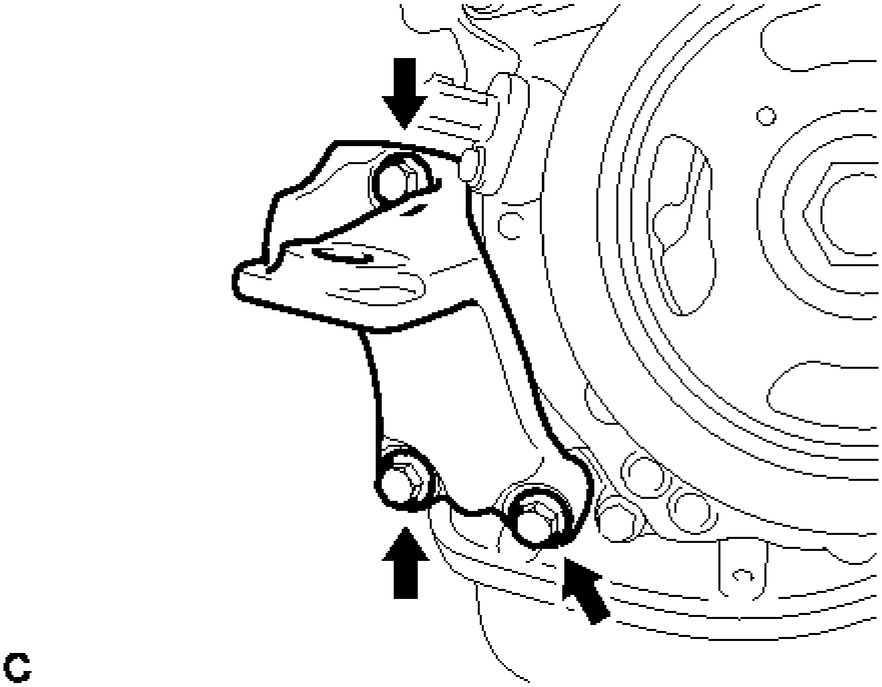

Fig. 165: Locating Engine Mounting Bracket RH Bolts

Courtesy of TOYOTA MOTOR SALES, U.S.A., INC.

71. **REMOVE AUTOMATIC TRANSAXLE ASSEMBLY** . Refer to **REMOVAL - Step 8**
72. **REMOVE DRIVE PLATE AND RING GEAR SUB-ASSEMBLY** See step 2
73. **INSTALL ENGINE STAND**
    a. Install the engine onto an engine stand with the bolts.

INSTALLATION

INSTALLATION

HINT:

Perform "Inspection After Repair" after replacing the engine assembly. Refer to **INITIALIZATION** .

1. **REMOVE ENGINE STAND**
    a. Using a chain block and engine sling device, secure the engine assembly.

    NOTE:

    - **Adjust the angle of the sling device carefully to prevent the engine assembly or engine hanger from deforming or becoming damaged.**
    - **Servicing an engine assembly while it is hanging is dangerous. This can be done only when installing/removing the engine assembly to/from an engine stand.**

    b. Remove the engine stand from the engine.
2. **INSTALL DRIVE PLATE AND RING GEAR SUB-ASSEMBLY** See step 2
3. **INSTALL AUTOMATIC TRANSAXLE ASSEMBLY** . Refer to **INSTALLATION - Step 8**
4. **INSTALL ENGINE MOUNTING BRACKET RH**
    a. Install the engine mounting bracket RH with the 3 bolts.

    Torque: 54 N*m (551 kgf*cm, 40 ft.*lbf)
5. **INSTALL DRIVE SHAFT BEARING BRACKET**
    a. Install the drive shaft bearing bracket with the 3 bolts.

    Torque: 64 N*m (653 kgf*cm, 47 ft.*lbf)
6. **TEMPORARILY INSTALL FRONT ENGINE MOUNTING INSULATOR**
    a. Temporarily install the front engine mounting insulator with the 3 nuts.

    HINT:

    Perform this procedure only when replacement of the front engine mounting insulator is necessary.

7. **TEMPORARILY INSTALL ENGINE MOUNTING INSULATOR LH**
    a. Temporarily install the engine mounting insulator LH with the 3 nuts.

    HINT:

    Perform this procedure only when replacement of the engine mounting insulator LH is necessary.

8. **TEMPORARILY INSTALL ENGINE MOUNTING INSULATOR RH**
    a. Temporarily install the engine mounting insulator RH with the 3 nuts.

    HINT:

    Perform this procedure only when replacement of the engine mounting insulator RH is necessary.

9. **INSTALL FRONT FRAME ASSEMBLY**
    a. Install the engine mounting insulator LH with the nut.

    Torque: 95 N*m (969 kgf*cm, 70 ft.*lbf)

    b. Install the engine mounting insulator RH with the nut.

    Torque: 95 N*m (969 kgf*cm, 70 ft.*lbf)

    c. Install the front engine mounting insulator with the bolt.

    Torque: 87 N*m (887 kgf*cm, 64 ft.*lbf)

    d. Fully tighten the 9 temporarily installed nuts of the engine mounting insulators to the specified torque.

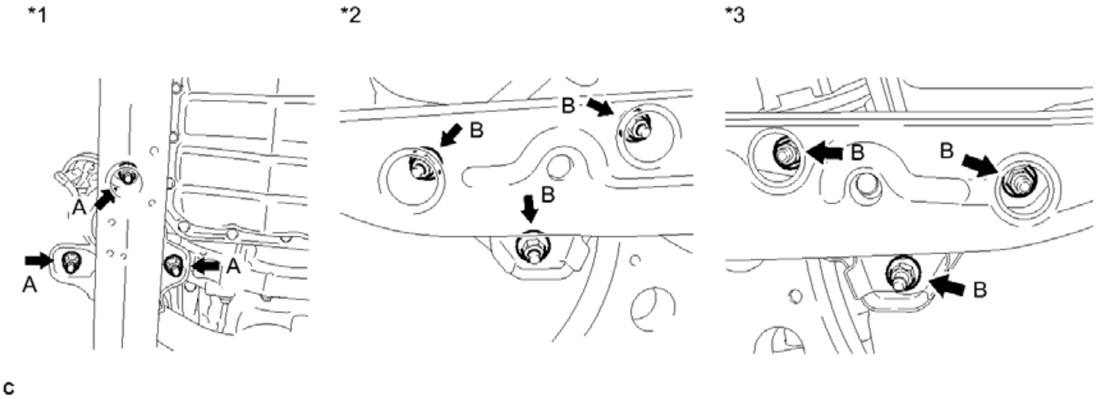

Fig. 166: Identifying Engine Mounting Insulator
Courtesy of TOYOTA MOTOR SALES, U.S.A., INC.

TEXT IN ILLUSTRATION

*1	Front Engine Mounting Insulator	*2	Engine Mounting Insulator RH
*3	Engine Mounting Insulator LH	-	-

HINT:

Perform this procedure only when replacement of the engine mounting insulator is necessary.

A

Torque: 52 N*m (530 kgf*cm, 38 ft.*lbf)

B

Torque: 87 N*m (887 kgf*cm, 64 ft.*lbf)

e. Install the 4 hole plugs.

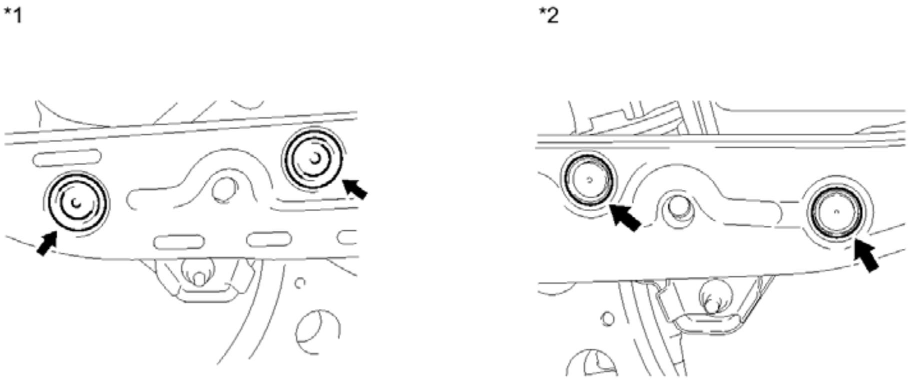

Fig. 167: Identifying Hole Plugs
Courtesy of TOYOTA MOTOR SALES, U.S.A., INC.

TEXT IN ILLUSTRATION

*1	Engine Mounting Insulator RH	*2	Engine Mounting Insulator LH

HINT:

Perform this procedure only when replacement of the engine mounting insulator is necessary.

10. **INSTALL FRONT DRIVE SHAFT HOLE SNAP RING LH** . Refer to **REASSEMBLY - Step 13**
11. **INSTALL FRONT DRIVE SHAFT ASSEMBLY LH** . Refer to **INSTALLATION - Step 1**
12. **INSTALL FRONT DRIVE SHAFT ASSEMBLY RH** . Refer to **INSTALLATION - Step 2**
13. **INSTALL GENERATOR ASSEMBLY** . Refer to **INSTALLATION - Step 1**
14. **INSTALL COMPRESSOR ASSEMBLY WITH PULLEY** . Refer to **INSTALLATION - Step 2**
15. **INSTALL V-RIBBED BELT** See step 1
16. **INSTALL ENGINE WIRE**
    a. Install the engine wire to the engine with transaxle.
17. **INSTALL ENGINE ASSEMBLY WITH TRANSAXLE**
    a. Set the engine assembly with transaxle on an engine lifter.

NOTE:

- **Install a height adjustment attachment and plate lift attachment onto the engine assembly with transaxle.**
- **Do not position a height adjustment attachment or plate lift attachment onto the front frame assembly.**
- **To prevent the oil pan from deforming, do not place any attachments onto the oil pan of the engine assembly with transaxle.**
- **Make sure to support the engine assembly with transaxle securely to prevent it from falling.**

b. Remove the engine hangers See step 1.

c. Install the engine assembly to the vehicle.

NOTE: **Do not raise the engine more than necessary. If the engine is raised excessively, the vehicle may also be lifted up.**

HINT:

- Make sure that the engine is clear of all wiring and hoses.
- While raising the engine into the vehicle, do not allow it to contact the vehicle.

d. Install the frame side rail plate RH and LH with the 4 bolts and 2 nuts.

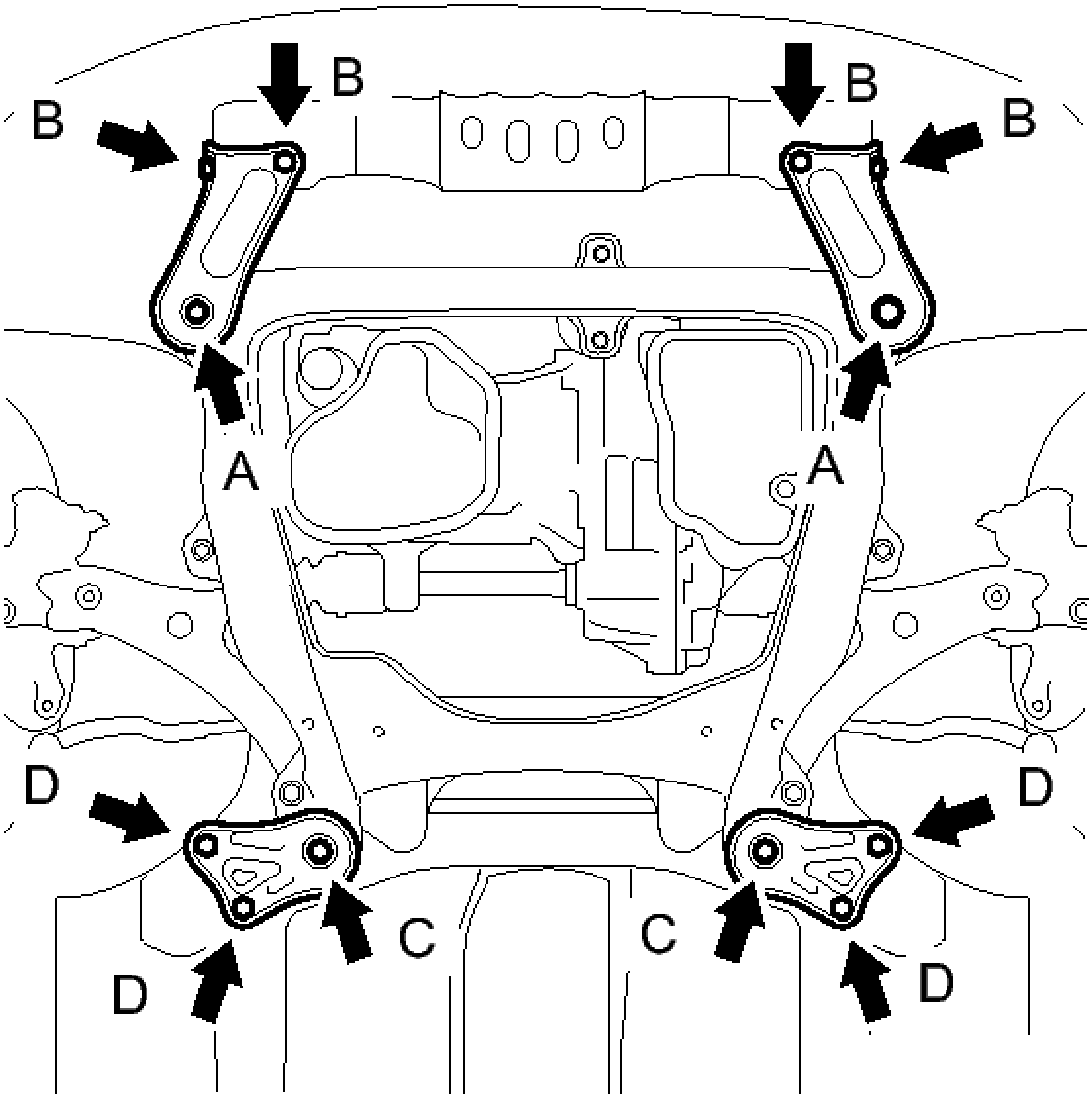

Fig. 168: Identifying Frame Side Rail Plate Bolts And Nuts
Courtesy of TOYOTA MOTOR SALES, U.S.A., INC.

A

Torque: 85 N*m (867 kgf*cm, 62 ft.*lbf)

B

Torque: 32 N*m (326 kgf*cm, 24 ft.*lbf)

e. Install the front suspension member brace rear RH and LH with the 4 bolts and 2 nuts.

C

Torque: 85 N*m (867 kgf*cm, 62 ft.*lbf)

D

Torque: 32 N*m (326 kgf*cm, 24 ft.*lbf)

HINT:

Perform "Inspection After Repair" after replacing the engine assembly. Refer to **INITIALIZATION** .

18. **INSTALL DRIVE PLATE AND TORQUE CONVERTER SETTING BOLT**
    a. Apply a few drops of adhesive to 2 or 3 threads at the tip of each of the 6 drive plate and torque converter setting bolts.

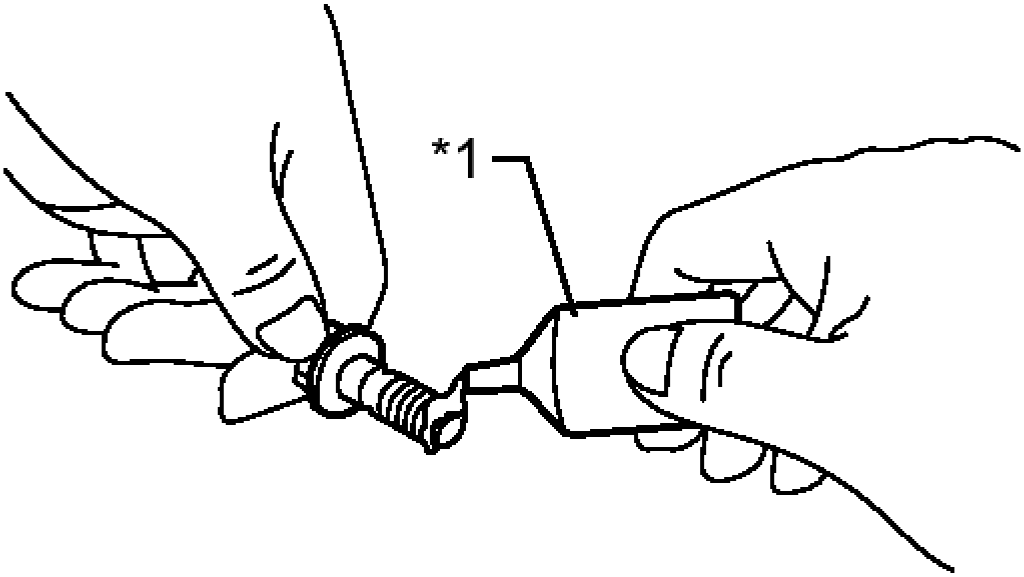

Fig. 169: Apply Adhesive To End Threads Of Bolts
Courtesy of TOYOTA MOTOR SALES, U.S.A., INC.

TEXT IN ILLUSTRATION

*1	Adhesive

Adhesive

Toyota Genuine Adhesive 1324, Three Bond 1324 or equivalent

    b. Turn the crankshaft to gain access to the installation locations of the 6 torque converter setting bolts and install each bolt while holding the crankshaft pulley bolt with a wrench.

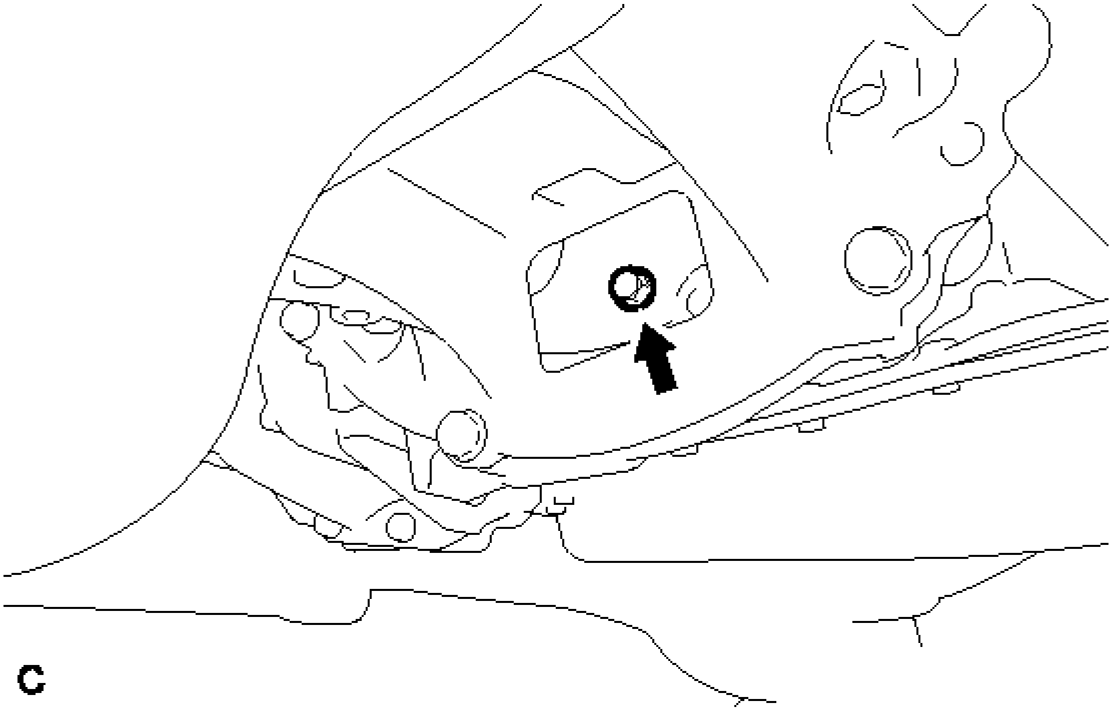

Fig. 170: Locating Torque Converter Clutch Setting Bolt
Courtesy of TOYOTA MOTOR SALES, U.S.A., INC.

Torque: 41 N*m (418 kgf*cm, 30 ft.*lbf)

NOTE: **Install the black colored bolt first, and then the 5 silver colored bolts.**

19. **INSTALL FLYWHEEL HOUSING UNDER COVER**
    a. Install the flywheel housing under cover.
20. **CONNECT STEERING INTERMEDIATE SHAFT ASSEMBLY** . Refer to **INSTALLATION - Step 10**
21. **INSTALL FRONT LOWER NO. 1 SUSPENSION ARM SUB-ASSEMBLY LH** . Refer to **INSTALLATION - Step 8**
22. **INSTALL FRONT LOWER NO. 1 SUSPENSION ARM SUB-ASSEMBLY RH**

    HINT:

    Use the same procedure described for the LH side.

23. **INSTALL TIE ROD ASSEMBLY LH** . Refer to **INSTALLATION - Step 8**
24. **INSTALL TIE ROD ASSEMBLY RH**

    HINT:

    Use the same procedure described for the LH side.

25. **INSTALL FRONT SPEED SENSOR LH** . Refer to **INSTALLATION - Step 19**
26. **INSTALL FRONT SPEED SENSOR RH**

    HINT:

    Use the same procedure described for the LH side.

27. **INSTALL FRONT STABILIZER LINK ASSEMBLY LH** . Refer to **INSTALLATION - Step 10**
28. **INSTALL FRONT STABILIZER LINK ASSEMBLY RH**

    HINT:

    Use the same procedure described for the LH side.

29. **INSTALL FRONT AXLE SHAFT NUT LH** . Refer to **INSTALLATION - Step 7**
30. **INSTALL FRONT AXLE SHAFT NUT RH**

    HINT:

    Use the same procedure described for the LH side.

31. **INSTALL FRONT EXHAUST PIPE ASSEMBLY** . Refer to **INSTALLATION - Step 2**
32. **CONNECT FUEL TUBE SUB-ASSEMBLY**
    a. Push in the fuel tube connector to the fuel pipe until the connector makes a "click" sound.

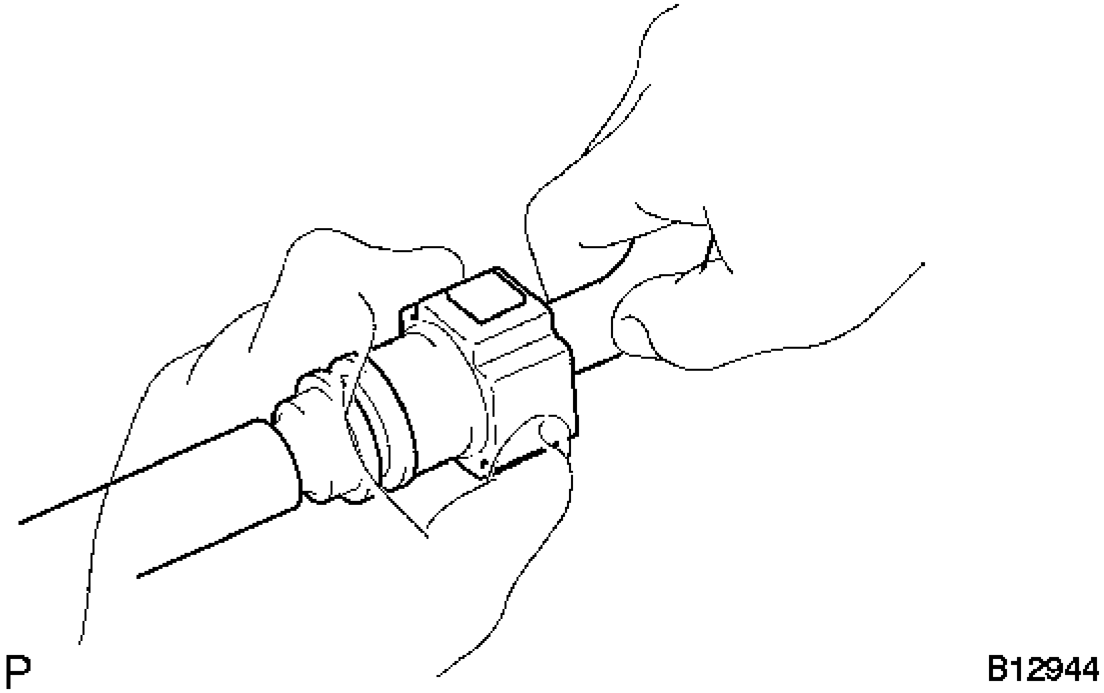

Fig. 171: Pushing Fuel Tube Connector To Fuel Pipe

Courtesy of TOYOTA MOTOR SALES, U.S.A., INC.

NOTE:

- **Check for damage or contamination on the connected part of the pipe.**
- **Check if the pipe and the connector are securely connected by trying to pull them apart.**

b. Install the No. 1 fuel pipe clamp.

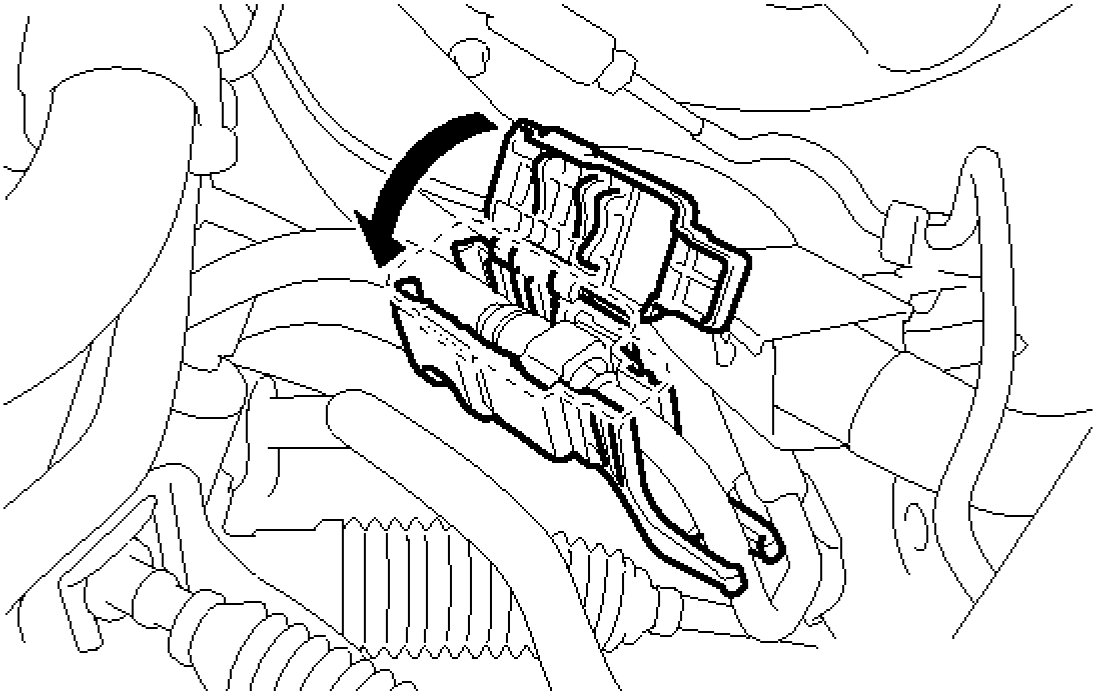

Fig. 172: Identifying No. 1 Fuel Pipe Clamp
Courtesy of TOYOTA MOTOR SALES, U.S.A., INC.

33. **INSTALL NO. 1 COOLER REFRIGERANT DISCHARGE HOSE** . Refer to **INSTALLATION - Step 3**
34. **INSTALL SUCTION HOSE SUB-ASSEMBLY (for TMMK Made)** . Refer to **INSTALLATION - Step 4**
35. **INSTALL NO. 1 COOLER REFRIGERANT SUCTION HOSE (for SIA Made)** . Refer to **INSTALLATION - Step 5**
36. **CONNECT UNION TO CONNECTOR TUBE HOSE**
    a. Connect the union to connector tube hose.
37. **INSTALL ENGINE MOVING CONTROL ROD**
    a. Temporarily install the engine moving control rod to the engine moving control rod bracket with the bolt.

    HINT:

Perform this procedure only when replacement of the engine moving control rod is necessary.

38. **INSTALL ENGINE MOVING CONTROL ROD BRACKET**

a. When the engine moving control rod has been replaced.

1. Temporarily install the engine moving control rod bracket with the 4 bolts.

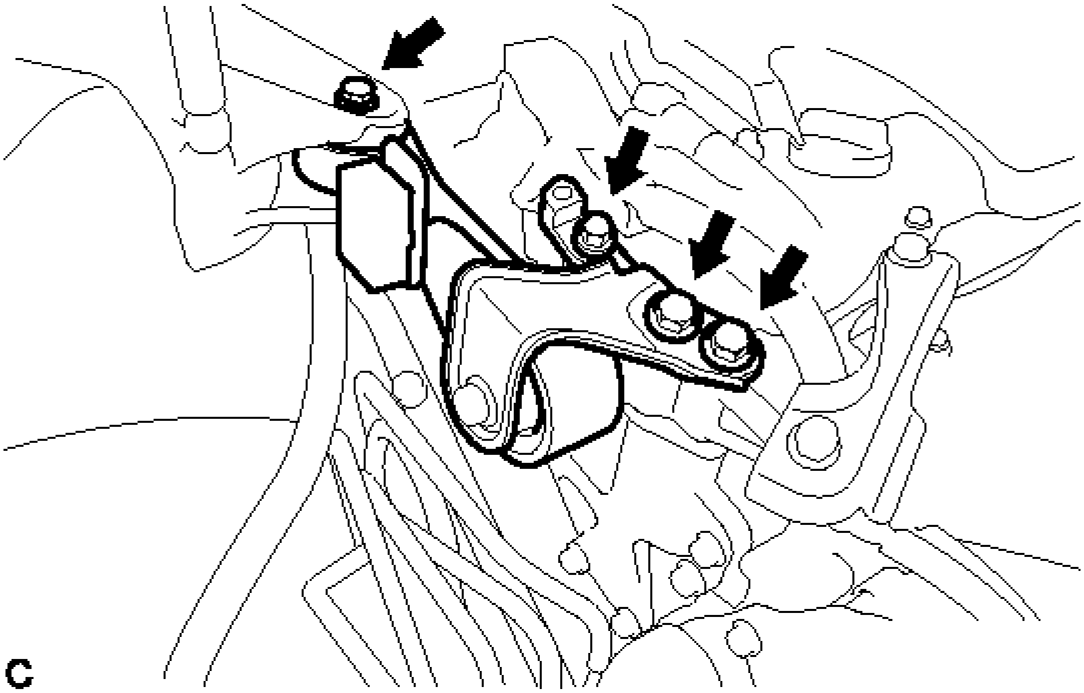

Fig. 173: Identifying Engine Moving Control Rod Bracket And Bolts
Courtesy of TOYOTA MOTOR SALES, U.S.A., INC.

2. Fully tighten the engine moving control rod bracket with the bolts except bolt A.

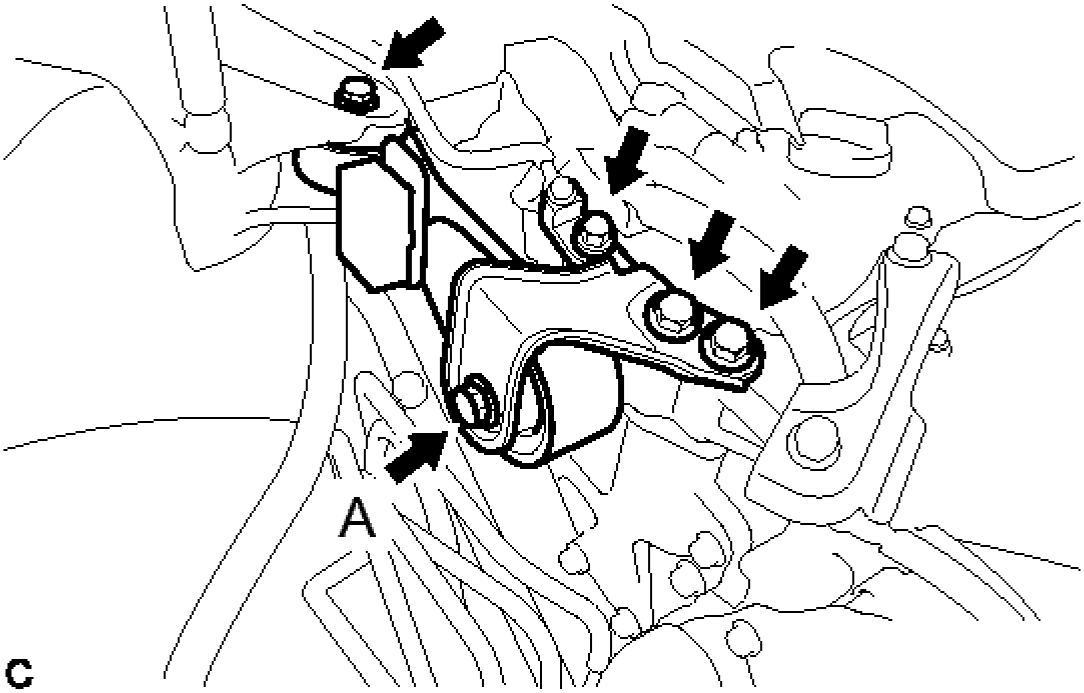

Fig. 174: Identifying Engine Moving Control Rod Bracket Bolts
Courtesy of TOYOTA MOTOR SALES, U.S.A., INC.

Torque: 38 N*m (387 kgf*cm, 28 ft.*lbf)

3. Fully tighten the bolt A.

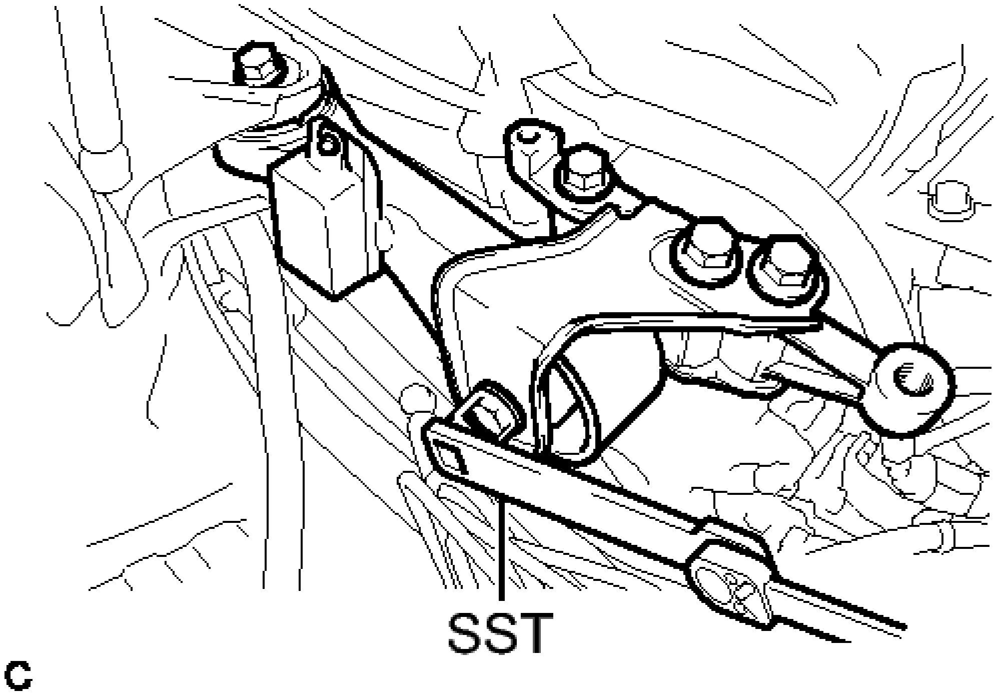

Fig. 175: Identifying Engine Moving Control Rod Bracket Bolt A
Courtesy of TOYOTA MOTOR SALES, U.S.A., INC.

- **SST: 09961-00950**

Without SST

Torque: 52 N*m (530 kgf*cm, 38 ft.*lbf)

With SST

Torque: 33 N*m (340 kgf*cm, 25 ft.*lbf)

NOTE:

- **The "with SST" torque value is effective when using SST with a fulcrum length of 150 mm (5.91 in.) and a torque wrench with a fulcrum length of 260 mm (10.24 in.). Refer to PRECAUTION .**
- **The "with SST" torque value is effective when SST is parallel to the torque wrench.**
- **Fully tighten the bolt A using SST.**

b. When the engine moving control rod has been reused.

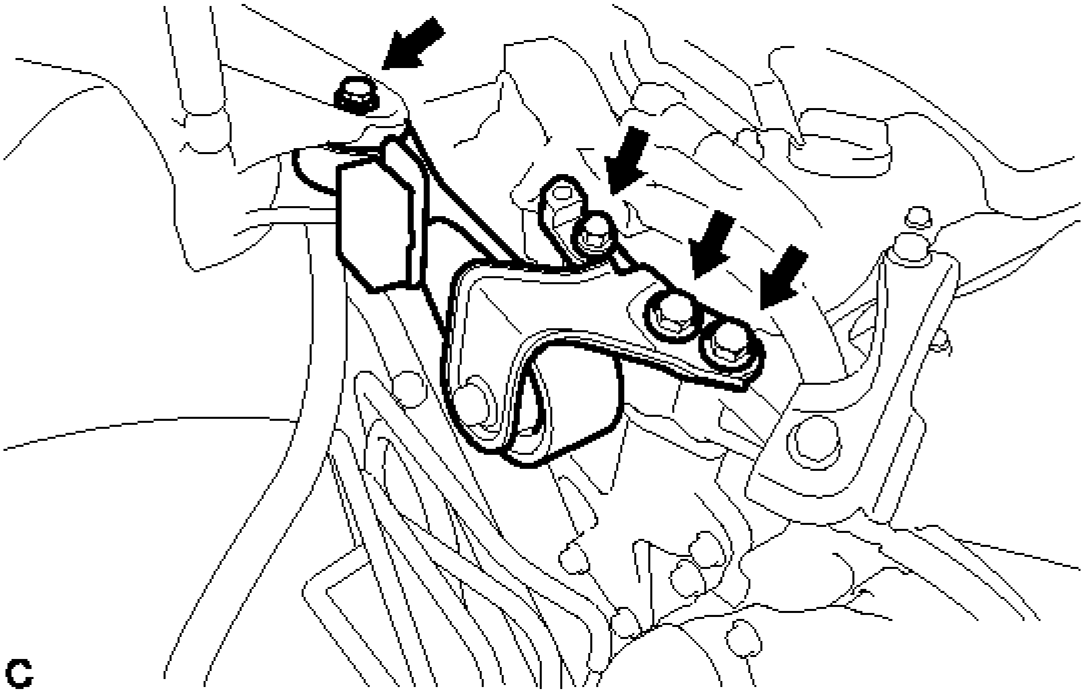

Fig. 176: Identifying Engine Moving Control Rod Bracket Bolts
Courtesy of TOYOTA MOTOR SALES, U.S.A., INC.

1. Temporarily install the engine moving control rod bracket with the 4 bolts.
2. Fully tighten the engine moving control rod bracket with the 4 bolts.

   Torque: 38 N*m (387 kgf*cm, 28 ft.*lbf)

39. **INSTALL EARTH WIRE**
    a. Install the earth wire with the bolt.

    Torque: 8.0 N*m (82 kgf*cm, 71 in.*lbf)

40. **INSTALL NO. 2 ENGINE MOUNTING STAY RH**
    a. Install the No. 2 engine mounting stay RH with the 2 bolts.

    Torque: 38 N*m (387 kgf*cm, 28 ft.*lbf)

41. **CONNECT TRANSMISSION CONTROL CABLE ASSEMBLY**
    a. Connect the control cable to the bracket with a new clip.

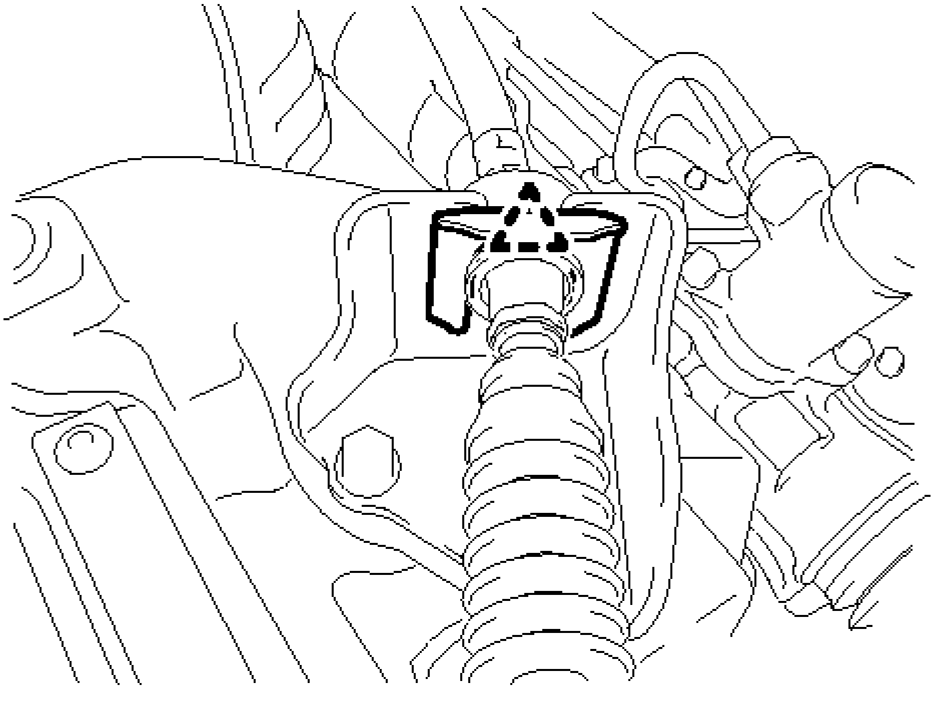

Fig. 177: Remove The Clip From The Transmission Cable Bracket
Courtesy of TOYOTA MOTOR SALES, U.S.A., INC.

b. Install the control cable to the control shaft lever with the nut.

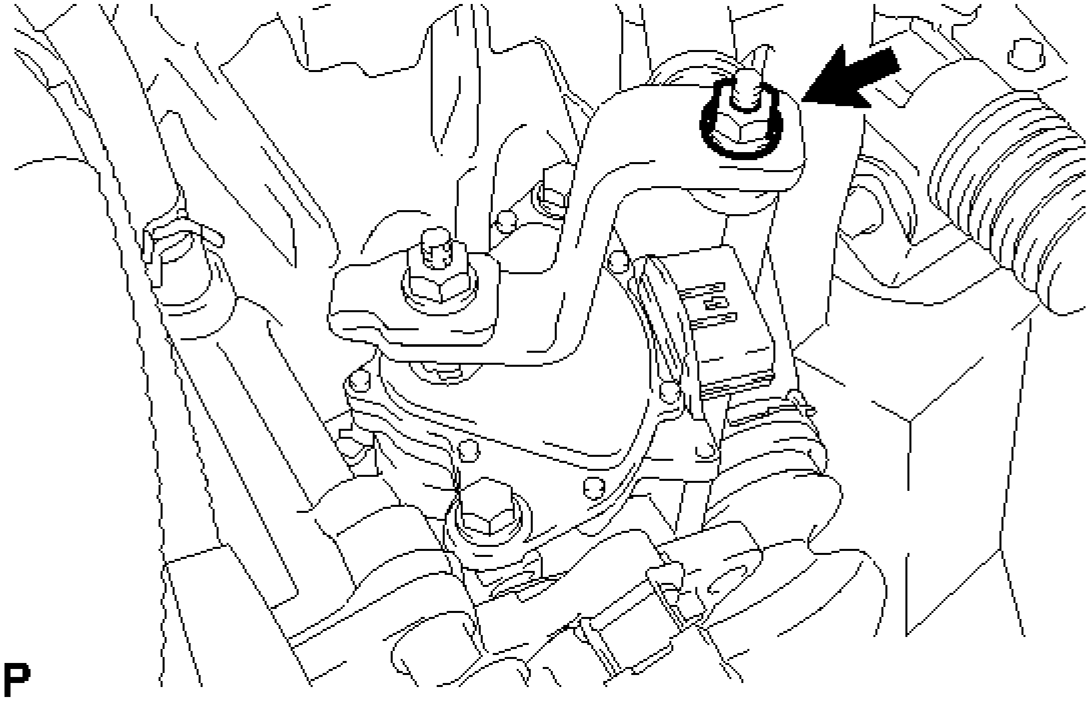

Fig. 178: Locating Transmission Control Cable Nut
Courtesy of TOYOTA MOTOR SALES, U.S.A., INC.

Torque: 13 N*m (130 kgf*cm, 9 ft.*lbf)

42. **INSTALL NO. 1 AIR CLEANER BRACKET**
    1. Install the No. 1 air cleaner bracket to the battery carrier with the bolt.

       Torque: 8.0 N*m (82 kgf*cm, 71 in.*lbf)

    2. Connect the 2 wire clamps.
43. **CONNECT ENGINE WIRE**
    1. Connect the 2 wire clamps.

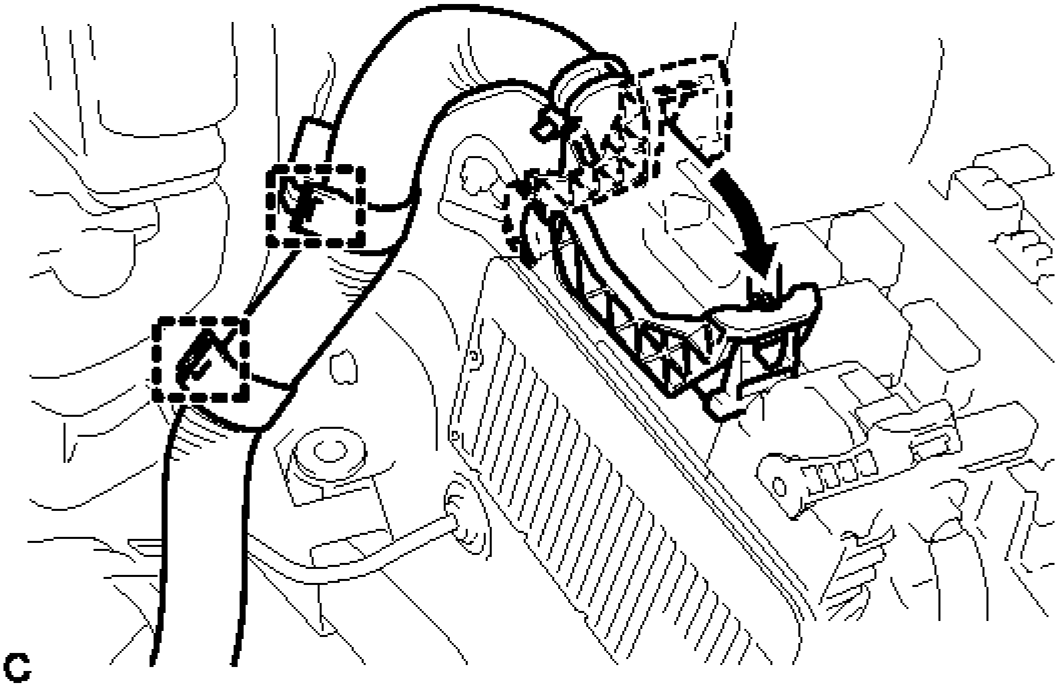

Fig. 179: Identifying Engine Wire Clamps And Connectors
Courtesy of TOYOTA MOTOR SALES, U.S.A., INC.

b. Connect the connector to the ECM with the lock lever.
c. Connect the engine wire to the engine room relay block.
d. Connect the 4 connectors.
e. Connect the engine wire to the engine room relay block.

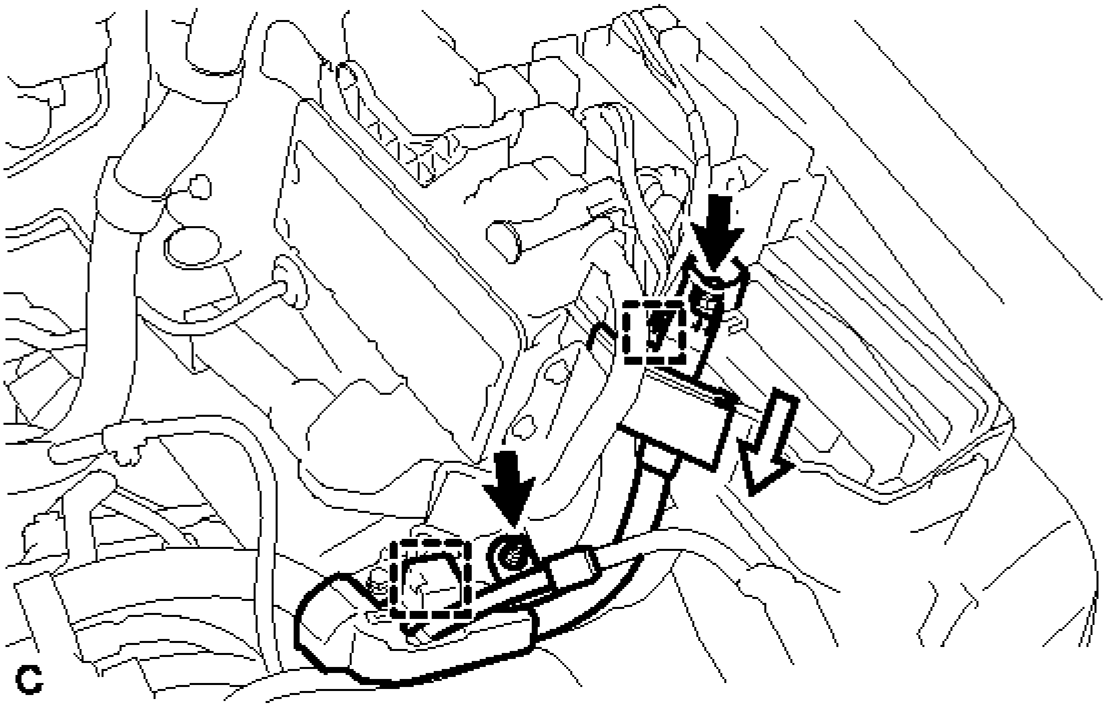

Fig. 180: Identifying Wire Clamp And Nuts
Courtesy of TOYOTA MOTOR SALES, U.S.A., INC.

f. Connect the wire clamp and install the 2 nuts.

Torque: 8.0 N*m (82 kgf*cm, 71 in.*lbf)

g. Install the No. 1 relay block cover.

44. **INSTALL STARTER ASSEMBLY** . Refer to **INSTALLATION - Step 1**
45. **CONNECT INLET HEATER WATER HOSE**
    a. Connect the inlet heater water hose.
46. **CONNECT OUTLET HEATER WATER HOSE**
    a. Connect the 3 outlet heater water hoses.
47. **CONNECT NO. 1 RADIATOR HOSE**
    a. Connect the air fuel ratio sensor wire to the No. 1 radiator hose with the hose clamp.
48. **CONNECT NO. 2 RADIATOR HOSE**
    a. Connect the No. 2 radiator hose.
49. **INSTALL BATTERY**
    a. Install the battery and battery tray.
    b. Install the battery clamp with the bolt and nut.

Bolt

Torque: 9.0 N*m (92 kgf*cm, 80 in.*lbf)

Nut

Torque: 3.5 N*m (36 kgf*cm, 31 in.*lbf)

c. Connect the positive (+) battery terminal

Torque: 6.9 N*m (70 kgf*cm, 61 in.*lbf)

50. **INSTALL AIR CLEANER CASE SUB-ASSEMBLY**

a. Insert the projection of the air cleaner case sub-assembly to the hole of the No. 2 air cleaner bracket as shown in the illustration.

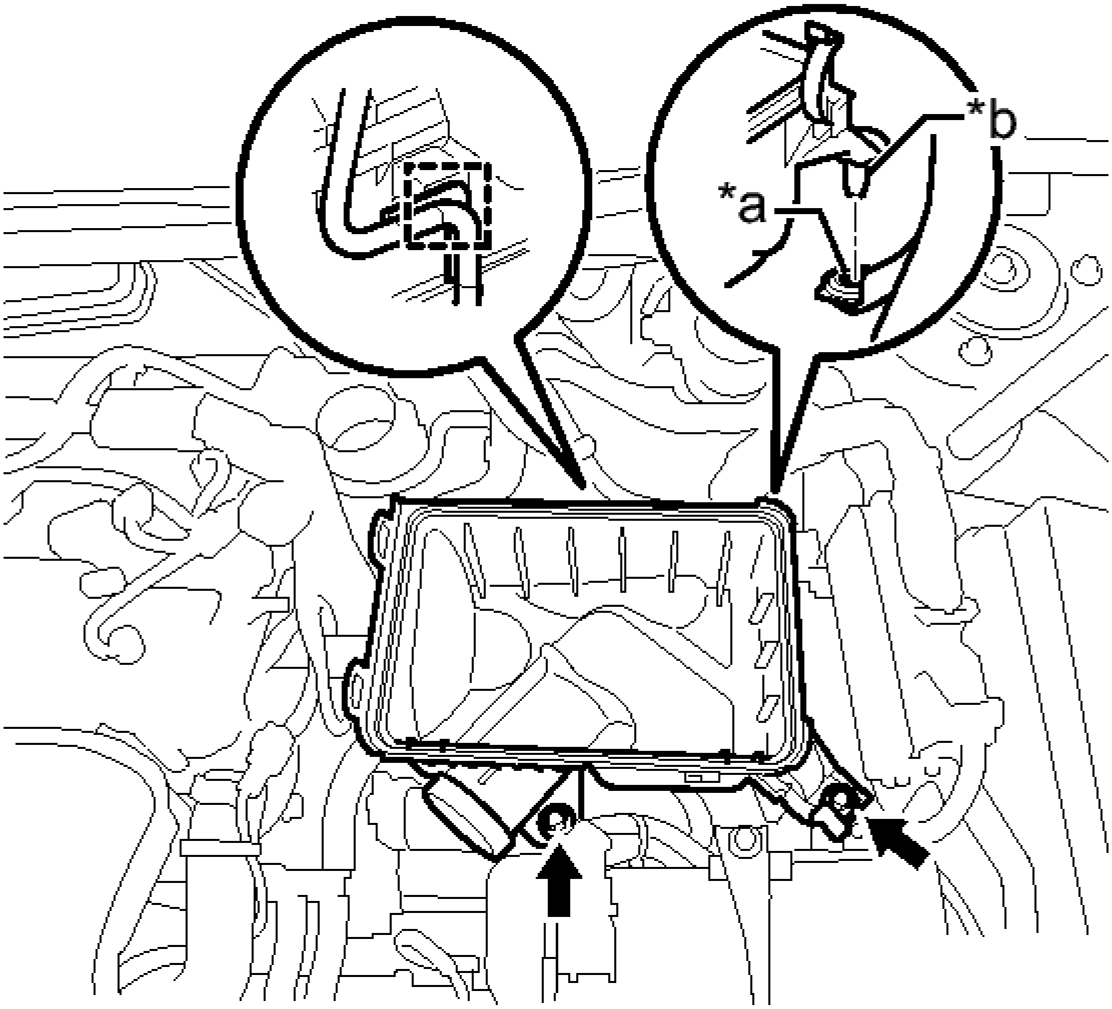

Fig. 181: Identifying Air Cleaner Case Sub-Assembly
Courtesy of TOYOTA MOTOR SALES, U.S.A., INC.

TEXT IN ILLUSTRATION

*a	Hole
*b	Projection

b. Tighten the 2 bolts.

Torque: 5.0 N*m (51 kgf*cm, 44 in.*lbf)

c. Connect the wire harness clamp.

51. **INSTALL AIR CLEANER FILTER ELEMENT SUB-ASSEMBLY**
    a. Install the air cleaner filter element sub-assembly.

    NOTE: **Install the air cleaner filter element sub-assembly with the printed side facing the vehicle front.**

52. **INSTALL AIR CLEANER CAP SUB-ASSEMBLY** . Refer to **INSTALLATION - Step 2**
53. **INSTALL INLET AIR CLEANER ASSEMBLY**
    a. Install the inlet air cleaner with the 2 bolts.

    Torque: 8.0 N*m (82 kgf*cm, 71 in.*lbf)

54. **CONNECT CABLE TO NEGATIVE BATTERY TERMINAL**
    a. Connect the negative (-) battery terminal.

    Torque: 6.9 N*m (70 kgf*cm, 61 in.*lbf)

    NOTE: **When disconnecting the cable, some systems need to be initialized after the cable is reconnected. Refer to INITIALIZATION .**

55. **ADD ENGINE OIL**
56. **ADD ENGINE COOLANT** . Refer to **REPLACEMENT - Step 2**
57. **ADD AUTOMATIC TRANSAXLE FLUID**

    Refer to **ADJUSTMENT**

58. **CHARGE WITH REFRIGERANT** . Refer to **REPLACEMENT - Step 2**
59. **WARM UP ENGINE**
60. **INSPECT FOR FUEL LEAK** . Refer to **ON-VEHICLE INSPECTION - Step 1**
61. **INSPECT FOR OIL LEAK**
62. **INSPECT FOR COOLANT LEAK** . Refer to **ON-VEHICLE INSPECTION - Step 1**
63. **INSPECT FOR EXHAUST GAS LEAK**
64. **INSPECT REFRIGERANT LEAK** . Refer to **REPLACEMENT - Step 4**
65. **INSPECT IGNITION TIMING** See step 7
66. **INSPECT ENGINE IDLE SPEED** See step 8
67. **INSPECT CO/HC** See step 10
68. **INSTALL NO. 1 ENGINE COVER SUB-ASSEMBLY**

a. Fit the 3 retainers and install the No. 1 engine cover sub-assembly.

69. **INSTALL COOL AIR INTAKE DUCT SEAL** . Refer to **INSTALLATION - Step 4**
70. **INSPECT SHIFT LEVER POSITION**

    Refer to **ADJUSTMENT - Step 1**

71. **ADJUST SHIFT LEVER POSITION**

    Refer to **ADJUSTMENT - Step 2**

72. **INSTALL FRONT FENDER APRON SEAL LH**
73. **INSTALL FRONT FENDER APRON SEAL RH**
74. **INSTALL ENGINE UNDER COVER LH**
75. **INSTALL FRONT WHEEL OPENING EXTENSION PAD LH**
76. **INSTALL ENGINE UNDER COVER RH**
77. **INSTALL FRONT WHEEL OPENING EXTENSION PAD RH**
78. **INSTALL FRONT WHEEL**

    Torque: 103 N*m (1049 kgf*cm, 76 ft.*lbf)

79. **ADJUST FRONT WHEEL ALIGNMENT**

    Refer to **ADJUSTMENT**

80. **CHECK ABS SPEED SENSOR SIGNAL**

    Refer to **TEST MODE PROCEDURE**

ENGINE UNIT

COMPONENTS

ILLUSTRATION

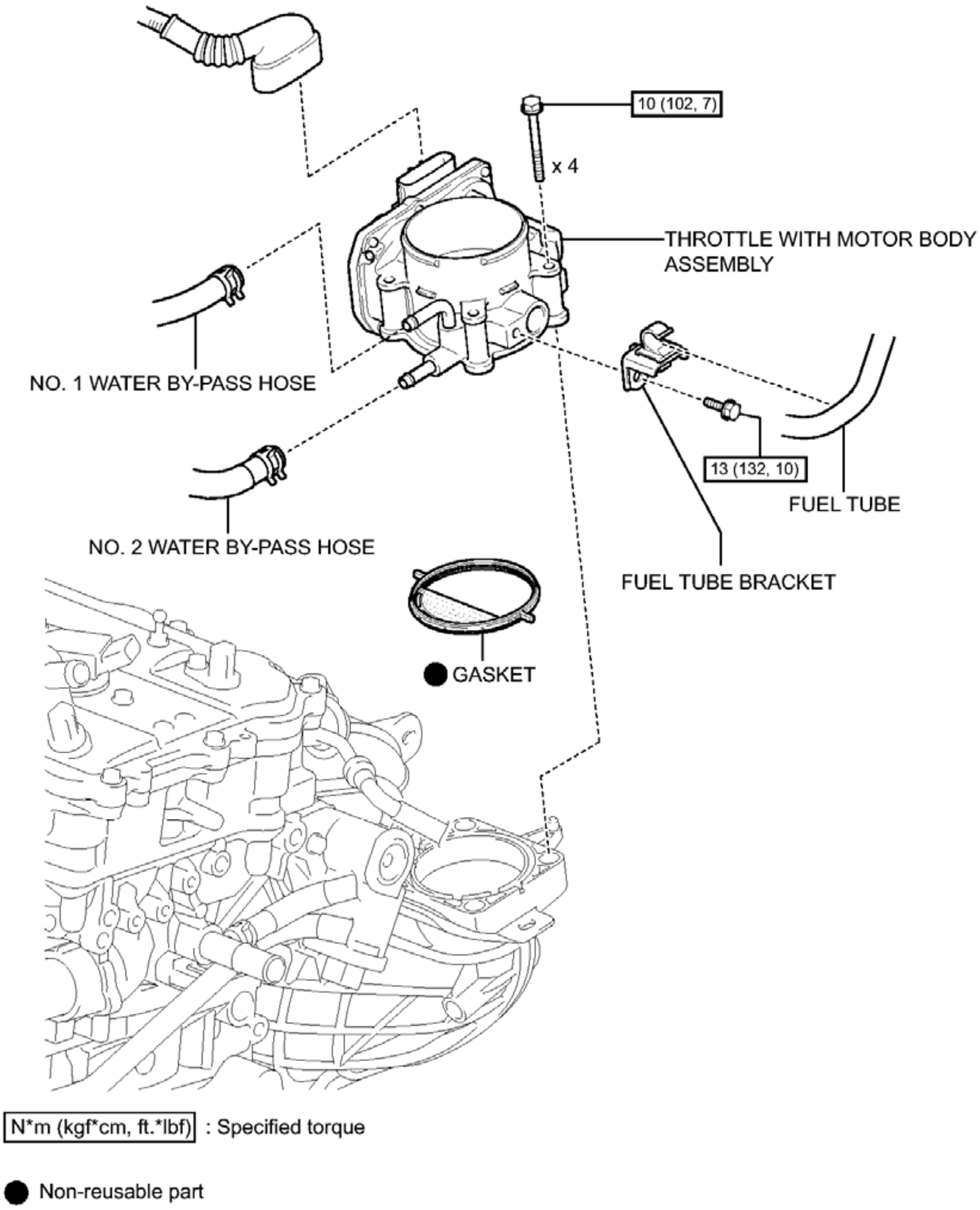
10 (102, 7)
x 4
THROTTLE WITH MOTOR BODY ASSEMBLY
NO. 1 WATER BY-PASS HOSE
13 (132, 10)
FUEL TUBE
NO. 2 WATER BY-PASS HOSE
FUEL TUBE BRACKET
● GASKET
N*m (kgf*cm, ft.*lbf) : Specified torque
● Non-reusable part
c

Fig. 182: Identifying Engine Unit Replacement Components With Torque Specifications (1 Of 11)
Courtesy of TOYOTA MOTOR SALES, U.S.A., INC.

ILLUSTRATION

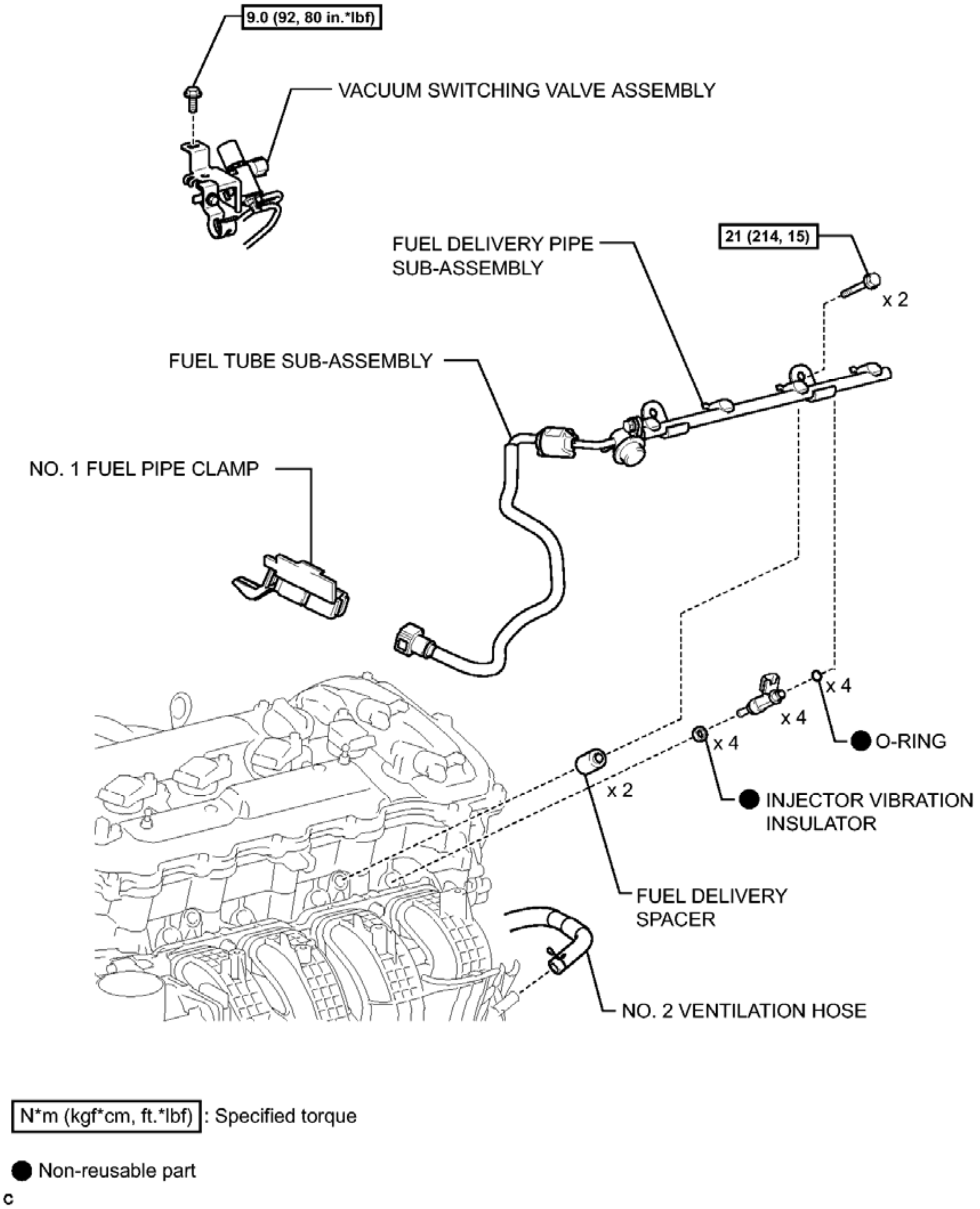
9.0 (92, 80 in.*lbf)
VACUUM SWITCHING VALVE ASSEMBLY
FUEL DELIVERY PIPE SUB-ASSEMBLY
21 (214, 15)
x 2
FUEL TUBE SUB-ASSEMBLY
NO. 1 FUEL PIPE CLAMP
x 4
x 4
● O-RING
x 4
x 2
● INJECTOR VIBRATION INSULATOR
FUEL DELIVERY SPACER
NO. 2 VENTILATION HOSE
N*m (kgf*cm, ft.*lbf) : Specified torque
● Non-reusable part
c

Fig. 183: Identifying Engine Unit Replacement Components With Torque Specifications (2 Of 11)
Courtesy of TOYOTA MOTOR SALES, U.S.A., INC.

ILLUSTRATION

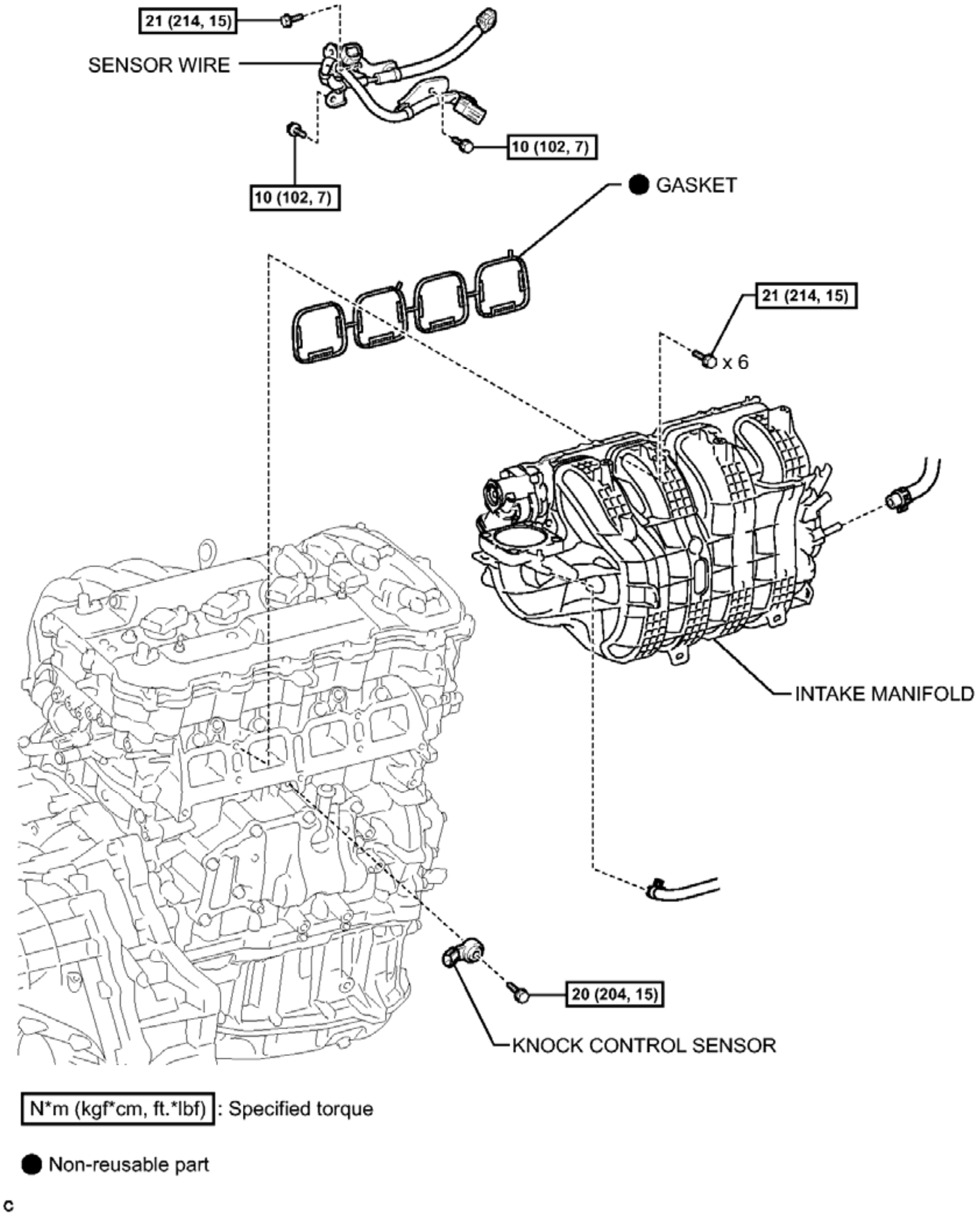
21 (214, 15)
SENSOR WIRE
10 (102, 7)
10 (102, 7)
● GASKET
21 (214, 15)
x 6
INTAKE MANIFOLD
20 (204, 15)
KNOCK CONTROL SENSOR
N*m (kgf*cm, ft.*lbf) : Specified torque
● Non-reusable part
c

Fig. 184: Identifying Engine Unit Replacement Components With Torque Specifications (3 Of 11)
Courtesy of TOYOTA MOTOR SALES, U.S.A., INC.

ILLUSTRATION

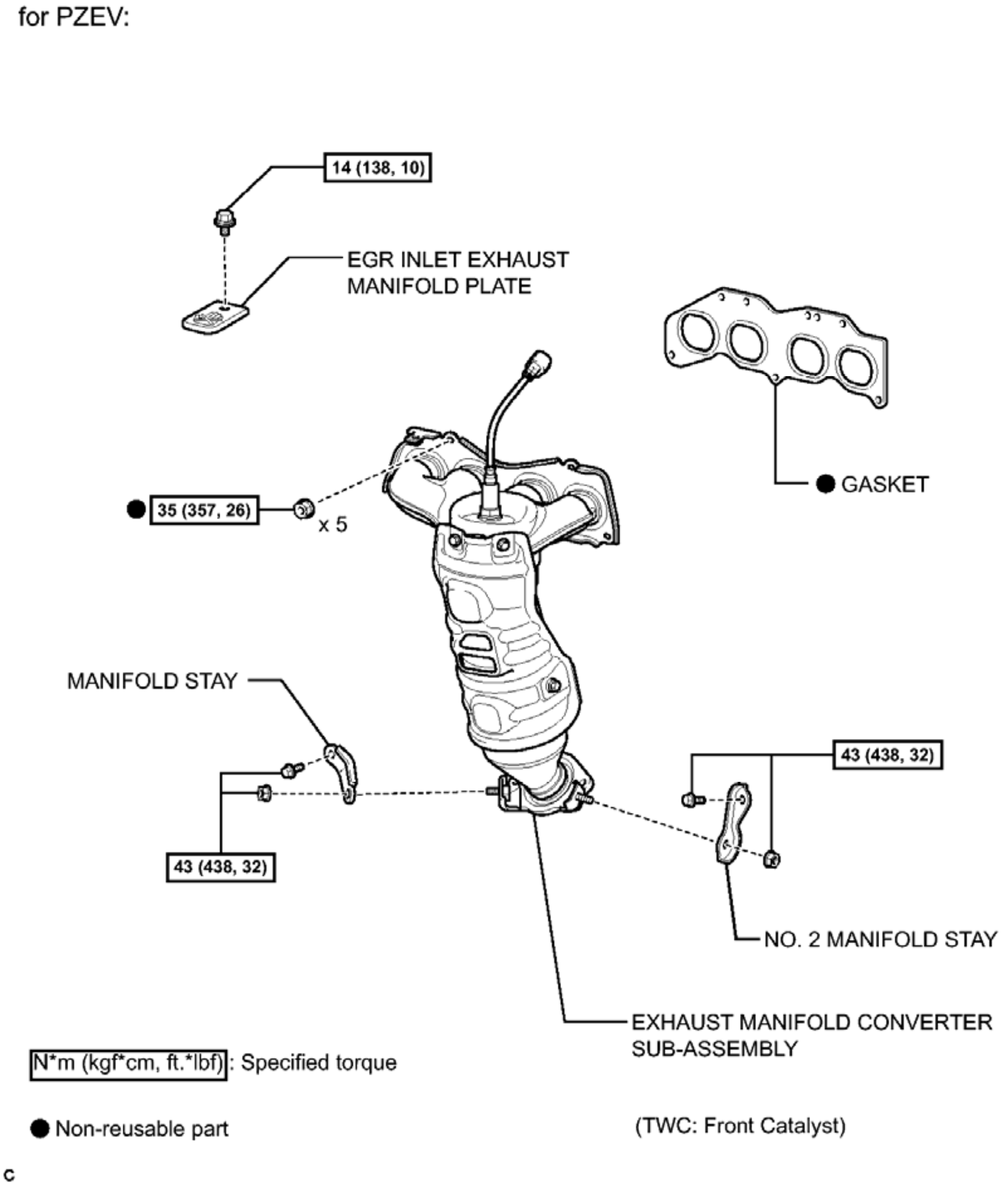
for PZEV:
14 (138, 10)
EGR INLET EXHAUST MANIFOLD PLATE
GASKET
35 (357, 26)
x 5
MANIFOLD STAY
43 (438, 32)
43 (438, 32)
NO. 2 MANIFOLD STAY
EXHAUST MANIFOLD CONVERTER SUB-ASSEMBLY
N*m (kgf*cm, ft.*lbf): Specified torque
● Non-reusable part
(TWC: Front Catalyst)
c

Fig. 185: Identifying Engine Unit Replacement Components With Torque Specifications (4 Of 11)
Courtesy of TOYOTA MOTOR SALES, U.S.A., INC.

ILLUSTRATION

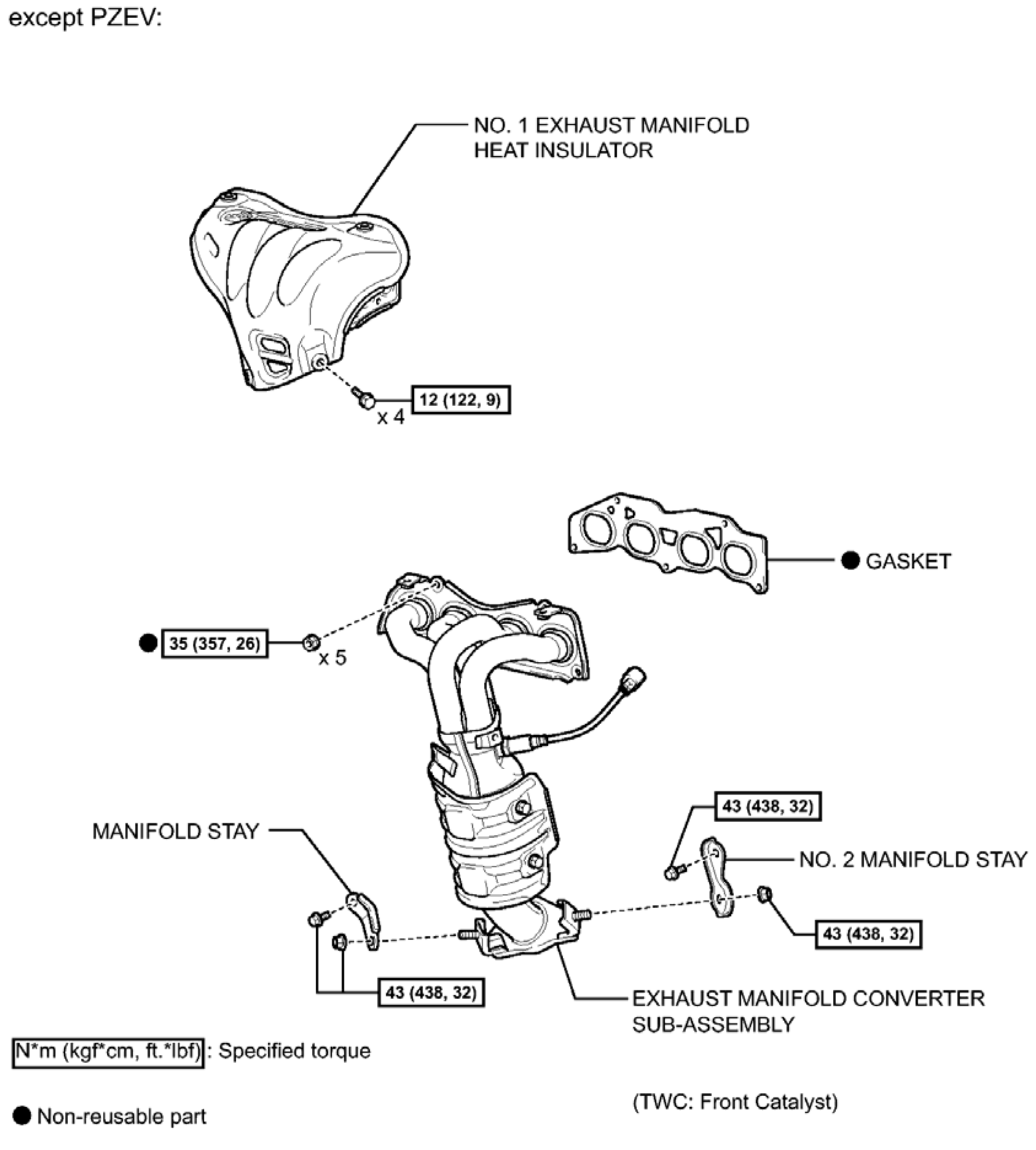
except PZEV:
NO. 1 EXHAUST MANIFOLD HEAT INSULATOR
12 (122, 9)
x 4
● GASKET
● 35 (357, 26)
x 5
43 (438, 32)
NO. 2 MANIFOLD STAY
MANIFOLD STAY
43 (438, 32)
43 (438, 32)
EXHAUST MANIFOLD CONVERTER SUB-ASSEMBLY
N*m (kgf*cm, ft.*lbf) : Specified torque
(TWC: Front Catalyst)
● Non-reusable part
c

Fig. 186: Identifying Engine Unit Replacement Components With Torque Specifications (5 Of 11)
Courtesy of TOYOTA MOTOR SALES, U.S.A., INC.

ILLUSTRATION

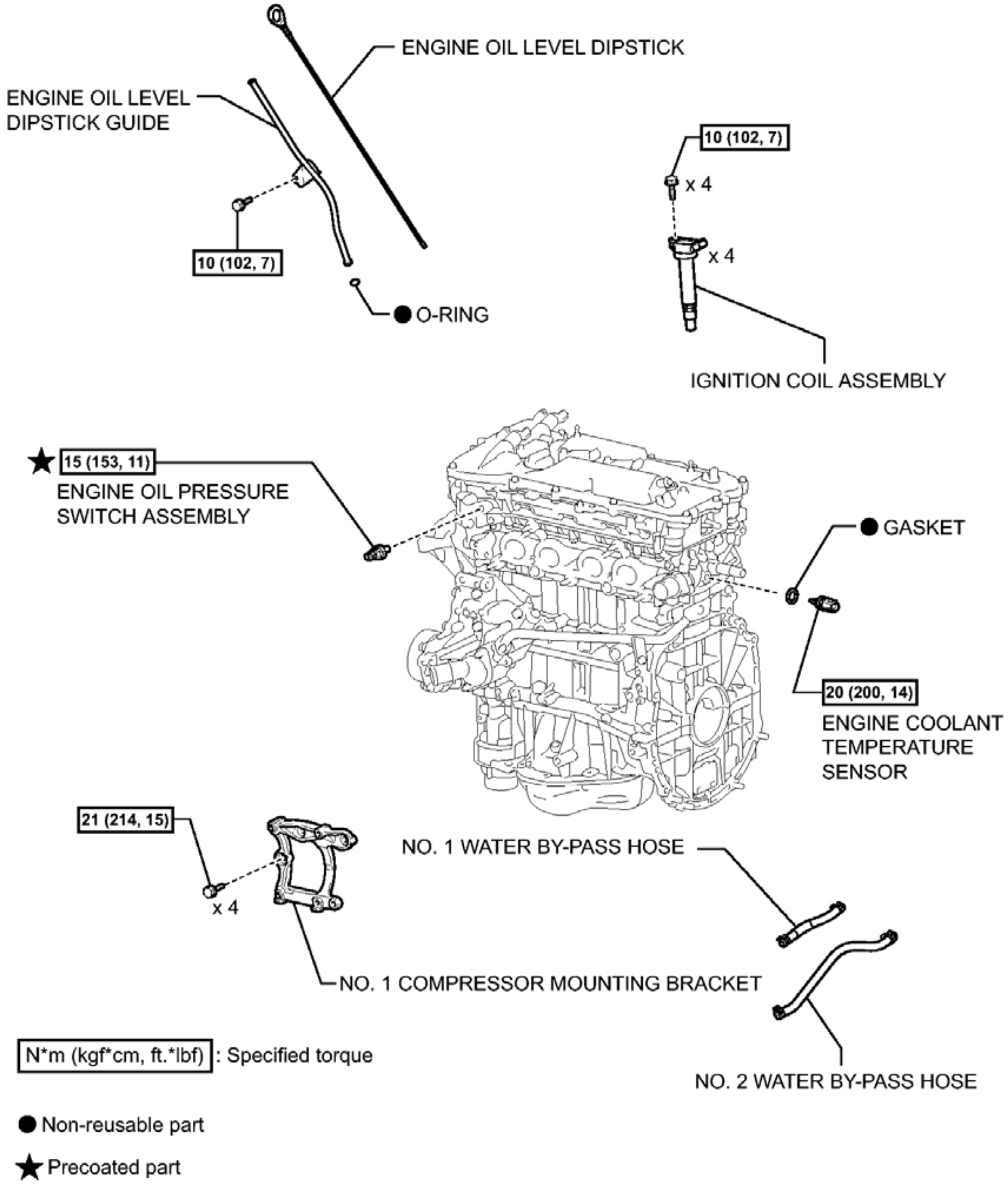
ENGINE OIL LEVEL DIPSTICK
ENGINE OIL LEVEL DIPSTICK GUIDE
10 (102, 7)
10 (102, 7)
x 4
x 4
● O-RING
IGNITION COIL ASSEMBLY
★ 15 (153, 11)
ENGINE OIL PRESSURE SWITCH ASSEMBLY
● GASKET
20 (200, 14)
ENGINE COOLANT TEMPERATURE SENSOR
21 (214, 15)
x 4
NO. 1 WATER BY-PASS HOSE
NO. 1 COMPRESSOR MOUNTING BRACKET
N*m (kgf*cm, ft.*lbf) : Specified torque
NO. 2 WATER BY-PASS HOSE
● Non-reusable part
★ Precoated part

Fig. 187: Identifying Engine Unit Replacement Components With Torque Specifications (6 Of 11)
Courtesy of TOYOTA MOTOR SALES, U.S.A., INC.

ILLUSTRATION

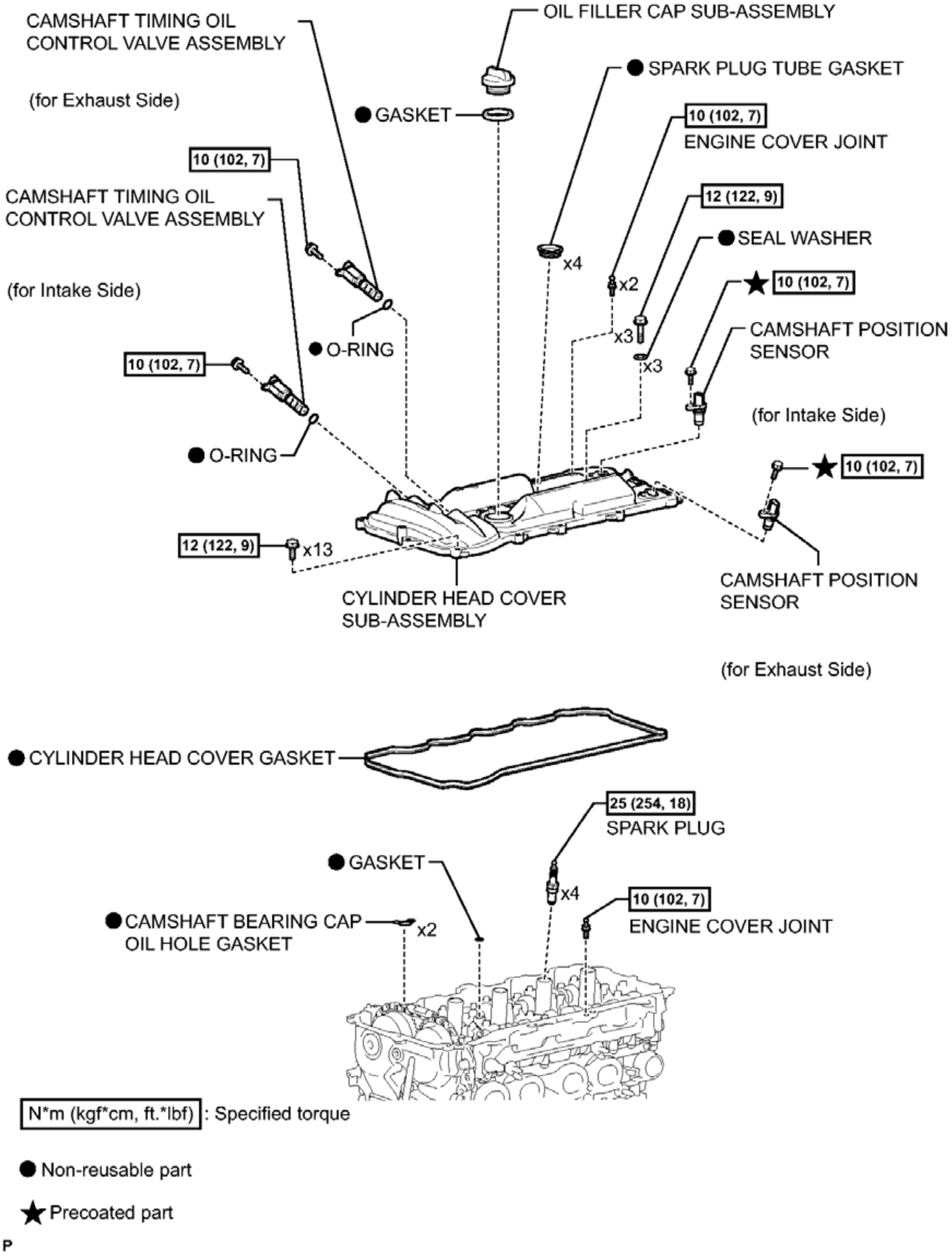
CAMSHAFT TIMING OIL CONTROL VALVE ASSEMBLY
(for Exhaust Side)
OIL FILLER CAP SUB-ASSEMBLY
● SPARK PLUG TUBE GASKET
● GASKET
10 (102, 7)
ENGINE COVER JOINT
10 (102, 7)
CAMSHAFT TIMING OIL CONTROL VALVE ASSEMBLY
(for Intake Side)
12 (122, 9)
● SEAL WASHER
x4
x2
★ 10 (102, 7)
x3
CAMSHAFT POSITION SENSOR
● O-RING
x3
10 (102, 7)
(for Intake Side)
● O-RING
★ 10 (102, 7)
12 (122, 9)
x13
CYLINDER HEAD COVER SUB-ASSEMBLY
CAMSHAFT POSITION SENSOR
(for Exhaust Side)
● CYLINDER HEAD COVER GASKET
25 (254, 18)
SPARK PLUG
● GASKET
x4
● CAMSHAFT BEARING CAP OIL HOLE GASKET
x2
10 (102, 7)
ENGINE COVER JOINT
N*m (kgf*cm, ft.*lbf) : Specified torque
● Non-reusable part
★ Precoated part
P

Fig. 188: Identifying Engine Unit Replacement Components With Torque Specifications (7 Of 11)
Courtesy of TOYOTA MOTOR SALES, U.S.A., INC.

ILLUSTRATION

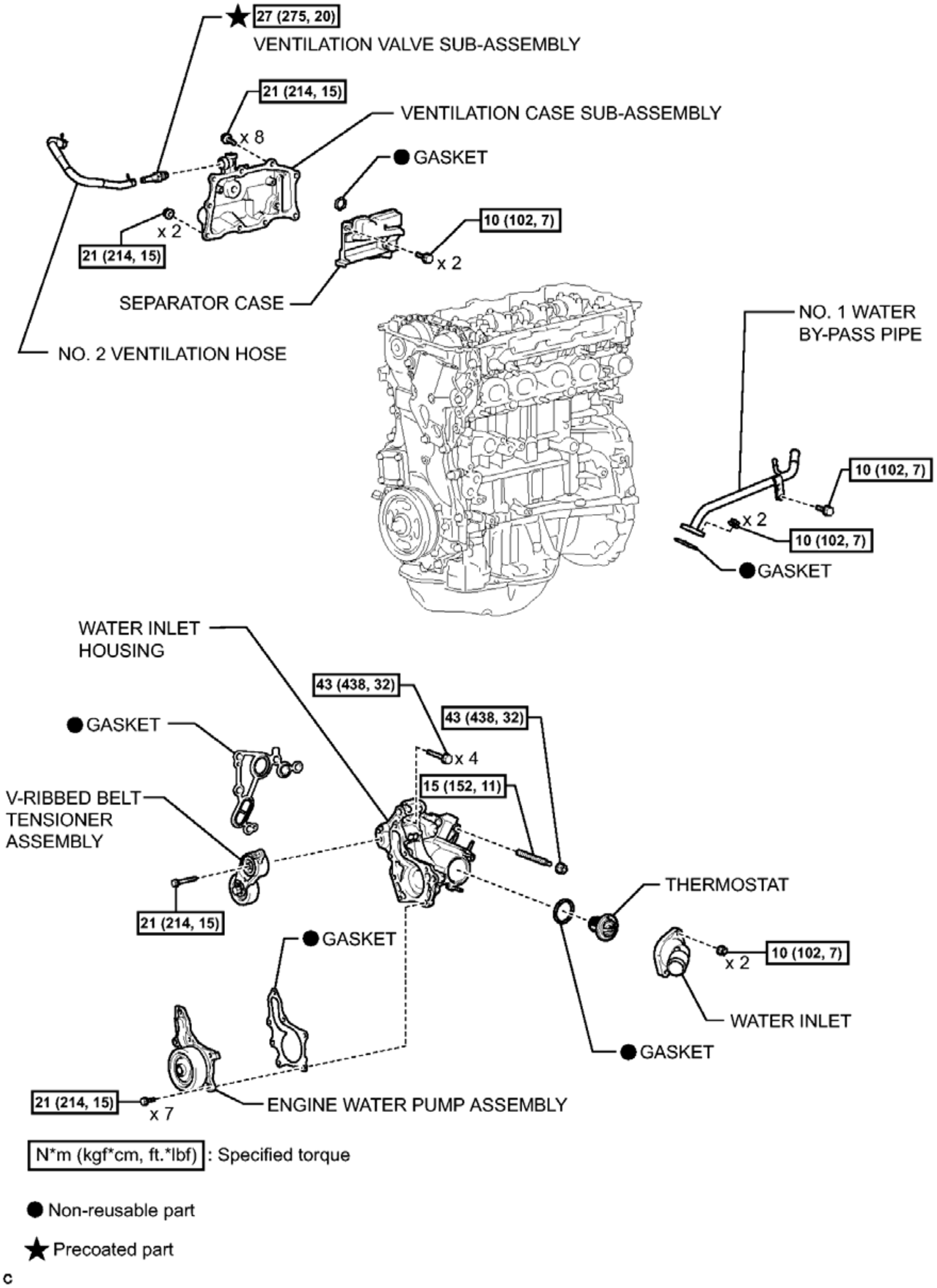
27 (275, 20)
VENTILATION VALVE SUB-ASSEMBLY
21 (214, 15)
VENTILATION CASE SUB-ASSEMBLY
x 8
GASKET
x 2
21 (214, 15)
10 (102, 7)
x 2
SEPARATOR CASE
NO. 1 WATER BY-PASS PIPE
NO. 2 VENTILATION HOSE
10 (102, 7)
x 2
10 (102, 7)
GASKET
WATER INLET HOUSING
43 (438, 32)
43 (438, 32)
GASKET
x 4
15 (152, 11)
V-RIBBED BELT TENSIONER ASSEMBLY
THERMOSTAT
21 (214, 15)
GASKET
10 (102, 7)
x 2
WATER INLET
GASKET
21 (214, 15)
x 7
ENGINE WATER PUMP ASSEMBLY
N*m (kgf*cm, ft.*lbf) : Specified torque
Non-reusable part
Precoated part
c

Fig. 189: Identifying Engine Unit Replacement Components With Torque Specifications (8 Of 11)
Courtesy of TOYOTA MOTOR SALES, U.S.A., INC.

ILLUSTRATION

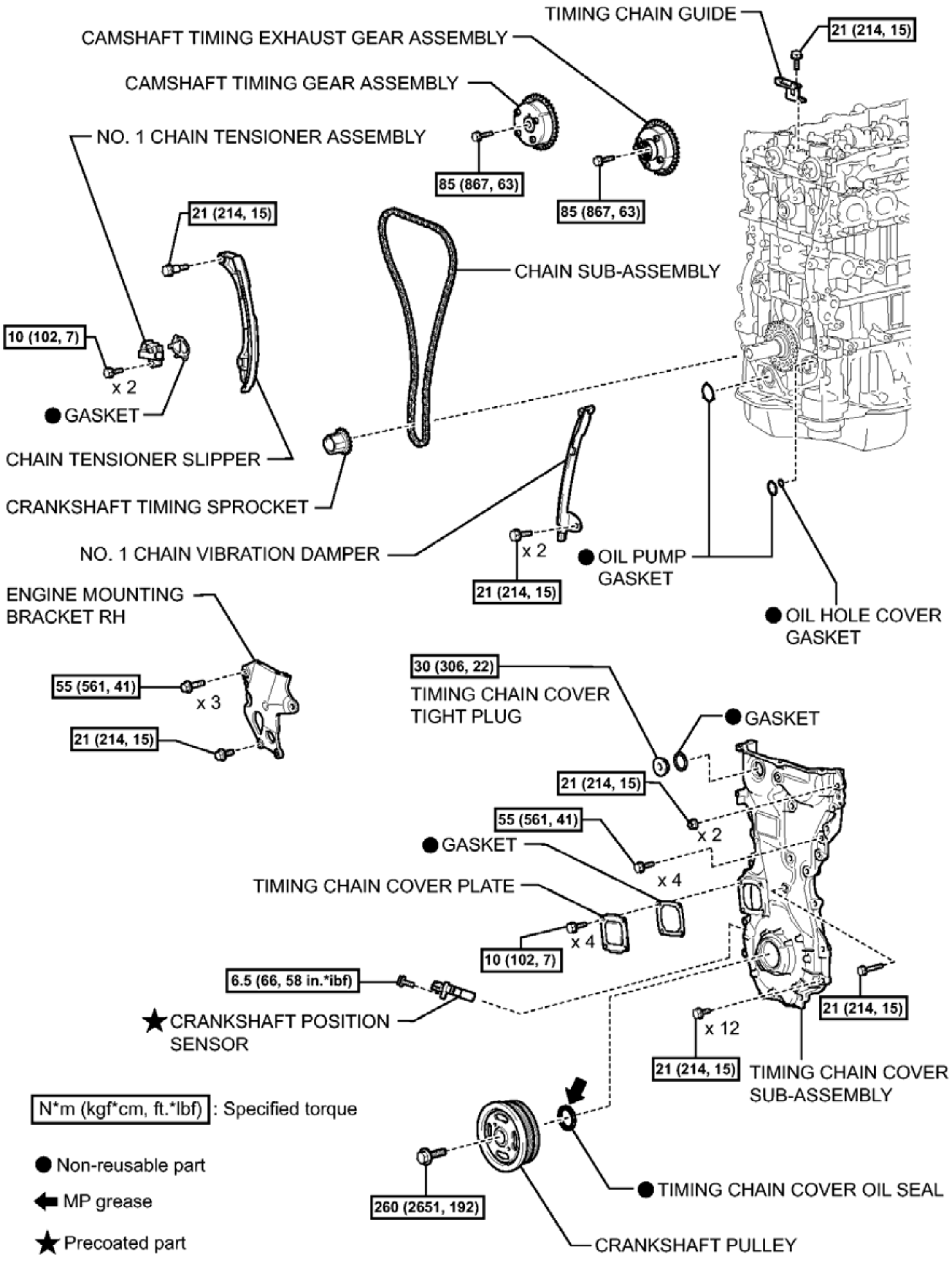
TIMING CHAIN GUIDE
21 (214, 15)
CAMSHAFT TIMING EXHAUST GEAR ASSEMBLY
CAMSHAFT TIMING GEAR ASSEMBLY
NO. 1 CHAIN TENSIONER ASSEMBLY
85 (867, 63)
85 (867, 63)
21 (214, 15)
CHAIN SUB-ASSEMBLY
10 (102, 7)
x 2
● GASKET
CHAIN TENSIONER SLIPPER
CRANKSHAFT TIMING SPROCKET
NO. 1 CHAIN VIBRATION DAMPER
x 2
21 (214, 15)
● OIL PUMP GASKET
● OIL HOLE COVER GASKET
ENGINE MOUNTING BRACKET RH
55 (561, 41)
x 3
21 (214, 15)
30 (306, 22)
TIMING CHAIN COVER TIGHT PLUG
● GASKET
21 (214, 15)
x 2
55 (561, 41)
● GASKET
x 4
TIMING CHAIN COVER PLATE
x 4
10 (102, 7)
6.5 (66, 58 in.*lbf)
★ CRANKSHAFT POSITION SENSOR
21 (214, 15)
x 12
21 (214, 15)
TIMING CHAIN COVER SUB-ASSEMBLY
N*m (kgf*cm, ft.*lbf) : Specified torque
● Non-reusable part
MP grease
★ Precoated part
260 (2651, 192)
● TIMING CHAIN COVER OIL SEAL
CRANKSHAFT PULLEY

Fig. 190: Identifying Engine Unit Replacement Components With Torque Specifications (9 Of 11)
Courtesy of TOYOTA MOTOR SALES, U.S.A., INC.

ILLUSTRATION

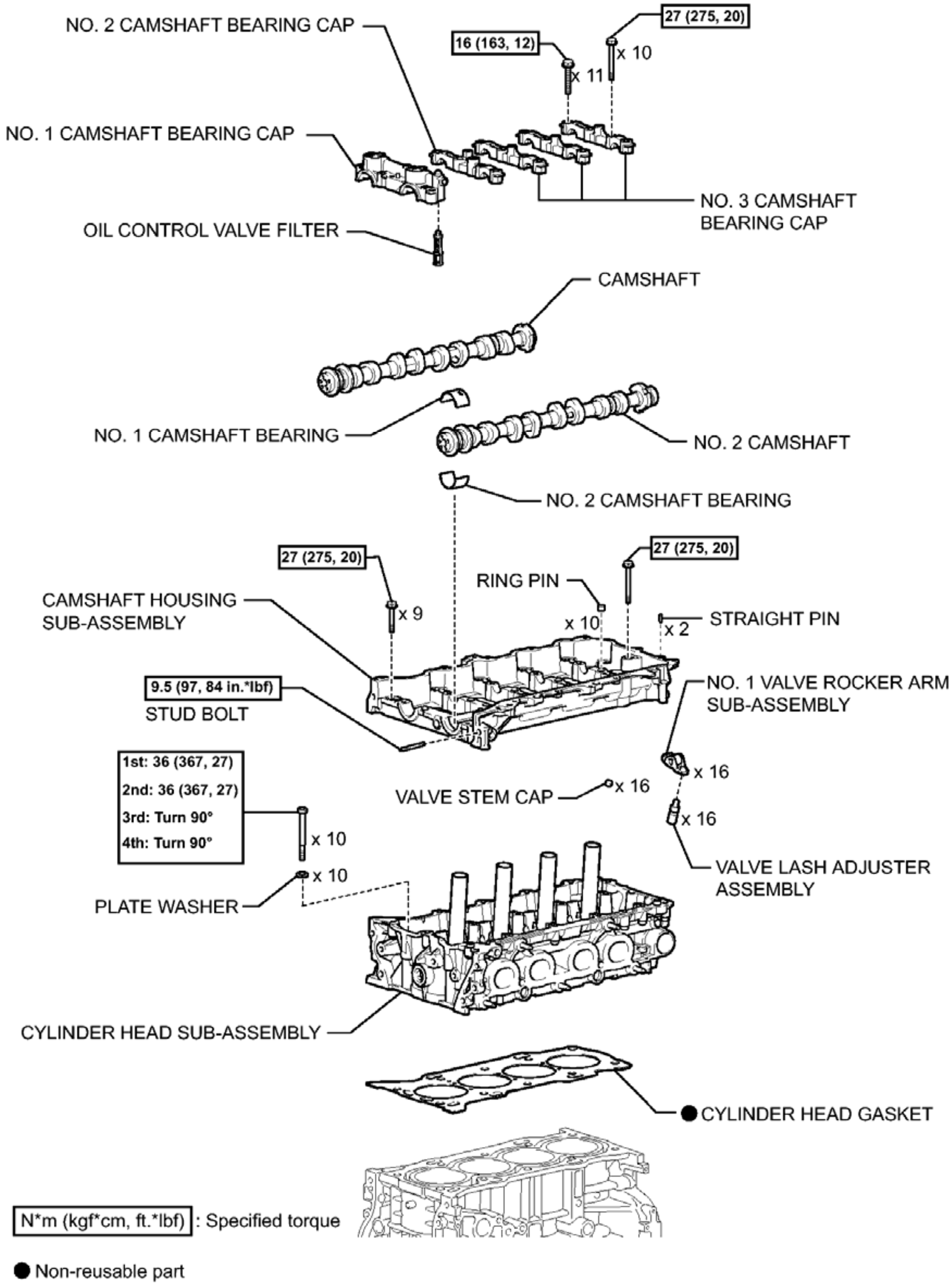
NO. 2 CAMSHAFT BEARING CAP
27 (275, 20)
16 (163, 12)
x 10
x 11
NO. 1 CAMSHAFT BEARING CAP
NO. 3 CAMSHAFT BEARING CAP
OIL CONTROL VALVE FILTER
CAMSHAFT
NO. 1 CAMSHAFT BEARING
NO. 2 CAMSHAFT
NO. 2 CAMSHAFT BEARING
27 (275, 20)
27 (275, 20)
RING PIN
CAMSHAFT HOUSING SUB-ASSEMBLY
x 9
x 10
STRAIGHT PIN
x 2
9.5 (97, 84 in.*lbf)
STUD BOLT
NO. 1 VALVE ROCKER ARM SUB-ASSEMBLY
1st: 36 (367, 27)
2nd: 36 (367, 27)
3rd: Turn 90°
4th: Turn 90°
x 16
VALVE STEM CAP
x 16
x 10
x 16
VALVE LASH ADJUSTER ASSEMBLY
x 10
PLATE WASHER
CYLINDER HEAD SUB-ASSEMBLY
● CYLINDER HEAD GASKET
N*m (kgf*cm, ft.*lbf) : Specified torque
● Non-reusable part

Fig. 191: Identifying Engine Unit Replacement Components With Torque Specifications (10 Of 11)
Courtesy of TOYOTA MOTOR SALES, U.S.A., INC.

ILLUSTRATION

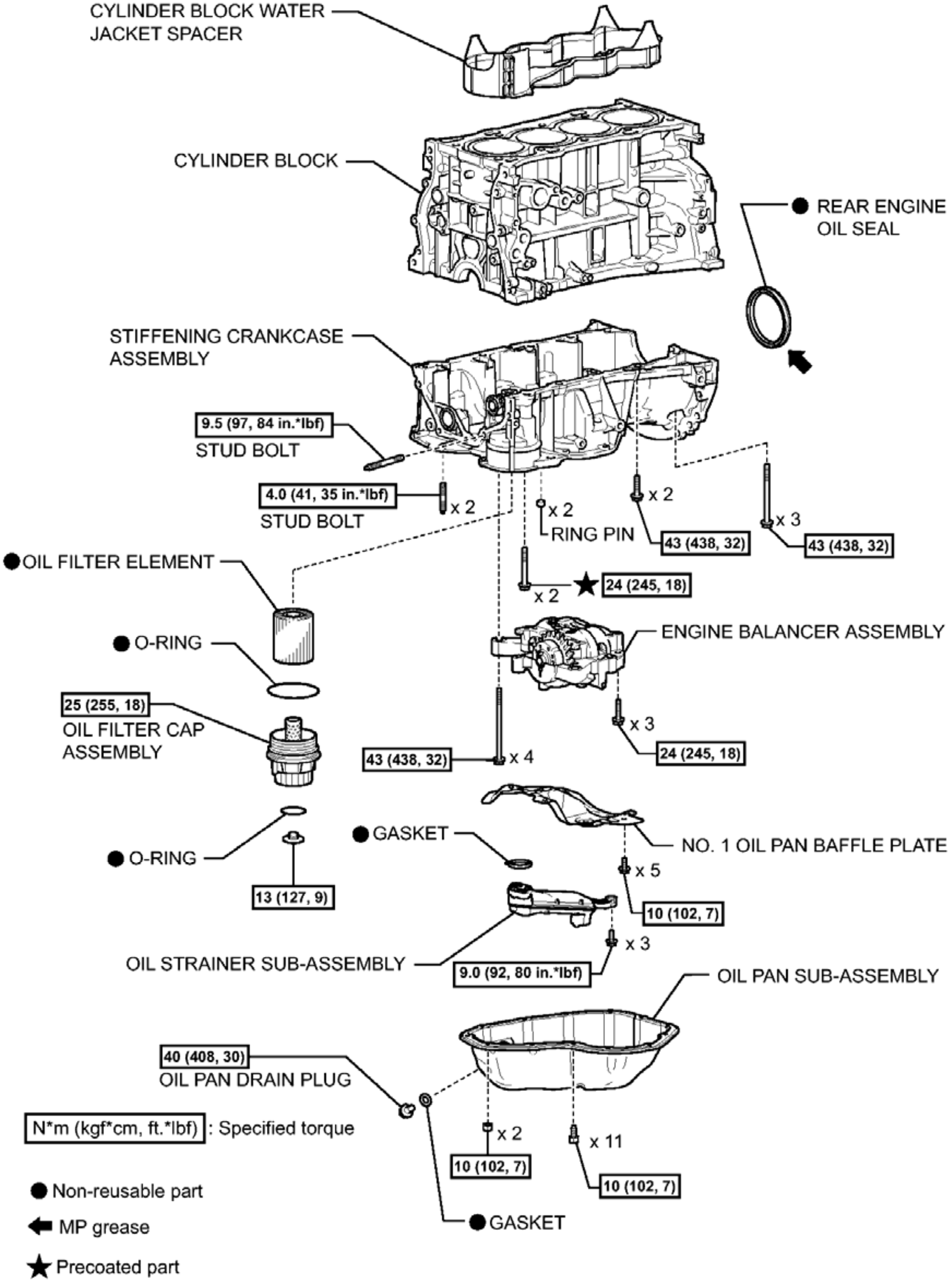
CYLINDER BLOCK WATER JACKET SPACER
CYLINDER BLOCK
● REAR ENGINE OIL SEAL
STIFFENING CRANKCASE ASSEMBLY
9.5 (97, 84 in.*lbf)
STUD BOLT
4.0 (41, 35 in.*lbf)
x 2
STUD BOLT
x 2
RING PIN
x 2
43 (438, 32)
x 3
43 (438, 32)
●OIL FILTER ELEMENT
x 2
★ 24 (245, 18)
● O-RING
ENGINE BALANCER ASSEMBLY
25 (255, 18)
OIL FILTER CAP ASSEMBLY
x 3
43 (438, 32)
x 4
24 (245, 18)
● GASKET
NO. 1 OIL PAN BAFFLE PLATE
● O-RING
x 5
13 (127, 9)
10 (102, 7)
OIL STRAINER SUB-ASSEMBLY
x 3
9.0 (92, 80 in.*lbf)
OIL PAN SUB-ASSEMBLY
40 (408, 30)
OIL PAN DRAIN PLUG
N*m (kgf*cm, ft.*lbf) : Specified torque
x 2
x 11
10 (102, 7)
10 (102, 7)
● Non-reusable part
MP grease
● GASKET
★ Precoated part

Fig. 192: Identifying Engine Unit Replacement Components With Torque Specifications (11 Of 11)
Courtesy of TOYOTA MOTOR SALES, U.S.A., INC.

REMOVAL

REMOVAL

1. REMOVE ENGINE HANGERS

a. Remove the 2 bolts and 2 engine hangers.

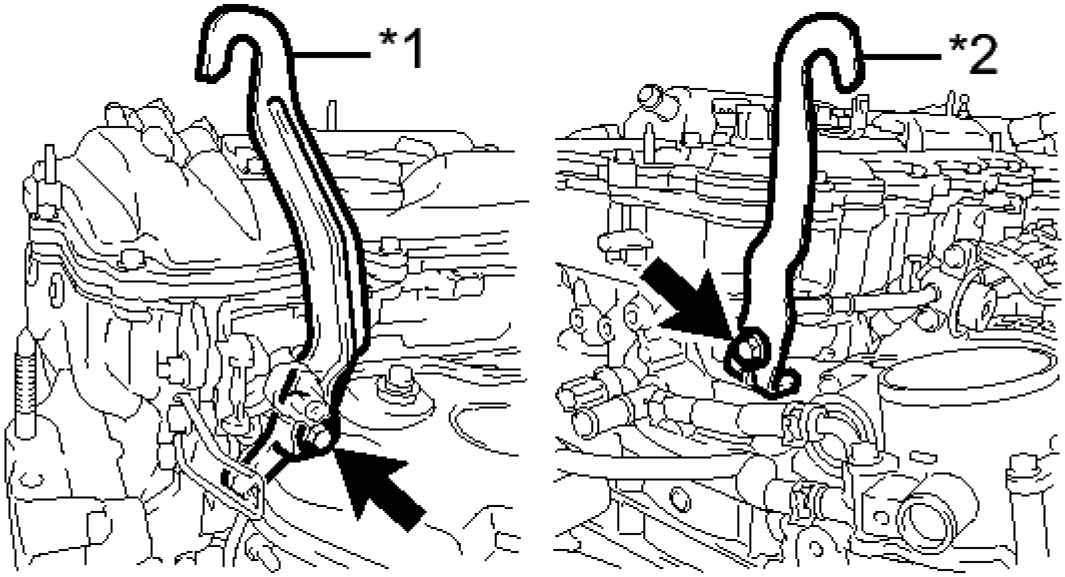

Fig. 193: Identifying Engine Hangers Bolts
Courtesy of TOYOTA MOTOR SALES, U.S.A., INC.

TEXT IN ILLUSTRATION

*1	No. 1 Engine Hanger
*2	No. 2 Engine Hanger

2. REMOVE ENGINE OIL LEVEL DIPSTICK GUIDE

a. Remove the engine oil level dipstick.

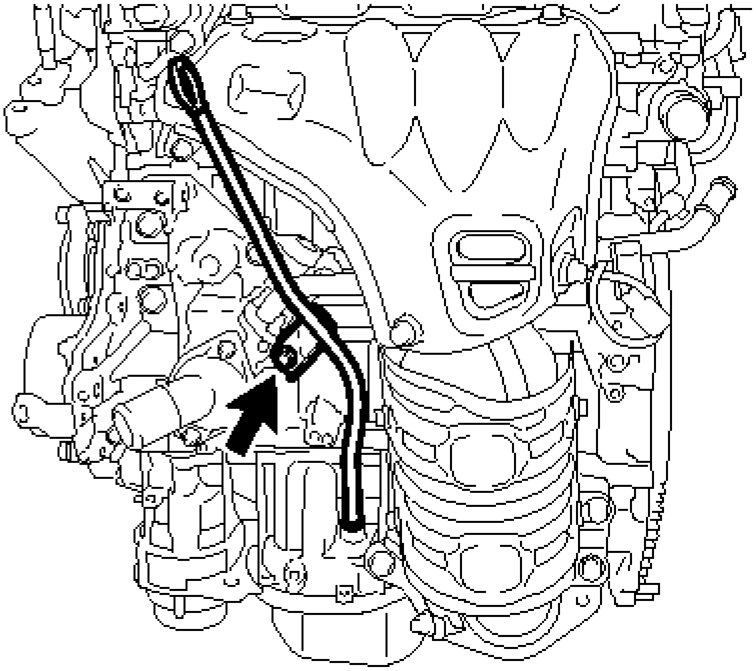

P

Fig. 194: Locating Dipstick Guide Bolt
Courtesy of TOYOTA MOTOR SALES, U.S.A., INC.

  b. Remove the bolt and engine oil level dipstick guide.
  c. Remove the O-ring from the engine oil level dipstick guide.

3. **REMOVE MANIFOLD STAY** . Refer to **REMOVAL - Step 6**
4. **REMOVE NO. 2 MANIFOLD STAY** . Refer to **REMOVAL - Step 7**
5. **REMOVE EGR INLET EXHAUST MANIFOLD PLATE (for PZEV)** . Refer to **REMOVAL - Step 9**
6. **REMOVE NO. 1 EXHAUST MANIFOLD HEAT INSULATOR (except PZEV)** . Refer to **REMOVAL - Step 8**
7. **REMOVE EXHAUST MANIFOLD CONVERTER SUB-ASSEMBLY** . Refer to **REMOVAL - Step 11**
8. **REMOVE NO. 1 COMPRESSOR MOUNTING BRACKET**
    a. Remove the 4 bolts and bracket.

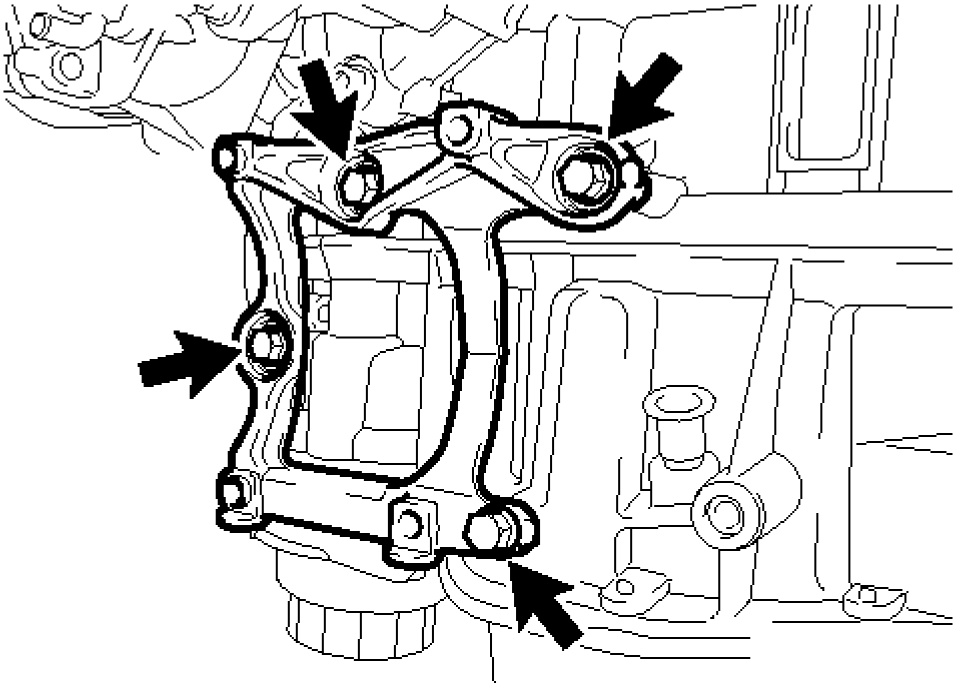

Fig. 195: Locating NO. 1 Compressor Mounting Bracket & Bolts
Courtesy of TOYOTA MOTOR SALES, U.S.A., INC.

9. **REMOVE THROTTLE WITH MOTOR BODY ASSEMBLY** . Refer to **REMOVAL - Step 8**
10. **REMOVE WATER BY-PASS HOSE**
    a. Remove the No. 1 and No. 2 water by-pass hoses.

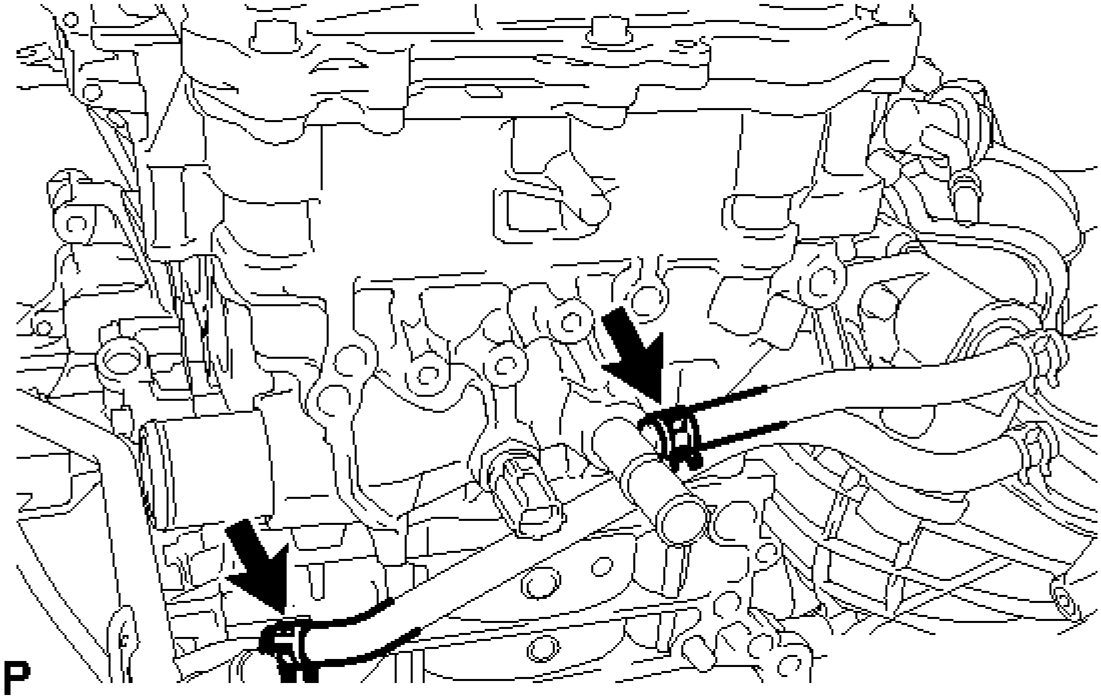

Fig. 196: Locating No. 1 And No. 2 Water By-Pass Hoses
Courtesy of TOYOTA MOTOR SALES, U.S.A., INC.

11. **REMOVE VACUUM SWITCHING VALVE ASSEMBLY (for ACIS)** . Refer to **REMOVAL - Step 7**
12. **DISCONNECT NO. 2 VENTILATION HOSE** . Refer to **REMOVAL - Step 8**
13. **REMOVE UNION TO CONNECTOR TUBE HOSE** . Refer to **REMOVAL - Step 9**
14. **REMOVE FUEL DELIVERY PIPE SUB-ASSEMBLY** . Refer to **REMOVAL - Step 9**
15. **REMOVE INTAKE MANIFOLD** . Refer to **REMOVAL - Step 12**
16. **REMOVE SENSOR WIRE**
    a. Disconnect the knock control sensor connector.

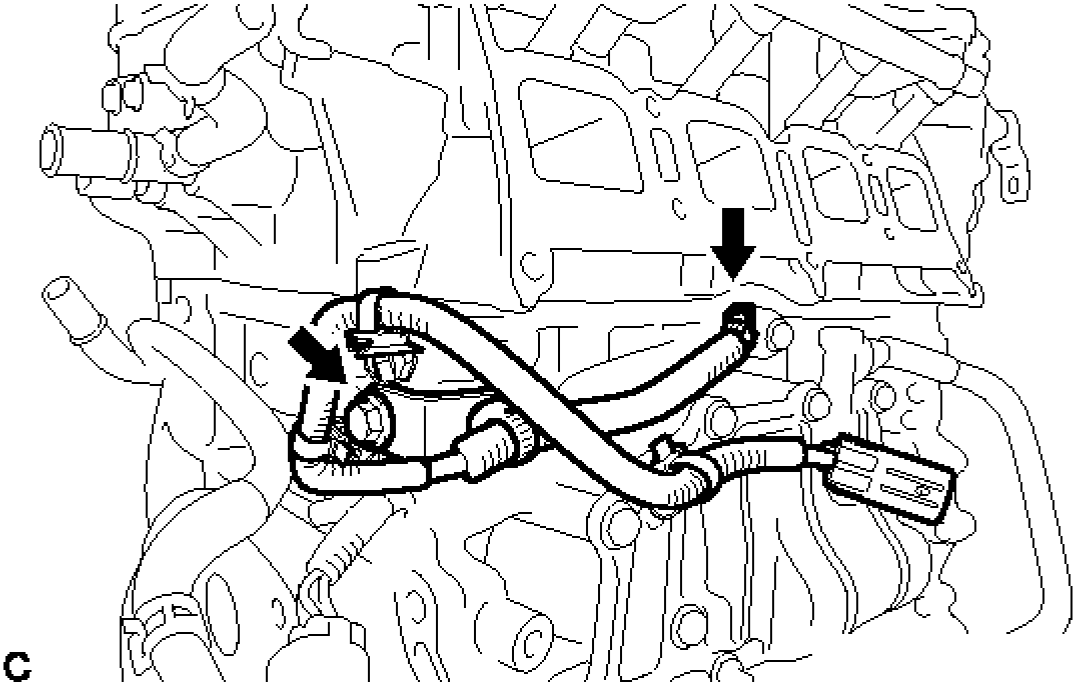

Fig. 197: Identifying Knock Control Sensor Connector, Wire And Bolt
Courtesy of TOYOTA MOTOR SALES, U.S.A., INC.

    b. Remove the bolt and knock control sensor wire.

17. **REMOVE KNOCK CONTROL SENSOR** . Refer to **REMOVAL - Step 2**
18. **REMOVE ENGINE OIL PRESSURE SWITCH ASSEMBLY** . Refer to **REMOVAL - Step 1**
19. **REMOVE ENGINE COOLANT TEMPERATURE SENSOR** . Refer to **REMOVAL - Step 9**
20. **REMOVE IGNITION COIL ASSEMBLY** . Refer to **REMOVAL - Step 2**

DISASSEMBLY

DISASSEMBLY

1. **REMOVE ENGINE COVER JOINT**
    a. Remove the 3 joints.

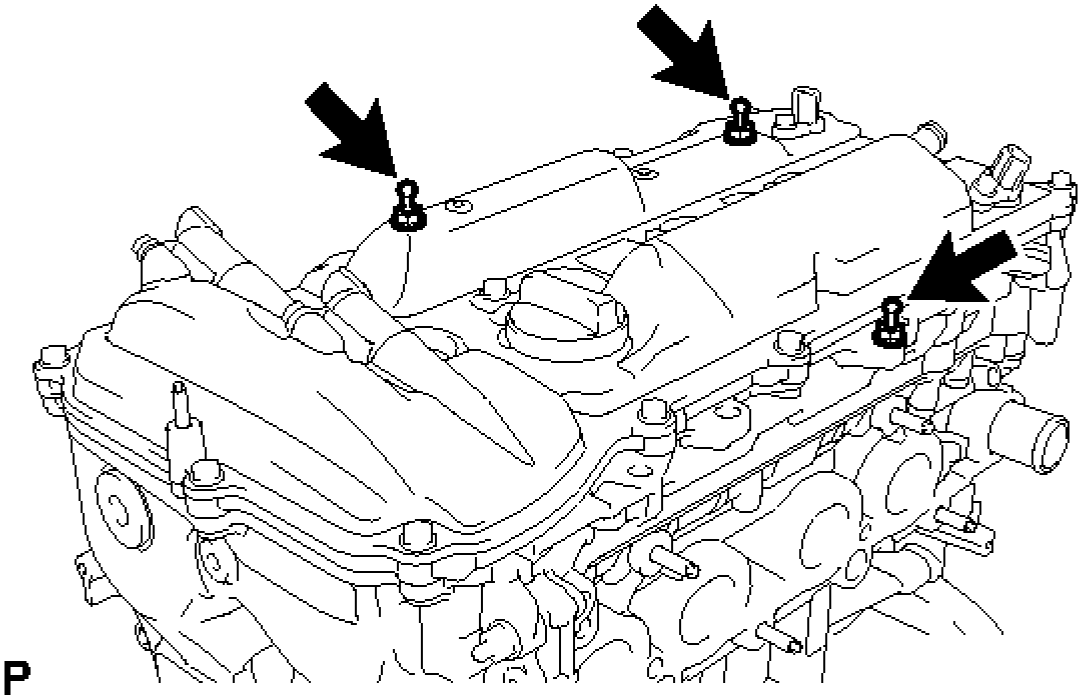

Fig. 198: Locating Engine Cover Joint
Courtesy of TOYOTA MOTOR SALES, U.S.A., INC.

2. **REMOVE SPARK PLUG** . Refer to **REMOVAL - Step 3**
3. **REMOVE CAMSHAFT TIMING OIL CONTROL VALVE ASSEMBLY** . Refer to **REMOVAL - Step 3**
4. **REMOVE CAMSHAFT POSITION SENSOR** . Refer to **REMOVAL - Step 2**
5. **REMOVE OIL FILLER CAP SUB-ASSEMBLY**
    a. Remove the oil filler cap from the cylinder head.
    b. Remove the gasket from the oil filler cap.
6. **REMOVE CRANKSHAFT POSITION SENSOR** . Refer to **REMOVAL - Step 1**
7. **REMOVE VENTILATION VALVE SUB-ASSEMBLY** . Refer to **REMOVAL - Step 2**
8. **REMOVE VENTILATION CASE SUB-ASSEMBLY**
    a. Remove the 8 bolts and 2 nuts.

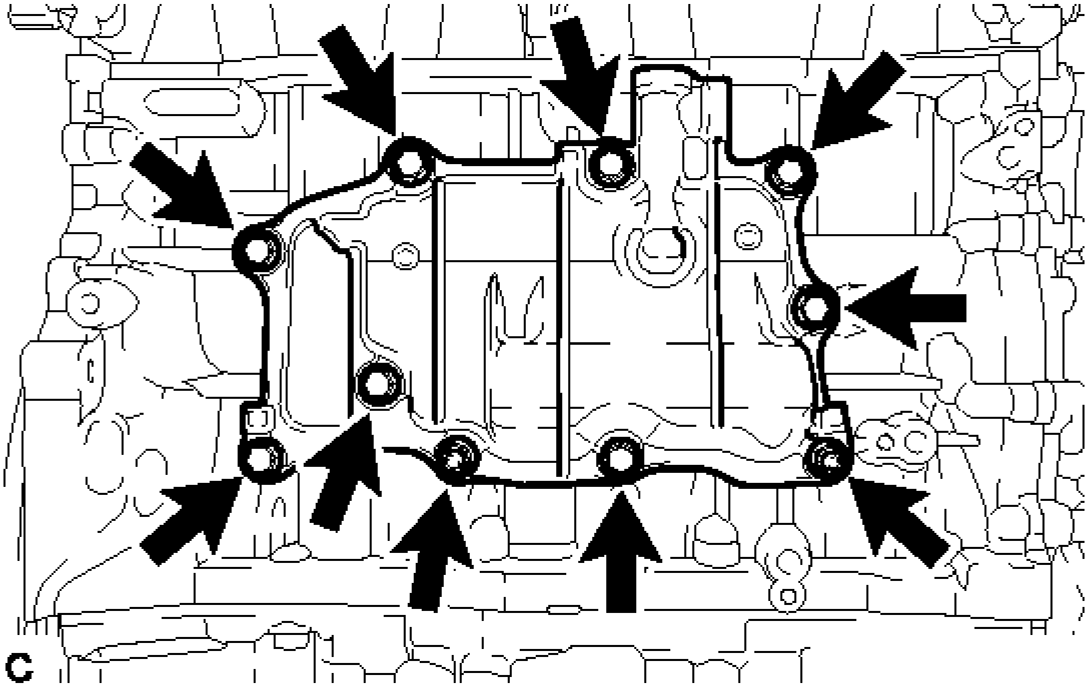

Fig. 199: Locating Ventilation Case Sub-Assembly Bolts And Nuts
Courtesy of TOYOTA MOTOR SALES, U.S.A., INC.

b. Remove the ventilation case by prying between the ventilation case and cylinder block with a screwdriver.

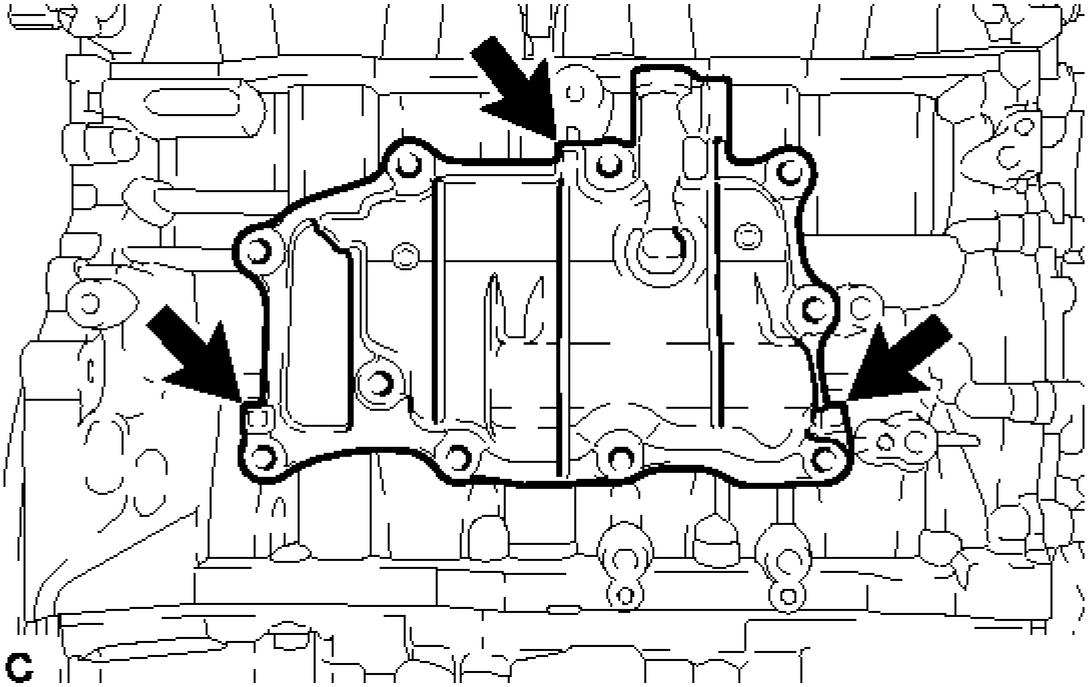

Fig. 200: Locating Contact Surfaces Of Cylinder Block And Ventilation Case

Courtesy of TOYOTA MOTOR SALES, U.S.A., INC.

HINT:

Tape the screwdriver tip before use.

NOTE: **Be careful not to damage the contact surfaces of the cylinder block and ventilation case.**

9. **REMOVE SEPARATOR CASE**
    a. Remove the 2 bolts, separator case and gasket.

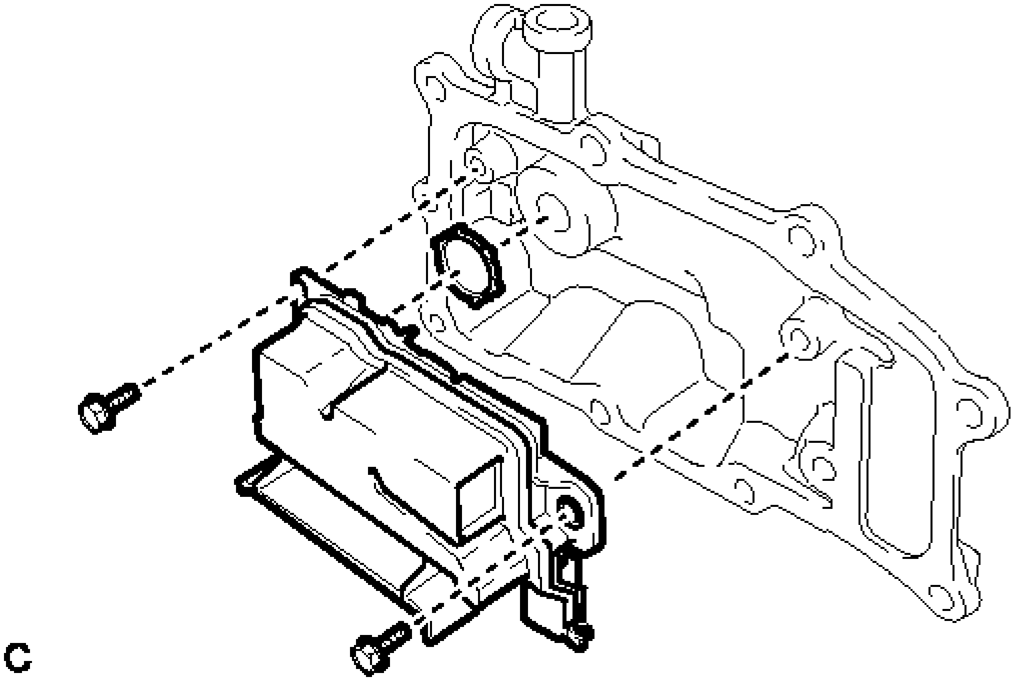

Fig. 201: Identifying Case And Gasket Bolts
Courtesy of TOYOTA MOTOR SALES, U.S.A., INC.

10. **REMOVE NO. 1 WATER BY-PASS PIPE**
    a. Remove the bolt, 2 nuts, water by-pass pipe and gasket.

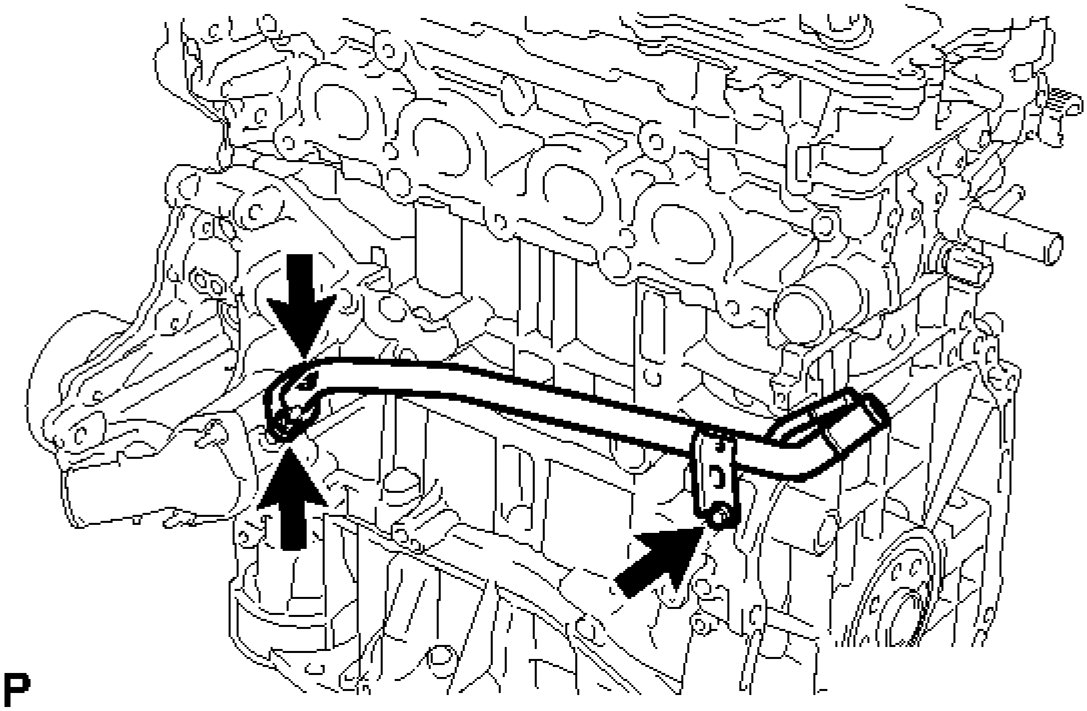

Fig. 202: Locating Water By-Pass Pipe And Gasket Bolt And Nuts
Courtesy of TOYOTA MOTOR SALES, U.S.A., INC.

11. **REMOVE WATER INLET** . Refer to **REMOVAL - Step 3**
12. **REMOVE THERMOSTAT** . Refer to **REMOVAL - Step 4**
13. **REMOVE V-RIBBED BELT TENSIONER ASSEMBLY**
    a. Remove the bolt and V-ribbed belt tensioner.

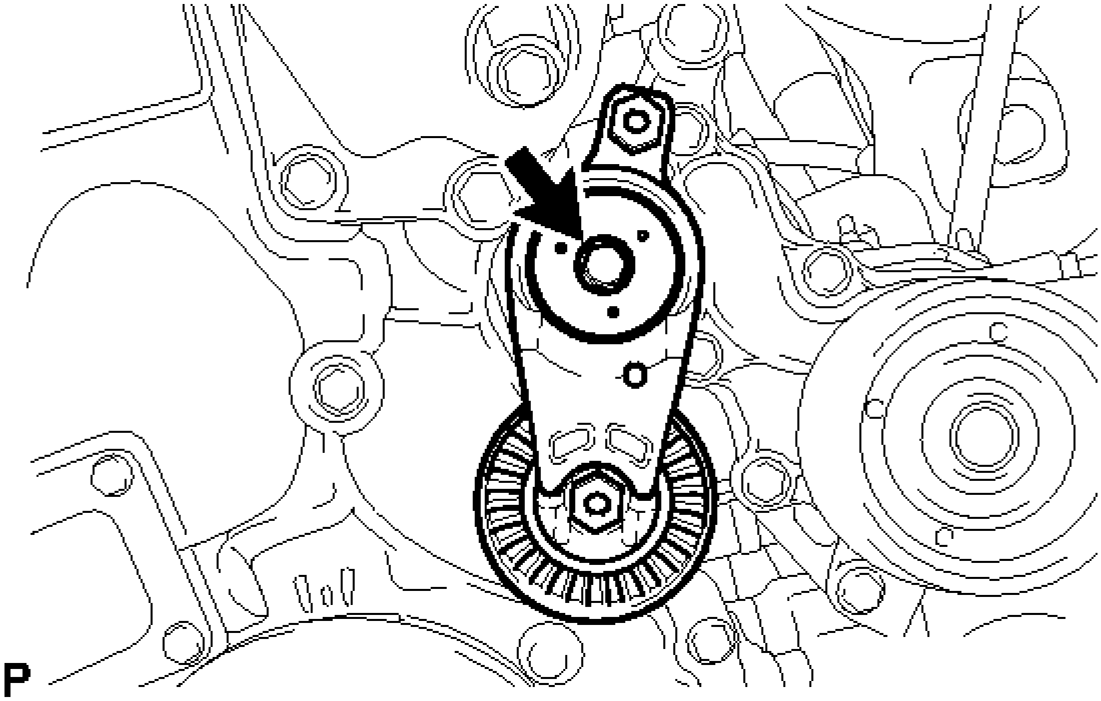

Fig. 203: Locating Bolt And V-Ribbed Belt Tensioner
Courtesy of TOYOTA MOTOR SALES, U.S.A., INC.

14. **REMOVE ENGINE WATER PUMP ASSEMBLY** . Refer to **REMOVAL - Step 5**
15. **REMOVE WATER INLET HOUSING**
    a. Remove the 4 bolts, nut, inlet water housing and gasket.

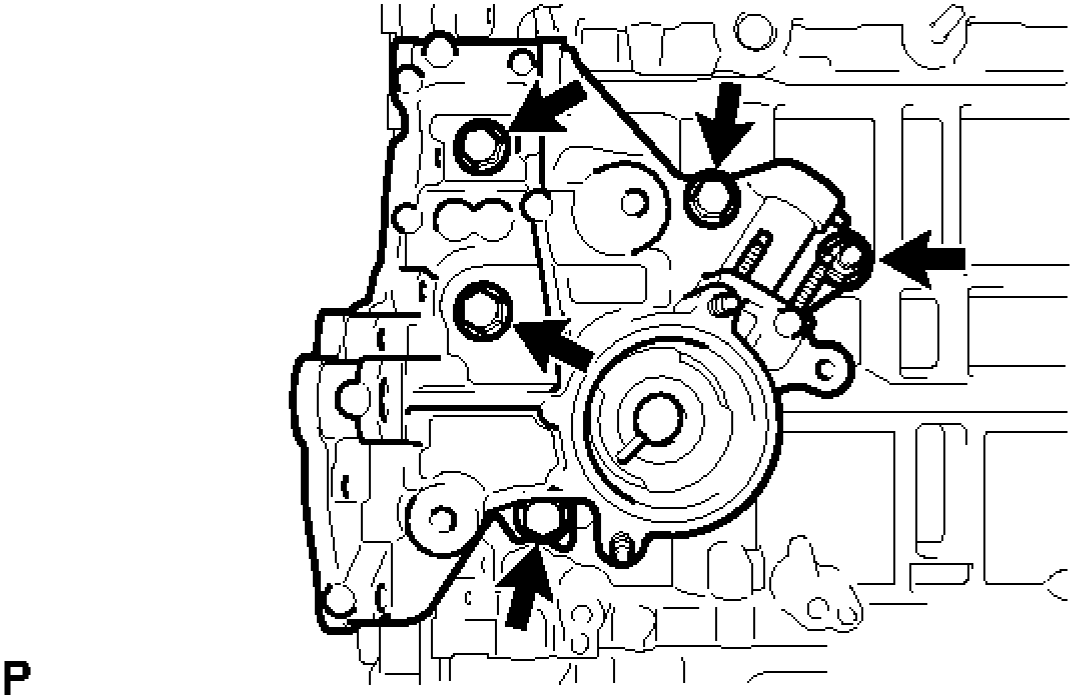

Fig. 204: Locating Inlet Water Housing And Gasket Bolts And Nut
Courtesy of TOYOTA MOTOR SALES, U.S.A., INC.

16. **REMOVE CRANKSHAFT PULLEY**
    a. Using SST, hold the crankshaft pulley and loosen the pulley bolt. Further loosen the bolt until 2 or 3 threads are screwed into the crankshaft.

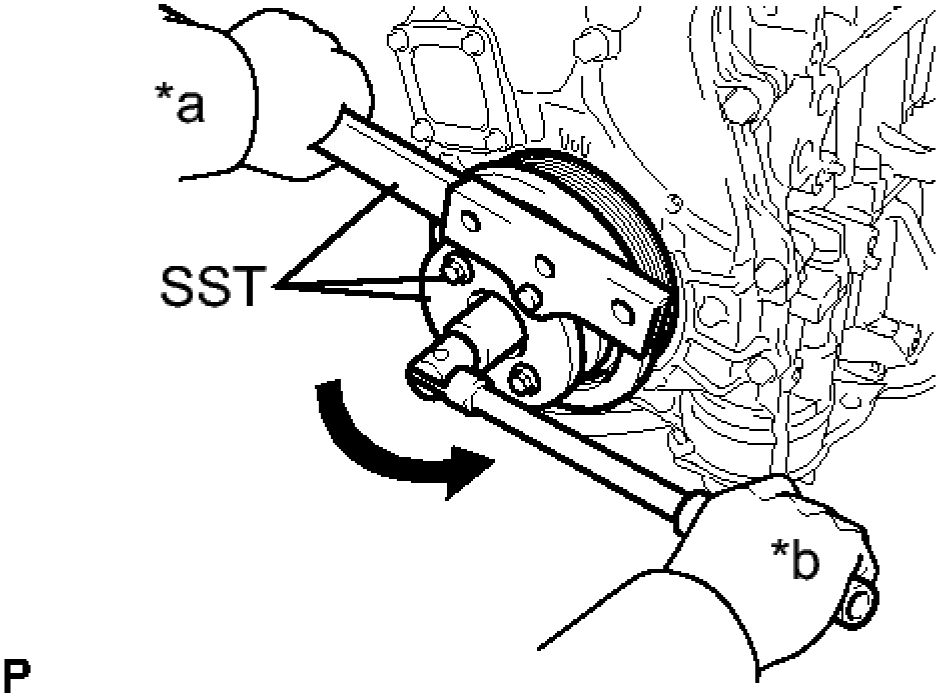

Fig. 205: Removing Crankshaft Pulley
Courtesy of TOYOTA MOTOR SALES, U.S.A., INC.

TEXT IN ILLUSTRATION

*a	Hold
*b	Turn

- **SST: 09213-54015**
- **SST: 09330-00021**
- **SST: 91551-80650**

b. Using SST and the pulley bolt, remove the crankshaft pulley.

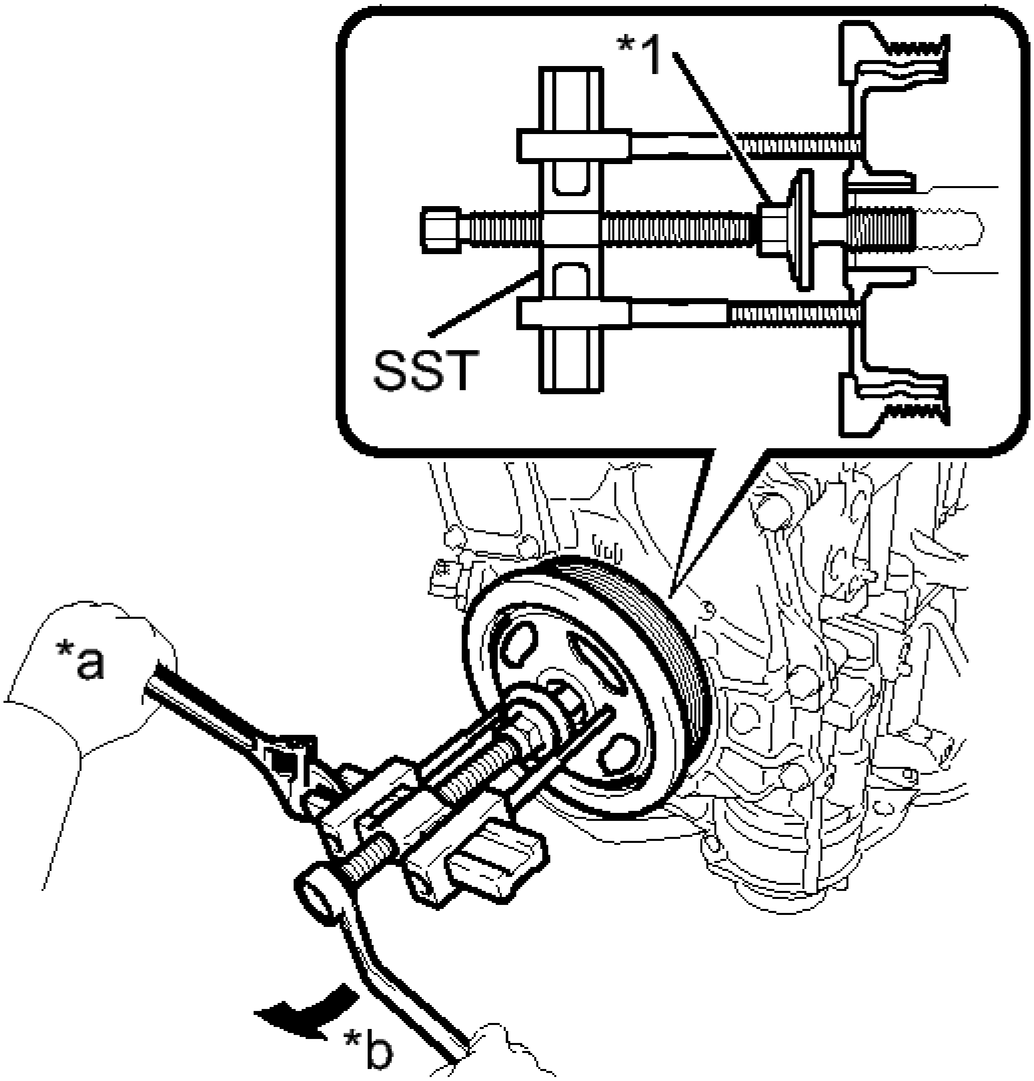

Fig. 206: Removing Crankshaft Pulley Using SST
Courtesy of TOYOTA MOTOR SALES, U.S.A., INC.

TEXT IN ILLUSTRATION

*1	Pulley Bolt
*a	Hold
*b	Turn

- **SST: 09950-50013**

  09951-05010

  09952-05010

  09953-05020

  09954-05011

HINT:

Apply a lubricant to the threads and end of SST.

17. **REMOVE CYLINDER HEAD COVER SUB-ASSEMBLY**
    a. Remove the 16 bolts, 3 seal washers, cylinder head cover and gasket.

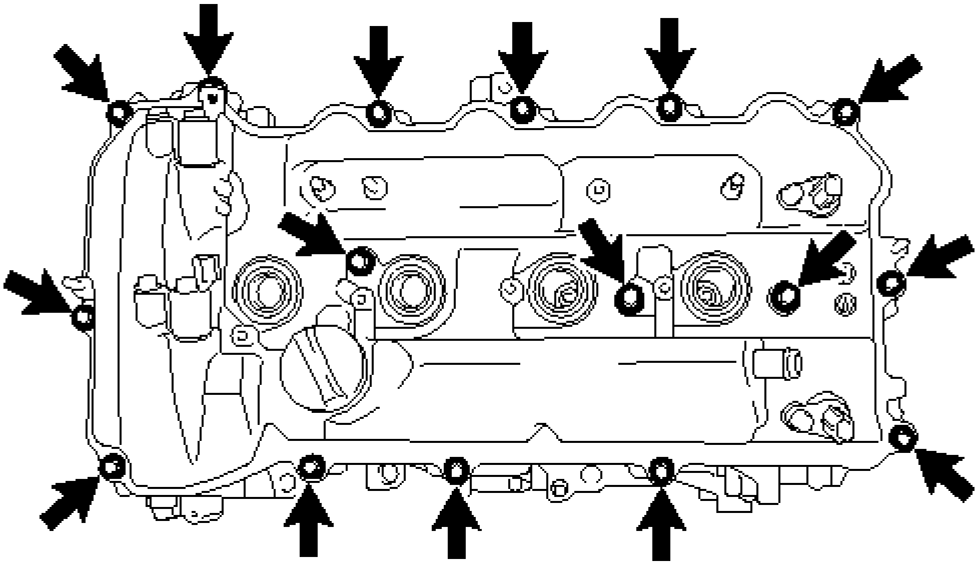

Fig. 207: Locating Cylinder Head Cover And Gasket Bolts And Seal Washers
Courtesy of TOYOTA MOTOR SALES, U.S.A., INC.

    b. Remove the 3 gaskets from the camshaft bearing caps.

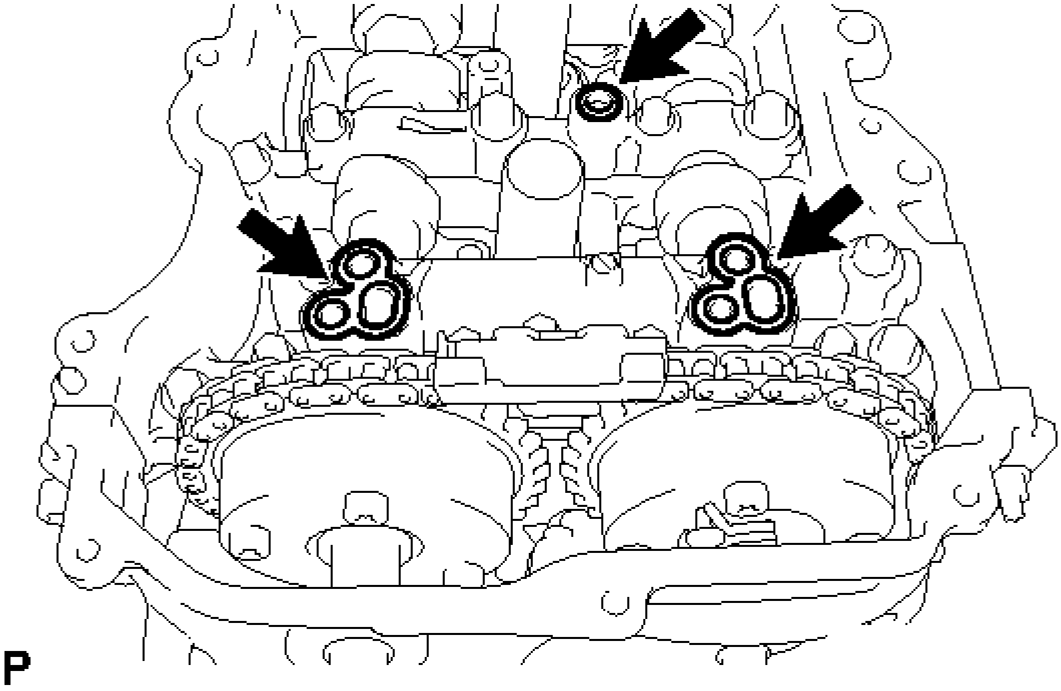

Fig. 208: Locating Camshaft Bearing Caps Gaskets
Courtesy of TOYOTA MOTOR SALES, U.S.A., INC.

18. **REMOVE SPARK PLUG TUBE GASKET**
    a. Using a screwdriver, pry out the 4 plug tube gaskets.

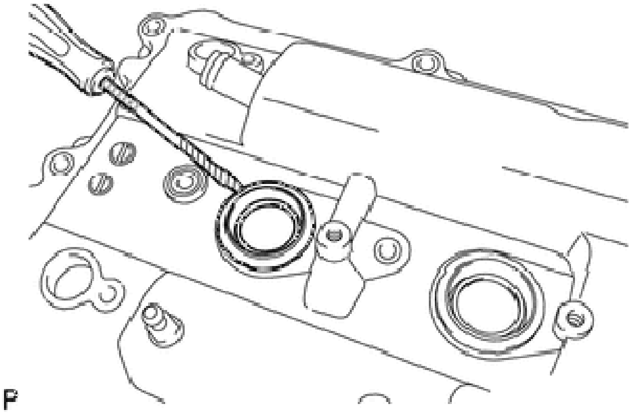

Fig. 209: Prying Out Plug Tube Gaskets
Courtesy of TOYOTA MOTOR SALES, U.S.A., INC.

NOTE: Be careful not to damage the cylinder head cover.

HINT:

Tape the screwdriver tip before use.

19. **REMOVE ENGINE MOUNTING BRACKET RH** . Refer to **REMOVAL - Step 7**
20. **REMOVE TIMING CHAIN COVER SUB-ASSEMBLY** . Refer to **REMOVAL - Step 9**
21. **REMOVE TIMING CHAIN COVER TIGHT PLUG**
    a. Using a 14 mm hexagon wrench, remove the plug and gasket.

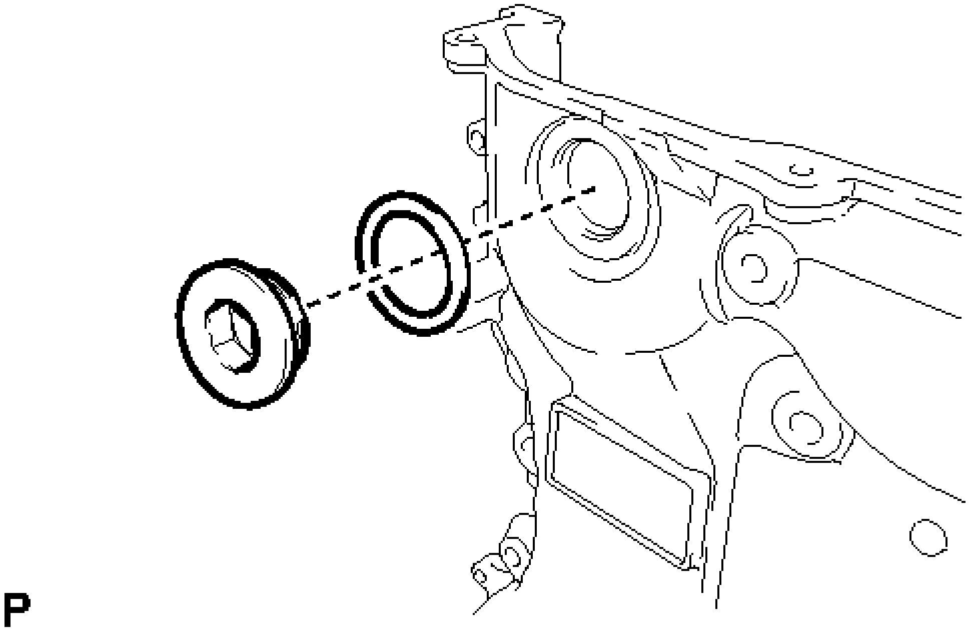

Fig. 210: Identifying Plug And Gasket
Courtesy of TOYOTA MOTOR SALES, U.S.A., INC.

22. **REMOVE TIMING CHAIN COVER PLATE**
    a. Remove the 4 bolts, timing chain cover plate and gasket.

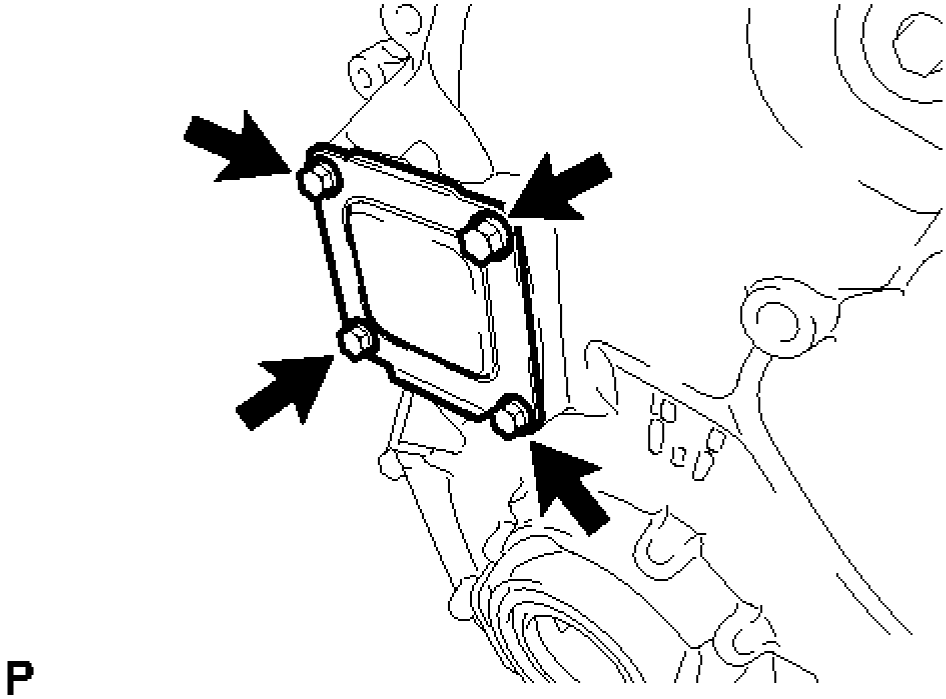

Fig. 211: Locating Timing Chain Cover Plate Bolts
Courtesy of TOYOTA MOTOR SALES, U.S.A., INC.

23. **REMOVE TIMING CHAIN COVER OIL SEAL** . Refer to **REMOVAL - Step 10**
24. **SET NO. 1 CYLINDER TO TDC/COMPRESSION** See step 12
25. **REMOVE TIMING CHAIN GUIDE** See step 13
26. **REMOVE NO. 1 CHAIN TENSIONER ASSEMBLY** See step 14
27. **REMOVE CHAIN TENSIONER SLIPPER** See step 15
28. **REMOVE CHAIN SUB-ASSEMBLY**
    a. Remove the chain sub-assembly.
29. **REMOVE NO. 1 CHAIN VIBRATION DAMPER** See step 17
30. **REMOVE CRANKSHAFT TIMING SPROCKET**
    a. Remove the crankshaft timing sprocket from the crankshaft.

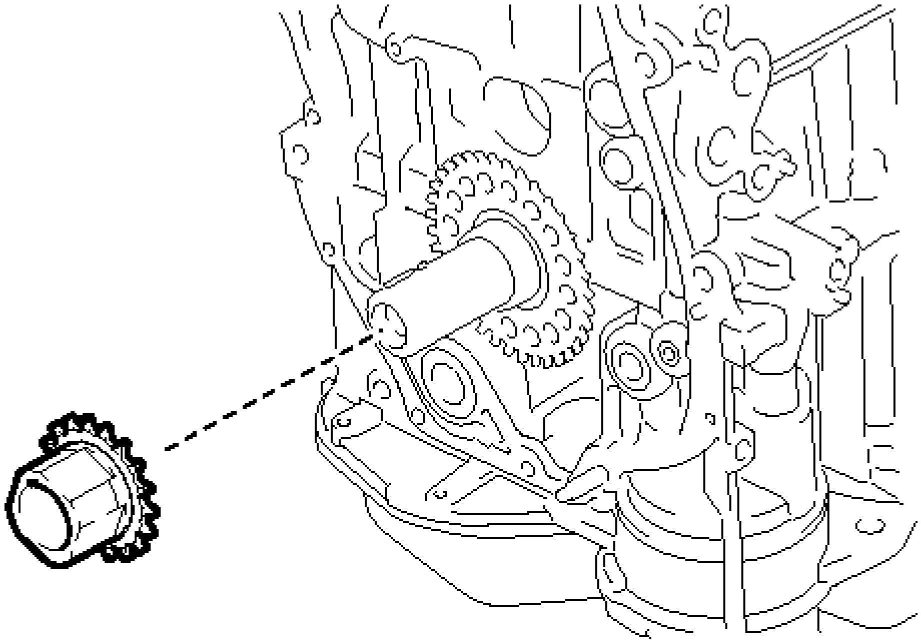

Fig. 212: Identifying Crankshaft Timing Sprocket
Courtesy of TOYOTA MOTOR SALES, U.S.A., INC.

31. **REMOVE CAMSHAFT TIMING GEAR ASSEMBLY** See step 18
32. **REMOVE CAMSHAFT TIMING EXHAUST GEAR ASSEMBLY** See step 19
33. **REMOVE CAMSHAFT HOUSING SUB-ASSEMBLY** See step 20
34. **REMOVE CAMSHAFT BEARING CAP** See step 21
35. **REMOVE OIL CONTROL VALVE FILTER**
    a. Remove the oil control valve filter from the No. 1 camshaft bearing cap.

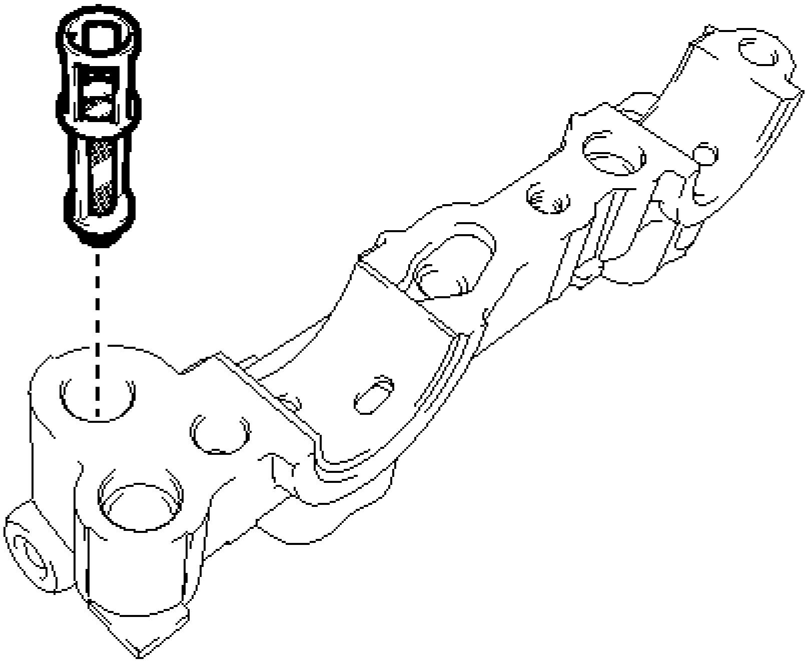

Fig. 213: Identifying Oil Control Valve Filter
Courtesy of TOYOTA MOTOR SALES, U.S.A., INC.

36. **REMOVE CAMSHAFT** See step 24
37. **REMOVE NO. 1 CAMSHAFT BEARING**
    a. Remove the No. 1 camshaft bearing.

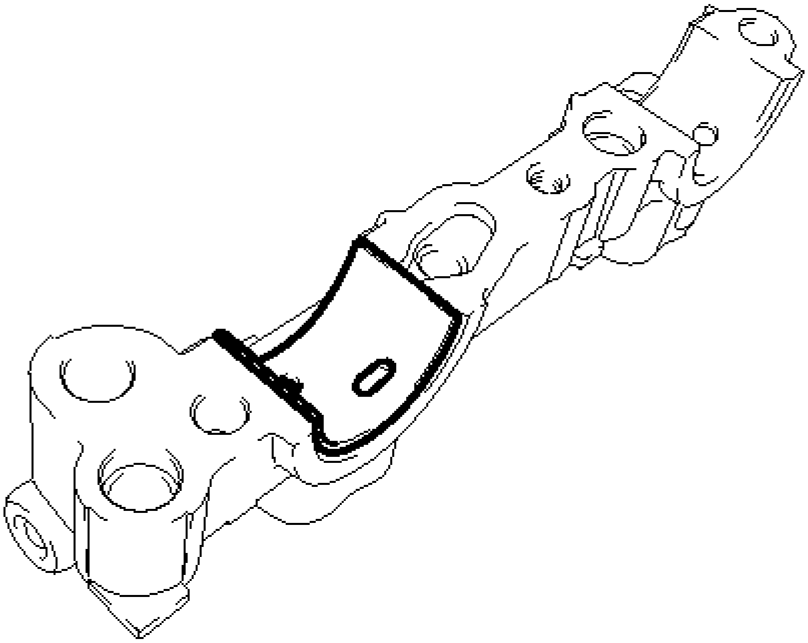

Fig. 214: Identifying No. 1 Camshaft Bearing
Courtesy of TOYOTA MOTOR SALES, U.S.A., INC.

38. **REMOVE NO. 2 CAMSHAFT BEARING**
    a. Remove the No. 2 camshaft bearing.

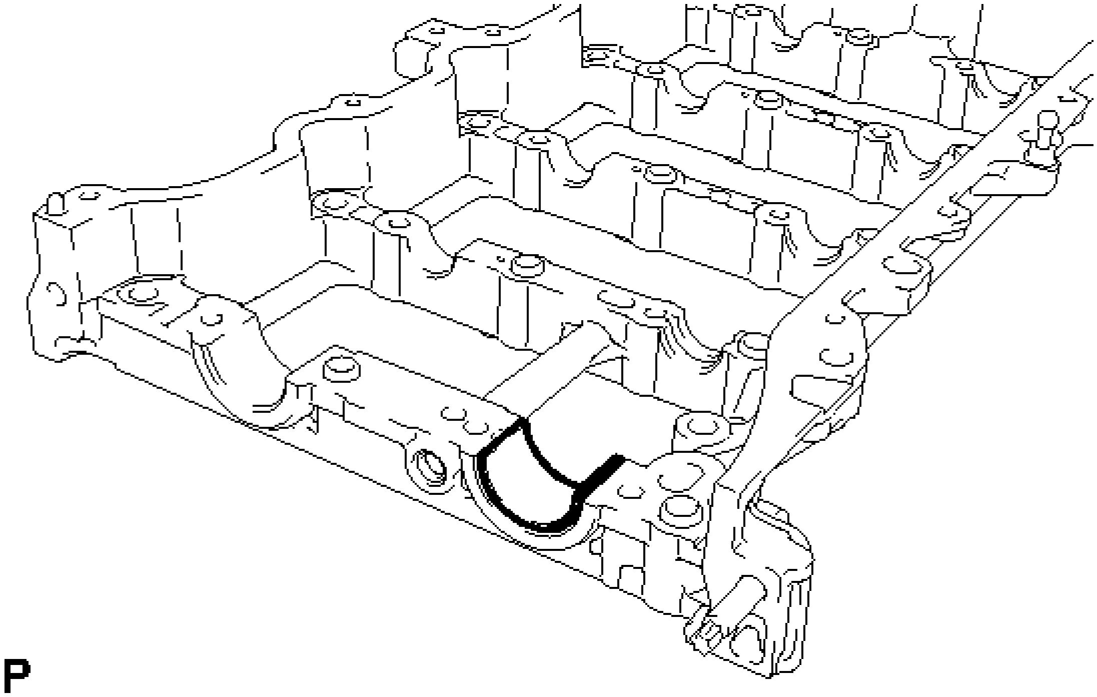

Fig. 215: Identifying No. 2 Camshaft Bearing
Courtesy of TOYOTA MOTOR SALES, U.S.A., INC.

39. **REMOVE CAMSHAFT HOUSING STUD BOLT**

NOTE: **If a stud bolt is deformed or its threads are damaged, replace it.**

40. **REMOVE CAMSHAFT BEARING CAP SETTING RING PIN**

NOTE: **It is not necessary to remove the ring pin unless it is being replaced.**

41. **REMOVE CAMSHAFT HOUSING STRAIGHT PIN**

NOTE: **It is not necessary to remove the straight pin unless it is being replaced.**

42. **REMOVE NO. 1 VALVE ROCKER ARM SUB-ASSEMBLY** See step 26
43. **REMOVE VALVE LASH ADJUSTER ASSEMBLY** See step 27
44. **REMOVE VALVE STEM CAP** See step 28
45. **REMOVE CYLINDER HEAD SUB-ASSEMBLY** See step 29

46. **REMOVE CYLINDER HEAD GASKET** See step 30
47. **REMOVE CYLINDER BLOCK WATER JACKET SPACER**
    a. Remove the cylinder block water jacket spacer from the cylinder block.

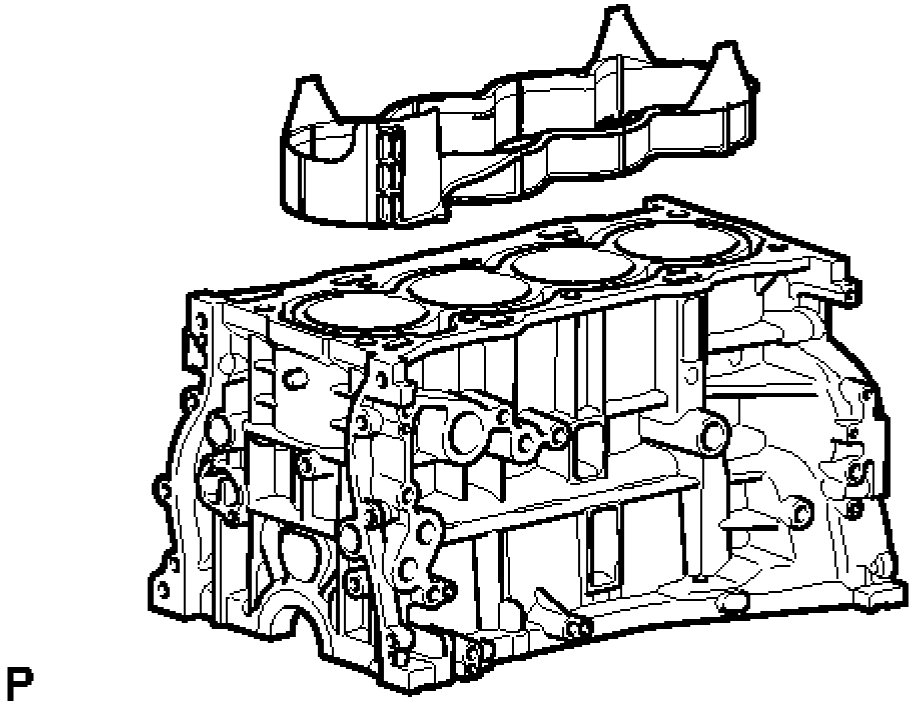

Fig. 216: Identifying Cylinder Block Water Jacket Spacer
Courtesy of TOYOTA MOTOR SALES, U.S.A., INC.

NOTE: Be sure to remove the water jacket spacer. If it is not removed, it may fall and become damaged when the cylinder block is inverted.

48. **REMOVE OIL FILTER CAP ASSEMBLY** . Refer to **REPLACEMENT - Step 2**
49. **REMOVE OIL PAN SUB-ASSEMBLY**
    a. Remove the 11 bolts and 2 nuts.

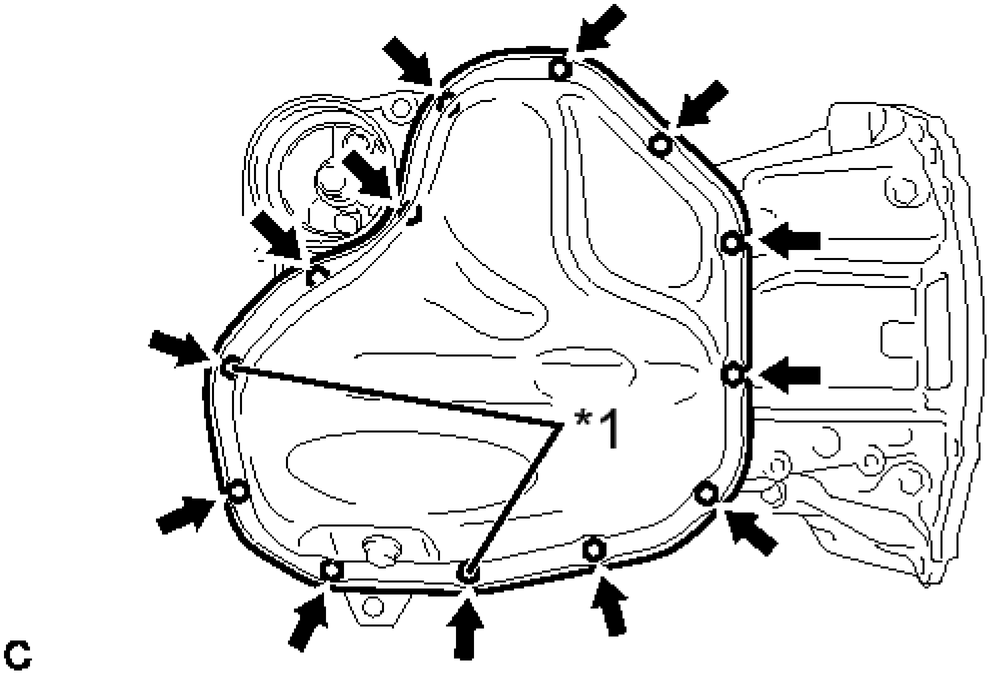

Fig. 217: Identifying Oil Pan Sub-Assembly Bolts And Nuts
Courtesy of TOYOTA MOTOR SALES, U.S.A., INC.

TEXT IN ILLUSTRATION

*1	Nut

b. Insert the blade of an oil pan seal cutter between the oil pan and stiffening crankcase, cut off the applied sealer and remove the oil pan.

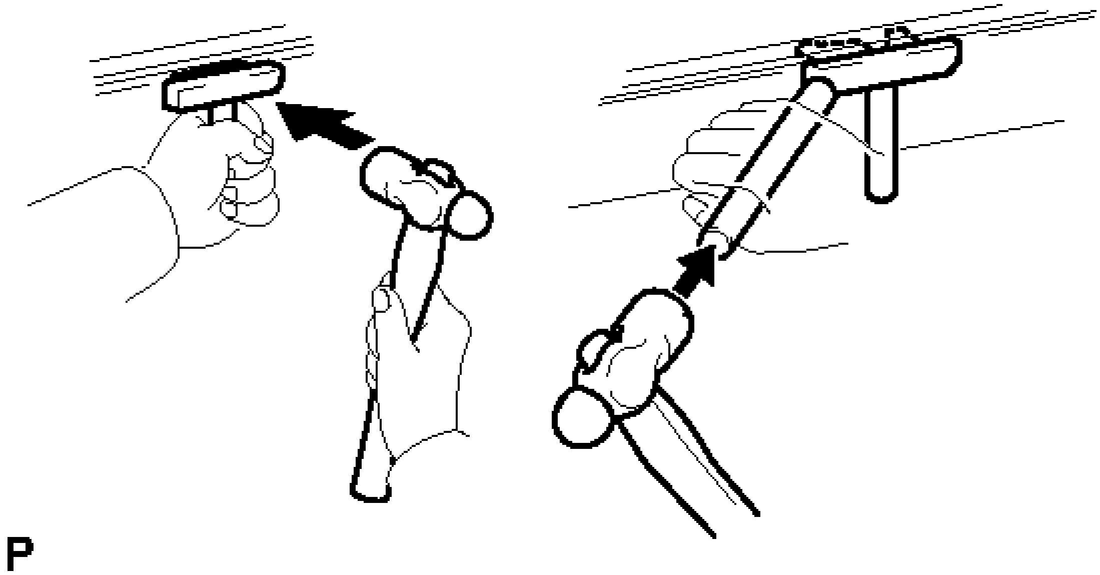

Fig. 218: Inserting Blade Of SST Between No. 1 & No. 2 Oil Pans
Courtesy of TOYOTA MOTOR SALES, U.S.A., INC.

NOTE:

- **Be careful not to damage the stiffening crankcase contact surface of the oil pan.**
- **Be careful not to damage the stiffening crankcase flange.**

50. **REMOVE OIL STRAINER SUB-ASSEMBLY**
    a. Remove the 3 bolts, oil strainer and gasket.

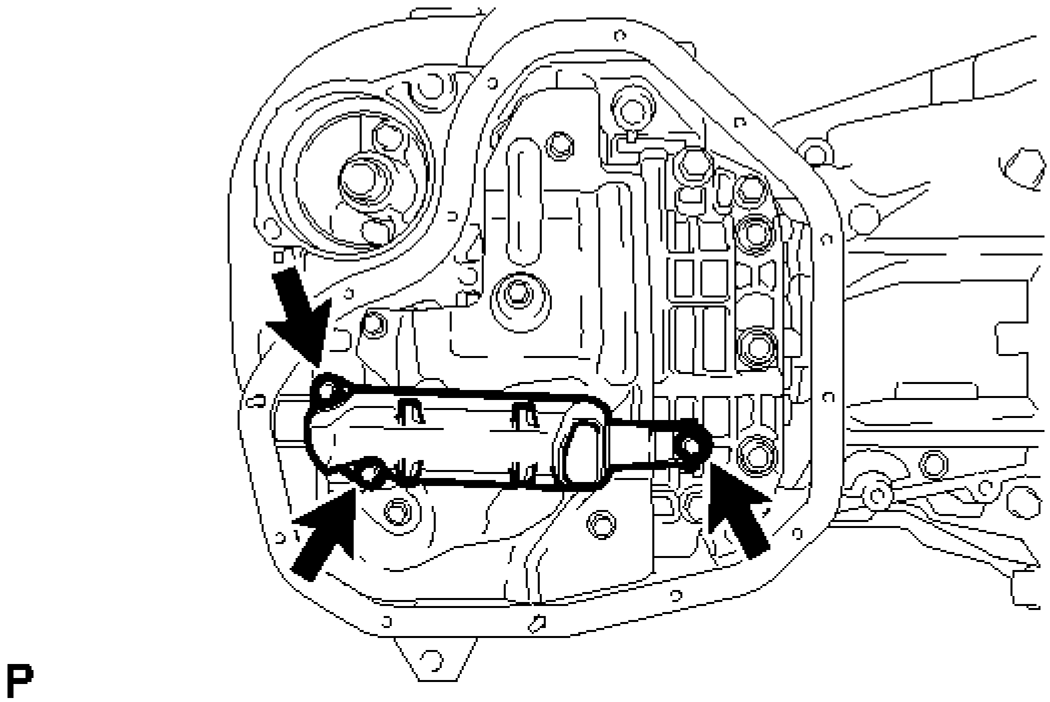

Fig. 219: Locating Oil Strainer And Gasket Bolts
Courtesy of TOYOTA MOTOR SALES, U.S.A., INC.

51. **REMOVE NO. 1 OIL PAN BAFFLE PLATE**
    a. Remove the 5 bolts and oil pan baffle plate.

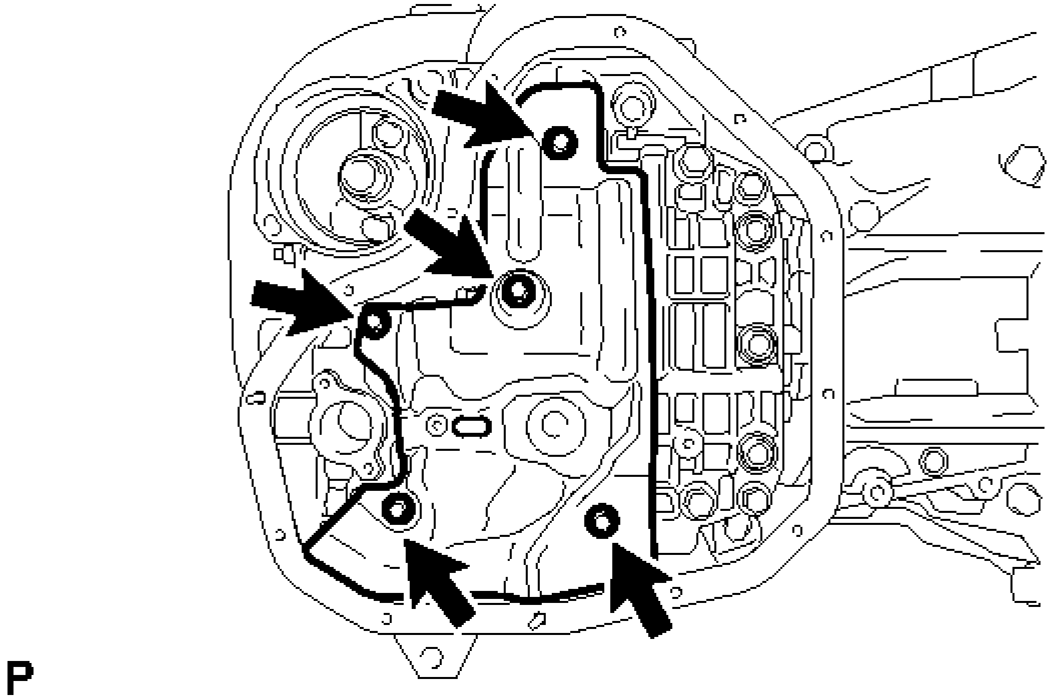

Fig. 220: Locating Oil Pan Baffle Plate Bolts

Courtesy of TOYOTA MOTOR SALES, U.S.A., INC.

52. **INSPECT CRANKSHAFT BACKLASH**
    a. Using a dial indicator, measure the backlash of the crankshaft and balance shaft as shown in the illustration.

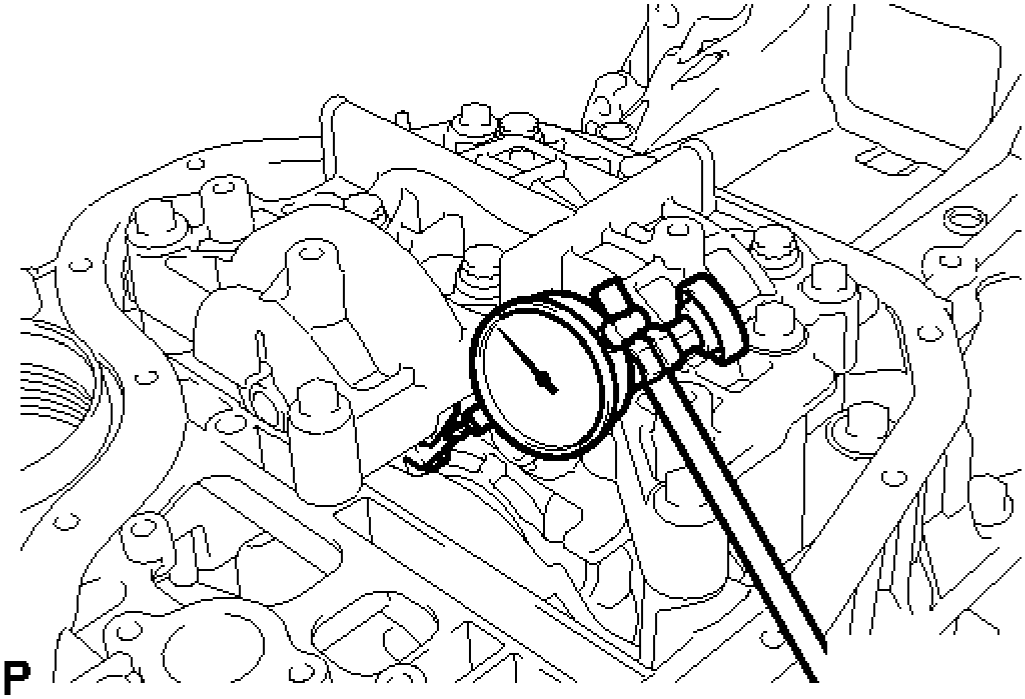

Fig. 221: Measuring Backlash Of Crankshaft And Balance Shaft
Courtesy of TOYOTA MOTOR SALES, U.S.A., INC.

Standard backlash

0.005 to 0.020 mm (0.000197 to 0.000787 in.)

Maximum backlash

0.020 mm (0.000787 in.)

If the backlash is more than the maximum, replace the engine balancer assembly.

53. **REMOVE ENGINE BALANCER ASSEMBLY**
    a. Remove the 7 bolts and engine balancer.

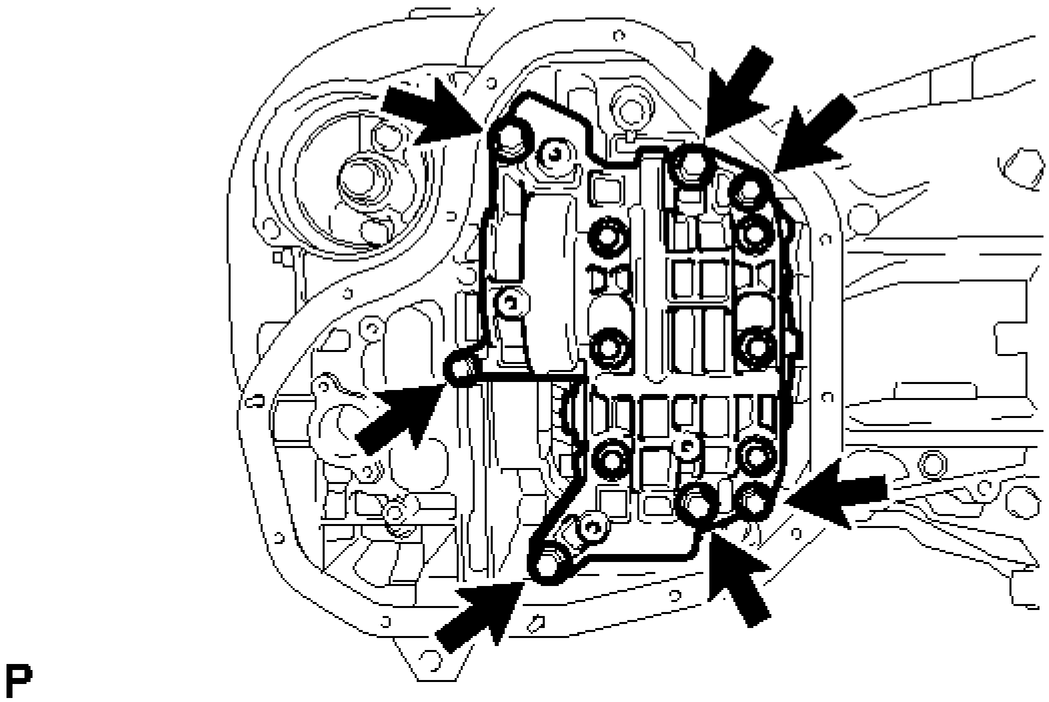

Fig. 222: Locating Engine Balancer Bolts
Courtesy of TOYOTA MOTOR SALES, U.S.A., INC.

NOTE: Do not disassemble the engine balancer.

54. **INSPECT BALANCE SHAFT THRUST CLEARANCE** See step 14
55. **REMOVE STIFFENING CRANKCASE ASSEMBLY**
    a. Remove the 7 bolts.

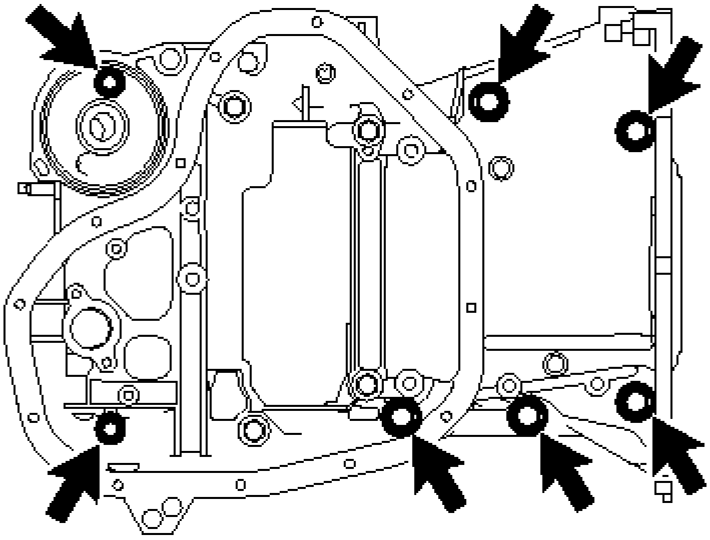

P

Fig. 223: Locating Stiffening Crankcase Assembly Bolts
Courtesy of TOYOTA MOTOR SALES, U.S.A., INC.

b. Using a screwdriver, remove the stiffening crankcase by prying between the stiffening crankcase and cylinder block at the places shown in the illustration.

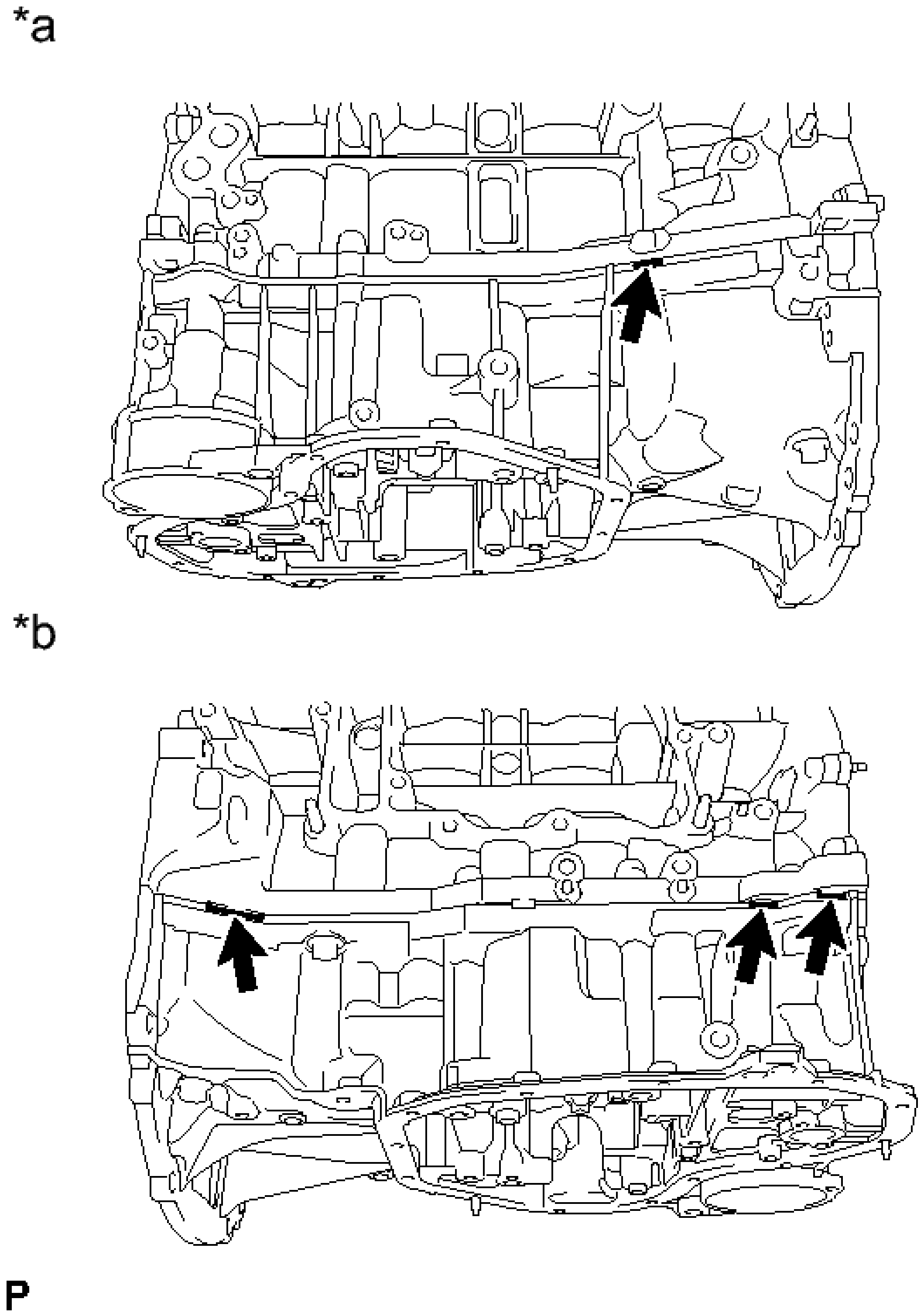

Fig. 224: Locating Stiffening Crankcase & Cylinder Block Prying Areas
Courtesy of TOYOTA MOTOR SALES, U.S.A., INC.

TEXT IN ILLUSTRATION

	LH

*a	Side:
*b	RH Side:

HINT:

Tape the screwdriver tip before use.

NOTE: **Be careful not to damage the contact surfaces of the cylinder block and stiffening crankcase.**

56. **REMOVE STIFFENING CRANKCASE STUD BOLT**

NOTE: **If a stud bolt is deformed or its threads are damaged, replace it.**

57. **REMOVE STIFFENING CRANKCASE RING PIN**

NOTE: **It is not necessary to remove the ring pin unless it is being replaced.**

58. **REMOVE REAR ENGINE OIL SEAL**

    a. Remove the rear engine oil seal from the cylinder block.

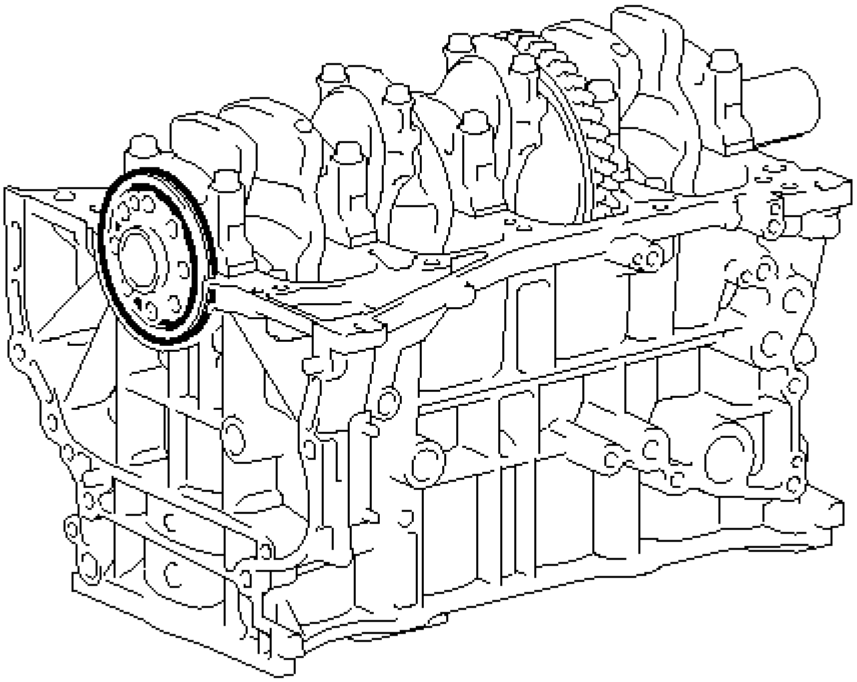

P

Fig. 225: Identifying Rear Engine Oil Seal
Courtesy of TOYOTA MOTOR SALES, U.S.A., INC.

INSPECTION

INSPECTION

1. **INSPECT NO. 1 VALVE ROCKER ARM SUB-ASSEMBLY**
    a. Turn the roller by hand to check that it turns smoothly.

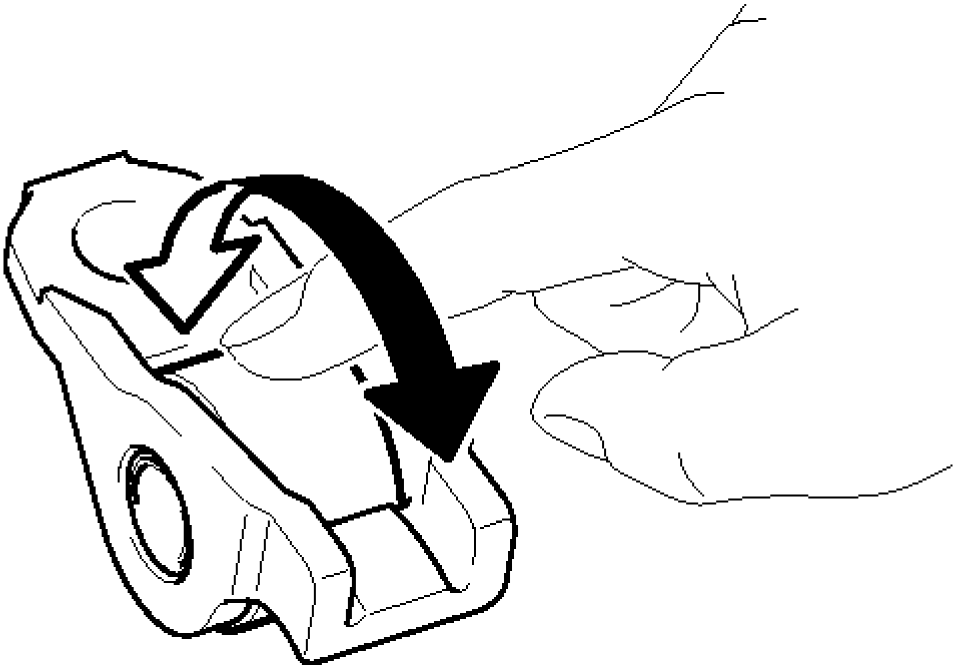

Fig. 226: Inspecting No. 1 Valve Rocker Arm Sub-Assembly
Courtesy of TOYOTA MOTOR SALES, U.S.A., INC.

If the roller does not turn smoothly, replace the valve rocker arm sub-assembly.

2. **INSPECT VALVE LASH ADJUSTER ASSEMBLY**

NOTE:

- **Keep the adjuster free from dirt and foreign matter.**
- **Use only clean engine oil.**

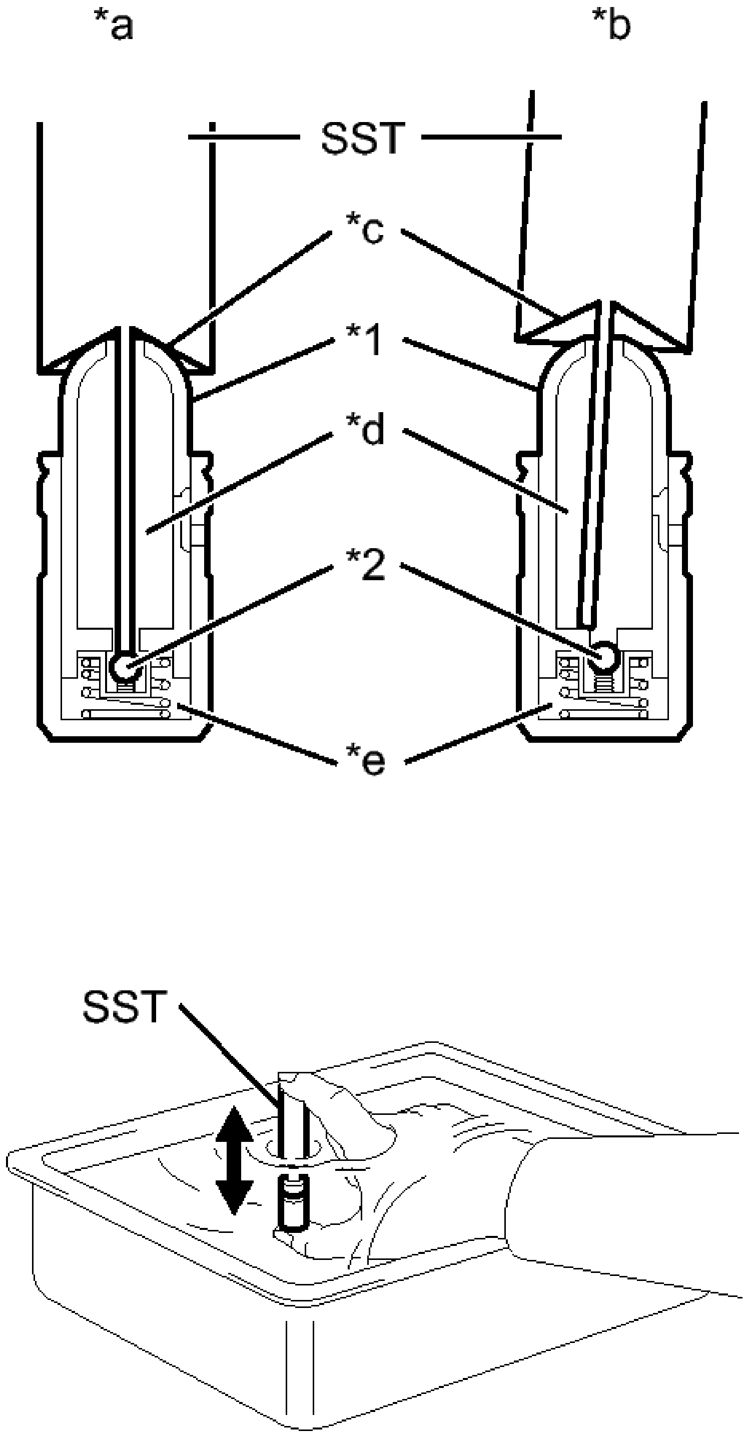
*a
*b
SST
*c
*1
*d
*2
*e
SST

P

Fig. 227: Inspecting Valve Lash Adjuster Assembly Using SST
Courtesy of TOYOTA MOTOR SALES, U.S.A., INC.

TEXT IN ILLUSTRATION

*1	Plunger
*2	Check Ball
*a	CORRECT
*b	INCORRECT
*c	Taper Part
*d	Low Pressure Chamber
*e	High Pressure Chamber

a. Place the lash adjuster into a container full of new engine oil.
b. Insert the tip of SST into the lash adjuster plunger and use the tip to press down on the check ball inside the plunger.
    - **SST: 09276-75010**
c. Squeeze SST and the lash adjuster together to move the plunger up and down 5 to 6 times.
d. Check the movement of the plunger and bleed the air.

    OK

    Plunger moves up and down.

    NOTE: **When bleeding high-pressure air from the compression chamber, make sure that the tip of SST is actually pressing the check ball as shown in the illustration. If the check ball is not pressed, air will not bleed.**

e. After bleeding the air, remove SST. Then try to quickly and firmly press the plunger with your fingers.

    OK

    Plunger is very difficult to move.

    If the result is not as specified, replace the valve lash adjuster assembly.

3. **INSPECT CAMSHAFT OIL CLEARANCE** See step 8
4. **INSPECT CAMSHAFT THRUST CLEARANCE** See step 9
5. **INSPECT CAMSHAFT**
    a. Inspect the camshaft runout.

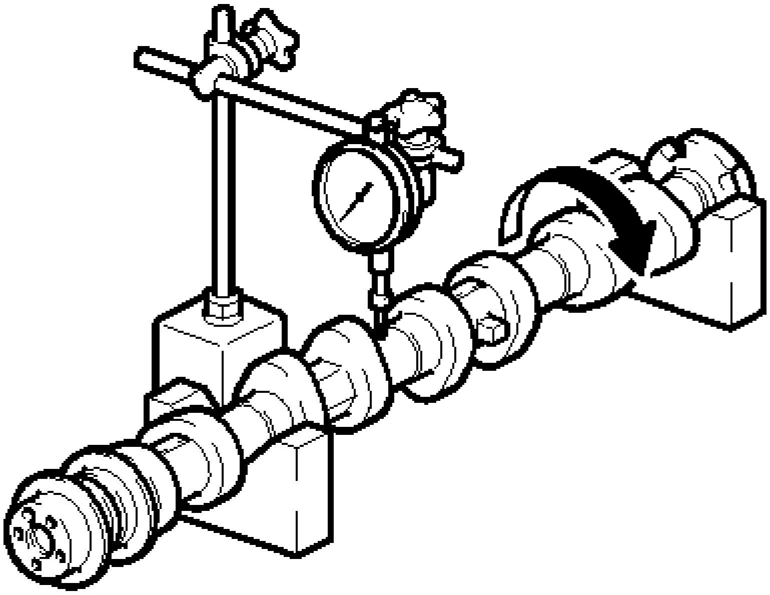

Fig. 228: Checking Camshaft Runout
Courtesy of TOYOTA MOTOR SALES, U.S.A., INC.

1. Place the camshaft on V-blocks.
2. Using a dial indicator, measure the circle runout at the center journal.

   Maximum circle runout

   0.03 mm (0.00118 in.)

   If the circle runout is more than the maximum, replace the camshaft sub-assembly.

   HINT:

   Check the oil clearance after replacing the camshaft.

b. Inspect the cam lobes.

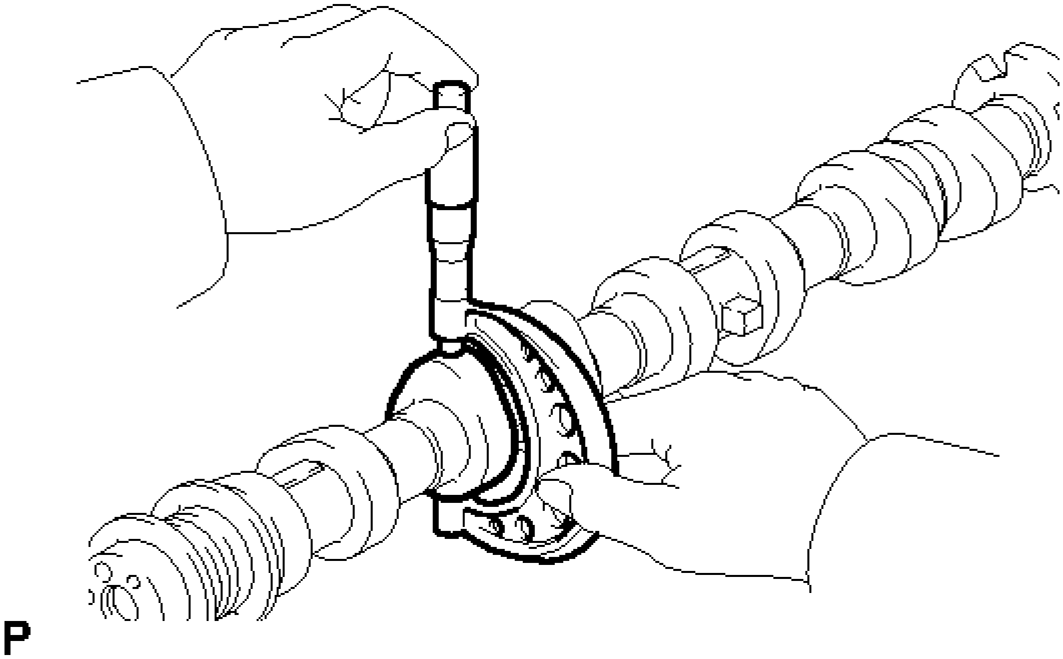

Fig. 229: Checking Cam Lobes
Courtesy of TOYOTA MOTOR SALES, U.S.A., INC.

1. Using a micrometer, measure the cam lobe height.

   Standard Cam Lobe Height

Item	Specified Condition
Intake	44.163 to 44.305 mm (1.739 to 1.744 in.)
Exhaust	44.144 to 44.286 mm (1.738 to 1.744 in.)

   Minimum Cam Lobe Height

Item	Specified Condition
Intake	44.013 mm

	(1.733 in.)
Exhaust	43.996 mm (1.732 in.)

If the cam lobe height is less than the minimum, replace the camshaft sub-assembly.

c. Inspect the camshaft journals.

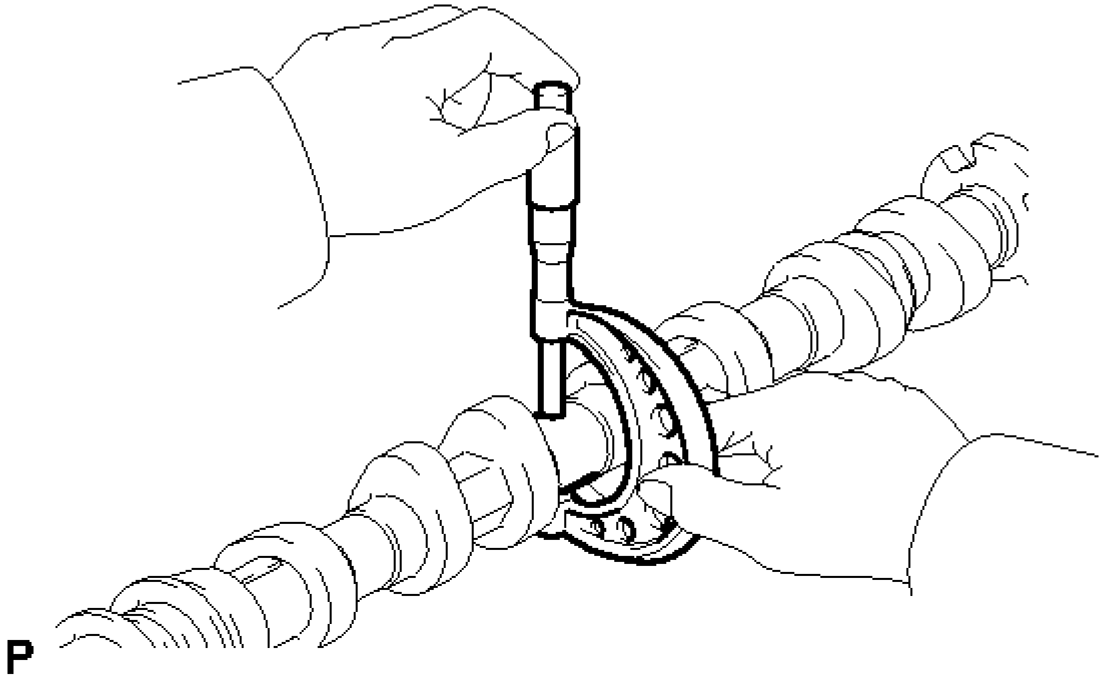

Fig. 230: Checking Camshaft Journals
Courtesy of TOYOTA MOTOR SALES, U.S.A., INC.

1. Using a micrometer, measure the journal diameter.

   Standard Journal Diameter

Item	Specified Condition
No. 1 journal	34.449 to 34.465 mm (1.356 to 1.357 in.)
Other journals	22.959 to 22.975 mm

	(0.904 to 0.905 in.)

If the journal diameter is not as specified, check the oil clearance See step 8.

6. **INSPECT CAMSHAFT TIMING GEAR ASSEMBLY**
    a. Align and attach the knock pin of the No. 1 camshaft with the pin hole of the camshaft timing gear.

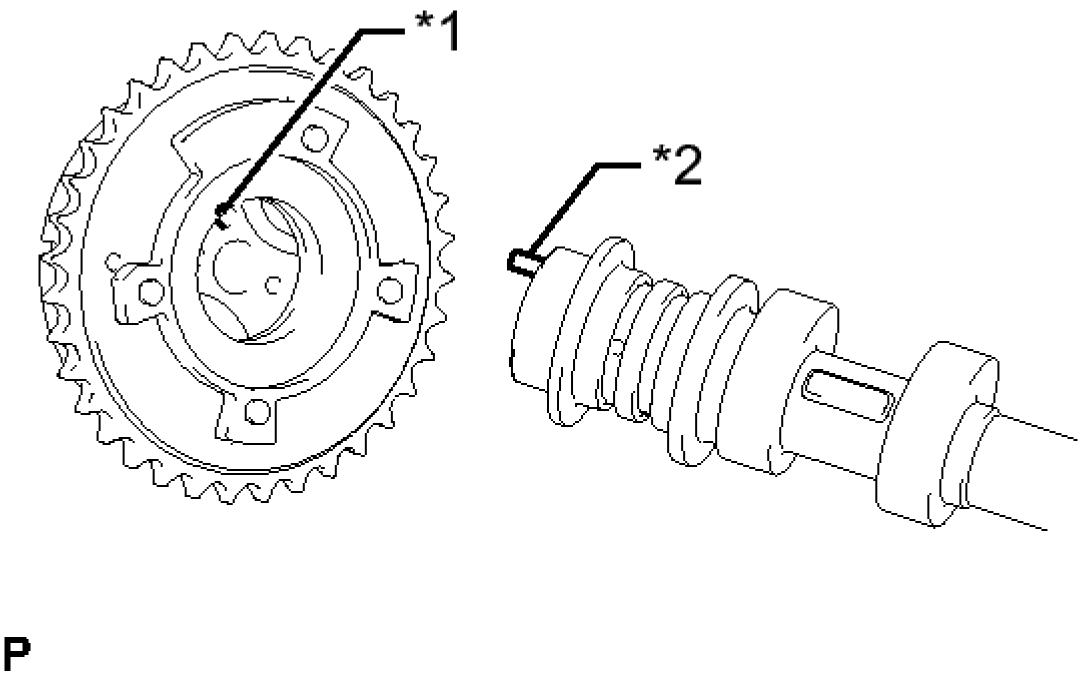

Fig. 231: Identifying Pin Hole And Knock Pin
Courtesy of TOYOTA MOTOR SALES, U.S.A., INC.

TEXT IN ILLUSTRATION

*1	Pin Hole
*2	Knock Pin

    b. Check that there is no clearance between the camshaft timing gear and camshaft flange.

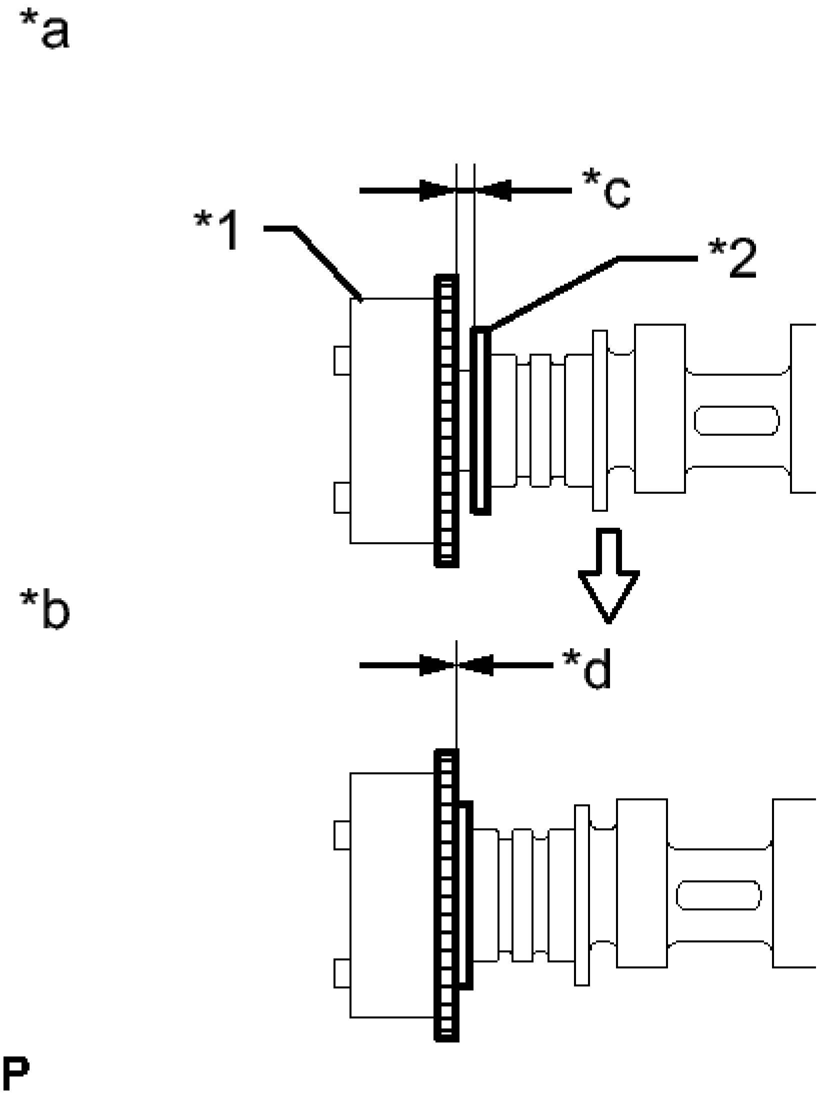

Fig. 232: Identifying No Clearance Between Camshaft Timing Exhaust Gear And Camshaft Flange

Courtesy of TOYOTA MOTOR SALES, U.S.A., INC.

TEXT IN ILLUSTRATION

*1	Camshaft Timing Gear
*2	Flange
*a	INCORRECT
*b	CORRECT
*c	Clearance
*d	No Clearance

c. Secure the camshaft in place by hand, and then install the installation bolt of the camshaft timing gear by hand.

NOTE: Do not use any tools to install the bolt. If the bolt is installed using a tool, the lock pin will be damaged.

d. Check the lock of the camshaft timing gear.
   1. Make sure that the camshaft timing gear is locked.

NOTE: Be careful not to damage the camshaft.

e. Release the lock pin.

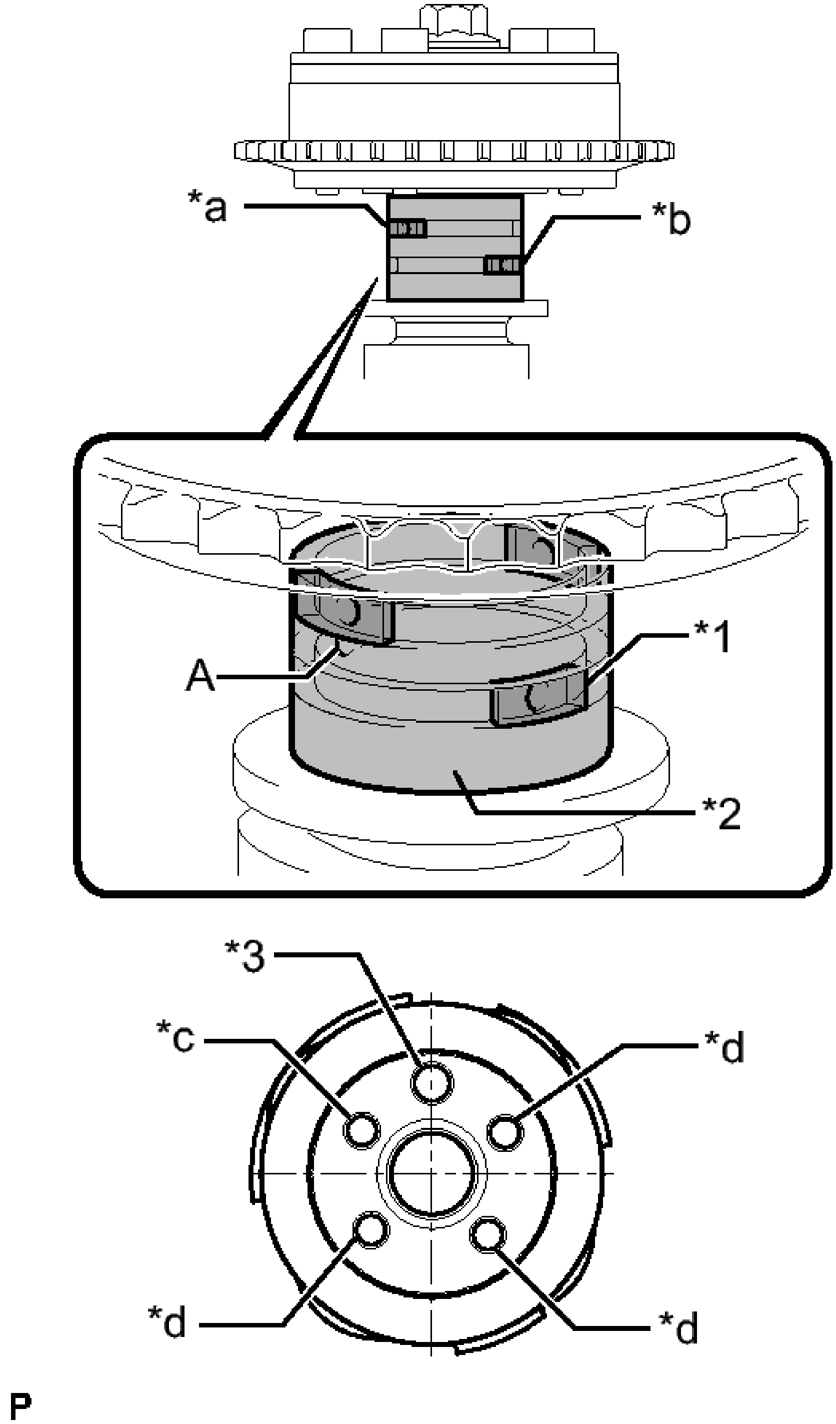
*a
*b
*1
A
*2
*3
*c
*d
*d
*d
P

Fig. 233: Identifying Lock Pin
Courtesy of TOYOTA MOTOR SALES, U.S.A., INC.

TEXT IN ILLUSTRATION

*1	Rubber
*2	Vinyl Tape
*3	Knock Pin
*a	Retard Side Path
*b	Advance Side Path
*c	Open
*d	Close

1. Clean the camshaft journal with non-residue solvent.
2. Cover the 4 oil paths of the cam journal with vinyl tape as shown in the illustration.

   HINT:

   There are 4 oil paths in the grooves of the camshaft. Plug three of the paths with pieces of rubber.

3. Open a hole at port A shown in the illustration.
4. While applying approximately 200 kPa (2.0 kgf/ cm^2 , 29 psi) of air pressure to the oil path, forcibly turn the camshaft timing gear assembly in the advance direction (counterclockwise).

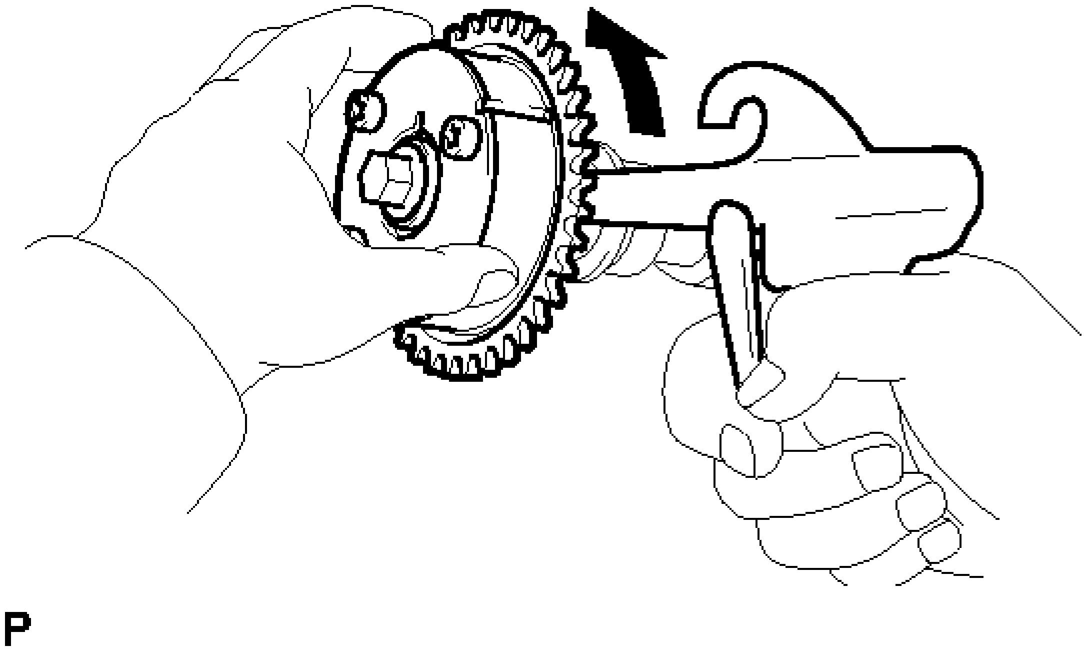

Fig. 234: Turning Camshaft Timing Gear Assembly
Courtesy of TOYOTA MOTOR SALES, U.S.A., INC.

WARNING: **Cover the paths with a piece of cloth when applying pressure to keep oil from splashing.**

NOTE: **Do not allow the camshaft timing gear assembly to lock. If it locks, release the lock pin again.**

HINT:

- The camshaft timing gear assembly may be turned in the advance direction without applying any force.
- If enough air pressure cannot be applied because of air leakage from the port, releasing the lock pin may be difficult.

f. Check for smooth rotation.
    1. Turn the camshaft timing gear within its movable range (26.5 to 28.5°) 2 or 3 times, but do not turn it to the most retarded position. Make sure that the gear turns smoothly.

NOTE: **Do not allow the camshaft timing gear assembly to lock.**

If it locks, release the lock pin again.

g. Remove the vinyl tape and rubber pieces from the camshaft.
h. Remove the bolt and camshaft timing gear.

7. **INSPECT CAMSHAFT TIMING EXHAUST GEAR ASSEMBLY**
    a. Align and attach the knock pin of the No. 2 camshaft with the pin hole of the camshaft timing exhaust gear.

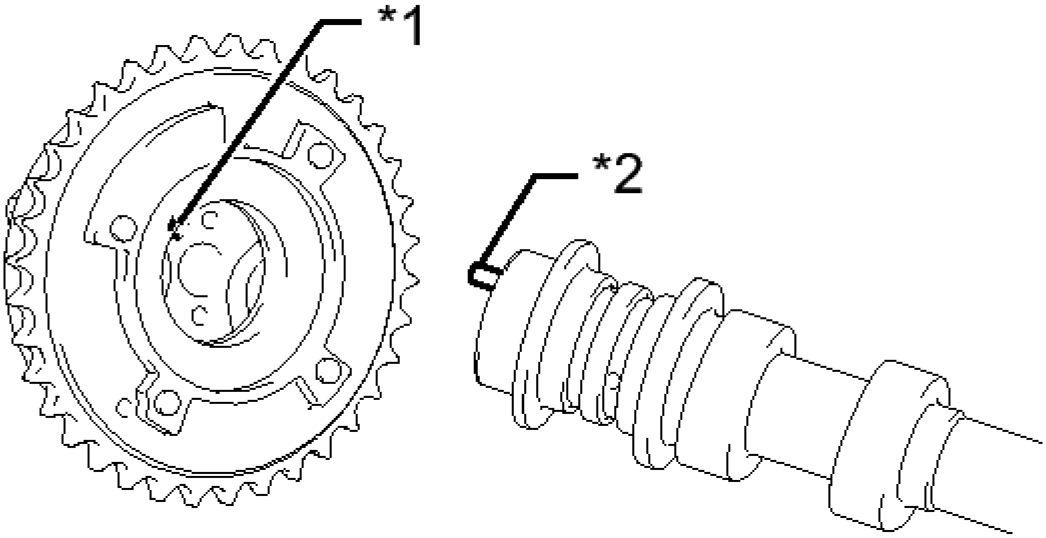

P

Fig. 235: Identifying Pin Hole And Knock Pin
Courtesy of TOYOTA MOTOR SALES, U.S.A., INC.

TEXT IN ILLUSTRATION

*1	Pin Hole
*2	Knock Pin

b. Check that there is no clearance between the camshaft timing exhaust gear and camshaft flange.

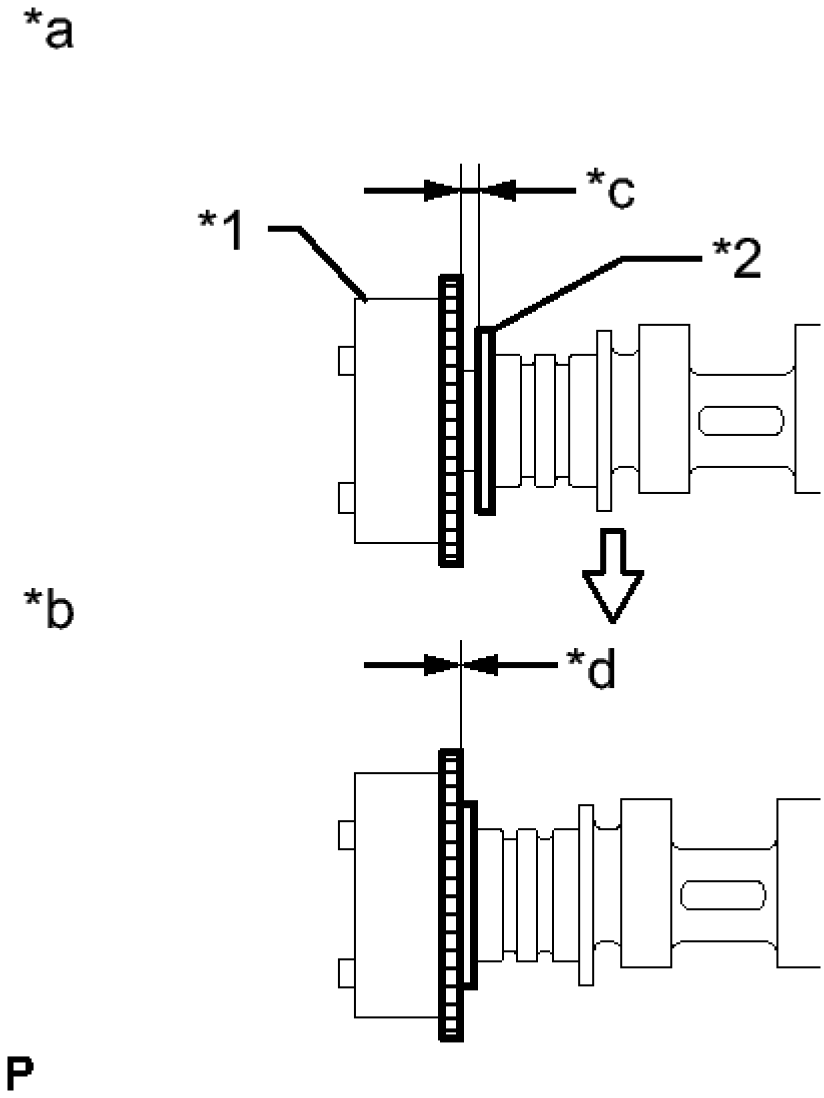

Fig. 236: Identifying No Clearance Between Camshaft Timing Exhaust Gear And Camshaft Flange
Courtesy of TOYOTA MOTOR SALES, U.S.A., INC.

TEXT IN ILLUSTRATION

*1	Camshaft Timing Exhaust Gear
*2	Flange
*a	INCORRECT
*b	CORRECT
*c	Clearance
*d	No Clearance

c. Secure the camshaft in place by hand, and then install the installation bolt of the camshaft timing exhaust gear by hand.

d. Check the lock of the camshaft timing exhaust gear.
    1. Make sure that the camshaft timing exhaust gear is locked.

NOTE: Be careful not to damage the camshaft.

e. Release the lock pin.

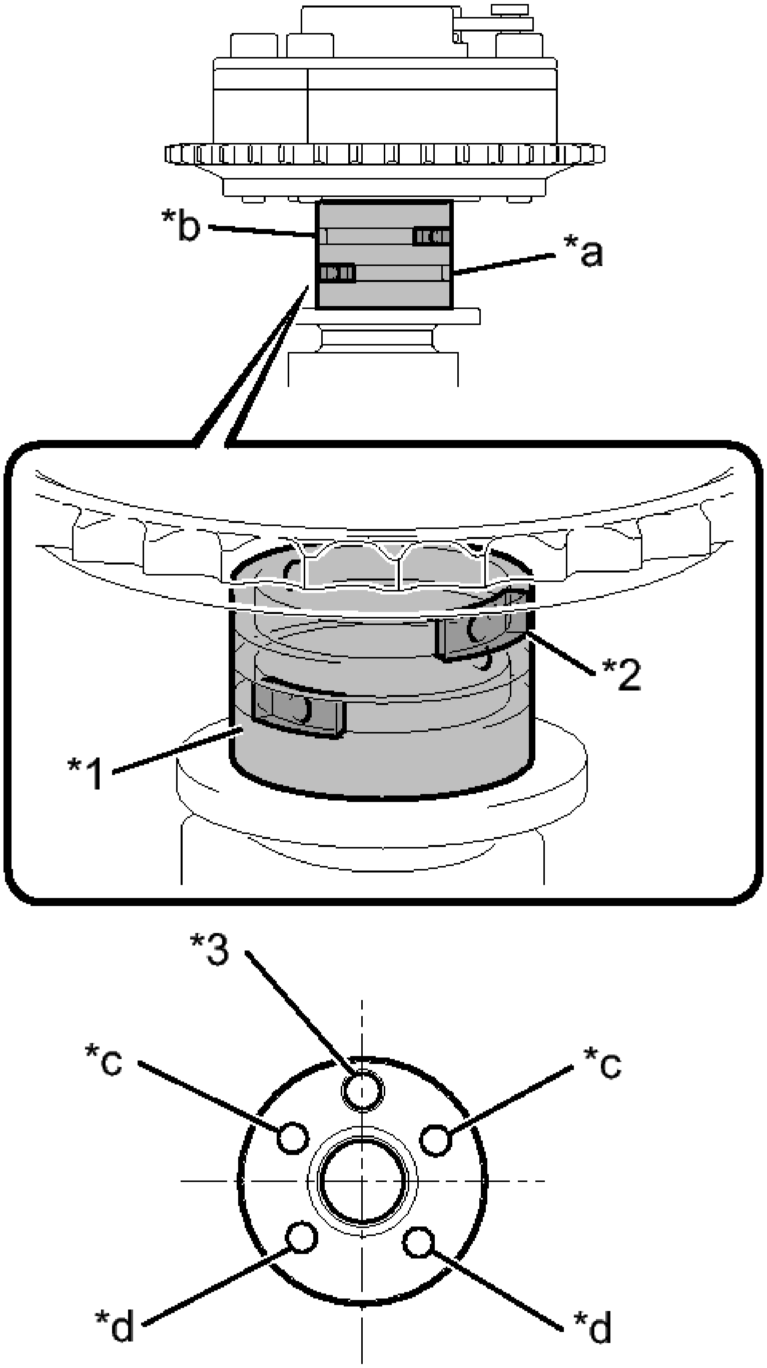

P

Fig. 237: Identifying Lock Pin
Courtesy of TOYOTA MOTOR SALES, U.S.A., INC.

TEXT IN ILLUSTRATION

*1	Vinyl Tape
*2	Rubber
*3	Knock Pin
*a	Retard Side Path
*b	Advance Side Path
*c	Open
*d	Close

1. Clean the camshaft journal with non-residue solvent.
2. Cover the 4 oil paths of the cam journal with vinyl tape as shown in the illustration.

   HINT:

   There are 4 oil paths in the grooves of the camshaft. Plug 2 paths with rubber pieces.

3. Prick a hole in the tape placed on the advance side path. Prick a hole in the tape placed on the retard side path, on the opposite side to that of the advance side path, as shown in the illustration.
4. Apply approximately 200 kPa (2.0 kgf/cm^2 , 29 psi) of air pressure to the two open paths (the advance side path and retard side path).

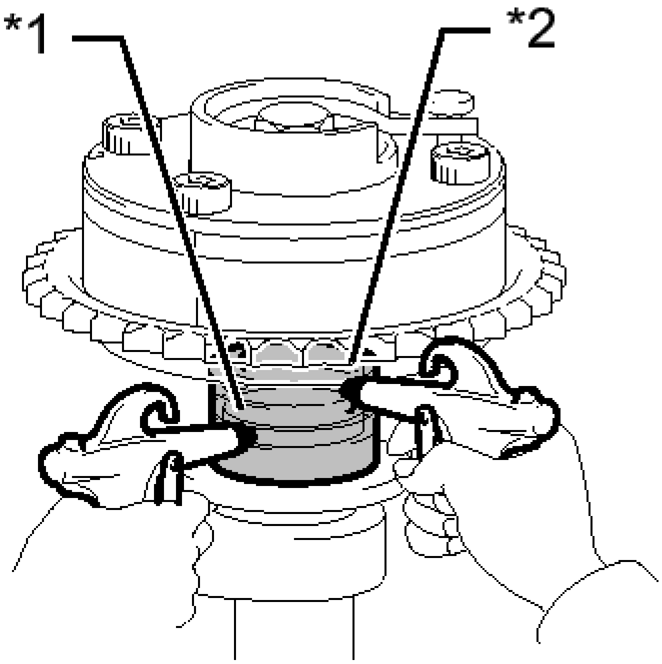

P

Fig. 238: Applying Compressed Air To Camshaft Journal Oil Paths
Courtesy of TOYOTA MOTOR SALES, U.S.A., INC.

TEXT IN ILLUSTRATION

*1	Retard Side Path
*2	Advance Side Path

NOTE: **Cover the paths with a piece of cloth when applying pressure to keep oil from splashing.**

5. Check that the camshaft timing exhaust gear turns in the retard direction when reducing the air pressure applied to the advance side path.

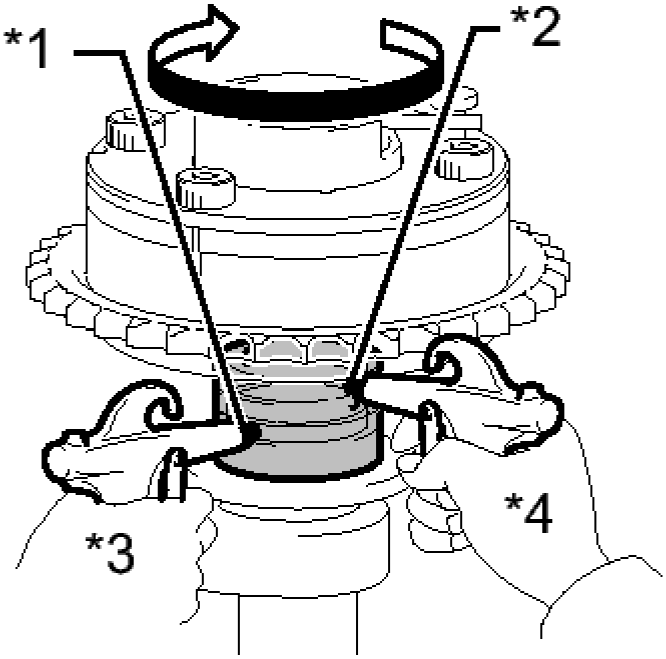

Fig. 239: Checking Camshaft Timing Exhaust Gear Turns In Retard Direction
Courtesy of TOYOTA MOTOR SALES, U.S.A., INC.

TEXT IN ILLUSTRATION

*1	Retard Side Path
*2	Advance Side Path
*3	Hold Pressure
*4	Decompress

HINT:

The lock pin is released and the camshaft timing exhaust gear turns in the retard direction.

6. When the camshaft timing exhaust gear moves to the most retarded position, release the air pressure from the advance side path, and then release the air pressure from the retard side path.

NOTE: **Be sure to release the air pressure from the advance side path first. If the air pressure of the retard side path is released first, the camshaft timing exhaust gear may abruptly shift in the advance direction and break the lock pin or other parts.**

f. Check for smooth rotation.

    1. Turn the camshaft timing exhaust gear within its movable range (21.5 to 23.5°) 2 or 3 times, but do not turn it to the most advanced position. Make sure that the gear turns smoothly.

NOTE: When the air pressure is released from the advance side path and then from the retard side path, the gear automatically returns to the most advanced position due to the advance assist spring operation, and locks. Gradually release the air pressure from the retard side path before performing the smooth rotation check.

g. Check the lock at the most advanced position.
    1. Make sure that the camshaft timing exhaust gear locks at the most advanced position.

h. Remove the vinyl tape and rubber pieces from the camshaft.

i. Remove the bolt and camshaft timing gear.

8. **INSPECT CHAIN SUB-ASSEMBLY**

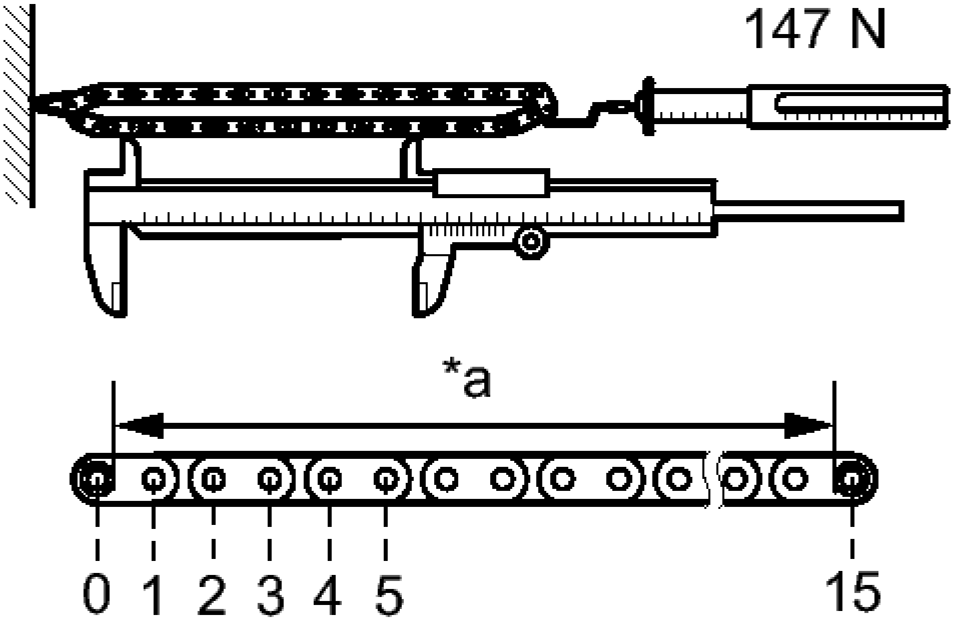

Fig. 240: Inspecting Chain Sub-Assembly
Courtesy of TOYOTA MOTOR SALES, U.S.A., INC.

TEXT IN ILLUSTRATION

*a	Measurement Area

a. Using a spring scale, pull the chain with a force of 147 N (15 kgf, 33.0 lbf) as shown in the illustration.

b. Using a vernier caliper, measure the length of 15 pins.

Maximum chain elongation

137.7 mm (5.42 in.)

HINT:

Perform the measurement at 3 random places.

If the elongation is more than the maximum, replace the chain sub-assembly.

9. **INSPECT CRANKSHAFT TIMING SPROCKET**

a. Place the chain around the sprocket.

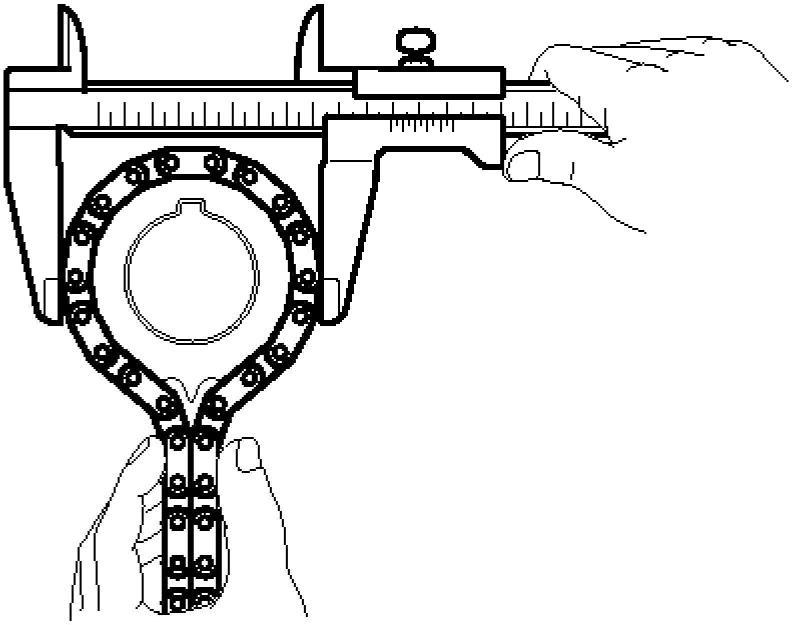

Fig. 241: Measuring Sprocket Diameter With Chain
Courtesy of TOYOTA MOTOR SALES, U.S.A., INC.

b. Using a vernier caliper, measure the sprocket diameter with the chain.

Minimum sprocket diameter (with chain)

59.94 mm (2.36 in.)

If the diameter is less than the minimum, replace the chain and crankshaft timing sprocket.

HINT:

The vernier caliper must contact the chain rollers for the measurement.

10. **INSPECT NO. 1 CHAIN TENSIONER ASSEMBLY**

   a. Move the stopper plate counterclockwise to release the lock. Push the plunger and check that it moves smoothly.

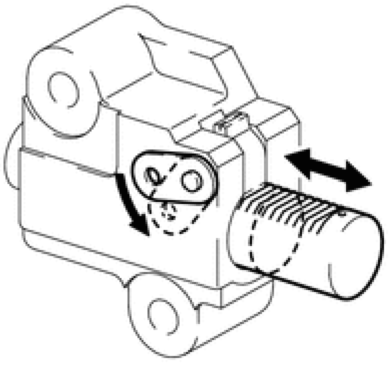

Fig. 242: Inspecting No. 1 Chain Tensioner Assembly
Courtesy of TOYOTA MOTOR SALES, U.S.A., INC.

If necessary, replace the No. 1 chain tensioner assembly.

11. **INSPECT CHAIN TENSIONER SLIPPER**

   a. Measure the worn depth of the chain tensioner slipper.

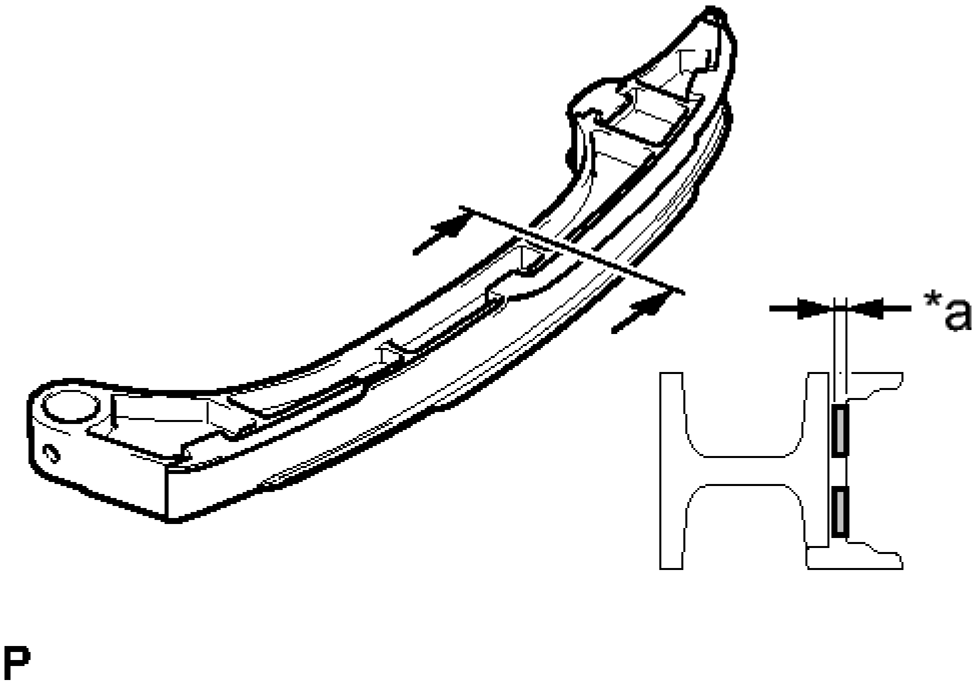

Fig. 243: Measuring Chain Tensioner Slipper Depth

Courtesy of TOYOTA MOTOR SALES, U.S.A., INC.

TEXT IN ILLUSTRATION

*a	Depth

Maximum depth

1.0 mm (0.0394 in.)

If the depth is more than the maximum, replace the chain tensioner slipper.

12. **INSPECT NO. 1 CHAIN VIBRATION DAMPER**
    a. Measure the worn depth of the chain vibration damper.

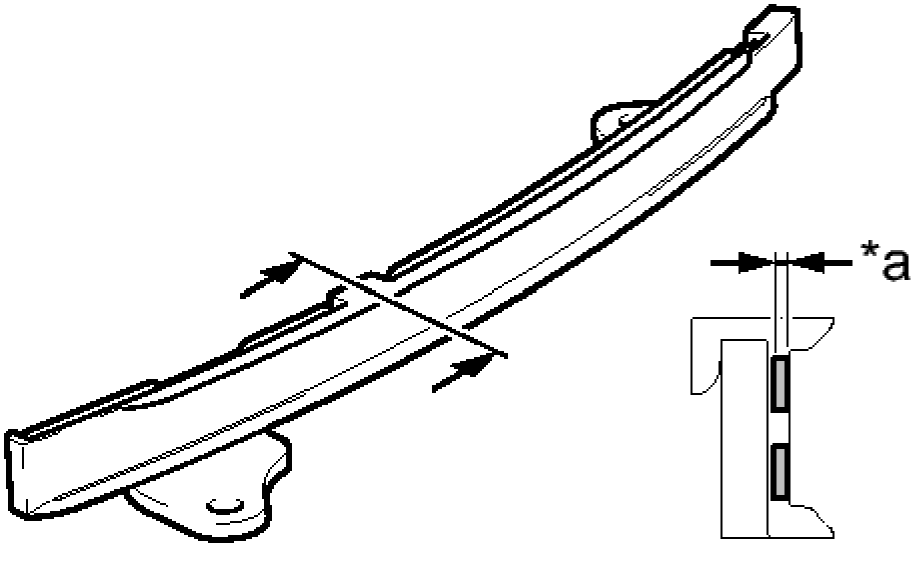

Fig. 244: Measuring Chain Vibration Damper Worn Depth
Courtesy of TOYOTA MOTOR SALES, U.S.A., INC.

TEXT IN ILLUSTRATION

*a	Depth

Maximum depth

1.0 mm (0.0394 in.)

If the depth is more than the maximum, replace the No. 1 chain vibration damper.

13. **INSPECT TIMING CHAIN GUIDE**

   a. Measure the worn depth of the timing chain guide.

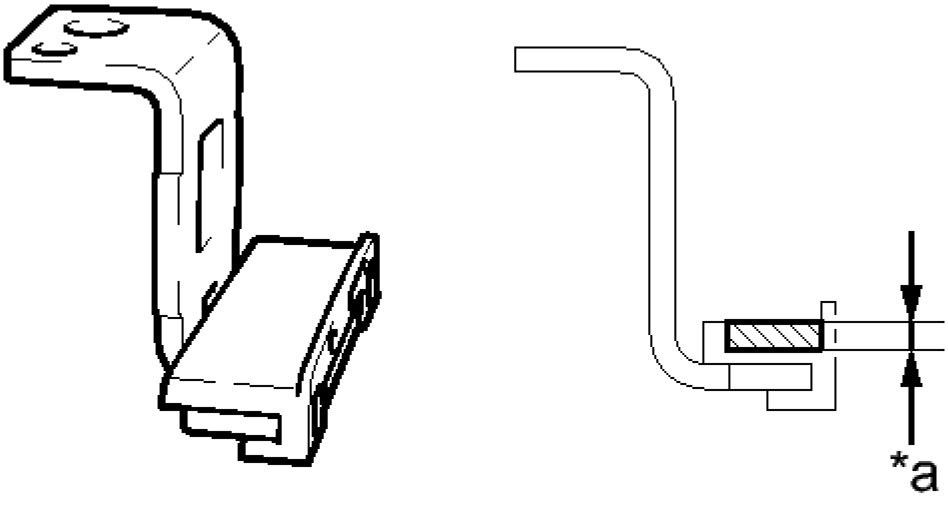

Fig. 245: Measuring Timing Chain Guide Worn Depth
Courtesy of TOYOTA MOTOR SALES, U.S.A., INC.

TEXT IN ILLUSTRATION

*a	Depth

Maximum depth

1.0 mm (0.0394 in.)

If the depth is more than the maximum, replace the timing chain guide.

14. **INSPECT NO. 1 BALANCE SHAFT THRUST CLEARANCE**

   a. Using a dial indicator, measure the thrust clearance while moving the No. 1 balance shaft back and forth.

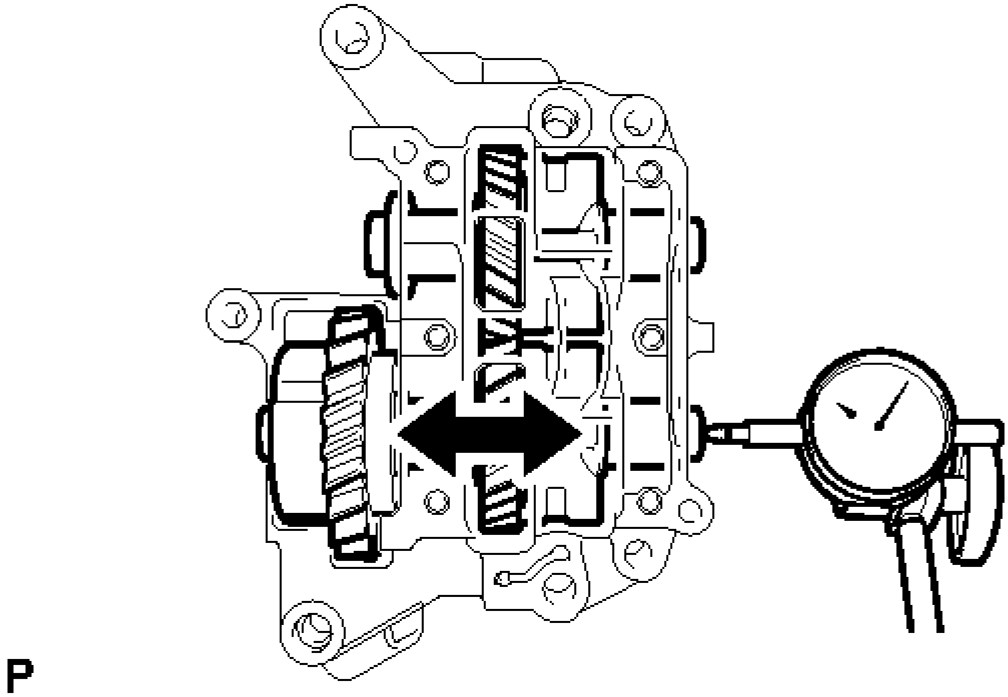

Fig. 246: Inspecting No. 1 Balance Shaft Thrust Clearance
Courtesy of TOYOTA MOTOR SALES, U.S.A., INC.

Standard thrust clearance

0.05 to 0.09 mm (0.00197 to 0.00354 in.)

Maximum thrust clearance

0.09 mm (0.00354 in.)

If the thrust clearance is more than the maximum, replace the engine balancer assembly.

15. **INSPECT NO. 2 BALANCE SHAFT THRUST CLEARANCE**
    a. Using a dial indicator, measure the thrust clearance while moving the No. 2 balance shaft back and forth.

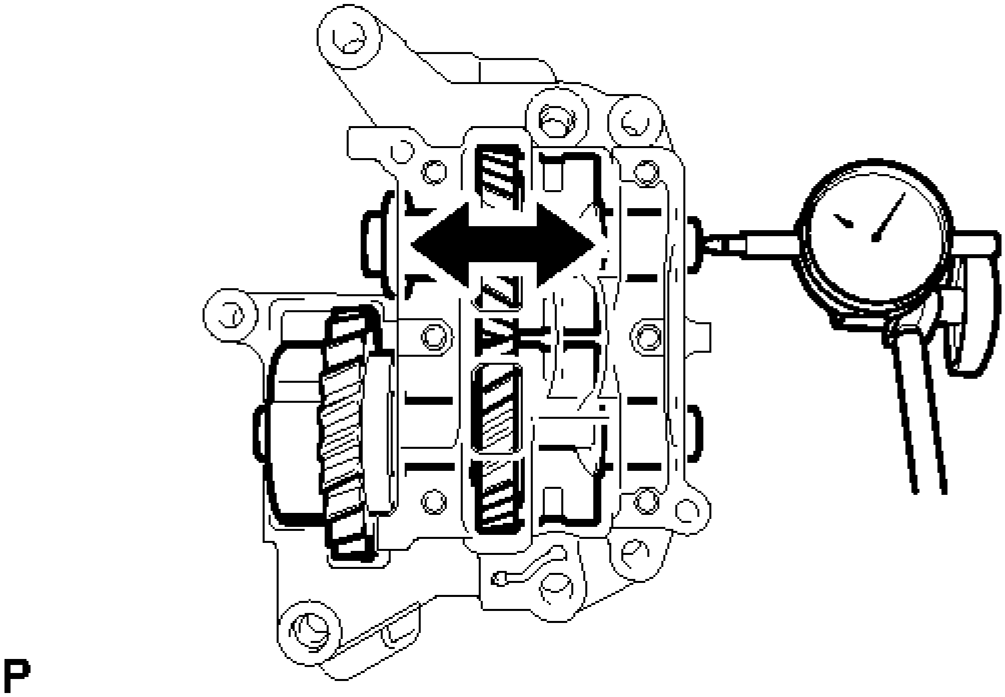

Fig. 247: Inspecting No. 2 Balance Shaft Thrust Clearance
Courtesy of TOYOTA MOTOR SALES, U.S.A., INC.

Standard thrust clearance

0.05 to 0.09 mm (0.00197 to 0.00354 in.)

Maximum thrust clearance

0.09 mm (0.00354 in.)

If the thrust clearance is more than the maximum, replace the engine balancer assembly.

16. **INSPECT BALANCE SHAFT BACKLASH**
    a. Secure the No. 2 balance shaft in place, and then using a dial indicator, measure the backlash of the No. 1 and No. 2 balance shafts as shown in the illustration.

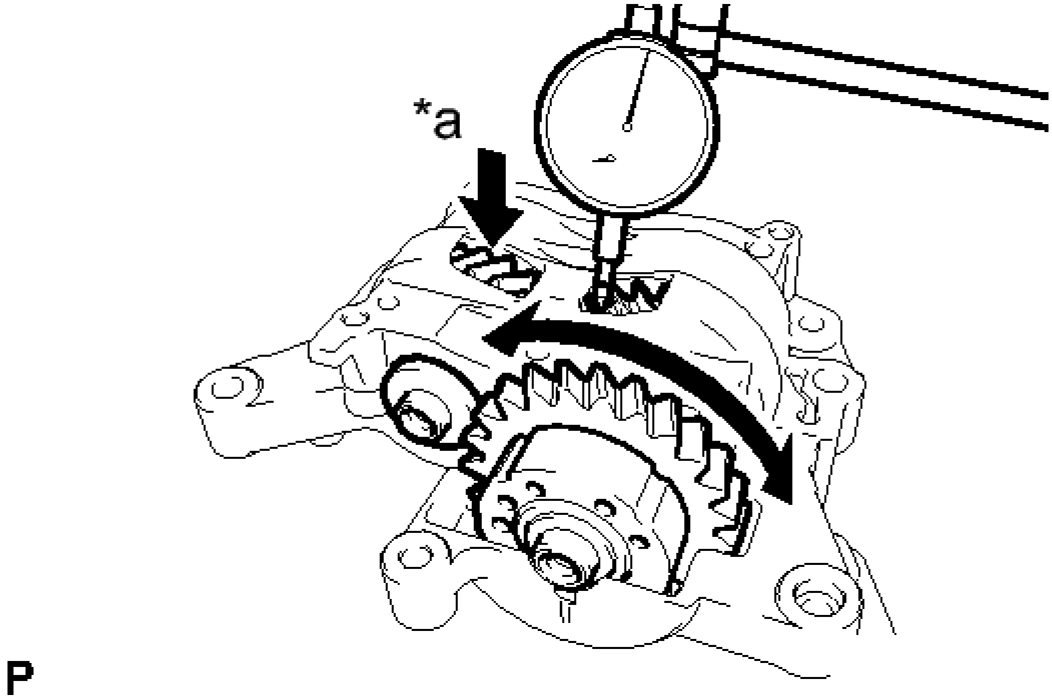

Fig. 248: Measuring No. 1 And No. 2 Balance Shafts Backlash
Courtesy of TOYOTA MOTOR SALES, U.S.A., INC.

TEXT IN ILLUSTRATION

*a	Fix

Standard backlash

0.04 to 0.17 mm (0.00157 to 0.00669 in.)

Maximum backlash

0.17 m (0.00669 in.)

NOTE: **Measure at 3 or more areas around the circumference of the No. 1 and No. 2 balance shafts.**

If the backlash is more than the maximum, replace the engine balancer assembly.

17. **INSPECT CYLINDER HEAD BOLT**
    a. Using a vernier caliper, measure the diameter of the threads at the measurement point.

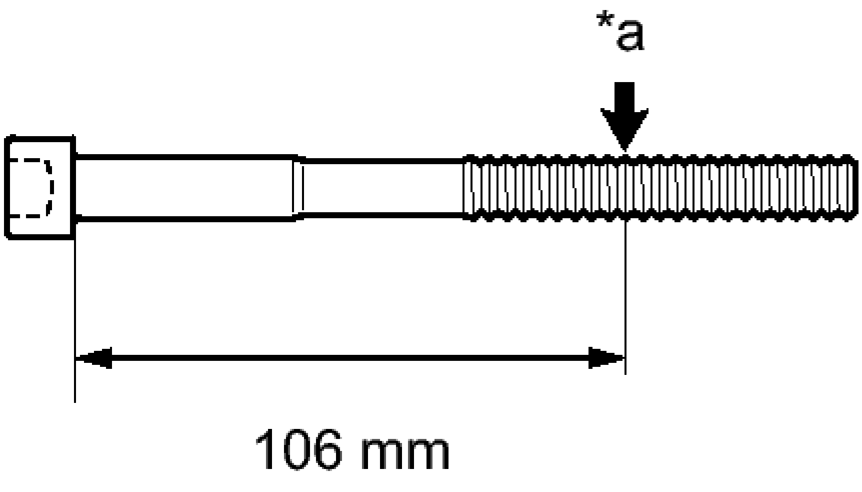

Fig. 249: Inspecting Cylinder Head Bolt
Courtesy of TOYOTA MOTOR SALES, U.S.A., INC.

TEXT IN ILLUSTRATION

*a	Measurement Point

Standard diameter

10.85 to 11.00 mm (0.427 to 0.433 in.)

Minimum diameter

10.6 mm (0.417 in.)

Measurement point (distance from the seat)

106 mm (4.17 in.)

HINT:

- If the diameter is less than the minimum, replace the cylinder head bolt. Failure to do so may lead to engine damage.
- If there is any thread deformation, replace the cylinder head bolt with a new one.

18. **INSPECT EXHAUST MANIFOLD CONVERTER SUB-ASSEMBLY**
    a. Using a precision straightedge and feeler gauge, measure the warpage of the surface that contacts

the cylinder head.

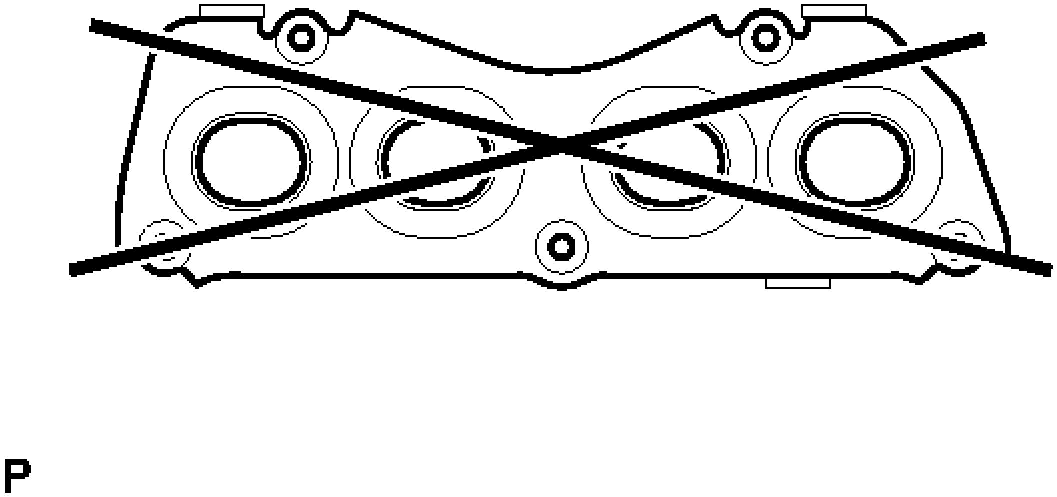

Fig. 250: Measuring Warpage Of Exhaust Manifold Converter Surface
Courtesy of TOYOTA MOTOR SALES, U.S.A., INC.

Maximum warpage

0.7 mm (0.0276 in.)

If the warpage is more than the maximum, replace the exhaust manifold.

REASSEMBLY

REASSEMBLY

1. **INSTALL ENGINE BALANCER ASSEMBLY**
    a. Check that the alignment marks of the balance shaft damper cover and balance shaft driven gear are aligned.

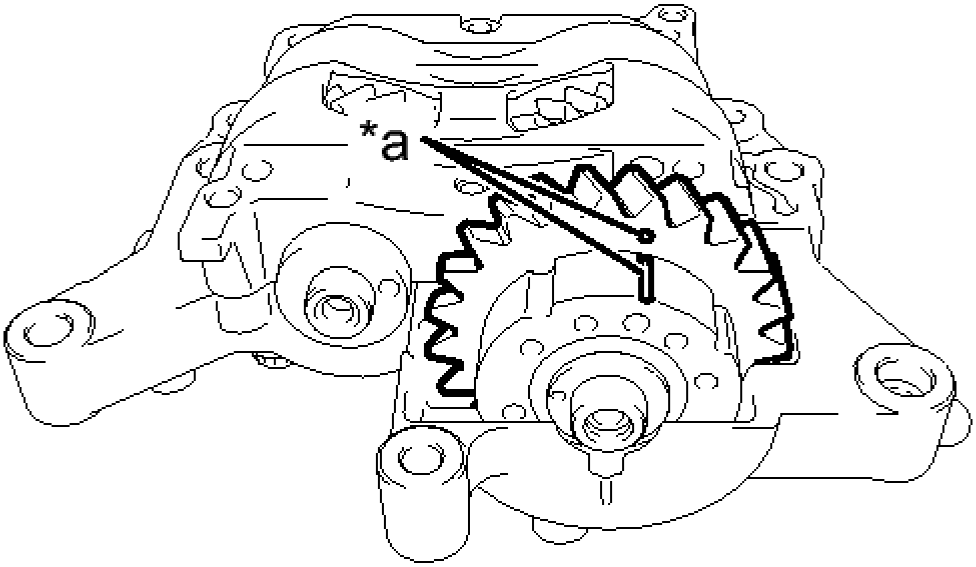

P

Fig. 251: Aligning Marks To Balance Shaft Damper And Balance Shaft Driven Gear
Courtesy of TOYOTA MOTOR SALES, U.S.A., INC.

TEXT IN ILLUSTRATION

*a	Alignment Mark

If the alignment marks are not aligned, realign them.

1. Place a wrench on the rear cutout part of the No. 2 balance shaft and secure the shaft in place.

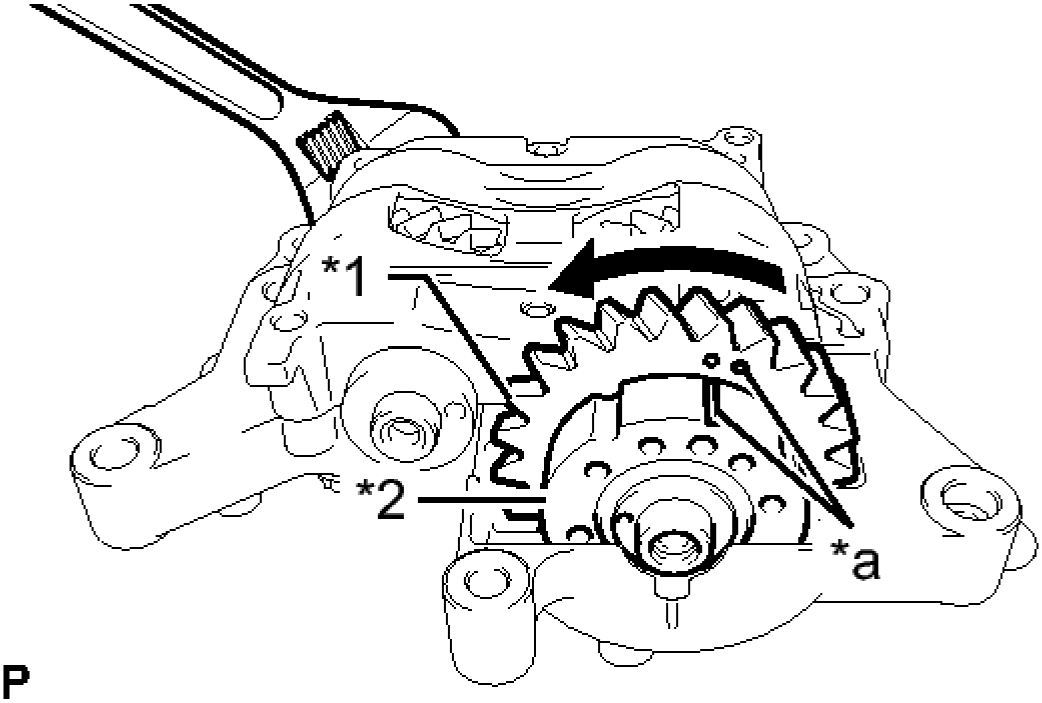

Fig. 252: Identifying Driven Gear And Damper Cover
Courtesy of TOYOTA MOTOR SALES, U.S.A., INC.

TEXT IN ILLUSTRATION

*1	Driven Gear
*2	Damper Cover
*a	Alignment Mark

2. Rotate the balance shaft driven gear of the No. 1 balance shaft counterclockwise to align the alignment mark of the balance shaft driven gear with the alignment mark of the balance shaft damper cover.

b. Install the engine balancer to the stiffening crankcase with the 3 bolts, and tighten the bolts in the sequence shown in the illustration.

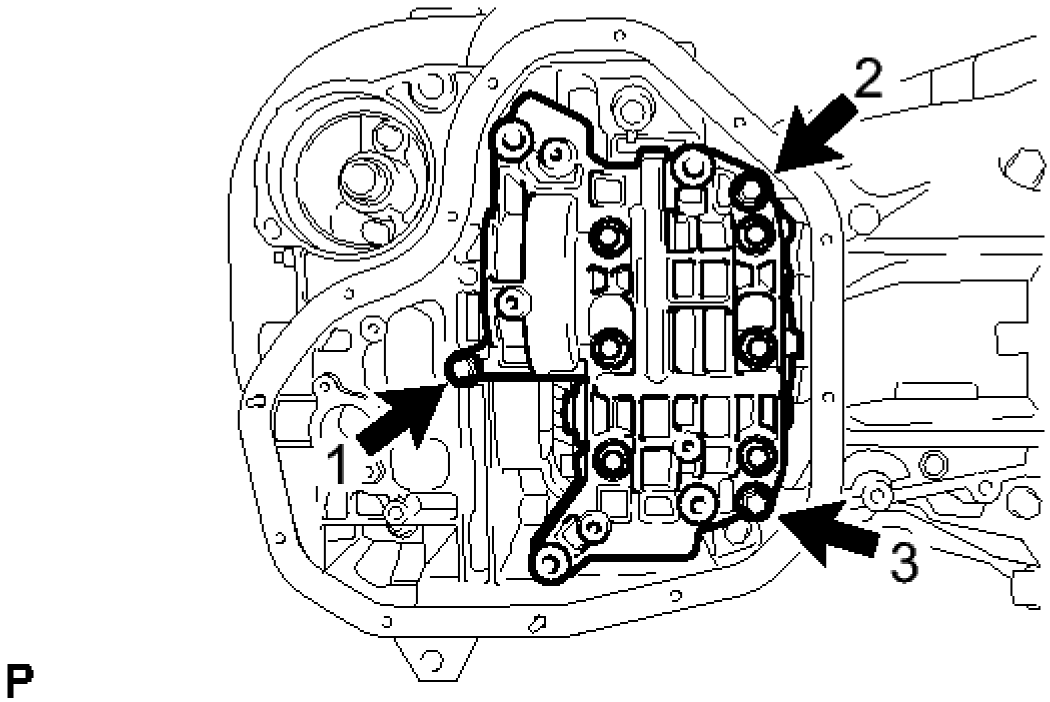

Fig. 253: Identifying Engine Balancer Bolts Tightening Sequence
Courtesy of TOYOTA MOTOR SALES, U.S.A., INC.

Torque: 24 N*m (245 kgf*cm, 18 ft.*lbf)

2. **INSTALL STIFFENING CRANKCASE STUD BOLT**

NOTE: If a stud bolt is deformed or the threads are damaged, replace it.

   a. Using an E5 and E8 "TORX" socket wrench, install the stud bolts.

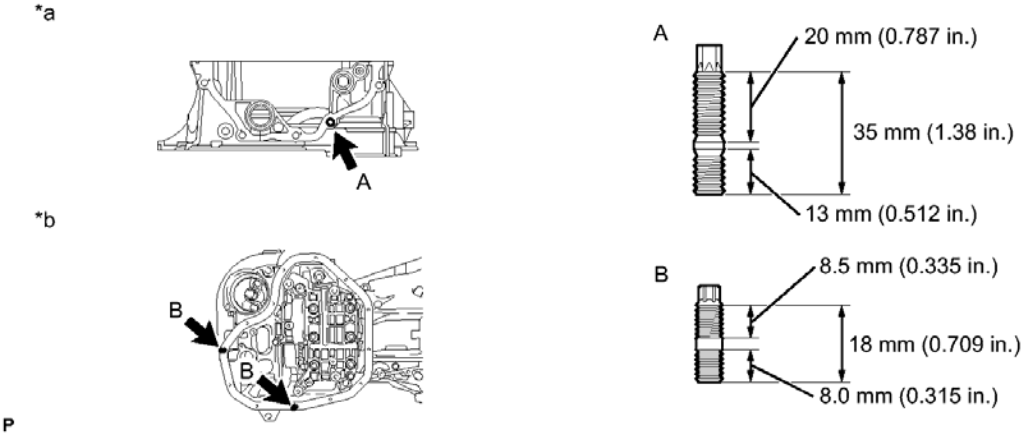
*a
A
*b
B
B
P
A
20 mm (0.787 in.)
35 mm (1.38 in.)
13 mm (0.512 in.)
B
8.5 mm (0.335 in.)
18 mm (0.709 in.)
8.0 mm (0.315 in.)

Fig. 254: Identifying Stud Bolts
Courtesy of TOYOTA MOTOR SALES, U.S.A., INC.

for stud bolt A

Torque: 5.0 N*m (51 kgf*cm, 44 in.*lbf)

for stud bolt B

Torque: 9.5 N*m (97 kgf*cm, 84 in.*lbf)

TEXT IN ILLUSTRATION

*a	Front Side	*b	Lower Side

3. INSTALL STIFFENING CRANKCASE RING PIN

NOTE: **It is not necessary to remove the ring pin unless it is being replaced.**

a. Using a plastic-faced hammer, tap in 2 new ring pins until they stop.

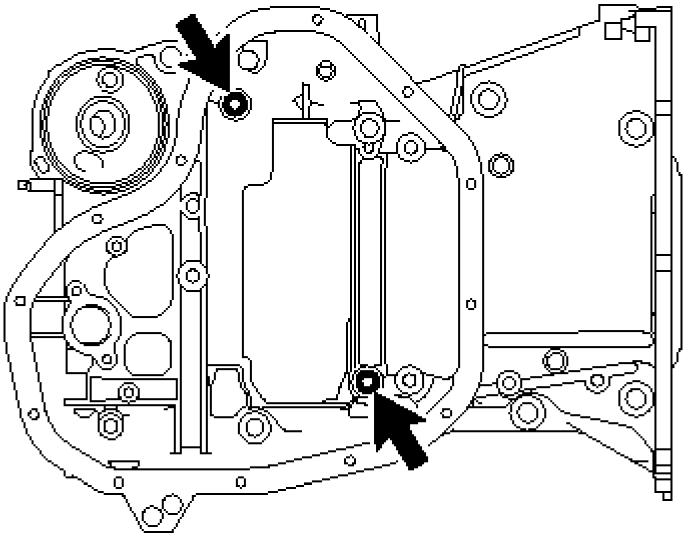

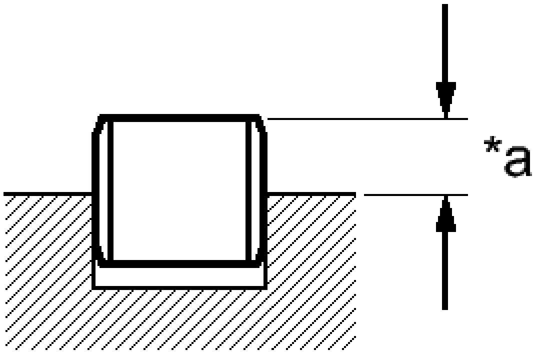

P

Fig. 255: Locating Stiffening Crankcase Ring Pins
Courtesy of TOYOTA MOTOR SALES, U.S.A., INC.

Standard protrusion height

4.3 to 5.3 mm (0.169 to 0.209 in.)

TEXT IN ILLUSTRATION

*a	Protrusion Height

4. **INSTALL STIFFENING CRANKCASE ASSEMBLY**
   a. Rotate the crankshaft clockwise so that the crankshaft key is at the position 90° from the bottom as shown in the illustration.

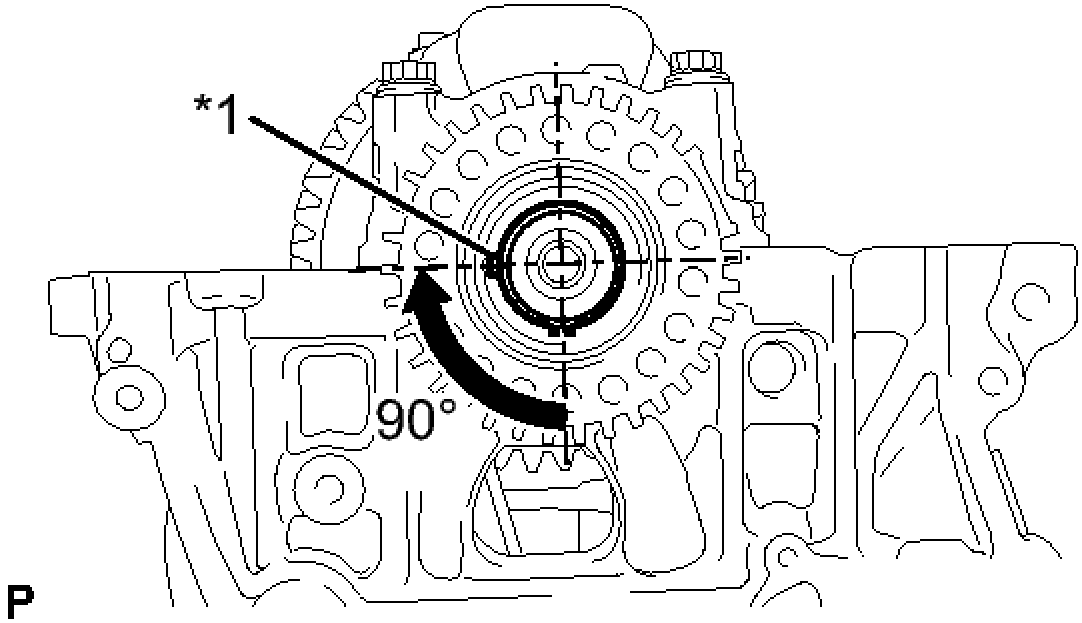

Fig. 256: Rotating Crankshaft Clockwise
Courtesy of TOYOTA MOTOR SALES, U.S.A., INC.

TEXT IN ILLUSTRATION

*1	Key

   b. Apply seal packing in a continuous line as shown in the illustration.

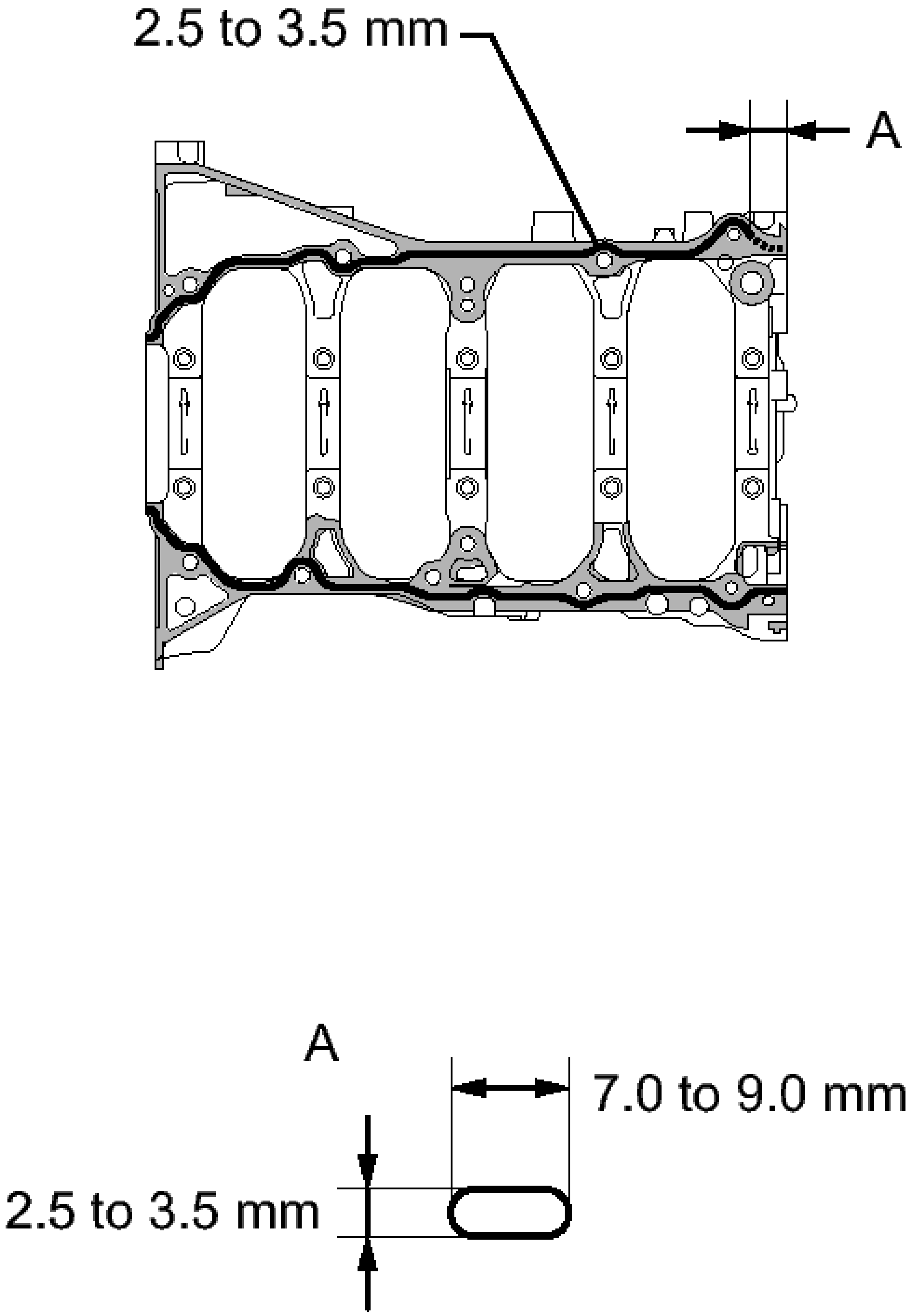
2.5 to 3.5 mm
A
A
7.0 to 9.0 mm
2.5 to 3.5 mm

Fig. 257: Identifying Seal Packing
Courtesy of TOYOTA MOTOR SALES, U.S.A., INC.

Seal packing

Toyota Genuine Seal Packing Black, Three Bond 1207B or equivalent

Standard Seal Dimension

Area	Specified Condition
Continuous Line	2.5 to 3.5 mm (0.0984 to 0.138 in.)
Dashed Line	7.0 to 9.0 mm (0.276 to 0.354 in.) wide and 2.5 to 3.5 mm (0.0984 to 0.138 in.) thick

Application Length A

28 mm (1.10 in.)

TEXT IN ILLUSTRATION

	Stiffening Crankcase
	Cylinder Block

NOTE:

- **Remove any oil from the contact surface.**
- **Install the oil pan within 3 minutes and tighten the bolts and nuts within 15 minutes after applying seal packing.**
- **Do not apply oil for at least 2 hours after the installation.**

c. Check that the rear cutout parts are as shown in the illustration.

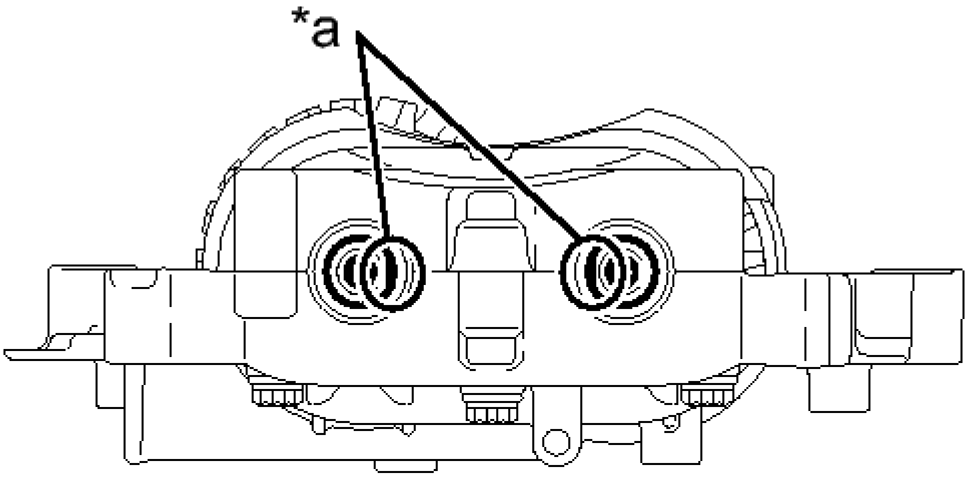

Fig. 258: Identifying Stiffening Crankcase Rear Cutout Parts
Courtesy of TOYOTA MOTOR SALES, U.S.A., INC.

TEXT IN ILLUSTRATION

*a	Cutout

d. Clean the bolts and their installation holes.
e. Apply adhesive to 3 or more threads of the ends of bolts A.

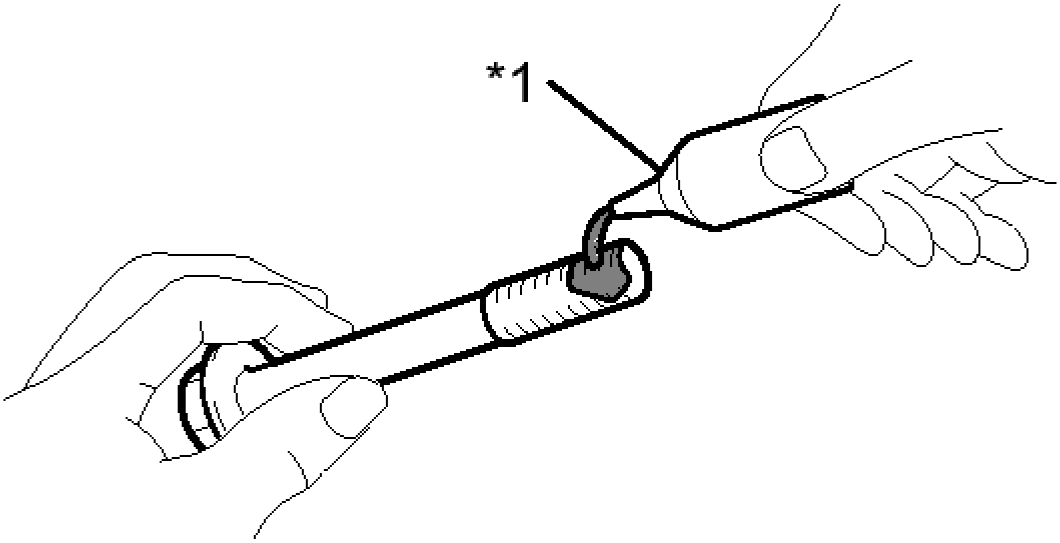

P

Fig. 259: Applying Adhesive To Bolt Threads
Courtesy of TOYOTA MOTOR SALES, U.S.A., INC.

Adhesive

Toyota Genuine Adhesive 1344, Three Bond 1344 or equivalent

TEXT IN ILLUSTRATION

*1	Adhesive

f. Temporarily install the stiffening crankcase with the 11 bolts.

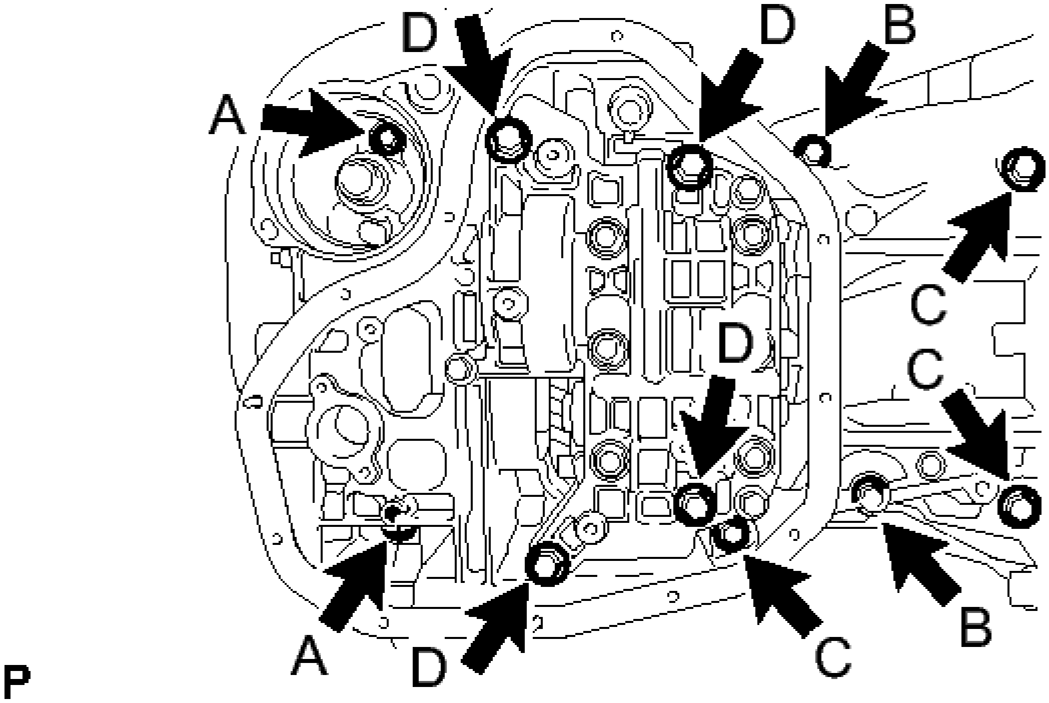

Fig. 260: Identifying Stiffening Crankcase Bolts Tightening Sequence
Courtesy of TOYOTA MOTOR SALES, U.S.A., INC.

Bolt Length

Item	Length
Bolt A	65 mm (2.56 in.)
Bolt B	35 mm (1.38 in.)
Bolt C	125 mm (4.92 in.)
Bolt D	165 mm (6.50 in.)

HINT:

Apply adhesive to bolts A before installing them.

g. Tighten the 11 bolts in the sequence shown in the illustration to install the stiffening crankcase

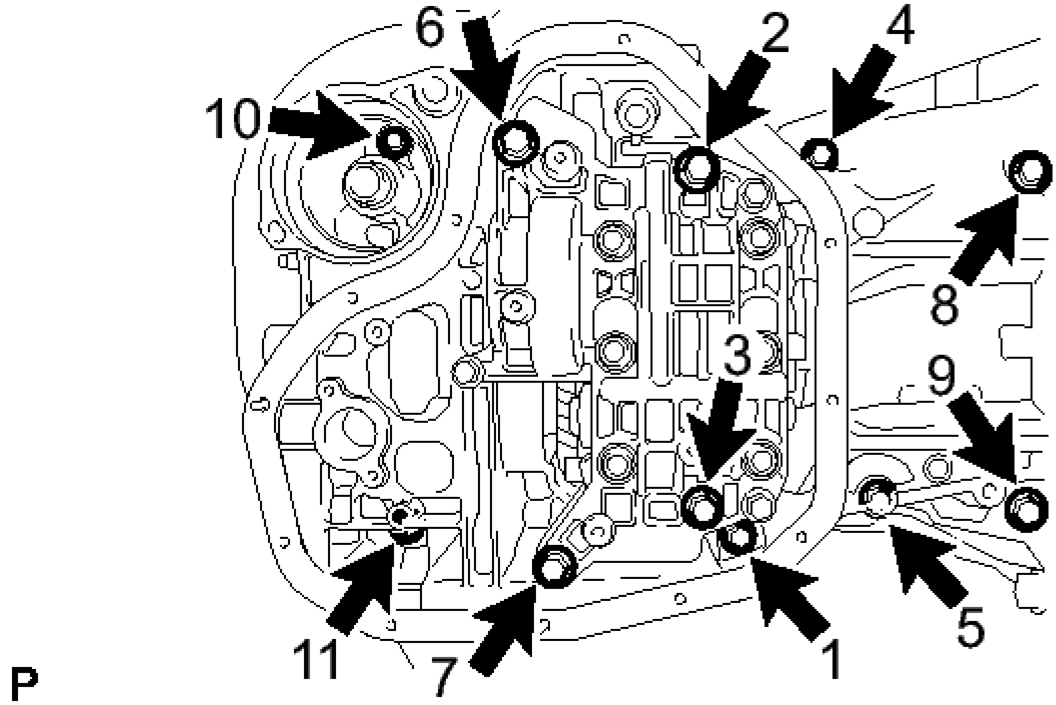

Fig. 261: Identifying Stiffening Crankcase Bolts Tightening Sequence
Courtesy of TOYOTA MOTOR SALES, U.S.A., INC.

for Bolt A

Torque: 24 N*m (245 kgf*cm, 18 ft.*lbf)

except Bolt A

Torque: 43 N*m (438 kgf*cm, 32 ft.*lbf)

5. **INSTALL NO. 1 OIL PAN BAFFLE PLATE**
    a. Install the oil pan baffle plate and uniformly tighten the 5 bolts in several steps, in the sequence shown in the illustration.

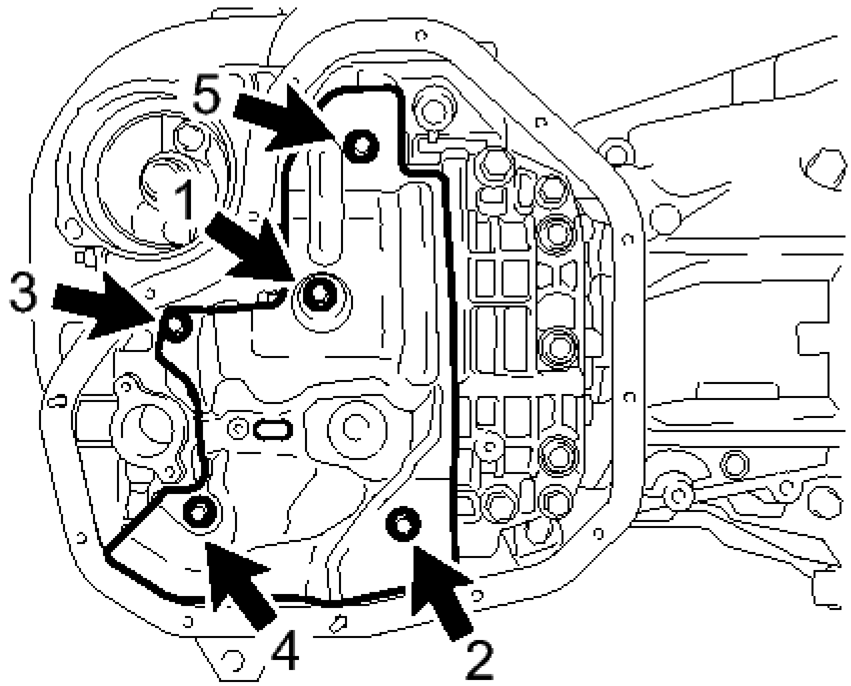

Fig. 262: Identifying No. 1 Oil Pan Baffle Plate Bolts Tightening Sequence
Courtesy of TOYOTA MOTOR SALES, U.S.A., INC.

Torque: 10 N*m (102 kgf*cm, 7 ft.*lbf)

6. **INSTALL OIL STRAINER SUB-ASSEMBLY**
   1. Apply a light coat of engine oil to a new gasket.
   2. Align the protrusion of the gasket with the cutout of the oil strainer, and install the gasket to the oil strainer.

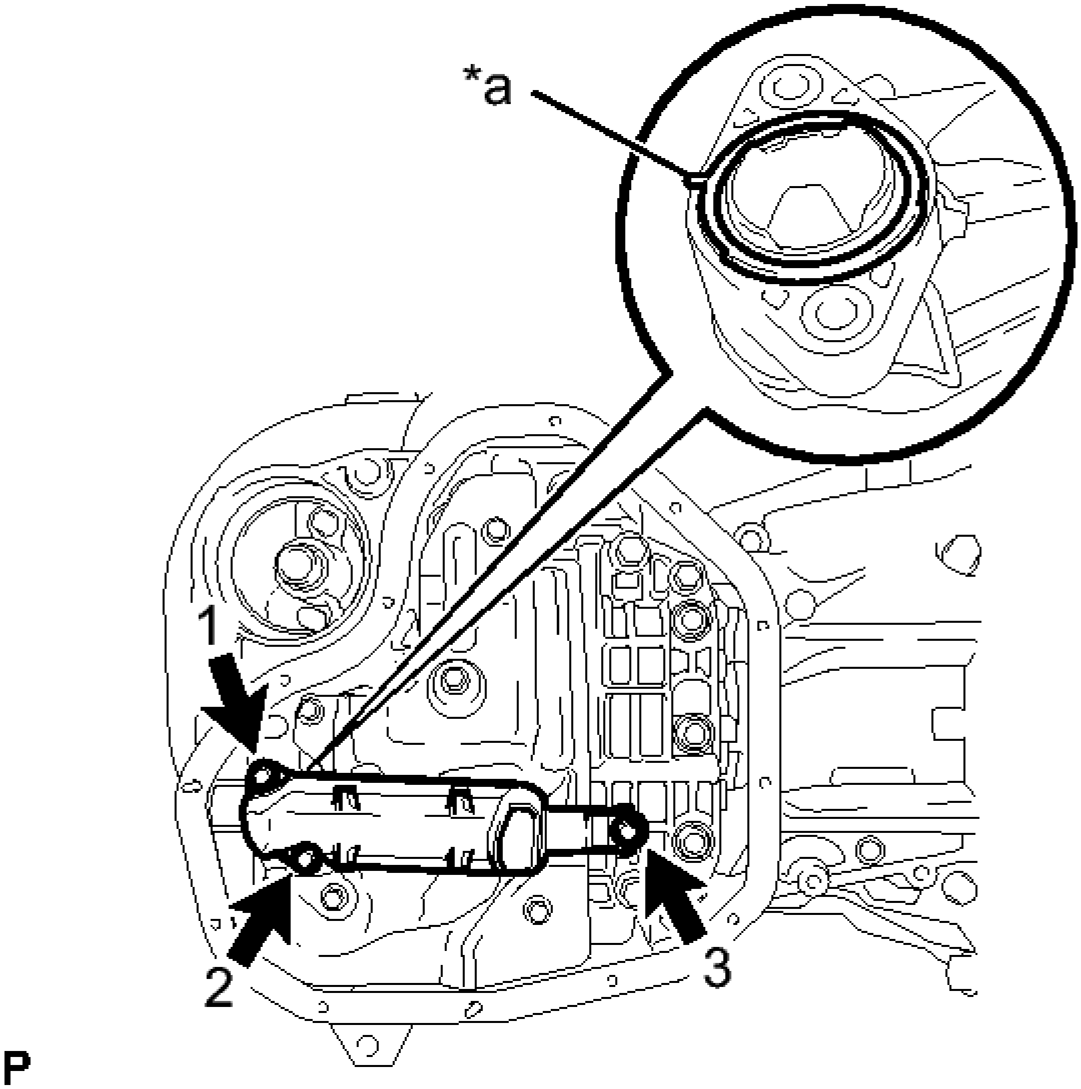

Fig. 263: Identifying 3 Oil Strainer Bolts With Tightening Sequence & Aligning Gasket Protrusion To Oil Strainer Cutout
Courtesy of TOYOTA MOTOR SALES, U.S.A., INC.

TEXT IN ILLUSTRATION

*a	Protrusion

c. Install the oil strainer with the 3 bolts in several steps, in the sequence shown in the illustration.

Torque: 9 N*m (92 kgf*cm, 80 in.*lbf)

7. **INSTALL OIL PAN SUB-ASSEMBLY**
   a. Apply seal packing in a continuous line as shown in the illustration.

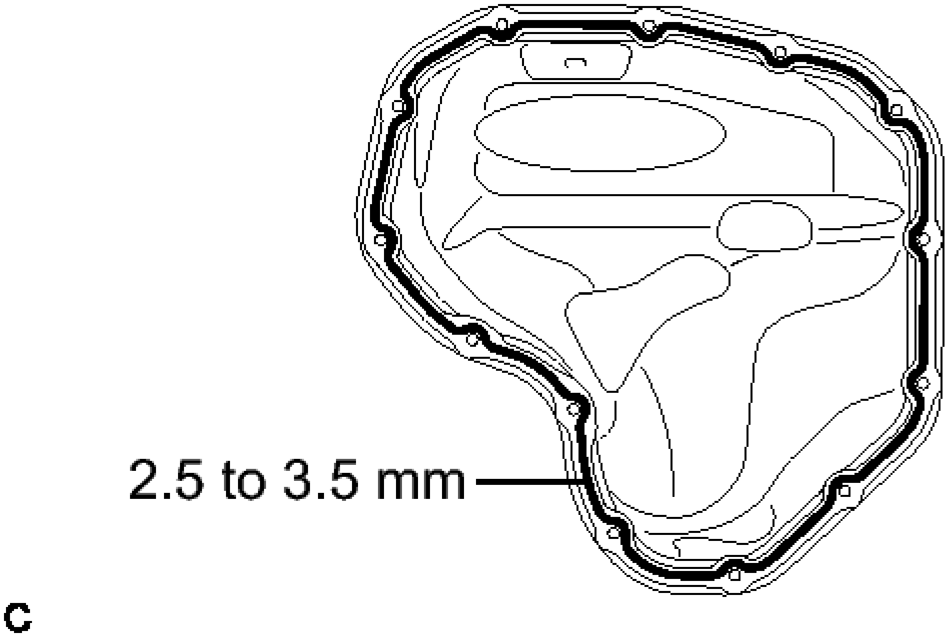

Fig. 264: Applying Seal Packing
Courtesy of TOYOTA MOTOR SALES, U.S.A., INC.

Seal packing

Toyota Genuine Seal Packing Black, Three Bond 1207B or equivalent

Standard seal diameter

2.5 to 3.5 mm (0.0984 to 0.138 in.)

NOTE:

- **Remove any oil from the contact surface.**
- **Install the oil pan within 3 minutes and tighten the bolts and nuts within 10 minutes after applying seal packing.**
- **Do not apply oil for at least 2 hours after the installation.**

b. Install the oil pan with the 11 bolts and 2 nuts in several steps, in the sequence shown in the illustration.

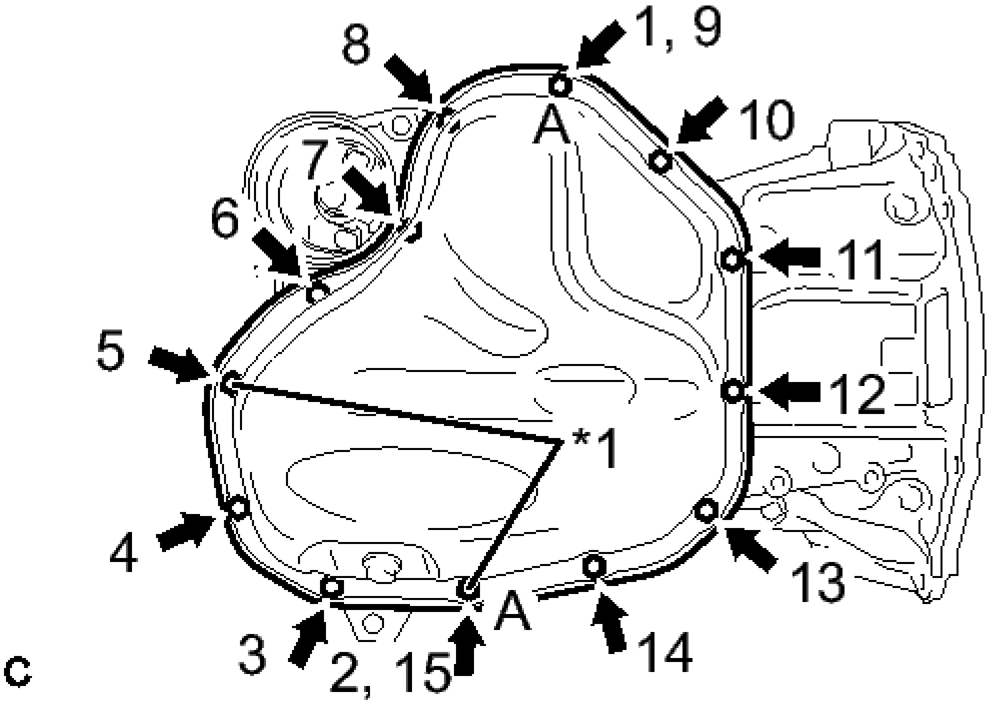

Fig. 265: Identifying Oil Pan Bolts And Nuts
Courtesy of TOYOTA MOTOR SALES, U.S.A., INC.

Torque: 10 N*m (102 kgf*cm, 7 ft.*lbf)

TEXT IN ILLUSTRATION

*1	Nut

HINT:

Bolt A and nut A are tightened twice.

8. **INSTALL OIL FILTER CAP ASSEMBLY** . Refer to **REPLACEMENT - Step 3**
9. **INSTALL REAR ENGINE OIL SEAL** See step 1
10. **INSTALL CYLINDER BLOCK WATER JACKET SPACER**
    a. Install the water jacket spacer to the cylinder block.

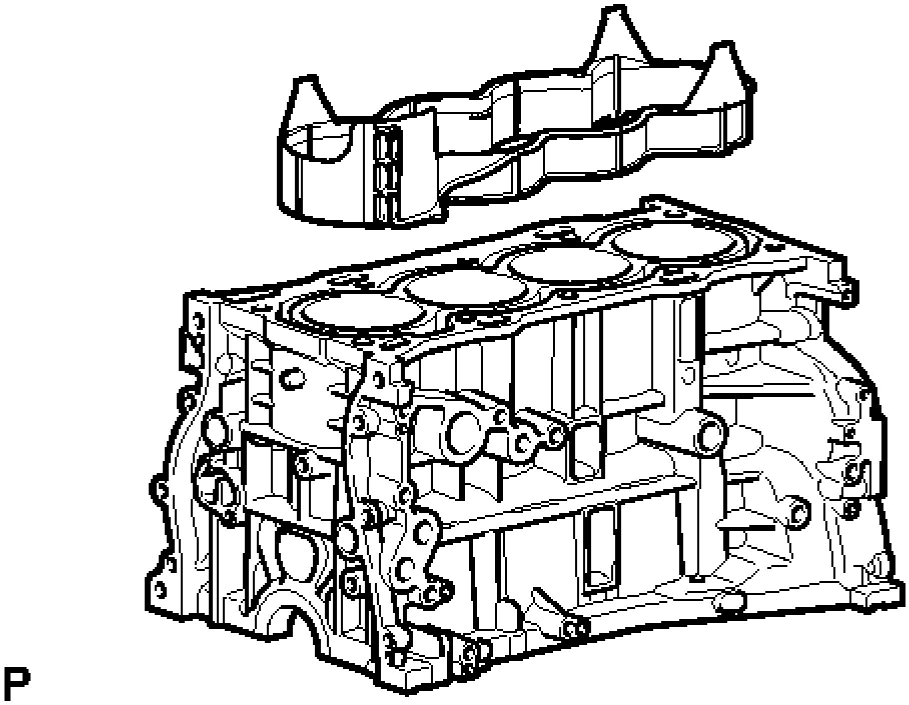

Fig. 266: Identifying Cylinder Block Water Jacket Spacer
Courtesy of TOYOTA MOTOR SALES, U.S.A., INC.

11. **INSTALL CYLINDER HEAD GASKET** See step 3
12. **INSTALL CYLINDER HEAD SUB-ASSEMBLY** See step 4
13. **SET CAMSHAFT TIMING GEAR ASSEMBLY** See step 6
14. **INSTALL CAMSHAFT BEARING CAP SETTING RING PIN**

NOTE: It is not necessary to remove the ring pin unless it is being replaced.

a. Using a plastic-faced hammer, tap in 10 new ring pins to the camshaft housing.

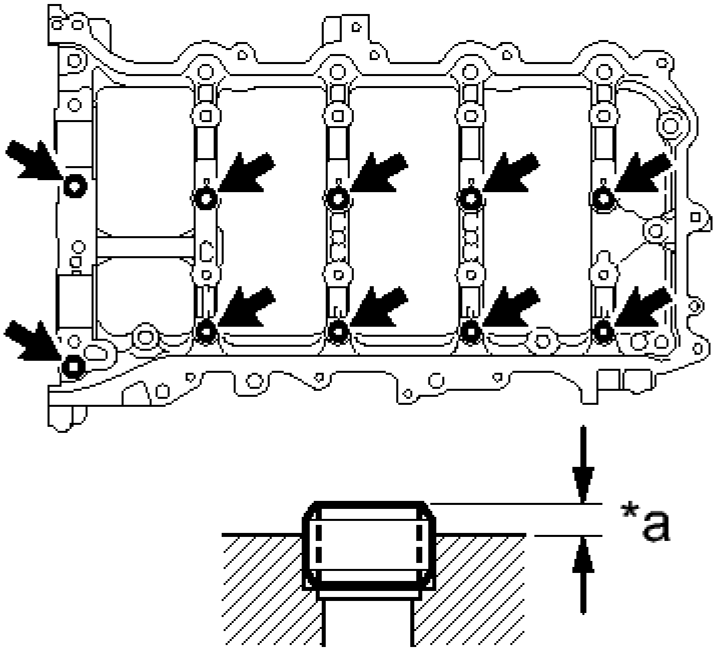

Fig. 267: Locating Camshaft Bearing Ring Pins
Courtesy of TOYOTA MOTOR SALES, U.S.A., INC.

Standard protrusion height

2.7 to 3.3 mm (0.106 to 0.130 in.)

TEXT IN ILLUSTRATION

*a	Protrusion Height

15. **INSTALL CAMSHAFT HOUSING STRAIGHT PIN**

NOTE: It is not necessary to remove the straight pin unless it is being replaced.

a. Using a plastic-faced hammer, tap in 2 new straight pins to the camshaft housing.

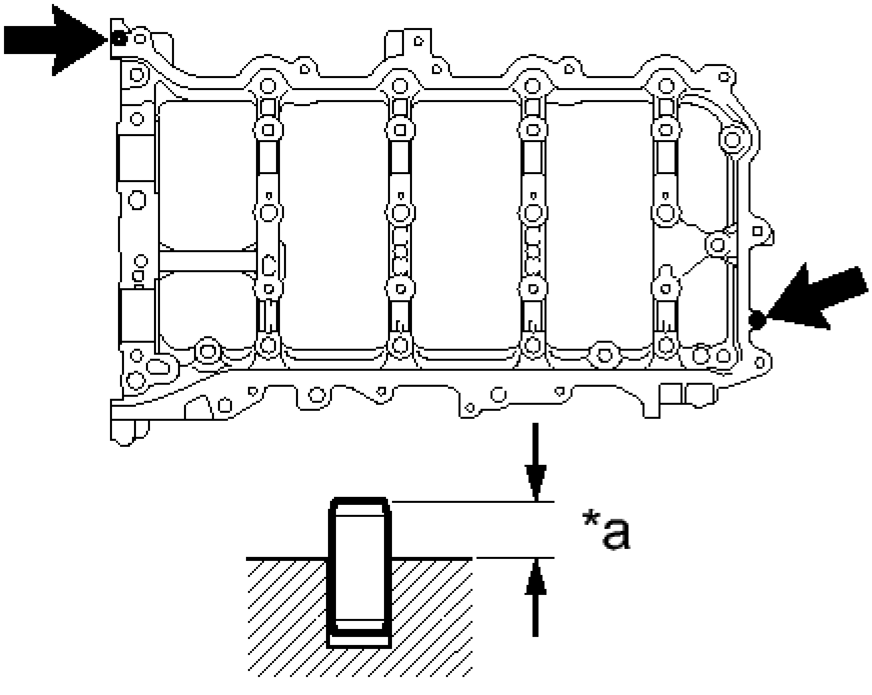

Fig. 268: Locating Camshaft Housing Straight Pins
Courtesy of TOYOTA MOTOR SALES, U.S.A., INC.

Standard protrusion height

5.0 to 7.0 mm (0.197 to 0.276 in.)

TEXT IN ILLUSTRATION

*a	Protrusion Height

16. **INSTALL CAMSHAFT HOUSING STUD BOLT**

NOTE: If a stud bolt is deformed or the threads are damaged, replace it.

a. Using an E8 "TORX" socket wrench, install the stud bolt.

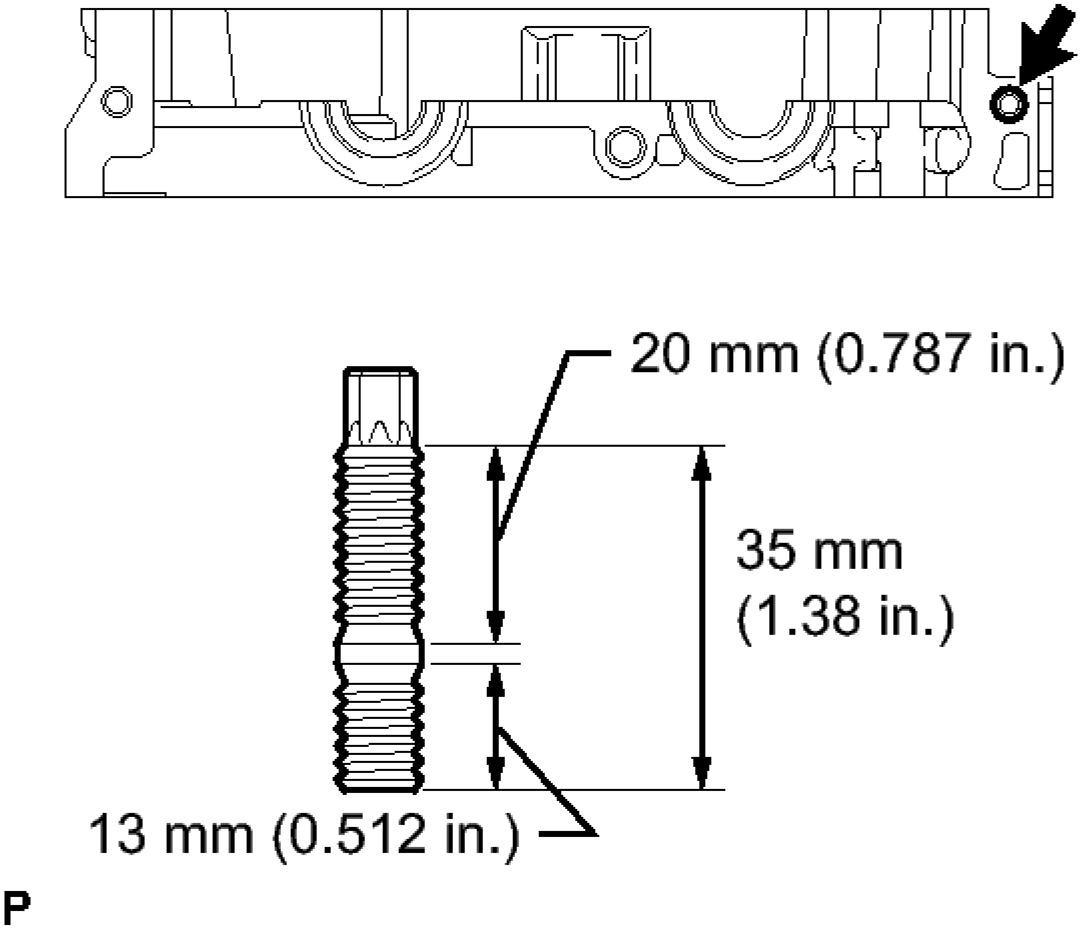
20 mm (0.787 in.)
35 mm
(1.38 in.)
13 mm (0.512 in.)
P

Fig. 269: Identifying Camshaft Housing Stud Bolt Dimensions
Courtesy of TOYOTA MOTOR SALES, U.S.A., INC.

Torque: 9.5 N*m (97 kgf*cm, 84 in.*lbf)

17. **INSTALL NO. 1 CAMSHAFT BEARING**
    a. Clean the No. 1 camshaft bearing.

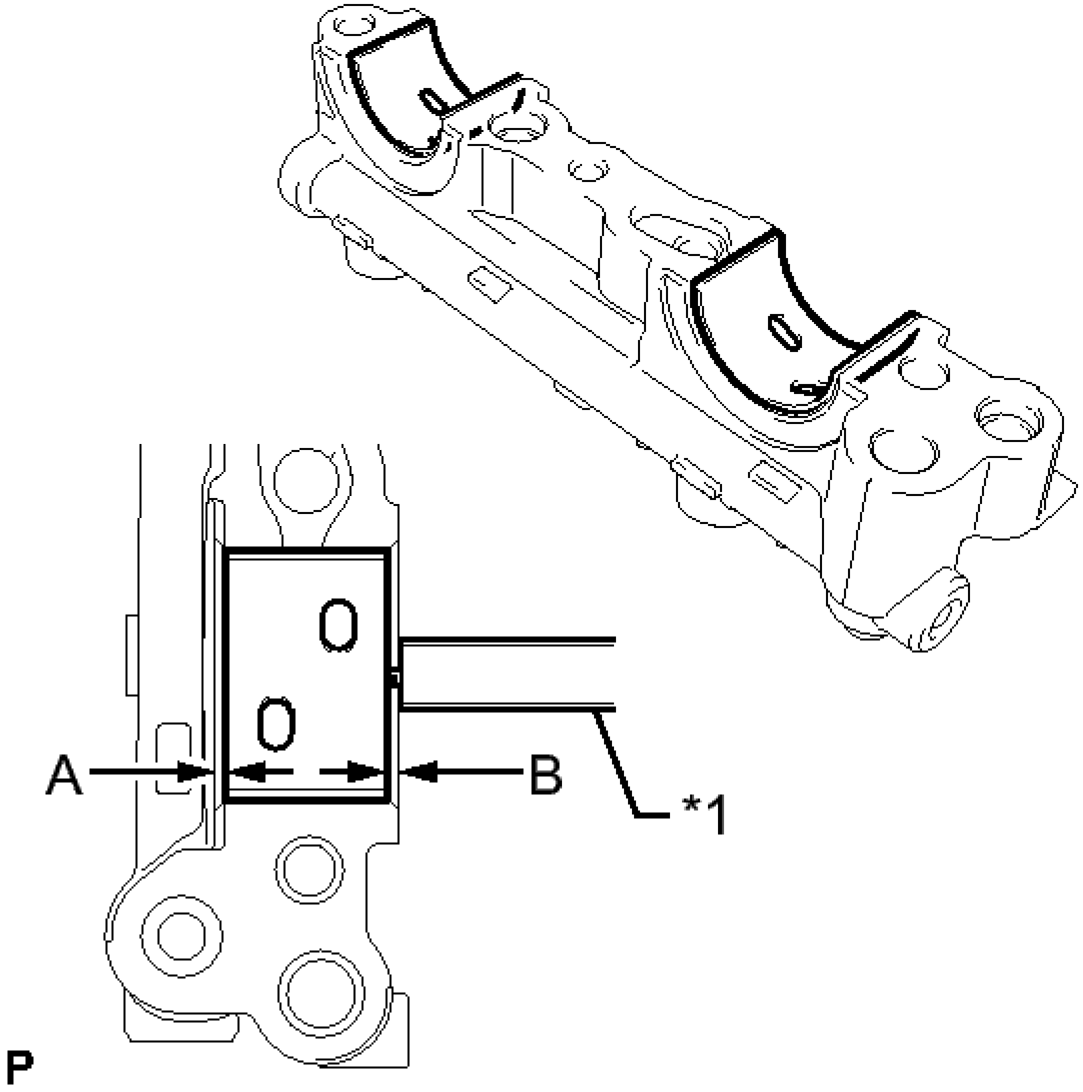

Fig. 270: Measuring No. 1 Camshaft Bearing
Courtesy of TOYOTA MOTOR SALES, U.S.A., INC.

TEXT IN ILLUSTRATION

*1	Vernier Caliper

b. Install the camshaft bearing to the No. 1 camshaft bearing cap.
c. Using a vernier caliper, measure the distance between the camshaft bearing cap edge and the camshaft bearing edge.

Standard dimension A - B or B - A

0 to 0.7 mm (0 to 0.0276 in.)

18. **INSTALL NO. 2 CAMSHAFT BEARING**

a. Clean the No. 2 camshaft bearing.
b. Install the camshaft bearing to the camshaft housing.
c. Using a vernier caliper, measure the distance between the camshaft housing edge and the camshaft bearing edge.

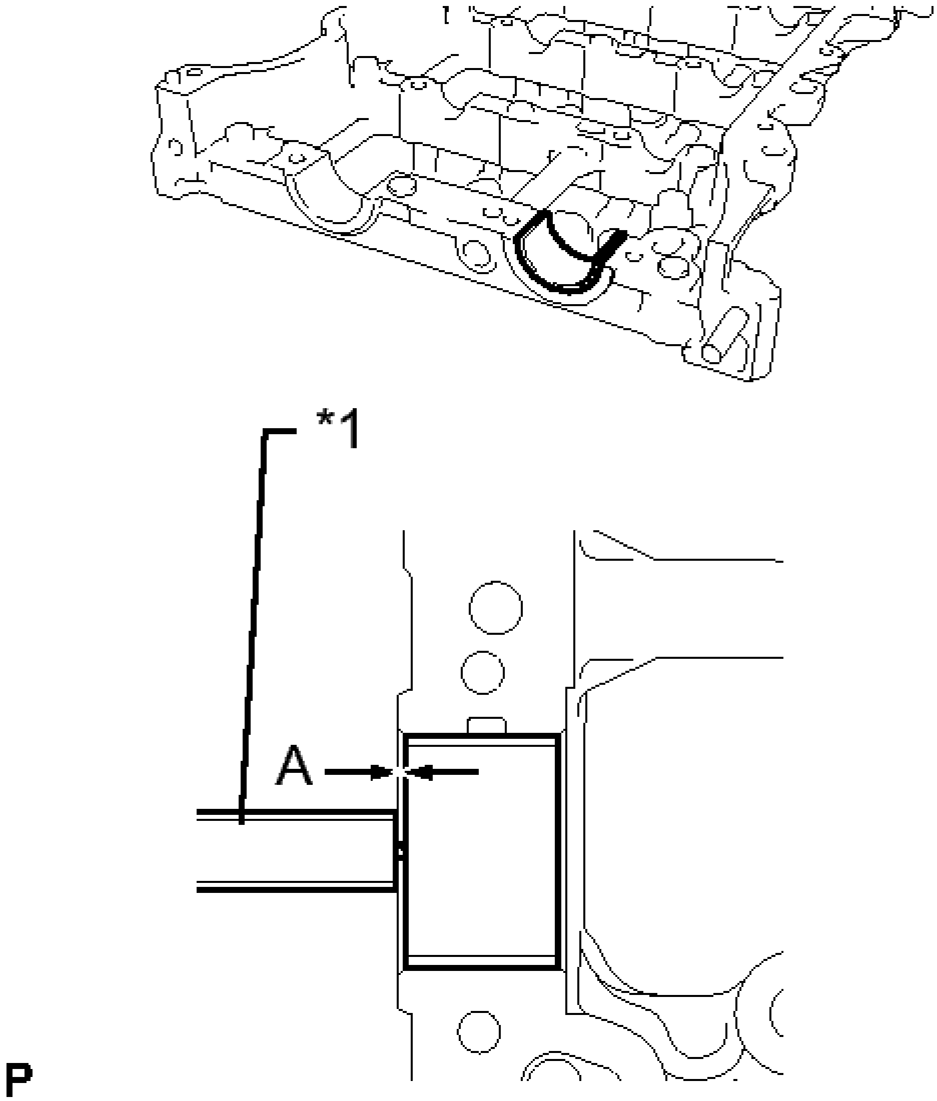

Fig. 271: Measuring No. 2 Camshaft Bearing
Courtesy of TOYOTA MOTOR SALES, U.S.A., INC.

Standard distance

1.15 to 1.85 mm (0.0453 to 0.0728 in.)

TEXT IN ILLUSTRATION

*1	Vernier Caliper

19. **INSTALL OIL CONTROL VALVE FILTER**
    a. Install the oil control valve filter to the No. 1 camshaft bearing cap.

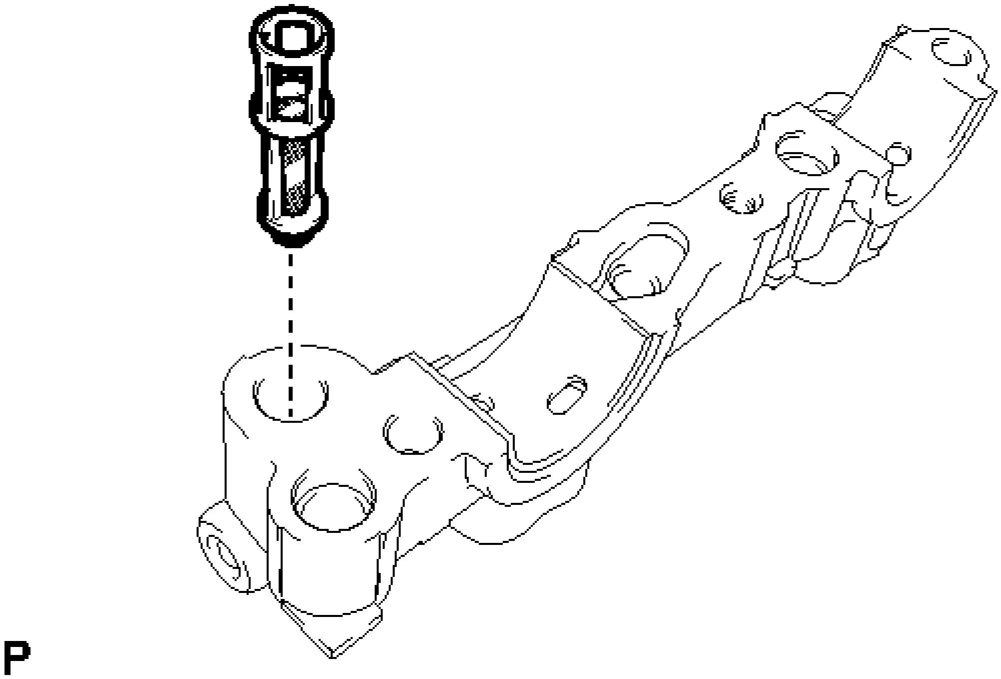

Fig. 272: Identifying Oil Control Valve Filter
Courtesy of TOYOTA MOTOR SALES, U.S.A., INC.

20. **INSTALL CAMSHAFT** See step 12
21. **INSTALL CAMSHAFT BEARING CAP** See step 13
22. **INSTALL VALVE STEM CAP** See step 5
23. **INSTALL VALVE LASH ADJUSTER ASSEMBLY** See step 7
24. **INSTALL NO. 1 VALVE ROCKER ARM SUB-ASSEMBLY** See step 8
25. **INSTALL CAMSHAFT HOUSING SUB-ASSEMBLY** See step 14
26. **INSTALL CAMSHAFT TIMING GEAR ASSEMBLY** See step 15
27. **INSTALL CAMSHAFT TIMING EXHAUST GEAR ASSEMBLY** See step 16
28. **INSTALL CRANKSHAFT TIMING SPROCKET**
    a. Install the crankshaft timing sprocket to the crankshaft.

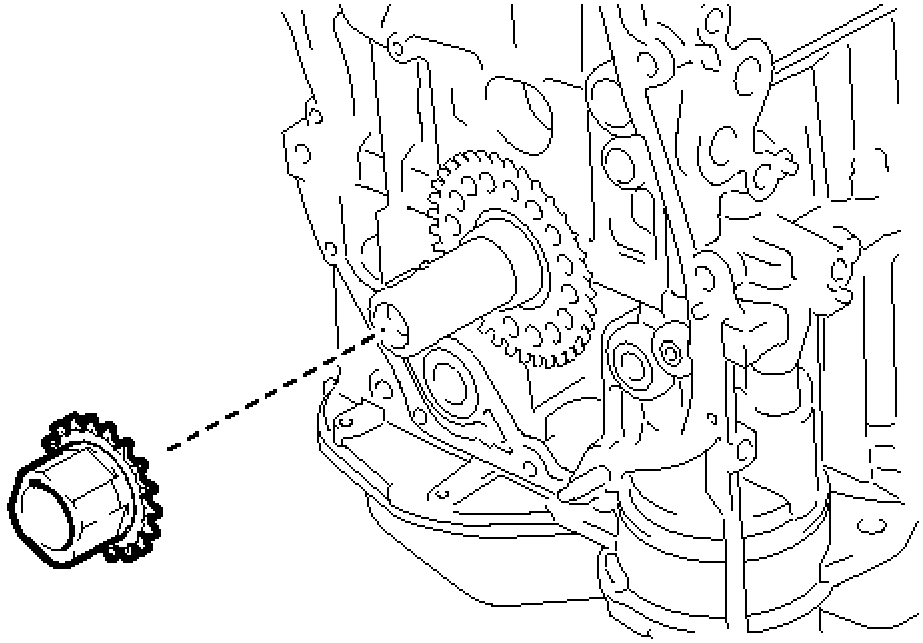

Fig. 273: Identifying Crankshaft Timing Sprocket
Courtesy of TOYOTA MOTOR SALES, U.S.A., INC.

29. **ADD ENGINE OIL** See step 17
30. **SET NO. 1 CYLINDER TO TDC/COMPRESSION** See step 18
31. **INSTALL NO. 1 CHAIN VIBRATION DAMPER** See step 19
32. **INSTALL CHAIN SUB-ASSEMBLY** See step 20
33. **INSTALL CHAIN TENSIONER SLIPPER** See step 21
34. **INSTALL NO. 1 CHAIN TENSIONER ASSEMBLY** See step 22
35. **INSTALL TIMING CHAIN GUIDE** See step 23
36. **CHECK NO. 1 CYLINDER TO TDC/COMPRESSION** See step 24
37. **INSTALL TIMING CHAIN COVER PLATE**
    a. Install a new gasket and the timing chain cover plate with the 4 bolts.

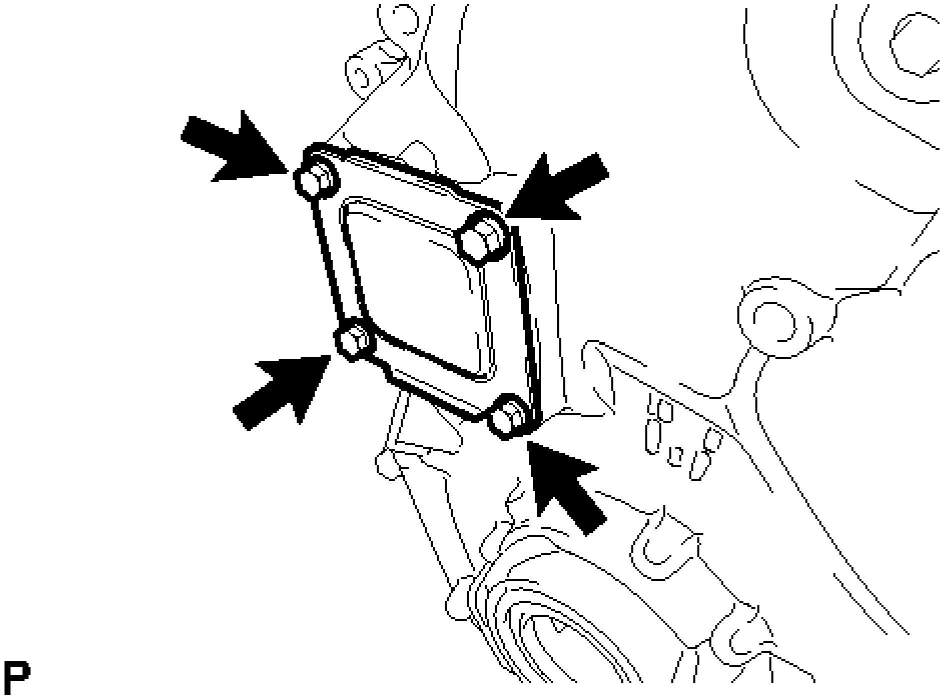

Fig. 274: Locating Timing Chain Cover Plate Bolts
Courtesy of TOYOTA MOTOR SALES, U.S.A., INC.

Torque: 10 N*m (102 kgf*cm, 7 ft.*lbf)

38. **INSTALL TIMING CHAIN COVER TIGHT PLUG**
    a. Using a 14 mm hexagon wrench, install a new gasket and the plug.

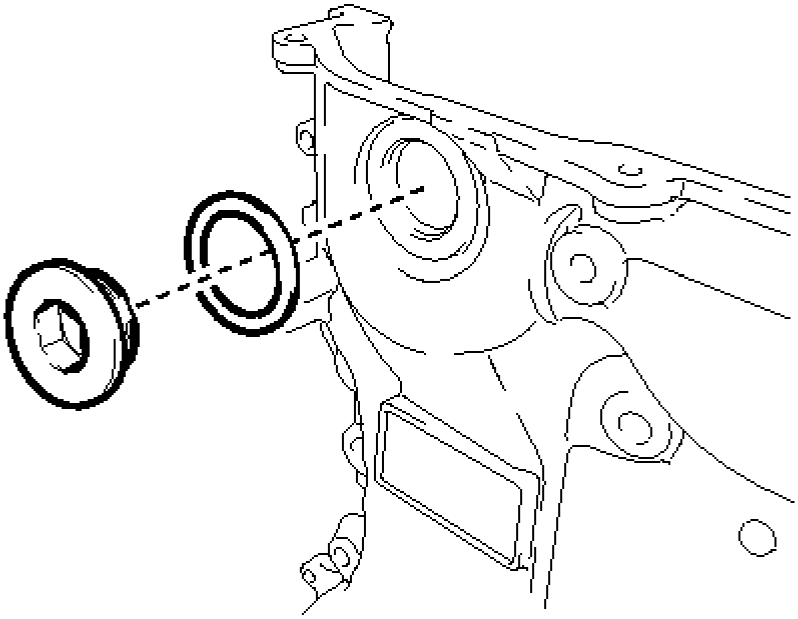

Fig. 275: Identifying Plug And Gasket
Courtesy of TOYOTA MOTOR SALES, U.S.A., INC.

Torque: 30 N*m (306 kgf*cm, 22 ft.*lbf)

39. **INSTALL TIMING CHAIN COVER SUB-ASSEMBLY** . Refer to **INSTALLATION - Step 1**
40. **INSTALL ENGINE MOUNTING BRACKET RH** . Refer to **INSTALLATION - Step 2**
41. **INSTALL TIMING CHAIN COVER OIL SEAL** See step 1
42. **INSTALL SPARK PLUG TUBE GASKET**
    a. Install 4 new plug tube gaskets to the cylinder head cover.

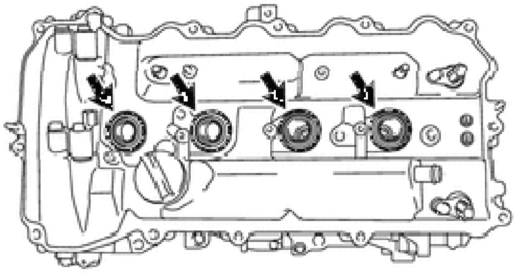

Fig. 276: Identifying Plug Tube Gaskets
Courtesy of TOYOTA MOTOR SALES, U.S.A., INC.

NOTE: After pressing in the spark plug tube gasket, make sure the gasket protrudes 1.0 mm (0.0394 in.) or less from the cylinder head cover.

43. INSTALL CYLINDER HEAD COVER SUB-ASSEMBLY

a. Apply a light coat of engine oil to 3 new gaskets.

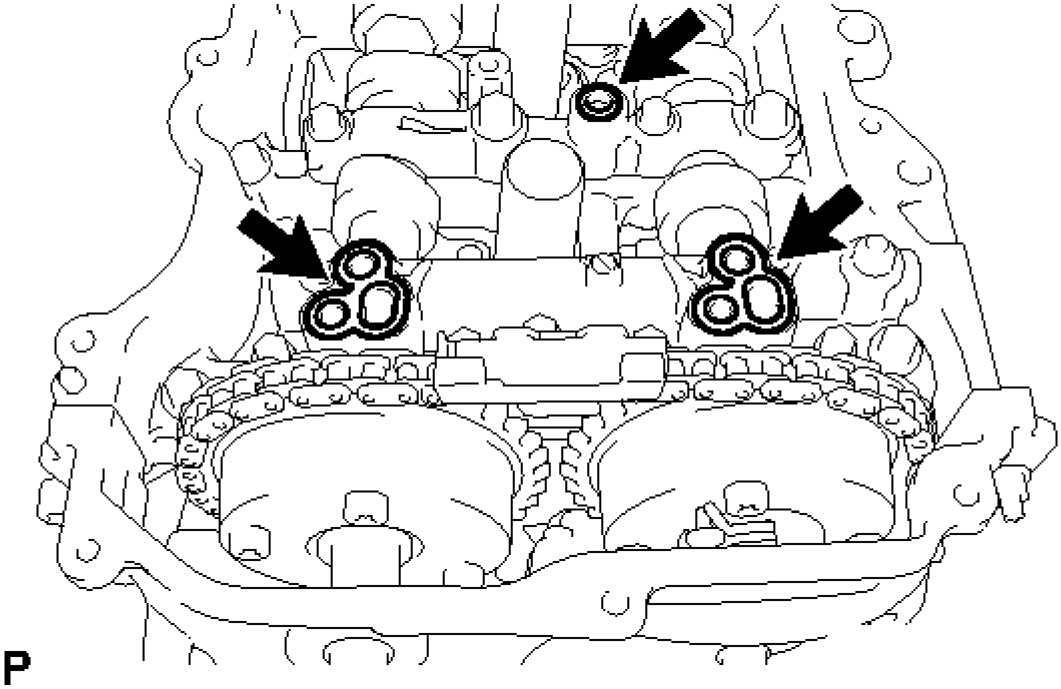

Fig. 277: Locating Camshaft Bearing Caps Gaskets
Courtesy of TOYOTA MOTOR SALES, U.S.A., INC.

b. Install the 3 gaskets to the camshaft bearing caps.

c. Install a new gasket to the cylinder head cover.

NOTE: Remove any oil from the contact surface.

d. Apply seal packing as shown in the illustration.

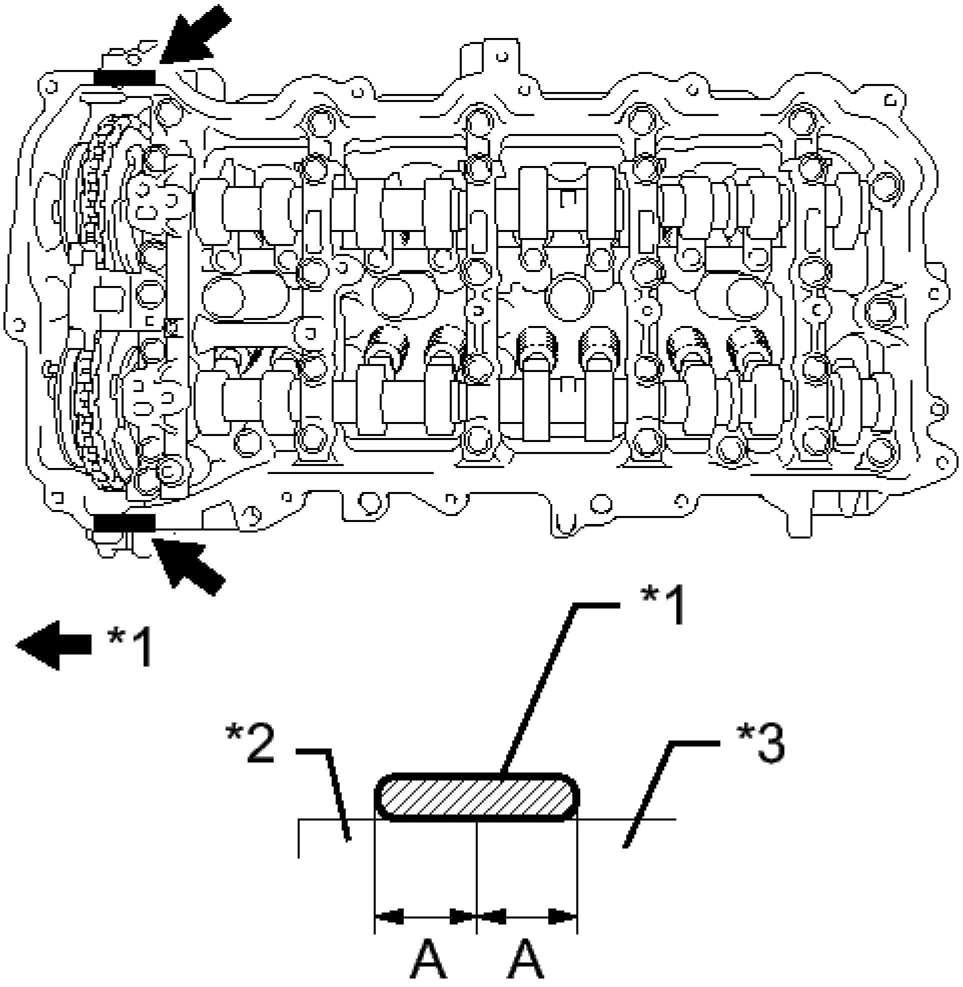

P

Fig. 278: Cylinder Head Cover Sub-Assembly
Courtesy of TOYOTA MOTOR SALES, U.S.A., INC.

Seal packing

Toyota Genuine Seal Packing Black, Three Bond 1207B or equivalent

Standard seal diameter

3.0 to 6.0 mm (0.118 to 0.236 in.)

Application width A

5.0 mm (0.197 in.)

TEXT IN ILLUSTRATION

*1	Seal packing
*2	Timing Chain Cover
*3	Camshaft Housing

NOTE:

- **Remove any oil from the contact surface.**
- **Install the cylinder head cover within 3 minutes and tighten the bolts within 15 minutes after applying seal packing.**

e. Align the cylinder head cover with pin A. Then align the cylinder head cover with pin B and install the cylinder head cover.

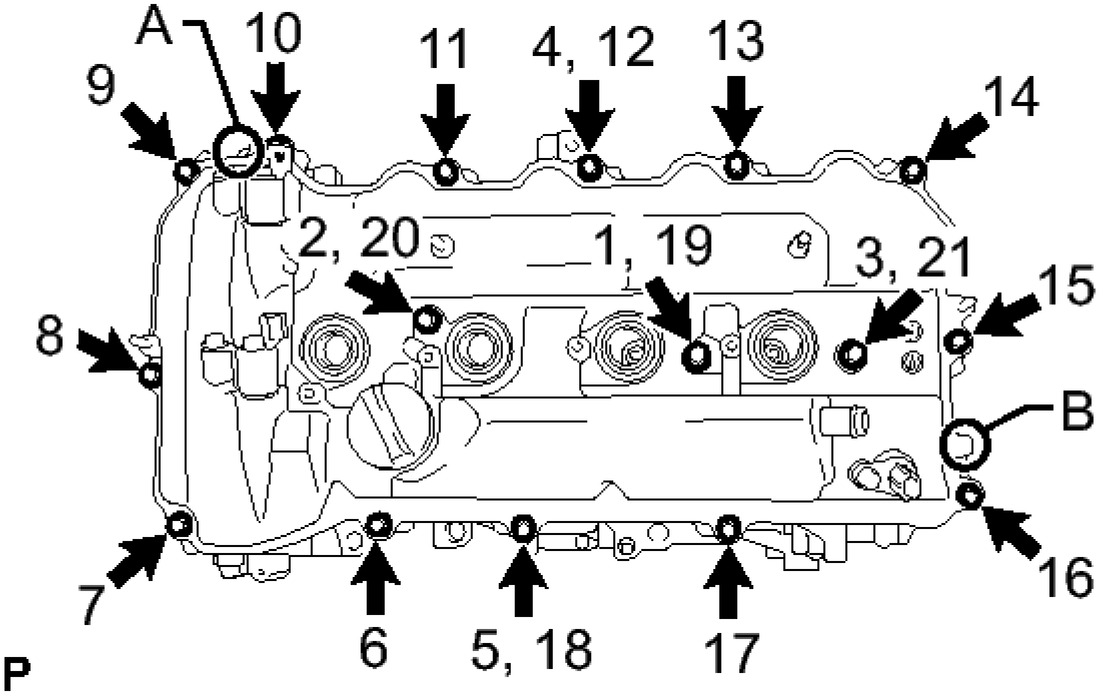

Fig. 279: Identifying Cylinder Head Cover Bolts Tightening Sequence
Courtesy of TOYOTA MOTOR SALES, U.S.A., INC.

f. Install 3 new seal washers and the 16 bolts, and then tighten the bolts in the order shown in the illustration.

Torque: 12 N*m (122 kgf*cm, 9 ft.*lbf)

NOTE: **Do not apply oil for at least 2 hours after the installation.**

44. **INSTALL CRANKSHAFT PULLEY**

a. Align the pulley set key with the key groove of the crankshaft pulley.

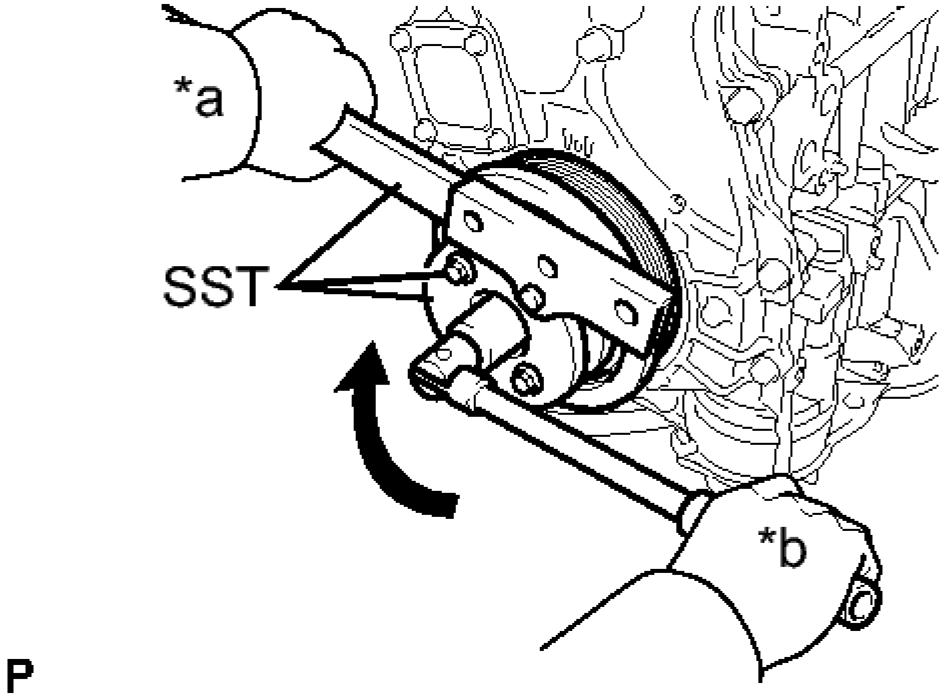

Fig. 280: Installing Crankshaft Pulley
Courtesy of TOYOTA MOTOR SALES, U.S.A., INC.

TEXT IN ILLUSTRATION

*a	Hold
*b	Turn

b. Using SST, hold the crankshaft pulley and install the pulley bolt.
  - **SST: 09213-54015**
  - **SST: 09330-00021**
  - **SST: 91551-80650**

Torque: 260 N*m (2651 kgf*cm, 192 ft.*lbf)

45. **INSTALL CRANKSHAFT POSITION SENSOR** . Refer to **INSTALLATION - Step 1**
46. **INSTALL WATER INLET HOUSING**
    a. Install a new gasket and the inlet water housing with the 4 bolts and nut.

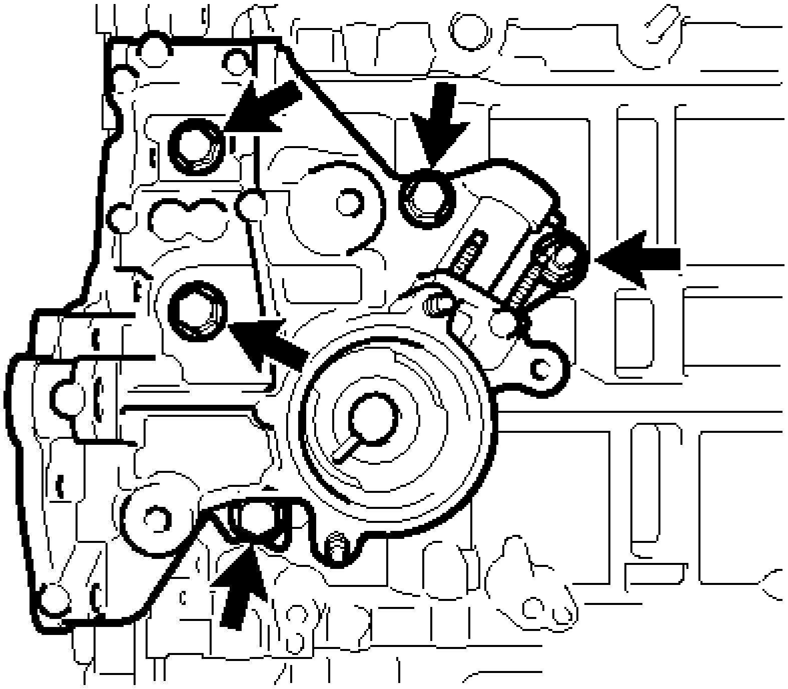

P

Fig. 281: Locating Inlet Water Housing And Gasket Bolts And Nut
Courtesy of TOYOTA MOTOR SALES, U.S.A., INC.

Torque: 43 N*m (438 kgf*cm, 32 ft.*lbf)

47. **INSTALL ENGINE WATER PUMP ASSEMBLY** . Refer to **INSTALLATION - Step 1**
48. **INSTALL V-RIBBED BELT TENSIONER ASSEMBLY**
    a. Install the V-ribbed belt tensioner with the bolt.

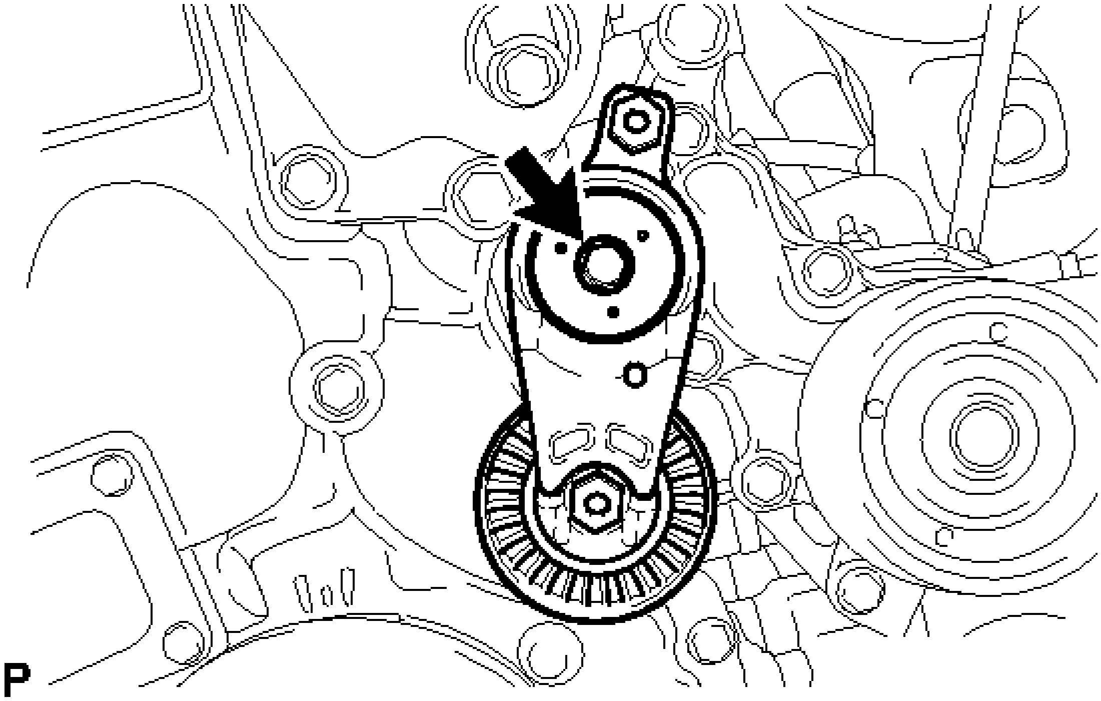

Fig. 282: Locating Bolt And V-Ribbed Belt Tensioner
Courtesy of TOYOTA MOTOR SALES, U.S.A., INC.

Torque: 21 N*m (214 kgf*cm, 15 ft.*lbf)

49. **INSTALL THERMOSTAT** . Refer to **INSTALLATION - Step 1**
50. **INSTALL WATER INLET** . Refer to **INSTALLATION - Step 2**
51. **INSTALL NO. 1 WATER BY-PASS PIPE**
    a. Install a new gasket and the water by-pass pipe with the 2 nuts and bolt.

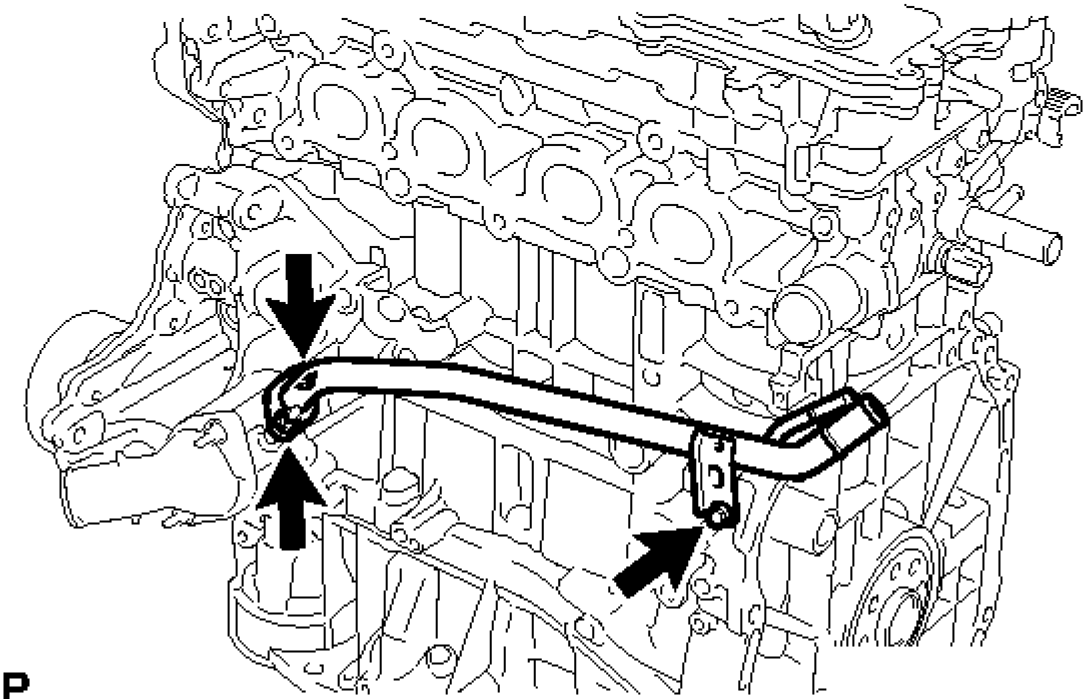

Fig. 283: Locating Water By-Pass Pipe And Gasket Bolt And Nuts
Courtesy of TOYOTA MOTOR SALES, U.S.A., INC.

Torque: 10 N*m (102 kgf*cm, 7 ft.*lbf)

52. **INSTALL SEPARATOR CASE**
    a. Apply a light coat of engine oil to a new gasket.

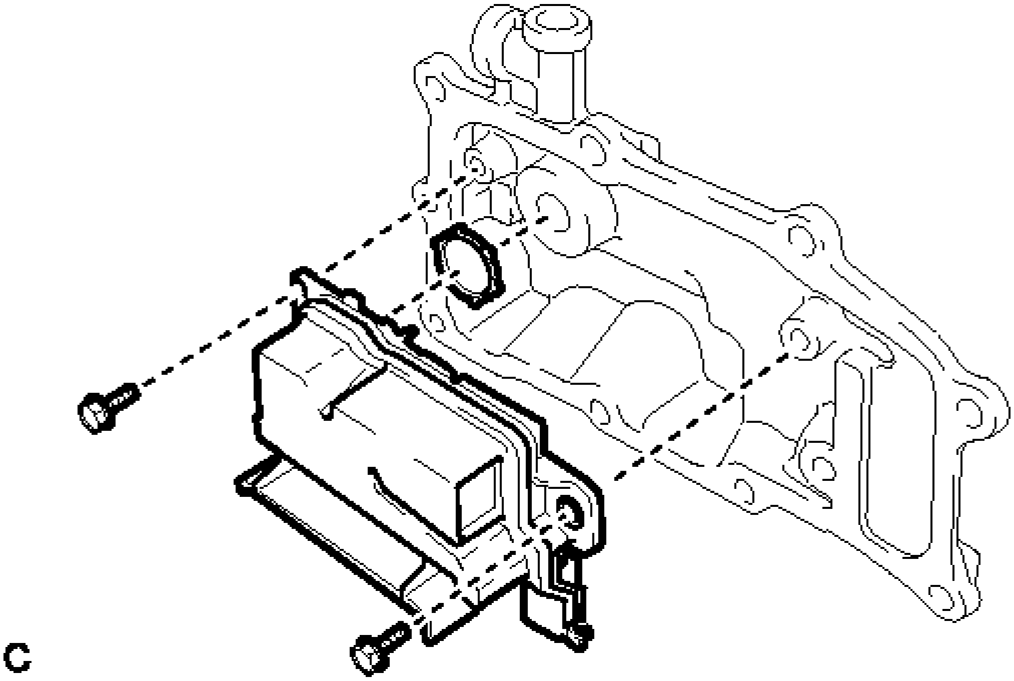

Fig. 284: Identifying Case And Gasket Bolts
Courtesy of TOYOTA MOTOR SALES, U.S.A., INC.

b. Install the gasket to the separator case.
c. Install the separator case with the 2 bolts.

Torque: 10 N*m (102 kgf*cm, 7 ft.*lbf)

53. **INSTALL VENTILATION CASE SUB-ASSEMBLY**

a. Apply seal packing in a continuous line as shown in the illustration.

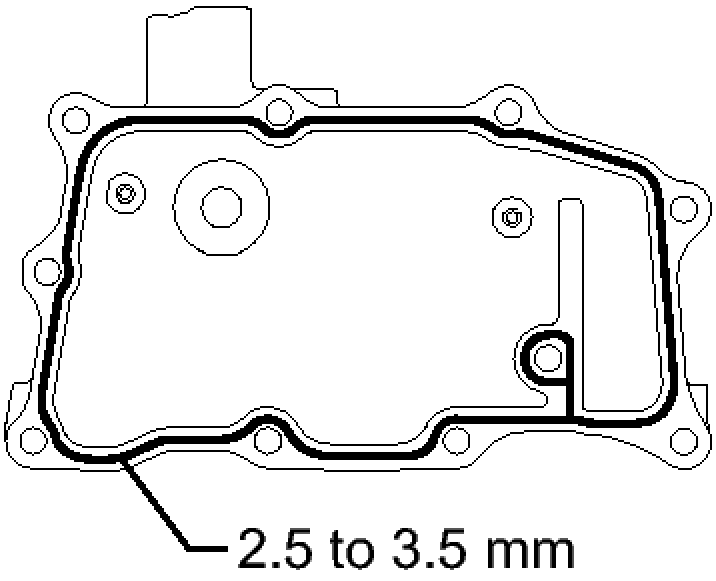

C

Fig. 285: Identifying Seal Packing Applying Area
Courtesy of TOYOTA MOTOR SALES, U.S.A., INC.

Seal packing

Toyota Genuine Seal Packing Black, Three Bond 1207B or equivalent

Standard seal diameter

2.5 to 3.5 mm (0.0984 to 0.138 in.)

NOTE:

- **Remove any oil from the contact surface.**
- **Install the ventilation case within 3 minutes and tighten the bolts and nuts within 15 minutes after applying seal packing.**

b. Install the ventilation case, and install the 8 bolts and 2 nuts in the order shown in the illustration.

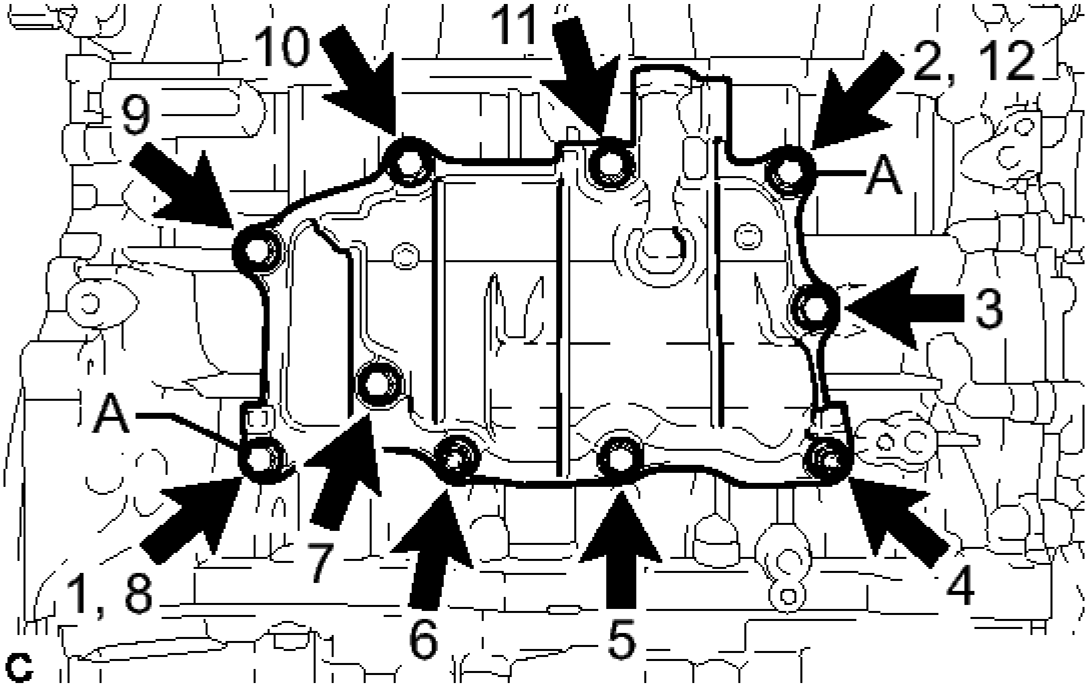

Fig. 286: Identifying Ventilation Case Sub-Assembly Bolts Tightening Sequence
Courtesy of TOYOTA MOTOR SALES, U.S.A., INC.

Torque: 21 N*m (214 kgf*cm, 15 ft.*lbf)

HINT:

Bolt A is tightened twice.

54. **INSTALL VENTILATION VALVE SUB-ASSEMBLY** . Refer to **INSTALLATION - Step 1**
55. **INSTALL CAMSHAFT POSITION SENSOR** . Refer to **INSTALLATION - Step 1**
56. **INSTALL CAMSHAFT TIMING OIL CONTROL VALVE ASSEMBLY** . Refer to **INSTALLATION - Step 1**
57. **INSTALL OIL FILLER CAP SUB-ASSEMBLY**
    a. Install a new gasket to the oil filler cap.
    b. Install the oil filler cap to the cylinder head.
58. **INSTALL SPARK PLUG** . Refer to **INSTALLATION - Step 1**
59. **INSTALL ENGINE COVER JOINT**
    a. Install the 3 joints.

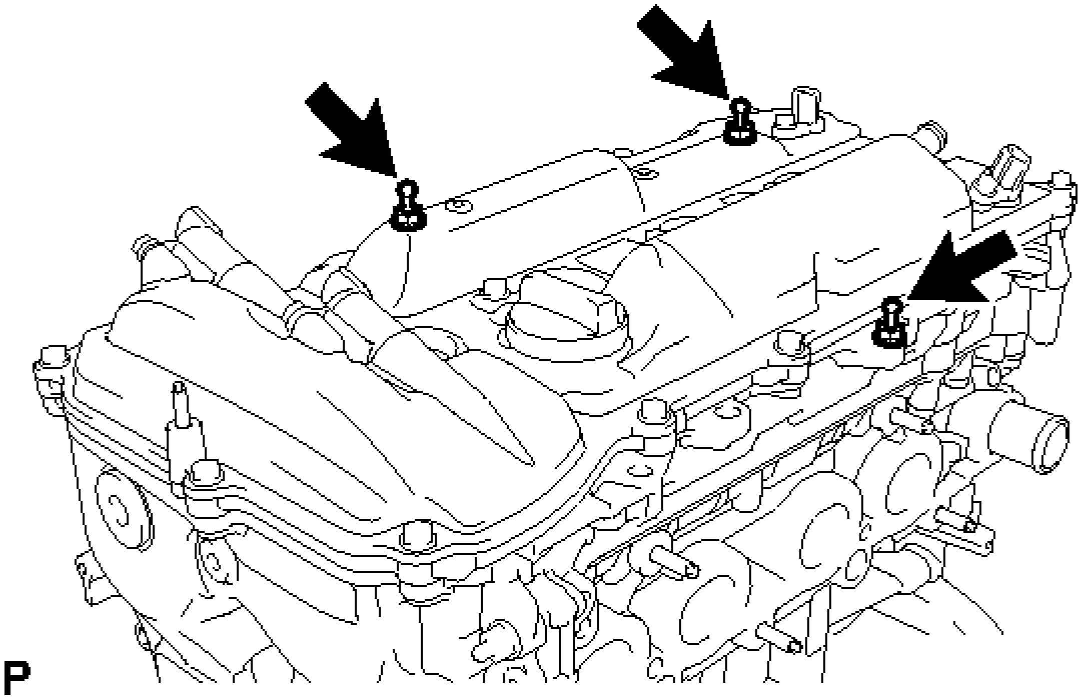

Fig. 287: Locating Engine Cover Joint
Courtesy of TOYOTA MOTOR SALES, U.S.A., INC.

Torque: 10 N*m (102 kgf*cm, 7 ft.*lbf)

INSTALLATION

INSTALLATION

HINT:

Perform "Inspection After Repair" after replacing the engine assembly. Refer to **INITIALIZATION** .

1. **INSTALL IGNITION COIL ASSEMBLY** . Refer to **INSTALLATION - Step 2**
2. **INSTALL ENGINE COOLANT TEMPERATURE SENSOR** . Refer to **INSTALLATION - Step 1**
3. **INSTALL ENGINE OIL PRESSURE SWITCH ASSEMBLY** . Refer to **INSTALLATION - Step 1**
4. **INSTALL KNOCK CONTROL SENSOR** . Refer to **INSTALLATION - Step 1**
5. **INSTALL SENSOR WIRE**
    a. Install the sensor wire with the bolt.

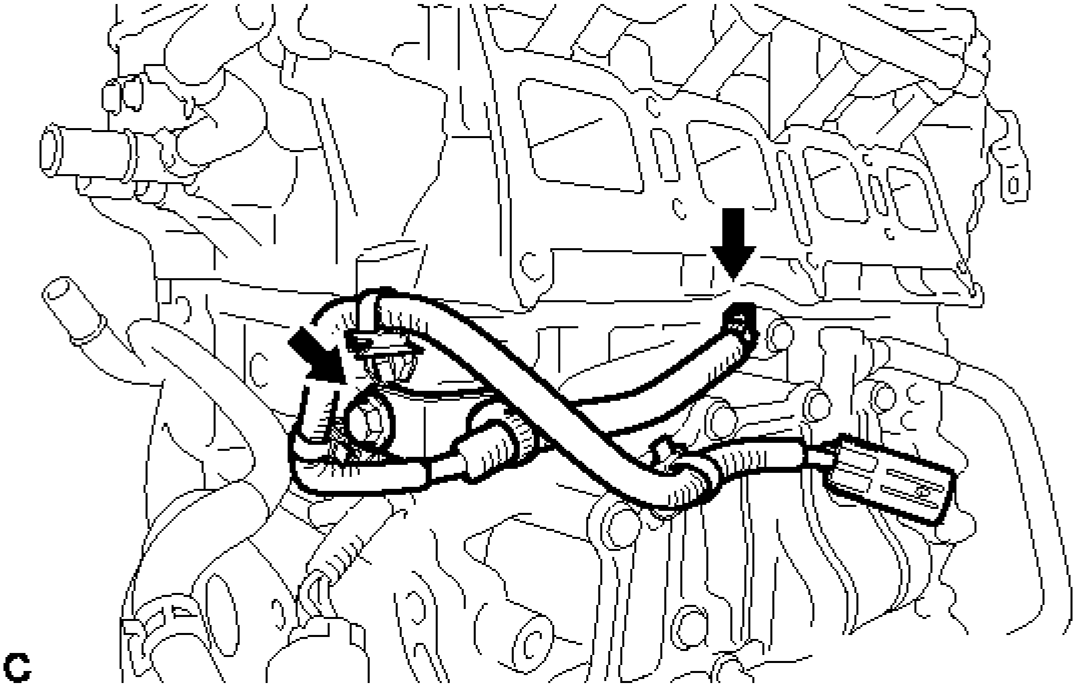

Fig. 288: Identifying Knock Control Sensor Connector, Wire And Bolt
Courtesy of TOYOTA MOTOR SALES, U.S.A., INC.

Torque: 21 N*m (214 kgf*cm, 15 ft.*lbf)

b. Connect the knock control sensor connector.

6. **INSTALL INTAKE MANIFOLD** . Refer to **INSTALLATION - Step 1**
7. **INSTALL FUEL DELIVERY PIPE SUB-ASSEMBLY** . Refer to **INSTALLATION - Step 2**
8. **INSTALL UNION TO CONNECTOR TUBE HOSE** . Refer to **INSTALLATION - Step 4**
9. **CONNECT NO. 2 VENTILATION HOSE** . Refer to **INSTALLATION - Step 5**
10. **INSTALL VACUUM SWITCHING VALVE ASSEMBLY (for ACIS)** . Refer to **INSTALLATION - Step 6**
11. **INSTALL WATER BY-PASS HOSE**
    a. Install the No. 1 and No. 2 water by-pass hoses.

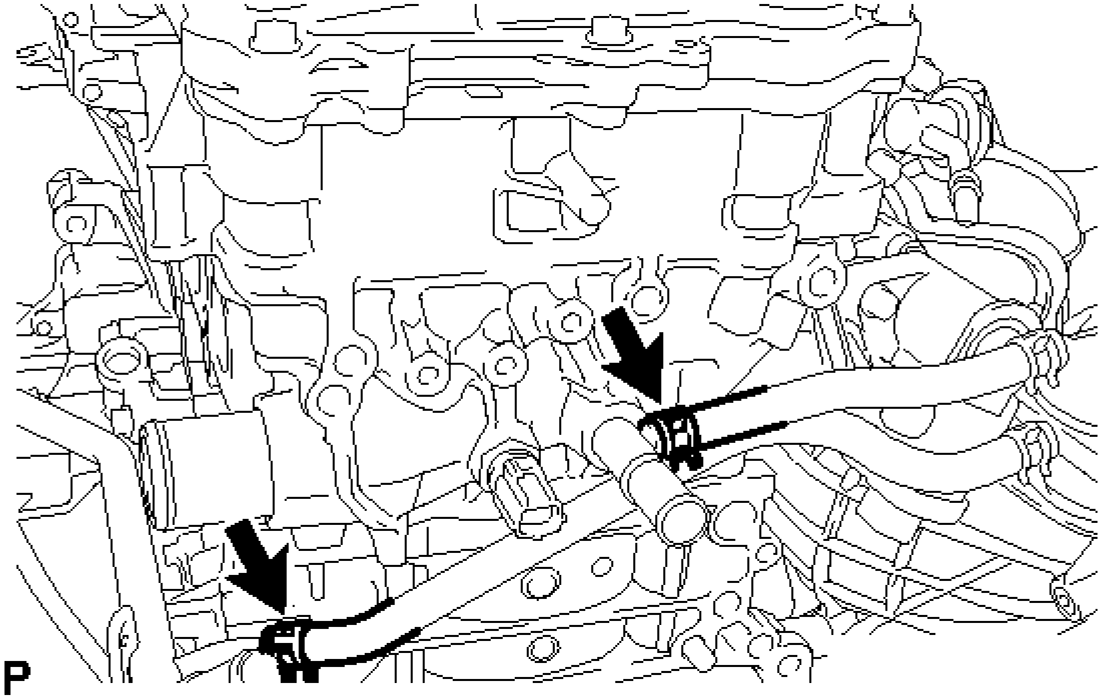

Fig. 289: Locating No. 1 And No. 2 Water By-Pass Hoses
Courtesy of TOYOTA MOTOR SALES, U.S.A., INC.

12. **INSTALL THROTTLE WITH MOTOR BODY ASSEMBLY** . Refer to **INSTALLATION - Step 1**
13. **INSTALL NO. 1 COMPRESSOR MOUNTING BRACKET**
    a. Install the bracket with the 4 bolts.

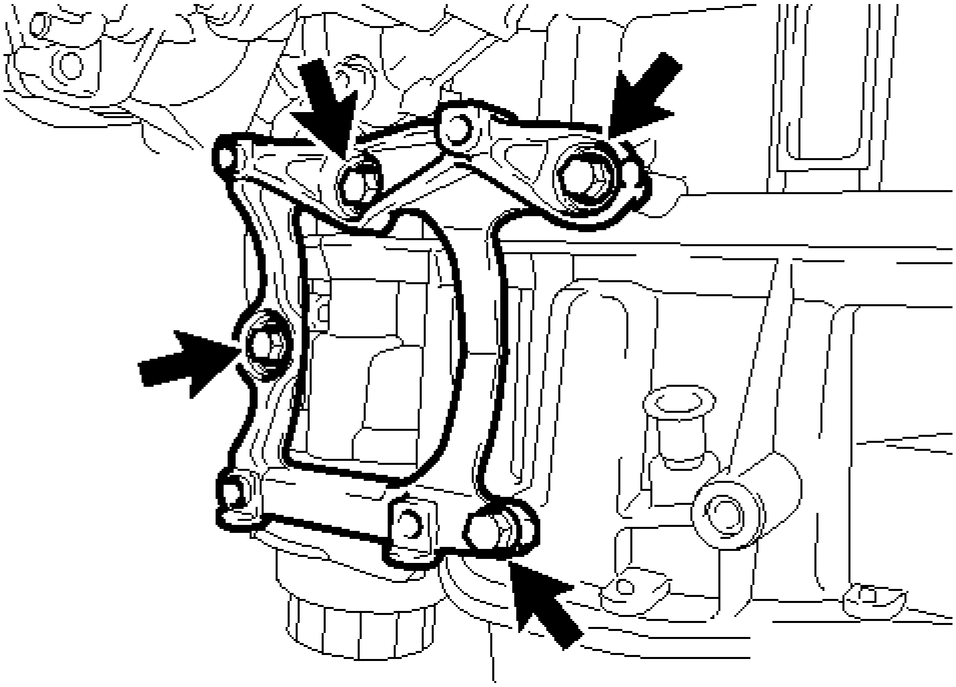

Fig. 290: Locating NO. 1 Compressor Mounting Bracket & Bolts
Courtesy of TOYOTA MOTOR SALES, U.S.A., INC.

Torque: 21 N*m (214 kgf*cm, 15 ft.*lbf)

14. **INSTALL EXHAUST MANIFOLD CONVERTER SUB-ASSEMBLY** . Refer to **INSTALLATION - Step 3**
15. **INSTALL EGR INLET EXHAUST MANIFOLD PLATE (for PZEV)** . Refer to **INSTALLATION - Step 5**
16. **INSTALL NO. 1 EXHAUST MANIFOLD HEAT INSULATOR (except PZEV)** . Refer to **INSTALLATION - Step 4**
17. **INSTALL NO. 2 MANIFOLD STAY** . Refer to **INSTALLATION - Step 6**
18. **INSTALL MANIFOLD STAY** . Refer to **INSTALLATION - Step 7**
19. **INSTALL ENGINE OIL LEVEL DIPSTICK GUIDE**
    a. Apply a light coat of engine oil to a new O-ring.

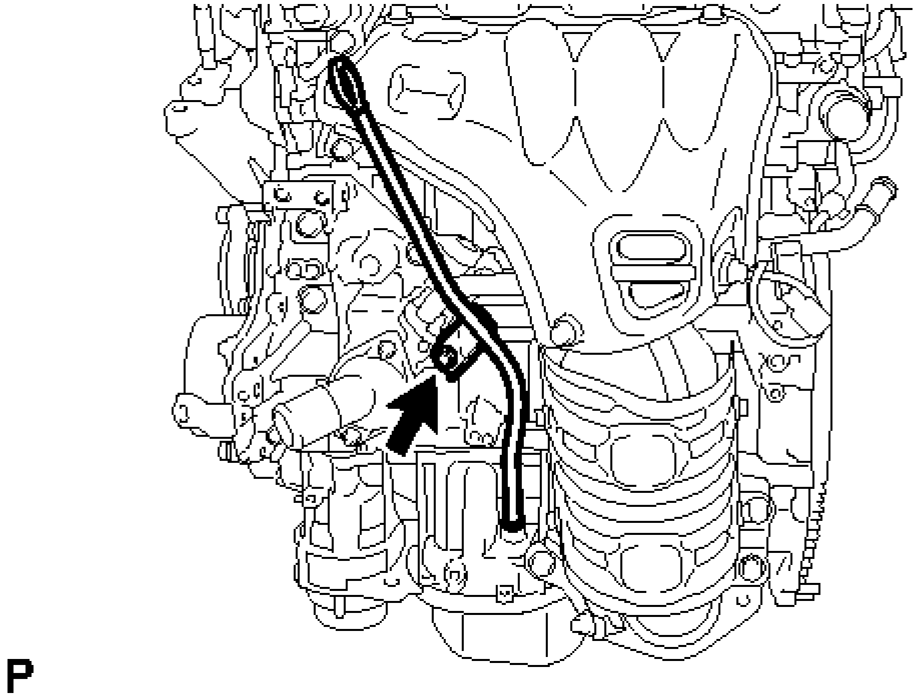

Fig. 291: Locating Dipstick Guide Bolt
Courtesy of TOYOTA MOTOR SALES, U.S.A., INC.

    b. Install the O-ring to the engine oil level dipstick guide.
    c. Install the engine oil level dipstick guide with the bolt.

Torque: 10 N*m (102 kgf*cm, 7 ft.*lbf)

    d. Install the engine oil level dipstick.

20. **INSTALL ENGINE HANGERS**

a. Install the 2 engine hangers with the 4 bolts as shown in the illustration.

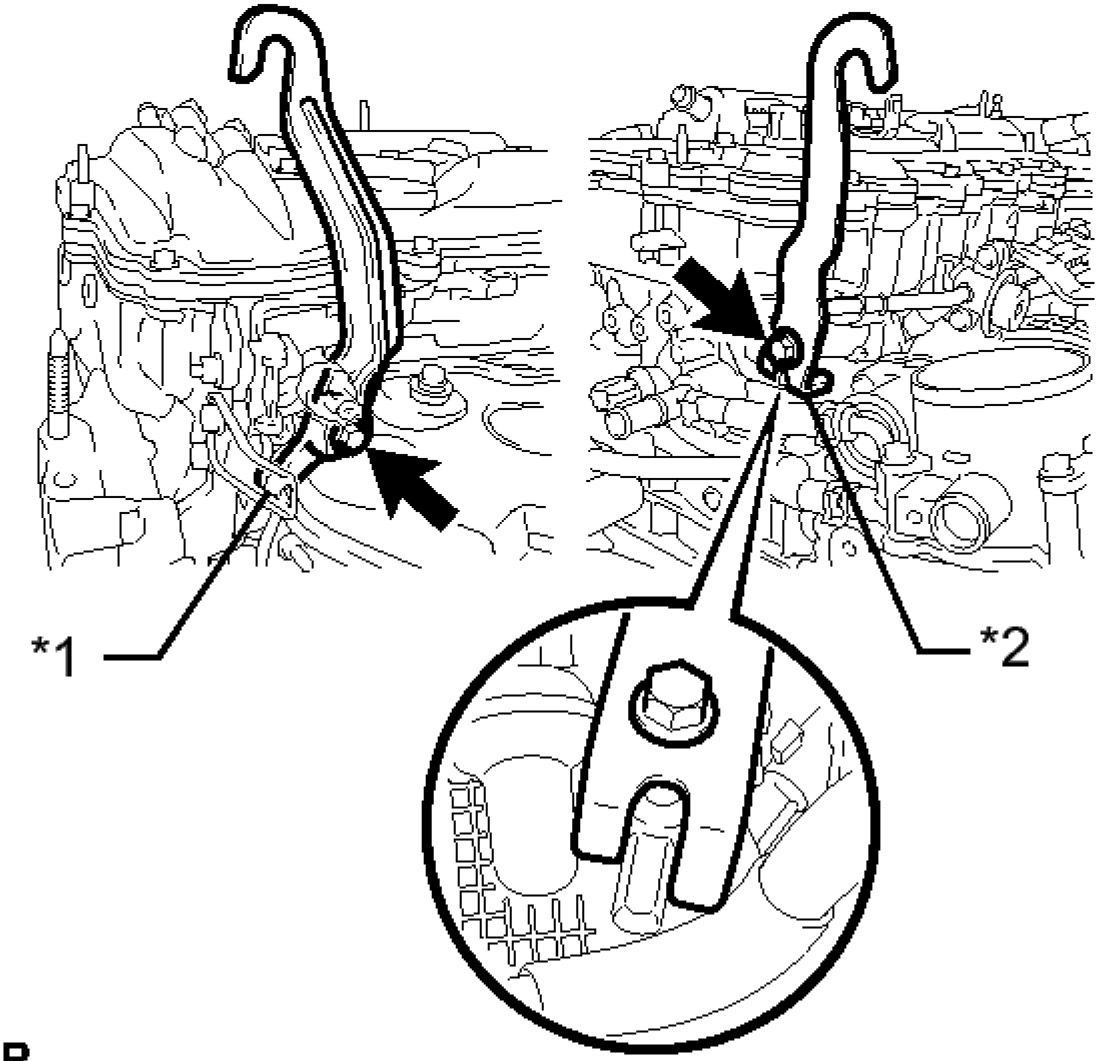

P

Fig. 292: Identifying Engine Hangers With Bolts
Courtesy of TOYOTA MOTOR SALES, U.S.A., INC.

PART NO.

Item	Part No.
No. 1 engine hanger	12281-36020
No. 2 engine hanger	12282-36021

Bolt	91552-81040 or 91552-81025

Torque: 43 N*m (438 kgf*cm, 32 ft.*lbf)

b. Attach an engine sling device and hang the engine with the chain block.

CYLINDER HEAD

COMPONENTS

ILLUSTRATION

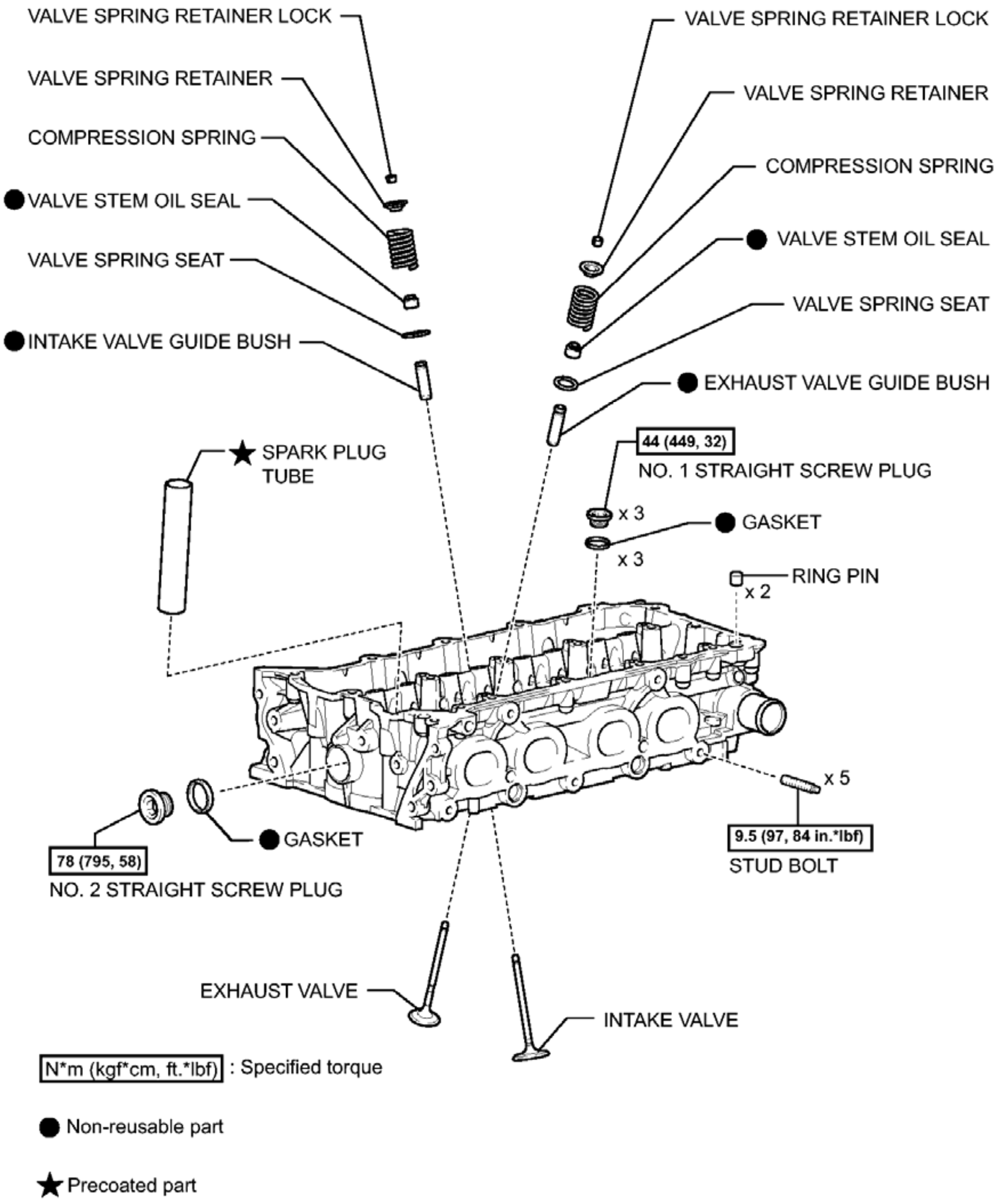
VALVE SPRING RETAINER LOCK
VALVE SPRING RETAINER
COMPRESSION SPRING
● VALVE STEM OIL SEAL
VALVE SPRING SEAT
● INTAKE VALVE GUIDE BUSH
VALVE SPRING RETAINER LOCK
VALVE SPRING RETAINER
COMPRESSION SPRING
● VALVE STEM OIL SEAL
VALVE SPRING SEAT
● EXHAUST VALVE GUIDE BUSH
★ SPARK PLUG TUBE
44 (449, 32)
NO. 1 STRAIGHT SCREW PLUG
x 3
● GASKET
x 3
RING PIN
x 2
x 5
9.5 (97, 84 in.*lbf)
STUD BOLT
78 (795, 58)
● GASKET
NO. 2 STRAIGHT SCREW PLUG
EXHAUST VALVE
INTAKE VALVE
N*m (kgf*cm, ft.*lbf) : Specified torque
● Non-reusable part
★ Precoated part

Fig. 293: Identifying Cylinder Head Replacement Components With Torque Specifications
Courtesy of TOYOTA MOTOR SALES, U.S.A., INC.

DISASSEMBLY

DISASSEMBLY

1. **REMOVE INTAKE VALVE**

a. Using SST and wooden blocks, compress the compression spring and remove the valve spring retainer locks.

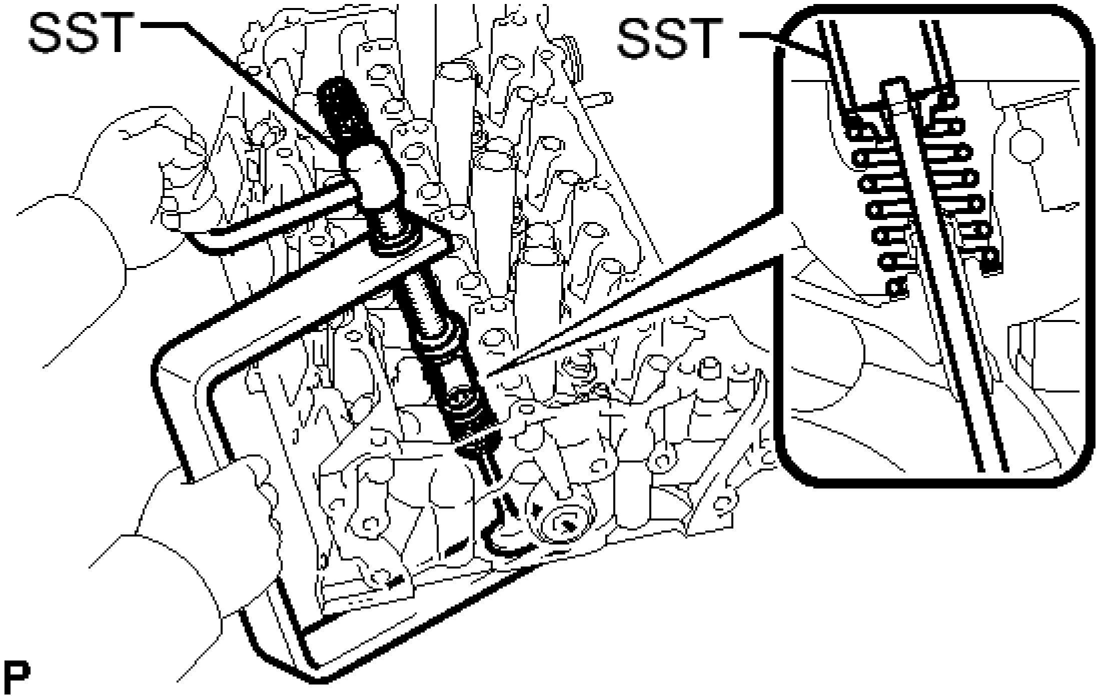

Fig. 294: Compressing Spring
Courtesy of TOYOTA MOTOR SALES, U.S.A., INC.

- **SST: 09202-70020**

  09202-00010

b. Remove the retainer, compression spring and valve.

HINT:

Arrange the removed parts in the correct order.

2. **REMOVE EXHAUST VALVE**

a. Using SST and wooden blocks, compress the compression spring and remove the valve spring retainer locks.

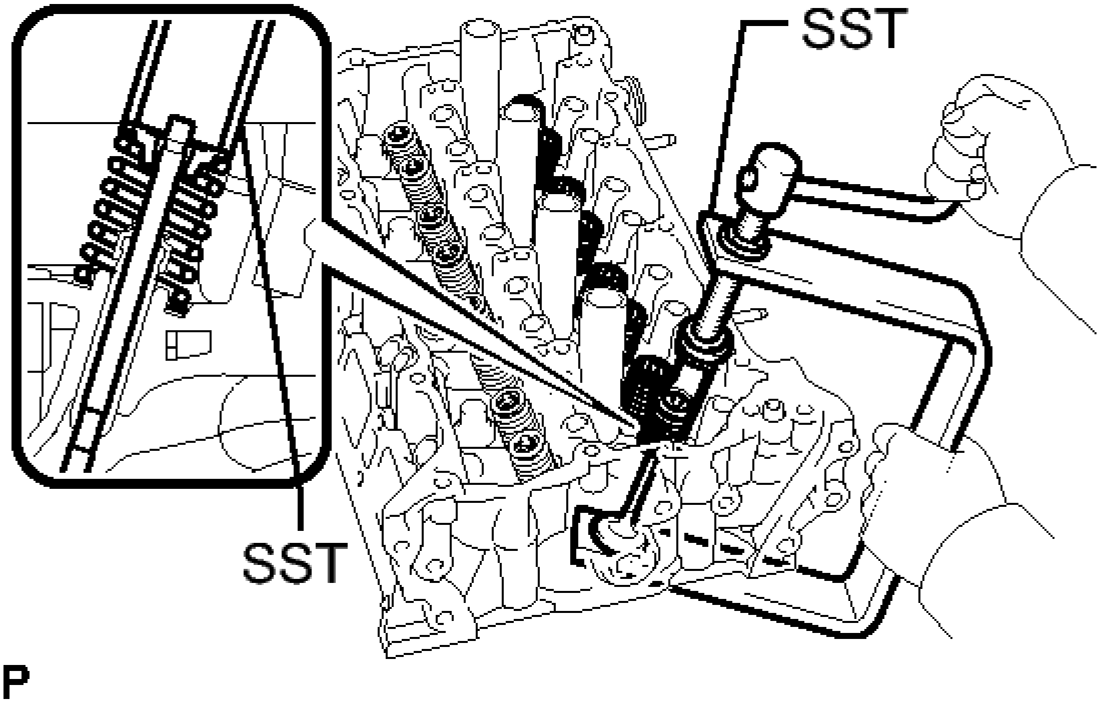

Fig. 295: Compressing Spring
Courtesy of TOYOTA MOTOR SALES, U.S.A., INC.

- **SST: 09202-70020**
  09202-00010

b. Remove the retainer, compression spring and valve.

   HINT:

   Arrange the removed parts in the correct order.

3. **REMOVE VALVE STEM OIL SEAL**
   a. Using needle-nose pliers, remove the oil seals.

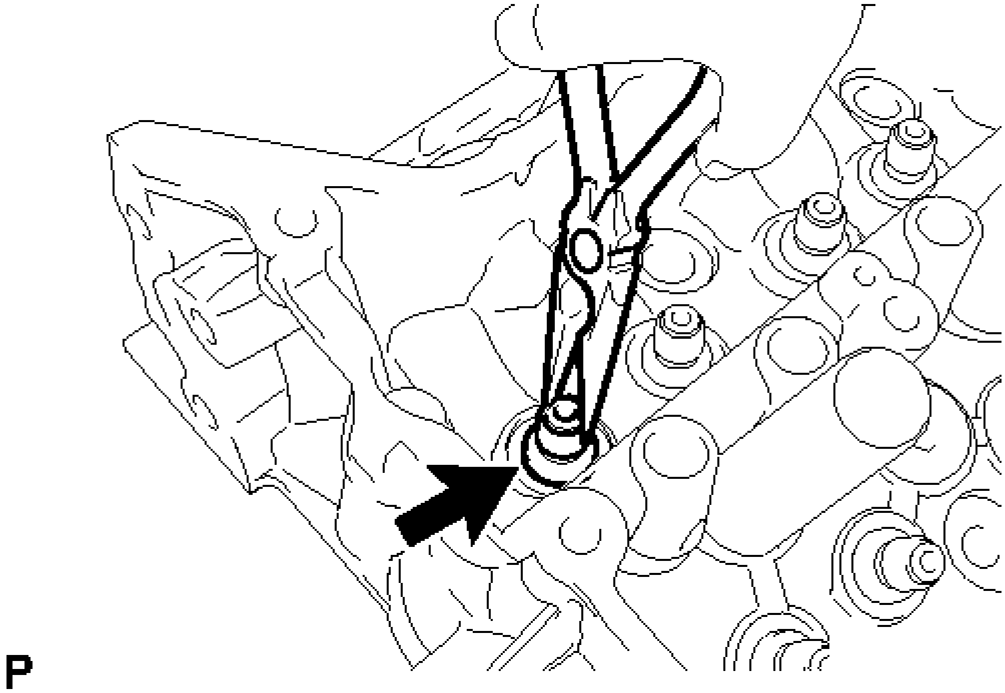

Fig. 296: Removing Oil Seals
Courtesy of TOYOTA MOTOR SALES, U.S.A., INC.

4. **REMOVE VALVE SPRING SEAT**
   a. Using compressed air and a Magnet Hand, remove the valve spring seat by blowing air onto it.

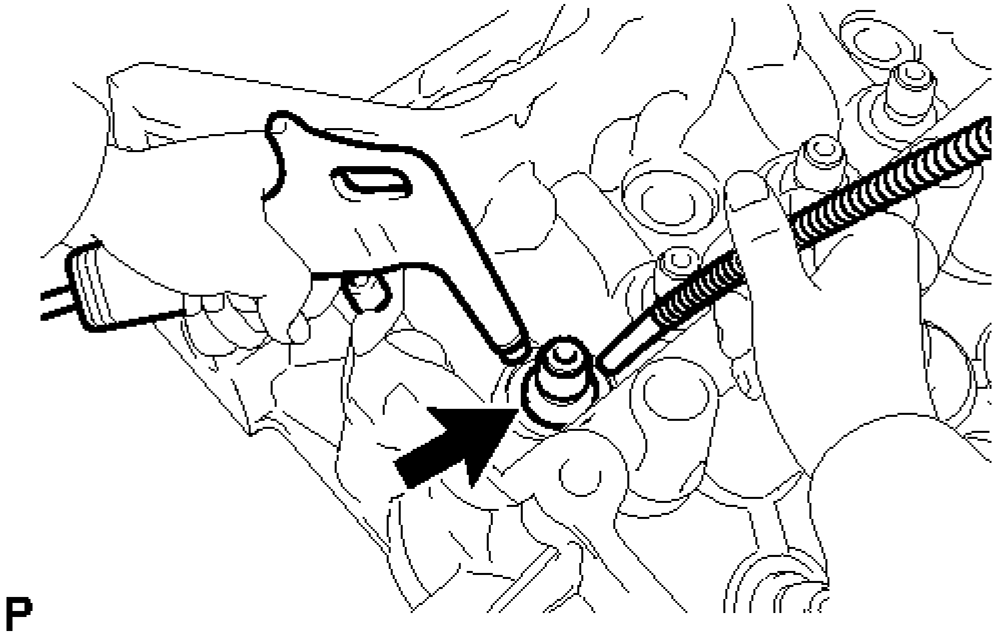

Fig. 297: Removing Valve Spring Seat

Courtesy of TOYOTA MOTOR SALES, U.S.A., INC.

5. **REMOVE NO. 1 STRAIGHT SCREW PLUG**

NOTE: If water leaks from the No. 1 screw plug or the plug is corroded, replace it.

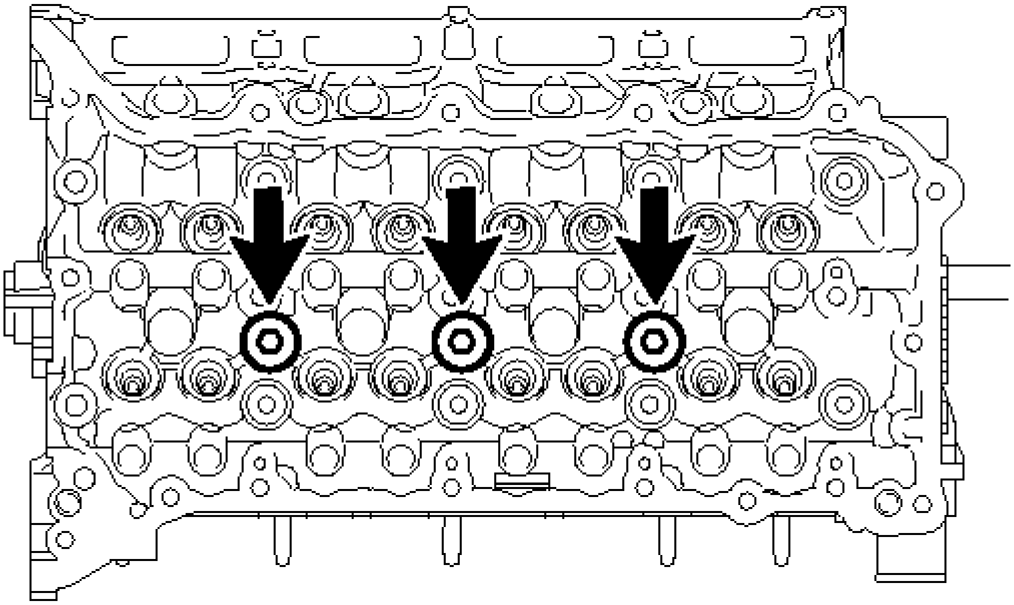

Fig. 298: Locating No. 1 Straight Screw Plugs
Courtesy of TOYOTA MOTOR SALES, U.S.A., INC.

a. Using a 10 mm hexagon wrench, remove the 3 screw plugs and 3 gaskets.

6. **REMOVE NO. 2 STRAIGHT SCREW PLUG**

NOTE: If water leaks from the No. 2 screw plug or the plug is corroded, replace it.

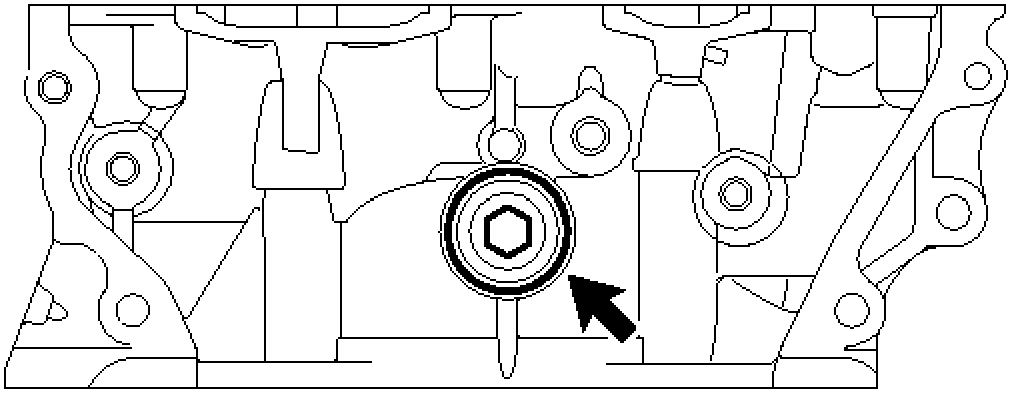

P

Fig. 299: Locating No. 2 Straight Screw Plug
Courtesy of TOYOTA MOTOR SALES, U.S.A., INC.

   a. Using a 14 mm hexagon wrench, remove the screw plug and gasket.

7. **REMOVE STUD BOLT**

   NOTE: If a stud bolt is deformed or its threads are damaged, replace it.

INSPECTION

INSPECTION

1. **INSPECT CYLINDER HEAD SUB-ASSEMBLY**
   a. Using a precision straightedge and feeler gauge, measure the warpage of the contact surfaces where the cylinder head contacts the cylinder block and manifold.

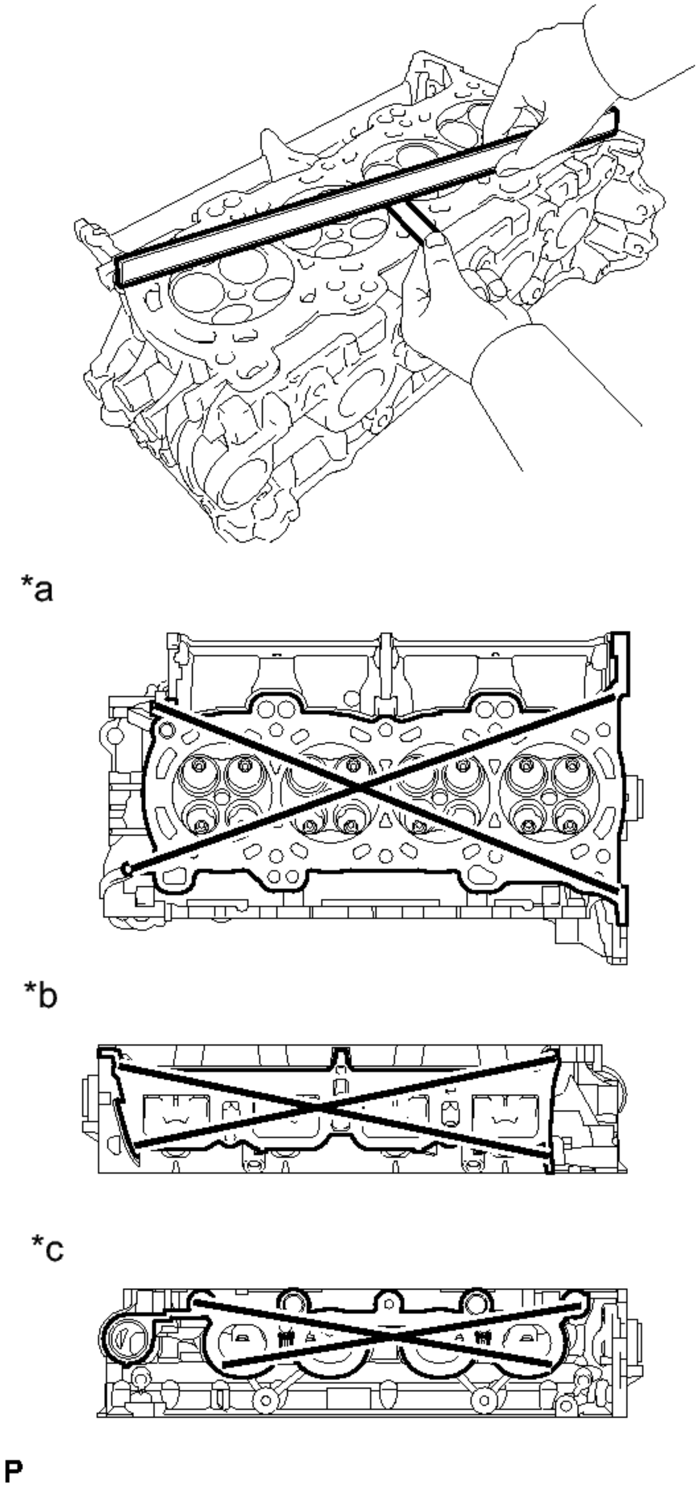

Fig. 300: Measuring Warpage Of Contact Surfaces
Courtesy of TOYOTA MOTOR SALES, U.S.A., INC.

Maximum Warpage

Item	Specified Condition
Cylinder head lower side	0.05 mm (0.00197 in.)
Intake manifold side	0.10 mm (0.00394 in.)
Exhaust manifold side	0.10 mm (0.00394 in.)

TEXT IN ILLUSTRATION

*a	Cylinder Head Lower Side
*b	Intake Manifold Side
*c	Exhaust Manifold Side

If the warpage is more than the maximum, replace the cylinder head.

b. Using a dye penetrant, check the intake ports, exhaust ports and cylinder surface for cracks.

If cracked, replace the cylinder head.

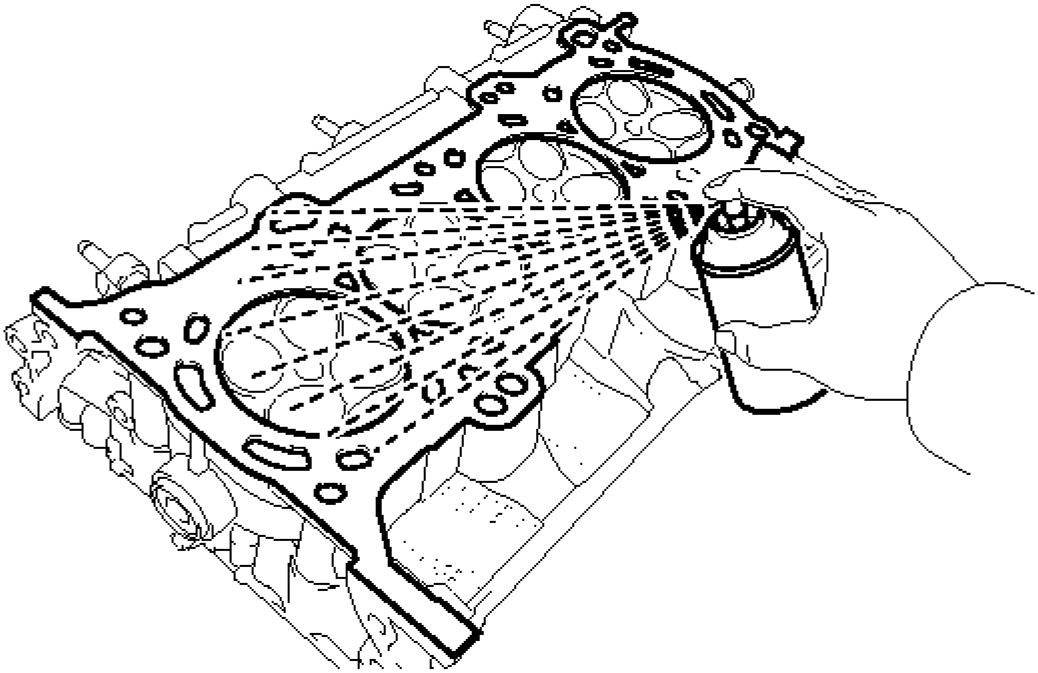

P

Fig. 301: Checking Cylinder Contact Surface
Courtesy of TOYOTA MOTOR SALES, U.S.A., INC.

2. **INSPECT COMPRESSION SPRING**
    a. Using a vernier caliper, measure the free length of the inner compression spring.

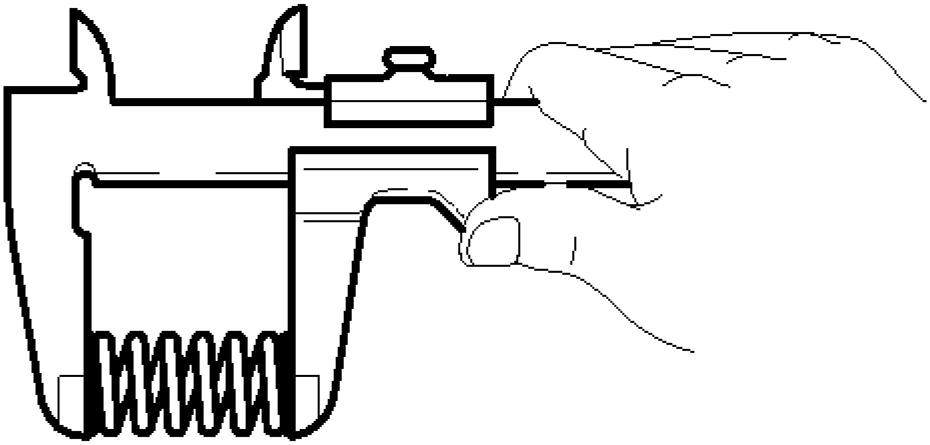

P

Fig. 302: Measuring Free Length Of Inner Compression Spring

Courtesy of TOYOTA MOTOR SALES, U.S.A., INC.

Standard free length

47.2 to 49.2 mm (1.86 to 1.94 in.)

If the free length is not as specified, replace the spring.

b. Using a steel square, measure the deviation of the inner compression spring.

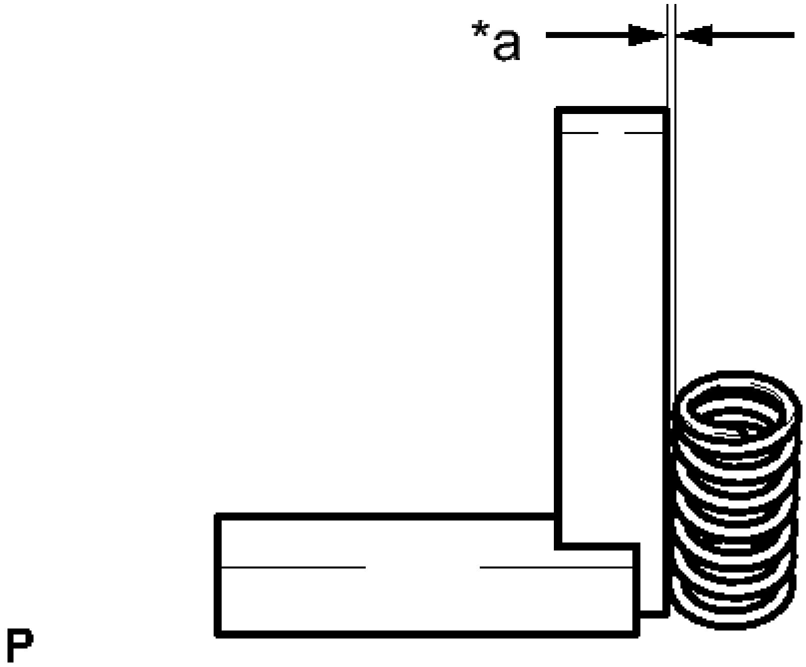

Fig. 303: Measuring Inner Compression Spring Deviation
Courtesy of TOYOTA MOTOR SALES, U.S.A., INC.

Maximum deviation

1.0 mm (0.0394 in.)

Maximum angle

2°

TEXT IN ILLUSTRATION

*a	Deviation

If the deviation is more than the maximum, replace the spring.

3. **INSPECT INTAKE VALVE**

a. Using a micrometer, measure the diameter of the valve stem.

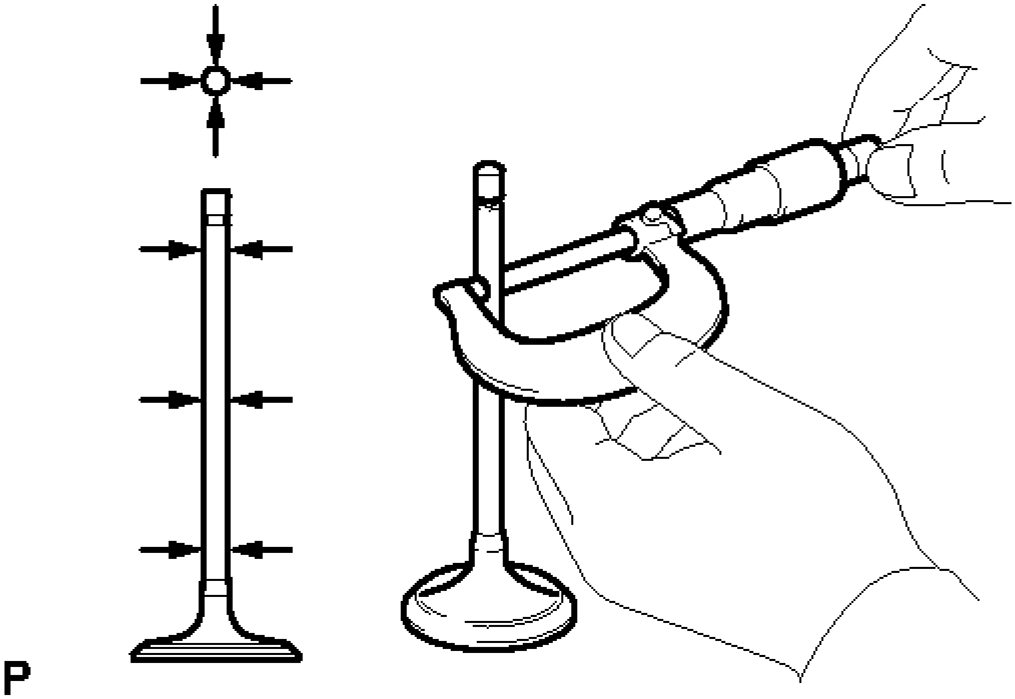

Fig. 304: Measuring Diameter Of Valve Stem
Courtesy of TOYOTA MOTOR SALES, U.S.A., INC.

Standard valve stem diameter

5.470 mm to 5.485 mm (0.21535 to 0.21594 in.)

b. Using a vernier caliper, measure the valve head margin thickness.

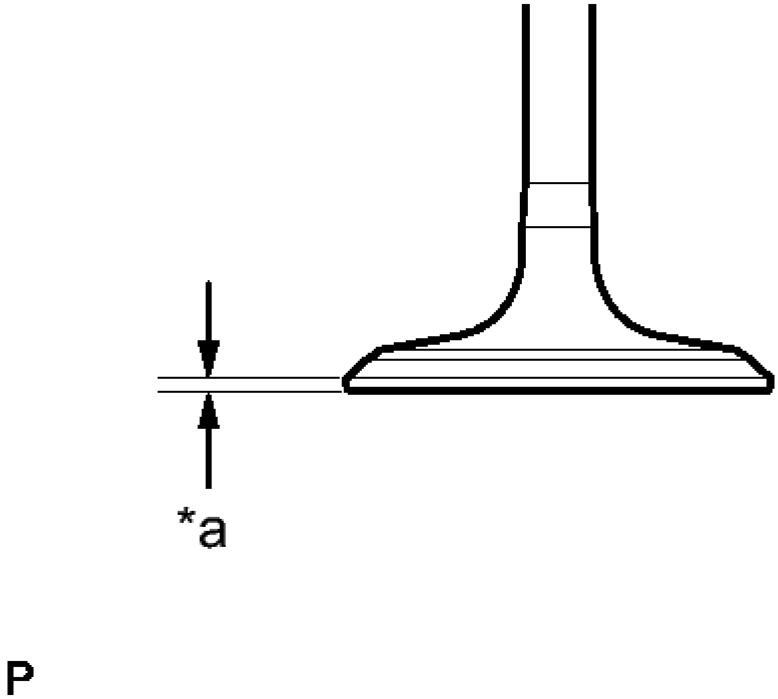

Fig. 305: Measuring Valve Head Margin Thickness
Courtesy of TOYOTA MOTOR SALES, U.S.A., INC.

Standard margin thickness

1.0 mm (0.0394 in.)

Minimum margin thickness

0.50 mm (0.0197 in.)

TEXT IN ILLUSTRATION

*a	Margin Thickness

If the margin thickness is less than the minimum, replace the valve.

c. Using a vernier caliper, measure the overall length of the valve.

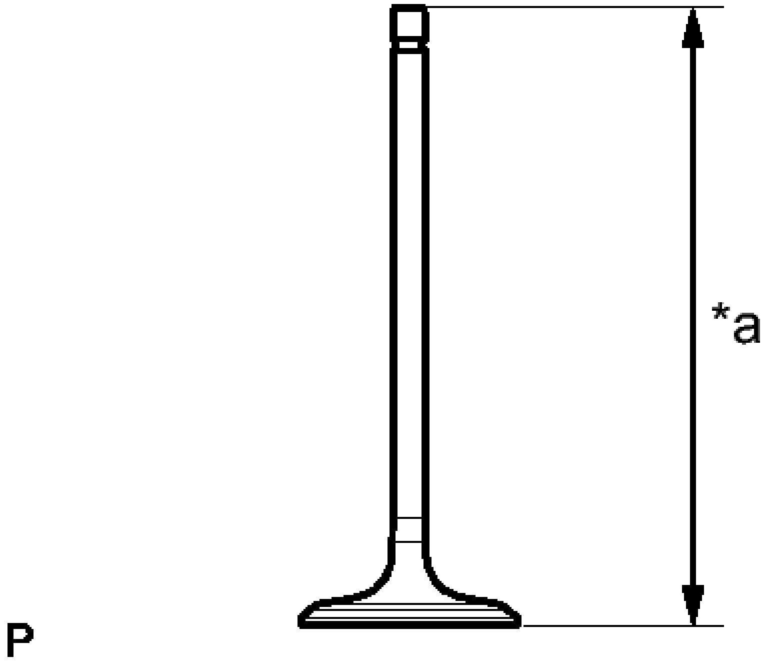

Fig. 306: Measuring Overall Length Of Valve
Courtesy of TOYOTA MOTOR SALES, U.S.A., INC.

Standard overall length

103.92 mm (4.09 in.)

Minimum overall length

103.42 mm (4.07 in.)

TEXT IN ILLUSTRATION

*a	Overall Length

If the overall length is less than the minimum, replace the intake valve.

4. **INSPECT EXHAUST VALVE**
    a. Using a micrometer, measure the diameter of the valve stem.

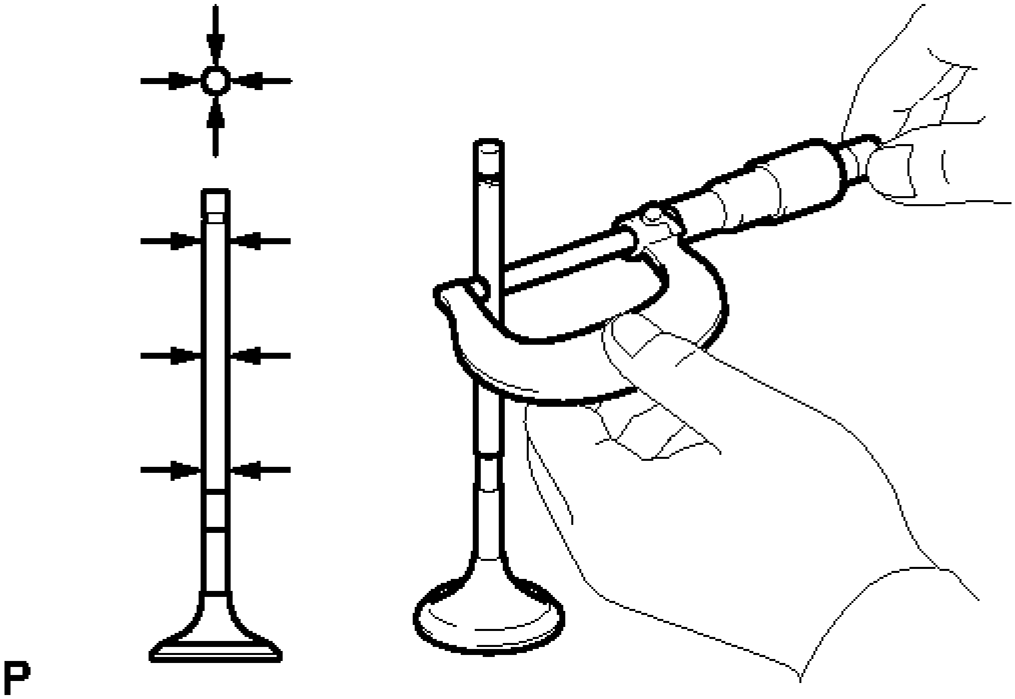

Fig. 307: Measuring Diameter Of Valve Stem
Courtesy of TOYOTA MOTOR SALES, U.S.A., INC.

Standard valve stem diameter

5.465 mm to 5.480 mm (0.21516 to 0.21575 in.)

b. Using a vernier caliper, measure the valve head margin thickness.

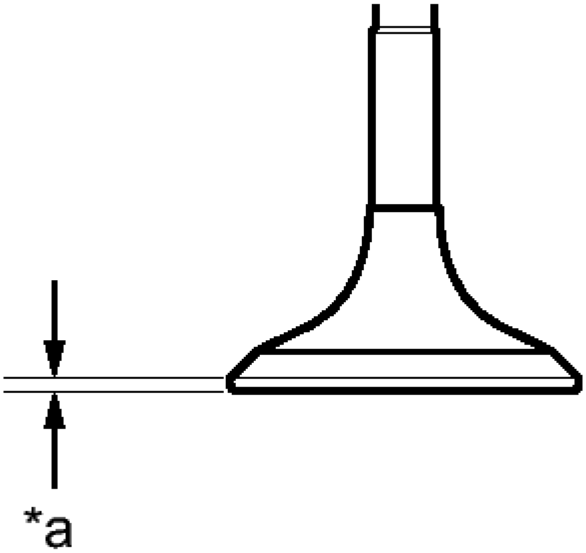

P

Fig. 308: Measuring Valve Head Margin Thickness
Courtesy of TOYOTA MOTOR SALES, U.S.A., INC.

Standard margin thickness

1.0 mm (0.0394 in.)

Minimum margin thickness

0.50 mm (0.0197 in.)

TEXT IN ILLUSTRATION

*a	Margin Thickness

If the margin thickness is less than the minimum, replace the exhaust valve.

c. Using a vernier caliper, measure the overall length of the valve.

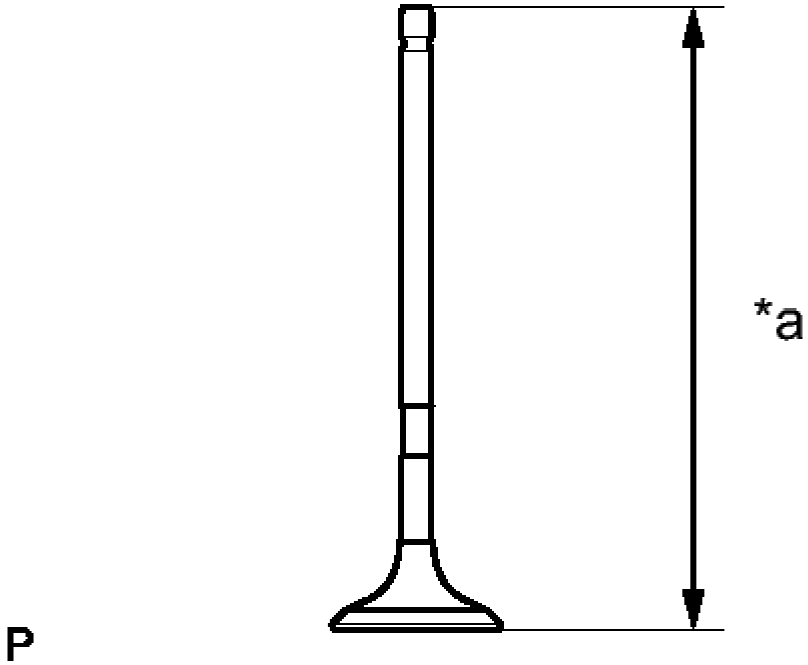

Fig. 309: Measuring Overall Length Of Valve
Courtesy of TOYOTA MOTOR SALES, U.S.A., INC.

Standard overall length

112.91 mm (4.44 in.)

Minimum overall length

112.41 mm (4.43 in.)

TEXT IN ILLUSTRATION

*a	Overall Length

If the overall length is less than the minimum, replace the exhaust valve.

5. **INSPECT VALVE GUIDE BUSH OIL CLEARANCE**
   a. Using a caliper gauge, measure the inside diameter of the guide bush.

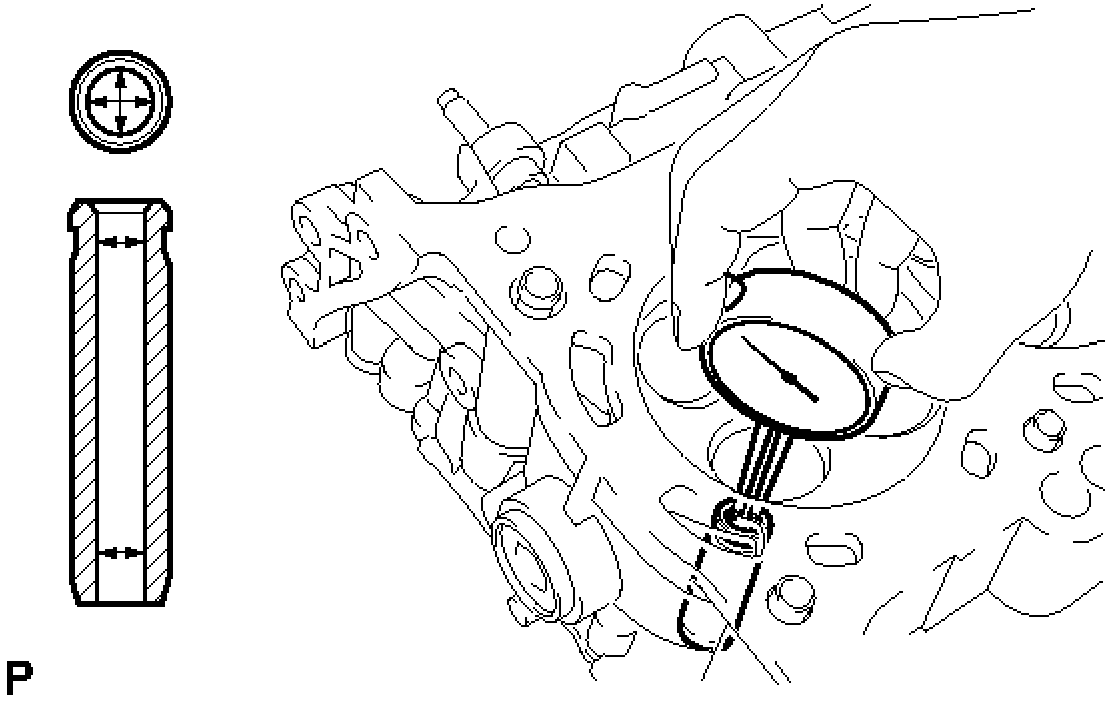

Fig. 310: Measuring Inside Diameter Of Guide Bush
Courtesy of TOYOTA MOTOR SALES, U.S.A., INC.

Standard bush inside diameter

5.510 to 5.530 mm (0.2169 to 0.2177 in.)

b. Subtract the valve stem diameter measurement from the guide bush inside diameter measurement.

Standard Oil Clearance

Item	Specified Condition
Intake	0.025 to 0.060 mm (0.000984 to 0.00236 in.)
Exhaust	0.030 to 0.065 mm (0.00118 to 0.00256 in.)

Maximum Oil Clearance

	Specified

Item	Condition
Intake	0.08 mm (0.00315 in.)
Exhaust	0.10 mm (0.00394 in.)

If the oil clearance is more than the maximum, replace the valve and guide bush.

6. **INSPECT INTAKE VALVE SEAT**
    a. Apply a light coat of Prussian blue to the valve face.
    b. Lightly press the valve face against the valve seat.

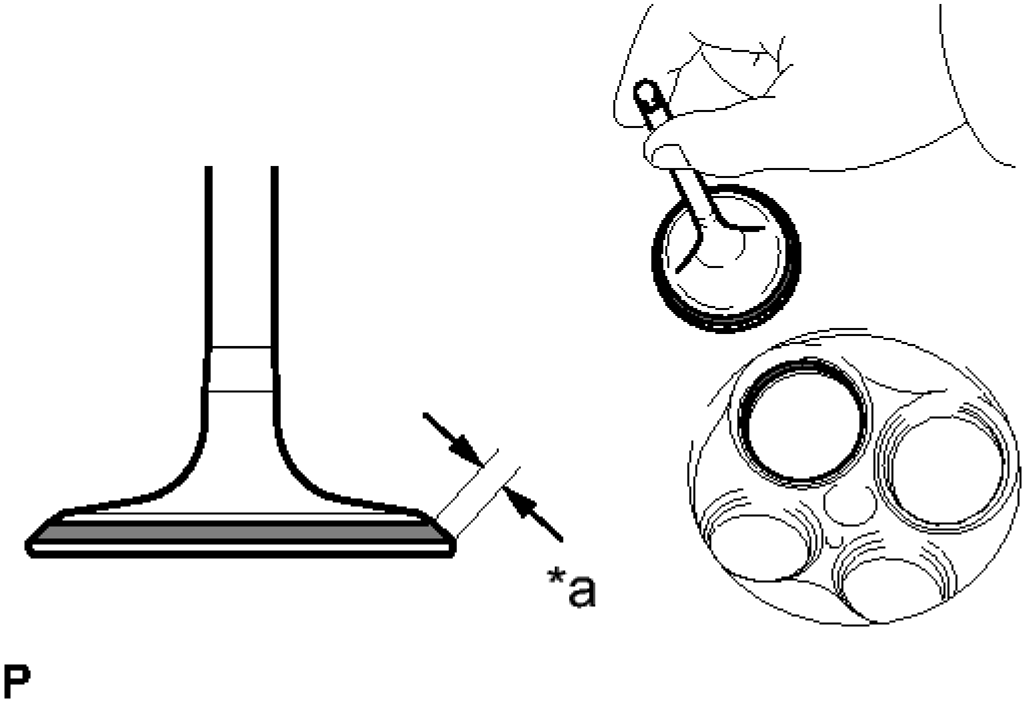

Fig. 311: Inspecting Intake Valve Seat
Courtesy of TOYOTA MOTOR SALES, U.S.A., INC.

TEXT IN ILLUSTRATION

*a	Width

HINT:

Do not rotate the valve while pressing the valve.

    c. Check the valve face and valve seat.
        1. Check that the contact surfaces of the valve seat and valve face are in the middle area of their

respective surfaces, with the width between 1.1 and 1.5 mm (0.0433 and 0.0591 in.).

If not, correct the valve seat.

2. Check that the contact surfaces of the valve seat and valve face are even around the entire valve seat.

   If not, correct the valve seat.

7. **INSPECT EXHAUST VALVE SEAT**
   a. Apply a light coat of Prussian blue to the valve face.
   b. Lightly press the valve face against the valve seat.

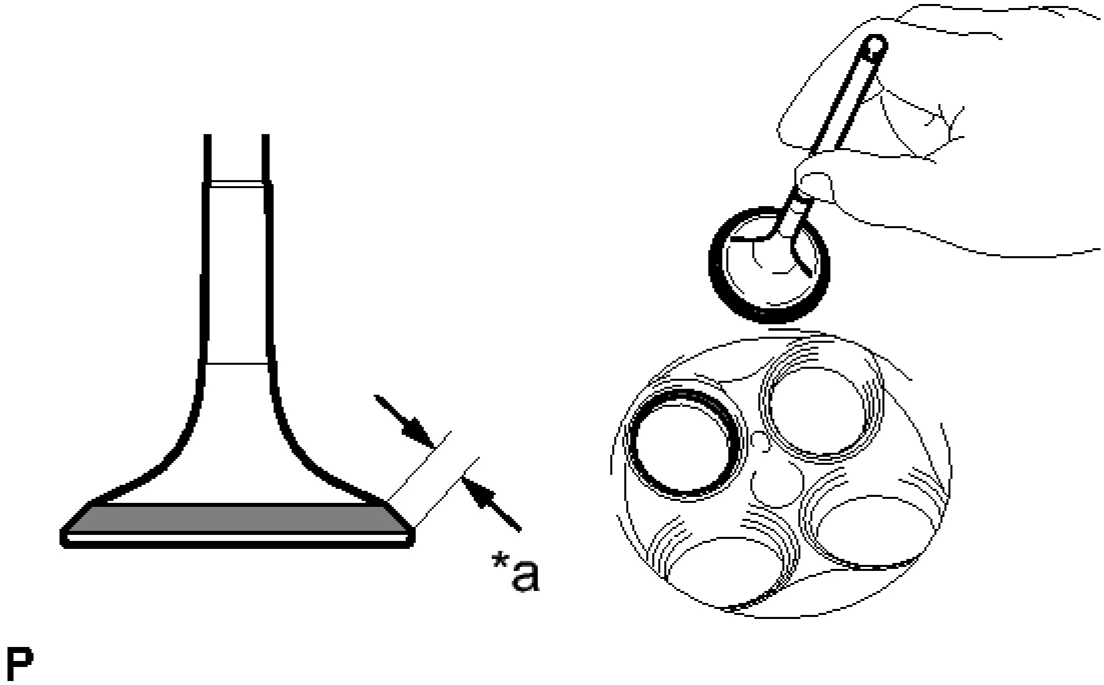

Fig. 312: Inspecting Exhaust Valve Seat
Courtesy of TOYOTA MOTOR SALES, U.S.A., INC.

TEXT IN ILLUSTRATION

*a	Width

HINT:

Do not rotate the valve while pressing the valve.

c. Check the valve face and valve seat.
   1. Check that the contact surfaces of the valve seat and valve face are in the middle area of their respective surfaces, with the width between 1.1 and 1.5 mm (0.0433 and 0.0591 in.).

If not, correct the valve seat.

2. Check that the contact surfaces of the valve seat and valve face are even around the entire valve seat.

   If not, correct the valve seat.

8. **INSPECT CAMSHAFT OIL CLEARANCE**

NOTE: **Do not turn the camshafts.**

a. Clean the bearing caps, camshaft housing and camshaft journals.
b. Place the camshafts on the camshaft housing.
c. Lay a strip of Plastigage across each of the camshaft journals.

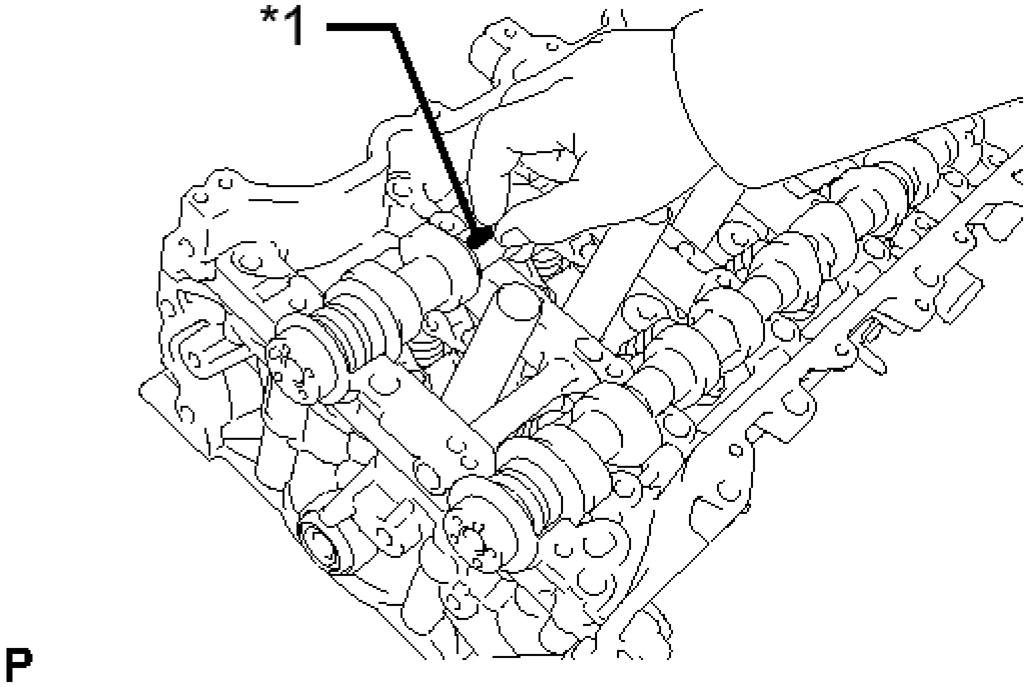

Fig. 313: Inspecting Camshaft Oil Clearance
Courtesy of TOYOTA MOTOR SALES, U.S.A., INC.

TEXT IN ILLUSTRATION

*1	Plastigage

d. Install the camshaft bearing caps See step 13.
e. Install the camshaft housing sub-assembly See step 14.
f. Remove the camshaft bearing caps See step 21.
g. Measure the Plastigage at its widest point.

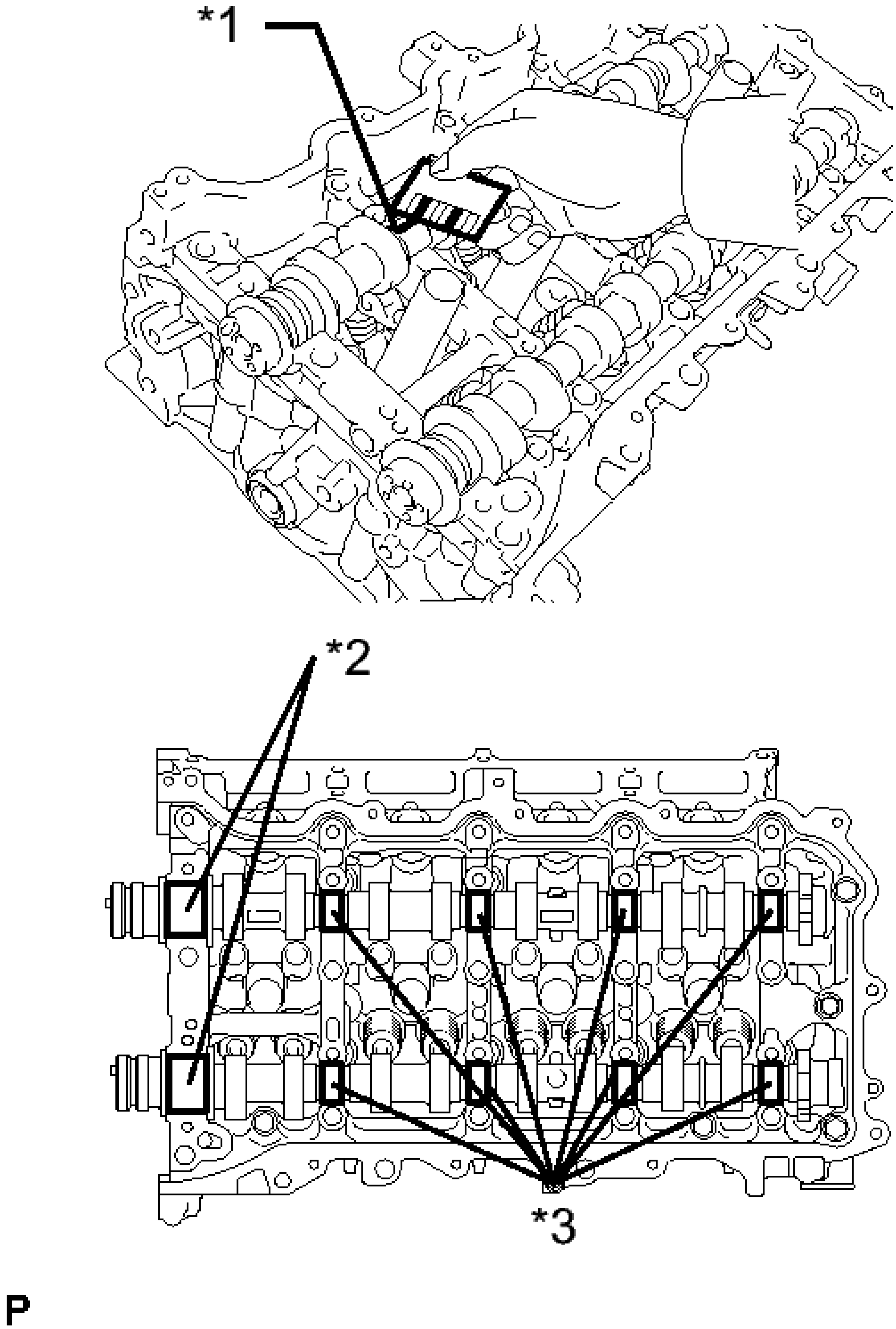

Fig. 314: Measuring Plastigage At Widest Point
Courtesy of TOYOTA MOTOR SALES, U.S.A., INC.

Standard Oil Clearance

Item	Specified Condition
Intake No. 1 journal	0.035 to 0.072 mm (0.00137 to 0.00283 in.)
Exhaust No. 1 journal	0.049 to 0.086 mm (0.00193 to 0.00339 in.)
Other journal	0.025 to 0.062 mm (0.000984 to 0.00244 in.)

Maximum Oil Clearance

Item	Specified Condition
Intake No. 1 journal	0.085 mm (0.00335 in.)
Exhaust No. 1 journal	0.095 mm (0.00374 in.)
Other journal	0.085 mm (0.00335 in.)

TEXT IN ILLUSTRATION

*1	Plastigage
*2	No. 1 Journal
*3	Other Journal

If the oil clearance is more than the maximum, replace the camshaft. If necessary, replace the camshaft housing.

9. **INSPECT CAMSHAFT THRUST CLEARANCE**
   1. Clean the bearing caps, camshaft housing and camshaft journals.
   2. Place the camshafts on the camshaft housing.

c. Install the camshaft bearing caps See step 13.
d. Install the camshaft housing sub-assembly See step 14.
e. Using a dial indicator, measure the thrust clearance while moving the camshaft back and forth.

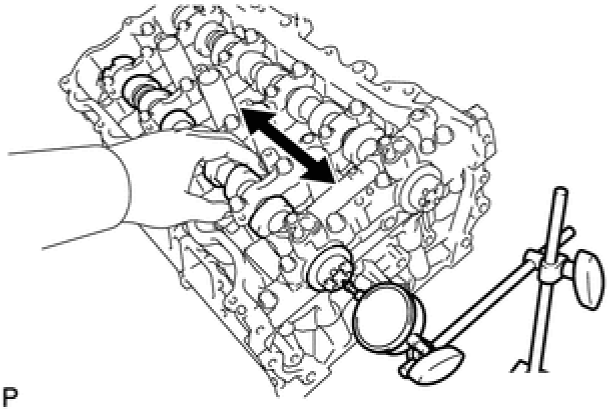

Fig. 315: Measuring Camshaft Thrust Clearance
Courtesy of TOYOTA MOTOR SALES, U.S.A., INC.

Standard Thrust Clearance

Item	Specified Condition
Intake	0.060 to 0.155 mm (0.00236 to 0.00610 in.)
Exhaust	0.060 to 0.155 mm (0.00236 to 0.00610 in.)

Maximum Thrust Clearance

Item	Specified Condition
Intake	0.170 mm (0.00669 in.)
Exhaust	0.170 mm (0.00669 in.)

If the thrust clearance is more than the maximum, replace the camshaft housing. If the thrust surface is damaged, replace the camshaft.

REPLACEMENT

REPLACEMENT

1. **REPLACE INTAKE VALVE GUIDE BUSH**
   a. Heat the cylinder head to approximately 80 to 100°C (176 to 212°F).
   b. Place the cylinder head on wooden blocks.
   c. Using SST and a hammer, tap out the valve guide bush.
      - **SST: 09201-01055**
      - **SST: 09950-70010**
        09951-07100

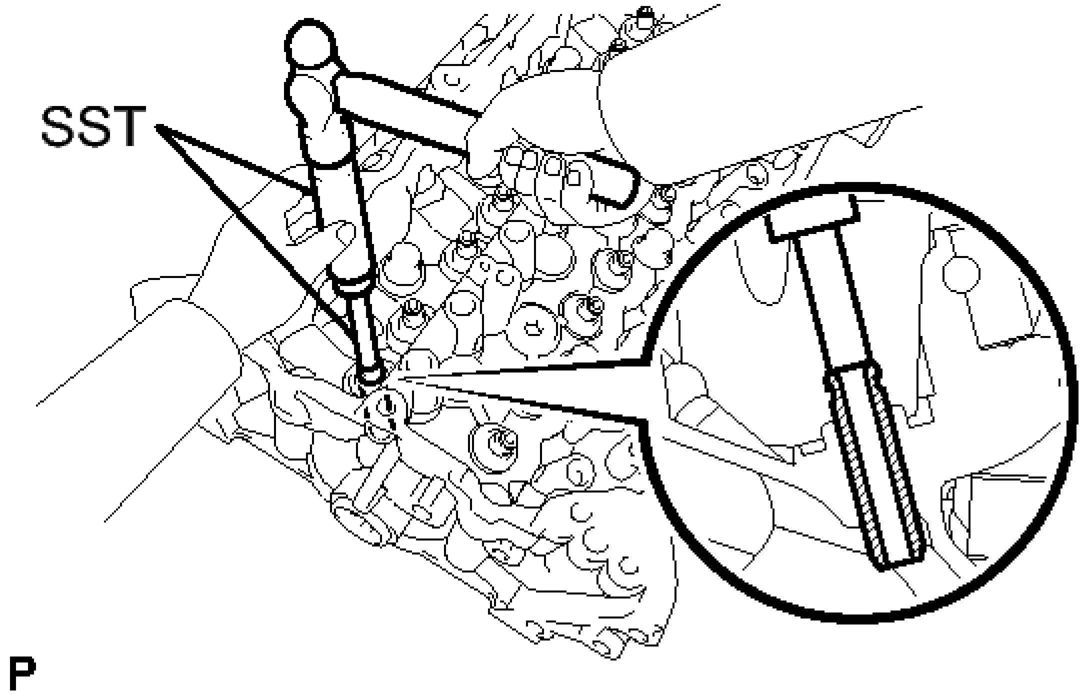

Fig. 316: Tapping Out Valve Guide Bush Using SST
Courtesy of TOYOTA MOTOR SALES, U.S.A., INC.

   d. Using a caliper gauge, measure the bush bore diameter of the cylinder head.

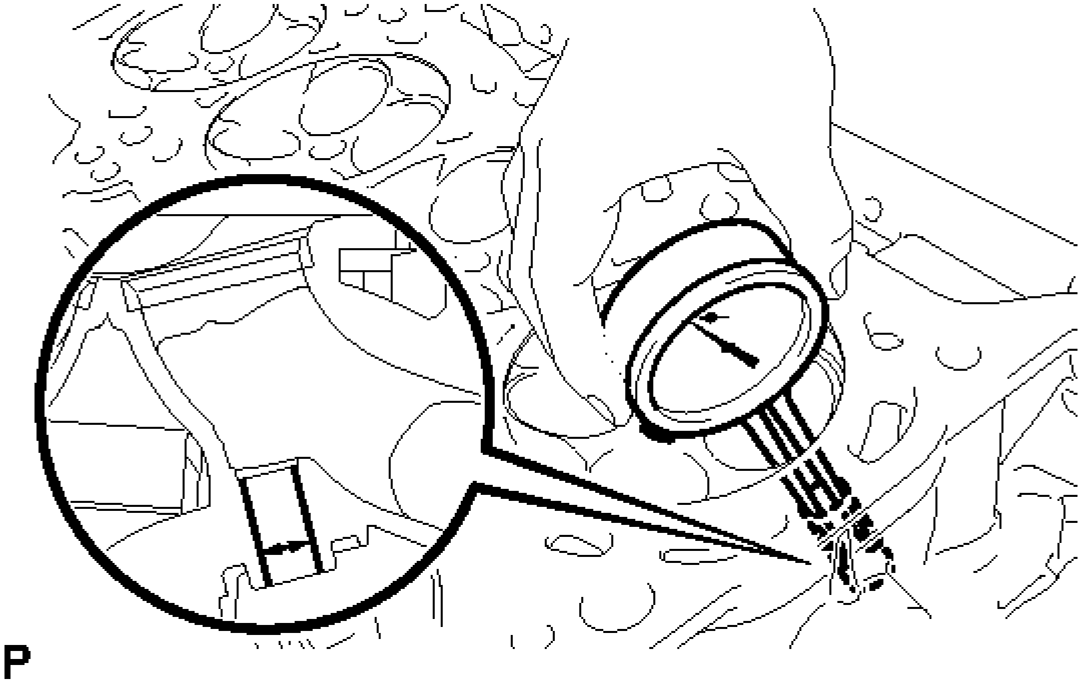

Fig. 317: Measuring Bush Bore Diameter Of Cylinder Head
Courtesy of TOYOTA MOTOR SALES, U.S.A., INC.

Standard bush bore diameter

10.285 to 10.306 mm (0.405 to 0.406 in.)

If the bush bore diameter of the cylinder head is between 10.285 and 10.306 mm (0.405 and 0.406 in.), proceed to the next step.

If the bush bore diameter of the cylinder head is 10.356 mm (0.408 in.) or more, replace the cylinder head.

e. Select a new guide bush (STD or O/S 0.05), and measure its diameter.
f. Machine the bush bore of the cylinder head to the diameter of the selected guide bush.

Bush Bore Diameter

Bush Size	Specified Condition
STD	10.333 to 10.344 mm (0.4068 to 0.4072 in.)
	10.383 to

O/S 0.05	10.394 mm (0.4088 to 0.4092 in.)

Standard bush length

41.3 to 41.7 mm (1.626 to 1.642 in.)

g. Heat the cylinder head to approximately 80 to 100°C (176 to 212°F).
h. Using SST and a hammer, tap in the selected guide bush to the standard protrusion height.
    - **SST: 09201-10000**
      09201-01050
    - **SST: 09950-70010**
      09951-07100

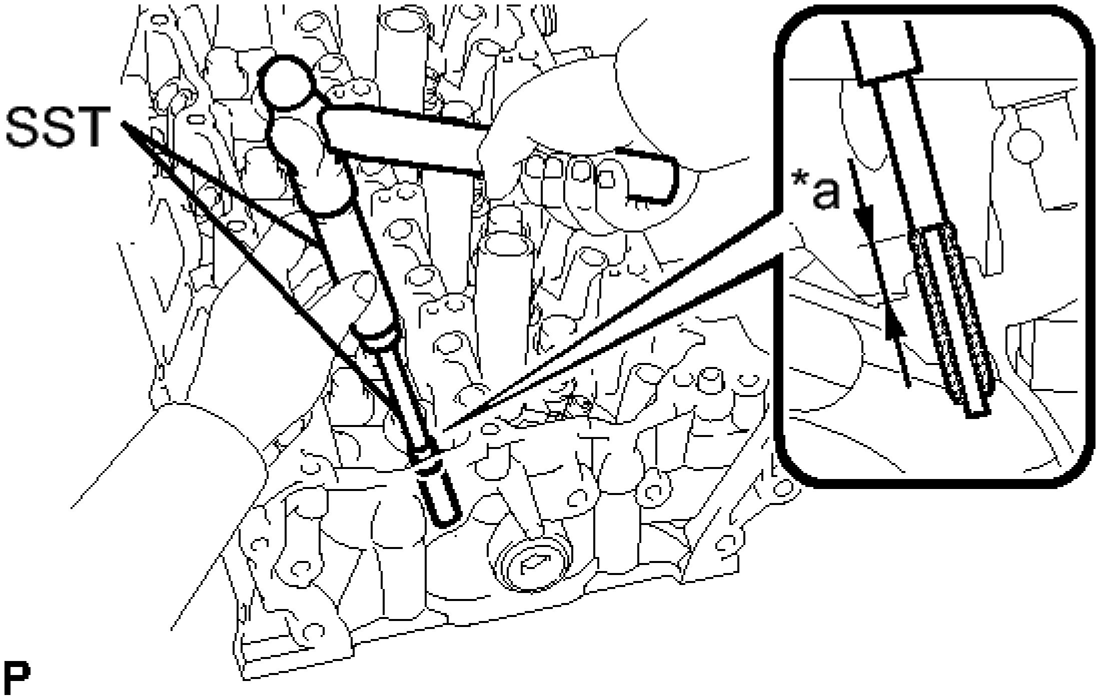

Fig. 318: Identifying Protrusion Height
Courtesy of TOYOTA MOTOR SALES, U.S.A., INC.

Standard protrusion height

14.8 to 15.2 mm (0.582 to 0.598 in.)

TEXT IN ILLUSTRATION

*a	Height

i. Using a sharp 5.5 mm reamer, ream the guide bush to obtain the standard oil clearance between the guide bush and valve stem.

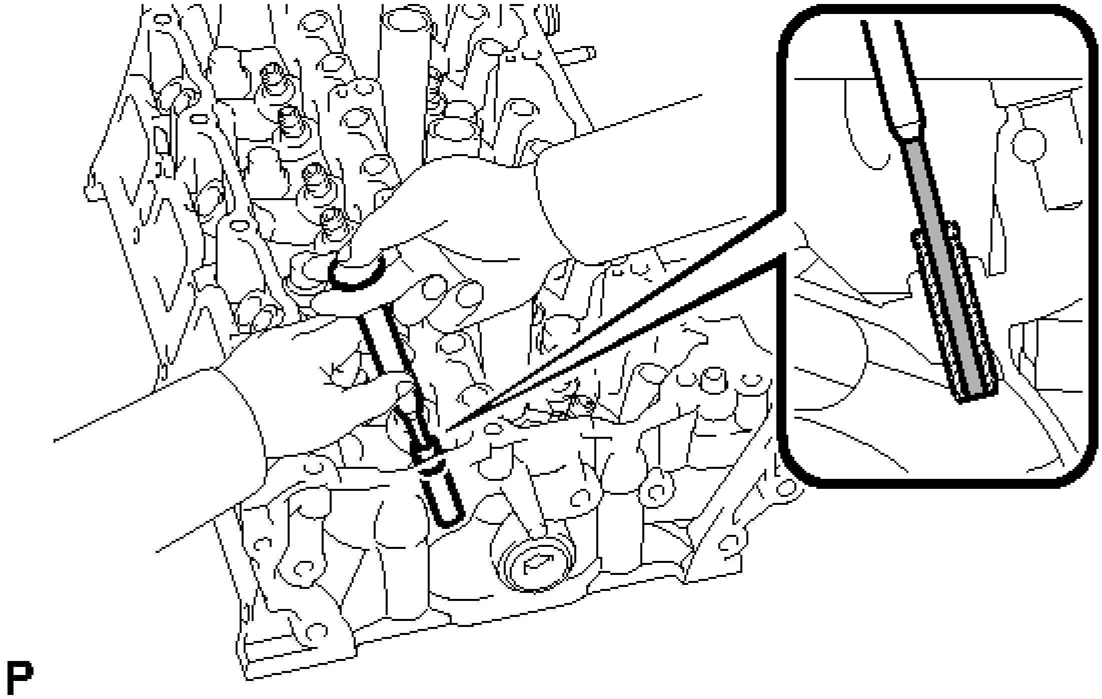

Fig. 319: Reaming Guide Bush
Courtesy of TOYOTA MOTOR SALES, U.S.A., INC.

Standard oil clearance

0.025 to 0.060 mm (0.000984 to 0.00236 in.)

2. **REPLACE EXHAUST VALVE GUIDE BUSH**
   a. Heat the cylinder head to approximately 80 to 100°C (176 to 212°F).
   b. Place the cylinder head on wooden blocks.
   c. Using SST and a hammer, tap out the valve guide bush.
      - **SST: 09201-01055**
      - **SST: 09950-70010**
        09951-07100

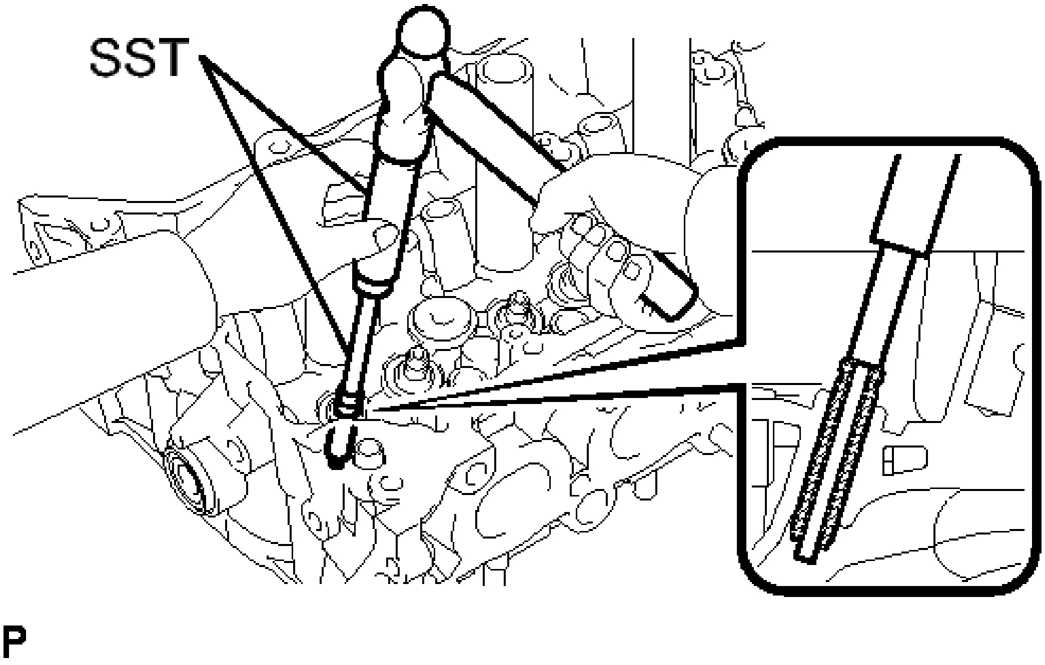

Fig. 320: Tapping Out Valve Guide Bush Using SST
Courtesy of TOYOTA MOTOR SALES, U.S.A., INC.

d. Using a caliper gauge, measure the bush bore diameter of the cylinder head.

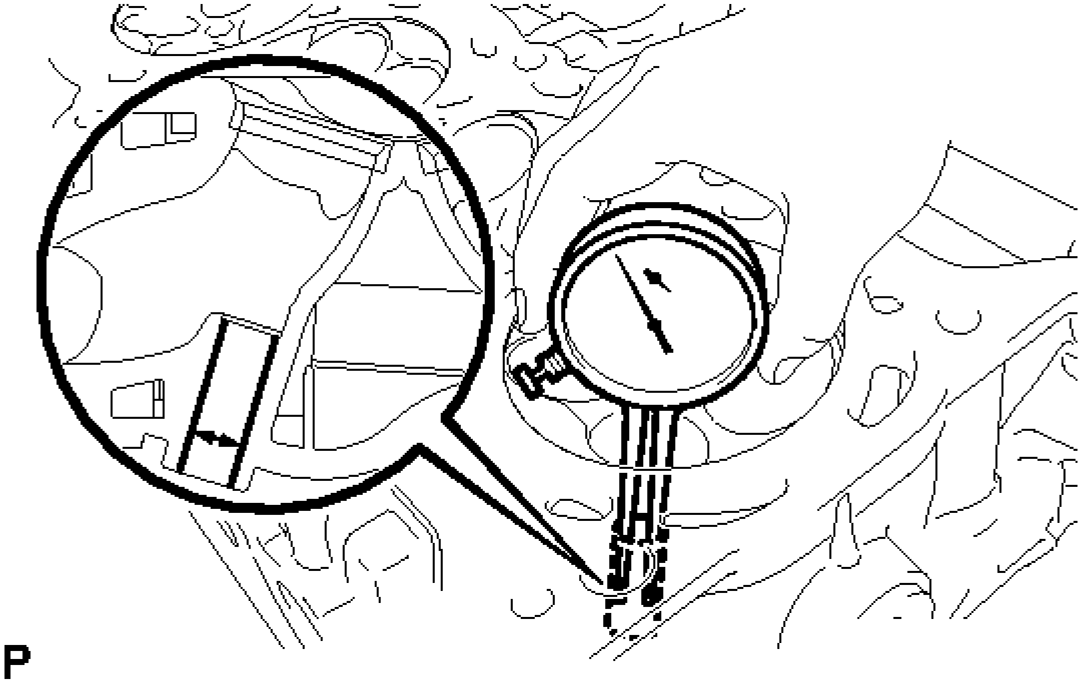

Fig. 321: Measuring Bush Bore Diameter Of Cylinder Head
Courtesy of TOYOTA MOTOR SALES, U.S.A., INC.

Standard bush bore diameter

10.285 to 10.306 mm (0.405 to 0.406 in.)

If the bush diameter of the cylinder head is between 10.285 and 10.306 mm (0.405 and 0.406 in.), proceed to the next step.

If the bush bore diameter of the cylinder head is 10.356 mm (0.408 in.) or more, replace the cylinder head.

e. Select a new guide bush (STD or O/S 0.05), and measure its diameter.
f. Machine the bush bore of the cylinder head to the diameter of the selected guide bush.

Bush Bore Diameter

Bush Size	Specified Condition
STD	10.333 to 10.344 mm (0.4068 in 0.4072 in.)
O/S 0.05	10.383 to 10.394 mm (0.4088 to 0.4092 in.)

Standard bush length

46.8 to 47.2 mm (1.843 to 1.858 in.)

g. Heat the cylinder head to approximately 80 to 100°C (176 to 212°F).
h. Using SST and a hammer, tap in the selected guide bush to the standard protrusion height.
    - **SST: 09201-10000**
      09201-01050
    - **SST: 09950-70010**
      09951-07100

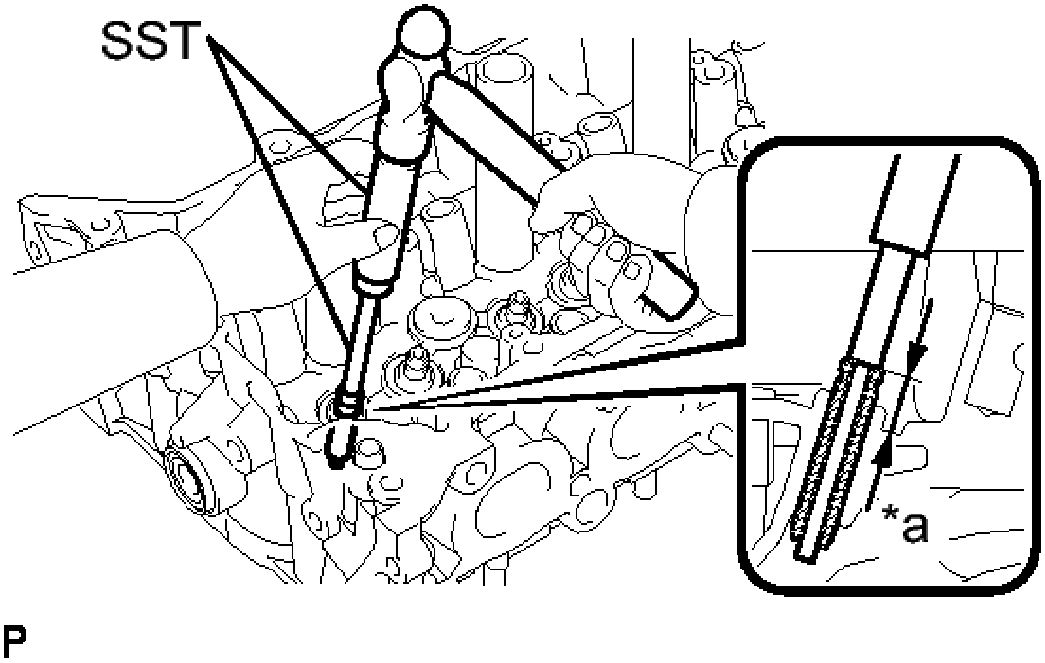

Fig. 322: Identifying Protrusion Height
Courtesy of TOYOTA MOTOR SALES, U.S.A., INC.

Standard protrusion height

14.2 to 14.6 mm (0.559 to 0.575 in.)

TEXT IN ILLUSTRATION

*a	Height

i. Using a sharp 5.5 mm reamer, ream the guide bush to obtain the standard oil clearance between the guide bush and valve stem.

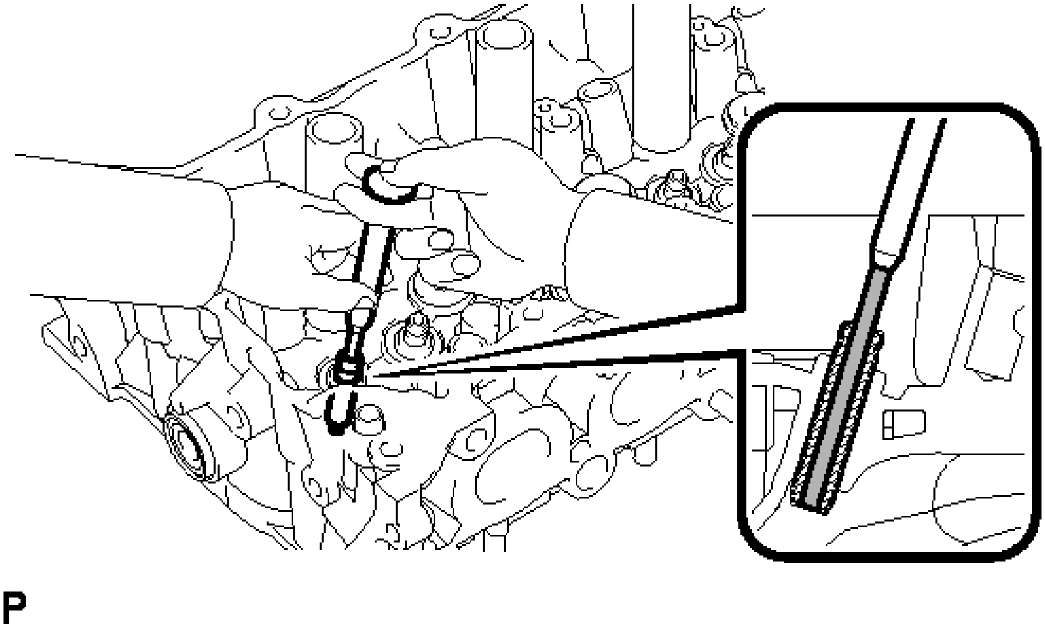

Fig. 323: Reaming Guide Bush
Courtesy of TOYOTA MOTOR SALES, U.S.A., INC.

Standard oil clearance

0.030 to 0.065 mm (0.00118 to 0.00256 in.)

3. **REPLACE RING PIN**

NOTE: It is not necessary to remove the ring pin unless it is being replaced.

a. Remove the ring pins.
b. Using a plastic-faced hammer, tap in new ring pins to the cylinder head.

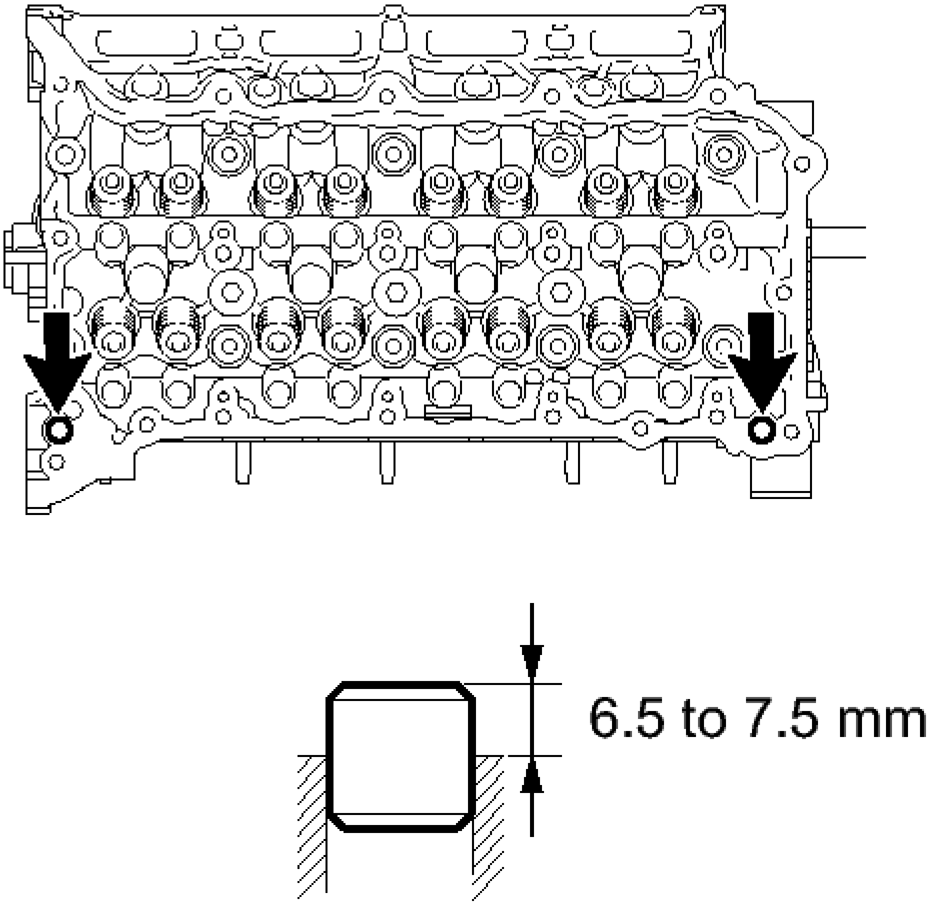

P

Fig. 324: Identifying Protrusion Height
Courtesy of TOYOTA MOTOR SALES, U.S.A., INC.

Standard protrusion height

6.5 to 7.5 mm (0.256 to 0.295 in.)

REASSEMBLY

REASSEMBLY

HINT:

Perform "Inspection After Repair" after replacing the cylinder head sub-assembly. Refer to **INITIALIZATION** .

1. **INSTALL SPARK PLUG TUBE**

   HINT:

   When using a new cylinder head, the spark plug tubes must be replaced.

   a. Apply adhesive onto the shaded area of a new spark plug tube.

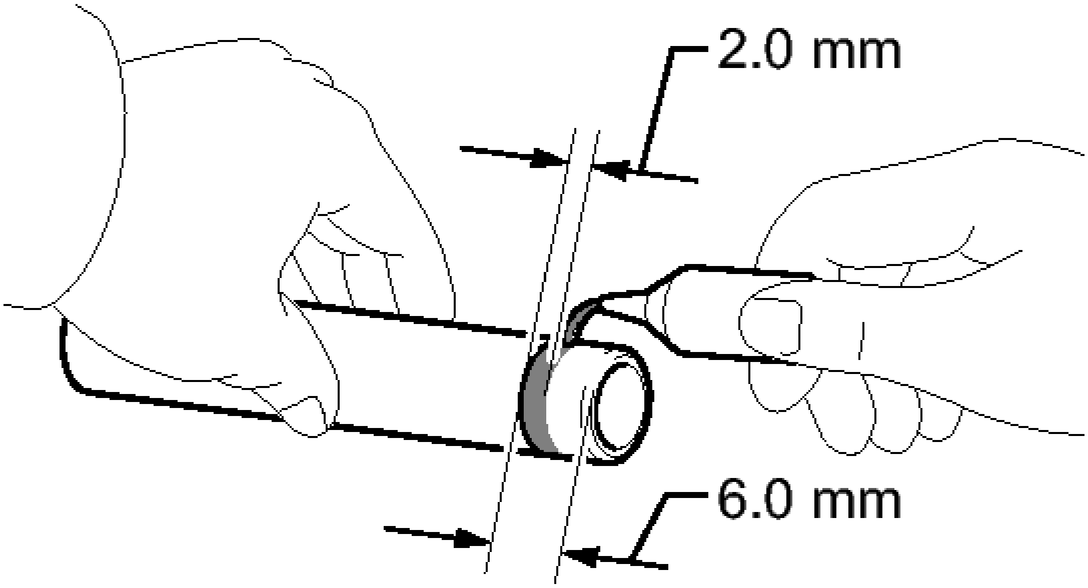

P

Fig. 325: Applying Adhesive Onto Shaded Area
Courtesy of TOYOTA MOTOR SALES, U.S.A., INC.

Adhesive

Toyota Genuine Adhesive 1324, Three Bond 1324 or equivalent.

Standard application width

2.0 mm (0.0787 in.)

NOTE:

- **Install the spark plug tube within 3 minutes after applying adhesive.**
- **Be careful not to deform the spark plug tube.**
- **Be careful not to expose the seal to coolant for at least 1 hour after installing it.**

b. Using a wooden block and hammer, tap in the spark plug tube to the specified protrusion height.

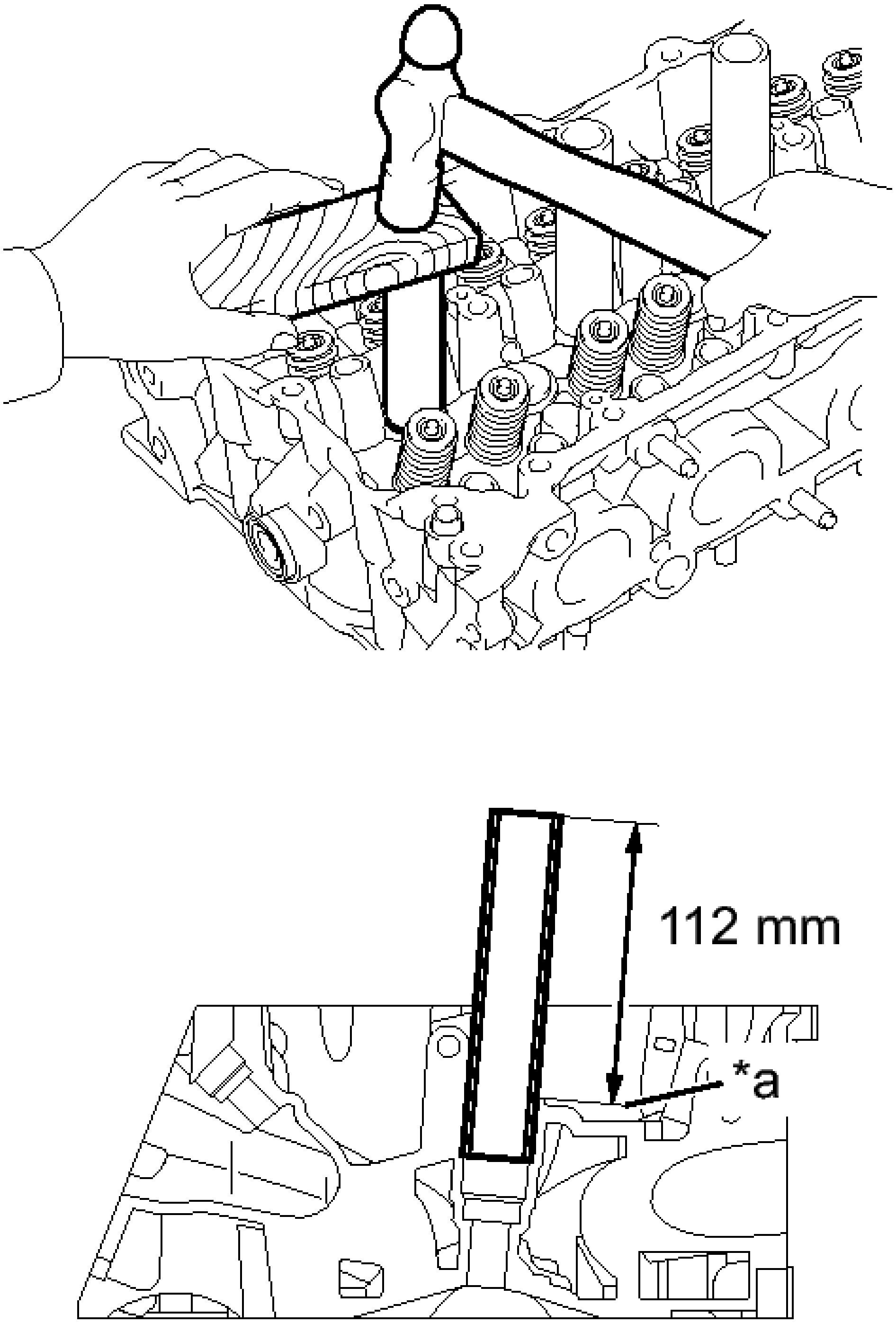

P

Fig. 326: Tapping Spark Plug Tube To Specified Protrusion Height Using A Wooden Block & Hammer

Courtesy of TOYOTA MOTOR SALES, U.S.A., INC.

TEXT IN ILLUSTRATION

*a	Cylinder Head Casting Surface

Standard protrusion height

112 mm (4.41 in.)

NOTE: **To avoid tapping in the spark plug tube too far, measure the protrusion height while tapping it.**

2. **INSTALL CYLINDER HEAD STUD BOLT**
   a. Using an E7 "TORX" socket wrench, install the cylinder head stud bolts.

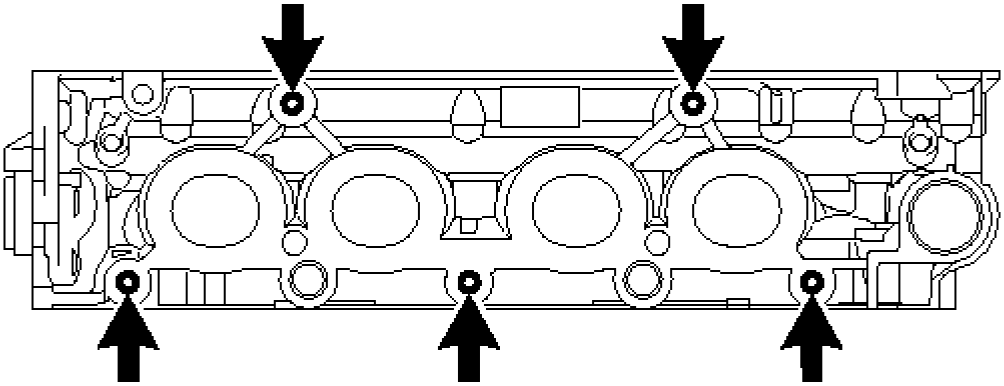

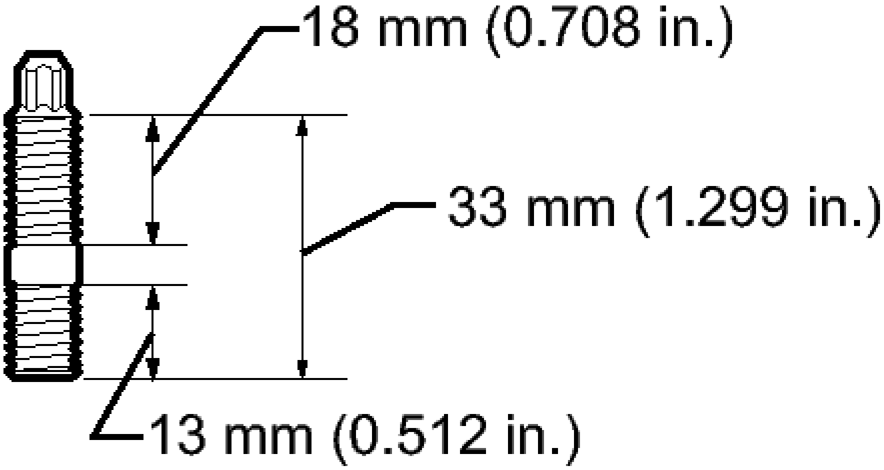
18 mm (0.708 in.)
33 mm (1.299 in.)
13 mm (0.512 in.)

P

Fig. 327: Identifying Cylinder Head Stud Bolt Dimensions
Courtesy of TOYOTA MOTOR SALES, U.S.A., INC.

Torque: 9.5 N*m (97 kgf*cm, 84 in.*lbf)

3. **INSTALL NO. 1 STRAIGHT SCREW PLUG**
   a. Using a 10 mm hexagon wrench, install 3 new gaskets and the 3 straight screw plugs.

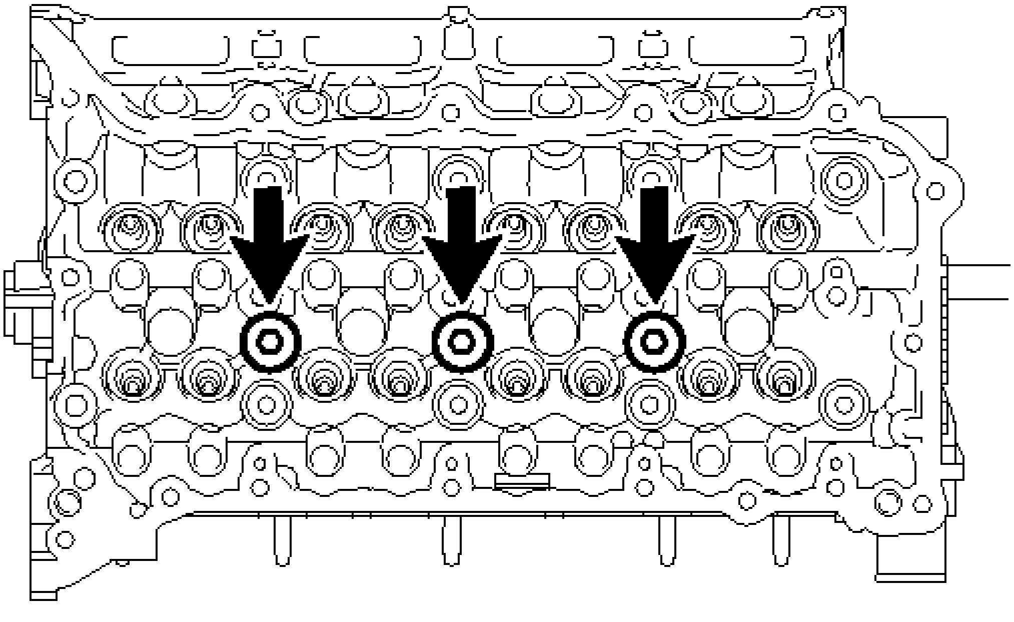

Fig. 328: Locating No. 1 Straight Screw Plugs
Courtesy of TOYOTA MOTOR SALES, U.S.A., INC.

Torque: 44 N*m (449 kgf*cm, 32 ft.*lbf)

4. **INSTALL NO. 2 STRAIGHT SCREW PLUG**
   a. Using a 14 mm hexagon wrench, install a new gasket and the straight screw plug.

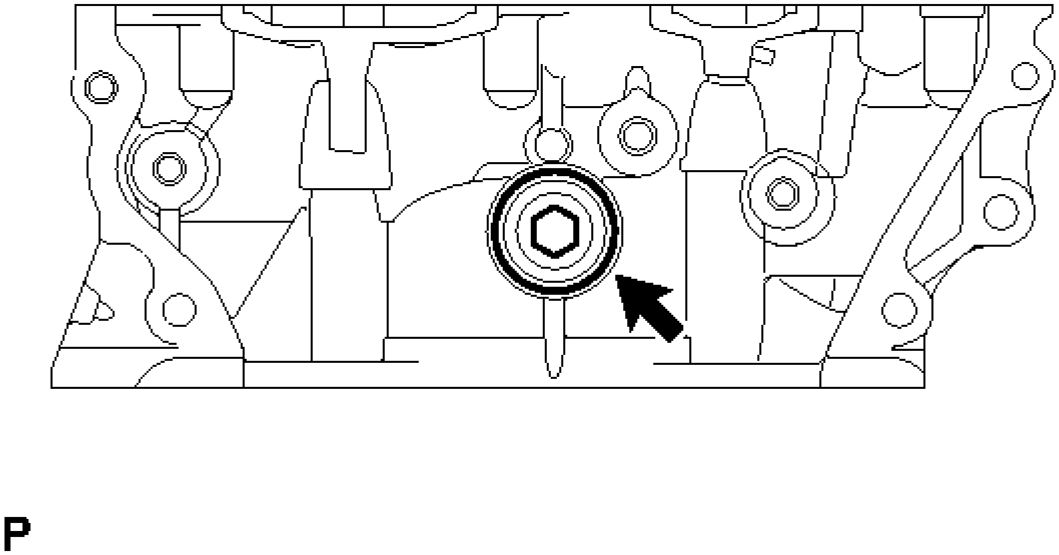

Fig. 329: Locating No. 2 Straight Screw Plug
Courtesy of TOYOTA MOTOR SALES, U.S.A., INC.

Torque: 78 N*m (795 kgf*cm, 58 ft.*lbf)

5. **INSTALL VALVE SPRING SEAT**
   a. Install the valve spring seats to the cylinder head.
6. **INSTALL VALVE STEM OIL SEAL**
   a. Apply a light coat of engine oil to new oil seals.

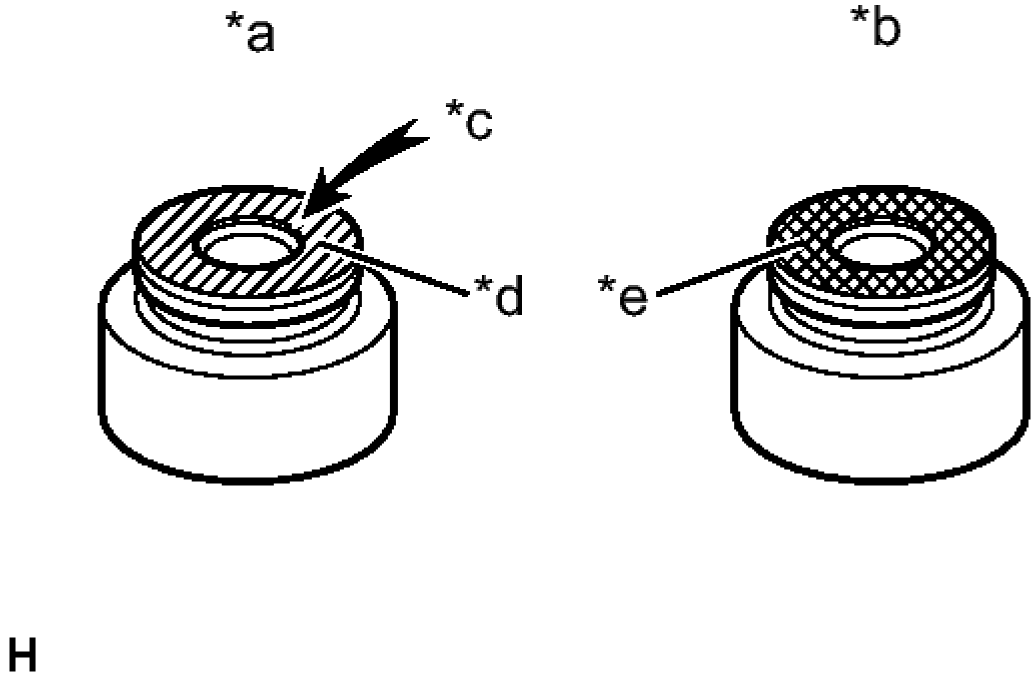

Fig. 330: Identifying Valve Stem Oil Seals
Courtesy of TOYOTA MOTOR SALES, U.S.A., INC.

TEXT IN ILLUSTRATION

*a	Intake
*b	Exhaust
*c	Mark "NOK"
*d	Gray
*e	Black

NOTE: **Pay attention when installing the intake and exhaust oil seals. For example, installing the intake oil seal onto the exhaust side or installing the exhaust oil seal onto the intake side can cause installation problems later.**

HINT:

The intake valve oil seals are gray and the exhaust valve oil seals are black.

b. Using SST, push in the intake and exhaust valve oil seals.

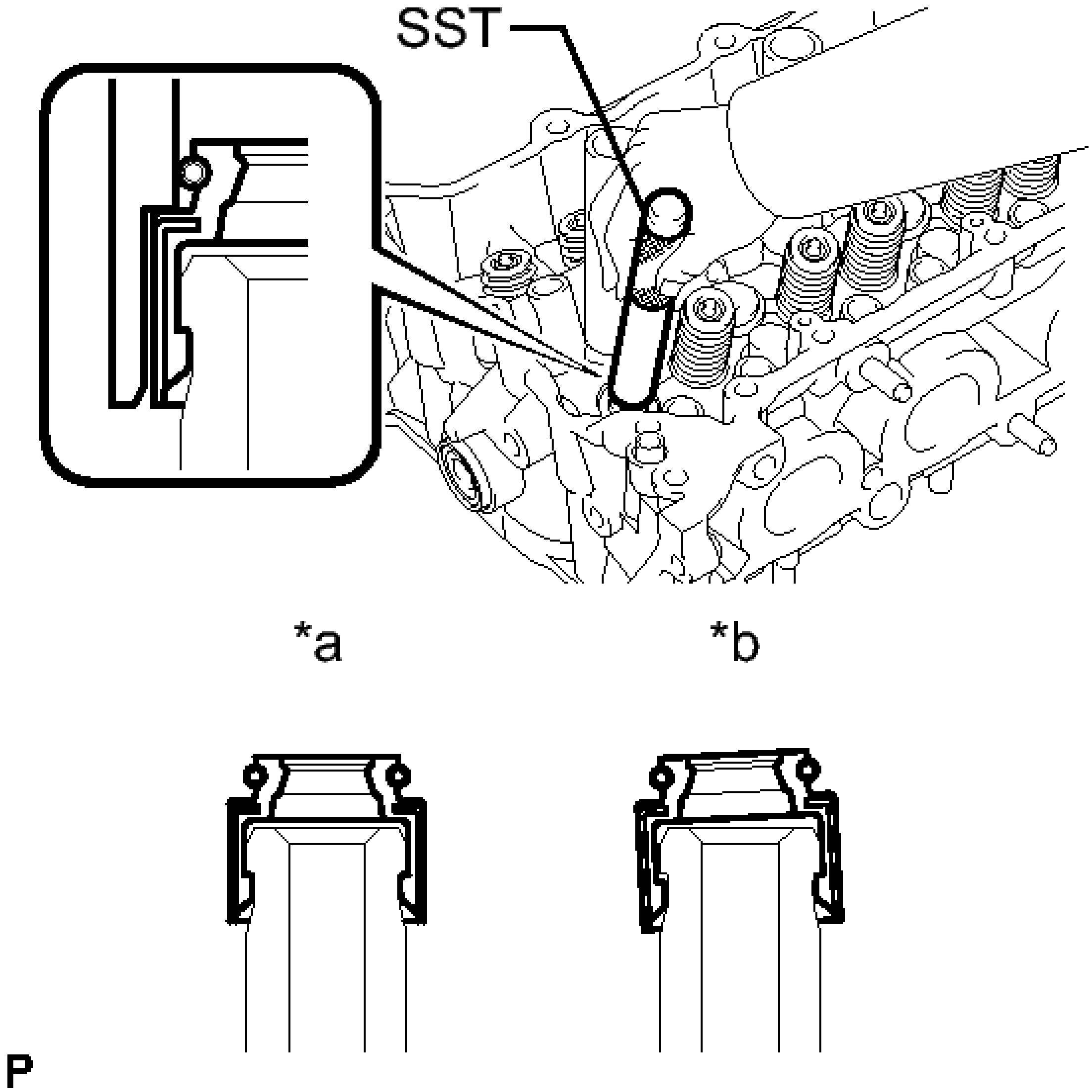

Fig. 331: Installing Valve Oil Seals using SST
Courtesy of TOYOTA MOTOR SALES, U.S.A., INC.

TEXT IN ILLUSTRATION

*a	CORRECT
*b	INCORRECT

- **SST: 09201-41020**

NOTE: **Failure to use SST will cause the seal to be damaged or improperly seated.**

7. **INSTALL INTAKE VALVE**
   a. Apply plenty of engine oil to the tip area of the intake valve shown in the illustration.

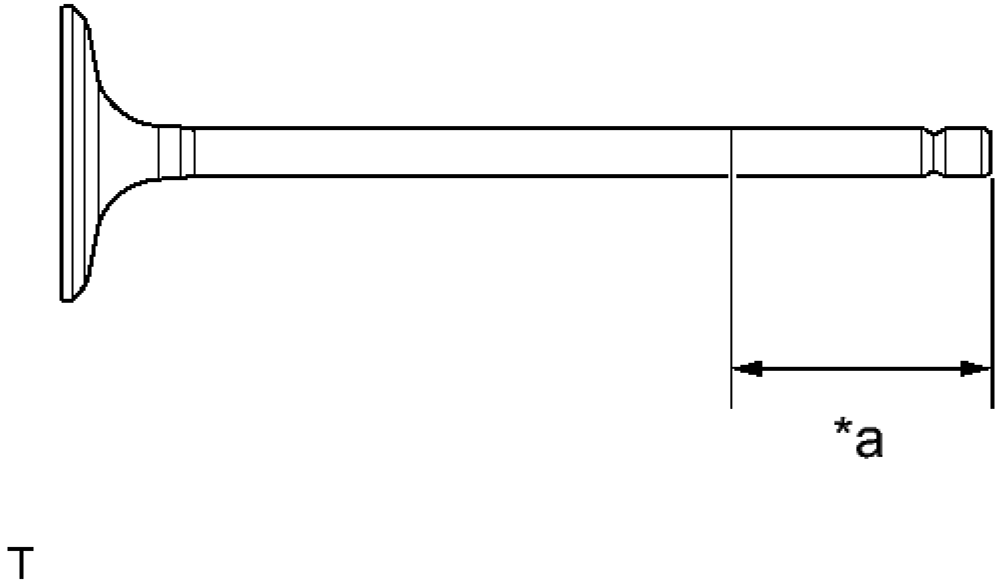

Fig. 332: Identifying Intake Valve
Courtesy of TOYOTA MOTOR SALES, U.S.A., INC.

TEXT IN ILLUSTRATION

*a	30 mm (1.18 in.) or more

b. Install the valve, compression spring and spring retainer to the cylinder head.

NOTE: **Install the same parts in the same combination to their original locations.**

c. Using SST and wooden blocks, compress the spring and install the retainer locks.

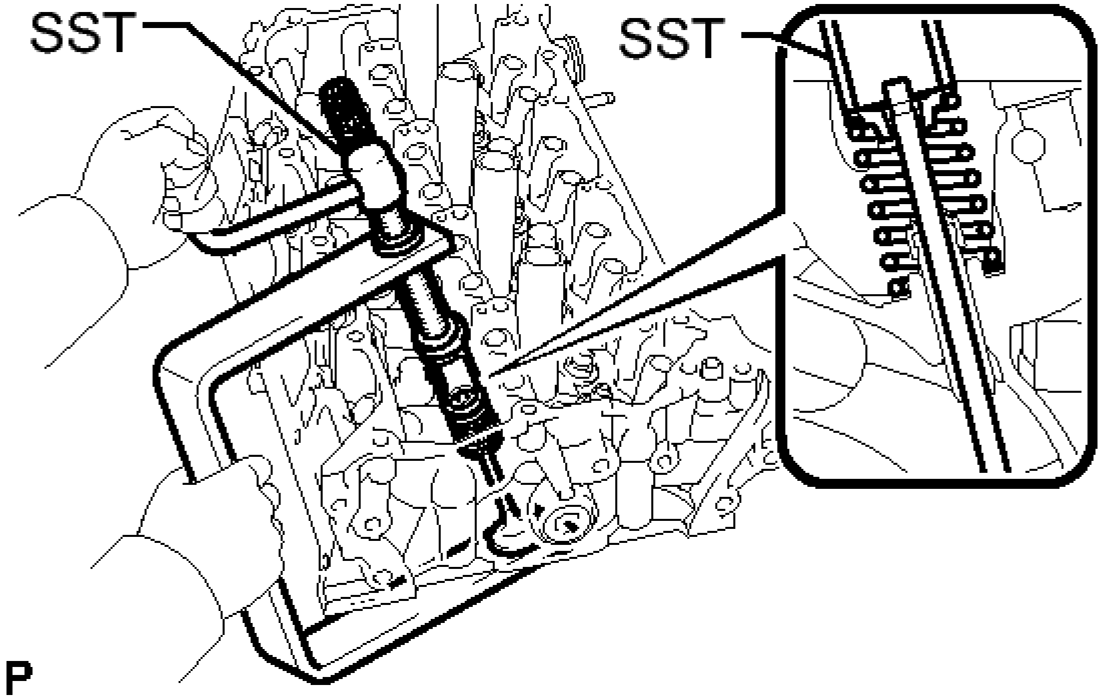

Fig. 333: Compressing Spring
Courtesy of TOYOTA MOTOR SALES, U.S.A., INC.

- **SST: 09202-70020**
  09202-00010

d. Using a plastic-faced hammer, lightly tap the valve stem tip to ensure a proper fit.

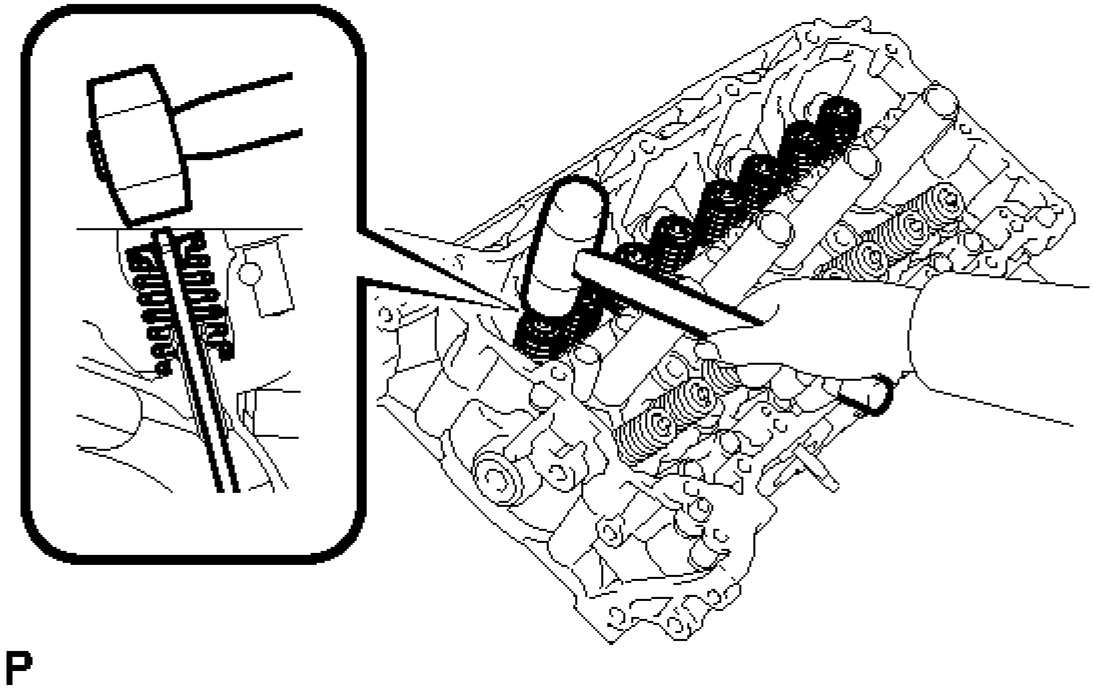

Fig. 334: Tapping Valve Stem Tip
Courtesy of TOYOTA MOTOR SALES, U.S.A., INC.

NOTE: **Be careful not to damage the retainer.**

8. **INSTALL EXHAUST VALVE**
    a. Apply plenty of engine oil to the tip area of the exhaust valve shown in the illustration.

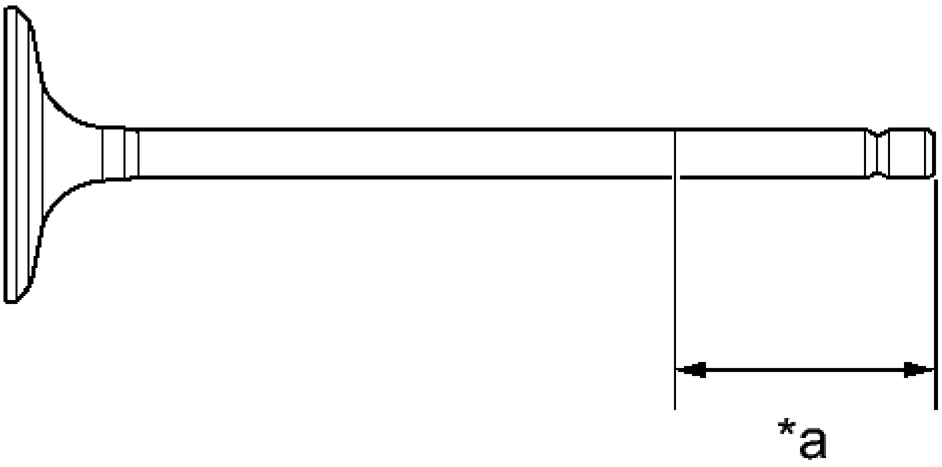

T

Fig. 335: Identifying Intake Valve
Courtesy of TOYOTA MOTOR SALES, U.S.A., INC.

TEXT IN ILLUSTRATION

*a	30 mm (1.18 in.) or more

b. Install the valve, compression spring and spring retainer to the cylinder head.

NOTE: **Install the same parts in the same combination to their original locations.**

c. Using SST and wooden blocks, compress the spring and install the retainer locks.

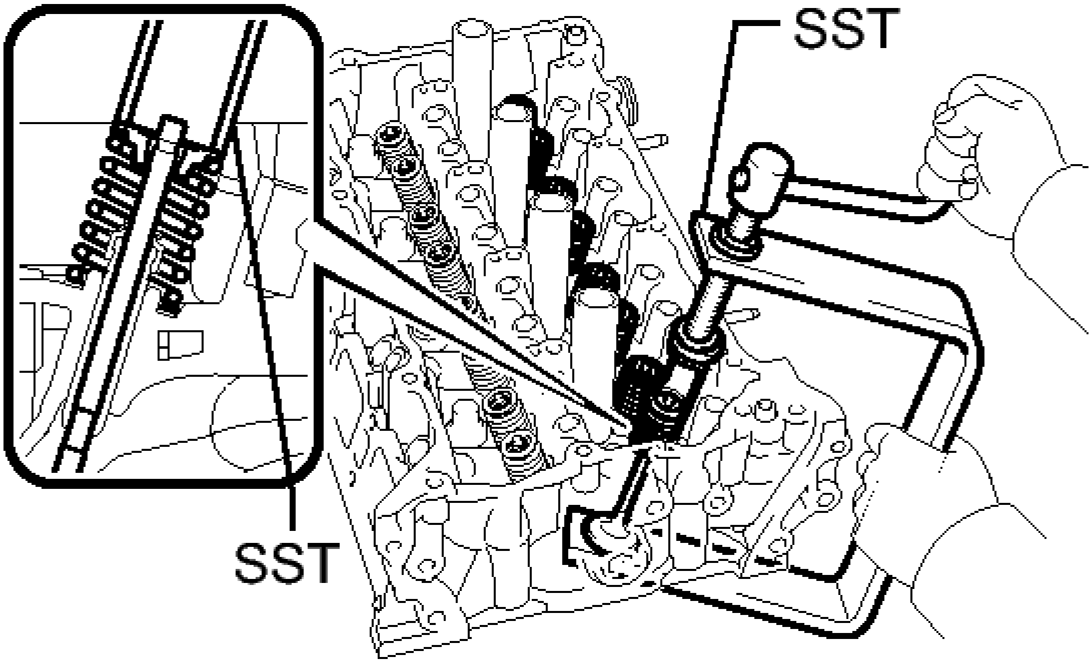

P

Fig. 336: Compressing Spring
Courtesy of TOYOTA MOTOR SALES, U.S.A., INC.

- **SST: 09202-70020**

  09202-00010

d. Using a plastic-faced hammer, lightly tap the valve stem tip to ensure a proper fit.

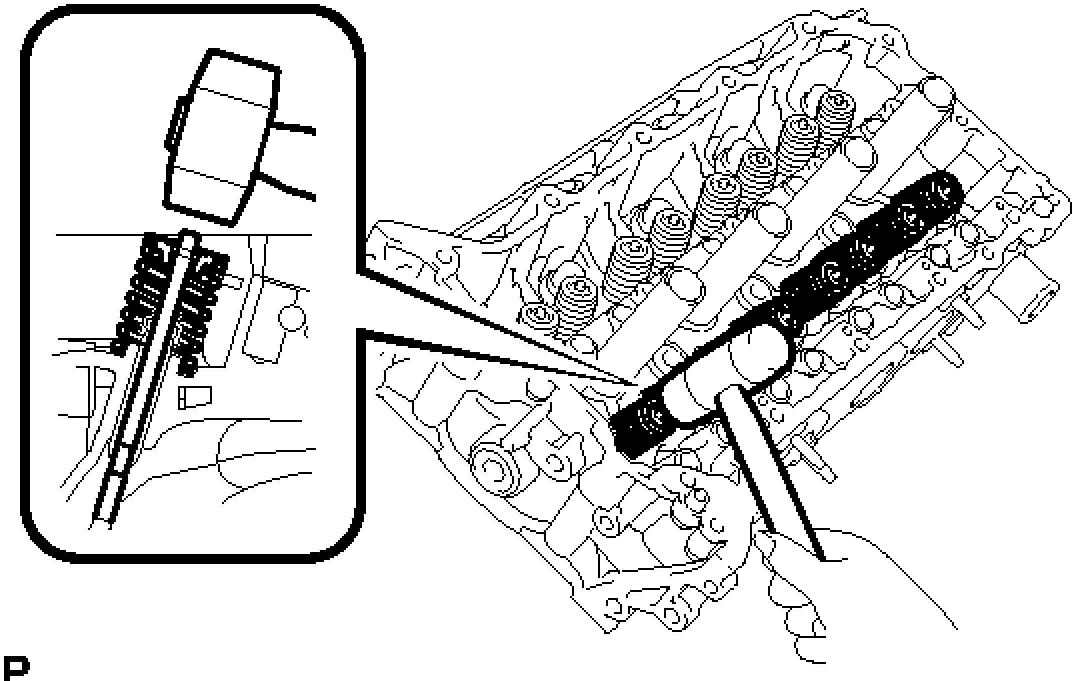

P

Fig. 337: Tapping Valve Stem Tip
Courtesy of TOYOTA MOTOR SALES, U.S.A., INC.

NOTE: **Be careful not to damage the retainer.**

REPAIR

REPAIR

1. **REPAIR INTAKE VALVE SEAT**

NOTE:

- **Repair the seat while checking the seating position.**
- **Keep the lip free of foreign matter.**
- **Take off the cutter gradually to make the intake valve seat smooth.**

a. Using a 45° cutter, resurface the valve seat so that the valve seat width is more than the specification.

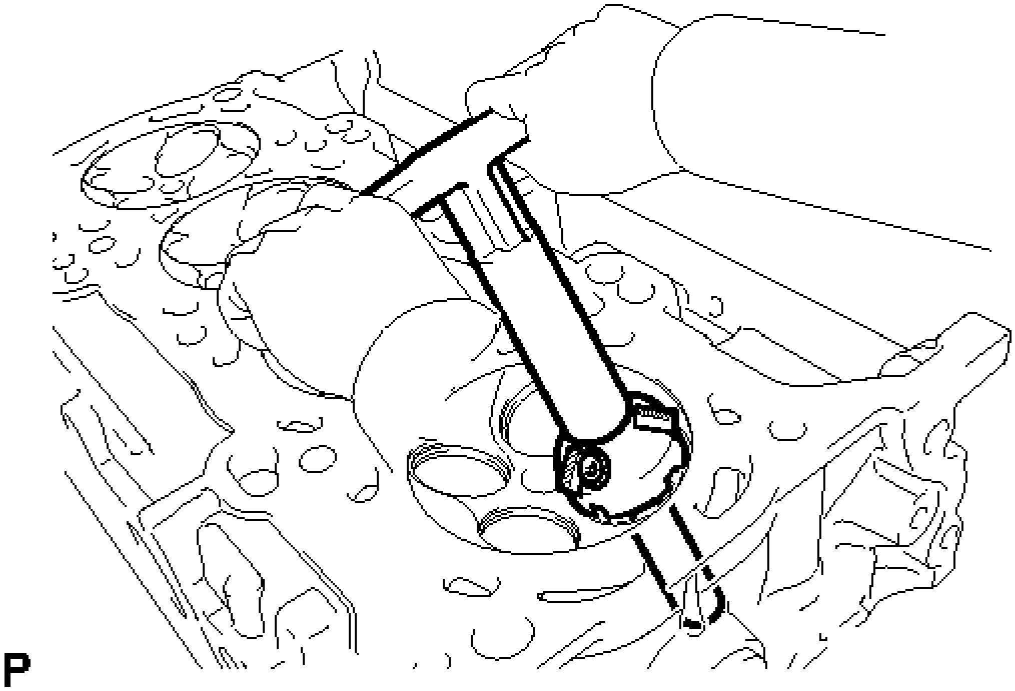

Fig. 338: Cutting Intake Valve Seat
Courtesy of TOYOTA MOTOR SALES, U.S.A., INC.

b. Using 30° and 60° cutters, correct the valve seat so that the valve contacts the entire circumference of the seat. The contact should be in the center of the valve seat, and the valve seat width should be maintained within the specified range around the entire circumference of the seat.

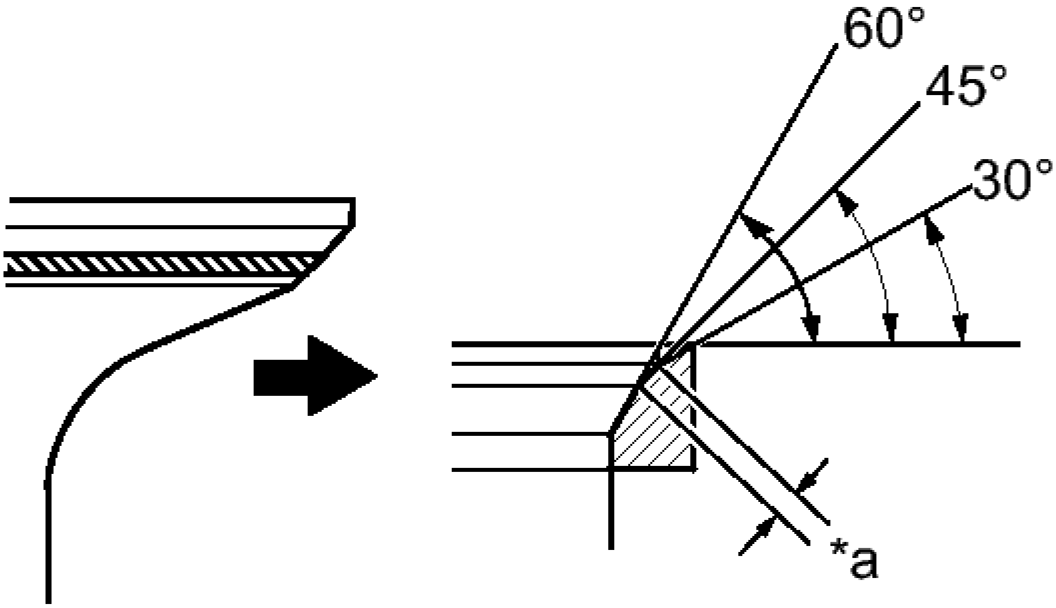

T

Fig. 339: Measuring Seat Width

Courtesy of TOYOTA MOTOR SALES, U.S.A., INC.

Standard width

1.0 to 1.4 mm (0.0394 to 0.0551 in.)

TEXT IN ILLUSTRATION

*a	Width

c. Hand-lap the valve and valve seat with an abrasive compound.
d. Check the valve seating position.

2. **REPAIR EXHAUST VALVE SEAT**

NOTE:

- **Repair the seat while checking the seating position.**
- **Keep the lip free of foreign matter.**
- **Take off the cutter gradually to make the exhaust valve seat smooth.**

a. Using a 45° cutter, resurface the valve seat so that the valve seat width is more than the specification.

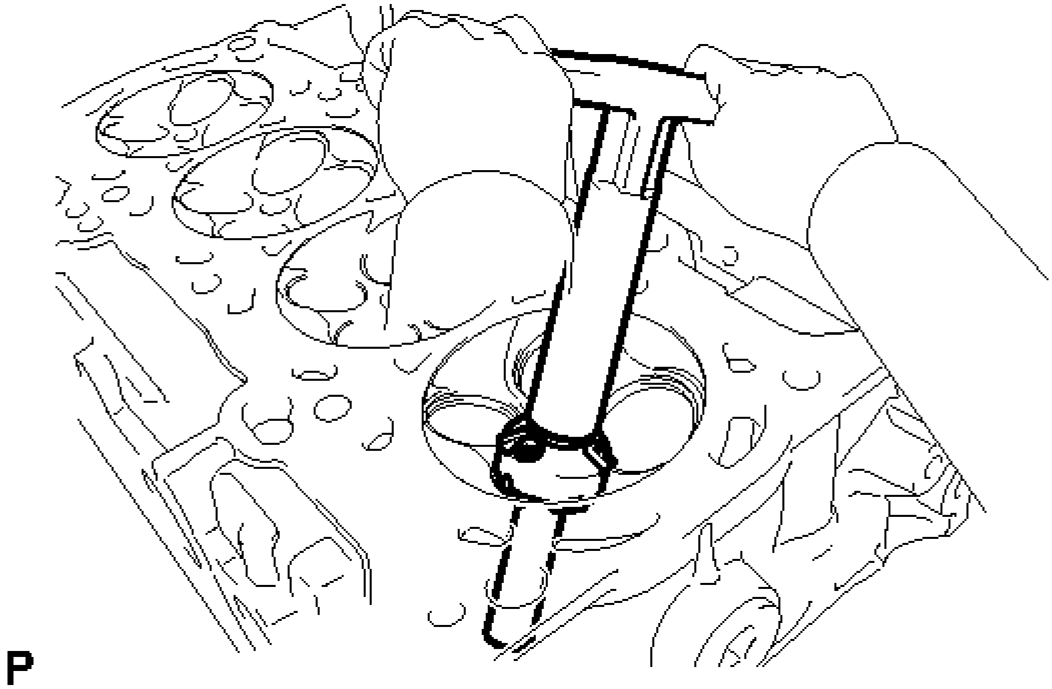

Fig. 340: Cutting Exhaust Valve Seat
Courtesy of TOYOTA MOTOR SALES, U.S.A., INC.

b. Using 30° and 75° cutters, correct the valve seat so that the valve contacts the entire circumference of the seat. The contact should be in the center of the valve seat, and the valve seat width should be maintained within the specified range around the entire circumference of the seat.

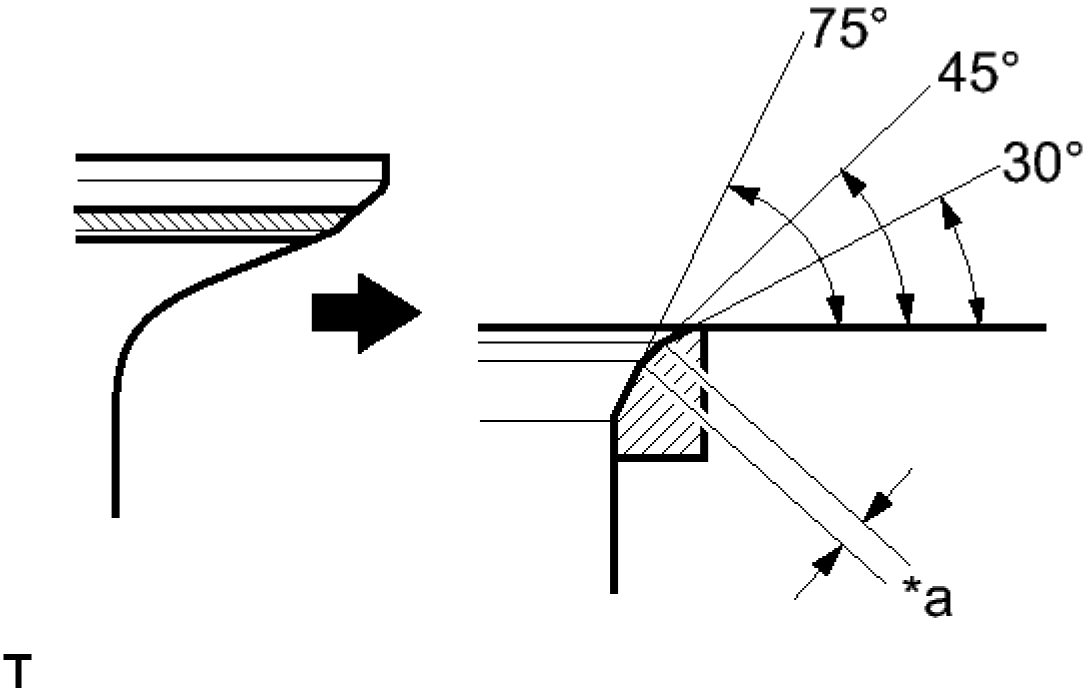

Fig. 341: Measuring Seat Width
Courtesy of TOYOTA MOTOR SALES, U.S.A., INC.

Standard width

1.2 to 1.6 mm (0.0472 to 0.0630 in.)

TEXT IN ILLUSTRATION

*a	Width

c. Hand-lap the valve and valve seat with an abrasive compound.
d. Check the valve seating position.

CYLINDER BLOCK

COMPONENTS

ILLUSTRATION

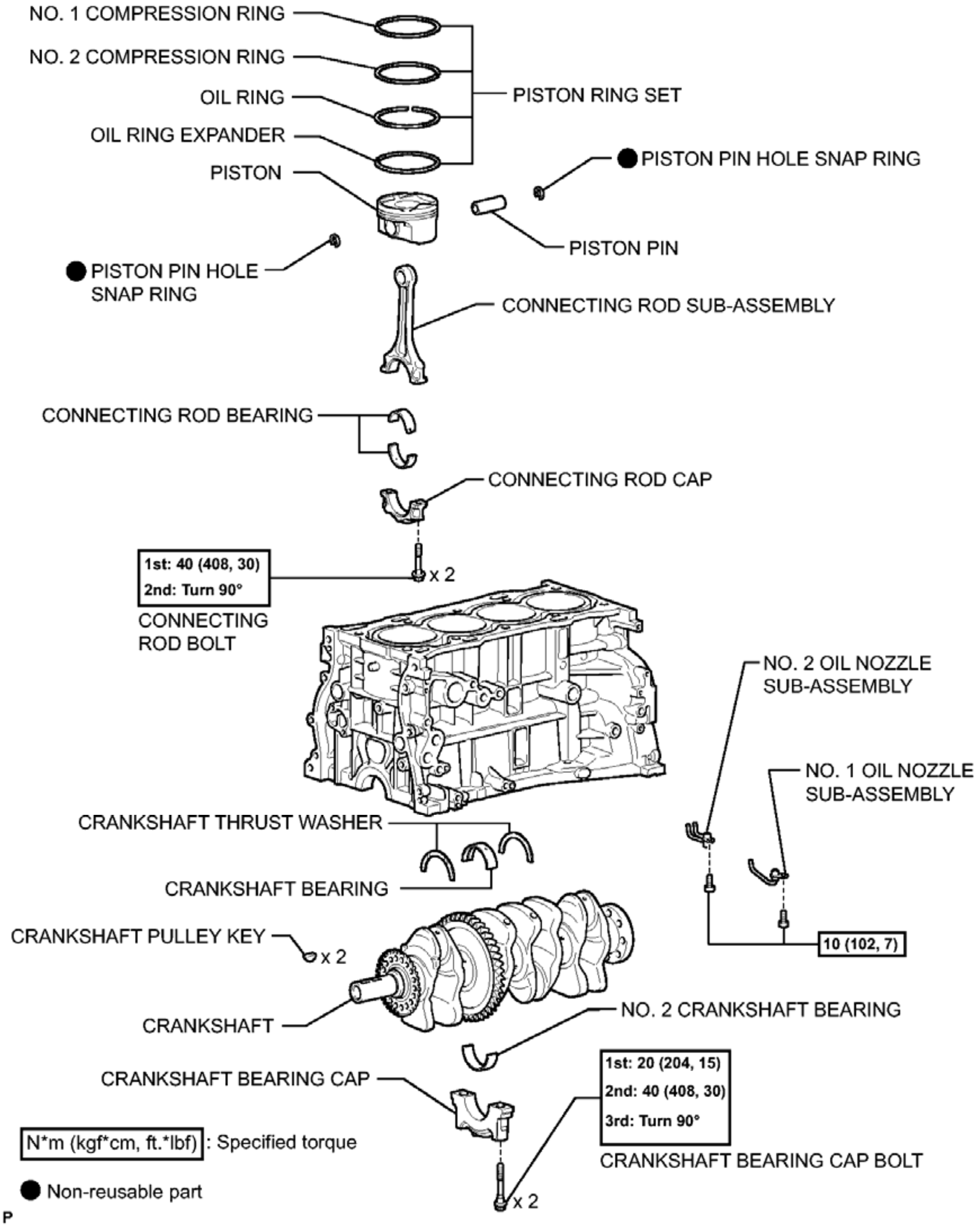
NO. 1 COMPRESSION RING
NO. 2 COMPRESSION RING
OIL RING
OIL RING EXPANDER
PISTON
PISTON RING SET
● PISTON PIN HOLE SNAP RING
PISTON PIN
● PISTON PIN HOLE SNAP RING
CONNECTING ROD SUB-ASSEMBLY
CONNECTING ROD BEARING
CONNECTING ROD CAP
1st: 40 (408, 30)
2nd: Turn 90°
x 2
CONNECTING ROD BOLT
NO. 2 OIL NOZZLE SUB-ASSEMBLY
NO. 1 OIL NOZZLE SUB-ASSEMBLY
CRANKSHAFT THRUST WASHER
CRANKSHAFT BEARING
10 (102, 7)
CRANKSHAFT PULLEY KEY
x 2
CRANKSHAFT
NO. 2 CRANKSHAFT BEARING
CRANKSHAFT BEARING CAP
1st: 20 (204, 15)
2nd: 40 (408, 30)
3rd: Turn 90°
CRANKSHAFT BEARING CAP BOLT
N*m (kgf*cm, ft.*lbf) : Specified torque
● Non-reusable part
x 2
P

Fig. 342: Identifying Cylinder Block Replacement Components With Torque Specifications
Courtesy of TOYOTA MOTOR SALES, U.S.A., INC.

DISASSEMBLY

DISASSEMBLY

1. **INSPECT CONNECTING ROD THRUST CLEARANCE**

a. Using a dial indicator, measure the thrust clearance while moving the connecting rod back and forth.

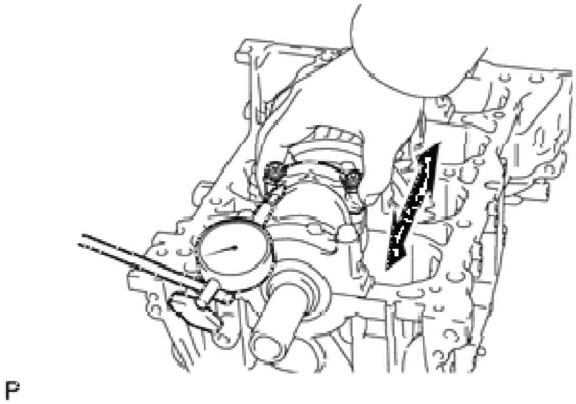

Fig. 343: Measuring Connecting Rod Thrust Clearance
Courtesy of TOYOTA MOTOR SALES, U.S.A., INC.

Standard thrust clearance

0.160 to 0.512 mm (0.00630 to 0.0202 in.)

Maximum thrust clearance

0.512 mm (0.0202 in.)

If the thrust clearance is more than the maximum, replace the connecting rod. If necessary, replace the crankshaft.

2. **INSPECT CONNECTING ROD OIL CLEARANCE**
   a. Check the alignment marks on the connecting rod and cap to ensure correct reassembly.

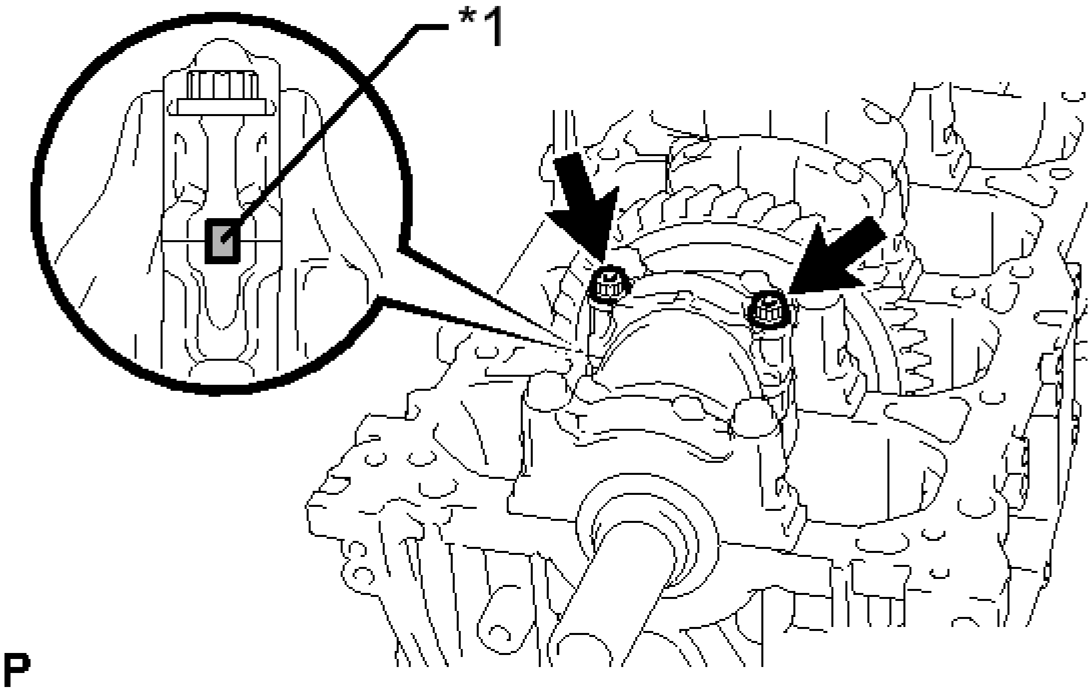

Fig. 344: Identifying Alignment Marks On Connecting Rod And Cap
Courtesy of TOYOTA MOTOR SALES, U.S.A., INC.

TEXT IN ILLUSTRATION

*1	Alignment Mark

b. Remove the 2 bolts and connecting rod cap.

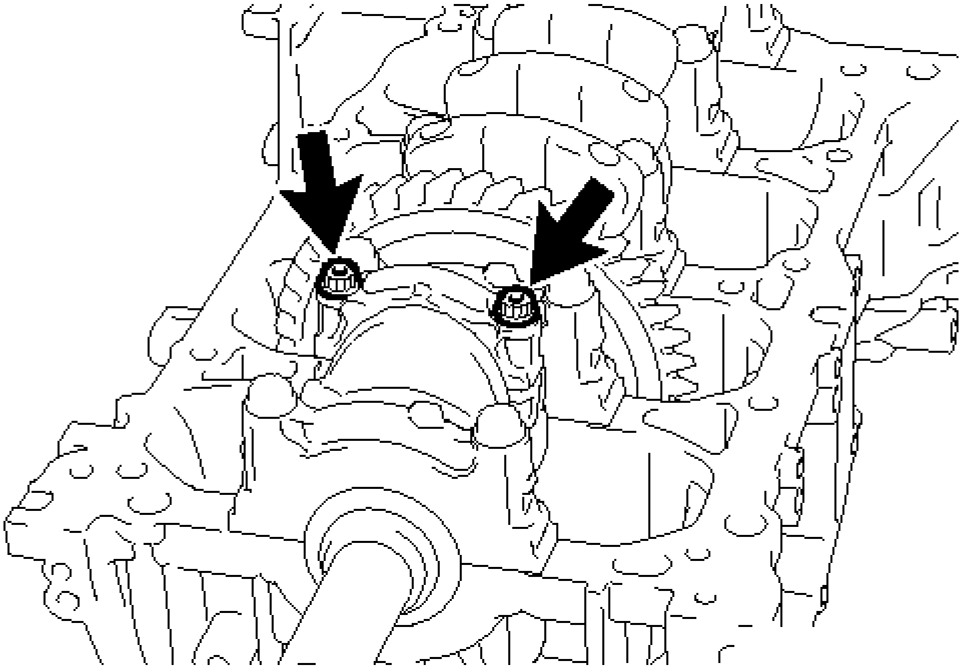

Fig. 345: Locating Connecting Rod Cap Bolts
Courtesy of TOYOTA MOTOR SALES, U.S.A., INC.

HINT:

Keep the lower bearing and connecting rod cap together.

c. Clean the crank pin and bearing.
d. Check the crank pin and bearing for pitting and scratches.

   If the crank pin or bearing is damaged, replace the bearings. If necessary, replace the crankshaft.

e. Lay a strip of Plastigage on the crank pin.

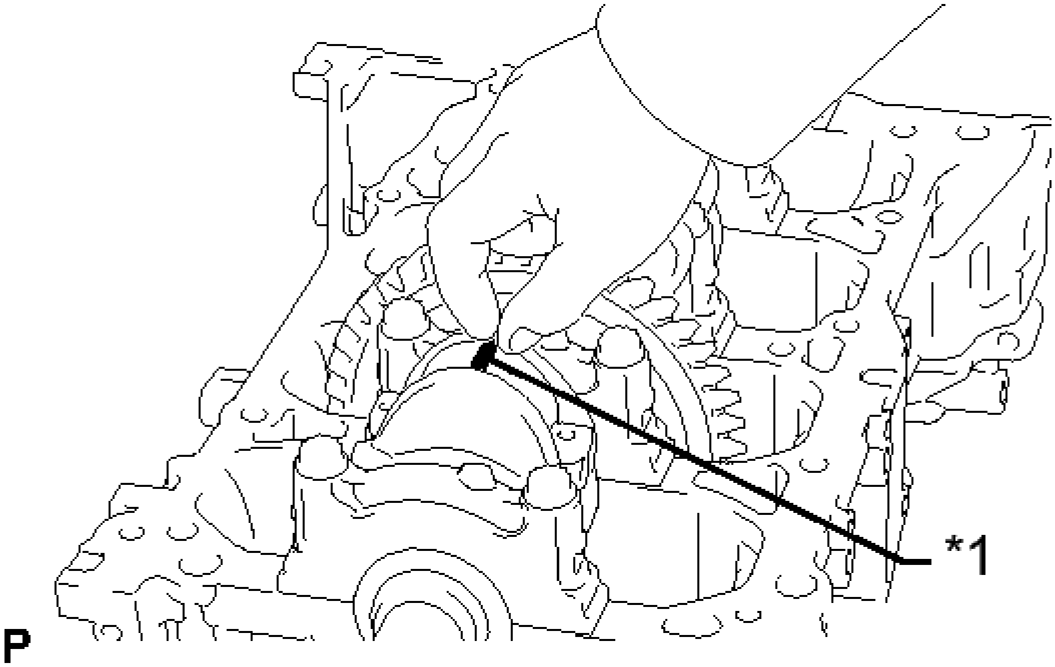

Fig. 346: Laying Plastigage On Crank Pin
Courtesy of TOYOTA MOTOR SALES, U.S.A., INC.

TEXT IN ILLUSTRATION

*1	Plastigage

f. Check that the front mark of the connecting rod cap is facing in the correct direction.

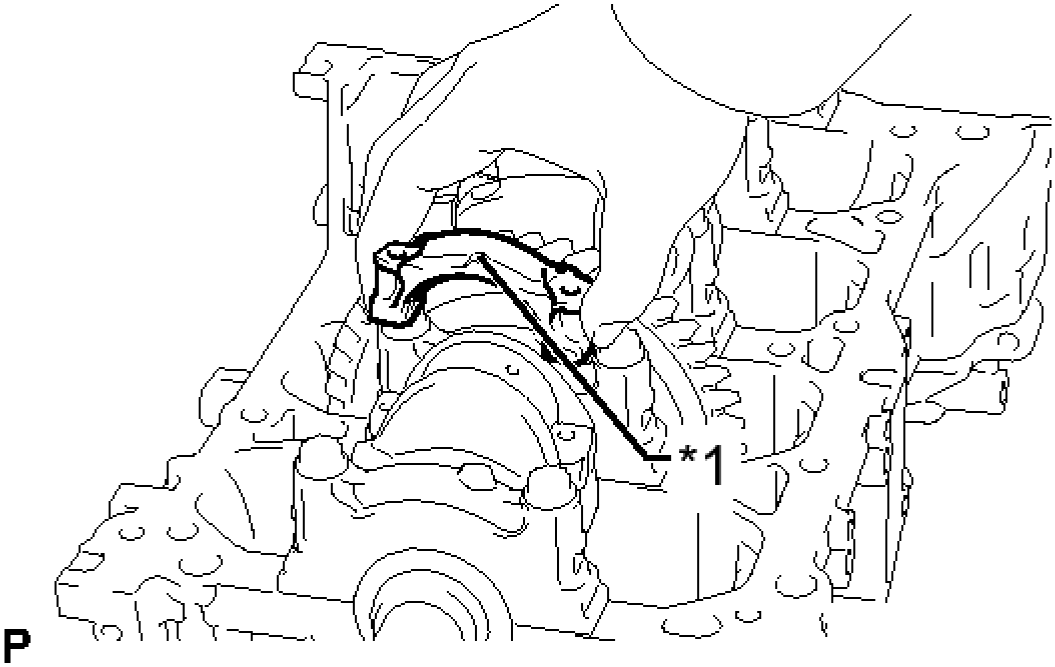

Fig. 347: Identifying Front Mark
Courtesy of TOYOTA MOTOR SALES, U.S.A., INC.

TEXT IN ILLUSTRATION

*1	Front Mark

g. Apply a light coat of engine oil to the threads and under the heads of the connecting rod bolts.

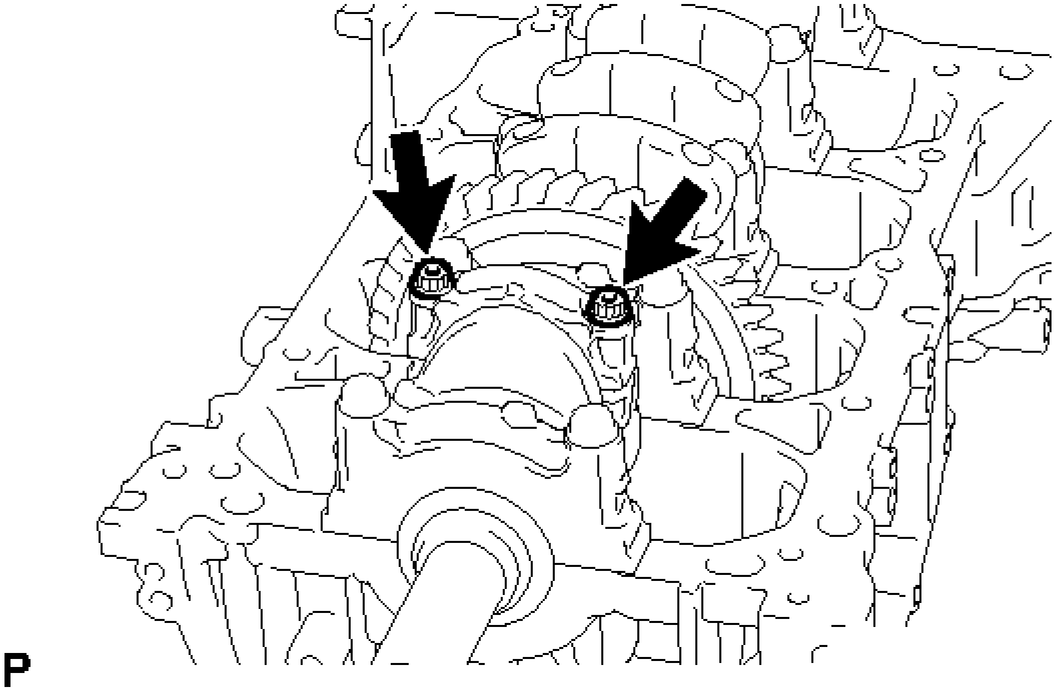

Fig. 348: Locating Connecting Rod Cap Bolts
Courtesy of TOYOTA MOTOR SALES, U.S.A., INC.

h. Install and alternately tighten the bolts of the connecting rod cap in several steps.

   Torque: 40 N*m (408 kgf*cm, 30 ft.*lbf)

   NOTE: Do not turn the crankshaft during the measurement.

   If any one of the connecting rod bolts does not meet the torque specification, replace the connecting rod bolts.

i. Mark the front of each connecting rod bolt with paint.

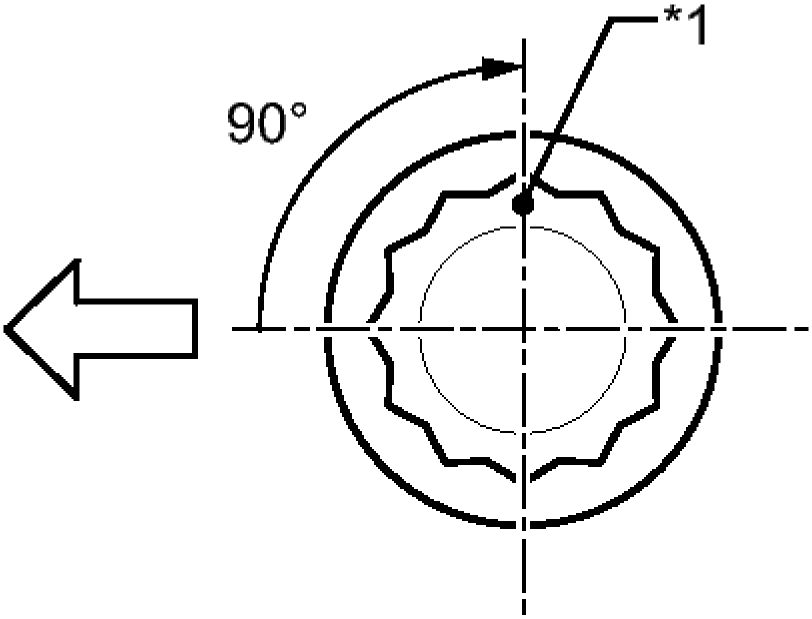

P

Fig. 349: Identifying Paint Mark
Courtesy of TOYOTA MOTOR SALES, U.S.A., INC.

TEXT IN ILLUSTRATION

*1	Paint Mark
	Engine Front

j. Tighten the bolts 90° as shown in the illustration.

NOTE: **Do not turn the crankshaft during the measurement.**

k. Remove the 2 bolts and connecting rod cap.

HINT:

Keep the lower bearing and connecting rod cap together.

l. Measure the Plastigage at its widest point.

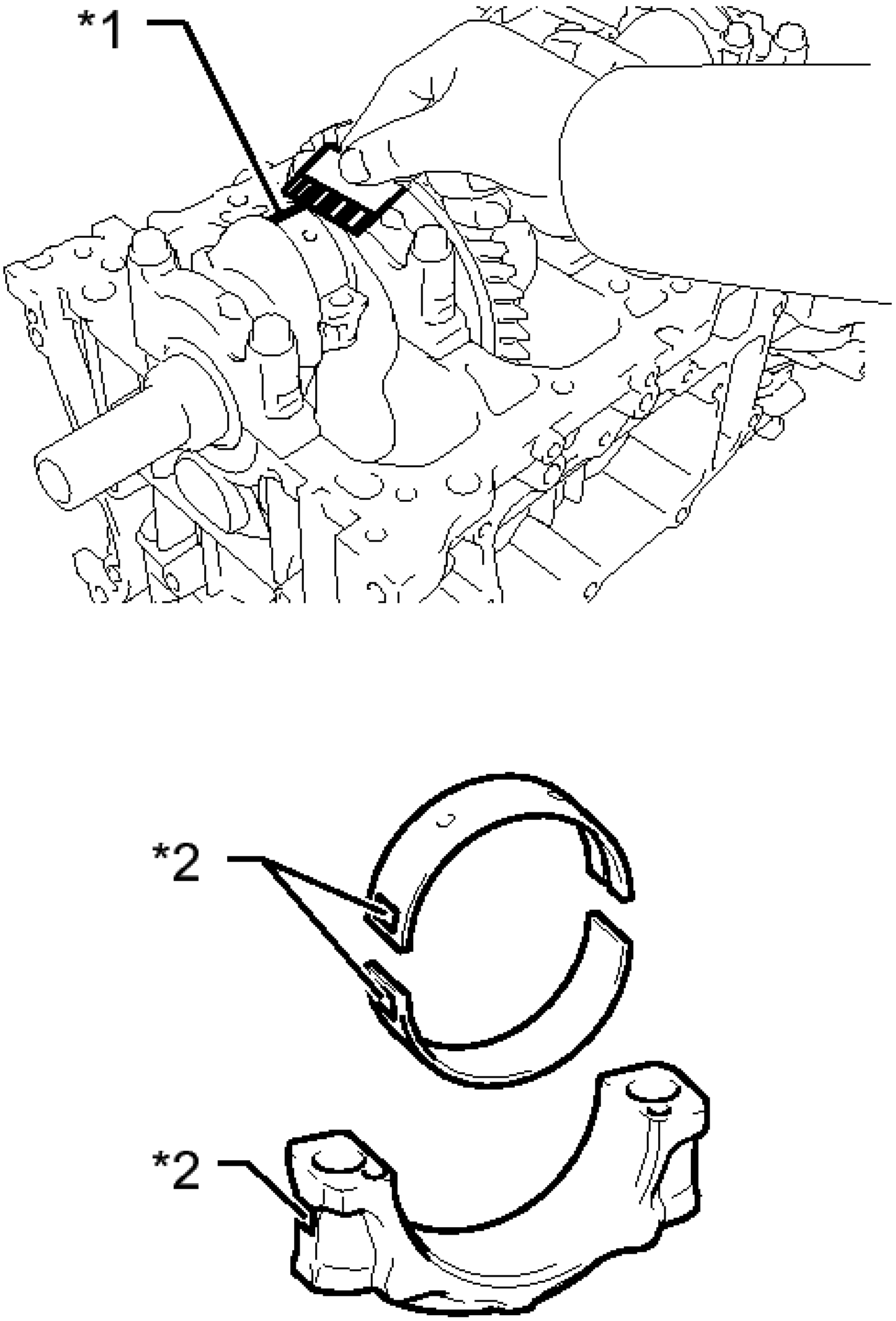

Fig. 350: Measuring Plastigage Widest Point
Courtesy of TOYOTA MOTOR SALES, U.S.A., INC.

TEXT IN ILLUSTRATION

*1	Plastigage

*2	Number Mark

Standard oil clearance

0.030 to 0.063 mm (0.00118 to 0.00248 in.)

Maximum oil clearance

0.07 mm (0.00276 in.)

NOTE: **Remove the Plastigage completely after the measurement.**

If the oil clearance is more than the maximum, replace the connecting rod bearing. If necessary, grind or replace the crankshaft.

HINT:

If replacing a bearing, select a new one with the same number as marked on the connecting rod. There are 3 sizes of standard bearings, marked "1", "2" and "3" accordingly.

Standard crank pin diameter

51.492 to 51.500 mm (2.0272 to 2.0276 in.)

Standard Connecting Rod Big End Inside Diameter

Item	Specified Condition
Mark 1	54.500 to 54.508 mm (2.1457 to 2.1460 in.)
Mark 2	54.509 to 54.516 mm (2.1460 to 2.1463 in.)
Mark 3	54.517 to 54.524 mm (2.1463 to 2.1466

	in.)

Standard Size Bearing Center Wall Thickness

Item	Specified Condition
Mark 1	1.483 to 1.487 mm (0.0584 to 0.0585 in.)
Mark 2	1.488 to 1.491 mm (0.0586 to 0.0587 in.)
Mark 3	1.492 to 1.495 mm (0.0587 to 0.0589 in.)

m. Perform the inspection above for each cylinder.

3. **REMOVE PISTON WITH CONNECTING ROD**
   a. Using a ridge reamer, remove all the carbon from the top of the cylinder.

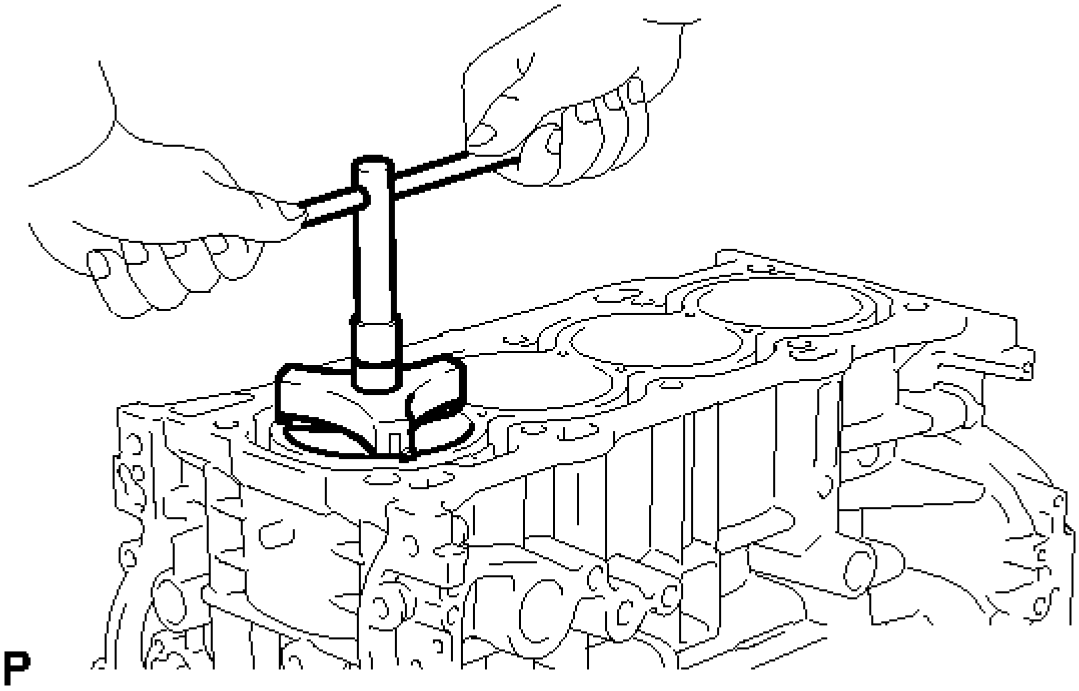

Fig. 351: Removing Carbon From Top Of Cylinder
Courtesy of TOYOTA MOTOR SALES, U.S.A., INC.

b. Remove the 8 bolts, 4 connecting rod caps and 4 lower bearings.
c. Push the piston, connecting rod assembly and upper bearing through the top of the cylinder block.

HINT:

- Keep the bearings, connecting rod and cap together.
- Arrange the piston and connecting rod assemblies in the correct order.
- Be sure to arrange the removed piston and connecting rod assemblies in such a way that they can be reinstalled exactly as before.

4. **REMOVE CONNECTING ROD BEARING**

a. Remove the connecting rod bearings from the connecting rods and connecting rod caps.

HINT:

Arrange the removed parts in the correct order.

5. **INSPECT CRANKSHAFT THRUST CLEARANCE**

a. Using a dial indicator, measure the thrust clearance while prying the crankshaft back and forth with a screwdriver.

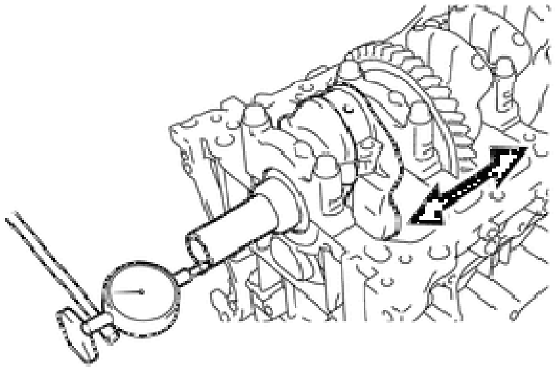

Fig. 352: Measuring Crankshaft Thrust Clearance
Courtesy of TOYOTA MOTOR SALES, U.S.A., INC.

Standard thrust clearance

0.04 to 0.24 mm (0.00157 to 0.00945 in.)

Maximum thrust clearance

0.30 mm (0.0118 in.)

If the thrust clearance is more than the maximum, replace the thrust washers as a set. If necessary, replace the crankshaft.

Standard thrust washer thickness

1.93 to 1.98 mm (0.0760 to 0.0780 in.)

6. **REMOVE CRANKSHAFT**
   1. Using several steps, uniformly loosen and remove the 10 bearing cap bolts in the sequence shown in the illustration.

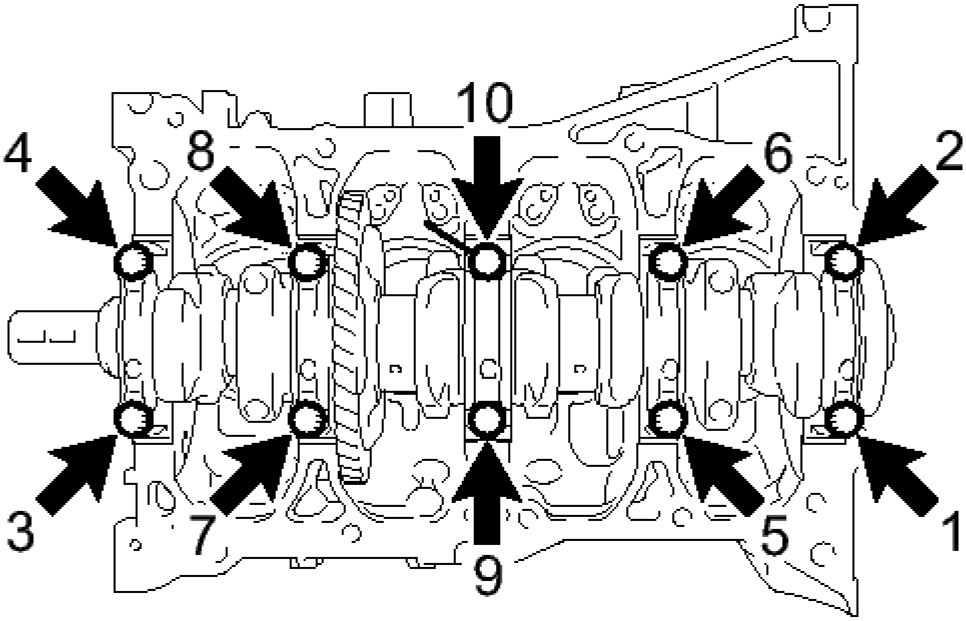

Fig. 353: Identifying Bearing Cap Bolts Loosening Sequence
Courtesy of TOYOTA MOTOR SALES, U.S.A., INC.

b. Remove the 5 bearing caps from the cylinder block.

HINT:

- Keep the No. 2 crankshaft bearings and crankshaft bearing caps together.
- Arrange the bearing caps in the correct order.

c. Remove the crankshaft from the cylinder block.

HINT:

Keep the crankshaft bearings and crankshaft thrust washers together with the cylinder block.

d. Check each crankshaft journal and bearing for pitting and scratches.

If the journal or bearing is damaged, replace the bearings. If necessary, replace the crankshaft.

7. **REMOVE CRANKSHAFT THRUST WASHER**
    a. Remove the thrust washers from the cylinder block.

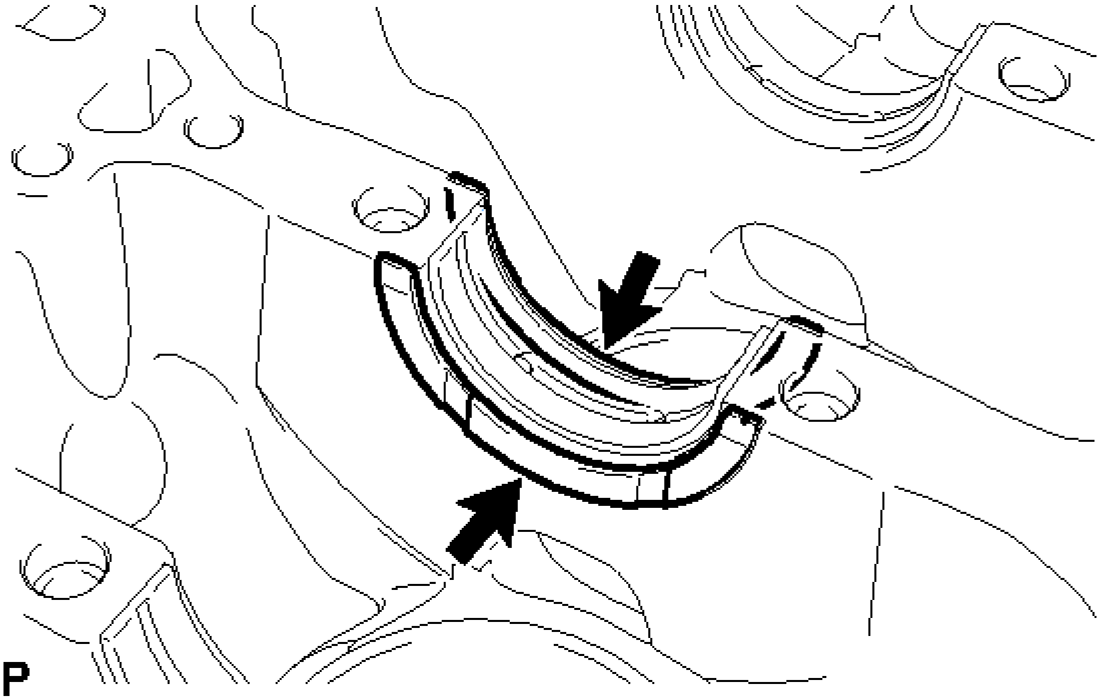

Fig. 354: Locating Crankshaft Bearing
Courtesy of TOYOTA MOTOR SALES, U.S.A., INC.

8. **REMOVE CRANKSHAFT BEARING**
    a. Remove the crankshaft bearings from the cylinder block and bearing caps.

       HINT:

       Arrange the bearings in the correct order.

9. **REMOVE CRANKSHAFT PULLEY KEY**
    a. Using a screwdriver, remove the 2 pulley keys from the crankshaft.
10. **REMOVE PISTON RING SET**
    a. Using a piston ring expander, remove the 2 compression rings.

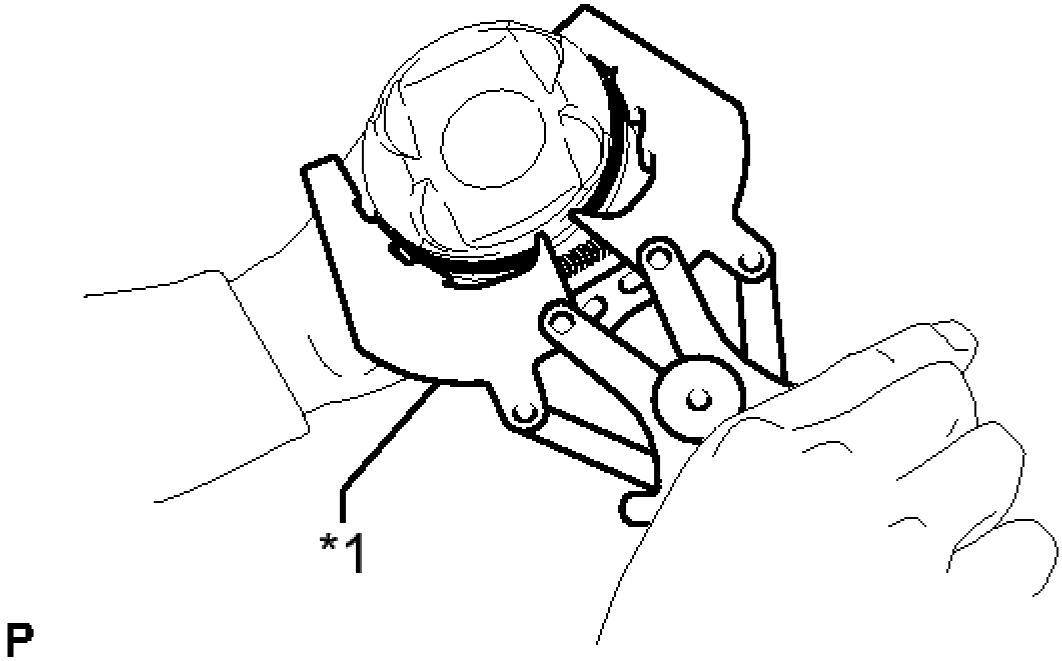

Fig. 355: Removing Piston Compression Rings

Courtesy of TOYOTA MOTOR SALES, U.S.A., INC.

TEXT IN ILLUSTRATION

*1	Piston Ring Expander

b. Remove the oil ring and expander by hand.

HINT:

Arrange the removed parts in the correct order.

11. **REMOVE PISTON PIN HOLE SNAP RING**
    a. Using a screwdriver, pry out the 2 snap rings.

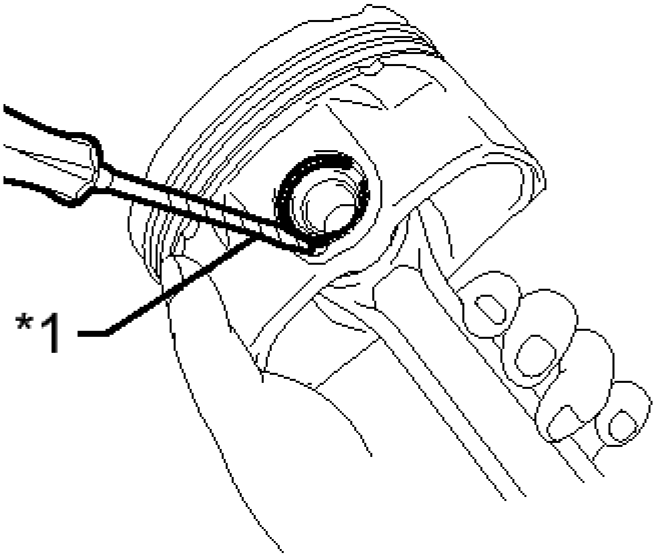

P

Fig. 356: Identifying Snap Rings
Courtesy of TOYOTA MOTOR SALES, U.S.A., INC.

TEXT IN ILLUSTRATION

*1	Protective Tape

HINT:

Tape the screwdriver tip before use.

12. **REMOVE PISTON**
    a. Gradually heat each piston up to 80 to 90°C (176 to 194°F).

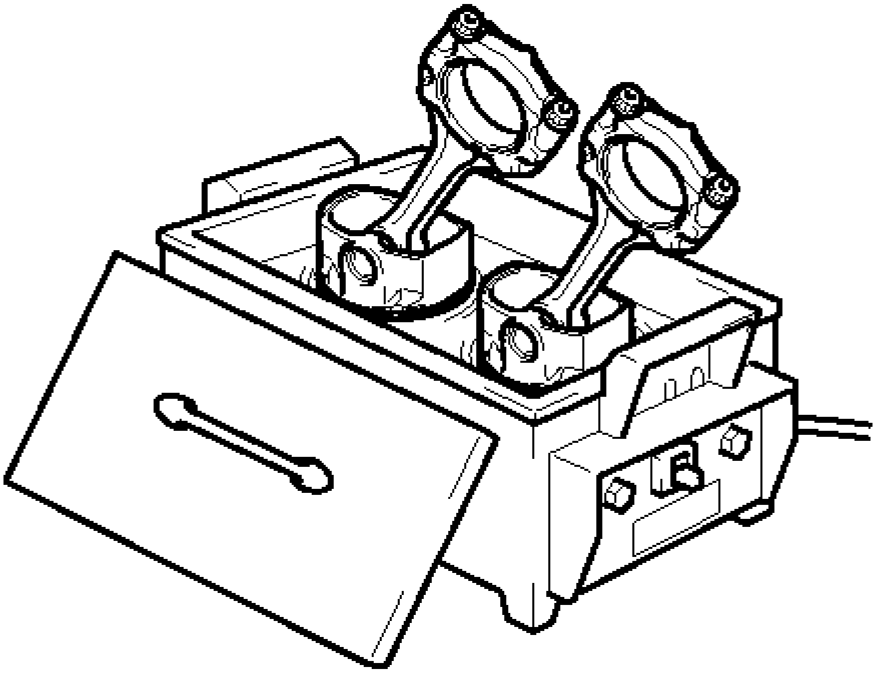

Fig. 357: Heating Piston
Courtesy of TOYOTA MOTOR SALES, U.S.A., INC.

b. Using a plastic-faced hammer and brass bar, lightly tap out the piston pin. Then remove the connecting rod.

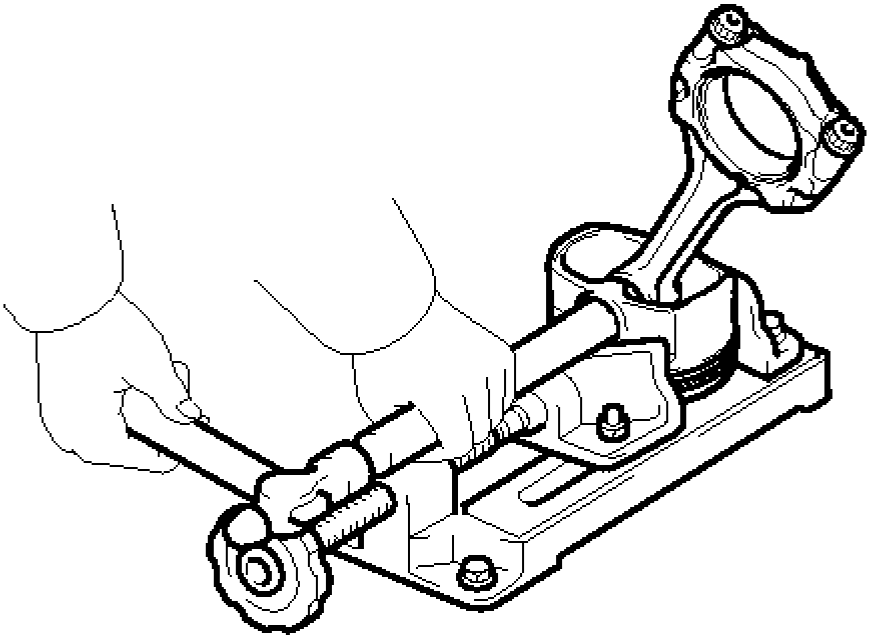

Fig. 358: Tapping Out Piston Pin

Courtesy of TOYOTA MOTOR SALES, U.S.A., INC.

HINT:

- The piston and pin are a matched set.
- Be sure to arrange the removed pistons, pins, rings, connecting rods and bearings in such a way that the parts can be reinstalled exactly as before.
- Arrange the pistons, pins, rings, connecting rods and bearings in the correct order.

13. **REMOVE NO. 1 OIL NOZZLE SUB-ASSEMBLY**
    a. Using a 5 mm hexagon wrench, remove the 2 bolts and 2 oil nozzles.

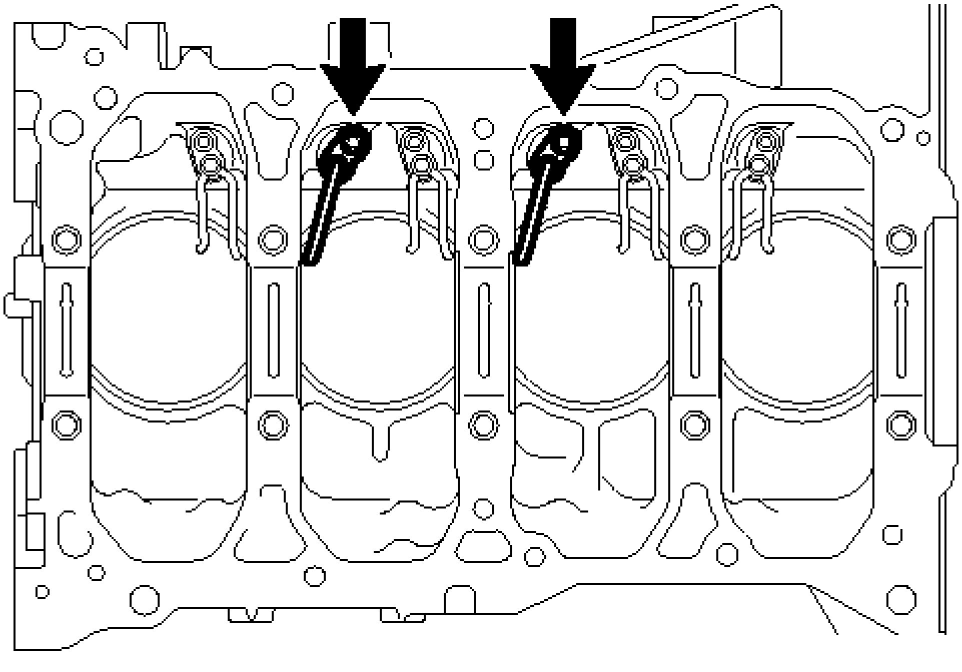

Fig. 359: Locating NO. 1 Oil Nozzles Bolts
Courtesy of TOYOTA MOTOR SALES, U.S.A., INC.

14. **REMOVE NO. 2 OIL NOZZLE SUB-ASSEMBLY**
    a. Using a 5 mm hexagon wrench, remove the 4 bolts and 4 oil nozzles.

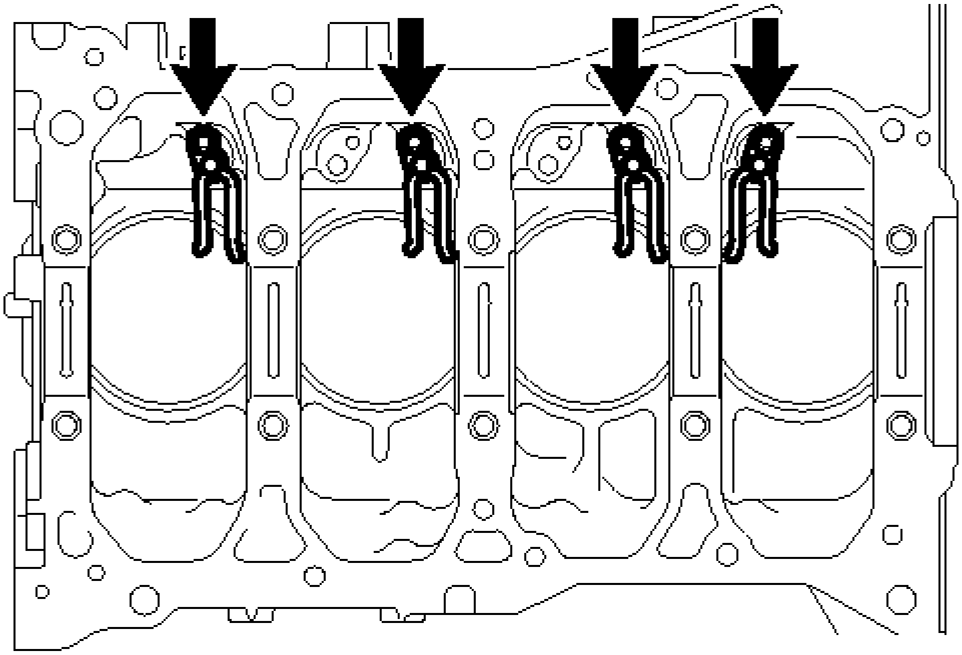

Fig. 360: Locating NO. 2 Oil Nozzles Bolts
Courtesy of TOYOTA MOTOR SALES, U.S.A., INC.

15. **REMOVE STUD BOLT**

NOTE: **If a stud bolt is deformed or its threads are damaged, replace it.**

INSPECTION

INSPECTION

1. **INSPECT CYLINDER BLOCK FOR WARPAGE**
    a. Using a precision straightedge and feeler gauge, measure the warpage of the surface that contacts with the cylinder head gasket.

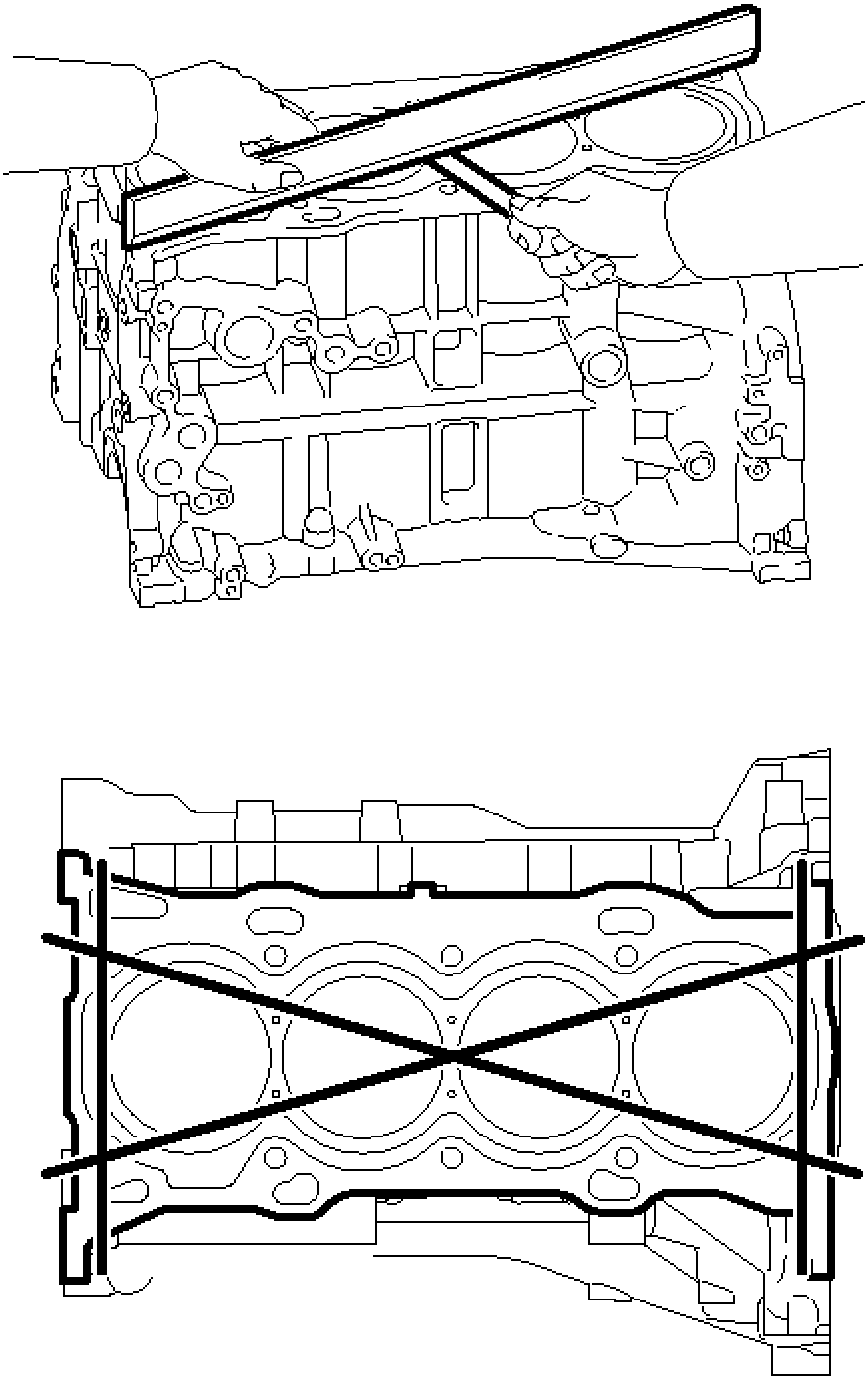

Fig. 361: Inspecting Cylinder Block For Warpage
Courtesy of TOYOTA MOTOR SALES, U.S.A., INC.

Maximum warpage

0.05 mm (0.00197 in.)

If the warpage is more than the maximum, replace the cylinder block.

2. **INSPECT CYLINDER BORE**
   a. Using a cylinder gauge, measure the cylinder bore diameter at positions A and B in the thrust and axial directions.

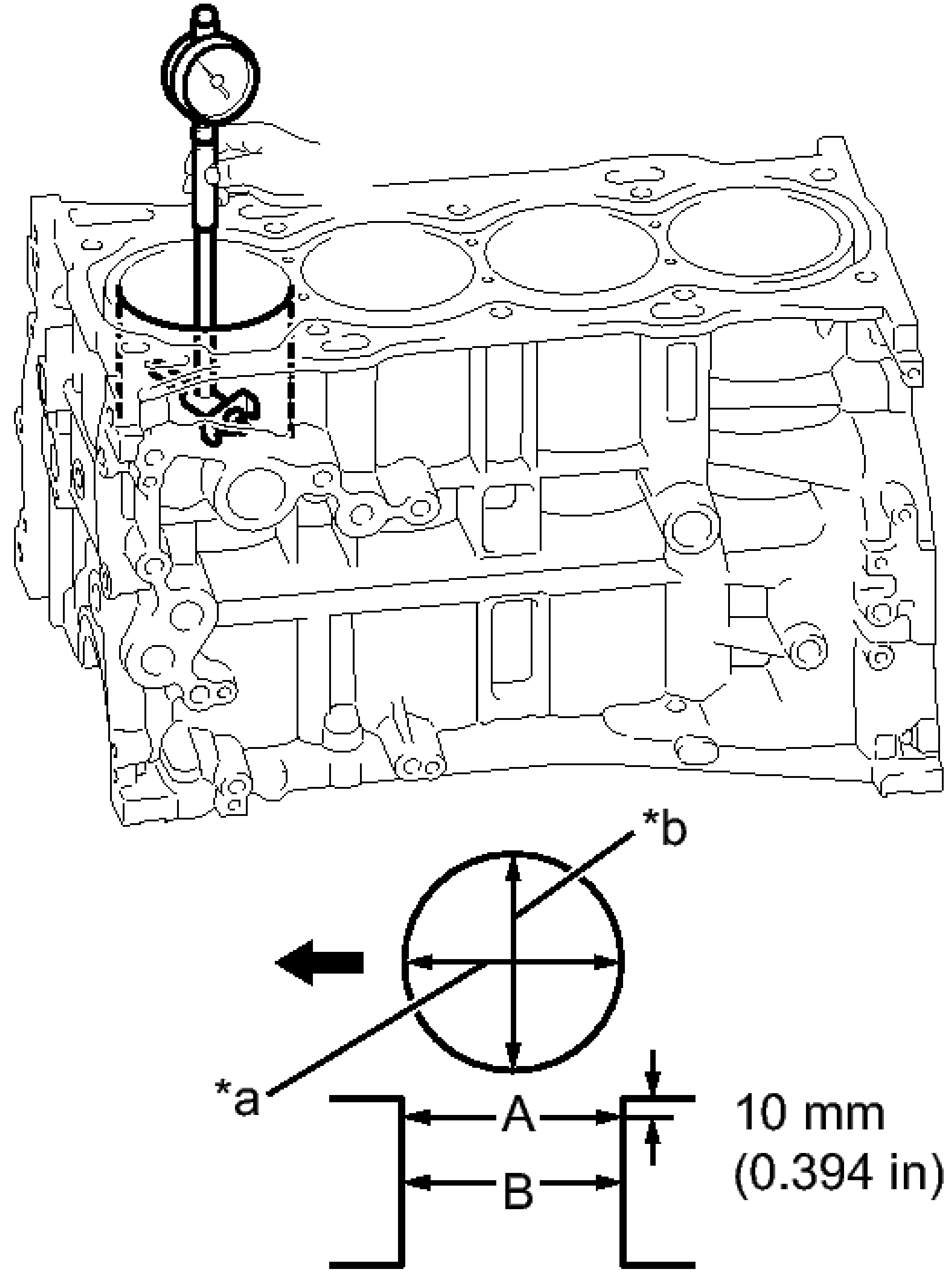
*b
*a
A
B
10 mm
(0.394 in)

P

Fig. 362: Measuring Cylinder Bore Diameter Using Cylinder Gauge
Courtesy of TOYOTA MOTOR SALES, U.S.A., INC.

TEXT IN ILLUSTRATION

	Thrust

*a	Direction
*b	Axial Direction
·	Front

Standard diameter

90.000 to 90.013 mm (3.543 to 3.544 in.)

Maximum diameter

90.13 mm (3.548 in.)

If the average diameter of the 4 positions is more than the maximum, replace the cylinder block.

3. **INSPECT PISTON**
    a. Using a gasket scraper, remove the carbon from the piston top.

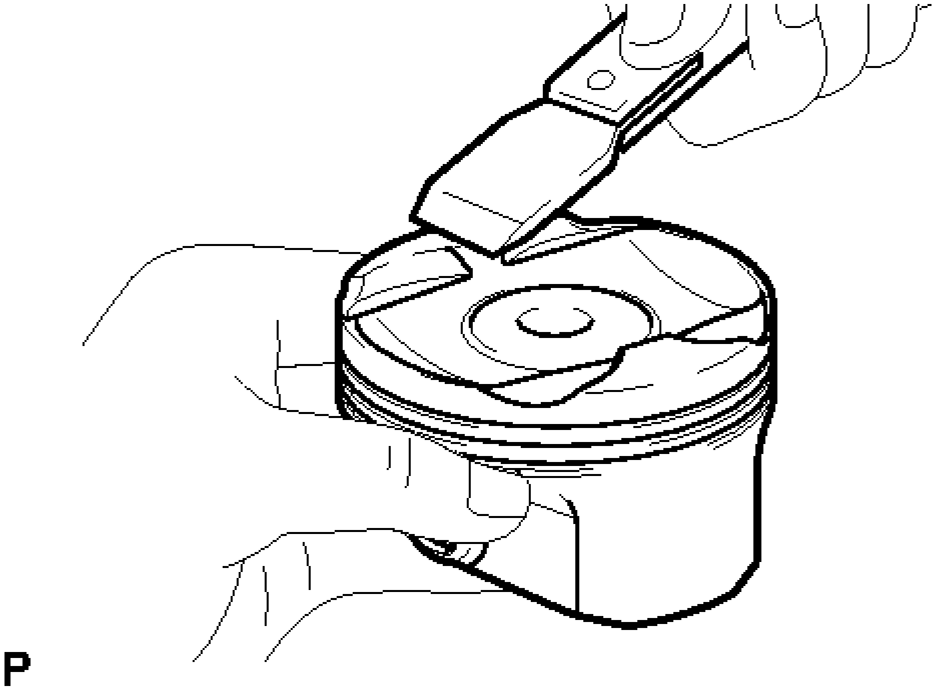

Fig. 363: Removing Carbon Using Gasket Scraper
Courtesy of TOYOTA MOTOR SALES, U.S.A., INC.

    b. Using a groove cleaning tool or a broken ring, clean the piston ring grooves.

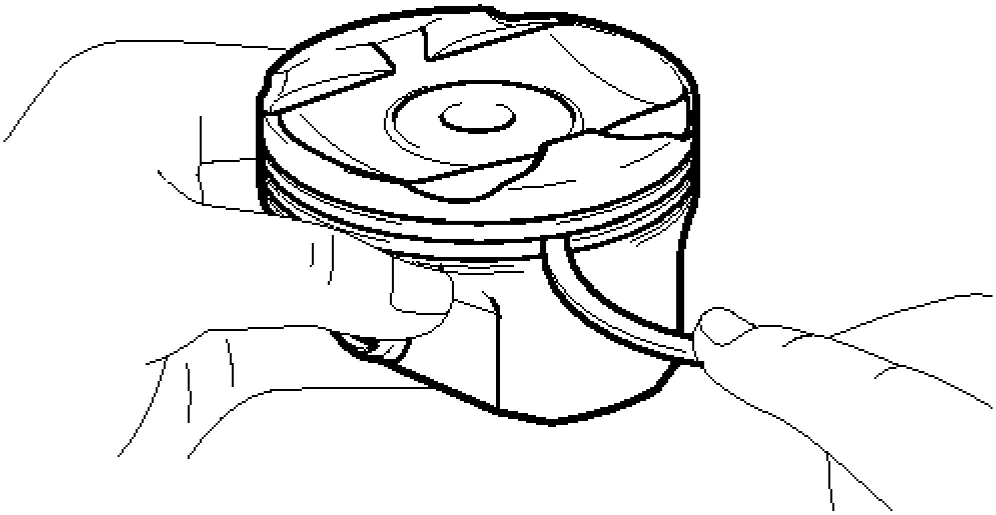

Fig. 364: Cleaning Piston Ring Grooves
Courtesy of TOYOTA MOTOR SALES, U.S.A., INC.

c. Using a brush and solvent, thoroughly clean the piston.

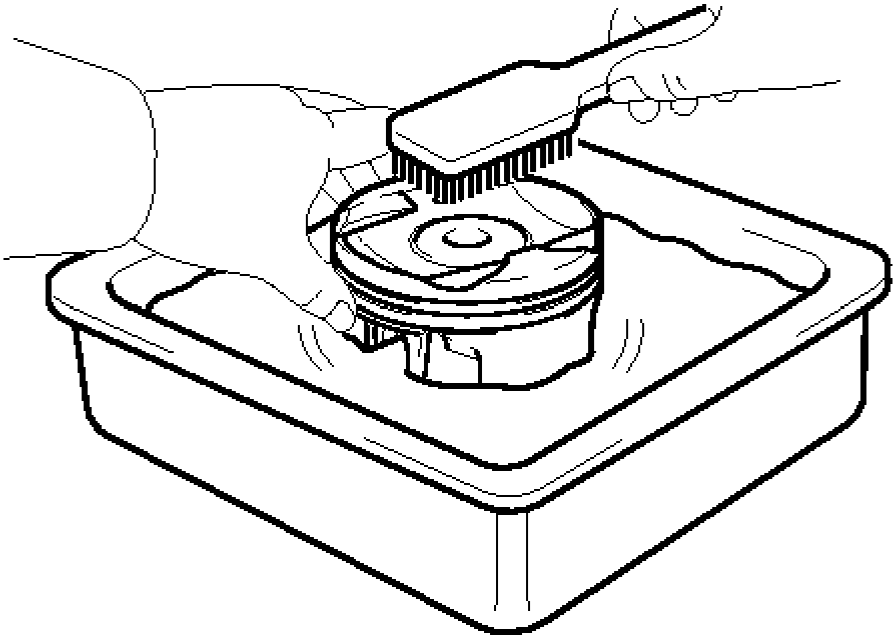

Fig. 365: View Of Cleaning Piston Using Brush
Courtesy of TOYOTA MOTOR SALES, U.S.A., INC.

NOTE: Do not use a wire brush.

d. Using a micrometer, measure the piston diameter at a position that is 10.5 mm (0.413 in.) from the bottom of the piston (refer to the illustration).

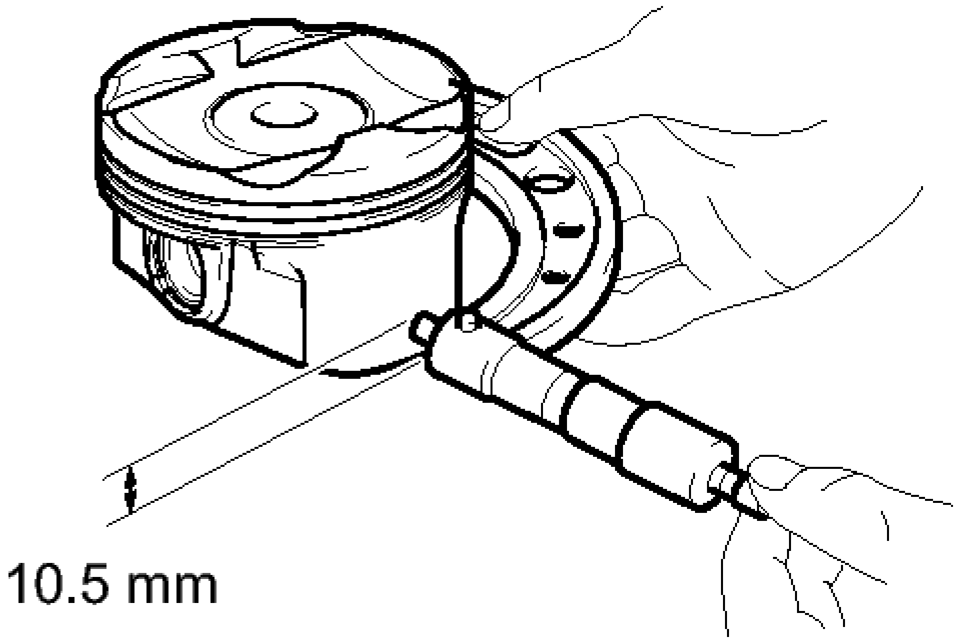

Fig. 366: Measuring Piston Diameter
Courtesy of TOYOTA MOTOR SALES, U.S.A., INC.

Standard piston diameter

89.985 to 89.995mm (3.5427 to 3.5413 in.)

If the diameter is less than the minimum, replace the piston with pin.

4. **INSPECT PISTON OIL CLEARANCE**
   a. Measure the cylinder bore diameter in the thrust direction.
   b. Subtract the piston diameter measurement from the cylinder bore diameter measurement.

Standard oil clearance

0.010 to 0.033 mm (0.000394 to 0.00130 in.)

Maximum oil clearance

0.10 mm (0.00394 in.)

If the oil clearance is more than the maximum, replace all the pistons. If necessary, replace the cylinder block.

5. **INSPECT RING GROOVE CLEARANCE**
    a. Using a feeler gauge, measure the clearance between the new piston ring and the wall of the ring groove.

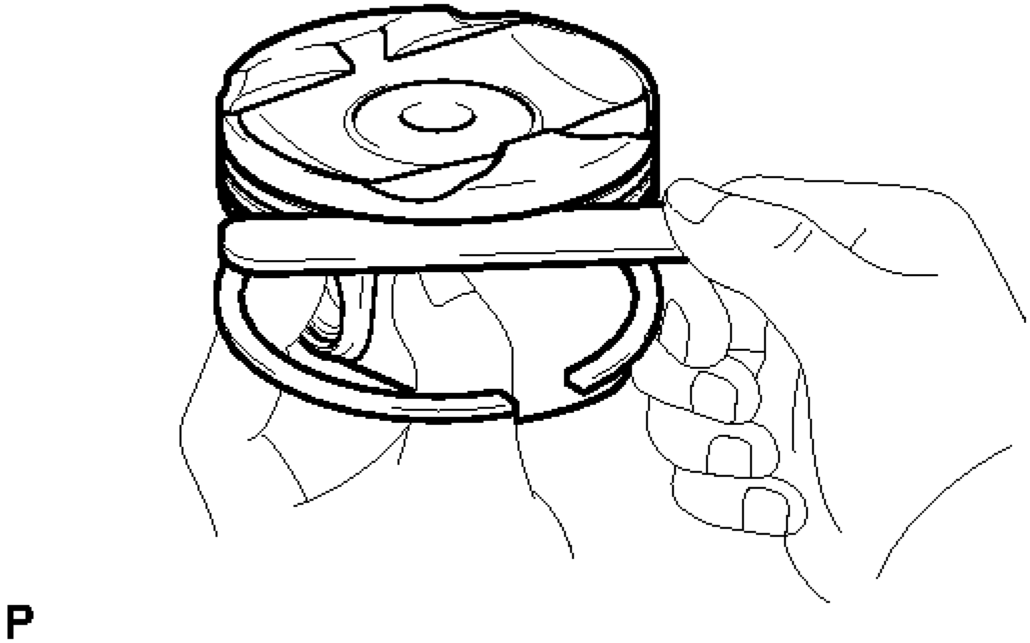

Fig. 367: Measuring Clearance Between Piston Ring And Wall Of Ring Groove
Courtesy of TOYOTA MOTOR SALES, U.S.A., INC.

Standard Ring Groove Clearance

Item	Specified Condition
No. 1 ring	0.020 to 0.070 mm (0.000787 to 0.00276 in.)
No. 2 ring	0.020 to 0.060 mm (0.000787 to 0.00236 in.)
Oil	0.020 to 0.070 mm (0.000787

ring	to 0.00276 in.)

If the groove clearance is not as specified, replace the piston with pin.

6. **INSPECT PISTON RING END GAP**
   a. Insert the piston ring into the cylinder bore.

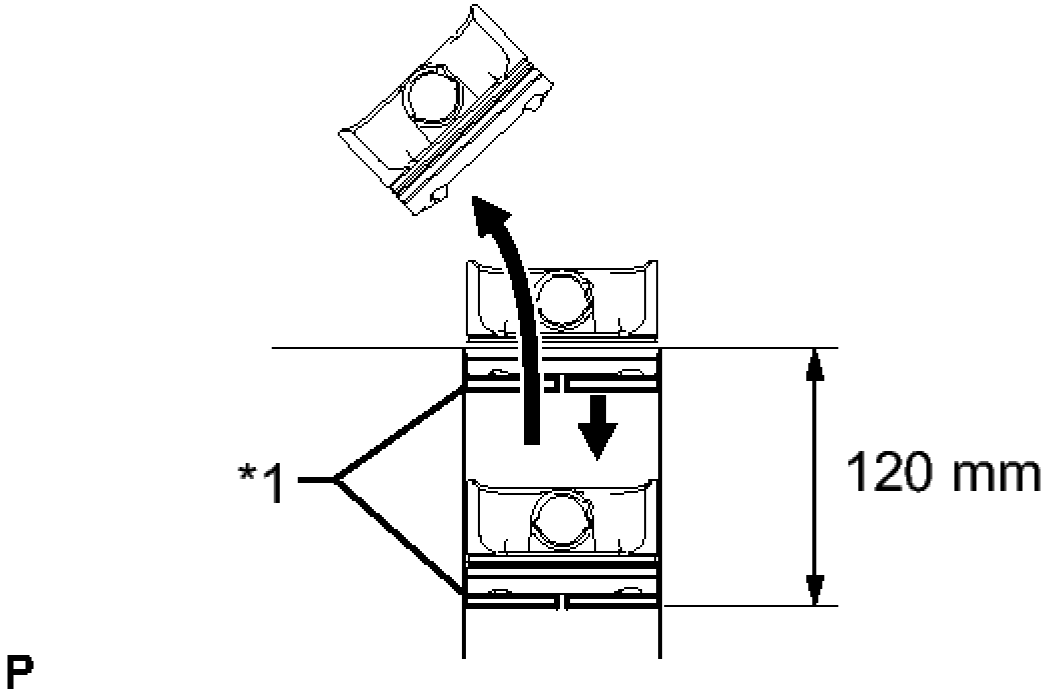

Fig. 368: Identifying Piston Ring
Courtesy of TOYOTA MOTOR SALES, U.S.A., INC.

TEXT IN ILLUSTRATION

*1	Piston Ring

   b. Using a piston, push the piston ring a little beyond the bottom of the ring travel, 120 mm (4.72 in.) from the top of the cylinder block.
   c. Using a feeler gauge, measure the end gap.

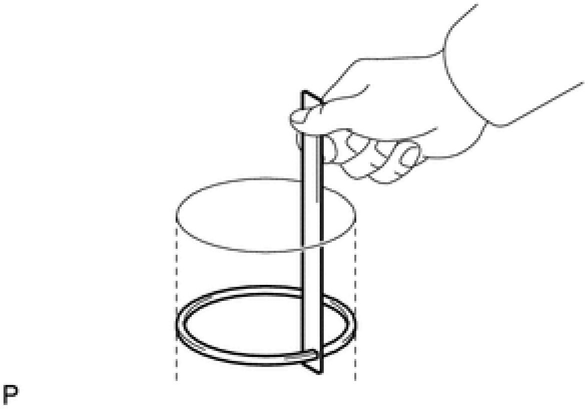

Fig. 369: Measuring End Gap
Courtesy of TOYOTA MOTOR SALES, U.S.A., INC.

Standard End Gap

Item	Specified Condition
No. 1 ring	0.22 to 0.27 mm (0.00866 to 0.0106 in.)
No. 2 ring	0.37 to 0.42 mm (0.0146 to 0.0165 in.)
Oil ring	0.10 to 0.20 mm (0.00394 to 0.00787 in.)

Maximum End Gap

Item	Specified Condition
No. 1 ring	0.87 mm (0.0342 in.)
No. 2 ring	1.02 mm (0.0402 in.)
Oil	0.80 mm

ring	(0.0315 in.)

If the end gap is more than the maximum, replace the piston ring. If the end gap is more than the maximum, even with a new piston ring, replace the cylinder block.

7. **INSPECT PISTON PIN OIL CLEARANCE**
   a. Check each mark on the piston, piston pin and connecting rod.

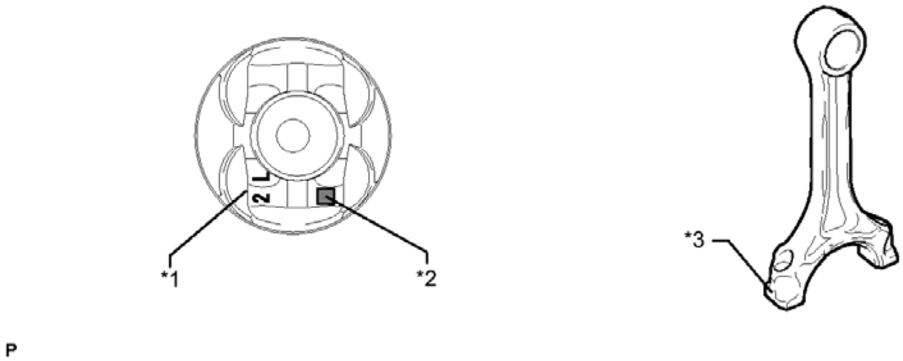

Fig. 370: Checking Piston, Pin & Connecting Rod Marks
Courtesy of TOYOTA MOTOR SALES, U.S.A., INC.

TEXT IN ILLUSTRATION

*1	Front Mark	*2	Piston Pin Hole Inside Diameter Mark
*3	Connecting Rod Small End Bush Inside Diameter Mark	-	-

HINT:

The front mark is "2L" printed in raised letters.

   b. Using a caliper gauge, measure the inside diameter of the piston pin hole.

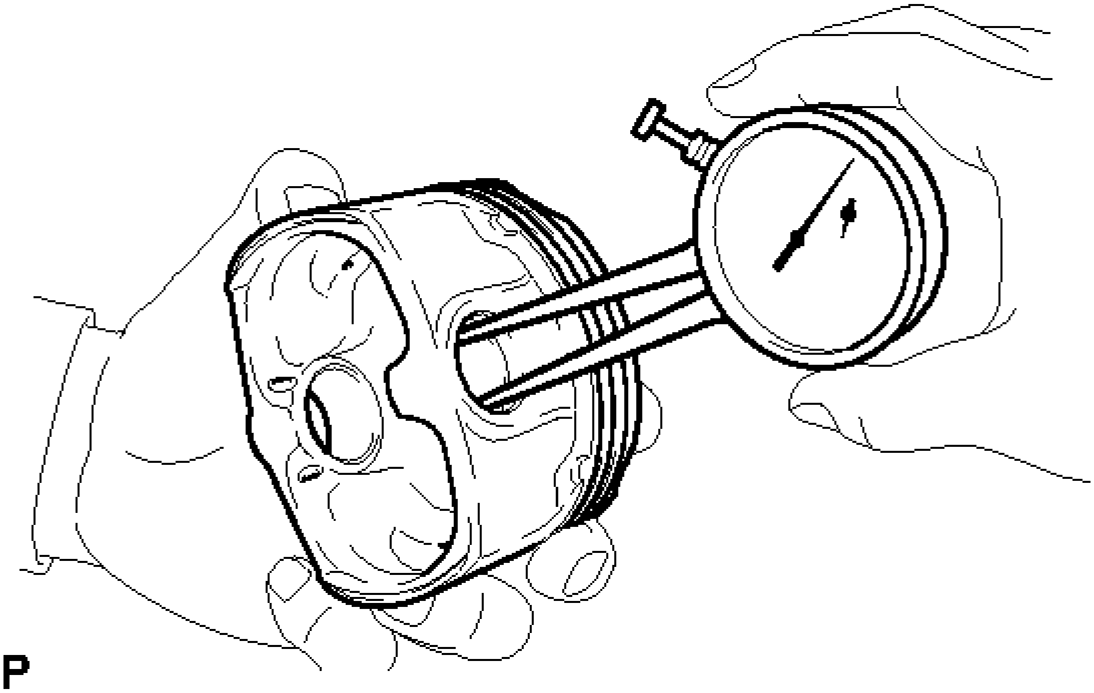

Fig. 371: Measuring Inside Diameter Of Piston Pin Hole
Courtesy of TOYOTA MOTOR SALES, U.S.A., INC.

Standard Piston Pin Hole Inside Diameter

Item	Specified Condition
Mark A	22.001 to 22.004 mm (0.86618 to 0.86630 in.)
Mark B	22.005 to 22.007 mm (0.86634 to 0.86642 in.)
Mark C	22.008 to 22.010 mm (0.86645 to 0.86653 in.)

c. Using a micrometer, measure the piston pin diameter.

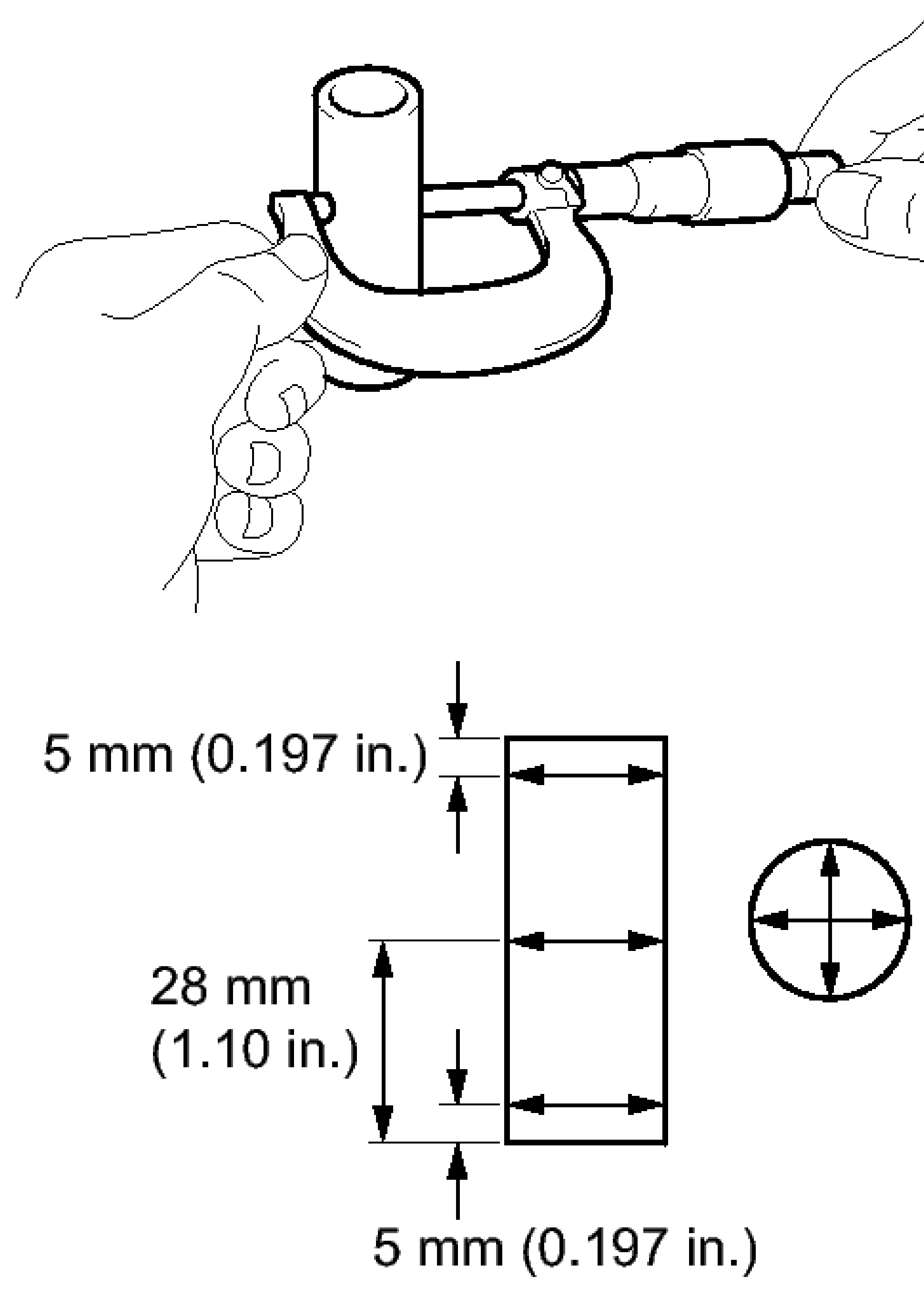
5 mm (0.197 in.)
28 mm (1.10 in.)
5 mm (0.197 in.)
P

Fig. 372: Measuring Piston Pin Diameter
Courtesy of TOYOTA MOTOR SALES, U.S.A., INC.

Standard Piston Pin Diameter

Item	**Specified Condition**
Mark A	21.997 to 22.000 mm (0.86602 to 0.86614 in.)
Mark B	22.001 to 22.003 mm (0.86617 to 0.86626 in.)
Mark C	22.004 to 22.006 mm (0.86630 to 0.86638 in.)

If the diameter is not as specified, replace the piston pin.

d. Using a caliper gauge, measure the connecting rod small end bush inside diameter.

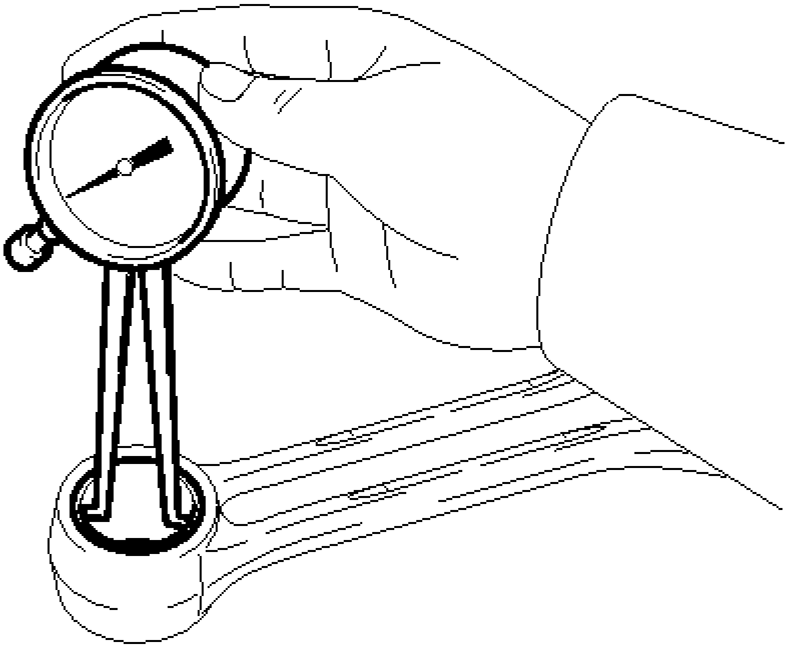

Fig. 373: Measuring Connecting Rod Small End Bush Inside Diameter
Courtesy of TOYOTA MOTOR SALES, U.S.A., INC.

Standard Connecting Rod Small End Bush Inside Diameter

Item	**Specified Condition**
Mark A	22.005 to 22.008 mm (0.86634 to 0.86645 in.)
Mark B	22.009 to 22.011 mm (0.86649 to 0.86657 in.)
Mark C	22.012 to 22.014 mm (0.86661 to 0.86669 in.)

If the diameter is not as specified, replace the connecting rod.

e. Subtract the piston pin diameter measurement from the piston pin hole inside diameter measurement.

Standard oil clearance

0.001 to 0.007 mm (0.0000394 to 0.000276 in.)

Maximum oil clearance

0.013 mm (0.000512 in.)

If the oil clearance is more than the maximum, replace the piston and piston pin as a set.

f. Subtract the piston pin diameter measurement from the connecting rod small end bush inside diameter measurement.

Standard oil clearance

0.005 to 0.011 mm (0.000197 to 0.000433 in.)

Maximum oil clearance

0.017 mm (0.000669 in.)

If the oil clearance is more than the maximum, replace the connecting rod. If necessary, replace the connecting rod and piston pin as a set.

8. **INSPECT CONNECTING ROD SUB-ASSEMBLY**
    a. Using a connecting rod aligner and feeler gauge, check the connecting rod alignment.

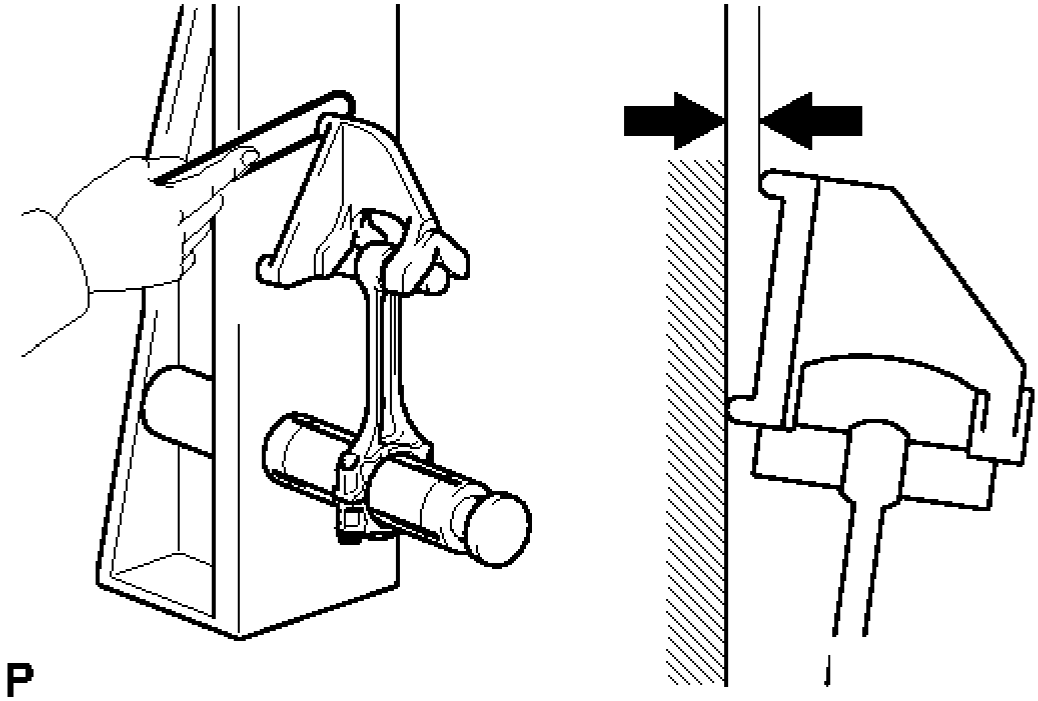

Fig. 374: Checking Connecting Rod Alignment (For Band)
Courtesy of TOYOTA MOTOR SALES, U.S.A., INC.

1. Check for bend.

   Maximum bend

   0.05 mm (0.00197 in.) per 100 mm (3.94 in.)

   If the bend is more than the maximum, replace the connecting rod.

2. Check for twist.

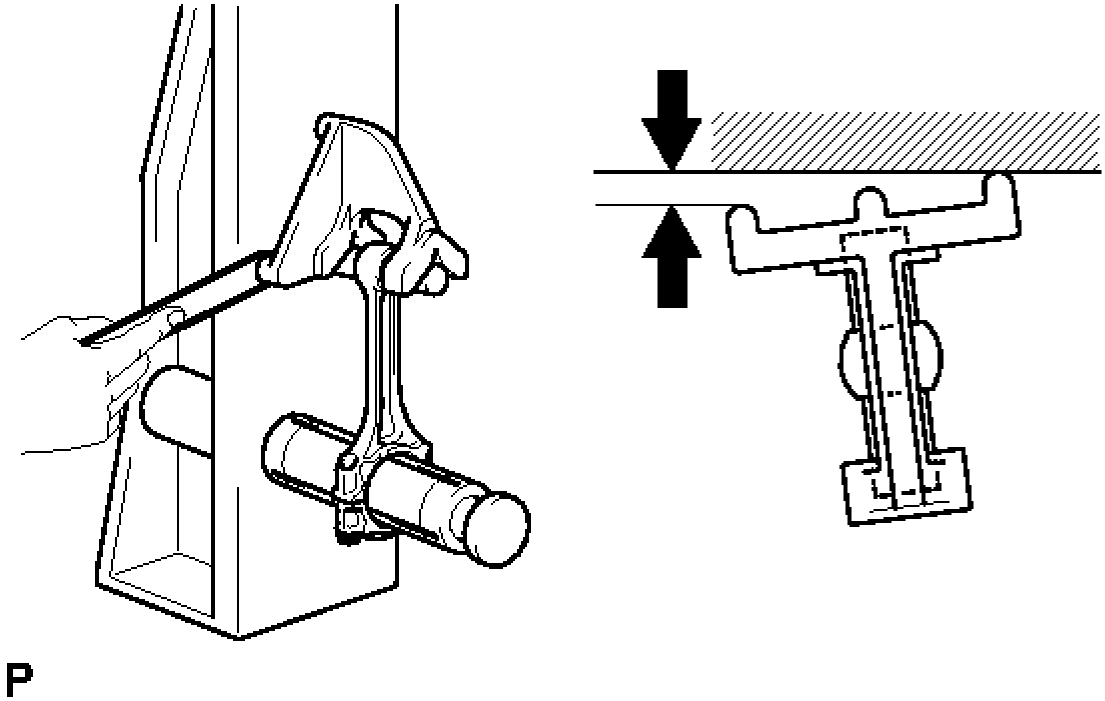

Fig. 375: Checking Connecting Rod Alignment (For Twist)
Courtesy of TOYOTA MOTOR SALES, U.S.A., INC.

Maximum twist

0.15 mm (0.00591 in.) per 100 mm (3.94 in.)

If the twist is more than the maximum, replace the connecting rod.

9. **INSPECT CRANKSHAFT**
    a. Inspect for circle runout.

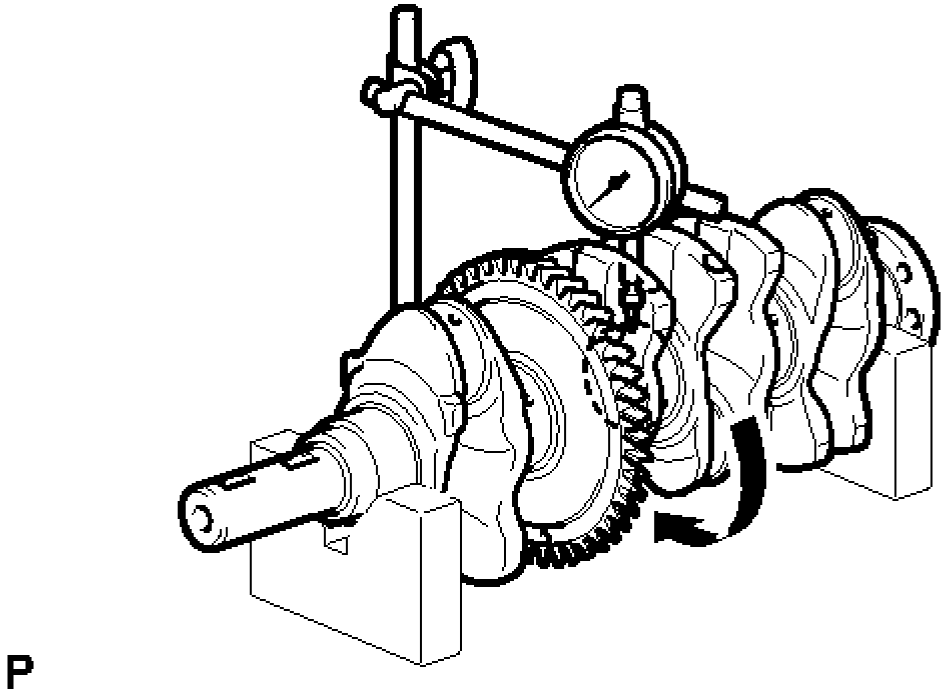

Fig. 376: Measuring Circle Runout
Courtesy of TOYOTA MOTOR SALES, U.S.A., INC.

1. Using a dial indicator and V-blocks, measure the circle runout as shown in the illustration.

   Maximum circle runout

   0.003 mm (0.000118 in.)

   If the circle runout is more than the maximum, replace the crankshaft.

b. Inspect the main journals.

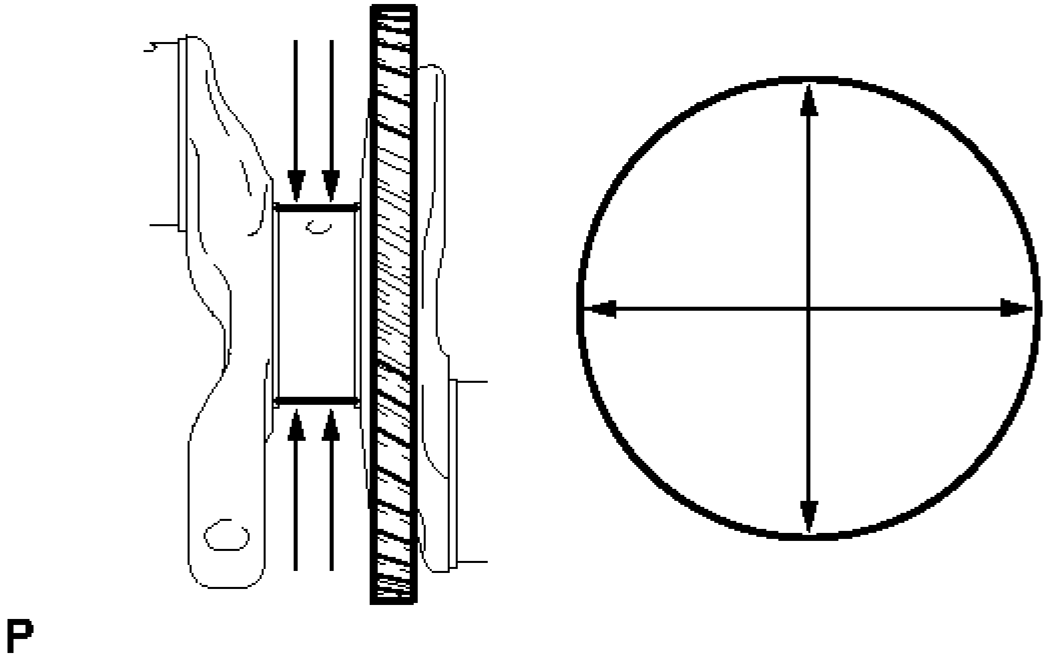

Fig. 377: Checking Crankshaft Main Journal
Courtesy of TOYOTA MOTOR SALES, U.S.A., INC.

   1. Using a micrometer, measure the diameter of each main journal.

      Standard main journal diameter

      54.988 to 55.000 mm (2.1649 to 2.1654 in.)

      If the diameter is not as specified, check the crankshaft oil clearance. If necessary, replace the crankshaft.

   2. Check each main journal for taper and out-of-round as shown in the illustration.

      Maximum taper and out-of-round

      0.003 mm (0.000118 in.)

      If the taper and out-of-round are more than the maximum, replace the crankshaft.

c. Inspect the crank pin.

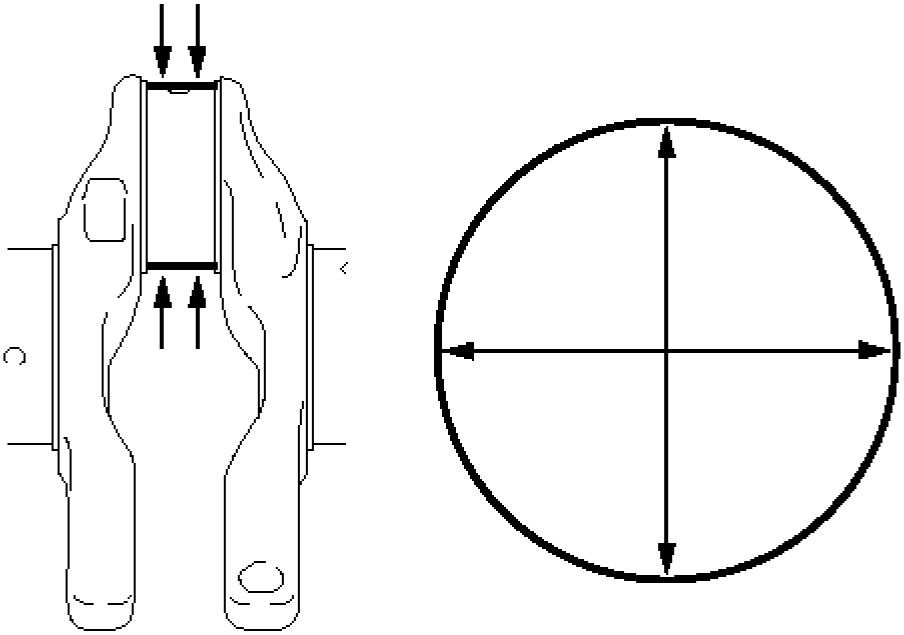

Fig. 378: Measuring Diameter Of Crank Pin
Courtesy of TOYOTA MOTOR SALES, U.S.A., INC.

1. Using a micrometer, measure the diameter of each crank pin.

   Standard crank pin diameter

   51.492 to 51.500 mm (2.027 to 2.028 in.)

   If the diameter is not as specified, check the connecting rod oil clearance. If necessary, replace the crankshaft.

2. Inspect each crank pin for taper and out-of-round as shown in the illustration.

   Maximum taper and out-of-round

   0.003 mm (0.000118 in.)

   If the taper and out-of-round are more than the maximum, replace the crankshaft.

10. **INSPECT CRANKSHAFT OIL CLEARANCE**
    a. Install the crankshaft bearings See step 7.
    b. Install the crankshaft thrust washers See step 8.
    c. Clean each main journal and bearing.

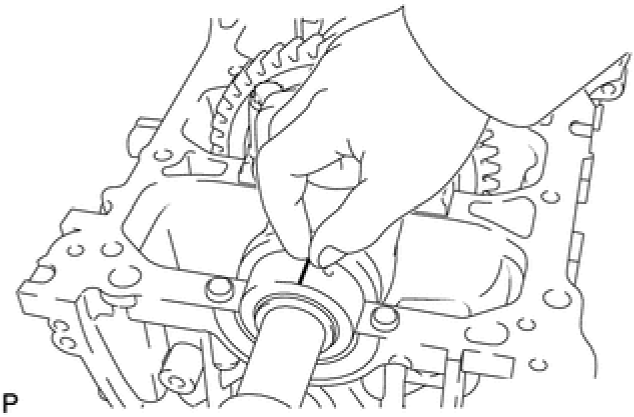

Fig. 379: Laying Strip Of Plastigage Across Journal
Courtesy of TOYOTA MOTOR SALES, U.S.A., INC.

d. Place the crankshaft onto the cylinder block.
e. Lay a strip of Plastigage across each journal.
f. Install the crankshaft bearing caps See step 9.

NOTE: Do not turn the crankshaft.

g. Remove the crankshaft bearing caps See step 6.
h. Measure the Plastigage at its widest point.

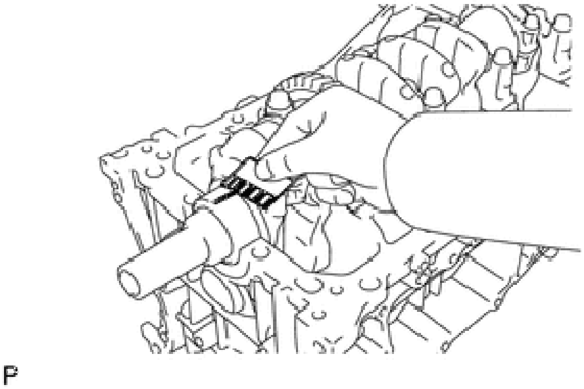

Fig. 380: Measuring Oil Clearance Using Plastigage
Courtesy of TOYOTA MOTOR SALES, U.S.A., INC.

Standard oil clearance

0.016 to 0.039 mm (0.000630 to 0.00154 in.)

Maximum oil clearance

0.05 mm (0.00197 in.)

NOTE: Remove the Plastigage completely after the measurement.

If the oil clearance is more than the maximum, replace the crankshaft bearing. If necessary, replace the crankshaft.

HINT:

If replacing a bearing, select a new one with the same number. If the number of the bearing cannot be determined, calculate the correct bearing number by adding together the numbers imprinted on the cylinder block and crankshaft. Then select a new bearing with the calculated number. There are 4 sizes of standard bearings, marked "1", "2", "3" and "4" accordingly.

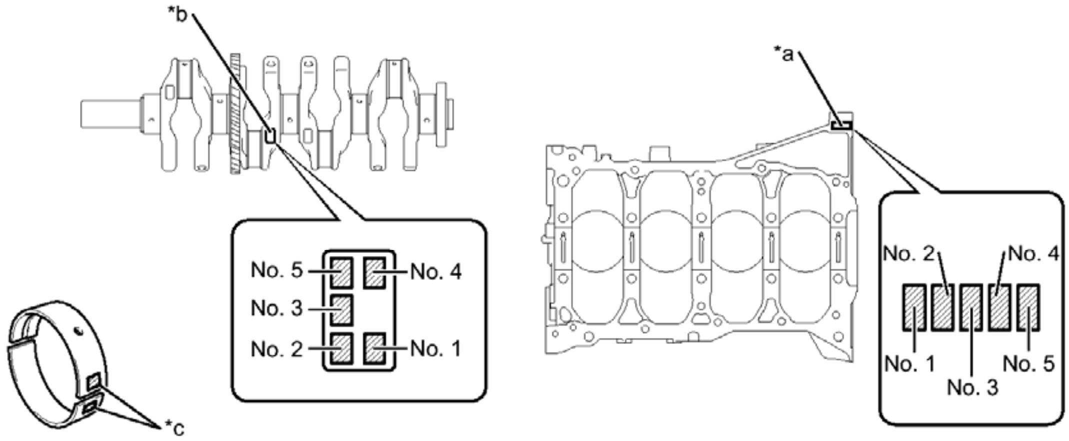

P

Fig. 381: Identifying Cylinder Block/Crankshaft Number Marks & Diameter Marks
Courtesy of TOYOTA MOTOR SALES, U.S.A., INC.

TEXT IN ILLUSTRATION

*a	Cylinder Block Number Mark (A)	*b	Crankshaft Number Mark (B)
*c	Diameter Mark	-	-

EXAMPLE

Cylinder block (A) "3" + Crankshaft (B) "4" = Total "7"

Select the bearing marked "3".

Bearing Chart

(A) + (B)	Use Bearing
0 to 2	1
3 to 5	2
6 to 8	3
9 to 11	4

Standard Cylinder Block Journal Inside Diameter (A)

Item	Specified Condition
Mark 0	59.000 to 59.002 mm (2.32283 to 2.32291 in.)
Mark 1	59.003 to 59.004 mm (2.32295 to 2.32299 in.)
Mark 2	59.005 to 59.006 mm (2.32303 to 2.32307 in.)
Mark 3	59.007 to 59.009 mm (2.32311 to 2.32318 in.)

Mark 4	59.010 to 59.011 mm (2.32322 to 2.32326 in.)
Mark 5	59.012 to 59.013 mm (2.32330 to 2.32334 in.)
Mark 6	59.014 to 59.016 mm (2.32338 to 2.32346 in.)

Standard Crankshaft Main Journal Diameter (B)

Item	Specified Condition
Mark 0	54.999 to 55.000 mm (2.16531 to 2.16535 in.)
Mark 1	54.997 to 54.998 mm (2.16523 to 2.16527 in.)
Mark 2	54.995 to 54.996 mm (2.16515 to 2.16519 in.)
Mark 3	54.993 to 54.994 mm (2.16507 to 2.16511

	in.)
Mark 4	54.991 to 54.992 mm (2.16500 to 2.16504 in.)
Mark 5	54.988 to 54.990 mm (2.16488 to 2.16496 in.)

Standard Bearing Center Wall Thickness

Item	**Specified Condition**
Mark 1	1.991 to 1.994 mm (0.07839 to 0.07850 in.)
Mark 2	1.995 to 1.997 mm (0.07854 to 0.07862 in.)
Mark 3	1.998 to 2.000 mm (0.07866 to 0.07874 in.)
Mark 4	2.001 to 2.003 mm (0.07878 to 0.07886 in.)

i. Perform the inspection above for each journal.

11. **INSPECT CRANKSHAFT BEARING CAP BOLT**

a. Using a vernier caliper, measure the diameter of the threads at the measurement point shown in the illustration.

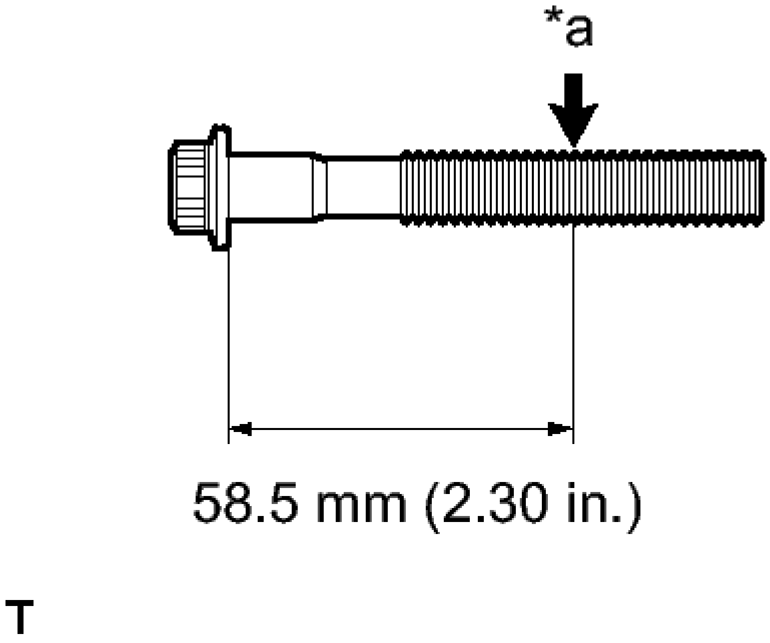

Fig. 382: Measuring Crankshaft Bearing Cap Bolt Threads
Courtesy of TOYOTA MOTOR SALES, U.S.A., INC.

TEXT IN ILLUSTRATION

*a	Measurement Point

Standard diameter

9.77 to 9.96 mm (0.385 to 0.392 in.)

Minimum diameter

9.1 mm (0.358 in.)

HINT:

- If the diameter is less than the minimum, replace the crankshaft bearing cap bolt. Failure to do so may lead to engine damage.
- If there is any thread deformation, replace the crankshaft bearing cap bolt with a new one.

12. **INSPECT CONNECTING ROD BOLT**
    a. Using a vernier caliper, measure the diameter of the bolt in the area shown in the illustration.

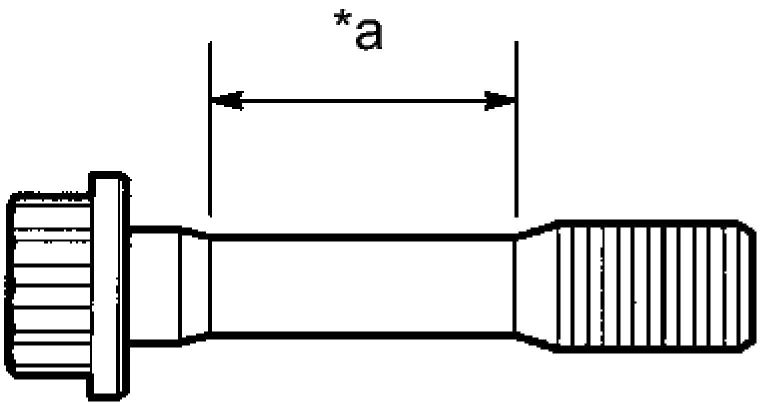

Fig. 383: Inspecting Connecting Rod Bolt
Courtesy of TOYOTA MOTOR SALES, U.S.A., INC.

TEXT IN ILLUSTRATION

*a	Measurement Area

Standard diameter

8.5 to 8.6 mm (0.335 to 0.339 in.)

Minimum diameter

8.3 mm (0.327 in.)

HINT:

- Diameter measurements should be done at several points.
- If the diameter is less than the minimum, replace the connecting rod bolt with a new one. Failure to do so may lead to engine damage.
- If there is any thread deformation, replace the connecting rod bolt with a new one.

13. **INSPECT NO. 1 OIL NOZZLE SUB-ASSEMBLY**
    a. Push the check valve with a pin to check if it is stuck.

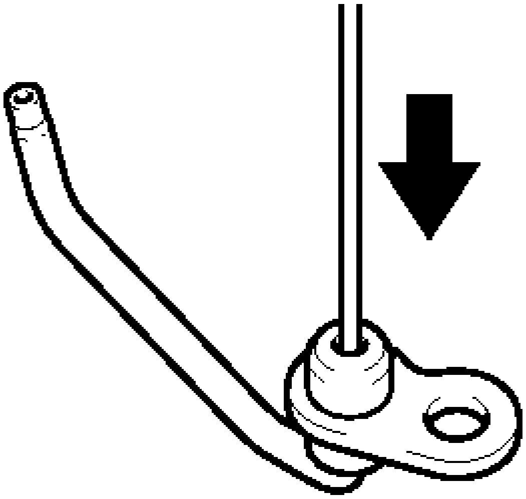

Fig. 384: Pushing Check Valve With Pin
Courtesy of TOYOTA MOTOR SALES, U.S.A., INC.

If stuck, replace the No. 1 oil nozzle.

b. Push the check valve with a pin to check if it moves smoothly.

If it does not move smoothly, clean or replace the No. 1 oil nozzle.

c. Apply air into A. Check that air does not leak through B.

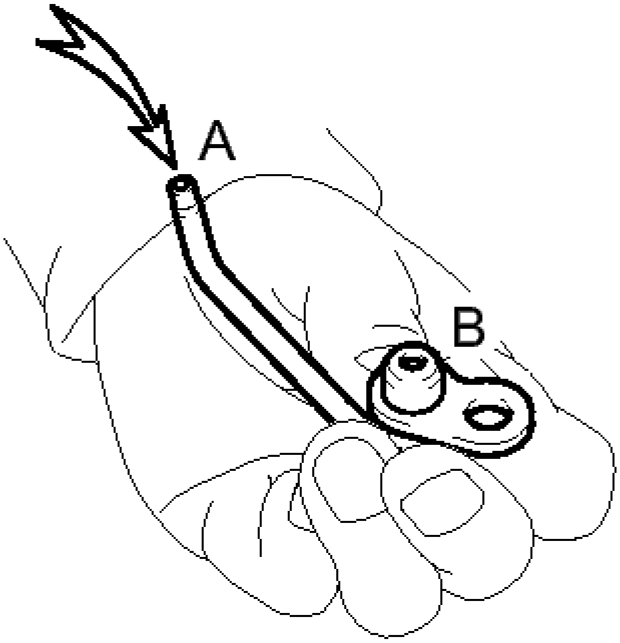

P

Fig. 385: Checking Air Leak Through B
Courtesy of TOYOTA MOTOR SALES, U.S.A., INC.

If air leaks, clean or replace the No. 1 oil nozzle.

d. Push the check valve while applying air into A. Check that air passes through B.

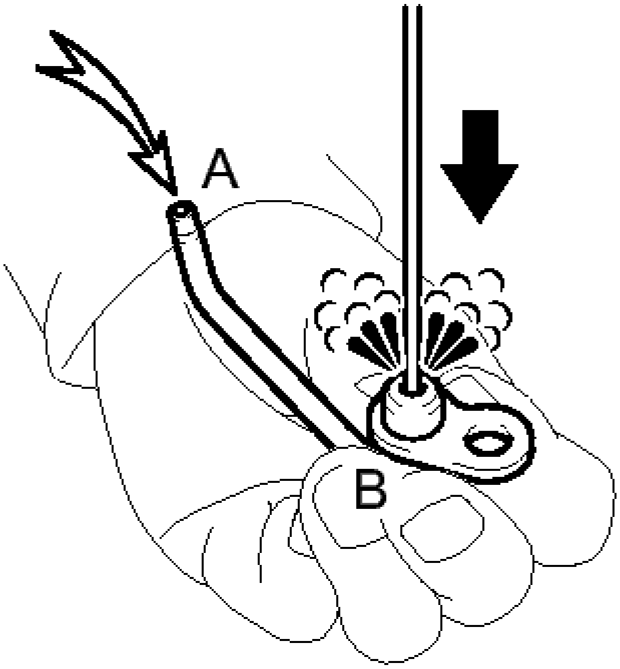

P

Fig. 386: Pushing Check Valve
Courtesy of TOYOTA MOTOR SALES, U.S.A., INC.

If air does not pass through B, clean or replace the No. 1 oil nozzle.

14. **INSPECT NO. 2 OIL NOZZLE SUB-ASSEMBLY**
    a. Push the check valve with a pin to check if it is stuck.

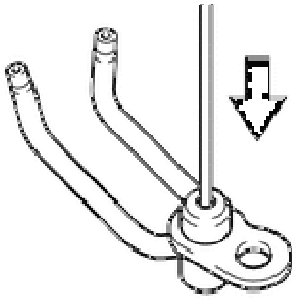

Fig. 387: Pushing Check Valve With Pin
Courtesy of TOYOTA MOTOR SALES, U.S.A., INC.

If stuck, replace the No. 2 oil nozzle.

b. Push the check valve with a pin to check if it moves smoothly.

If it does not move smoothly, clean or replace the No. 2 oil nozzle.

c. While covering A, apply air into B. Check that air does not leak through C. Perform the check again while covering B and applying air into A.

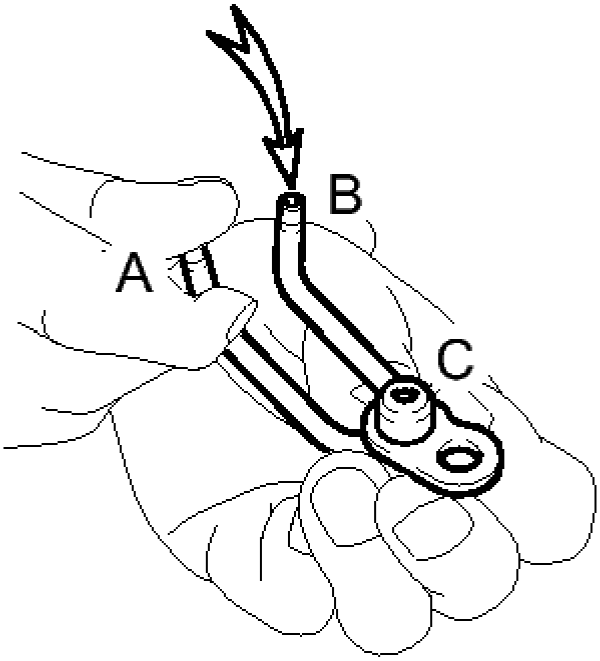

Fig. 388: Checking Air Leak
Courtesy of TOYOTA MOTOR SALES, U.S.A., INC.

If air leaks, clean or replace the No. 2 oil nozzle.

d. Push the check valve while covering A, and apply air into B. Check that air passes through C. Perform the check again while covering B, pushing the check valve and applying air into A.

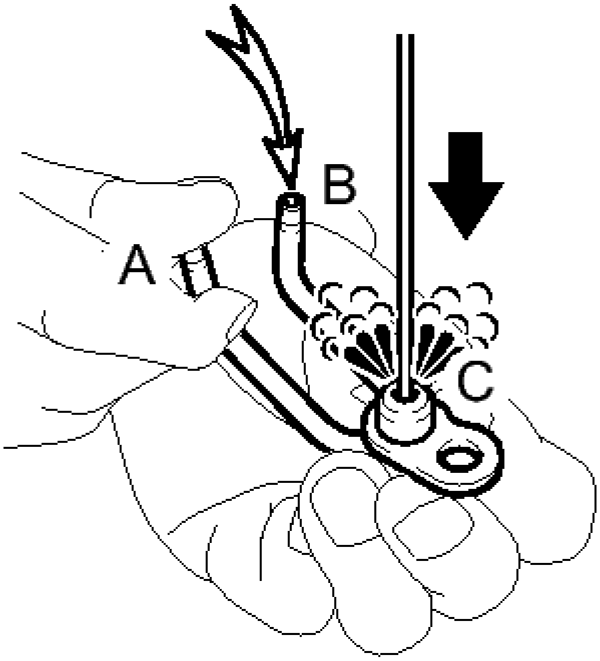

Fig. 389: Locating Ring Pin
Courtesy of TOYOTA MOTOR SALES, U.S.A., INC.

If air does not pass through C, clean or replace the No. 2 oil nozzle.

REPLACEMENT

REPLACEMENT

1. **REPLACE RING PIN**

NOTE: It is not necessary to remove the ring pin unless it is being replaced.

a. Remove the 12 ring pins.
b. Using a plastic-faced hammer, install 12 new ring pins.

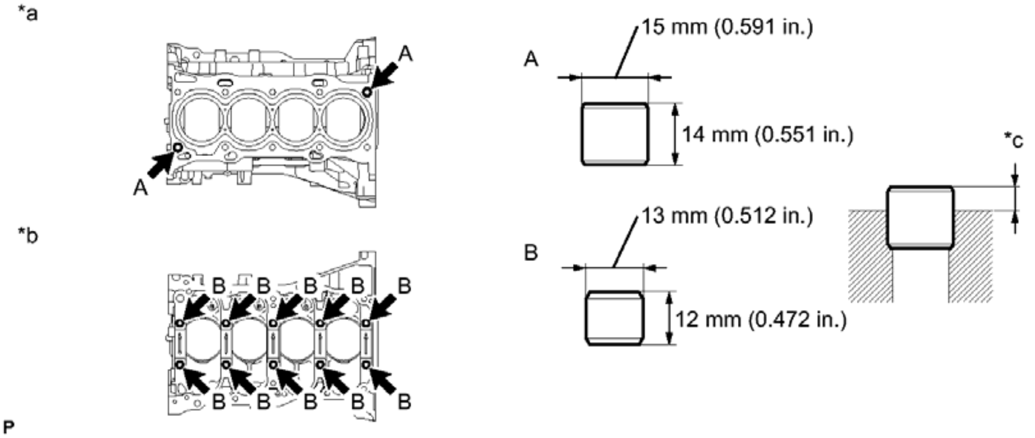

Fig. 390: Identifying Ring Pins & Standard Protrusion Height
Courtesy of TOYOTA MOTOR SALES, U.S.A., INC.

TEXT IN ILLUSTRATION

*a	Upper Side:	*b	Lower Side:
*c	Protrusion Height	-	-

Standard Protrusion Height

Item	Specified Condition
A	5.0 to 7.0 mm (0.197 to 0.276 in.)

B	4.0 to 7.0 mm (0.157 to 0.276 in.)

2. **REPLACE STRAIGHT PIN**

NOTE: It is not necessary to remove the straight pin unless it is being replaced.

a. Remove the 14 straight pins.
b. Using a plastic-faced hammer, install 14 new straight pins.

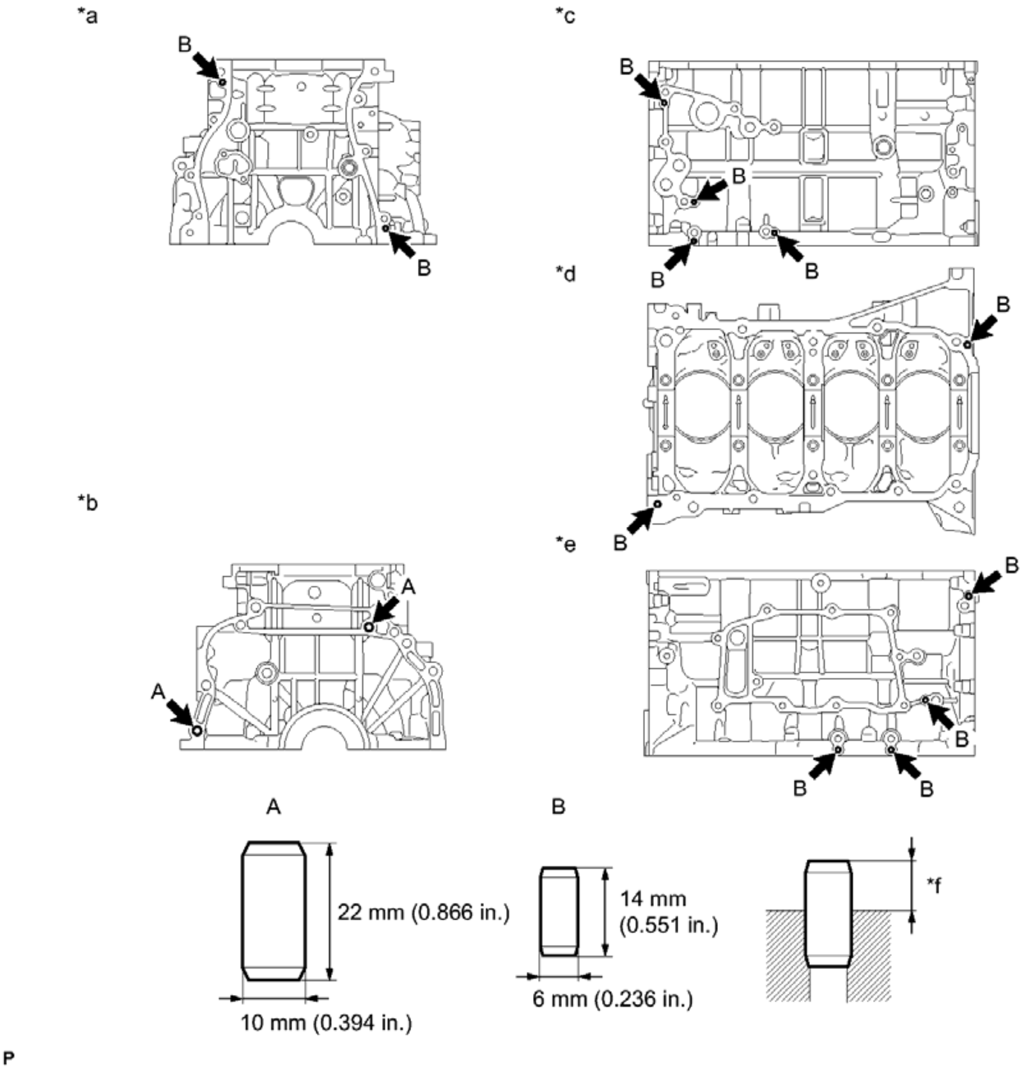
*a
B
B
*b
A
A
*c
B
B
B
B
*d
B
B
*e
B
B
B
B
A
B
22 mm (0.866 in.)
10 mm (0.394 in.)
14 mm
(0.551 in.)
6 mm (0.236 in.)
*f
P

Fig. 391: Identifying Straight Pins & Standard Protrusion Height
Courtesy of TOYOTA MOTOR SALES, U.S.A., INC.

TEXT IN ILLUSTRATION

*a	Front Side:	*b	Rear Side:
*c	LH Side:	*d	Lower Side:
*e	RH Side:	*f	Protrusion Height

Standard Protrusion Height

Item	**Specified Condition**
A	11.0 to 13.0 mm (0.433 to 0.512 in.)
B	5.0 to 7.0 mm (0.197 to 0.276 in.)

REASSEMBLY

REASSEMBLY

HINT:

Perform "Inspection After Repair" after replacing the piston or piston ring. Refer to **INITIALIZATION** .

1. **INSTALL STUD BOLT**

NOTE: **If a stud bolt is deformed or the threads are damaged, replace it.**

a. Using an E8 and E10 "TORX" socket wrench, install the stud bolts.

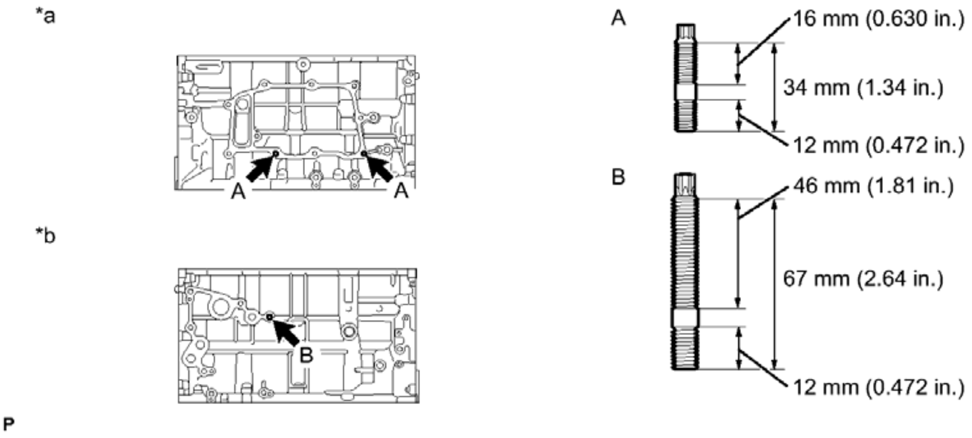
*a
A
A
*b
B
A
16 mm (0.630 in.)
34 mm (1.34 in.)
12 mm (0.472 in.)
B
46 mm (1.81 in.)
67 mm (2.64 in.)
12 mm (0.472 in.)
P

Fig. 392: Identifying Stud Bolts
Courtesy of TOYOTA MOTOR SALES, U.S.A., INC.

TEXT IN ILLUSTRATION

*a	RH Side:	*b	LH Side:

for stud bolt A

Torque: 9.5 N*m (97 kgf*cm, 84 in.*lbf)

for stud bolt B

Torque: 21 N*m (214 kgf*cm, 15 ft.*lbf)

2. **INSTALL NO. 2 OIL NOZZLE SUB-ASSEMBLY**
    a. Using a 5 mm hexagon wrench, install the 4 oil nozzles with the 4 bolts.

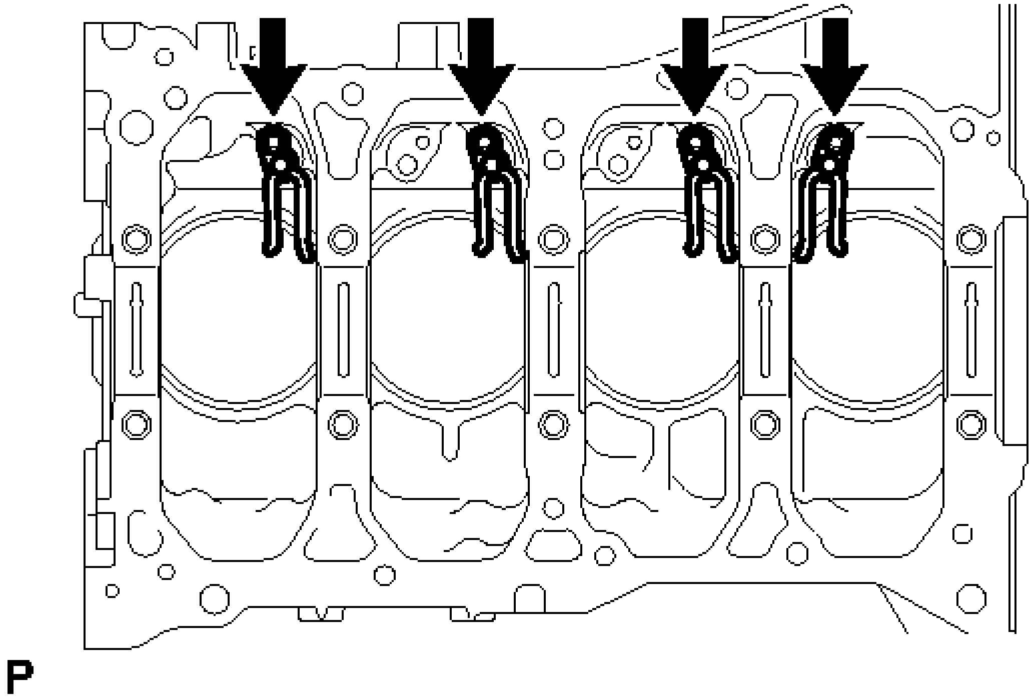

Fig. 393: Locating NO. 2 Oil Nozzles Bolts
Courtesy of TOYOTA MOTOR SALES, U.S.A., INC.

Torque: 10 N*m (102 kgf*cm, 7 ft.*lbf)

3. **INSTALL NO. 1 OIL NOZZLE SUB-ASSEMBLY**
    a. Using a 5 mm hexagon wrench, install the 2 oil nozzles with the 2 bolts.

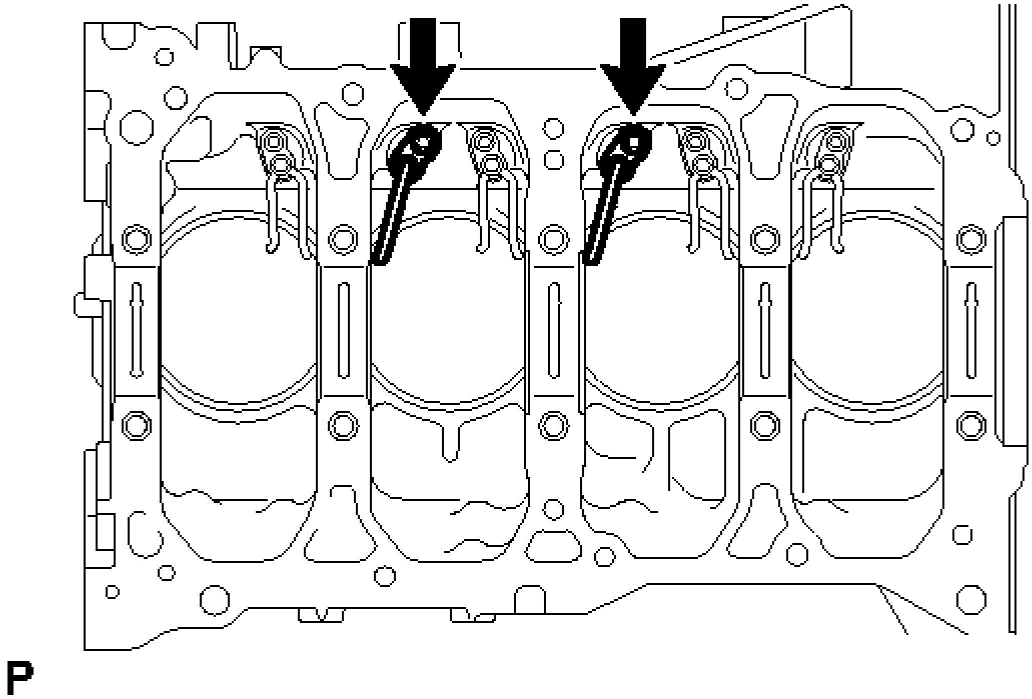

Fig. 394: Locating NO. 1 Oil Nozzles Bolts
Courtesy of TOYOTA MOTOR SALES, U.S.A., INC.

Torque: 10 N*m (102 kgf*cm, 7 ft.*lbf)

4. **INSTALL PISTON**
    a. Using a small screwdriver, install a new snap ring at one end of the piston pin hole.
    b. Gradually heat the piston up to 80 to 90°C (176 to 194°F).
    c. Coat the piston, piston pin and connecting rod with engine oil.
    d. Align the front marks of the piston and connecting rod, insert the connecting rod into the piston, and then push in the piston pin with your thumb until the pin comes into contact with the snap ring.

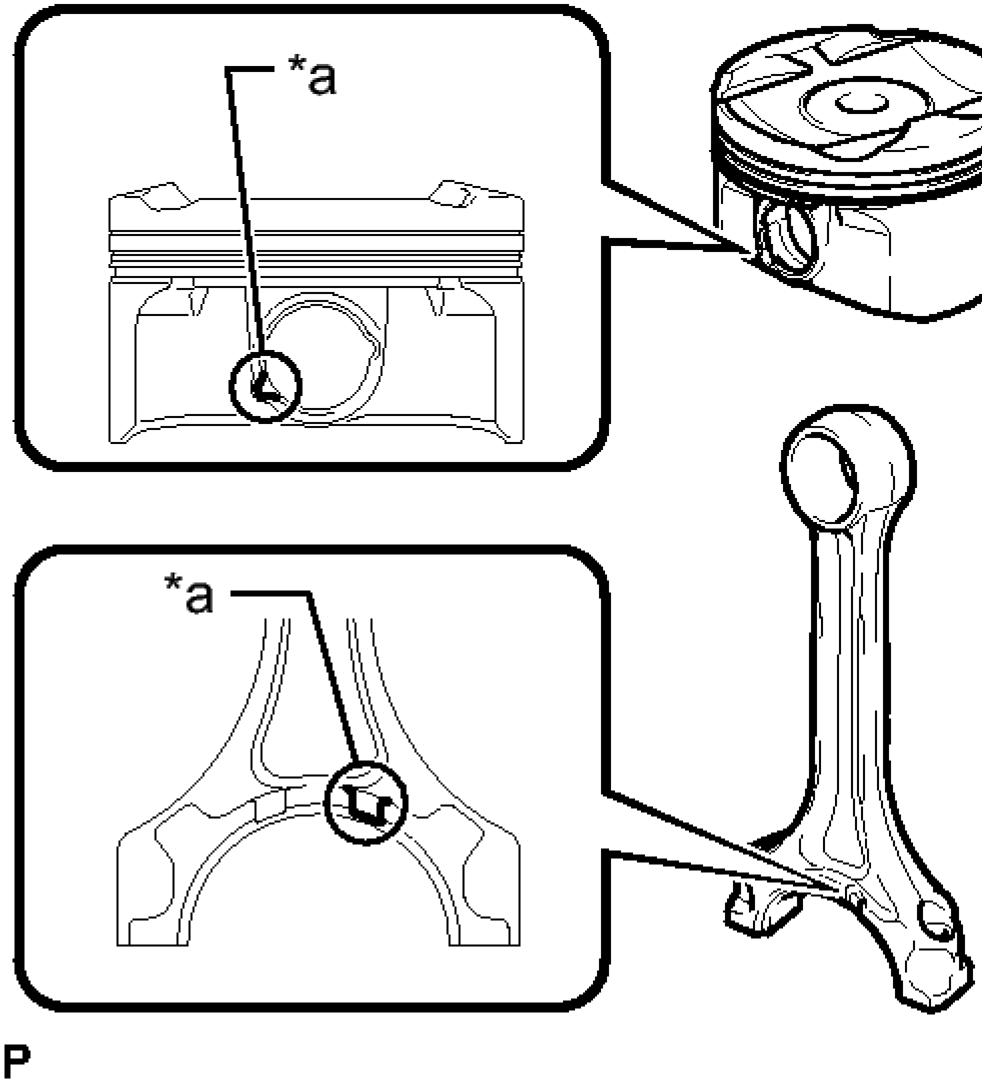

Fig. 395: Identifying Front Marks
Courtesy of TOYOTA MOTOR SALES, U.S.A., INC.

TEXT IN ILLUSTRATION

*a	Front Mark

HINT:

The piston and pin are a matched set.

e. Using a small screwdriver, install a new snap ring on the other side of the piston pin hole.

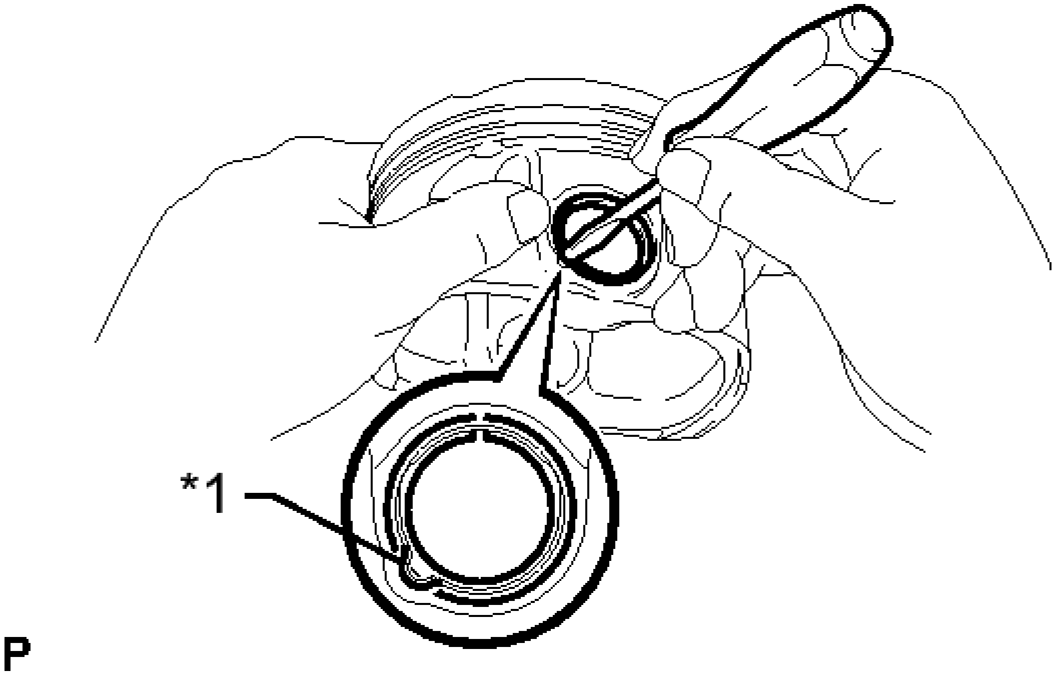

Fig. 396: Installing Snap Ring
Courtesy of TOYOTA MOTOR SALES, U.S.A., INC.

TEXT IN ILLUSTRATION

*1	Service Hole

HINT:

Be sure that the end gap of the snap ring is not aligned with the service hole cutout portion of the piston.

f. Check the fitting condition between the piston and piston pin.

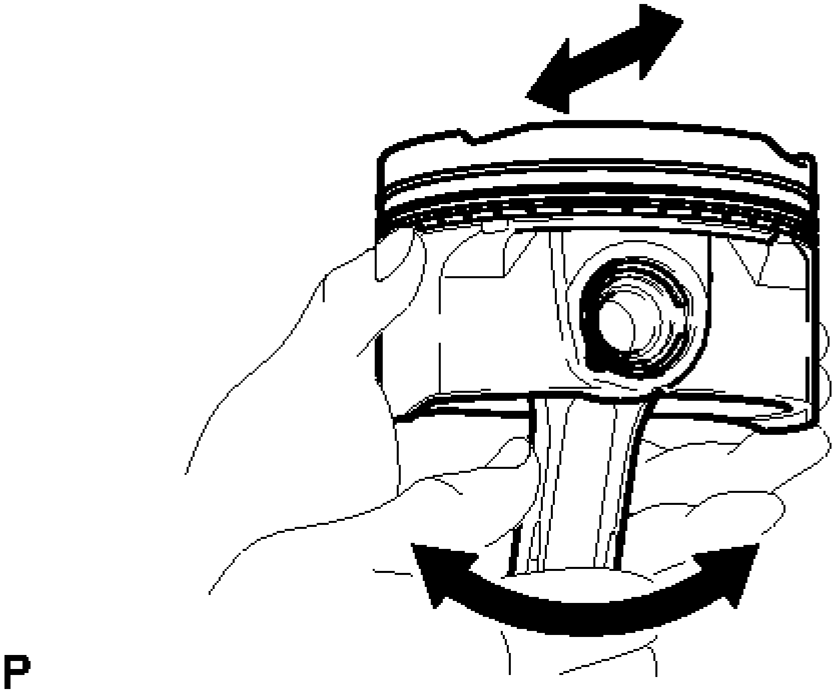

Fig. 397: Checking Fitting Condition Between Piston And Piston Pin
Courtesy of TOYOTA MOTOR SALES, U.S.A., INC.

1. Move the connecting rod back and forth on the piston pin. Check the fitting condition.

   If abnormal movement is felt, replace the piston and pin as a set.

2. Rotate the piston back and forth on the piston pin. Check the fitting condition.

   If abnormal movement is felt, replace the piston and pin as a set.

   HINT:

   Perform "Inspection After Repair" after replacing the piston. Refer to **INITIALIZATION** .

5. **INSTALL PISTON RING SET**
   a. Install the oil ring expander and oil ring by hand.

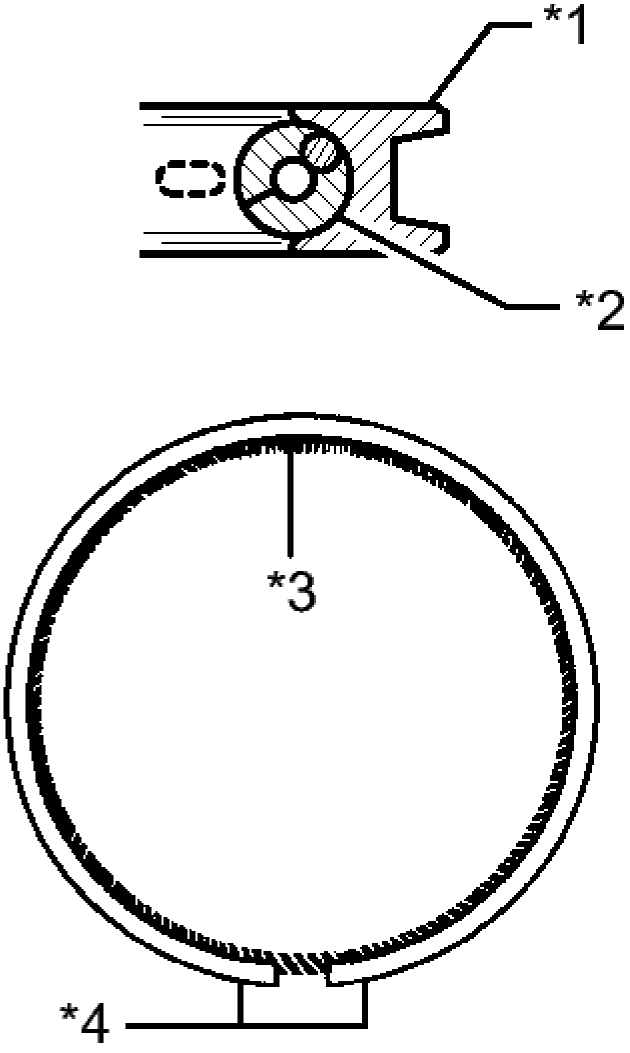

Fig. 398: Identifying Rings Position
Courtesy of TOYOTA MOTOR SALES, U.S.A., INC.

TEXT IN ILLUSTRATION

*1	Oil Ring
*2	Oil Ring Expander
*3	Coil Joint
*4	Oil Ring End

HINT:

Arrange the oil ring ends and coil joint as shown in the illustration.

b. Using a piston ring expander, install the 2 compression rings with the code mark positioned as shown in the illustration.

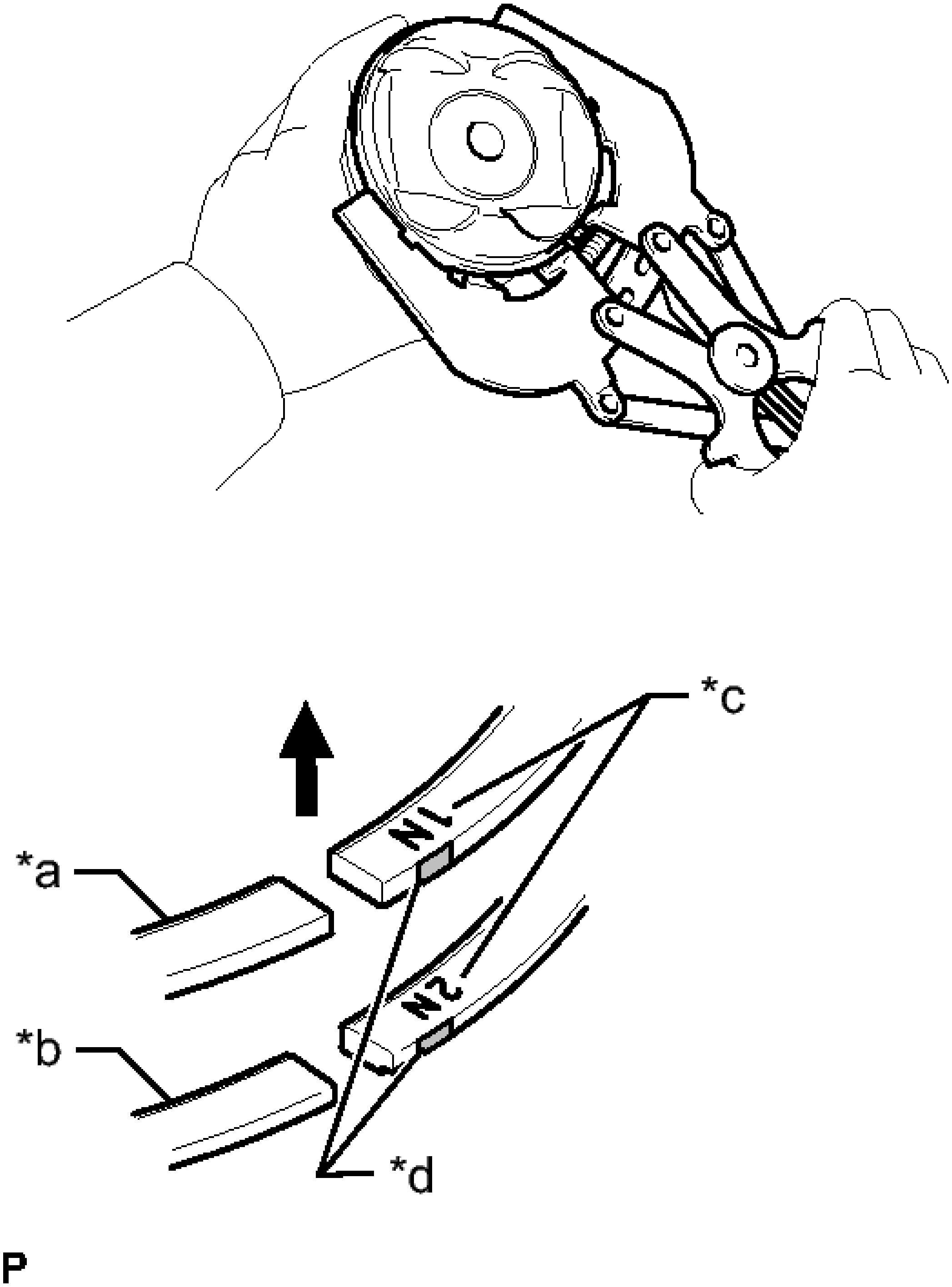

Fig. 399: Identifying Compression Rings Using Piston Ring Expander
Courtesy of TOYOTA MOTOR SALES, U.S.A., INC.

TEXT IN ILLUSTRATION

*a	No. 1
*b	No. 2
*c	Code Mark
*d	Paint Mark
	Paint Mark

Piston Ring Mark

Item	Code Mark	Paint Mark
No. 1	1N	Blue
No. 2	2N	Orange

NOTE: **Install the compression ring with the code mark facing upward.**

HINT:

Perform "Inspection After Repair" after replacing the piston, piston ring. Refer to **INITIALIZATION** .

6. **INSTALL CRANKSHAFT PULLEY KEY**
   a. Install the 2 crankshaft pulley keys to the crankshaft.
7. **INSTALL CRANKSHAFT BEARING**
   a. Clean the main journal and both surfaces of the bearing.

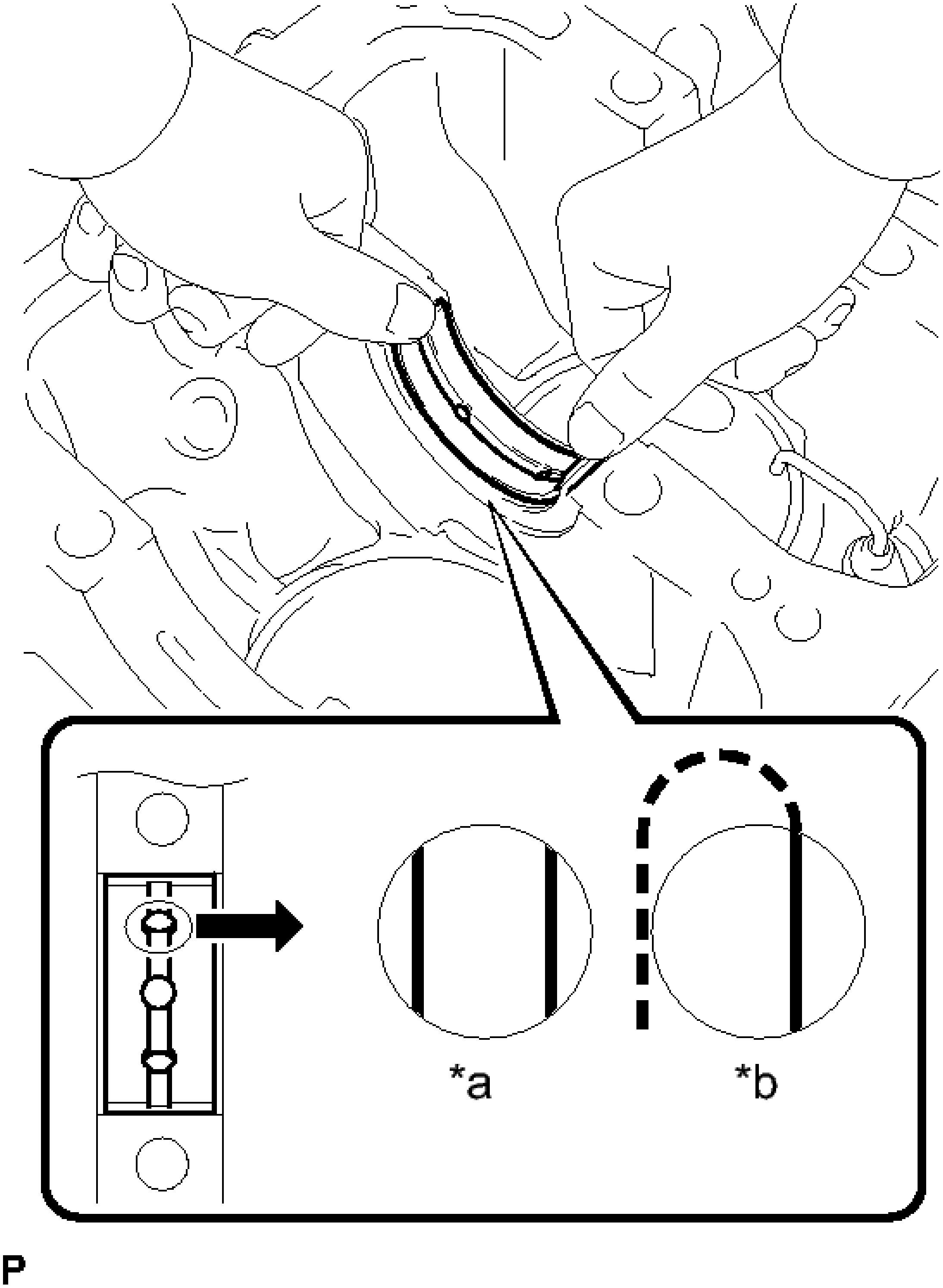

Fig. 400: Installing Upper Bearing At Cylinder Block
Courtesy of TOYOTA MOTOR SALES, U.S.A., INC.

TEXT IN ILLUSTRATION

*a	CORRECT

*b	INCORRECT

b. Install the upper bearing to the cylinder block as shown in the illustration.

NOTE:

- **Do not apply engine oil to the bearings or their contact surfaces.**
- **Both sides of the oil groove in the cylinder block should be visible through the oil feed holes in the bearing. The amount visible on each side of the holes should be equal.**
- **Do not allow coolant to come into contact with the bearing inner surface.**
- **If any coolant comes into contact with the bearing inner surface, replace the bearing with a new one.**

c. Install the lower bearing onto the bearing cap.

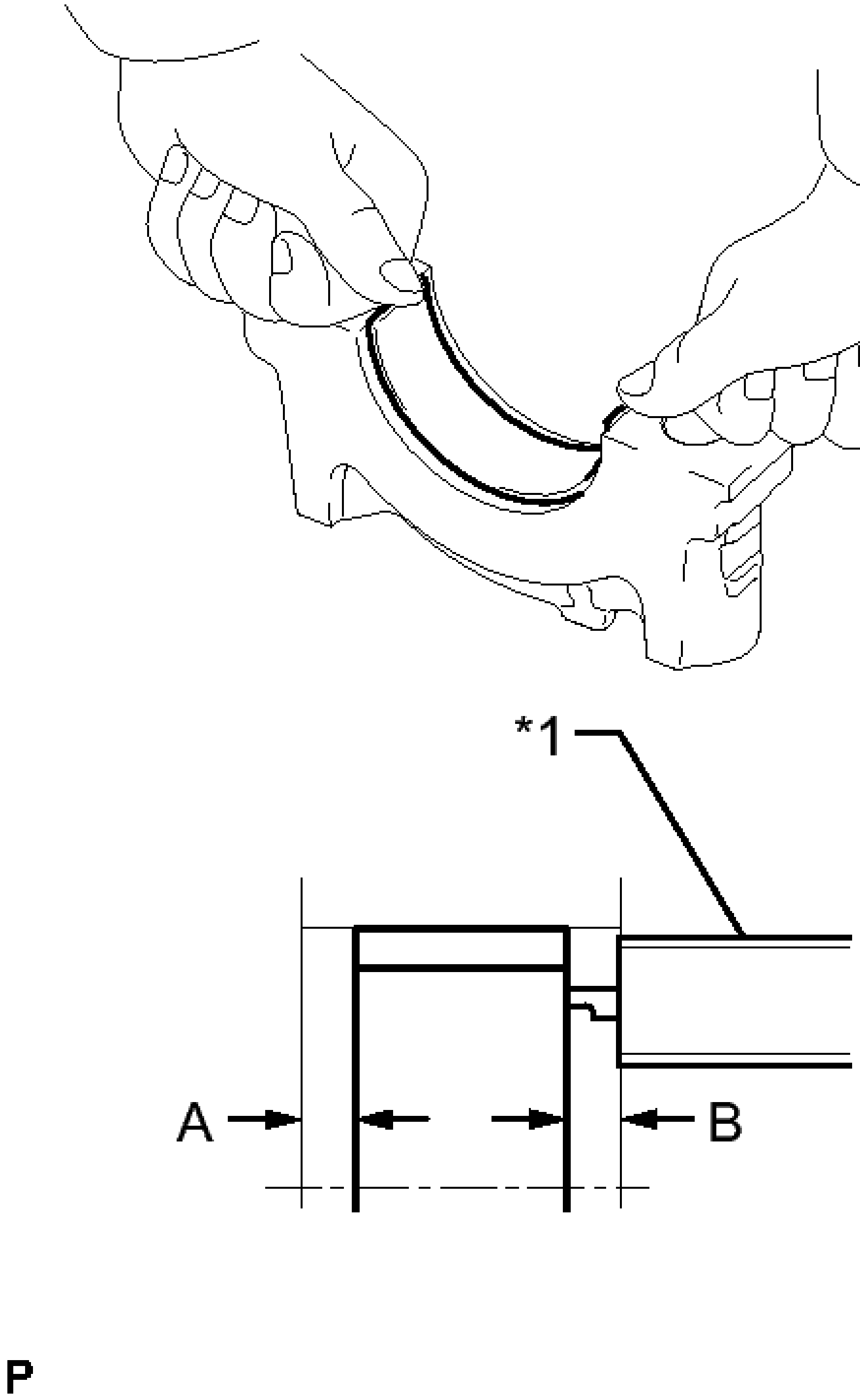

Fig. 401: Measuring Distance Between Crankshaft Bearing Cap Edge And Lower Bearing Edge
Courtesy of TOYOTA MOTOR SALES, U.S.A., INC.

TEXT IN ILLUSTRATION

*1	Vernier Caliper

d. Using a vernier caliper, measure the distance between the crankshaft bearing cap edge and the lower bearing edge.

Standard dimension A - B or B - A

0 to 0.7 mm (0 to 0.0276 in.)

NOTE:

- **Do not apply engine oil to the bearings and the contact surfaces.**
- **Do not allow coolant to come into contact with the bearing inner surface.**
- **If any coolant comes into contact with the bearing inner surface, replace the bearing with a new one.**

8. **INSTALL CRANKSHAFT THRUST WASHER**
   a. Apply engine oil to the thrust washers.

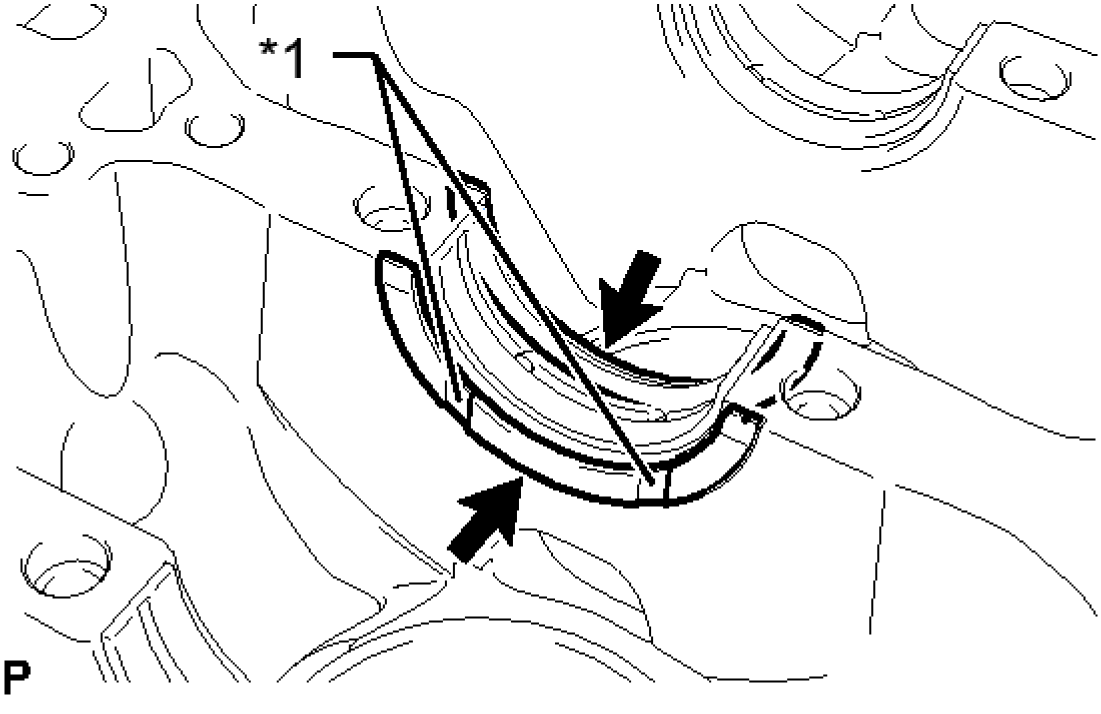

Fig. 402: Identifying Oil Groove
Courtesy of TOYOTA MOTOR SALES, U.S.A., INC.

TEXT IN ILLUSTRATION

*1	Oil

	Groove

b. Install the 2 thrust washers onto the No. 3 journal position of the cylinder block with the oil grooves facing outward.

9. **INSTALL CRANKSHAFT**
    a. Apply engine oil to the upper bearing, and install the crankshaft onto the cylinder block.

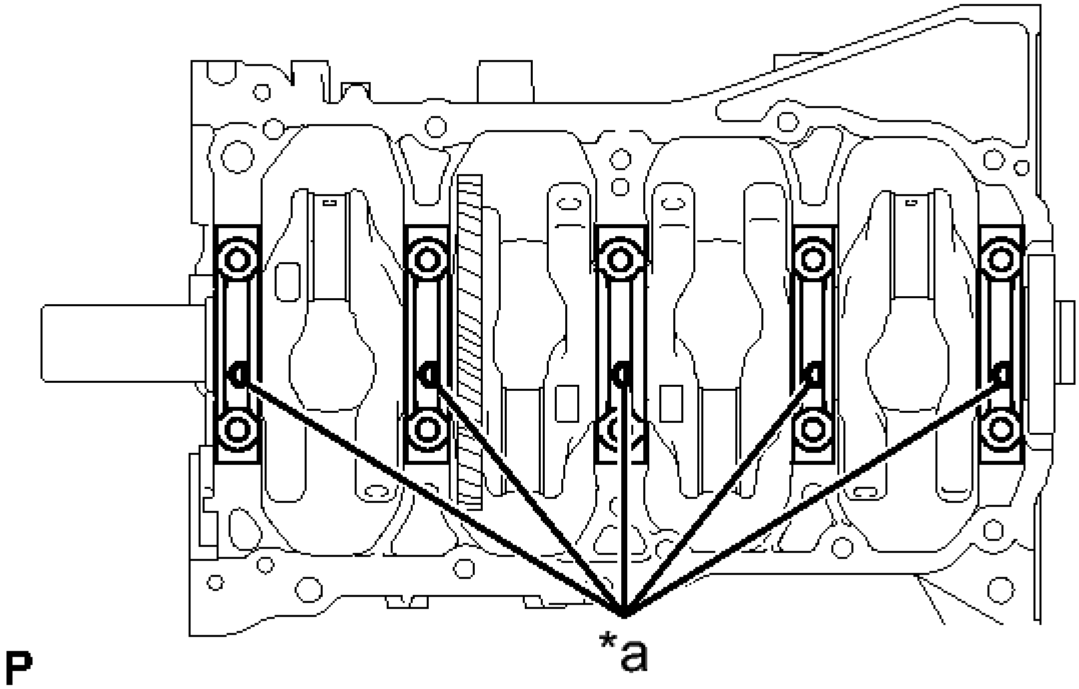

Fig. 403: Identifying Front Mark
Courtesy of TOYOTA MOTOR SALES, U.S.A., INC.

TEXT IN ILLUSTRATION

*a	Front Mark

b. Examine the front marks and numbers, and install the bearing caps onto the cylinder block with the front marks as shown in the illustration.

HINT:

The crankshaft bearing cap bolts are tightened in 3 progressive steps.

c. Apply a light coat of engine oil to the threads and under the heads of the bearing cap bolts.

d. Step 1:
    1. Using several steps, uniformly install and tighten the 10 bearing cap bolts in the sequence shown in the illustration.

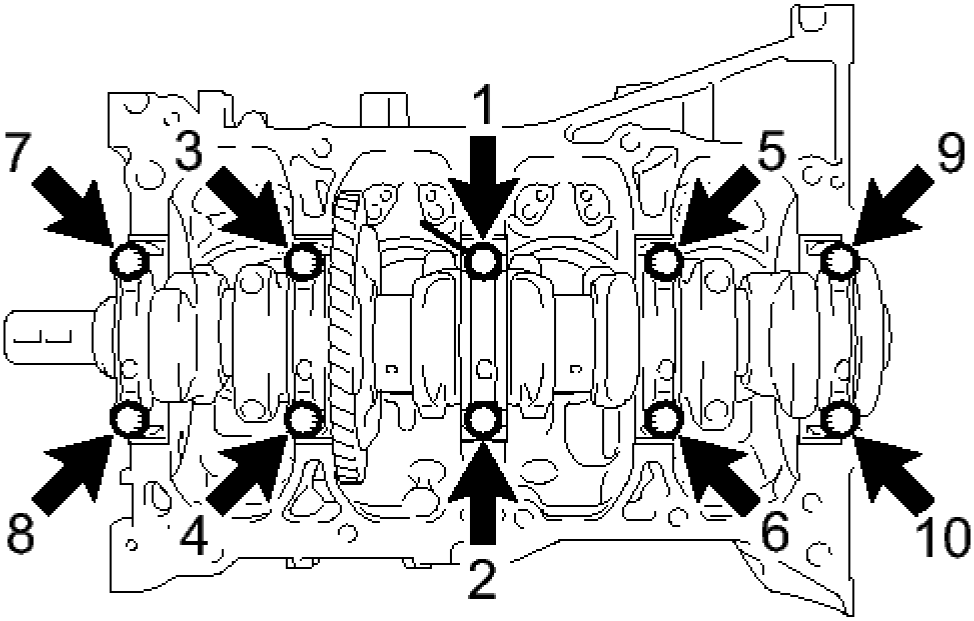

Fig. 404: Identifying Bearing Cap Bolts Tightening Sequence
Courtesy of TOYOTA MOTOR SALES, U.S.A., INC.

Torque: 20 N*m (204 kgf*cm, 15 ft.*lbf)

e. Step 2:
   1. Tighten the 10 bearing cap bolts again in the sequence shown in the illustration.

      Torque: 40 N*m (408 kgf*cm, 30 ft.*lbf)

      If a crankshaft bearing cap bolt does not meet the specified torque, replace it.

f. Step 3:
   1. Mark the front of the bearing cap bolts with paint.

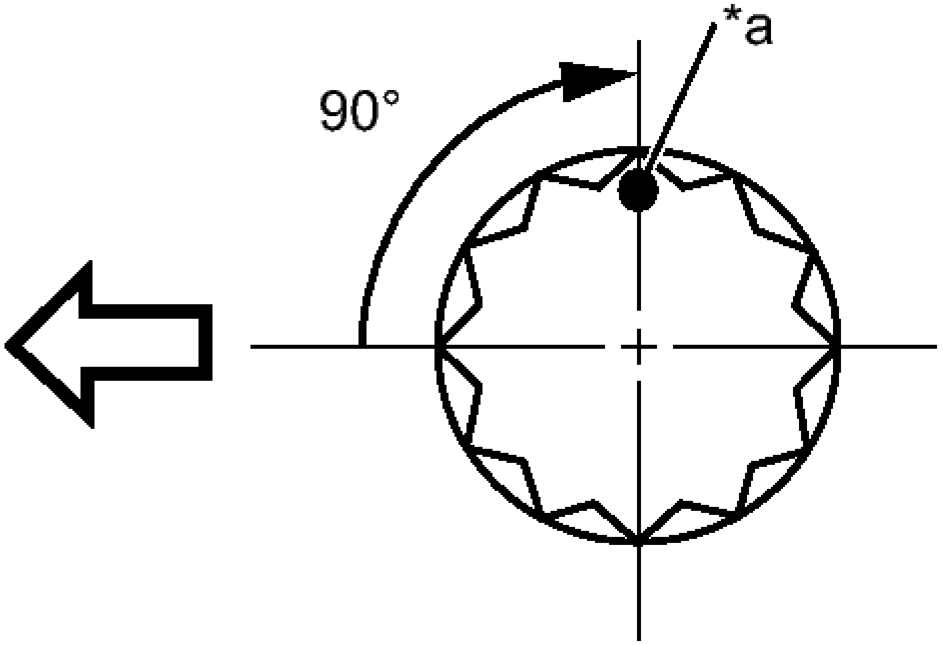

Fig. 405: Identifying Paint Mark
Courtesy of TOYOTA MOTOR SALES, U.S.A., INC.

TEXT IN ILLUSTRATION

*a	Paint Mark
⇦	Engine Front

    2. Tighten the 10 bearing cap bolts 90° in the same sequence.
    3. Check that the paint marks are now at a 90° angle to the front.
  g. Check that the crankshaft turns smoothly.

10. **INSTALL CONNECTING ROD BEARING**
    a. Clean the bearing contact surface of the connecting rod and cap, and both surfaces of both bearings.

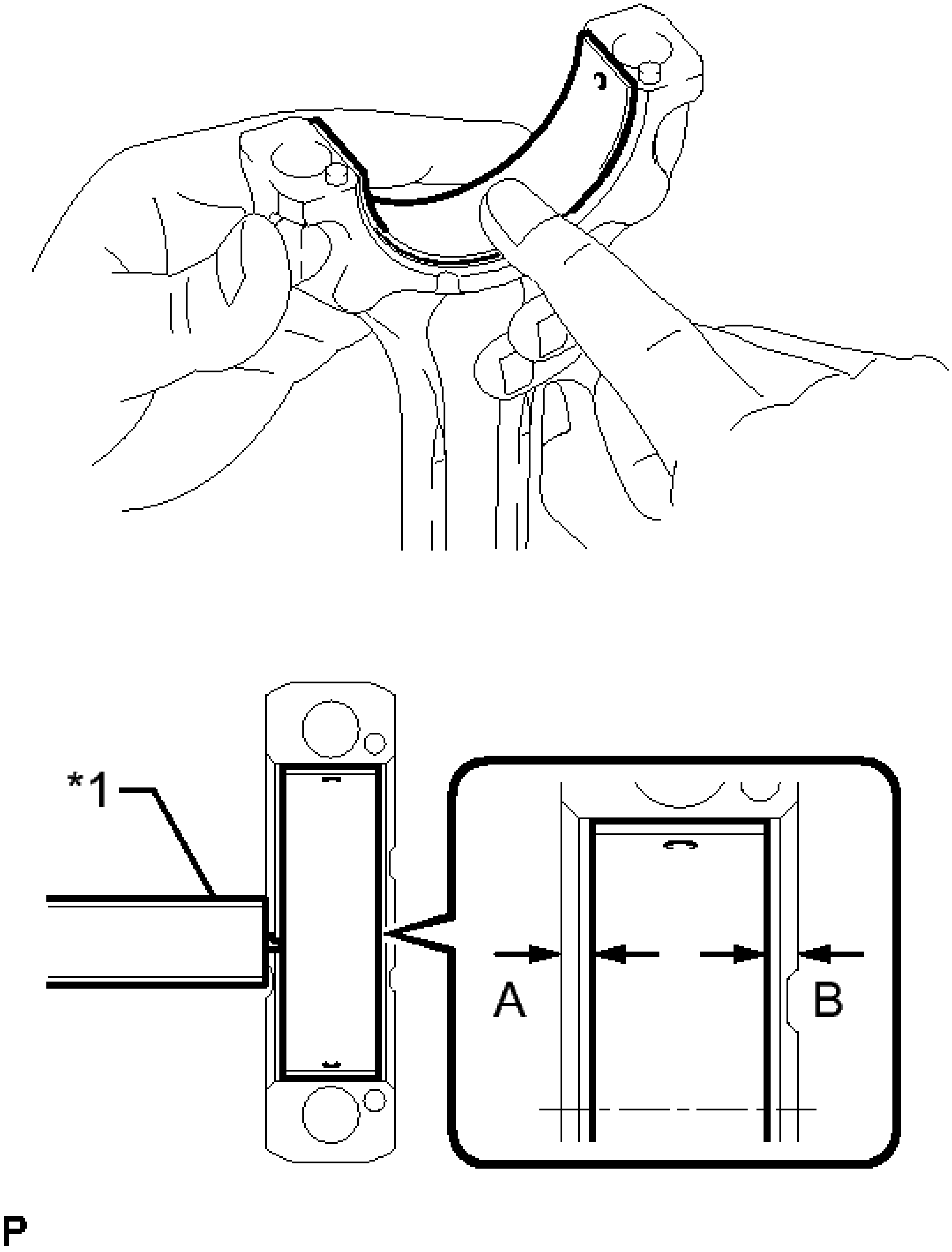

Fig. 406: Cleaning Bearing Contact Surface Of Connector Rod And Cap
Courtesy of TOYOTA MOTOR SALES, U.S.A., INC.

TEXT IN ILLUSTRATION

	Vernier

*1	Caliper

b. Install the connecting rod bearings to the connecting rods and connecting rod caps.

c. Using a vernier caliper, measure the distance between the edges of the connecting rod and connecting rod bearing, and the edges of the bearing cap and connecting rod bearing.

Standard dimension A - B or B - A

0 to 0.7 mm (0 to 0.0276 in.)

NOTE:

- **Do not apply engine oil to the bearings and the contact surfaces.**
- **Do not allow coolant to come into contact with the bearing inner surface.**
- **If any coolant comes into contact with the bearing inner surface, replace the bearing with a new one.**

11. INSTALL PISTON WITH CONNECTING ROD

a. Apply engine oil to the cylinder walls, pistons, and surfaces of the connecting rod bearings.

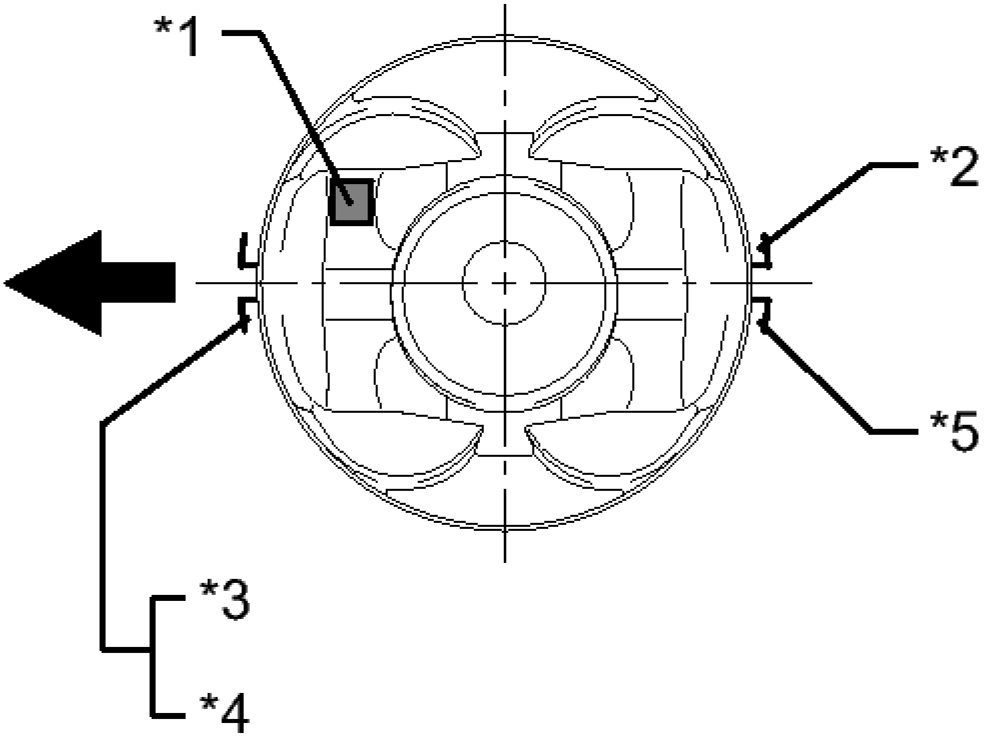

Fig. 407: Piston Ring Position
Courtesy of TOYOTA MOTOR SALES, U.S.A., INC.

TEXT IN ILLUSTRATION

*1	Front Mark
*2	No. 2 Compression Ring
*3	No. 1 Compression Ring
*4	Oil Ring
*5	Oil Ring (Expander)

b. Position the piston rings so that the ring ends are as shown in the illustration.

c. Using a hammer handle and piston ring compressor, press a piston with connecting rod into each cylinder with the front mark of the piston facing forward.

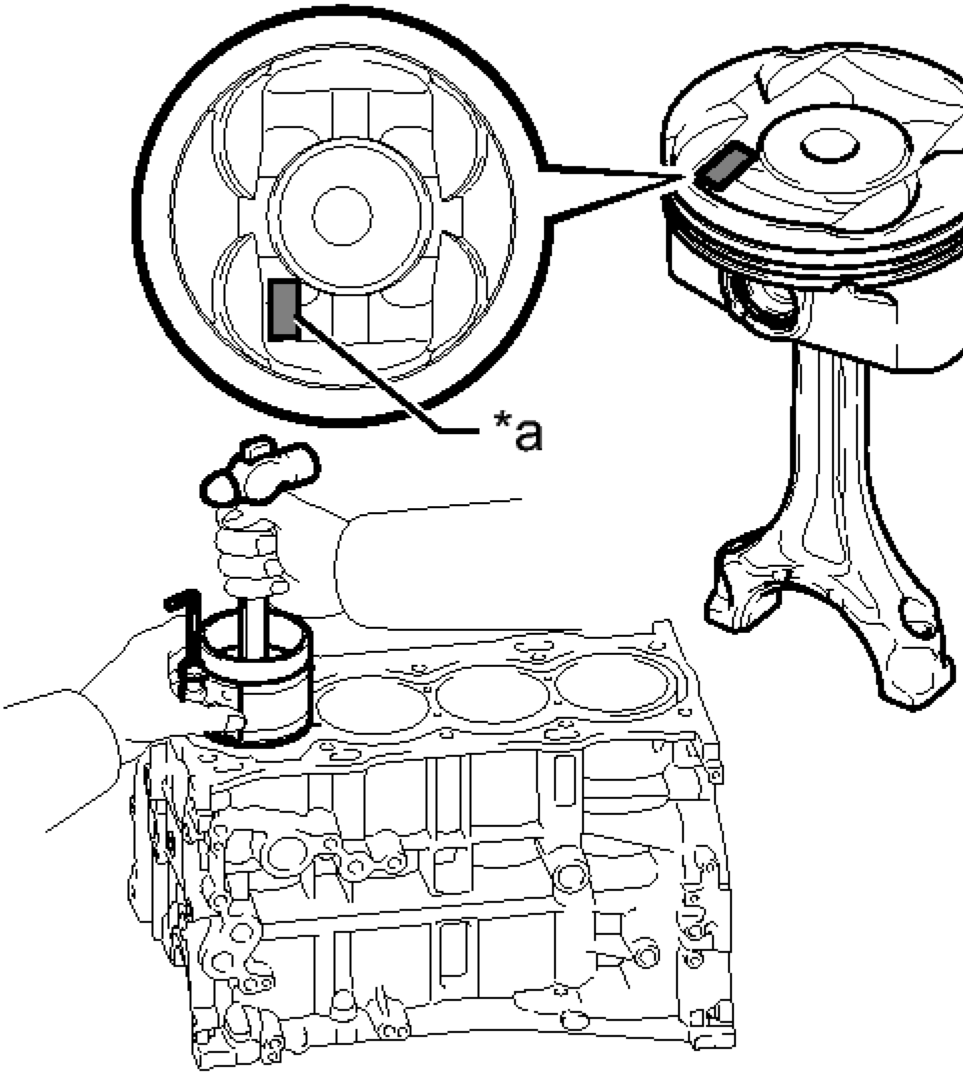

Fig. 408: Pressing Connecting Rod Into Cylinder
Courtesy of TOYOTA MOTOR SALES, U.S.A., INC.

TEXT IN ILLUSTRATION

*a	Front Mark

NOTE: **When inserting the piston with connecting rod into the cylinder block, make sure the oil nozzle does not interfere with the connecting rod.**

HINT:

The front mark is "2L" printed in raised letters.

d. Check that the front mark of the connecting rod cap is facing in the correct direction.

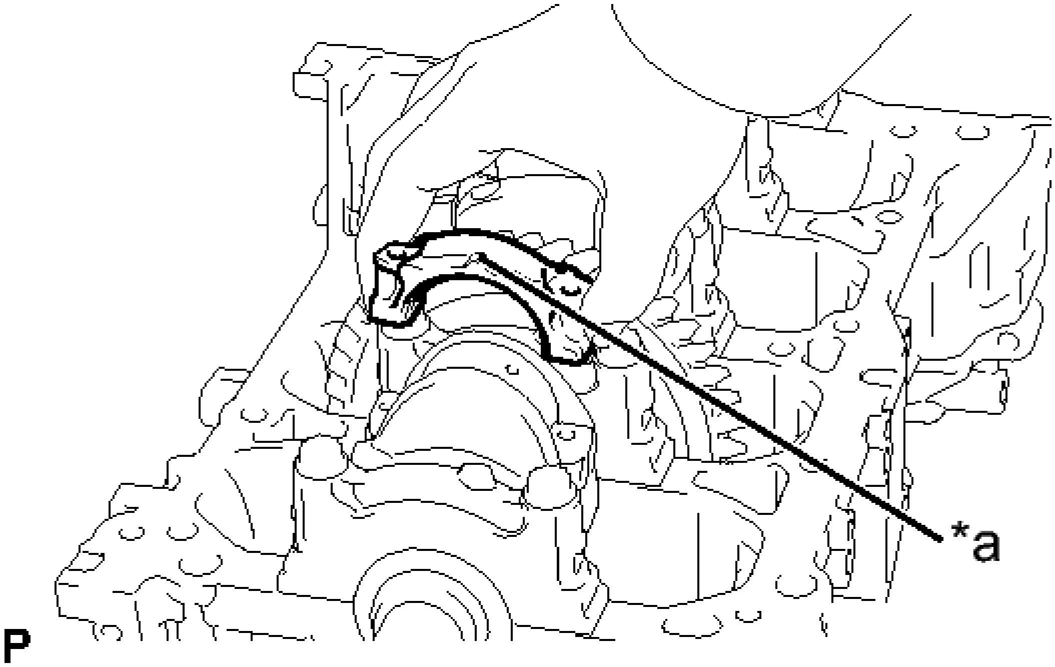

Fig. 409: Identifying Front Mark
Courtesy of TOYOTA MOTOR SALES, U.S.A., INC.

TEXT IN ILLUSTRATION

*a	Front Mark

NOTE: **Match the numbered connecting rod cap with the connecting rod.**

e. Apply a light coat of engine oil to the threads and under the heads of the connecting rod bolts.

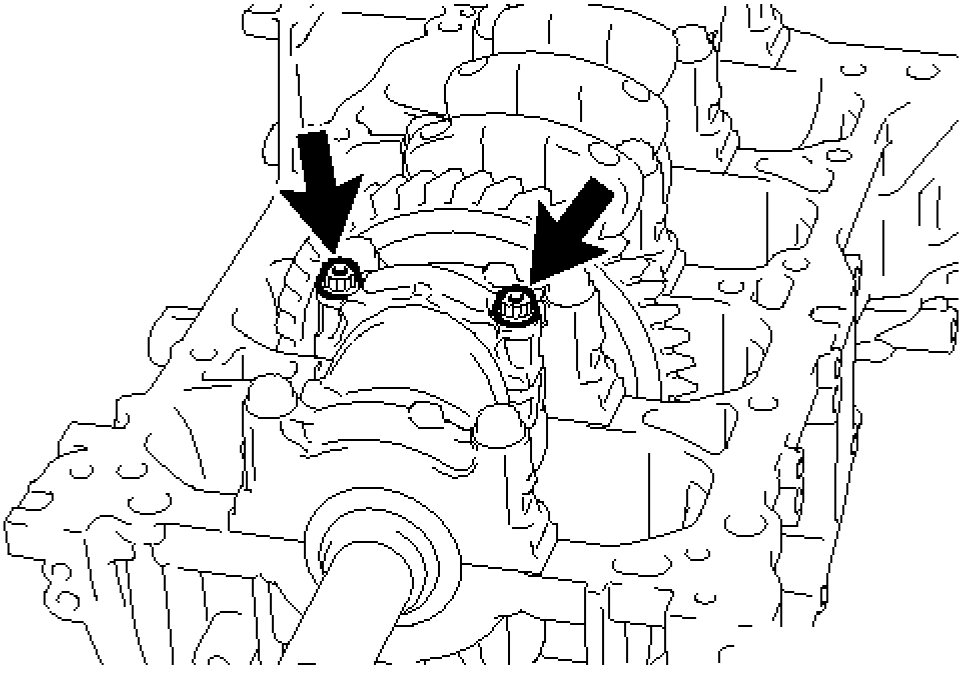

Fig. 410: Locating Connecting Rod Cap Bolts
Courtesy of TOYOTA MOTOR SALES, U.S.A., INC.

f. Temporarily install the connecting rod bolts.

   HINT:

   The connecting rod bolts are tightened in 2 progressive steps.

g. Step 1:
   1. Alternately tighten the connecting rod bolts in several steps.

      Torque: 40 N*m (408 kgf*cm, 30 ft.*lbf)

h. Step 2:

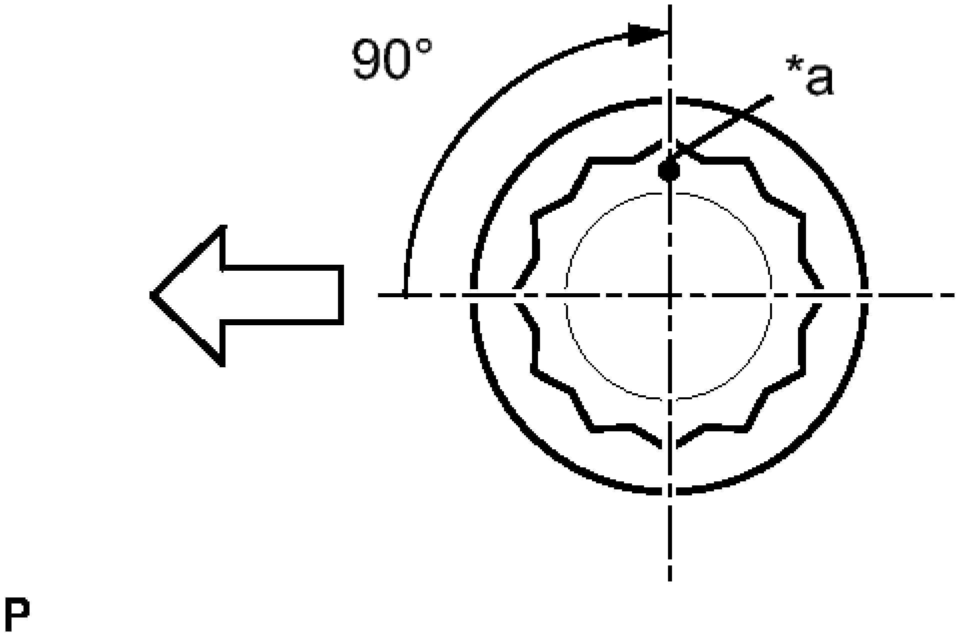

Fig. 411: Identifying Connecting Rod Cap Bolts Final Torque Position
Courtesy of TOYOTA MOTOR SALES, U.S.A., INC.

TEXT IN ILLUSTRATION

*a	Paint Mark
	Engine Front

  1. Mark the front of the connecting rod bolts with paint.
  2. Tighten the bolts 90° as shown in the illustration.
  3. Check that the paint marks are now at a 90° angle to the front.

i. Check that the crankshaft turns smoothly.

ENGINE

ON-VEHICLE INSPECTION

ON-VEHICLE INSPECTION

1. **INSPECT ENGINE COOLANT**

   Refer to **ON-VEHICLE INSPECTION**

2. **INSPECT ENGINE OIL**

   Refer to **ON-VEHICLE INSPECTION**

3. **INSPECT BATTERY**

   Refer to **ON-VEHICLE INSPECTION**

4. **INSPECT AIR CLEANER FILTER ELEMENT SUB-ASSEMBLY**
   a. Remove the air cleaner filter element sub-assembly.
   b. Visually check that the air cleaner filter is not excessively damaged or oily. If necessary, replace the air cleaner filter.

      HINT:

      - If there is any dirt or a blockage in the air cleaner filter element sub-assembly, clean it with compressed air.
      - If any dirt or a blockage remains even after cleaning the air cleaner filter element sub-assembly with compressed air, replace it.

   c. Install the air cleaner filter element sub-assembly.
5. **INSPECT V-RIBBED BELT**

   Refer to **ON-VEHICLE INSPECTION**

6. **INSPECT V-RIBBED BELT TENSIONER ASSEMBLY**
   a. Remove the V-ribbed belt. Refer to **REMOVAL**.
   b. Check that nothing is caught in the tensioner by turning it clockwise and counterclockwise. If a malfunction exists, replace the tensioner.
   c. Install the V-ribbed belt. Refer to **INSTALLATION**.
7. **INSPECT SPARK PLUG**

Refer to **ON-VEHICLE INSPECTION**

8. **INSPECT VALVE LASH ADJUSTER NOISE**
    a. Rev up the engine several times. Check that the engine does not emit unusual noises.

       If unusual noises occur, warm up the engine and idle it for over 30 minutes. Then perform the preceding inspection.

       HINT:

       If any defects or problems are found during the preceding inspection, perform lash adjuster inspection See step 2.

9. **INSPECT IGNITION TIMING**
    a. Warm up and stop the engine.

       HINT:

       A warmed up engine should have an engine coolant temperature of over 80°C (176°F), an engine oil temperature of 60°C (140°F), and the engine speed should be stabilized.

    b. When using the Techstream:

       Check the ignition timing.

        1. Connect the Techstream to the DLC3.
        2. Start the engine and run it at idle.
        3. Turn the Techstream main switch on.
        4. Enter the following menus: Powertrain / Engine / Data List / IGN Advance.

           Standard ignition timing

           9.5 to 24.5° BTDC at idle

           NOTE:

           - **Check the ignition timing with the cooling fans off.**
           - **Turn off all electrical systems and the A/C.**
           - **When checking the ignition timing, the transaxle should be in neutral or park.**

           HINT:

           Refer to the Techstream operator's manual for further details.

        5. Check that the ignition timing advances immediately when the engine speed is increased.

    6. Enter the following menus: Powertrain / Engine / Active Test / Connect the TC and TE1.
    7. Monitor IGN Advance.
    8. Perform the Active Test.

       Standard ignition timing

       8 to 12° BTDC at idle

       NOTE: **When checking the ignition timing, the transaxle should be in neutral or park.**

       HINT:

       Refer to the Techstream operator's manual for further details.

c. When not using the Techstream:
    1. Using SST, connect terminals 13 (TC) and 4 (CG) of the DLC3.

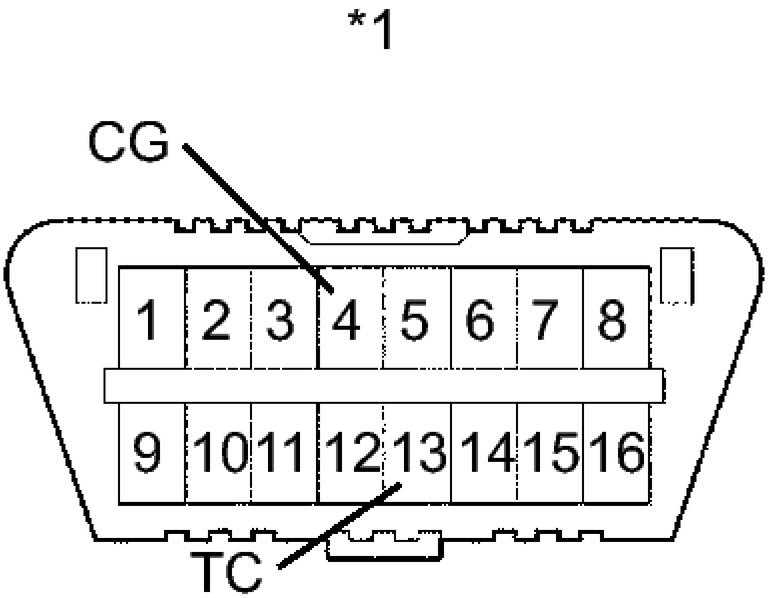

Fig. 1: Identifying DLC3 Connector Terminal Identification
Courtesy of TOYOTA MOTOR SALES, U.S.A., INC.

TEXT IN ILLUSTRATION

*1	DLC3

- **SST: 09843-18040**

NOTE:

- **Confirm the terminals before connecting them. Connecting the wrong terminals may result in damage to electrical components.**
- **Check the ignition timing with the cooling fans off.**
- **Turn off all the electrical systems and the A/C.**
- **When checking the ignition timing, the transaxle should be in neutral or park.**

2. Remove the V-bank cover sub-assembly See step 17.
3. Connect the timing light tester probe to the ignition coil wire for No. 1 cylinder.

   NOTE: **Use a timing light that detects primary signals.**

4. Check the ignition timing at idle.

   Standard ignition timing

   8 to 12° BTDC at idle

   NOTE: **When checking the ignition timing, the transaxle should be in neutral or park.**

   HINT:

   Run the engine at 1000 to 1300 rpm for 5 seconds, and then check that the engine rpm returns to idle speed.

5. Disconnect terminals 13 (TC) and 4 (CG) of the DLC3.
6. Check the ignition timing at idle.

   Standard ignition timing

   9.5 to 24.5° BTDC at idle

7. Confirm that the ignition timing advances immediately when the engine rpm is increased.
8. Remove the timing light from the engine.
9. Install the V-bank cover sub-assembly See step 82.

10. **INSPECT ENGINE IDLE SPEED**
    a. Warm up and stop the engine.

       HINT:

       A warmed up engine should have an engine coolant temperature of over 80°C (176°F), an engine oil temperature of 60°C (140°F), and the engine speed should be stabilized.

b. When using the Techstream:

Check the idle speed.

1. Connect the Techstream to the DLC3.
2. Start the engine and run it at idle.
3. Turn the Techstream main switch on.
4. Enter the following menus: Powertrain / Engine / Data List / Engine Speed.
5. Read the value displayed on the tester.

Standard idle speed

600 to 700 rpm

NOTE:

- **Check the idle speed with the cooling fans off.**
- **Turn off all the electrical systems and the A/C.**
- **When checking the idle speed, the transaxle should be in neutral or park.**

HINT:

- Refer to the Techstream operator's manual for further details.
- If the speed is not as specified, check the air intake system.

c. When not using the Techstream:

1. Using SST, connect a tachometer probe to terminal 9 (TAC) of the DLC3.

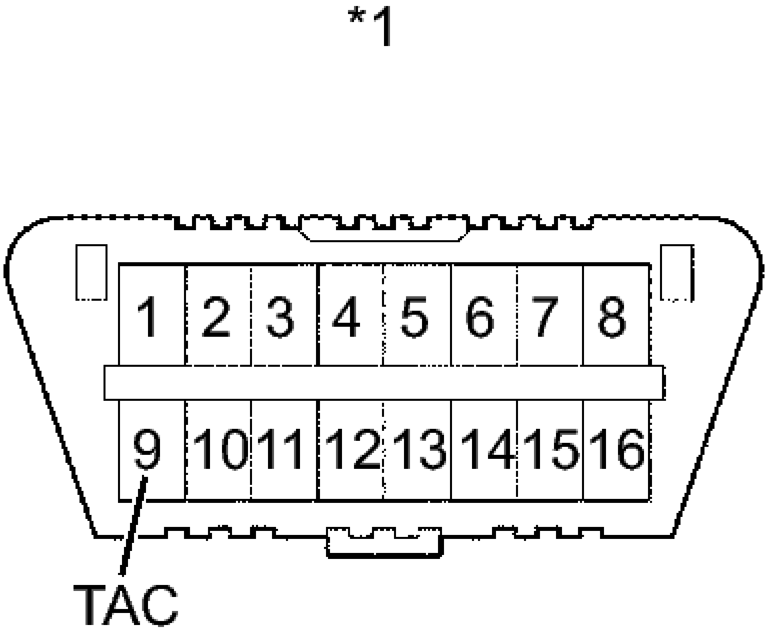

Fig. 2: Identifying DLC3 Connector Terminal Identification
Courtesy of TOYOTA MOTOR SALES, U.S.A., INC.

TEXT IN ILLUSTRATION

*1	DLC3

- **SST: 09843-18030**

2. Check the idle speed.

   Standard idle speed

   600 to 700 rpm

   NOTE:

   - **Check the idle speed with the cooling fans off.**
   - **Turn off all the electrical systems and the A/C.**
   - **When checking the idle speed, the transaxle should be in neutral or park.**

   HINT:

   If the speed is not as specified, check the air intake system.

11. **INSPECT COMPRESSION**
    a. Warm up and stop the engine.

       HINT:

A warmed up engine should have an engine coolant temperature of over 80°C (176°F), an engine oil temperature of 60°C (140°F), and the engine speed should be stabilized.

b. Remove the 6 spark plugs. Refer to **REMOVAL** .

c. Check the cylinder compression pressure.

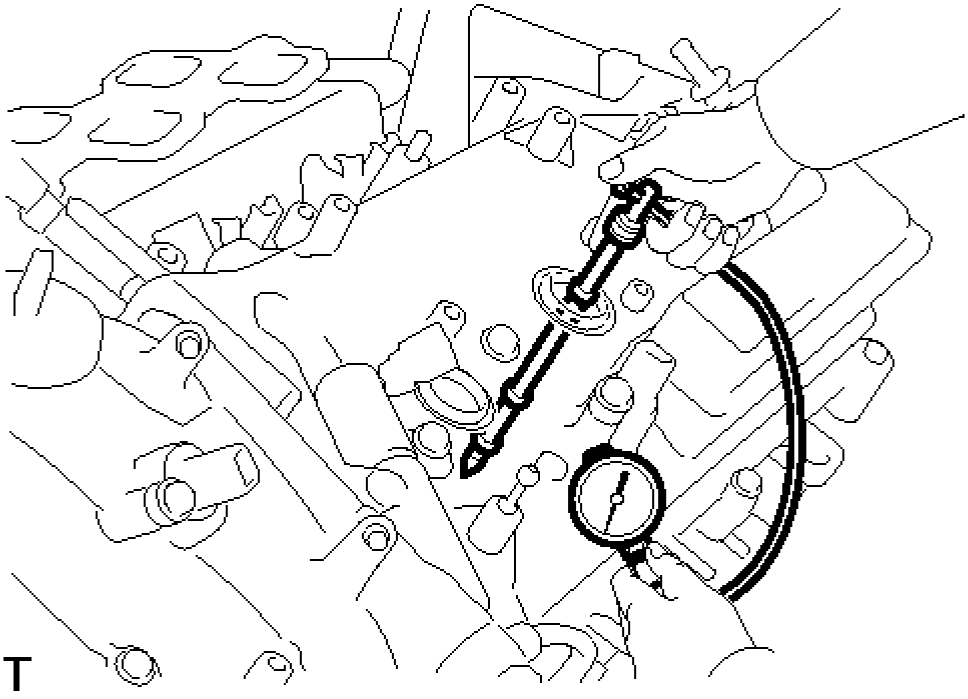

Fig. 3: Checking Cylinder Compression Pressure
Courtesy of TOYOTA MOTOR SALES, U.S.A., INC.

1. Insert a compression gauge into the spark plug hole.
2. While cranking the engine, measure the compression pressure.

   Standard compression pressure

   1300 kPa (13 kgf/cm^2 , 189 psi)

   Minimum pressure

   980 kPa (10 kgf/cm^2 , 142 psi)

   Difference between each cylinder

   100 kPa (1.0 kgf/cm^2 , 15 psi)

NOTE:

- **Always use a fully charged battery to obtain an engine speed of 250 rpm or more.**

- **Check the compression pressure of the other cylinders in the same way.**
- **This measurement must be done as quickly as possible.**

3. If the cylinder compression is low, pour a small amount of engine oil into the cylinder through the spark plug hole and inspect again.

   HINT:

   - If adding oil increases the compression, the piston rings and/or cylinder bore may be worn or damaged.
   - If the pressure stays low, a valve may be stuck or seated improperly, or there may be leakage in the gasket.

d. Install the 6 spark plugs. Refer to **INSTALLATION** .

12. **INSPECT CO/HC**

HINT:

This check determines whether or not the idle CO/HC complies with regulations.

a. Start the engine.
b. Keep the engine speed at 2500 rpm for approximately 180 seconds.
c. Insert the CO/HC meter testing probe at least 40 cm (1.31 ft.) into the tailpipe during idle.
d. Immediately check CO/HC concentration during idle and when running at 2500 rpm.

HINT:

When performing the 2 mode (with the engine idling/running at 2500 rpm) test, follow the measurement order determined by applicable local regulations.

If the CO/HC concentration does not comply with the regulations, perform troubleshooting in the order given below.

1. Check the DTCs. Refer to **DTC CHECK / CLEAR** .
2. See the table below for possible causes, then inspect and correct the applicable causes if necessary.

CO	HC	Problem	Cause
			a. Faulty ignition: • Incorrect valve timing • Fouled,

Normal	High	Rough idle	shorted or improperly gapped plugs b. Incorrect valve clearance (valve lash adjuster) c. Leaks in intake or exhaust valves d. Leaks in cylinders
Low	High	Rough idle (Fluctuating HC reading)	a. Vacuum leaks: • PCV hoses • Intake manifold • Throttle body assembly • Brake booster line b. Lean mixture causing misfire
High	High	Rough idle (Black smoke from exhaust)	a. Restricted air cleaner filter element sub-assembly b. Plugged PCV valve c. Faulty SFI system: • Faulty fuel pressure regulator • Defective engine coolant temperature sensor • Defective mass air flow meter • Faulty ECM

				- Faulty injector assemblies - Faulty throttle position sensor (built in throttle body assembly)

DRIVE BELT

COMPONENTS

ILLUSTRATION

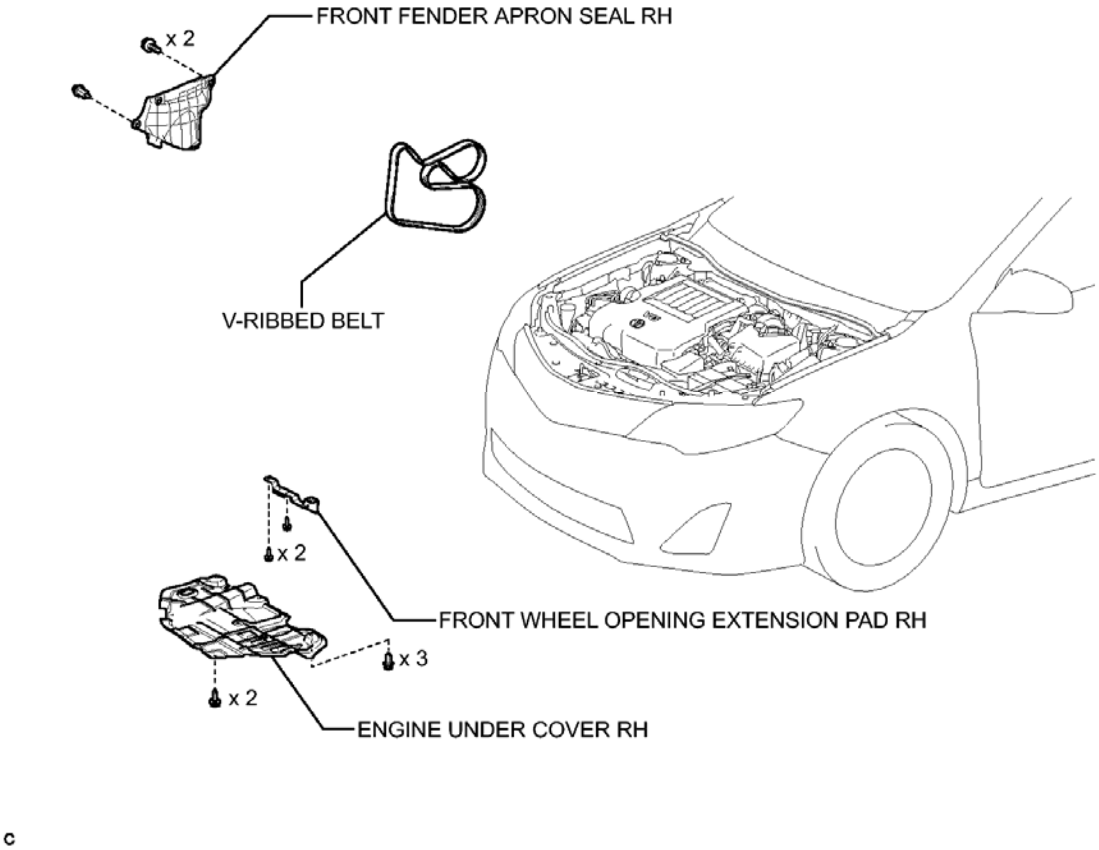
FRONT FENDER APRON SEAL RH
x 2
V-RIBBED BELT
x 2
FRONT WHEEL OPENING EXTENSION PAD RH
x 3
x 2
ENGINE UNDER COVER RH
c

Fig. 4: Identifying Drive Belt Replacement Components
Courtesy of TOYOTA MOTOR SALES, U.S.A., INC.

ON-VEHICLE INSPECTION

ON-VEHICLE INSPECTION

1. **INSPECT V-RIBBED BELT**
    1. Check the belt for wear, cracks or other signs of damage.

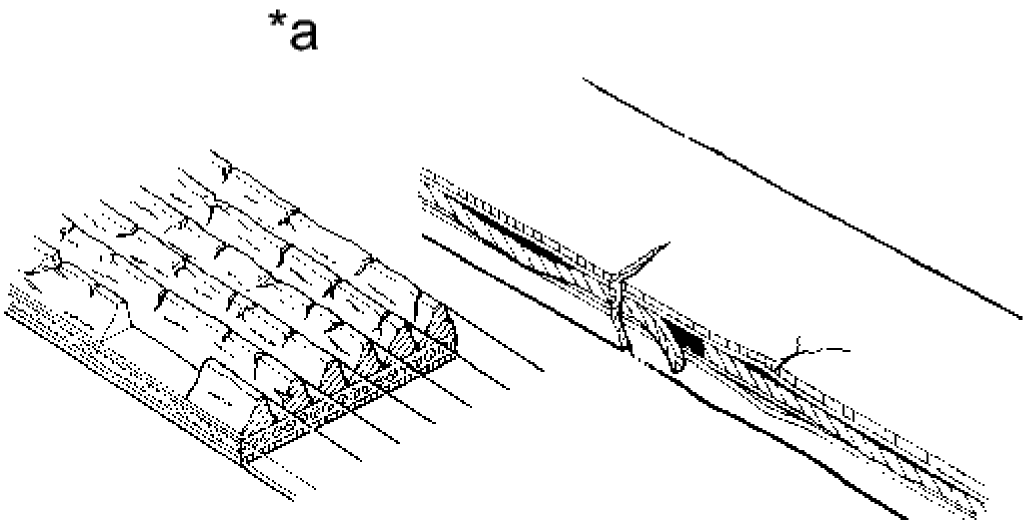

Fig. 5: Inspecting Condition Of Fan & Generator V Belt
Courtesy of TOYOTA MOTOR SALES, U.S.A., INC.

TEXT IN ILLUSTRATION

*a	INCORRECT

If any of the following defects is found, replace the V-ribbed belt.

- The belt is cracked.
- The belt is worn out to the extent that the cords are exposed.
- The belt has chunks missing from the ribs.

b. Check that the belt fits properly in the ribbed grooves.

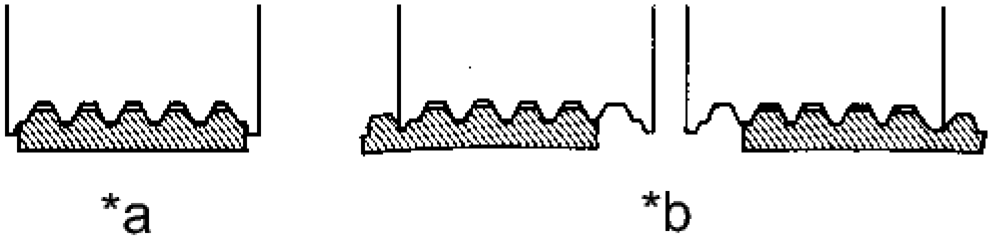

Fig. 6: Checking V Belt For Proper Installation
Courtesy of TOYOTA MOTOR SALES, U.S.A., INC.

TEXT IN ILLUSTRATION

*a	CORRECT
*b	INCORRECT

HINT:

Check with your hand to confirm that the belt has not slipped out of the grooves on the bottom of the pulley. If it has slipped out, replace the V-ribbed. Install a new V-ribbed correctly.

REMOVAL

REMOVAL

1. **REMOVE FRONT WHEEL RH**
2. **REMOVE FRONT WHEEL OPENING EXTENSION PAD RH**
3. **REMOVE ENGINE UNDER COVER RH**
4. **REMOVE FRONT FENDER APRON SEAL RH**
5. **REMOVE V-RIBBED BELT**
    a. Release the V-ribbed belt tension by turning the V-ribbed belt tensioner counterclockwise, and remove the V-ribbed belt from the V-ribbed belt tensioner.

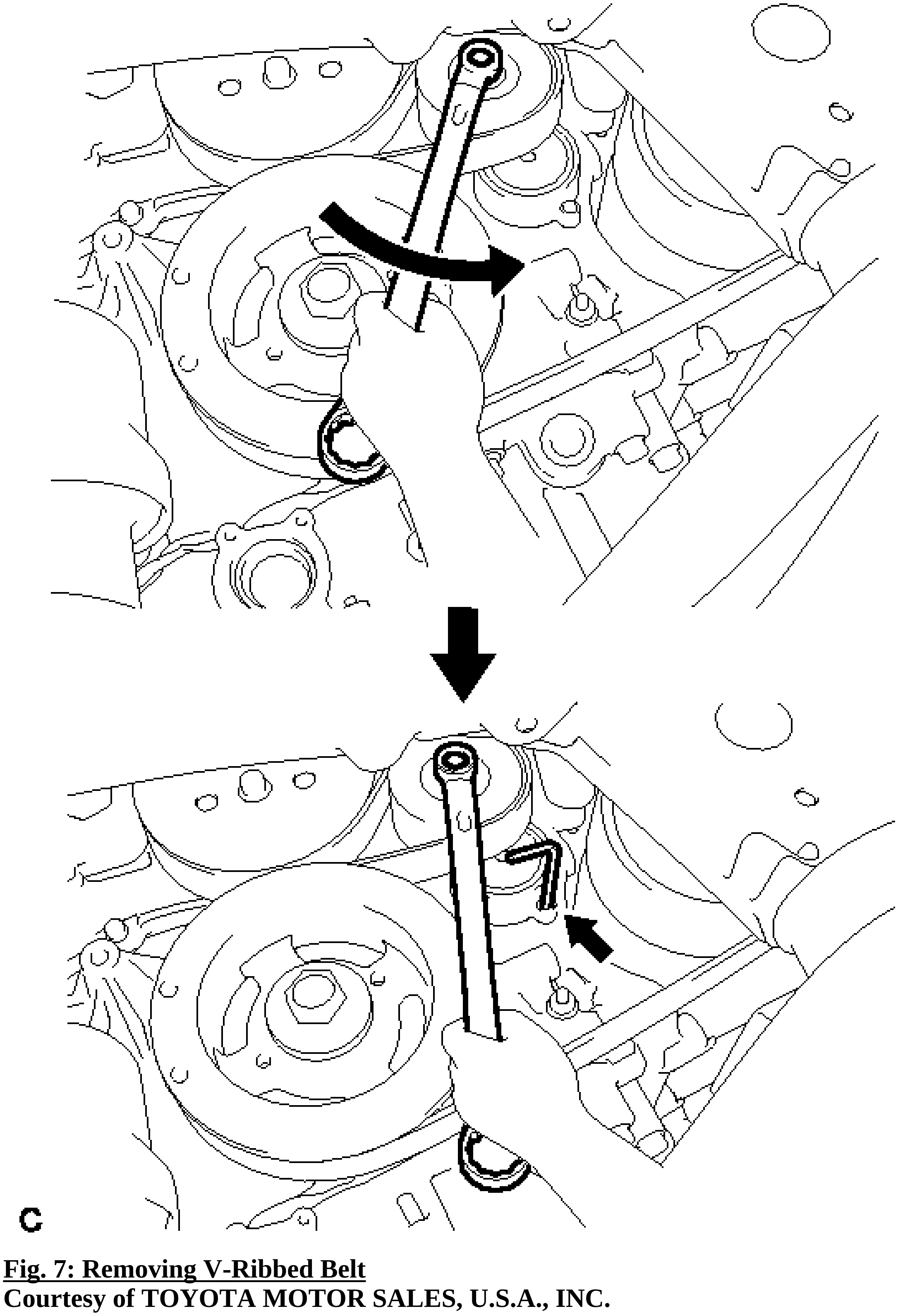

Fig. 7: Removing V-Ribbed Belt
Courtesy of TOYOTA MOTOR SALES, U.S.A., INC.

b. While turning the V-ribbed belt tensioner counterclockwise, align its holes, and then insert a 5 mm hexagon wrench into the holes to fix the V-ribbed belt tensioner.

INSTALLATION

INSTALLATION

1. **INSTALL V-RIBBED BELT**
   a. Install the V-ribbed belt.

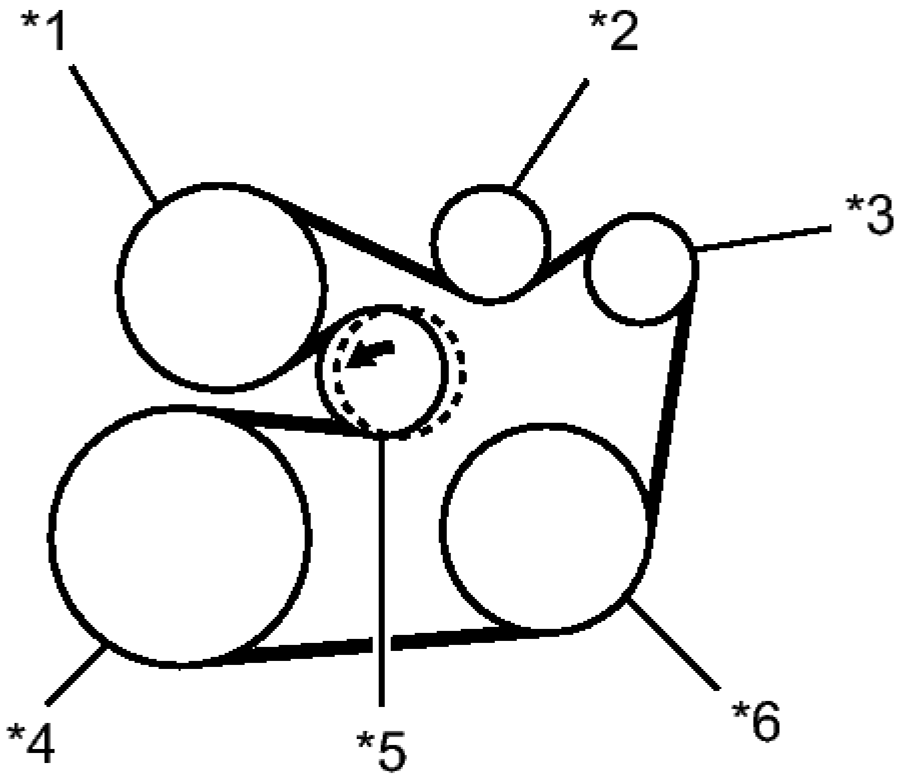

Fig. 8: Identifying V-Ribbed Belt Routing Diagram
Courtesy of TOYOTA MOTOR SALES, U.S.A., INC.

TEXT IN ILLUSTRATION

*1	Water Pump
*2	Idler
*3	Generator

*4	Crankshaft
*5	Tensioner
*6	A/C Compressor

b. Turn the V-ribbed belt tensioner counterclockwise and remove the 5 mm hexagon wrench.

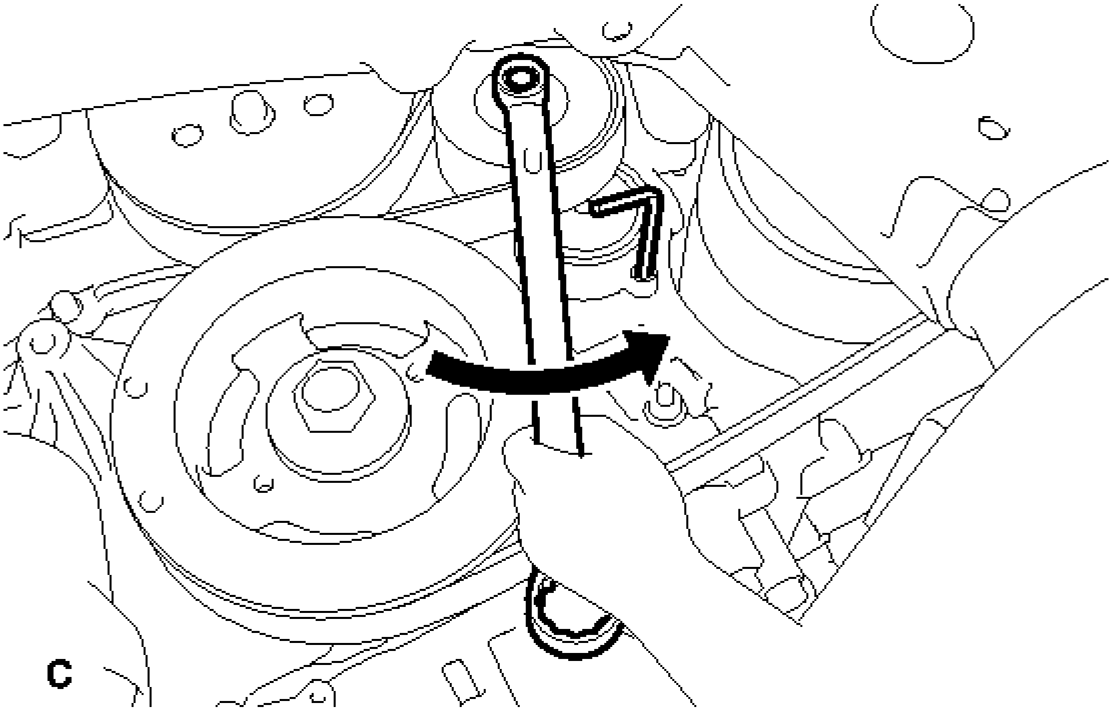

Fig. 9: Turning V-Ribbed Belt Tensioner Counterclockwise
Courtesy of TOYOTA MOTOR SALES, U.S.A., INC.

c. After installing the V-ribbed belt, check that it fits properly in the ribbed grooves. Confirm that the belt has not slipped out of the grooves on the bottom of the crank pulley by hand.

2. **INSTALL FRONT FENDER APRON SEAL RH**
3. **INSTALL ENGINE UNDER COVER RH**
4. **INSTALL FRONT WHEEL OPENING EXTENSION PAD RH**
5. **INSTALL FRONT WHEEL RH**

Torque: 103 N*m (1049 kgf*cm, 76 ft.*lbf)

CAMSHAFT

COMPONENTS

ILLUSTRATION

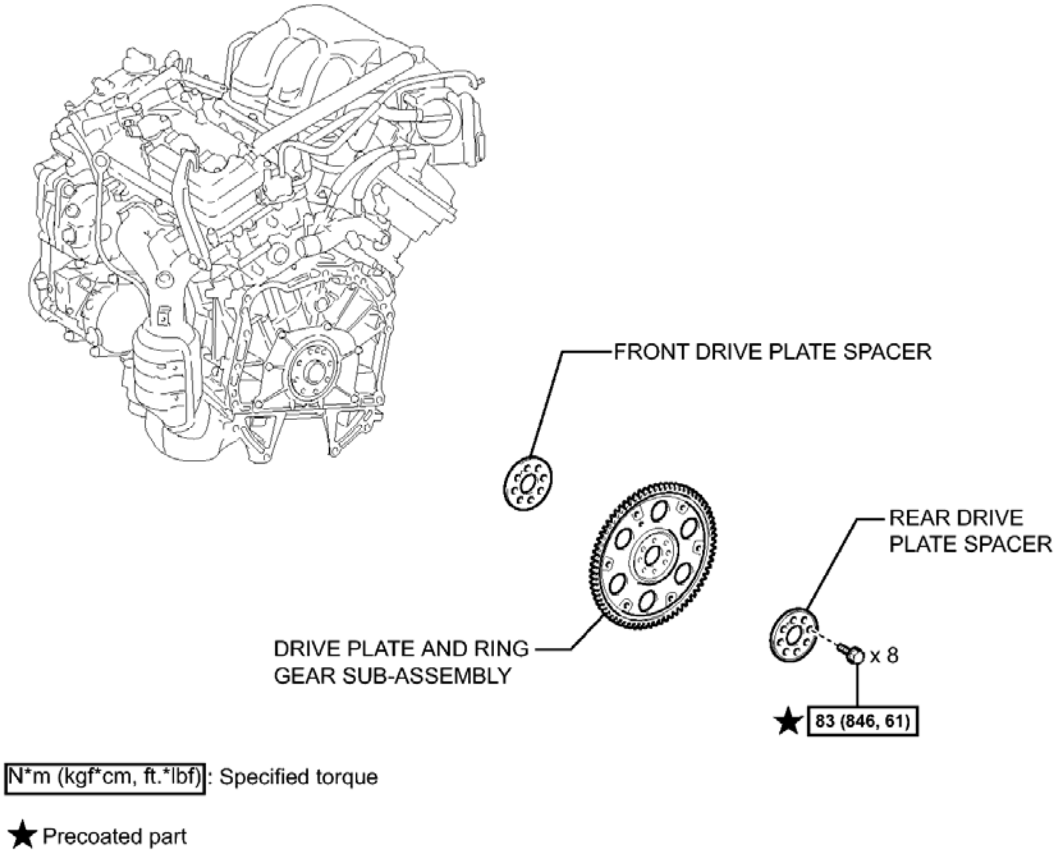
FRONT DRIVE PLATE SPACER
REAR DRIVE PLATE SPACER
DRIVE PLATE AND RING GEAR SUB-ASSEMBLY
x 8
★ 83 (846, 61)
N*m (kgf*cm, ft.*lbf): Specified torque
★ Precoated part

Fig. 10: Identifying Camshaft Replacement Components With Torque Specifications (1 Of 9)
Courtesy of TOYOTA MOTOR SALES, U.S.A., INC.

ILLUSTRATION

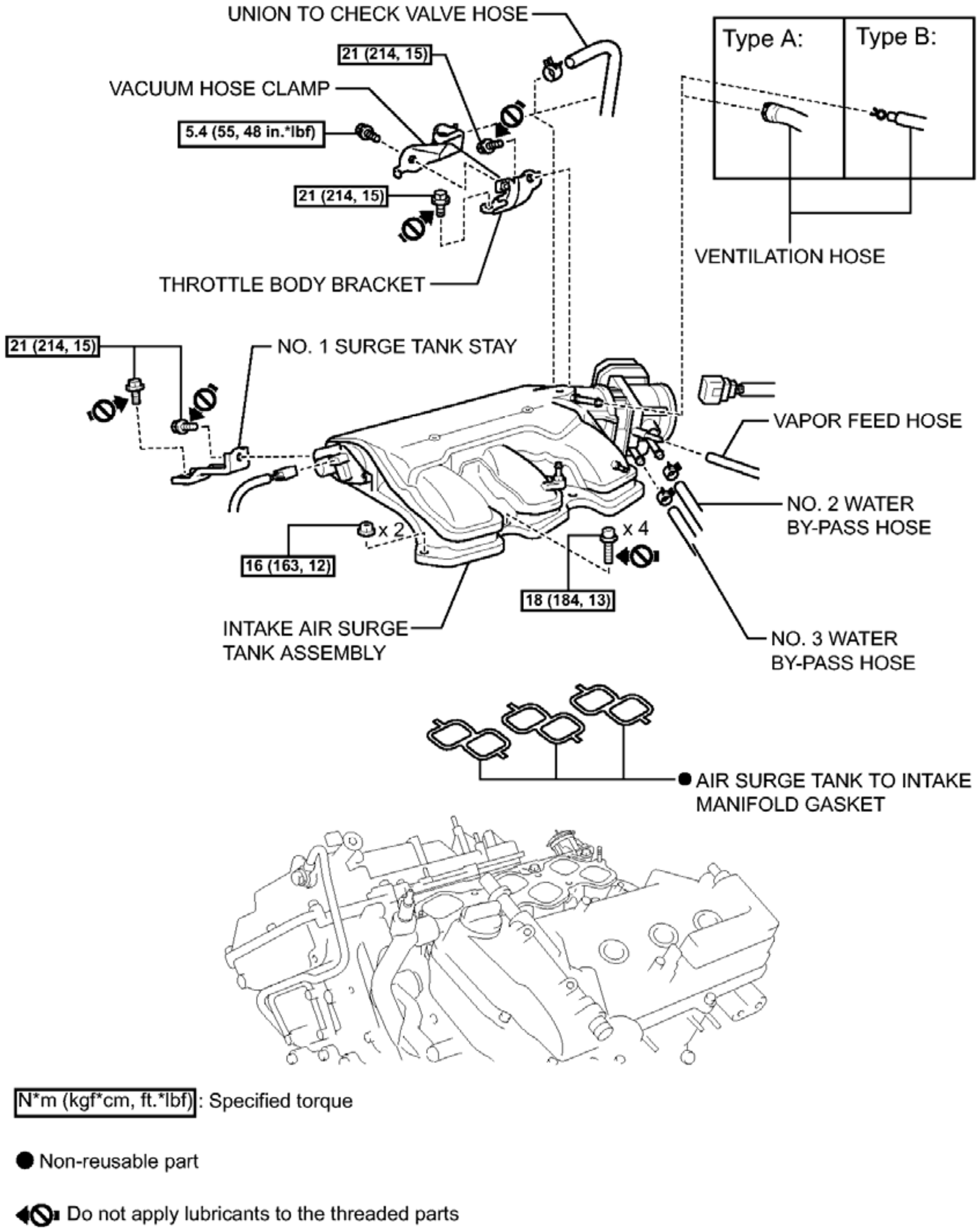
UNION TO CHECK VALVE HOSE
21 (214, 15)
VACUUM HOSE CLAMP
5.4 (55, 48 in.*lbf)
21 (214, 15)
THROTTLE BODY BRACKET
Type A:
Type B:
VENTILATION HOSE
21 (214, 15)
NO. 1 SURGE TANK STAY
VAPOR FEED HOSE
NO. 2 WATER
BY-PASS HOSE
x 2
16 (163, 12)
x 4
18 (184, 13)
INTAKE AIR SURGE
TANK ASSEMBLY
NO. 3 WATER
BY-PASS HOSE
● AIR SURGE TANK TO INTAKE
MANIFOLD GASKET
N*m (kgf*cm, ft.*lbf) : Specified torque
● Non-reusable part
Do not apply lubricants to the threaded parts

Fig. 11: Identifying Camshaft Replacement Components With Torque Specifications (2 Of 9)
Courtesy of TOYOTA MOTOR SALES, U.S.A., INC.

ILLUSTRATION

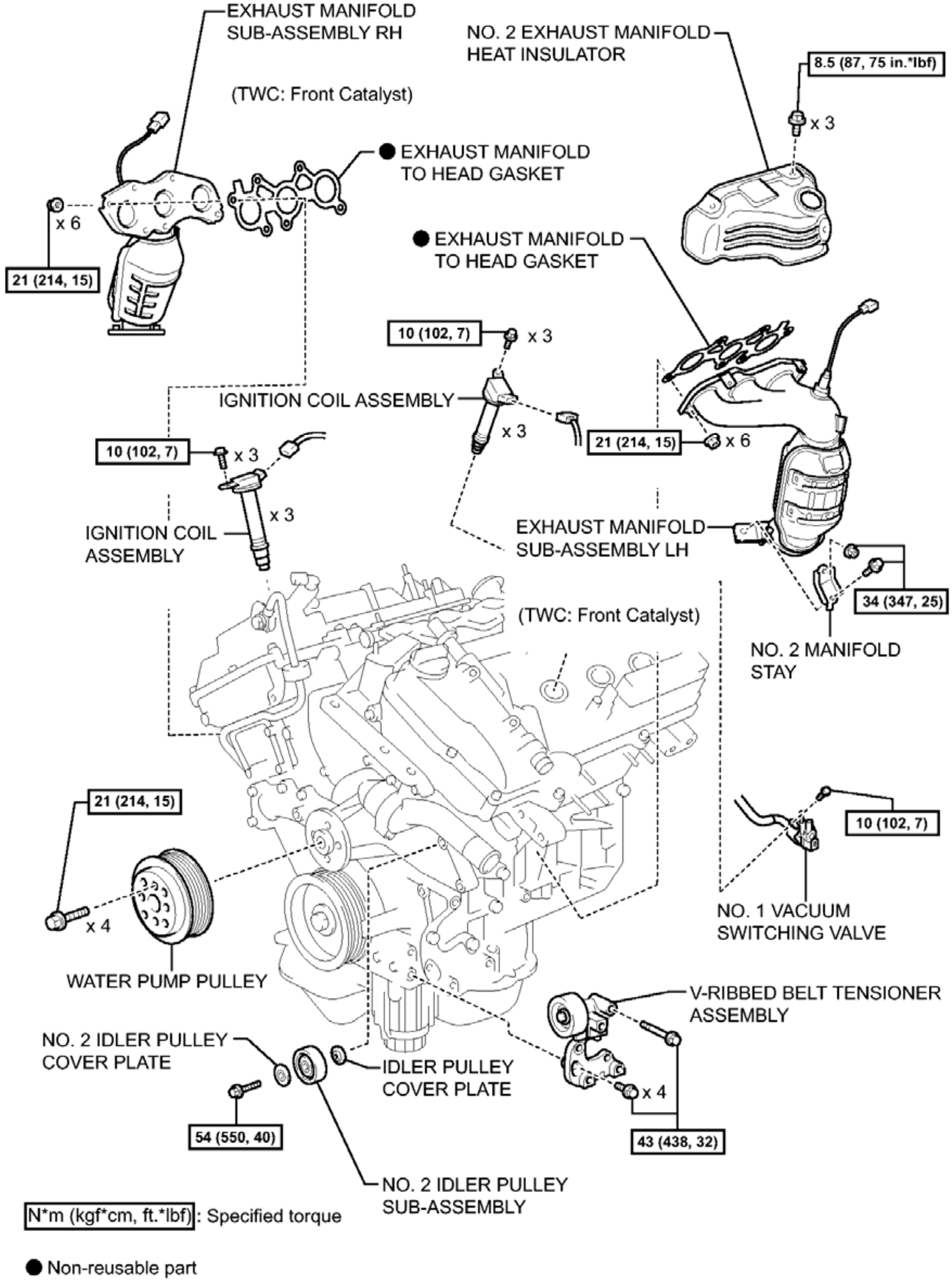
EXHAUST MANIFOLD SUB-ASSEMBLY RH
NO. 2 EXHAUST MANIFOLD HEAT INSULATOR
8.5 (87, 75 in.*lbf)
x 3
(TWC: Front Catalyst)
● EXHAUST MANIFOLD TO HEAD GASKET
x 6
21 (214, 15)
● EXHAUST MANIFOLD TO HEAD GASKET
10 (102, 7)
x 3
IGNITION COIL ASSEMBLY
x 3
21 (214, 15)
x 6
10 (102, 7)
x 3
x 3
IGNITION COIL ASSEMBLY
EXHAUST MANIFOLD SUB-ASSEMBLY LH
34 (347, 25)
(TWC: Front Catalyst)
NO. 2 MANIFOLD STAY
21 (214, 15)
10 (102, 7)
x 4
NO. 1 VACUUM SWITCHING VALVE
WATER PUMP PULLEY
V-RIBBED BELT TENSIONER ASSEMBLY
NO. 2 IDLER PULLEY COVER PLATE
IDLER PULLEY COVER PLATE
x 4
54 (550, 40)
43 (438, 32)
NO. 2 IDLER PULLEY SUB-ASSEMBLY
N*m (kgf*cm, ft.*lbf): Specified torque
● Non-reusable part

c

Fig. 12: Identifying Camshaft Replacement Components With Torque Specifications (3 Of 9)
Courtesy of TOYOTA MOTOR SALES, U.S.A., INC.

ILLUSTRATION

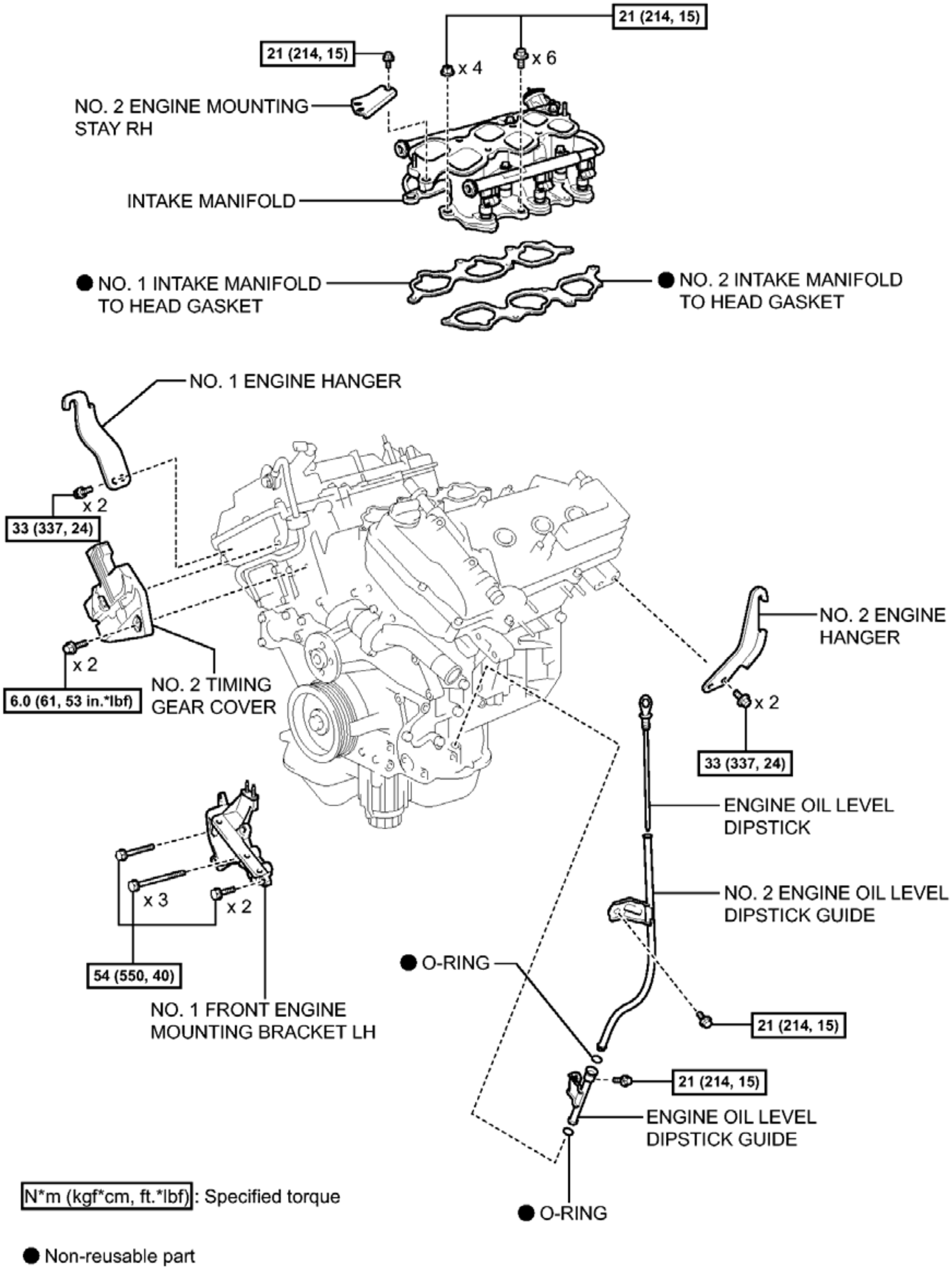
21 (214, 15)
21 (214, 15)
x 4
x 6
NO. 2 ENGINE MOUNTING STAY RH
INTAKE MANIFOLD
● NO. 1 INTAKE MANIFOLD TO HEAD GASKET
● NO. 2 INTAKE MANIFOLD TO HEAD GASKET
NO. 1 ENGINE HANGER
x 2
33 (337, 24)
x 2
6.0 (61, 53 in.*lbf)
NO. 2 TIMING GEAR COVER
NO. 2 ENGINE HANGER
x 2
33 (337, 24)
ENGINE OIL LEVEL DIPSTICK
NO. 2 ENGINE OIL LEVEL DIPSTICK GUIDE
x 3
x 2
54 (550, 40)
NO. 1 FRONT ENGINE MOUNTING BRACKET LH
● O-RING
21 (214, 15)
21 (214, 15)
ENGINE OIL LEVEL DIPSTICK GUIDE
● O-RING
N*m (kgf*cm, ft.*lbf) : Specified torque
● Non-reusable part

Fig. 13: Identifying Camshaft Replacement Components With Torque Specifications (4 Of 9)
Courtesy of TOYOTA MOTOR SALES, U.S.A., INC.

ILLUSTRATION

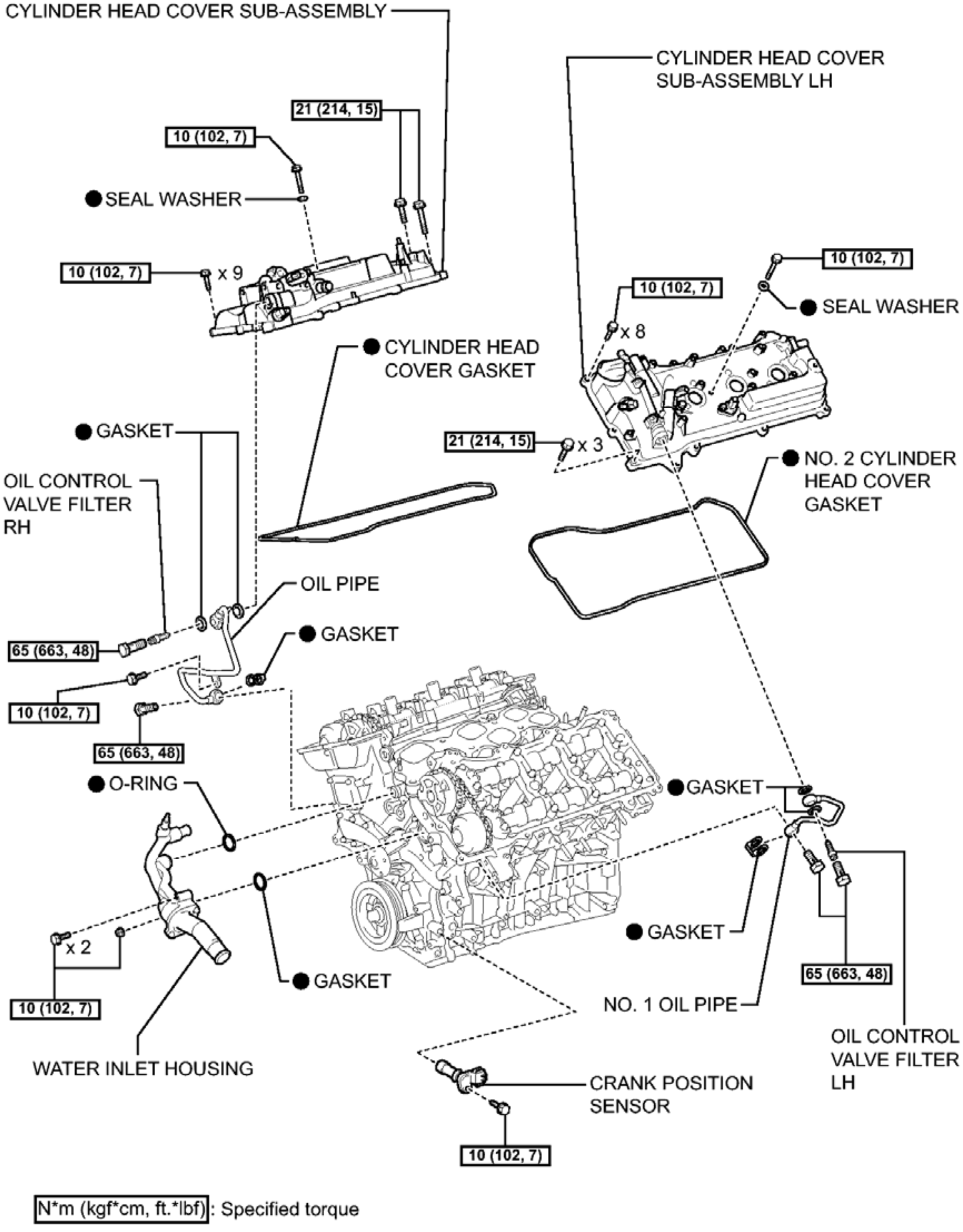
CYLINDER HEAD COVER SUB-ASSEMBLY
CYLINDER HEAD COVER SUB-ASSEMBLY LH
21 (214, 15)
10 (102, 7)
● SEAL WASHER
10 (102, 7)
x 9
10 (102, 7)
10 (102, 7)
● SEAL WASHER
x 8
● CYLINDER HEAD COVER GASKET
● GASKET
21 (214, 15)
x 3
● NO. 2 CYLINDER HEAD COVER GASKET
OIL CONTROL VALVE FILTER RH
OIL PIPE
● GASKET
65 (663, 48)
10 (102, 7)
65 (663, 48)
● O-RING
● GASKET
● GASKET
x 2
● GASKET
65 (663, 48)
10 (102, 7)
NO. 1 OIL PIPE
OIL CONTROL VALVE FILTER LH
WATER INLET HOUSING
CRANK POSITION SENSOR
10 (102, 7)
N*m (kgf*cm, ft.*lbf): Specified torque
● Non-reusable part

Fig. 14: Identifying Camshaft Replacement Components With Torque Specifications (5 Of 9)
Courtesy of TOYOTA MOTOR SALES, U.S.A., INC.

ILLUSTRATION

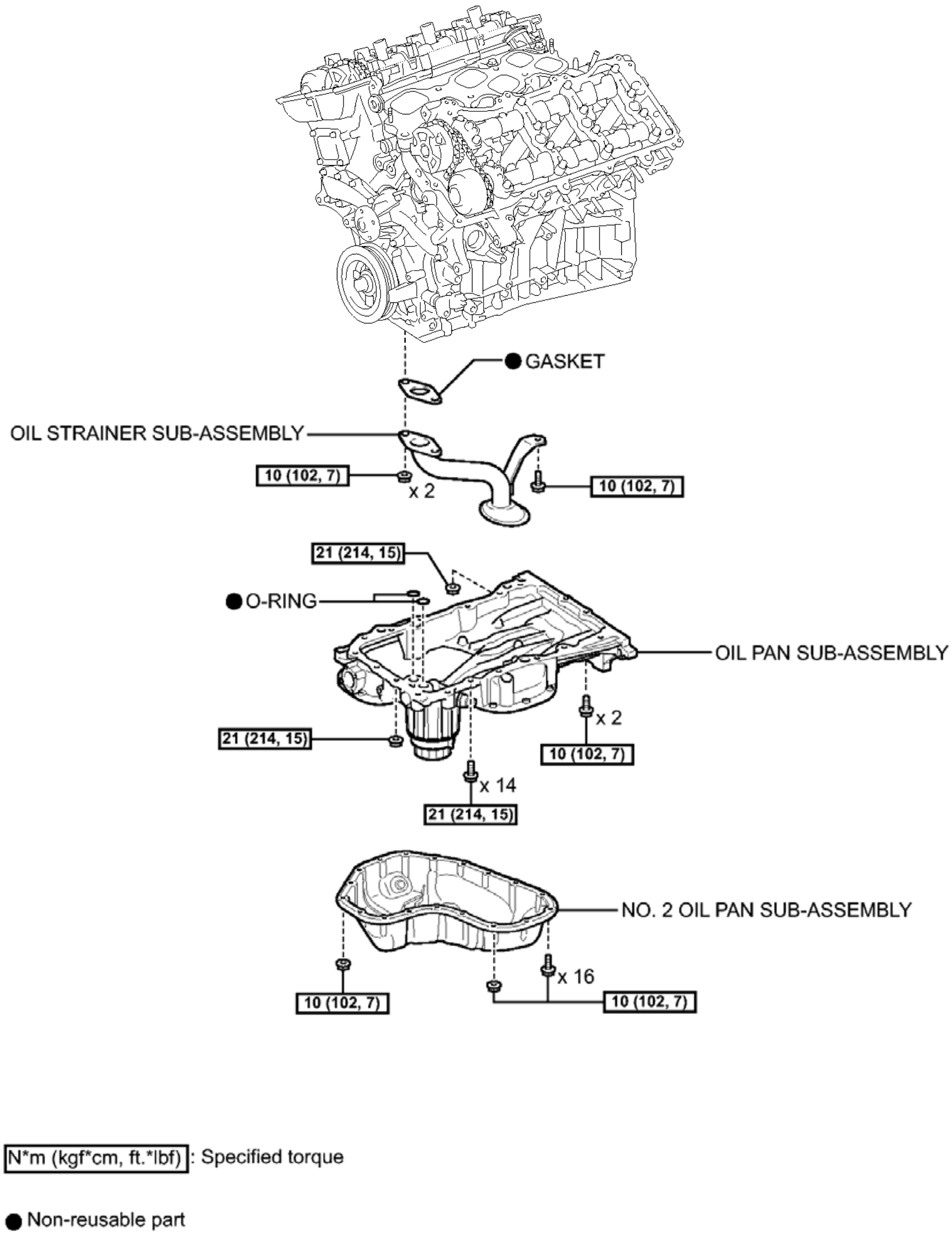
● GASKET
OIL STRAINER SUB-ASSEMBLY
10 (102, 7)
x 2
10 (102, 7)
21 (214, 15)
● O-RING
OIL PAN SUB-ASSEMBLY
x 2
21 (214, 15)
10 (102, 7)
x 14
21 (214, 15)
NO. 2 OIL PAN SUB-ASSEMBLY
x 16
10 (102, 7)
10 (102, 7)
N*m (kgf*cm, ft.*lbf) : Specified torque
● Non-reusable part

Fig. 15: IIdentifying Camshaft Replacement Components With Torque Specifications (6 Of 9)
Courtesy of TOYOTA MOTOR SALES, U.S.A., INC.

ILLUSTRATION

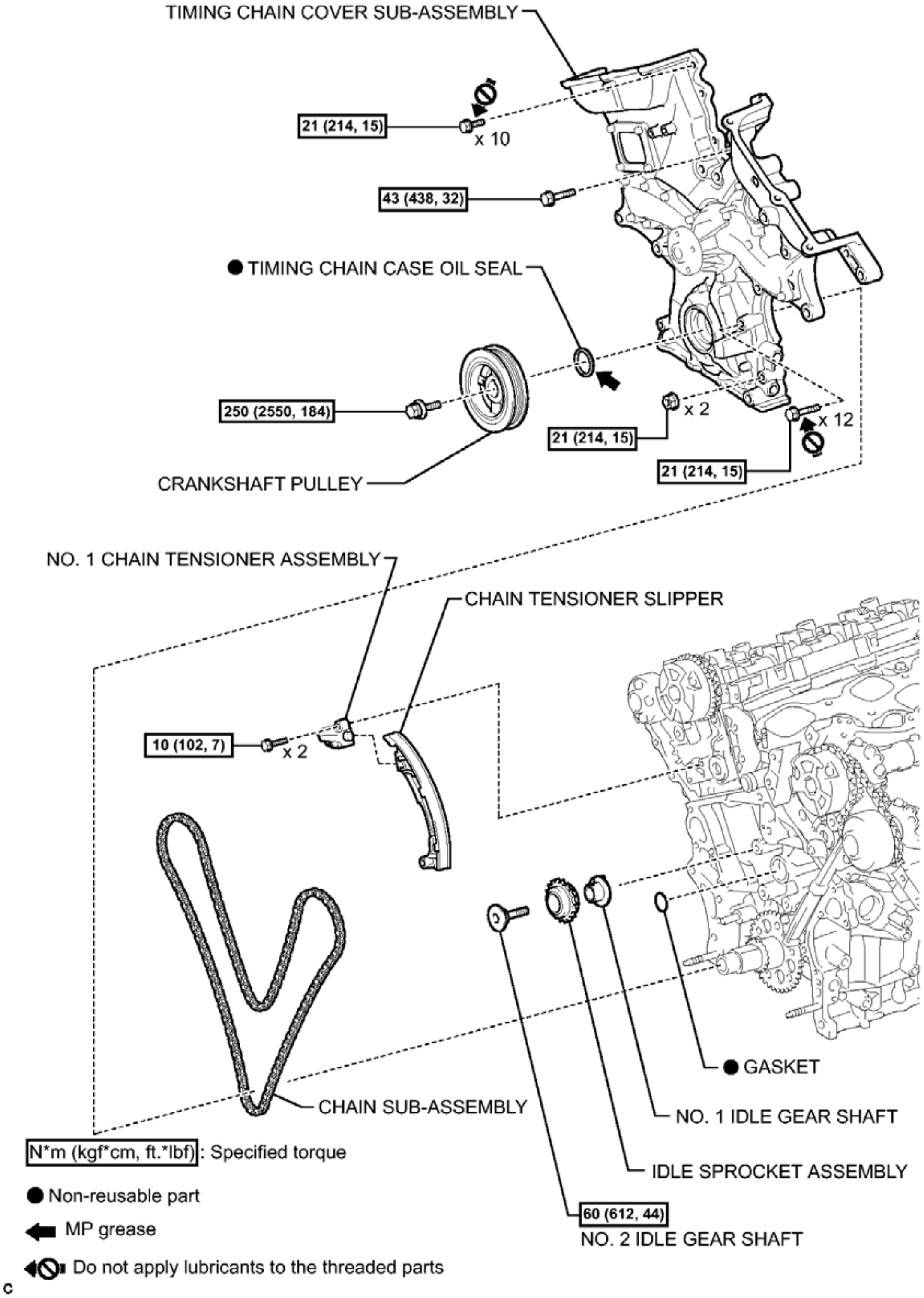
TIMING CHAIN COVER SUB-ASSEMBLY
21 (214, 15)
x 10
43 (438, 32)
● TIMING CHAIN CASE OIL SEAL
250 (2550, 184)
21 (214, 15)
x 2
x 12
21 (214, 15)
CRANKSHAFT PULLEY
NO. 1 CHAIN TENSIONER ASSEMBLY
CHAIN TENSIONER SLIPPER
10 (102, 7)
x 2
● GASKET
CHAIN SUB-ASSEMBLY
NO. 1 IDLE GEAR SHAFT
N*m (kgf*cm, ft.*lbf): Specified torque
IDLE SPROCKET ASSEMBLY
● Non-reusable part
MP grease
60 (612, 44)
NO. 2 IDLE GEAR SHAFT
Do not apply lubricants to the threaded parts
c

Fig. 16: Identifying Camshaft Replacement Components With Torque Specifications (7 Of 9)
Courtesy of TOYOTA MOTOR SALES, U.S.A., INC.

ILLUSTRATION

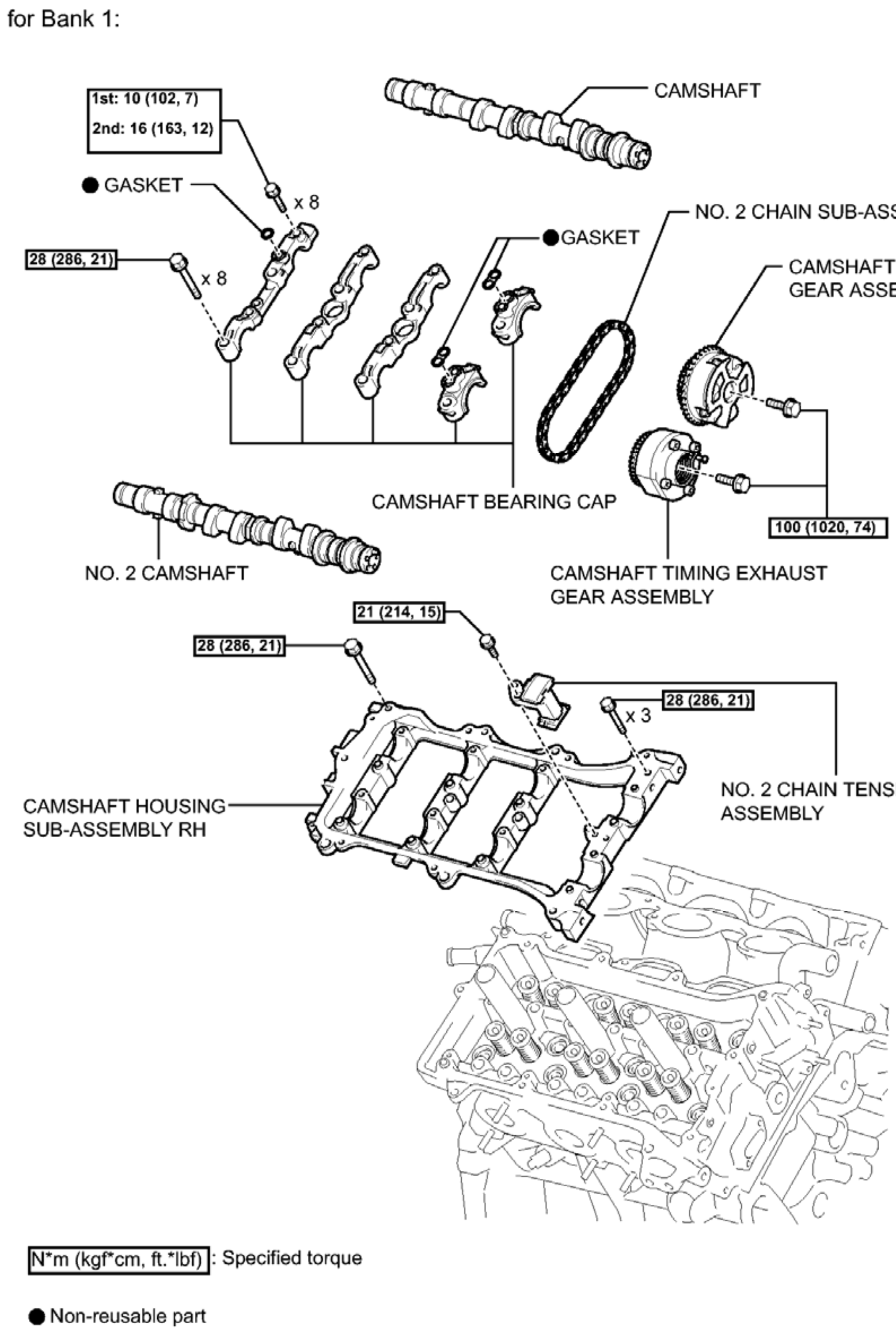
for Bank 1:
1st: 10 (102, 7)
2nd: 16 (163, 12)
CAMSHAFT
● GASKET
x 8
NO. 2 CHAIN SUB-ASSEMBLY
●GASKET
28 (286, 21)
x 8
CAMSHAFT TIMING GEAR ASSEMBLY
CAMSHAFT BEARING CAP
100 (1020, 74)
NO. 2 CAMSHAFT
CAMSHAFT TIMING EXHAUST GEAR ASSEMBLY
21 (214, 15)
28 (286, 21)
28 (286, 21)
x 3
CAMSHAFT HOUSING SUB-ASSEMBLY RH
NO. 2 CHAIN TENSIONER ASSEMBLY
N*m (kgf*cm, ft.*lbf) : Specified torque
● Non-reusable part

Fig. 17: Identifying Camshaft Replacement Components With Torque Specifications (8 Of 9)
Courtesy of TOYOTA MOTOR SALES, U.S.A., INC.

ILLUSTRATION

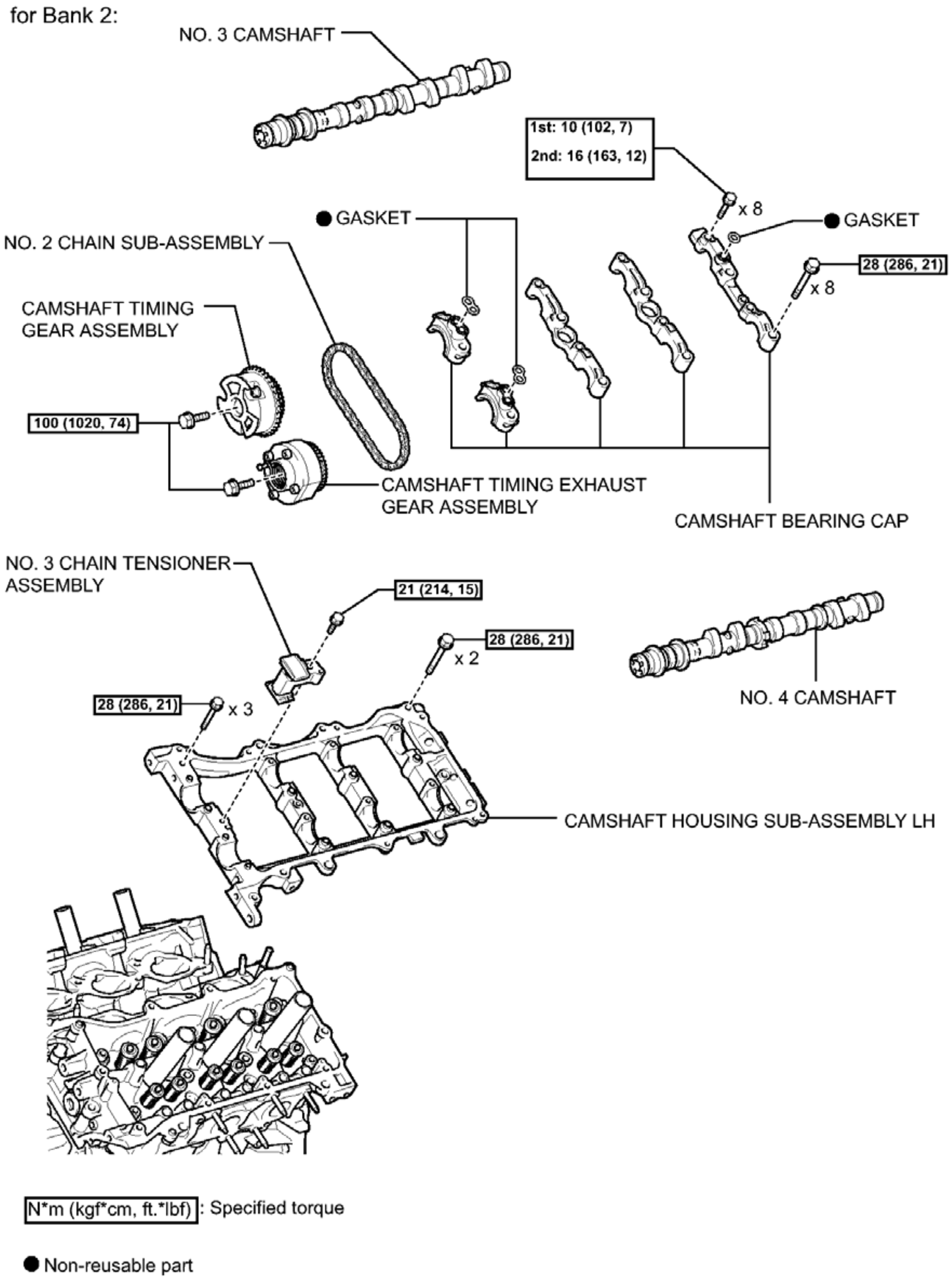
for Bank 2:
NO. 3 CAMSHAFT
1st: 10 (102, 7)
2nd: 16 (163, 12)
x 8
● GASKET
● GASKET
NO. 2 CHAIN SUB-ASSEMBLY
28 (286, 21)
x 8
CAMSHAFT TIMING
GEAR ASSEMBLY
100 (1020, 74)
CAMSHAFT TIMING EXHAUST
GEAR ASSEMBLY
CAMSHAFT BEARING CAP
NO. 3 CHAIN TENSIONER
ASSEMBLY
21 (214, 15)
28 (286, 21)
x 2
NO. 4 CAMSHAFT
28 (286, 21)
x 3
CAMSHAFT HOUSING SUB-ASSEMBLY LH
N*m (kgf*cm, ft.*lbf) : Specified torque
● Non-reusable part

Fig. 18: Identifying Camshaft Replacement Components With Torque Specifications (9 Of 9)
Courtesy of TOYOTA MOTOR SALES, U.S.A., INC.

REMOVAL

REMOVAL

1. **REMOVE AUTOMATIC TRANSAXLE ASSEMBLY**

   Refer to **REMOVAL**

2. **REMOVE DRIVE PLATE AND RING GEAR SUB-ASSEMBLY** See step 2
3. **INSTALL ENGINE ON ENGINE STAND** See step 78
4. **REMOVE ENGINE HANGERS** See step 1
5. **REMOVE INTAKE AIR SURGE TANK ASSEMBLY** . Refer to **REMOVAL - Step 9**
6. **REMOVE NO. 1 SURGE TANK STAY** See step 3
7. **REMOVE THROTTLE BODY BRACKET** See step 4
8. **REMOVE IGNITION COIL ASSEMBLY** . Refer to **REMOVAL - Step 3**
9. **REMOVE NO. 2 ENGINE MOUNTING STAY RH** See step 6
10. **REMOVE INTAKE MANIFOLD** See step 7
11. **REMOVE EXHAUST MANIFOLD SUB-ASSEMBLY RH** See step 8
12. **REMOVE NO. 2 ENGINE OIL LEVEL DIPSTICK GUIDE** See step 9
13. **REMOVE NO. 2 MANIFOLD STAY** . Refer to **REMOVAL - Step 11**
14. **REMOVE NO. 2 EXHAUST MANIFOLD HEAT INSULATOR** . Refer to **REMOVAL - Step 10**
15. **REMOVE EXHAUST MANIFOLD SUB-ASSEMBLY LH** See step 12
16. **REMOVE V-RIBBED BELT TENSIONER ASSEMBLY** See step 13
17. **REMOVE ENGINE OIL LEVEL DIPSTICK GUIDE** See step 13
18. **REMOVE NO. 2 TIMING GEAR COVER** See step 14
19. **REMOVE WATER PUMP PULLEY** See step 15
20. **REMOVE NO. 2 IDLER PULLEY SUB-ASSEMBLY** See step 16
21. **REMOVE NO. 1 VACUUM SWITCHING VALVE** See step 17
22. **REMOVE CRANK POSITION SENSOR** . Refer to **REMOVAL - Step 2**
23. **REMOVE NO. 1 OIL PIPE** See step 8
24. **REMOVE OIL PIPE** See step 9
25. **REMOVE CRANKSHAFT PULLEY** See step 6
26. **REMOVE NO. 1 FRONT ENGINE MOUNTING BRACKET LH** See step 14
27. **REMOVE WATER INLET HOUSING** . Refer to **REMOVAL - Step 10**
28. **REMOVE CYLINDER HEAD COVER SUB-ASSEMBLY** See step 17
29. **REMOVE CYLINDER HEAD COVER SUB-ASSEMBLY LH** See step 18
30. **REMOVE NO. 2 OIL PAN SUB-ASSEMBLY** See step 19
31. **REMOVE OIL STRAINER SUB-ASSEMBLY** See step 20
32. **REMOVE OIL PAN SUB-ASSEMBLY** See step 21
33. **REMOVE TIMING CHAIN COVER SUB-ASSEMBLY** . Refer to **REMOVAL - Step 31**
34. **REMOVE TIMING CHAIN CASE OIL SEAL** . Refer to **REMOVAL - Step 32**

35. **SET NO. 1 CYLINDER TO TDC/COMPRESSION** See step 28
36. **REMOVE NO. 1 CHAIN TENSIONER ASSEMBLY** See step 29
37. **REMOVE CHAIN TENSIONER SLIPPER** See step 30
38. **REMOVE CHAIN SUB-ASSEMBLY** See step 31
39. **REMOVE IDLE SPROCKET ASSEMBLY** See step 32
40. **REMOVE CAMSHAFT TIMING GEARS AND NO. 2 CHAIN (for Bank 1)**
    a. While raising the No. 2 chain tensioner assembly, insert a pin of 1.0 mm (0.0394 in.) diameter into the hole to hold the No. 2 chain tensioner assembly.

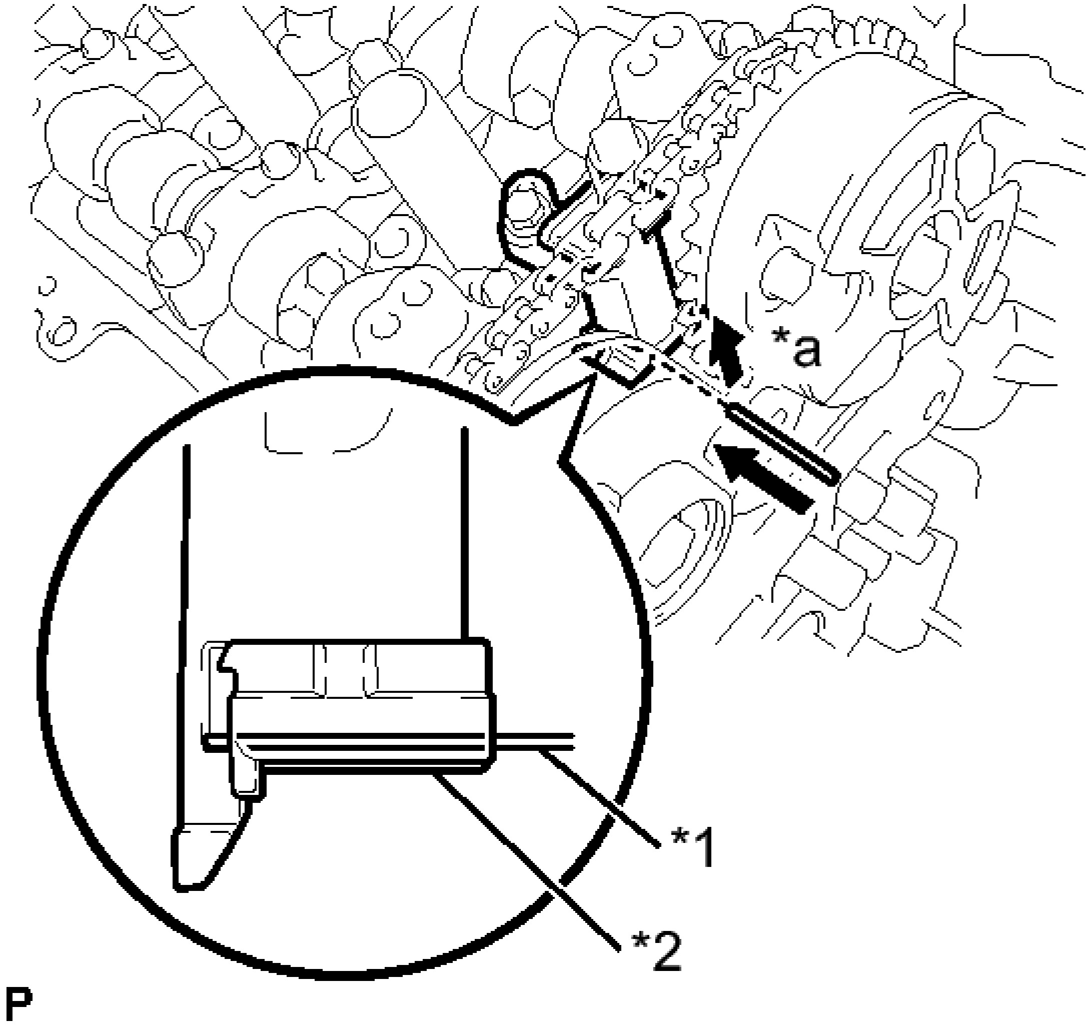

Fig. 19: Raising No. 2 Chain Tensioner & Inserting Pin
Courtesy of TOYOTA MOTOR SALES, U.S.A., INC.

TEXT IN ILLUSTRATION

*1	Pin

*2	Plunger
*a	Push

b. Using SST to hold the hexagonal portion of each camshaft, loosen the flange bolts of the camshaft timing gear assembly and the camshaft timing exhaust gear assembly.

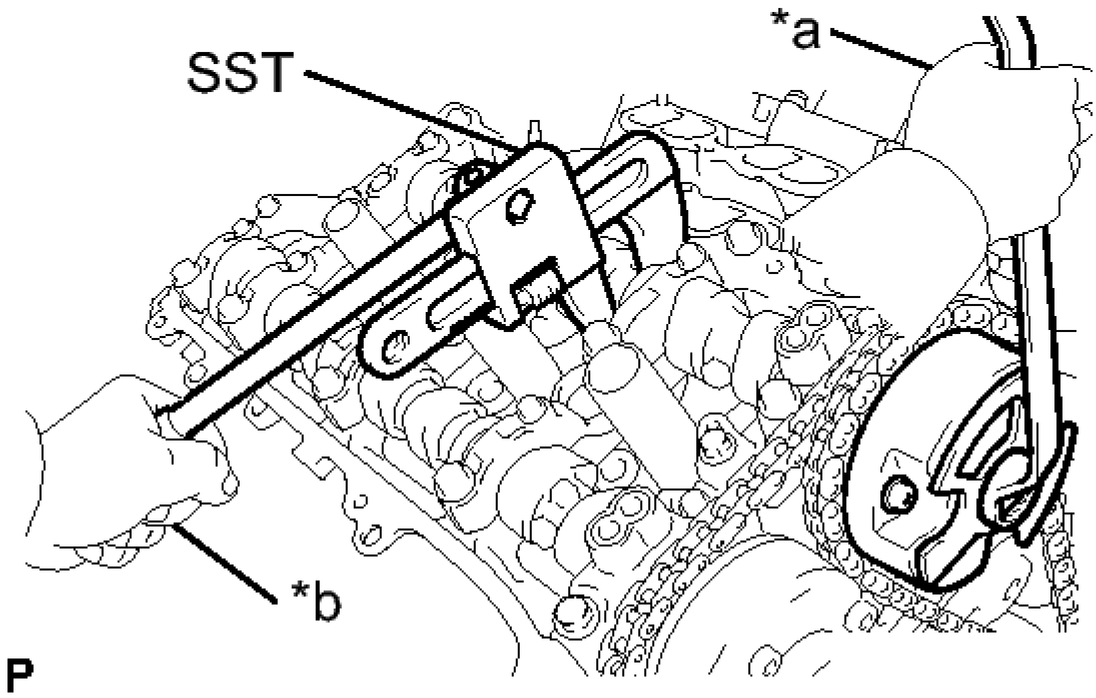

Fig. 20: Removing/Installing Camshaft Timing Gear & Exhaust Gear Assembly Flange Bolts Using SST RH
Courtesy of TOYOTA MOTOR SALES, U.S.A., INC.

TEXT IN ILLUSTRATION

*a	Turn
*b	Hold

- **SST: 09922-10010**

NOTE:

- **Be careful not to damage the cylinder head with SST.**
- **Do not loosen the other bolts. If any of the bolts is loosened, replace the camshaft timing gear assembly and/or the camshaft timing exhaust gear assembly with a new one.**

c. Remove the 2 bolts and the camshaft timing gear assembly together with the No. 2 chain.

41. **REMOVE NO. 2 CHAIN TENSIONER ASSEMBLY**

a. Remove the bolt and No. 2 chain tensioner assembly.

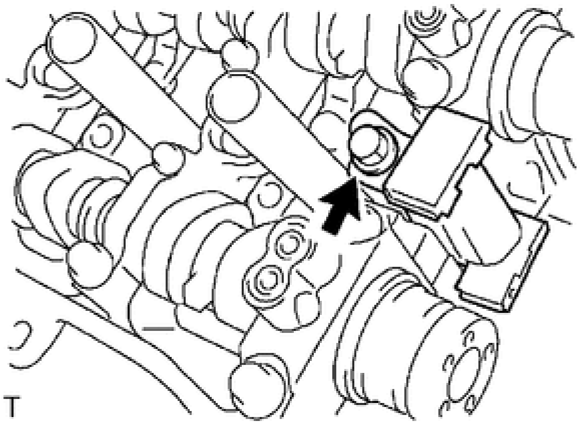

Fig. 21: Identifying No. 2 Chain Tensioner Bolt
Courtesy of TOYOTA MOTOR SALES, U.S.A., INC.

42. **REMOVE CAMSHAFT BEARING CAP (for Bank 1)**
    a. Check that the camshafts are positioned as shown in the illustration.

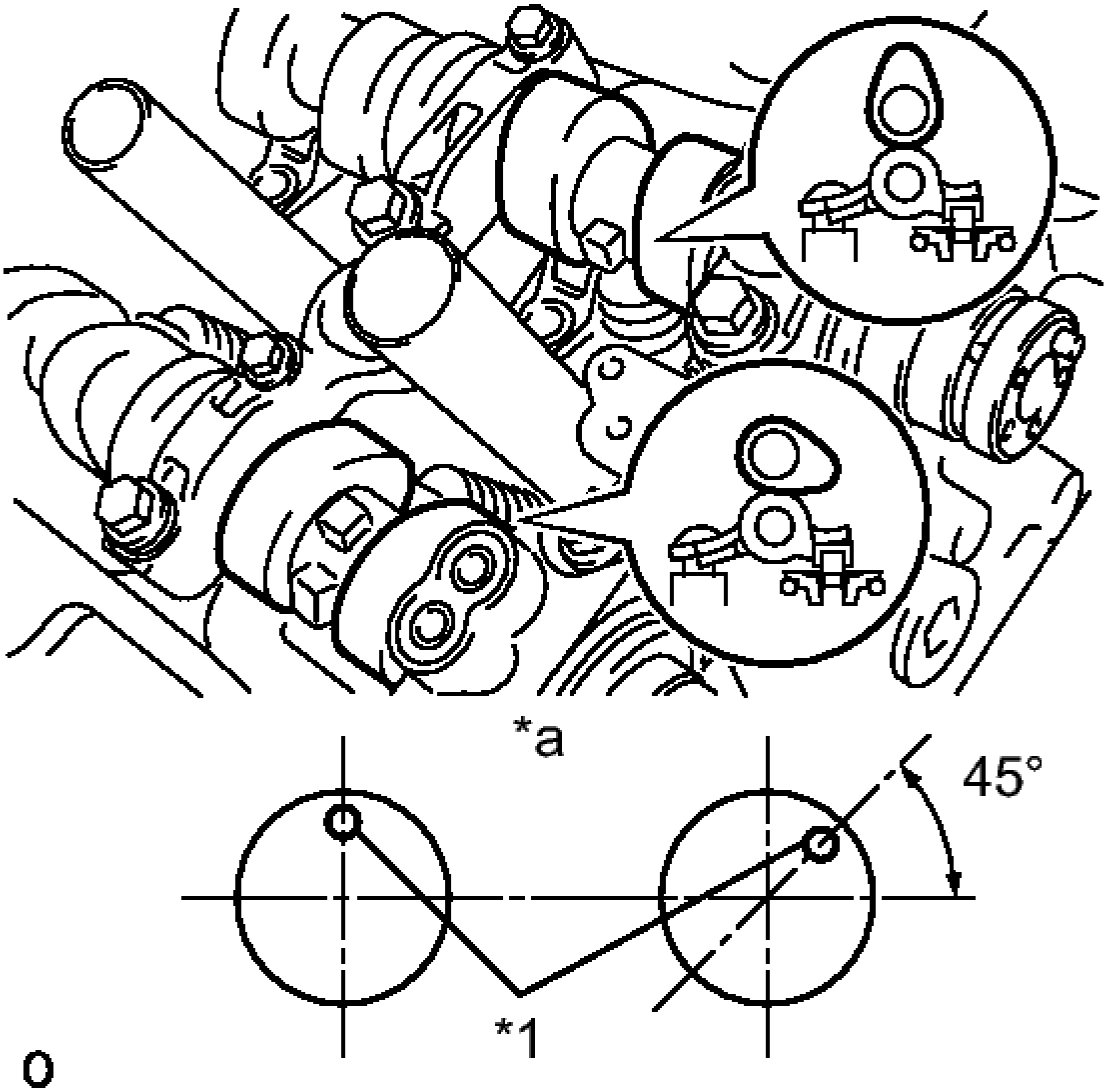

Fig. 22: Identifying Camshaft Position (For Bank 1)
Courtesy of TOYOTA MOTOR SALES, U.S.A., INC.

TEXT IN ILLUSTRATION

*1	Knock Pin
*a	Front View

b. Uniformly loosen and remove the 8 bearing cap bolts in several steps and in the sequence shown in the illustration.

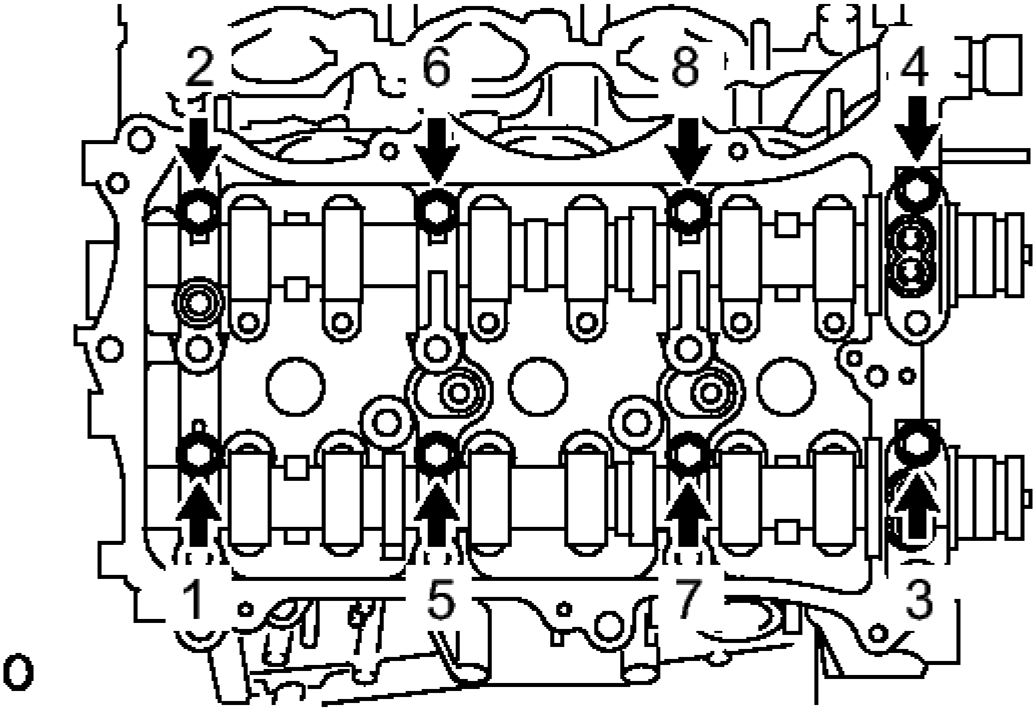

Fig. 23: Identifying Bearing Cap Bolts Loosening Sequence
Courtesy of TOYOTA MOTOR SALES, U.S.A., INC.

c. Uniformly loosen and remove the 12 bearing cap bolts in several steps and in the sequence shown in the illustration.

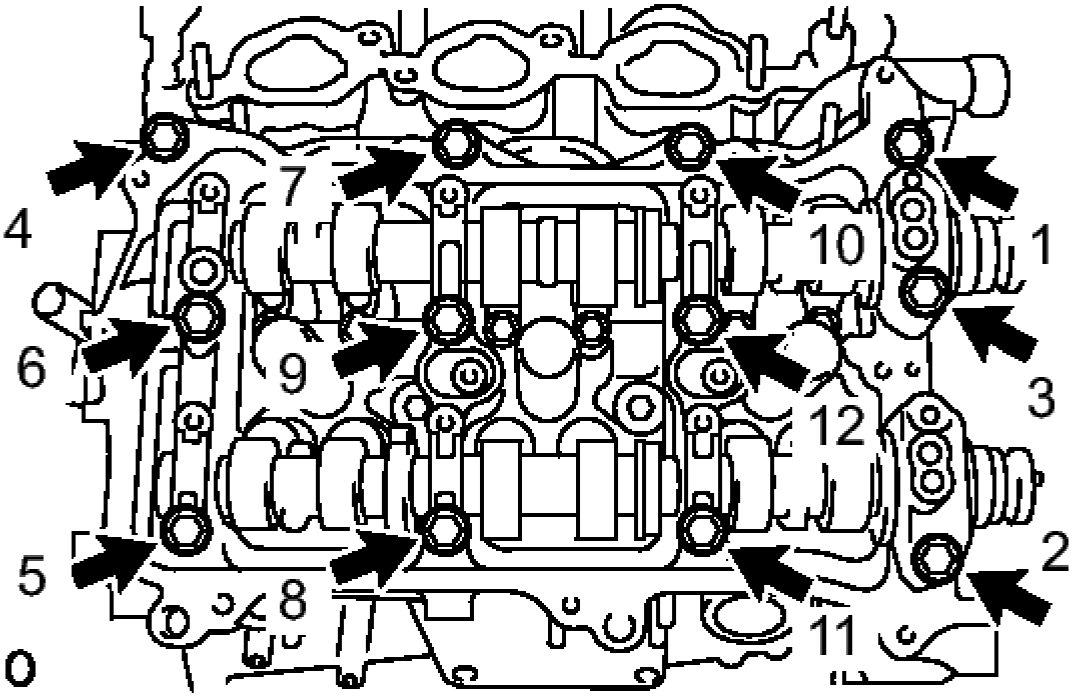
4
7
10
1
6
9
3
12
5
8
11
2
o

Fig. 24: Identifying Bearing Cap Bolts

Courtesy of TOYOTA MOTOR SALES, U.S.A., INC.

NOTE: Uniformly loosen the bolts while keeping the camshaft level.

d. Remove the 5 camshaft bearing caps.

43. **REMOVE CAMSHAFT**
    a. Remove the camshaft.
44. **REMOVE NO. 2 CAMSHAFT**
    a. Remove the No. 2 camshaft.
45. **REMOVE CAMSHAFT HOUSING SUB-ASSEMBLY RH**
    a. Remove the camshaft housing sub-assembly RH by prying between the cylinder head and camshaft housing sub-assembly RH with a screwdriver.

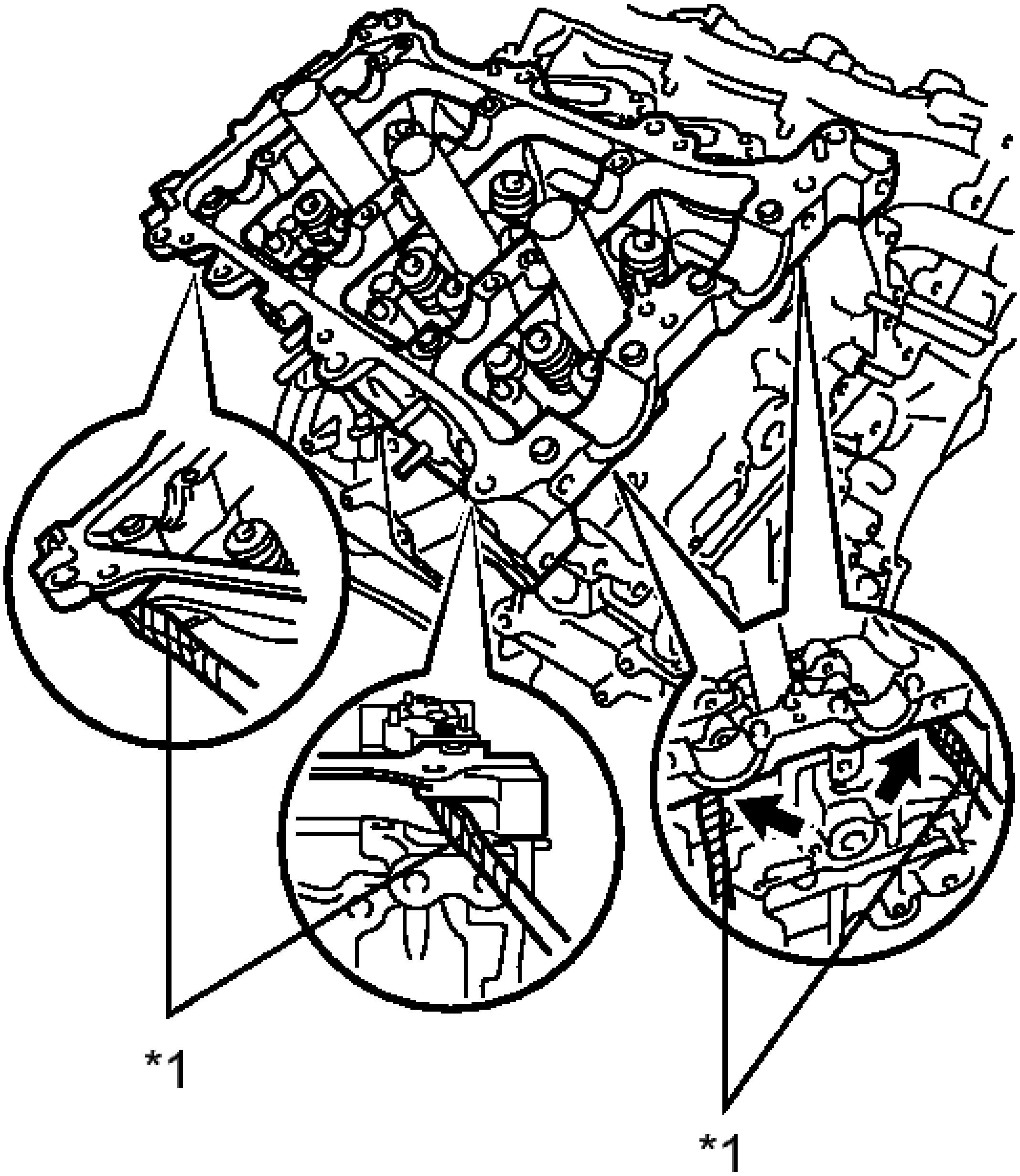

o

Fig. 25: Identifying Camshaft Housing Sub-Assembly RH
Courtesy of TOYOTA MOTOR SALES, U.S.A., INC.

TEXT IN ILLUSTRATION

	Protective

*1	Tape

NOTE: **Be careful not to damage the contact surfaces of the cylinder head and camshaft housing sub-assembly RH.**

HINT:

Tape the screwdriver tip before use.

46. **REMOVE CAMSHAFT TIMING GEARS AND NO. 2 CHAIN (for Bank 2)**
    a. While pushing down the No. 3 chain tensioner assembly, insert a pin of 1.0 mm (0.0394 in.) diameter into the hole to hold the No. 3 chain tensioner assembly.

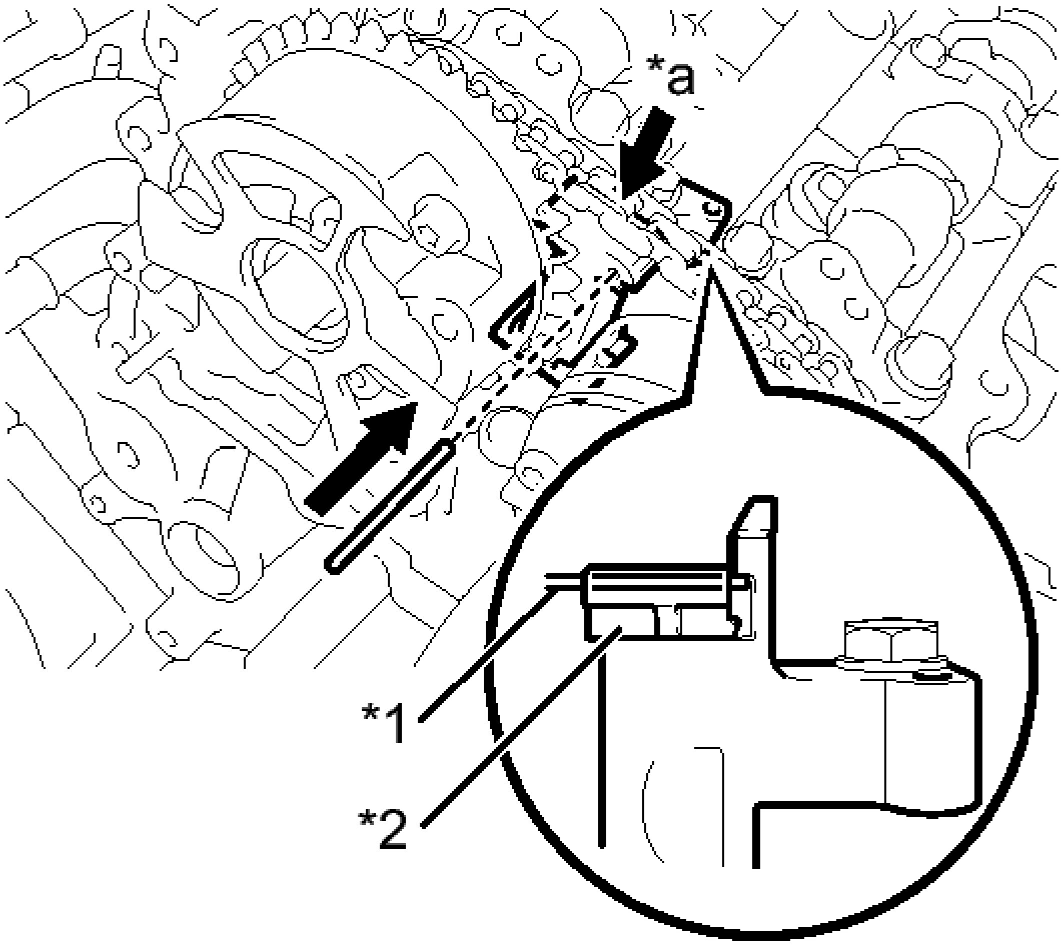

P

Fig. 26: Pushing Down No. 3 Chain Tensioner & Inserting Pin
Courtesy of TOYOTA MOTOR SALES, U.S.A., INC.

TEXT IN ILLUSTRATION

*1	Pin
*2	Plunger
*a	Push

b. Using SST to hold the hexagonal portion of each camshaft, loosen the flange bolts of the camshaft timing gear assembly and the camshaft timing exhaust gear assembly.

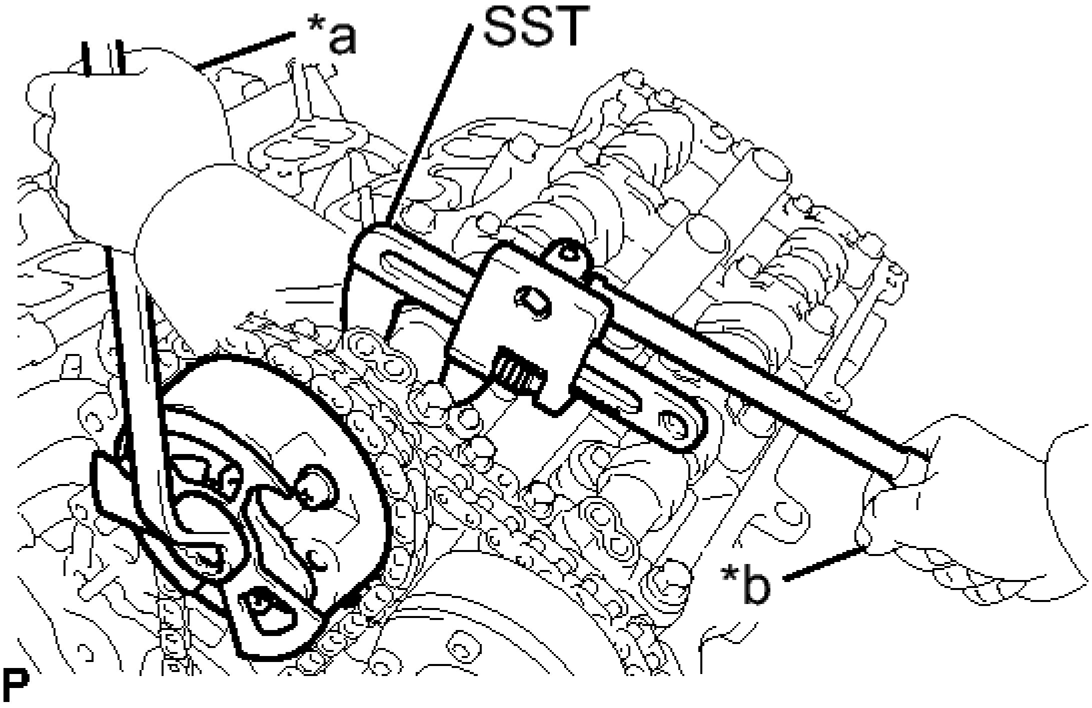

Fig. 27: Removing/Installing Camshaft Timing Gear & Exhaust Gear Assembly Flange Bolts Using SST LH
Courtesy of TOYOTA MOTOR SALES, U.S.A., INC.

TEXT IN ILLUSTRATION

*a	Turn
*b	Hold

- **SST: 09922-10010**

NOTE:

- **Be careful not to damage the cylinder head with SST.**
- **Do not loosen the other bolts. If any of the bolts is loosened, replace the camshaft timing gear assembly and/or the camshaft timing exhaust gear assembly with a new one.**

c. Remove the 2 bolts and the camshaft timing gear together with the No. 2 chain.

47. **REMOVE NO. 3 CHAIN TENSIONER ASSEMBLY**

a. Remove the bolt and No. 3 chain tensioner assembly.

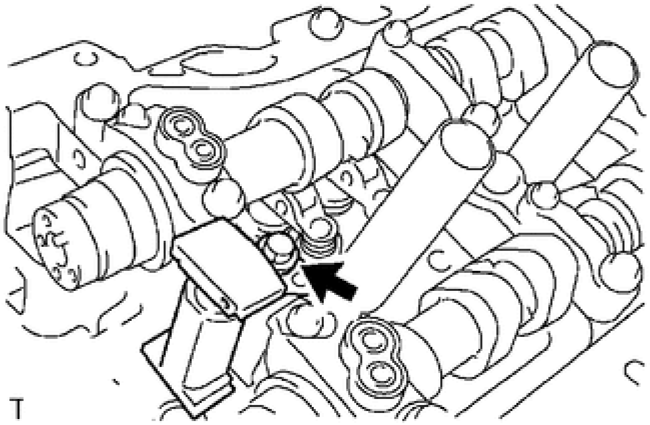

Fig. 28: Identifying No. 3 Chain Tensioner Bolt
Courtesy of TOYOTA MOTOR SALES, U.S.A., INC.

48. **REMOVE CAMSHAFT BEARING CAP (for Bank 2)**
    a. Check that the camshafts are positioned as shown in the illustration.

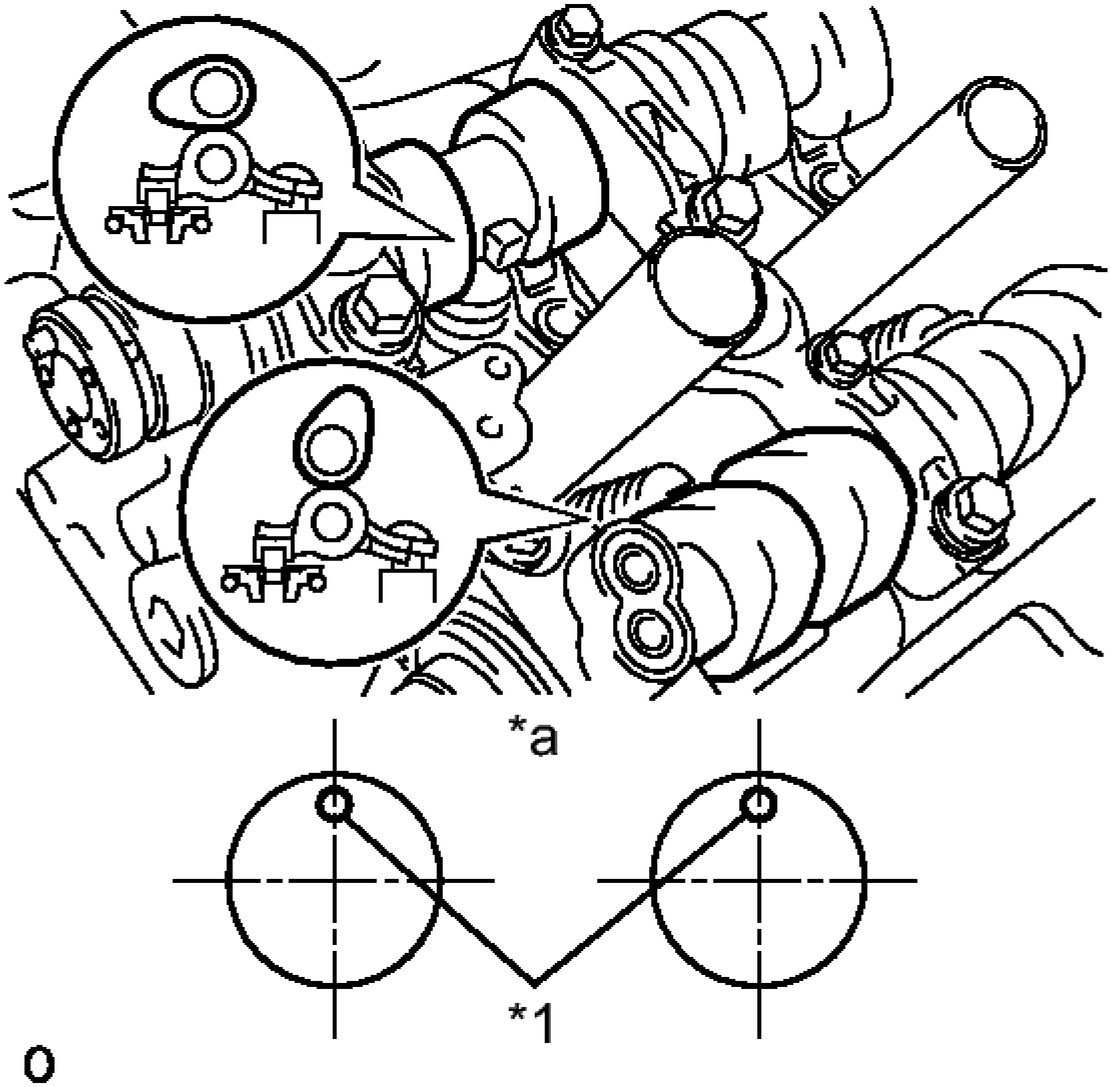

Fig. 29: Identifying Camshaft Position (For Bank 2)
Courtesy of TOYOTA MOTOR SALES, U.S.A., INC.

TEXT IN ILLUSTRATION

*1	Knock Pin
*a	Front View

b. Uniformly loosen and remove the 8 bearing cap bolts in several steps and in the sequence shown in the illustration.

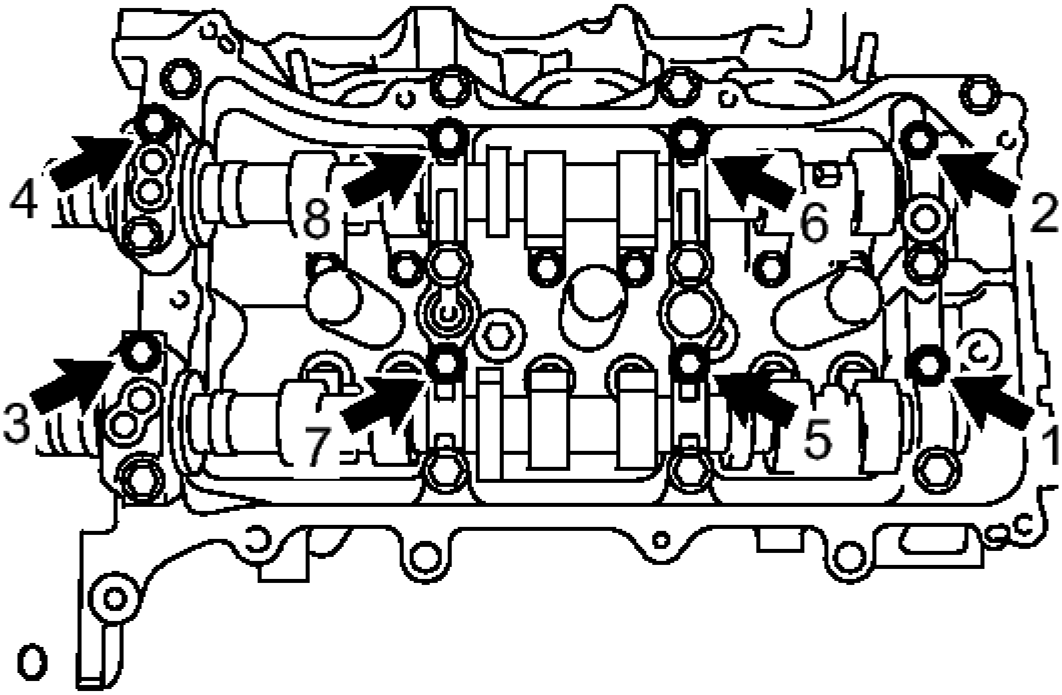

Fig. 30: Identifying Bearing Cap Bolts Loosening Sequence
Courtesy of TOYOTA MOTOR SALES, U.S.A., INC.

c. Uniformly loosen and remove the 13 bearing cap bolts in several steps and in the sequence shown in the illustration.

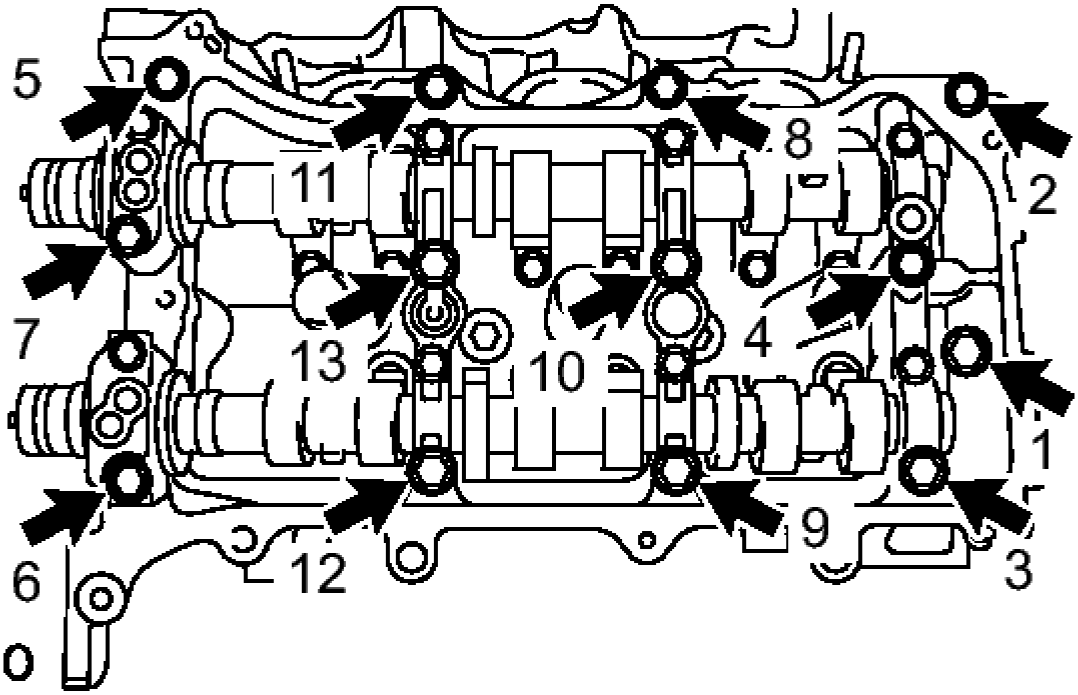
5
8
11
2
7
13
10
4
1
6
12
9
3
O

Fig. 31: Locating Bearing Cap Bolts In Sequence

Courtesy of TOYOTA MOTOR SALES, U.S.A., INC.

NOTE: Uniformly loosen the bolts while keeping the camshaft level.

d. Remove the 5 camshaft bearing caps.

49. **REMOVE NO. 3 CAMSHAFT**

    a. Remove the No. 3 camshaft.

50. **REMOVE NO. 4 CAMSHAFT**

    a. Remove the No. 4 camshaft.

51. **REMOVE CAMSHAFT HOUSING SUB-ASSEMBLY LH**

    a. Remove the camshaft housing sub-assembly LH by prying between the cylinder head and camshaft housing sub-assembly LH with a screwdriver.

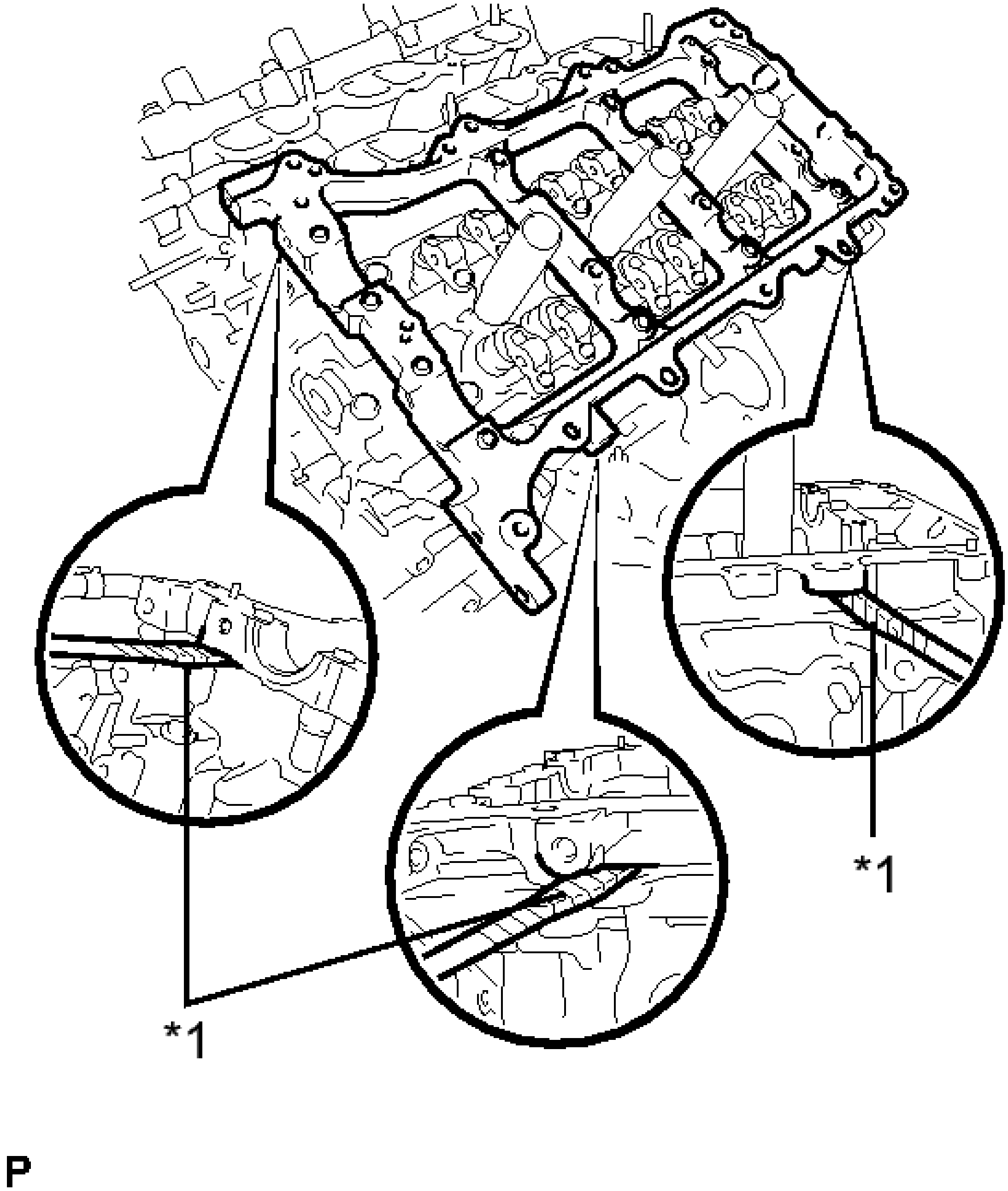

Fig. 32: Identifying Camshaft Housing Sub-Assembly LH
Courtesy of TOYOTA MOTOR SALES, U.S.A., INC.

TEXT IN ILLUSTRATION

	Protective

*1	Tape

NOTE: **Be careful not to damage the contact surfaces of the cylinder head and camshaft housing sub-assembly LH.**

HINT:

Tape the screwdriver tip before use.

INSTALLATION

INSTALLATION

HINT:

Perform "Inspection After Repair" after replacing the camshaft, No. 2 camshaft, No. 3 camshaft, No. 4 camshaft, camshaft timing gear assembly, camshaft timing exhaust gear assembly. Refer to **INITIALIZATION** .

1. **INSTALL NO. 3 CAMSHAFT**
    a. Apply a light coat of engine oil to the No. 3 camshaft journals and camshaft housing sub-assembly LH.

    b. Install the No. 3 camshaft to the camshaft housing sub-assembly LH.

    HINT:

    Perform "Inspection After Repair" after replacing the No. 3 camshaft. Refer to **INITIALIZATION** .

2. **INSTALL NO. 4 CAMSHAFT**
    a. Apply a light coat of engine oil to the No. 4 camshaft journals and camshaft housing sub-assembly LH.

    b. Install the No. 4 camshaft to the camshaft housing sub-assembly LH.

    HINT:

    Perform "Inspection After Repair" after replacing the No. 4 camshaft. Refer to **INITIALIZATION** .

3. **INSTALL CAMSHAFT BEARING CAP (for Bank 2)**
    a. Apply engine oil to the camshaft bearing caps.

    b. Make sure of the marks and numbers on the camshaft bearing caps and place them in each proper position and direction.

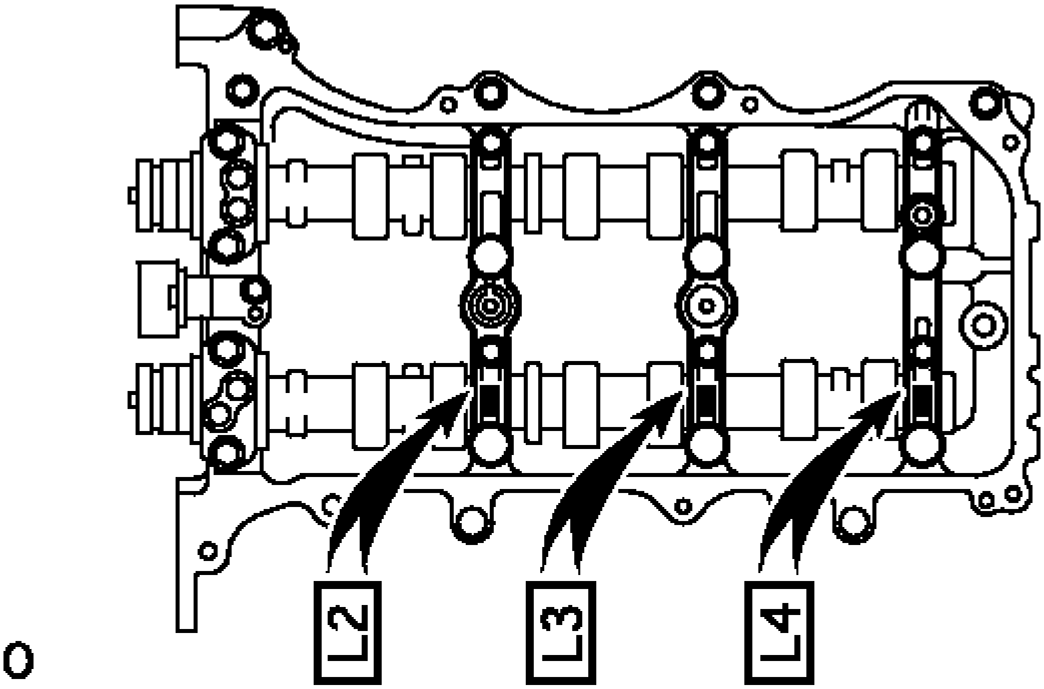

Fig. 33: Identifying Marks And Numbers On Camshaft Bearing Caps
Courtesy of TOYOTA MOTOR SALES, U.S.A., INC.

c. Temporarily tighten the 8 bolts in the order shown in the illustration.

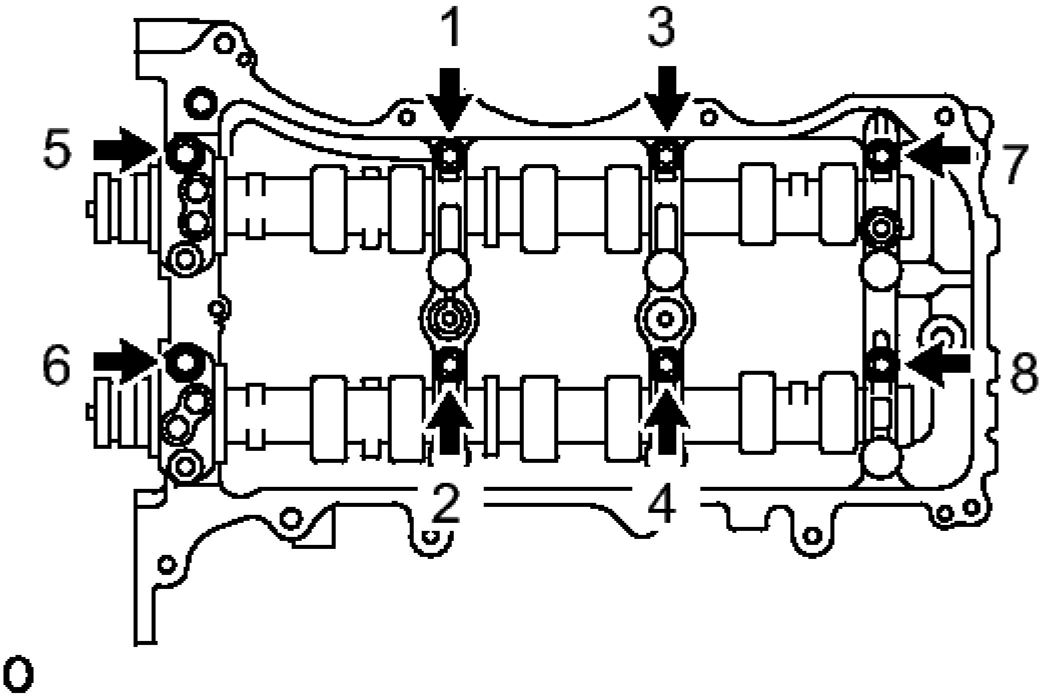

Fig. 34: Tightening Bolts In Sequence
Courtesy of TOYOTA MOTOR SALES, U.S.A., INC.

Torque: 10 N*m (102 kgf*cm, 7 ft.*lbf)

4. **INSTALL CAMSHAFT HOUSING SUB-ASSEMBLY LH**
    a. Make sure that the valve rocker arm is installed as shown in the illustration.

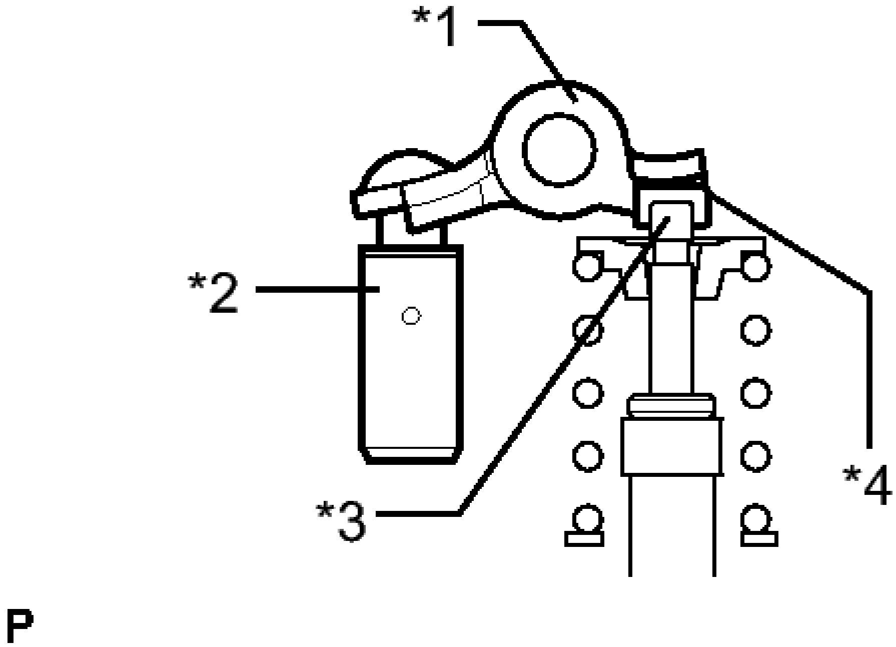

Fig. 35: Identifying Valve Rocker Arm
Courtesy of TOYOTA MOTOR SALES, U.S.A., INC.

TEXT IN ILLUSTRATION

*1	Valve Rocker Arm
*2	Lash Adjuster
*3	Valve Stem
*4	Valve Stem Cap

    b. Apply seal packing in a continuous line as shown in the illustration.

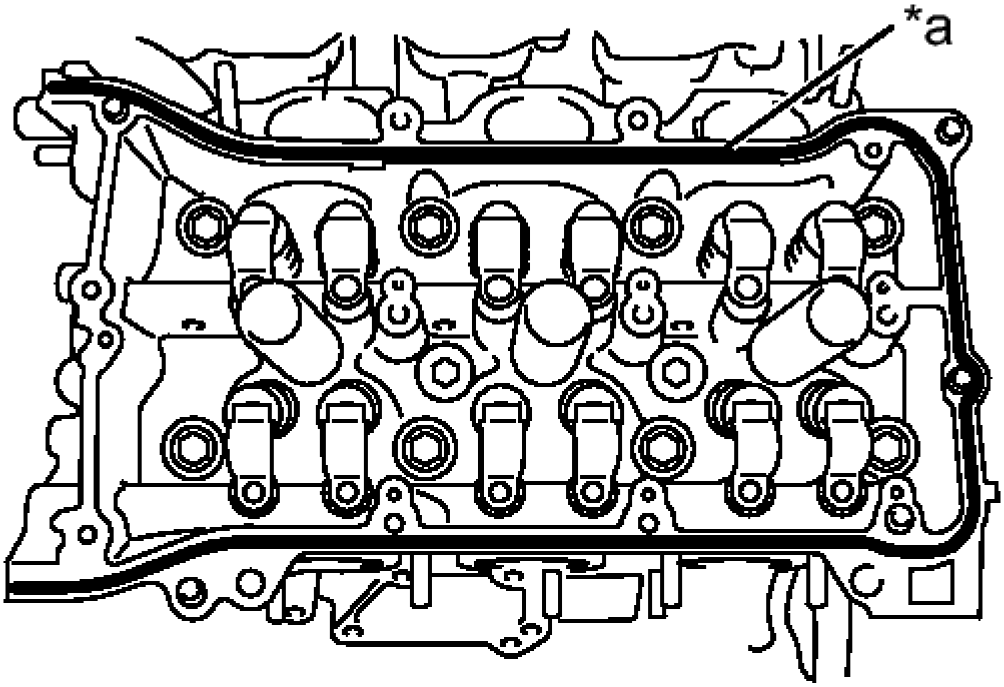

Fig. 36: Identifying Camshaft Housing Sub-Assembly Seal Packing Applying Area
Courtesy of TOYOTA MOTOR SALES, U.S.A., INC.

TEXT IN ILLUSTRATION

*a	Seal packing diameter (3.5 to 4.5 mm)

Seal packing

Toyota Genuine Seal Packing Black, Three Bond 1207B or equivalent

Standard seal diameter

3.5 to 4.5 mm (0.138 to 0.177 in.)

NOTE:

- **Remove any oil from the contact surface.**
- **Install the camshaft housing sub-assembly LH within 3 minutes and tighten the bolts.**
- **Do not start the engine for at least 2 hours after installing.**

c. Install the camshaft housing sub-assembly LH and tighten the 13 bolts in the order shown in the illustration.

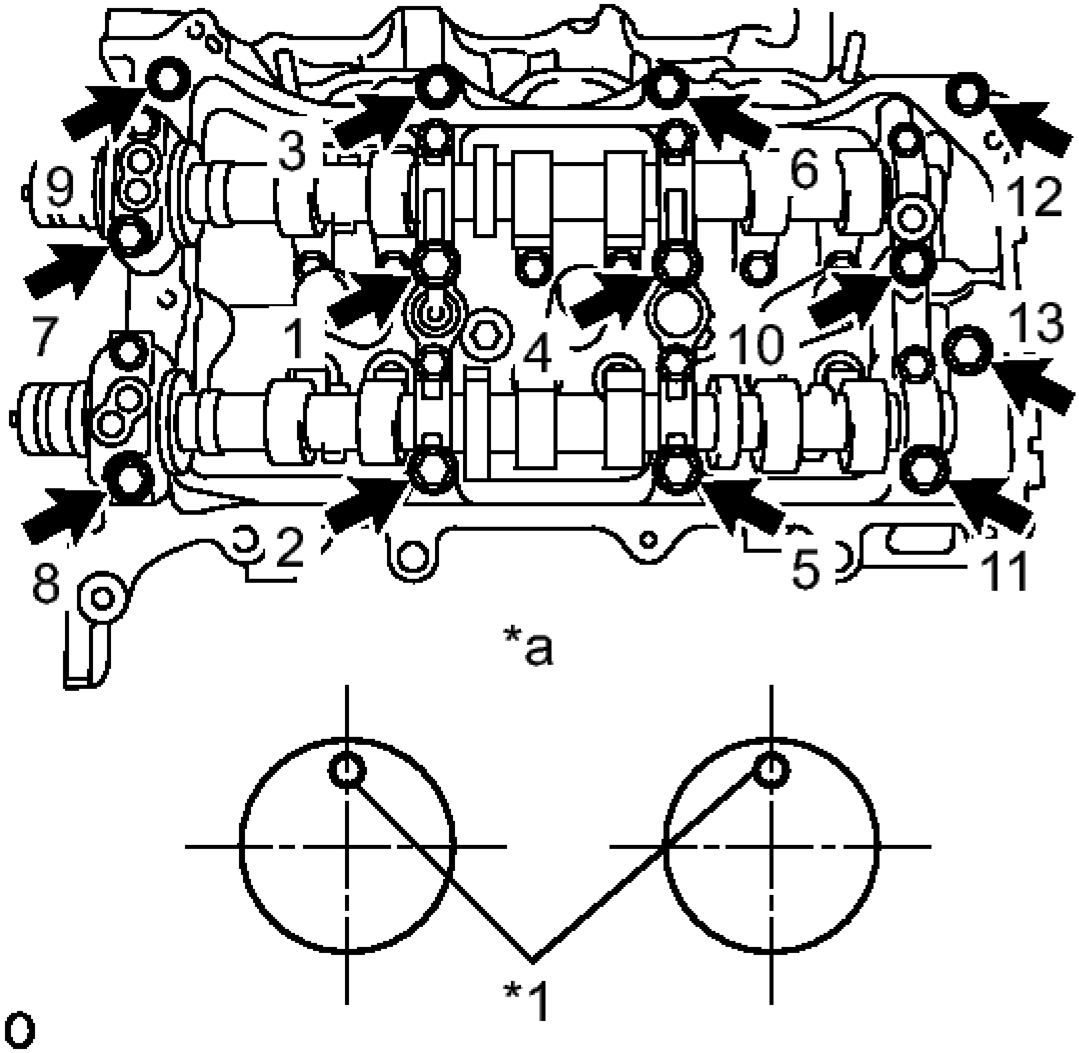

Fig. 37: Identifying 13 LH Camshaft Housing Bolts With Tightening Sequence
Courtesy of TOYOTA MOTOR SALES, U.S.A., INC.

TEXT IN ILLUSTRATION

*1	Knock Pin
*a	Front View

Torque: 28 N*m (286 kgf*cm, 21 ft.*lbf)

NOTE:

- **When installing the camshaft housing sub-assembly LH, it is necessary to correctly position the camshafts as shown in the illustration. Failure to correctly position these parts may result in damage due to contact between the pistons and valves. If a**

camshaft is rotated, valve contact with a piston at TDC will occur.

- **If any of the bolts are loosened during installation, remove the camshaft housing sub-assembly LH, clean the installation surfaces, and reapply seal packing.**
- **If the camshaft housing sub-assembly LH is removed because any of the bolts are loosened during installation, make sure that the previously applied seal packing does not enter any oil passages.**

d. Tighten the 8 bolts in the order shown in the illustration.

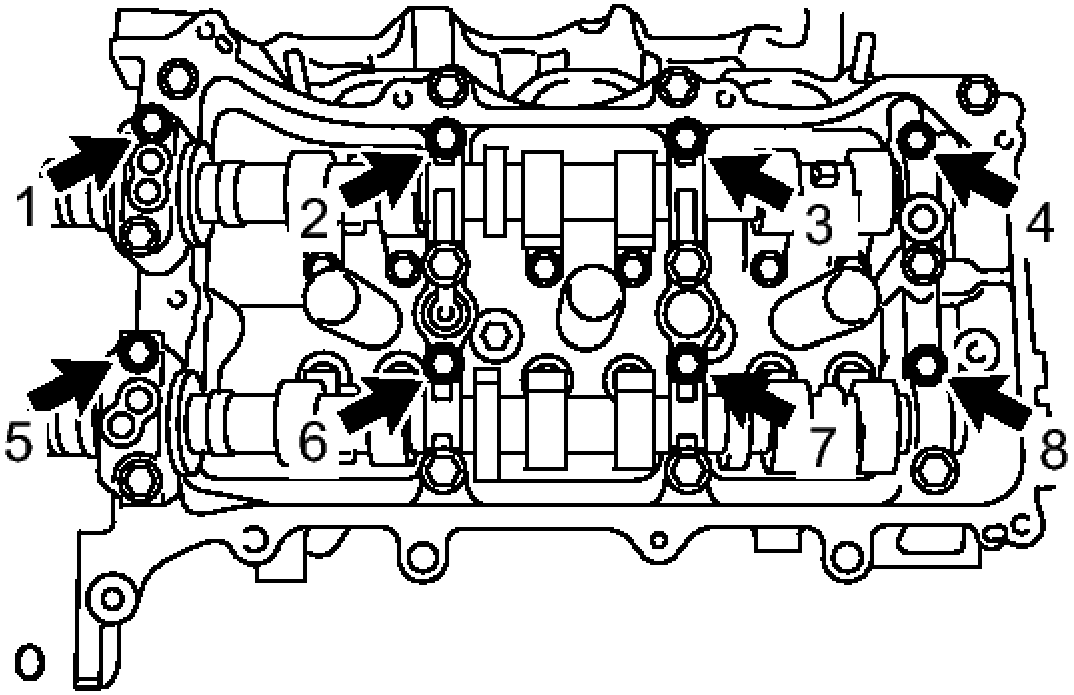

Fig. 38: Locating Bolts
Courtesy of TOYOTA MOTOR SALES, U.S.A., INC.

Torque: 16 N*m (163 kgf*cm, 12 ft.*lbf)

5. **INSTALL CAMSHAFT**
   a. Apply a light coat of engine oil to the camshaft journals and camshaft housing sub-assembly RH.
   b. Install the camshaft to the camshaft housing sub-assembly RH.

HINT:

Perform "Inspection After Repair" after replacing the camshaft. Refer to **INITIALIZATION** .

6. **INSTALL NO. 2 CAMSHAFT**

a. Apply a light coat of engine oil to the No. 2 camshaft journals and camshaft housing sub-assembly RH.

b. Install the No. 2 camshaft to the camshaft housing sub-assembly RH.

   HINT:

   Perform "Inspection After Repair" after replacing the No. 2 camshaft. Refer to **INITIALIZATION** .

7. **INSTALL CAMSHAFT BEARING CAP (for Bank 1)**

   a. Apply engine oil to the camshaft bearing caps.

   b. Make sure of the marks and numbers on the camshaft bearing caps and place them in each proper position and direction.

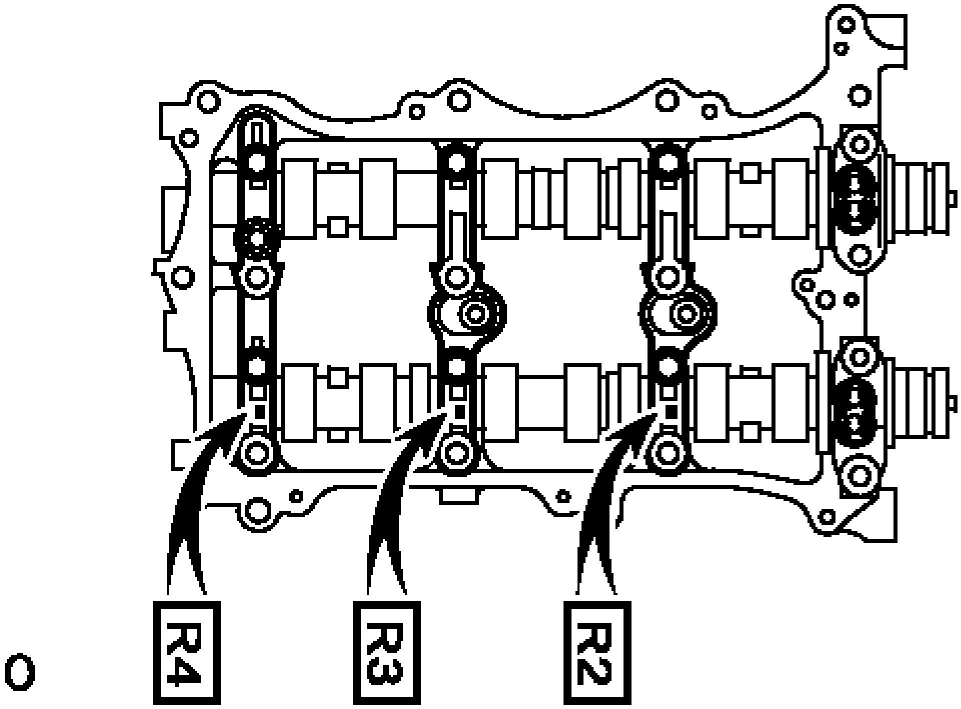

Fig. 39: Identifying Marks And Numbers On Camshaft Bearing Caps
Courtesy of TOYOTA MOTOR SALES, U.S.A., INC.

   c. Temporarily tighten the 8 bearing cap bolts in the order shown in the illustration.

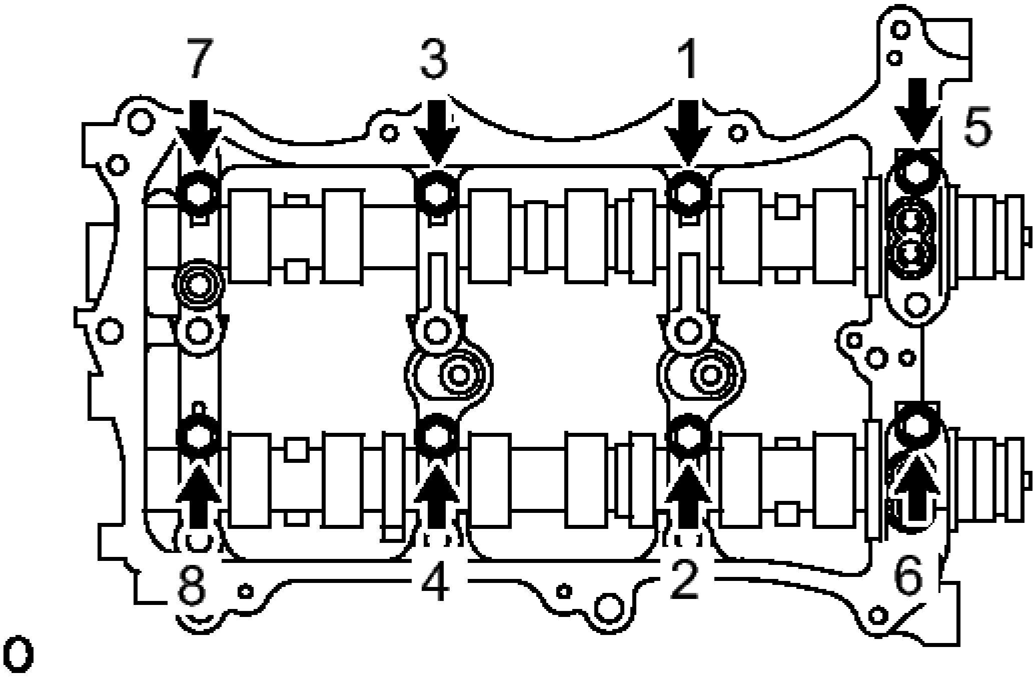

Fig. 40: Tightening Bolts In Sequence
Courtesy of TOYOTA MOTOR SALES, U.S.A., INC.

Torque: 10 N*m (102 kgf*cm, 7 ft.*lbf)

8. **INSTALL CAMSHAFT HOUSING SUB-ASSEMBLY RH**
   a. Make sure that the No. 1 valve rocker arm sub-assembly is installed as shown in the illustration.

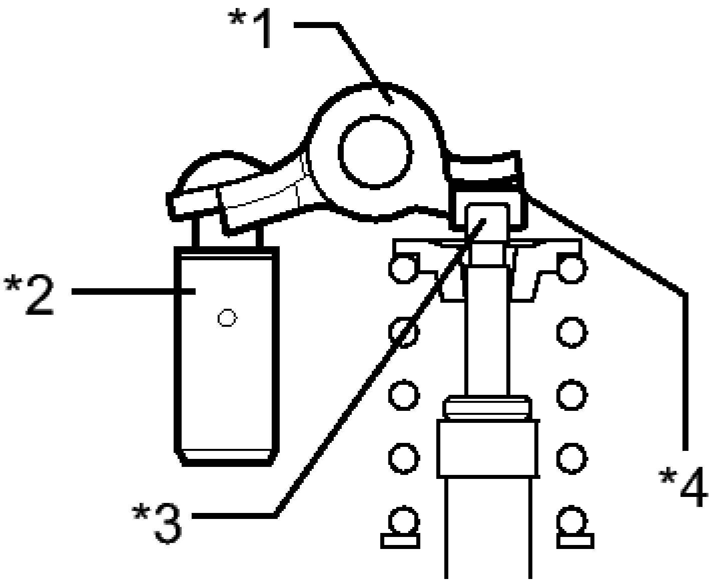

P

Fig. 41: Identifying Valve Rocker Arm
Courtesy of TOYOTA MOTOR SALES, U.S.A., INC.

TEXT IN ILLUSTRATION

*1	Valve Rocker Arm
*2	Lash Adjuster
*3	Valve Stem
*4	Valve Stem Cap

b. Apply seal packing in a continuous line as shown in the illustration.

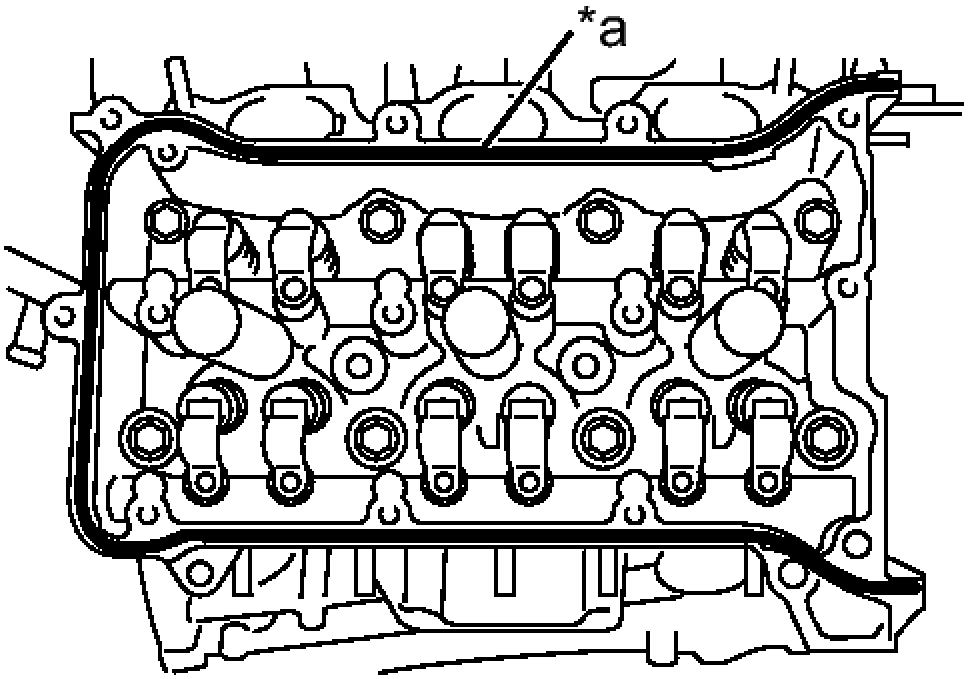

Fig. 42: Identifying Camshaft Housing Seal Packing Applying Area
Courtesy of TOYOTA MOTOR SALES, U.S.A., INC.

TEXT IN ILLUSTRATION

*a	Seal packing diameter (3.5 to 4.5 mm)

Seal packing

Toyota Genuine Seal Packing Black, Three Bond 1207B or equivalent

Standard seal diameter

3.5 to 4.5 mm (0.138 to 0.177 in.)

NOTE:

- **Remove any oil from the contact surface.**
- **Install the camshaft housing sub-assembly RH within 3 minutes and tighten the bolts.**
- **Do not start the engine for at least 2 hours after installing.**

c. Install the camshaft housing sub-assembly RH and tighten the 12 bolts in the order shown in the illustration.

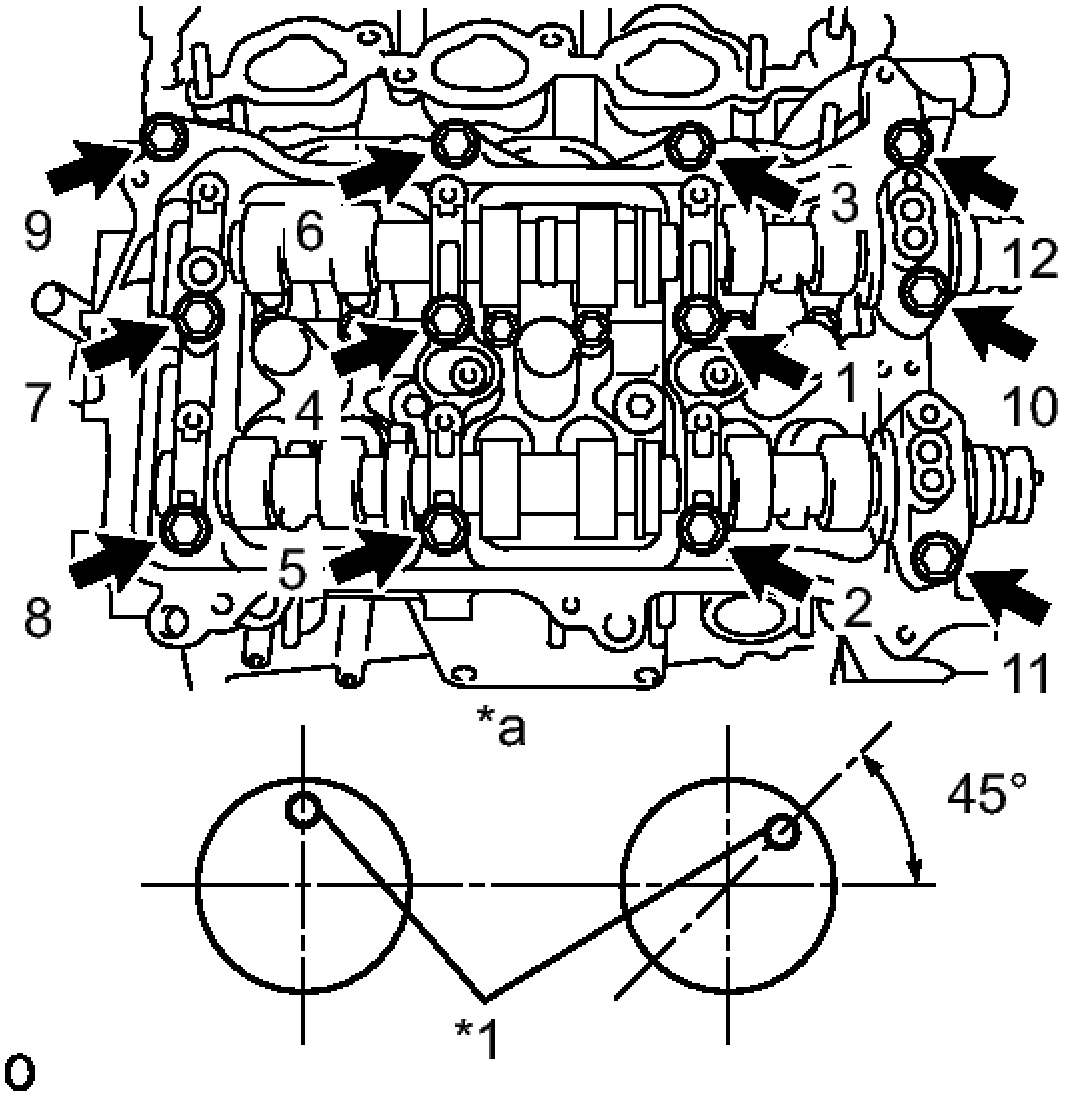

Fig. 43: Identifying Camshaft Housing Bolts With Tightening Sequence RH
Courtesy of TOYOTA MOTOR SALES, U.S.A., INC.

TEXT IN ILLUSTRATION

*1	Knock Pin
*a	Front View

Torque: 28 N*m (286 kgf*cm, 21 ft.*lbf)

NOTE:	- **When installing the camshaft housing RH, it is necessary to correctly position the camshafts as shown in the illustration.** **Failure to correctly position these parts may result in damage**

due to contact between the pistons and valves. If a camshaft is rotated, valve contact with a piston at TDC will occur.

- **If any of the bolts are loosened during installation, remove the camshaft housing sub-assembly RH, clean the installation surfaces, and reapply seal packing.**
- **If the camshaft housing sub-assembly RH is removed because any of the bolts are loosened during installation, make sure that the previously applied seal packing does not enter any oil passages.**

d. Tighten the 8 bolts in the order shown in the illustration.

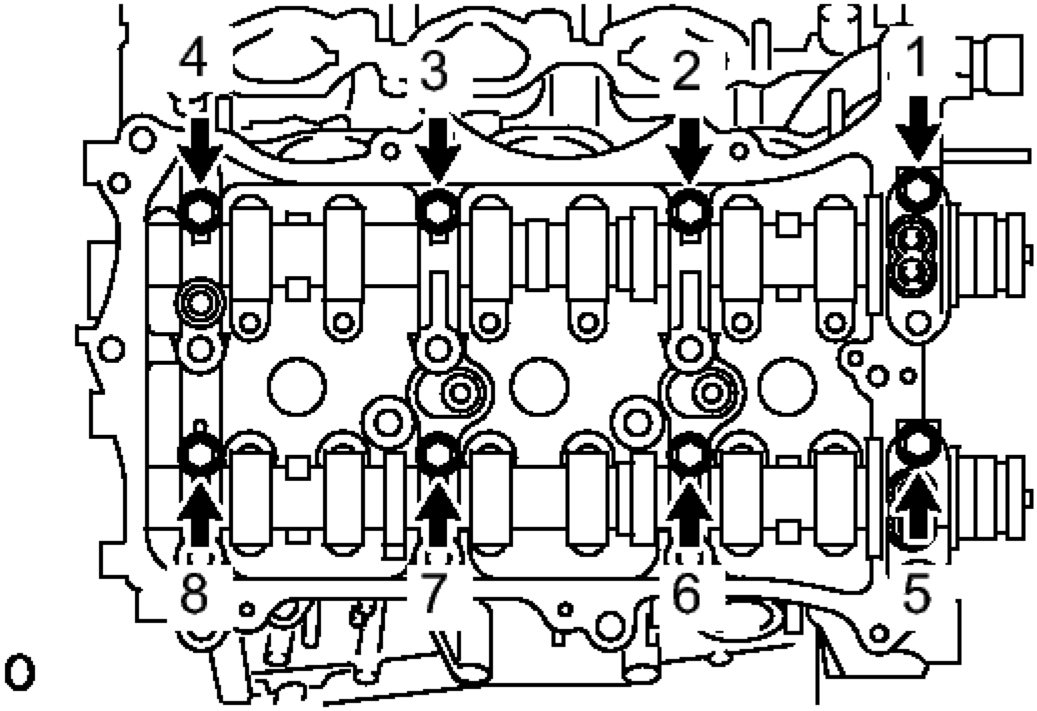

Fig. 44: Tightening Bolts In Sequence
Courtesy of TOYOTA MOTOR SALES, U.S.A., INC.

Torque: 16 N*m (163 kgf*cm, 12 ft.*lbf)

9. **INSTALL NO. 3 CHAIN TENSIONER ASSEMBLY**
   a. Install the No. 3 chain tensioner assembly with the bolt.

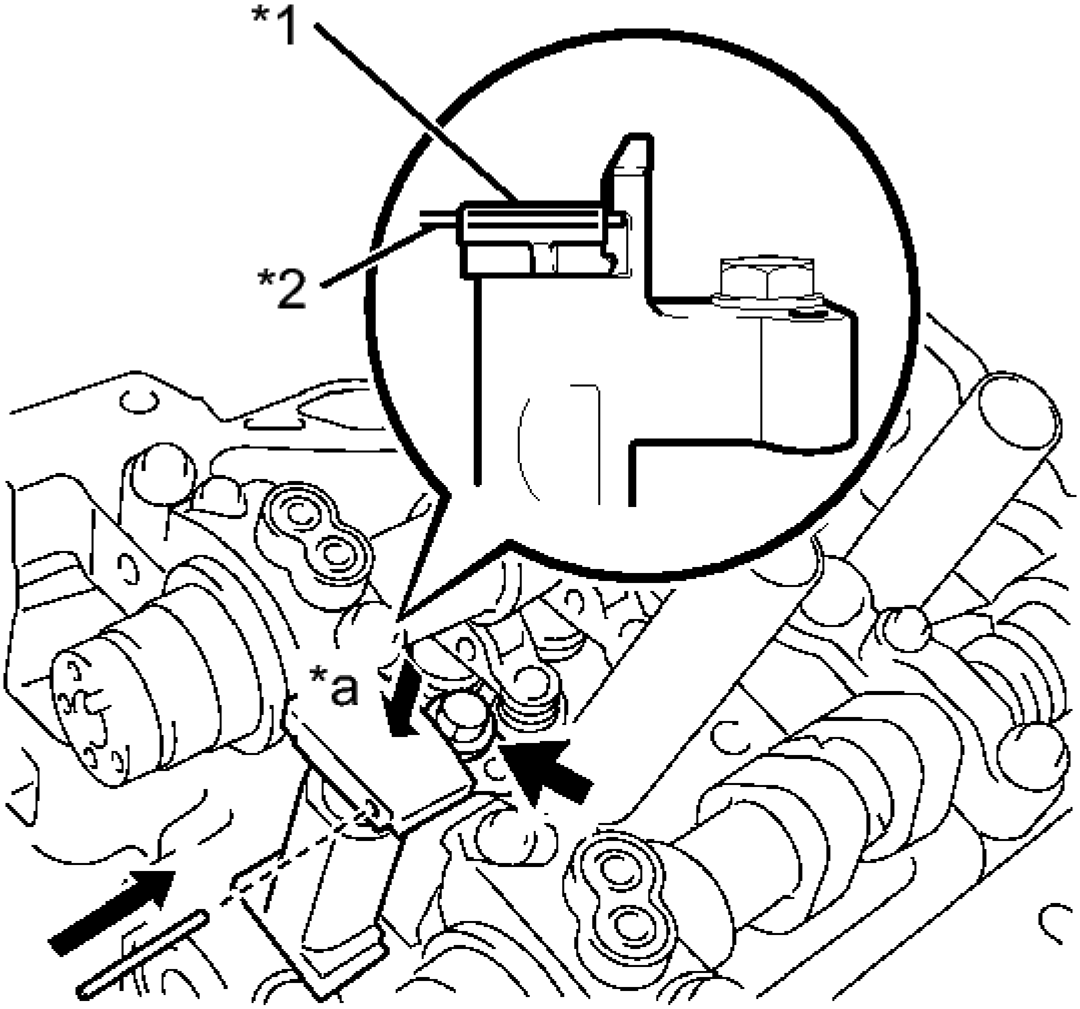

Fig. 45: Identifying No. 3 Chain Tensioner Assembly
Courtesy of TOYOTA MOTOR SALES, U.S.A., INC.

TEXT IN ILLUSTRATION

*1	Plunger
*2	Pin
*a	Push

Torque: 21 N*m (214 kgf*cm, 15 ft.*lbf)

b. While pushing in the tensioner, insert a pin of 1.0 mm (0.0394 in.) diameter into the hole to hold it.

10. **INSTALL CAMSHAFT TIMING GEARS AND NO. 2 CHAIN (for Bank 2)**

    a. Align the mark plates (yellow) with the timing marks of the camshaft timing gear assemblies as shown in the illustration.

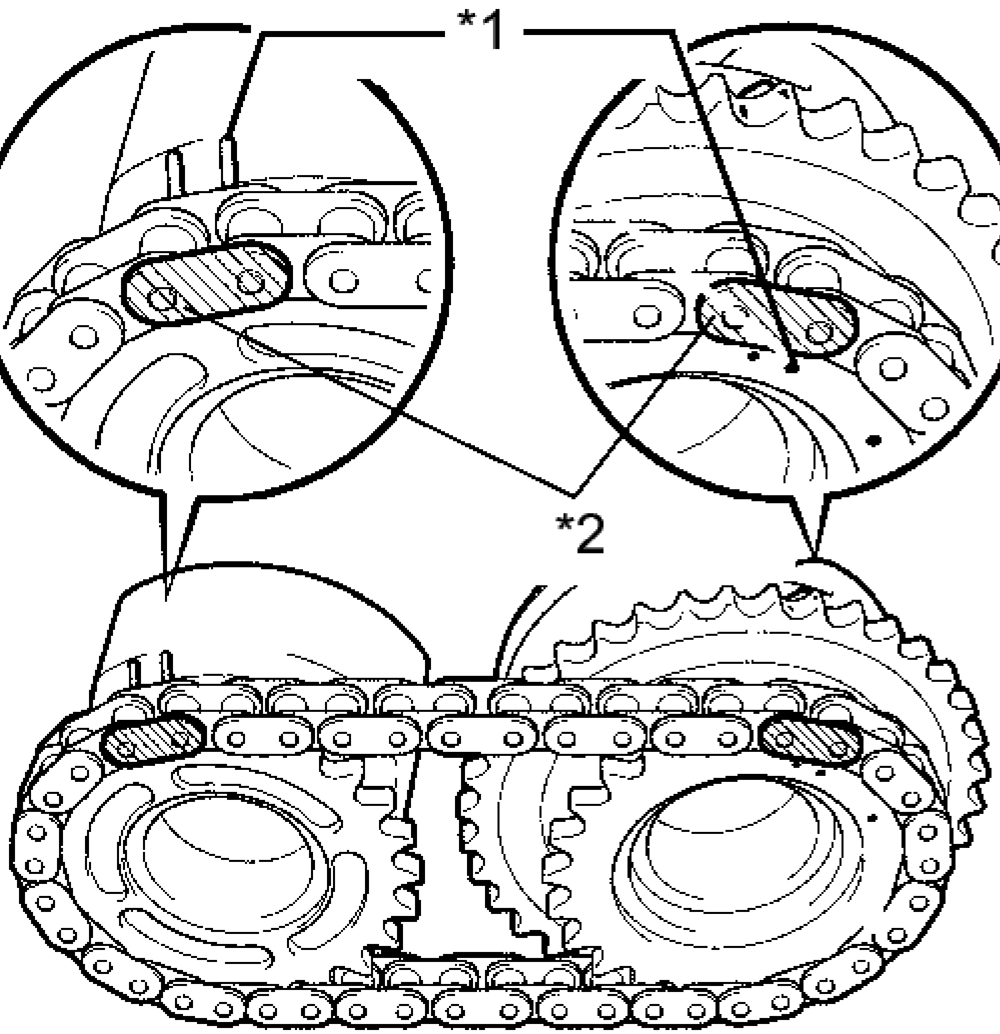

Fig. 46: Identifying Timing Marks Of Camshaft Timing Gears And No. 2 Chain (For Bank 2)
Courtesy of TOYOTA MOTOR SALES, U.S.A., INC.

TEXT IN ILLUSTRATION

*1	Timing Mark
*2	Mark Plate

b. Apply a light coat of engine oil to the bolt threads and bolt-seating surface.
c. Align the knock pin of the camshaft with the pin hole of the camshaft timing gear assembly. Install the camshaft timing gear assembly and camshaft timing exhaust gear assembly with the No. 2 chain sub-assembly installed.

d. Using SST to hold the hexagonal portion of each camshaft, tighten the flange bolts of the camshaft timing gear assembly and the camshaft timing exhaust gear assembly.

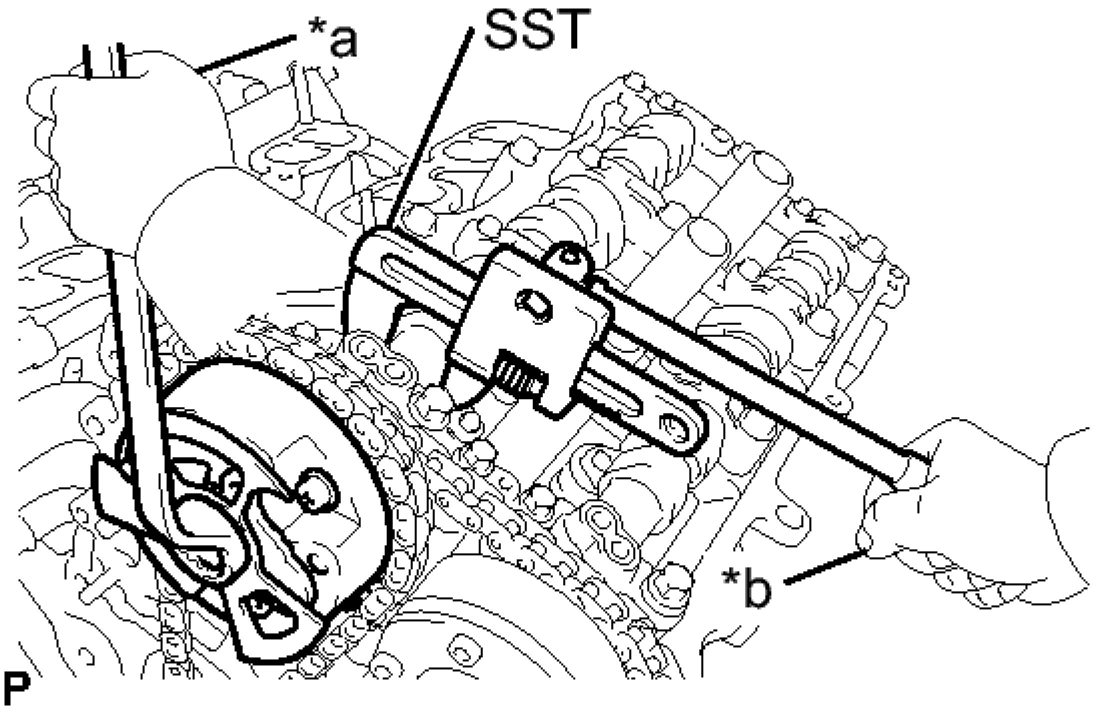

Fig. 47: Removing/Installing Camshaft Timing Gear & Exhaust Gear Assembly Flange Bolts Using SST LH
Courtesy of TOYOTA MOTOR SALES, U.S.A., INC.

TEXT IN ILLUSTRATION

*a	Turn
*b	Hold

- **SST: 09922-10010**

Torque: 100 N*m (1020 kgf*cm, 74 ft.*lbf)

e. Remove the pin from the No. 3 chain tensioner assembly.

HINT:

Perform "Inspection After Repair" after replacing the camshaft timing gear assembly or camshaft timing exhaust gear assembly. Refer to **INITIALIZATION** .

11. **INSTALL NO. 2 CHAIN TENSIONER ASSEMBLY**

a. Install the No. 2 chain tensioner assembly with the bolt.

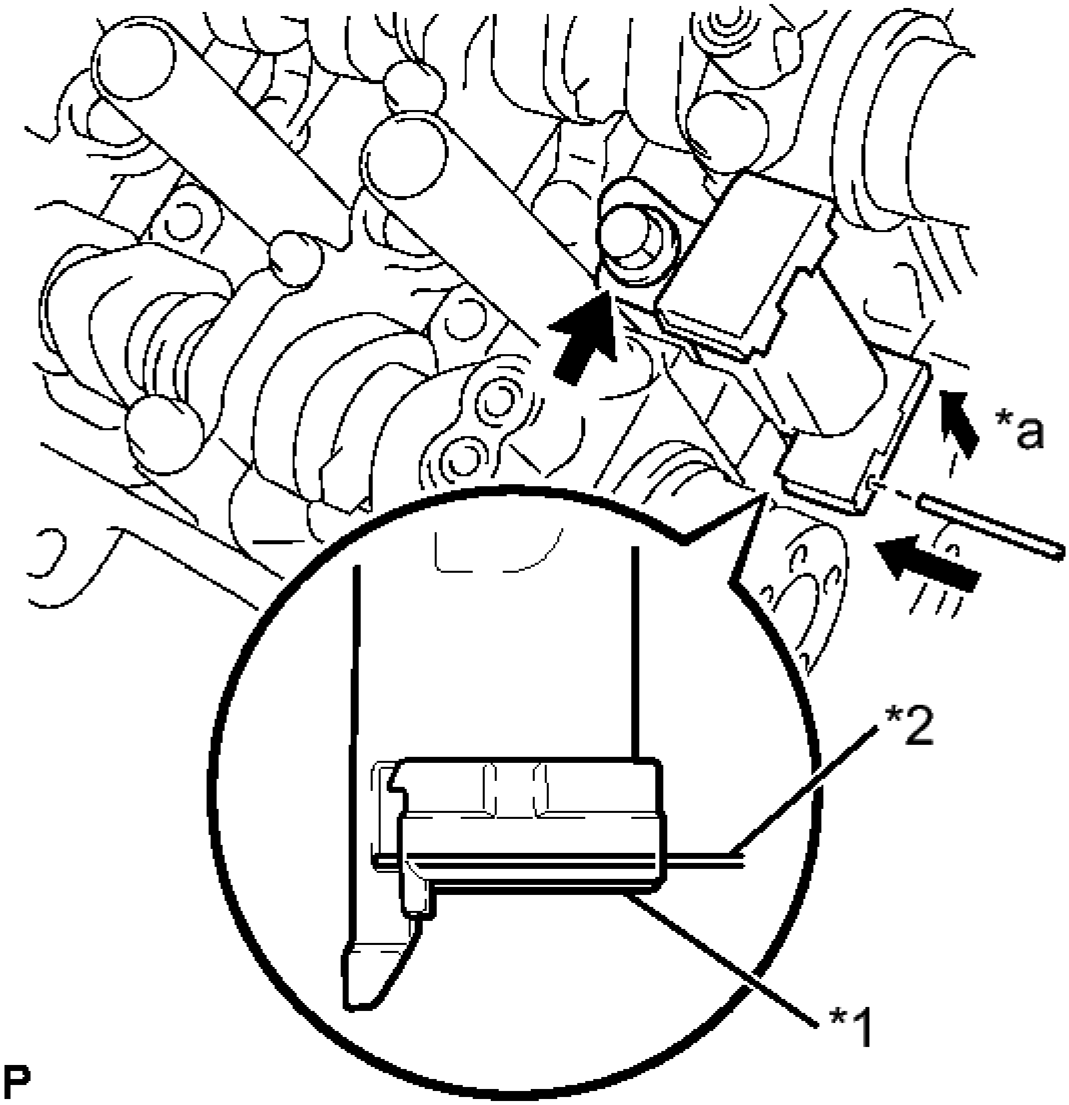

Fig. 48: Identifying No. 2 Chain Tensioner Assembly
Courtesy of TOYOTA MOTOR SALES, U.S.A., INC.

TEXT IN ILLUSTRATION

*1	Plunger
*2	Pin
*a	Push

Torque: 21 N*m (214 kgf*cm, 15 ft.*lbf)

b. While pushing in the No. 2 chain tensioner assembly, insert a pin of 1.0 mm (0.0394 in.) diameter into the hole to hold it.

12. **INSTALL CAMSHAFT TIMING GEARS AND NO. 2 CHAIN (for Bank 1)**

a. Align the mark plates (yellow) with the timing marks of the camshaft timing gear assemblies as shown in the illustration.

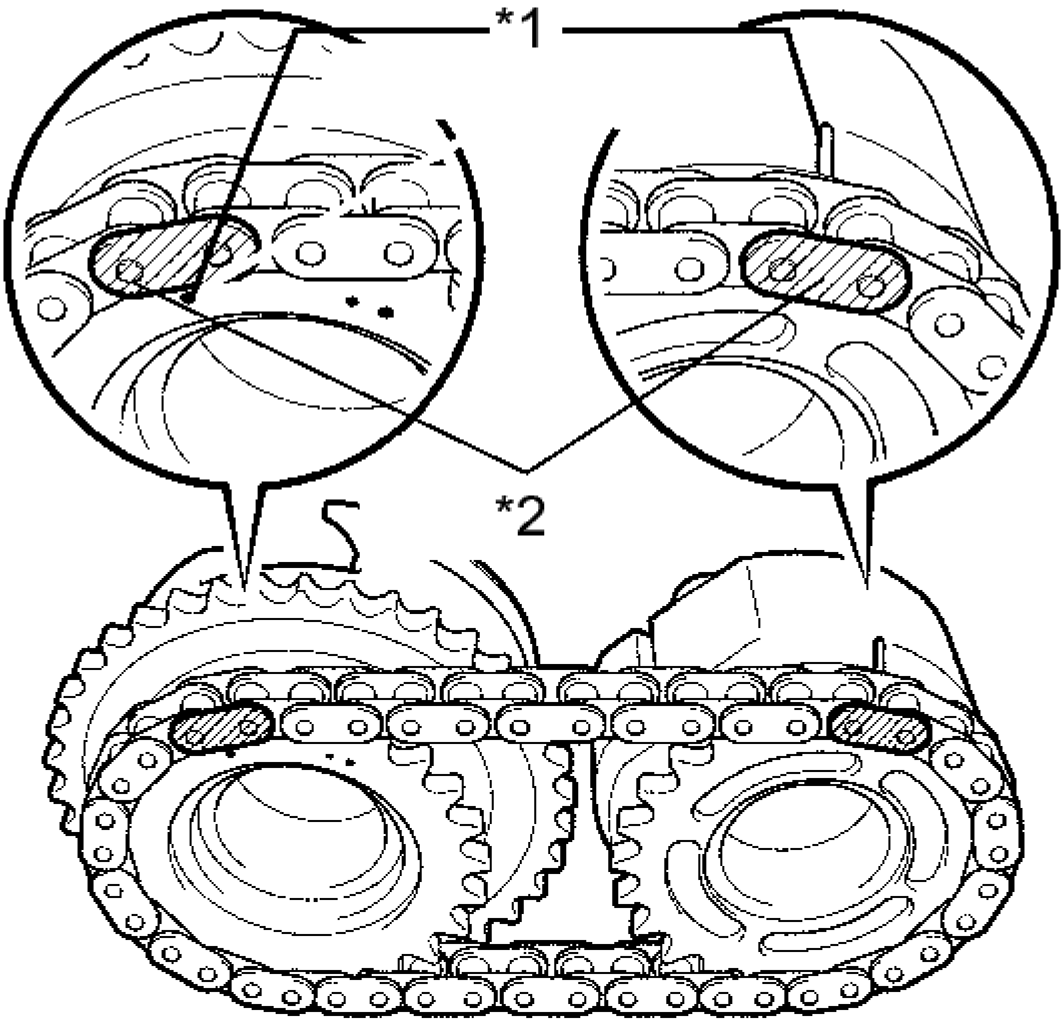

Fig. 49: Identifying Camshaft Timing Gears And No 2 Chain (Bank 1)
Courtesy of TOYOTA MOTOR SALES, U.S.A., INC.

TEXT IN ILLUSTRATION

*1	Timing Mark
*2	Mark Plate

b. Apply a light coat of engine oil to the bolt threads and bolt-seating surface.
c. Align the knock pin of the camshaft with the pin hole of the camshaft timing gear assembly. Install the camshaft timing gear assembly and camshaft timing exhaust gear assembly with the No. 2 chain sub-assembly installed.
d. Using SST to hold the hexagonal portion of each camshaft, tighten the flange bolts of the camshaft timing gear assembly and the camshaft timing exhaust gear assembly.

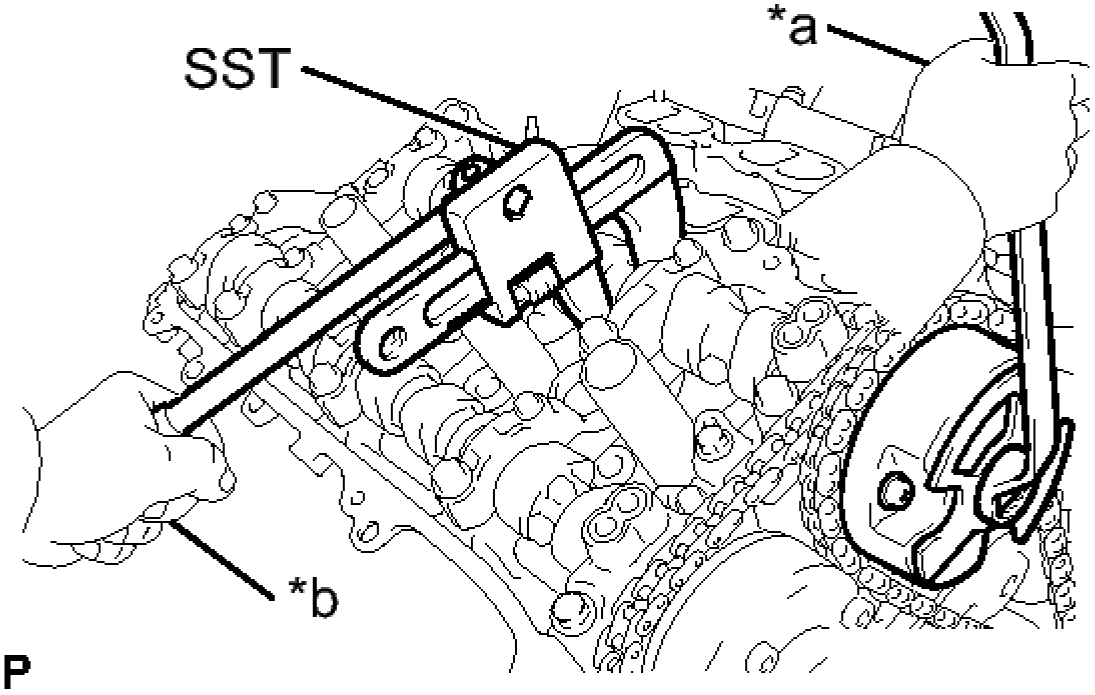

Fig. 50: Removing/Installing Camshaft Timing Gear & Exhaust Gear Assembly Flange Bolts Using SST RH
Courtesy of TOYOTA MOTOR SALES, U.S.A., INC.

TEXT IN ILLUSTRATION

*a	Turn
*b	Hold

- **SST: 09922-10010**

Torque: 100 N*m (1020 kgf*cm, 74 ft.*lbf)

e. Remove the pin from the No. 2 chain tensioner assembly.

HINT:

Perform "Inspection After Repair" after replacing the camshaft timing gear assembly or camshaft timing exhaust gear assembly. Refer to **INITIALIZATION** .

13. **INSTALL IDLE SPROCKET ASSEMBLY** See step 26
14. **INSTALL CHAIN SUB-ASSEMBLY** See step 27
15. **INSTALL CHAIN TENSIONER SLIPPER** See step 28
16. **INSTALL NO. 1 CHAIN TENSIONER ASSEMBLY** See step 29
17. **INSPECT VALVE TIMING** See step 30
18. **INSTALL TIMING CHAIN CASE OIL SEAL** . Refer to **INSTALLATION - Step 1**

19. **INSTALL TIMING CHAIN COVER SUB-ASSEMBLY** . Refer to **INSTALLATION - Step 2**
20. **INSTALL OIL PAN SUB-ASSEMBLY** See step 37
21. **INSTALL OIL STRAINER SUB-ASSEMBLY** See step 38
22. **INSTALL NO. 2 OIL PAN SUB-ASSEMBLY** See step 39
23. **INSTALL CYLINDER HEAD COVER SUB-ASSEMBLY** See step 41
24. **INSTALL CYLINDER HEAD COVER SUB-ASSEMBLY LH** See step 42
25. **INSTALL WATER INLET HOUSING** . Refer to **INSTALLATION - Step 3**
26. **INSTALL NO. 1 FRONT ENGINE MOUNTING BRACKET LH** See step 35
27. **INSTALL CRANKSHAFT PULLEY** See step 2
28. **INSTALL NO. 1 OIL PIPE** See step 48
29. **INSTALL OIL PIPE** See step 49
30. **INSTALL CRANK POSITION SENSOR** . Refer to **INSTALLATION - Step 1**
31. **INSTALL NO. 1 VACUUM SWITCHING VALVE** See step 5
32. **INSTALL WATER PUMP PULLEY** See step 6
33. **INSTALL NO. 2 IDLER PULLEY SUB-ASSEMBLY** See step 7
34. **INSTALL NO. 2 TIMING GEAR COVER** See step 8
35. **INSTALL ENGINE OIL LEVEL DIPSTICK GUIDE** See step 44
36. **INSTALL V-RIBBED BELT TENSIONER ASSEMBLY** See step 9
37. **INSTALL EXHAUST MANIFOLD SUB-ASSEMBLY LH** See step 10
38. **INSTALL NO. 2 EXHAUST MANIFOLD HEAT INSULATOR** . Refer to **INSTALLATION - Step 3**
39. **INSTALL NO. 2 MANIFOLD STAY** . Refer to **INSTALLATION - Step 2**
40. **INSTALL NO. 2 ENGINE OIL LEVEL DIPSTICK GUIDE** See step 13
41. **INSTALL EXHAUST MANIFOLD SUB-ASSEMBLY RH** See step 14
42. **INSTALL INTAKE MANIFOLD** See step 15
43. **INSTALL NO. 2 ENGINE MOUNTING STAY RH** See step 16
44. **INSTALL IGNITION COIL ASSEMBLY** . Refer to **INSTALLATION - Step 2**
45. **INSTALL THROTTLE BODY BRACKET** See step 19
46. **INSTALL NO. 1 SURGE TANK STAY** See step 18
47. **INSTALL INTAKE AIR SURGE TANK ASSEMBLY** . Refer to **INSTALLATION - Step 6**
48. **INSTALL ENGINE HANGERS** See step 1
49. **REMOVE ENGINE STAND**
50. **INSTALL DRIVE PLATE AND RING GEAR SUB-ASSEMBLY** See step 2
51. **INSTALL AUTOMATIC TRANSAXLE ASSEMBLY**

    Refer to **INSTALLATION**

CYLINDER HEAD GASKET

COMPONENTS

ILLUSTRATION

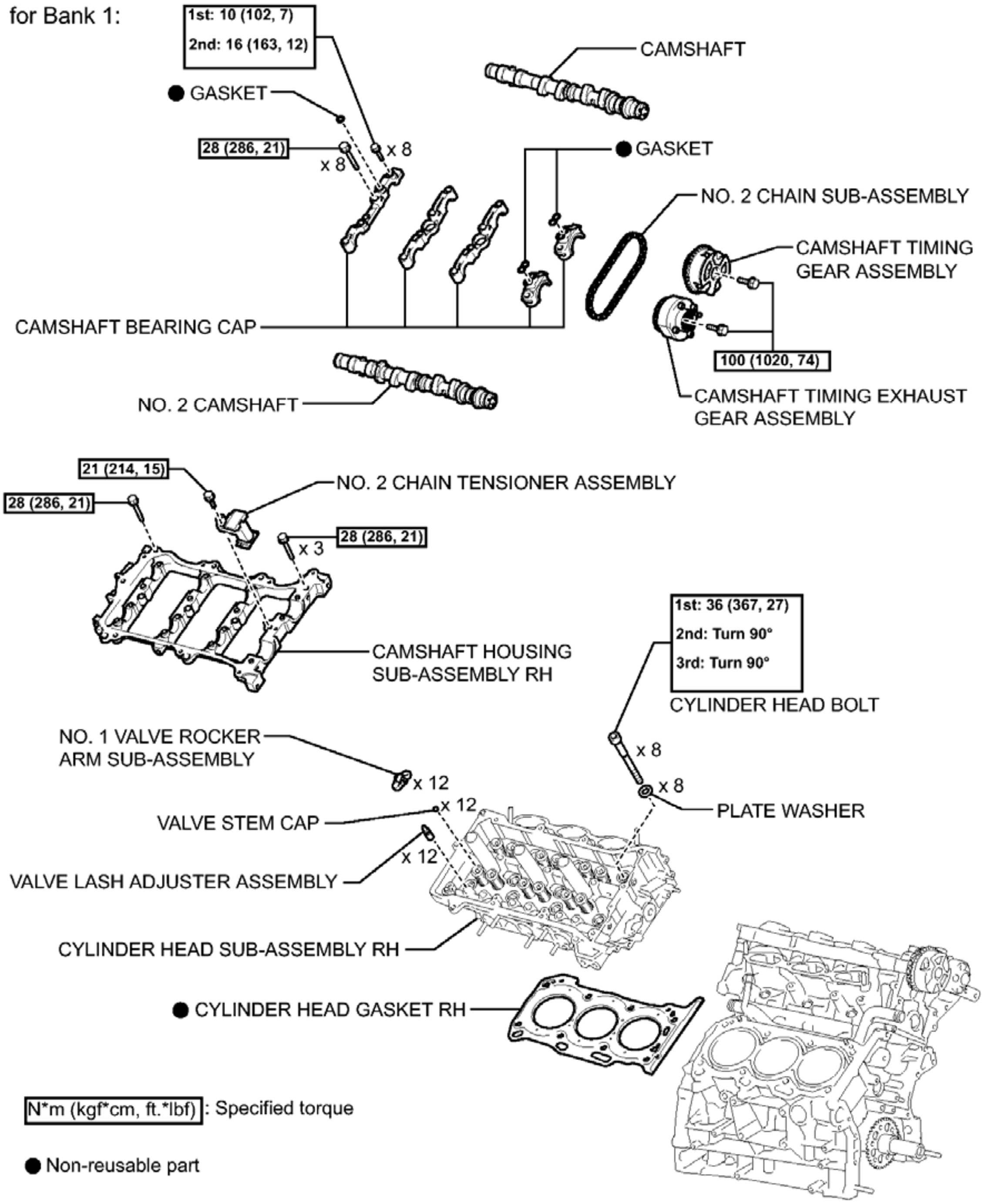
for Bank 1:
1st: 10 (102, 7)
2nd: 16 (163, 12)
CAMSHAFT
● GASKET
28 (286, 21)
x 8
x 8
● GASKET
NO. 2 CHAIN SUB-ASSEMBLY
CAMSHAFT TIMING GEAR ASSEMBLY
CAMSHAFT BEARING CAP
100 (1020, 74)
NO. 2 CAMSHAFT
CAMSHAFT TIMING EXHAUST GEAR ASSEMBLY
21 (214, 15)
NO. 2 CHAIN TENSIONER ASSEMBLY
28 (286, 21)
x 3
28 (286, 21)
CAMSHAFT HOUSING SUB-ASSEMBLY RH
1st: 36 (367, 27)
2nd: Turn 90°
3rd: Turn 90°
CYLINDER HEAD BOLT
NO. 1 VALVE ROCKER ARM SUB-ASSEMBLY
x 8
x 12
x 8
x 12
PLATE WASHER
VALVE STEM CAP
x 12
VALVE LASH ADJUSTER ASSEMBLY
CYLINDER HEAD SUB-ASSEMBLY RH
● CYLINDER HEAD GASKET RH
N*m (kgf*cm, ft.*lbf) : Specified torque
● Non-reusable part

Fig. 51: Identifying Cylinder Head Gasket Replacement Components With Torque Specifications (1 Of 2)
Courtesy of TOYOTA MOTOR SALES, U.S.A., INC.

ILLUSTRATION

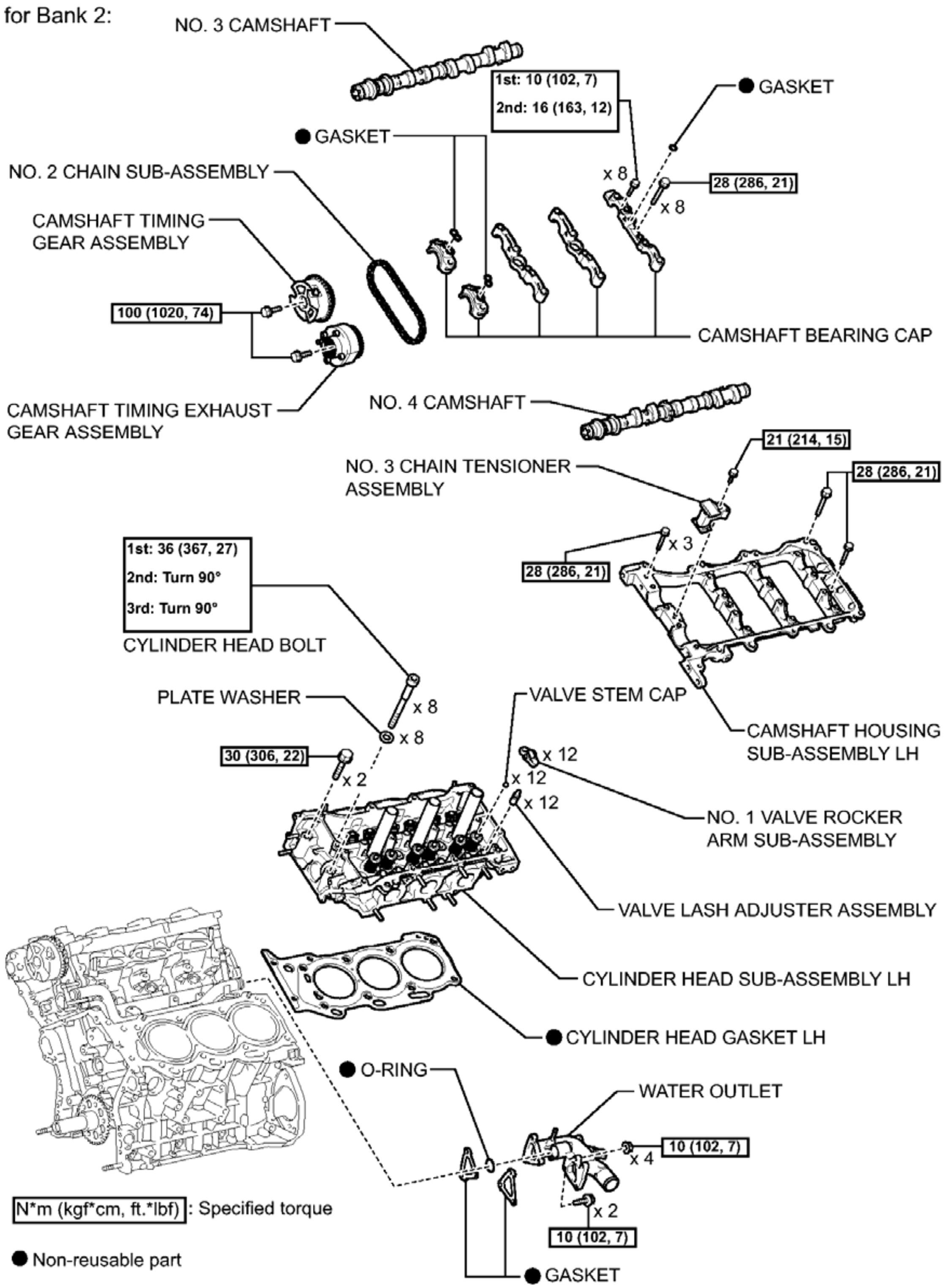
for Bank 2:
NO. 3 CAMSHAFT
1st: 10 (102, 7)
2nd: 16 (163, 12)
● GASKET
● GASKET
NO. 2 CHAIN SUB-ASSEMBLY
x 8
28 (286, 21)
x 8
CAMSHAFT TIMING GEAR ASSEMBLY
100 (1020, 74)
CAMSHAFT BEARING CAP
CAMSHAFT TIMING EXHAUST GEAR ASSEMBLY
NO. 4 CAMSHAFT
21 (214, 15)
NO. 3 CHAIN TENSIONER ASSEMBLY
28 (286, 21)
x 3
28 (286, 21)
1st: 36 (367, 27)
2nd: Turn 90°
3rd: Turn 90°
CYLINDER HEAD BOLT
PLATE WASHER
x 8
x 8
VALVE STEM CAP
CAMSHAFT HOUSING SUB-ASSEMBLY LH
30 (306, 22)
x 2
x 12
x 12
x 12
NO. 1 VALVE ROCKER ARM SUB-ASSEMBLY
VALVE LASH ADJUSTER ASSEMBLY
CYLINDER HEAD SUB-ASSEMBLY LH
● CYLINDER HEAD GASKET LH
● O-RING
WATER OUTLET
10 (102, 7)
x 4
x 2
10 (102, 7)
N*m (kgf*cm, ft.*lbf) : Specified torque
● Non-reusable part
● GASKET

Fig. 52: Identifying Cylinder Head Gasket Replacement Components With Torque Specifications (2 Of 2)
Courtesy of TOYOTA MOTOR SALES, U.S.A., INC.

REMOVAL

REMOVAL

1. **REMOVE CAMSHAFT**

   Refer to **REMOVAL**

2. **REMOVE NO. 2 CAMSHAFT** See step 44
3. **REMOVE CAMSHAFT HOUSING SUB-ASSEMBLY RH** See step 45
4. **REMOVE CAMSHAFT TIMING GEARS AND NO. 2 CHAIN (for Bank 2)** See step 46
5. **REMOVE NO. 3 CHAIN TENSIONER ASSEMBLY** See step 47
6. **REMOVE CAMSHAFT BEARING CAP (for Bank 2)** See step 48
7. **REMOVE NO. 3 CAMSHAFT** See step 49
8. **REMOVE NO. 4 CAMSHAFT** See step 50
9. **REMOVE CAMSHAFT HOUSING SUB-ASSEMBLY LH** See step 51
10. **REMOVE NO. 1 VALVE ROCKER ARM SUB-ASSEMBLY**
    a. Remove the 24 valve rocker arms.

       HINT:

       Arrange the removed parts in the correct order.

11. **REMOVE VALVE LASH ADJUSTER ASSEMBLY**
    a. Remove the 24 valve lash adjuster assemblies from the cylinder head.

       HINT:

       Arrange the removed parts in the correct order.

12. **REMOVE VALVE STEM CAP**
    a. Remove the 24 valve stem caps.
13. **REMOVE WATER OUTLET** See step 16
14. **REMOVE CYLINDER HEAD SUB-ASSEMBLY RH**
    a. Using a 10 mm bi-hexagon wrench, uniformly loosen the 8 cylinder head bolts in the sequence shown in the illustration. Remove the 8 cylinder head bolts and plate washers.

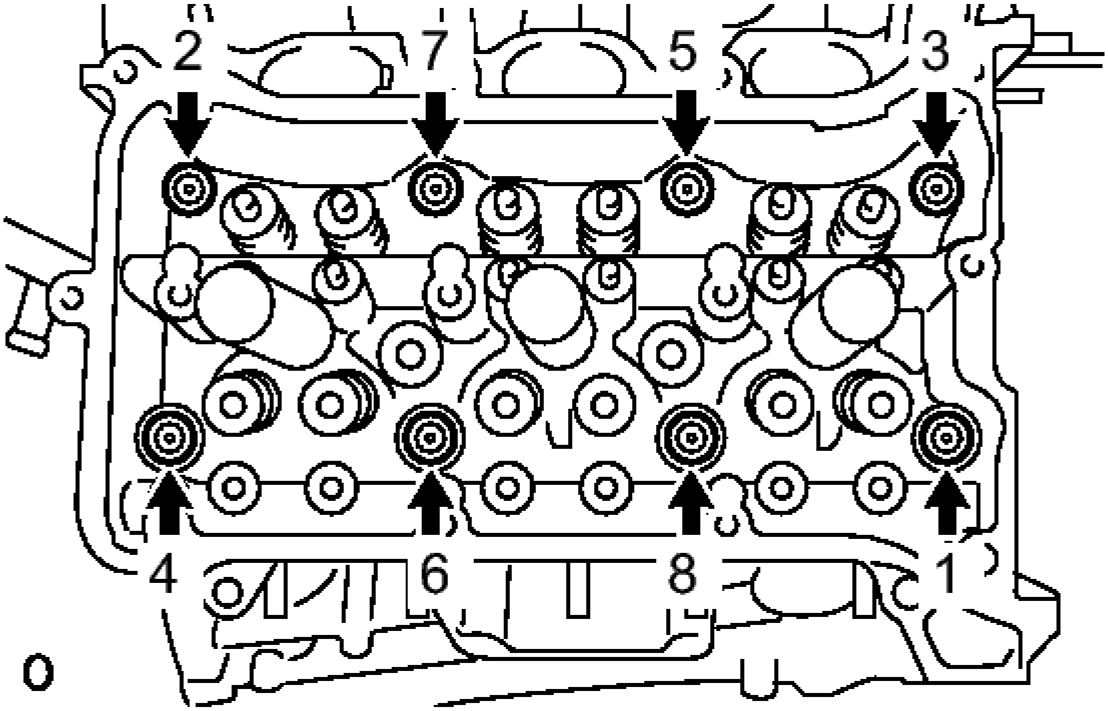

Fig. 53: Locating Cylinder Head Bolts And Plate Washers
Courtesy of TOYOTA MOTOR SALES, U.S.A., INC.

NOTE:

- **Be careful not to drop washers into the cylinder head sub-assembly.**
- **Cylinder head warpage or cracking could result from removing bolts in the incorrect order.**

HINT:

Arrange the removed parts in the correct order.

b. Remove the cylinder head sub-assembly RH.

15. **REMOVE CYLINDER HEAD GASKET RH**

    a. Remove the cylinder head gasket RH.

16. **REMOVE CYLINDER HEAD SUB-ASSEMBLY LH**

    a. Uniformly loosen and remove the 2 cylinder head set bolts in several steps and in the sequence shown in the illustration.

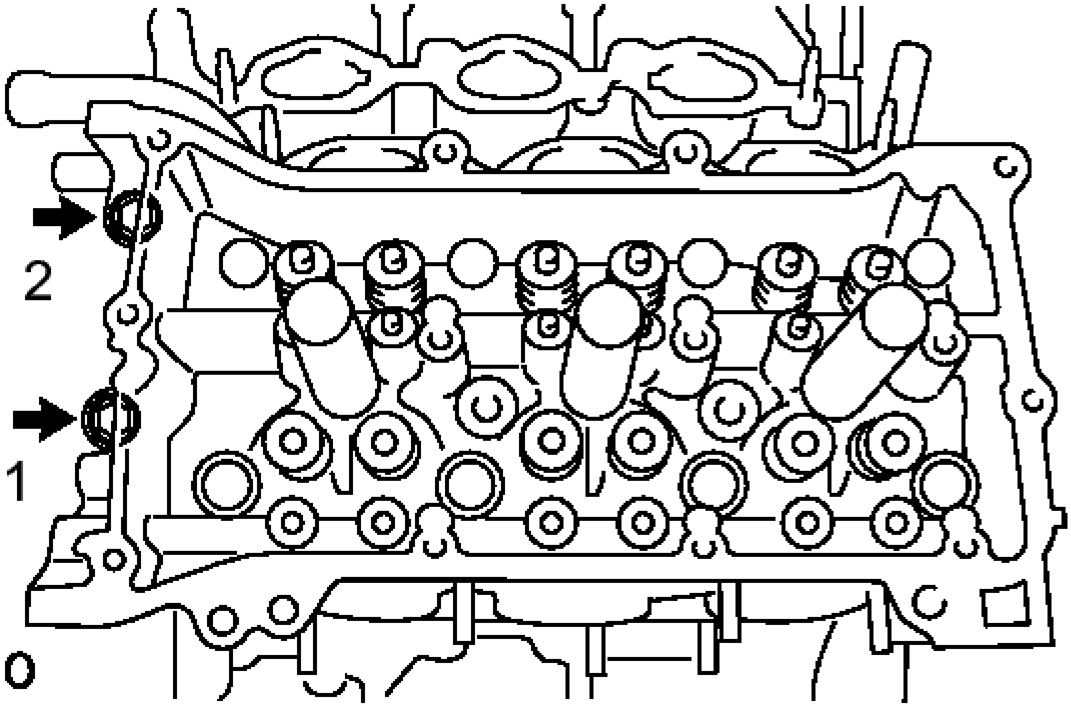

Fig. 54: Identifying Bolts
Courtesy of TOYOTA MOTOR SALES, U.S.A., INC.

b. Using a 10 mm bi-hexagon wrench, uniformly loosen the 8 bolts in the sequence shown in the illustration. Remove the 8 cylinder head bolts and plate washers.

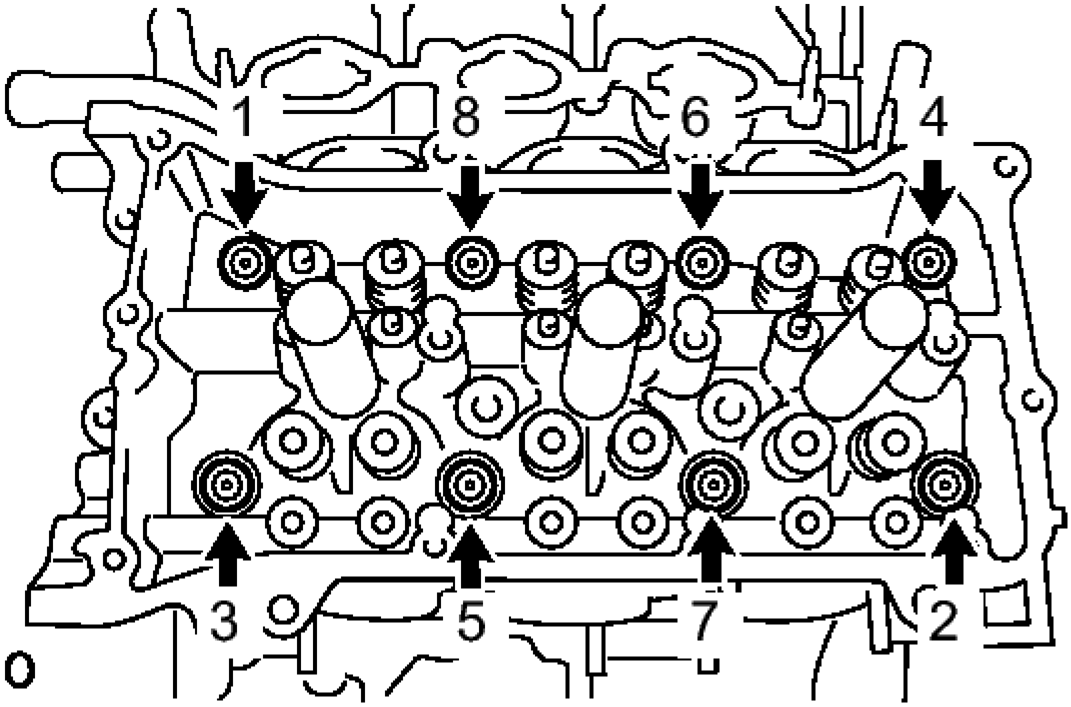

Fig. 55: Locating Cylinder Head Bolts And Plate Washers

Courtesy of TOYOTA MOTOR SALES, U.S.A., INC.

NOTE:

- **Be careful not to drop washers into the cylinder head sub-assembly.**
- **Cylinder head warpage or cracking could result from removing bolts in the incorrect order.**

HINT:

Be sure to keep separate the removed parts for each installation position.

c. Remove the cylinder head sub-assembly LH.

17. **REMOVE CYLINDER HEAD GASKET LH**
    a. Remove the cylinder head gasket LH.

INSTALLATION

INSTALLATION

HINT:

Perform "Inspection After Repair" after replacing the cylinder head RH or cylinder head LH. Refer to **INITIALIZATION** .

1. **INSTALL CYLINDER HEAD GASKET RH**
    a. Place a new cylinder head gasket RH on the cylinder block surface with the Lot No. stamp facing upward.

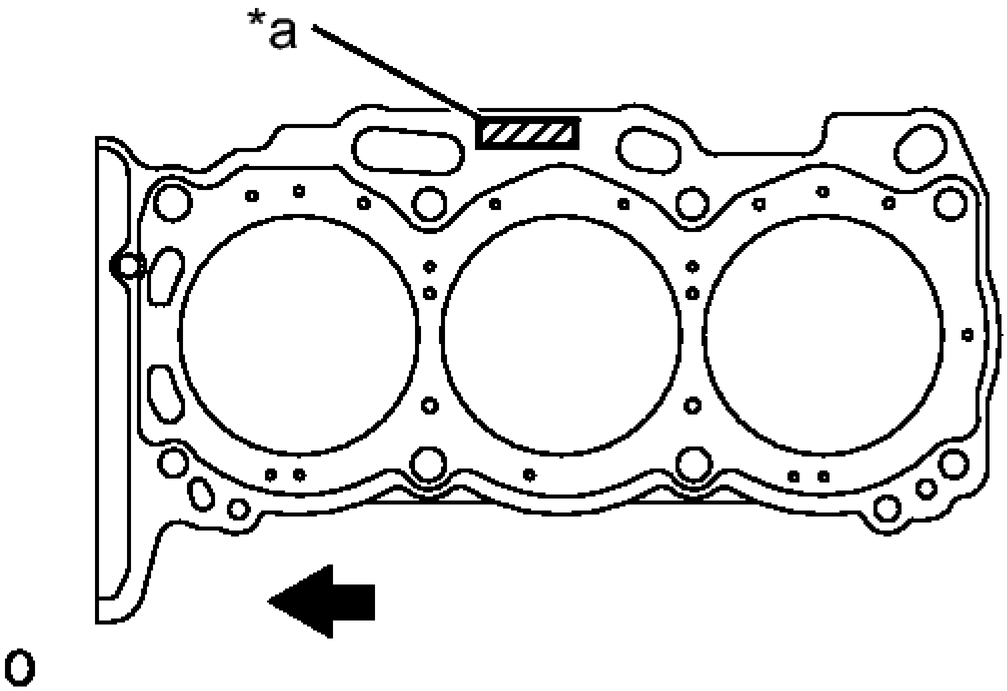

Fig. 56: Identifying RH Cylinder Head Gasket, Lot No. & Engine Front Position
Courtesy of TOYOTA MOTOR SALES, U.S.A., INC.

TEXT IN ILLUSTRATION

*a	Lot No.
·	Engine Front

NOTE: **Be careful of the installation direction.**

2. **INSTALL CYLINDER HEAD SUB-ASSEMBLY RH**
   a. Place the cylinder head on the cylinder block.

NOTE:

- **Be careful not to allow oil to adhere to the bottom part of the cylinder head.**
- **Gently lower the cylinder head in order not to damage the gasket with the bottom part of the head.**

HINT:

The cylinder head bolts are tightened in 3 progressive steps.

   b. Apply a light coat of engine oil to the threads and under the heads of the cylinder head bolts.
   c. Step 1

1. Using a 10 mm bi-hexagon wrench, install and uniformly tighten the 8 cylinder head bolts with the plate washers in several steps and in the sequence shown in the illustration.

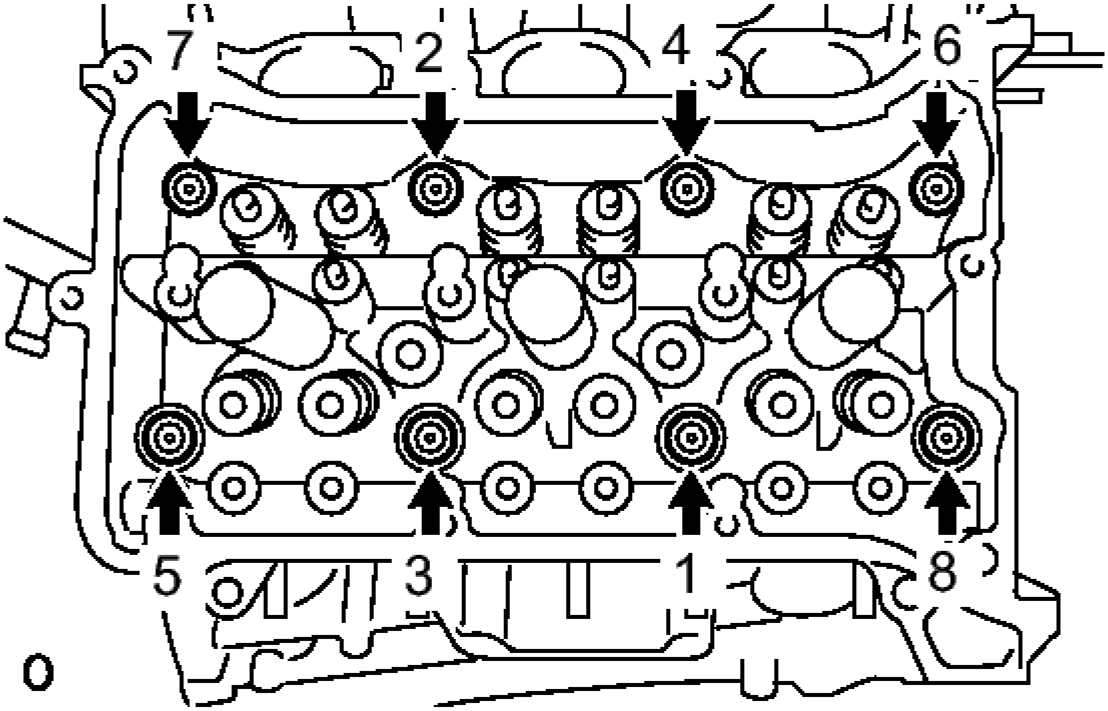

Fig. 57: Identifying Cylinder Head Bolts
Courtesy of TOYOTA MOTOR SALES, U.S.A., INC.

Torque: 36 N*m (367 kgf*cm, 27 ft.*lbf)

d. Step 2

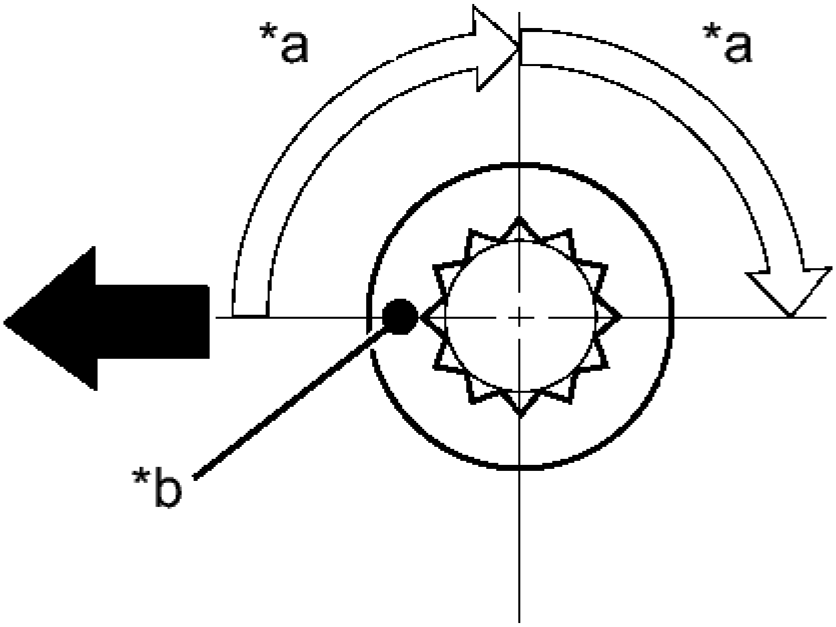

Fig. 58: Tightening Cylinder Head Bolts Another 90Degrees With Tightening Sequence
Courtesy of TOYOTA MOTOR SALES, U.S.A., INC.

TEXT IN ILLUSTRATION

*a	Turn 90°
*b	Painted Mark
	Engine Front

1. Mark each cylinder head bolt head with paint as shown in the illustration.
2. Tighten the cylinder head bolts 90° in the sequence shown in step 1.

e. Step 3
    1. Tighten the cylinder head bolts an additional 90° in the sequence shown in step 1.
    2. Check that the painted mark is now facing rearward.

       HINT:

       Perform "Inspection After Repair" after replacing the cylinder head RH. Refer to **INITIALIZATION** .

3. **INSTALL CYLINDER HEAD GASKET LH**
    a. Place a new cylinder head gasket LH on the cylinder block surface with the Lot No. stamp facing upward.

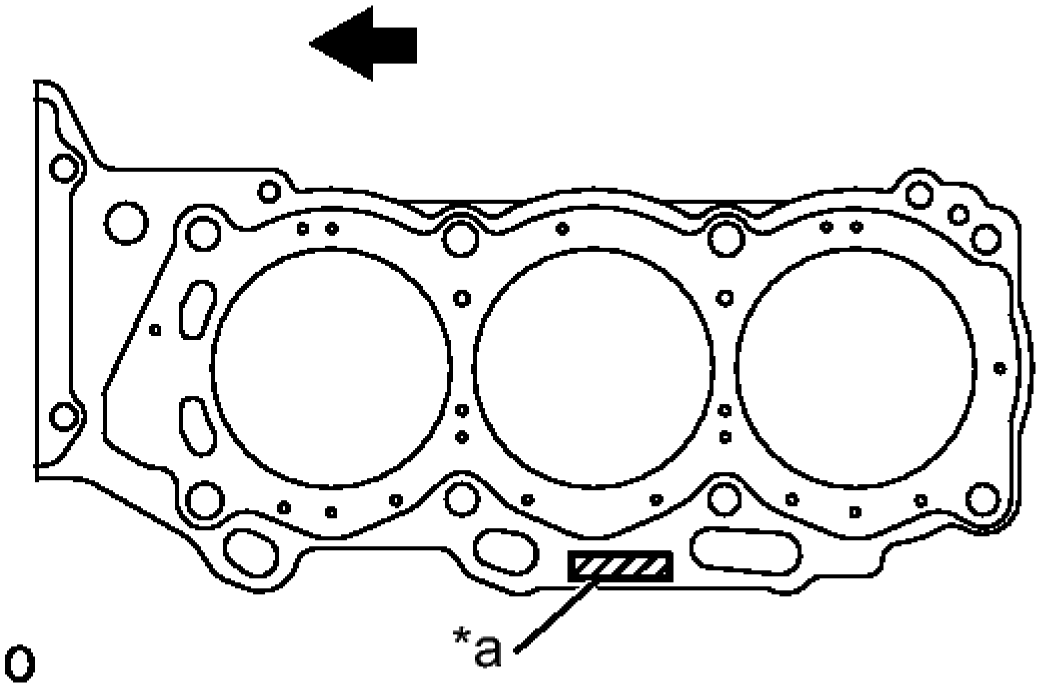

Fig. 59: Identifying LH Cylinder Head Gasket, Lot No. & Engine Front Position
Courtesy of TOYOTA MOTOR SALES, U.S.A., INC.

TEXT IN ILLUSTRATION

*a	Lot No.
·	Engine Front

NOTE: **Be careful of the installation direction.**

4. **INSTALL CYLINDER HEAD SUB-ASSEMBLY LH**
   a. Place the cylinder head on the cylinder block.

NOTE:

- **Be careful not to allow oil to adhere to the bottom part of the cylinder head.**
- **Gently lower the cylinder head in order not to damage the gasket with the bottom part of the head.**

HINT:

The cylinder head bolts are tightened in 3 progressive steps.

   b. Apply a light coat of engine oil to the threads and under the heads of the cylinder head bolts.
   c. Step 1

1. Using a 10 mm bi-hexagon wrench, install and uniformly tighten the 8 cylinder head bolts with the plate washers in several steps in the sequence shown in the illustration.

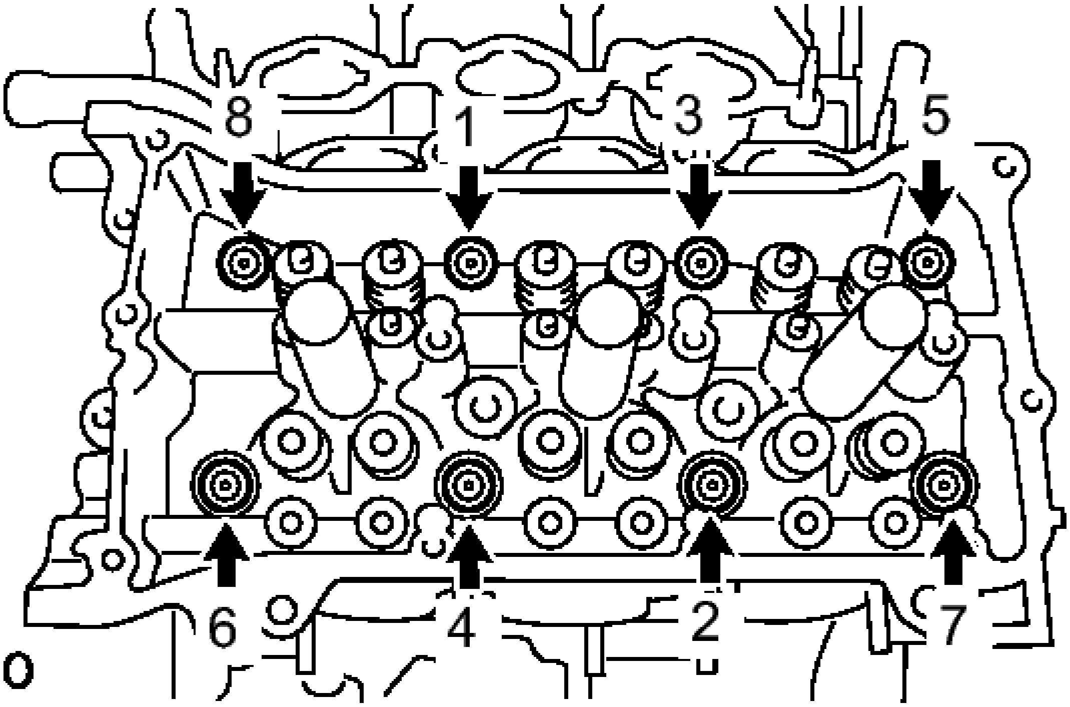

Fig. 60: Locating Cylinder Head Bolts
Courtesy of TOYOTA MOTOR SALES, U.S.A., INC.

Torque: 36 N*m (367 kgf*cm, 27 ft.*lbf)

d. Step 2

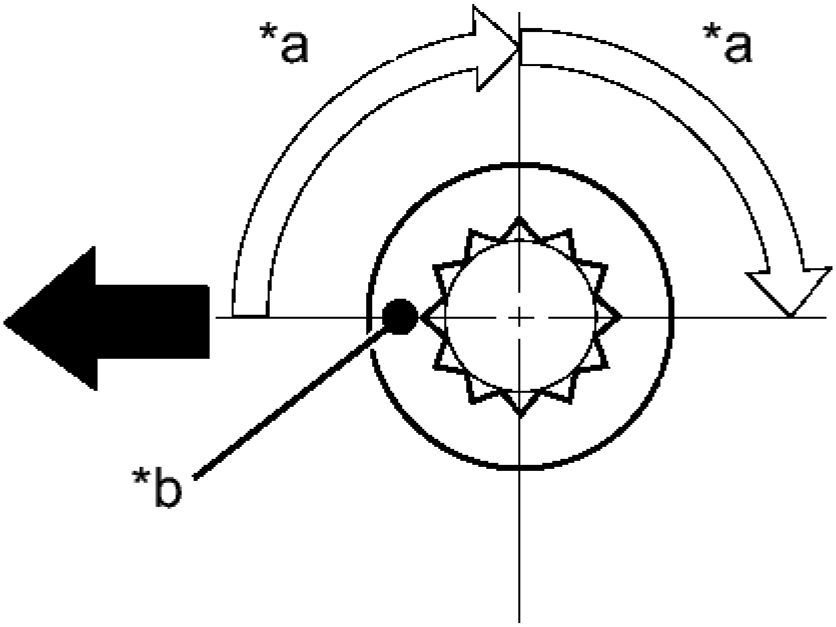

Fig. 61: Turning Head Bolt An Additional 90 Degrees
Courtesy of TOYOTA MOTOR SALES, U.S.A., INC.

TEXT IN ILLUSTRATION

*a	Turn 90°
*b	Painted Mark
-	Engine Front

    1. Mark each cylinder head bolt head with paint as shown in the illustration.
    2. Tighten the cylinder head bolts 90° in the sequence shown in step 1.

e. Step 3
    1. Tighten the cylinder head bolts an additional 90° in the sequence shown in step 1.
    2. Check that the painted mark is now facing rearward.

f. Tighten the 2 bolts in the order shown in the illustration.

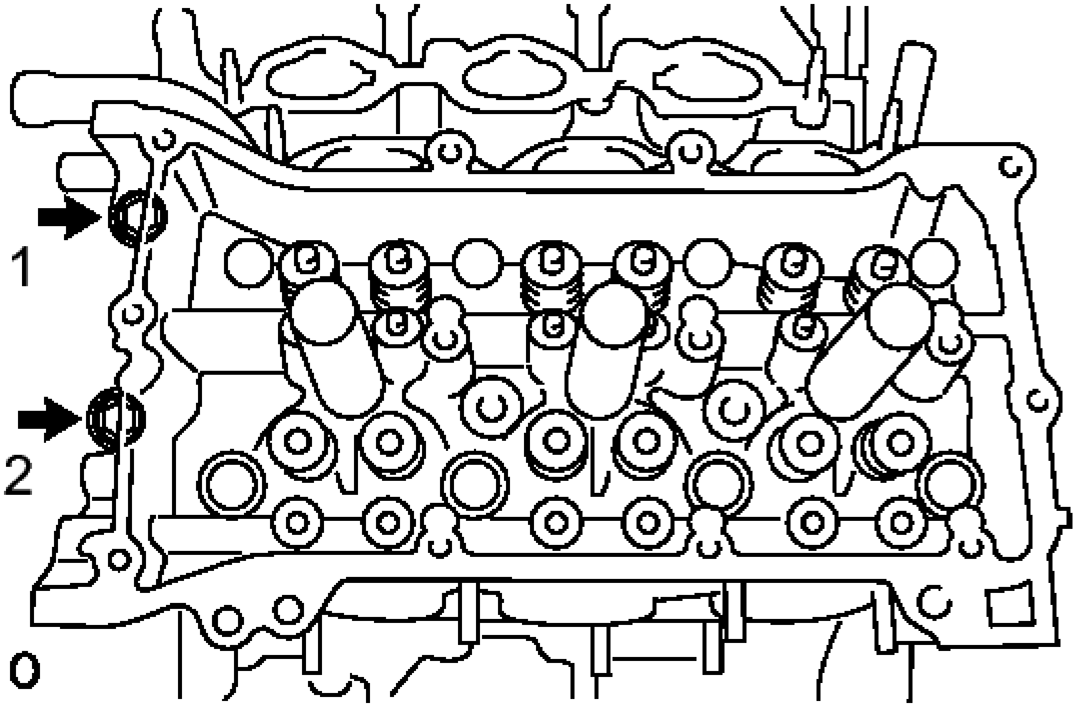

Fig. 62: Identifying Bolt Tightening Sequence
Courtesy of TOYOTA MOTOR SALES, U.S.A., INC.

Torque: 30 N*m (306 kgf*cm, 22 ft.*lbf)

HINT:

Perform "Inspection After Repair" after replacing the cylinder head LH. Refer to **INITIALIZATION** .

5. **INSTALL WATER OUTLET** See step 43
6. **INSTALL VALVE STEM CAP**
   a. Install the 24 valve stem caps.
7. **INSTALL VALVE LASH ADJUSTER ASSEMBLY**

NOTE:

- **Keep the lash adjuster free of dirt and foreign objects.**
- **Only use clean engine oil.**

   a. Place the lash adjuster into a container filled with engine oil.
   b. Insert the tip of SST into the lash adjuster plunger and use the tip to press down on the check ball inside the plunger.

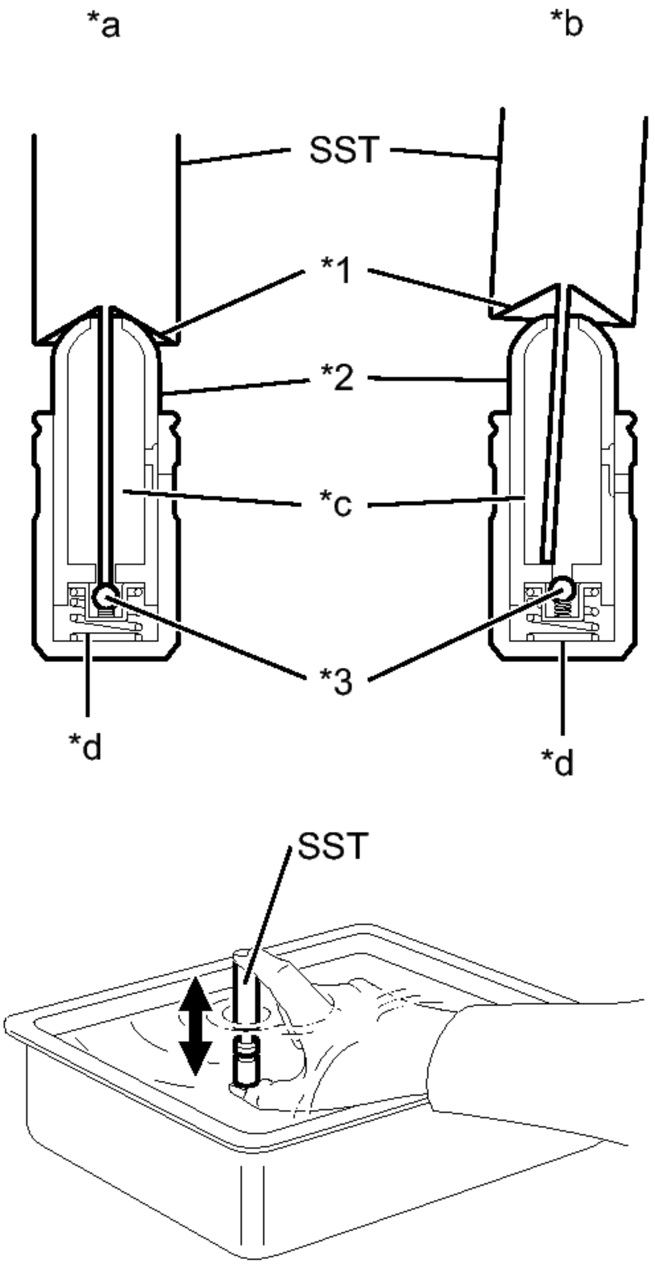
*a
*b
SST
*1
*2
*c
*3
*d
*d
SST

T

Fig. 63: Bleeding Valve Lash Adjuster Using SST
Courtesy of TOYOTA MOTOR SALES, U.S.A., INC.

TEXT IN ILLUSTRATION

*1	Tapered Part
*2	Plunger
*3	Check Ball
*a	CORRECT
*b	INCORRECT
*c	Low Pressure Chamber
*d	High Pressure Chamber

- **SST: 09276-75010**

c. Squeeze SST and lash adjuster together to move the plunger up and down 5 to 6 times.
d. Check the movement of the plunger and bleed the air.

OK

Plunger moves up and down.

NOTE: **When bleeding air from the high-pressure chamber, make sure that the tip of SST is actually pressing the check ball as shown in the illustration. If the check ball is not pressed, air will not bleed.**

e. After bleeding the air, remove SST. Then, try to press the plunger quickly and firmly by hand.

OK

Plunger is very difficult to move.

If the result is not as specified, replace the valve lash adjuster.

f. Install the valve lash adjusters.

NOTE: **Install each valve lash adjuster to the same place it was removed from.**

8. INSTALL NO. 1 VALVE ROCKER ARM SUB-ASSEMBLY

a. Apply engine oil to the lash adjuster tip and valve stem cap end.
b. Install the valve rocker arms as shown in the illustration.

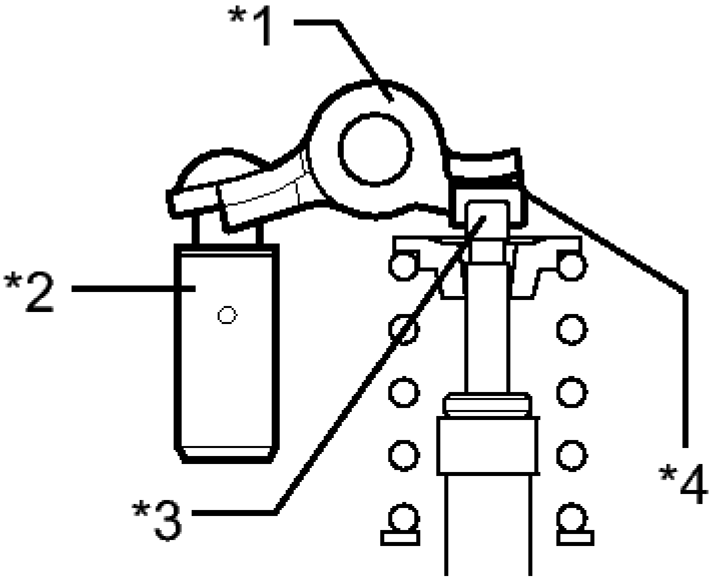

Fig. 64: Identifying Valve Rocker Arm
Courtesy of TOYOTA MOTOR SALES, U.S.A., INC.

TEXT IN ILLUSTRATION

*1	Valve Rocker Arm
*2	Lash Adjuster
*3	Valve Stem
*4	Valve Stem Cap

9. **INSTALL NO. 3 CAMSHAFT** See step 1
10. **INSTALL NO. 4 CAMSHAFT** See step 2
11. **INSTALL CAMSHAFT BEARING CAP (for Bank 2)** See step 3
12. **INSTALL CAMSHAFT HOUSING SUB-ASSEMBLY LH** See step 4
13. **INSTALL CAMSHAFT** See step 5
14. **INSTALL NO. 2 CAMSHAFT** See step 6
15. **INSTALL CAMSHAFT BEARING CAP (for Bank 1)** See step 7
16. **INSTALL CAMSHAFT HOUSING SUB-ASSEMBLY RH**

    See step 8

FRONT CRANKSHAFT OIL SEAL

COMPONENTS

ILLUSTRATION

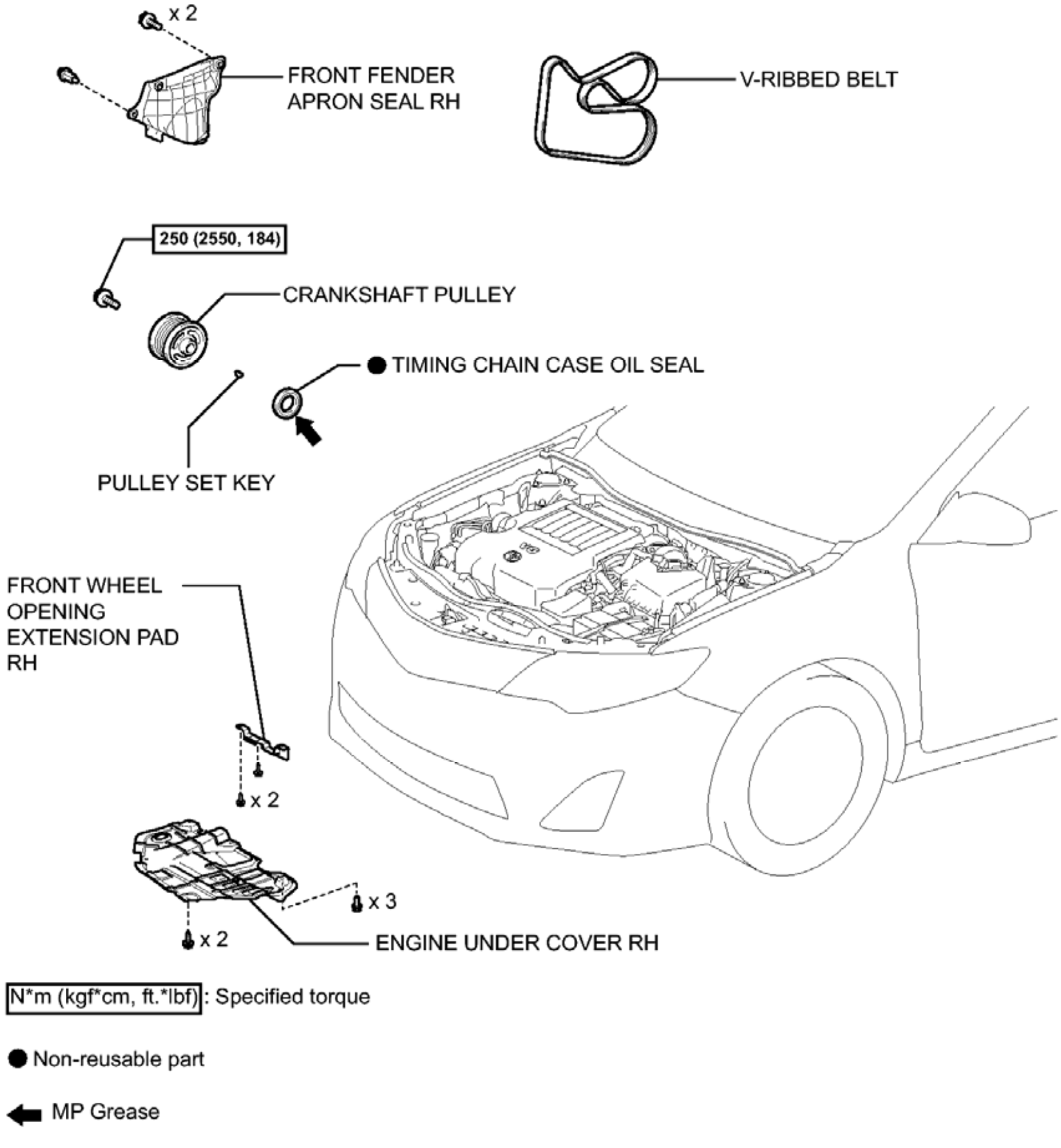
x 2
FRONT FENDER APRON SEAL RH
V-RIBBED BELT
250 (2550, 184)
CRANKSHAFT PULLEY
● TIMING CHAIN CASE OIL SEAL
PULLEY SET KEY
FRONT WHEEL OPENING EXTENSION PAD RH
x 2
x 3
x 2
ENGINE UNDER COVER RH
N*m (kgf*cm, ft.*lbf) : Specified torque
● Non-reusable part
MP Grease
c

Fig. 65: Identifying Front Crankshaft Oil Seal Replacement Components With Toque Specifications
Courtesy of TOYOTA MOTOR SALES, U.S.A., INC.

REMOVAL

REMOVAL

1. **REMOVE FRONT WHEEL RH**
2. **REMOVE FRONT WHEEL OPENING EXTENSION PAD RH**
3. **REMOVE ENGINE UNDER COVER RH**
4. **REMOVE FRONT FENDER APRON SEAL RH**
5. **REMOVE V-RIBBED BELT** See step 5
6. **REMOVE CRANKSHAFT PULLEY**
    a. Using SST, loosen the crankshaft pulley bolt.

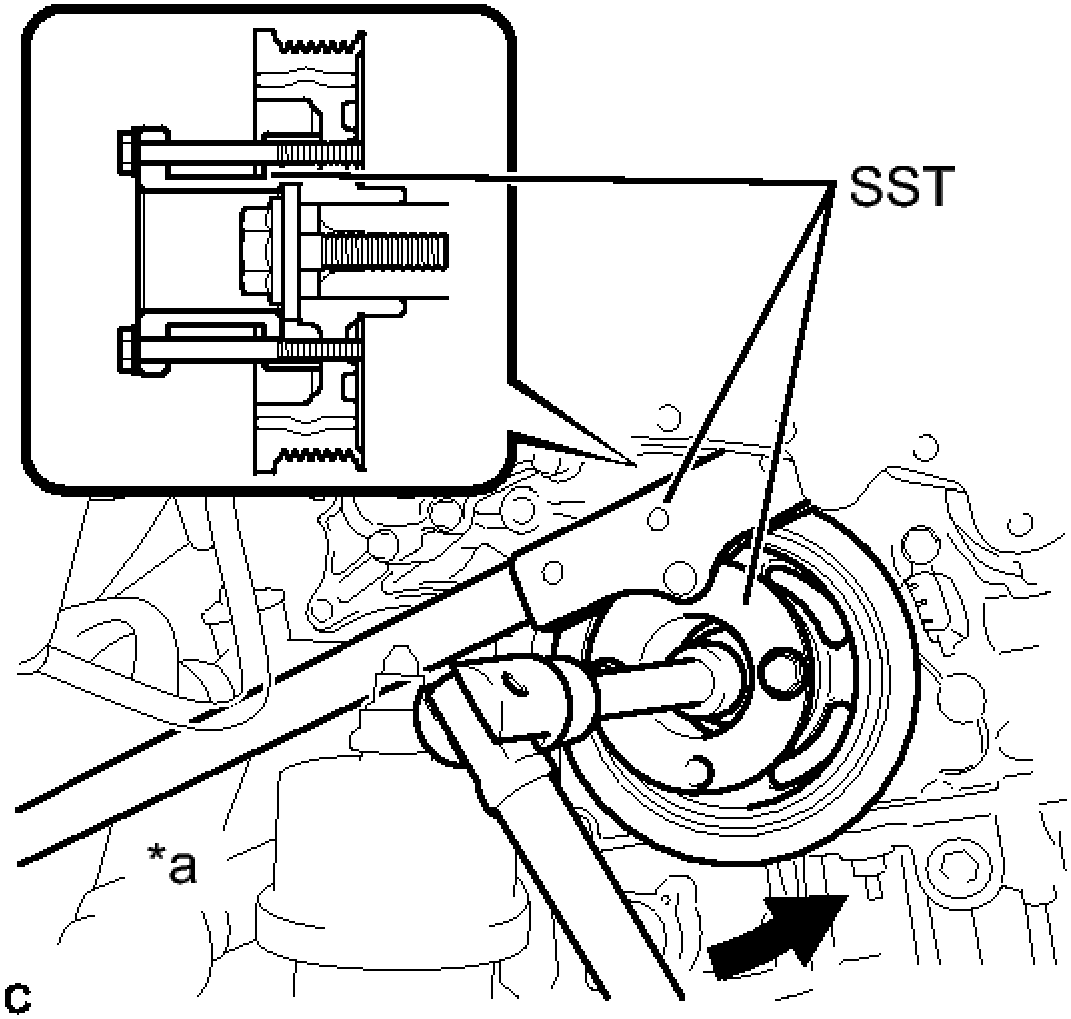

Fig. 66: Removing Crankshaft Pulley Bolt Using SST
Courtesy of TOYOTA MOTOR SALES, U.S.A., INC.

- **SST: 09213-70011**
  09213-70020
- **SST: 09330-00021**

TEXT IN ILLUSTRATION

*a	Hold
·	Turn

b. Using SST, remove the crankshaft pulley bolt and crankshaft pulley.

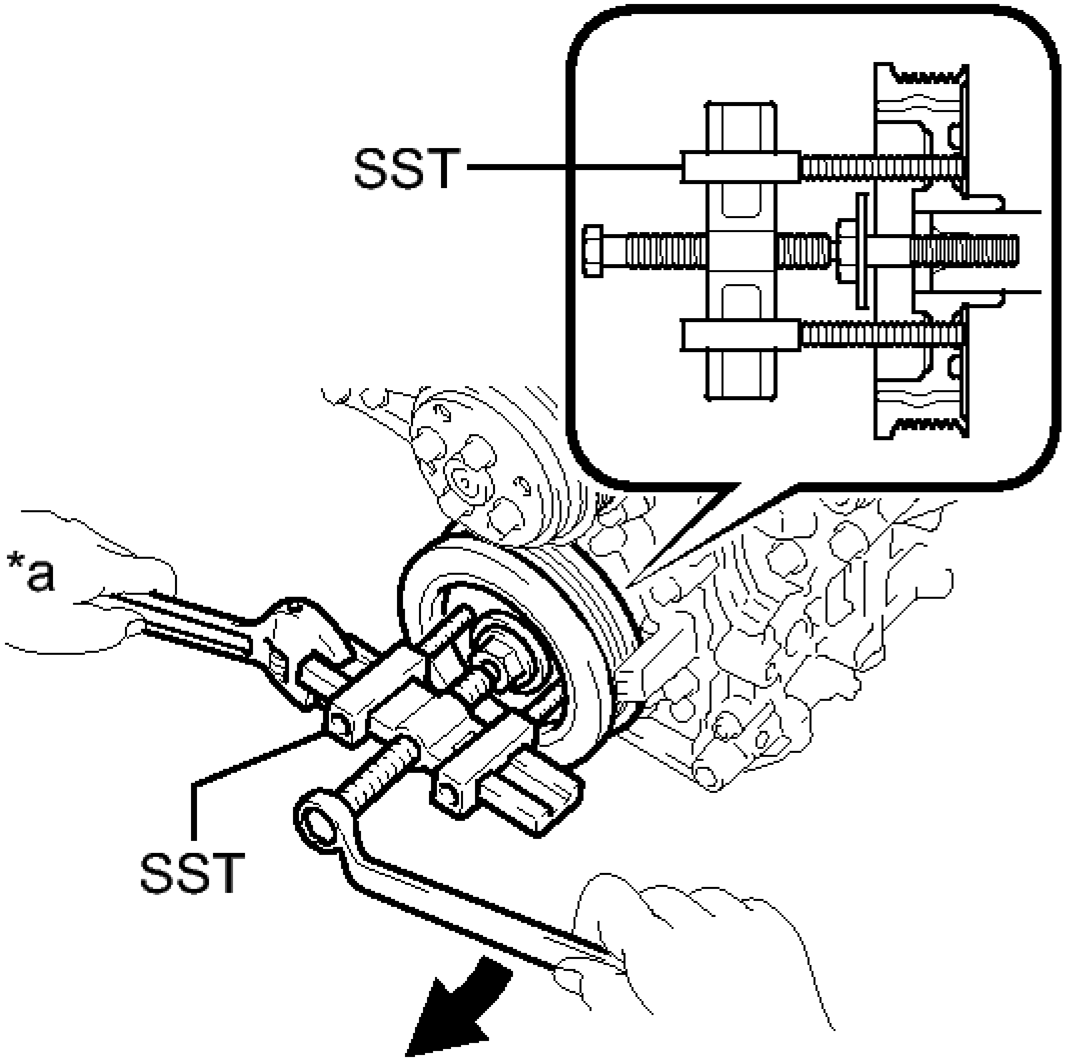

Fig. 67: Removing Crankshaft Pulley With Bolt
Courtesy of TOYOTA MOTOR SALES, U.S.A., INC.

- **SST: 09950-50013**
  09951-05010
  09952-05010
  09953-05020
  09954-05021

TEXT IN ILLUSTRATION

*a	Hold
→	Turn

c. Remove the pulley set key from the crankshaft.

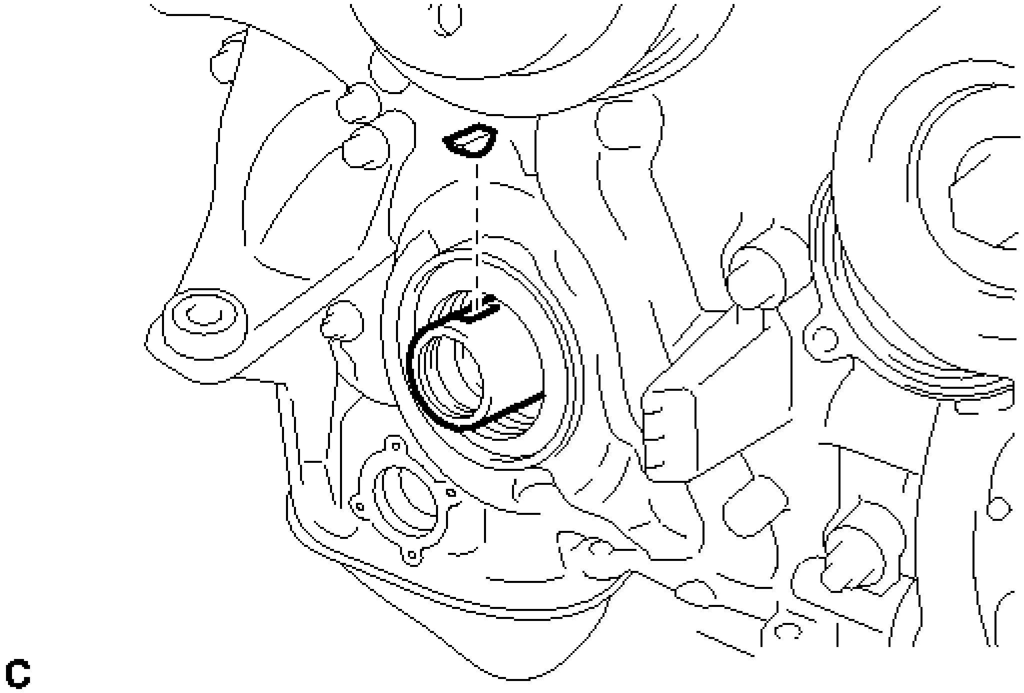

Fig. 68: Identifying Crankshaft & Set Key
Courtesy of TOYOTA MOTOR SALES, U.S.A., INC.

7. **REMOVE TIMING CHAIN CASE OIL SEAL**
   a. Using a knife, cut off the timing chain case oil seal lip.

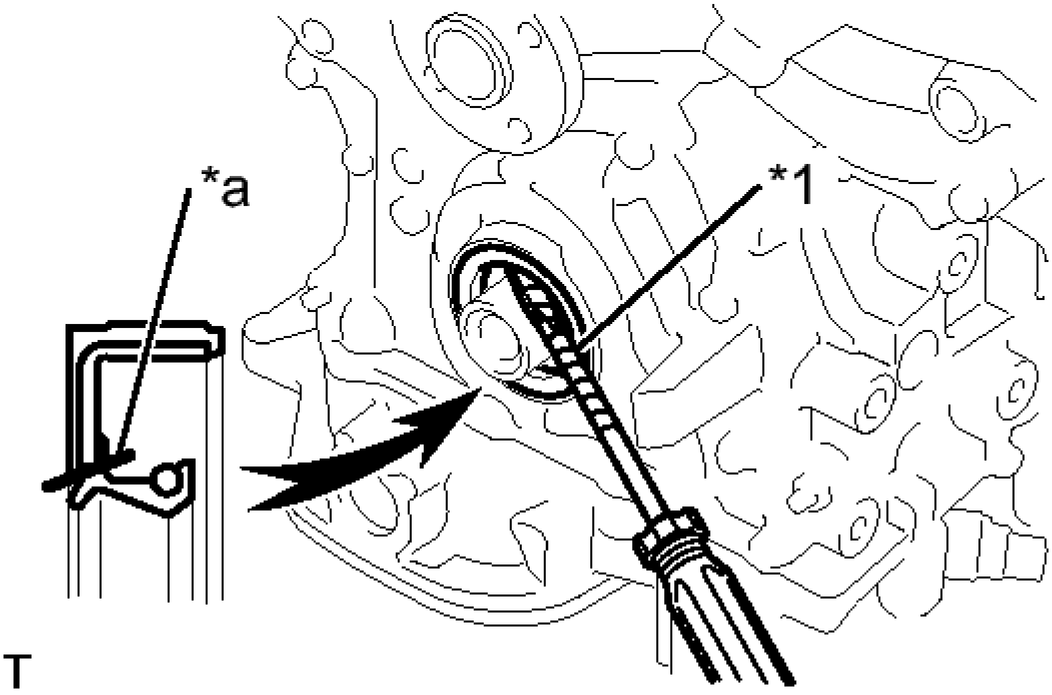

Fig. 69: Removing Timing Chain Case Oil Seal Using A Screwdriver
Courtesy of TOYOTA MOTOR SALES, U.S.A., INC.

TEXT IN ILLUSTRATION

*1	Protective Tape
*a	Cut Position

b. Using a screwdriver, pry out the timing chain case oil seal.

NOTE: **After removal, check the crankshaft for damage. If it is damaged, smooth the surface with 400-grit sandpaper.**

HINT:

Tape the screwdriver tip before use.

INSTALLATION

INSTALLATION

1. **INSTALL TIMING CHAIN CASE OIL SEAL**
   a. Apply MP grease to a new timing chain case oil seal lip.

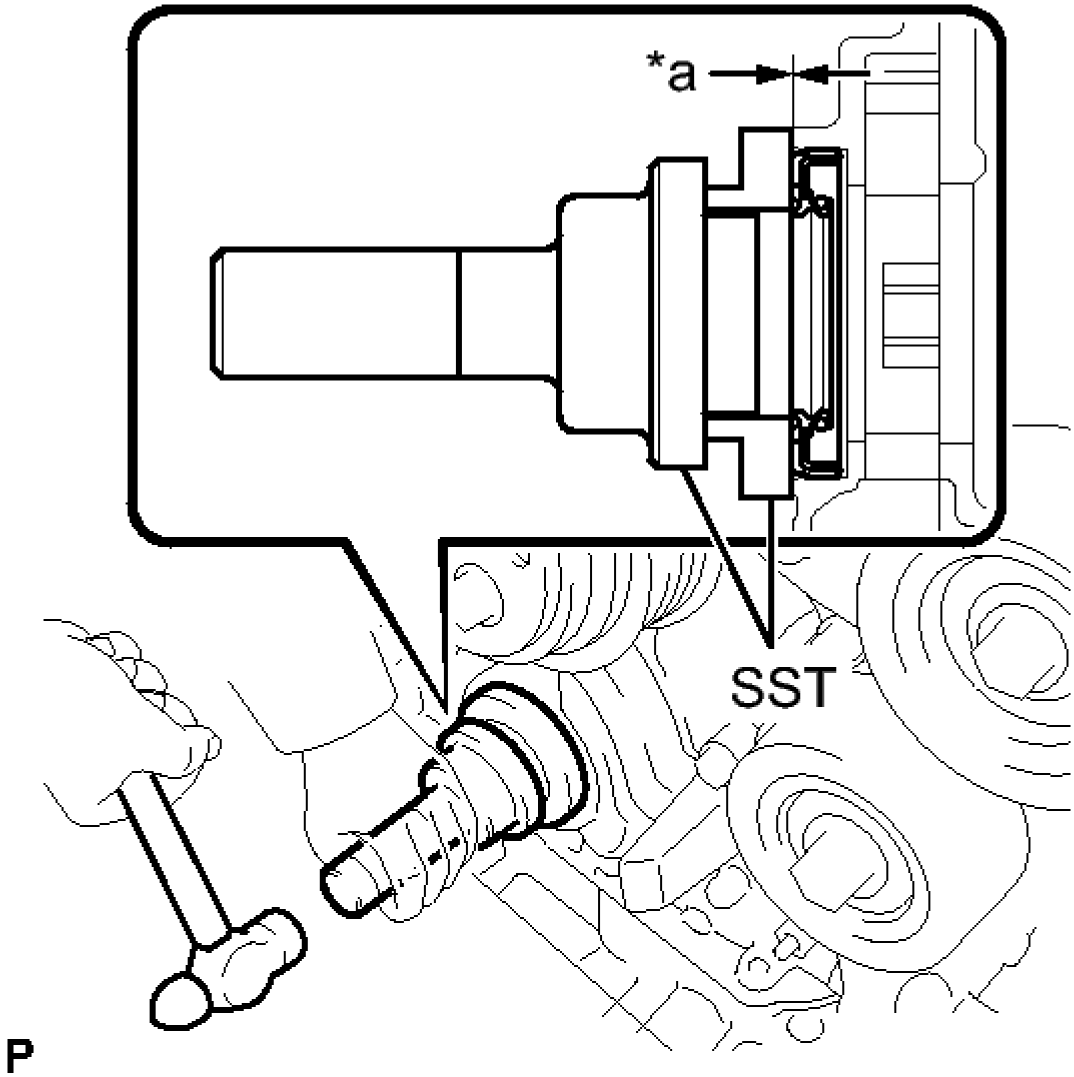

Fig. 70: Installing Timing Chain Case Oil Seal Using SST
Courtesy of TOYOTA MOTOR SALES, U.S.A., INC.

b. Using SST and a hammer, tap in the timing chain case oil seal until its surface is flush with the timing chain cover edge.

TEXT IN ILLUSTRATION

*a	Oil seal tap in depth (0 to 1.0 mm)

- **SST: 09223-22010**
- **SST: 09506-35010**

Oil seal tap in depth

0 to 1.0 mm (0 to 0.0393 in.)

NOTE:

- **Keep the lip free of foreign matter.**
- **Do not tap the timing chain case oil seal at an angle.**

2. **INSTALL CRANKSHAFT PULLEY**
   a. Align the pulley set key with the key groove of the pulley, and slide on the pulley.
   b. Using SST, install the pulley bolt.

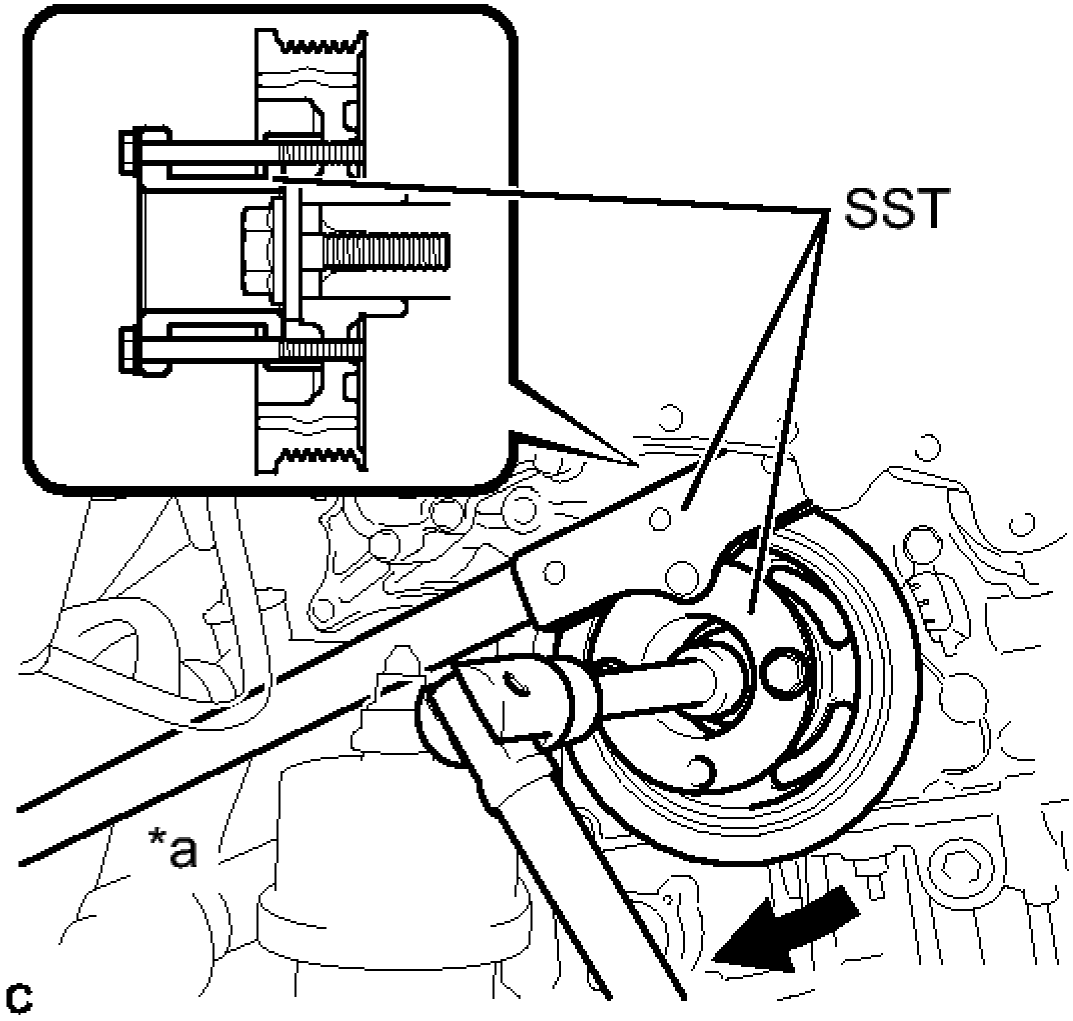

Fig. 71: Installing Crankshaft Pulley Bolt Using SST
Courtesy of TOYOTA MOTOR SALES, U.S.A., INC.

- **SST: 09213-70011**
  09213-70020
- **SST: 09330-00021**

Torque: 250 N*m (2550 kgf*cm, 184 ft.*lbf)

TEXT IN ILLUSTRATION

*a	Hold
→	Turn

3. **INSTALL V-RIBBED BELT** See step 1
4. **INSTALL FRONT FENDER APRON SEAL RH**
5. **INSTALL ENGINE UNDER COVER RH**
6. **INSTALL FRONT WHEEL OPENING EXTENSION PAD RH**
7. **INSTALL FRONT WHEEL RH**

   Torque: 103 N*m (1049 kgf*cm, 76 ft.*lbf)

REAR CRANKSHAFT OIL SEAL

COMPONENTS

ILLUSTRATION

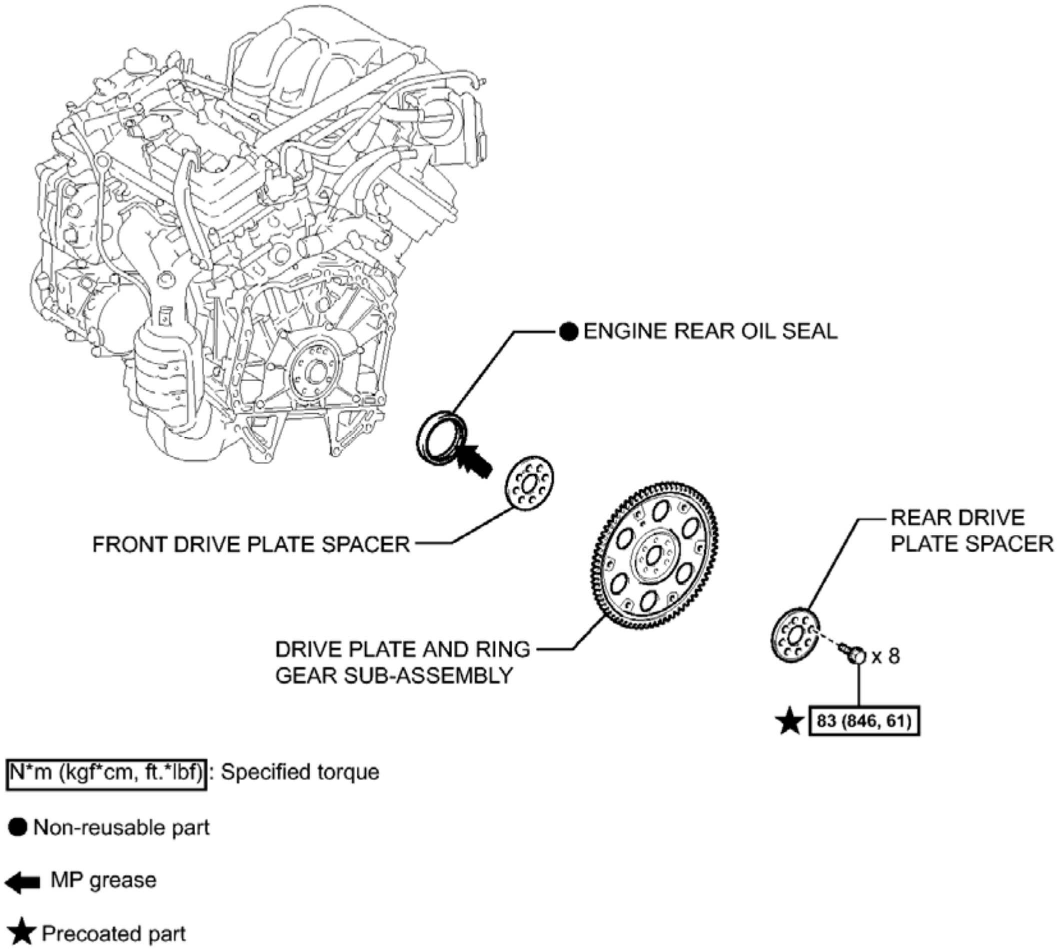
ENGINE REAR OIL SEAL
FRONT DRIVE PLATE SPACER
REAR DRIVE PLATE SPACER
DRIVE PLATE AND RING GEAR SUB-ASSEMBLY
x 8
83 (846, 61)
N*m (kgf*cm, ft.*lbf): Specified torque
Non-reusable part
MP grease
Precoated part

Fig. 72: Identifying Rear Crankshaft Oil Seal Replacement Components With Torque Specifications
Courtesy of TOYOTA MOTOR SALES, U.S.A., INC.

REMOVAL

REMOVAL

1. **REMOVE AUTOMATIC TRANSAXLE ASSEMBLY**

   Refer to **REMOVAL**

2. **REMOVE DRIVE PLATE AND RING GEAR SUB-ASSEMBLY**
   1. Using SST, hold the crankshaft pulley.

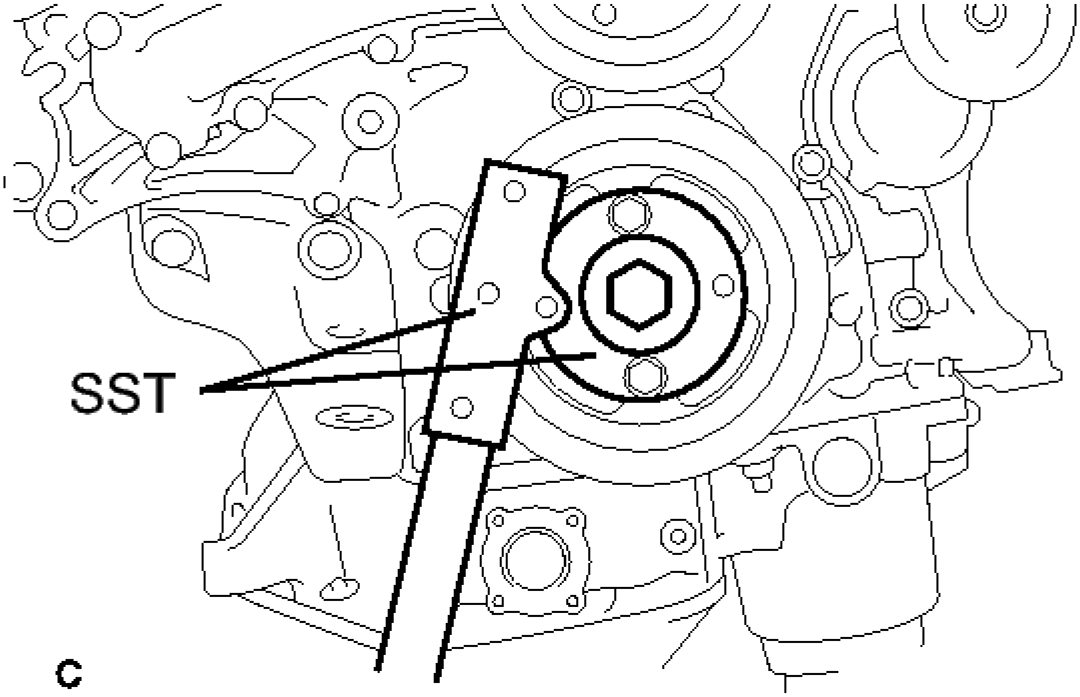

Fig. 73: Identifying Crankshaft Pulley And SST
Courtesy of TOYOTA MOTOR SALES, U.S.A., INC.

- **SST: 09213-70011**
  09213-70020
- **SST: 09330-00021**

b. Remove the 8 bolts, front drive plate spacer, drive plate and ring gear sub-assembly and rear drive plate spacer.

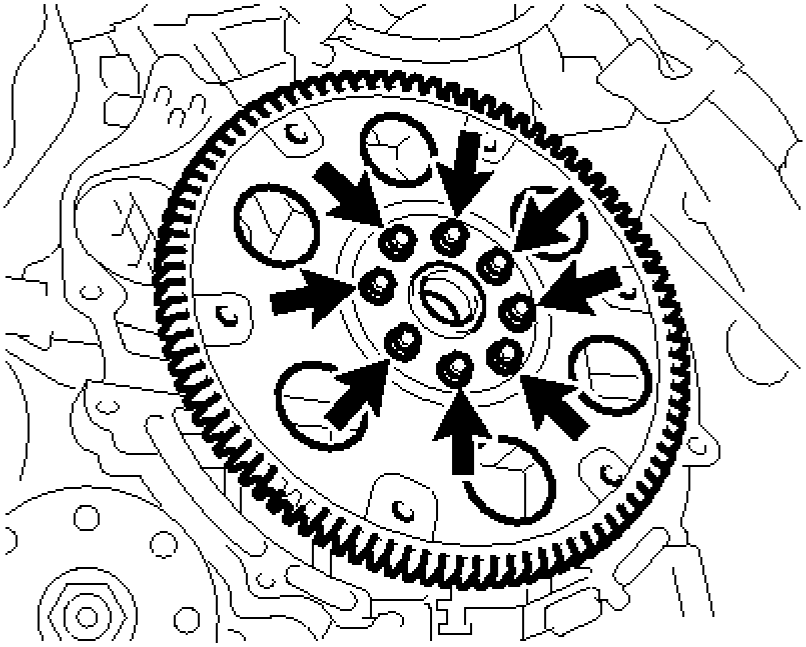

P

Fig. 74: Identifying Drive Plate Bolts
Courtesy of TOYOTA MOTOR SALES, U.S.A., INC.

3. **REMOVE ENGINE REAR OIL SEAL**
    a. Using a knife, cut off the engine rear oil seal lip.

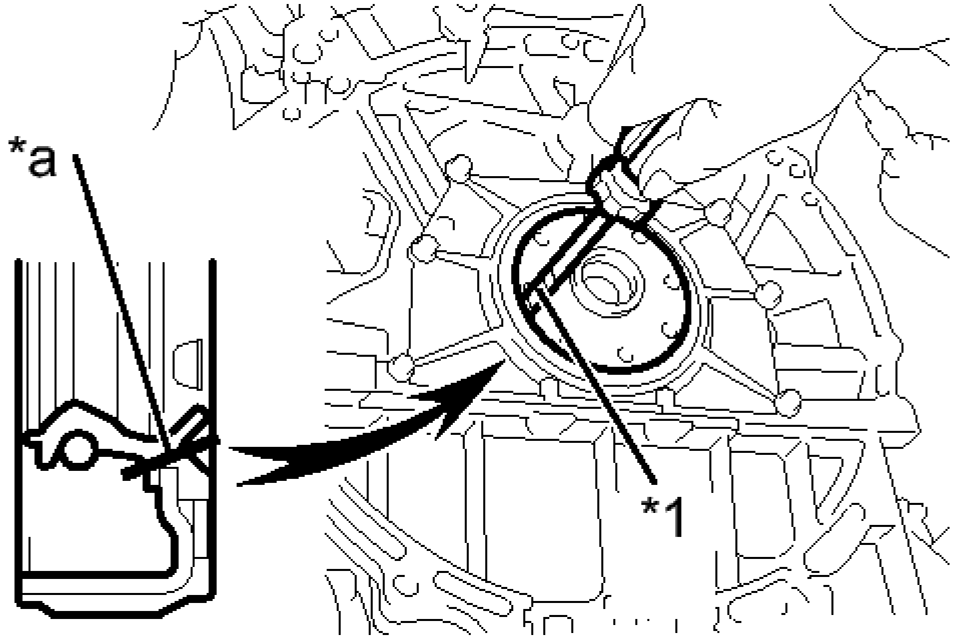

P

Fig. 75: Removing Engine Rear Oil Seal Using A Screwdriver

Courtesy of TOYOTA MOTOR SALES, U.S.A., INC.

TEXT IN ILLUSTRATION

*1	Protective Tape
*a	Cut Position

b. Using a screwdriver, pry out the engine rear oil seal.

NOTE: **Be careful not to damage the crankshaft.**

HINT:

Tape the screwdriver tip before use.

INSTALLATION

INSTALLATION

1. **INSTALL ENGINE REAR OIL SEAL**
    a. Apply MP grease to a new engine rear oil seal lip.

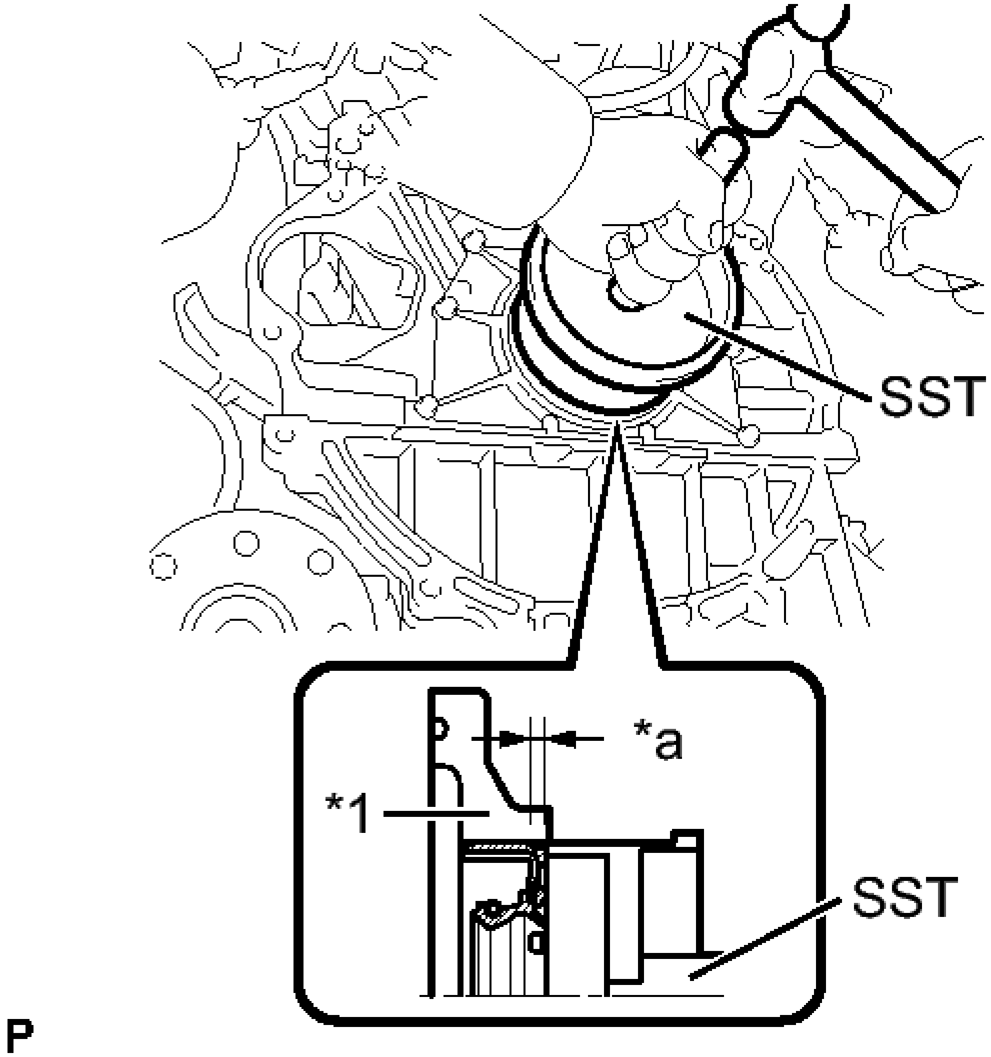

Fig. 76: Installing Engine Rear Oil Seal Using SST
Courtesy of TOYOTA MOTOR SALES, U.S.A., INC.

TEXT IN ILLUSTRATION

*1	Retainer
*a	Oil seal tap in depth (-0.5 to 0.5 mm)

b. Using SST and a hammer, tap in the engine rear oil seal.
    - **SST: 09223-15030**
    - **SST: 09950-70010**

09951-07150

Oil seal tap in depth

-0.5 to 0.5 mm (-0.0196 to 0.0196 in.)

2. **INSTALL DRIVE PLATE AND RING GEAR SUB-ASSEMBLY**
    a. Using SST, hold the crankshaft pulley.
        - **SST: 09213-70011**
          09213-70020
        - **SST: 09330-00021**
    b. Clean the 8 bolts and 8 bolt holes.
    c. Install the front drive plate spacer.

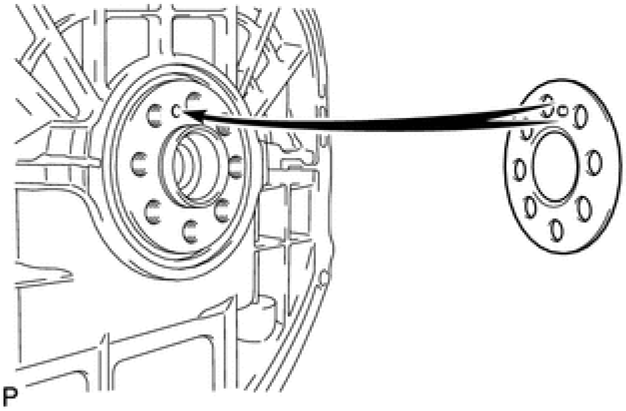

Fig. 77: Aligning Pin With Pin Hole
Courtesy of TOYOTA MOTOR SALES, U.S.A., INC.

HINT:

Align the pin of the front drive plate spacer with the pin hole of the crankshaft.

    d. Install the drive plate and ring gear sub-assembly and rear drive plate spacer onto the crankshaft.

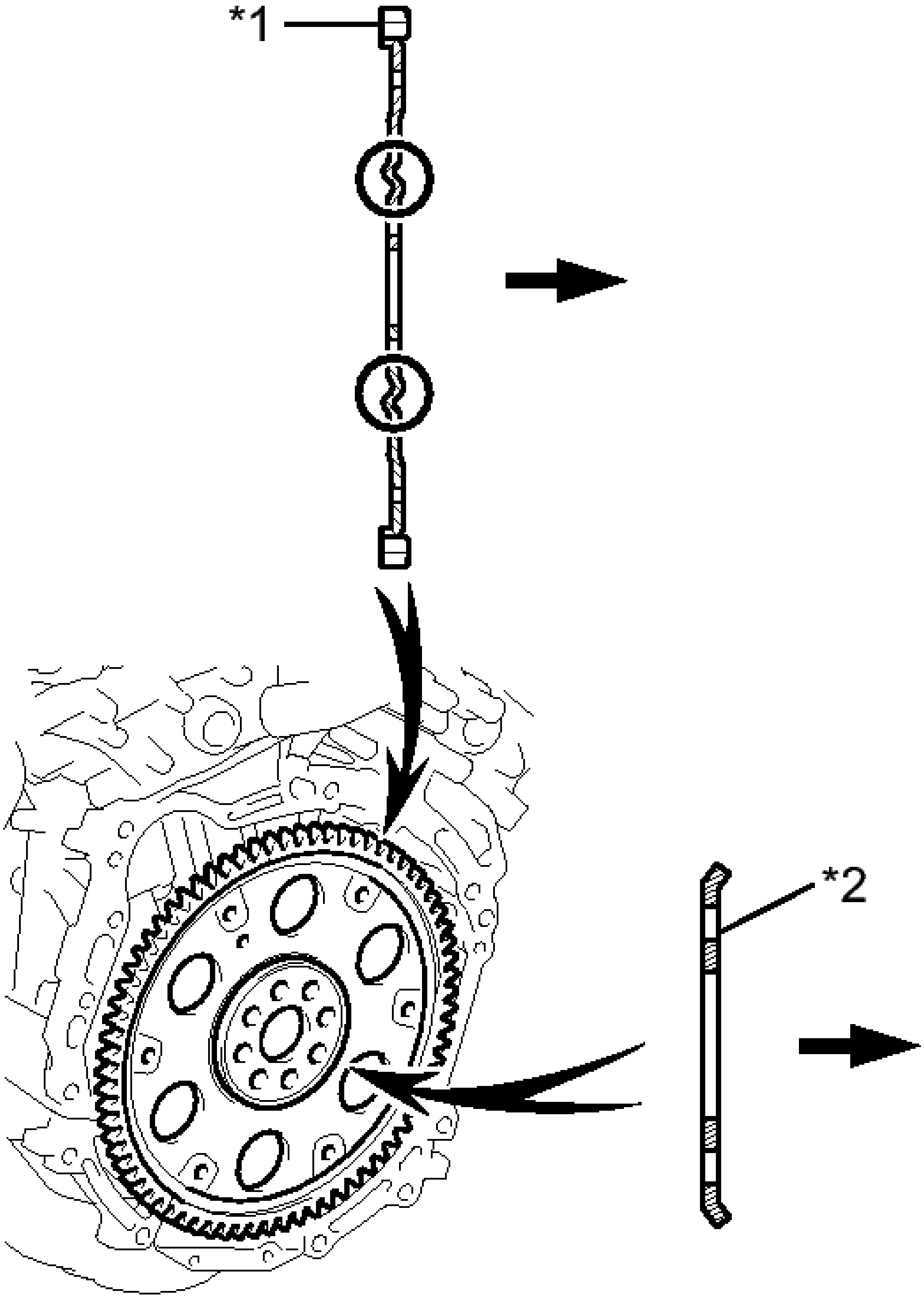

Fig. 78: Identifying Drive Plate/Ring Gear & Rear Drive Plate Spacer Position
Courtesy of TOYOTA MOTOR SALES, U.S.A., INC.

TEXT IN ILLUSTRATION

	Drive

*1	Plate
*2	Rear Spacer
	Transaxle Side

e. Apply adhesive to 2 or 3 threads of each bolt.

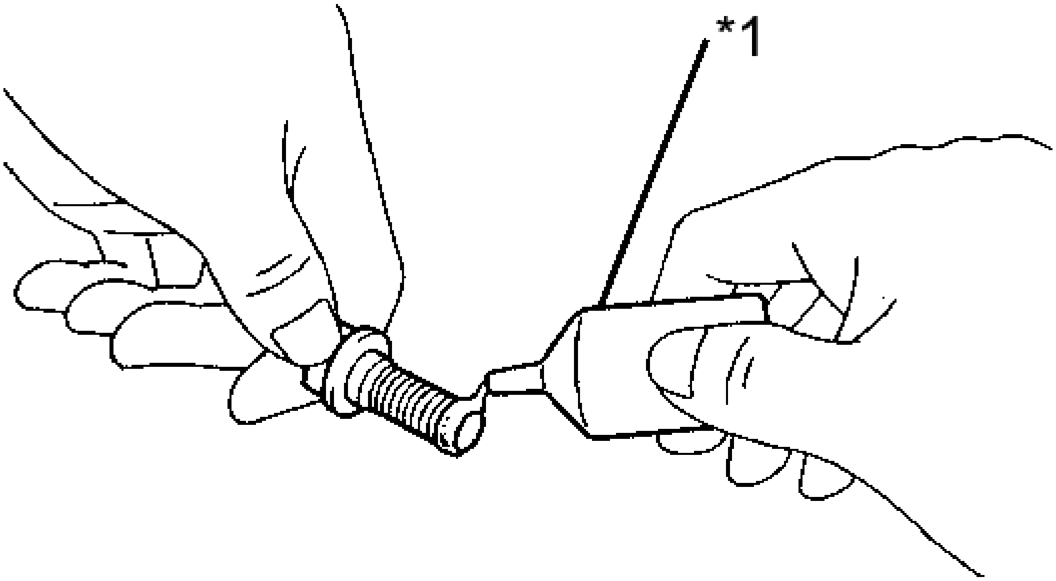

Fig. 79: Applying Adhesive To Bolt Threads
Courtesy of TOYOTA MOTOR SALES, U.S.A., INC.

TEXT IN ILLUSTRATION

*1	Adhesive

Adhesive

Toyota Genuine Adhesive 1324, Three Bond 1324 or equivalent

f. In several steps, uniformly install and tighten the 8 bolts in the sequence shown in the illustration.

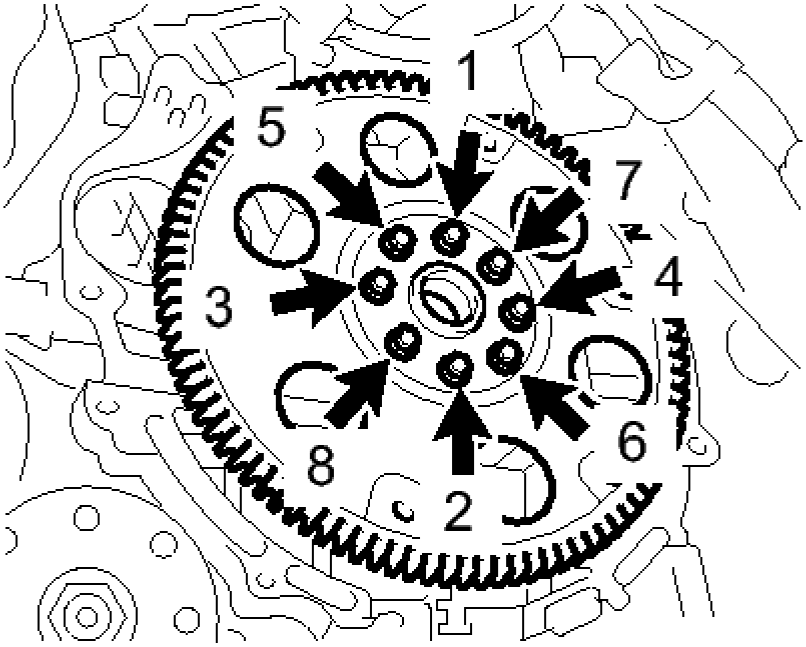

Fig. 80: Tightening Bolts In Sequence
Courtesy of TOYOTA MOTOR SALES, U.S.A., INC.

Torque: 83 N*m (846 kgf*cm, 61 ft.*lbf)

NOTE: **Do not start the engine for at least an hour after installing the drive plate.**

3. **INSTALL AUTOMATIC TRANSAXLE ASSEMBLY**

   Refer to **INSTALLATION**

ENGINE ASSEMBLY

COMPONENTS

ILLUSTRATION

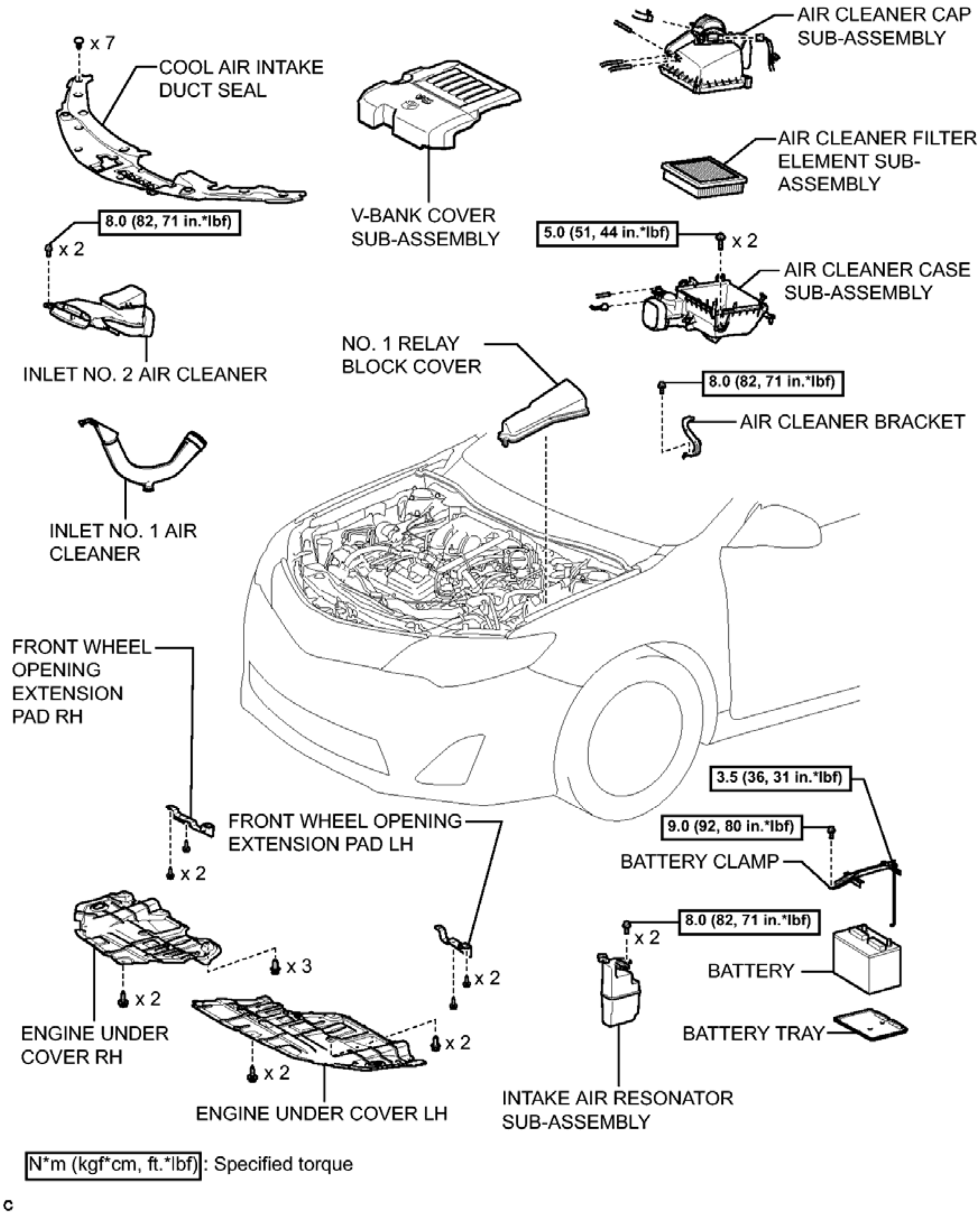
x 7
COOL AIR INTAKE DUCT SEAL
V-BANK COVER SUB-ASSEMBLY
AIR CLEANER CAP SUB-ASSEMBLY
AIR CLEANER FILTER ELEMENT SUB-ASSEMBLY
8.0 (82, 71 in.*lbf)
x 2
5.0 (51, 44 in.*lbf)
x 2
AIR CLEANER CASE SUB-ASSEMBLY
INLET NO. 2 AIR CLEANER
NO. 1 RELAY BLOCK COVER
8.0 (82, 71 in.*lbf)
AIR CLEANER BRACKET
INLET NO. 1 AIR CLEANER
FRONT WHEEL OPENING EXTENSION PAD RH
3.5 (36, 31 in.*lbf)
9.0 (92, 80 in.*lbf)
BATTERY CLAMP
FRONT WHEEL OPENING EXTENSION PAD LH
x 2
8.0 (82, 71 in.*lbf)
x 2
BATTERY
x 3
x 2
x 2
BATTERY TRAY
ENGINE UNDER COVER RH
x 2
x 2
ENGINE UNDER COVER LH
INTAKE AIR RESONATOR SUB-ASSEMBLY
N*m (kgf*cm, ft.*lbf): Specified torque
C

Fig. 81: Identifying Engine Assembly Replacement Components (1 Of 6)
Courtesy of TOYOTA MOTOR SALES, U.S.A., INC.

ILLUSTRATION

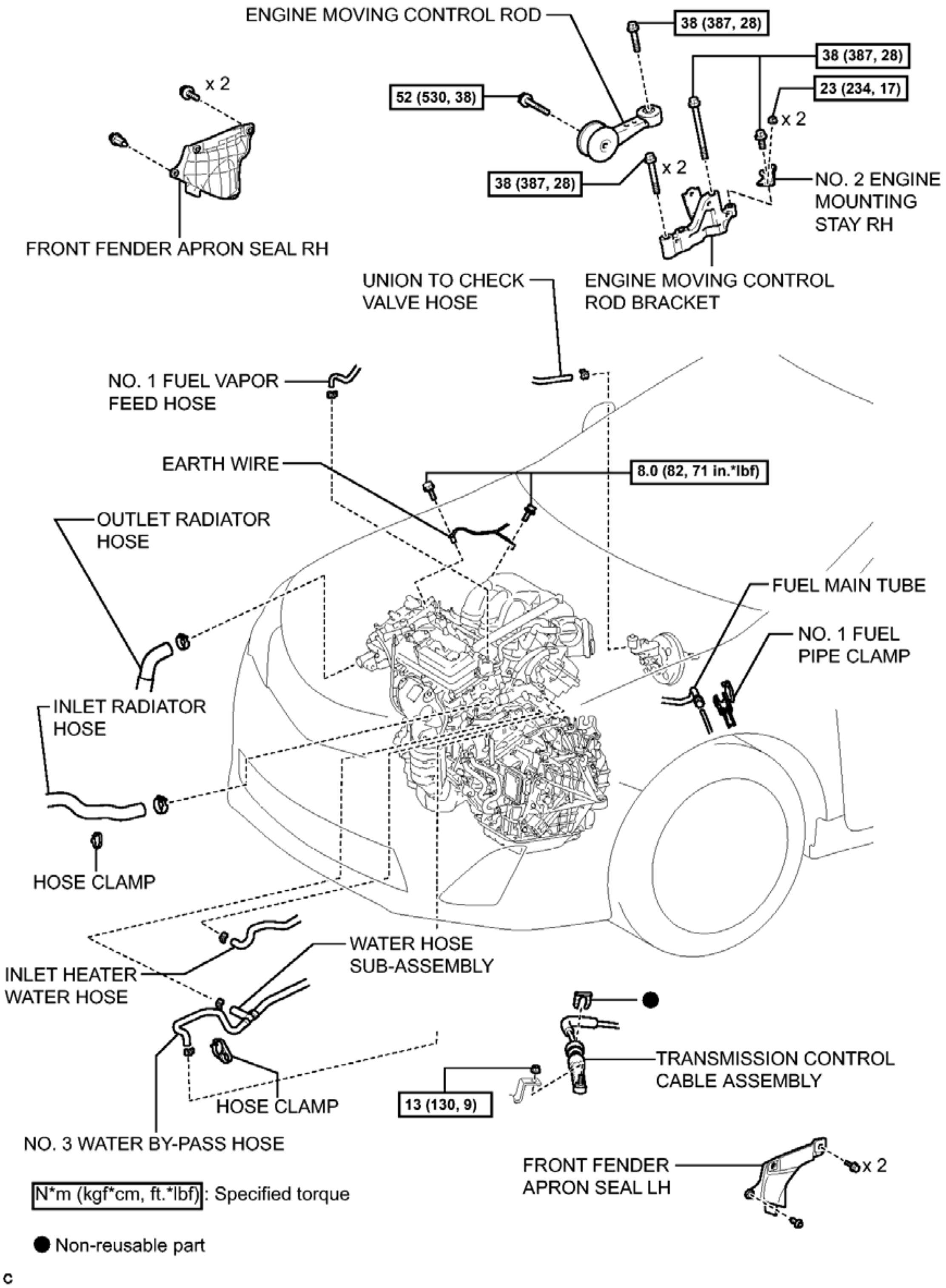
ENGINE MOVING CONTROL ROD
38 (387, 28)
38 (387, 28)
x 2
23 (234, 17)
52 (530, 38)
x 2
38 (387, 28)
x 2
NO. 2 ENGINE MOUNTING STAY RH
FRONT FENDER APRON SEAL RH
UNION TO CHECK VALVE HOSE
ENGINE MOVING CONTROL ROD BRACKET
NO. 1 FUEL VAPOR FEED HOSE
EARTH WIRE
8.0 (82, 71 in.*lbf)
OUTLET RADIATOR HOSE
FUEL MAIN TUBE
NO. 1 FUEL PIPE CLAMP
INLET RADIATOR HOSE
HOSE CLAMP
WATER HOSE SUB-ASSEMBLY
INLET HEATER WATER HOSE
●
TRANSMISSION CONTROL CABLE ASSEMBLY
13 (130, 9)
HOSE CLAMP
NO. 3 WATER BY-PASS HOSE
FRONT FENDER APRON SEAL LH
x 2
N*m (kgf*cm, ft.*lbf): Specified torque
● Non-reusable part
c

Fig. 82: Identifying Engine Assembly Replacement Components (2 Of 6)
Courtesy of TOYOTA MOTOR SALES, U.S.A., INC.

ILLUSTRATION

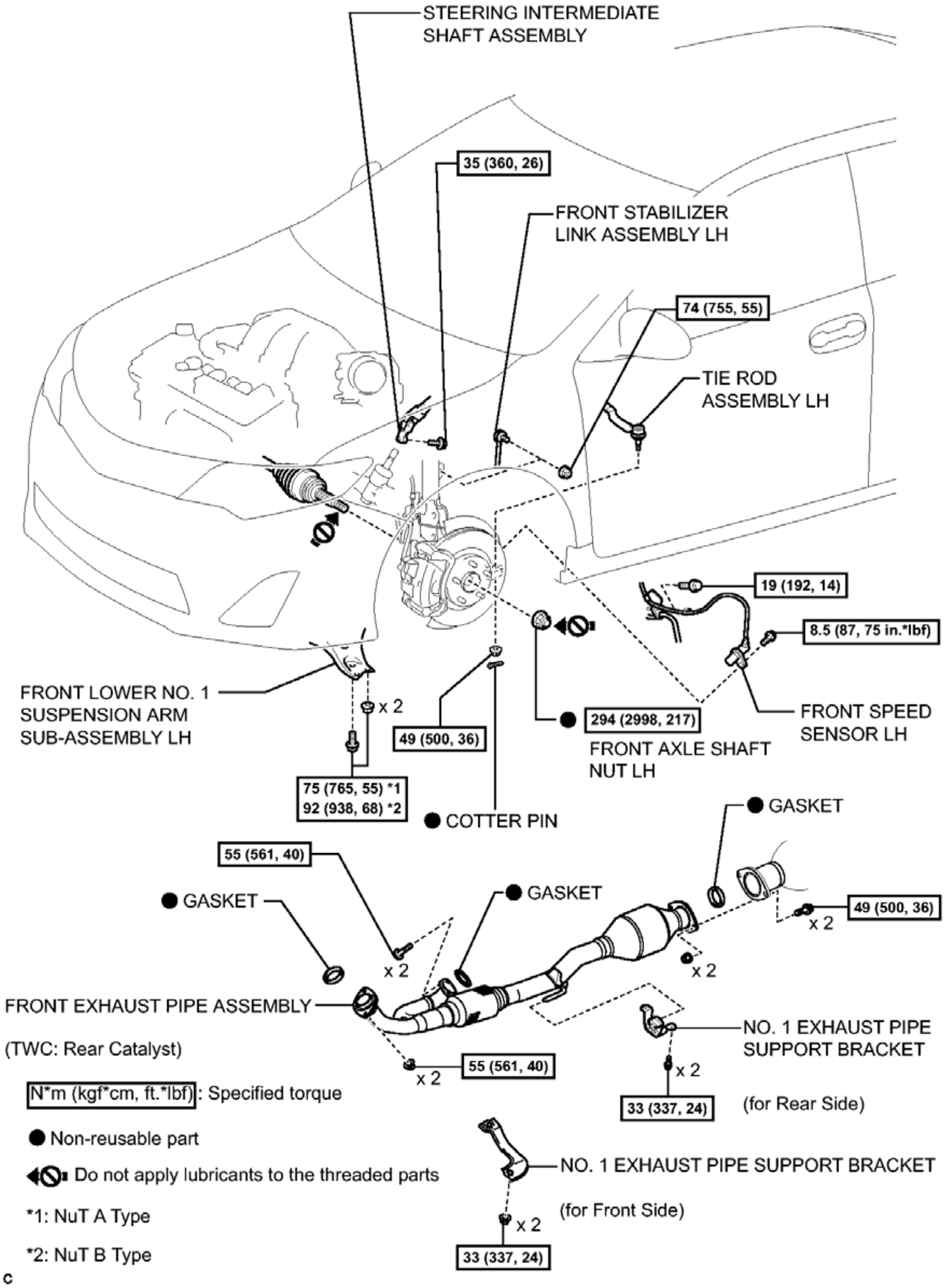
STEERING INTERMEDIATE SHAFT ASSEMBLY
35 (360, 26)
FRONT STABILIZER LINK ASSEMBLY LH
74 (755, 55)
TIE ROD ASSEMBLY LH
19 (192, 14)
8.5 (87, 75 in.*lbf)
FRONT SPEED SENSOR LH
FRONT LOWER NO. 1 SUSPENSION ARM SUB-ASSEMBLY LH
x 2
75 (765, 55) *1
92 (938, 68) *2
49 (500, 36)
● COTTER PIN
● 294 (2998, 217)
FRONT AXLE SHAFT NUT LH
● GASKET
55 (561, 40)
x 2
● GASKET
● GASKET
49 (500, 36)
x 2
x 2
FRONT EXHAUST PIPE ASSEMBLY
(TWC: Rear Catalyst)
55 (561, 40)
x 2
NO. 1 EXHAUST PIPE SUPPORT BRACKET
x 2
33 (337, 24)
(for Rear Side)
NO. 1 EXHAUST PIPE SUPPORT BRACKET
(for Front Side)
x 2
33 (337, 24)
N*m (kgf*cm, ft.*lbf) : Specified torque
● Non-reusable part
Do not apply lubricants to the threaded parts
*1: NuT A Type
*2: NuT B Type
c

Fig. 83: Identifying Engine Assembly Replacement Components (3 Of 6)
Courtesy of TOYOTA MOTOR SALES, U.S.A., INC.

ILLUSTRATION

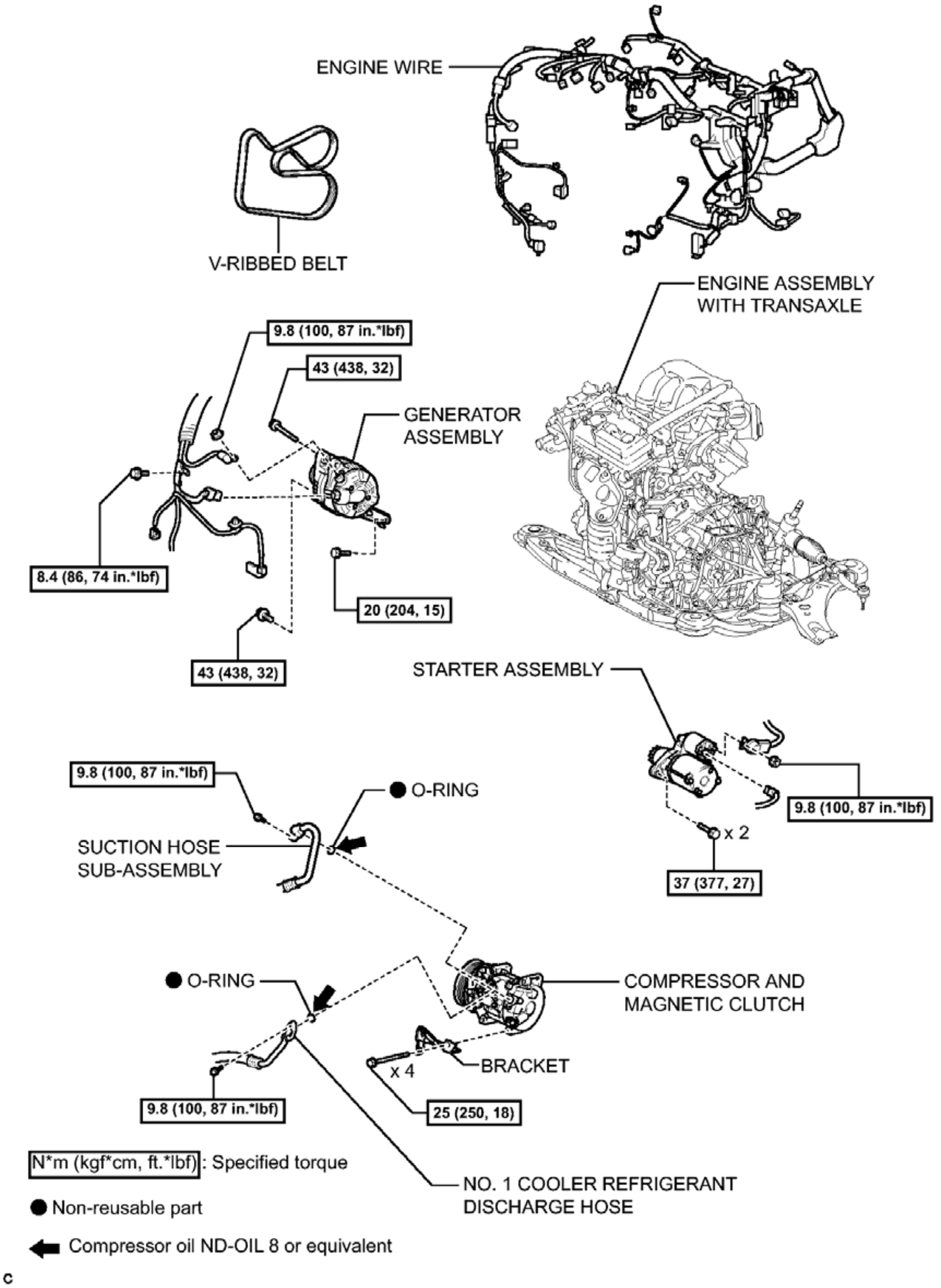
ENGINE WIRE
V-RIBBED BELT
ENGINE ASSEMBLY WITH TRANSAXLE
9.8 (100, 87 in.*lbf)
43 (438, 32)
GENERATOR ASSEMBLY
8.4 (86, 74 in.*lbf)
20 (204, 15)
43 (438, 32)
STARTER ASSEMBLY
9.8 (100, 87 in.*lbf)
x 2
37 (377, 27)
9.8 (100, 87 in.*lbf)
● O-RING
SUCTION HOSE SUB-ASSEMBLY
● O-RING
COMPRESSOR AND MAGNETIC CLUTCH
BRACKET
x 4
9.8 (100, 87 in.*lbf)
25 (250, 18)
N*m (kgf*cm, ft.*lbf) : Specified torque
● Non-reusable part
Compressor oil ND-OIL 8 or equivalent
NO. 1 COOLER REFRIGERANT DISCHARGE HOSE
c

Fig. 84: Identifying Engine Assembly Replacement Components (4 Of 6)
Courtesy of TOYOTA MOTOR SALES, U.S.A., INC.

ILLUSTRATION

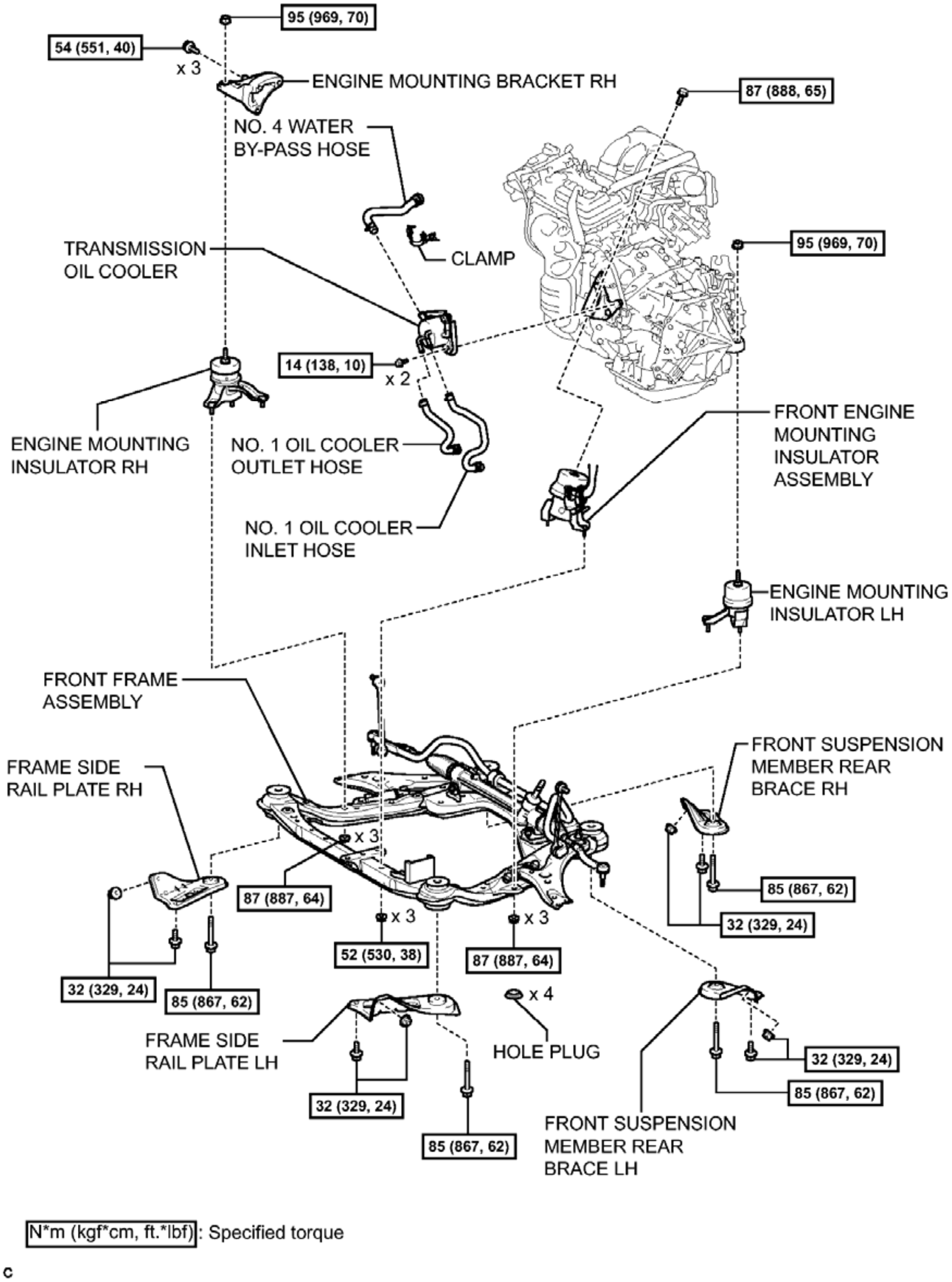
95 (969, 70)
54 (551, 40)
x 3
ENGINE MOUNTING BRACKET RH
87 (888, 65)
NO. 4 WATER BY-PASS HOSE
CLAMP
TRANSMISSION OIL COOLER
95 (969, 70)
14 (138, 10)
x 2
ENGINE MOUNTING INSULATOR RH
NO. 1 OIL COOLER OUTLET HOSE
NO. 1 OIL COOLER INLET HOSE
FRONT ENGINE MOUNTING INSULATOR ASSEMBLY
ENGINE MOUNTING INSULATOR LH
FRONT FRAME ASSEMBLY
FRAME SIDE RAIL PLATE RH
FRONT SUSPENSION MEMBER REAR BRACE RH
x 3
87 (887, 64)
x 3
x 3
85 (867, 62)
32 (329, 24)
52 (530, 38)
87 (887, 64)
32 (329, 24)
85 (867, 62)
x 4
HOLE PLUG
FRAME SIDE RAIL PLATE LH
32 (329, 24)
85 (867, 62)
32 (329, 24)
85 (867, 62)
FRONT SUSPENSION MEMBER REAR BRACE LH
N*m (kgf*cm, ft.*lbf): Specified torque
c

Fig. 85: Identifying Engine Assembly Replacement Components (5 Of 6)
Courtesy of TOYOTA MOTOR SALES, U.S.A., INC.

ILLUSTRATION

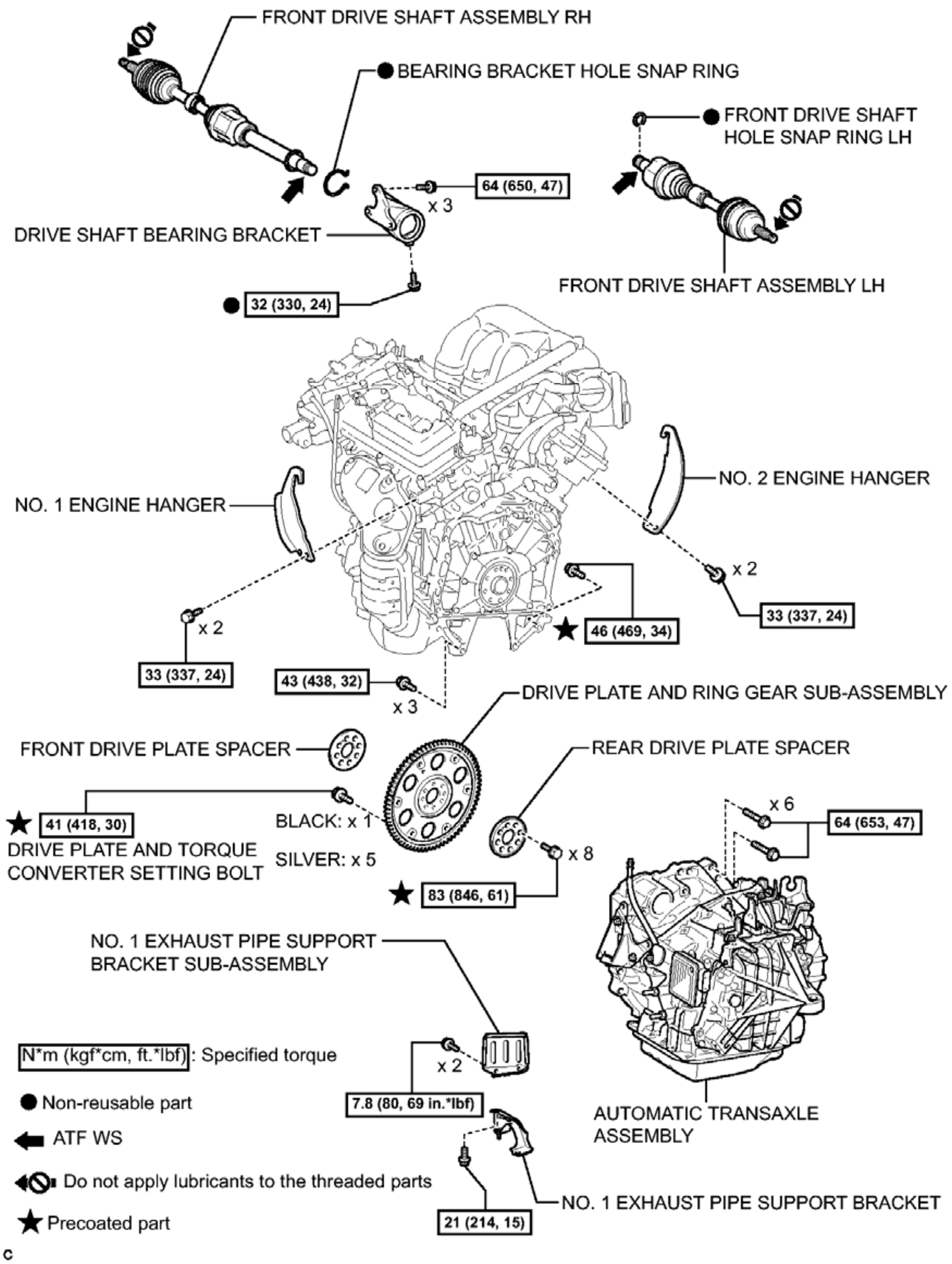
FRONT DRIVE SHAFT ASSEMBLY RH
● BEARING BRACKET HOLE SNAP RING
● FRONT DRIVE SHAFT HOLE SNAP RING LH
64 (650, 47)
x 3
DRIVE SHAFT BEARING BRACKET
FRONT DRIVE SHAFT ASSEMBLY LH
● 32 (330, 24)
NO. 2 ENGINE HANGER
NO. 1 ENGINE HANGER
x 2
33 (337, 24)
★ 46 (469, 34)
x 2
33 (337, 24)
43 (438, 32)
x 3
DRIVE PLATE AND RING GEAR SUB-ASSEMBLY
FRONT DRIVE PLATE SPACER
REAR DRIVE PLATE SPACER
x 6
64 (653, 47)
★ 41 (418, 30)
BLACK: x 1
DRIVE PLATE AND TORQUE CONVERTER SETTING BOLT
SILVER: x 5
x 8
★ 83 (846, 61)
NO. 1 EXHAUST PIPE SUPPORT BRACKET SUB-ASSEMBLY
N*m (kgf*cm, ft.*lbf): Specified torque
x 2
● Non-reusable part
7.8 (80, 69 in.*lbf)
AUTOMATIC TRANSAXLE ASSEMBLY
ATF WS
Do not apply lubricants to the threaded parts
NO. 1 EXHAUST PIPE SUPPORT BRACKET
★ Precoated part
21 (214, 15)
c

Fig. 86: Identifying Engine Assembly Replacement Components (6 Of 6)
Courtesy of TOYOTA MOTOR SALES, U.S.A., INC.

REMOVAL

REMOVAL

1. **PRECAUTION**

   WARNING: **The engine assembly with transmission is very heavy. Be sure to follow the procedure described in the repair manual, or the engine lifter may suddenly drop.**

   NOTE: After turning the engine switch off, waiting time may be required before disconnecting the cable from the negative (-) battery terminal. Therefore, make sure to read the disconnecting the cable from the negative (-) battery terminal notices before proceeding with work. Refer to PRECAUTION .

2. **RECOVER REFRIGERANT FROM AIR CONDITIONING SYSTEM** . Refer to **REPLACEMENT - Step 1**
3. **DISCHARGE FUEL SYSTEM PRESSURE**

   Refer to **PRECAUTION**

4. **ALIGN FRONT WHEELS FACING STRAIGHT AHEAD**
5. **DISCONNECT CABLE FROM NEGATIVE BATTERY TERMINAL**

   NOTE: When disconnecting the cable, some systems need to be initialized after the cable is reconnected. Refer to INITIALIZATION .

6. **REMOVE FRONT WHEELS**
7. **REMOVE FRONT WHEEL OPENING EXTENSION PAD RH**
8. **REMOVE ENGINE UNDER COVER RH**
9. **REMOVE FRONT FENDER APRON SEAL RH**
10. **REMOVE FRONT WHEEL OPENING EXTENSION PAD LH**
11. **REMOVE ENGINE UNDER COVER LH**
12. **REMOVE FRONT FENDER APRON SEAL LH**
13. **DRAIN ENGINE OIL** . Refer to **REPLACEMENT - Step 1**
14. **DRAIN ENGINE COOLANT** . Refer to **REPLACEMENT - Step 1**
15. **DRAIN AUTOMATIC TRANSAXLE FLUID** . Refer to **REPLACEMENT - Step 1**
16. **REMOVE COOL AIR INTAKE DUCT SEAL** . Refer to **REMOVAL - Step 1**
17. **REMOVE V-BANK COVER SUB-ASSEMBLY**
    1. Hold the front of the V-bank cover sub-assembly and raise it to disengage the 2 retainers on the front of the V-bank cover sub-assembly. Continue to raise the V-bank cover sub-assembly to disengage the retainer on the rear of the V-bank cover sub-assembly and remove the V-bank cover sub-assembly.

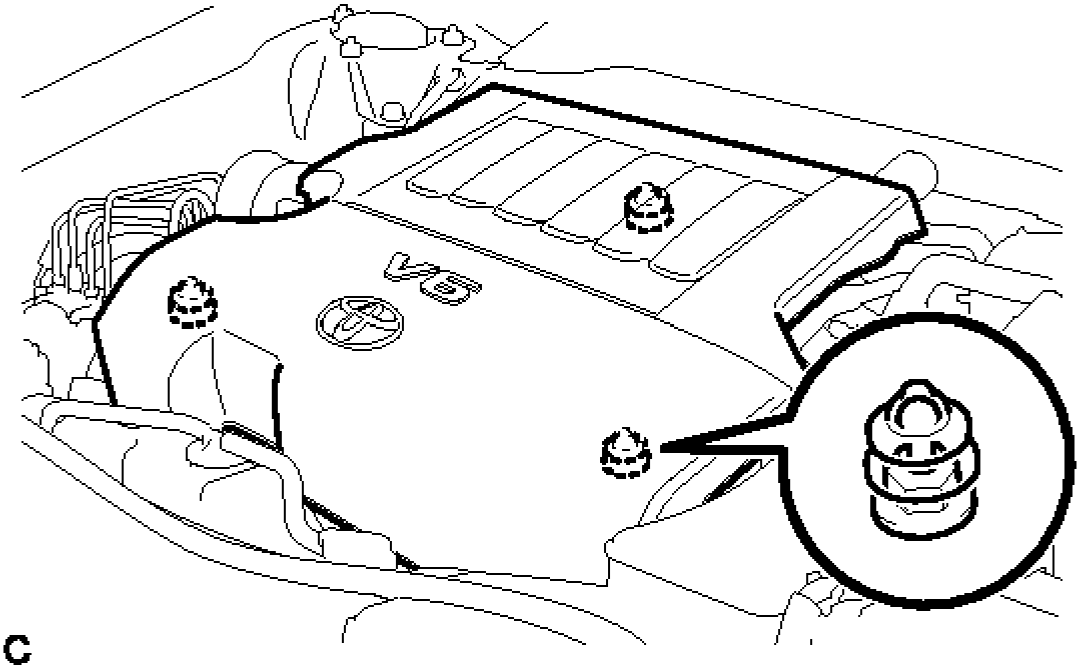

Fig. 87: Identifying V-Bank Cover Sub-Assembly Retainers
Courtesy of TOYOTA MOTOR SALES, U.S.A., INC.

NOTE: **Attempting to disengage both front and rear retainers at the same time may cause the V-bank cover sub-assembly to break.**

18. **REMOVE INLET NO. 2 AIR CLEANER**
    a. Disconnect the 2 wire harness clamps and vacuum hose clamp.

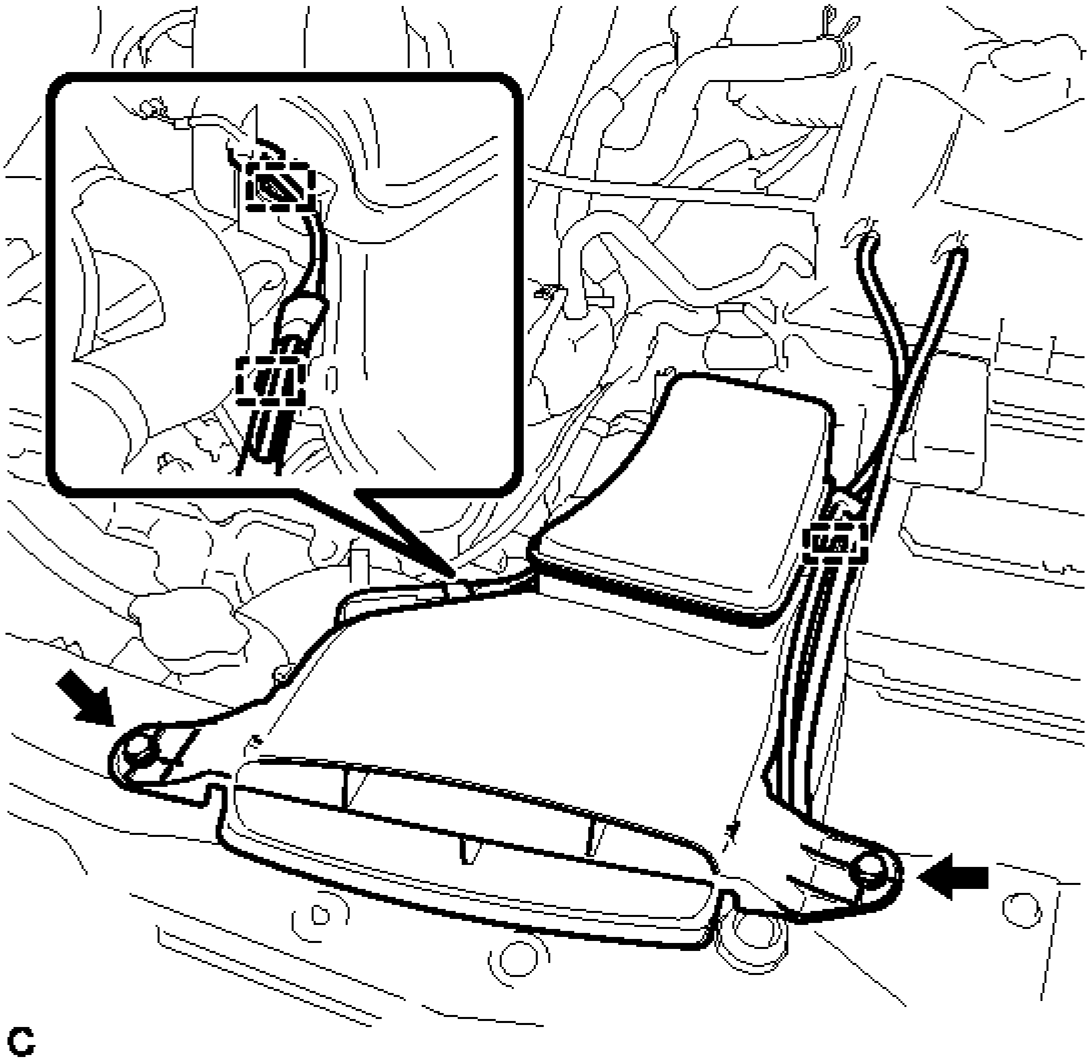

Fig. 88: Identifying Wire Harness Clamps, Vacuum Hose Clamp, Inlet No. 2 Air Cleaner And Bolts
Courtesy of TOYOTA MOTOR SALES, U.S.A., INC.

b. Remove the 2 bolts and inlet No. 2 air cleaner.

19. **REMOVE AIR CLEANER CAP SUB-ASSEMBLY** . Refer to **REMOVAL - Step 7**
20. **REMOVE AIR CLEANER FILTER ELEMENT SUB-ASSEMBLY**
21. **REMOVE AIR CLEANER CASE SUB-ASSEMBLY**
    a. Disconnect the wire harness clamp, connector, vacuum hose and No. 1 fuel vapor feed hose.

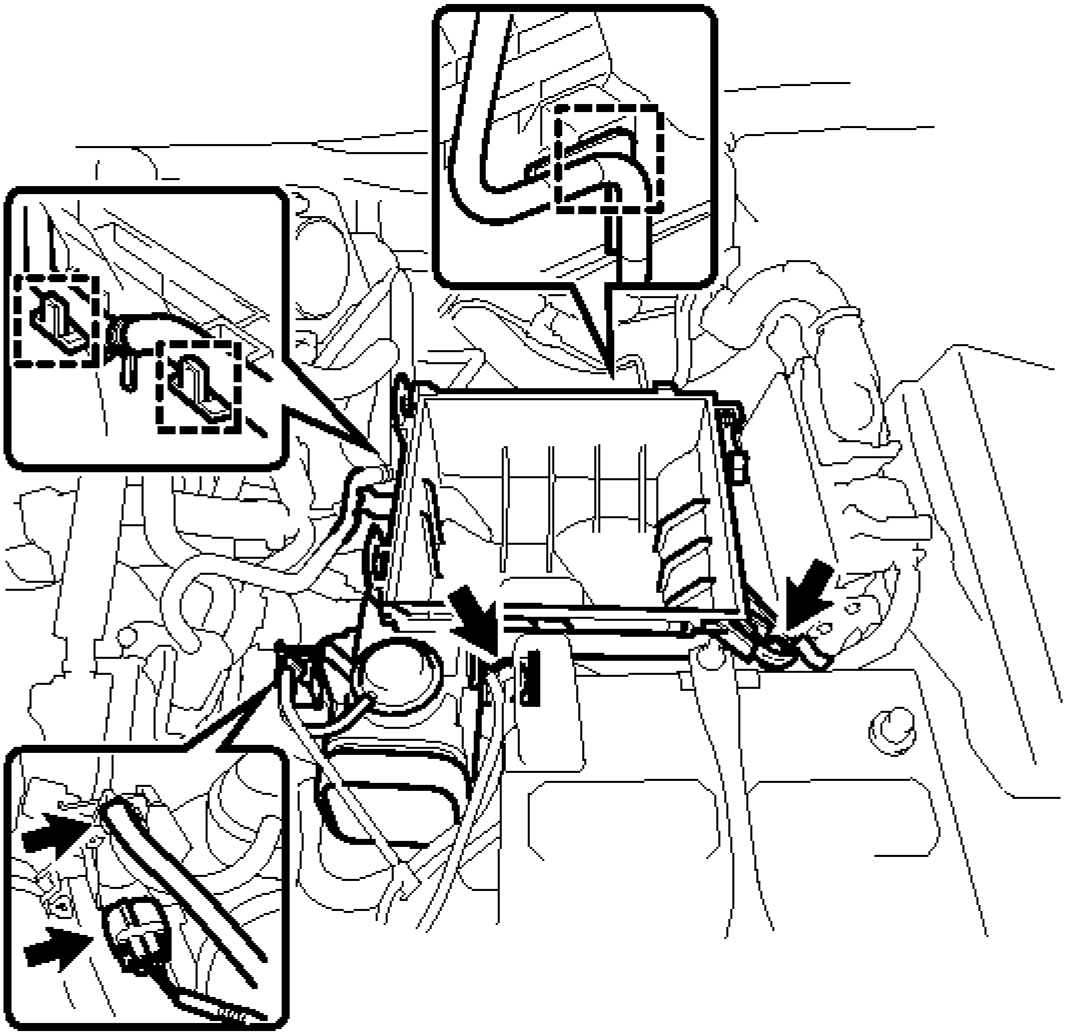

Fig. 89: Identifying Wire Harness Clamp, Connector, Vacuum Hose And No. 1 Fuel Vapor Feed Hose
Courtesy of TOYOTA MOTOR SALES, U.S.A., INC.

b. Remove the 2 bolts and air cleaner case sub-assembly.

22. **REMOVE BATTERY**

a. Disconnect the positive (+) cable from the positive (+) battery terminal.

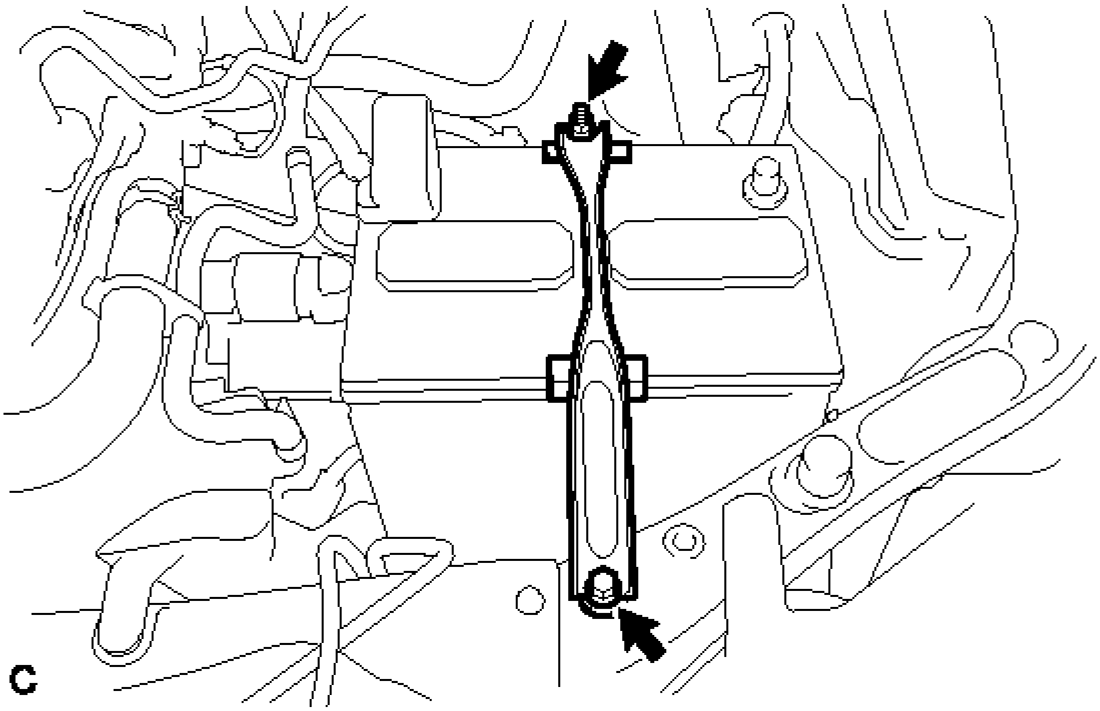

Fig. 90: Identifying Battery And Battery Tray Bolts
Courtesy of TOYOTA MOTOR SALES, U.S.A., INC.

b. Loosen the nut and remove the bolt.
c. Remove the battery and battery tray.

23. **REMOVE INLET NO. 1 AIR CLEANER**
    a. Disengage the pin and remove the inlet No. 1 air cleaner.

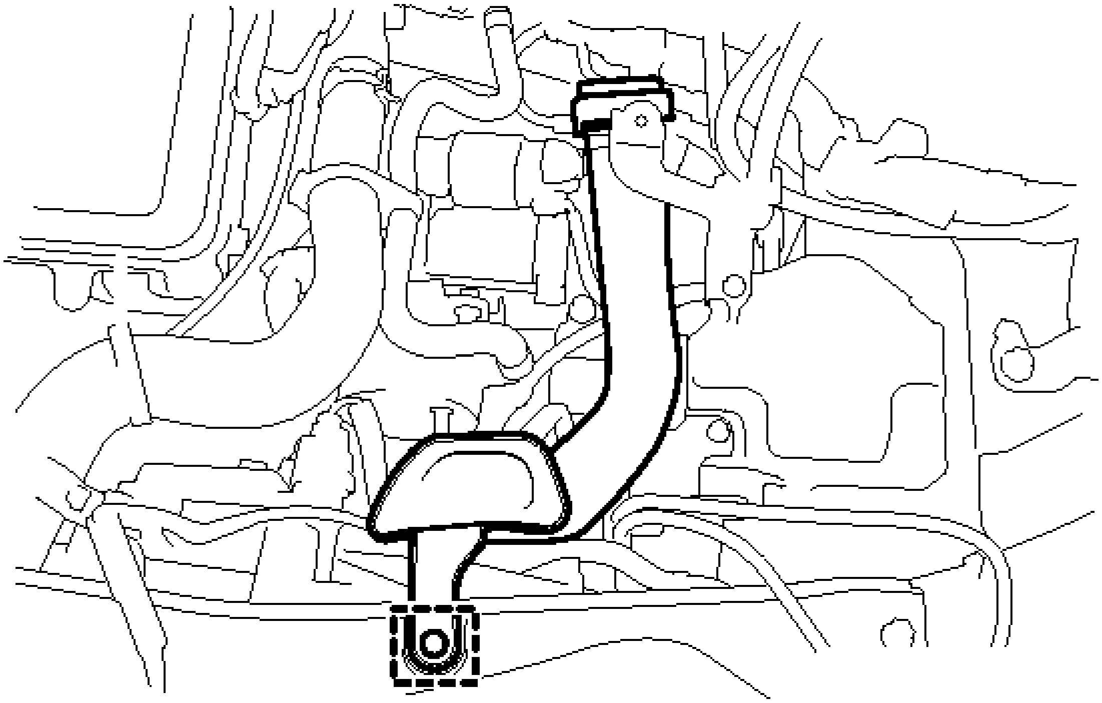

Fig. 91: Identifying Inlet No. 1 Air Cleaner
Courtesy of TOYOTA MOTOR SALES, U.S.A., INC.

24. REMOVE INTAKE AIR RESONATOR SUB-ASSEMBLY

a. Disengage the claw and disconnect the 2 vacuum hoses.

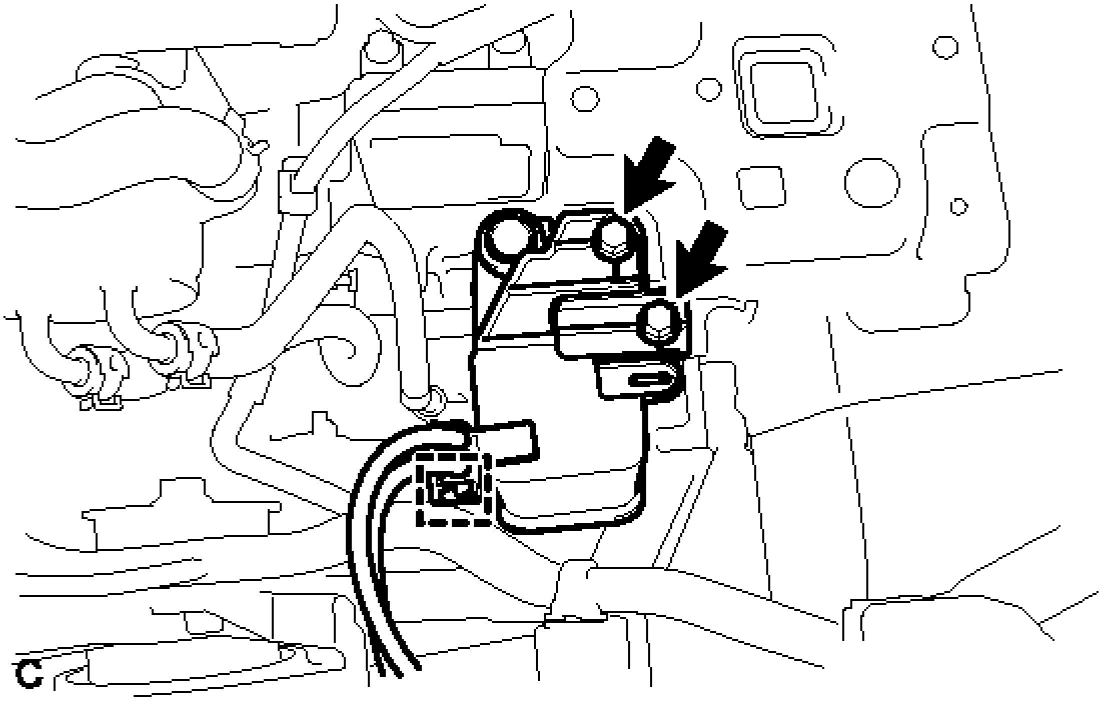

Fig. 92: Identifying Intake Air Resonator Sub-Assembly Bolts

Courtesy of TOYOTA MOTOR SALES, U.S.A., INC.

b. Remove the 2 bolts and intake air resonator sub-assembly.

25. **REMOVE NO. 2 ENGINE MOUNTING STAY RH**
    a. Remove the bolt, 2 nuts and No. 2 engine mounting stay RH.

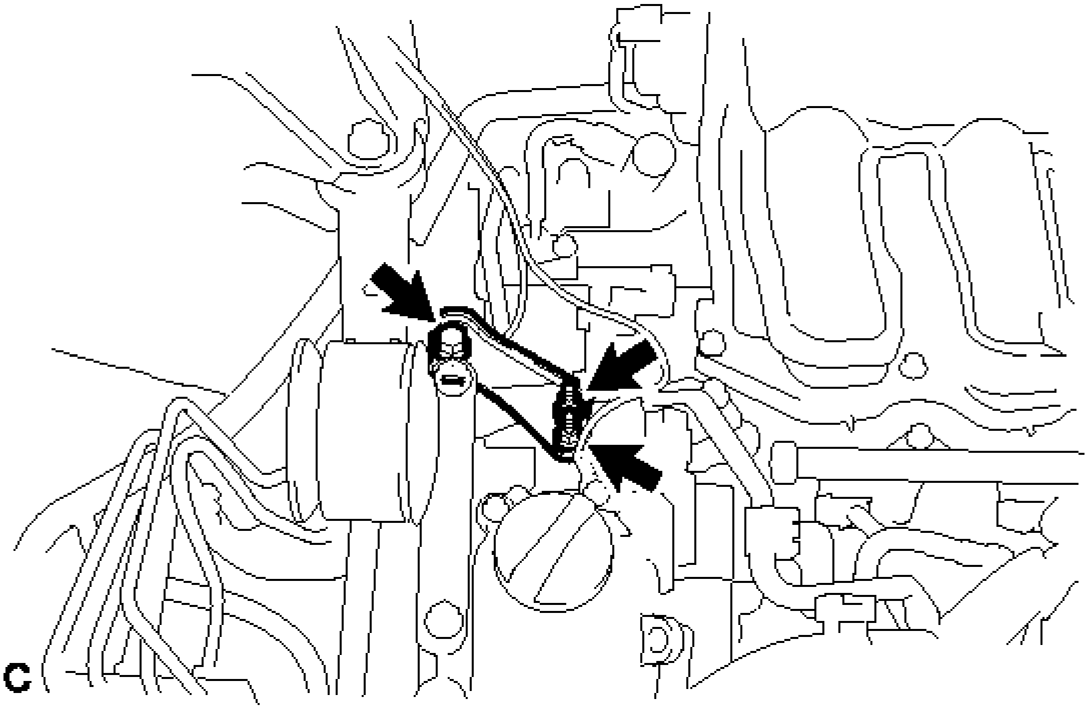

Fig. 93: Identifying No. 2 Engine Mounting Stay Bolts And Nuts RH
Courtesy of TOYOTA MOTOR SALES, U.S.A., INC.

26. **REMOVE ENGINE MOVING CONTROL ROD BRACKET**
    a. Remove the 4 bolts and engine moving control rod bracket with engine moving control rod.

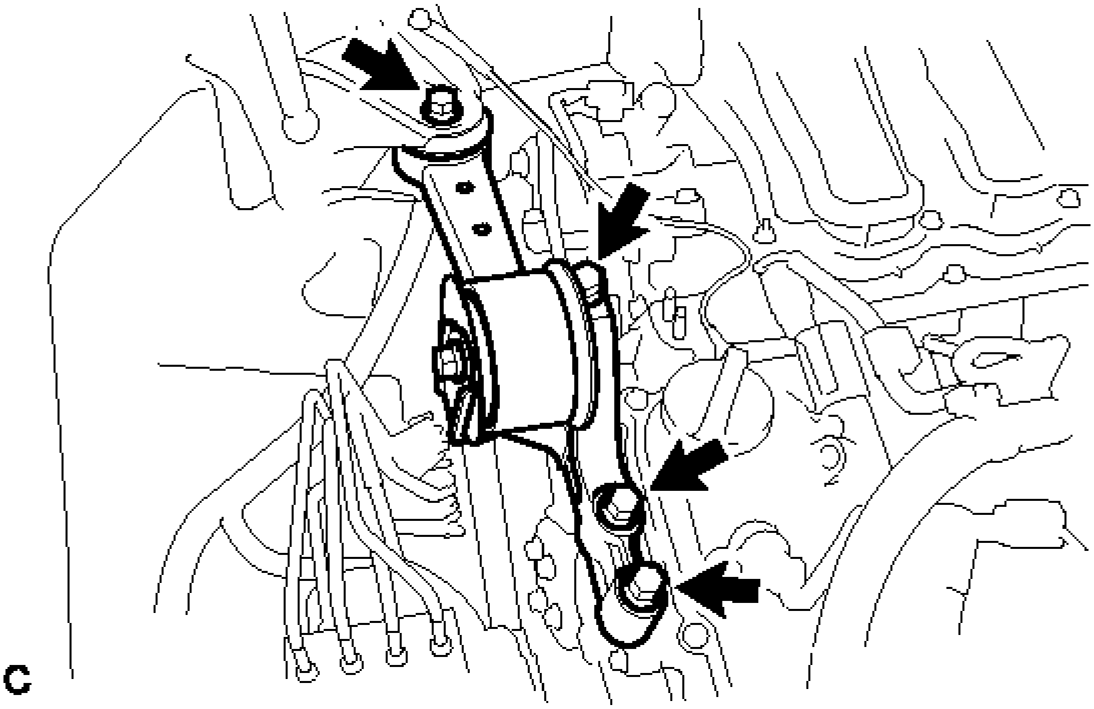

Fig. 94: Identifying Engine Moving Control Rod Bracket Bolts
Courtesy of TOYOTA MOTOR SALES, U.S.A., INC.

27. **REMOVE ENGINE MOVING CONTROL ROD**
    a. Remove the bolt and engine moving control rod from the engine moving control rod bracket.

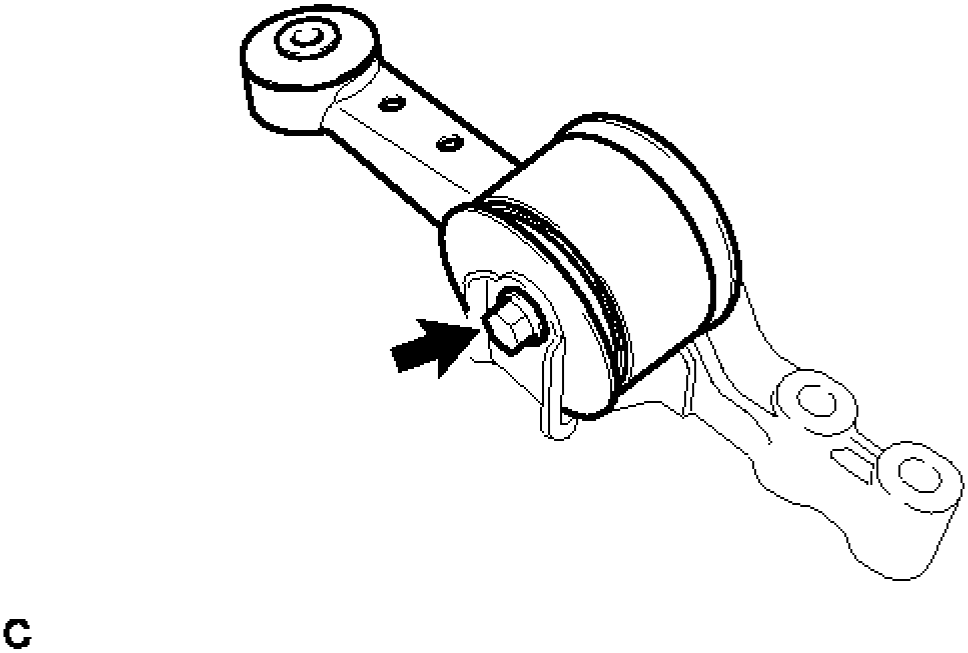

Fig. 95: Identifying Engine Moving Control Rod Bolt

Courtesy of TOYOTA MOTOR SALES, U.S.A., INC.

HINT:

Perform this procedure only when replacement of the engine moving control rod is necessary.

28. **SEPARATE EARTH WIRE**
    a. Remove the 2 bolts and separate the earth wire from the engine assembly.

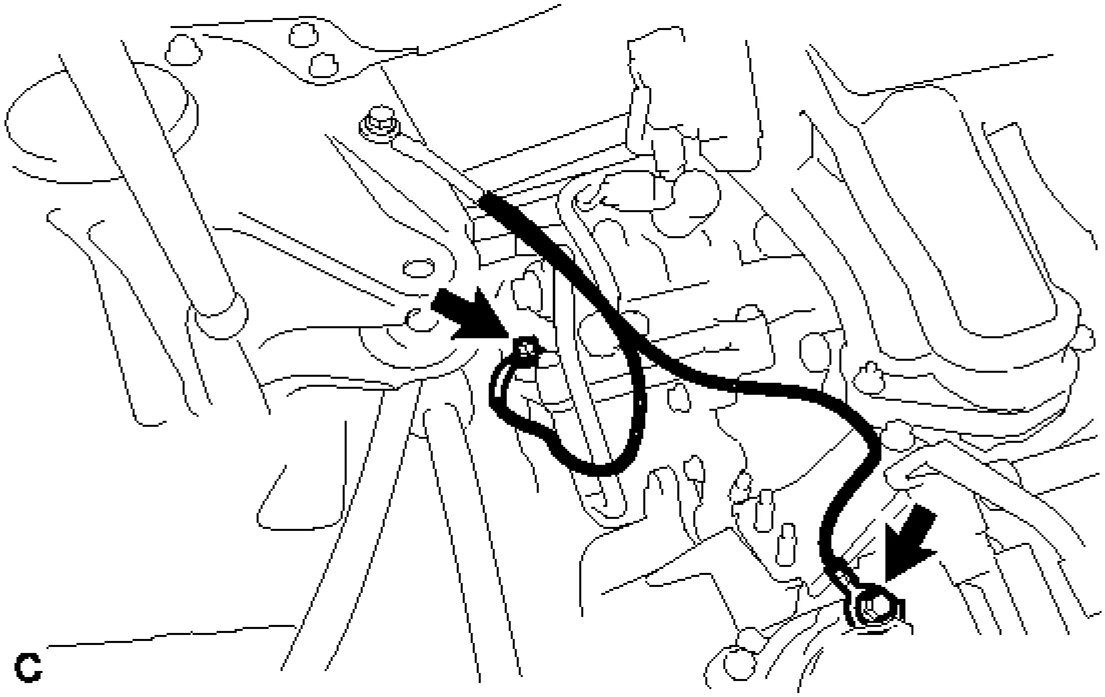

Fig. 96: Identifying Earth Wire And Bolts
Courtesy of TOYOTA MOTOR SALES, U.S.A., INC.

29. **DISCONNECT NO. 1 FUEL VAPOR FEED HOSE**
    a. Disconnect the No. 1 fuel vapor feed hose.

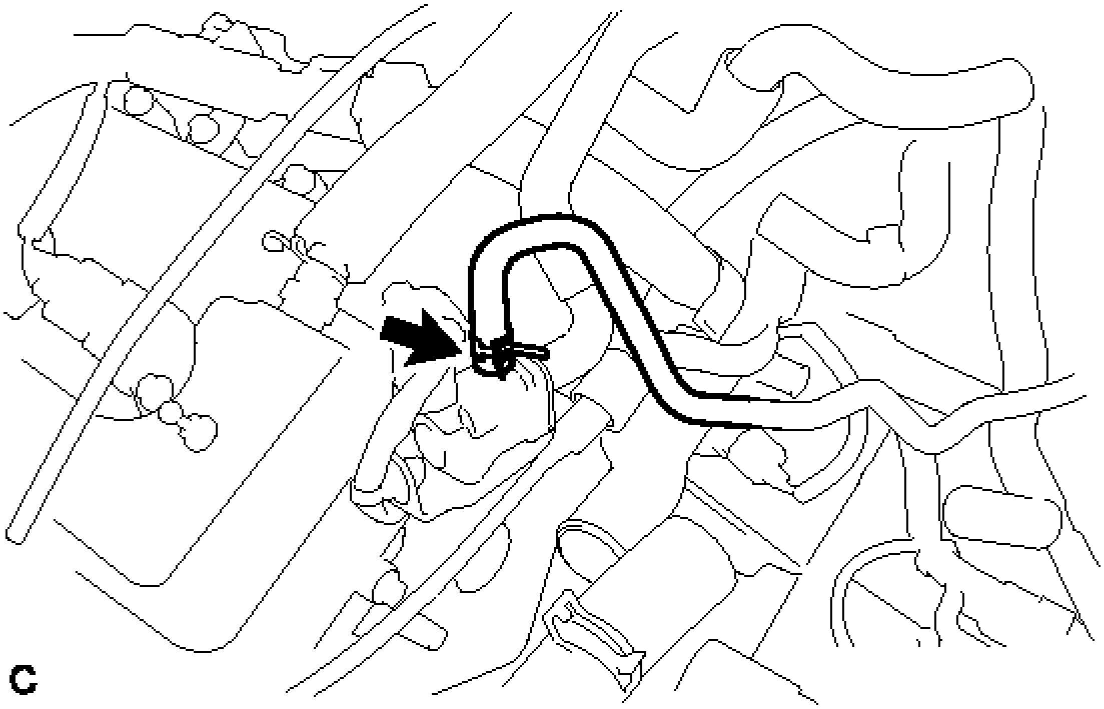

Fig. 97: Identifying No. 1 Fuel Vapor Feed Hose
Courtesy of TOYOTA MOTOR SALES, U.S.A., INC.

30. **DISCONNECT UNION TO CHECK VALVE HOSE**
    a. Disconnect the union to check valve hose from the brake booster.

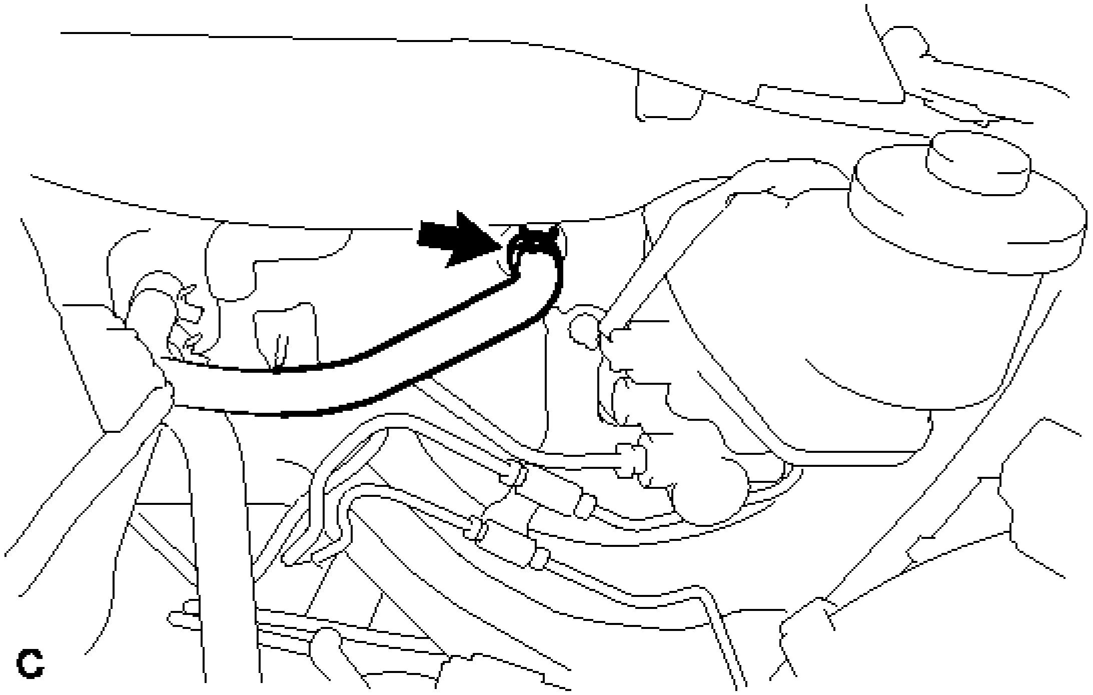

Fig. 98: Identifying Union And Check Valve Hose

Courtesy of TOYOTA MOTOR SALES, U.S.A., INC.

31. **DISCONNECT INLET RADIATOR HOSE**
    a. Remove the hose clamp to separate the air fuel ratio sensor wire from the inlet radiator hose.

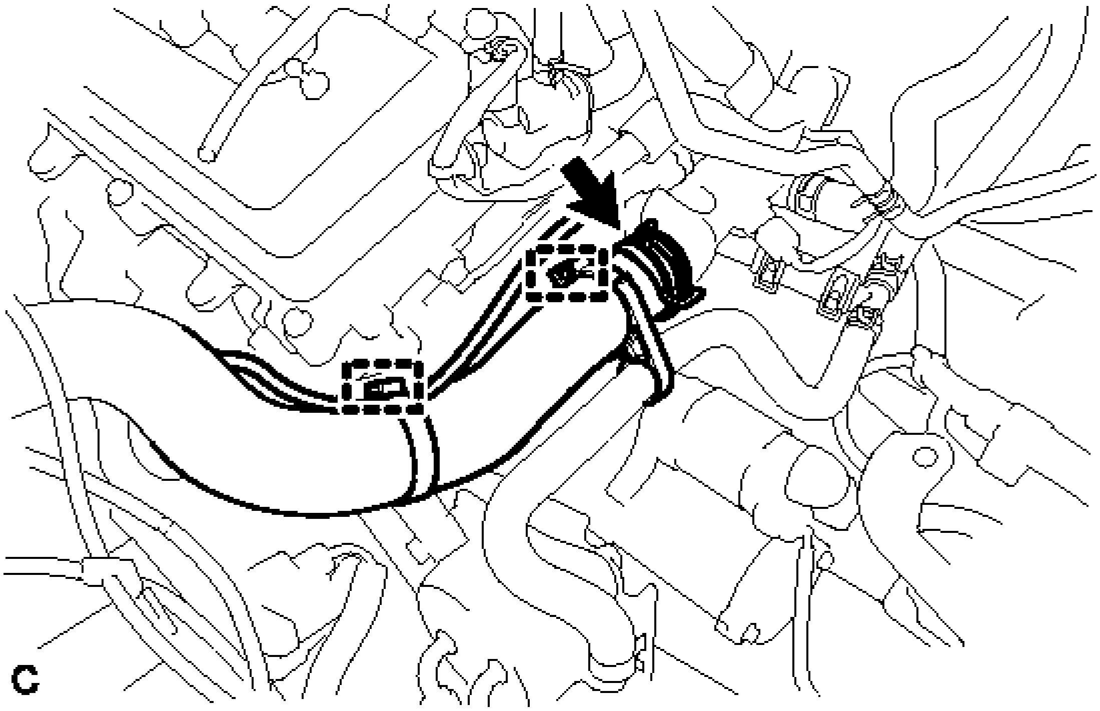

Fig. 99: Identifying Inlet Radiator Hose Clamp
Courtesy of TOYOTA MOTOR SALES, U.S.A., INC.

    b. Remove the hose clamp to separate the No. 3 water by-pass hose from the inlet radiator hose.
    c. Disconnect the inlet radiator hose.

32. **DISCONNECT OUTLET RADIATOR HOSE**
    a. Disconnect the outlet radiator hose.

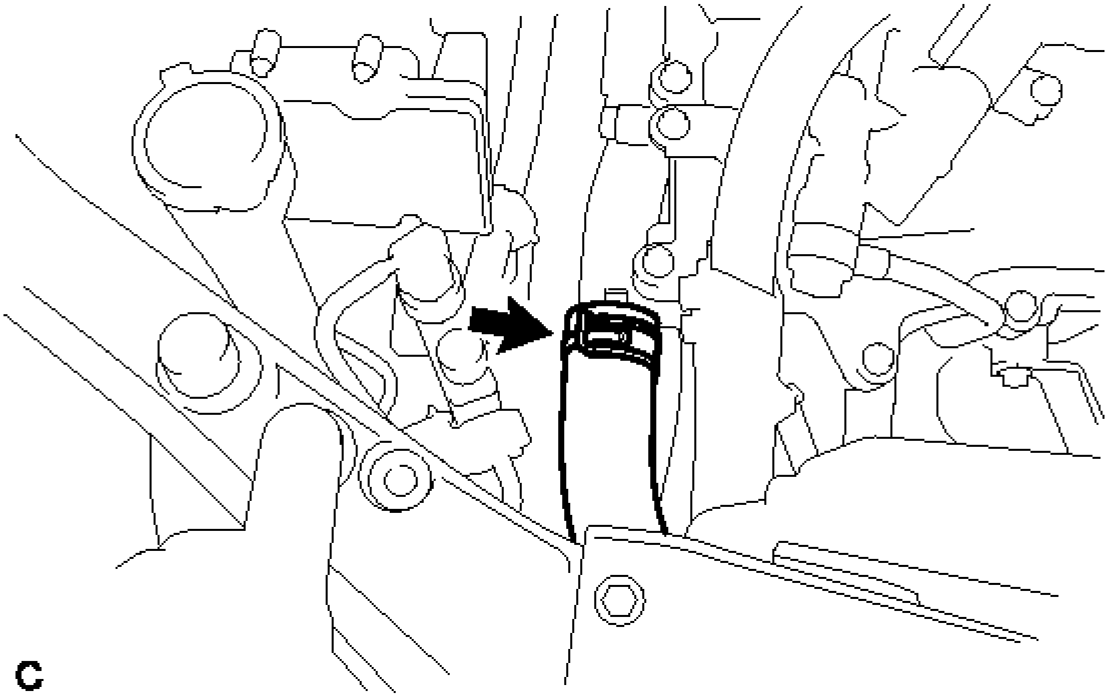

Fig. 100: Identifying Outlet Radiator Hose Clamp
Courtesy of TOYOTA MOTOR SALES, U.S.A., INC.

33. **DISCONNECT NO. 3 WATER BY-PASS HOSE**
    a. Disconnect the No. 3 water by-pass hose from the transmission oil cooler.

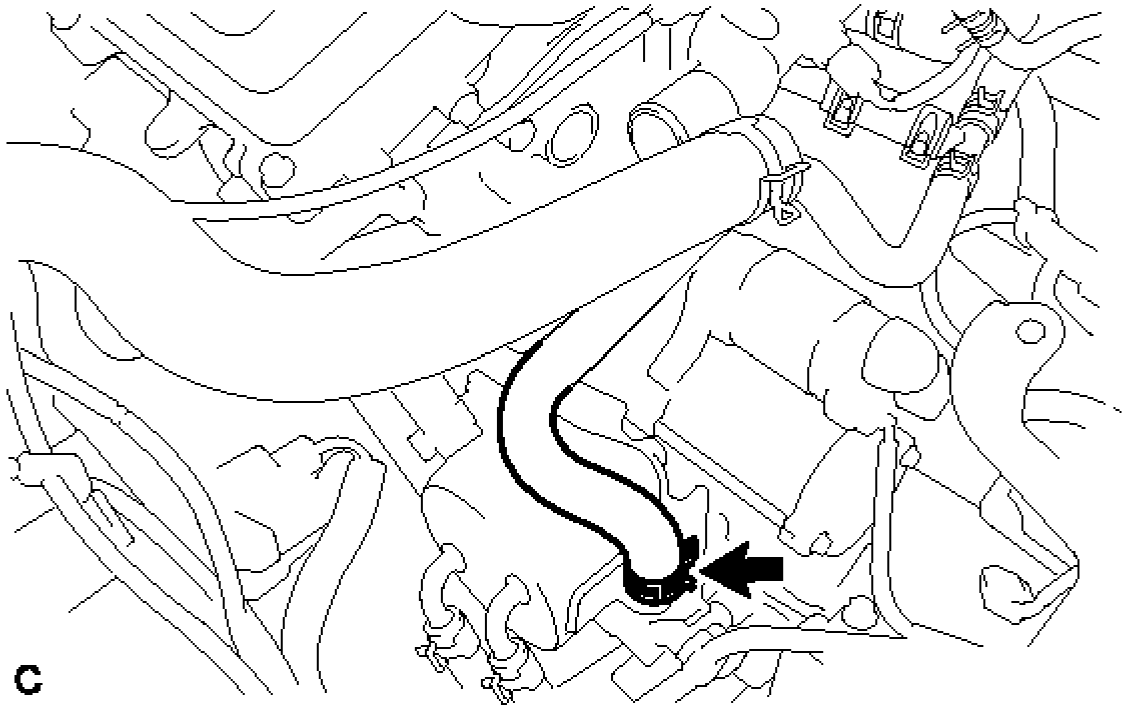

Fig. 101: Identifying No. 3 Water By-Pass Hose Clamp

Courtesy of TOYOTA MOTOR SALES, U.S.A., INC.

34. **DISCONNECT INLET HEATER WATER HOSE**
    a. Disconnect the inlet heater water hose.

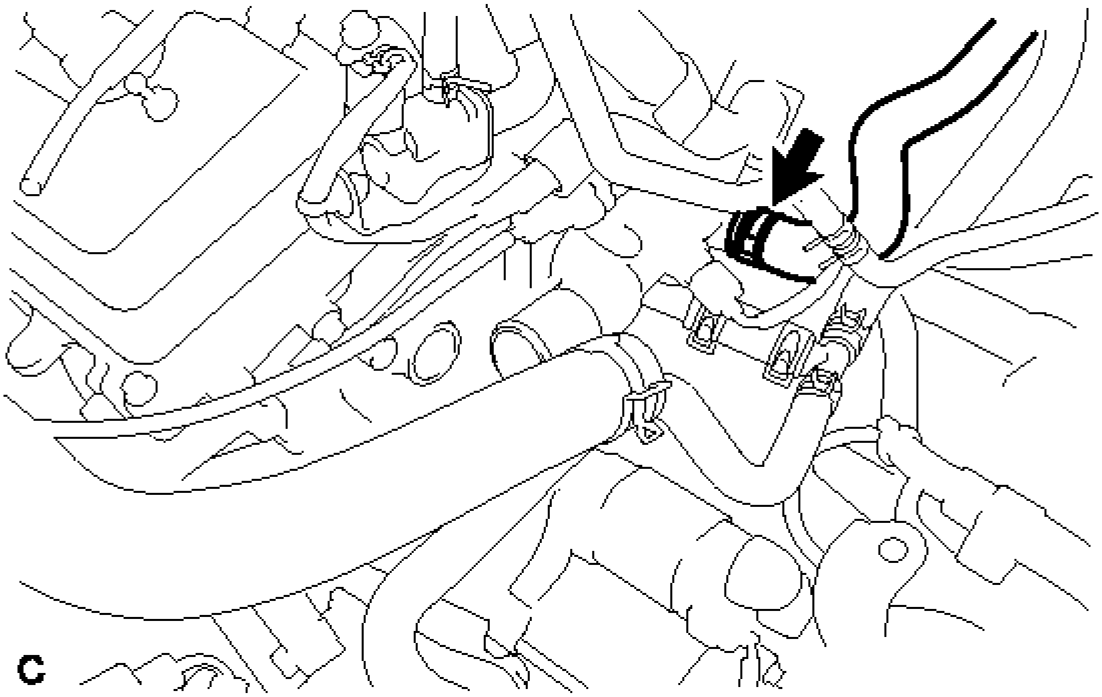

Fig. 102: Identifying Inlet Heater Water Hose Clamp
Courtesy of TOYOTA MOTOR SALES, U.S.A., INC.

35. **DISCONNECT WATER HOSE SUB-ASSEMBLY**
    a. Disconnect the water hose sub-assembly.

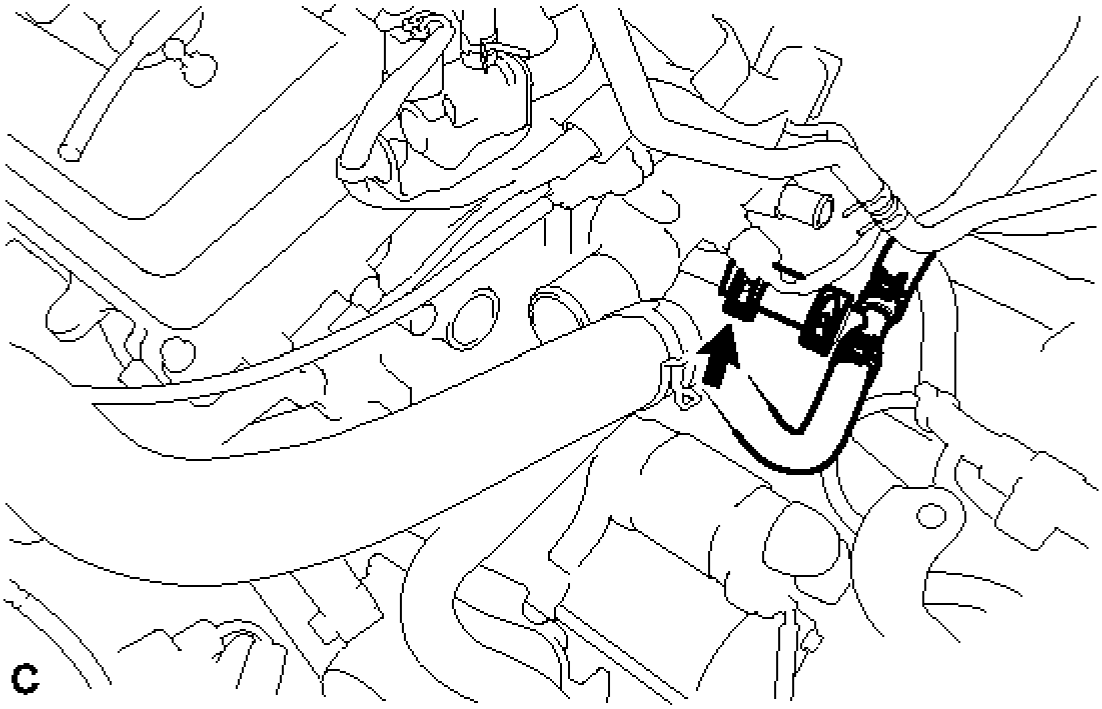

Fig. 103: Identifying Water Hose Sub-Assembly
Courtesy of TOYOTA MOTOR SALES, U.S.A., INC.

36. **REMOVE STARTER ASSEMBLY** . Refer to **REMOVAL - Step 11**
37. **DISCONNECT ENGINE WIRE**
    1. Remove the No. 1 relay block cover.
    2. Remove the 2 nuts and disconnect the wire clamp.

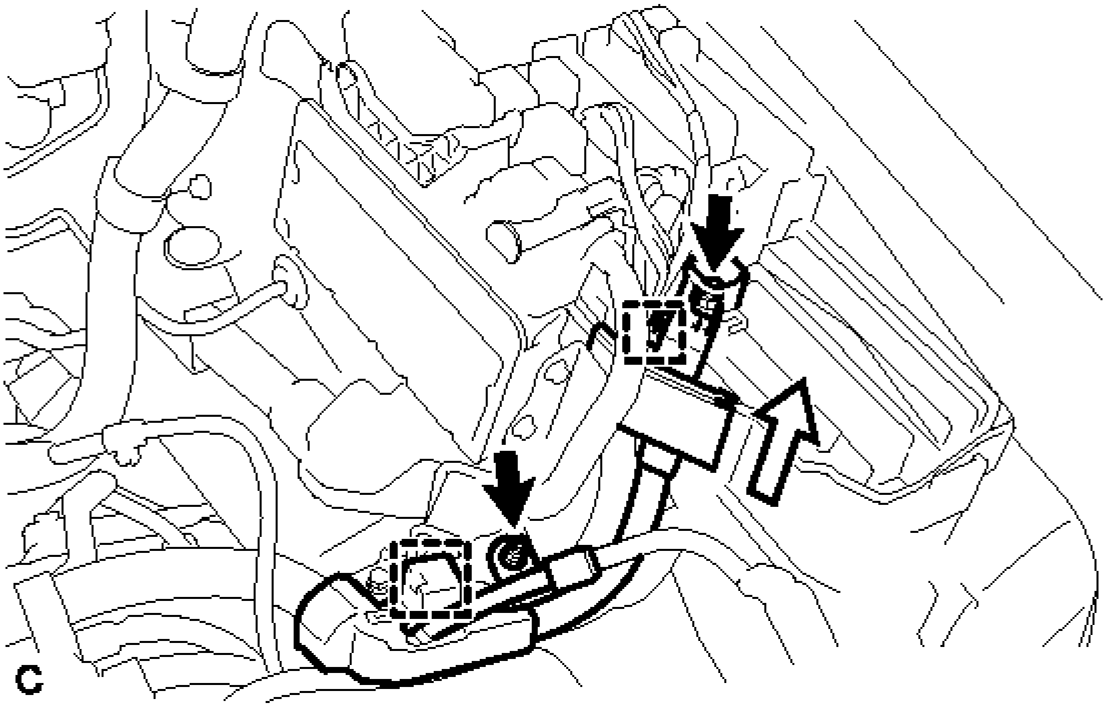

Fig. 104: Identifying Engine Wire Nuts And Wire Clamp
Courtesy of TOYOTA MOTOR SALES, U.S.A., INC.

c. Using a screwdriver, unlock the claw and separate the engine wire from the engine room relay block.
d. Disconnect the 4 connectors.

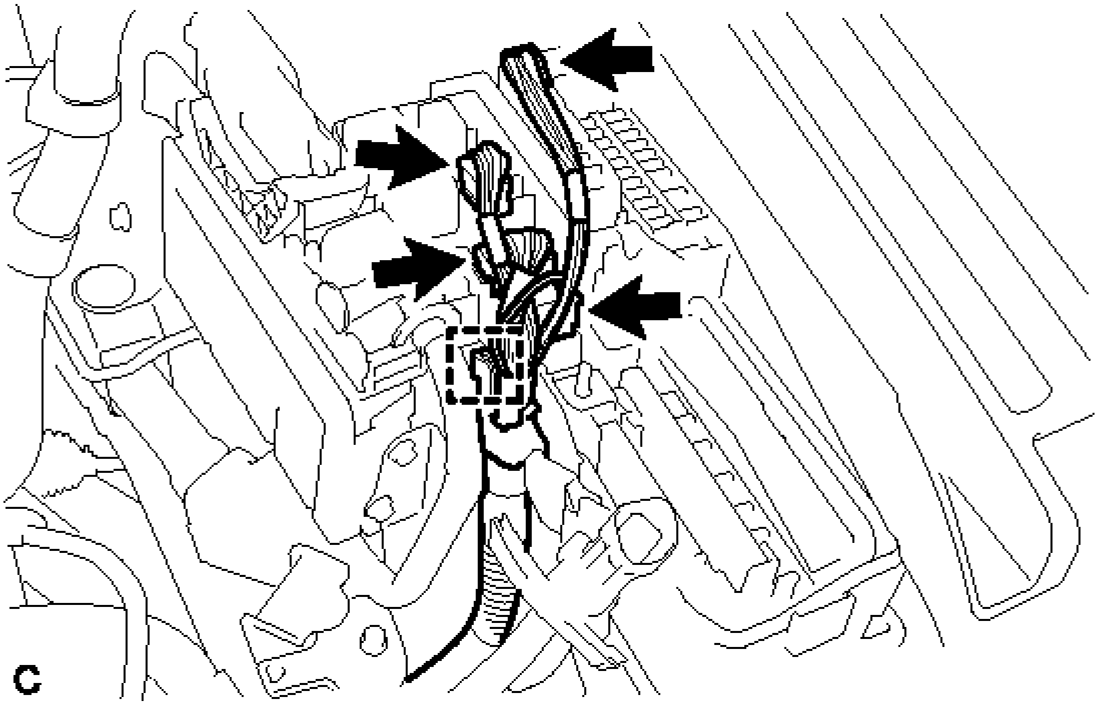

Fig. 105: Identifying Connectors
Courtesy of TOYOTA MOTOR SALES, U.S.A., INC.

e. Using a screwdriver, unlock the claw and separate the engine wire from the engine room relay block.
f. Pull up the lever to disconnect the ECM connector.

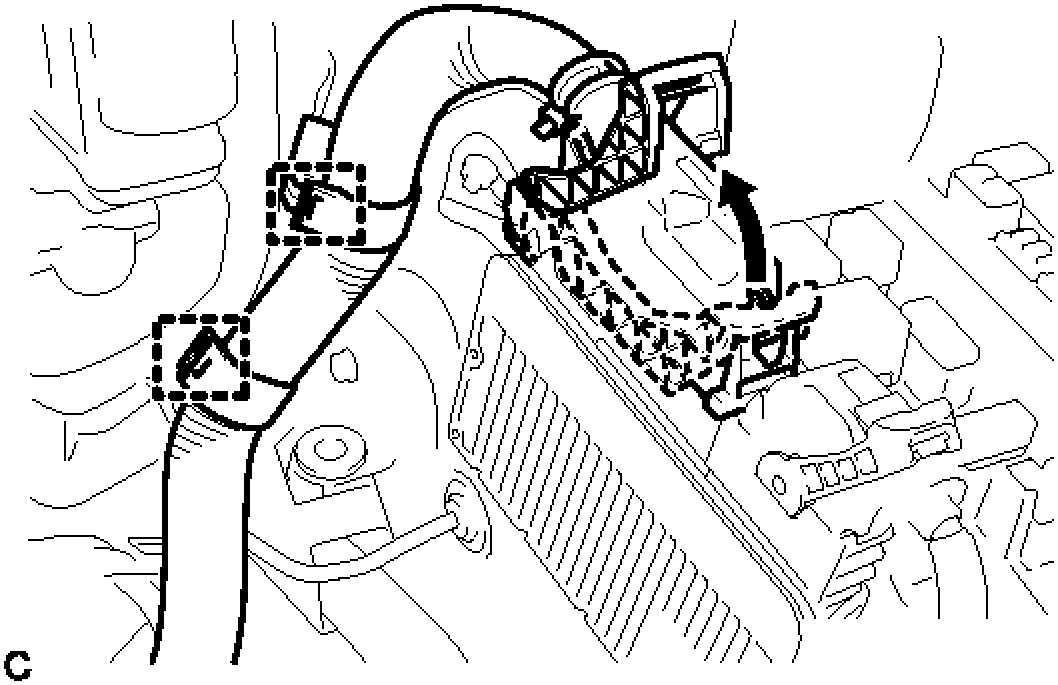

Fig. 106: Identifying ECM Connector
Courtesy of TOYOTA MOTOR SALES, U.S.A., INC.

g. Disconnect the 2 wire clamps.

38. **REMOVE AIR CLEANER BRACKET**
    a. Disconnect the 2 wire clamps.

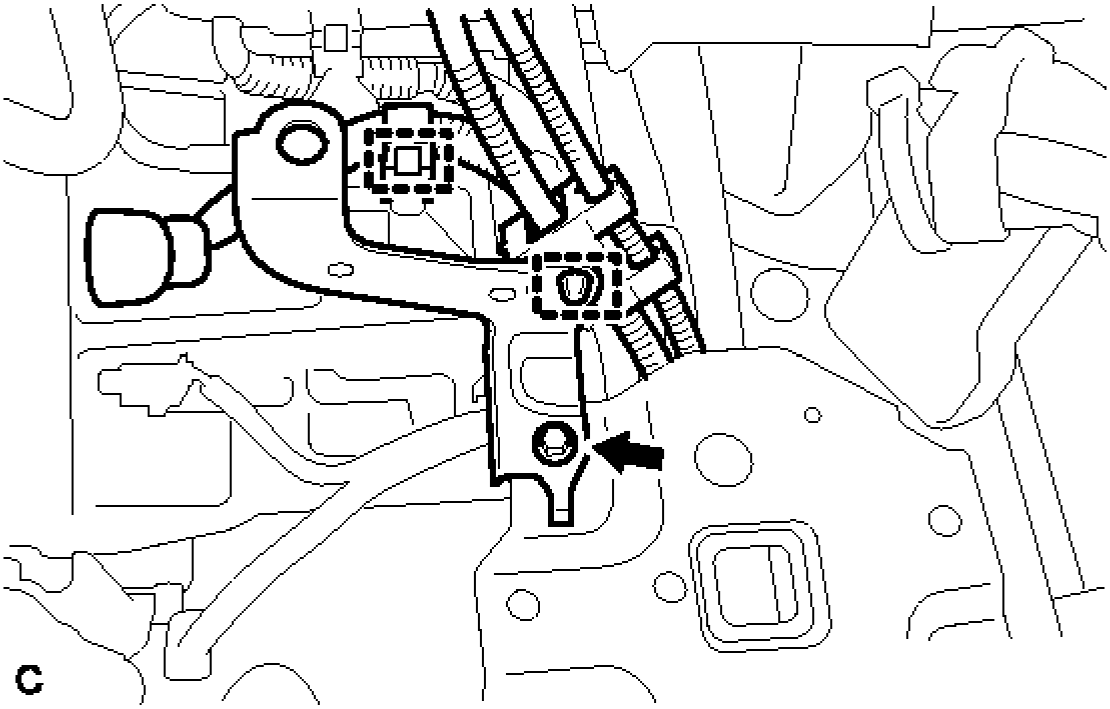

Fig. 107: Identifying Air Cleaner Bracket Wire Clamps And Bolt
Courtesy of TOYOTA MOTOR SALES, U.S.A., INC.

b. Remove the bolt and No. 1 air cleaner bracket from the battery carrier.

39. **SEPARATE TRANSMISSION CONTROL CABLE ASSEMBLY** . Refer to **REMOVAL - Step 6**
40. **DISCONNECT FUEL MAIN TUBE**

a. Remove the No. 1 fuel pipe clamp.

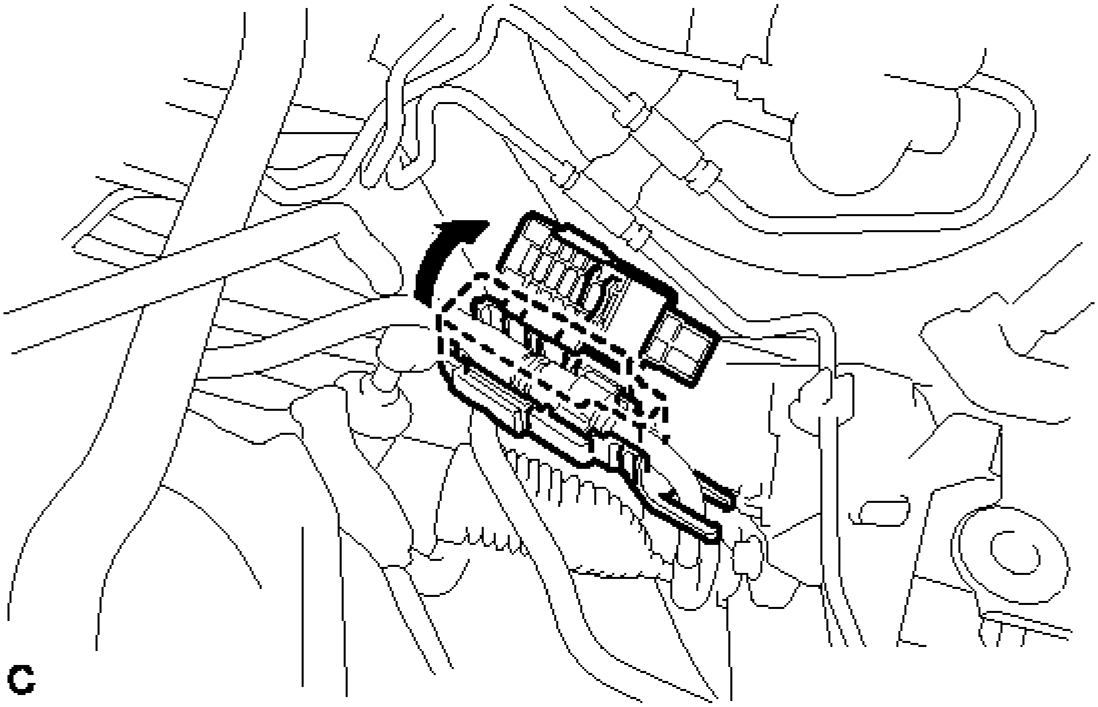

Fig. 108: Identifying Fuel Main Tube
Courtesy of TOYOTA MOTOR SALES, U.S.A., INC.

b. Disconnect the connector from the pipe by hand. When the connector and the pipe are stuck, push in and pull on the connector to release it. Pull the connector out of the pipe carefully.

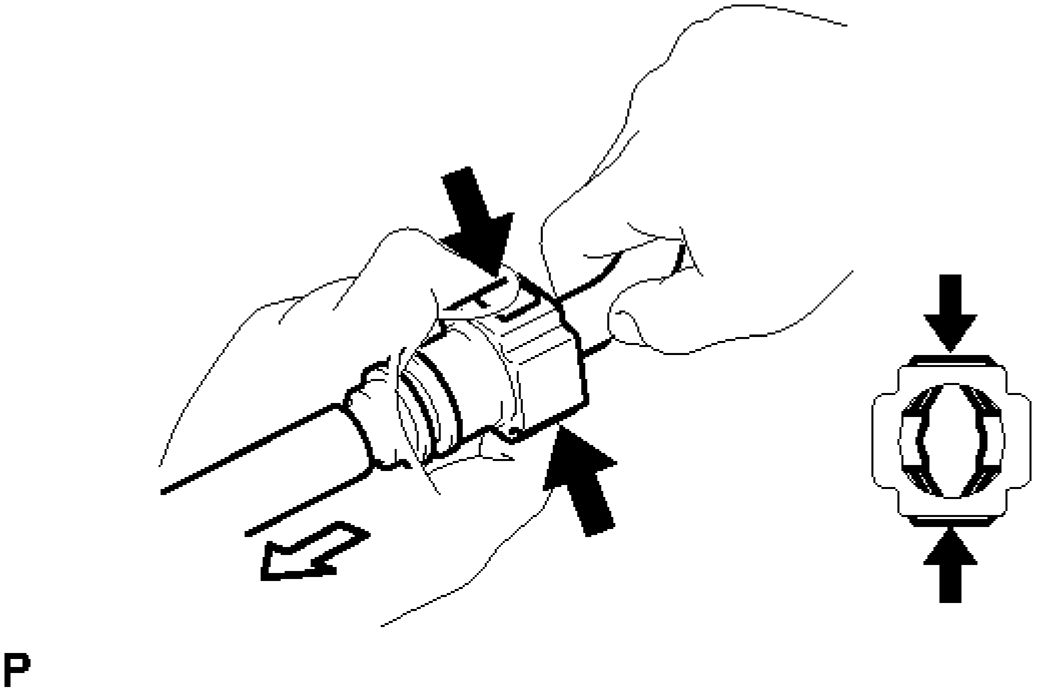

Fig. 109: Disconnecting Fuel Main Tube Connector & Pipe

Courtesy of TOYOTA MOTOR SALES, U.S.A., INC.

TEXT IN ILLUSTRATION

	Push
	Pull

NOTE:

- **Check for any dirt and foreign matter contamination in the pipe and around the connector. Clean if necessary. Foreign matter may damage the O-rings or cause leaks in the seal between the pipe and connector.**
- **Do not use any tools to separate the pipe and connector.**
- **Do not forcefully bend or twist the nylon tube.**
- **Check for any dirt and foreign matter on the pipe seal surface. Clean if necessary.**
- **Put the pipe and connector ends in plastic bags to prevent damage and dirt contamination.**
- **If the pipe and connector are stuck together, pinch the tube between your fingers and turn it carefully to free it. Then disconnect the hose.**

41. **DISCONNECT NO. 1 COOLER REFRIGERANT DISCHARGE HOSE** . Refer to **REMOVAL - Step 5**
42. **DISCONNECT SUCTION HOSE SUB-ASSEMBLY** . Refer to **REMOVAL - Step 6**
43. **REMOVE NO. 1 EXHAUST PIPE SUPPORT BRACKET** . Refer to **REMOVAL - Step 7**
44. **REMOVE FRONT EXHAUST PIPE ASSEMBLY** . Refer to **REMOVAL - Step 5**
45. **SECURE STEERING WHEEL** . Refer to **REMOVAL - Step 3**
46. **SEPARATE STEERING INTERMEDIATE SHAFT ASSEMBLY** . Refer to **REMOVAL - Step 4**
47. **REMOVE FRONT AXLE SHAFT NUT LH** . Refer to **REMOVAL - Step 9**
48. **REMOVE FRONT AXLE SHAFT NUT RH**

    HINT:

    Perform the same procedure as for the LH side.

49. **SEPARATE FRONT STABILIZER LINK ASSEMBLY LH** . Refer to **REMOVAL - Step 4**
50. **SEPARATE FRONT STABILIZER LINK ASSEMBLY RH**

    HINT:

    Perform the same procedure as for the LH side.

51. **SEPARATE FRONT SPEED SENSOR LH** . Refer to **REMOVAL - Step 3**
52. **SEPARATE FRONT SPEED SENSOR RH**

HINT:

Perform the same procedure as for the LH side.

53. **SEPARATE TIE ROD ASSEMBLY LH** . Refer to **REMOVAL - Step 5**
54. **SEPARATE TIE ROD ASSEMBLY RH**

    HINT:

    Perform the same procedure as for the LH side.

55. **SEPARATE FRONT LOWER NO. 1 SUSPENSION ARM SUB-ASSEMBLY LH** . Refer to **REMOVAL - Step 8**
56. **SEPARATE FRONT LOWER NO. 1 SUSPENSION ARM SUB-ASSEMBLY RH**

    HINT:

    Perform the same procedure as for the LH side.

57. **SEPARATE FRONT DRIVE SHAFT ASSEMBLY** . Refer to **REMOVAL - Step 7**
58. **REMOVE FRONT DRIVE SHAFT ASSEMBLY LH** . Refer to **REMOVAL - Step 15**
59. **REMOVE FRONT DRIVE SHAFT HOLE SNAP RING LH** . Refer to **REMOVAL - Step 17**
60. **REMOVE FRONT DRIVE SHAFT ASSEMBLY RH** . Refer to **REMOVAL - Step 16**
61. **REMOVE NO. 1 EXHAUST PIPE SUPPORT BRACKET**
    a. Remove the bolt and No. 1 exhaust pipe support bracket.

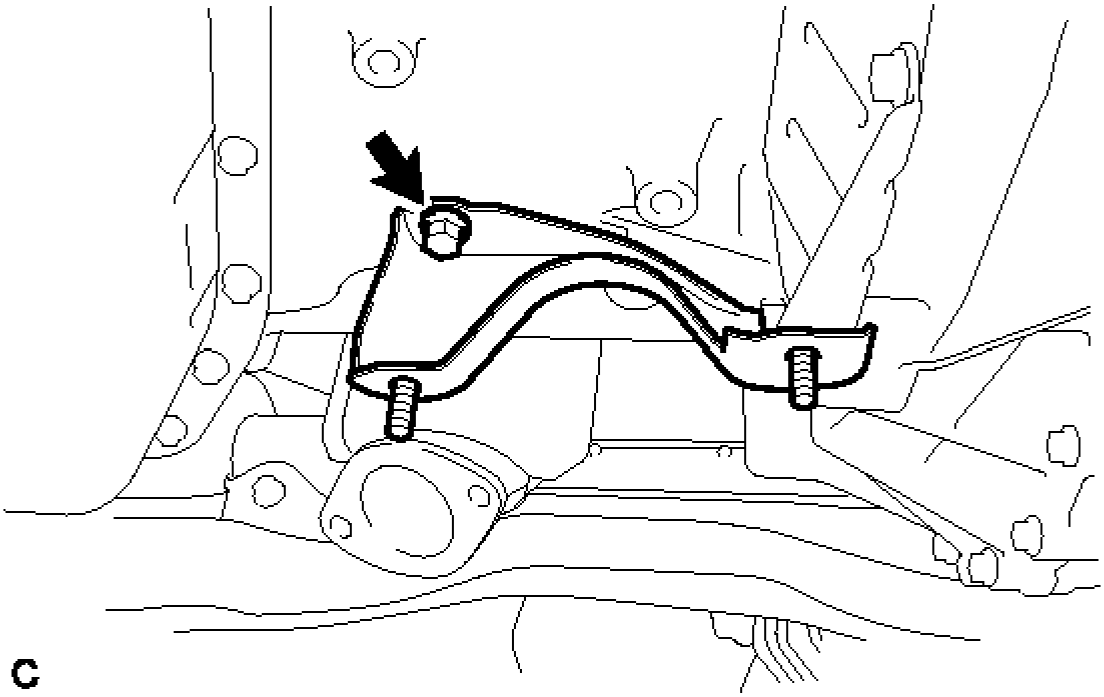

Fig. 110: Identifying No. 1 Exhaust Pipe Support Bracket Bolt
Courtesy of TOYOTA MOTOR SALES, U.S.A., INC.

62. **REMOVE NO. 1 EXHAUST PIPE SUPPORT BRACKET SUB-ASSEMBLY**
    a. Remove the 2 bolts and No. 1 exhaust pipe support bracket sub-assembly.

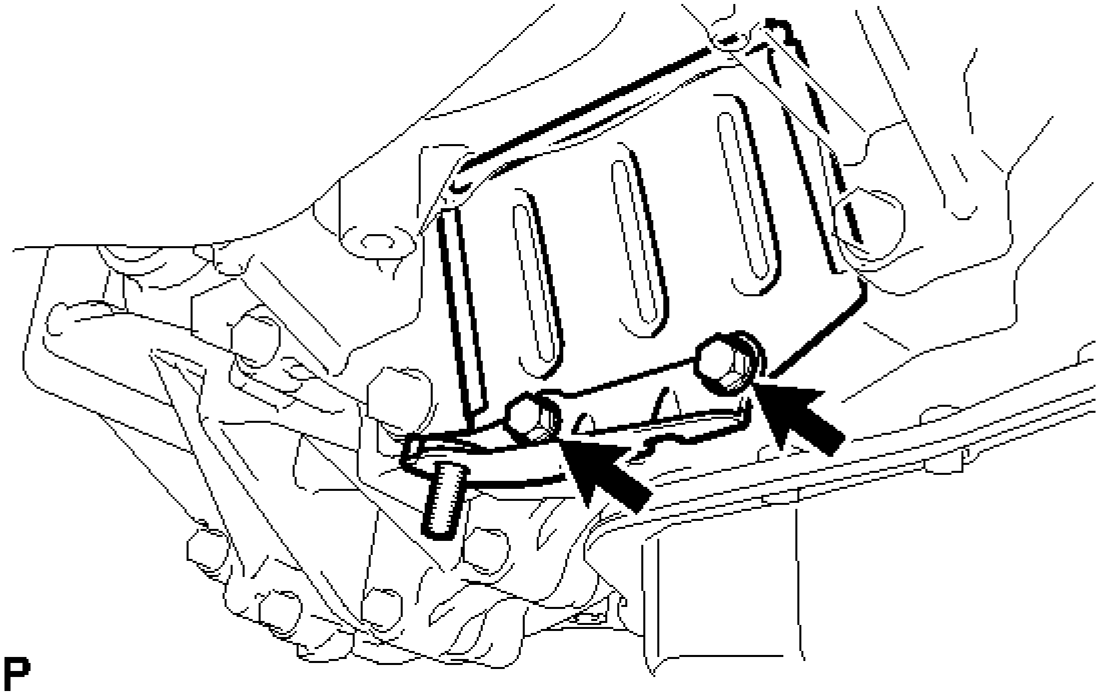

Fig. 111: Locating Flywheel Housing Under Cover Bolts
Courtesy of TOYOTA MOTOR SALES, U.S.A., INC.

63. **REMOVE DRIVE PLATE AND TORQUE CONVERTER SETTING BOLT**
    a. Turn the crankshaft to gain access to the removable locations of the 6 torque converter setting bolts and remove each bolt while holding the crankshaft pulley bolt with a wrench.

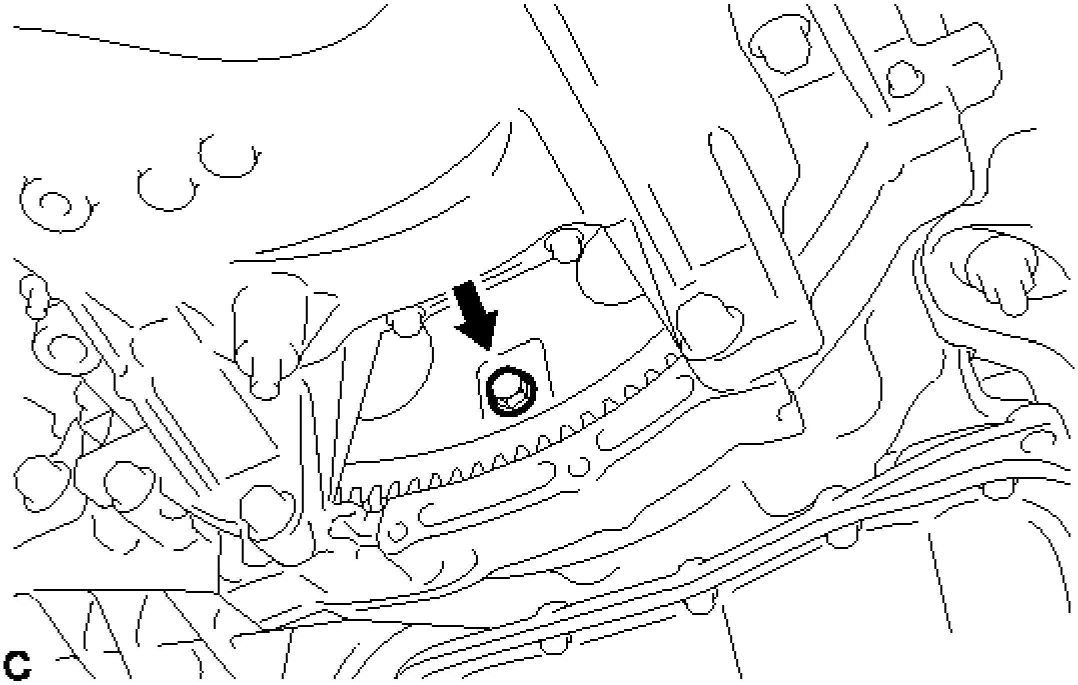

Fig. 112: Identifying Driver Plate And Torque Converter Setting Bolt
Courtesy of TOYOTA MOTOR SALES, U.S.A., INC.

HINT:

There will be one black colored bolt.

64. **REMOVE ENGINE ASSEMBLY WITH TRANSAXLE**
    a. Set the engine lifter.

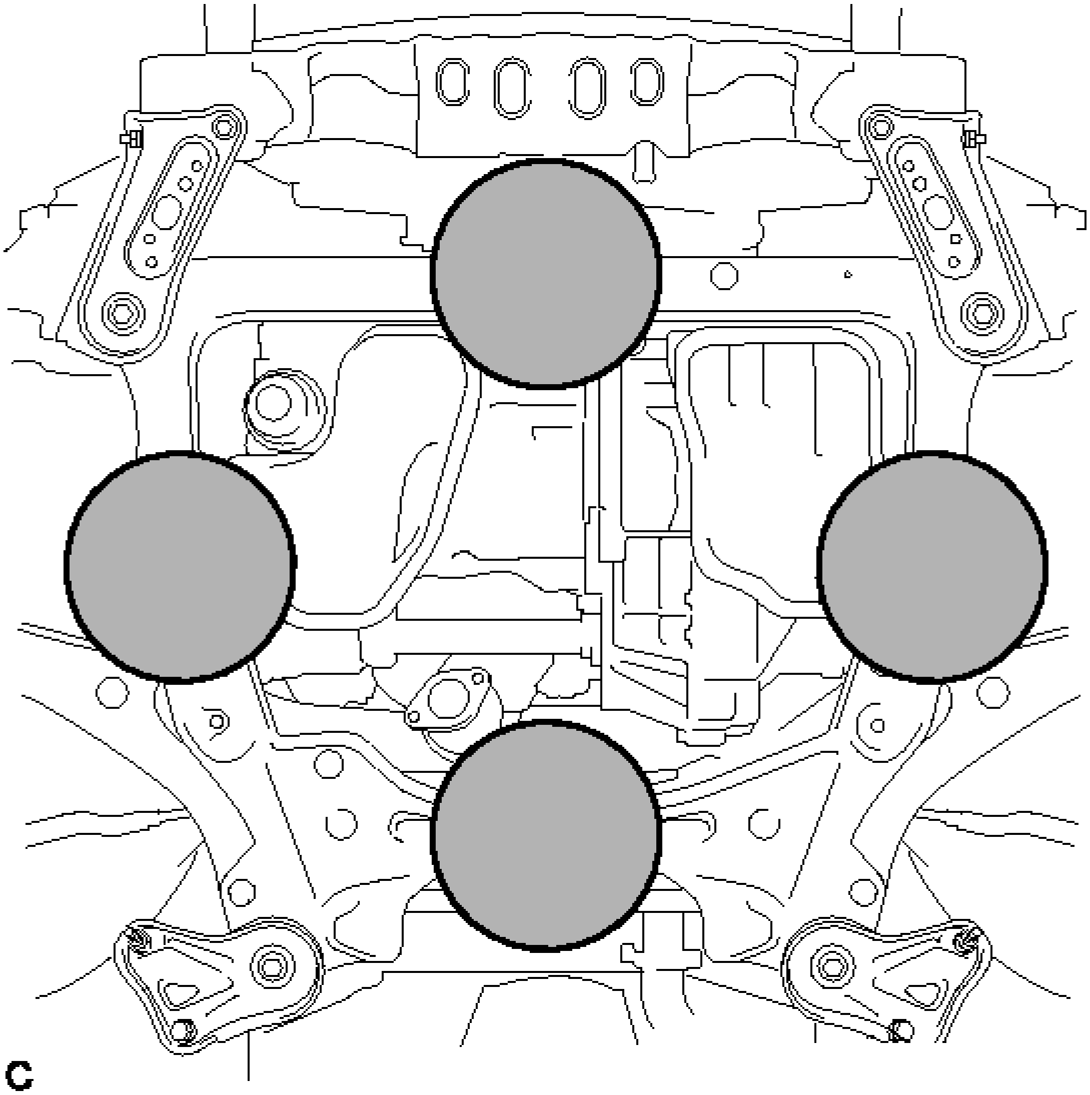

Fig. 113: Identifying Engine Lifter
Courtesy of TOYOTA MOTOR SALES, U.S.A., INC.

TEXT IN ILLUSTRATION

	Attachment Installation Position

NOTE:

- **Install a height adjustment attachment and plate lift attachment onto the engine assembly with transaxle.**
- **Securely support the engine assembly to prevent it from turning upside down until it is secured to an engine stand.**
- **To prevent the oil pan from deforming, do not place any attachments onto the oil pan of the engine assembly with transaxle.**

- **Do not perform any procedure while the engine assembly is suspended because doing so may cause the engine assembly to drop, resulting in injury. However, the engine assembly needs to be suspended when it is installed to or removed from an engine stand.**

b. Remove the 4 bolts, 2 nuts and frame side rail plates RH and LH.

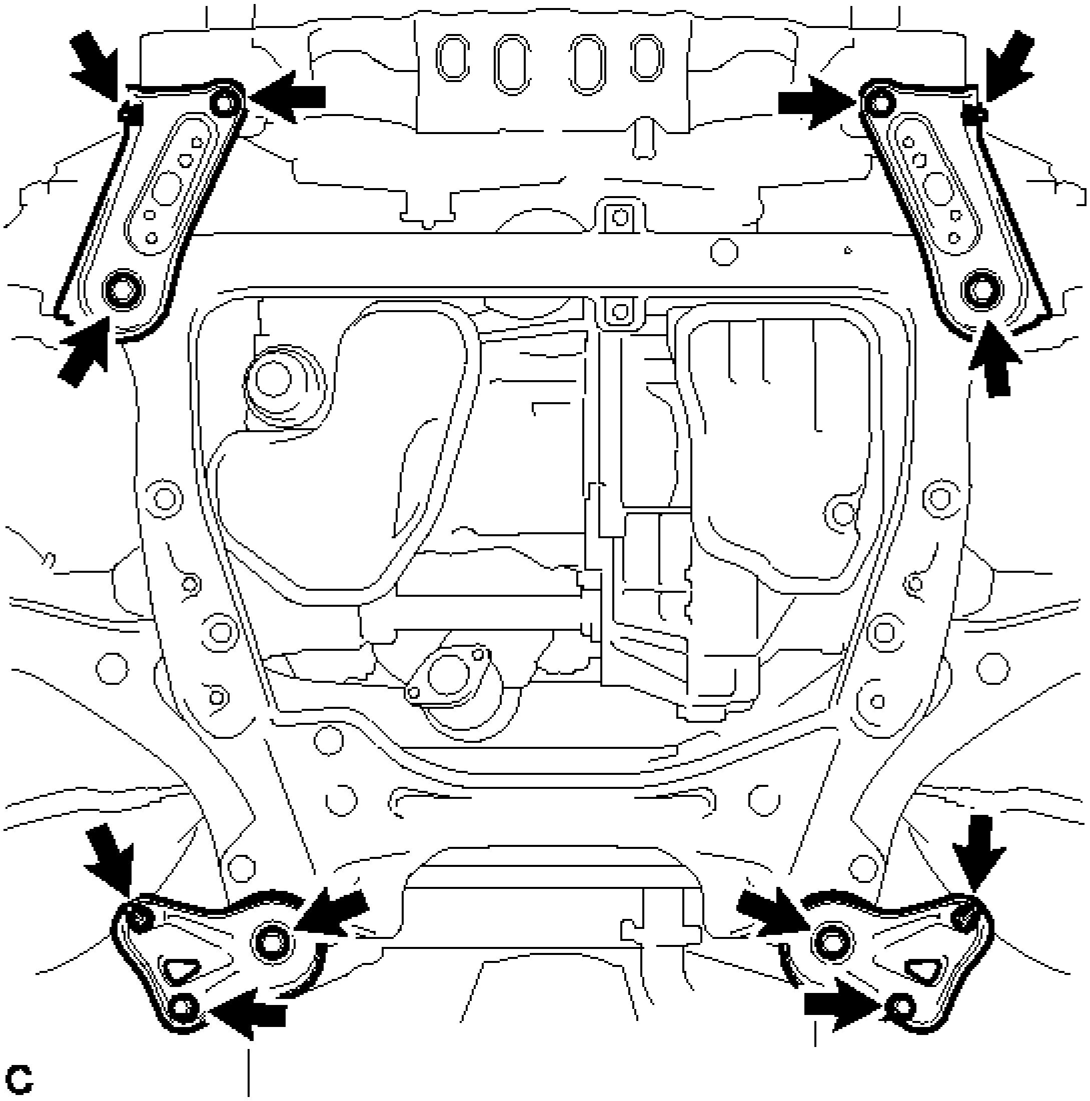

Fig. 114: Identifying Frame Side Rail Plates Nuts And Bolts
Courtesy of TOYOTA MOTOR SALES, U.S.A., INC.

c. Remove the 4 bolts, 2 nuts and front suspension member rear braces RH and LH.

d. Operate the engine lifter, then remove the engine assembly from the vehicle.

NOTE:

- **Make sure that the engine is clear of all wiring and hoses.**

- **While lowering the engine from the vehicle, do not allow it to contact the vehicle.**

  e. Install the engine hangers See step 21.

65. **REMOVE V-RIBBED BELT** See step 5
66. **REMOVE GENERATOR ASSEMBLY** . Refer to **REMOVAL - Step 6**
67. **REMOVE COMPRESSOR AND MAGNETIC CLUTCH** . Refer to **REMOVAL - Step 7**
68. **REMOVE TRANSMISSION OIL COOLER** . Refer to **REMOVAL - Step 4**
69. **REMOVE FRONT FRAME ASSEMBLY**
    a. Disconnect the oil pressure switch connector and 2 clamps.

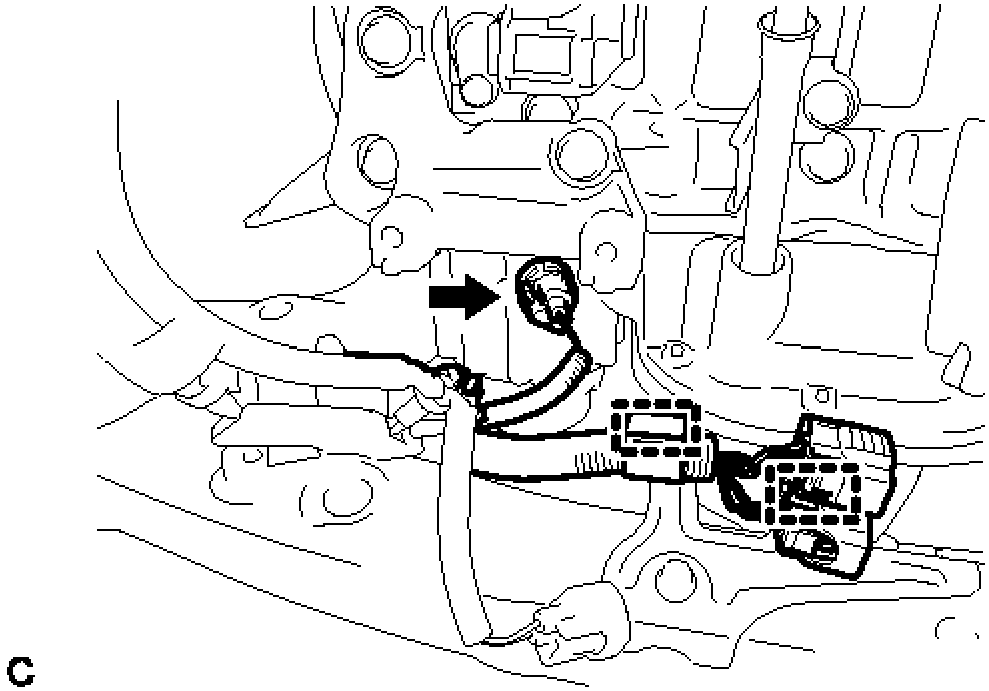

Fig. 115: Identifying Oil Pressure Switch Connector And Clamps
Courtesy of TOYOTA MOTOR SALES, U.S.A., INC.

    b. Disconnect the 2 clamps and vacuum switching valve connector.

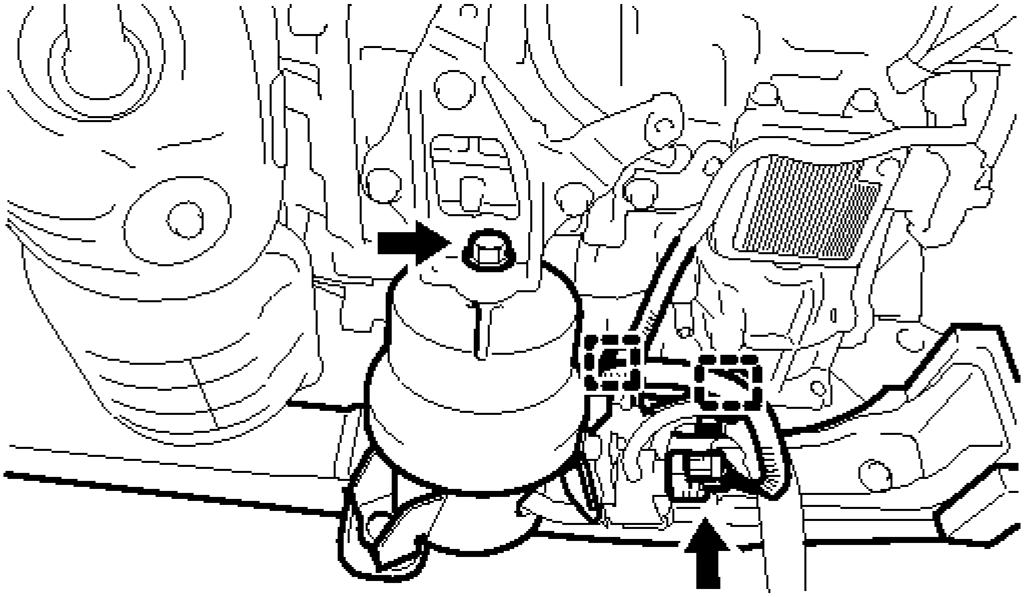

Fig. 116: Identifying Vacuum Switching Valve Connector And Clamps
Courtesy of TOYOTA MOTOR SALES, U.S.A., INC.

c. Remove the bolt and disconnect the front engine mounting insulator.
d. Remove the nut and disconnect the engine mounting insulator LH.

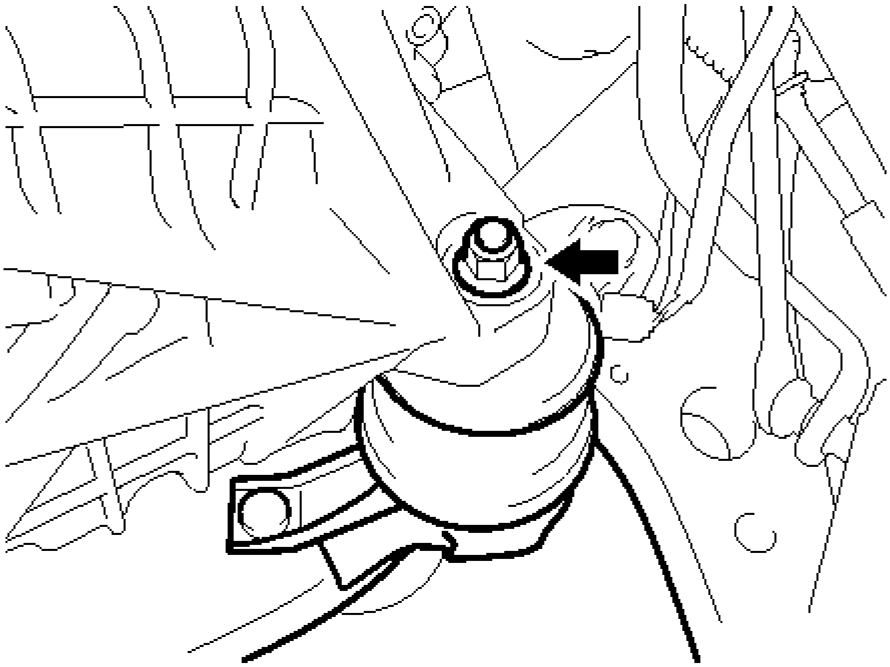

Fig. 117: Identifying Engine Mounting Insulator Nut LH

Courtesy of TOYOTA MOTOR SALES, U.S.A., INC.

e. Remove the nut and disconnect the engine mounting insulator RH.

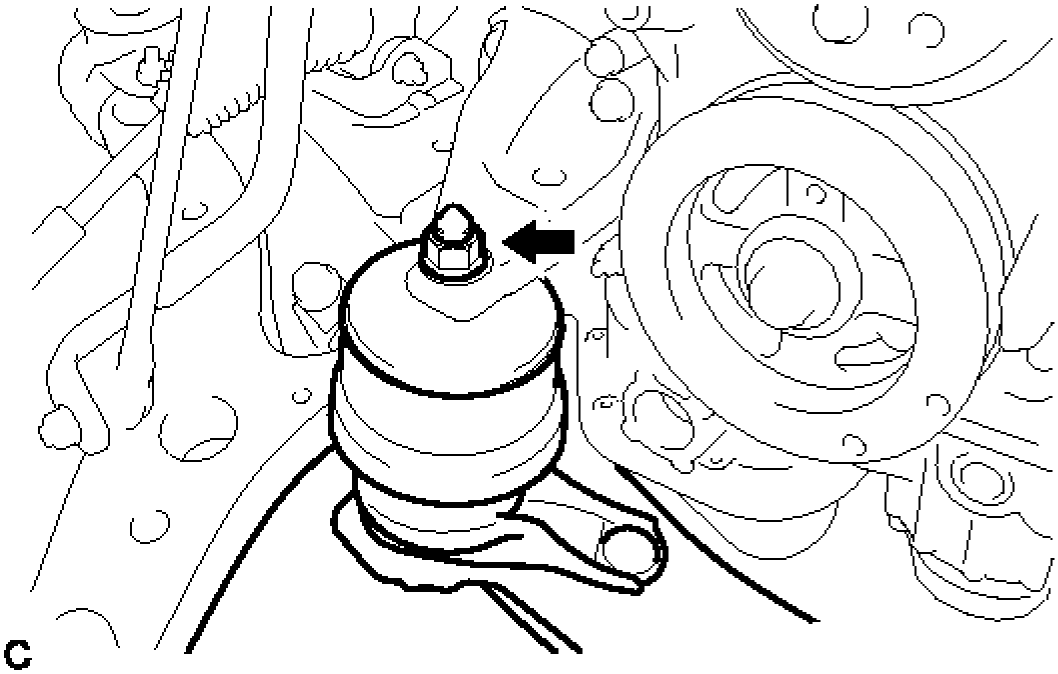

Fig. 118: Identifying Engine Mounting Insulator Nut RH
Courtesy of TOYOTA MOTOR SALES, U.S.A., INC.

f. Remove the front frame assembly.

70. **REMOVE FRONT ENGINE MOUNTING INSULATOR ASSEMBLY**

a. Remove the 3 nuts and front engine mounting insulator assembly.

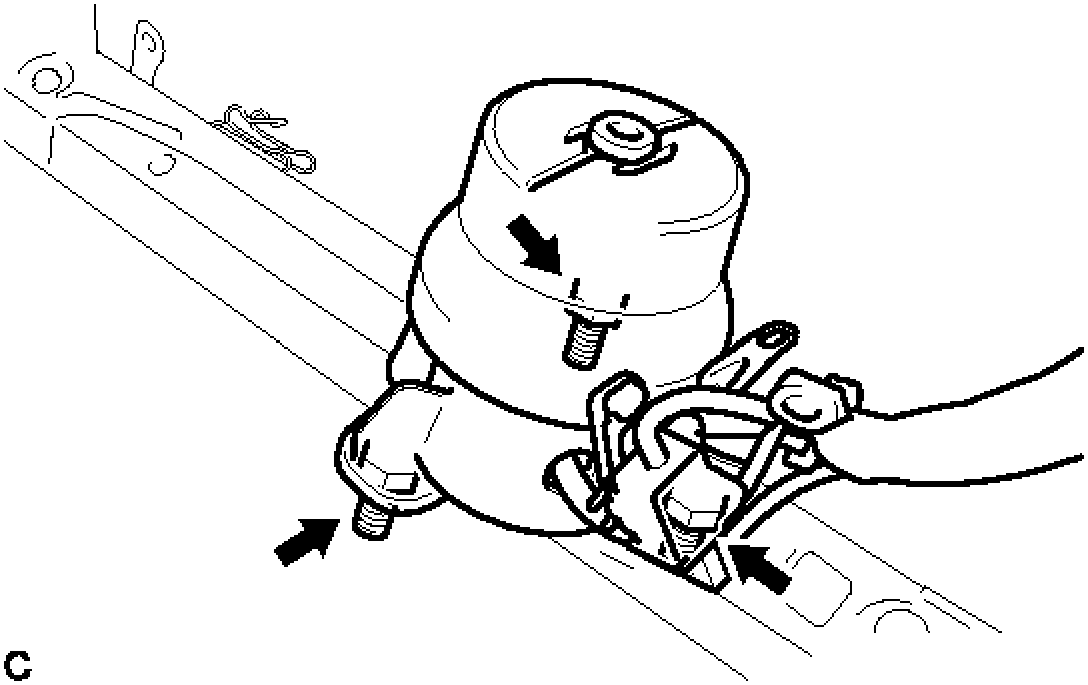

Fig. 119: Identifying Front Engine Mounting Insulator Assembly Nuts
Courtesy of TOYOTA MOTOR SALES, U.S.A., INC.

HINT:

Perform this procedure only when replacement of the front engine mounting insulator assembly is necessary.

71. **REMOVE ENGINE MOUNTING INSULATOR LH**
    a. Remove the 2 hole plugs from the front frame assembly.

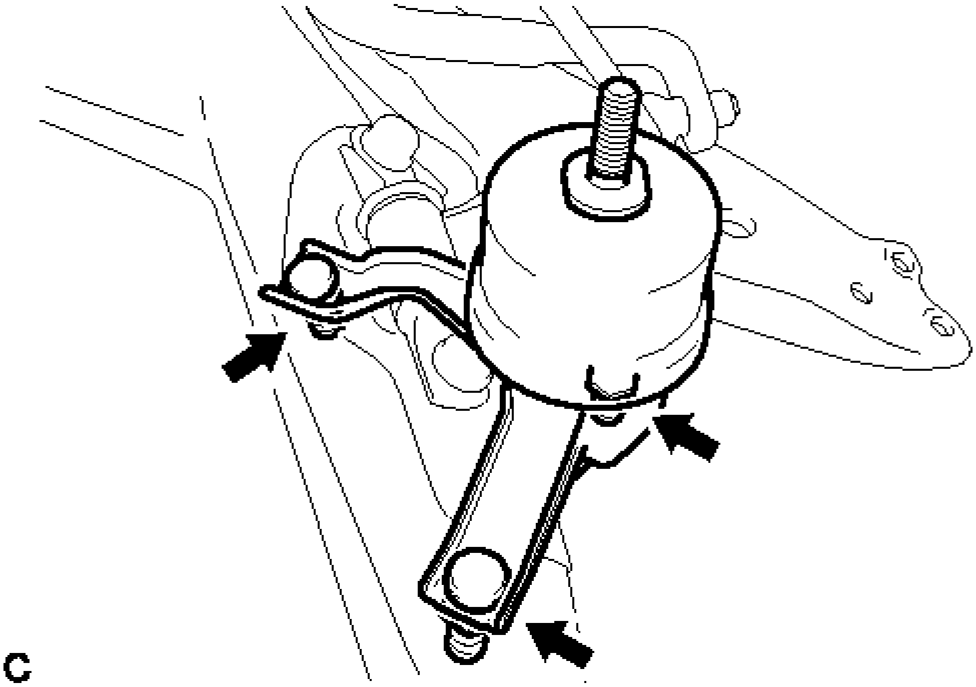

Fig. 120: Identifying Engine Mounting Insulator LH
Courtesy of TOYOTA MOTOR SALES, U.S.A., INC.

b. Remove the 3 nuts and engine mounting insulator LH.

HINT:

Perform this procedure only when replacement of the engine mounting insulator LH is necessary.

72. **REMOVE ENGINE MOUNTING INSULATOR RH**

a. Remove the 2 hole plugs from the front frame assembly.

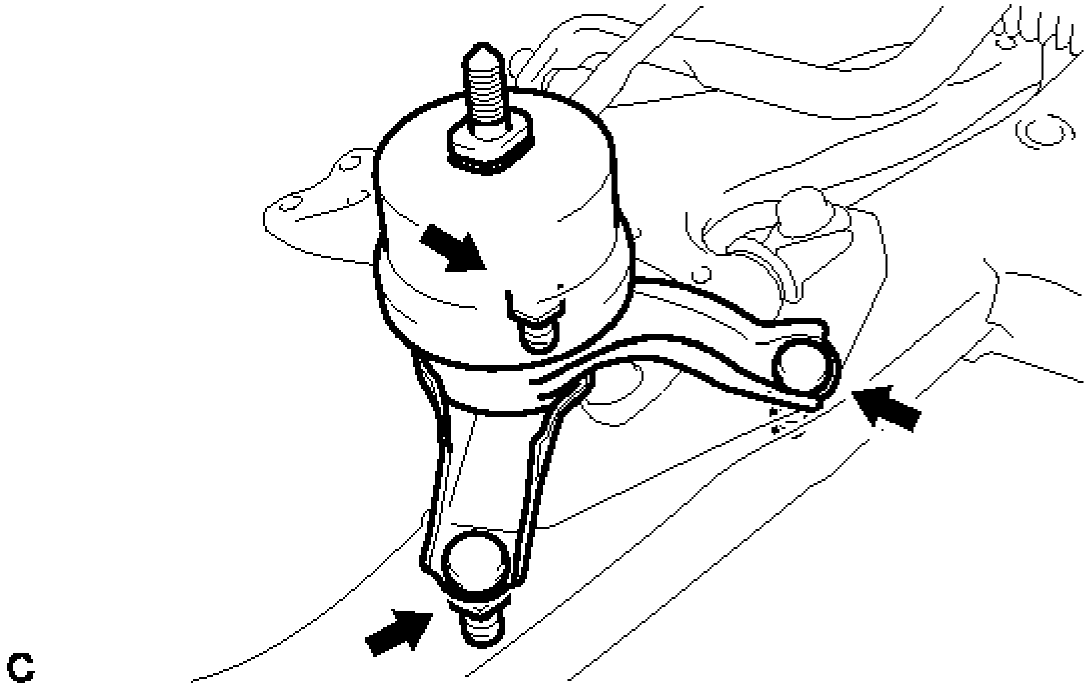

Fig. 121: Identifying Engine Mounting Insulator RH
Courtesy of TOYOTA MOTOR SALES, U.S.A., INC.

b. Remove the 3 nuts and engine mounting insulator RH.

HINT:

Perform this procedure only when replacement of the engine mounting insulator RH is necessary.

73. **REMOVE ENGINE WIRE**
    a. Remove the engine wire from the engine with transaxle.
74. **REMOVE AUTOMATIC TRANSAXLE ASSEMBLY** . Refer to **REMOVAL - Step 6**
75. **REMOVE ENGINE MOUNTING BRACKET RH**
    a. Remove the 3 bolts and engine mounting bracket RH.

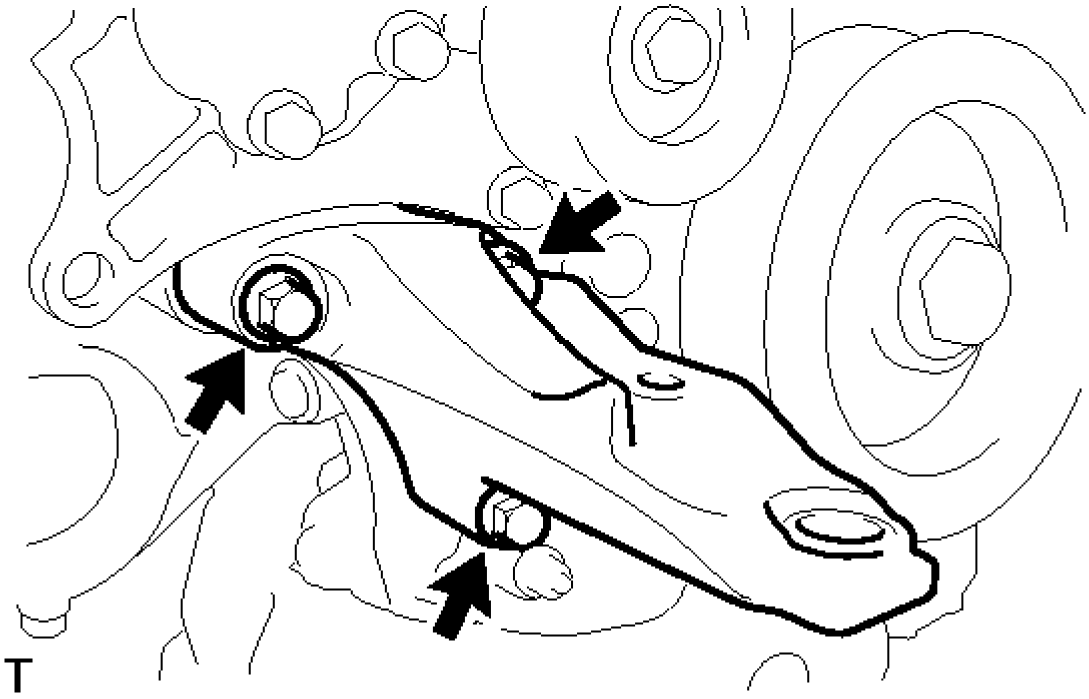

Fig. 122: Identifying Engine Mounting Bracket RH With Bolts
Courtesy of TOYOTA MOTOR SALES, U.S.A., INC.

76. **REMOVE DRIVE SHAFT BEARING BRACKET**

a. Remove the 3 bolts and drive shaft bearing bracket.

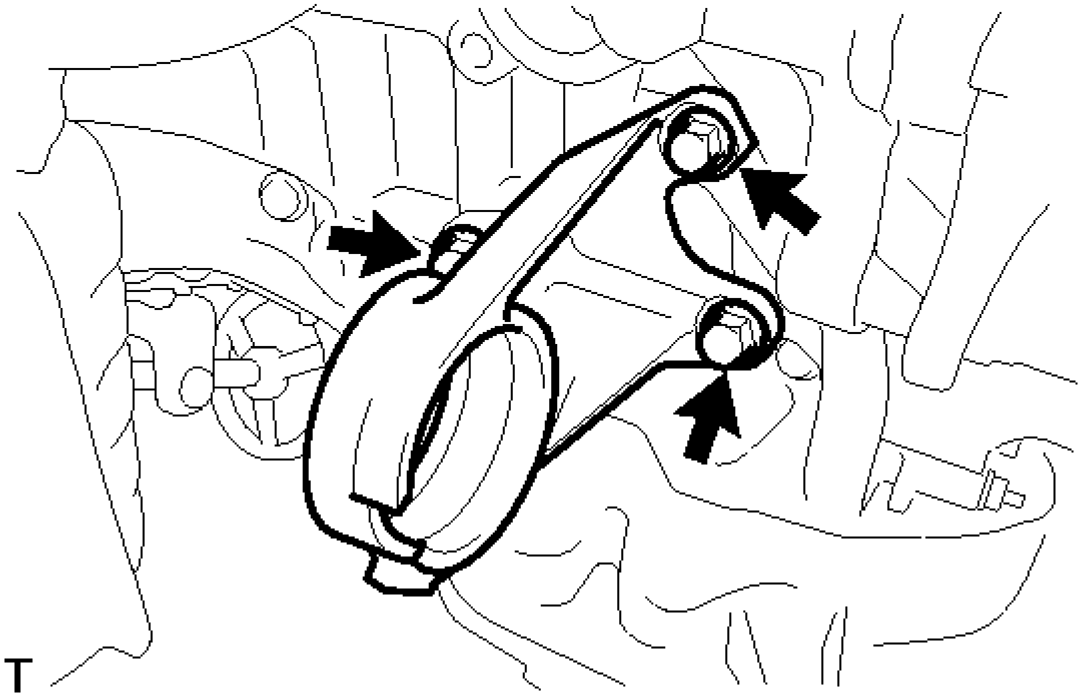

Fig. 123: Identifying Drive Shaft Bearing Bracket Bolts

77. **REMOVE DRIVE PLATE AND RING GEAR SUB-ASSEMBLY** See step 2
78. **INSTALL ENGINE ON ENGINE STAND**
    a. Install the engine onto an engine stand with the bolts.

INSTALLATION

INSTALLATION

HINT:

Perform "Inspection After Repair" after replacing the engine assembly. Refer to **INITIALIZATION** .

1. **REMOVE ENGINE STAND**
2. **INSTALL DRIVE PLATE AND RING GEAR SUB-ASSEMBLY** See step 2
3. **INSTALL DRIVE SHAFT BEARING BRACKET**
    a. Install the drive shaft bearing bracket with the 3 bolts.

       Torque: 64 N*m (650 kgf*cm, 47 ft.*lbf)

4. **INSTALL ENGINE MOUNTING BRACKET RH**
    a. Install the engine mounting bracket RH with the 3 bolts.

       Torque: 54 N*m (551 kgf*cm, 40 ft.*lbf)

5. **INSTALL AUTOMATIC TRANSAXLE ASSEMBLY** . Refer to **INSTALLATION - Step 6**
6. **INSTALL ENGINE WIRE**
    a. Install the engine wire to the engine with transaxle.
7. **INSTALL FRONT ENGINE MOUNTING INSULATOR ASSEMBLY**
    a. Temporarily install the front engine mounting insulator assembly with the 3 nuts.

       HINT:

       Perform this procedure only when replacement of the front engine mounting insulator assembly is necessary.

8. **INSTALL ENGINE MOUNTING INSULATOR LH**
    a. Temporarily install the engine mounting insulator LH with the 3 nuts.

       HINT:

       Perform this procedure only when replacement of the engine mounting insulator LH is necessary.

9. **INSTALL ENGINE MOUNTING INSULATOR RH**
    a. Temporarily install the engine mounting insulator RH with the 3 nuts.

    HINT:

    Perform this procedure only when replacement of the engine mounting insulator RH is necessary.

10. **INSTALL FRONT FRAME ASSEMBLY**
    a. Install the engine mounting insulator RH with the nut.

    Torque: 95 N*m (969 kgf*cm, 70 ft.*lbf)

    b. Install the engine mounting insulator LH with the nut.

    Torque: 95 N*m (969 kgf*cm, 70 ft.*lbf)

    c. Install the front engine mounting insulator assembly with the bolt.

    Torque: 87 N*m (888 kgf*cm, 65 ft.*lbf)

    d. Connect the 2 wire clamps and vacuum switching valve connector.
    e. Connect the 2 wire clamps and oil pressure switch connector.
    f. Fully tighten the 9 temporarily installed nuts of the engine mounting insulators to the specified torque.

    HINT:

    Perform this procedure only when replacement of the engine mounting insulator is necessary.

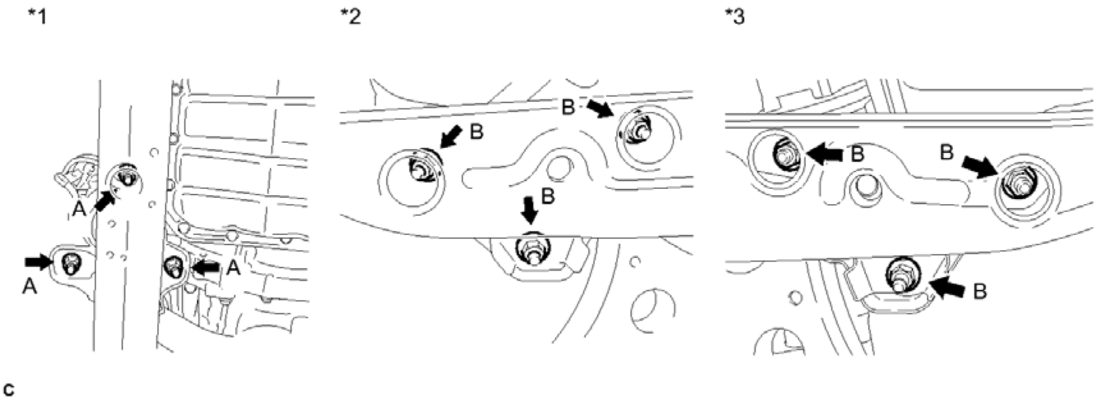

Fig. 124: Identifying Front Engine Mounting Insulator Assembly Bolts\ And Engine Mounting Insulator Bolts
Courtesy of TOYOTA MOTOR SALES, U.S.A., INC.

TEXT IN ILLUSTRATION

*1	Front Engine Mounting Insulator Assembly	*2	Engine Mounting Insulator RH
*3	Engine Mounting Insulator LH	-	-

A

Torque: 52 N*m (530 kgf*cm, 38 ft.*lbf)

B

Torque: 87 N*m (887 kgf*cm, 64 ft.*lbf)

g. Install the 4 hole plugs.

HINT:

Perform this procedure only when replacement of the engine mounting insulator is necessary.

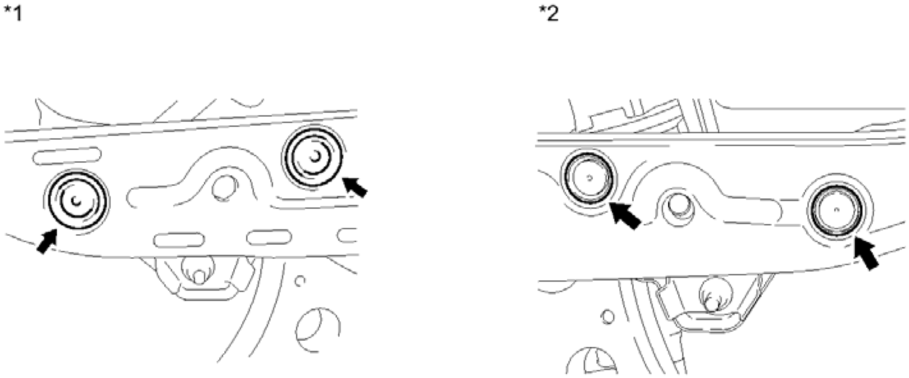

Fig. 125: Identifying Engine Mounting Insulator Bolts
Courtesy of TOYOTA MOTOR SALES, U.S.A., INC.

TEXT IN ILLUSTRATION

*1	Engine Mounting Insulator RH	*2	Engine Mounting Insulator LH

11. **INSTALL TRANSMISSION OIL COOLER** . Refer to **INSTALLATION - Step 8**
12. **INSTALL COMPRESSOR AND MAGNETIC CLUTCH** . Refer to **INSTALLATION - Step 2**
13. **INSTALL GENERATOR ASSEMBLY** . Refer to **INSTALLATION - Step 1**
14. **INSTALL V-RIBBED BELT** See step 1
15. **INSTALL ENGINE ASSEMBLY WITH TRANSAXLE**
    a. Set the engine assembly with transaxle on an engine lifter.

NOTE:

- **Install a height adjustment attachment and plate lift attachment onto the engine assembly with transaxle.**
- **Do not position a height adjustment attachment or plate lift attachment onto the front frame assembly.**
- **Servicing an engine assembly while it is hanging is dangerous. This can be done only when installing/removing the engine assembly to/from an engine stand.**
- **To prevent the oil pan from deforming, do not place any attachments onto the oil pan of the engine assembly with transaxle.**
- **Make sure to support the engine assembly with transaxle securely to prevent it from falling.**

    b. Remove the engine hangers See step 1.
    c. Install the engine assembly with transaxle to the vehicle.

NOTE:

- **Do not raise the engine more than necessary. If the engine is raised excessively, the vehicle may also be lifted up.**
- **Make sure that the engine is clear of all wiring and hoses.**
- **While raising the engine into the vehicle, do not allow it to contact the vehicle.**

    d. Install the frame side rail plates RH and LH with the 4 bolts and 2 nuts.

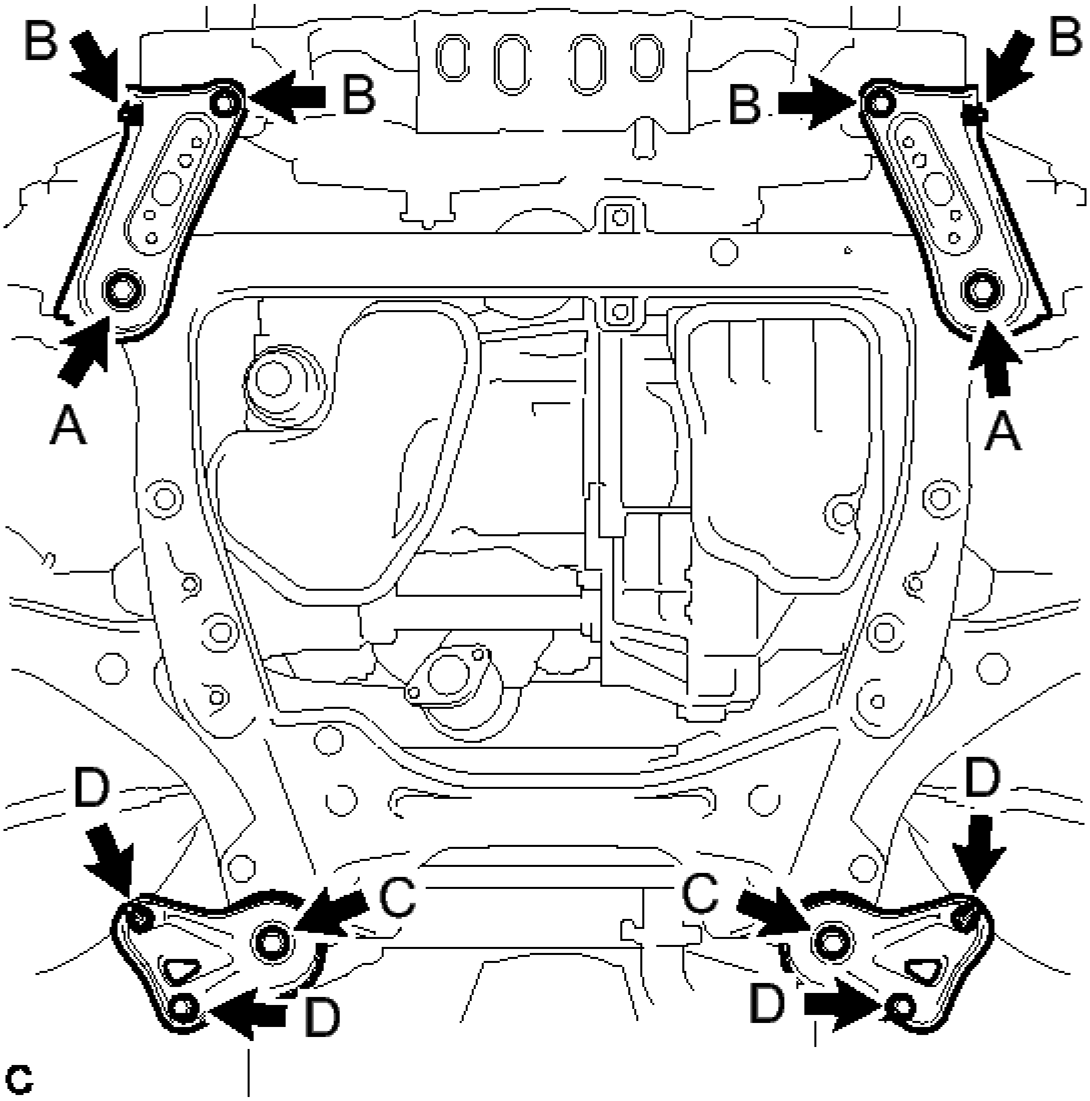

Fig. 126: Identifying Frame Side Rail Plates Bolts And Nuts
Courtesy of TOYOTA MOTOR SALES, U.S.A., INC.

A

Torque: 85 N*m (867 kgf*cm, 62 ft.*lbf)

B

Torque: 32 N*m (329 kgf*cm, 24 ft.*lbf)

e. Install the front suspension member rear braces RH and LH with the 4 bolts and 2 nuts.

C

Torque: 85 N*m (867 kgf*cm, 62 ft.*lbf)

D

Torque: 32 N*m (329 kgf*cm, 24 ft.*lbf)

HINT:

Perform "Inspection After Repair" after replacing the engine assembly. Refer to **INITIALIZATION** .

16. **INSTALL DRIVE PLATE AND TORQUE CONVERTER SETTING BOLT**
    a. Apply a few drops of adhesive to 2 or 3 threads at the tip of each of the 6 torque converter setting bolts.

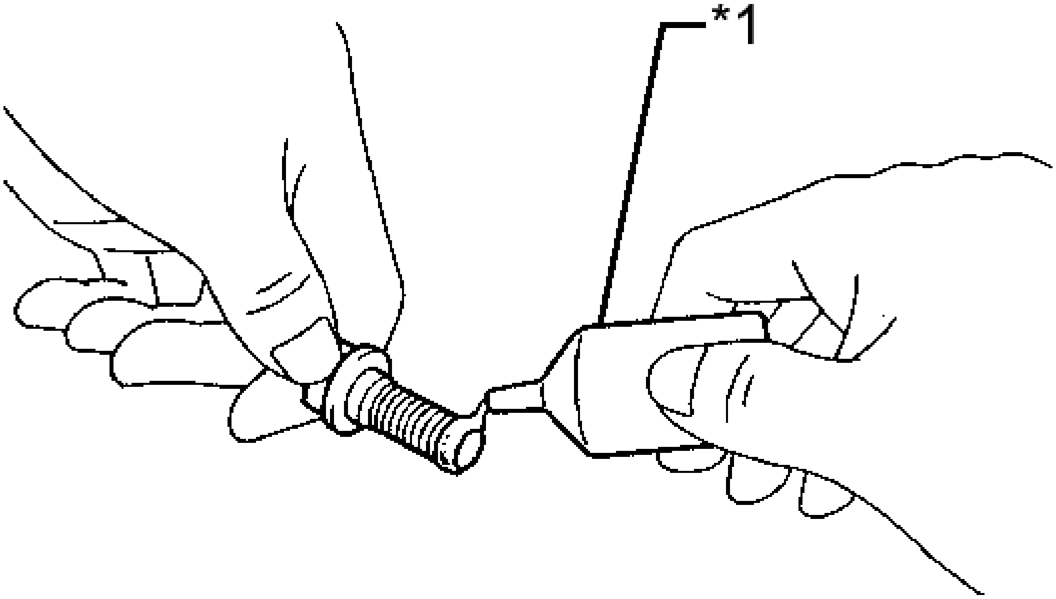

Fig. 127: Applying Adhesive To Threads Of Torque Converter Setting Bolts
Courtesy of TOYOTA MOTOR SALES, U.S.A., INC.

TEXT IN ILLUSTRATION

*1	Adhesive 1324

Adhesive

Toyota Genuine Adhesive 1324, Three Bond 1324 or equivalent.

    b. Turn the crankshaft to gain access to the installation locations of the 6 torque converter setting bolts and install each bolt while holding the crankshaft pulley bolt with a wrench.

Torque: 41 N*m (418 kgf*cm, 30 ft.*lbf)

NOTE: **First install the black colored bolt, and then the remaining 5 silver colored bolts.**

17. **INSTALL NO. 1 EXHAUST PIPE SUPPORT BRACKET SUB-ASSEMBLY**
    a. Install the No. 1 exhaust pipe support bracket sub-assembly with the 2 bolts.

    Torque: 7.8 N*m (80 kgf*cm, 69 in.*lbf)

18. **INSTALL NO. 1 EXHAUST PIPE SUPPORT BRACKET**
    a. Install the No. 1 exhaust pipe support bracket with the bolt.

    Torque: 21 N*m (214 kgf*cm, 15 ft.*lbf)

19. **INSTALL FRONT DRIVE SHAFT HOLE SNAP RING LH** . Refer to **REASSEMBLY - Step 13**
20. **INSTALL FRONT DRIVE SHAFT ASSEMBLY LH** . Refer to **INSTALLATION - Step 1**
21. **INSTALL FRONT DRIVE SHAFT ASSEMBLY RH** . Refer to **INSTALLATION - Step 2**
22. **CONNECT FRONT LOWER NO. 1 SUSPENSION ARM SUB-ASSEMBLY LH** . Refer to **INSTALLATION - Step 8**
23. **CONNECT FRONT LOWER NO. 1 SUSPENSION ARM SUB-ASSEMBLY RH**

    HINT:

    Perform the same procedure as for the LH side.

24. **CONNECT TIE ROD ASSEMBLY LH** . Refer to **INSTALLATION - Step 8**
25. **CONNECT TIE ROD ASSEMBLY RH**

    HINT:

    Perform the same procedure as for the LH side.

26. **INSTALL FRONT SPEED SENSOR LH** . Refer to **INSTALLATION - Step 19**
27. **INSTALL FRONT SPEED SENSOR RH**

    HINT:

    Perform the same procedure as for the LH side.

28. **INSTALL FRONT STABILIZER LINK ASSEMBLY LH** . Refer to **INSTALLATION - Step 10**
29. **INSTALL FRONT STABILIZER LINK ASSEMBLY RH**

    HINT:

Perform the same procedure as for the LH side.

30. **INSTALL FRONT AXLE SHAFT NUT LH** . Refer to **INSTALLATION - Step 7**
31. **INSTALL FRONT AXLE SHAFT NUT RH**

    HINT:

    Perform the same procedure as for the LH side.

32. **CONNECT STEERING INTERMEDIATE SHAFT ASSEMBLY** . Refer to **INSTALLATION - Step 10**
33. **INSTALL FRONT EXHAUST PIPE ASSEMBLY** . Refer to **INSTALLATION - Step 8**
34. **INSTALL NO. 1 EXHAUST PIPE SUPPORT BRACKET** . Refer to **INSTALLATION - Step 4**
35. **CONNECT SUCTION HOSE SUB-ASSEMBLY** . Refer to **INSTALLATION - Step 3**
36. **CONNECT NO. 1 COOLER REFRIGERANT DISCHARGE HOSE** . Refer to **INSTALLATION - Step 4**
37. **CONNECT FUEL MAIN TUBE**
    a. Push in the fuel tube connector to the fuel main tube until the fuel tube connector makes a "click" sound.

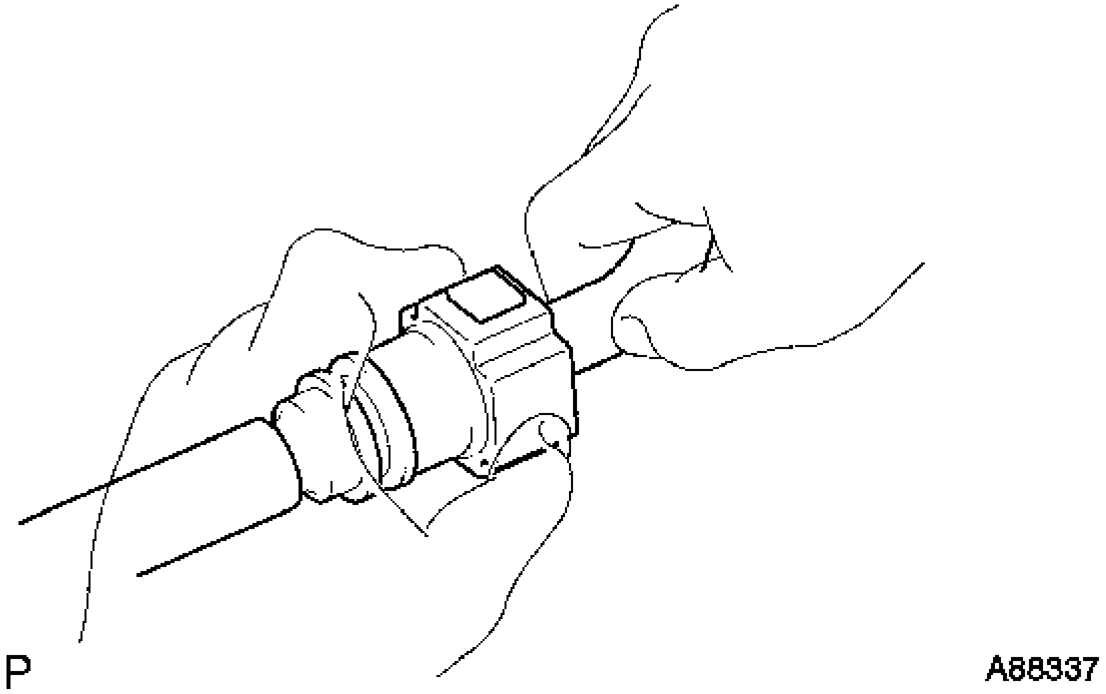

Fig. 128: Connecting Fuel Main Tube
Courtesy of TOYOTA MOTOR SALES, U.S.A., INC.

NOTE:

- **Check that there is no damage or foreign objects on the fuel tube connector.**

- **After connecting, check that the fuel tube connector and the pipe are securely connected by pulling on them.**

b. Install the No. 1 fuel pipe clamp.

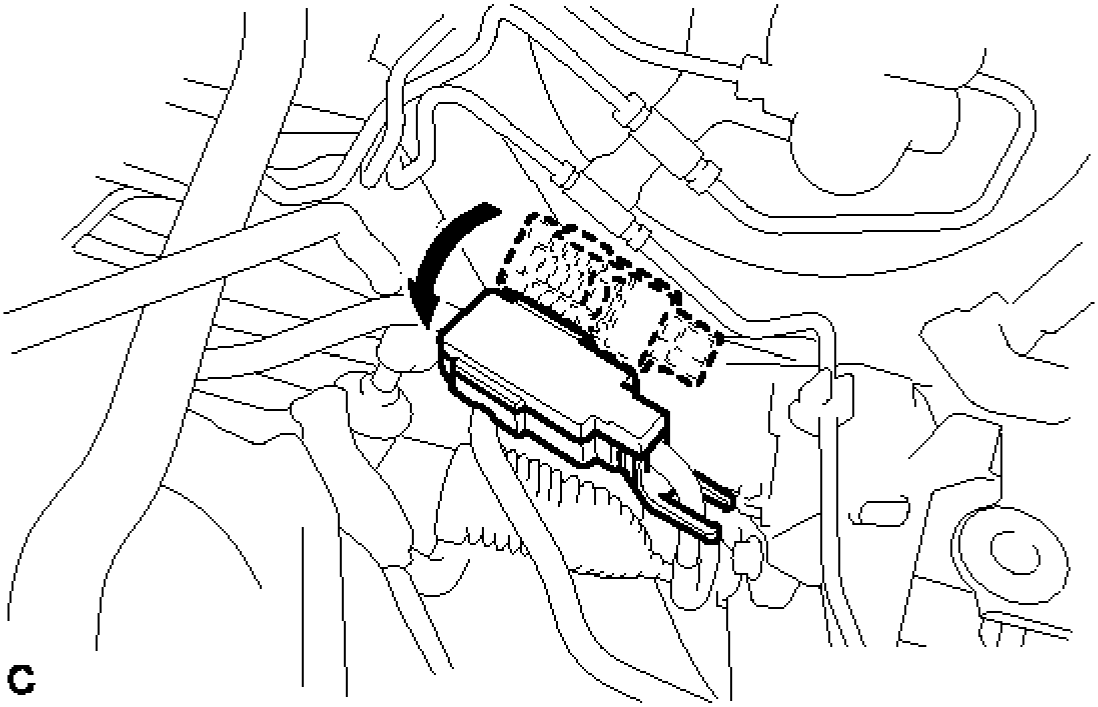

Fig. 129: Identifying No. 1 Fuel Pipe Clamp
Courtesy of TOYOTA MOTOR SALES, U.S.A., INC.

HINT:

The half connection prevention connector prevents the fuel hose connector cover from being locked if the fuel tube is not securely connected.

38. **CONNECT TRANSMISSION CONTROL CABLE ASSEMBLY** . Refer to **INSTALLATION - Step 2**
39. **INSTALL AIR CLEANER BRACKET**
    a. Install the air cleaner bracket to the battery carrier with the bolt.

    Torque: 8.0 N*m (82 kgf*cm, 71 in.*lbf)

    b. Connect the 2 wire clamps.
40. **CONNECT ENGINE WIRE**
    a. Connect the 2 wire clamps.

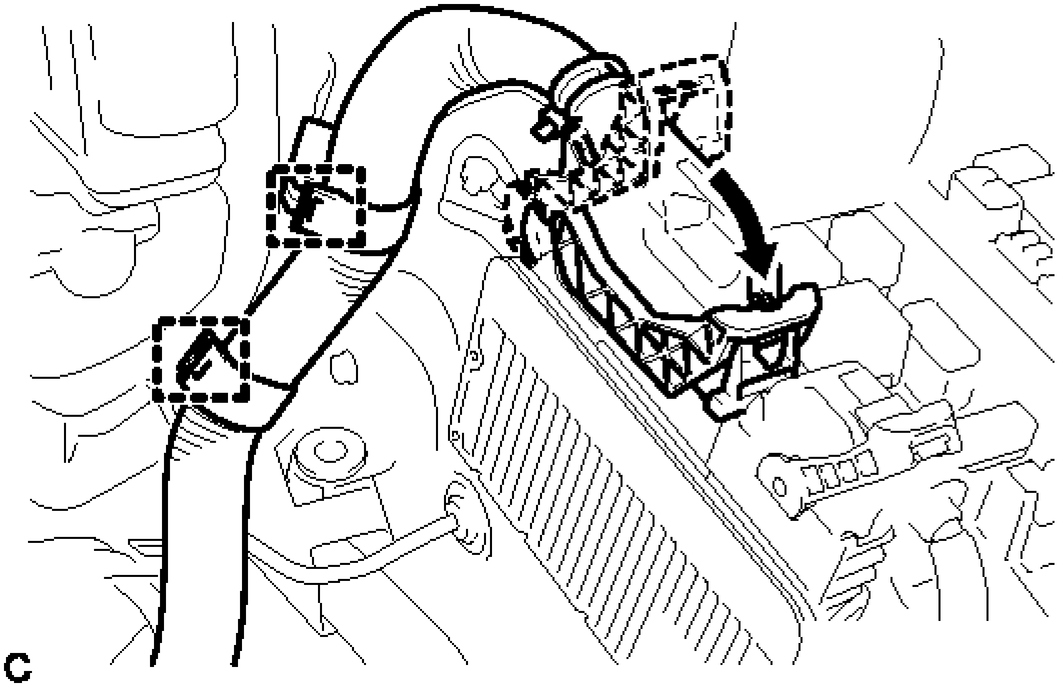

Fig. 130: Identifying Wire Clamps
Courtesy of TOYOTA MOTOR SALES, U.S.A., INC.

b. Connect the connector to the ECM with the lock lever.
c. Connect the engine wire to the engine room relay block.
d. Connect the 4 connectors.
e. Connect the engine wire to the engine room relay block.

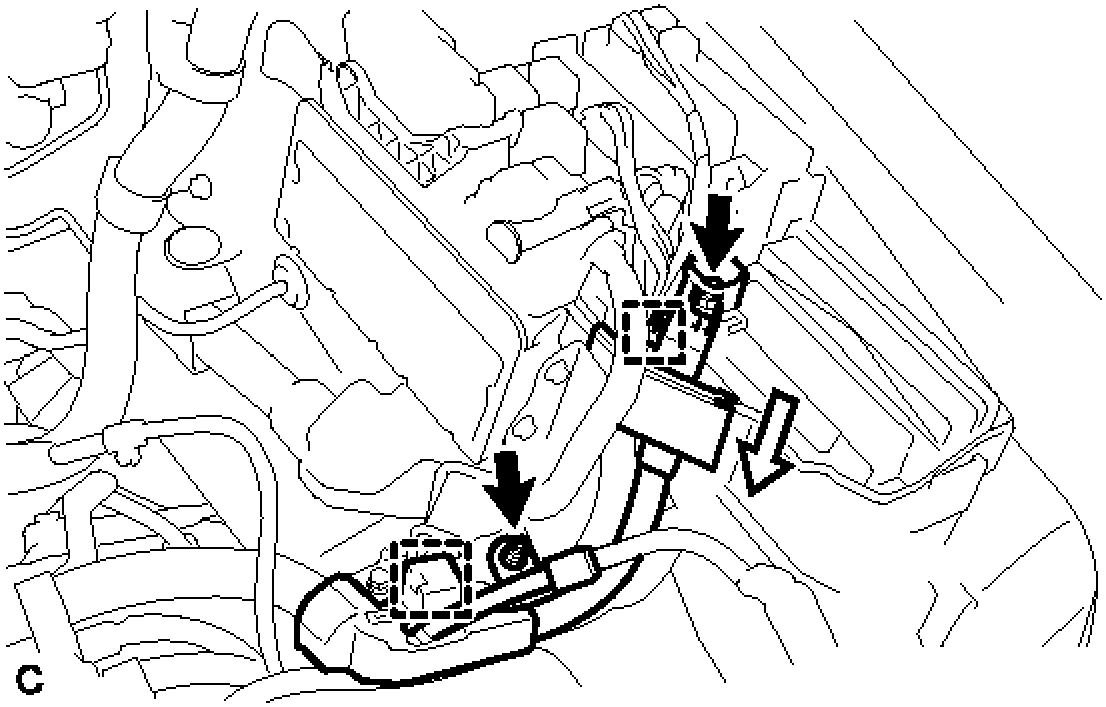

Fig. 131: Identifying Wire Clamp And Nuts
Courtesy of TOYOTA MOTOR SALES, U.S.A., INC.

f. Connect the wire clamp and install the 2 nuts.

   Torque: 8.0 N*m (82 kgf*cm, 71 in.*lbf)

g. Install the No. 1 relay block cover.

41. **INSTALL STARTER ASSEMBLY** . Refer to **INSTALLATION - Step 1**
42. **CONNECT WATER HOSE SUB-ASSEMBLY**
    a. Connect the water hose sub-assembly with the hose clip.
43. **CONNECT INLET HEATER WATER HOSE**
    a. Connect the inlet heater water hose with the hose clip.
44. **CONNECT NO. 3 WATER BY-PASS HOSE**
    a. Connect the No. 3 water by-pass hose to the transmission oil cooler with the hose clip.
45. **CONNECT OUTLET RADIATOR HOSE**
    a. Connect the outlet radiator hose with the hose clip.
46. **CONNECT INLET RADIATOR HOSE**
    a. Connect the inlet radiator hose with the hose clip.
    b. Install the No. 3 water by-pass hose to the inlet radiator hose with the hose clamp.
    c. Install the air fuel ratio sensor wire to the inlet radiator hose with the hose clamp.
47. **CONNECT UNION TO CHECK VALVE HOSE**
    a. Connect the union to check valve hose to the brake booster with the hose clip.

48. **CONNECT NO. 1 FUEL VAPOR FEED HOSE**
    a. Connect the No. 1 fuel vapor feed hose with the hose clip.
49. **CONNECT EARTH WIRE**
    a. Install the earth wire with the 2 bolts.

    Torque: 8.0 N*m (82 kgf*cm, 71 in.*lbf)

50. **INSTALL ENGINE MOVING CONTROL ROD**
    a. Temporarily install the engine moving control rod to the engine moving control rod bracket with the bolt.

    HINT:

    Perform this procedure only when replacement of the engine moving control rod is necessary.

51. **INSTALL ENGINE MOVING CONTROL ROD BRACKET**
    a. When replacing the engine moving control rod.

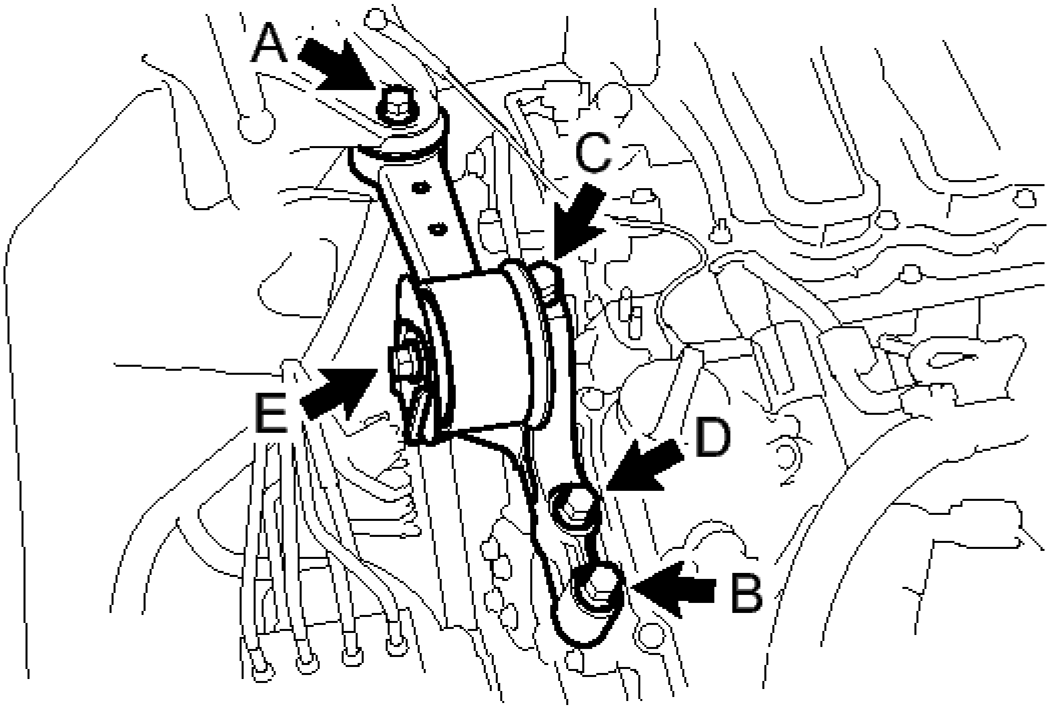

Fig. 132: Identifying Engine Moving Control Rod Bracket Bolts
Courtesy of TOYOTA MOTOR SALES, U.S.A., INC.

1. Install the engine moving control rod bracket with engine moving control rod with the 4 bolts.

   Torque: 38 N*m (387 kgf*cm, 28 ft.*lbf)

NOTE: Temporarily tighten bolt A and B, and then fully tighten the 4 bolts in the order of C, D, A and B.

2. Tighten the bolt E.

   Torque: 52 N*m (530 kgf*cm, 38 ft.*lbf)

b. When not replacing the engine moving control rod.

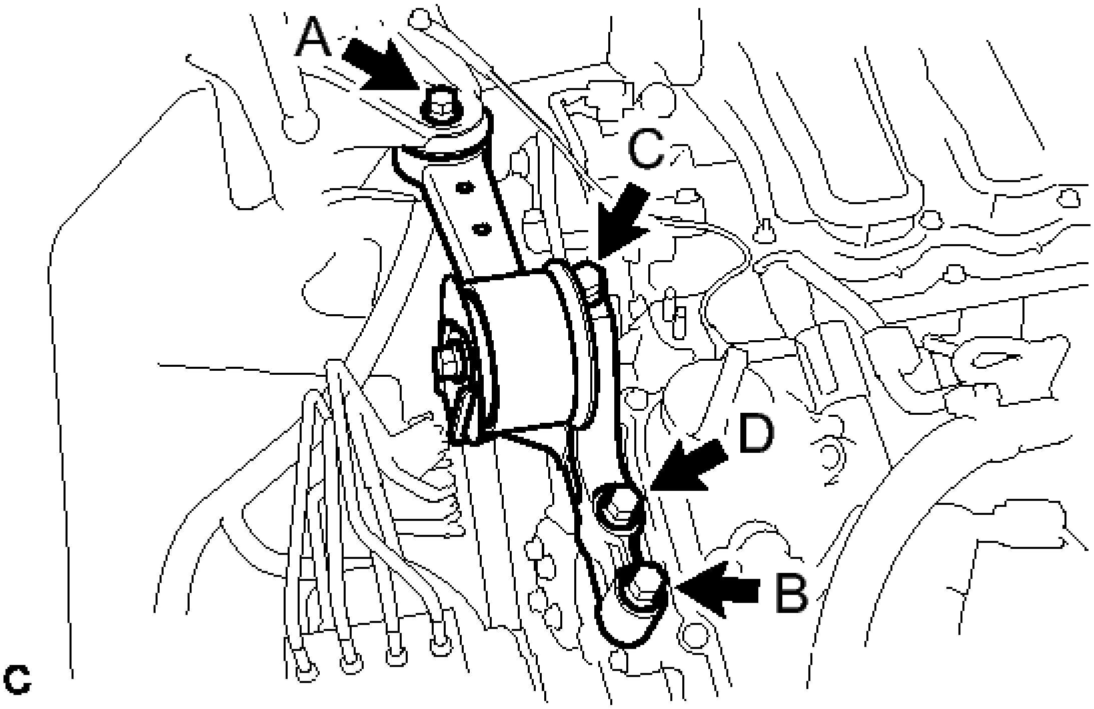

Fig. 133: Identifying Engine Moving Control Rod Bracket Bolts
Courtesy of TOYOTA MOTOR SALES, U.S.A., INC.

1. Install the engine moving control rod bracket with engine moving control rod with the 4 bolts.

   Torque: 38 N*m (387 kgf*cm, 28 ft.*lbf)

NOTE: Temporarily tighten bolt A and B, and then fully tighten the 4 bolts in the order of C, D, A and B.

52. **INSTALL NO. 2 ENGINE MOUNTING STAY RH**

a. Install the No. 2 engine mounting stay RH with the bolt.

   Torque: 38 N*m (387 kgf*cm, 28 ft.*lbf)

b. Tighten the 2 nuts.

Torque: 23 N*m (234 kgf*cm, 17 ft.*lbf)

53. **INSTALL INTAKE AIR RESONATOR SUB-ASSEMBLY**
    a. Install the intake air resonator sub-assembly with the 2 bolts.

    Torque: 8.0 N*m (82 kgf*cm, 71 in.*lbf)

    b. Connect the 2 vacuum hoses and engage the claw.
54. **INSTALL INLET NO. 1 AIR CLEANER**
    a. Install the inlet No. 1 air cleaner to the intake air resonator sub-assembly.

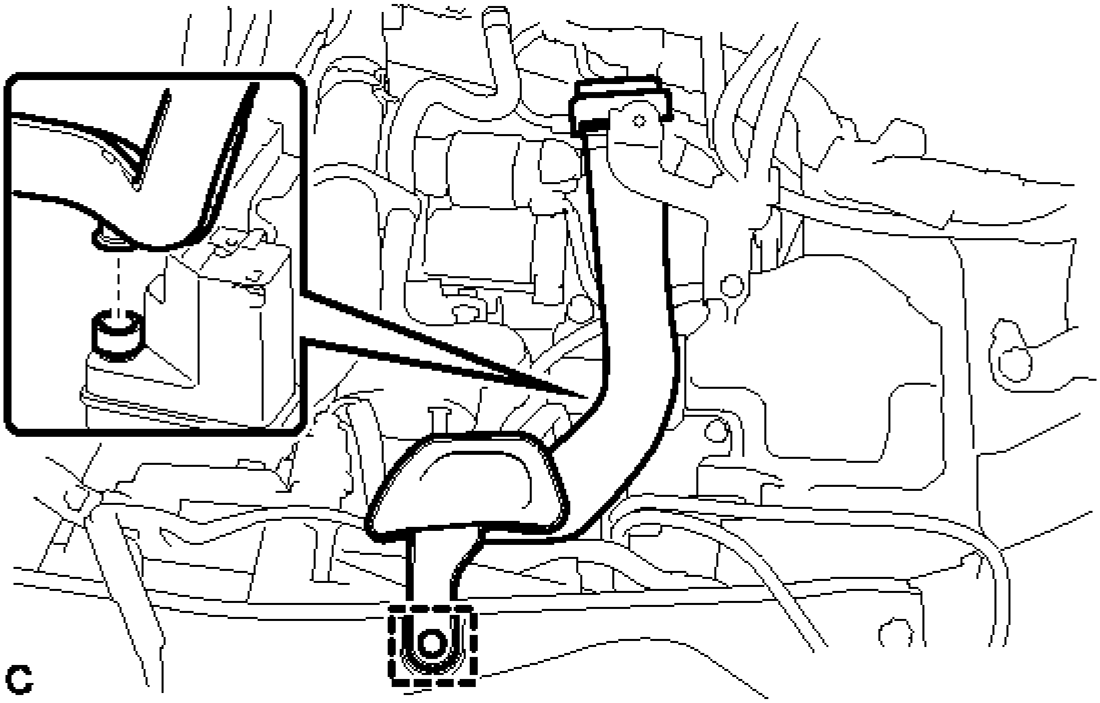

Fig. 134: Identifying Inlet No. 1 Air Cleaner
Courtesy of TOYOTA MOTOR SALES, U.S.A., INC.

    b. Engage the pin to the radiator support.
55. **INSTALL BATTERY**
    a. Install the battery and battery tray.
    b. Install the battery clamp with the bolt and nut.

Bolt

Torque: 9.0 N*m (92 kgf*cm, 80 in.*lbf)

Nut

Torque: 3.5 N*m (36 kgf*cm, 31 in.*lbf)

c. Connect the positive (+) cable to the positive (+) battery terminal.

Torque: 6.9 N*m (70 kgf*cm, 61 in.*lbf)

56. INSTALL AIR CLEANER CASE SUB-ASSEMBLY

a. Install the air cleaner case sub-assembly to the inlet No. 1 air cleaner.

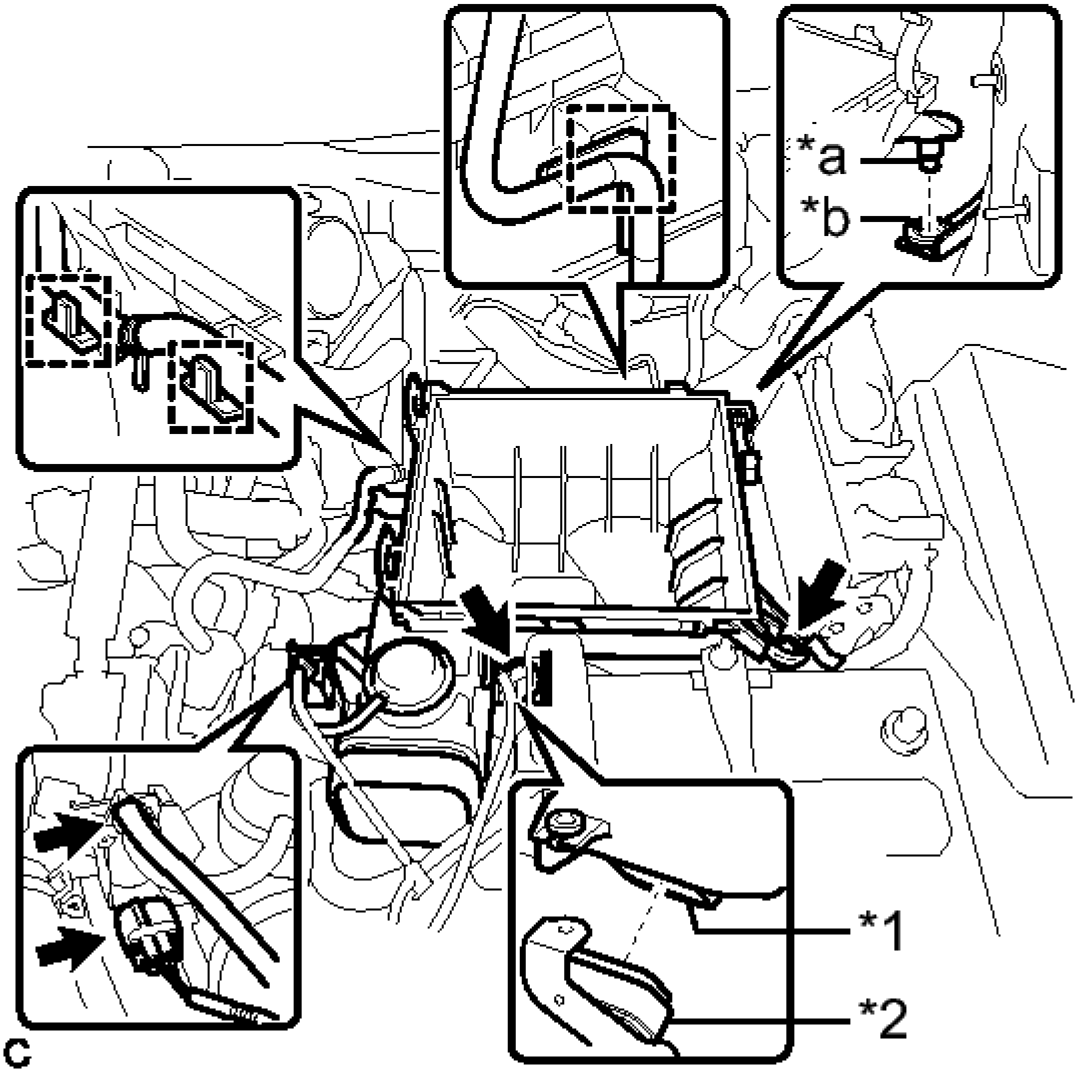

Fig. 135: Identifying Air Cleaner Case Sub-Assembly
Courtesy of TOYOTA MOTOR SALES, U.S.A., INC.

b. Insert the projection of the air cleaner case sub-assembly to the hole of the No. 2 air cleaner bracket as shown in the illustration.

TEXT IN ILLUSTRATION

	Air

*1	Cleaner Case Sub-assembly
*2	Inlet No. 1 Air Cleaner
*a	Projection
*b	Hole

c. Tighten the 2 bolts.

Torque: 5.0 N*m (51 kgf*cm, 44 in.*lbf)

d. Connect the wire harness clamp, connector, vacuum hose and No. 1 fuel vapor feed hose.

57. **INSTALL AIR CLEANER FILTER ELEMENT SUB-ASSEMBLY**
58. **INSTALL AIR CLEANER CAP SUB-ASSEMBLY** . Refer to **INSTALLATION - Step 2**
59. **INSTALL INLET NO. 2 AIR CLEANER**

a. Install the inlet No. 2 air cleaner to the air cleaner case sub-assembly with the 2 bolts.

Torque: 8.0 N*m (82 kgf*cm, 71 in.*lbf)

b. Connect the 2 wire harness clamps and vacuum hose clamp.

60. **INSPECT VACUUM HOSES**

a. Inspect the vacuum hoses.

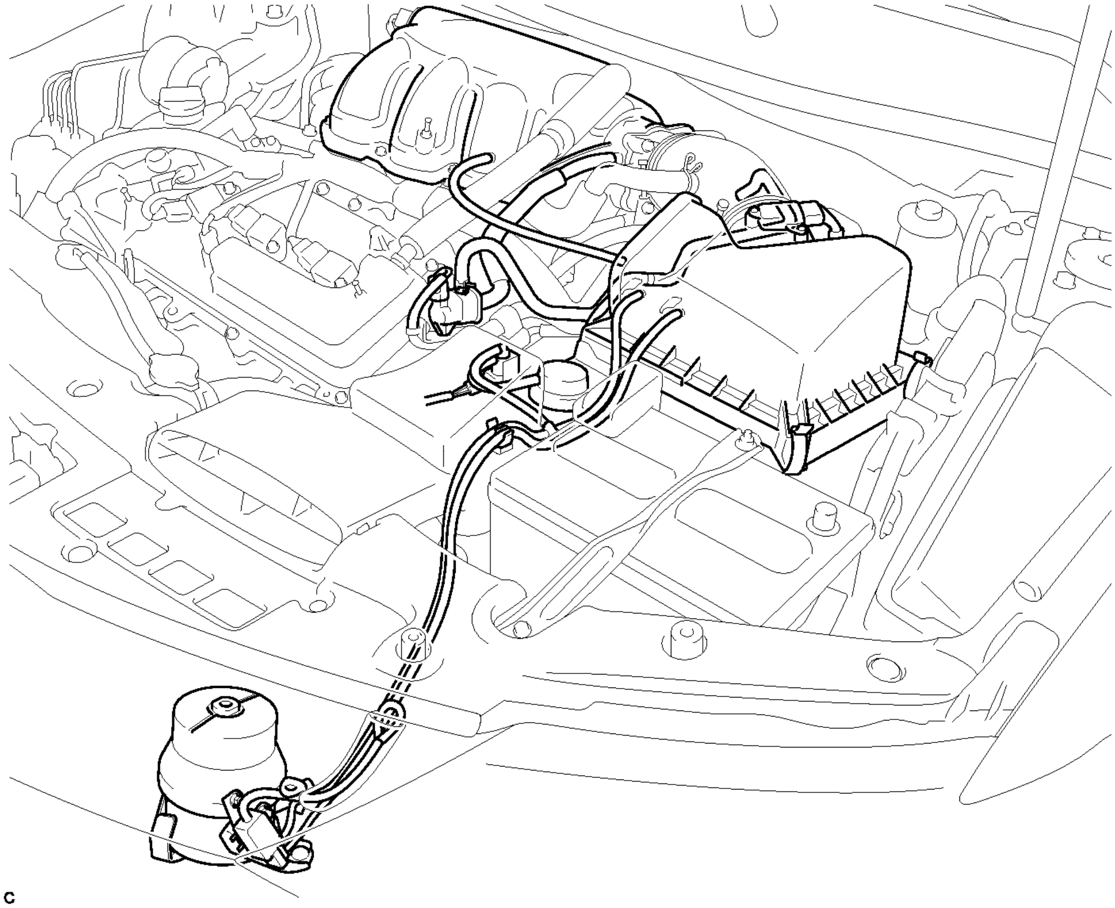

Fig. 136: Identifying Vacuum Hoses
Courtesy of TOYOTA MOTOR SALES, U.S.A., INC.

61. **CONNECT CABLE TO NEGATIVE BATTERY TERMINAL**
    a. Connect the negative (-) cable to the negative (-) battery terminal.

    NOTE: When disconnecting the cable, some systems need to be initialized after the cable is reconnected. Refer to INITIALIZATION .

    Torque: 6.9 N*m (70 kgf*cm, 61 in.*lbf)

62. **INSTALL FRONT WHEEL**

    Torque: 103 N*m (1049 kgf*cm, 76 ft.*lbf)

63. **ADD ENGINE OIL** . Refer to **REPLACEMENT - Step 4**
64. **ADD ENGINE COOLANT**

    Refer to **REPLACEMENT - Step 2**

65. **ADD AUTOMATIC TRANSAXLE FLUID**

Refer to **ADJUSTMENT**

66. **CHARGE AIR CONDITIONING SYSTEM WITH REFRIGERANT** . Refer to **REPLACEMENT - Step 2**
67. **WARM UP ENGINE** . Refer to **REPLACEMENT - Step 3**
68. **INSPECT FOR REFRIGERANT LEAK** . Refer to **REPLACEMENT - Step 4**
69. **INSPECT ENGINE OIL LEVEL** . Refer to **ON-VEHICLE INSPECTION - Step 1**
70. **INSPECT ENGINE COOLANT LEVEL IN RESERVOIR** . Refer to **ON-VEHICLE INSPECTION - Step 2**
71. **INSPECT FOR FUEL LEAK** . Refer to **ON-VEHICLE INSPECTION - Step 1**
72. **INSPECT FOR COOLANT LEAK** . Refer to **ON-VEHICLE INSPECTION - Step 1**
73. **INSPECT FOR OIL LEAK**
74. **INSPECT FOR EXHAUST GAS LEAK**
75. **INSPECT IGNITION TIMING** See step 9
76. **INSPECT ENGINE IDLE SPEED** See step 10
77. **INSPECT CO/HC** See step 12
78. **CHECK FOR SPEED SENSOR SIGNAL**

Refer to **TEST MODE PROCEDURE**

79. **INSPECT SHIFT LEVER POSITION** . Refer to **ADJUSTMENT - Step 1**
80. **ADJUST SHIFT LEVER POSITION** . Refer to **ADJUSTMENT - Step 2**
81. **INSPECT AND ADJUST FRONT WHEEL ALIGNMENT**

Refer to **ADJUSTMENT**

82. **INSTALL V-BANK COVER SUB-ASSEMBLY**
    a. Fit the 3 retainers and install the V-bank cover sub-assembly.
83. **INSTALL COOL AIR INTAKE DUCT SEAL** . Refer to **INSTALLATION - Step 4**
84. **INSTALL FRONT FENDER APRON SEAL LH**
85. **INSTALL ENGINE UNDER COVER LH**
86. **INSTALL FRONT WHEEL OPENING EXTENSION PAD LH**
87. **INSTALL FRONT FENDER APRON SEAL RH**
88. **INSTALL FRONT WHEEL OPENING EXTENSION PAD RH**
89. **INSTALL ENGINE UNDER COVER RH**

ENGINE UNIT

COMPONENTS

ILLUSTRATION

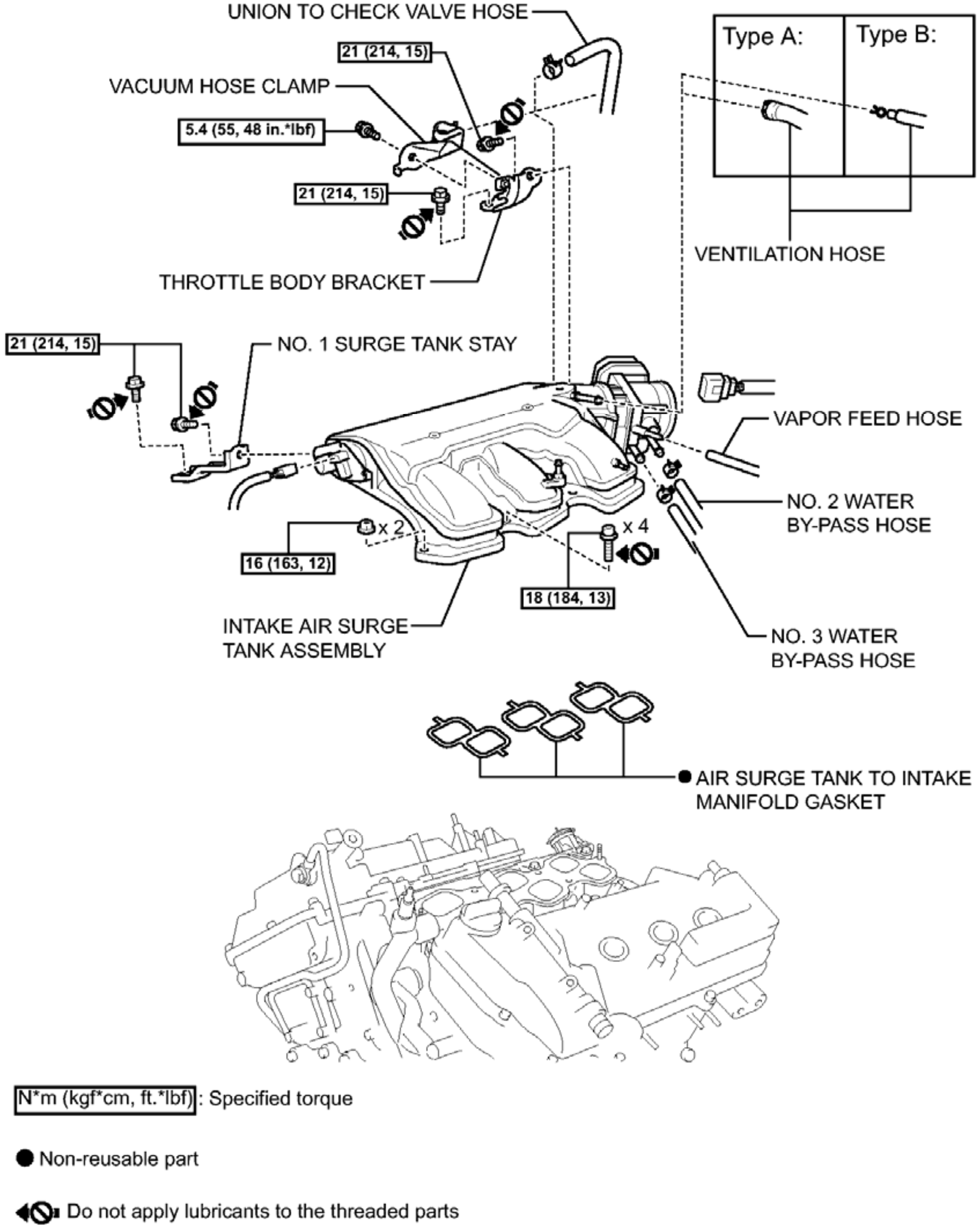
UNION TO CHECK VALVE HOSE
21 (214, 15)
VACUUM HOSE CLAMP
5.4 (55, 48 in.*lbf)
21 (214, 15)
THROTTLE BODY BRACKET
Type A:
Type B:
VENTILATION HOSE
21 (214, 15)
NO. 1 SURGE TANK STAY
VAPOR FEED HOSE
NO. 2 WATER
BY-PASS HOSE
x 2
16 (163, 12)
x 4
18 (184, 13)
INTAKE AIR SURGE
TANK ASSEMBLY
NO. 3 WATER
BY-PASS HOSE
● AIR SURGE TANK TO INTAKE
MANIFOLD GASKET
N*m (kgf*cm, ft.*lbf) : Specified torque
● Non-reusable part
Do not apply lubricants to the threaded parts

Fig. 137: Identifying Engine Unit Replacement Components With Torque Specifications (1 Of 12)
Courtesy of TOYOTA MOTOR SALES, U.S.A., INC.

ILLUSTRATION

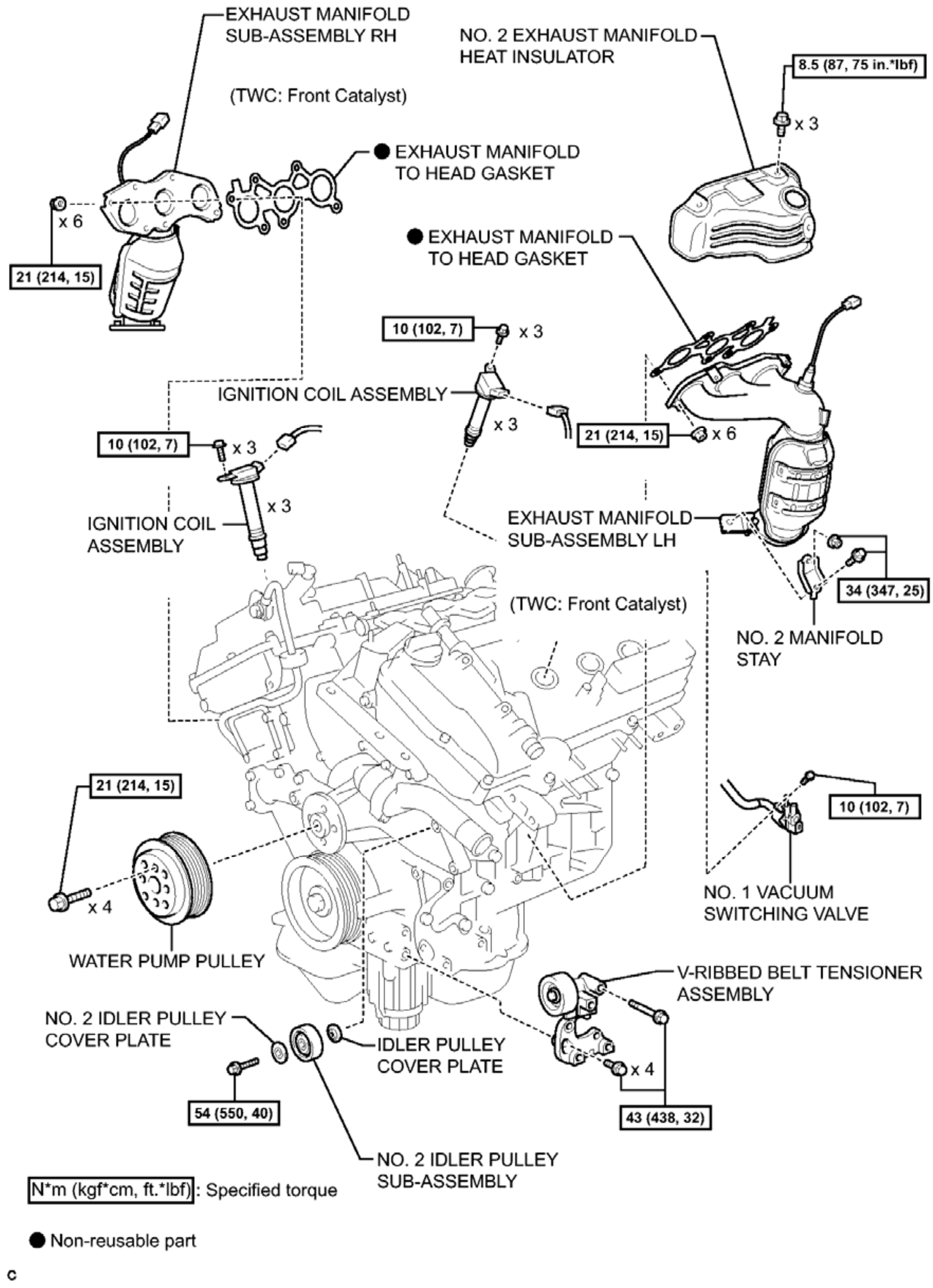
EXHAUST MANIFOLD SUB-ASSEMBLY RH
NO. 2 EXHAUST MANIFOLD HEAT INSULATOR
8.5 (87, 75 in.*lbf)
x 3
(TWC: Front Catalyst)
● EXHAUST MANIFOLD TO HEAD GASKET
x 6
21 (214, 15)
● EXHAUST MANIFOLD TO HEAD GASKET
10 (102, 7)
x 3
IGNITION COIL ASSEMBLY
x 3
21 (214, 15)
x 6
10 (102, 7)
x 3
x 3
IGNITION COIL ASSEMBLY
EXHAUST MANIFOLD SUB-ASSEMBLY LH
34 (347, 25)
(TWC: Front Catalyst)
NO. 2 MANIFOLD STAY
21 (214, 15)
10 (102, 7)
x 4
NO. 1 VACUUM SWITCHING VALVE
WATER PUMP PULLEY
V-RIBBED BELT TENSIONER ASSEMBLY
NO. 2 IDLER PULLEY COVER PLATE
IDLER PULLEY COVER PLATE
x 4
54 (550, 40)
43 (438, 32)
NO. 2 IDLER PULLEY SUB-ASSEMBLY
N*m (kgf*cm, ft.*lbf): Specified torque
● Non-reusable part
c

Fig. 138: Identifying Engine Unit Replacement Components With Torque Specifications (2 Of 12)
Courtesy of TOYOTA MOTOR SALES, U.S.A., INC.

ILLUSTRATION

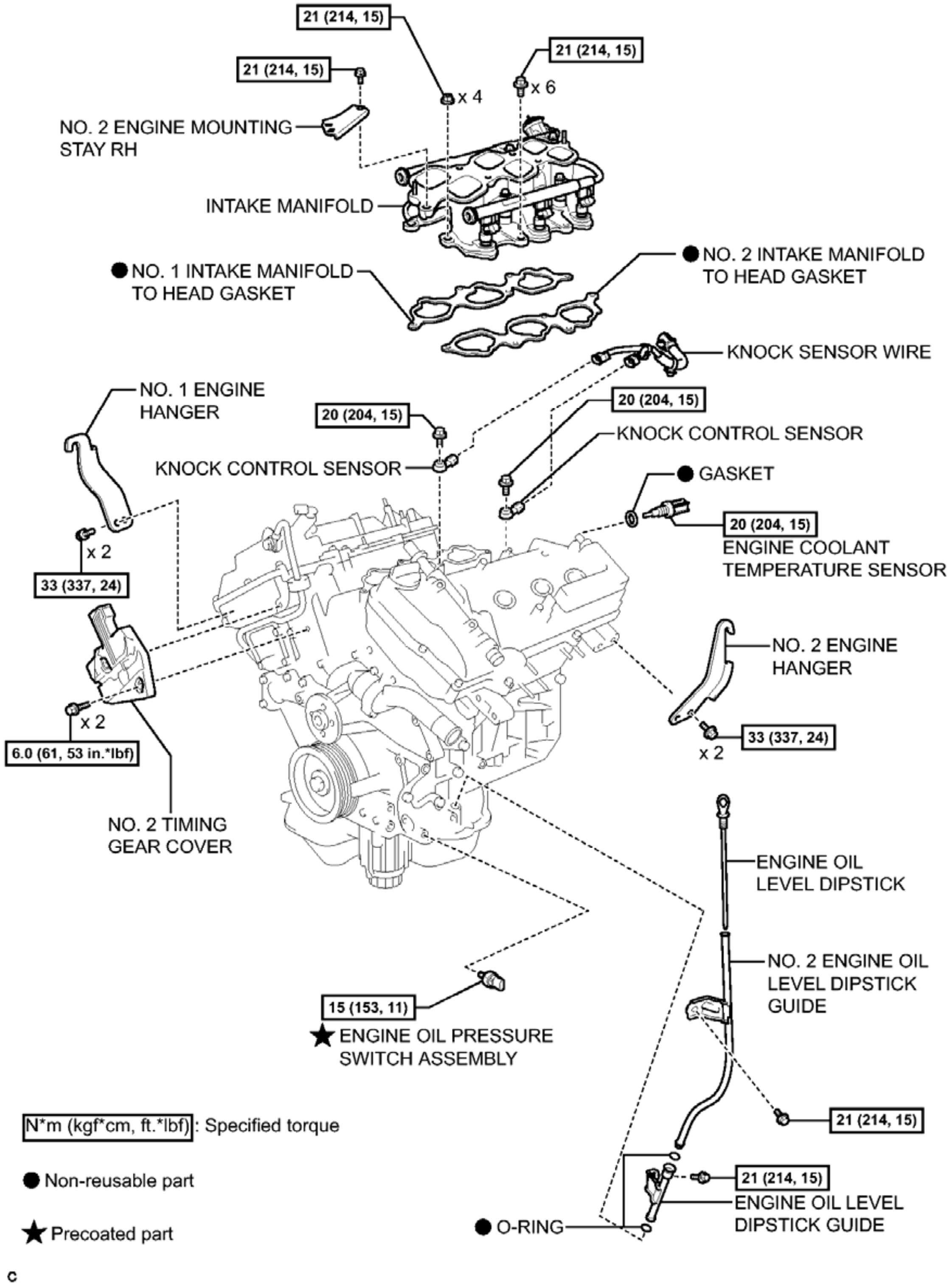
21 (214, 15)
21 (214, 15)
x 4
21 (214, 15)
x 6
NO. 2 ENGINE MOUNTING STAY RH
INTAKE MANIFOLD
● NO. 2 INTAKE MANIFOLD TO HEAD GASKET
● NO. 1 INTAKE MANIFOLD TO HEAD GASKET
KNOCK SENSOR WIRE
NO. 1 ENGINE HANGER
20 (204, 15)
20 (204, 15)
KNOCK CONTROL SENSOR
KNOCK CONTROL SENSOR
● GASKET
20 (204, 15)
ENGINE COOLANT TEMPERATURE SENSOR
x 2
33 (337, 24)
NO. 2 ENGINE HANGER
x 2
6.0 (61, 53 in.*lbf)
33 (337, 24)
x 2
NO. 2 TIMING GEAR COVER
ENGINE OIL LEVEL DIPSTICK
NO. 2 ENGINE OIL LEVEL DIPSTICK GUIDE
15 (153, 11)
★ ENGINE OIL PRESSURE SWITCH ASSEMBLY
21 (214, 15)
N*m (kgf*cm, ft.*lbf) : Specified torque
21 (214, 15)
● Non-reusable part
ENGINE OIL LEVEL DIPSTICK GUIDE
● O-RING
★ Precoated part
c

Fig. 139: Identifying Engine Unit Replacement Components With Torque Specifications (3 Of 12)
Courtesy of TOYOTA MOTOR SALES, U.S.A., INC.

ILLUSTRATION

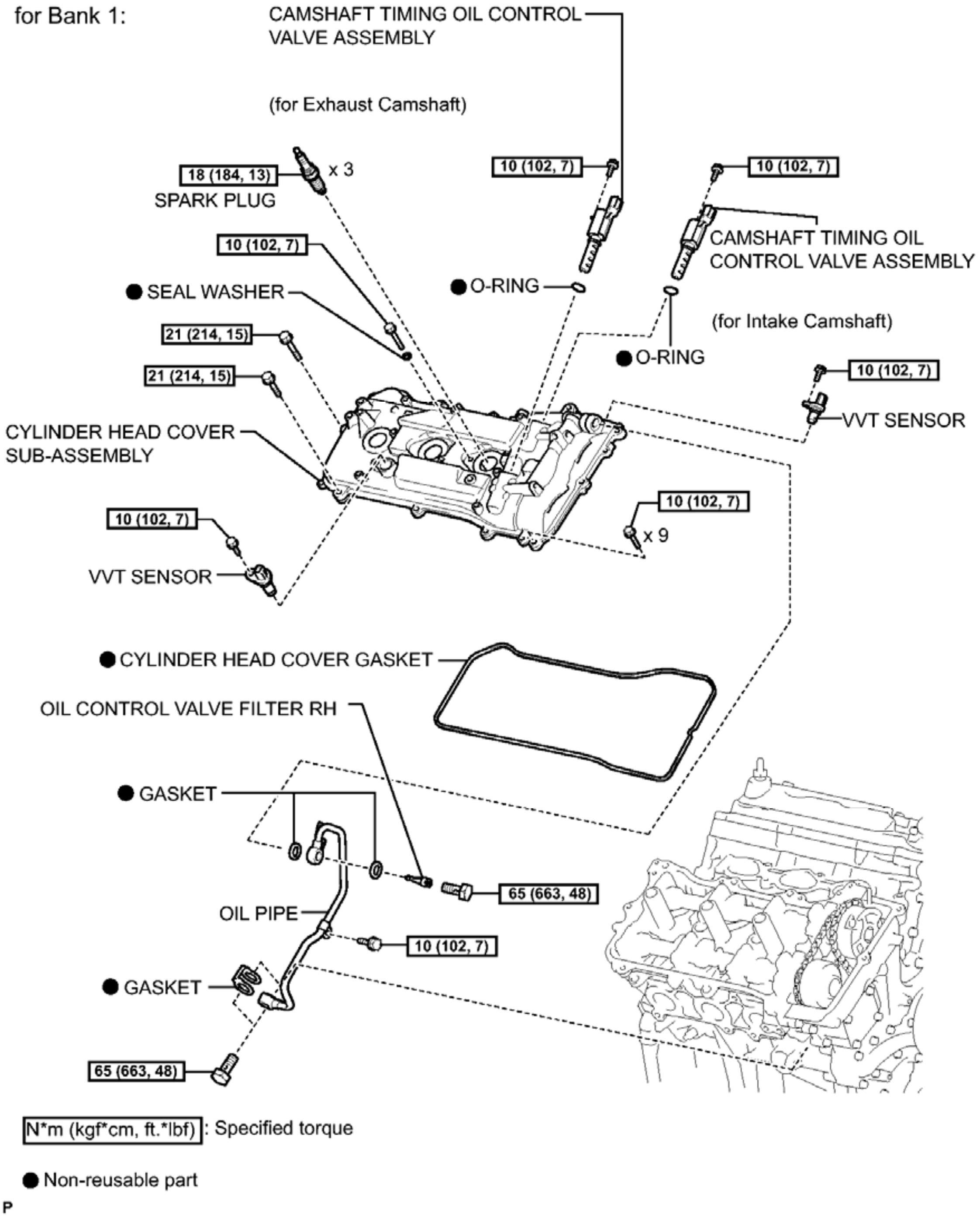
for Bank 1:
CAMSHAFT TIMING OIL CONTROL VALVE ASSEMBLY
(for Exhaust Camshaft)
18 (184, 13)
x 3
SPARK PLUG
10 (102, 7)
10 (102, 7)
10 (102, 7)
CAMSHAFT TIMING OIL CONTROL VALVE ASSEMBLY
● SEAL WASHER
● O-RING
● O-RING
(for Intake Camshaft)
21 (214, 15)
21 (214, 15)
10 (102, 7)
VVT SENSOR
CYLINDER HEAD COVER SUB-ASSEMBLY
10 (102, 7)
x 9
10 (102, 7)
VVT SENSOR
● CYLINDER HEAD COVER GASKET
OIL CONTROL VALVE FILTER RH
● GASKET
65 (663, 48)
OIL PIPE
10 (102, 7)
● GASKET
65 (663, 48)
N*m (kgf*cm, ft.*lbf): Specified torque
● Non-reusable part
P

Fig. 140: Identifying Engine Unit Replacement Components With Torque Specifications (4 Of 12)
Courtesy of TOYOTA MOTOR SALES, U.S.A., INC.

ILLUSTRATION

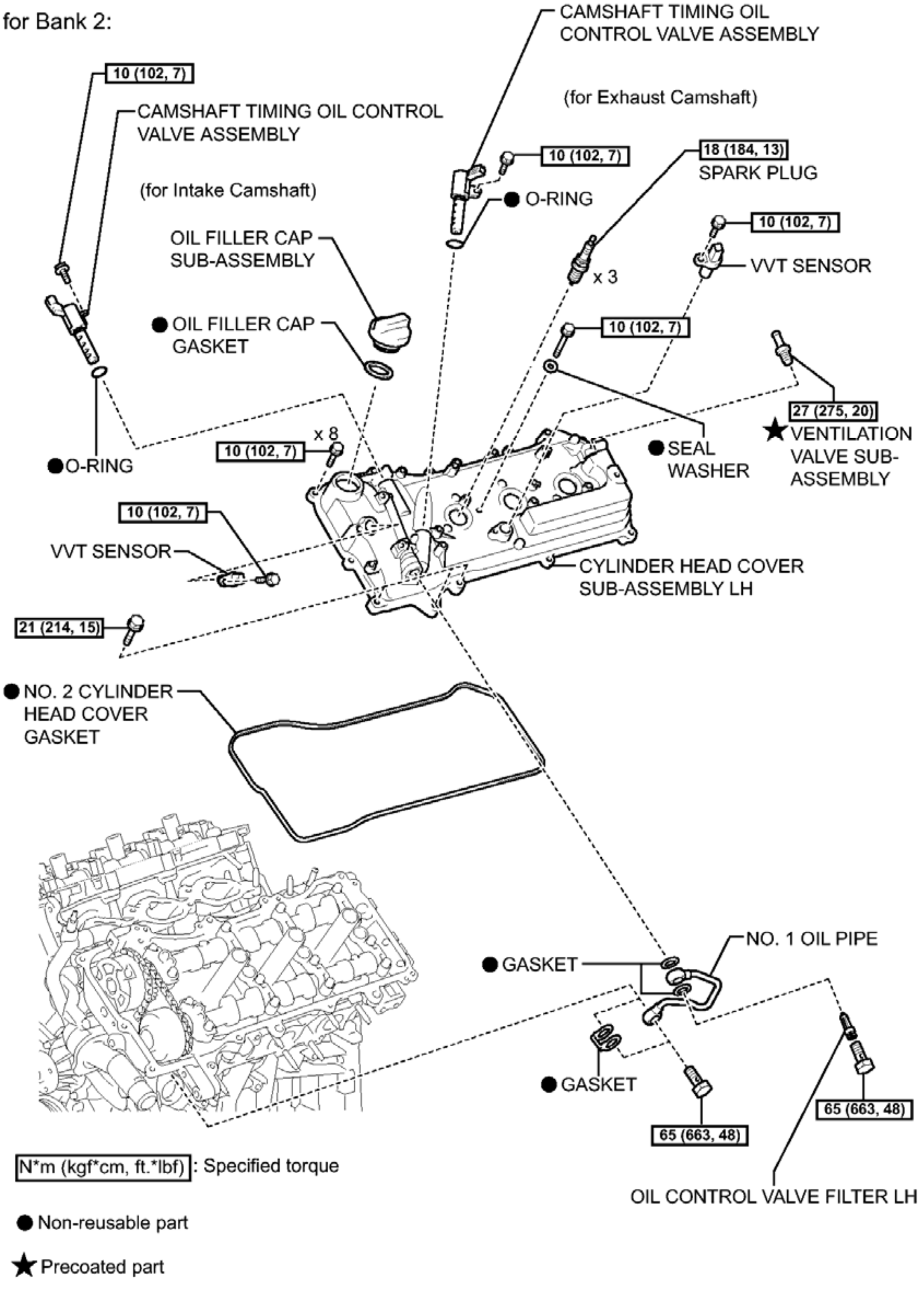
for Bank 2:
10 (102, 7)
CAMSHAFT TIMING OIL CONTROL VALVE ASSEMBLY
(for Intake Camshaft)
CAMSHAFT TIMING OIL CONTROL VALVE ASSEMBLY
(for Exhaust Camshaft)
10 (102, 7)
● O-RING
18 (184, 13)
SPARK PLUG
x 3
10 (102, 7)
VVT SENSOR
OIL FILLER CAP SUB-ASSEMBLY
● OIL FILLER CAP GASKET
10 (102, 7)
27 (275, 20)
★ VENTILATION VALVE SUB-ASSEMBLY
● SEAL WASHER
●O-RING
x 8
10 (102, 7)
10 (102, 7)
VVT SENSOR
CYLINDER HEAD COVER SUB-ASSEMBLY LH
21 (214, 15)
● NO. 2 CYLINDER HEAD COVER GASKET
NO. 1 OIL PIPE
● GASKET
● GASKET
65 (663, 48)
65 (663, 48)
OIL CONTROL VALVE FILTER LH
N*m (kgf*cm, ft.*lbf) : Specified torque
● Non-reusable part
★ Precoated part

Fig. 141: Identifying Engine Unit Replacement Components With Torque Specifications (5 Of 12)
Courtesy of TOYOTA MOTOR SALES, U.S.A., INC.

ILLUSTRATION

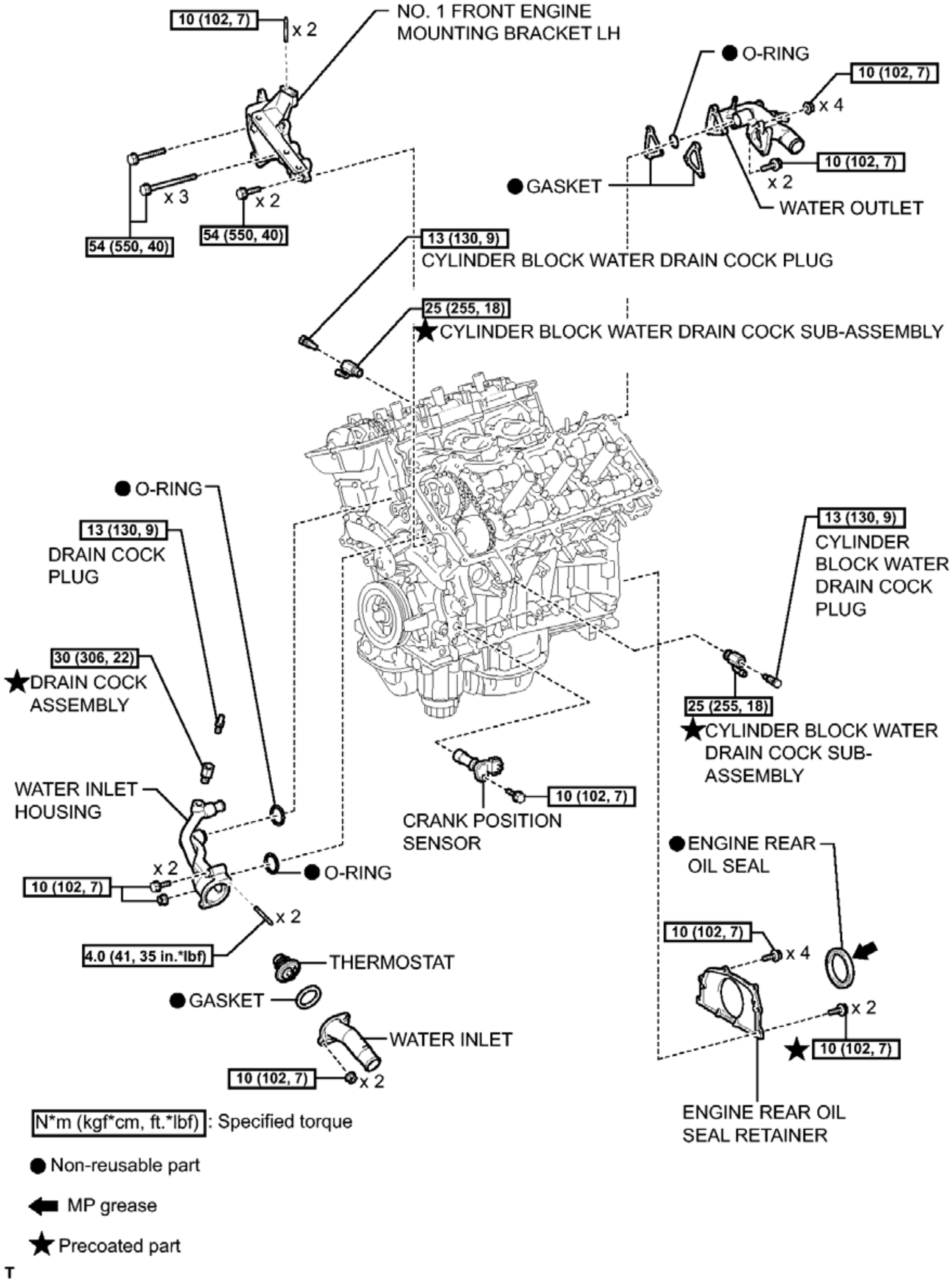
10 (102, 7)
x 2
NO. 1 FRONT ENGINE MOUNTING BRACKET LH
x 3
x 2
54 (550, 40)
54 (550, 40)
● O-RING
10 (102, 7)
x 4
● GASKET
10 (102, 7)
x 2
WATER OUTLET
13 (130, 9)
CYLINDER BLOCK WATER DRAIN COCK PLUG
25 (255, 18)
★CYLINDER BLOCK WATER DRAIN COCK SUB-ASSEMBLY
● O-RING
13 (130, 9)
DRAIN COCK PLUG
30 (306, 22)
★DRAIN COCK ASSEMBLY
WATER INLET HOUSING
x 2
10 (102, 7)
● O-RING
x 2
4.0 (41, 35 in.*lbf)
THERMOSTAT
● GASKET
WATER INLET
10 (102, 7)
x 2
13 (130, 9)
CYLINDER BLOCK WATER DRAIN COCK PLUG
25 (255, 18)
★CYLINDER BLOCK WATER DRAIN COCK SUB-ASSEMBLY
CRANK POSITION SENSOR
10 (102, 7)
● ENGINE REAR OIL SEAL
10 (102, 7)
x 4
x 2
★ 10 (102, 7)
ENGINE REAR OIL SEAL RETAINER
N*m (kgf*cm, ft.*lbf) : Specified torque
● Non-reusable part
MP grease
★ Precoated part
T

Fig. 142: Identifying Engine Unit Replacement Components With Torque Specifications (6 Of 12)
Courtesy of TOYOTA MOTOR SALES, U.S.A., INC.

ILLUSTRATION

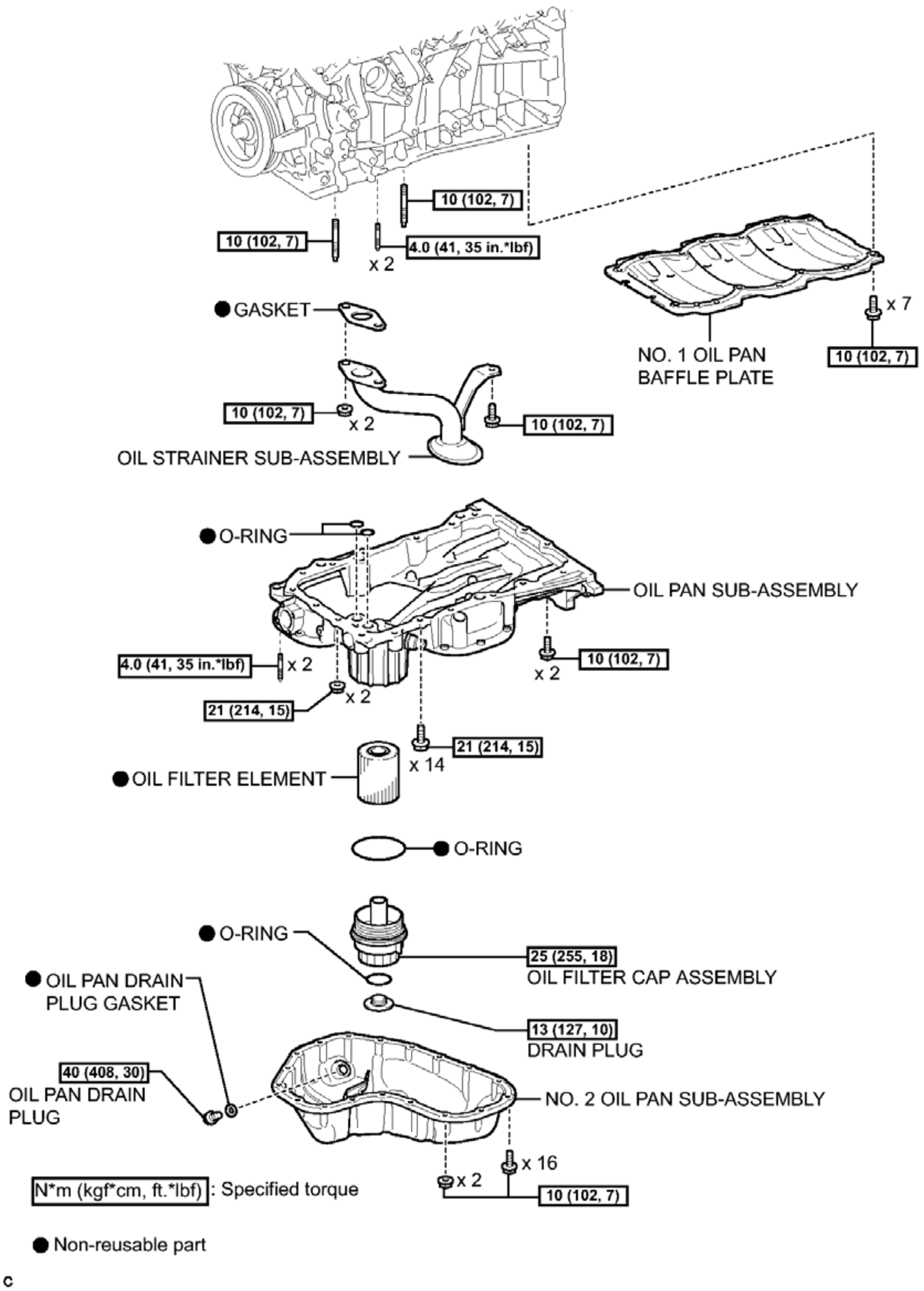
10 (102, 7)
10 (102, 7)
4.0 (41, 35 in.*lbf)
x 2
GASKET
x 7
NO. 1 OIL PAN BAFFLE PLATE
10 (102, 7)
10 (102, 7)
x 2
10 (102, 7)
OIL STRAINER SUB-ASSEMBLY
O-RING
OIL PAN SUB-ASSEMBLY
4.0 (41, 35 in.*lbf)
x 2
10 (102, 7)
x 2
21 (214, 15)
x 2
21 (214, 15)
x 14
OIL FILTER ELEMENT
O-RING
O-RING
25 (255, 18)
OIL FILTER CAP ASSEMBLY
OIL PAN DRAIN PLUG GASKET
13 (127, 10)
DRAIN PLUG
40 (408, 30)
OIL PAN DRAIN PLUG
NO. 2 OIL PAN SUB-ASSEMBLY
x 16
x 2
10 (102, 7)
N*m (kgf*cm, ft.*lbf) : Specified torque
● Non-reusable part
c

Fig. 143: Identifying Engine Unit Replacement Components With Torque Specifications (7 Of 12)
Courtesy of TOYOTA MOTOR SALES, U.S.A., INC.

ILLUSTRATION

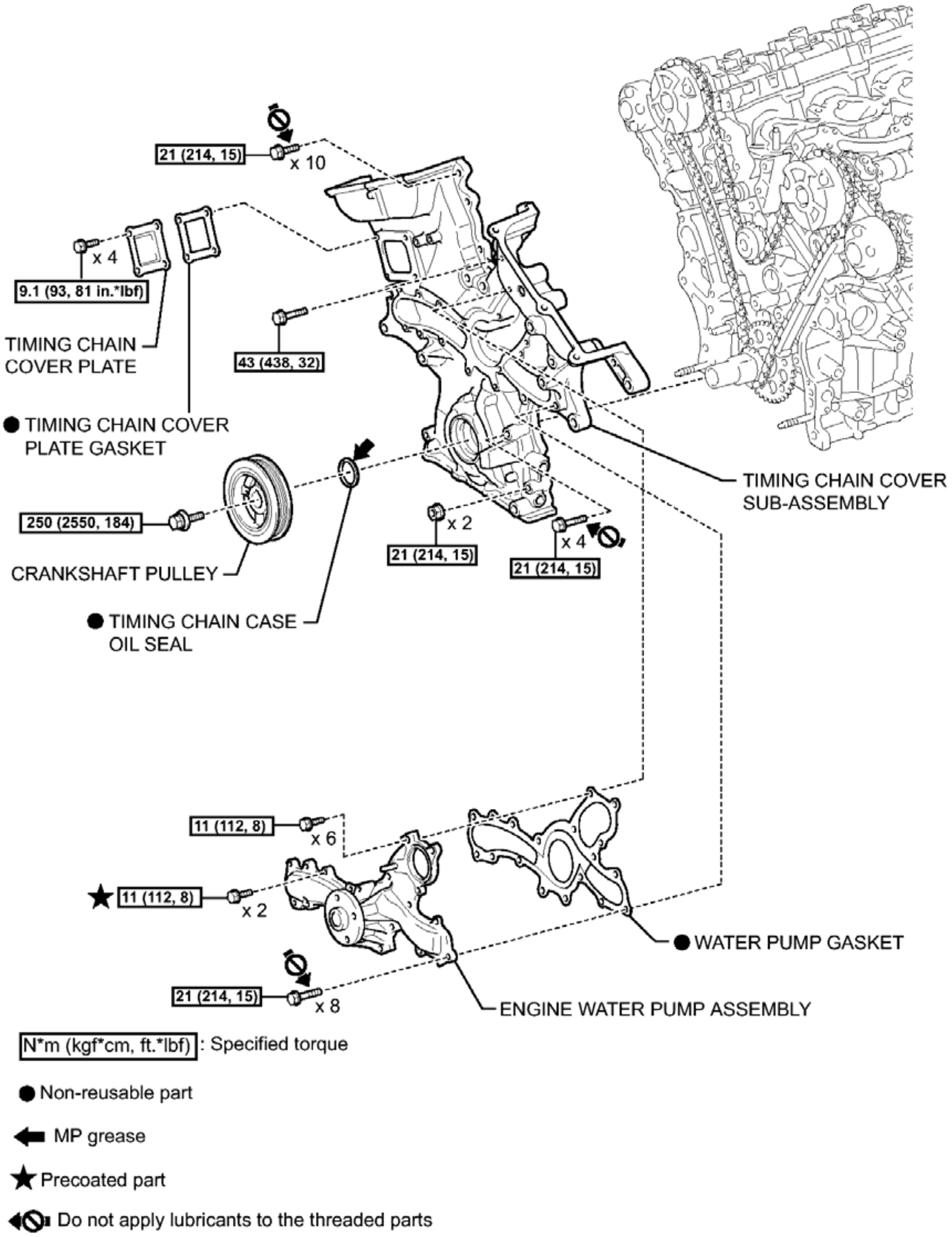
21 (214, 15)
x 10
x 4
9.1 (93, 81 in.*lbf)
TIMING CHAIN COVER PLATE
43 (438, 32)
● TIMING CHAIN COVER PLATE GASKET
250 (2550, 184)
CRANKSHAFT PULLEY
● TIMING CHAIN CASE OIL SEAL
x 2
21 (214, 15)
x 4
21 (214, 15)
TIMING CHAIN COVER SUB-ASSEMBLY
11 (112, 8)
x 6
★ 11 (112, 8)
x 2
21 (214, 15)
x 8
● WATER PUMP GASKET
ENGINE WATER PUMP ASSEMBLY
N*m (kgf*cm, ft.*lbf) : Specified torque
● Non-reusable part
MP grease
★ Precoated part
Do not apply lubricants to the threaded parts

Fig. 144: Identifying Engine Unit Replacement Components With Torque Specifications (8 Of 12)
Courtesy of TOYOTA MOTOR SALES, U.S.A., INC.

ILLUSTRATION

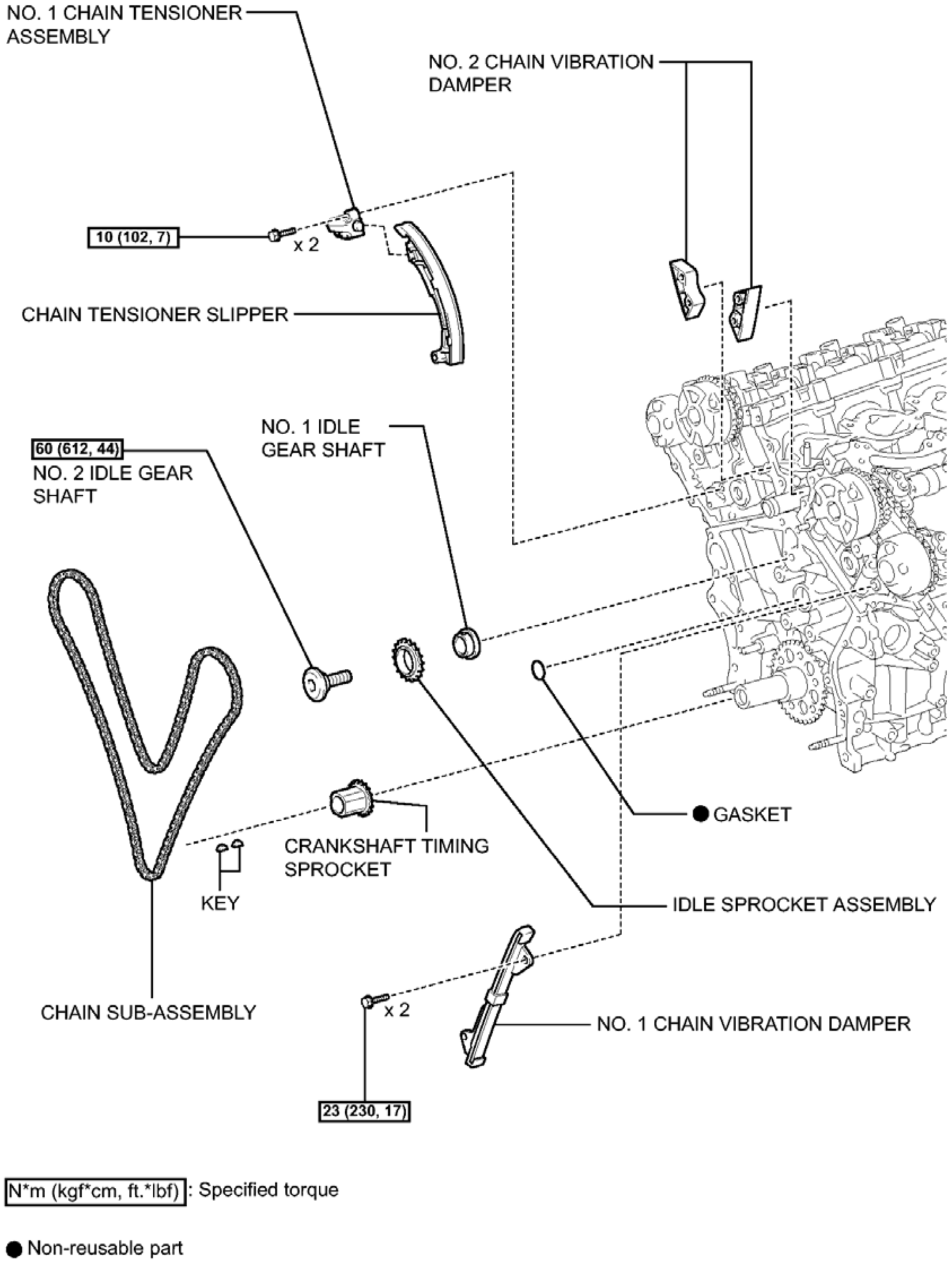
NO. 1 CHAIN TENSIONER ASSEMBLY
NO. 2 CHAIN VIBRATION DAMPER
10 (102, 7)
x 2
CHAIN TENSIONER SLIPPER
NO. 1 IDLE GEAR SHAFT
60 (612, 44)
NO. 2 IDLE GEAR SHAFT
GASKET
CRANKSHAFT TIMING SPROCKET
KEY
IDLE SPROCKET ASSEMBLY
CHAIN SUB-ASSEMBLY
x 2
NO. 1 CHAIN VIBRATION DAMPER
23 (230, 17)
N*m (kgf*cm, ft.*lbf) : Specified torque
● Non-reusable part

Fig. 145: Identifying Engine Unit Replacement Components With Torque Specifications (9 Of 12)
Courtesy of TOYOTA MOTOR SALES, U.S.A., INC.

ILLUSTRATION

for Bank 1:

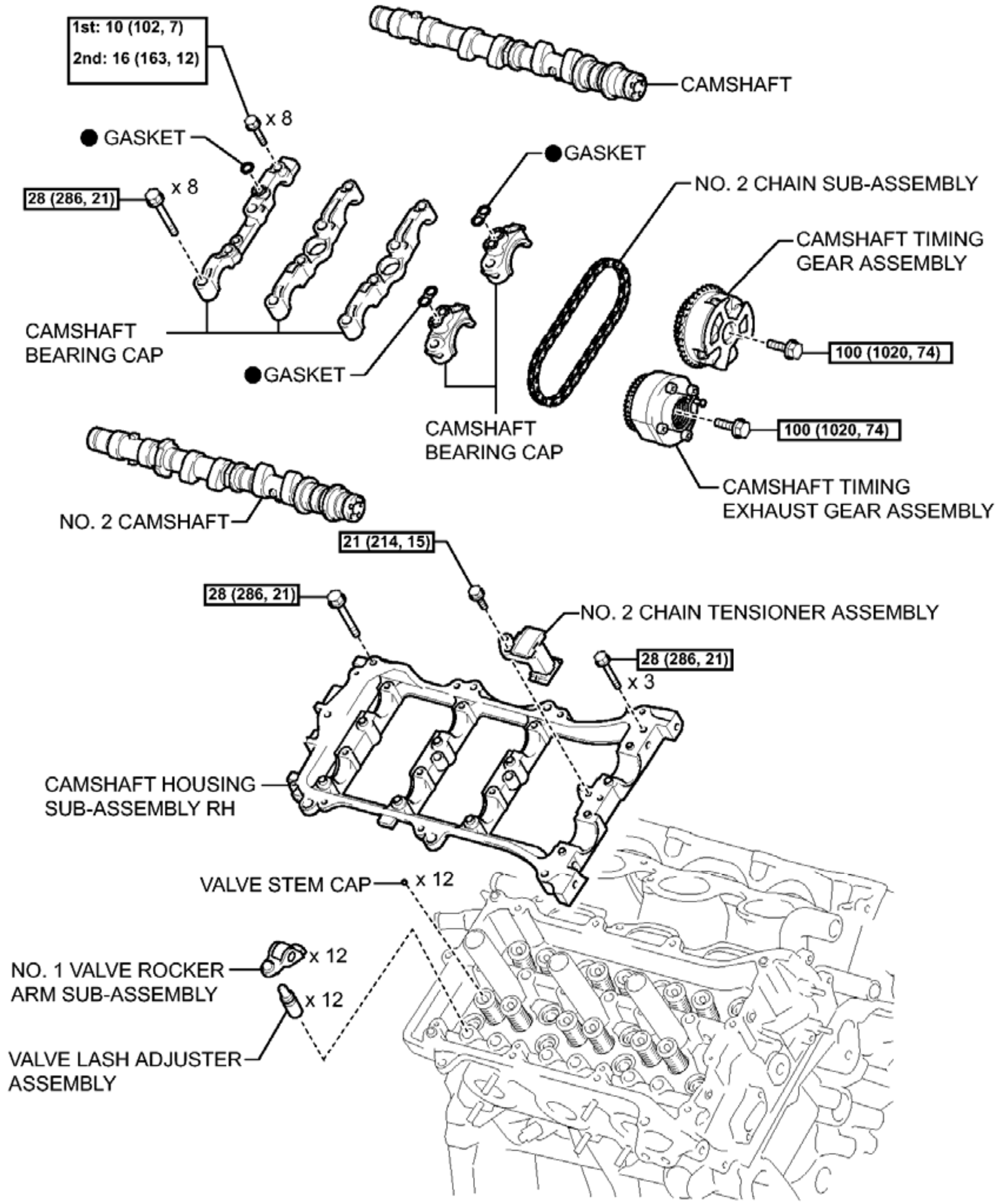
1st: 10 (102, 7)
2nd: 16 (163, 12)
CAMSHAFT
x 8
● GASKET
● GASKET
28 (286, 21)
x 8
NO. 2 CHAIN SUB-ASSEMBLY
CAMSHAFT TIMING GEAR ASSEMBLY
100 (1020, 74)
CAMSHAFT BEARING CAP
● GASKET
100 (1020, 74)
CAMSHAFT BEARING CAP
CAMSHAFT TIMING EXHAUST GEAR ASSEMBLY
NO. 2 CAMSHAFT
21 (214, 15)
28 (286, 21)
NO. 2 CHAIN TENSIONER ASSEMBLY
28 (286, 21)
x 3
CAMSHAFT HOUSING SUB-ASSEMBLY RH
VALVE STEM CAP
x 12
NO. 1 VALVE ROCKER ARM SUB-ASSEMBLY
x 12
x 12
VALVE LASH ADJUSTER ASSEMBLY

N*m (kgf*cm, ft.*lbf) : Specified torque

● Non-reusable part

Fig. 146: Identifying Engine Unit Replacement Components With Torque Specifications (10 Of 12)
Courtesy of TOYOTA MOTOR SALES, U.S.A., INC.

ILLUSTRATION

for Bank 2:

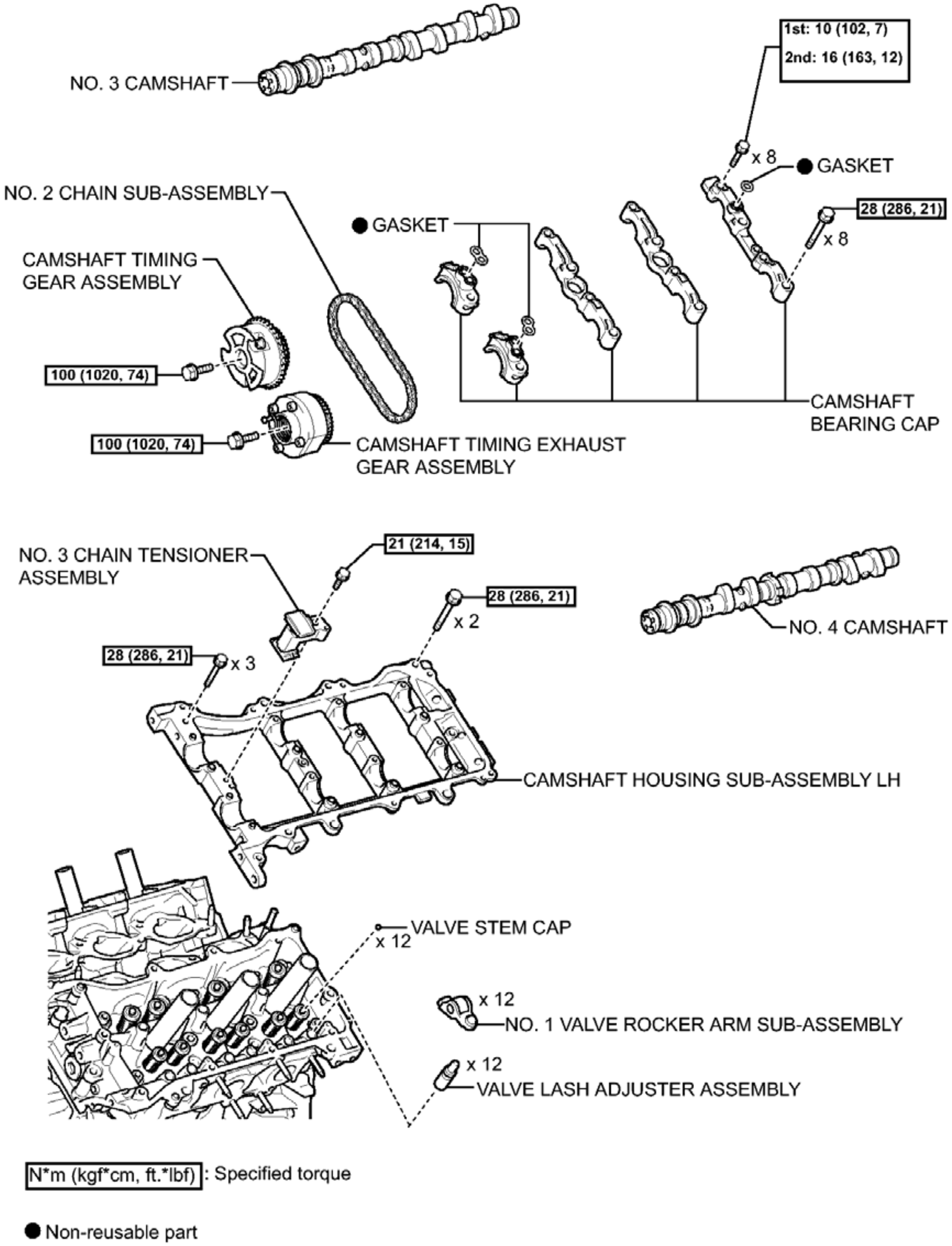
NO. 3 CAMSHAFT
1st: 10 (102, 7)
2nd: 16 (163, 12)
x 8
● GASKET
NO. 2 CHAIN SUB-ASSEMBLY
● GASKET
28 (286, 21)
x 8
CAMSHAFT TIMING
GEAR ASSEMBLY
100 (1020, 74)
100 (1020, 74)
CAMSHAFT
BEARING CAP
CAMSHAFT TIMING EXHAUST
GEAR ASSEMBLY
NO. 3 CHAIN TENSIONER
ASSEMBLY
21 (214, 15)
28 (286, 21)
x 2
NO. 4 CAMSHAFT
28 (286, 21)
x 3
CAMSHAFT HOUSING SUB-ASSEMBLY LH
VALVE STEM CAP
x 12
x 12
NO. 1 VALVE ROCKER ARM SUB-ASSEMBLY
x 12
VALVE LASH ADJUSTER ASSEMBLY
N*m (kgf*cm, ft.*lbf) : Specified torque
● Non-reusable part

Fig. 147: Identifying Engine Unit Replacement Components With Torque Specifications (11 Of 12)
Courtesy of TOYOTA MOTOR SALES, U.S.A., INC.

ILLUSTRATION

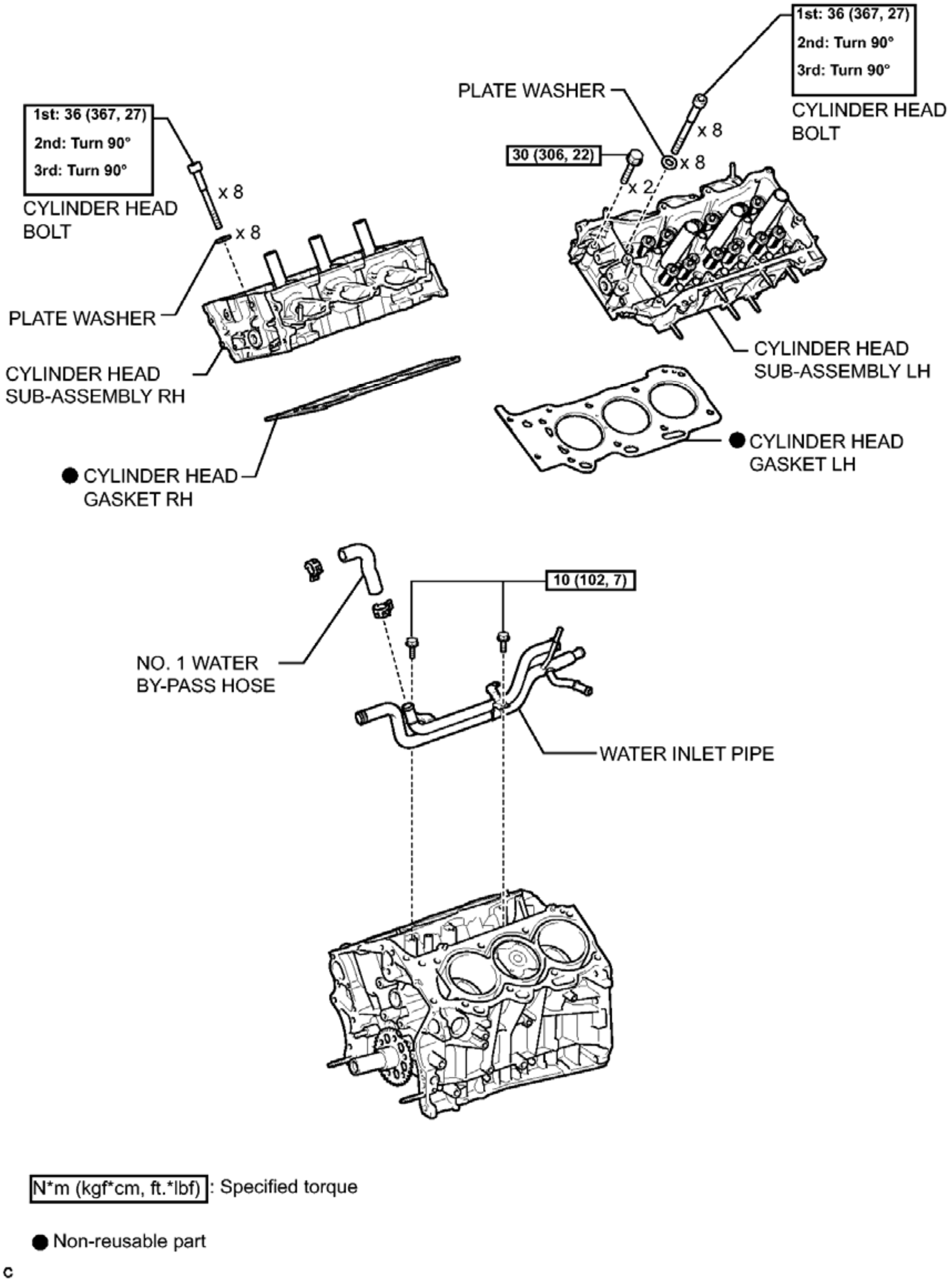
1st: 36 (367, 27)
2nd: Turn 90°
3rd: Turn 90°
CYLINDER HEAD BOLT
x 8
x 8
PLATE WASHER
CYLINDER HEAD SUB-ASSEMBLY RH
● CYLINDER HEAD GASKET RH
PLATE WASHER
30 (306, 22)
x 2
x 8
x 8
1st: 36 (367, 27)
2nd: Turn 90°
3rd: Turn 90°
CYLINDER HEAD BOLT
CYLINDER HEAD SUB-ASSEMBLY LH
● CYLINDER HEAD GASKET LH
10 (102, 7)
NO. 1 WATER BY-PASS HOSE
WATER INLET PIPE
N*m (kgf*cm, ft.*lbf) : Specified torque
● Non-reusable part
c

Fig. 148: Identifying Engine Unit Replacement Components With Torque Specifications (12 Of 12)
Courtesy of TOYOTA MOTOR SALES, U.S.A., INC.

REMOVAL

REMOVAL

1. **REMOVE ENGINE HANGERS**
    a. Remove the 4 bolts and 2 engine hangers.

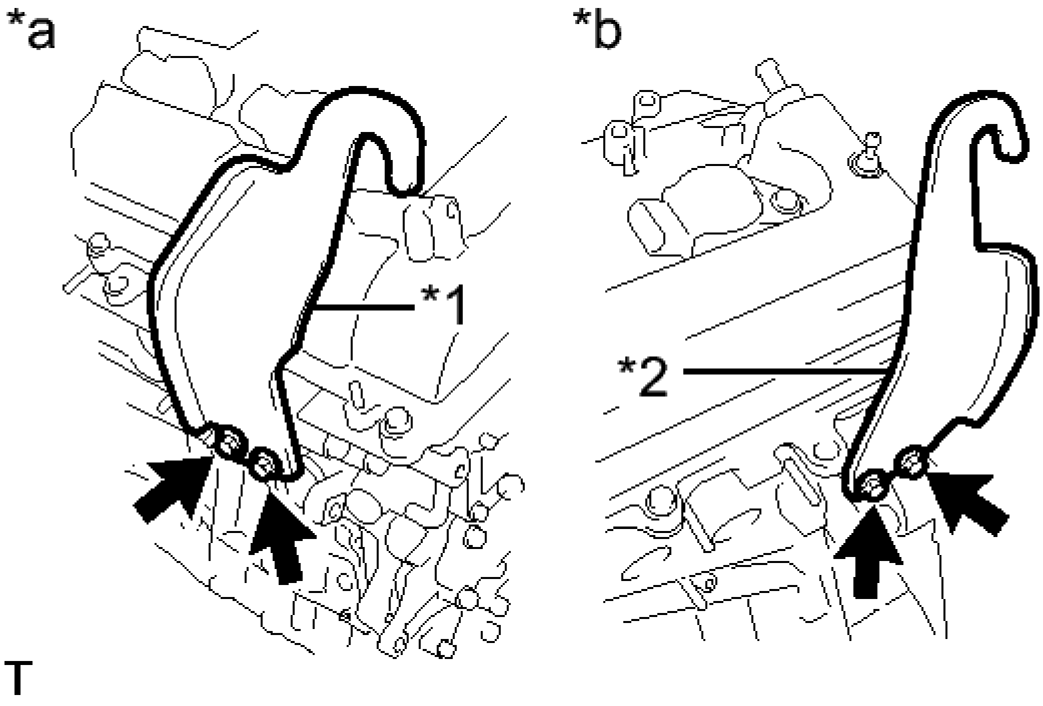

Fig. 149: Locating Engine Hangers & Bolts
Courtesy of TOYOTA MOTOR SALES, U.S.A., INC.

TEXT IN ILLUSTRATION

*1	No. 1 engine hanger
*2	No. 2 engine hanger
*a	Bank 1
*b	Bank 2

2. **REMOVE INTAKE AIR SURGE TANK ASSEMBLY** . Refer to **REMOVAL - Step 9**
3. **REMOVE NO. 1 SURGE TANK STAY**
    a. Remove the bolt and No. 1 surge tank stay.

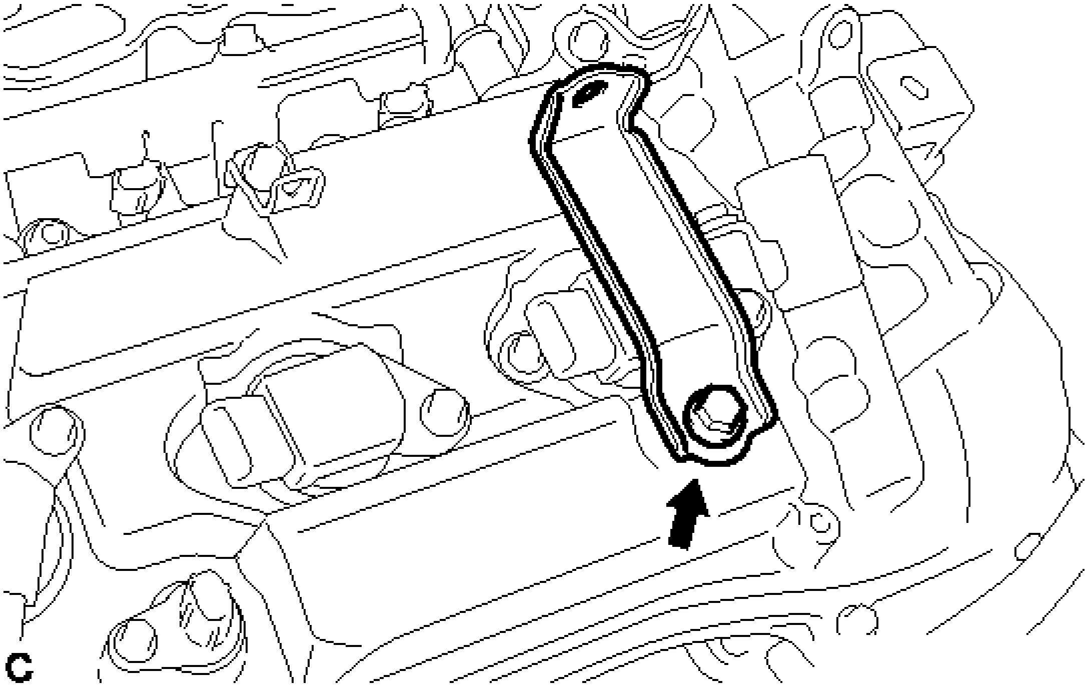

Fig. 150: Locating No. 1 Surge Tank Stay & Bolt
Courtesy of TOYOTA MOTOR SALES, U.S.A., INC.

4. **REMOVE THROTTLE BODY BRACKET**
   a. Remove the bolt and throttle body bracket.

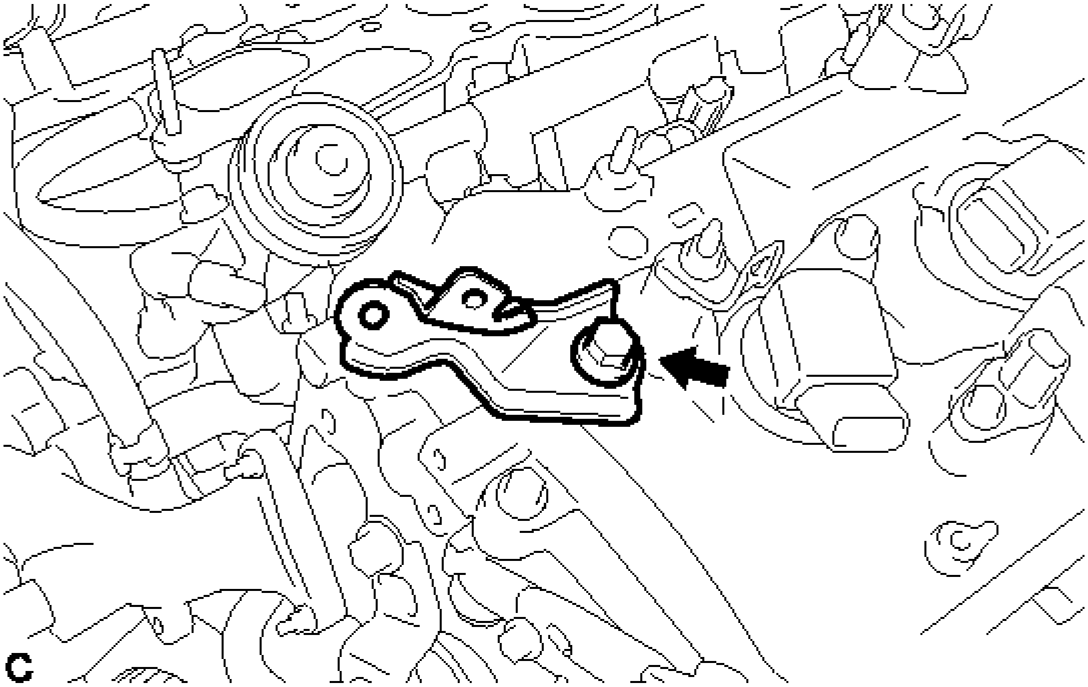

Fig. 151: Identifying Throttle Body Bracket

Courtesy of TOYOTA MOTOR SALES, U.S.A., INC.

5. **REMOVE IGNITION COIL ASSEMBLY** . Refer to **REMOVAL - Step 3**
6. **REMOVE NO. 2 ENGINE MOUNTING STAY RH**
    a. Remove the bolt and No. 2 engine mounting stay RH.

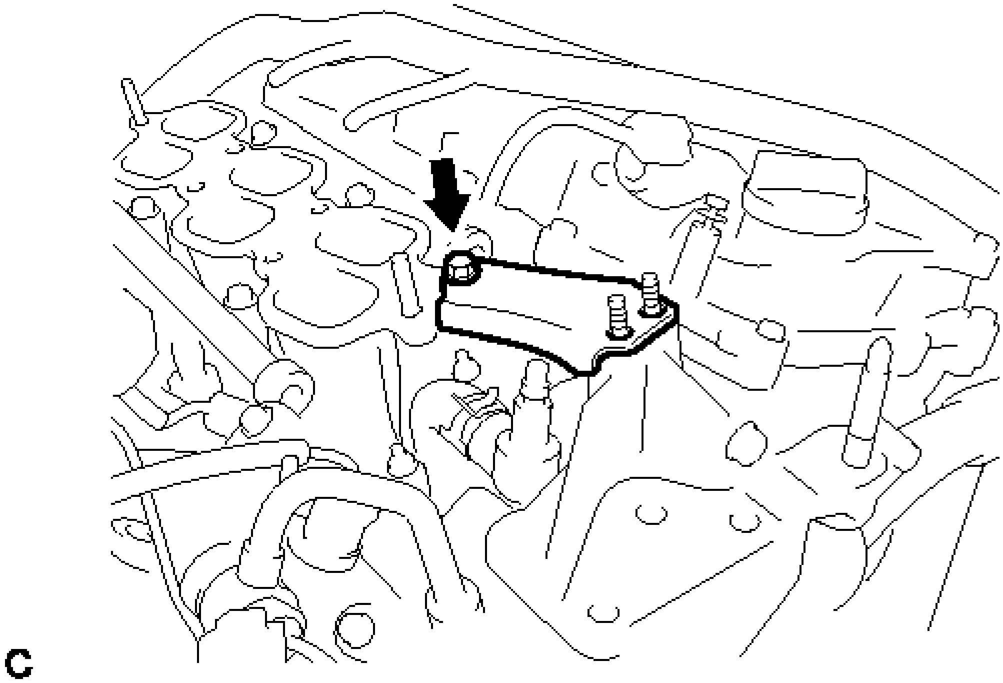

Fig. 152: Locating Bolt And No. 2 Engine Mounting Stay RH
Courtesy of TOYOTA MOTOR SALES, U.S.A., INC.

7. **REMOVE INTAKE MANIFOLD**
    a. Uniformly loosen and remove the 6 bolts and 4 nuts.

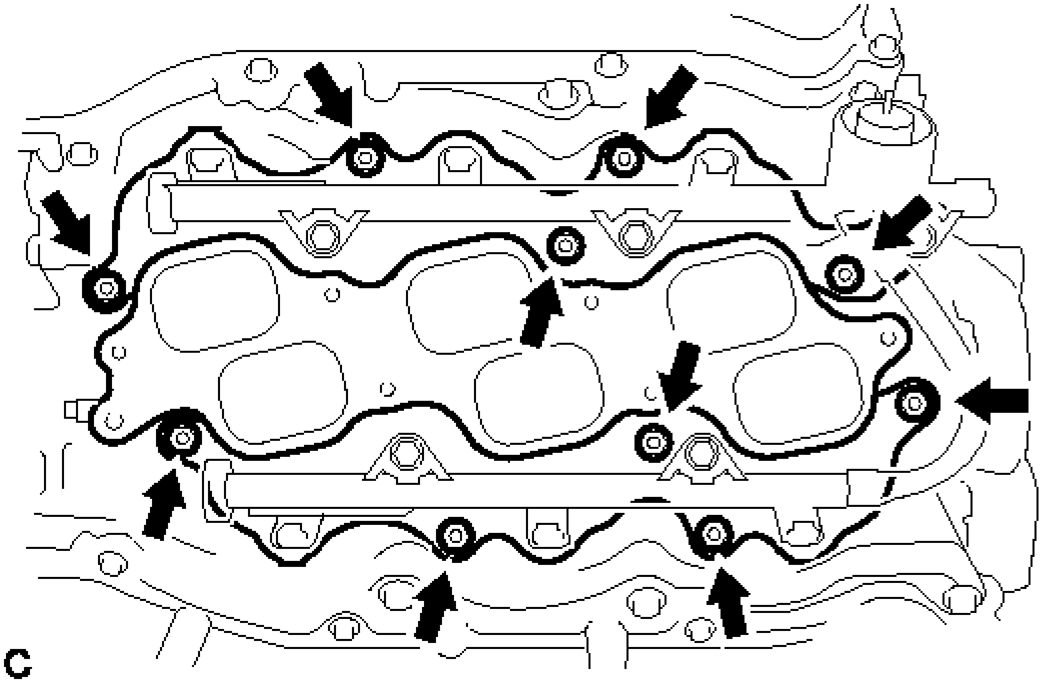

Fig. 153: Locating Intake Manifold Bolts
Courtesy of TOYOTA MOTOR SALES, U.S.A., INC.

b. Remove the intake manifold and 2 gaskets.

8. **REMOVE EXHAUST MANIFOLD SUB-ASSEMBLY RH**

a. Uniformly loosen and remove the 6 nuts.

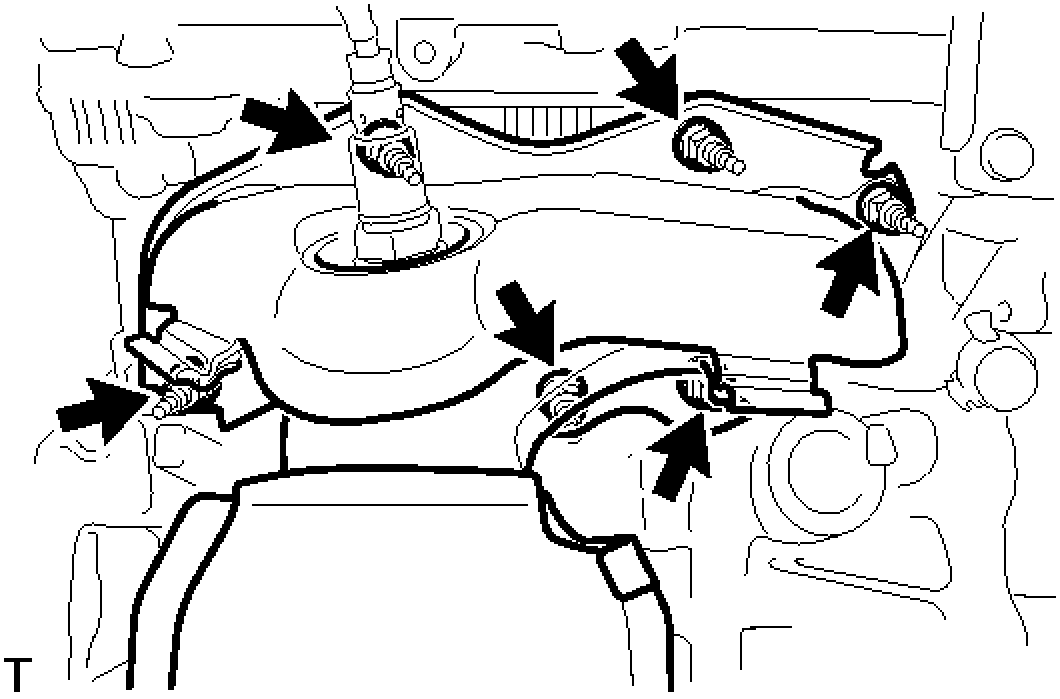

Fig. 154: Identifying Exhaust Manifold Sub-Assembly Nuts
Courtesy of TOYOTA MOTOR SALES, U.S.A., INC.

b. Remove the exhaust manifold sub-assembly RH and gasket.

9. **REMOVE NO. 2 ENGINE OIL LEVEL DIPSTICK GUIDE**

a. Remove the oil level dipstick.

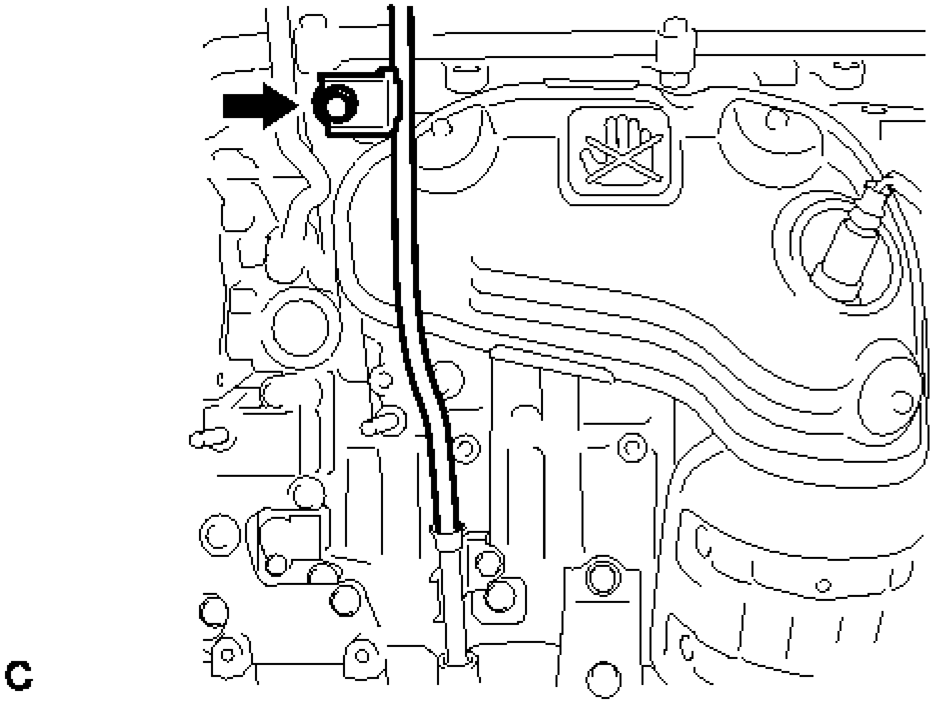

Fig. 155: Identifying No. 2 Engine Oil Level Dipstick Guide Bolt
Courtesy of TOYOTA MOTOR SALES, U.S.A., INC.

b. Remove the bolt and No. 2 engine oil level dipstick guide.

c. Remove the O-ring from the No. 2 engine oil level dipstick guide.

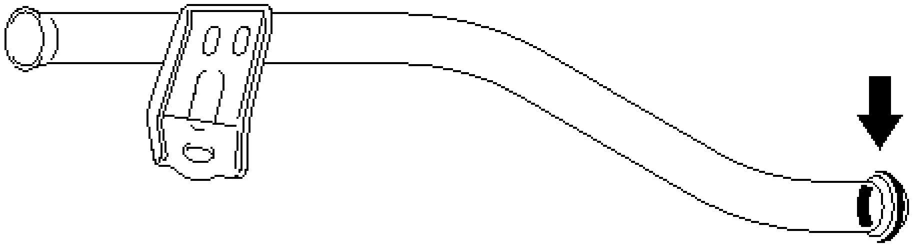

Fig. 156: Identifying No. 2 Engine Oil Level Dipstick Guide O-Ring
Courtesy of TOYOTA MOTOR SALES, U.S.A., INC.

10. **REMOVE NO. 2 MANIFOLD STAY** . Refer to **REMOVAL - Step 11**
11. **REMOVE NO. 2 EXHAUST MANIFOLD HEAT INSULATOR** . Refer to **REMOVAL - Step 10**
12. **REMOVE EXHAUST MANIFOLD SUB-ASSEMBLY LH**
    a. Uniformly loosen and remove the 6 nuts.

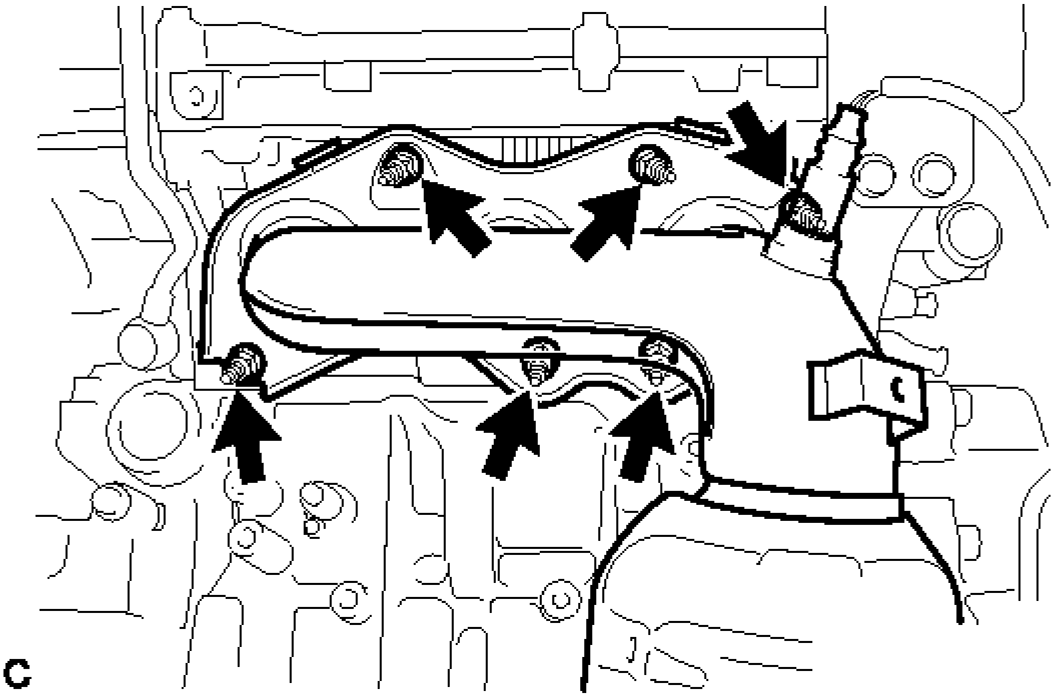

Fig. 157: Identifying Exhaust Manifold Sub-Assembly LH & Fasteners
Courtesy of TOYOTA MOTOR SALES, U.S.A., INC.

  b. Remove the exhaust manifold assembly LH and gasket.

13. **REMOVE V-RIBBED BELT TENSIONER ASSEMBLY**

  a. Remove the 5 bolts and V-ribbed belt tensioner assembly.

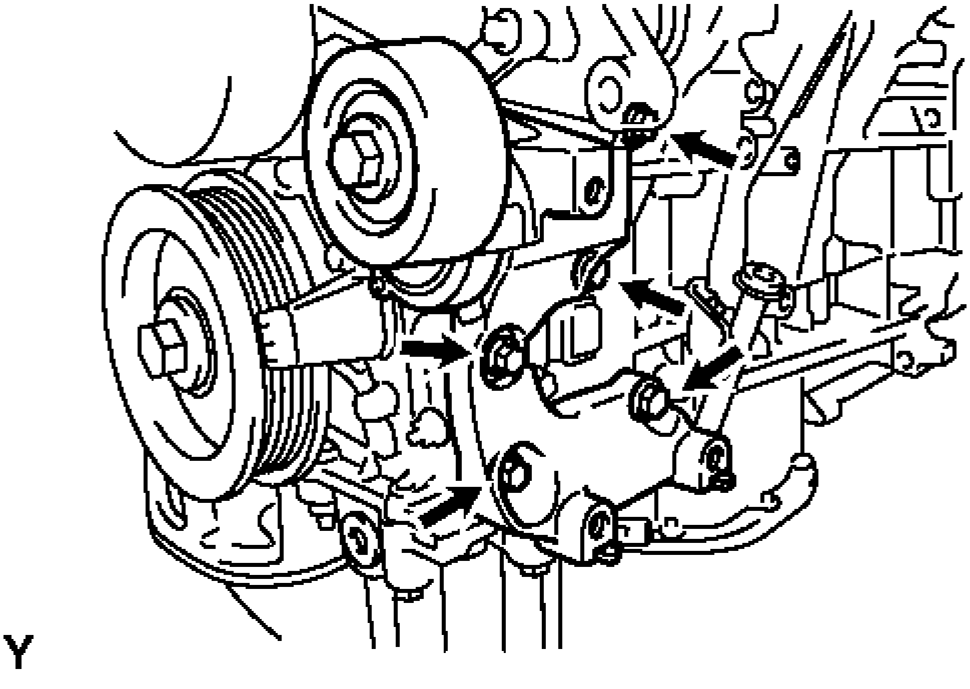

Fig. 158: Identifying V-Ribbed Belt Tensioner Assembly Bolts
Courtesy of TOYOTA MOTOR SALES, U.S.A., INC.

14. **REMOVE NO. 2 TIMING GEAR COVER**
    a. Remove the 2 bolts and No. 2 timing gear cover.

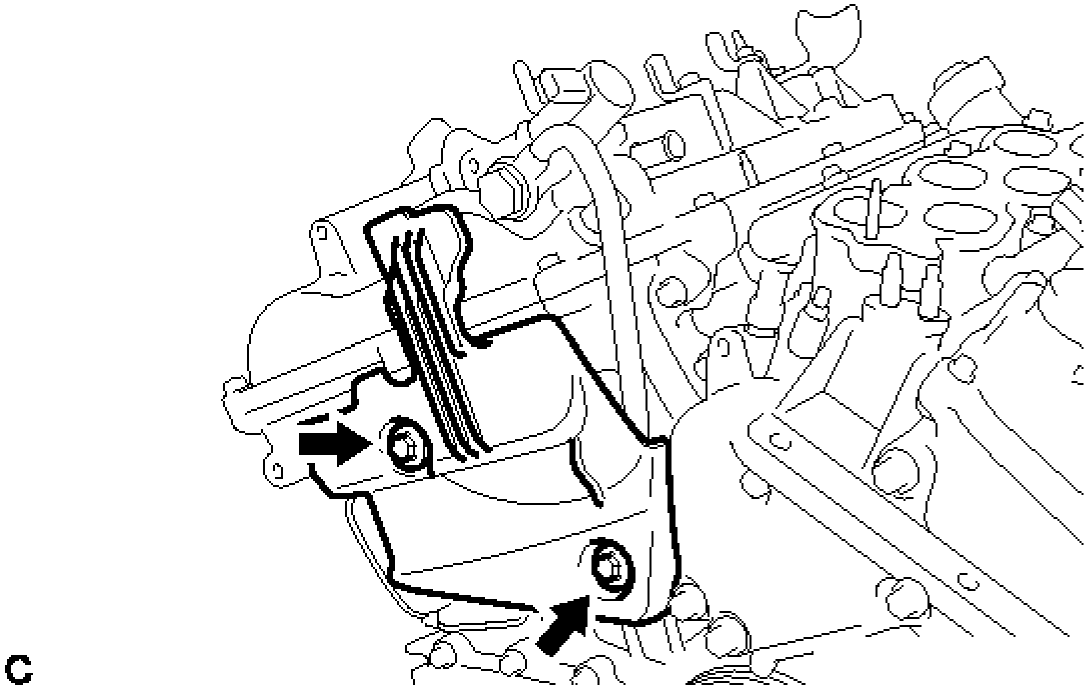

Fig. 159: Identifying No 2 Timing Gear Cover And Bolts
Courtesy of TOYOTA MOTOR SALES, U.S.A., INC.

15. **REMOVE WATER PUMP PULLEY**
    a. Using SST, hold the water pump pulley.

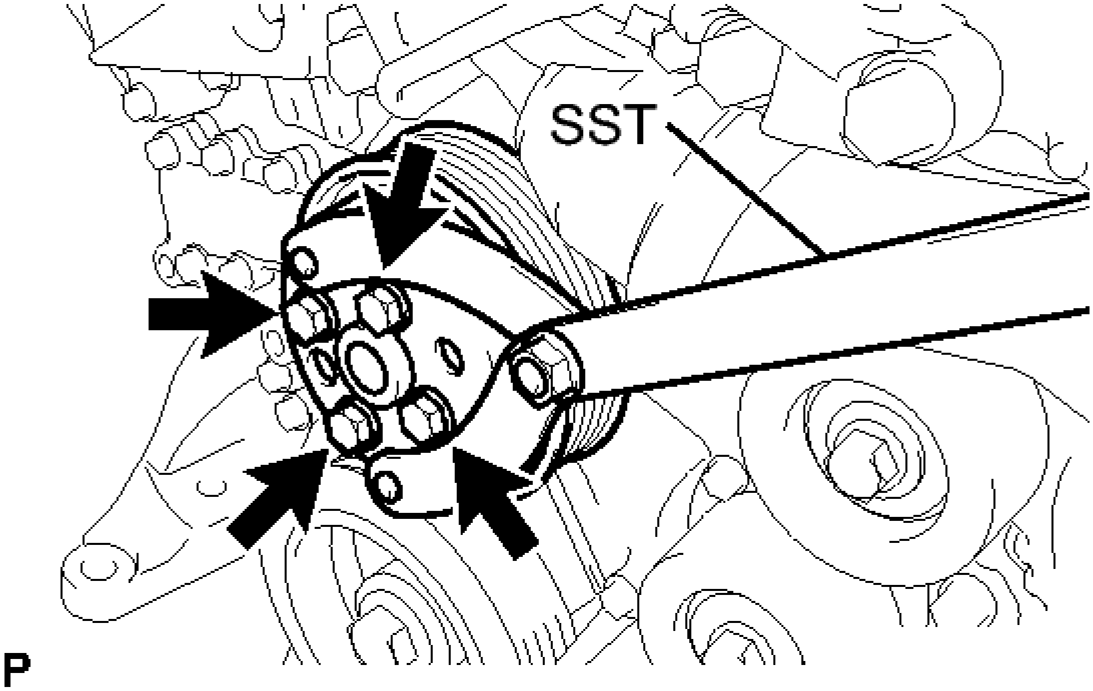

Fig. 160: Identifying Water Pump Pulley, Bolts & SST
Courtesy of TOYOTA MOTOR SALES, U.S.A., INC.

- **SST: 09960-10010**
  09962-01000
  09963-00700

b. Remove the 4 bolts and water pump pulley.

16. **REMOVE NO. 2 IDLER PULLEY SUB-ASSEMBLY**

a. Remove the bolt, No. 2 idler pulley cover plate, No. 2 idler pulley sub-assembly and idler pulley cover plate.

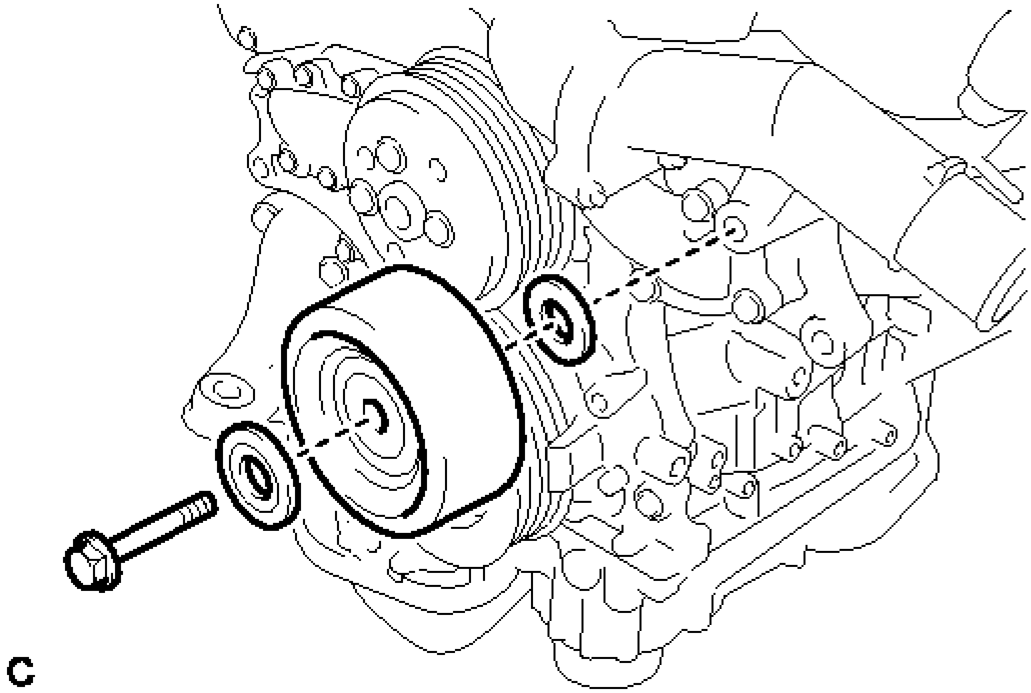

Fig. 161: Identifying No 2 Idler Pulley Sub-Assembly And Bolt
Courtesy of TOYOTA MOTOR SALES, U.S.A., INC.

17. **REMOVE NO. 1 VACUUM SWITCHING VALVE**
    a. Remove the bolt and No. 1 vacuum switching valve.

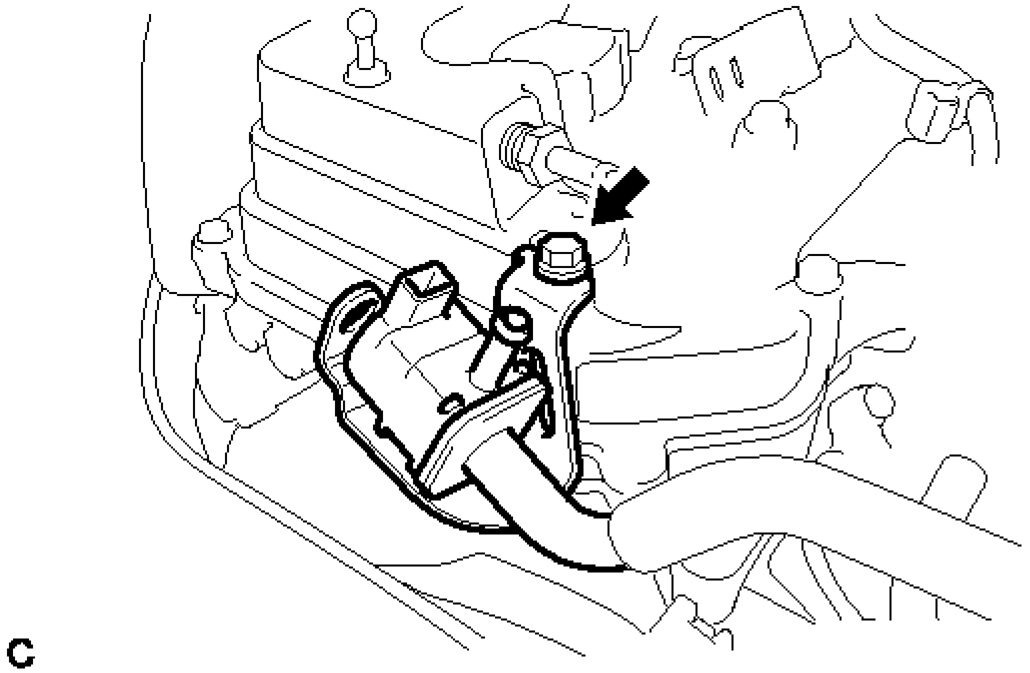

Fig. 162: Locating No. 1 Vacuum Switching Valve Assembly & Bolt

Courtesy of TOYOTA MOTOR SALES, U.S.A., INC.

18. **REMOVE ENGINE OIL PRESSURE SWITCH ASSEMBLY**
    a. Using a deep socket wrench, remove the engine oil pressure switch assembly.

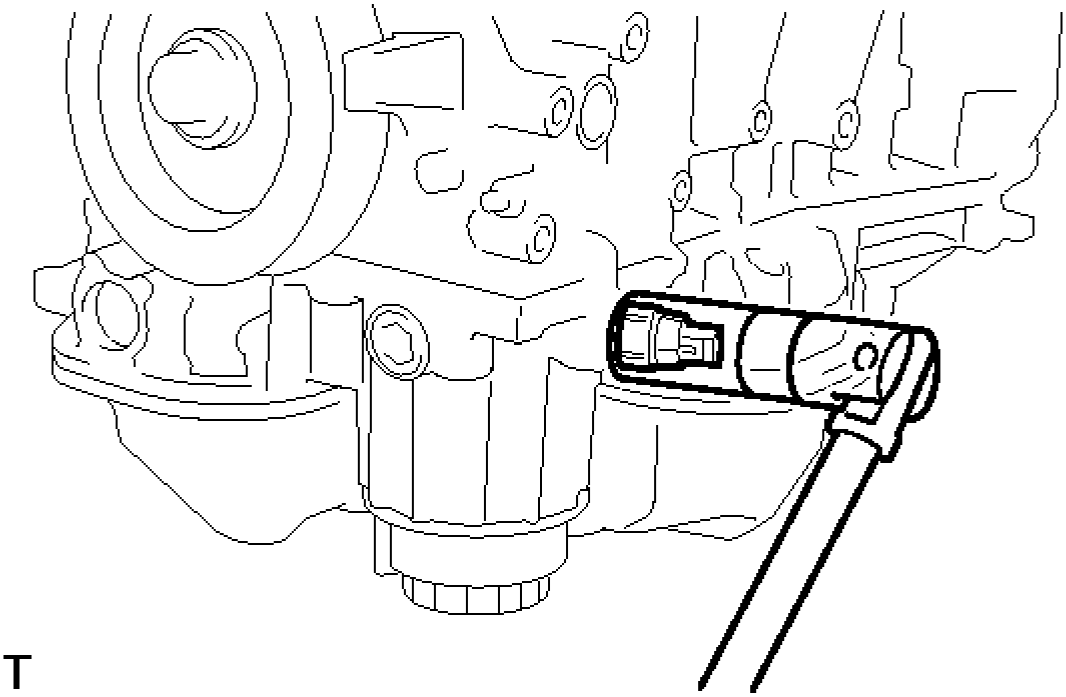

Fig. 163: Removing/Installing Oil Pressure Switch With Deep Socket Wrench
Courtesy of TOYOTA MOTOR SALES, U.S.A., INC.

19. **REMOVE KNOCK CONTROL SENSOR** . Refer to **REMOVAL - Step 2**
20. **REMOVE KNOCK SENSOR WIRE**
    a. Disconnect the 3 clamps and remove the knock sensor wire from the engine assembly.

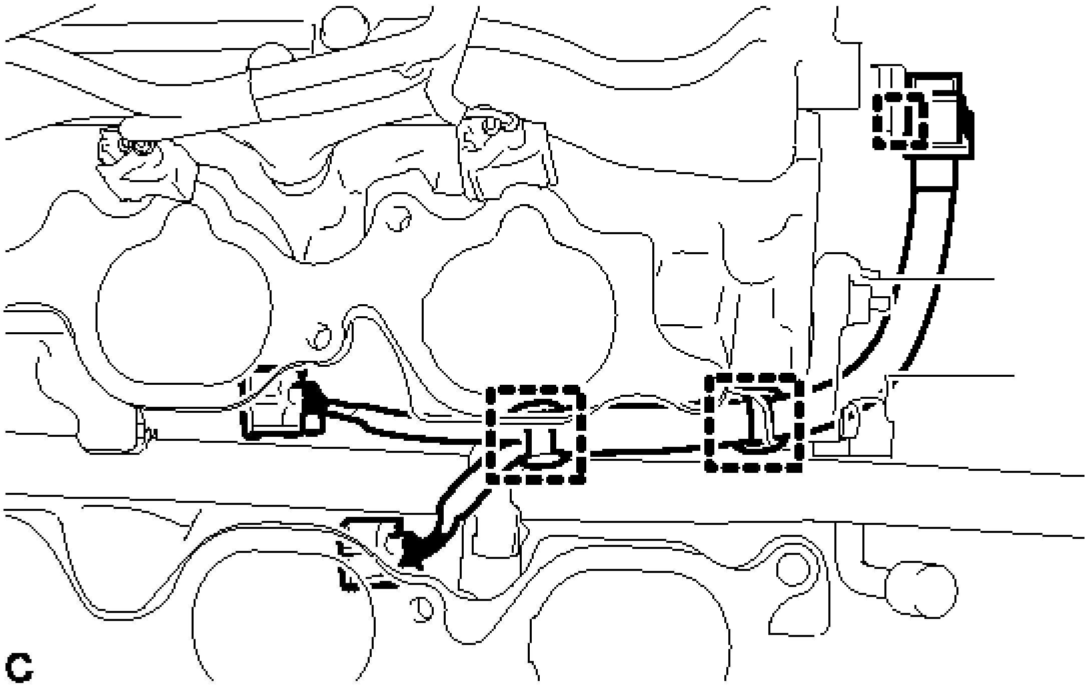

Fig. 164: Identifying Knock Sensor Wire
Courtesy of TOYOTA MOTOR SALES, U.S.A., INC.

21. **REMOVE ENGINE COOLANT TEMPERATURE SENSOR**
    a. Using a 19 mm deep socket wrench, remove the engine coolant temperature sensor and gasket.

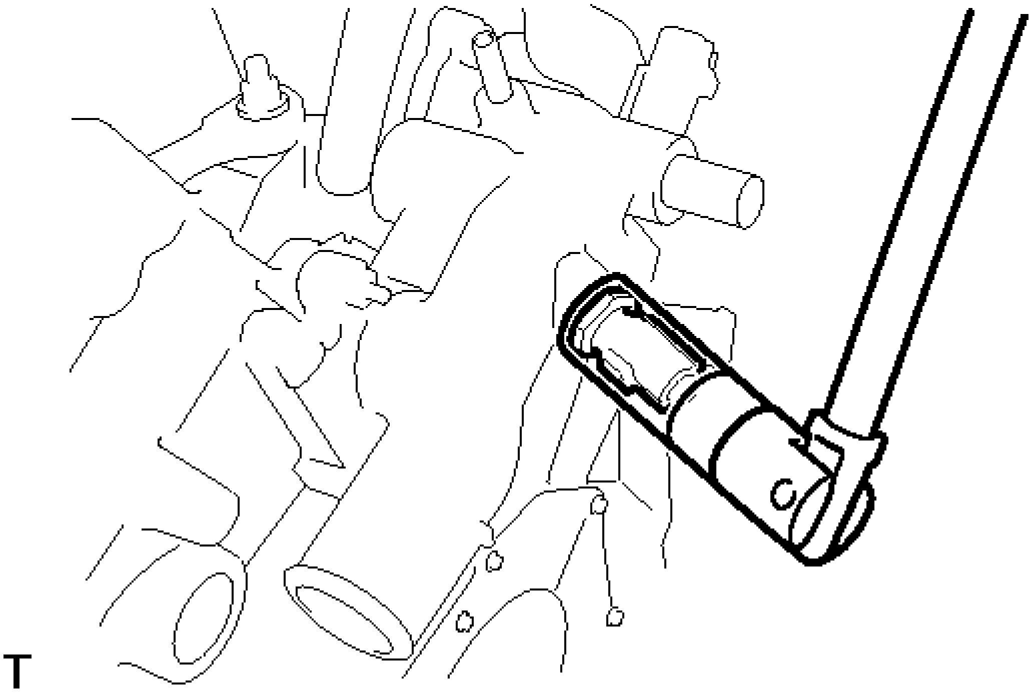

Fig. 165: Removing/Installing Engine Coolant Temperature Sensor With Deep Socket

Wrench
Courtesy of TOYOTA MOTOR SALES, U.S.A., INC.

DISASSEMBLY

DISASSEMBLY

1. **REMOVE OIL FILLER CAP SUB-ASSEMBLY**
    a. Remove the oil filler cap sub-assembly and oil filler gasket.
2. **REMOVE SPARK PLUG** . Refer to **REMOVAL - Step 4**
3. **REMOVE OIL PAN DRAIN PLUG**
    a. Remove the oil pan drain plug and oil pan drain plug gasket.

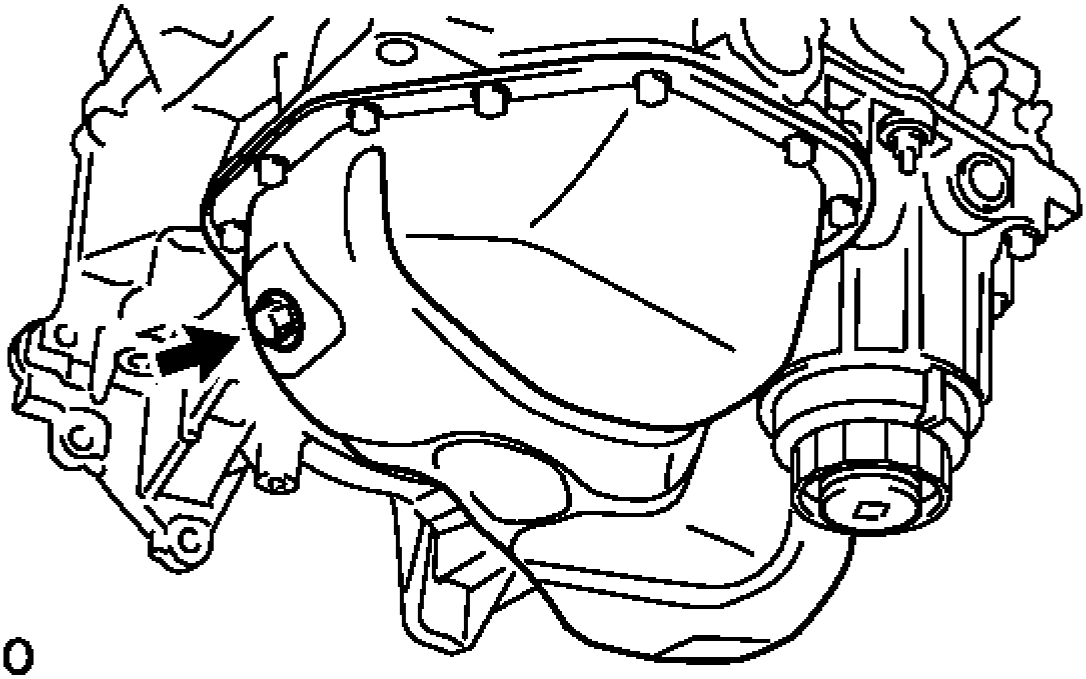

Fig. 166: Locating Oil Pan Drain Plug
Courtesy of TOYOTA MOTOR SALES, U.S.A., INC.

4. **REMOVE VENTILATION VALVE SUB-ASSEMBLY**
    a. Remove the ventilation valve sub-assembly.

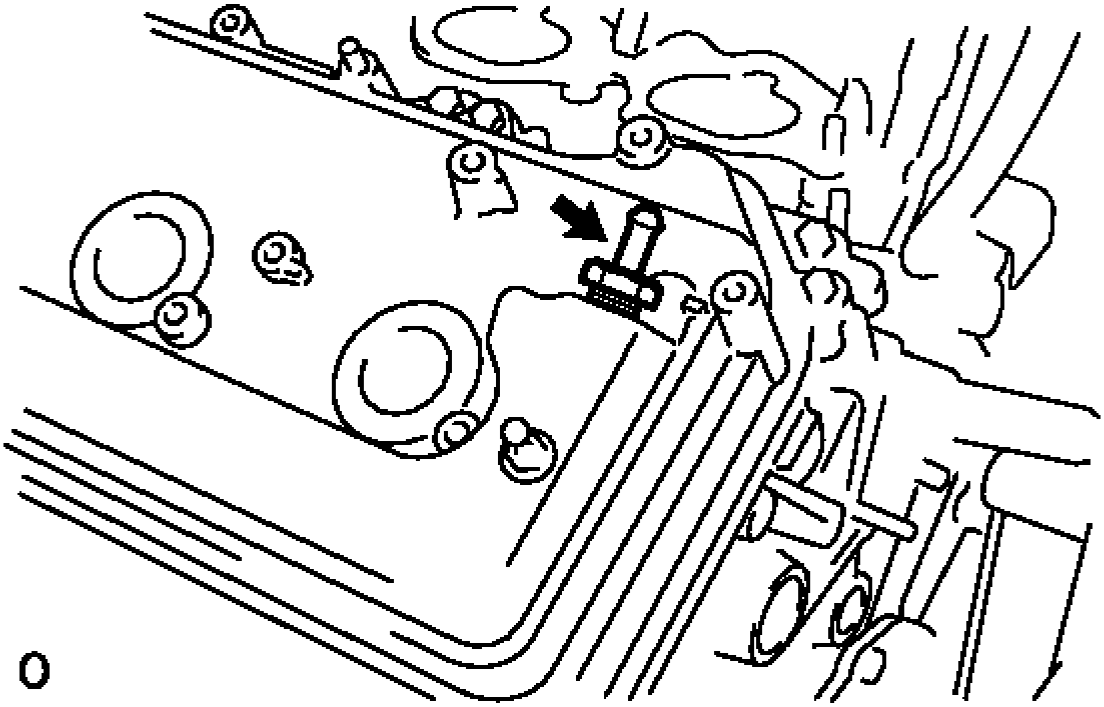

Fig. 167: Identifying Ventilation Valve Sub-Assembly
Courtesy of TOYOTA MOTOR SALES, U.S.A., INC.

5. **REMOVE VVT SENSOR** . Refer to **REMOVAL - Step 2**
6. **REMOVE CAMSHAFT TIMING OIL CONTROL VALVE ASSEMBLY** . Refer to **REMOVAL - Step 3**
7. **REMOVE CRANK POSITION SENSOR** . Refer to **REMOVAL - Step 2**
8. **REMOVE NO. 1 OIL PIPE**
    a. Remove the 2 oil pipe unions, gaskets and No. 1 oil pipe.

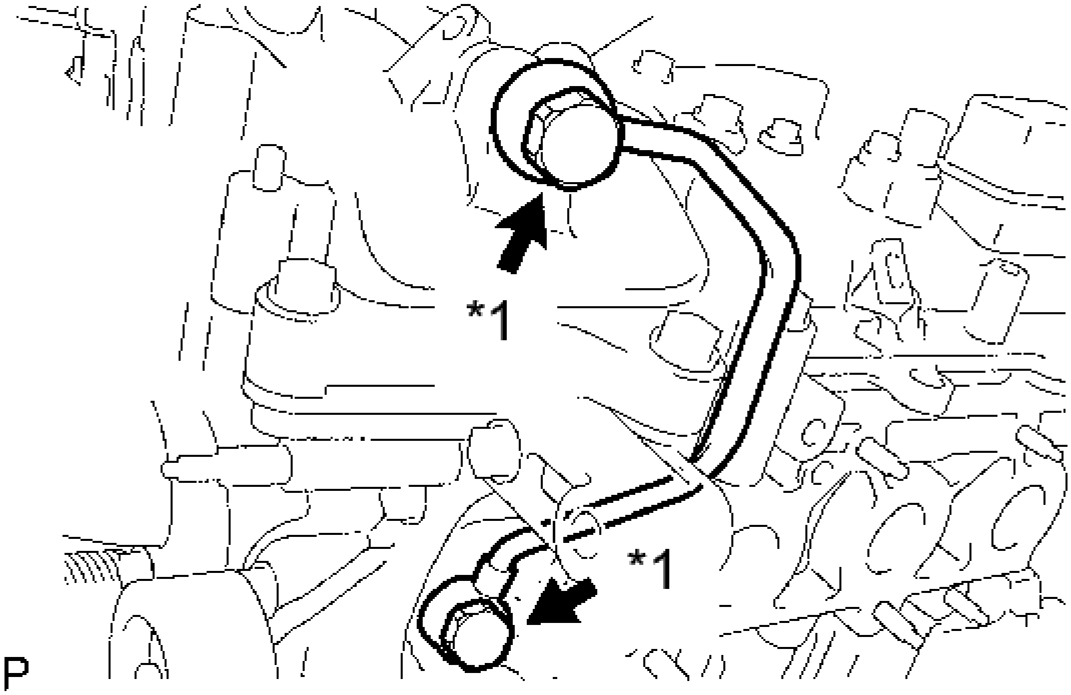

Fig. 168: Identifying Oil Pipe Union And No. 1 Oil Pipe
Courtesy of TOYOTA MOTOR SALES, U.S.A., INC.

TEXT IN ILLUSTRATION

*1	Oil Pipe Union

b. Remove the oil control valve filter LH and gaskets.

9. **REMOVE OIL PIPE**

   a. Remove the bolt.

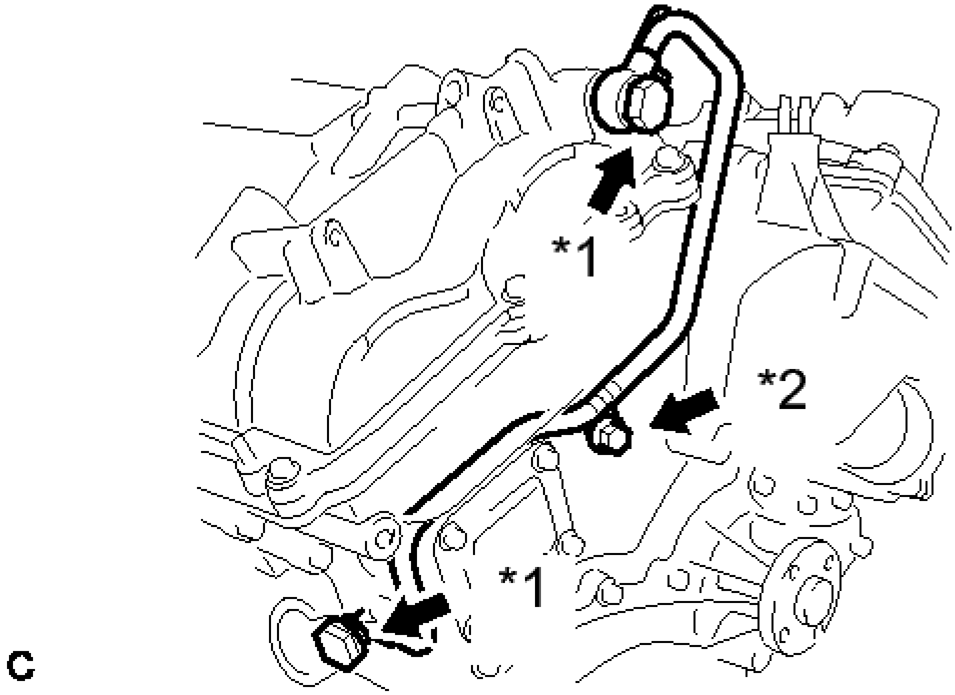

Fig. 169: Identifying Oil Pipe Union Bolts
Courtesy of TOYOTA MOTOR SALES, U.S.A., INC.

TEXT IN ILLUSTRATION

*1	Oil Pipe Union
*2	Bolt

b. Remove the 2 oil pipe unions and oil pipe.

c. Remove the oil control valve filter RH and gaskets.

10. **REMOVE CYLINDER BLOCK WATER DRAIN COCK SUB-ASSEMBLY**

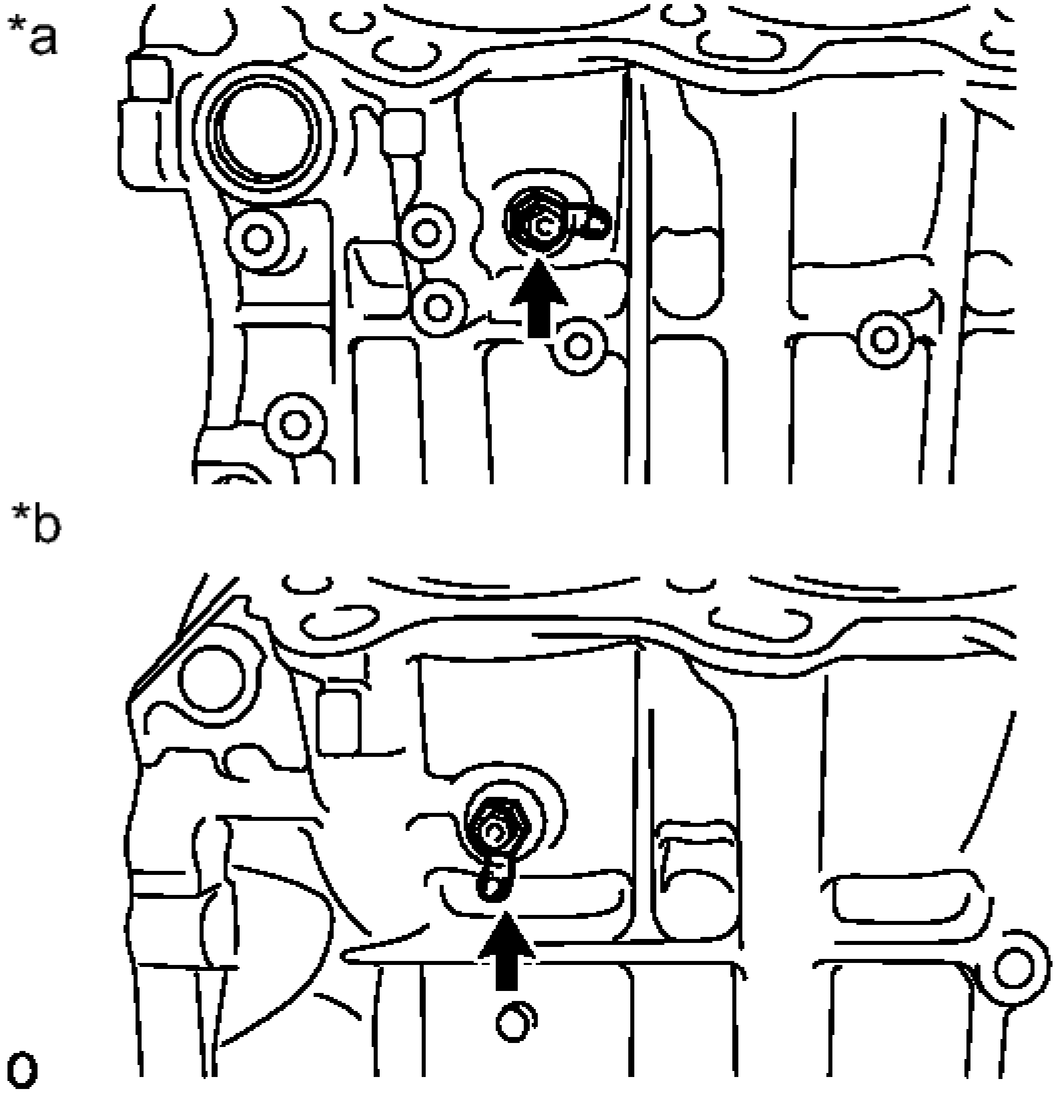

Fig. 170: Locating Bank 1 & Bank 2 Cylinder Block Water Drain Cock Sub-Assemblies
Courtesy of TOYOTA MOTOR SALES, U.S.A., INC.

TEXT IN ILLUSTRATION

*a	for Bank 1
*b	for Bank 2

a. Remove the 2 cylinder block water drain cock sub-assemblies from the cylinder block.
b. Remove the 2 cylinder block water drain cock plugs from the 2 water drain cock sub-assemblies.

11. **REMOVE OIL FILTER CAP ASSEMBLY** . Refer to **REPLACEMENT - Step 2**
12. **REMOVE CRANKSHAFT PULLEY** See step 6

13. **REMOVE ENGINE OIL LEVEL DIPSTICK GUIDE**

   a. Remove the bolt and engine oil level dipstick guide.

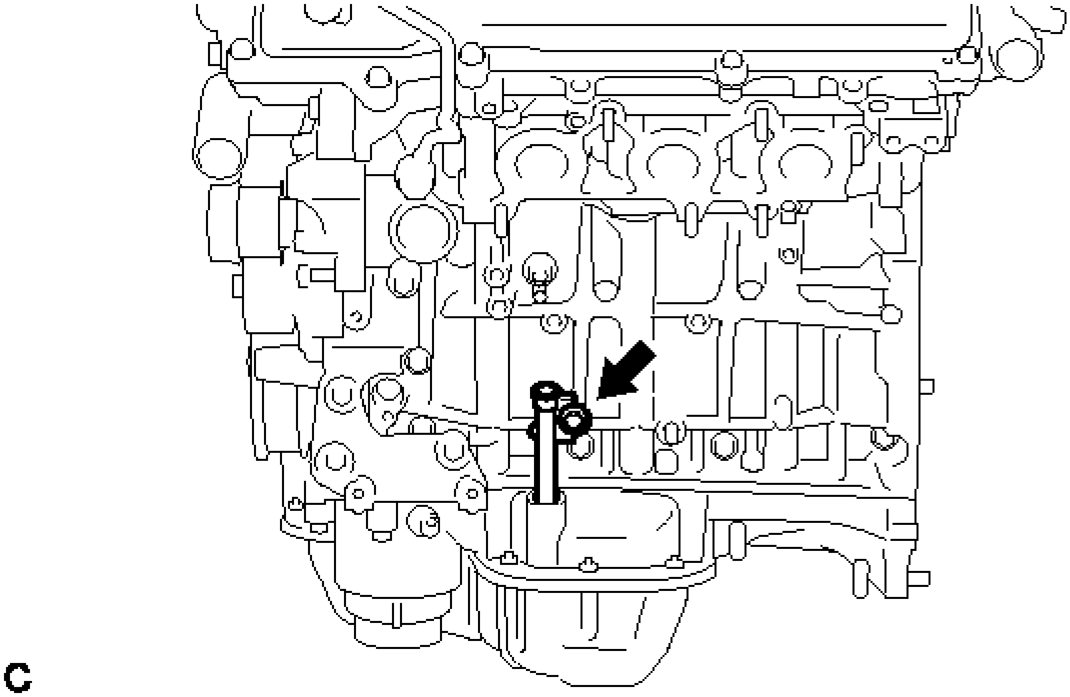

Fig. 171: Identifying Engine Oil Level Dipstick Guide And Bolt
Courtesy of TOYOTA MOTOR SALES, U.S.A., INC.

   b. Remove the O-ring.

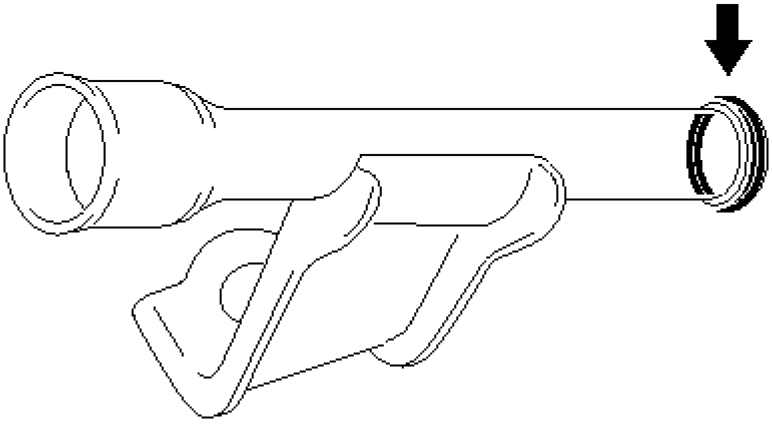

Fig. 172: Identifying Engine Oil Level Dipstick Guide And O-Ring
Courtesy of TOYOTA MOTOR SALES, U.S.A., INC.

14. **REMOVE NO. 1 FRONT ENGINE MOUNTING BRACKET LH**
    a. Remove the 6 bolts and No. 1 front engine mounting bracket LH.

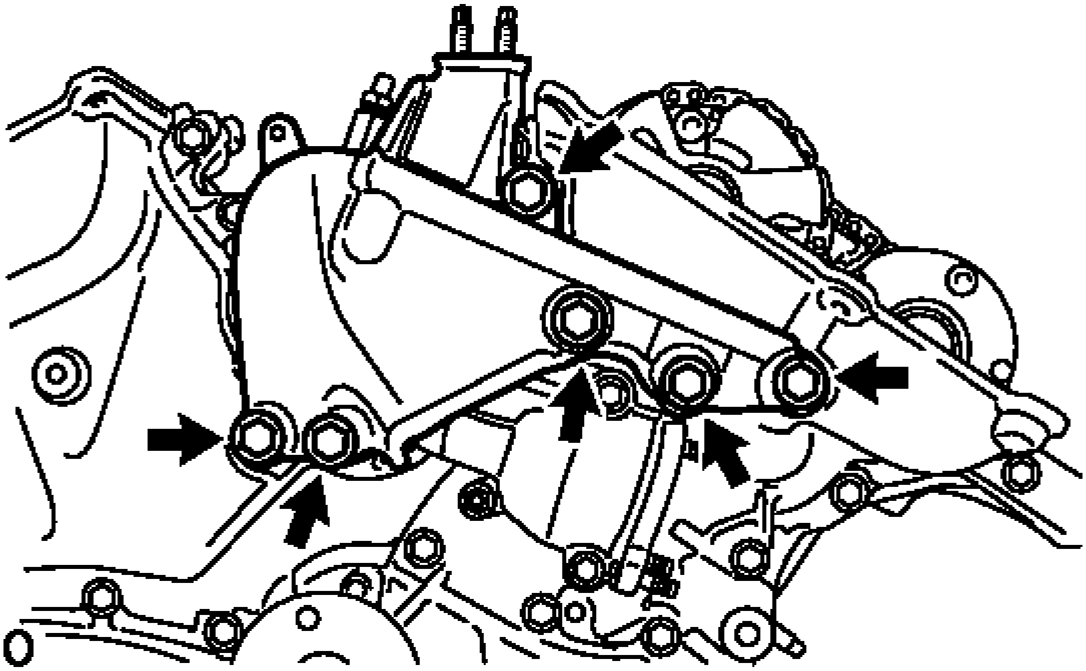

Fig. 173: Locating Engine Mounting Bracket Front And Bolts

Courtesy of TOYOTA MOTOR SALES, U.S.A., INC.

b. Using an E8 "TORX" socket wrench, remove the 2 stud bolts.

15. **REMOVE WATER INLET HOUSING**
    a. Remove the 2 nuts, water inlet and thermostat.

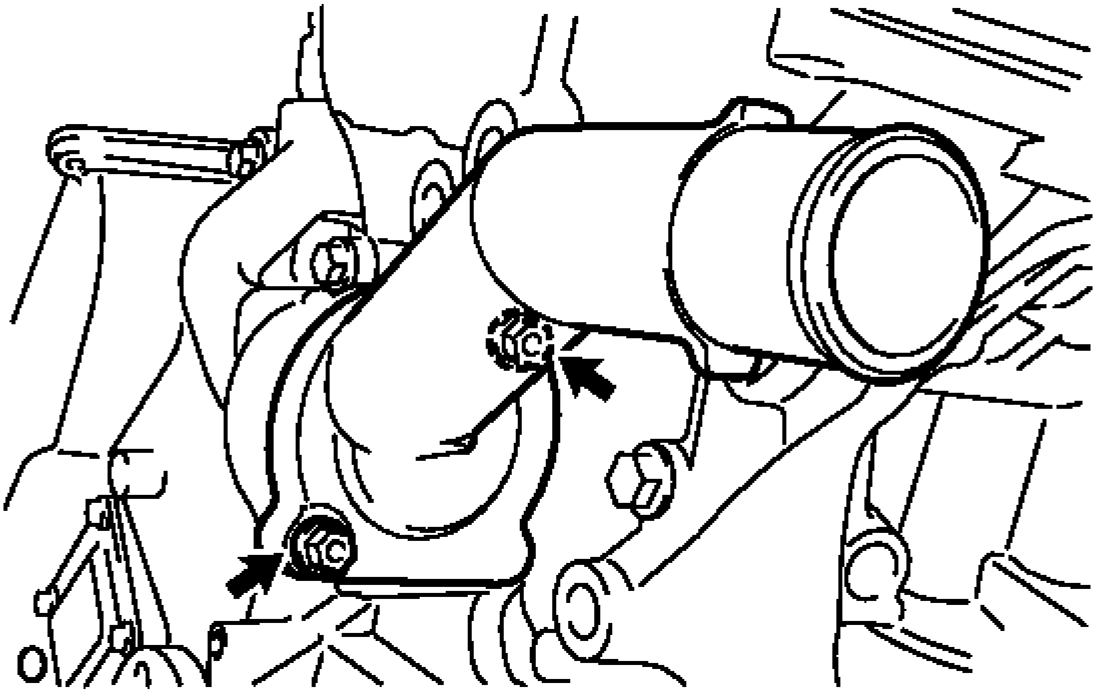

Fig. 174: Locating Water Inlet With Nuts
Courtesy of TOYOTA MOTOR SALES, U.S.A., INC.

b. Remove the gasket.
c. Remove the 2 stud bolts.
d. Separate the No. 1 water by-pass hose from the water inlet housing.
e. Remove the drain cock plug.

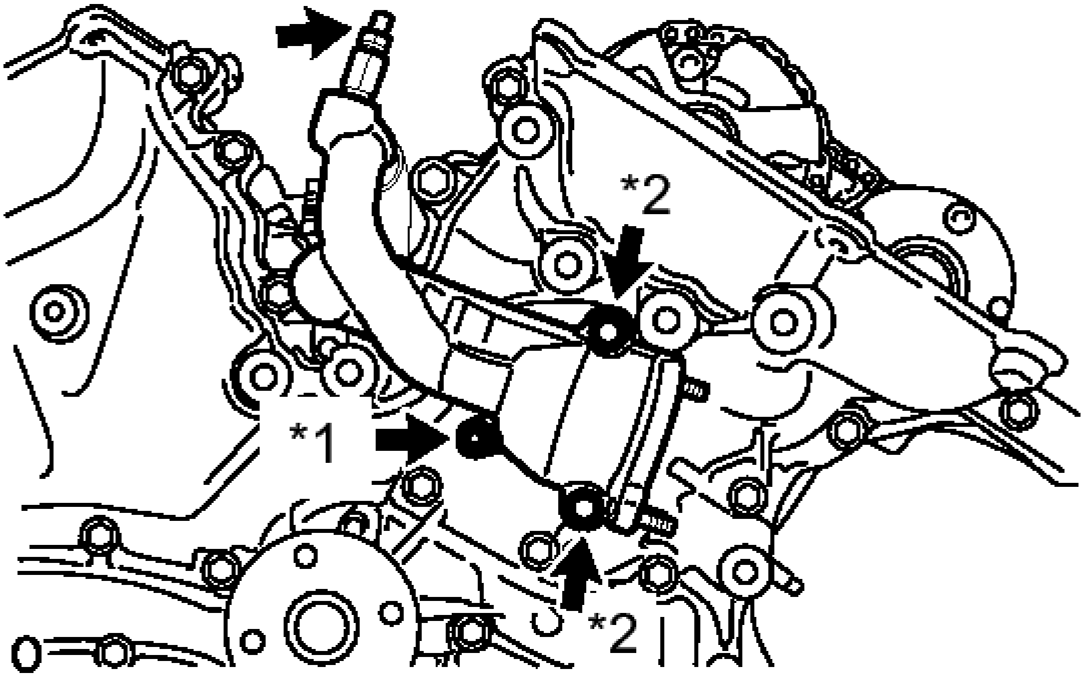

Fig. 175: Locating Water Inlet Housing Drain Cock Plug & Fasteners
Courtesy of TOYOTA MOTOR SALES, U.S.A., INC.

TEXT IN ILLUSTRATION

*1	Nut
*2	Bolt

f. Remove the drain cock assembly.
g. Remove the 2 bolts, nut, and water inlet housing.
h. Remove the 2 O-rings.

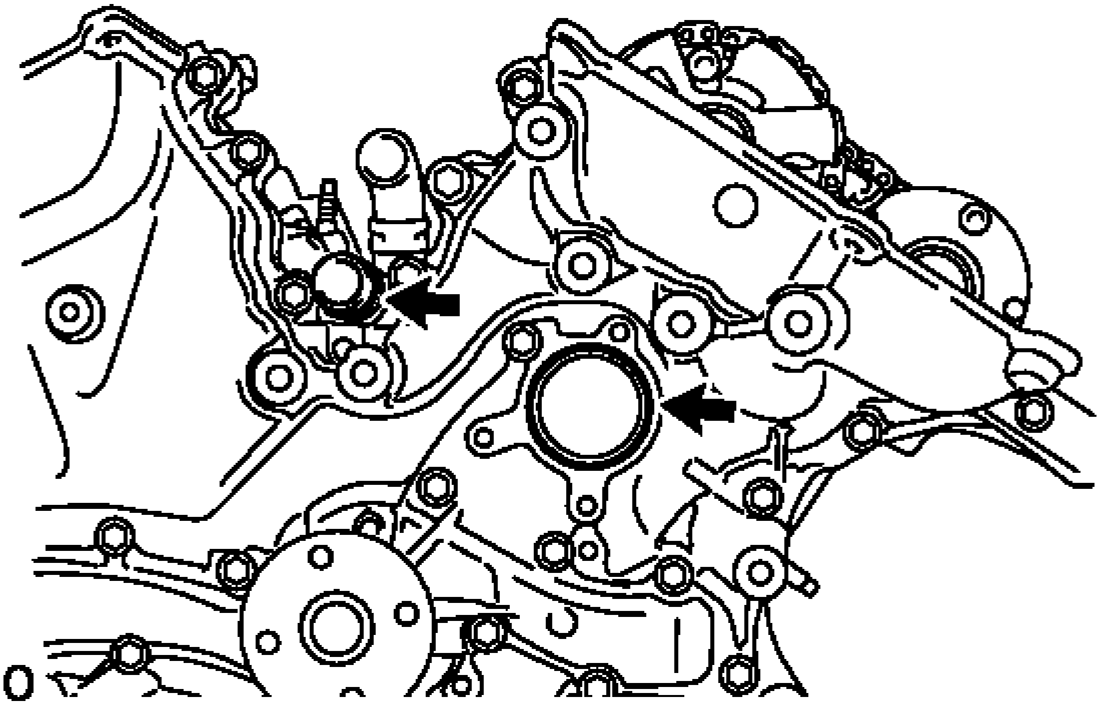

Fig. 176: Locating O-Rings
Courtesy of TOYOTA MOTOR SALES, U.S.A., INC.

16. **REMOVE WATER OUTLET**
    a. Remove the 2 bolts, 4 nuts and water outlet.

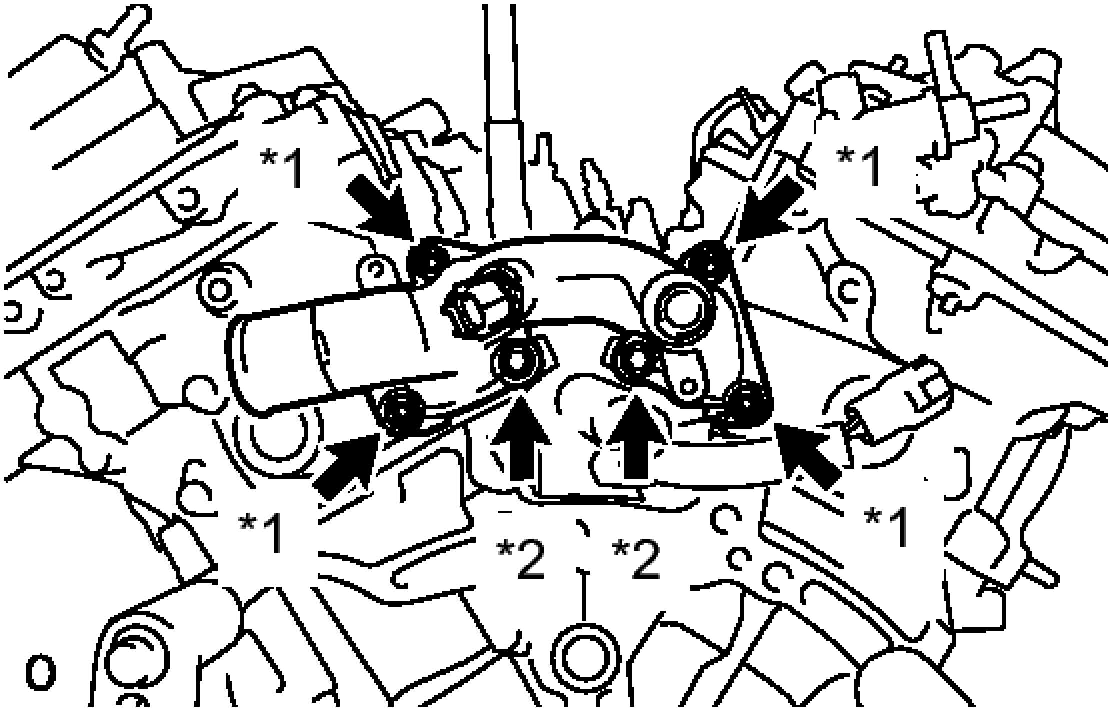

Fig. 177: Identifying Water Outlet With Bolts And Nuts

Courtesy of TOYOTA MOTOR SALES, U.S.A., INC.

TEXT IN ILLUSTRATION

*1	Nut
*2	Bolt

b. Remove the 2 gaskets and O-ring.

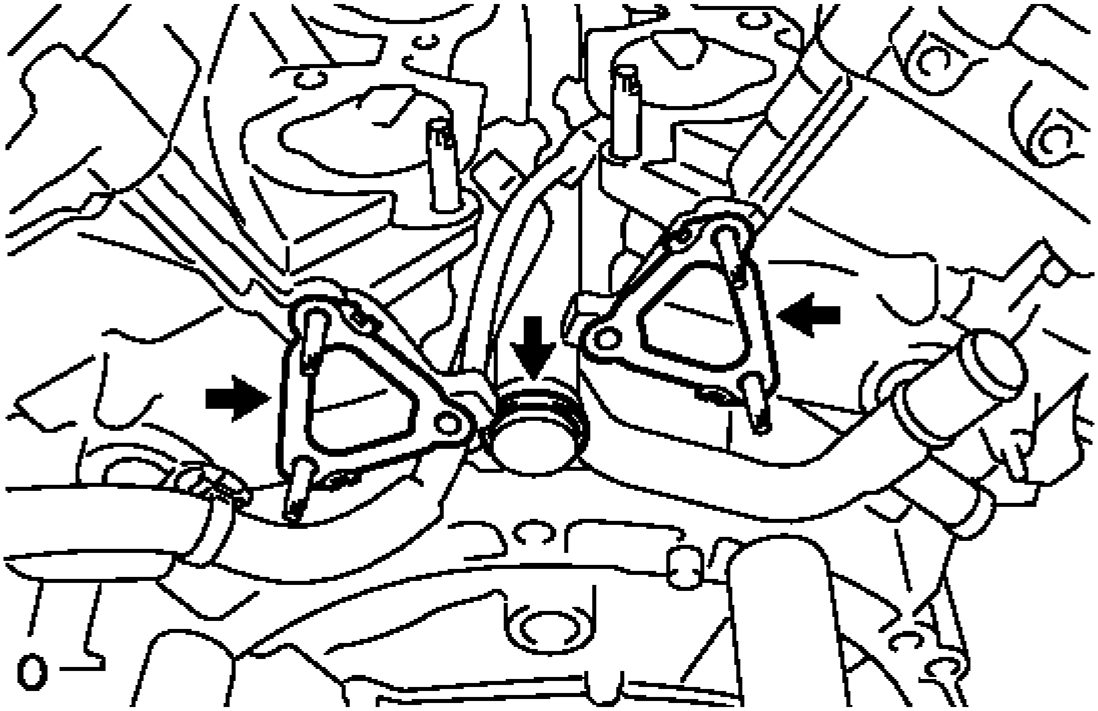

Fig. 178: Locating Gaskets And O-Ring
Courtesy of TOYOTA MOTOR SALES, U.S.A., INC.

17. REMOVE CYLINDER HEAD COVER SUB-ASSEMBLY

a. Remove the 12 bolts, seal washer, cylinder head cover sub-assembly and cylinder head cover gasket.

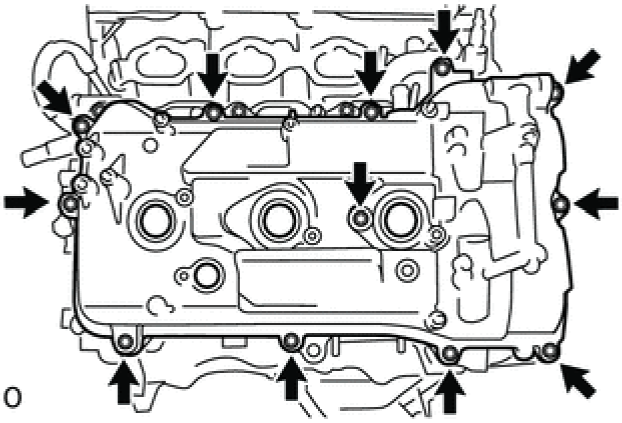

Fig. 179: Locating Bolts, Head Cover And Gasket
Courtesy of TOYOTA MOTOR SALES, U.S.A., INC.

b. Remove the 3 gaskets.

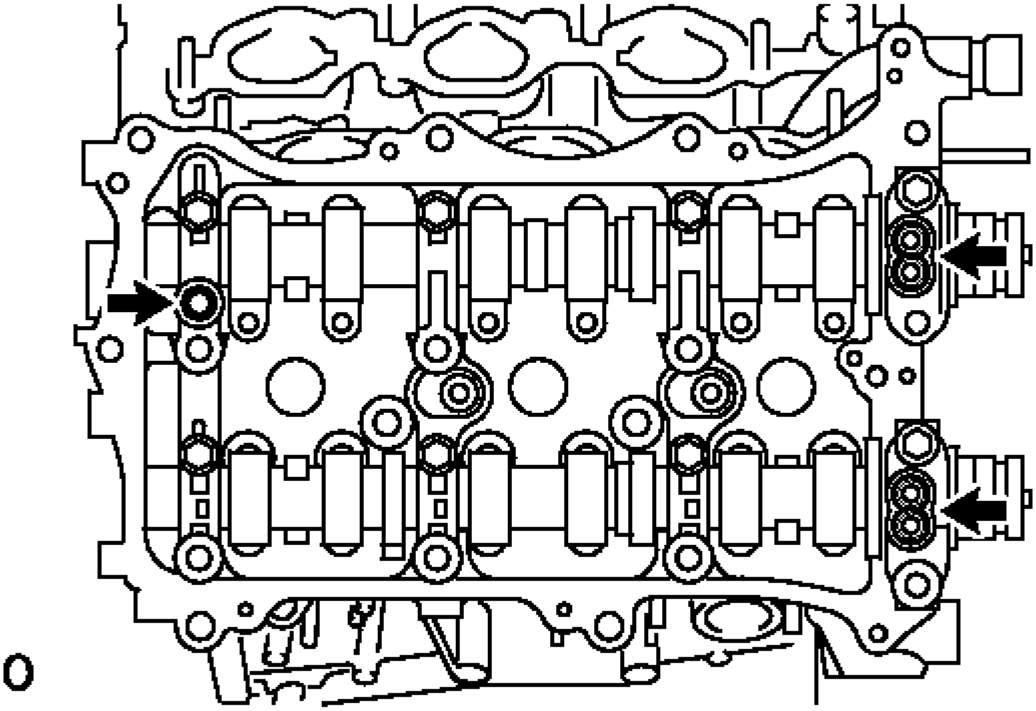

Fig. 180: Identifying Gaskets
Courtesy of TOYOTA MOTOR SALES, U.S.A., INC.

18. **REMOVE CYLINDER HEAD COVER SUB-ASSEMBLY LH**

    a. Remove the 12 bolts, seal washer, cylinder head cover sub-assembly LH and No. 2 cylinder head cover gasket.

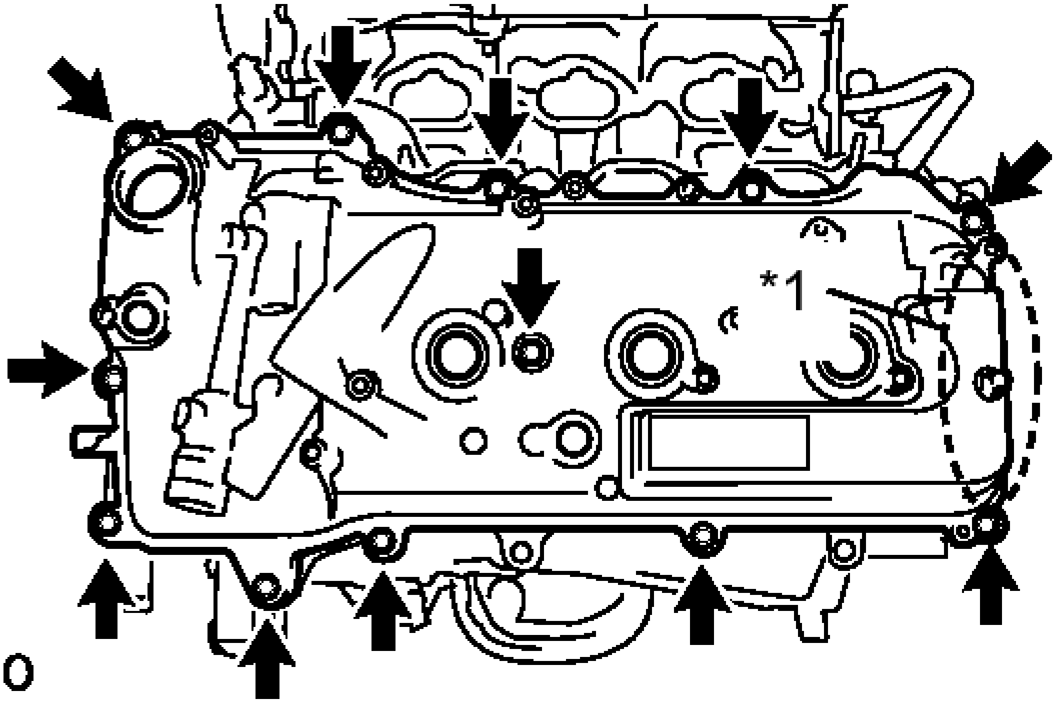

Fig. 181: Identifying Cylinder Head Cover Sub-Assembly Bolts LH
Courtesy of TOYOTA MOTOR SALES, U.S.A., INC.

TEXT IN ILLUSTRATION

*1	Baffle Plate

NOTE: **The baffle plate is located on the back of the portion shown in the illustration. Do not damage the baffle plate when removing the cylinder head cover sub-assembly LH.**

b. Remove the 3 gaskets.

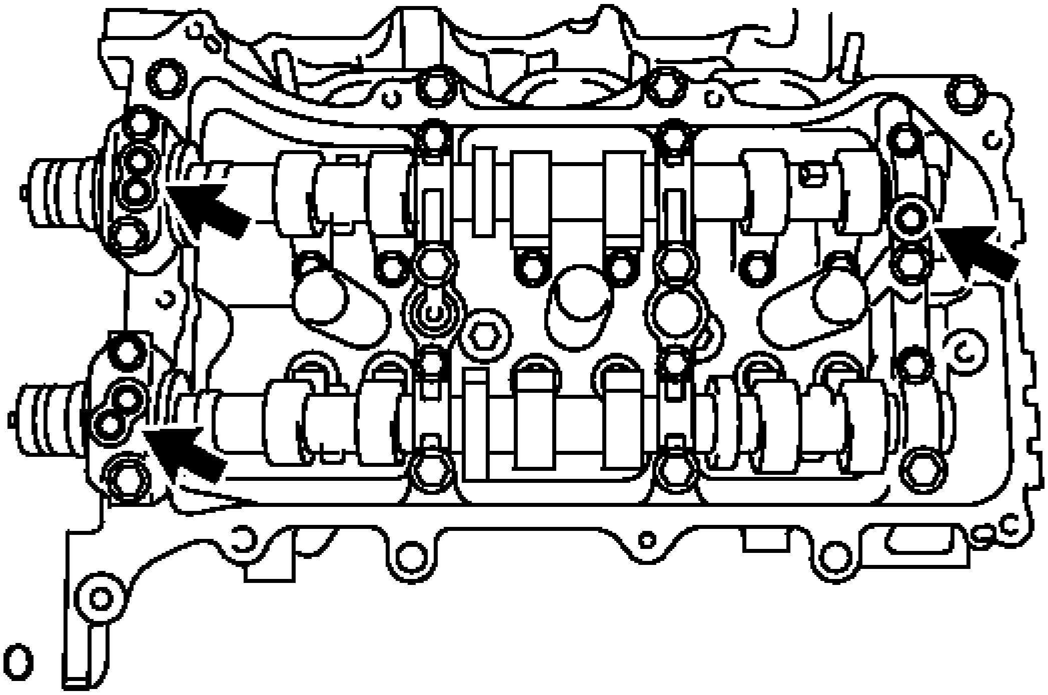

Fig. 182: Locating Gaskets
Courtesy of TOYOTA MOTOR SALES, U.S.A., INC.

19. **REMOVE NO. 2 OIL PAN SUB-ASSEMBLY**
    a. Remove the 16 bolts and 2 nuts.

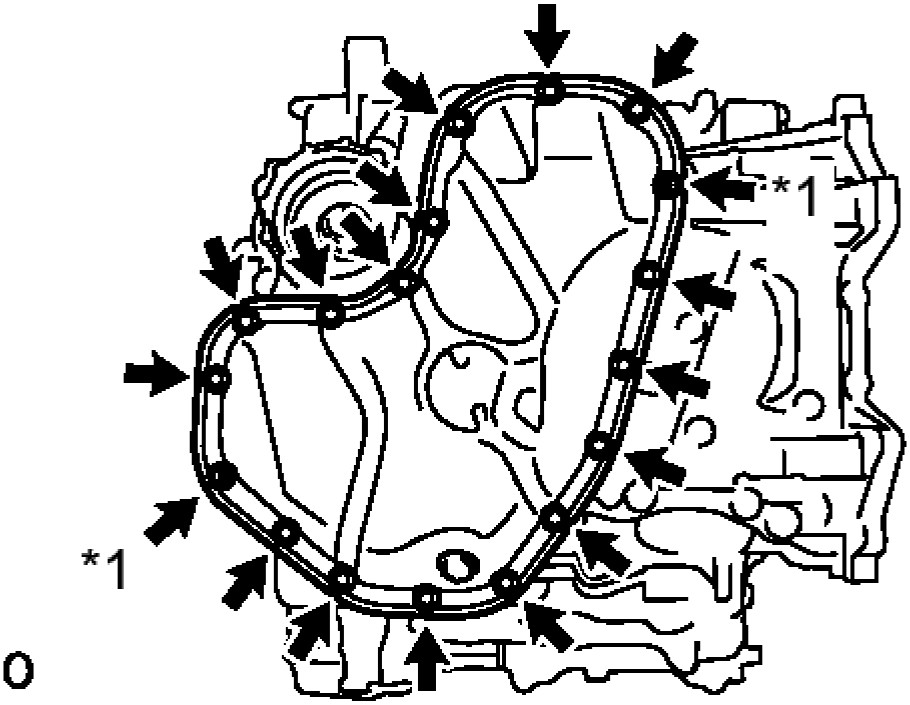

Fig. 183: Identifying No. 2 Oil Pan Sub-Assembly, Bolts & Nuts

Courtesy of TOYOTA MOTOR SALES, U.S.A., INC.

TEXT IN ILLUSTRATION

*1	Nut

b. Insert the blade of the oil pan seal cutter between the oil pans. Cut through the applied sealer and remove the No. 2 oil pan sub-assembly.

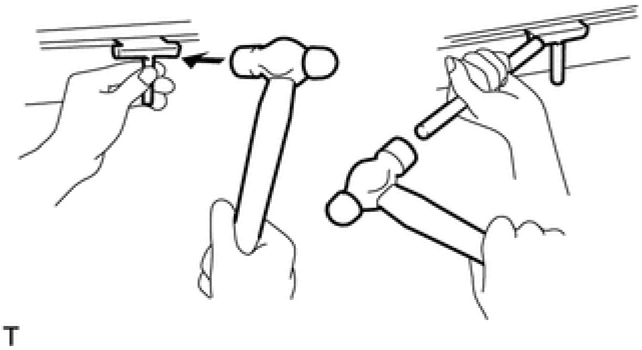

Fig. 184: Inserting Blade Of Oil Pan Seal Cutter Between Oil Pans
Courtesy of TOYOTA MOTOR SALES, U.S.A., INC.

NOTE: Be careful not to damage the contact surfaces of the oil pans.

c. Using an E6 "TORX" socket wrench, remove the 2 stud bolts.

20. **REMOVE OIL STRAINER SUB-ASSEMBLY**

a. Remove the bolt, 2 nuts, oil strainer sub-assembly and gasket.

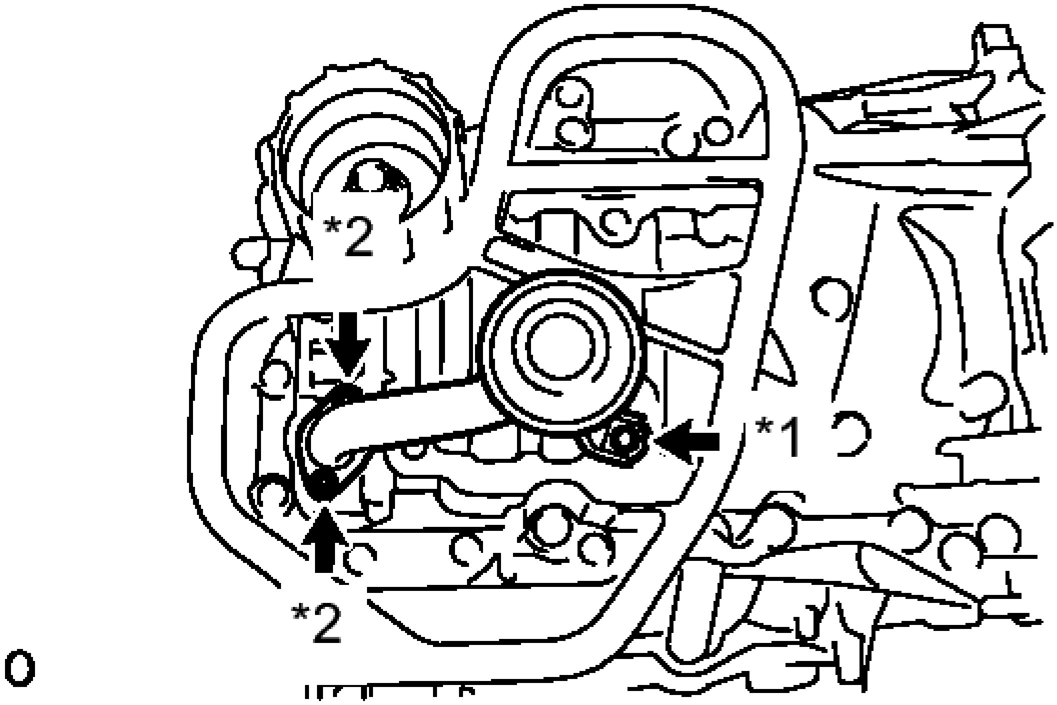

Fig. 185: Locating Oil Pan Sub-Assembly With Bolts And Nuts
Courtesy of TOYOTA MOTOR SALES, U.S.A., INC.

TEXT IN ILLUSTRATION

*1	Bolt
*2	Nut

b. Using an E6 "TORX" socket wrench, remove the 2 stud bolts.

21. **REMOVE OIL PAN SUB-ASSEMBLY**

a. Remove the 16 bolts and 2 nuts.

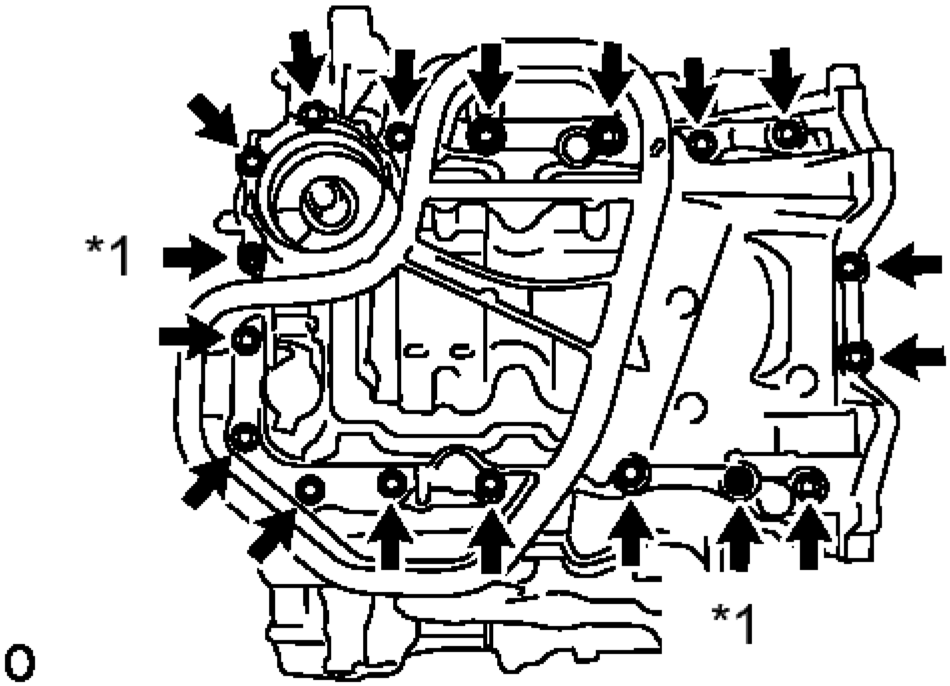

Fig. 186: Locating Oil Control Valves Bolts
Courtesy of TOYOTA MOTOR SALES, U.S.A., INC.

TEXT IN ILLUSTRATION

*1	Nut

HINT:

Be sure to clean the bolts and stud bolts and check the threads for cracks or other damage.

b. Remove the oil pan sub-assembly by prying between the oil pan sub-assembly and cylinder block sub-assembly with a screwdriver.

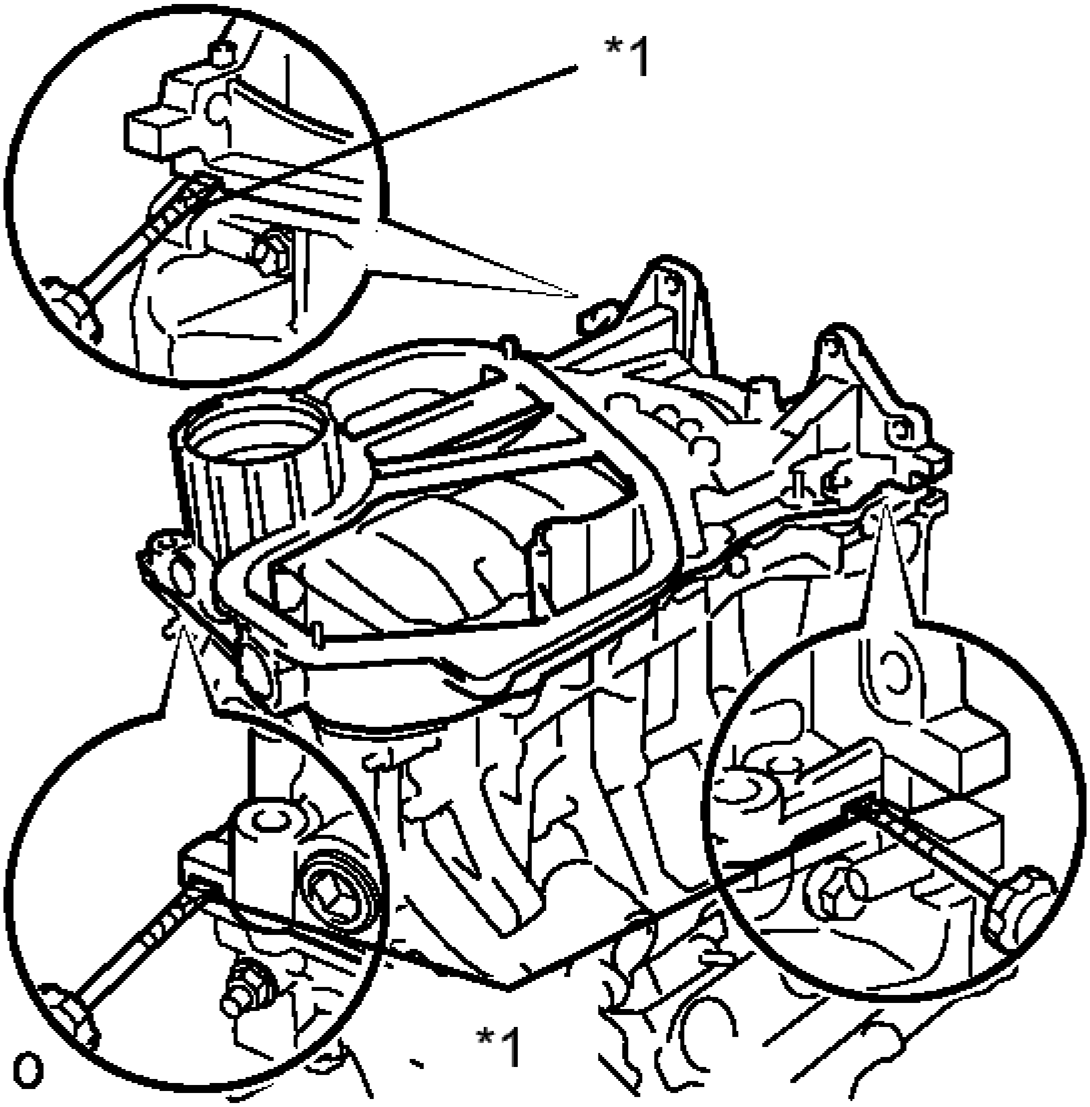

Fig. 187: Identifying Oil Pan Sub-Assembly And Pry Points
Courtesy of TOYOTA MOTOR SALES, U.S.A., INC.

TEXT IN ILLUSTRATION

*1	Protective Tape

NOTE: **Be careful not to damage the contact surfaces of the cylinder block and oil pan.**

HINT:

Tape the screwdriver tip before use.

c. Remove the 2 O-rings.

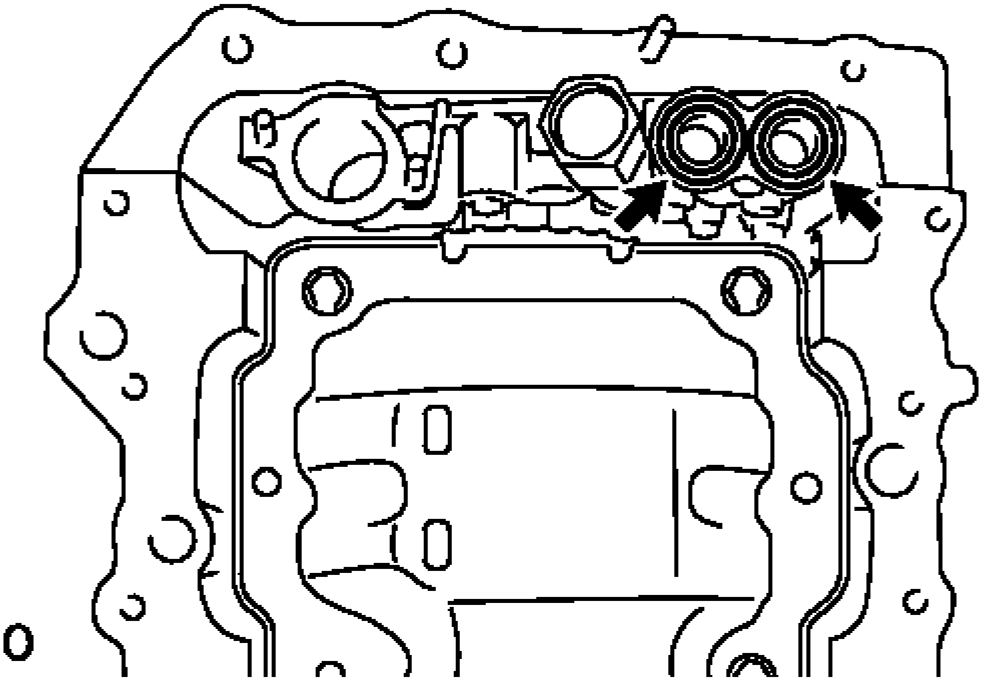

Fig. 188: Locating O-Rings
Courtesy of TOYOTA MOTOR SALES, U.S.A., INC.

d. Using an E8 "TORX" socket wrench, remove the 2 stud bolts.

22. **REMOVE NO. 1 OIL PAN BAFFLE PLATE**

a. Remove the 7 bolts and No. 1 oil pan baffle plate.

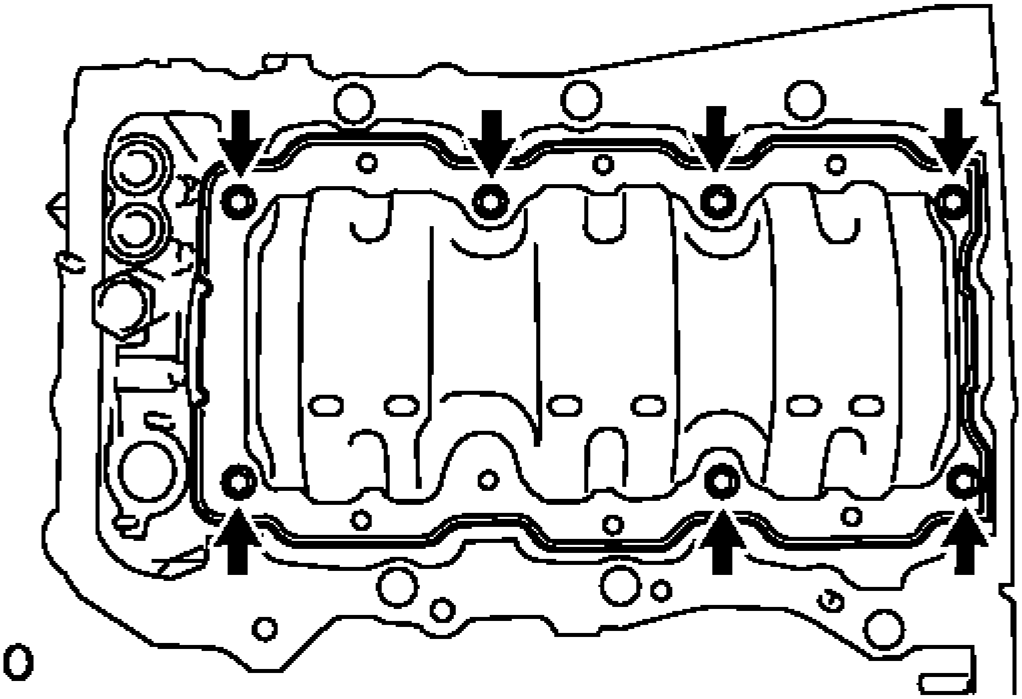

Fig. 189: Locating Oil Pan Baffle Plate Bolts
Courtesy of TOYOTA MOTOR SALES, U.S.A., INC.

23. **REMOVE ENGINE REAR OIL SEAL RETAINER**
    a. Remove the 6 bolts.

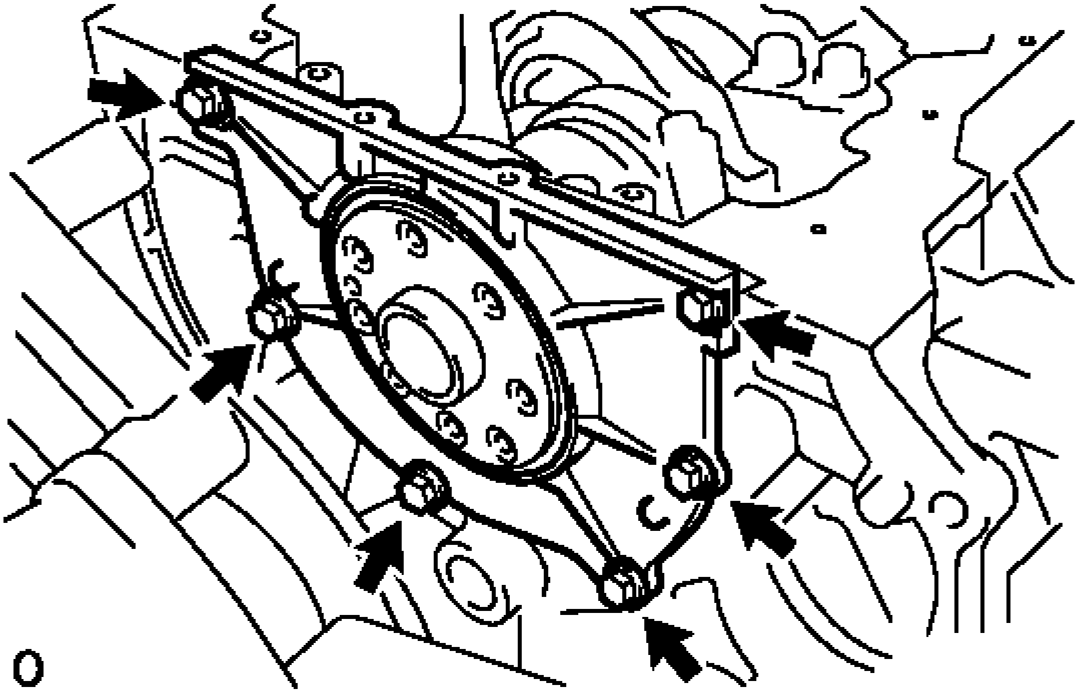

Fig. 190: Identifying Engine Rear Oil Seal Retainer Bolts
Courtesy of TOYOTA MOTOR SALES, U.S.A., INC.

    b. Using a screwdriver, pry out the engine rear oil seal retainer.

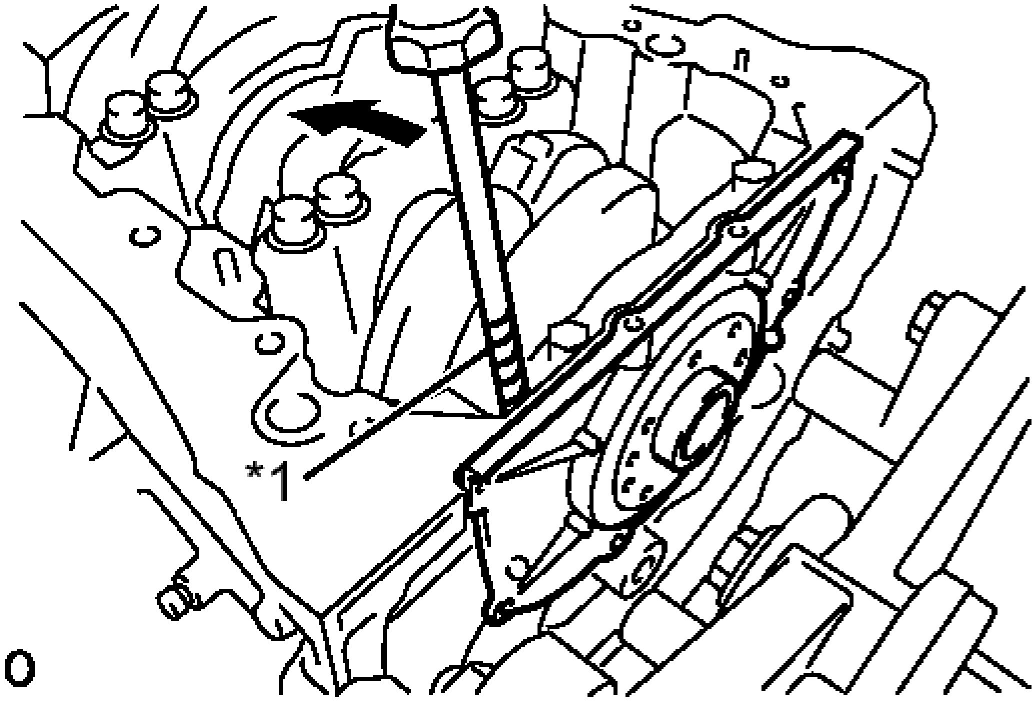

Fig. 191: Prying Out Engine Rear Oil Seal Retainer Using A Screwdriver
Courtesy of TOYOTA MOTOR SALES, U.S.A., INC.

TEXT IN ILLUSTRATION

*1	Protective Tape
·	Pry

NOTE: Be careful not to damage the engine rear oil seal retainer.

HINT:

Tape the screwdriver tip before use.

24. **REMOVE ENGINE REAR OIL SEAL**
    a. Place the engine rear oil seal retainer on wooden blocks.

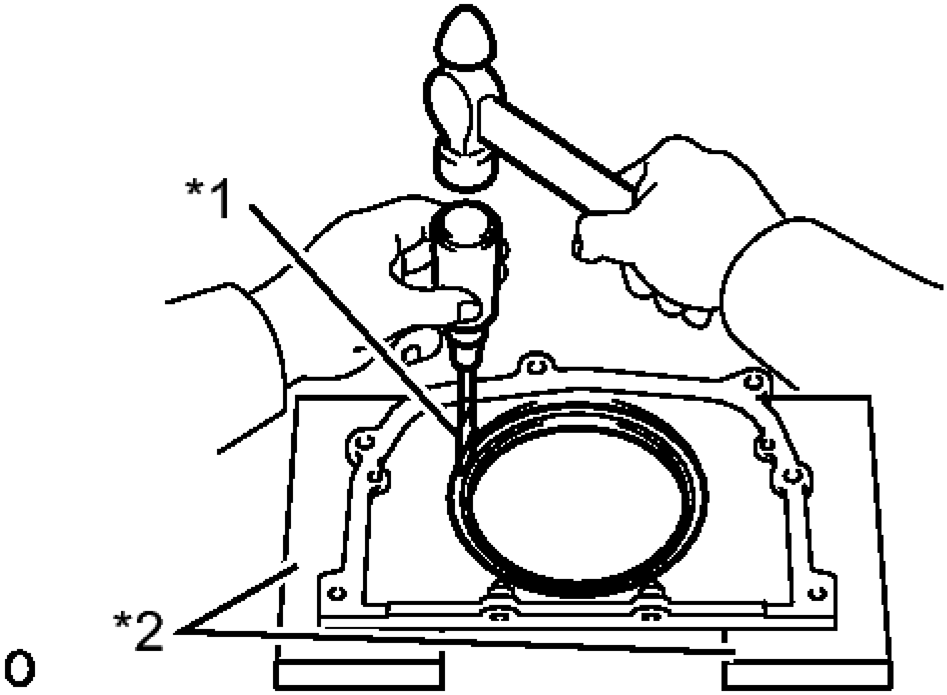

Fig. 192: Removing Engine Rear Oil Using A Screwdriver
Courtesy of TOYOTA MOTOR SALES, U.S.A., INC.

TEXT IN ILLUSTRATION

*1	Protective Tape
*2	Wooden Block

b. Using a screwdriver and a hammer, tap out the oil seal.

NOTE: Be careful not to damage the engine rear oil seal retainer.

HINT:

Tape the screwdriver tip before use.

25. **REMOVE ENGINE WATER PUMP ASSEMBLY**
    a. Remove the 16 bolts, engine water pump assembly and water pump gasket.

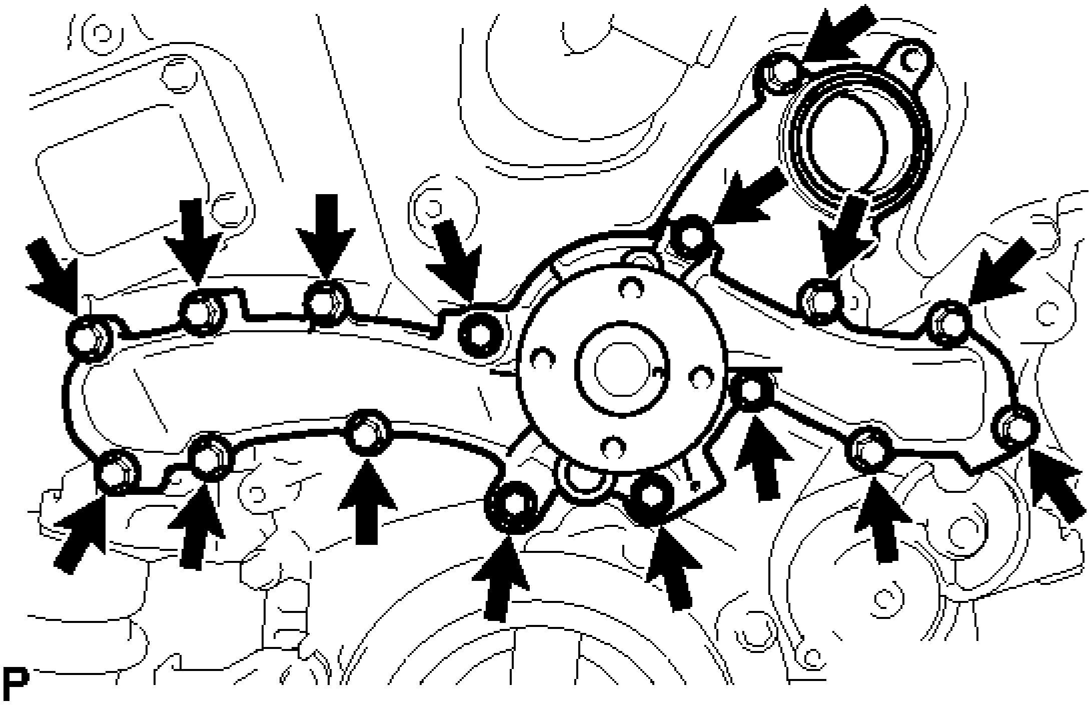

Fig. 193: Locating Bolts, Water Pump And Gasket
Courtesy of TOYOTA MOTOR SALES, U.S.A., INC.

26. **REMOVE TIMING CHAIN COVER SUB-ASSEMBLY**
    a. Remove the 15 bolts and 2 nuts as shown in the illustration.

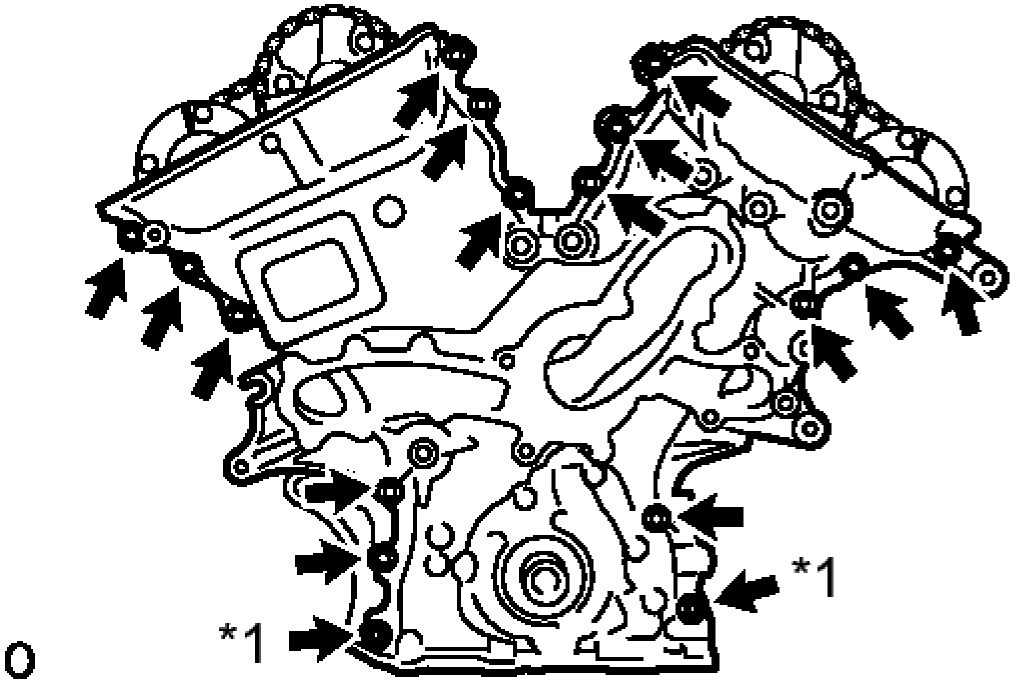

Fig. 194: Locating Timing Chain Cover Sub-Assembly Nuts & Bolts

Courtesy of TOYOTA MOTOR SALES, U.S.A., INC.

TEXT IN ILLUSTRATION

*1	Nut

b. Remove the timing chain cover sub-assembly by prying between the timing chain cover and cylinder head sub-assembly or cylinder block sub-assembly with a screwdriver.

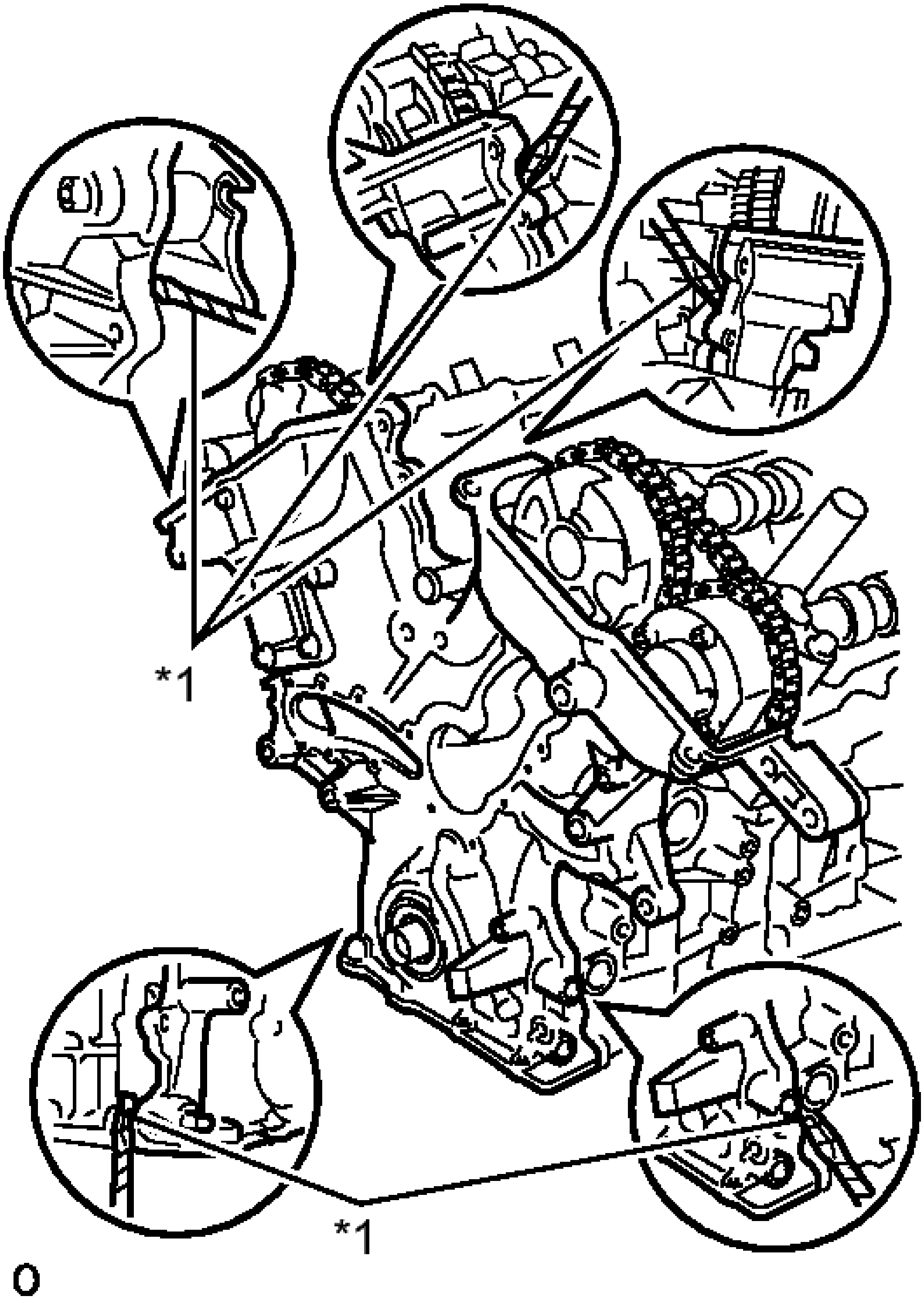

Fig. 195: Removing Timing Chain Cover Sub-Assembly With Screwdriver
Courtesy of TOYOTA MOTOR SALES, U.S.A., INC.

TEXT IN ILLUSTRATION

	Protective

*1	Tape

NOTE: Be careful not to damage the contact surfaces of the cylinder head, cylinder block and chain cover.

HINT:

Tape the screwdriver tip before use.

c. Remove the 4 bolts, timing chain cover plate and timing chain cover plate gasket.

d. Remove the gasket.

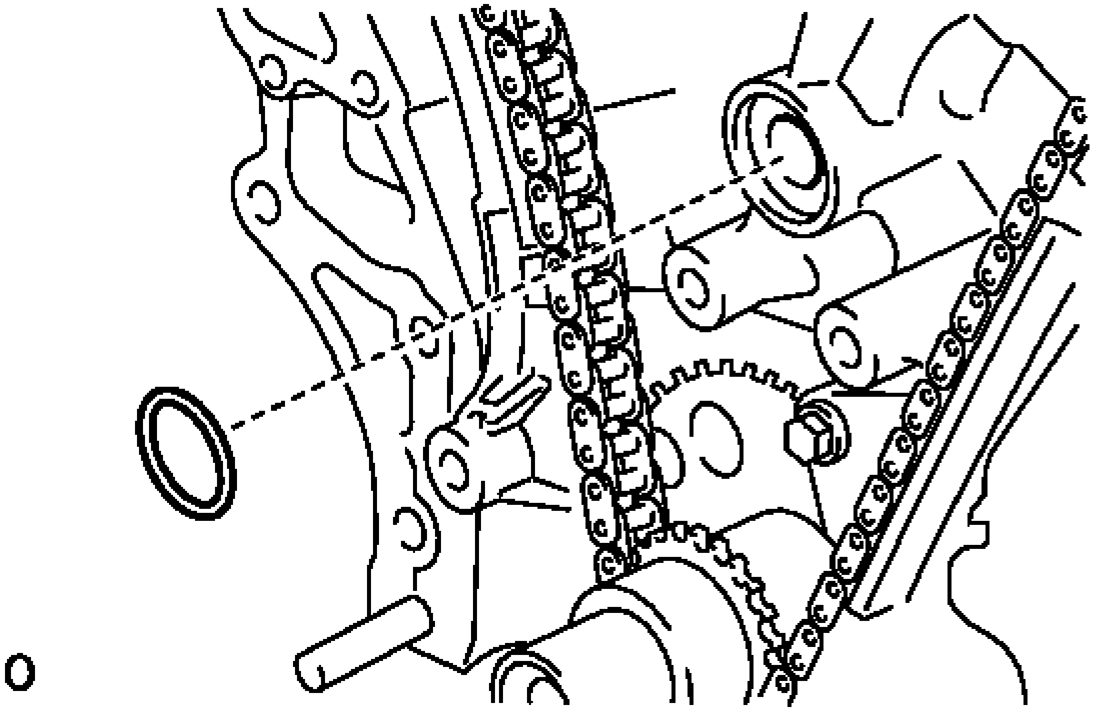

Fig. 196: Identifying Gasket
Courtesy of TOYOTA MOTOR SALES, U.S.A., INC.

27. **REMOVE TIMING CHAIN CASE OIL SEAL** . Refer to **REMOVAL - Step 32**

28. **SET NO. 1 CYLINDER TO TDC/COMPRESSION**

    a. Temporarily tighten the pulley set bolt.

    b. Turn the crankshaft clockwise to align the timing mark on the crank angle sensor plate with the RH block bore center line (TDC/compression).

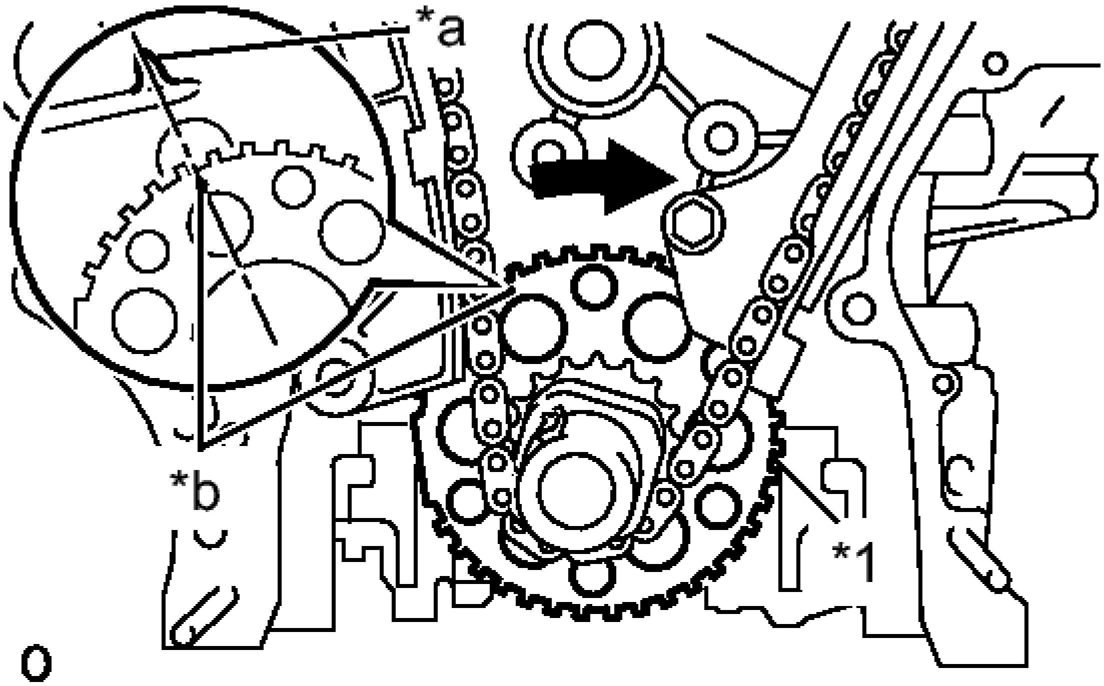

Fig. 197: Turning Crankshaft Clockwise & Aligning Crank Angle Sensor Plate With RH Block Bore Center Line
Courtesy of TOYOTA MOTOR SALES, U.S.A., INC.

TEXT IN ILLUSTRATION

*1	Sensor Plate
*a	Center Line
*b	Timing Mark

c. Check that the timing marks of the camshaft timing gears are aligned with the timing marks of the bearing cap as shown in the illustration.

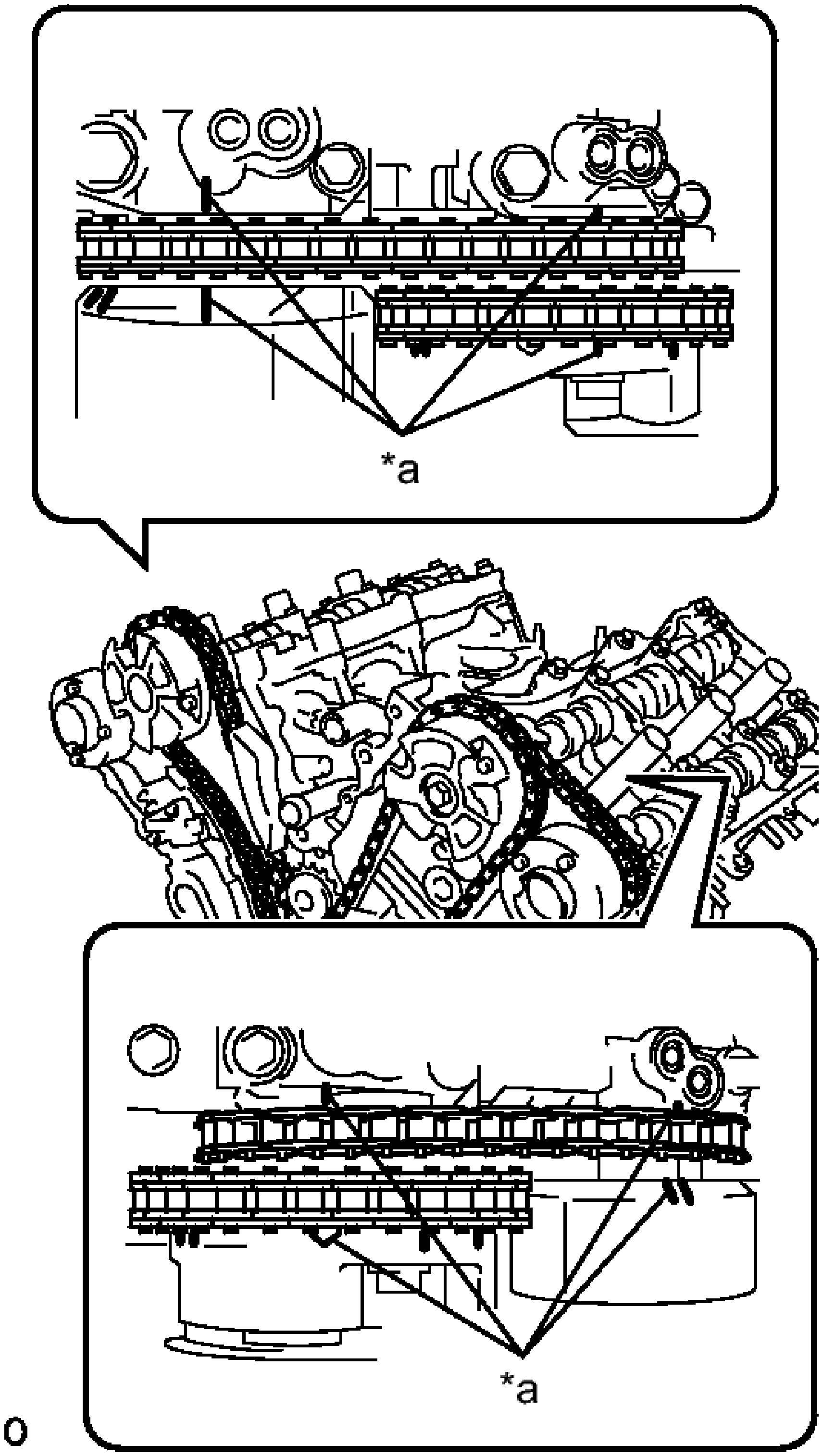

Fig. 198: Identifying Alignment Of Camshaft Timing Gear & Bearing Cap Timing Marks
Courtesy of TOYOTA MOTOR SALES, U.S.A., INC.

TEXT IN ILLUSTRATION

*a	Timing Mark

If not, turn the crankshaft clockwise 1 revolution (360°) and align the timing marks as above.

29. **REMOVE NO. 1 CHAIN TENSIONER ASSEMBLY**

a. Move the stopper plate upward to release the lock, and push the plunger deep into the tensioner.

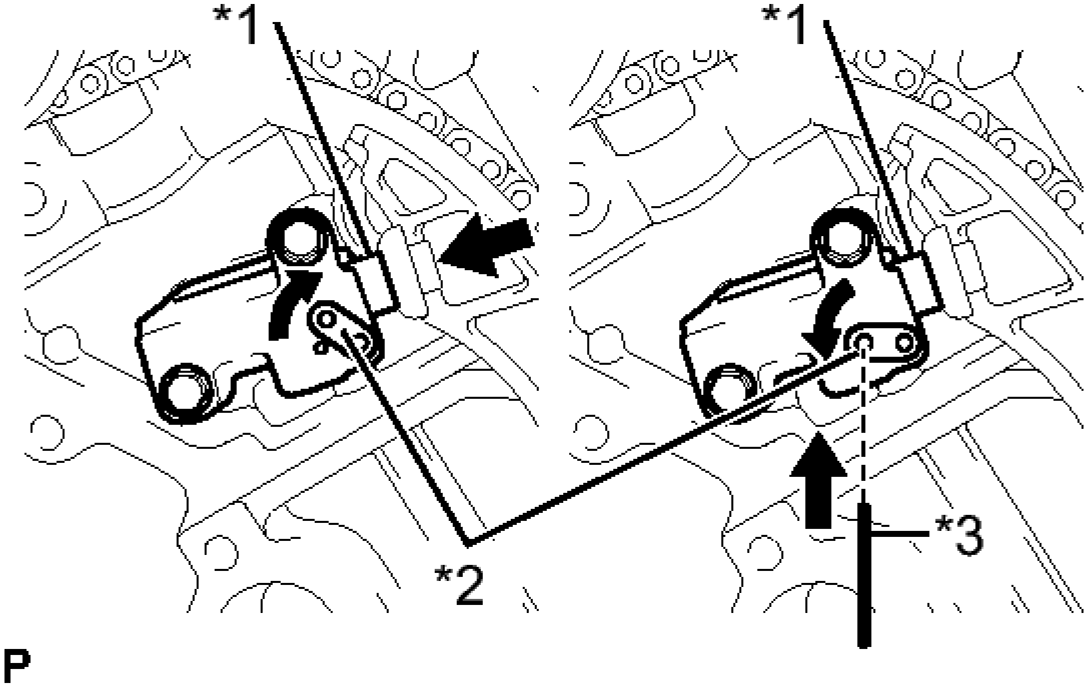

Fig. 199: Removing No. 1 Chain Tensioner Assembly
Courtesy of TOYOTA MOTOR SALES, U.S.A., INC.

TEXT IN ILLUSTRATION

*1	Plunger
*2	Stopper Plate
*3	Pin

b. Move the stopper plate downward to set the lock, and insert a pin of 1.27 mm diameter (0.0500 in.) into the stopper plate hole.

c. Remove the 2 bolts and No. 1 chain tensioner assembly.

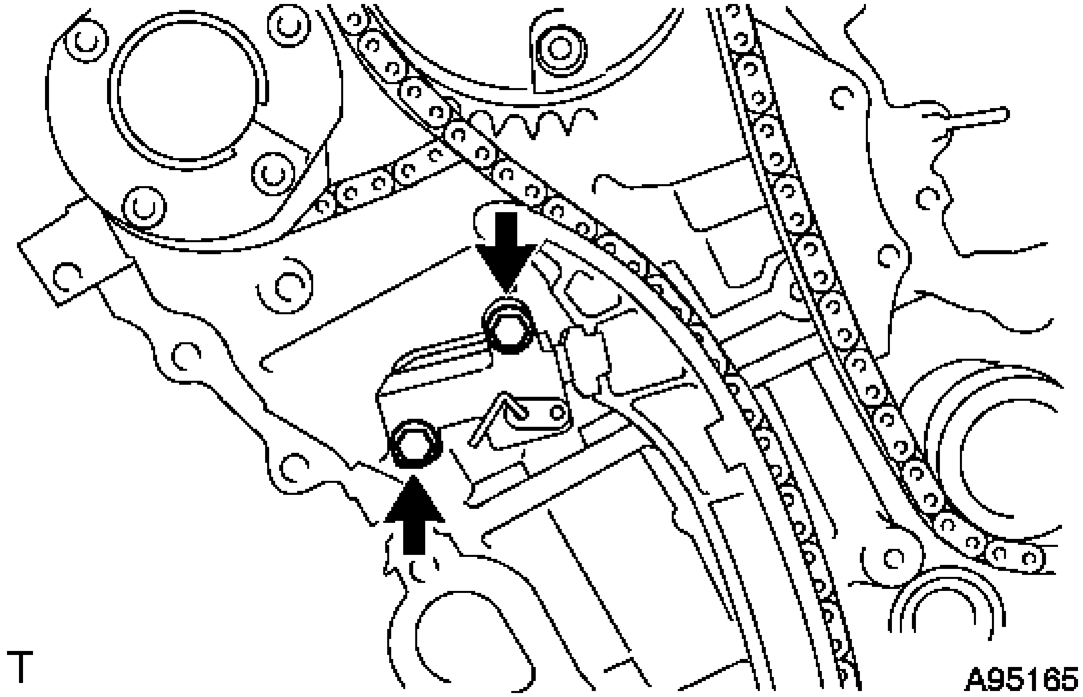

Fig. 200: Locating Chain Tensioner With Bolts
Courtesy of TOYOTA MOTOR SALES, U.S.A., INC.

30. **REMOVE CHAIN TENSIONER SLIPPER**
    a. Remove the chain tensioner slipper.
31. **REMOVE CHAIN SUB-ASSEMBLY**
    a. Turn the crankshaft counterclockwise 10° to loosen the chain of the crankshaft timing sprocket.

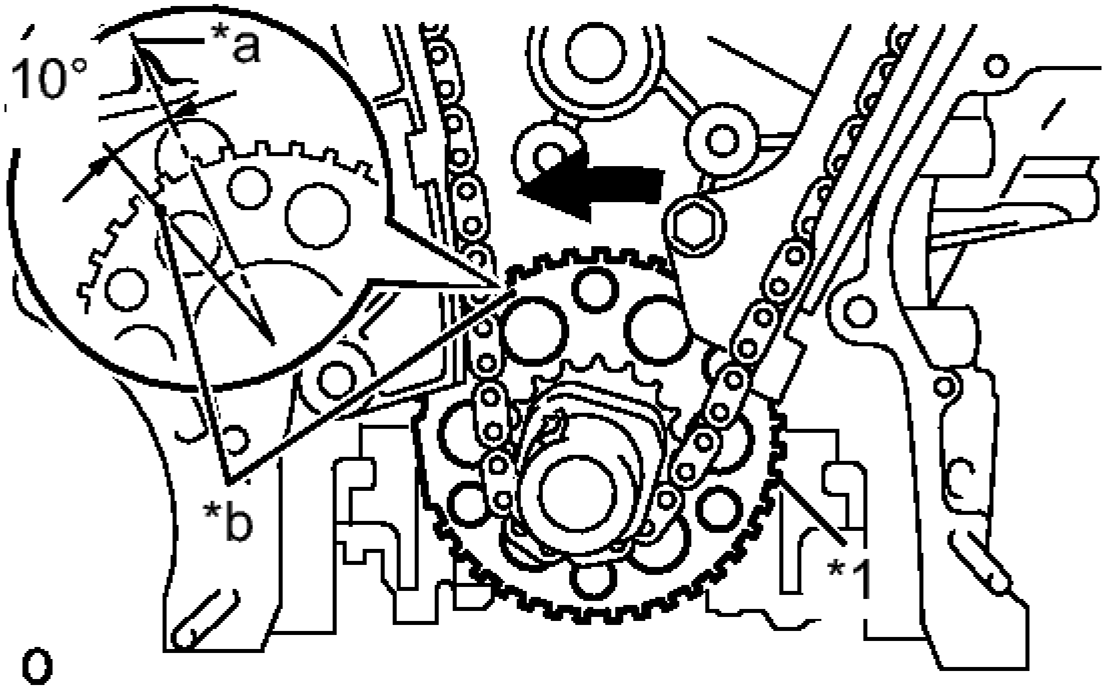

Fig. 201: Turning Crankshaft Counterclockwise
Courtesy of TOYOTA MOTOR SALES, U.S.A., INC.

TEXT IN ILLUSTRATION

*1	Sensor Plate
*a	Center Line
*b	Timing Mark

b. Remove the pulley set bolt.

c. Remove the chain sub-assembly from the crankshaft timing sprocket and place it on the crankshaft.

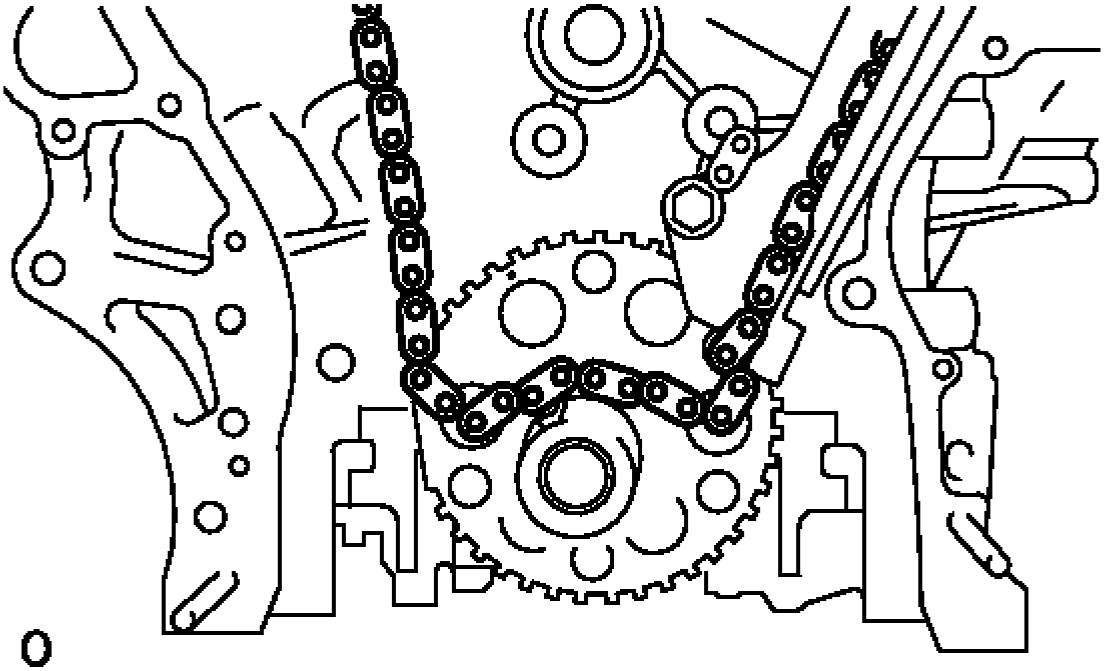

Fig. 202: Identifying Chain Set
Courtesy of TOYOTA MOTOR SALES, U.S.A., INC.

d. Turn the camshaft timing gear assembly on bank 1 clockwise (approximately 60°) and set it as shown in the illustration. Be sure to loosen the chain sub-assembly between the banks.

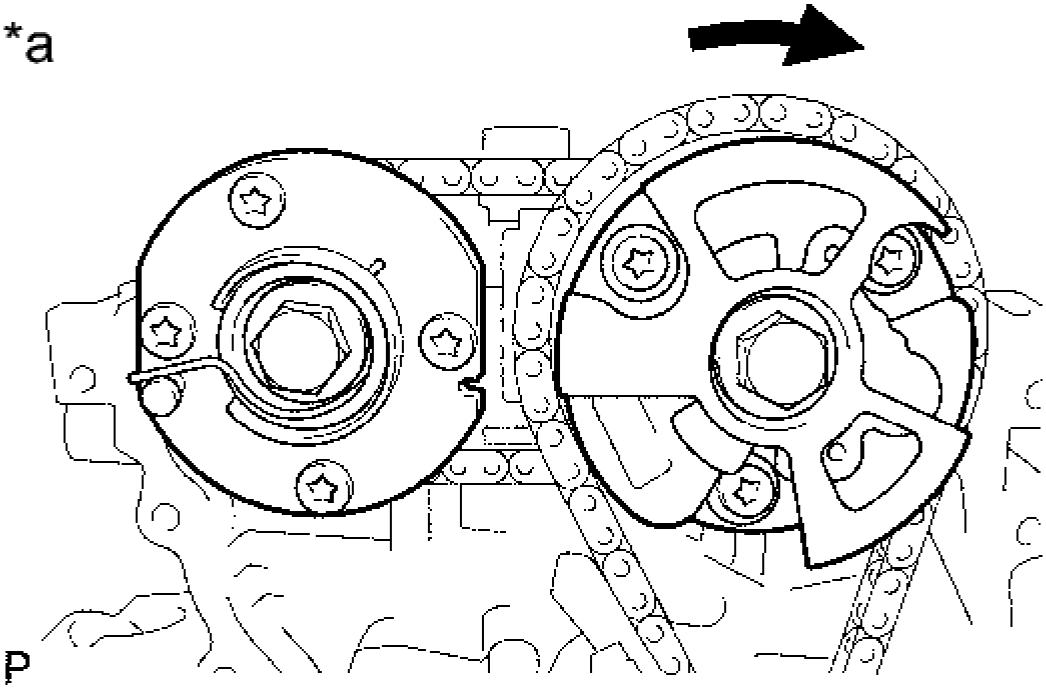

Fig. 203: Turning Camshaft Timing Gear Assembly Clockwise (Bank 1)
Courtesy of TOYOTA MOTOR SALES, U.S.A., INC.

TEXT IN ILLUSTRATION

*a	for Bank 1

e. Remove the chain sub-assembly.

32. **REMOVE IDLE SPROCKET ASSEMBLY**

a. Using a 10 mm hexagon wrench, remove the No. 2 idle gear shaft, idle sprocket assembly and No. 1 idle gear shaft.

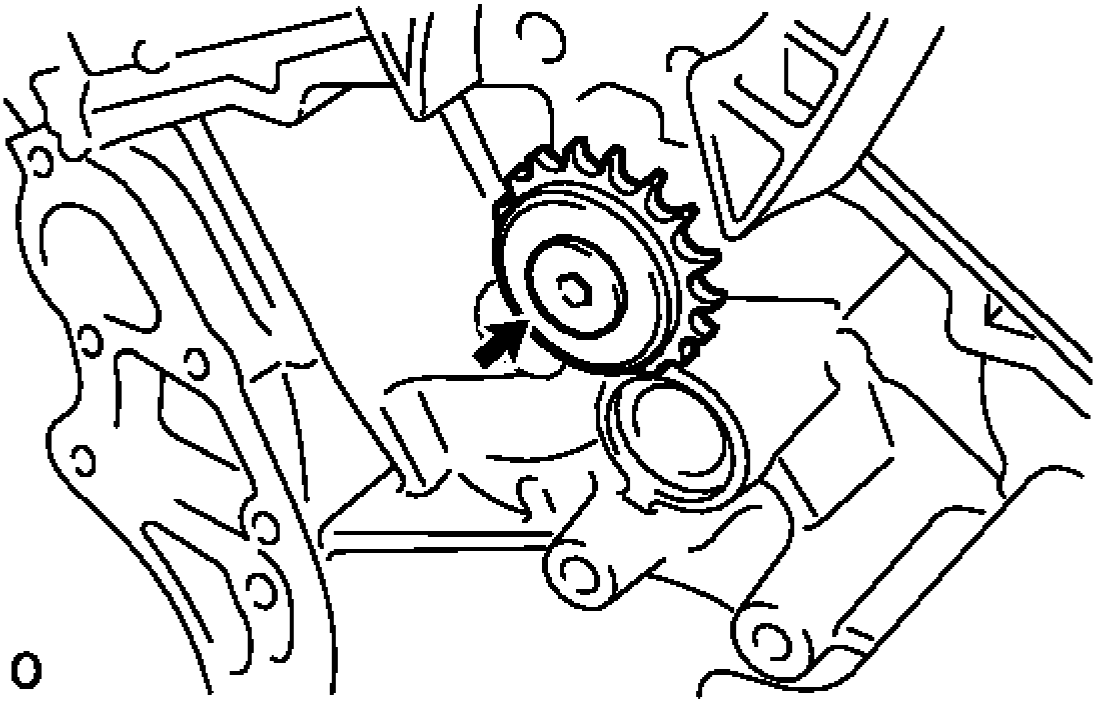

Fig. 204: Locating Idle Gear Shaft No. 2, Idle Sprocket And Idle Gear Shaft
Courtesy of TOYOTA MOTOR SALES, U.S.A., INC.

33. **REMOVE NO. 1 CHAIN VIBRATION DAMPER**

a. Remove the 2 bolts and No. 1 chain vibration damper.

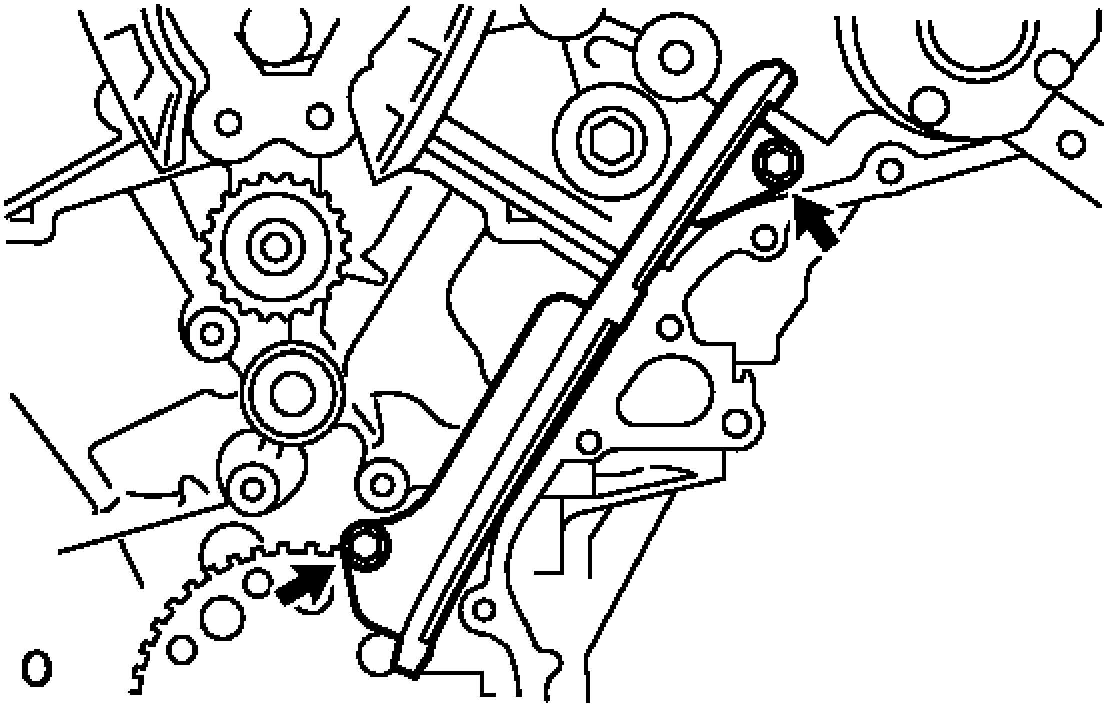

Fig. 205: Locating Chain Vibration Damper With Bolts
Courtesy of TOYOTA MOTOR SALES, U.S.A., INC.

34. **REMOVE NO. 2 CHAIN VIBRATION DAMPER**
    a. Remove the 2 No. 2 chain vibration dampers.
35. **REMOVE CRANKSHAFT TIMING SPROCKET**
    a. Remove the crankshaft timing sprocket from the crankshaft.

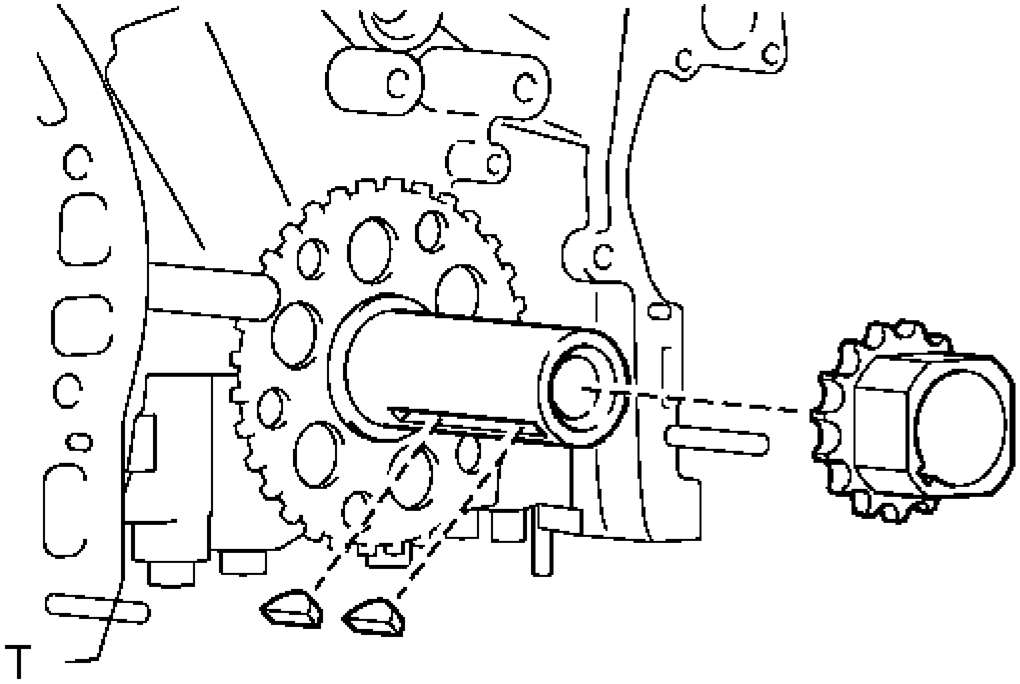

Fig. 206: Identifying Crankshaft Timing Sprocket
Courtesy of TOYOTA MOTOR SALES, U.S.A., INC.

b. Remove the 2 keys from the crankshaft.

36. **REMOVE CAMSHAFT TIMING GEARS AND NO. 2 CHAIN (for Bank 1)** See step 40
37. **REMOVE NO. 2 CHAIN TENSIONER ASSEMBLY** See step 41
38. **REMOVE CAMSHAFT BEARING CAP (for Bank 1)** See step 42
39. **REMOVE CAMSHAFT** See step 43
40. **REMOVE NO. 2 CAMSHAFT** See step 44
41. **REMOVE CAMSHAFT HOUSING SUB-ASSEMBLY RH** See step 45
42. **REMOVE CAMSHAFT TIMING GEARS AND NO. 2 CHAIN (for Bank 2)** See step 46
43. **REMOVE NO. 3 CHAIN TENSIONER ASSEMBLY** See step 47
44. **REMOVE CAMSHAFT BEARING CAP (for Bank 2)** See step 48
45. **REMOVE NO. 3 CAMSHAFT** See step 49
46. **REMOVE NO. 4 CAMSHAFT** See step 50
47. **REMOVE CAMSHAFT HOUSING SUB-ASSEMBLY LH** See step 51
48. **REMOVE NO. 1 VALVE ROCKER ARM SUB-ASSEMBLY** See step 10
49. **REMOVE VALVE LASH ADJUSTER ASSEMBLY** See step 11
50. **REMOVE VALVE STEM CAP** See step 12
51. **REMOVE CYLINDER HEAD SUB-ASSEMBLY RH** See step 14
52. **REMOVE CYLINDER HEAD GASKET RH** See step 15
53. **REMOVE CYLINDER HEAD SUB-ASSEMBLY LH** See step 16
54. **REMOVE CYLINDER HEAD GASKET LH** See step 17

55. **REMOVE WATER INLET PIPE**
    a. Remove the 2 clamps and separate the No. 1 water by-pass hose.
    b. Remove the 2 bolts and water inlet pipe.

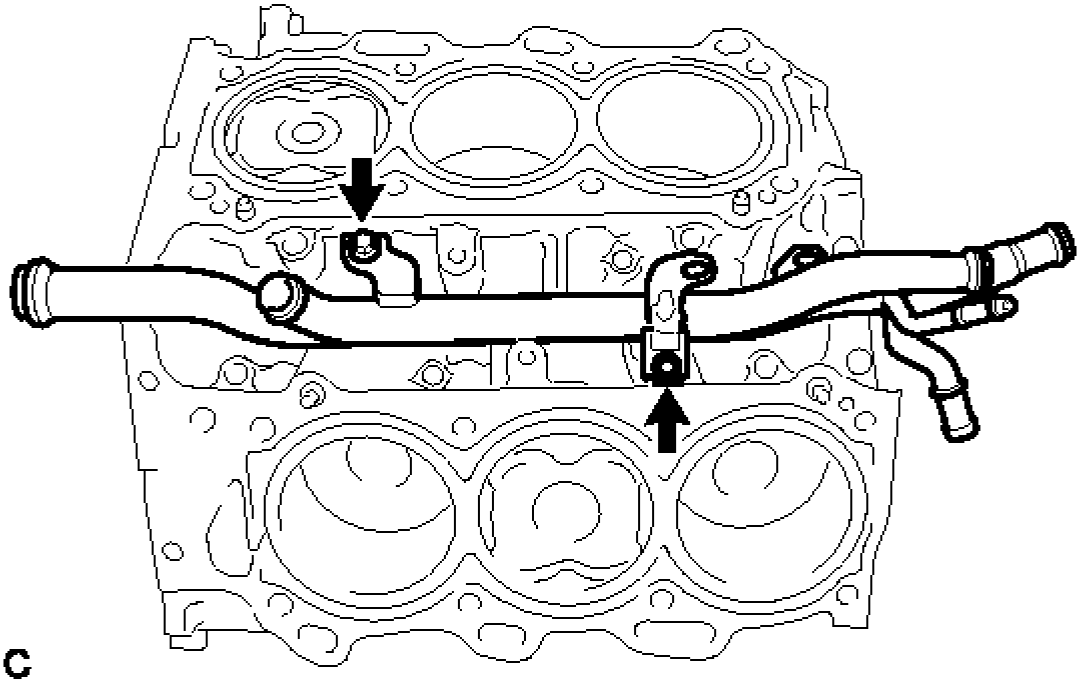

Fig. 207: Identifying Water Inlet Pipe
Courtesy of TOYOTA MOTOR SALES, U.S.A., INC.

INSPECTION

INSPECTION

1. **INSPECT NO. 1 VALVE ROCKER ARM SUB-ASSEMBLY**
    a. Turn the roller by hand to check that it turns smoothly.

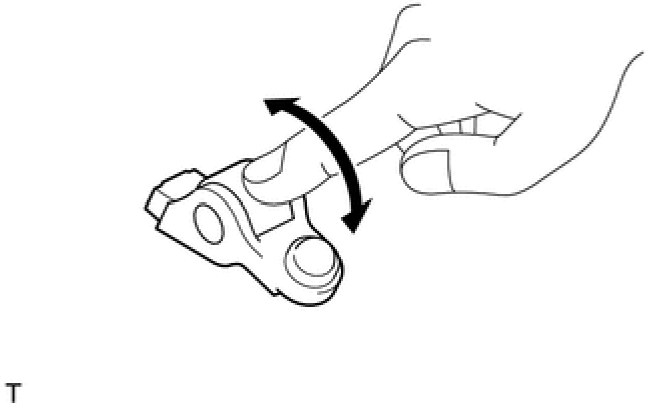

Fig. 208: Turning Roller By Hand For Checking Smoothly Turns

Courtesy of TOYOTA MOTOR SALES, U.S.A., INC.

HINT:

If the roller does not turn smoothly, replace the No. 1 valve rocker arm sub-assembly.

2. INSPECT VALVE LASH ADJUSTER ASSEMBLY

NOTE:

- **Keep the valve lash adjuster assembly free of dirt and foreign objects.**
- **Only use clean engine oil.**

a. Place the valve lash adjuster assembly into a container filled with engine oil.

b. Insert the tip of SST into the valve lash adjuster assembly plunger and use the tip to press down on the check ball inside the plunger.

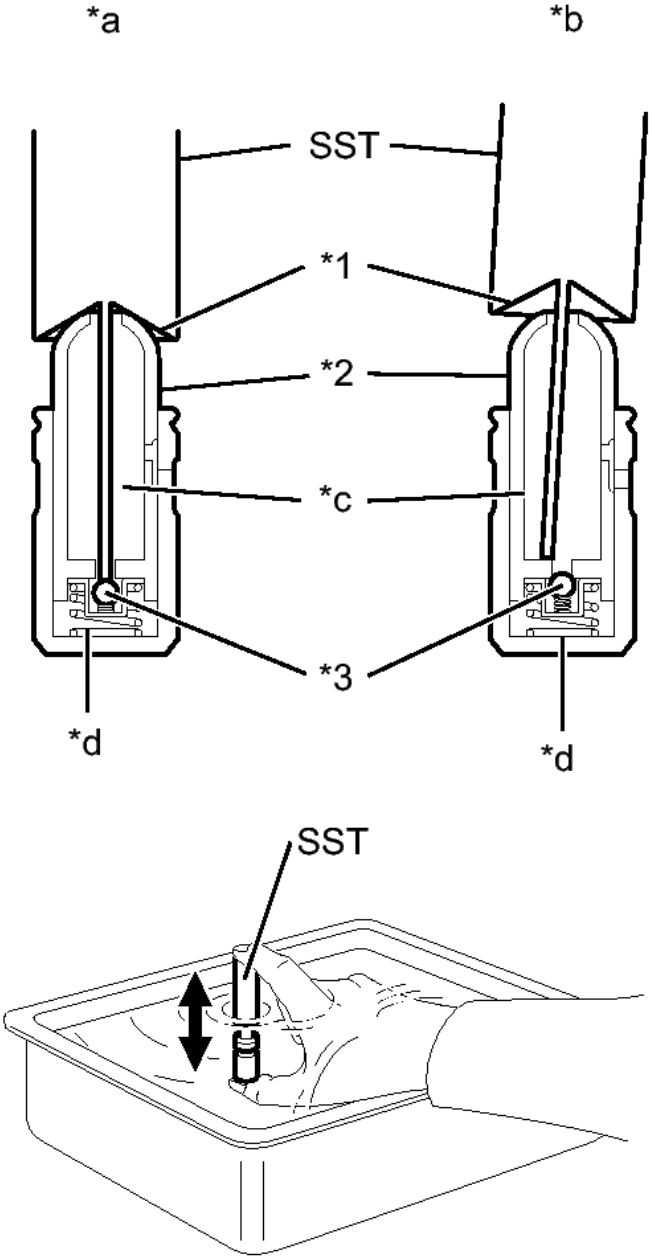
*a
*b
SST
*1
*2
*c
*3
*d
*d
SST

T

Fig. 209: Bleeding Valve Lash Adjuster Using SST
Courtesy of TOYOTA MOTOR SALES, U.S.A., INC.

TEXT IN ILLUSTRATION

*1	Tapered Part
*2	Plunger
*3	Check Ball
*a	CORRECT
*b	INCORRECT
*c	Low Pressure Chamber
*d	High Pressure Chamber

- **SST: 09276-75010**

c. Squeeze SST and the valve lash adjuster assembly together to move the plunger up and down 5 to 6 times.

d. Check the movement of the plunger and bleed the air.

   OK

   Plunger moves up and down.

   NOTE: **When bleeding air from the high-pressure chamber, make sure that the tip of SST is actually pressing the check ball as shown in the illustration. If the check ball is not pressed, air will not bleed.**

e. After bleeding the air, remove SST. Then try to quickly and firmly press the plunger by hand.

   OK

   Plunger is very difficult to move.

   If the result is not as specified, replace the valve lash adjuster assembly.

3. **INSPECT CAMSHAFT**
   a. Inspect the camshaft for runout.
      1. Place the camshaft on V-blocks.
      2. Using a dial indicator, measure the circle runout at the center journal.

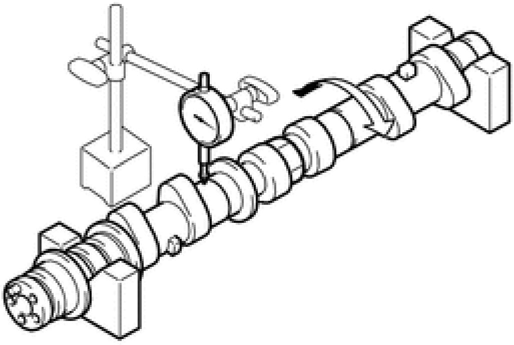

Fig. 210: Measuring Circle Runout At Center Journal
Courtesy of TOYOTA MOTOR SALES, U.S.A., INC.

Maximum runout

0.04 mm (0.00157 in.)

If the runout is greater than the maximum, replace the camshaft.

HINT:

Check the oil clearance after replacing the camshaft.

b. Using a micrometer, measure the cam lobe height.

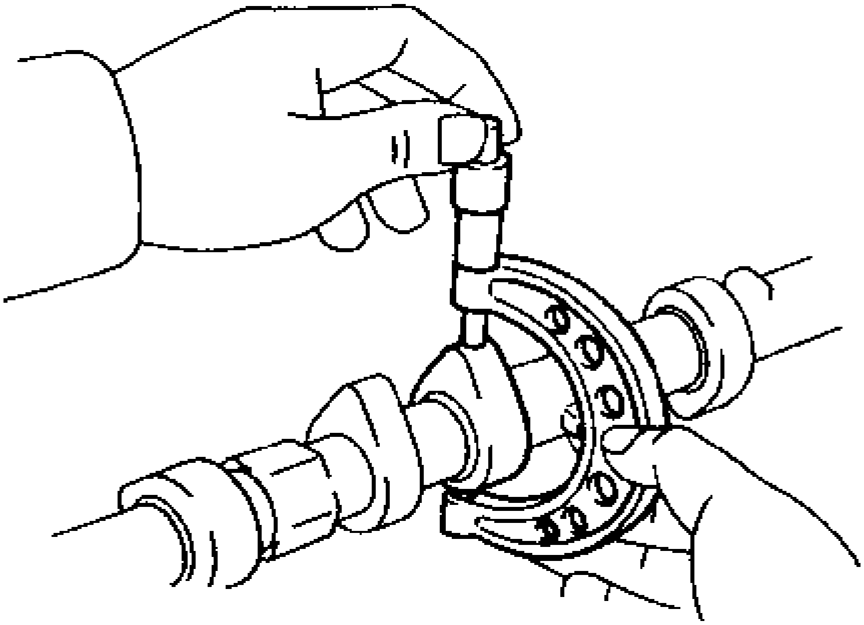

Fig. 211: Checking Cam Lobe Height

Courtesy of TOYOTA MOTOR SALES, U.S.A., INC.

Standard Cam Lobe Height

Item	Specification
Intake camshaft	44.316 to 44.416 mm (1.7448 to 1.7486 in.)
Exhaust camshaft	44.262 to 44.362 mm (1.7426 to 1.7465 in.)

Minimum Cam Lobe Height

Item	Specification
Intake camshaft	44.166 mm (1.7388 in.)
Exhaust camshaft	44.112 mm (1.7366 in.)

If the cam lobe height is less than the minimum, replace the camshaft.

c. Using a micrometer, measure the journal diameter.

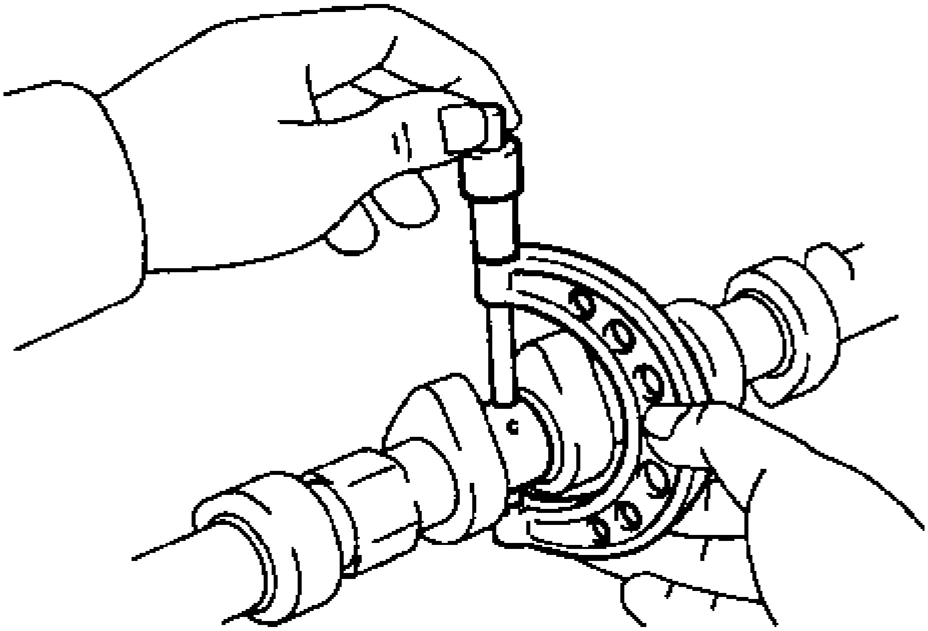

Fig. 212: Measuring Journal Diameter

Courtesy of TOYOTA MOTOR SALES, U.S.A., INC.

Standard Journal Diameter

Item	Specification
No. 1 journal	35.946 to 35.960 mm (1.4152 to 1.4157 in.)
Other journals	25.959 to 25.975 mm (1.0221 to 1.0226 in.)

If the journal diameter is not as specified, check the oil clearance.

4. **INSPECT CAMSHAFT TIMING GEAR ASSEMBLY**
   a. Clamp the camshaft in a vise.

   NOTE: Be careful not to damage the camshaft in the vise.

   b. Put the camshaft timing gear assembly and camshaft together by aligning the key groove and straight pin.

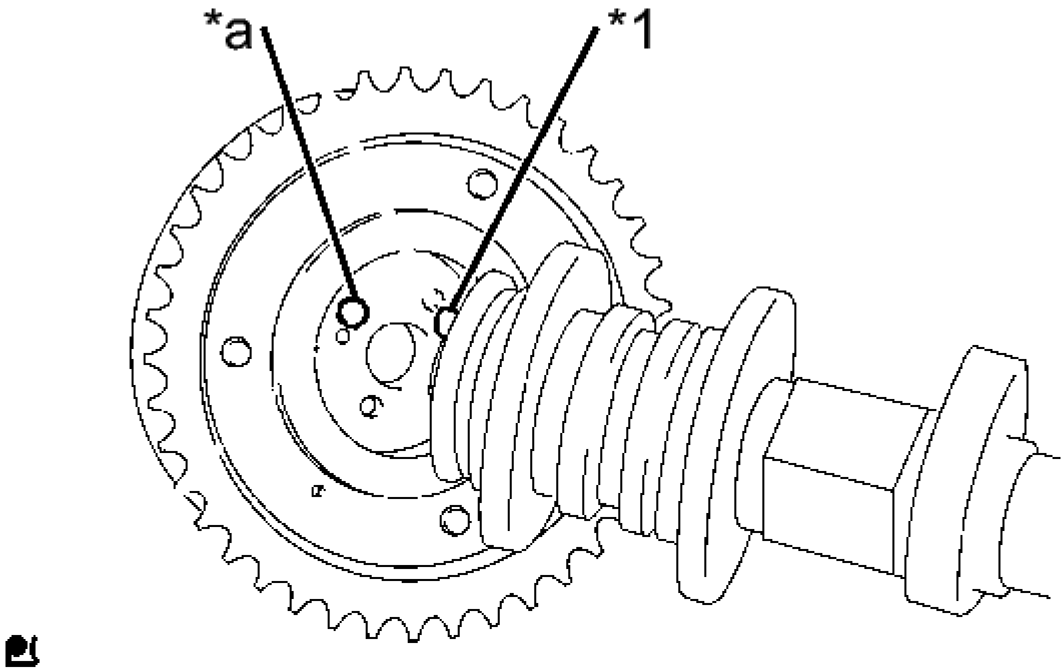

Fig. 213: Identifying Camshaft Timing Gear Key Groove & Camshaft Straight Pin
Courtesy of TOYOTA MOTOR SALES, U.S.A., INC.

TEXT IN ILLUSTRATION

*1	Straight Pin
*a	Key Groove

c. Check that there is no clearance between the camshaft timing gear assembly flange and the camshaft.

d. Tighten the flange bolt while holding the camshaft.

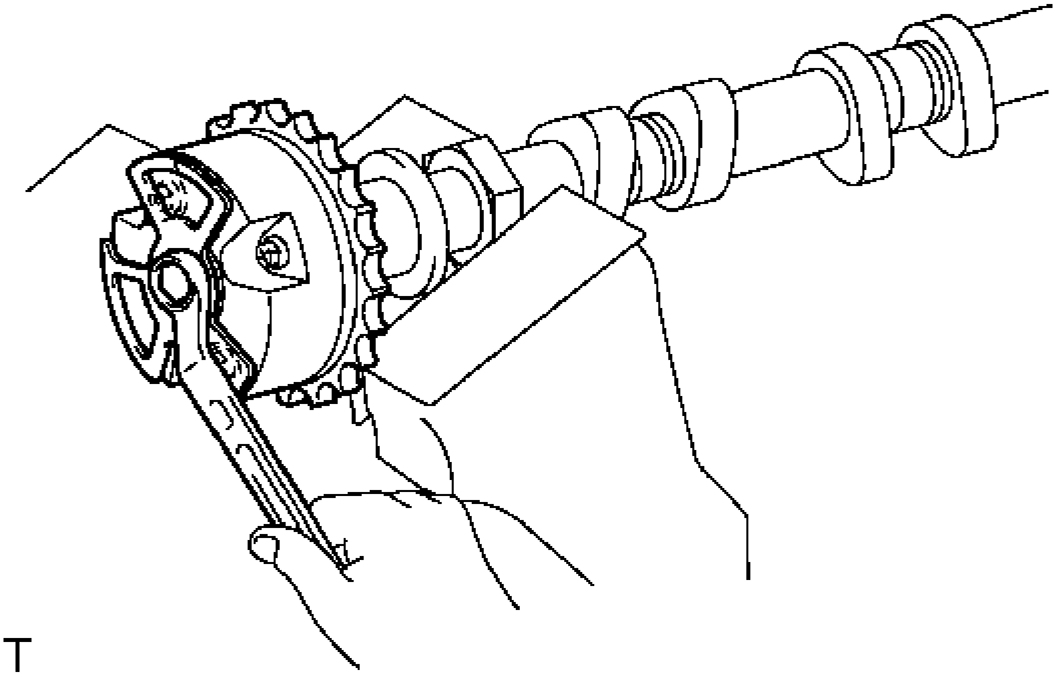

Fig. 214: Tightening Flange Bolt
Courtesy of TOYOTA MOTOR SALES, U.S.A., INC.

Torque: 100 N*m (1020 kgf*cm, 74 ft.*lbf)

e. Check the lock of the camshaft timing gear assembly.
   1. Clamp the camshaft in a vise, and confirm that the camshaft timing gear assembly is locked.

NOTE: Be careful not to damage the camshaft.

f. Release the lock pin.

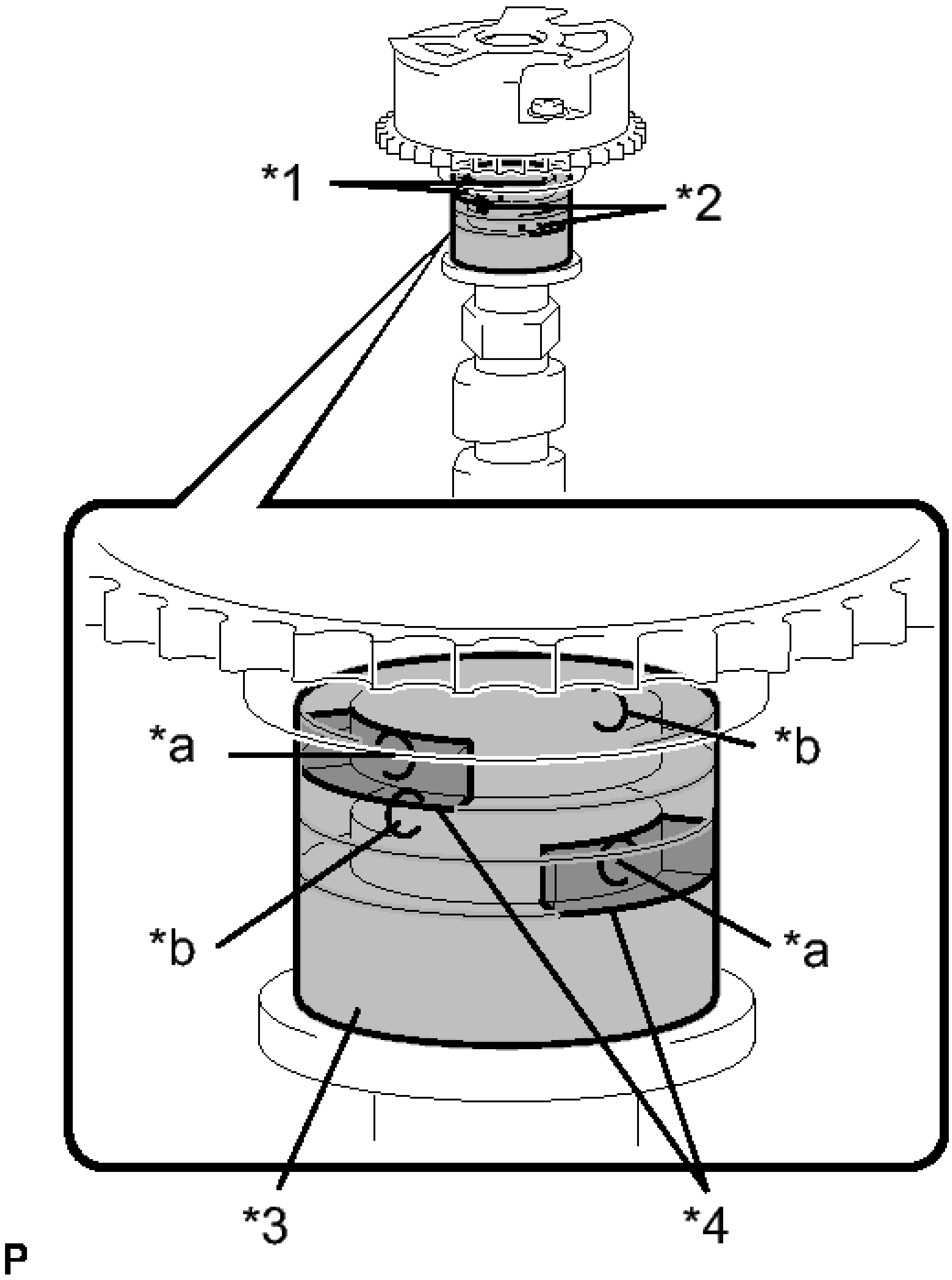

Fig. 215: Covering 4 Oil Paths Of The Cam Journal Using Vinyl Tape
Courtesy of TOYOTA MOTOR SALES, U.S.A., INC.

TEXT IN ILLUSTRATION

	Advance

*1	Side Path
*2	Retard Side Path
*3	Vinyl Tape
*4	Rubber
*a	Close
*b	Open

1. Cover the 4 oil paths of the cam journal with vinyl tape as shown in the illustration.

   HINT:

   The 2 advance side paths are located in the camshaft groove. Plug one of the paths with a rubber piece.

2. Break through the tape on the advance side path and the retard side path on the opposite side of the hole of the advance side path as shown in the illustration.
3. Apply approximately 200 kPa (2.0 kgf/cm^2 , 29 psi) of air pressure to the 2 opened paths.

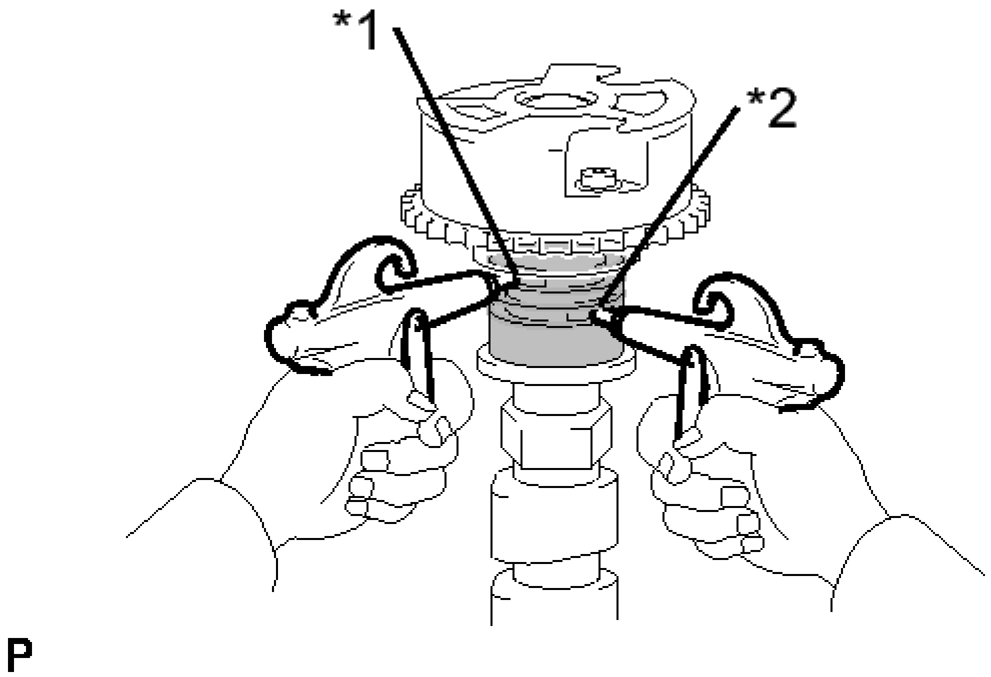

Fig. 216: Applying Air Pressure To Advanced & Retard Side Paths
Courtesy of TOYOTA MOTOR SALES, U.S.A., INC.

TEXT IN ILLUSTRATION

*1	Advanced Side Path
*2	Retard Side Path

WARNING: Cover the paths with a piece of cloth when applying pressure to prevent oil from spraying.

4. Check that the camshaft timing gear assembly rotates in the advance direction when reducing the air pressure applied to the retard side path.

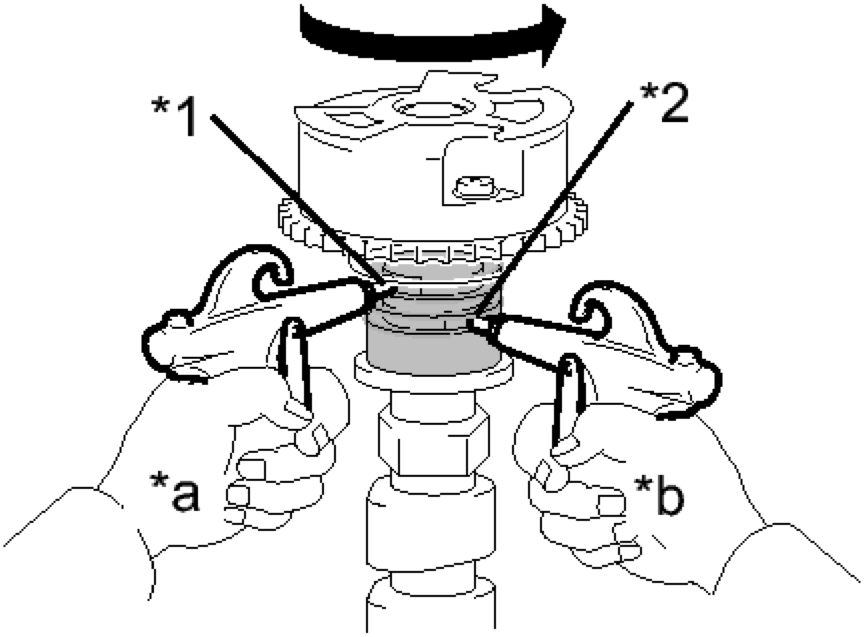

P

Fig. 217: Checking Camshaft Timing Gear Rotation With Air Pressure Applied To Retard Side Path
Courtesy of TOYOTA MOTOR SALES, U.S.A., INC.

TEXT IN ILLUSTRATION

*1	Advance Side Path
*2	Retard Side Path
*a	Hold Pressure
*b	Decompress

HINT:

This operation releases the lock pin at the most retarded position.

5. When the camshaft timing gear assembly reaches the most advanced position, release the air pressure first from the retard side path and next from the advance side path.

NOTE: **Do not release the air pressure from the advance side path first. The gear may abruptly shift in the retard direction and break the lock pin.**

g. Check for smooth rotation.
    1. Turn the camshaft timing gear assembly within its movable range (21°) 2 or 3 times, but do not turn it to the most retarded position. Make sure that the gear turns smoothly.

NOTE: **Do not use air pressure to perform the smooth operation check.**

h. Check the lock in the most retarded position.
    1. Confirm that the camshaft timing gear assembly locks at the most retarded position.

i. Remove the flange bolt and camshaft timing gear assembly.

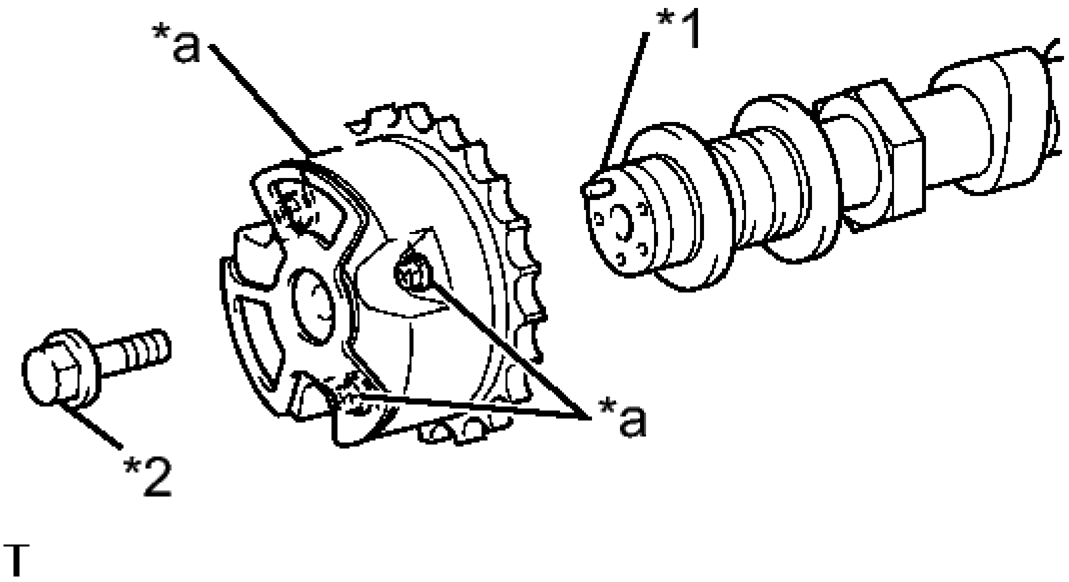

Fig. 218: Identifying Straight Pin And Flange Bolt
Courtesy of TOYOTA MOTOR SALES, U.S.A., INC.

TEXT IN ILLUSTRATION

*1	Straight Pin
	Flange

*2	Bolt
*a	Do Not Remove

NOTE:

- **Do not remove the other 3 bolts.**
- **If planning to reuse the camshaft timing gear, be sure to release the straight pin lock before installing the camshaft timing gear.**

5. **INSPECT CAMSHAFT TIMING EXHAUST GEAR ASSEMBLY**
   1. Clamp the camshaft in a vise.

      NOTE: **Be careful not to damage the camshaft in the vise.**

   2. Put the camshaft timing exhaust gear assembly and camshaft together by aligning the key groove and straight pin.

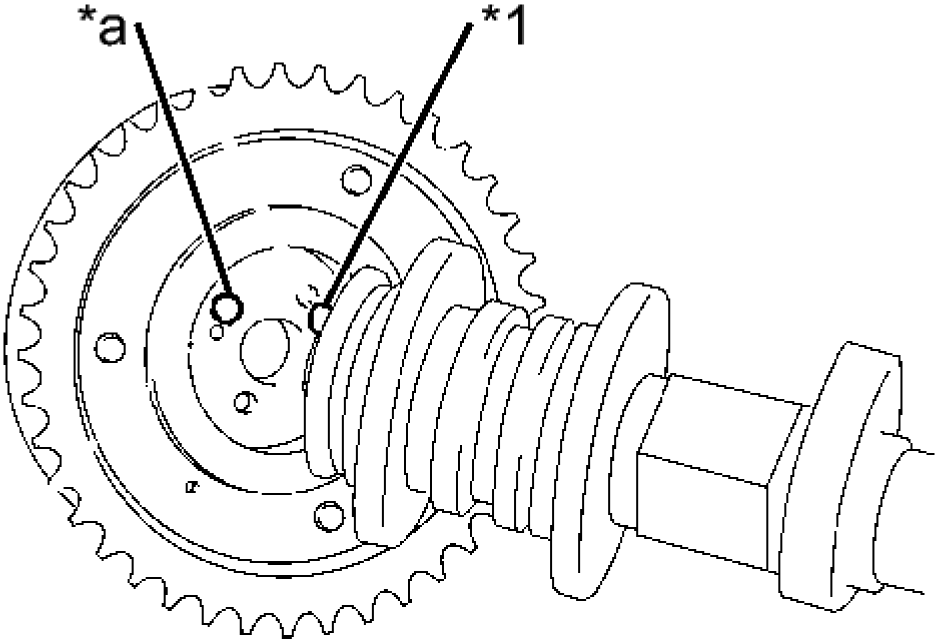

Fig. 219: Identifying Camshaft Timing Gear Key Groove & Camshaft Straight Pin
Courtesy of TOYOTA MOTOR SALES, U.S.A., INC.

TEXT IN ILLUSTRATION

*1	Straight Pin
*a	Key Groove

c. Check that there is no clearance between the gear flange and the camshaft.
d. Tighten the flange bolt while holding the camshaft.

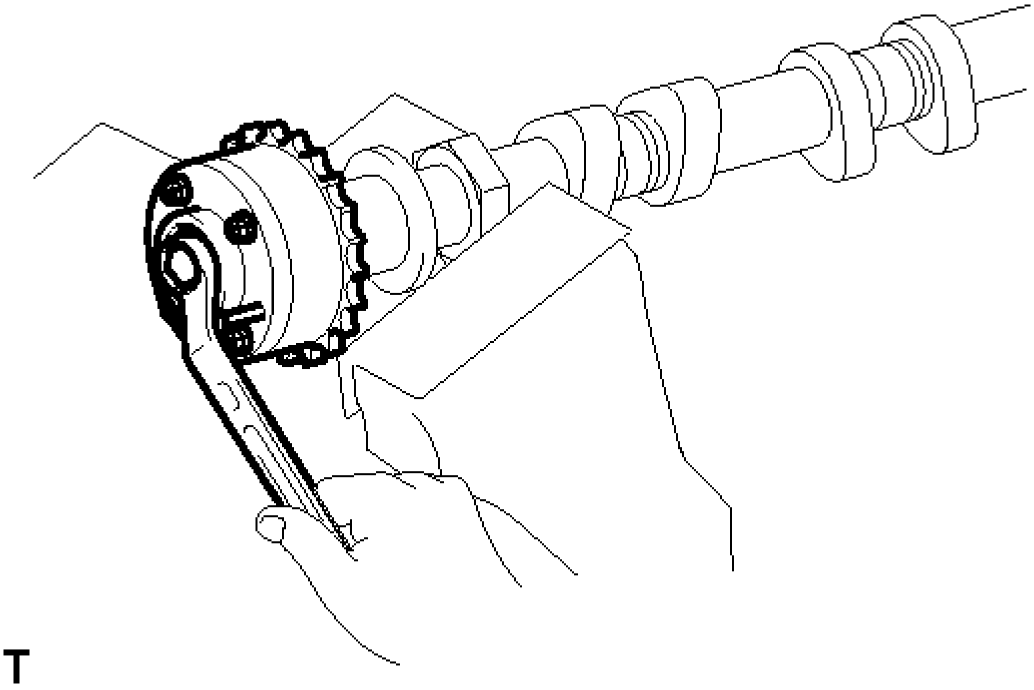

Fig. 220: Checking Camshaft Timing Exhaust Gear Lock
Courtesy of TOYOTA MOTOR SALES, U.S.A., INC.

Torque: 100 N*m (1020 kgf*cm, 74 ft.*lbf)

e. Check the camshaft timing exhaust gear lock.
    1. Make sure that the camshaft timing exhaust gear assembly locks.
f. Release the lock pin.

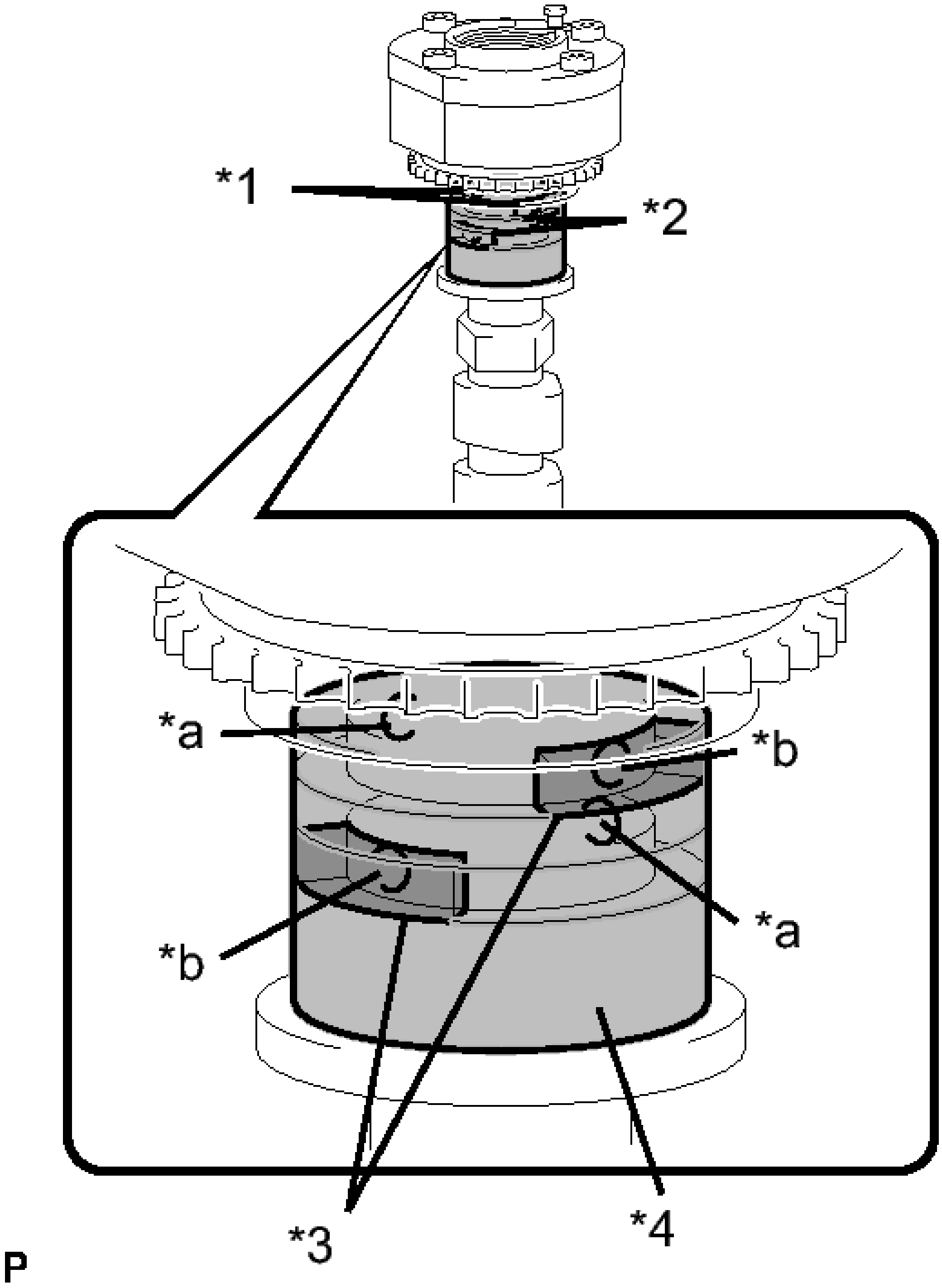

Fig. 221: Covering 4 Oil Paths Of The Cam Journal Using Vinyl Tape
Courtesy of TOYOTA MOTOR SALES, U.S.A., INC.

TEXT IN ILLUSTRATION

	Retard

*1	Side Path
*2	Advance Side Path
*3	Rubber
*4	Vinyl Tape
*a	Open
*b	Close

1. Cover the 4 oil paths of the cam journal with vinyl tape as shown in the illustration.

   HINT:

   The 2 advance side paths are located in the camshaft groove. Plug one of the paths with a rubber piece.

2. Break through the tape on the advance side path and the retard side path on the opposite side of the hole of the advance side path as shown in the illustration.
3. Apply approximately 200 kPa (2.0 kgf/cm^2 , 29 psi) of air pressure to the 2 opened paths (the advance side path and the retard side path).

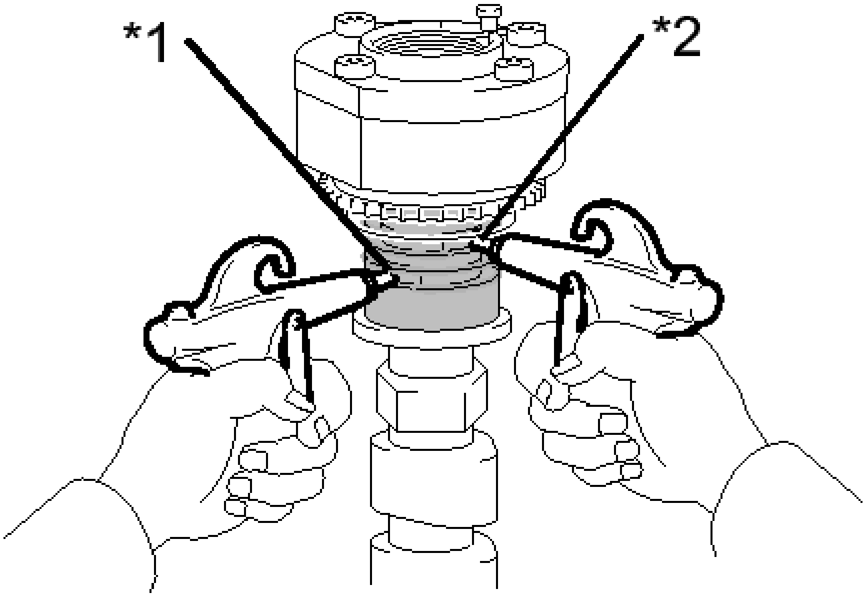

P

Fig. 222: Applying Air Pressure To Advanced & Retard Side Paths
Courtesy of TOYOTA MOTOR SALES, U.S.A., INC.

TEXT IN ILLUSTRATION

*1	Advanced Side Path
*2	Retard Side Path

WARNING: Cover the paths with a piece of cloth when applying pressure to prevent oil from spraying.

4. Make sure that the camshaft timing exhaust gear assembly rotates in the retard direction when reducing the air pressure applied to the advance side path.

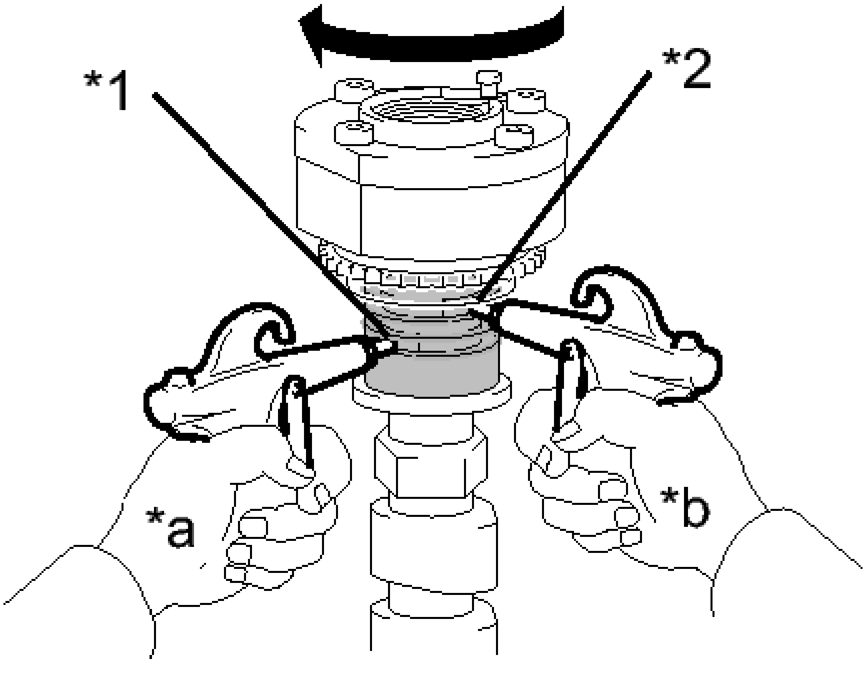

Fig. 223: Checking Camshaft Timing Exhaust Gear Rotation With Air Pressure Applied To Advance Side Path
Courtesy of TOYOTA MOTOR SALES, U.S.A., INC.

TEXT IN ILLUSTRATION

*1	Advance Side Path
*2	Retard Side Path
*a	Decompress
*b	Hold Pressure

HINT:

The lock pin is released and the camshaft timing exhaust gear assembly turns in the retard direction.

5. When the camshaft timing exhaust gear assembly moves to the most retarded position, release the air pressure first from the advance side path, and then release the air pressure from the retard side path.

NOTE: Be sure to release the air pressure from the advance side path first. If the air pressure of the retard side path is released first, the camshaft timing exhaust gear assembly may abruptly shift in the advance direction and break the lock pin or other parts.

g. Check for smooth rotation.
    1. Turn the camshaft timing exhaust gear assembly within its movable range (18.5°) 2 or 3 times, but do not turn it to the most advanced position. Make sure that the gear assembly turns smoothly.

NOTE: When the air pressure is released from the advance side path and then from the retard side path, the gear assembly automatically returns to the most advanced position due to the advance assist spring operation and locks. Gradually release the air pressure from the retard side path before performing the smooth rotation check.

h. Check the lock at the most advanced position.
    1. Make sure that the camshaft timing exhaust gear assembly locks at the most advanced position.

i. Remove the flange bolt and camshaft timing exhaust gear assembly.

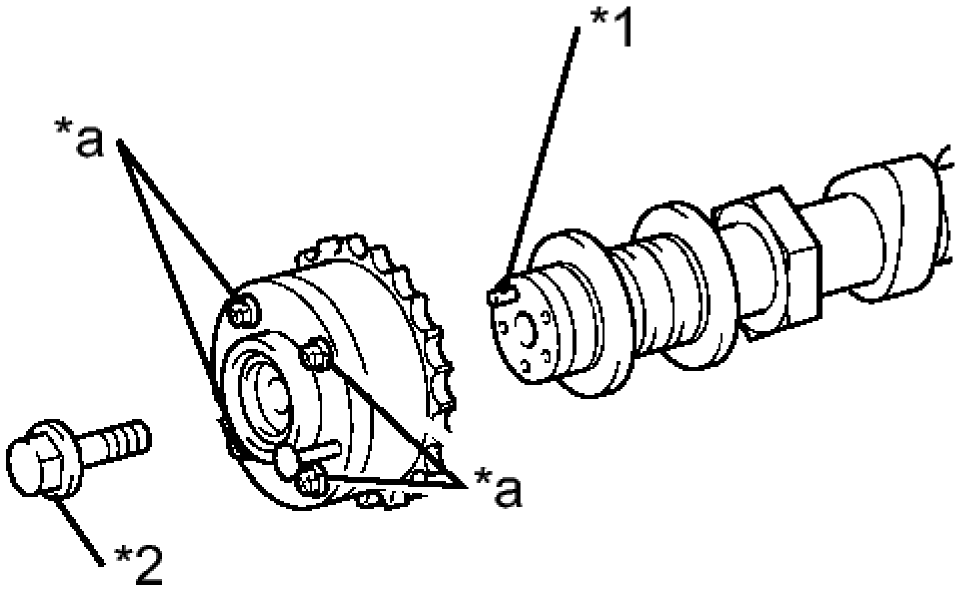

Fig. 224: Identifying Straight Pin And Flange Bolt
Courtesy of TOYOTA MOTOR SALES, U.S.A., INC.

TEXT IN ILLUSTRATION

*1	Straight Pin
*2	Flange Bolt
*a	Do Not Remove

NOTE:

- **Be sure not to remove the other 4 bolts.**
- **If planning to reuse the gear, be sure to release the straight pin lock before installing the gear.**

6. **INSPECT CYLINDER HEAD SET BOLT**
   a. Using a vernier caliper, measure the diameter of the threads at the measurement point.

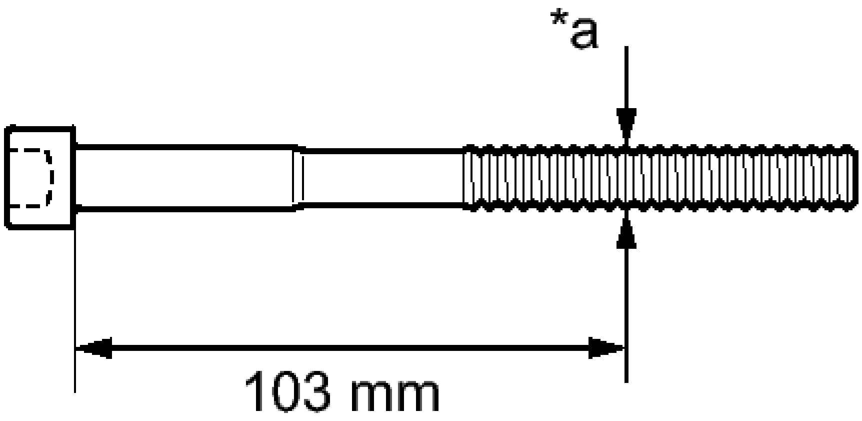

Fig. 225: Measuring Diameter Of Threads
Courtesy of TOYOTA MOTOR SALES, U.S.A., INC.

TEXT IN ILLUSTRATION

*a	Measurement Point

Standard diameter

10.85 to 11.00 mm (0.4272 to 0.4330 in.)

Minimum diameter

10.70 mm (0.4212 in.)

Measurement point (distance from the seat)

103 mm (4.06 in.)

HINT:

- If the diameter is less than the minimum, replace the cylinder head bolt. Failure to do so may lead to engine damage.
- If there is any thread deformation, replace the cylinder head bolt with a new one.

7. **INSPECT CHAIN SUB-ASSEMBLY**
   a. Pull the chain sub-assembly with a force of 147 N (15 kgf, 33.1 lbf) as shown in the illustration.

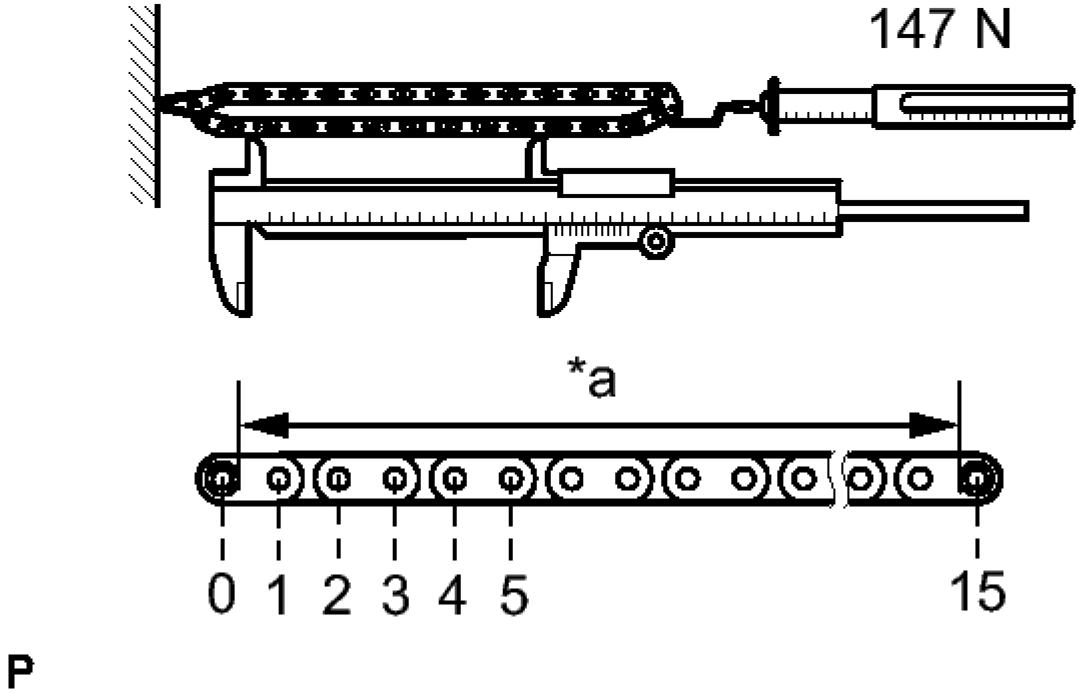

Fig. 226: Inspecting Chain Sub-Assembly
Courtesy of TOYOTA MOTOR SALES, U.S.A., INC.

b. Using a vernier caliper, measure the length of 15 links.

TEXT IN ILLUSTRATION

*a	Measuring Point

Maximum chain elongation

136.9 mm (5.389 in.)

NOTE: **Perform the measurement at 3 random places. Use the average of the measurements.**

If the average elongation is greater than the maximum, replace the chain sub-assembly.

8. **INSPECT NO. 2 CHAIN SUB-ASSEMBLY**
    a. Pull the No. 2 chain sub-assembly with a force of 147 N (15 kgf, 33.1 lbf) as shown in the illustration.

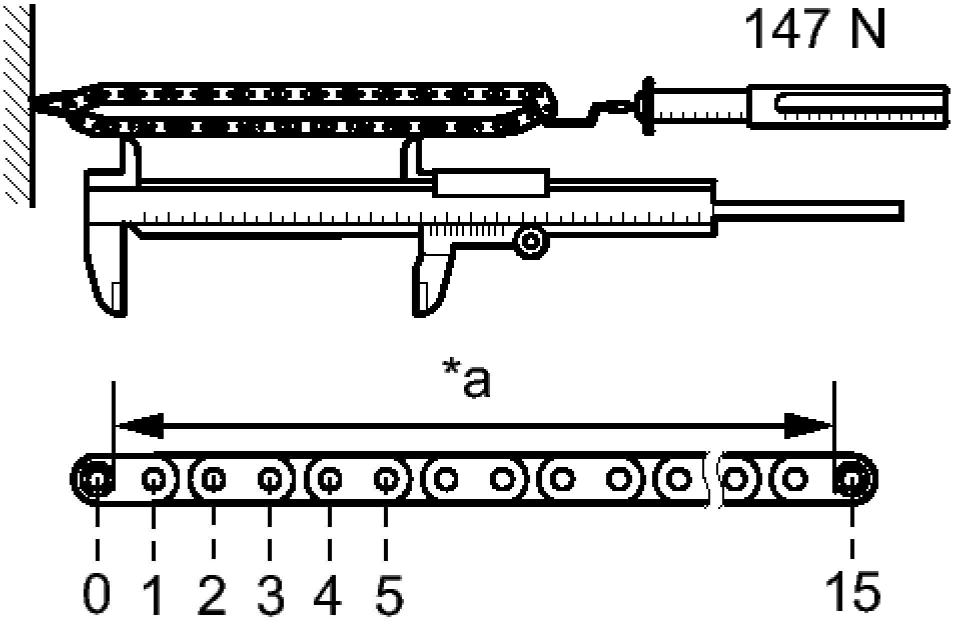

Fig. 227: Inspecting Chain Sub-Assembly
Courtesy of TOYOTA MOTOR SALES, U.S.A., INC.

b. Using a vernier caliper, measure the length of 15 links.

TEXT IN ILLUSTRATION

*a	Measuring Point

Maximum chain elongation

137.6 mm (5.417 in.)

NOTE: **Perform the measurement at 3 random places. Use the average of the measurements.**

If the average elongation is greater than the maximum, replace the chain sub-assembly.

9. **INSPECT CRANKSHAFT TIMING SPROCKET**
   a. Place the chain around the sprocket.
   b. Using a vernier caliper, measure the sprocket diameter with the chain sub-assembly.

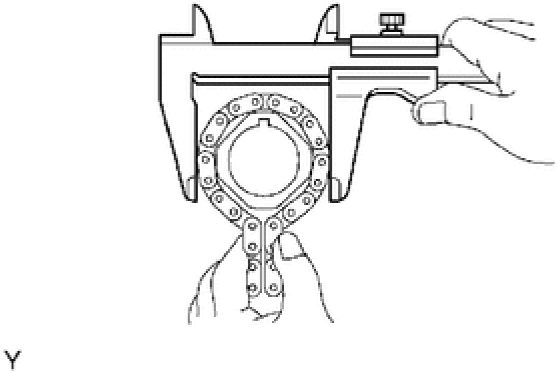

Fig. 228: Measuring Sprocket Diameter
Courtesy of TOYOTA MOTOR SALES, U.S.A., INC.

Minimum sprocket diameter (with chain)

61.4 mm (2.418 in.)

HINT:

The vernier caliper must contact the chain rollers for the measurement.

If the diameter is less than the minimum, replace the chain and sprocket.

10. **INSPECT IDLE SPROCKET ASSEMBLY**
    a. Place the chain around the sprocket.
    b. Using a vernier caliper, measure the sprocket diameter with the chain.

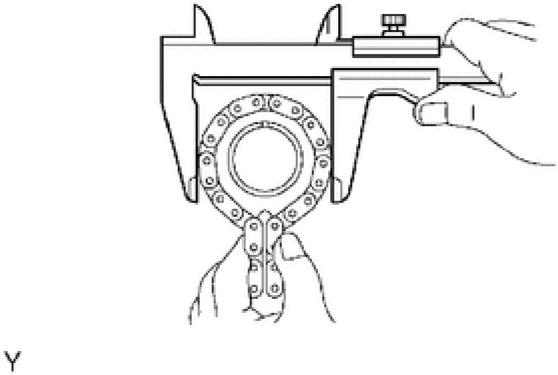

Fig. 229: Measuring Sprocket Diameter
Courtesy of TOYOTA MOTOR SALES, U.S.A., INC.

Minimum sprocket diameter (with chain)

61.4 mm (2.418 in.)

HINT:

The vernier caliper must contact the chain rollers for the measurement.

If the diameter is less than the minimum, replace the chain and sprocket.

11. **INSPECT IDLE GEAR SHAFT OIL CLEARANCE**
    a. Using a micrometer, measure the idle gear shaft diameter.

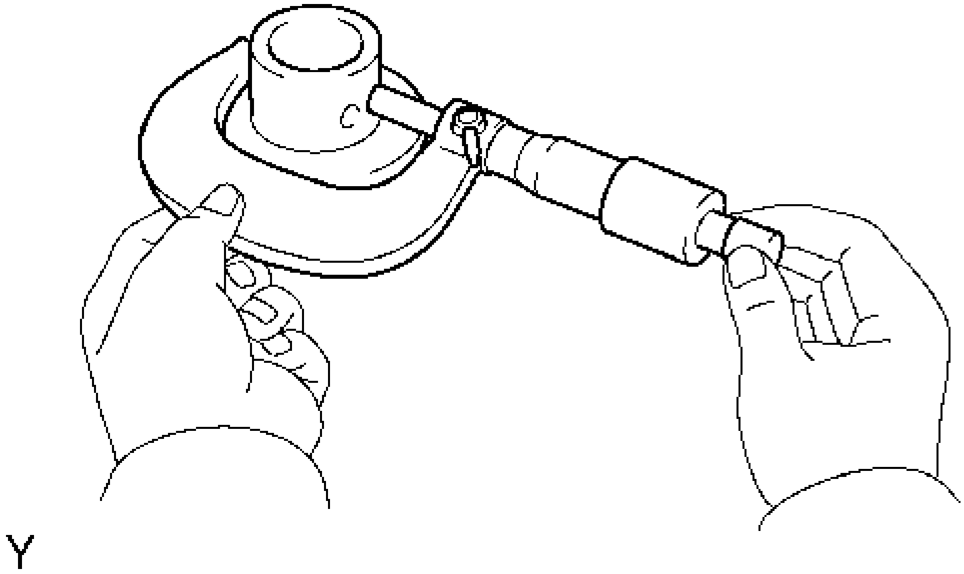

Fig. 230: Measuring Idle Gear Shaft Diameter Using A Micrometer
Courtesy of TOYOTA MOTOR SALES, U.S.A., INC.

Standard idle gear shaft diameter

22.987 to 23.000 mm (0.9050 to 0.9055 in.)

    b. Using a caliper gauge, measure the inside diameter of the idle sprocket assembly.

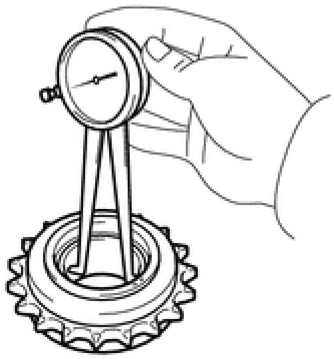

Fig. 231: Measuring Idle Sprocket Inside Diameter
Courtesy of TOYOTA MOTOR SALES, U.S.A., INC.

Standard idle gear inside diameter

23.020 to 23.030 mm (0.9063 to 0.9067 in.)

c. Subtract the idle gear shaft diameter measurement from the idle sprocket inside diameter measurement.

Standard oil clearance

0.020 to 0.043 mm (0.000787 to 0.00169 in.)

Maximum oil clearance

0.093 mm (0.00366 in.)

If the thrust oil clearance is greater than the maximum, replace the idle gear shaft and idle sprocket assembly.

12. **INSPECT NO. 1 CHAIN TENSIONER ASSEMBLY**

a. Move the stopper plate upward to release the lock. Push the plunger and check that it moves smoothly.

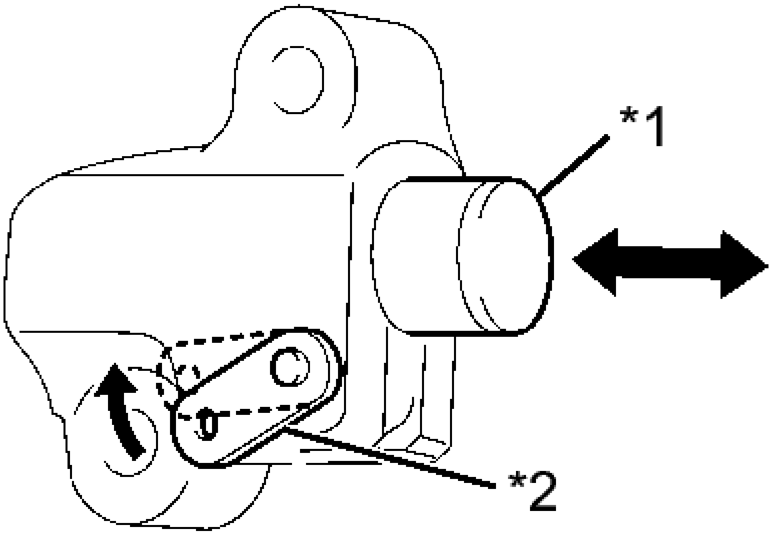

Fig. 232: Identifying Plunger And Stopper Plate
Courtesy of TOYOTA MOTOR SALES, U.S.A., INC.

TEXT IN ILLUSTRATION

*1	Plunger
*2	Stopper Plate

If necessary, replace the No. 1 chain tensioner assembly.

13. **INSPECT NO. 2 CHAIN TENSIONER ASSEMBLY**
    a. Check that the plunger moves smoothly.

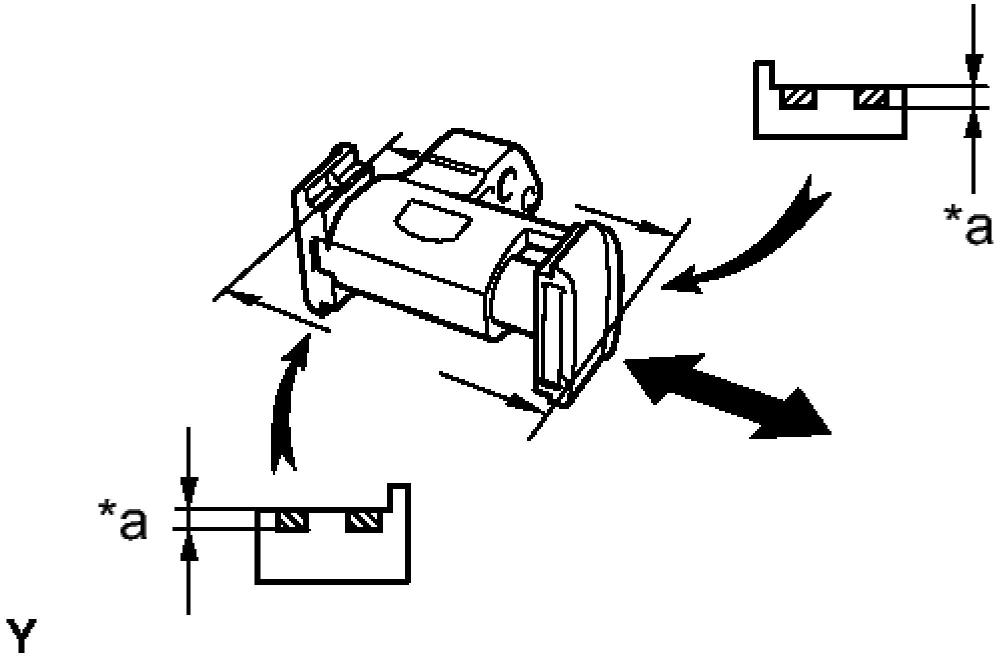

Fig. 233: Inspecting No. 2 Chain Tensioner Assembly
Courtesy of TOYOTA MOTOR SALES, U.S.A., INC.

TEXT IN ILLUSTRATION

*a	Depth

b. Using a vernier caliper, measure the worn depth of the No. 2 chain tensioner assembly.

Maximum depth

0.9 mm (0.0354 in.)

If the depth is greater than the maximum, replace the No. 2 chain tensioner assembly.

14. **INSPECT NO. 3 CHAIN TENSIONER ASSEMBLY**
    a. Check that the plunger moves smoothly.

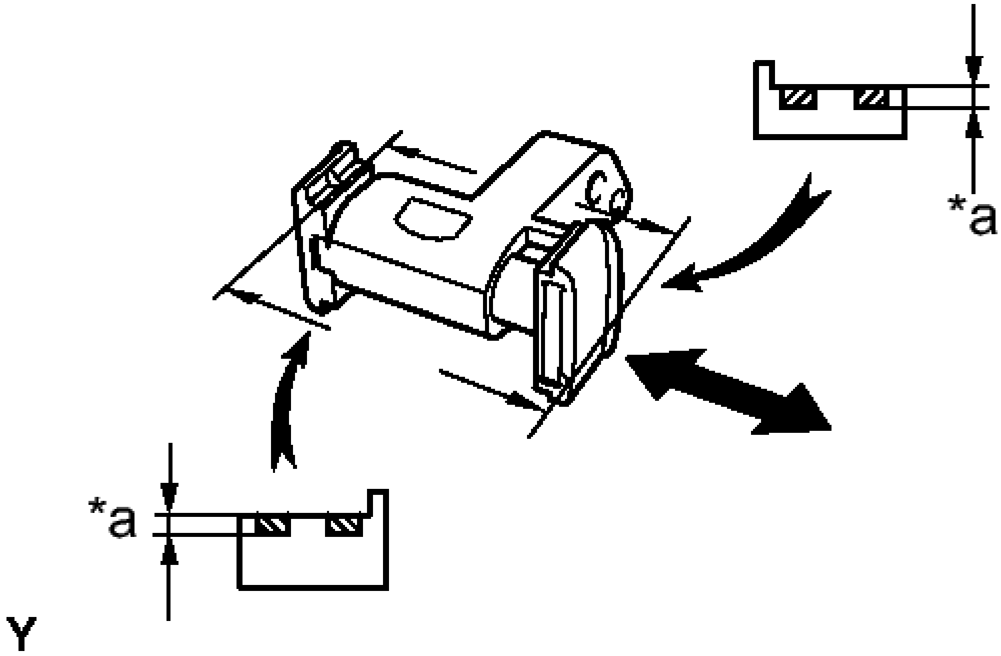

Fig. 234: Inspecting No. 3 Chain Tensioner Assembly
Courtesy of TOYOTA MOTOR SALES, U.S.A., INC.

TEXT IN ILLUSTRATION

*a	Depth

b. Using a vernier caliper, measure the worn depth of the No. 3 chain tensioner assembly.

Maximum depth

0.9 mm (0.0354 in.)

If the depth is greater than the maximum, replace the No. 3 chain tensioner assembly.

15. **INSPECT CHAIN TENSIONER SLIPPER**

a. Measure the worn depth of the chain tensioner slipper.

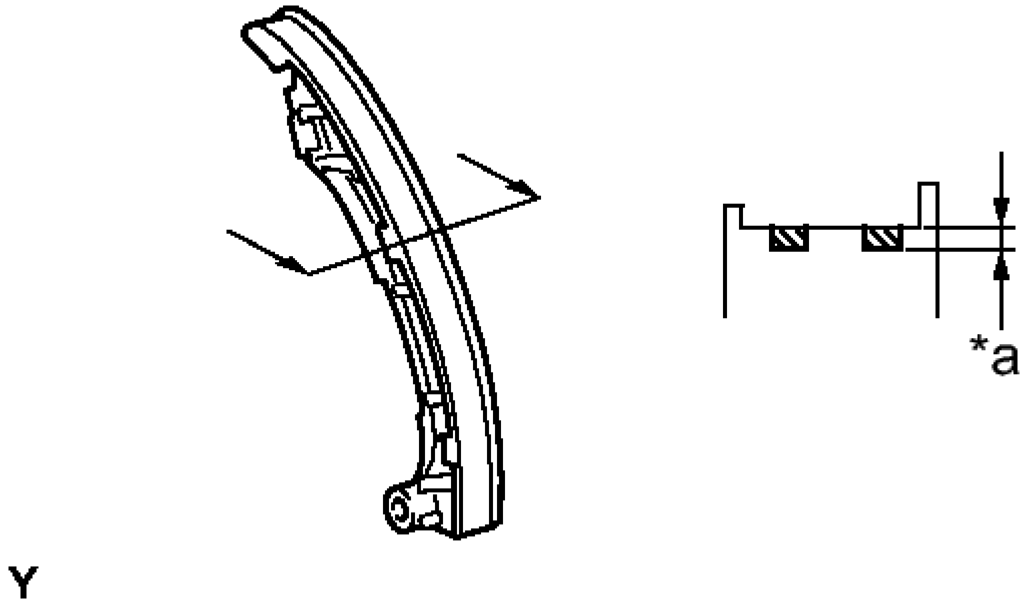

Fig. 235: Inspecting Worn Depth Of Chain Tensioner Slipper
Courtesy of TOYOTA MOTOR SALES, U.S.A., INC.

TEXT IN ILLUSTRATION

*a	Depth

Maximum depth

1.0 mm (0.0394 in.)

If the depth is greater than the maximum, replace the chain tensioner slipper.

16. **INSPECT NO. 1 CHAIN VIBRATION DAMPER**
    a. Using a vernier caliper, measure the worn depth of the No. 1 chain vibration damper.

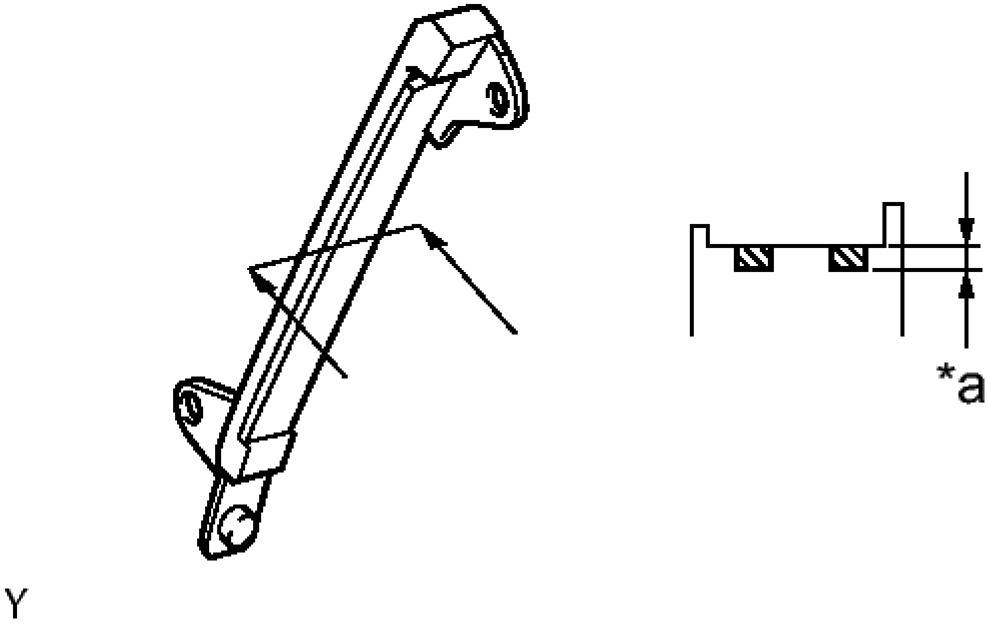

Fig. 236: Inspecting Worn Depth Of No. 1 Chain Vibration Damper
Courtesy of TOYOTA MOTOR SALES, U.S.A., INC.

TEXT IN ILLUSTRATION

*a	Depth

Maximum depth

1.0 mm (0.0394 in.)

If the depth is greater than the maximum, replace the No. 1 chain vibration damper.

17. **INSPECT NO. 2 CHAIN VIBRATION DAMPER**
    a. Using a vernier caliper, measure the worn depth of the No. 2 chain vibration damper.

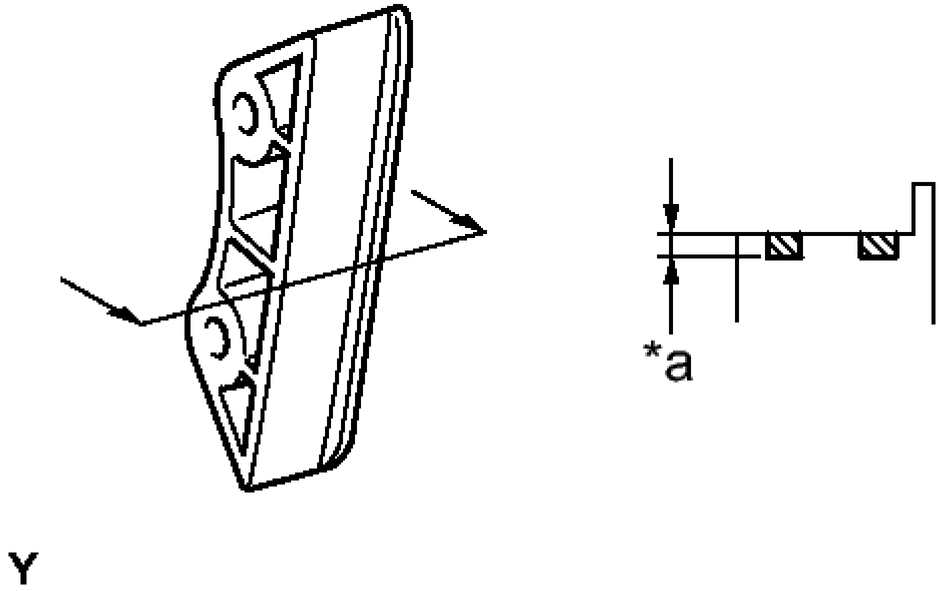

Fig. 237: Inspecting Worn Depth Of No. 2 Chain Vibration Damper
Courtesy of TOYOTA MOTOR SALES, U.S.A., INC.

TEXT IN ILLUSTRATION

*a	Depth

Maximum depth

1.0 mm (0.0394 in.)

If the depth is greater than the maximum, replace the No. 2 chain vibration damper.

18. **INSPECT CAMSHAFT THRUST CLEARANCE**
    a. Inspect the bank 1 camshaft thrust clearance.
        1. Install the bank 1 camshaft See step 5.
        2. Using a dial indicator, measure the thrust clearance while moving the camshaft back and forth.

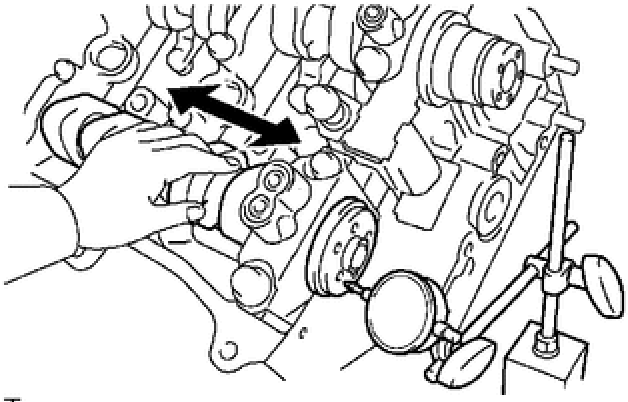

Fig. 238: Checking Camshaft Thrust Clearance
Courtesy of TOYOTA MOTOR SALES, U.S.A., INC.

Standard thrust clearance

0.08 to 0.13 mm (0.00315 to 0.00512 in.)

Maximum thrust clearance

0.15 mm (0.00591 in.)

If the thrust clearance is greater than the maximum, replace the cylinder head. If the thrust surface is damaged, replace the camshaft.

b. Inspect the bank 2 camshaft thrust clearance.
   1. Install the bank 2 camshaft. Refer to **INSTALLATION**.
   2. Using a dial indicator, measure the thrust clearance while moving the camshaft back and forth.

      Standard thrust clearance

      0.08 to 0.13 mm (0.00315 to 0.00512 in.)

      Maximum thrust clearance

      0.15 mm (0.00591 in.)

      If the thrust clearance is greater than the maximum, replace the cylinder head. If the thrust surface is damaged, replace the camshaft.

19. **INSPECT CAMSHAFT OIL CLEARANCE (for Bank 1)**
    a. Clean the camshaft bearing caps, camshaft housing and camshaft journals.
    b. Place the camshafts on the camshaft housing.
    c. Lay a strip of Plastigage across each camshaft journal.

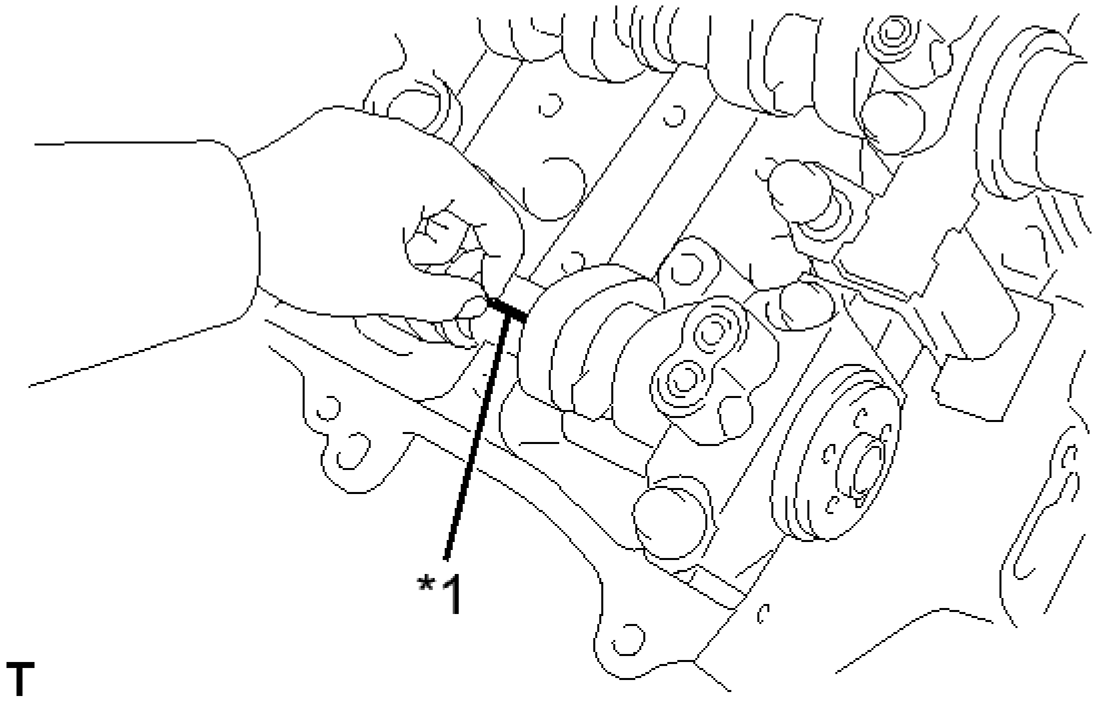

Fig. 239: Applying Plastigage Across Camshaft Journal
Courtesy of TOYOTA MOTOR SALES, U.S.A., INC.

TEXT IN ILLUSTRATION

*1	Plastigage

d. Install the camshaft bearing caps See step 7.

NOTE: Do not turn the camshaft.

e. Remove the camshaft bearing caps See step 42.
f. Measure the Plastigage at its widest point.

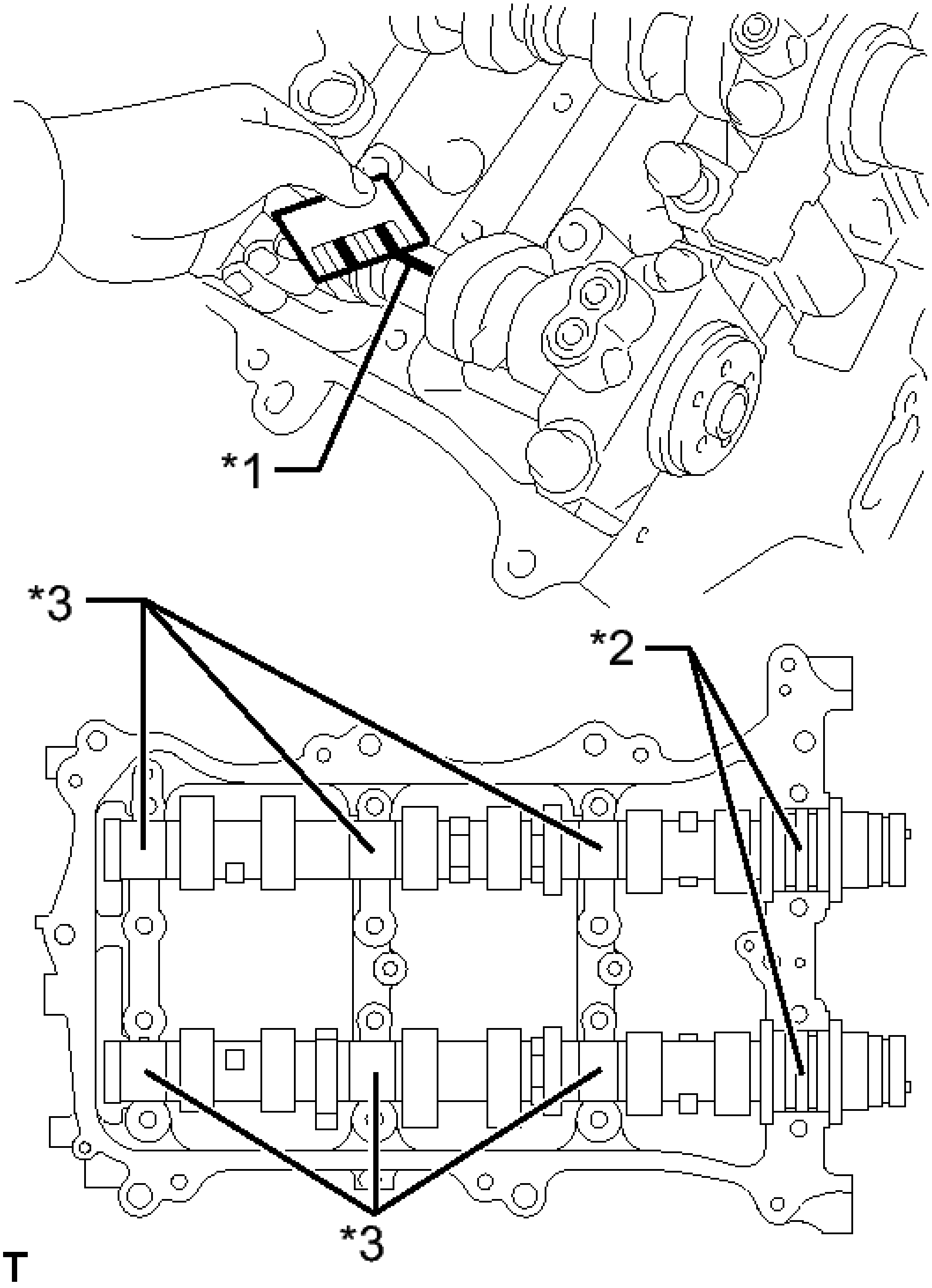

Fig. 240: Measuring Plastigage At Its Widest Point
Courtesy of TOYOTA MOTOR SALES, U.S.A., INC.

TEXT IN ILLUSTRATION

*1	Plastigage

*2	No. 1 Journal
*3	Other Journals

Standard Oil Clearance

Item	Oil Clearance
No. 1 journal	0.032 to 0.071 mm (0.00126 to 0.00280 in.)
Other journals	0.025 to 0.062 mm (0.000984 to 0.00244 in.)

Maximum Oil Clearance

Item	Oil Clearance
No. 1 journal	0.10 mm (0.00394 in.)
Other journals	0.09 mm (0.00354 in.)

If the oil clearance is greater than the maximum, replace the camshaft. If necessary, replace the camshaft housing.

20. **INSPECT CAMSHAFT OIL CLEARANCE (for Bank 2)**
    a. Clean the camshaft bearing caps, camshaft housing and camshaft journals.
    b. Place the camshafts on the camshaft housing.
    c. Lay a strip of Plastigage across each camshaft journal.

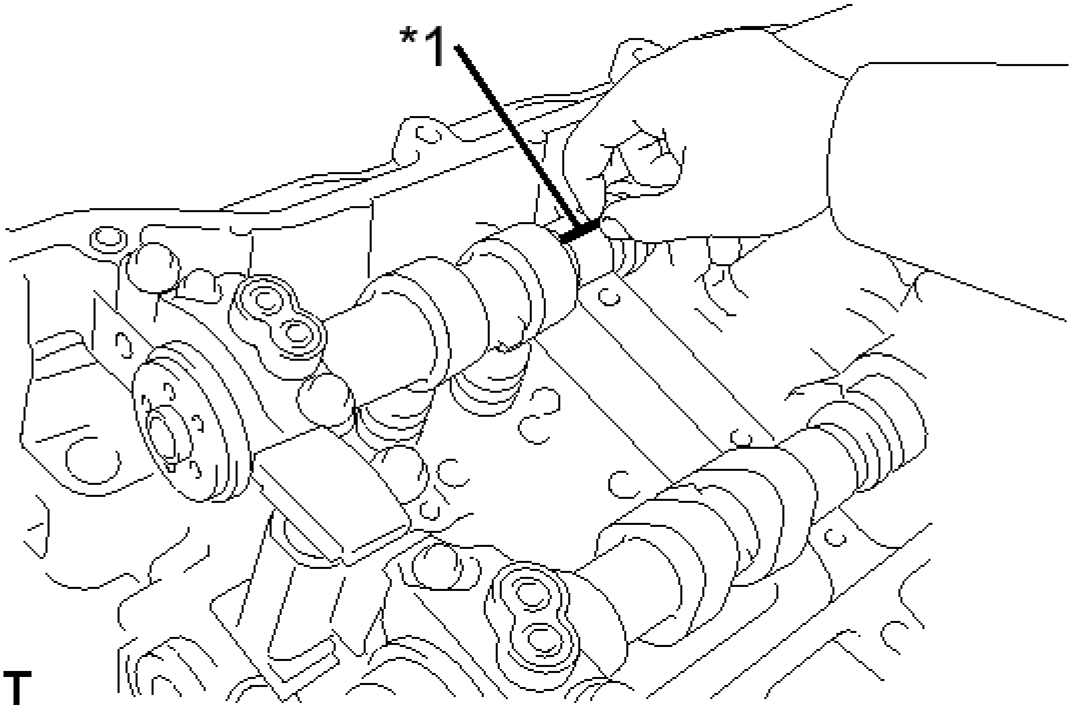

Fig. 241: Applying Plastigage Across Camshaft Journal
Courtesy of TOYOTA MOTOR SALES, U.S.A., INC.

TEXT IN ILLUSTRATION

*1	Plastigage

d. Install the camshaft bearing caps. Refer to **INSTALLATION**.

NOTE: **Do not turn the camshaft.**

e. Remove the camshaft bearing caps See step 48.
f. Measure the Plastigage at its widest point.

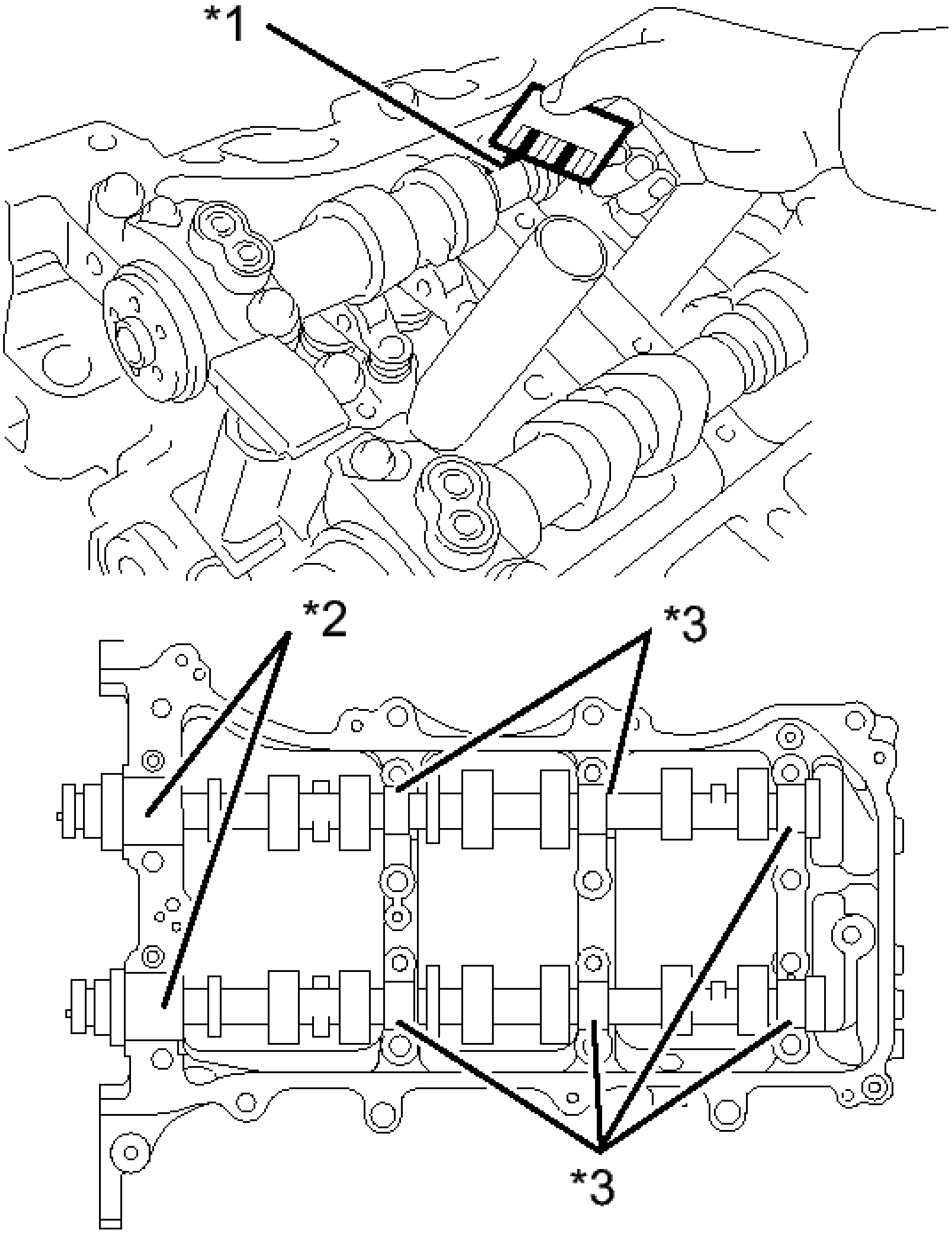

T

Fig. 242: Measuring Widest Point Of Plastigage
Courtesy of TOYOTA MOTOR SALES, U.S.A., INC.

TEXT IN ILLUSTRATION

*1	Plastigage

*2	No. 1 Journal
*3	Other Journals

Standard Oil Clearance

Item	Oil Clearance
No. 1 journal	0.032 to 0.071 mm (0.00126 to 0.00280 in.)
Other journals	0.025 to 0.062 mm (0.000984 to 0.00244 in.)

Maximum Oil Clearance

Item	Oil Clearance
No. 1 journal	0.10 mm (0.00394 in.)
Other journals	0.09 mm (0.00354 in.)

If the oil clearance is greater than the maximum, replace the camshaft. If necessary, replace the camshaft housing sub-assembly.

21. **INSPECT EXHAUST MANIFOLD SUB-ASSEMBLY LH**
    a. Using a precision straightedge and feeler gauge, measure the warpage on the contact surface of the cylinder head.

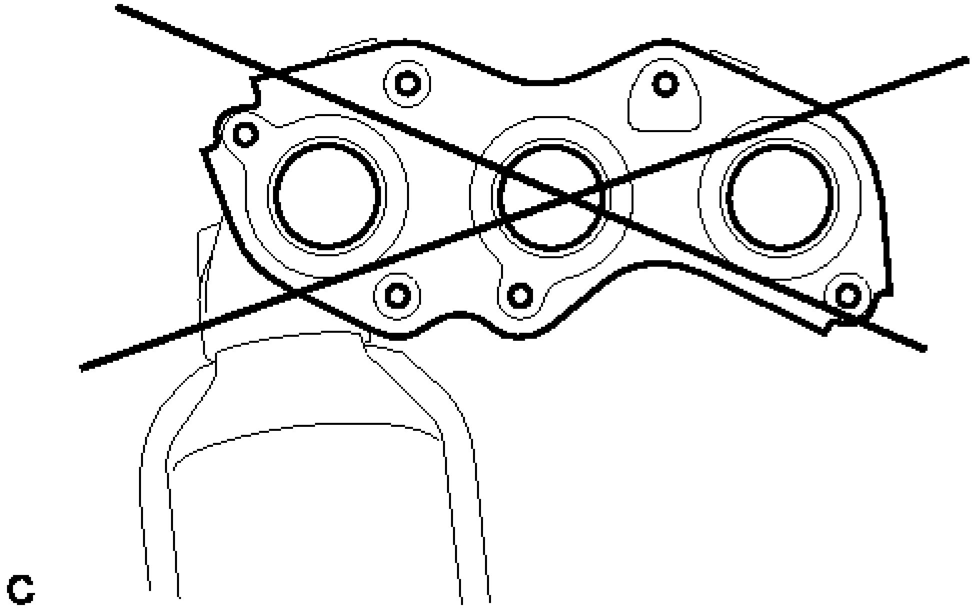

Fig. 243: Inspecting Exhaust Manifold Sub-Assembly LH
Courtesy of TOYOTA MOTOR SALES, U.S.A., INC.

Maximum warpage

0.7 mm (0.0276 in.)

HINT:

The maximum allowable warpage of each installation surface is 0.3 mm (0.0118 in.).

If the warpage is greater than the maximum, replace the manifold.

22. **INSPECT EXHAUST MANIFOLD SUB-ASSEMBLY RH**
    a. Using a precision straightedge and feeler gauge, measure the warpage on the contact surface of the cylinder head.

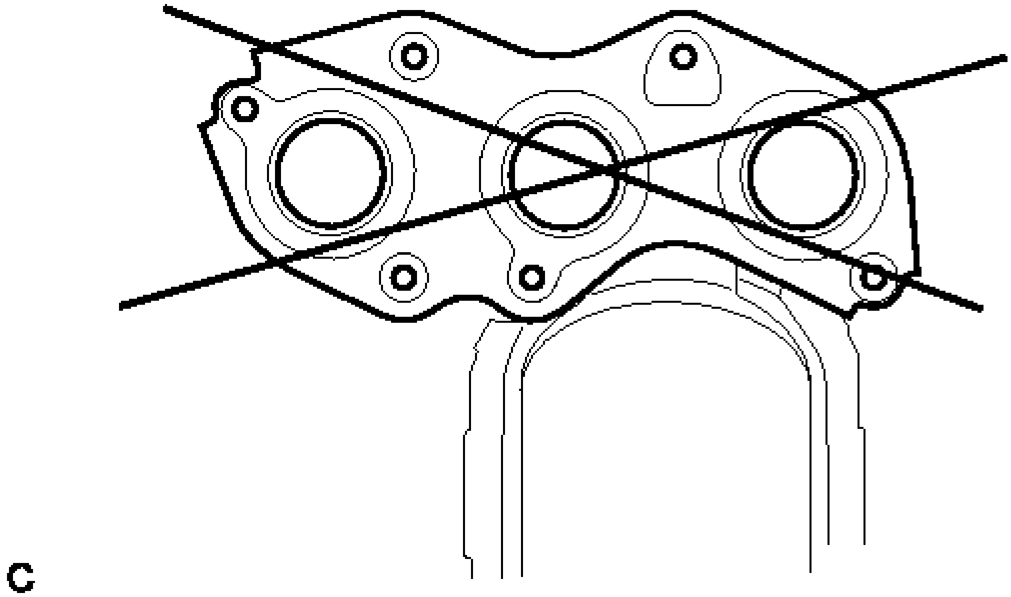

Fig. 244: Inspecting Exhaust Manifold Sub-Assembly RH
Courtesy of TOYOTA MOTOR SALES, U.S.A., INC.

Maximum warpage

0.7 mm (0.0276 in.)

HINT:

The maximum allowable warpage of each installation surface is 0.3 mm (0.0118 in.).

If the warpage is greater than the maximum, replace the manifold.

23. **INSPECT INTAKE MANIFOLD**

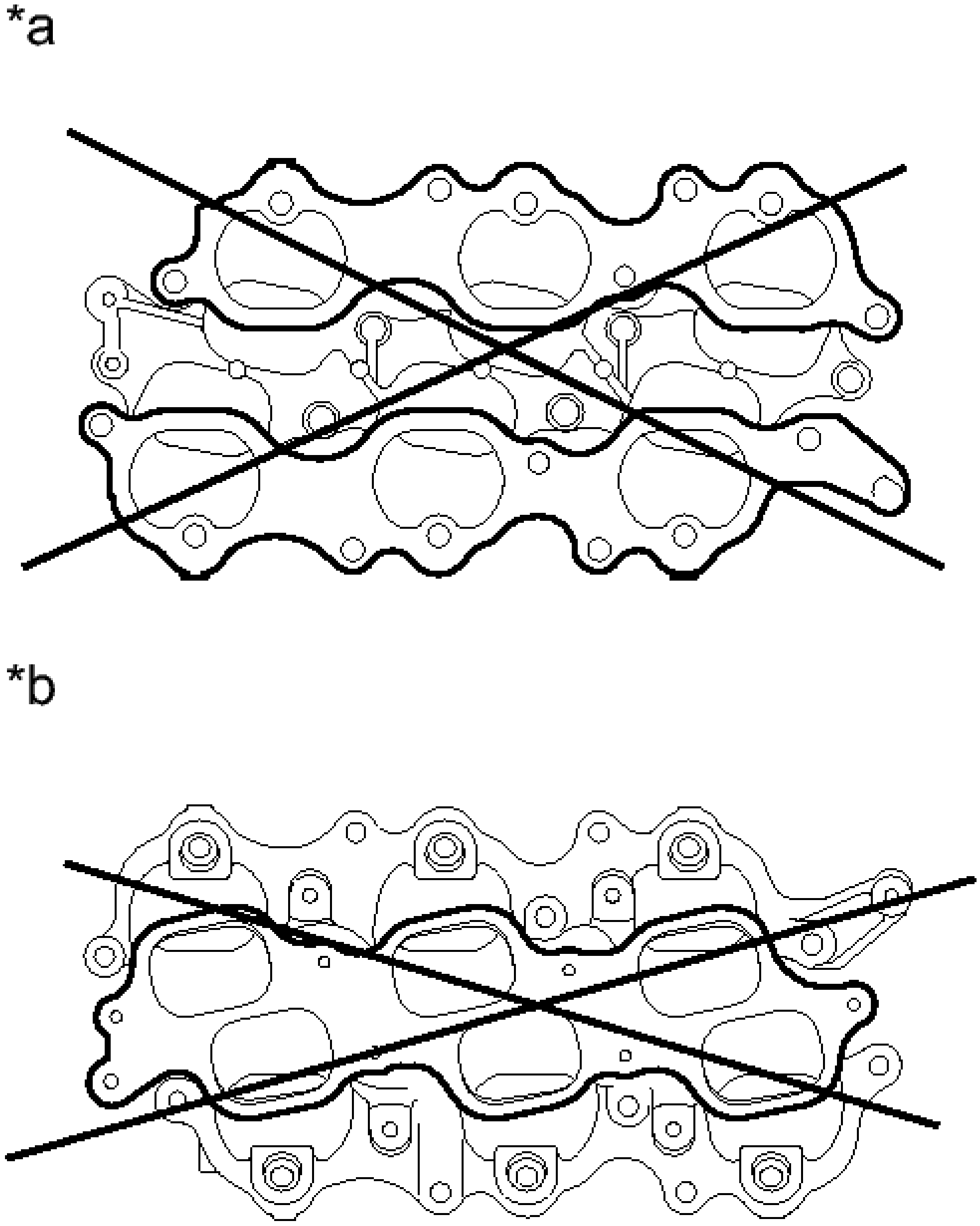

c

Fig. 245: Inspecting Intake Manifold
Courtesy of TOYOTA MOTOR SALES, U.S.A., INC.

TEXT IN ILLUSTRATION

	Cylinder

*a	Head Side
*b	Surge Tank Side

1. Cylinder head side:
    1. Using a precision straightedge and feeler gauge, measure the surface contacting the cylinder head for warpage.

       Maximum warpage

       0.1 mm (0.00394 in.)

       If the warpage is greater than the maximum, replace the intake manifold.
2. Surge tank side:
    1. Using a precision straightedge and feeler gauge, measure the surface contacting the surge tank for warpage.

       Maximum warpage

       0.1 mm (0.00394 in.)

       If the warpage is greater than the maximum, replace the intake manifold.

REASSEMBLY

REASSEMBLY

1. **INSTALL ENGINE REAR OIL SEAL**
    1. Place the oil seal retainer on wooden blocks.
    2. Using SST, tap in a new engine rear oil seal until its surface is flush with the engine rear oil seal retainer edge.

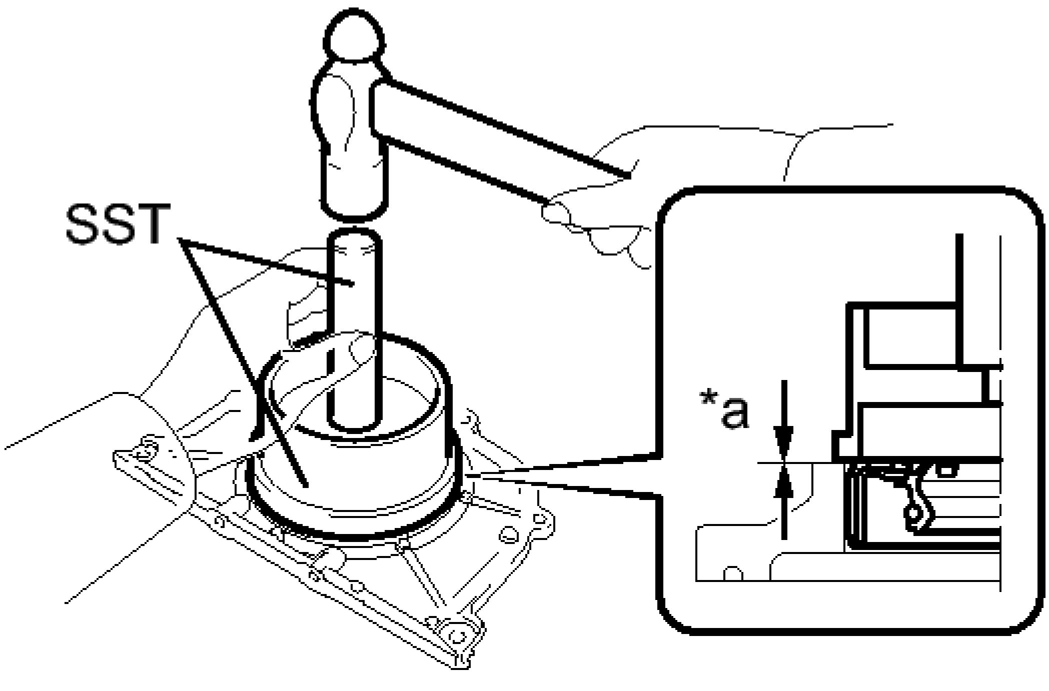

Fig. 246: Installing Engine Rear Oil Seal Using SST
Courtesy of TOYOTA MOTOR SALES, U.S.A., INC.

- **SST: 09223-15030**
- **SST: 09950-70010**

  09951-07100

TEXT IN ILLUSTRATION

*a	Depth

NOTE:

- **Keep the lip free of foreign matter.**
- **Do not tap the engine rear oil seal at an angle.**

2. **INSTALL ENGINE REAR OIL SEAL RETAINER**
   a. Apply seal packing in a continuous line as shown in the illustration.

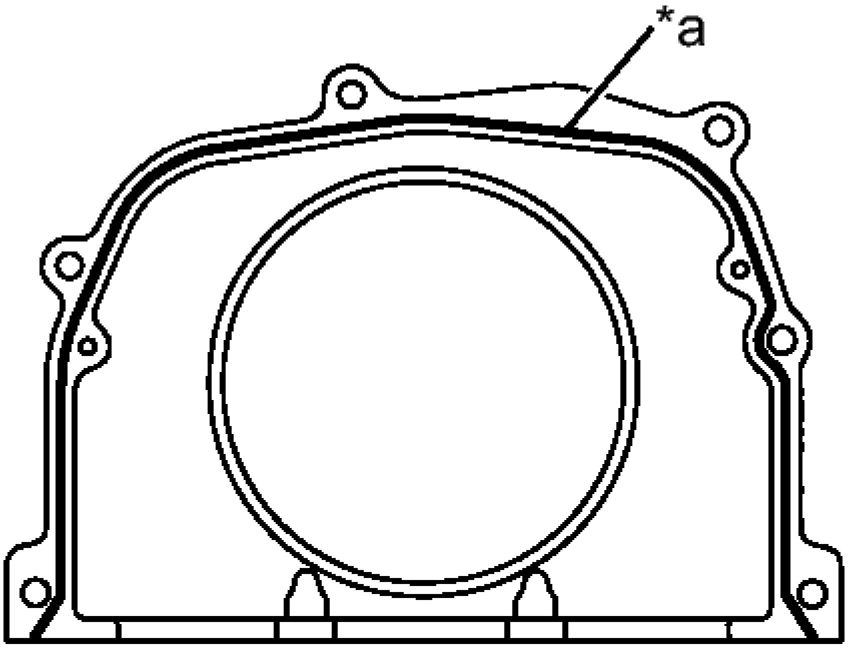

Fig. 247: Identifying Rear Oil Seal Retainer Seal Packing Applying Area
Courtesy of TOYOTA MOTOR SALES, U.S.A., INC.

TEXT IN ILLUSTRATION

*a	Seal Packing Diameter (2.0 to 3.0 mm (0.0787 to 0.118 in.))

Seal packing

Toyota Genuine Seal Packing Black, Three Bond 1207B or equivalent

Seal diameter

2.0 to 3.0 mm (0.0787 to 0.118 in.)

NOTE:

- **Remove any oil from the contact surfaces.**
- **Install the oil seal retainer within 3 minutes after applying seal packing.**
- **Do not start the engine for at least 2 hours after installation.**

b. Install the engine rear oil seal retainer with the 6 bolts.

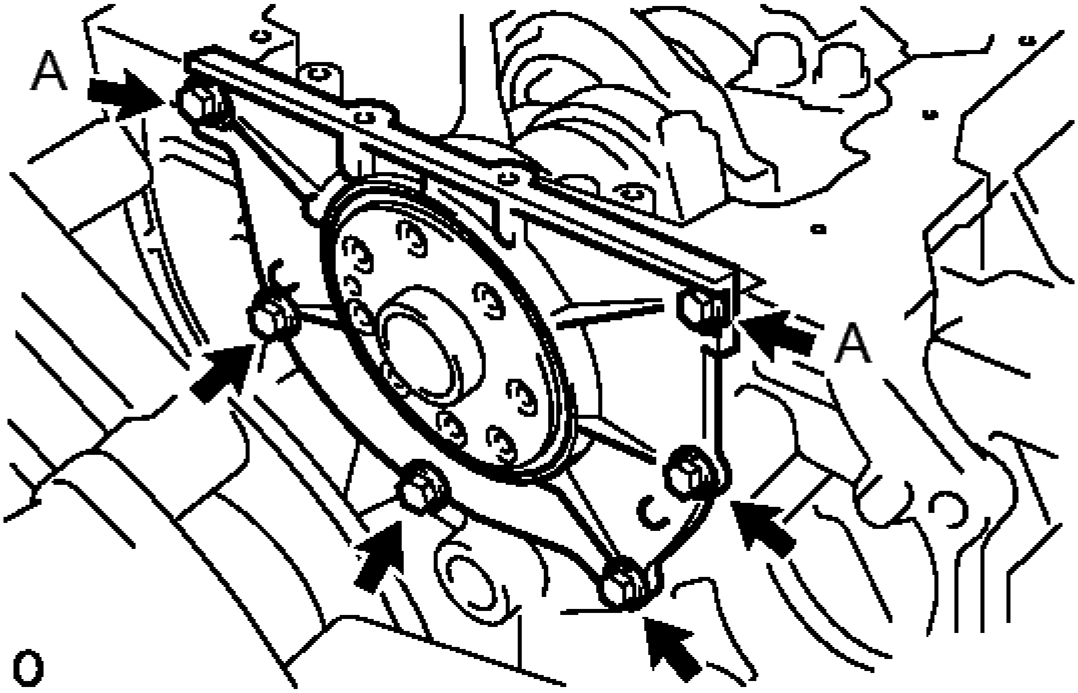

Fig. 248: Identifying Oil Seal Retainer Bolts
Courtesy of TOYOTA MOTOR SALES, U.S.A., INC.

Torque: 10 N*m (102 kgf*cm, 7 ft.*lbf)

NOTE: **Be sure to apply adhesive 1324 to the bolts in the places indicated by A before installing them.**

Adhesive

Toyota Genuine Adhesive 1324, Three Bond 1324 or equivalent

3. **INSTALL WATER INLET PIPE**

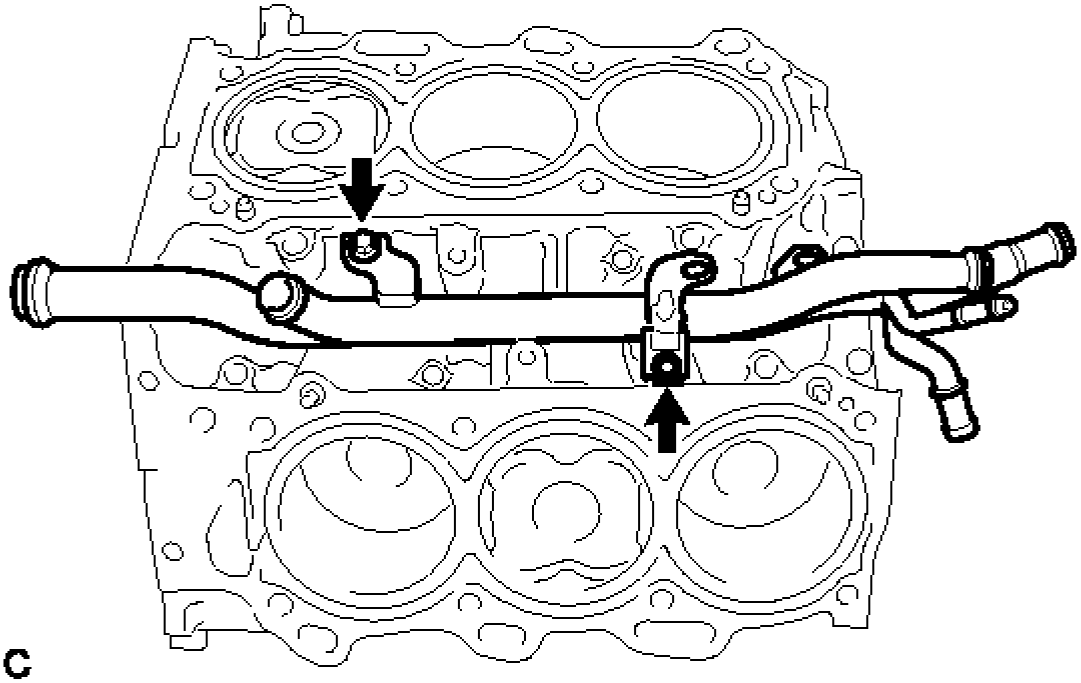

Fig. 249: Identifying Water Inlet Pipe
Courtesy of TOYOTA MOTOR SALES, U.S.A., INC.

a. Install the water inlet pipe with the 2 bolts.

   Torque: 10 N*m (102 kgf*cm, 7 ft.*lbf)

b. Install the No. 1 water by-pass hose.

4. **INSTALL CYLINDER HEAD GASKET RH** See step 1
5. **INSTALL CYLINDER HEAD SUB-ASSEMBLY RH** See step 2
6. **INSTALL CYLINDER HEAD GASKET LH** See step 3
7. **INSTALL CYLINDER HEAD SUB-ASSEMBLY LH** See step 4
8. **INSTALL VALVE STEM CAP** See step 6
9. **INSTALL VALVE LASH ADJUSTER ASSEMBLY** See step 7
10. **INSTALL NO. 1 VALVE ROCKER ARM SUB-ASSEMBLY** See step 8
11. **INSTALL NO. 3 CAMSHAFT** See step 1
12. **INSTALL NO. 4 CAMSHAFT** See step 2
13. **INSTALL CAMSHAFT BEARING CAP (for Bank 2)** See step 3
14. **INSTALL CAMSHAFT HOUSING SUB-ASSEMBLY LH** See step 4
15. **INSTALL CAMSHAFT** See step 5
16. **INSTALL NO. 2 CAMSHAFT** See step 6
17. **INSTALL CAMSHAFT BEARING CAP (for Bank 1)** See step 7
18. **INSTALL CAMSHAFT HOUSING SUB-ASSEMBLY RH** See step 8

19. **INSTALL NO. 3 CHAIN TENSIONER ASSEMBLY** See step 9
20. **INSTALL CAMSHAFT TIMING GEARS AND NO. 2 CHAIN (for Bank 2)** See step 10
21. **INSTALL NO. 2 CHAIN TENSIONER ASSEMBLY** See step 11
22. **INSTALL CAMSHAFT TIMING GEARS AND NO. 2 CHAIN (for Bank 1)** See step 12
23. **INSTALL NO. 1 CHAIN VIBRATION DAMPER**
    a. Install the No. 1 chain vibration damper with the 2 bolts.

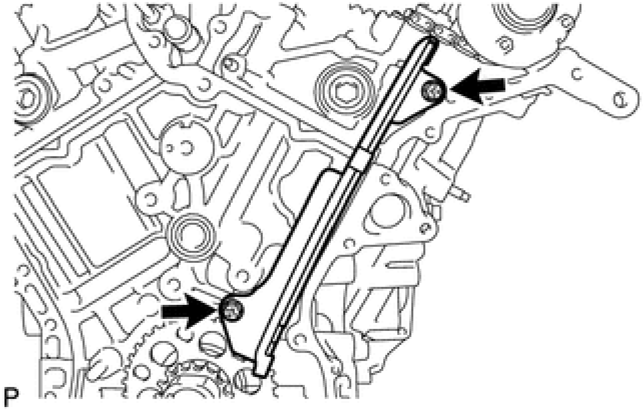

Fig. 250: Identifying No. 1 Chain Vibration Damper Bolts
Courtesy of TOYOTA MOTOR SALES, U.S.A., INC.

Torque: 23 N*m (230 kgf*cm, 17 ft.*lbf)

24. **INSTALL NO. 2 CHAIN VIBRATION DAMPER**
    a. Install the 2 No. 2 chain vibration dampers.
25. **INSTALL CRANKSHAFT TIMING SPROCKET**
    a. Install the 2 keys and crankshaft timing sprocket as shown in the illustration.

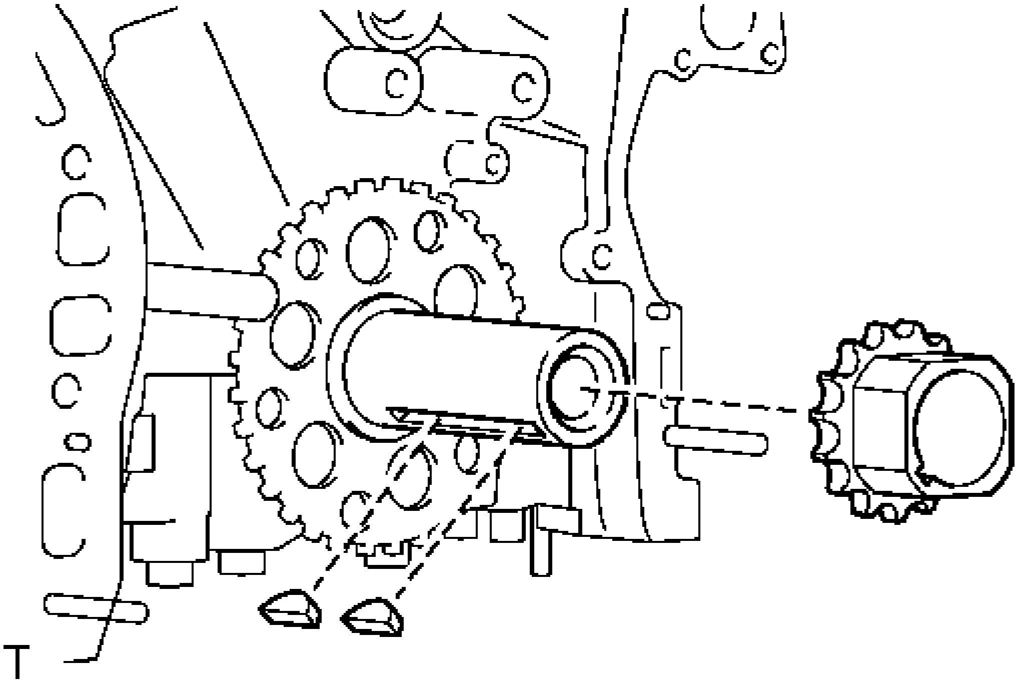

Fig. 251: Identifying Crankshaft Timing Sprocket
Courtesy of TOYOTA MOTOR SALES, U.S.A., INC.

26. **INSTALL IDLE SPROCKET ASSEMBLY**
    a. Apply a light coat of engine oil to the rotating surface of the No. 1 idle gear shaft.

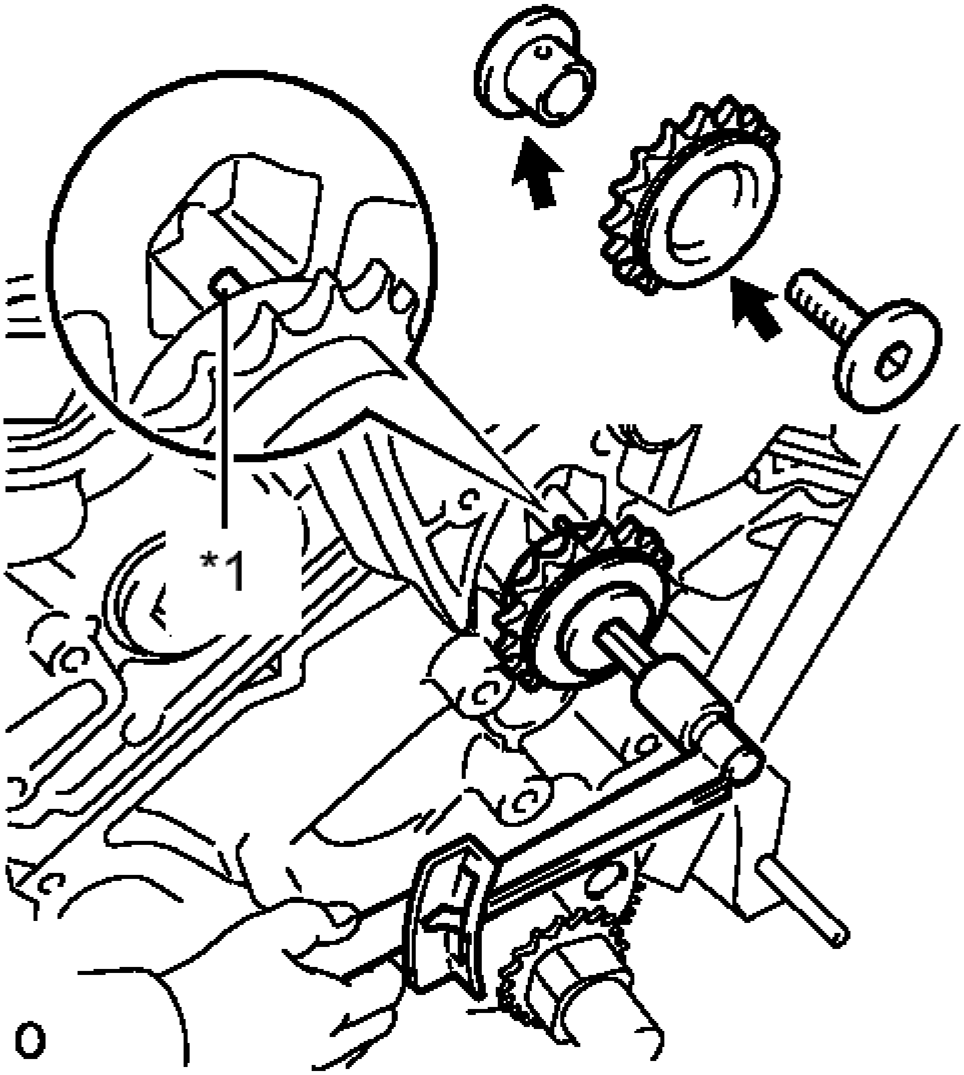

Fig. 252: Installing Idle Sprocket Assembly
Courtesy of TOYOTA MOTOR SALES, U.S.A., INC.

TEXT IN ILLUSTRATION

*1	Knock Pin

b. Temporarily install the No. 1 idle gear shaft and idle sprocket with the No. 2 idle gear shaft while aligning the knock pin of the No. 1 idle gear shaft with the knock pin groove of the cylinder block.

NOTE: **Be careful of the idle gear installation position.**

HINT:

Check that no foreign objects are on the No. 1 and No. 2 idle gear shafts.

c. Using a 10 mm hexagon wrench, tighten the No. 2 idle gear shaft.

Torque: 60 N*m (612 kgf*cm, 44 ft.*lbf)

HINT:

After installing the idle sprocket assembly, check that the idle sprocket turns smoothly.

27. **INSTALL CHAIN SUB-ASSEMBLY**

a. Align the mark plates and timing marks as shown in the illustration and install the chain.

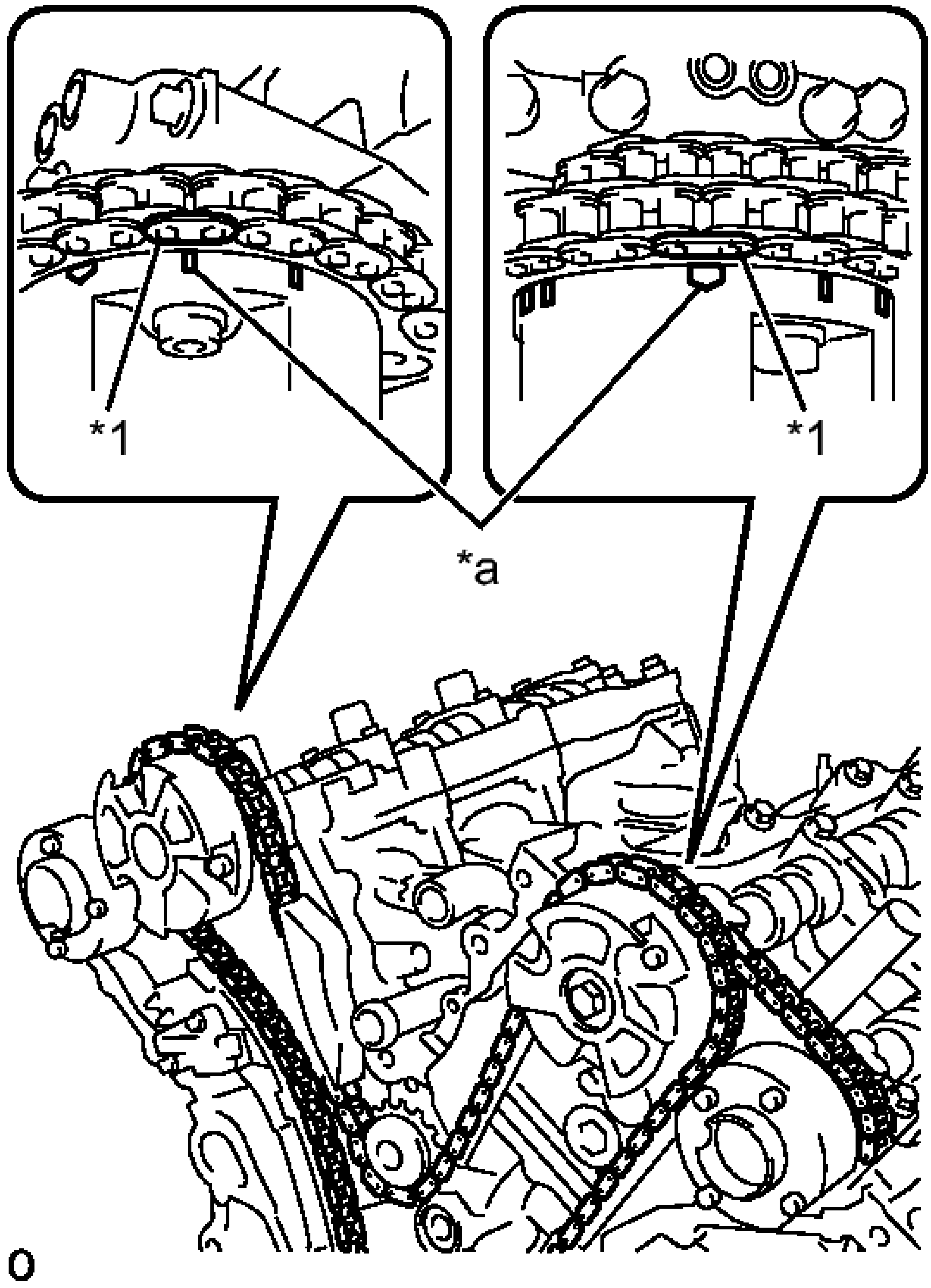

Fig. 253: Identifying Chain Mark Plates & Timing Marks
Courtesy of TOYOTA MOTOR SALES, U.S.A., INC.

TEXT IN ILLUSTRATION

	Mark

*1	Plate
*a	Timing Mark

HINT:

The camshaft mark plates are orange.

b. Do not pass the chain over the crankshaft, just temporarily place it on the crankshaft.

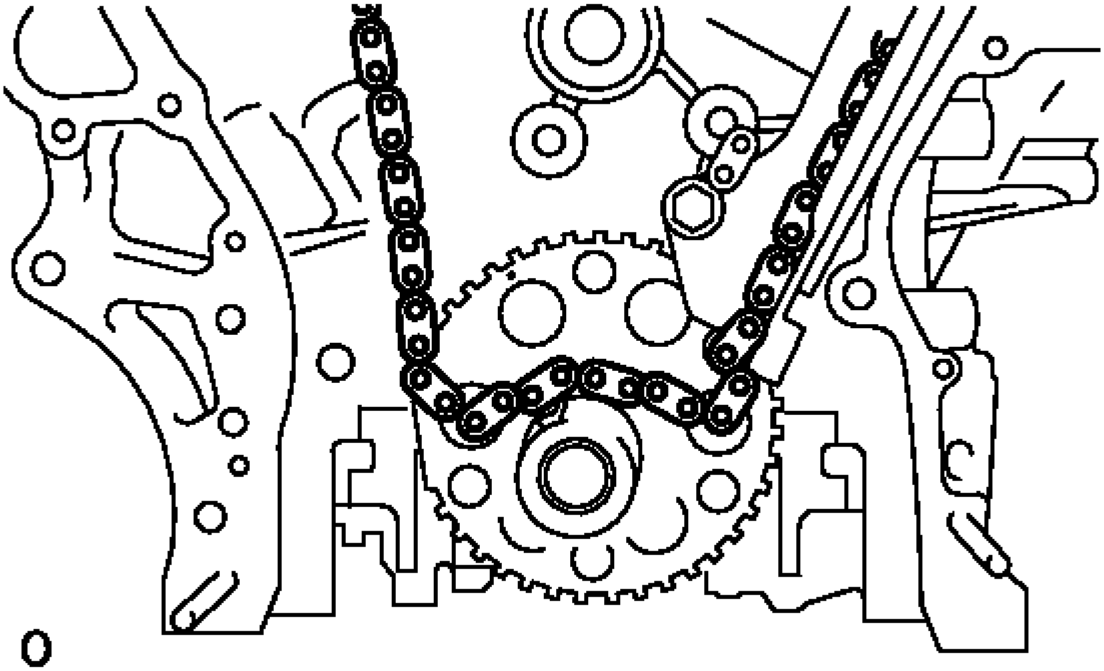

Fig. 254: Identifying Chain Set
Courtesy of TOYOTA MOTOR SALES, U.S.A., INC.

c. Turn the camshaft timing gear assembly on bank 1 counterclockwise to tighten the chain between the banks.

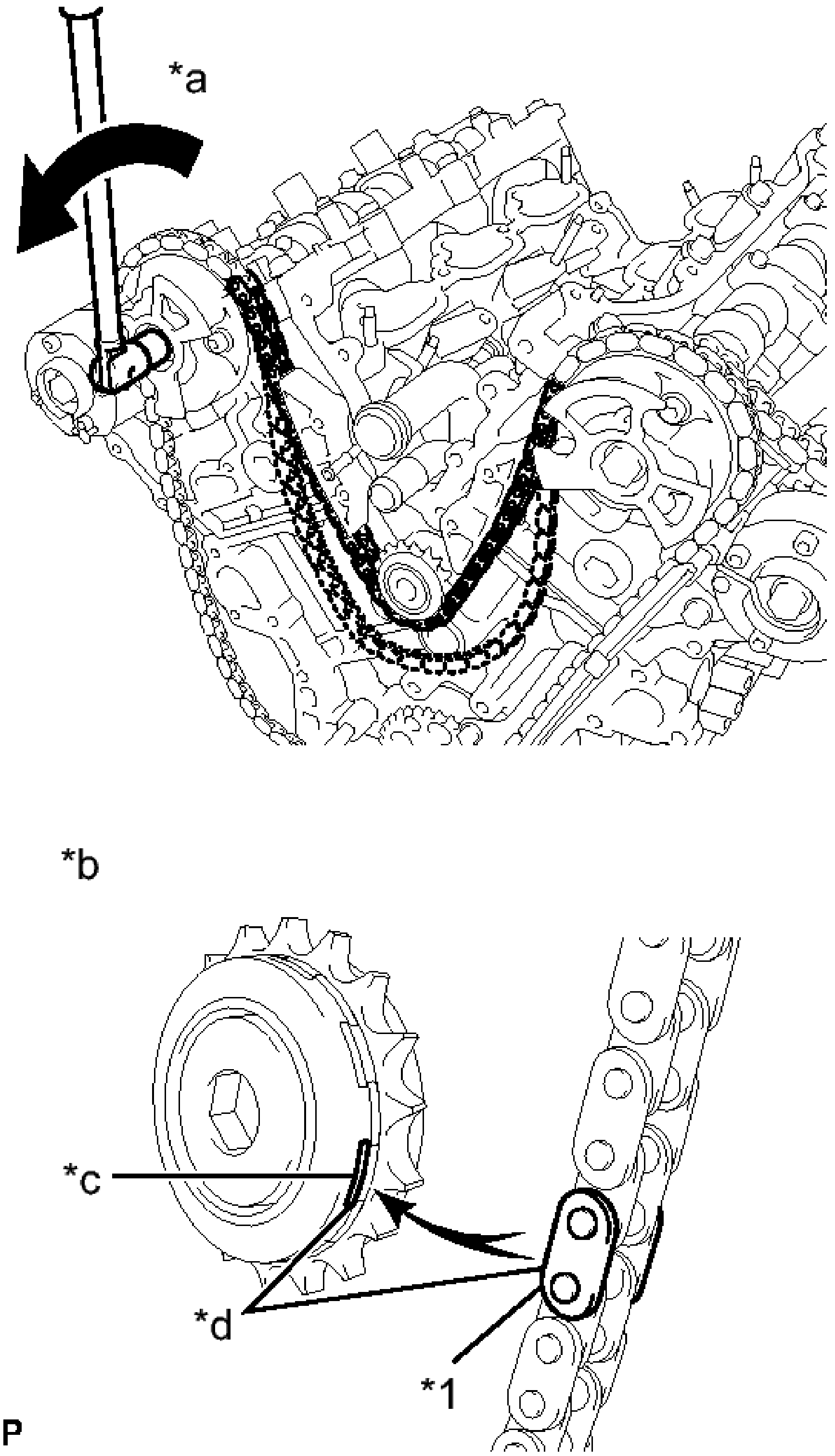

Fig. 255: Turning Bank 1 Camshaft Timing Gear Counterclockwise & Aligning Mark Plate/Timing Marks
Courtesy of TOYOTA MOTOR SALES, U.S.A., INC.

TEXT IN ILLUSTRATION

*1	Mark Plate
*a	Turn
*b	When the idle sprocket is reused
*c	Mark
*d	Align

NOTE: **When the idle sprocket assembly is reused, align the chain plate with the mark where the plate had been in order to tighten the chain between the banks.**

d. Align the mark plate and timing marks as shown in the illustration and install the chain onto the crankshaft timing sprocket.

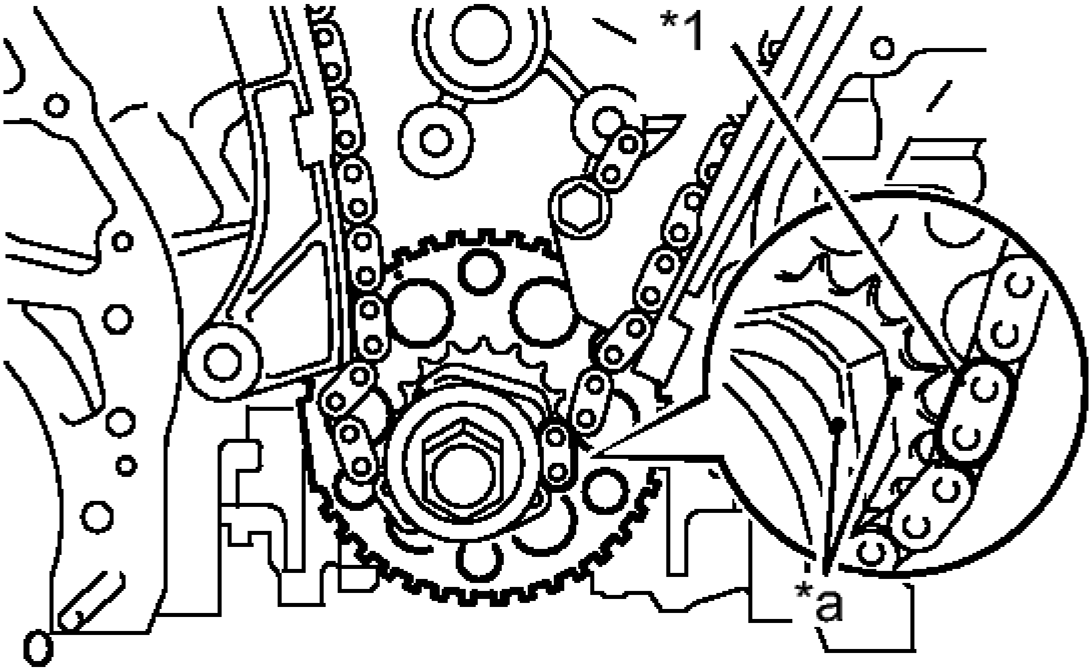

Fig. 256: Identifying Chain Mark Plate & Timing Marks
Courtesy of TOYOTA MOTOR SALES, U.S.A., INC.

TEXT IN ILLUSTRATION

*1	Mark Plate
*a	Timing Mark

HINT:

The crankshaft mark plate is yellow.

e. Temporarily tighten the pulley set bolt.
f. Turn the crankshaft clockwise to set it to the RH block bore center line (TDC/compression).

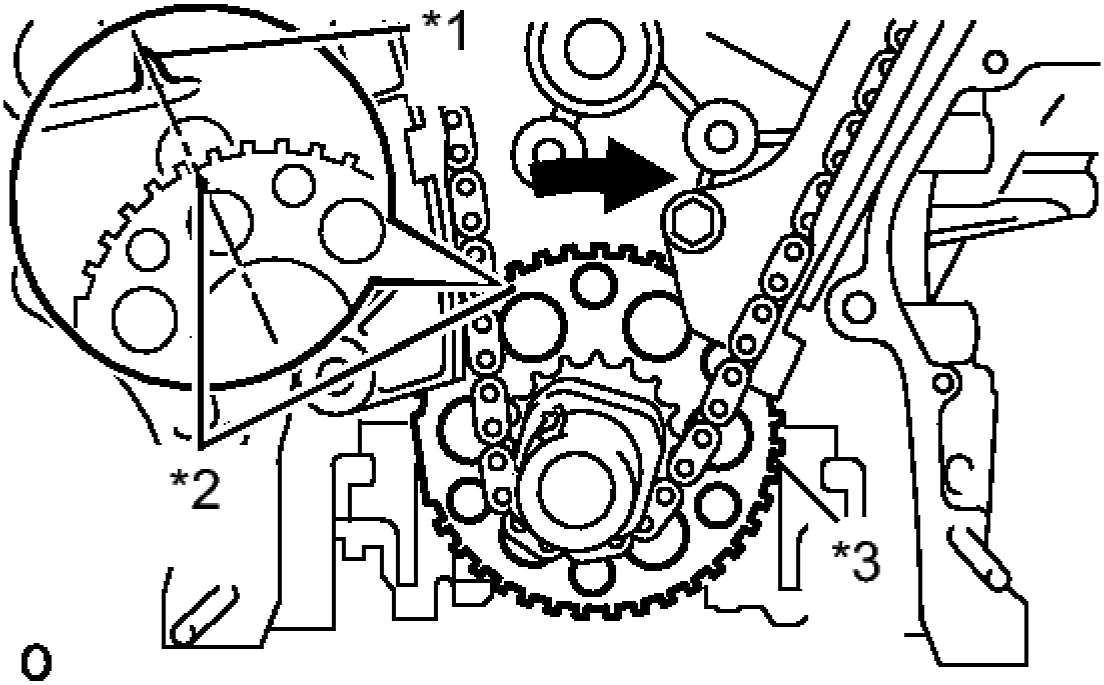

Fig. 257: Turning Crankshaft Clockwise To Set RH Block Bore Center Line (TDC/Compression)
Courtesy of TOYOTA MOTOR SALES, U.S.A., INC.

TEXT IN ILLUSTRATION

*1	Center Line
*2	Timing Mark
*3	Sensor Plate

28. **INSTALL CHAIN TENSIONER SLIPPER**
    a. Install the chain tensioner slipper.
29. **INSTALL NO. 1 CHAIN TENSIONER ASSEMBLY**
    a. Move the stopper plate upward to release the lock, and push the plunger deep into the tensioner.

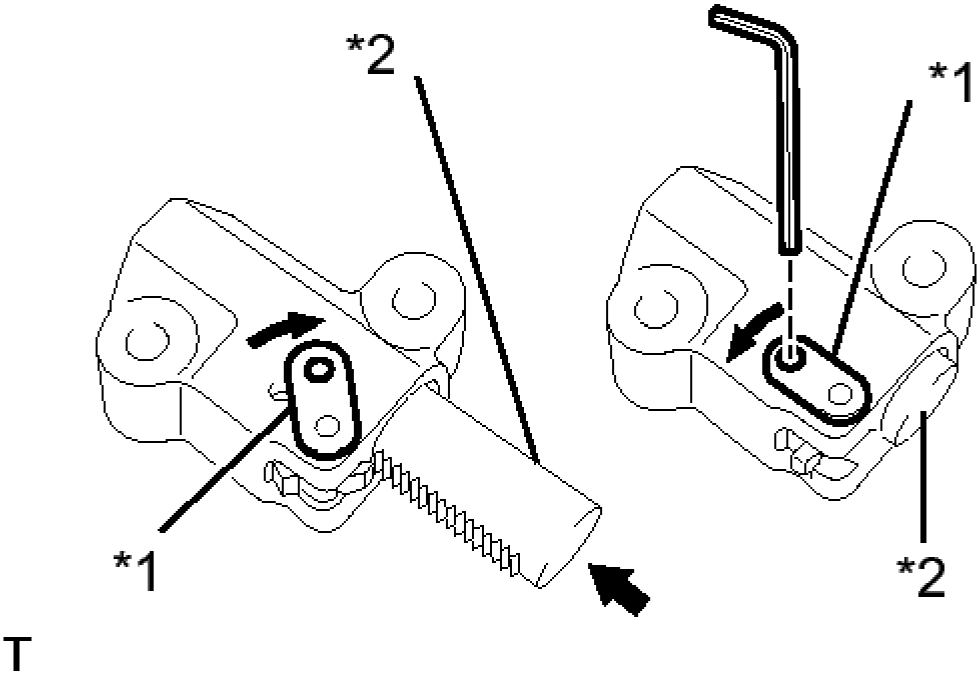

Fig. 258: Turning Stopper Plate Upward & Pushing Plunger Into Tensioner
Courtesy of TOYOTA MOTOR SALES, U.S.A., INC.

TEXT IN ILLUSTRATION

*1	Stopper Plate
*2	Plunger

b. Move the stopper plate downward to set the lock, and insert a hexagon wrench into the hole of the stopper plate.
c. Install the No. 1 chain tensioner assembly with the 2 bolts.

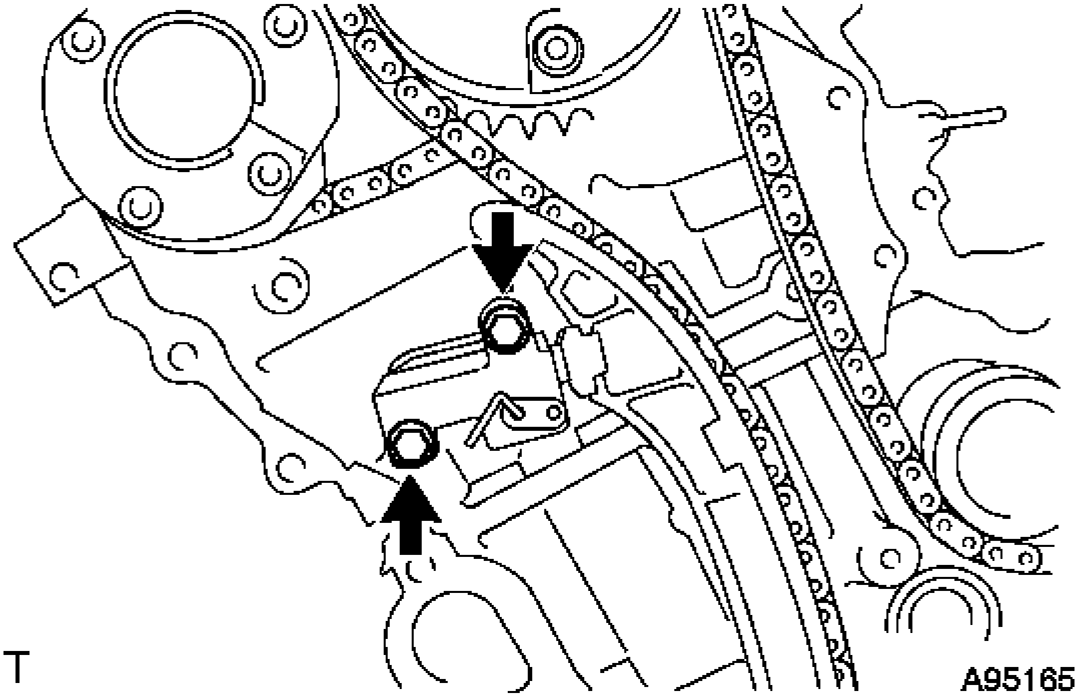

Fig. 259: Locating Chain Tensioner With Bolts
Courtesy of TOYOTA MOTOR SALES, U.S.A., INC.

Torque: 10 N*m (102 kgf*cm, 7 ft.*lbf)

d. Remove the hexagon wrench from the No. 1 chain tensioner assembly.

30. **INSPECT VALVE TIMING**

a. Check the camshaft timing marks.

NOTE:

- **Check each timing mark from a viewpoint directly in line with the center of the camshaft and the timing mark on each camshaft timing gear.**
- **If the timing marks are checked from any other viewpoint, the valve timing may appear misaligned.**

b. Check that each camshaft timing mark is positioned as shown in the illustration.

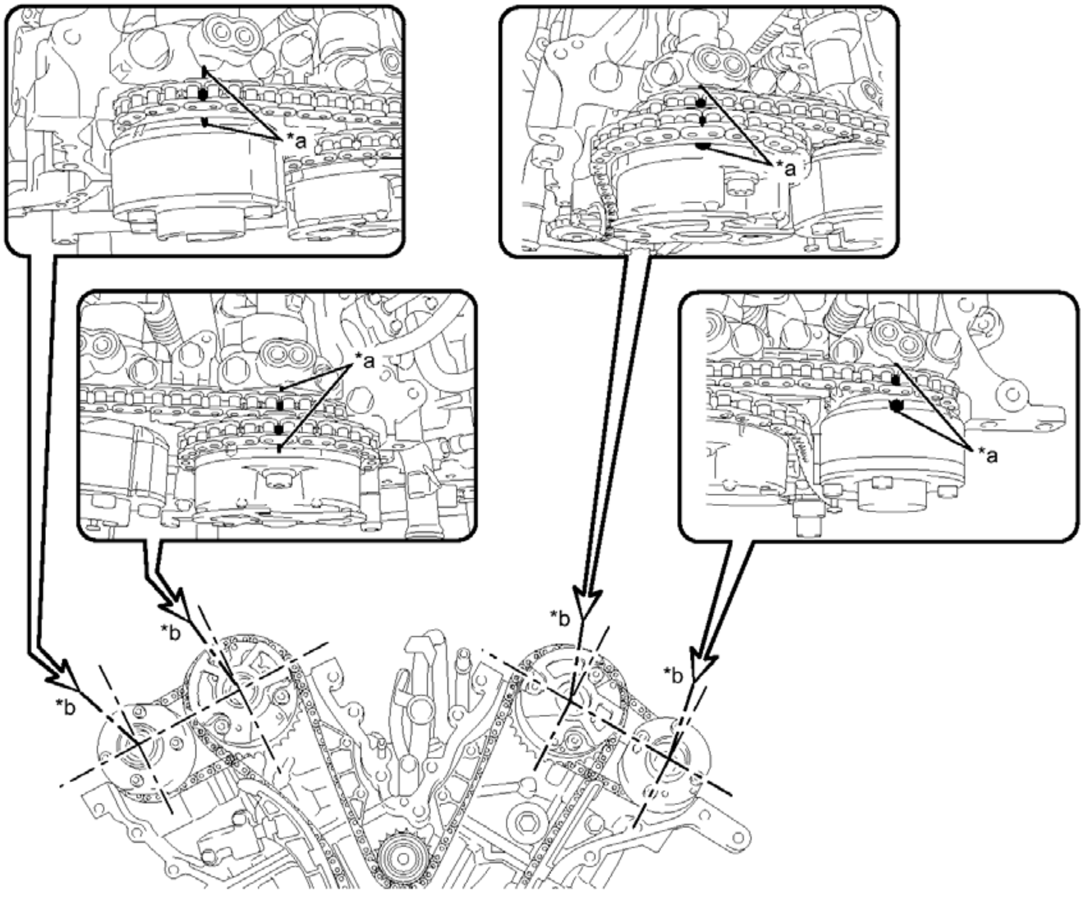

Fig. 260: Identifying Camshaft Timing Mark Position
Courtesy of TOYOTA MOTOR SALES, U.S.A., INC.

TEXT IN ILLUSTRATION

*a	Timing Mark	*b	Viewpoint

HINT:

For the intake camshaft:

Be sure to check mark A at the point when marks B, C, and D are positioned in line. If the marks are checked from any other viewpoint, they cannot be checked correctly.

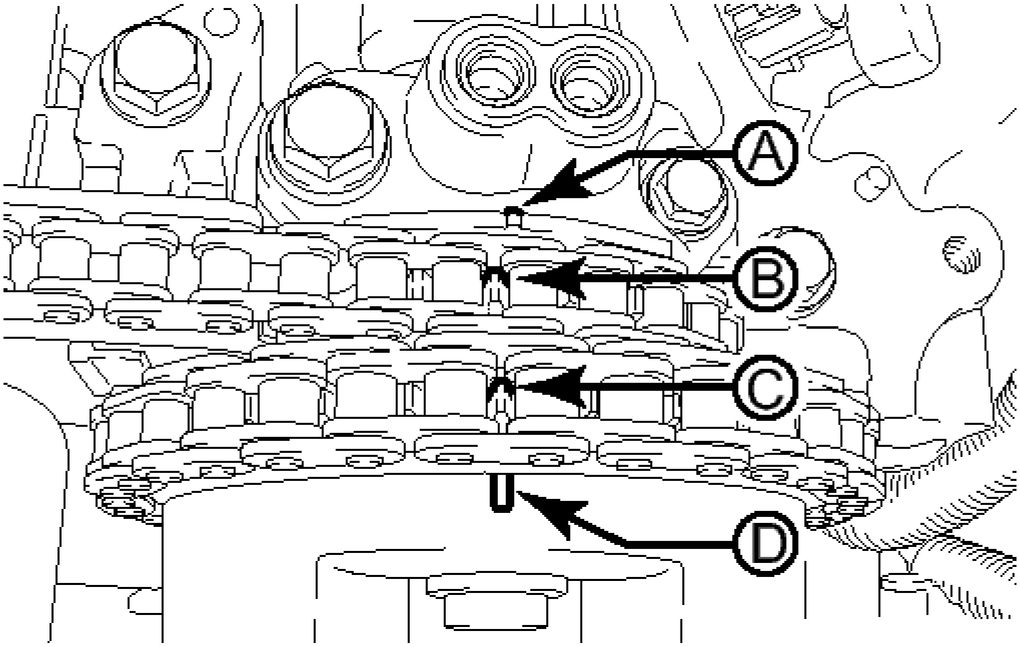

Fig. 261: Identifying Camshaft Timing Mark Position
Courtesy of TOYOTA MOTOR SALES, U.S.A., INC.

- c. If the valve timing is misaligned, reinstall the timing chain.
- d. Remove the pulley set bolt.

31. **INSTALL TIMING CHAIN CASE OIL SEAL** . Refer to **INSTALLATION - Step 1**
32. **INSTALL ENGINE WATER PUMP ASSEMBLY**
    - a. Install a new water pump gasket and the engine water pump assembly with the 8 bolts.

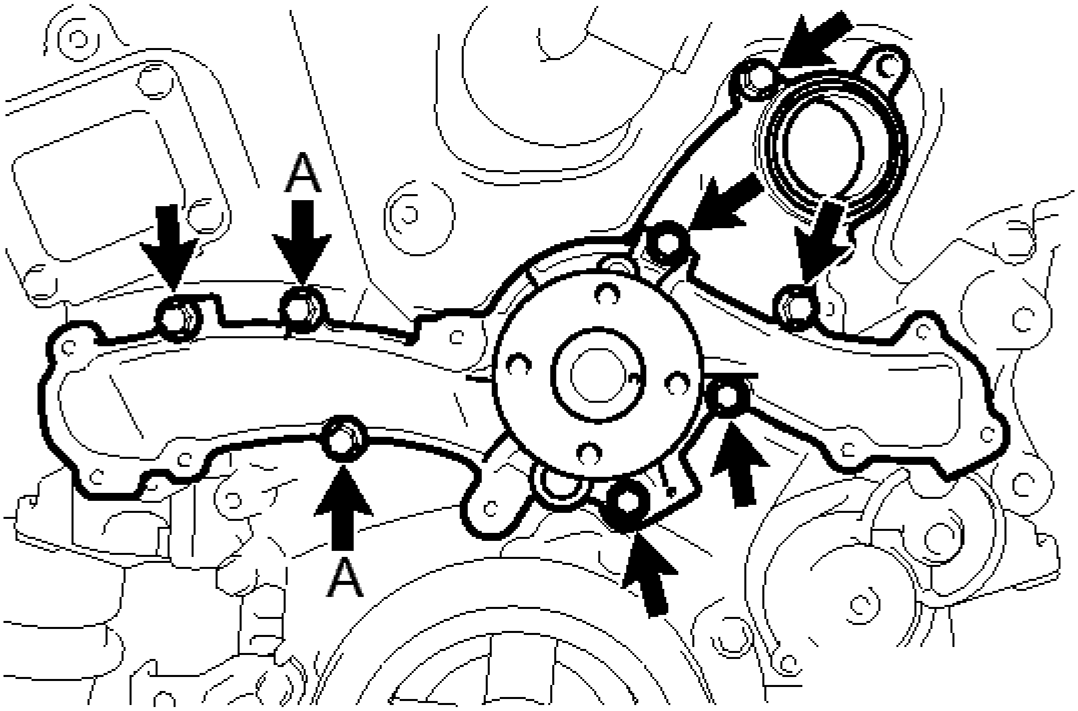

Fig. 262: Identifying Water Pump Assembly And Fasteners
Courtesy of TOYOTA MOTOR SALES, U.S.A., INC.

Torque: 11 N*m (112 kgf*cm, 8 ft.*lbf)

NOTE: **Be sure to replace the bolts indicated by A with new ones or reuse them after applying adhesive 1344.**

33. **INSTALL TIMING CHAIN COVER SUB-ASSEMBLY**
    a. Apply seal packing in a continuous line to the engine unit as shown in the following illustration.

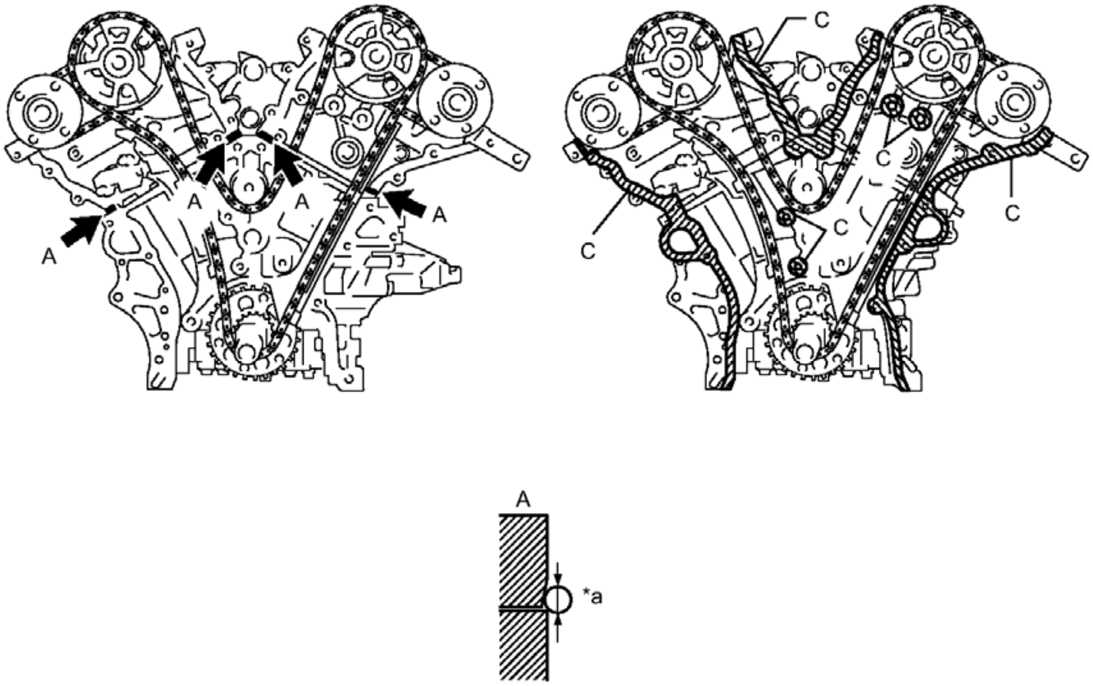

o

Fig. 263: Applying Seal Packing To Timing Chain Cover Sub-Assembly
Courtesy of TOYOTA MOTOR SALES, U.S.A., INC.

TEXT IN ILLUSTRATION

*a	Seal Diameter: 3.0 mm or more		Seal Packing

Seal packing

Toyota Genuine Seal Packing Black, Three Bond 1207B or equivalent

Seal diameter

3.0 mm (0.118 in.)

NOTE:

- **Be sure to clean and degrease the contact surfaces, especially the surfaces indicated by C in the illustration.**
- **If there is oil on the contact surfaces, wipe them with an oil-free cloth before applying seal packing.**
- **Install the chain cover within 3 minutes.**
- **Do not start the engine for at least 2 hours after installing.**

b. Apply seal packing in a continuous line to the timing chain cover as shown in the following illustration.

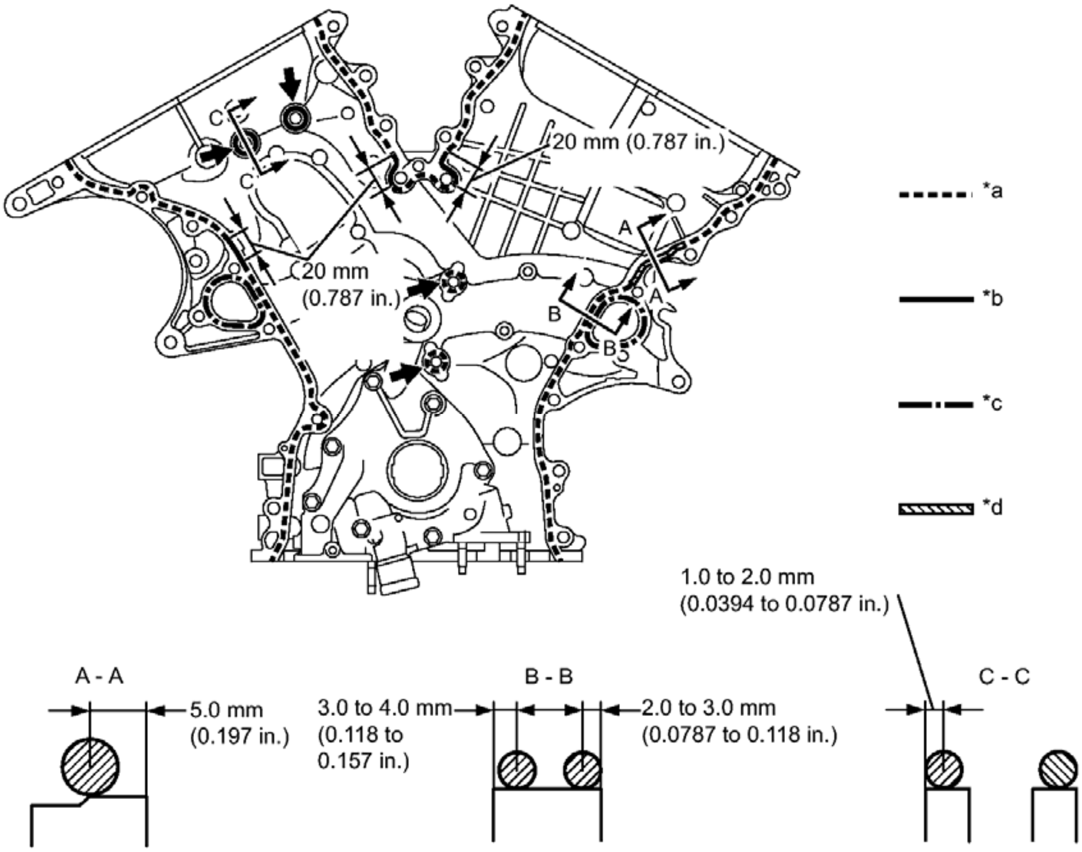
C
C
20 mm (0.787 in.)
20 mm
(0.787 in.)
A
A
B
B
*a
*b
*c
*d
1.0 to 2.0 mm
(0.0394 to 0.0787 in.)
A - A
5.0 mm
(0.197 in.)
3.0 to 4.0 mm
(0.118 to
0.157 in.)
B - B
2.0 to 3.0 mm
(0.0787 to 0.118 in.)
C - C

Fig. 264: Identifying Timing Chain Cover Seal Packing Applying Areas
Courtesy of TOYOTA MOTOR SALES, U.S.A., INC.

TEXT IN ILLUSTRATION

*a	Dashed line area (Seal packing: Toyota Genuine Seal Packing Black, Three Bond 1207B or equivalent)	*b	Continuous line area (Seal packing: Toyota Genuine Seal Packing Black, Three Bond 1207B or equivalent)
	Alternate		

*c	long and short dashed line area (Seal packing: Toyota Genuine Seal Packing 1282B, Three Bond 1282B or equivalent)	*d	Diagonal line area (Seal packing: Toyota Genuine Seal Packing Black, Three Bond 1207B or equivalent)
	Be sure to apply seal packing	-	-

Seal packing

Toyota Genuine Seal Packing Black, Three Bond 1207B or equivalent

Toyota Genuine Seal Packing 1282B, Three Bond 1282B or equivalent

NOTE:

- **If there is oil on the contact surfaces, wipe them with an oil-free cloth before applying seal packing.**
- **Install the chain cover within 3 minutes and tighten the bolts within 15 minutes after applying seal packing.**
- **Do not start the engine for at least 2 hours after installing.**

SEAL PACKING APPLICATION CHART

Area	Seal Packing Diameter	Application Position from Inside Seal Line
Continuous Line Area	4.5 mm or more (0.177 in.)	1.0 to 2.0 mm (0.0394 to 0.0787 in.)
Alternate Long and Short Dashed Line Area	3.5 mm or more (0.138 in.)	2.0 to 3.0 mm (0.0787 to 0.118 in.)

Dashed Line Area	3.5 mm or more (0.138 in.)	3.0 to 4.0 mm (0.118 to 0.158 in.)
Diagonal Line Area	6.0 mm or more (0.236 in.)	5.0 mm (0.197 in.)

c. Install a new gasket.

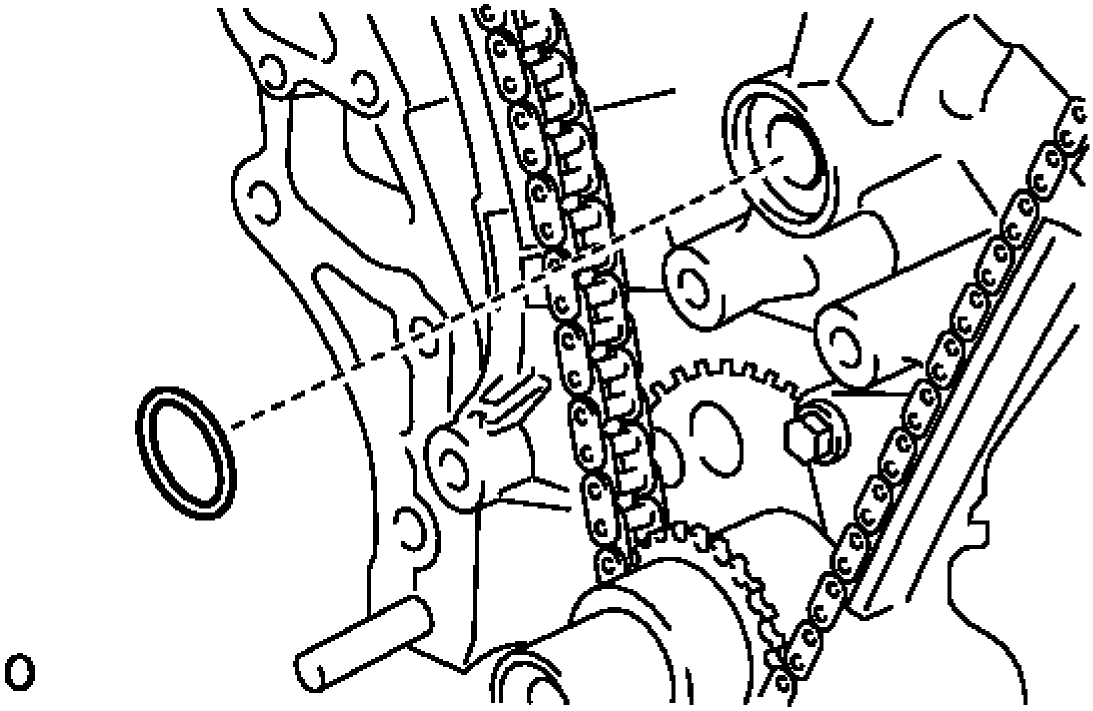

Fig. 265: Identifying Gasket
Courtesy of TOYOTA MOTOR SALES, U.S.A., INC.

d. Align the oil pump's drive rotor spline and the crankshaft as shown in the illustration. Install the spline and chain cover to the crankshaft.

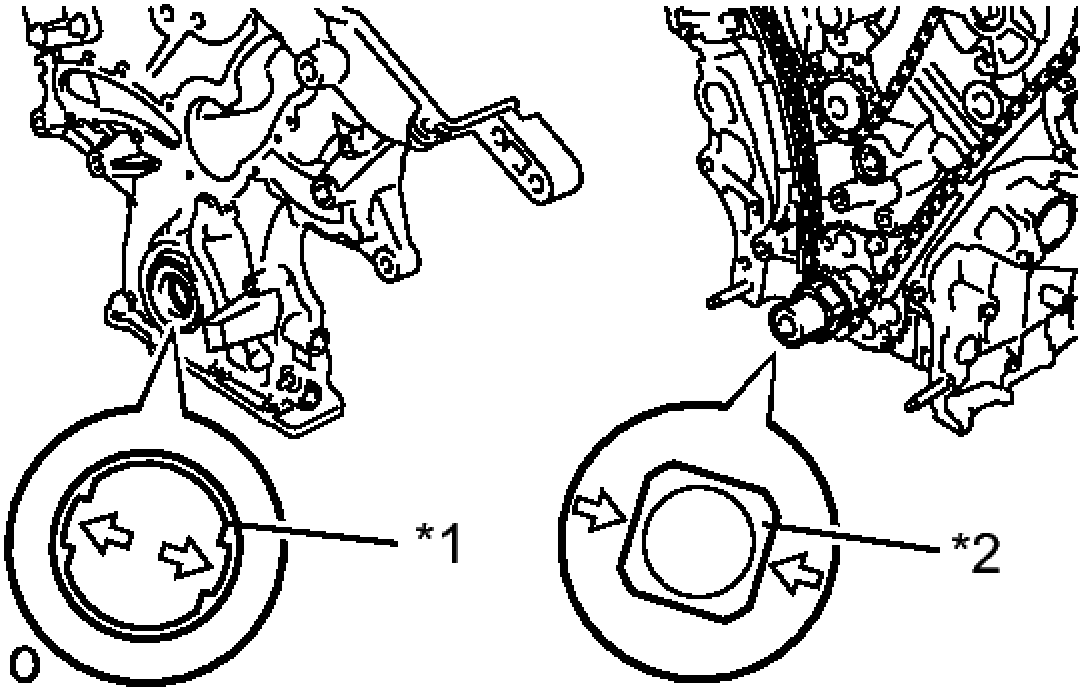

Fig. 266: Aligning Oil Pump Drive Rotor Spline & Crankshaft
Courtesy of TOYOTA MOTOR SALES, U.S.A., INC.

TEXT IN ILLUSTRATION

*1	Drive Rotor Spline
*2	Crankshaft

e. Temporarily tighten the timing chain cover with the 23 bolts and 2 nuts.

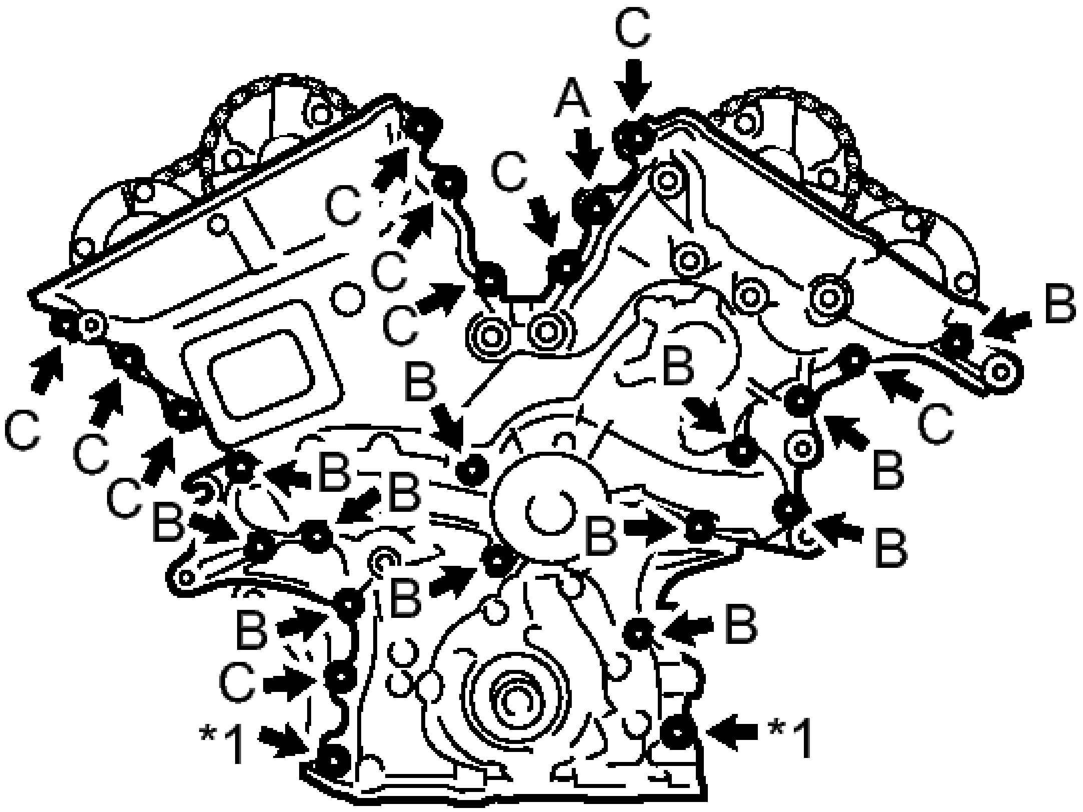
C
A
C
C
C
C
B
B
C
C
C
B
C
B
B
B
B
B
B
B
B
B
B
C
*1
*1

Fig. 267: Locating Timing Chain Cover Nuts & Bolts
Courtesy of TOYOTA MOTOR SALES, U.S.A., INC.

TEXT IN ILLUSTRATION

*1	Nut

BOLT LENGTH

Item	Length
Bolt A	40 mm (1.57 in.)
Bolt B	55 mm (2.17 in.)
Bolt	25 mm

C	(0.984 in.)

NOTE: **Make sure that there is no oil on the threads of bolts B and C.**

f. Fully tighten the bolts in this order: Area 1 and Area 2.

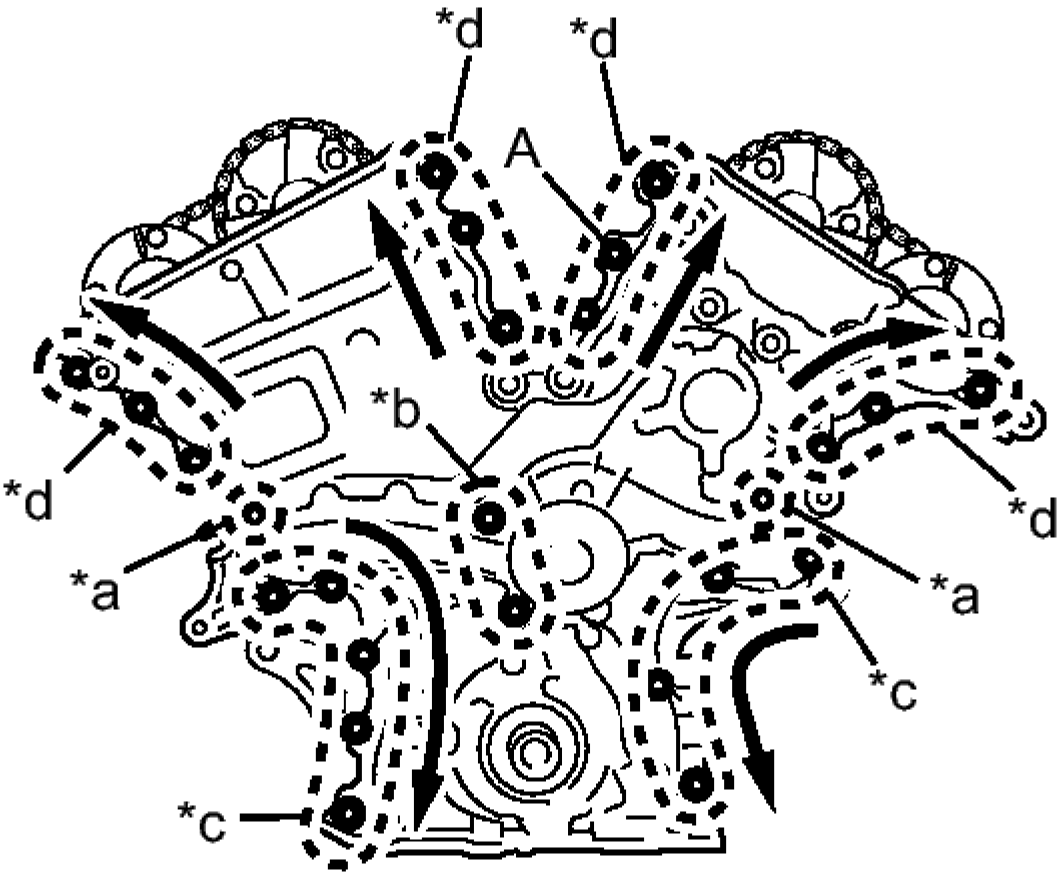

Fig. 268: Identifying Timing Chain Cover Nuts & Bolts Tightening Sequence
Courtesy of TOYOTA MOTOR SALES, U.S.A., INC.

TEXT IN ILLUSTRATION

*a	Area 1
*b	Area 2

*c	Area 3
*d	Area 4

Torque: 21 N*m (214 kgf*cm, 15 ft.*lbf)

g. Fully tighten the bolts and nuts in Area 3.

Torque: 21 N*m (214 kgf*cm, 15 ft.*lbf)

HINT:

Tighten the bolts and nuts from top to bottom as shown in the illustration.

h. Fully tighten the bolts in Area 4.

Bolt A

Torque: 43 N*m (438 kgf*cm, 32 ft.*lbf)

Except bolt A

Torque: 21 N*m (214 kgf*cm, 15 ft.*lbf)

HINT:

Tighten the bolts from bottom to top as shown in the illustration.

i. Install a new timing chain cover plate gasket and the timing chain cover plate with the 4 bolts.

Torque: 9.1 N*m (93 kgf*cm, 81 in.*lbf)

34. **INSTALL WATER INLET HOUSING**
    a. Install 2 new O-rings.

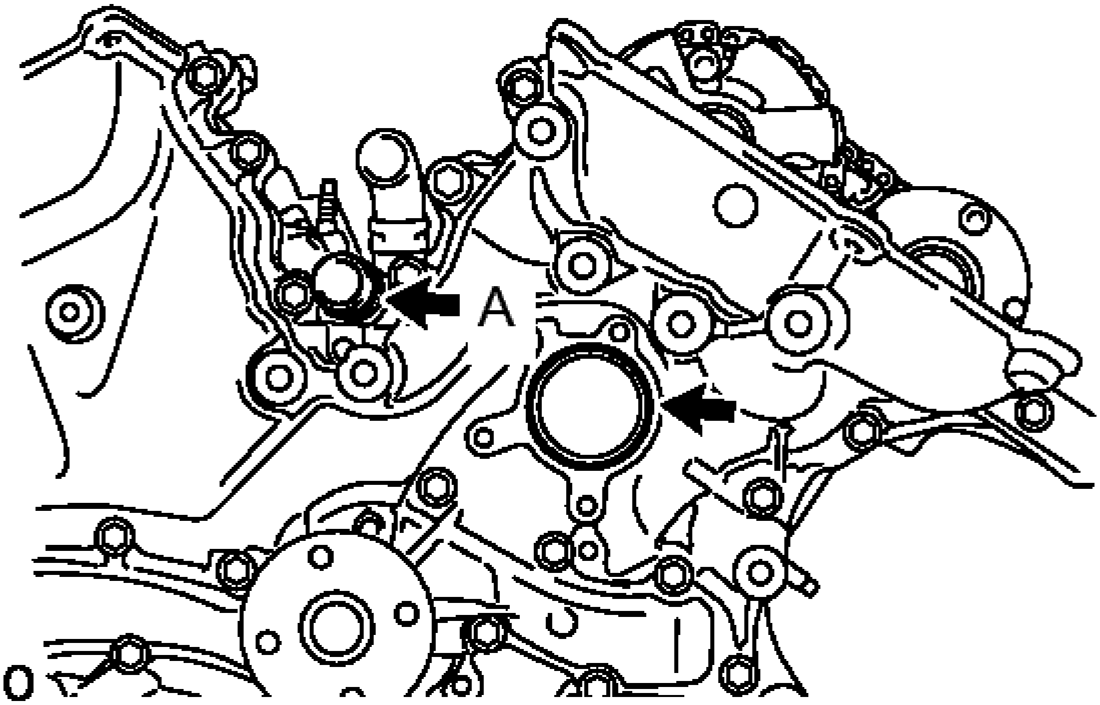

Fig. 269: Locating O-Ring
Courtesy of TOYOTA MOTOR SALES, U.S.A., INC.

HINT:

Apply a small amount of water or soapy water to O-ring (A) shown in the illustration before installation.

b. Install the 2 stud bolts.

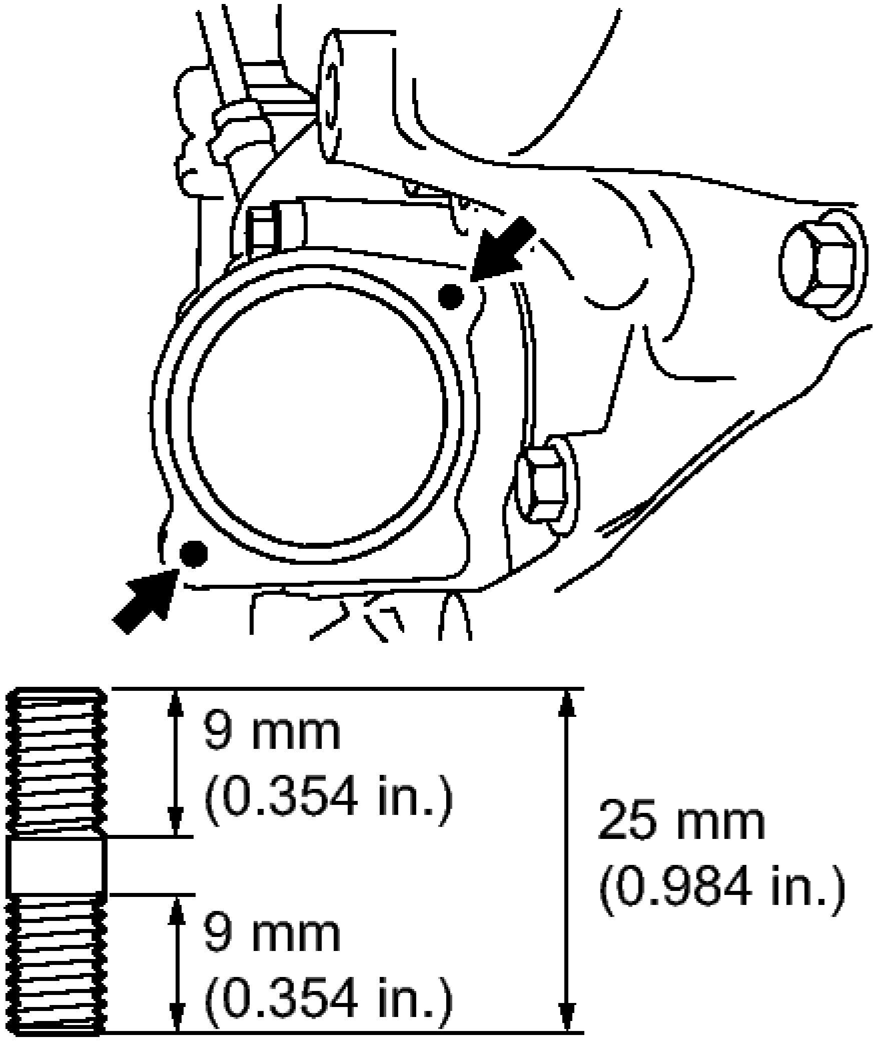
9 mm
(0.354 in.)
9 mm
(0.354 in.)
25 mm
(0.984 in.)

Fig. 270: Locating Water Inlet Housing Studs
Courtesy of TOYOTA MOTOR SALES, U.S.A., INC.

Torque: 4.0 N*m (41 kgf*cm, 35 in.*lbf)

c. Install the water inlet housing with the 2 bolts and nut.

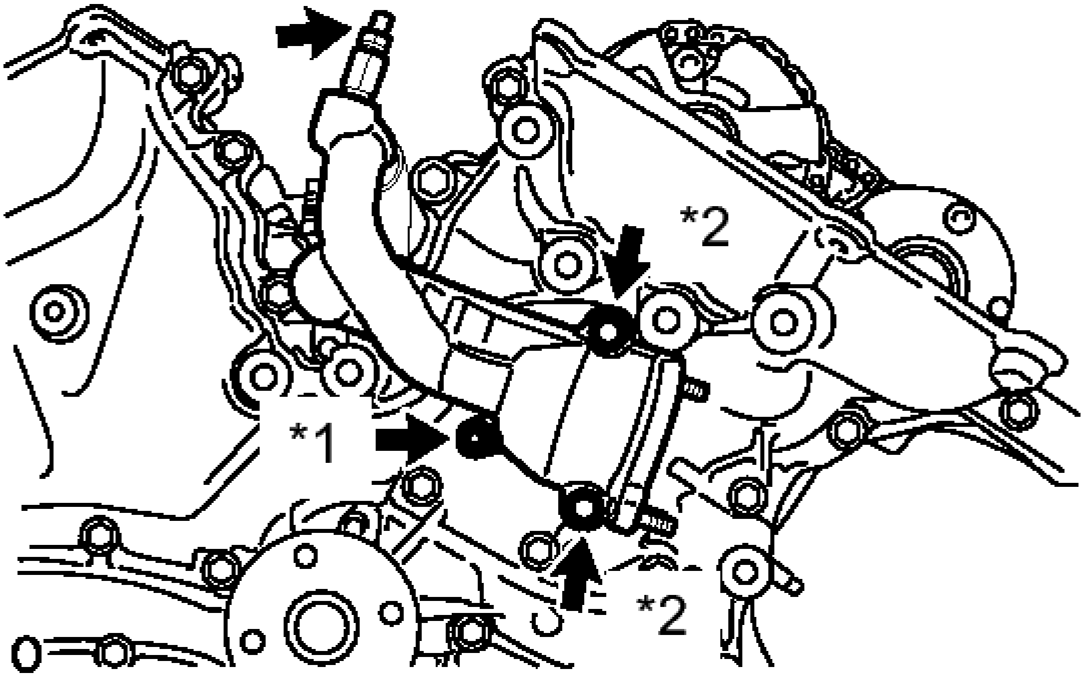

Fig. 271: Aligning Thermostat Jiggle Valve With Upper Stud Bolt Angle
Courtesy of TOYOTA MOTOR SALES, U.S.A., INC.

TEXT IN ILLUSTRATION

*1	Nut
*2	Bolt

Torque: 10 N*m (102 kgf*cm, 7 ft.*lbf)

NOTE: **Be careful that the O-ring does not get caught between the parts.**

d. Connect the No. 1 water by-pass hose.
e. Apply adhesive around the drain cock.

Adhesive

Toyota Genuine Adhesive 1324, Three Bond 1324 or equivalent

f. Install the drain cock assembly to the water inlet housing.

Torque: 30 N*m (306 kgf*cm, 22 ft.*lbf)

g. Install the drain cock plug to the drain cock assembly.

Torque: 13 N*m (130 kgf*cm, 9 ft.*lbf)

h. Install a new gasket to the thermostat.
i. Align the thermostat jiggle valve with the upper stud bolt, and insert the thermostat in the water inlet housing.

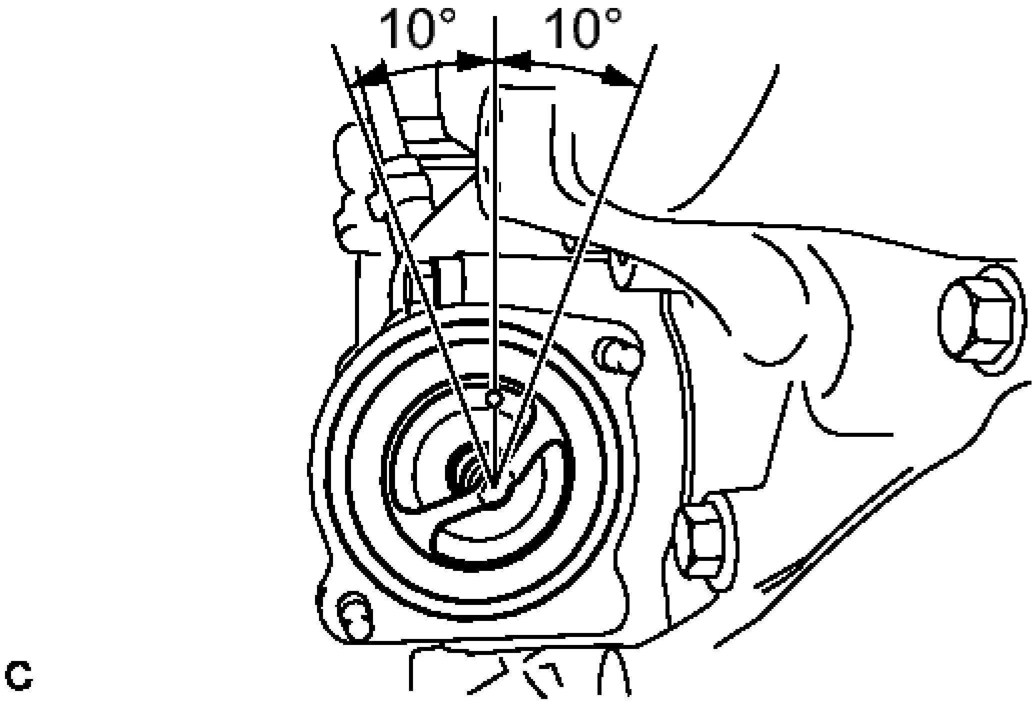

Fig. 272: Identifying Jiggle Valve Angles
Courtesy of TOYOTA MOTOR SALES, U.S.A., INC.

HINT:

The jiggle valve may be set within 10° of either side of the prescribed position.

j. Install the water inlet with the 2 nuts.

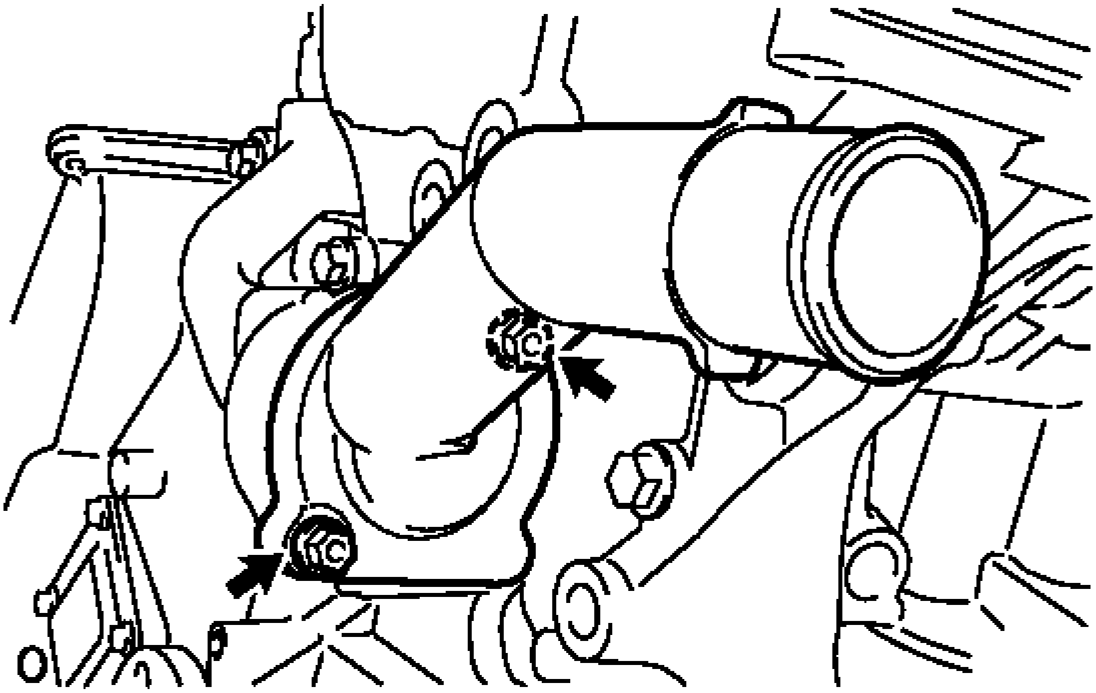

Fig. 273: Locating Water Inlet With Nuts
Courtesy of TOYOTA MOTOR SALES, U.S.A., INC.

Torque: 10 N*m (102 kgf*cm, 7 ft.*lbf)

35. **INSTALL NO. 1 FRONT ENGINE MOUNTING BRACKET LH**
    a. Using an E8 "TORX" socket wrench, install the 2 stud bolts.

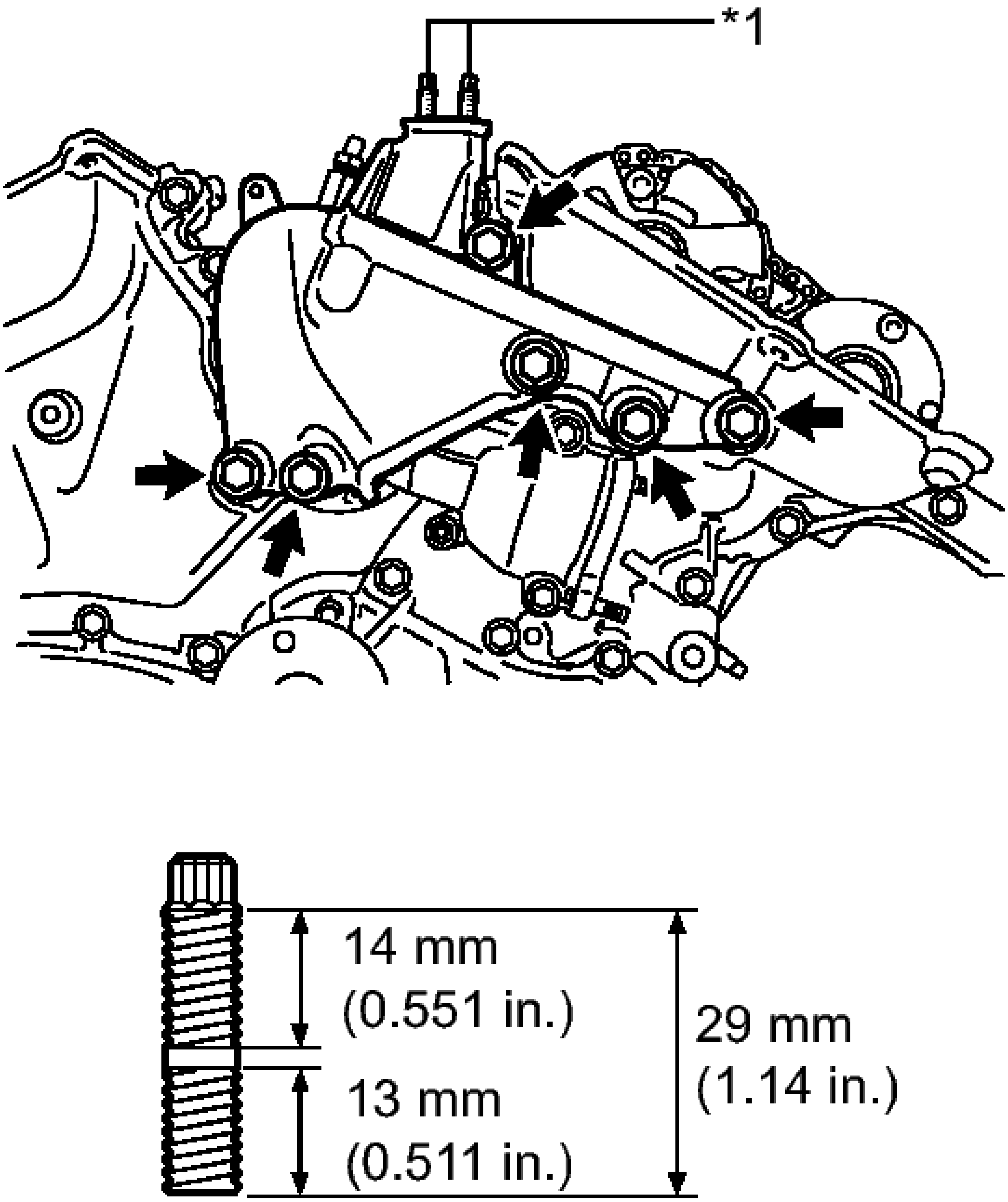
*1
14 mm
(0.551 in.)
13 mm
(0.511 in.)
29 mm
(1.14 in.)

Fig. 274: Locating No. 1 LH Front Engine Mounting Bracket Bolts & Stud Bolts
Courtesy of TOYOTA MOTOR SALES, U.S.A., INC.

TEXT IN ILLUSTRATION

	Stud

*1	Bolt

Torque: 10 N*m (102 kgf*cm, 7 ft.*lbf)

b. Install the No. 1 front engine mounting bracket LH with the 6 bolts.

Torque: 54 N*m (550 kgf*cm, 40 ft.*lbf)

NOTE:

- **Install the water inlet and mounting bracket within 15 minutes after installing the chain cover.**
- **Do not start the engine for at least 2 hours after installation.**

36. **INSTALL NO. 1 OIL PAN BAFFLE PLATE**

a. Install the No. 1 oil pan baffle plate with the 7 bolts.

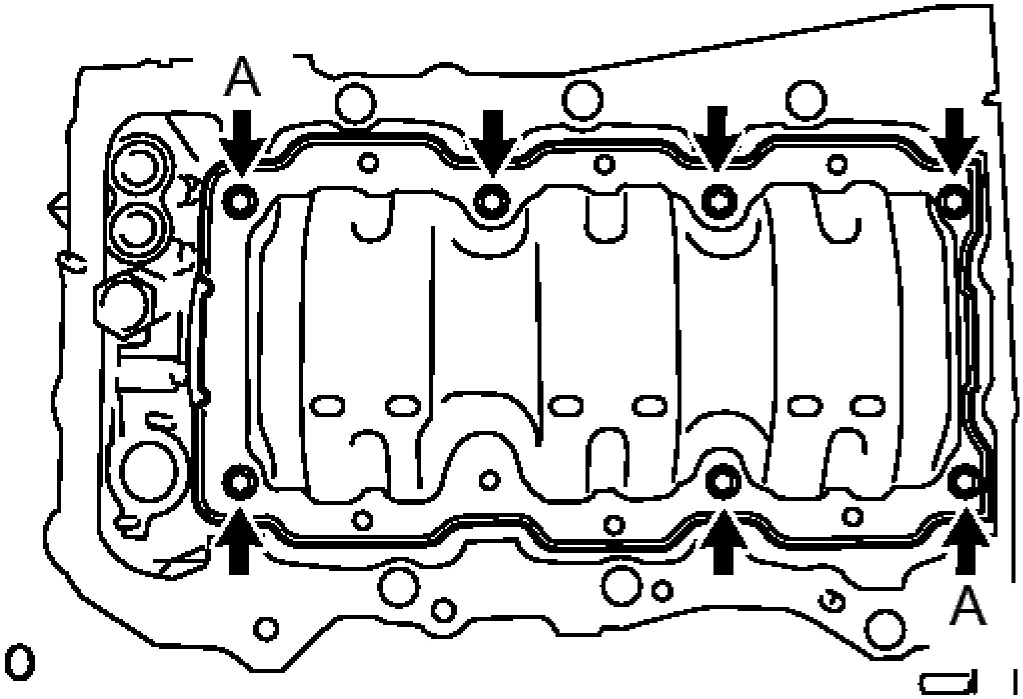

Fig. 275: Locating Oil Pan Baffle Plate Bolts
Courtesy of TOYOTA MOTOR SALES, U.S.A., INC.

Torque: 10 N*m (102 kgf*cm, 7 ft.*lbf)

HINT:

Temporarily tighten the 7 bolts. Fully tighten the 2 bolts (A) shown in the illustration before tightening the other bolts.

37. **INSTALL OIL PAN SUB-ASSEMBLY**

a. Using an E8 "TORX" socket wrench, install the 2 stud bolts.

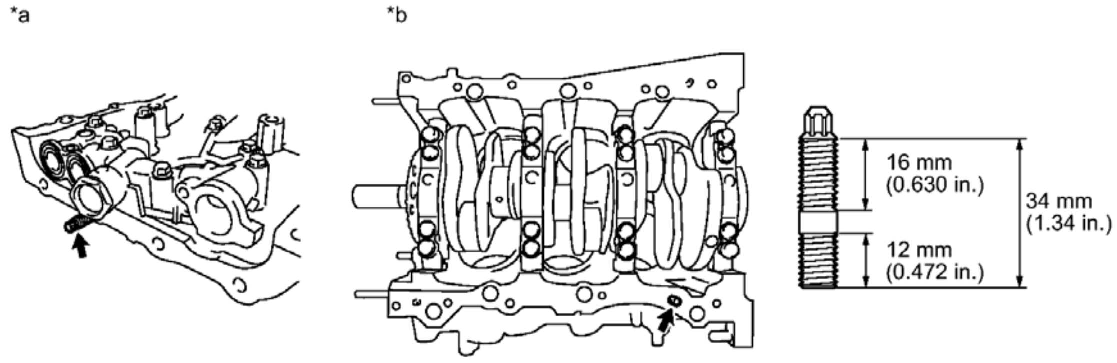
*a
*b
16 mm
(0.630 in.)
34 mm
(1.34 in.)
12 mm
(0.472 in.)

o

Fig. 276: Identifying Oil Pan Sub-Assembly
Courtesy of TOYOTA MOTOR SALES, U.S.A., INC.

TEXT IN ILLUSTRATION

*a	Timing Chain Cover	*b	Lower Cylinder Block

Torque: 10 N*m (102 kgf*cm, 7 ft.*lbf)

b. Install 2 new O-rings.

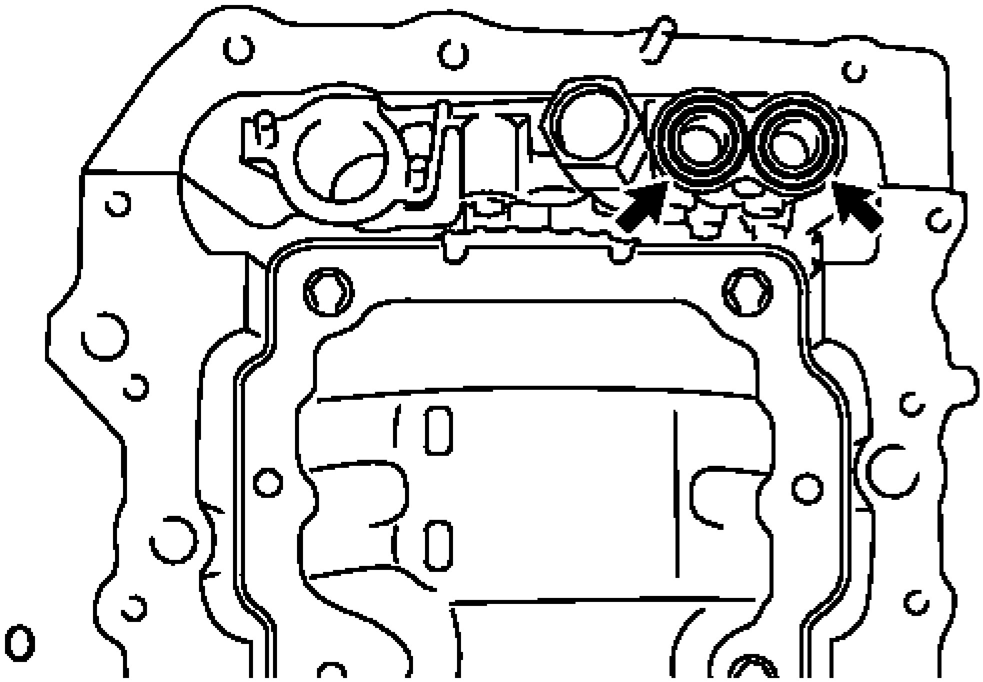

Fig. 277: Locating O-Rings
Courtesy of TOYOTA MOTOR SALES, U.S.A., INC.

c. Apply seal packing in a continuous line as shown in the illustration.

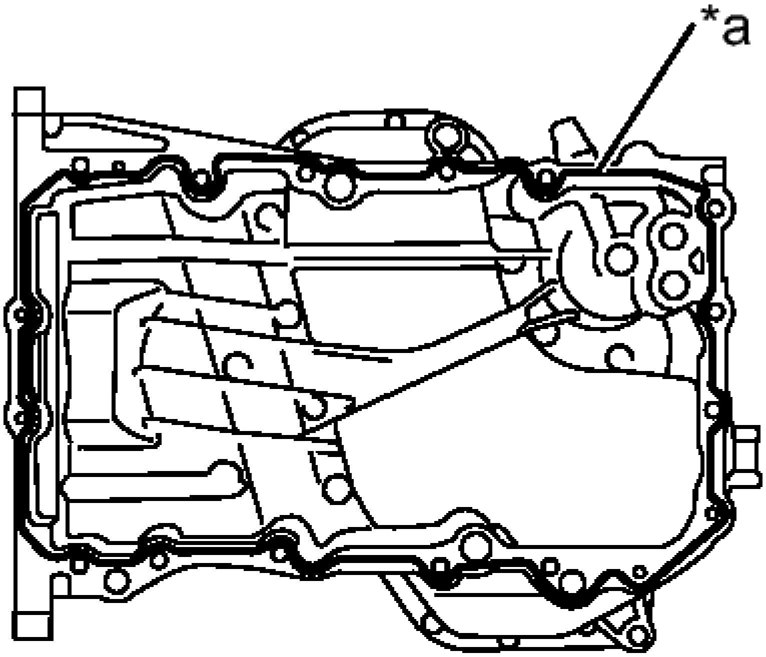

Fig. 278: Identifying Oil Pan Seal Packing Applying Area
Courtesy of TOYOTA MOTOR SALES, U.S.A., INC.

TEXT IN ILLUSTRATION

*a	Seal Diameter

Seal packing

Toyota Genuine Seal Packing Black, Three Bond 1207B or equivalent

Seal diameter

3.0 to 4.0 mm (0.118 to 0.157 in.)

NOTE:

- **Remove any oil from the contact surface.**
- **Install the oil pan within 3 minutes after applying seal packing.**
- **Do not start the engine for at least 2 hours after installing.**

d. Install the oil pan with the 16 bolts and 2 nuts.

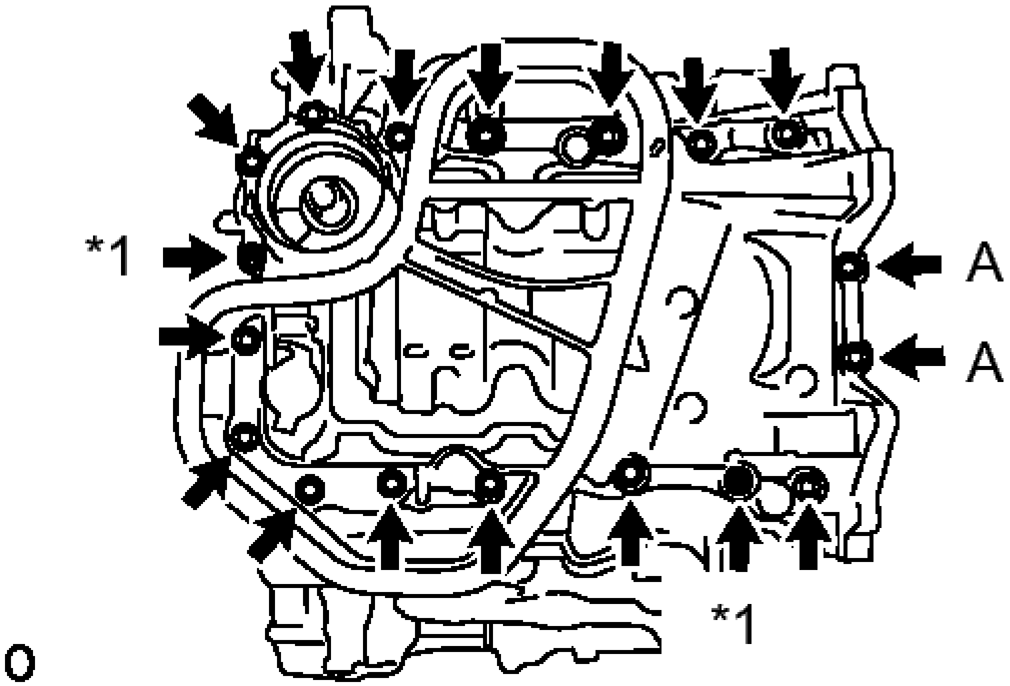

Fig. 279: Identifying Oil Pan Bolts And Nuts
Courtesy of TOYOTA MOTOR SALES, U.S.A., INC.

TEXT IN ILLUSTRATION

*1	Nut

Bolts A

Torque: 10 N*m (102 kgf*cm, 7 ft.*lbf)

Except bolts A

Torque: 21 N*m (214 kgf*cm, 15 ft.*lbf)

38. **INSTALL OIL STRAINER SUB-ASSEMBLY**
    a. Using an E6 "TORX" socket wrench, install the 2 stud bolts as shown in the illustration.

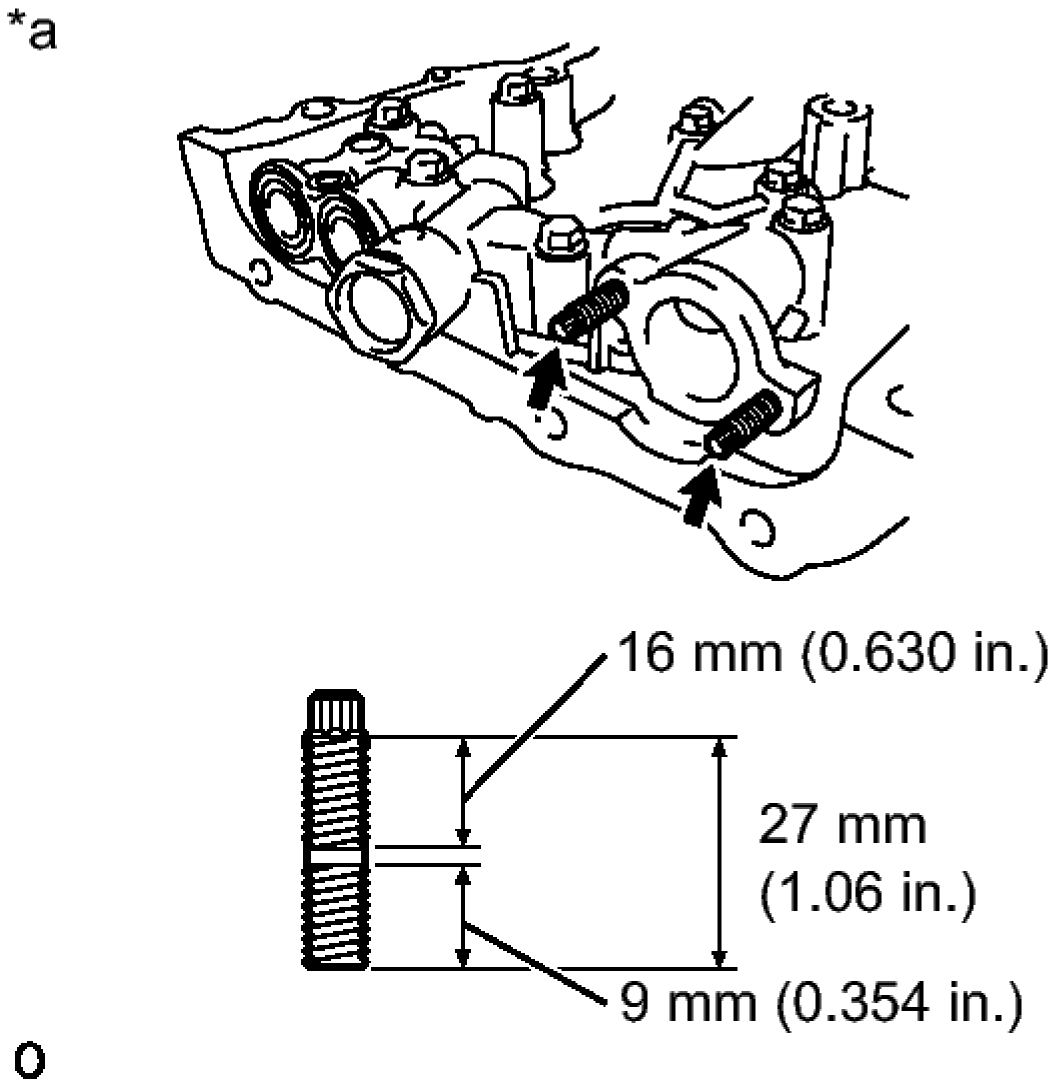
*a
16 mm (0.630 in.)
27 mm
(1.06 in.)
9 mm (0.354 in.)
o

Fig. 280: Locating Oil Strainer Stud Bolts
Courtesy of TOYOTA MOTOR SALES, U.S.A., INC.

TEXT IN ILLUSTRATION

*a	Timing Chain Cover

Torque: 4.0 N*m (41 kgf*cm, 35 in.*lbf)

b. Install a new gasket and the oil strainer sub-assembly with the bolt and 2 nuts.

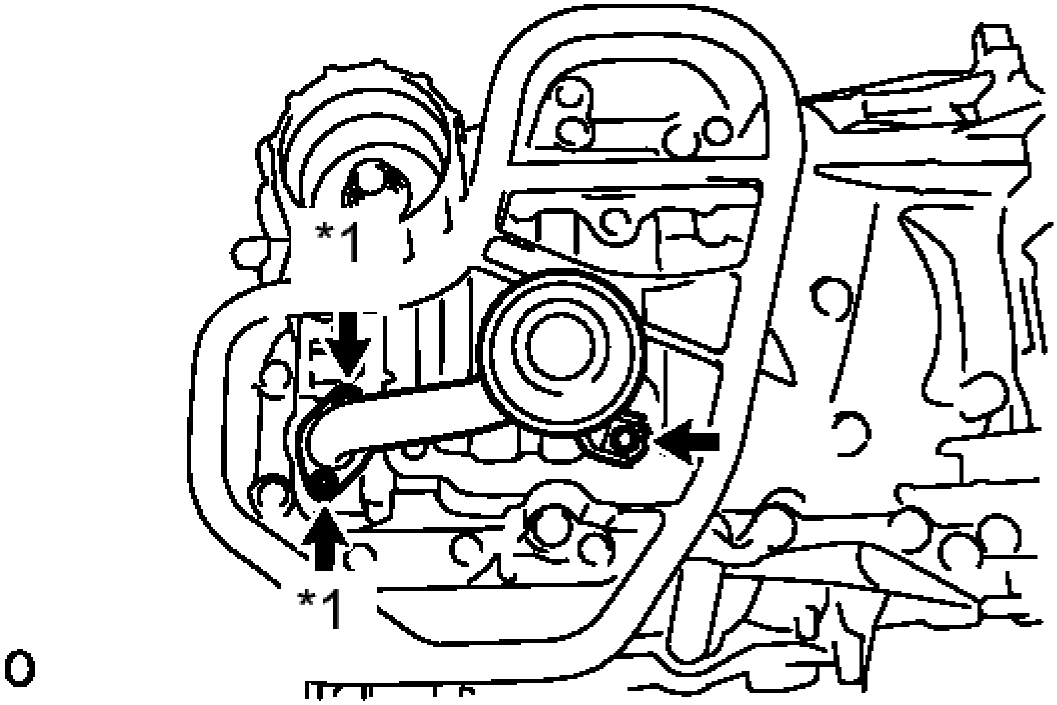

Fig. 281: Locating Oil Strainer Sub-Assembly Fasteners
Courtesy of TOYOTA MOTOR SALES, U.S.A., INC.

TEXT IN ILLUSTRATION

*1	Nut

Torque: 10 N*m (102 kgf*cm, 7 ft.*lbf)

39. **INSTALL NO. 2 OIL PAN SUB-ASSEMBLY**
    a. Using an E6 "TORX" socket wrench, install the 2 stud bolts as shown in the illustration.

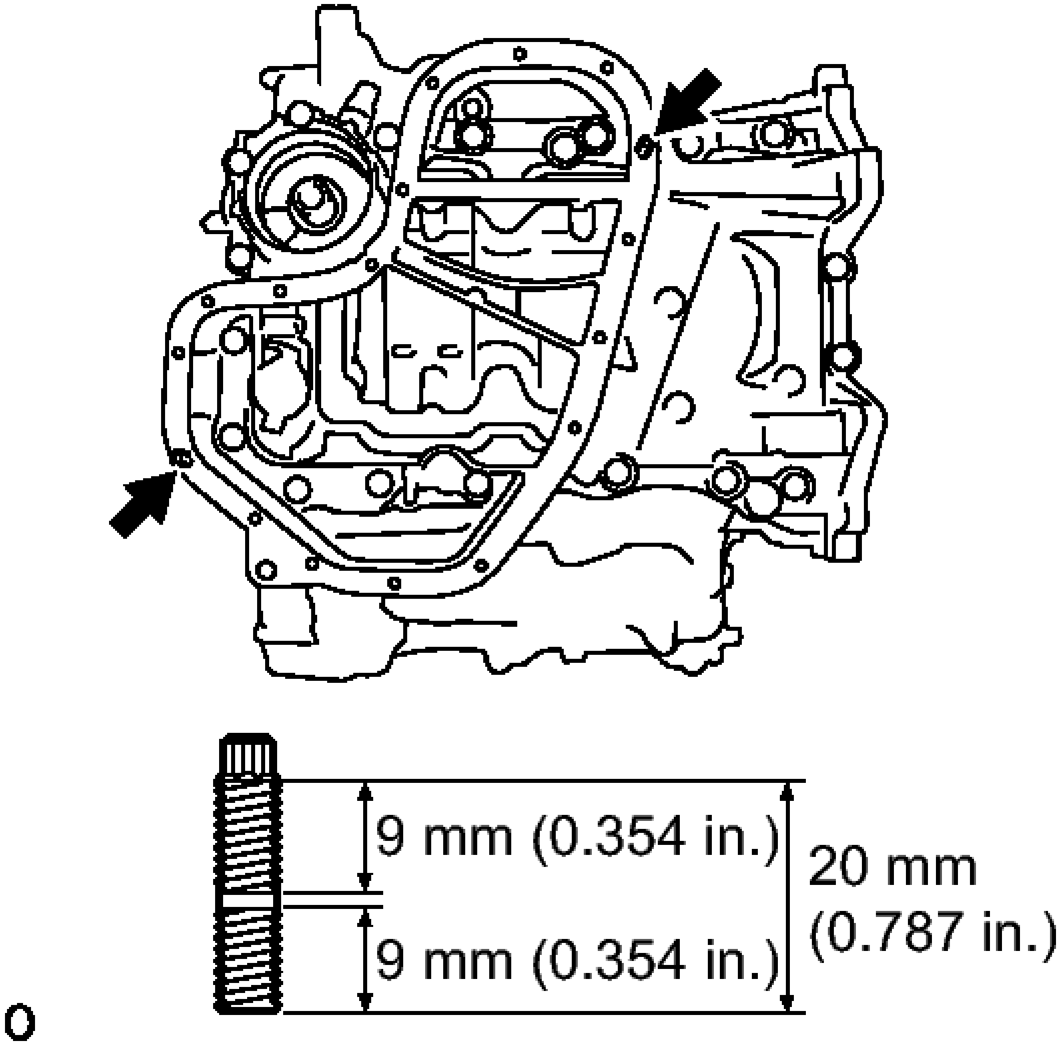
9 mm (0.354 in.)
9 mm (0.354 in.)
20 mm (0.787 in.)

Fig. 282: Identifying Location Of Stud Bolts
Courtesy of TOYOTA MOTOR SALES, U.S.A., INC.

Torque: 4.0 N*m (41 kgf*cm, 35 in.*lbf)

b. Apply seal packing in a continuous line as shown in the illustration.

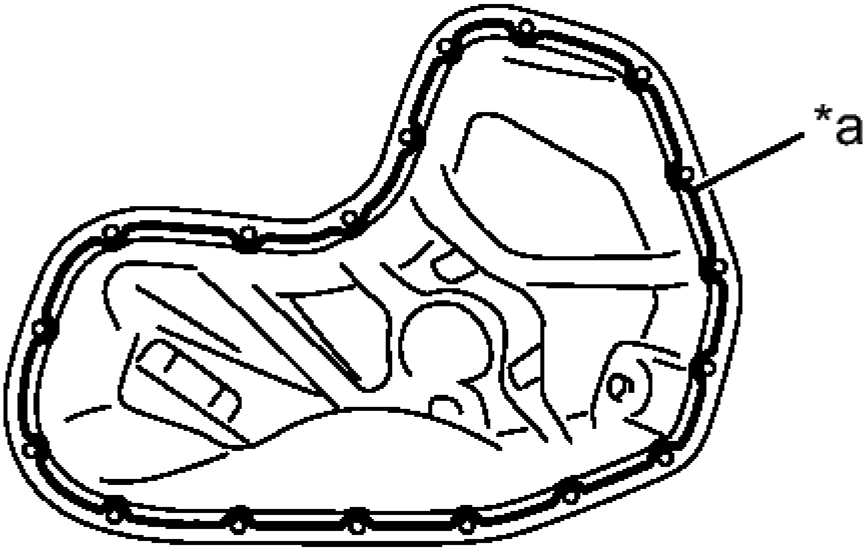

Fig. 283: Identifying No. 2 Oil Pan Seal Packing Applying Area
Courtesy of TOYOTA MOTOR SALES, U.S.A., INC.

TEXT IN ILLUSTRATION

*a	Seal Diameter

Seal packing

Toyota Genuine Seal Packing Black, Three Bond 1207B or equivalent

Seal diameter

3.0 to 4.0 mm (0.118 to 0.157 in.)

NOTE:

- **Remove any oil from the contact surface.**
- **Install the No. 2 oil pan sub-assembly within 3 minutes after applying seal packing.**
- **Do not start the engine for at least 2 hours after installing.**

c. Install the No. 2 oil pan sub-assembly with the 16 bolts and 2 nuts.

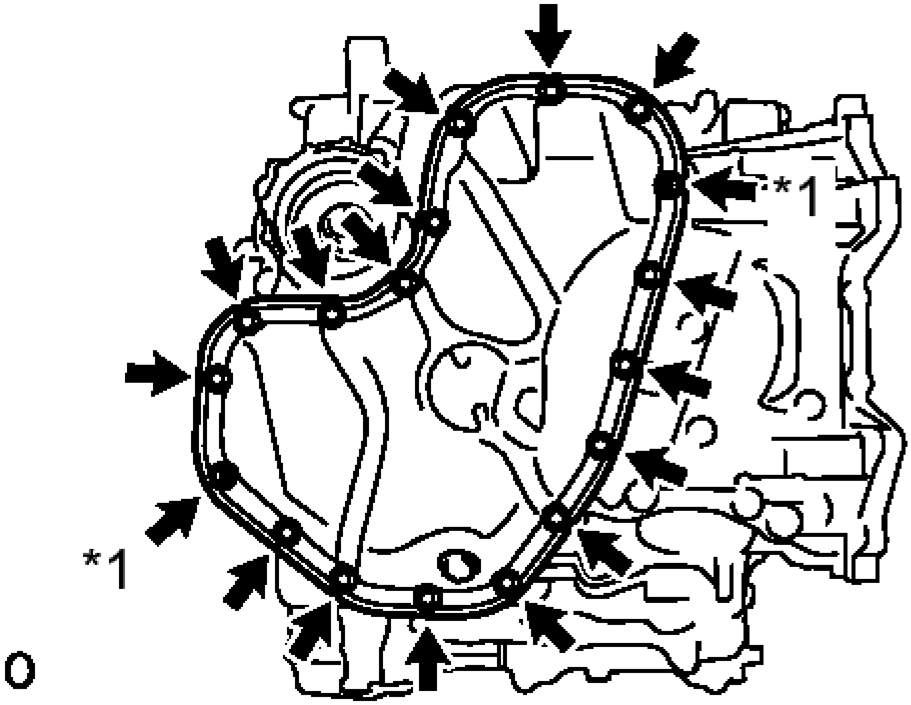

Fig. 284: Identifying No. 2 Oil Pan Sub-Assembly, Bolts & Nuts
Courtesy of TOYOTA MOTOR SALES, U.S.A., INC.

TEXT IN ILLUSTRATION

*1	Nut

Torque: 10 N*m (102 kgf*cm, 7 ft.*lbf)

40. **INSTALL OIL PAN DRAIN PLUG**
    1. Install a new oil pan drain plug gasket and the oil pan drain plug.

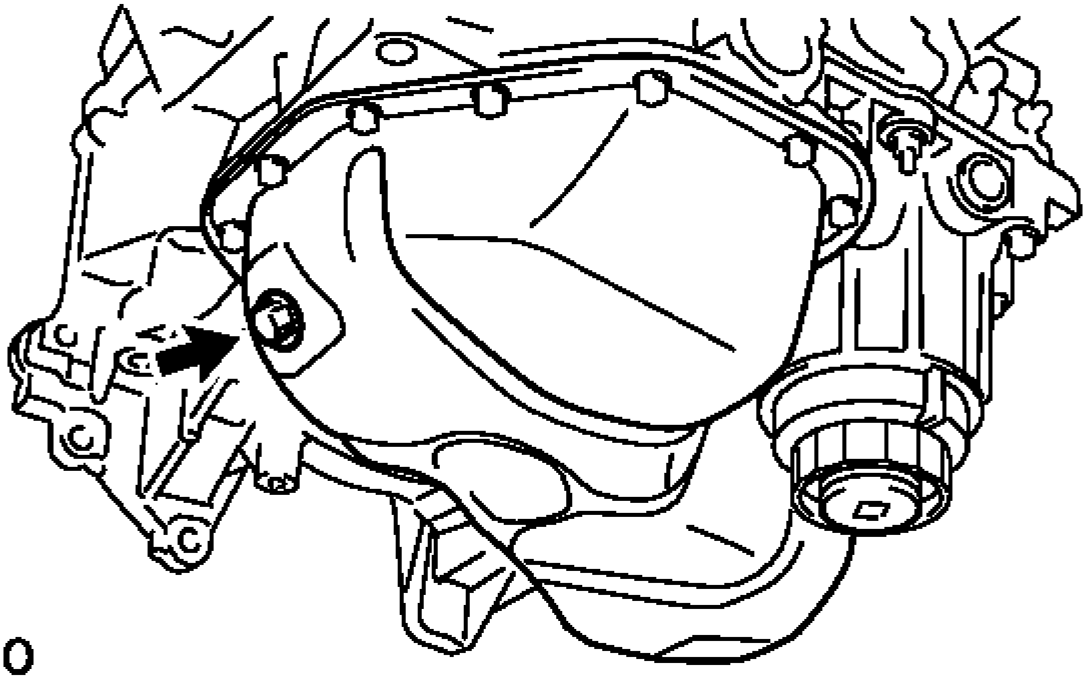

Fig. 285: Locating Oil Pan Drain Plug
Courtesy of TOYOTA MOTOR SALES, U.S.A., INC.

Torque: 40 N*m (408 kgf*cm, 30 ft.*lbf)

41. **INSTALL CYLINDER HEAD COVER SUB-ASSEMBLY**
    a. Apply seal packing as shown in the illustration.

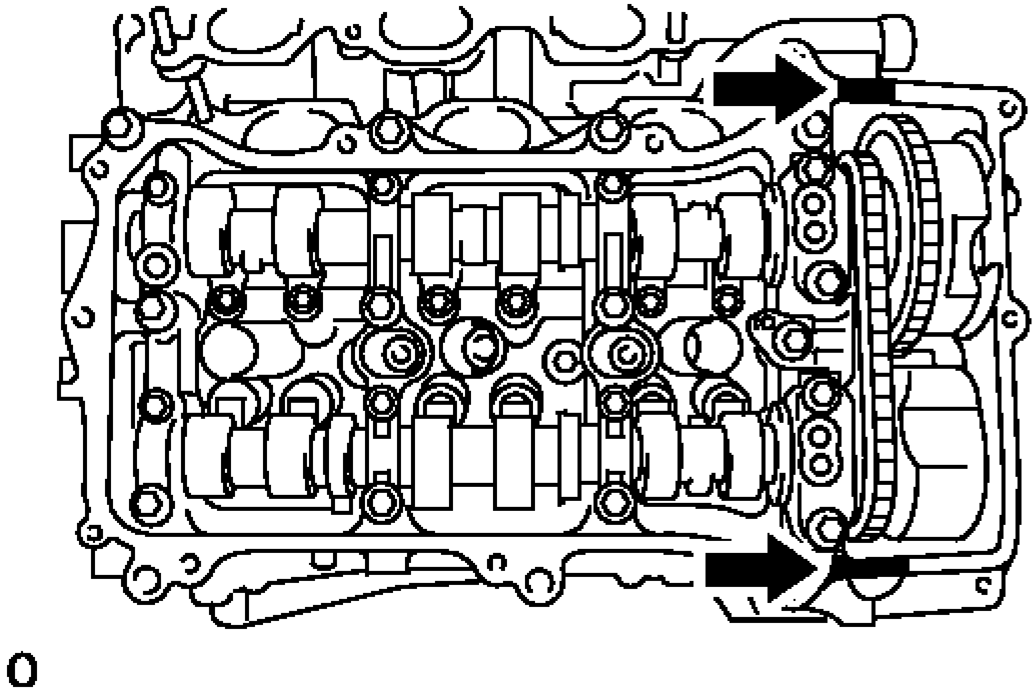

Fig. 286: Locating Cylinder Head Cover Seal Packing Applying Areas
Courtesy of TOYOTA MOTOR SALES, U.S.A., INC.

TEXT IN ILLUSTRATION

	Seal Packing

Seal packing

Toyota Genuine Seal Packing Black, Three Bond 1207B or equivalent

NOTE:

- **Remove any oil from the contact surface.**
- **Install the head cover within 3 minutes after applying seal packing.**
- **Do not start the engine for at least 2 hours after installing.**

b. Install 3 new gaskets as shown in the illustration.

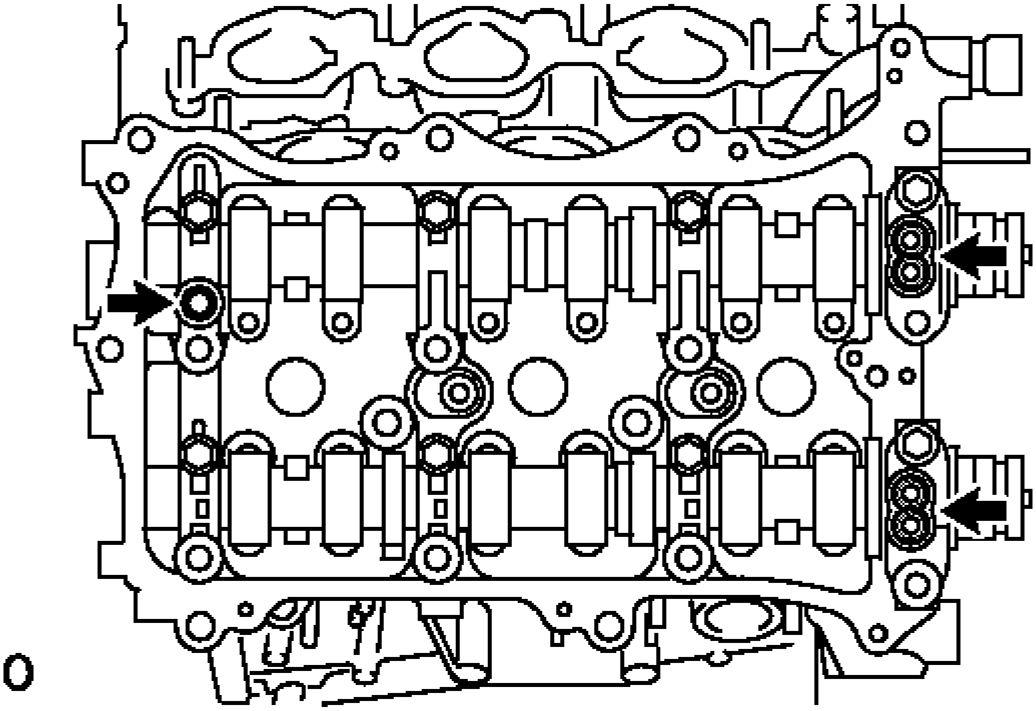

Fig. 287: Identifying Gaskets
Courtesy of TOYOTA MOTOR SALES, U.S.A., INC.

c. Install a new cylinder head cover gasket to the cylinder head cover sub-assembly.
d. Install the head cover with the 12 bolts and a new seal washer.

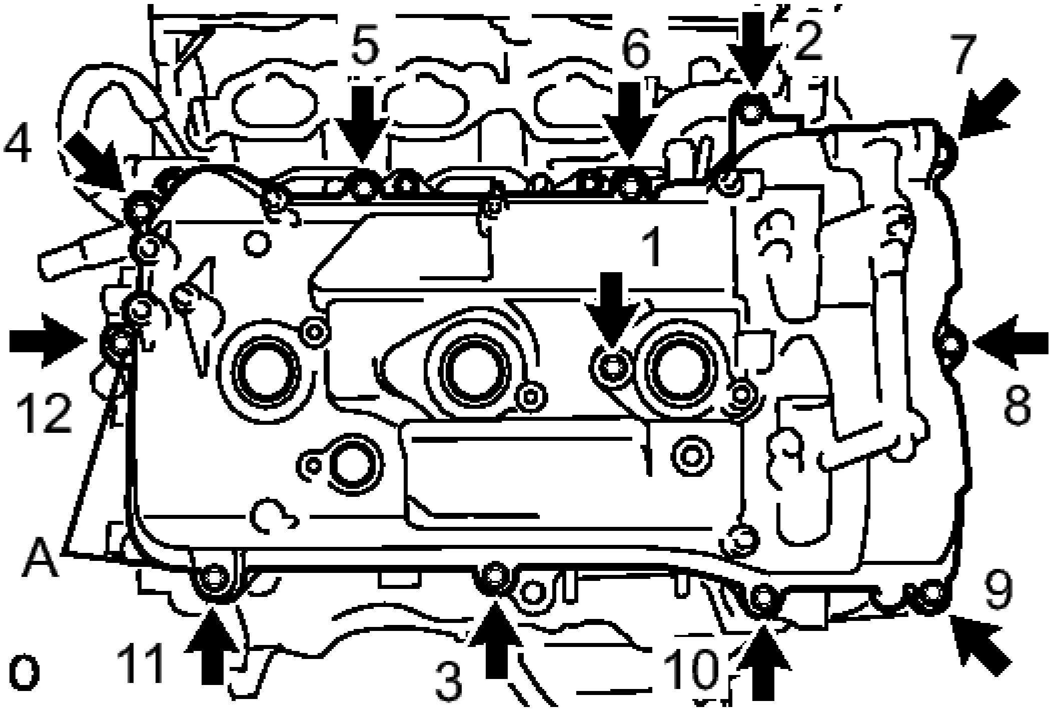

Fig. 288: Identifying Head Cover With Bolts

Courtesy of TOYOTA MOTOR SALES, U.S.A., INC.

Bolts A

Torque: 21 N*m (214 kgf*cm, 15 ft.*lbf)

Except bolts A

Torque: 10 N*m (102 kgf*cm, 7 ft.*lbf)

HINT:

After tightening all bolts, check the tightening torque of 1 and 11. Retighten the bolt if necessary.

42. **INSTALL CYLINDER HEAD COVER SUB-ASSEMBLY LH**
    a. Apply seal packing as shown in the illustration.

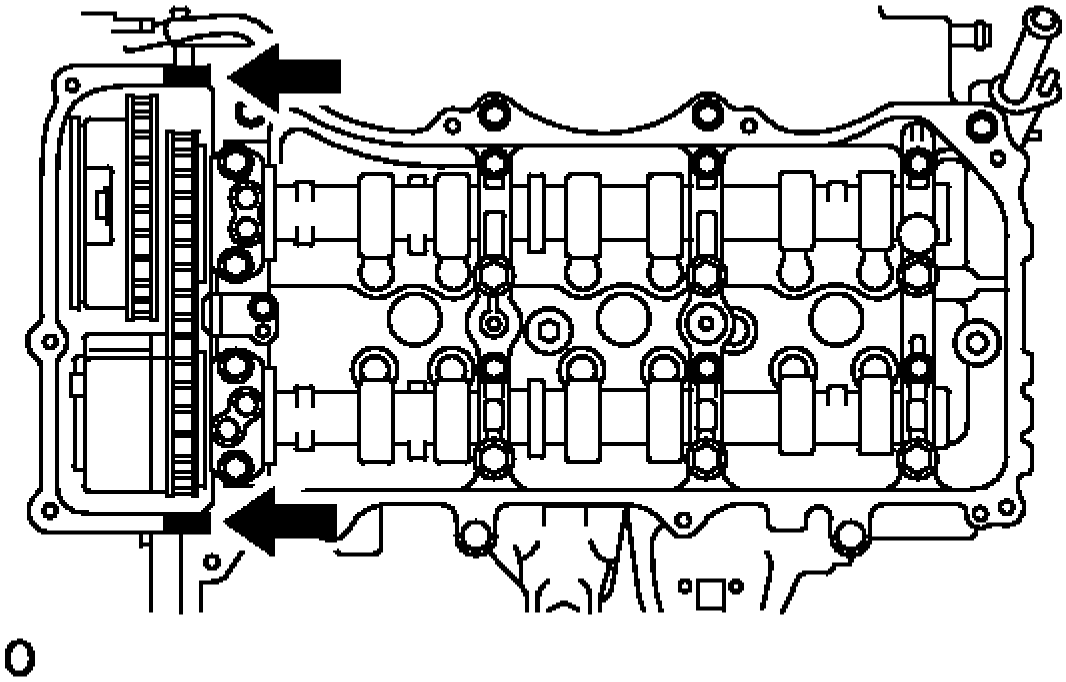

Fig. 289: Locating LH Cylinder Head Cover Seal Packing Applying Areas
Courtesy of TOYOTA MOTOR SALES, U.S.A., INC.

TEXT IN ILLUSTRATION

	Seal Packing

Seal packing

Toyota Genuine Seal Packing Black, Three Bond 1207B or equivalent

NOTE:

- **Remove any oil from the contact surfaces.**
- **Install the cylinder head cover sub-assembly LH within 3 minutes after applying seal packing.**
- **Do not start the engine for at least 2 hours after installing.**

b. Install 3 new gaskets as shown in the illustration.

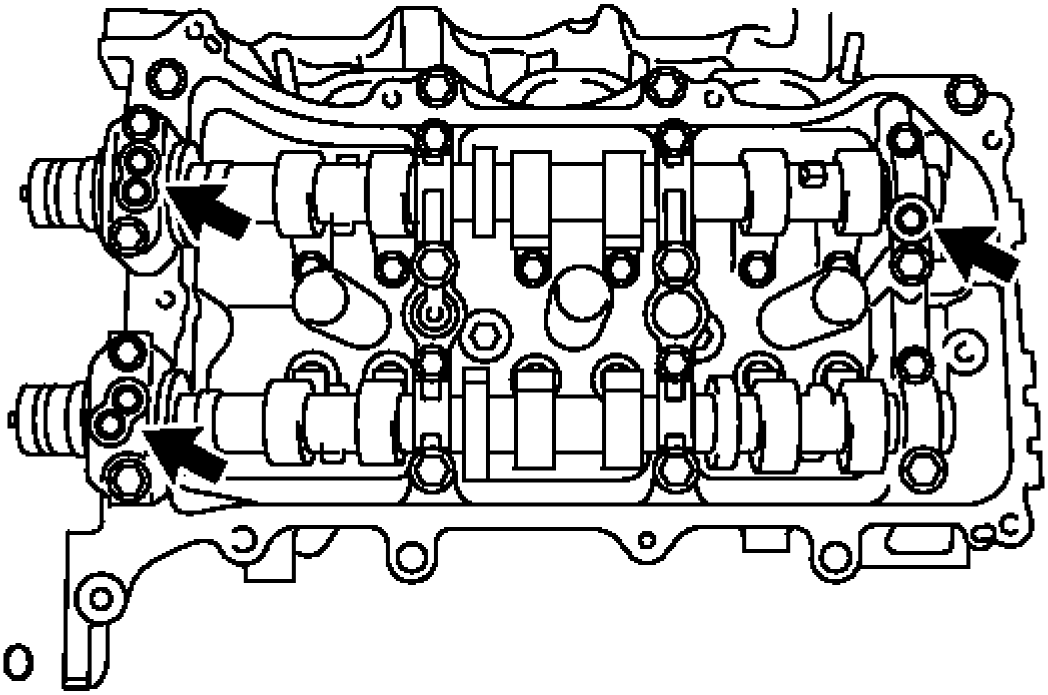

Fig. 290: Locating Gaskets
Courtesy of TOYOTA MOTOR SALES, U.S.A., INC.

c. Install a new No. 2 cylinder head cover gasket to the cylinder head cover sub-assembly LH.

d. Install the cylinder head cover sub-assembly LH with the 12 bolts and a new seal washer.

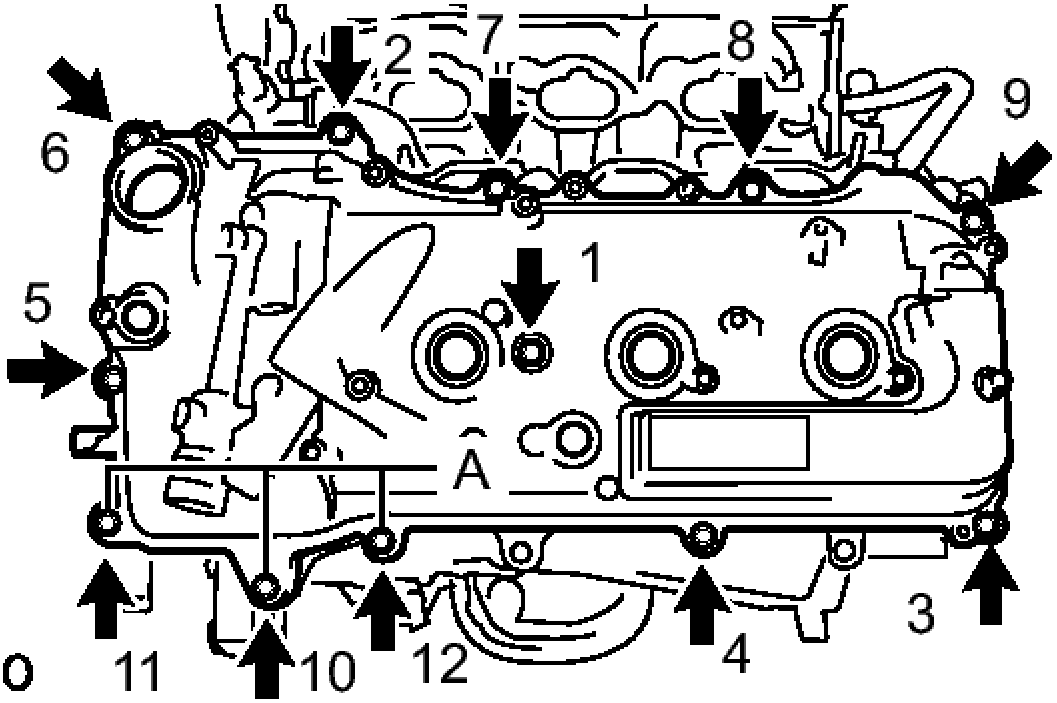

Fig. 291: Locating Gaskets And O-Ring
Courtesy of TOYOTA MOTOR SALES, U.S.A., INC.

Bolts A

Torque: 21 N*m (214 kgf*cm, 15 ft.*lbf)

Except bolts A

Torque: 10 N*m (102 kgf*cm, 7 ft.*lbf)

HINT:

After tightening all bolts, check the tightening torque of 1 and 10. Retighten the bolt if necessary.

43. **INSTALL WATER OUTLET**
    a. Install 2 new gaskets and a new O-ring.

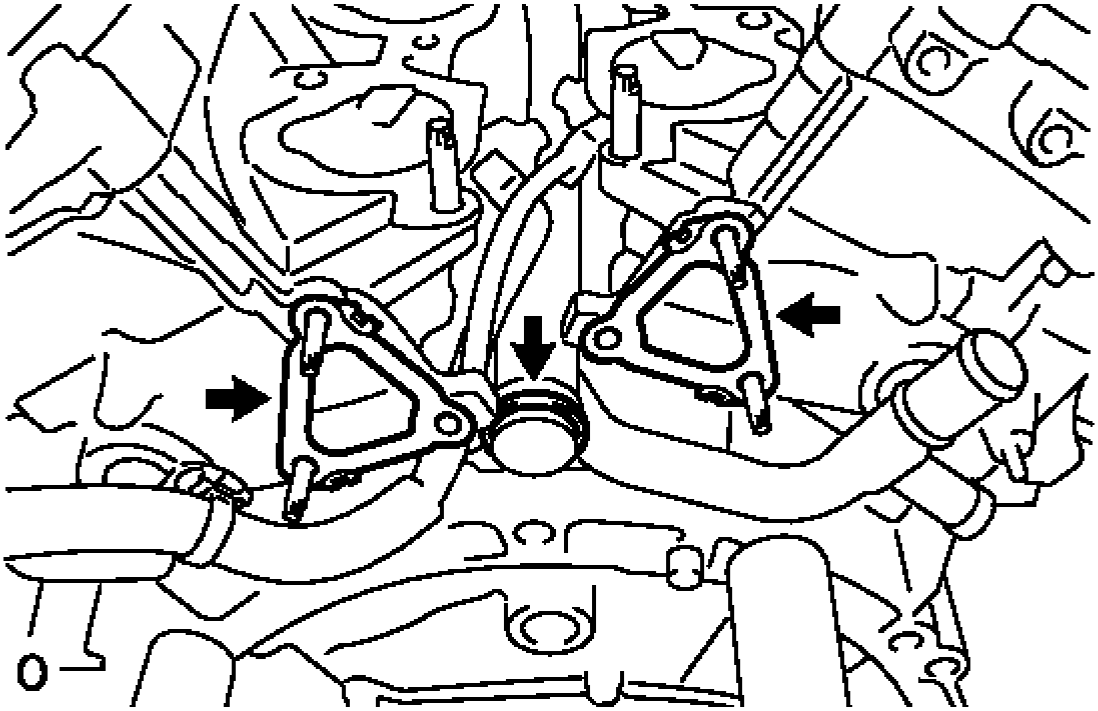

Fig. 292: Locating Gaskets And O-Ring
Courtesy of TOYOTA MOTOR SALES, U.S.A., INC.

HINT:

Apply soapy water to the O-ring.

b. Install the water outlet with the 2 bolts and 4 nuts.

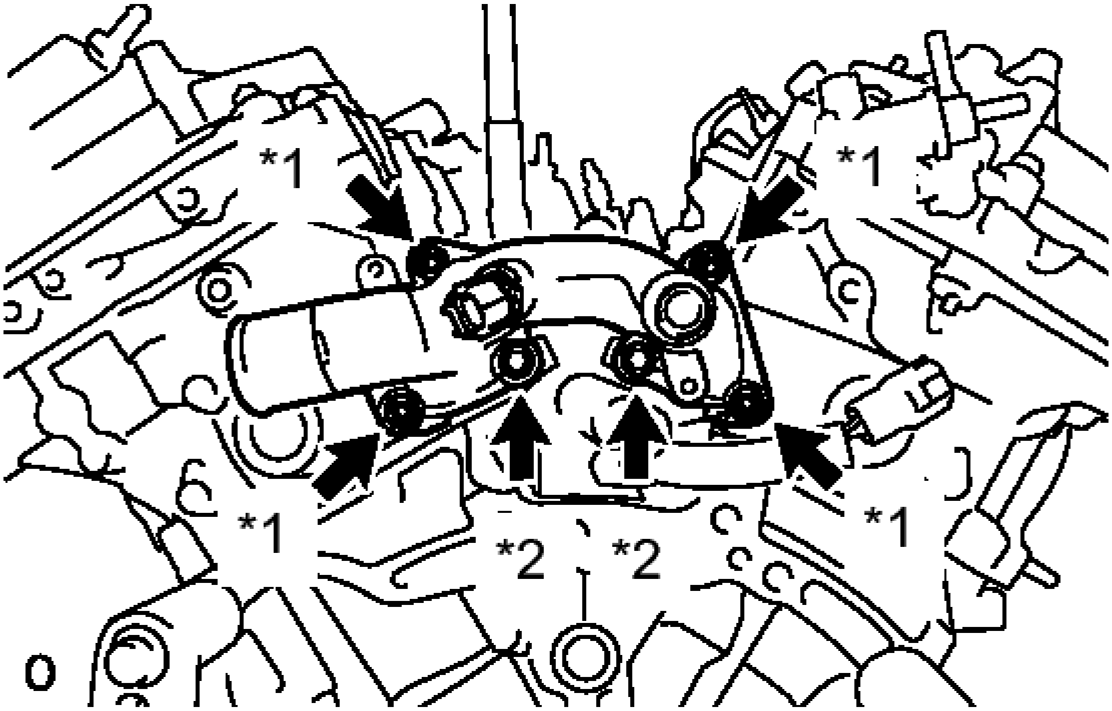

Fig. 293: Identifying Water Outlet With Bolts And Nuts
Courtesy of TOYOTA MOTOR SALES, U.S.A., INC.

TEXT IN ILLUSTRATION

*1	Nut
*2	Bolt

Torque: 10 N*m (102 kgf*cm, 7 ft.*lbf)

NOTE: **Be careful that the O-ring does not get caught between the parts.**

44. **INSTALL ENGINE OIL LEVEL DIPSTICK GUIDE**
    a. Apply a light coat of engine oil to a new O-ring and install it to the engine oil level dipstick guide.

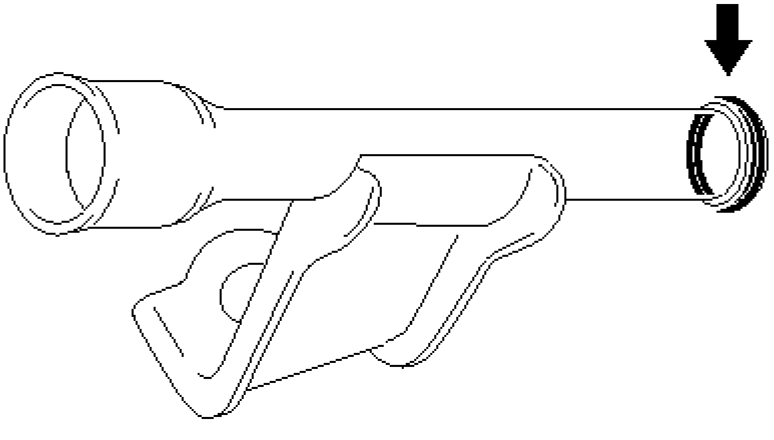

Fig. 294: Identifying Engine Oil Level Dipstick Guide And O-Ring
Courtesy of TOYOTA MOTOR SALES, U.S.A., INC.

b. Install the engine oil level dipstick guide with the bolt.

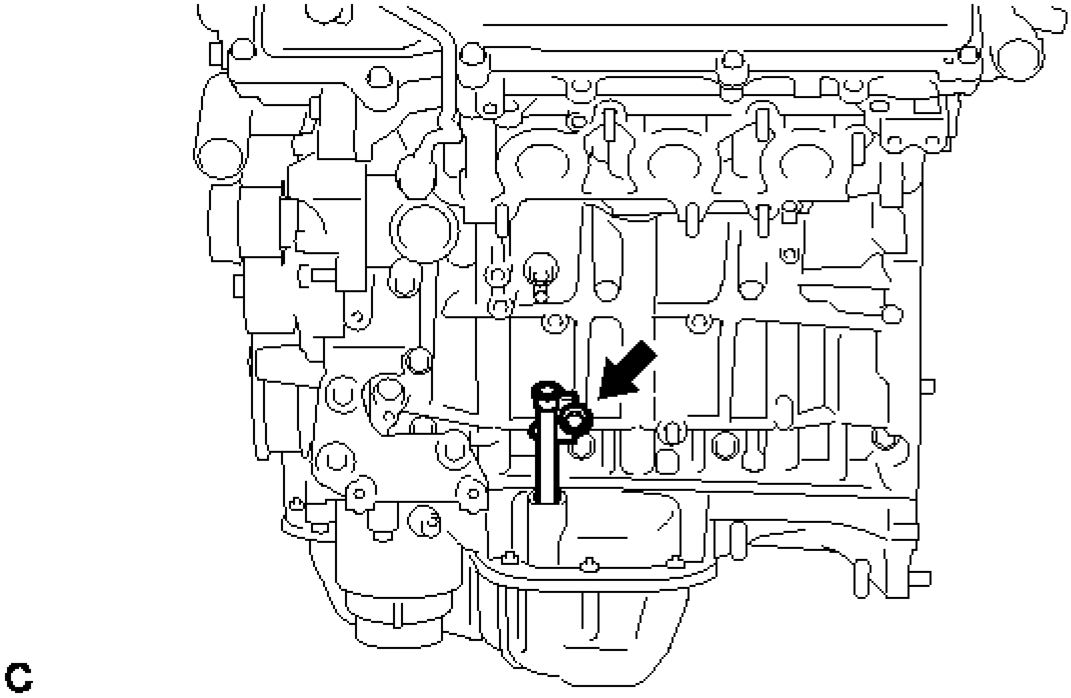

Fig. 295: Identifying Engine Oil Level Dipstick Guide And Bolt
Courtesy of TOYOTA MOTOR SALES, U.S.A., INC.

Torque: 21 N*m (214 kgf*cm, 15 ft.*lbf)

45. **INSTALL CRANKSHAFT PULLEY** See step 2
46. **INSTALL OIL FILTER CAP ASSEMBLY** . Refer to **REPLACEMENT - Step 3**
47. **INSTALL CYLINDER BLOCK WATER DRAIN COCK SUB-ASSEMBLY**
    a. Apply adhesive around the drain cock sub-assembly.

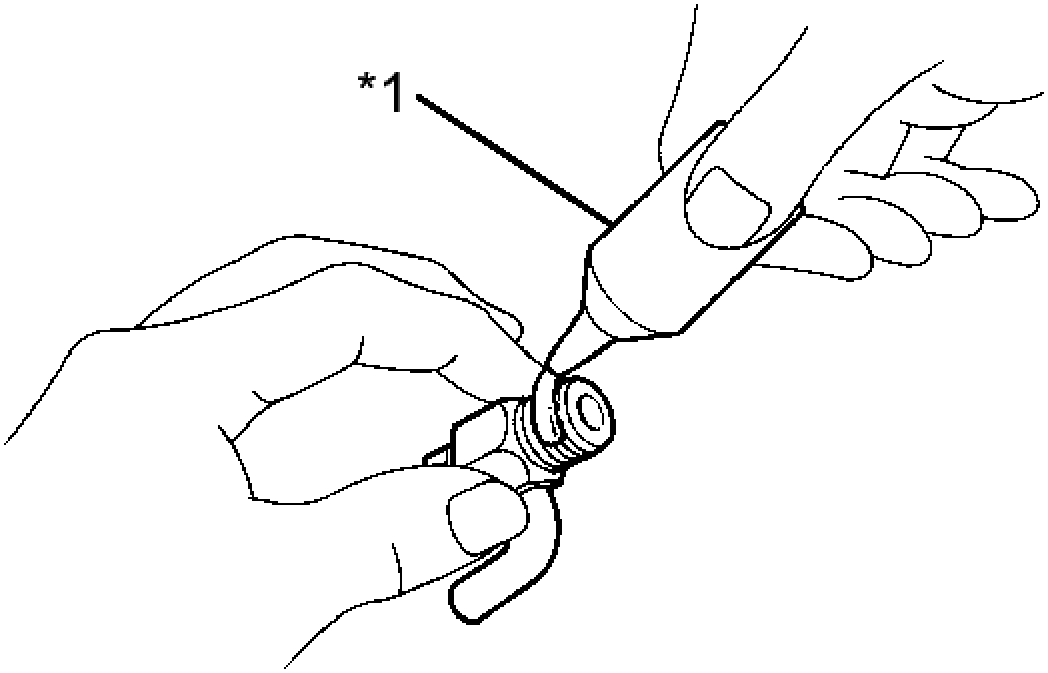

Fig. 296: Applying Adhesive To Drain Cock Sub-Assembly Threads
Courtesy of TOYOTA MOTOR SALES, U.S.A., INC.

TEXT IN ILLUSTRATION

*1	Adhesive

Adhesive

Toyota Genuine Adhesive 1324, Three Bond 1324 or equivalent

b. Install the water drain cocks as shown in the illustration.

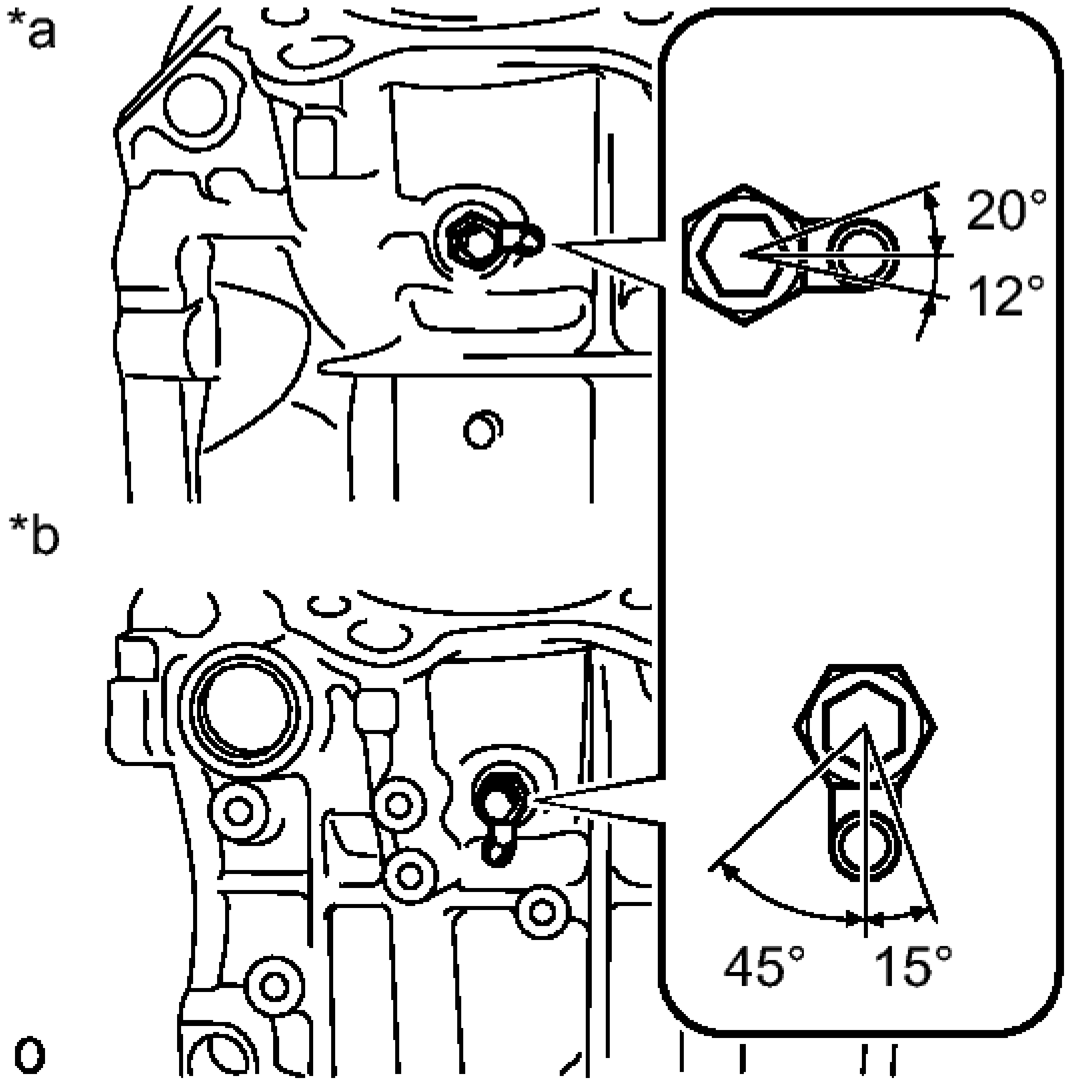

Fig. 297: Identifying Bank 1 & Bank 2 Drain Cock Angles
Courtesy of TOYOTA MOTOR SALES, U.S.A., INC.

TEXT IN ILLUSTRATION

*a	for Bank 1
*b	for Bank 2

Torque: 25 N*m (255 kgf*cm, 18 ft.*lbf)

NOTE: **Do not rotate the drain cocks more than 1 revolution (360°) after tightening the drain cocks with the specified torque.**

c. Install the water drain cock plugs to the water drain cocks.

   Torque: 13 N*m (130 kgf*cm, 9 ft.*lbf)

48. **INSTALL NO. 1 OIL PIPE**

a. Make sure that there is no foreign matter on the mesh of the oil control valve filter LH.

   NOTE: Do not touch the mesh when installing the oil control valve filter.

b. Install the oil control valve filter LH to the oil pipe union. Install new gaskets and temporarily install the oil pipe (on the head cover side) with the union.

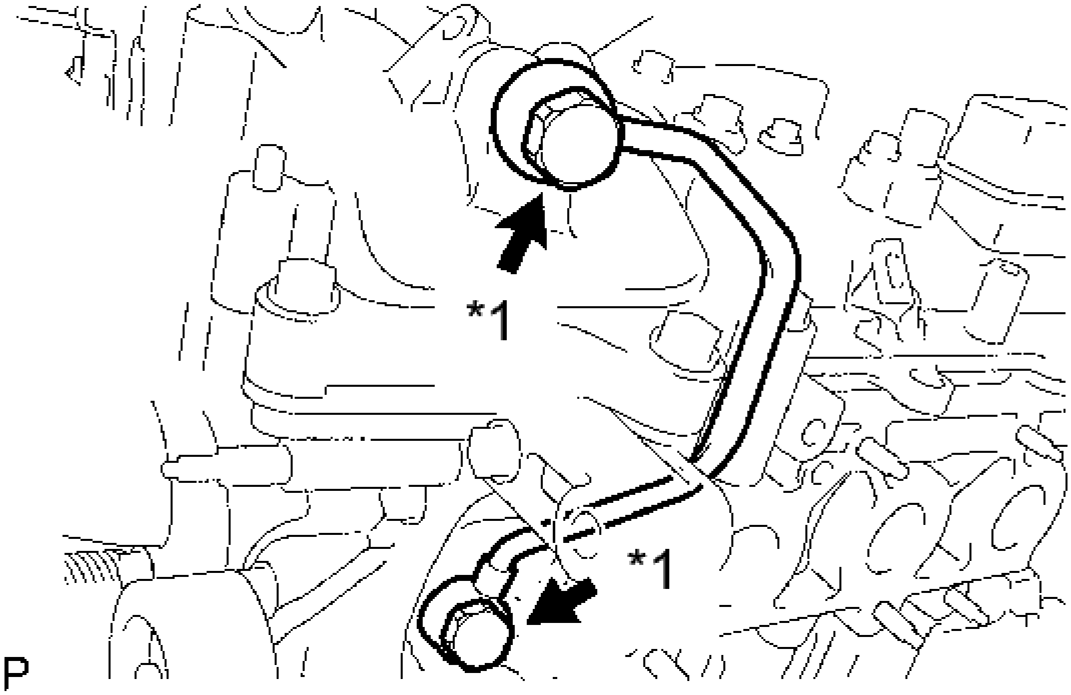

Fig. 298: Identifying Oil Pipe Union And No. 1 Oil Pipe
Courtesy of TOYOTA MOTOR SALES, U.S.A., INC.

TEXT IN ILLUSTRATION

*1	Oil Pipe Union

c. Install a new gasket and temporarily install the oil pipe (on the cylinder head side) with the union.

d. Tighten the oil pipe union (on the head cover side).

   Torque: 65 N*m (663 kgf*cm, 48 ft.*lbf)

e. Tighten the oil pipe union (on the cylinder head side).

Torque: 65 N*m (663 kgf*cm, 48 ft.*lbf)

NOTE: **If the link that connects the gaskets is broken, remove the connecting link by using side cutters or a similar tool.**

49. **INSTALL OIL PIPE**
    a. Make sure that there is no foreign matter on the mesh of the oil control valve filter RH.

    NOTE: **Do not touch the mesh when installing the oil control valve filter.**

    b. Install the oil control valve filter RH to the oil pipe union. Install new gaskets and temporarily install the oil pipe (on the head cover side) with the union.

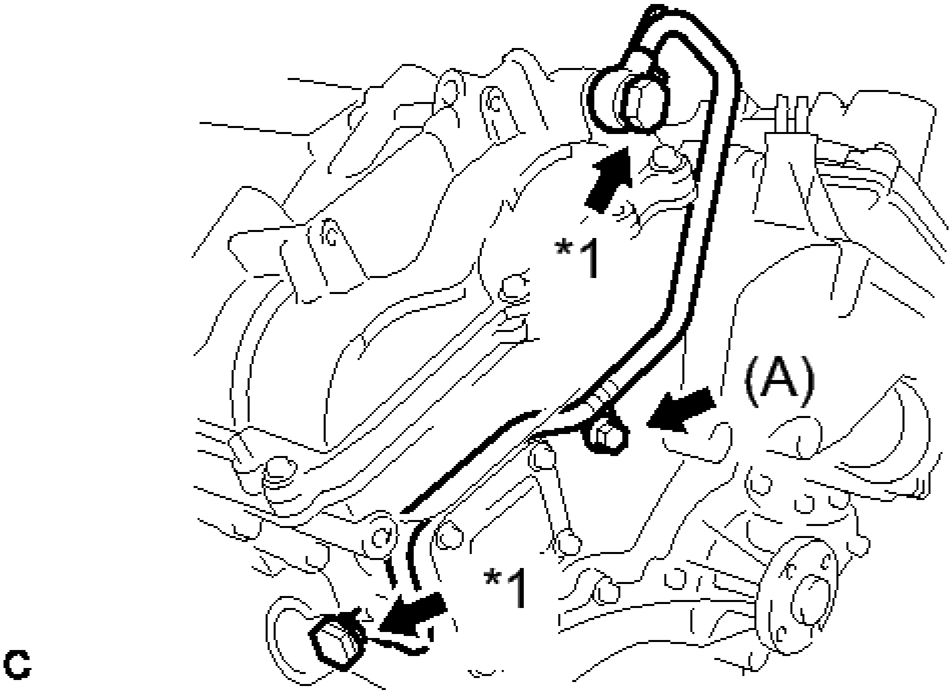

Fig. 299: Identifying Oil Pipe Union
Courtesy of TOYOTA MOTOR SALES, U.S.A., INC.

TEXT IN ILLUSTRATION

*1	Oil Pipe Union

    c. Install a new gasket and temporarily install the oil pipe (on the cylinder head side) with the union.
    d. Install the bolt (A) to the cylinder head.

Torque: 10 N*m (102 kgf*cm, 7 ft.*lbf)

e. Tighten the oil pipe union (on the head cover side).

Torque: 65 N*m (663 kgf*cm, 48 ft.*lbf)

f. Tighten the oil pipe union (on the cylinder head side).

Torque: 65 N*m (663 kgf*cm, 48 ft.*lbf)

NOTE: If the link that connects the gaskets is broken, remove the connecting link by using side cutters or a similar tool.

50. **INSTALL CRANK POSITION SENSOR** . Refer to **INSTALLATION - Step 1**
51. **INSTALL CAMSHAFT TIMING OIL CONTROL VALVE ASSEMBLY** . Refer to **INSTALLATION - Step 1**
52. **INSTALL VVT SENSOR** . Refer to **INSTALLATION - Step 1**
53. **INSTALL VENTILATION VALVE SUB-ASSEMBLY**
    a. Apply adhesive around the ventilation valve sub-assembly.

    Adhesive

    Toyota Genuine Adhesive 1324, Three Bond 1324 or equivalent

    b. Using a deep socket wrench 19 mm, install the ventilation valve sub-assembly.

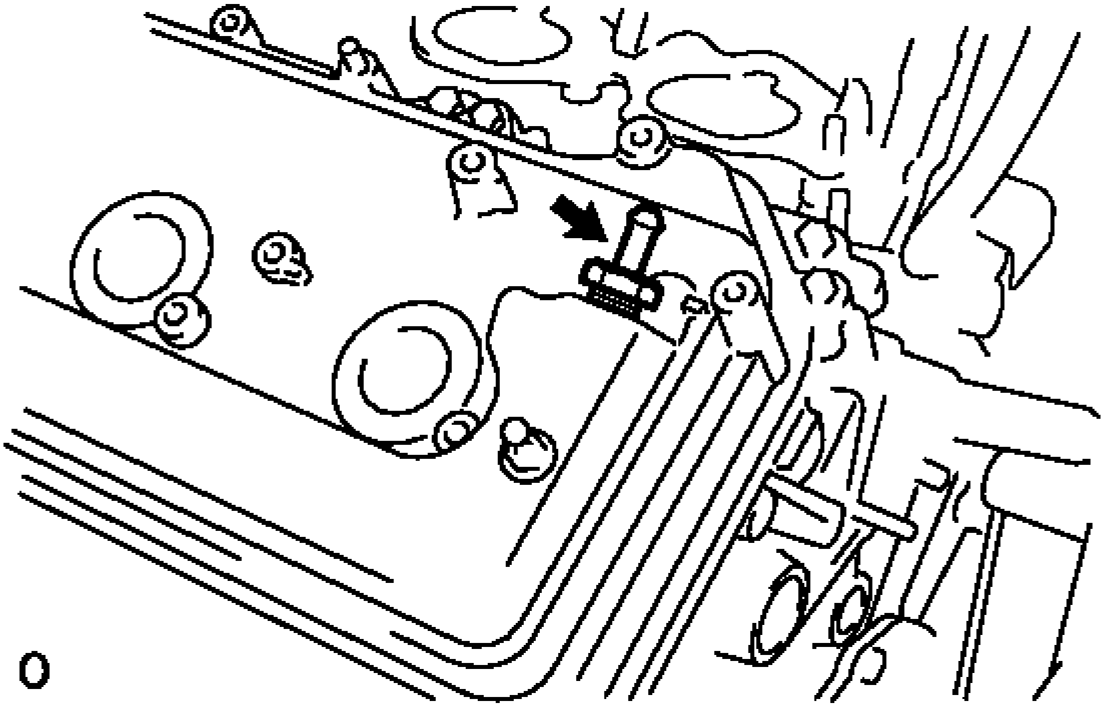

Fig. 300: Identifying Ventilation Valve Sub-Assembly
Courtesy of TOYOTA MOTOR SALES, U.S.A., INC.

Torque: 27 N*m (275 kgf*cm, 20 ft.*lbf)

54. **INSTALL SPARK PLUG** . Refer to **INSTALLATION - Step 1**
55. **INSTALL OIL FILLER CAP SUB-ASSEMBLY**
    a. Install a new oil filler gasket.
    b. Install the oil filler cap sub-assembly.

INSTALLATION

INSTALLATION

HINT:

Perform "Inspection After Repair" after replacing the engine assembly. Refer to **INITIALIZATION** .

1. **INSTALL ENGINE COOLANT TEMPERATURE SENSOR**
    a. Using a 19 mm deep socket wrench, install the engine coolant temperature sensor and a new gasket.

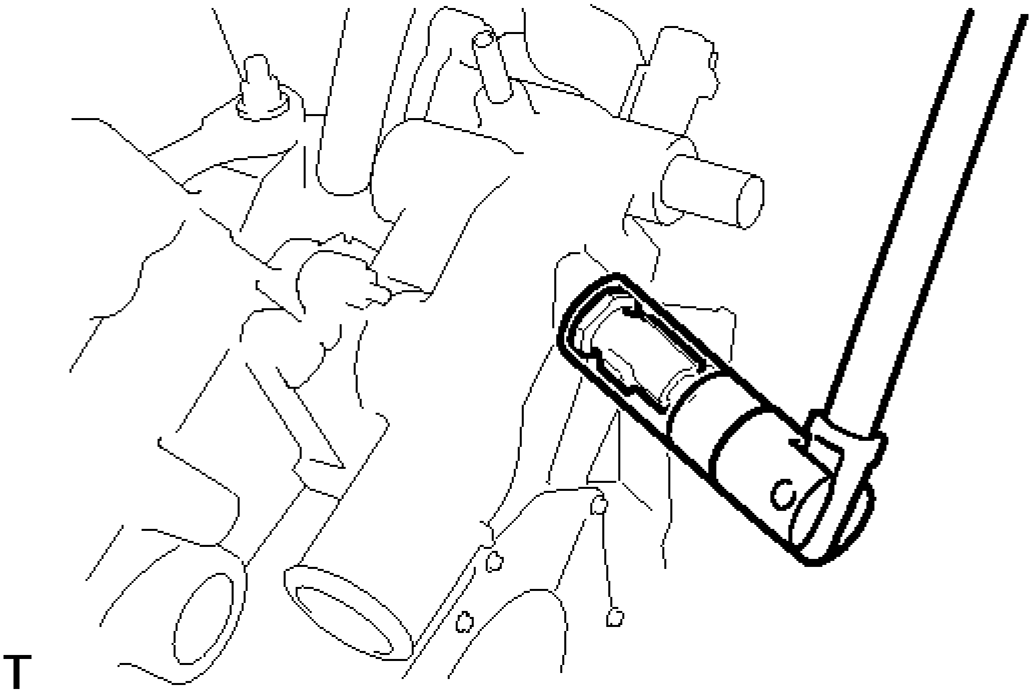

Fig. 301: Removing/Installing Engine Coolant Temperature Sensor With Deep Socket Wrench
Courtesy of TOYOTA MOTOR SALES, U.S.A., INC.

Torque: 20 N*m (204 kgf*cm, 15 ft.*lbf)

2. **INSTALL KNOCK SENSOR WIRE**
    a. Connect the 2 clamps, 2 knock sensor connectors and knock sensor wire connector.

3. **INSTALL KNOCK CONTROL SENSOR** . Refer to **INSTALLATION - Step 1**
4. **INSTALL ENGINE OIL PRESSURE SWITCH ASSEMBLY**
    a. Clean the threads of the oil pressure switch. Apply adhesive to 2 or 3 threads of the oil pressure switch assembly.

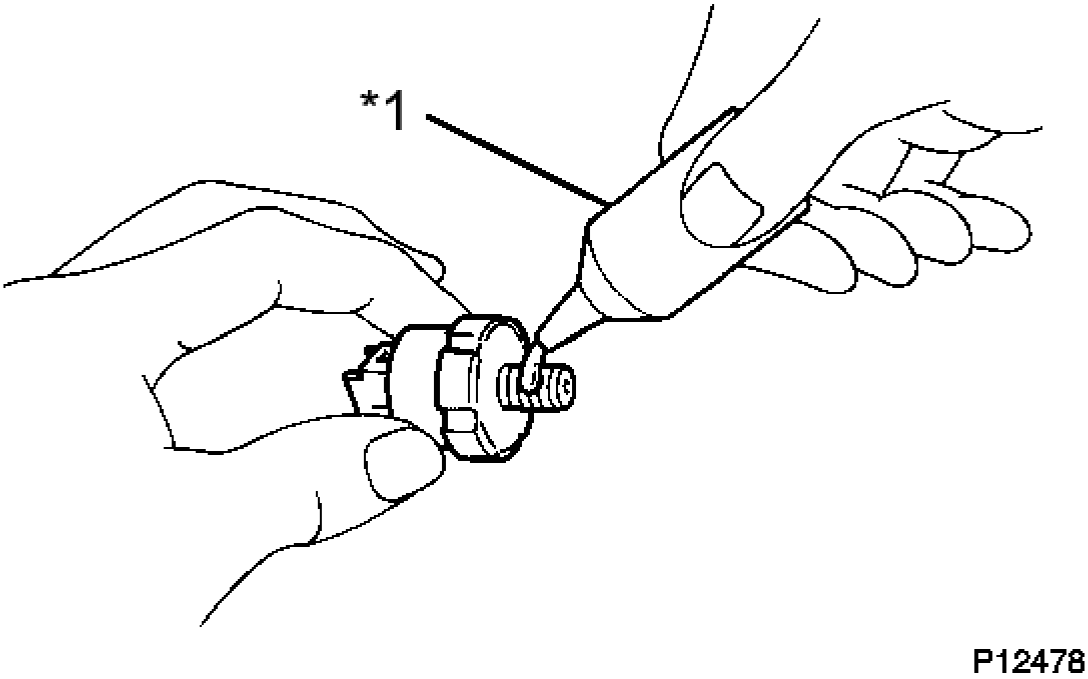

Fig. 302: Applying Adhesive To Oil Pressure Switch Threads
Courtesy of TOYOTA MOTOR SALES, U.S.A., INC.

TEXT IN ILLUSTRATION

*1	Adhesive

Adhesive

Toyota Genuine Adhesive 1344, Three Bond 1344 or equivalent

    b. Using a deep socket wrench, install the oil pressure switch.

Torque: 15 N*m (153 kgf*cm, 11 ft.*lbf)

NOTE: **Do not start the engine within 1 hour after installation to prevent oil leaks.**

5. **INSTALL NO. 1 VACUUM SWITCHING VALVE**
    a. Install the No. 1 vacuum switching valve with the bolt.

Torque: 10 N*m (102 kgf*cm, 7 ft.*lbf)

6. **INSTALL WATER PUMP PULLEY**
    a. Temporarily install the water pump pulley with the 4 bolts.
    b. Using SST, hold the water pump pulley.
        - **SST: 09960-10010**
          09962-01000
          09963-00700
    c. Tighten the 4 bolts.

       Torque: 21 N*m (214 kgf*cm, 15 ft.*lbf)

7. **INSTALL NO. 2 IDLER PULLEY SUB-ASSEMBLY**
    a. Install the idler pulley cover plate, No. 2 idler pulley sub-assembly and No. 2 idler pulley cover plate with the bolt.

       Torque: 54 N*m (550 kgf*cm, 40 ft.*lbf)

8. **INSTALL NO. 2 TIMING GEAR COVER**
    a. Install the No. 2 timing gear cover with the 2 bolts.

       Torque: 6.0 N*m (61 kgf*cm, 53 in.*lbf)

9. **INSTALL V-RIBBED BELT TENSIONER ASSEMBLY**
    a. Temporarily install the V-ribbed belt tensioner assembly with the 5 bolts.

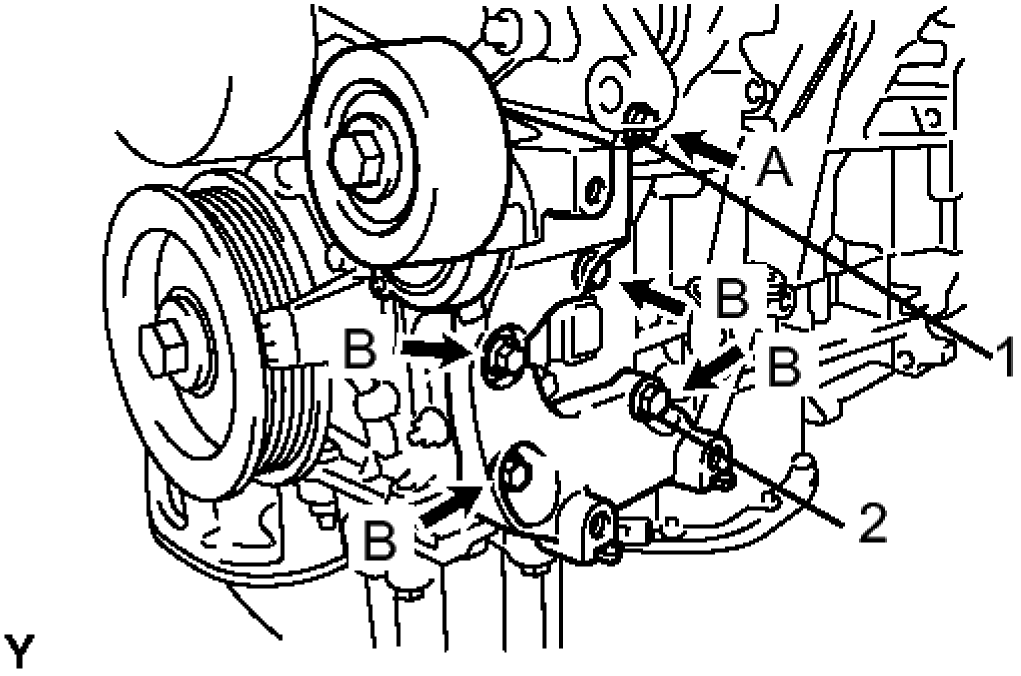

Fig. 303: Identifying V-Ribbed Belt Tensioner

Courtesy of TOYOTA MOTOR SALES, U.S.A., INC.

HINT:

Each bolt length is as follows:

A: 70 mm (2.76 in.)

B: 33 mm (1.30 in.)

b. Install the V-ribbed belt tensioner assembly by tightening the bolt 1 and bolt 2 in the order shown in the illustration.

Torque: 43 N*m (438 kgf*cm, 32 ft.*lbf)

c. Tighten the other bolts.

Torque: 43 N*m (438 kgf*cm, 32 ft.*lbf)

10. INSTALL EXHAUST MANIFOLD SUB-ASSEMBLY LH

a. Install a new gasket as shown in the illustration.

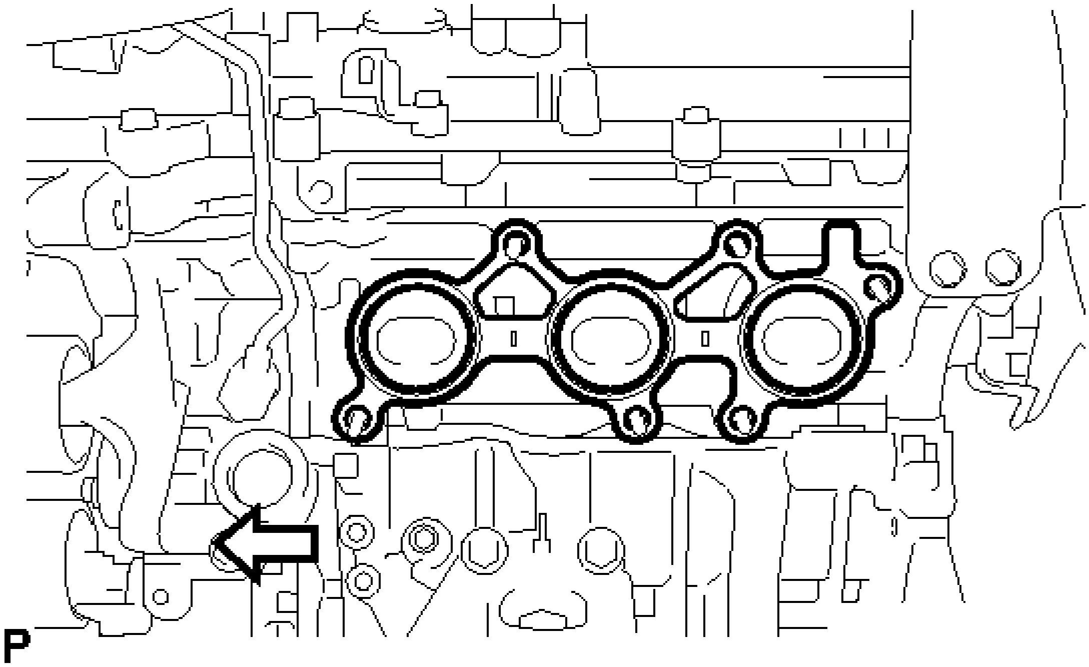

Fig. 304: Identifying Exhaust Manifold Gasket Engine Front Position LH
Courtesy of TOYOTA MOTOR SALES, U.S.A., INC.

TEXT IN ILLUSTRATION

Engine

Front

b. Install the exhaust manifold sub-assembly LH with the 6 nuts in the order shown in the illustration.

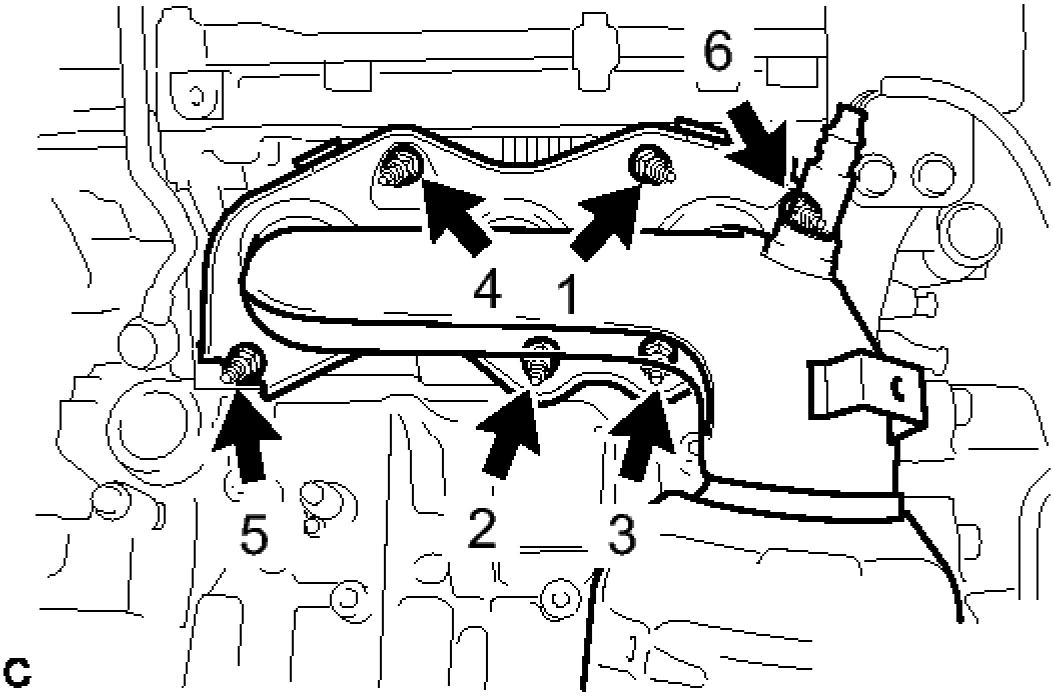

Fig. 305: Identifying Exhaust Manifold Sub-Assembly LH
Courtesy of TOYOTA MOTOR SALES, U.S.A., INC.

Torque: 21 N*m (214 kgf*cm, 15 ft.*lbf)

11. **INSTALL NO. 2 EXHAUST MANIFOLD HEAT INSULATOR** . Refer to **INSTALLATION - Step 3**
12. **INSTALL NO. 2 MANIFOLD STAY** . Refer to **INSTALLATION - Step 2**
13. **INSTALL NO. 2 ENGINE OIL LEVEL DIPSTICK GUIDE**
    a. Install a new O-ring to the No. 2 engine oil level dipstick guide.
    b. Apply a light coat of engine oil to the O-ring.
    c. Push in the No. 2 engine oil level dipstick guide end into the engine oil level dipstick guide.
    d. Install the No. 2 engine oil level dipstick guide with the bolt.

    Torque: 21 N*m (214 kgf*cm, 15 ft.*lbf)

    e. Install the engine oil level dipstick.
14. **INSTALL EXHAUST MANIFOLD SUB-ASSEMBLY RH**
    a. Install a new gasket as shown in the illustration.

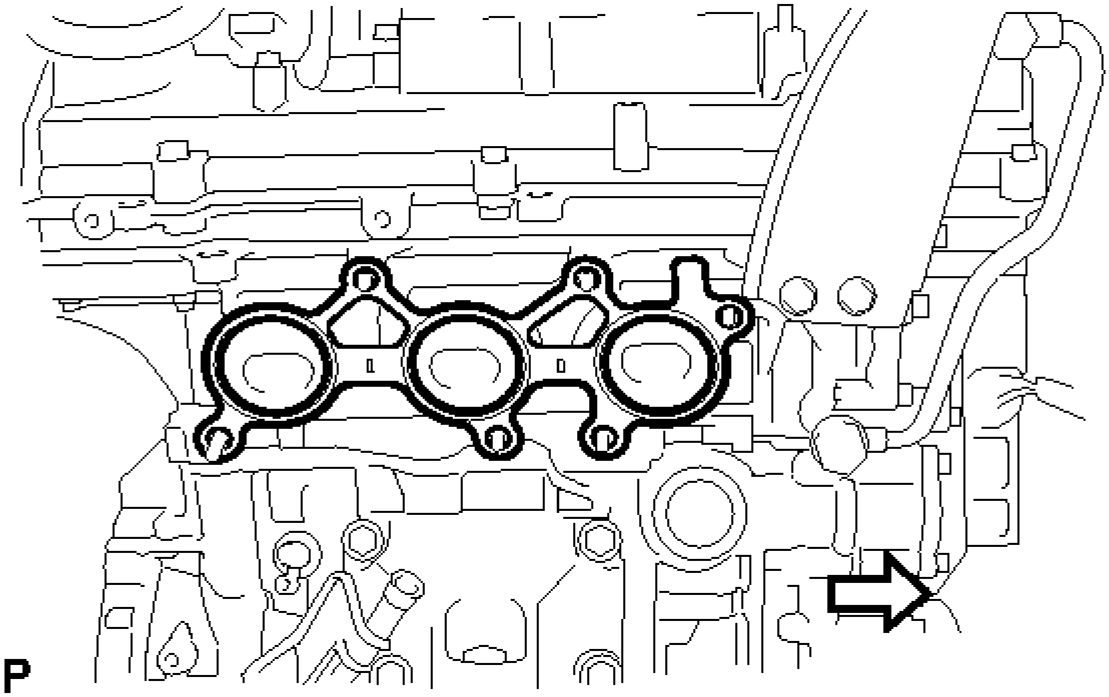

Fig. 306: Identifying Exhaust Manifold Gasket Engine Front Position RH
Courtesy of TOYOTA MOTOR SALES, U.S.A., INC.

TEXT IN ILLUSTRATION

	Engine Front

b. Install the exhaust manifold sub-assembly RH with the 6 nuts in the order shown in the illustration.

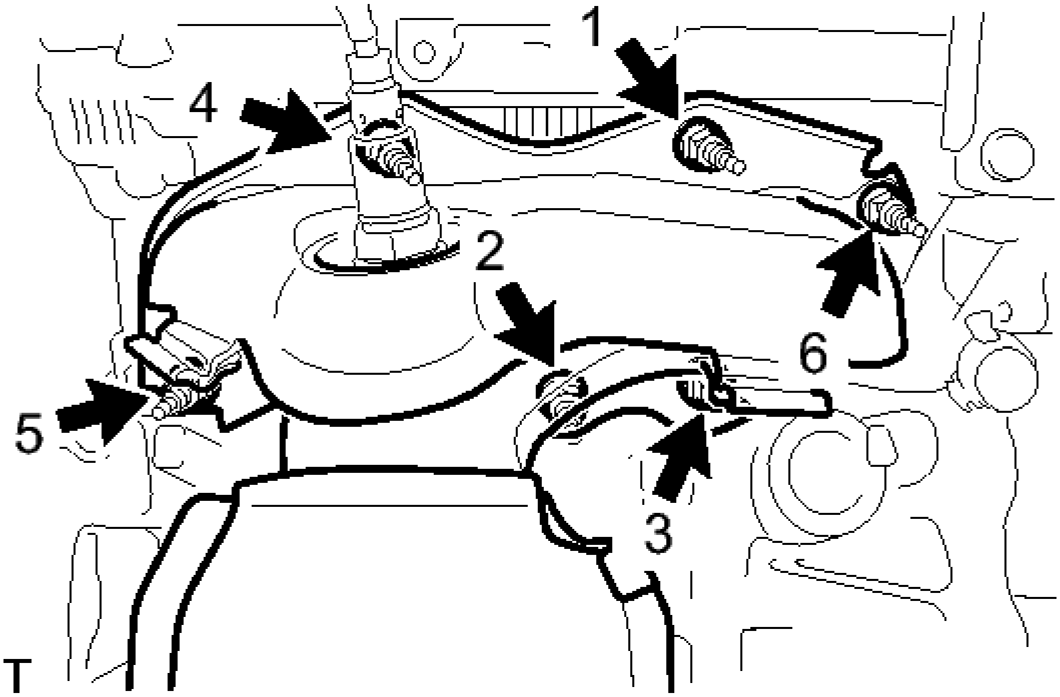

Fig. 307: Identifying Exhaust Manifold Sub-Assembly Nuts RH
Courtesy of TOYOTA MOTOR SALES, U.S.A., INC.

Torque: 21 N*m (214 kgf*cm, 15 ft.*lbf)

15. **INSTALL INTAKE MANIFOLD**
    1. Set a new gasket on each cylinder head.

NOTE:

- **Align the port holes of the gasket and cylinder head.**
- **Make sure that the gasket is installed in the correct direction.**

    2. Set the intake manifold on the cylinder heads.
    3. Install and tighten the 6 bolts and 4 nuts uniformly in several steps.

Torque: 21 N*m (214 kgf*cm, 15 ft.*lbf)

16. **INSTALL NO. 2 ENGINE MOUNTING STAY RH**
    1. Install the No. 2 engine mounting stay RH with the bolt.

Torque: 21 N*m (214 kgf*cm, 15 ft.*lbf)

17. **INSTALL IGNITION COIL ASSEMBLY** . Refer to **INSTALLATION - Step 2**
18. **INSTALL NO. 1 SURGE TANK STAY**

NOTE: **Do not apply oil to the bolt as listed below:**

Oil Application Prohibited Bolt
Bolt for No. 1 surge tank stay and cylinder head cover

a. Install the No. 1 surge tank stay with the bolt.

Torque: 21 N*m (214 kgf*cm, 15 ft.*lbf)

19. **INSTALL THROTTLE BODY BRACKET**

NOTE: Do not apply oil to the bolt as listed below:

Oil Application Prohibited Bolt
Bolt for throttle body bracket and cylinder head cover

a. Install the throttle body bracket with the bolt.

Torque: 21 N*m (214 kgf*cm, 15 ft.*lbf)

20. **INSTALL INTAKE AIR SURGE TANK ASSEMBLY** . Refer to **INSTALLATION - Step 6**
21. **INSTALL ENGINE HANGERS**
    a. Install the 2 engine hangers with the 4 bolts as shown in the illustration.

PART NO.

Item	Part No.
No. 1 engine	12281-31120

hanger	
No. 2 engine hanger	12282-31100
Bolt	90119-A0117

Torque: 33 N*m (337 kgf*cm, 24 ft.*lbf)

b. Attach an engine sling device and hang the engine with a chain block.

CYLINDER HEAD

COMPONENTS

ILLUSTRATION

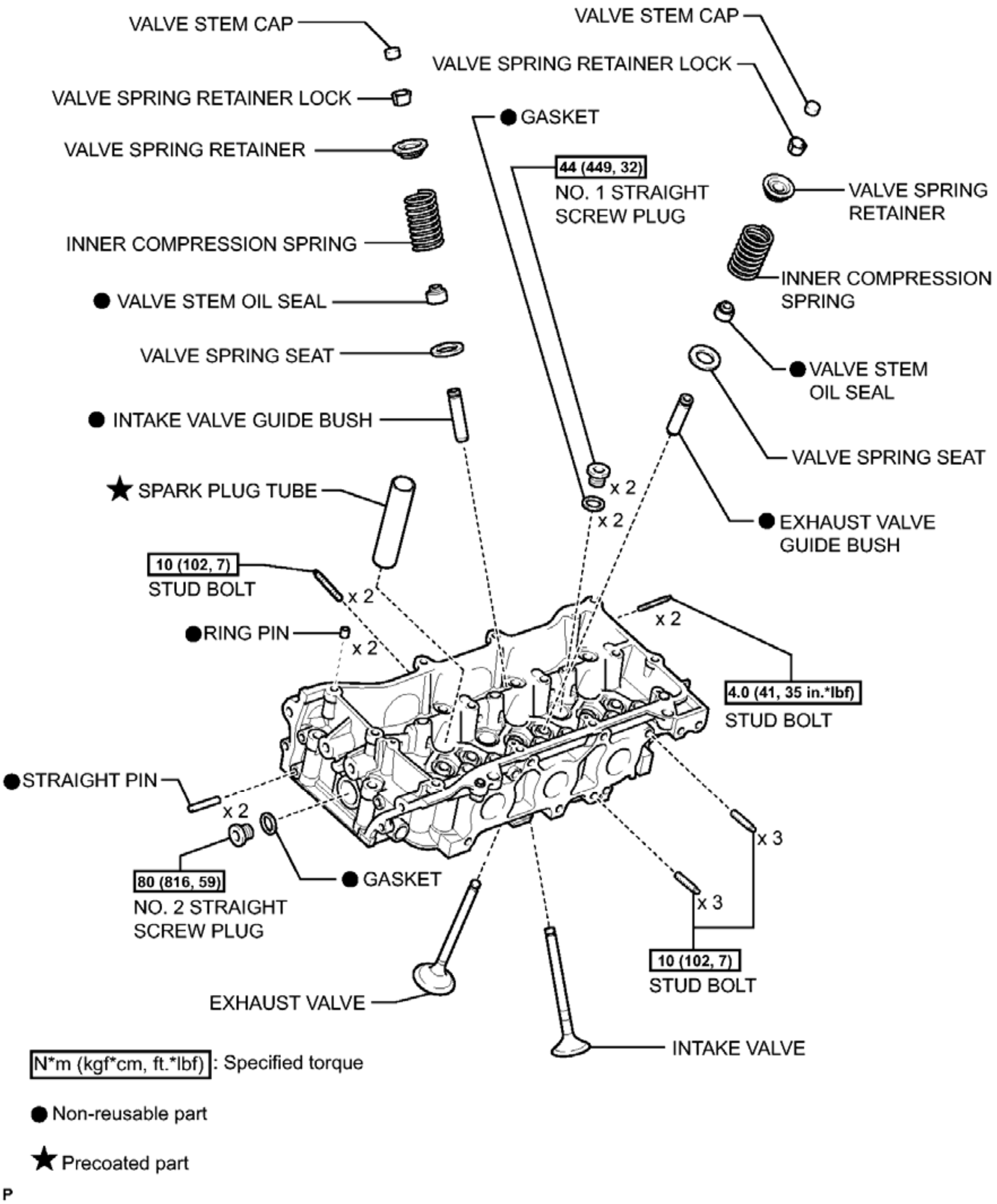
VALVE STEM CAP
VALVE SPRING RETAINER LOCK
VALVE SPRING RETAINER
INNER COMPRESSION SPRING
● VALVE STEM OIL SEAL
VALVE SPRING SEAT
● INTAKE VALVE GUIDE BUSH
★ SPARK PLUG TUBE
10 (102, 7)
STUD BOLT
x 2
●RING PIN
x 2
●STRAIGHT PIN
x 2
80 (816, 59)
NO. 2 STRAIGHT SCREW PLUG
● GASKET
EXHAUST VALVE
INTAKE VALVE
VALVE STEM CAP
VALVE SPRING RETAINER LOCK
● GASKET
44 (449, 32)
NO. 1 STRAIGHT SCREW PLUG
VALVE SPRING RETAINER
INNER COMPRESSION SPRING
● VALVE STEM OIL SEAL
VALVE SPRING SEAT
x 2
x 2
● EXHAUST VALVE GUIDE BUSH
x 2
4.0 (41, 35 in.*lbf)
STUD BOLT
x 3
x 3
10 (102, 7)
STUD BOLT
N*m (kgf*cm, ft.*lbf) : Specified torque
● Non-reusable part
★ Precoated part
P

Fig. 308: Identifying Cylinder Head Replacement Components With Torque Specifications
Courtesy of TOYOTA MOTOR SALES, U.S.A., INC.

DISASSEMBLY

DISASSEMBLY

1. **REMOVE VALVE STEM CAP**

a. Remove the valve stem caps from the cylinder heads.

HINT:

Arrange the removed parts in the correct order.

2. **REMOVE INTAKE VALVE**

a. Using SST, compress the inner compression spring and remove the valve spring retainer locks.

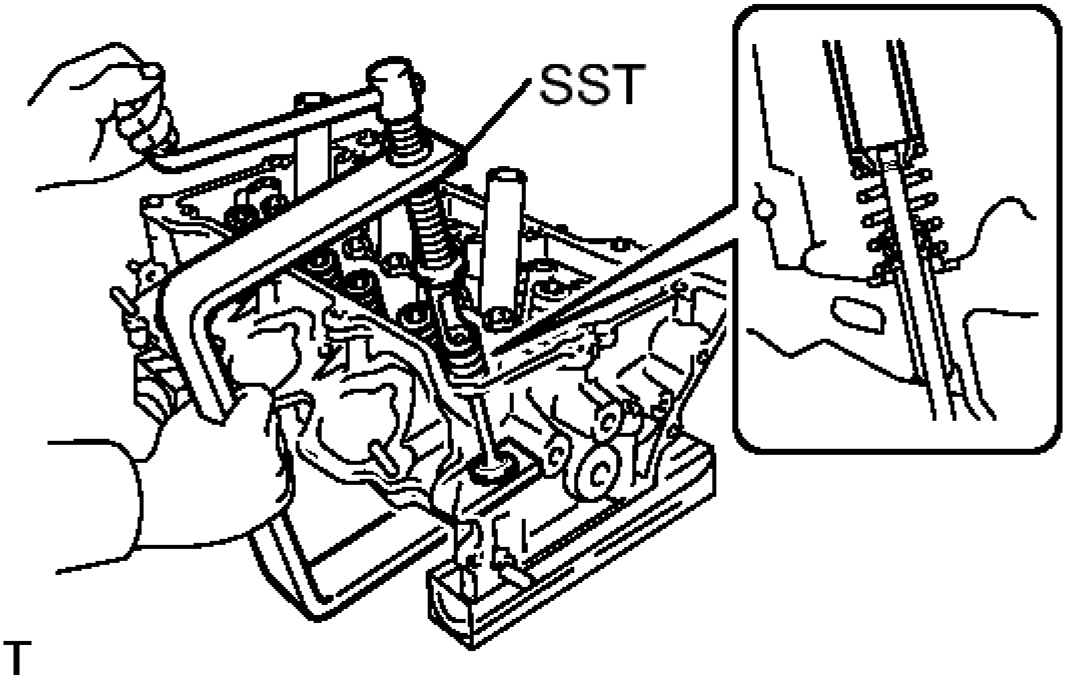

Fig. 309: Compressing Compression Spring
Courtesy of TOYOTA MOTOR SALES, U.S.A., INC.

- **SST: 09202-70020**
  09202-00010
  09202-01010
  09202-01020

b. Remove the valve spring retainer, inner compression spring and intake valve.

HINT:

Arrange the removed parts in the correct order.

3. **REMOVE EXHAUST VALVE**

a. Using SST, compress the inner compression spring and remove the valve spring retainer locks.

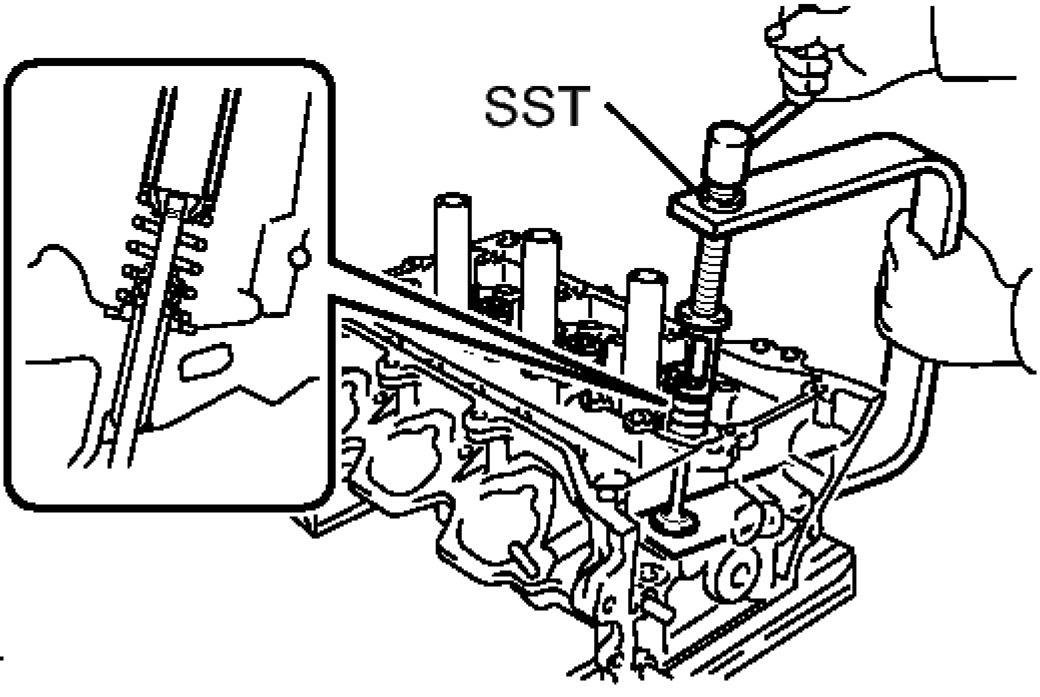

Fig. 310: Compressing Compression Spring
Courtesy of TOYOTA MOTOR SALES, U.S.A., INC.

- **SST: 09202-70020**
  09202-00010
  09202-01010
  09202-01020

b. Remove the valve spring retainer, inner compression spring and exhaust valve.

   HINT:

   Arrange the removed parts in the correct order.

4. **REMOVE VALVE STEM OIL SEAL**
   a. Using needle-nose pliers, remove the valve stem oil seals.

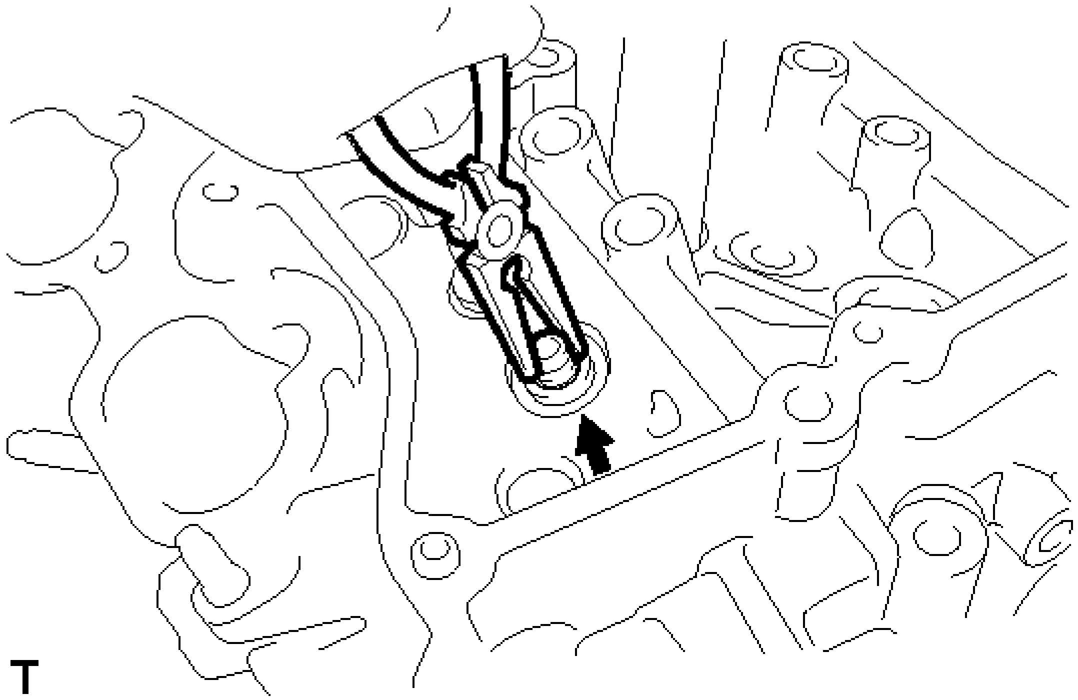

Fig. 311: Removing Valve Stem Oil Seal Using Needle-Nose Pliers
Courtesy of TOYOTA MOTOR SALES, U.S.A., INC.

5. **REMOVE VALVE SPRING SEAT**
   a. Using compressed air and a Magnet Hand, remove the valve spring seats by blowing air onto them.

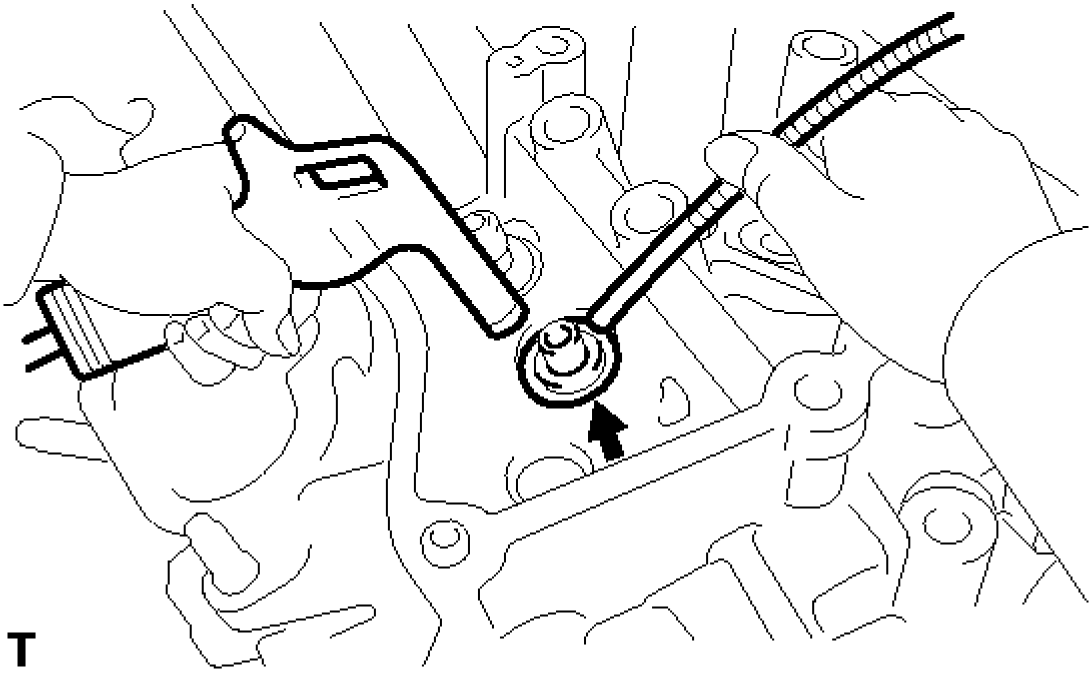

Fig. 312: Removing Valve Spring Seat

Courtesy of TOYOTA MOTOR SALES, U.S.A., INC.

6. **REMOVE NO. 1 STRAIGHT SCREW PLUG**
   a. Using a 10 mm hexagon wrench, remove the 4 No. 1 straight screw plugs and 4 gaskets.

*a

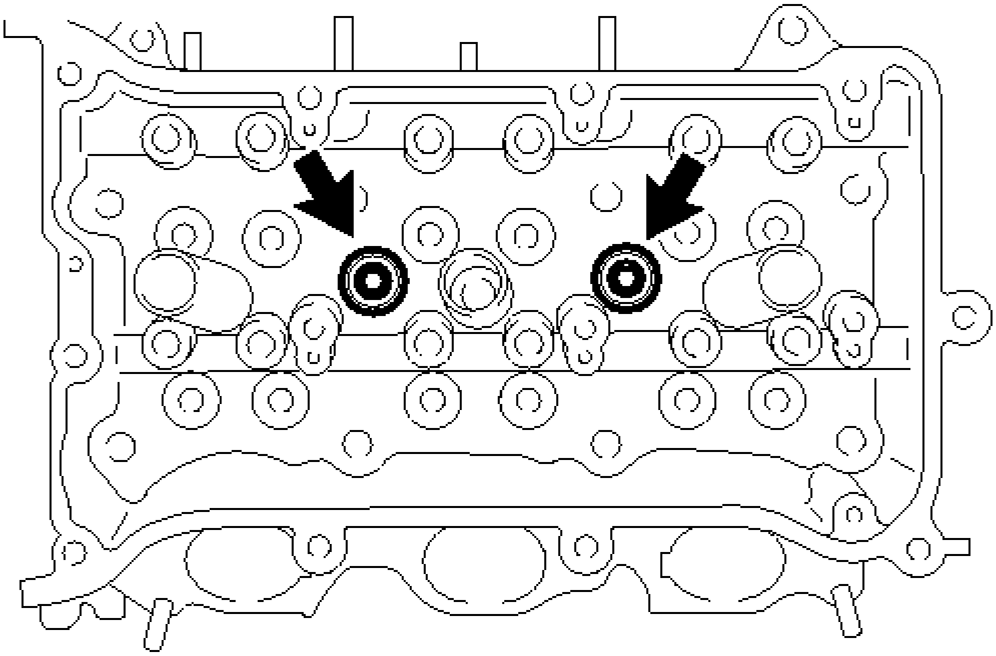

*b

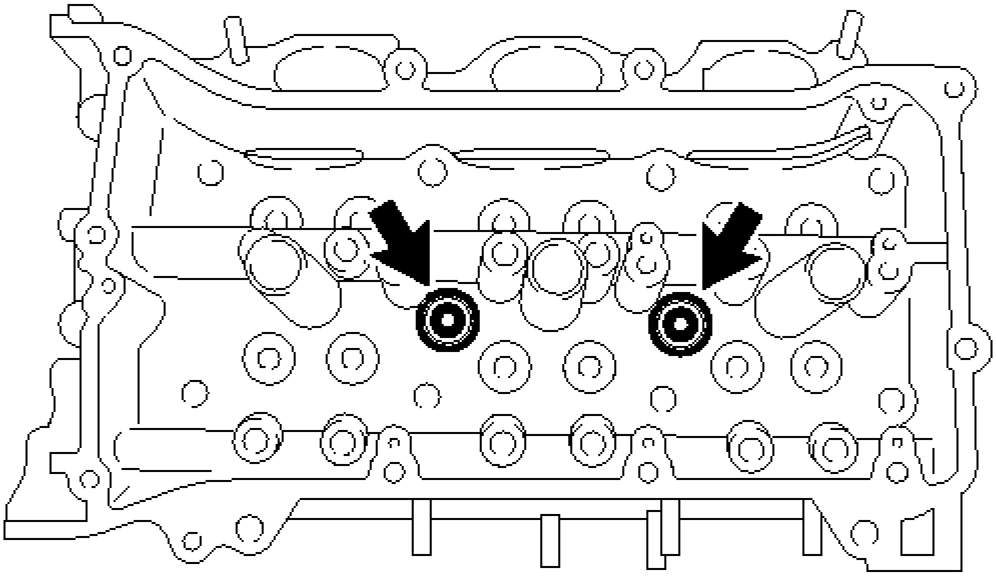

Fig. 313: Locating No. 1 Straight Screw Plugs
Courtesy of TOYOTA MOTOR SALES, U.S.A., INC.

TEXT IN ILLUSTRATION

*a	for Bank 1
*b	for Bank 2

NOTE: **If water leaks from a straight screw plug or the plug is corroded, replace it.**

7. **REMOVE NO. 2 STRAIGHT SCREW PLUG**
    a. Using a 14 mm hexagon wrench, remove the 2 No. 2 straight screw plugs and 2 gaskets.

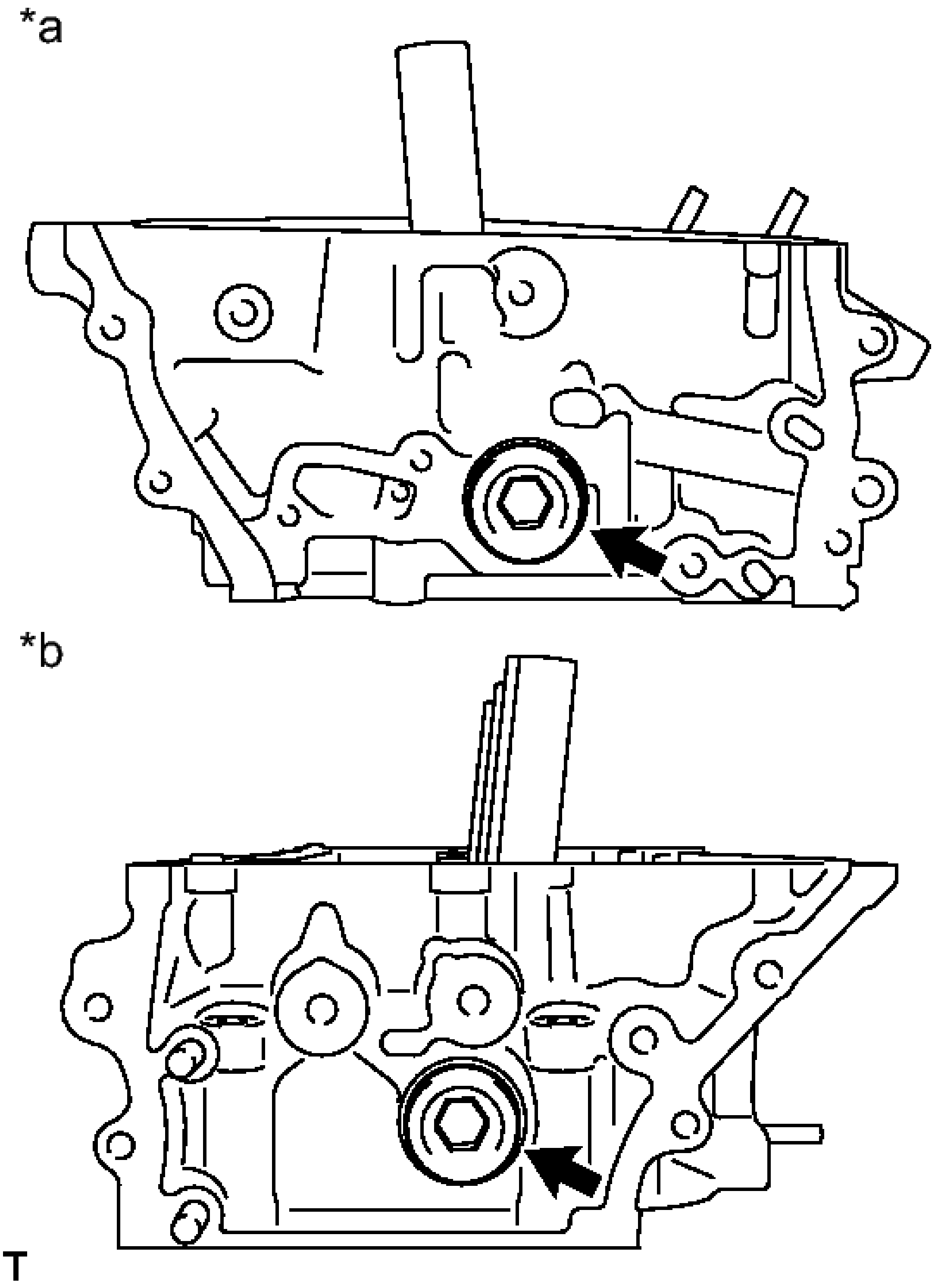

Fig. 314: Locating No. 2 Straight Screw Plugs
Courtesy of TOYOTA MOTOR SALES, U.S.A., INC.

TEXT IN ILLUSTRATION

	for

*a	Bank 1
*b	for Bank 2

NOTE: **If water leaks from a straight screw plug or the plug is corroded, replace it.**

INSPECTION

INSPECTION

1. **INSPECT CYLINDER HEAD SUB-ASSEMBLY**

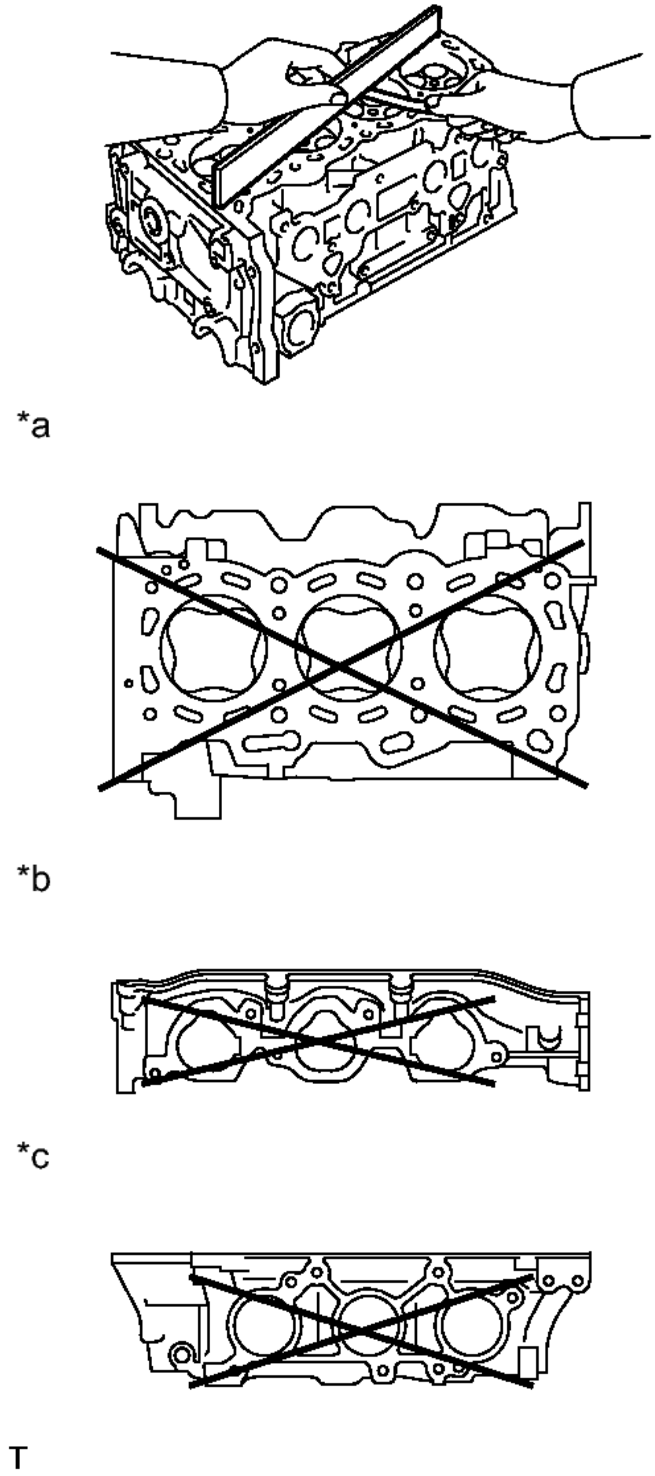

Fig. 315: Inspecting Cylinder Head Sub-Assembly
Courtesy of TOYOTA MOTOR SALES, U.S.A., INC.

TEXT IN ILLUSTRATION

*a	Cylinder Head Lower Side
*b	Intake Side
*c	Exhaust Side

a. Using a precision straightedge and feeler gauge, measure the warpage of the contact surface of the cylinder block sub-assembly and manifolds.

Standard Warpage

Item	Warpage
Cylinder head lower	0.05 mm (0.00197 in.)
Intake	0.08 mm (0.00315 in.)
Exhaust	0.08 mm (0.00315 in.)

Maximum Warpage

Item	Warpage
Cylinder head lower	0.10 mm (0.00394 in.)
Intake	0.10 mm (0.00394 in.)
Exhaust	0.10 mm (0.00394 in.)

If the warpage is greater than the maximum, replace the cylinder head sub-assembly.

2. **INSPECT CYLINDER HEAD FOR CRACKS**
   a. Using a dye penetrant, check the intake ports, exhaust ports and cylinder surface for cracks.

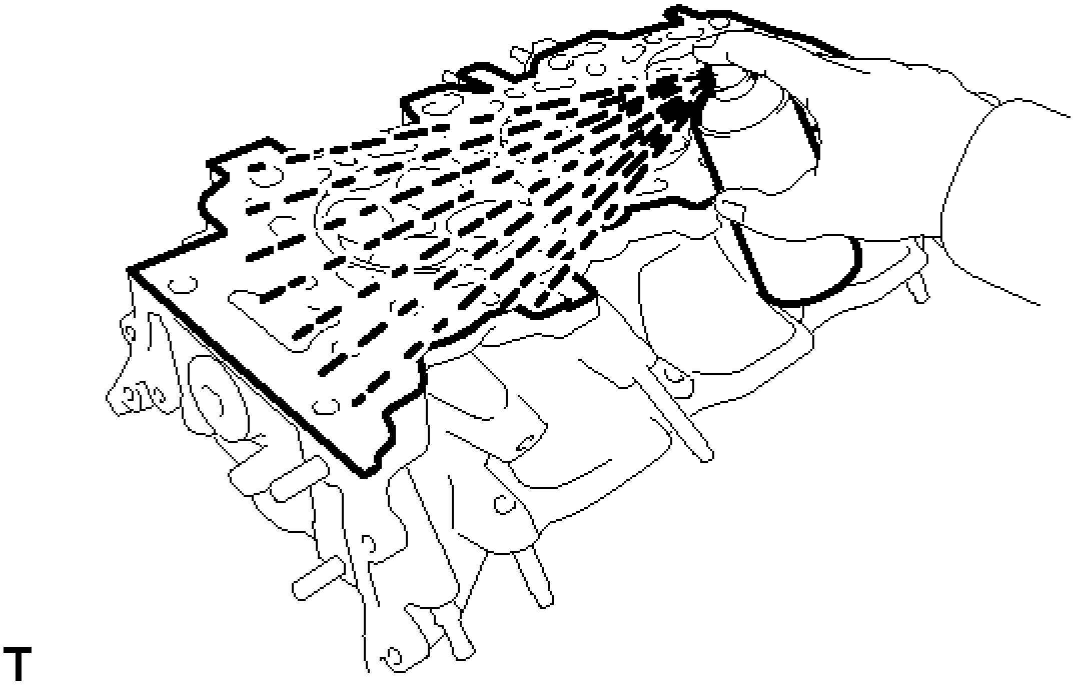

Fig. 316: Checking Intake Ports, Exhaust Ports And Cylinder Surface For Cracks
Courtesy of TOYOTA MOTOR SALES, U.S.A., INC.

If cracked, replace the cylinder head sub-assembly.

3. **INSPECT INTAKE VALVE**
   a. Using a micrometer, measure the diameter of the valve stem.

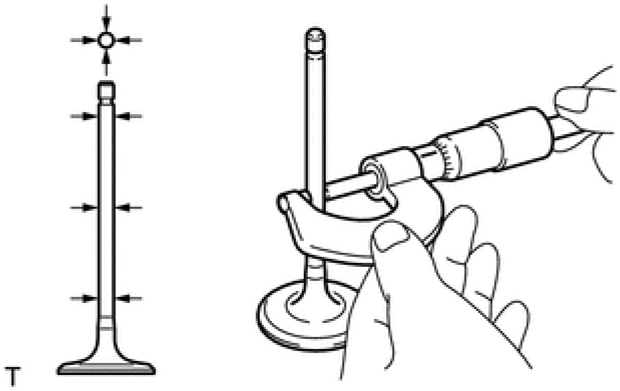

Fig. 317: Measuring Diameter Of Valve Stem
Courtesy of TOYOTA MOTOR SALES, U.S.A., INC.

Valve stem diameter

5.470 to 5.485 mm (0.2154 to 0.2159 in.)

If the valve stem is not as specified, check the oil clearance.

b. Using a vernier caliper, measure the valve head margin thickness.

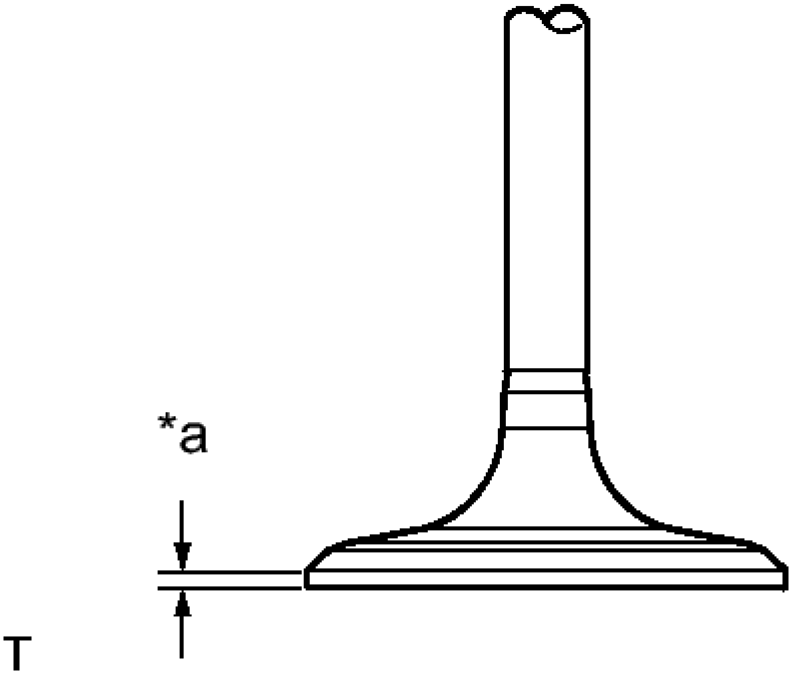

Fig. 318: Measuring Intake Valve Head Margin Thickness Using A Vernier Caliper
Courtesy of TOYOTA MOTOR SALES, U.S.A., INC.

TEXT IN ILLUSTRATION

*a	Margin thickness

Standard margin thickness

1.0 mm (0.0394 in.)

Minimum margin thickness

0.5 mm (0.0197 in.)

If the margin thickness is less than the minimum, replace the intake valve.

c. Using a vernier caliper, measure the valve overall length.

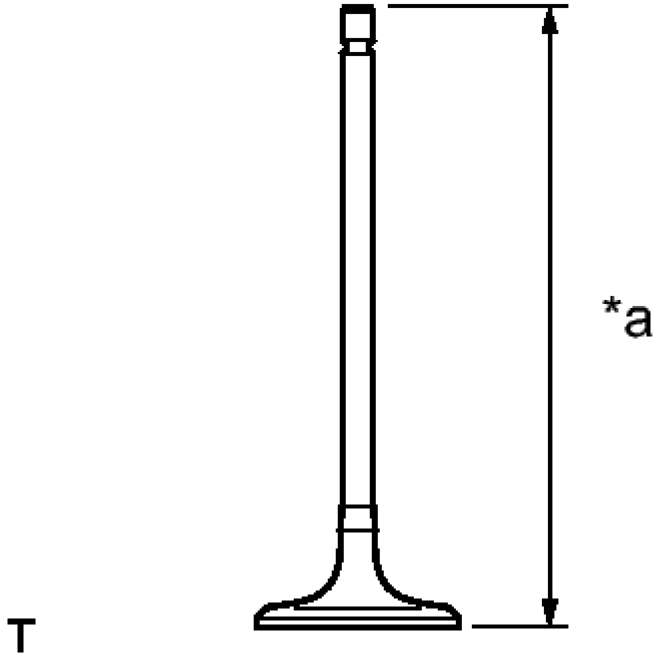

Fig. 319: Identifying Overall Length Of Intake Valve
Courtesy of TOYOTA MOTOR SALES, U.S.A., INC.

TEXT IN ILLUSTRATION

*a	Overall Length

Standard overall length

105.85 mm (4.1673 in.)

Minimum overall length

105.35 mm (4.1476 in.)

If the overall length is less than the minimum, replace the intake valve.

4. **INSPECT EXHAUST VALVE**
   a. Using a micrometer, measure the diameter of the valve stem.

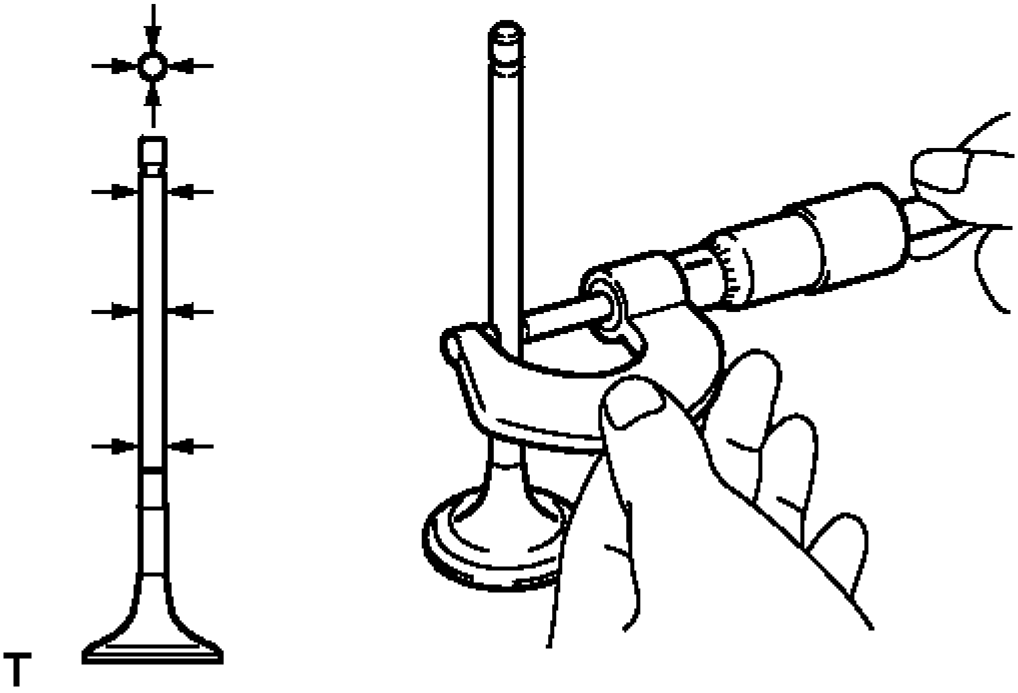

Fig. 320: Checking Diameter Of Exhaust Valve Stem
Courtesy of TOYOTA MOTOR SALES, U.S.A., INC.

Valve stem diameter

5.465 to 5.480 mm (0.2152 to 0.2157 in.)

If the valve stem is not as specified, check the oil clearance.

b. Using a vernier caliper, measure the valve head margin thickness.

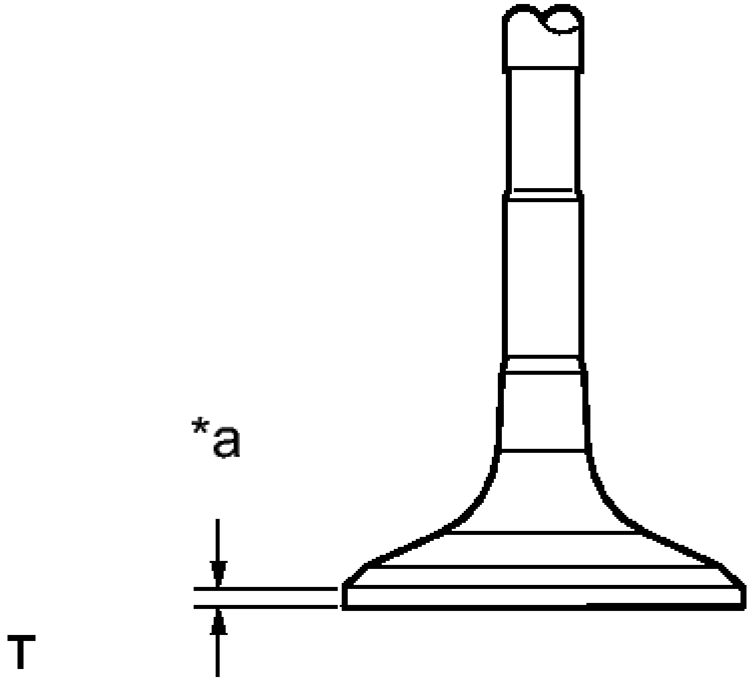

Fig. 321: Measuring Exhaust Valve Head Margin Thickness Using A Vernier Caliper
Courtesy of TOYOTA MOTOR SALES, U.S.A., INC.

TEXT IN ILLUSTRATION

*a	Margin thickness

Standard margin thickness

1.0 mm (0.0394 in.)

Minimum margin thickness

0.5 mm (0.0197 in.)

If the margin thickness is less than the minimum, replace the exhaust valve.

c. Using a vernier caliper, measure the valve overall length.

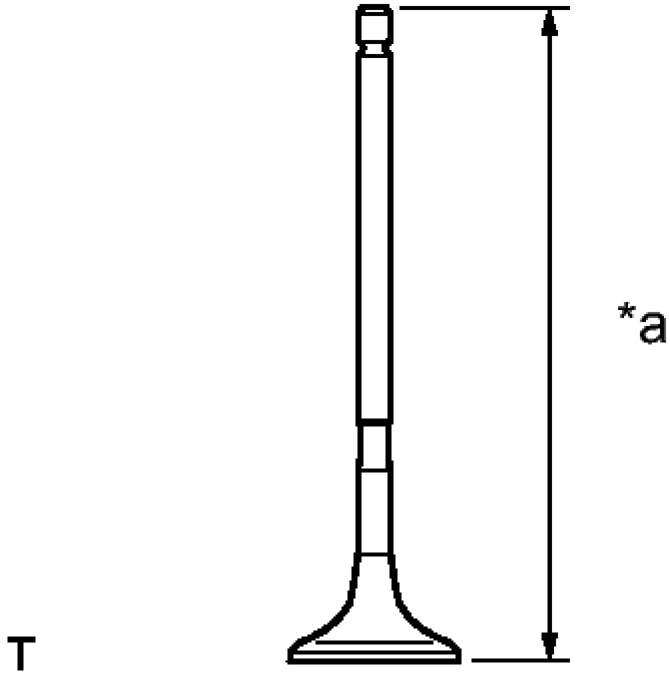

Fig. 322: Identifying Overall Length Of Exhaust Valve
Courtesy of TOYOTA MOTOR SALES, U.S.A., INC.

TEXT IN ILLUSTRATION

*a	Overall Length

Standard overall length

110.40 mm (4.3464 in.)

Minimum overall length

109.90 mm (4.3268 in.)

If the overall length is less than the minimum, replace the exhaust valve.

5. **INSPECT INTAKE VALVE SEAT**
    a. Apply a light coat of Prussian blue to the valve face.
    b. Lightly press the valve face against the valve seat.
    c. Check the valve face and valve seat by using the following procedure:

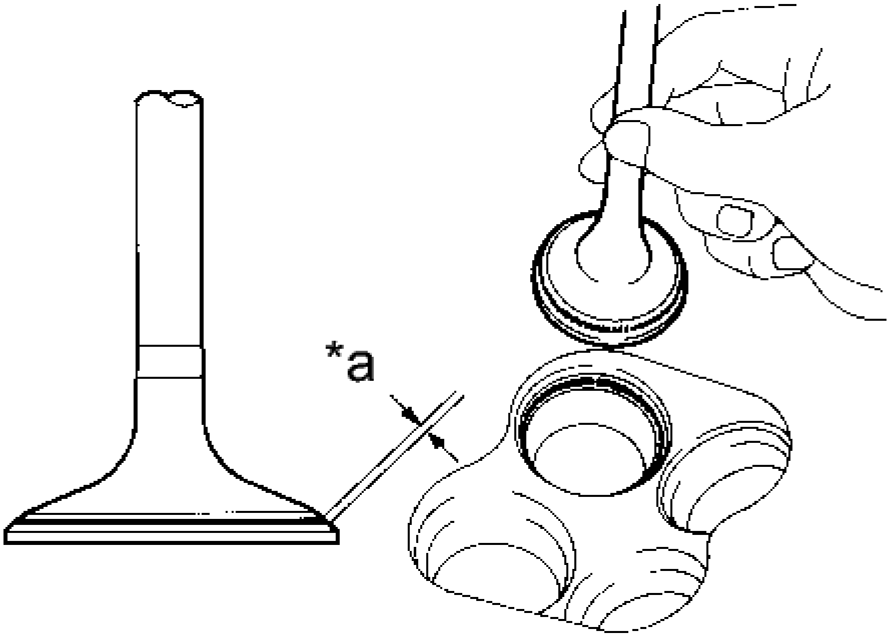

Fig. 323: Inspecting Intake Valve Seat
Courtesy of TOYOTA MOTOR SALES, U.S.A., INC.

TEXT IN ILLUSTRATION

*a	Width

1. If Prussian blue appears around the entire valve face, the valve face is concentric. If not, replace the valve.
2. If Prussian blue appears around the entire valve seat, the valve seat and valve face are concentric. If not, resurface the valve seat.
3. Check that the valve seat contacts the middle of the valve face with the width between 1.1 and 1.5 mm (0.0433 and 0.0591 in.).

6. **INSPECT EXHAUST VALVE SEAT**
   a. Apply a light coat of Prussian blue to the valve face.
   b. Lightly press the valve face against the valve seat.
   c. Check the valve face and valve seat by using the following procedure:

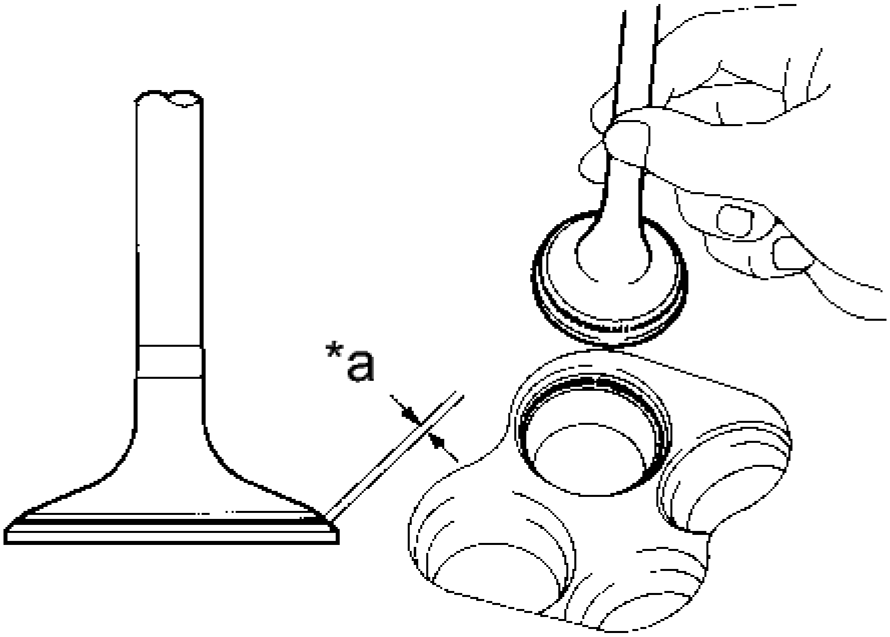

Fig. 324: Inspecting Intake Valve Seat
Courtesy of TOYOTA MOTOR SALES, U.S.A., INC.

TEXT IN ILLUSTRATION

*a	Width

1. If Prussian blue appears around the entire valve face, the valve face is concentric. If not, replace the valve.
2. If Prussian blue appears around the entire valve seat, the valve seat and valve face are concentric. If not, resurface the valve seat.
3. Check that the valve seat contacts the middle of the valve face with the width between 1.1 and 1.5 mm (0.0433 and 0.0591 in.).

7. **INSPECT INNER COMPRESSION SPRING**
   a. Using a vernier caliper, measure the free length of the inner compression spring.

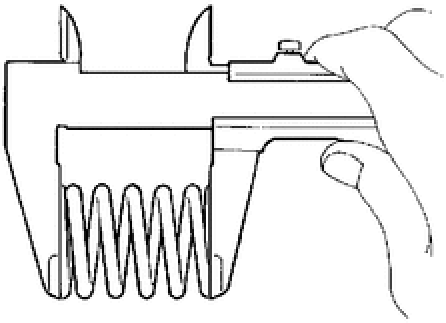

Fig. 325: Measuring Free Length Of Inner Compression Spring
Courtesy of TOYOTA MOTOR SALES, U.S.A., INC.

Free length

45.91 mm (1.8075 in.)

If the free length is not as specified, replace the inner compression spring.

b. Using a steel square, measure the deviation of the inner compression spring.

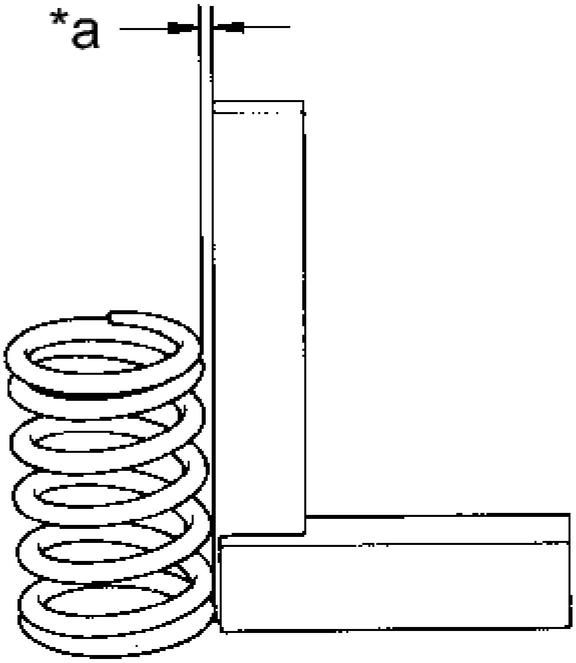

Fig. 326: Measuring Deviation Of Inner Compression Spring Using Steel Square
Courtesy of TOYOTA MOTOR SALES, U.S.A., INC.

TEXT IN ILLUSTRATION

*a	Deviation

Maximum deviation

1.0 mm (0.0394 in.)

Maximum angle (reference)

2°

If the deviation is greater than the maximum, replace the inner compression spring.

8. **INSPECT VALVE GUIDE BUSH OIL CLEARANCE**
   a. Using a caliper gauge, measure the inside diameter of the valve guide bush.

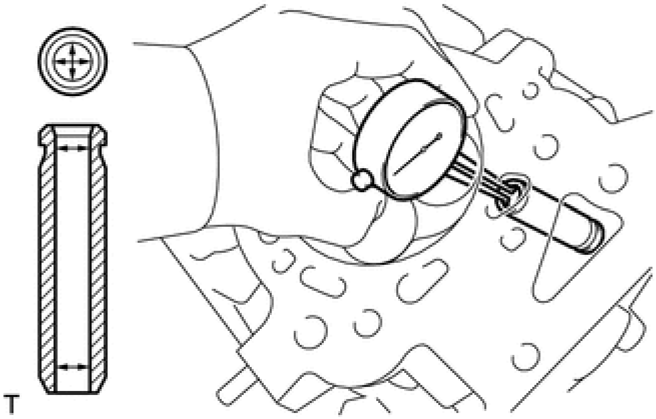

Fig. 327: Measuring Inside Diameter Of Guide Bush Using Caliper Gauge
Courtesy of TOYOTA MOTOR SALES, U.S.A., INC.

Bush inside diameter

5.510 to 5.530 mm (0.2169 to 0.2177 in.)

   b. Subtract the valve stem diameter measurement from the valve guide bush inside diameter measurement.

Standard Oil Clearance

Item	Clearance
Intake	0.025 to 0.060 mm (0.000984 to 0.00236 in.)
Exhaust	0.030 to 0.065 mm (0.00118 to 0.00256 in.)

Maximum Oil Clearance

Item	Clearance
Intake	0.08 mm (0.00315 in.)
	0.10 mm

Exhaust	(0.00394 in.)

If the clearance is greater than the maximum, replace the valve and valve guide bush.

REPLACEMENT

REPLACEMENT

1. **REPLACE INTAKE VALVE GUIDE BUSH**
    a. Heat the cylinder head to 80 to 100°C (176 to 212°F).
    b. Place the cylinder head on wooden blocks.
    c. Using SST and a hammer, tap out the intake valve guide bushes.

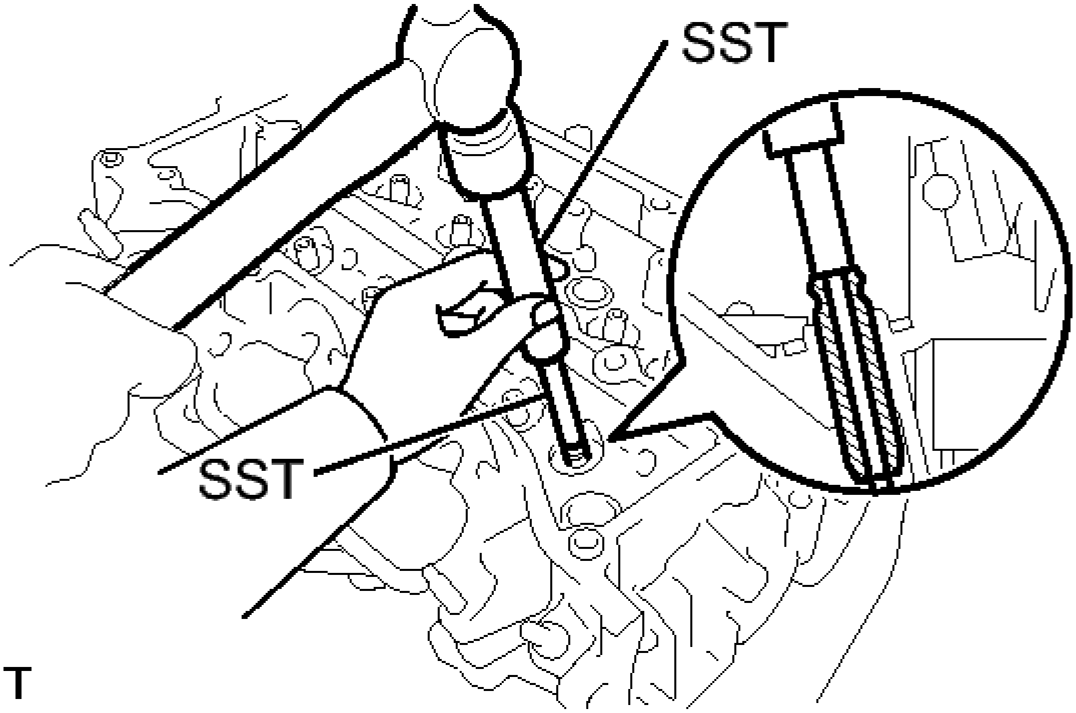

Fig. 328: Tapping Out Intake Valve Guide Bush Using SST
Courtesy of TOYOTA MOTOR SALES, U.S.A., INC.

- **SST: 09201-10000**
  09201-01050
- **SST: 09950-70010**
  09951-07100

    d. Using a caliper gauge, measure the intake valve guide bush bore diameter of the cylinder head.

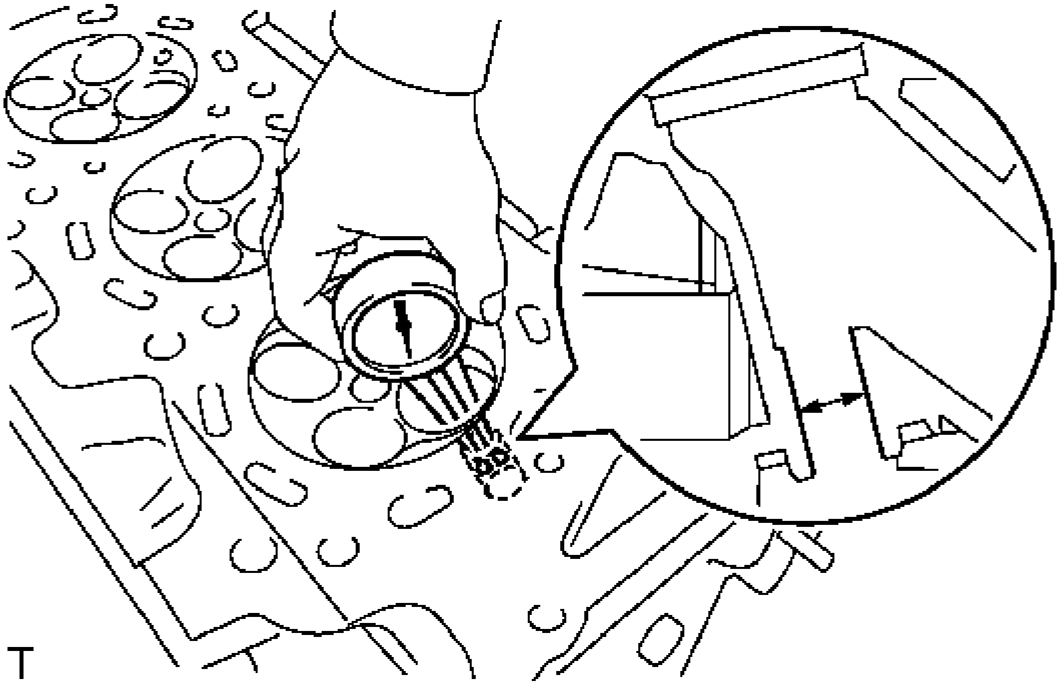

Fig. 329: Checking Bush Bore Diameter Of Cylinder Head
Courtesy of TOYOTA MOTOR SALES, U.S.A., INC.

Cylinder bore diameter

10.285 to 10.306 mm (0.4049 to 0.4057 in.)

Select a new guide bush (STD or O/S 0.05)

Bush Size	Bush Bore Diameter
STD	10.333 to 10.344 mm (0.4068 to 0.4072 in.)
O/S 0.05	10.383 to 10.394 mm (0.4088 to 0.4092 in.)

If the bush bore diameter of the cylinder head is greater than 10.306 mm (0.4057 in.), machine the bush bore to the dimension of 10.335 to 10.356 mm (0.4069 to 0.4077 in.) to install an O/S 0.05

valve guide bush.

If the bush bore diameter of the cylinder head is greater than 10.356 mm (0.4077 in.), replace the cylinder head.

e. Heat the cylinder head to 80 to 100°C (176 to 212°F).
f. Place the cylinder head on wooden blocks.
g. Using SST, tap in new intake valve guide bushes to the specified protrusion height.

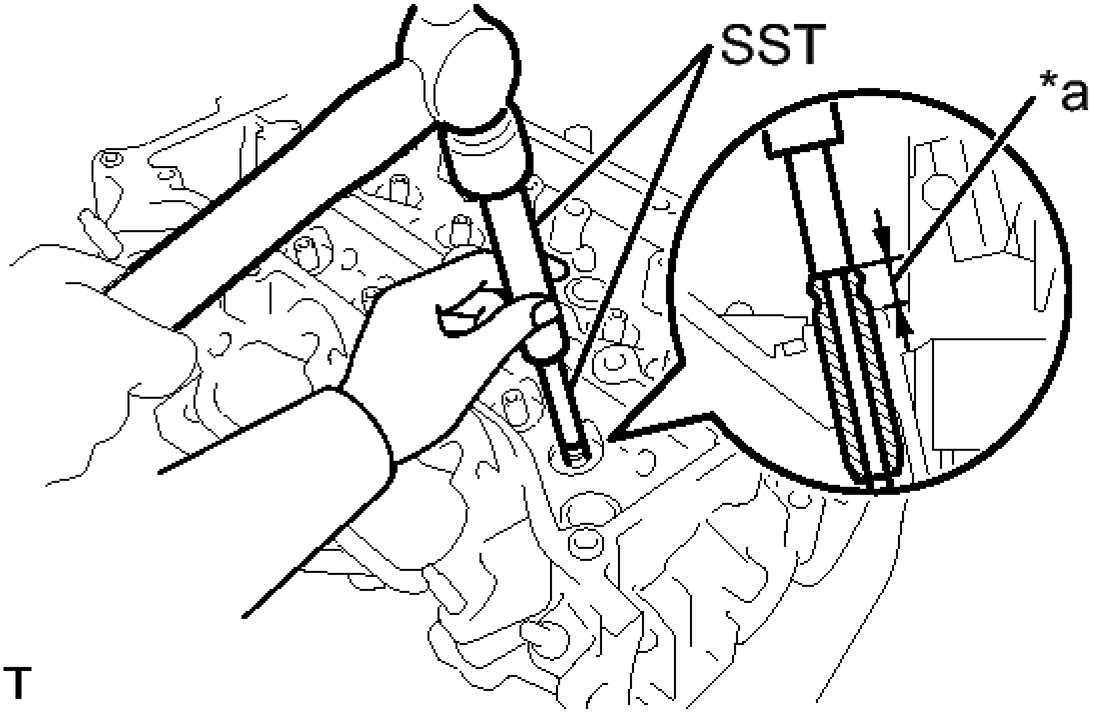

Fig. 330: Tapping In Intake Valve Guide Bush Using SST
Courtesy of TOYOTA MOTOR SALES, U.S.A., INC.

TEXT IN ILLUSTRATION

*a	Protrusion Height

- **SST: 09201-10000**
  09201-01050
- **SST: 09950-70010**
  09951-07100

Protrusion height

9.30 to 9.70 mm (0.3661 to 0.3819 in.)

h. Using a sharp 5.5 mm reamer, ream the valve guide bushings to obtain the specified clearance.

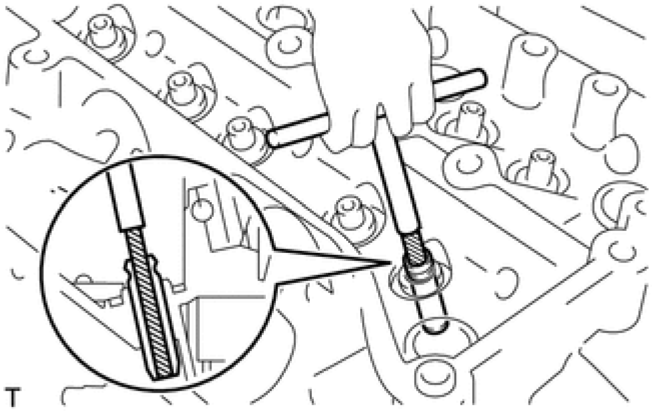

Fig. 331: Reaming Valve Guide Bush
Courtesy of TOYOTA MOTOR SALES, U.S.A., INC.

Standard oil clearance

0.025 to 0.060 mm (0.000984 to 0.00236 in.)

2. **REPLACE EXHAUST VALVE GUIDE BUSH**
    a. Heat the cylinder head to 80 to 100°C (176 to 212°F).
    b. Place the cylinder head on wooden blocks.
    c. Using SST and a hammer, tap out the exhaust valve guide bushes.
        - **SST: 09201-10000**
          09201-01050
        - **SST: 09950-70010**
          09951-07100
    d. Using a caliper gauge, measure the exhaust valve guide bush bore diameter of the cylinder head.

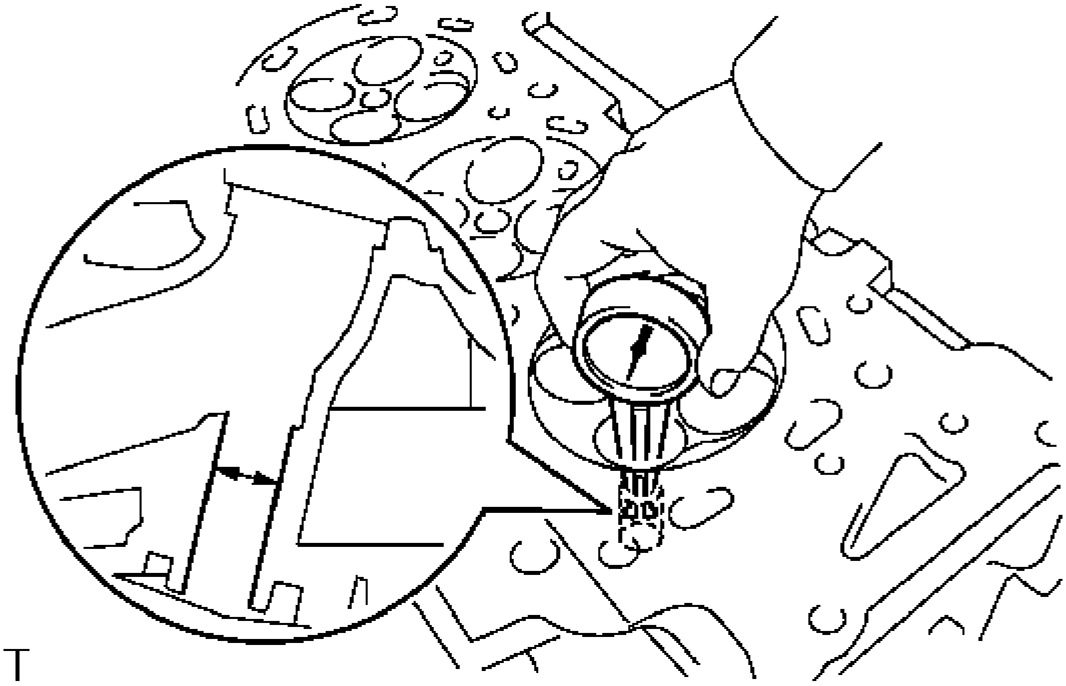

Fig. 332: Checking Bush Bore Diameter Of Cylinder Head
Courtesy of TOYOTA MOTOR SALES, U.S.A., INC.

Cylinder bore diameter

10.285 to 10.306 mm (0.4049 to 0.4057 in.)

Select a new guide bush (STD or O/S 0.05)

Bush Size	Bush Bore Diameter
STD	10.333 to 10.344 mm (0.4068 to 0.4072 in.)
O/S 0.05	10.383 to 10.394 mm (0.4088 to 0.4092 in.)

If the bush bore diameter of the cylinder head is greater than 10.306 mm (0.4057 in.), machine the bush bore to the dimension of 10.335 to 10.356 mm (0.4069 to 0.4077 in.) to install an O/S 0.05

valve guide bush.

If the bush bore diameter of the cylinder head is greater than 10.356 mm (0.4077 in.), replace the cylinder head.

e. Heat the cylinder head to 80 to 100°C (176 to 212°F).
f. Place the cylinder head on wooden blocks.
g. Using SST, tap in new exhaust valve guide bushes to the specified protrusion height.

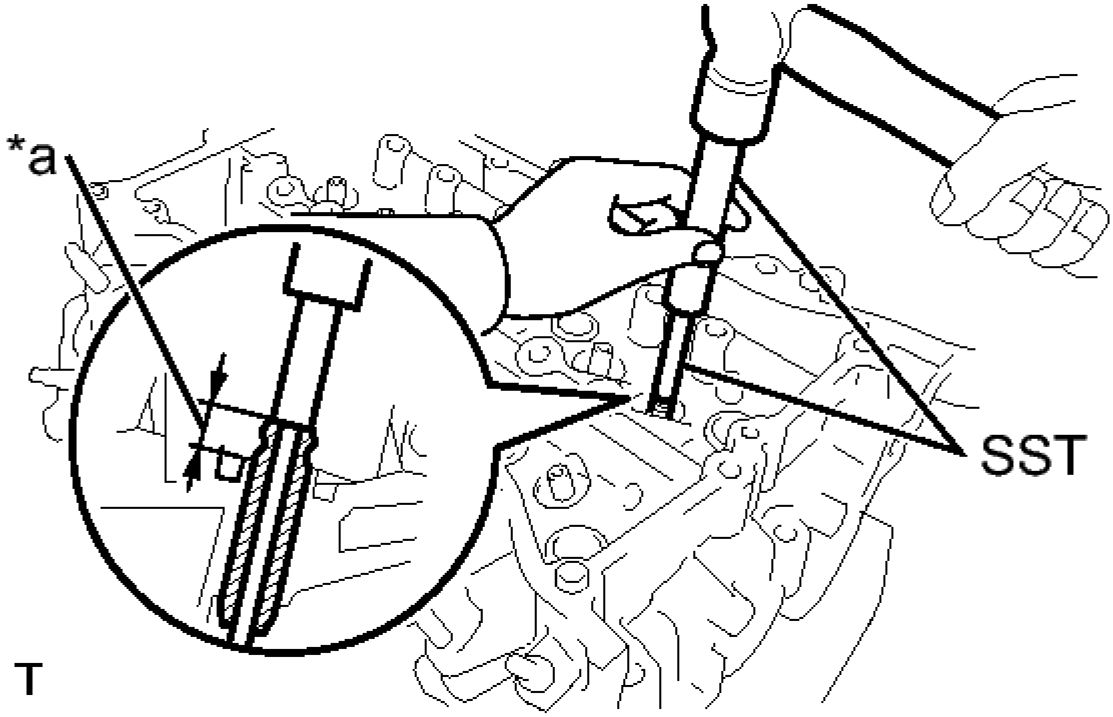

Fig. 333: Tapping In Exhaust Valve Guide Bush Using SST
Courtesy of TOYOTA MOTOR SALES, U.S.A., INC.

TEXT IN ILLUSTRATION

*a	Protrusion Height

- **SST: 09201-10000**
  09201-01050
- **SST: 09950-70010**
  09951-07100

Protrusion height

9.30 to 9.70 mm (0.3661 to 0.3819 in.)

h. Using a sharp 5.5 mm reamer, ream the valve guide bushings to obtain the specified clearance.

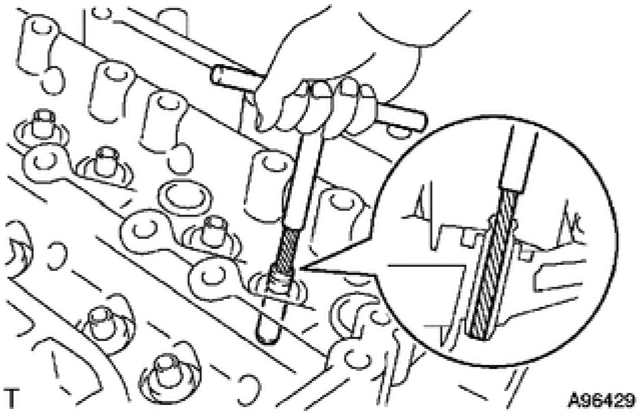

Fig. 334: Reaming Valve Guide Bushing
Courtesy of TOYOTA MOTOR SALES, U.S.A., INC.

Standard oil clearance

0.030 to 0.065 mm (0.00118 to 0.00256 in.)

3. **REPLACE RING PIN**

NOTE: It is not necessary to remove the ring pin unless it is being replaced.

   a. Using a plastic hammer, tap in new ring pins to the specified protrusion height.

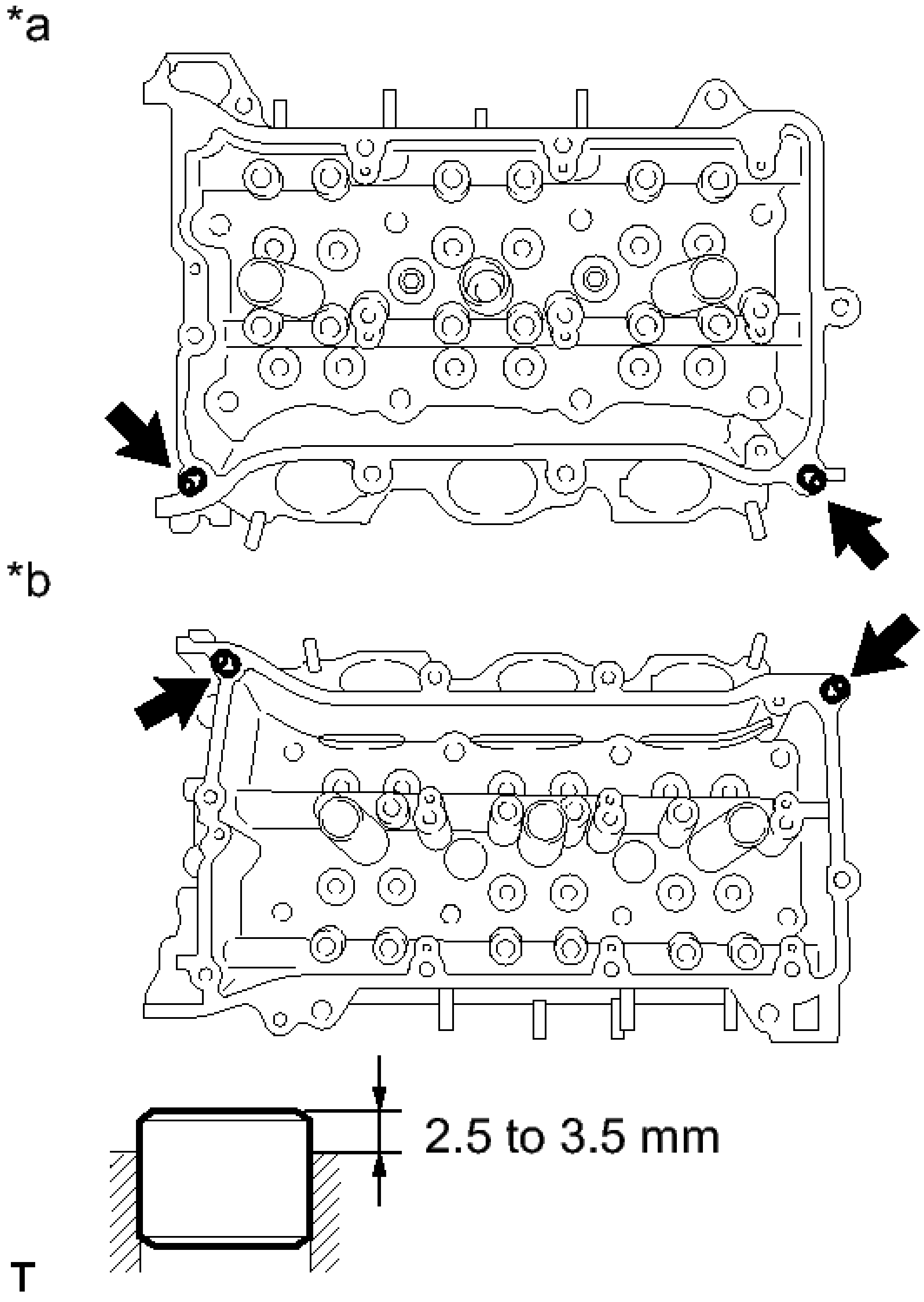
*a
*b
2.5 to 3.5 mm
T

Fig. 335: Locating Cylinder Head Ring Pins
Courtesy of TOYOTA MOTOR SALES, U.S.A., INC.

TEXT IN ILLUSTRATION

	for

*a	Bank 1
*b	for Bank 2

Specified protrusion height

2.5 to 3.5 mm (0.0984 to 0.138 in.)

4. **REPLACE STUD BOLT**

NOTE: If a stud bolt is deformed or the threads are damaged, replace it.

a. Using an E6 and E8 "TORX" socket wrench, install the stud bolts.

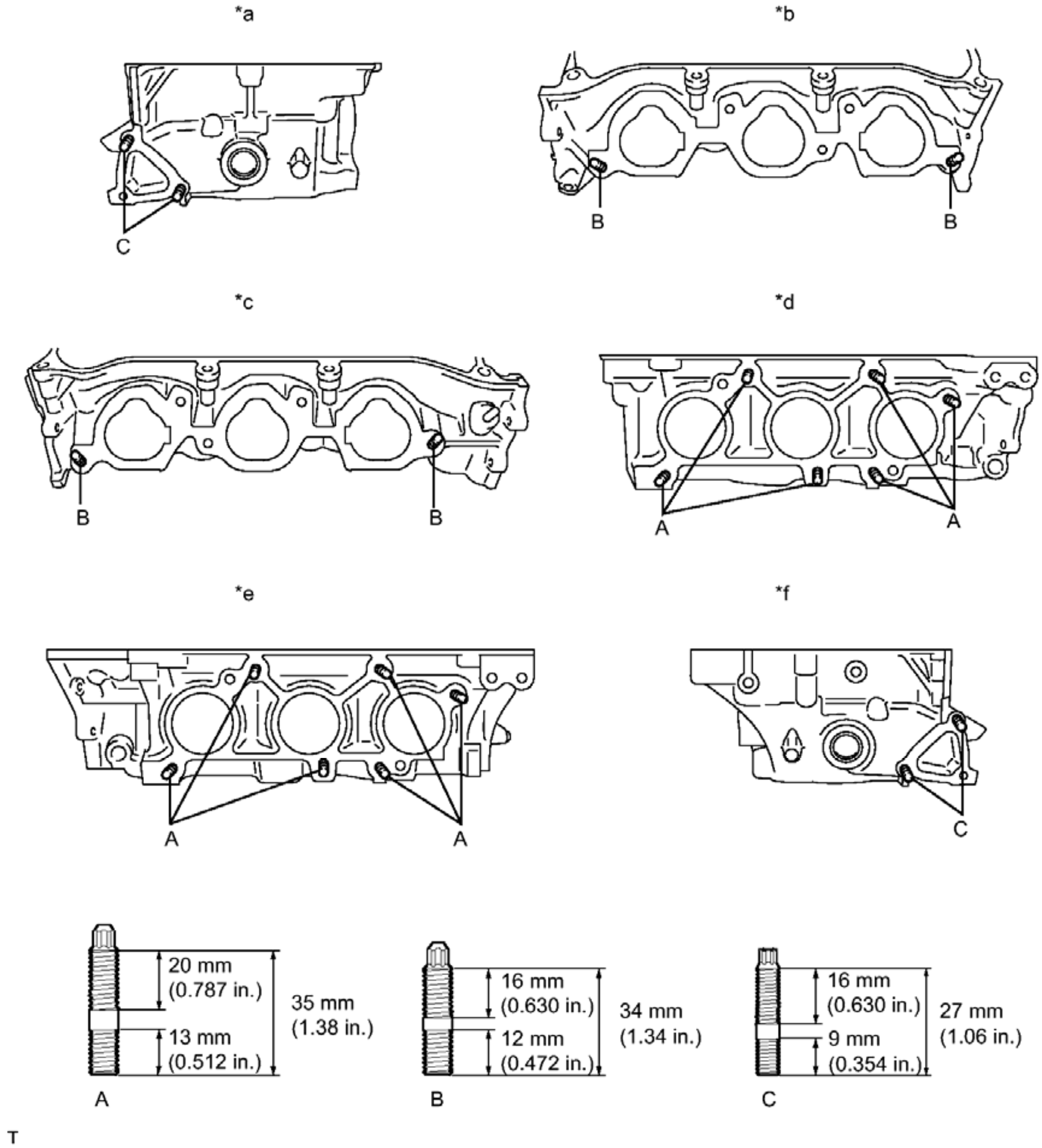
*a
C
*b
B
B
*c
B
B
*d
A
A
*e
A
A
*f
C
20 mm
(0.787 in.)
13 mm
(0.512 in.)
35 mm
(1.38 in.)
A
16 mm
(0.630 in.)
12 mm
(0.472 in.)
34 mm
(1.34 in.)
B
16 mm
(0.630 in.)
9 mm
(0.354 in.)
27 mm
(1.06 in.)
C
T

Fig. 336: Identifying Cylinder Head Stud Bolts
Courtesy of TOYOTA MOTOR SALES, U.S.A., INC.

TEXT IN ILLUSTRATION

*a	Bank 1 Rear Side	*b	Bank 1 Intake Side
*c	Bank 2 Intake Side	*d	Bank 1 Exhaust Side
*e	Bank 2 Exhaust	*f	Bank 2 Rear

	Side		Side

Bolts A and B

Torque: 10 N*m (102 kgf*cm, 7 ft.*lbf)

Bolt C

Torque: 4.0 N*m (41 kgf*cm, 35 in.*lbf)

5. **REPLACE STRAIGHT PIN**

NOTE: **If a straight pin is deformed, replace it.**

a. Using a plastic hammer, tap in new straight pins as shown in the illustration.

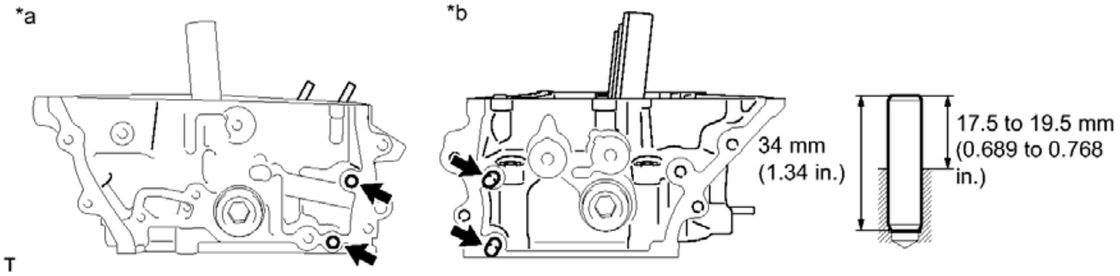

Fig. 337: Locating Cylinder Head Straight Pins
Courtesy of TOYOTA MOTOR SALES, U.S.A., INC.

TEXT IN ILLUSTRATION

*a	for Bank 1	*b	for Bank 2

Protrusion height

17.5 to 19.5 mm (0.689 to 0.768 in.)

REASSEMBLY

REASSEMBLY

HINT:

Perform "Inspection After Repair" after replacing the cylinder head. Refer to **INITIALIZATION** .

1. **INSTALL SPARK PLUG TUBE**

HINT:

When using a new cylinder head, the spark plug tubes must be replaced.

a. Apply adhesive onto the shaded area of a new spark plug tube.

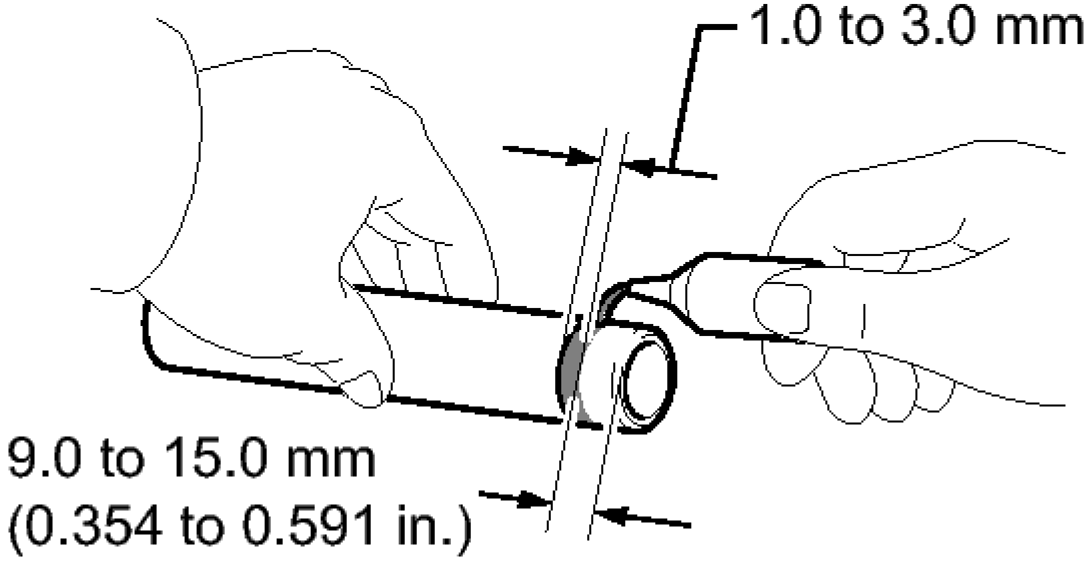

Fig. 338: Applying Adhesive To Spark Plug Tube
Courtesy of TOYOTA MOTOR SALES, U.S.A., INC.

Adhesive

Toyota Genuine Adhesive 1324, Three Bond 1324 or equivalent.

Standard application width

1.0 to 3.0 mm (0.0394 to 0.118 in.)

NOTE:

- **Install the spark plug tube within 3 minutes after applying adhesive.**
- **Be careful not to deform the spark plug tube.**
- **Be careful not to expose the seal to engine oil for at least 1 hour after installing it.**

b. Using a wooden block and hammer, tap in the spark plug tube to the specified protrusion height.

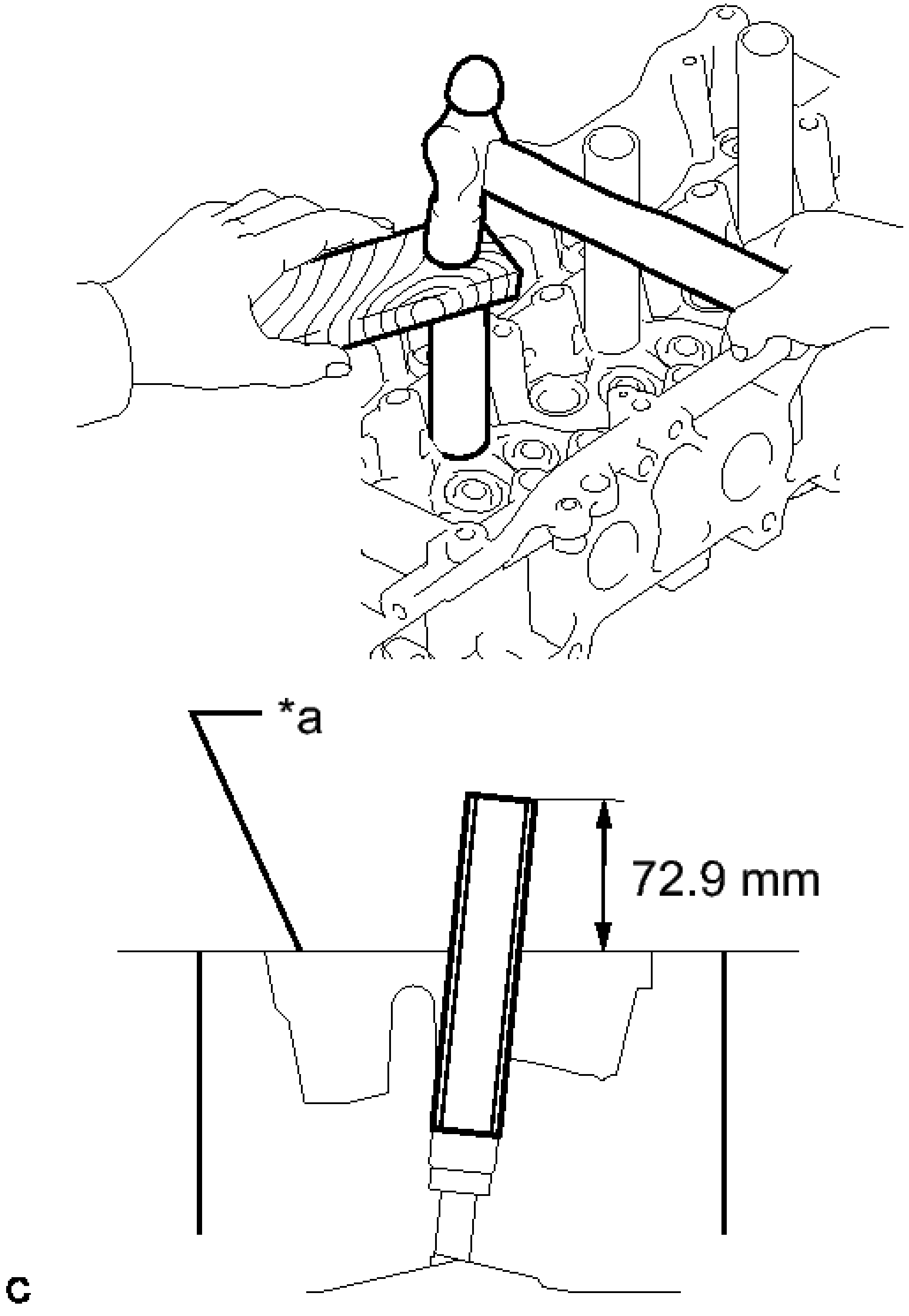

Fig. 339: Tapping Spark Plug Tube
Courtesy of TOYOTA MOTOR SALES, U.S.A., INC.

TEXT IN ILLUSTRATION

	Cylinder

*a	Head Top Surface

Standard protrusion height

72.9 mm (2.87 in.)

NOTE: **To avoid tapping in the spark plug tube too far, measure the protrusion height while tapping it.**

2. **INSTALL NO. 1 STRAIGHT SCREW PLUG**
    a. Using a 10 mm hexagon wrench, install 4 new gaskets and the 4 No. 1 straight screw plugs.

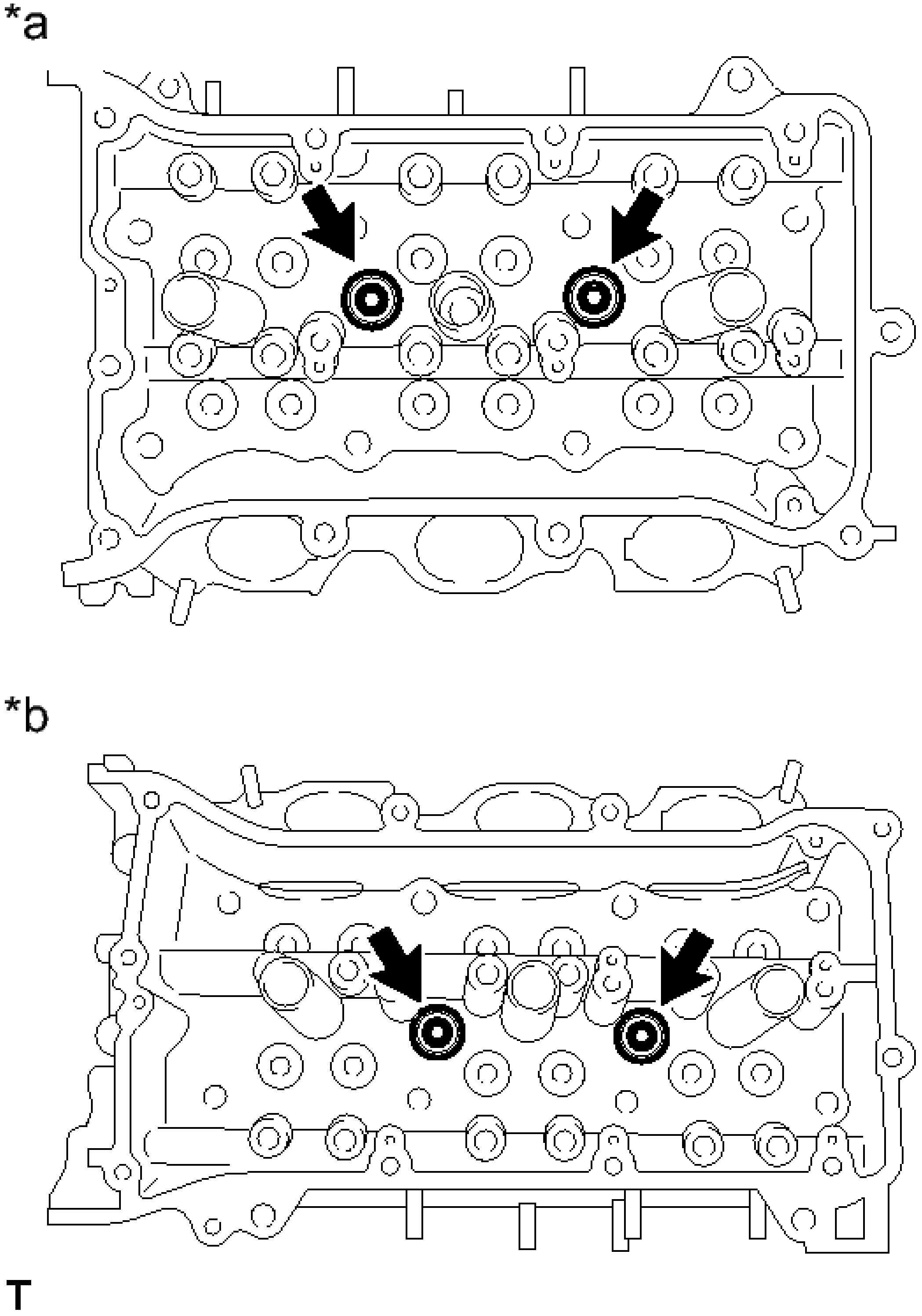

Fig. 340: Locating No. 1 Straight Screw Plugs
Courtesy of TOYOTA MOTOR SALES, U.S.A., INC.

TEXT IN ILLUSTRATION

	Bank

*a	1
*b	Bank 2

Torque: 44 N*m (449 kgf*cm, 32 ft.*lbf)

3. **INSTALL NO. 2 STRAIGHT SCREW PLUG**
   a. Using a 14 mm hexagon wrench, install 2 new gaskets and the 2 No. 2 straight screw plugs.

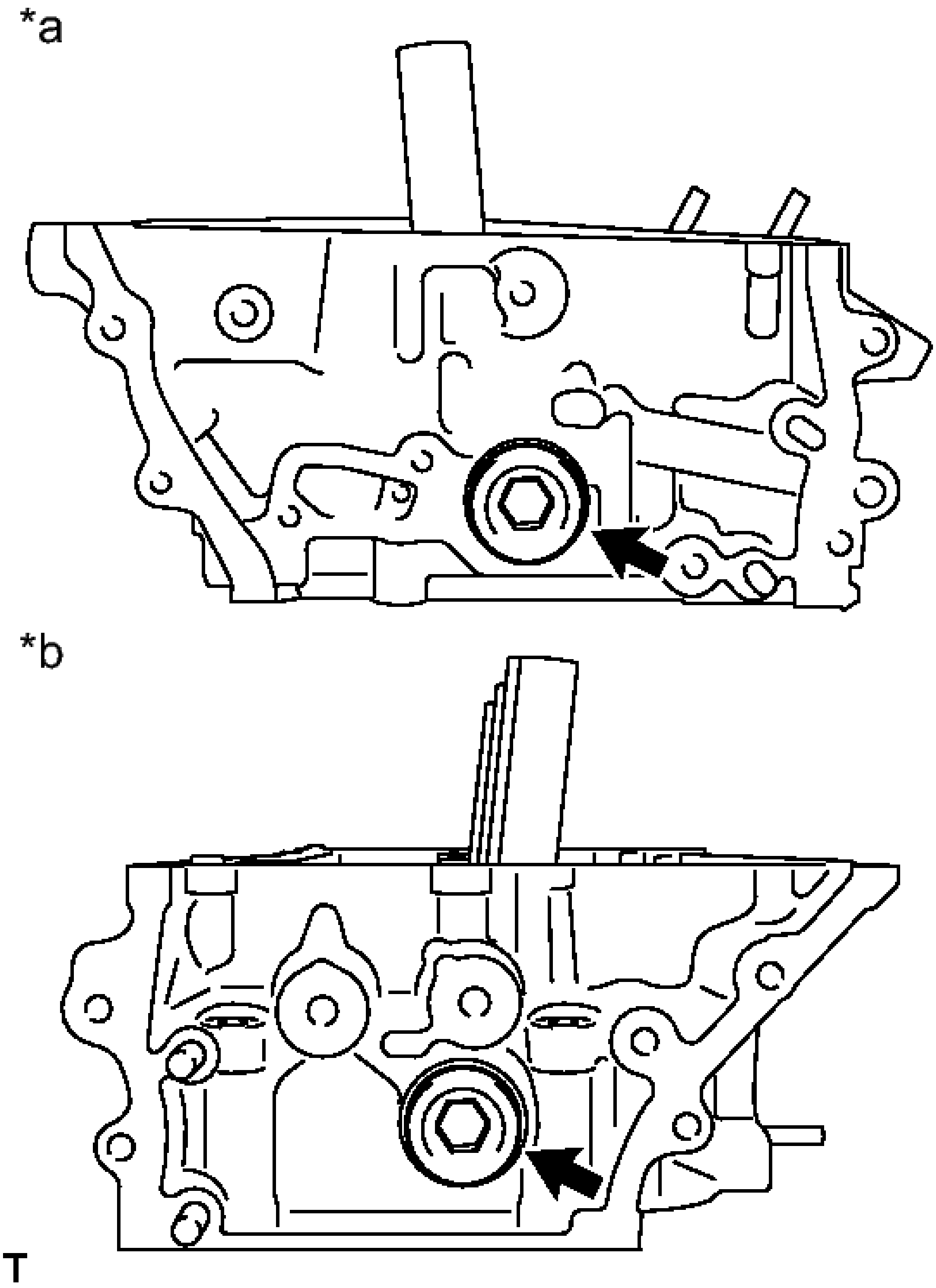

Fig. 341: Locating No. 2 Straight Screw Plugs

Courtesy of TOYOTA MOTOR SALES, U.S.A., INC.

TEXT IN ILLUSTRATION

	Bank

*a	1
*b	Bank 2

Torque: 80 N*m (816 kgf*cm, 59 ft.*lbf)

4. **INSTALL VALVE SPRING SEAT**
    a. Install the valve spring seats to the cylinder head.
5. **INSTALL VALVE STEM OIL SEAL**
    a. Apply a light coat of engine oil to new valve stem oil seals.

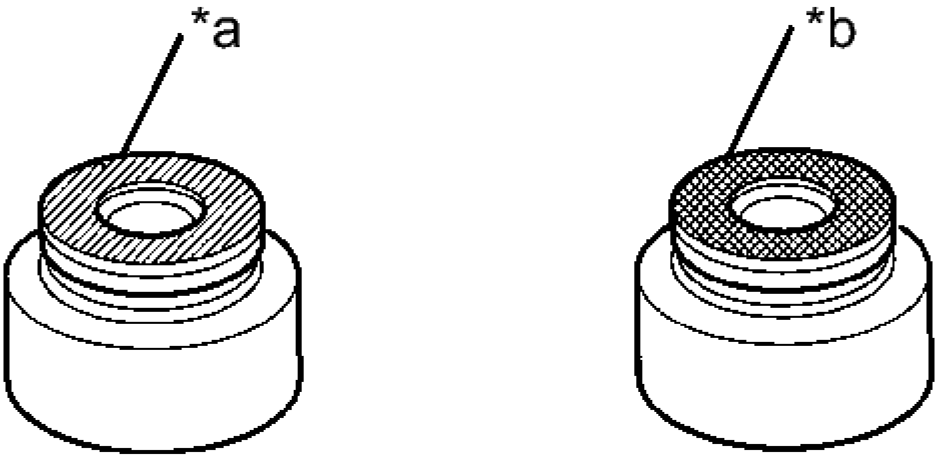

Fig. 342: Identifying Valve Stem Oil Seals
Courtesy of TOYOTA MOTOR SALES, U.S.A., INC.

TEXT IN ILLUSTRATION

*a	Gray (Intake Side)
*b	Black (Exhaust Side)

NOTE: **Pay attention when installing the intake and exhaust valve stem oil seals. For example, installing the intake valve stem oil seal into the exhaust side or installing the exhaust valve stem oil seal to the intake side can cause installation problems later.**

HINT:

The intake valve oil seals are gray and the exhaust valve oil seals are black.

b. Using SST, push in the oil seals.

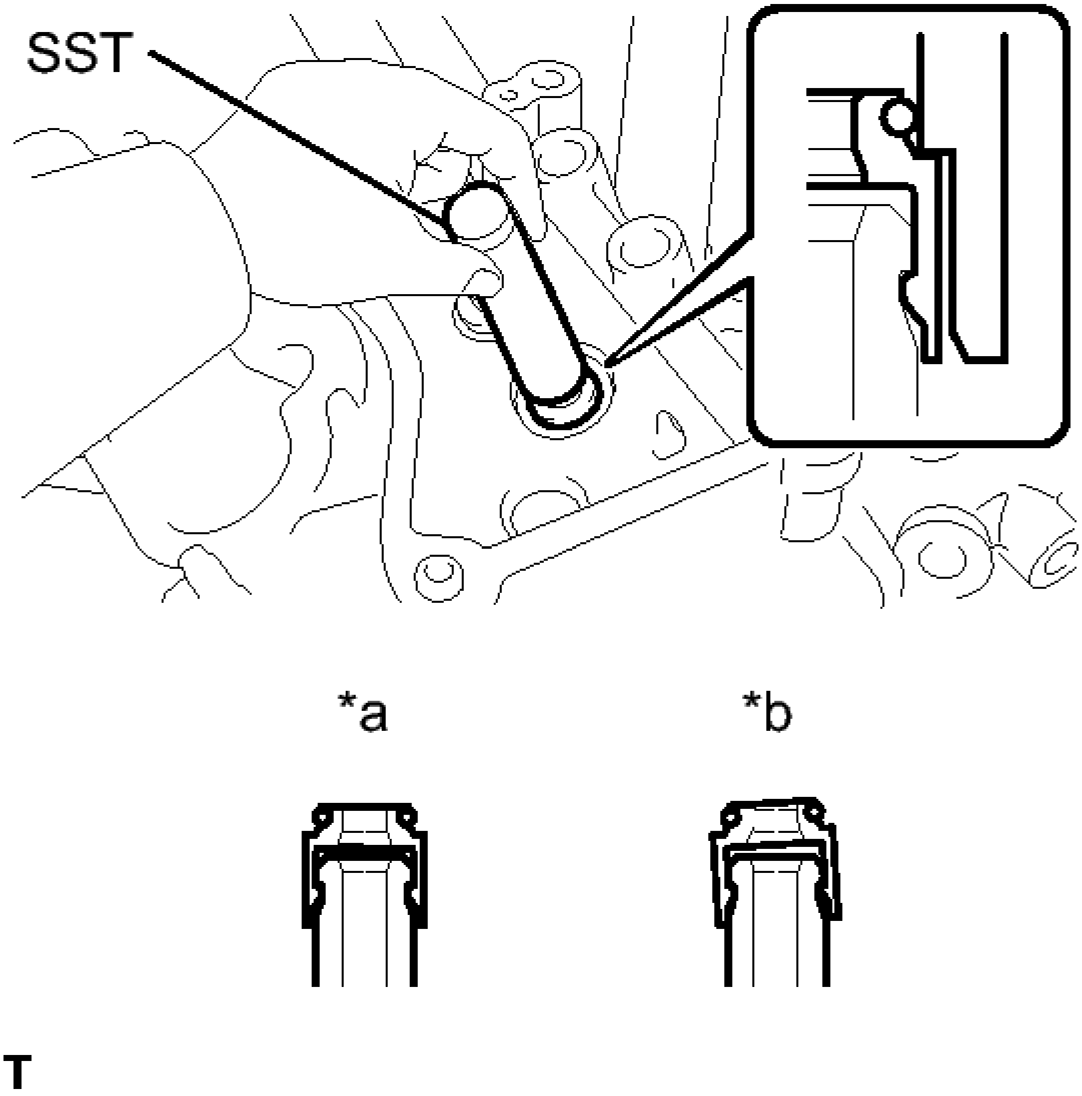

Fig. 343: Installing Valve Stem Oil Seals Using SST
Courtesy of TOYOTA MOTOR SALES, U.S.A., INC.

TEXT IN ILLUSTRATION

*a	CORRECT
*b	INCORRECT

- **SST: 09201-41020**

NOTE: **Failure to use SST will cause the seal to be damaged or improperly seated.**

6. **INSTALL EXHAUST VALVE**
   a. Apply a sufficient coat of engine oil to the tip area of the exhaust valve shown in the illustration.

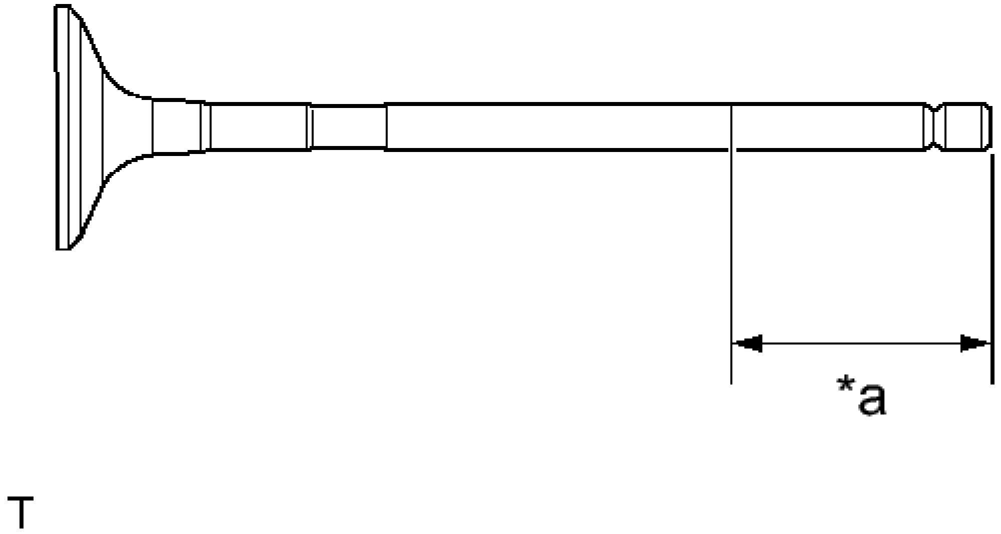

Fig. 344: Identifying Exhaust Valve Engine Oil Applying Area
Courtesy of TOYOTA MOTOR SALES, U.S.A., INC.

TEXT IN ILLUSTRATION

*a	30 mm (1.18 in.) or more

   b. Install the exhaust valve, inner compression spring and valve spring retainer to the cylinder head.

NOTE: **Install the same parts in the same combination to the original locations.**

   c. Using SST, compress the inner compression spring and install the 2 valve spring retainer locks.

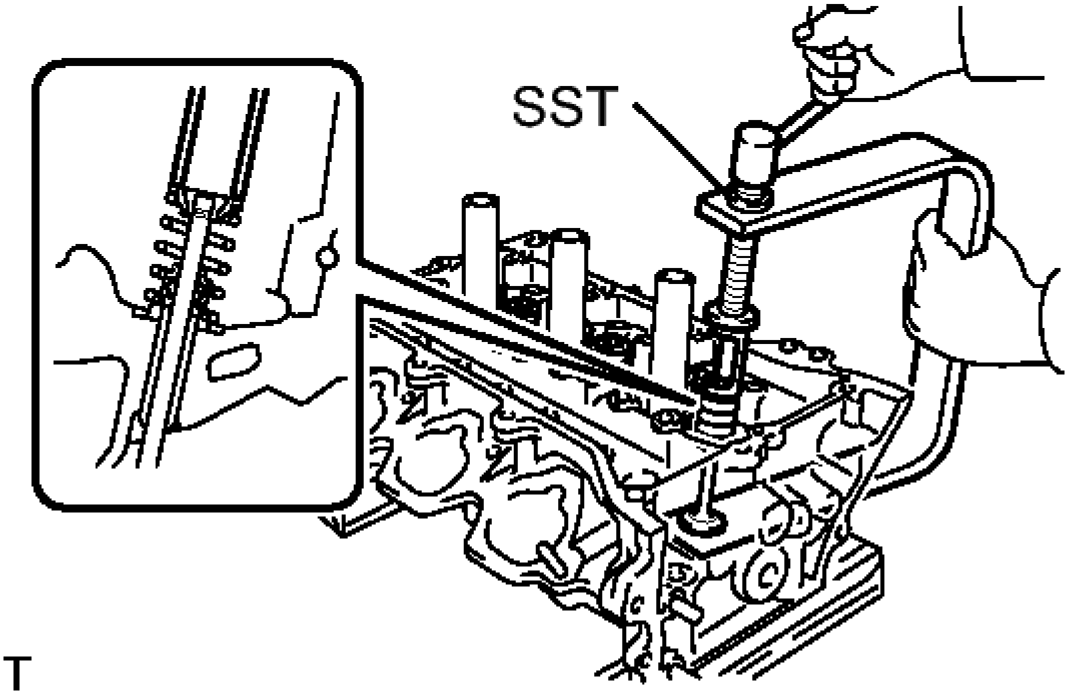

Fig. 345: Compressing Compression Spring
Courtesy of TOYOTA MOTOR SALES, U.S.A., INC.

- **SST: 09202-70020**

  09202-00010

  09202-01010

  09202-01020

d. Using a plastic hammer, lightly tap the valve stem tip to ensure a proper fit.

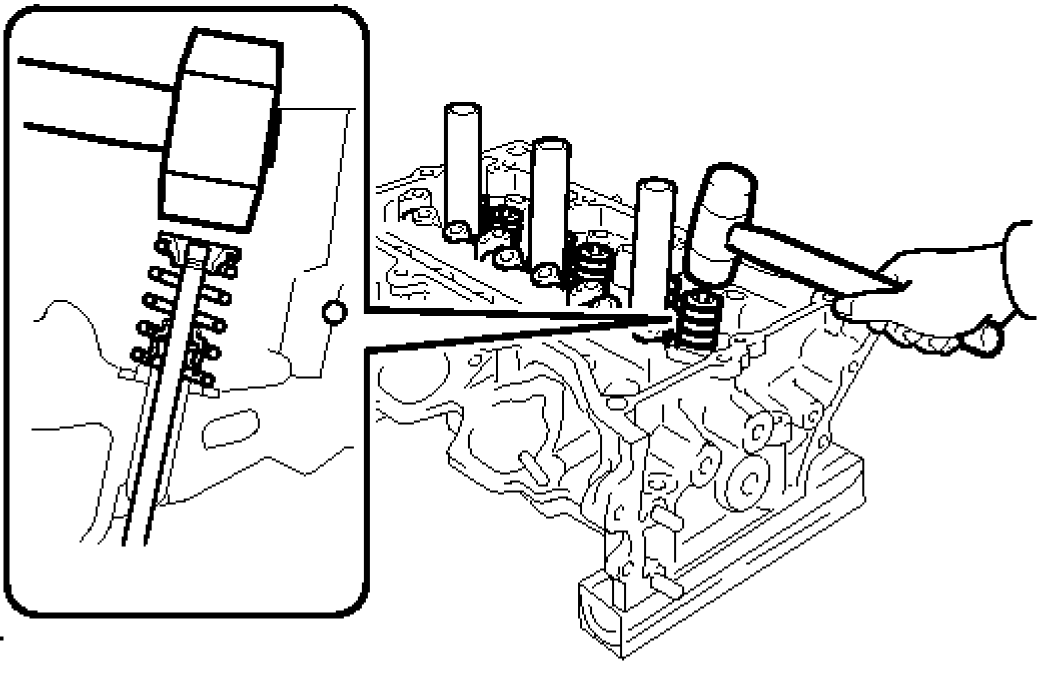

Fig. 346: Tapping Valve Stem Tip To Ensure Proper Fit
Courtesy of TOYOTA MOTOR SALES, U.S.A., INC.

NOTE: **Be careful not to damage the retainer.**

7. **INSTALL INTAKE VALVE**
   a. Apply a sufficient coat of engine oil to the tip area of the intake valve shown in the illustration.

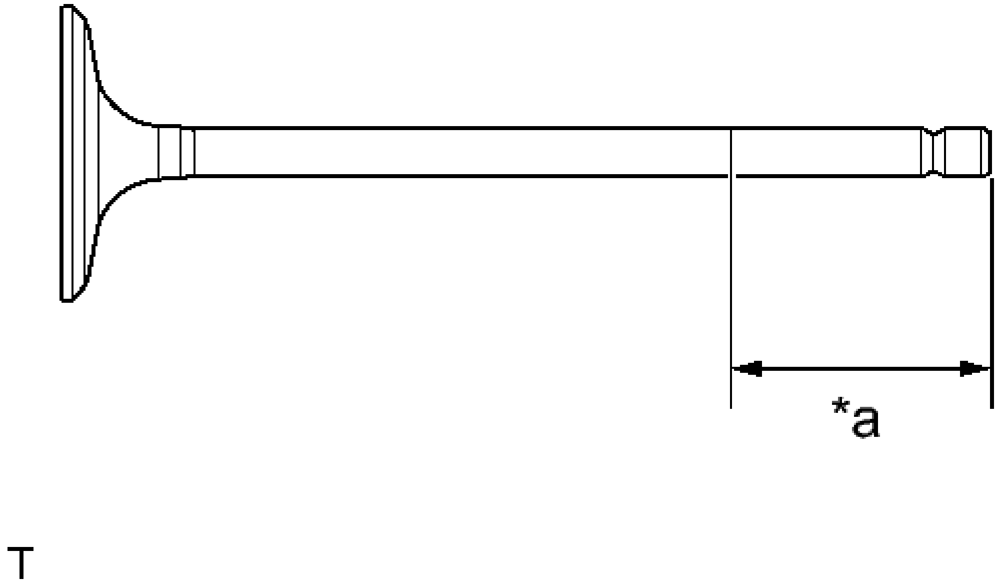

Fig. 347: Identifying Intake Valve
Courtesy of TOYOTA MOTOR SALES, U.S.A., INC.

TEXT IN ILLUSTRATION

*a	30 mm (1.18 in.) or more

b. Install the intake valve, inner compression spring and valve spring retainer to the cylinder head.

NOTE: **Install the same parts in the same combination to their original locations.**

c. Using SST, compress the inner compression spring and install the 2 valve spring retainer locks.

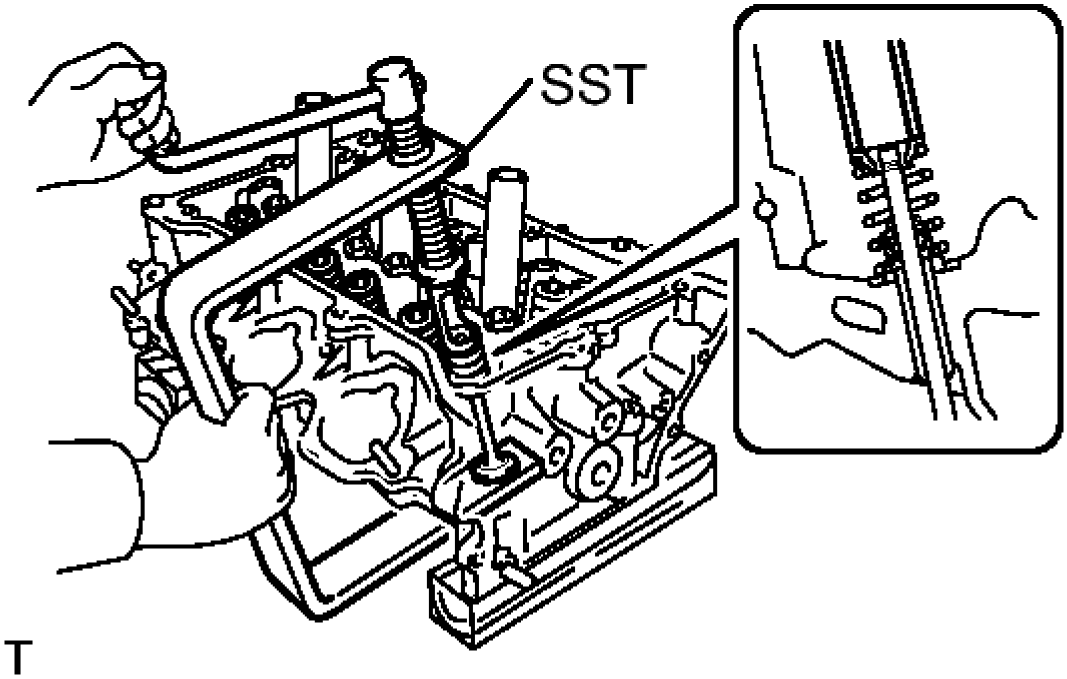

Fig. 348: Compressing Compression Spring
Courtesy of TOYOTA MOTOR SALES, U.S.A., INC.

- **SST: 09202-70020**
  09202-00010
  09202-01010
  09202-01020

d. Using a plastic hammer, lightly tap the valve stem tip to ensure a proper fit.

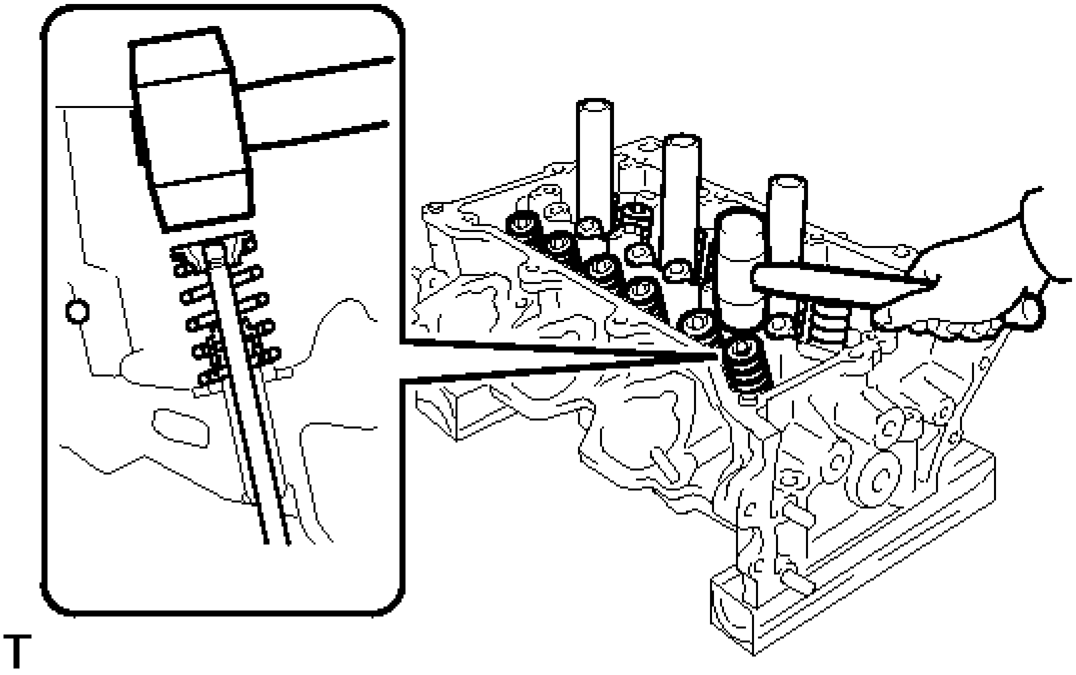

Fig. 349: Tapping Valve Stem Tip To Ensure Proper Fit
Courtesy of TOYOTA MOTOR SALES, U.S.A., INC.

NOTE: **Be careful not to damage the retainer.**

8. **INSTALL VALVE STEM CAP**
   1. Apply a light coat of engine oil to the valve stem caps.
   2. Install the valve stem caps on the valves.

REPAIR

REPAIR

1. **REPAIR INTAKE VALVE SEAT**

NOTE:

- **Repair the intake valve seat while checking the seating position.**
- **Keep the lip free of foreign matter.**

a. Using a 45° cutter, resurface the valve seat so that the valve seat width is greater than the specification.

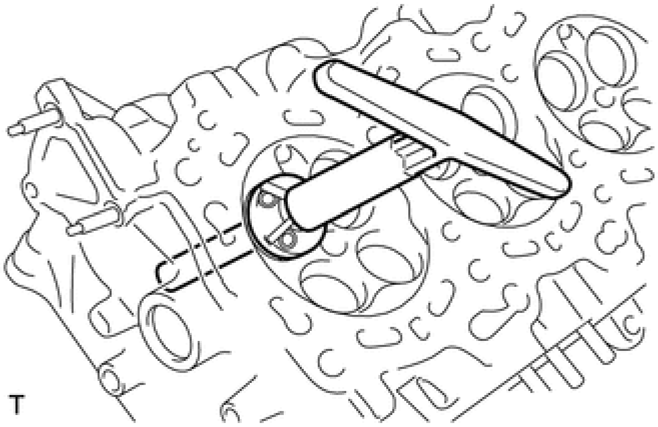

Fig. 350: Resurfacing Valve Seat
Courtesy of TOYOTA MOTOR SALES, U.S.A., INC.

b. Using 30° and 60° cutters, correct the valve seat so that the intake valve contacts the entire circumference of the seat. The contact should be in the center of the intake valve seat, and the intake valve seat width should be maintained within the specified range around the entire circumference of the intake valve seat.

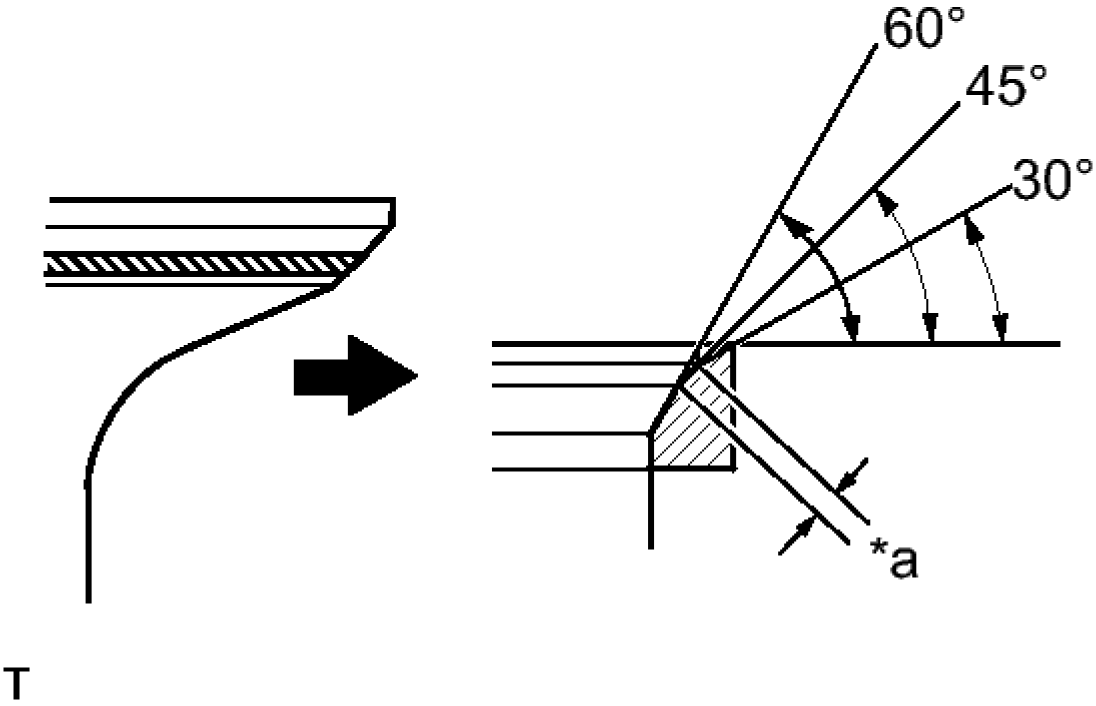

Fig. 351: Identifying Intake Valve Seat Contacts
Courtesy of TOYOTA MOTOR SALES, U.S.A., INC.

TEXT IN ILLUSTRATION

*a	Width

Width

1.1 to 1.5 mm (0.0433 to 0.0591 in.)

c. Handrub the intake valve and intake valve seat with an abrasive compound.
d. Check the intake valve seating position.

2. **REPAIR EXHAUST VALVE SEAT**

NOTE:

- **Repair the seat while checking the seating position.**
- **Keep the lip free of foreign matter.**

a. Using a 45° cutter, resurface the valve seat so that the valve seat width is greater than the specification.

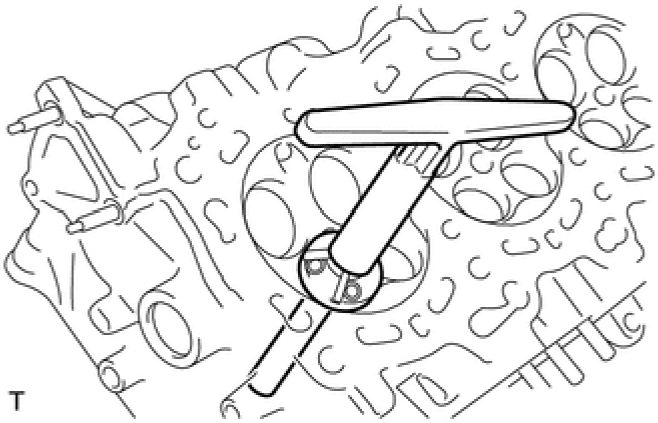

Fig. 352: Resurfacing Valve Seat
Courtesy of TOYOTA MOTOR SALES, U.S.A., INC.

b. Using 30° and 75° cutters, correct the exhaust valve seat so that the exhaust valve contacts the entire circumference of the seat. The contact should be in the center of the exhaust valve seat, and the exhaust valve seat width should be maintained within the specified range around the entire circumference of the exhaust valve seat.

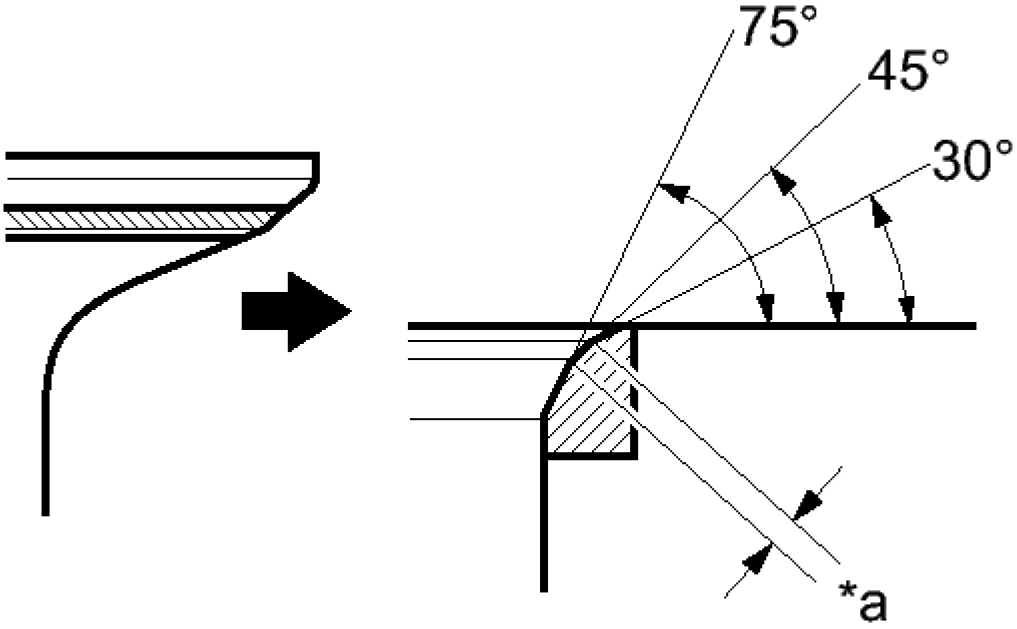

Fig. 353: Identifying Exhaust Valve Seat Contacts
Courtesy of TOYOTA MOTOR SALES, U.S.A., INC.

TEXT IN ILLUSTRATION

*a	Width

Width

1.1 to 1.5 mm (0.0433 to 0.0591 in.)

c. Handrub the exhaust valve and exhaust valve seat with an abrasive compound.
d. Check the exhaust valve seating position.

CYLINDER BLOCK

COMPONENTS

ILLUSTRATION

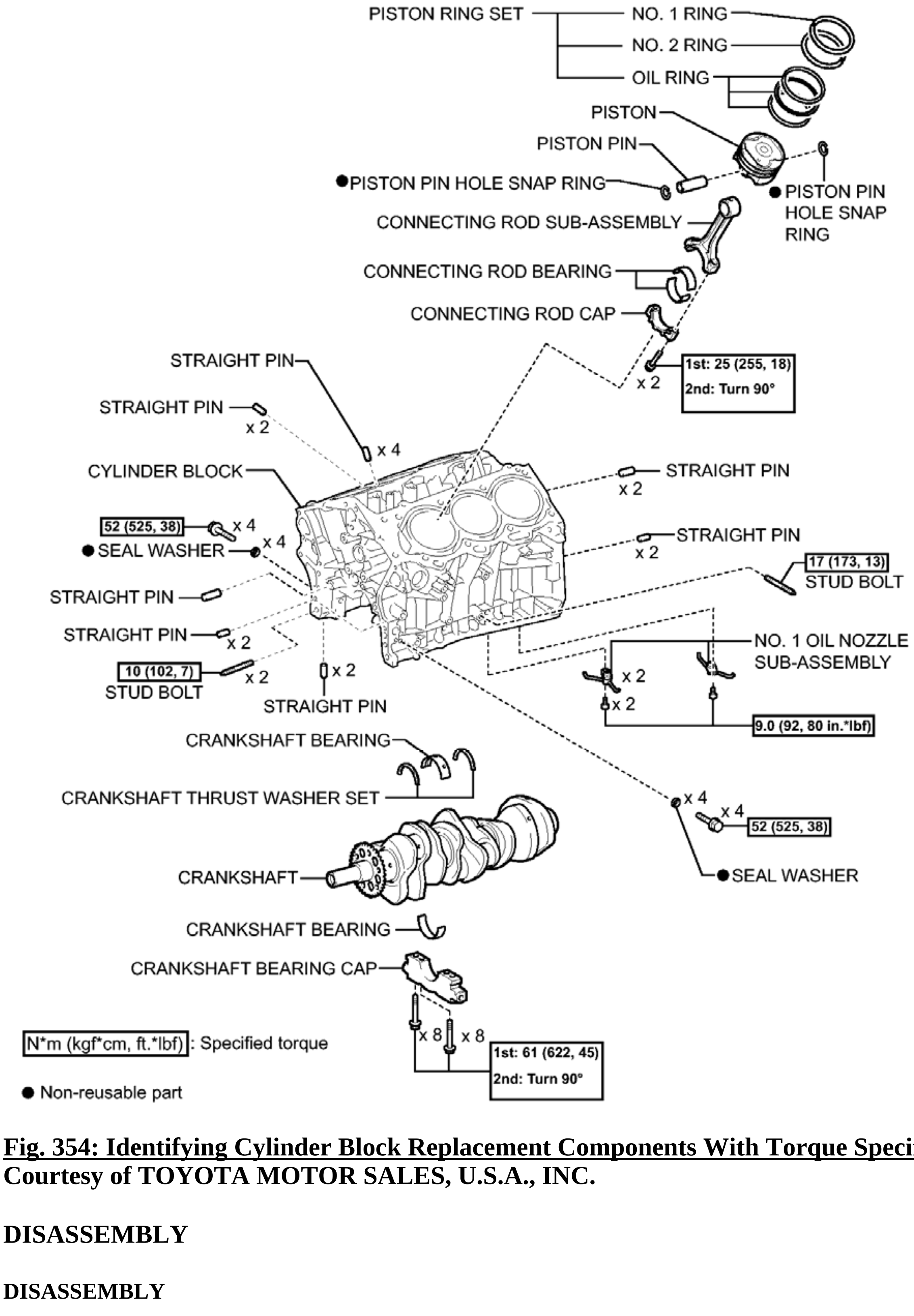
PISTON RING SET
NO. 1 RING
NO. 2 RING
OIL RING
PISTON
PISTON PIN
●PISTON PIN HOLE SNAP RING
● PISTON PIN HOLE SNAP RING
CONNECTING ROD SUB-ASSEMBLY
CONNECTING ROD BEARING
CONNECTING ROD CAP
1st: 25 (255, 18)
2nd: Turn 90°
x 2
STRAIGHT PIN
STRAIGHT PIN
x 2
x 4
CYLINDER BLOCK
STRAIGHT PIN
x 2
52 (525, 38)
x 4
● SEAL WASHER
x 4
STRAIGHT PIN
x 2
17 (173, 13)
STUD BOLT
STRAIGHT PIN
STRAIGHT PIN
x 2
NO. 1 OIL NOZZLE SUB-ASSEMBLY
10 (102, 7)
STUD BOLT
x 2
x 2
STRAIGHT PIN
x 2
x 2
9.0 (92, 80 in.*lbf)
CRANKSHAFT BEARING
CRANKSHAFT THRUST WASHER SET
x 4
x 4
52 (525, 38)
CRANKSHAFT
● SEAL WASHER
CRANKSHAFT BEARING
CRANKSHAFT BEARING CAP
x 8
x 8
1st: 61 (622, 45)
2nd: Turn 90°
N*m (kgf*cm, ft.*lbf) : Specified torque
● Non-reusable part

Fig. 354: Identifying Cylinder Block Replacement Components With Torque Specifications
Courtesy of TOYOTA MOTOR SALES, U.S.A., INC.

DISASSEMBLY

DISASSEMBLY

1. **REMOVE PISTON SUB-ASSEMBLY WITH CONNECTING ROD**

a. Check that the matchmarks on the connecting rod sub-assembly and connecting rod cap are aligned.

   HINT:

   The matchmarks on the connecting rod sub-assembly and connecting rod cap are guides for the correct reassembly.

b. Remove the 2 connecting rod cap bolts.

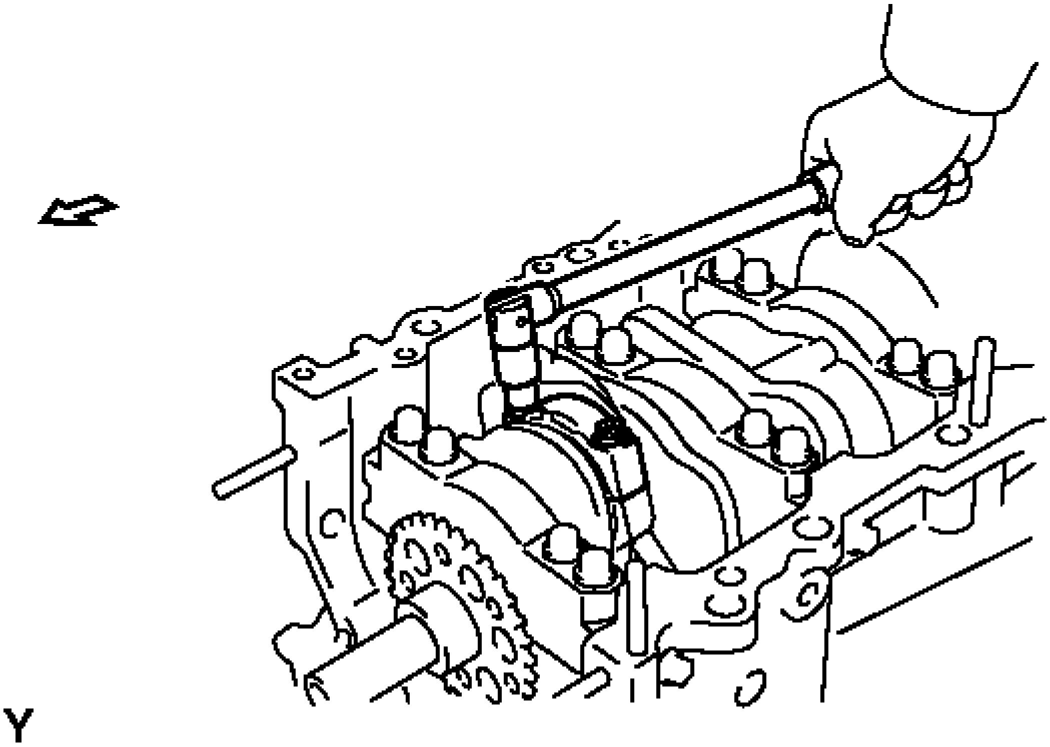

Fig. 355: Removing Connecting Rod Cap Bolts
Courtesy of TOYOTA MOTOR SALES, U.S.A., INC.

TEXT IN ILLUSTRATION

	Engine Front

c. Using the 2 removed connecting rod cap bolts, remove the connecting rod cap and lower bearing by wiggling the connecting rod cap right and left.

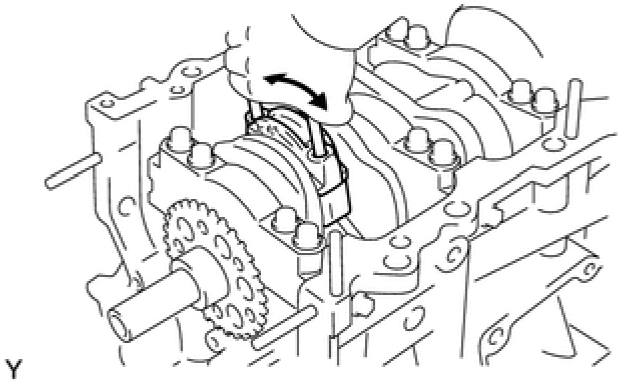

Fig. 356: Removing Connecting Rod Cap
Courtesy of TOYOTA MOTOR SALES, U.S.A., INC.

HINT:

Keep the lower bearing inserted to the connecting rod cap.

d. Using a ridge reamer, remove all the carbon from the top of the cylinder.

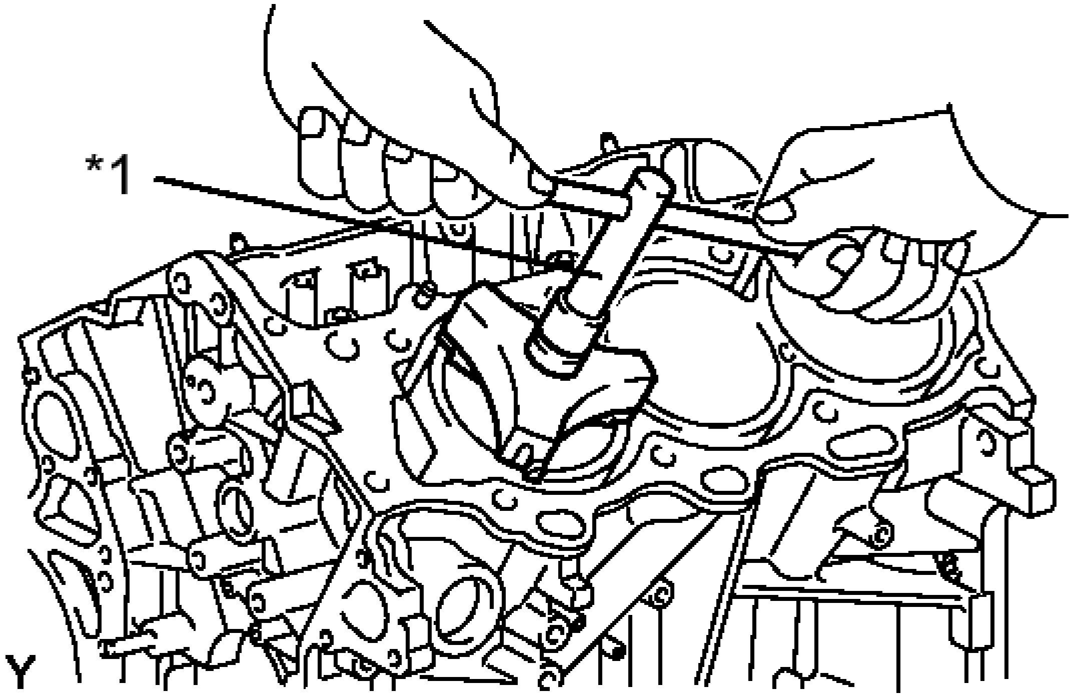

Fig. 357: Removing Carbon From Top Of Cylinder
Courtesy of TOYOTA MOTOR SALES, U.S.A., INC.

TEXT IN ILLUSTRATION

*1	Ridge Reamer

e. Push the piston, connecting rod assembly and upper bearing through the top of the cylinder block.

HINT:

- Keep the bearing, connecting rod and cap together.
- Arrange the piston and connecting rod assemblies in the correct order.

2. **REMOVE CONNECTING ROD BEARING**

HINT:

Arrange the removed parts in the correct order.

3. **REMOVE PISTON RING SET**

a. Using a piston ring expander, remove the 2 compression rings.

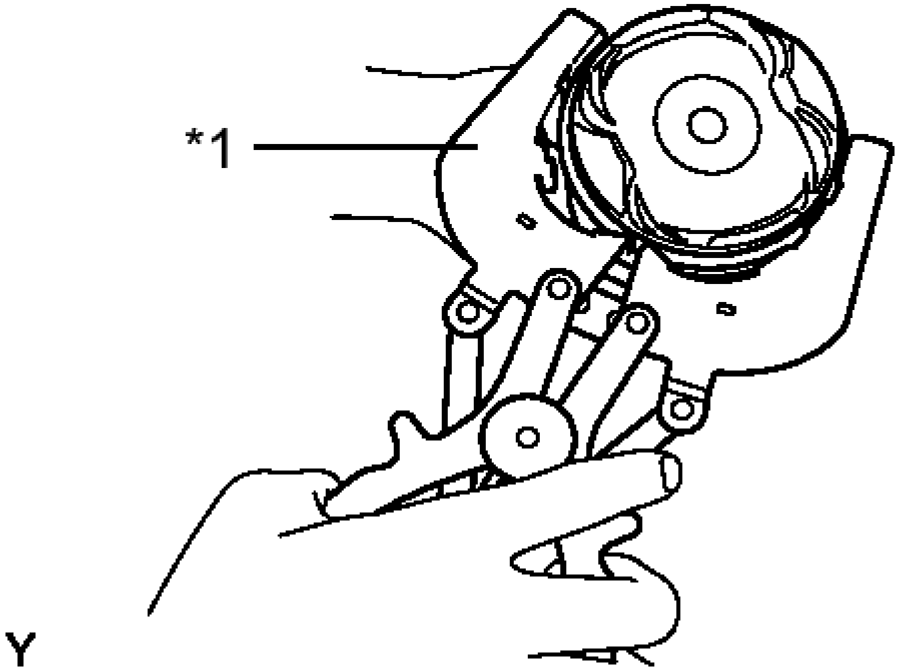

Fig. 358: Removing Compression Rings Using Compression Ring Expander
Courtesy of TOYOTA MOTOR SALES, U.S.A., INC.

TEXT IN ILLUSTRATION

*1	Piston Ring Expander

b. Remove the oil ring expander and 2 side rails by hand.

HINT:

Arrange the removed parts in the correct order.

4. **REMOVE PISTON**
    a. Check the fitting condition between the piston and piston pin.

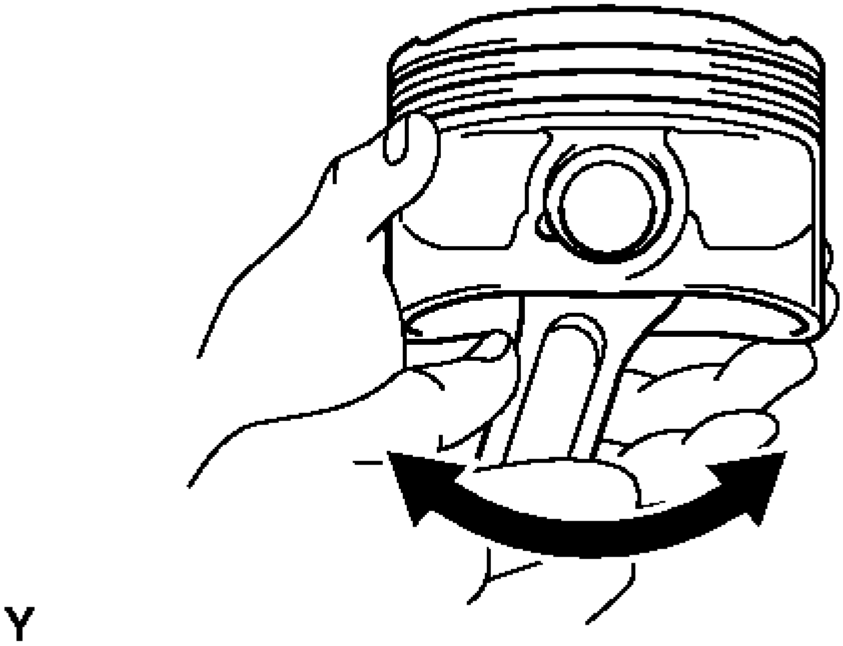

Fig. 359: Checking Fitting Condition Between Piston And Piston Pin
Courtesy of TOYOTA MOTOR SALES, U.S.A., INC.

1. Try to move the piston back and forth on the piston pin.

    If any movement is felt, replace the piston and pin as a set.

b. Disconnect the connecting rod from the piston.

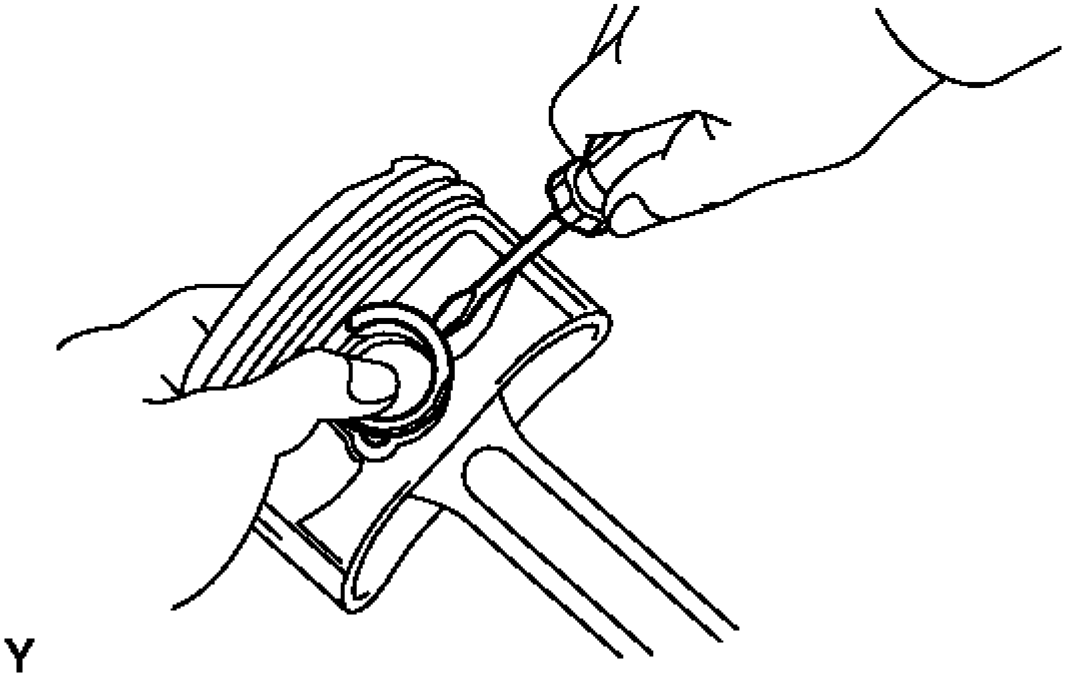

Fig. 360: Prying Off Snap Rings From Piston
Courtesy of TOYOTA MOTOR SALES, U.S.A., INC.

1. Using a screwdriver, pry off the piston pin hole snap rings from the piston.
2. Gradually heat the piston to approximately 80°C (176°F).

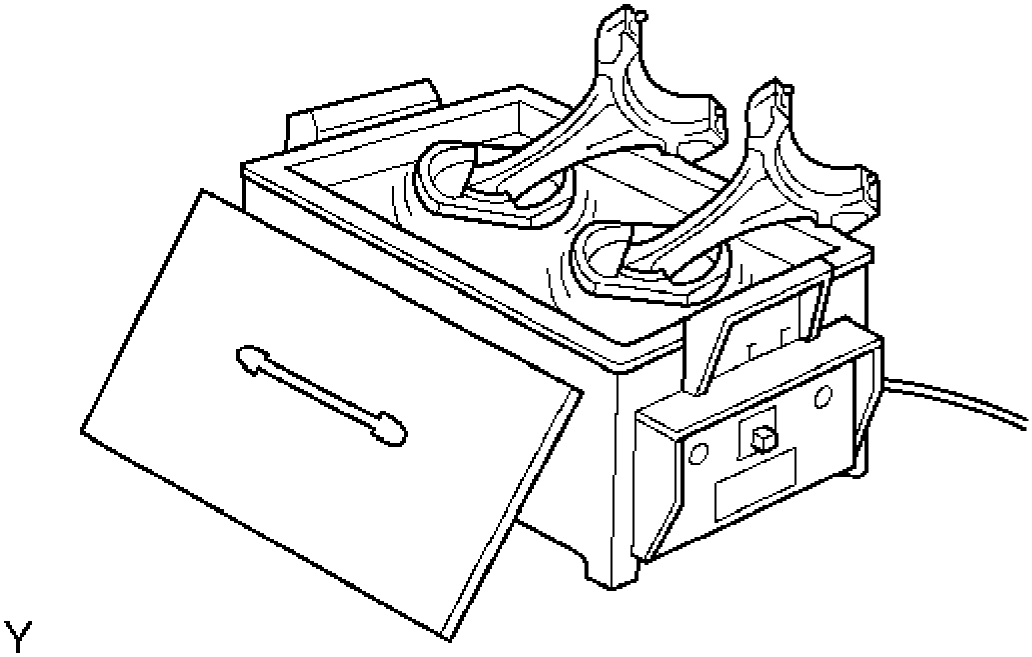

Fig. 361: Heating Piston
Courtesy of TOYOTA MOTOR SALES, U.S.A., INC.

3. Using a brass bar and a plastic hammer, lightly tap out the piston pin and remove the connecting rod sub-assembly.

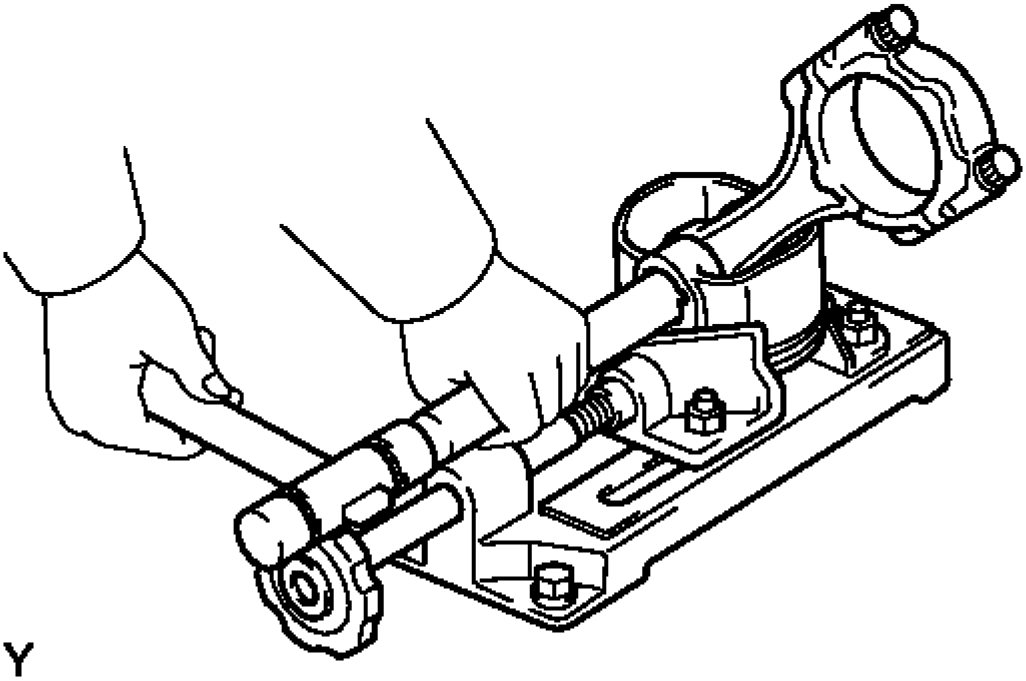

Fig. 362: Removing Connecting Rod
Courtesy of TOYOTA MOTOR SALES, U.S.A., INC.

HINT:

- The piston and piston pin are a matched set.
- Arrange the pistons, piston pins, piston pin hole snap rings, connecting rods and connecting rod bearings in the correct order.

c. Using a gasket scraper, remove the carbon from the piston top.

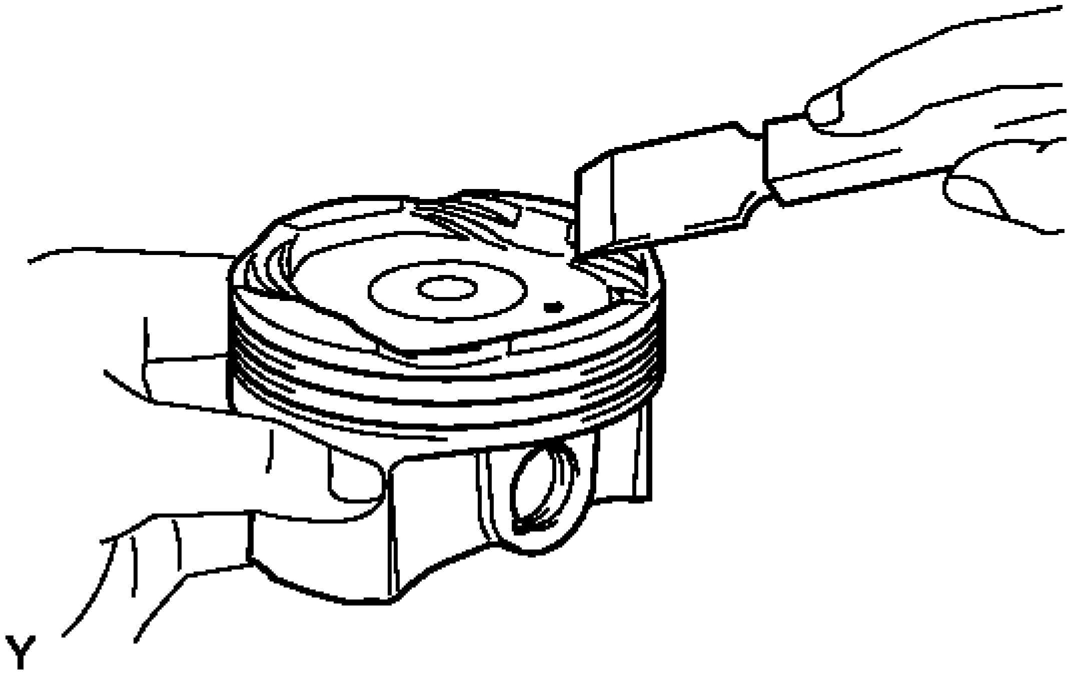

Fig. 363: Removing Carbon From Piston Top
Courtesy of TOYOTA MOTOR SALES, U.S.A., INC.

NOTE: Be careful not to scratch a piston.

d. Using a groove cleaning tool, clean the piston ring grooves.
e. Using solvent and a brush, thoroughly clean the piston.

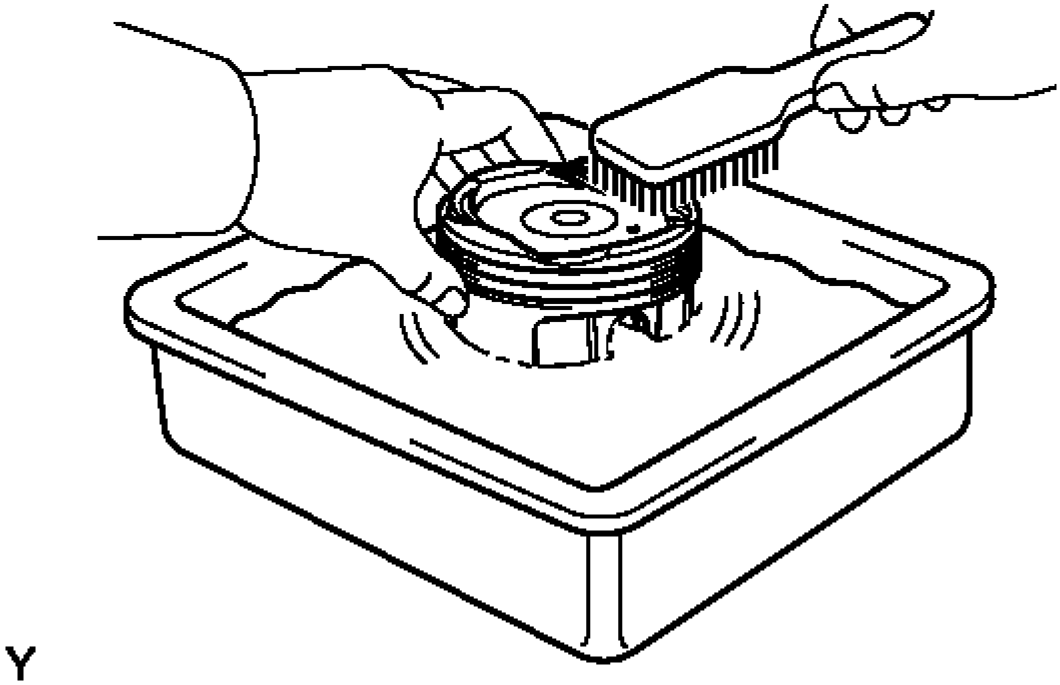

Fig. 364: Cleaning Piston Using Solvent And Brush
Courtesy of TOYOTA MOTOR SALES, U.S.A., INC.

NOTE: **Do not use a wire brush.**

5. **REMOVE CRANKSHAFT**
   1. Uniformly loosen and remove the 8 crankshaft bearing cap bolts and the 8 seal washers in several steps and in the sequence shown in the illustration.

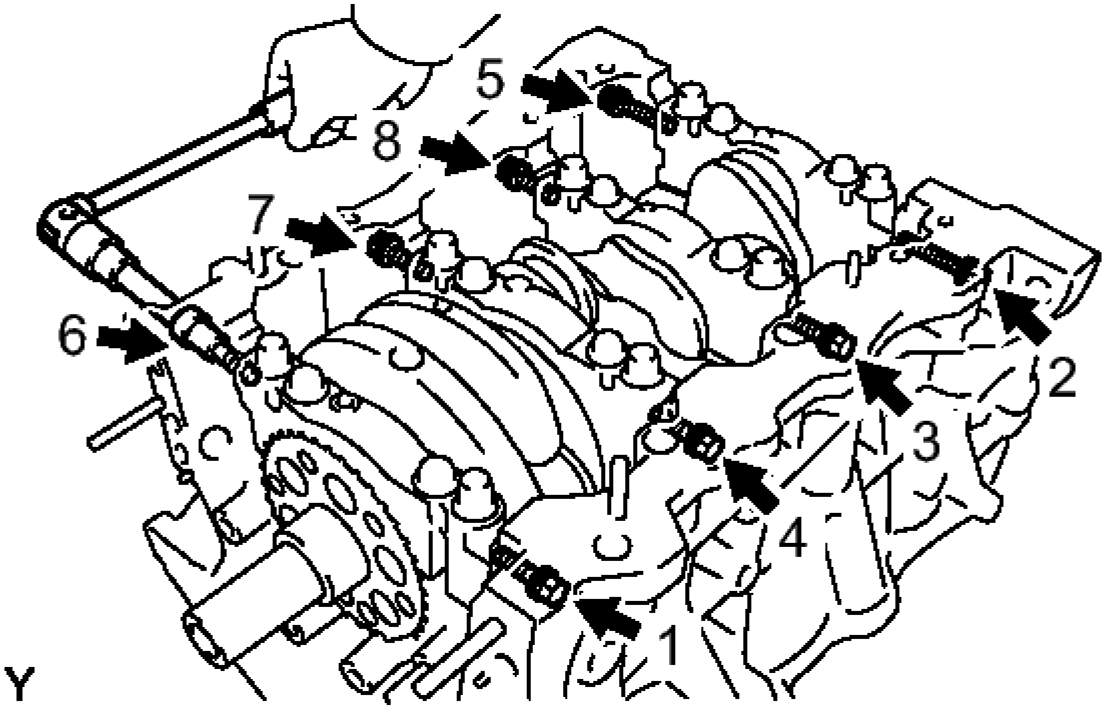

Fig. 365: Removing Main Bearing Cap Bolts In Sequence
Courtesy of TOYOTA MOTOR SALES, U.S.A., INC.

b. Uniformly loosen the 16 crankshaft bearing cap bolts, in several steps and in the sequence shown in the illustration.

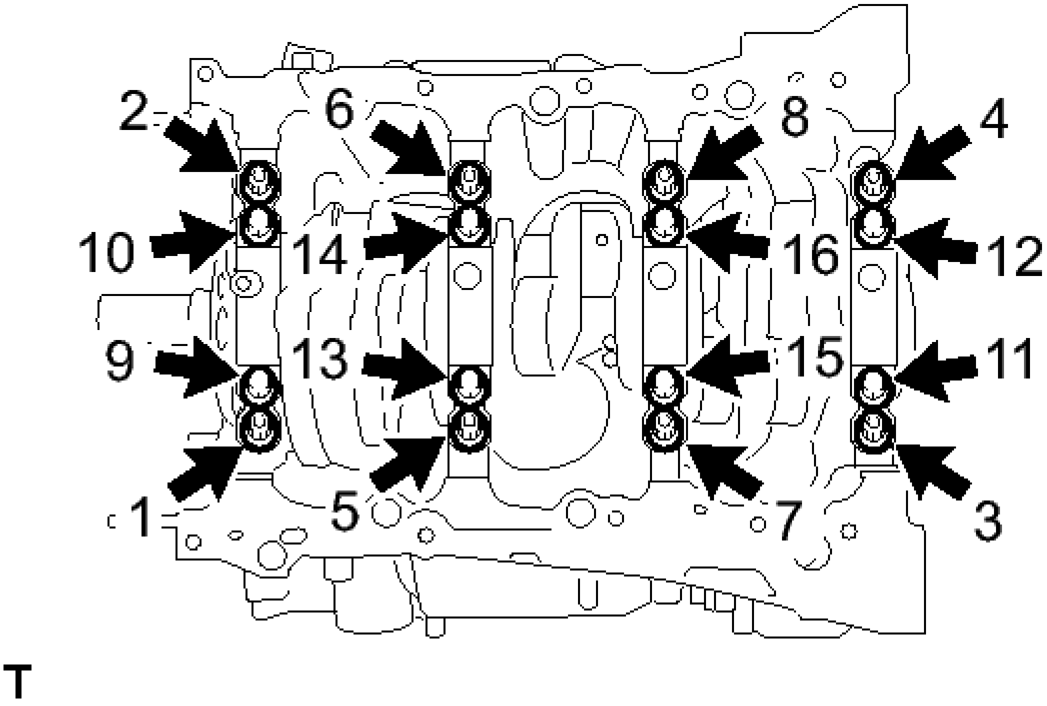
2
6
8
4
10
14
16
12
9
13
15
11
1
5
7
3
T

Fig. 366: Identifying Bearing Cap Bolts Loosening Sequence

Courtesy of TOYOTA MOTOR SALES, U.S.A., INC.

c. Using a screwdriver, pry out the crankshaft bearing caps. Remove the 4 crankshaft bearing caps and lower crankshaft bearings.

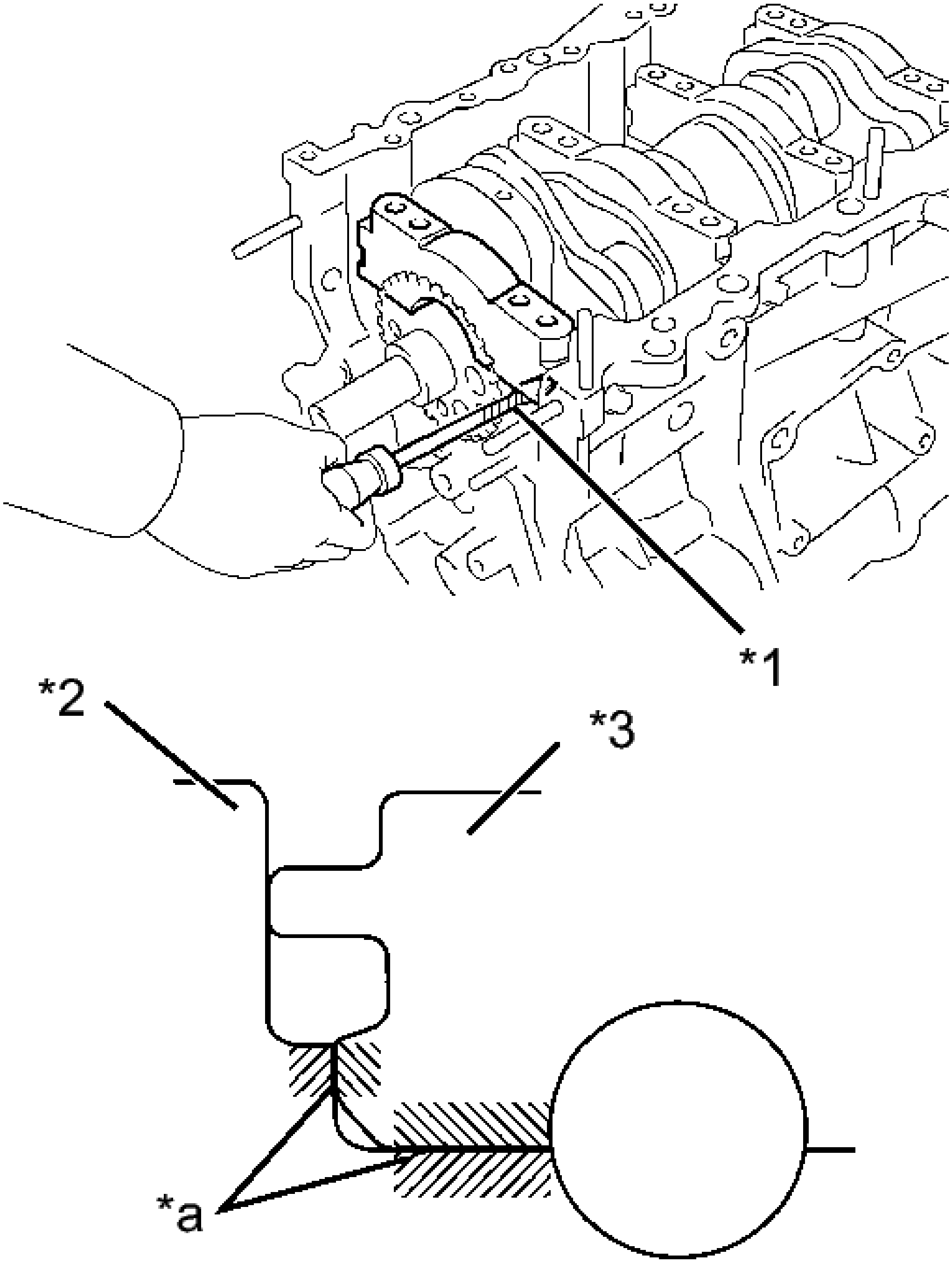

Fig. 367: Prying Out Crankshaft Bearing Cap Using A Screwdriver
Courtesy of TOYOTA MOTOR SALES, U.S.A., INC.

TEXT IN ILLUSTRATION

*1	Protective Tape
*2	Cylinder Block
*3	Bearing Cap
*a	Joint Surface

NOTE:

- **Push up on the cap slowly and evenly, alternating from the right and left side so that the bearing cap can be removed.**
- **Be careful not to damage the joint surface of the cylinder block and the crankshaft bearing cap.**

d. Remove the crankshaft.

6. **REMOVE CRANKSHAFT BEARING**
   a. Remove the upper crankshaft bearings and lower crankshaft bearings.

   HINT:

   Arrange the removed parts in the correct order.

7. **REMOVE CRANKSHAFT THRUST WASHER SET**
   a. Remove the upper crankshaft thrust washers from the cylinder block sub-assembly.

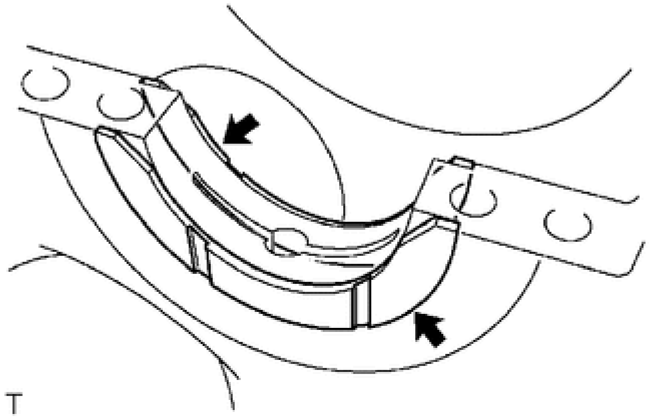

Fig. 368: Identifying Upper Bearings And Upper Thrust Washers
Courtesy of TOYOTA MOTOR SALES, U.S.A., INC.

8. **REMOVE NO. 1 OIL NOZZLE SUB-ASSEMBLY**

a. Using a 5 mm hexagon wrench, remove the 3 bolts and No. 1 oil nozzle sub-assemblies.

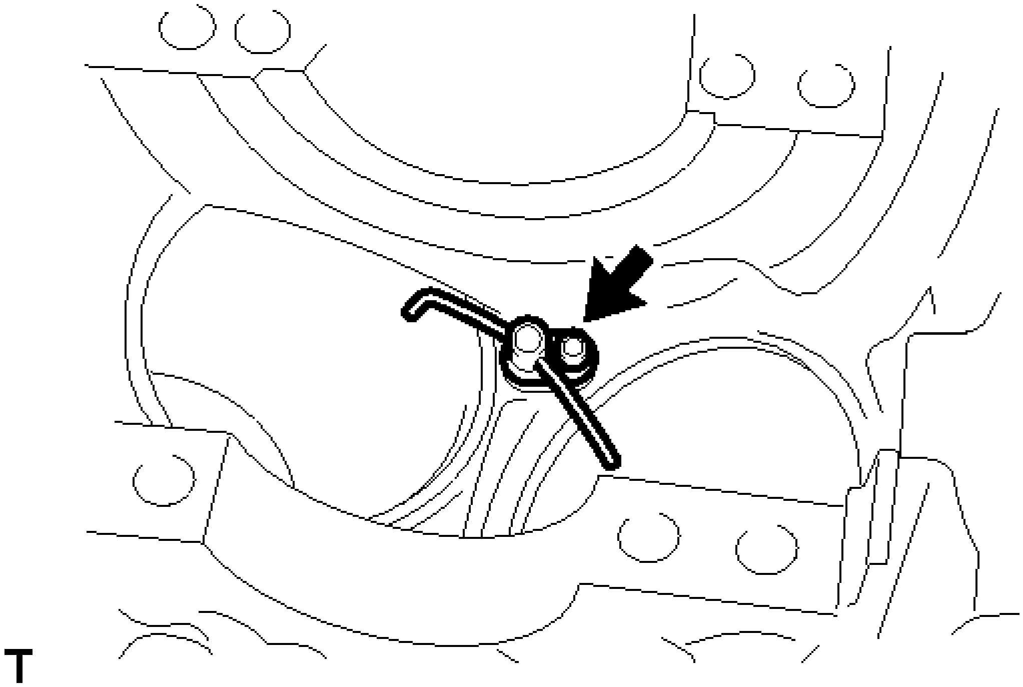

Fig. 369: Identifying Bolt And Oil Nozzle
Courtesy of TOYOTA MOTOR SALES, U.S.A., INC.

b. Check the 3 oil nozzles for damage or clogging.

If necessary, replace the No. 1 oil nozzle sub-assembly.

9. **CLEAN CYLINDER BLOCK**

INSPECTION

INSPECTION

1. **INSPECT CONNECTING ROD THRUST CLEARANCE**
    a. Install the connecting rod cap See step 8.
    b. Using a dial indicator, measure the thrust clearance while moving the connecting rod back and forth.

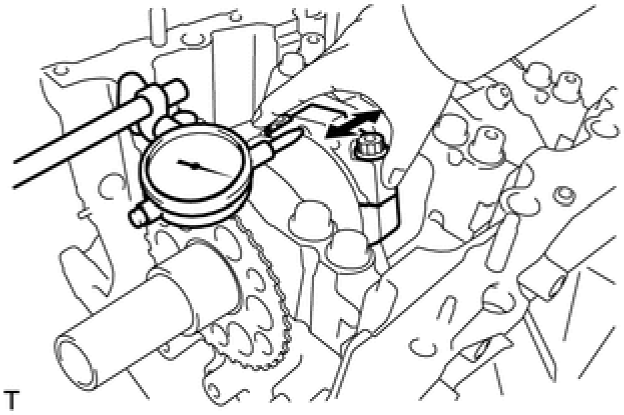

Fig. 370: Measuring Thrust Clearance
Courtesy of TOYOTA MOTOR SALES, U.S.A., INC.

Standard thrust clearance

0.15 to 0.40 mm (0.00591 to 0.0157 in.)

Maximum thrust clearance

0.50 mm (0.0197 in.)

If the thrust clearance is greater than the maximum, replace the connecting rod assembly. If necessary, replace the crankshaft.

2. **INSPECT CONNECTING ROD OIL CLEARANCE**
    a. Clean the crank pin and bearing.
    b. Check the crank pin and bearing for pitting and scratches.
    c. Lay a strip of Plastigage on the crank pin.

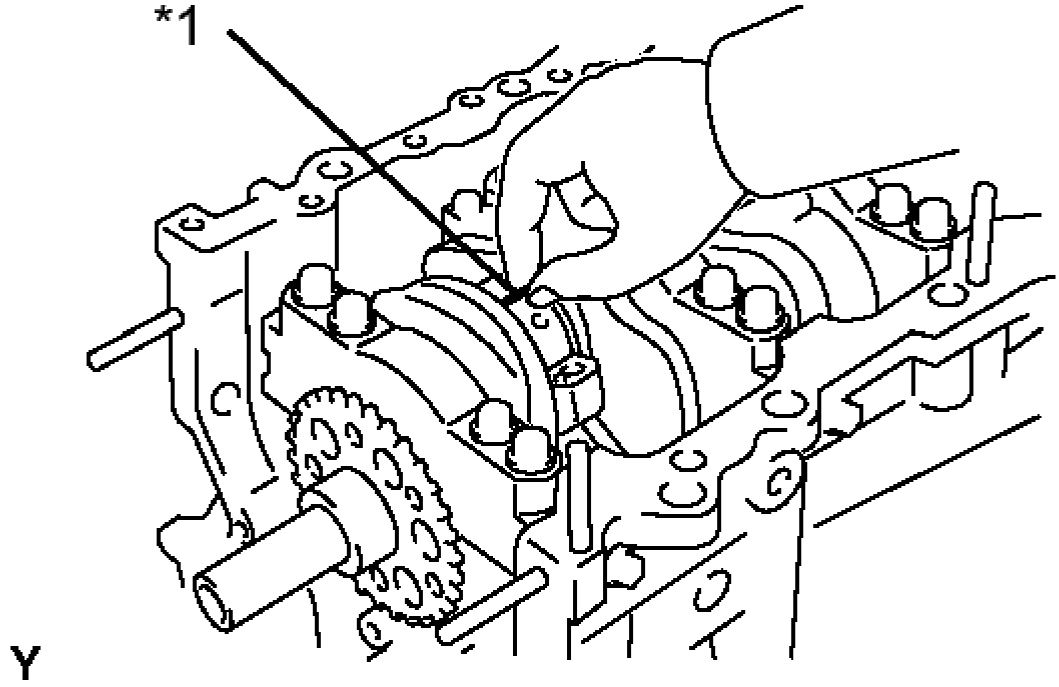

Fig. 371: Identifying Front Mark Of Connecting Rod Cap
Courtesy of TOYOTA MOTOR SALES, U.S.A., INC.

TEXT IN ILLUSTRATION

*1	Plastigage

d. Ensure that the front mark of the connecting rod cap is facing forward.

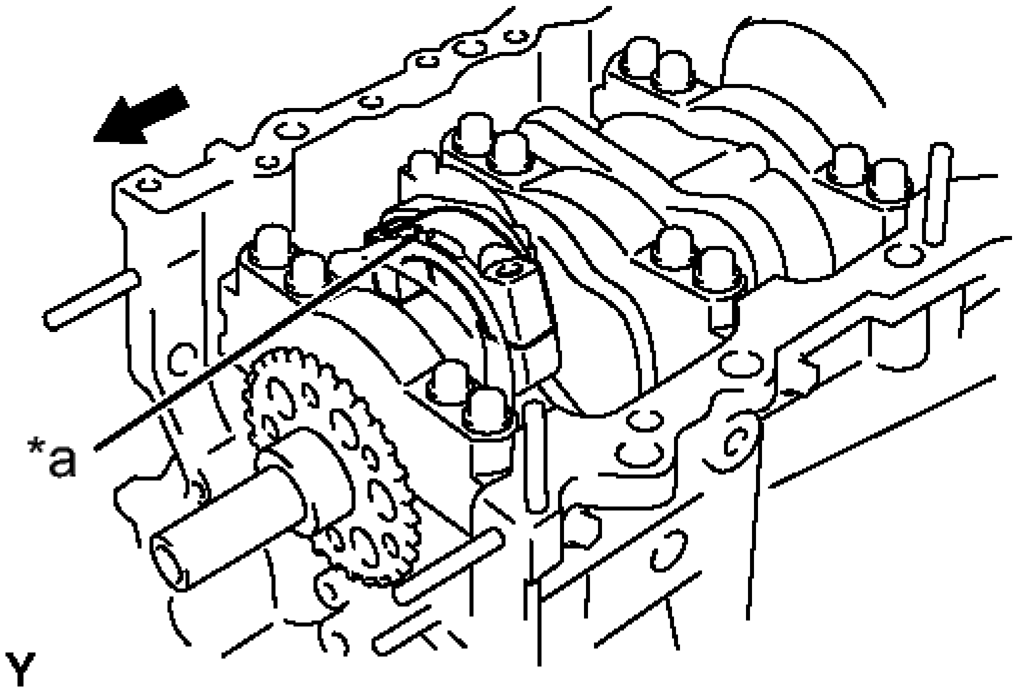

Fig. 372: Identifying Front Mark Of Connecting Rod Cap
Courtesy of TOYOTA MOTOR SALES, U.S.A., INC.

TEXT IN ILLUSTRATION

*a	Front Mark
	Engine Front

e. Install the connecting rod cap See step 8.

NOTE: Do not turn the crankshaft.

f. Remove the 2 bolts and connecting rod cap See step 1.

g. Measure the Plastigage at its widest point.

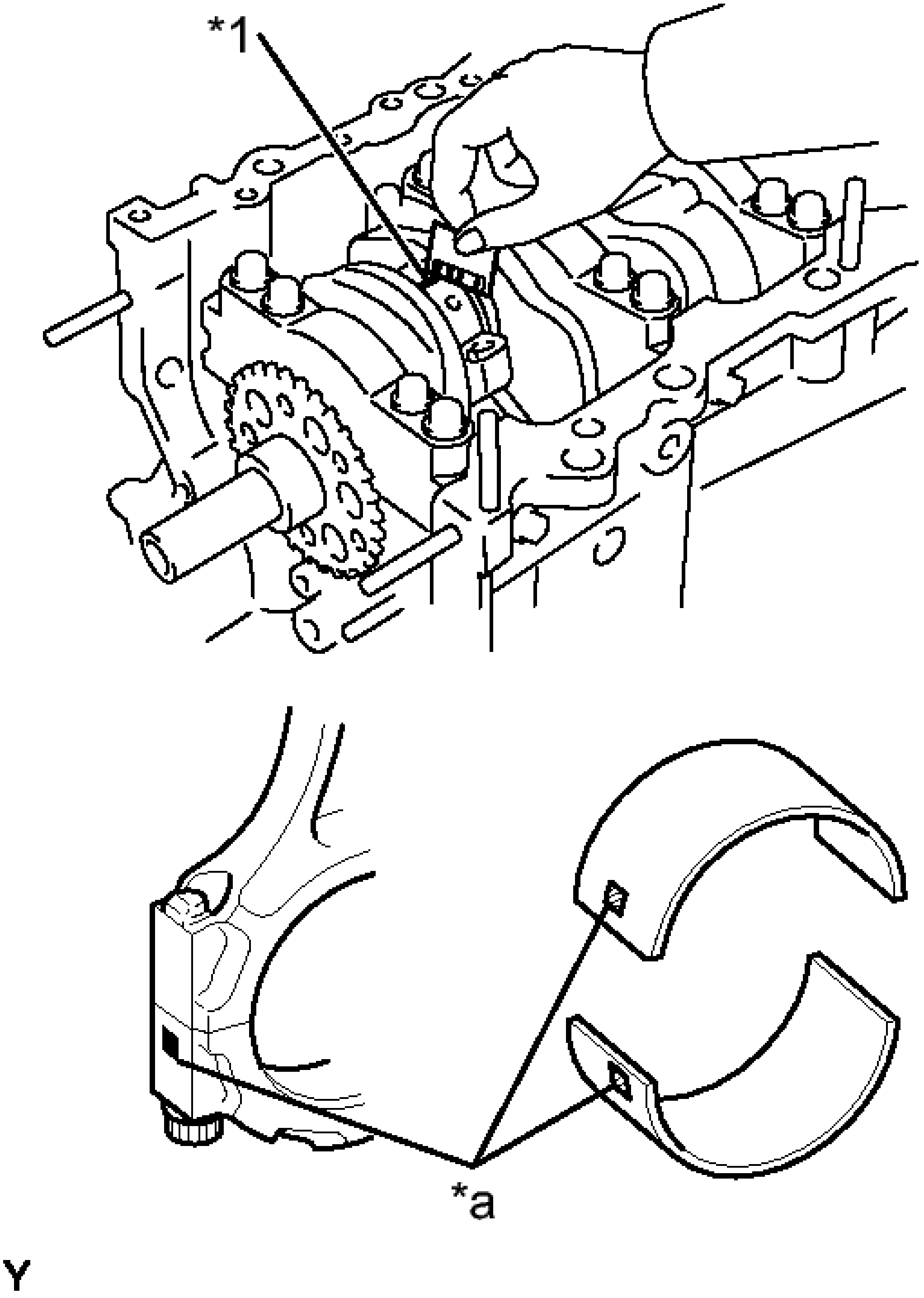

Fig. 373: Measuring Widest Point Of Plastigage
Courtesy of TOYOTA MOTOR SALES, U.S.A., INC.

TEXT IN ILLUSTRATION

*1	Plastigage

*a	Mark 1, 2, 3, or 4

Standard oil clearance

0.045 to 0.067 mm (0.00177 to 0.00264 in.)

Maximum oil clearance

0.070 mm (0.00276 in.)

If the oil clearance is greater than the maximum, replace the connecting rod bearings. If necessary, inspect the crankshaft.

HINT:

If replacing a bearing, replace it with one that has the same number as its respective connecting rod cap. Each bearing standard thickness is indicated by a number (1, 2, 3 or 4) marked on its surface.

Connecting Rod Diameter

Mark	Diameter
1	56.000 to 56.006 mm (2.20472 to 2.20496 in.)
2	56.007 to 56.012 mm (2.20500 to 2.20519 in.)
3	56.013 to 56.018 mm (2.20523 to 2.20543 in.)
	56.019 to 56.024 mm

4	(2.20547 to 2.20566 in.)

Connecting Rod Bearing Center Wall Thickness

Mark	Thickness
1	1.481 to 1.484 mm (0.05831 to 0.05843 in.)
2	1.484 to 1.487 mm (0.05843 to 0.05854 in.)
3	1.487 to 1.490 mm (0.05854 to 0.05866 in.)
4	1.490 to 1.493 mm (0.05866 to 0.05878 in.)

Standard crankshaft pin diameter

52.992 to 53.000 mm (2.0863 to 2.0866 in.)

NOTE: Completely remove the Plastigage after the measurement.

3. **INSPECT CYLINDER BLOCK FOR WARPAGE**
   a. Using a precision straightedge and feeler gauge, measure the warpage of the contact surface of the cylinder head gasket.

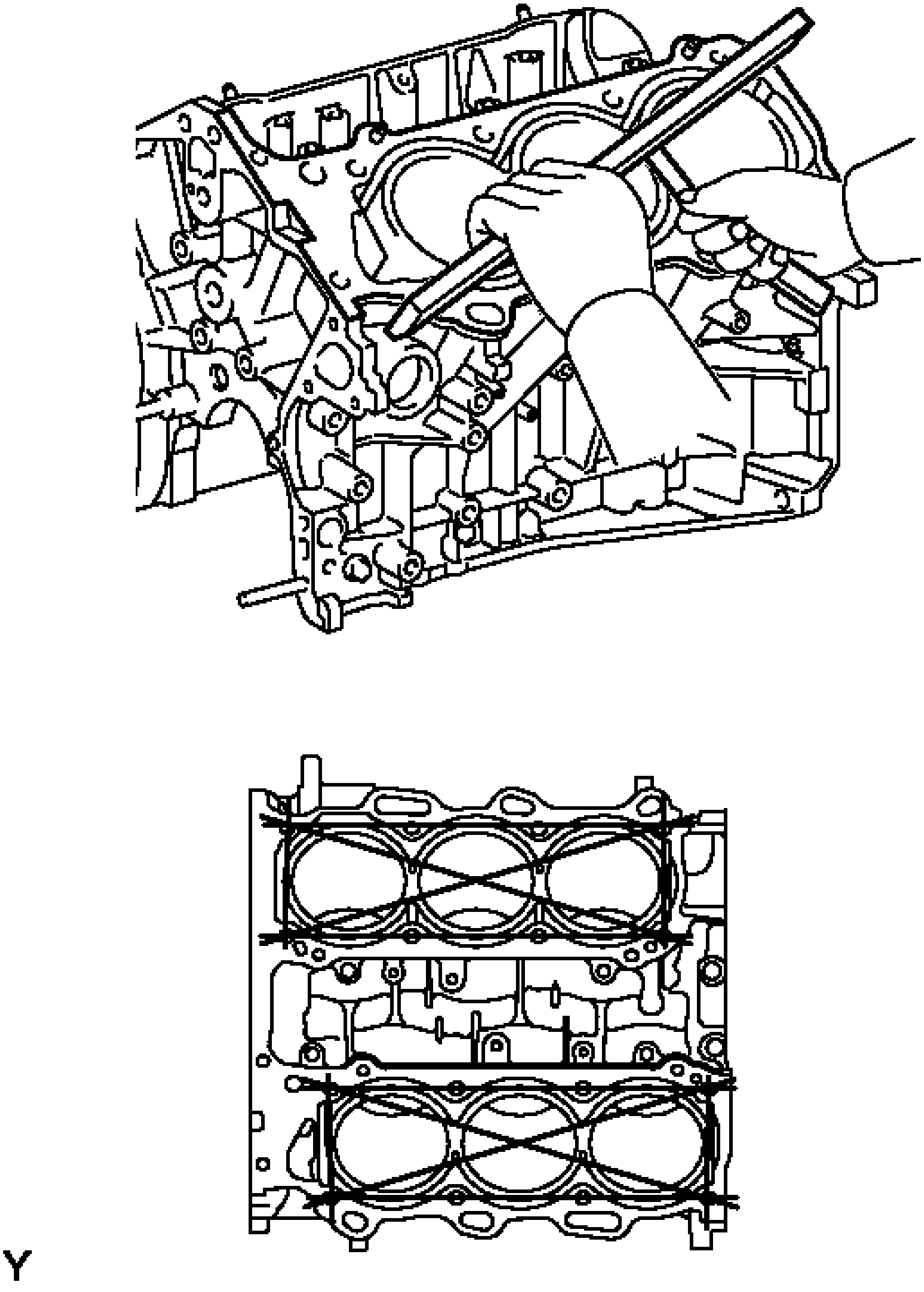

Fig. 374: Measuring Warpage Of Contact Surface Of Cylinder Head Gasket
Courtesy of TOYOTA MOTOR SALES, U.S.A., INC.

Maximum warpage

0.07 mm (0.00276 in.)

If the warpage is greater than the maximum, replace the cylinder block sub-assembly.

4. **INSPECT CYLINDER BORE**
    a. Using a cylinder gauge, measure the cylinder bore diameter at positions A and B in the thrust and axial directions.

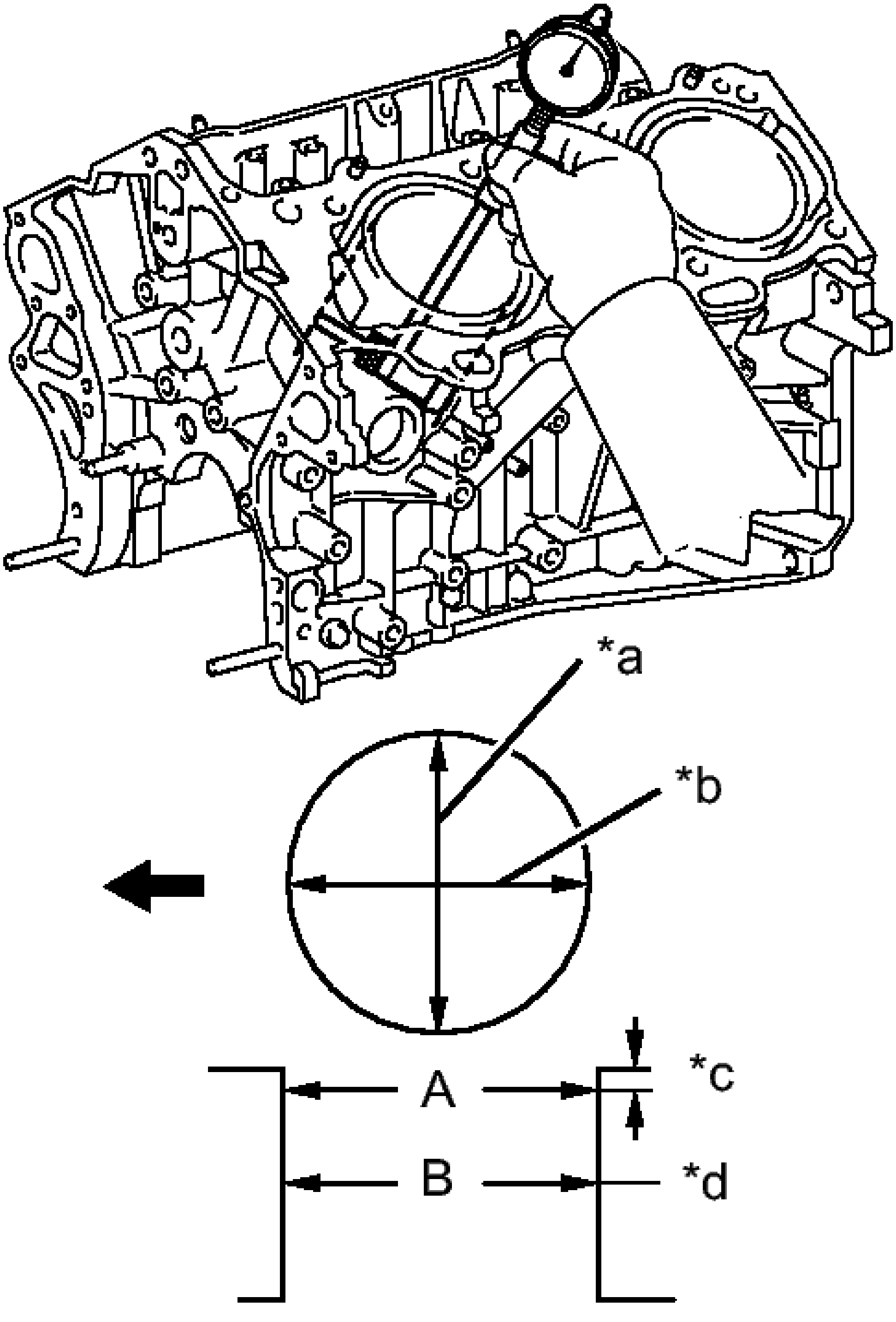

Fig. 375: Measuring Cylinder Bore Diameter Using A Cylinder Gauge
Courtesy of TOYOTA MOTOR SALES, U.S.A., INC.

Standard diameter

94.000 to 94.012 mm (3.7008 to 3.7013 in.)

Maximum diameter

94.13 mm (3.7059 in.)

TEXT IN ILLUSTRATION

*a	Axial Direction
*b	Thrust Direction
*c	10 mm (0.394 in.)
*d	Center
·	Front

If the average diameter of 4 positions is greater than the maximum, replace the cylinder block sub-assembly.

5. **INSPECT PISTON**
    a. Using a micrometer, measure the piston diameter at right angles to the piston center line where the distance from the piston end is as specified.

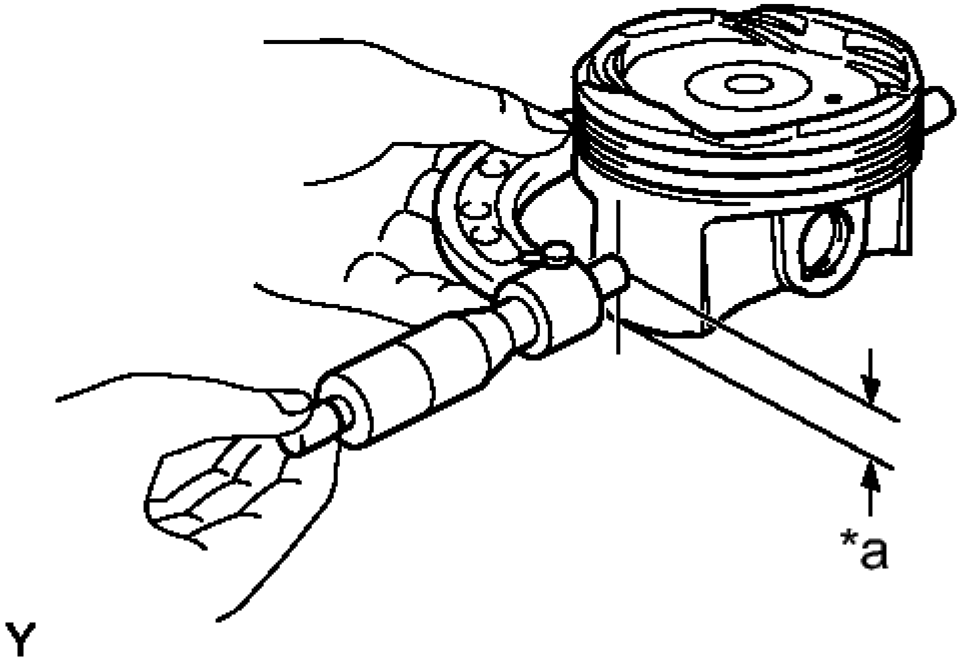

Fig. 376: Measuring Piston Diameter Using A Micrometer
Courtesy of TOYOTA MOTOR SALES, U.S.A., INC.

Distance

8.9 mm (0.3504 in.)

Standard diameter

93.960 to 93.980 mm (3.6992 to 3.7000 in.)

Minimum diameter

93.830 mm (3.6941 in.)

TEXT IN ILLUSTRATION

*a	Distance

If the piston diameter is less than the minimum, replace the piston and piston pin as a set.

6. **INSPECT PISTON OIL CLEARANCE**
   a. Measure the cylinder bore diameter in the thrust directions.
   b. Subtract the piston diameter measurement from the cylinder bore diameter measurement.

Standard oil clearance

0.020 to 0.052 mm (0.000787 to 0.00205 in.)

Maximum oil clearance

0.060 mm (0.00236 in.)

If the oil clearance is greater than the maximum, replace all the pistons. If necessary, replace the cylinder block sub-assembly.

7. **INSPECT RING GROOVE CLEARANCE**
   a. Using a feeler gauge, measure the clearance between a new piston ring and the wall of the ring groove.

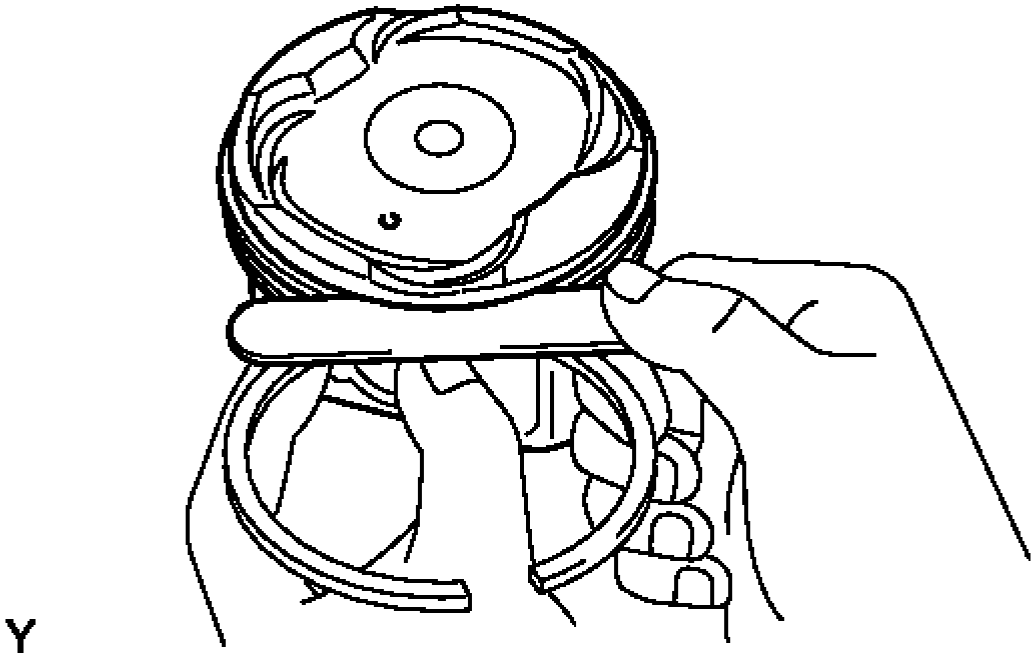

Fig. 377: Measuring Ring Groove
Courtesy of TOYOTA MOTOR SALES, U.S.A., INC.

Ring Groove Clearance

Item	Clearance
No. 1	0.020 to 0.070 mm (0.000787 to 0.00276 in.)
No. 2	0.020 to 0.060 mm (0.000787 to 0.00236 in.)
Oil	0.070 to 0.150 mm (0.00276 to 0.00591 in.)

If the clearance is not as specified, replace the piston.

8. **INSPECT PISTON PIN OIL CLEARANCE**
    a. Using a caliper gauge, measure the inside diameter of the piston pin hole.

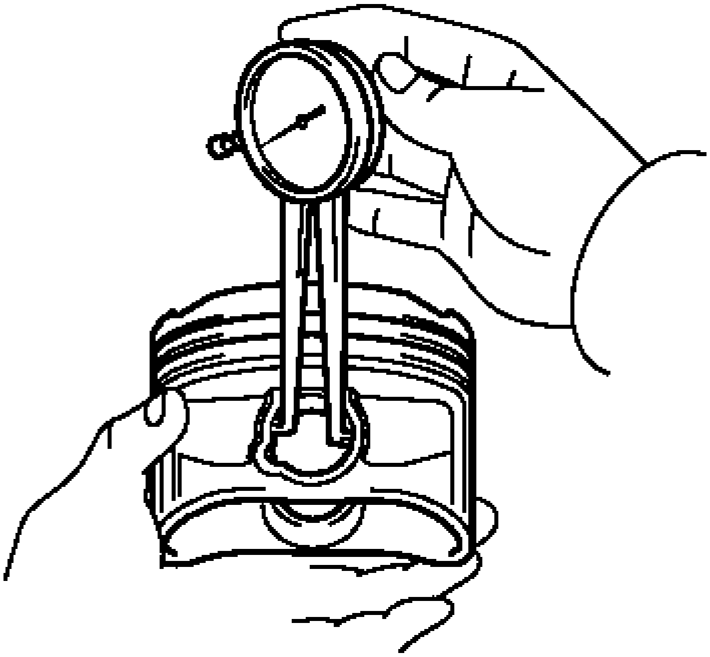

Fig. 378: Measuring Inside Diameter Of Piston Pin Hole
Courtesy of TOYOTA MOTOR SALES, U.S.A., INC.

Piston Pin Hole Inside Diameter

Mark	Diameter
A	22.001 to 22.004 mm (0.8662 to 0.8663 in.)
B	22.004 to 22.007 mm (0.8663 to 0.8664 in.)
C	22.007 to 22.010 mm (0.8664 to 0.8665 in.)

b. Using a micrometer, measure the piston pin diameter.

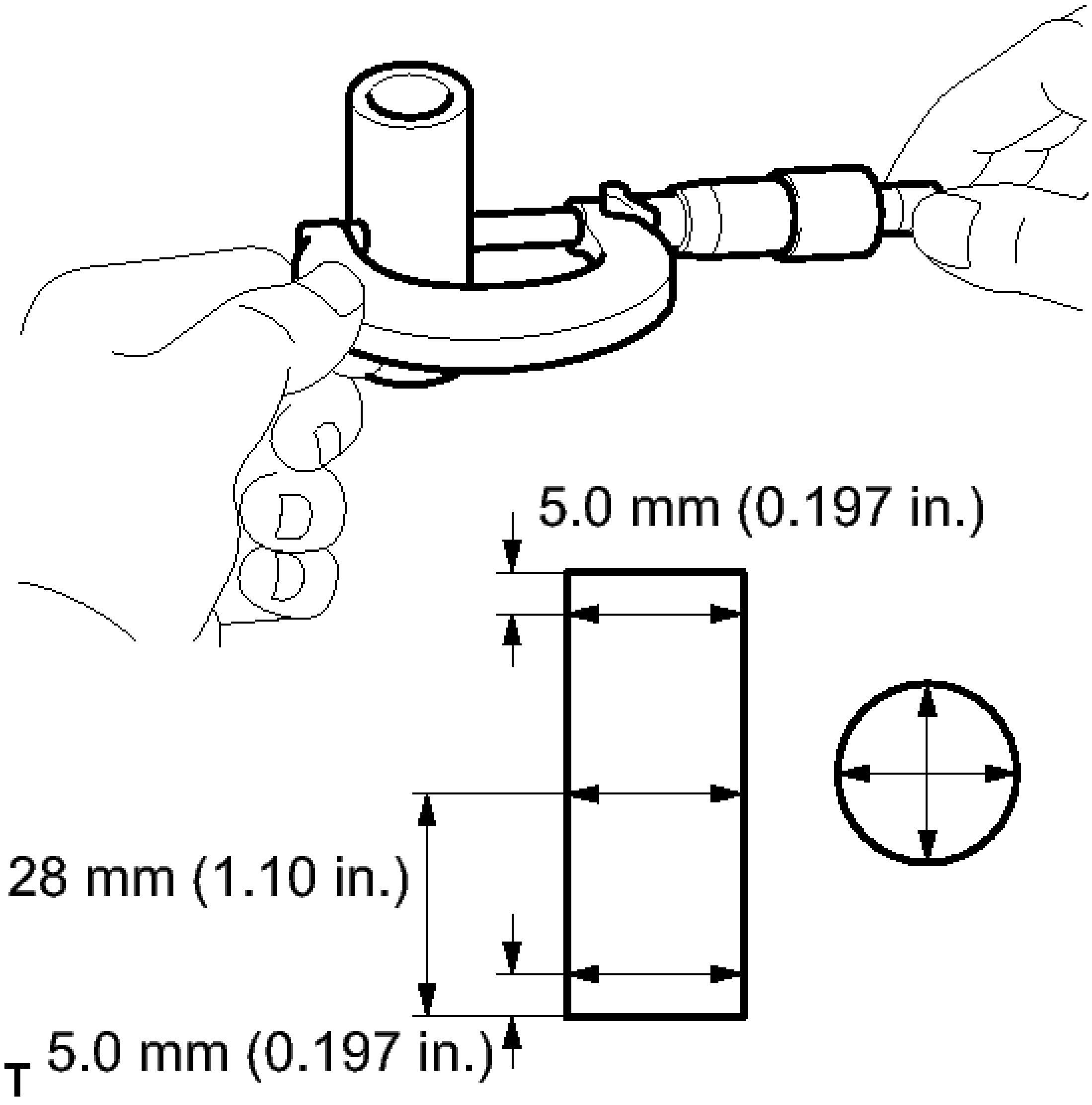
5.0 mm (0.197 in.)
28 mm (1.10 in.)
T
5.0 mm (0.197 in.)

Fig. 379: Measuring Inside Diameter Of Connecting Rod Bushing
Courtesy of TOYOTA MOTOR SALES, U.S.A., INC.

Piston Pin Diameter

Mark	Diameter
A	21.997 to 22.000 mm (0.8660 to 0.8661 in.)
B	22.000 to 22.003 mm (0.8661

	to 0.8663 in.)
C	22.003 to 22.006 mm (0.8663 to 0.8664 in.)

c. Subtract the piston pin diameter measurement from the piston pin hole diameter measurement.

Standard oil clearance

0.001 to 0.007 mm (0.0000394 to 0.000276 in.)

Maximum oil clearance

0.015 mm (0.000591 in.)

If the oil clearance is greater than the maximum, replace the piston and piston pin as a set.

d. Using a caliper gauge, measure the inside diameter of the connecting rod bushing.

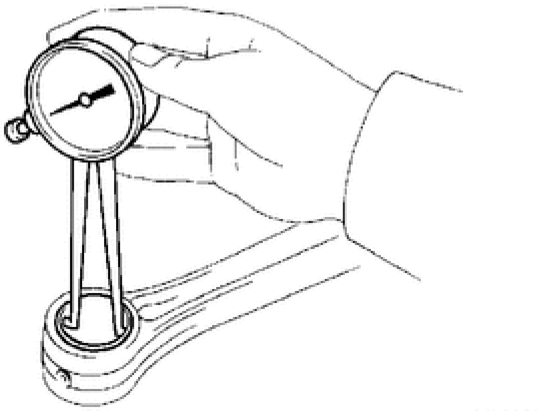

Fig. 380: Checking Inside Diameter Of Connecting Rod Bushing
Courtesy of TOYOTA MOTOR SALES, U.S.A., INC.

Bushing Inside Diameter

Mark	Diameter
A	22.005 to 22.008 mm (0.86634 to 0.86645

	in.)
B	22.009 to 22.011 mm (0.86649 to 0.86657 in.)
C	22.012 to 22.014 mm (0.86661 to 0.86669 in.)

e. Subtract the piston pin diameter measurement from the bushing inside diameter measurement.

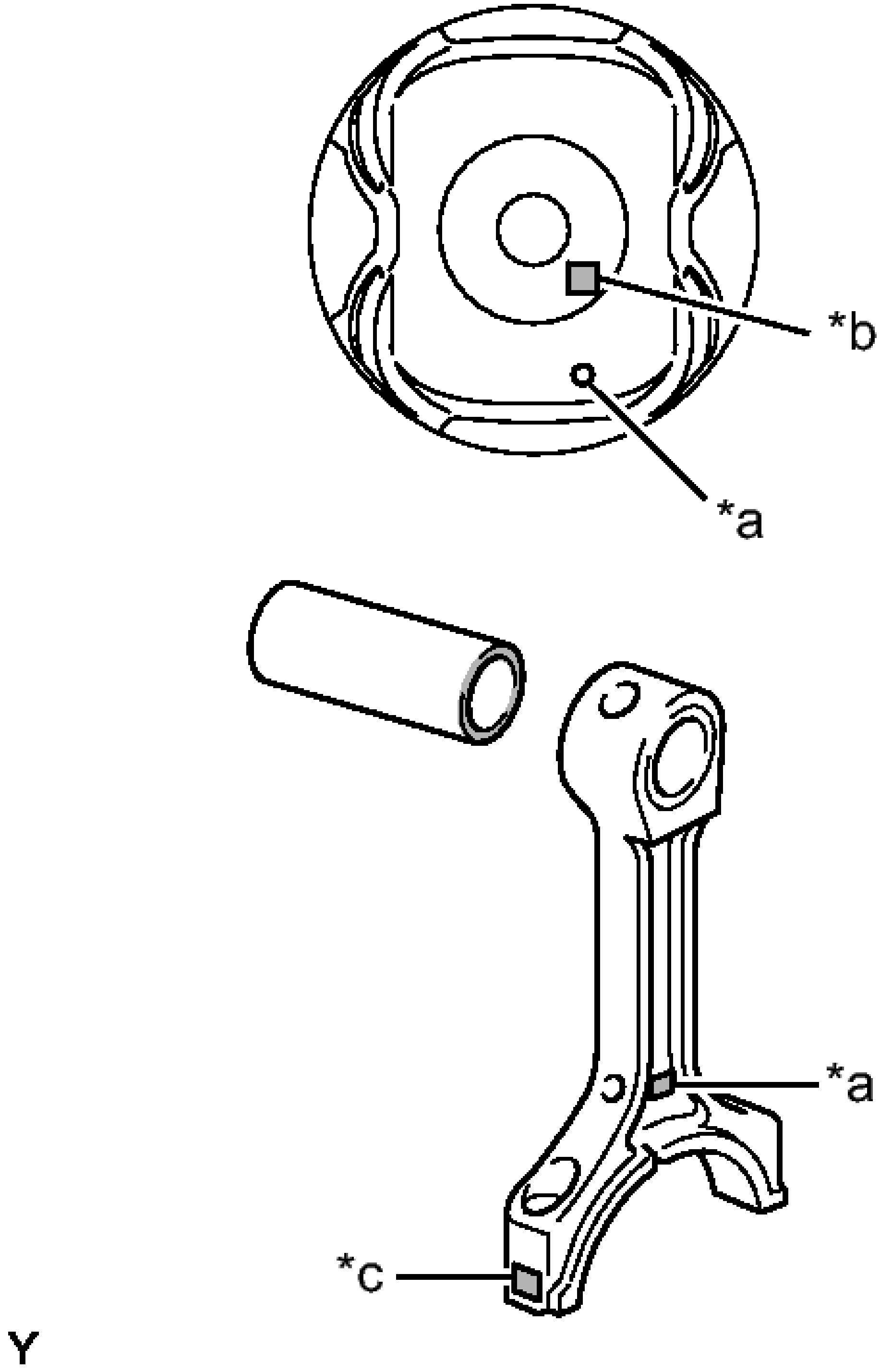

Fig. 381: Identifying Front Mark, Piston Pin Hole Inside Diameter Mark & Connecting Rod Bushing Inside Diameter Mark
Courtesy of TOYOTA MOTOR SALES, U.S.A., INC.

TEXT IN ILLUSTRATION

*a	Front Mark
*b	Piston Pin Hole Inside Diameter Mark
*c	Connecting Rod Bushing Inside Diameter Mark

Standard oil clearance

0.005 to 0.011 mm (0.000197 to 0.000433 in.)

Maximum oil clearance

0.030 mm (0.00118 in.)

If the oil clearance is greater than the maximum, replace the bushing. If necessary, replace the connecting rod and piston pin as a set.

9. **INSPECT PISTON RING END GAP**
    a. Insert the piston ring into the cylinder bore.
    b. Using a piston, push the piston ring slightly beyond the bottom of the ring travel, 110 mm (4.33 in.) from the top of the cylinder block sub-assembly.

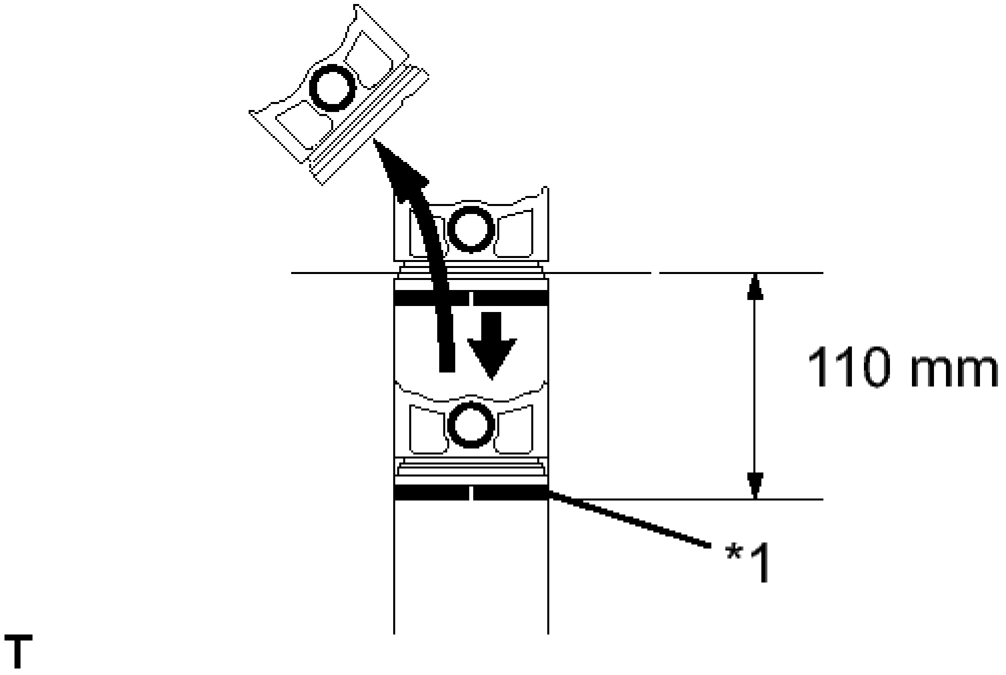

Fig. 382: Identifying Piston Ring
Courtesy of TOYOTA MOTOR SALES, U.S.A., INC.

TEXT IN ILLUSTRATION

*1	Piston Ring

c. Using a feeler gauge, measure the end gap.

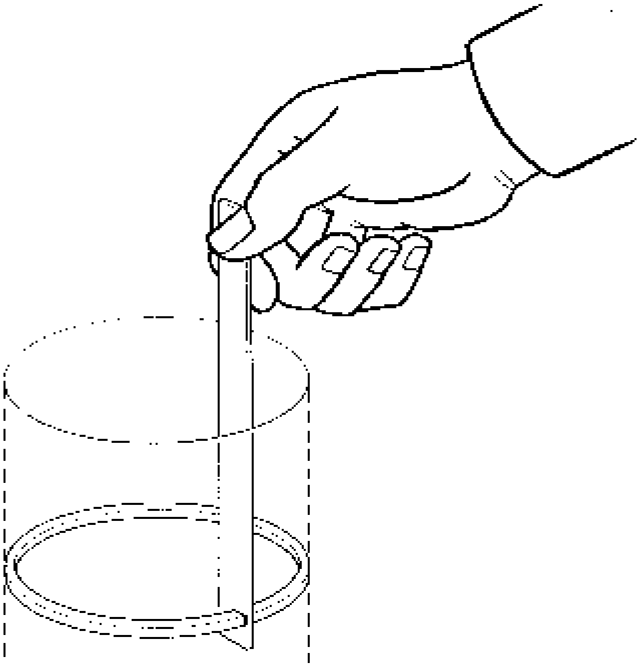

Fig. 383: Checking End Gap
Courtesy of TOYOTA MOTOR SALES, U.S.A., INC.

Standard End Gap

Item	**End Gap**
No. 1	0.22 to 0.32 mm (0.00866 to 0.0126 in.)
No. 2	0.35 to 0.45 mm (0.0138 to 0.0177 in.)
Oil	0.10 to 0.40 mm (0.00394 to 0.0157 in.)

Maximum End Gap

Item	End Gap
No. 1	0.50 mm (0.0197 in.)
No. 2	0.85 mm (0.0335 in.)
Oil	0.60 mm (0.0236 in.)

If the end gap is greater than the maximum, replace the piston ring. If the end gap is greater than the maximum even with a new piston ring, replace the cylinder block sub-assembly.

10. **INSPECT CRANKSHAFT THRUST CLEARANCE**
    a. Install the crankshaft bearing cap See step 8.
    b. Using a dial indicator, measure the thrust clearance while prying the crankshaft back and forth with a screwdriver.

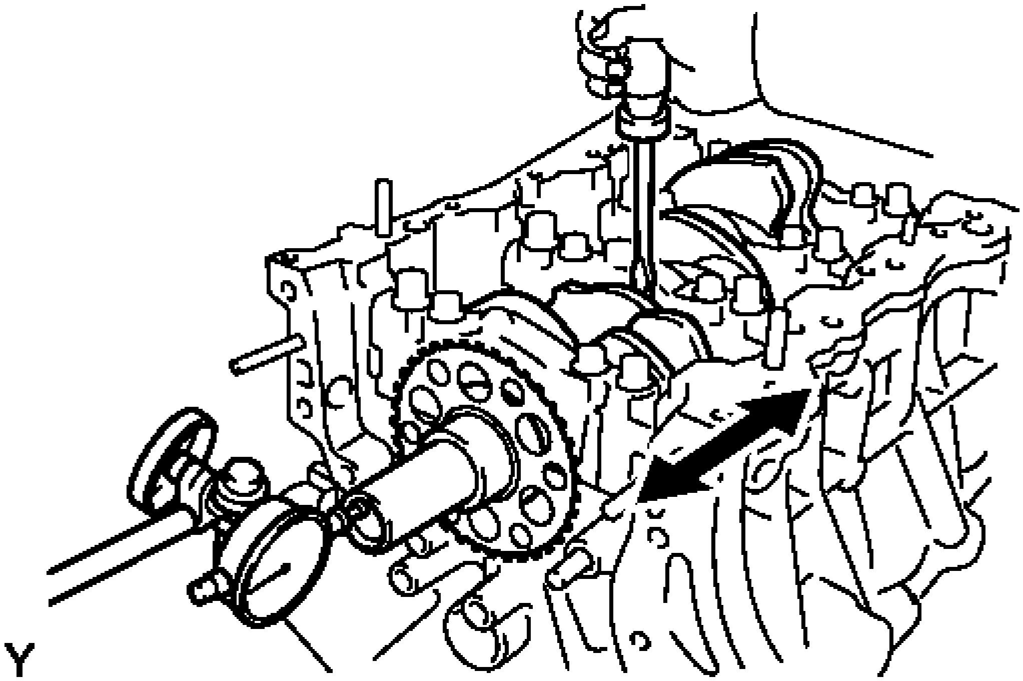

Fig. 384: Measuring Crankshaft Thrust Clearance
Courtesy of TOYOTA MOTOR SALES, U.S.A., INC.

Standard thrust clearance

0.04 to 0.24 mm (0.00157 to 0.00945 in.)

Maximum thrust clearance

0.30 mm (0.0118 in.)

If the thrust clearance is greater than the maximum, replace the thrust washers as a set. If necessary, replace the crankshaft.

Thrust washer thickness

2.43 to 2.48 mm (0.0957 to 0.0976 in.)

11. **INSPECT CONNECTING ROD SUB-ASSEMBLY**
    a. Using a rod aligner and feeler gauge, check the connecting rod alignment.

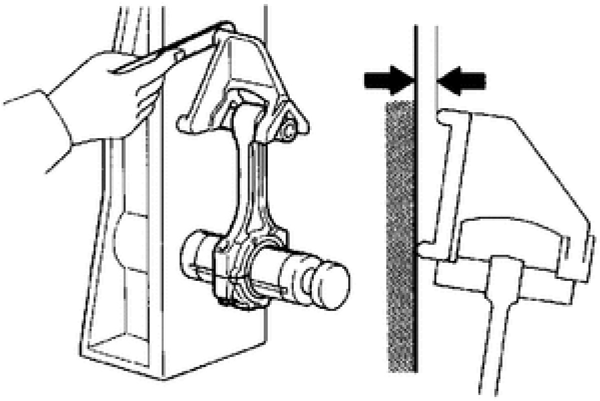

Fig. 385: Checking Connecting Rod
Courtesy of TOYOTA MOTOR SALES, U.S.A., INC.

1. Check for out-of-alignment.

   Maximum out-of-alignment

   0.05 mm (0.00197 in.) per 100 mm (3.94 in.)

   If the out-of-alignment is greater than the maximum, replace the connecting rod sub-assembly.

2. Check for twist.

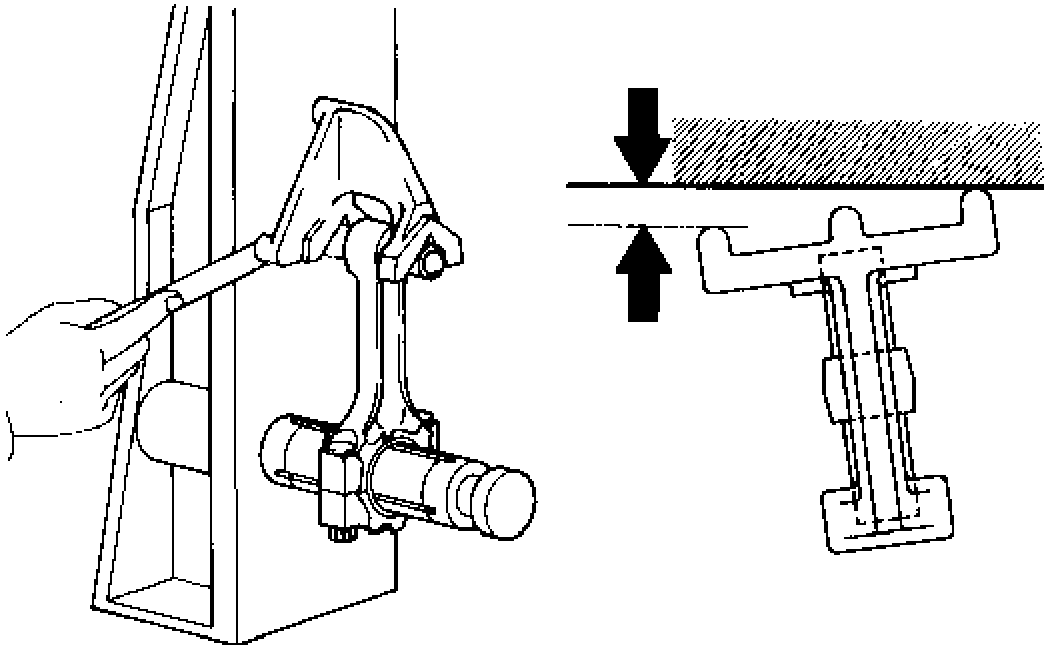

Fig. 386: Checking Connecting Rod For Twist
Courtesy of TOYOTA MOTOR SALES, U.S.A., INC.

Maximum twist

0.15 mm (0.00591 in.) per 100 mm (3.94 in.)

If the twist is greater than the maximum, replace the connecting rod sub-assembly.

12. **INSPECT CONNECTING ROD BOLT**
    a. Using a vernier caliper, measure the diameter of the bolt in the area shown in the illustration.

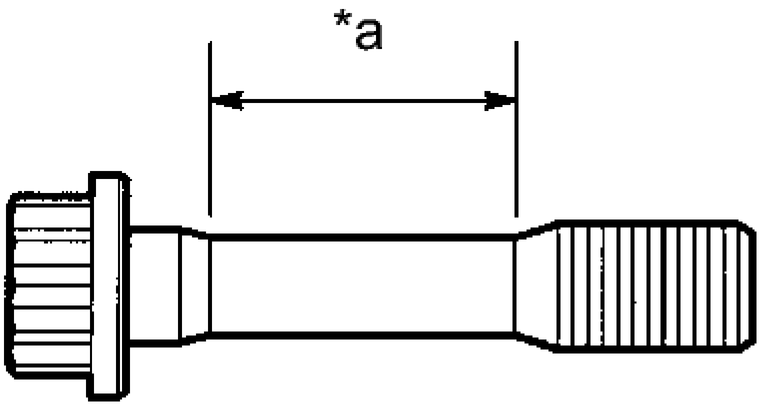

Fig. 387: Inspecting Connecting Rod Bolt
Courtesy of TOYOTA MOTOR SALES, U.S.A., INC.

TEXT IN ILLUSTRATION

*a	Measurement Area

Standard diameter

7.2 to 7.3 mm (0.283 to 0.287 in.)

Minimum diameter

7.0 mm (0.276 in.)

If the diameter is less than the minimum, replace the bolt.

HINT:

- Diameter measurements should be done at several points.
- If the diameter is less than the minimum, replace the connecting rod bolt with a new one. Failure to do so may lead to engine damage.
- If there is any thread deformation, replace the connecting rod bolt with a new one.

13. **INSPECT CRANKSHAFT**
    a. Inspect for runout.
        1. Clean the crank journal.

2. Place the crankshaft on V-blocks.
3. Using a dial indicator, measure the runout at the center journal.

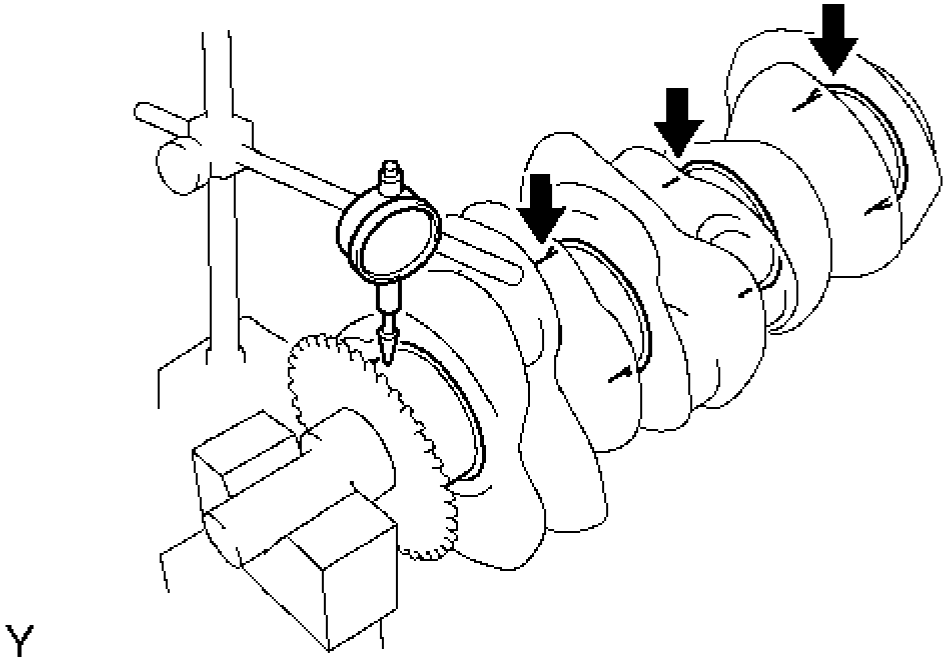

Fig. 388: Checking Circle Runout At Center Journal
Courtesy of TOYOTA MOTOR SALES, U.S.A., INC.

Maximum runout

0.06 mm (0.00236 in.)

If the runout is greater than the maximum, replace the crankshaft.

b. Inspect the main journals.
   1. Using a micrometer, measure the diameter of each main journal.

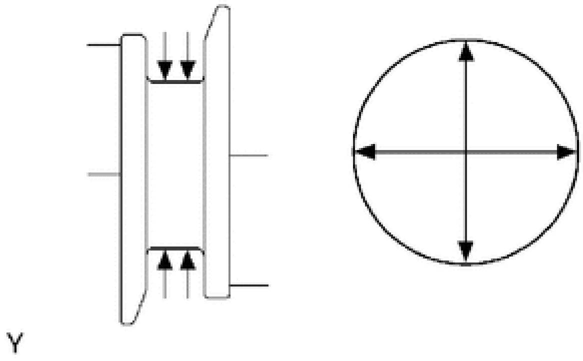

Fig. 389: Checking Main Journal For Taper And Out-Of Round
Courtesy of TOYOTA MOTOR SALES, U.S.A., INC.

Standard journal diameter

60.988 to 61.000 mm (2.4011 to 2.4016 in.)

If the diameter is not as specified, check the oil clearance. If necessary, replace the crankshaft.

2. Check each main journal for taper and out-of-round as shown in the illustration.

   Maximum taper and out-of-round

   0.02 mm (0.000787 in.)

   If the taper and out-of-round is greater than the maximum, replace the crankshaft.

c. Inspect the crank pin.
   1. Using a micrometer, measure the diameter of each crank pin.

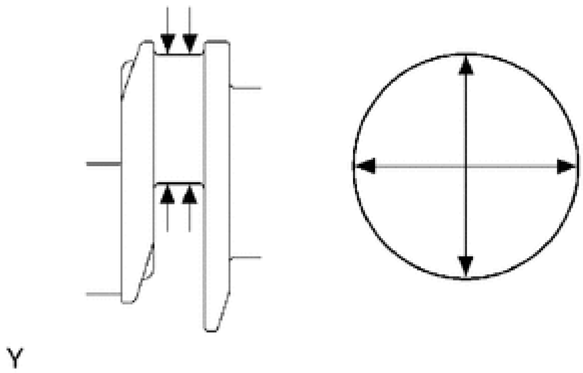

Fig. 390: Checking Crank Pin For Taper And Out-Of Round
Courtesy of TOYOTA MOTOR SALES, U.S.A., INC.

Crank pin diameter

52.992 to 53.000 mm (2.0863 to 2.0866 in.)

If the diameter is not as specified, check the oil clearance. If necessary, replace the crankshaft.

2. Check each crank pin for taper and out-of-round as shown in the illustration.

   Maximum taper and out-of-round

0.02 mm (0.000787 in.)

If the taper and out-of-round is greater than the maximum, replace the crankshaft.

14. **INSPECT CRANKSHAFT OIL CLEARANCE**
    a. Check the crank journal and crankshaft bearing for pitting and scratches.
    b. Install the crankshaft bearing See step 8.
    c. Place the crankshaft on the cylinder block.
    d. Lay a strip of Plastigage across each journal.

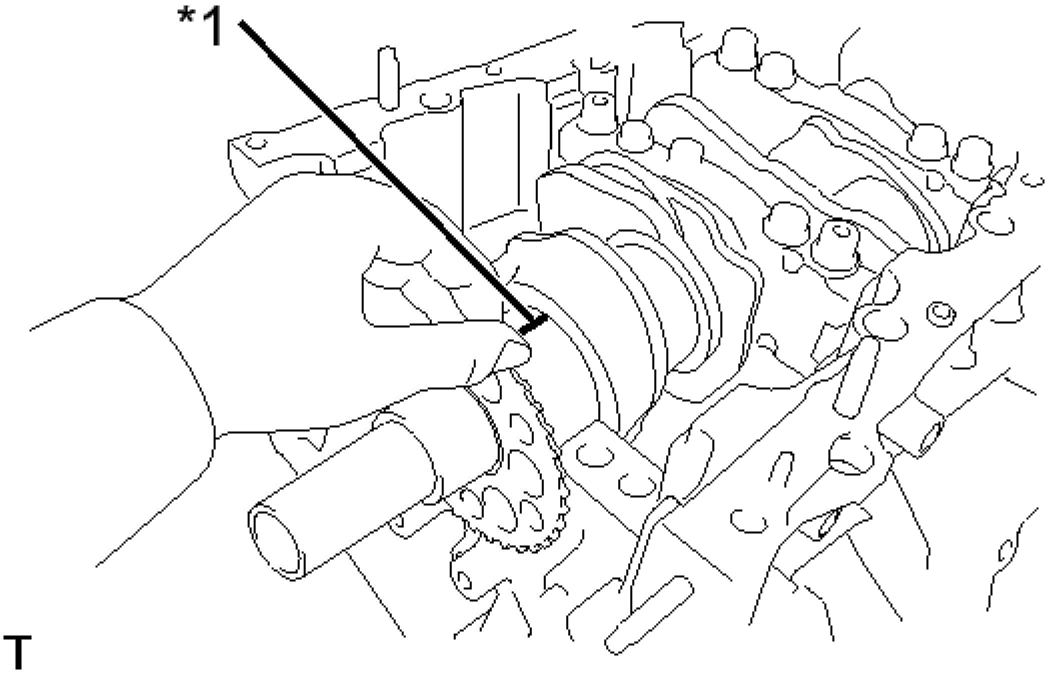

Fig. 391: Applying Plastigage Across Crankshaft Journal
Courtesy of TOYOTA MOTOR SALES, U.S.A., INC.

TEXT IN ILLUSTRATION

*1	Plastigage

e. Examine the front marks and numbers to install the crankshaft bearing caps on the cylinder block.

HINT:

A number is marked on each main bearing cap to indicate the installation position.

f. Install the main bearing cap See step 8.

NOTE: Do not turn the crankshaft.

g. Remove the main bearing caps See step 1.

h. Measure the Plastigage at its widest point.

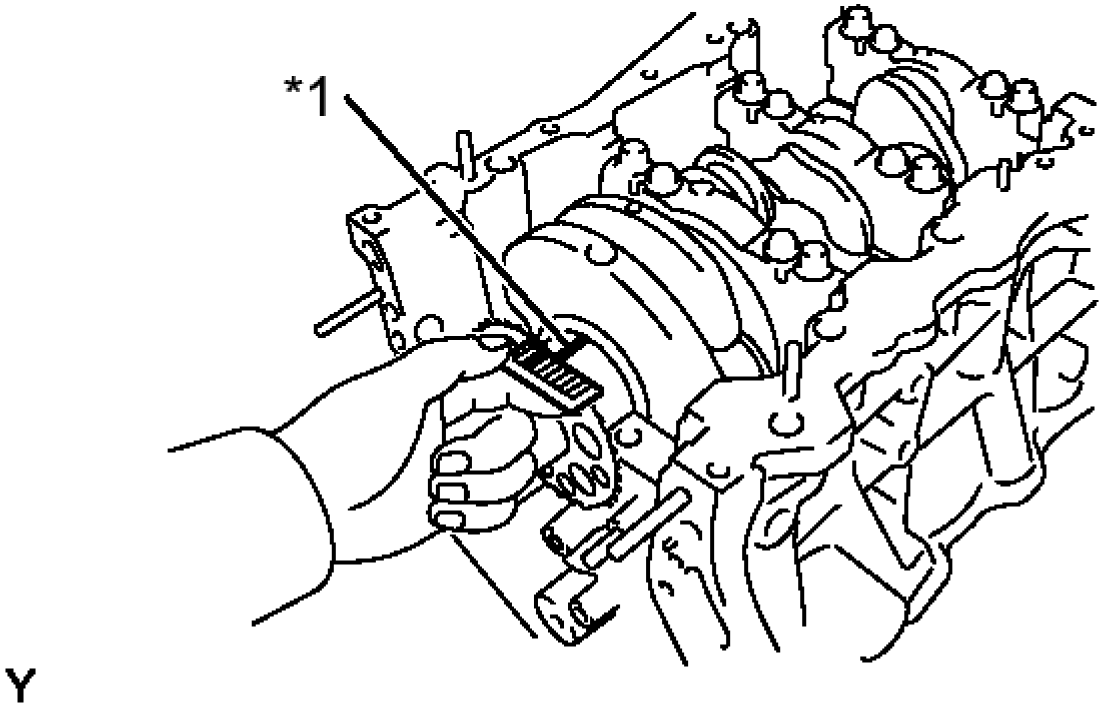

Fig. 392: Measuring Widest Point Of Plastigage
Courtesy of TOYOTA MOTOR SALES, U.S.A., INC.

TEXT IN ILLUSTRATION

*1	Plastigage

Standard oil clearance

0.026 to 0.047 mm (0.00102 to 0.00185 in.)

Maximum oil clearance

0.050 mm (0.00197 in.)

If the oil clearance is greater than the maximum, replace the bearings. If necessary, replace the crankshaft.

NOTE: Completely remove the Plastigage after the measurement.

i. If replacing a bearing, replace it with one having the same number. If the number of the bearing cannot be determined, select the correct bearing by adding together the numbers imprinted on the cylinder block and crankshaft, then refer to the table below for the appropriate bearing number. There are 5 sizes of standard bearings, marked "1", "2", "3", "4" and "5" accordingly.

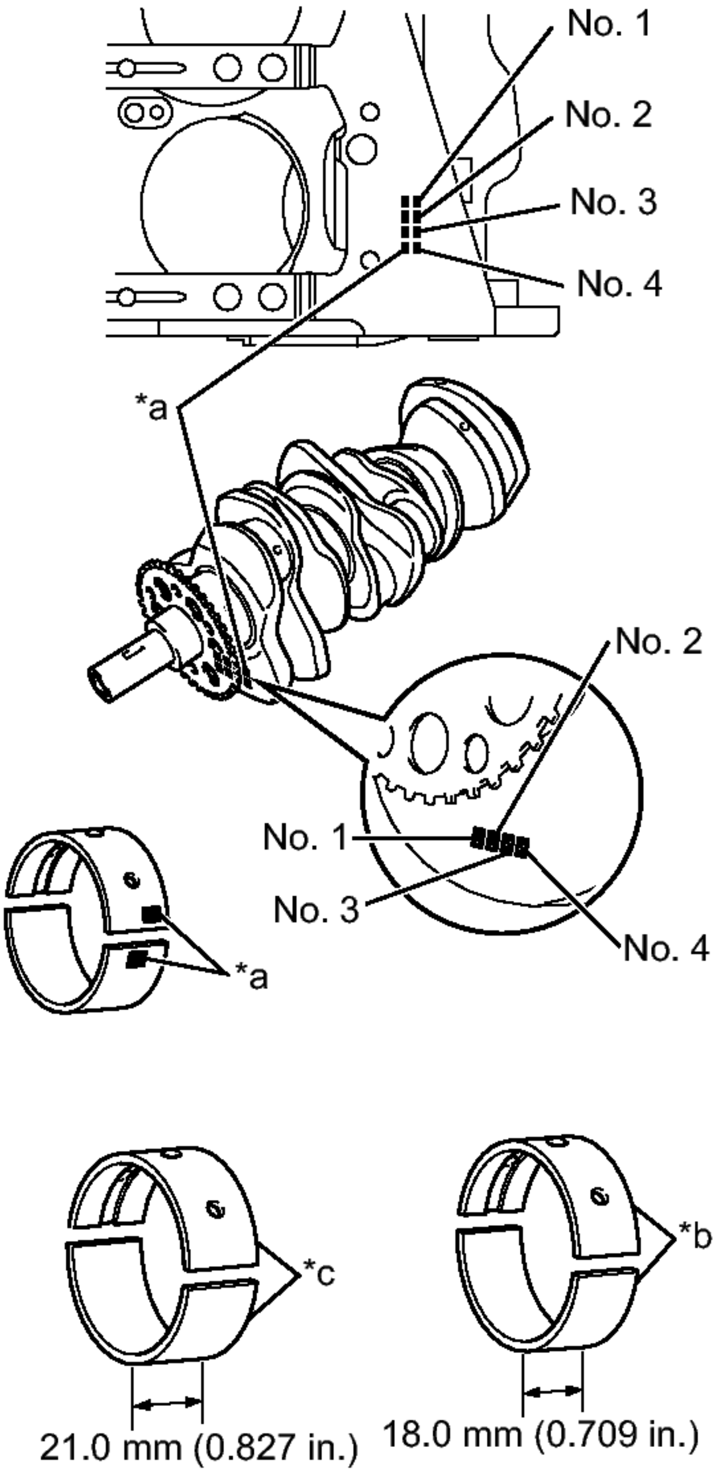
No. 1
No. 2
No. 3
No. 4
*a
No. 2
No. 1
No. 3
No. 4
*a
*c
*b
21.0 mm (0.827 in.)
18.0 mm (0.709 in.)

Fig. 393: Identifying Bearing Number Marks
Courtesy of TOYOTA MOTOR SALES, U.S.A., INC.

TEXT IN ILLUSTRATION

*a	Number Mark
*b	No. 2 and No. 3 Journal Bearing
*c	No. 1 and No. 4 Journal Bearing

JOURNAL BEARINGS

Cylinder block + Crankshaft	0 - 5	6 - 11	12 - 17	18 - 23	24 - 28
Bearing to be used	"1"	"2"	"3"	"4"	"5"

HINT:

EXAMPLE: Cylinder block "11" + Crankshaft "06" = Total number 17 (Use bearing "3")

Crankshaft Main Journal Diameter

Mark	Diameter
"00"	60.999 to 61.000 mm (2.40153 to 2.40157 in.)
"01"	60.998 to 60.999 mm (2.40149 to 2.40153 in.)
"02"	60.997 to 60.998 mm (2.40145 to 2.40149 in.)
	60.996 to

"03"	60.997 mm (2.40141 to 2.40145 in.)
"04"	60.995 to 60.996 mm (2.40137 to 2.40141 in.)
"05"	60.994 to 60.995 mm (2.40133 to 2.40137 in.)
"06"	60.993 to 60.994 mm (2.40129 to 2.40133 in.)
"07"	60.992 to 60.993 mm (2.40126 to 2.40129 in.)
"08"	60.991 to 60.992 mm (2.40122 to 2.40126 in.)
"09"	60.990 to 60.991 mm (2.40118 to 2.40122

	in.)
"10"	60.989 to 60.990 mm (2.40114 to 2.40118 in.)
"11"	60.988 to 60.989 mm (2.40110 to 2.40114 in.)

Standard Upper Bearing Center Wall Thickness (No. 1 and No. 4 journal)

Mark	Thickness
"1"	2.500 to 2.503 mm (0.09843 to 0.09854 in.)
"2"	2.503 to 2.506 mm (0.09854 to 0.09866 in.)
"3"	2.506 to 2.509 mm (0.09866 to 0.09878 in.)
"4"	2.509 to 2.512 mm (0.09878 to 0.09890 in.)
"5"	2.512 to 2.515 mm (0.09890 to 0.09902 in.)

Standard Lower Bearing Center Wall Thickness (No. 1 and No. 4 journal)

Mark	Thickness
"1"	2.478 to 2.481 mm (0.09756 to 0.09768 in.)
"2"	2.481 to 2.484 mm (0.09768 to 0.09780 in.)
"3"	2.484 to 2.487 mm (0.09780 to 0.09791 in.)
"4"	2.487 to 2.490 mm (0.09791 to 0.09803 in.)
"5"	2.490 to 2.493 mm (0.09803 to 0.09815 in.)

Standard Upper Bearing Center Wall Thickness (No. 2 and No. 3 journal)

Mark	Thickness
"1"	2.478 to 2.481 mm (0.09756 to 0.09768 in.)
"2"	2.481 to 2.484 mm (0.09768 to 0.09780 in.)
"3"	2.484 to 2.487 mm (0.09780 to 0.09791 in.)
	2.487 to

"4"	2.490 mm (0.09791 to 0.09803 in.)
"5"	2.490 to 2.493 mm (0.09803 to 0.09815 in.)

Standard Lower Bearing Center Wall Thickness (No. 2 and No. 3 journal)

Mark	Thickness
"1"	2.500 to 2.503 mm (0.09843 to 0.09854 in.)
"2"	2.503 to 2.506 mm (0.09854 to 0.09866 in.)
"3"	2.506 to 2.509 mm (0.09866 to 0.09878 in.)
"4"	2.509 to 2.512 mm (0.09878 to 0.09890 in.)
"5"	2.512 to 2.515 mm (0.09890 to 0.09902 in.)

15. **INSPECT CRANKSHAFT BEARING CAP SET BOLT**
    a. Using a vernier caliper, measure the diameter of the threads at the measurement point.

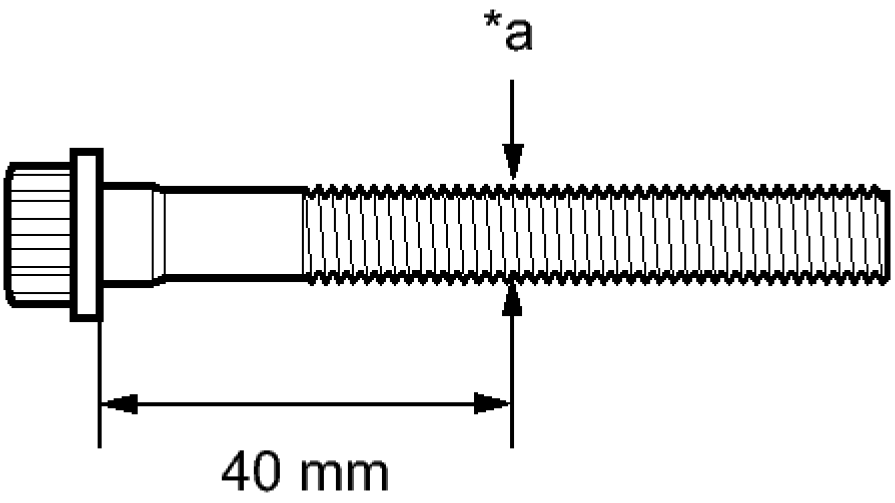

Fig. 394: Measuring Diameter Of Threads
Courtesy of TOYOTA MOTOR SALES, U.S.A., INC.

TEXT IN ILLUSTRATION

*a	Measurement Point

Standard diameter

10.8 to 11.0 mm (0.4252 to 0.4331 in.)

Minimum diameter

10.7 mm (0.4213 in.)

Measurement Point

40 mm (1.57 in.)

HINT:

- If the diameter is less than the minimum, replace the crankshaft bearing cap set bolt. Failure to do so may lead to engine damage.
- If there is any thread deformation, replace the crankshaft bearing cap set bolt with a new one.

16. **INSPECT NO. 1 OIL NOZZLE SUB-ASSEMBLY**
    a. Check the oil nozzles for damage or clogs.

HINT:

If there is damage or clogs, replace the oil nozzle.

REPLACEMENT

REPLACEMENT

1. **REPLACE STRAIGHT PIN**
    a. Using a plastic hammer, tap in new straight pins to the cylinder block.

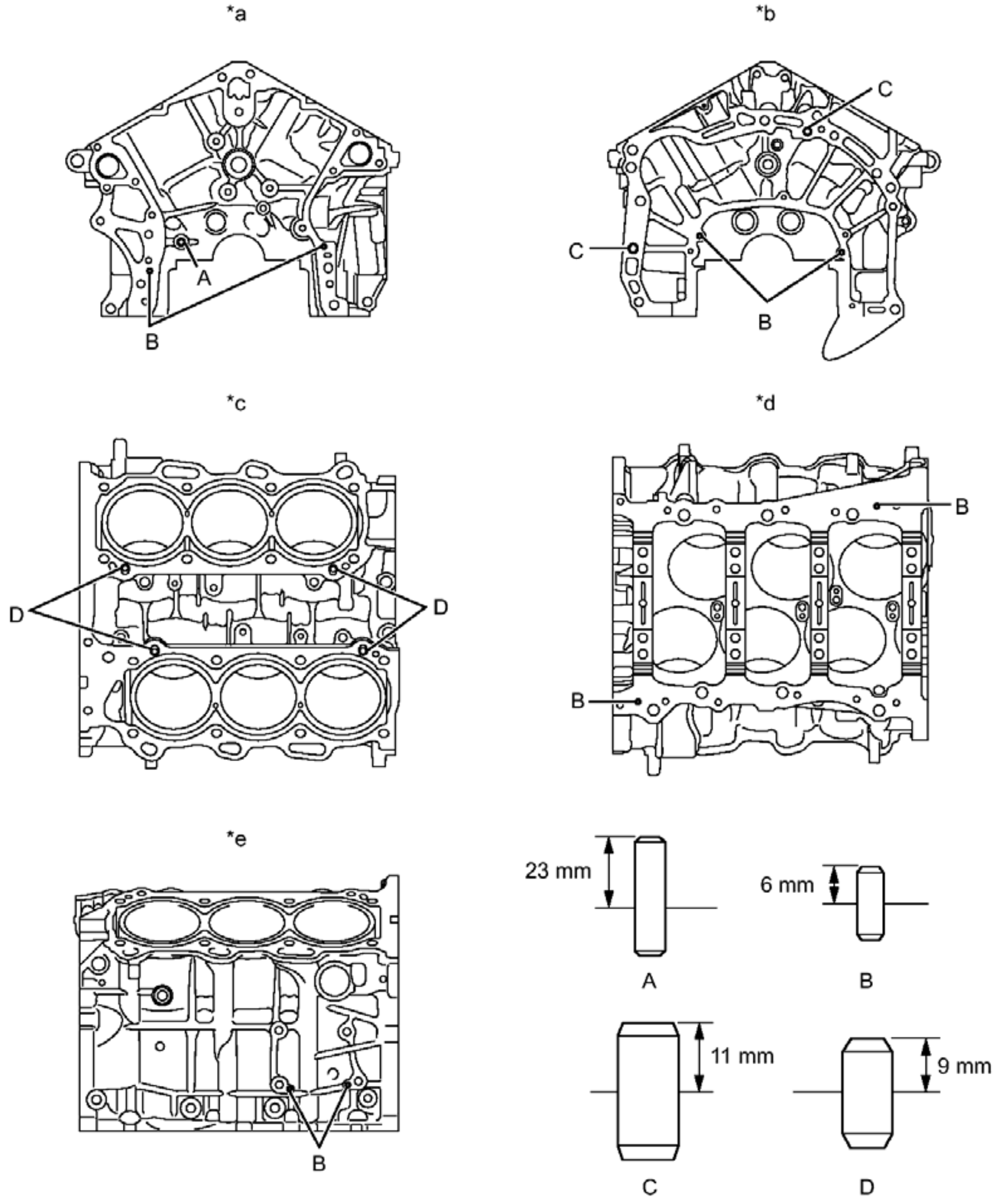
*a
A
B
*b
C
C
B
*c
D
D
*d
B
B
*e
B
23 mm
A
6 mm
B
11 mm
C
9 mm
D
Y

Fig. 395: Identifying Cylinder Block Straight Pins
Courtesy of TOYOTA MOTOR SALES, U.S.A., INC.

TEXT IN ILLUSTRATION

*a	Front Cylinder Block	*b	Rear Cylinder Block
*c	Upper Cylinder Block	*d	Lower Cylinder Block
*e	Cylinder Block RH Side	-	-

Standard Protrusion

Item	Protrusion
Pin A	23 mm (0.906 in.)
Pin B	6 mm (0.236 in.)
Pin C	11 mm (0.433 in.)
Pin D	9 mm (0.354 in.)

2. **REPLACE STUD BOLT**
   a. Using an E8 and E10 "TORX" socket wrench, install the stud bolts.

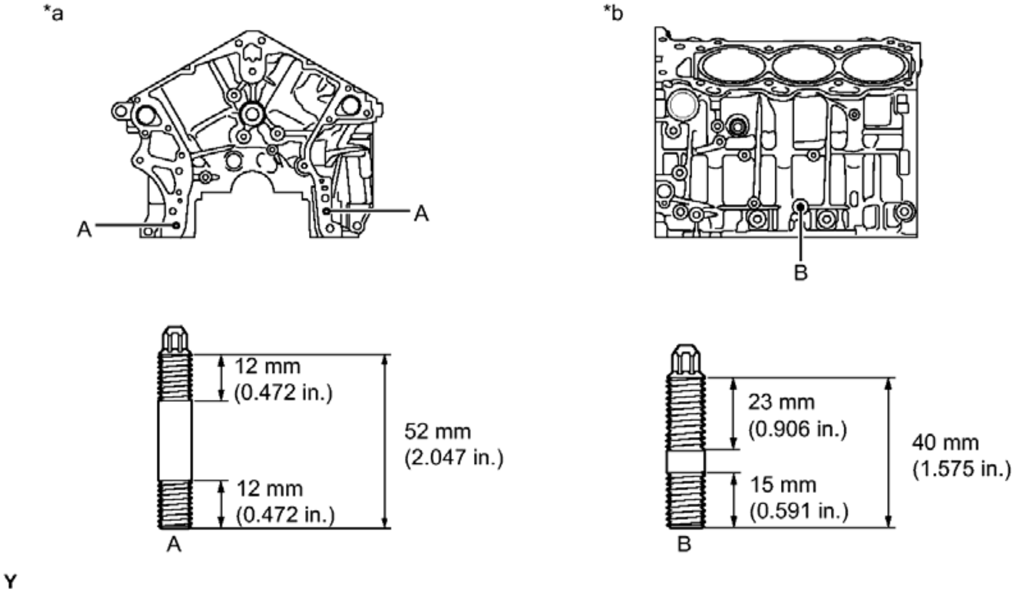
*a
*b
A
A
B
12 mm
(0.472 in.)
52 mm
(2.047 in.)
12 mm
(0.472 in.)
A
23 mm
(0.906 in.)
40 mm
(1.575 in.)
15 mm
(0.591 in.)
B
Y

Fig. 396: Identifying Cylinder Block Stud Bolts
Courtesy of TOYOTA MOTOR SALES, U.S.A., INC.

TEXT IN ILLUSTRATION

*a	Front Cylinder Block	*b	Cylinder Block LH Side

Bolt A

Torque: 10 N*m (102 kgf*cm, 7 ft.*lbf)

Bolt B

Torque: 17 N*m (173 kgf*cm, 13 ft.*lbf)

REASSEMBLY

REASSEMBLY

HINT:

Perform "Inspection After Repair" after replacing the piston and piston ring. Refer to **INITIALIZATION** .

1. **INSTALL NO. 1 OIL NOZZLE SUB-ASSEMBLY**
    a. Using a 5 mm hexagon wrench, install the No. 1 oil nozzle sub-assemblies with the 3 bolts.

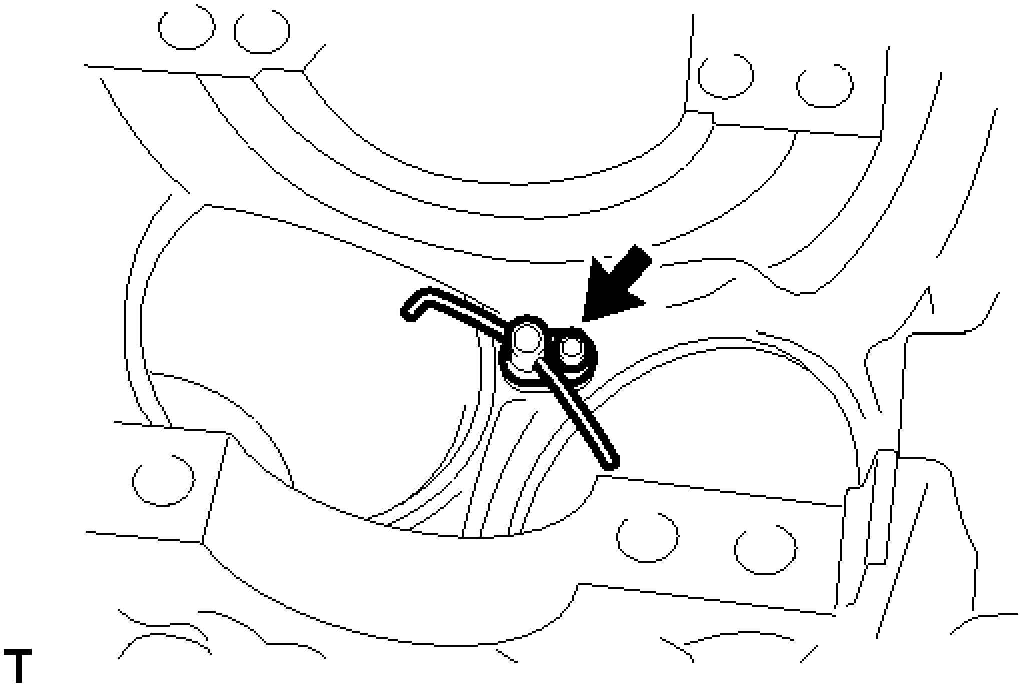

Fig. 397: Identifying Bolt And Oil Nozzle
Courtesy of TOYOTA MOTOR SALES, U.S.A., INC.

Torque: 9.0 N*m (92 kgf*cm, 80 in.*lbf)

2. **INSTALL PISTON**
   a. Using a screwdriver, install a new piston pin hole snap ring at one end of the piston pin hole.

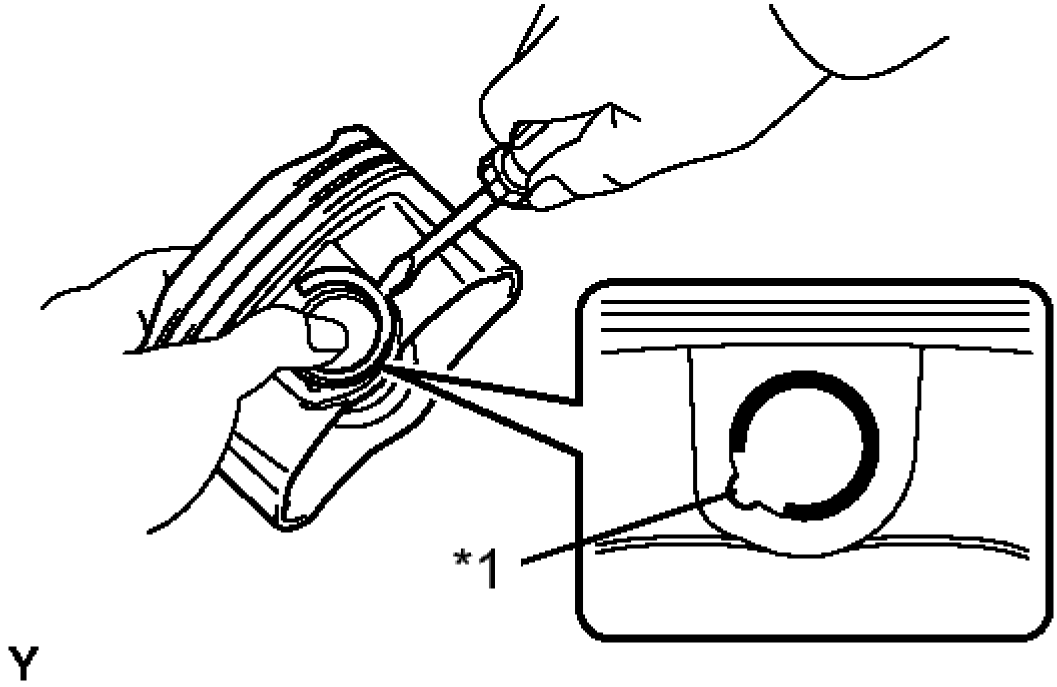

Fig. 398: Installing New Piston Pin Hole Snap Ring
Courtesy of TOYOTA MOTOR SALES, U.S.A., INC.

TEXT IN ILLUSTRATION

*1	Service Hole

HINT:

Confirm that the end gap of the snap ring is not aligned with the pin hole cutout portion of the piston.

   b. Gradually heat the piston to approximately 80°C (176°F).

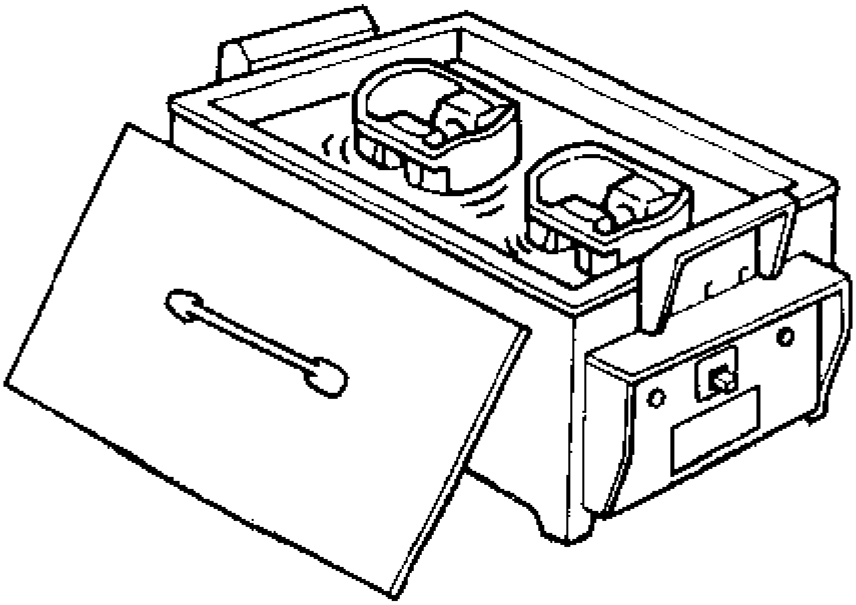

Fig. 399: Heating Piston
Courtesy of TOYOTA MOTOR SALES, U.S.A., INC.

c. Coat the piston pin with engine oil.
d. Align the front marks of the piston and connecting rod, and push in the piston pin with your thumb.

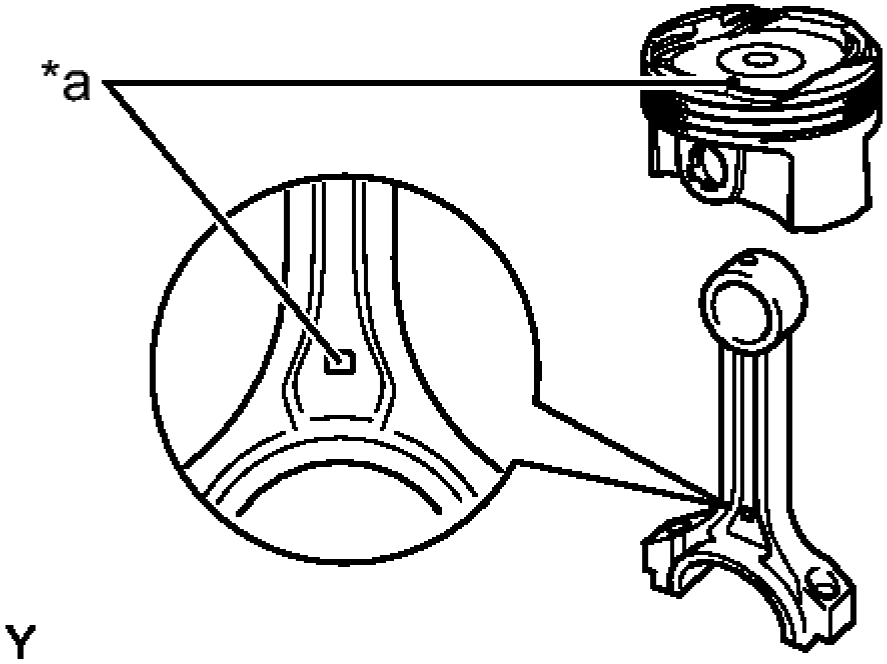

Fig. 400: Identifying Piston & Connecting Rod Front Marks
Courtesy of TOYOTA MOTOR SALES, U.S.A., INC.

TEXT IN ILLUSTRATION

*a	Front Mark

HINT:

The piston and pin are a matched set.

e. Check the fitting condition between the piston and piston pin by trying to move the piston back and forth on the piston pin.

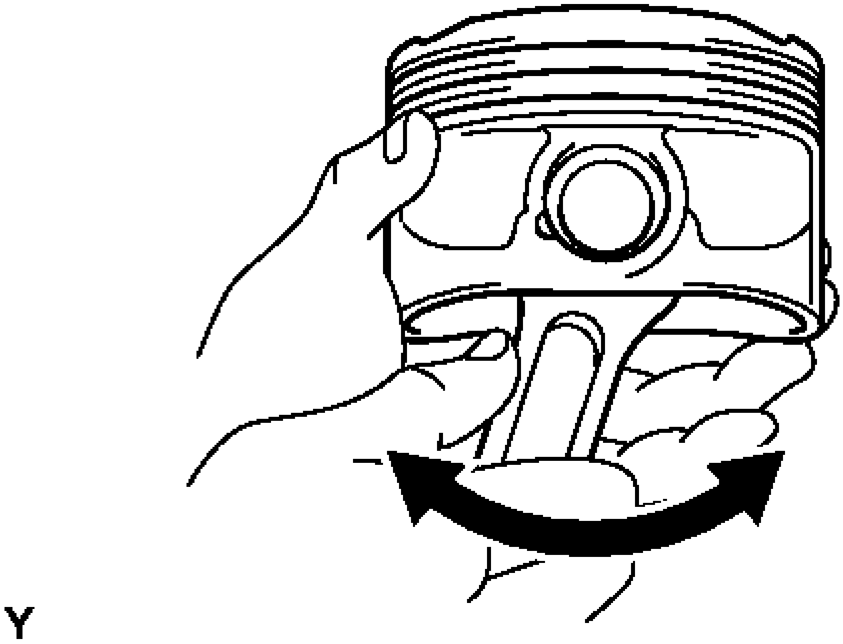

Fig. 401: Checking Fitting Condition Between Piston And Piston Pin
Courtesy of TOYOTA MOTOR SALES, U.S.A., INC.

f. Using a screwdriver, install a new piston pin hole snap ring at the other end of the piston pin hole.

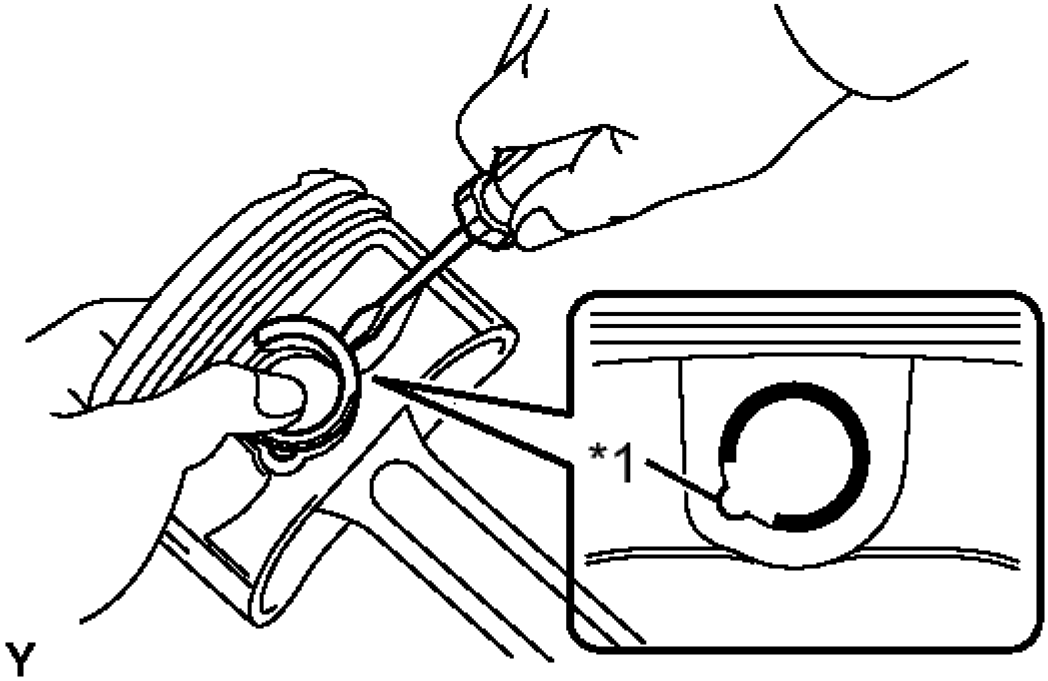

Fig. 402: Installing Piston Pin Hole Snap Ring Using A Screwdriver
Courtesy of TOYOTA MOTOR SALES, U.S.A., INC.

TEXT IN ILLUSTRATION

*1	Service Hole

HINT:

- Confirm that the end gap of the snap ring is not aligned with the pin hole cutout portion of the piston.
- Perform "Inspection After Repair" after replacing the piston. Refer to **INITIALIZATION** .

3. **INSTALL PISTON RING SET**
    a. Install the oil ring expander and 2 side rails by hand.
    b. Using a piston ring expander, install the compression ring as shown in the illustration.

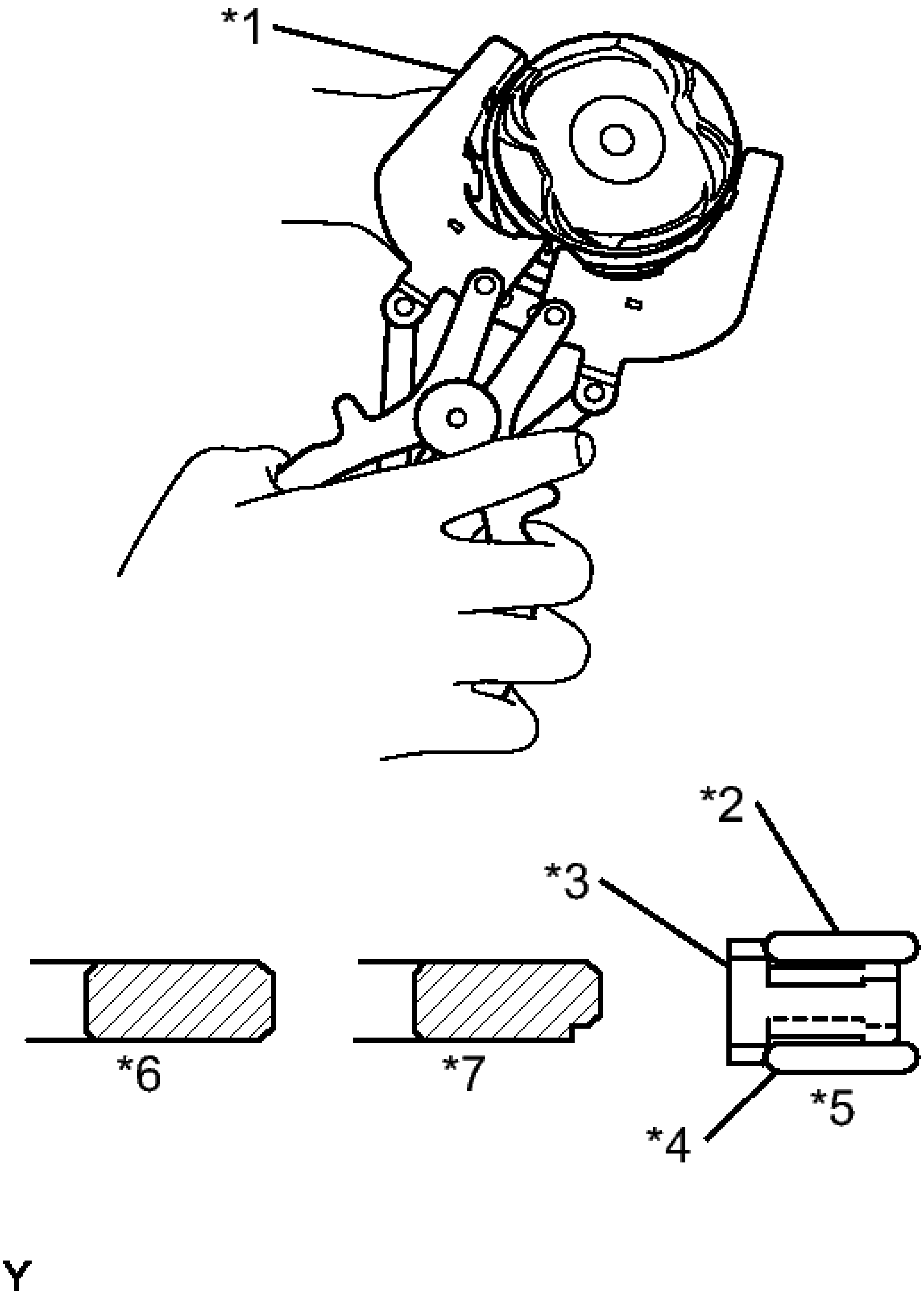

Fig. 403: Installing Piston Ring Set
Courtesy of TOYOTA MOTOR SALES, U.S.A., INC.

TEXT IN ILLUSTRATION

	Piston

*1	Ring Expander
*2	Upper Side Rail
*3	Oil Ring Expander
*4	Lower Side Rail
*5	Oil Ring
*6	No. 1 Ring
*7	No. 2 Ring

c. Position the piston rings so that the ring ends are as shown in the illustration.

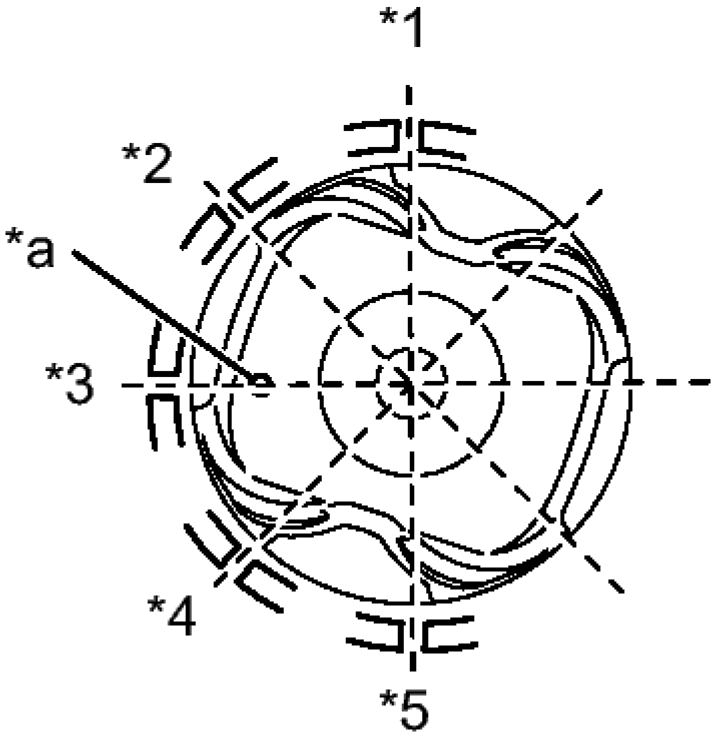

Y

Fig. 404: Identifying Piston Ring Position
Courtesy of TOYOTA MOTOR SALES, U.S.A., INC.

TEXT IN ILLUSTRATION

*1	Lower Side Rail
*2	No. 2 Ring
*3	Oil Ring Expander
*4	No. 1 Ring
*5	Upper Side Rail
*a	Front

	Mark

NOTE: **Do not align the ring ends.**

HINT:

Perform "Inspection After Repair" after replacing the piston ring. Refer to **INITIALIZATION** .

4. **INSTALL CRANKSHAFT BEARING**
   a. Clean the main journal and both surfaces of the bearings.

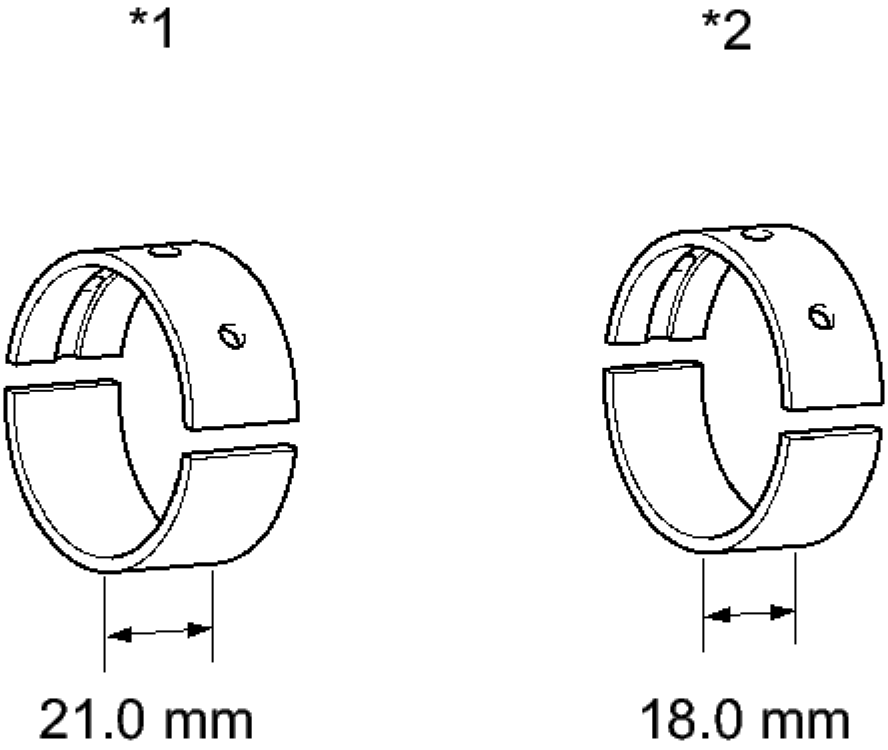

Fig. 405: Identifying Main Bearing Widths
Courtesy of TOYOTA MOTOR SALES, U.S.A., INC.

TEXT IN ILLUSTRATION

*1	No. 1 and No. 4 Journal Bearing
*2	No. 2 and No. 3 Journal Bearing

NOTE: **Main bearings come in widths between 18.0 mm (0.709 in.) and 21.0 mm (0.827 in.). Install the 21.0 mm (0.827 in.) bearings in the No. 1 and No. 4 cylinder block journal positions with the main bearing cap. Install the 18.0 mm (0.709 in.) bearings in the No. 2 and No. 3 positions.**

b. Install the upper crankshaft bearing.

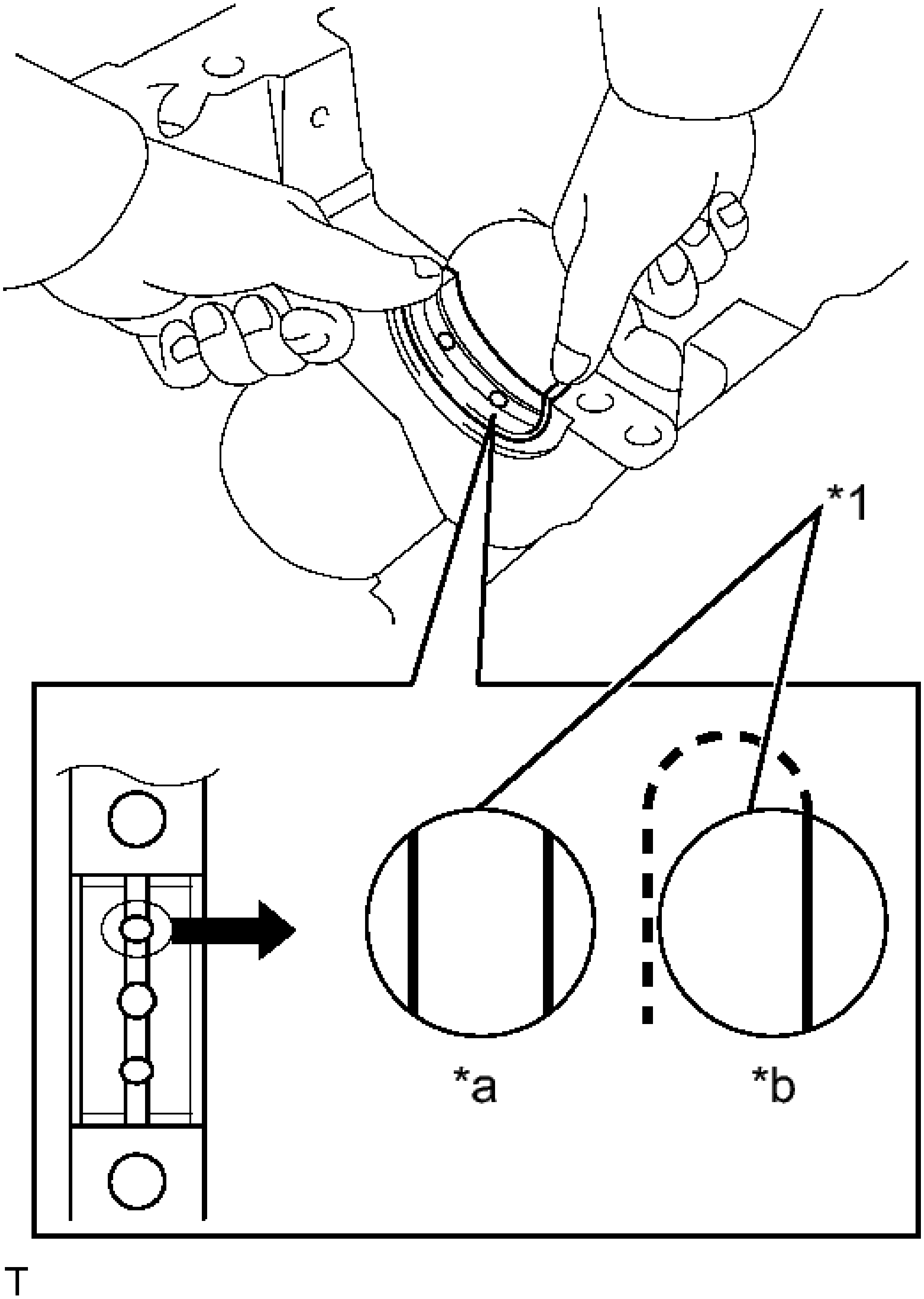

Fig. 406: Installing Upper Crankshaft Bearing
Courtesy of TOYOTA MOTOR SALES, U.S.A., INC.

1. Install the upper crankshaft bearings to the cylinder block as shown in the illustration.

TEXT IN ILLUSTRATION

*1	Upper Bearing
*a	CORRECT
*b	INCORRECT

NOTE:

- **Do not apply engine oil to the bearings and the contact surfaces.**
- **Both sides of the oil groove in the cylinder block should be visible through the oil feed holes in the bearing. The amount visible on each side of the holes should be equal.**

c. Install the lower crankshaft bearing.

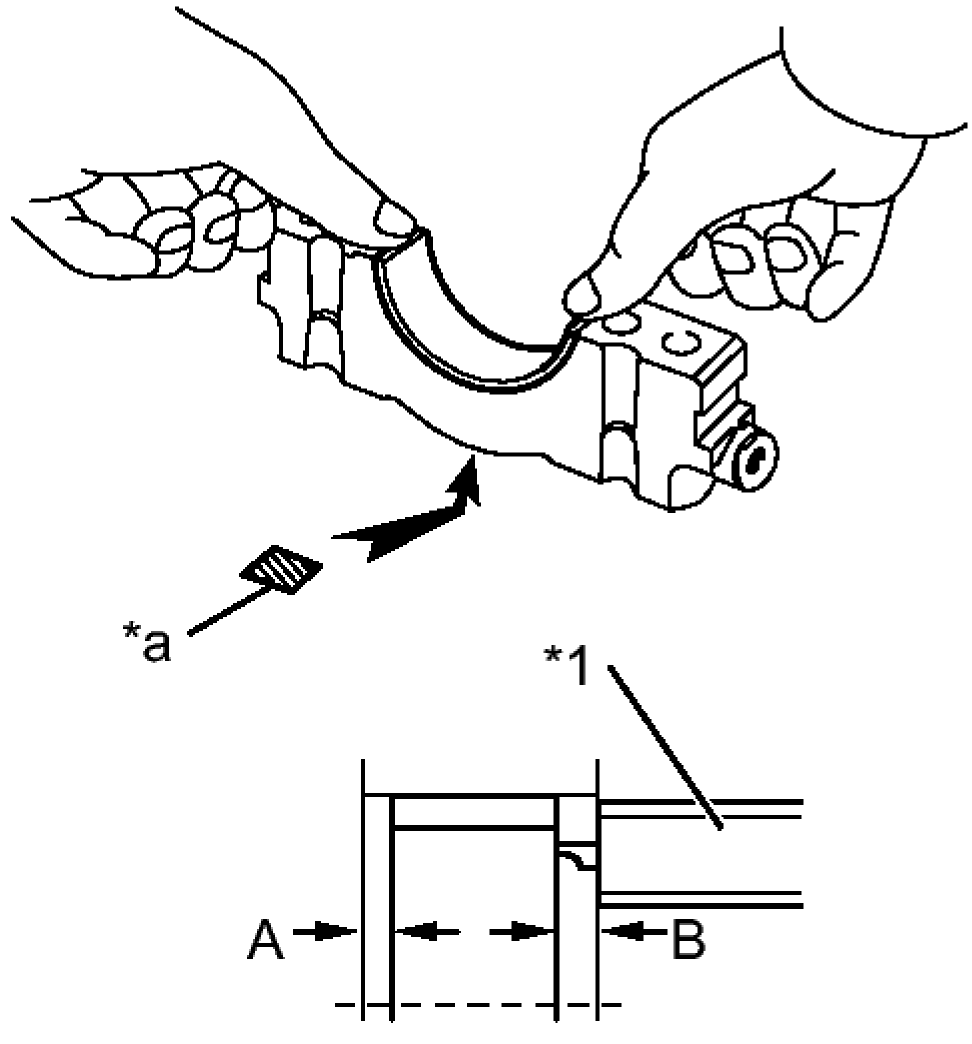

Fig. 407: Installing Lower Crankshaft Bearing
Courtesy of TOYOTA MOTOR SALES, U.S.A., INC.

TEXT IN ILLUSTRATION

*1	Vernier Caliper
*a	Mark 1, 2, 3, 4 or 5

1. Install the lower crankshaft bearings to the crankshaft bearing caps.
2. Using a vernier caliper, measure the distance between the crankshaft bearing cap edge and the lower crankshaft bearing edge.

   Dimension (A - B)

   0.7 mm (0.0276 in.) or less

   NOTE: **Do not apply engine oil to the crankshaft bearings and the contact surfaces.**

5. **INSTALL CRANKSHAFT THRUST WASHER SET**
   a. Apply engine oil to the crankshaft thrust washer.
   b. Install the 2 upper crankshaft thrust washers under the No. 2 journal position of the cylinder block sub-assembly with the oil grooves facing outward.

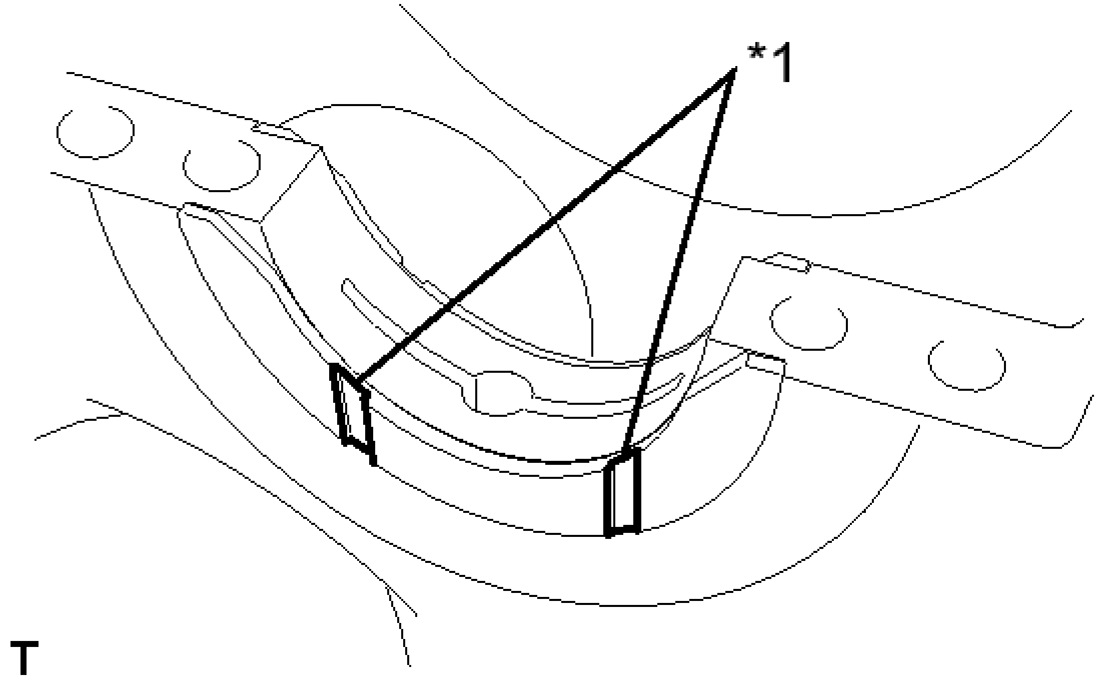

Fig. 408: Identifying Oil Grooves Facing Outward
Courtesy of TOYOTA MOTOR SALES, U.S.A., INC.

TEXT IN ILLUSTRATION

*1	Oil Grooves

6. **INSTALL CRANKSHAFT**
   1. Apply engine oil to the upper bearing, then place the crankshaft on the cylinder block.
   2. Confirm the projections and numbers on the main bearing caps and install the crankshaft bearing caps on the cylinder block.

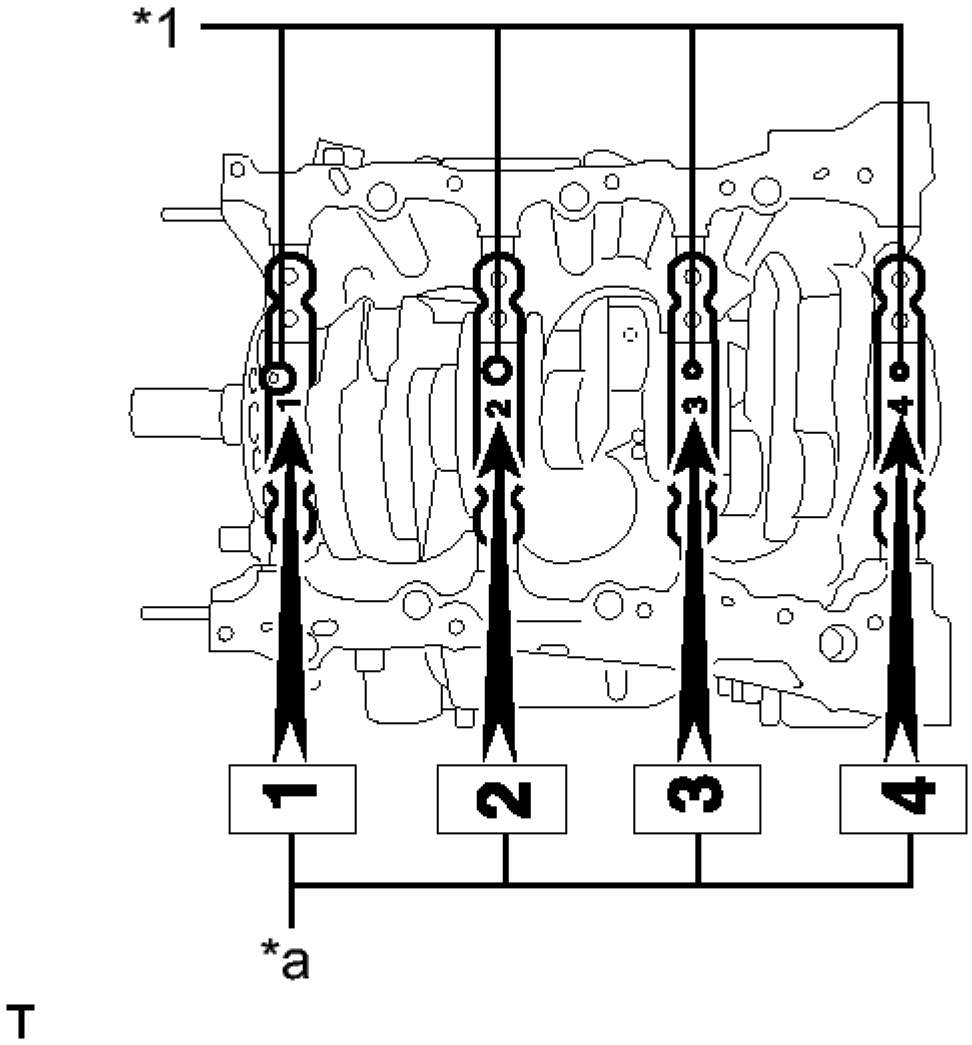

Fig. 409: Identifying Main Bearing Cap Projections & Numbers
Courtesy of TOYOTA MOTOR SALES, U.S.A., INC.

TEXT IN ILLUSTRATION

*1	Projection
	Number

*a	Mark

HINT:

A number is marked on each main bearing cap to indicate the installation position.

c. Apply a light coat of engine oil to the threads and under the heads of the crankshaft bearing cap bolts.
d. Temporarily install the 8 crankshaft bearing cap bolts to the inside positions.
e. Insert the crankshaft bearing cap with your hand until the clearance between the crankshaft bearing cap and the cylinder block is less than 6 mm (0.236 in.) by marking the 2 internal crankshaft bearing cap bolts as a guide.

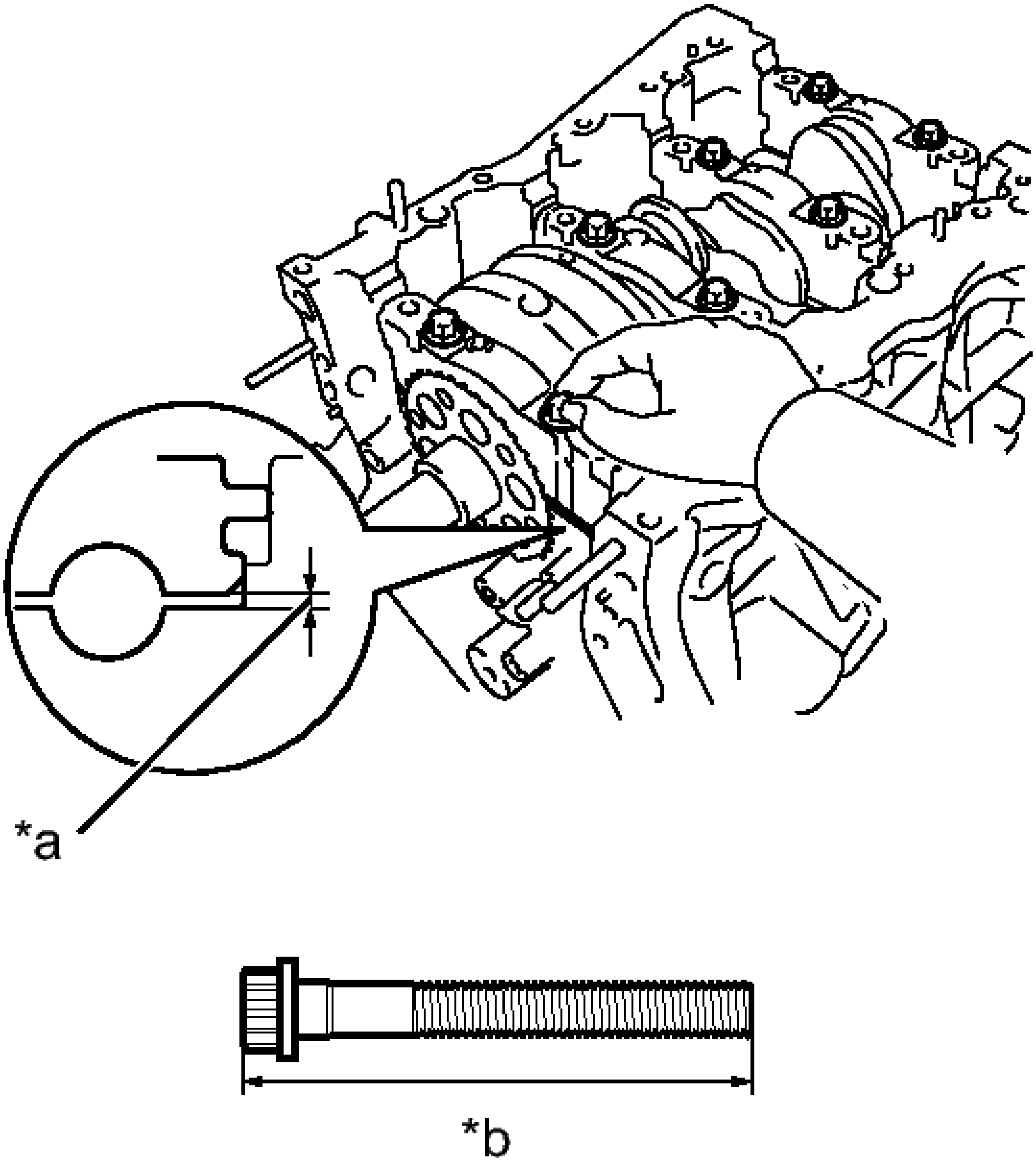

Fig. 410: Identifying Crankshaft Bearing Cap & Cylinder Block Clearance
Courtesy of TOYOTA MOTOR SALES, U.S.A., INC.

TEXT IN ILLUSTRATION

	Less

*a	than 6 mm
*b	Bolt Length 100 to 102 mm

Bolt length

100 to 102 mm (3.94 to 4.02 in.)

f. Using a plastic hammer, lightly tap the crankshaft bearing cap to ensure a proper fit.

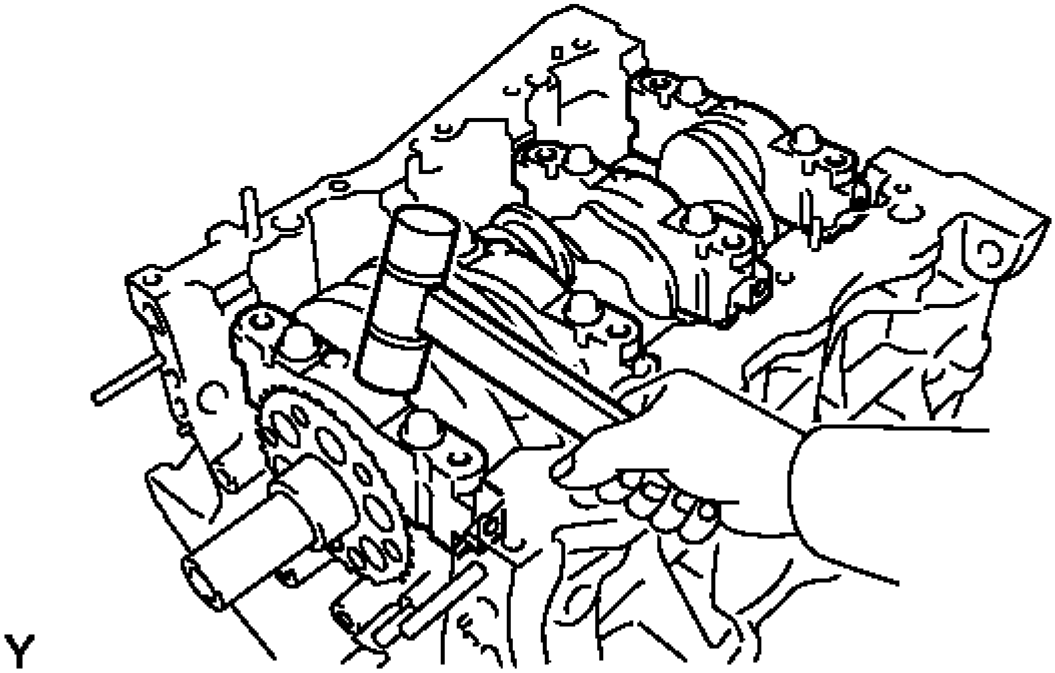

Fig. 411: Tapping Bearing Cap To Ensure Proper Fit
Courtesy of TOYOTA MOTOR SALES, U.S.A., INC.

g. Apply a light coat of engine oil to the threads and under the heads of the 8 crankshaft bearing cap bolts.
h. Install the 8 crankshaft bearing cap bolts to the outside positions.

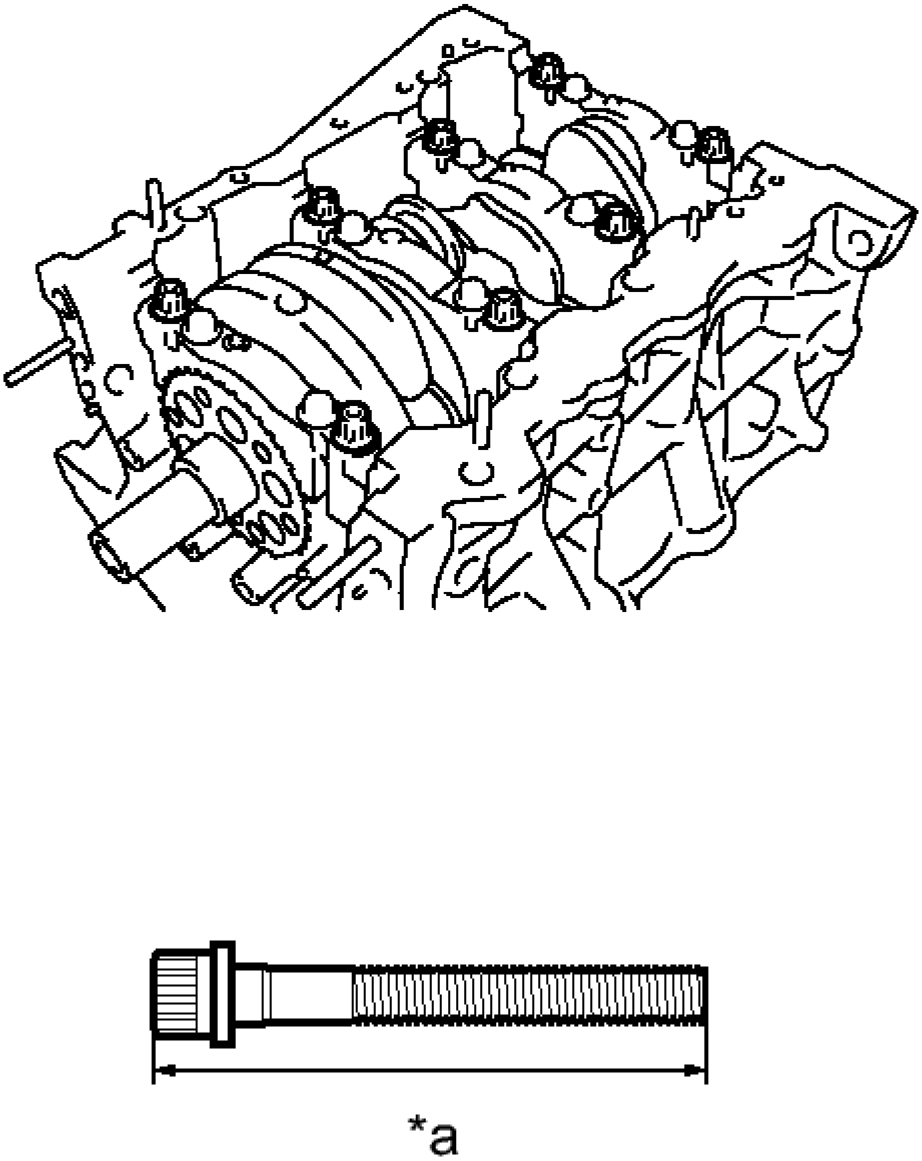

Fig. 412: Identifying Crankshaft Bearing Cap Bolt Length
Courtesy of TOYOTA MOTOR SALES, U.S.A., INC.

TEXT IN ILLUSTRATION

	Bolt

*a	Length

Bolt length

105.5 to 107.5 mm (4.15 to 4.23 in.)

i. Install the crankshaft bearing cap bolts.

HINT:

The crankshaft bearing cap bolts are tightened in 2 progressive steps.

j. Step 1
  1. Install and uniformly tighten the 16 crankshaft bearing cap bolts in several steps and in the sequence shown in the illustration.

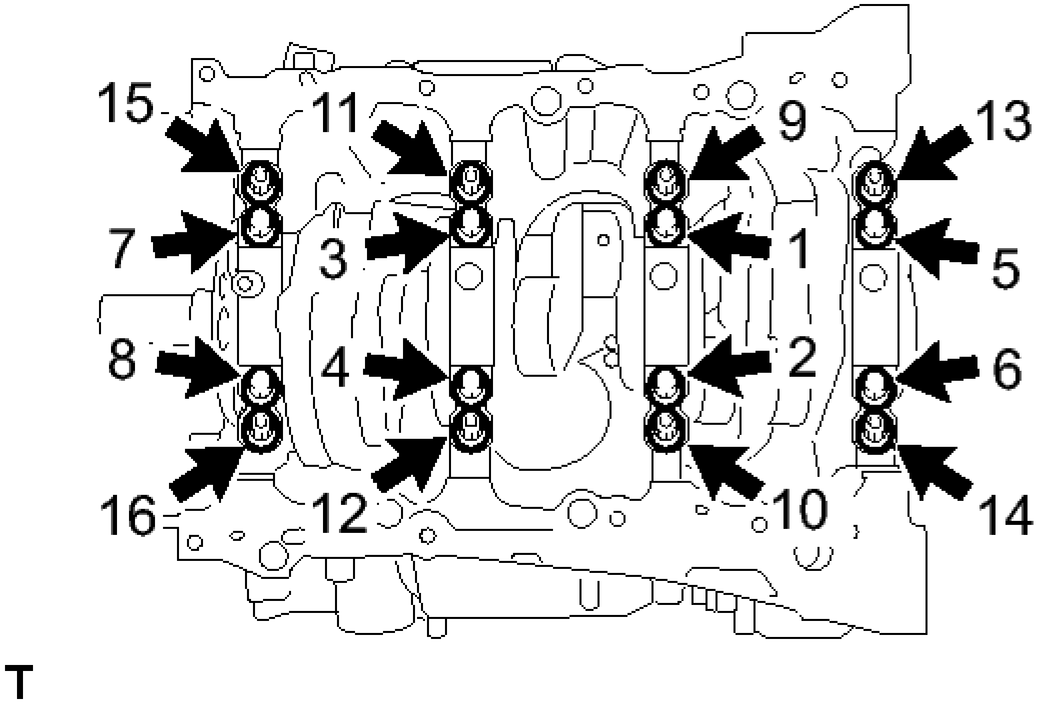

Fig. 413: Locating Main Bearing Cap Bolts Loosening Sequence
Courtesy of TOYOTA MOTOR SALES, U.S.A., INC.

Torque: 61 N*m (622 kgf*cm, 45 ft.*lbf)

If any of the crankshaft bearing cap bolts does not meet the torque specified, replace it.

k. Step 2

TEXT IN ILLUSTRATION

*a	Paint Mark
*b	Turn 90°
	Engine Front

1. Mark the front of the bearing cap bolts with paint.

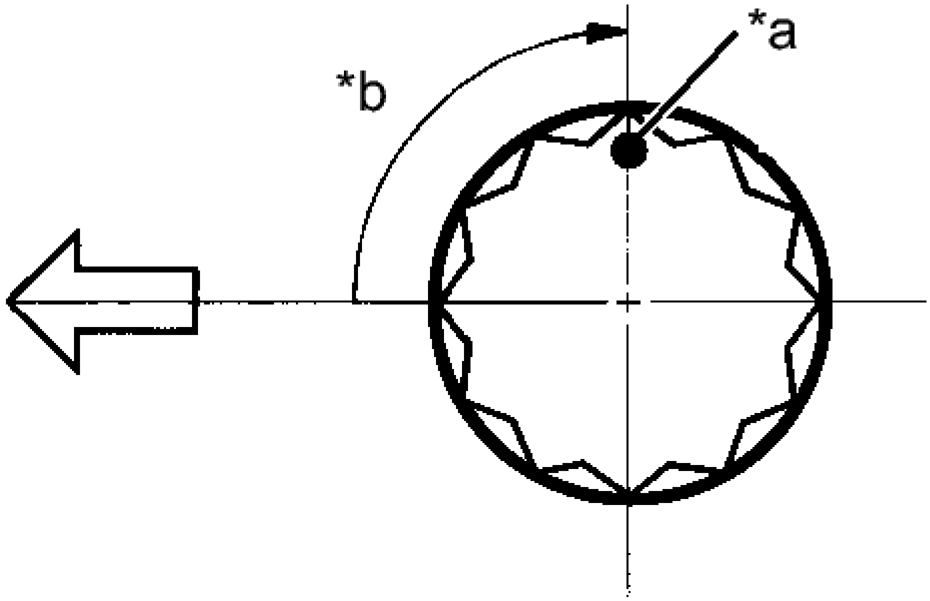

Fig. 414: Identifying Connecting Rod Bolt Paint Mark
Courtesy of TOYOTA MOTOR SALES, U.S.A., INC.

2. Retighten the bearing cap bolts 90° in the sequence shown in the illustration.
3. Check that the painted mark is now at a 90° angle to the front of the engine.

l. Install 8 new seal washers and uniformly tighten the 8 crankshaft bearing cap bolts in several steps and in the sequence shown in the illustration.

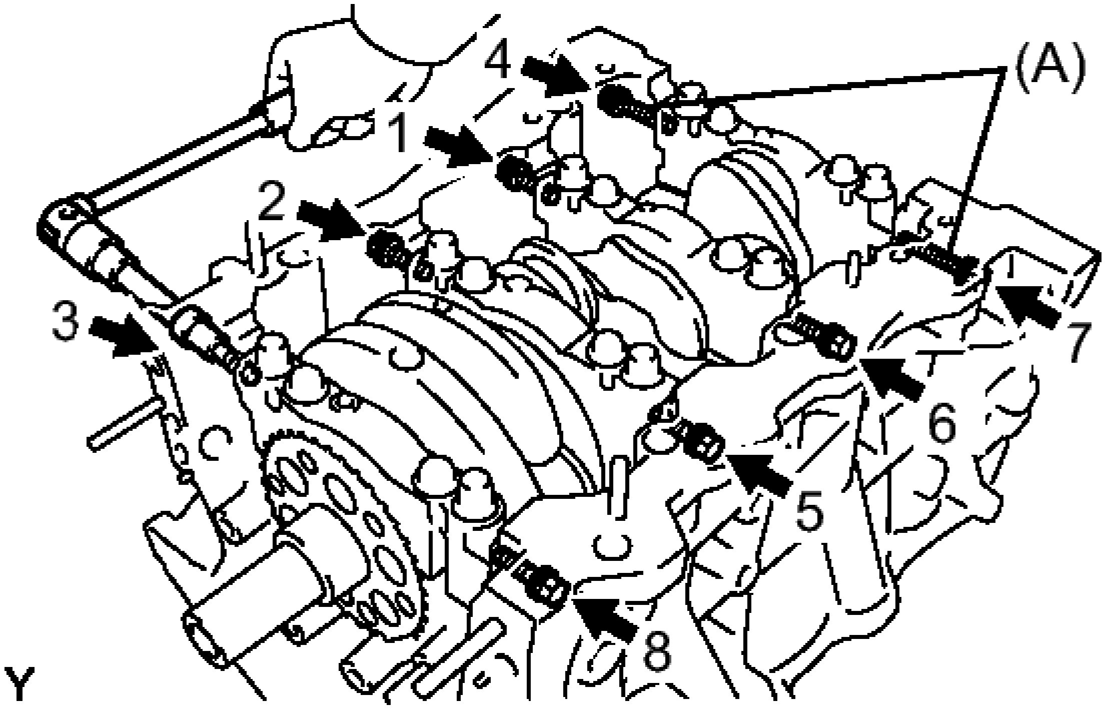

Fig. 415: Locating Main Bearing Cap Tightening Sequence
Courtesy of TOYOTA MOTOR SALES, U.S.A., INC.

Torque: 52 N*m (525 kgf*cm, 38 ft.*lbf)

Bolt Length

Item	Length
Bolt A	45 mm (1.77 in.)
Except bolt A	30 mm (1.18 in.)

m. Check that the crankshaft turns smoothly.
n. Check the crankshaft thrust clearance See step 10.

7. **INSTALL CONNECTING ROD BEARING**
   a. Install the connecting rod bearing to the connecting rod and connecting rod cap.
   b. Using a vernier caliper, measure the distance between the connecting rod and bearing cap edges and the connecting rod bearing edge.

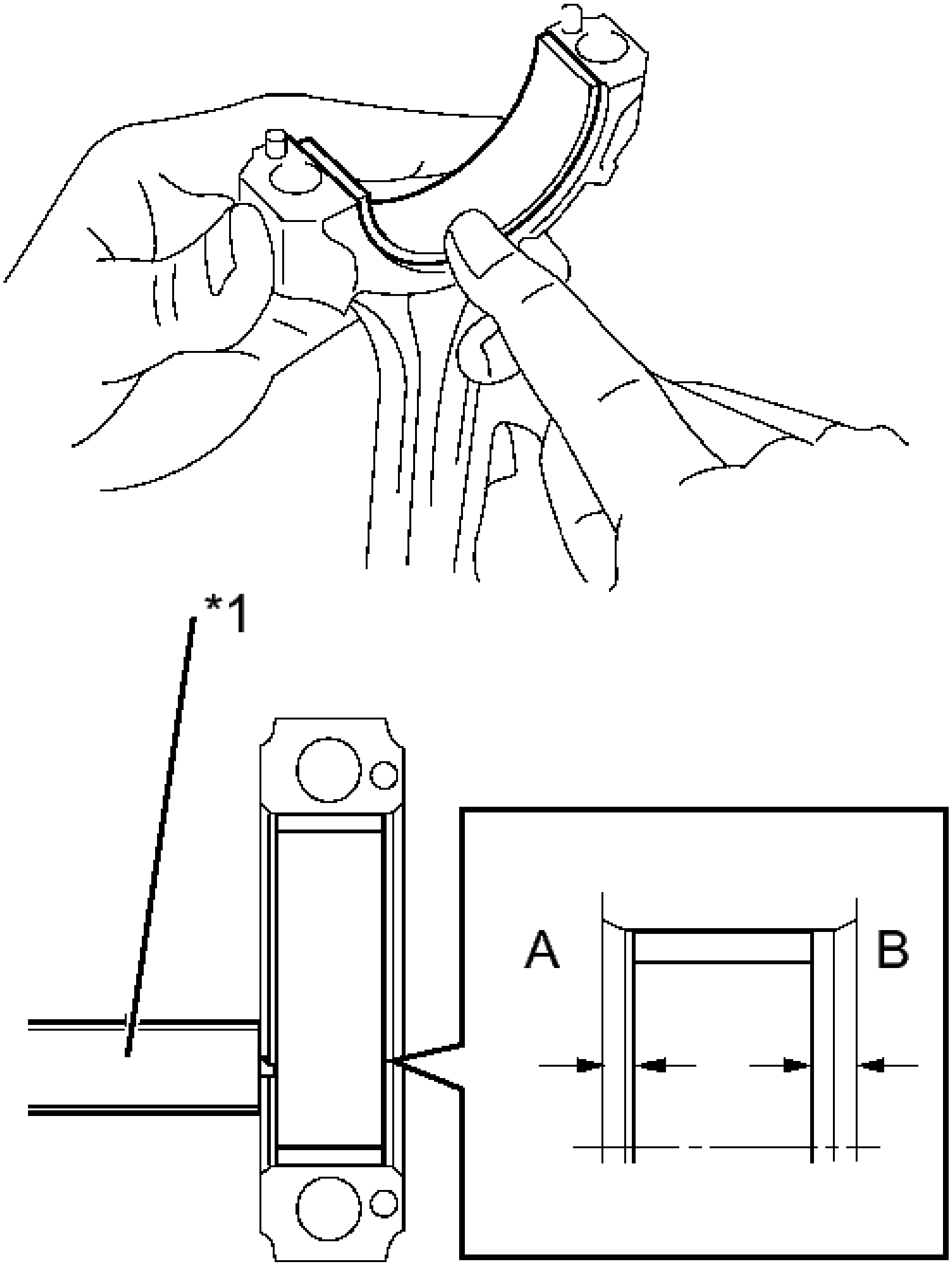

Fig. 416: Installing Connecting Rod Bearing
Courtesy of TOYOTA MOTOR SALES, U.S.A., INC.

TEXT IN ILLUSTRATION

*1	Vernier Caliper

Dimension (A - B)

0.7 mm (0.0276 in.) or less

NOTE: **Do not apply engine oil to the bearings and the contact surfaces.**

8. **INSTALL PISTON SUB-ASSEMBLY WITH CONNECTING ROD**
   a. Apply engine oil to the cylinder walls, the pistons, and the surfaces of the connecting rod bearings.
   b. Position the piston rings so that the ring ends are as shown in the illustration.

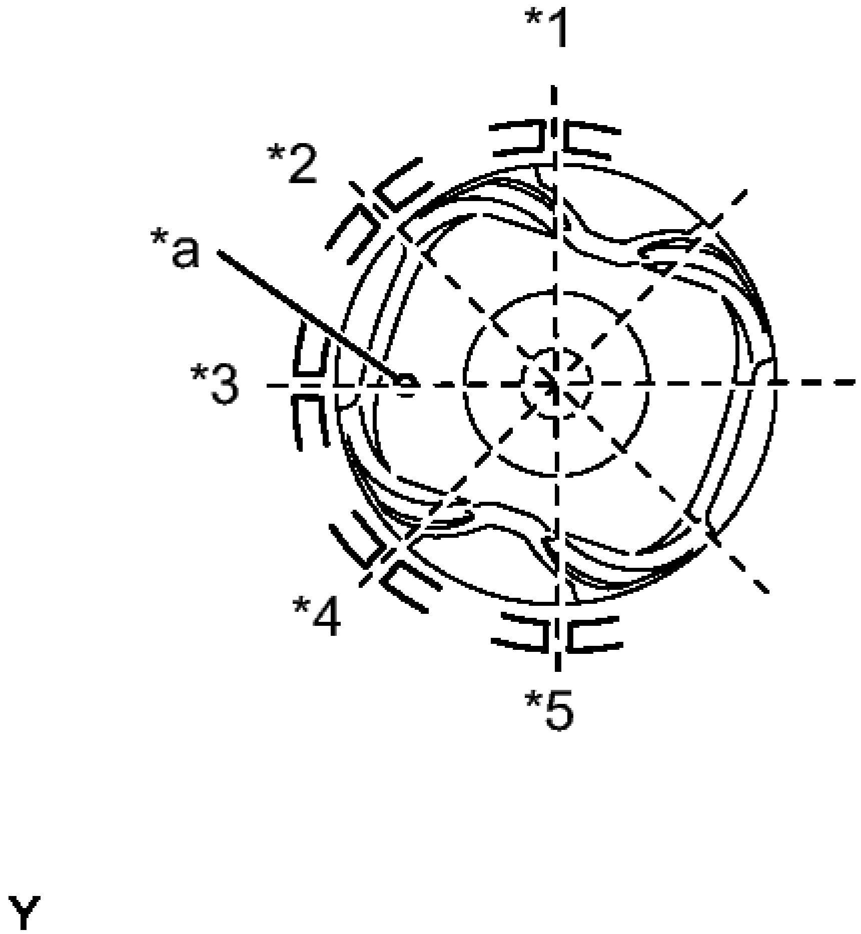

Fig. 417: Identifying Piston Ring Position
Courtesy of TOYOTA MOTOR SALES, U.S.A., INC.

TEXT IN ILLUSTRATION

*1	Lower

	Side Rail
*2	No. 2 Ring
*3	Oil Ring Expander
*4	No. 1 Ring
*5	Upper Side Rail
*a	Front Mark

NOTE: Do not align the ring ends.

c. Using a piston ring compressor, push the correctly numbered piston and connecting rod assembly into the cylinder with the front mark of the piston facing forward.

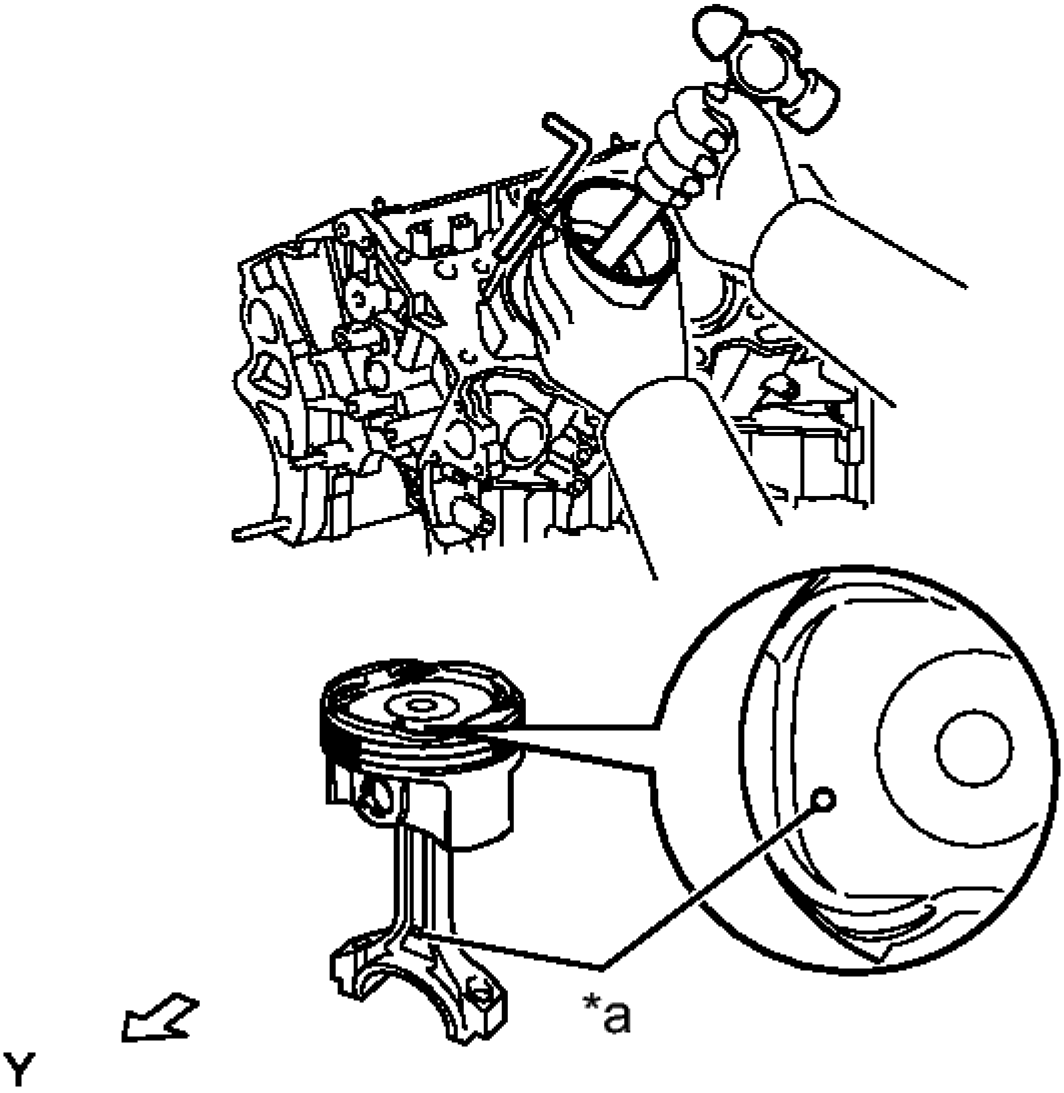

Fig. 418: Pushing Piston & Connecting Rod Assembly Into Cylinder Using A Piston Ring Compressor
Courtesy of TOYOTA MOTOR SALES, U.S.A., INC.

TEXT IN ILLUSTRATION

*a	Front Mark
	Engine Front

NOTE: **Match the numbered connecting rod cap with the connecting rod.**

d. Check that the front mark of the connecting rod cap is facing forward.

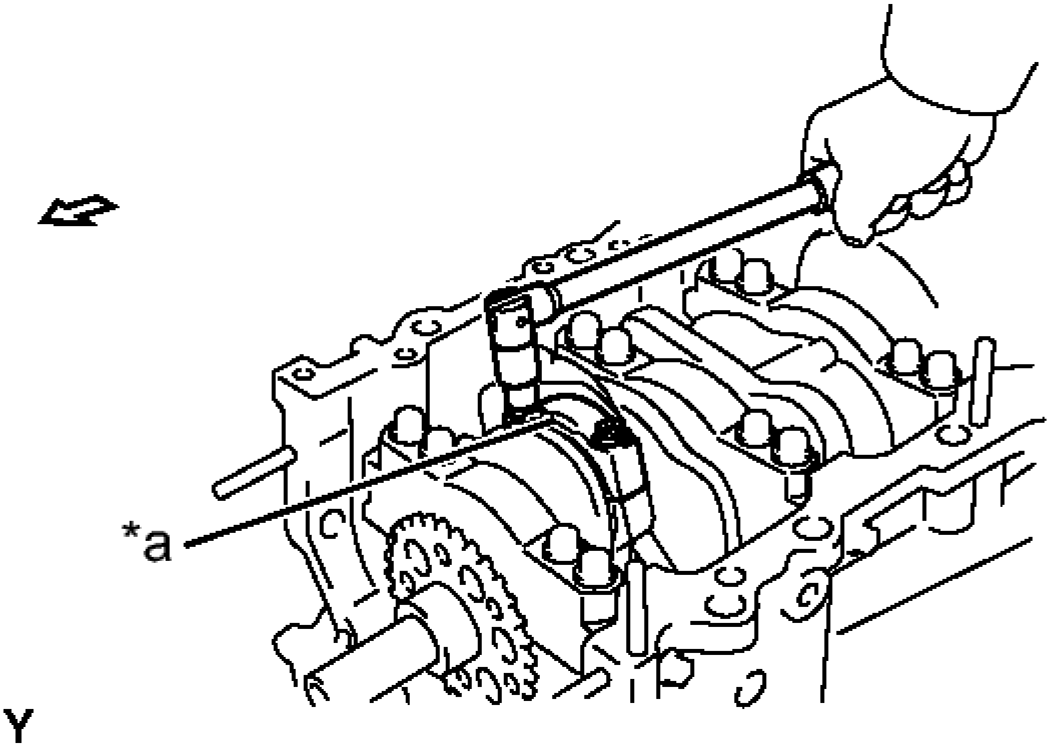

Fig. 419: Installing Connecting Rod Cap Bolt With Front Mark Facing Forward
Courtesy of TOYOTA MOTOR SALES, U.S.A., INC.

TEXT IN ILLUSTRATION

*a	Front Mark
⇦	Engine Front

e. Apply a light coat of engine oil to the threads and under the heads of the connecting rod cap bolts.
f. Install the connecting rod cap bolts.

   HINT:

   The connecting rod cap bolts are tightened in 2 progressive steps.

g. Step 1
   1. Install and alternately tighten the bolts of the connecting rod cap in several steps.

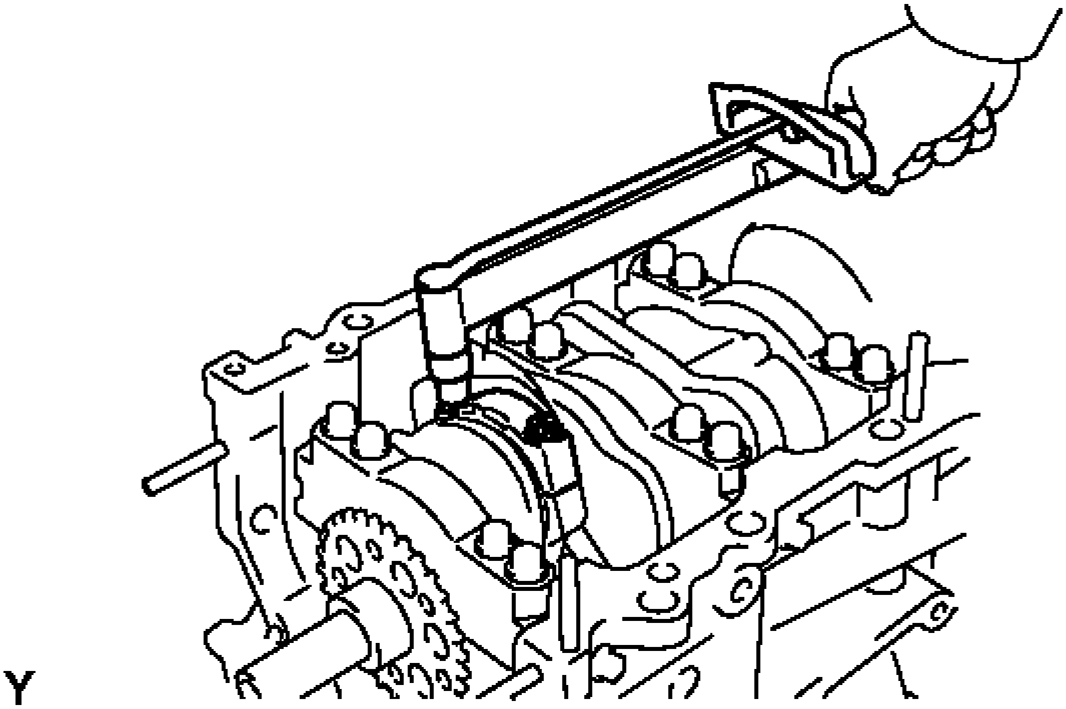

Fig. 420: Tightening Connecting Cap Bolts
Courtesy of TOYOTA MOTOR SALES, U.S.A., INC.

Torque: 25 N*m (255 kgf*cm, 18 ft.*lbf)

h. Step 2

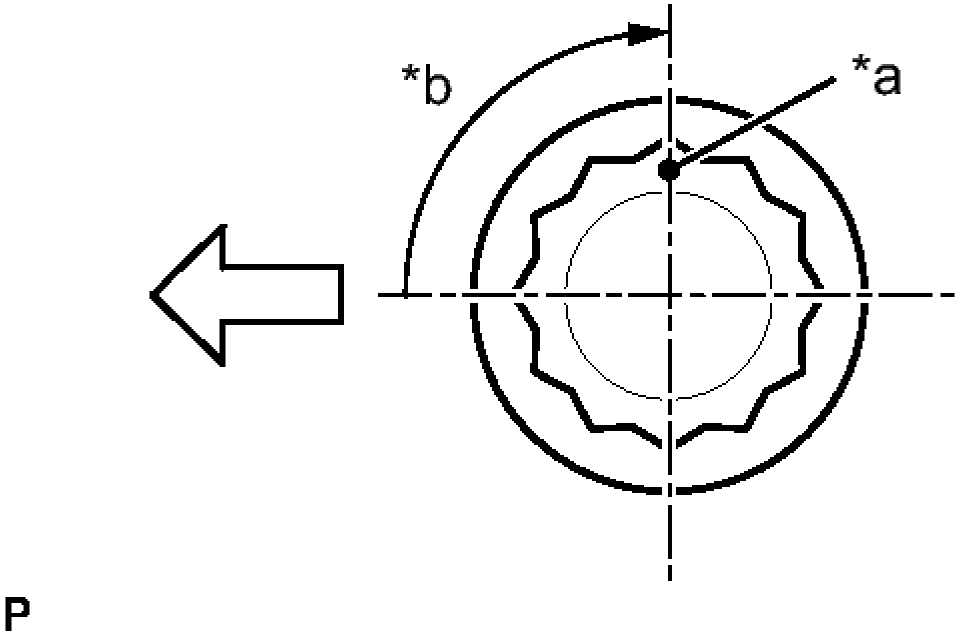

Fig. 421: Identifying Connecting Rod Cap Bolt Paint Mark

Courtesy of TOYOTA MOTOR SALES, U.S.A., INC.

TEXT IN ILLUSTRATION

*a	Paint Mark
*b	Turn 90°
	Engine Front

1. Mark the front side of each connecting rod cap bolt with paint.
2. Retighten the cap bolts 90° as shown in the illustration.
3. Check that the painted mark is now at a 90° angle to the front.

i. Confirm that the crankshaft turns smoothly.

j. Check the connecting rod thrust clearance See step 1.

ENGINE

ON-VEHICLE INSPECTION

ON-VEHICLE INSPECTION

1. **INSPECT COOLANT (for Engine)**

   Refer to **ON-VEHICLE INSPECTION**

2. **INSPECT ENGINE OIL**

   Refer to **ON-VEHICLE INSPECTION**

3. **INSPECT AUXILIARY BATTERY**

   Refer to **ON-VEHICLE INSPECTION**

4. **INSPECT AIR CLEANER FILTER ELEMENT SUB-ASSEMBLY**
   1. Remove the air cleaner cap.
   2. Remove the air cleaner filter element.
   3. Visually check that the air cleaner filter element is not excessively damaged or oily.

      If necessary, replace the air cleaner filter element.

   4. Install the air cleaner filter element.
   5. Install the air cleaner cap.
5. **INSPECT VALVE AND ADJUSTER NOISE**
   1. Put the engine in inspection mode. Refer to **INSPECTION MODE PROCEDURE** .
   2. Rev up the engine several times. Check that the engine does not emit unusual noises. If unusual noises occur, warm up the engine and idle it for over 30 minutes. Then, perform the inspection above again. If any defects or problems are found during the inspection above, perform a lash adjuster inspection See step 2.
6. **INSPECT IGNITION TIMING**
   1. Put the engine in inspection mode. Refer to **INSPECTION MODE PROCEDURE** .
   2. Warm up and stop the engine.
   3. When using the Techstream:

      Check the ignition timing.

1. Connect the Techstream to the DLC3.
2. Put the engine in inspection mode. Refer to **INSPECTION MODE PROCEDURE** .
3. Enter the following menus: Powertrain / Engine and ECT / Data List / IGN Advance.

   Standard ignition timing

   5 to 20 degrees BTDC

   NOTE:

   - **Check the ignition timing with the cooling fans off.**
   - **Turn off all electrical systems and the A/C.**
   - **When checking the ignition timing, the shift lever should be in P.**

   HINT:

   Refer to the Techstream operator's manual for further details.

4. Check that the ignition timing advances immediately when the engine speed is increased.
5. Enter the following menus: Powertrain / Engine and ECT / Active Test / Connect the TC and TE1 / ON.
6. Monitor IGN Advance of the Data List.

   Standard ignition timing

   8 to 12 degrees BTDC

   NOTE: **When checking the ignition timing, the shift lever should be in P.**

   HINT:

   Refer to the Techstream operator's manual for further details.

7. Enter the following menus: Connect the TC and TE1 / OFF.
8. Turn the power switch off.
9. Turn the Techstream off.
10. Disconnect the Techstream from the DLC3.

d. When not using the Techstream:

   1. Using SST, connect terminals 13 (TC) and 4 (CG) of the DLC3.

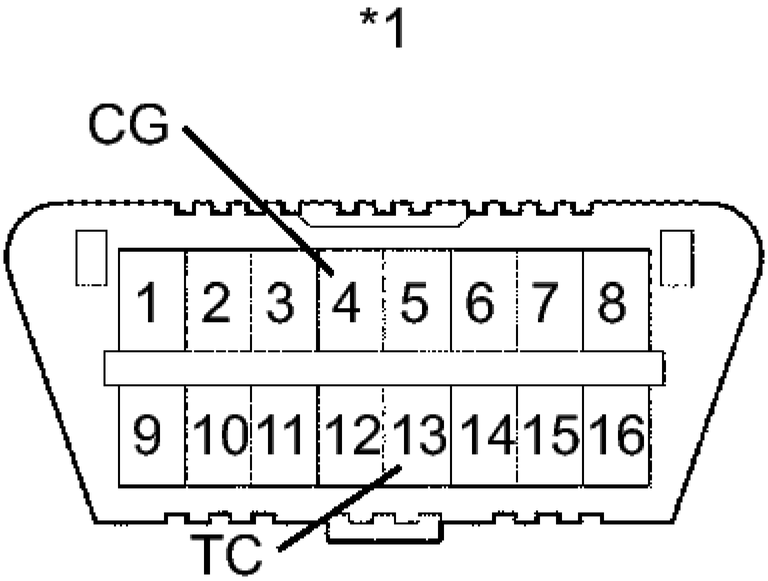

Fig. 1: DLC3 Connector End View
Courtesy of TOYOTA MOTOR SALES, U.S.A., INC.

TEXT IN ILLUSTRATION

*1	DLC3

- **SST: 09843-18040**

NOTE:

- **Confirm the terminals before connecting them. Connecting the wrong terminals may result in damage to electrical components.**
- **Check the ignition timing with the cooling fans off.**
- **Turn off all electrical systems and the A/C.**
- **When checking the ignition timing, the shift lever should be in P.**

2. Remove the No. 1 engine cover sub-assembly.
3. Pull out the wire harness.

NOTE: **After checking, wrap the wire harness with tape.**

4. Connect the clip of the timing light to the wire harness.

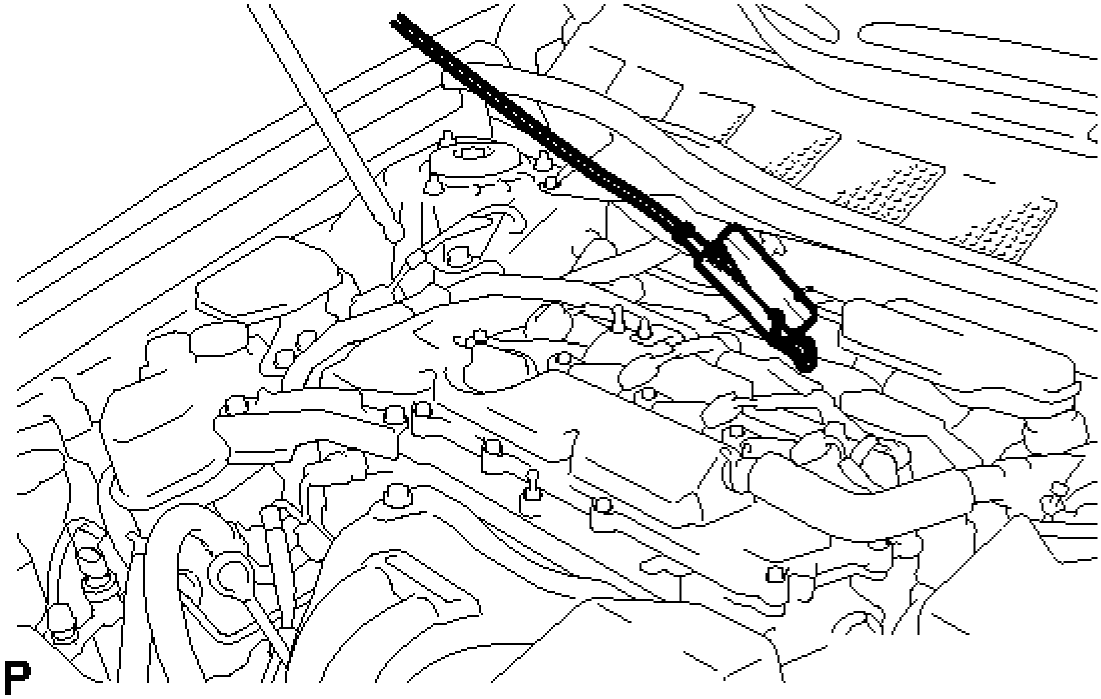

Fig. 2: Connect Clip Of Timing Light To Wire Harness
Courtesy of TOYOTA MOTOR SALES, U.S.A., INC.

NOTE: **Use a timing light that detects the primary signal.**

5. Inspect the ignition timing at idle.

   Standard ignition timing

   8 to 12 degrees BTDC

   NOTE: **When checking the ignition timing, the shift lever should be in P.**

   HINT:

   After running the engine at 1000 to 1300 rpm for 5 seconds, check that it returns to idle speed.

6. Disconnect terminals 13 (TC) and 4 (CG) of the DLC3.
7. Inspect the ignition timing at idle.

   Standard ignition timing

   5 to 20 degrees BTDC

        8. Confirm that the ignition timing advances when the engine rpm is increased.
        9. Remove the timing light.
        10. Install the No. 1 engine cover sub-assembly.

7. **INSPECT ENGINE IDLE SPEED**
    a. Put the engine in inspection mode. Refer to **INSPECTION MODE PROCEDURE** .
    b. Warm up and stop the engine.
    c. When using the Techstream:
        1. Connect the Techstream to the DLC3.
        2. Put the engine in inspection mode. Refer to **INSPECTION MODE PROCEDURE** .
        3. Enter the following menus: Powertrain / Engine and ECT / Data List / Engine Speed.

            HINT:

            Refer to the Techstream operator's manual for further details.

        4. Inspect the engine idle speed.

            Standard idle speed

            900 to 1050 rpm

            NOTE:

            - **Turn all electrical systems and the A/C off.**
            - **Inspect the idle speed with the cooling fans off.**
            - **When checking the ignition timing, the shift lever should be in P.**

        5. Turn the power switch off.
        6. Turn the Techstream off.
        7. Disconnect the Techstream from the DLC3.
    d. When not using the Techstream:
        1. Using SST, connect a tachometer tester probe to terminal 9 (TAC) of the DLC3.

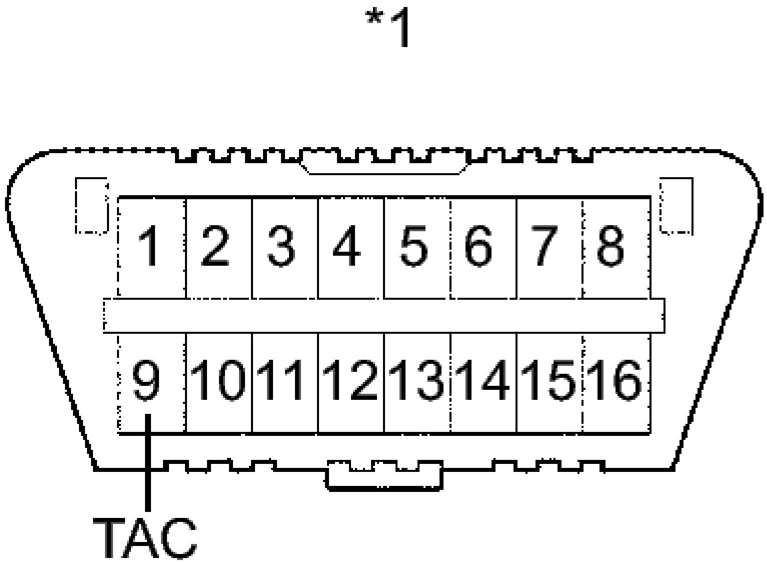

Fig. 3: DLC3 Connector End View
Courtesy of TOYOTA MOTOR SALES, U.S.A., INC.

TEXT IN ILLUSTRATION

*1	DLC3

- **SST: 09843-18030**

2. Put the engine in inspection mode. Refer to **INSPECTION MODE PROCEDURE** .
3. Inspect the engine idle speed.

   Standard idle speed

   900 to 1050 rpm

   NOTE:

   - **Turn all electrical systems and the A/C off.**
   - **Inspect the idle speed with the cooling fans off.**
   - **When checking the ignition timing, the shift lever should be in P.**

4. Disconnect the tachometer probe from the DLC3.

8. **INSPECT COMPRESSION**
   a. Put the engine in inspection mode. Refer to **INSPECTION MODE PROCEDURE** .
   b. Warm up and stop the engine.
   c. Remove the 4 spark plugs. Refer to **REMOVAL** .

NOTE: **If the ignition coil assembly connector is disconnected because a DTC is detected in inspection, always reconnect it.**

d. Inspect the cylinder compression pressure.

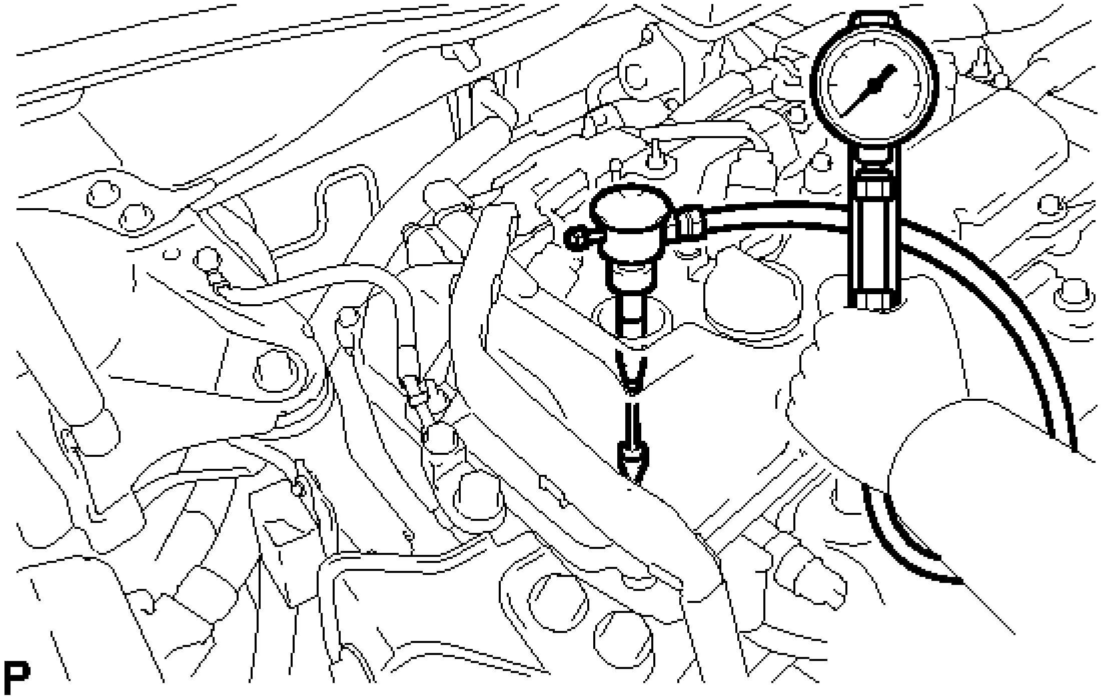

Fig. 4: Inspecting Cylinder Compression Pressure
Courtesy of TOYOTA MOTOR SALES, U.S.A., INC.

1. Insert a compression gauge into the spark plug hole.
2. Connect the Techstream to the DLC3.
3. Turn the power switch on (IG).
4. Turn the Techstream on.

NOTE: **Check the HV battery voltage in the data list to ensure that the battery is fully charged.**

5. Enter the following menus: Powertrain / Hybrid Control / Active Test / Compression Test / ON.
6. Depress and hold the brake pedal, and turn the power switch on (READY).

NOTE: **The measurement must be done as quickly as possible.**

HINT:

Noise may be emitted from the transmission. However, this is not a malfunction.

Standard compression pressure

1100 kPa (11.2 kgf/cm^2 , 160 psi)

Minimum pressure

750 kPa (7.6kgf/cm^2 , 109 psi)

Pressure difference between each cylinder

100 kPa (1.0 kgf/cm^2 , 15 psi)

NOTE:

- **Inspect the other cylinders in the same way.**
- **Measure the compression as quickly as possible.**

7. If the cylinder compression is low, pour a small amount of engine oil into the cylinder through the spark plug hole, then inspect it again.

   HINT:

   - If adding oil increases the compression, the piston rings and/or cylinder bore may be worn or damaged.
   - If the pressure stays low, a valve may be stuck or seated improperly, or there may be leaks from the gasket.

e. Install the 4 spark plugs. Refer to **INSTALLATION** .

NOTE: **After performing all the steps, be sure to clear any DTCs stored in memory.**

9. **INSPECT CO/HC**

   HINT:

   This check determines whether or not the idle CO / HC complies with regulations.

   a. Put the engine in inspection mode. Refer to **INSPECTION MODE PROCEDURE** .
   b. Warm up the engine.
   c. Run the engine at 2500 rpm for approximately 180 seconds.
   d. Insert a CO/HC meter testing probe at least 40 cm (1.31 ft.) into the tailpipe while idling.
   e. Check the CO/HC concentration while idling and when the engine is running at 2500 rpm.

      HINT:

      When doing a 2 mode (with the engine idling/ running at 2500 rpm) test, the measurement procedures are determined by applicable local regulations.

If the CO/HC concentration does not comply with the regulations, troubleshoot in the order given below.

1. Check the DTCs. Refer to **DTC CHECK / CLEAR** .
2. See the table below for possible causes, then inspect the applicable parts and repair them if necessary.

CO	HC	Problem	Possible Cause
Normal	High	Rough idle	a. Faulty ignition: • Incorrect timing • Fouled, shorted or improperly gapped plugs b. Incorrect valve clearance c. Leaks from intake and exhaust valves d. Leaks from cylinders e. Faulty EGR
Low	High	Rough idle (Fluctuating HC reading)	a. Vacuum leaks: • PCV hoses • Intake manifold • Throttle body b. Lean mixture causing misfire c. Faulty EGR
			a. Restricted air cleaner filter element b. Plugged PCV valve c. Faulty EFI systems:

High	High	Rough idle (Black smoke from exhaust)	- Faulty pressure regulator - Faulty engine coolant temperature sensor - Faulty mass air flow meter - Faulty ECM - Faulty injectors - Throttle body d. Faulty EGR

CAMSHAFT

COMPONENTS

ILLUSTRATION

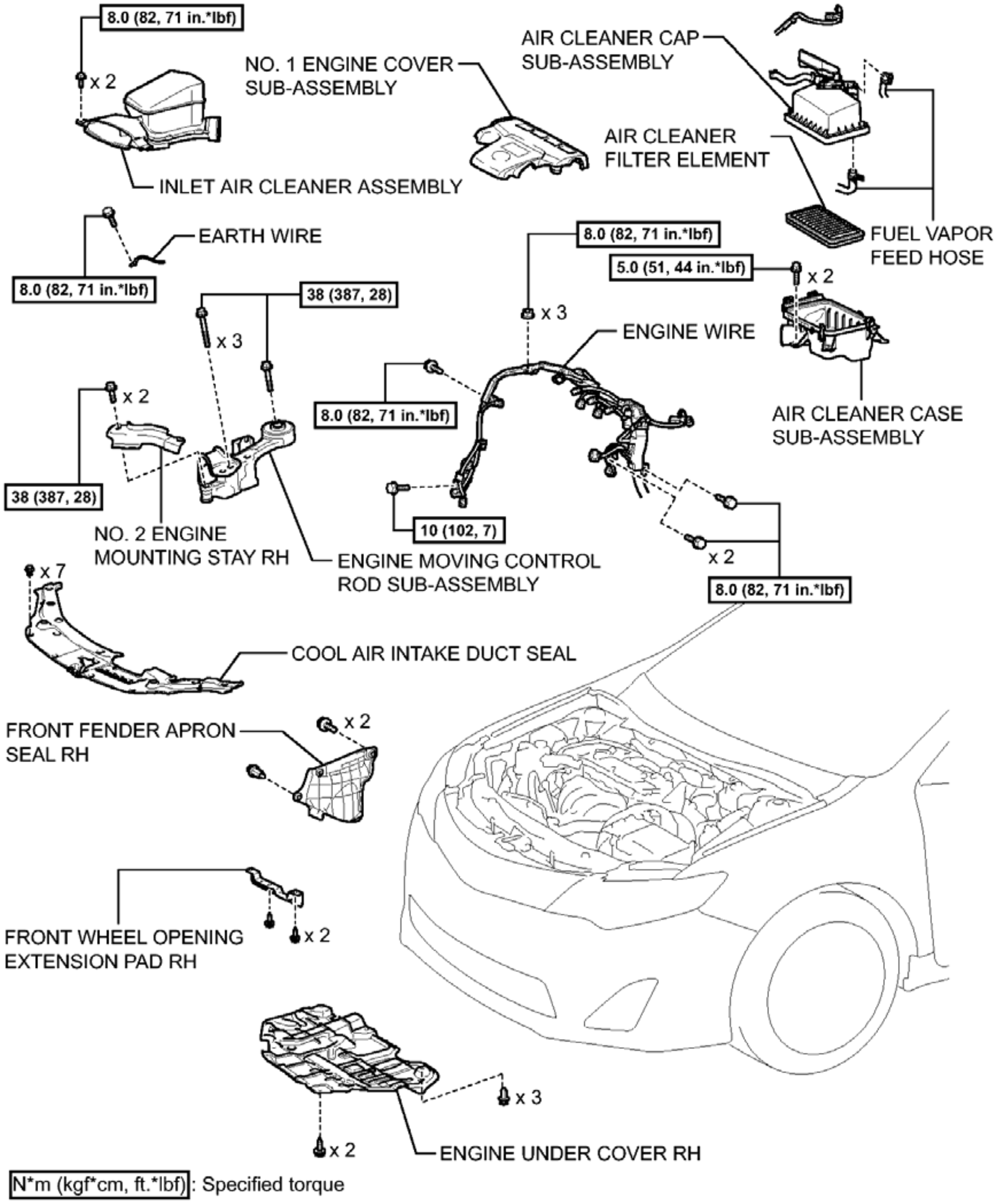
8.0 (82, 71 in.*lbf)
x 2
NO. 1 ENGINE COVER SUB-ASSEMBLY
AIR CLEANER CAP SUB-ASSEMBLY
INLET AIR CLEANER ASSEMBLY
AIR CLEANER FILTER ELEMENT
EARTH WIRE
8.0 (82, 71 in.*lbf)
FUEL VAPOR FEED HOSE
5.0 (51, 44 in.*lbf)
x 2
8.0 (82, 71 in.*lbf)
38 (387, 28)
x 3
x 3
ENGINE WIRE
x 2
8.0 (82, 71 in.*lbf)
AIR CLEANER CASE SUB-ASSEMBLY
38 (387, 28)
10 (102, 7)
NO. 2 ENGINE MOUNTING STAY RH
ENGINE MOVING CONTROL ROD SUB-ASSEMBLY
x 2
8.0 (82, 71 in.*lbf)
x 7
COOL AIR INTAKE DUCT SEAL
x 2
FRONT FENDER APRON SEAL RH
FRONT WHEEL OPENING EXTENSION PAD RH
x 2
x 3
x 2
ENGINE UNDER COVER RH
N*m (kgf*cm, ft.*lbf): Specified torque

Fig. 5: Identifying Camshaft Replacement Components With Torque Specifications (1 Of 3)
Courtesy of TOYOTA MOTOR SALES, U.S.A., INC.

ILLUSTRATION

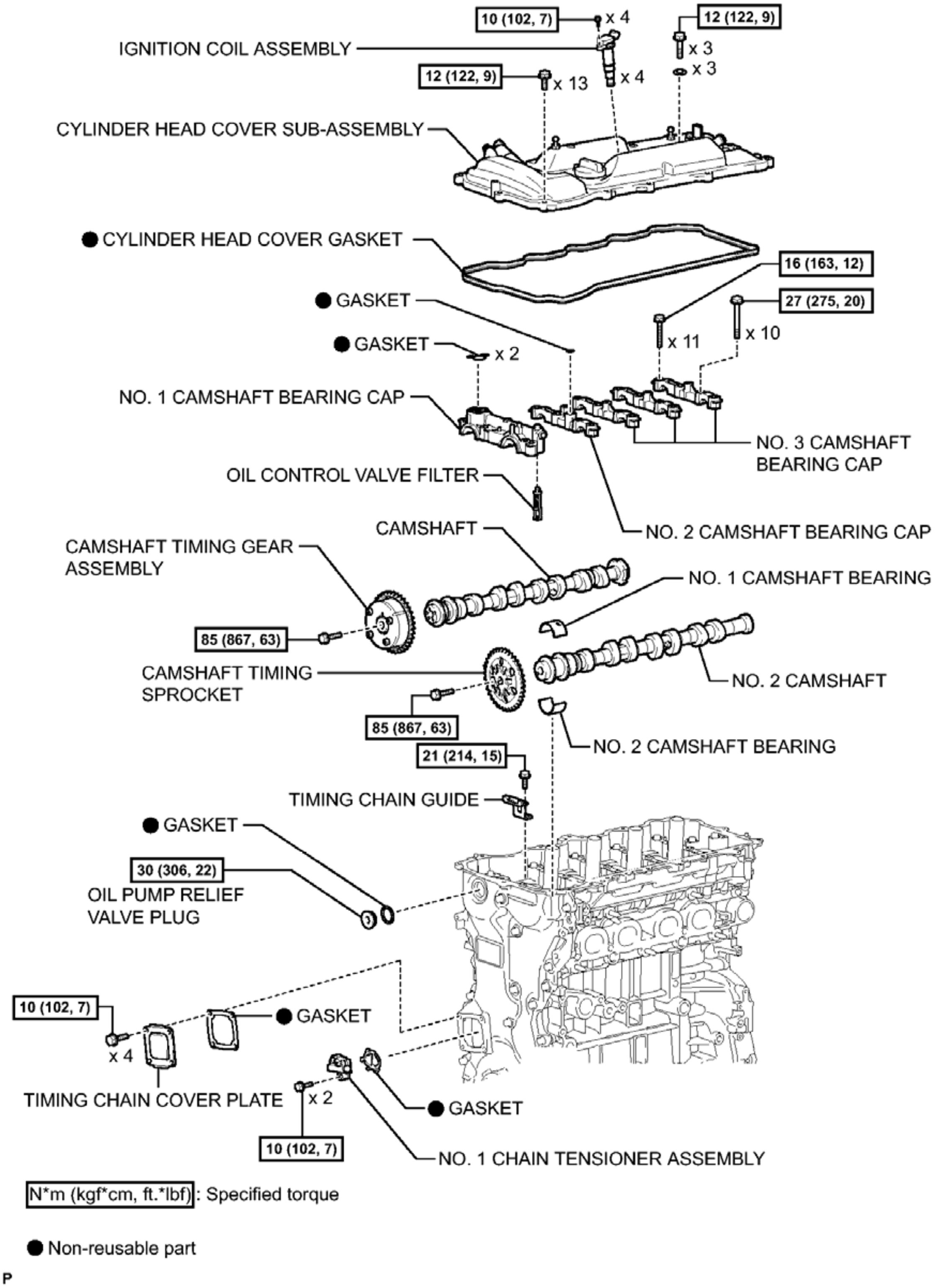
10 (102, 7)
x 4
12 (122, 9)
IGNITION COIL ASSEMBLY
x 3
x 3
12 (122, 9)
x 13
x 4
CYLINDER HEAD COVER SUB-ASSEMBLY
● CYLINDER HEAD COVER GASKET
16 (163, 12)
● GASKET
27 (275, 20)
● GASKET
x 2
x 11
x 10
NO. 1 CAMSHAFT BEARING CAP
NO. 3 CAMSHAFT BEARING CAP
OIL CONTROL VALVE FILTER
CAMSHAFT
NO. 2 CAMSHAFT BEARING CAP
CAMSHAFT TIMING GEAR ASSEMBLY
NO. 1 CAMSHAFT BEARING
85 (867, 63)
CAMSHAFT TIMING SPROCKET
NO. 2 CAMSHAFT
85 (867, 63)
NO. 2 CAMSHAFT BEARING
21 (214, 15)
TIMING CHAIN GUIDE
● GASKET
30 (306, 22)
OIL PUMP RELIEF VALVE PLUG
10 (102, 7)
● GASKET
x 4
x 2
TIMING CHAIN COVER PLATE
● GASKET
10 (102, 7)
NO. 1 CHAIN TENSIONER ASSEMBLY
N*m (kgf*cm, ft.*lbf): Specified torque
● Non-reusable part
P

Fig. 6: Identifying Camshaft Replacement Components With Torque Specifications (2 Of 3)

Courtesy of TOYOTA MOTOR SALES, U.S.A., INC.

ILLUSTRATION

for LHD:

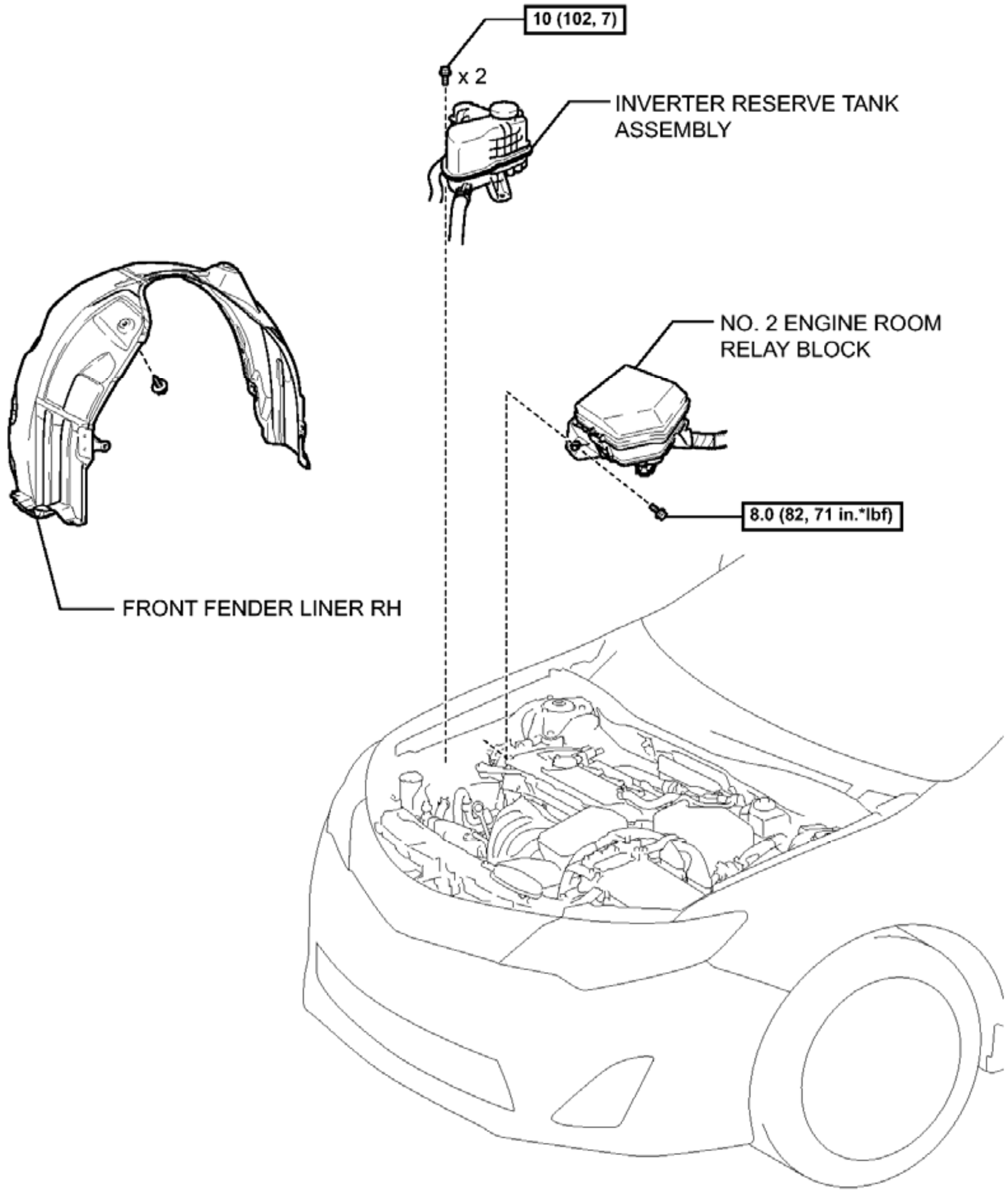
10 (102, 7)
x 2
INVERTER RESERVE TANK ASSEMBLY
NO. 2 ENGINE ROOM RELAY BLOCK
8.0 (82, 71 in.*lbf)
FRONT FENDER LINER RH

N*m (kgf*cm, ft.*lbf): Specified torque

Fig. 7: Identifying Camshaft Replacement Components With Torque Specifications (3 Of 3)
Courtesy of TOYOTA MOTOR SALES, U.S.A., INC.

REMOVAL

REMOVAL

1. **REMOVE FRONT WHEEL RH**

2. **REMOVE FRONT WHEEL OPENING EXTENSION PAD RH**
3. **REMOVE ENGINE UNDER COVER RH**
4. **REMOVE FRONT FENDER APRON SEAL RH**
5. **REMOVE NO. 1 ENGINE COVER SUB-ASSEMBLY** See step 25
6. **REMOVE COOL AIR INTAKE DUCT SEAL** . Refer to **REMOVAL - Step 1**
7. **REMOVE INLET AIR CLEANER ASSEMBLY** See step 30
8. **REMOVE AIR CLEANER CAP SUB-ASSEMBLY** . Refer to **REMOVAL - Step 3**
9. **REMOVE AIR CLEANER FILTER ELEMENT** See step 32
10. **REMOVE AIR CLEANER CASE SUB-ASSEMBLY** See step 33
11. **REMOVE NO. 2 ENGINE MOUNTING STAY RH** See step 58
12. **DISCONNECT EARTH WIRE** See step 59
13. **REMOVE ENGINE MOVING CONTROL ROD SUB-ASSEMBLY** See step 60
14. **DISCONNECT INVERTER RESERVE TANK ASSEMBLY (for LHD)**
    a. Remove the 2 bolts and disconnect the inverter reserve tank assembly.

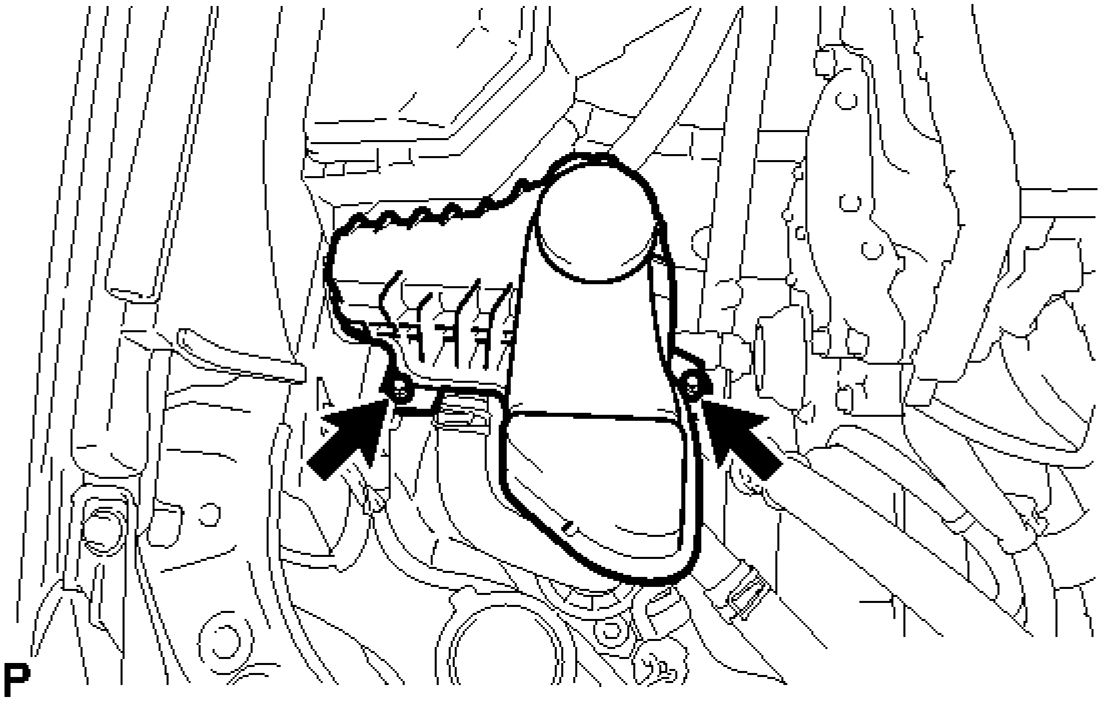

Fig. 8: Identifying Inverter Reserve Tank Assembly Bolts
Courtesy of TOYOTA MOTOR SALES, U.S.A., INC.

15. **DISCONNECT NO. 2 ENGINE ROOM RELAY BLOCK (for LHD)**
    a. Remove the screw and disconnect the front fender liner RH.

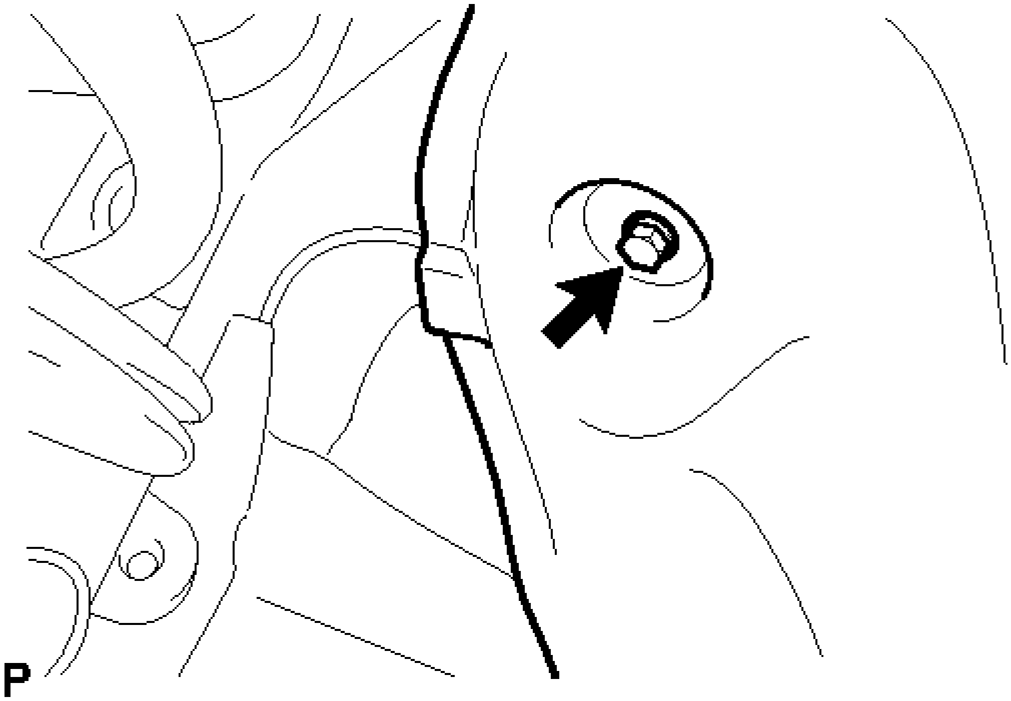

Fig. 9: Identifying Front Fender Liner Screw RH
Courtesy of TOYOTA MOTOR SALES, U.S.A., INC.

b. Remove the bolt, harness clamp and disconnect the No. 2 engine room relay block.

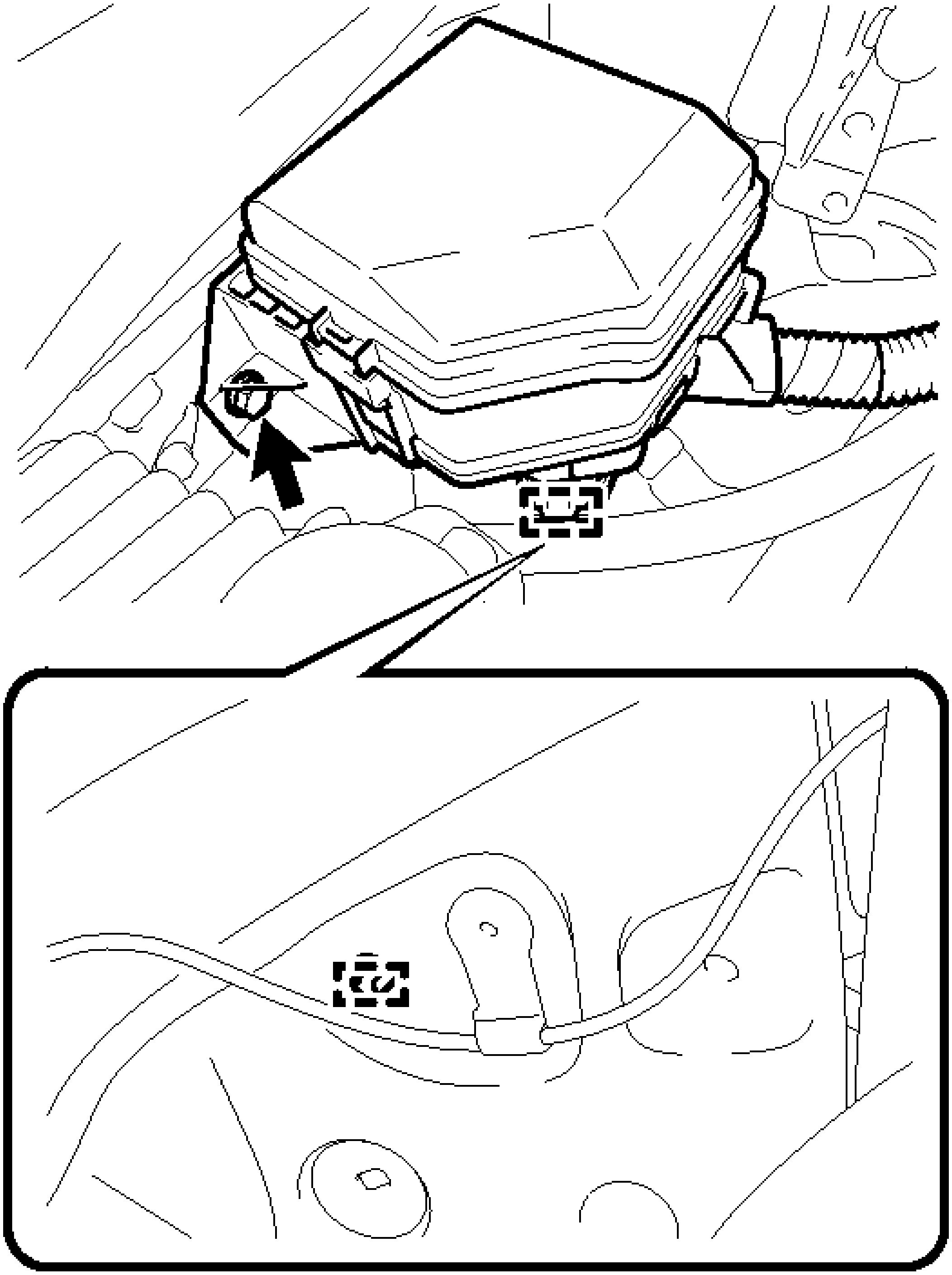

Fig. 10: Identifying No. 2 Engine Room Relay Block Harness Clamp And Bolt
Courtesy of TOYOTA MOTOR SALES, U.S.A., INC.

16. **DISCONNECT ENGINE WIRE**
    a. Disconnect the 8 connectors and 2 harness clamps.

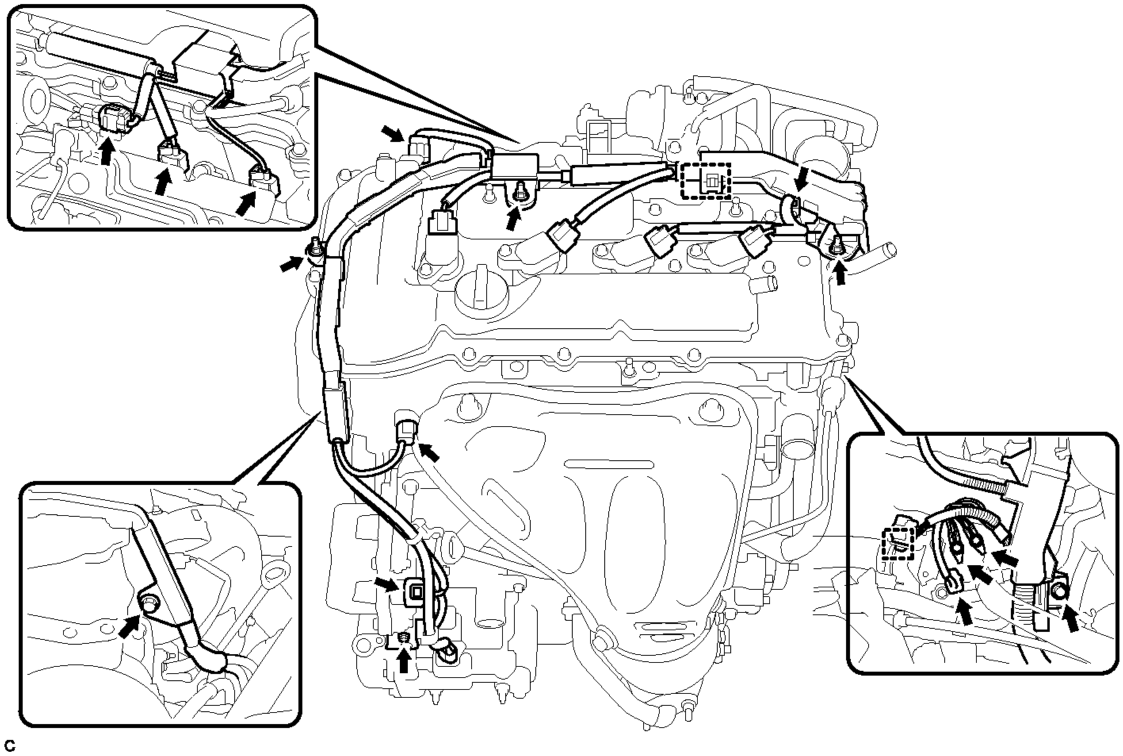

Fig. 11: Identifying Connectors And Harness Clamps
Courtesy of TOYOTA MOTOR SALES, U.S.A., INC.

b. Remove the 5 bolts and 3 nuts and disconnect the engine wire from the engine.

17. **REMOVE IGNITION COIL ASSEMBLY** . Refer to **REMOVAL - Step 2**
18. **REMOVE CYLINDER HEAD COVER SUB-ASSEMBLY** See step 15
19. **SET NO. 1 CYLINDER TO TDC/COMPRESSION**
    a. Turn the crankshaft pulley until its timing notch (groove) and the timing mark "0" of the timing chain cover are aligned.

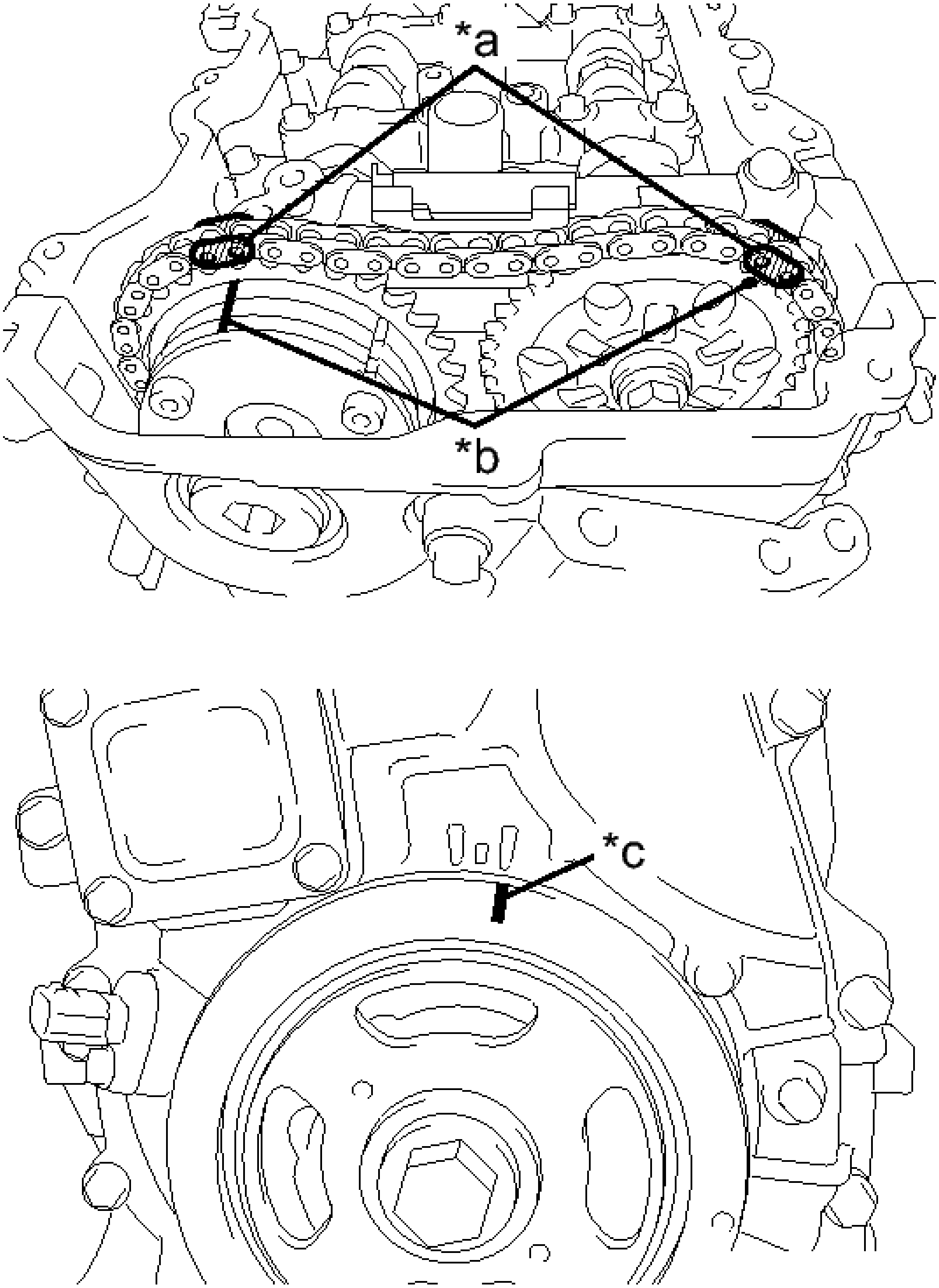

Fig. 12: Identifying Paint Mark, Timing Mark And Timing Notch
Courtesy of TOYOTA MOTOR SALES, U.S.A., INC.

TEXT IN ILLUSTRATION

	Paint

*a	Mark
*b	Timing Mark
*c	Timing Notch

b. Check that each timing mark of the camshaft timing gear assembly and camshaft timing sprocket are aligned with each timing mark located as shown in the illustration. If not, turn the crankshaft 1 revolution (360°) to align the timing marks as shown in the illustration.

c. Place paint marks on the chain in alignment with the timing marks on the camshaft timing gear and camshaft timing sprocket.

20. **REMOVE TIMING CHAIN COVER PLATE**

a. Remove the 4 bolts, timing chain cover plate and gasket.

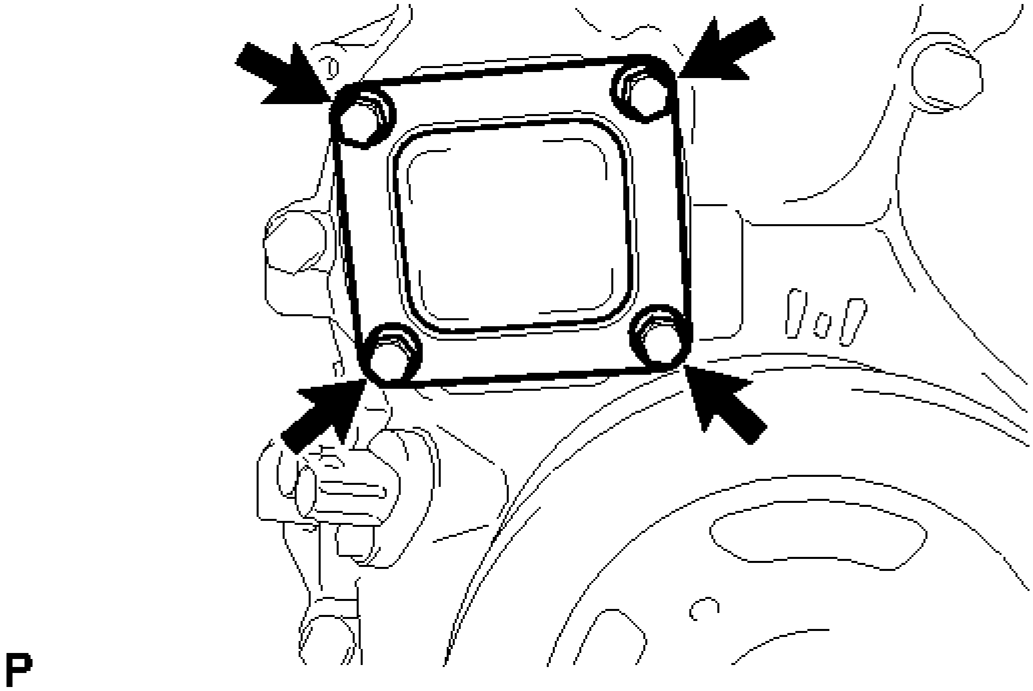

Fig. 13: Identifying Timing Chain Cover Plate Bolts
Courtesy of TOYOTA MOTOR SALES, U.S.A., INC.

21. **REMOVE NO. 1 CHAIN TENSIONER ASSEMBLY**

a. Turn the crankshaft approximately 10° clockwise.

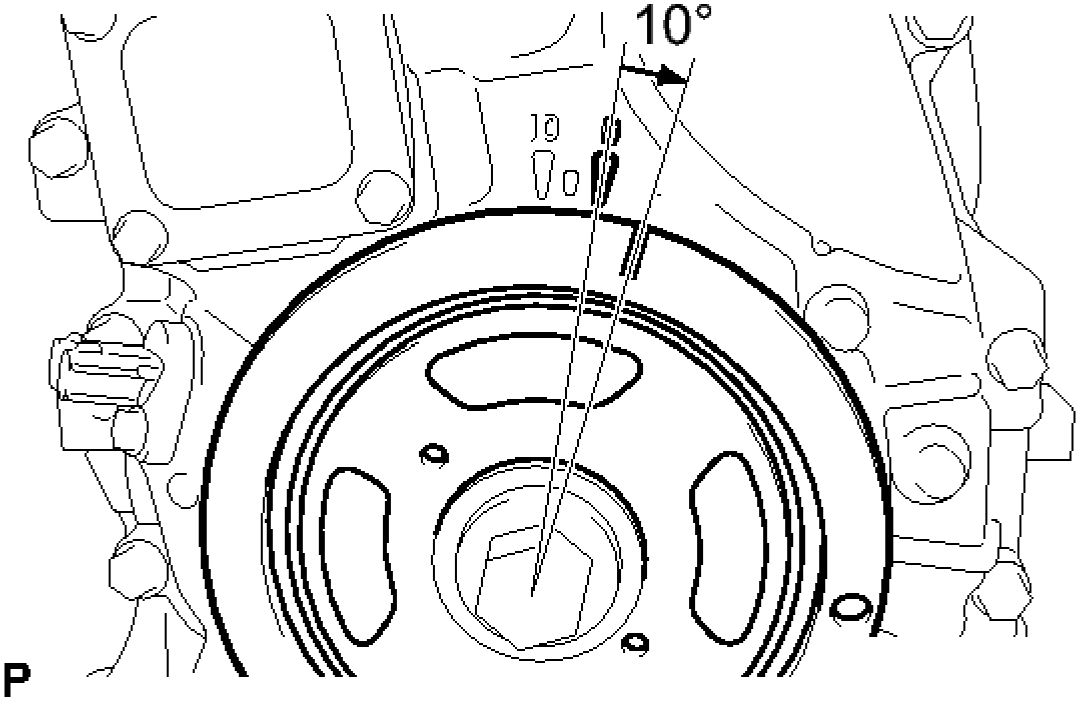

Fig. 14: Turning Crankshaft Approximately 10° Clockwise
Courtesy of TOYOTA MOTOR SALES, U.S.A., INC.

b. Turn the crankshaft approximately 10° counterclockwise.

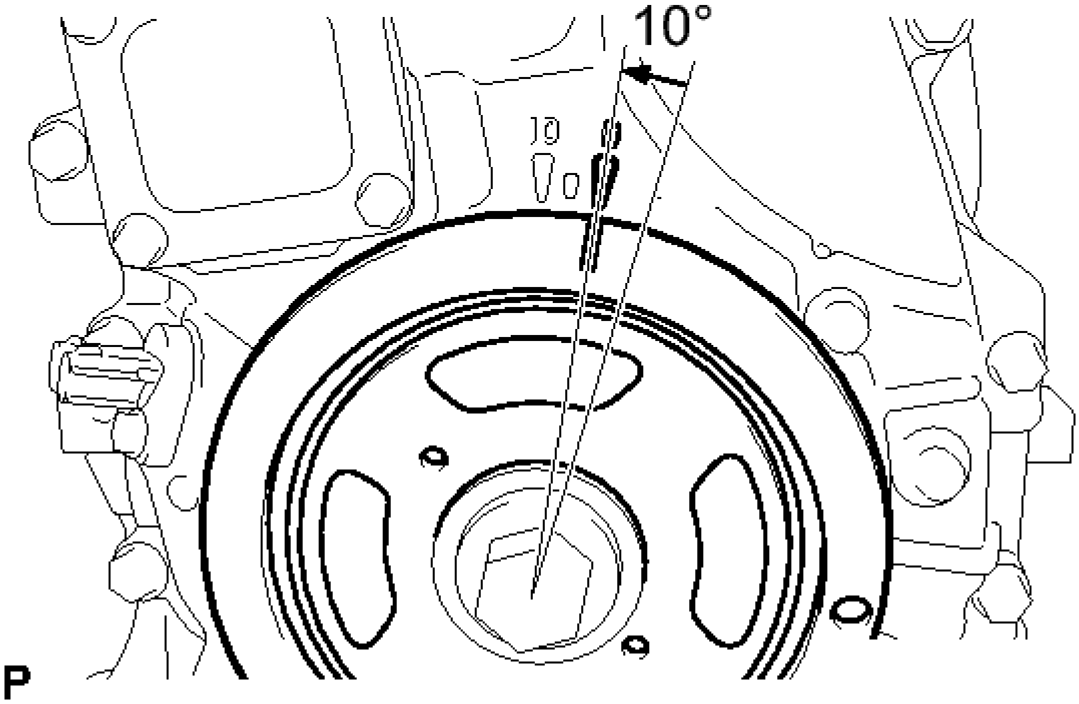

Fig. 15: Turning Crankshaft Approximately 10° Counterclockwise
Courtesy of TOYOTA MOTOR SALES, U.S.A., INC.

c. Align the holes of the stopper plate and tensioner, and insert a pin into the stopper plate hole to lock the tensioner.

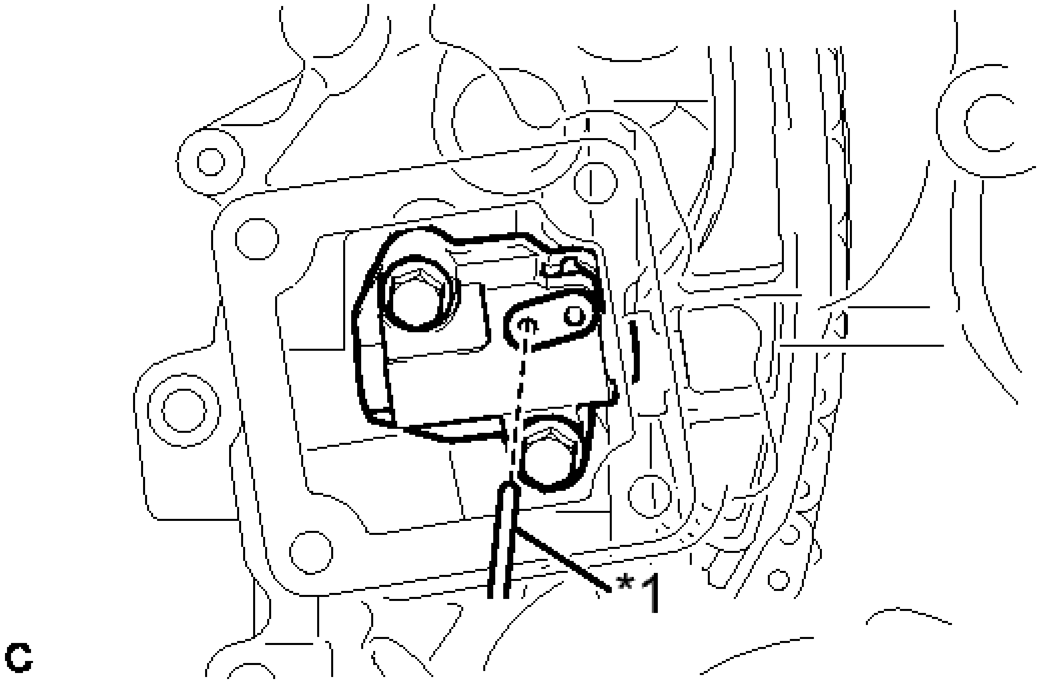

Fig. 16: Insert Pin Into Stopper Plate Hole To Lock Tensioner
Courtesy of TOYOTA MOTOR SALES, U.S.A., INC.

TEXT IN ILLUSTRATION

*1	Pin

d. Turn the crankshaft approximately 10° clockwise.

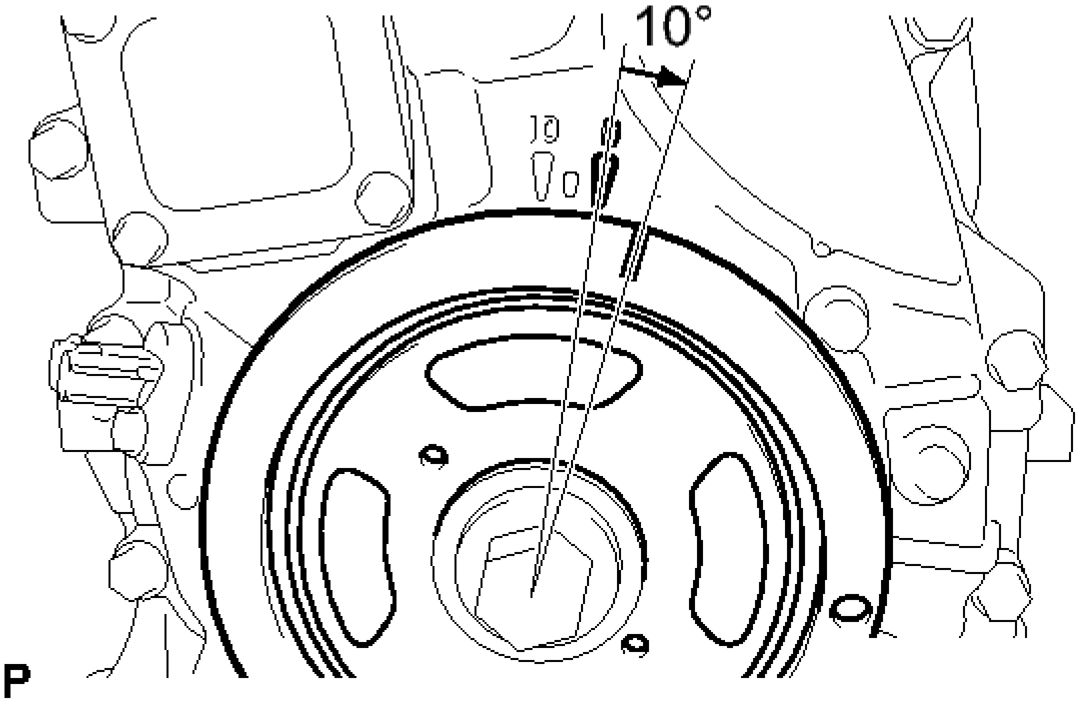

Fig. 17: Turning Crankshaft Approximately 10° Clockwise
Courtesy of TOYOTA MOTOR SALES, U.S.A., INC.

e. Remove the 2 bolts, chain tensioner and gasket.

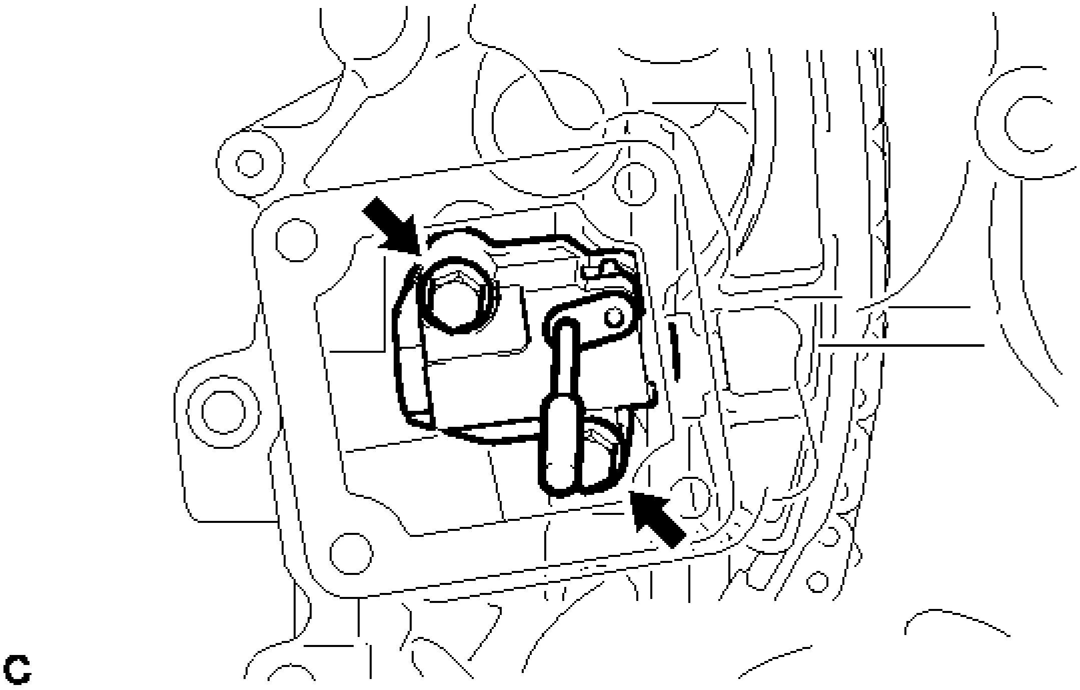

Fig. 18: Identifying Timing Chain Cover Bolts
Courtesy of TOYOTA MOTOR SALES, U.S.A., INC.

NOTE: Make sure not to drop the gasket inside the timing chain cover.

f. Turn the crankshaft approximately 10° counterclockwise.

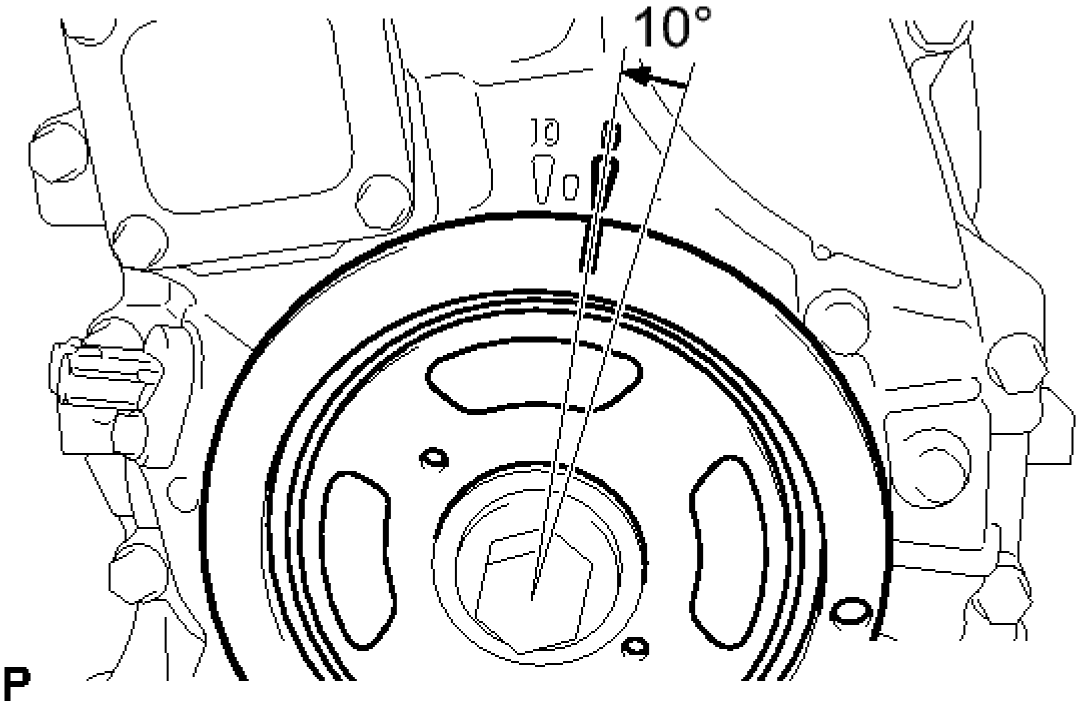

Fig. 19: Turning Crankshaft Approximately 10° Counterclockwise
Courtesy of TOYOTA MOTOR SALES, U.S.A., INC.

22. **REMOVE TIMING CHAIN GUIDE** See step 14
23. **REMOVE OIL PUMP RELIEF VALVE PLUG** See step 20
24. **REMOVE CAMSHAFT TIMING GEAR ASSEMBLY**
    a. Hold the hexagonal portion of the camshaft with a wrench and remove the bolt from the camshaft.

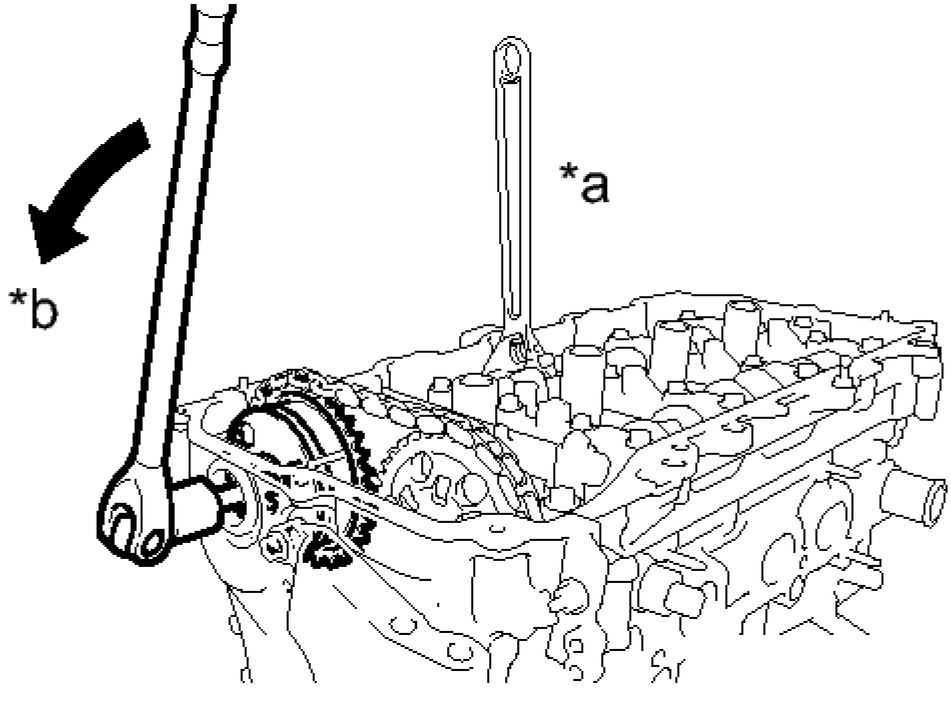

Fig. 20: Removing Camshaft Timing Gear Assembly
Courtesy of TOYOTA MOTOR SALES, U.S.A., INC.

TEXT IN ILLUSTRATION

*a	Hold
*b	Turn

NOTE: **Be careful not to damage the cylinder head or spark plug tube with the wrench.**

b. Separate the camshaft timing gear assembly from the camshaft.

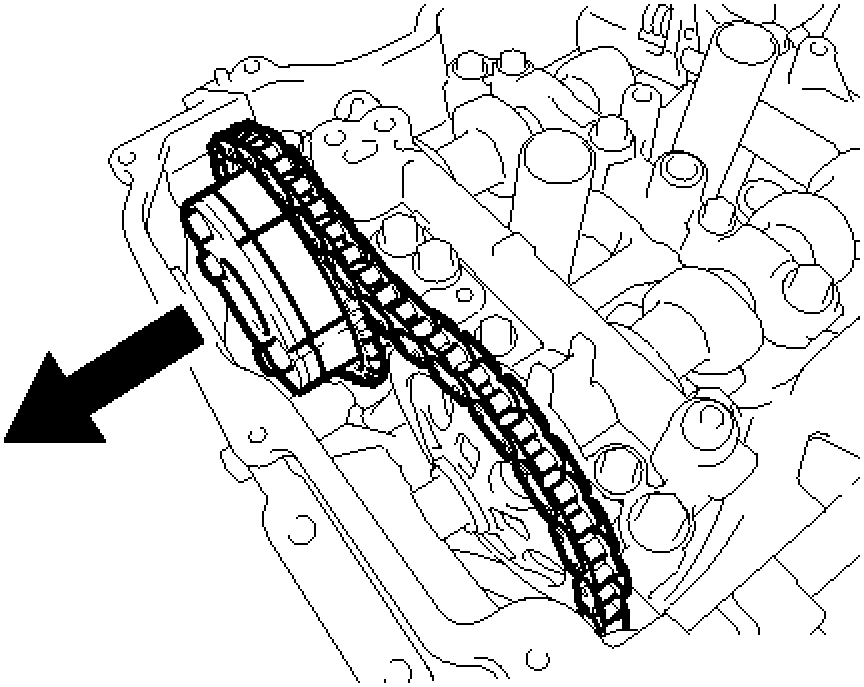

Fig. 21: Removing Camshaft Timing Gear Assembly
Courtesy of TOYOTA MOTOR SALES, U.S.A., INC.

c. Remove the timing chain from the camshaft timing gear assembly, and turn the camshaft timing gear assembly approximately 180°.

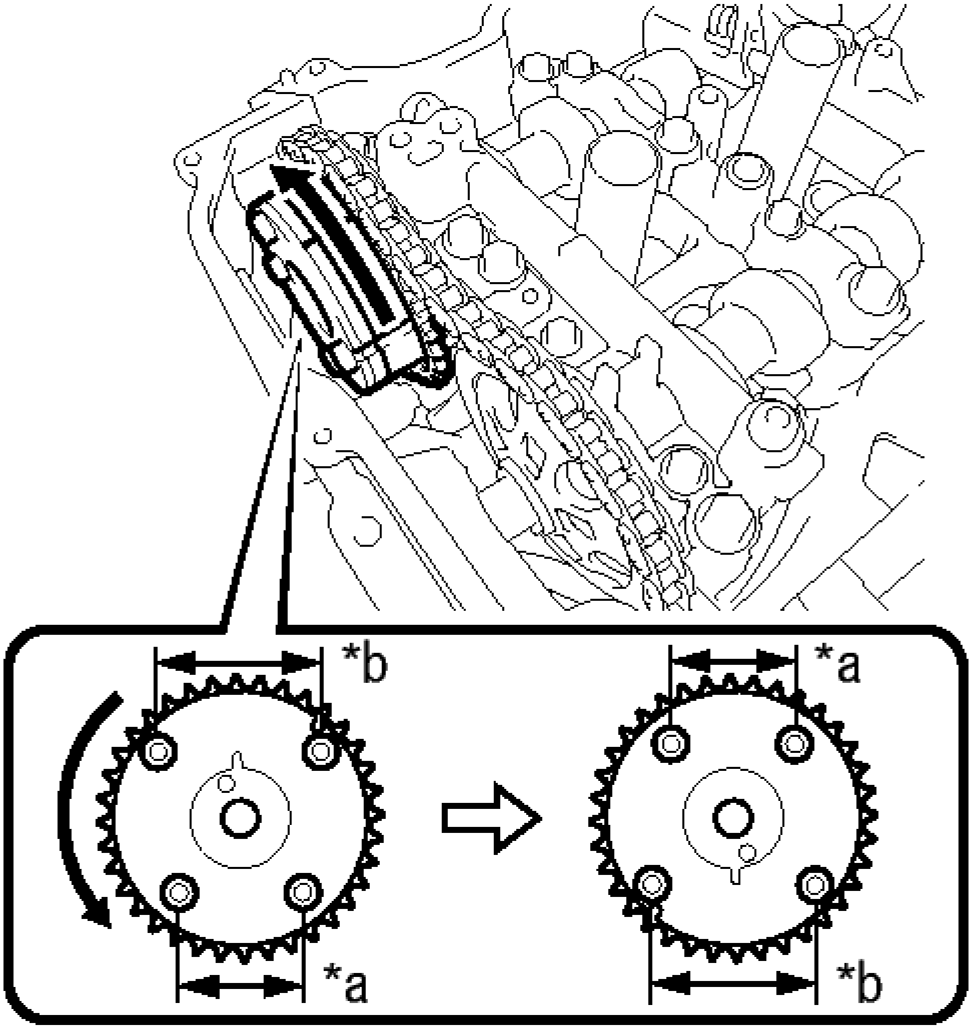

P

Fig. 22: Turning Timing Gear Assembly
Courtesy of TOYOTA MOTOR SALES, U.S.A., INC.

TEXT IN ILLUSTRATION

*a	Narrow
*b	Wide

d. Remove the camshaft timing gear assembly.

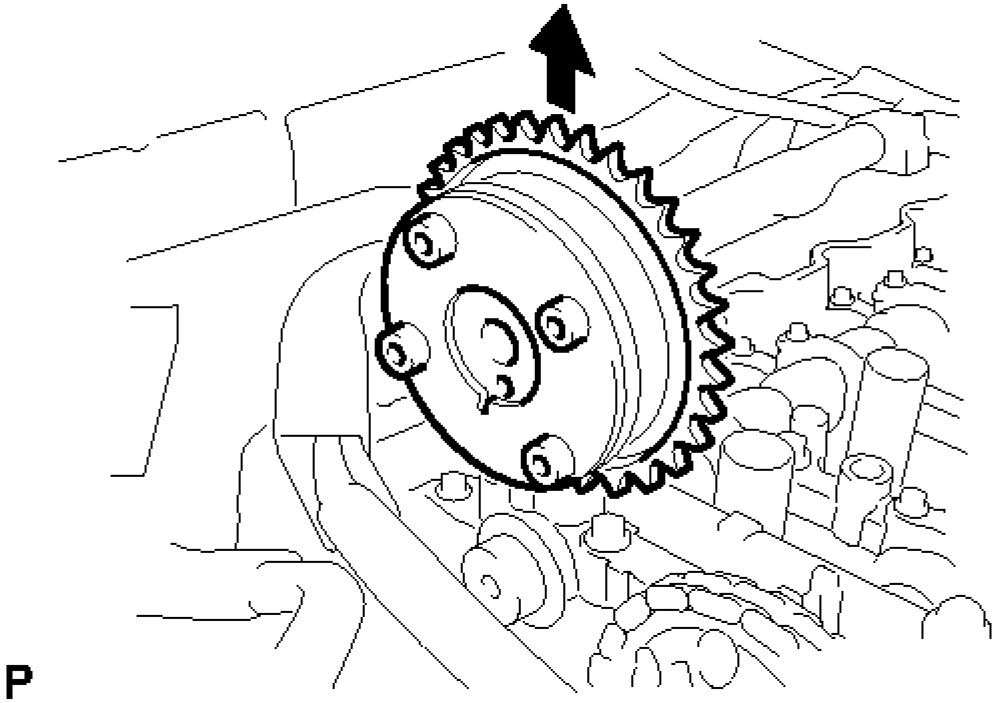

Fig. 23: Removing Camshaft Timing Gear Assembly
Courtesy of TOYOTA MOTOR SALES, U.S.A., INC.

NOTE: Do not disassemble the camshaft timing gear.

25. **REMOVE CAMSHAFT BEARING CAP**
    a. Using several steps, remove the 11 bearing cap bolts in the sequence shown in the illustration.

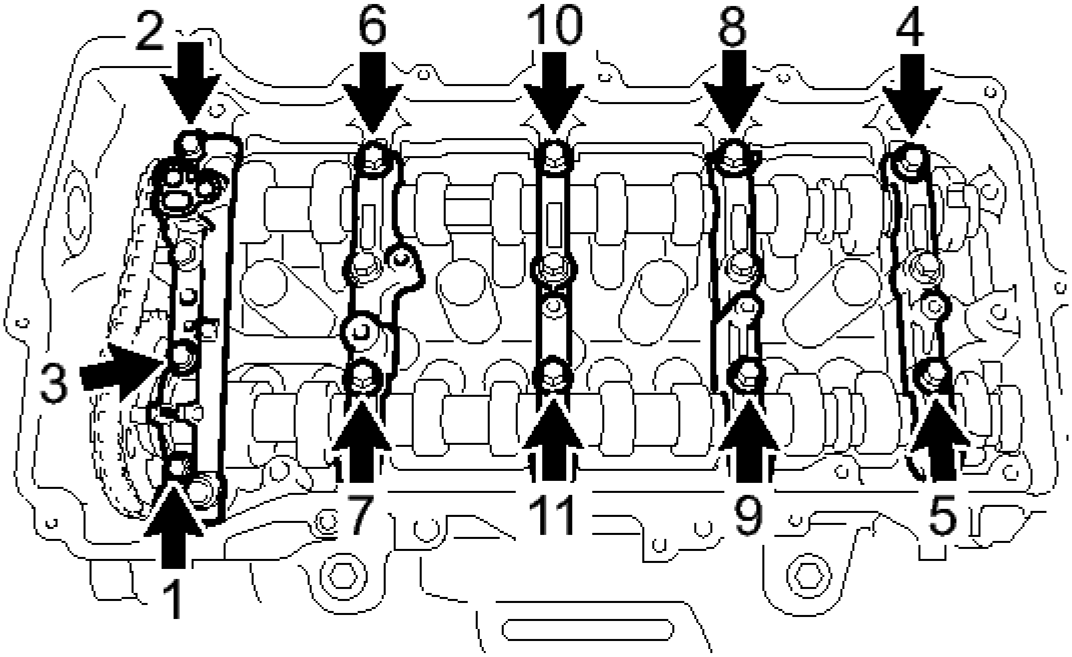

Fig. 24: Removing Camshaft Bearing Cap Bolts In Sequence
Courtesy of TOYOTA MOTOR SALES, U.S.A., INC.

b. Using several steps, remove the 10 bearing cap bolts in the sequence shown in the illustration.

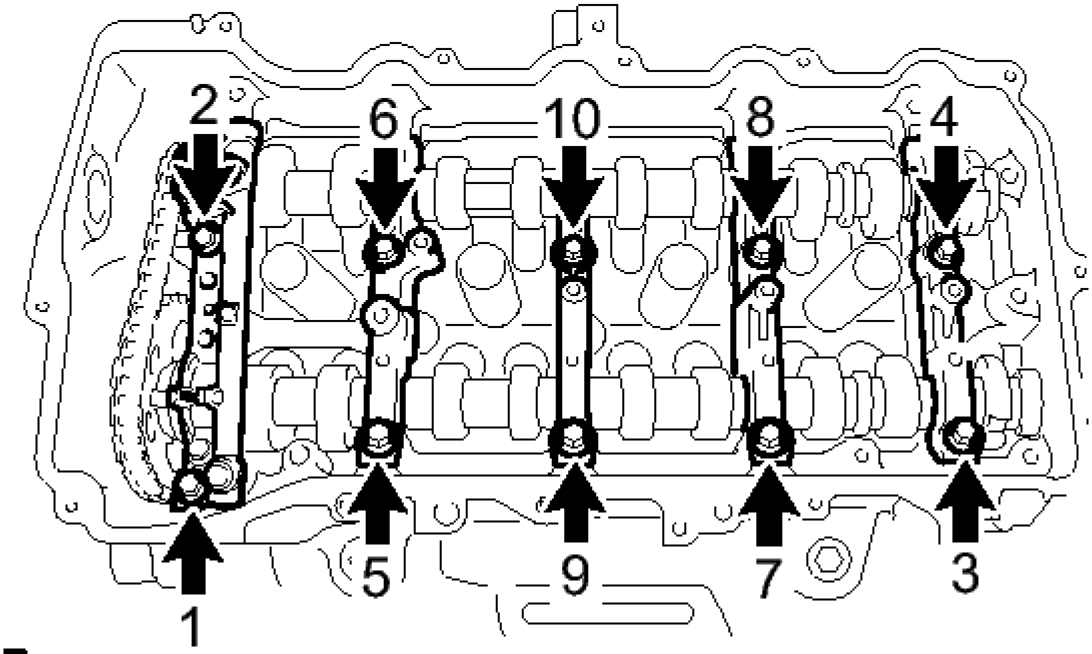

Fig. 25: Removing Camshaft Bearing Cap Bolts In Sequence
Courtesy of TOYOTA MOTOR SALES, U.S.A., INC.

c. Remove the 5 bearing caps.

HINT:

Arrange the removed parts in the correct order.

26. **REMOVE CAMSHAFT**
    a. Remove the camshaft from the camshaft housing.

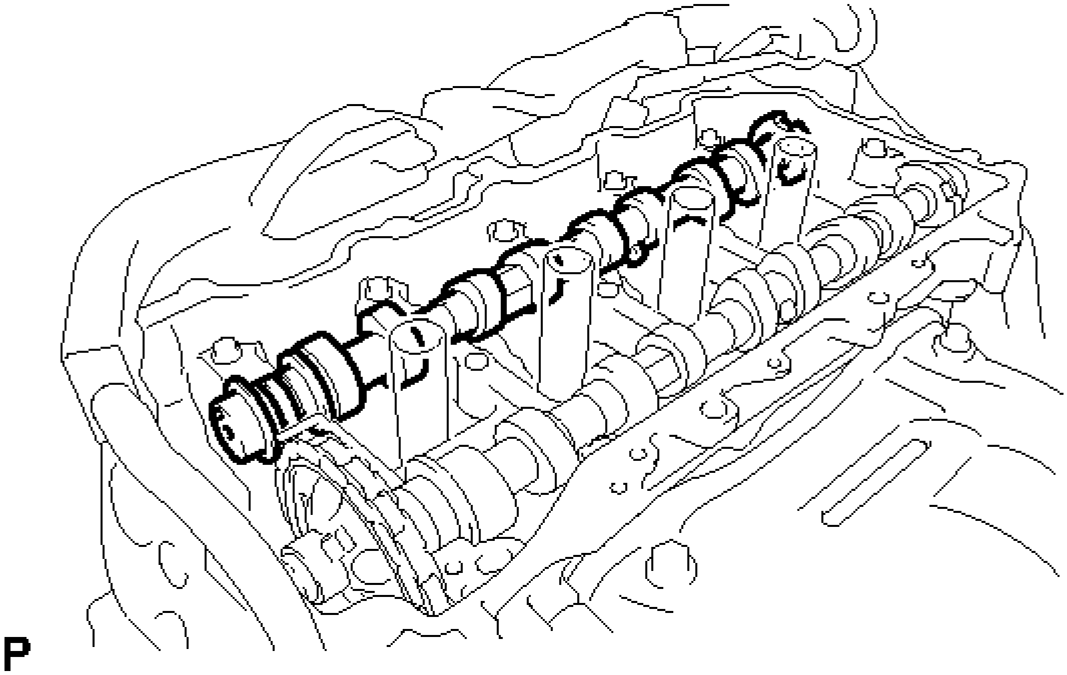

Fig. 26: Identifying Camshaft
Courtesy of TOYOTA MOTOR SALES, U.S.A., INC.

27. **REMOVE NO. 2 CAMSHAFT**
    a. Hold up the chain and remove the No. 2 camshaft from the camshaft housing.

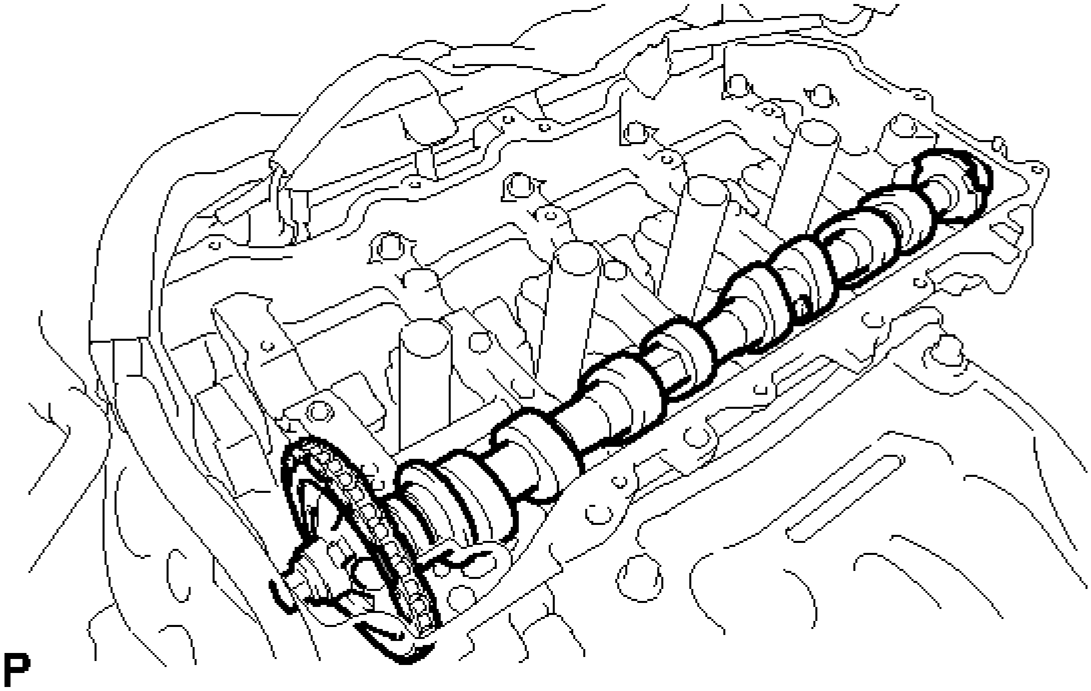

Fig. 27: Identifying No. 2 Camshaft
Courtesy of TOYOTA MOTOR SALES, U.S.A., INC.

b. Suspend the chain with a string or equivalent as shown in the illustration.

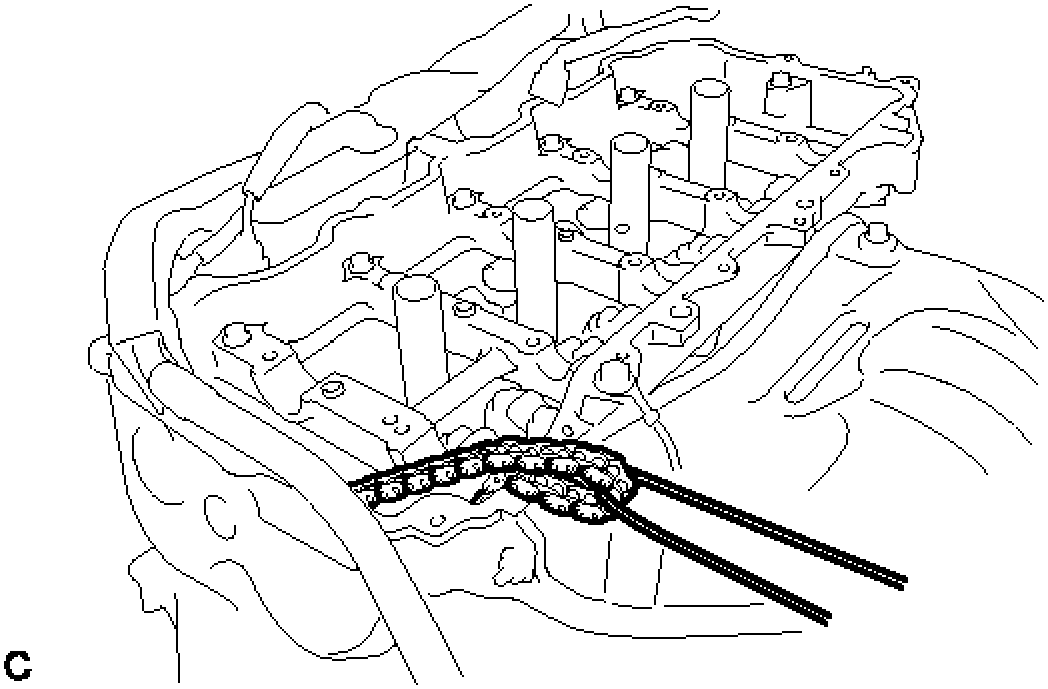

Fig. 28: Suspending Chain With A String Or Equivalent
Courtesy of TOYOTA MOTOR SALES, U.S.A., INC.

NOTE: Be careful not to drop the chain inside the timing chain cover.

28. **REMOVE CAMSHAFT TIMING SPROCKET**
    a. Secure the camshaft in a vice by clamping the hexagonal part using aluminum plates.

NOTE: Do not damage the camshaft by tightening the vice excessively.

    b. Remove the flange bolt and camshaft timing sprocket.

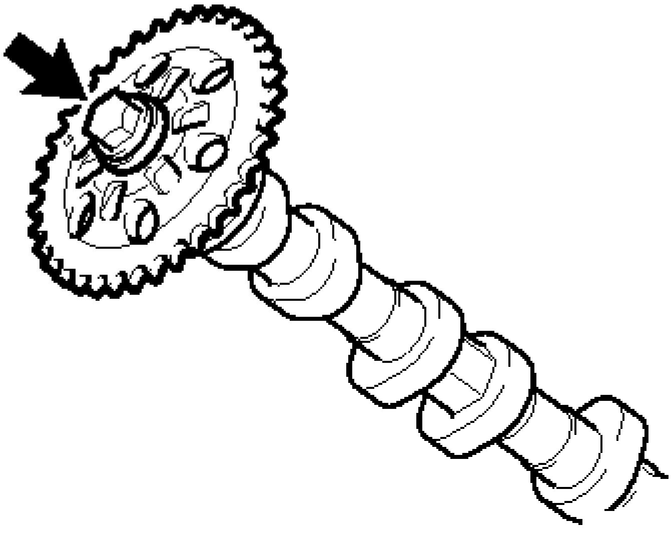

Fig. 29: Identifying Flange Bolt And Camshaft Timing Sprocket
Courtesy of TOYOTA MOTOR SALES, U.S.A., INC.

NOTE: Do not damage the No. 2 camshaft or camshaft timing sprocket.

29. **REMOVE OIL CONTROL VALVE FILTER** See step 34
30. **REMOVE NO. 1 CAMSHAFT BEARING** See step 36
31. **REMOVE NO. 2 CAMSHAFT BEARING** See step 37

INSTALLATION

INSTALLATION

HINT:

Perform "Inspection After Repair" after replacing the camshaft, No. 2 camshaft or camshaft timing gear assembly. Refer to **INITIALIZATION** .

1. **INSPECT CAMSHAFT TIMING GEAR ASSEMBLY** See step 6
2. **INSTALL NO. 2 CAMSHAFT BEARING** See step 18
3. **INSTALL NO. 1 CAMSHAFT BEARING** See step 17
4. **INSTALL OIL CONTROL VALVE FILTER** See step 19
5. **INSTALL CAMSHAFT TIMING SPROCKET**
    a. Secure the camshaft in a vice by clamping the hexagonal part using aluminum plates.

    NOTE: Do not damage the camshaft by tightening the vice excessively.

    b. Install the camshaft timing sprocket to the No. 2 camshaft with the bolt.

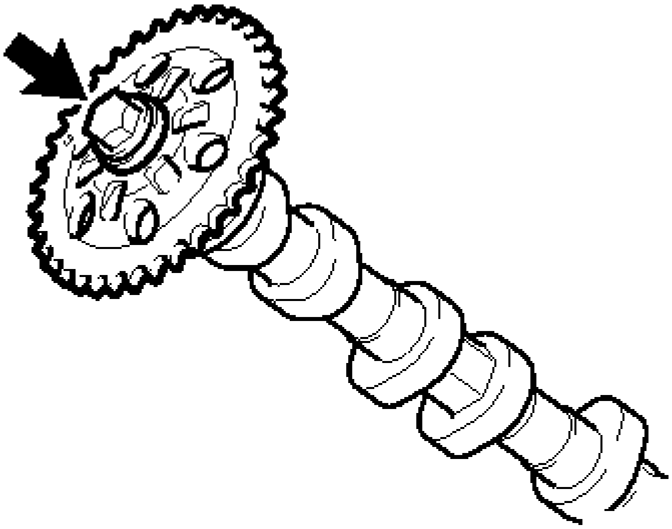

P

Fig. 30: Identifying Flange Bolt And Camshaft Timing Sprocket
Courtesy of TOYOTA MOTOR SALES, U.S.A., INC.

Torque: 85 N*m (867 kgf*cm, 63 ft.*lbf)

NOTE: Do not damage the No. 2 camshaft or camshaft timing sprocket.

6. **SET NO. 1 CYLINDER TO TDC/COMPRESSION**
    a. Turn the crankshaft pulley until its timing notch (groove) and the timing mark "0" of the timing chain cover are aligned.

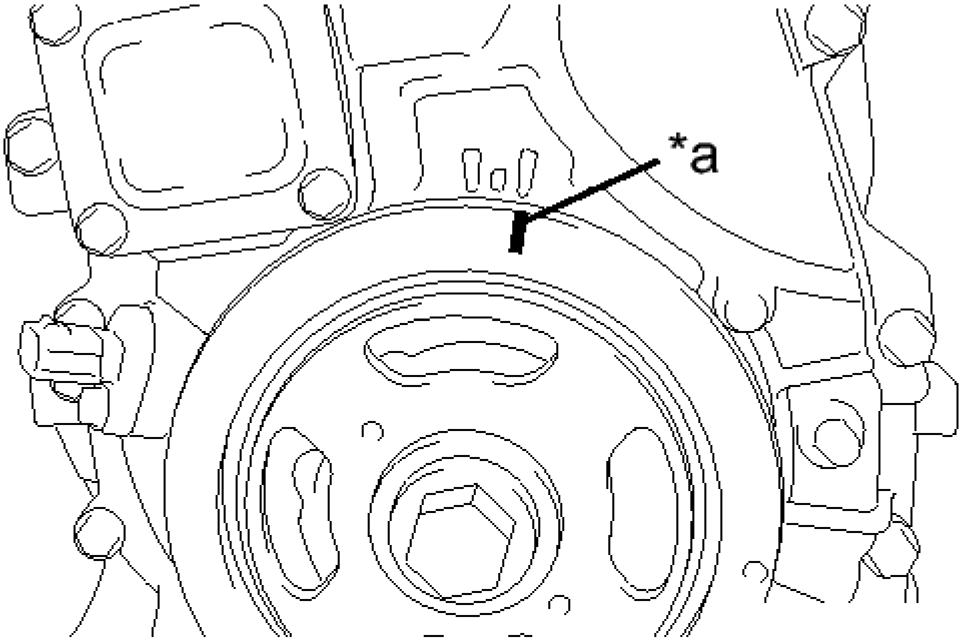

Fig. 31: Setting No. 1 Cylinder To TDC/Compression
Courtesy of TOYOTA MOTOR SALES, U.S.A., INC.

TEXT IN ILLUSTRATION

*a	Timing Notch

7. **INSTALL NO. 2 CAMSHAFT**
    a. Make sure that the valve rocker arms are installed as shown in the illustration.

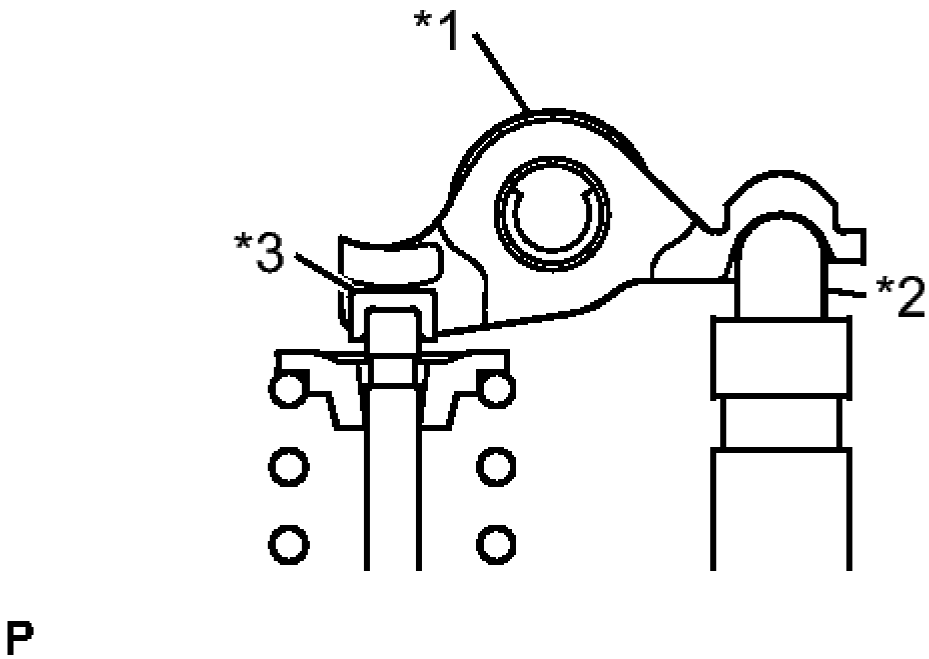

Fig. 32: Identifying Valve Rocker Arms
Courtesy of TOYOTA MOTOR SALES, U.S.A., INC.

TEXT IN ILLUSTRATION

*1	Valve Rocker Arm
*2	Valve Lash Adjuster
*3	Valve Stem Cap

b. Clean the camshaft journals.
c. Apply a light coat of engine oil to the camshaft journals, camshaft housings and bearing caps.
d. Hold up the chain and align the timing mark and the paint mark, and install the No. 2 camshaft.

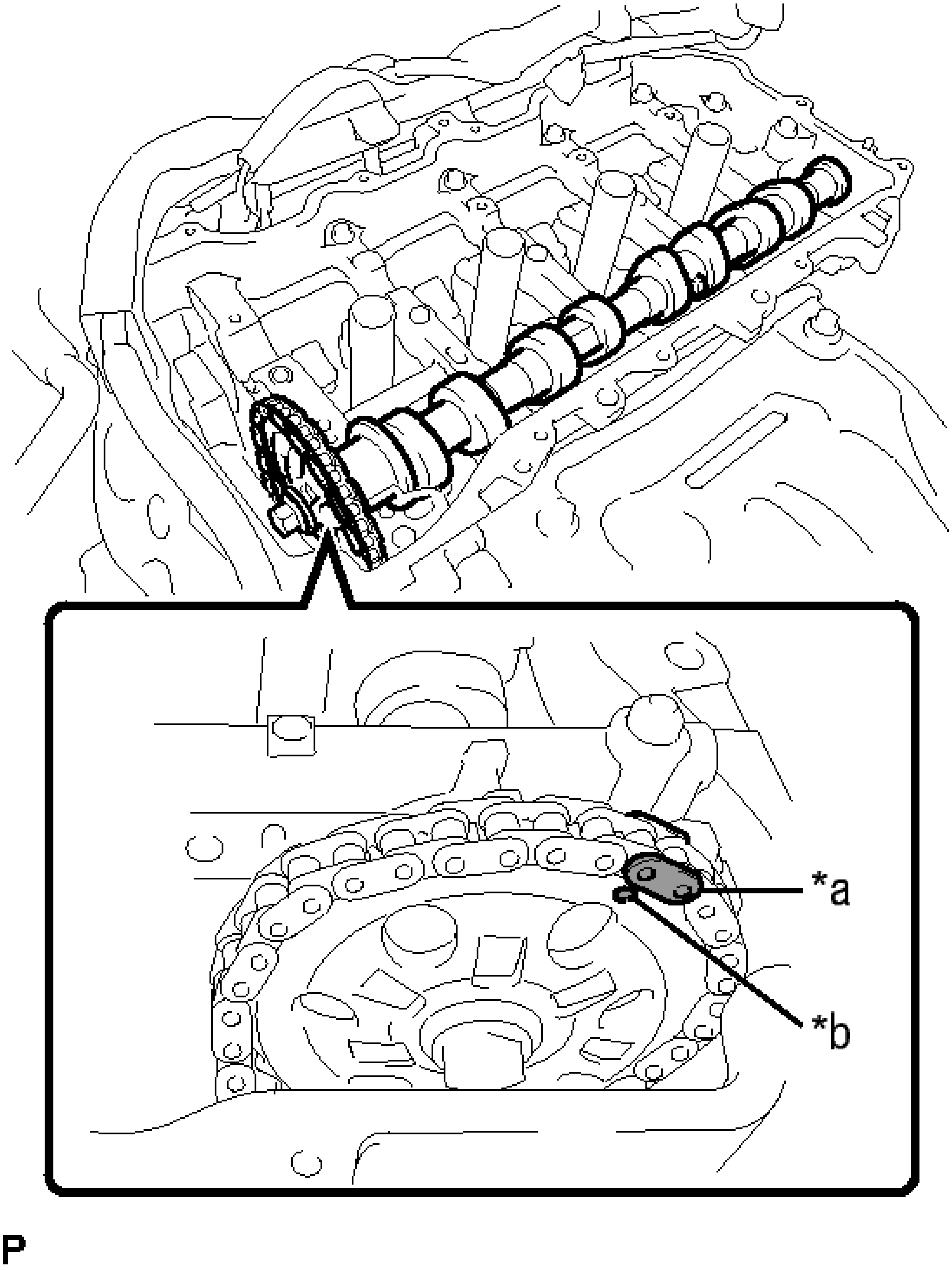

Fig. 33: Identifying Paint Mark And Timing Mark
Courtesy of TOYOTA MOTOR SALES, U.S.A., INC.

TEXT IN ILLUSTRATION

	Paint

*a	Mark
*b	Timing mark

HINT:

Perform "Inspection After Repair" after replacing the No. 2 camshaft. Refer to **INITIALIZATION** .

8. **INSTALL CAMSHAFT**
   a. Make sure that the valve rocker arms are installed as shown in the illustration.

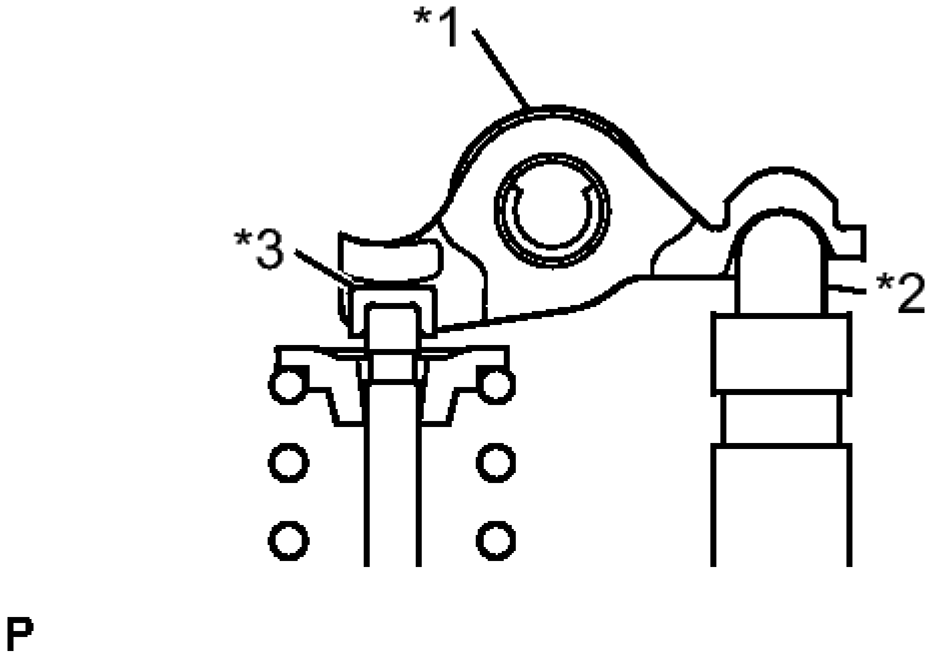

Fig. 34: Identifying Valve Rocker Arms
Courtesy of TOYOTA MOTOR SALES, U.S.A., INC.

TEXT IN ILLUSTRATION

*1	Valve Rocker Arm
*2	Valve Lash Adjuster
*3	Valve Stem Cap

b. Clean the camshaft journals.
c. Apply a light coat of engine oil to the camshaft journals, camshaft housings and bearing caps.
d. Install the camshaft to the camshaft housing as shown in the illustration.

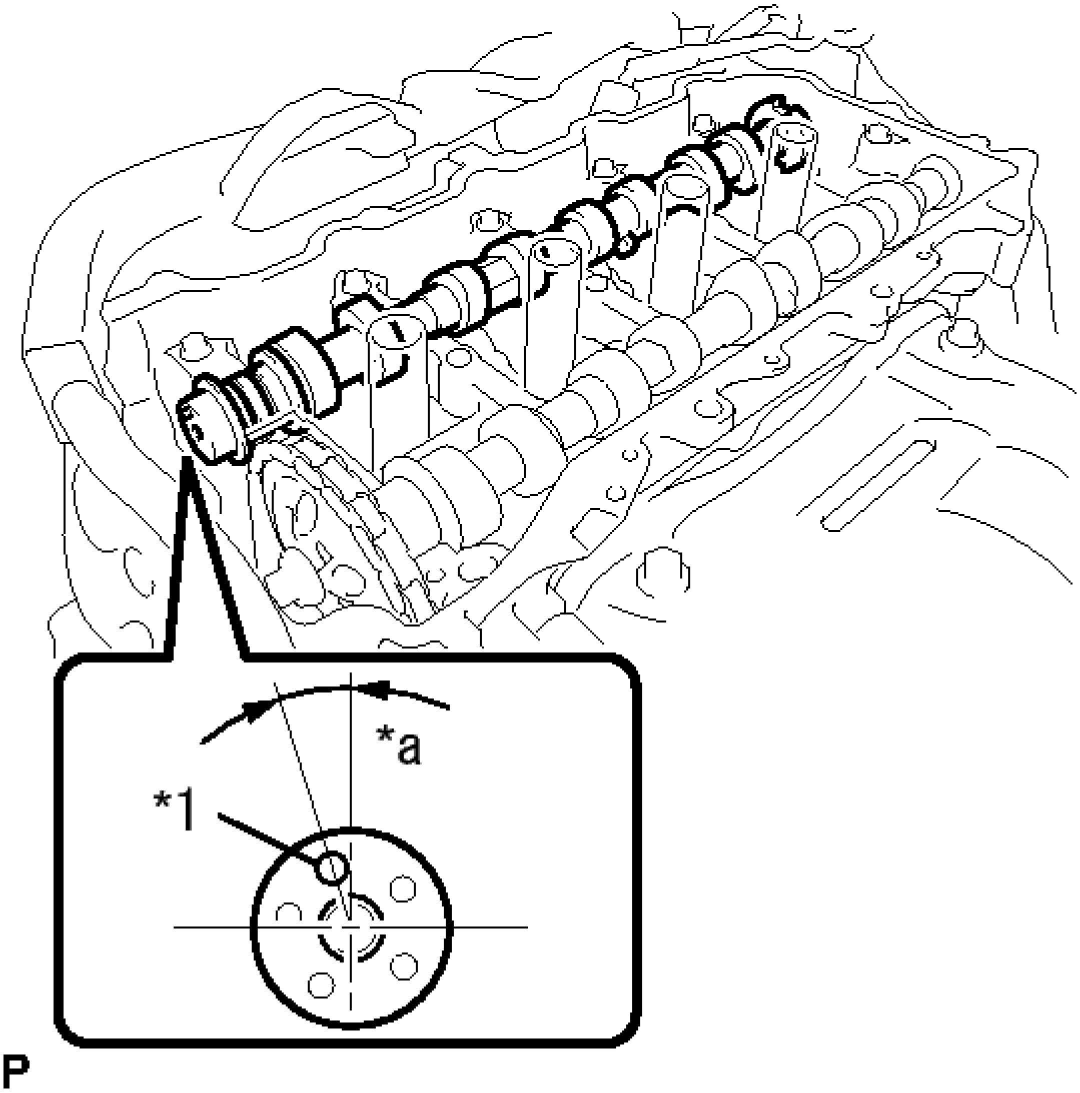

Fig. 35: Installing Camshaft To Camshaft Housing
Courtesy of TOYOTA MOTOR SALES, U.S.A., INC.

TEXT IN ILLUSTRATION

*1	Knock Pin
*a	Approximately 17°

HINT:

Perform "Inspection After Repair" after replacing the camshaft. Refer to **INITIALIZATION** .

9. **INSTALL CAMSHAFT BEARING CAP**

a. Confirm the marks and numbers on the camshaft bearing caps and place them in their proper positions and directions.

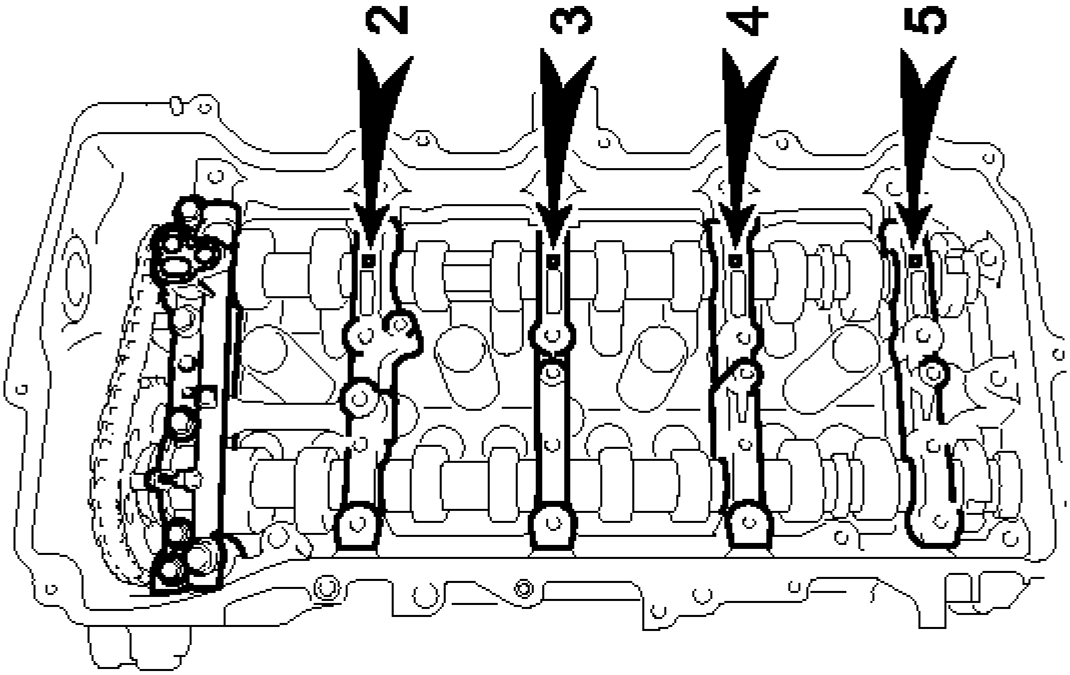

Fig. 36: Identifying Camshaft Bearing Cap Marks And Numbers
Courtesy of TOYOTA MOTOR SALES, U.S.A., INC.

b. Using several steps, uniformly tighten the 10 bolts in the sequence shown in the illustration.

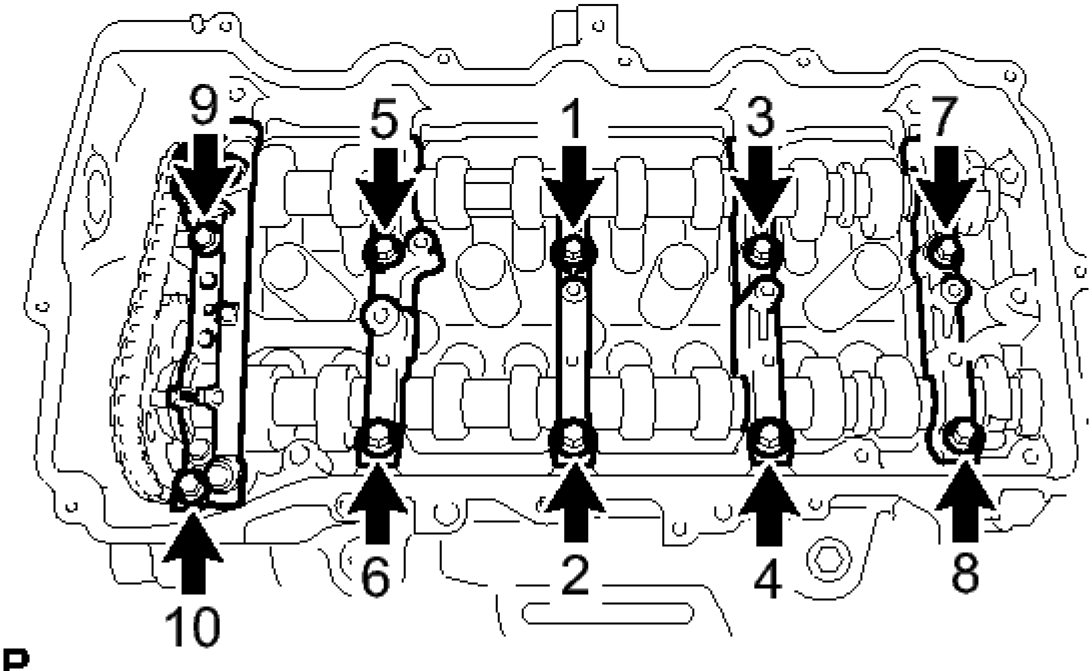
9
5
1
3
7
6
2
4
8
10

P

Fig. 37: Tightening Camshaft Bearing Cap In Sequence
Courtesy of TOYOTA MOTOR SALES, U.S.A., INC.

Torque: 27 N*m (275 kgf*cm, 20 ft.*lbf)

c. Using several steps, uniformly tighten the 11 bolts in the sequence shown in the illustration.

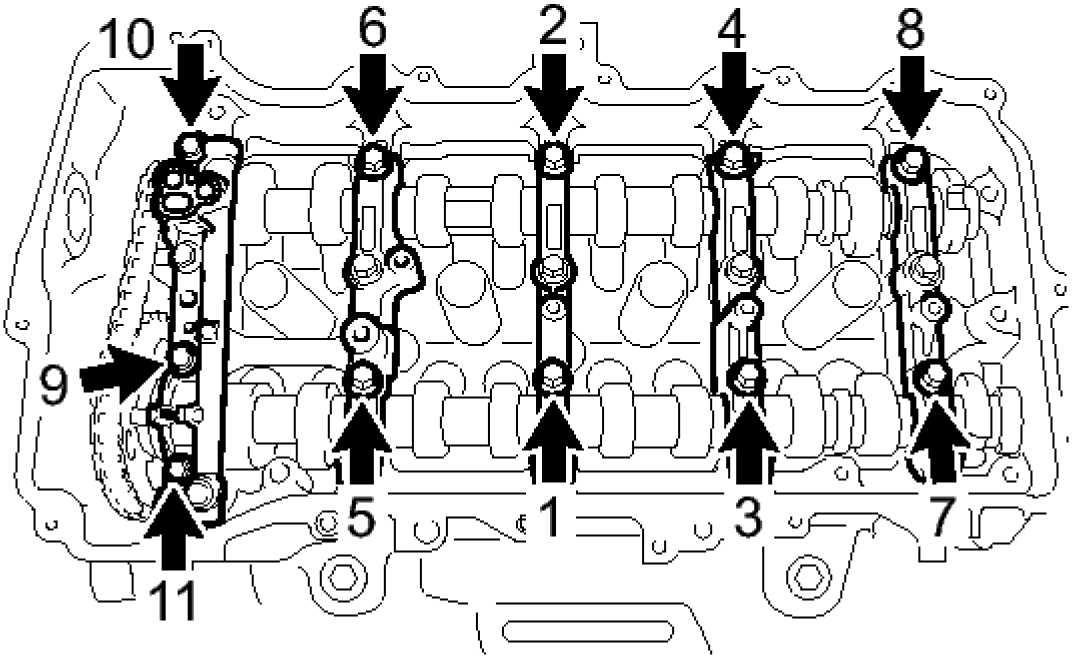
10
6
2
4
8
9
5
1
3
7
11

P

Fig. 38: Tightening Camshaft Bearing Cap In Sequence
Courtesy of TOYOTA MOTOR SALES, U.S.A., INC.

Torque: 16 N*m (163 kgf*cm, 12 ft.*lbf)

d. Check the torque of each bolt again.

10. **INSTALL CAMSHAFT TIMING GEAR ASSEMBLY**

a. Check the camshaft timing gear position.

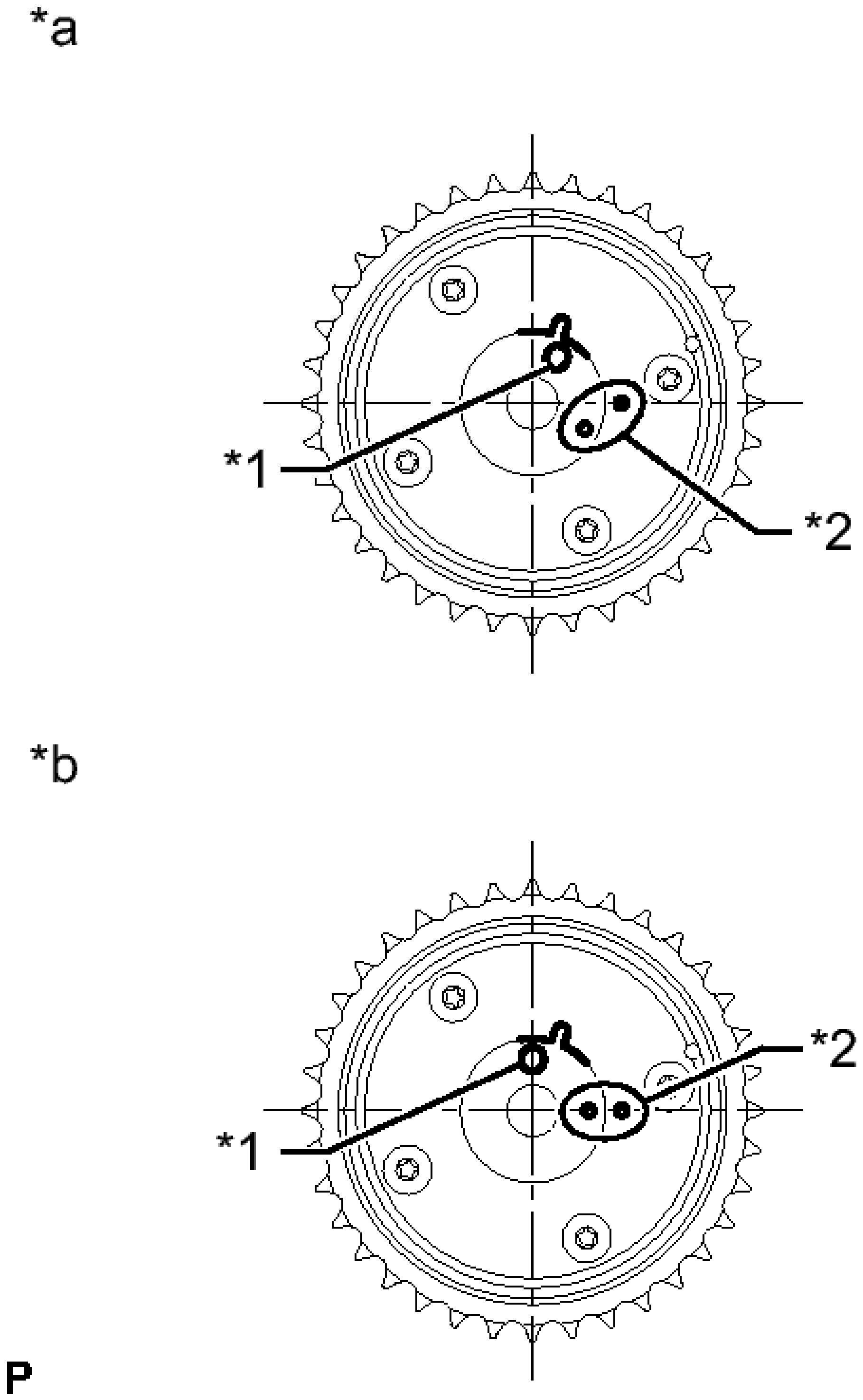

Fig. 39: Identifying Camshaft Timing Gear Position
Courtesy of TOYOTA MOTOR SALES, U.S.A., INC.

TEXT IN ILLUSTRATION

	Knock Pin

*1	Hole
*2	Alignment Mark
*a	Advanced Position
*b	Retarded Position

NOTE:

- **If the camshaft timing gear is set to the advanced position, do not let the camshaft timing gear rotate clockwise during installation.**
- **If the camshaft timing gear has rotated to the most retarded position, make sure to release the lock pin and set the camshaft timing gear to the most advanced position before tightening the camshaft timing gear.**

b. Install the camshaft timing gear as shown in the illustration.

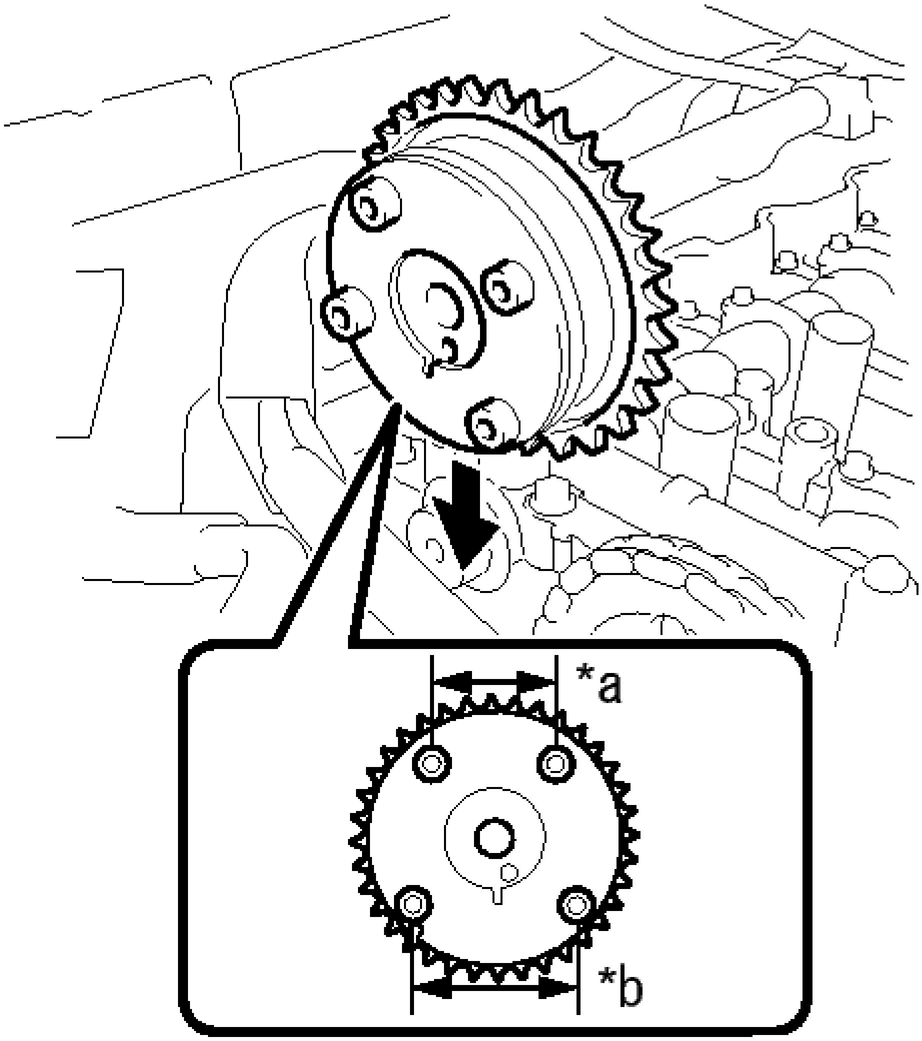

P

Fig. 40: Installing Camshaft Timing Gear
Courtesy of TOYOTA MOTOR SALES, U.S.A., INC.

TEXT IN ILLUSTRATION

*a	Narrow
*b	Wide

c. Turn the camshaft timing gear approximately 180° counterclockwise.

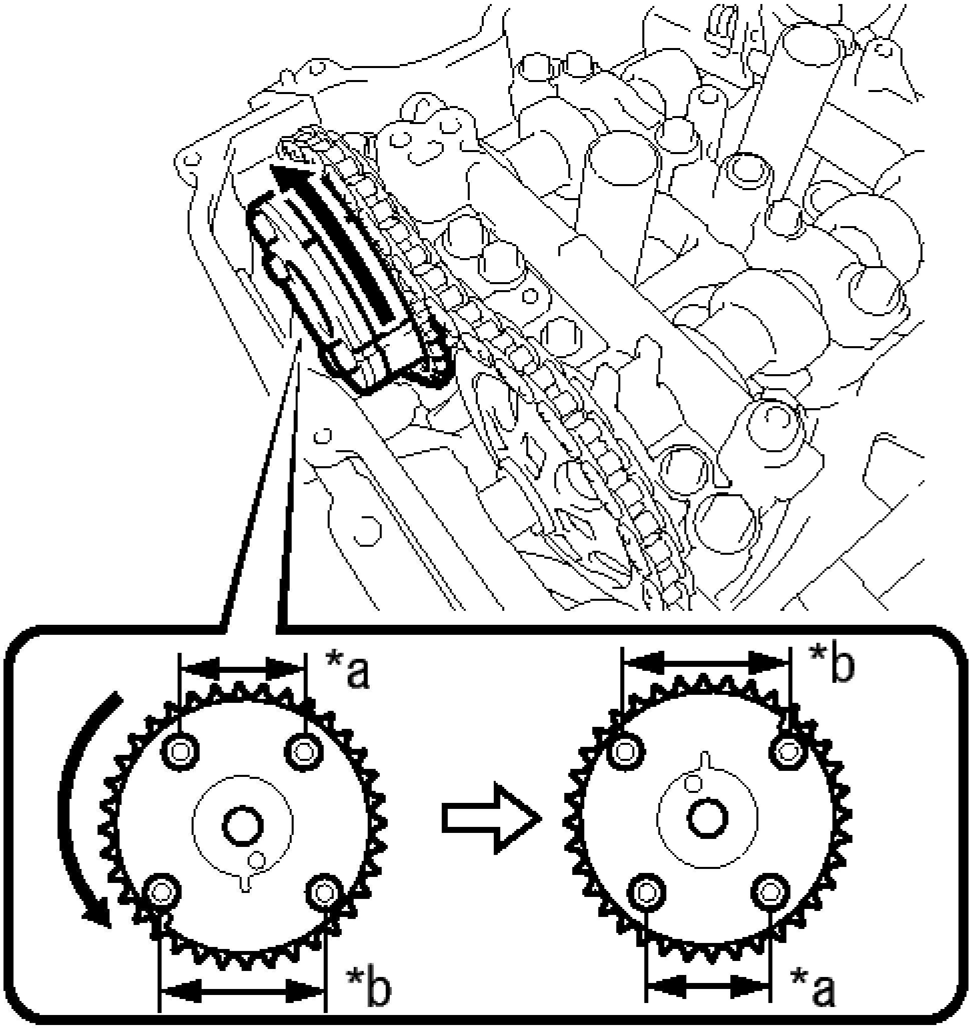

Fig. 41: Turning Camshaft Timing Gear
Courtesy of TOYOTA MOTOR SALES, U.S.A., INC.

TEXT IN ILLUSTRATION

*a	Narrow
*b	Wide

d. Align the paint mark with the timing mark to install the chain.

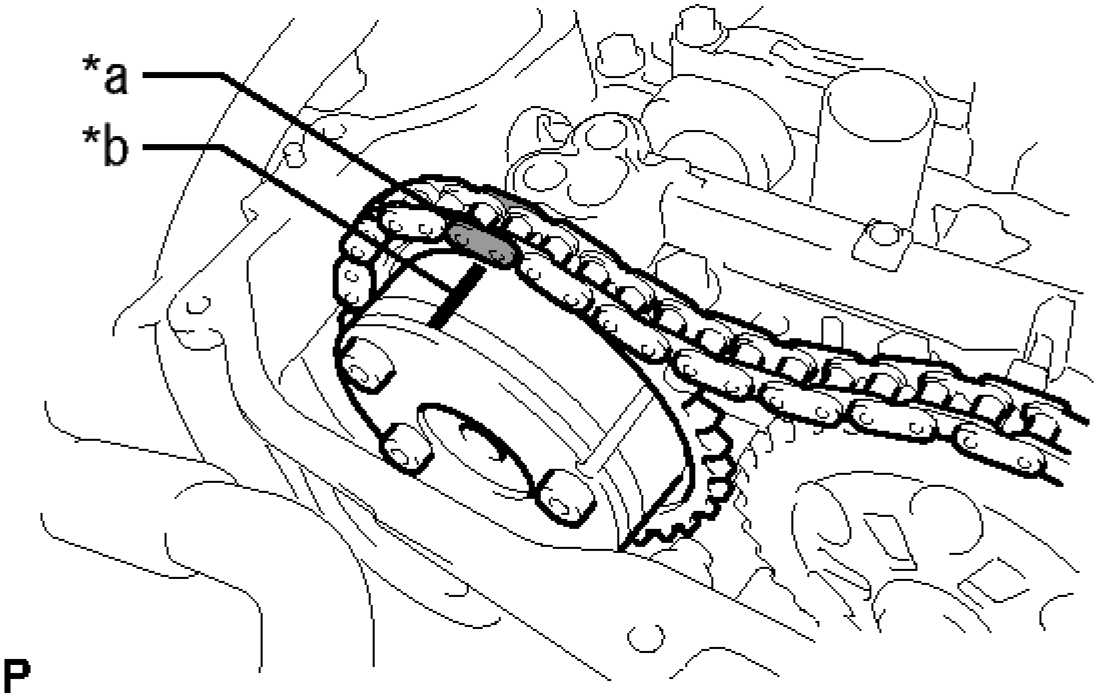

Fig. 42: Aligning Paint Mark And Timing Mark To Chain
Courtesy of TOYOTA MOTOR SALES, U.S.A., INC.

TEXT IN ILLUSTRATION

*a	Paint Mark
*b	Timing mark

e. Align and attach the knock pin of the camshaft with the pin hole of the camshaft timing gear.

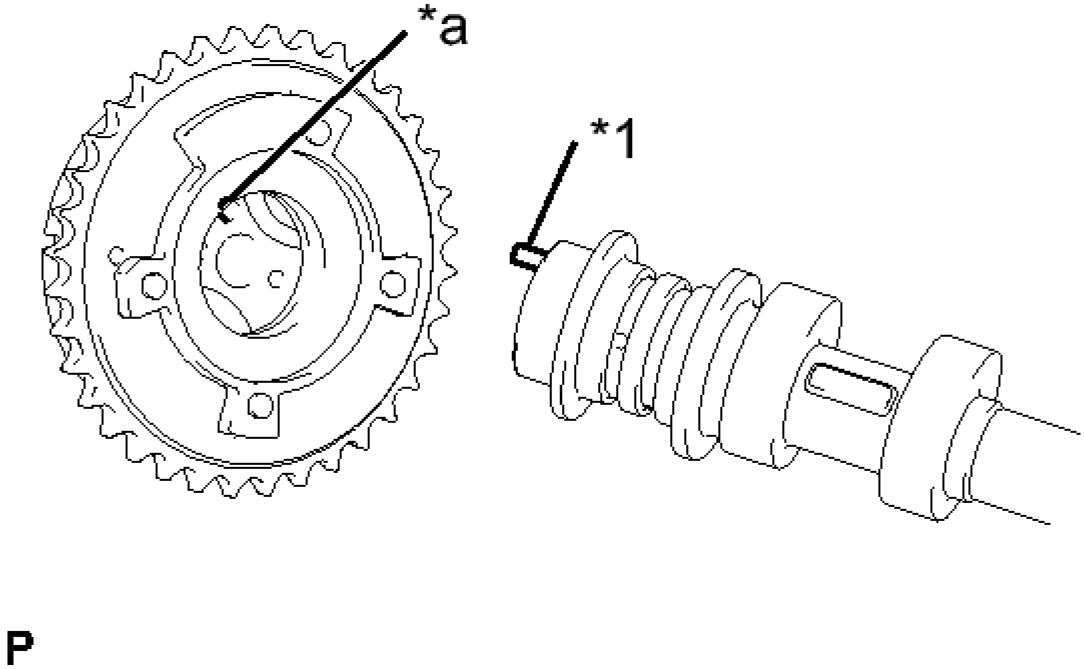

Fig. 43: Identifying No. 1 Camshaft Knock Pin & Camshaft Timing Gear Knock Pin Hole
Courtesy of TOYOTA MOTOR SALES, U.S.A., INC.

TEXT IN ILLUSTRATION

*1	Knock Pin
*a	Knock Pin Hole

f. Check that there is no clearance between the camshaft timing gear and camshaft flange.

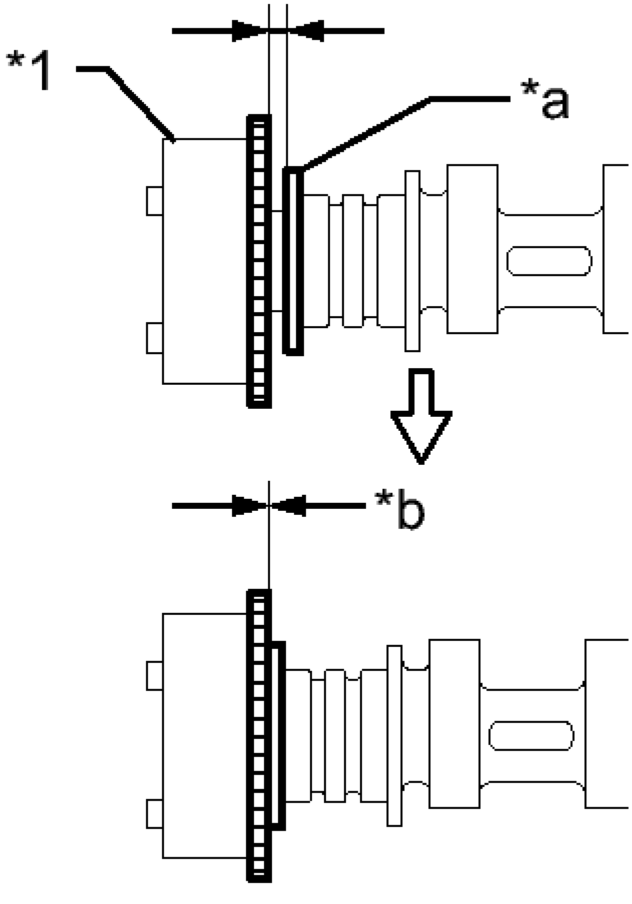

Fig. 44: Identifying No Clearance Between Camshaft Timing Gear And Camshaft Flange
Courtesy of TOYOTA MOTOR SALES, U.S.A., INC.

TEXT IN ILLUSTRATION

*1	Camshaft Timing Gear
*a	Camshaft Flange
*b	No Clearance

g. Secure the camshaft in place by hand, and then install the installation bolt of the camshaft timing gear by hand.

NOTE: **Do not use any tools to install the bolt. If the bolt is installed using a tool, the lock pin will be damaged.**

h. If the lock pin has not been released, release it.

1. After cleaning and degreasing the intake side VVT oil hole on the No. 1 camshaft bearing cap, completely seal the oil hole with adhesive tape or equivalent as shown in the illustration to prevent air from leaking.

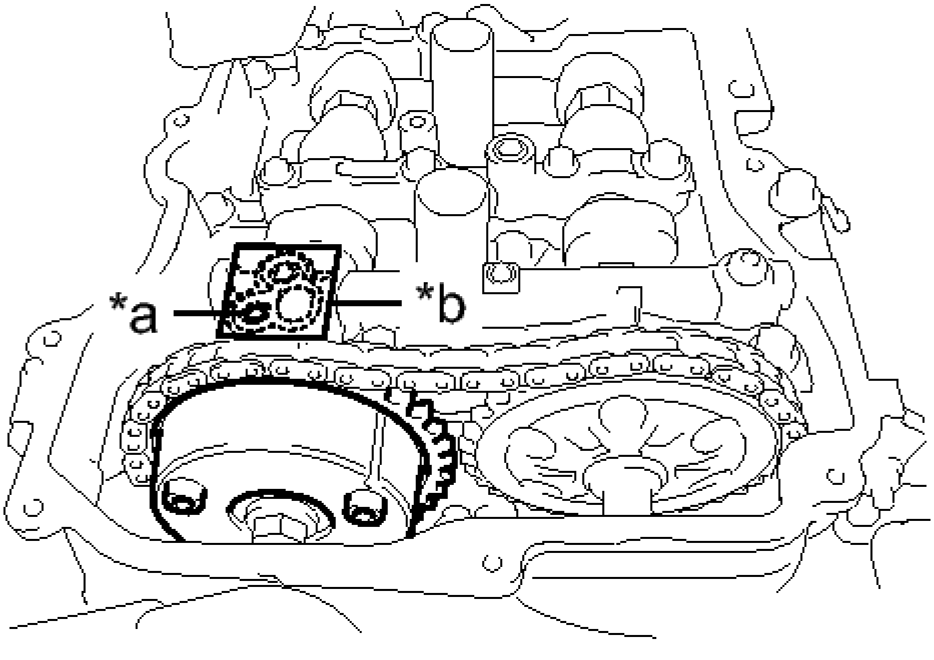

Fig. 45: Identifying Seal On Oil Hole With Adhesive Tape
Courtesy of TOYOTA MOTOR SALES, U.S.A., INC.

TEXT IN ILLUSTRATION

*1	Adhesive Tape Sealing Area
*a	Make a Hole

NOTE: **Be sure to seal the oil hole completely because air leaks due to insufficient sealing will prevent the lock pin from being released.**

2. Make a hole in the adhesive tape covering the oil hole as shown in the illustration. (Procedure A)
3. Apply approximately 200 kPa (2.0 kgf/ cm^2 , 29 psi) of air pressure to the hole made in

procedure A to release the lock pin.

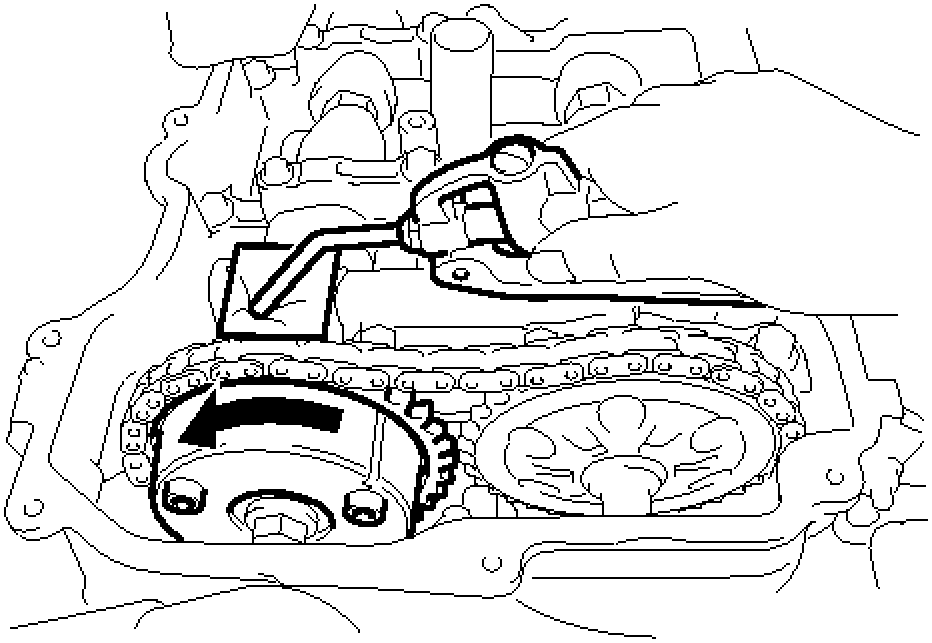

P

Fig. 46: Making Hole In Adhesive Tape Covering Oil Hole
Courtesy of TOYOTA MOTOR SALES, U.S.A., INC.

NOTE:

- **If air leaks out, reattach the adhesive tape.**
- **Cover the oil hole with a piece of cloth when applying air pressure to prevent oil from spraying.**

4. Forcibly turn the camshaft timing gear in the advance direction (counterclockwise).

   HINT:

   Depending on the air pressure applied, the camshaft timing gear may turn in the advance direction without assistance by hand.

5. Remove the adhesive tape from the No. 1 camshaft bearing cap.

i. Using a wrench to hold the hexagonal portion of the camshaft, install the bolt.

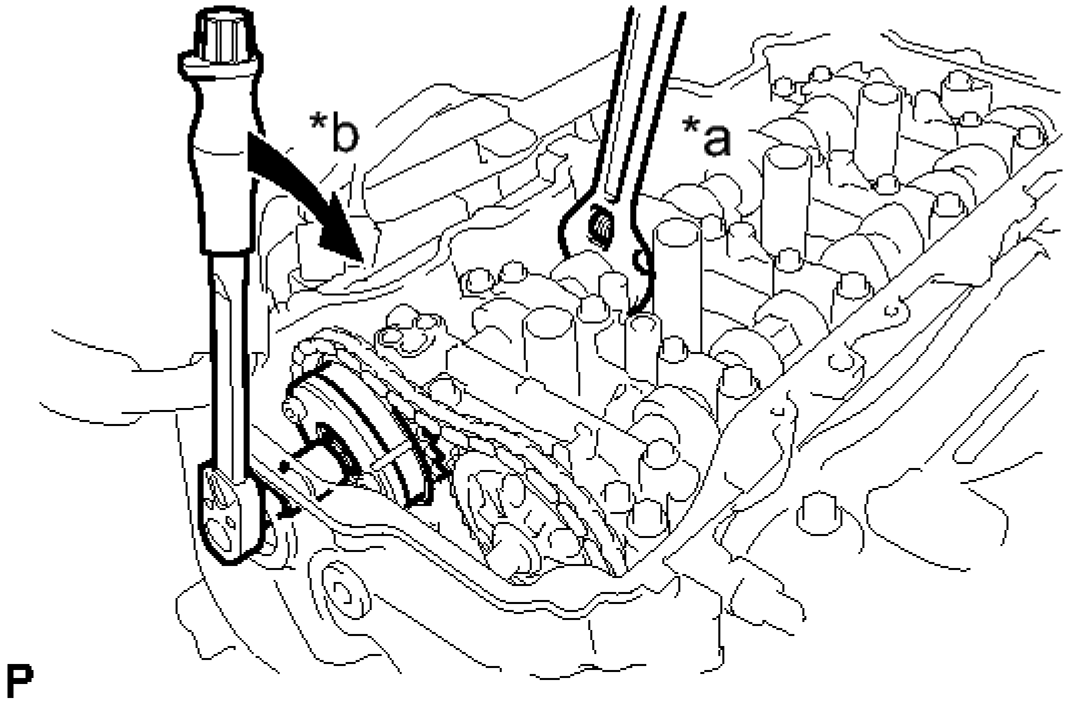

Fig. 47: Removing/Installing Camshaft Bolt Using Hexagonal And Turning
Courtesy of TOYOTA MOTOR SALES, U.S.A., INC.

TEXT IN ILLUSTRATION

*a	Hold
*b	Turn

Torque: 85 N*m (867 kgf*cm, 63 ft.*lbf)

NOTE: **Be careful not to damage the cylinder head or spark plug tube with the wrench.**

j. Check that each timing mark of the camshaft timing gear and camshaft timing sprocket are aligned with each timing mark located as shown in the illustration.

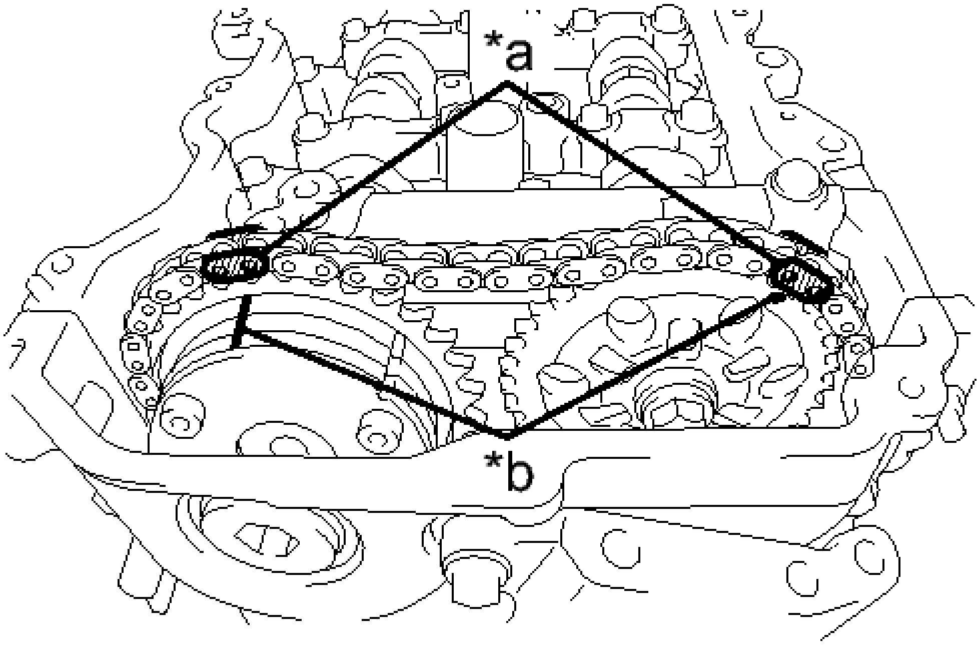

Fig. 48: Aligning Paint Mark And Timing Mark With Camshaft Timing Gear And Camshaft Timing Sprocket
Courtesy of TOYOTA MOTOR SALES, U.S.A., INC.

TEXT IN ILLUSTRATION

*a	Paint Mark
*b	Timing Mark

HINT:

Perform "Inspection After Repair" after replacing the camshaft timing gear assembly. Refer to **INITIALIZATION** .

11. **ADD ENGINE OIL** See step 17
12. **INSTALL TIMING CHAIN GUIDE** See step 23
13. **INSTALL NO. 1 CHAIN TENSIONER ASSEMBLY**
    a. Turn the crankshaft approximately 10° clockwise.

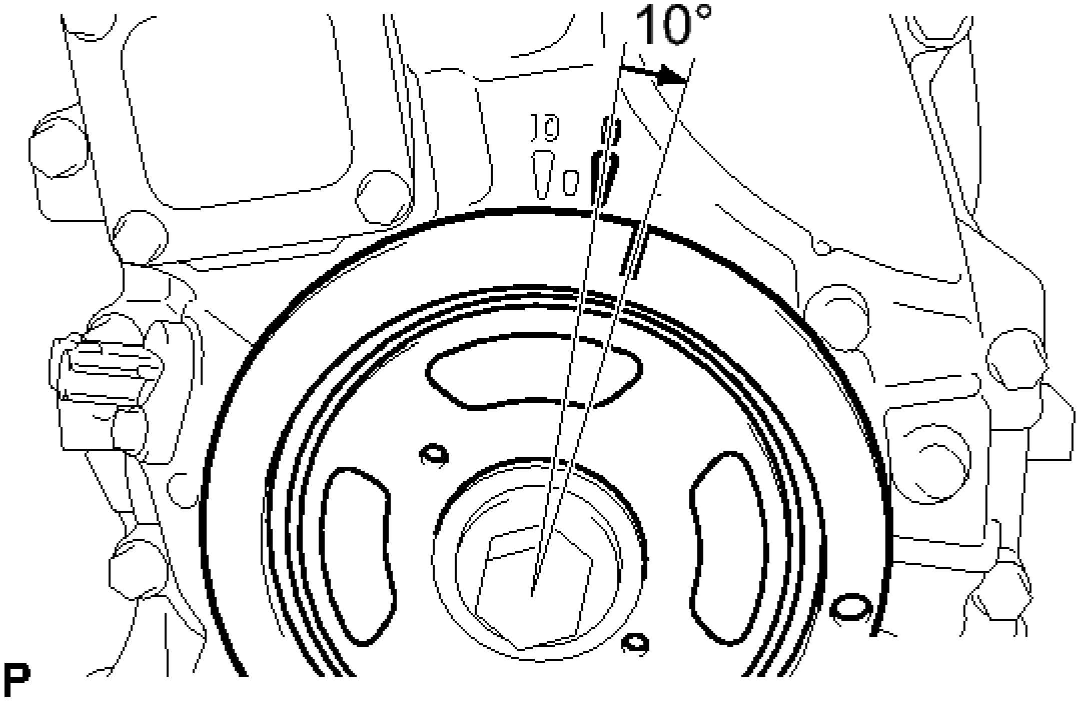

Fig. 49: Turning Crankshaft Approximately 10° Clockwise
Courtesy of TOYOTA MOTOR SALES, U.S.A., INC.

b. Install a new gasket and the No. 1 chain tensioner assembly with the 2 bolts.

Torque: 10 N*m (102 kgf*cm, 7 ft.*lbf)

NOTE: Make sure not to drop the gasket inside the timing chain cover.

c. Remove the pin from the stopper plate.

14. **SET NO. 1 CYLINDER TO TDC/COMPRESSION**

a. Turn the crankshaft pulley until its timing notch (groove) and the timing mark "0" of the timing chain cover are aligned.

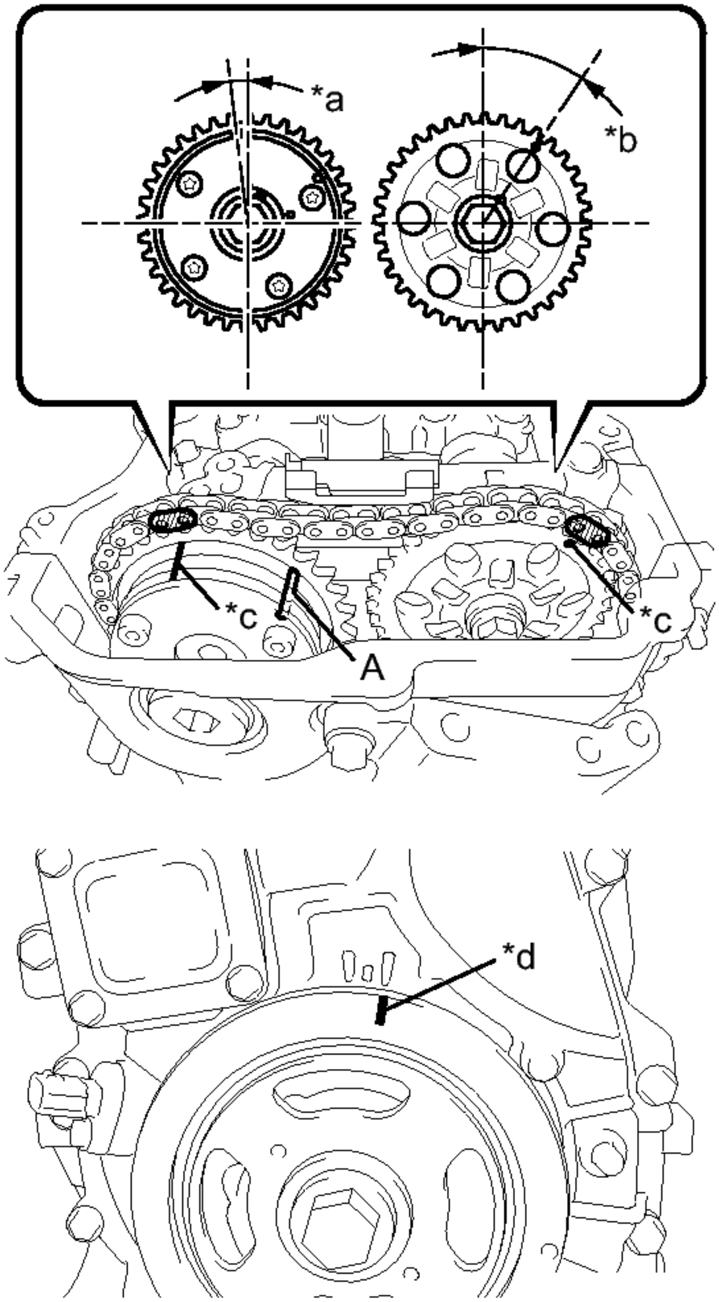

Fig. 50: Setting No. 1 Cylinder To TDC/Compression
Courtesy of TOYOTA MOTOR SALES, U.S.A., INC.

TEXT IN ILLUSTRATION

*a	Approximately 7°
*b	Approximately 32°
*c	Timing Mark
*d	Timing Notch

b. Check that the timing marks of the camshaft timing gears are as shown in the illustration. If not, turn the crankshaft 1 revolution (360°) to align the timing marks as shown in the illustration.

HINT:

"A" is not a timing mark.

15. **INSTALL TIMING CHAIN COVER PLATE**
    a. Install a new gasket and the timing chain cover plate with the 4 bolts.

    Torque: 10 N*m (102 kgf*cm, 7 ft.*lbf)

16. **INSTALL OIL PUMP RELIEF VALVE PLUG** See step 38
17. **INSTALL CYLINDER HEAD COVER SUB-ASSEMBLY** See step 44
18. **INSTALL IGNITION COIL ASSEMBLY** . Refer to **INSTALLATION - Step 2**
19. **CONNECT ENGINE WIRE**
    a. Install the engine wire to the engine with the 5 bolts and 3 nuts.

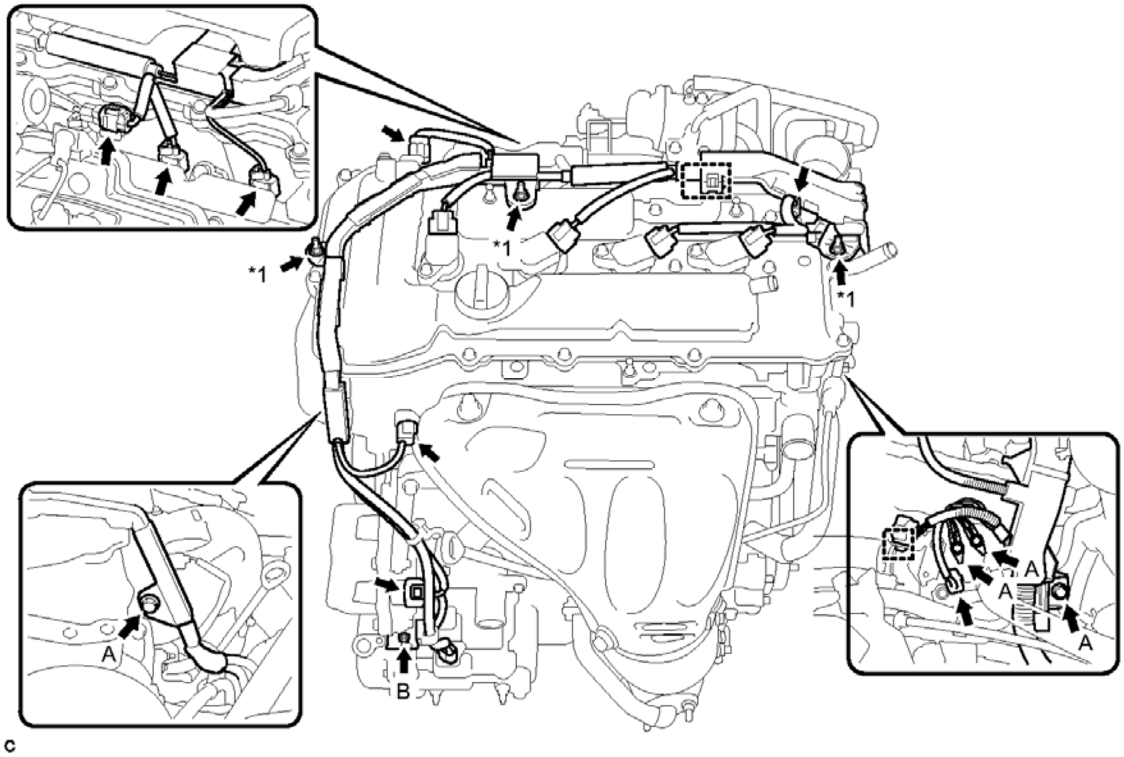

Fig. 51: Identifying Engine Wire, Engine, Bolts And Nuts
Courtesy of TOYOTA MOTOR SALES, U.S.A., INC.

TEXT IN ILLUSTRATION

*1	Nut	-	-

Bolt A

Torque: 8.0 N*m (82 kgf*cm, 71 in.*lbf)

Bolt B

Torque: 10.0 N*m (102 kgf*cm, 7 ft.*lbf)

Nut

Torque: 8.0 N*m (82 kgf*cm, 71 in.*lbf)

b. Connect the 8 connectors and 2 harness clamps.

20. **INSTALL NO. 2 ENGINE ROOM RELAY BLOCK (for LHD)**
    a. Install the No. 2 engine room relay block with the bolt and harness clamp.

    Torque: 8.0 N*m (82 kgf*cm, 71 in.*lbf)

    b. Install the front fender liner RH with the screw.

21. **INSTALL INVERTER RESERVE TANK ASSEMBLY (for LHD)**
    1. Temporarily install the inverter reserve tank assembly with the 2 bolts.

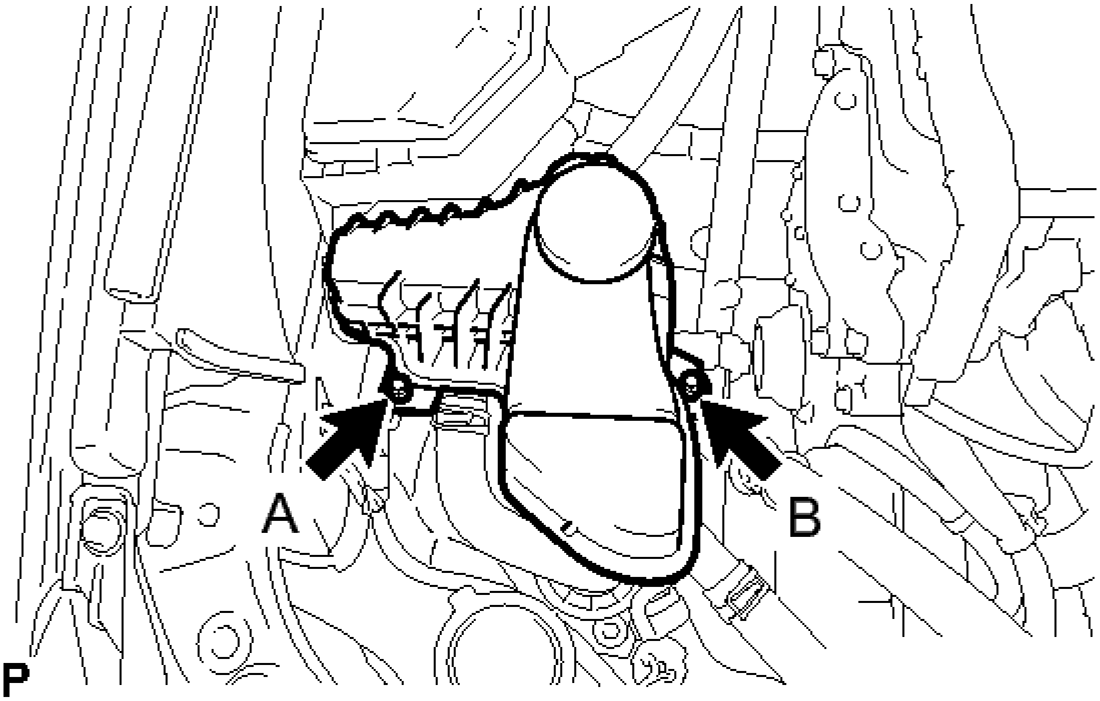

Fig. 52: Identifying Inverter Reserve Tank Assembly Bolts (For LHD)
Courtesy of TOYOTA MOTOR SALES, U.S.A., INC.

    2. Tighten the 2 bolts to the inverter reserve tank assembly in the order the bolt A and bolt B.

       Torque: 10 N*m (102 kgf*cm, 7 ft.*lbf)

22. **INSTALL ENGINE MOVING CONTROL ROD SUB-ASSEMBLY** See step 32
23. **CONNECT EARTH WIRE** See step 33
24. **INSTALL NO. 2 ENGINE MOUNTING STAY RH** See step 34
25. **INSTALL AIR CLEANER CASE SUB-ASSEMBLY** See step 60
26. **INSTALL AIR CLEANER FILTER ELEMENT** See step 61
27. **INSTALL AIR CLEANER CAP SUB-ASSEMBLY** . Refer to **INSTALLATION - Step 2**
28. **INSTALL INLET AIR CLEANER ASSEMBLY** See step 63
29. **INSPECT FOR OIL LEAK**
30. **INSTALL FRONT FENDER APRON SEAL RH**
31. **INSTALL ENGINE UNDER COVER RH**
32. **INSTALL FRONT WHEEL OPENING EXTENSION PAD RH**
33. **INSTALL NO. 1 ENGINE COVER SUB-ASSEMBLY** See step 86
34. **INSTALL COOL AIR INTAKE DUCT SEAL** . Refer to **INSTALLATION - Step 4**

35. **INSTALL FRONT WHEEL RH**

Torque: 103 N*m (1049 kgf*cm, 76 ft.*lbf)

CYLINDER HEAD GASKET

COMPONENTS

ILLUSTRATION

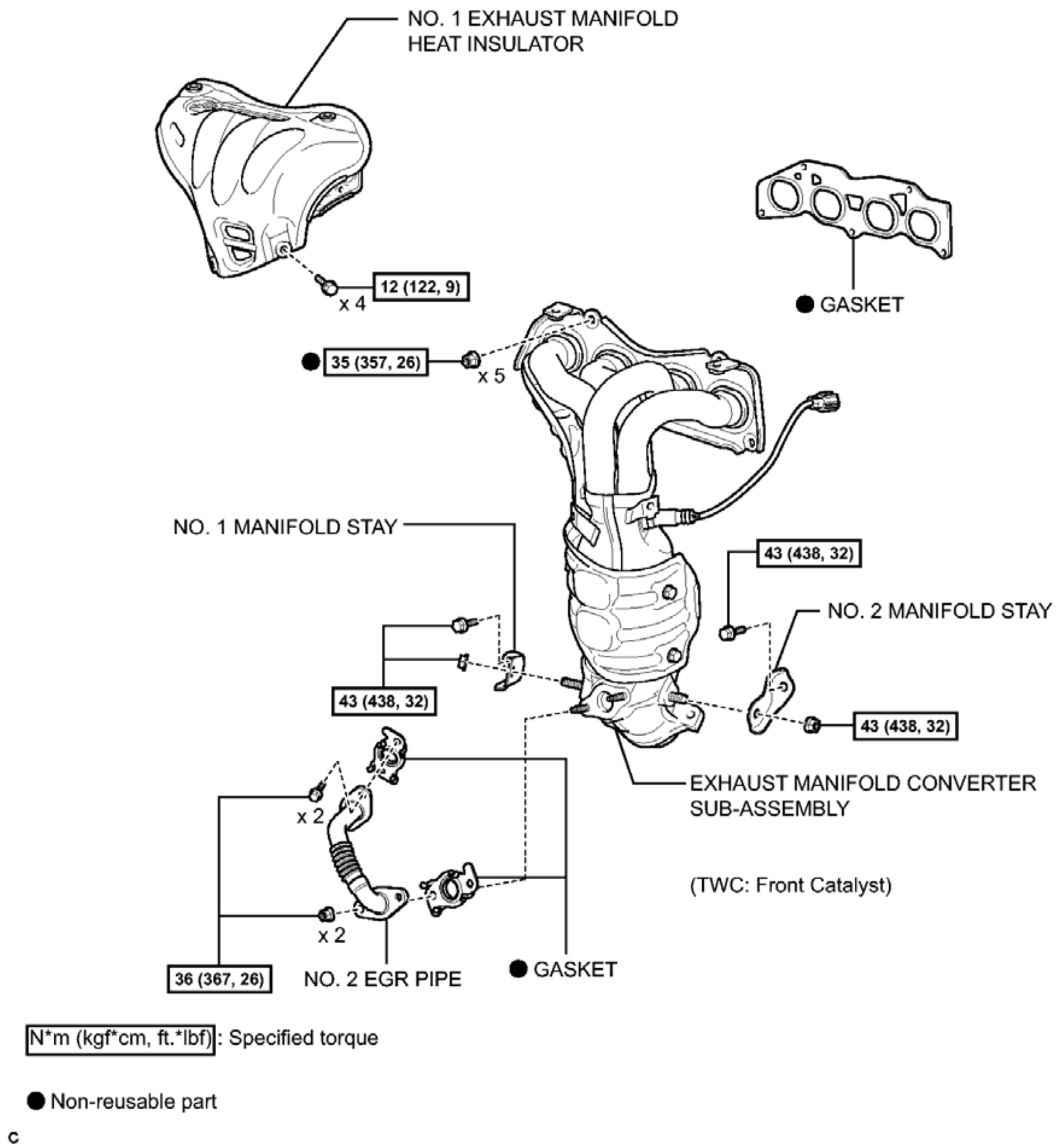
NO. 1 EXHAUST MANIFOLD HEAT INSULATOR
12 (122, 9)
x 4
● GASKET
● 35 (357, 26)
x 5
NO. 1 MANIFOLD STAY
43 (438, 32)
NO. 2 MANIFOLD STAY
43 (438, 32)
43 (438, 32)
EXHAUST MANIFOLD CONVERTER SUB-ASSEMBLY
x 2
(TWC: Front Catalyst)
x 2
36 (367, 26)
NO. 2 EGR PIPE
● GASKET
N*m (kgf*cm, ft.*lbf) : Specified torque
● Non-reusable part
c

Fig. 53: Identifying Cylinder Head Gasket Replacement Components With Torque Specifications (1 Of 4)
Courtesy of TOYOTA MOTOR SALES, U.S.A., INC.

ILLUSTRATION

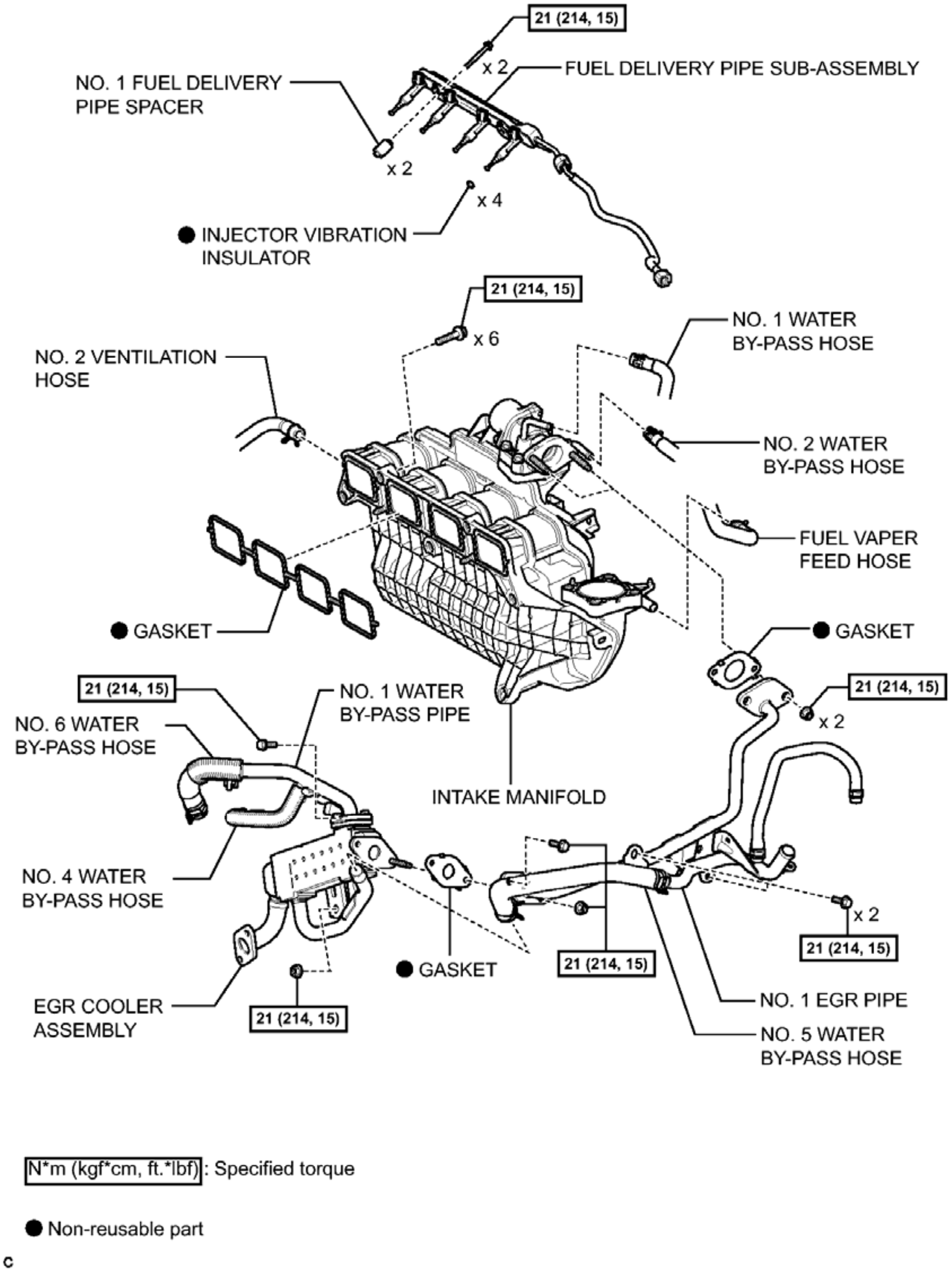
21 (214, 15)
x 2
FUEL DELIVERY PIPE SUB-ASSEMBLY
NO. 1 FUEL DELIVERY PIPE SPACER
x 2
x 4
● INJECTOR VIBRATION INSULATOR
21 (214, 15)
x 6
NO. 1 WATER BY-PASS HOSE
NO. 2 VENTILATION HOSE
NO. 2 WATER BY-PASS HOSE
FUEL VAPER FEED HOSE
● GASKET
● GASKET
21 (214, 15)
x 2
21 (214, 15)
NO. 1 WATER BY-PASS PIPE
NO. 6 WATER BY-PASS HOSE
INTAKE MANIFOLD
NO. 4 WATER BY-PASS HOSE
x 2
21 (214, 15)
● GASKET
21 (214, 15)
NO. 1 EGR PIPE
EGR COOLER ASSEMBLY
21 (214, 15)
NO. 5 WATER BY-PASS HOSE
N*m (kgf*cm, ft.*lbf): Specified torque
● Non-reusable part
c

Fig. 54: Identifying Cylinder Head Gasket Replacement Components With Torque Specifications (2 Of 4)
Courtesy of TOYOTA MOTOR SALES, U.S.A., INC.

ILLUSTRATION

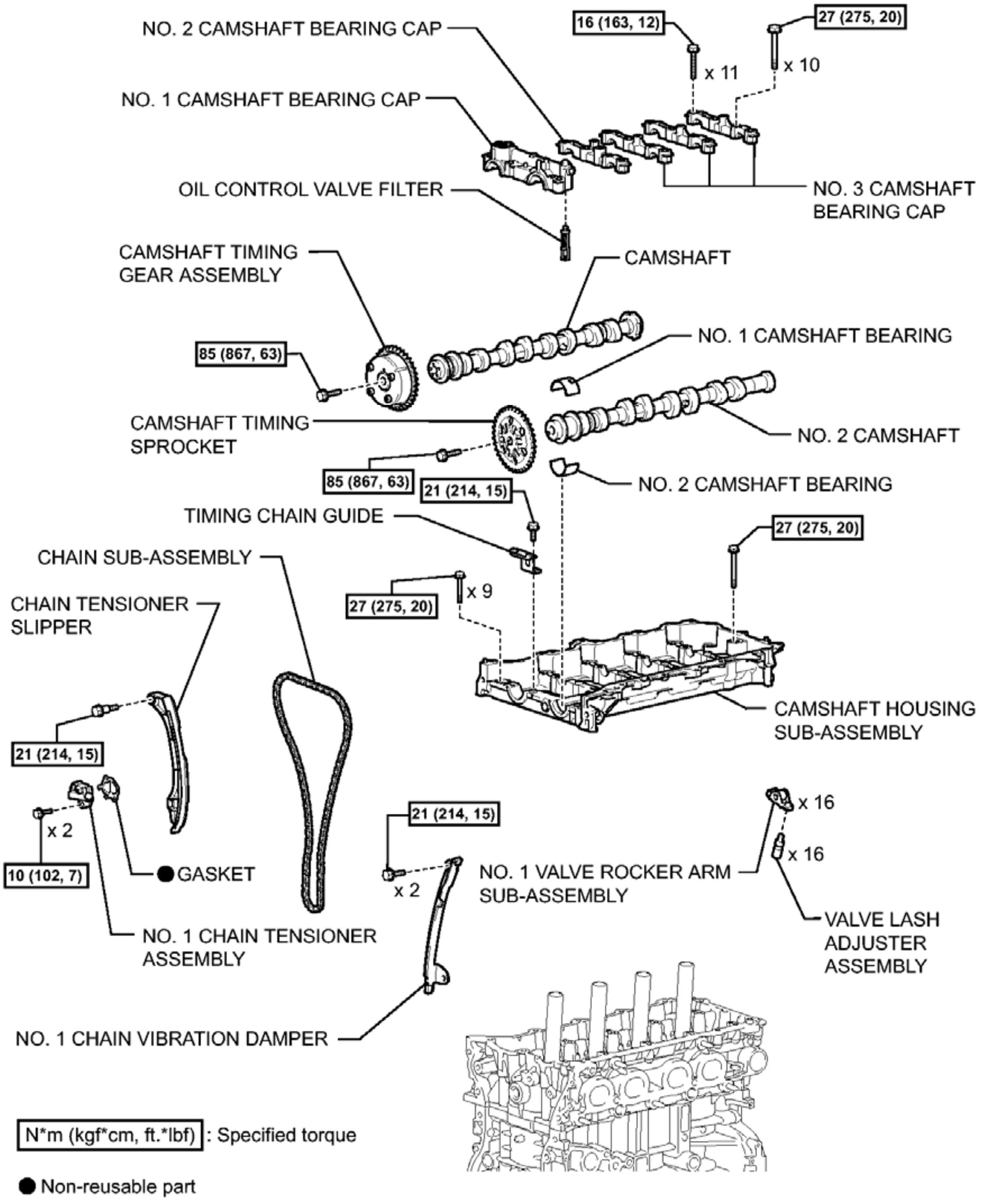
NO. 2 CAMSHAFT BEARING CAP
16 (163, 12)
27 (275, 20)
x 11
x 10
NO. 1 CAMSHAFT BEARING CAP
OIL CONTROL VALVE FILTER
NO. 3 CAMSHAFT BEARING CAP
CAMSHAFT TIMING GEAR ASSEMBLY
CAMSHAFT
85 (867, 63)
NO. 1 CAMSHAFT BEARING
CAMSHAFT TIMING SPROCKET
NO. 2 CAMSHAFT
85 (867, 63)
21 (214, 15)
NO. 2 CAMSHAFT BEARING
TIMING CHAIN GUIDE
27 (275, 20)
CHAIN SUB-ASSEMBLY
CHAIN TENSIONER SLIPPER
27 (275, 20)
x 9
CAMSHAFT HOUSING SUB-ASSEMBLY
21 (214, 15)
x 2
10 (102, 7)
● GASKET
21 (214, 15)
x 16
x 16
x 2
NO. 1 VALVE ROCKER ARM SUB-ASSEMBLY
VALVE LASH ADJUSTER ASSEMBLY
NO. 1 CHAIN TENSIONER ASSEMBLY
NO. 1 CHAIN VIBRATION DAMPER
N*m (kgf*cm, ft.*lbf) : Specified torque
● Non-reusable part

Fig. 55: Identifying Cylinder Head Gasket Replacement Components With Torque Specifications (3 Of 4)
Courtesy of TOYOTA MOTOR SALES, U.S.A., INC.

ILLUSTRATION

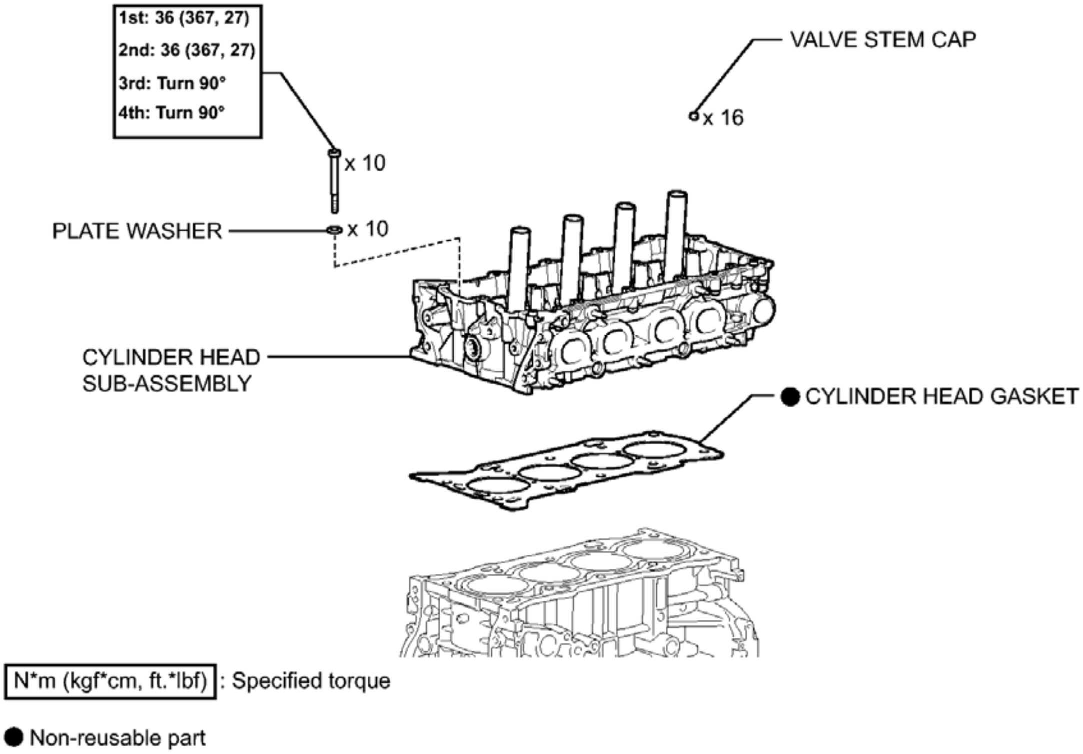
1st: 36 (367, 27)
2nd: 36 (367, 27)
3rd: Turn 90°
4th: Turn 90°
x 10
VALVE STEM CAP
x 16
PLATE WASHER
x 10
CYLINDER HEAD SUB-ASSEMBLY
● CYLINDER HEAD GASKET
N*m (kgf*cm, ft.*lbf) : Specified torque
● Non-reusable part

Fig. 56: Identifying Cylinder Head Gasket Replacement Components With Torque Specifications (4 Of 4)
Courtesy of TOYOTA MOTOR SALES, U.S.A., INC.

REMOVAL

REMOVAL

1. **REMOVE TIMING CHAIN COVER SUB-ASSEMBLY**

   Refer to **REMOVAL**

2. **REMOVE NO. 1 EXHAUST MANIFOLD HEAT INSULATOR** . Refer to **REMOVAL - Step 6**
3. **DISCONNECT NO. 1 WATER BY-PASS HOSE** See step 4
4. **REMOVE THROTTLE WITH MOTOR BODY ASSEMBLY** . Refer to **REMOVAL - Step 4**
5. **REMOVE NO. 2 EGR PIPE** . Refer to **REMOVAL - Step 9**
6. **REMOVE MANIFOLD STAY** . Refer to **REMOVAL - Step 11**
7. **REMOVE NO. 2 MANIFOLD STAY** . Refer to **REMOVAL - Step 10**
8. **REMOVE EXHAUST MANIFOLD CONVERTER SUB-ASSEMBLY** . Refer to **REMOVAL - Step 12**
9. **REMOVE EGR COOLER ASSEMBLY** See step 10

10. **REMOVE NO. 1 EGR PIPE** See step 11
11. **REMOVE FUEL DELIVERY PIPE SUB-ASSEMBLY** . Refer to **REMOVAL - Step 7**
12. **REMOVE INTAKE MANIFOLD** . Refer to **REMOVAL - Step 13**
13. **SET NO. 1 CYLINDER TO TDC/COMPRESSION**
    a. Temporarily install the crankshaft pulley bolt.

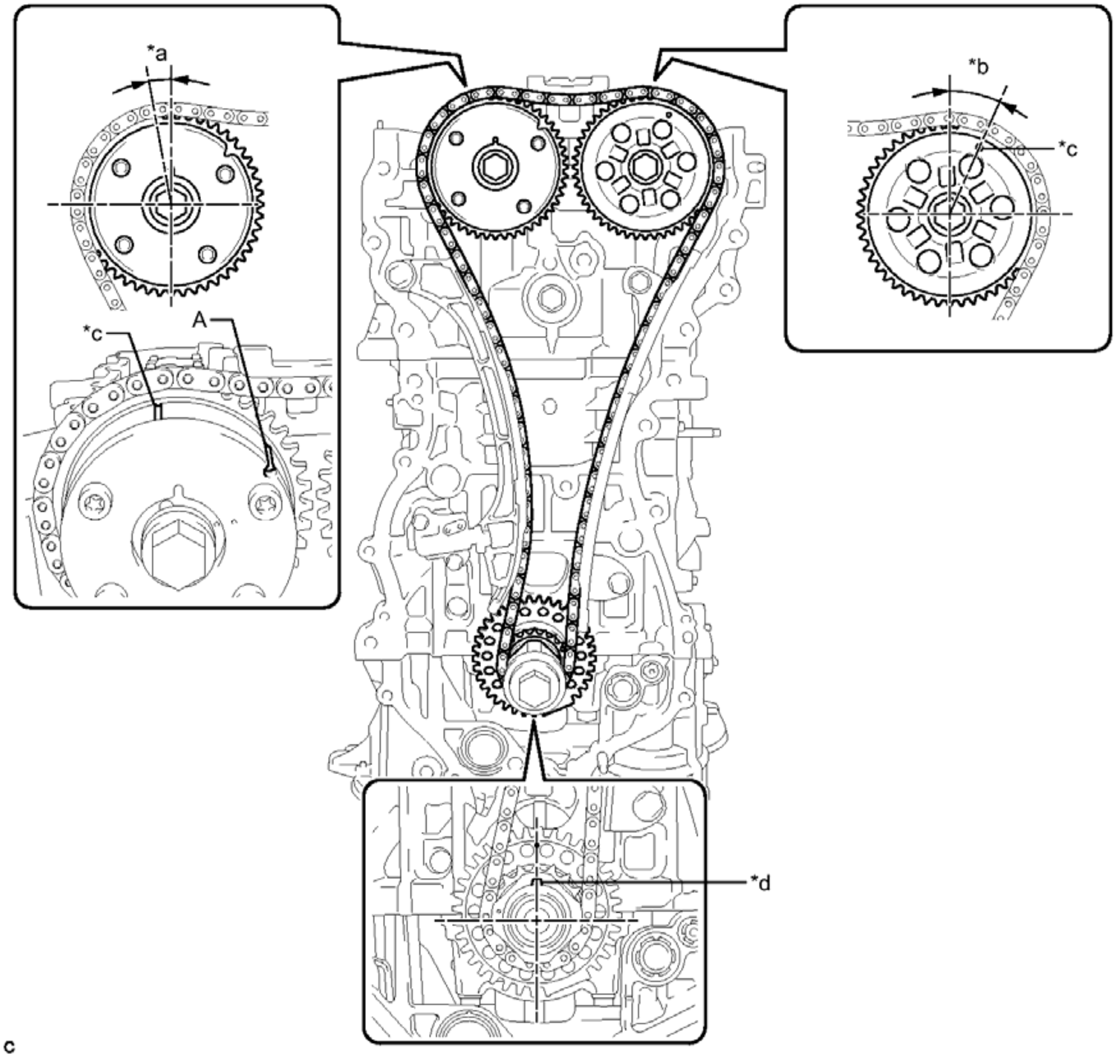

Fig. 57: Setting No. 1 Cylinder To TDC/Compression
Courtesy of TOYOTA MOTOR SALES, U.S.A., INC.

TEXT IN ILLUSTRATION

*a	Approximately 7°	*b	Approximately 32°
*c	Timing Mark	*d	Key

HINT:

"A" is not a timing mark.

b. Rotate the crankshaft clockwise so that the timing marks on the crankshaft timing gear and camshaft timing gears are as shown in the illustration.

HINT:

If the timing marks do not align, rotate the crankshaft clockwise again and align the timing marks.

c. Remove the crankshaft pulley bolt.

14. REMOVE TIMING CHAIN GUIDE

a. Remove the bolt and timing chain guide.

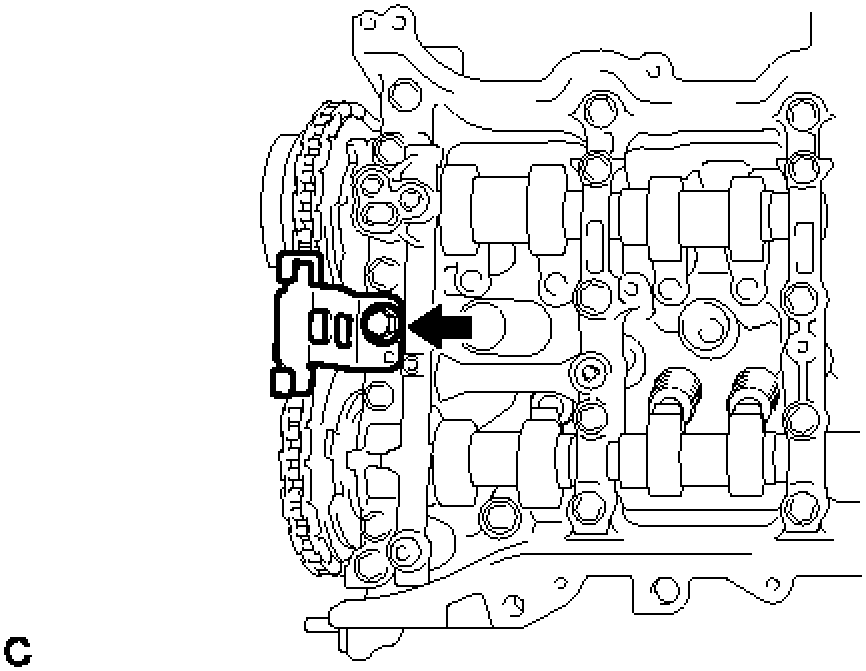

Fig. 58: Identifying Timing Chain Guide Bolt
Courtesy of TOYOTA MOTOR SALES, U.S.A., INC.

15. REMOVE NO. 1 CHAIN TENSIONER ASSEMBLY

a. Allow the plunger to extend slightly, and then rotate the stopper plate counterclockwise to release the lock. Once the lock is released, push the plunger into the tensioner.

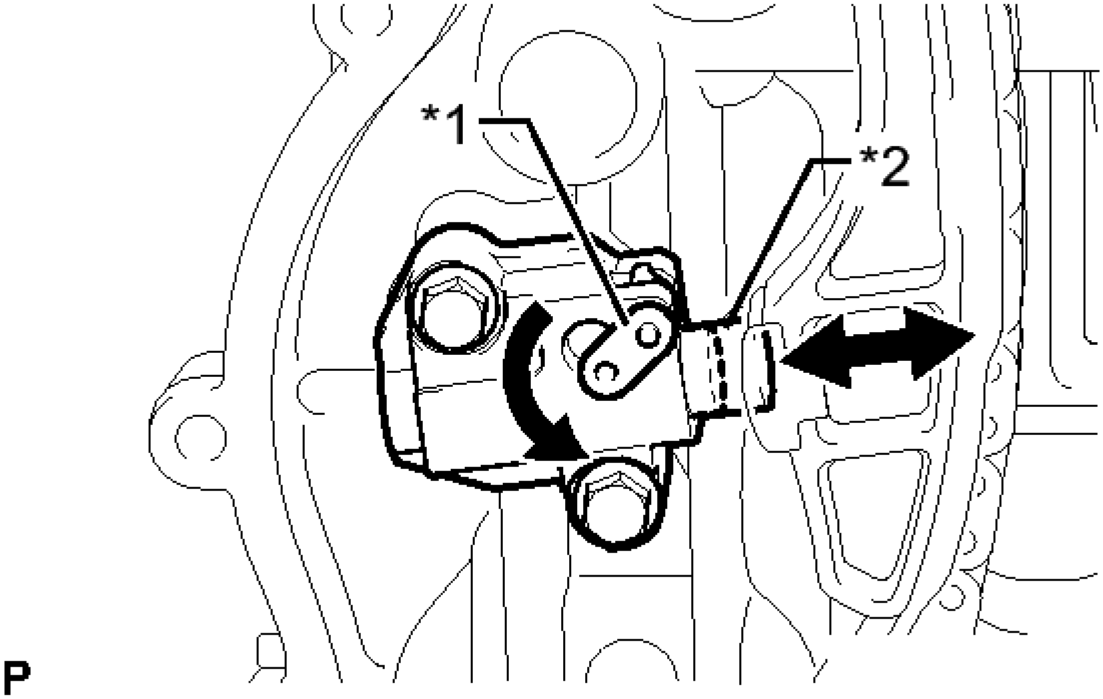

Fig. 59: Identifying Stopper Plate And Plunger
Courtesy of TOYOTA MOTOR SALES, U.S.A., INC.

TEXT IN ILLUSTRATION

*1	Stopper Plate
*2	Plunger

b. Move the stopper plate clockwise to set the lock, and insert a pin into the stopper plate hole.

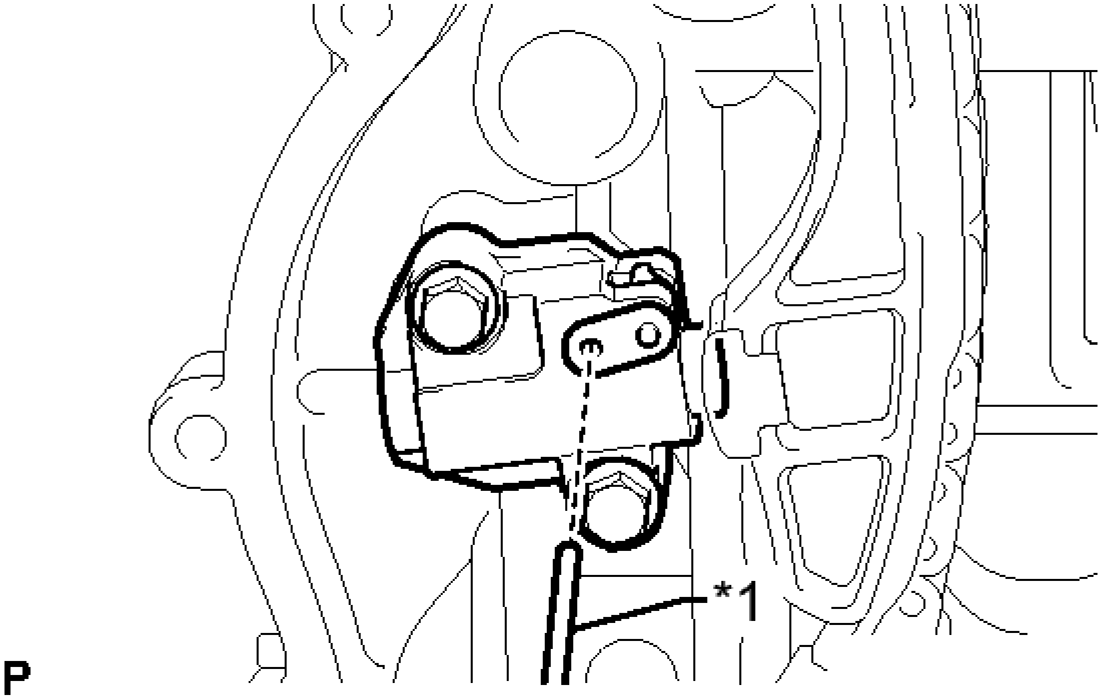

Fig. 60: Insert Pin Into Stopper Plate Hole
Courtesy of TOYOTA MOTOR SALES, U.S.A., INC.

TEXT IN ILLUSTRATION

*1	Pin

c. Remove the 2 bolts, chain tensioner and gasket.

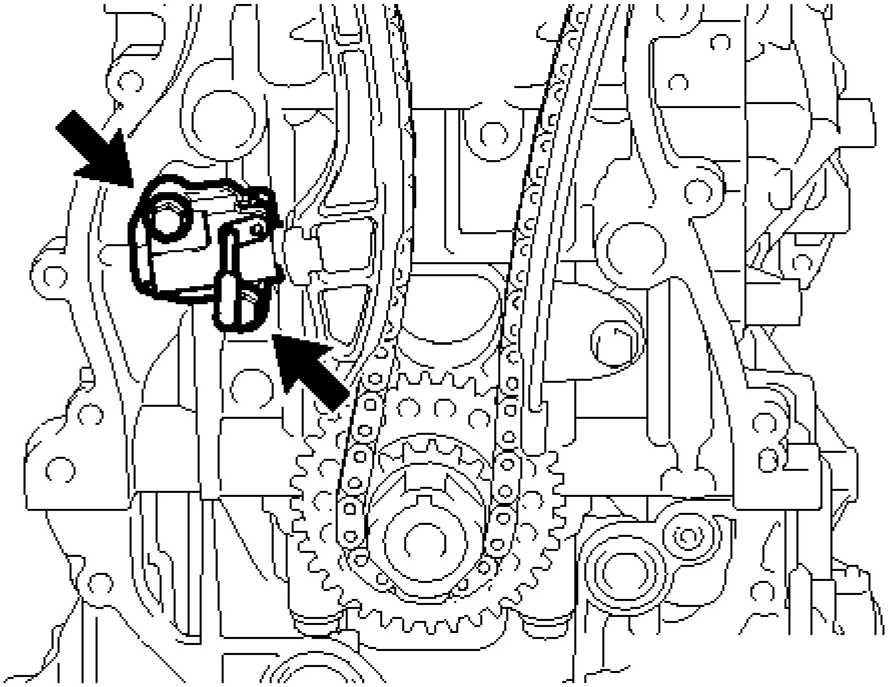

Fig. 61: Identifying Chain Tensioner Bolts
Courtesy of TOYOTA MOTOR SALES, U.S.A., INC.

16. **REMOVE CHAIN TENSIONER SLIPPER**
    a. Remove the bolt and chain tensioner slipper.

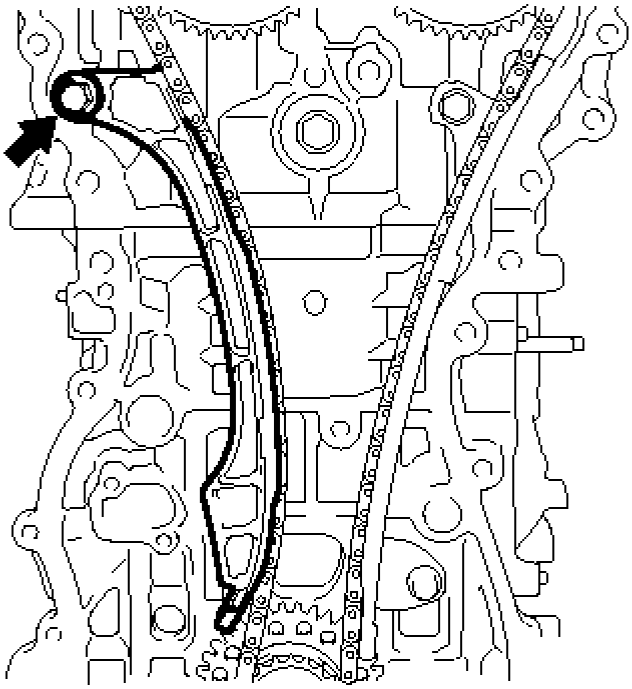

Fig. 62: Identifying Chain Tensioner Slipper Bolt

Courtesy of TOYOTA MOTOR SALES, U.S.A., INC.

17. **REMOVE CHAIN SUB-ASSEMBLY** See step 27
18. **REMOVE NO. 1 CHAIN VIBRATION DAMPER**
    a. Remove the 2 bolts and chain vibration damper.

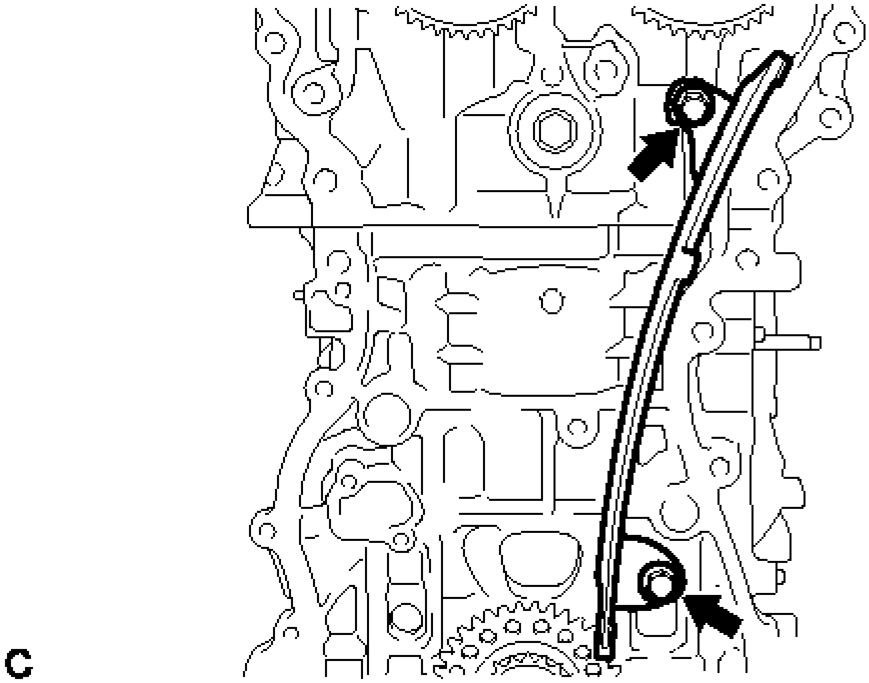

Fig. 63: Identifying Chain Vibration Damper Bolts
Courtesy of TOYOTA MOTOR SALES, U.S.A., INC.

19. **REMOVE CAMSHAFT TIMING GEAR ASSEMBLY**
    a. Hold the hexagonal portion of the camshaft with a wrench and remove the bolt and camshaft timing gear.

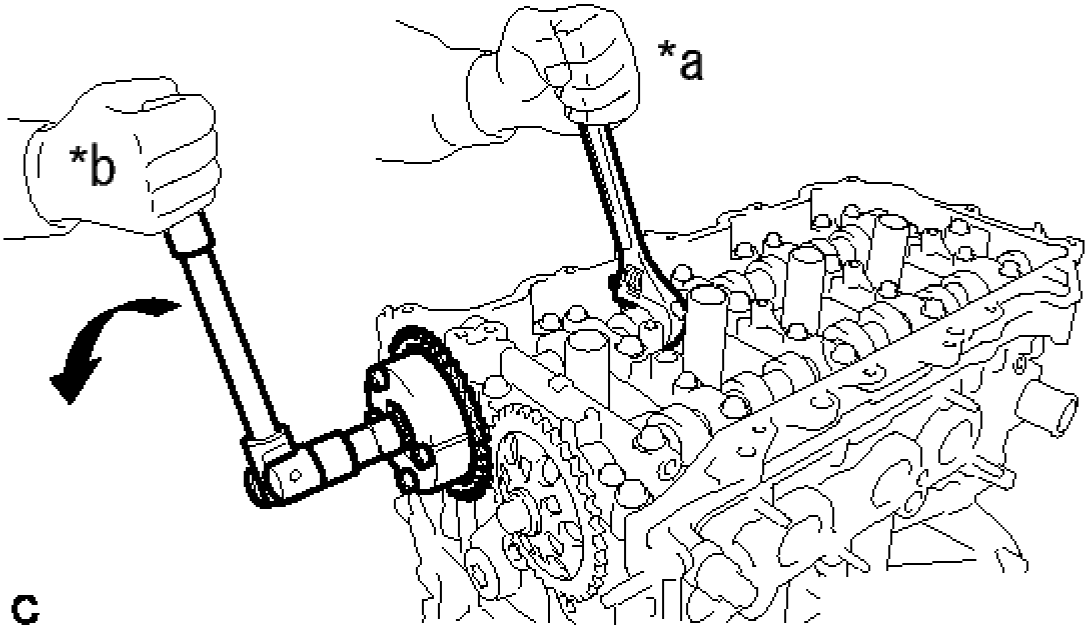

Fig. 64: Removing Camshaft Timing Gear Assembly
Courtesy of TOYOTA MOTOR SALES, U.S.A., INC.

TEXT IN ILLUSTRATION

*a	Hold
*b	Turn

NOTE:

- **Be careful not to damage the cylinder head or spark plug tube with the wrench.**
- **Do not disassemble the camshaft timing gear.**

20. **REMOVE CAMSHAFT TIMING SPROCKET**
    a. Hold the hexagonal portion of the camshaft with a wrench and remove the bolt and camshaft timing sprocket.

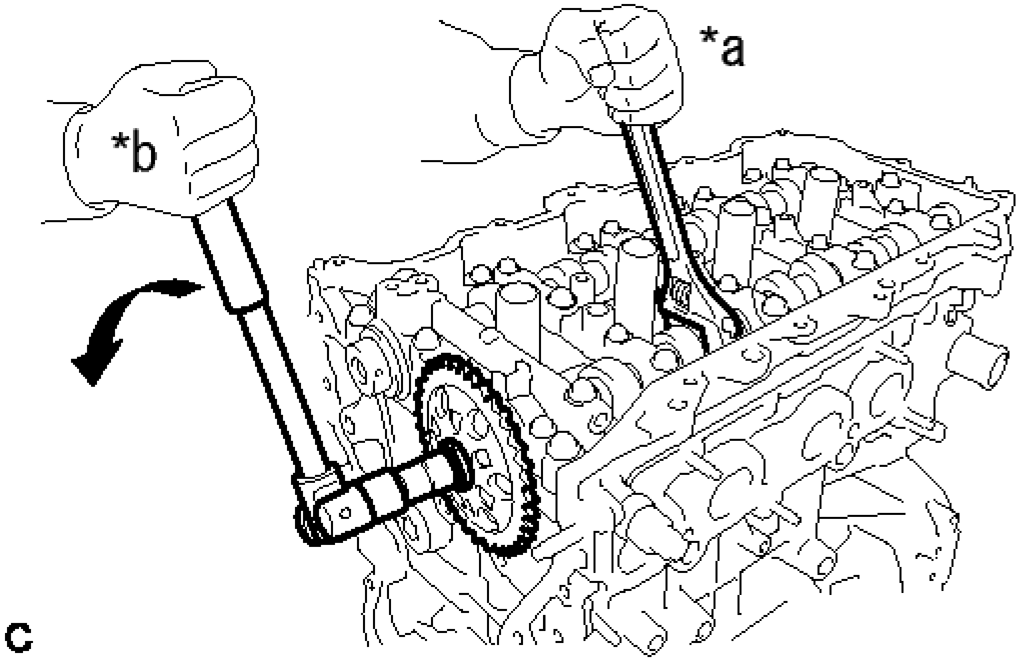

Fig. 65: Removing Camshaft Timing Sprocket
Courtesy of TOYOTA MOTOR SALES, U.S.A., INC.

TEXT IN ILLUSTRATION

*a	Hold
*b	Turn

NOTE: **Be careful not to damage the cylinder head or spark plug tube with the wrench.**

21. **REMOVE CAMSHAFT HOUSING SUB-ASSEMBLY**
    a. Uniformly loosen and remove the 20 bearing cap bolts in the sequence shown in the illustration.

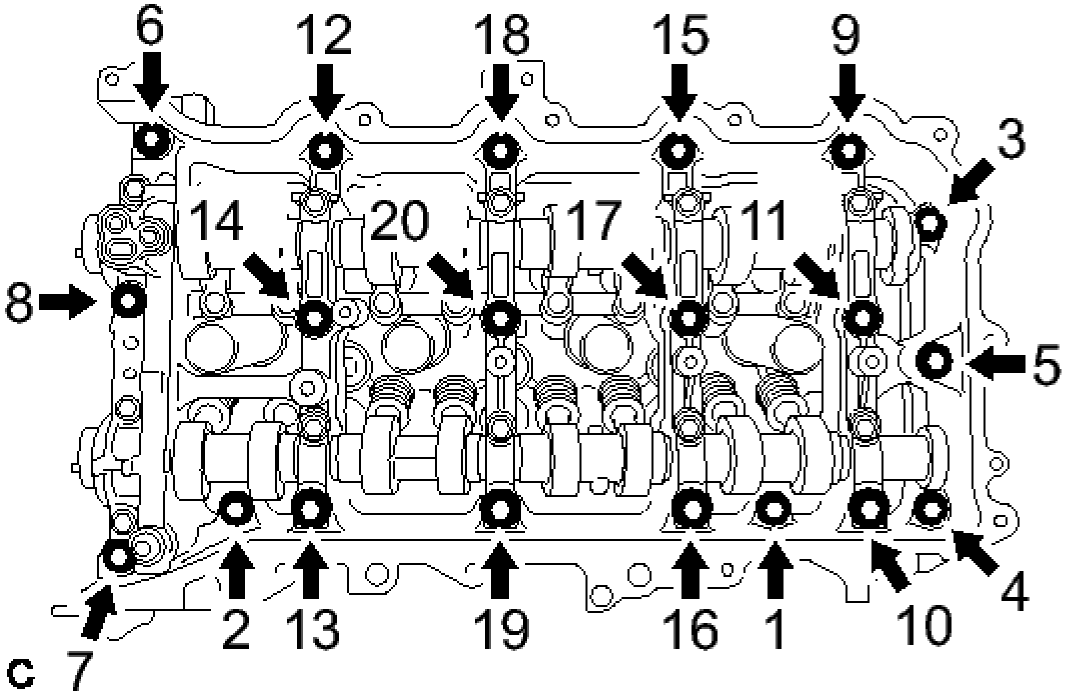
6
12
18
15
9
3
14
20
17
11
8
5
2
13
19
16
1
10
4
7
C

Fig. 66: Removing Bearing Cap Bolts In Sequence
Courtesy of TOYOTA MOTOR SALES, U.S.A., INC.

b. Remove the camshaft housing by prying between the cylinder head and camshaft housing with a screwdriver.

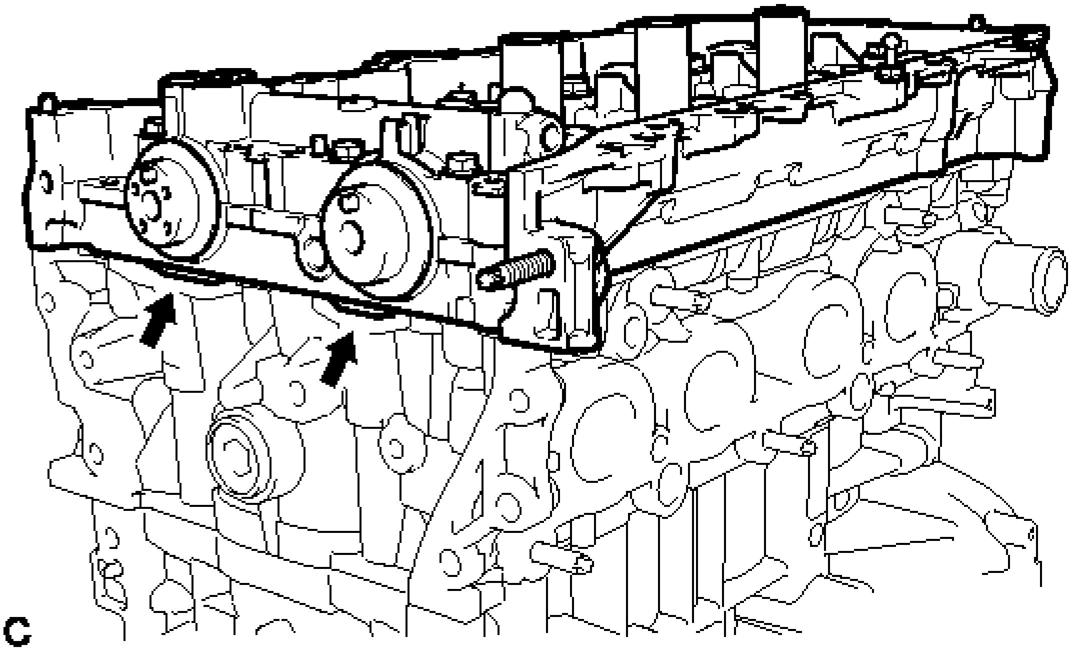

Fig. 67: Identifying Camshaft Housing

Courtesy of TOYOTA MOTOR SALES, U.S.A., INC.

HINT:

Tape the screwdriver tip before use.

NOTE: **Be careful not to damage the contact surfaces of the cylinder head and camshaft housing.**

22. **REMOVE CAMSHAFT BEARING CAP**
    a. Remove the 11 bearing cap bolts in the sequence shown in the illustration.

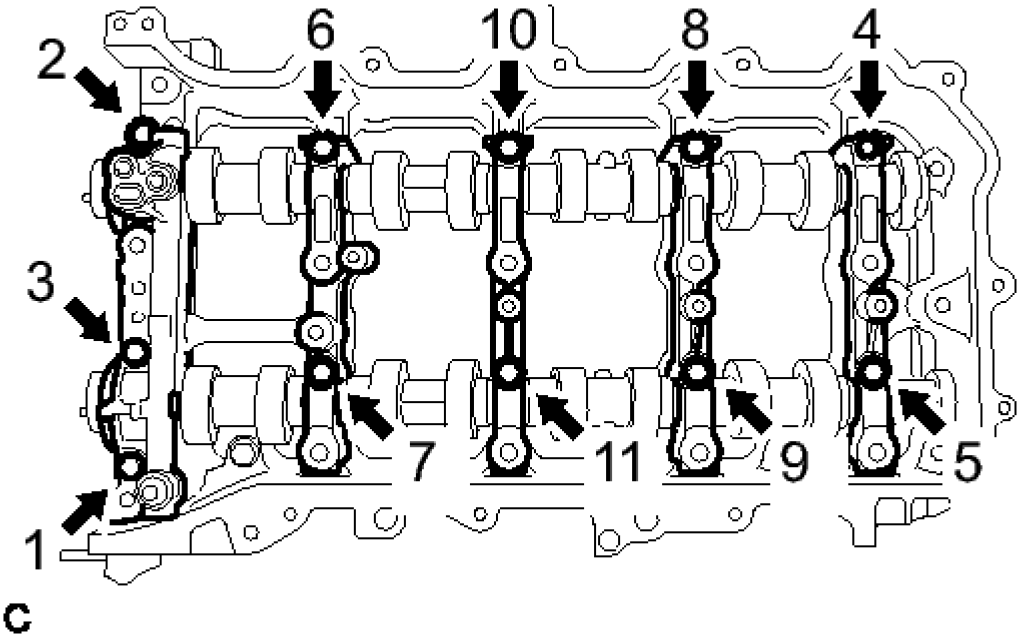

Fig. 68: Removing Bearing Cap Bolts In Sequence
Courtesy of TOYOTA MOTOR SALES, U.S.A., INC.

    b. Remove the 5 bearing caps.

HINT:

Arrange the removed parts in the correct order.

23. **REMOVE OIL CONTROL VALVE FILTER** See step 34
24. **REMOVE NO. 1 CAMSHAFT BEARING** See step 36
25. **REMOVE CAMSHAFT**
    a. Remove the camshaft and No. 2 camshaft.
26. **REMOVE NO. 2 CAMSHAFT BEARING** See step 37

27. **REMOVE NO. 1 VALVE ROCKER ARM SUB-ASSEMBLY**
    a. Remove the 16 valve rocker arms from the cylinder head.

    HINT:

    Arrange the removed parts in the correct order.

28. **REMOVE VALVE LASH ADJUSTER ASSEMBLY**
    a. Remove the 16 valve lash adjusters from the cylinder head.

    HINT:

    Arrange the removed parts in the correct order.

29. **REMOVE VALVE STEM CAP**
    a. Remove the 16 valve stem caps from the cylinder head.

    HINT:

    Arrange the removed parts in the correct order.

30. **REMOVE CYLINDER HEAD SUB-ASSEMBLY**
    a. Using a 10 mm bi-hexagon wrench, uniformly loosen the 10 bolts in the sequence shown in the illustration. Remove the 10 cylinder head bolts and plate washers.

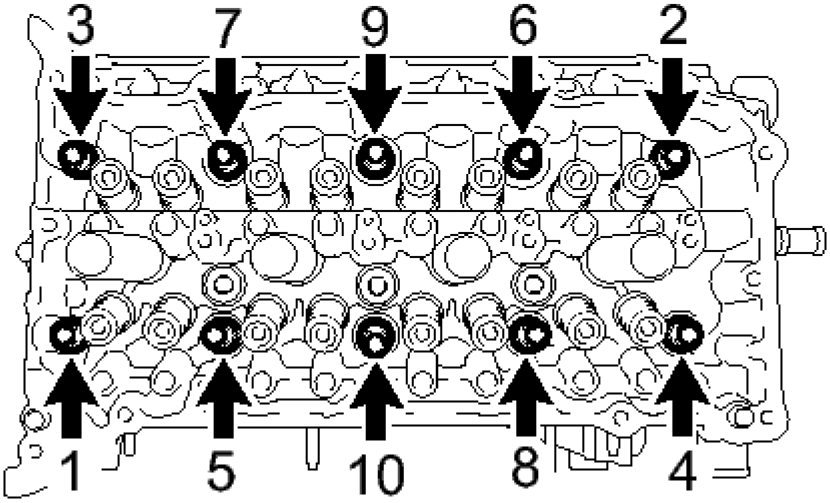

P

Fig. 69: Identifying Bolts Loosening Sequence

Courtesy of TOYOTA MOTOR SALES, U.S.A., INC.

HINT:

Be sure to keep the removed parts separate for each installation position.

NOTE:

- **Be careful not to drop washers into the cylinder head.**
- **Head warpage or cracking could result from removing bolts in the incorrect order.**

b. Remove the cylinder head.

31. **REMOVE CYLINDER HEAD GASKET**
    a. Remove the cylinder head gasket from the cylinder block.

INSTALLATION

INSTALLATION

HINT:

Perform "Inspection After Repair" after replacing the cylinder head sub-assembly. Refer to **INITIALIZATION** .

1. **INSPECT CYLINDER HEAD BOLT** See step 17
2. **INSPECT CYLINDER HEAD SUB-ASSEMBLY** See step 1
3. **INSTALL CYLINDER HEAD GASKET**
    a. Clean the cylinder block and cylinder head with solvent.

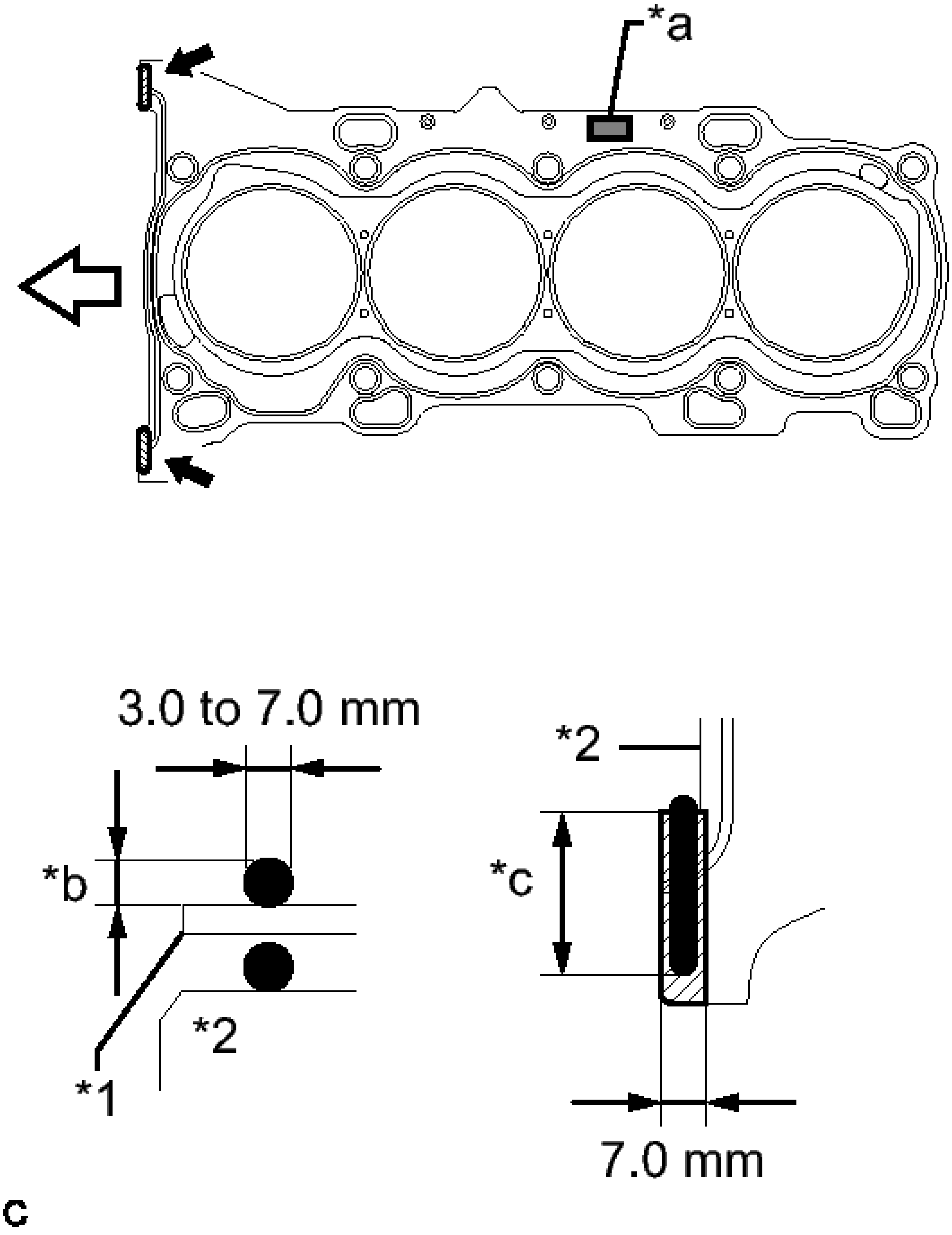
*a
3.0 to 7.0 mm
*2
*b
*c
*2
*1
7.0 mm
c

Fig. 70: Identifying Cylinder Block And Cylinder Head
Courtesy of TOYOTA MOTOR SALES, U.S.A., INC.

TEXT IN ILLUSTRATION

	Cylinder

*1	Head Gasket
*2	Cylinder Block
*a	Lot No.
*b	3.0 mm or more
*c	20 mm or more
	Seal Packing
	Front

b. Apply a continuous line of seal packing to a new cylinder head gasket as shown in the illustration.

Seal packing

Toyota Genuine Seal Packing Black, Three Bond 1207B or equivalent

Standard seal dimension

3.0 to 7.0 mm (0.118 to 0.276 in.) wide and 3.0 mm (0.118 in.) thick

HINT:

Apply at least 20 mm (0.787 in.) of seal packing from the inside edge of the protrusion of the cylinder block.

NOTE:

- **Remove any oil from the contact surface.**
- **Install the cylinder head gasket within 3 minutes and tighten the bolts within 15 minutes after applying seal packing.**

c. Place a new cylinder head gasket on the cylinder block surface with the front face of the Lot No. stamp facing upward.

NOTE: **Pay attention to the installation direction.**

4. **INSTALL CYLINDER HEAD SUB-ASSEMBLY**

HINT:

The cylinder head bolts are tightened in 4 progressive steps.

a. Place the cylinder head on the cylinder block.

NOTE:

- **Ensure that no oil is on the mounting surface of the cylinder head.**
- **Place the cylinder head on the cylinder block gently in order not to damage the gasket with the bottom part of the head.**

b. Install the plate washers to the cylinder head bolts.
c. Apply a light coat of engine oil to the threads and under the heads of the cylinder head bolts.
d. Step 1:
   1. Using a 10 mm bi-hexagon wrench, install and uniformly tighten the 10 cylinder head bolts in several steps, in the sequence shown in the illustration.

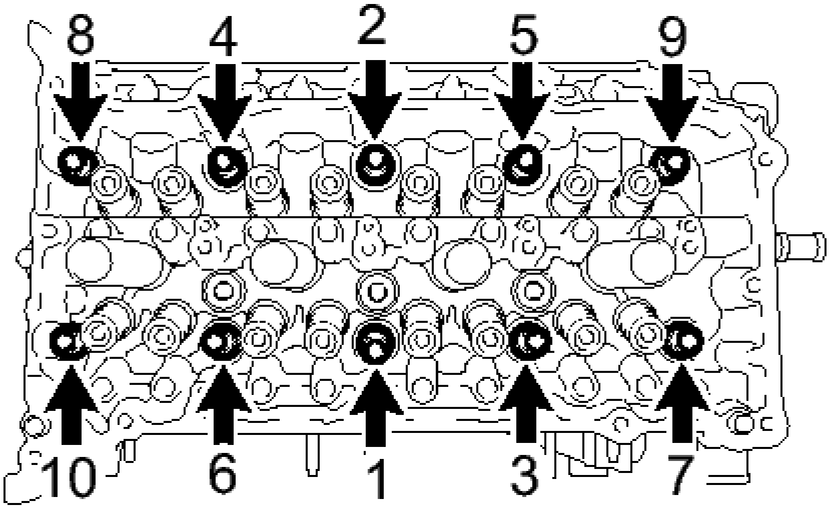

P

Fig. 71: Identifying Cylinder Head Bolts Tightening Sequence
Courtesy of TOYOTA MOTOR SALES, U.S.A., INC.

Torque: 36 N*m (367 kgf*cm, 27 ft.*lbf)

NOTE: **Do not drop the plate washer for the cylinder head bolt into the cylinder head.**

e. Step 2:
   1. Tighten the cylinder head bolts again in the sequence shown in the illustration to make sure that they are tightened to the specified torque.

Torque: 36 N*m (367 kgf*cm, 27 ft.*lbf)

f. Step 3:
  1. Mark each cylinder head bolt head with paint as shown in the illustration.

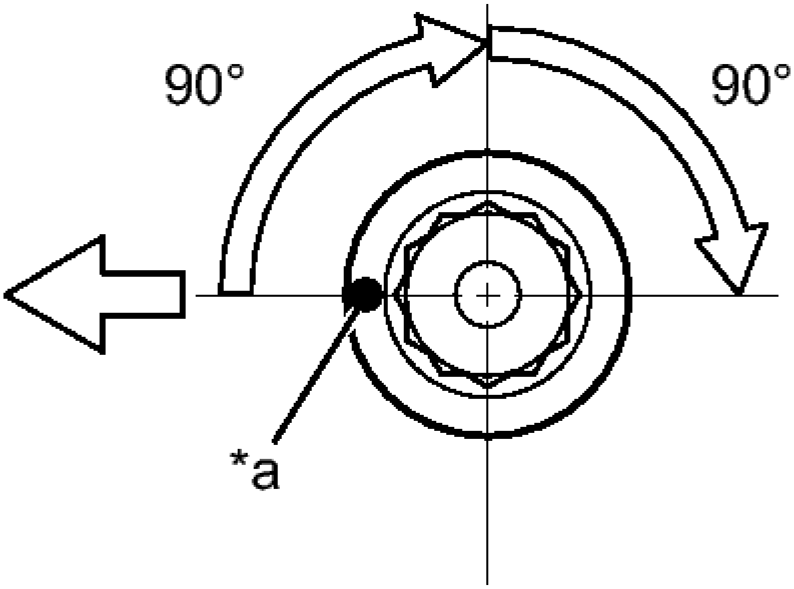

P

Fig. 72: Identifying Paint Mark On Cylinder Head Bolt
Courtesy of TOYOTA MOTOR SALES, U.S.A., INC.

TEXT IN ILLUSTRATION

	Front
*a	Painted Mark

  2. Tighten the cylinder head bolts 90° in the sequence shown in step 1.

g. Step 4:
  1. Tighten the cylinder head bolts another 90° in the sequence shown in step 1.
  2. Check that the paint marks are now facing rearward.

NOTE:

- **Do not apply oil for at least 2 hours after installation.**
- **Do not start the engine for at least 2 hours after installation.**
- **After installation, if the seal packing has seeped out, wipe it off.**

HINT:

Perform "Inspection After Repair" after replacing the cylinder head sub-assembly. Refer to **INITIALIZATION** .

5. **INSTALL VALVE STEM CAP**
    1. Apply a light coat of engine oil to the valve stem ends.
    2. Install the 16 valve stem caps to the cylinder head.

NOTE: **Do not drop the valve stem caps into the cylinder head.**

6. **SET CAMSHAFT TIMING GEAR ASSEMBLY**

HINT:

When installing the camshaft timing gear, release the lock pin and set the camshaft timing gear to the advanced position before installation.

a. Check the camshaft timing gear position.

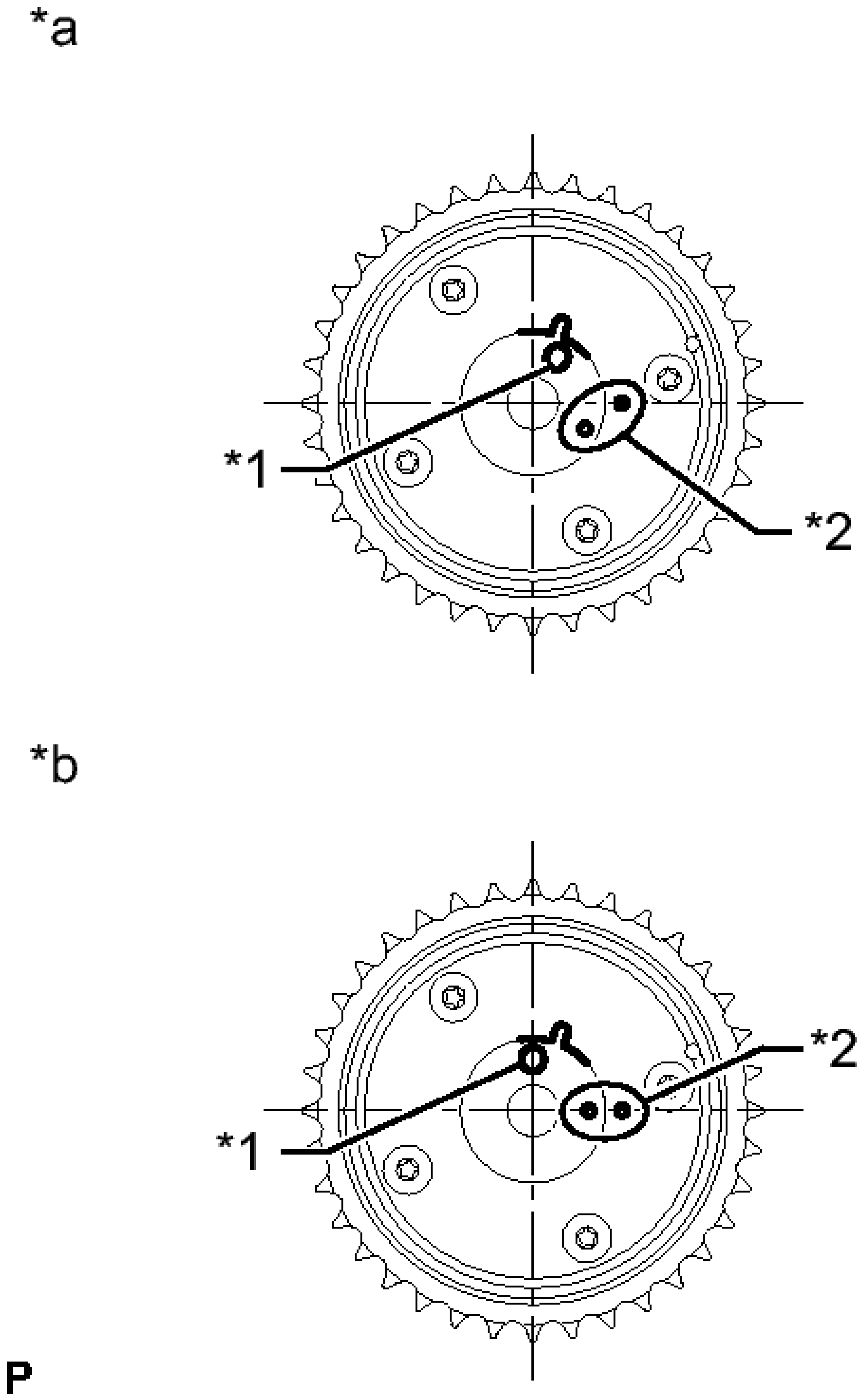

Fig. 73: Identifying Camshaft Timing Gear Position
Courtesy of TOYOTA MOTOR SALES, U.S.A., INC.

TEXT IN ILLUSTRATION

	Knock Pin

*1	Hole
*2	Alignment Mark
*a	Advanced Position:
*b	Retarded Position:

NOTE: **If the camshaft timing gear is set to the advanced position, do not let the camshaft timing gear rotate clockwise during installation.**

If the camshaft timing gear rotates to the retarded position, release the lock pin and set the camshaft timing gear to the advanced position.

b. Align and attach the knock pin of the No. 1 camshaft with the pin hole of the camshaft timing gear.

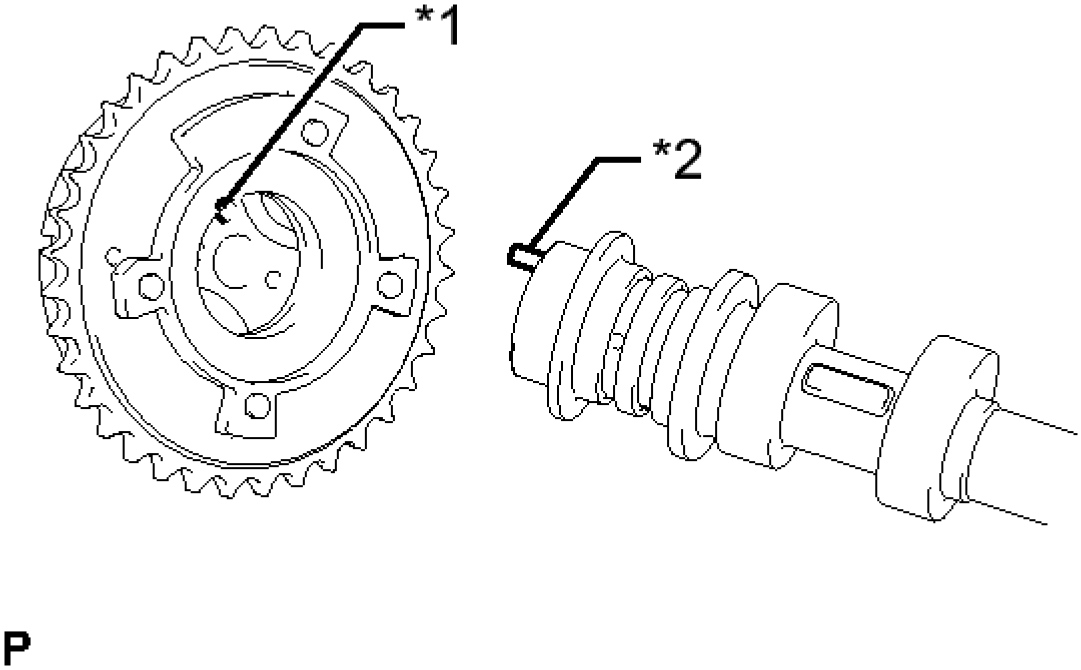

Fig. 74: Identifying Pin Hole And Knock Pin
Courtesy of TOYOTA MOTOR SALES, U.S.A., INC.

TEXT IN ILLUSTRATION

*1	Pin Hole
*2	Knock Pin

c. Check that there is no clearance between the camshaft timing gear and camshaft flange.

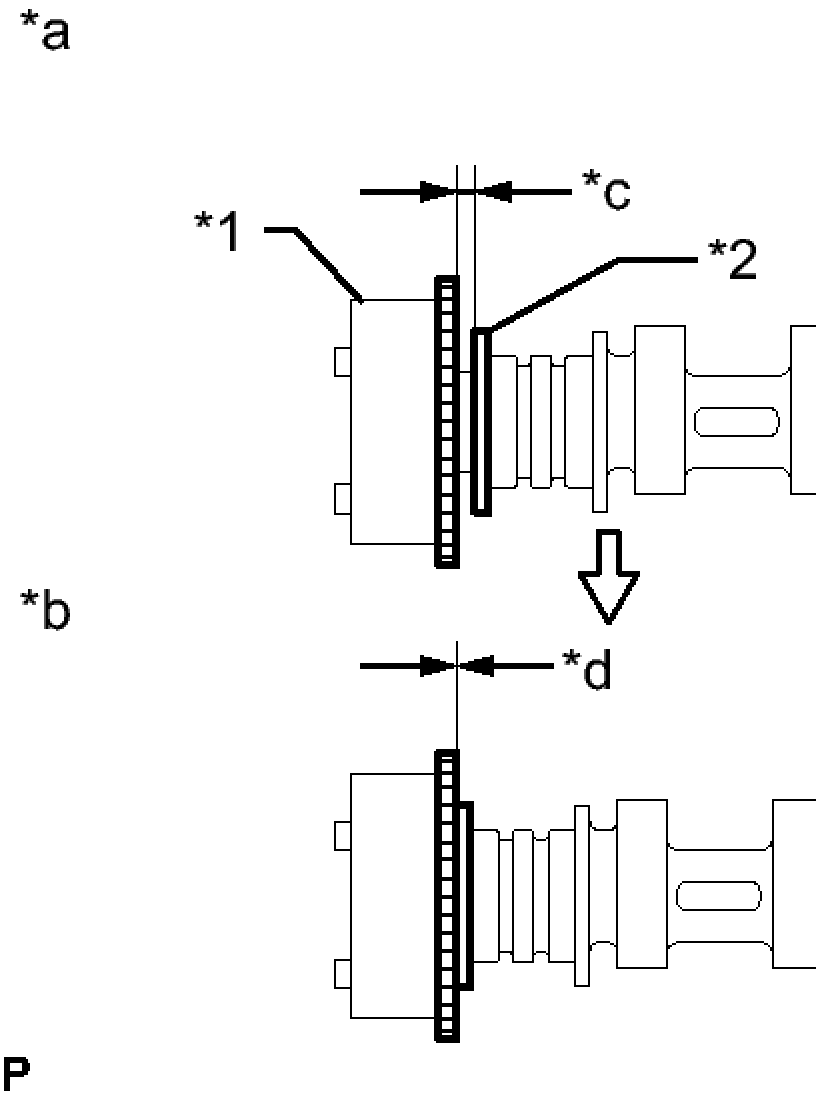

Fig. 75: Identifying No Clearance Between Camshaft Timing Gear And Camshaft Flange
Courtesy of TOYOTA MOTOR SALES, U.S.A., INC.

TEXT IN ILLUSTRATION

*1	Camshaft Timing Gear
*2	Flange
*a	INCORRECT
*b	CORRECT
*c	Clearance
*d	No Clearance

d. Secure the camshaft in place by hand, and then install the installation bolt of the camshaft timing gear by hand.

NOTE: Do not use any tools to install the bolt. If the bolt is installed using a tool, the lock pin will be damaged.

e. Release the lock pin.

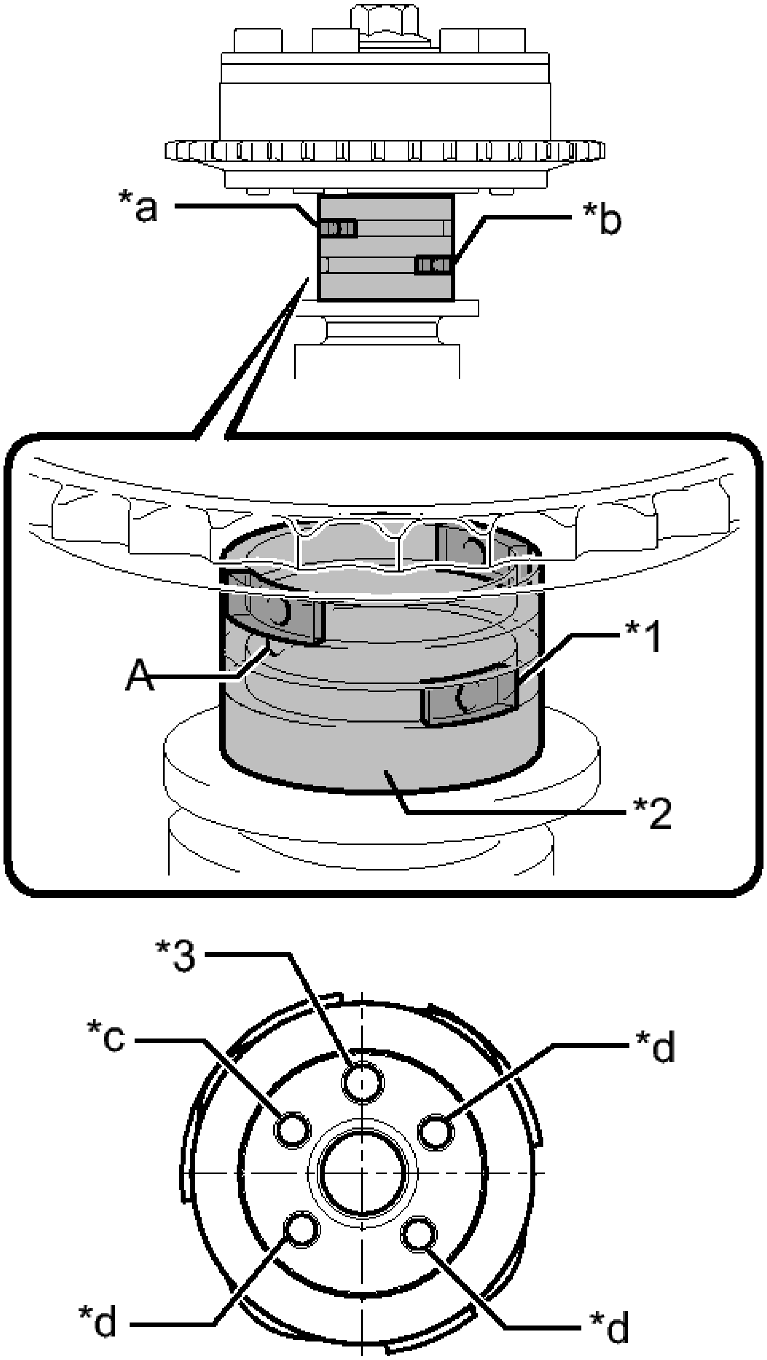

P

Fig. 76: Identifying Rubber, Vinyl Tape, Knock Pin, Retard Side Path And Advance Side Path

Courtesy of TOYOTA MOTOR SALES, U.S.A., INC.

TEXT IN ILLUSTRATION

*1	Rubber
*2	Vinyl Tape
*3	Knock Pin
*a	Retard Side Path
*b	Advance Side Path
*c	Open
*d	Close

1. Clean the camshaft journal with non-residue solvent.
2. Cover the 4 oil paths of the cam journal with vinyl tape as shown in the illustration.

   HINT:

   There are 4 oil paths in the grooves of the camshaft. Plug three of the paths with pieces of rubber.

3. Open a hole at port A shown in the illustration.
4. While applying approximately 200 kPa (2.0 kgf/ cm^2 , 29 psi) of air pressure to the oil path, forcibly turn the camshaft timing gear assembly in the advance direction (counterclockwise).

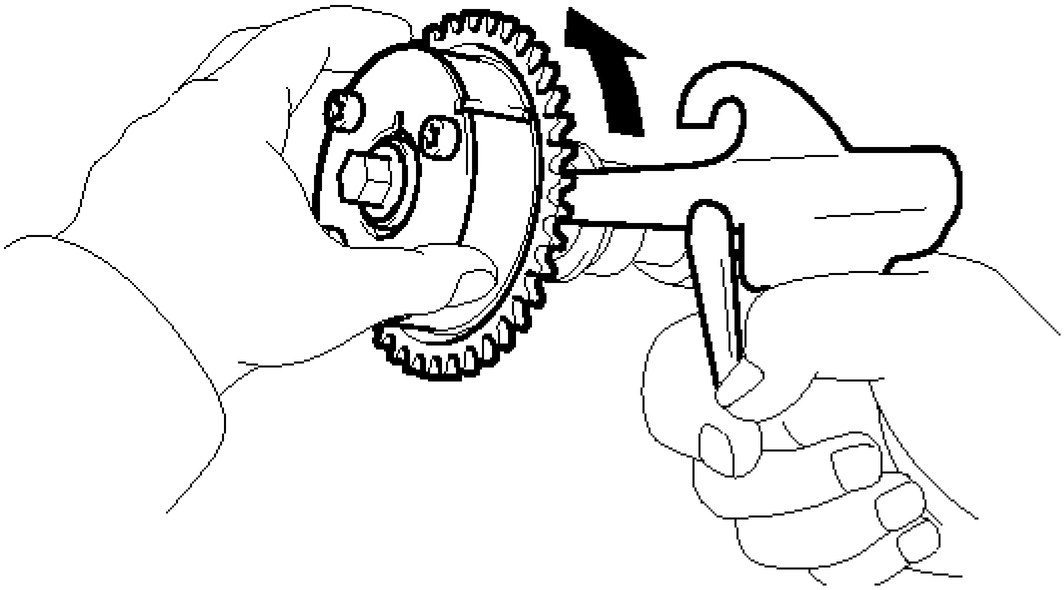

Fig. 77: Turning Camshaft Timing Gear Assembly
Courtesy of TOYOTA MOTOR SALES, U.S.A., INC.

WARNING: **Cover the paths with a piece of cloth when applying pressure to keep oil from splashing.**

NOTE: Do not allow the camshaft timing gear assembly to lock. If it locks, release the lock pin again.

HINT:

- The camshaft timing gear assembly may be turned in the advance direction without applying any force.
- If enough air pressure cannot be applied because of air leakage from the port, releasing the lock pin may be difficult.

5. Remove the vinyl tape and rubber pieces from the camshaft.

f. Remove the bolt and camshaft timing gear.

NOTE: Do not allow the camshaft timing gear assembly to lock. If it locks, release the lock pin again.

7. **INSTALL VALVE LASH ADJUSTER ASSEMBLY**
    a. Inspect the valve lash adjuster before installing it See step 2.
    b. Install the 16 lash adjusters to the cylinder head.

NOTE: Install the lash adjuster to the same place it was removed from.

8. **INSTALL NO. 1 VALVE ROCKER ARM SUB-ASSEMBLY**
    a. Apply engine oil to the lash adjuster tips and valve stem caps.

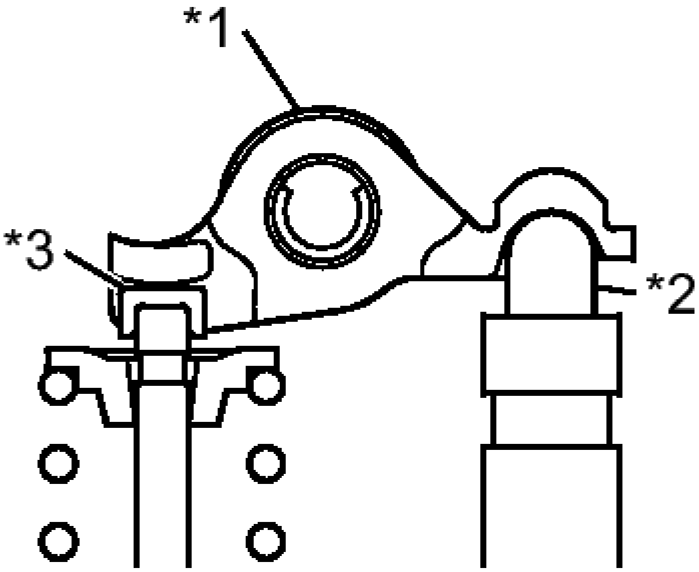

P

Fig. 78: Identifying Valve Rocker Arms
Courtesy of TOYOTA MOTOR SALES, U.S.A., INC.

TEXT IN ILLUSTRATION

*1	Valve Rocker Arm
*2	Valve Lash Adjuster
*3	Valve Stem Cap

b. Install the 16 valve rocker arms as shown in the illustration.

9. **INSTALL NO. 2 CAMSHAFT BEARING** See step 18
10. **INSTALL NO. 1 CAMSHAFT BEARING** See step 17
11. **INSTALL OIL CONTROL VALVE FILTER** See step 19
12. **INSTALL CAMSHAFT**
    a. Clean the camshaft journals, camshaft housing and bearing caps.
    b. Apply a light coat of engine oil to the camshaft journal, camshaft housing and bearing caps.
    c. Install the camshaft and No. 2 camshafts to the camshaft housing.

    HINT:

Perform "Inspection After Repair" after replacing the camshaft or No. 2 camshaft. Refer to **INITIALIZATION** .

13. **INSTALL CAMSHAFT BEARING CAP**
    a. Confirm the marks and numbers on the camshaft bearing caps and place them in their proper positions and directions.

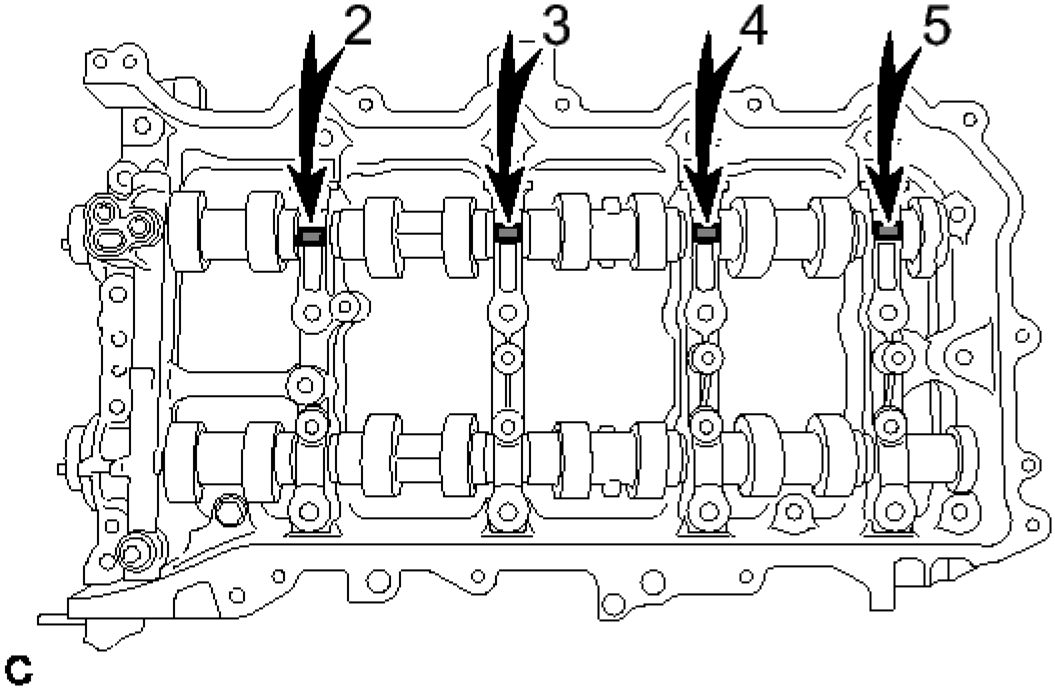

Fig. 79: Identifying Marks And Numbers On Camshaft Bearing Caps
Courtesy of TOYOTA MOTOR SALES, U.S.A., INC.

    b. Install the 11 bolts in the order shown in the illustration.

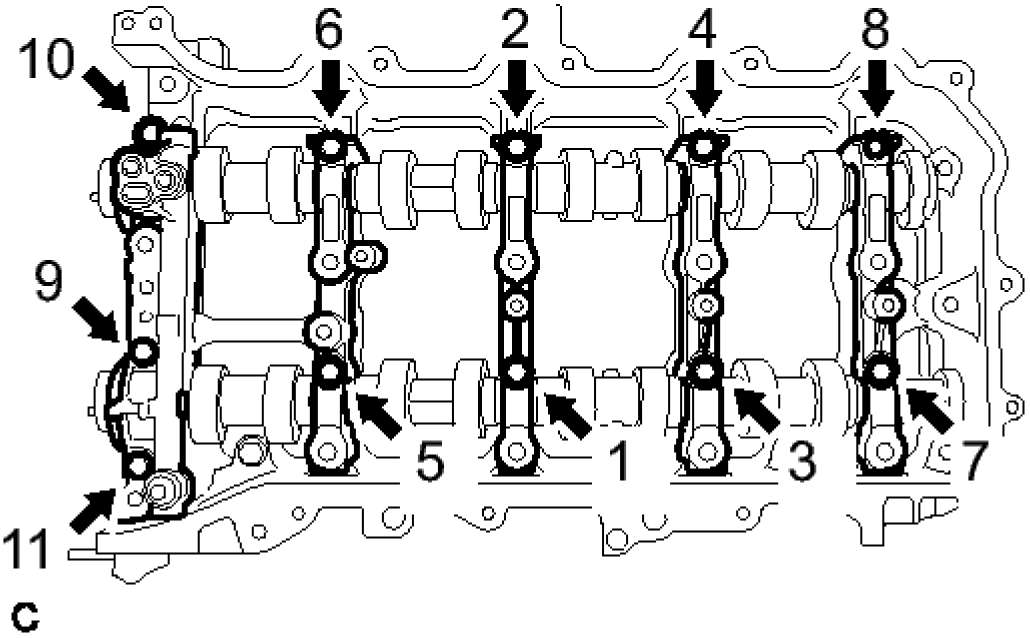

Fig. 80: Installing Camshaft Bearing Cap Bolts In Sequence
Courtesy of TOYOTA MOTOR SALES, U.S.A., INC.

Torque: 16 N*m (163 kgf*cm, 12 ft.*lbf)

NOTE: **Make sure that the camshaft rotates smoothly after installing the bearing caps.**

14. **INSTALL CAMSHAFT HOUSING SUB-ASSEMBLY**
    a. Check that the valve rocker arms are installed as shown in the illustration.

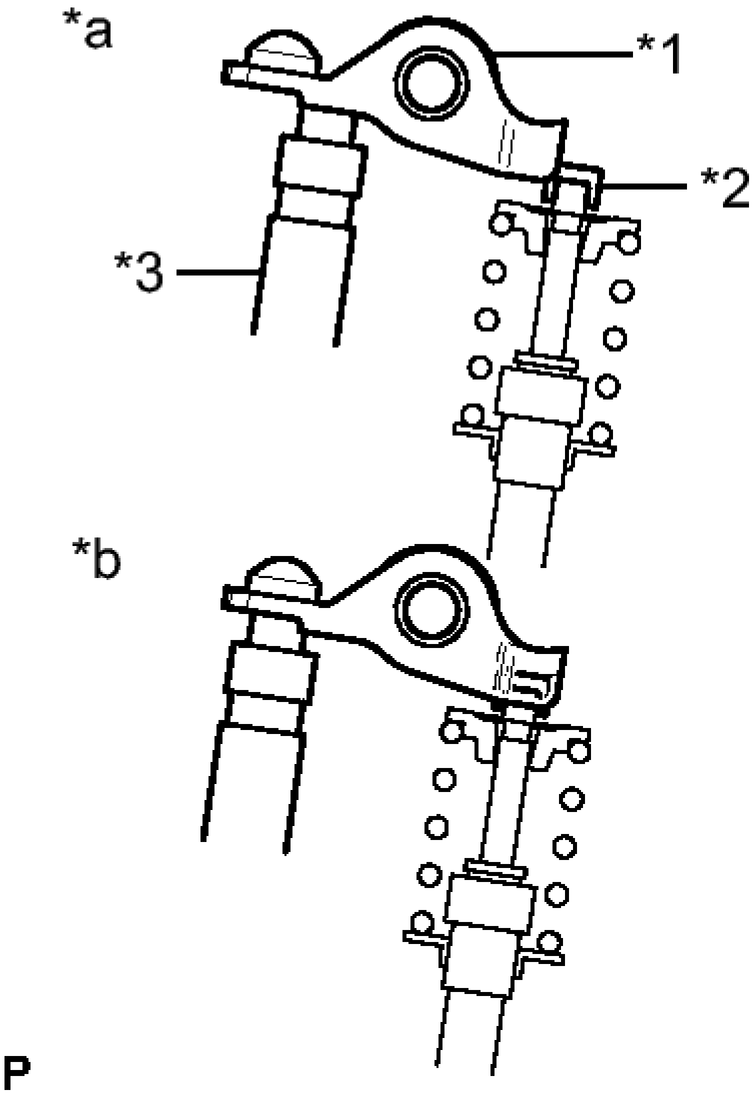

Fig. 81: Identifying Valve Rocker Arm Installation
Courtesy of TOYOTA MOTOR SALES, U.S.A., INC.

TEXT IN ILLUSTRATION

*1	Valve Rocker Arm
*2	Valve Stem Cap
*3	Valve Lash Adjuster
*a	INCORRECT
*b	CORRECT

b. Apply seal packing in a continuous line as shown in the illustration.

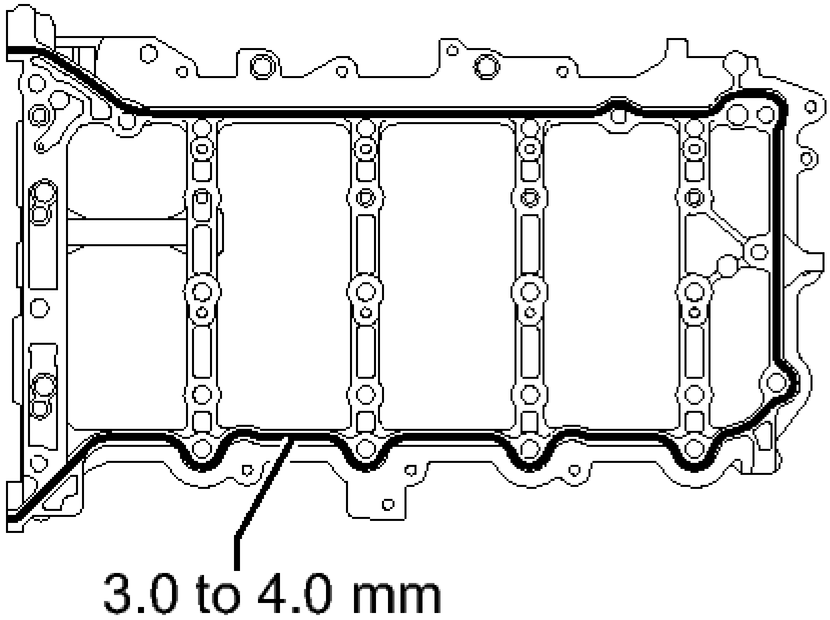

P

Fig. 82: Identifying Seal Diameter
Courtesy of TOYOTA MOTOR SALES, U.S.A., INC.

Seal packing

Toyota Genuine Seal Packing Black, Three Bond 1207B or equivalent

Standard seal diameter

3.0 to 4.0 mm (0.118 to 0.157 in.)

NOTE:

- **Remove any oil from the contact surface.**
- **Install the camshaft housing within 3 minutes and tighten the bolts within 10 minutes after applying seal packing.**

c. Position the knock pin of the No. 1 and No. 2 camshafts as shown in the illustration.

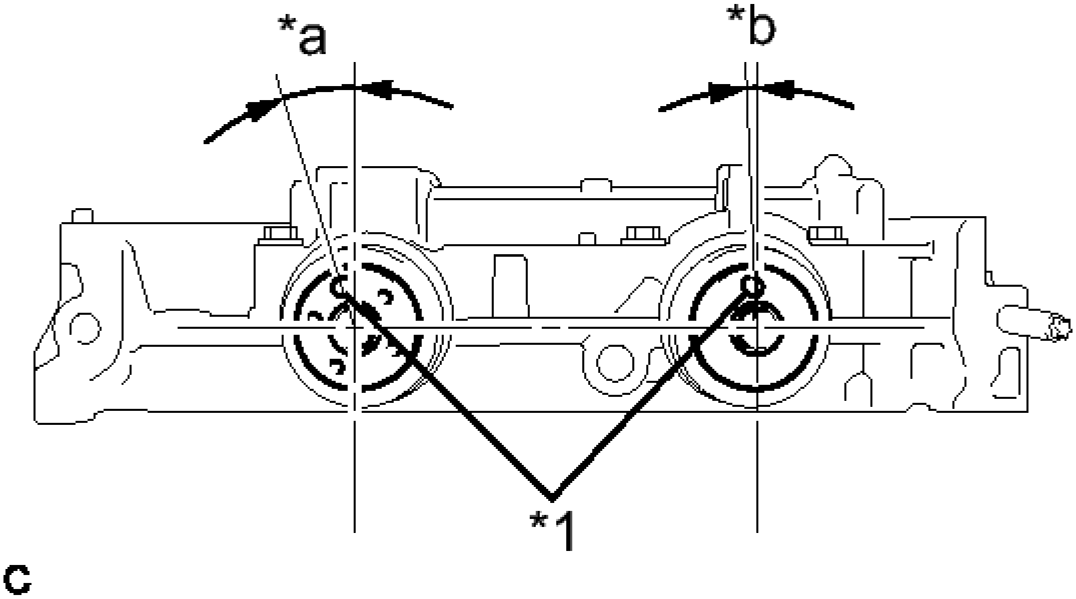

Fig. 83: Position Knock Pin Of No. 1 And No. 2 Camshafts
Courtesy of TOYOTA MOTOR SALES, U.S.A., INC.

TEXT IN ILLUSTRATION

*1	Knock Pin
*a	Approximately 17°
*b	Approximately 2°

d. Install the camshaft housing, and then install the 20 bolts in the order shown in the illustration.

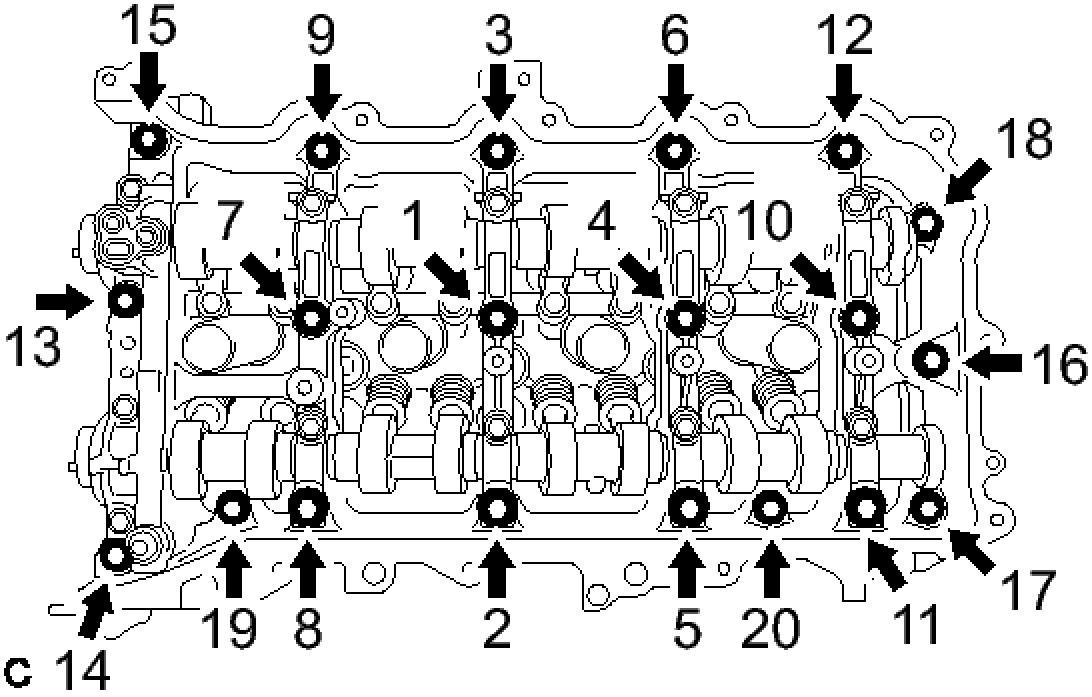

Fig. 84: Installing Camshaft Housing Bolts In Sequence
Courtesy of TOYOTA MOTOR SALES, U.S.A., INC.

Torque: 27 N*m (275 kgf*cm, 20 ft.*lbf)

NOTE:

- **Do not apply oil for at least 2 hours after the installation.**
- **Do not start the engine for at least 2 hours after the installation.**
- **Thoroughly wipe clean any seal packing.**

15. **INSTALL CAMSHAFT TIMING SPROCKET**
    a. Using a wrench to hold the hexagonal portion of the No. 2 camshaft, and install the camshaft timing sprocket with the bolt.

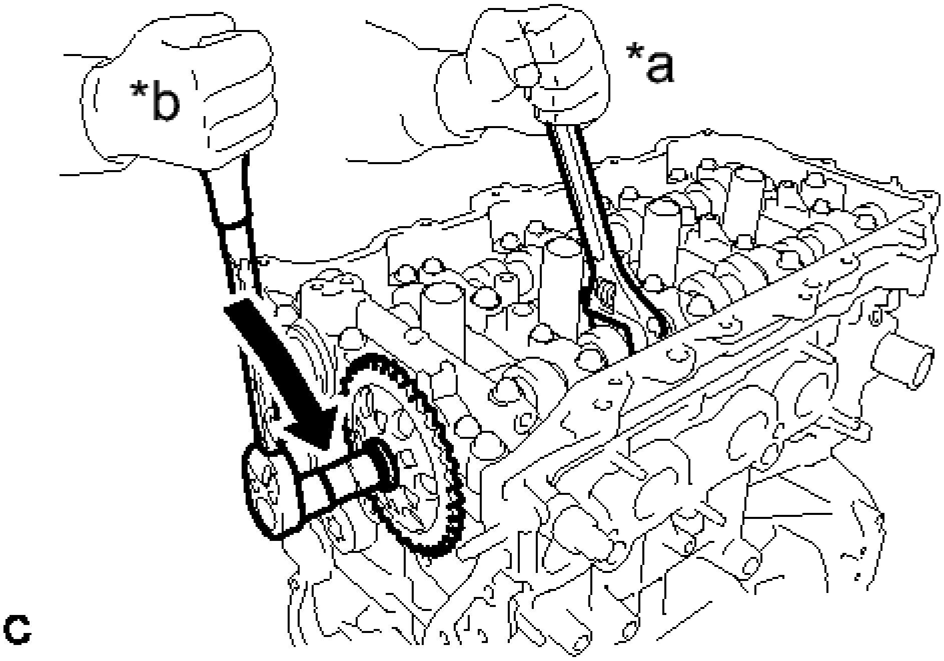

Fig. 85: Installing Camshaft Timing Sprocket Using Hexagonal
Courtesy of TOYOTA MOTOR SALES, U.S.A., INC.

TEXT IN ILLUSTRATION

*a	Hold
*b	Turn

Torque: 85 N*m (867 kgf*cm, 63 ft.*lbf)

NOTE: **Be careful not to damage the cylinder head or spark plug tube with the wrench.**

16. **INSTALL CAMSHAFT TIMING GEAR ASSEMBLY**
    a. Check the camshaft timing gear position.

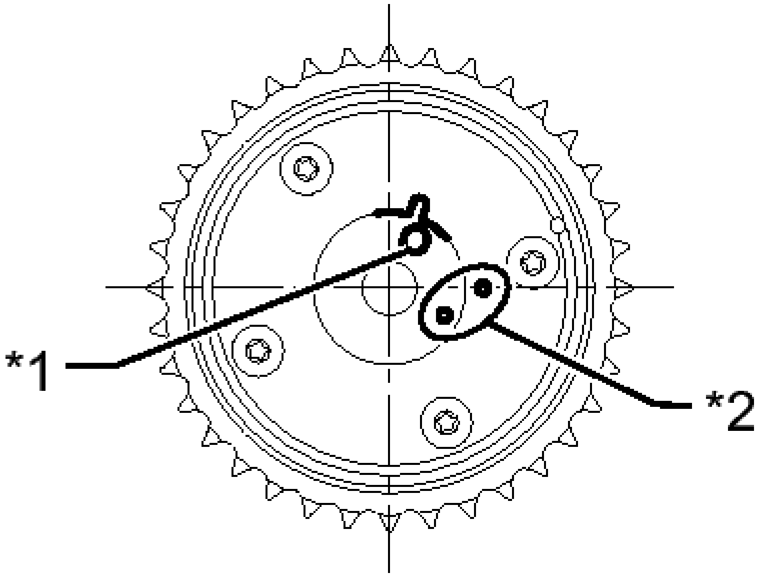

Fig. 86: Identifying Camshaft Timing Gear Position
Courtesy of TOYOTA MOTOR SALES, U.S.A., INC.

TEXT IN ILLUSTRATION

*1	Knock Pin Hole
*2	Alignment Mark

If the camshaft timing gear is not set to the advanced position, release the lock pin and reset the camshaft timing gear (Refer to the "Set Camshaft Timing Gear Assembly" procedure" in step 6).

b. Align and attach the knock pin of the No. 1 camshaft with the pin hole of the camshaft timing gear.

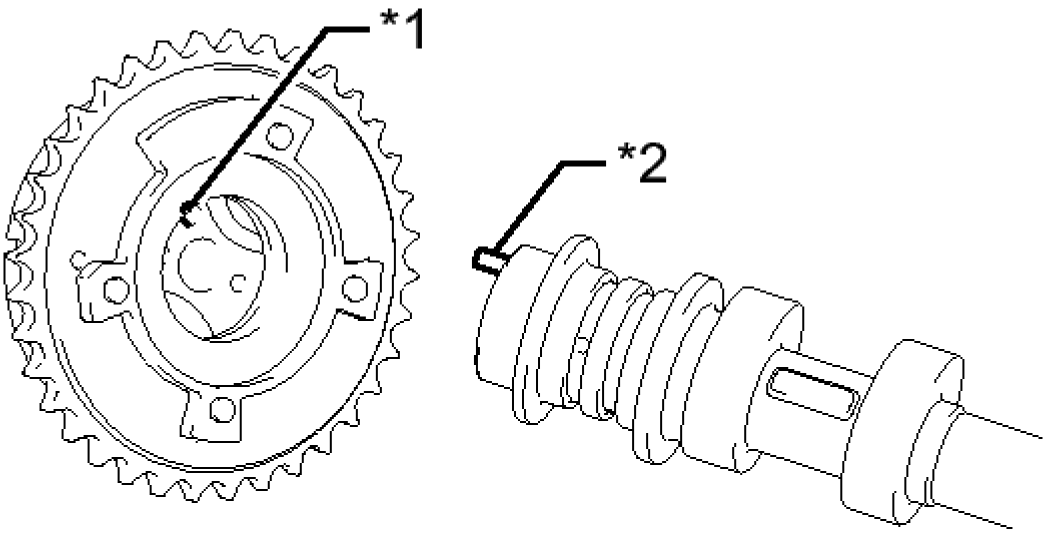

Fig. 87: Identifying Pin Hole And Knock Pin
Courtesy of TOYOTA MOTOR SALES, U.S.A., INC.

TEXT IN ILLUSTRATION

*1	Pin Hole
*2	Knock Pin

c. Check that there is no clearance between the camshaft timing gear and camshaft flange.

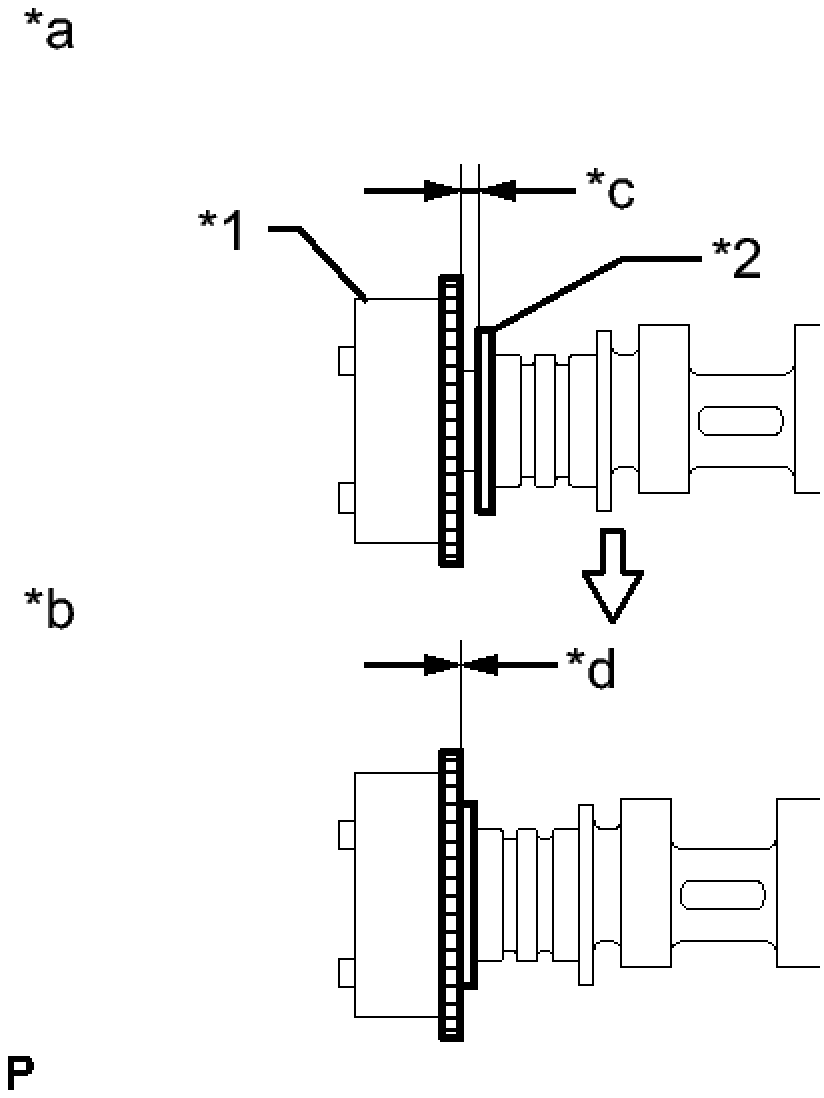

Fig. 88: Identifying No Clearance Between Camshaft Timing Gear And Camshaft Flange
Courtesy of TOYOTA MOTOR SALES, U.S.A., INC.

TEXT IN ILLUSTRATION

*1	Camshaft Timing Gear
*2	Flange
*a	INCORRECT
*b	CORRECT
*c	Clearance
*d	No Clearance

d. Using a wrench to hold the hexagonal portion of the No. 1 camshaft, install the bolt.

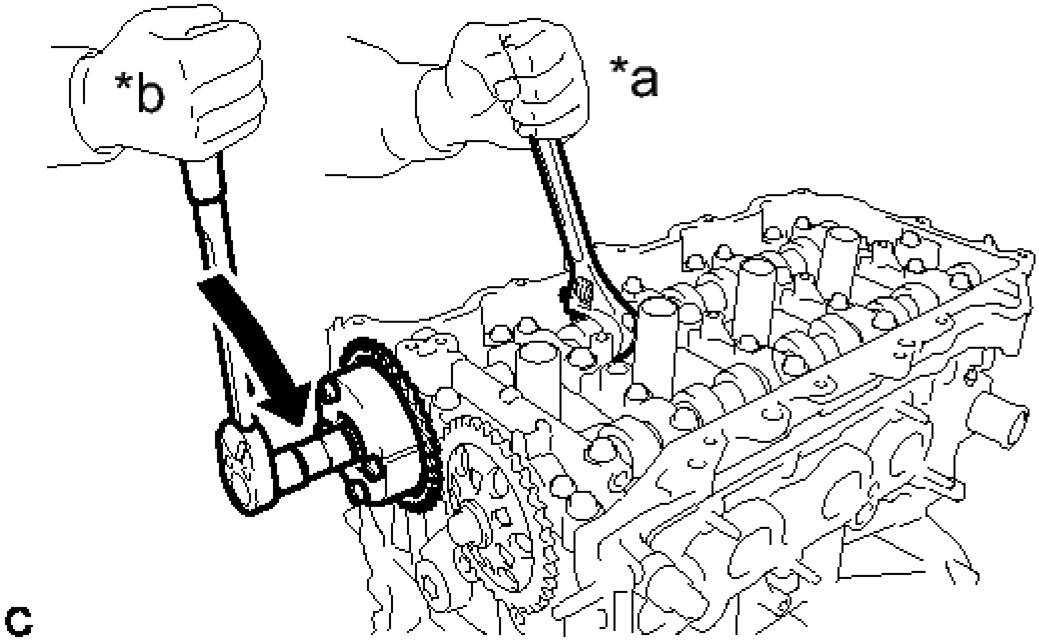

Fig. 89: Installing No. 1 Camshaft Bolt Using Hexagonal
Courtesy of TOYOTA MOTOR SALES, U.S.A., INC.

TEXT IN ILLUSTRATION

*a	Hold
*b	Turn

Torque: 85 N*m (867 kgf*cm, 63 ft.*lbf)

NOTE:

- **Be careful not to damage the cylinder head or spark plug tube with the wrench.**
- **Do not disassemble the camshaft timing gear.**

HINT:

Perform "Inspection After Repair" after replacing the camshaft timing gear assembly. Refer to **INITIALIZATION** .

17. **ADD ENGINE OIL**
    a. Add 50 cc (3.1 cu. in) of engine oil into the oil hole shown in the illustration.

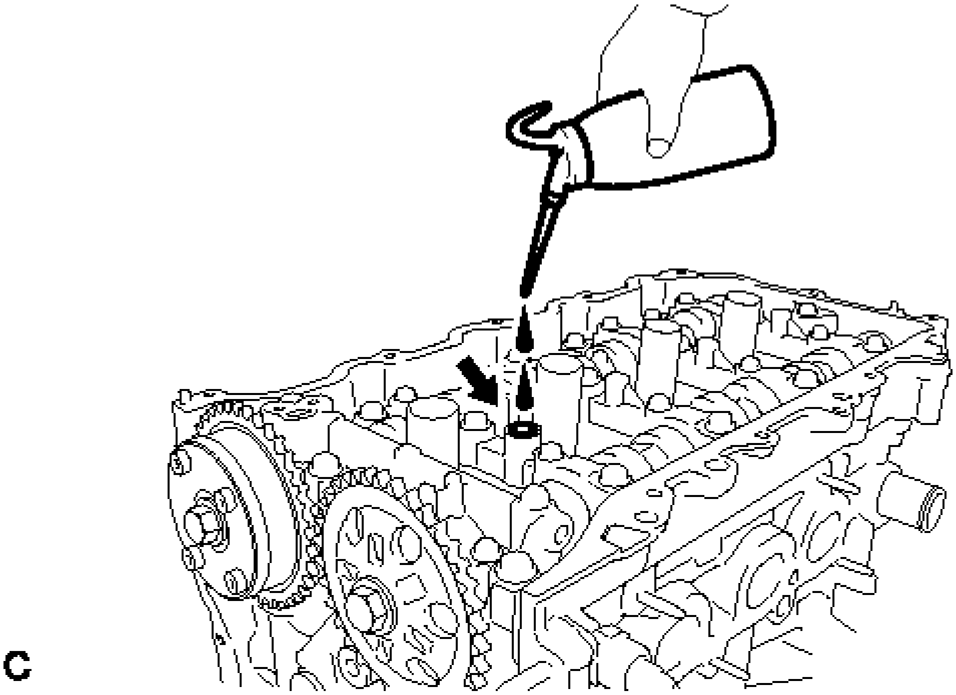

Fig. 90: Adding Engine Oil Into Oil Hole
Courtesy of TOYOTA MOTOR SALES, U.S.A., INC.

NOTE:

- **Oil must be added if the lash adjusters were removed.**
- **Make sure that the low pressure chamber and oil paths of the lash adjusters are full of engine oil.**

18. **INSTALL NO. 1 CHAIN VIBRATION DAMPER**
    a. Install the chain vibration damper with the 2 bolts.

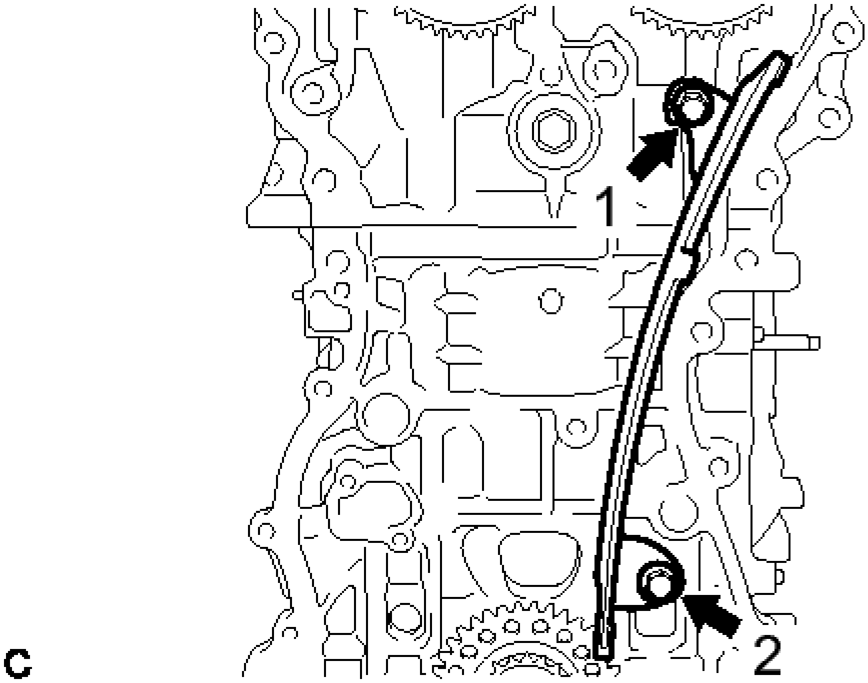

Fig. 91: Identifying No. 1 Chain Vibration Damper
Courtesy of TOYOTA MOTOR SALES, U.S.A., INC.

Torque: 21 N*m (214 kgf*cm, 15 ft.*lbf)

19. **SET NO. 1 CYLINDER TO TDC/COMPRESSION**
    a. Temporarily install the crankshaft pulley bolt.

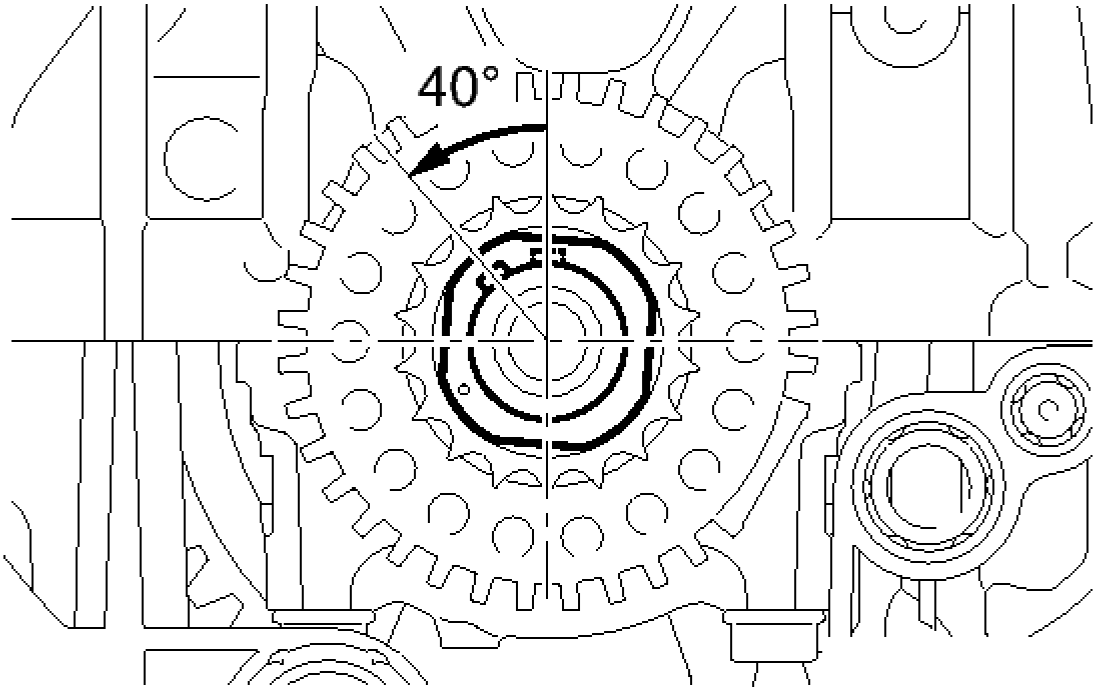

Fig. 92: Rotating Crankshaft 40° Counterclockwise
Courtesy of TOYOTA MOTOR SALES, U.S.A., INC.

b. Rotate the crankshaft 40° counterclockwise to position the crankshaft pulley key as shown in the illustration.
c. Check that the timing marks of the camshaft timing gears are as shown in the illustration.

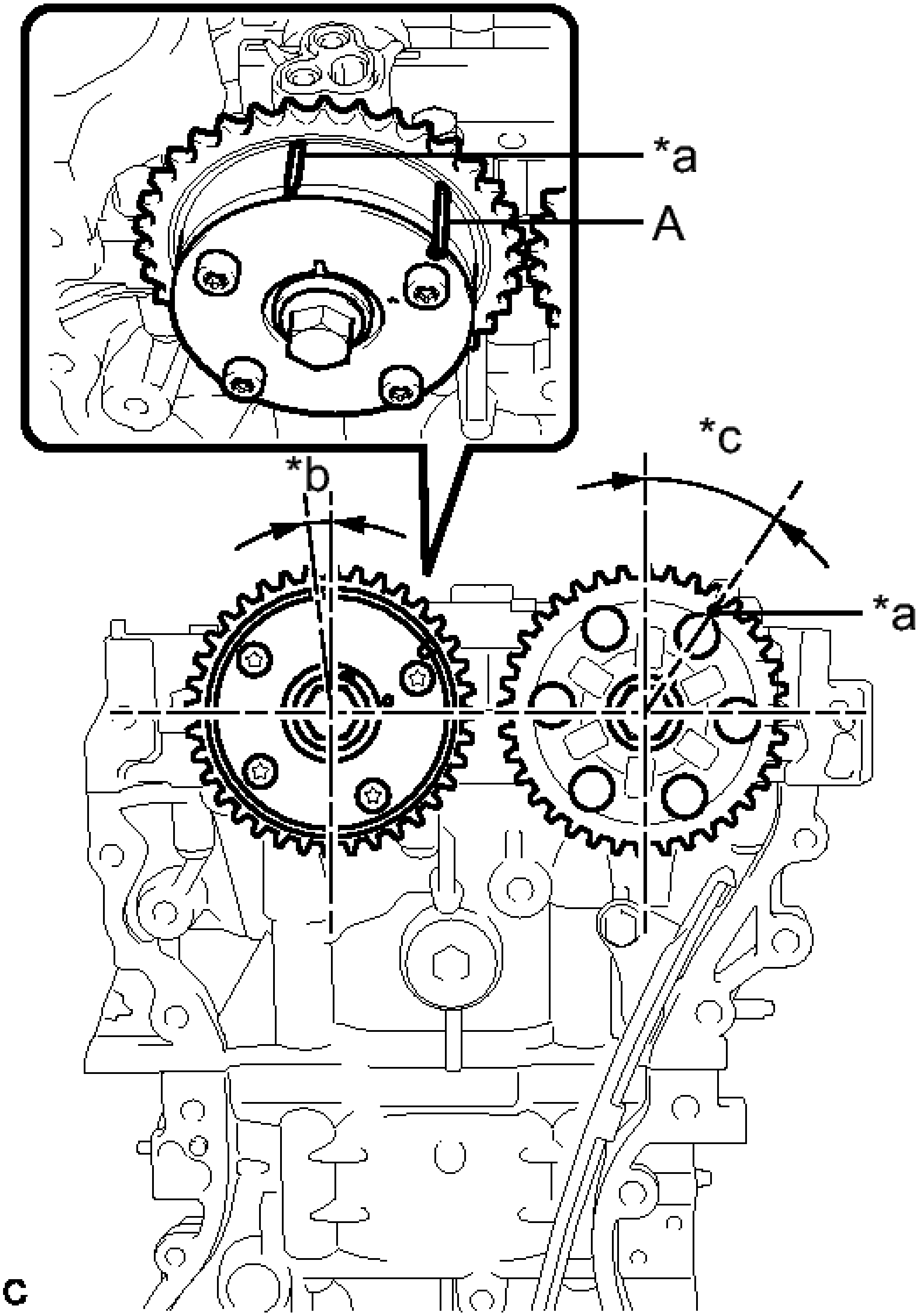

Fig. 93: Identifying Timing Marks Of Camshaft Timing Gears
Courtesy of TOYOTA MOTOR SALES, U.S.A., INC.

TEXT IN ILLUSTRATION

*a	Timing Mark

*b	Approximately 7°
*c	Approximately 32°

HINT:

"A" is not a timing mark.

20. **INSTALL CHAIN SUB-ASSEMBLY**
    a. Place the chain onto the camshaft timing gears and crankshaft timing sprocket.

    HINT:

    - Make sure the mark plate of the chain faces away from the engine.
    - It is not necessary to install the chain to the teeth of the gears and sprocket.

    b. Align the mark plate (yellow or gold) of the chain with the timing mark of the camshaft timing sprocket and install the chain to the camshaft timing sprocket.

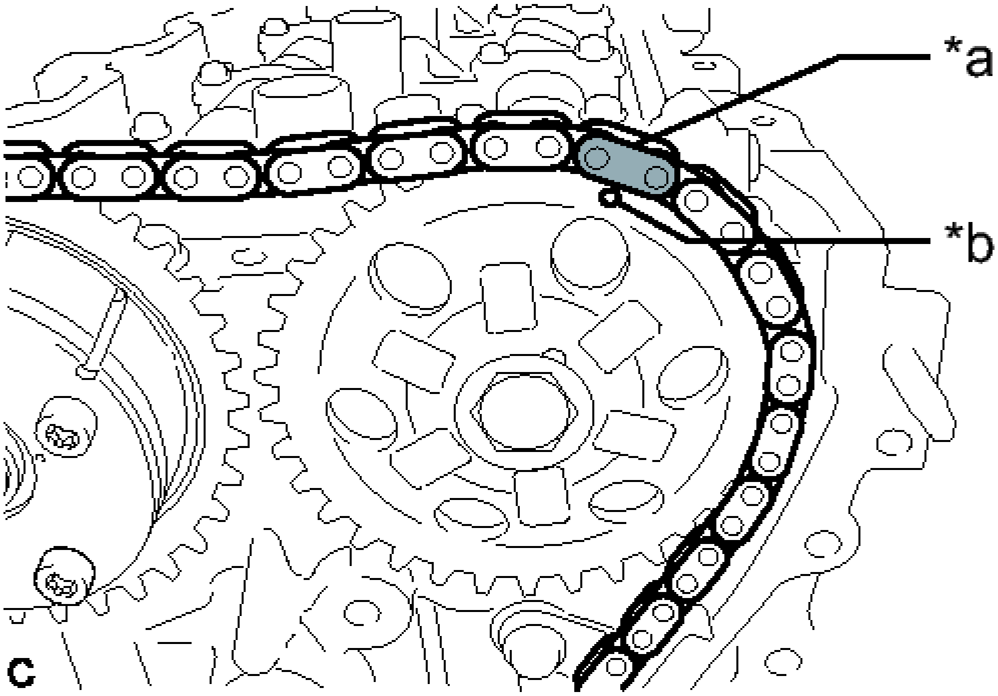

Fig. 94: Aligning Mark Plate And Timing Mark
Courtesy of TOYOTA MOTOR SALES, U.S.A., INC.

TEXT IN ILLUSTRATION

*a	Mark Plate
	Timing

*b	Mark

c. Align the mark plate (pink or gold) of the chain with the timing mark of the crankshaft timing sprocket and install the chain to the crankshaft timing sprocket.

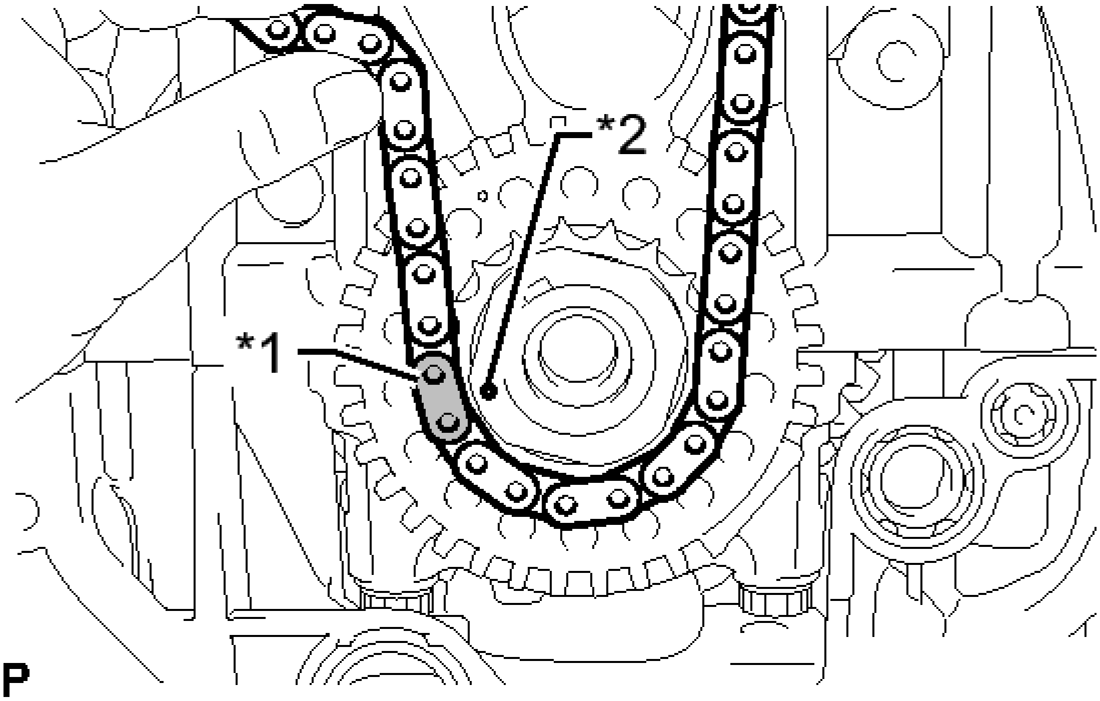

Fig. 95: Identifying Timing Chain Mark Plate & Crankshaft Sprocket Timing Mark
Courtesy of TOYOTA MOTOR SALES, U.S.A., INC.

TEXT IN ILLUSTRATION

*1	Mark Plate
*2	Timing Mark

d. Tie a string above the crankshaft timing sprocket so that the chain is secure.

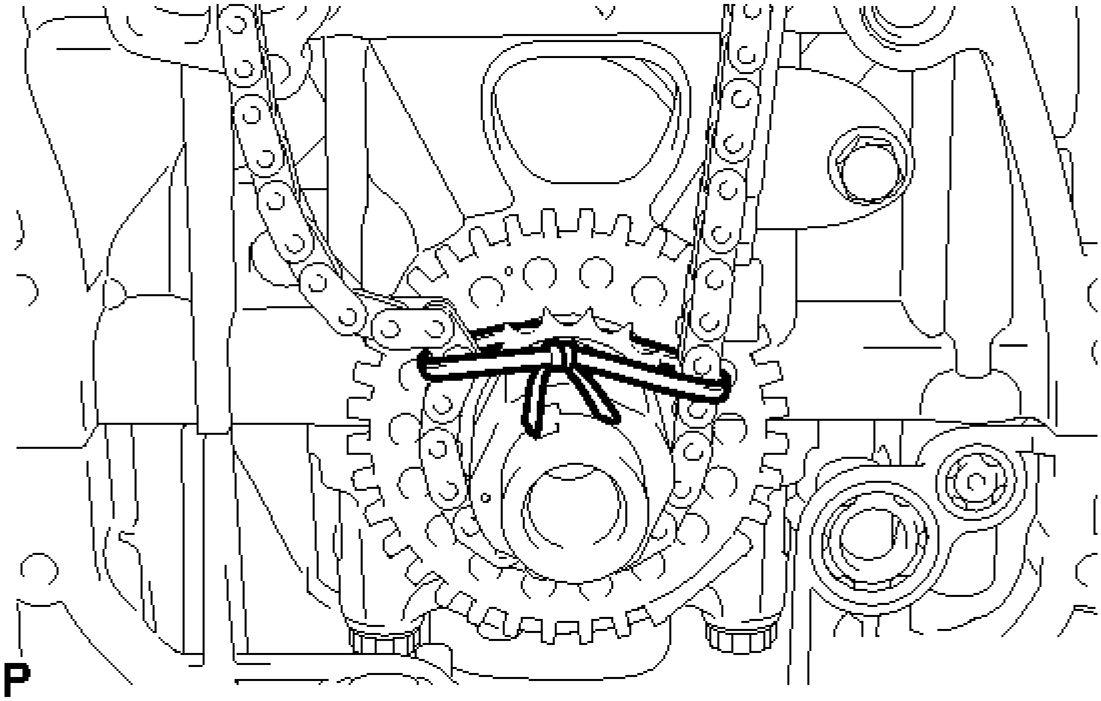

Fig. 96: Tying String Above Crankshaft Timing Sprocket
Courtesy of TOYOTA MOTOR SALES, U.S.A., INC.

e. Using the hexagonal portion of the intake camshaft, rotate the intake camshaft counterclockwise with a wrench, align the timing mark of the camshaft timing gear with the mark plate (yellow or gold) of the chain and install the chain to the camshaft timing gear.

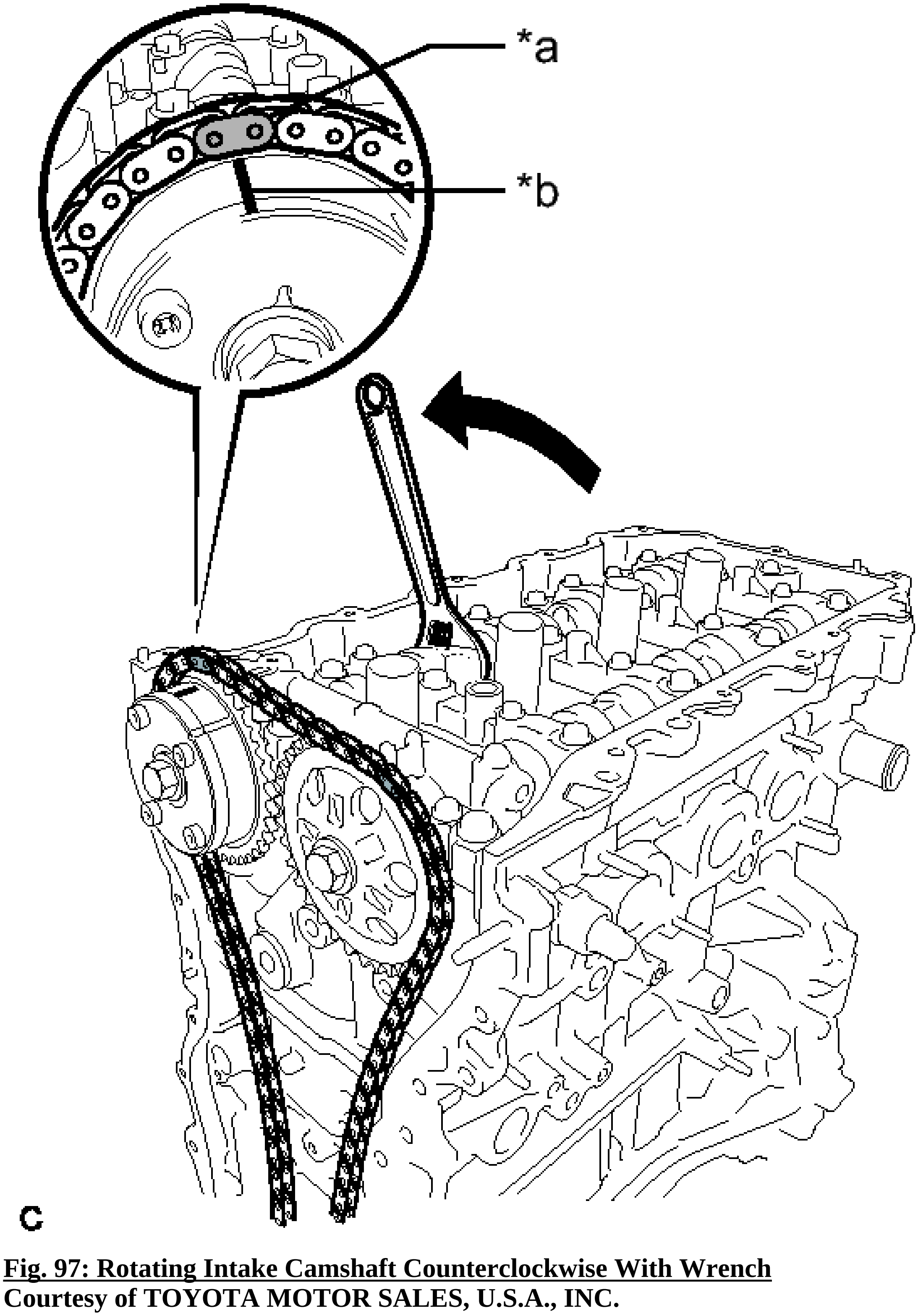

Fig. 97: Rotating Intake Camshaft Counterclockwise With Wrench
Courtesy of TOYOTA MOTOR SALES, U.S.A., INC.

TEXT IN ILLUSTRATION

	Mark

*1	Plate
*2	Timing Mark

HINT:

Hold the intake camshaft in place with a wrench until the chain tensioner is installed.

f. Remove the string above the crankshaft timing sprocket, rotate the crankshaft clockwise, and loosen the chain so that the chain tensioner slipper can be installed.

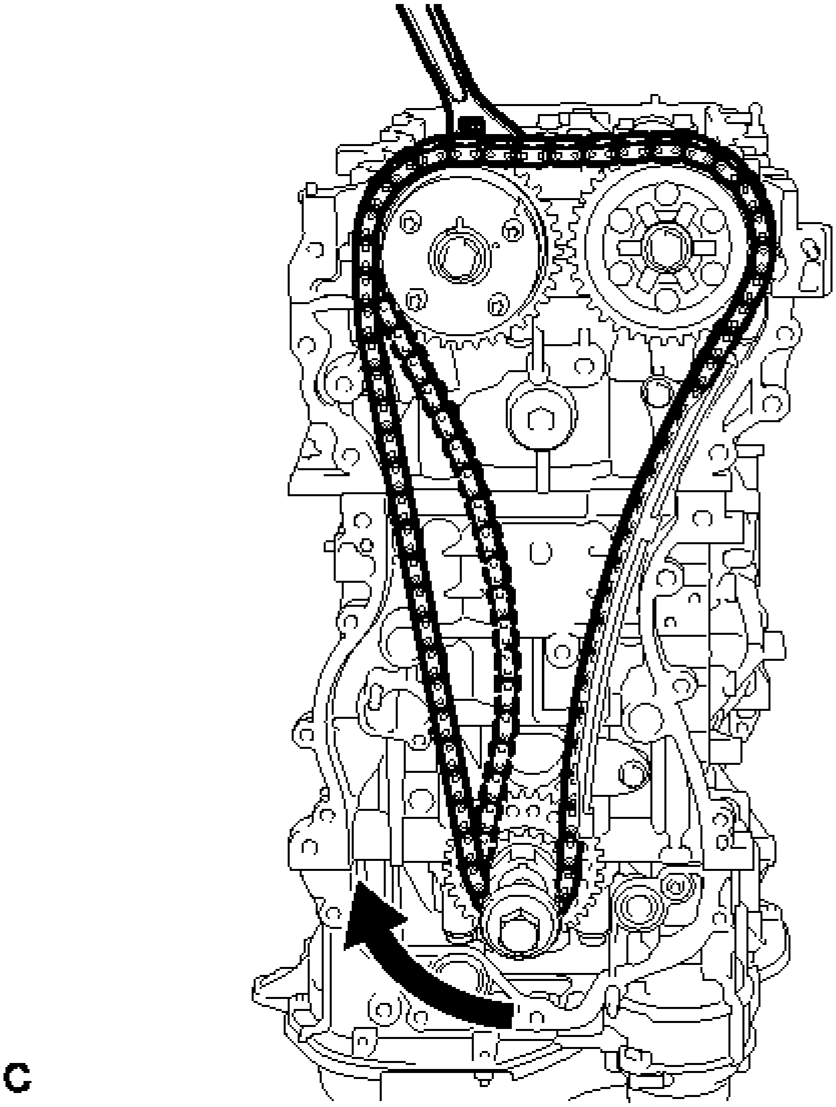

Fig. 98: Installing Chain Tensioner Slipper By Loosening Chain
Courtesy of TOYOTA MOTOR SALES, U.S.A., INC.

NOTE: **Make sure the chain is secure.**

21. **INSTALL CHAIN TENSIONER SLIPPER**
    a. Install the chain tensioner slipper with the bolt.

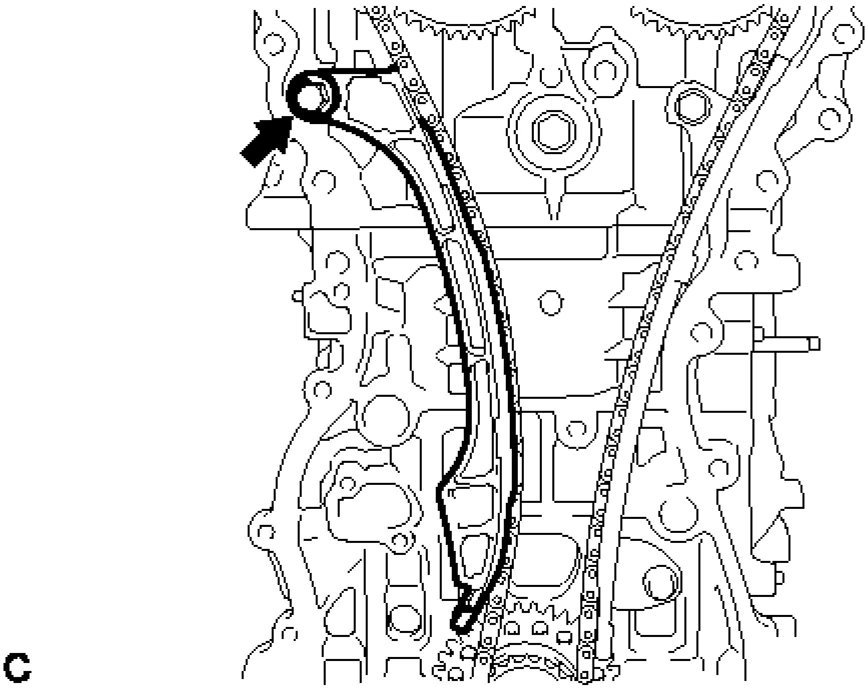

Fig. 99: Identifying Chain Tensioner Slipper Bolt
Courtesy of TOYOTA MOTOR SALES, U.S.A., INC.

Torque: 21 N*m (214 kgf*cm, 15 ft.*lbf)

22. **INSTALL NO. 1 CHAIN TENSIONER ASSEMBLY**
    a. Install a new gasket and the chain tensioner with the 2 bolts.

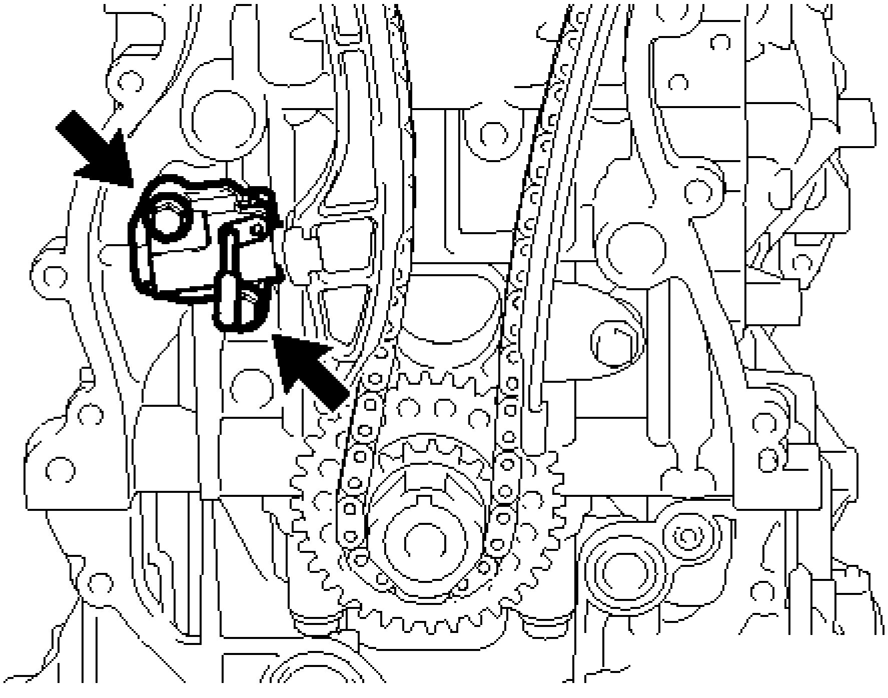

Fig. 100: Identifying Chain Tensioner Bolts
Courtesy of TOYOTA MOTOR SALES, U.S.A., INC.

Torque: 10 N*m (102 kgf*cm, 7 ft.*lbf)

b. Remove the pin from the stopper plate.

23. **INSTALL TIMING CHAIN GUIDE**

a. Install the timing chain guide with the bolt.

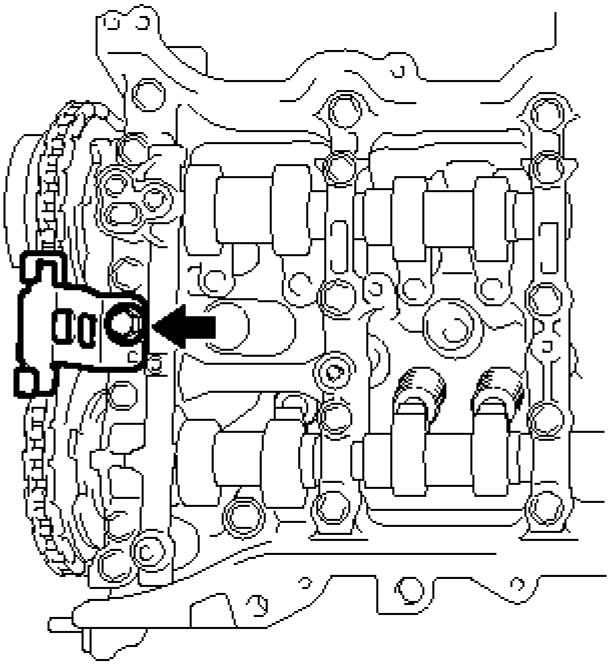

C

Fig. 101: Identifying Timing Chain Guide Bolt
Courtesy of TOYOTA MOTOR SALES, U.S.A., INC.

Torque: 21 N*m (214 kgf*cm, 15 ft.*lbf)

24. **SET NO. 1 CYLINDER TO TDC/COMPRESSION**
    a. Temporarily install the crankshaft pulley bolt.

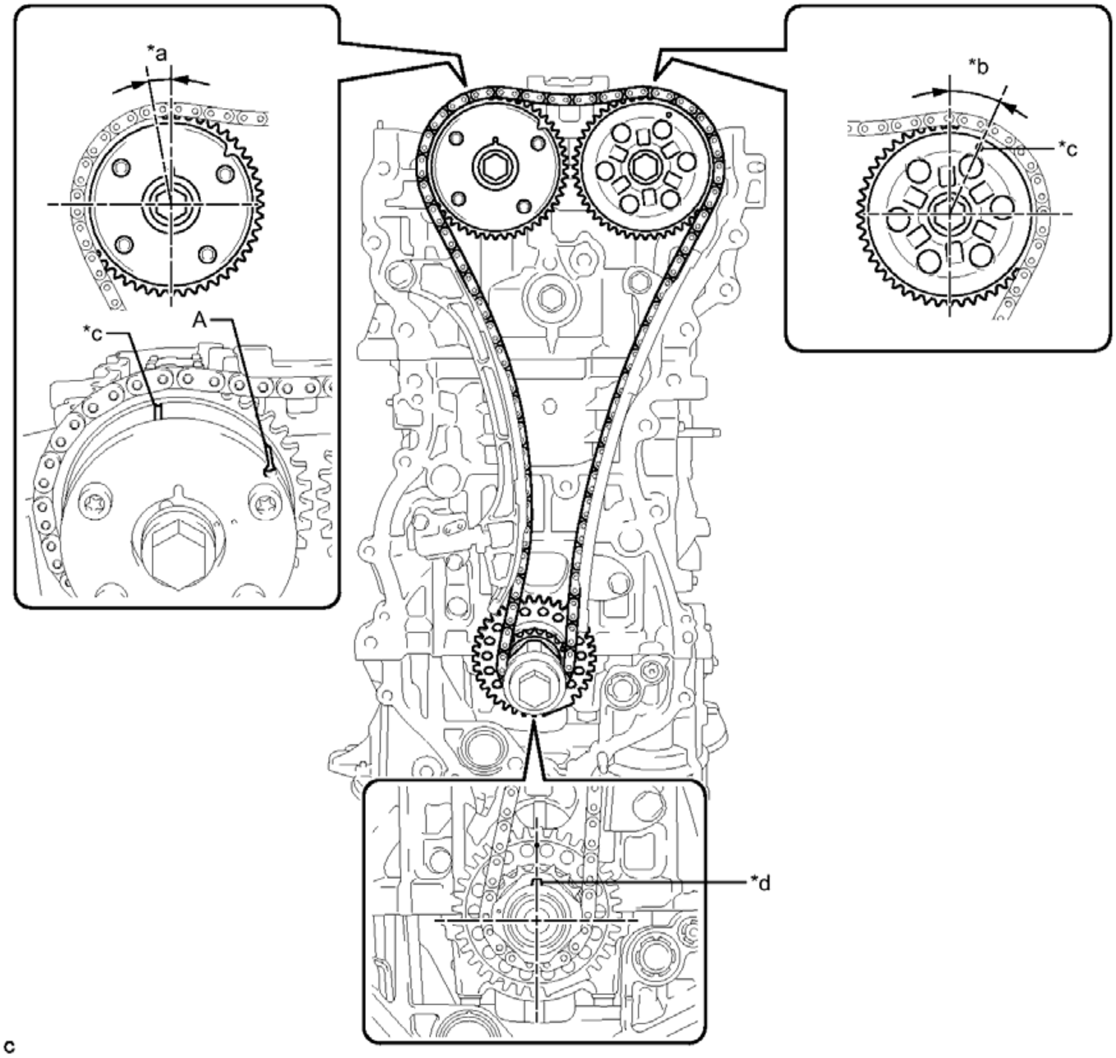

Fig. 102: Setting No. 1 Cylinder To TDC/Compression
Courtesy of TOYOTA MOTOR SALES, U.S.A., INC.

TEXT IN ILLUSTRATION

*a	Approximately 7°	*b	Approximately 32°
*c	Timing Mark	*d	Crankshaft pulley set key

b. Rotate the crankshaft clockwise, and check that the timing marks on the crankshaft timing sprocket and camshaft timing gears are as shown in the illustration.

HINT:

"A" is not a timing mark.

c. Remove the crankshaft pulley bolt.

25. **INSTALL INTAKE MANIFOLD** . Refer to **INSTALLATION - Step 4**
26. **INSTALL FUEL DELIVERY PIPE SUB-ASSEMBLY** . Refer to **INSTALLATION - Step 2**
27. **INSTALL NO. 1 EGR PIPE** See step 10
28. **INSTALL NO. 1 WATER BY-PASS PIPE** See step 17
29. **INSTALL EGR COOLER ASSEMBLY** See step 11
30. **INSTALL EXHAUST MANIFOLD CONVERTER SUB-ASSEMBLY** . Refer to **INSTALLATION - Step 2**
31. **INSTALL NO. 2 MANIFOLD STAY** . Refer to **INSTALLATION - Step 4**
32. **INSTALL MANIFOLD STAY** . Refer to **INSTALLATION - Step 3**
33. **INSTALL NO. 2 EGR PIPE** . Refer to **INSTALLATION - Step 5**
34. **INSTALL NO. 1 EXHAUST MANIFOLD HEAT INSULATOR** . Refer to **INSTALLATION - Step 8**
35. **INSTALL THROTTLE WITH MOTOR BODY ASSEMBLY** . Refer to **INSTALLATION - Step 1**
36. **INSTALL TIMING CHAIN COVER SUB-ASSEMBLY**

    Refer to **INSTALLATION**

FRONT CRANKSHAFT OIL SEAL

COMPONENTS

ILLUSTRATION

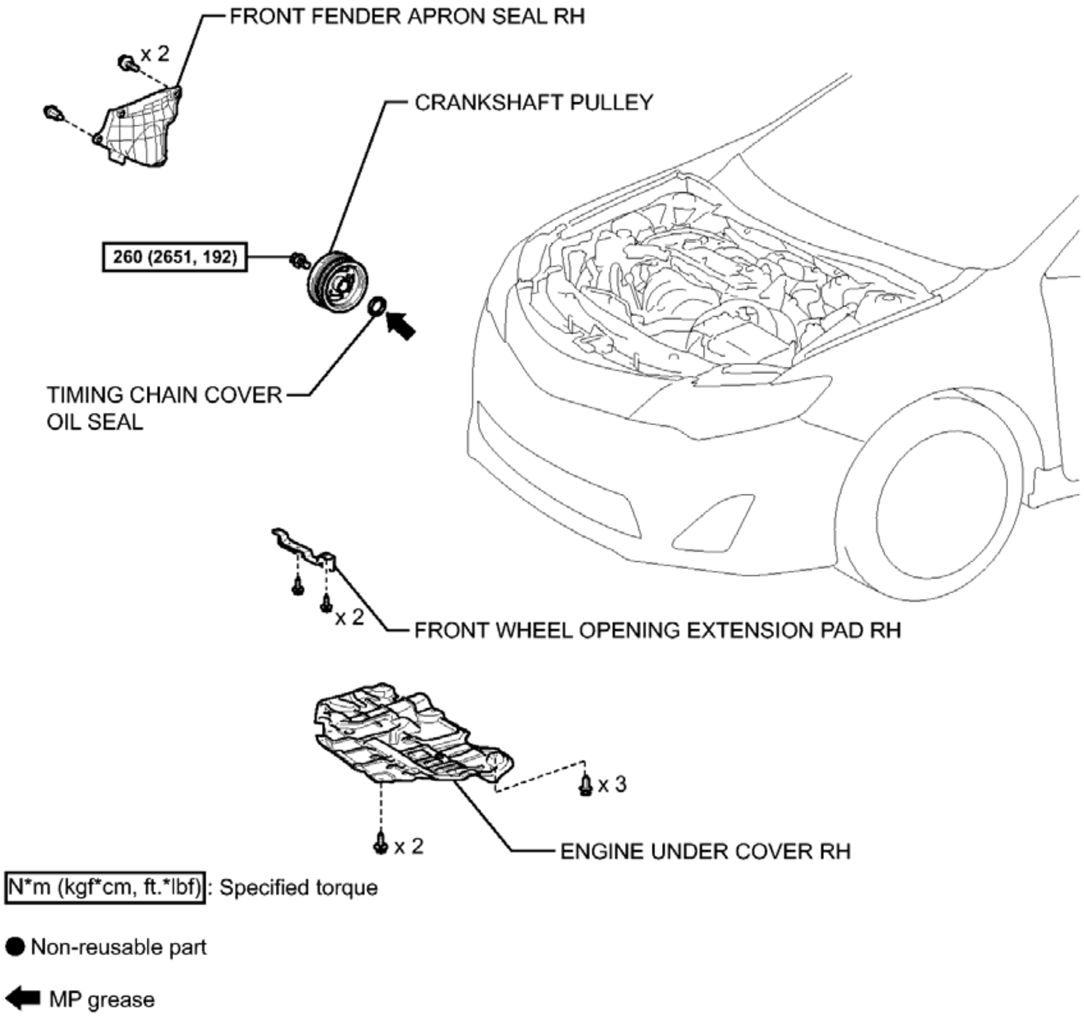
FRONT FENDER APRON SEAL RH
x 2
CRANKSHAFT PULLEY
260 (2651, 192)
TIMING CHAIN COVER OIL SEAL
FRONT WHEEL OPENING EXTENSION PAD RH
x 2
x 3
x 2
ENGINE UNDER COVER RH
N*m (kgf*cm, ft.*lbf): Specified torque
● Non-reusable part
MP grease
c

Fig. 103: Identifying Front Crankshaft Oil Seal Replacement Components With Torque Specifications
Courtesy of TOYOTA MOTOR SALES, U.S.A., INC.

REMOVAL

REMOVAL

1. **REMOVE FRONT WHEEL RH**
2. **REMOVE FRONT WHEEL OPENING EXTENSION PAD RH**
3. **REMOVE ENGINE UNDER COVER RH**
4. **REMOVE FRONT FENDER APRON SEAL RH**
5. **REMOVE CRANKSHAFT PULLEY**

a. Using SST, hold the crankshaft pulley and loosen the pulley bolt. Further loosen the bolt until 2 or 3 threads are screwed into the crankshaft.

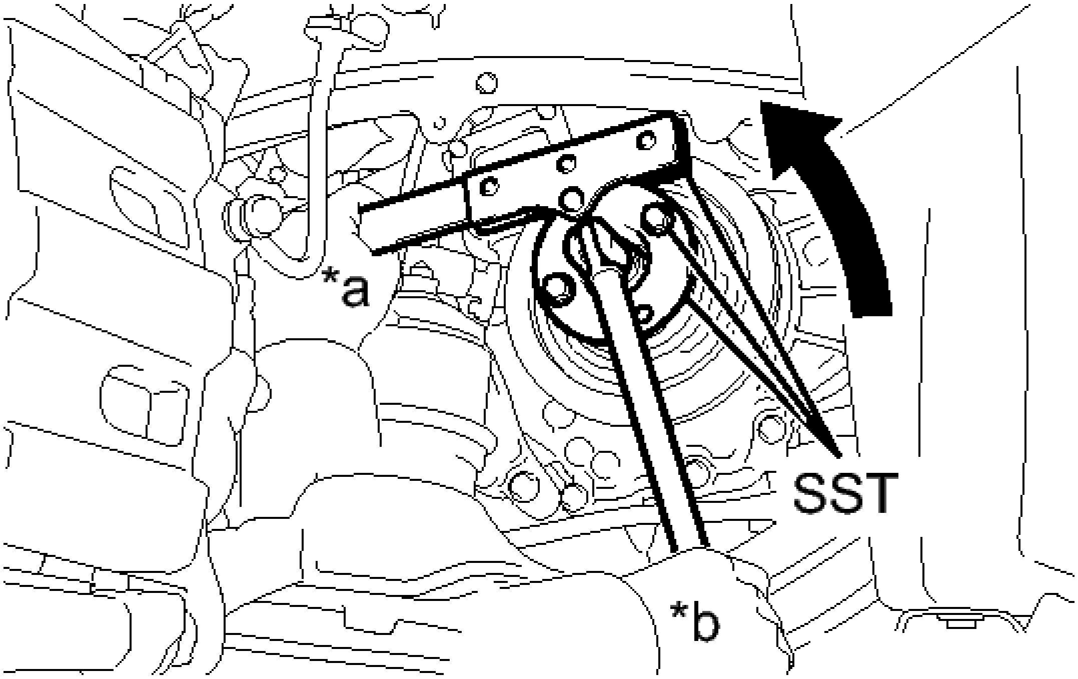

Fig. 104: Removing Crankshaft Pulley Using SST
Courtesy of TOYOTA MOTOR SALES, U.S.A., INC.

TEXT IN ILLUSTRATION

*a	Hold
*b	Turn

- **SST: 09213-54015**
- **SST: 09330-00021**
- **SST: 91551-80650**

b. Using SST and the pulley bolt, remove the crankshaft pulley.

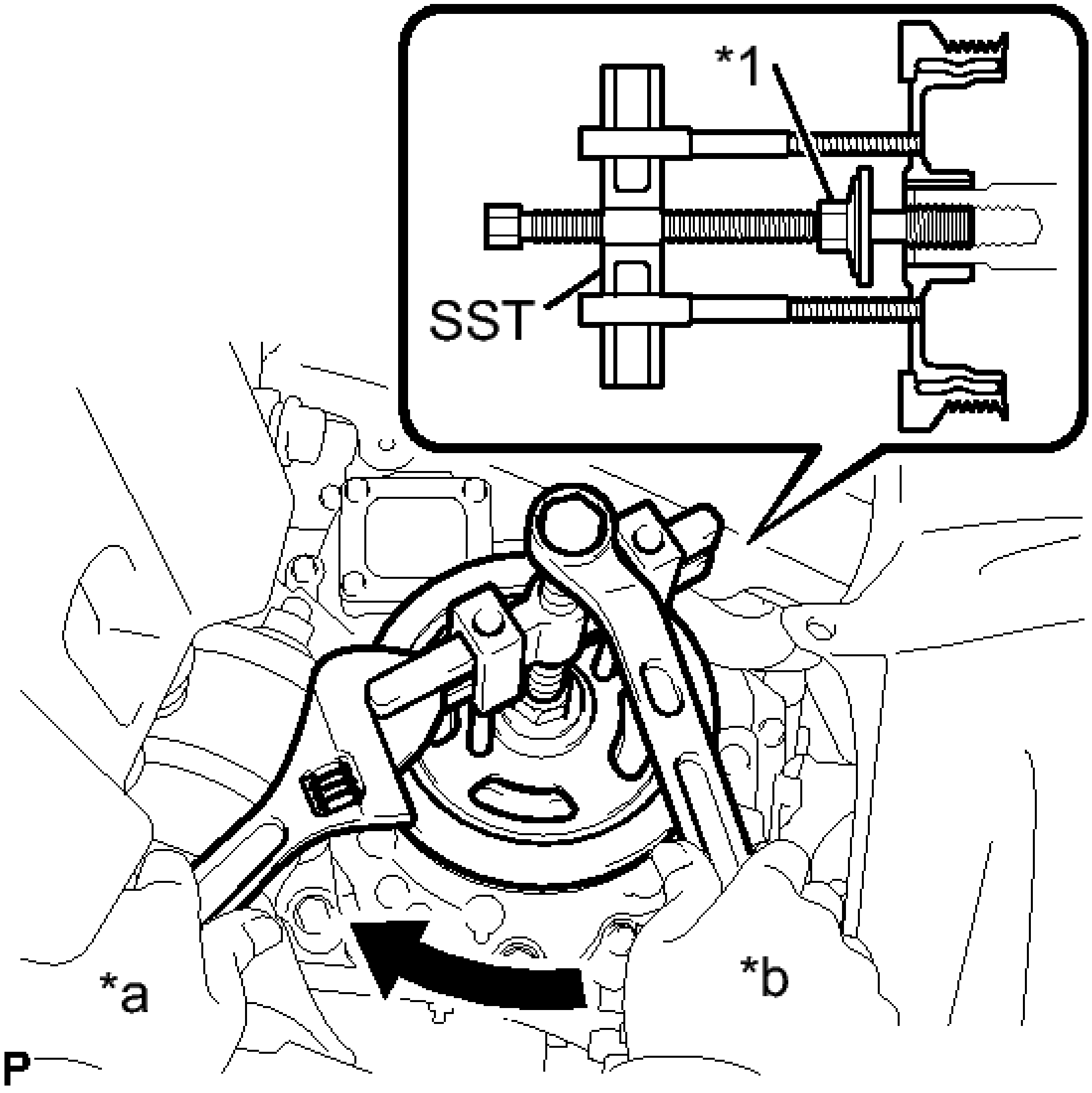

Fig. 105: Removing Crankshaft Pulley Using SST & Pulley Bolt
Courtesy of TOYOTA MOTOR SALES, U.S.A., INC.

TEXT IN ILLUSTRATION

*1	Pulley Bolt
*a	Hold
*b	Turn

- **SST: 09950-50013**

  09951-05010

  09952-05010

  09953-05020

  09954-05011

HINT:

Apply a lubricant to the threads and end of SST.

6. **REMOVE TIMING CHAIN COVER OIL SEAL**
    a. Using a screwdriver, pry out the oil seal.

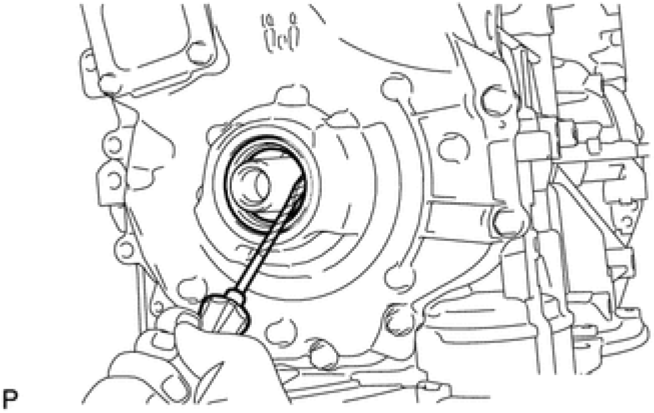

Fig. 106: Prying Out Oil Seal
Courtesy of TOYOTA MOTOR SALES, U.S.A., INC.

HINT:

Tape the screwdriver tip before use.

NOTE: **Do not damage the surface of the oil seal press fit hole or the crankshaft.**

INSTALLATION

INSTALLATION

1. **INSTALL TIMING CHAIN COVER OIL SEAL**
    a. Apply MP grease to the lip of a new oil seal.

NOTE:

- **Do not allow foreign matter to contact the lip of the oil seal.**
- **Do not allow MP grease to contact the dust seal.**

    b. Using SST and a hammer, tap in the oil seal until its surface is flush with the timing chain cover edge.

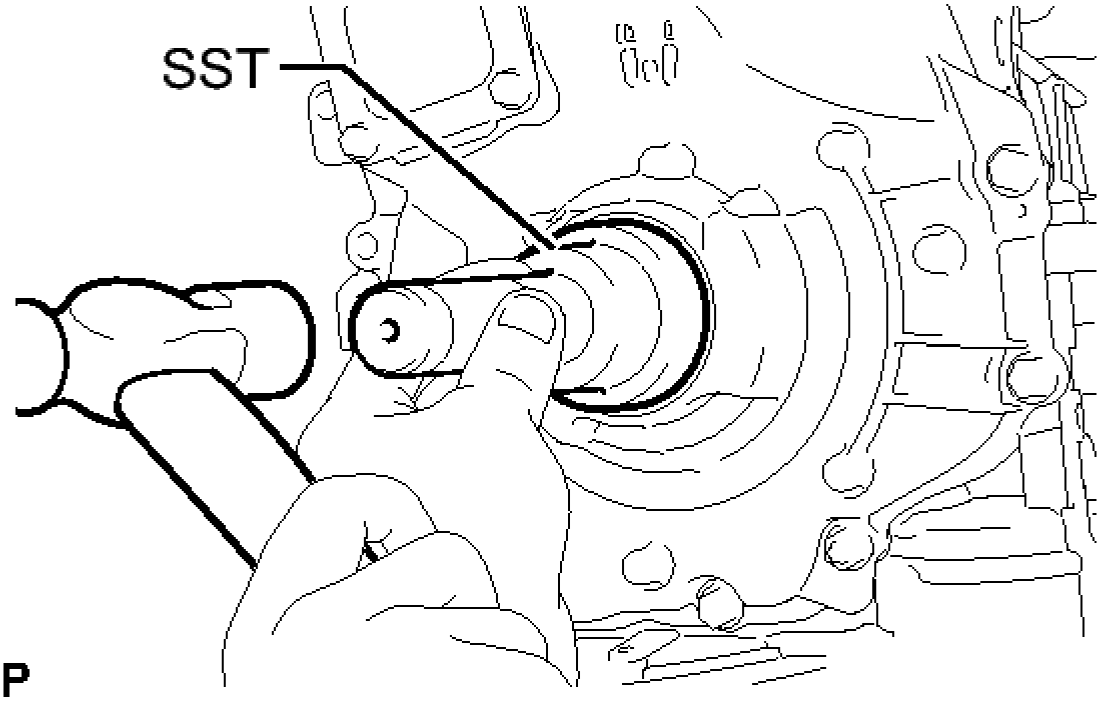

Fig. 107: Installing Oil Seal
Courtesy of TOYOTA MOTOR SALES, U.S.A., INC.

- **SST: 09223-22010**

NOTE:

- **Keep the lip of the oil seal free from foreign matter.**
- **Do not tap in the oil seal at an angle.**

2. **INSTALL CRANKSHAFT PULLEY**
    a. Align the pulley set key with the key groove of the crankshaft pulley.
    b. Using SST, hold the crankshaft pulley and install the pulley bolt.

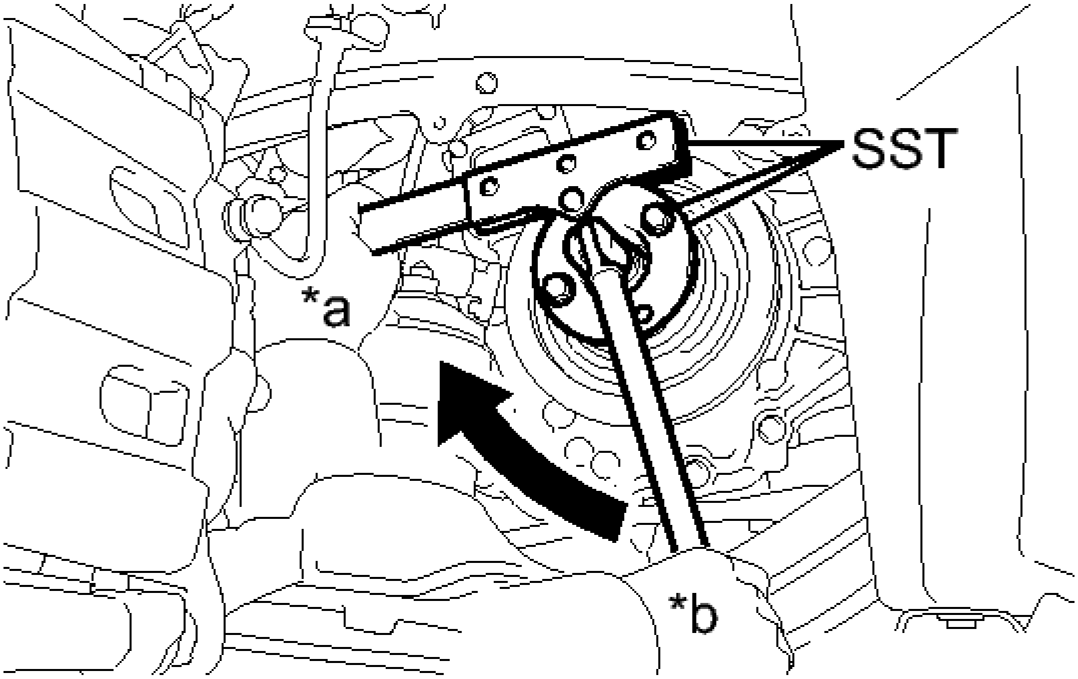

Fig. 108: Installing Crankshaft Pulley Using SST
Courtesy of TOYOTA MOTOR SALES, U.S.A., INC.

TEXT IN ILLUSTRATION

*a	Hold
*b	Turn

- **SST: 09213-54015**
- **SST: 09330-00021**
- **SST: 91551-80650**

Torque: 260 N*m (2651 kgf*cm, 192 ft.*lbf)

3. **INSPECT FOR OIL LEAK**
4. **INSTALL FRONT FENDER APRON SEAL RH**
5. **INSTALL ENGINE UNDER COVER RH**
6. **INSTALL FRONT WHEEL OPENING EXTENSION PAD RH**
7. **INSTALL FRONT WHEEL RH**

Torque: 103 N*m (1049 kgf*cm, 76 ft.*lbf)

REAR CRANKSHAFT OIL SEAL

COMPONENTS

ILLUSTRATION

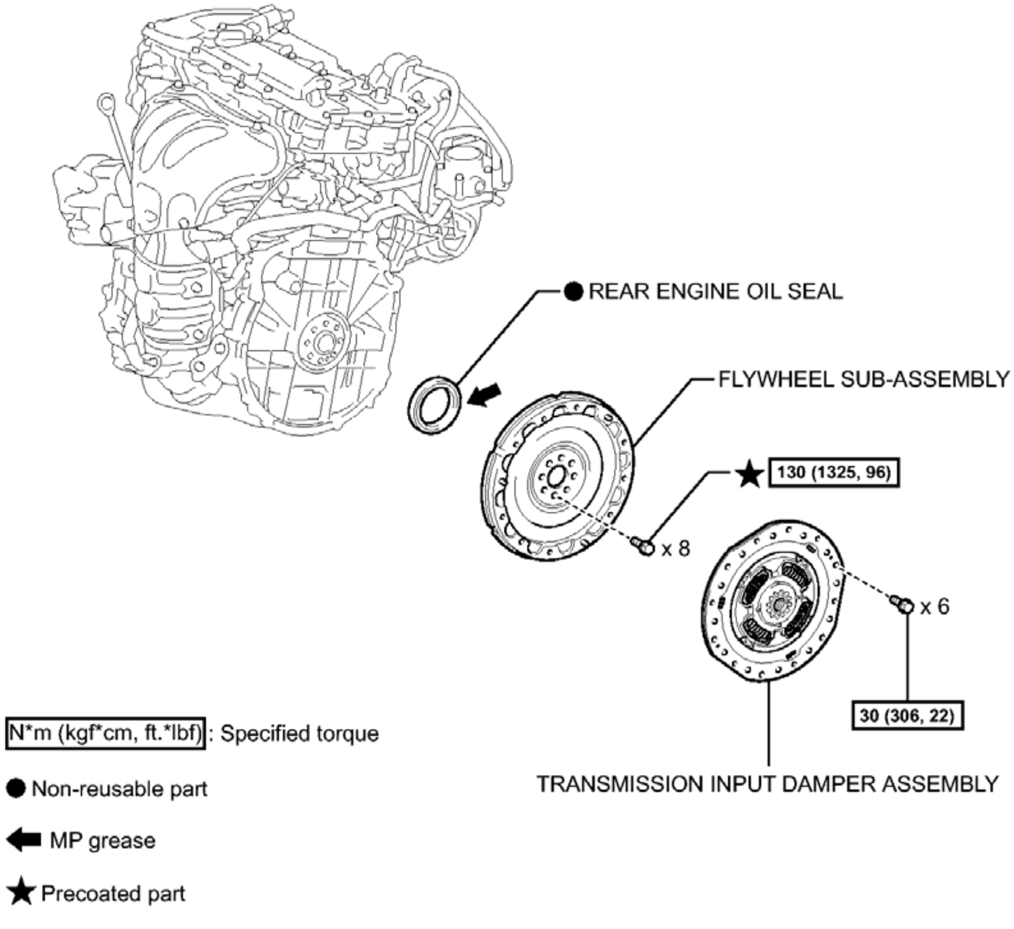
● REAR ENGINE OIL SEAL
FLYWHEEL SUB-ASSEMBLY
★ 130 (1325, 96)
x 8
x 6
30 (306, 22)
TRANSMISSION INPUT DAMPER ASSEMBLY
N*m (kgf*cm, ft.*lbf): Specified torque
● Non-reusable part
MP grease
★ Precoated part
P

Fig. 109: Identifying Rear Crankshaft Oil Seal Replacement Components With Torque Specifications
Courtesy of TOYOTA MOTOR SALES, U.S.A., INC.

REMOVAL

REMOVAL

1. **REMOVE HYBRID VEHICLE TRANSAXLE ASSEMBLY**

   Refer to **REMOVAL**

2. **REMOVE TRANSMISSION INPUT DAMPER ASSEMBLY**
   a. Using SST, hold the crankshaft pulley.

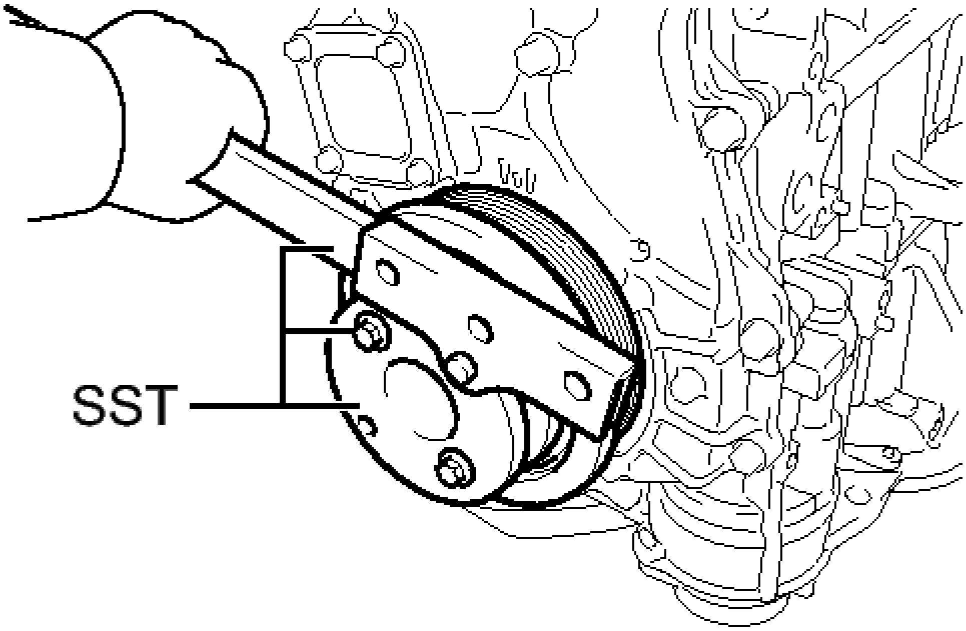

Fig. 110: Holding Crankshaft Pulley Using SST
Courtesy of TOYOTA MOTOR SALES, U.S.A., INC.

- **SST: 09213-54015**
- **SST: 09330-00021**
- **SST: 91551-80650**

b. Remove the 6 bolts and transmission input damper assembly.

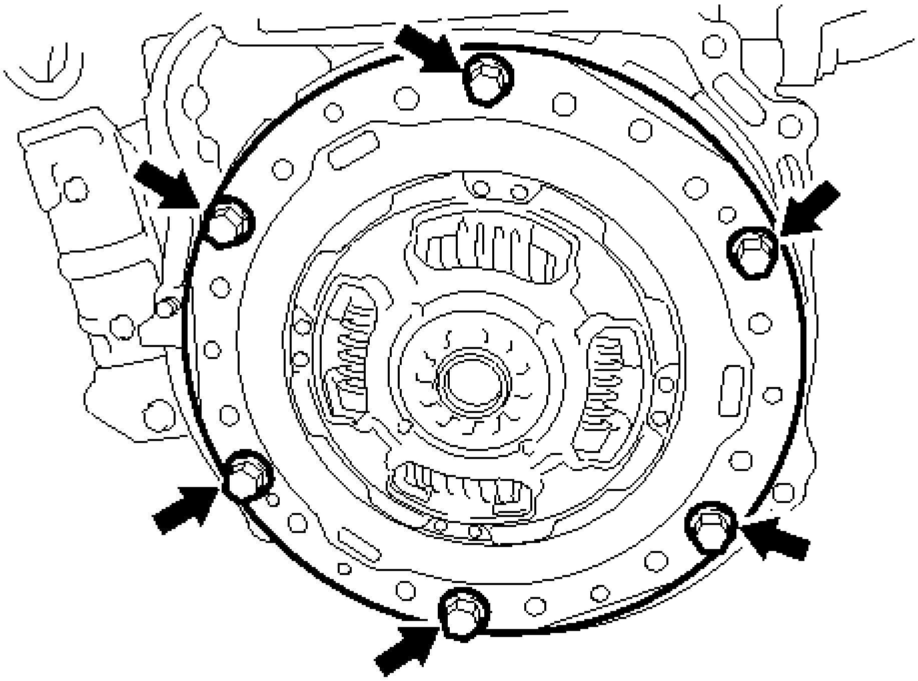

Fig. 111: Identifying Transmission Input Damper Assembly Bolts
Courtesy of TOYOTA MOTOR SALES, U.S.A., INC.

3. **REMOVE FLYWHEEL SUB-ASSEMBLY**
    a. Using SST, hold the crankshaft pulley.

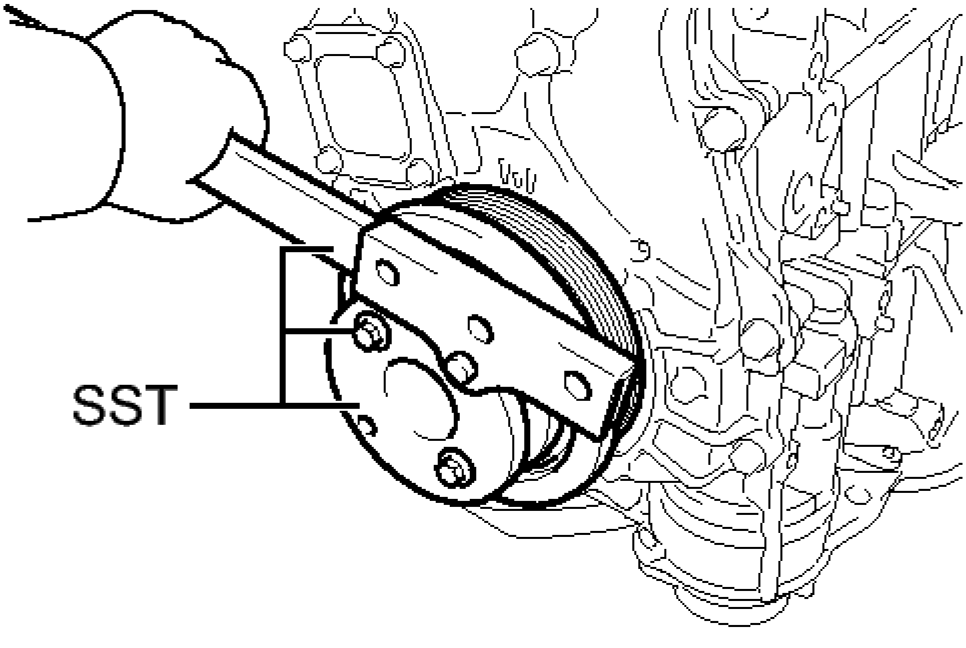

Fig. 112: Holding Crankshaft Pulley Using SST

Courtesy of TOYOTA MOTOR SALES, U.S.A., INC.

- **SST: 09213-54015**
- **SST: 09330-00021**
- **SST: 91551-80650**

b. Remove the 8 bolts and flywheel sub-assembly.

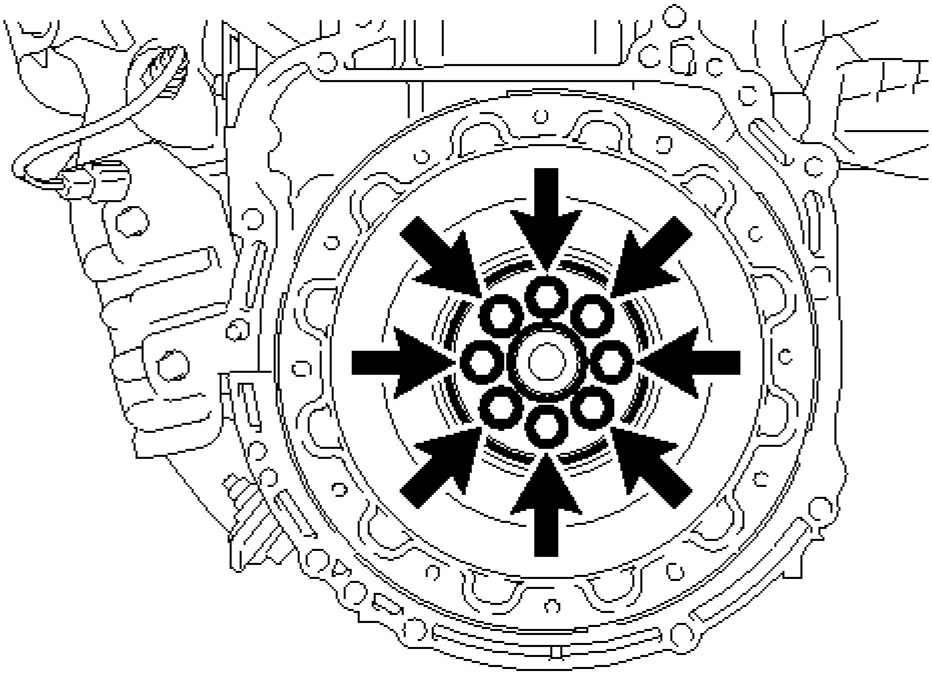

Fig. 113: Identifying Flywheel Sub-Assembly Bolts
Courtesy of TOYOTA MOTOR SALES, U.S.A., INC.

4. **REMOVE REAR ENGINE OIL SEAL**
   a. Using a knife, cut off the lip of the oil seal.

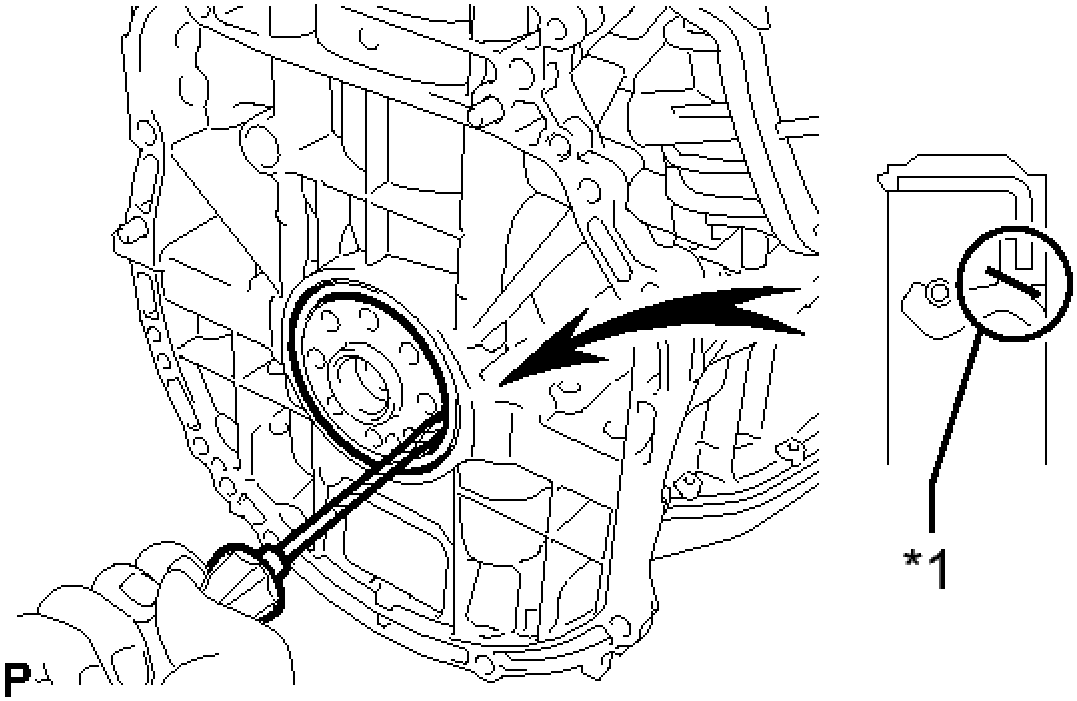

Fig. 114: Removing Rear Engine Oil Seal
Courtesy of TOYOTA MOTOR SALES, U.S.A., INC.

TEXT IN ILLUSTRATION

*1	Cut Position

b. Using a screwdriver, pry out the oil seal.

HINT:

Tape the screwdriver tip before use.

NOTE: **After removing, check the crankshaft for damage. If damaged, smooth the surface with 400-grit sandpaper.**

INSTALLATION

INSTALLATION

1. **INSTALL REAR ENGINE OIL SEAL**
    a. Apply MP grease to the lip of a new oil seal.

NOTE:

- **Do not allow foreign matter to contact the lip of the oil seal.**
- **Do not allow MP grease to contact the dust seal.**

b. Using SST and a hammer, tap in the oil seal until its surface is flush with the edges of the cylinder block and crankcase.

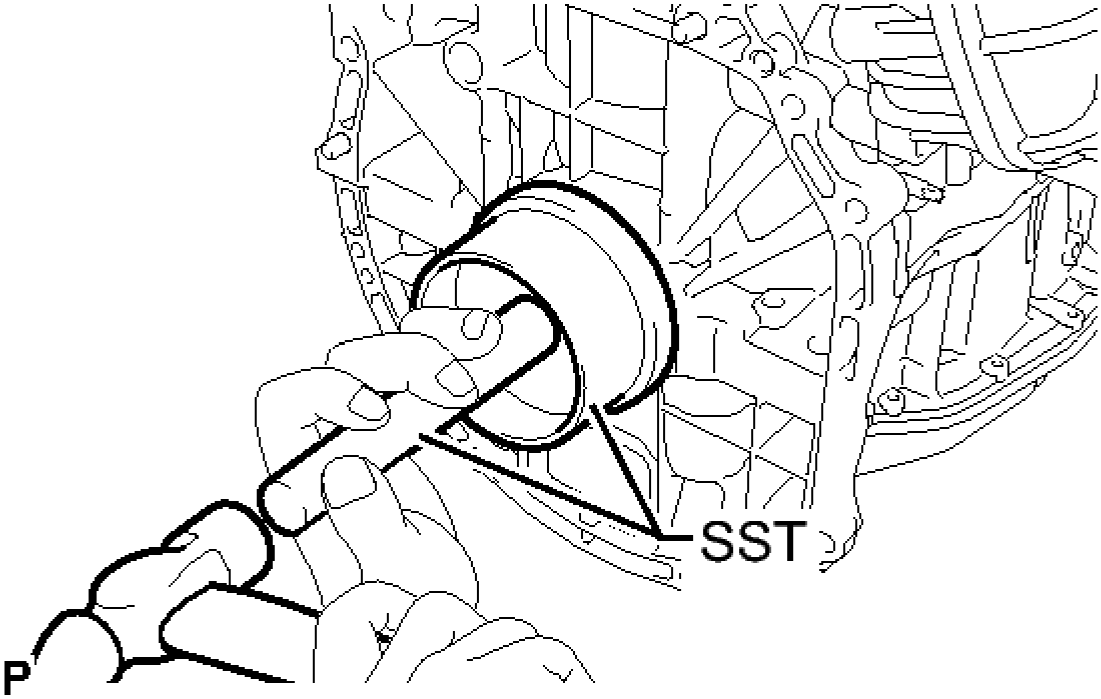

Fig. 115: Installing Rear Engine Oil Seal
Courtesy of TOYOTA MOTOR SALES, U.S.A., INC.

- **SST: 09223-15030**
- **SST: 09950-70010**
  09951-07150

NOTE:

- **Keep the lip of the oil seal free from foreign matter.**
- **Do not tap in the oil seal at an angle.**

2. **INSTALL FLYWHEEL SUB-ASSEMBLY**
   a. Using SST, hold the crankshaft.

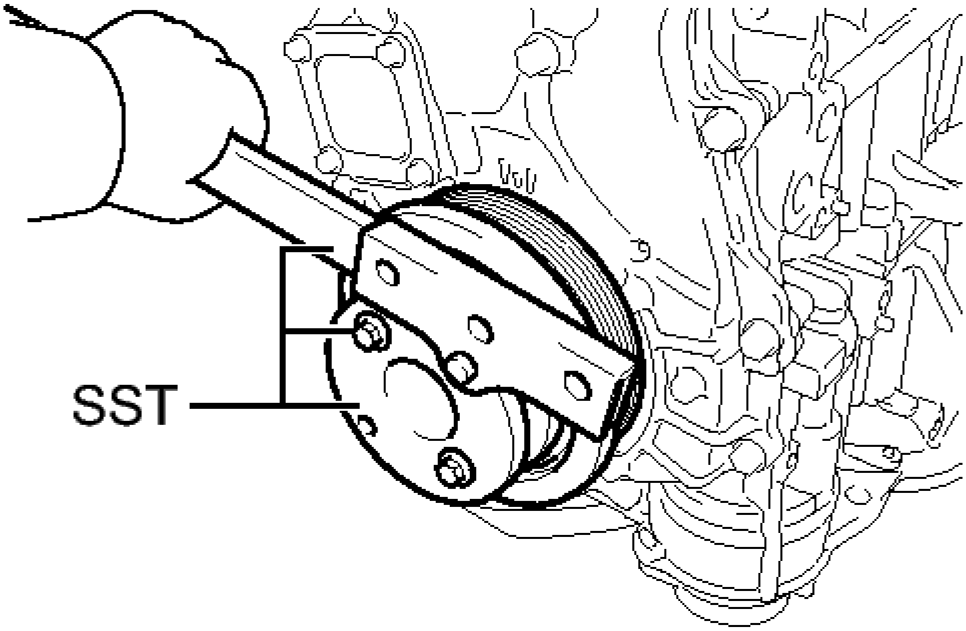

Fig. 116: Holding Crankshaft Pulley Using SST
Courtesy of TOYOTA MOTOR SALES, U.S.A., INC.

- **SST: 09213-54015**
- **SST: 91551-80650**
- **SST: 09330-00021**

b. Apply a few drops of adhesive to 2 or 3 threads at the tip of each of the 8 bolts.

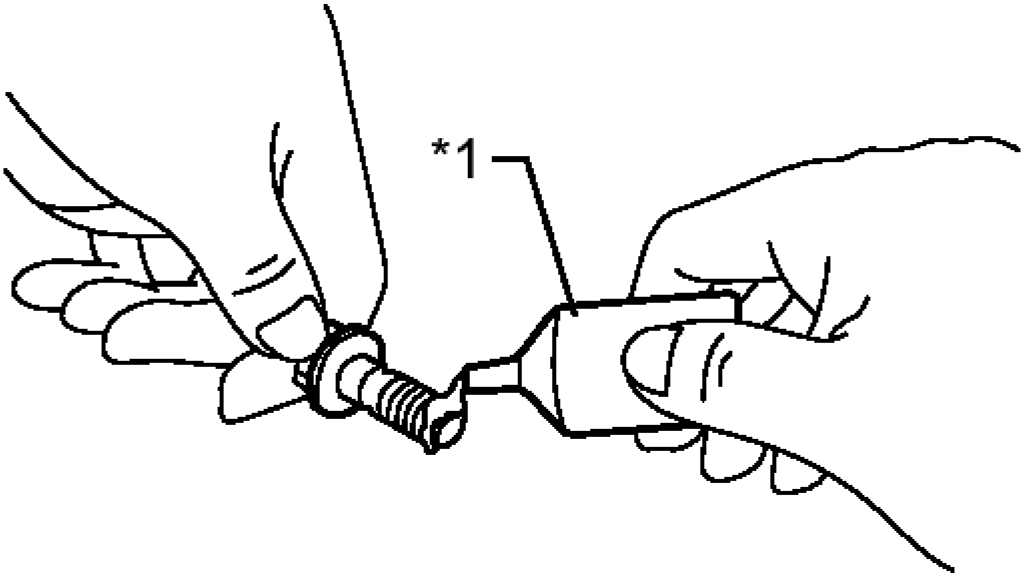

Fig. 117: Apply Adhesive To End Threads Of Bolts
Courtesy of TOYOTA MOTOR SALES, U.S.A., INC.

TEXT IN ILLUSTRATION

*1	Adhesive

Adhesive

Toyota Genuine Adhesive 1324, Three Bond 1324 or equivalent

c. Install and uniformly tighten the 8 bolts in the sequence shown in the illustration.

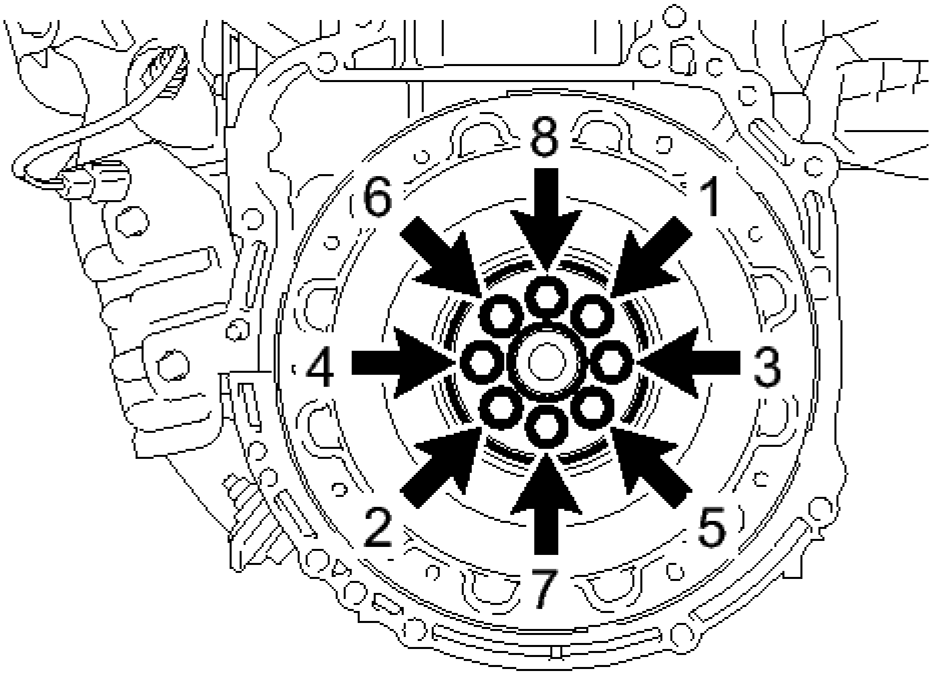

Fig. 118: Tightening Flywheel Sub-Assembly Bolts In Sequence
Courtesy of TOYOTA MOTOR SALES, U.S.A., INC.

Torque: 130 N*m (1326 kgf*cm, 96 ft.*lbf)

NOTE:	**Do not start the engine for at least an hour after installing the flywheel sub-assembly.**

d. Check that the crankshaft turns smoothly.

3. **INSTALL TRANSMISSION INPUT DAMPER ASSEMBLY**

   a. Using SST, hold the crankshaft.

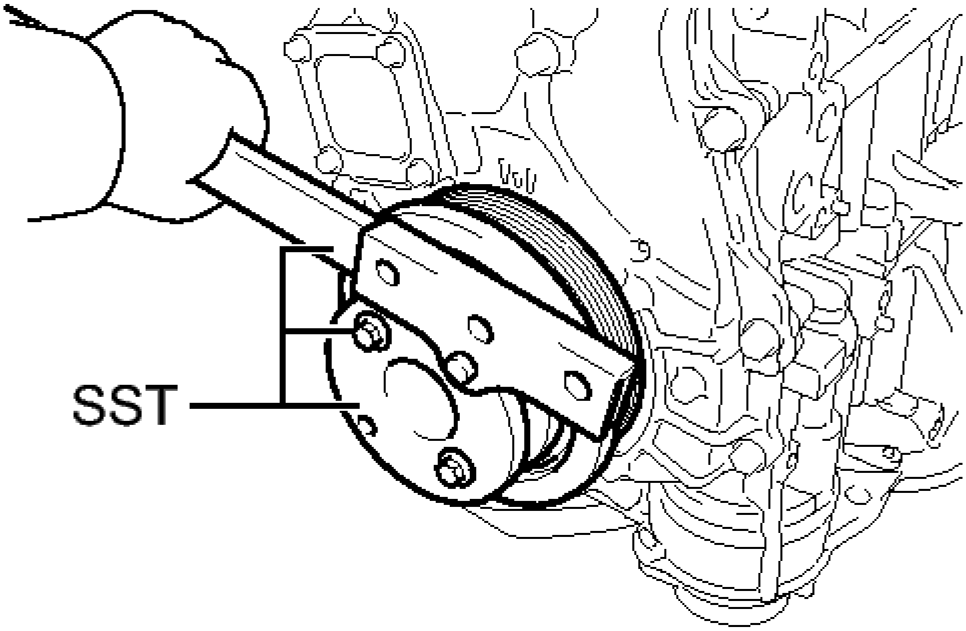

P

Fig. 119: Holding Crankshaft Pulley Using SST
Courtesy of TOYOTA MOTOR SALES, U.S.A., INC.

- **SST: 09213-54015**
- **SST: 09330-00021**
- **SST: 91551-80650**

b. Install the transmission input damper assembly.
c. Install and uniformly tighten the 6 bolts in the sequence shown in the illustration.

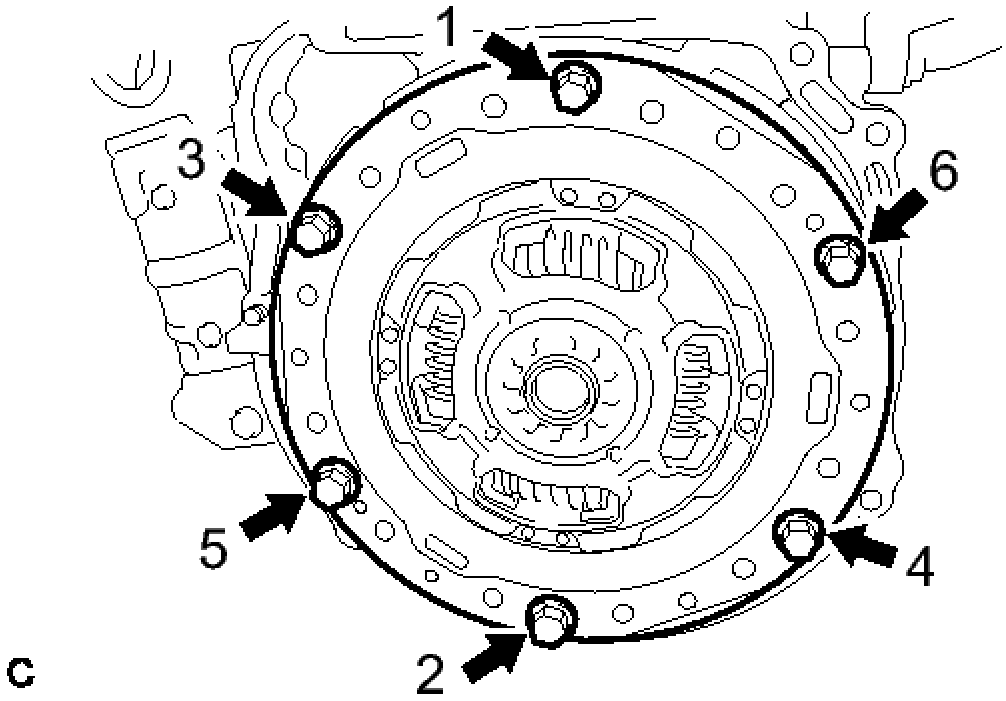

Fig. 120: Tightening Transmission Input Damper Assembly Bolts In Sequence
Courtesy of TOYOTA MOTOR SALES, U.S.A., INC.

Torque: 30 N*m (306 kgf*cm, 22 ft.*lbf)

NOTE:	- **Take care not to insert the transmission input damper assembly in the wrong direction.**

4. **INSTALL HYBRID VEHICLE TRANSAXLE ASSEMBLY**

   Refer to **INSTALLATION - Step 10**

ENGINE ASSEMBLY

COMPONENTS

ILLUSTRATION

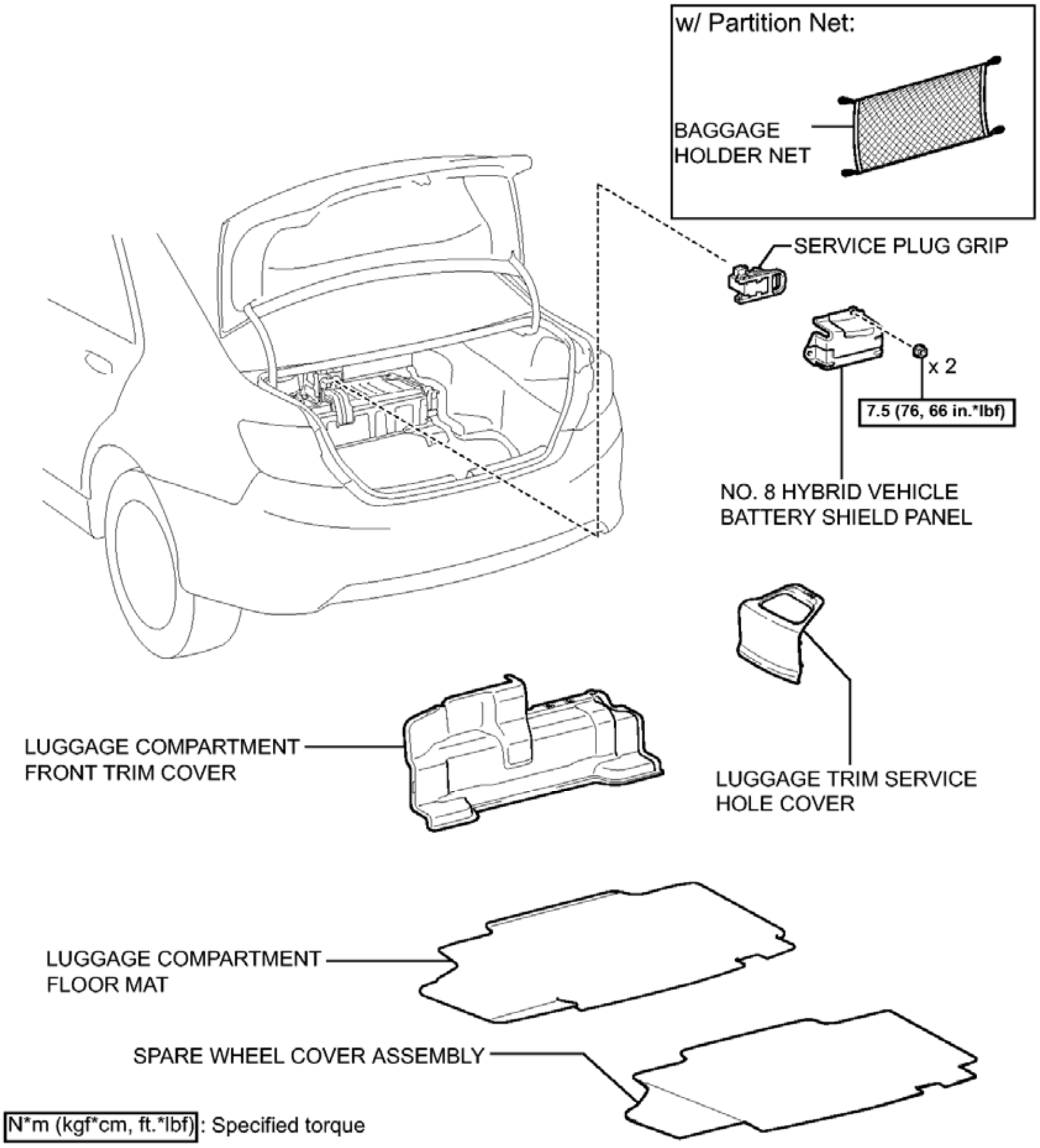
w/ Partition Net:
BAGGAGE HOLDER NET
SERVICE PLUG GRIP
x 2
7.5 (76, 66 in.*lbf)
NO. 8 HYBRID VEHICLE BATTERY SHIELD PANEL
LUGGAGE COMPARTMENT FRONT TRIM COVER
LUGGAGE TRIM SERVICE HOLE COVER
LUGGAGE COMPARTMENT FLOOR MAT
SPARE WHEEL COVER ASSEMBLY
N*m (kgf*cm, ft.*lbf) : Specified torque
C

Fig. 121: Identifying Engine Assembly Replacement Components With Torque Specifications (1 Of 8)
Courtesy of TOYOTA MOTOR SALES, U.S.A., INC.

ILLUSTRATION

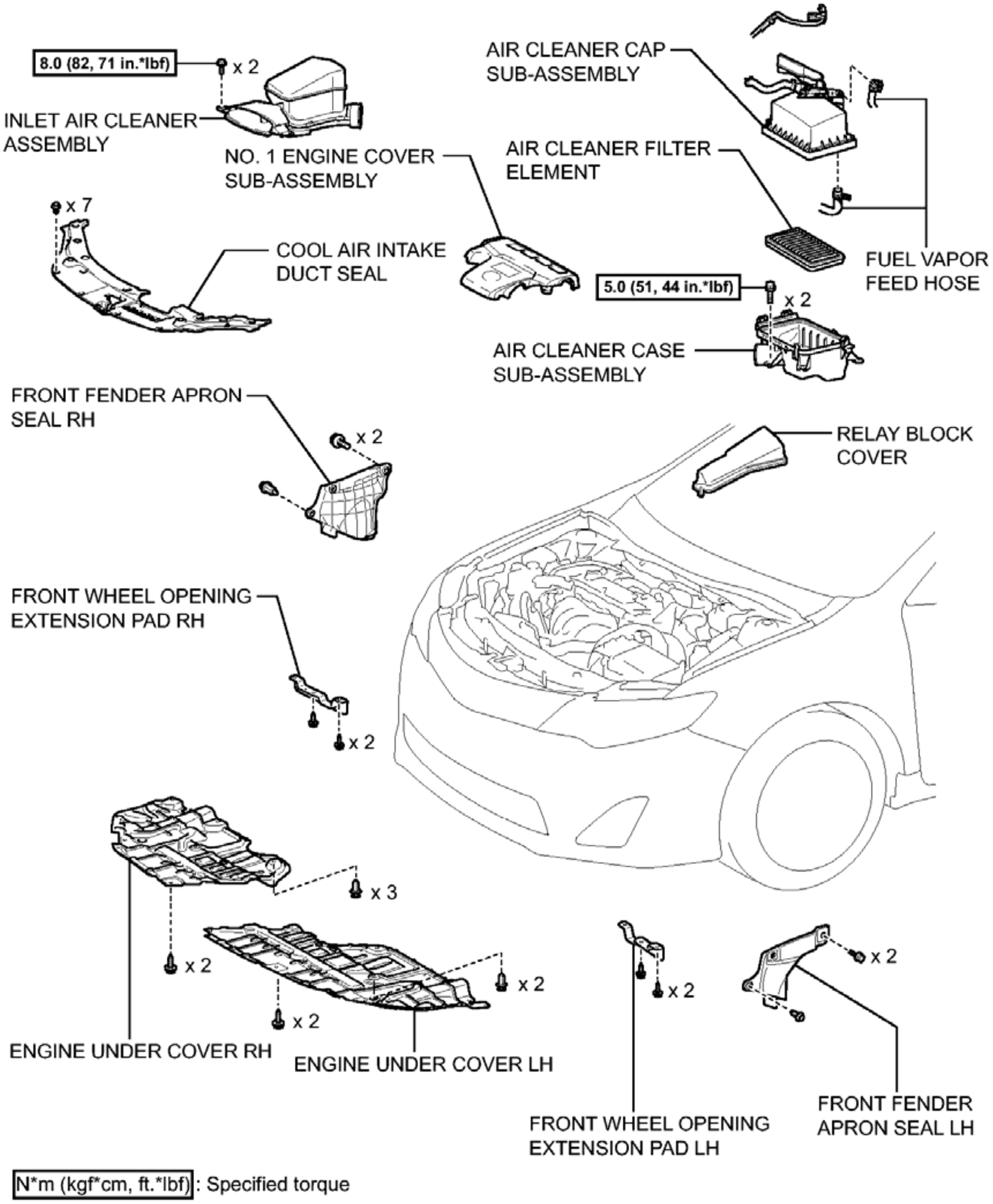
8.0 (82, 71 in.*lbf)
x 2
INLET AIR CLEANER ASSEMBLY
NO. 1 ENGINE COVER SUB-ASSEMBLY
AIR CLEANER CAP SUB-ASSEMBLY
AIR CLEANER FILTER ELEMENT
x 7
COOL AIR INTAKE DUCT SEAL
FUEL VAPOR FEED HOSE
5.0 (51, 44 in.*lbf)
x 2
AIR CLEANER CASE SUB-ASSEMBLY
FRONT FENDER APRON SEAL RH
x 2
RELAY BLOCK COVER
FRONT WHEEL OPENING EXTENSION PAD RH
x 2
x 3
x 2
x 2
x 2
x 2
x 2
x 2
ENGINE UNDER COVER RH
ENGINE UNDER COVER LH
FRONT WHEEL OPENING EXTENSION PAD LH
FRONT FENDER APRON SEAL LH
N*m (kgf*cm, ft.*lbf) : Specified torque

Fig. 122: Identifying Engine Assembly Replacement Components With Torque Specifications (2 Of 8)
Courtesy of TOYOTA MOTOR SALES, U.S.A., INC.

ILLUSTRATION

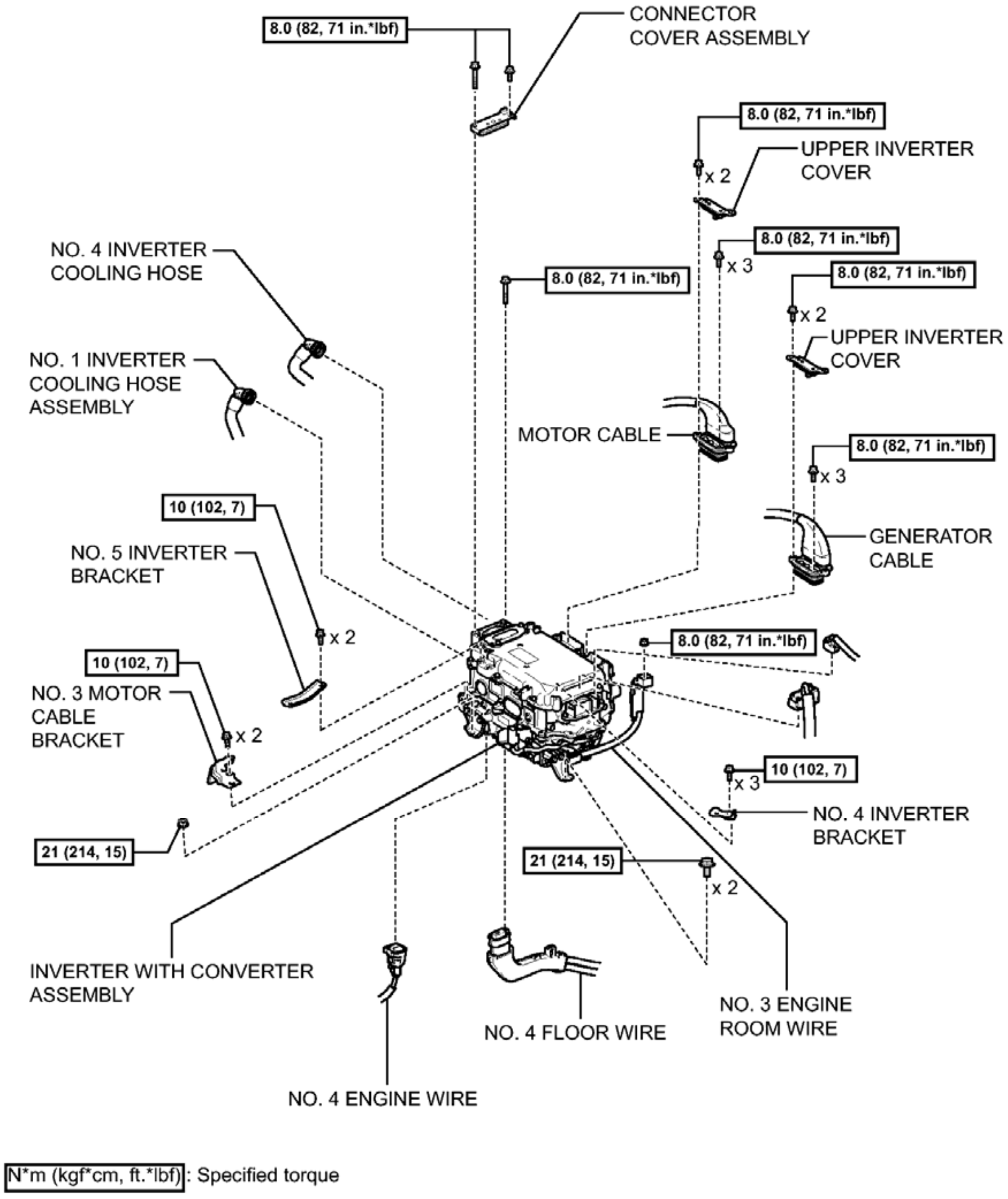
8.0 (82, 71 in.*lbf)
CONNECTOR COVER ASSEMBLY
8.0 (82, 71 in.*lbf)
x 2
UPPER INVERTER COVER
8.0 (82, 71 in.*lbf)
x 3
NO. 4 INVERTER COOLING HOSE
8.0 (82, 71 in.*lbf)
8.0 (82, 71 in.*lbf)
x 2
UPPER INVERTER COVER
NO. 1 INVERTER COOLING HOSE ASSEMBLY
MOTOR CABLE
8.0 (82, 71 in.*lbf)
x 3
10 (102, 7)
GENERATOR CABLE
NO. 5 INVERTER BRACKET
x 2
8.0 (82, 71 in.*lbf)
10 (102, 7)
NO. 3 MOTOR CABLE BRACKET
x 2
10 (102, 7)
x 3
NO. 4 INVERTER BRACKET
21 (214, 15)
21 (214, 15)
x 2
INVERTER WITH CONVERTER ASSEMBLY
NO. 3 ENGINE ROOM WIRE
NO. 4 FLOOR WIRE
NO. 4 ENGINE WIRE
N*m (kgf*cm, ft.*lbf): Specified torque
C

Fig. 123: Identifying Engine Assembly Replacement Components With Torque Specifications (3 Of 8)
Courtesy of TOYOTA MOTOR SALES, U.S.A., INC.

ILLUSTRATION

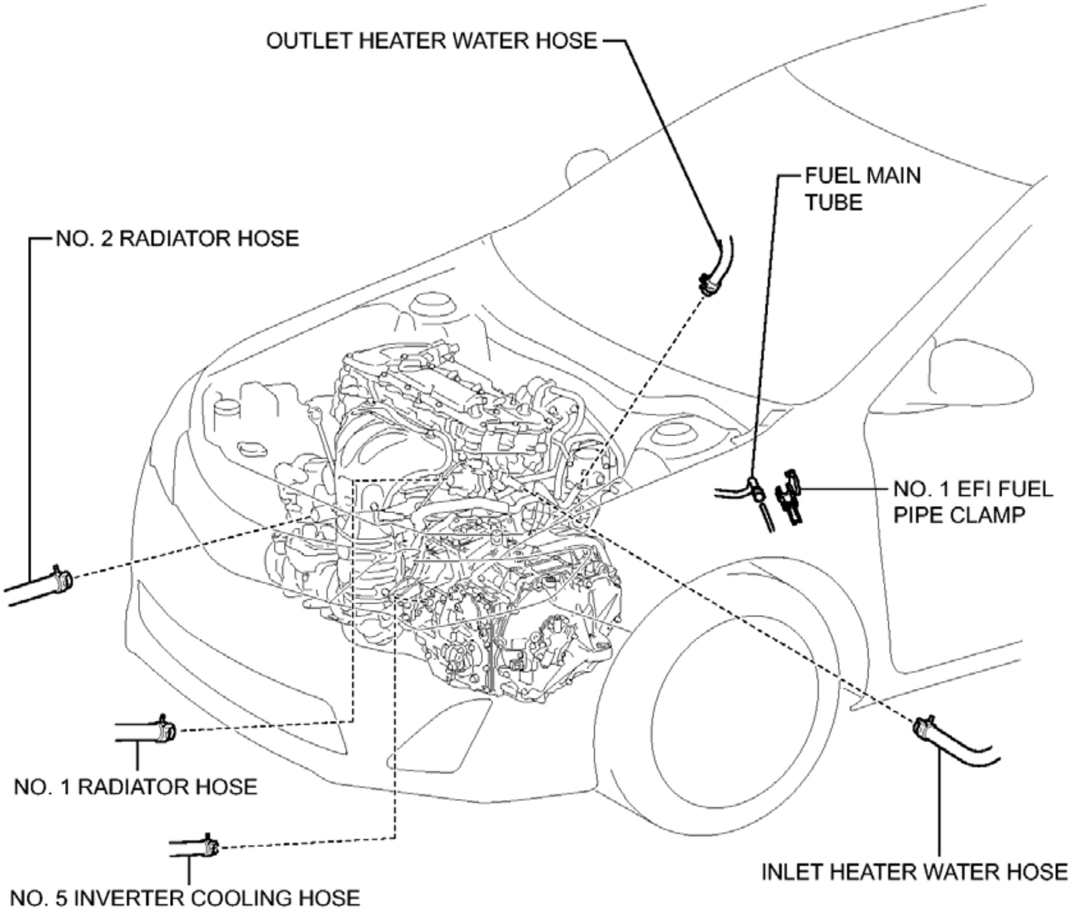
OUTLET HEATER WATER HOSE
FUEL MAIN TUBE
NO. 2 RADIATOR HOSE
NO. 1 EFI FUEL PIPE CLAMP
NO. 1 RADIATOR HOSE
NO. 5 INVERTER COOLING HOSE
INLET HEATER WATER HOSE

c

Fig. 124: Identifying Engine Assembly Replacement Components With Torque Specifications (4 Of 8)
Courtesy of TOYOTA MOTOR SALES, U.S.A., INC.

ILLUSTRATION

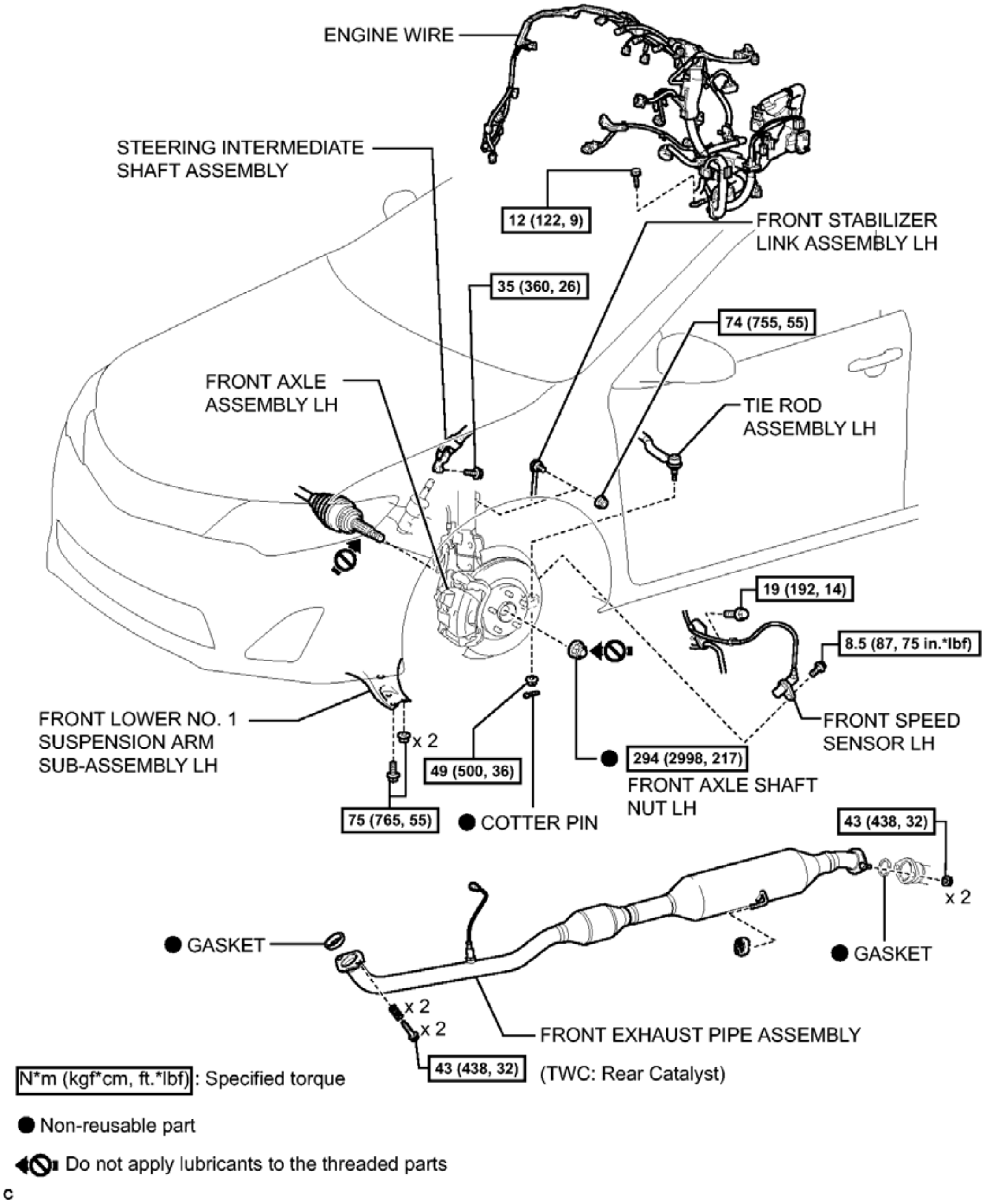
ENGINE WIRE
STEERING INTERMEDIATE SHAFT ASSEMBLY
12 (122, 9)
FRONT STABILIZER LINK ASSEMBLY LH
35 (360, 26)
74 (755, 55)
FRONT AXLE ASSEMBLY LH
TIE ROD ASSEMBLY LH
19 (192, 14)
8.5 (87, 75 in.*lbf)
FRONT LOWER NO. 1 SUSPENSION ARM SUB-ASSEMBLY LH
x 2
FRONT SPEED SENSOR LH
● 294 (2998, 217)
FRONT AXLE SHAFT NUT LH
49 (500, 36)
75 (765, 55)
● COTTER PIN
43 (438, 32)
x 2
● GASKET
● GASKET
x 2
x 2
FRONT EXHAUST PIPE ASSEMBLY
43 (438, 32)
(TWC: Rear Catalyst)
N*m (kgf*cm, ft.*lbf): Specified torque
● Non-reusable part
Do not apply lubricants to the threaded parts
c

Fig. 125: Identifying Engine Assembly Replacement Components With Torque Specifications (5 Of 8)
Courtesy of TOYOTA MOTOR SALES, U.S.A., INC.

ILLUSTRATION

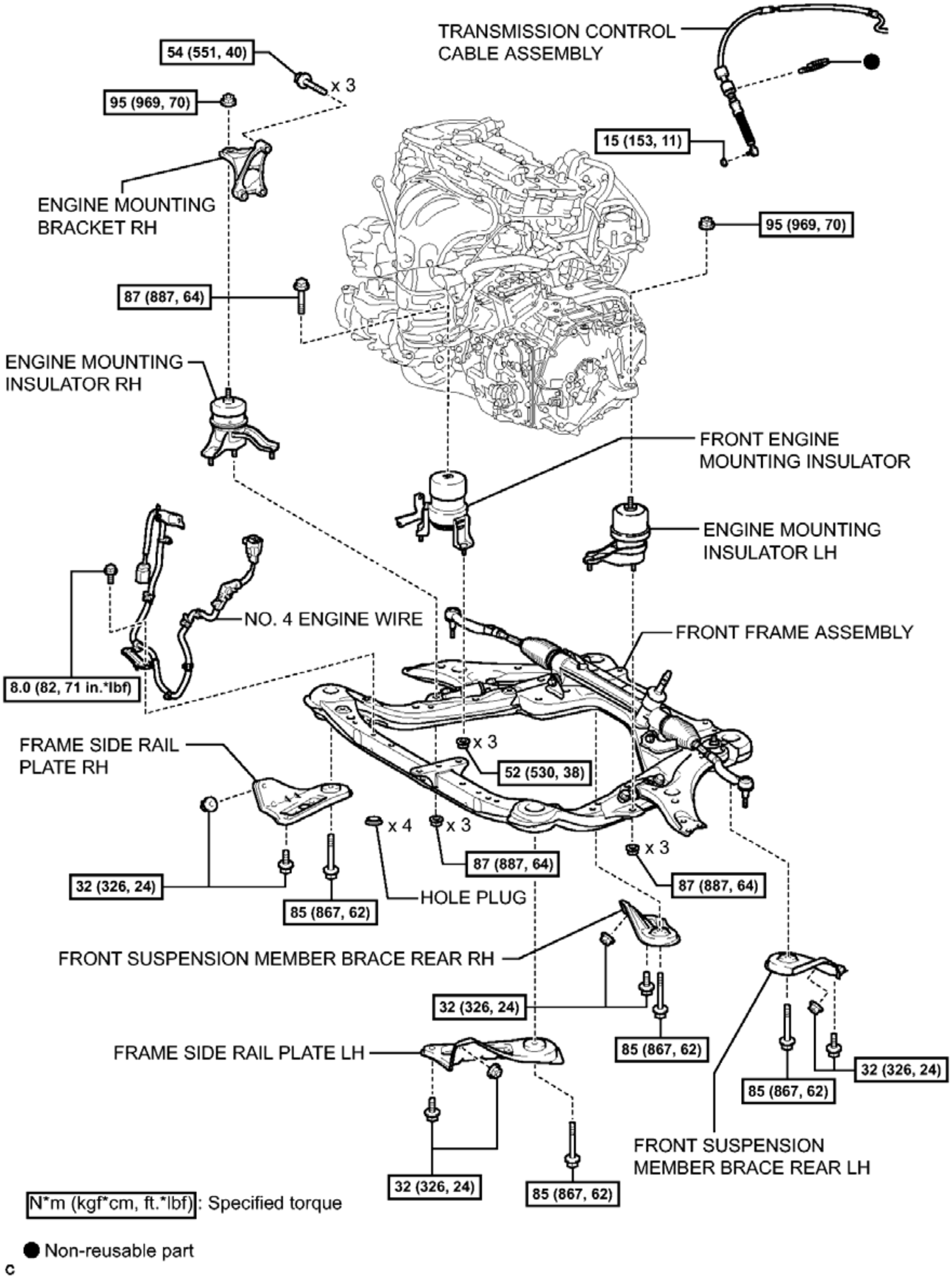
TRANSMISSION CONTROL CABLE ASSEMBLY
54 (551, 40)
x 3
95 (969, 70)
15 (153, 11)
ENGINE MOUNTING BRACKET RH
95 (969, 70)
87 (887, 64)
ENGINE MOUNTING INSULATOR RH
FRONT ENGINE MOUNTING INSULATOR
ENGINE MOUNTING INSULATOR LH
NO. 4 ENGINE WIRE
FRONT FRAME ASSEMBLY
8.0 (82, 71 in.*lbf)
FRAME SIDE RAIL PLATE RH
x 3
52 (530, 38)
x 4
x 3
x 3
87 (887, 64)
87 (887, 64)
32 (326, 24)
85 (867, 62)
HOLE PLUG
FRONT SUSPENSION MEMBER BRACE REAR RH
32 (326, 24)
85 (867, 62)
FRAME SIDE RAIL PLATE LH
85 (867, 62)
32 (326, 24)
32 (326, 24)
85 (867, 62)
FRONT SUSPENSION MEMBER BRACE REAR LH
N*m (kgf*cm, ft.*lbf): Specified torque
● Non-reusable part
c

Fig. 126: Identifying Engine Assembly Replacement Components With Torque Specifications (6 Of 8)
Courtesy of TOYOTA MOTOR SALES, U.S.A., INC.

ILLUSTRATION

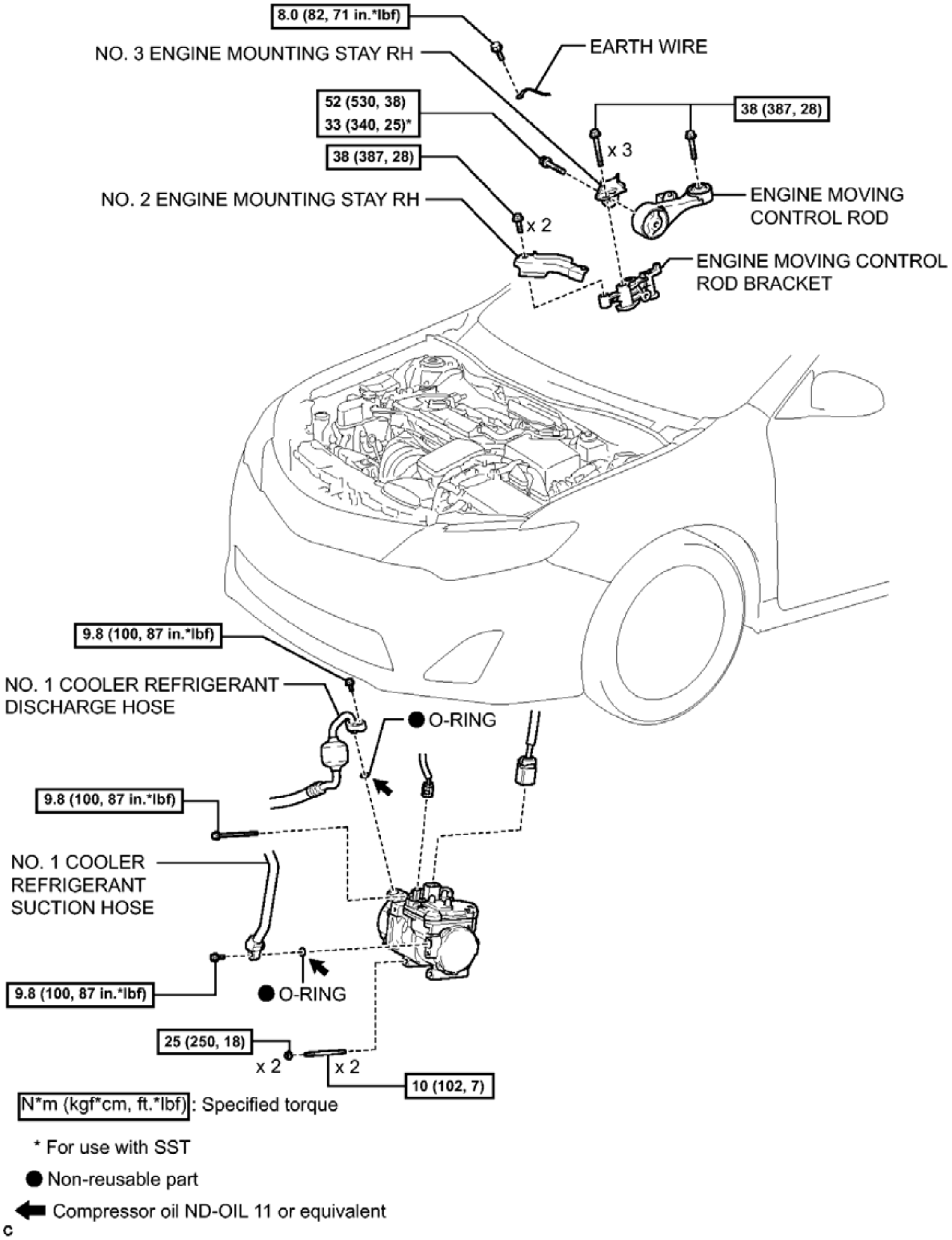
8.0 (82, 71 in.*lbf)
NO. 3 ENGINE MOUNTING STAY RH
EARTH WIRE
52 (530, 38)
33 (340, 25)*
38 (387, 28)
x 3
38 (387, 28)
NO. 2 ENGINE MOUNTING STAY RH
x 2
ENGINE MOVING CONTROL ROD
ENGINE MOVING CONTROL ROD BRACKET
9.8 (100, 87 in.*lbf)
NO. 1 COOLER REFRIGERANT DISCHARGE HOSE
● O-RING
9.8 (100, 87 in.*lbf)
NO. 1 COOLER REFRIGERANT SUCTION HOSE
9.8 (100, 87 in.*lbf)
● O-RING
25 (250, 18)
x 2
x 2
10 (102, 7)
N*m (kgf*cm, ft.*lbf): Specified torque
* For use with SST
● Non-reusable part
Compressor oil ND-OIL 11 or equivalent
c

Fig. 127: Identifying Engine Assembly Replacement Components With Torque Specifications (7 Of 8)
Courtesy of TOYOTA MOTOR SALES, U.S.A., INC.

ILLUSTRATION

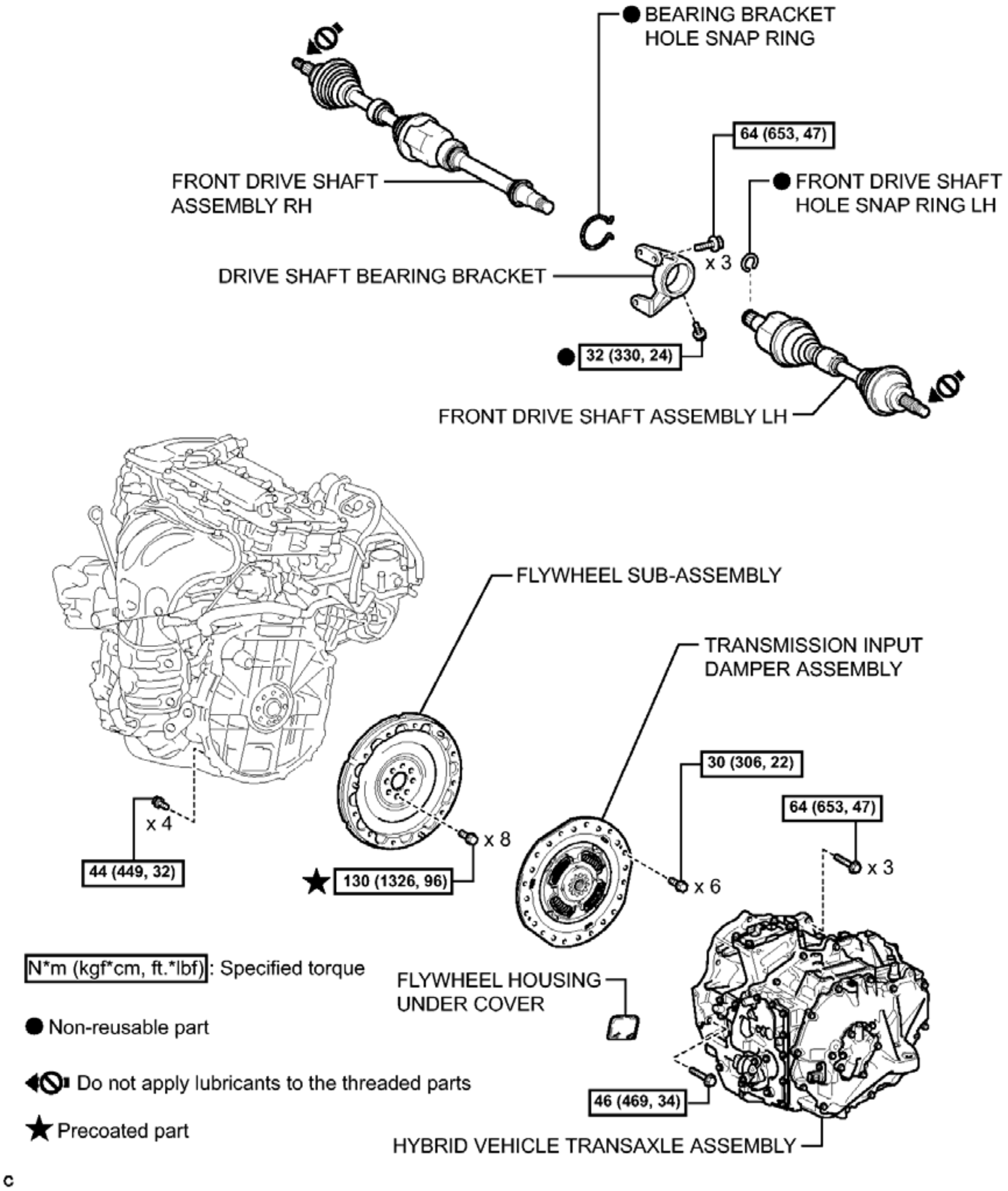
● BEARING BRACKET HOLE SNAP RING
64 (653, 47)
FRONT DRIVE SHAFT ASSEMBLY RH
● FRONT DRIVE SHAFT HOLE SNAP RING LH
x 3
DRIVE SHAFT BEARING BRACKET
● 32 (330, 24)
FRONT DRIVE SHAFT ASSEMBLY LH
FLYWHEEL SUB-ASSEMBLY
TRANSMISSION INPUT DAMPER ASSEMBLY
30 (306, 22)
64 (653, 47)
x 4
x 8
x 3
x 6
44 (449, 32)
★ 130 (1326, 96)
N*m (kgf*cm, ft.*lbf): Specified torque
● Non-reusable part
Do not apply lubricants to the threaded parts
★ Precoated part
FLYWHEEL HOUSING UNDER COVER
46 (469, 34)
HYBRID VEHICLE TRANSAXLE ASSEMBLY
c

Fig. 128: Identifying Engine Assembly Replacement Components With Torque Specifications (8 Of 8)
Courtesy of TOYOTA MOTOR SALES, U.S.A., INC.

REMOVAL

REMOVAL

1. **PRECAUTION**

WARNING:

- **The engine assembly with transmission is very heavy. Be sure to follow the procedure described in the repair manual, or the engine lifter may suddenly drop.**
- **The vehicle has a hybrid system that operates at voltages up to 650V. The hybrid system uses an HV battery that contains an electrolyte which is a strong alkali solution that includes potassium hydroxide. Be sure to follow the instructions in this service information to handle the system correctly. Failure to do so may result in serious injury or electrocution. Refer to PRECAUTION .**

NOTE: **After turning the power switch off, waiting time may be required before disconnecting the cable from the negative (-) auxiliary battery terminal. Therefore, make sure to read the disconnecting the cable from the negative (-) auxiliary battery terminal notices before proceeding with work. Refer to PRECAUTION .**

2. **RECOVER REFRIGERANT FROM AIR CONDITIONING SYSTEM** . Refer to **REPLACEMENT - Step 1**
3. **REMOVE LUGGAGE TRIM SERVICE HOLE COVER** . Refer to **REMOVAL - Step 2**
4. **DISCONNECT CABLE FROM AUXILIARY BATTERY NEGATIVE TERMINAL**

   NOTE: **When disconnecting the cable, some systems need to be initialized after the cable is reconnected. Refer to INITIALIZATION .**

5. **REMOVE LUGGAGE COMPARTMENT FLOOR MAT** . Refer to **REMOVAL - Step 1**
6. **REMOVE SPARE WHEEL COVER ASSEMBLY** . Refer to **REMOVAL - Step 2**
7. **REMOVE BAGGAGE HOLDER NET (w/ Partition Net)** . Refer to **REMOVAL - Step 3**
8. **REMOVE LUGGAGE COMPARTMENT FRONT TRIM COVER** . Refer to **REMOVAL - Step 6**
9. **REMOVE NO. 8 HYBRID VEHICLE BATTERY SHIELD PANEL** . Refer to **REMOVAL - Step 8**
10. **REMOVE SERVICE PLUG GRIP** . Refer to **REMOVAL - Step 9**
11. **DISCHARGE FUEL SYSTEM PRESSURE**

    Refer to **PRECAUTION**

12. **ALIGN FRONT WHEELS FACING STRAIGHT AHEAD**
13. **SECURE STEERING WHEEL** . Refer to **REMOVAL - Step 3**
14. **REMOVE FRONT WHEELS**
15. **REMOVE FRONT WHEEL OPENING EXTENSION PAD LH**
16. **REMOVE ENGINE UNDER COVER LH**
17. **REMOVE FRONT WHEEL OPENING EXTENSION PAD RH**
18. **REMOVE ENGINE UNDER COVER RH**

19. **REMOVE FRONT FENDER APRON SEAL LH**
20. **REMOVE FRONT FENDER APRON SEAL RH**
21. **DRAIN ENGINE OIL** . Refer to **REPLACEMENT - Step 1**
22. **DRAIN COOLANT (for Engine)** . Refer to **REPLACEMENT - Step 1**
23. **DRAIN COOLANT (for Inverter)** . Refer to **REPLACEMENT - Step 1**
24. **DRAIN HYBRID TRANSAXLE FLUID** . Refer to **ADJUSTMENT - Step 1**
25. **REMOVE NO. 1 ENGINE COVER SUB-ASSEMBLY**
    a. Lift the rear of the engine cover to detach the cover from the 2 pins, and then lift the front of the engine cover to detach the cover from the pin and remove the No. 1 engine cover sub-assembly.

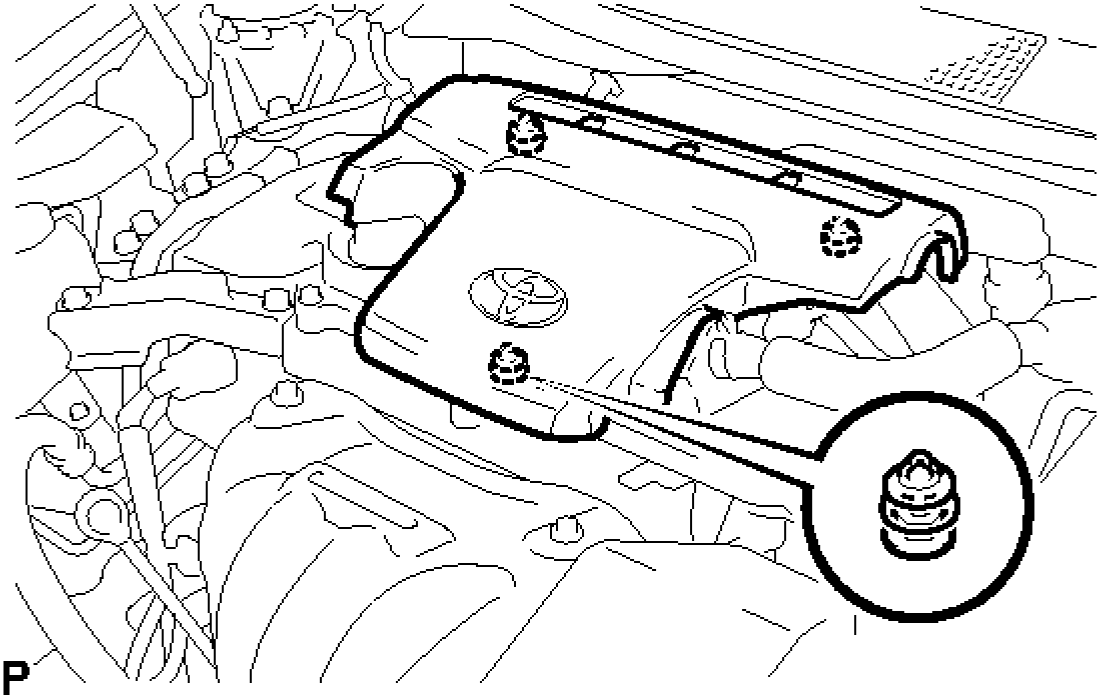

Fig. 129: Identifying No. 1 Engine Cover Sub-Assembly
Courtesy of TOYOTA MOTOR SALES, U.S.A., INC.

NOTE: **Attempting to disengage both front and rear clips at the same time may cause the No. 1 engine cover sub-assembly to break.**

26. **REMOVE COOL AIR INTAKE DUCT SEAL** . Refer to **REMOVAL - Step 1**
27. **REMOVE CONNECTOR COVER ASSEMBLY** . Refer to **REMOVAL - Step 4**
28. **CHECK TERMINAL VOLTAGE** . Refer to **REMOVAL - Step 5**
29. **TEMPORARILY INSTALL CONNECTOR COVER ASSEMBLY** . Refer to **REMOVAL - Step 6**
30. **REMOVE INLET AIR CLEANER ASSEMBLY**
    a. Remove the 2 bolts and inlet air cleaner assembly.

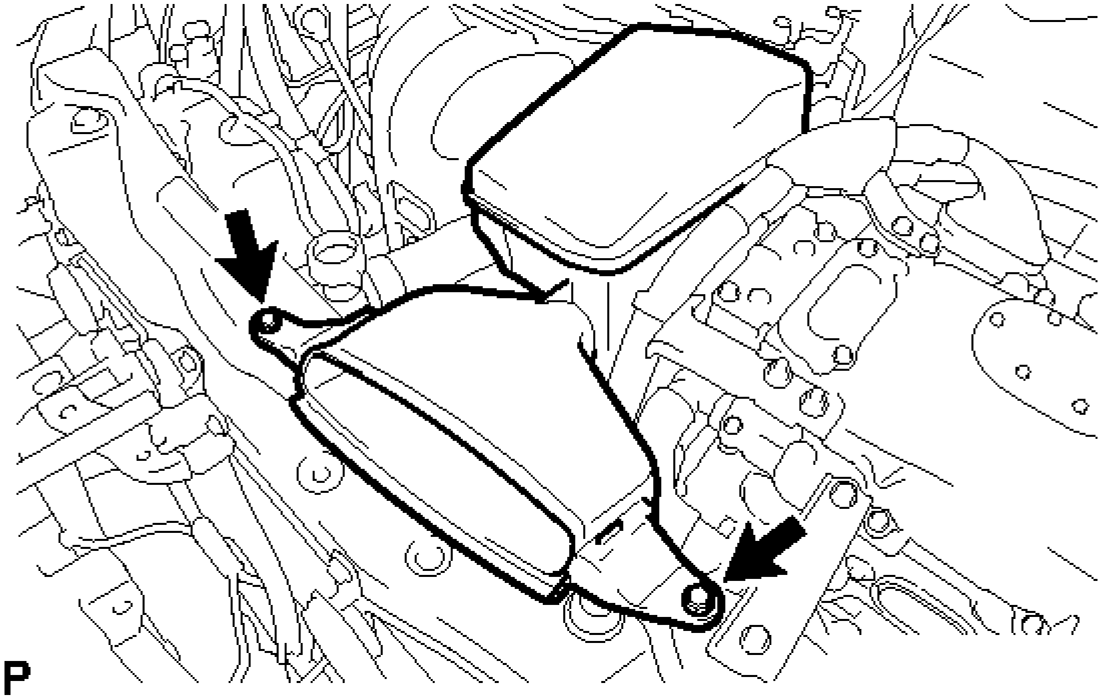

Fig. 130: Identifying Inlet Air Cleaner Assembly Bolts
Courtesy of TOYOTA MOTOR SALES, U.S.A., INC.

31. **REMOVE AIR CLEANER CAP SUB-ASSEMBLY** . Refer to **REMOVAL - Step 3**
32. **REMOVE AIR CLEANER FILTER ELEMENT**
    a. Remove the air cleaner filter element.
33. **REMOVE AIR CLEANER CASE SUB-ASSEMBLY**
    a. Remove the 2 bolts and air cleaner case sub-assembly.

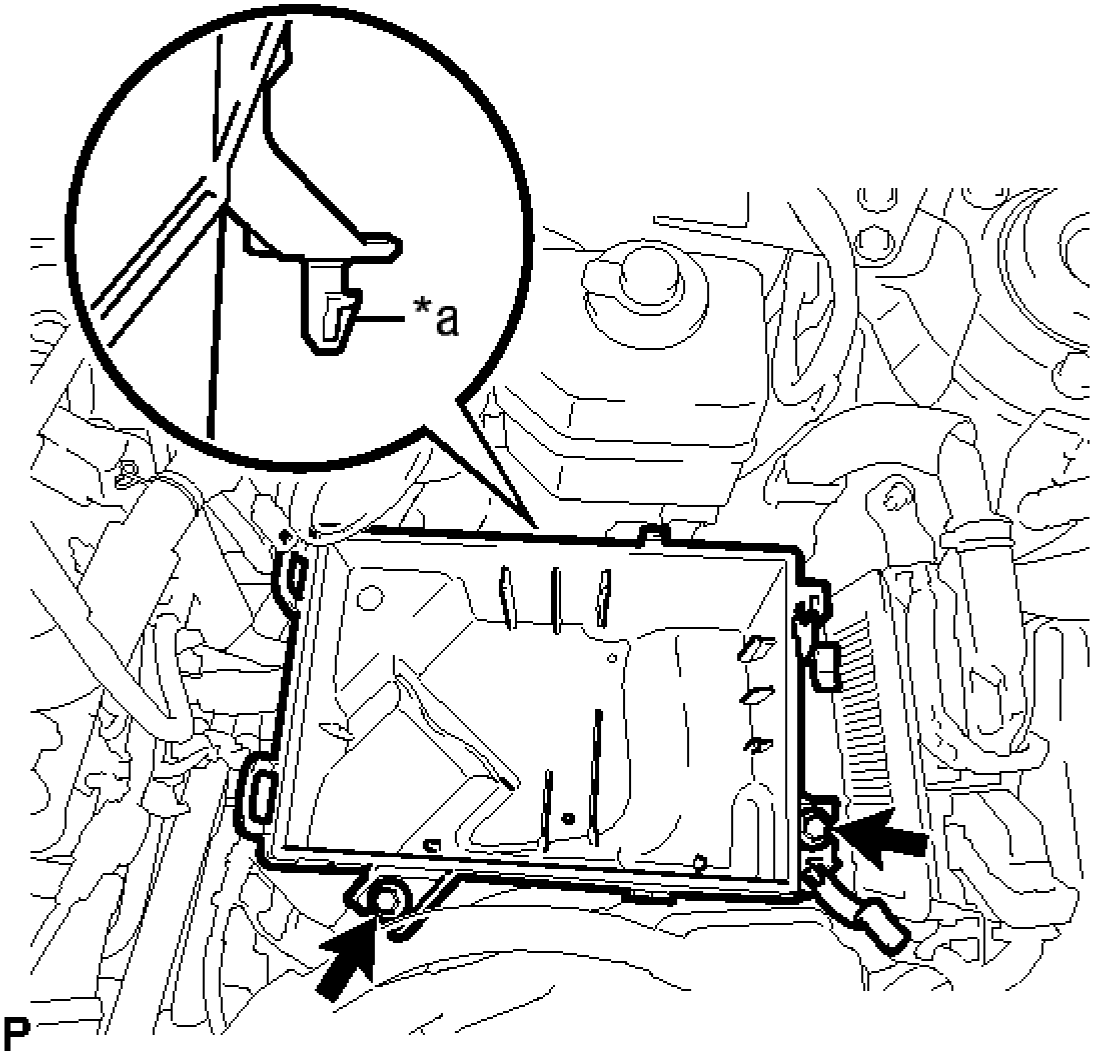

Fig. 131: Identifying Air Cleaner Case Sub-Assembly
Courtesy of TOYOTA MOTOR SALES, U.S.A., INC.

TEXT IN ILLUSTRATION

*a	Projection

34. **REMOVE NO. 5 INVERTER BRACKET** . Refer to **REMOVAL - Step 12**
35. **REMOVE NO. 4 INVERTER BRACKET** . Refer to **REMOVAL - Step 13**
36. **REMOVE UPPER INVERTER COVER** . Refer to **REMOVAL - Step 14**
37. **DISCONNECT GENERATOR CABLE** . Refer to **REMOVAL - Step 15**
38. **REMOVE UPPER INVERTER COVER** . Refer to **REMOVAL - Step 16**
39. **DISCONNECT MOTOR CABLE** . Refer to **REMOVAL - Step 17**
40. **REMOVE NO. 3 MOTOR CABLE BRACKET** . Refer to **REMOVAL - Step 18**
41. **REMOVE CONNECTOR COVER ASSEMBLY** . Refer to **REMOVAL - Step 19**

42. **DISCONNECT NO. 4 ENGINE WIRE** . Refer to **REMOVAL - Step 20**
43. **DISCONNECT NO. 4 FLOOR WIRE** . Refer to **REMOVAL - Step 21**
44. **TEMPORARILY INSTALL CONNECTOR COVER ASSEMBLY** . Refer to **REMOVAL - Step 22**
45. **DISCONNECT LOW VOLTAGE CONNECTOR** . Refer to **REMOVAL - Step 23**
46. **DISCONNECT NO. 3 ENGINE ROOM WIRE** . Refer to **REMOVAL - Step 24**
47. **REMOVE NO. 4 INVERTER COOLING HOSE** . Refer to **REMOVAL - Step 25**
48. **REMOVE NO. 1 INVERTER COOLING HOSE ASSEMBLY** . Refer to **REMOVAL - Step 26**
49. **REMOVE INVERTER WITH CONVERTER ASSEMBLY** . Refer to **REMOVAL - Step 27**
50. **DISCONNECT NO. 4 ENGINE WIRE**
    a. Remove the 3 wire harness clamps and disconnect the No. 4 engine wire from the fan shroud.

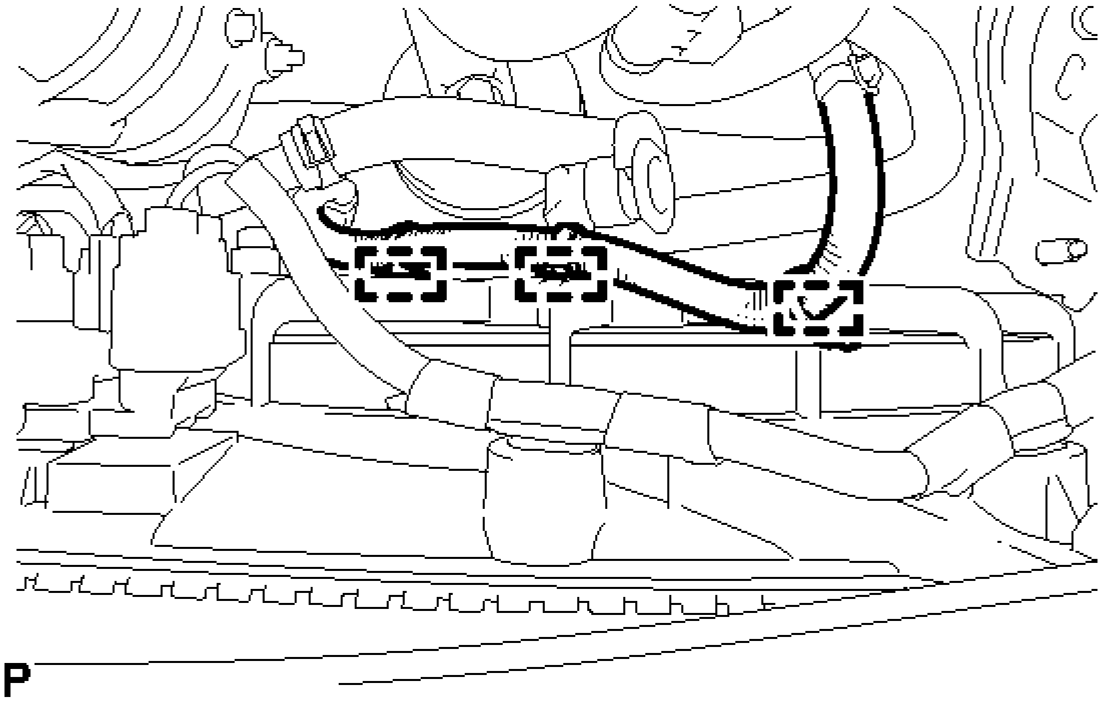

Fig. 132: Identifying No. 4 Engine Wire
Courtesy of TOYOTA MOTOR SALES, U.S.A., INC.

51. **DISCONNECT ENGINE WIRE**
    a. Disconnect the 4 connectors and disconnect the wire harness clamp.

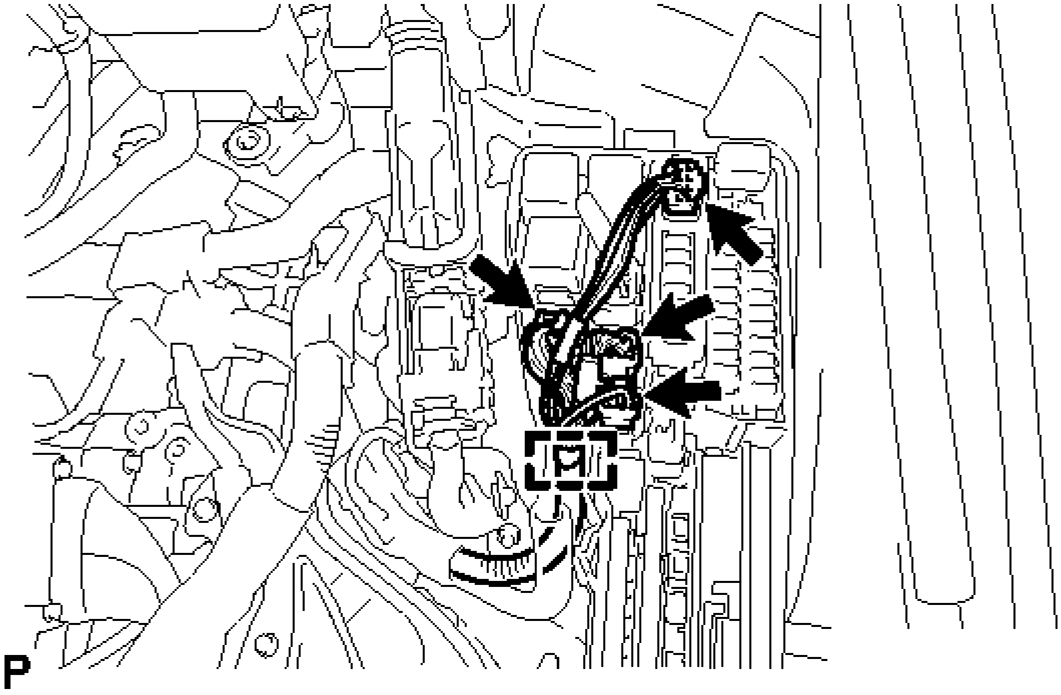

Fig. 133: Identifying Engine Wire Connectors
Courtesy of TOYOTA MOTOR SALES, U.S.A., INC.

b. Remove the bolt and disconnect the earth wire from the body.

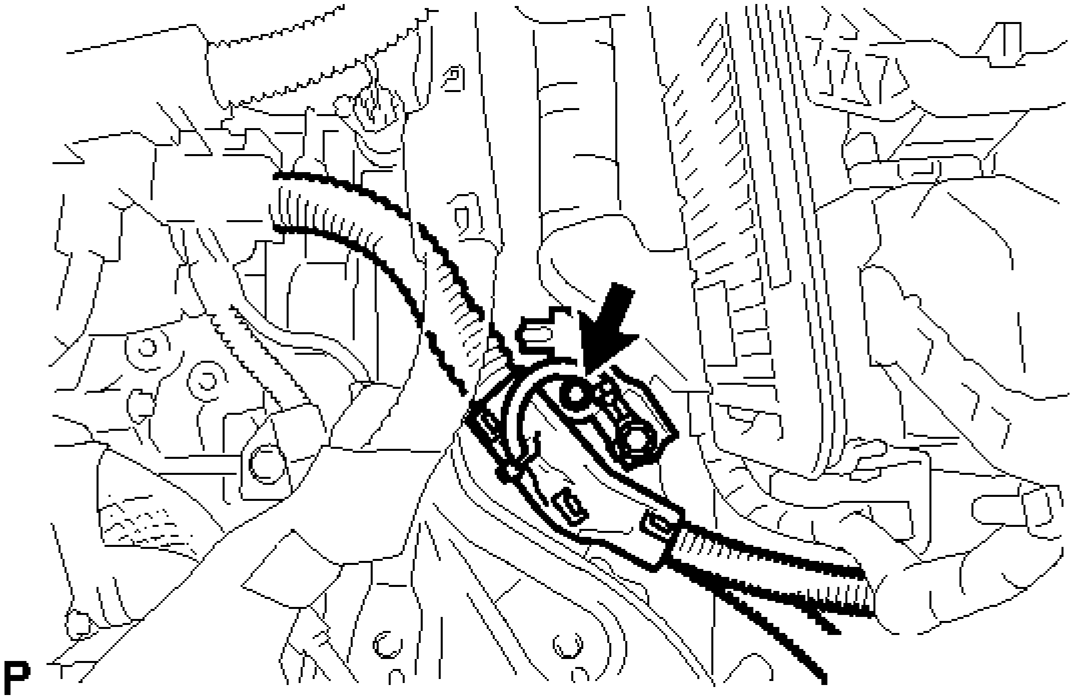

Fig. 134: Identifying Earth Wire Bolt
Courtesy of TOYOTA MOTOR SALES, U.S.A., INC.

c. Pull up the lever to disconnect the ECM connector.

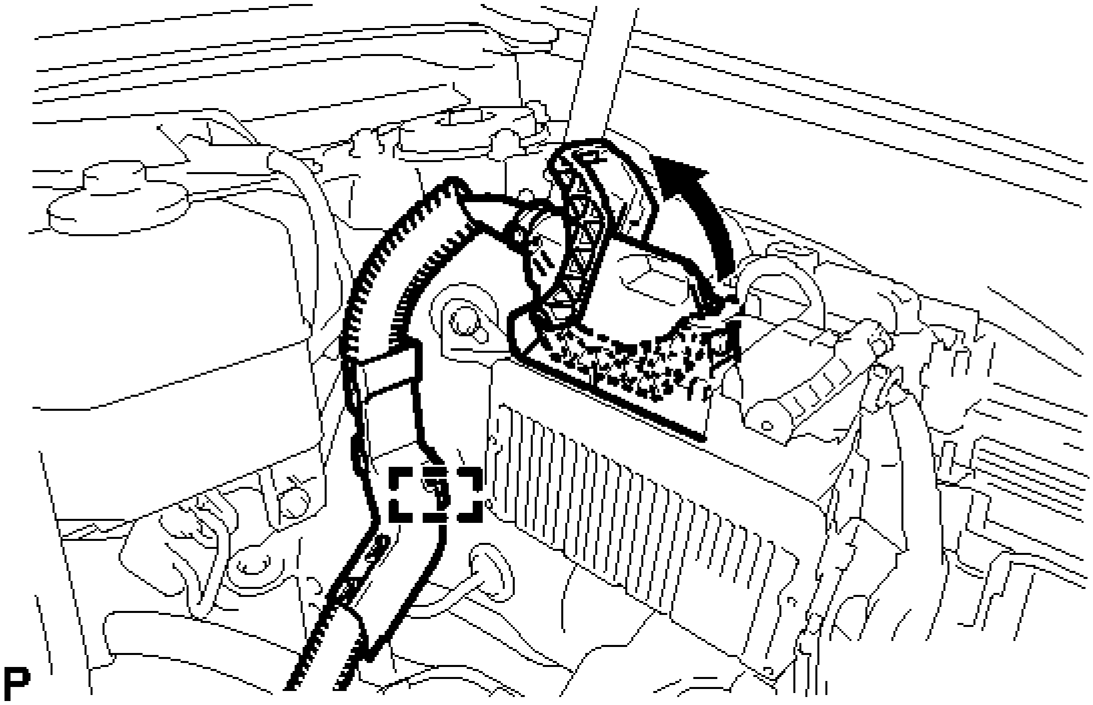

Fig. 135: Disconnecting ECM Connector And Wire Clamp
Courtesy of TOYOTA MOTOR SALES, U.S.A., INC.

d. Disconnect the wire clamp.

52. **DISCONNECT TRANSMISSION CONTROL CABLE ASSEMBLY**
    a. Remove the nut and disconnect the transmission control cable assembly from the control shaft lever.

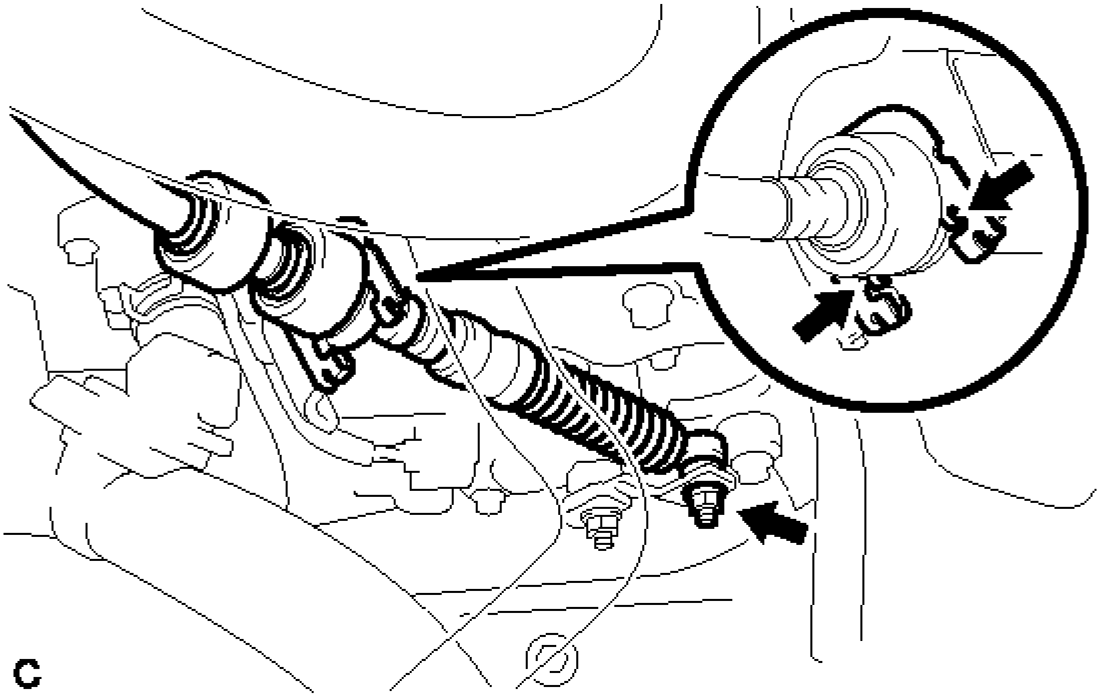

Fig. 136: Identifying Transmission Control Cable Assembly Nut
Courtesy of TOYOTA MOTOR SALES, U.S.A., INC.

b. Using a screwdriver, disengage the 4 claws and disconnect the transmission control cable assembly with clip from the No. 1 transmission control cable bracket.
c. Remove the clip from the transmission control cable assembly.
d. Disconnect the transmission control cable assembly from the 2 transmission control brackets.

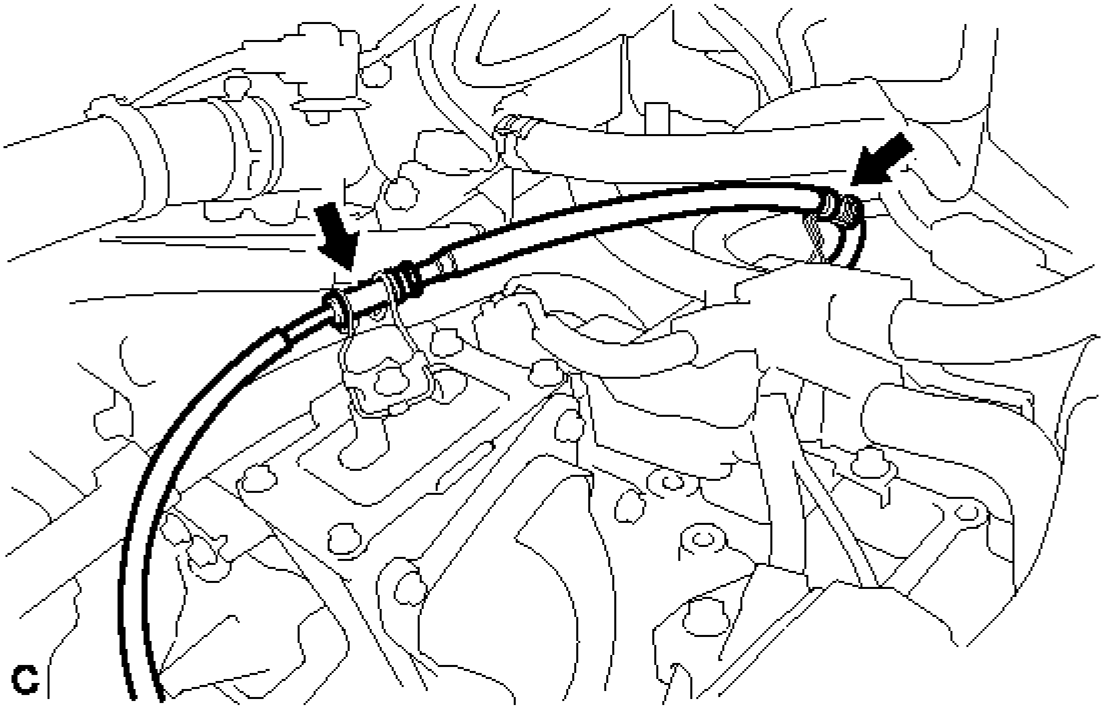

Fig. 137: Identifying Transmission Control Cable Assembly Control Brackets
Courtesy of TOYOTA MOTOR SALES, U.S.A., INC.

53. **DISCONNECT NO. 1 RADIATOR HOSE**
    a. Remove the hose clamp to disconnect the air fuel ratio sensor wire from the No. 1 radiator hose.

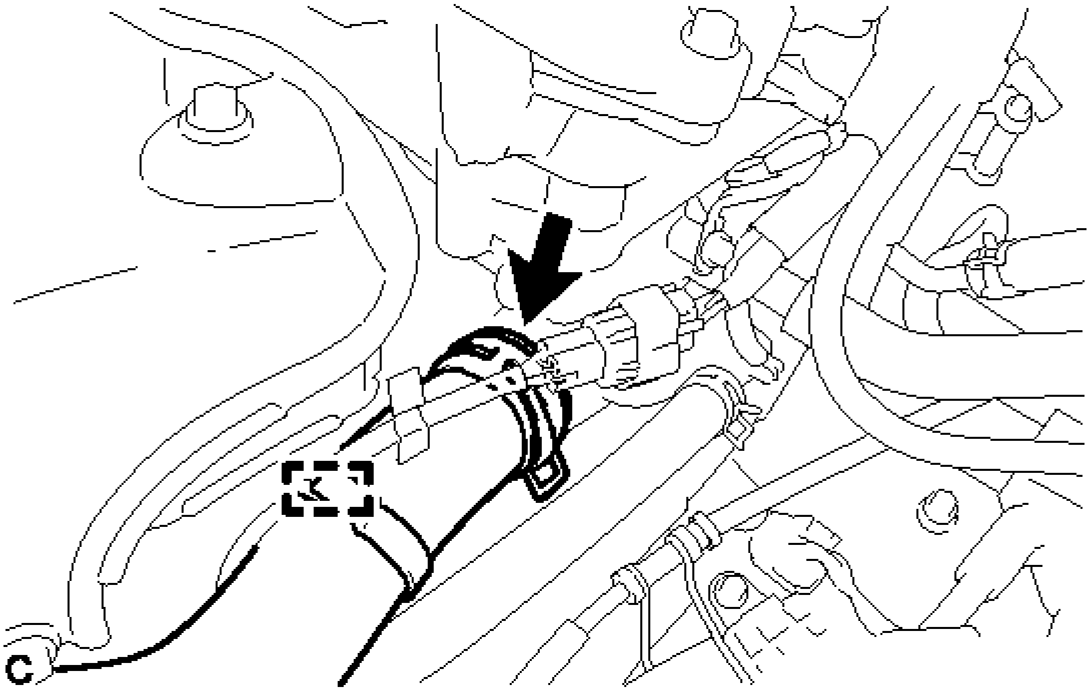

Fig. 138: Identifying No. 1 Radiator Hose Clamp

Courtesy of TOYOTA MOTOR SALES, U.S.A., INC.

b. Disconnect the No. 1 radiator hose.

54. **DISCONNECT NO. 5 INVERTER COOLING HOSE**
    a. Disconnect the No. 5 inverter cooling hose from the hybrid vehicle transaxle assembly.

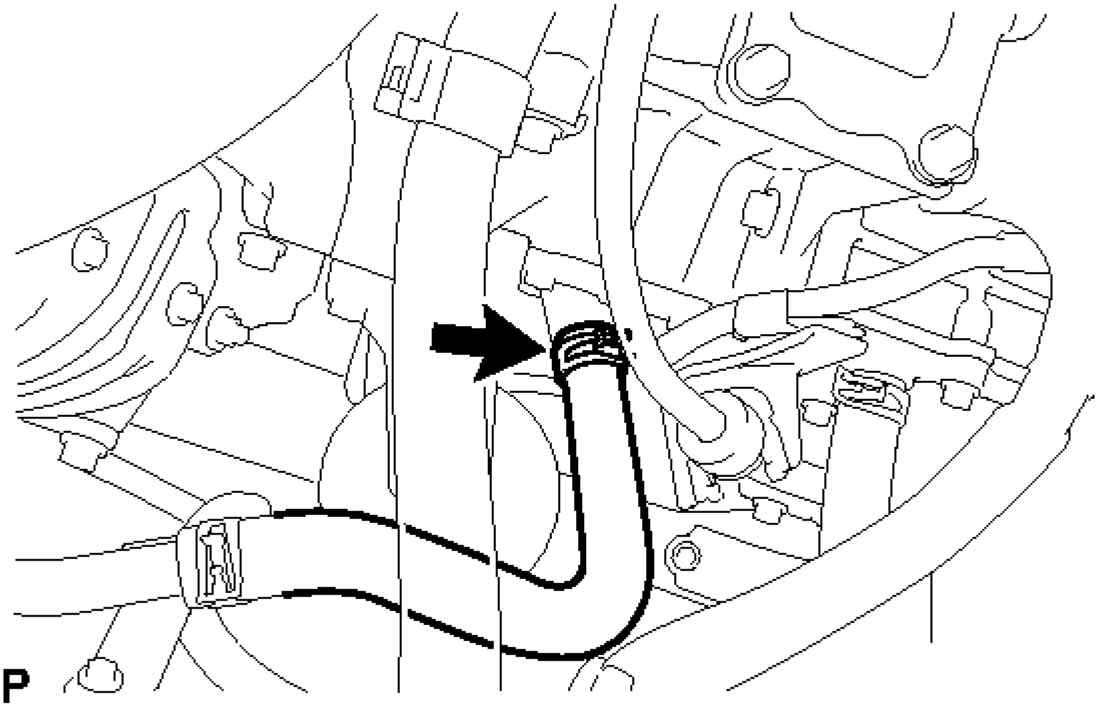

Fig. 139: Identifying No. 5 Inverter Cooling Hose
Courtesy of TOYOTA MOTOR SALES, U.S.A., INC.

55. **DISCONNECT INLET HEATER WATER HOSE**
    a. Disconnect the inlet heater water hose.

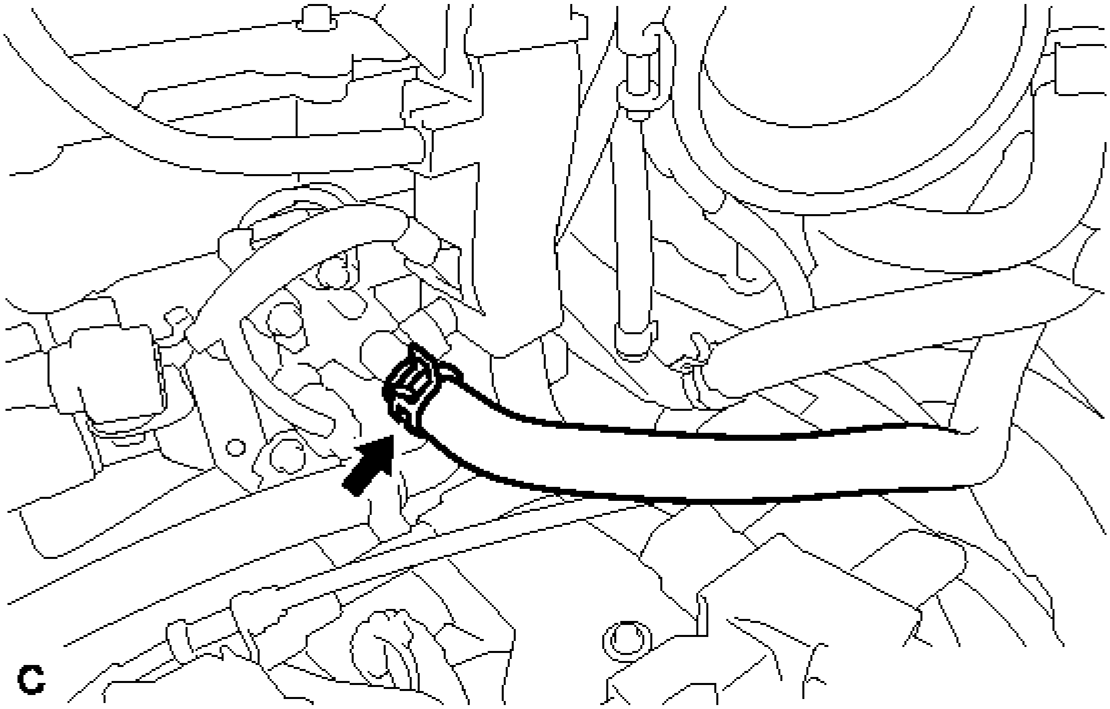

Fig. 140: Identifying Inlet Heater Water Hose
Courtesy of TOYOTA MOTOR SALES, U.S.A., INC.

56. **DISCONNECT OUTLET HEATER WATER HOSE**
    a. Disconnect the outlet heater water hose.

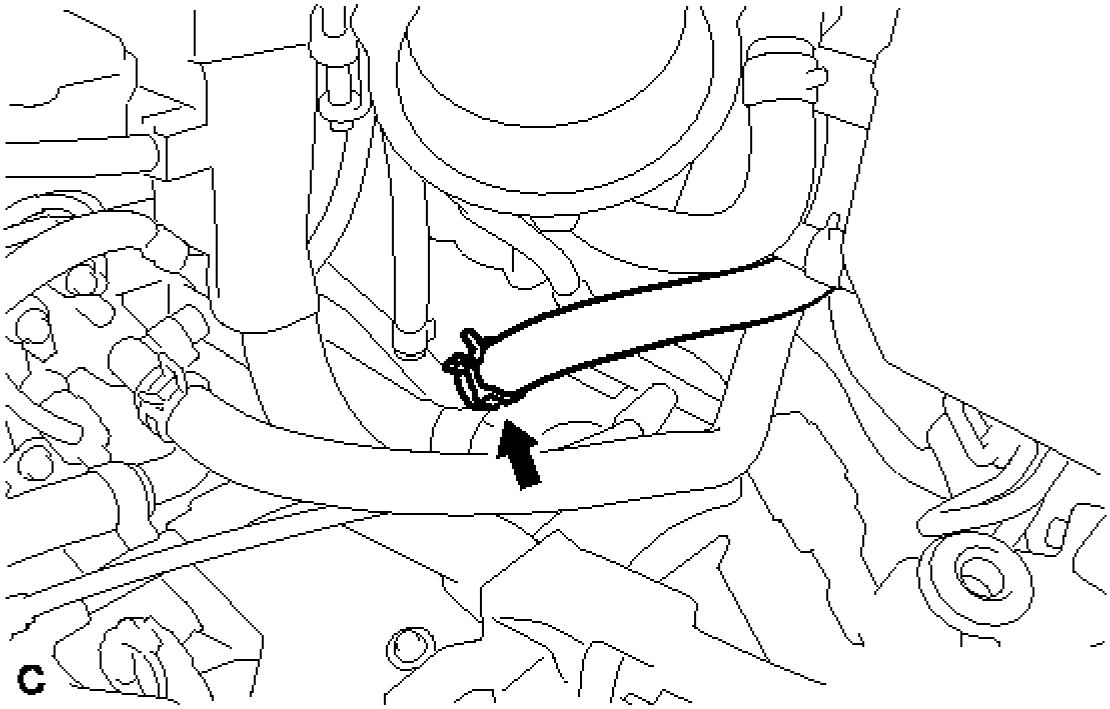

Fig. 141: Identifying Outlet Heater Water Hose

Courtesy of TOYOTA MOTOR SALES, U.S.A., INC.

57. DISCONNECT FUEL MAIN TUBE

a. Release the claw and remove the No. 1 EFI fuel pipe clamp.

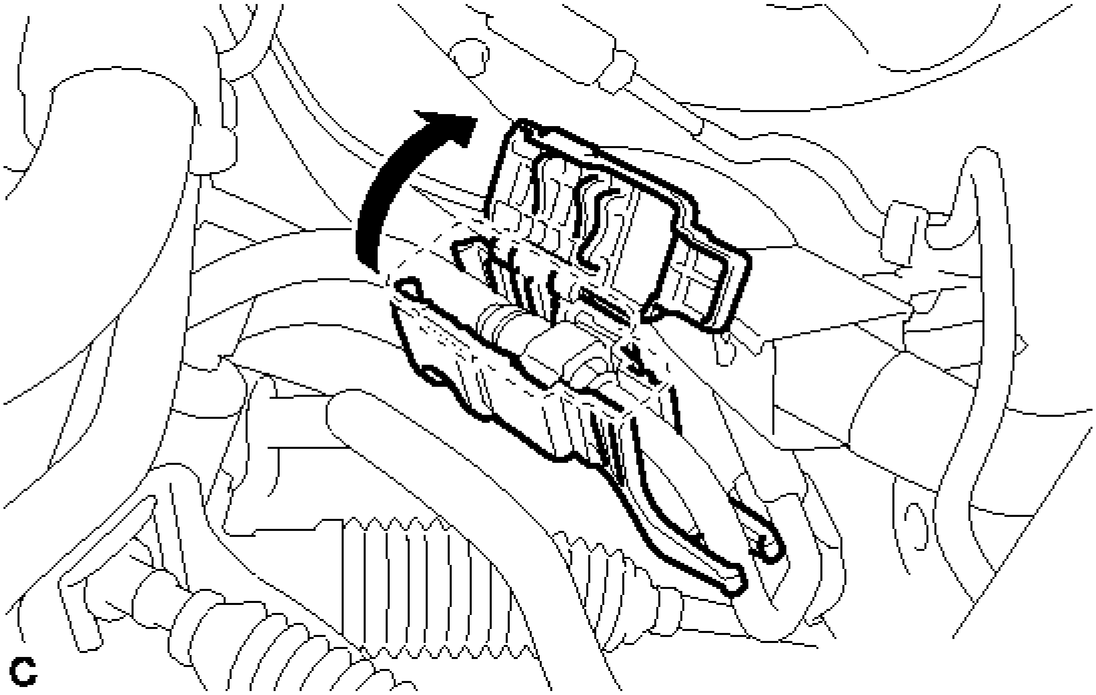

Fig. 142: Identifying No. 1 Fuel Pipe Clamp
Courtesy of TOYOTA MOTOR SALES, U.S.A., INC.

b. Pinch the fuel tube connector and then pull out the fuel main tube.

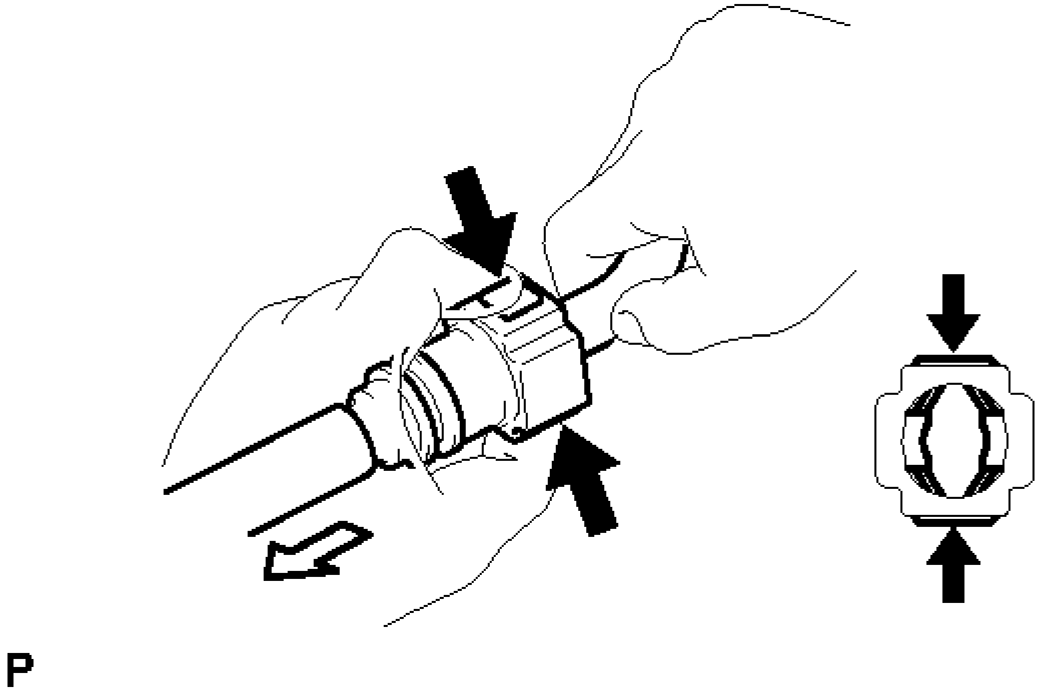

Fig. 143: Disconnecting Fuel Main Tube Connector & Pipe
Courtesy of TOYOTA MOTOR SALES, U.S.A., INC.

NOTE:

- **Check for dirt and foreign objects on the pipe and around the connector. Clean if necessary and then disconnect the connector.**
- **Disconnect the connector by hand.**
- **Do not bend, fold or rotate the nylon tube.**
- **If the pipe and connector are stuck together, push and pull the connector until it becomes free.**
- **Put the pipe and connector ends in vinyl bags to prevent damage and contamination.**

58. **REMOVE NO. 2 ENGINE MOUNTING STAY RH**
    a. Remove the 2 bolts and No. 2 engine mounting stay RH.

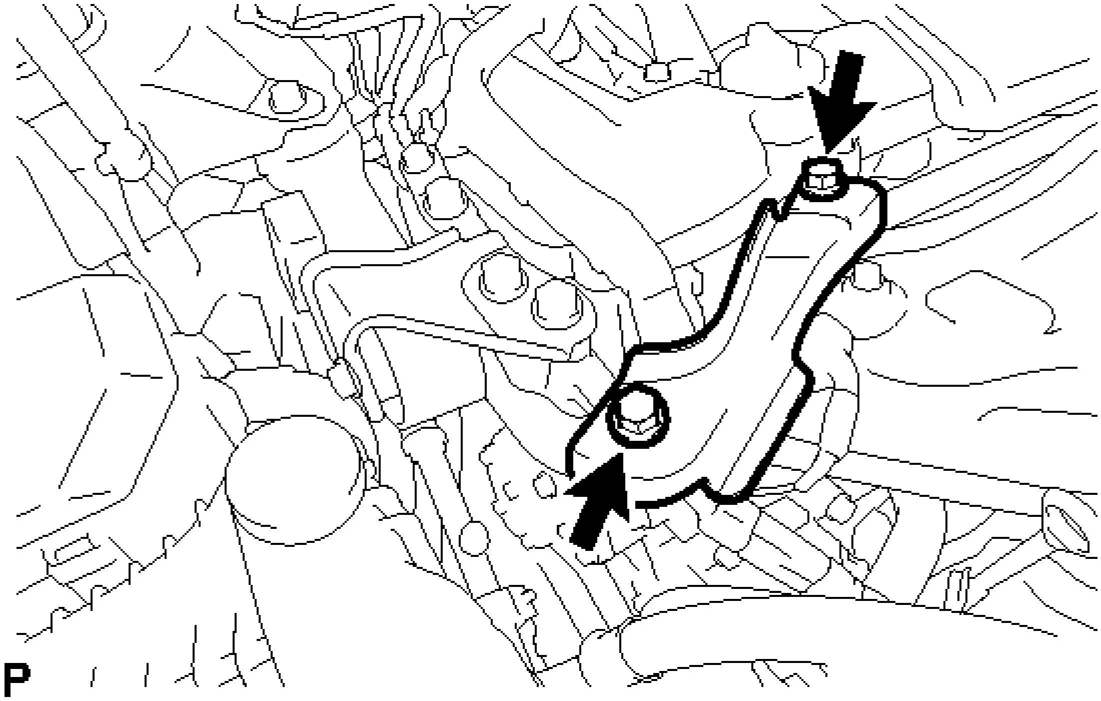

Fig. 144: Identifying No. 2 Engine Mounting Stay Bolts
Courtesy of TOYOTA MOTOR SALES, U.S.A., INC.

59. **SEPARATE EARTH WIRE**

   a. Remove the bolt and separate the earth wire from the engine moving control rod bracket.

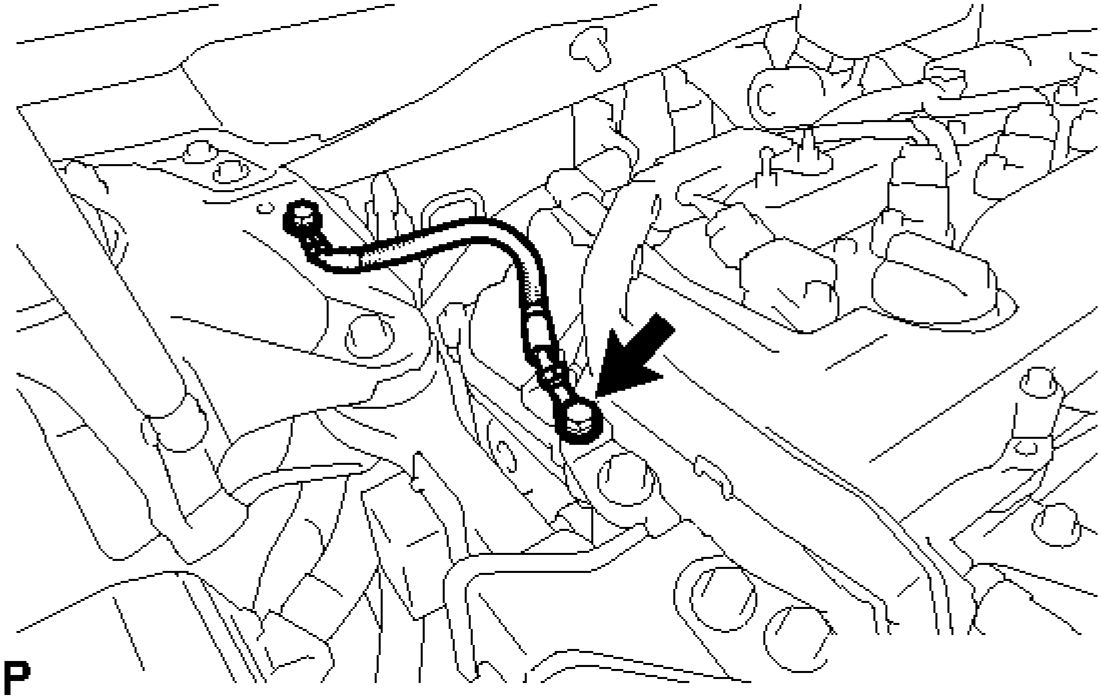

Fig. 145: Identifying Earth Wire

Courtesy of TOYOTA MOTOR SALES, U.S.A., INC.

60. **REMOVE ENGINE MOVING CONTROL ROD SUB-ASSEMBLY**
    a. Remove the 4 bolts and engine moving control rod sub-assembly.

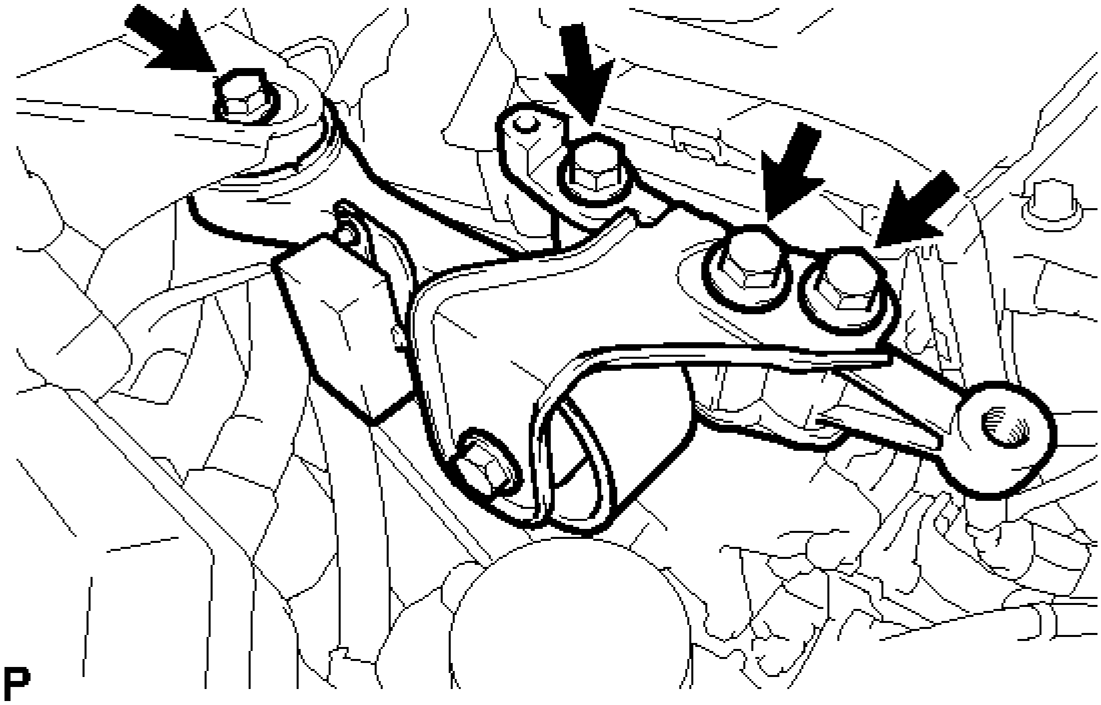

Fig. 146: Identifying Engine Moving Control Rod Sub-Assembly Bolts
Courtesy of TOYOTA MOTOR SALES, U.S.A., INC.

61. **REMOVE ENGINE MOVING CONTROL ROD**
    a. Remove the bolt and engine moving control rod from the engine moving control rod bracket.

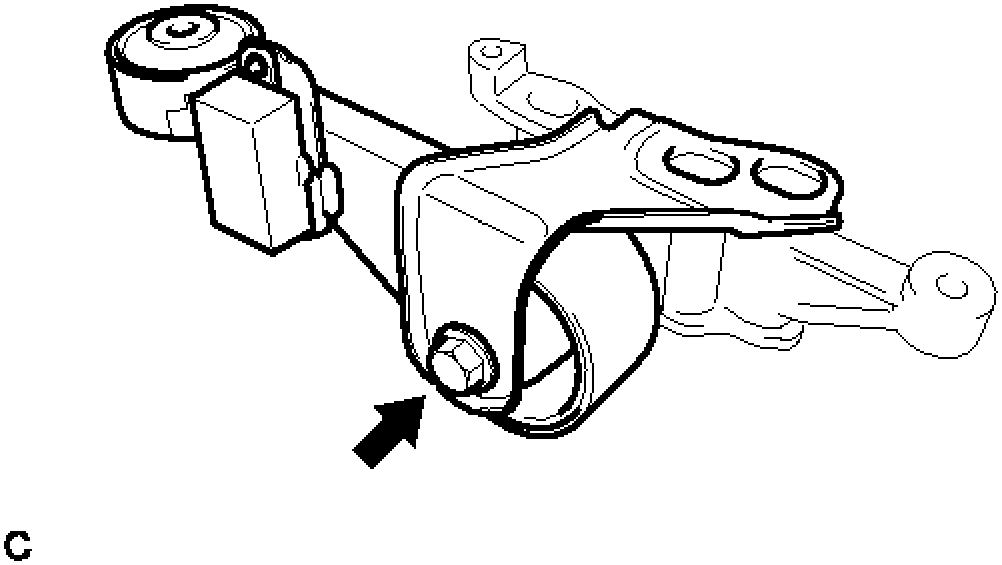

Fig. 147: Identifying Engine Moving Control Rod Bolt
Courtesy of TOYOTA MOTOR SALES, U.S.A., INC.

HINT:

Perform this procedure only when replacement of the engine moving control rod is necessary.

62. **DISCONNECT NO. 1 COOLER REFRIGERANT SUCTION HOSE** . Refer to **REMOVAL - Step 6**
63. **DISCONNECT NO. 1 COOLER REFRIGERANT DISCHARGE HOSE** . Refer to **REMOVAL - Step 5**
64. **DISCONNECT NO. 2 RADIATOR HOSE**
    a. Disconnect the No. 2 radiator hose.

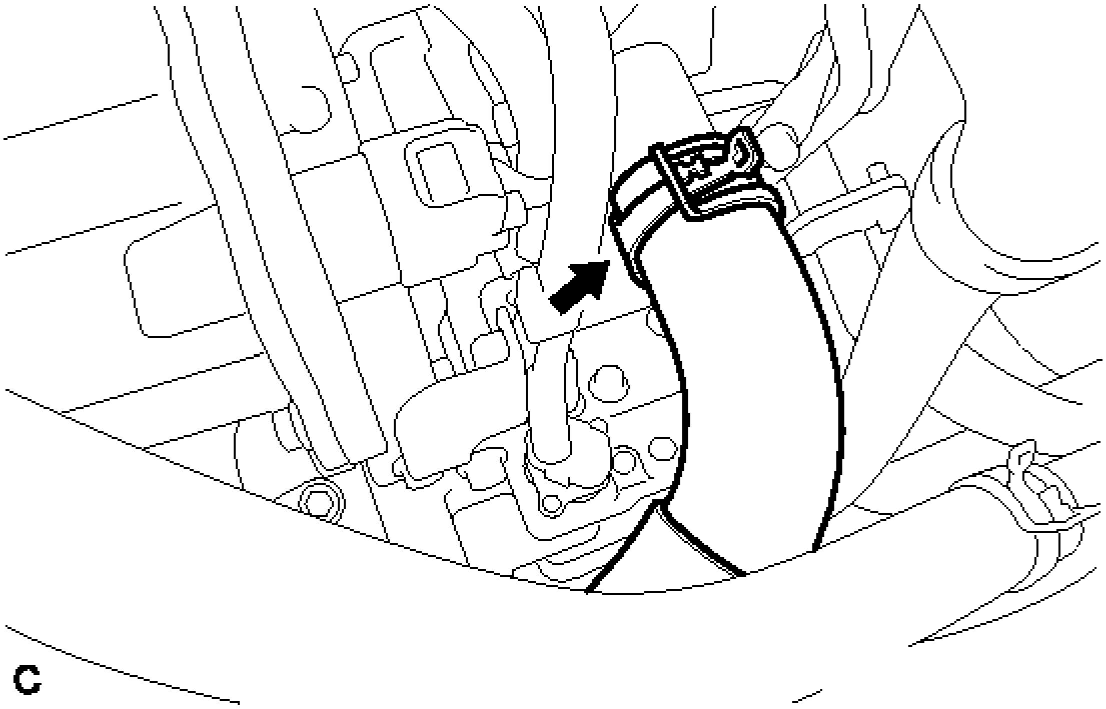

Fig. 148: Identifying No. 2 Radiator Hose
Courtesy of TOYOTA MOTOR SALES, U.S.A., INC.

65. **REMOVE FRONT EXHAUST PIPE ASSEMBLY** . Refer to **REMOVAL - Step 5**
66. **DISCONNECT STEERING INTERMEDIATE SHAFT ASSEMBLY** . Refer to **REMOVAL - Step 10**
67. **REMOVE FRONT AXLE SHAFT NUT LH** . Refer to **REMOVAL - Step 9**
68. **REMOVE FRONT AXLE SHAFT NUT RH**

    HINT:

    Use the same procedure described for the LH side.

69. **SEPARATE FRONT STABILIZER LINK ASSEMBLY LH** . Refer to **REMOVAL - Step 4**
70. **SEPARATE FRONT STABILIZER LINK ASSEMBLY RH**

    HINT:

    Use the same procedure described for the LH side.

71. **SEPARATE FRONT SPEED SENSOR LH** . Refer to **REMOVAL - Step 5**
72. **SEPARATE FRONT SPEED SENSOR RH**

    HINT:

    Use the same procedure described for the LH side.

73. **SEPARATE TIE ROD ASSEMBLY LH** . Refer to **REMOVAL - Step 5**
74. **SEPARATE TIE ROD ASSEMBLY RH**

    HINT:

    Use the same procedure described for the LH side.

75. **SEPARATE FRONT LOWER NO. 1 SUSPENSION ARM SUB-ASSEMBLY LH** . Refer to **REMOVAL - Step 10**
76. **SEPARATE FRONT LOWER NO. 1 SUSPENSION ARM SUB-ASSEMBLY RH**

    HINT:

    Use the same procedure described for the LH side.

77. **SEPARATE FRONT AXLE ASSEMBLY LH** . Refer to **REMOVAL - Step 9**
78. **SEPARATE FRONT AXLE ASSEMBLY RH**

    HINT:

    Use the same procedure described for the LH side.

79. **REMOVE FLYWHEEL HOUSING UNDER COVER**
    a. Remove the flywheel housing under cover.

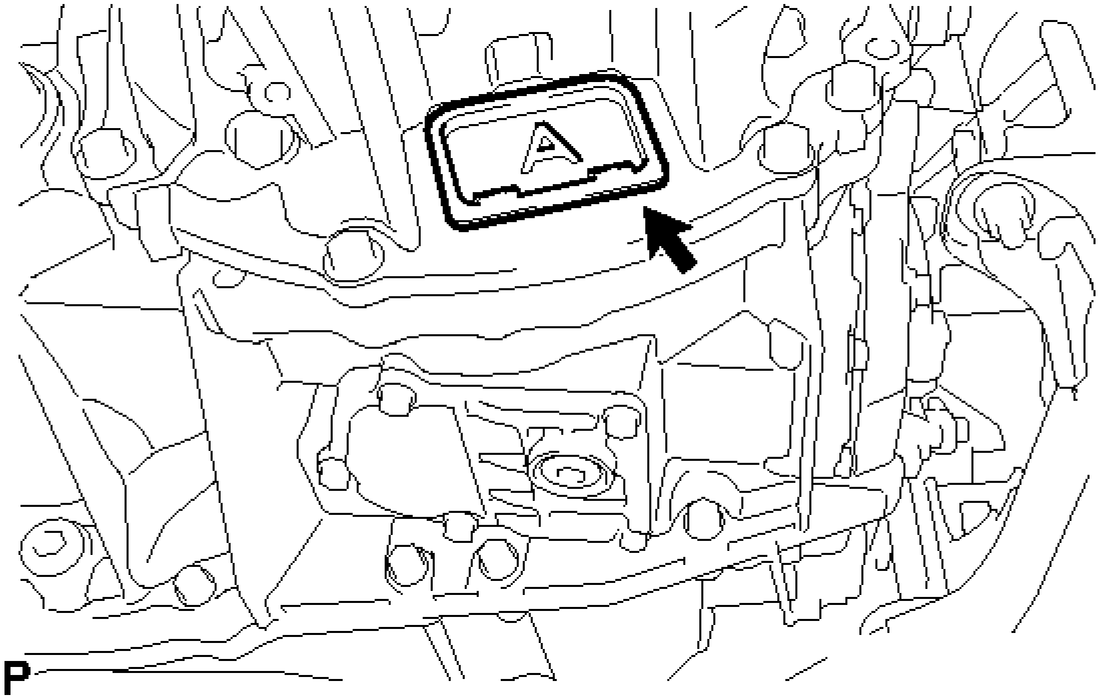

Fig. 149: Identifying Flywheel Housing Under Cover

Courtesy of TOYOTA MOTOR SALES, U.S.A., INC.

80. **REMOVE ENGINE ASSEMBLY WITH TRANSAXLE**
    a. Set an engine lifter.

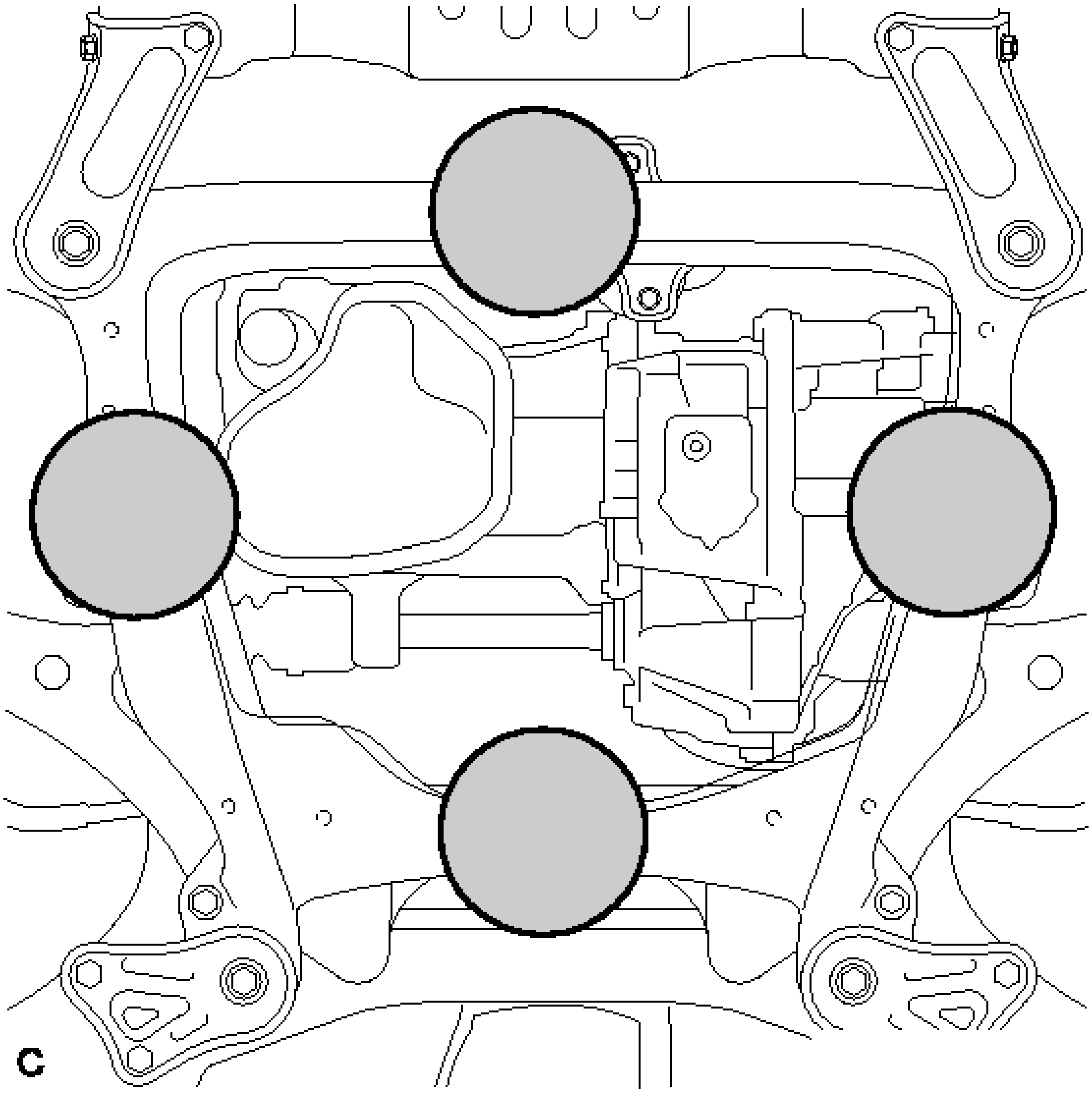

Fig. 150: Identifying Engine Lifter Points
Courtesy of TOYOTA MOTOR SALES, U.S.A., INC.

TEXT IN ILLUSTRATION

	Attachment Installation Position

NOTE:

- **Install a height adjustment attachment and plate lift attachment onto the engine assembly with transaxle.**

- **Securely support the engine assembly to prevent it from turning upside down until it is secured to an engine stand.**
- **To prevent the oil pan from deforming, do not place any attachments onto the oil pan of the engine assembly with transaxle.**
- **Servicing an engine assembly while it is hanging is dangerous. This can be done only when installing/removing the engine assembly to/from an engine stand.**
- **Do not perform any procedure while the engine assembly is suspended because doing so may cause the engine assembly to drop, resulting in injury. However, the engine assembly needs to be suspended when it is installed or removed from an engine stand.**

b. Remove the 4 bolts, 2 nuts, and frame side rail plate RH and LH.

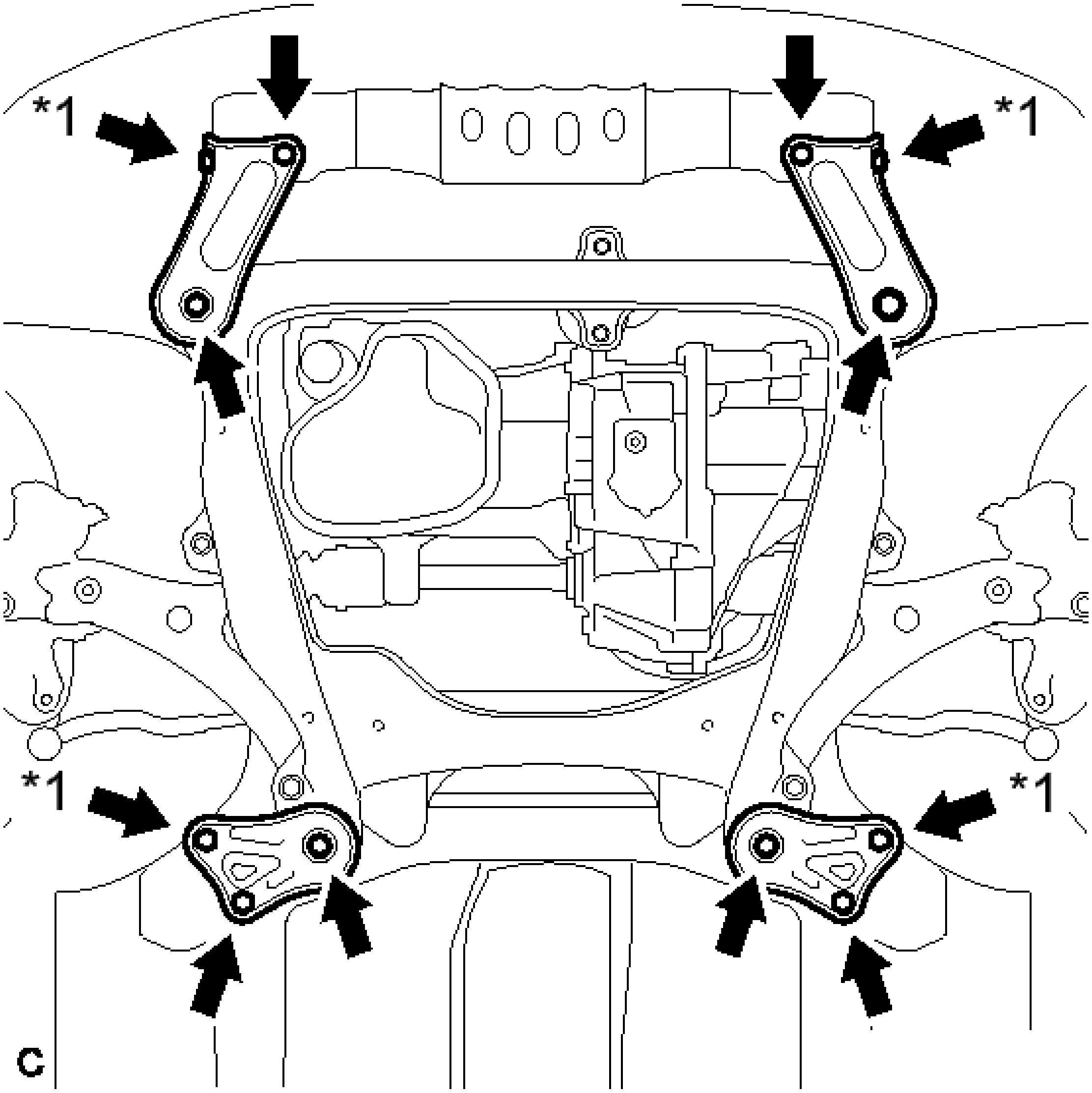

Fig. 151: Identifying Frame Side Rail Plate, Bolts And Nuts
Courtesy of TOYOTA MOTOR SALES, U.S.A., INC.

TEXT IN ILLUSTRATION

*1	Nut

c. Remove the 4 bolts, 2 nuts, and front suspension member brace rear RH and LH.
d. Operate the engine lifter and remove the engine assembly from the vehicle.

NOTE:

- **Make sure that the engine is clear of all wiring and hoses.**
- **While lowering the engine from the vehicle, do not allow it to contact the vehicle.**

e. Install the engine hangers See step 20.

81. **REMOVE ENGINE WIRE**
   a. Remove the engine wire from the engine with transaxle.
82. **REMOVE FRONT DRIVE SHAFT ASSEMBLY LH** . Refer to **REMOVAL - Step 15**
83. **REMOVE FRONT DRIVE SHAFT HOLE SNAP RING LH** . Refer to **REMOVAL - Step 17**
84. **REMOVE FRONT DRIVE SHAFT ASSEMBLY RH** . Refer to **REMOVAL - Step 16**
85. **REMOVE FRONT FRAME ASSEMBLY**
   a. Remove the bolt and disconnect the No. 4 engine wire from the front frame assembly.

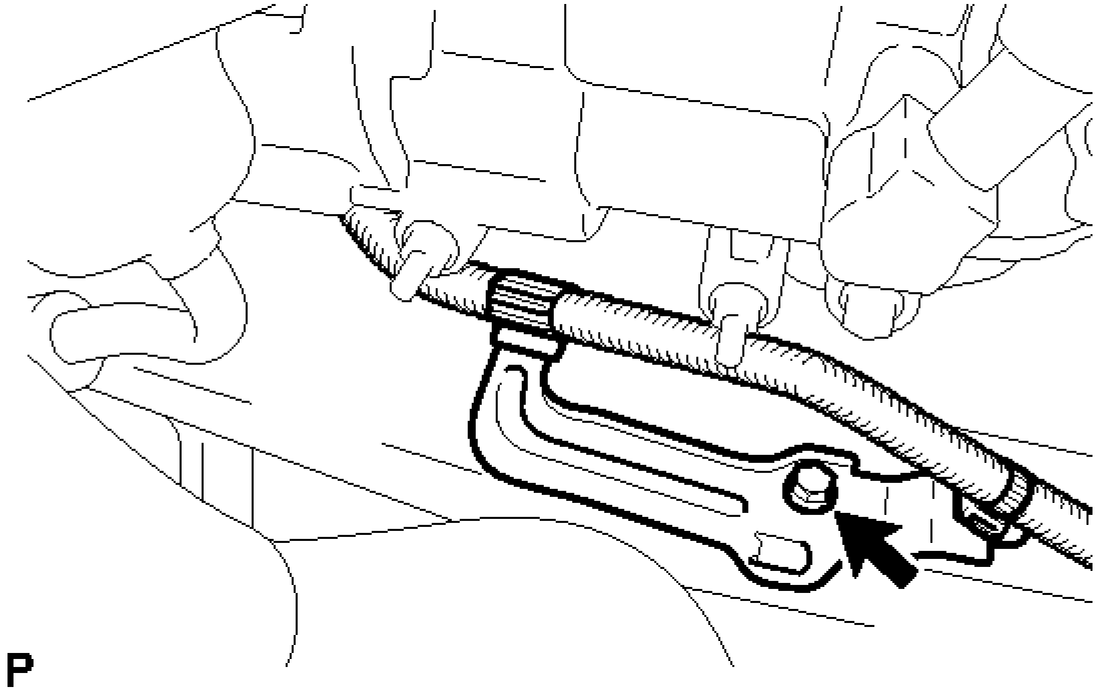

Fig. 152: Identifying No. 4 Engine Wire Bolt
Courtesy of TOYOTA MOTOR SALES, U.S.A., INC.

   b. Remove the nut and separate the engine mounting insulator LH.

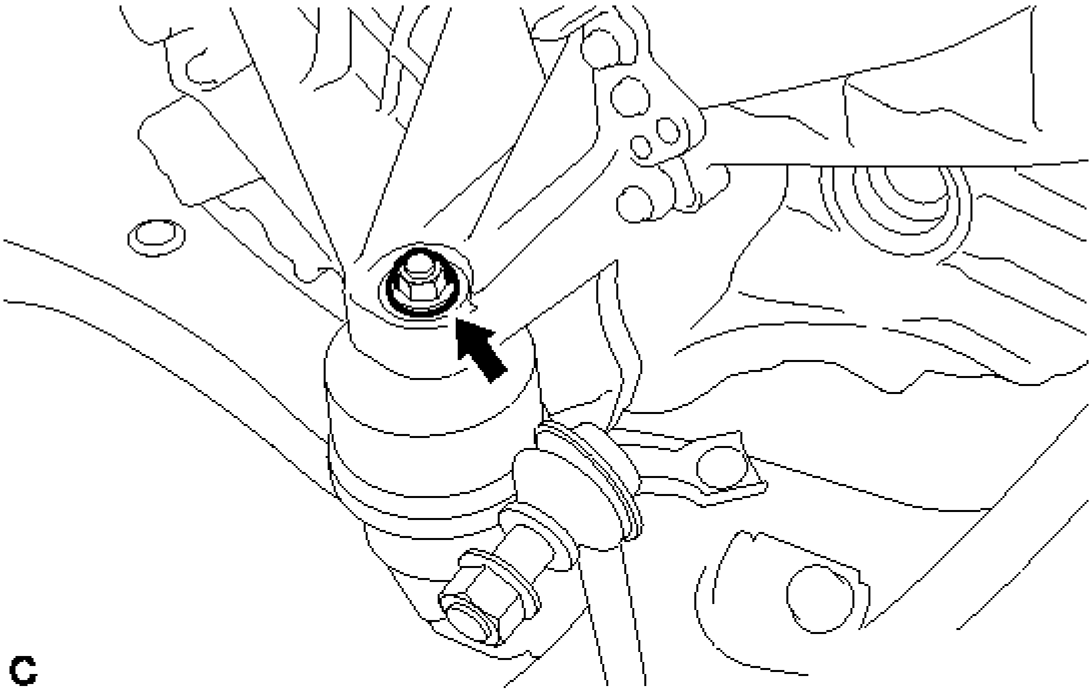

Fig. 153: Identifying Engine Mounting Insulator Nut LH
Courtesy of TOYOTA MOTOR SALES, U.S.A., INC.

c. Remove the bolt and separate the front engine mounting insulator.

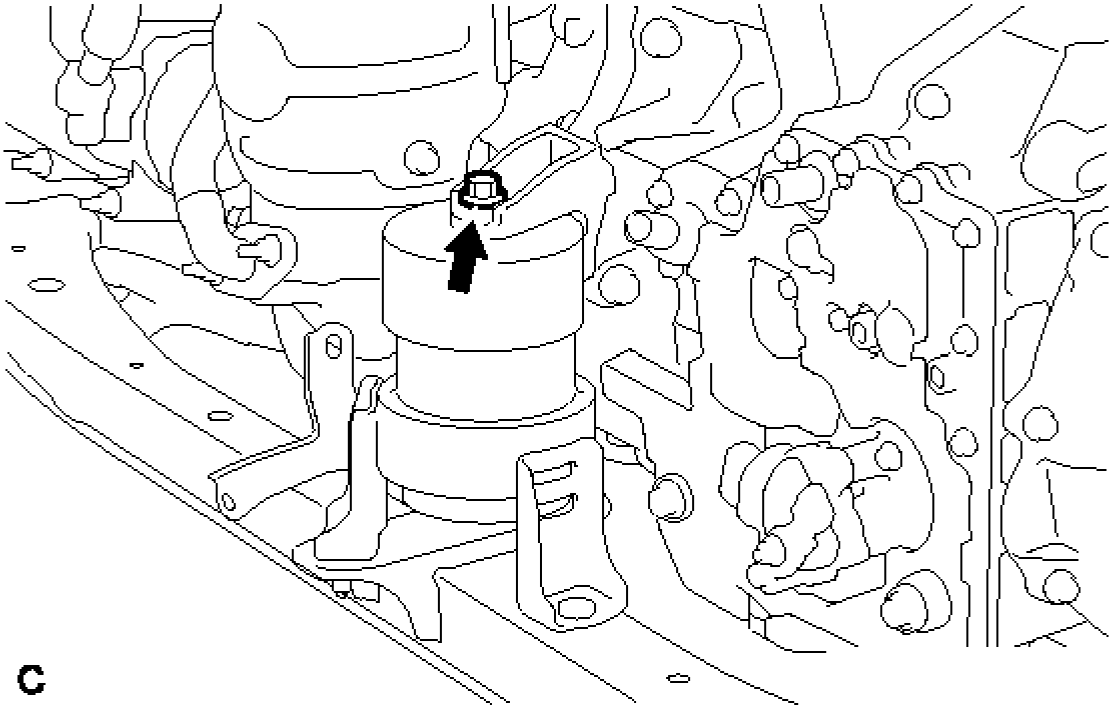

Fig. 154: Identifying Front Engine Mounting Insulator Bolt
Courtesy of TOYOTA MOTOR SALES, U.S.A., INC.

d. Remove the nut and separate the engine mounting insulator RH.

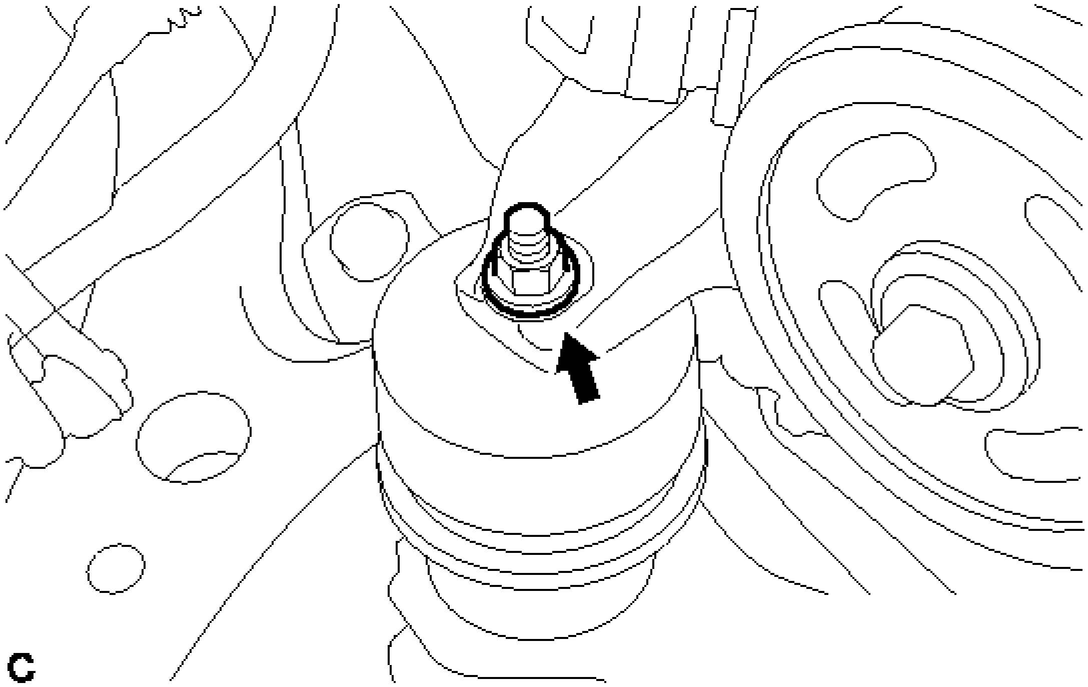

Fig. 155: Identifying Engine Mounting Insulator Nut RH
Courtesy of TOYOTA MOTOR SALES, U.S.A., INC.

e. Remove the front frame assembly.

f. Using a height adjustable attachment and plate lift attachment, place the engine assembly on a flat level surface.

NOTE:

- **Using a height adjustable attachment and plate lift attachment, place the engine assembly with transaxle horizontally.**
- **To prevent the oil pan from deforming, do not place any attachments onto the oil pan of the engine assembly with transaxle.**
- **Using an engine sling device and engine lift, secure the engine assembly before service.**

86. **REMOVE FRONT ENGINE MOUNTING INSULATOR**

a. Remove the 3 nuts and front engine mounting insulator.

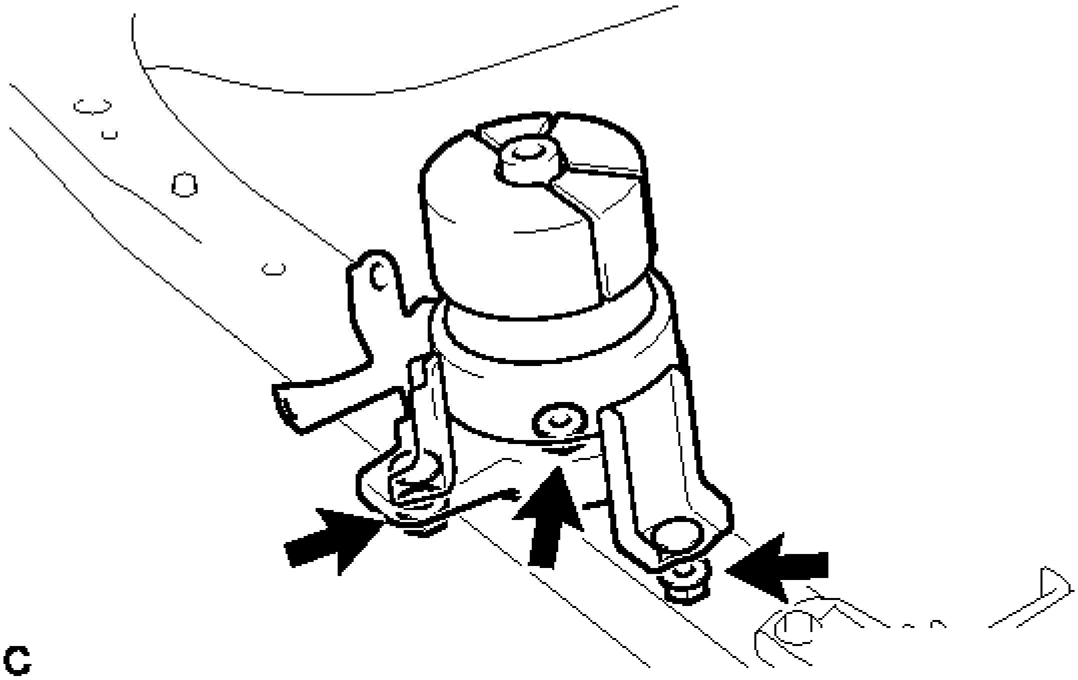

Fig. 156: Identifying Engine Mounting Insulator Nuts
Courtesy of TOYOTA MOTOR SALES, U.S.A., INC.

HINT:

Perform this procedure only when replacement of the front engine mounting insulator is necessary.

87. **REMOVE ENGINE MOUNTING INSULATOR LH**
    a. Remove the 2 hole plugs from the front frame assembly.

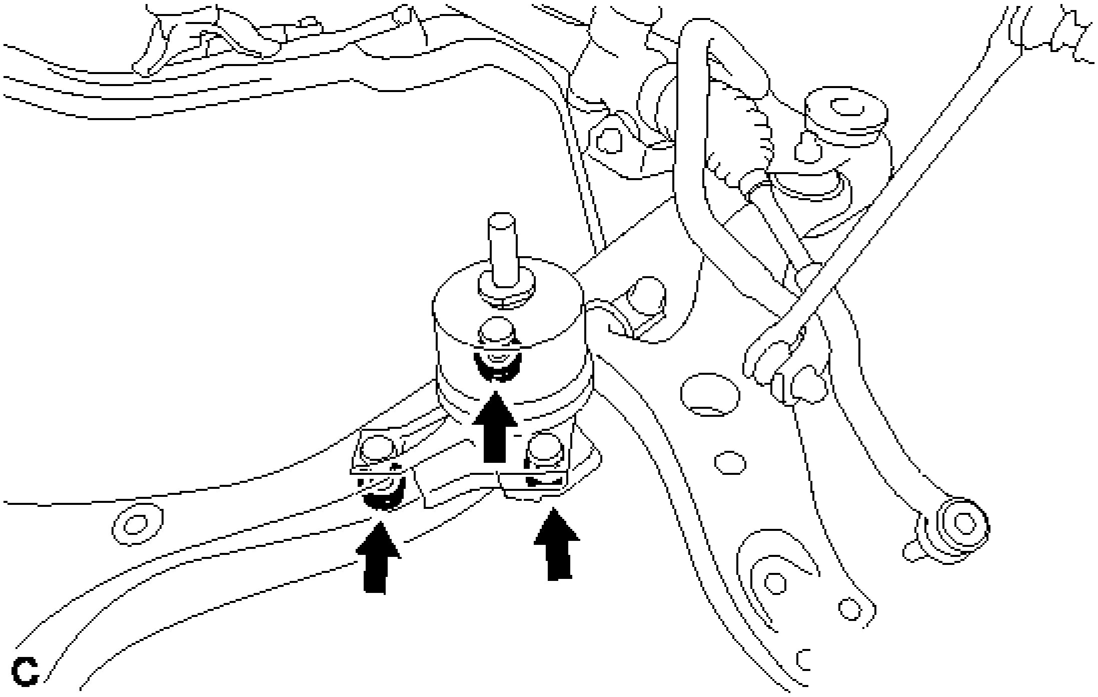

Fig. 157: Identifying Front Frame Assembly Hole Plugs
Courtesy of TOYOTA MOTOR SALES, U.S.A., INC.

b. Remove the 3 nuts and engine mounting insulator LH.

HINT:

Perform this procedure only when replacement of the engine mounting insulator LH is necessary.

88. **REMOVE ENGINE MOUNTING INSULATOR RH**

a. Remove the 2 hole plugs from the front frame assembly.

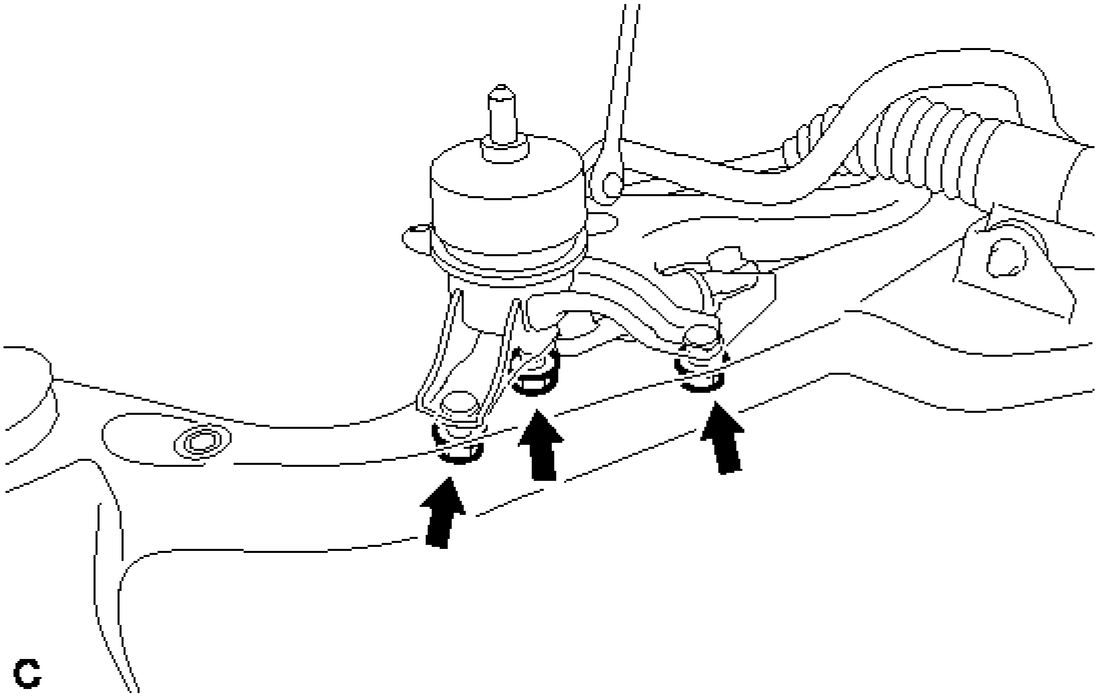

Fig. 158: Identifying Front Frame Assembly Hole Plugs
Courtesy of TOYOTA MOTOR SALES, U.S.A., INC.

b. Remove the 3 nuts and engine mounting insulator RH.

HINT:

Perform this procedure only when replacement of the engine mounting insulator RH is necessary.

89. **REMOVE ENGINE MOUNTING BRACKET RH**
    a. Remove the 3 bolts and engine mounting bracket RH.

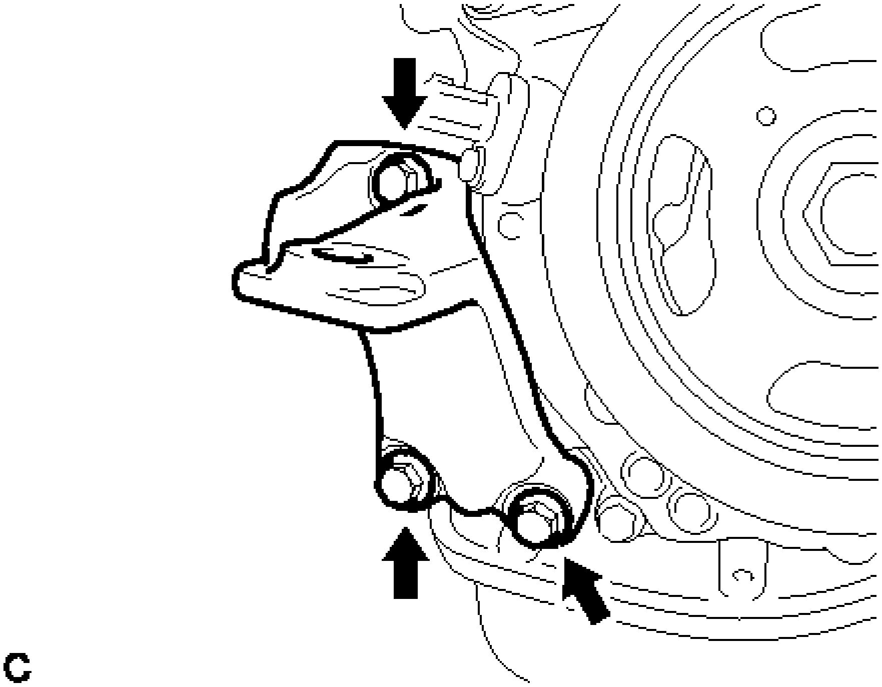

Fig. 159: Identifying Engine Mounting Bracket RH Bolts
Courtesy of TOYOTA MOTOR SALES, U.S.A., INC.

90. **REMOVE DRIVE SHAFT BEARING BRACKET**
    a. Remove the 3 bolts and drive shaft bearing bracket.

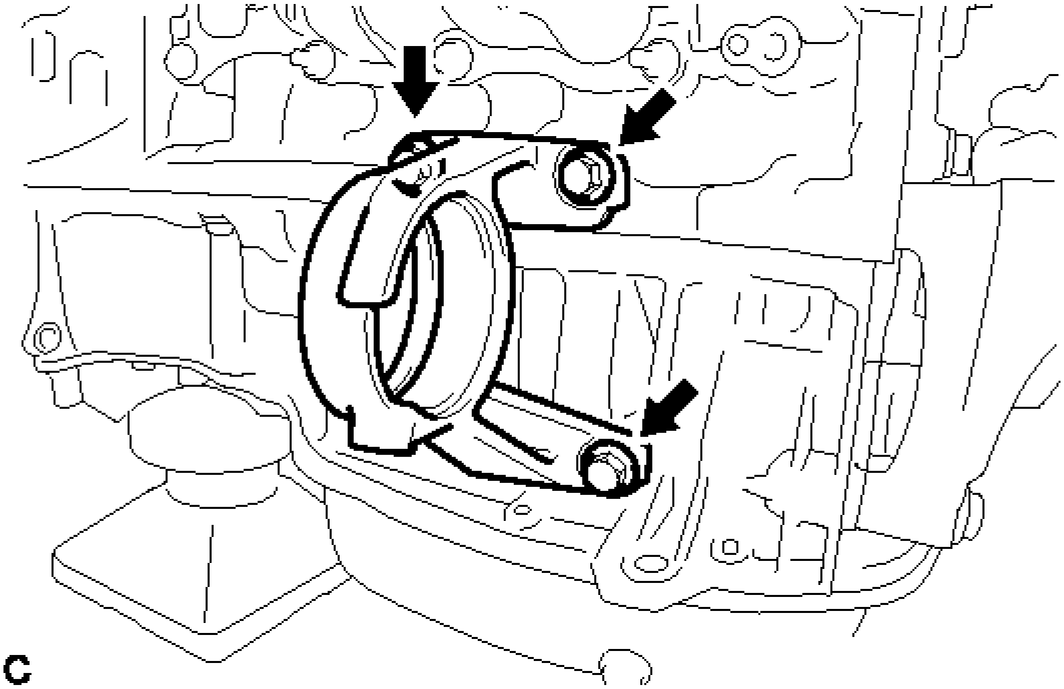

Fig. 160: Identifying Drive Shaft Bearing Bracket Bolts

Courtesy of TOYOTA MOTOR SALES, U.S.A., INC.

91. **REMOVE HYBRID VEHICLE TRANSAXLE ASSEMBLY** . Refer to **REMOVAL - Step 4**
92. **REMOVE TRANSMISSION INPUT DAMPER ASSEMBLY** See step 2
93. **REMOVE FLYWHEEL SUB-ASSEMBLY** See step 3
94. **INSTALL ENGINE STAND**
    a. Install the engine onto an engine stand with the bolts.

INSTALLATION

INSTALLATION

HINT:

Perform "Inspection After Repair" after replacing the engine assembly. Refer to **INITIALIZATION** .

1. **REMOVE ENGINE STAND**
    a. Using a chain block and engine sling device, secure the engine assembly.

NOTE:

- **Adjust the angle of the sling device carefully to prevent the engine assembly or engine hanger from deforming or becoming damaged.**
- **Servicing an engine assembly while it is hanging is dangerous. This can be done only when installing/removing the engine assembly to/from an engine stand.**

    b. Remove the engine stand from the engine.
2. **INSTALL ENGINE WIRE**
    a. Install the engine wire to the engine with transaxle.
3. **INSTALL FLYWHEEL SUB-ASSEMBLY** See step 2
4. **INSTALL TRANSMISSION INPUT DAMPER ASSEMBLY** See step 3
5. **INSTALL HYBRID VEHICLE TRANSAXLE ASSEMBLY** . Refer to **INSTALLATION - Step 10**
6. **INSTALL ENGINE MOUNTING BRACKET RH**
    a. Install the engine mounting bracket RH with the 3 bolts.

Torque: 54 N*m (551 kgf*cm, 40 ft.*lbf)

7. **INSTALL DRIVE SHAFT BEARING BRACKET**
    a. Install the drive shaft bearing bracket with the 3 bolts.

Torque: 64 N*m (653 kgf*cm, 47 ft.*lbf)

8. **TEMPORARILY INSTALL FRONT ENGINE MOUNTING INSULATOR**

a. Temporarily install the front engine mounting insulator with the 3 nuts.

   HINT:

   Perform this procedure only when replacement of the front engine mounting insulator is necessary.

9. **TEMPORARILY INSTALL ENGINE MOUNTING INSULATOR LH**
   a. Temporarily install the engine mounting insulator LH with the 3 nuts.

      HINT:

      Perform this procedure only when replacement of the engine mounting insulator LH is necessary.

10. **TEMPORARILY INSTALL ENGINE MOUNTING INSULATOR RH**
    a. Temporarily install the engine mounting insulator RH with the 3 nuts.

       HINT:

       Perform this procedure only when replacement of the engine mounting insulator RH is necessary.

11. **INSTALL FRONT FRAME ASSEMBLY**
    a. Install the engine mounting insulator LH with the nut.

       Torque: 95 N*m (969 kgf*cm, 70 ft.*lbf)

    b. Install the engine mounting insulator RH with the nut.

       Torque: 95 N*m (969 kgf*cm, 70 ft.*lbf)

    c. Install the front engine mounting insulator with the bolt.

       Torque: 87 N*m (887 kgf*cm, 64 ft.*lbf)

    d. Fully tighten the 9 temporarily installed nuts of the engine mounting insulators to the specified torque.

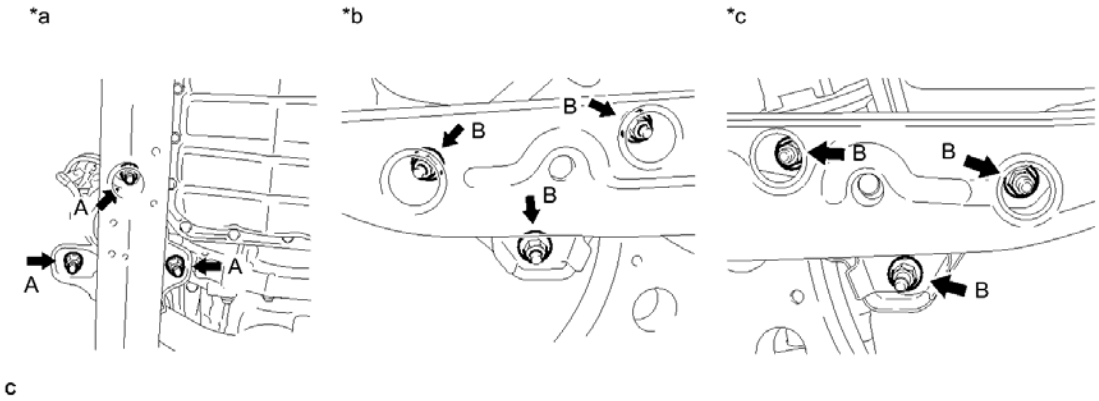

Fig. 161: Identifying Engine Mounting Insulators Nuts
Courtesy of TOYOTA MOTOR SALES, U.S.A., INC.

TEXT IN ILLUSTRATION

*a	Front Engine Mounting Insulator	*b	Engine Mounting Insulator RH
*c	Engine Mounting Insulator LH	-	-

HINT:

Perform this procedure only when replacement of the engine mounting insulator is necessary.

A

Torque: 52 N*m (530 kgf*cm, 38 ft.*lbf)

B

Torque: 87 N*m (887 kgf*cm, 64 ft.*lbf)

e. Install the 4 hole plugs.

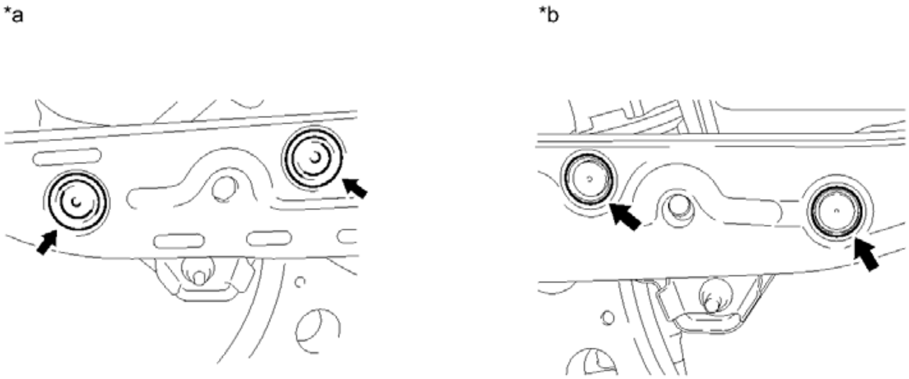

Fig. 162: Identifying Hole Plugs
Courtesy of TOYOTA MOTOR SALES, U.S.A., INC.

TEXT IN ILLUSTRATION

*a	Engine Mounting Insulator RH	*b	Engine Mounting Insulator LH

HINT:

Perform this procedure only when replacement of the engine mounting insulator is necessary.

12. **INSTALL FRONT DRIVE SHAFT HOLE SNAP RING LH** . Refer to **REASSEMBLY - Step 13**
13. **INSTALL FRONT DRIVE SHAFT ASSEMBLY LH** . Refer to **INSTALLATION - Step 1**
14. **INSTALL FRONT DRIVE SHAFT ASSEMBLY RH** . Refer to **INSTALLATION - Step 2**
15. **INSTALL ENGINE ASSEMBLY WITH TRANSAXLE**
    a. Set the engine assembly with transaxle on an engine lifter.

NOTE:

- **Install a height adjustment attachment and plate lift attachment onto the engine assembly with transaxle.**
- **Do not position a height adjustment attachment or plate lift attachment onto the front frame assembly.**
- **To prevent the oil pan from deforming, do not place any attachments onto the oil pan of the engine assembly with transaxle.**
- **Make sure to support the engine assembly with transaxle securely to prevent it from falling.**

    b. Remove the engine hangers See step 1.
    c. Install the engine assembly to the vehicle.

NOTE: **Do not raise the engine more than necessary. If the engine is raised excessively, the vehicle may also be lifted up.**

HINT:

- Make sure that the engine is clear of all wiring and hoses.
- While raising the engine into the vehicle, do not allow it to contact the vehicle.

d. Install the frame side rail plate RH and LH with the 4 bolts and 2 nuts.

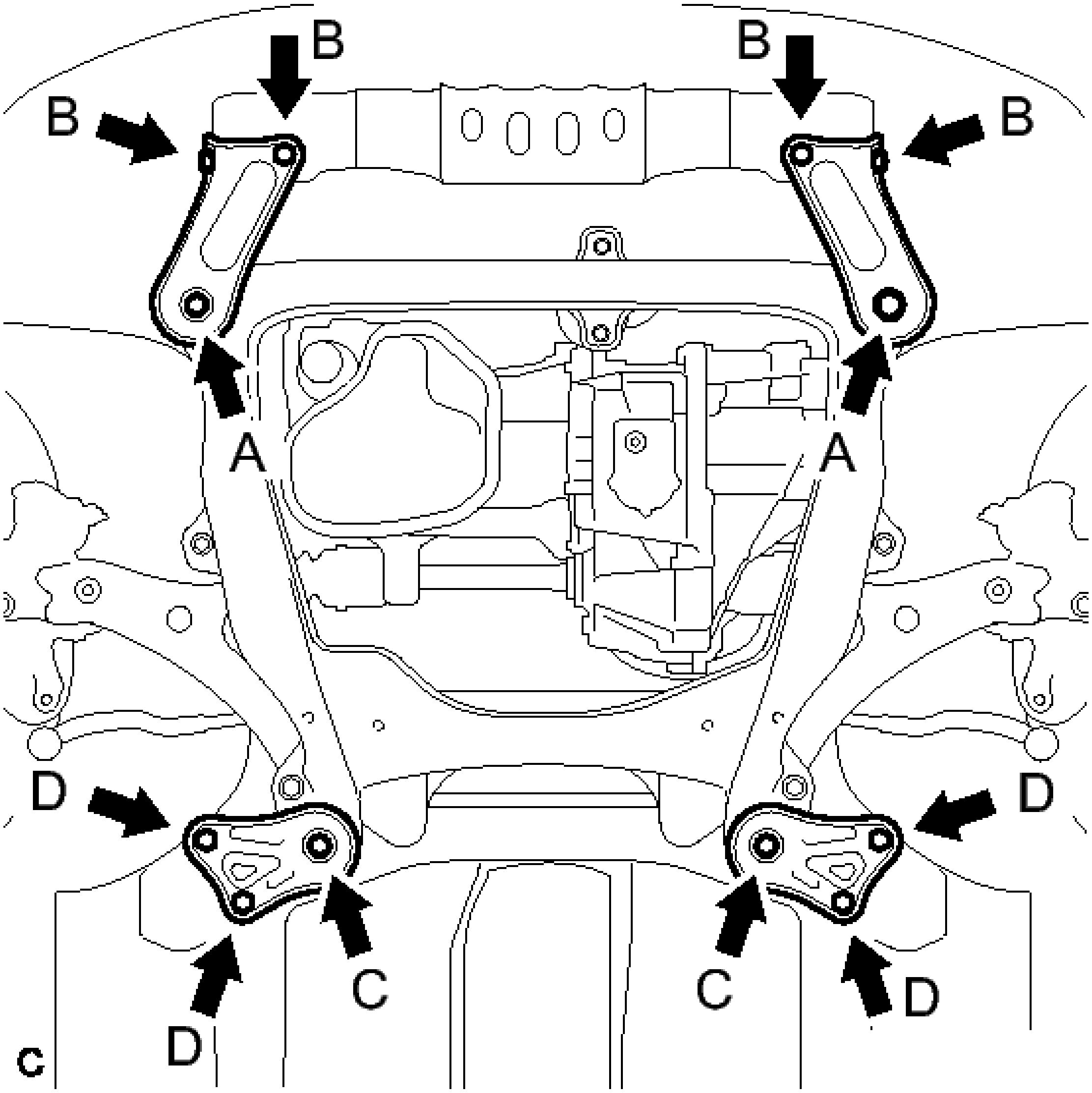

Fig. 163: Identifying Frame Side Rail Plate Bolts And Nuts
Courtesy of TOYOTA MOTOR SALES, U.S.A., INC.

A

Torque: 85 N*m (867 kgf*cm, 62 ft.*lbf)

B

Torque: 32 N*m (326 kgf*cm, 24 ft.*lbf)

e. Install the front suspension member brace rear RH and LH with the 4 bolts and 2 nuts.

C

Torque: 85 N*m (867 kgf*cm, 62 ft.*lbf)

D

Torque: 32 N*m (326 kgf*cm, 24 ft.*lbf)

HINT:

Perform "Inspection After Repair" after replacing the engine assembly. Refer to **INITIALIZATION** .

16. **INSTALL FLYWHEEL HOUSING UNDER COVER**
    a. Install the flywheel housing under cover.
17. **INSTALL FRONT LOWER NO. 1 SUSPENSION ARM SUB-ASSEMBLY LH** . Refer to **INSTALLATION - Step 8**
18. **INSTALL FRONT LOWER NO. 1 SUSPENSION ARM SUB-ASSEMBLY RH**

    HINT:

    Use the same procedure described for the LH side.

19. **INSTALL TIE ROD ASSEMBLY LH** . Refer to **INSTALLATION - Step 8**
20. **INSTALL TIE ROD ASSEMBLY RH**

    HINT:

    Use the same procedure described for the LH side.

21. **INSTALL FRONT SPEED SENSOR LH** . Refer to **INSTALLATION - Step 19**
22. **INSTALL FRONT SPEED SENSOR RH**

    HINT:

    Use the same procedure described for the LH side.

23. **INSTALL FRONT STABILIZER LINK ASSEMBLY LH** . Refer to **INSTALLATION - Step 10**
24. **INSTALL FRONT STABILIZER LINK ASSEMBLY RH**

HINT:

Use the same procedure described for the LH side.

25. **INSTALL FRONT AXLE SHAFT NUT LH** . Refer to **INSTALLATION - Step 7**
26. **CONNECT STEERING INTERMEDIATE SHAFT ASSEMBLY** . Refer to **INSTALLATION - Step 10**
27. **INSTALL FRONT AXLE SHAFT NUT RH**

    HINT:

    Use the same procedure described for the LH side.

28. **INSTALL FRONT EXHAUST PIPE ASSEMBLY** . Refer to **INSTALLATION - Step 1**
29. **INSTALL NO. 1 COOLER REFRIGERANT DISCHARGE HOSE** . Refer to **INSTALLATION - Step 4**
30. **INSTALL NO. 1 COOLER REFRIGERANT SUCTION HOSE** . Refer to **INSTALLATION - Step 3**
31. **INSTALL ENGINE MOVING CONTROL ROD**
    a. Temporarily install the engine moving control rod to the engine moving control rod bracket with the bolt.

       HINT:

       Perform this procedure only when replacement of the engine moving control rod is necessary.

32. **INSTALL ENGINE MOVING CONTROL ROD SUB-ASSEMBLY**
    a. When the engine moving control rod has been replaced.
        1. Temporarily install the engine moving control rod sub-assembly with the 4 bolts.

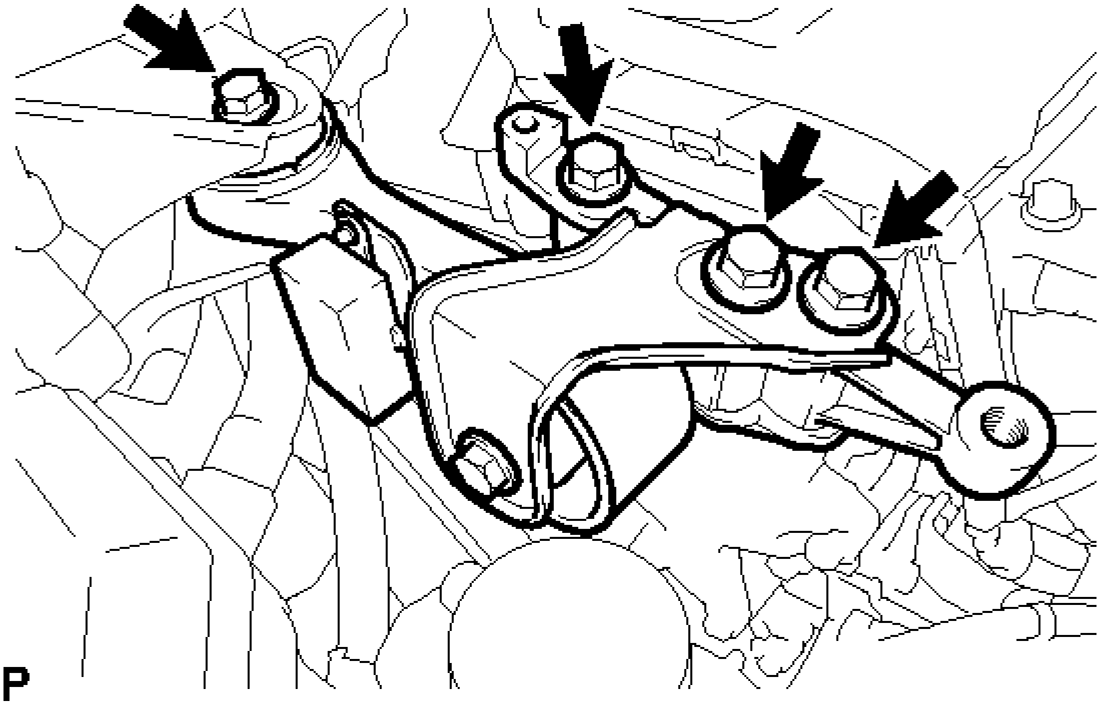

Fig. 164: Identifying Engine Moving Control Rod Sub-Assembly Bolts
Courtesy of TOYOTA MOTOR SALES, U.S.A., INC.

2. Fully tighten the engine moving control rod sub-assembly with the bolts except bolt A.

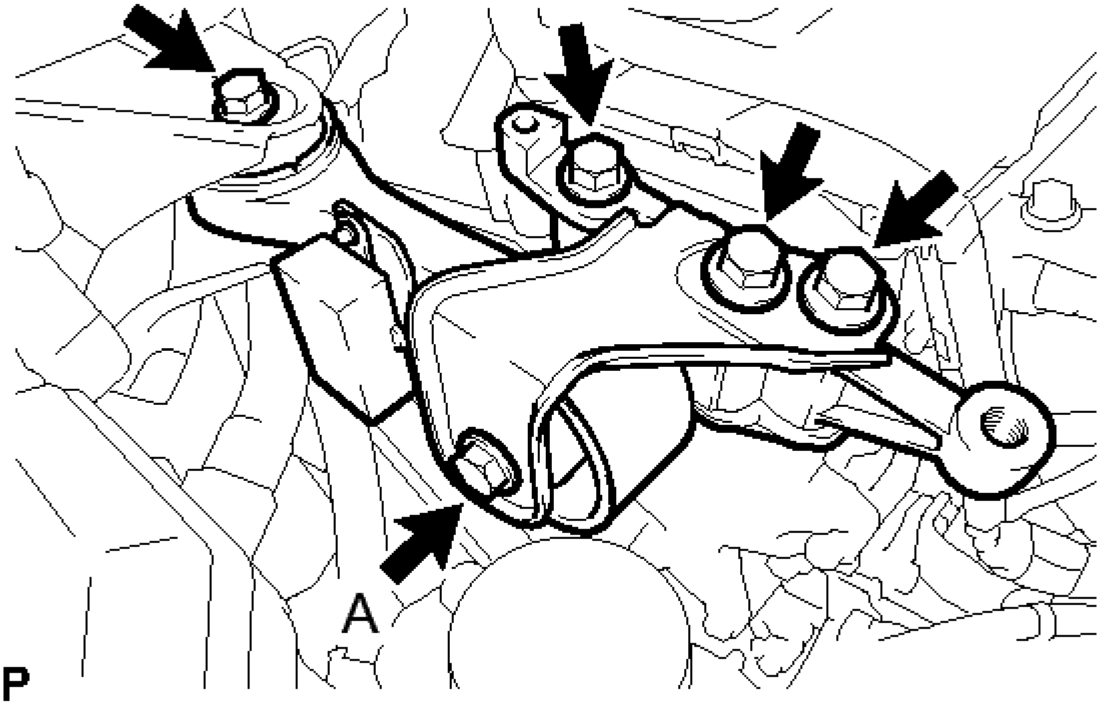

Fig. 165: Identifying Engine Moving Control Rod Sub-Assembly Bolts
Courtesy of TOYOTA MOTOR SALES, U.S.A., INC.

Torque: 38 N*m (387 kgf*cm, 28 ft.*lbf)

3. Using SST, fully tighten the bolt A.

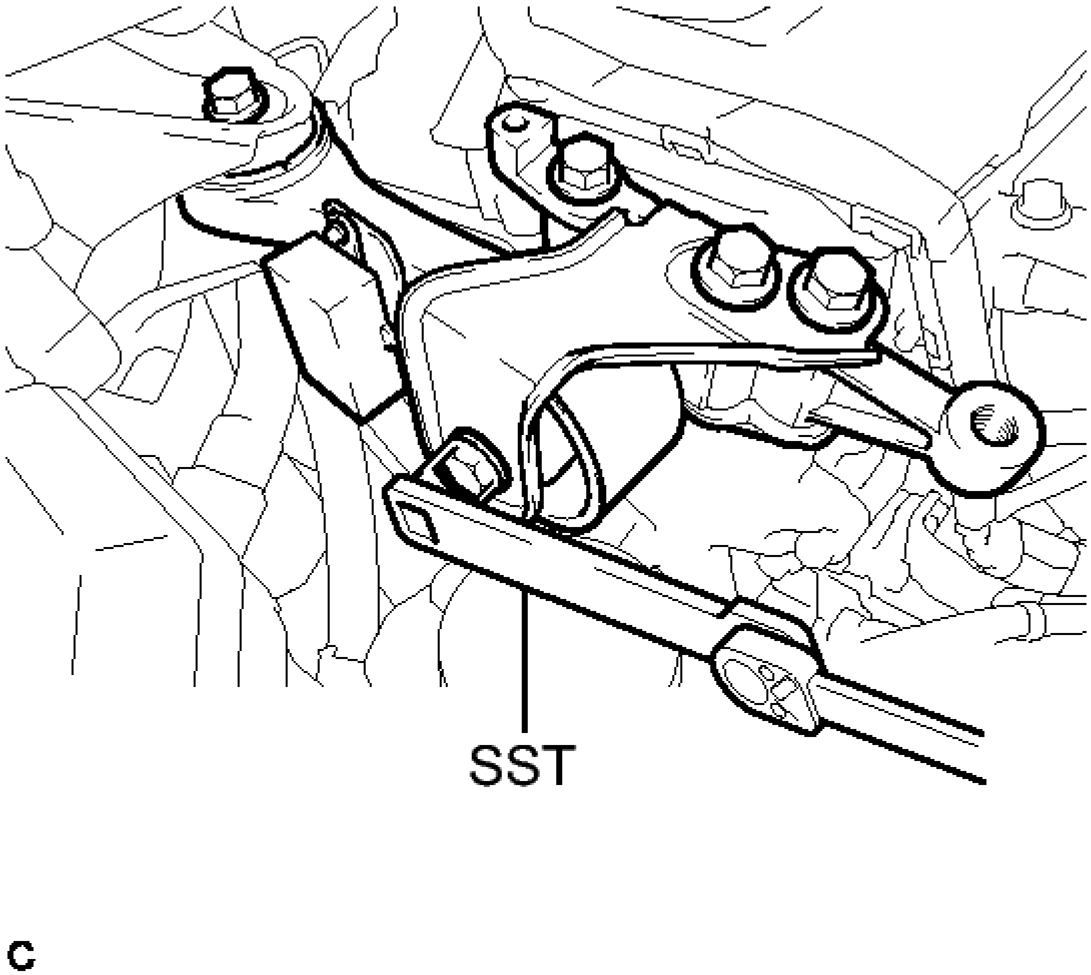

Fig. 166: Identifying SST
Courtesy of TOYOTA MOTOR SALES, U.S.A., INC.

- **SST: 09961-00950**

Without SST

Torque: 52 N*m (530 kgf*cm, 38 ft.*lbf)

With SST

Torque: 33 N*m (340 kgf*cm, 25 ft.*lbf)

NOTE:

- **The "with SST" torque value is effective when using SST with a fulcrum length of 150 mm (5.91 in.) and a torque wrench with a fulcrum length of 260 mm (10.24 in.). Refer to PRECAUTION .**
- **The "with SST" torque value is effective when SST is parallel to the torque wrench.**
- **Fully tighten bolt A using SST.**

b. When the engine moving control rod has been reused.

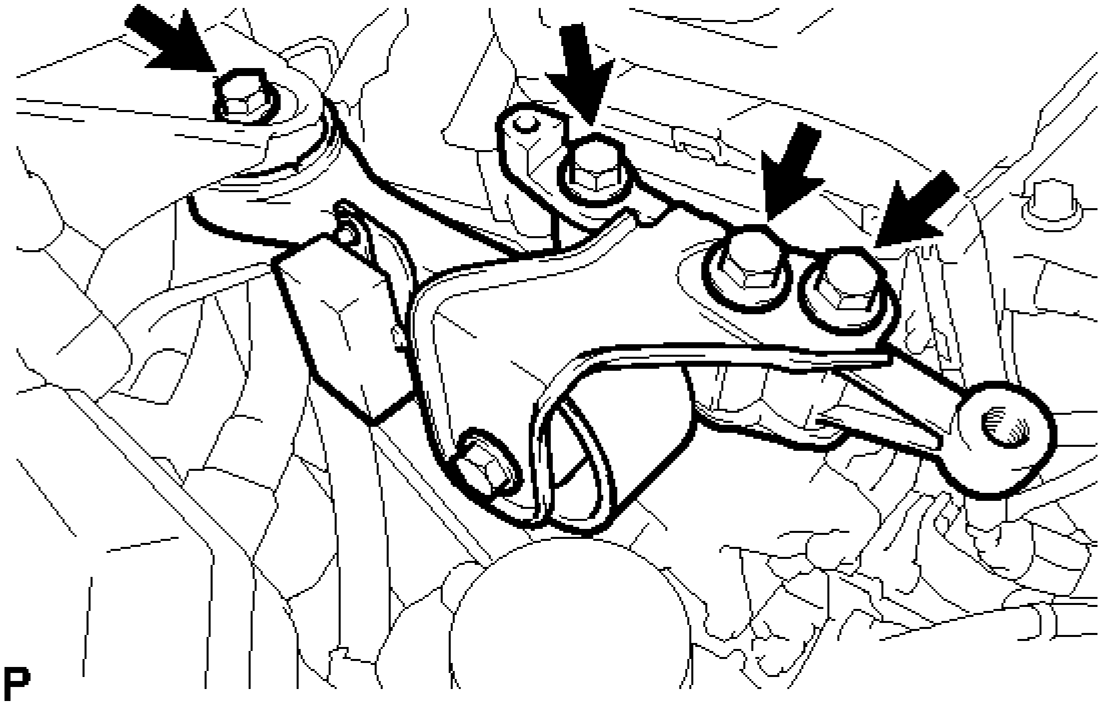

Fig. 167: Identifying Engine Moving Control Rod Sub-Assembly Bolts
Courtesy of TOYOTA MOTOR SALES, U.S.A., INC.

1. Temporarily install the engine moving control rod sub-assembly with the 4 bolts.
2. Fully tighten the engine moving control rod sub-assembly with the 4 bolts.

   Torque: 38 N*m (387 kgf*cm, 28 ft.*lbf)

33. **INSTALL EARTH WIRE**

a. Install the earth wire with the bolt.

   Torque: 8.0 N*m (82 kgf*cm, 71 in.*lbf)

34. **INSTALL NO. 2 ENGINE MOUNTING STAY RH**

a. Install the No. 2 engine mounting stay RH with the 2 bolts.

Torque: 38 N*m (387 kgf*cm, 28 ft.*lbf)

35. **CONNECT FUEL MAIN TUBE**

   a. Push in the fuel tube connector to the fuel pipe until the connector makes a "click" sound.

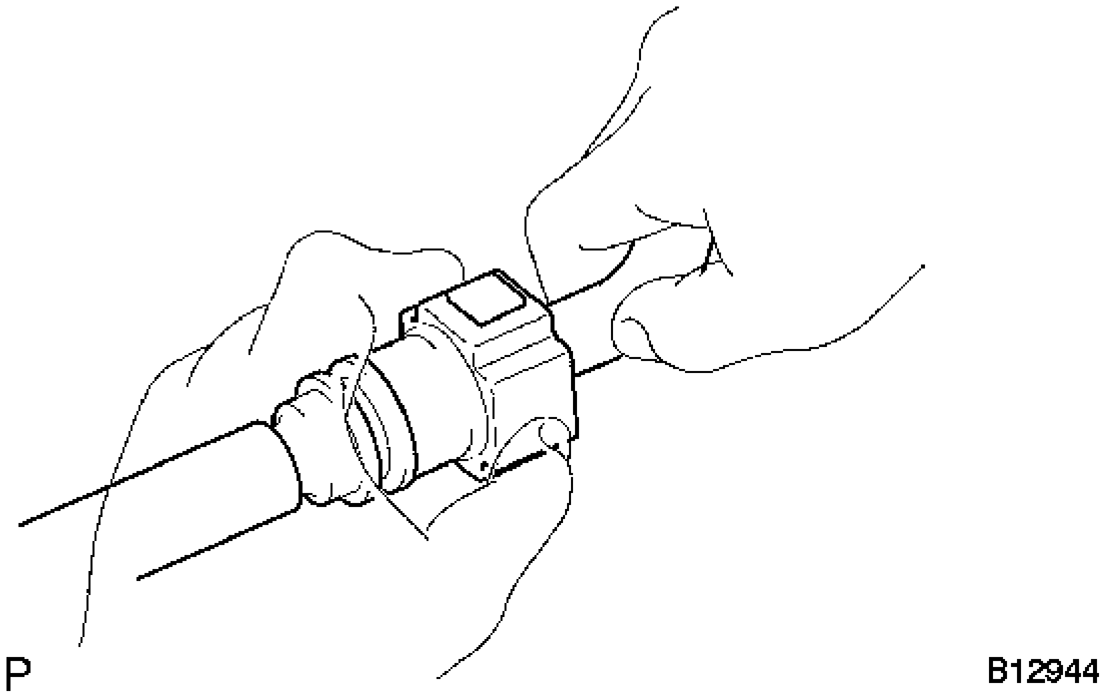

Fig. 168: Pushing Fuel Tube Connector To Fuel Pipe
Courtesy of TOYOTA MOTOR SALES, U.S.A., INC.

NOTE:

- **Check for damage or contamination on the connected part of the pipe.**
- **Check if the pipe and the connector are securely connected by trying to pull them apart.**

   b. Install the No. 1 fuel pipe clamp.

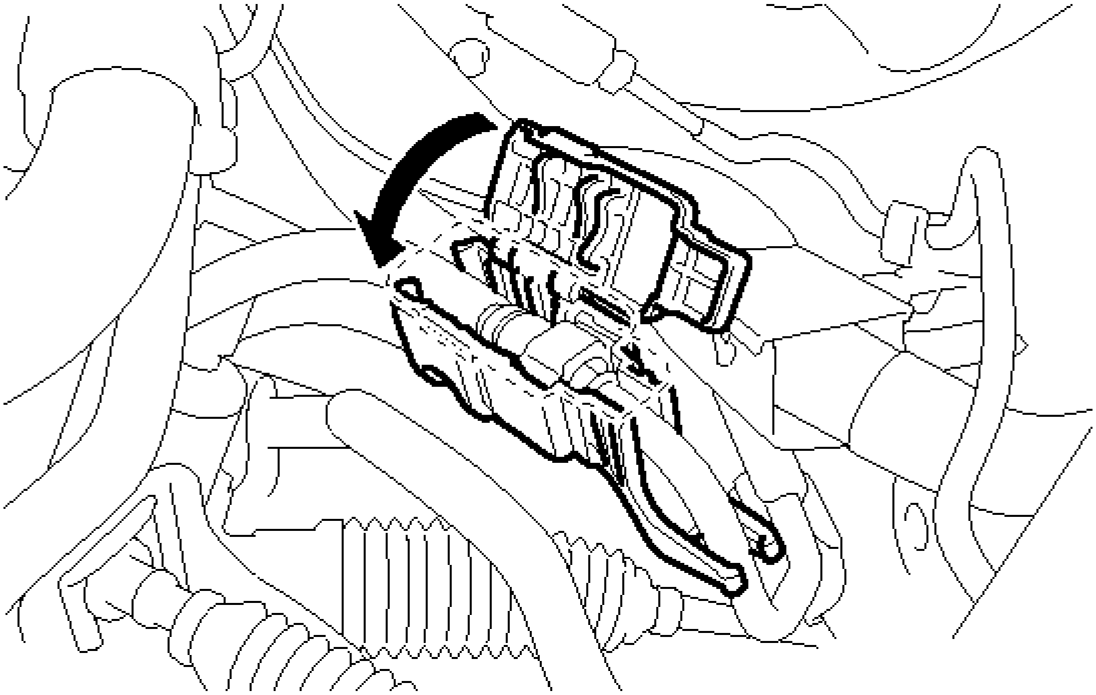

Fig. 169: Identifying No. 1 Fuel Pipe Clamp
Courtesy of TOYOTA MOTOR SALES, U.S.A., INC.

36. **CONNECT INLET HEATER WATER HOSE**
    a. Connect the inlet heater water hose.
37. **CONNECT OUTLET HEATER WATER HOSE**
    a. Connect the outlet heater water hose.
38. **CONNECT NO. 5 INVERTER COOLING HOSE**
    a. Connect the No. 5 inverter cooling hose to the hybrid vehicle transaxle assembly.
39. **CONNECT NO. 1 RADIATOR HOSE**
    a. Connect the air fuel ratio sensor wire to the No. 1 radiator hose with the hose clamp.
40. **CONNECT NO. 2 RADIATOR HOSE**
    a. Connect the No. 2 radiator hose.
41. **CONNECT TRANSMISSION CONTROL CABLE ASSEMBLY**
    a. Connect the transmission control cable assembly to the 2 transmission control cable brackets.
    b. Install a new clip to the No. 1 transmission control cable bracket.
    c. Install the transmission control cable assembly to the No. 1 transmission control cable bracket

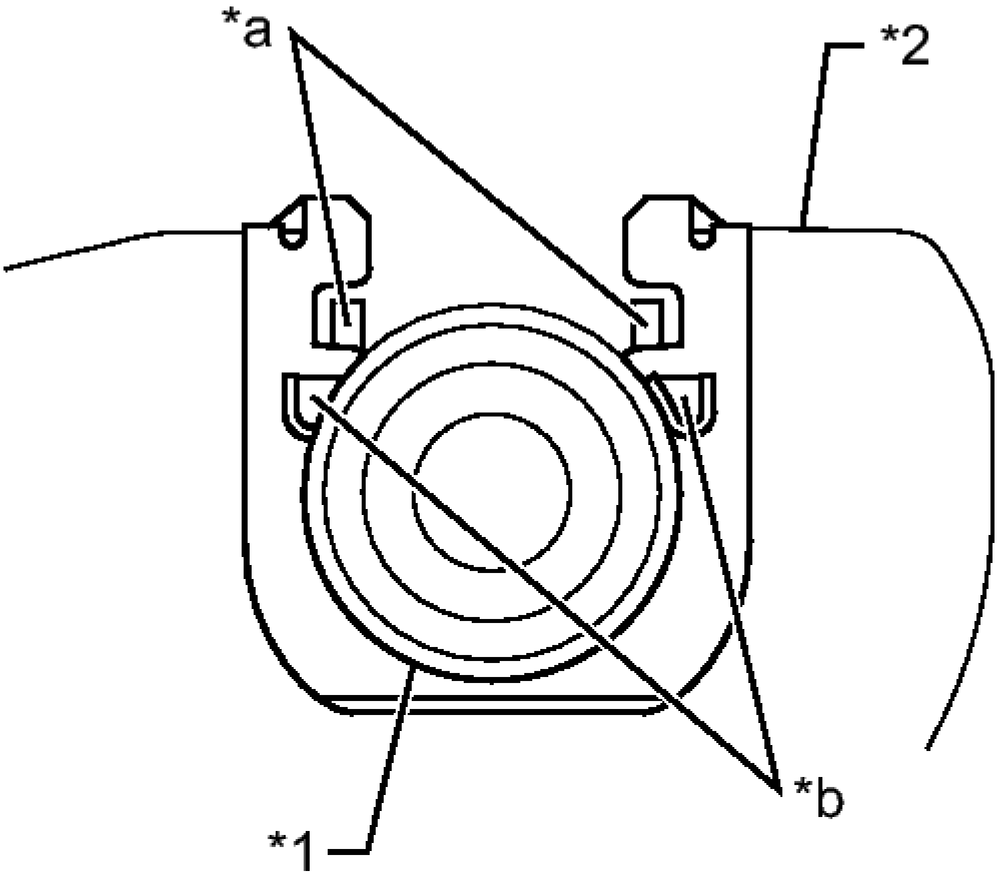

Fig. 170: Identifying Transmission Control Cable Assembly And Bracket
Courtesy of TOYOTA MOTOR SALES, U.S.A., INC.

TEXT IN ILLUSTRATION

*1	No. 1 Transmission Control Cable Assembly
*2	No. 1 Transmission Control Cable Bracket
*a	Claw A
*b	Claw B

NOTE:

- **Make sure that the claws A on the clip are securely fit into the bracket holes.**
- **Make sure that the cable is securely installed inside of the claws B of the clip.**

d. Connect the transmission control cable assembly to the control shaft lever with the nut.

Torque: 15 N*m (153 kgf*cm, 11 ft.*lbf)

42. **INSTALL NO. 4 ENGINE WIRE**
    a. Install the 3 wire harness clamps and connect the No. 4 engine wire to the fan shroud.
43. **INSTALL INVERTER WITH CONVERTER ASSEMBLY** . Refer to **INSTALLATION - Step 11**
44. **CONNECT ENGINE WIRE**
    a. Connect the wire harness clamp.

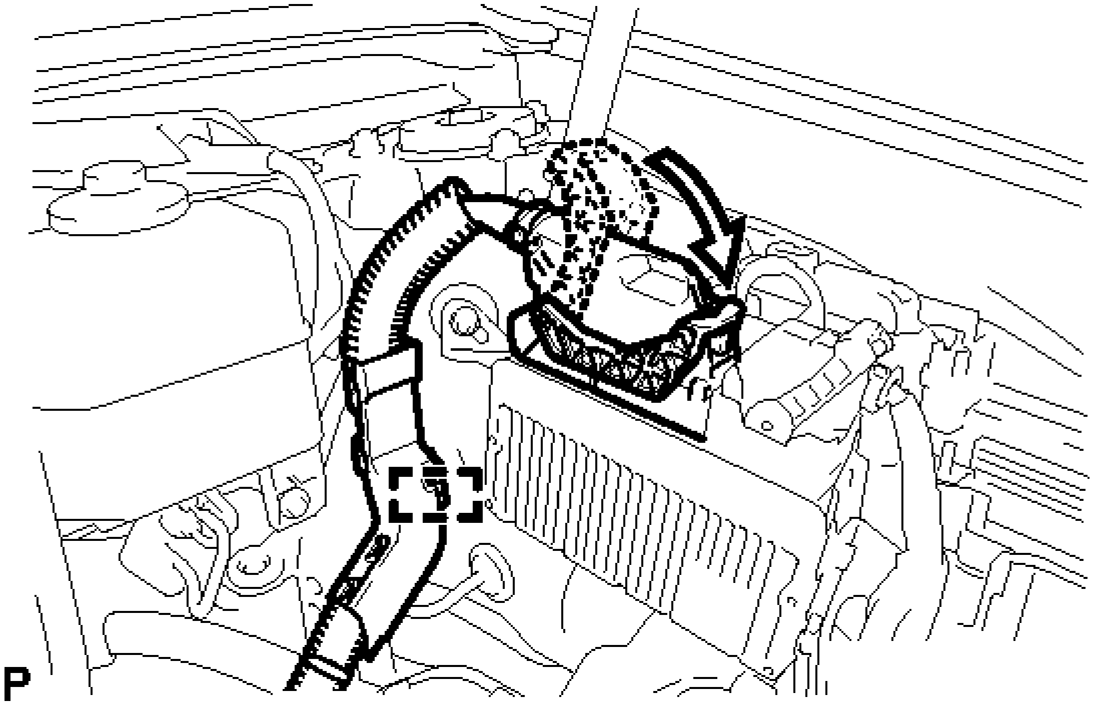

Fig. 171: Identifying Wire Harness Clamp
Courtesy of TOYOTA MOTOR SALES, U.S.A., INC.

b. Connect the connector to the ECM with the lock lever.
c. Install the earth wire with the bolt.

Torque: 8.0 N*m (82 kgf*cm, 71 in.*lbf)

d. Connect the 4 connectors and wire harness clamp.

45. **CONNECT NO. 1 INVERTER COOLING HOSE ASSEMBLY** . Refer to **INSTALLATION - Step**

12

46. **CONNECT NO. 4 INVERTER COOLING HOSE** . Refer to **INSTALLATION - Step 13**
47. **CONNECT NO. 3 ENGINE ROOM WIRE** . Refer to **INSTALLATION - Step 14**
48. **CONNECT LOW VOLTAGE CONNECTOR** . Refer to **INSTALLATION - Step 15**
49. **REMOVE CONNECTOR COVER ASSEMBLY** . Refer to **REMOVAL - Step 19**
50. **CONNECT NO. 4 FLOOR WIRE** . Refer to **INSTALLATION - Step 17**
51. **CONNECT NO. 4 ENGINE WIRE** . Refer to **INSTALLATION - Step 18**
52. **INSTALL CONNECTOR COVER ASSEMBLY** . Refer to **INSTALLATION - Step 19**
53. **INSTALL NO. 3 MOTOR CABLE BRACKET** . Refer to **INSTALLATION - Step 20**
54. **CONNECT MOTOR CABLE** . Refer to **INSTALLATION - Step 21**
55. **INSTALL UPPER INVERTER COVER** . Refer to **INSTALLATION - Step 22**
56. **CONNECT GENERATOR CABLE** . Refer to **INSTALLATION - Step 23**
57. **INSTALL UPPER INVERTER COVER** . Refer to **INSTALLATION - Step 22**
58. **INSTALL NO. 4 INVERTER BRACKET** . Refer to **INSTALLATION - Step 25**
59. **INSTALL NO. 5 INVERTER BRACKET** . Refer to **INSTALLATION - Step 26**
60. **INSTALL AIR CLEANER CASE SUB-ASSEMBLY**
    a. Insert the projection of the air cleaner case sub-assembly to the hole of the No. 2 air cleaner bracket as shown in the illustration.

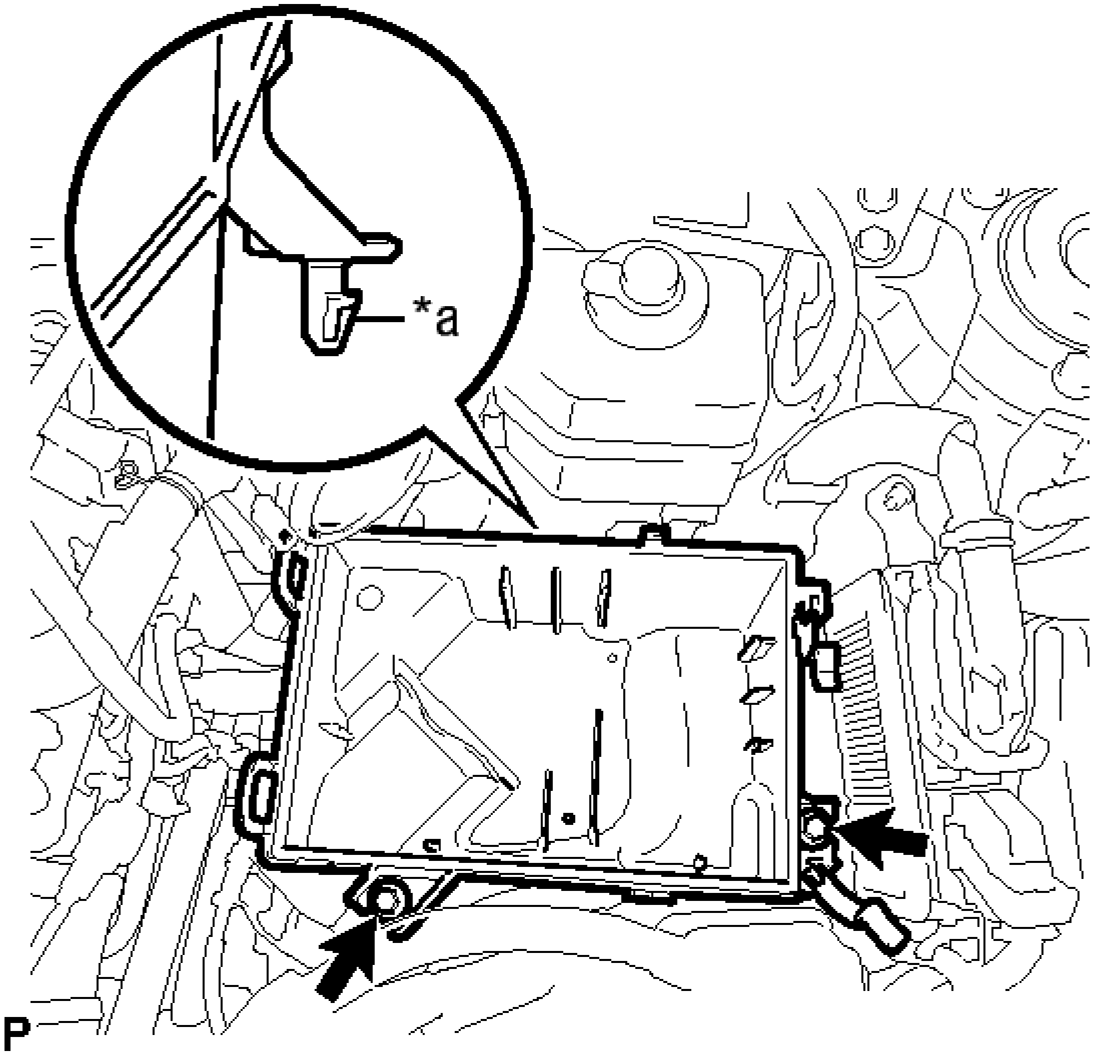

Fig. 172: Identifying Air Cleaner Case Sub-Assembly
Courtesy of TOYOTA MOTOR SALES, U.S.A., INC.

TEXT IN ILLUSTRATION

*a	Projection

b. Tighten the 2 bolts.

Torque: 5.0 N*m (51 kgf*cm, 44 in.*lbf)

61. **INSTALL AIR CLEANER FILTER ELEMENT**

a. Install the air cleaner filter element.

NOTE: **Install the air cleaner filter element with the printed side facing the vehicle front.**

62. **INSTALL AIR CLEANER CAP SUB-ASSEMBLY** . Refer to **INSTALLATION - Step 2**
63. **INSTALL INLET AIR CLEANER ASSEMBLY**
    a. Install the inlet air cleaner assembly with the 2 bolts.

       Torque: 8.0 N*m (82 kgf*cm, 71 in.*lbf)

64. **INSTALL SERVICE PLUG GRIP** . Refer to **INSTALLATION - Step 1**
65. **INSTALL NO. 8 HYBRID VEHICLE BATTERY SHIELD PANEL** . Refer to **INSTALLATION - Step 2**
66. **INSTALL LUGGAGE COMPARTMENT FRONT TRIM COVER** . Refer to **INSTALLATION - Step 9**
67. **INSTALL BAGGAGE HOLDER NET (w/ Partition Net)** . Refer to **INSTALLATION - Step 11**
68. **INSTALL SPARE WHEEL COVER ASSEMBLY** . Refer to **INSTALLATION - Step 12**
69. **INSTALL LUGGAGE COMPARTMENT FLOOR MAT** . Refer to **INSTALLATION - Step 13**
70. **CONNECT CABLE TO AUXILIARY BATTERY NEGATIVE TERMINAL** . Refer to **INSTALLATION - Step 2**
71. **INSTALL LUGGAGE TRIM SERVICE HOLE COVER** . Refer to **INSTALLATION - Step 3**
72. **ADD ENGINE OIL** . Refer to **REPLACEMENT - Step 4**
73. **ADD COOLANT (for Engine)** . Refer to **REPLACEMENT - Step 2**
74. **ADD COOLANT (for Inverter)** . Refer to **REPLACEMENT - Step 2**
75. **ADD HYBRID TRANSAXLE FLUID**

    Refer to **REPLACEMENT**

76. **CHARGE AIR CONDITIONING SYSTEM WITH REFRIGERANT** . Refer to **REPLACEMENT - Step 2**
77. **WARM UP ENGINE**
78. **INSPECT FOR FUEL LEAK** . Refer to **ON-VEHICLE INSPECTION - Step 1**
79. **INSPECT FOR OIL LEAK**
80. **INSPECT FOR COOLANT LEAK** . Refer to **ON-VEHICLE INSPECTION - Step 1**
81. **INSPECT FOR EXHAUST GAS LEAK**
82. **INSPECT REFRIGERANT LEAK** . Refer to **REPLACEMENT - Step 4**
83. **INSPECT IGNITION TIMING** See step 6
84. **INSPECT ENGINE IDLE SPEED** See step 7
85. **INSPECT CO/HC** See step 9
86. **INSTALL NO. 1 ENGINE COVER SUB-ASSEMBLY**
    a. Engage the 3 pins and install the No. 1 engine cover sub-assembly.
87. **INSTALL COOL AIR INTAKE DUCT SEAL** . Refer to **INSTALLATION - Step 4**
88. **INSPECT AND ADJUST SHIFT LEVER POSITION**

Refer to **ADJUSTMENT**

89. **INSTALL FRONT FENDER APRON SEAL LH**
90. **INSTALL FRONT FENDER APRON SEAL RH**
91. **INSTALL ENGINE UNDER COVER LH**
92. **INSTALL FRONT WHEEL OPENING EXTENSION PAD LH**
93. **INSTALL ENGINE UNDER COVER RH**
94. **INSTALL FRONT WHEEL OPENING EXTENSION PAD RH**
95. **INSTALL FRONT WHEEL**

    Torque: 103 N*m (1049 kgf*cm, 76 ft.*lbf)

96. **CHECK ABS SPEED SENSOR SIGNAL**

    Refer to **TEST MODE PROCEDURE**

97. **INSPECT AND ADJUST FRONT WHEEL ALIGNMENT**

    Refer to **ADJUSTMENT**

ENGINE UNIT

COMPONENTS

ILLUSTRATION

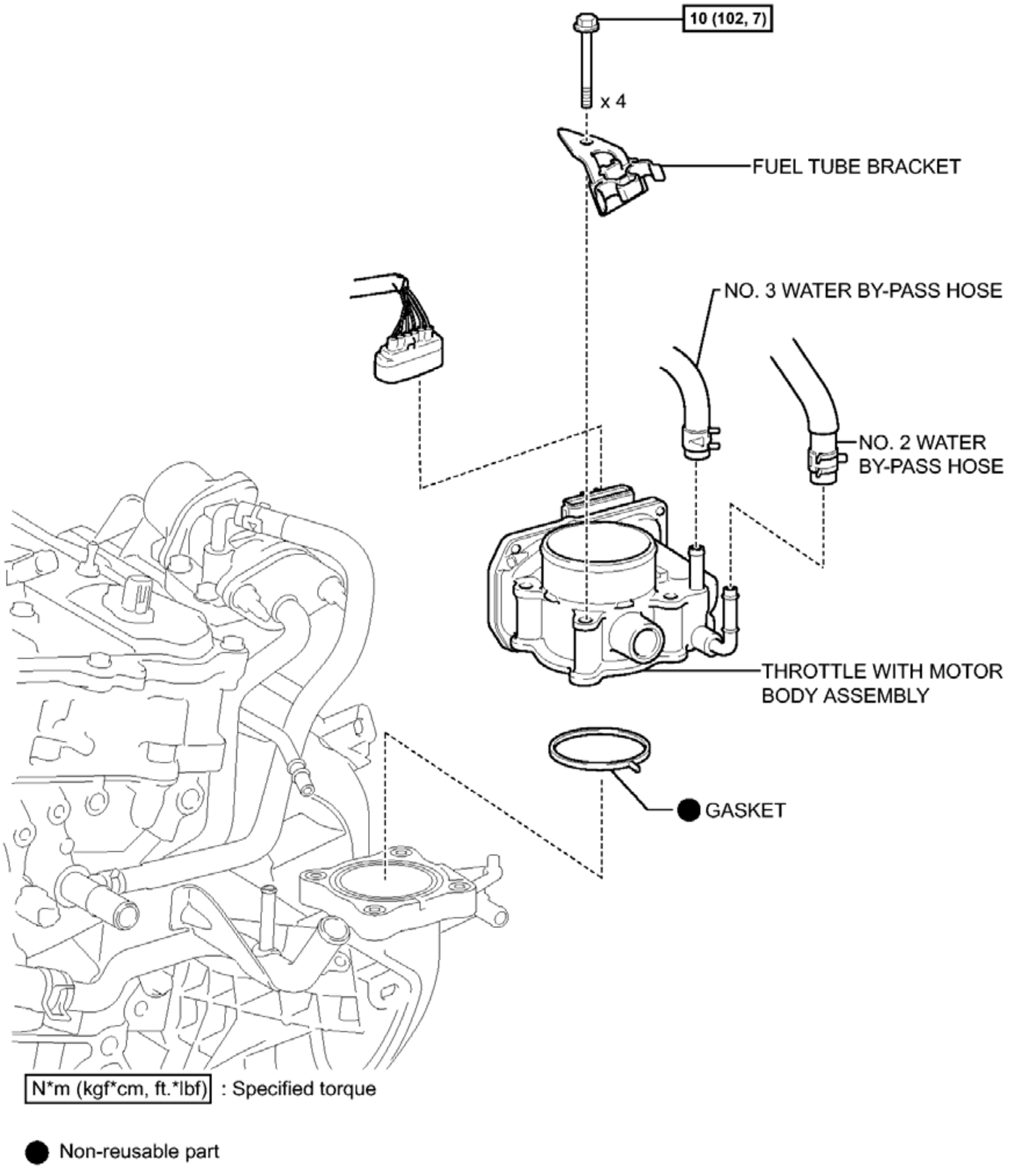
10 (102, 7)
x 4
FUEL TUBE BRACKET
NO. 3 WATER BY-PASS HOSE
NO. 2 WATER BY-PASS HOSE
THROTTLE WITH MOTOR BODY ASSEMBLY
GASKET
N*m (kgf*cm, ft.*lbf) : Specified torque
Non-reusable part
c

Fig. 173: Identifying Engine Unit Replacement Components With Torque Specifications (1 Of 10)
Courtesy of TOYOTA MOTOR SALES, U.S.A., INC.

ILLUSTRATION

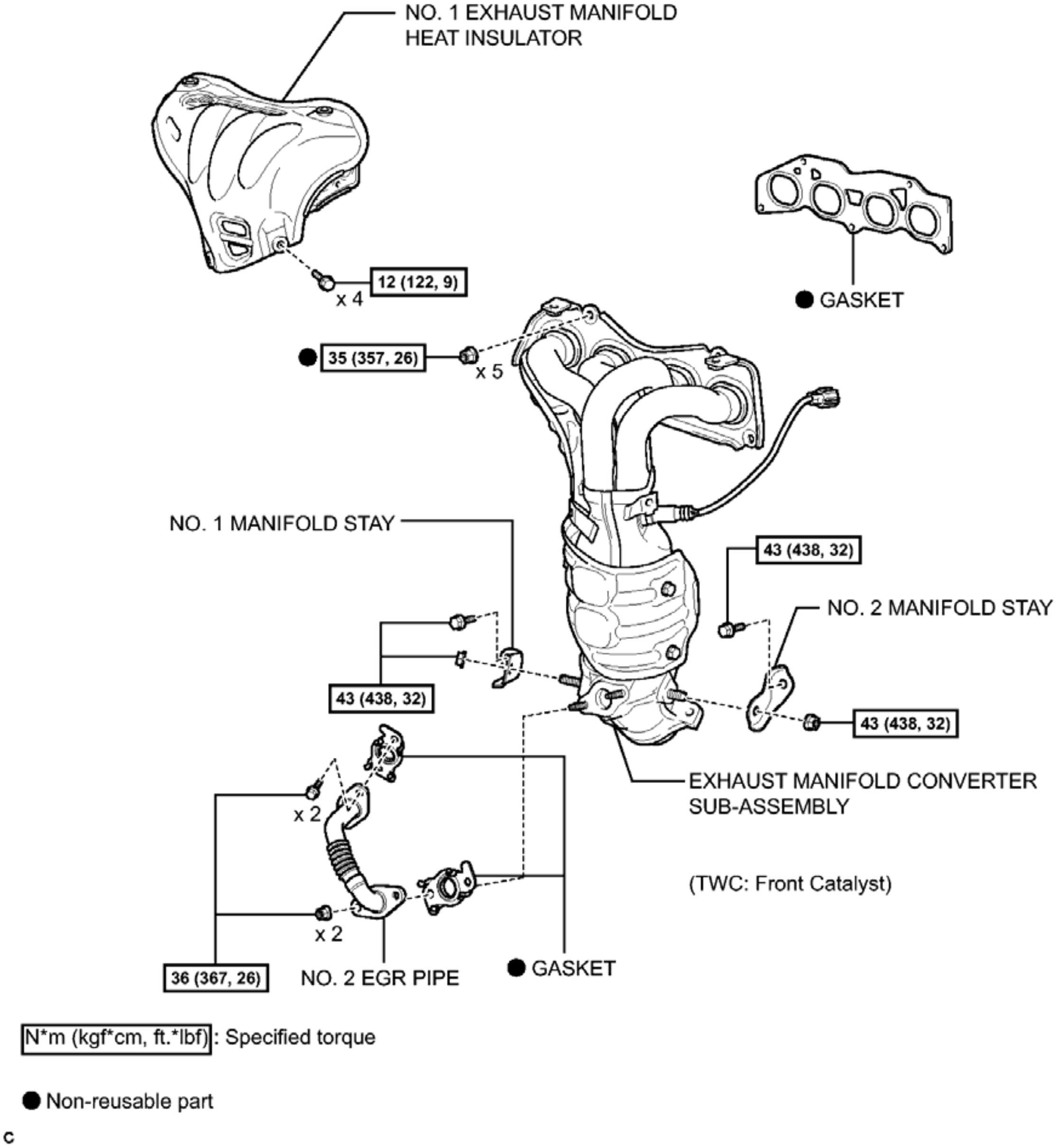
NO. 1 EXHAUST MANIFOLD HEAT INSULATOR
12 (122, 9)
x 4
● GASKET
● 35 (357, 26)
x 5
NO. 1 MANIFOLD STAY
43 (438, 32)
NO. 2 MANIFOLD STAY
43 (438, 32)
43 (438, 32)
EXHAUST MANIFOLD CONVERTER SUB-ASSEMBLY
x 2
(TWC: Front Catalyst)
x 2
36 (367, 26)
NO. 2 EGR PIPE
● GASKET
N*m (kgf*cm, ft.*lbf) : Specified torque
● Non-reusable part
c

Fig. 174: Identifying Engine Unit Replacement Components With Torque Specifications (2 Of 10)
Courtesy of TOYOTA MOTOR SALES, U.S.A., INC.

ILLUSTRATION

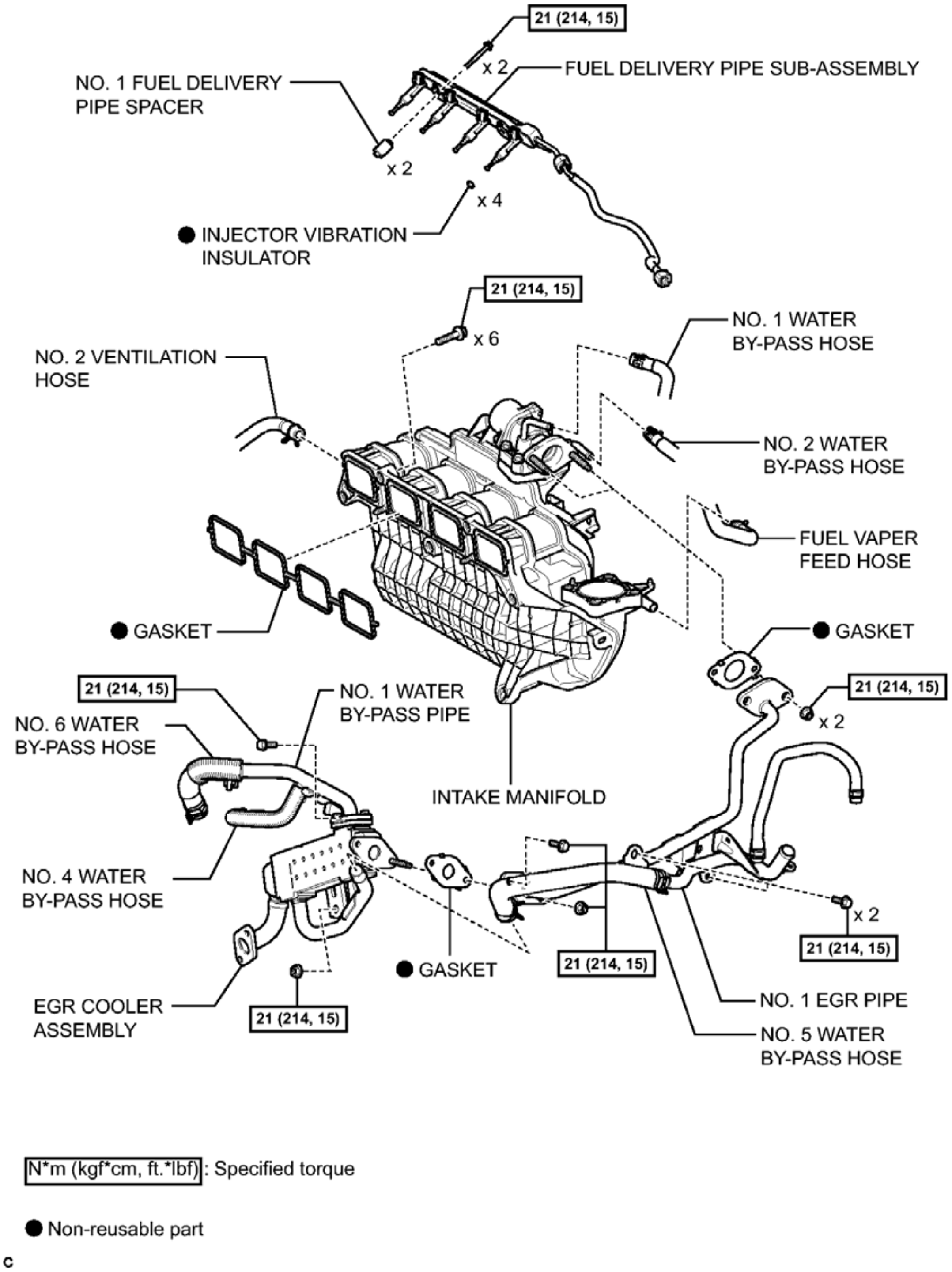
21 (214, 15)
x 2
FUEL DELIVERY PIPE SUB-ASSEMBLY
NO. 1 FUEL DELIVERY PIPE SPACER
x 2
x 4
● INJECTOR VIBRATION INSULATOR
21 (214, 15)
x 6
NO. 1 WATER BY-PASS HOSE
NO. 2 VENTILATION HOSE
NO. 2 WATER BY-PASS HOSE
FUEL VAPER FEED HOSE
● GASKET
● GASKET
21 (214, 15)
x 2
21 (214, 15)
NO. 1 WATER BY-PASS PIPE
NO. 6 WATER BY-PASS HOSE
INTAKE MANIFOLD
NO. 4 WATER BY-PASS HOSE
x 2
21 (214, 15)
● GASKET
21 (214, 15)
EGR COOLER ASSEMBLY
21 (214, 15)
NO. 1 EGR PIPE
NO. 5 WATER BY-PASS HOSE
N*m (kgf*cm, ft.*lbf): Specified torque
● Non-reusable part
c

Fig. 175: Identifying Engine Unit Replacement Components With Torque Specifications (3 Of 10)
Courtesy of TOYOTA MOTOR SALES, U.S.A., INC.

ILLUSTRATION

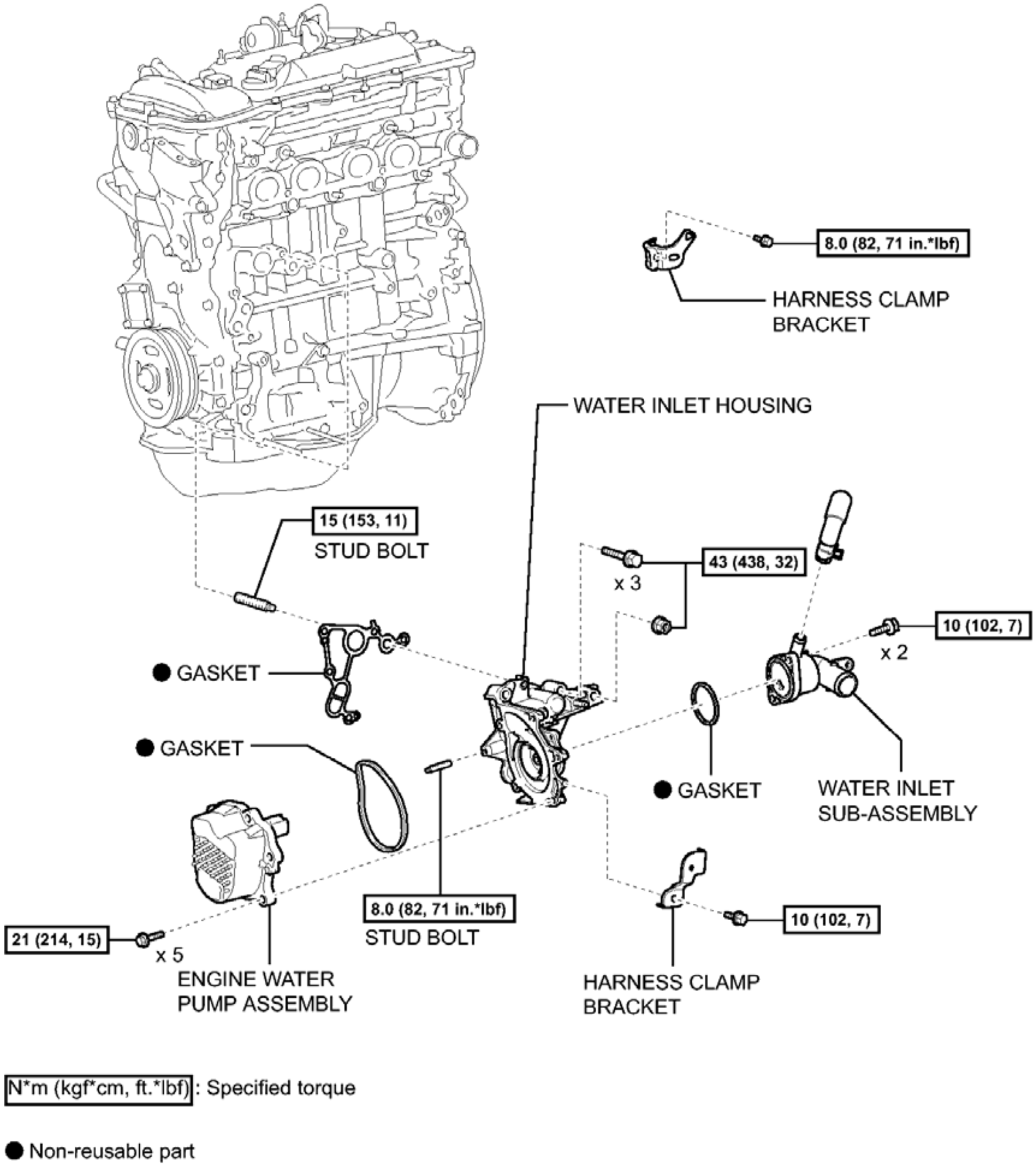
8.0 (82, 71 in.*lbf)
HARNESS CLAMP BRACKET
WATER INLET HOUSING
15 (153, 11)
STUD BOLT
43 (438, 32)
x 3
10 (102, 7)
x 2
● GASKET
● GASKET
● GASKET
WATER INLET SUB-ASSEMBLY
8.0 (82, 71 in.*lbf)
STUD BOLT
10 (102, 7)
21 (214, 15)
x 5
ENGINE WATER PUMP ASSEMBLY
HARNESS CLAMP BRACKET
N*m (kgf*cm, ft.*lbf) : Specified torque
● Non-reusable part

Fig. 176: Identifying Engine Unit Replacement Components With Torque Specifications (4 Of 10)
Courtesy of TOYOTA MOTOR SALES, U.S.A., INC.

ILLUSTRATION

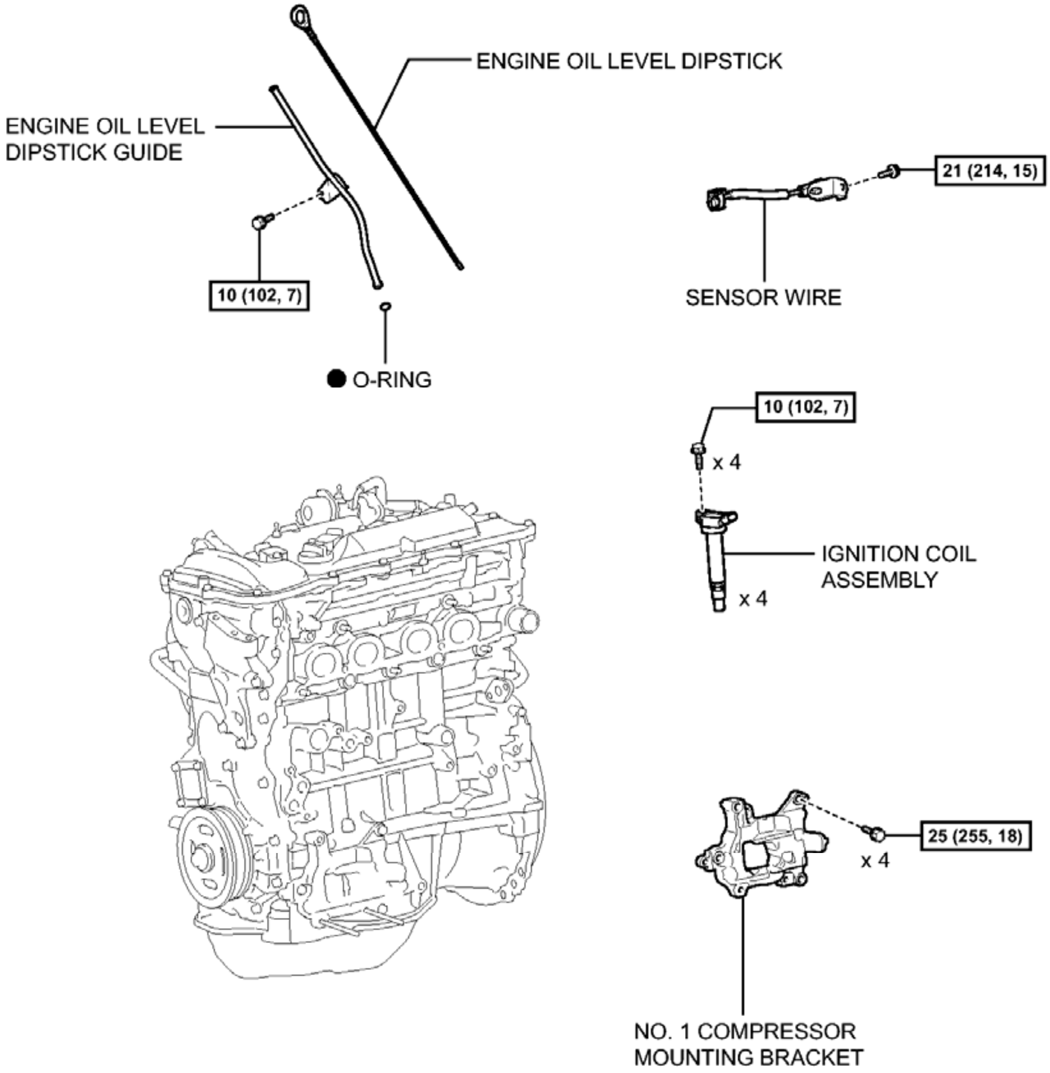
ENGINE OIL LEVEL DIPSTICK
ENGINE OIL LEVEL DIPSTICK GUIDE
21 (214, 15)
10 (102, 7)
SENSOR WIRE
● O-RING
10 (102, 7)
x 4
IGNITION COIL ASSEMBLY
x 4
25 (255, 18)
x 4
NO. 1 COMPRESSOR MOUNTING BRACKET

N*m (kgf*cm, ft.*lbf) : Specified torque

● Non-reusable part

Fig. 177: Identifying Engine Unit Replacement Components With Torque Specifications (5 Of 10)
Courtesy of TOYOTA MOTOR SALES, U.S.A., INC.

ILLUSTRATION

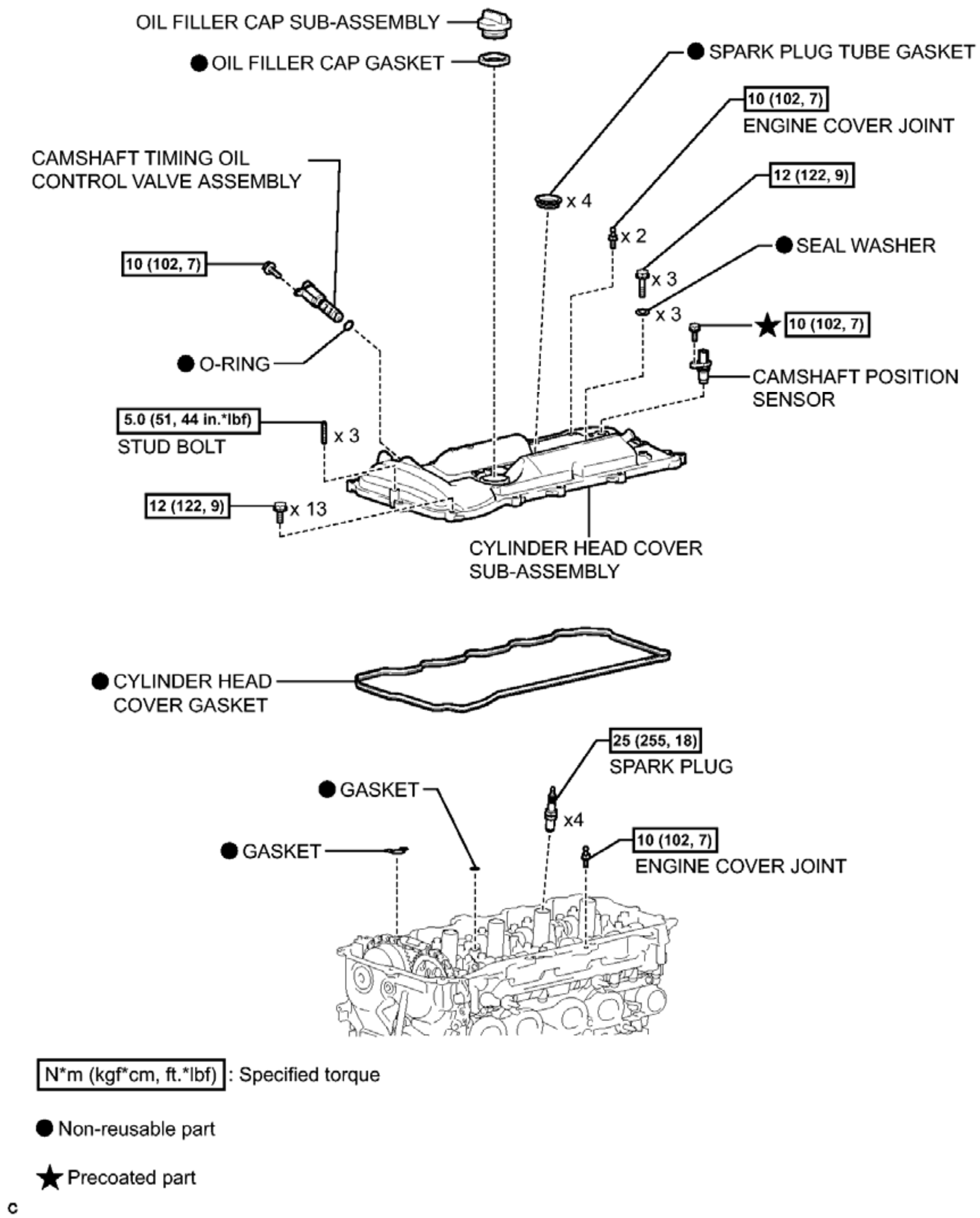
OIL FILLER CAP SUB-ASSEMBLY
● OIL FILLER CAP GASKET
● SPARK PLUG TUBE GASKET
10 (102, 7)
ENGINE COVER JOINT
CAMSHAFT TIMING OIL CONTROL VALVE ASSEMBLY
x 4
12 (122, 9)
x 2
● SEAL WASHER
10 (102, 7)
x 3
x 3
★ 10 (102, 7)
● O-RING
CAMSHAFT POSITION SENSOR
5.0 (51, 44 in.*lbf)
STUD BOLT
x 3
12 (122, 9)
x 13
CYLINDER HEAD COVER SUB-ASSEMBLY
● CYLINDER HEAD COVER GASKET
25 (255, 18)
SPARK PLUG
● GASKET
x4
● GASKET
10 (102, 7)
ENGINE COVER JOINT
N*m (kgf*cm, ft.*lbf) : Specified torque
● Non-reusable part
★ Precoated part
c

Fig. 178: Identifying Engine Unit Replacement Components With Torque Specifications (6 Of 10)
Courtesy of TOYOTA MOTOR SALES, U.S.A., INC.

ILLUSTRATION

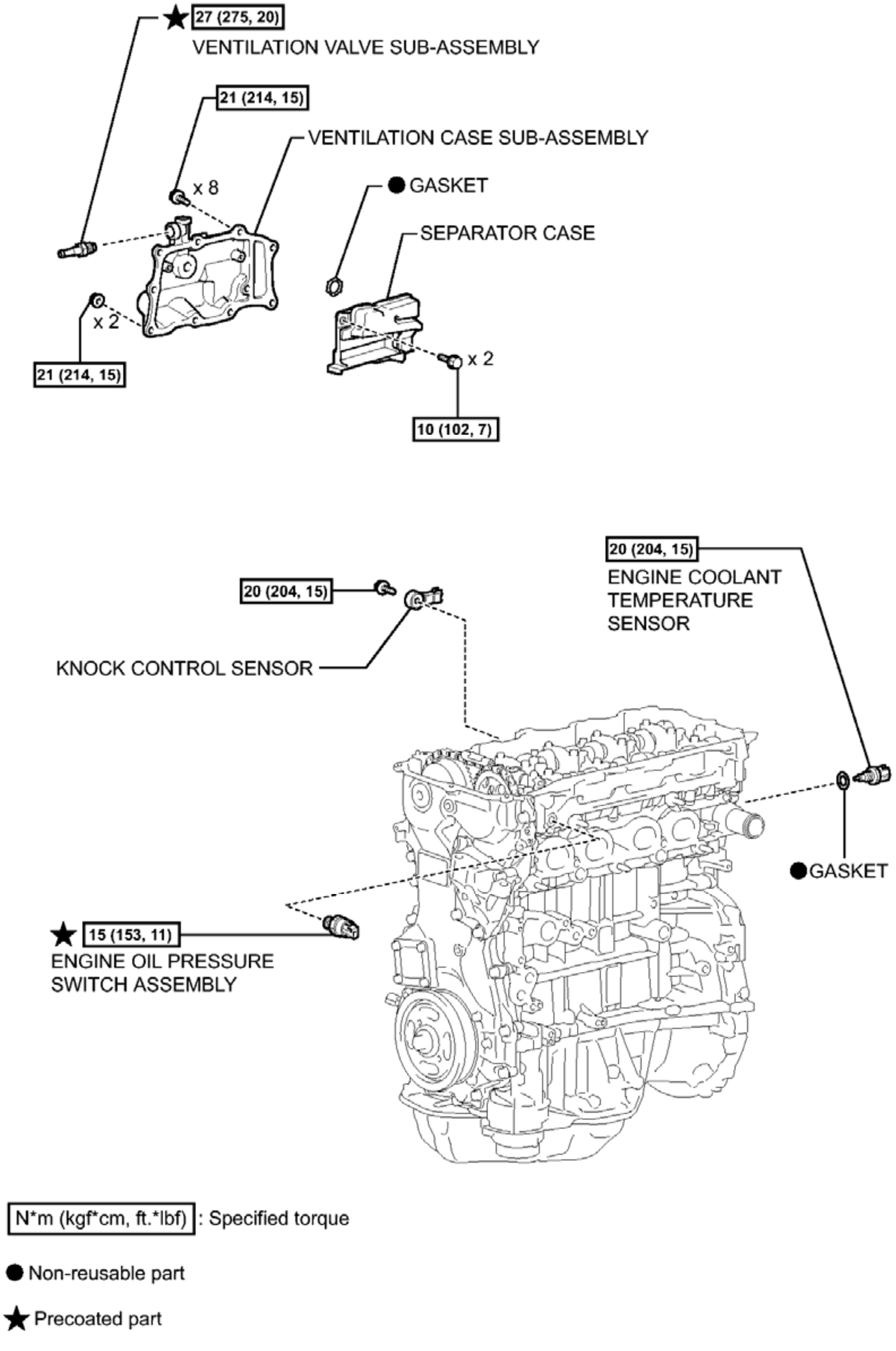
★ 27 (275, 20)
VENTILATION VALVE SUB-ASSEMBLY
21 (214, 15)
VENTILATION CASE SUB-ASSEMBLY
x 8
● GASKET
SEPARATOR CASE
x 2
21 (214, 15)
x 2
10 (102, 7)
20 (204, 15)
ENGINE COOLANT TEMPERATURE SENSOR
20 (204, 15)
KNOCK CONTROL SENSOR
●GASKET
★ 15 (153, 11)
ENGINE OIL PRESSURE SWITCH ASSEMBLY
N*m (kgf*cm, ft.*lbf) : Specified torque
● Non-reusable part
★ Precoated part
c

Fig. 179: Identifying Engine Unit Replacement Components With Torque Specifications (7 Of 10)
Courtesy of TOYOTA MOTOR SALES, U.S.A., INC.

ILLUSTRATION

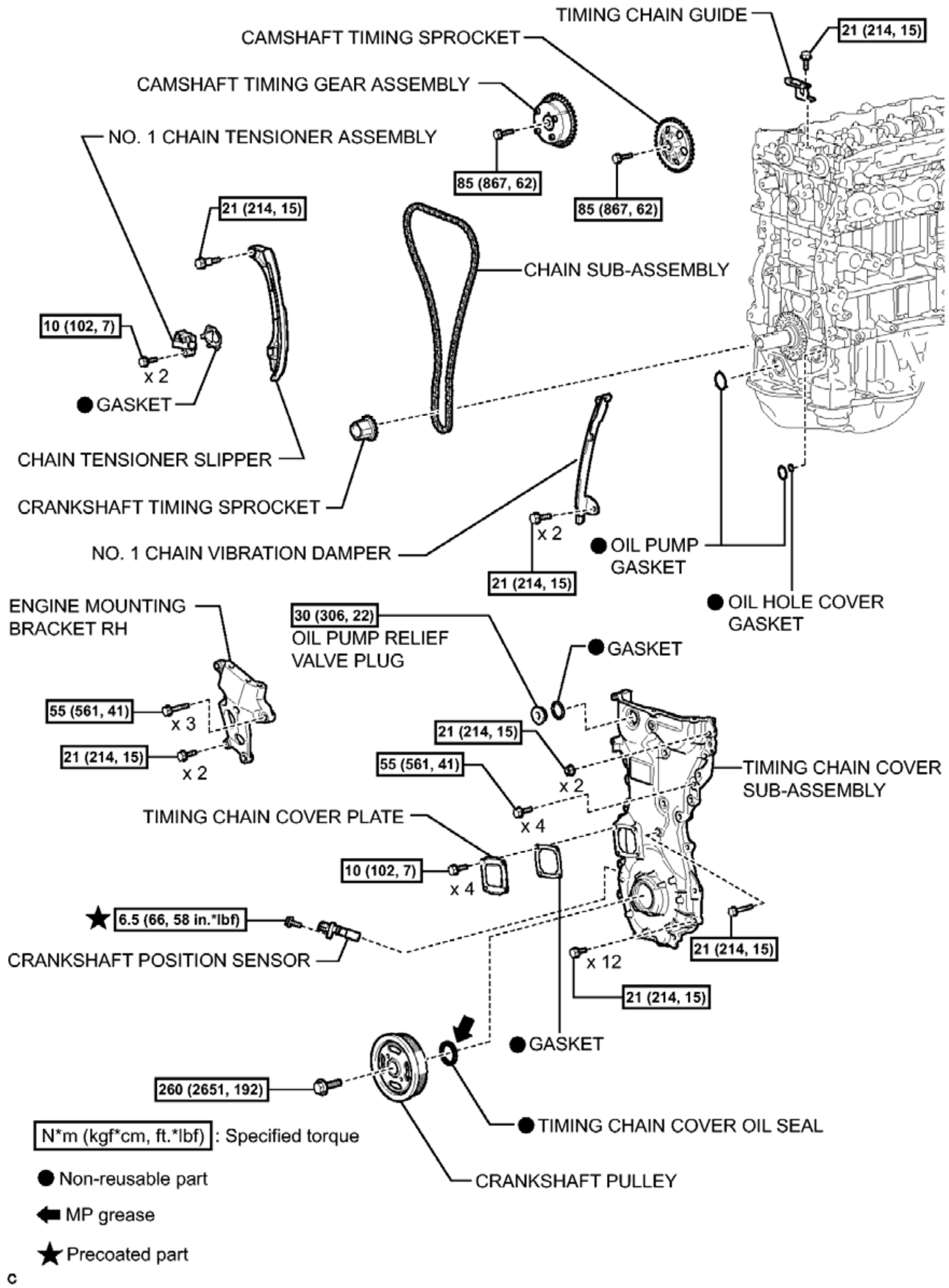
TIMING CHAIN GUIDE
21 (214, 15)
CAMSHAFT TIMING SPROCKET
CAMSHAFT TIMING GEAR ASSEMBLY
NO. 1 CHAIN TENSIONER ASSEMBLY
85 (867, 62)
85 (867, 62)
21 (214, 15)
CHAIN SUB-ASSEMBLY
10 (102, 7)
x 2
GASKET
CHAIN TENSIONER SLIPPER
CRANKSHAFT TIMING SPROCKET
x 2
OIL PUMP GASKET
NO. 1 CHAIN VIBRATION DAMPER
21 (214, 15)
OIL HOLE COVER GASKET
ENGINE MOUNTING BRACKET RH
30 (306, 22)
OIL PUMP RELIEF VALVE PLUG
GASKET
55 (561, 41)
x 3
21 (214, 15)
21 (214, 15)
x 2
55 (561, 41)
x 2
TIMING CHAIN COVER SUB-ASSEMBLY
TIMING CHAIN COVER PLATE
x 4
10 (102, 7)
x 4
6.5 (66, 58 in.*lbf)
CRANKSHAFT POSITION SENSOR
21 (214, 15)
x 12
21 (214, 15)
GASKET
260 (2651, 192)
TIMING CHAIN COVER OIL SEAL
N*m (kgf*cm, ft.*lbf) : Specified torque
CRANKSHAFT PULLEY
Non-reusable part
MP grease
Precoated part
c

Fig. 180: Identifying Engine Unit Replacement Components With Torque Specifications (8 Of 10)
Courtesy of TOYOTA MOTOR SALES, U.S.A., INC.

ILLUSTRATION

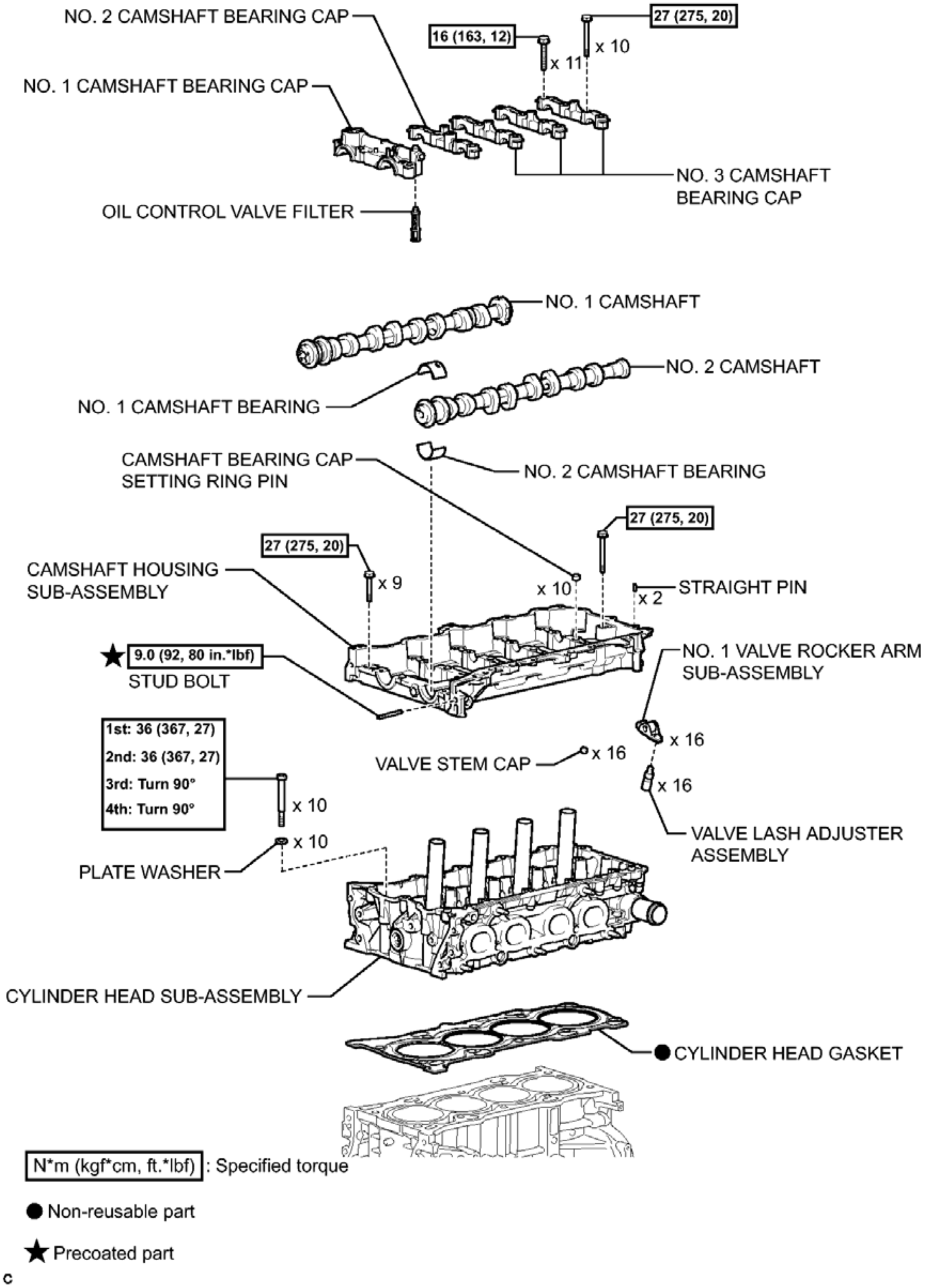
NO. 2 CAMSHAFT BEARING CAP
16 (163, 12)
27 (275, 20)
x 11
x 10
NO. 1 CAMSHAFT BEARING CAP
NO. 3 CAMSHAFT BEARING CAP
OIL CONTROL VALVE FILTER
NO. 1 CAMSHAFT
NO. 2 CAMSHAFT
NO. 1 CAMSHAFT BEARING
CAMSHAFT BEARING CAP SETTING RING PIN
NO. 2 CAMSHAFT BEARING
27 (275, 20)
27 (275, 20)
CAMSHAFT HOUSING SUB-ASSEMBLY
x 9
x 10
STRAIGHT PIN
x 2
★ 9.0 (92, 80 in.*lbf)
STUD BOLT
NO. 1 VALVE ROCKER ARM SUB-ASSEMBLY
x 16
1st: 36 (367, 27)
2nd: 36 (367, 27)
3rd: Turn 90°
4th: Turn 90°
VALVE STEM CAP
x 16
x 16
x 10
x 10
VALVE LASH ADJUSTER ASSEMBLY
PLATE WASHER
CYLINDER HEAD SUB-ASSEMBLY
● CYLINDER HEAD GASKET
N*m (kgf*cm, ft.*lbf) : Specified torque
● Non-reusable part
★ Precoated part
c

Fig. 181: Identifying Engine Unit Replacement Components With Torque Specifications (9 Of 10)
Courtesy of TOYOTA MOTOR SALES, U.S.A., INC.

ILLUSTRATION

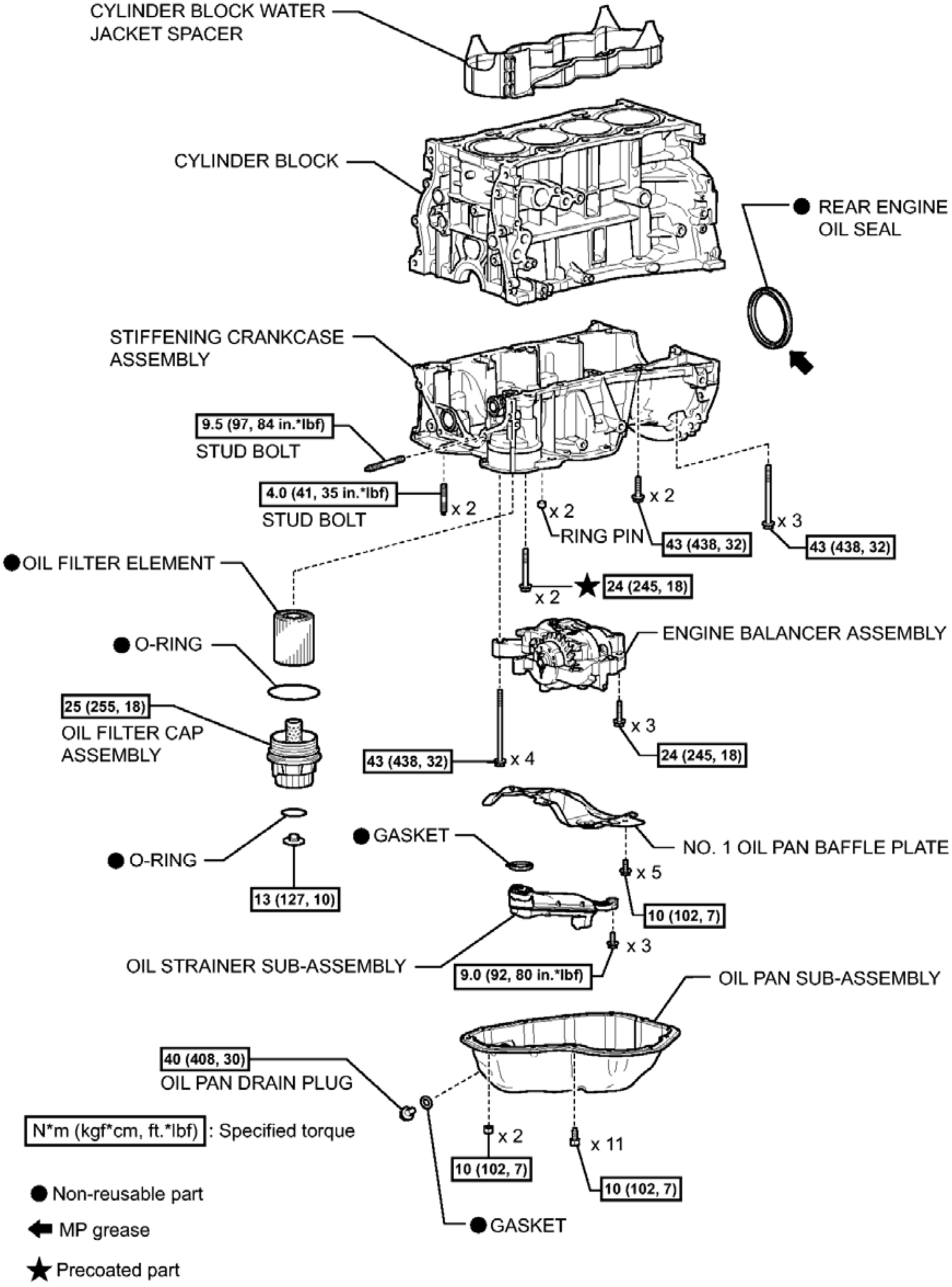
CYLINDER BLOCK WATER JACKET SPACER
CYLINDER BLOCK
● REAR ENGINE OIL SEAL
STIFFENING CRANKCASE ASSEMBLY
9.5 (97, 84 in.*lbf)
STUD BOLT
4.0 (41, 35 in.*lbf)
STUD BOLT
x 2
x 2
RING PIN
x 2
43 (438, 32)
x 3
43 (438, 32)
●OIL FILTER ELEMENT
x 2
★ 24 (245, 18)
● O-RING
ENGINE BALANCER ASSEMBLY
25 (255, 18)
OIL FILTER CAP ASSEMBLY
x 3
24 (245, 18)
43 (438, 32)
x 4
● GASKET
NO. 1 OIL PAN BAFFLE PLATE
● O-RING
13 (127, 10)
x 5
10 (102, 7)
OIL STRAINER SUB-ASSEMBLY
x 3
9.0 (92, 80 in.*lbf)
OIL PAN SUB-ASSEMBLY
40 (408, 30)
OIL PAN DRAIN PLUG
N*m (kgf*cm, ft.*lbf) : Specified torque
x 2
10 (102, 7)
x 11
10 (102, 7)
● Non-reusable part
MP grease
★ Precoated part
● GASKET

Fig. 182: Identifying Engine Unit Replacement Components With Torque Specifications (10 Of 10)
Courtesy of TOYOTA MOTOR SALES, U.S.A., INC.

REMOVAL

REMOVAL

1. **REMOVE ENGINE HANGERS**
   a. Remove the 2 bolts and 2 engine hangers.

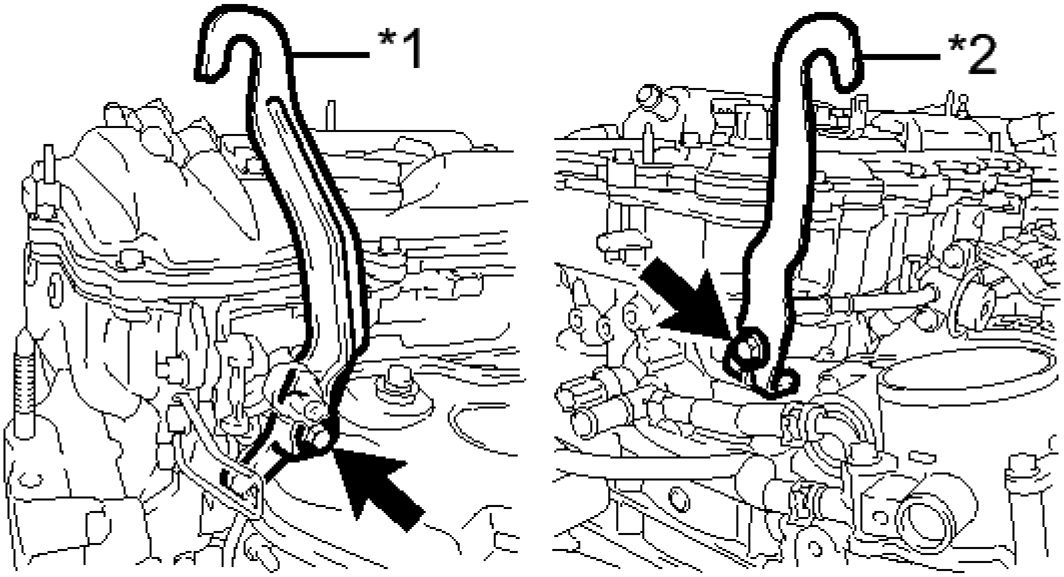

Fig. 183: Identifying Engine Hangers
Courtesy of TOYOTA MOTOR SALES, U.S.A., INC.

TEXT IN ILLUSTRATION

*1	No. 1 Engine Hanger
*2	No. 2 Engine Hanger

2. **REMOVE ENGINE OIL LEVEL DIPSTICK GUIDE**
   a. Remove the engine oil level dipstick.

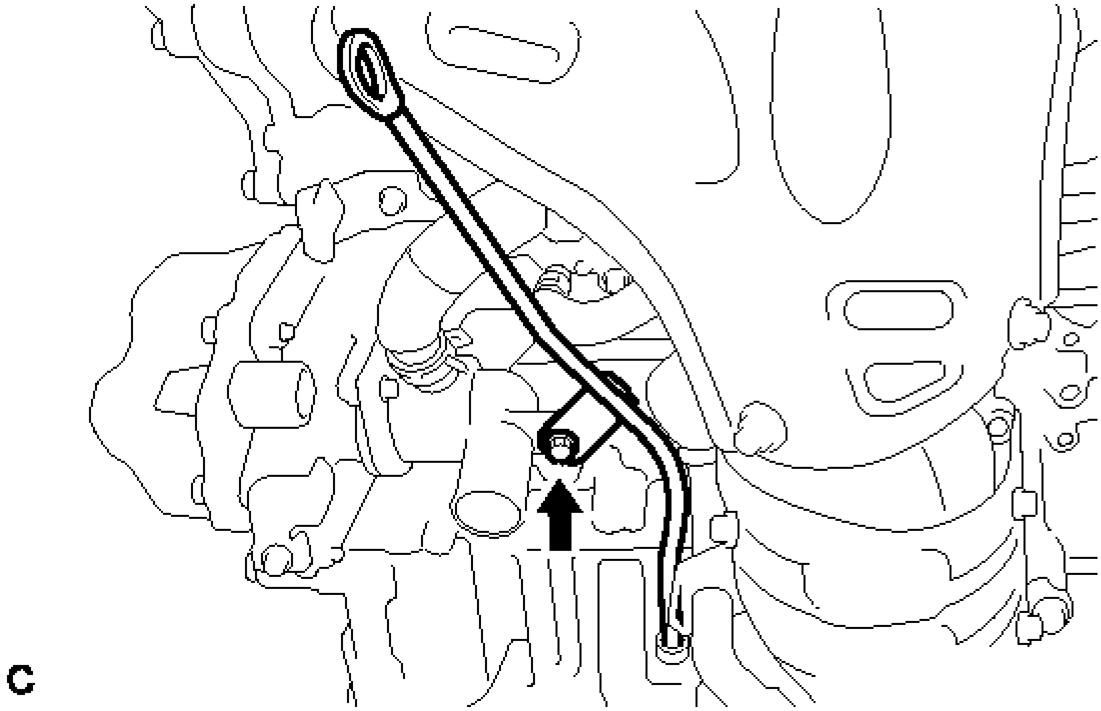

Fig. 184: Identifying Engine Oil Level Dipstick Guide
Courtesy of TOYOTA MOTOR SALES, U.S.A., INC.

b. Remove the bolt and engine oil level dipstick guide.

c. Remove the O-ring from the engine oil level dipstick guide.

3. **REMOVE NO. 1 EXHAUST MANIFOLD HEAT INSULATOR**

a. Remove the 4 bolts and No. 1 exhaust manifold heat insulator.

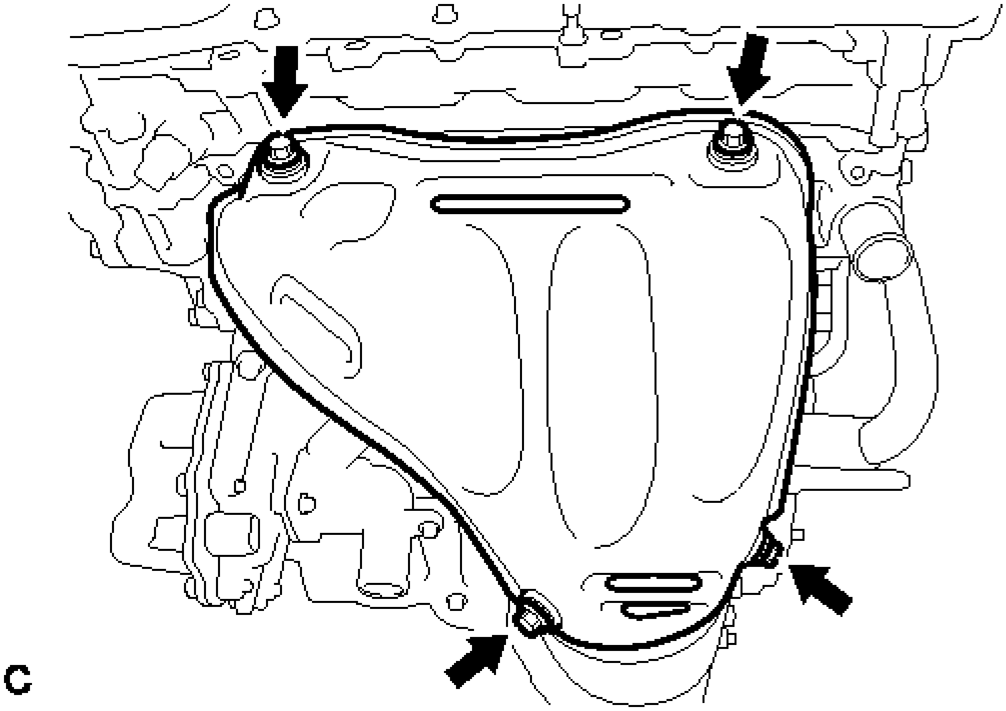

Fig. 185: Identifying No. 1 Exhaust Manifold Heat Insulator Bolts
Courtesy of TOYOTA MOTOR SALES, U.S.A., INC.

4. **DISCONNECT NO. 1 WATER BY-PASS HOSE**
    a. Disconnect the No. 1 water by-pass hose.

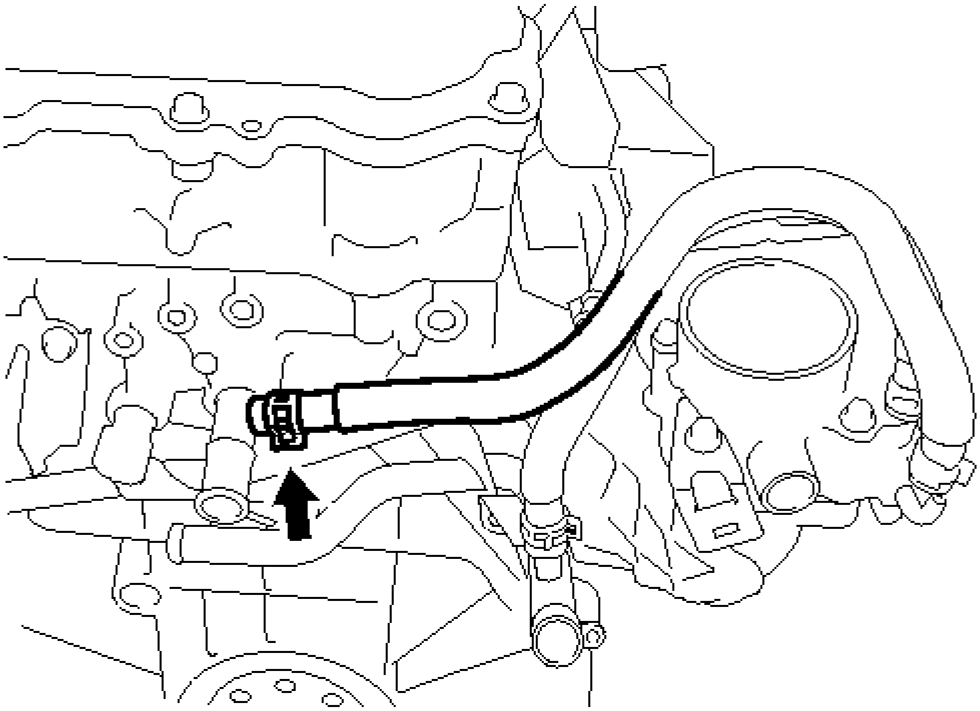

Fig. 186: Identifying No. 1 Water By-Pass Hose

Courtesy of TOYOTA MOTOR SALES, U.S.A., INC.

5. **REMOVE THROTTLE WITH MOTOR BODY ASSEMBLY** . Refer to **REMOVAL - Step 4**
6. **REMOVE NO. 2 EGR PIPE** . Refer to **REMOVAL - Step 9**
7. **REMOVE MANIFOLD STAY** . Refer to **REMOVAL - Step 11**
8. **REMOVE NO. 2 MANIFOLD STAY** . Refer to **REMOVAL - Step 10**
9. **REMOVE EXHAUST MANIFOLD CONVERTER SUB-ASSEMBLY** . Refer to **REMOVAL - Step 12**
10. **REMOVE EGR COOLER ASSEMBLY**
    a. Disconnect the water by-pass hose.

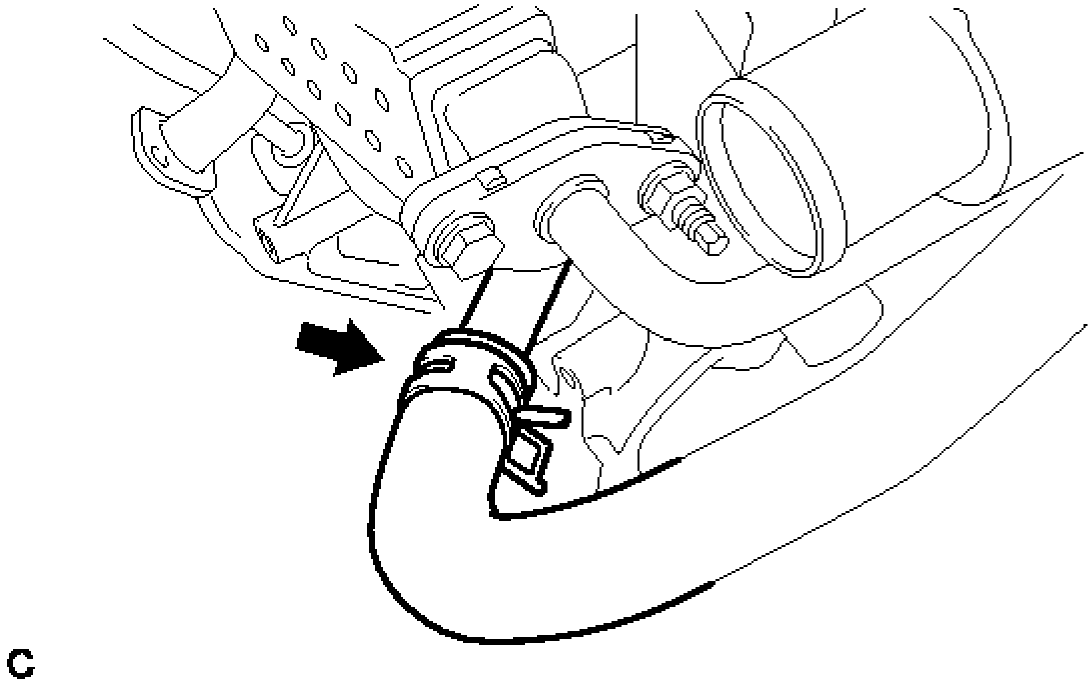

Fig. 187: Identifying Water By-Pass Hose
Courtesy of TOYOTA MOTOR SALES, U.S.A., INC.

    b. Remove the bolt and nut.

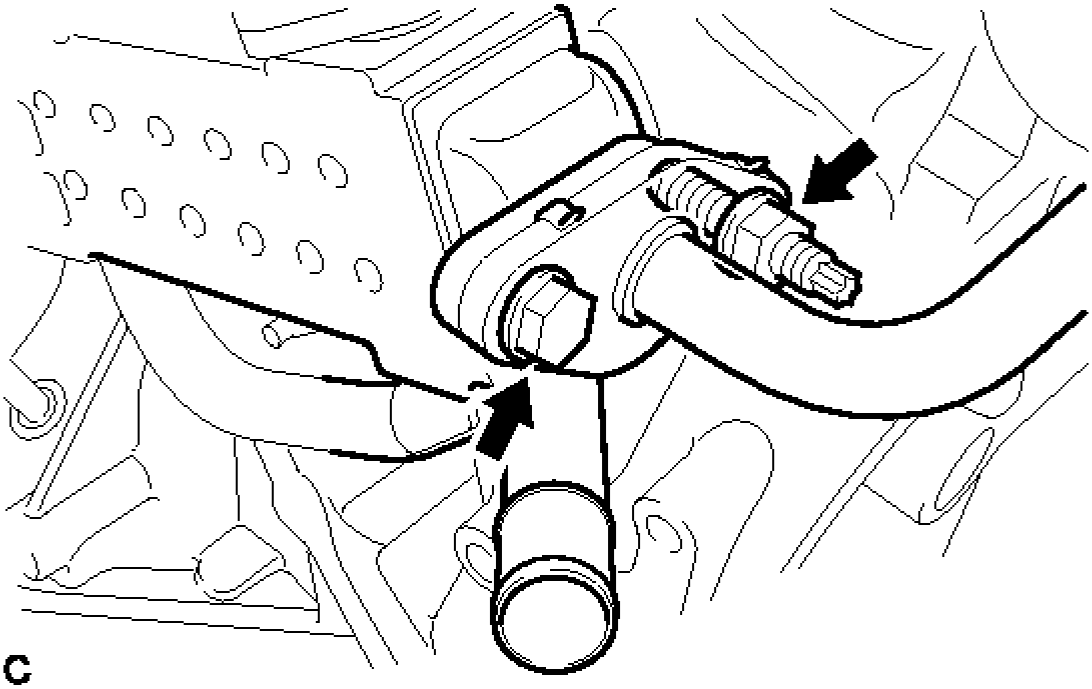

Fig. 188: Identifying Water By-Pass Hose Bolt And Nut
Courtesy of TOYOTA MOTOR SALES, U.S.A., INC.

c. Separate the 2 clamps.

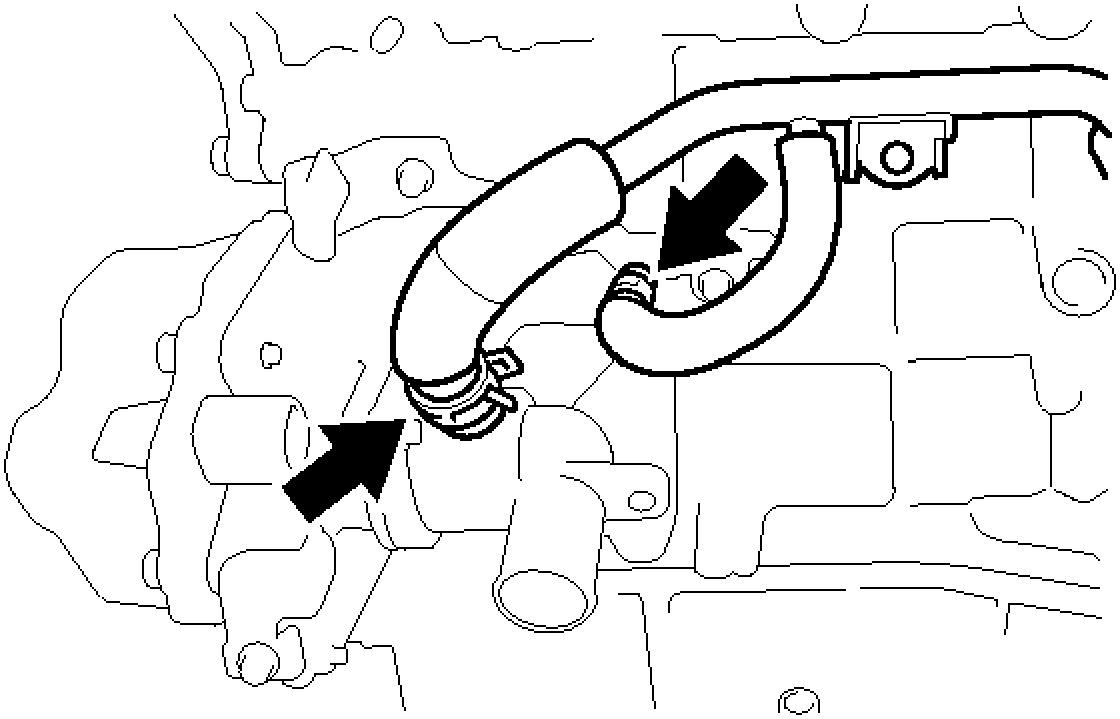

Fig. 189: Identifying Water By-Pass Hose Clamps
Courtesy of TOYOTA MOTOR SALES, U.S.A., INC.

d. Disconnect the No. 4 water by-pass hose and No. 6 water by-pass hose.
e. Remove the bolt, nut and separate the EGR cooler assembly from the engine.

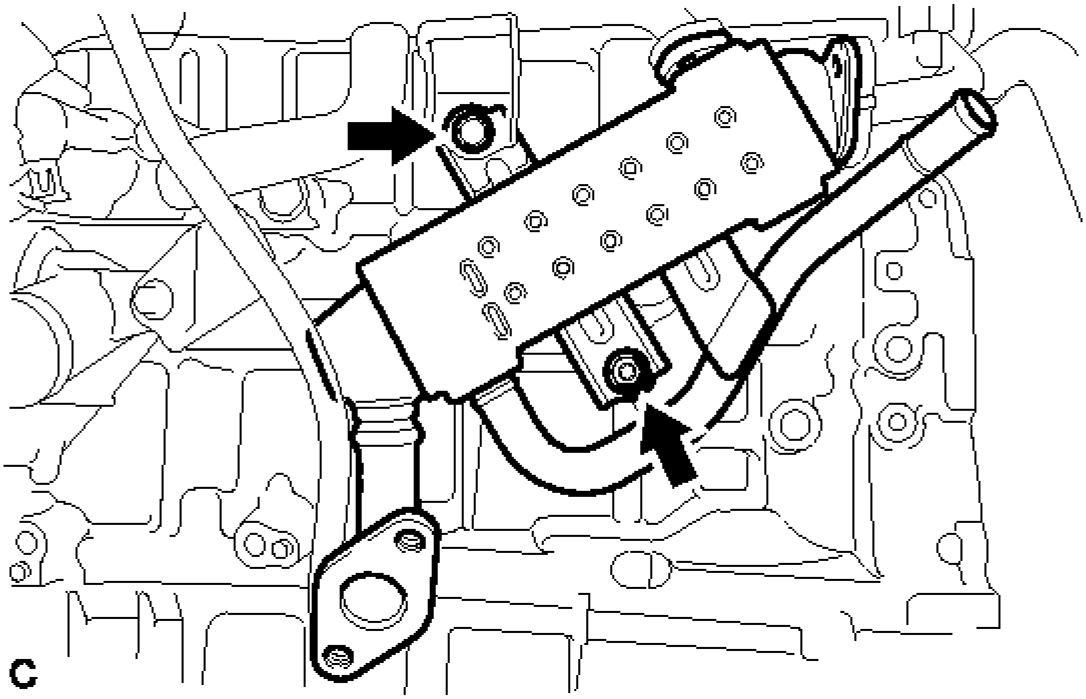

Fig. 190: Identifying EGR Cooler Assembly Bolt And Nut
Courtesy of TOYOTA MOTOR SALES, U.S.A., INC.

11. **REMOVE NO. 1 EGR PIPE**
    a. Remove the 2 bolts and No. 1 EGR pipe.

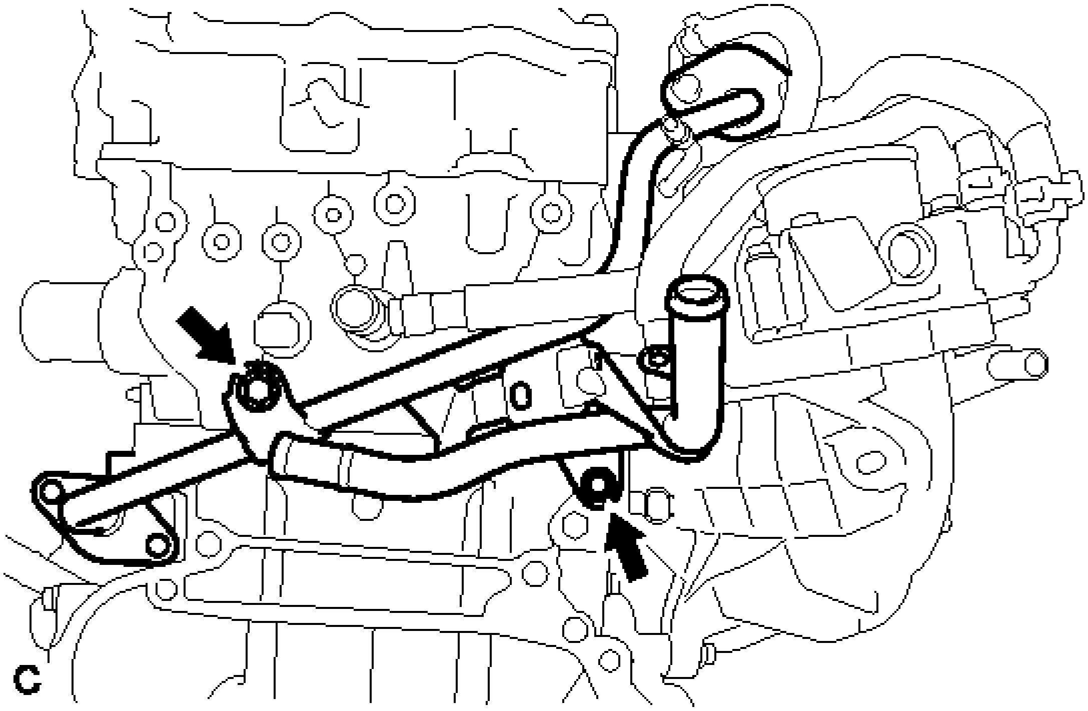

Fig. 191: Identifying No. 1 EGR Pipe Bolts
Courtesy of TOYOTA MOTOR SALES, U.S.A., INC.

12. **REMOVE COMPRESSOR WITH MOTOR ASSEMBLY** . Refer to **REMOVAL - Step 7**
13. **REMOVE ENGINE WATER PUMP ASSEMBLY**
    a. Disconnect the harness clamp.

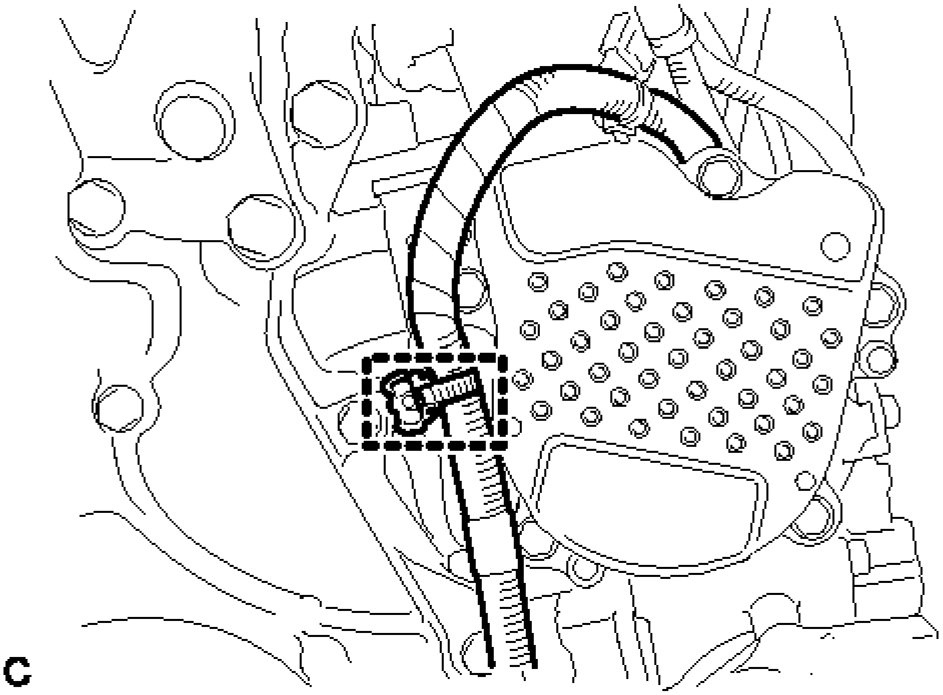

Fig. 192: Identifying Harness Clamp
Courtesy of TOYOTA MOTOR SALES, U.S.A., INC.

b. Disconnect the connector from the engine water pump assembly.

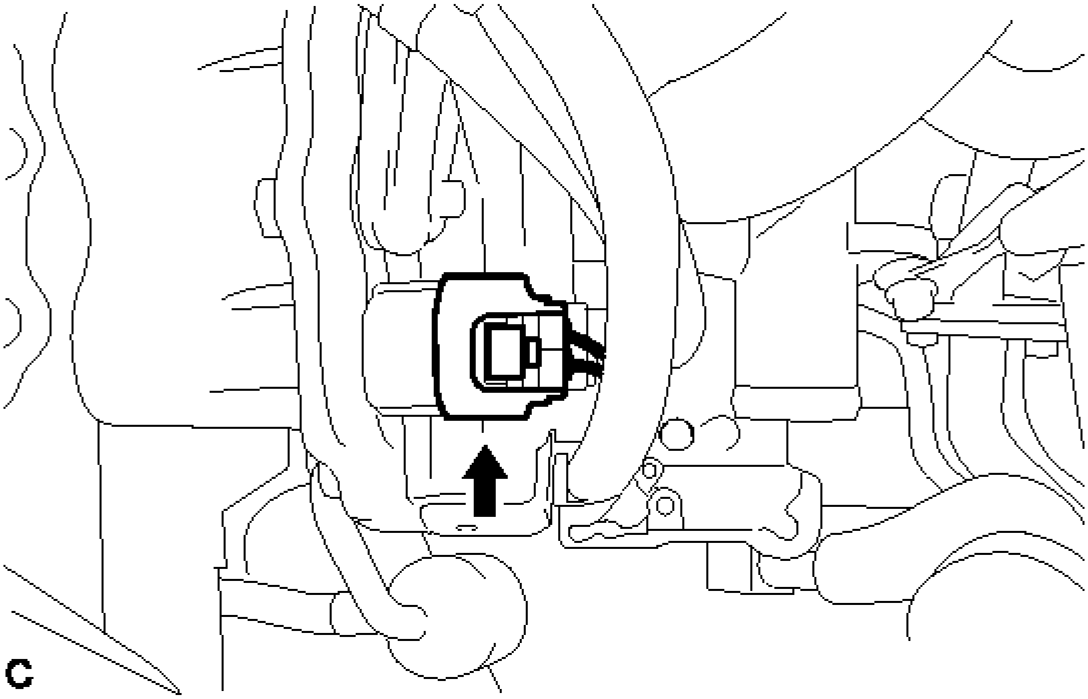

Fig. 193: Identifying Engine Water Pump Assembly Connector
Courtesy of TOYOTA MOTOR SALES, U.S.A., INC.

c. Remove the 5 bolts and engine water pump assembly.

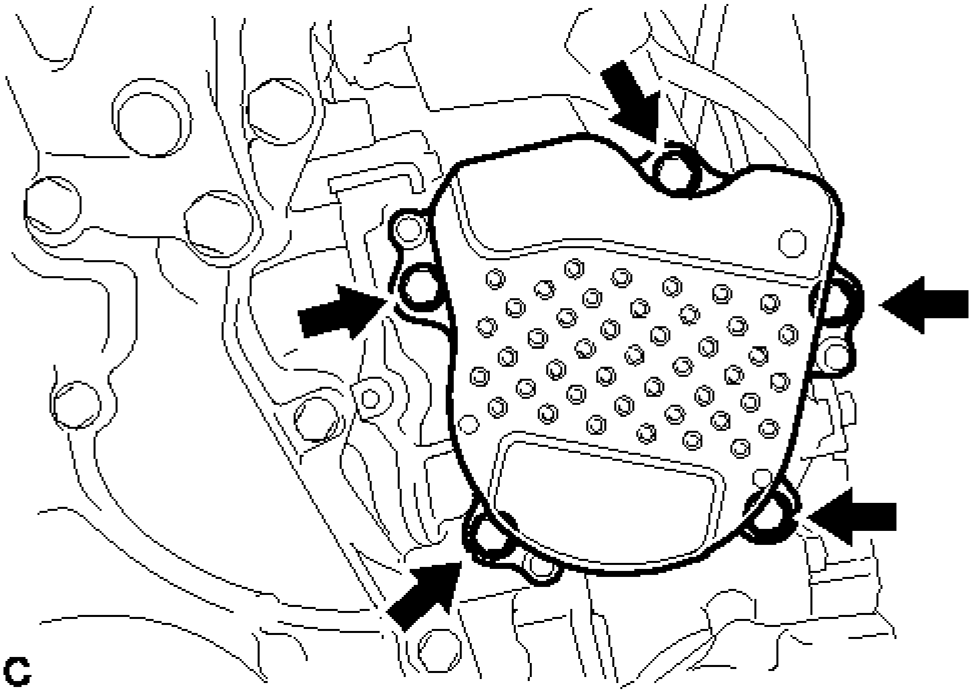

Fig. 194: Identifying Engine Water Pump Assembly Bolts
Courtesy of TOYOTA MOTOR SALES, U.S.A., INC.

d. Remove the gasket from the engine water pump assembly.

14. **REMOVE WATER INLET SUB-ASSEMBLY**
    a. Remove the 2 bolts and water inlet sub-assembly.

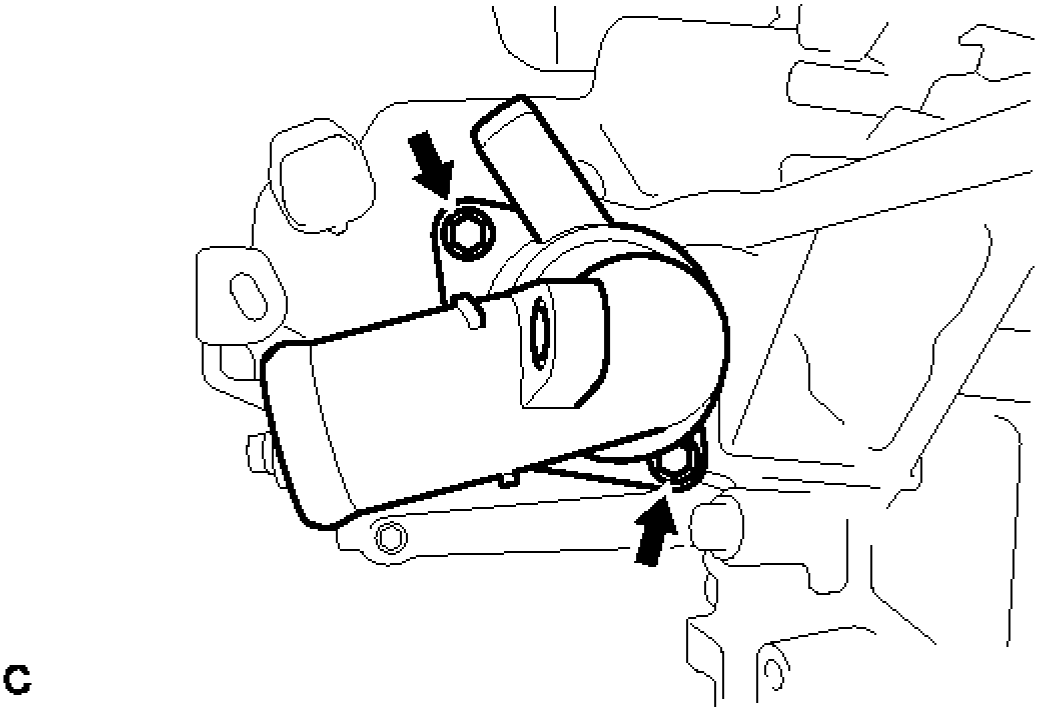

Fig. 195: Identifying Water Inlet Sub-Assembly Bolts
Courtesy of TOYOTA MOTOR SALES, U.S.A., INC.

b. Remove the gasket from the water inlet sub-assembly.

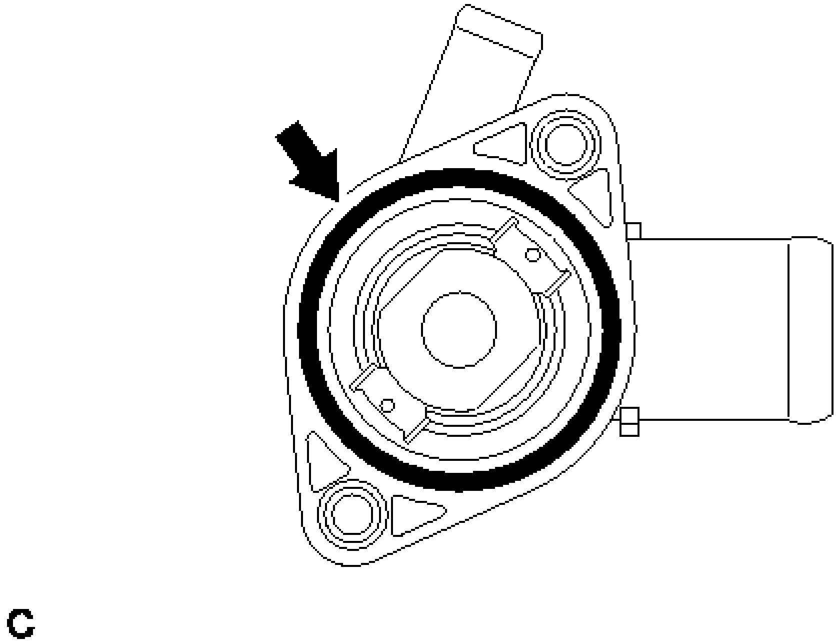

Fig. 196: Identifying Water Inlet Sub-Assembly Gasket
Courtesy of TOYOTA MOTOR SALES, U.S.A., INC.

15. **REMOVE WATER INLET HOUSING**
    a. Remove the bolt and harness clamp bracket from the cylinder block.

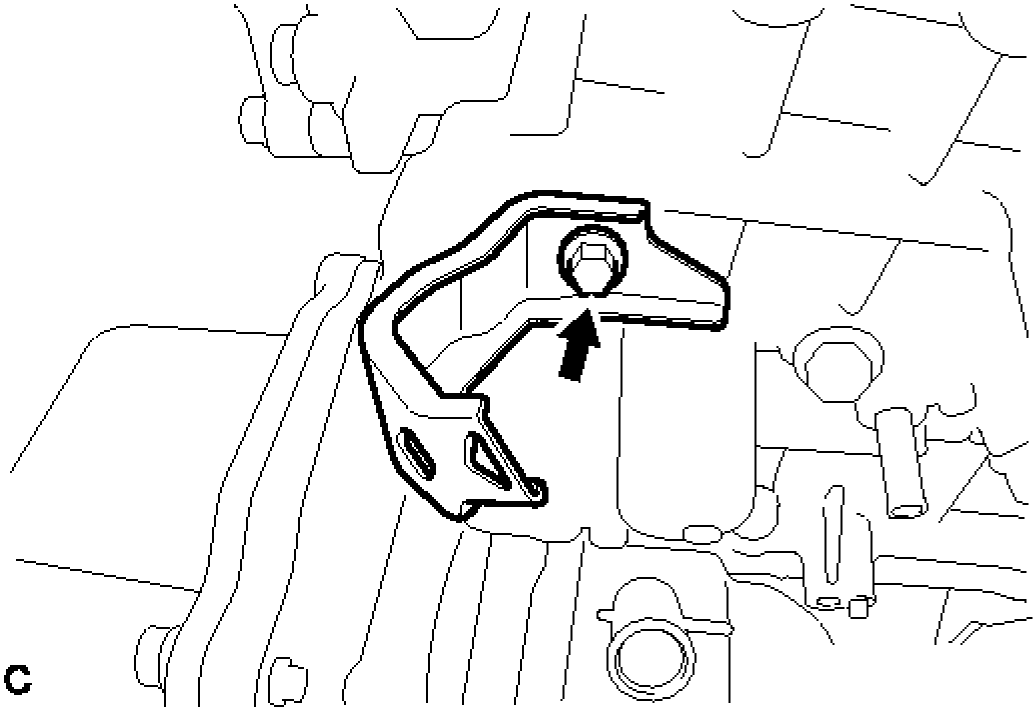

Fig. 197: Identifying Cylinder Block Harness Clamp Bracket And Bolt
Courtesy of TOYOTA MOTOR SALES, U.S.A., INC.

b. Remove the bolt and harness clamp bracket from the water inlet housing.

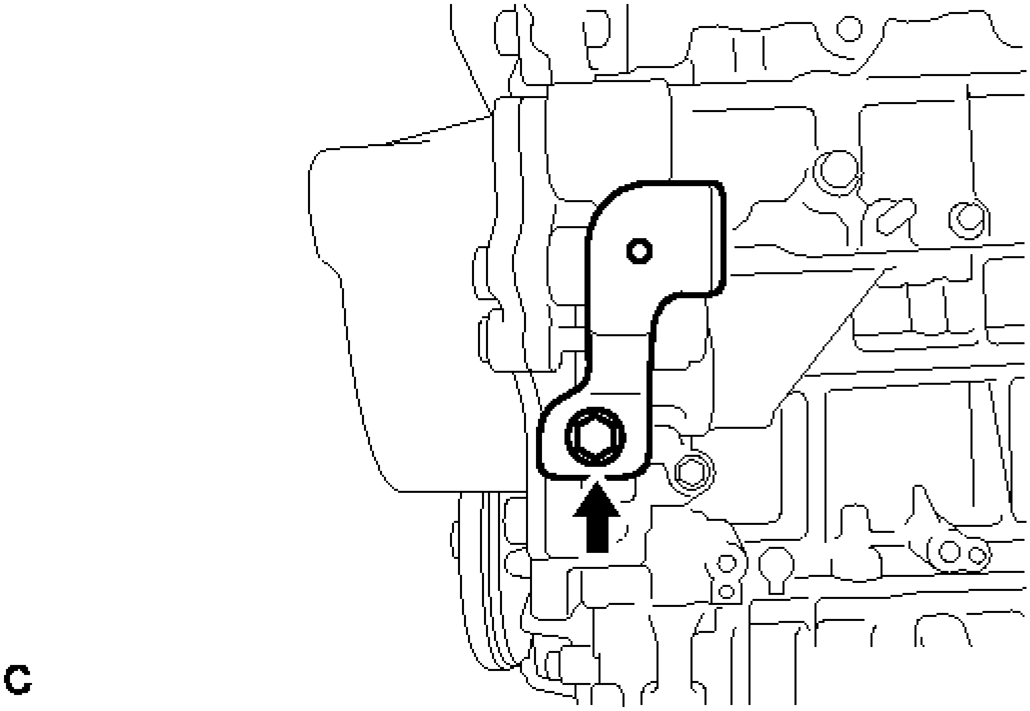

Fig. 198: Identifying Water Inlet Housing Harness Clamp Bracket And Bolt
Courtesy of TOYOTA MOTOR SALES, U.S.A., INC.

c. Remove the 3 bolts, nut, and water inlet housing.

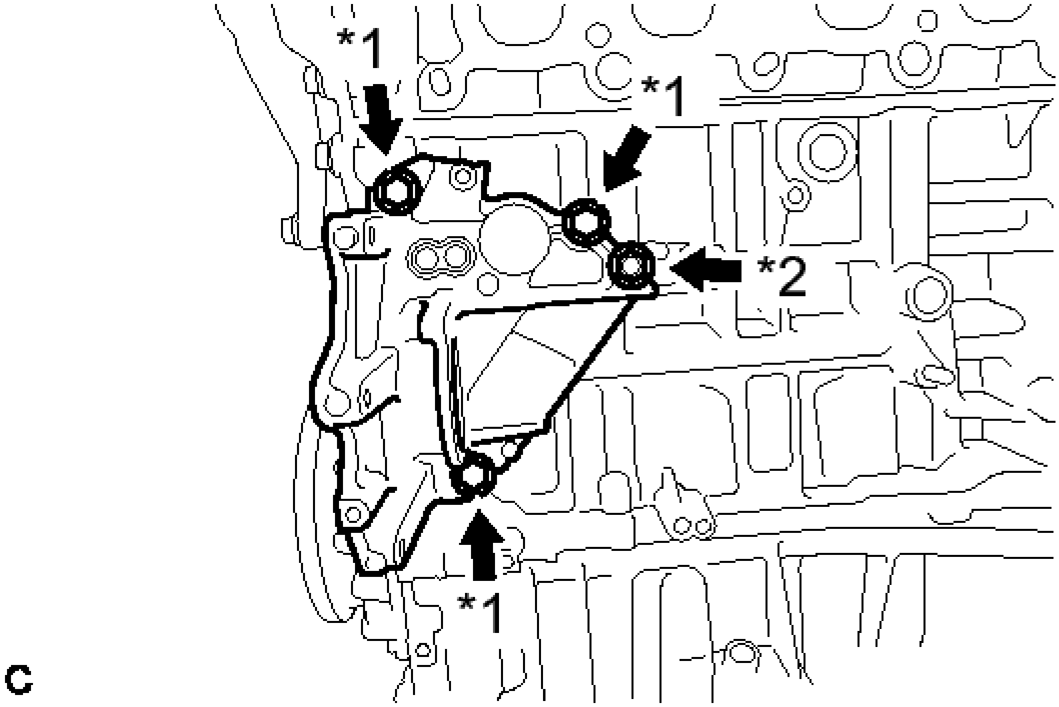

Fig. 199: Identifying Water Inlet Housing Bolts And Nut
Courtesy of TOYOTA MOTOR SALES, U.S.A., INC.

TEXT IN ILLUSTRATION

*1	Bolt
*2	Nut

d. Remove the gasket.

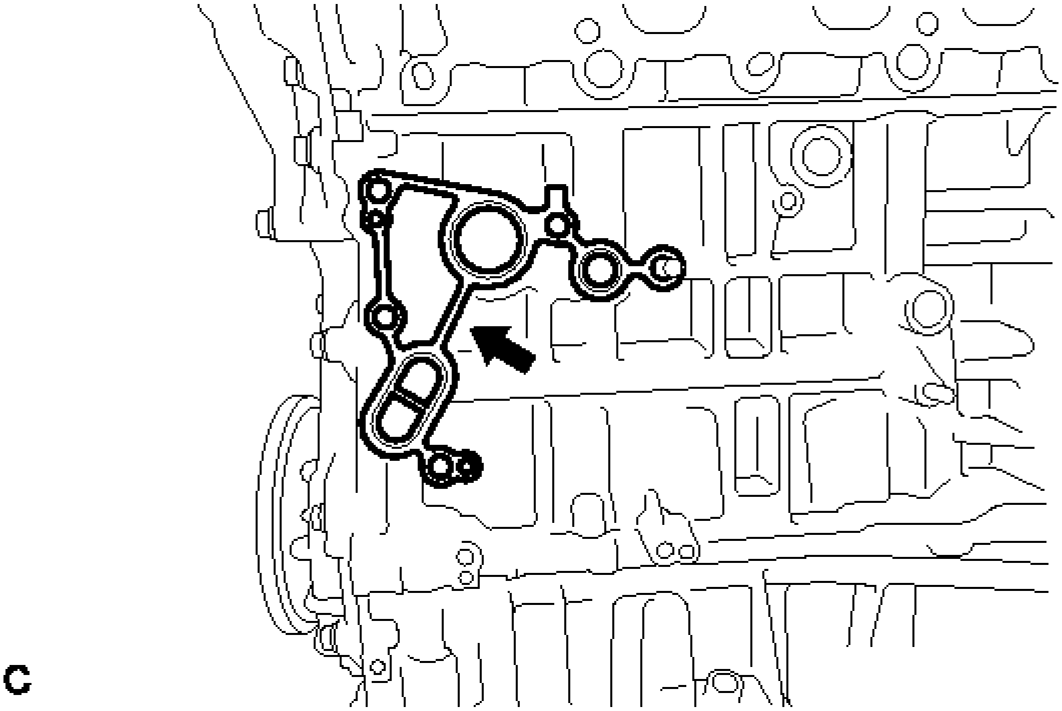

Fig. 200: Identifying Gasket
Courtesy of TOYOTA MOTOR SALES, U.S.A., INC.

e. Using an E8 "TORX" socket wrench, remove the stud bolt from the cylinder block.

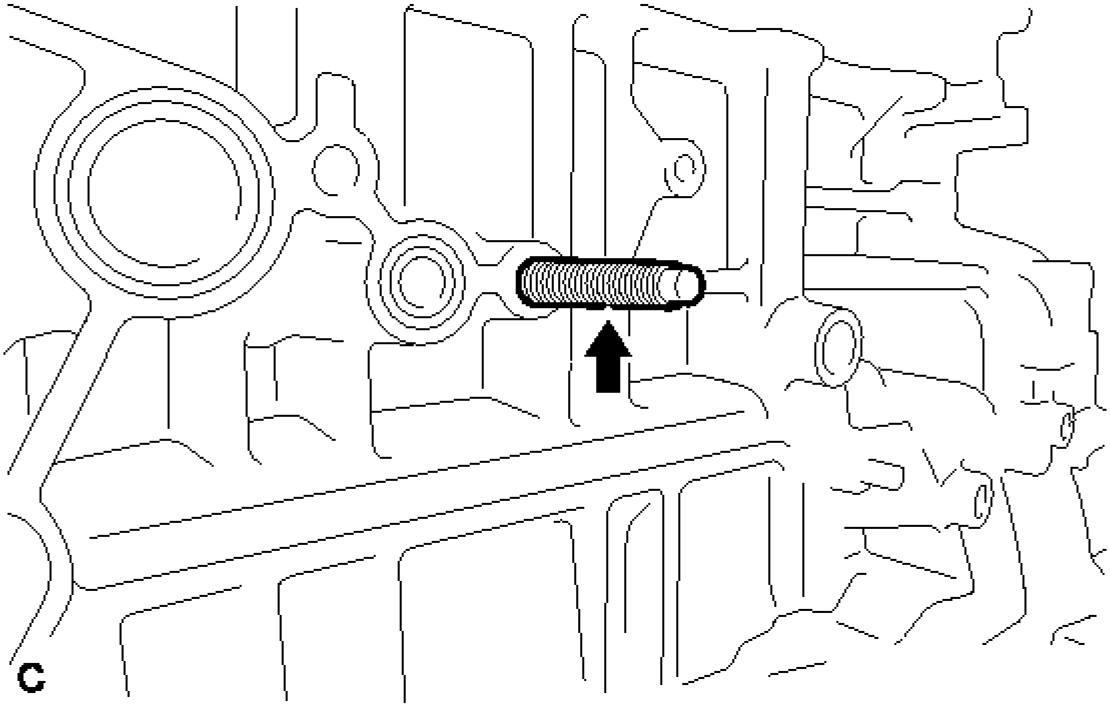

Fig. 201: Identifying Cylinder Block Stud Bolt
Courtesy of TOYOTA MOTOR SALES, U.S.A., INC.

f. Using an E5 "TORX" socket wrench, remove the stud bolt from the water inlet housing.

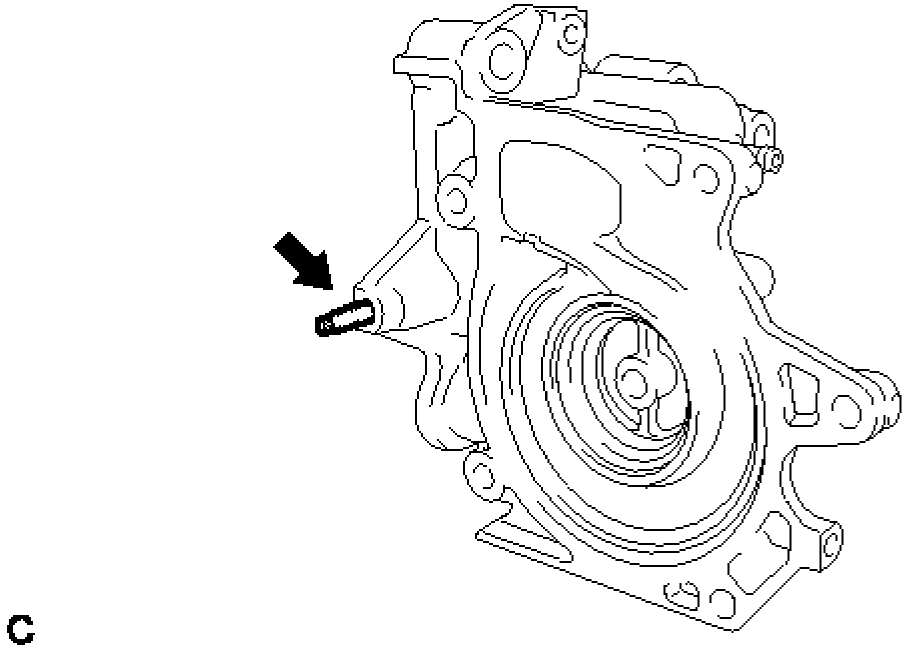

Fig. 202: Identifying Water Inlet Housing Stud Bolt
Courtesy of TOYOTA MOTOR SALES, U.S.A., INC.

16. **REMOVE NO. 1 COMPRESSOR MOUNTING BRACKET**
    a. Remove the 4 bolts and No. 1 compressor mounting bracket.

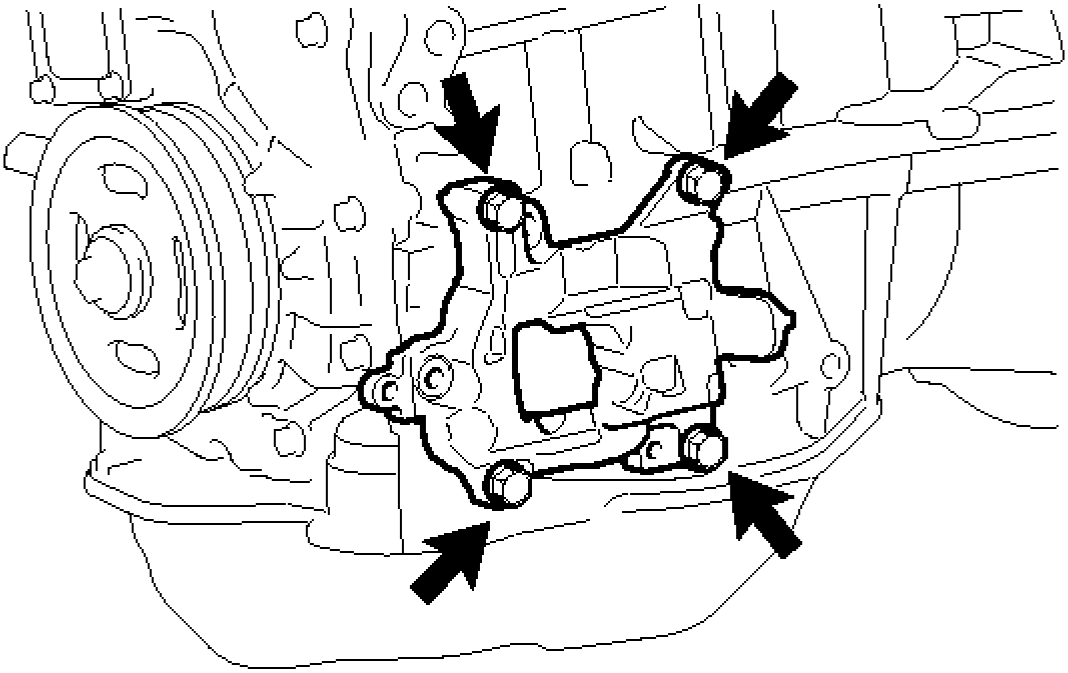

Fig. 203: Identifying No. 1 Compressor Mounting Bracket Bolts
Courtesy of TOYOTA MOTOR SALES, U.S.A., INC.

17. **REMOVE FUEL DELIVERY PIPE SUB-ASSEMBLY** . Refer to **REMOVAL - Step 7**
18. **REMOVE INTAKE MANIFOLD** . Refer to **REMOVAL - Step 13**
19. **REMOVE SENSOR WIRE**
    a. Disconnect the knock control sensor connector.

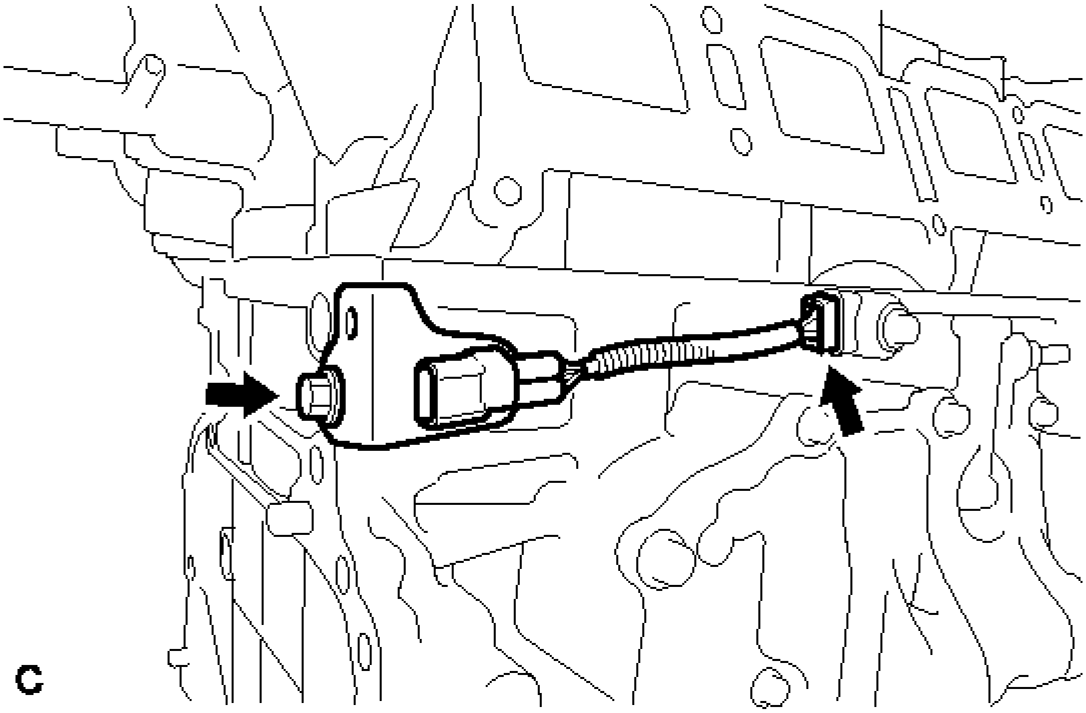

Fig. 204: Identifying Knock Control Sensor Connector
Courtesy of TOYOTA MOTOR SALES, U.S.A., INC.

b. Remove the bolt and knock control sensor wire.

20. **REMOVE IGNITION COIL ASSEMBLY** . Refer to **REMOVAL - Step 2**

DISASSEMBLY

DISASSEMBLY

1. **REMOVE ENGINE COVER JOINT**
   a. Remove the 3 engine cover joints.

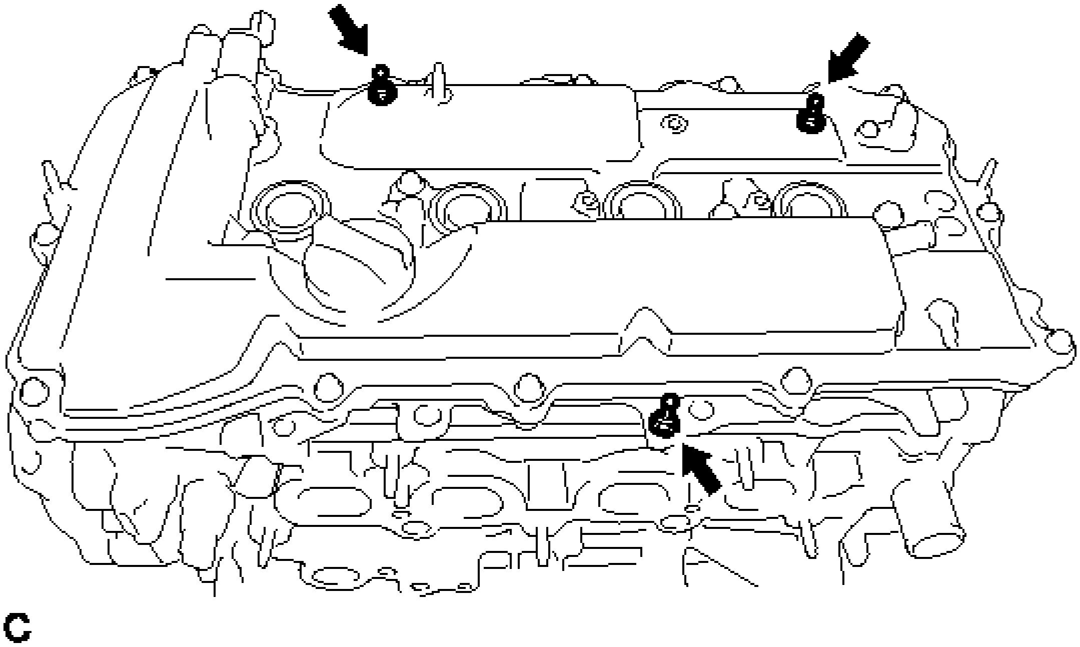

Fig. 205: Identifying Engine Cover Joints
Courtesy of TOYOTA MOTOR SALES, U.S.A., INC.

2. **REMOVE SPARK PLUG** . Refer to **REMOVAL - Step 3**
3. **REMOVE KNOCK CONTROL SENSOR** . Refer to **REMOVAL - Step 2**
4. **REMOVE ENGINE COOLANT TEMPERATURE SENSOR** . Refer to **REMOVAL - Step 5**
5. **REMOVE ENGINE OIL PRESSURE SWITCH ASSEMBLY** . Refer to **REMOVAL - Step 1**
6. **REMOVE CAMSHAFT TIMING OIL CONTROL VALVE ASSEMBLY** . Refer to **REMOVAL - Step 2**
7. **REMOVE CAMSHAFT POSITION SENSOR** . Refer to **REMOVAL - Step 2**
8. **REMOVE OIL FILLER CAP SUB-ASSEMBLY**
    a. Remove the oil filler cap sub-assembly from the cylinder head cover sub-assembly.
9. **REMOVE OIL FILLER CAP GASKET**
    a. Remove the oil filler cap gasket from the oil filler cap sub-assembly.
10. **REMOVE CRANKSHAFT POSITION SENSOR** . Refer to **REMOVAL - Step 1**
11. **REMOVE VENTILATION VALVE SUB-ASSEMBLY** . Refer to **REMOVAL - Step 2**
12. **REMOVE VENTILATION CASE SUB-ASSEMBLY**
    a. Remove the 8 bolts and 2 nuts.

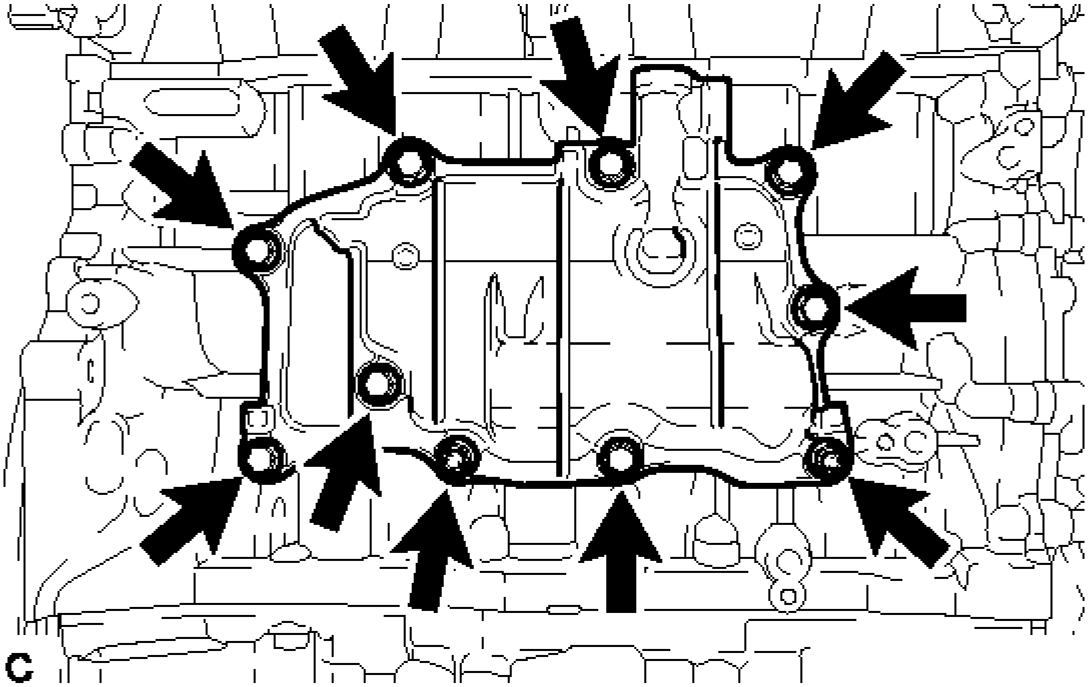

Fig. 206: Identifying Ventilation Case Sub-Assembly Bolts And Nuts
Courtesy of TOYOTA MOTOR SALES, U.S.A., INC.

b. Remove the ventilation case by prying between the ventilation case and cylinder block with a screwdriver.

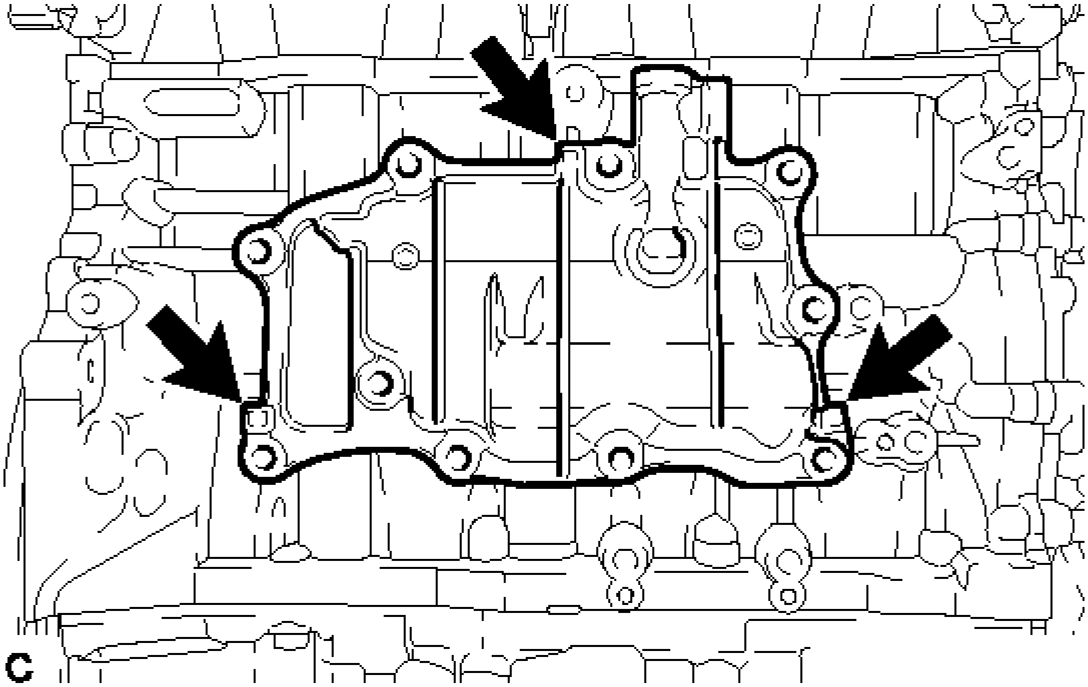

Fig. 207: Locating Contact Surfaces Of Cylinder Block And Ventilation Case

Courtesy of TOYOTA MOTOR SALES, U.S.A., INC.

NOTE: **Be careful not to damage the contact surfaces of the cylinder block and ventilation case.**

HINT:

Tape the screwdriver tip before use.

13. **REMOVE SEPARATOR CASE**
    a. Remove the 2 bolts, separator case and gasket.

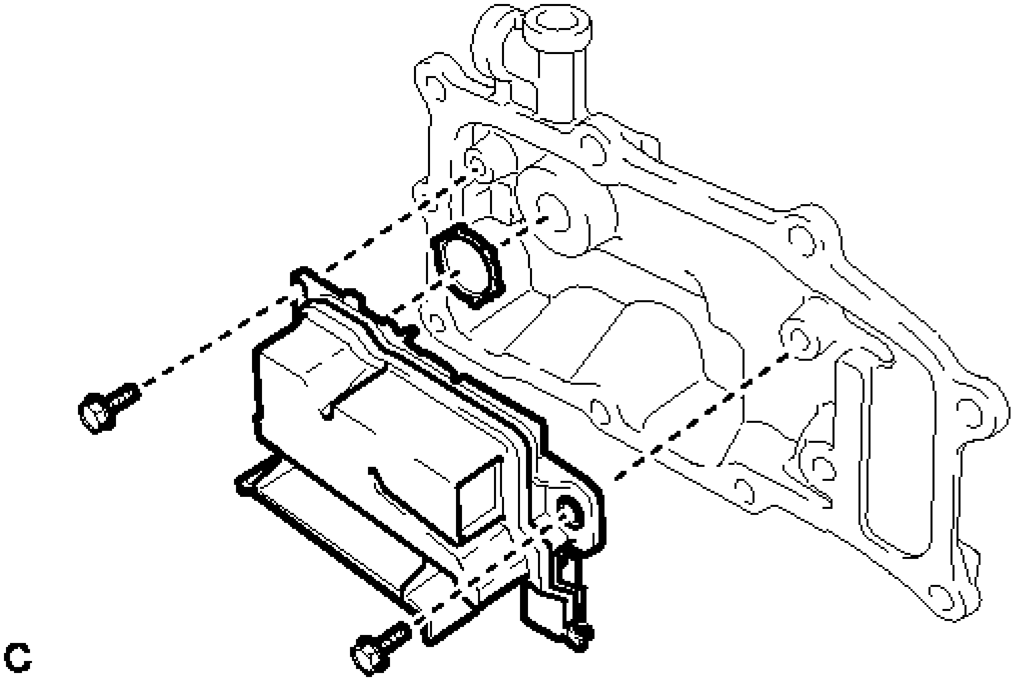

Fig. 208: Identifying Case And Gasket Bolts
Courtesy of TOYOTA MOTOR SALES, U.S.A., INC.

14. **REMOVE CRANKSHAFT PULLEY**
    a. Using SST, hold the crankshaft pulley and loosen the pulley bolt. Further loosen the bolt until 2 or 3 threads are screwed into the crankshaft.

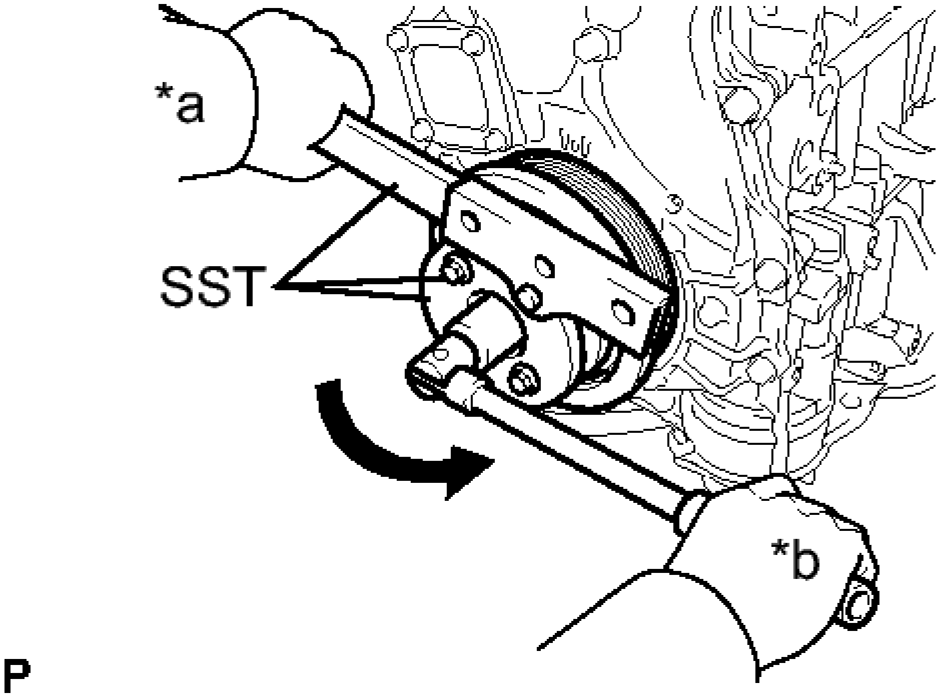

Fig. 209: Loosening Crankshaft Pulley
Courtesy of TOYOTA MOTOR SALES, U.S.A., INC.

TEXT IN ILLUSTRATION

*a	Hold
*b	Turn

- **SST: 09213-54015**
- **SST: 09330-00021**
- **SST: 91551-80650**

b. Using SST and the pulley bolt, remove the crankshaft pulley.

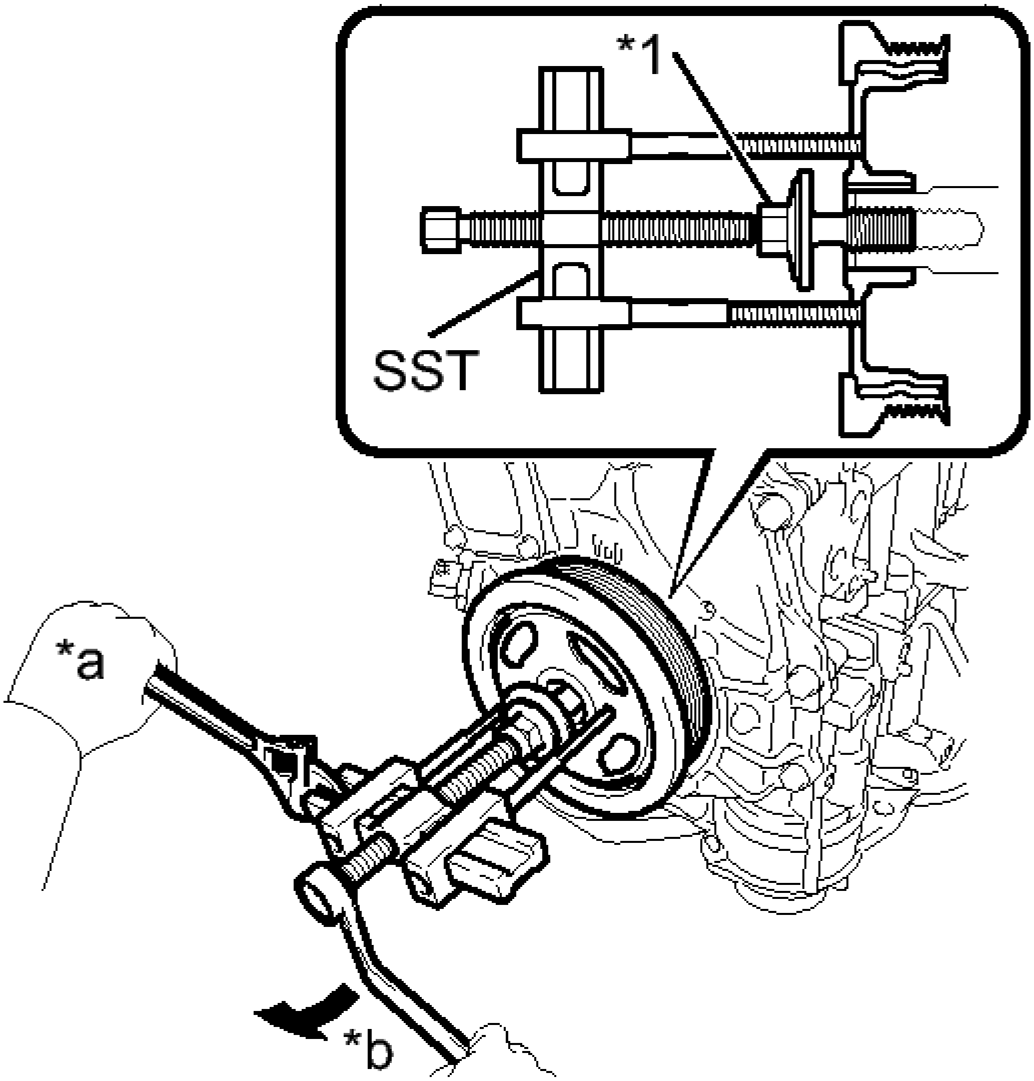

Fig. 210: Removing Crankshaft Pulley
Courtesy of TOYOTA MOTOR SALES, U.S.A., INC.

TEXT IN ILLUSTRATION

*1	Pulley Bolt
*a	Hold
*b	Turn

- **SST: 09950-50013**

  09951-05010

  09952-05010

  09953-05020

  09954-05011

HINT:

Apply a lubricant to the threads and end of SST.

15. **REMOVE CYLINDER HEAD COVER SUB-ASSEMBLY**
    a. Remove the 16 bolts, 3 seal washers, cylinder head cover sub-assembly and cylinder head cover gasket.

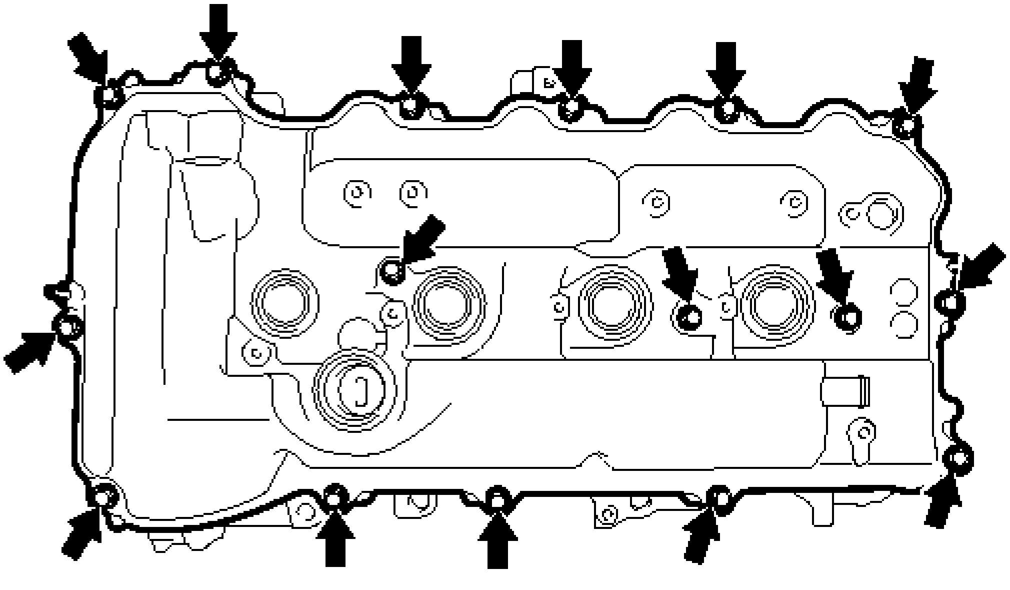

Fig. 211: Identifying Cylinder Head Cover Sub-Assembly, Cylinder Head Cover Gasket Bolts And Washer
Courtesy of TOYOTA MOTOR SALES, U.S.A., INC.

    b. Remove the 2 gaskets from the camshaft bearing caps.

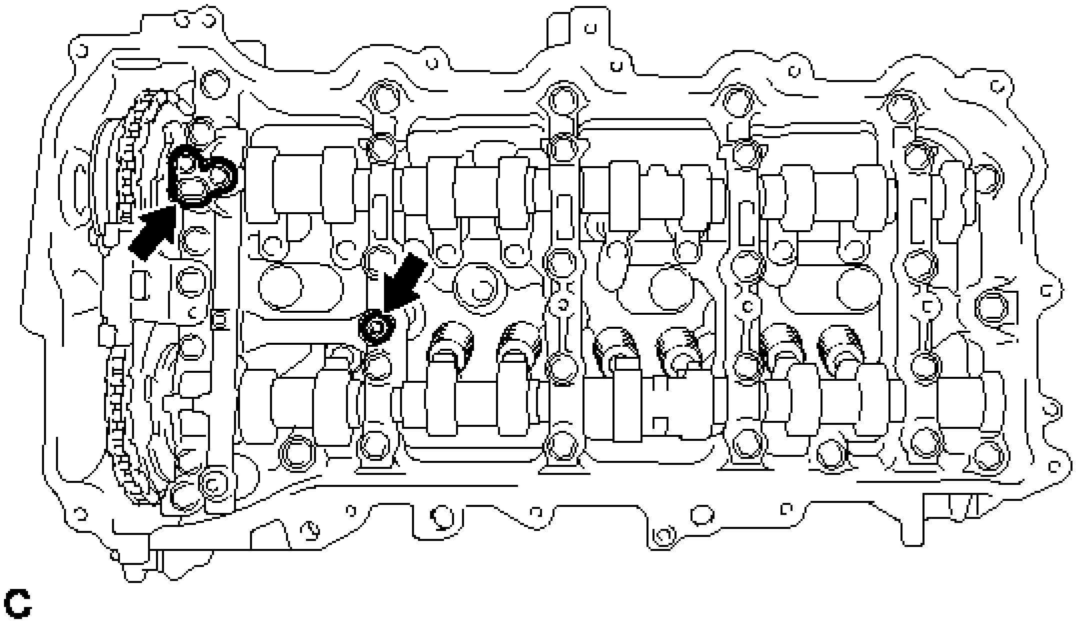

Fig. 212: Identifying Camshaft Bearing Caps Gaskets
Courtesy of TOYOTA MOTOR SALES, U.S.A., INC.

16. **REMOVE STUD BOLT**

NOTE: If a stud bolt is deformed or its threads are damaged, replace it.

a. Using an E6 "TORX" socket wrench, remove the 3 stud bolts from the cylinder head cover sub-assembly.

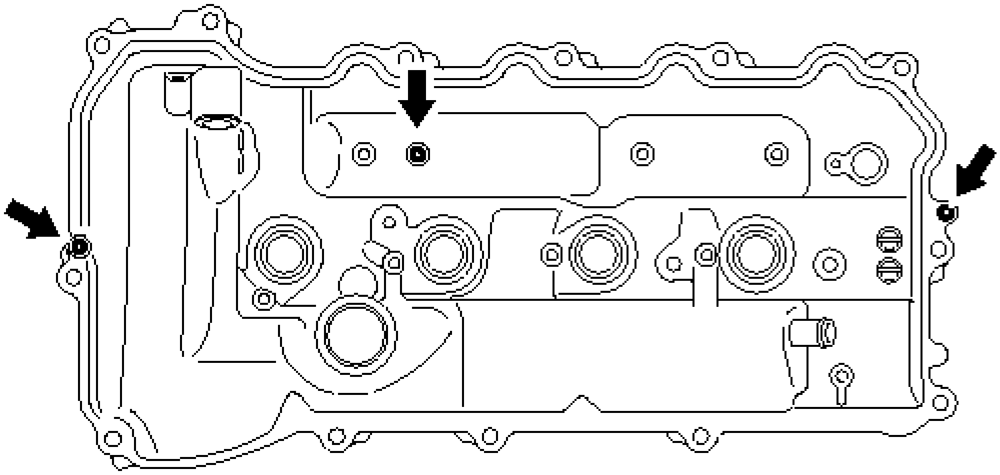

Fig. 213: Identifying Cylinder Head Cover Sub-Assembly Stud Bolts
Courtesy of TOYOTA MOTOR SALES, U.S.A., INC.

17. **REMOVE SPARK PLUG TUBE GASKET**
    a. Using a screwdriver, pry out the 4 spark plug tube gaskets.

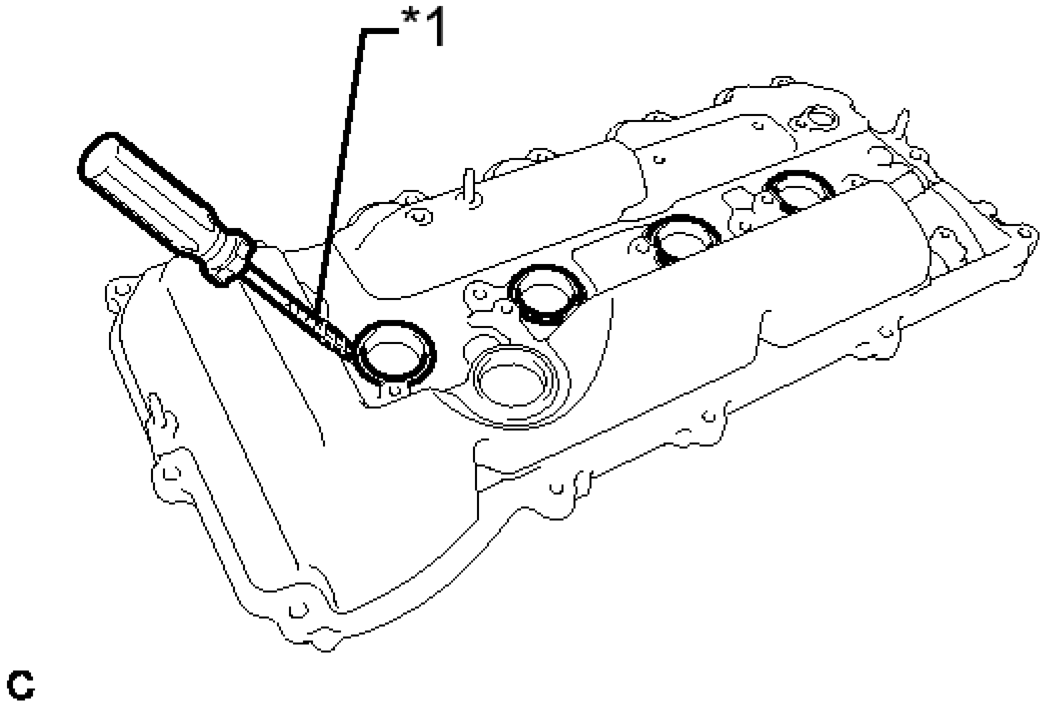

Fig. 214: Identifying Spark Plug Tube Gaskets

Courtesy of TOYOTA MOTOR SALES, U.S.A., INC.

TEXT IN ILLUSTRATION

*1	Tape

NOTE: **Be careful not to damage the cylinder head cover.**

HINT:

Tape the screwdriver tip before use.

18. **REMOVE ENGINE MOUNTING BRACKET RH** . Refer to **REMOVAL - Step 7**
19. **REMOVE TIMING CHAIN COVER SUB-ASSEMBLY** . Refer to **REMOVAL - Step 8**
20. **REMOVE OIL PUMP RELIEF VALVE PLUG**
    a. Using a 14 mm hexagon wrench, remove the oil pump relief valve plug and gasket.

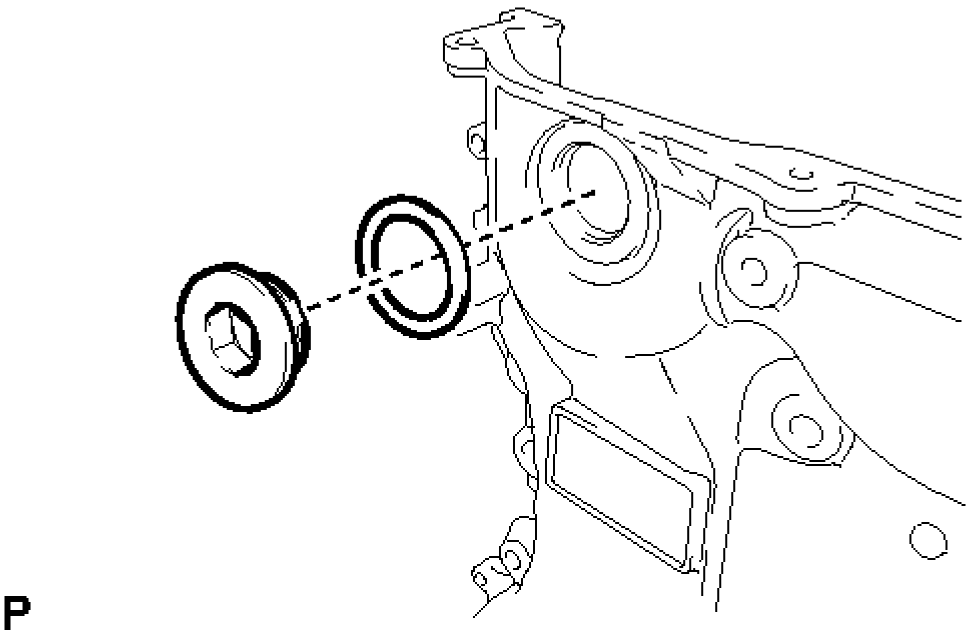

Fig. 215: Identifying Plug And Gasket
Courtesy of TOYOTA MOTOR SALES, U.S.A., INC.

21. **REMOVE TIMING CHAIN COVER PLATE**
    a. Remove the 4 bolts, timing chain cover plate and gasket.

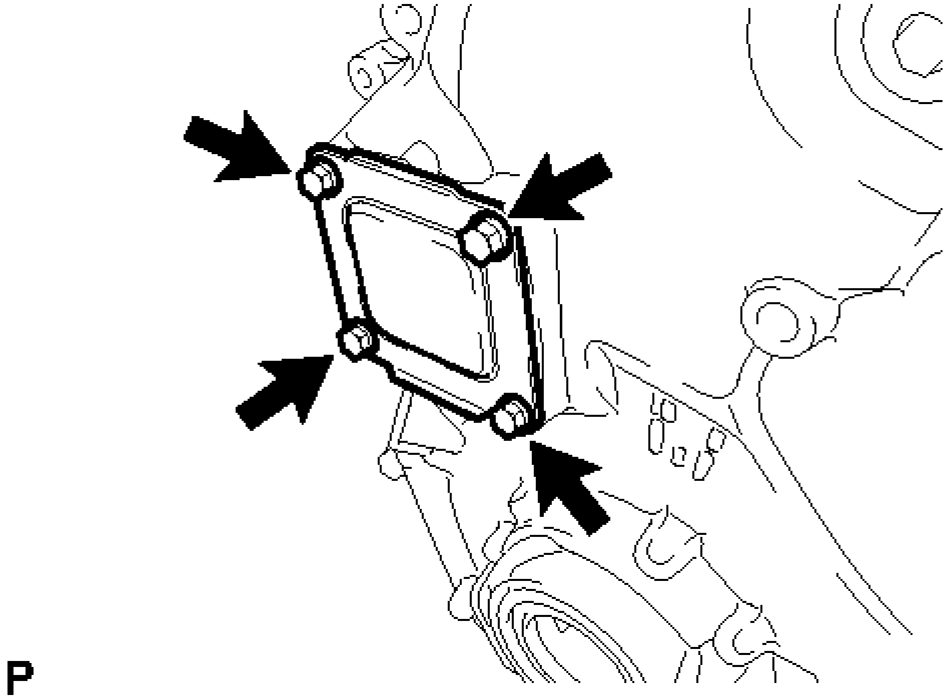

Fig. 216: Locating Timing Chain Cover Plate Bolts
Courtesy of TOYOTA MOTOR SALES, U.S.A., INC.

22. **REMOVE TIMING CHAIN COVER OIL SEAL** . Refer to **REMOVAL - Step 9**
23. **SET NO. 1 CYLINDER TO TDC/COMPRESSION** See step 13
24. **REMOVE TIMING CHAIN GUIDE** See step 14
25. **REMOVE NO. 1 CHAIN TENSIONER ASSEMBLY** See step 15
26. **REMOVE CHAIN TENSIONER SLIPPER** See step 16
27. **REMOVE CHAIN SUB-ASSEMBLY**
    a. Remove the chain sub-assembly.
28. **REMOVE NO. 1 CHAIN VIBRATION DAMPER** See step 18
29. **REMOVE CRANKSHAFT TIMING SPROCKET**
    a. Remove the crankshaft timing sprocket from the crankshaft.

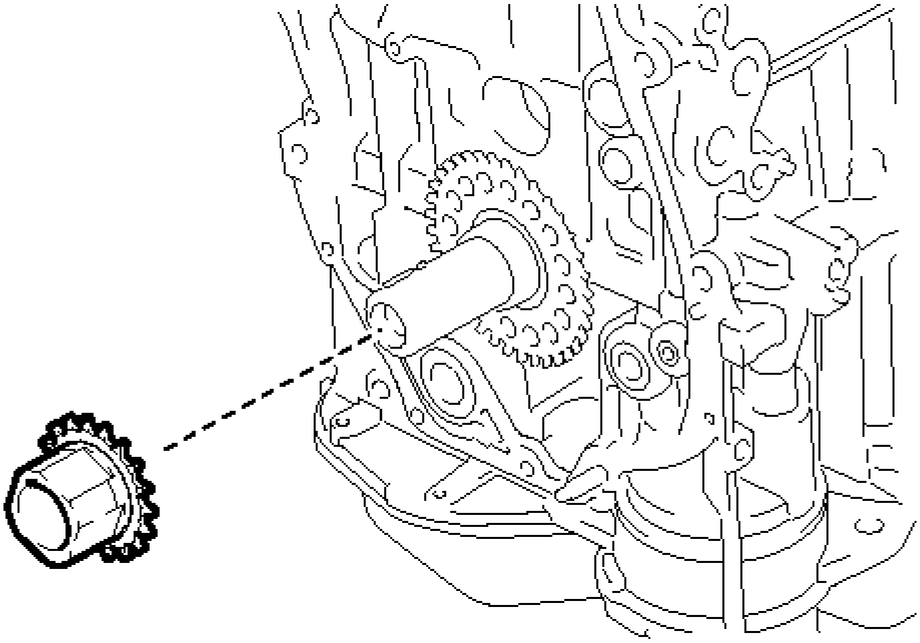

Fig. 217: Identifying Crankshaft Timing Sprocket
Courtesy of TOYOTA MOTOR SALES, U.S.A., INC.

30. **REMOVE CAMSHAFT TIMING GEAR ASSEMBLY** See step 19
31. **REMOVE CAMSHAFT TIMING SPROCKET** See step 20
32. **REMOVE CAMSHAFT HOUSING SUB-ASSEMBLY** See step 21
33. **REMOVE CAMSHAFT BEARING CAP** See step 22
34. **REMOVE OIL CONTROL VALVE FILTER**
    a. Remove the oil control valve filter from the No. 1 camshaft bearing cap.

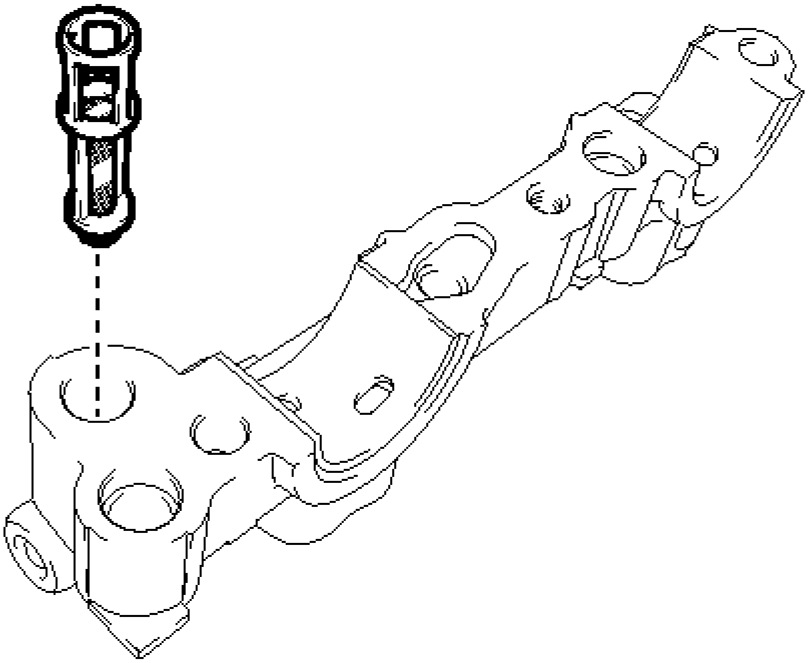

Fig. 218: Identifying Oil Control Valve Filter
Courtesy of TOYOTA MOTOR SALES, U.S.A., INC.

35. **REMOVE CAMSHAFT** See step 25
36. **REMOVE NO. 1 CAMSHAFT BEARING**
    a. Remove the No. 1 camshaft bearing from the No. 1 camshaft bearing cap.

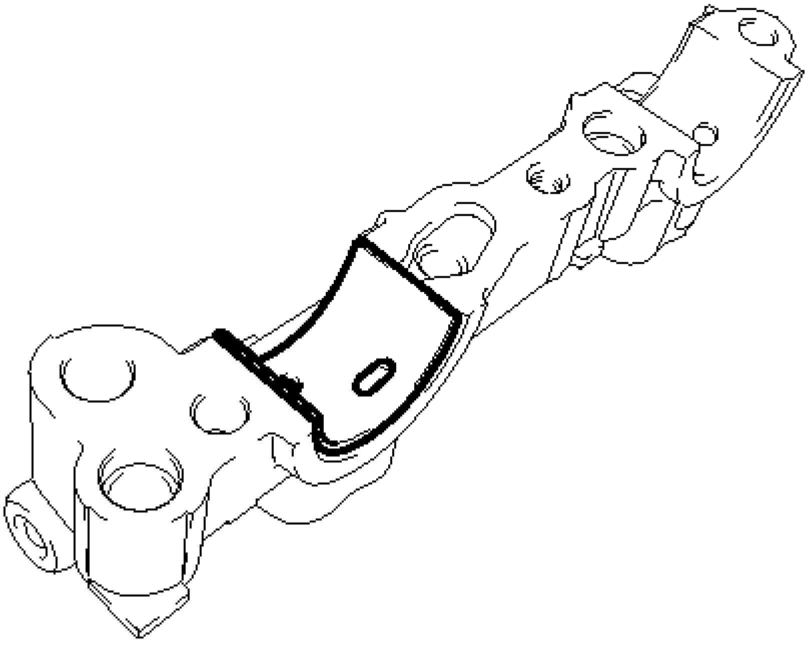

Fig. 219: Identifying No. 1 Camshaft Bearing
Courtesy of TOYOTA MOTOR SALES, U.S.A., INC.

37. REMOVE NO. 2 CAMSHAFT BEARING

a. Remove the No. 2 camshaft bearing from the camshaft housing sub-assembly.

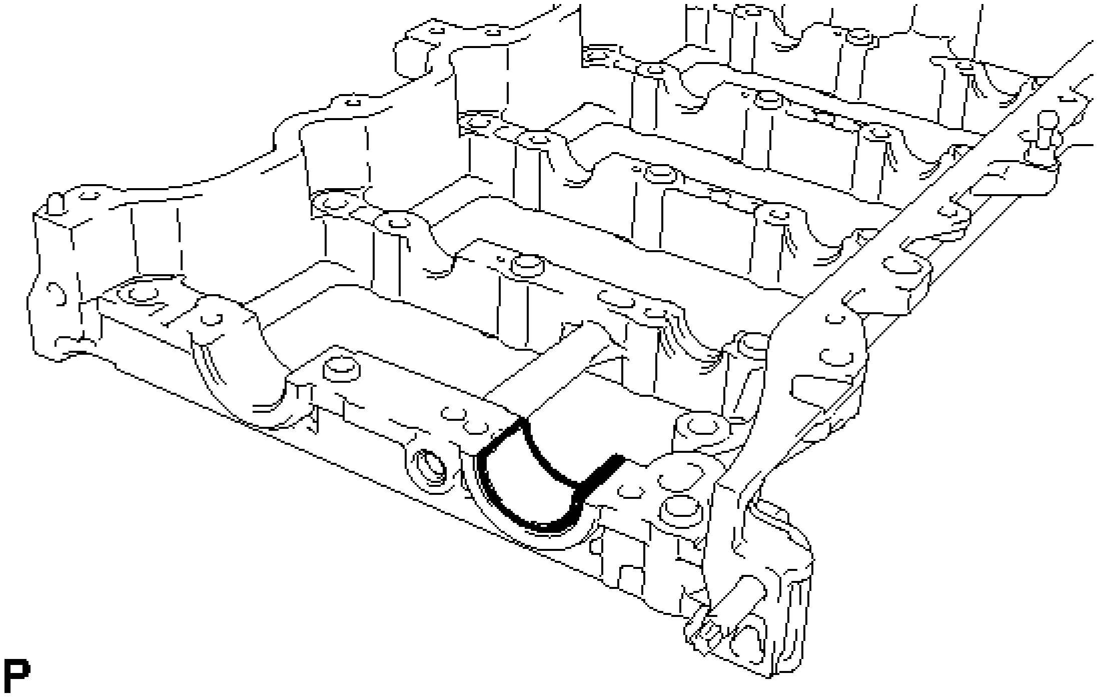

Fig. 220: Identifying No. 2 Camshaft Bearing
Courtesy of TOYOTA MOTOR SALES, U.S.A., INC.

38. REMOVE STUD BOLT

NOTE: If a stud bolt is deformed or its threads are damaged, replace it.

a. Using an E8 "TORX" socket wrench, remove the stud bolt from the camshaft housing sub-assembly.

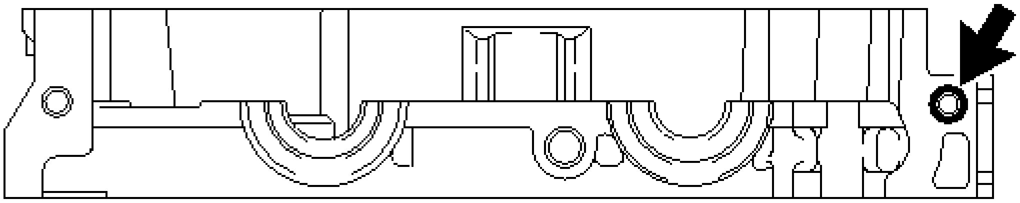

Fig. 221: Identifying Camshaft Housing Sub-Assembly Stud
Courtesy of TOYOTA MOTOR SALES, U.S.A., INC.

39. **REMOVE CAMSHAFT BEARING CAP SETTING RING PIN**

NOTE: It is not necessary to remove the ring pin unless it is being replaced.

a. Remove the 10 camshaft bearing cap setting ring pins from the camshaft housing sub-assembly.

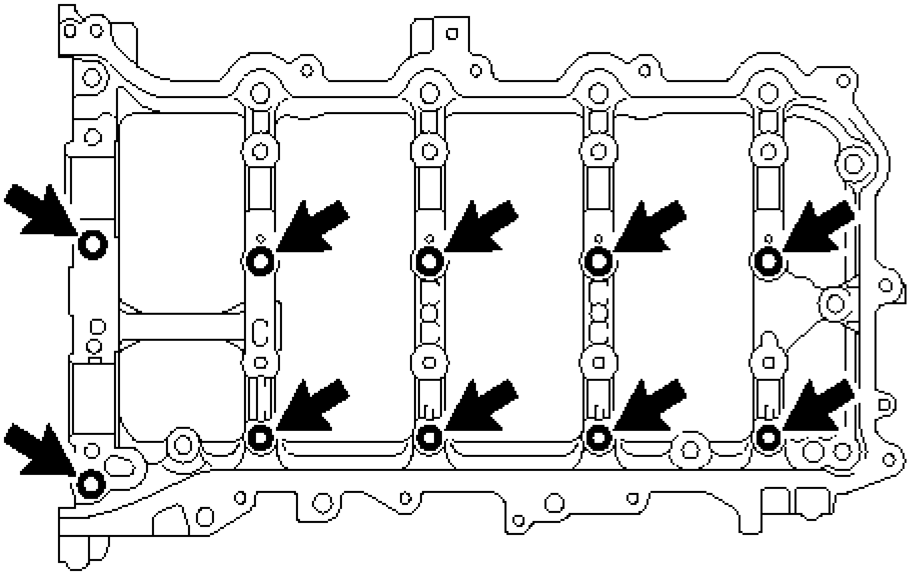

Fig. 222: Identifying Camshaft Housing Sub-Assembly Bearing Cap Setting Ring Pins
Courtesy of TOYOTA MOTOR SALES, U.S.A., INC.

40. **REMOVE STRAIGHT PIN**

NOTE: It is not necessary to remove the straight pin unless it is being replaced.

a. Remove the 2 straight pins from the camshaft housing sub-assembly.

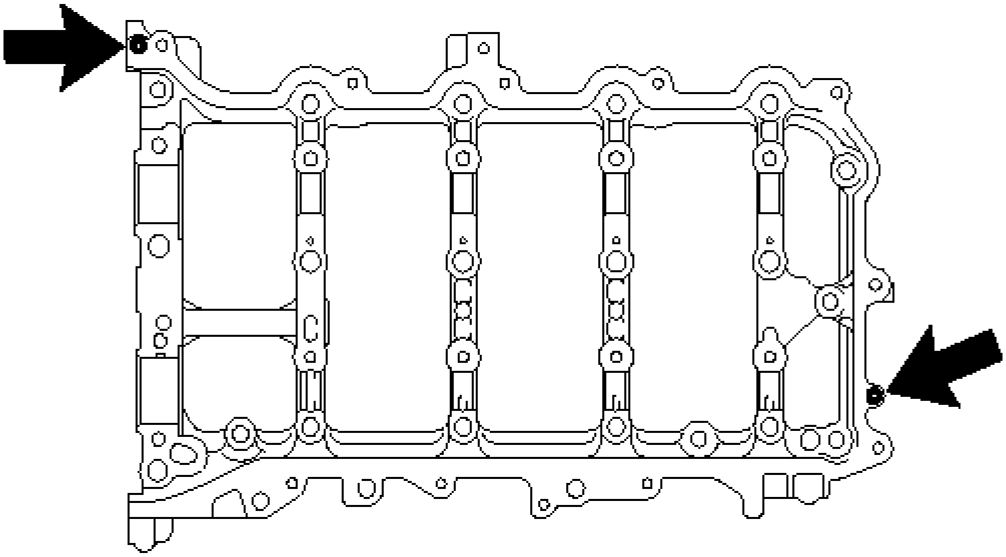

Fig. 223: Identifying Camshaft Housing Sub-Assembly Straight Pins
Courtesy of TOYOTA MOTOR SALES, U.S.A., INC.

41. **REMOVE NO. 1 VALVE ROCKER ARM SUB-ASSEMBLY** See step 27
42. **REMOVE VALVE LASH ADJUSTER ASSEMBLY** See step 28
43. **REMOVE VALVE STEM CAP** See step 29
44. **REMOVE CYLINDER HEAD SUB-ASSEMBLY** See step 30
45. **REMOVE CYLINDER HEAD GASKET** See step 31
46. **REMOVE CYLINDER BLOCK WATER JACKET SPACER**
    a. Remove the cylinder block water jacket spacer from the cylinder block.

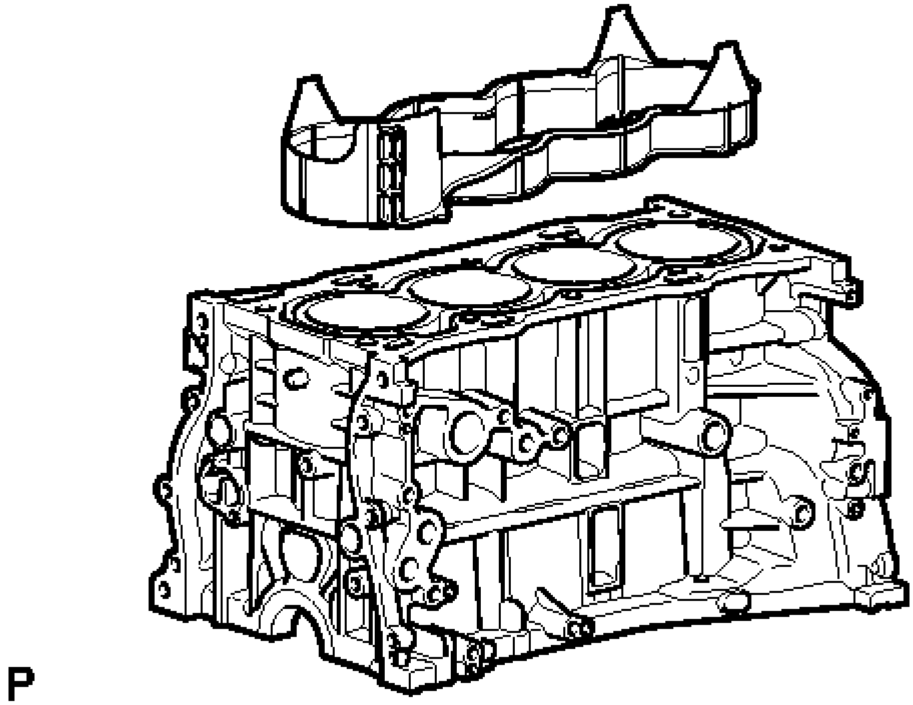

Fig. 224: Identifying Cylinder Block Water Jacket Spacer
Courtesy of TOYOTA MOTOR SALES, U.S.A., INC.

NOTE: Be sure to remove the water jacket spacer. If it is not removed, it may fall and become damaged when the cylinder block is inverted.

47. **REMOVE OIL FILTER CAP ASSEMBLY** . Refer to **REPLACEMENT - Step 2**
48. **REMOVE OIL PAN DRAIN PLUG**
    a. Remove the oil pan drain plug and gasket from the oil pan sub-assembly.
49. **REMOVE OIL PAN SUB-ASSEMBLY**
    a. Remove the 11 bolts and 2 nuts.

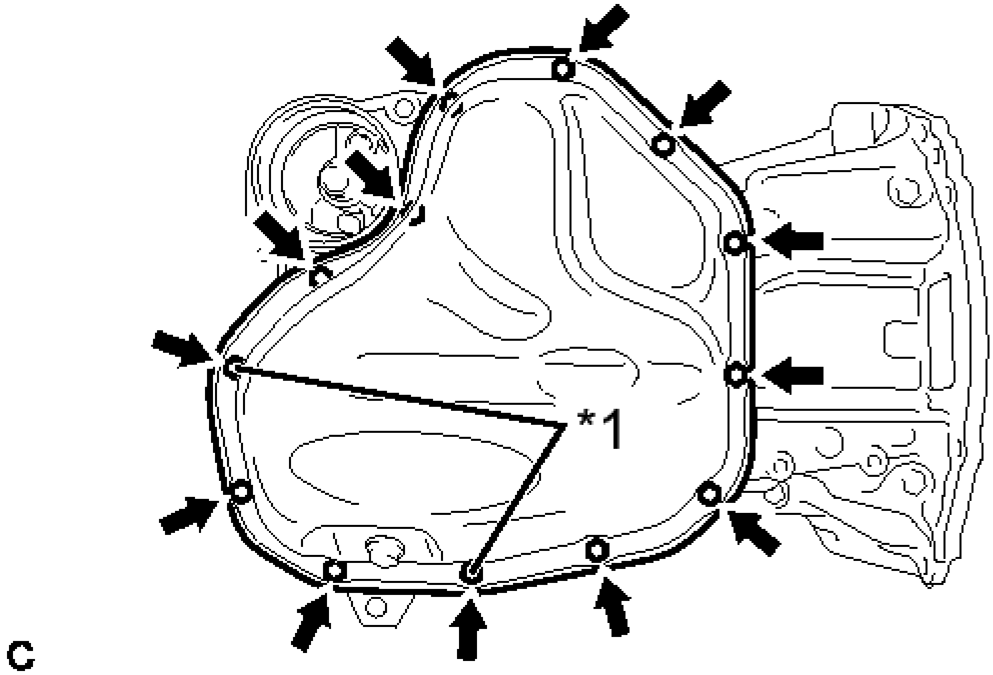

Fig. 225: Identifying Oil Pan Sub-Assembly Bolts And Nuts
Courtesy of TOYOTA MOTOR SALES, U.S.A., INC.

TEXT IN ILLUSTRATION

*1	Nut

b. Insert the blade of an oil pan seal cutter between the oil pan and stiffening crankcase, cut off the applied sealer and remove the oil pan.

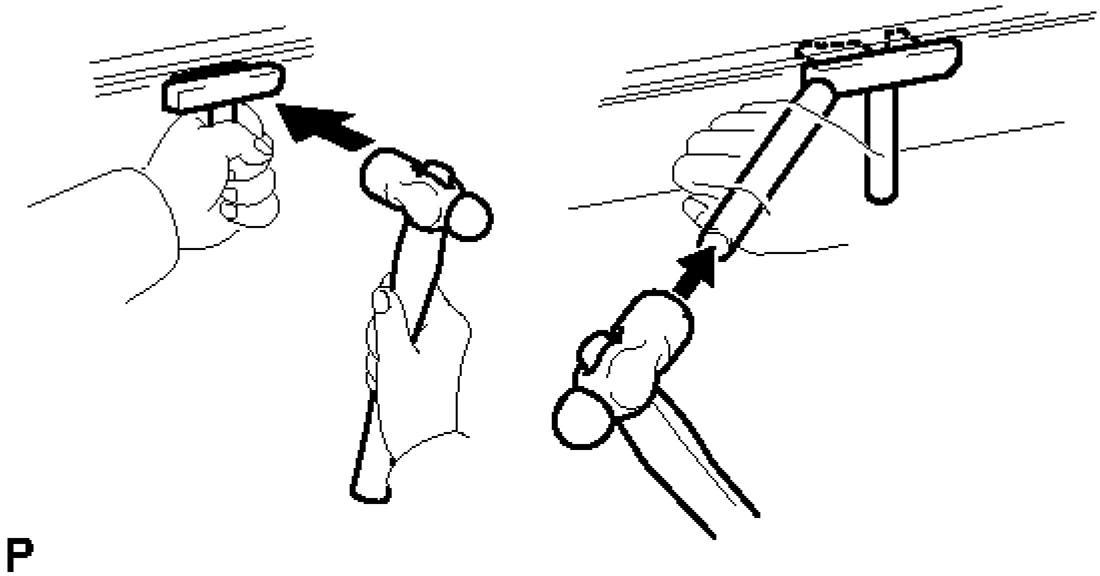

Fig. 226: Inserting Blade Of SST Between No. 1 & No. 2 Oil Pans
Courtesy of TOYOTA MOTOR SALES, U.S.A., INC.

NOTE:

- **Be careful not to damage the stiffening crankcase contact surface of the oil pan.**
- **Be careful not to damage the stiffening crankcase flange.**

50. **REMOVE OIL STRAINER SUB-ASSEMBLY**
    a. Remove the 3 bolts, oil strainer sub-assembly and gasket.

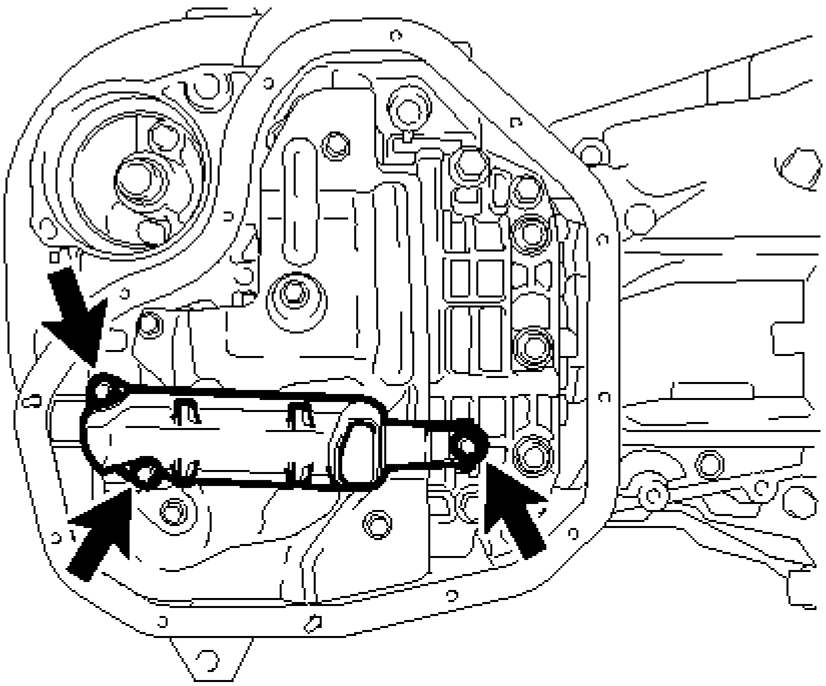

Fig. 227: Locating Oil Strainer And Gasket Bolts
Courtesy of TOYOTA MOTOR SALES, U.S.A., INC.

51. **REMOVE NO. 1 OIL PAN BAFFLE PLATE**
    a. Remove the 5 bolts and No. 1 oil pan baffle plate.

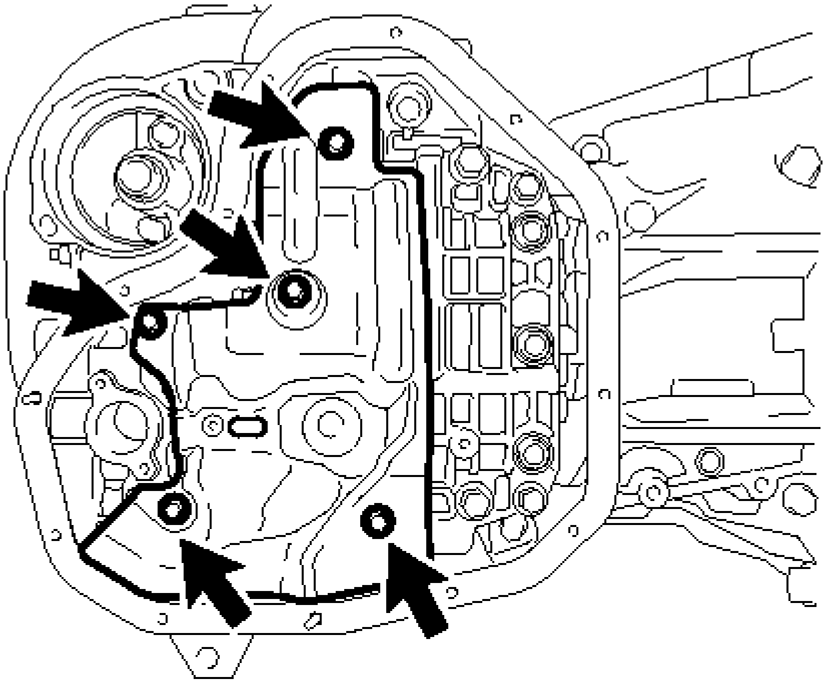

Fig. 228: Locating Oil Pan Baffle Plate Bolts

Courtesy of TOYOTA MOTOR SALES, U.S.A., INC.

52. **INSPECT CRANKSHAFT BACKLASH**
    a. Using a dial indicator, measure the backlash of the crankshaft and balance shaft as shown in the illustration.

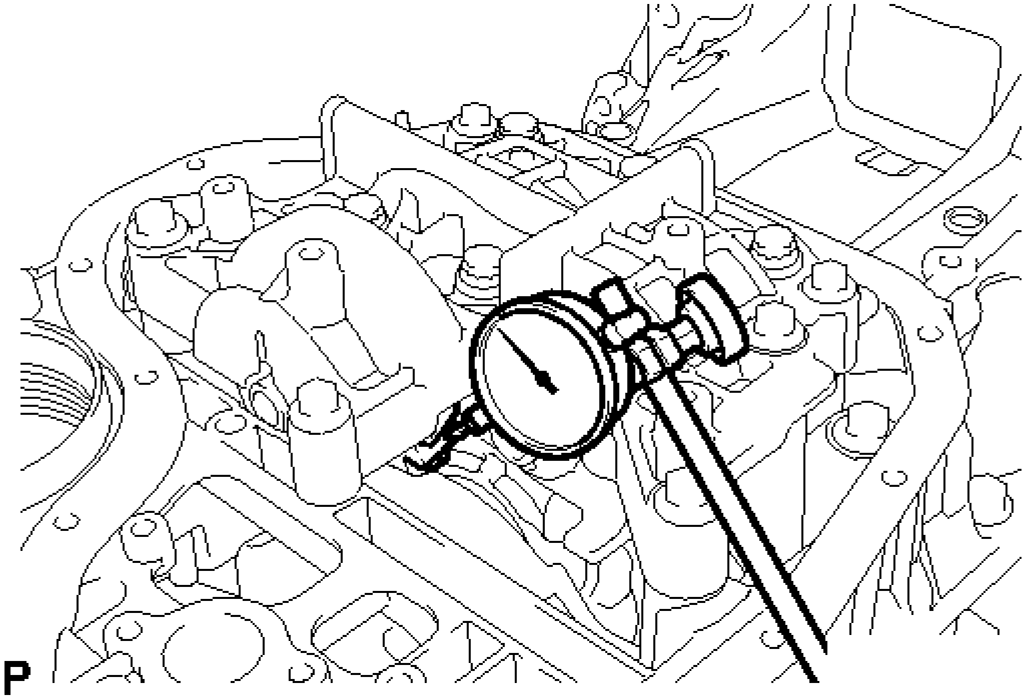

Fig. 229: Measuring Backlash Of Crankshaft And Balance Shaft
Courtesy of TOYOTA MOTOR SALES, U.S.A., INC.

Standard backlash

0.05 to 0.20 mm (0.00197 to 0.00787 in.)

Maximum backlash

0.20 mm (0.00787 in.)

If the backlash is more than the maximum, replace the engine balancer assembly.

53. **REMOVE ENGINE BALANCER ASSEMBLY**
    a. Remove the 7 bolts and engine balancer assembly.

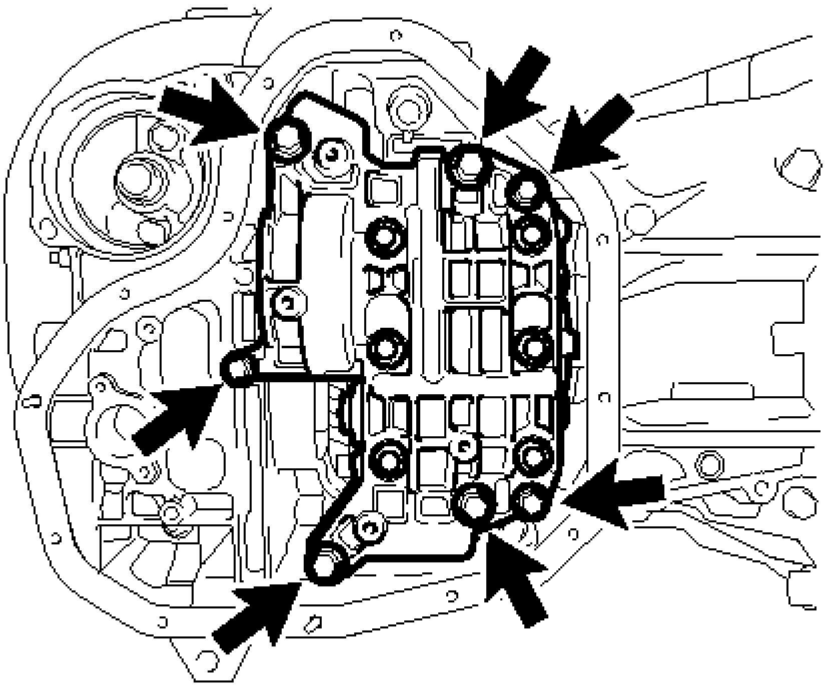

Fig. 230: Locating Engine Balancer Bolts
Courtesy of TOYOTA MOTOR SALES, U.S.A., INC.

NOTE: Do not disassemble the engine balancer.

54. **INSPECT NO. 1 BALANCE SHAFT THRUST CLEARANCE** See step 14
55. **INSPECT NO. 2 BALANCE SHAFT THRUST CLEARANCE** See step 15
56. **REMOVE STIFFENING CRANKCASE ASSEMBLY**
    a. Remove the 7 bolts.

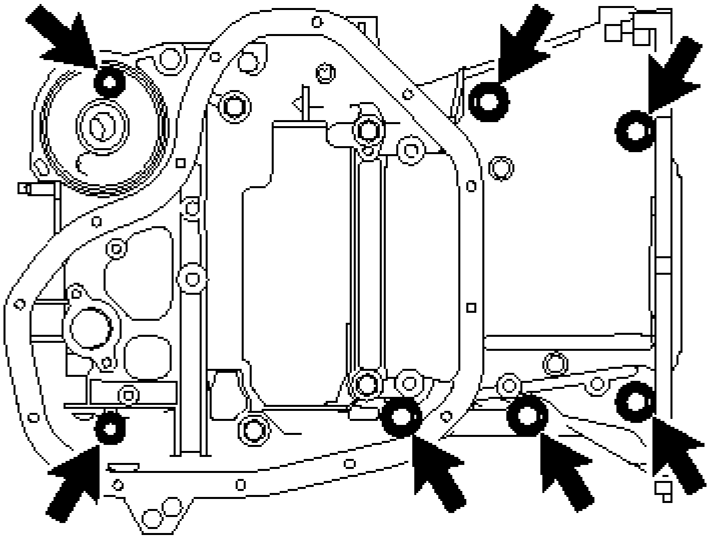

P

Fig. 231: Locating Stiffening Crankcase Assembly Bolts
Courtesy of TOYOTA MOTOR SALES, U.S.A., INC.

b. Using a screwdriver, remove the stiffening crankcase by prying between the stiffening crankcase and cylinder block at the places shown in the illustration.

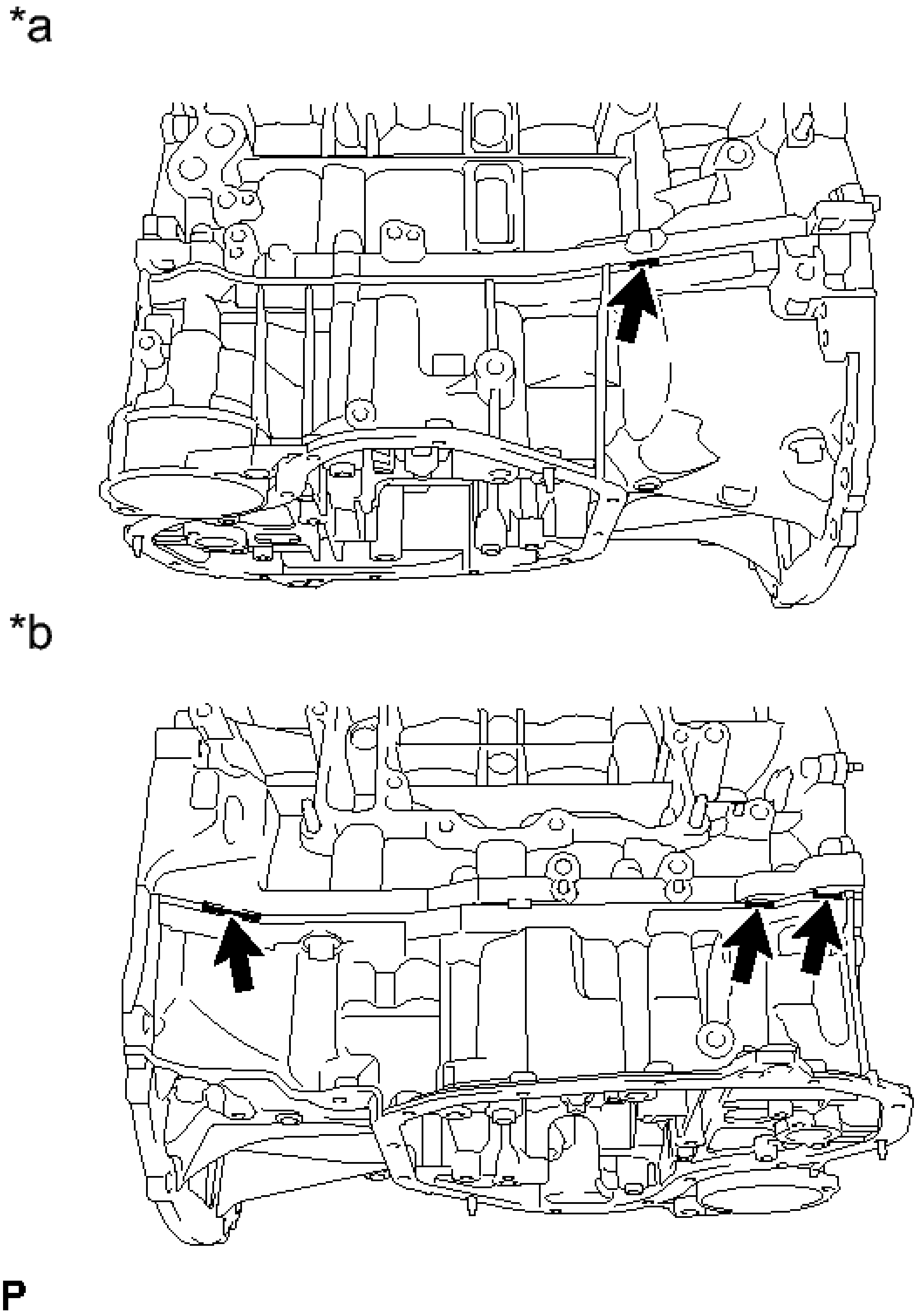

Fig. 232: Locating Stiffening Crankcase & Cylinder Block Prying Areas
Courtesy of TOYOTA MOTOR SALES, U.S.A., INC.

TEXT IN ILLUSTRATION

	LH

*a	Side:
*b	RH Side:

NOTE: Be careful not to damage the contact surfaces of the cylinder block and stiffening crankcase.

HINT:

Tape the screwdriver tip before use.

57. **REMOVE STUD BOLT**

NOTE: If a stud bolt is deformed or its threads are damaged, replace it.

a. Using an E5 and E8 "TORX" socket wrench, remove the 3 stud bolts from the stiffening crankcase assembly.

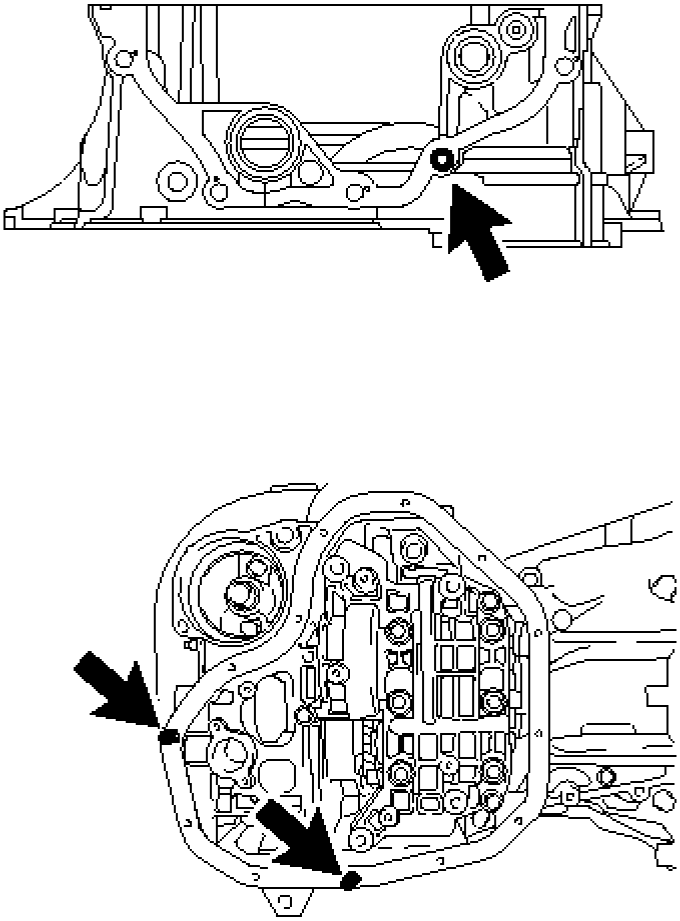

Fig. 233: Identifying Stiffening Crankcase Assembly Stud Bolts
Courtesy of TOYOTA MOTOR SALES, U.S.A., INC.

58. **REMOVE RING PIN**

NOTE: It is not necessary to remove the ring pin unless it is being replaced.

a. Remove the 2 ring pins from the stiffening crankcase assembly.

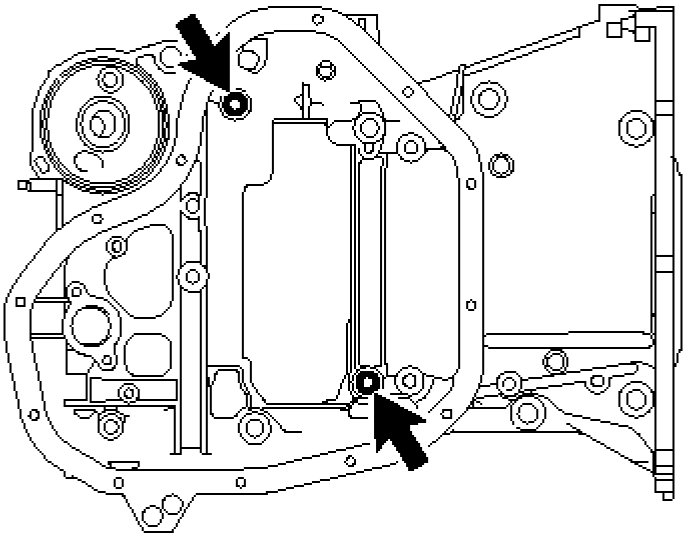

Fig. 234: Identifying Stiffening Crankcase Assembly Ring Pins
Courtesy of TOYOTA MOTOR SALES, U.S.A., INC.

59. **REMOVE REAR ENGINE OIL SEAL**
    a. Remove the rear engine oil seal from the cylinder block.

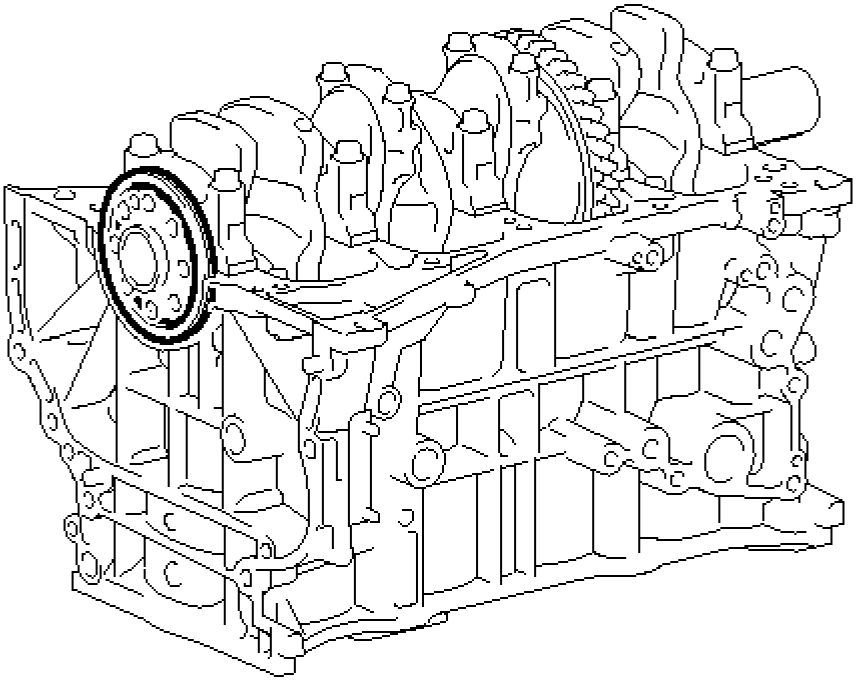

Fig. 235: Identifying Rear Engine Oil Seal

Courtesy of TOYOTA MOTOR SALES, U.S.A., INC.

INSPECTION

INSPECTION

1. **INSPECT NO. 1 VALVE ROCKER ARM SUB-ASSEMBLY**
    a. Turn the roller by hand to check that it turns smoothly.

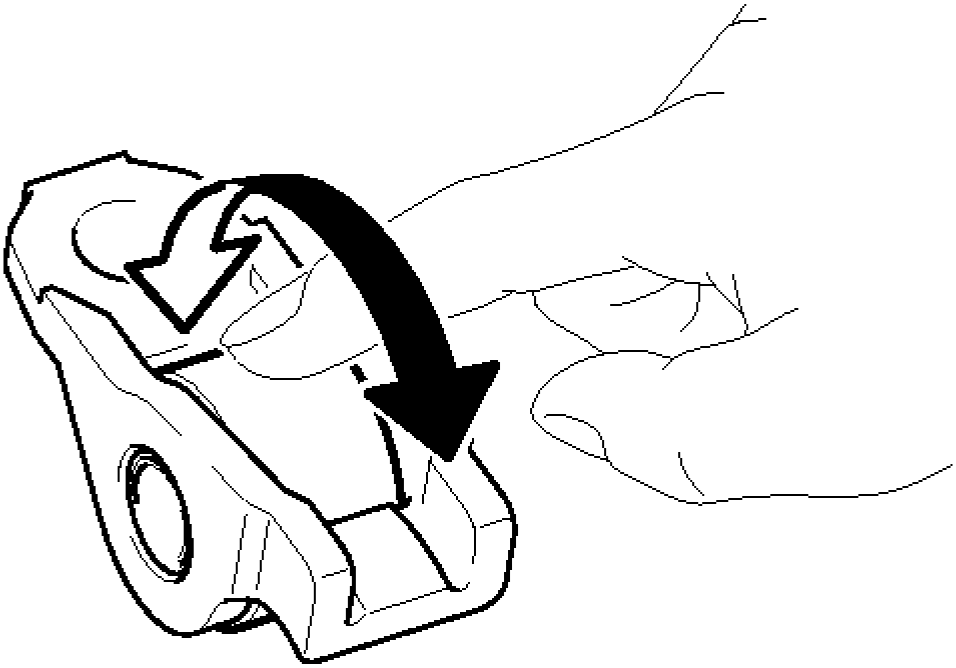

Fig. 236: Inspecting No. 1 Valve Rocker Arm Sub-Assembly
Courtesy of TOYOTA MOTOR SALES, U.S.A., INC.

If the roller does not turn smoothly, replace the No. 1 valve rocker arm sub-assembly.

2. **INSPECT VALVE LASH ADJUSTER ASSEMBLY**

NOTE:

- **Keep the adjuster free from dirt and foreign matter.**
- **Use only clean engine oil.**

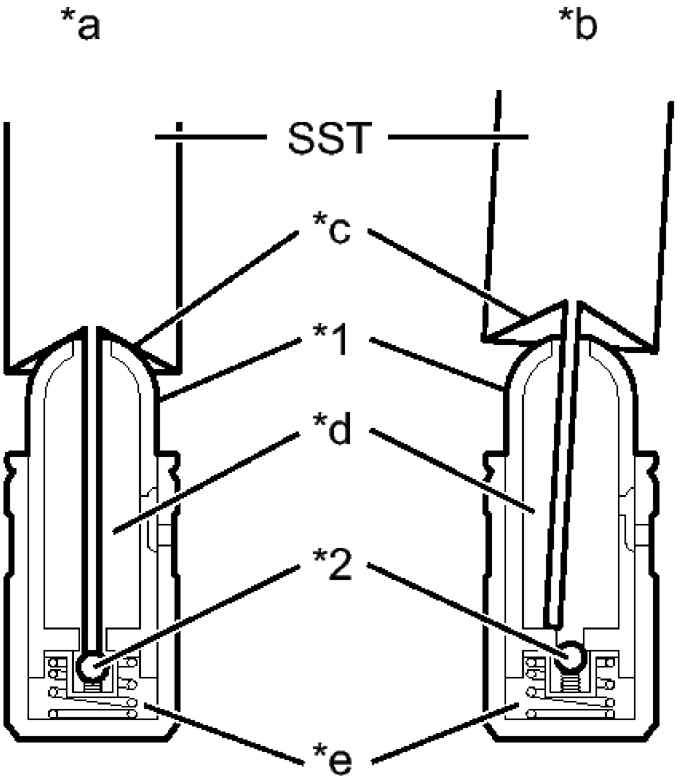
*a
*b
SST
*c
*1
*d
*2
*e

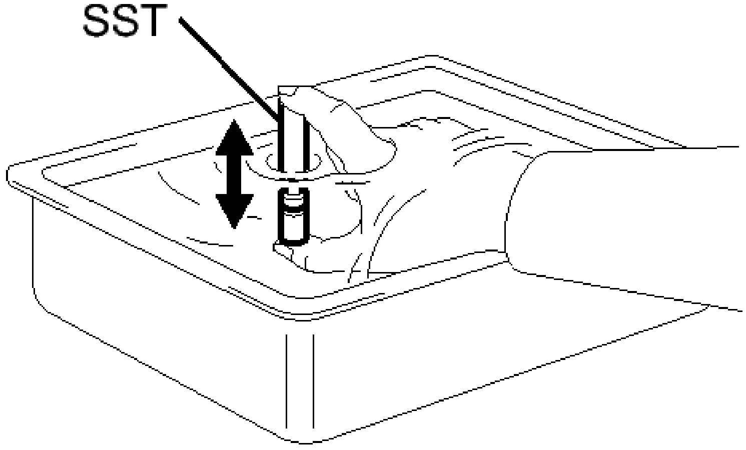

P

Fig. 237: Inspecting Valve Lash Adjuster Assembly Using SST
Courtesy of TOYOTA MOTOR SALES, U.S.A., INC.

TEXT IN ILLUSTRATION

*1	Plunger
*2	Check Ball
*a	CORRECT
*b	INCORRECT
*c	Taper Part
*d	Low Pressure Chamber
*e	High Pressure Chamber

a. Place the lash adjuster into a container full of new engine oil.

b. Insert the tip of SST into the lash adjuster plunger and use the tip to press down on the check ball inside the plunger.
   - **SST: 09276-75010**

c. Squeeze SST and the lash adjuster together to move the plunger up and down 5 to 6 times.

d. Check the movement of the plunger and bleed the air.

   OK

   Plunger moves up and down.

   NOTE: **When bleeding high-pressure air from the compression chamber, make sure that the tip of SST is actually pressing the check ball as shown in the illustration. If the check ball is not pressed, air will not bleed.**

e. After bleeding the air, remove SST. Then try to quickly and firmly press the plunger with your fingers.

   OK

   Plunger is very difficult to move.

   If the result is not as specified, replace the valve lash adjuster assembly.

3. **INSPECT CAMSHAFT OIL CLEARANCE** See step 8
4. **INSPECT CAMSHAFT THRUST CLEARANCE** See step 9
5. **INSPECT CAMSHAFT**
   a. Inspect the camshaft runout.

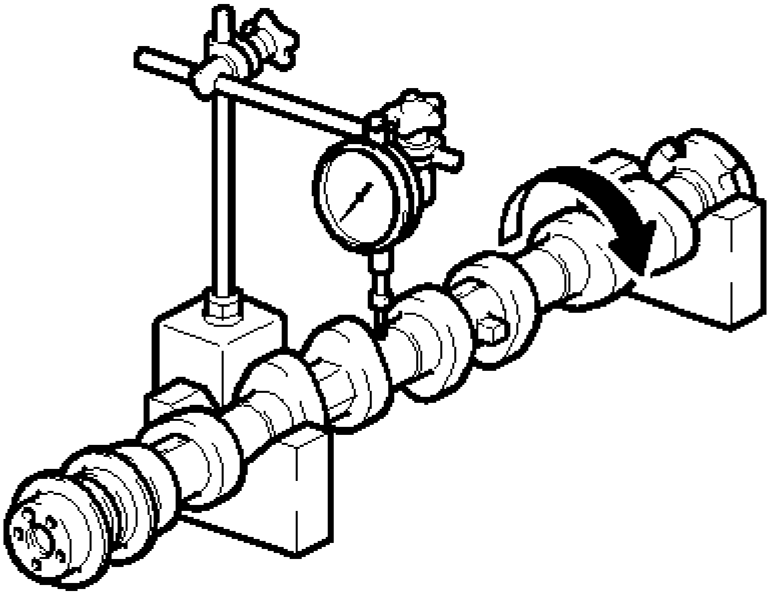

Fig. 238: Checking Camshaft Runout
Courtesy of TOYOTA MOTOR SALES, U.S.A., INC.

1. Place the camshaft on V-blocks.
2. Using a dial indicator, measure the circle runout at the center journal.

   Maximum circle runout

   0.03 mm (0.00118 in.)

   If the circle runout is more than the maximum, replace the camshaft.

   HINT:

   Check the oil clearance after replacing the camshaft.

b. Inspect the cam lobes.

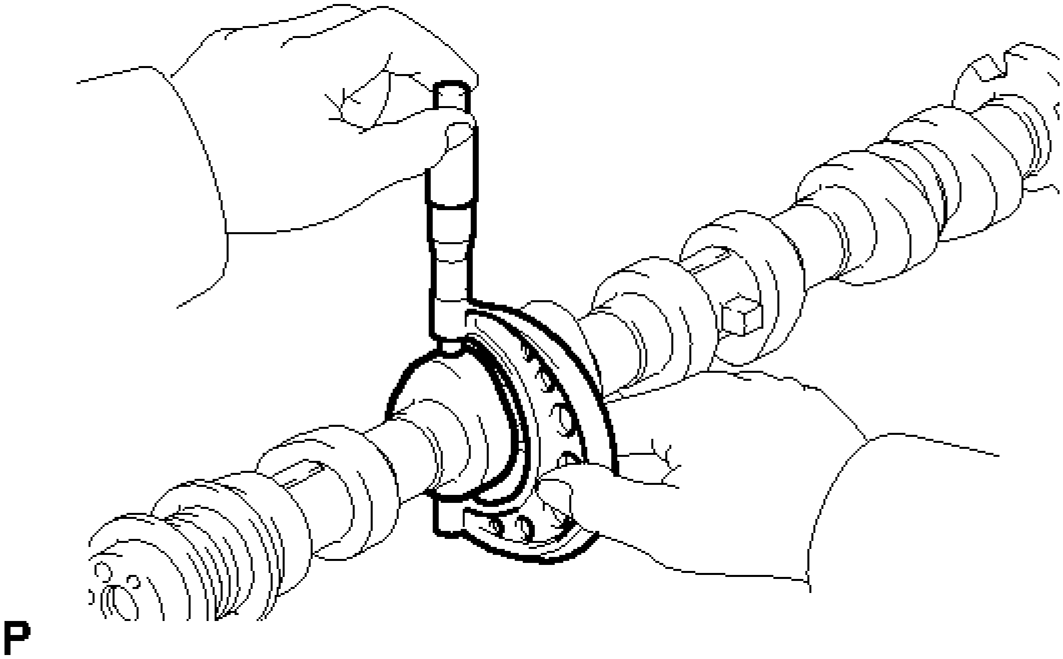

Fig. 239: Checking Cam Lobes
Courtesy of TOYOTA MOTOR SALES, U.S.A., INC.

1. Using a micrometer, measure the cam lobe height.

   Standard Cam Lobe Height

Item	Specified Condition
Intake	43.814 to 43.914 mm (1.725 to 1.729 in.)
Exhaust	42.939 to 43.039 mm (1.691 to 1.694 in.)

   Minimum Cam Lobe Height

Item	Specified Condition
Intake	43.704 mm

	(1.721 in.)
Exhaust	42.829 mm (1.686 in.)

If the cam lobe height is less than the minimum, replace the camshaft sub-assembly.

c. Inspect the camshaft journals.

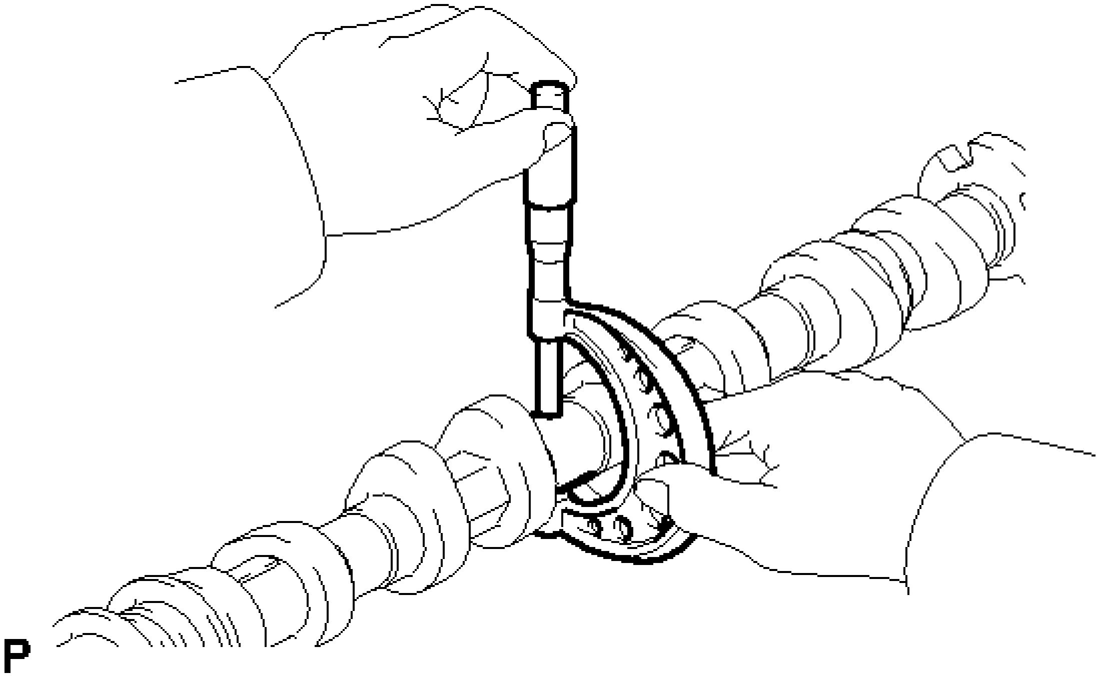

Fig. 240: Checking Camshaft Journals
Courtesy of TOYOTA MOTOR SALES, U.S.A., INC.

1. Using a micrometer, measure the journal diameter.

   Standard Journal Diameter

Item	Specified Condition
No. 1 journal	34.449 to 34.465 mm (1.356 to 1.357 in.)
Other journals	22.959 to 22.975 mm

	(0.904 to 0.905 in.)

If the journal diameter is not as specified, check the oil clearance See step 8.

6. **INSPECT CAMSHAFT TIMING GEAR ASSEMBLY**
   a. Align and attach the knock pin of the No. 1 camshaft with the pin hole of the camshaft timing gear.

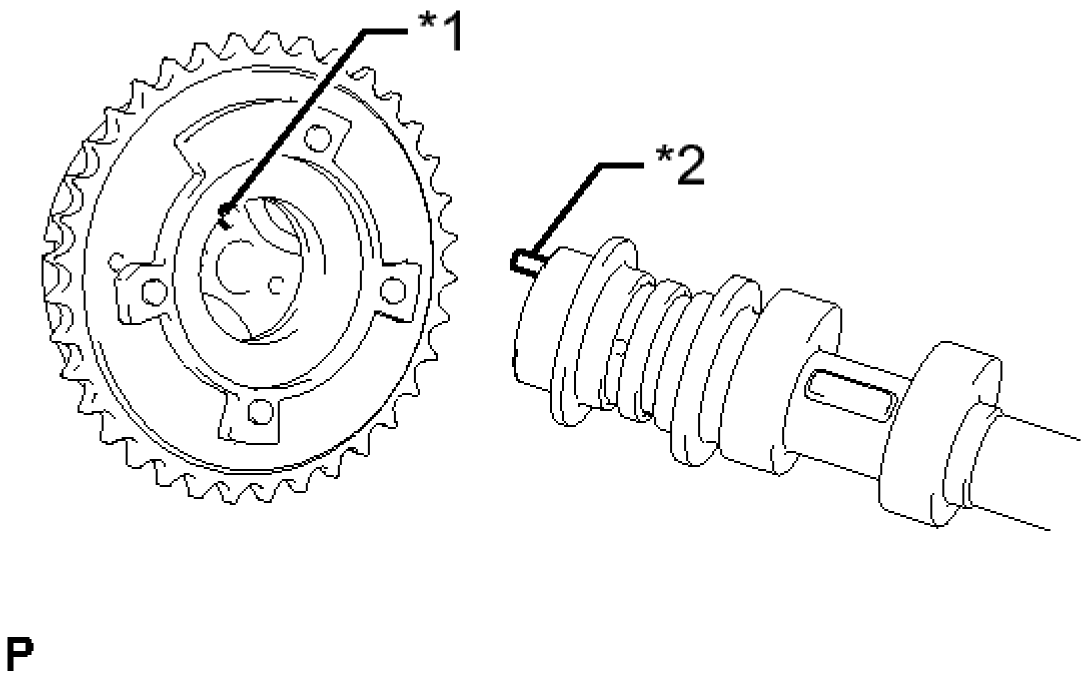

Fig. 241: Identifying Pin Hole And Knock Pin
Courtesy of TOYOTA MOTOR SALES, U.S.A., INC.

TEXT IN ILLUSTRATION

*1	Pin Hole
*2	Knock Pin

   b. Check that there is no clearance between the camshaft timing gear and camshaft flange.

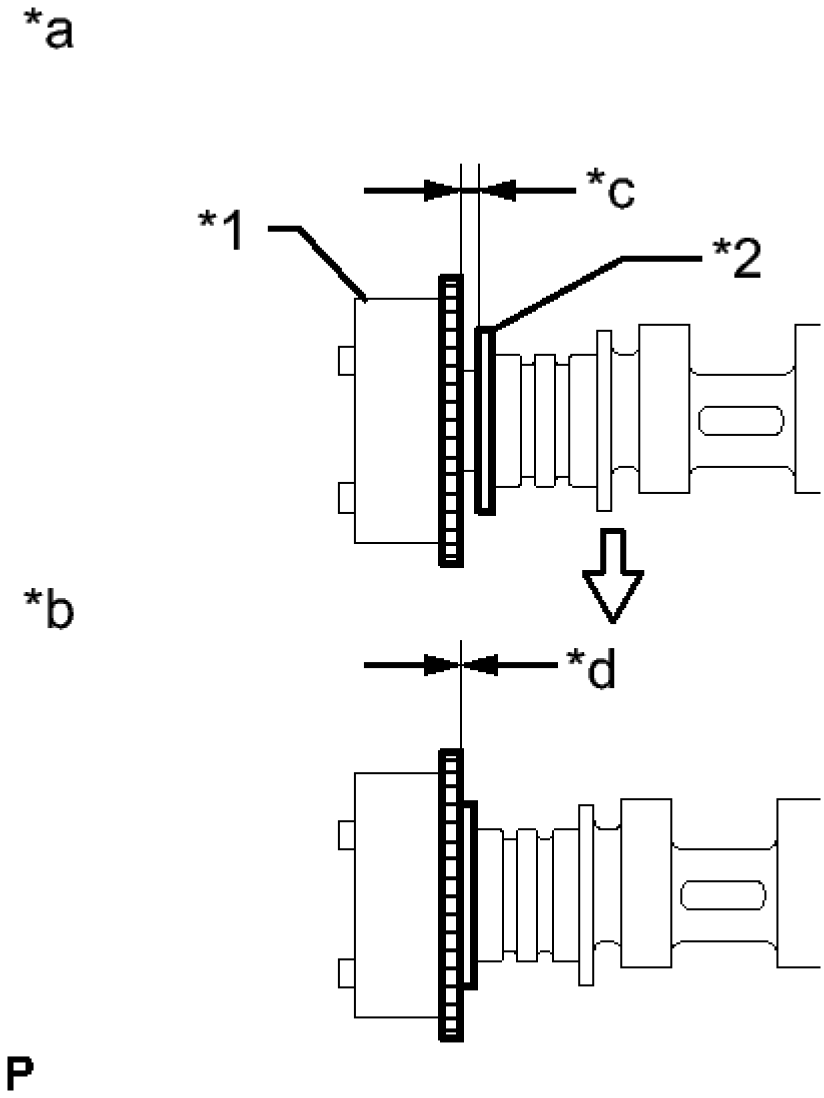

Fig. 242: Identifying No Clearance Between Camshaft Timing Gear And Camshaft Flange
Courtesy of TOYOTA MOTOR SALES, U.S.A., INC.

TEXT IN ILLUSTRATION

*1	Camshaft Timing Gear
*2	Flange
*a	INCORRECT
*b	CORRECT
*c	Clearance
*d	No Clearance

c. Secure the camshaft in place by hand, and then install the installation bolt of the camshaft timing gear by hand.

NOTE: Do not use any tools to install the bolt. If the bolt is installed using a tool, the lock pin will be damaged.

d. Check the lock of the camshaft timing gear.
   1. Make sure that the camshaft timing gear is locked.

NOTE: Be careful not to damage the camshaft.

e. Release the lock pin.

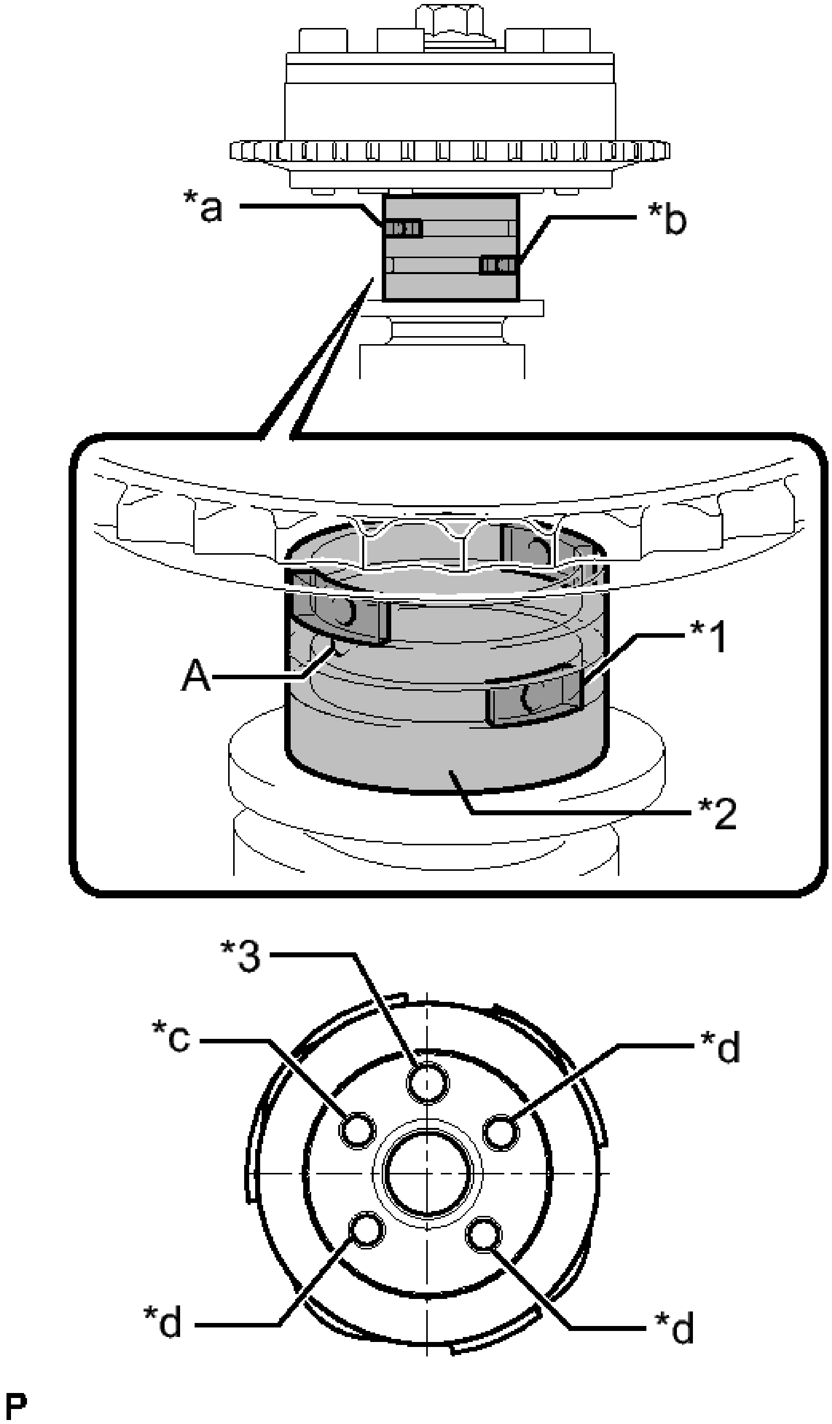
*a
*b
*1
A
*2
*3
*c
*d
*d
*d
P

Fig. 243: Identifying Lock Pin
Courtesy of TOYOTA MOTOR SALES, U.S.A., INC.

TEXT IN ILLUSTRATION

*1	Rubber
*2	Vinyl Tape
*3	Knock Pin
*a	Retard Side Path
*b	Advance Side Path
*c	Open
*d	Close

1. Clean the camshaft journal with non-residue solvent.
2. Cover the 4 oil paths of the cam journal with vinyl tape as shown in the illustration.

   HINT:

   There are 4 oil paths in the grooves of the camshaft. Plug three of the paths with pieces of rubber.

3. Open a hole at port A shown in the illustration.
4. While applying approximately 200 kPa (2.0 kgf/ cm^2 , 29 psi) of air pressure to the oil path, forcibly turn the camshaft timing gear assembly in the advance direction (counterclockwise).

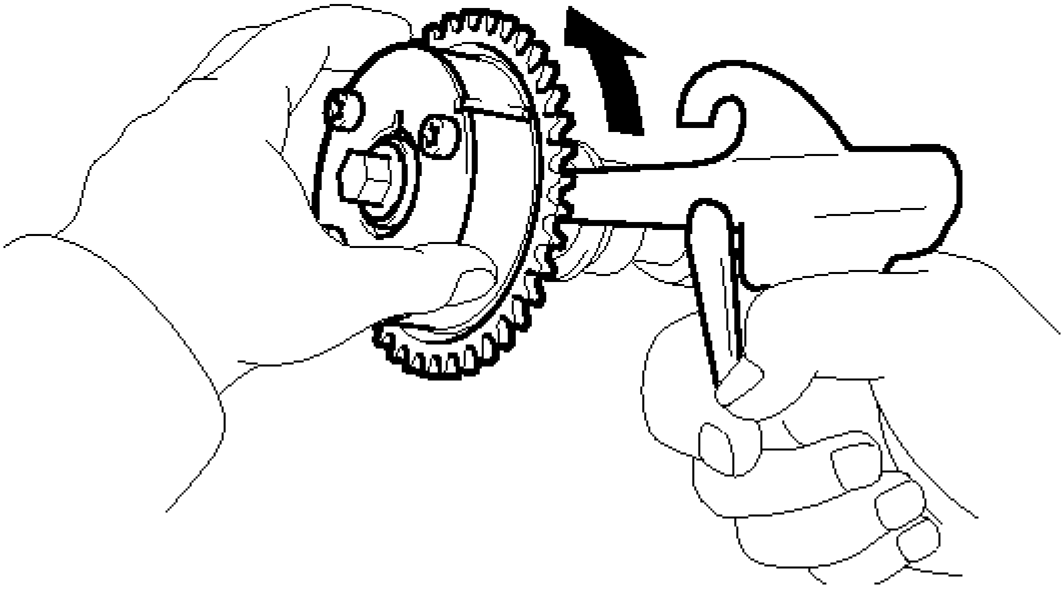

Fig. 244: Turning Camshaft Timing Gear Assembly
Courtesy of TOYOTA MOTOR SALES, U.S.A., INC.

WARNING: **Cover the paths with a piece of cloth when applying pressure to keep oil from splashing.**

NOTE: **Do not allow the camshaft timing gear assembly to lock. If it locks, release the lock pin again.**

HINT:

- The camshaft timing gear assembly may be turned in the advance direction without applying any force.
- If enough air pressure cannot be applied because of air leakage from the port, releasing the lock pin may be difficult.

f. Check for smooth rotation.
   1. Turn the camshaft timing gear within its movable range (26.5 to 28.5°) 2 or 3 times, but do not turn it to the most retarded position. Make sure that the gear turns smoothly.

NOTE: **Do not allow the camshaft timing gear assembly to lock.**

If it locks, release the lock pin again.

g. Remove the vinyl tape and rubber pieces from the camshaft.
h. Remove the bolt and camshaft timing gear.

7. **INSPECT CHAIN SUB-ASSEMBLY**
   a. Using a spring scale, pull the chain with a force of 147 N (15 kgf, 33.0 lbf) as shown in the illustration.

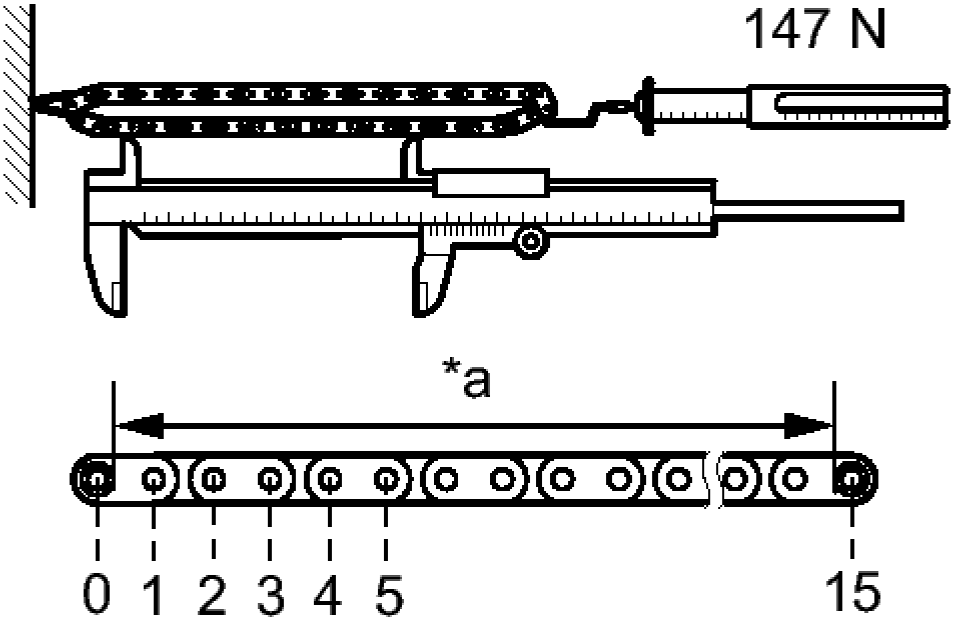

Fig. 245: Inspecting Chain Sub-Assembly
Courtesy of TOYOTA MOTOR SALES, U.S.A., INC.

TEXT IN ILLUSTRATION

*a	Measurement Area

b. Using a vernier caliper, measure the length of 15 pins.

   Maximum chain elongation

   137.7 mm (5.42 in.)

   HINT:

   Perform the measurement at 3 random places.

   If the elongation is more than the maximum, replace the chain sub-assembly.

8. **INSPECT CAMSHAFT TIMING SPROCKET**
   a. Place the chain around the sprocket.

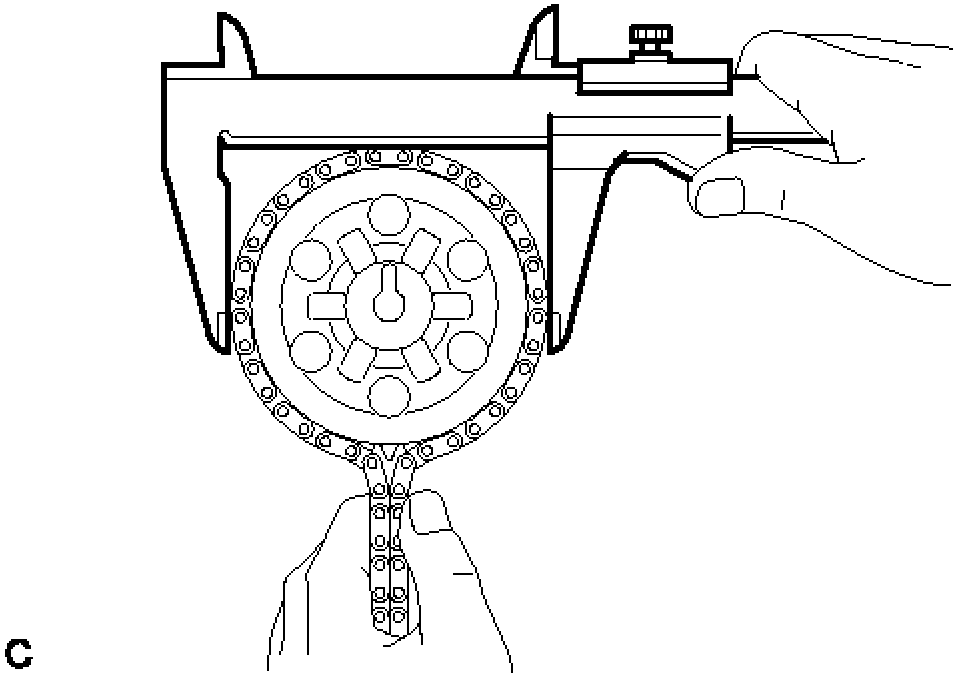

Fig. 246: Measuring Sprocket Diameter With Chain
Courtesy of TOYOTA MOTOR SALES, U.S.A., INC.

b. Using a vernier caliper, measure the sprocket diameter with the chain.

   Minimum sprocket diameter (with chain)

   115.12 mm (4.53 in.)

   If the diameter is less than the minimum, replace the chain sub-assembly and camshaft timing sprocket.

   HINT:

   The vernier caliper must contact the chain rollers for the measurement.

9. **INSPECT CRANKSHAFT TIMING SPROCKET**
   a. Place the chain around the sprocket.

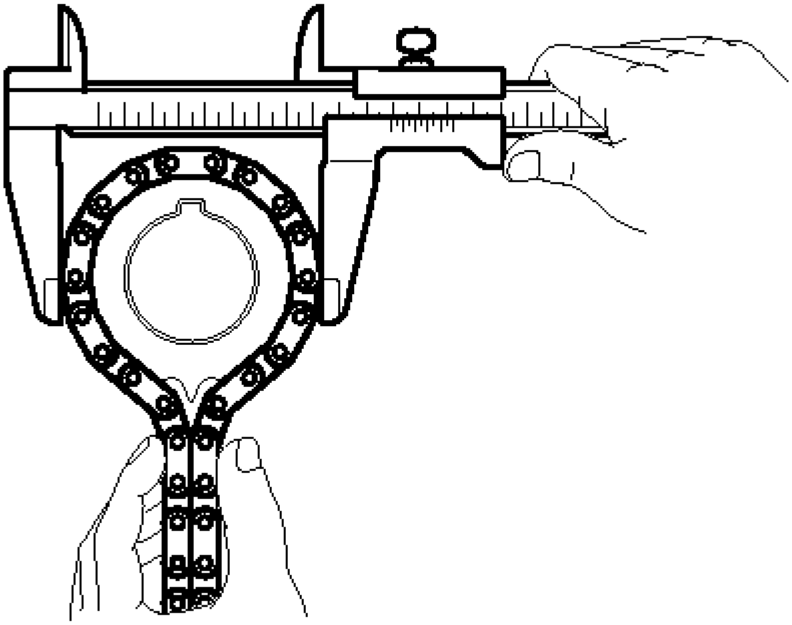

P

Fig. 247: Measuring Sprocket Diameter With Chain
Courtesy of TOYOTA MOTOR SALES, U.S.A., INC.

b. Using a vernier caliper, measure the sprocket diameter with the chain.

   Minimum sprocket diameter (with chain)

   59.94 mm (2.36 in.)

   If the diameter is less than the minimum, replace the chain sub-assembly and crankshaft timing sprocket.

   HINT:

   The vernier caliper must contact the chain rollers for the measurement.

10. **INSPECT NO. 1 CHAIN TENSIONER ASSEMBLY**
    a. Move the stopper plate counterclockwise to release the lock. Push the plunger and check that it moves smoothly.

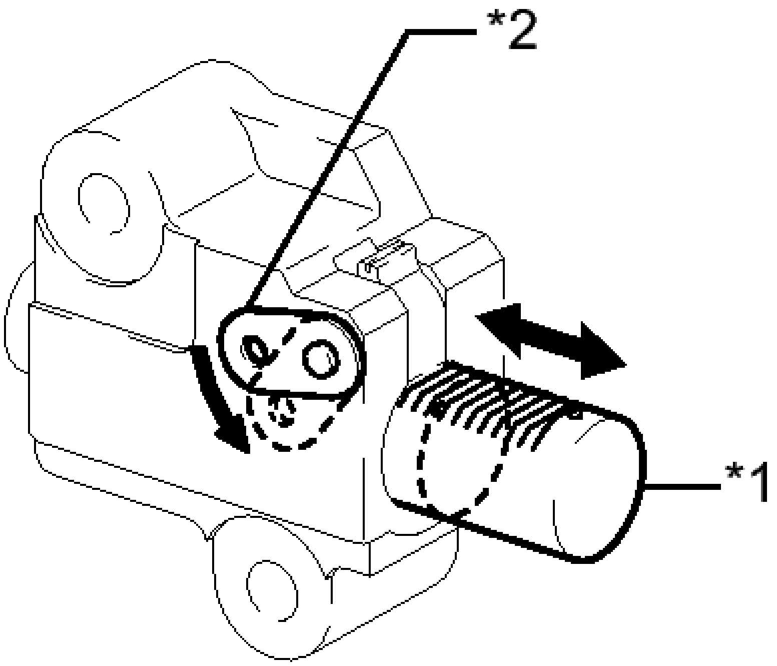

Fig. 248: Identifying Plunger And Stopper Plate
Courtesy of TOYOTA MOTOR SALES, U.S.A., INC.

TEXT IN ILLUSTRATION

*1	Plunger
*2	Stopper Plate

If necessary, replace the No. 1 chain tensioner assembly.

11. **INSPECT CHAIN TENSIONER SLIPPER**
    a. Measure the wear depth of the chain tensioner slipper.

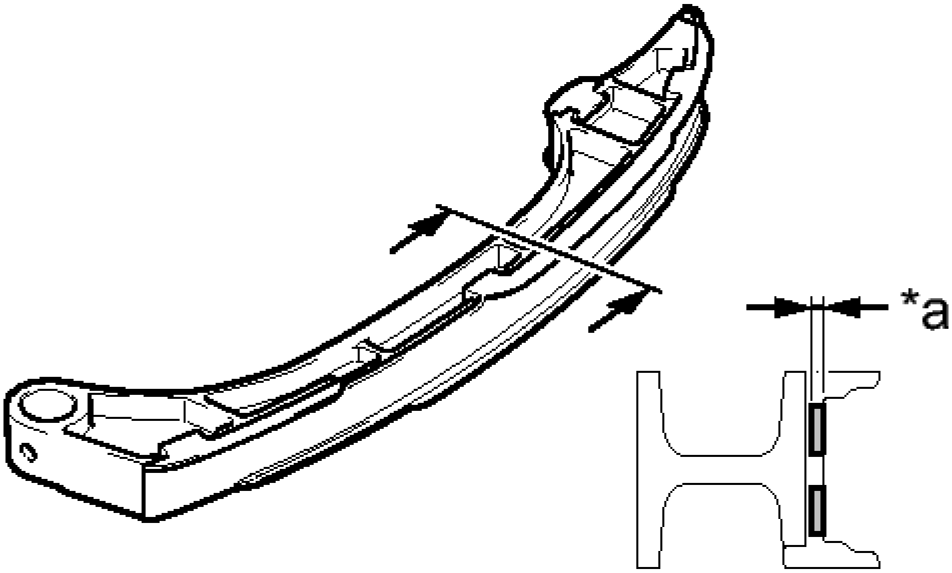

Fig. 249: Measuring Wear Depth Of Chain Tensioner Slipper
Courtesy of TOYOTA MOTOR SALES, U.S.A., INC.

TEXT IN ILLUSTRATION

*a	Depth

Maximum depth

1.0 mm (0.0394 in.)

If the depth is more than the maximum, replace the chain tensioner slipper.

12. **INSPECT NO. 1 CHAIN VIBRATION DAMPER**
    a. Measure the wear depth of the No. 1 chain vibration damper.

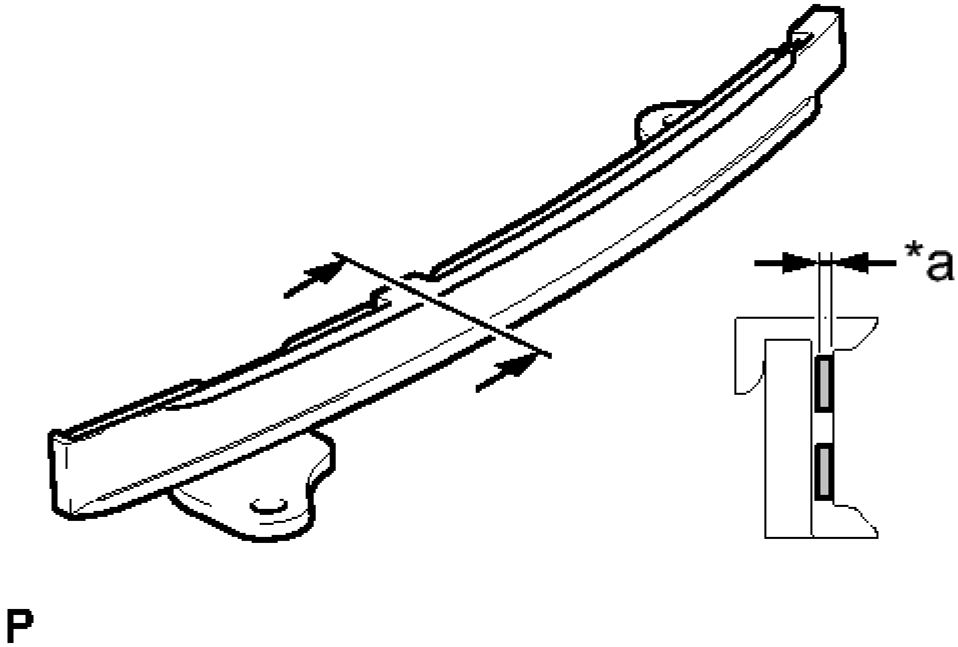

Fig. 250: Measuring Wear Depth Of No. 1 Chain Vibration Damper
Courtesy of TOYOTA MOTOR SALES, U.S.A., INC.

TEXT IN ILLUSTRATION

*a	Depth

Maximum depth

1.0 mm (0.0394 in.)

If the depth is more than the maximum, replace the No. 1 chain vibration damper.

13. **INSPECT TIMING CHAIN GUIDE**
    a. Measure the wear depth of the timing chain guide.

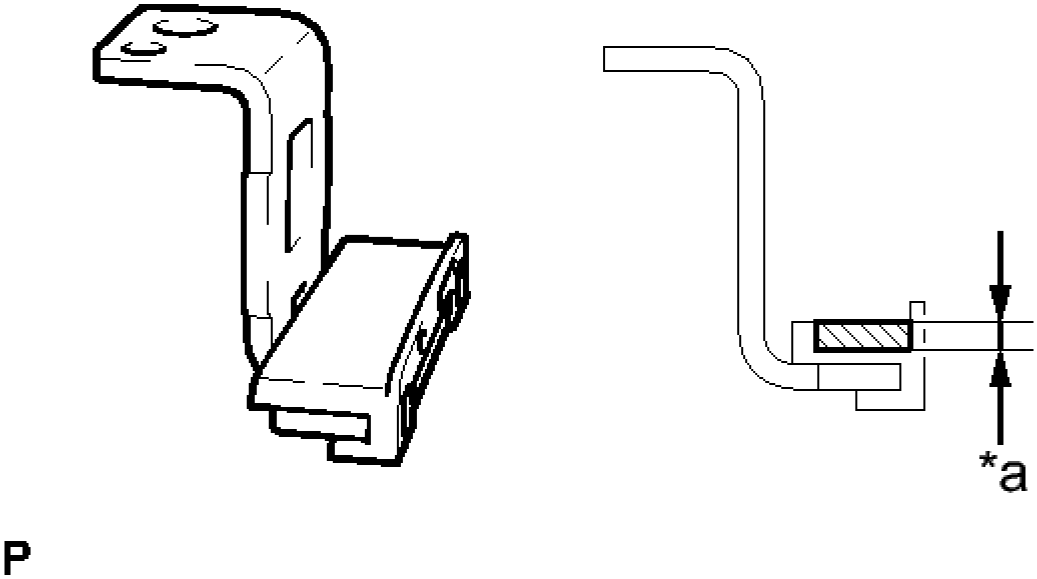

Fig. 251: Measuring Wear Depth Of Timing Chain Guide
Courtesy of TOYOTA MOTOR SALES, U.S.A., INC.

TEXT IN ILLUSTRATION

*a	Depth

Maximum depth

1.0 mm (0.0394 in.)

If the depth is more than the maximum, replace the timing chain guide.

14. **INSPECT NO. 1 BALANCE SHAFT THRUST CLEARANCE**
    a. Using a dial indicator, measure the thrust clearance while moving the No. 1 balance shaft back and forth.

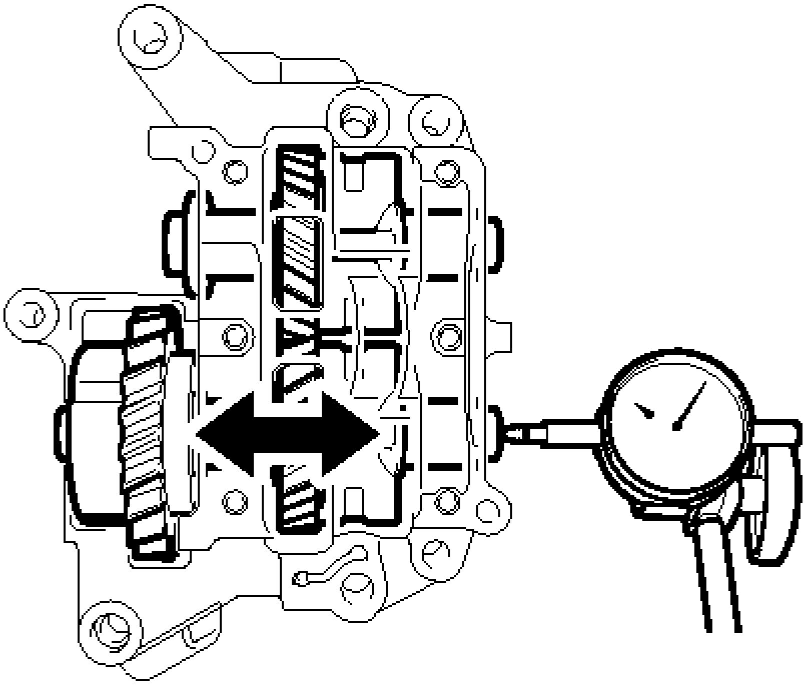

Fig. 252: Inspecting No. 1 Balance Shaft Thrust Clearance
Courtesy of TOYOTA MOTOR SALES, U.S.A., INC.

Standard thrust clearance

0.05 to 0.09 mm (0.00197 to 0.00354 in.)

Maximum thrust clearance

0.09 mm (0.00354 in.)

If the thrust clearance is more than the maximum, replace the engine balancer assembly.

15. **INSPECT NO. 2 BALANCE SHAFT THRUST CLEARANCE**
    a. Using a dial indicator, measure the thrust clearance while moving the No. 2 balance shaft back and forth.

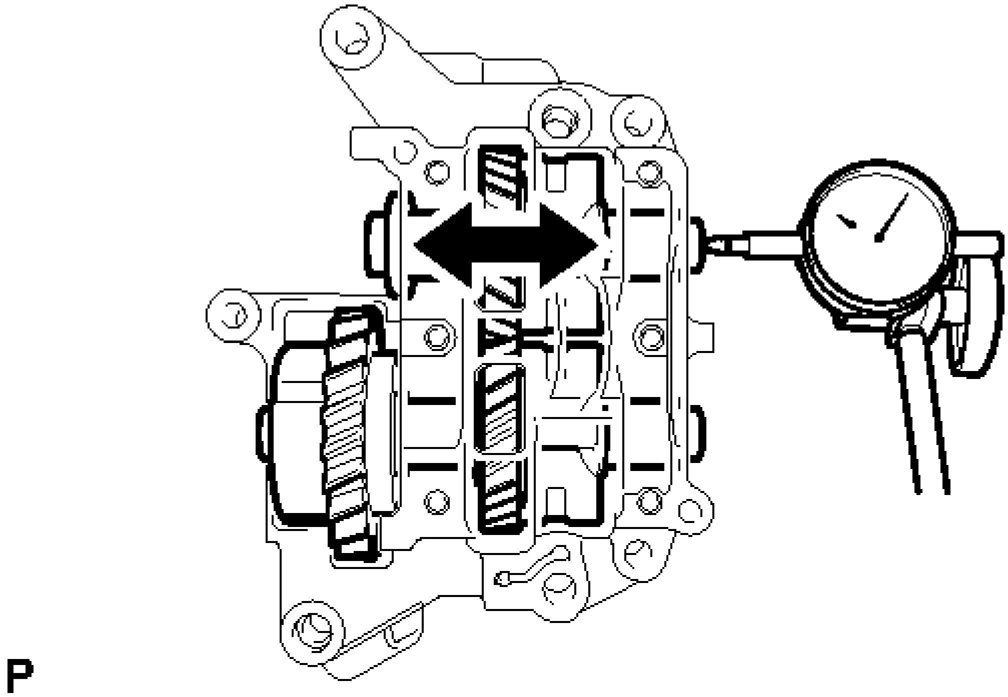

Fig. 253: Inspecting No. 2 Balance Shaft Thrust Clearance
Courtesy of TOYOTA MOTOR SALES, U.S.A., INC.

Standard thrust clearance

0.05 to 0.09 mm (0.00197 to 0.00354 in.)

Maximum thrust clearance

0.09 mm (0.00354 in.)

If the thrust clearance is more than the maximum, replace the engine balancer assembly.

16. **INSPECT BALANCE SHAFT BACKLASH**
    a. Secure the No. 2 balance shaft in place, and then using a dial indicator, measure the backlash of the No. 1 and No. 2 balance shafts as shown in the illustration.

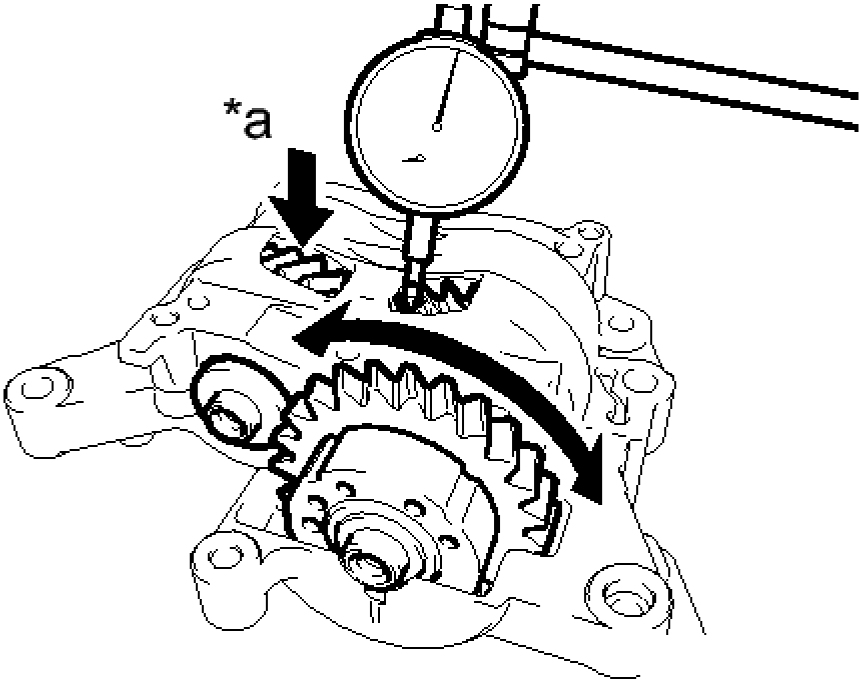

Fig. 254: Measuring No. 1 And No. 2 Balance Shafts Backlash
Courtesy of TOYOTA MOTOR SALES, U.S.A., INC.

TEXT IN ILLUSTRATION

*a	Fix

Standard backlash

0.04 to 0.17 mm (0.00157 to 0.00669 in.)

Maximum backlash

0.17 m (0.00669 in.)

NOTE: **Measure at 3 or more areas around the circumference of the No. 1 and No. 2 balance shafts.**

If the backlash is more than the maximum, replace the engine balancer assembly.

17. **INSPECT CYLINDER HEAD BOLT**
    a. Using a vernier caliper, measure the diameter of the threads at the measurement point.

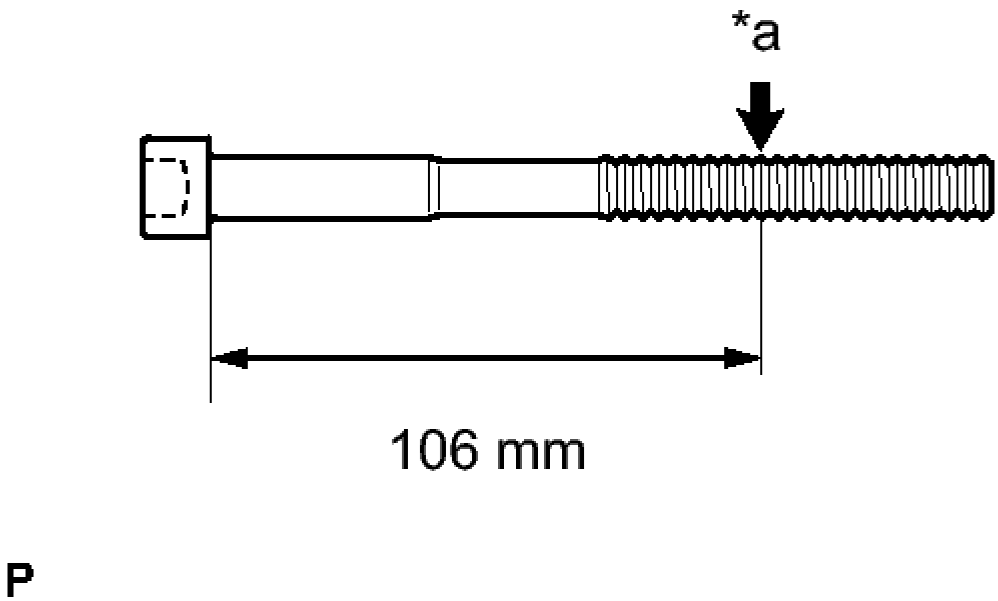

Fig. 255: Inspecting Cylinder Head Bolt
Courtesy of TOYOTA MOTOR SALES, U.S.A., INC.

TEXT IN ILLUSTRATION

*a	Measurement Point

Standard diameter

10.85 to 11.00 mm (0.427 to 0.433 in.)

Minimum diameter

10.6 mm (0.417 in.)

Measurement point (distance from the seat)

106 mm (4.17 in.)

HINT:

- If the diameter is less than the minimum, replace the cylinder head bolt. Failure to do so may lead to engine damage.
- If there is any thread deformation, replace the cylinder head bolt with a new one.

18. **INSPECT EXHAUST MANIFOLD CONVERTER SUB-ASSEMBLY**
    a. Using a precision straightedge and feeler gauge, measure the warpage of the surface that contacts

the cylinder head.

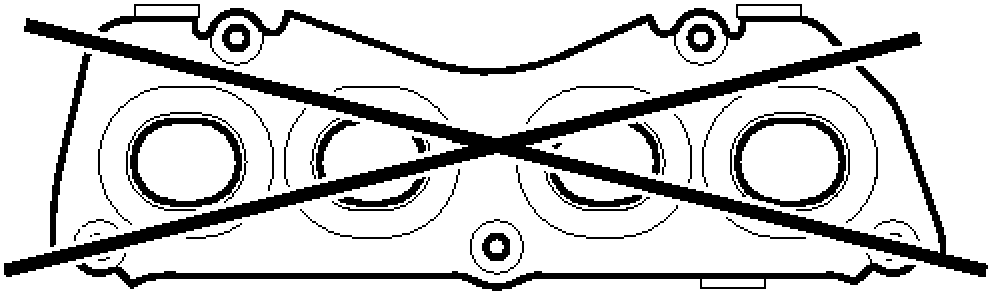

P

Fig. 256: Checking Exhaust Manifold Converter Sub-Assembly
Courtesy of TOYOTA MOTOR SALES, U.S.A., INC.

Maximum warpage

0.7 mm (0.0276 in.)

If the warpage is more than the maximum, replace the exhaust manifold converter sub-assembly.

REASSEMBLY

REASSEMBLY

1. **INSTALL RING PIN**

   NOTE: It is not necessary to remove the ring pin unless it is being replaced.

   a. Using a plastic-faced hammer, tap in 2 ring pins until they stop.

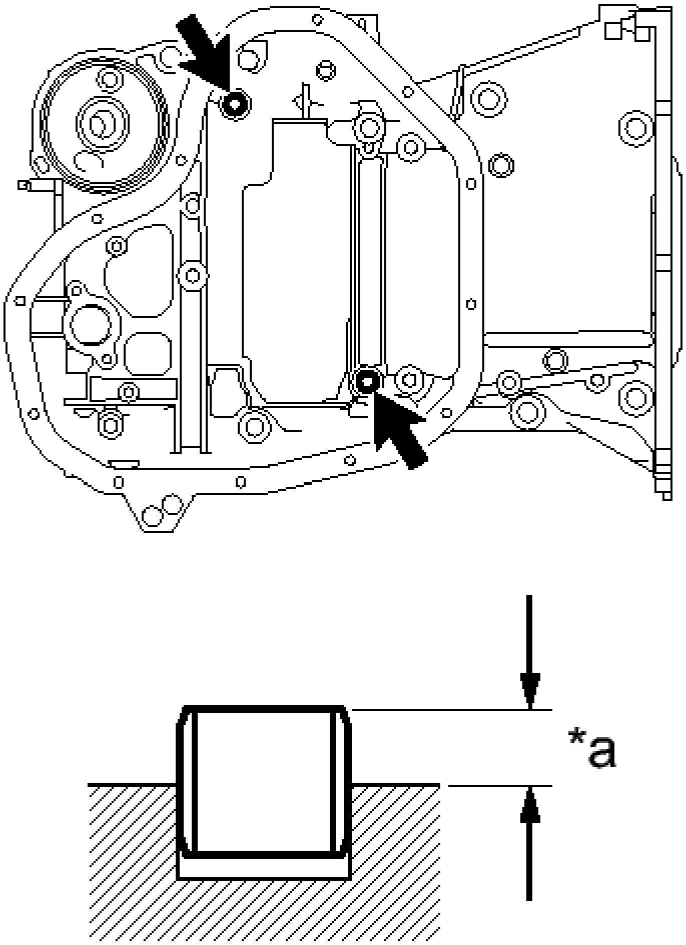

P

Fig. 257: Locating Stiffening Crankcase Ring Pins
Courtesy of TOYOTA MOTOR SALES, U.S.A., INC.

TEXT IN ILLUSTRATION

*a	Protrusion Height

Standard protrusion height

4.3 to 5.3 mm (0.169 to 0.209 in.)

2. **INSTALL ENGINE BALANCER ASSEMBLY**
    a. Check that the alignment marks of the balance shaft damper cover and balance shaft driven gear are aligned.

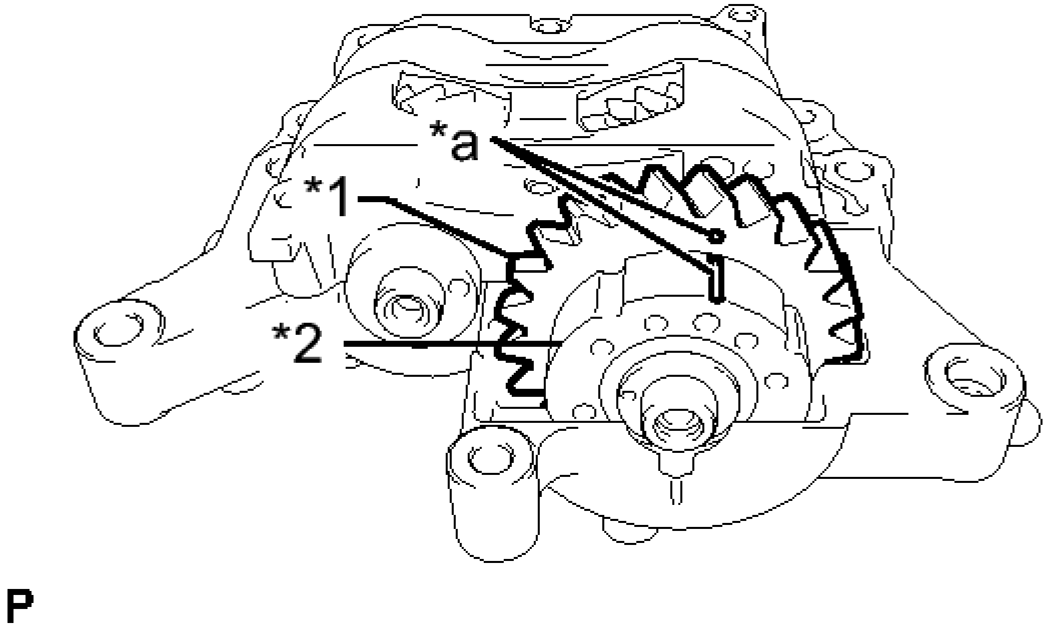

Fig. 258: Aligning Marks Of Balance Shaft Damper Cover And Balance Shaft Driven Gear
Courtesy of TOYOTA MOTOR SALES, U.S.A., INC.

TEXT IN ILLUSTRATION

*1	Driven Gear
*2	Damper Cover
*a	Alignment Mark

If the alignment marks are not aligned, realign them.

1. Place a wrench on the rear cutout part of the No. 2 balance shaft and secure the shaft in place.

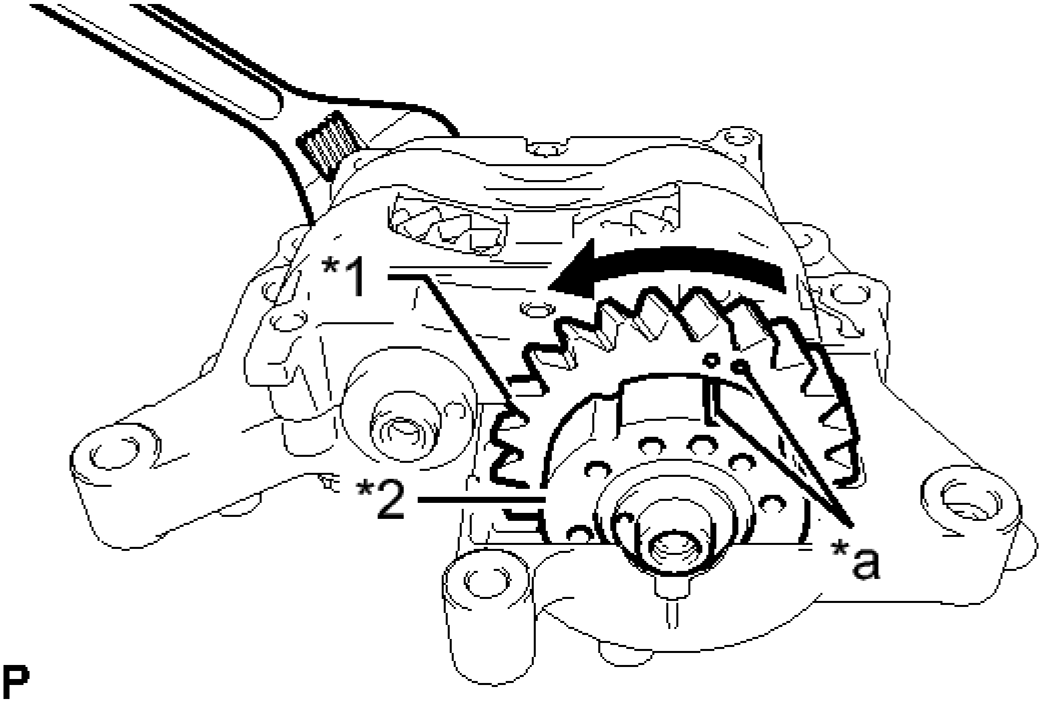

Fig. 259: Aligning Driven Gear And Damper Cover
Courtesy of TOYOTA MOTOR SALES, U.S.A., INC.

TEXT IN ILLUSTRATION

*1	Driven Gear
*2	Damper Cover
*a	Alignment Mark

2. Rotate the balance shaft driven gear of the No. 1 balance shaft counterclockwise to align the alignment mark of the balance shaft driven gear with the alignment mark of the balance shaft damper cover.

b. Install the engine balancer assembly to the stiffening crankcase with the 3 bolts, and tighten the bolts in the sequence shown in the illustration.

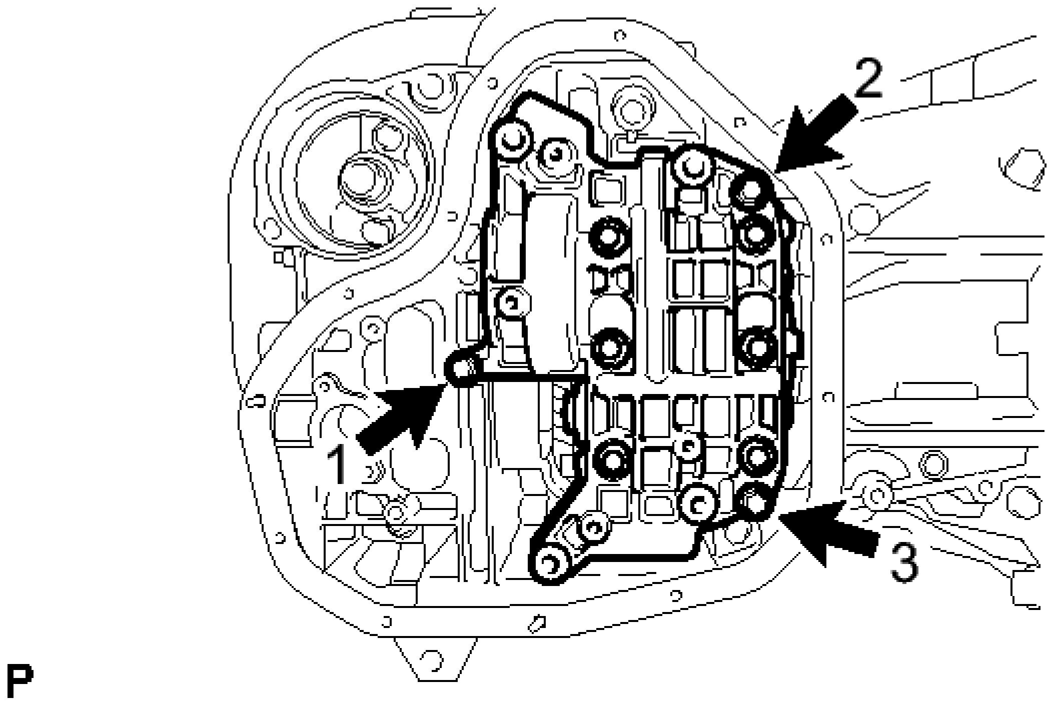

Fig. 260: Identifying Engine Balancer Bolts Tightening Sequence
Courtesy of TOYOTA MOTOR SALES, U.S.A., INC.

Torque: 24 N*m (245 kgf*cm, 18 ft.*lbf)

3. **INSTALL STUD BOLT**

NOTE: If a stud bolt is deformed or the threads are damaged, replace it.

a. Using an E5 and E8 "TORX" socket wrench, install the 3 stud bolts.

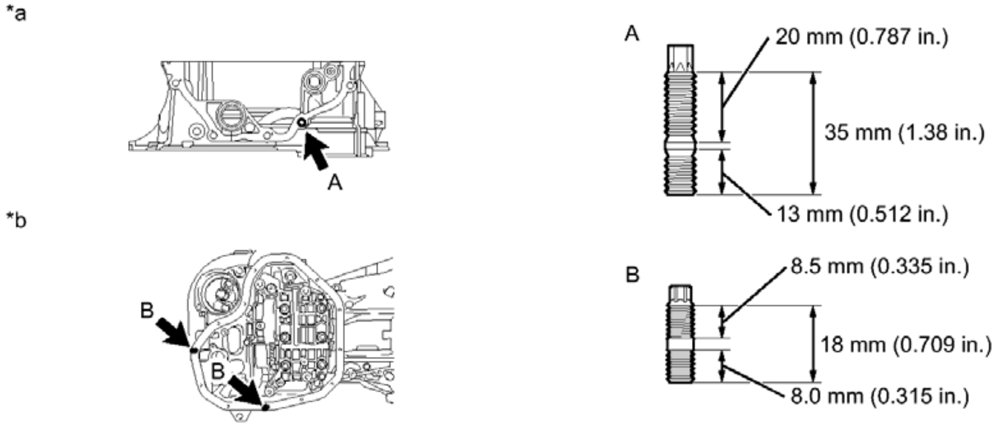
*a
A
*b
B
B
P
A
20 mm (0.787 in.)
35 mm (1.38 in.)
13 mm (0.512 in.)
B
8.5 mm (0.335 in.)
18 mm (0.709 in.)
8.0 mm (0.315 in.)

Fig. 261: Identifying Stud Bolts
Courtesy of TOYOTA MOTOR SALES, U.S.A., INC.

TEXT IN ILLUSTRATION

*a	Front Side	*b	Lower Side

for Stud Bolt A

Torque: 9.5 N*m (97 kgf*cm, 84 in.*lbf)

for Stud Bolt B

Torque: 4.0 N*m (41 kgf*cm, 35 in.*lbf)

4. **INSTALL STIFFENING CRANKCASE ASSEMBLY**
   1. Rotate the crankshaft clockwise so that the crankshaft key is at the position 90° from the bottom as shown in the illustration.

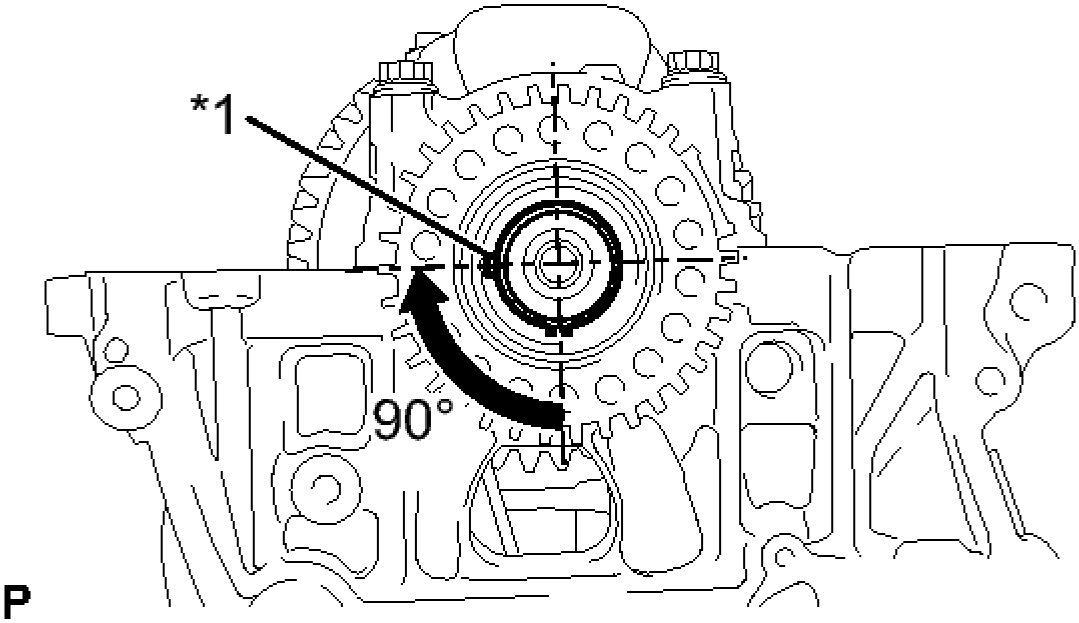

Fig. 262: Rotating Crankshaft Clockwise
Courtesy of TOYOTA MOTOR SALES, U.S.A., INC.

TEXT IN ILLUSTRATION

*1	Key

   2. Apply seal packing in a continuous line as shown in the illustration.

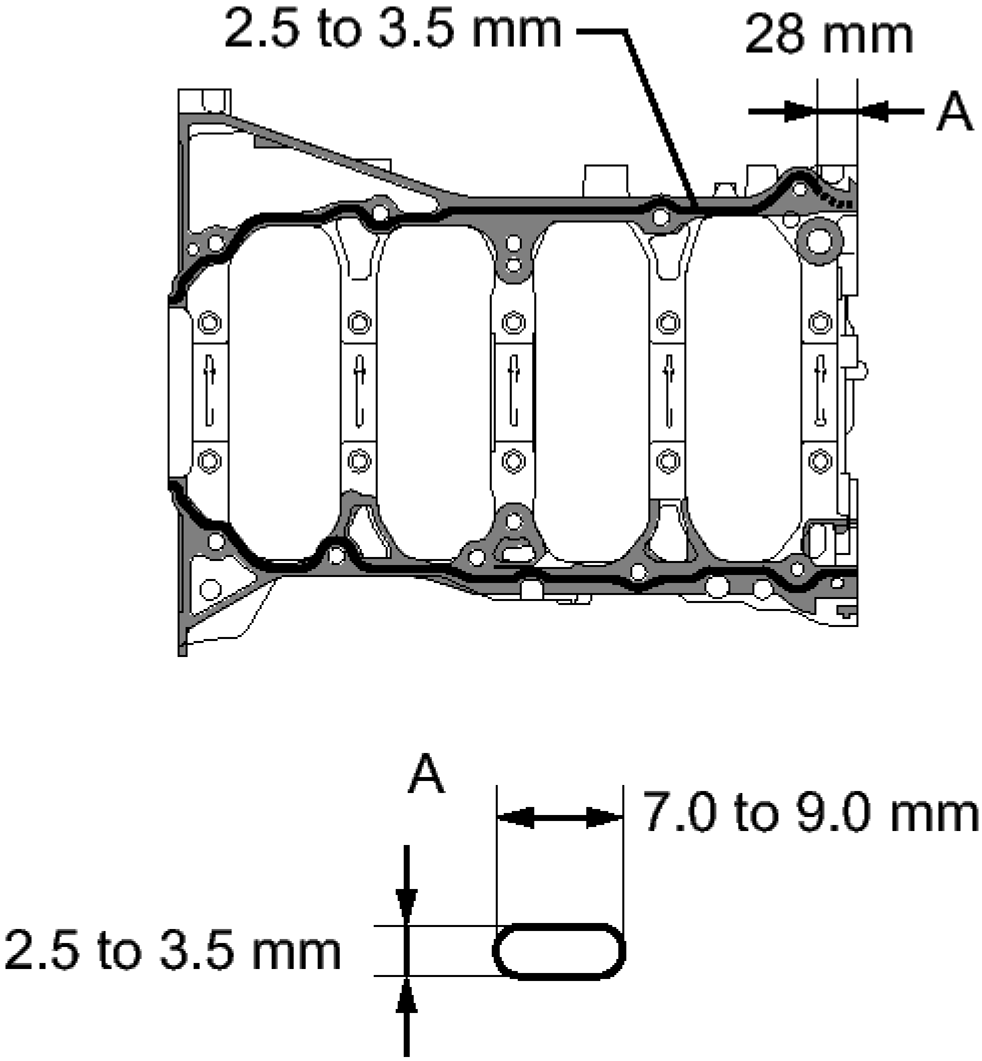
2.5 to 3.5 mm
28 mm
A
A
7.0 to 9.0 mm
2.5 to 3.5 mm

Fig. 263: Applying Seal Packing
Courtesy of TOYOTA MOTOR SALES, U.S.A., INC.

TEXT IN ILLUSTRATION

	Stiffening Crankcase
	Cylinder Block

Seal packing

Toyota Genuine Seal Packing Black, Three Bond 1207B or equivalent

Standard Seal Dimension

Area	Specified Condition
Continuous Line	2.5 to 3.5 mm (0.0984 to 0.138 in.)
Dashed Line	7.0 to 9.0 mm (0.276 to 0.354 in.) wide and 2.5 to 3.5 mm (0.0984 to 0.138 in.) thick

Application Length A

28 mm (1.10 in.)

NOTE:

- **Remove any oil from the contact surface.**
- **Install the oil pan within 3 minutes after applying seal packing.**
- **Do not apply oil for at least 2 hours after the installation.**

c. Check that the rear cutout parts are as shown in the illustration.

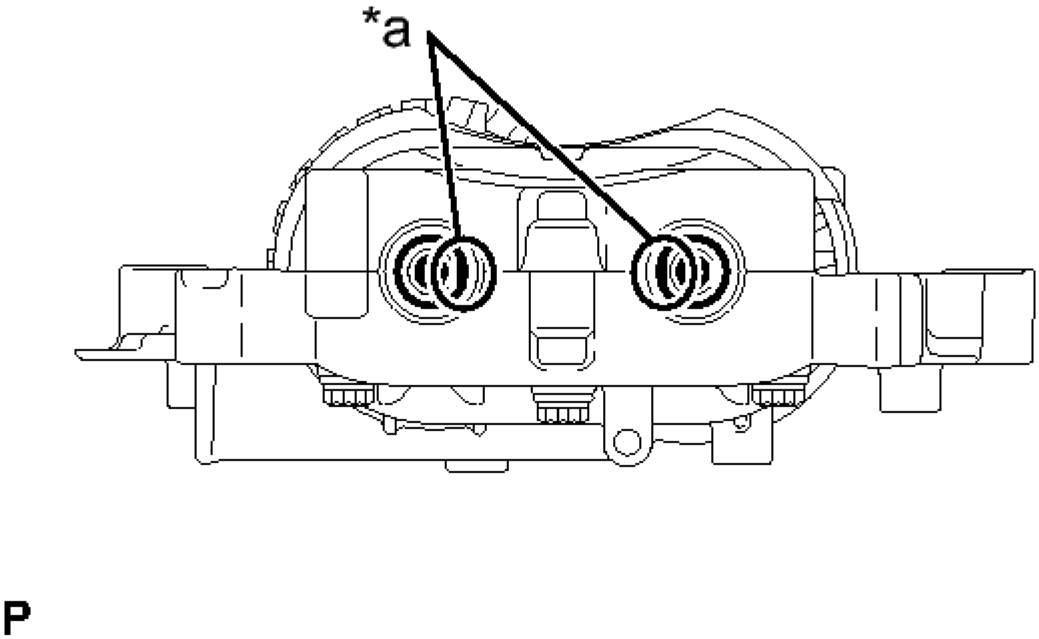

Fig. 264: Identifying Stiffening Crankcase Rear Cutout Parts
Courtesy of TOYOTA MOTOR SALES, U.S.A., INC.

TEXT IN ILLUSTRATION

*a	Cutout

d. Clean the bolts and their installation holes.
e. Apply adhesive to 3 or more threads of the ends of bolts A.

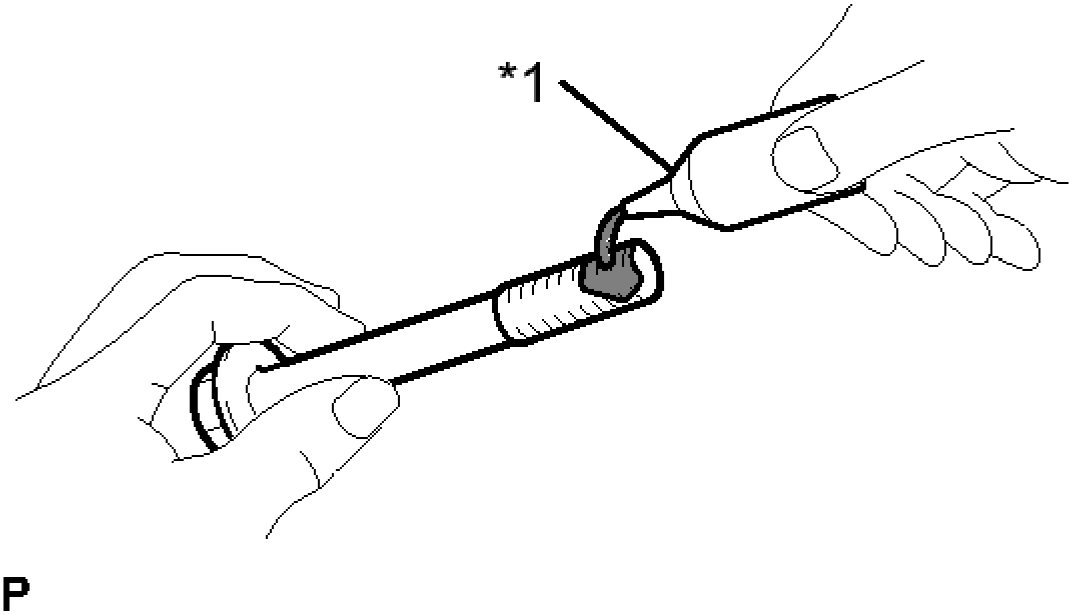

Fig. 265: Applying Adhesive To Bolt Threads
Courtesy of TOYOTA MOTOR SALES, U.S.A., INC.

Adhesive

Toyota Genuine Adhesive 1344, Three Bond 1344 or equivalent

TEXT IN ILLUSTRATION

*1	Adhesive

f. Temporarily install the stiffening crankcase with the 11 bolts.

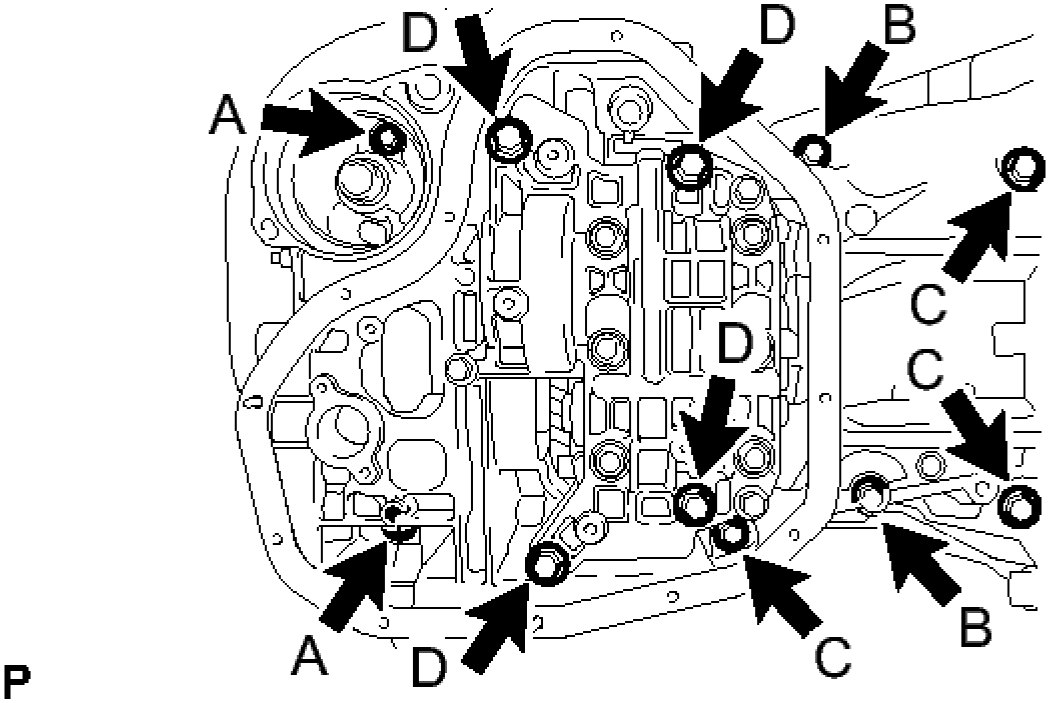

Fig. 266: Identifying Stiffening Crankcase Bolts Tightening Sequence
Courtesy of TOYOTA MOTOR SALES, U.S.A., INC.

Bolt Length

Item	Length
Bolt A	65 mm (2.56 in.)
Bolt B	35 mm (1.38 in.)
Bolt C	125 mm (4.92 in.)
Bolt D	165 mm (6.50 in.)

HINT:

Apply adhesive to bolts A before installation.

g. Tighten the 11 bolts in the sequence shown in the illustration to install the stiffening crankcase

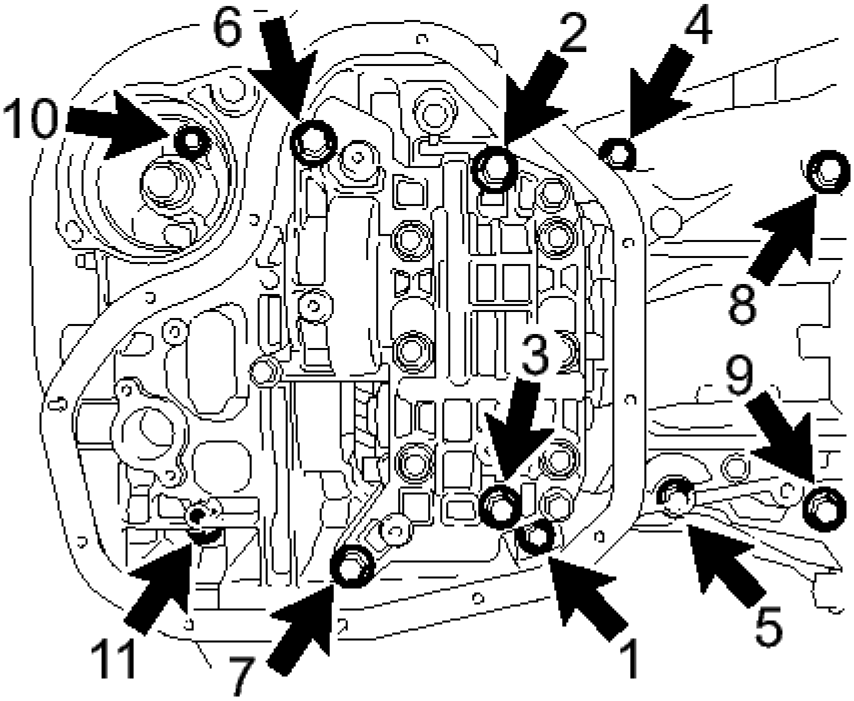

P

Fig. 267: Identifying Stiffening Crankcase Bolts Tightening Sequence
Courtesy of TOYOTA MOTOR SALES, U.S.A., INC.

for Bolt A

Torque: 24 N*m (245 kgf*cm, 18 ft.*lbf)

except Bolt A

Torque: 43 N*m (438 kgf*cm, 32 ft.*lbf)

5. **INSTALL NO. 1 OIL PAN BAFFLE PLATE**
   a. Install the No. 1 oil pan baffle plate and uniformly tighten the 5 bolts in several steps, in the sequence shown in the illustration.

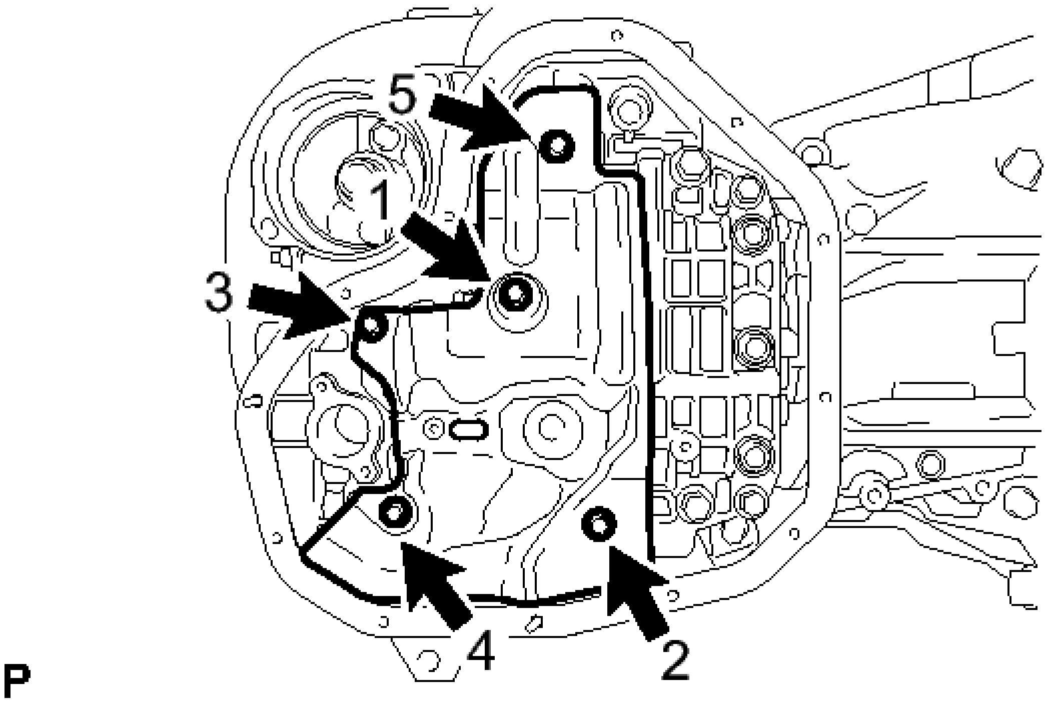

Fig. 268: Identifying No. 1 Oil Pan Baffle Plate Bolts Tightening Sequence
Courtesy of TOYOTA MOTOR SALES, U.S.A., INC.

Torque: 10 N*m (102 kgf*cm, 7 ft.*lbf)

6. **INSTALL OIL STRAINER SUB-ASSEMBLY**
   a. Apply a light coat of engine oil to a new gasket.
   b. Align the protrusion of the gasket with the cutout of the oil strainer, and install the gasket to the oil strainer sub-assembly.

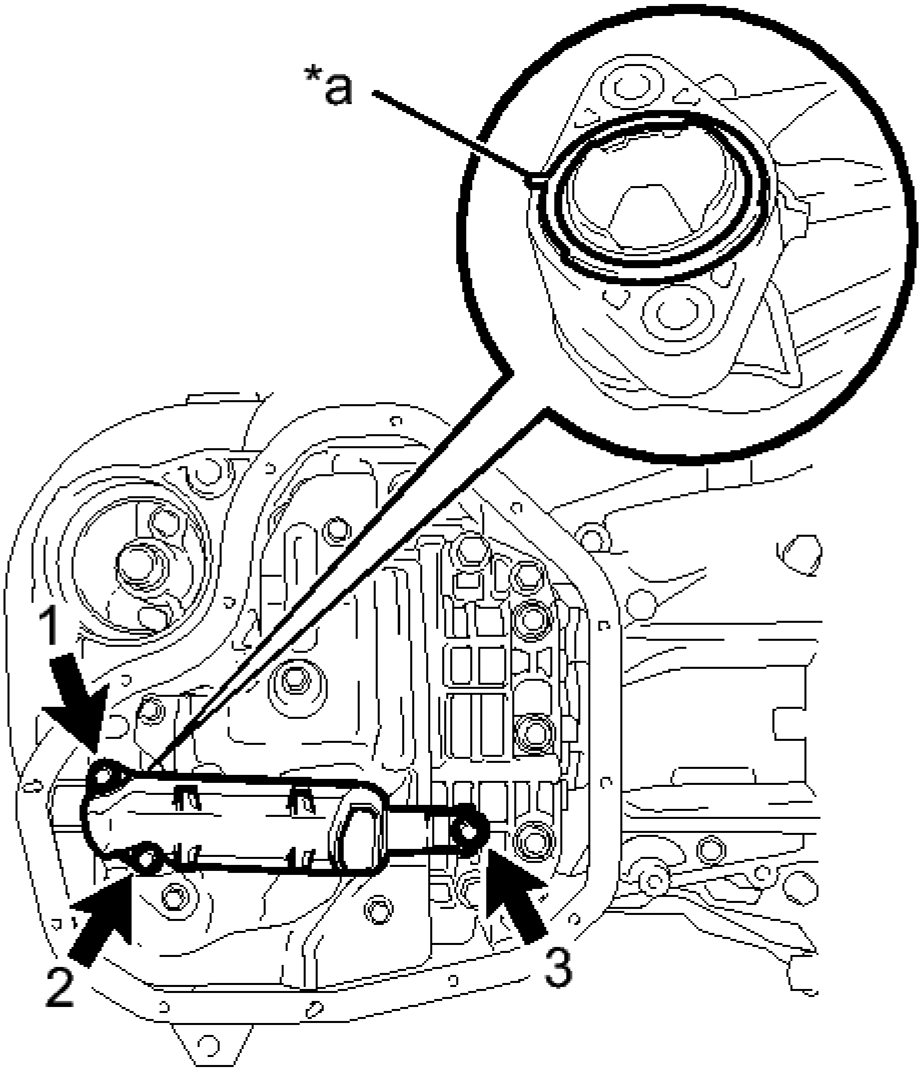

P

Fig. 269: Identifying 3 Oil Strainer Bolts With Tightening Sequence & Aligning Gasket Protrusion To Oil Strainer Cutout
Courtesy of TOYOTA MOTOR SALES, U.S.A., INC.

TEXT IN ILLUSTRATION

*a	Protrusion

c. Install the oil strainer sub-assembly with the 3 bolts in several steps, in the sequence shown in the illustration.

   Torque: 9.0 N*m (92 kgf*cm, 80 in.*lbf)

7. **INSTALL OIL PAN SUB-ASSEMBLY**
   a. Apply seal packing in a continuous line as shown in the illustration.

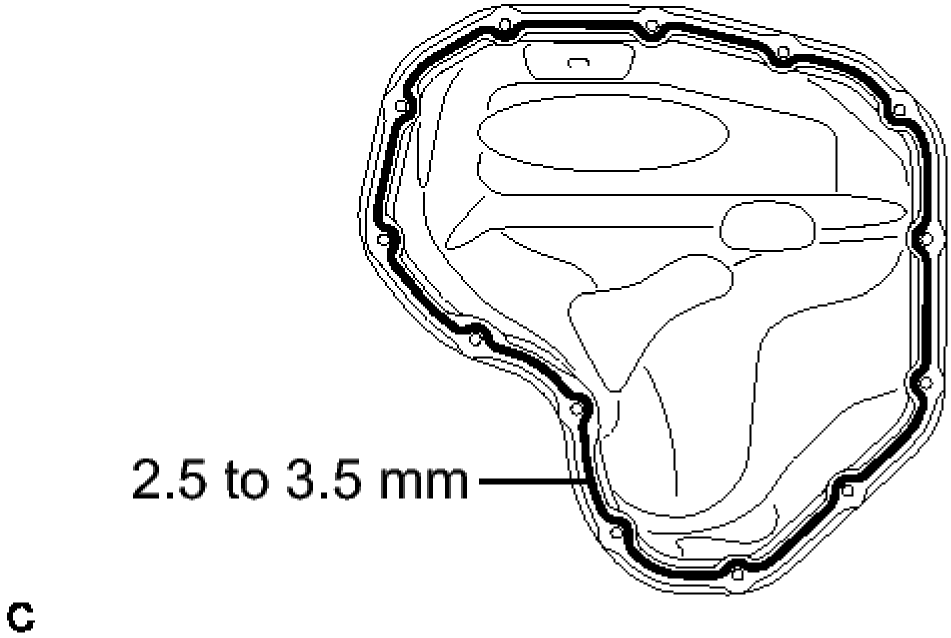

Fig. 270: Applying Seal Packing
Courtesy of TOYOTA MOTOR SALES, U.S.A., INC.

Seal packing

Toyota Genuine Seal Packing Black, Three Bond 1207B or equivalent

Standard seal diameter

2.5 to 3.5 mm (0.0984 to 0.138 in.)

NOTE:

- **Remove any oil from the contact surface.**
- **Install the oil pan within 3 minutes and tighten the bolts and nuts within 10 minutes after applying seal packing.**
- **Do not apply oil for at least 2 hours after the installation.**

b. Install the oil pan with the 11 bolts and 2 nuts in several steps, in the sequence shown in the illustration.

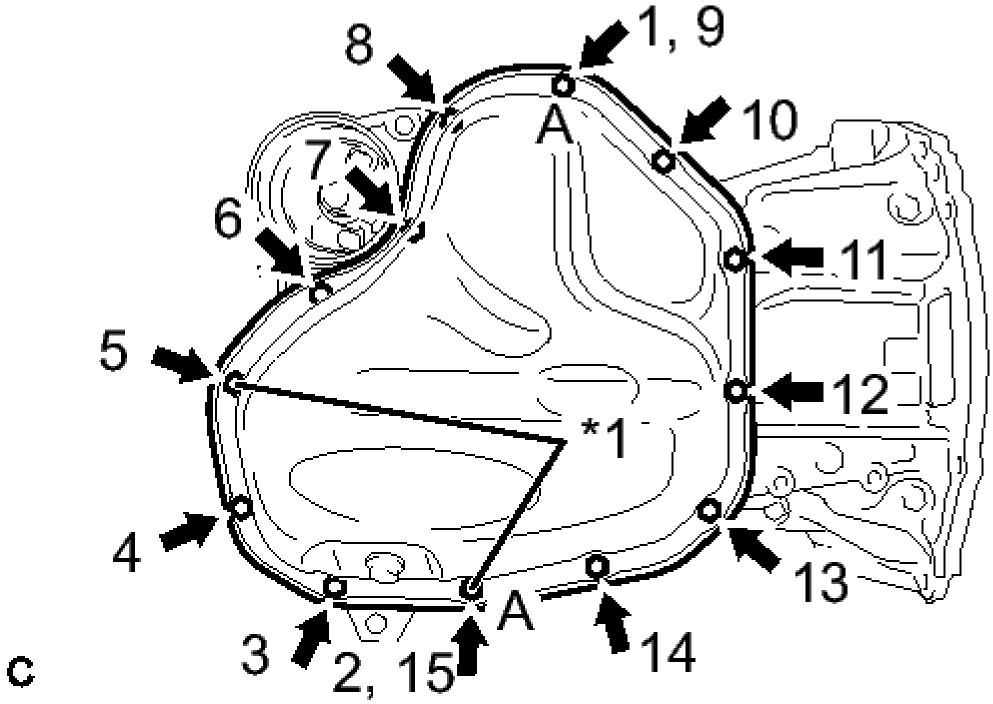

Fig. 271: Installing Oil Pan Bolts And Nuts In Sequence
Courtesy of TOYOTA MOTOR SALES, U.S.A., INC.

Torque: 10 N*m (102 kgf*cm, 7 ft.*lbf)

TEXT IN ILLUSTRATION

*1	Nut

HINT:

Bolt A and nut A are tightened twice.

8. **INSTALL OIL PAN DRAIN PLUG**
    1. Install a new gasket and oil pan drain plug to the oil pan sub-assembly.

        Torque: 40 N*m (408 kgf*cm, 30 ft.*lbf)
9. **INSTALL OIL FILTER CAP ASSEMBLY** . Refer to **REPLACEMENT - Step 3**
10. **INSTALL REAR ENGINE OIL SEAL** See step 1
11. **INSTALL CYLINDER BLOCK WATER JACKET SPACER**
    1. Install the cylinder block water jacket spacer to the cylinder block.

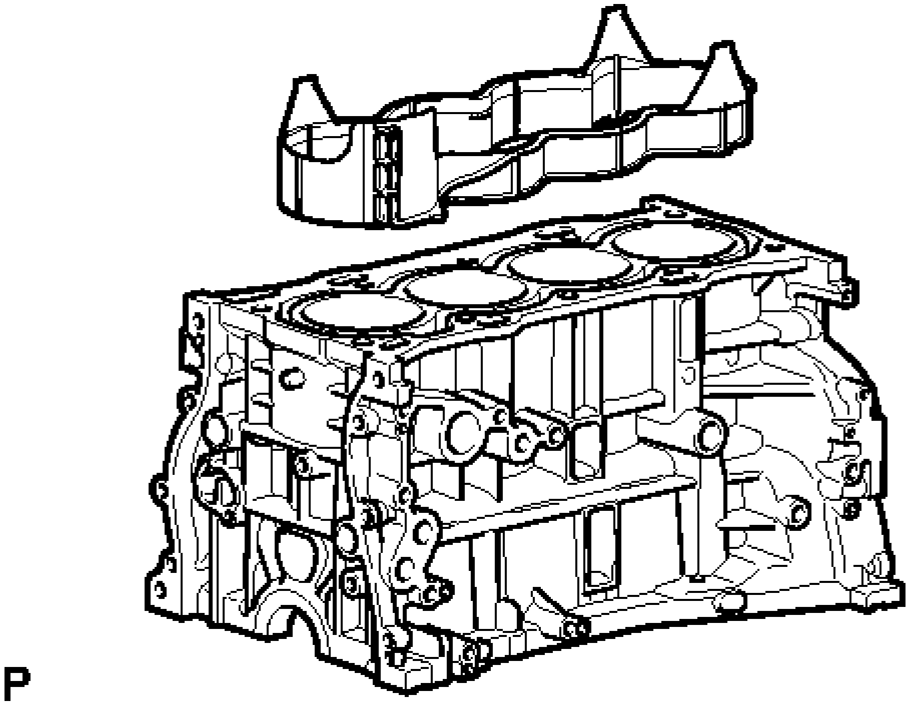

Fig. 272: Identifying Cylinder Block Water Jacket Spacer
Courtesy of TOYOTA MOTOR SALES, U.S.A., INC.

12. **INSTALL CYLINDER HEAD GASKET** See step 3
13. **INSTALL CYLINDER HEAD SUB-ASSEMBLY** See step 4
14. **INSTALL CAMSHAFT BEARING CAP SETTING RING PIN**

NOTE: It is not necessary to remove the ring pin unless it is being replaced.

a. Using a plastic-faced hammer, tap in 10 camshaft bearing cap setting ring pins to the camshaft housing sub-assembly.

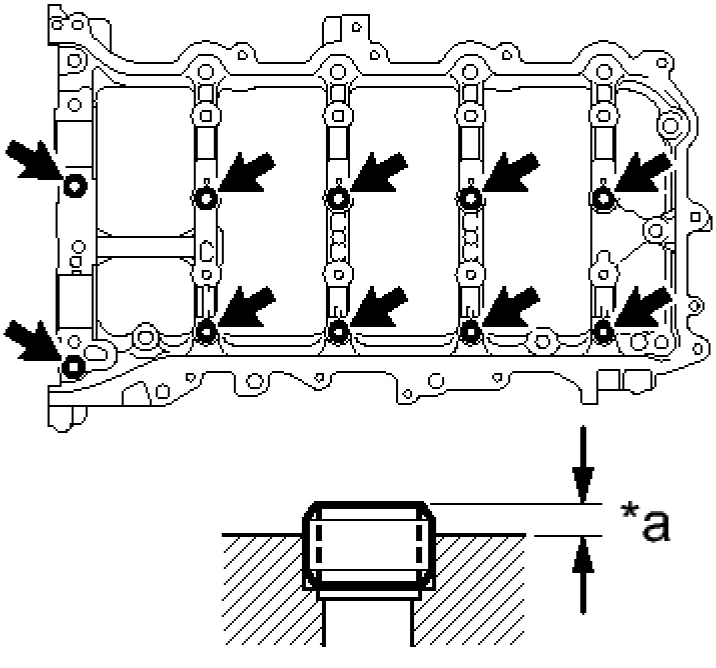

Fig. 273: Locating Camshaft Bearing Ring Pins
Courtesy of TOYOTA MOTOR SALES, U.S.A., INC.

TEXT IN ILLUSTRATION

*a	Protrusion Height

Standard protrusion height

2.7 to 3.3 mm (0.106 to 0.130 in.)

15. **INSTALL STRAIGHT PIN**

NOTE: It is not necessary to remove the straight pin unless it is being replaced.

a. Using a plastic-faced hammer, tap in 2 straight pins to the camshaft housing sub-assembly.

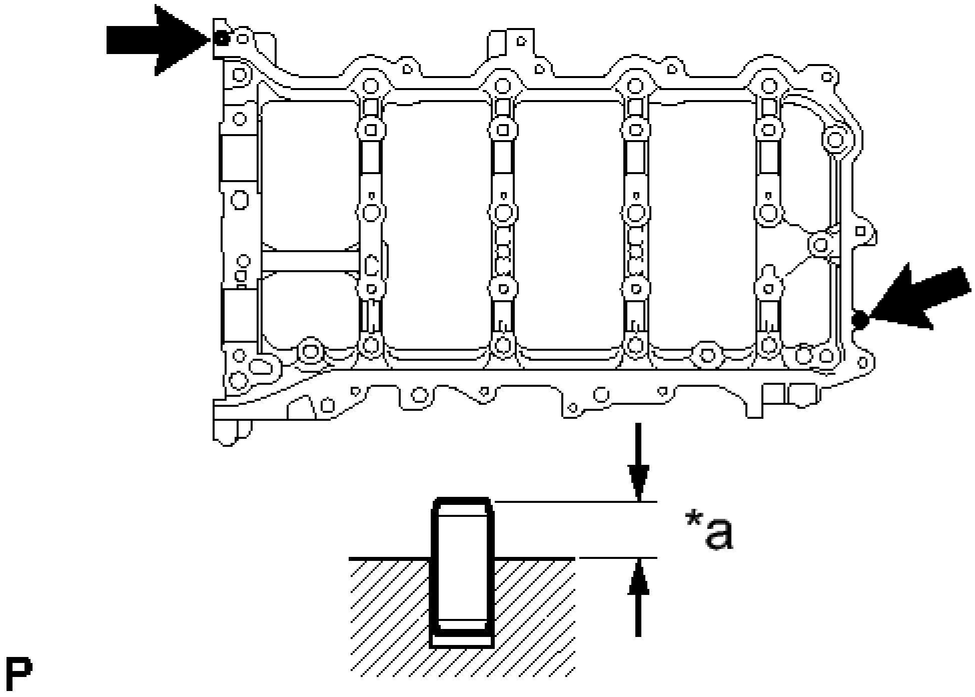

Fig. 274: Locating Camshaft Housing Straight Pins
Courtesy of TOYOTA MOTOR SALES, U.S.A., INC.

TEXT IN ILLUSTRATION

*a	Protrusion Height

Standard protrusion height

5.0 to 7.0 mm (0.197 to 0.276 in.)

16. **INSTALL STUD BOLT**

NOTE: **If a stud bolt is deformed or the threads are damaged, replace it.**

a. When reusing the stud bolt.
    1. Apply adhesive to threads of the stud bolt.

       Adhesive

       Toyota Genuine Adhesive 1324, Three Bond 1324 or equivalent

b. Using an E8 "TORX" socket wrench, install the camshaft housing stud bolt.

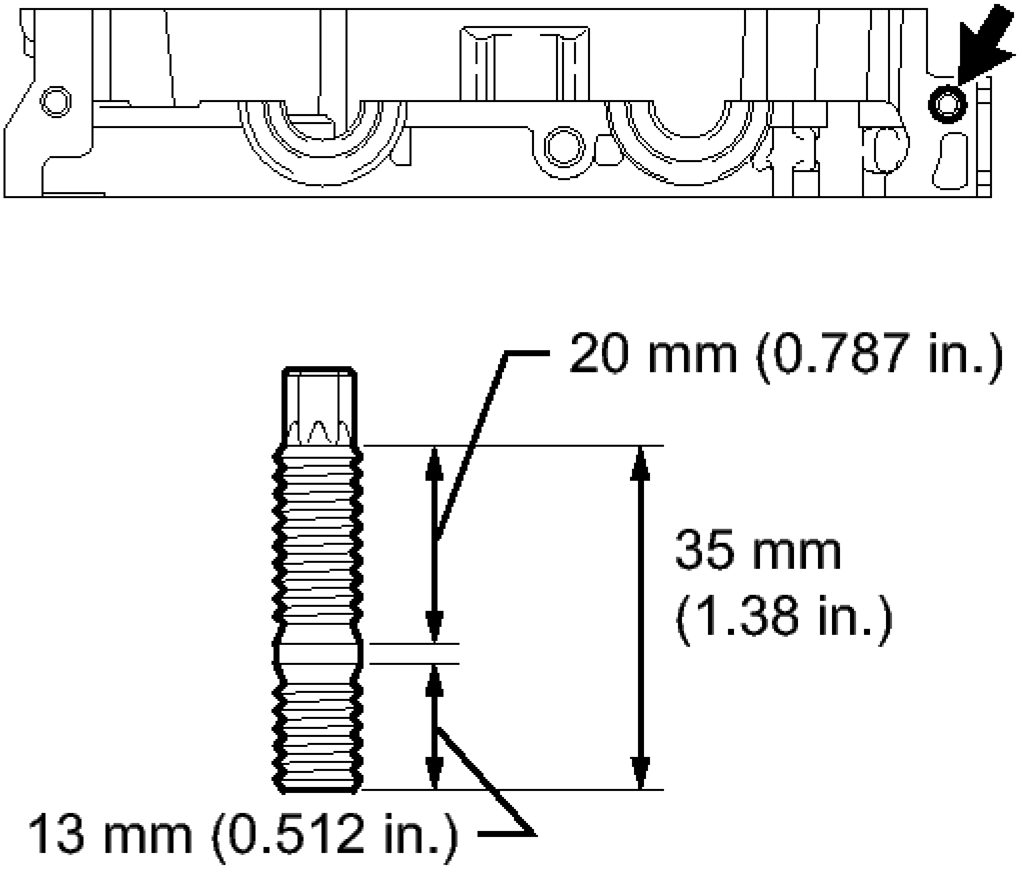
20 mm (0.787 in.)
35 mm (1.38 in.)
13 mm (0.512 in.)
P

Fig. 275: Identifying Camshaft Housing Stud Bolt Dimensions
Courtesy of TOYOTA MOTOR SALES, U.S.A., INC.

Torque: 9.0 N*m (92 kgf*cm, 80 in.*lbf)

17. **INSTALL NO. 1 CAMSHAFT BEARING**
    a. Clean the No. 1 camshaft bearing.
    b. Install the No. 1 camshaft bearing to the No. 1 camshaft bearing cap.

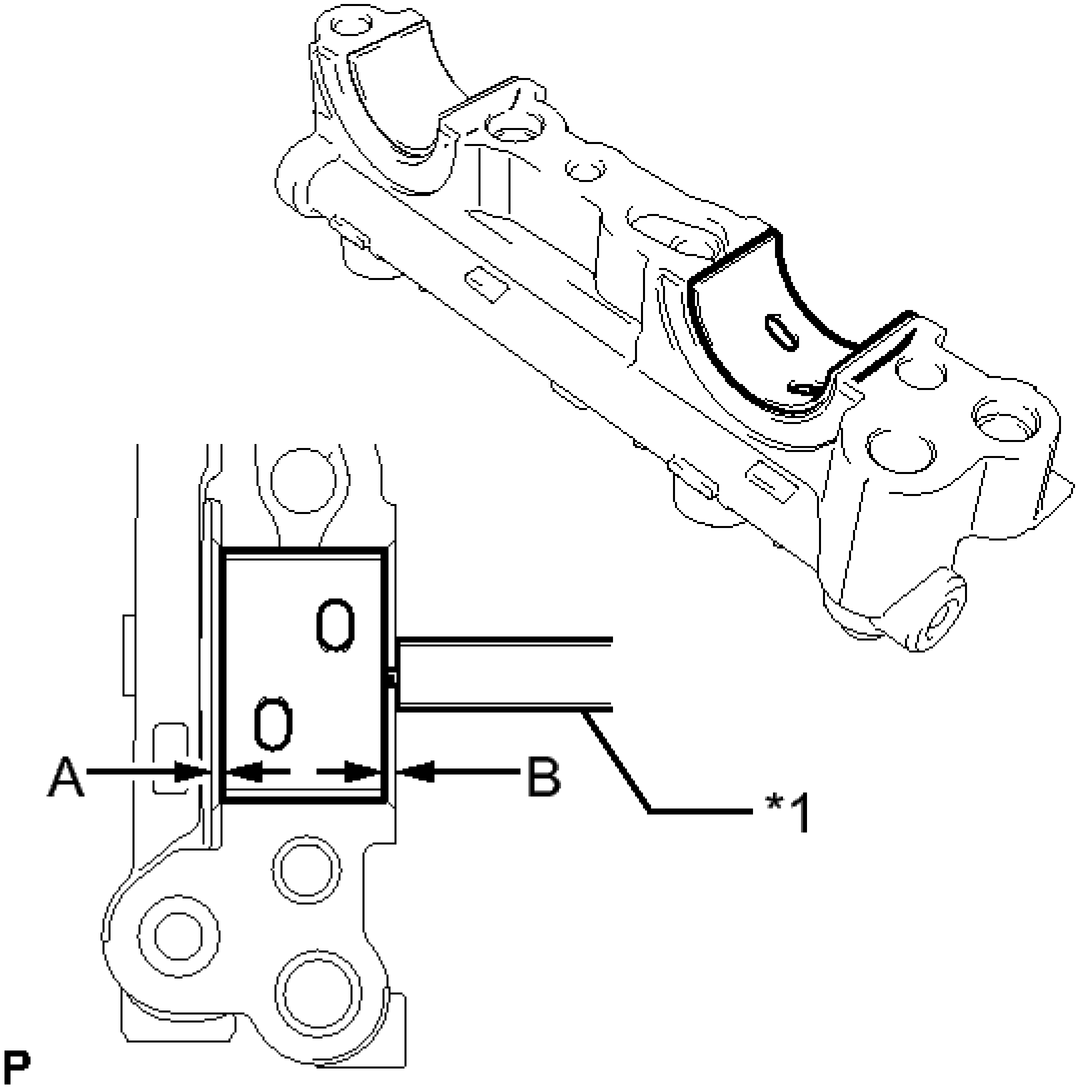

Fig. 276: Measuring Distance Between No. 1 Camshaft Bearing Cap Edge And No. 1 Camshaft Bearing Edge
Courtesy of TOYOTA MOTOR SALES, U.S.A., INC.

TEXT IN ILLUSTRATION

*1	Vernier Caliper

c. Using a vernier caliper, measure the distance between the No. 1 camshaft bearing cap edge and the No. 1 camshaft bearing edge.

Standard dimension A - B or B - A

0 to 0.7 mm (0 to 0.0276 in.)

18. **INSTALL NO. 2 CAMSHAFT BEARING**

a. Clean the No. 2 camshaft bearing.
b. Install the No. 2 camshaft bearing to the camshaft housing sub-assembly.

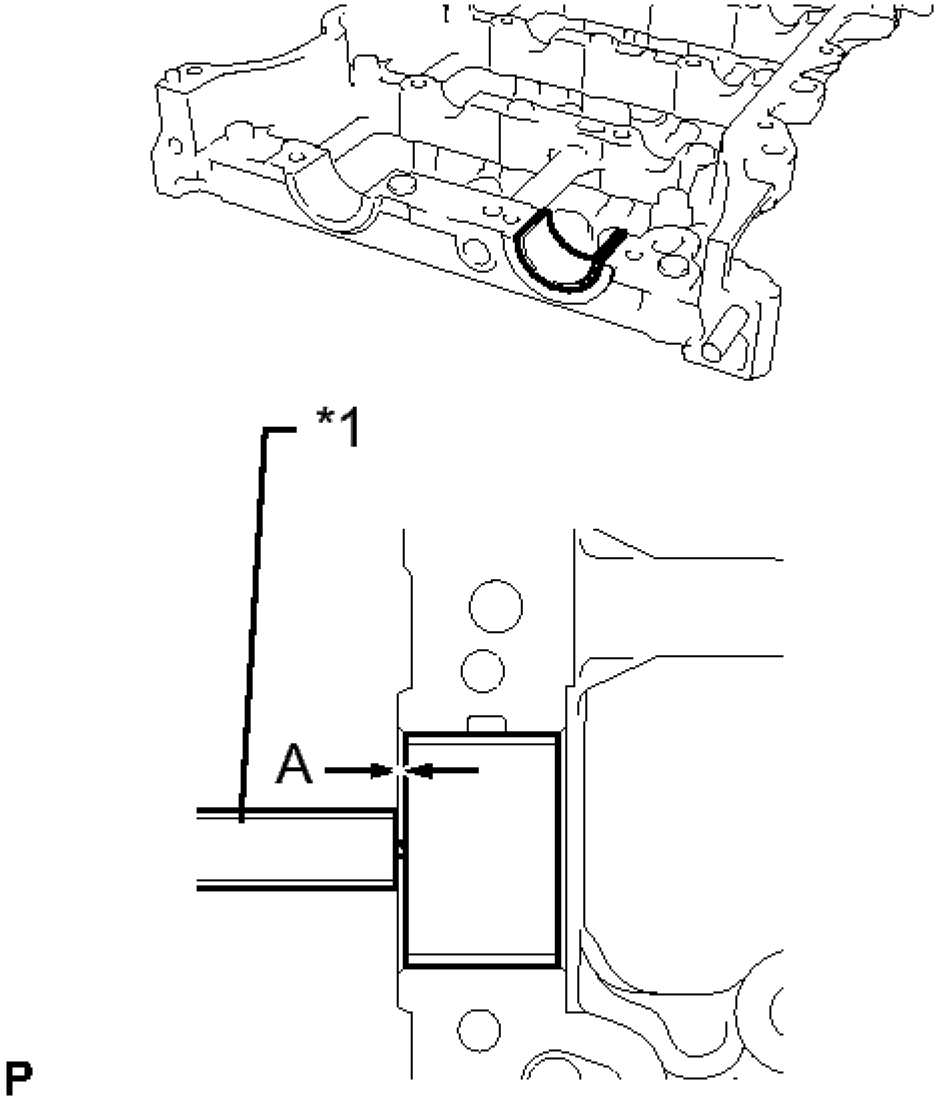

Fig. 277: Measuring No. 2 Camshaft Bearing
Courtesy of TOYOTA MOTOR SALES, U.S.A., INC.

TEXT IN ILLUSTRATION

*1	Vernier Caliper

c. Using a vernier caliper, measure the distance between the camshaft housing edge and the No. 2 camshaft bearing edge.

Standard distance

1.15 to 1.85 mm (0.0453 to 0.0728 in.)

19. **INSTALL OIL CONTROL VALVE FILTER**
    a. Install the oil control valve filter to the No. 1 camshaft bearing cap.

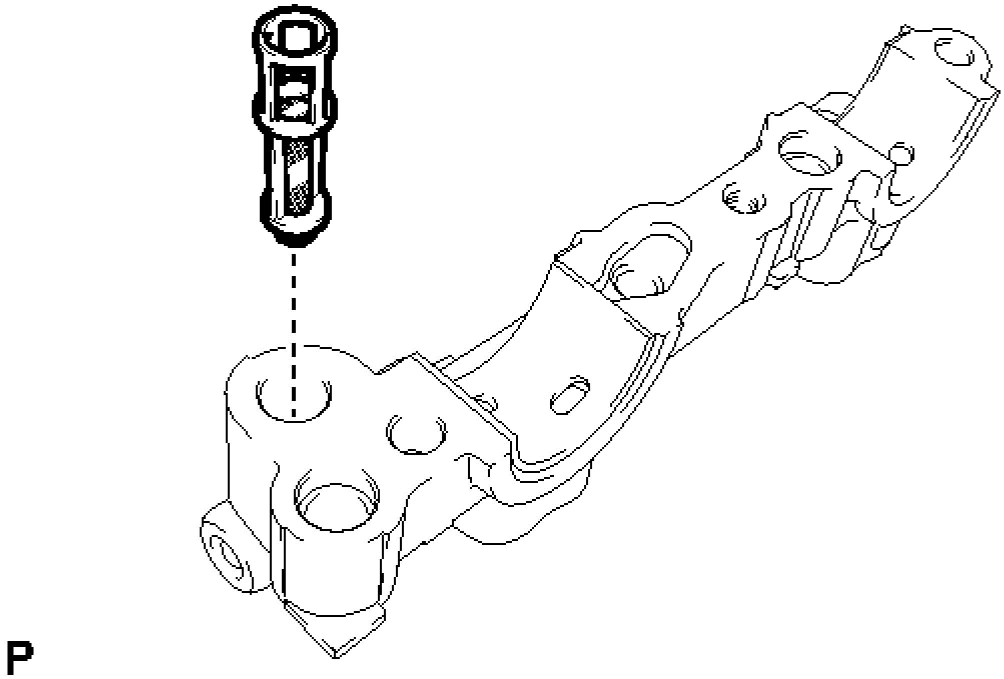

Fig. 278: Identifying Oil Control Valve Filter
Courtesy of TOYOTA MOTOR SALES, U.S.A., INC.

20. **INSTALL CAMSHAFT** See step 12
21. **INSTALL CAMSHAFT BEARING CAP** See step 13
22. **INSTALL VALVE STEM CAP** See step 5
23. **INSTALL VALVE LASH ADJUSTER ASSEMBLY** See step 7
24. **INSTALL NO. 1 VALVE ROCKER ARM SUB-ASSEMBLY** See step 8
25. **INSTALL CAMSHAFT HOUSING SUB-ASSEMBLY** See step 14
26. **INSTALL CAMSHAFT TIMING SPROCKET** See step 15
27. **INSTALL CAMSHAFT TIMING GEAR ASSEMBLY** See step 16
28. **INSTALL CRANKSHAFT TIMING SPROCKET**
    a. Install the crankshaft timing sprocket to the crankshaft.

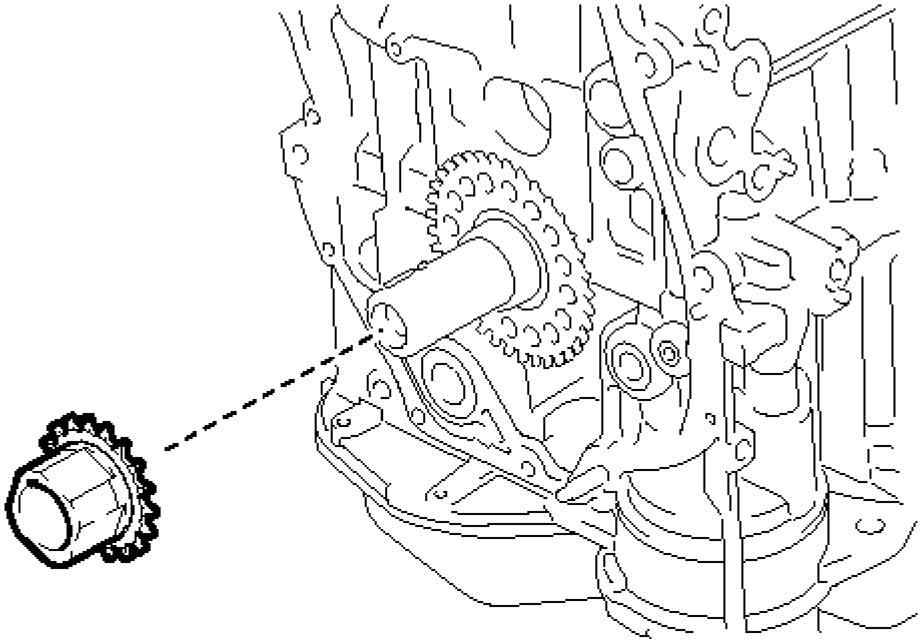

Fig. 279: Identifying Crankshaft Timing Sprocket
Courtesy of TOYOTA MOTOR SALES, U.S.A., INC.

29. **ADD ENGINE OIL** See step 17
30. **INSTALL NO. 1 CHAIN VIBRATION DAMPER** See step 18
31. **SET NO. 1 CYLINDER TO TDC/COMPRESSION** See step 19
32. **INSTALL CHAIN SUB-ASSEMBLY** See step 20
33. **INSTALL CHAIN TENSIONER SLIPPER** See step 21
34. **INSTALL NO. 1 CHAIN TENSIONER ASSEMBLY** See step 22
35. **INSTALL TIMING CHAIN GUIDE** See step 23
36. **SET NO. 1 CYLINDER TO TDC/COMPRESSION** See step 24
37. **INSTALL TIMING CHAIN COVER PLATE**
    a. Install a new gasket and the timing chain cover plate with the 4 bolts.

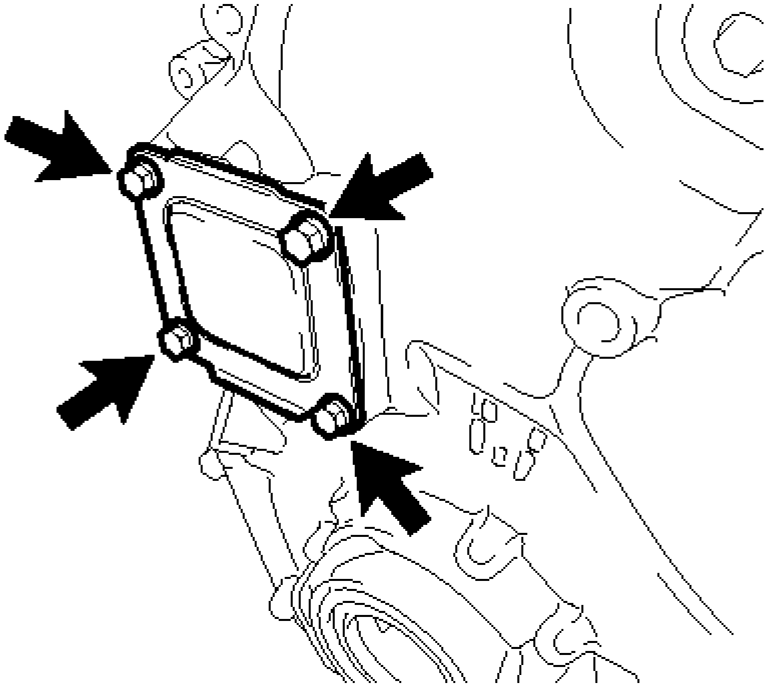

Fig. 280: Locating Timing Chain Cover Plate Bolts
Courtesy of TOYOTA MOTOR SALES, U.S.A., INC.

Torque: 10 N*m (102 kgf*cm, 7 ft.*lbf)

38. **INSTALL OIL PUMP RELIEF VALVE PLUG**
    a. Using a 14 mm hexagon wrench, install a new gasket and the oil pump relief valve plug.

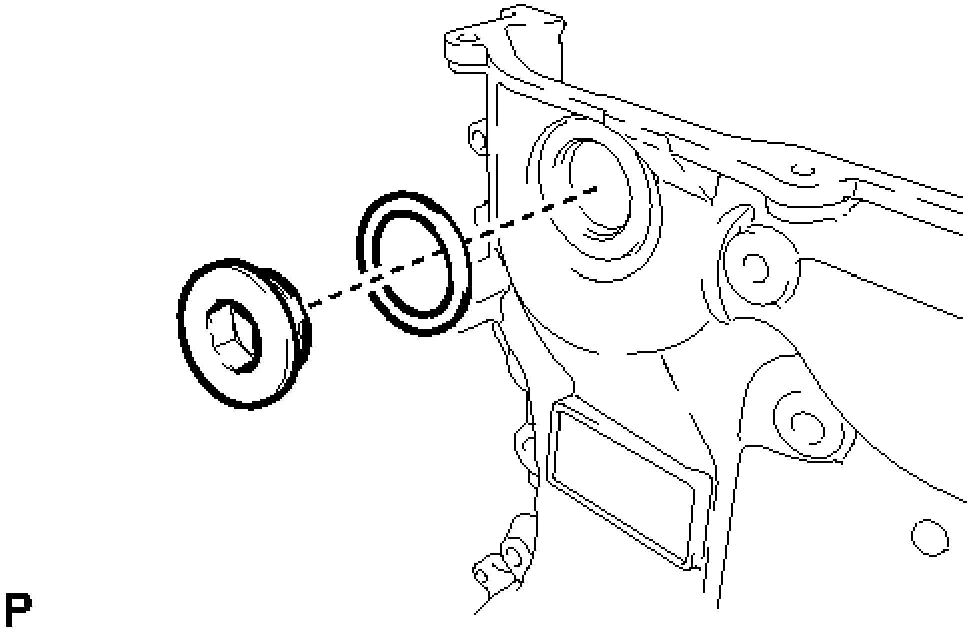

Fig. 281: Identifying Plug And Gasket
Courtesy of TOYOTA MOTOR SALES, U.S.A., INC.

Torque: 30 N*m (306 kgf*cm, 22 ft.*lbf)

39. **INSTALL TIMING CHAIN COVER SUB-ASSEMBLY** . Refer to **INSTALLATION - Step 1**
40. **INSTALL ENGINE MOUNTING BRACKET RH** . Refer to **INSTALLATION - Step 2**
41. **INSTALL TIMING CHAIN COVER OIL SEAL** See step 1
42. **INSTALL SPARK PLUG TUBE GASKET**
    a. Tap in the 4 new spark plug tube gaskets to the cylinder head cover sub-assembly.

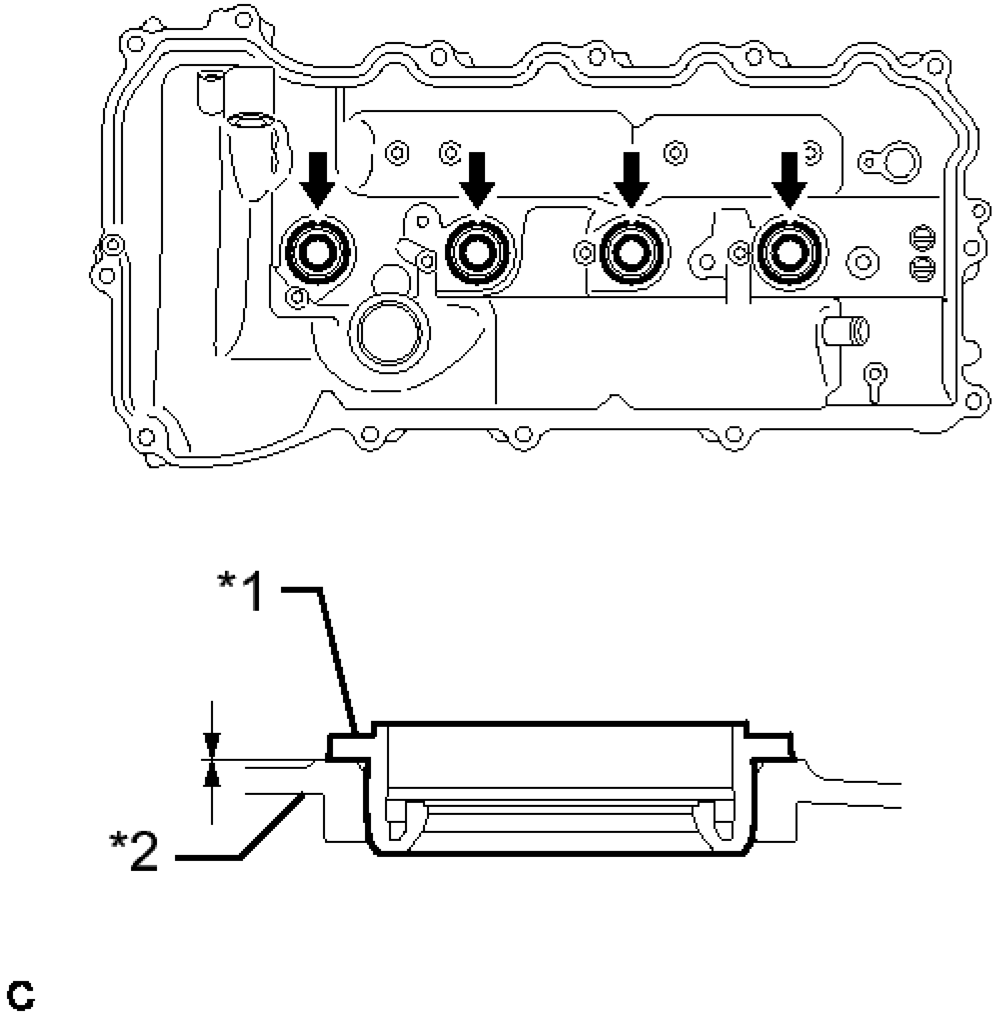

Fig. 282: Identifying Spark Plug Tube Gasket And Cylinder Head Cover Sub-Assembly
Courtesy of TOYOTA MOTOR SALES, U.S.A., INC.

TEXT IN ILLUSTRATION

*1	Spark Plug Tube Gasket
*2	Cylinder Head Cover Sub-assembly

NOTE:

- **Do not allow foreign matter to contact the lip of the spark plug**

tube gasket.

- **Do not tap in the spark plug tube gasket at an angle.**

43. **INSTALL STUD BOLT**

NOTE: **If a stud bolt is deformed or the threads are damaged, replace it.**

a. Using an E6 "TORX" socket wrench, install the 3 stud bolts.

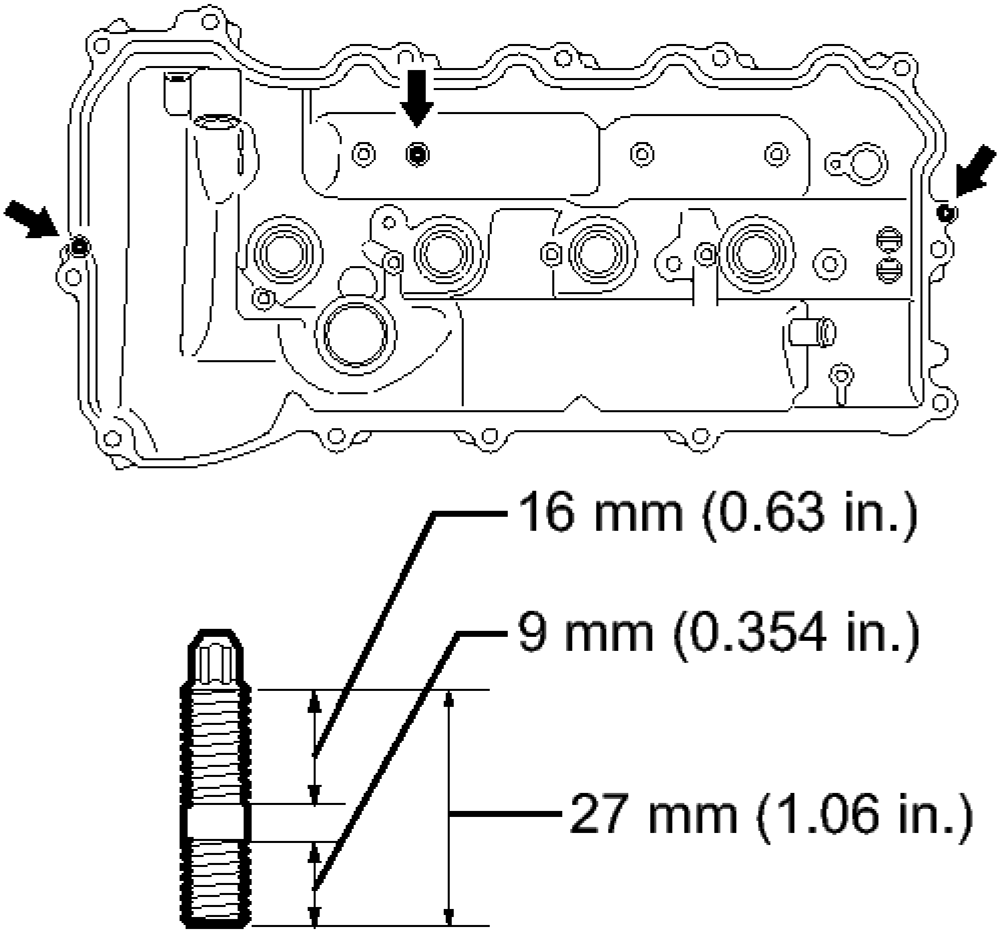

Fig. 283: Identifying Stud Bolt
Courtesy of TOYOTA MOTOR SALES, U.S.A., INC.

Torque: 5.0 N*m (51 kgf*cm, 44 in.*lbf)

44. **INSTALL CYLINDER HEAD COVER SUB-ASSEMBLY**

a. Apply a light coat of engine oil to 2 new gaskets.

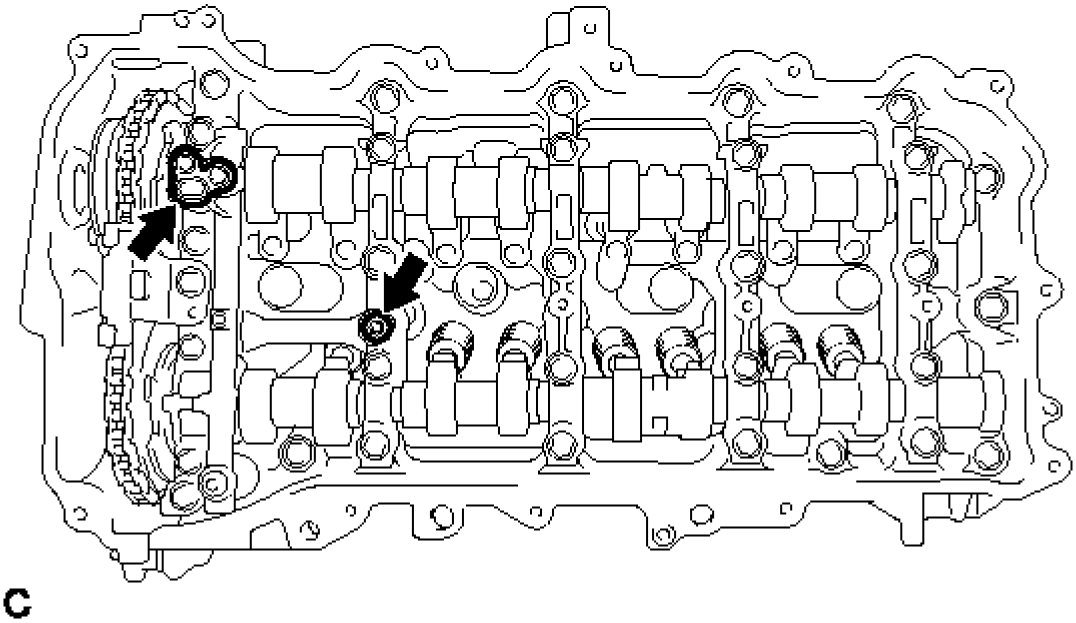

Fig. 284: Identifying Gaskets
Courtesy of TOYOTA MOTOR SALES, U.S.A., INC.

b. Install the 2 gaskets to the camshaft bearing caps.
c. Install a new gasket to the cylinder head cover sub-assembly.

NOTE: Remove any oil from the contact surface.

d. Apply seal packing as shown in the illustration.

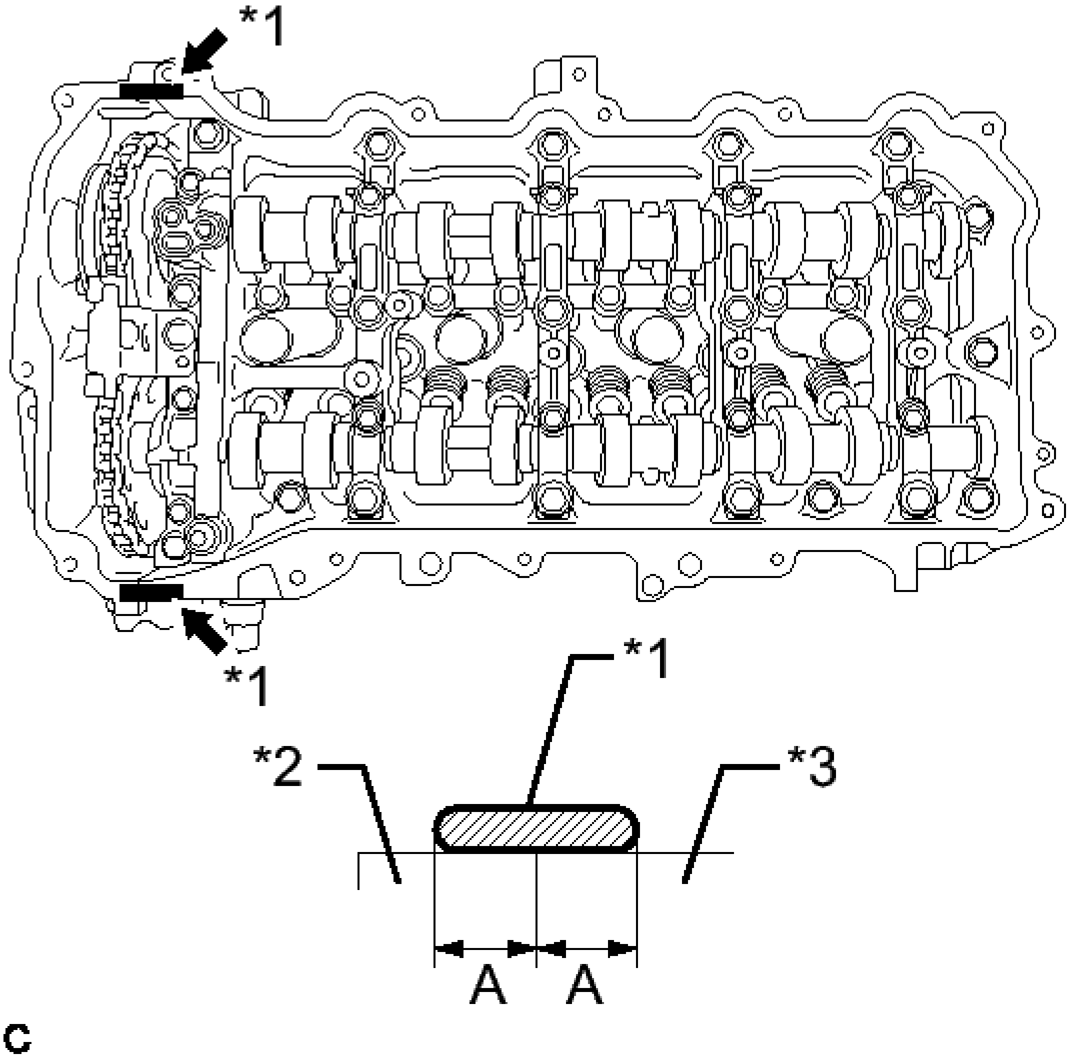

Fig. 285: Identifying Seal Packing
Courtesy of TOYOTA MOTOR SALES, U.S.A., INC.

Seal packing

Toyota Genuine Seal Packing Black, Three Bond 1207B or equivalent

Standard seal diameter

3.0 to 6.0 mm (0.118 to 0.236 in.)

Application width A

5.0 mm (0.197 in.)

TEXT IN ILLUSTRATION

*1	Seal Packing
*2	Timing Chain Cover
*3	Camshaft Housing

NOTE:

- **Remove any oil from the contact surface.**
- **Install the cylinder head cover within 3 minutes after applying seal packing.**

e. Align the cylinder head cover with pin A. Then align the cylinder head cover with pin B and install the cylinder head cover sub-assembly.

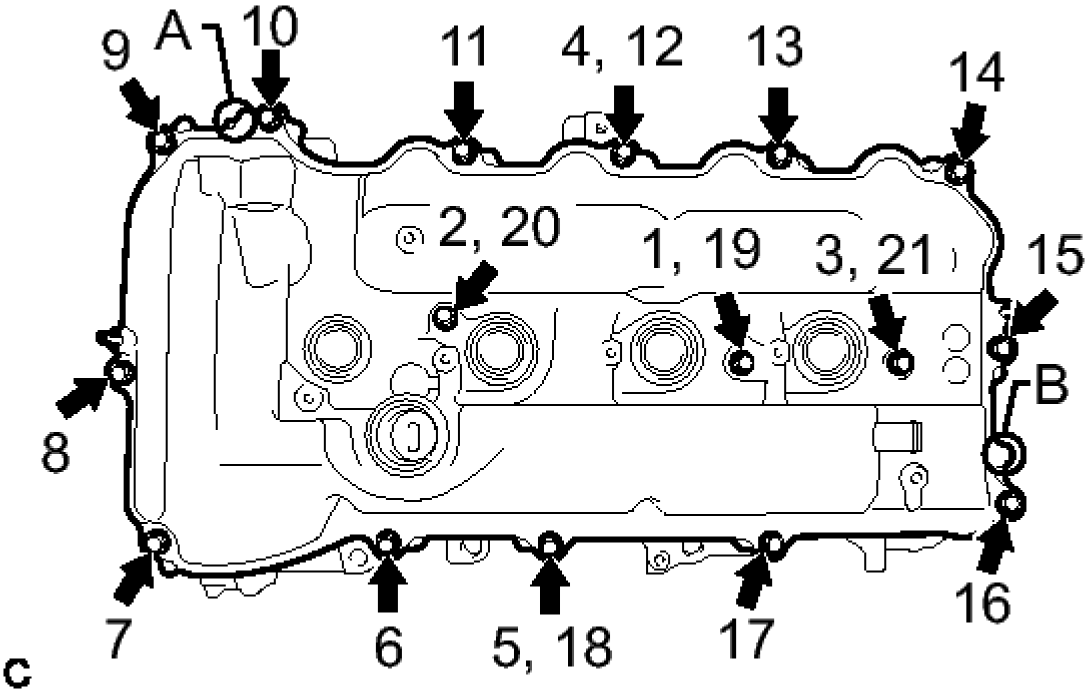

Fig. 286: Identifying Cylinder Head Cover Sub-Assembly Bolts And Washers
Courtesy of TOYOTA MOTOR SALES, U.S.A., INC.

f. Install 3 new seal washers and the 16 bolts, and then tighten the bolts in the order shown in the illustration.

Torque: 12 N*m (122 kgf*cm, 9 ft.*lbf)

NOTE: **Do not apply oil for at least 2 hours after the installation.**

45. **INSTALL CRANKSHAFT PULLEY**

a. Align the pulley set key with the key groove of the crankshaft pulley.

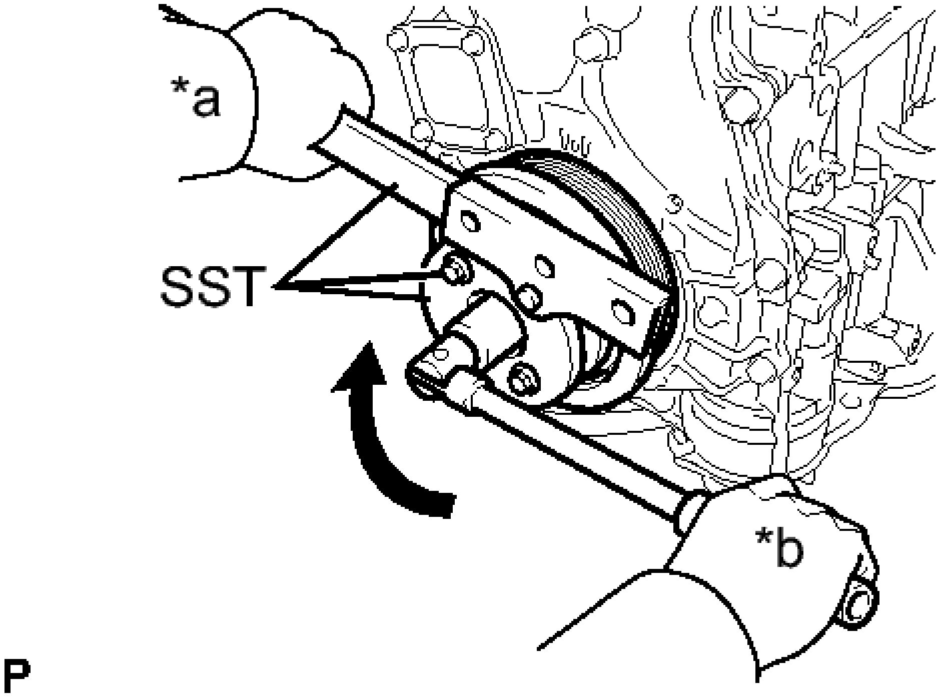

Fig. 287: Identifying Crankshaft Pulley
Courtesy of TOYOTA MOTOR SALES, U.S.A., INC.

TEXT IN ILLUSTRATION

*a	Hold
*b	Turn

b. Using SST, hold the crankshaft pulley and install the pulley bolt.
   - **SST: 09213-54015**
   - **SST: 09330-00021**
   - **SST: 91551-80650**

Torque: 260 N*m (2651 kgf*cm, 192 ft.*lbf)

46. **INSTALL CRANKSHAFT POSITION SENSOR** . Refer to **INSTALLATION - Step 1**
47. **INSTALL SEPARATOR CASE**

a. Apply a light coat of engine oil to a new gasket.

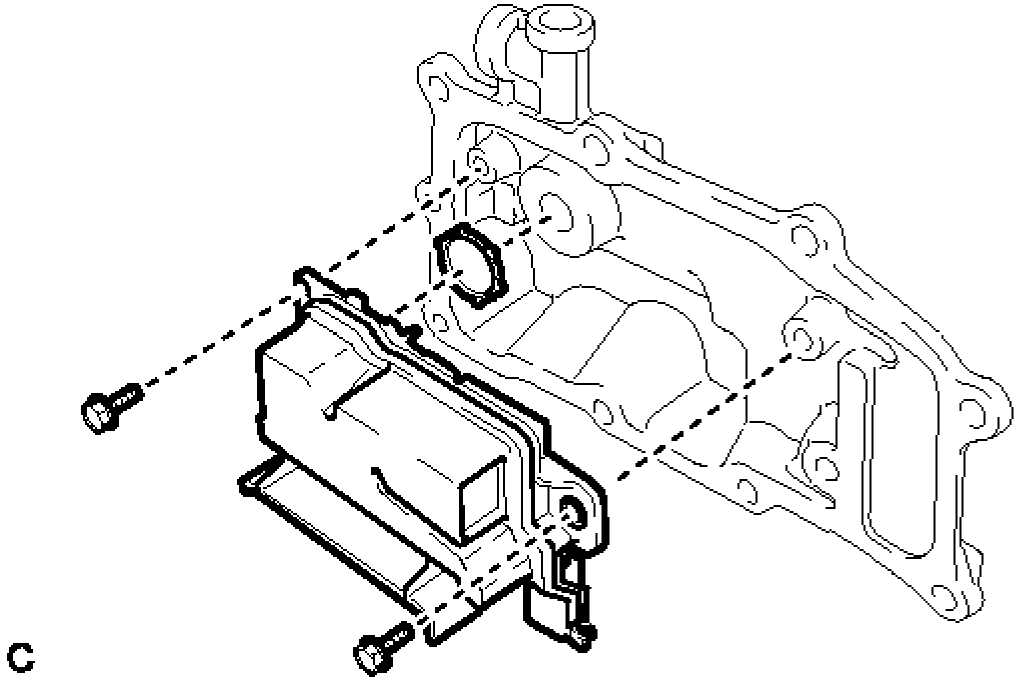

Fig. 288: Identifying Case And Gasket Bolts
Courtesy of TOYOTA MOTOR SALES, U.S.A., INC.

b. Install the gasket to the separator case.
c. Install the separator case with the 2 bolts.

Torque: 10 N*m (102 kgf*cm, 7 ft.*lbf)

48. **INSTALL VENTILATION CASE SUB-ASSEMBLY**
    a. Apply seal packing in a continuous line as shown in the illustration.

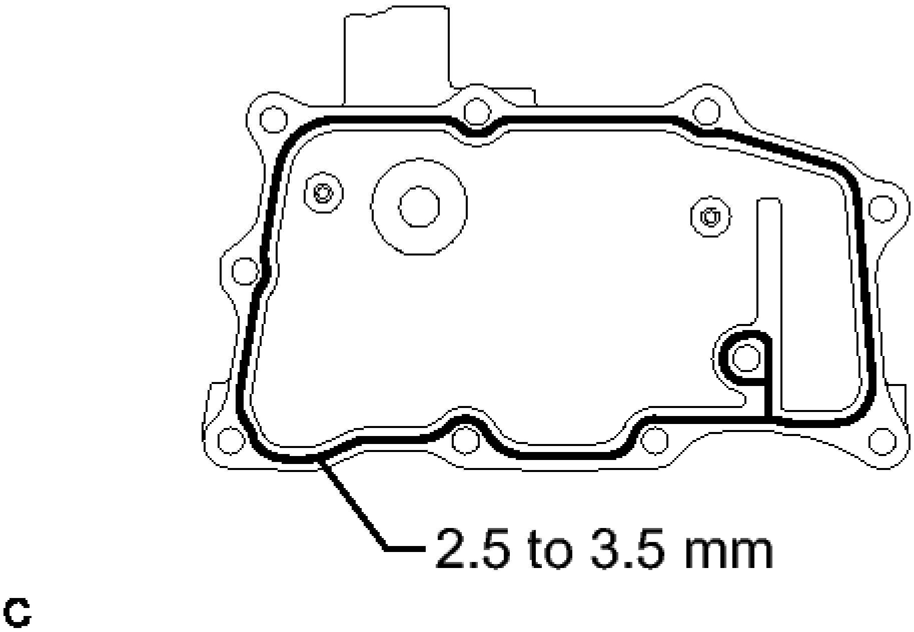

Fig. 289: Identifying Seal Packing Applying Area
Courtesy of TOYOTA MOTOR SALES, U.S.A., INC.

Seal packing

Toyota Genuine Seal Packing Black, Three Bond 1207B or equivalent

Standard seal diameter

2.5 to 3.5 mm (0.0984 to 0.138 in.)

NOTE:

- **Remove any oil from the contact surface.**
- **Install the ventilation case within 3 minutes and tighten the bolts and nuts within 15 minutes after applying seal packing.**

b. Install the ventilation case sub-assembly, and install the 8 bolts and 2 nuts in the order shown in the illustration.

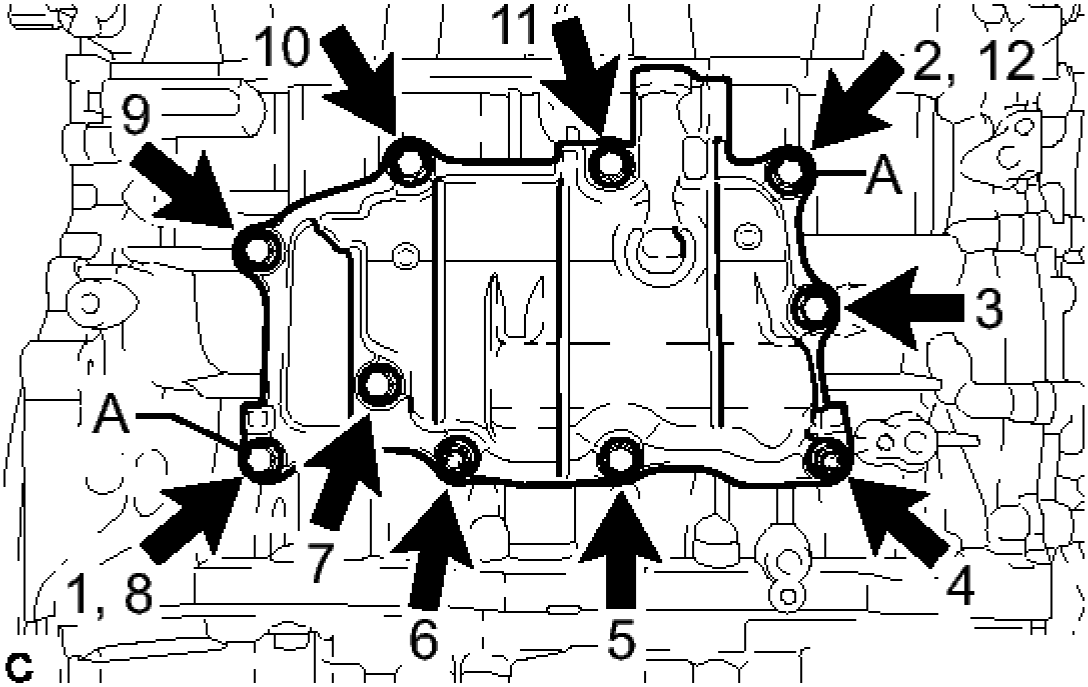

Fig. 290: Identifying Ventilation Case Sub-Assembly Bolts Tightening Sequence
Courtesy of TOYOTA MOTOR SALES, U.S.A., INC.

Torque: 21 N*m (214 kgf*cm, 15 ft.*lbf)

NOTE: **Do not apply oil for at least 2 hours after the installation.**

HINT:

Bolt A is tightened twice.

49. **INSTALL VENTILATION VALVE SUB-ASSEMBLY** . Refer to **INSTALLATION - Step 1**
50. **INSTALL CAMSHAFT POSITION SENSOR** . Refer to **INSTALLATION - Step 1**
51. **INSTALL CAMSHAFT TIMING OIL CONTROL VALVE ASSEMBLY** . Refer to **INSTALLATION - Step 1**
52. **INSTALL OIL FILLER CAP GASKET**
    a. Install a new oil filler cap gasket to the oil filler cap sub-assembly.
53. **INSTALL OIL FILLER CAP SUB-ASSEMBLY**
    a. Install the oil filler cap sub-assembly to the cylinder head cover sub-assembly.
54. **INSTALL ENGINE OIL PRESSURE SWITCH ASSEMBLY** . Refer to **INSTALLATION - Step 1**
55. **INSTALL ENGINE COOLANT TEMPERATURE SENSOR** . Refer to **INSTALLATION - Step 1**
56. **INSTALL KNOCK CONTROL SENSOR** . Refer to **INSTALLATION - Step 1**
57. **INSTALL SPARK PLUG** . Refer to **INSTALLATION - Step 1**
58. **INSTALL ENGINE COVER JOINT**

   a. Install the 3 engine cover joints.

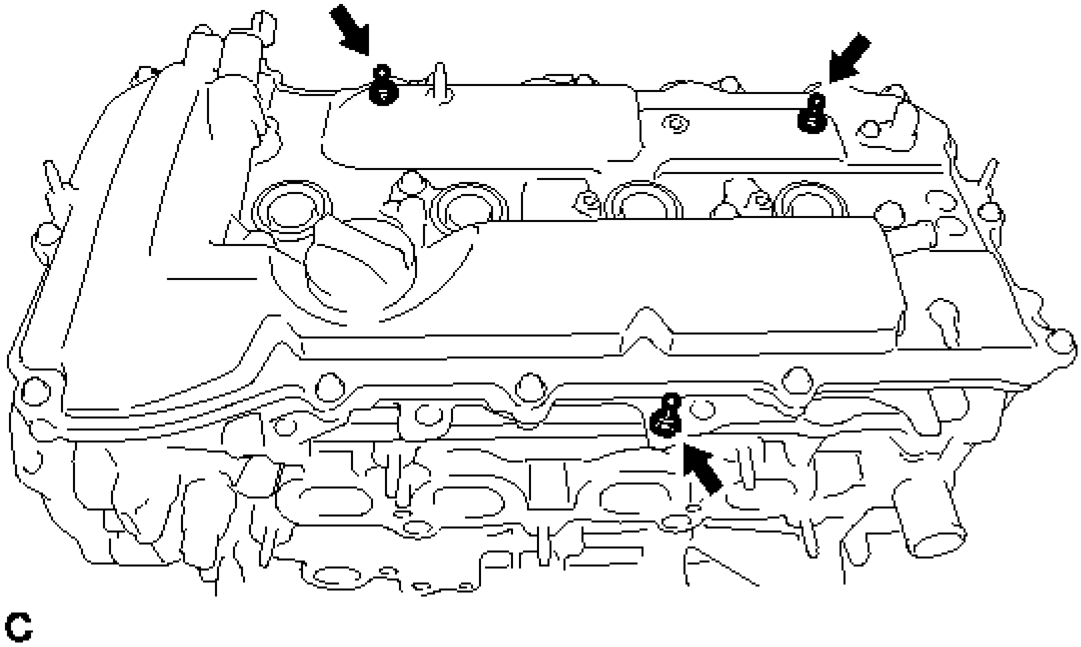

Fig. 291: Identifying Engine Cover Joints
Courtesy of TOYOTA MOTOR SALES, U.S.A., INC.

Torque: 10 N*m (102 kgf*cm, 7 ft.*lbf)

INSTALLATION

INSTALLATION

HINT:

Perform "Inspection After Repair" after replacing the engine assembly. Refer to **INITIALIZATION** .

1. **INSTALL IGNITION COIL ASSEMBLY** . Refer to **INSTALLATION - Step 2**
2. **INSTALL SENSOR WIRE**
   a. Install the sensor wire with the bolt.

      Torque: 21 N*m (214 kgf*cm, 15 ft.*lbf)

   b. Connect the knock control sensor connector.
3. **INSTALL FUEL DELIVERY PIPE SUB-ASSEMBLY** . Refer to **INSTALLATION - Step 2**
4. **INSTALL INTAKE MANIFOLD** . Refer to **INSTALLATION - Step 4**
5. **INSTALL NO. 1 COMPRESSOR MOUNTING BRACKET**
   a. Install the No. 1 compressor mounting bracket with the 4 bolts.

Torque: 25 N*m (255 kgf*cm, 18 ft.*lbf)

6. **INSTALL WATER INLET HOUSING**
   1. Using an E5 "TORX" socket, install the stud bolt to the water inlet housing.

      Torque: 8.0 N*m (82 kgf*cm, 71 in.*lbf)

   2. Using an E8 "TORX" socket, install the stud bolt to the cylinder block.

      Torque: 15 N*m (153 kgf*cm, 11 ft.*lbf)

   3. Install a new gasket.
   4. Install the water inlet housing with the 3 bolts and nut.

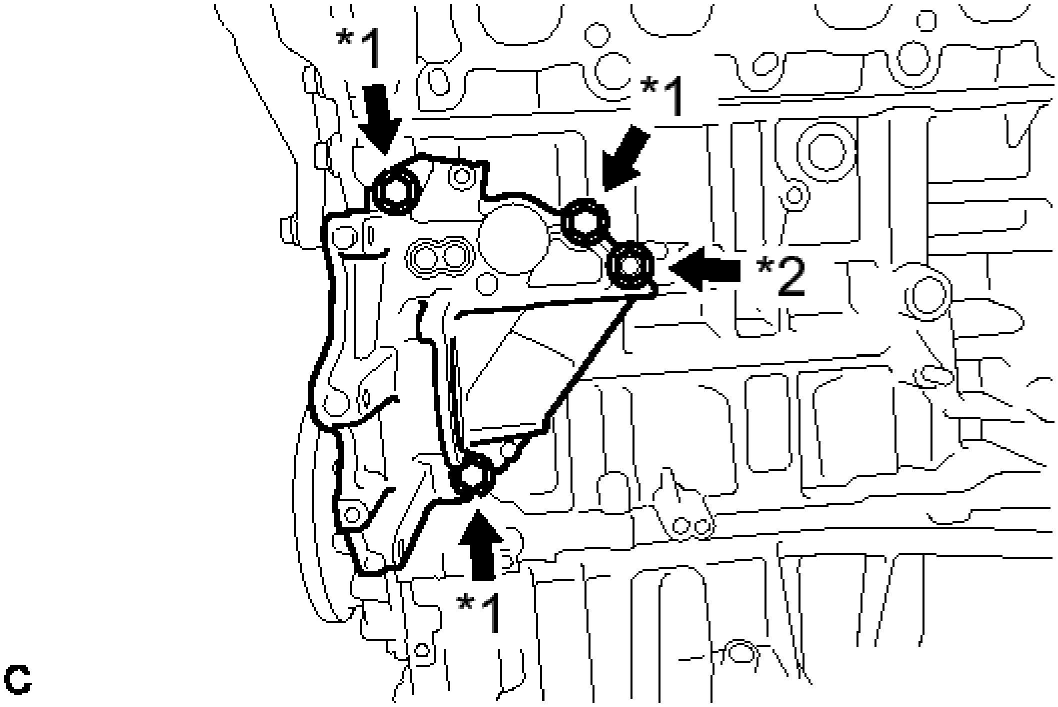

Fig. 292: Identifying Water Inlet Housing Bolts And Nut
Courtesy of TOYOTA MOTOR SALES, U.S.A., INC.

TEXT IN ILLUSTRATION

*1	Bolt
*2	Nut

Torque: 43 N*m (438 kgf*cm, 32 ft.*lbf)

5. Install the harness clamp bracket to the water inlet housing with the bolt.

   Torque: 10 N*m (102 kgf*cm, 7 ft.*lbf)

f. Install the harness clamp bracket to the cylinder block with the bolt.

Torque: 8.0 N*m (82 kgf*cm, 71 in.*lbf)

7. **INSTALL WATER INLET SUB-ASSEMBLY**
   a. Install a new gasket and the water inlet sub-assembly with the 2 bolts.

   Torque: 10 N*m (102 kgf*cm, 7 ft.*lbf)

8. **INSTALL ENGINE WATER PUMP ASSEMBLY**
   a. Install a new gasket and the engine water pump assembly with the 5 bolts.

   Torque: 21 N*m (214 kgf*cm, 15 ft.*lbf)

   b. Connect the connector to the engine water pump assembly.
   c. Connect the clamp.
9. **INSTALL COMPRESSOR WITH MOTOR ASSEMBLY** . Refer to **INSTALLATION - Step 2**
10. **INSTALL NO. 1 EGR PIPE**
    a. Install the No. 1 EGR pipe with the 2 bolts.

    Torque: 21 N*m (214 kgf*cm, 15 ft.*lbf)

11. **INSTALL EGR COOLER ASSEMBLY**
    a. Install the No. 4 water by-pass hose, No. 6 water by-pass hose and No. 1 water by-pass pipe with the 2 clamps.
    b. Temporarily install 2 new gaskets and the EGR cooler assembly with the bolt (A) and nut (A).

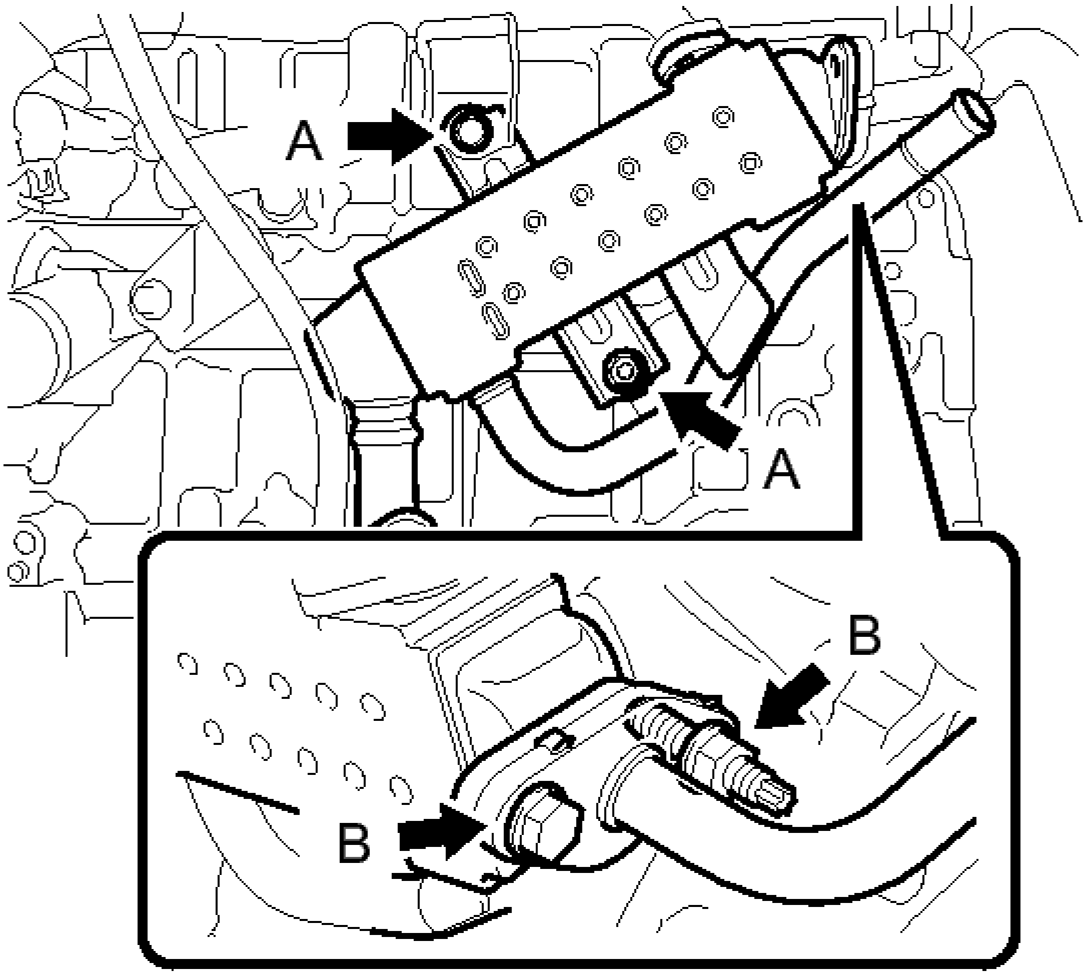

Fig. 293: Identifying EGR Cooler Assembly Gaskets, Bolt And Nut
Courtesy of TOYOTA MOTOR SALES, U.S.A., INC.

c. Temporarily install the bolt (B) and nut (B).
d. Tighten the 3 bolts and nut.

Torque: 21 N*m (214 kgf*cm, 15 ft.*lbf)

NOTE: **Make sure that all installation surfaces of the EGR cooler assembly are in even contact when tightening the bolts and nuts.**

12. **INSTALL EXHAUST MANIFOLD CONVERTER SUB-ASSEMBLY** . Refer to **INSTALLATION - Step 2**
13. **INSTALL MANIFOLD STAY** . Refer to **INSTALLATION - Step 3**
14. **INSTALL NO. 2 MANIFOLD STAY** . Refer to **INSTALLATION - Step 4**

15. **INSTALL NO. 2 EGR PIPE** . Refer to **INSTALLATION - Step 5**
16. **INSTALL NO. 1 EXHAUST MANIFOLD HEAT INSULATOR** . Refer to **INSTALLATION - Step 6**
17. **INSTALL NO. 1 WATER BY-PASS HOSE**
    a. Connect the No. 1 water by-pass hose with the clamp.
18. **INSTALL THROTTLE WITH MOTOR BODY ASSEMBLY** . Refer to **INSTALLATION - Step 1**
19. **INSTALL ENGINE OIL LEVEL DIPSTICK GUIDE**
    a. Apply a light coat of engine oil to a new O-ring.
    b. Install the O-ring to the engine oil level dipstick guide.
    c. Install the engine oil level dipstick guide with the bolt.

       Torque: 10 N*m (102 kgf*cm, 7 ft.*lbf)

    d. Install the engine oil level dipstick.
20. **INSTALL ENGINE HANGERS**
    a. Install the 2 engine hangers with the 4 bolts as shown in the illustration.

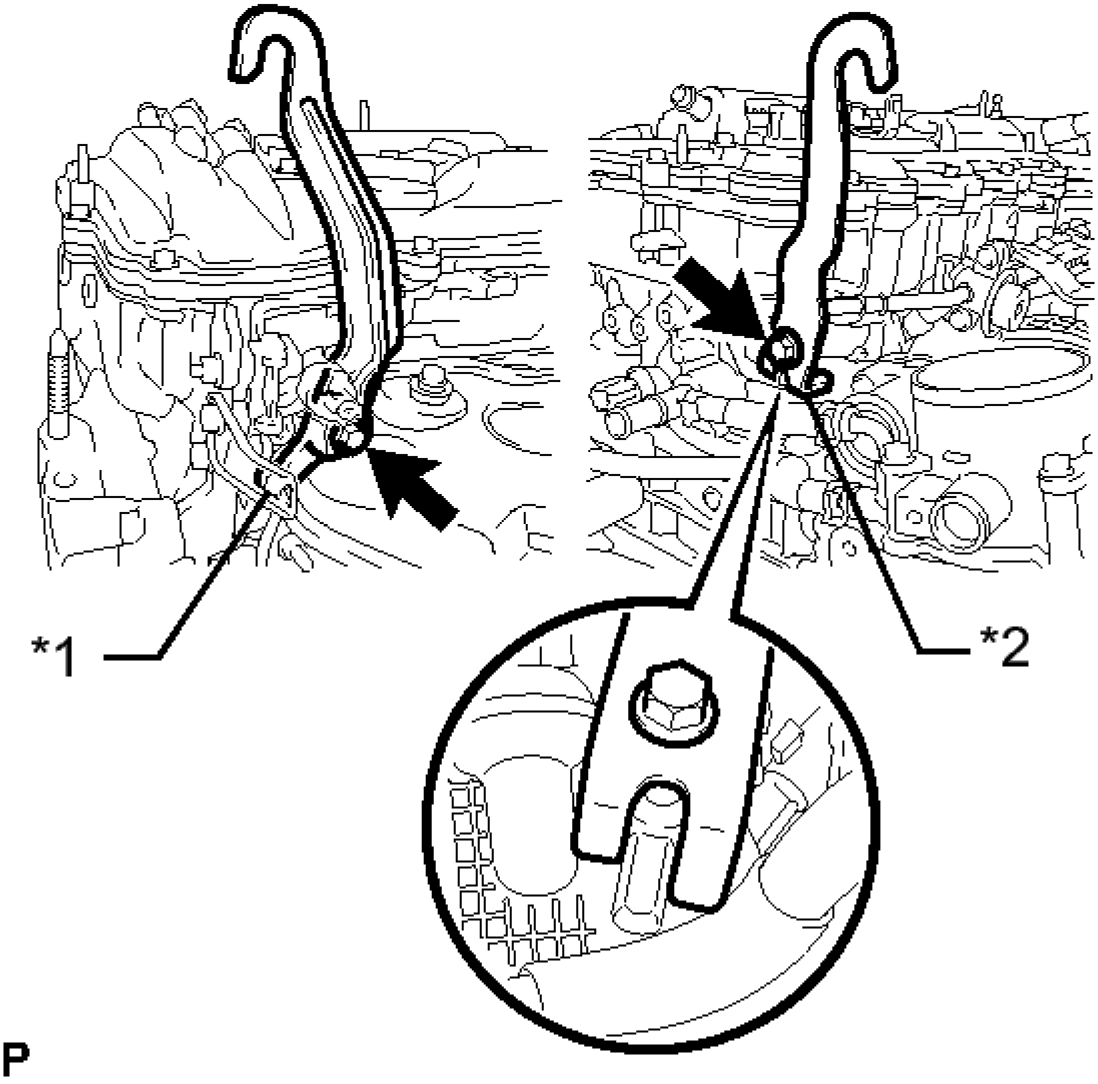

Fig. 294: Identifying Engine Hangers With Bolts
Courtesy of TOYOTA MOTOR SALES, U.S.A., INC.

PART NO.

Item	Part No.
No. 1 Engine Hanger	12281-36020
No. 2 Engine Hanger	12282-36021
Bolt	91552-81040 or 91552-

	81025

Torque: 43 N*m (438 kgf*cm, 32 ft.*lbf)

b. Attach an engine sling device and hang the engine with a chain block.

CYLINDER HEAD

COMPONENTS

ILLUSTRATION

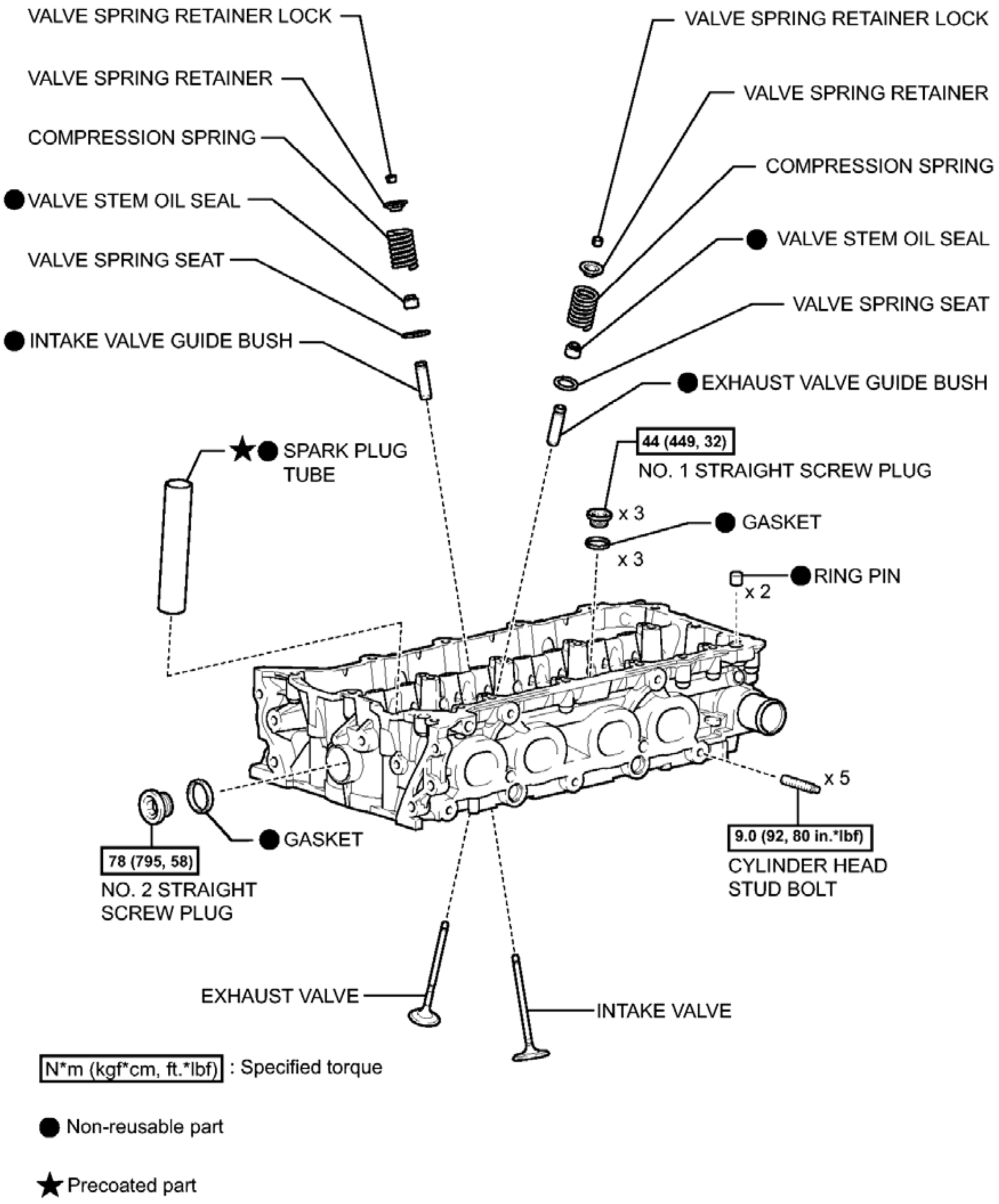
VALVE SPRING RETAINER LOCK
VALVE SPRING RETAINER
COMPRESSION SPRING
● VALVE STEM OIL SEAL
VALVE SPRING SEAT
● INTAKE VALVE GUIDE BUSH
VALVE SPRING RETAINER LOCK
VALVE SPRING RETAINER
COMPRESSION SPRING
● VALVE STEM OIL SEAL
VALVE SPRING SEAT
● EXHAUST VALVE GUIDE BUSH
★● SPARK PLUG TUBE
44 (449, 32)
NO. 1 STRAIGHT SCREW PLUG
x 3
● GASKET
x 3
● RING PIN
x 2
x 5
9.0 (92, 80 in.*lbf)
CYLINDER HEAD STUD BOLT
● GASKET
78 (795, 58)
NO. 2 STRAIGHT SCREW PLUG
EXHAUST VALVE
INTAKE VALVE
N*m (kgf*cm, ft.*lbf) : Specified torque
● Non-reusable part
★ Precoated part

Fig. 295: Identifying Cylinder Head Replacement Components With Torque Specifications
Courtesy of TOYOTA MOTOR SALES, U.S.A., INC.

DISASSEMBLY

DISASSEMBLY

1. **REMOVE INTAKE VALVE**

a. Using SST and wooden blocks, compress the compression spring and remove the valve spring retainer locks.

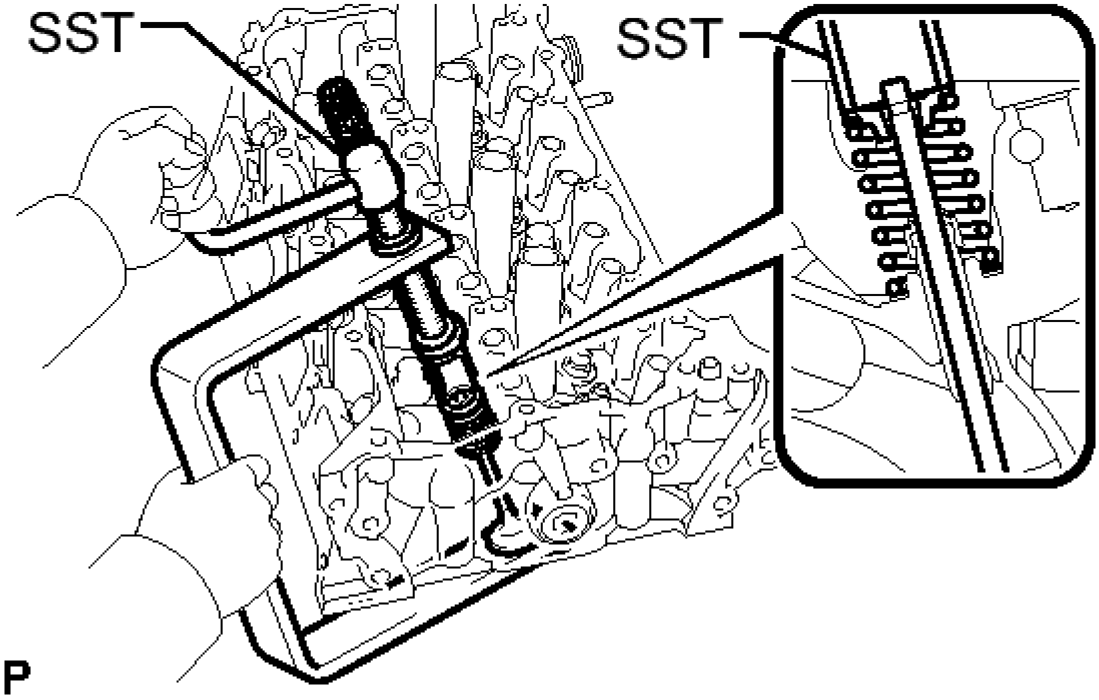

Fig. 296: Compressing Spring
Courtesy of TOYOTA MOTOR SALES, U.S.A., INC.

- **SST: 09202-70020**

  09202-00010

b. Remove the valve spring retainer, compression spring and intake valve.

   HINT:

   Arrange the removed parts in the correct order.

2. **REMOVE EXHAUST VALVE**
   a. Using SST and wooden blocks, compress the compression spring and remove the valve spring retainer locks.

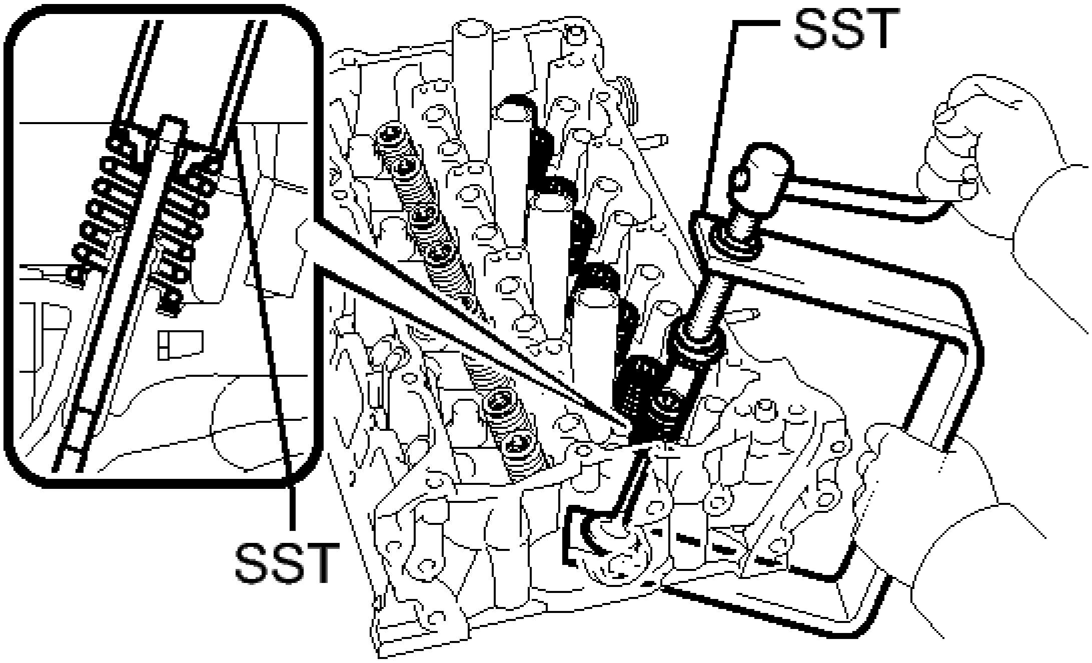

Fig. 297: Compressing Spring
Courtesy of TOYOTA MOTOR SALES, U.S.A., INC.

- **SST: 09202-70020**
  09202-00010

b. Remove the valve spring retainer, compression spring and exhaust valve.

   HINT:

   Arrange the removed parts in the correct order.

3. **REMOVE VALVE STEM OIL SEAL**
   a. Using needle-nose pliers, remove the valve stem oil seal.

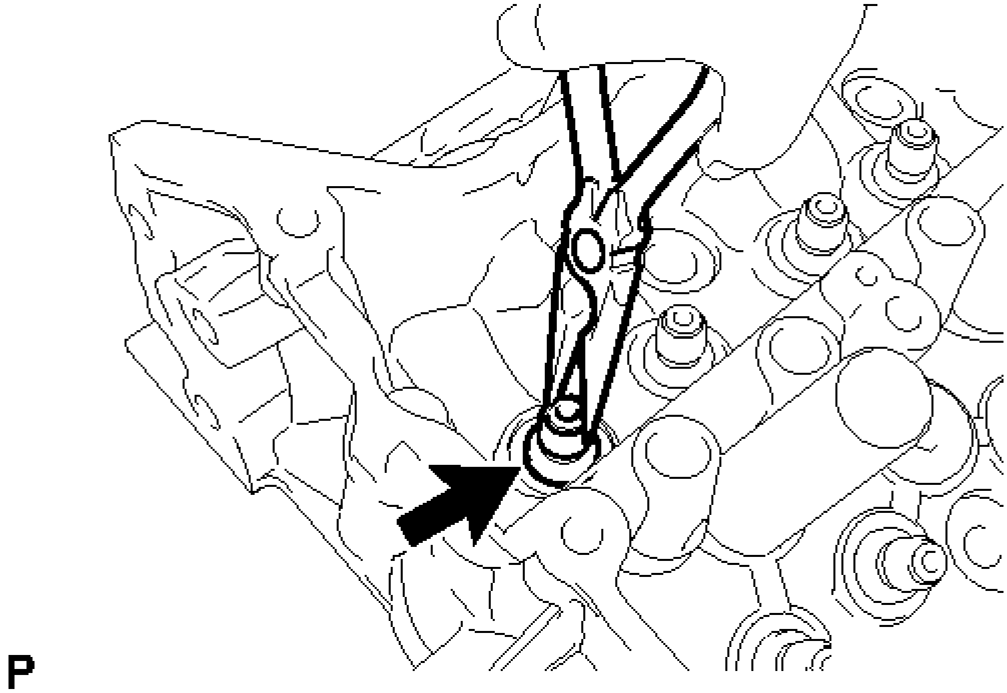

Fig. 298: Removing Oil Seals
Courtesy of TOYOTA MOTOR SALES, U.S.A., INC.

4. **REMOVE VALVE SPRING SEAT**
   a. Using compressed air and a Magnet Hand, remove the valve spring seat by blowing air onto it.

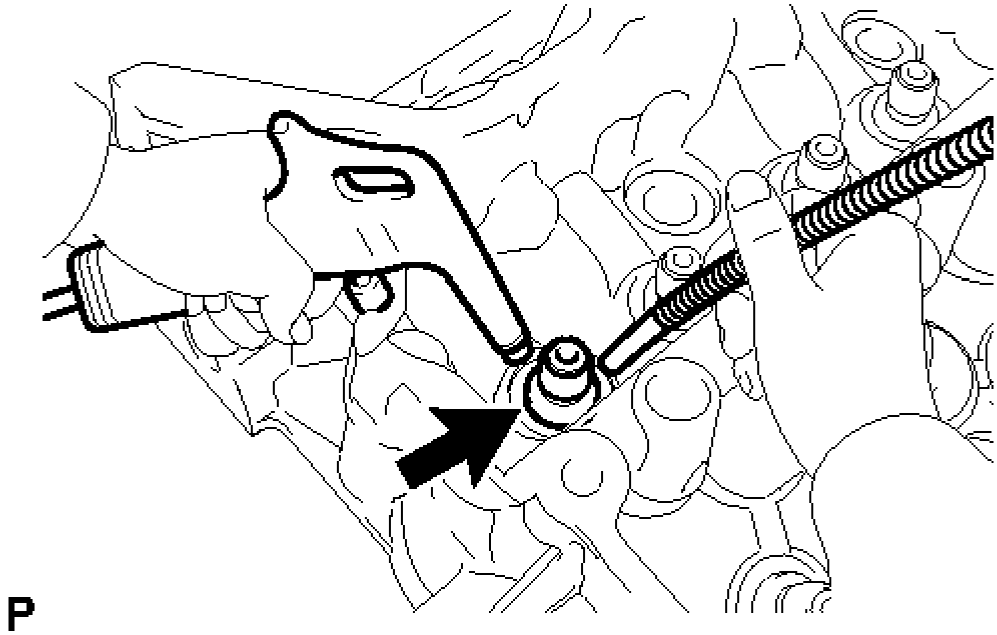

Fig. 299: Removing Valve Spring Seat

Courtesy of TOYOTA MOTOR SALES, U.S.A., INC.

5. **REMOVE NO. 1 STRAIGHT SCREW PLUG**

NOTE: If water leaks from the No. 1 straight screw plug or the plug is corroded, replace it.

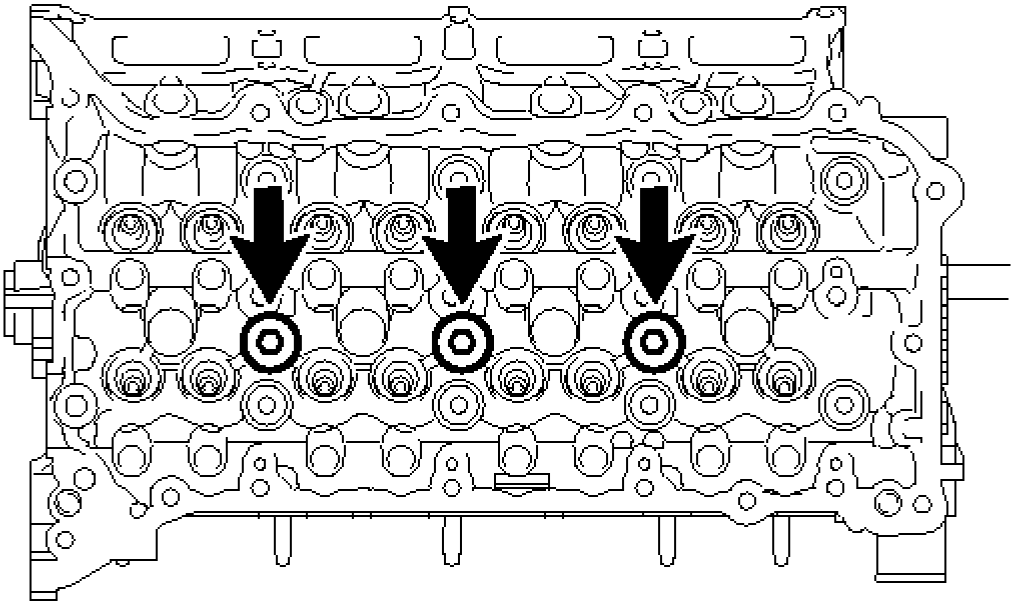

Fig. 300: Locating No. 1 Straight Screw Plugs
Courtesy of TOYOTA MOTOR SALES, U.S.A., INC.

a. Using a 10 mm hexagon wrench, remove the 3 No. 1 straight screw plugs and 3 gaskets.

6. **REMOVE NO. 2 STRAIGHT SCREW PLUG**

NOTE: If water leaks from the No. 2 straight screw plug or the plug is corroded, replace it.

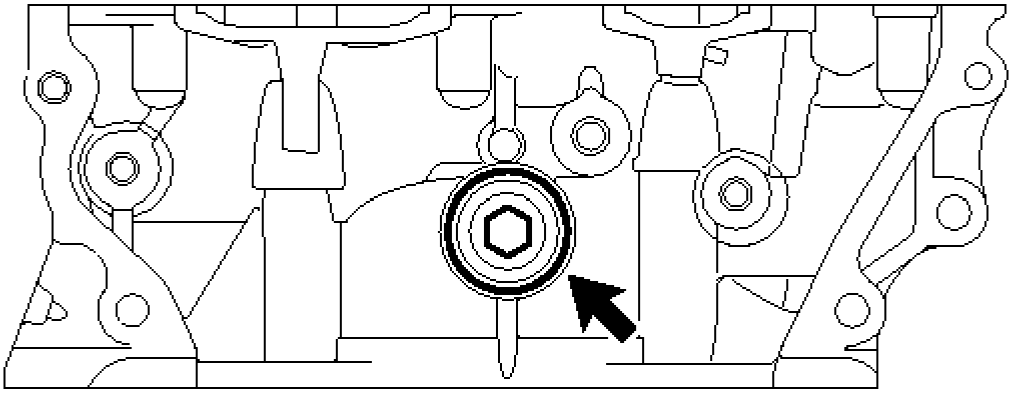

Fig. 301: Locating No. 2 Straight Screw Plug
Courtesy of TOYOTA MOTOR SALES, U.S.A., INC.

a. Using a 14 mm hexagon wrench, remove the No. 2 straight screw plug and gasket.

7. **REMOVE CYLINDER HEAD STUD BOLT**

NOTE: If a stud bolt is deformed or its threads are damaged, replace it.

a. Using an E7 "TORX" socket wrench, remove the 5 cylinder head stud bolts.

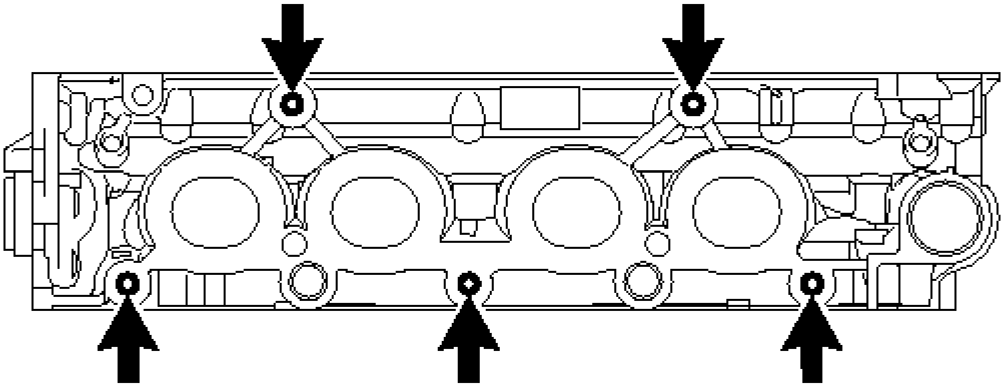

Fig. 302: Identifying Cylinder Head Stud Bolts
Courtesy of TOYOTA MOTOR SALES, U.S.A., INC.

INSPECTION

INSPECTION

1. **INSPECT CYLINDER HEAD SUB-ASSEMBLY**
    a. Using a precision straightedge and feeler gauge, measure the warpage of the contact surfaces where the cylinder head contacts the cylinder block and manifold.

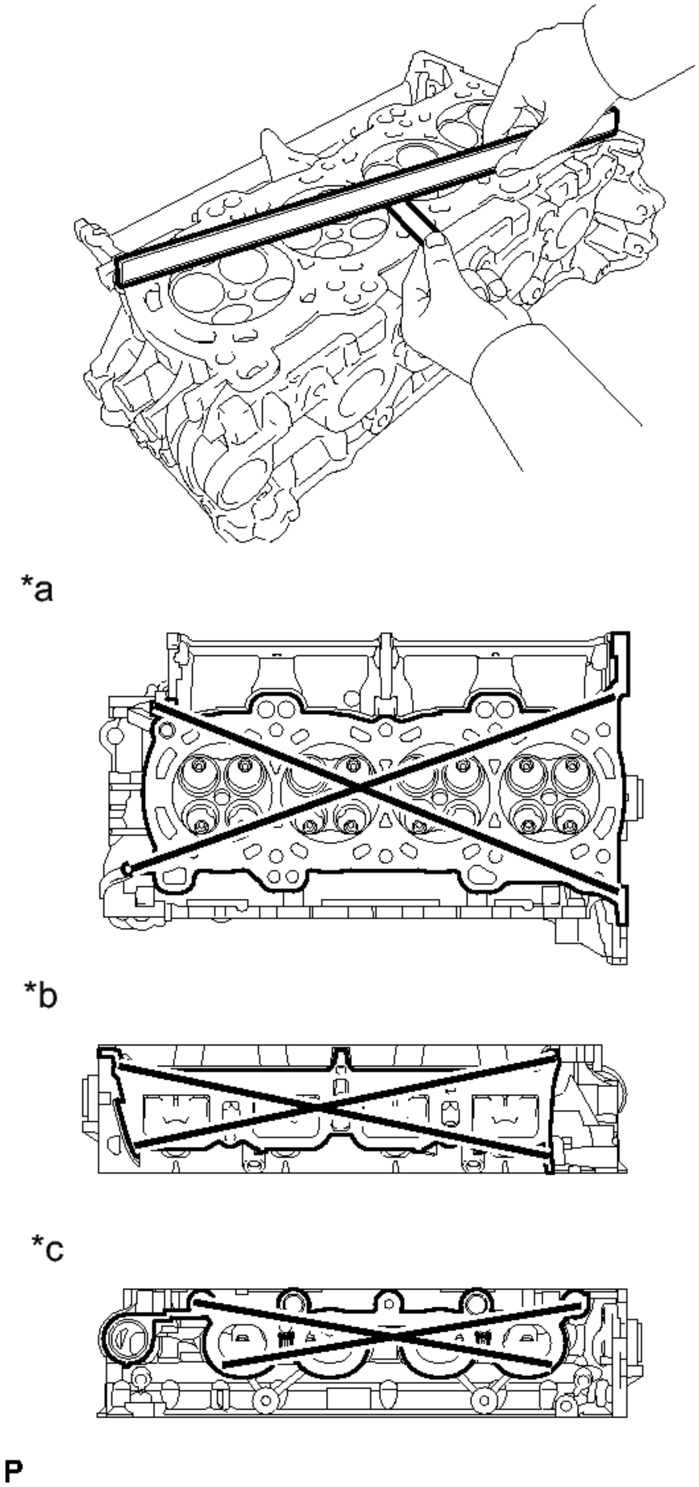

Fig. 303: Measuring Warpage Of Contact Surfaces
Courtesy of TOYOTA MOTOR SALES, U.S.A., INC.

Maximum Warpage

Item	Specified Condition
Cylinder head lower side	0.05 mm (0.00197 in.)
Intake manifold side	0.10 mm (0.00394 in.)
Exhaust manifold side	0.10 mm (0.00394 in.)

TEXT IN ILLUSTRATION

*a	Cylinder Head Lower Side
*b	Intake Manifold Side
*c	Exhaust Manifold Side

If the warpage is more than the maximum, replace the cylinder head.

b. Using a dye penetrant, check the intake ports, exhaust ports and cylinder head surface for cracks.

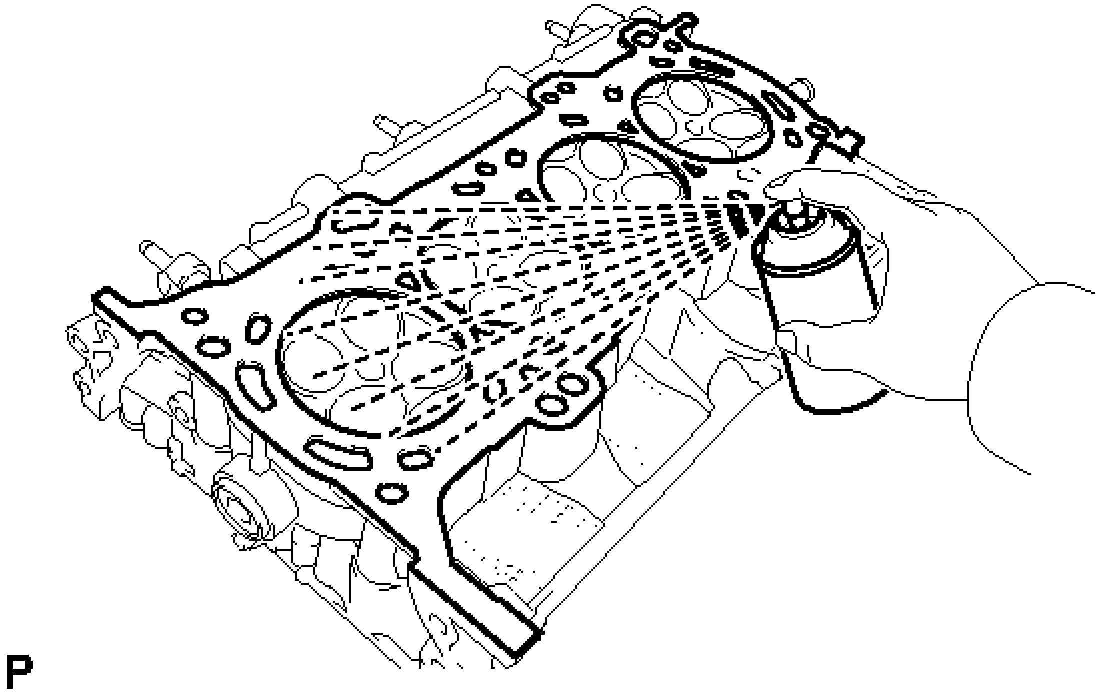

Fig. 304: Checking Cylinder Contact Surface
Courtesy of TOYOTA MOTOR SALES, U.S.A., INC.

If cracked, replace the cylinder head.

2. **INSPECT COMPRESSION SPRING**
    a. Using a vernier caliper, measure the free length of the inner compression spring.

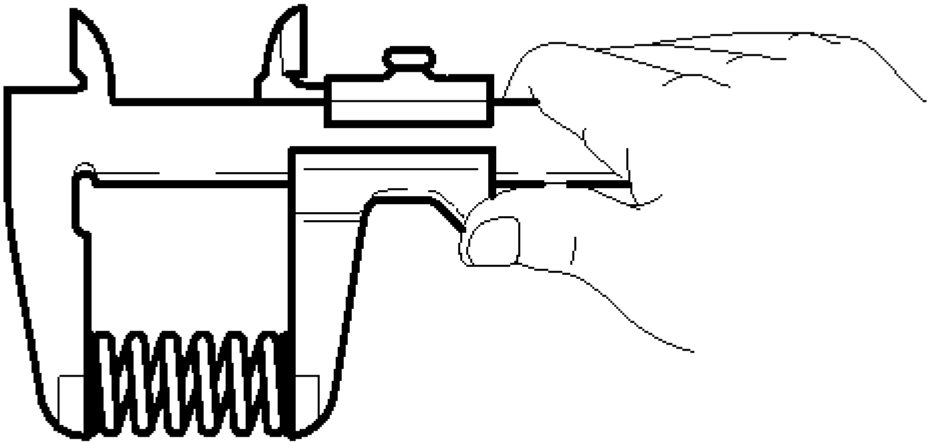

Fig. 305: Measuring Free Length Of Inner Compression Spring
Courtesy of TOYOTA MOTOR SALES, U.S.A., INC.

Standard free length

47.2 to 49.2 mm (1.86 to 1.94 in.)

If the free length is not as specified, replace the compression spring.

b. Using a steel square, measure the deviation of the inner compression spring.

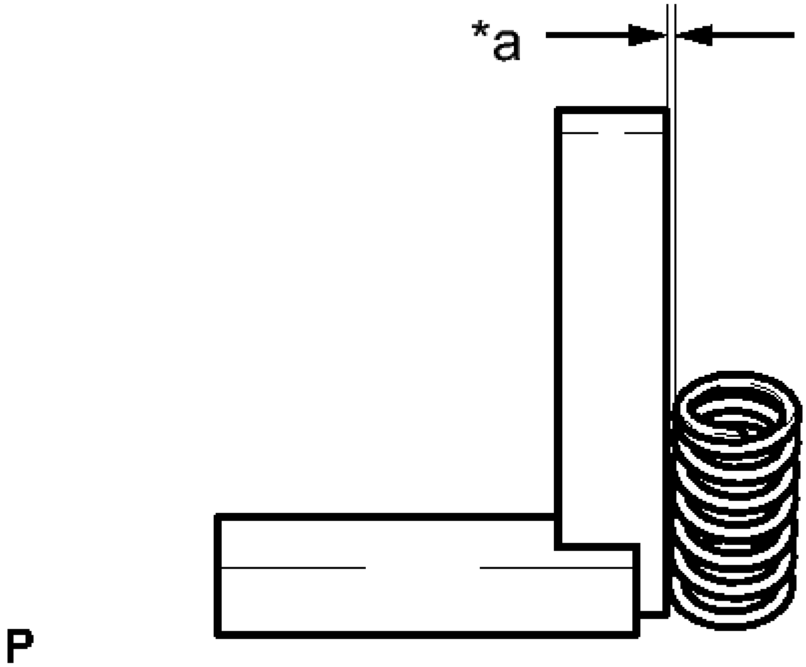

Fig. 306: Measuring Inner Compression Spring Deviation
Courtesy of TOYOTA MOTOR SALES, U.S.A., INC.

Maximum deviation

1.0 mm (0.0394 in.)

Maximum angle

2°

TEXT IN ILLUSTRATION

*a	Deviation

If the deviation is more than the maximum, replace the spring.

3. **INSPECT INTAKE VALVE**
   a. Using a micrometer, measure the diameter of the valve stem.

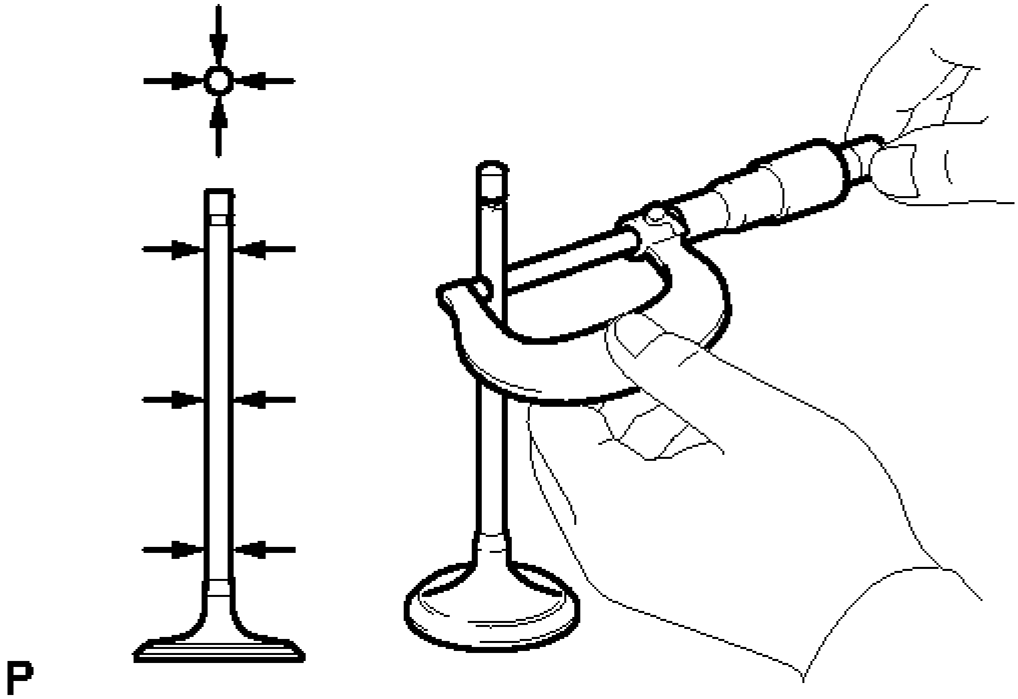

Fig. 307: Measuring Diameter Of Valve Stem
Courtesy of TOYOTA MOTOR SALES, U.S.A., INC.

Standard valve stem diameter

5.470 to 5.485 mm (0.21535 to 0.21594 in.)

b. Using a vernier caliper, measure the valve head margin thickness.

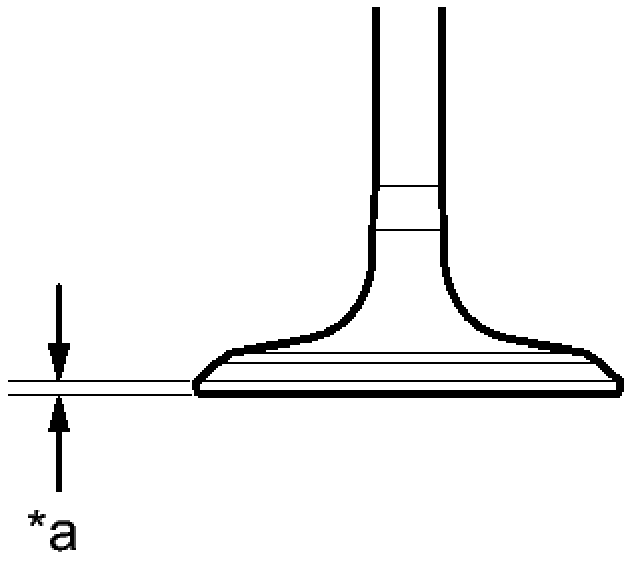

P

Fig. 308: Measuring Valve Head Margin Thickness
Courtesy of TOYOTA MOTOR SALES, U.S.A., INC.

Standard margin thickness

1.0 mm (0.0394 in.)

Minimum margin thickness

0.50 mm (0.0197 in.)

TEXT IN ILLUSTRATION

*a	Margin Thickness

If the margin thickness is less than the minimum, replace the intake valve.

c. Using a vernier caliper, measure the overall length of the intake valve.

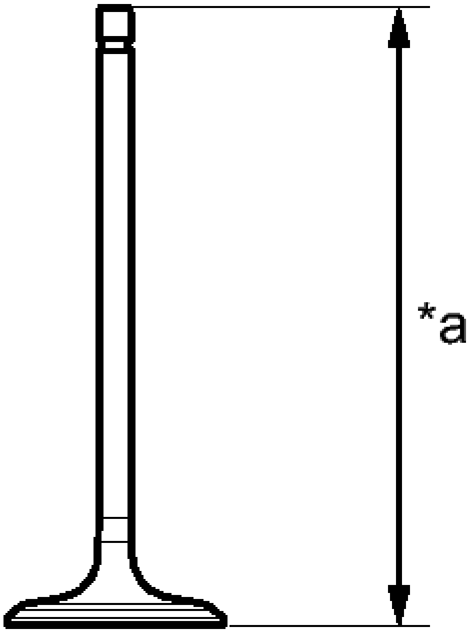

Fig. 309: Measuring Overall Length Of Intake Valve
Courtesy of TOYOTA MOTOR SALES, U.S.A., INC.

Standard overall length

103.92 mm (4.09 in.)

Minimum overall length

103.42 mm (4.07 in.)

TEXT IN ILLUSTRATION

*a	Overall Length

If the overall length is less than the minimum, replace the intake valve.

4. **INSPECT EXHAUST VALVE**
    a. Using a micrometer, measure the diameter of the valve stem.

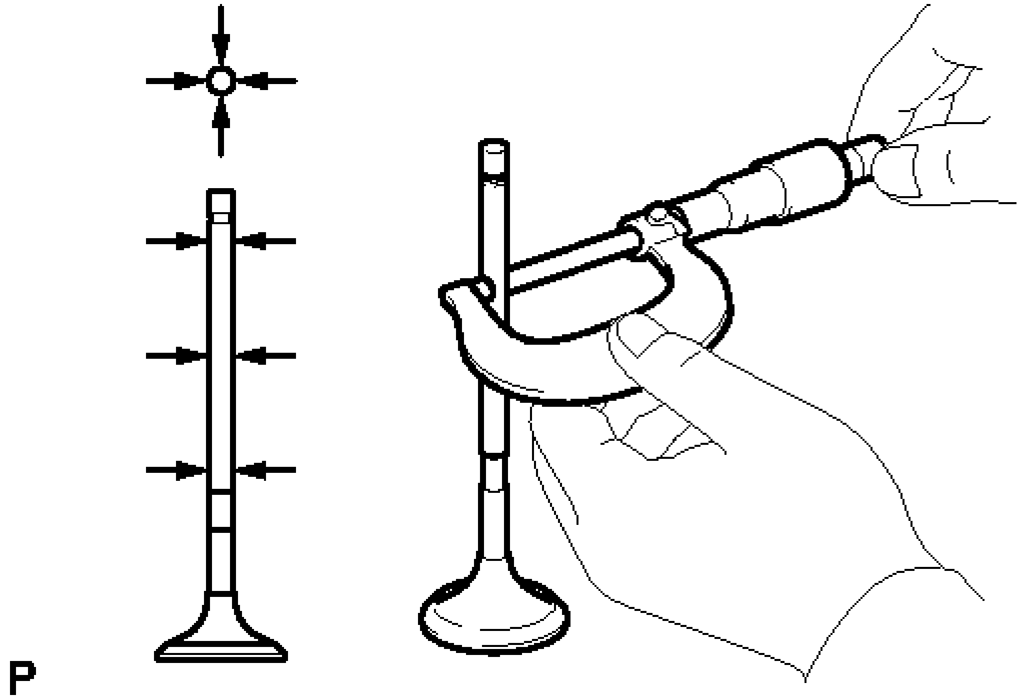

Fig. 310: Measuring Diameter Of Valve Stem
Courtesy of TOYOTA MOTOR SALES, U.S.A., INC.

Standard valve stem diameter

5.465 mm to 5.480 mm (0.21516 to 0.21575 in.)

b. Using a vernier caliper, measure the valve head margin thickness.

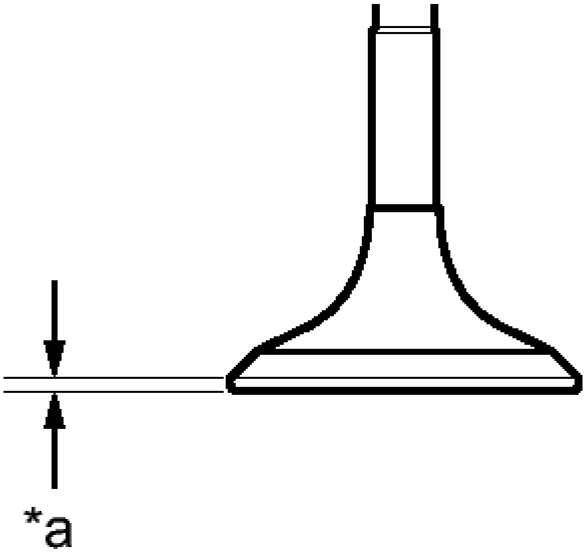

Fig. 311: Measuring Valve Head Margin Thickness
Courtesy of TOYOTA MOTOR SALES, U.S.A., INC.

Standard margin thickness

1.0 mm (0.0394 in.)

Minimum margin thickness

0.50 mm (0.0197 in.)

TEXT IN ILLUSTRATION

*a	Margin Thickness

If the margin thickness is less than the minimum, replace the exhaust valve.

c. Using a vernier caliper, measure the overall length of the exhaust valve.

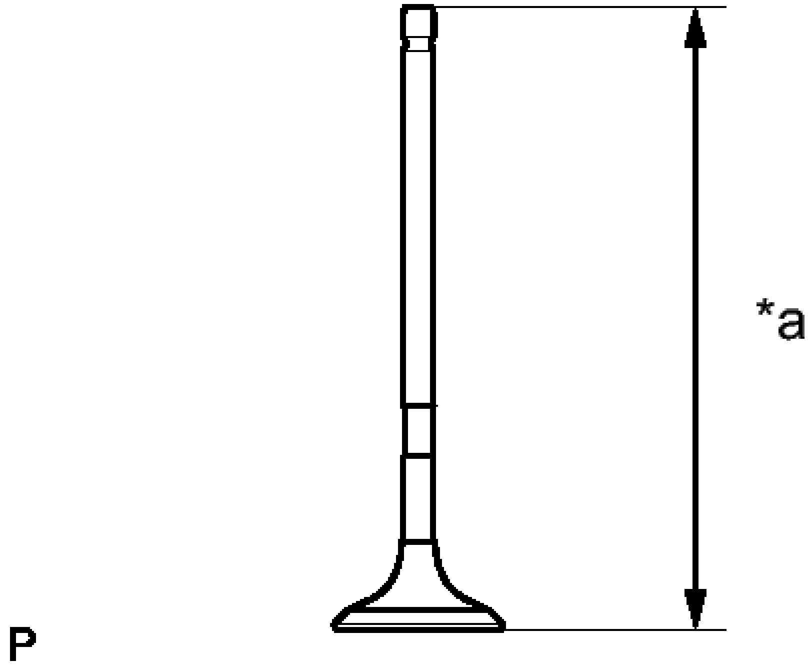

Fig. 312: Measuring Overall Length Of Exhaust Valve
Courtesy of TOYOTA MOTOR SALES, U.S.A., INC.

Standard overall length

112.91 mm (4.44 in.)

Minimum overall length

112.41 mm (4.43 in.)

TEXT IN ILLUSTRATION

*a	Overall Length

If the overall length is less than the minimum, replace the exhaust valve.

5. **INSPECT VALVE GUIDE BUSH OIL CLEARANCE**
    a. Using a caliper gauge, measure the inside diameter of the guide bush.

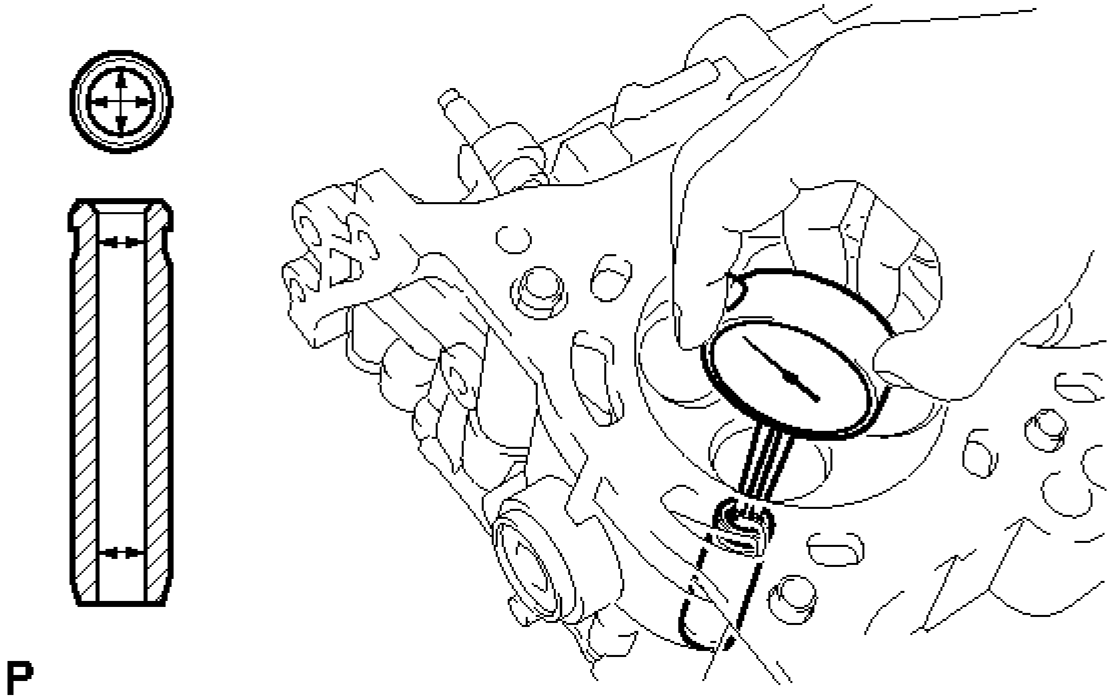

Fig. 313: Measuring Inside Diameter Of Guide Bush
Courtesy of TOYOTA MOTOR SALES, U.S.A., INC.

Standard bush inside diameter

5.510 to 5.530 mm (0.2169 to 0.2177 in.)

b. Subtract the valve stem diameter measurement from the guide bush inside diameter measurement.

Standard Oil Clearance

Item	Specified Condition
Intake	0.025 to 0.060 mm (0.000984 to 0.00236 in.)
Exhaust	0.030 to 0.065 mm (0.00118 to 0.00256 in.)

Maximum Oil Clearance

	Specified

Item	Condition
Intake	0.08 mm (0.00315 in.)
Exhaust	0.10 mm (0.00394 in.)

If the oil clearance is more than the maximum, replace the valve and guide bush.

6. **INSPECT INTAKE VALVE SEAT**
   a. Apply a light coat of Prussian blue to the valve face.
   b. Lightly press the valve face against the valve seat.

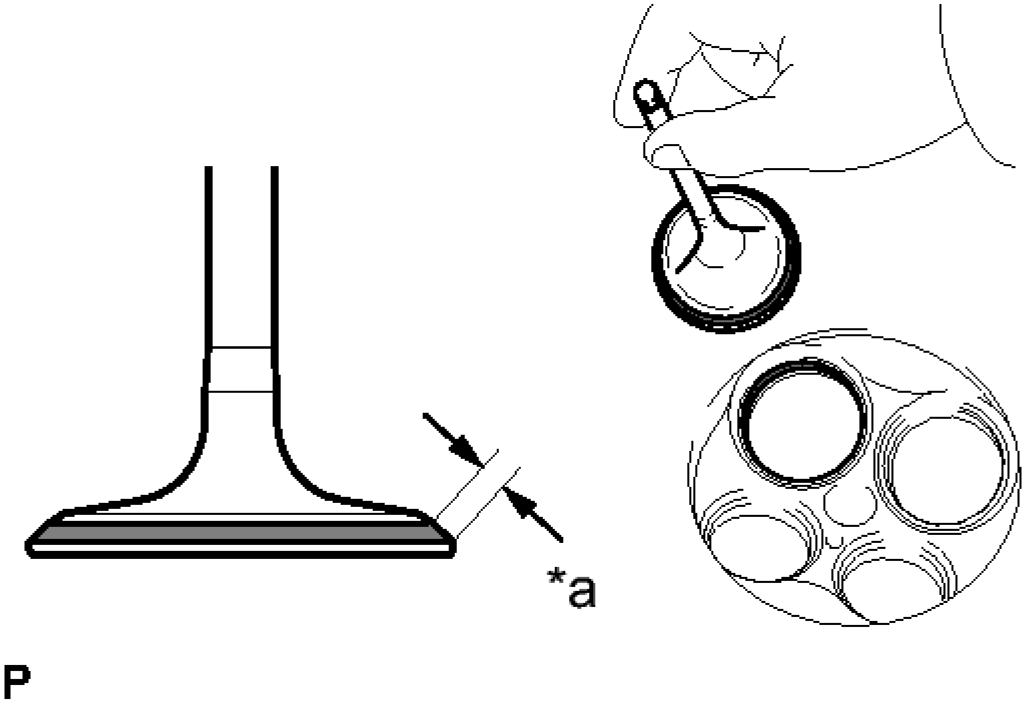

Fig. 314: Identifying Intake Valve Seat Width
Courtesy of TOYOTA MOTOR SALES, U.S.A., INC.

TEXT IN ILLUSTRATION

*a	Width

HINT:

Do not rotate the valve while pressing the valve.

   c. Check the valve face and valve seat.
      1. Check that the contact surfaces of the valve seat and valve face are in the middle area of their

respective surfaces, with the width between 1.1 and 1.5 mm (0.0433 and 0.0591 in.).

If not, correct the valve seat.

2. Check that the contact surfaces of the valve seat and valve face are even around the entire valve seat.

   If not, correct the valve seat.

7. **INSPECT EXHAUST VALVE SEAT**
   a. Apply a light coat of Prussian blue to the valve face.
   b. Lightly press the valve face against the valve seat.

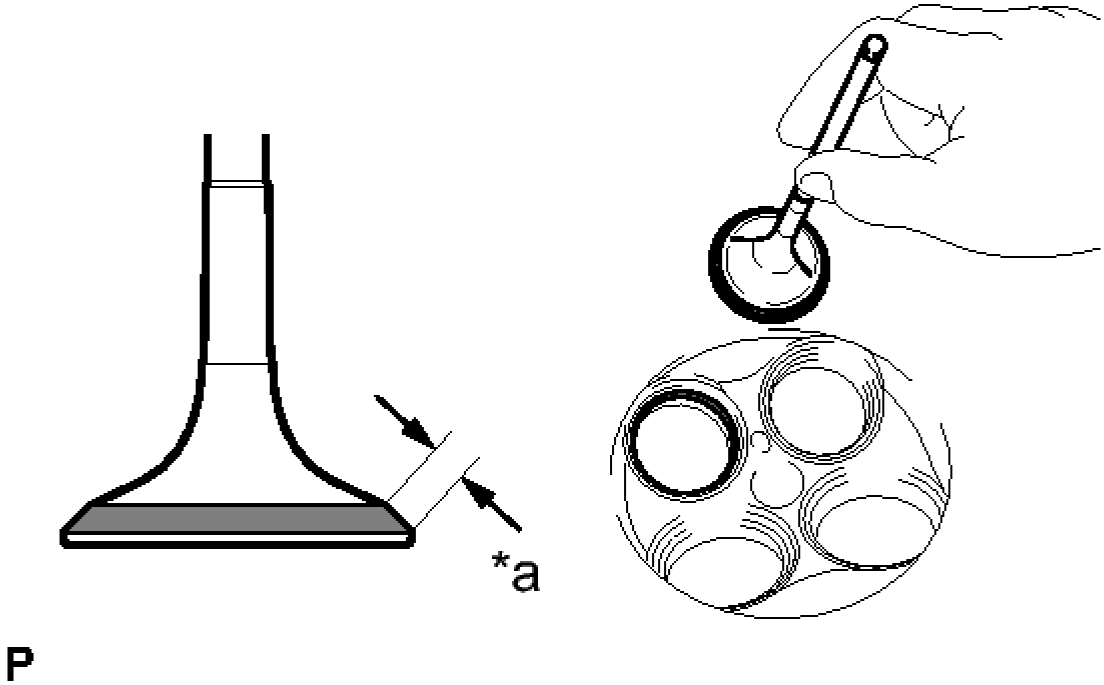

Fig. 315: Identifying Exhaust Valve Seat Width
Courtesy of TOYOTA MOTOR SALES, U.S.A., INC.

TEXT IN ILLUSTRATION

*a	Width

HINT:

Do not rotate the valve while pressing the valve.

c. Check the valve face and valve seat.
   1. Check that the contact surfaces of the valve seat and valve face are in the middle area of their respective surfaces, with the width between 1.1 and 1.5 mm (0.0433 and 0.0591 in.).

If not, correct the valve seat.

2. Check that the contact surfaces of the valve seat and valve face are even around the entire valve seat.

   If not, correct the valve seat.

8. **INSPECT CAMSHAFT OIL CLEARANCE**

NOTE: **Do not turn the camshafts.**

a. Clean the bearing caps, camshaft housing and camshaft journals.
b. Place the camshafts on the camshaft housing.
c. Lay a strip of Plastigage across each of the camshaft journals.

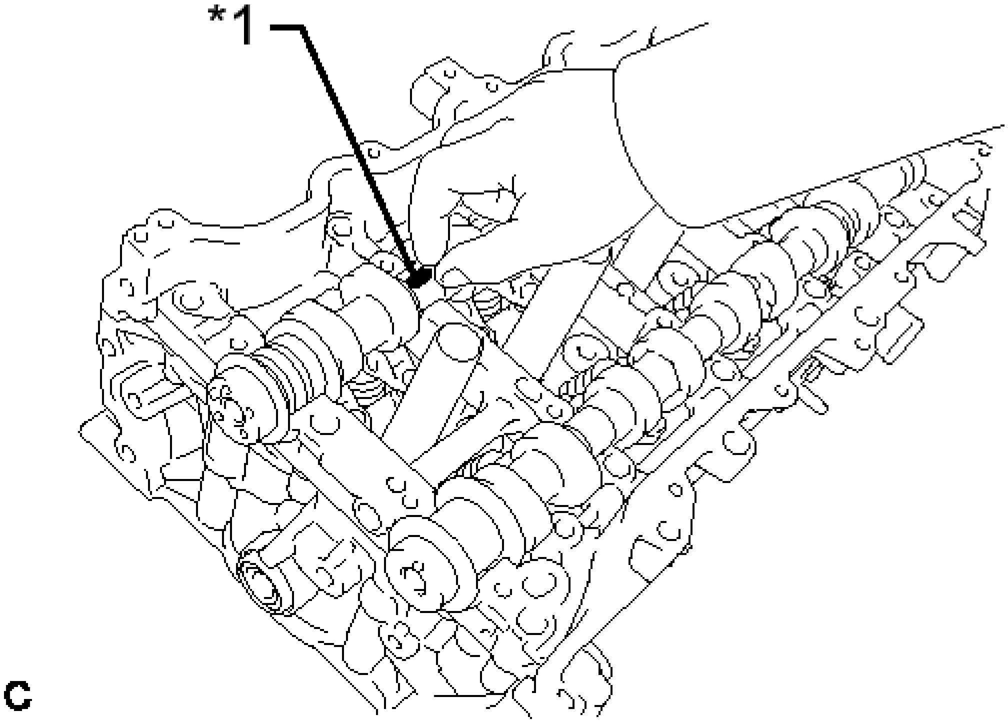

Fig. 316: Identifying Plastigage
Courtesy of TOYOTA MOTOR SALES, U.S.A., INC.

TEXT IN ILLUSTRATION

*1	Plastigage

d. Install the camshaft bearing caps See step 13.
e. Install the camshaft housing sub-assembly See step 14.
f. Remove the camshaft bearing caps See step 22.
g. Measure the Plastigage at its widest point.

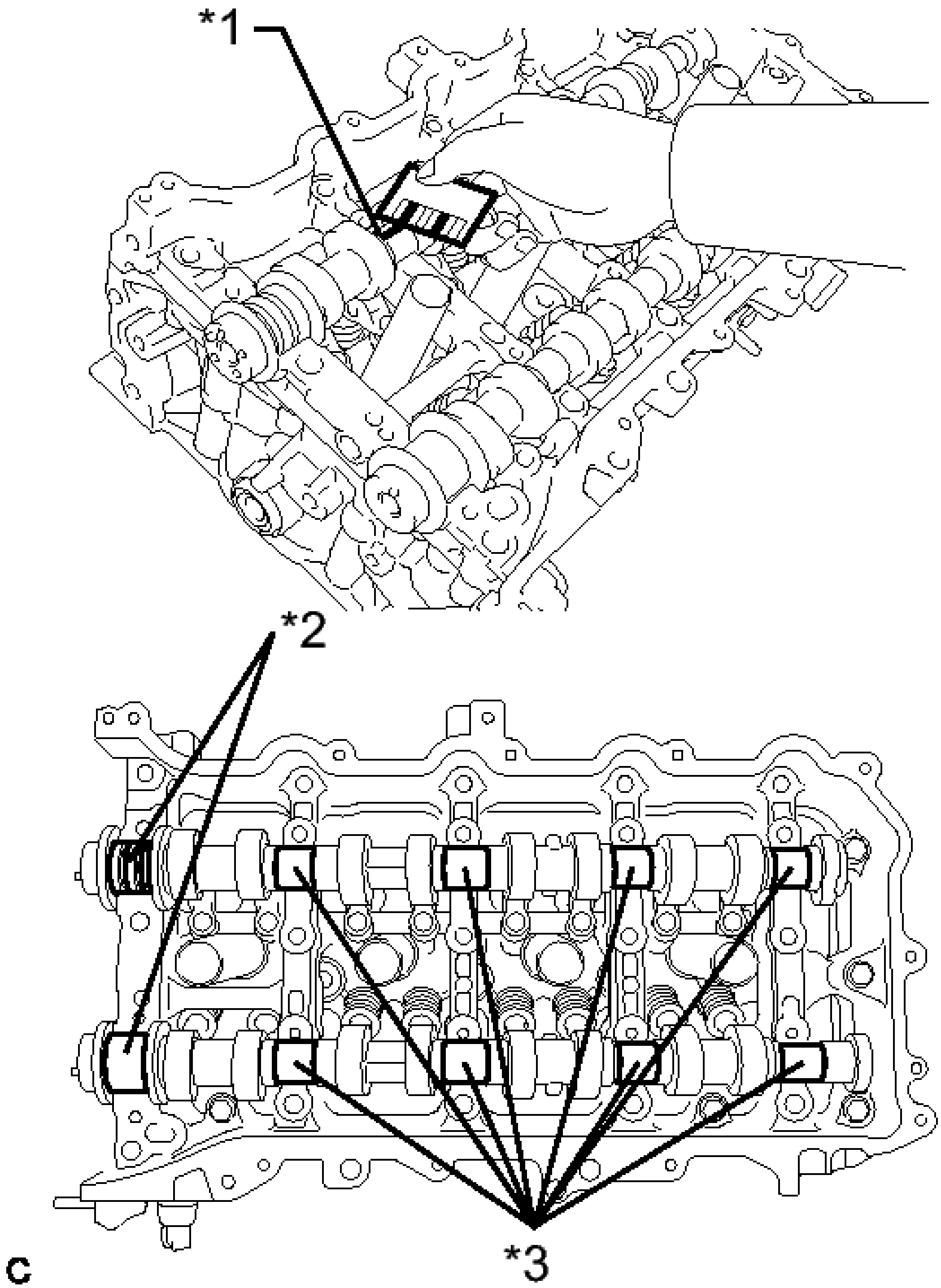

Fig. 317: Measuring Plastigage At Widest Point
Courtesy of TOYOTA MOTOR SALES, U.S.A., INC.

Standard Oil Clearance

Item	Specified Condition
Intake No. 1 journal	0.035 to 0.072 mm (0.00137 to 0.00283 in.)
Exhaust No. 1 journal	0.005 to 0.054 mm (0.000197 to 0.00213 in.)
Other journal	0.025 to 0.062 mm (0.000984 to 0.00244 in.)

Maximum Oil Clearance

Item	Specified Condition
Intake No. 1 journal	0.085 mm (0.00335 in.)
Exhaust No. 1 journal	0.085 mm (0.00335 in.)
Other journal	0.085 mm (0.00335 in.)

TEXT IN ILLUSTRATION

*1	Plastigage
*2	No. 1 Journal
*3	Other Journal

If the oil clearance is more than the maximum, replace the camshaft. If necessary, replace the camshaft housing.

9. **INSPECT CAMSHAFT THRUST CLEARANCE**
   a. Clean the bearing caps, camshaft housing and camshaft journals.
   b. Place the camshafts on the camshaft housing.

c. Install the camshaft bearing caps See step 13.
d. Install the camshaft housing sub-assembly See step 14.
e. Using a dial indicator, measure the thrust clearance while moving the camshaft back and forth.

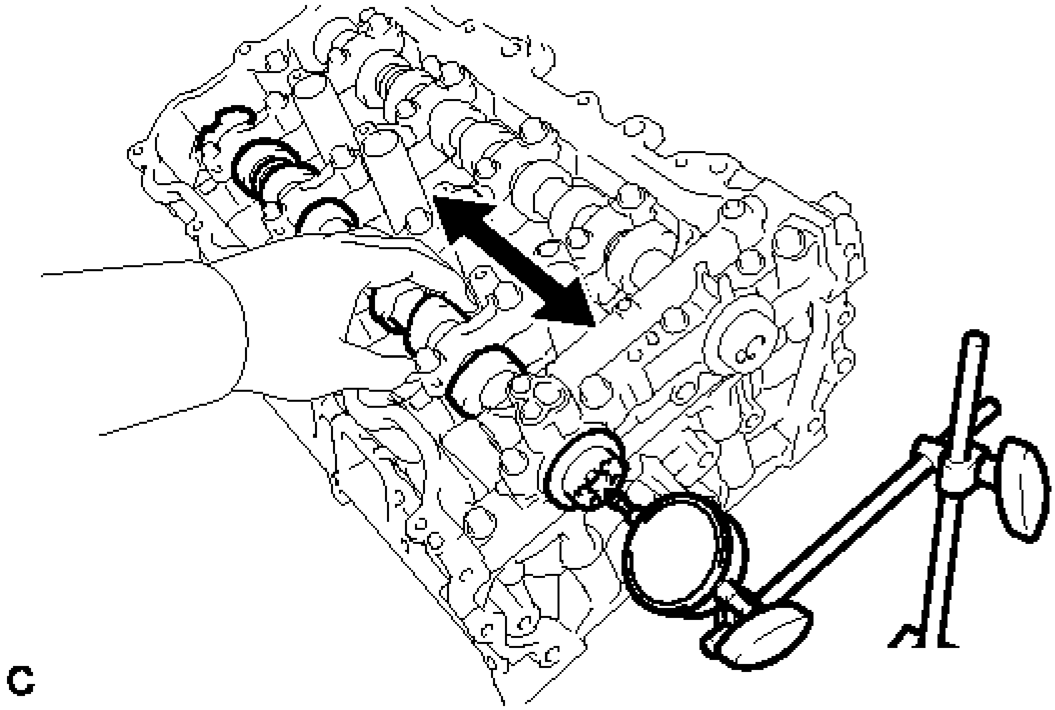

Fig. 318: Measuring Thrust Clearance Using Dial Indicator
Courtesy of TOYOTA MOTOR SALES, U.S.A., INC.

Standard Thrust Clearance

Item	Specified Condition
Intake	0.060 to 0.155 mm (0.00236 to 0.00610 in.)
Exhaust	0.060 to 0.155 mm (0.00236 to 0.00610 in.)

Maximum Thrust Clearance

Item	Specified Condition

Intake	0.170 mm (0.00669 in.)
Exhaust	0.170 mm (0.00669 in.)

If the thrust clearance is more than the maximum, replace the camshaft housing. If the thrust surface is damaged, replace the camshaft.

REPLACEMENT

REPLACEMENT

1. **REPLACE INTAKE VALVE GUIDE BUSH**
   a. Heat the cylinder head to approximately 80 to 100°C (176 to 212°F).
   b. Place the cylinder head on wooden blocks.
   c. Using SST and a hammer, tap out the intake valve guide bush.

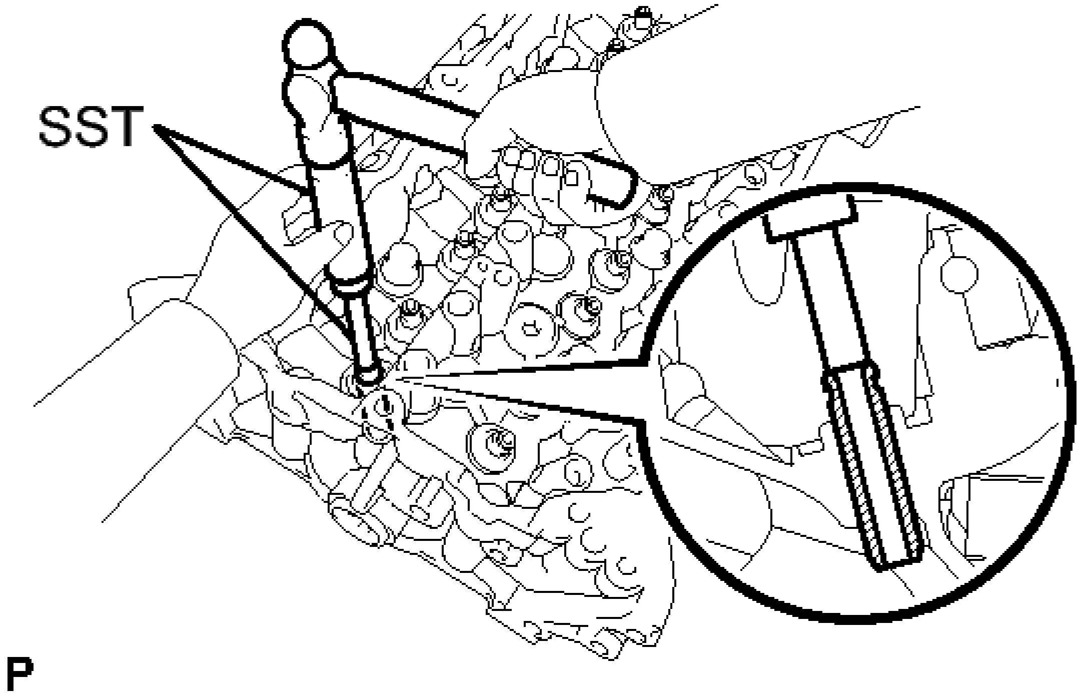

Fig. 319: Tapping Out Intake Valve Guide Bush
Courtesy of TOYOTA MOTOR SALES, U.S.A., INC.

- **SST: 09201-01055**
- **SST: 09950-70010**
  09951-07100

d. Using a caliper gauge, measure the bush bore diameter of the cylinder head.

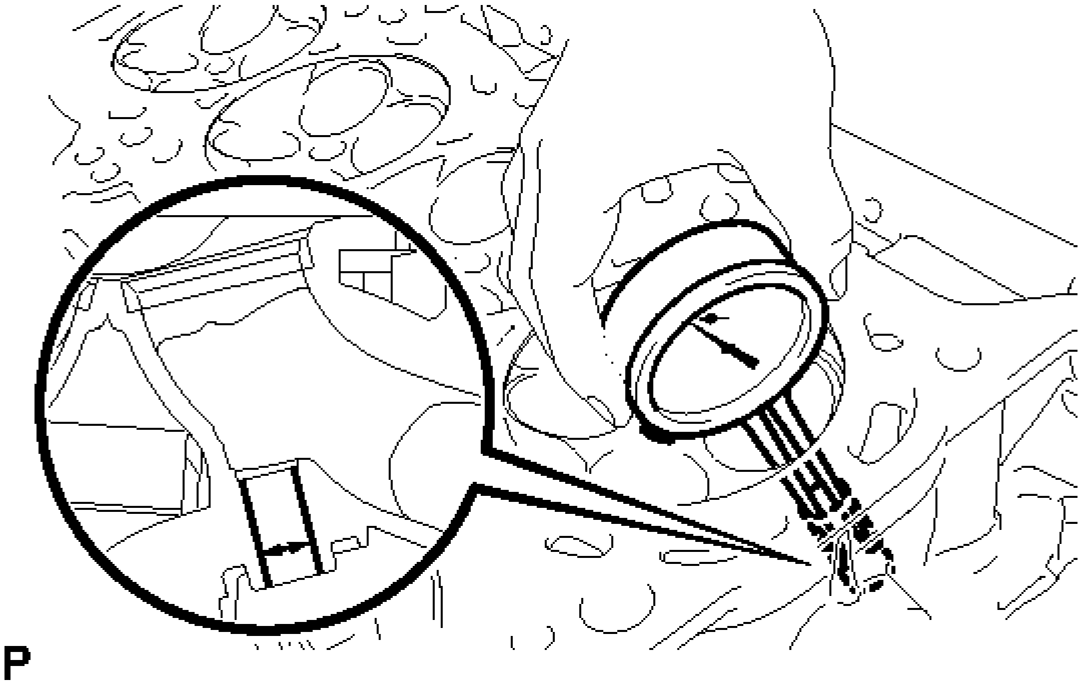

Fig. 320: Measuring Bush Bore Diameter Of Cylinder Head
Courtesy of TOYOTA MOTOR SALES, U.S.A., INC.

Standard bush bore diameter

10.285 to 10.306 mm (0.405 to 0.406 in.)

If the bush bore diameter of the cylinder head is 10.356 mm (0.408 in.) or more, replace the cylinder head.

e. Select a new guide bush (STD or O/S 0.05), and measure its diameter.
f. Machine the bush bore of the cylinder head to the diameter of the selected guide bush.

Bush Bore Diameter

Bush Size	Specified Condition
STD	10.333 to 10.344 mm (0.4068 to 0.4072 in.)
	10.383 to

O/S 0.05	10.394 mm (0.4088 to 0.4092 in.)

Standard bush length

41.3 to 41.7 mm (1.626 to 1.642 in.)

g. Heat the cylinder head to approximately 80 to 100°C (176 to 212°F).

h. Using SST and a hammer, tap in the selected guide bush to the standard protrusion height.

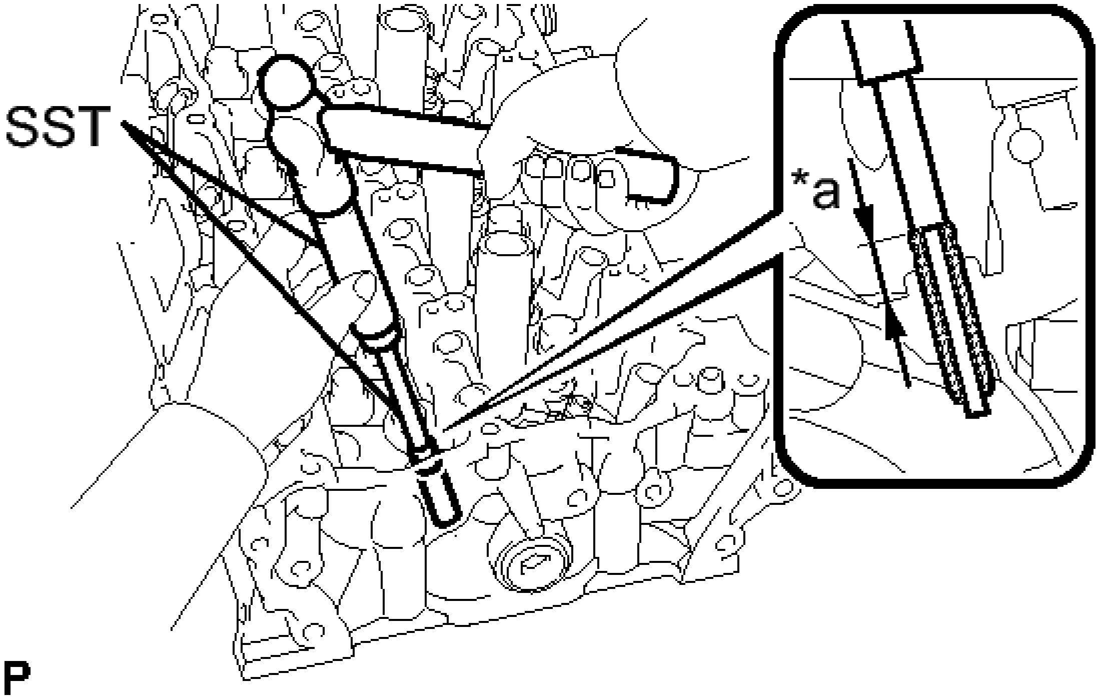

Fig. 321: Tapping Selected Guide Bush
Courtesy of TOYOTA MOTOR SALES, U.S.A., INC.

- **SST: 09201-10000**
  09201-01050
- **SST: 09950-70010**
  09951-07100

Standard protrusion height

14.8 to 15.2 mm (0.582 to 0.598 in.)

TEXT IN ILLUSTRATION

*a	Height

i. Using a sharp 5.5 mm reamer, ream the guide bush to obtain the standard oil clearance between the guide bush and valve stem.

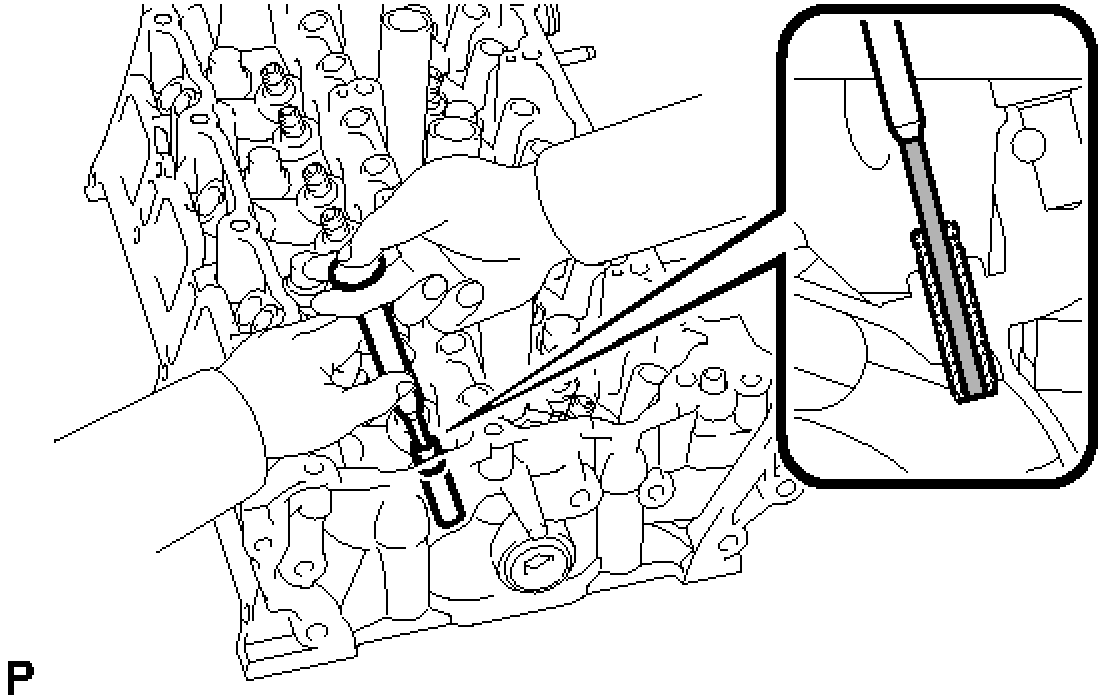

Fig. 322: Reaming Guide Bush
Courtesy of TOYOTA MOTOR SALES, U.S.A., INC.

Standard oil clearance

0.025 to 0.060 mm (0.000984 to 0.00236 in.)

2. **REPLACE EXHAUST VALVE GUIDE BUSH**
    a. Heat the cylinder head to approximately 80 to 100°C (176 to 212°F).
    b. Place the cylinder head on wooden blocks.
    c. Using SST and a hammer, tap out the exhaust valve guide bush.

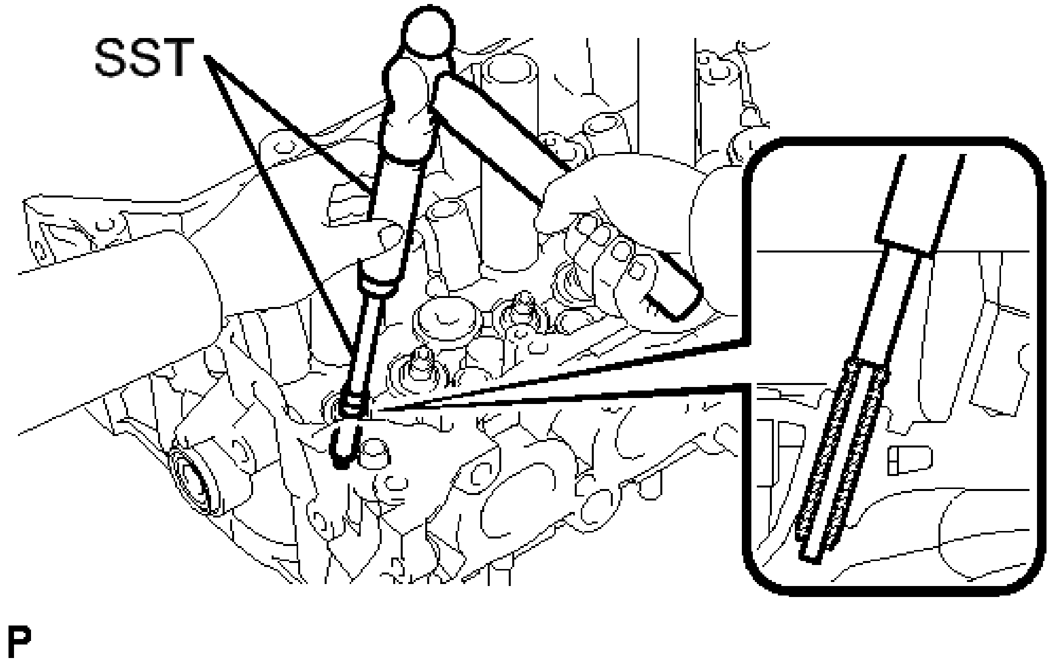

Fig. 323: Tapping Exhaust Valve Guide Bush
Courtesy of TOYOTA MOTOR SALES, U.S.A., INC.

- **SST: 09201-01055**
- **SST: 09950-70010**
  09951-07100

d. Using a caliper gauge, measure the bush bore diameter of the cylinder head.

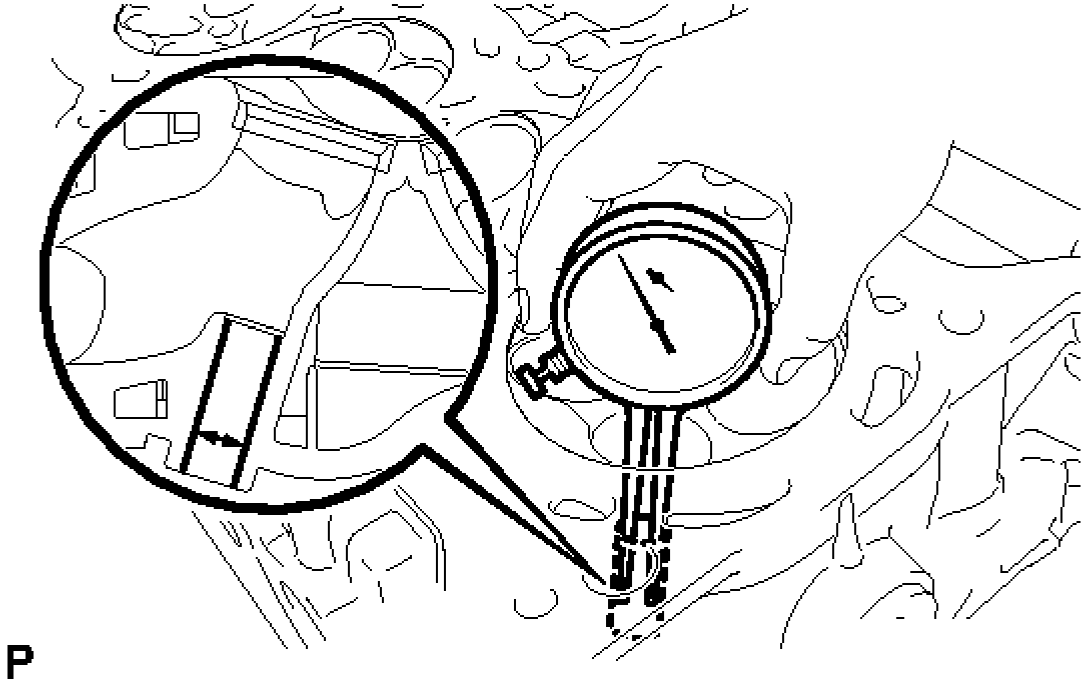

Fig. 324: Measuring Bush Bore Diameter Of Cylinder Head
Courtesy of TOYOTA MOTOR SALES, U.S.A., INC.

Standard bush bore diameter

10.285 to 10.306 mm (0.405 to 0.406 in.)

If the bush bore diameter of the cylinder head is 10.356 mm (0.408 in.) or more, replace the cylinder head.

e. Select a new guide bush (STD or O/S 0.05), and measure its diameter.
f. Machine the bush bore of the cylinder head to the diameter of the selected guide bush.

Bush Bore Diameter

Bush Size	Specified Condition
STD	10.333 to 10.344 mm (0.4068 in 0.4072 in.)
O/S 0.05	10.383 to 10.394 mm (0.4088 to 0.4092 in.)

Standard bush length

46.8 to 47.2 mm (1.843 to 1.858 in.)

g. Heat the cylinder head to approximately 80 to 100°C (176 to 212°F).
h. Using SST and a hammer, tap in the selected guide bush to the standard protrusion height.

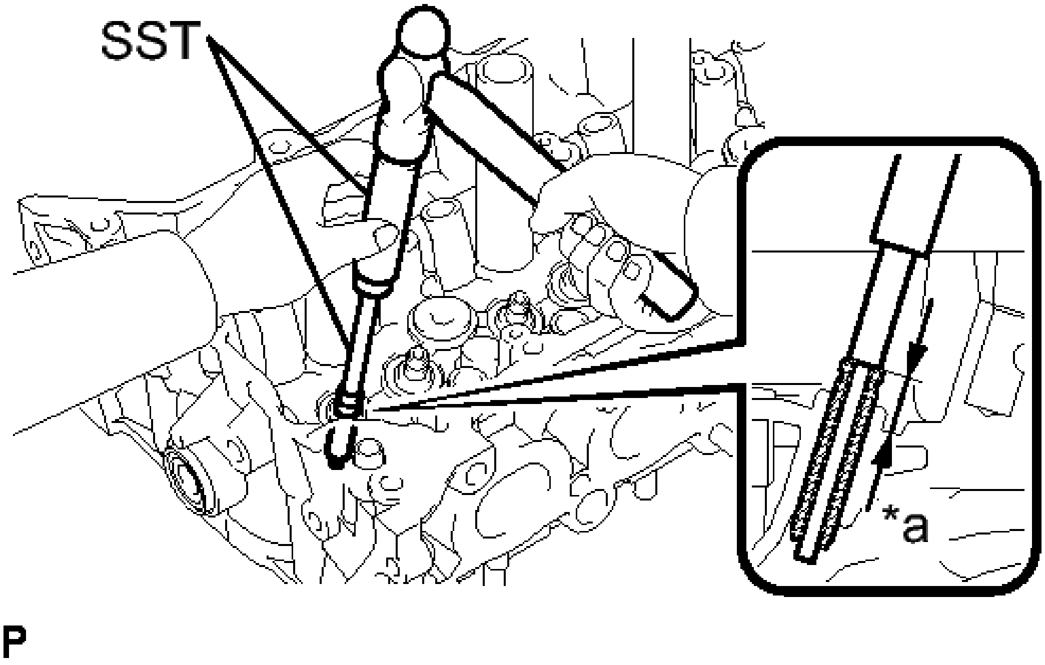

Fig. 325: Tapping Selected Guide Bush
Courtesy of TOYOTA MOTOR SALES, U.S.A., INC.

- **SST: 09201-10000**
  09201-01050
- **SST: 09950-70010**
  09951-07100

Standard protrusion height

14.2 to 14.6 mm (0.559 to 0.575 in.)

TEXT IN ILLUSTRATION

*a	Height

i. Using a sharp 5.5 mm reamer, ream the guide bush to obtain the standard oil clearance between the guide bush and valve stem.

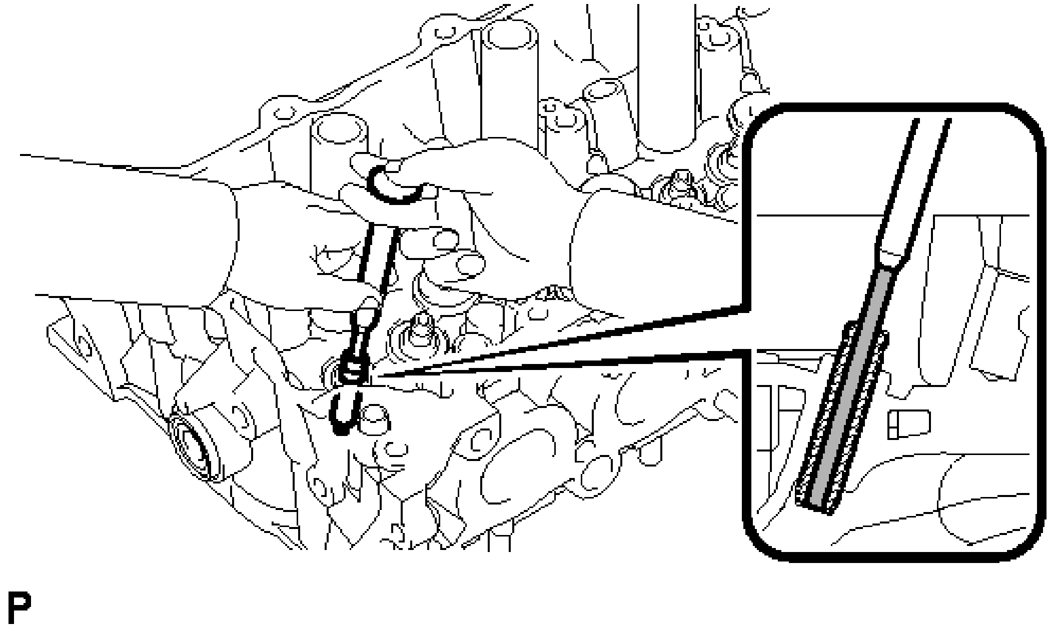

Fig. 326: Reaming Guide Bush
Courtesy of TOYOTA MOTOR SALES, U.S.A., INC.

Standard oil clearance

0.030 to 0.065 mm (0.00118 to 0.00256 in.)

3. **REPLACE RING PIN**

NOTE: It is not necessary to remove the ring pin unless it is being replaced.

a. Remove the ring pins.
b. Using a plastic-faced hammer, tap in 2 new ring pins to the cylinder head.

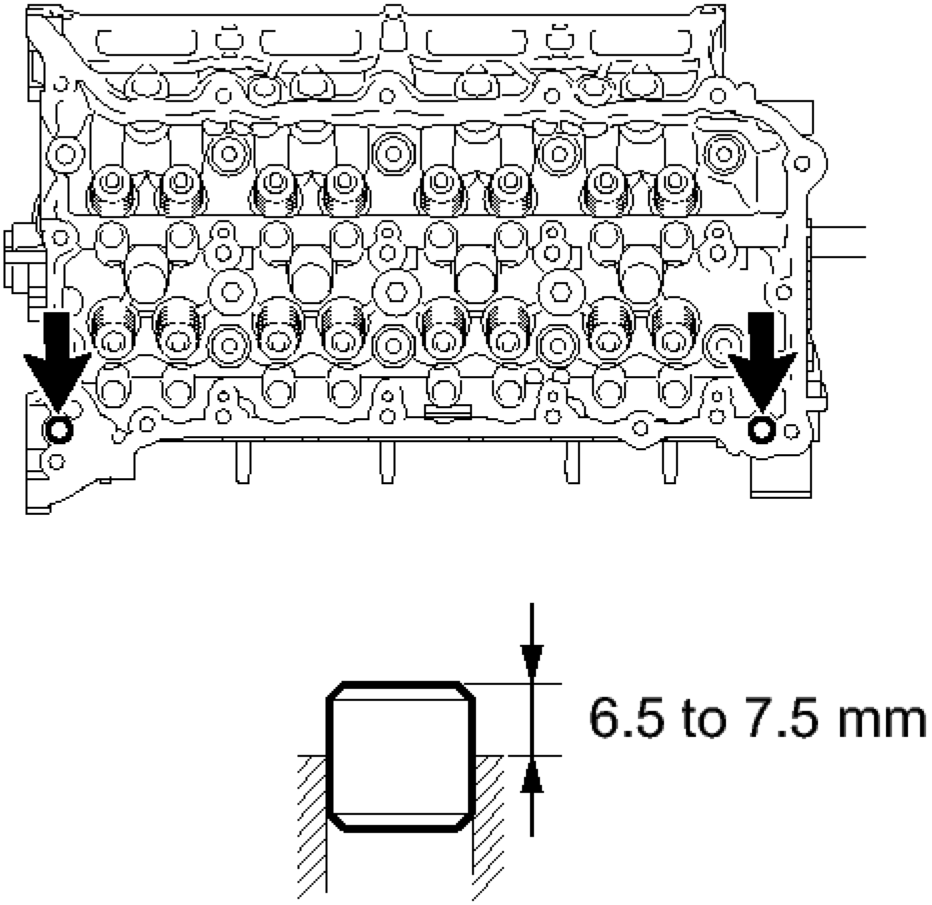

P

Fig. 327: Identifying Protrusion Height
Courtesy of TOYOTA MOTOR SALES, U.S.A., INC.

Standard protrusion height

6.5 to 7.5 mm (0.256 to 0.295 in.)

REASSEMBLY

REASSEMBLY

HINT:

Perform "Inspection After Repair" after replacing the cylinder head sub-assembly. Refer to **INITIALIZATION** .

1. **INSTALL SPARK PLUG TUBE**

HINT:

When using a new cylinder head, the spark plug tubes must be replaced.

a. Apply adhesive onto the shaded area of a new spark plug tube.

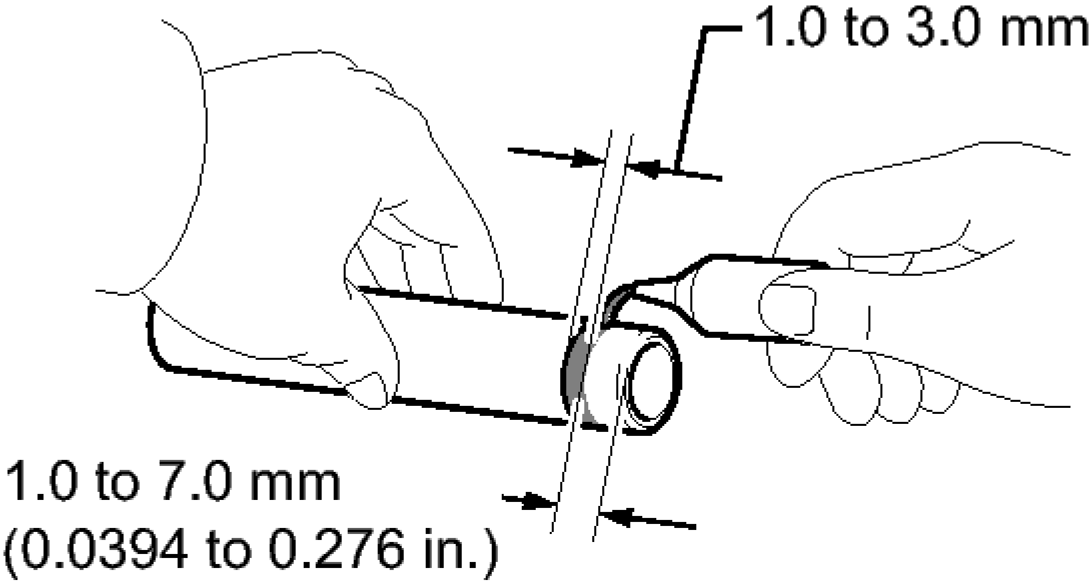

Fig. 328: Applying Adhesive To Spark Plug Tube
Courtesy of TOYOTA MOTOR SALES, U.S.A., INC.

Adhesive

Toyota Genuine Adhesive 1324, Three Bond 1324 or equivalent.

Standard application width

1.0 to 3.0 mm (0.0394 to 0.118 in.)

NOTE:

- **Install the spark plug tube within 3 minutes after applying adhesive.**
- **Be careful not to deform the spark plug tube.**
- **Be careful not to expose the seal to coolant for at least 1 hour after installing it.**

b. Using a wooden block and hammer, tap in the spark plug tube to the specified protrusion height.

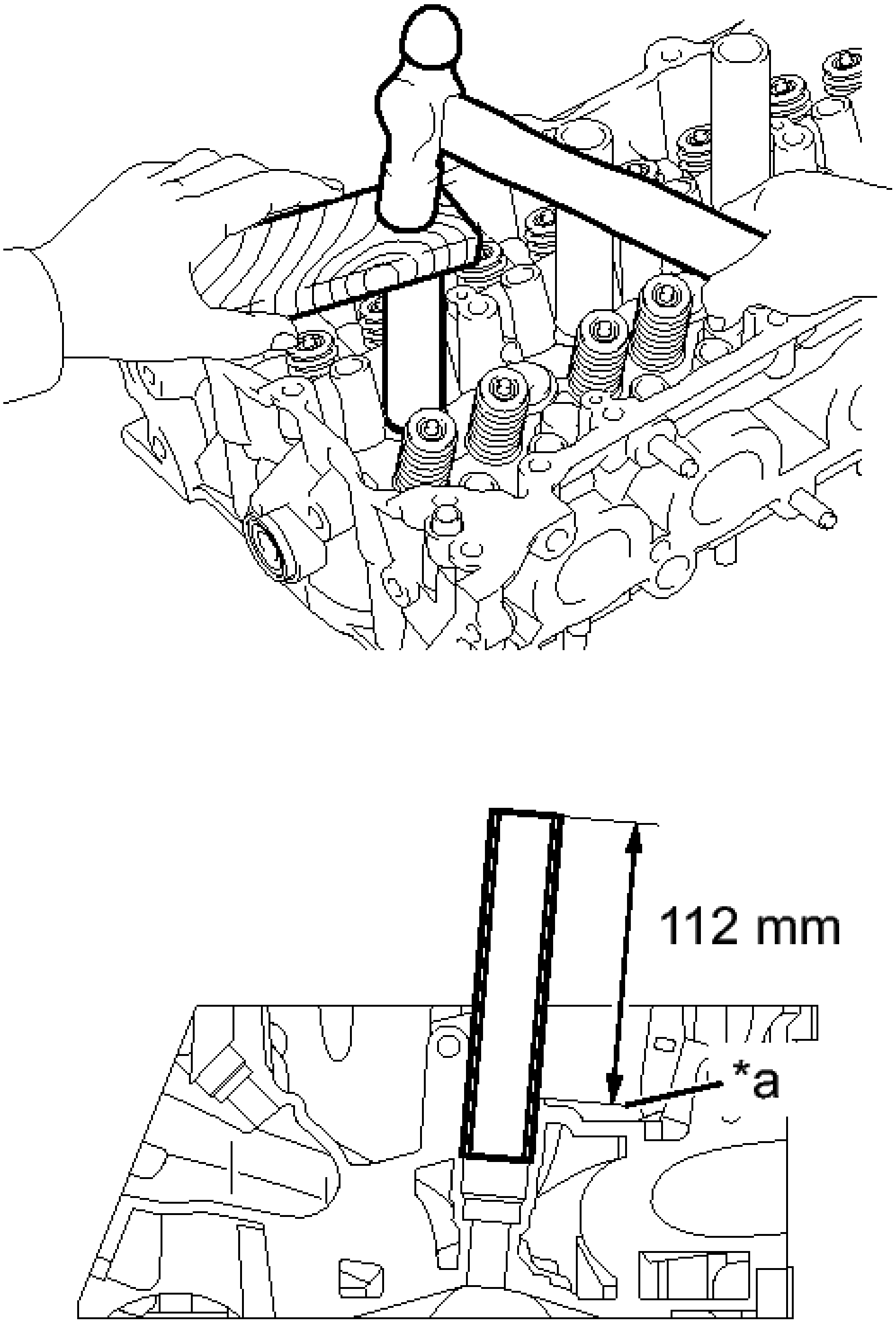

P

Fig. 329: Tapping Spark Plug Tube To Specified Protrusion Height Using A Wooden Block & Hammer
Courtesy of TOYOTA MOTOR SALES, U.S.A., INC.

TEXT IN ILLUSTRATION

*a	Cylinder Head Casting Surface

Standard protrusion height

112 mm (4.41 in.)

NOTE: **To avoid tapping in the spark plug tube too far, measure the protrusion height while tapping it.**

2. **INSTALL CYLINDER HEAD STUD BOLT**
   a. Using an E7 "TORX" socket wrench, install the 5 cylinder head stud bolts.

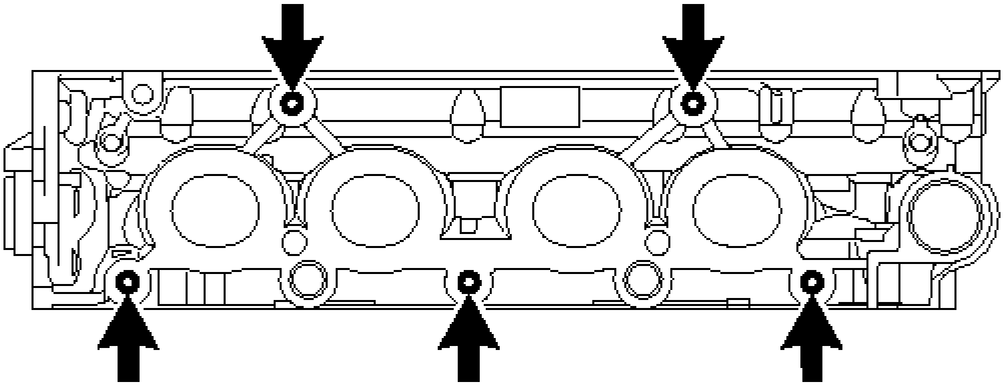

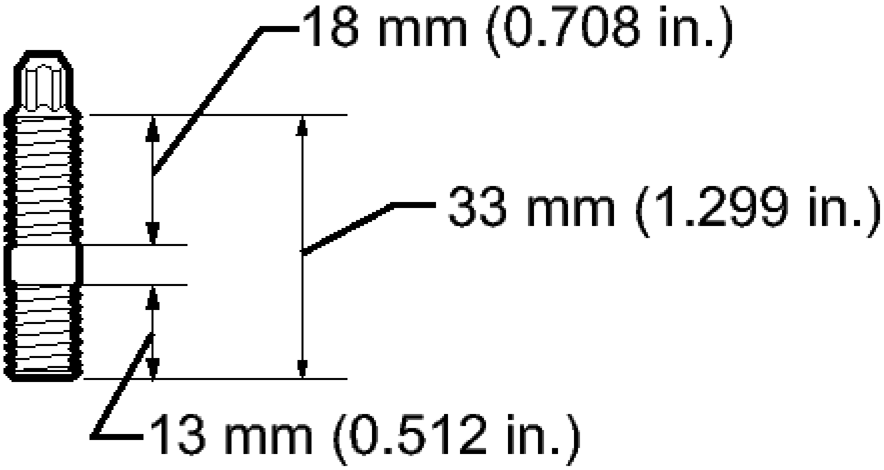
18 mm (0.708 in.)
33 mm (1.299 in.)
13 mm (0.512 in.)

P

Fig. 330: Identifying Cylinder Head Stud Bolt Dimensions
Courtesy of TOYOTA MOTOR SALES, U.S.A., INC.

Torque: 9.0 N*m (92 kgf*cm, 80 in.*lbf)

3. **INSTALL NO. 1 STRAIGHT SCREW PLUG**
    a. Using a 10 mm hexagon wrench, install 3 new gaskets and the 3 No. 1 straight screw plugs.

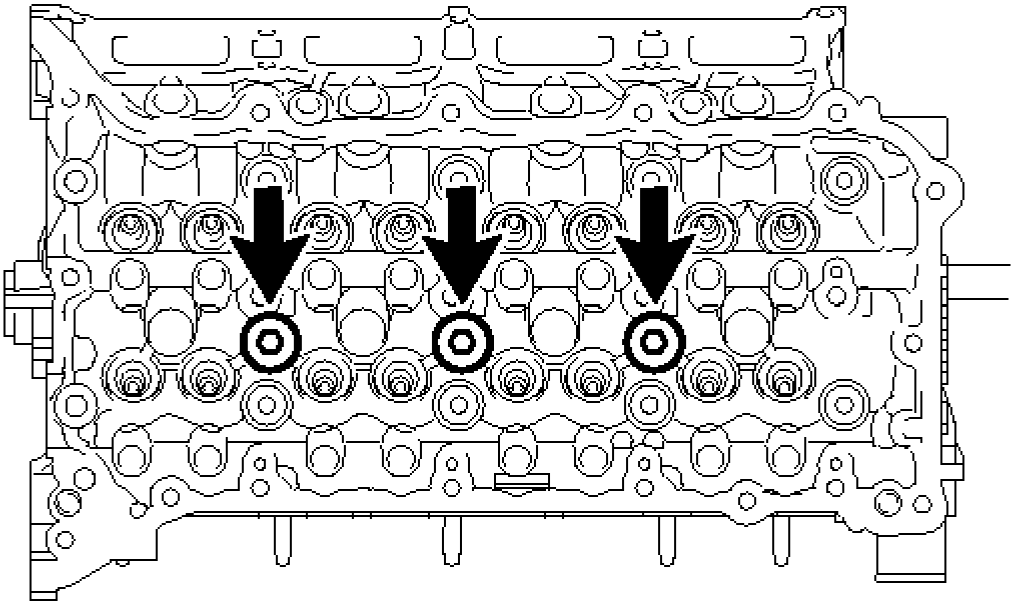

Fig. 331: Locating No. 1 Straight Screw Plugs
Courtesy of TOYOTA MOTOR SALES, U.S.A., INC.

Torque: 44 N*m (449 kgf*cm, 32 ft.*lbf)

4. **INSTALL NO. 2 STRAIGHT SCREW PLUG**
    a. Using a 14 mm hexagon wrench, install a new gasket and the No. 2 straight screw plug.

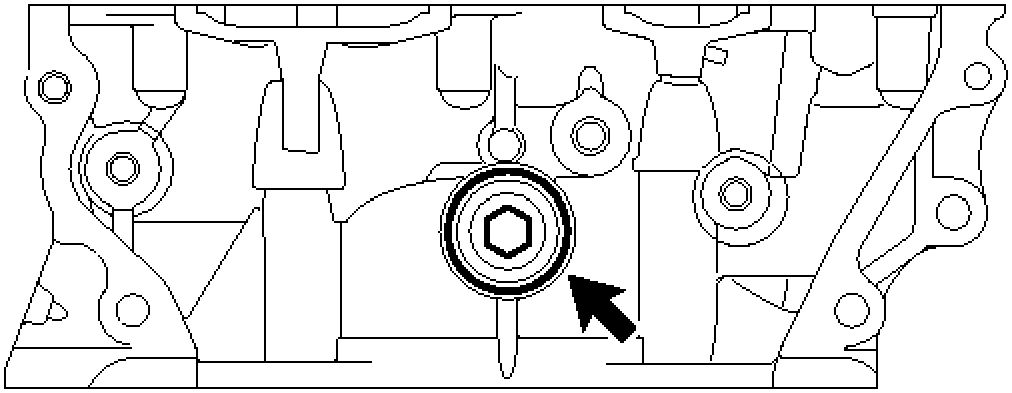

Fig. 332: Locating No. 2 Straight Screw Plug
Courtesy of TOYOTA MOTOR SALES, U.S.A., INC.

Torque: 78 N*m (795 kgf*cm, 58 ft.*lbf)

5. **INSTALL VALVE SPRING SEAT**
   1. Install the valve spring seats to the cylinder head.
6. **INSTALL VALVE STEM OIL SEAL**
   1. Apply a light coat of engine oil to new oil seals.

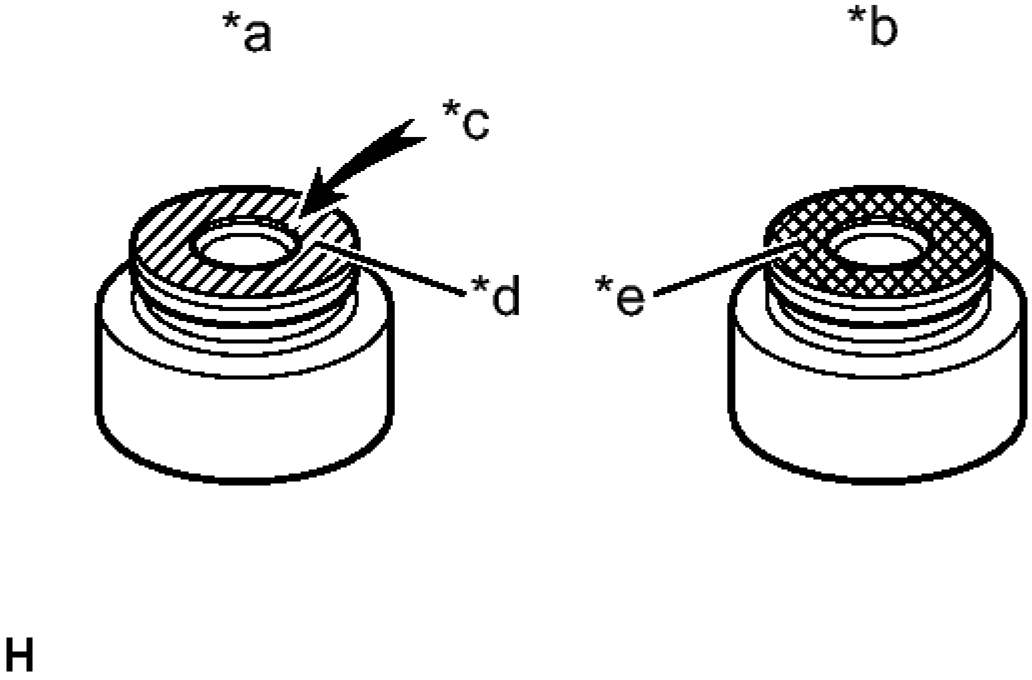

Fig. 333: Identifying Valve Stem Oil Seals
Courtesy of TOYOTA MOTOR SALES, U.S.A., INC.

TEXT IN ILLUSTRATION

*a	Intake
*b	Exhaust
*c	Mark "NOK"
*d	Gray
*e	Black

NOTE: **Pay attention when installing the intake and exhaust oil seals. For example, installing the intake oil seal onto the exhaust side or installing the exhaust oil seal onto the intake side can cause installation problems later.**

HINT:

The intake valve oil seals are gray and the exhaust valve oil seals are black.

b. Using SST, push in the intake and exhaust valve oil seals.

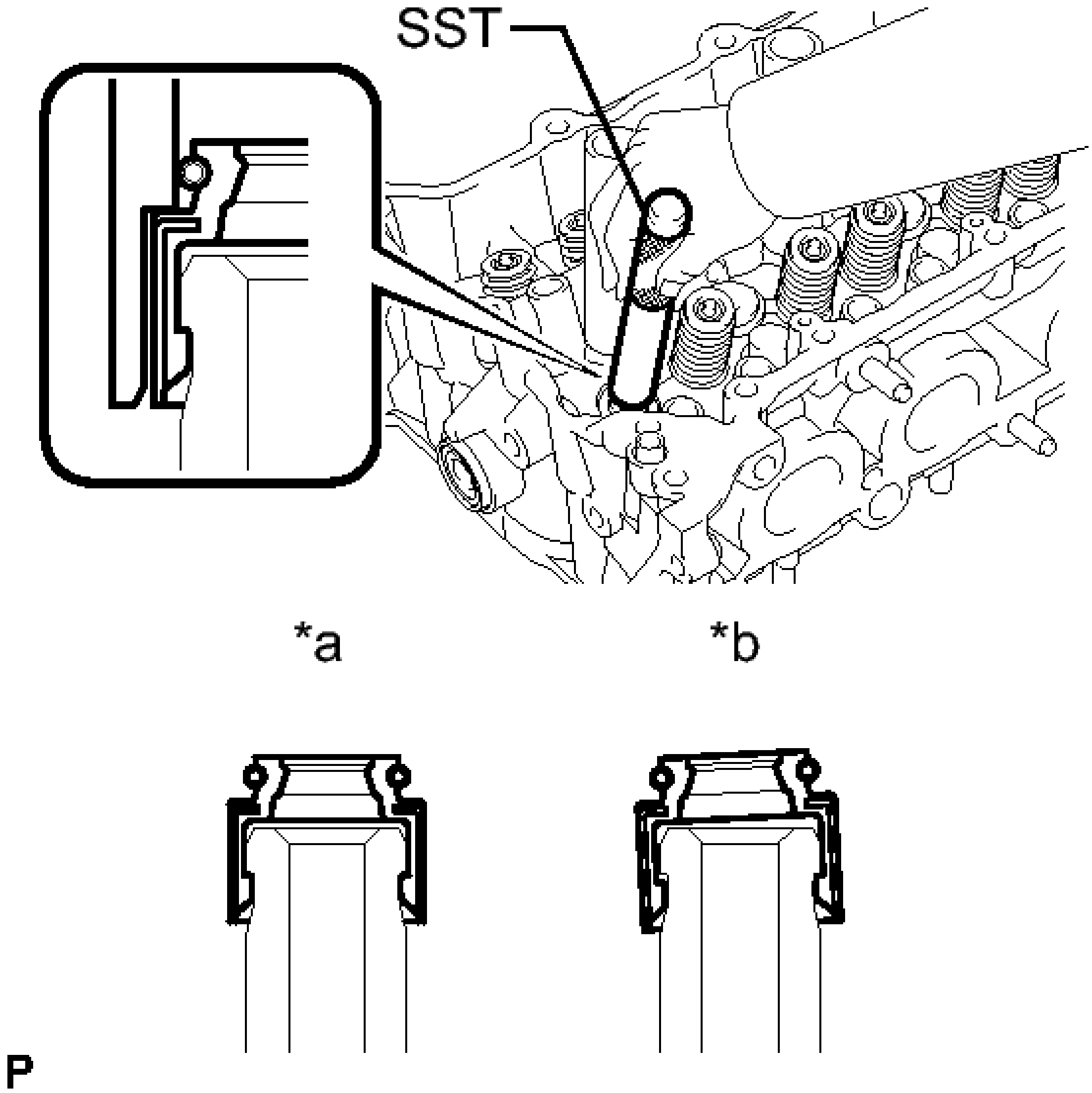

Fig. 334: Installing Valve Oil Seals Using SST
Courtesy of TOYOTA MOTOR SALES, U.S.A., INC.

TEXT IN ILLUSTRATION

*a	CORRECT
*b	INCORRECT

- **SST: 09201-41020**

NOTE: **Failure to use SST will cause the seal to be damaged or improperly seated.**

7. **INSTALL INTAKE VALVE**
    a. Apply plenty of engine oil to the tip area of the intake valve shown in the illustration.

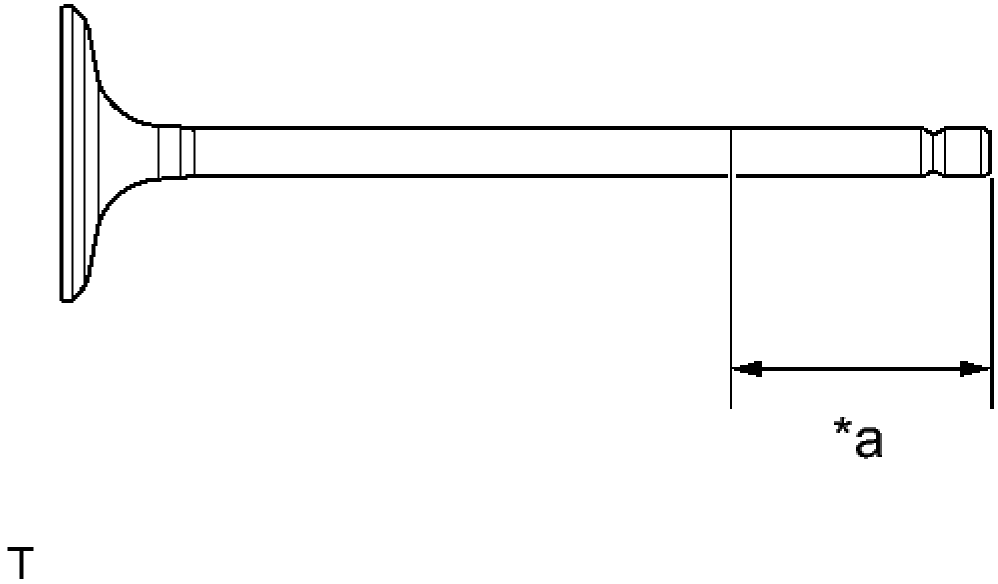

Fig. 335: Measuring Exhaust Or Intake Valve
Courtesy of TOYOTA MOTOR SALES, U.S.A., INC.

TEXT IN ILLUSTRATION

*a	30 mm (1.18 in.) or more

b. Install the intake valve, compression spring and valve spring retainer to the cylinder head.

NOTE: **Install the same parts in the same combination to their original locations.**

c. Using SST and wooden blocks, compress the spring and install the valve spring retainer locks.

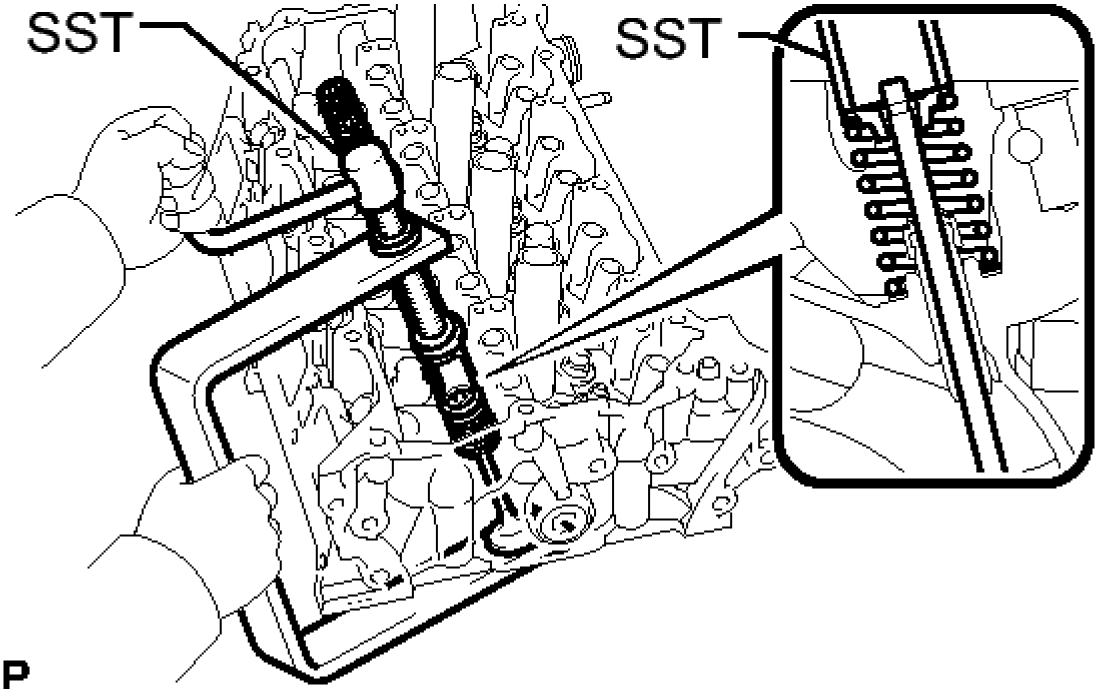

Fig. 336: Compressing Spring
Courtesy of TOYOTA MOTOR SALES, U.S.A., INC.

- **SST: 09202-70020**

  09202-00010

d. Using a plastic-faced hammer, lightly tap the valve stem tip to ensure a proper fit.

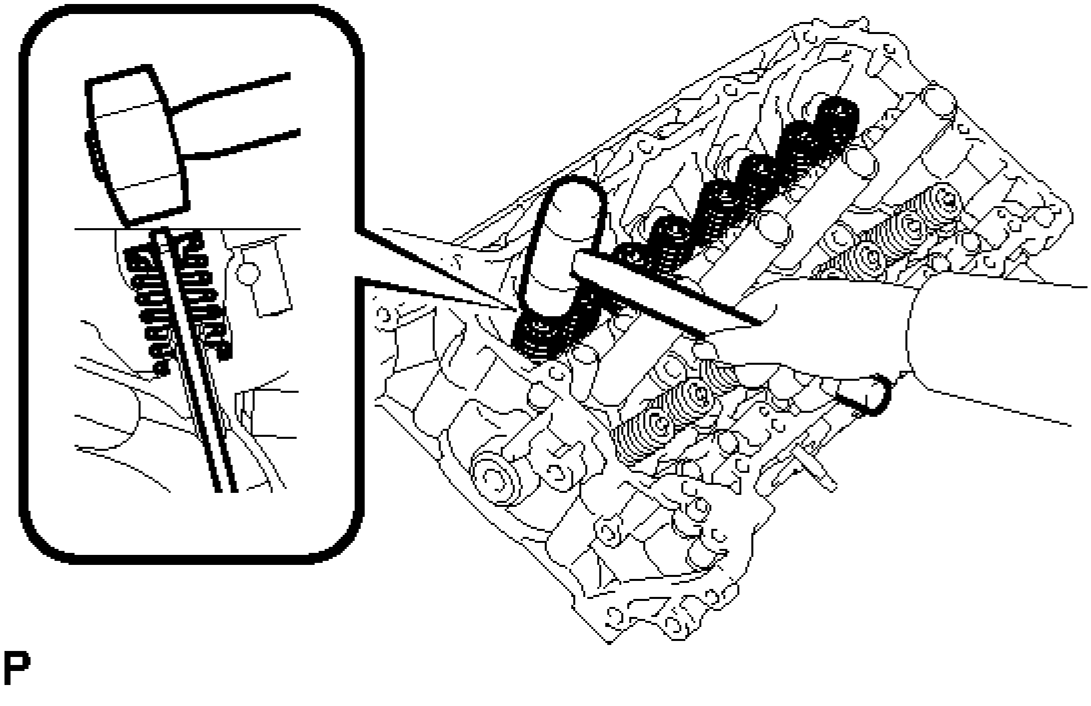

Fig. 337: Tapping Valve Stem Tip
Courtesy of TOYOTA MOTOR SALES, U.S.A., INC.

NOTE: **Be careful not to damage the retainer.**

8. **INSTALL EXHAUST VALVE**
   a. Apply plenty of engine oil to the tip area of the exhaust valve shown in the illustration.

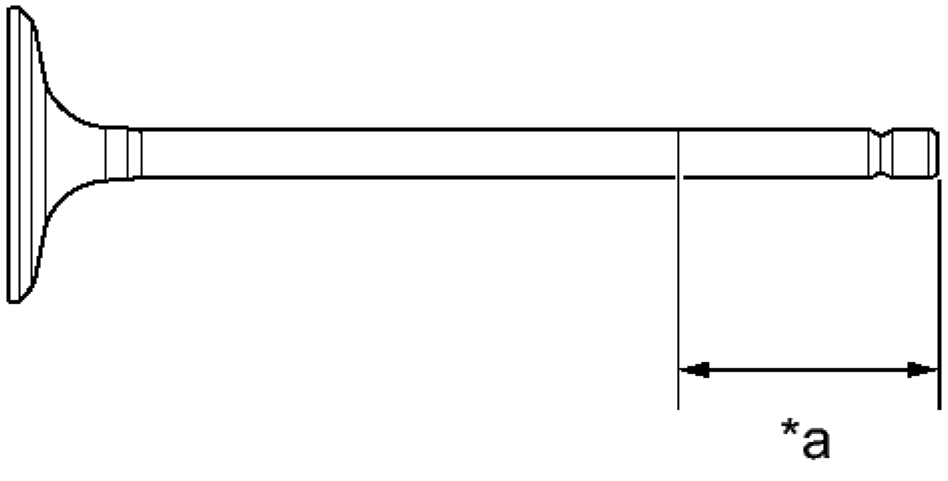

Fig. 338: Measuring Exhaust Or Intake Valve
Courtesy of TOYOTA MOTOR SALES, U.S.A., INC.

TEXT IN ILLUSTRATION

*a	30 mm (1.18 in.) or more

   b. Install the exhaust valve, compression spring and valve spring retainer to the cylinder head.

NOTE: **Install the same parts in the same combination to their original locations.**

   c. Using SST and wooden blocks, compress the spring and install the valve spring retainer locks.

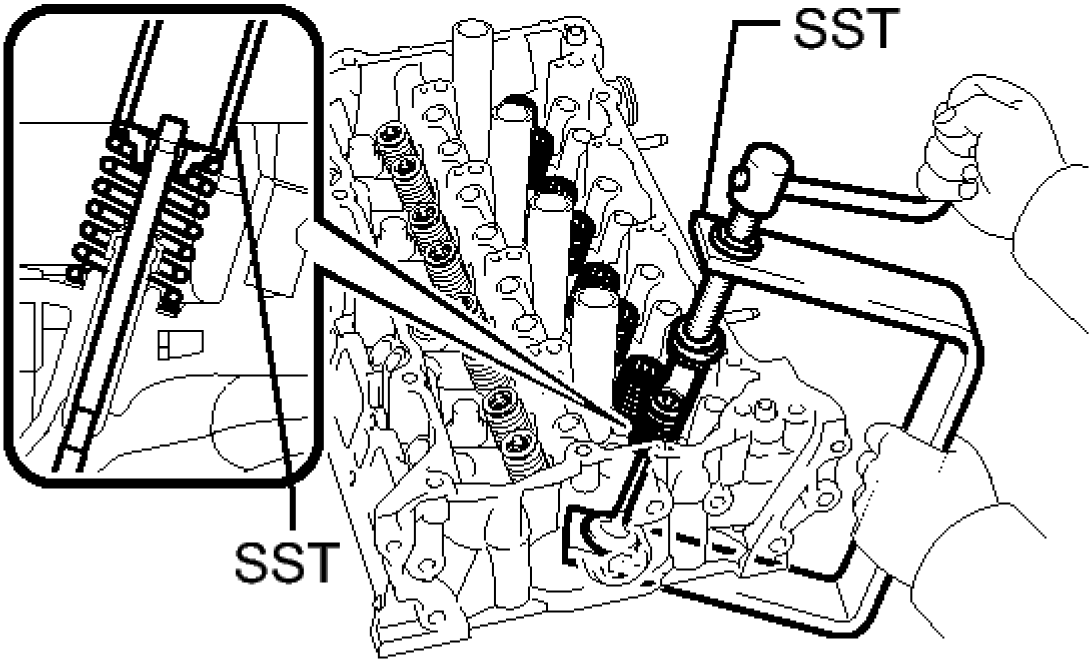

Fig. 339: Compressing Spring
Courtesy of TOYOTA MOTOR SALES, U.S.A., INC.

- **SST: 09202-70020**
  09202-00010

d. Using a plastic-faced hammer, lightly tap the valve stem tip to ensure a proper fit.

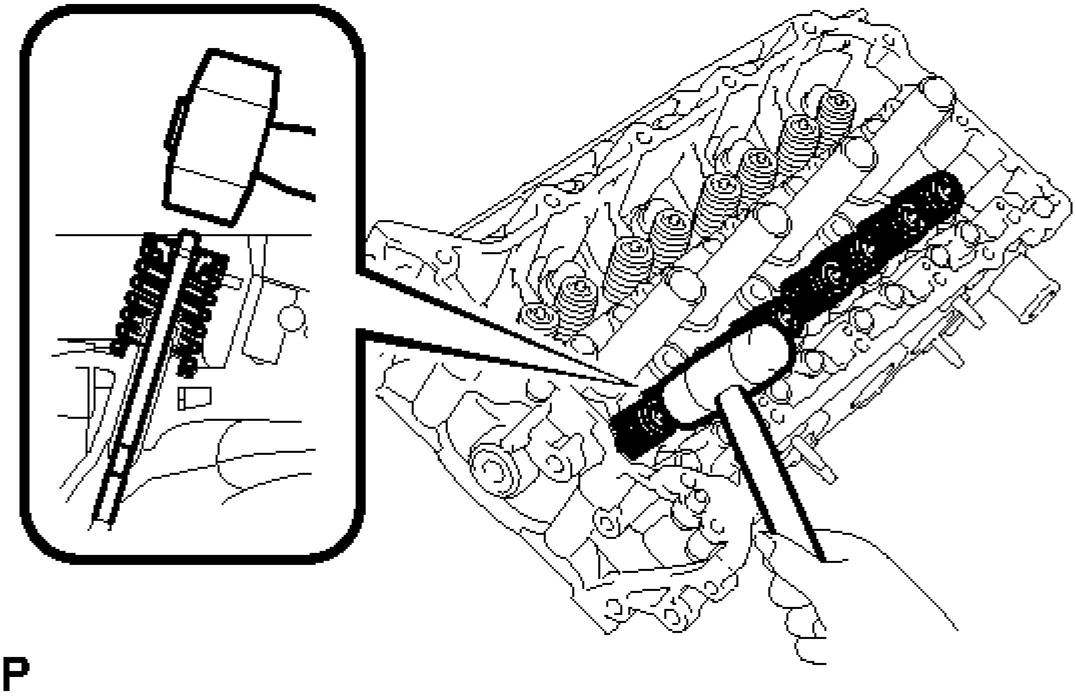

Fig. 340: Tapping Valve Stem Tip
Courtesy of TOYOTA MOTOR SALES, U.S.A., INC.

NOTE: **Be careful not to damage the retainer.**

REPAIR

REPAIR

1. **REPAIR INTAKE VALVE SEAT**

NOTE:

- **Repair the seat while checking the seating position.**
- **Keep the lip free of foreign matter.**
- **Take off the cutter gradually to make the intake valve seat smooth.**

a. Using a 45° cutter, resurface the valve seat so that the valve seat width is more than the specification.

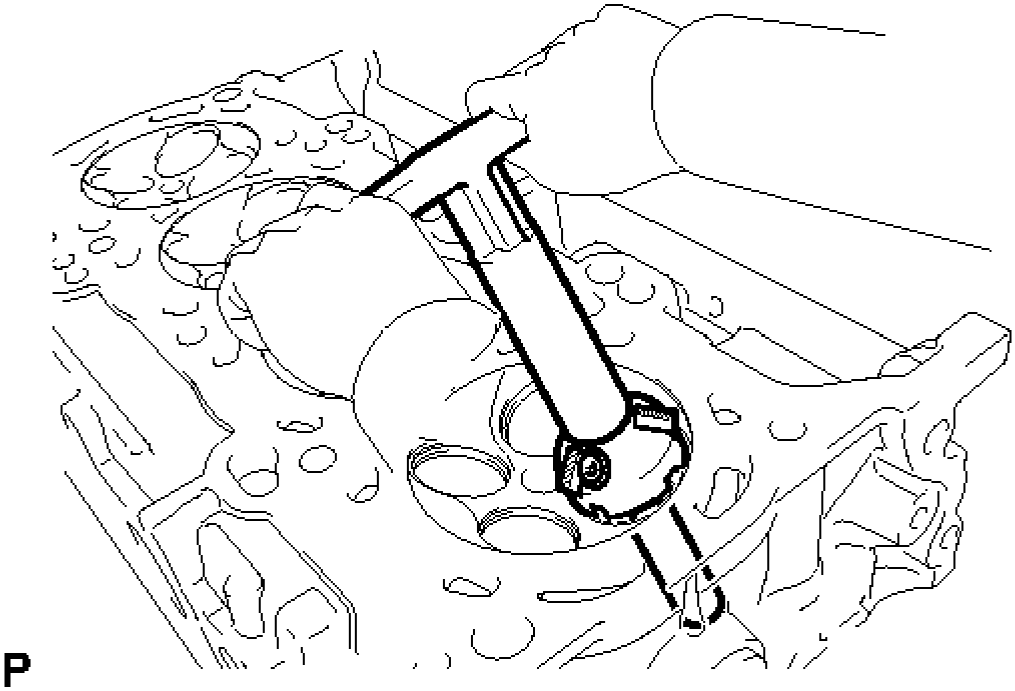

Fig. 341: Cutting Intake Valve Seat
Courtesy of TOYOTA MOTOR SALES, U.S.A., INC.

b. Using 30° and 60° cutters, correct the valve seat so that the valve contacts the entire circumference of the seat. The contact should be in the center of the valve seat, and the valve seat width should be maintained within the specified range around the entire circumference of the seat.

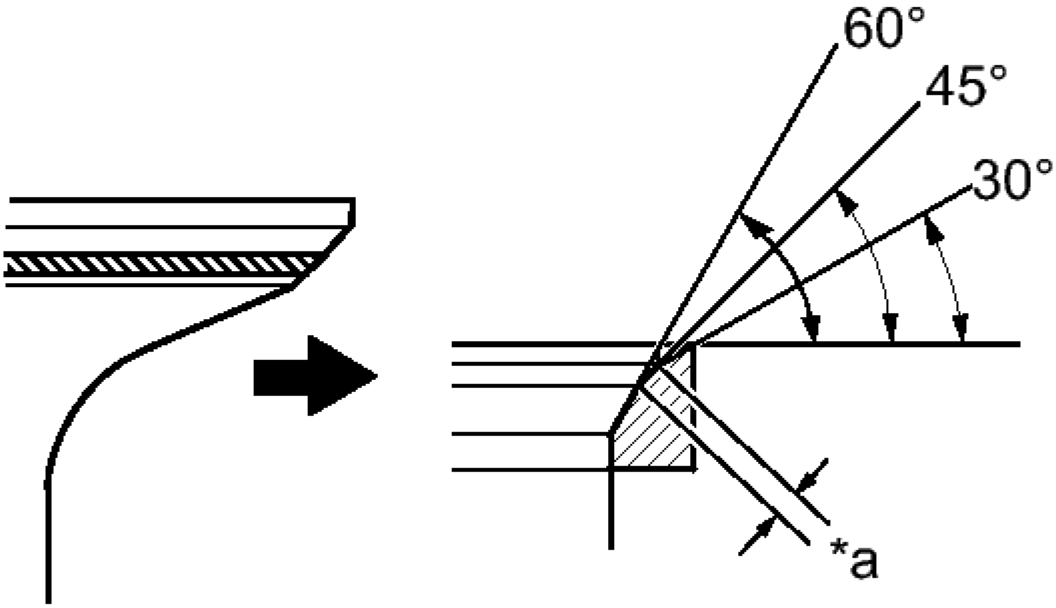

T

Fig. 342: Measuring Seat Width
Courtesy of TOYOTA MOTOR SALES, U.S.A., INC.

Standard width

1.0 to 1.4 mm (0.0394 to 0.0551 in.)

TEXT IN ILLUSTRATION

*a	Width

c. Hand-lap the valve and valve seat with an abrasive compound.
d. Check the valve seating position.

2. **REPAIR EXHAUST VALVE SEAT**

NOTE:

- **Repair the seat while checking the seating position.**
- **Keep the lip free of foreign matter.**
- **Take off the cutter gradually to make the exhaust valve seat smooth.**

a. Using a 45° cutter, resurface the valve seat so that the valve seat width is more than the specification.

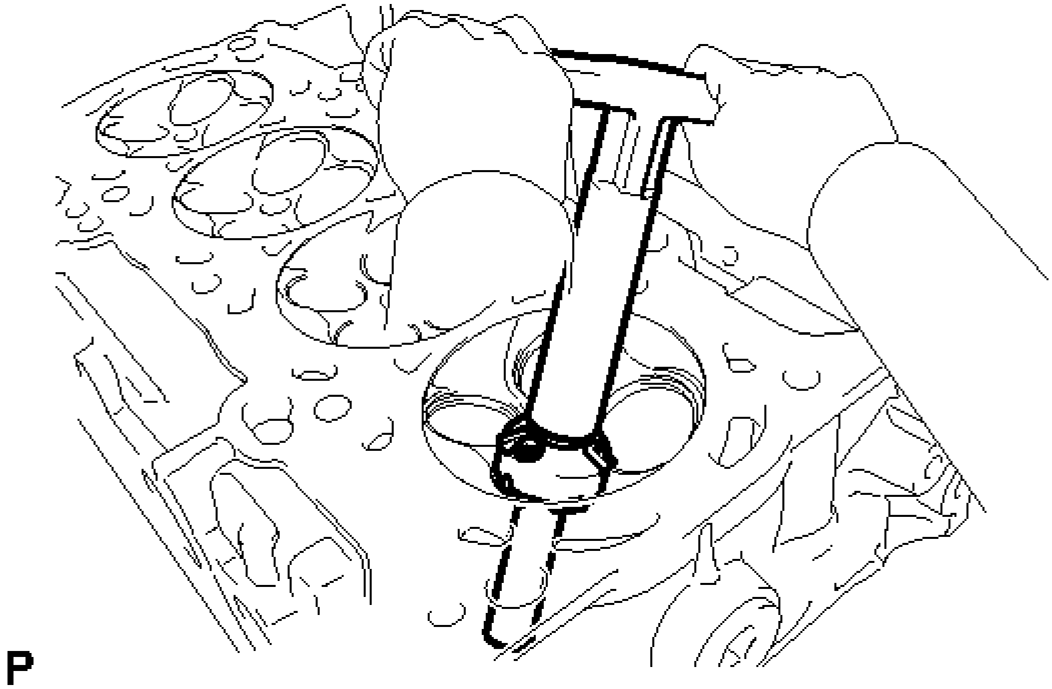

Fig. 343: Cutting Exhaust Valve Seat
Courtesy of TOYOTA MOTOR SALES, U.S.A., INC.

b. Using 30° and 75° cutters, correct the valve seat so that the valve contacts the entire circumference of the seat. The contact should be in the center of the valve seat, and the valve seat width should be maintained within the specified range around the entire circumference of the seat.

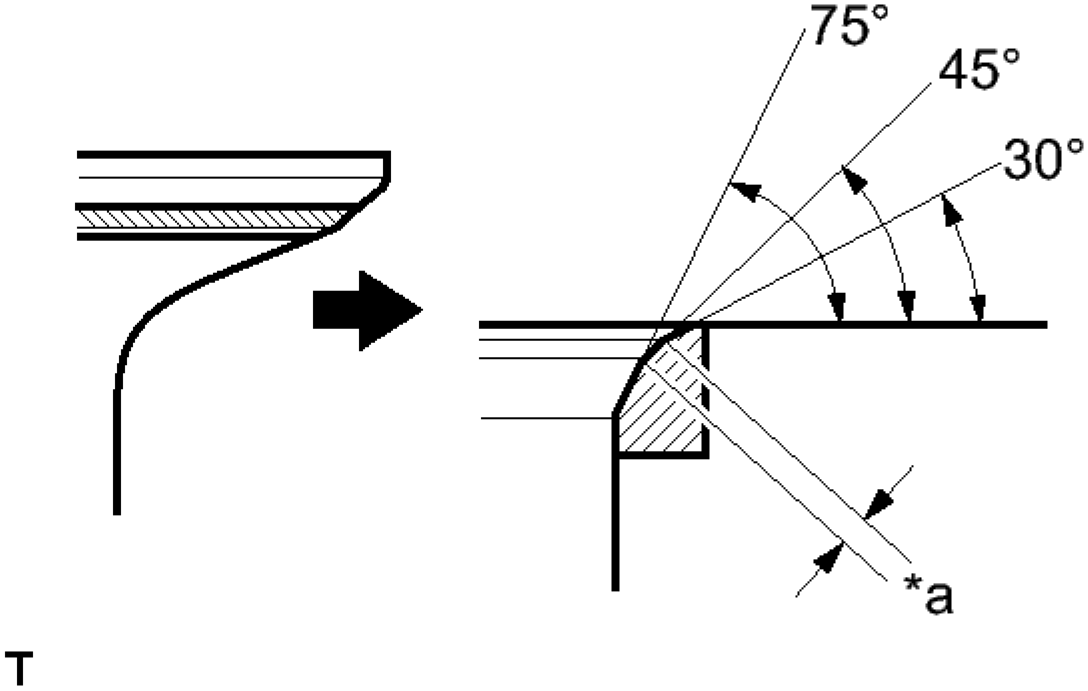

Fig. 344: Measuring Seat Width
Courtesy of TOYOTA MOTOR SALES, U.S.A., INC.

Standard width

1.2 to 1.6 mm (0.0472 to 0.0630 in.)

TEXT IN ILLUSTRATION

*a	Width

c. Hand-lap the valve and valve seat with an abrasive compound.
d. Check the valve seating position.

CYLINDER BLOCK

COMPONENTS

ILLUSTRATION

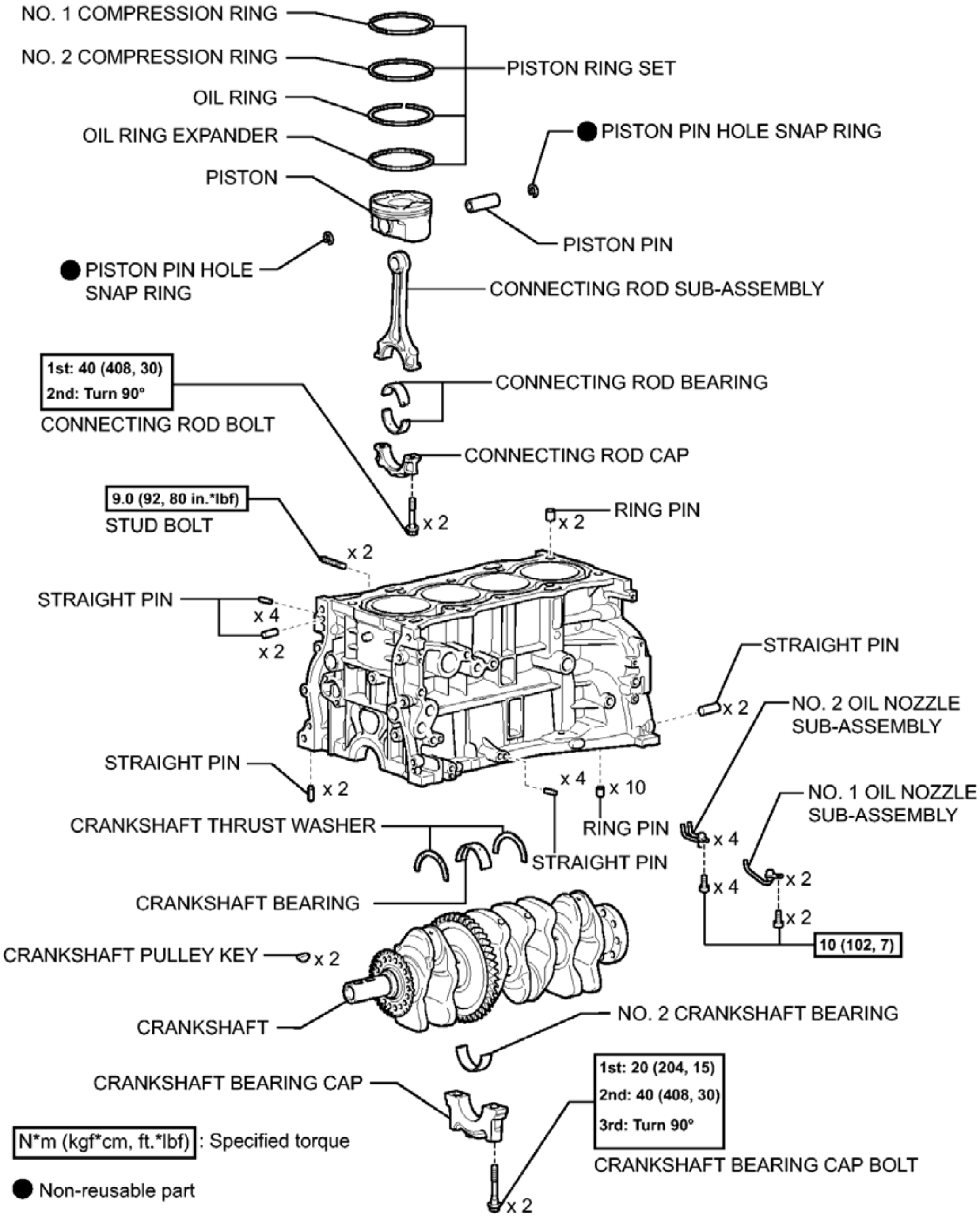
NO. 1 COMPRESSION RING
NO. 2 COMPRESSION RING
OIL RING
OIL RING EXPANDER
PISTON
PISTON RING SET
● PISTON PIN HOLE SNAP RING
PISTON PIN
● PISTON PIN HOLE SNAP RING
CONNECTING ROD SUB-ASSEMBLY
1st: 40 (408, 30)
2nd: Turn 90°
CONNECTING ROD BOLT
CONNECTING ROD BEARING
CONNECTING ROD CAP
9.0 (92, 80 in.*lbf)
STUD BOLT
x 2
x 2
RING PIN
x 2
STRAIGHT PIN
x 4
x 2
STRAIGHT PIN
x 2
NO. 2 OIL NOZZLE SUB-ASSEMBLY
STRAIGHT PIN
x 2
x 4
x 10
RING PIN
CRANKSHAFT THRUST WASHER
STRAIGHT PIN
NO. 1 OIL NOZZLE SUB-ASSEMBLY
x 4
x 4
x 2
x 2
CRANKSHAFT BEARING
10 (102, 7)
CRANKSHAFT PULLEY KEY
x 2
CRANKSHAFT
NO. 2 CRANKSHAFT BEARING
CRANKSHAFT BEARING CAP
1st: 20 (204, 15)
2nd: 40 (408, 30)
3rd: Turn 90°
CRANKSHAFT BEARING CAP BOLT
N*m (kgf*cm, ft.*lbf) : Specified torque
● Non-reusable part
x 2

Fig. 345: Identifying Cylinder Block Replacement Components With Torque Specifications
Courtesy of TOYOTA MOTOR SALES, U.S.A., INC.

DISASSEMBLY

DISASSEMBLY

1. **INSPECT CONNECTING ROD THRUST CLEARANCE**

a. Using a dial indicator, measure the thrust clearance while moving the connecting rod back and forth.

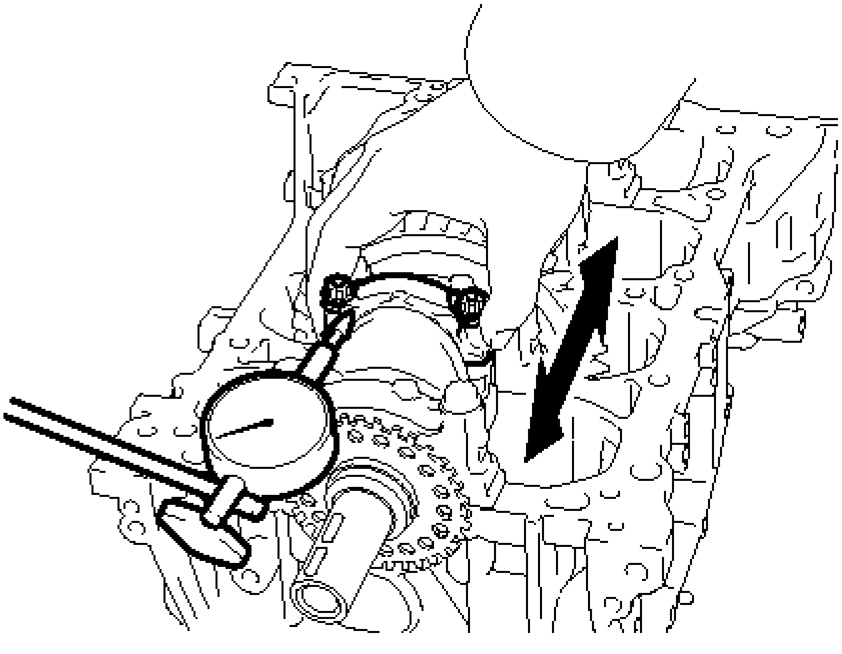

Fig. 346: Measuring Thrust Clearance
Courtesy of TOYOTA MOTOR SALES, U.S.A., INC.

Standard thrust clearance

0.160 to 0.512 mm (0.00630 to 0.0202 in.)

Maximum thrust clearance

0.512 mm (0.0202 in.)

If the thrust clearance is more than the maximum, replace the connecting rod. If necessary, replace the crankshaft.

2. **INSPECT CONNECTING ROD OIL CLEARANCE**
   a. Check the alignment marks on the connecting rod and cap to ensure correct reassembly.

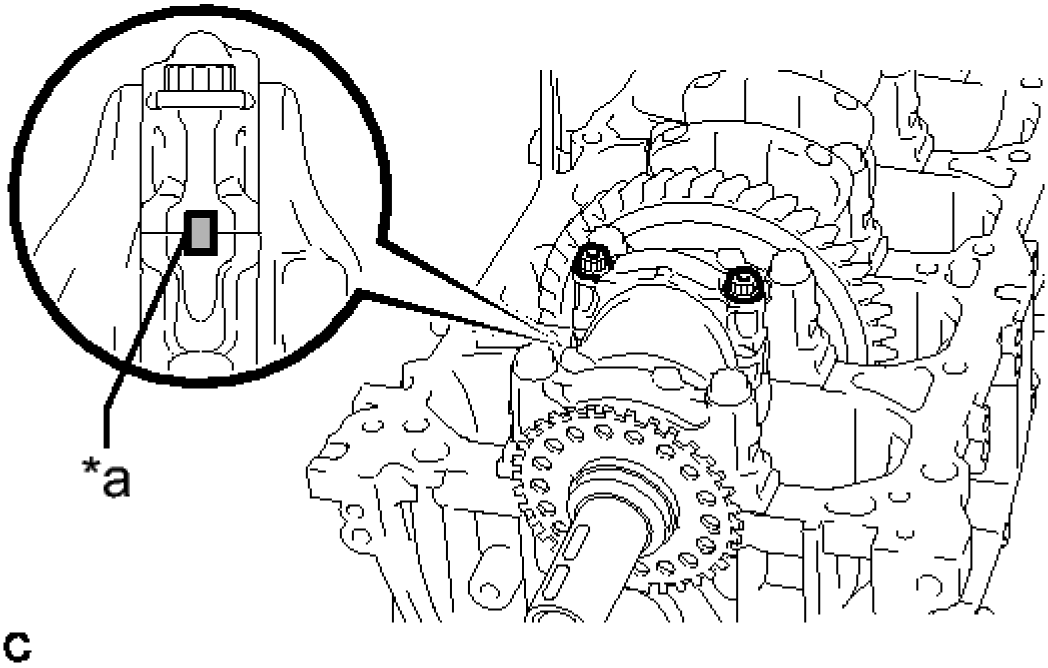

Fig. 347: Identifying Alignment Marks On Connecting Rod And Cap
Courtesy of TOYOTA MOTOR SALES, U.S.A., INC.

TEXT IN ILLUSTRATION

*a	Alignment Mark

b. Remove the 2 bolts and connecting rod cap.

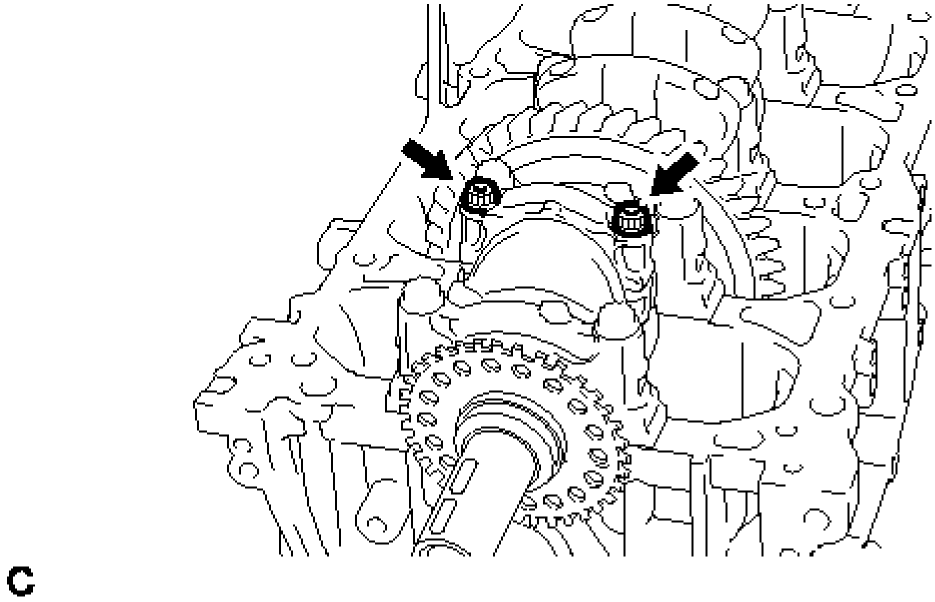

Fig. 348: Identifying Connector Rod Cap Bolts
Courtesy of TOYOTA MOTOR SALES, U.S.A., INC.

HINT:

Keep the lower bearing and connecting rod cap together.

c. Clean the crank pin and bearing.
d. Check the crank pin and bearing for pitting and scratches.

If the crank pin or bearing is damaged, replace the bearings. If necessary, replace the crankshaft.

e. Lay a strip of Plastigage on the crank pin.

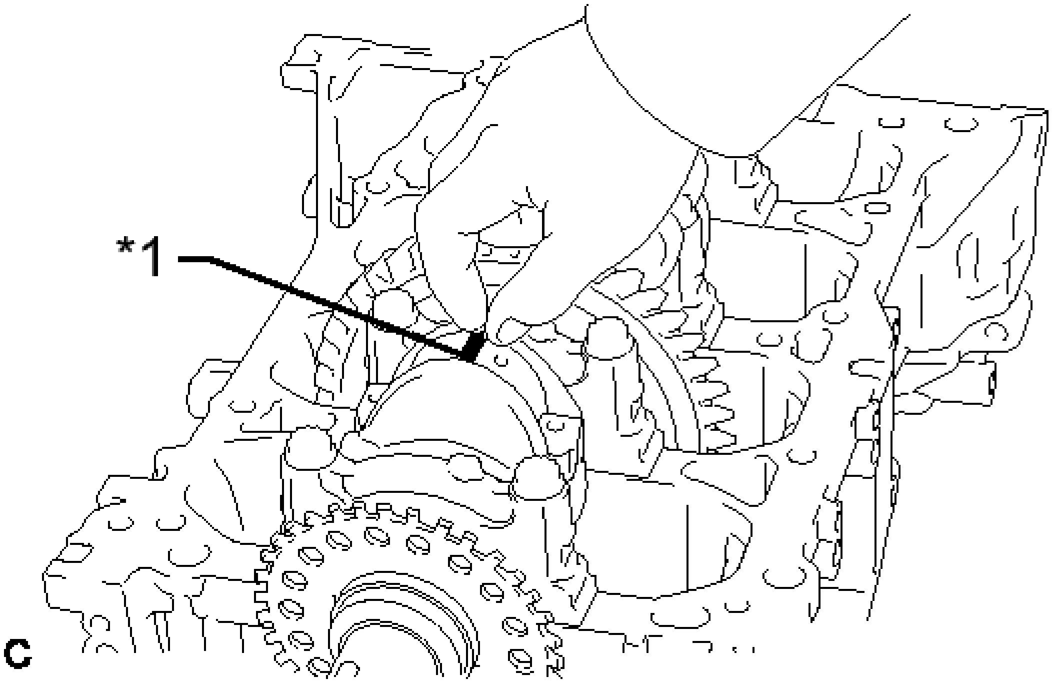

Fig. 349: Identifying Plastigage
Courtesy of TOYOTA MOTOR SALES, U.S.A., INC.

TEXT IN ILLUSTRATION

*1	Plastigage

f. Check that the front mark of the connecting rod cap is facing in the correct direction.

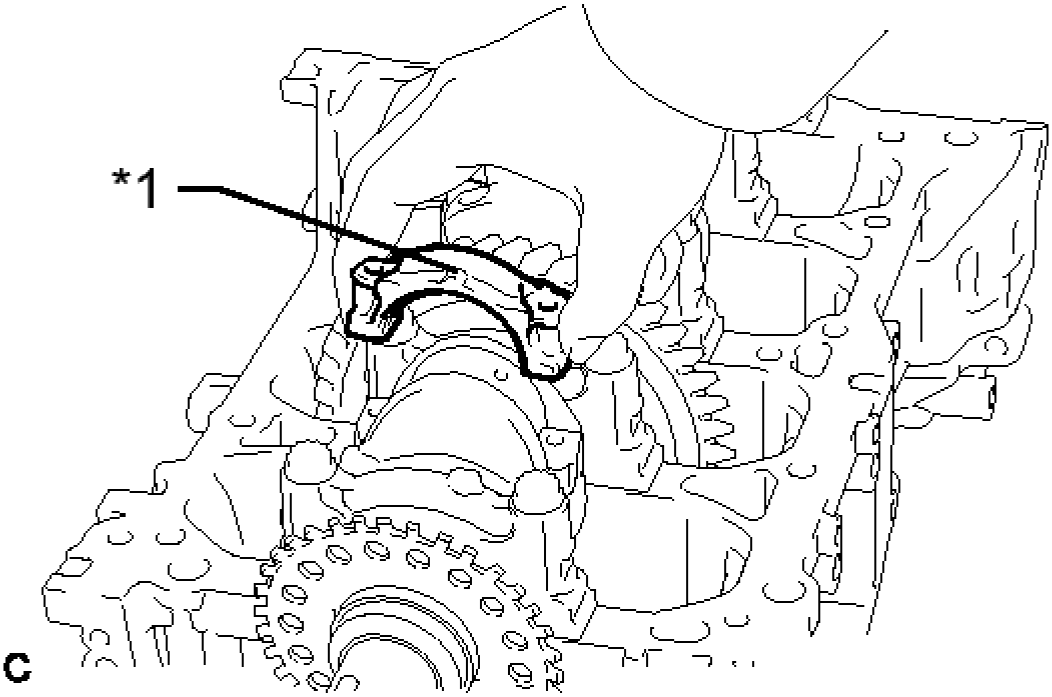

Fig. 350: Identifying Connecting Rod Cap Front Mark
Courtesy of TOYOTA MOTOR SALES, U.S.A., INC.

TEXT IN ILLUSTRATION

*1	Front Mark

g. Apply a light coat of engine oil to the threads and under the heads of the connecting rod bolts.

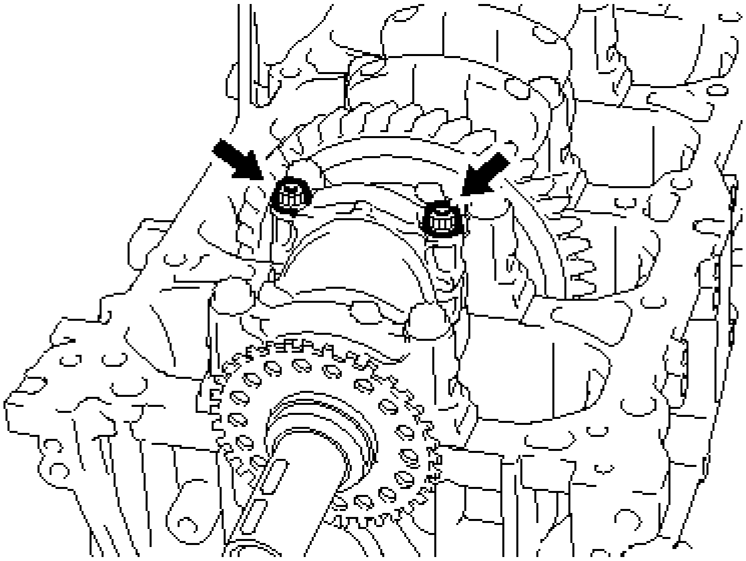

Fig. 351: Identifying Connector Rod Cap Bolts
Courtesy of TOYOTA MOTOR SALES, U.S.A., INC.

h. Install and alternately tighten the bolts of the connecting rod cap in several steps.

Torque: 40 N*m (408 kgf*cm, 30 ft.*lbf)

NOTE: **Do not turn the crankshaft during the measurement.**

i. Mark the front of each connecting rod bolt with paint.

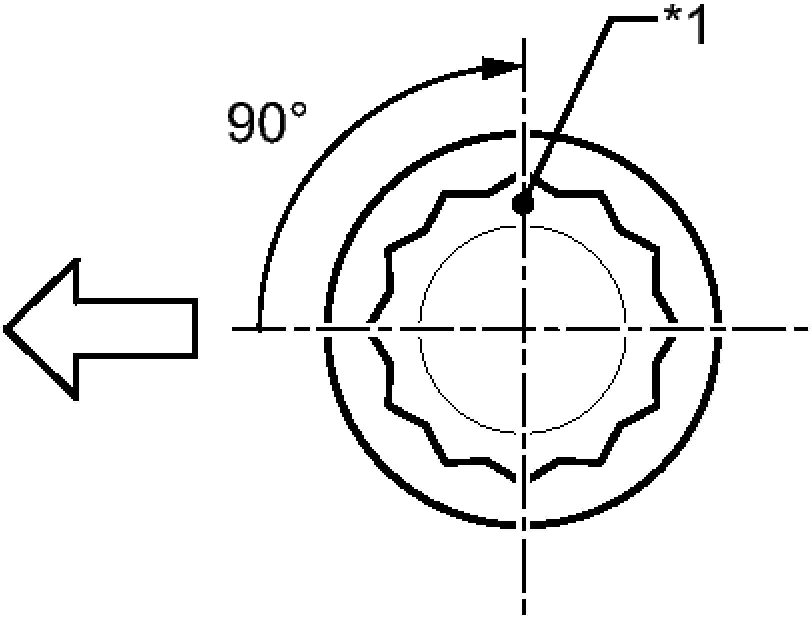

P

Fig. 352: Identifying Paint Mark
Courtesy of TOYOTA MOTOR SALES, U.S.A., INC.

TEXT IN ILLUSTRATION

*1	Paint Mark
	Engine Front

j. Tighten the bolts 90° as shown in the illustration.

NOTE: **Do not turn the crankshaft during the measurement.**

k. Remove the 2 bolts and connecting rod cap.

HINT:

Keep the lower bearing and connecting rod cap together.

l. Measure the Plastigage at its widest point.

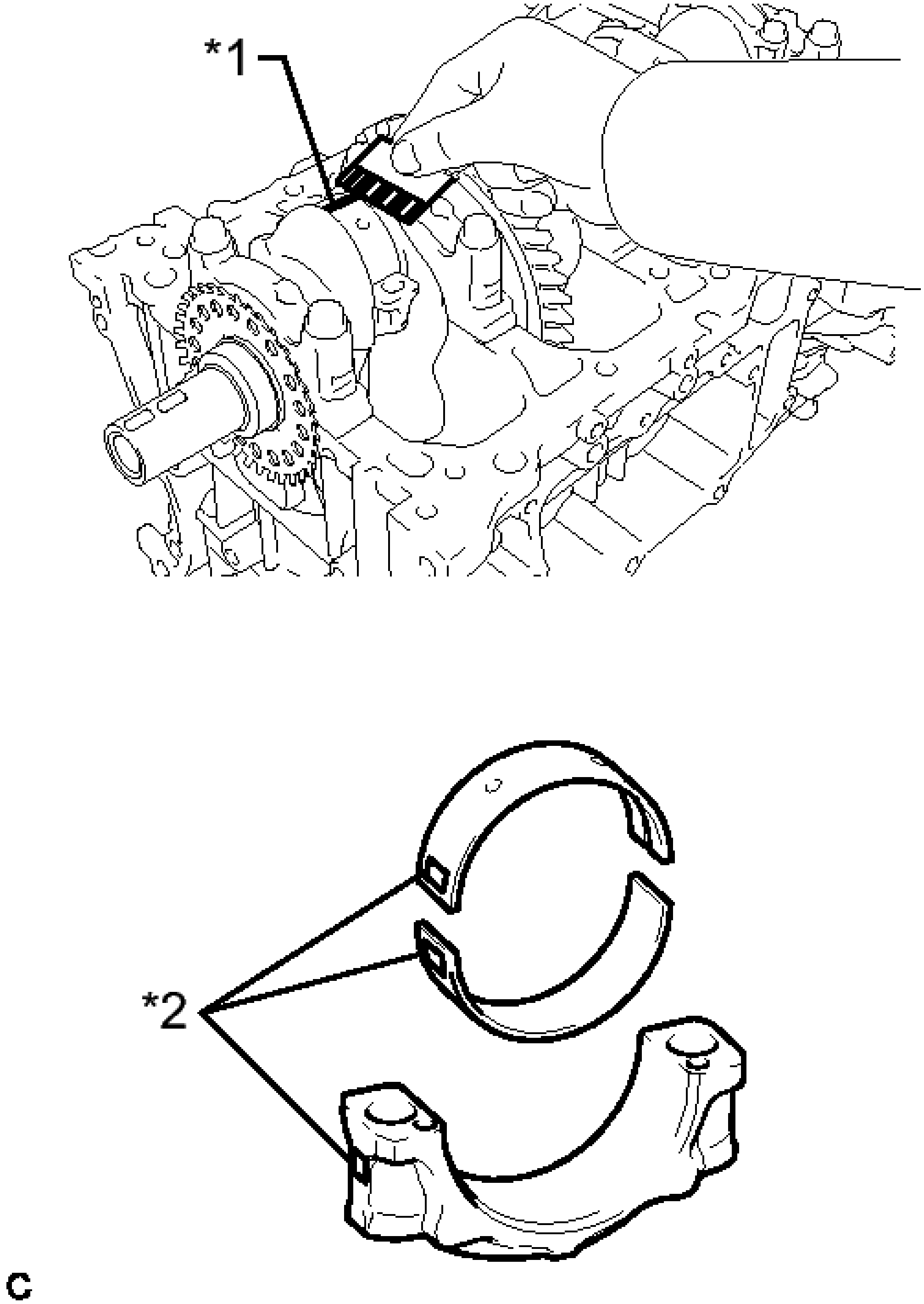

Fig. 353: Measuring Plastigage At Widest Point
Courtesy of TOYOTA MOTOR SALES, U.S.A., INC.

TEXT IN ILLUSTRATION

*1	Plastigage

*2	Number Mark

Standard oil clearance

0.030 to 0.063 mm (0.00118 to 0.00248 in.)

Maximum oil clearance

0.07 mm (0.00276 in.)

NOTE: **Remove the Plastigage completely after the measurement.**

If the oil clearance is more than the maximum, replace the connecting rod bearing. If necessary, grind or replace the crankshaft.

HINT:

If replacing a bearing, select a new one with the same number as marked on the connecting rod. There are 3 sizes of standard bearings, marked "1", "2" and "3" accordingly.

Standard crank pin diameter

51.492 to 51.500 mm (2.0272 to 2.0276 in.)

Standard Connecting Rod Big End Inside Diameter

Item	Specified Condition
Mark 1	54.500 to 54.508 mm (2.1457 to 2.1460 in.)
Mark 2	54.509 to 54.516 mm (2.1460 to 2.1463 in.)
Mark 3	54.517 to 54.524 mm (2.1463 to 2.1466

	in.)

Standard Size Bearing Center Wall Thickness

Item	Specified Condition
Mark 1	1.483 to 1.487 mm (0.0584 to 0.0585 in.)
Mark 2	1.488 to 1.491 mm (0.0586 to 0.0587 in.)
Mark 3	1.492 to 1.495 mm (0.0587 to 0.0589 in.)

m. Perform the inspection above for each cylinder.

3. **REMOVE PISTON WITH CONNECTING ROD**
   a. Using a ridge reamer, remove all the carbon from the top of the cylinder.

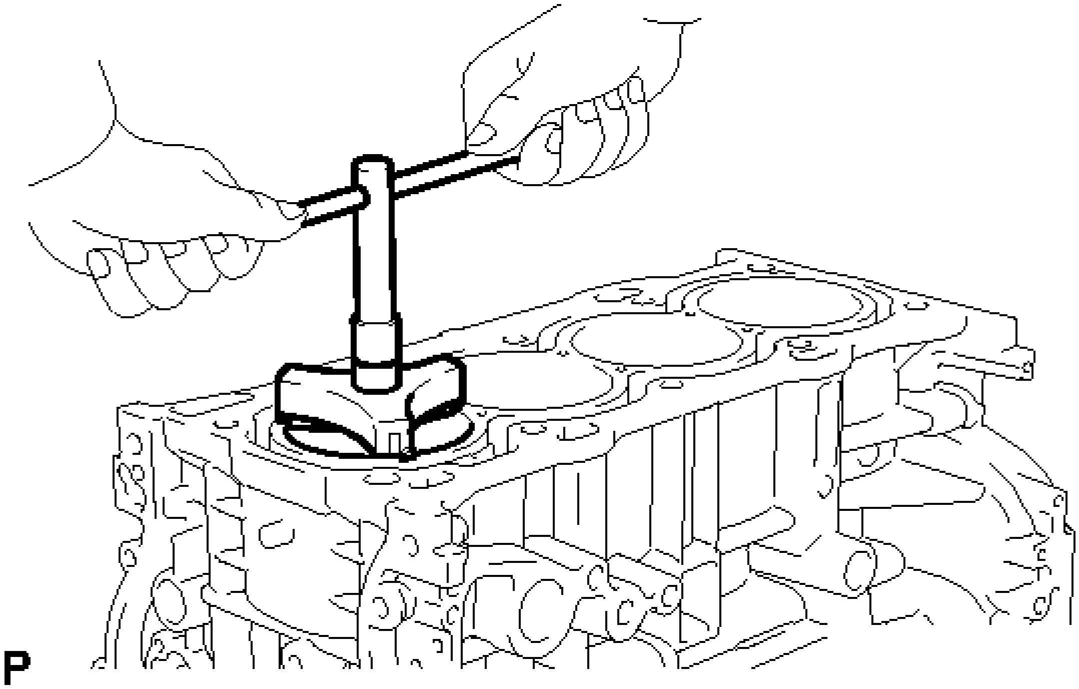

Fig. 354: Removing Carbon From Top Of Cylinder
Courtesy of TOYOTA MOTOR SALES, U.S.A., INC.

b. Remove the 8 bolts, 4 connecting rod caps and 4 lower bearings.
c. Push the piston, connecting rod assembly and upper bearing through the top of the cylinder block.

HINT:

- Keep the bearings, connecting rod and cap together.
- Arrange the piston and connecting rod assemblies in the correct order.
- Be sure to arrange the removed piston and connecting rod assemblies in such a way that they can be reinstalled exactly as before.

4. REMOVE CONNECTING ROD BEARING

a. Remove the connecting rod bearings from the connecting rods and connecting rod caps.

HINT:

Arrange the removed parts in the correct order.

5. INSPECT CRANKSHAFT THRUST CLEARANCE

a. Using a dial indicator, measure the thrust clearance while prying the crankshaft back and forth with a screwdriver.

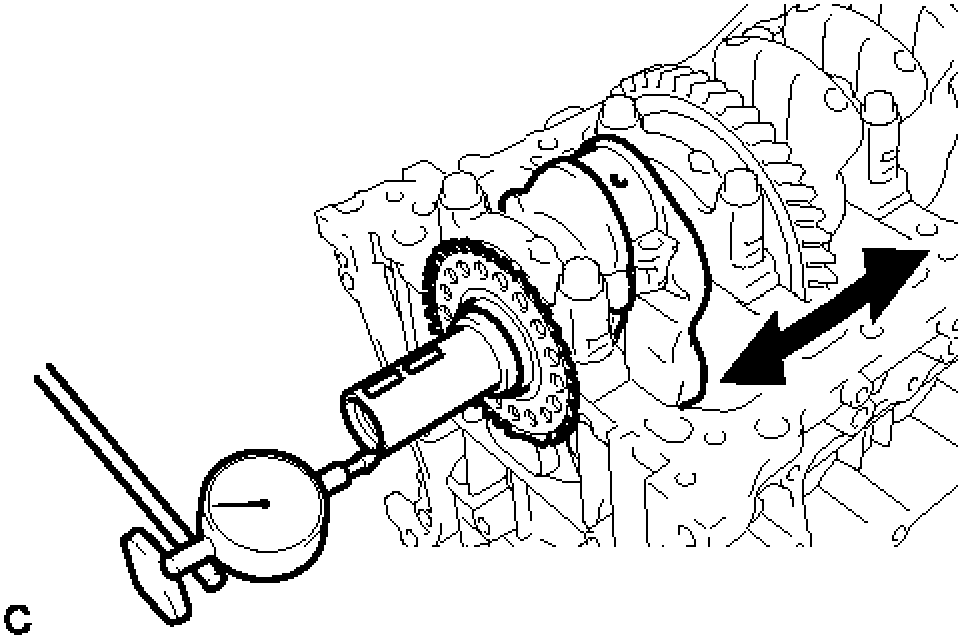

Fig. 355: Measuring Thrust Clearance Using Dial Indicator
Courtesy of TOYOTA MOTOR SALES, U.S.A., INC.

Standard thrust clearance

0.04 to 0.24 mm (0.00157 to 0.00945 in.)

Maximum thrust clearance

0.30 mm (0.0118 in.)

If the thrust clearance is more than the maximum, replace the thrust washers as a set. If necessary, replace the crankshaft.

Standard thrust washer thickness

1.93 to 1.98 mm (0.0760 to 0.0780 in.)

6. **REMOVE CRANKSHAFT**
    a. Using several steps, uniformly loosen and remove the 10 bearing cap bolts in the sequence shown in the illustration.

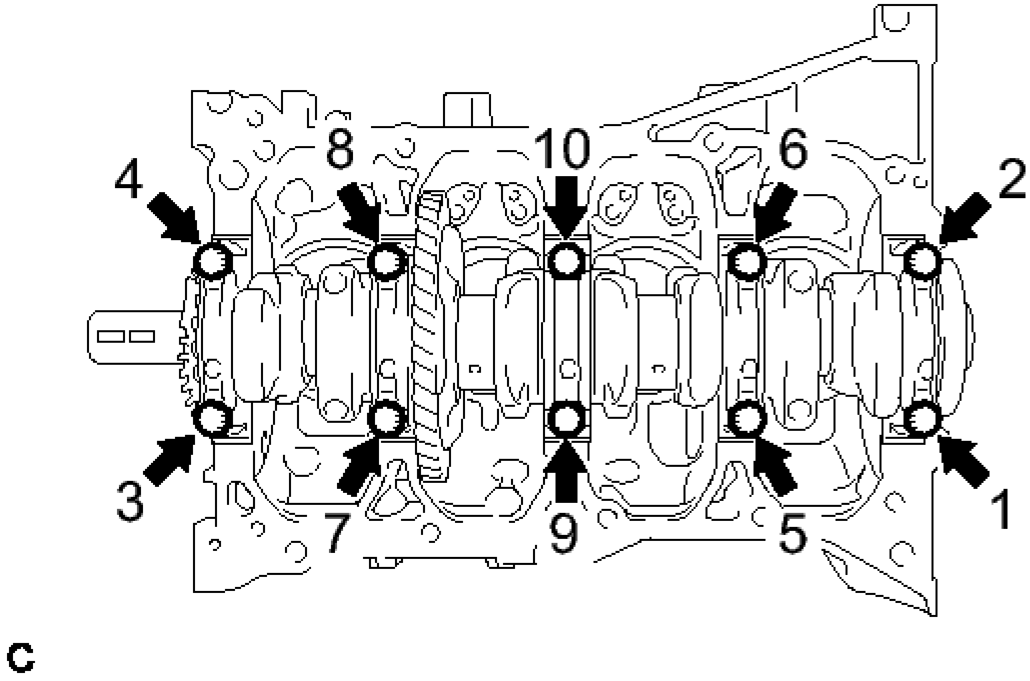

Fig. 356: Removing Bearing Cap Bolts In Sequence
Courtesy of TOYOTA MOTOR SALES, U.S.A., INC.

b. Remove the 5 bearing caps from the cylinder block.

HINT:

- Keep the No. 2 crankshaft bearings and crankshaft bearing caps together.

- Arrange the bearing caps in the correct order.

c. Remove the crankshaft from the cylinder block.

   HINT:

   Keep the crankshaft bearings and crankshaft thrust washers together with the cylinder block.

d. Check each crankshaft journal and bearing for pitting and scratches.

   If the journal or bearing is damaged, replace the bearings. If necessary, replace the crankshaft.

7. **REMOVE CRANKSHAFT THRUST WASHER**

   a. Remove the thrust washers from the cylinder block.

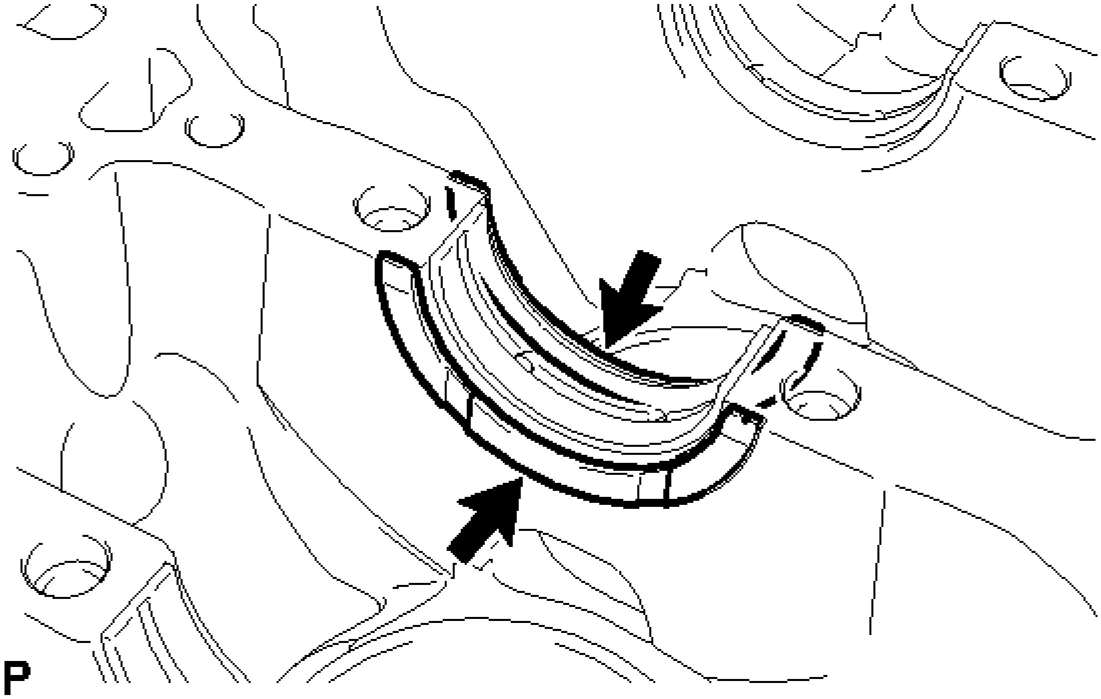

Fig. 357: Locating Crankshaft Bearing
Courtesy of TOYOTA MOTOR SALES, U.S.A., INC.

8. **REMOVE CRANKSHAFT BEARING**

   a. Remove the crankshaft bearings from the cylinder block and bearing caps.

   HINT:

   Arrange the bearings in the correct order.

9. **REMOVE CRANKSHAFT PULLEY KEY**

   a. Using a screwdriver, remove the 2 pulley keys from the crankshaft.

10. **REMOVE PISTON RING SET**

   a. Using a piston ring expander, remove the 2 compression rings.

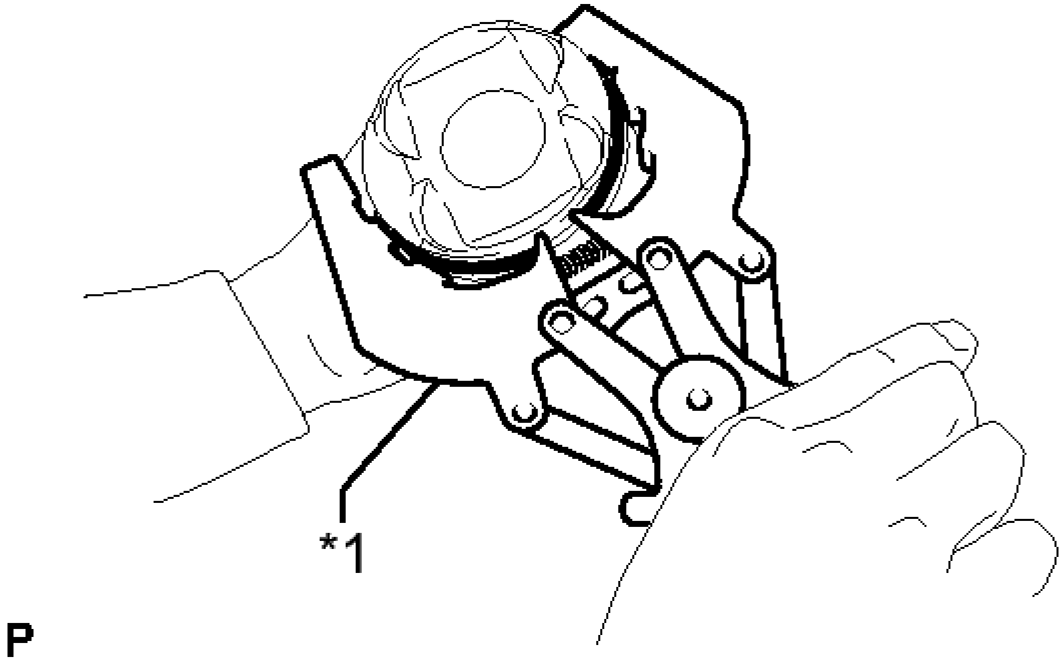

Fig. 358: Removing Piston Compression Rings
Courtesy of TOYOTA MOTOR SALES, U.S.A., INC.

TEXT IN ILLUSTRATION

*1	Piston Ring Expander

   b. Remove the oil ring and expander by hand.

HINT:

Arrange the removed parts in the correct order.

11. **REMOVE PISTON PIN HOLE SNAP RING**

   a. Using a screwdriver, pry out the snap ring (front side).

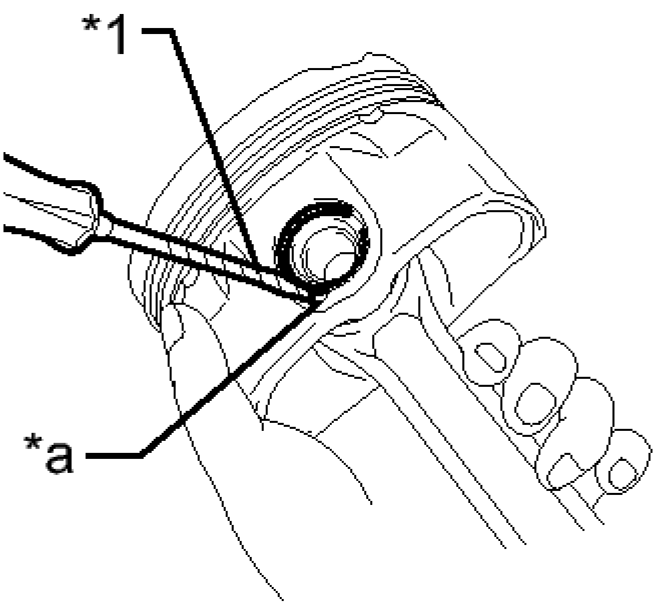

Fig. 359: Identifying Snap Ring
Courtesy of TOYOTA MOTOR SALES, U.S.A., INC.

TEXT IN ILLUSTRATION

*1	Protective Tape
*a	Front Mark

NOTE: **Do not remove the snap ring (rear side) unless necessary.**

HINT:

Tape the screwdriver tip before use.

12. **REMOVE PISTON**
    a. Gradually heat each piston up to 80 to 90°C (176 to 194°F).

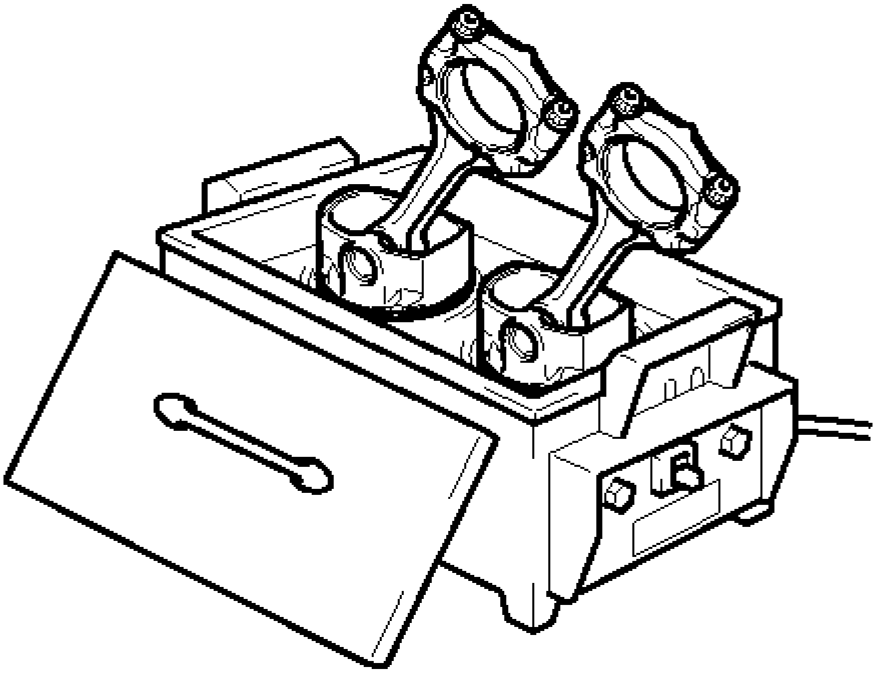

P

Fig. 360: Heating Piston
Courtesy of TOYOTA MOTOR SALES, U.S.A., INC.

b. Using a plastic-faced hammer and brass bar, lightly tap out the piston pin. Then remove the connecting rod.

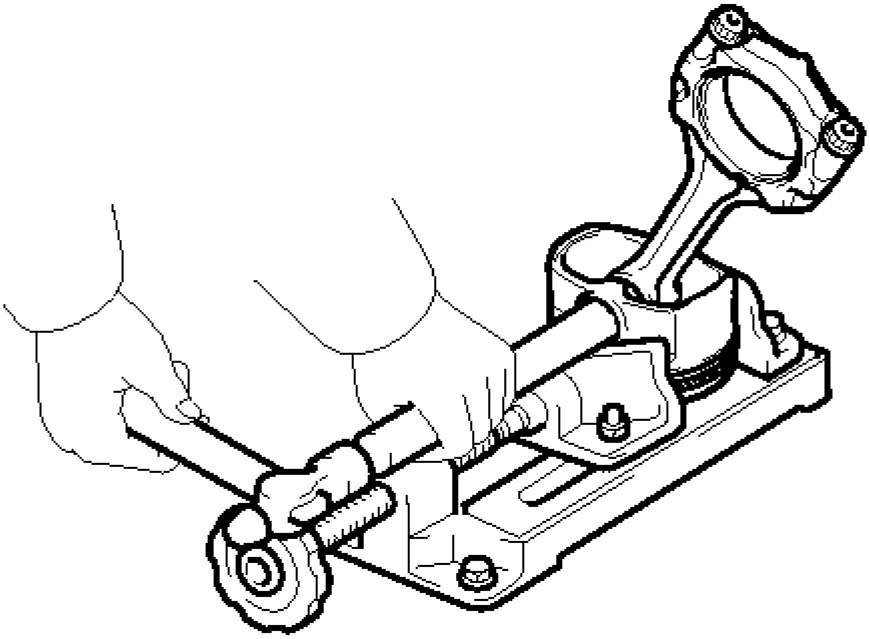

P

Fig. 361: Tapping Out Piston Pin

Courtesy of TOYOTA MOTOR SALES, U.S.A., INC.

HINT:

- The piston and pin are a matched set.
- Be sure to arrange the removed pistons, pins, rings, connecting rods and bearings in such a way that the parts can be reinstalled exactly as before.
- Arrange the pistons, pins, rings, connecting rods and bearings in the correct order.

13. **REMOVE NO. 1 OIL NOZZLE SUB-ASSEMBLY**
    a. Using a 5 mm hexagon wrench, remove the 2 bolts and 2 No. 1 oil nozzles sub-assembly.

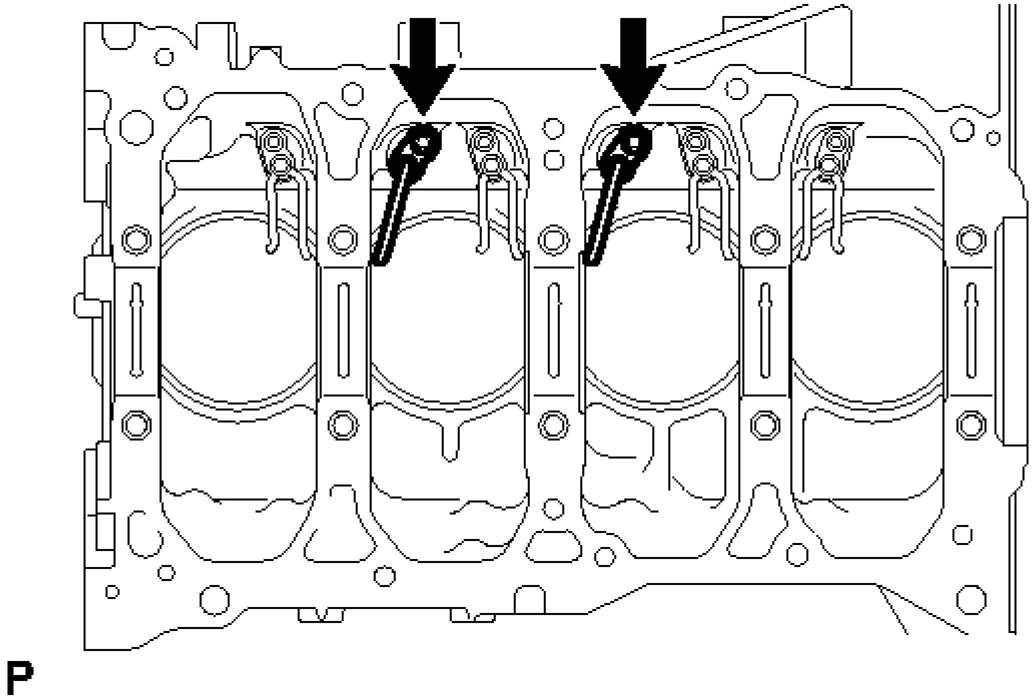

Fig. 362: Locating No. 1 Oil Nozzles Bolts
Courtesy of TOYOTA MOTOR SALES, U.S.A., INC.

14. **REMOVE NO. 2 OIL NOZZLE SUB-ASSEMBLY**
    a. Using a 5 mm hexagon wrench, remove the 4 bolts and 4 No. 2 oil nozzles sub-assembly.

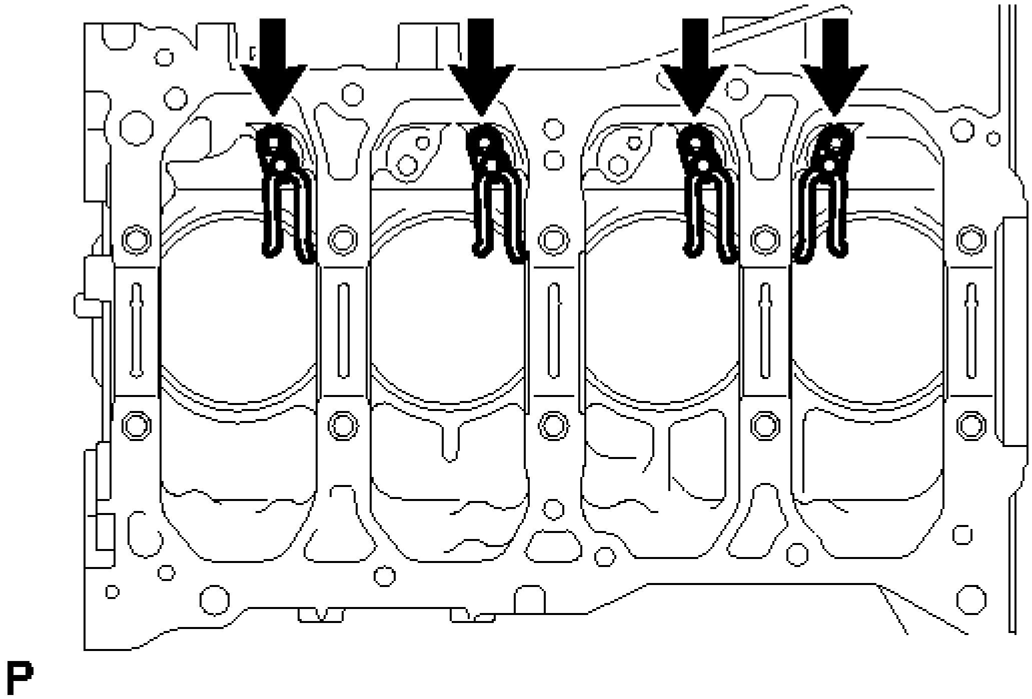

Fig. 363: Locating No. 2 Oil Nozzles Bolts
Courtesy of TOYOTA MOTOR SALES, U.S.A., INC.

15. **REMOVE STUD BOLT**

NOTE: **If a stud bolt is deformed or its threads are damaged, replace it.**

a. Using an E8 "TORX" socket wrench, remove the 2 stud bolts.

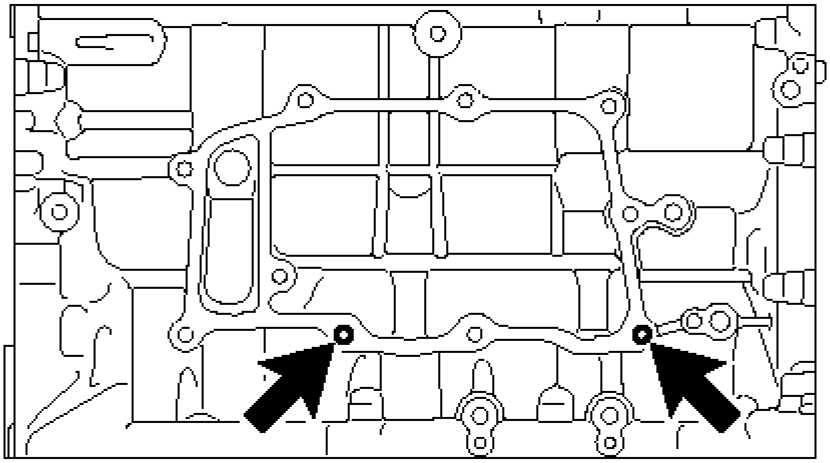

Fig. 364: Identifying Stud Bolts
Courtesy of TOYOTA MOTOR SALES, U.S.A., INC.

INSPECTION

INSPECTION

1. **INSPECT CYLINDER BLOCK FOR WARPAGE**
    a. Using a precision straightedge and feeler gauge, measure the warpage of the surface that contacts with the cylinder head gasket.

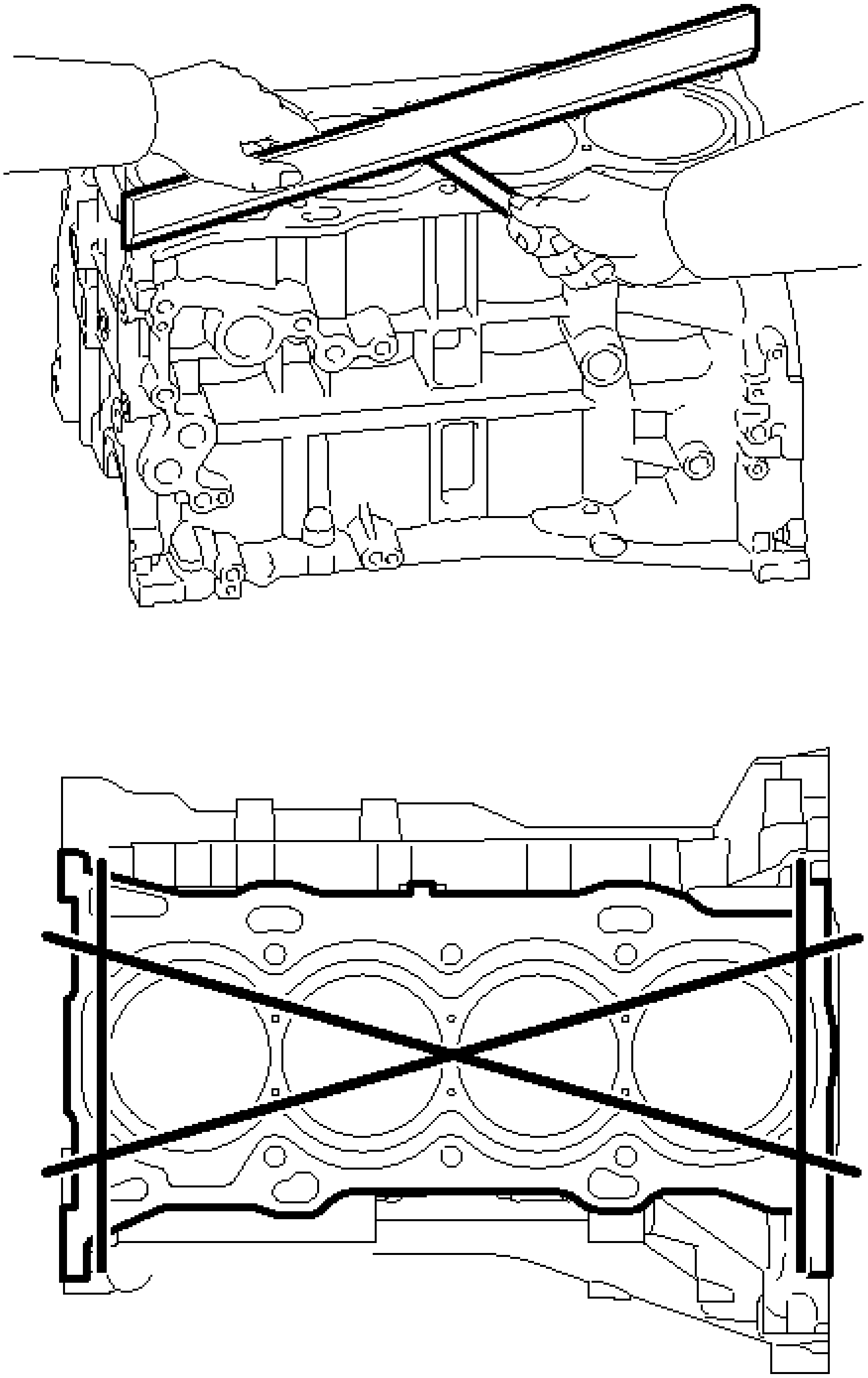

Fig. 365: Inspecting Cylinder Block For Warpage
Courtesy of TOYOTA MOTOR SALES, U.S.A., INC.

Maximum warpage

0.05 mm (0.00197 in.)

If the warpage is more than the maximum, replace the cylinder block.

2. **INSPECT CYLINDER BORE**
   a. Using a cylinder gauge, measure the cylinder bore diameter at positions A and B in the thrust and axial directions.

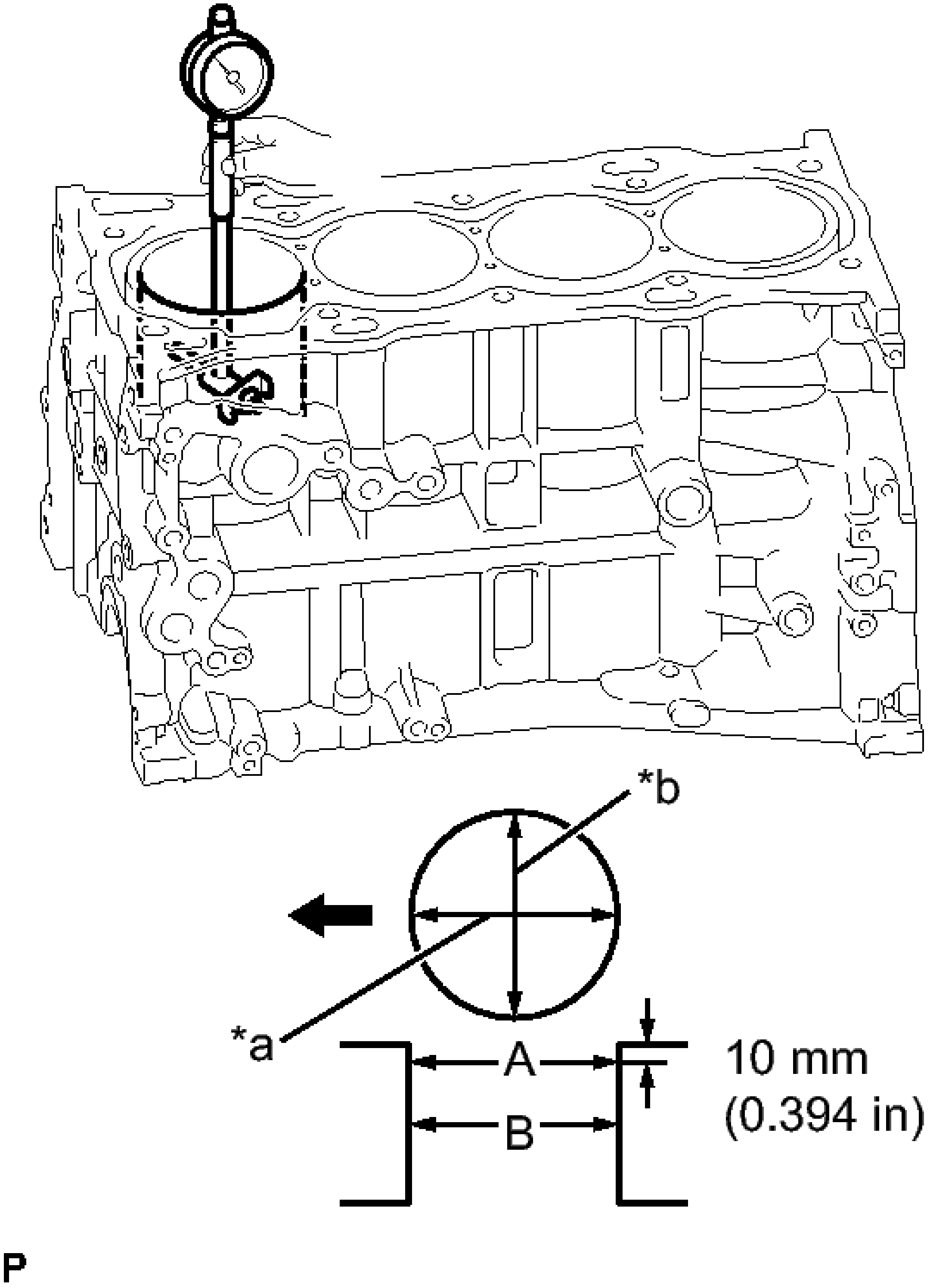
*b
*a
A
B
10 mm
(0.394 in)
P

Fig. 366: Measuring Cylinder Bore Diameter Using Cylinder Gauge
Courtesy of TOYOTA MOTOR SALES, U.S.A., INC.

TEXT IN ILLUSTRATION

	Thrust

*a	Direction
*b	Axial Direction
·	Front

Standard diameter

90.000 to 90.013 mm (3.543 to 3.544 in.)

Maximum diameter

90.13 mm (3.548 in.)

If the average diameter of the 4 positions is more than the maximum, replace the cylinder block.

3. **INSPECT PISTON**
    a. Using a gasket scraper, remove the carbon from the piston top.

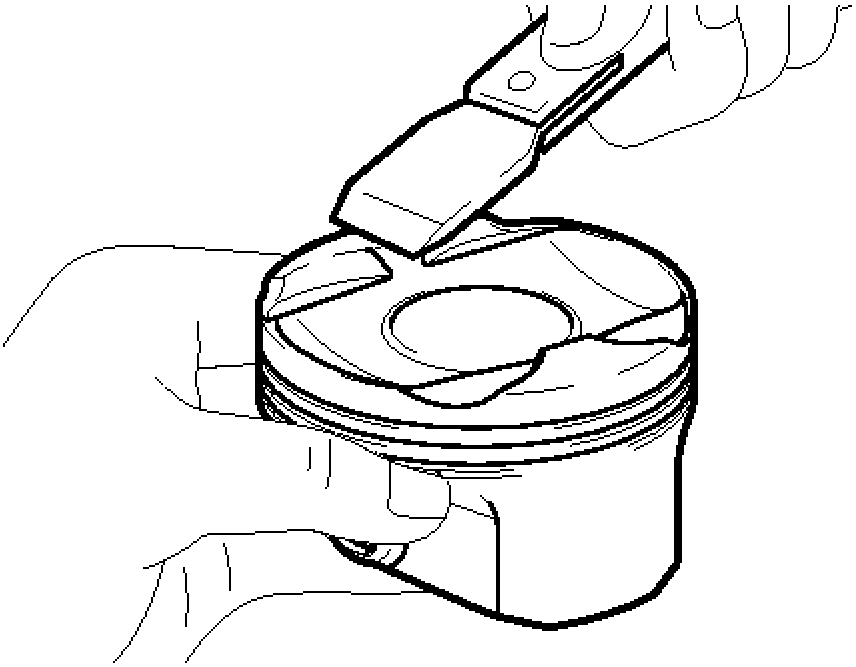

Fig. 367: Removing Carbon Using Gasket Scraper
Courtesy of TOYOTA MOTOR SALES, U.S.A., INC.

    b. Using a groove cleaning tool or a broken ring, clean the piston ring grooves.

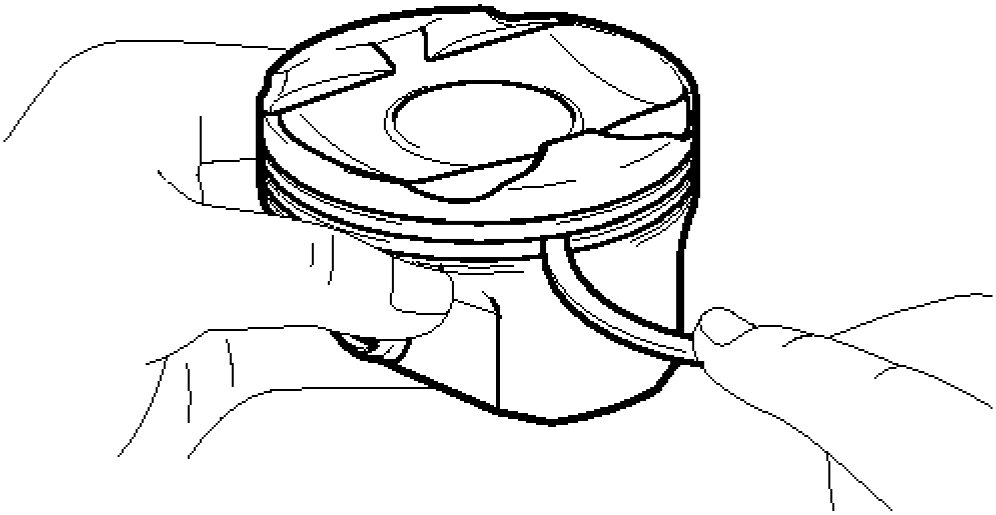

Fig. 368: Cleaning Piston Ring Grooves
Courtesy of TOYOTA MOTOR SALES, U.S.A., INC.

c. Using a brush and solvent, thoroughly clean the piston.

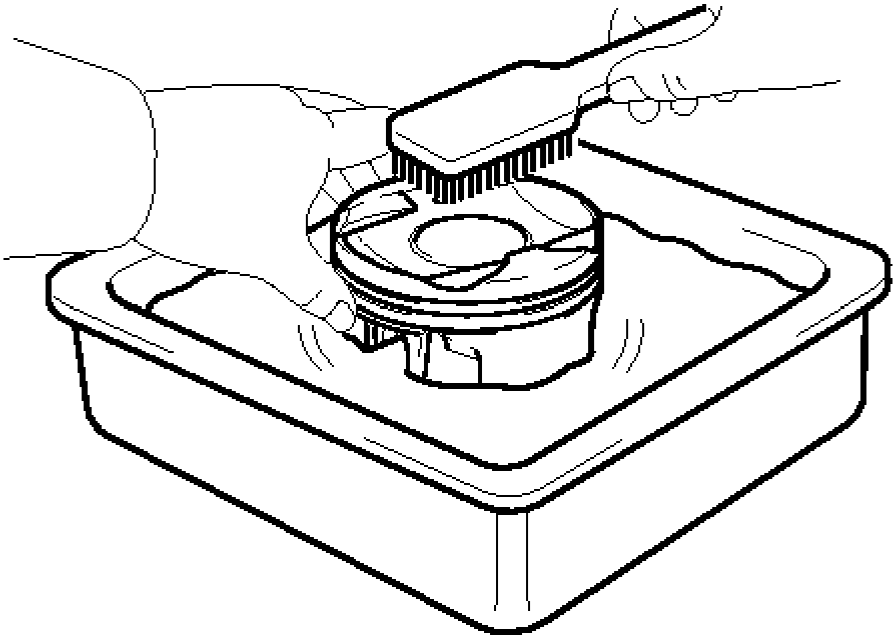

Fig. 369: Cleaning Piston With Brush And Solvent
Courtesy of TOYOTA MOTOR SALES, U.S.A., INC.

NOTE: **Do not use a wire brush.**

d. Using a micrometer, measure the piston diameter at a position that is 10.5 mm (0.413 in.) from the bottom of the piston (refer to the illustration).

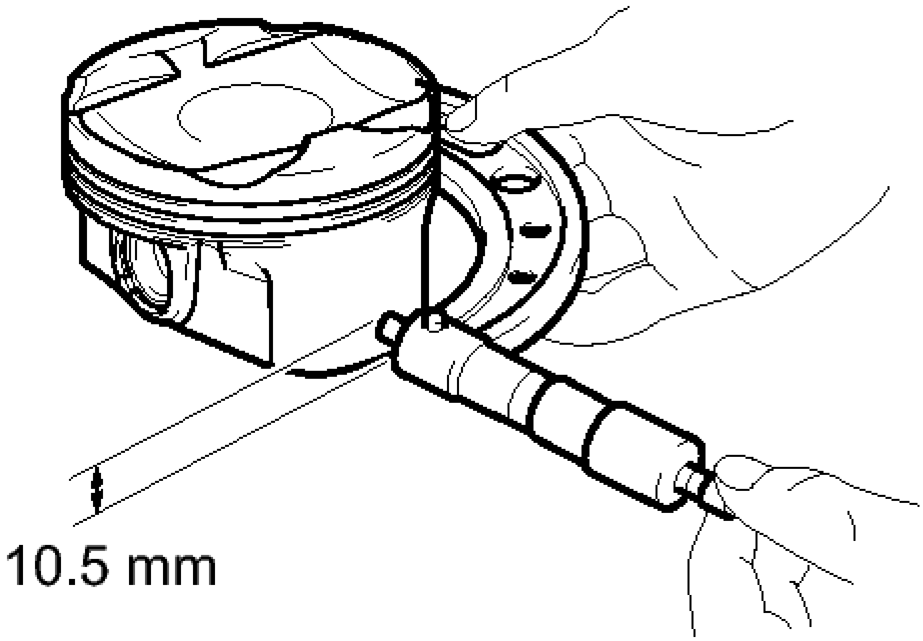

Fig. 370: Measuring Piston Diameter
Courtesy of TOYOTA MOTOR SALES, U.S.A., INC.

Standard piston diameter

89.980 to 89.995mm (3.5425 to 3.5413 in.)

If the diameter is less than the minimum, replace the piston with pin.

4. **INSPECT PISTON OIL CLEARANCE**
   a. Measure the cylinder bore diameter in the thrust direction.
   b. Subtract the piston diameter measurement from the cylinder bore diameter measurement.

Standard oil clearance

0.004 to 0.043 mm (0.000158 to 0.00169 in.)

Maximum oil clearance

0.10 mm (0.00394 in.)

If the oil clearance is more than the maximum, replace all the pistons. If necessary, replace the cylinder block.

5. **INSPECT RING GROOVE CLEARANCE**
    a. Using a feeler gauge, measure the clearance between the new piston ring and the wall of the ring groove.

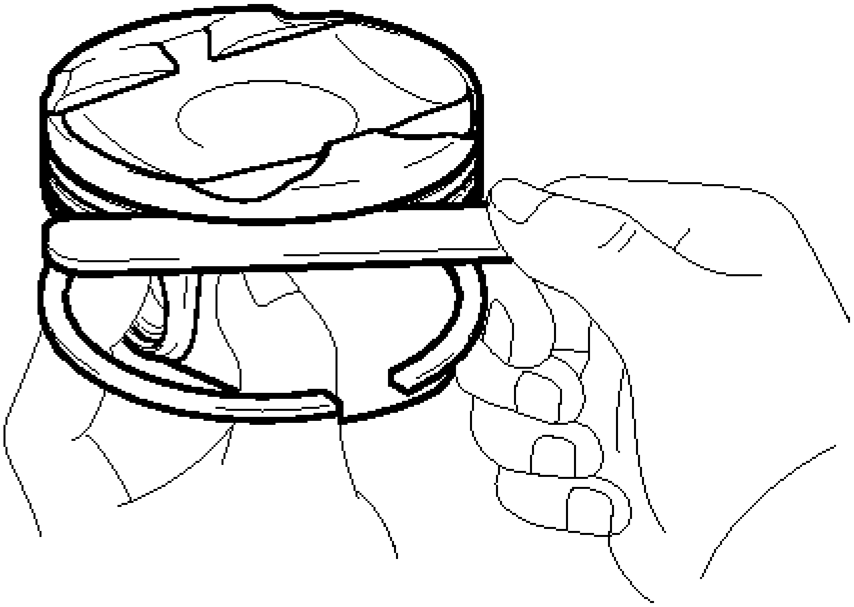

Fig. 371: Measuring Clearance
Courtesy of TOYOTA MOTOR SALES, U.S.A., INC.

Standard Ring Groove Clearance

Item	Specified Condition
No. 1 ring	0.020 to 0.070 mm (0.000787 to 0.00276 in.)
No. 2 ring	0.020 to 0.060 mm (0.000787 to 0.00236 in.)
Oil	0.020 to 0.070 mm (0.000787

ring	to 0.00276 in.)

If the groove clearance is not as specified, replace the piston with pin.

6. **INSPECT PISTON RING END GAP**
    a. Insert the piston ring into the cylinder bore.

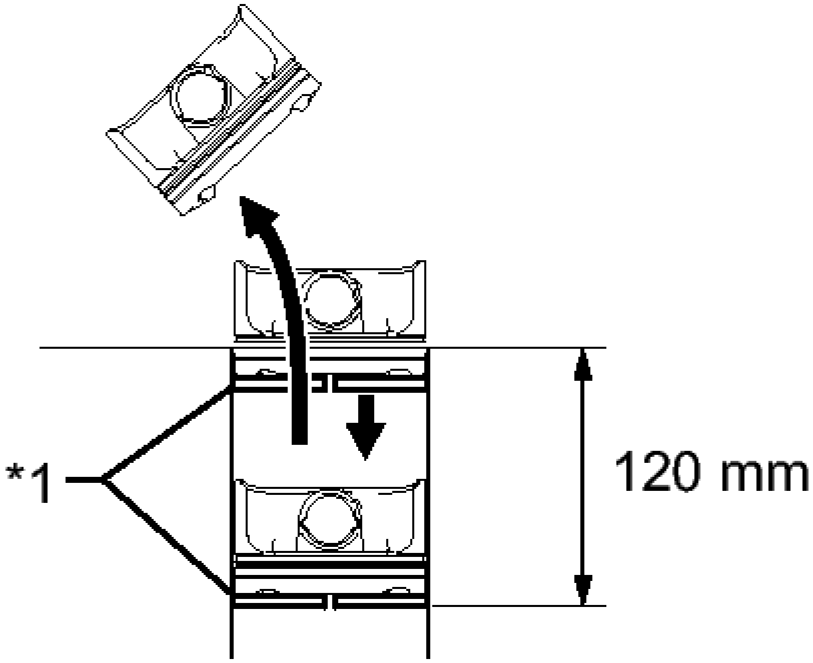

P

Fig. 372: Identifying Piston Ring End Gap
Courtesy of TOYOTA MOTOR SALES, U.S.A., INC.

TEXT IN ILLUSTRATION

*1	Piston Ring

    b. Using a piston, push the piston ring a little beyond the bottom of the ring travel, 120 mm (4.72 in.) from the top of the cylinder block.
    c. Using a feeler gauge, measure the end gap.

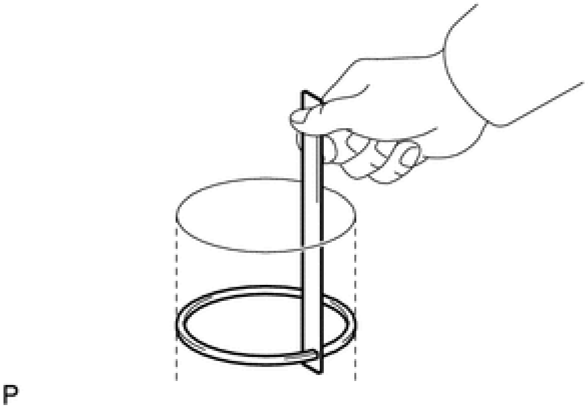

Fig. 373: Measuring End Gap
Courtesy of TOYOTA MOTOR SALES, U.S.A., INC.

Standard End Gap

Item	Specified Condition
No. 1 ring	0.22 to 0.27 mm (0.00866 to 0.0106 in.)
No. 2 ring	0.37 to 0.42 mm (0.0146 to 0.0165 in.)
Oil ring	0.10 to 0.20 mm (0.00394 to 0.00787 in.)

Maximum End Gap

Item	Specified Condition
No. 1 ring	0.87 mm (0.0342 in.)
No. 2 ring	1.02 mm (0.0402 in.)
Oil	0.80 mm

ring	(0.0315 in.)

If the end gap is more than the maximum, replace the piston ring. If the end gap is more than the maximum, even with a new piston ring, replace the cylinder block.

7. **INSPECT PISTON PIN OIL CLEARANCE**
   a. Check each mark on the piston, piston pin and connecting rod.

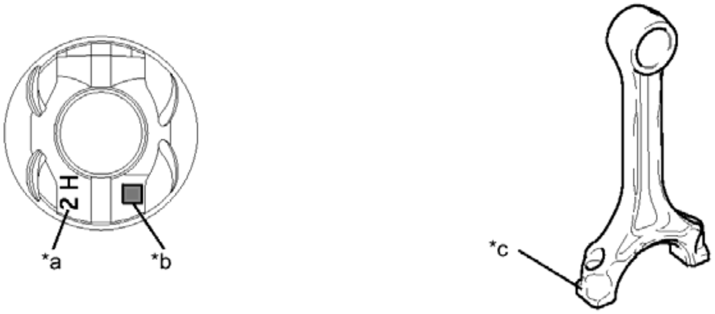

c

Fig. 374: Identifying Front Mark, Piston Pin Hole Inside Diameter Mark And Connector Rod Small End Bush Inside Diameter Mark
Courtesy of TOYOTA MOTOR SALES, U.S.A., INC.

TEXT IN ILLUSTRATION

*a	Front Mark	*b	Piston Pin Hole Inside Diameter Mark
*c	Connecting Rod Small End Bush Inside Diameter Mark	-	-

HINT:

The front mark is "2H" printed in raised letters.

   b. Using a caliper gauge, measure the inside diameter of the piston pin hole.

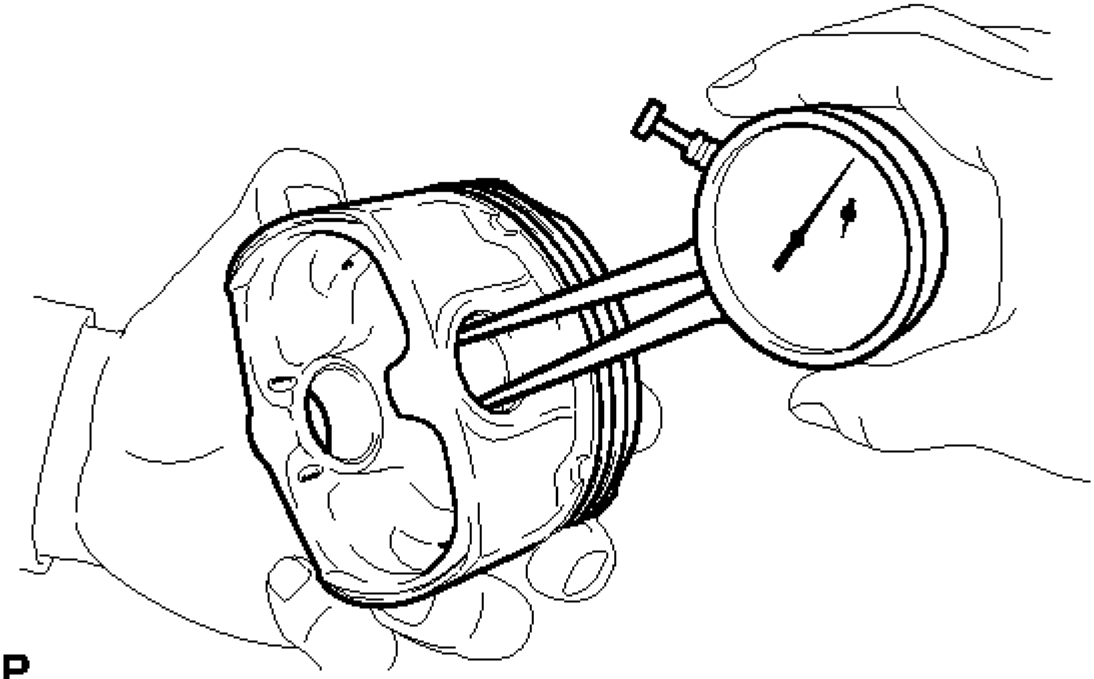

Fig. 375: Measuring Inside Diameter Of Piston Pin Hole
Courtesy of TOYOTA MOTOR SALES, U.S.A., INC.

Standard Piston Pin Hole Inside Diameter

Item	Specified Condition
Mark A	22.001 to 22.004 mm (0.86618 to 0.86630 in.)
Mark B	22.005 to 22.007 mm (0.86634 to 0.86642 in.)
Mark C	22.008 to 22.010 mm (0.86645 to 0.86653 in.)

c. Using a micrometer, measure the piston pin diameter.

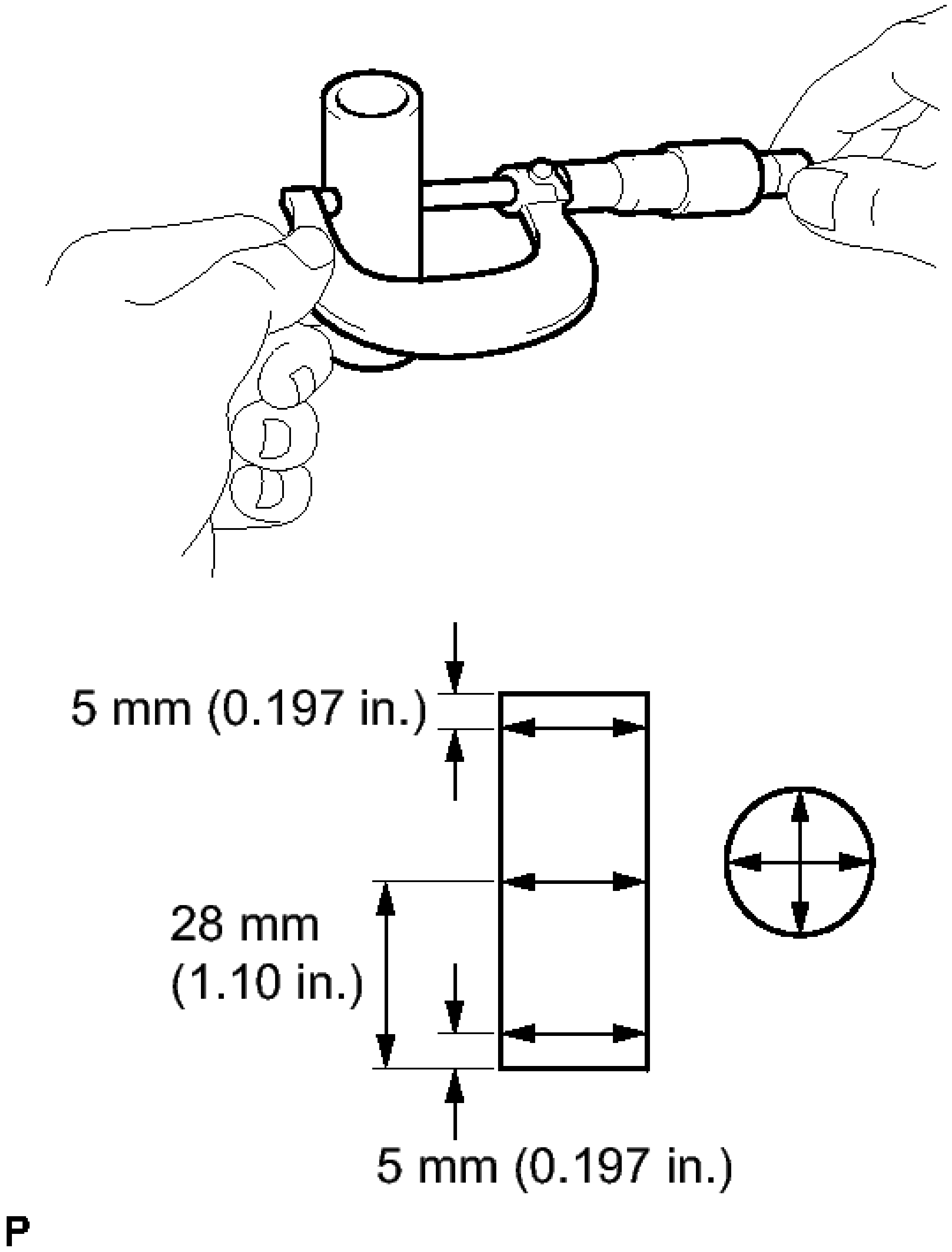
5 mm (0.197 in.)
28 mm
(1.10 in.)
5 mm (0.197 in.)
P

Fig. 376: Measuring Piston Pin Diameter
Courtesy of TOYOTA MOTOR SALES, U.S.A., INC.

Standard Piston Pin Diameter

Item	Specified Condition
Mark A	21.997 to 22.000 mm (0.86602 to 0.86614 in.)
Mark B	22.001 to 22.003 mm (0.86617 to 0.86626 in.)
Mark C	22.004 to 22.006 mm (0.86630 to 0.86638 in.)

If the diameter is not as specified, replace the piston pin.

d. Using a caliper gauge, measure the connecting rod small end bush inside diameter.

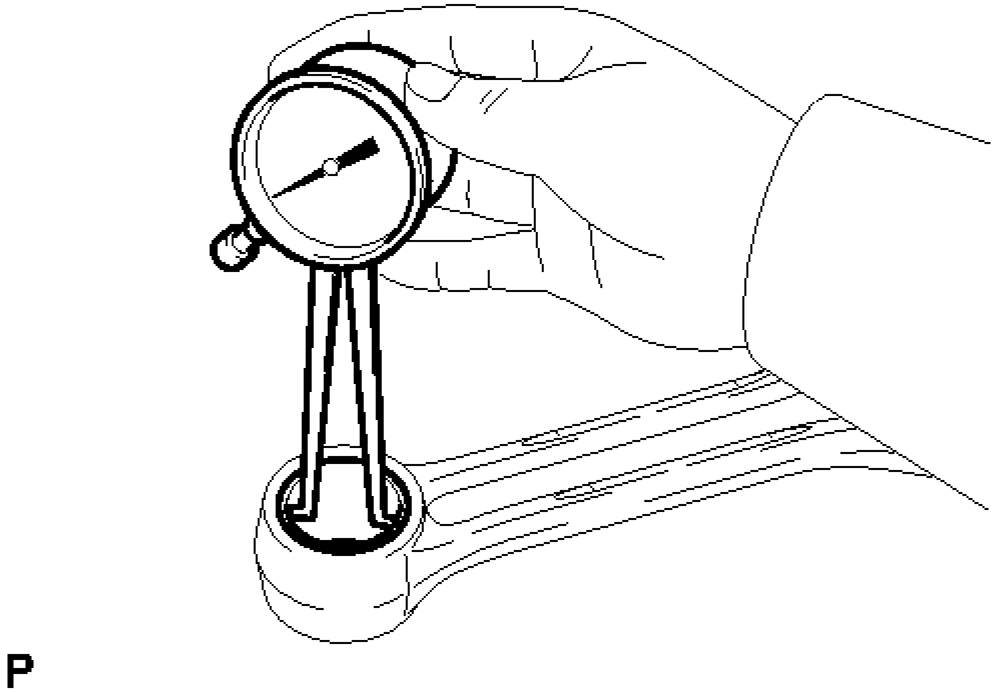

Fig. 377: Measuring Connecting Rod Small End Bush Inside Diameter
Courtesy of TOYOTA MOTOR SALES, U.S.A., INC.

Standard Connecting Rod Small End Bush Inside Diameter

Item	**Specified Condition**
Mark A	22.005 to 22.008 mm (0.86634 to 0.86645 in.)
Mark B	22.009 to 22.011 mm (0.86649 to 0.86657 in.)
Mark C	22.012 to 22.014 mm (0.86661 to 0.86669 in.)

If the diameter is not as specified, replace the connecting rod.

e. Subtract the piston pin diameter measurement from the piston pin hole inside diameter measurement.

Standard oil clearance

0.001 to 0.007 mm (0.0000394 to 0.000276 in.)

Maximum oil clearance

0.013 mm (0.000512 in.)

If the oil clearance is more than the maximum, replace the piston and piston pin as a set.

f. Subtract the piston pin diameter measurement from the connecting rod small end bush inside diameter measurement.

Standard oil clearance

0.005 to 0.011 mm (0.000197 to 0.000433 in.)

Maximum oil clearance

0.017 mm (0.000669 in.)

If the oil clearance is more than the maximum, replace the connecting rod. If necessary, replace the connecting rod and piston pin as a set.

8. **INSPECT CONNECTING ROD SUB-ASSEMBLY**
   a. Using a connecting rod aligner and feeler gauge, check the connecting rod alignment.

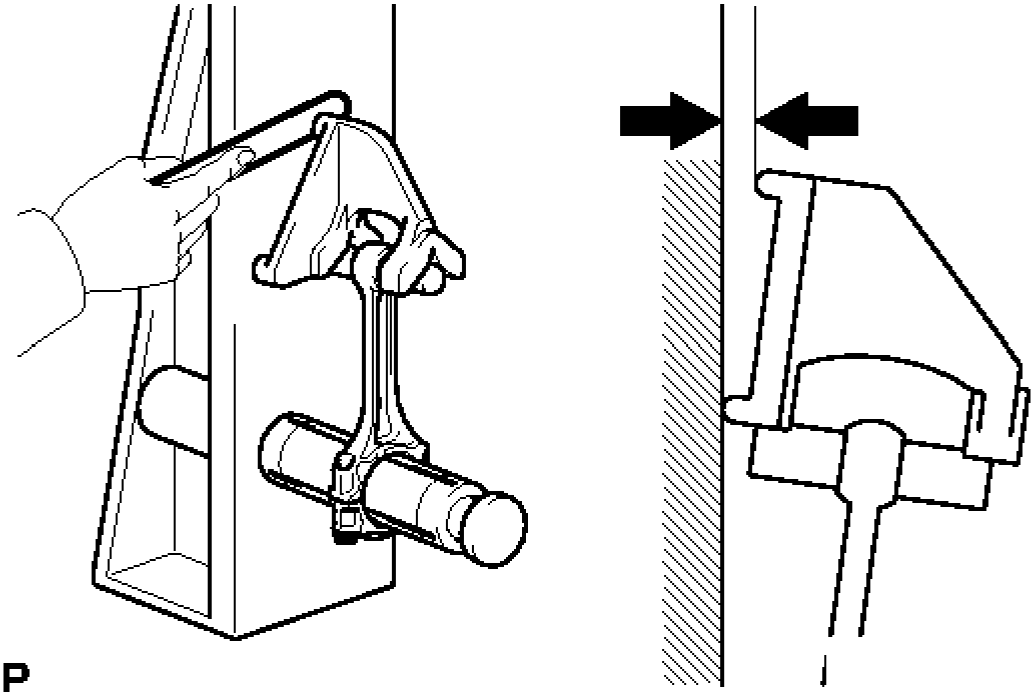

Fig. 378: Checking Connecting Rod Alignment (For Band)
Courtesy of TOYOTA MOTOR SALES, U.S.A., INC.

1. Check for bend.

   Maximum bend

   0.05 mm (0.00197 in.) per 100 mm (3.94 in.)

   If the bend is more than the maximum, replace the connecting rod.

2. Check for twist.

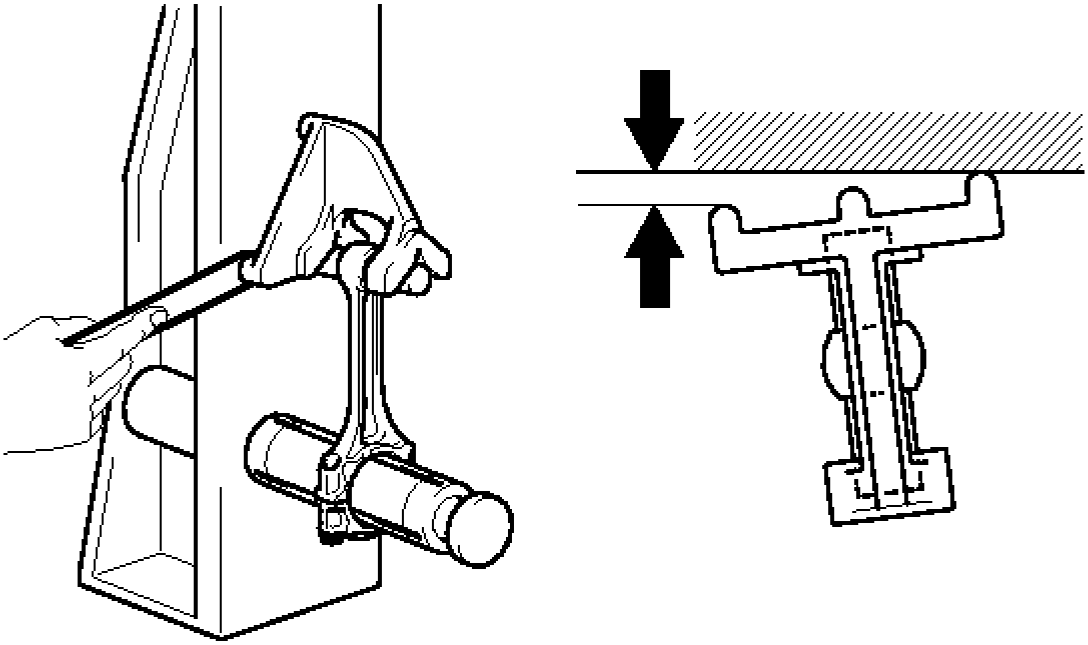

Fig. 379: Checking Connecting Rod Alignment (For Twist)
Courtesy of TOYOTA MOTOR SALES, U.S.A., INC.

Maximum twist

0.15 mm (0.00591 in.) per 100 mm (3.94 in.)

If the twist is more than the maximum, replace the connecting rod.

9. **INSPECT CRANKSHAFT**
    a. Inspect for circle runout.

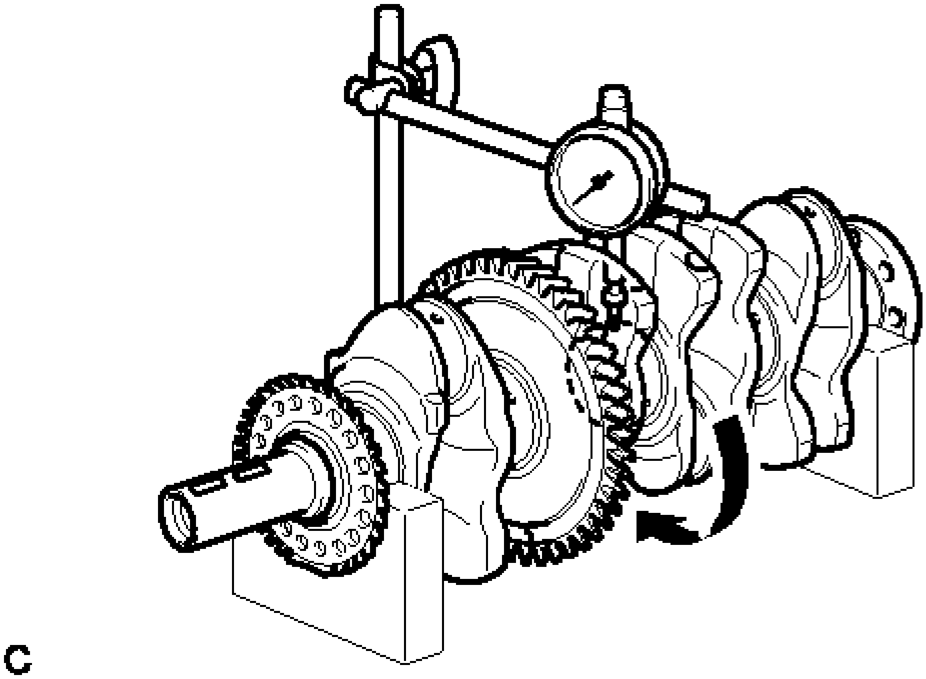

Fig. 380: Inspecting Crankshaft Circle Runout
Courtesy of TOYOTA MOTOR SALES, U.S.A., INC.

1. Using a dial indicator and V-blocks, measure the circle runout as shown in the illustration.

   Maximum circle runout

   0.003 mm (0.000118 in.)

   If the circle runout is more than the maximum, replace the crankshaft.

b. Inspect the main journals.

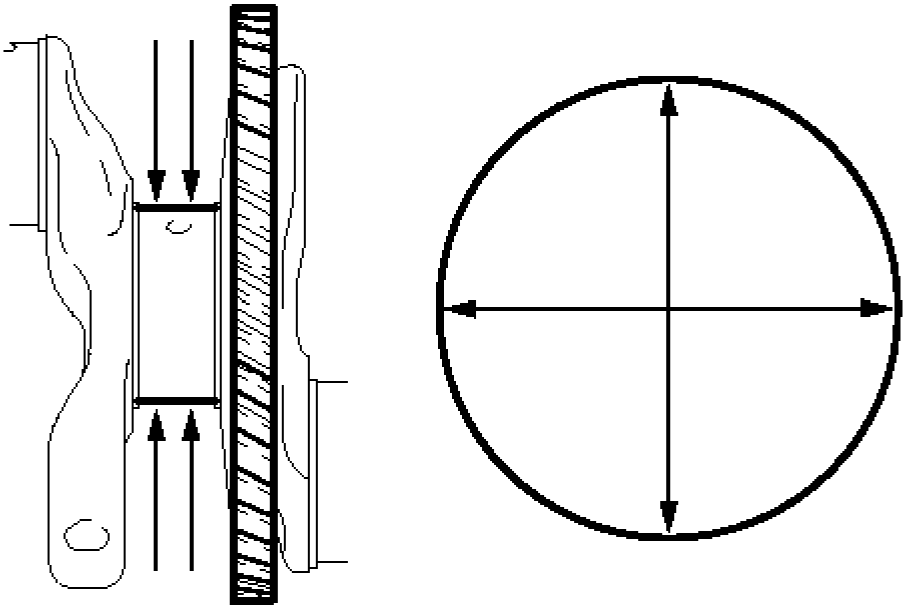

Fig. 381: Checking Crankshaft Main Journal
Courtesy of TOYOTA MOTOR SALES, U.S.A., INC.

1. Using a micrometer, measure the diameter of each main journal.

   Standard main journal diameter

   54.988 to 55.000 mm (2.1649 to 2.1654 in.)

   If the diameter is not as specified, check the crankshaft oil clearance. If necessary, replace the crankshaft.

2. Check each main journal for taper and out-of-round as shown in the illustration.

   Maximum taper and out-of-round

   0.003 mm (0.000118 in.)

   If the taper and out-of-round are more than the maximum, replace the crankshaft.

c. Inspect the crank pin.

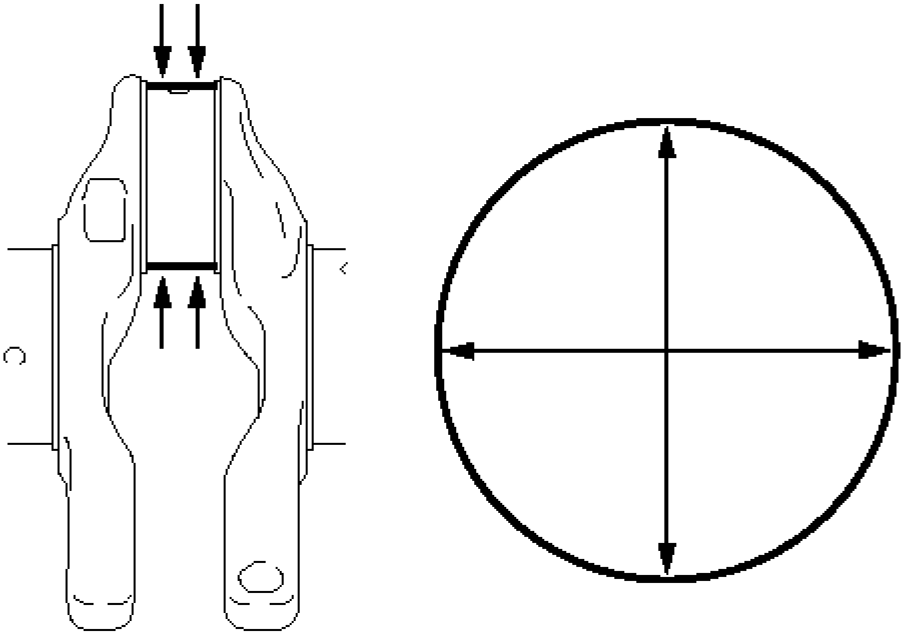

Fig. 382: Measuring Diameter Of Crank Pin
Courtesy of TOYOTA MOTOR SALES, U.S.A., INC.

1. Using a micrometer, measure the diameter of each crank pin.

   Standard crank pin diameter

   51.492 to 51.500 mm (2.027 to 2.028 in.)

   If the diameter is not as specified, check the connecting rod oil clearance. If necessary, replace the crankshaft.

2. Inspect each crank pin for taper and out-of-round as shown in the illustration.

   Maximum taper and out-of-round

   0.003 mm (0.000118 in.)

   If the taper and out-of-round are more than the maximum, replace the crankshaft.

10. **INSPECT CRANKSHAFT OIL CLEARANCE**
    - a. Install the crankshaft bearings See step 7.
    - b. Install the crankshaft thrust washers See step 8.
    - c. Place the crankshaft onto the cylinder block.
    - d. Lay a strip of Plastigage across each journal.

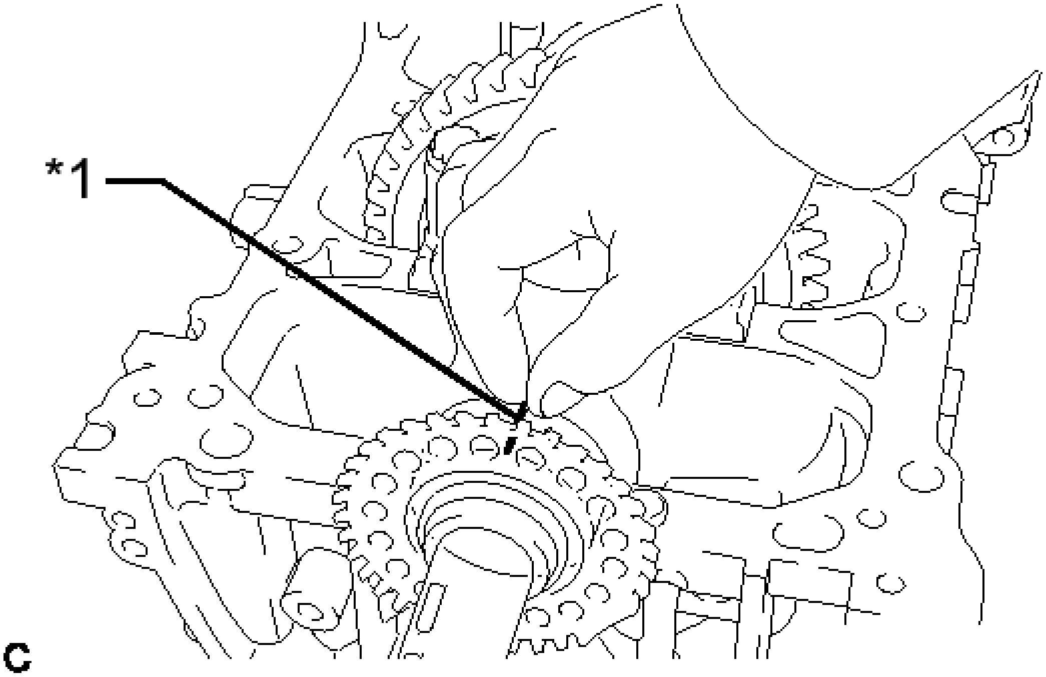

Fig. 383: Identifying Plastigage
Courtesy of TOYOTA MOTOR SALES, U.S.A., INC.

TEXT IN ILLUSTRATION

*1	Plastigage

e. Install the crankshaft bearing caps See step 9.

NOTE: Do not turn the crankshaft.

f. Remove the crankshaft bearing caps See step 6.
g. Measure the Plastigage at its widest point.

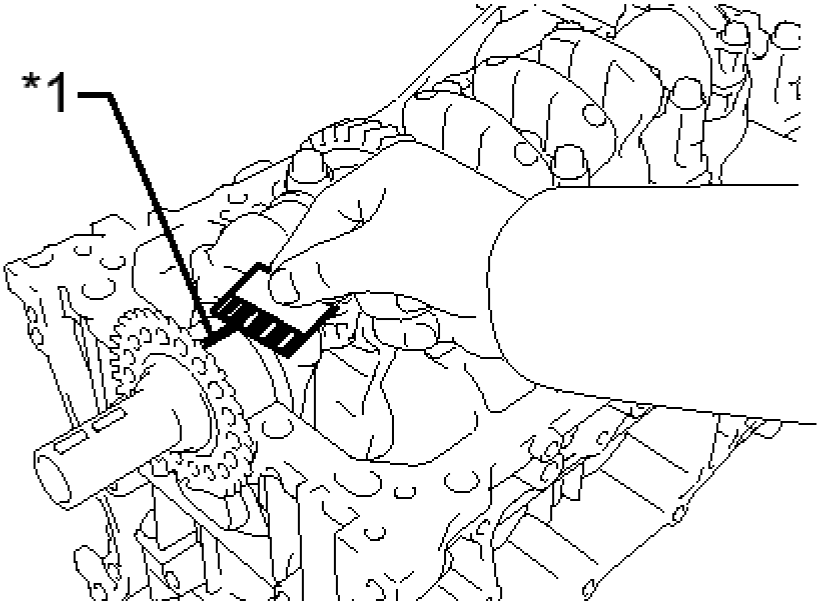

Fig. 384: Measuring Plastigage At Widest Point
Courtesy of TOYOTA MOTOR SALES, U.S.A., INC.

TEXT IN ILLUSTRATION

*1	Plastigage

Standard oil clearance

0.016 to 0.039 mm (0.000630 to 0.00154 in.)

Maximum oil clearance

0.05 mm (0.00197 in.)

NOTE: Remove the Plastigage completely after the measurement.

If the oil clearance is more than the maximum, replace the crankshaft bearing. If necessary, replace the crankshaft.

HINT:

If replacing a bearing, select a new one with the same number. If the number of the bearing cannot be determined, calculate the correct bearing number by adding together the numbers imprinted on the cylinder block and crankshaft. Then select a new bearing with the calculated number. There are 4 sizes of standard bearings, marked "1", "2", "3" and "4" accordingly.

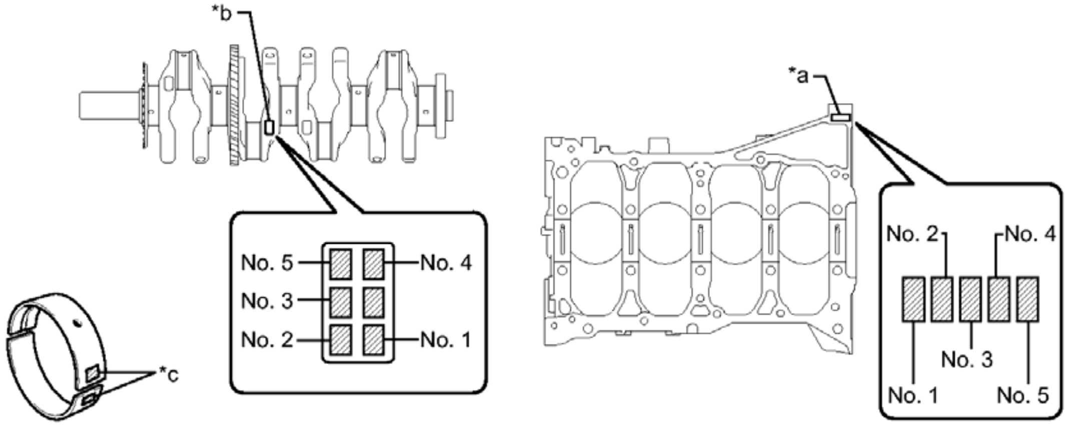
*b
No. 5
No. 4
No. 3
No. 2
No. 1
*c
*a
No. 2
No. 4
No. 3
No. 1
No. 5

c

Fig. 385: Identifying Diameter Mark, Cylinder Block Number Mark And Crankshaft Number Mark
Courtesy of TOYOTA MOTOR SALES, U.S.A., INC.

TEXT IN ILLUSTRATION

*a	Cylinder Block Number Mark (A)	*b	Crankshaft Number Mark (B)
*c	Diameter Mark	-	-

EXAMPLE

Cylinder block (A) "3" + Crankshaft (B) "4" = Total "7"

Select the bearing marked "3".

Bearing Chart

(A) + (B)	**Use Bearing**
0 to 2	1
3 to 5	2

6 to 8	3
9 to 11	4

Standard Cylinder Block Journal Inside Diameter (A)

Item	Specified Condition
Mark 0	59.000 to 59.002 mm (2.32283 to 2.32291 in.)
Mark 1	59.003 to 59.004 mm (2.32295 to 2.32299 in.)
Mark 2	59.005 to 59.006 mm (2.32303 to 2.32307 in.)
Mark 3	59.007 to 59.009 mm (2.32311 to 2.32318 in.)
Mark 4	59.010 to 59.011 mm (2.32322 to 2.32326 in.)
Mark 5	59.012 to 59.013 mm (2.32330 to 2.32334

	in.)
Mark 6	59.014 to 59.016 mm (2.32338 to 2.32346 in.)

Standard Crankshaft Main Journal Diameter (B)

Item	**Specified Condition**
Mark 0	54.999 to 55.000 mm (2.16531 to 2.16535 in.)
Mark 1	54.997 to 54.998 mm (2.16523 to 2.16527 in.)
Mark 2	54.995 to 54.996 mm (2.16515 to 2.16519 in.)
Mark 3	54.993 to 54.994 mm (2.16507 to 2.16511 in.)
Mark 4	54.991 to 54.992 mm (2.16500 to 2.16504 in.)
Mark 5	54.988 to 54.990 mm (2.16488

	to 2.16496 in.)

Standard Bearing Center Wall Thickness

Item	**Specified Condition**
Mark 1	1.991 to 1.994 mm (0.07839 to 0.07850 in.)
Mark 2	1.995 to 1.997 mm (0.07854 to 0.07862 in.)
Mark 3	1.998 to 2.000 mm (0.07866 to 0.07874 in.)
Mark 4	2.001 to 2.003 mm (0.07878 to 0.07886 in.)

h. Perform the inspection above for each journal.

11. **INSPECT CRANKSHAFT BEARING CAP BOLT**

a. Using a vernier caliper, measure the diameter of the threads at the measurement point shown in the illustration.

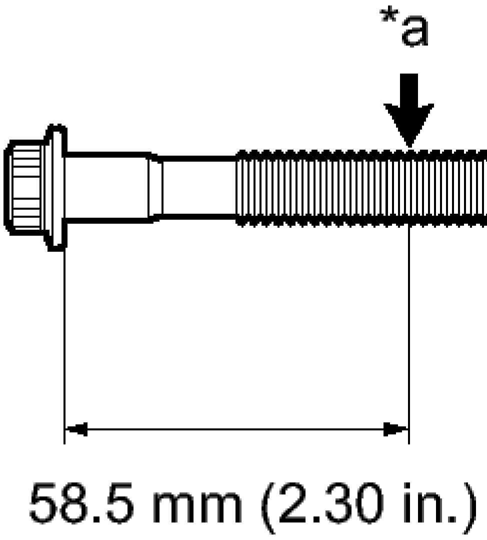

T

Fig. 386: Measuring Crankshaft Bearing Cap Bolt Thread At Measurement Point
Courtesy of TOYOTA MOTOR SALES, U.S.A., INC.

TEXT IN ILLUSTRATION

*a	Measurement Point

Standard diameter

9.77 to 9.96 mm (0.385 to 0.392 in.)

Minimum diameter

9.1 mm (0.358 in.)

HINT:

- If the diameter is less than the minimum, replace the crankshaft bearing cap bolt. Failure to do so may lead to engine damage.
- If there is any thread deformation, replace the crankshaft bearing cap bolt with a new one.

12. **INSPECT CONNECTING ROD BOLT**
    a. Using a vernier caliper, measure the diameter of the bolt in the area shown in the illustration.

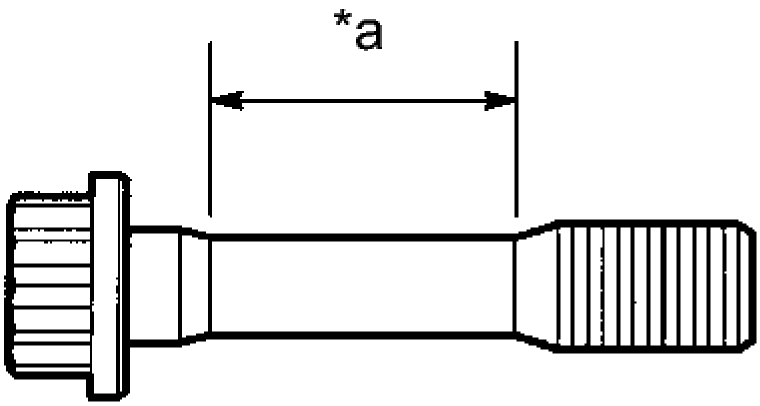

Fig. 387: Inspecting Connecting Rod Bolt
Courtesy of TOYOTA MOTOR SALES, U.S.A., INC.

TEXT IN ILLUSTRATION

*a	Measurement Area

Standard diameter

8.5 to 8.6 mm (0.335 to 0.339 in.)

Minimum diameter

8.3 mm (0.327 in.)

HINT:

- Diameter measurements should be done at several points.
- If the diameter is less than the minimum, replace the connecting rod bolt with a new one. Failure to do so may lead to engine damage.
- If there is any thread deformation, replace the connecting rod bolt with a new one.

13. **INSPECT NO. 1 OIL NOZZLE SUB-ASSEMBLY**
    a. Push the check valve with a pin to check if it is stuck.

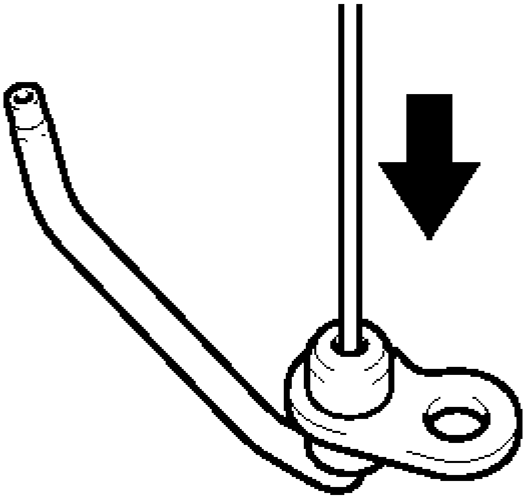

Fig. 388: Pushing Check Valve With Pin
Courtesy of TOYOTA MOTOR SALES, U.S.A., INC.

If stuck, replace the No. 1 oil nozzle.

b. Push the check valve with a pin to check if it moves smoothly.

If it does not move smoothly, clean or replace the No. 1 oil nozzle.

c. Apply air into A. Check that air does not leak through B.

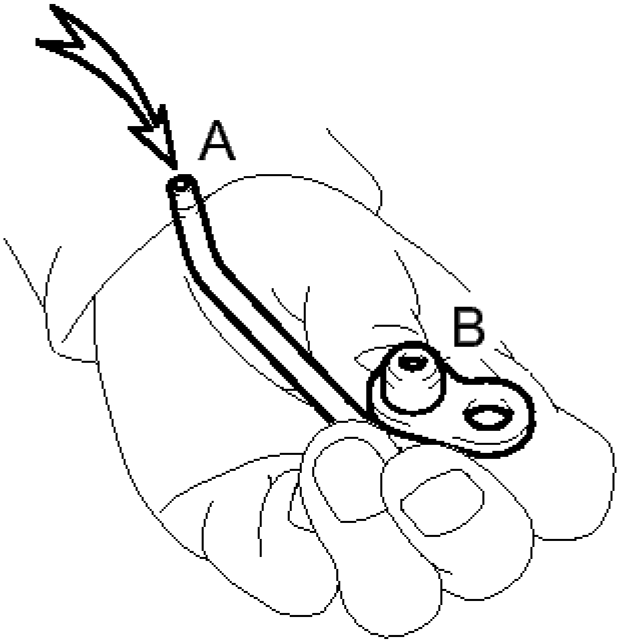

Fig. 389: Checking Air Leak Through B
Courtesy of TOYOTA MOTOR SALES, U.S.A., INC.

If air leaks, clean or replace the No. 1 oil nozzle.

d. Push the check valve while applying air into A. Check that air passes through B.

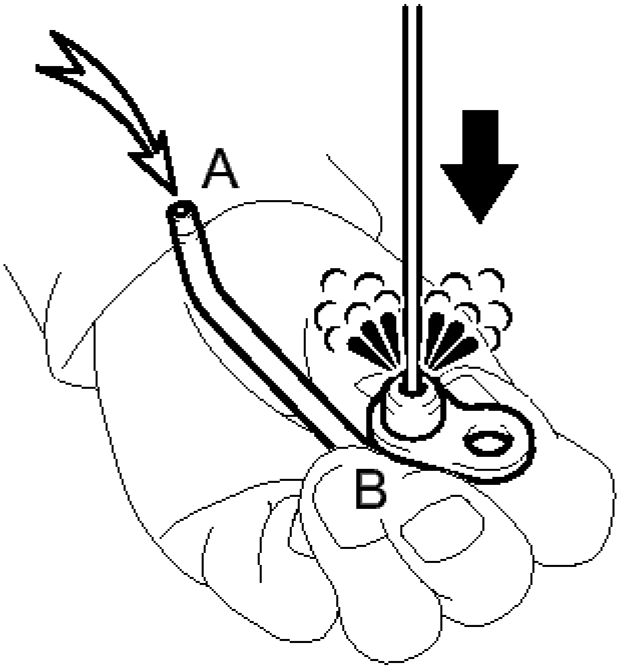

Fig. 390: Pushing Check Valve
Courtesy of TOYOTA MOTOR SALES, U.S.A., INC.

If air does not pass through B, clean or replace the No. 1 oil nozzle.

14. **INSPECT NO. 2 OIL NOZZLE SUB-ASSEMBLY**
    a. Push the check valve with a pin to check if it is stuck.

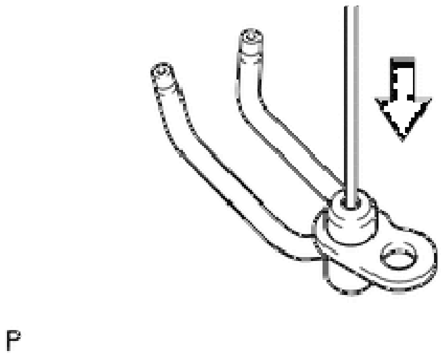

Fig. 391: Pushing Check Valve With Pin
Courtesy of TOYOTA MOTOR SALES, U.S.A., INC.

If stuck, replace the No. 2 oil nozzle.

    b. Push the check valve with a pin to check if it moves smoothly.

If it does not move smoothly, clean or replace the No. 2 oil nozzle.

    c. While covering A, apply air into B. Check that air does not leak through C. Perform the check again while covering B and applying air into A.

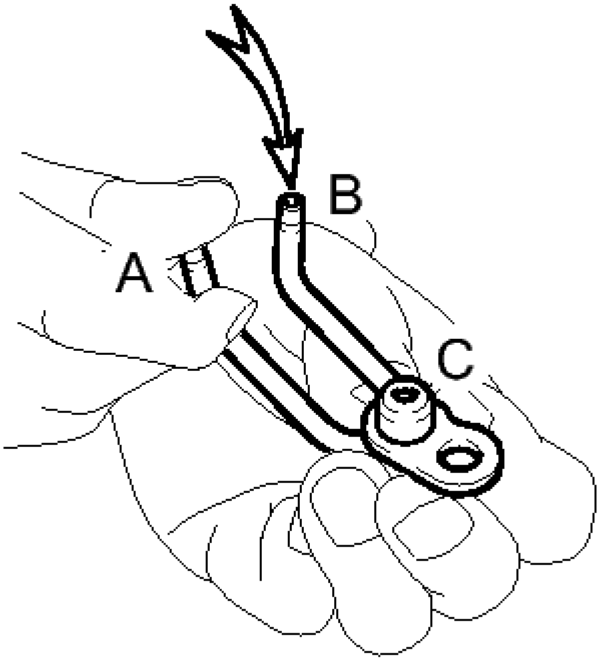

Fig. 392: Checking Air Leak
Courtesy of TOYOTA MOTOR SALES, U.S.A., INC.

If air leaks, clean or replace the No. 2 oil nozzle.

d. Push the check valve while covering A, and apply air into B. Check that air passes through C. Perform the check again while covering B, pushing the check valve and applying air into A.

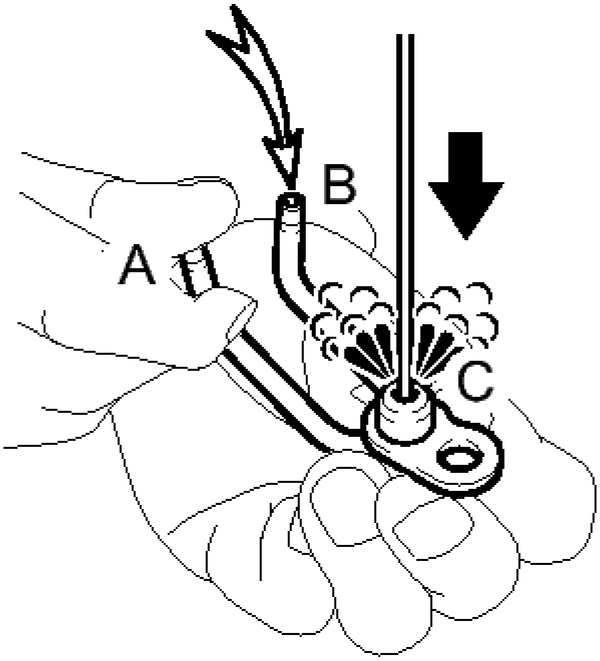

Fig. 393: Applying Air Into B While Covering A
Courtesy of TOYOTA MOTOR SALES, U.S.A., INC.

If air does not pass through C, clean or replace the No. 2 oil nozzle.

REPLACEMENT

REPLACEMENT

1. **REPLACE RING PIN**

NOTE: It is not necessary to remove the ring pin unless it is being replaced.

a. Remove the 12 ring pins.
b. Using a plastic-faced hammer, install 12 new ring pins.

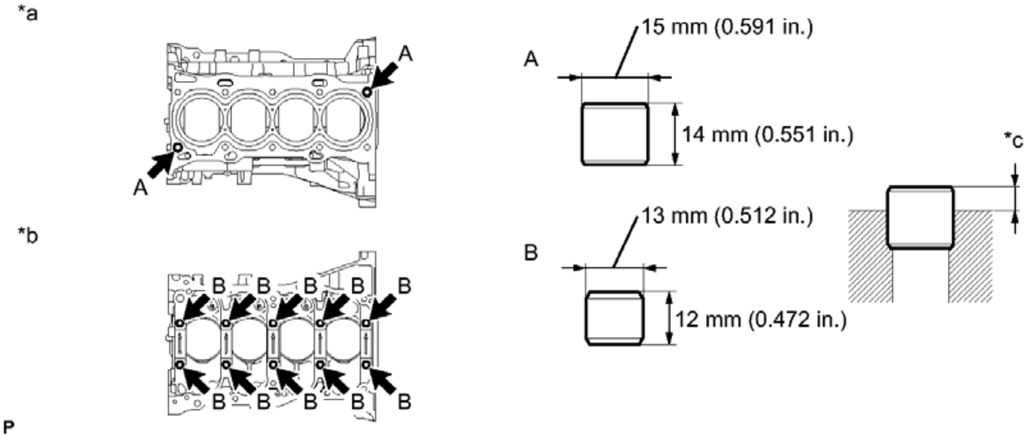
*a
A
A
15 mm (0.591 in.)
A
14 mm (0.551 in.)
*c
*b
B
B
B
B
B
B
B
B
B
B
13 mm (0.512 in.)
B
12 mm (0.472 in.)
P

Fig. 394: Identifying Ring Pins & Standard Protrusion Height
Courtesy of TOYOTA MOTOR SALES, U.S.A., INC.

TEXT IN ILLUSTRATION

*a	Upper Side:	*b	Lower Side:
*c	Protrusion Height	-	-

Standard Protrusion Height

Item	Specified Condition
A	5.0 to 7.0 mm (0.197 to 0.276 in.)

B	4.0 to 7.0 mm (0.157 to 0.276 in.)

2. **REPLACE STRAIGHT PIN**

NOTE: It is not necessary to remove the straight pin unless it is being replaced.

a. Remove the 14 straight pins.
b. Using a plastic-faced hammer, install 14 new straight pins.

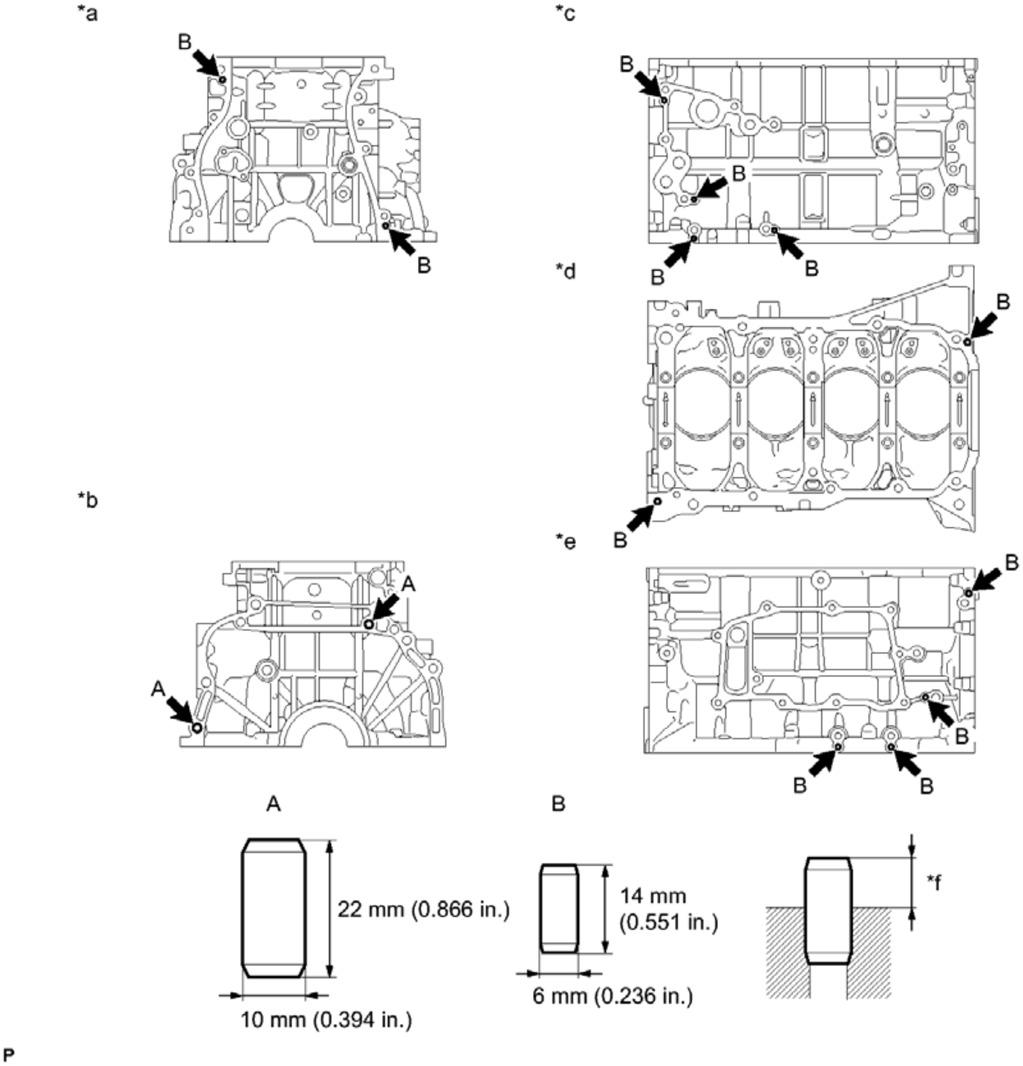
*a
B
B
*b
A
A
*c
B
B
B
B
*d
B
B
*e
B
B
B
B
A
B
22 mm (0.866 in.)
10 mm (0.394 in.)
14 mm
(0.551 in.)
6 mm (0.236 in.)
*f
P

Fig. 395: Identifying Straight Pins & Standard Protrusion Height
Courtesy of TOYOTA MOTOR SALES, U.S.A., INC.

TEXT IN ILLUSTRATION

*a	Front Side:	*b	Rear Side:
*c	LH Side:	*d	Lower Side:
*e	RH Side:	*f	Protrusion Height

Standard Protrusion Height

Item	Specified Condition
A	11.0 to 13.0 mm (0.433 to 0.512 in.)
B	5.0 to 7.0 mm (0.197 to 0.276 in.)

REASSEMBLY

REASSEMBLY

HINT:

Perform "Inspection After Repair" after replacing the piston or piston ring. Refer to **INITIALIZATION** .

1. **INSTALL STUD BOLT**

   NOTE: **If a stud bolt is deformed or the threads are damaged, replace it.**

   a. Using an E8 "TORX" socket wrench, install the 2 stud bolts.

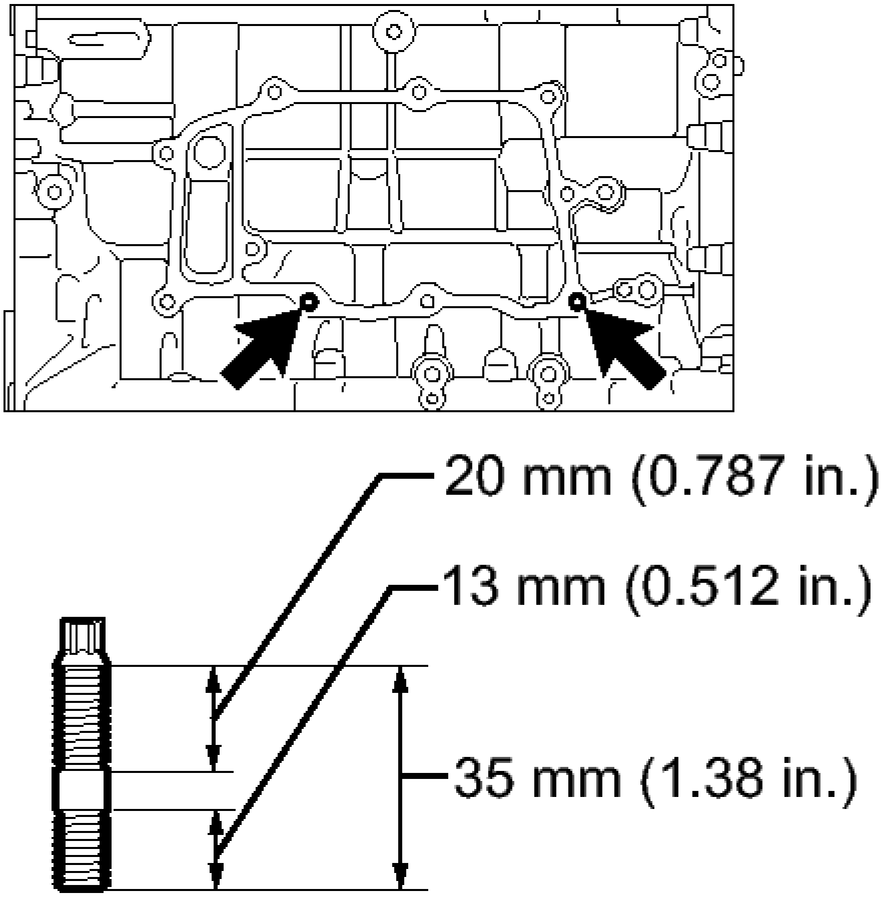
20 mm (0.787 in.)
13 mm (0.512 in.)
35 mm (1.38 in.)

Fig. 396: Identifying Stud Bolts
Courtesy of TOYOTA MOTOR SALES, U.S.A., INC.

Torque: 9.0 N*m (92 kgf*cm, 80 in.*lbf)

2. **INSTALL NO. 2 OIL NOZZLE SUB-ASSEMBLY**
    a. Using a 5 mm hexagon wrench, install the 4 No. 2 oil nozzles sub-assembly with the 4 bolts.

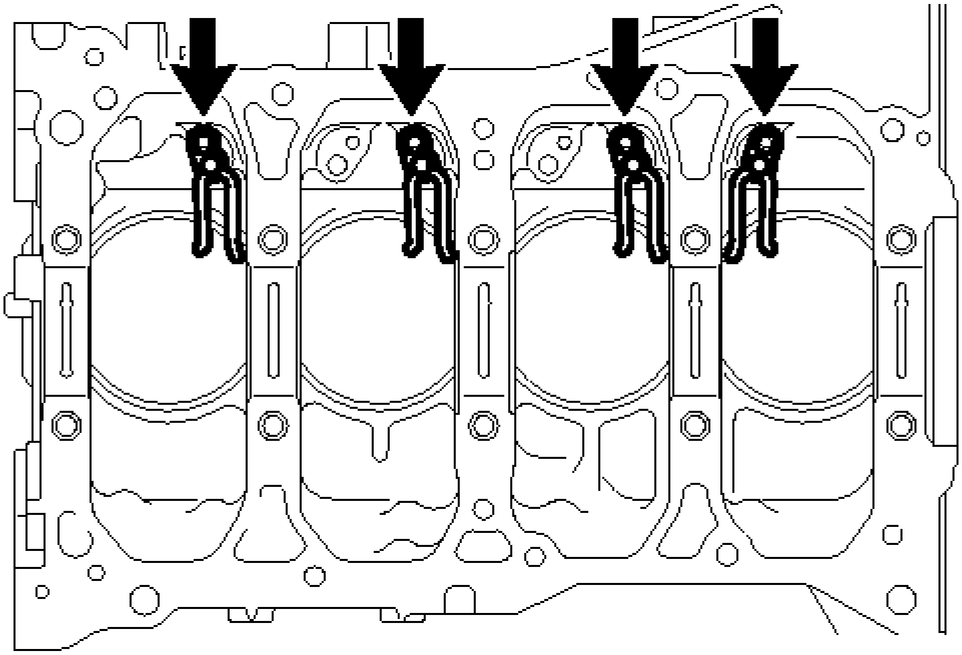

Fig. 397: Locating No. 2 Oil Nozzles Bolts
Courtesy of TOYOTA MOTOR SALES, U.S.A., INC.

Torque: 10 N*m (102 kgf*cm, 7 ft.*lbf)

3. **INSTALL NO. 1 OIL NOZZLE SUB-ASSEMBLY**
   a. Using a 5 mm hexagon wrench, install the 2 No. 1 oil nozzles sub-assembly with the 2 bolts.

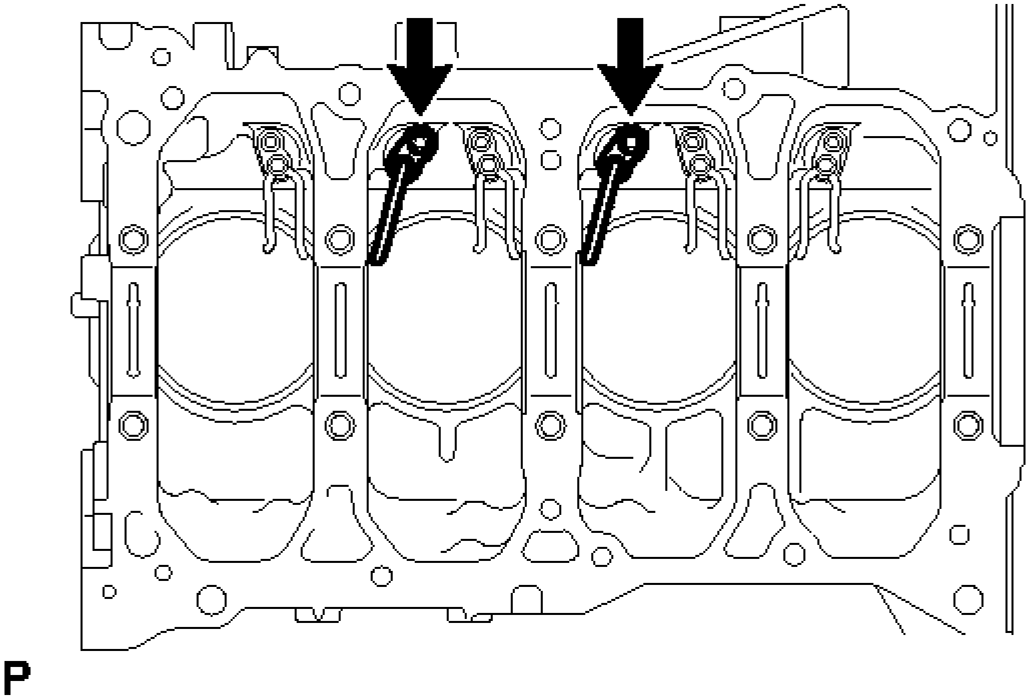

Fig. 398: Locating No. 1 Oil Nozzles Bolts
Courtesy of TOYOTA MOTOR SALES, U.S.A., INC.

Torque: 10 N*m (102 kgf*cm, 7 ft.*lbf)

4. **INSTALL PISTON**
    a. Using a small screwdriver, install a new snap ring (rear side) at one end of the piston pin hole.
    b. Gradually heat the piston up to 80 to 90°C (176 to 194°F).
    c. Coat the piston, piston pin and connecting rod with engine oil.
    d. Align the front marks of the piston and connecting rod, insert the connecting rod into the piston, and then push in the piston pin with your thumb until the pin comes into contact with the snap ring.

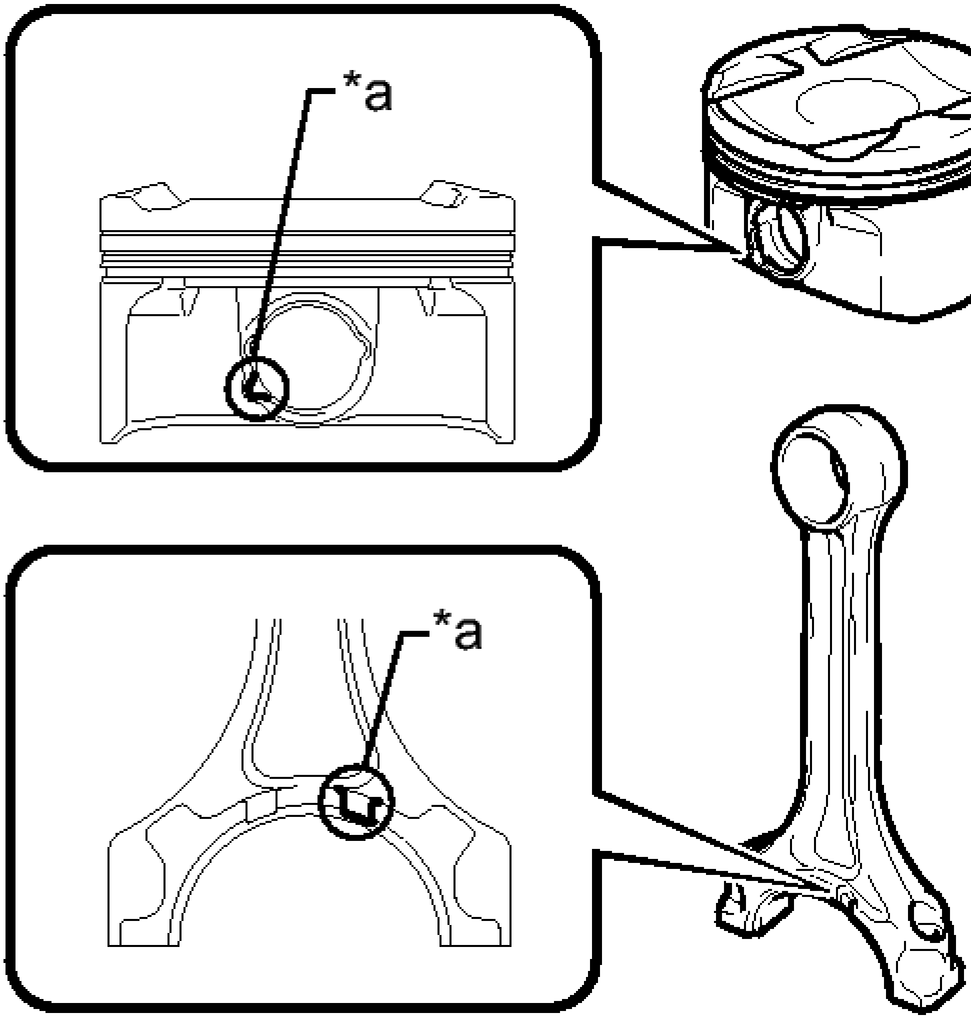

Fig. 399: Identifying Piston Front Marks
Courtesy of TOYOTA MOTOR SALES, U.S.A., INC.

TEXT IN ILLUSTRATION

*a	Front Mark

HINT:

The piston and pin are a matched set.

e. Using a small screwdriver, install a new snap ring (front side) on the other side of the piston pin hole.

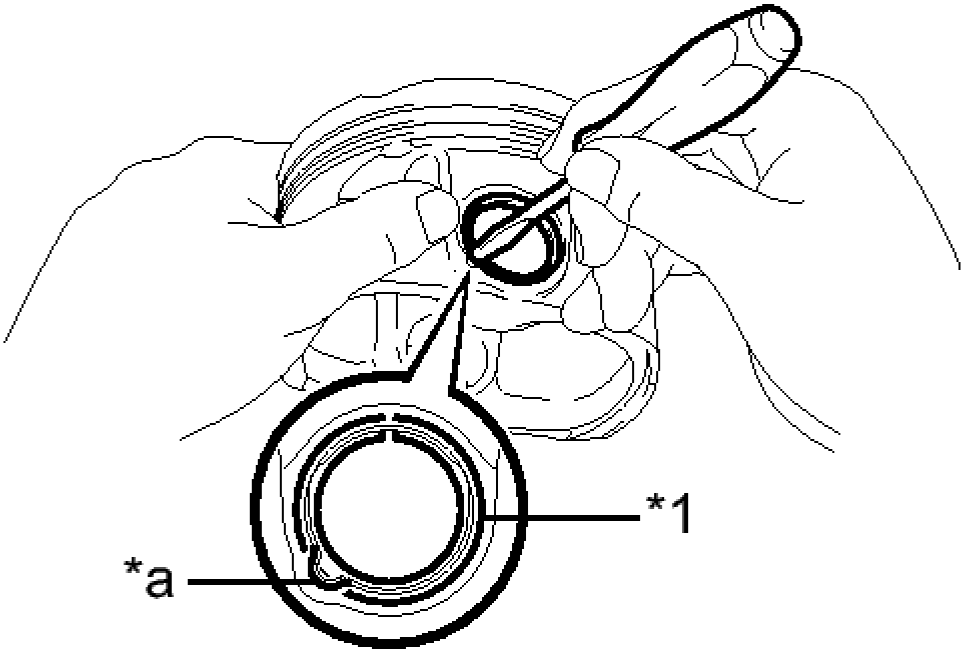

Fig. 400: Identifying Snap Ring
Courtesy of TOYOTA MOTOR SALES, U.S.A., INC.

TEXT IN ILLUSTRATION

*1	Snap Ring
*a	Front Mark Cutout Portion

HINT:

Be sure that the end gap of the snap ring is not aligned with the front mark cutout portion of the piston.

f. Check the fitting condition between the piston and piston pin.

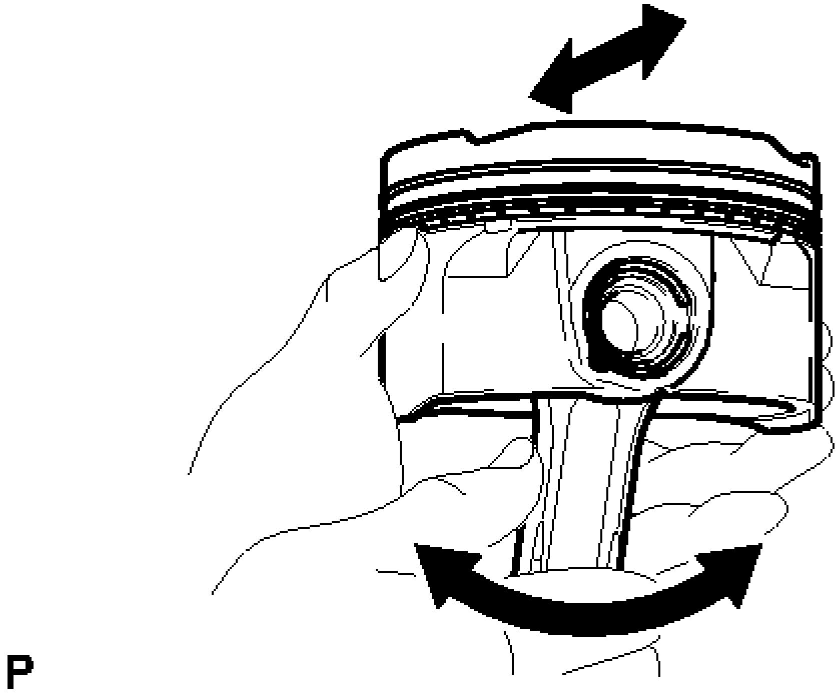

Fig. 401: Checking Fitting Condition Between Piston And Piston Pin
Courtesy of TOYOTA MOTOR SALES, U.S.A., INC.

1. Move the connecting rod back and forth on the piston pin. Check the fitting condition.

   If abnormal movement is felt, replace the piston and pin as a set.

2. Rotate the piston back and forth on the piston pin. Check the fitting condition.

   If abnormal movement is felt, replace the piston and pin as a set.

   HINT:

   Perform "Inspection After Repair" after replacing the piston. Refer to **INITIALIZATION** .

5. **INSTALL PISTON RING SET**
   a. Install the oil ring expander and oil ring by hand.

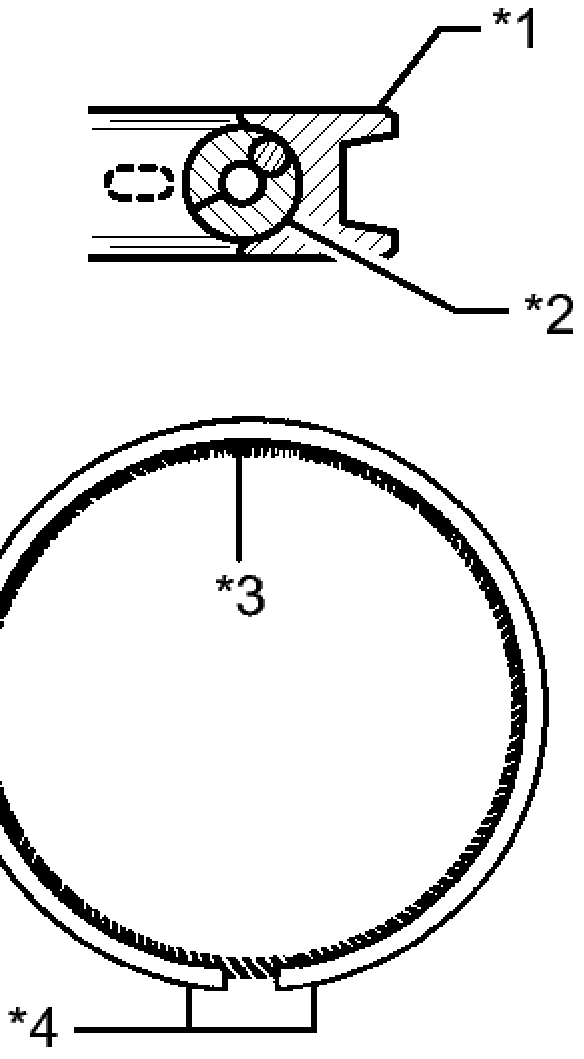

Fig. 402: Identifying Rings Position
Courtesy of TOYOTA MOTOR SALES, U.S.A., INC.

TEXT IN ILLUSTRATION

*1	Oil Ring
*2	Oil Ring Expander
*3	Coil Joint
*4	Oil Ring End

HINT:

Arrange the oil ring ends and coil joint as shown in the illustration.

b. Using a piston ring expander, install the 2 compression rings with the code mark positioned as shown in the illustration.

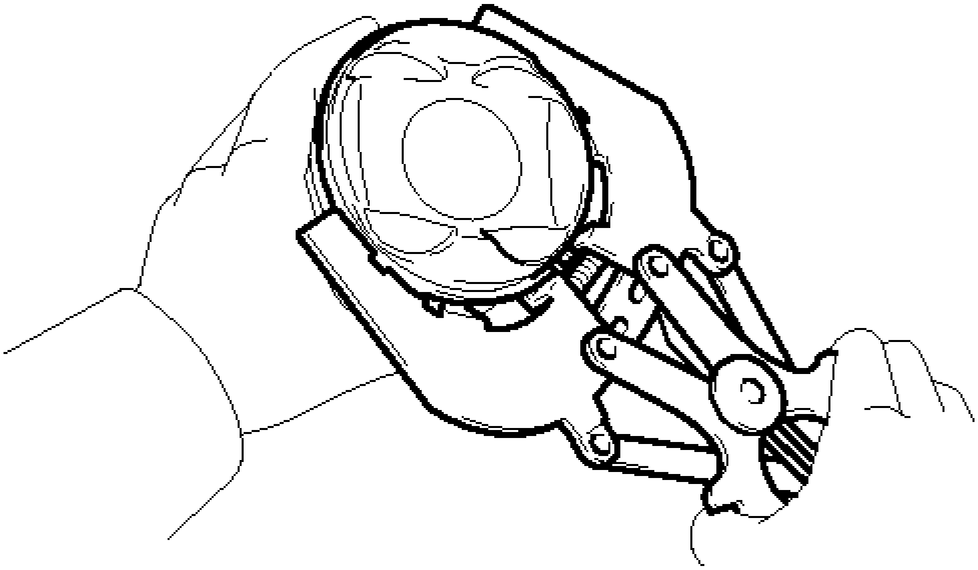

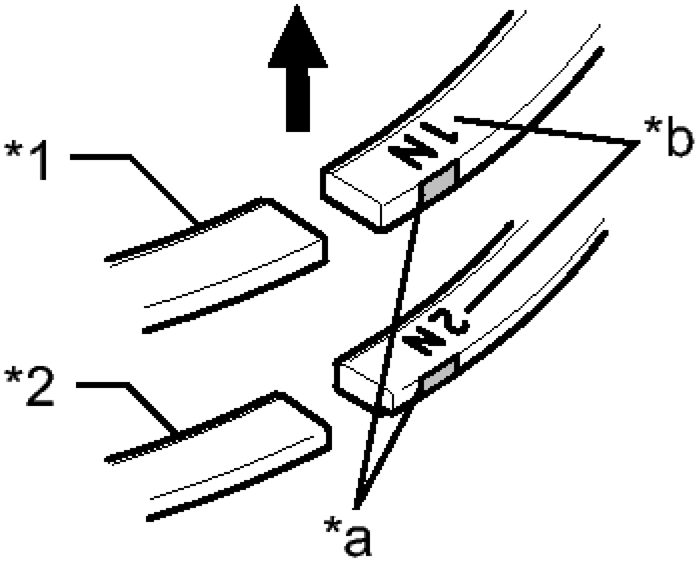

Fig. 403: Identifying Compression Rings
Courtesy of TOYOTA MOTOR SALES, U.S.A., INC.

TEXT IN ILLUSTRATION

*1	No. 1 Compression Ring
*2	No. 2 Compression Ring
*a	Paint Mark
*b	Code Mark
·	Upward

Piston Ring Mark

Item	Code Mark	Paint Mark
No. 1 Compression Ring	1N	Blue
No. 2 Compression Ring	2N	Orange

NOTE: **Install the compression ring with the code mark facing upward.**

HINT:

Perform "Inspection After Repair" after replacing the piston, piston ring. Refer to **INITIALIZATION** .

6. **INSTALL CRANKSHAFT PULLEY KEY**
    a. Install the 2 crankshaft pulley keys to the crankshaft.
7. **INSTALL CRANKSHAFT BEARING**
    a. Clean the main journal and both surfaces of the bearing.

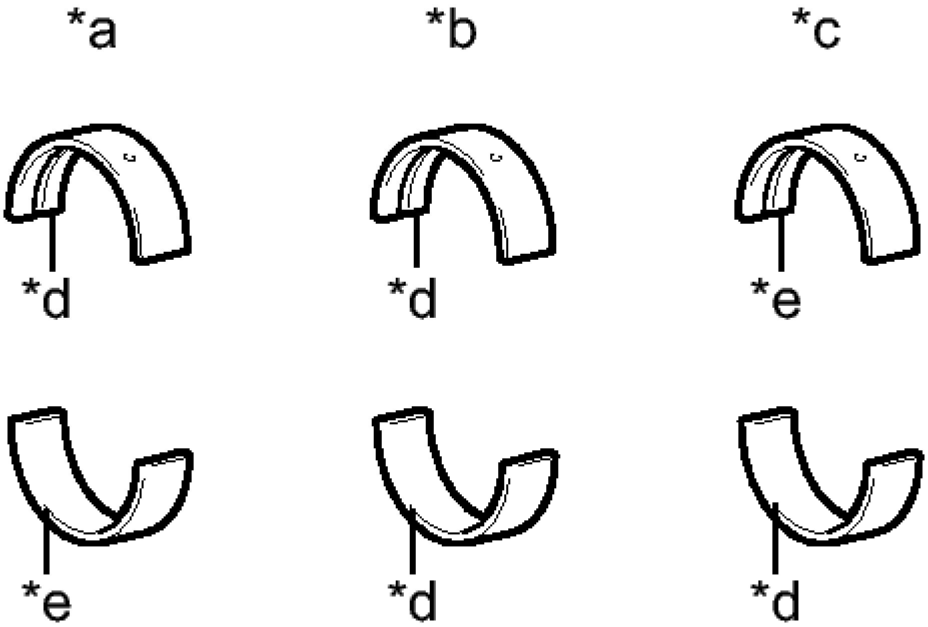

Fig. 404: Identifying Crankshaft Bearing
Courtesy of TOYOTA MOTOR SALES, U.S.A., INC.

TEXT IN ILLUSTRATION

*a	No. 1, No. 5 Journal Bearing
*b	No. 2, No. 4 Journal Bearing
*c	No. 3 Journal Bearing
*d	Silver
*e	Black

b. Install the upper bearing to the cylinder block as shown in the illustration.

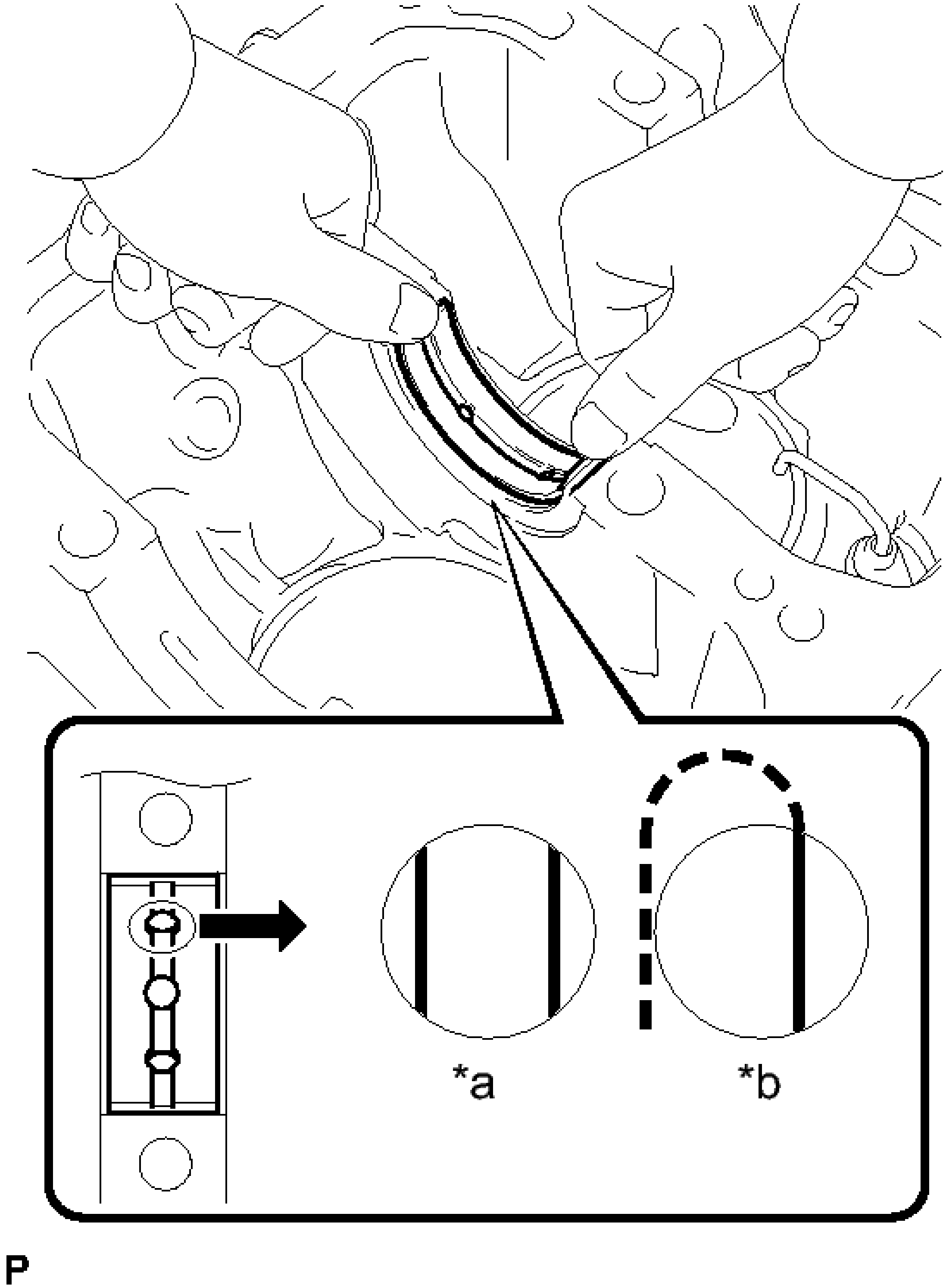

Fig. 405: Installing Upper Bearing At Cylinder Block
Courtesy of TOYOTA MOTOR SALES, U.S.A., INC.

TEXT IN ILLUSTRATION

*a	CORRECT

*b	INCORRECT

NOTE:

- **The color of the No. 3 journal bearing is different from that of the No. 1, No. 2, No. 4 and No. 5 journal bearings. Be sure to check the color before installation.**
- **Do not apply engine oil to the bearings or their contact surfaces.**
- **Both sides of the oil groove in the cylinder block should be visible through the oil feed holes in the bearing. The amount visible on each side of the holes should be equal.**
- **Do not allow coolant to come into contact with the bearing inner surface.**
- **If any coolant comes into contact with the bearing inner surface, replace the bearing with a new one.**

c. Install the lower bearing onto the bearing cap.

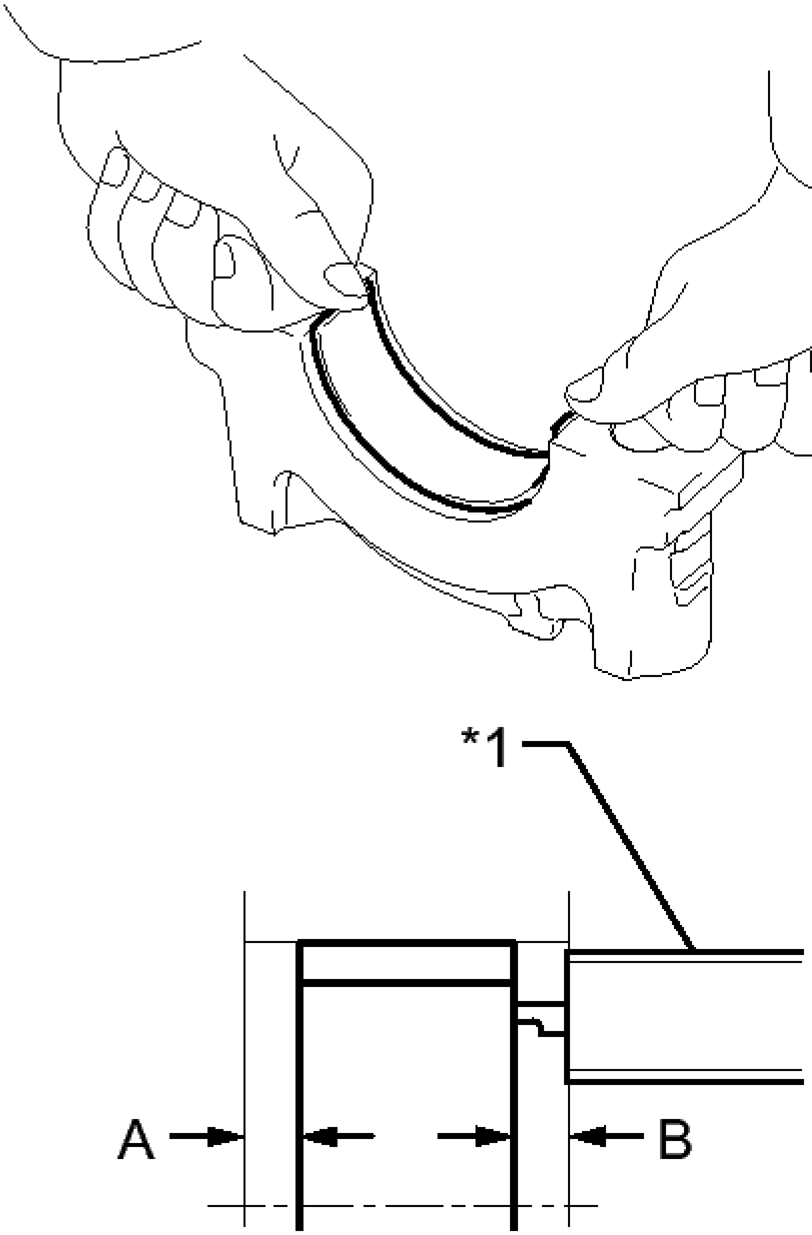

Fig. 406: Measuring Distance Between Crankshaft Cap Edge And Lower Bearing Edge
Courtesy of TOYOTA MOTOR SALES, U.S.A., INC.

TEXT IN ILLUSTRATION

	Vernier

*1	Caliper

d. Using a vernier caliper, measure the distance between the crankshaft bearing cap edge and the lower bearing edge.

Standard dimension A - B or B - A

0 to 0.7 mm (0 to 0.0276 in.)

NOTE:

- **The color of the No. 1 and No. 5 journal bearing is different from that of the No. 2, No. 3 and No. 4 journal bearings. Be sure to check the color before installation.**
- **Do not apply engine oil to the bearings and the contact surfaces.**
- **Do not allow coolant to come into contact with the bearing inner surface.**
- **If any coolant comes into contact with the bearing inner surface, replace the bearing with a new one.**

8. **INSTALL CRANKSHAFT THRUST WASHER**
   a. Apply engine oil to the thrust washers.
   b. Install the 2 thrust washers onto the No. 3 journal position of the cylinder block with the oil grooves facing outward.

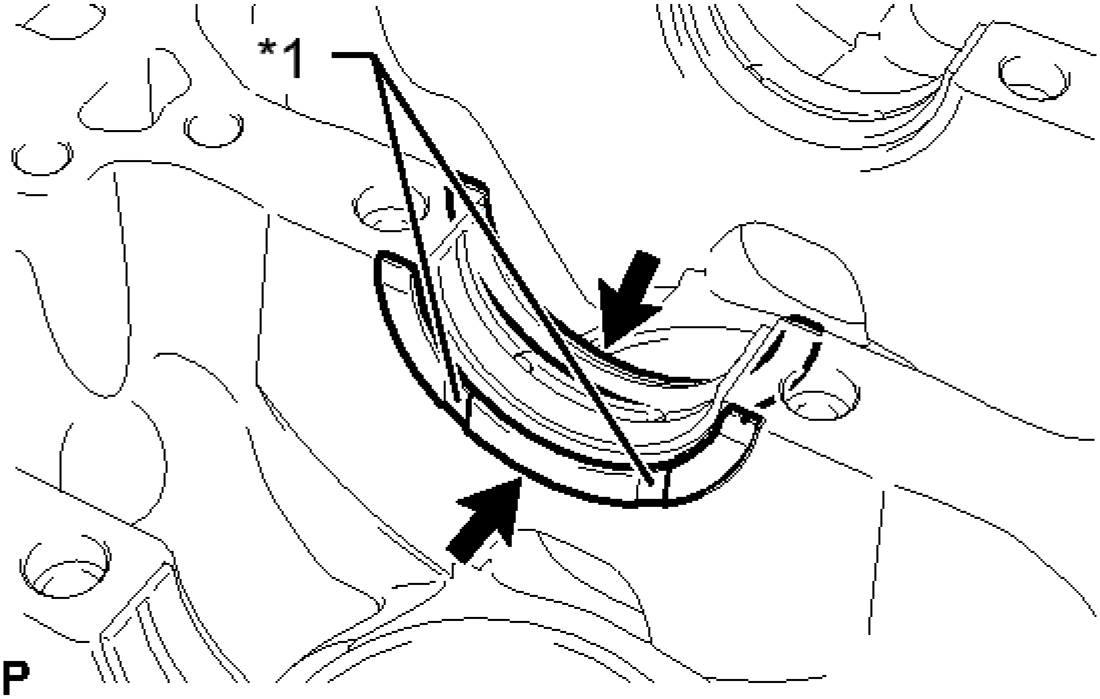

Fig. 407: Identifying Oil Groove

Courtesy of TOYOTA MOTOR SALES, U.S.A., INC.

TEXT IN ILLUSTRATION

*1	Oil Groove

9. **INSTALL CRANKSHAFT**
   a. Apply engine oil to the upper bearing, and install the crankshaft onto the cylinder block.
   b. Examine the front marks and numbers, and install the bearing caps onto the cylinder block with the front marks as shown in the illustration.

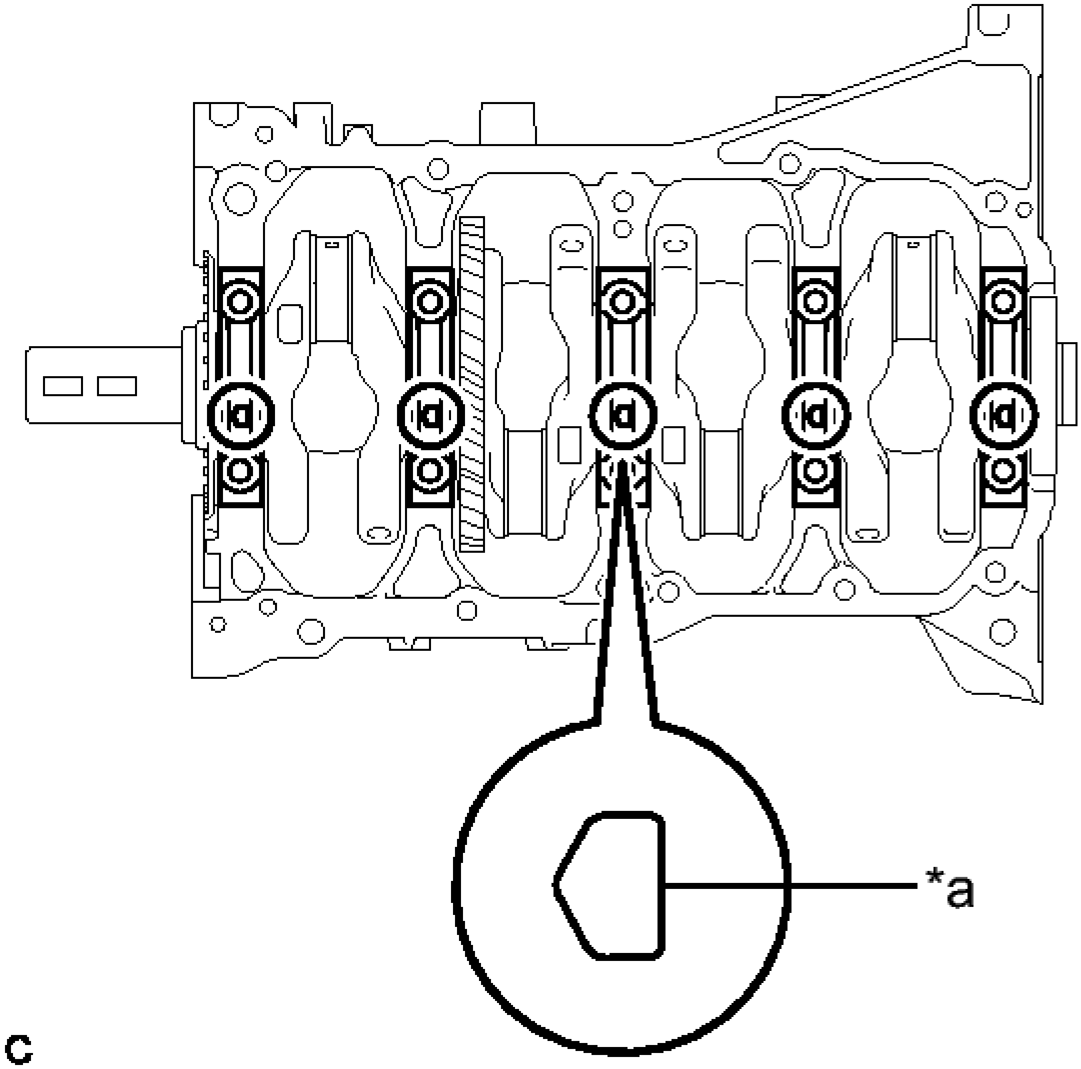

Fig. 408: Identifying Front Mark
Courtesy of TOYOTA MOTOR SALES, U.S.A., INC.

TEXT IN ILLUSTRATION

*a	Front Mark

HINT:

The crankshaft bearing cap bolts are tightened in 3 progressive steps.

c. Apply a light coat of engine oil to the threads and under the heads of the bearing cap bolts.
d. Step 1:
    1. Using several steps, uniformly install and tighten the 10 bearing cap bolts in the sequence shown in the illustration.

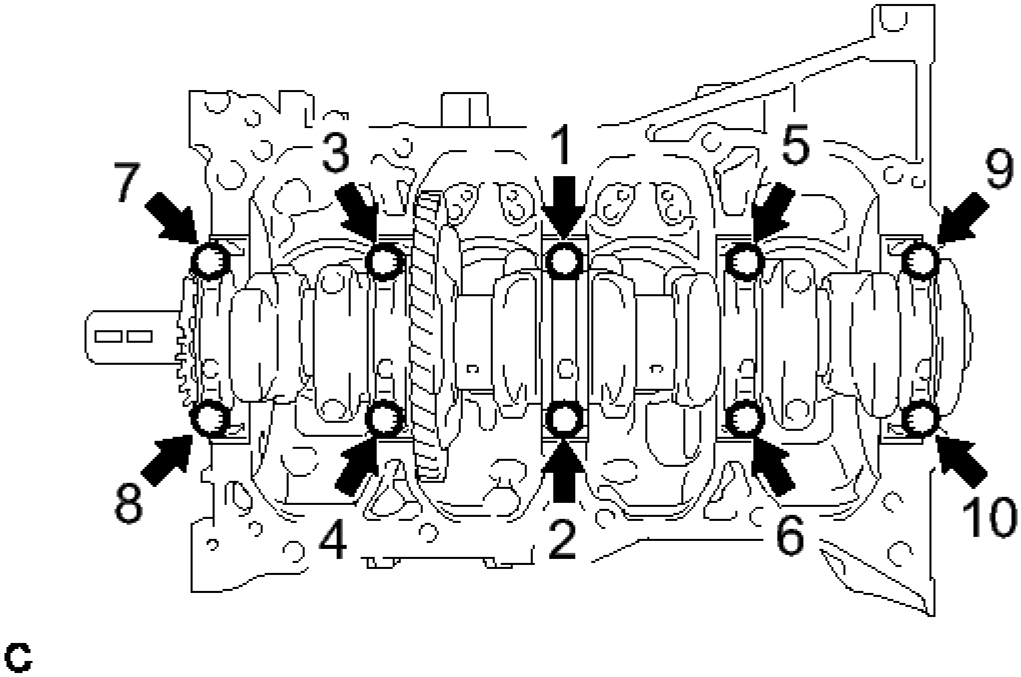

Fig. 409: Tightening Bearing Cap Bolts In Sequence
Courtesy of TOYOTA MOTOR SALES, U.S.A., INC.

Torque: 20 N*m (204 kgf*cm, 15 ft.*lbf)

e. Step 2:
    1. Tighten the 10 bearing cap bolts again in the sequence shown in the illustration.

Torque: 40 N*m (408 kgf*cm, 30 ft.*lbf)

f. Step 3:
    1. Mark the front of the bearing cap bolts with paint.

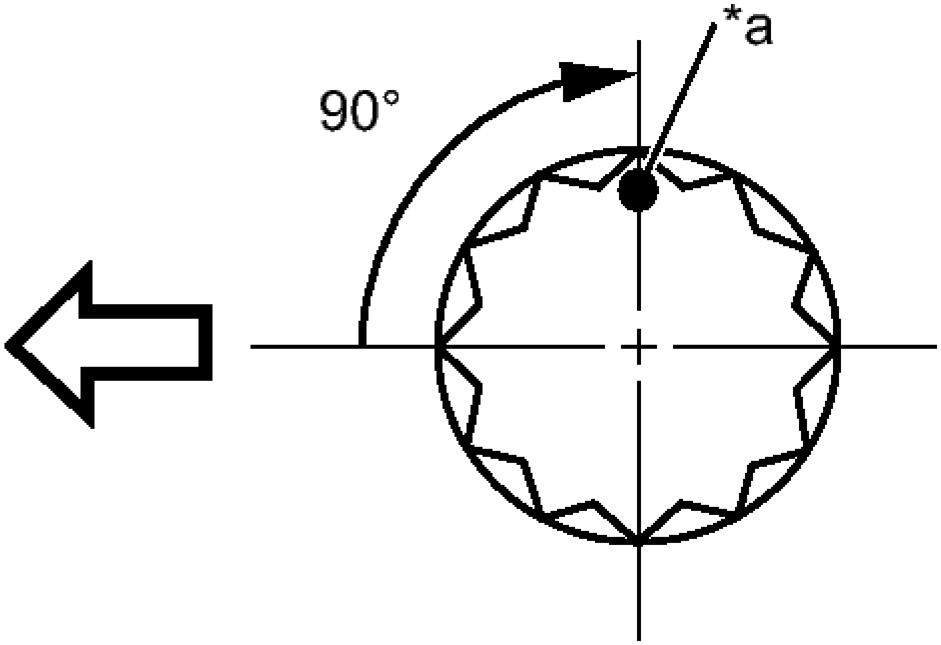

Fig. 410: Identifying Bearing Cap Bolts And Paint
Courtesy of TOYOTA MOTOR SALES, U.S.A., INC.

TEXT IN ILLUSTRATION

*a	Paint Mark
	Engine Front

   2. Tighten the 10 bearing cap bolts 90° in the same sequence.
   3. Check that the paint marks are now at a 90° angle to the front.

g. Check that the crankshaft turns smoothly.

10. **INSTALL CONNECTING ROD BEARING**

   a. Clean the bearing contact surface of the connecting rod and cap, and both surfaces of both bearings.

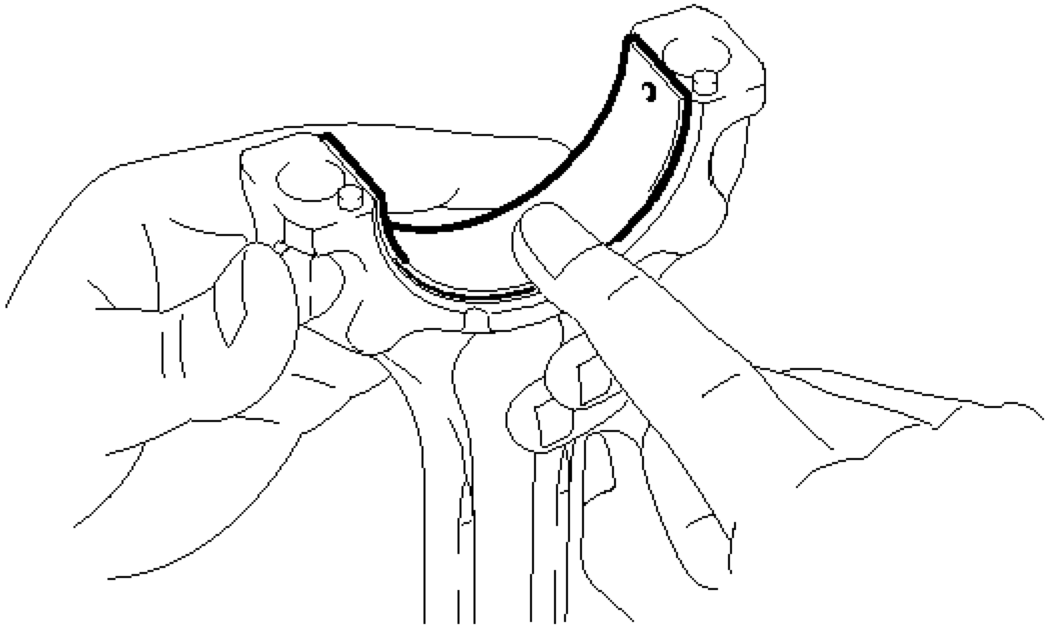

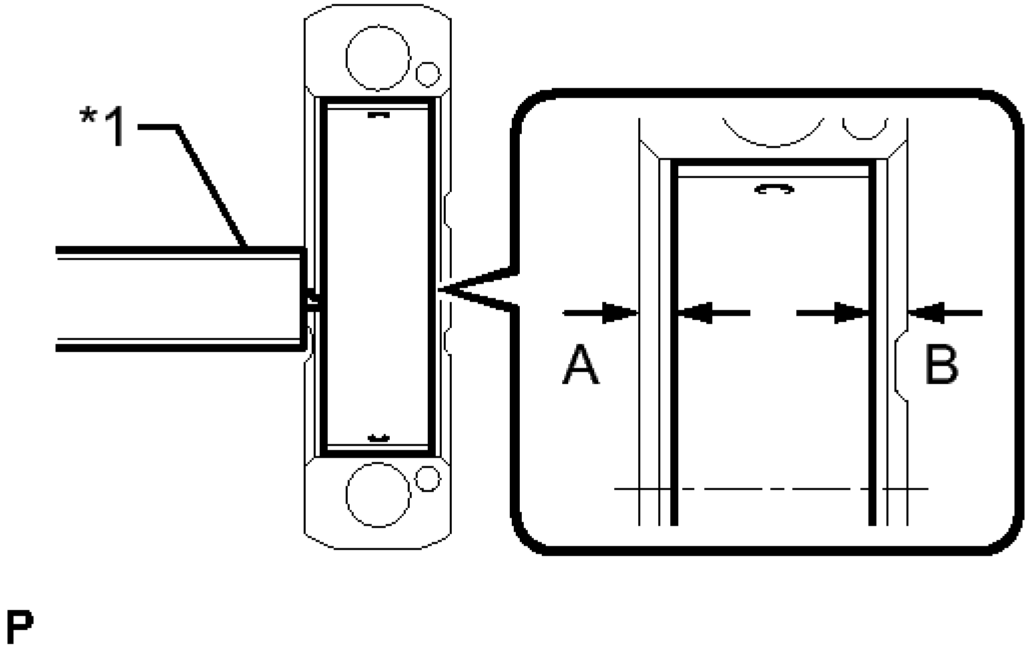

Fig. 411: Cleaning Bearing Contact Surface Of Connector Rod And Cap
Courtesy of TOYOTA MOTOR SALES, U.S.A., INC.

TEXT IN ILLUSTRATION

	Vernier

*1	Caliper

b. Install the connecting rod bearings to the connecting rods and connecting rod caps.

c. Using a vernier caliper, measure the distance between the edges of the connecting rod and connecting rod bearing, and the edges of the bearing cap and connecting rod bearing.

Standard dimension A - B or B - A

0 to 0.7 mm (0 to 0.0276 in.)

NOTE:

- **Do not apply engine oil to the bearings and the contact surfaces.**
- **Do not allow coolant to come into contact with the bearing inner surface.**
- **If any coolant comes into contact with the bearing inner surface, replace the bearing with a new one.**

11. **INSTALL PISTON WITH CONNECTING ROD**

a. Apply engine oil to the cylinder walls, pistons, and surfaces of the connecting rod bearings.

b. Position the piston rings so that the ring ends are as shown in the illustration.

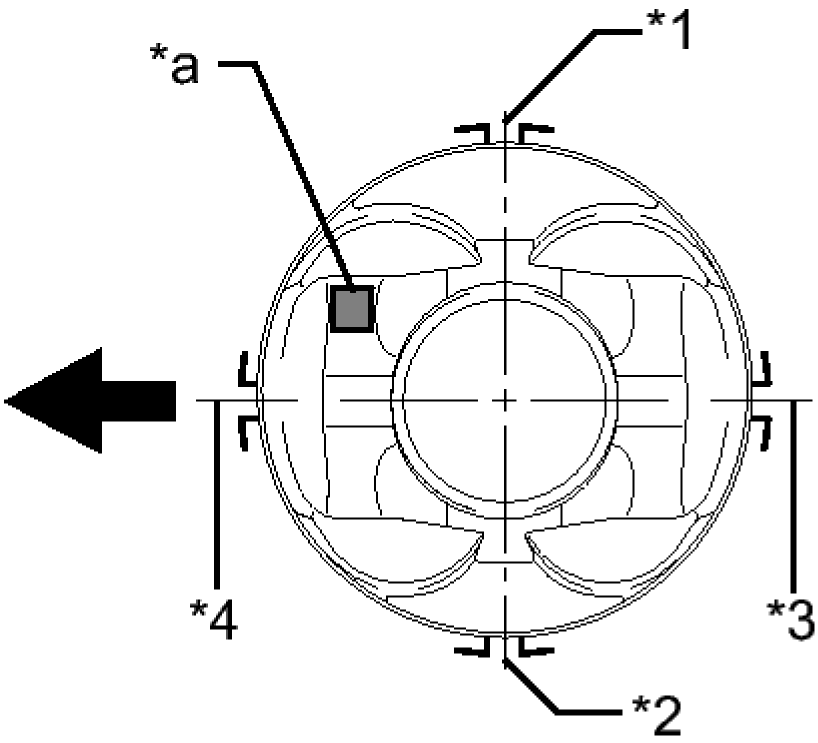

Fig. 412: Identifying Compression Ring
Courtesy of TOYOTA MOTOR SALES, U.S.A., INC.

TEXT IN ILLUSTRATION

*1	No. 1 Compression Ring
*2	No. 2 Compression Ring
*3	Oil Ring
*4	Oil Ring (Expander)
*a	Front Mark
·	Engine Front

c. Using a hammer handle and piston ring compressor, press a piston with connecting rod into each cylinder with the front mark of the piston facing forward.

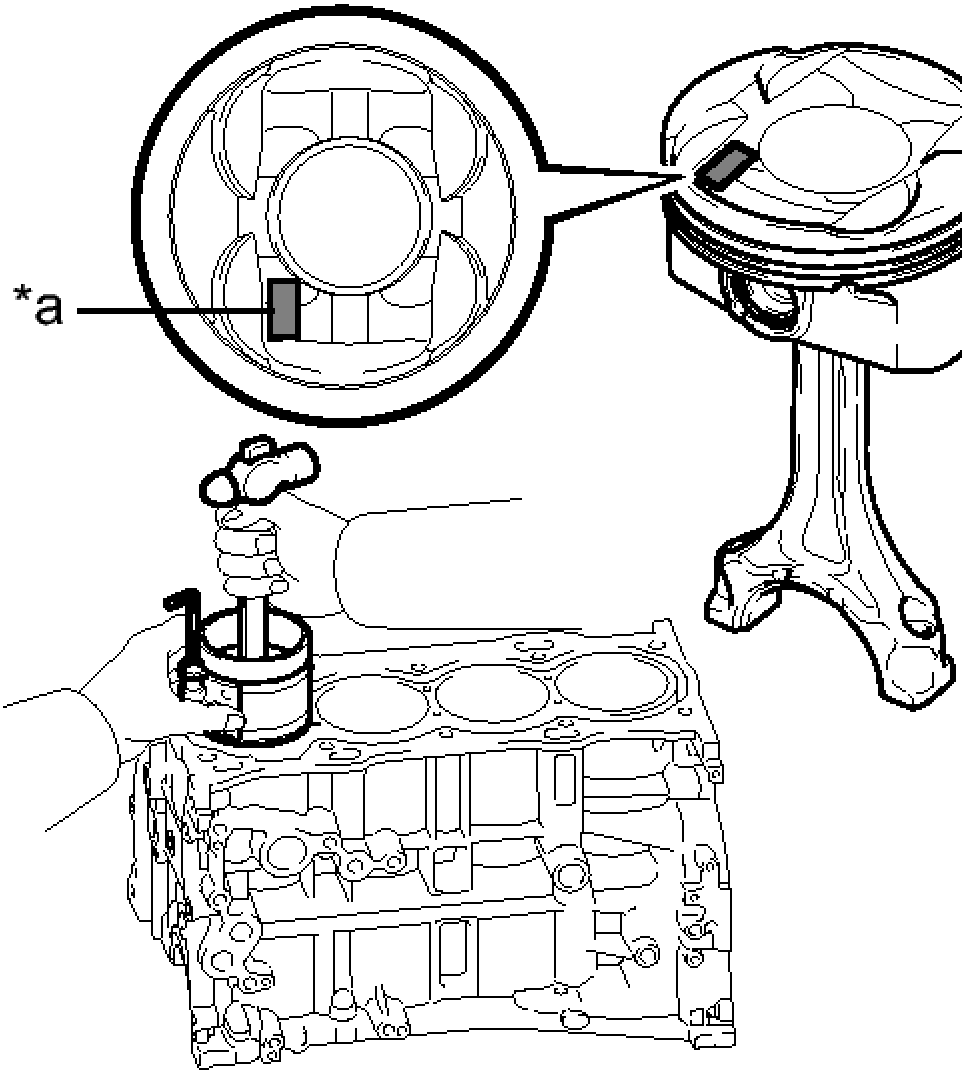

Fig. 413: Pressing Connecting Rod Into Cylinder
Courtesy of TOYOTA MOTOR SALES, U.S.A., INC.

TEXT IN ILLUSTRATION

*a	Front Mark

NOTE: **When inserting the piston with connecting rod into the cylinder block, make sure the oil nozzle does not interfere with the connecting rod.**

HINT:

The front mark is "2H" printed in raised letters.

d. Check that the front mark of the connecting rod cap is facing in the correct direction.

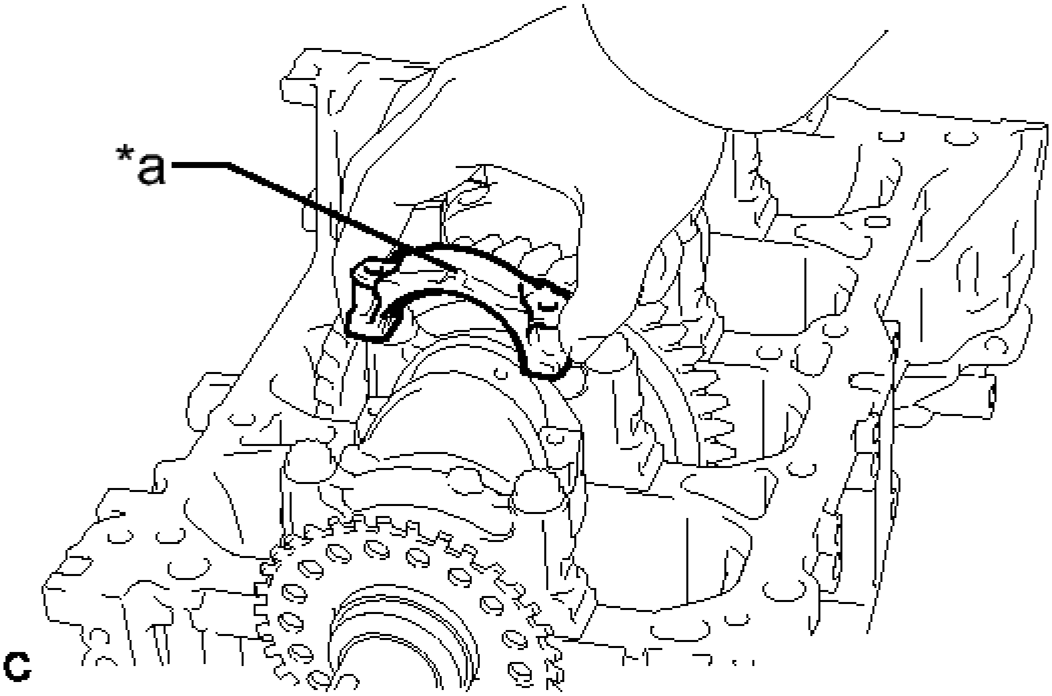

Fig. 414: Identifying Front Mark
Courtesy of TOYOTA MOTOR SALES, U.S.A., INC.

TEXT IN ILLUSTRATION

*a	Front Mark

NOTE: Match the numbered connecting rod cap with the connecting rod.

e. Apply a light coat of engine oil to the threads and under the heads of the connecting rod bolts.

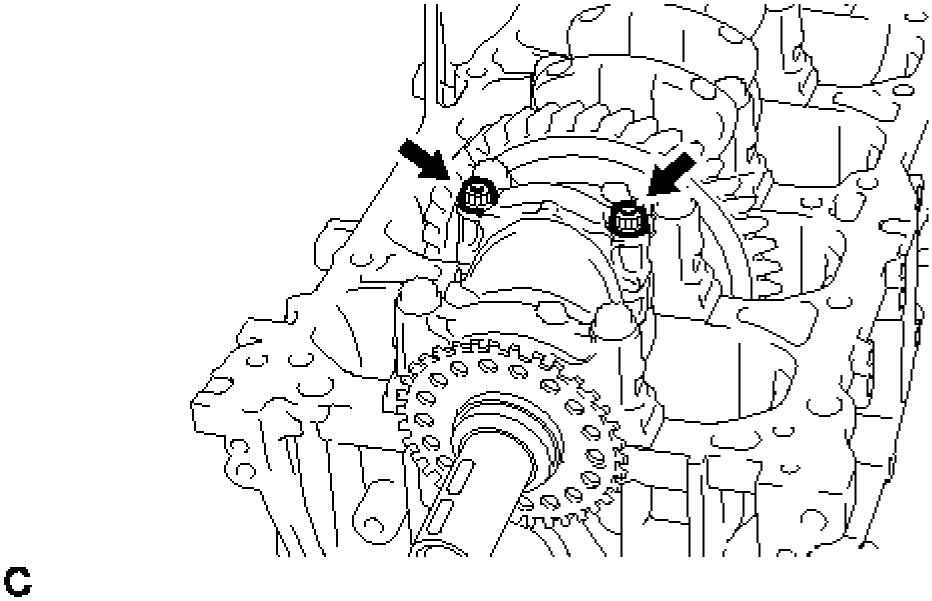

Fig. 415: Identifying Connector Rod Cap Bolts
Courtesy of TOYOTA MOTOR SALES, U.S.A., INC.

f. Temporarily install the connecting rod bolts.

   HINT:

   The connecting rod bolts are tightened in 2 progressive steps.

g. Step 1:
   1. Alternately tighten the connecting rod bolts in several steps.

      Torque: 40 N*m (408 kgf*cm, 30 ft.*lbf)

h. Step 2:

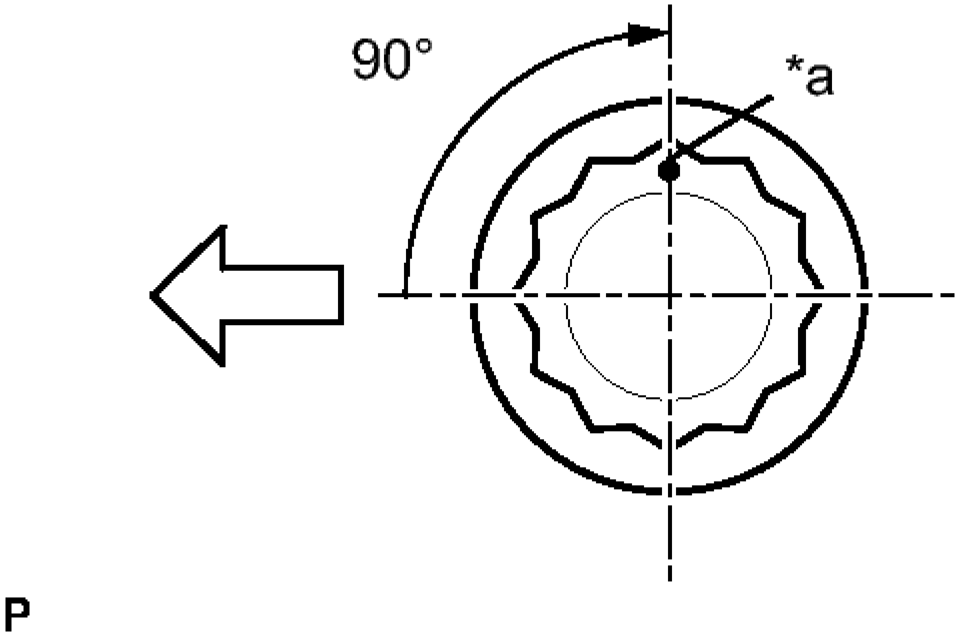

Fig. 416: Identifying Connecting Rod Cap Bolts Final Torque Position
Courtesy of TOYOTA MOTOR SALES, U.S.A., INC.

TEXT IN ILLUSTRATION

*a	Paint Mark
	Engine Front

1. Mark the front of the connecting rod bolts with paint.
2. Tighten the bolts 90° as shown in the illustration.
3. Check that the paint marks are now at a 90° angle to the front.

i. Check that the crankshaft turns smoothly.

INTAKE MANIFOLD

COMPONENTS

ILLUSTRATION

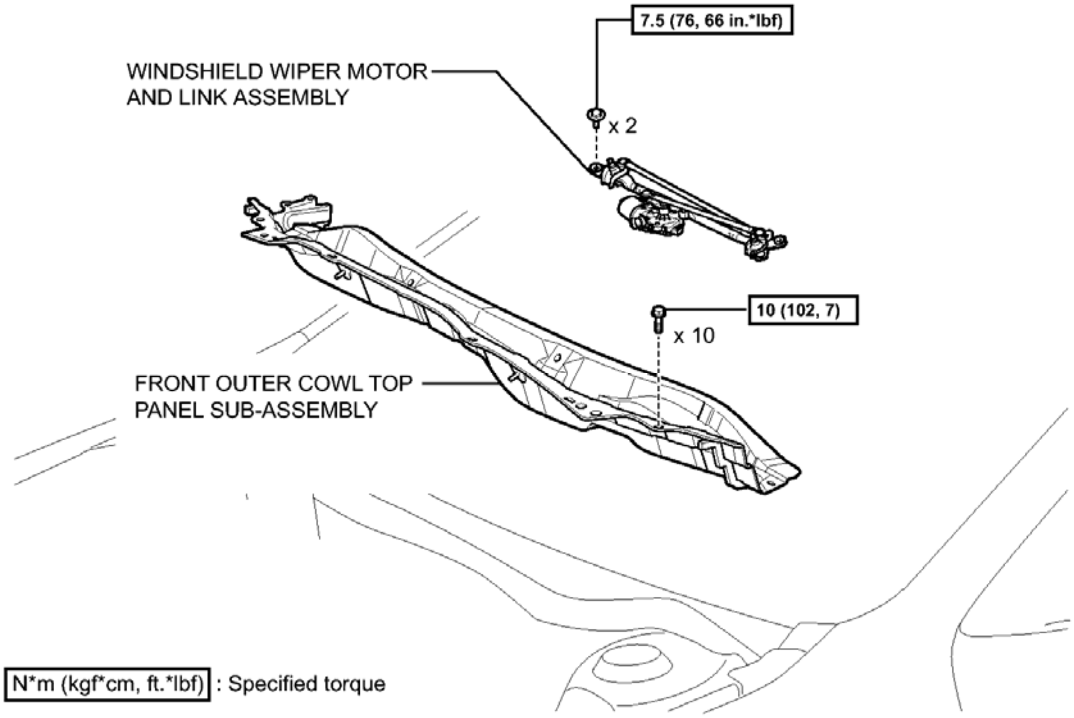
7.5 (76, 66 in.*lbf)
WINDSHIELD WIPER MOTOR AND LINK ASSEMBLY
x 2
10 (102, 7)
x 10
FRONT OUTER COWL TOP PANEL SUB-ASSEMBLY
N*m (kgf*cm, ft.*lbf) : Specified torque

Fig. 1: Identifying Intake Manifold Replacement Components With Torque Specifications (1 Of 4)
Courtesy of TOYOTA MOTOR SALES, U.S.A., INC.

ILLUSTRATION

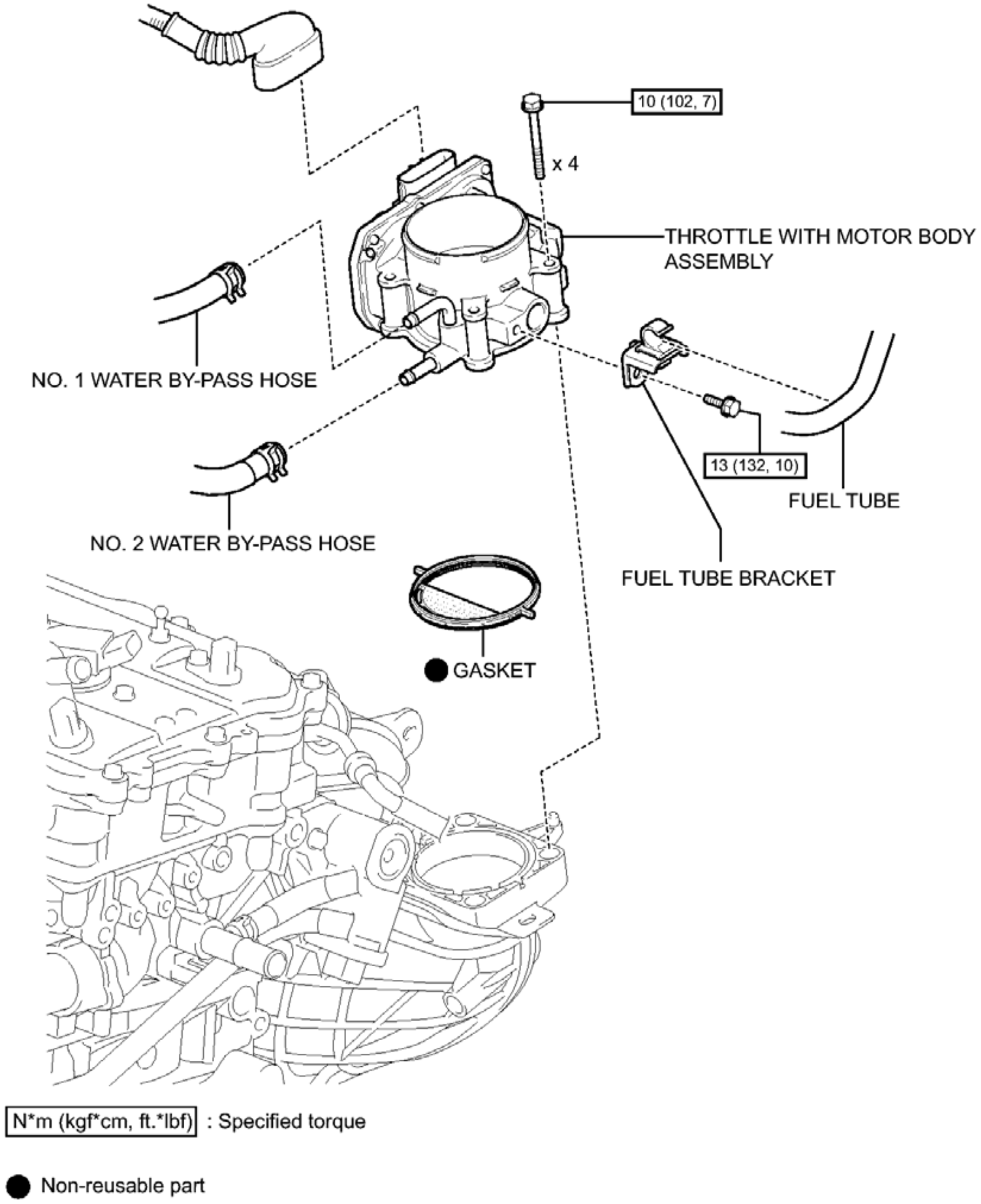
10 (102, 7)
x 4
THROTTLE WITH MOTOR BODY ASSEMBLY
NO. 1 WATER BY-PASS HOSE
13 (132, 10)
FUEL TUBE
NO. 2 WATER BY-PASS HOSE
FUEL TUBE BRACKET
● GASKET
N*m (kgf*cm, ft.*lbf) : Specified torque
● Non-reusable part

c

Fig. 2: Identifying Intake Manifold Replacement Components With Torque Specifications (2 Of 4)
Courtesy of TOYOTA MOTOR SALES, U.S.A., INC.

ILLUSTRATION

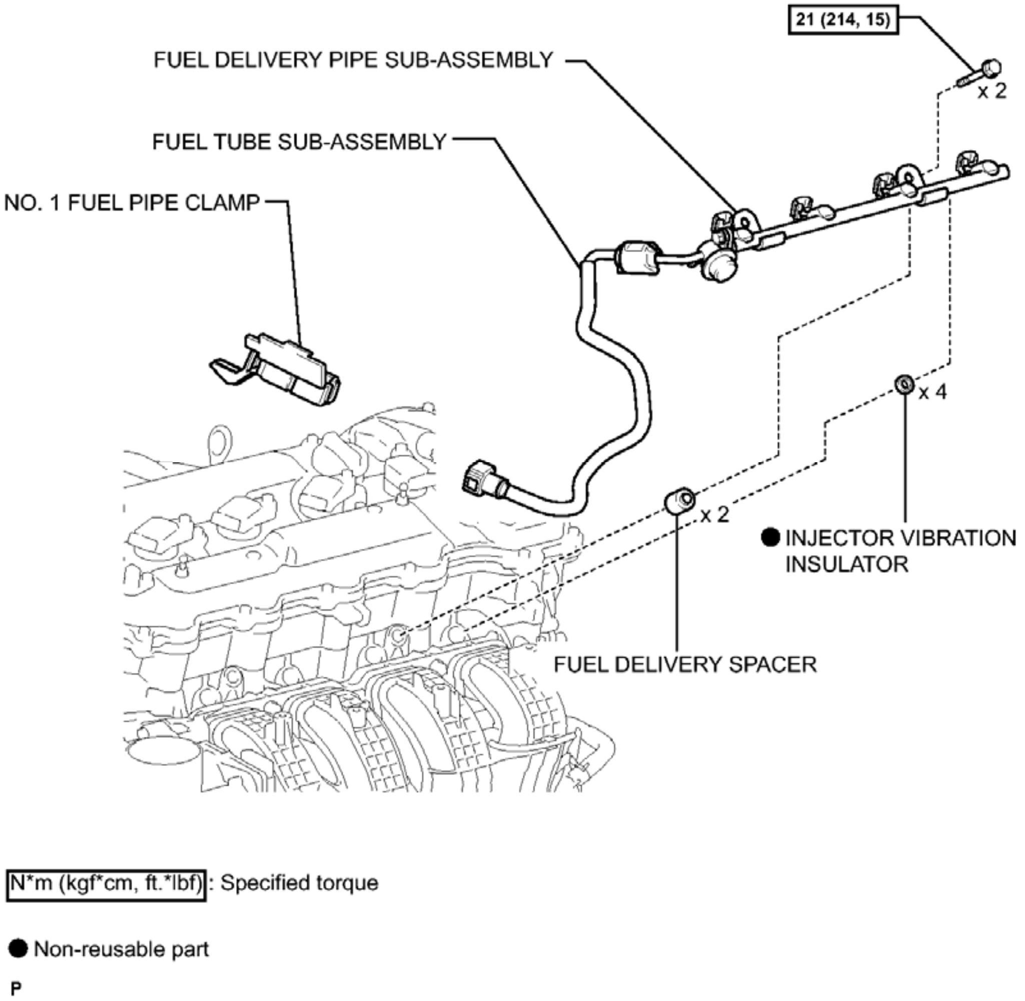
21 (214, 15)
x 2
FUEL DELIVERY PIPE SUB-ASSEMBLY
FUEL TUBE SUB-ASSEMBLY
NO. 1 FUEL PIPE CLAMP
x 4
x 2
● INJECTOR VIBRATION INSULATOR
FUEL DELIVERY SPACER
N*m (kgf*cm, ft.*lbf): Specified torque
● Non-reusable part
P

Fig. 3: Identifying Intake Manifold Replacement Components With Torque Specifications (3 Of 4)
Courtesy of TOYOTA MOTOR SALES, U.S.A., INC.

ILLUSTRATION

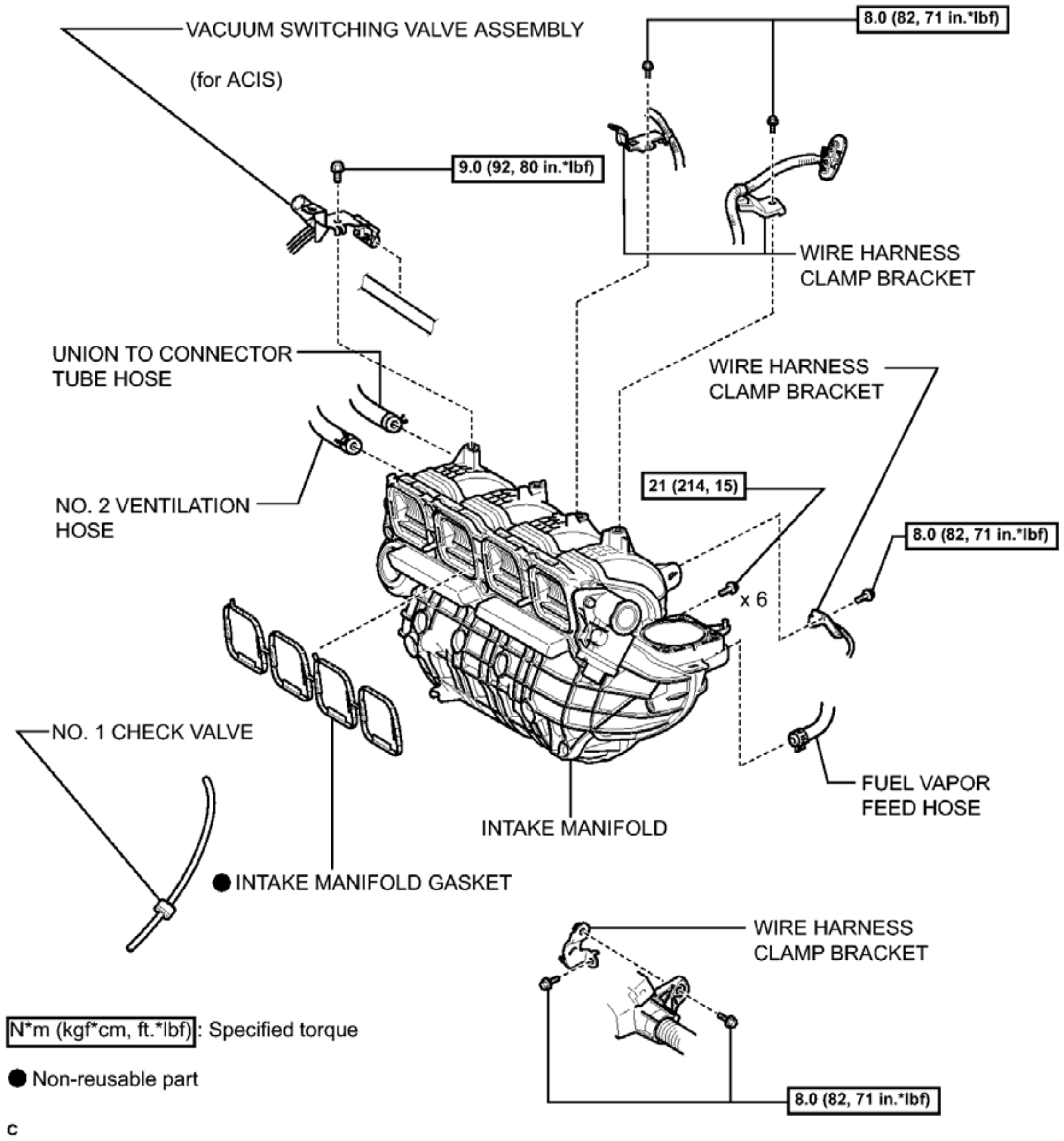
VACUUM SWITCHING VALVE ASSEMBLY
(for ACIS)
9.0 (92, 80 in.*lbf)
8.0 (82, 71 in.*lbf)
WIRE HARNESS CLAMP BRACKET
UNION TO CONNECTOR TUBE HOSE
WIRE HARNESS CLAMP BRACKET
NO. 2 VENTILATION HOSE
21 (214, 15)
x 6
8.0 (82, 71 in.*lbf)
NO. 1 CHECK VALVE
FUEL VAPOR FEED HOSE
INTAKE MANIFOLD
● INTAKE MANIFOLD GASKET
WIRE HARNESS CLAMP BRACKET
N*m (kgf*cm, ft.*lbf): Specified torque
● Non-reusable part
8.0 (82, 71 in.*lbf)
c

Fig. 4: Identifying Intake Manifold Replacement Components With Torque Specifications (4 Of 4)
Courtesy of TOYOTA MOTOR SALES, U.S.A., INC.

REMOVAL

REMOVAL

1. **PRECAUTION**

NOTE: **After turning the ignition switch off, waiting time may be required before disconnecting the cable from the negative (-) battery terminal. Therefore, make sure to read the disconnecting the cable from the negative (-) battery terminal notice before proceeding with work. Refer to PRECAUTION .**

2. **DISCHARGE FUEL SYSTEM PRESSURE**

   Refer to **PRECAUTION**

3. **DISCONNECT CABLE FROM NEGATIVE BATTERY TERMINAL**

   NOTE: When disconnecting the cable, some systems need to be initialized after the cable is reconnected. Refer to INITIALIZATION .

4. **REMOVE WINDSHIELD WIPER MOTOR AND LINK ASSEMBLY**

   Refer to **REMOVAL**

5. **REMOVE FRONT OUTER COWL TOP PANEL SUB-ASSEMBLY** . Refer to **REMOVAL - Step 3**
6. **REMOVE THROTTLE WITH MOTOR BODY ASSEMBLY**

   Refer to **REMOVAL**

7. **REMOVE VACUUM SWITCHING VALVE ASSEMBLY (for ACIS)**
   a. Disconnect the union to connector tube hose and wire harness clamp.

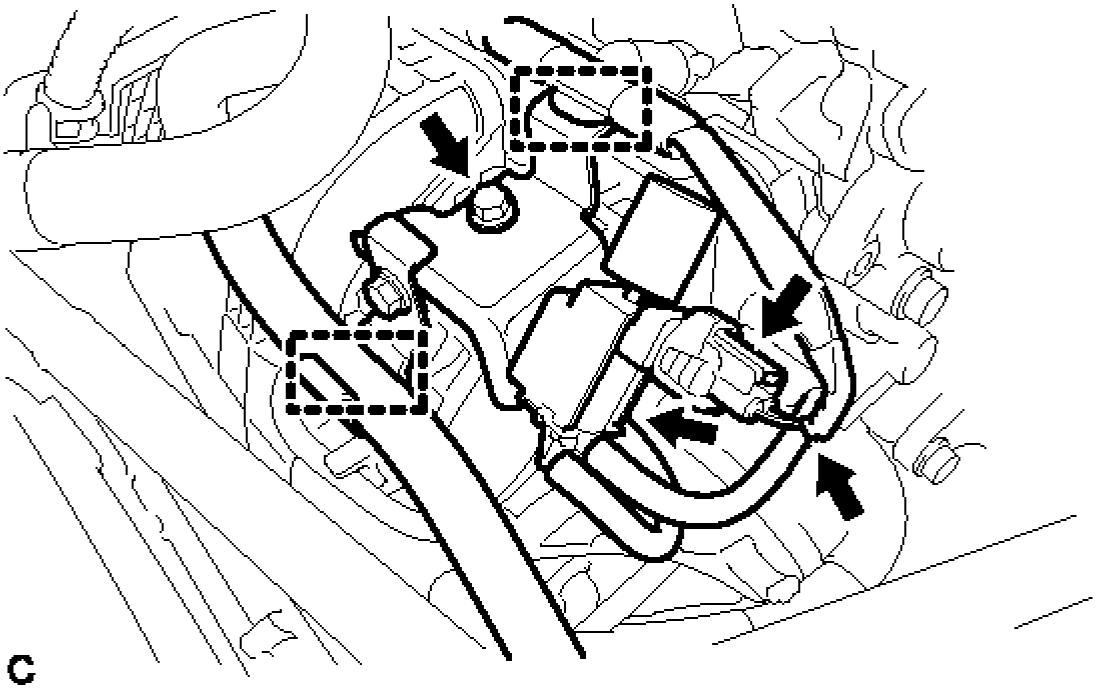

Fig. 5: Identifying Vacuum Switch Valve Assembly (For ACIS)
Courtesy of TOYOTA MOTOR SALES, U.S.A., INC.

   b. Disconnect the 2 vacuum hoses and connector.
   c. Remove the bolt and vacuum switching valve assembly.

8. **DISCONNECT NO. 2 VENTILATION HOSE**
    a. Disconnect the No. 2 ventilation hose from the intake manifold.

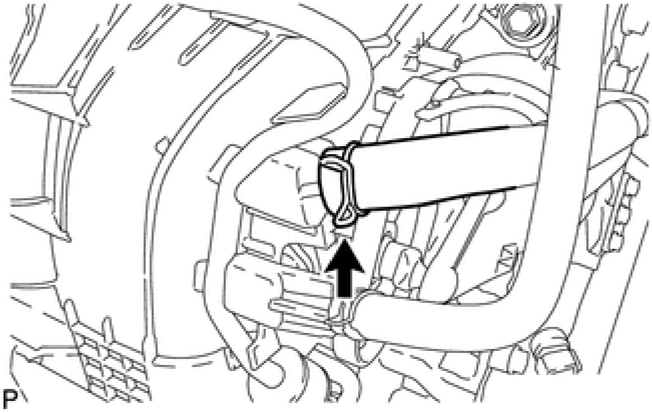

Fig. 6: Locating No. 2 Ventilation Hose
Courtesy of TOYOTA MOTOR SALES, U.S.A., INC.

9. **DISCONNECT UNION TO CONNECTOR TUBE HOSE**
    a. Disconnect the union to connector tube hose from the intake manifold.

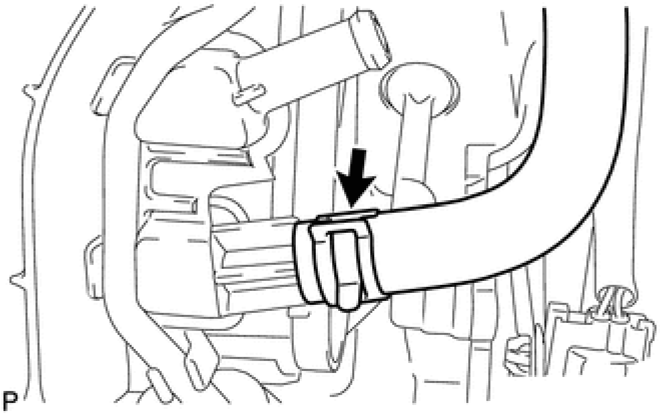

Fig. 7: Locating Connector Tube Hose
Courtesy of TOYOTA MOTOR SALES, U.S.A., INC.

10. **DISCONNECT FUEL TUBE SUB-ASSEMBLY** . Refer to **REMOVAL - Step 6**
11. **REMOVE FUEL DELIVERY PIPE SUB-ASSEMBLY** . Refer to **REMOVAL - Step 9**
12. **REMOVE INTAKE MANIFOLD**
    a. Remove the 2 bolts and 2 wire harness clamp brackets.

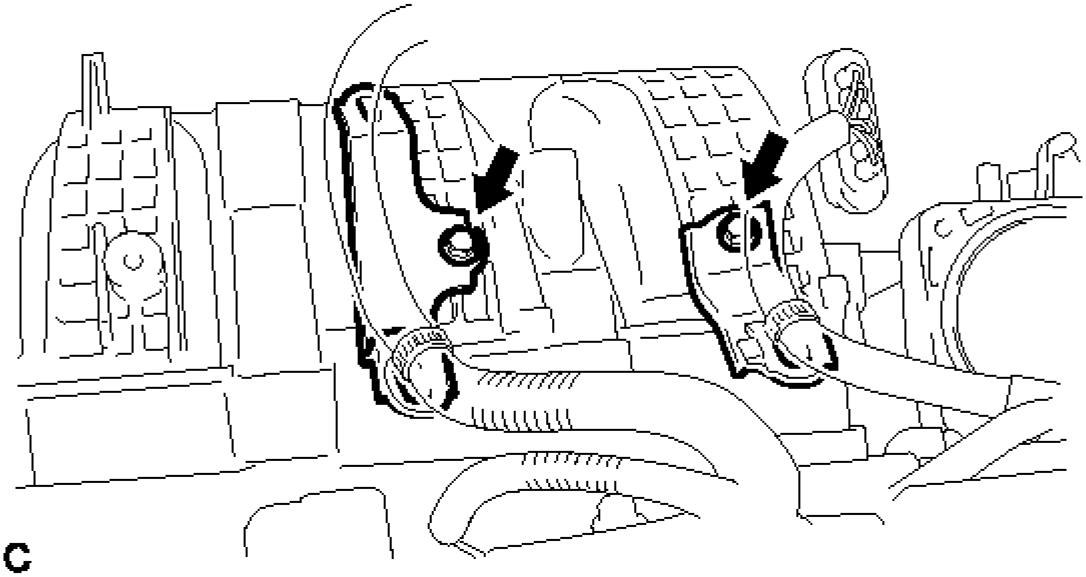

Fig. 8: Locating Wire Harness Brackets And Bolts
Courtesy of TOYOTA MOTOR SALES, U.S.A., INC.

b. Disconnect the fuel vapor feed hose.

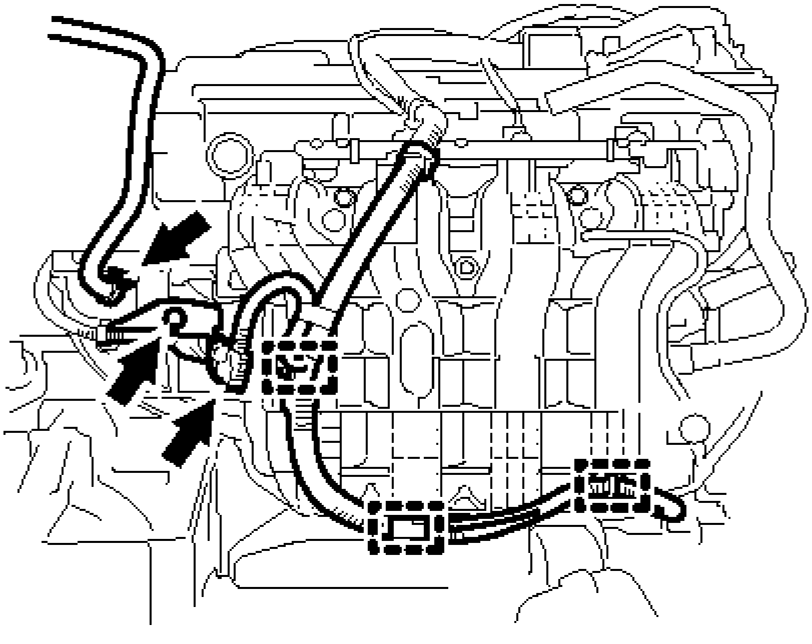

Fig. 9: Identifying Fuel Vapor Feed Hose
Courtesy of TOYOTA MOTOR SALES, U.S.A., INC.

c. Disconnect the 3 wire harness clamps and connector.
d. Remove the bolt and wire harness clamp bracket.
e. Apply battery voltage to the terminals of the connector to close the tumble control valves.

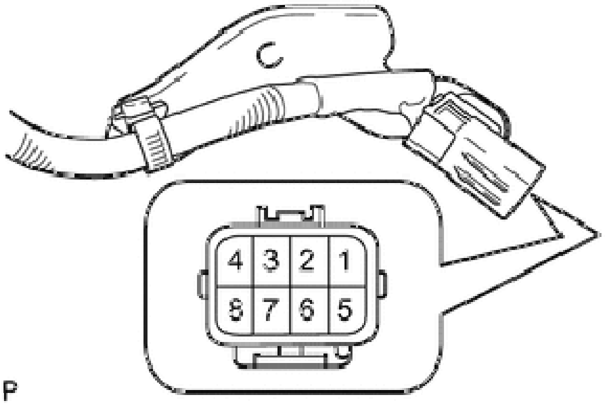

Fig. 10: Applying Battery Voltage To Terminals Of Connector And Tumble Control Valves
Courtesy of TOYOTA MOTOR SALES, U.S.A., INC.

Standard

Tester Connection	Specified Condition
Positive (+) battery voltage applied to terminal 8 (M-), and negative (-) battery voltage applied to terminal 4 (M+)	Open --> Closed

NOTE:

- **If this procedure is not performed, the tumble control valves may be damaged when the intake manifold is removed.**
- **Apply battery voltage for 1 to 3 seconds.**
- **If battery voltage is applied for more than 3 seconds, the actuator may be damaged.**
- **Do not allow the lead wires to contact the other terminals.**

f. Remove the bolt and separate the wire harness.

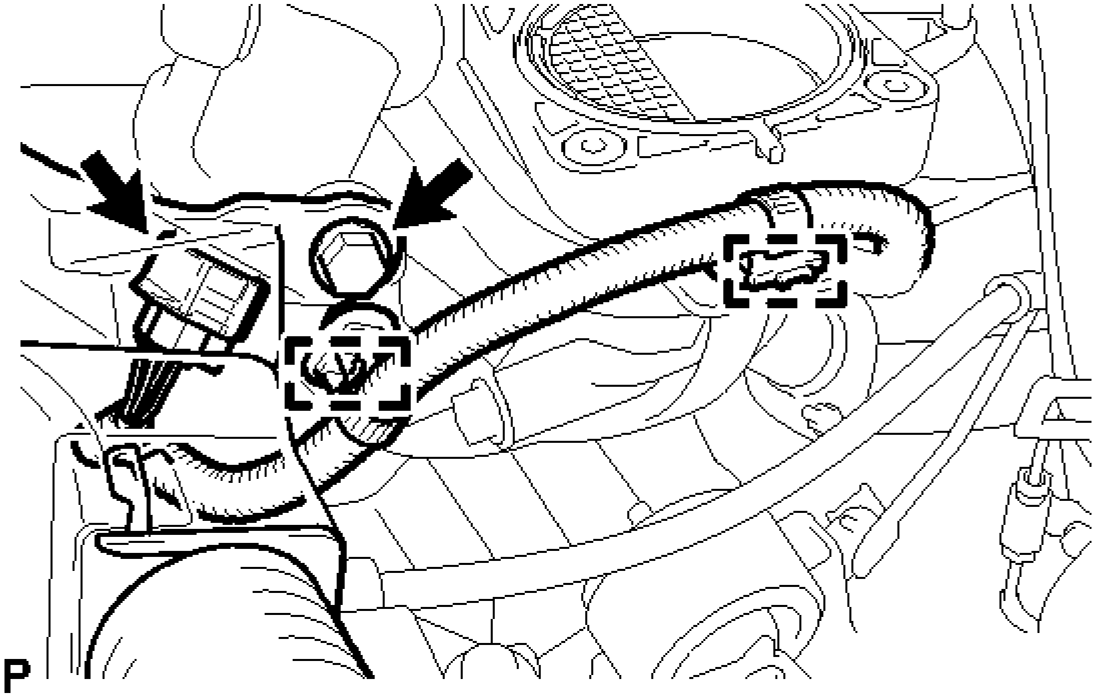

Fig. 11: Identifying Wire Harness And Bolt
Courtesy of TOYOTA MOTOR SALES, U.S.A., INC.

g. Disconnect the 2 wire harness clamps and intake air control valve actuator connector.
h. Remove the 6 bolts and intake manifold.

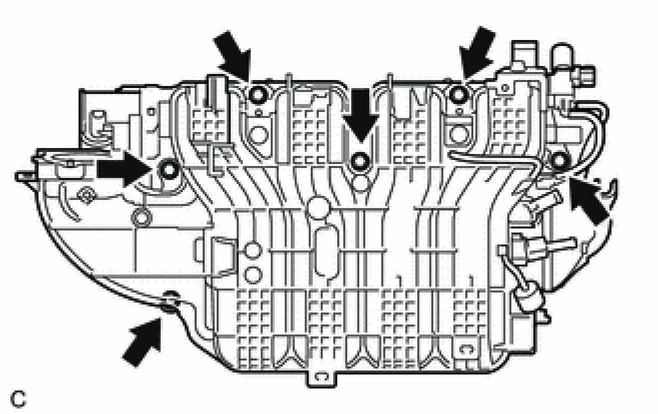

Fig. 12: Identifying Intake Manifold Bolts
Courtesy of TOYOTA MOTOR SALES, U.S.A., INC.

NOTE: **The tumble control valves may be damaged if they are not closed before removing the intake manifold.**

HINT:

Connect the battery to the terminals of the actuator to operate the motor and close the valves. Refer to **ON-VEHICLE INSPECTION - Step 3** .

i. Remove the intake manifold gasket from the intake manifold.

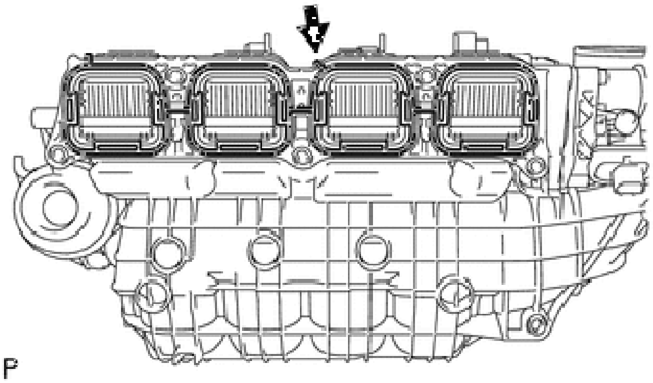

Fig. 13: Locating Gasket And Intake Manifold
Courtesy of TOYOTA MOTOR SALES, U.S.A., INC.

j. Disconnect the 2 vacuum hoses from the intake manifold and remove the No. 1 check valve.

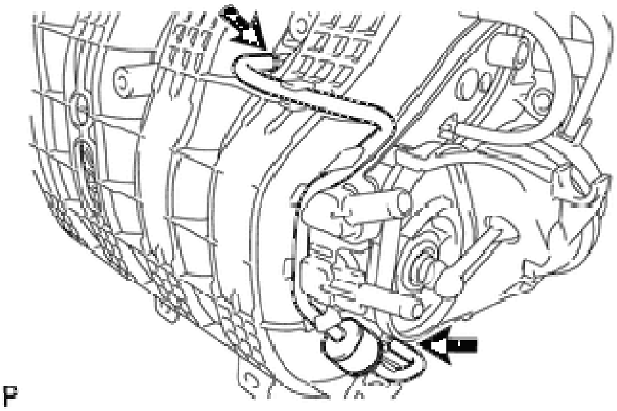

Fig. 14: Locating Vacuum Hoses
Courtesy of TOYOTA MOTOR SALES, U.S.A., INC.

k. Remove the bolt and wire harness clamp bracket.

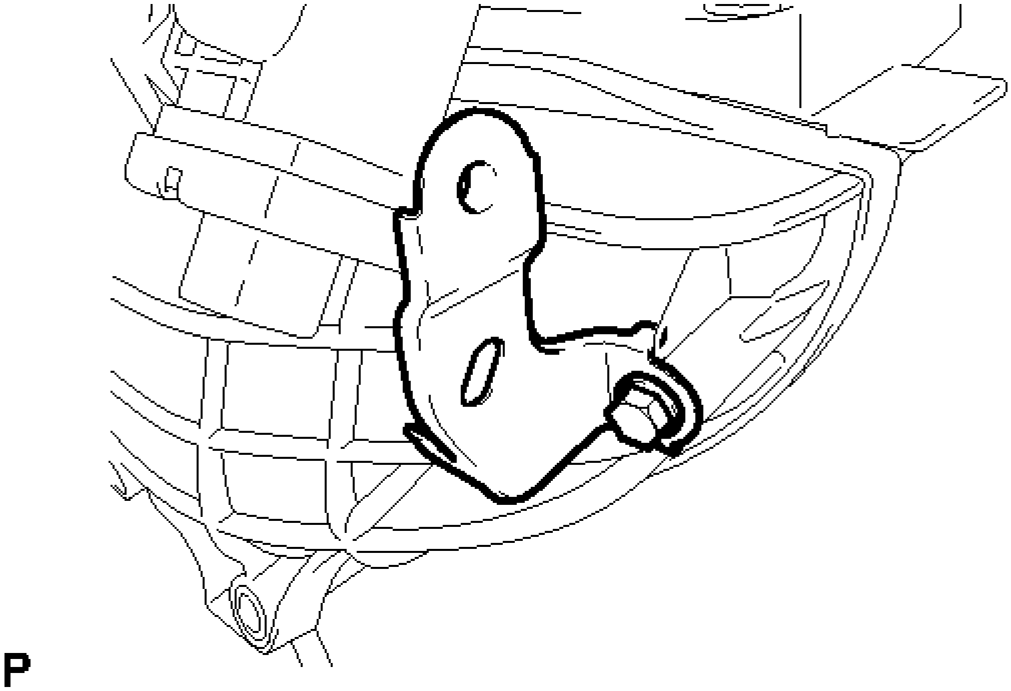

Fig. 15: Identifying Wiring Harness Clamp Bracket Bolts
Courtesy of TOYOTA MOTOR SALES, U.S.A., INC.

INSPECTION

INSPECTION

1. **INSPECT INTAKE AIR CONTROL VALVE (for ACIS)**
   a. Inspect the diaphragm.
      1. Using a vacuum pump, apply a vacuum of 60 kPa (450 mmHg, 17.7 in.Hg) or higher to the diaphragm chamber. Wait for 1 minute and check that the needle of the vacuum pump does not lower.

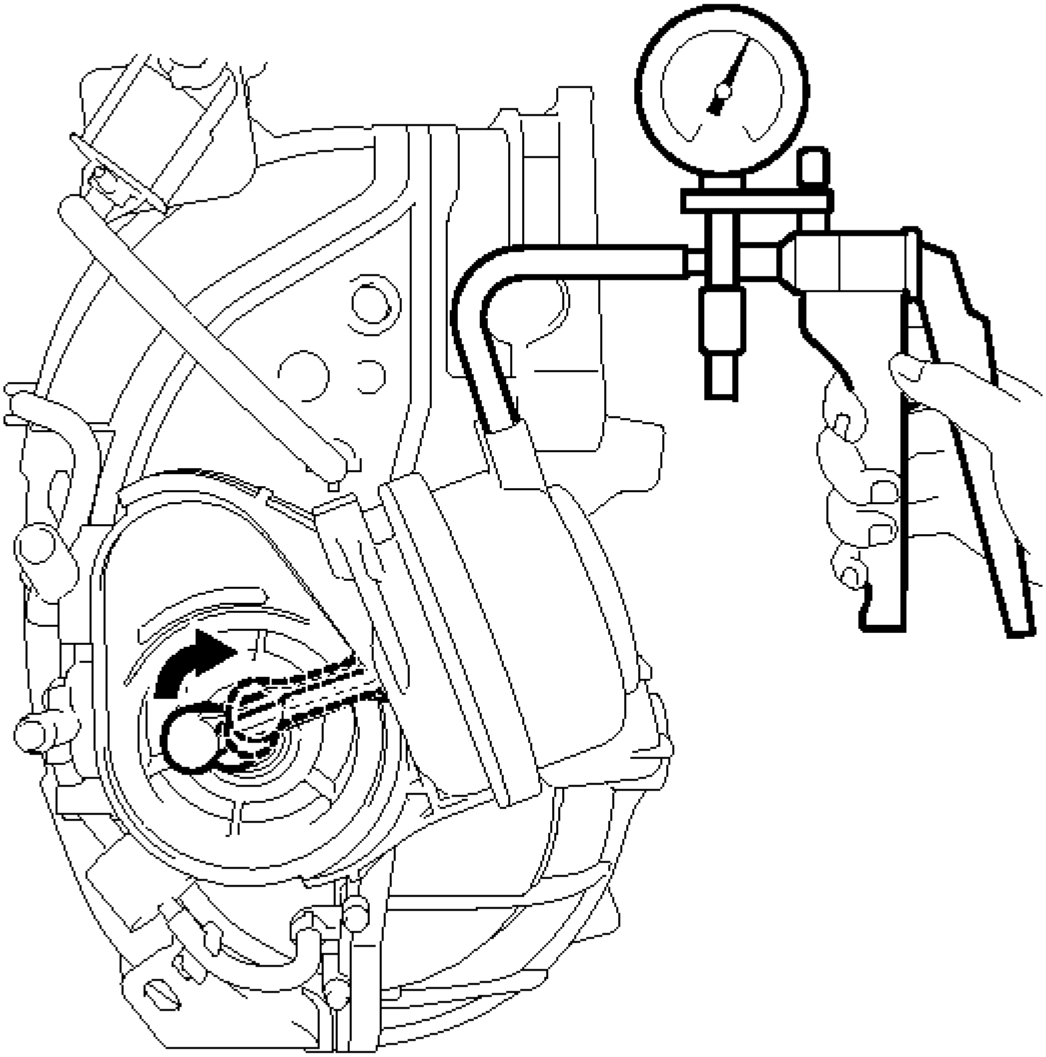

Fig. 16: Inspecting Intake Air Control Valve
Courtesy of TOYOTA MOTOR SALES, U.S.A., INC.

If the result is not as specified, replace the intake manifold.

 b. After applying vacuum in the step above, check that the actuator rod operates.

2. **INSPECT VACUUM TANK AND NO. 1 CHECK VALVE**
    a. Disconnect the vacuum hose from the No. 1 check valve.

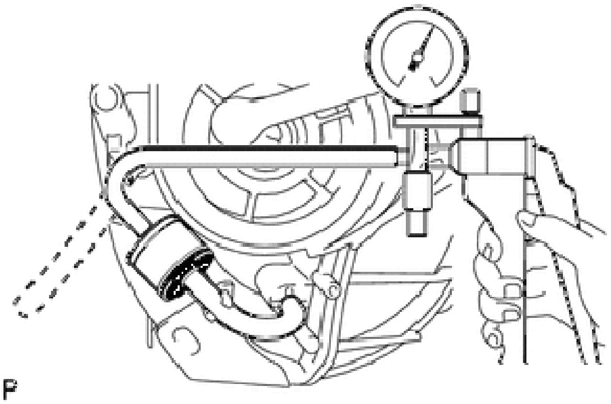

Fig. 17: Inspecting Vacuum Tank And Check Valve
Courtesy of TOYOTA MOTOR SALES, U.S.A., INC.

b. Using a vacuum pump, apply vacuum to the No. 1 check valve. Wait for 1 minute and check that the needle of the vacuum pump does not lower.

   If the result is not as specified, replace the No. 1 check valve.

c. Connect the vacuum hose to the No. 1 check valve.
d. Using a vacuum pump, apply a vacuum of 60 kPa (450 mmHg, 17.7 in.Hg) or higher to the vacuum tank. Wait for 1 minute and check that the needle of the vacuum pump does not lower.

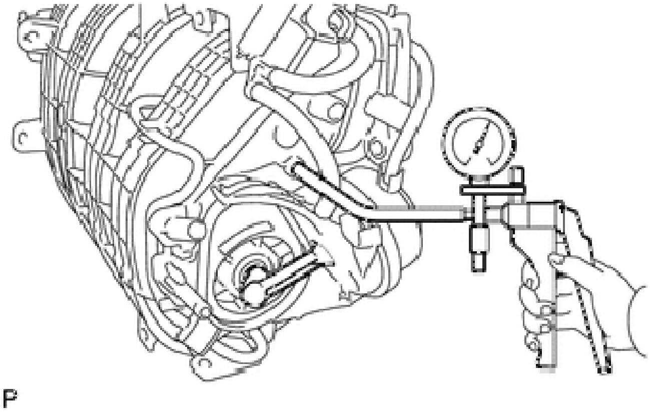

Fig. 18: Applying Vacuum To Vacuum Tank
Courtesy of TOYOTA MOTOR SALES, U.S.A., INC.

   If the result is not as specified, replace the intake manifold.

INSTALLATION

INSTALLATION

1. **INSTALL INTAKE MANIFOLD**
   a. Install the wire harness clamp bracket with the bolt.

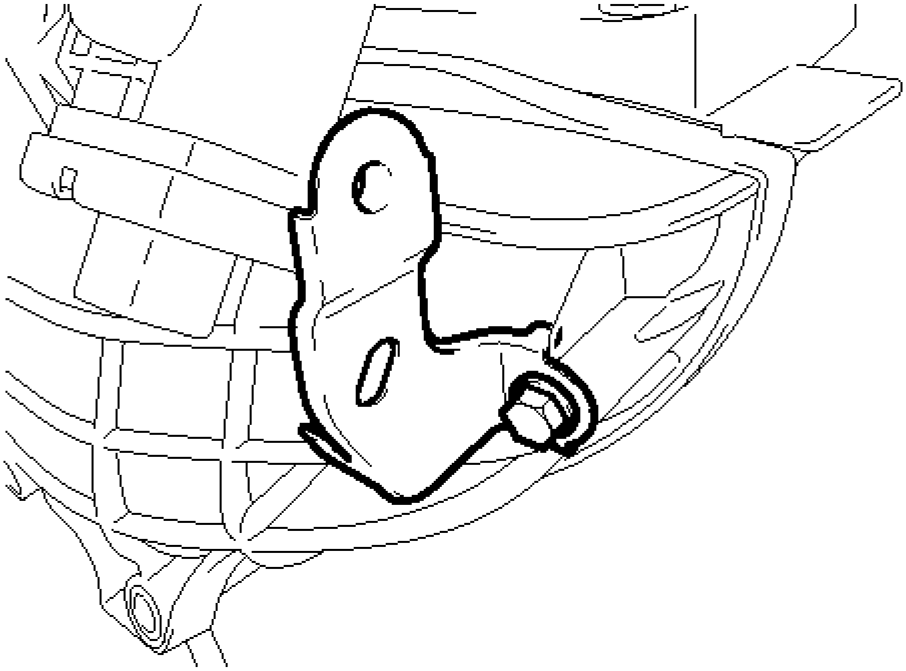

Fig. 19: Identifying Wiring Harness Clamp Bracket Bolts
Courtesy of TOYOTA MOTOR SALES, U.S.A., INC.

Torque: 8.0 N*m (2 kgf*cm, 71 in.*lbf)

b. Connect the 2 vacuum hoses and check that the No. 1 check valve is installed as shown in the illustration.

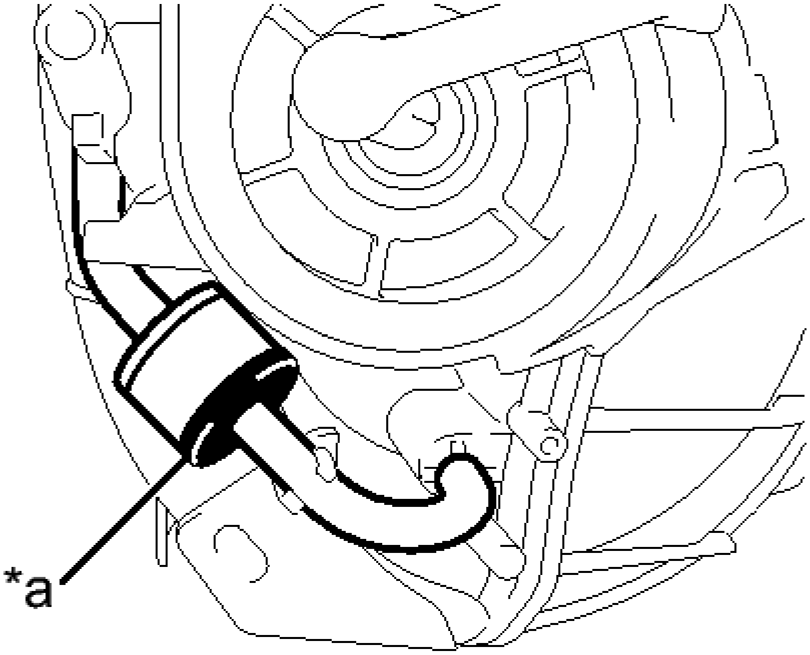

Fig. 20: Identifying Vacuum Hoses And No. 1 Check Valve
Courtesy of TOYOTA MOTOR SALES, U.S.A., INC.

TEXT IN ILLUSTRATION

*a	Black

c. Check the tumble control valves.

NOTE: The tumble control valves may be damaged if they are not closed before installing the intake manifold.

HINT:

Connect the battery to the terminals of the actuator to operate the motor and close the valves. Refer to **ON-VEHICLE INSPECTION - Step 3** .

d. Install a new intake manifold gasket to the intake manifold.
e. Install the intake manifold by tightening the 6 bolts in the sequence shown in the illustration.

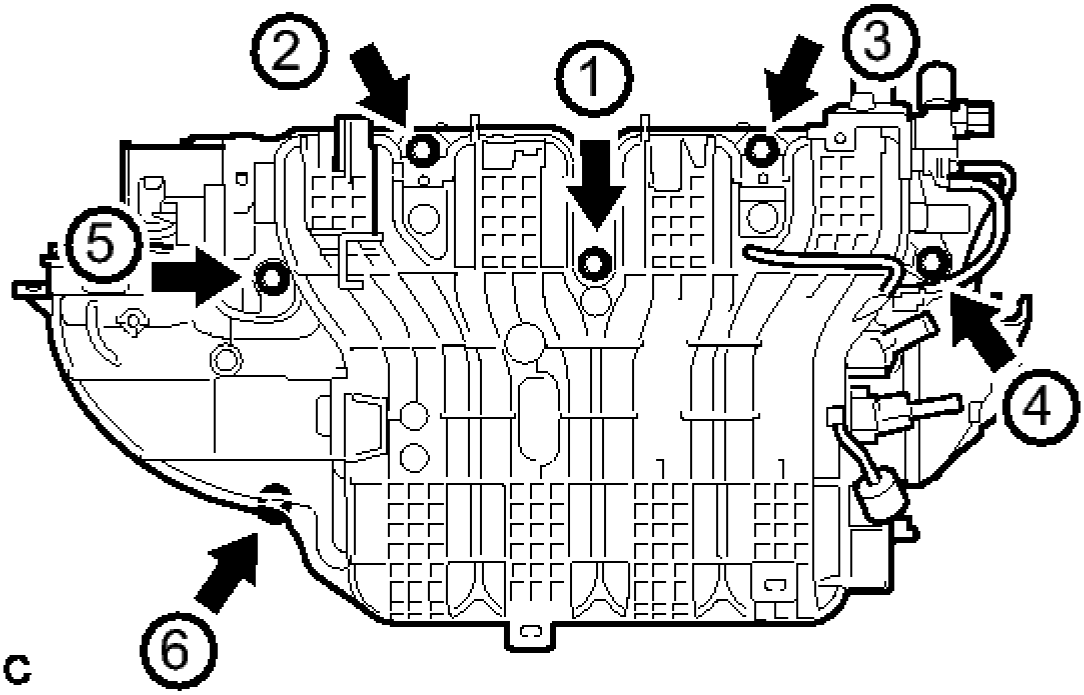

Fig. 21: Tightening Intake Manifold Bolts In Sequence
Courtesy of TOYOTA MOTOR SALES, U.S.A., INC.

Torque: 21 N*m (14 kgf*cm, 15 ft.*lbf)

f. Connect the intake air control actuator connector and 2 wire harness clamps.

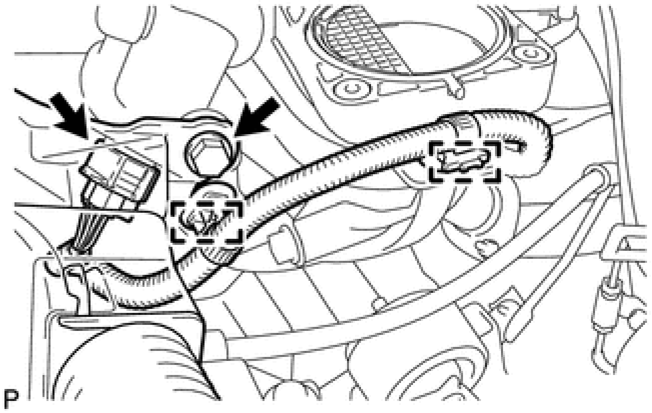

Fig. 22: Locating Intake Air Control Valve Actuator Connector
Courtesy of TOYOTA MOTOR SALES, U.S.A., INC.

g. Install the wire harness clamp with the bolt.

Torque: 8.0 N*m (2 kgf*cm, 71 in.*lbf)

h. Install the wire harness clamp bracket with the bolt.

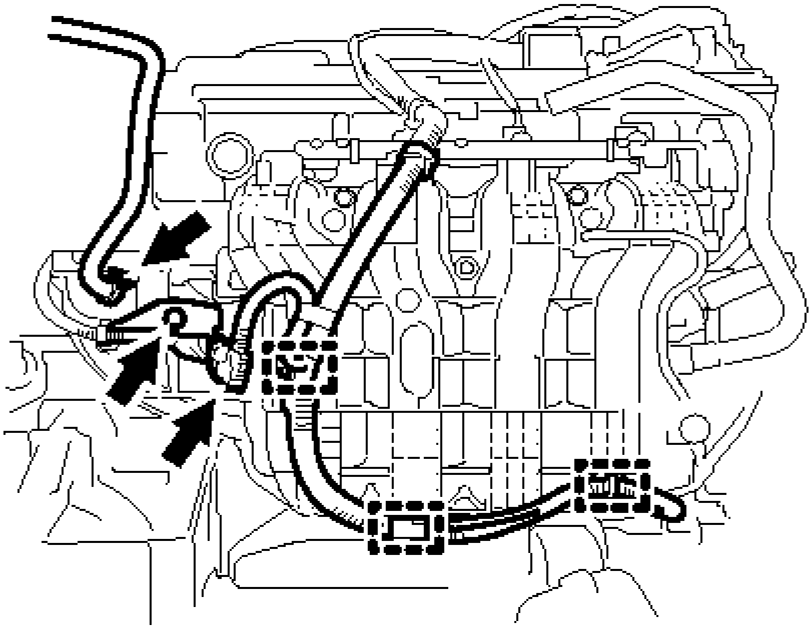

Fig. 23: Identifying Fuel Vapor Feed Hose
Courtesy of TOYOTA MOTOR SALES, U.S.A., INC.

Torque: 8.0 N*m (2 kgf*cm, 71 in.*lbf)

i. Connect the 3 wire harness clamps and connector.

j. Connect the fuel vapor feed hose.
k. Install the 2 wire harness clamp brackets with the 2 bolts.

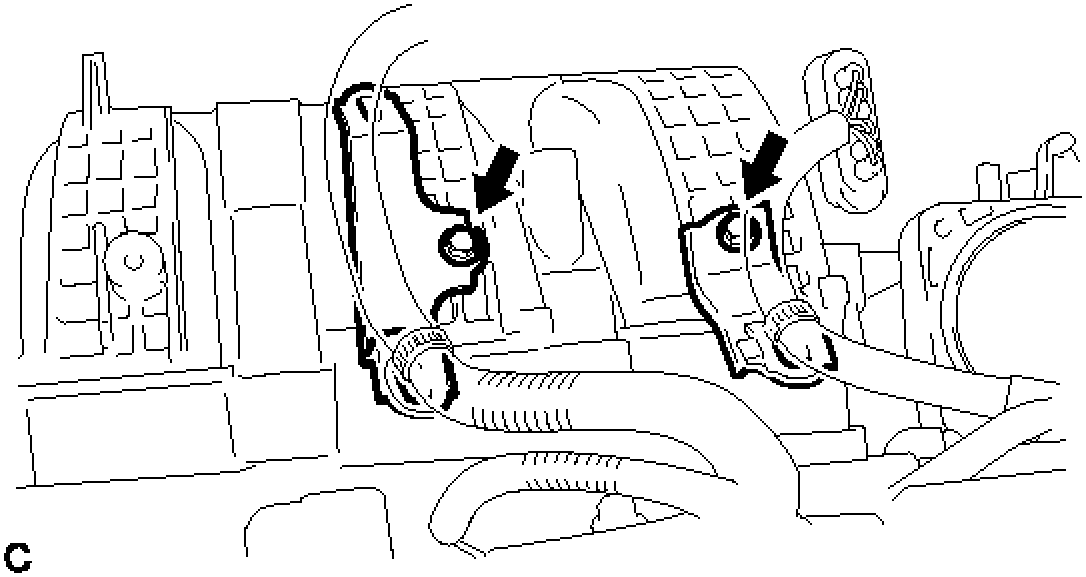

Fig. 24: Locating Wire Harness Brackets And Bolts
Courtesy of TOYOTA MOTOR SALES, U.S.A., INC.

Torque: 8.0 N*m (2 kgf*cm, 71 in.*lbf)

2. **INSTALL FUEL DELIVERY PIPE SUB-ASSEMBLY** . Refer to **INSTALLATION - Step 2**
3. **CONNECT FUEL TUBE SUB-ASSEMBLY** . Refer to **INSTALLATION - Step 5**
4. **CONNECT UNION TO CONNECTOR TUBE HOSE**
   a. Connect the union to connector tube hose to the intake manifold.
5. **CONNECT NO. 2 VENTILATION HOSE**
   a. Connect the No. 2 ventilation hose to the intake manifold.
6. **INSTALL VACUUM SWITCHING VALVE ASSEMBLY (for ACIS)**
   a. Install the vacuum switching valve assembly with the bolt.

      Torque: 9.0 N*m (2 kgf*cm, 80 in.*lbf)

   b. Connect the 2 vacuum hoses and connector.
   c. Connect the union to connector tube hose and wire harness clamp.
7. **INSTALL THROTTLE WITH MOTOR BODY ASSEMBLY**

   Refer to **INSTALLATION**

8. **INSTALL FRONT OUTER COWL TOP PANEL SUB-ASSEMBLY** . Refer to **INSTALLATION - Step 14**
9. **INSTALL WINDSHIELD WIPER MOTOR AND LINK ASSEMBLY**

   Refer to **INSTALLATION**

10. **CONNECT CABLE TO NEGATIVE BATTERY TERMINAL**

    NOTE: When disconnecting the cable, some systems need to be initialized after the cable is reconnected. Refer to INITIALIZATION .

11. **INSPECT FOR FUEL LEAK** . Refer to **ON-VEHICLE INSPECTION - Step 1**

INTAKE AIR CONTROL VALVE ACTUATOR (FOR TCV)

COMPONENTS

ILLUSTRATION

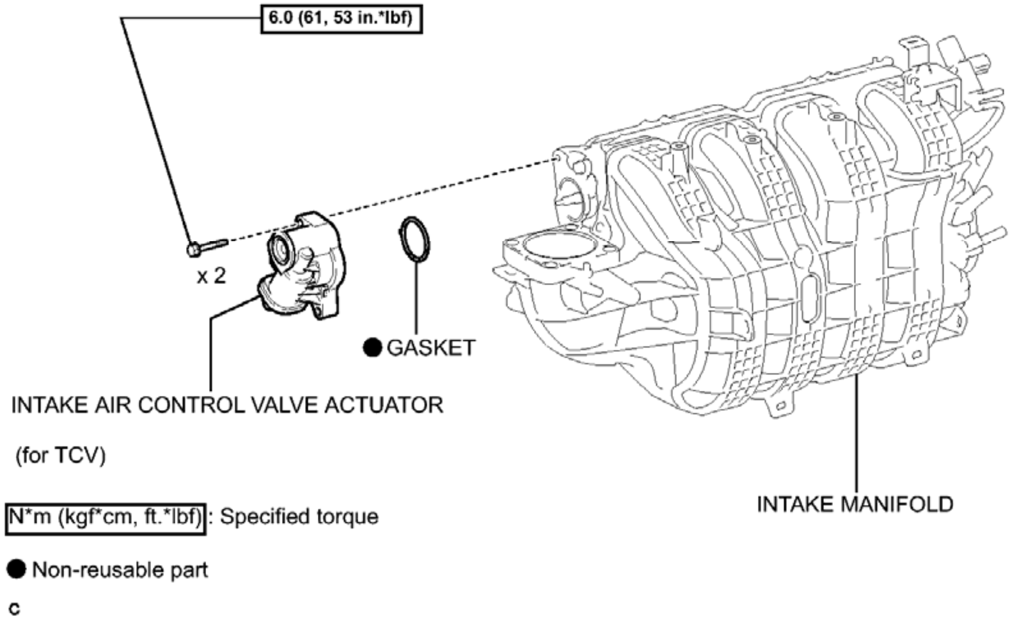
6.0 (61, 53 in.*lbf)
x 2
● GASKET
INTAKE AIR CONTROL VALVE ACTUATOR
(for TCV)
INTAKE MANIFOLD
N*m (kgf*cm, ft.*lbf): Specified torque
● Non-reusable part
c

Fig. 25: Identifying Intake Air Control Valve Actuator Replacement Components With Torque Specifications (For TCV)
Courtesy of TOYOTA MOTOR SALES, U.S.A., INC.

REMOVAL

REMOVAL

1. **REMOVE INTAKE MANIFOLD**

   Refer to **REMOVAL**

2. **REMOVE INTAKE AIR CONTROL VALVE ACTUATOR (for TCV)**
   1. Remove the 2 bolts, intake air control valve actuator and gasket from the intake manifold.

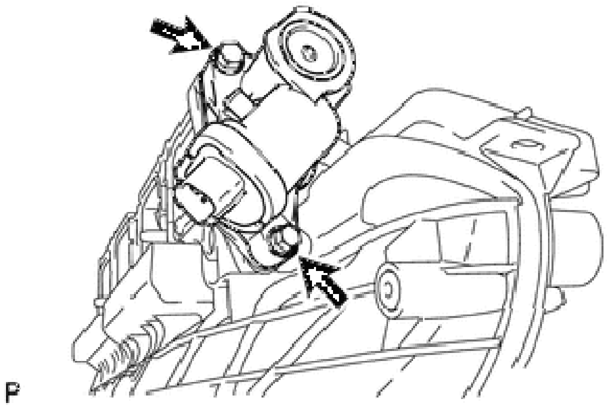

Fig. 26: Identifying Intake Air Control Valve Actuator Bolts
Courtesy of TOYOTA MOTOR SALES, U.S.A., INC.

NOTE:

- **Make sure that foreign matter, such as water, oil, sand or iron particles, does not enter the gear chamber or actuator at the locations marked by the circles in the illustration.**

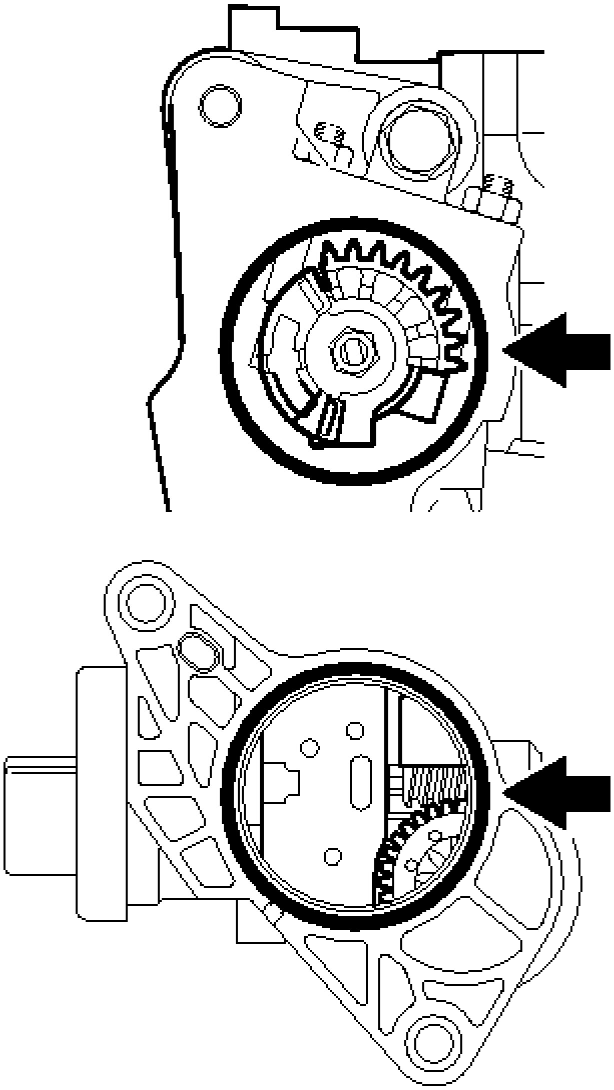

P

Fig. 27: Identifying Intake Air Control Valve Actuator Gasket
Courtesy of TOYOTA MOTOR SALES, U.S.A., INC.

- Do not loosen or remove the bolt and 2 nuts shown in the illustration.

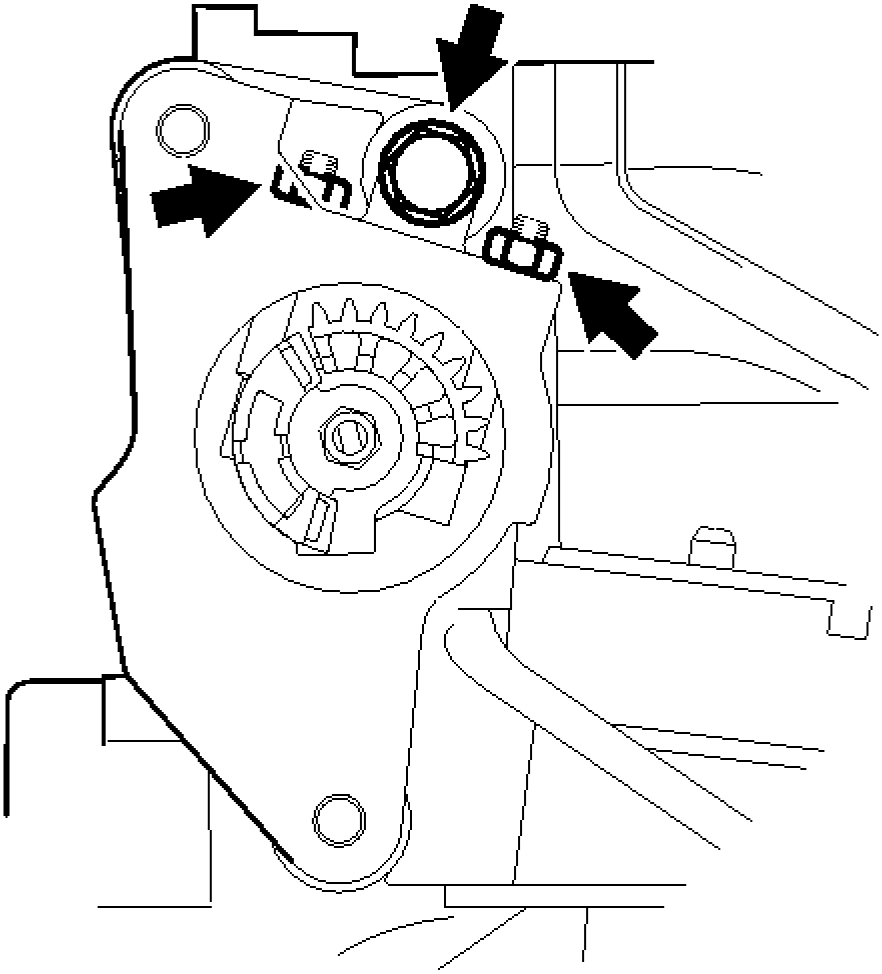

P

Fig. 28: Locating Bolt And Nut
Courtesy of TOYOTA MOTOR SALES, U.S.A., INC.

INSPECTION

INSPECTION

1. **INSPECT INTAKE AIR CONTROL VALVE ACTUATOR (for TCV)**
    a. Check the intake air control valve actuator operation.
        1. Check that the motor operates when the battery is connected to the terminals of the intake air control valve actuator.

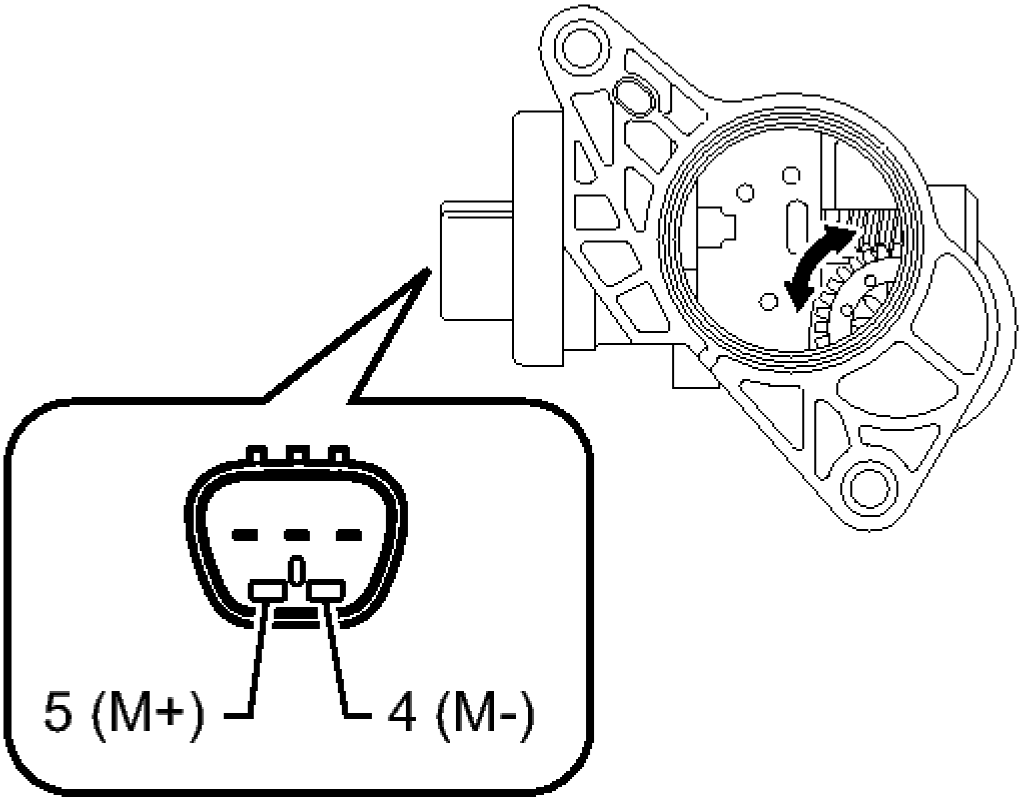

Fig. 29: Identifying Intake Air Control Valve Actuator Connector Terminal Identification (For TCV)
Courtesy of TOYOTA MOTOR SALES, U.S.A., INC.

NOTE:	**Apply battery voltage for 1 to 3 seconds.** **If battery voltage is applied for more than 3 seconds, the actuator may be damaged.** **If the positive (+) and negative (-) battery leads contact the sensor terminals, the actuator may be damaged.**

Standard

Tester Connection	Specified Condition

Positive (+) battery voltage applied to terminal 4 (M-), and negative (-) battery voltage applied to terminal 5 (M+)	Motor rotates clockwise
Positive (+) battery voltage applied to terminal 5 (M+), and negative (-) battery voltage applied to terminal 4 (M-)	Motor rotates counterclockwise

If the result is not as specified, replace the intake air control valve actuator.

INSTALLATION

INSTALLATION

1. **INSTALL INTAKE AIR CONTROL VALVE ACTUATOR (for TCV)**

NOTE:

- **Make sure that foreign matter, such as water, oil, sand or iron particles, does not enter the gear chamber or actuator at the locations marked by the circles in the illustration.**

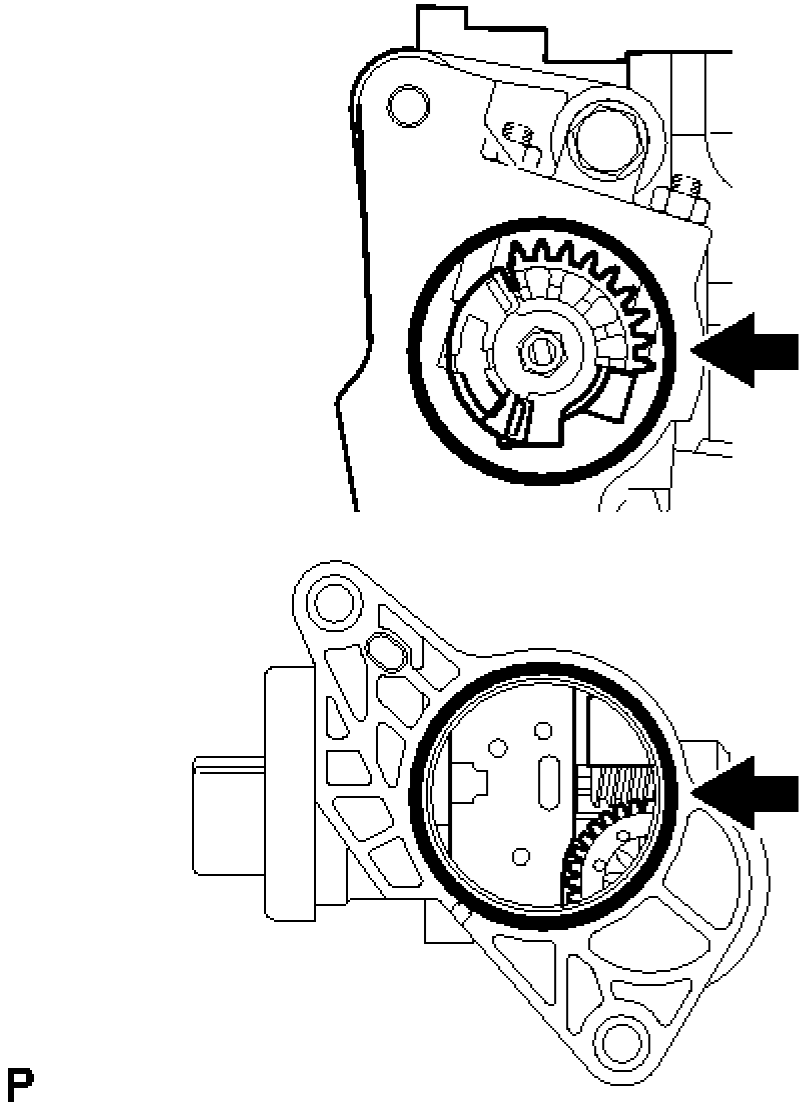

Fig. 30: Identifying Intake Air Control Valve Actuator Gasket
Courtesy of TOYOTA MOTOR SALES, U.S.A., INC.

- **Do not loosen or remove the bolt and 2 nuts shown in the illustration.**

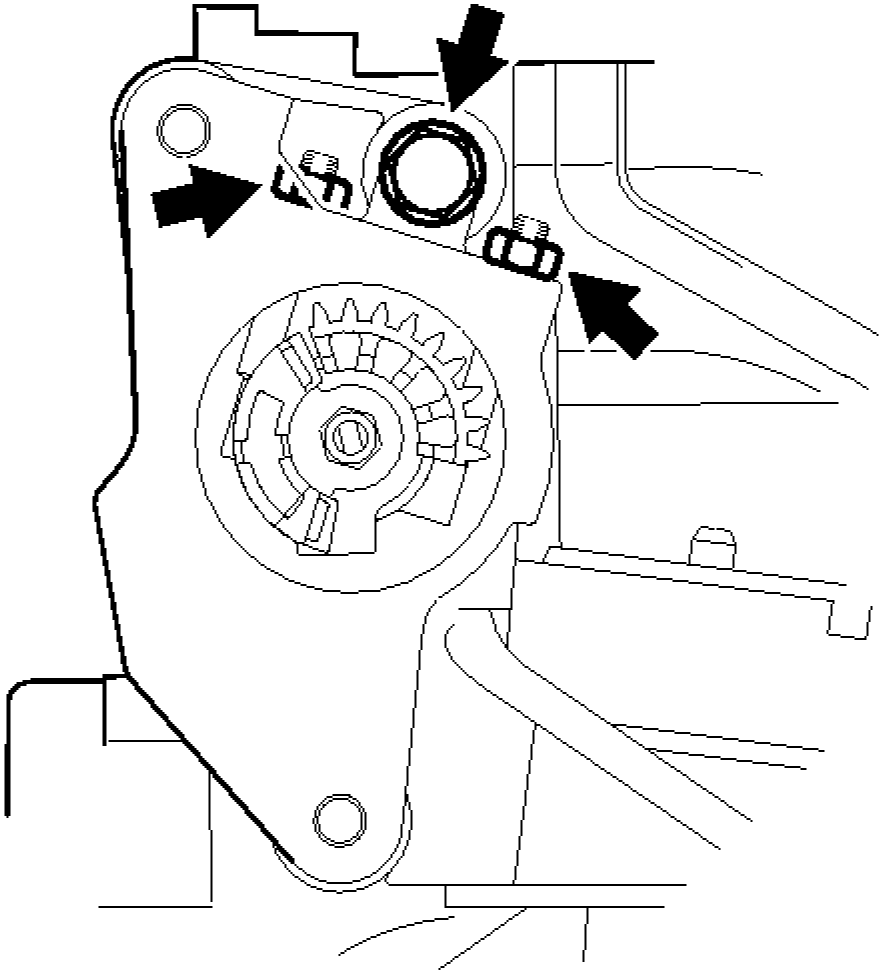

P

Fig. 31: Locating Bolt And Nut
Courtesy of TOYOTA MOTOR SALES, U.S.A., INC.

a. Check the tumble control valves.

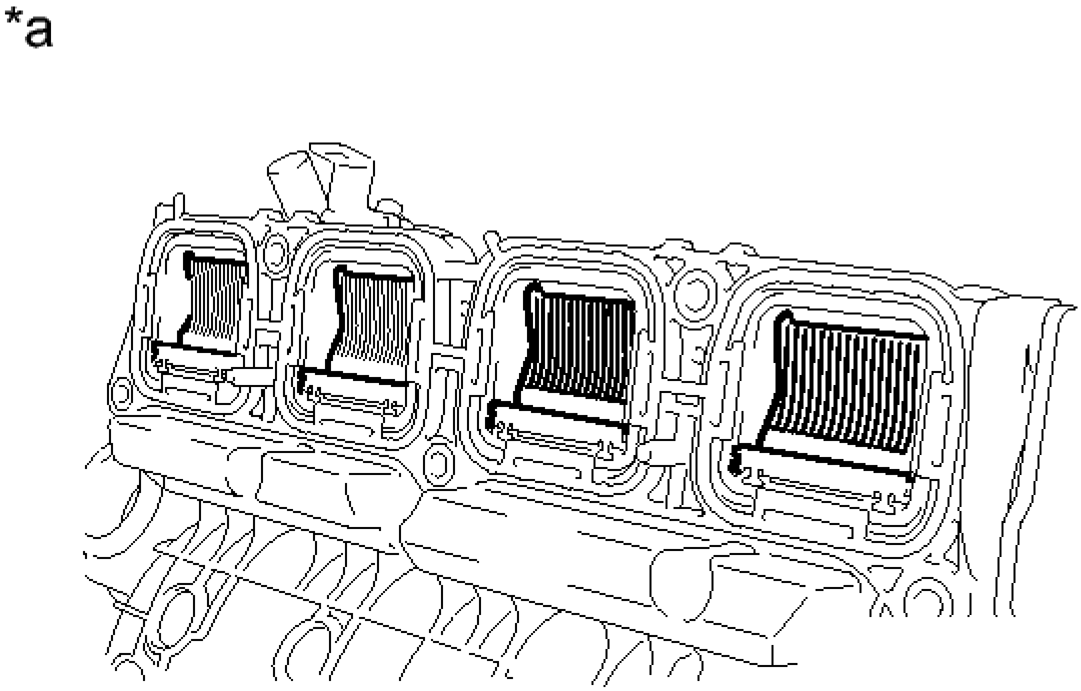

Fig. 32: Identifying Tumble Control Valves Closed
Courtesy of TOYOTA MOTOR SALES, U.S.A., INC.

TEXT IN ILLUSTRATION

*a	Condition: Closed

HINT:

If the tumble control valves are not closed, close them by hand.

b. Check that the gear of each tumble control valve is in the position shown in the illustration.

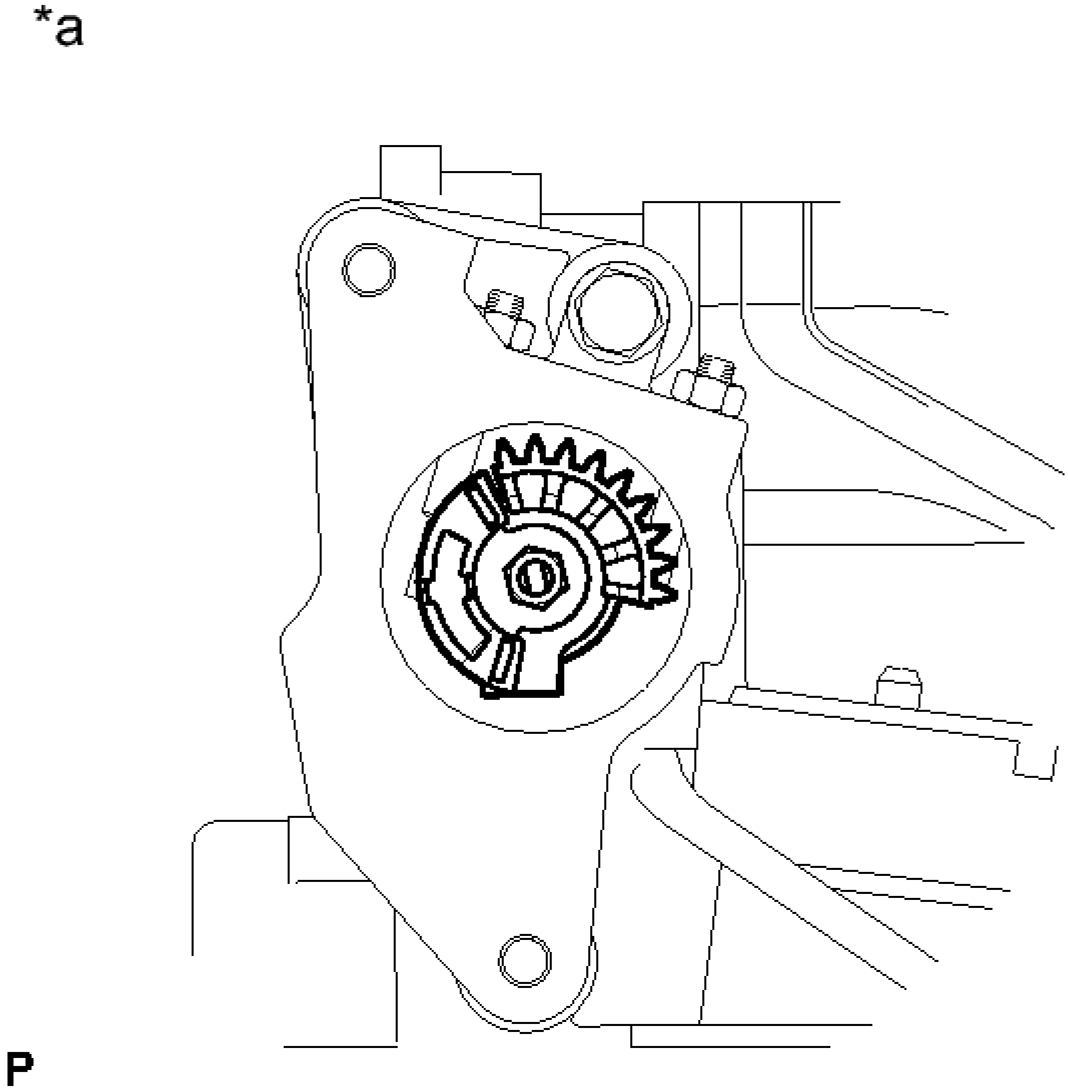

Fig. 33: Checking Tumble Control Valve Gear Operation
Courtesy of TOYOTA MOTOR SALES, U.S.A., INC.

TEXT IN ILLUSTRATION

*a	Condition: Closed

HINT:

Turn the gear clockwise until it contacts the stopper.

c. Install a new gasket to the intake air control valve actuator.
d. Install the intake air control valve actuator to the intake manifold with the 2 bolts.

Torque: 6.0 N*m (1 kgf*cm, 53 in.*lbf)

NOTE:

- **If excessive force is applied to the gear in the direction of rotation when installing the actuator, the valves and actuator may be damaged.**
- **After installing the actuator, make sure that the ends of the valves are not protruding from the surface where the intake manifold is installed. If the valves are protruding, remove and reinstall the actuator.**

2. **INSTALL INTAKE MANIFOLD**

   Refer to **INSTALLATION**

VACUUM SWITCHING VALVE (FOR ACIS)

COMPONENTS

ILLUSTRATION

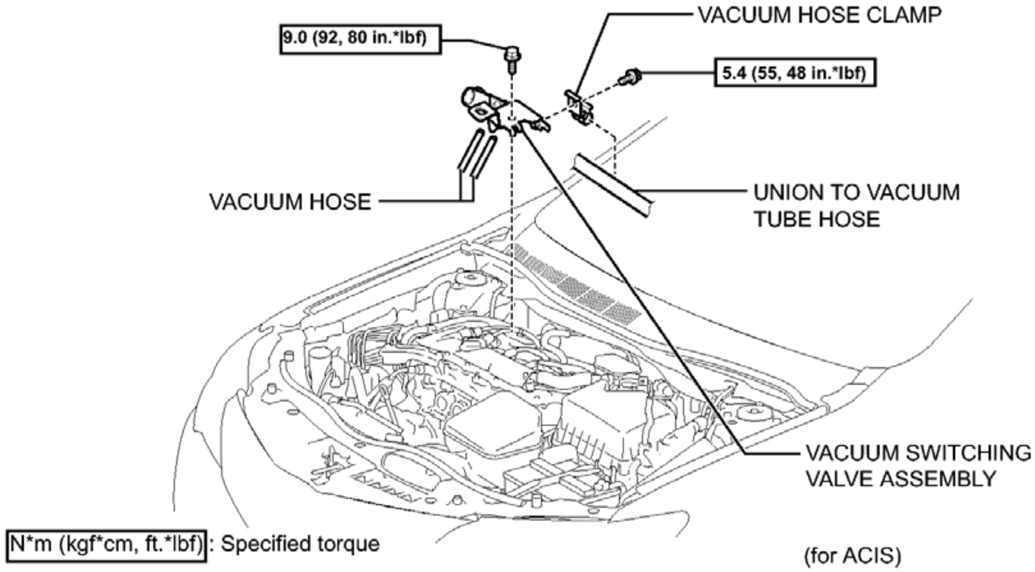
9.0 (92, 80 in.*lbf)
VACUUM HOSE CLAMP
5.4 (55, 48 in.*lbf)
VACUUM HOSE
UNION TO VACUUM TUBE HOSE
VACUUM SWITCHING VALVE ASSEMBLY
N*m (kgf*cm, ft.*lbf): Specified torque
(for ACIS)

Fig. 34: Identifying Vacuum Switching Valve Replacement Components With Torque Specifications (For ACIS)
Courtesy of TOYOTA MOTOR SALES, U.S.A., INC.

REMOVAL

REMOVAL

1. **REMOVE VACUUM SWITCHING VALVE ASSEMBLY (for ACIS)**
   1. Disconnect the union to connector tube hose and wire harness clamp.

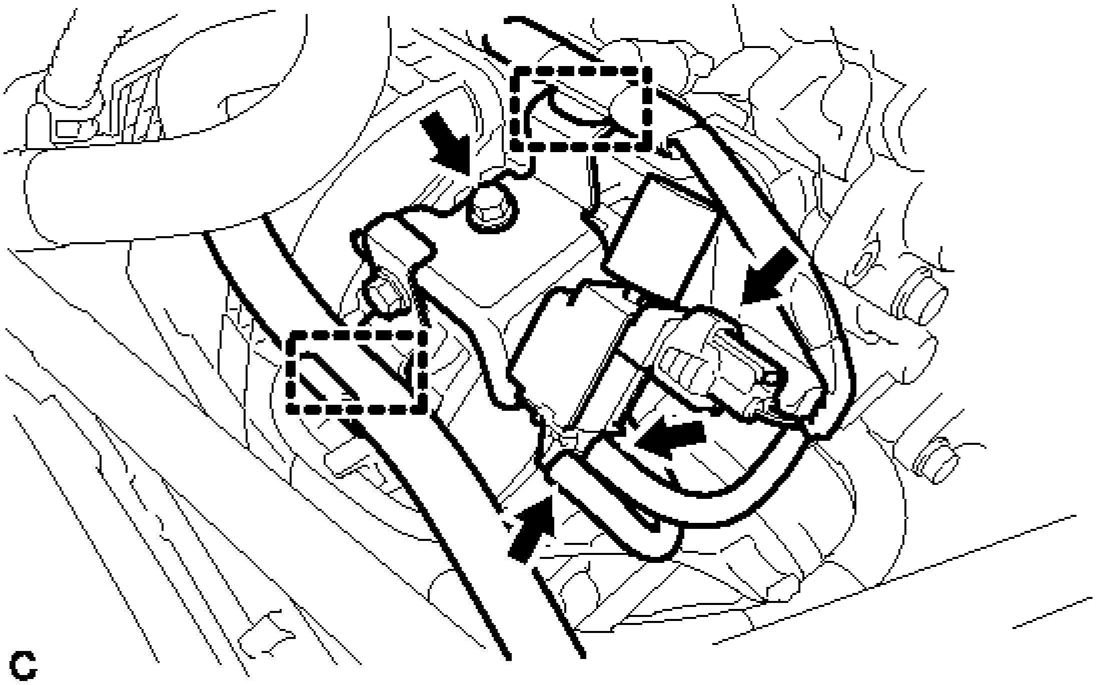

Fig. 35: Identifying Connector Tube Hose And Wire Harness Clamp
Courtesy of TOYOTA MOTOR SALES, U.S.A., INC.

b. Disconnect the 2 vacuum hoses and connector.
c. Remove the bolt and vacuum switching valve assembly.
d. Remove the bolt and vacuum hose clamp.

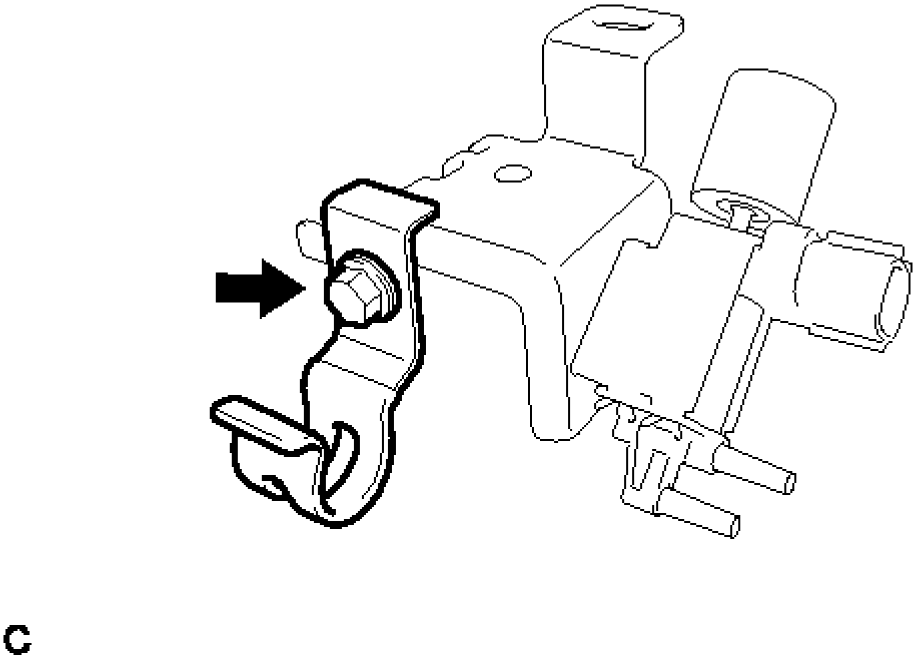

Fig. 36: Identifying Vacuum Hose Clamp Bolt
Courtesy of TOYOTA MOTOR SALES, U.S.A., INC.

INSPECTION

INSPECTION

1. **INSPECT VACUUM SWITCHING VALVE ASSEMBLY (for ACIS)**
   a. Measure the resistance according to the value(s) in the table below.

   Standard Resistance

Tester Connection	Condition	Specified Condition
1 - 2	20°C (68°F)	37 to 44 ohms
1 - Valve body	Always	10 kohms or higher
2 - Valve body		

   If the result is not as specified, replace the vacuum switching valve.

   b. Using a vacuum pump, check that air flows through the vacuum switching valve as specified.

   OK

Measurement Condition	Specified Condition
Battery voltage applied between terminals 1 and 2 and vacuum applied to port F.	Air is sucked into port E.
Battery voltage not applied between terminals 1 and 2 and vacuum applied to port	Air is sucked into filter.

E.	

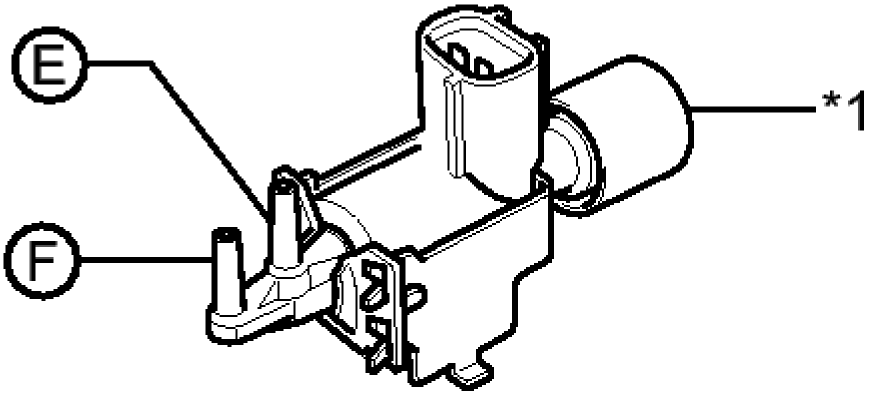

Fig. 37: Identifying Vacuum Switching Valve Assembly Filter (For ACIS)
Courtesy of TOYOTA MOTOR SALES, U.S.A., INC.

TEXT IN ILLUSTRATION

*1	Filter

If the result is not as specified, replace the vacuum switching valve.

INSTALLATION

INSTALLATION

1. **INSTALL VACUUM SWITCHING VALVE ASSEMBLY (for ACIS)**
    a. Install the vacuum hose clamp with the bolt.

    Torque: 5.4 N*m (5 kgf*cm, 48 in.*lbf)

    b. Install the vacuum switching valve assembly with the bolt.

    Torque: 9.0 N*m (2 kgf*cm, 80 in.*lbf)

    c. Connect the 2 vacuum hoses and connector.
    d. Connect the union to connector tube hose and wire harness clamp.

EXHAUST MANIFOLD

COMPONENTS

ILLUSTRATION

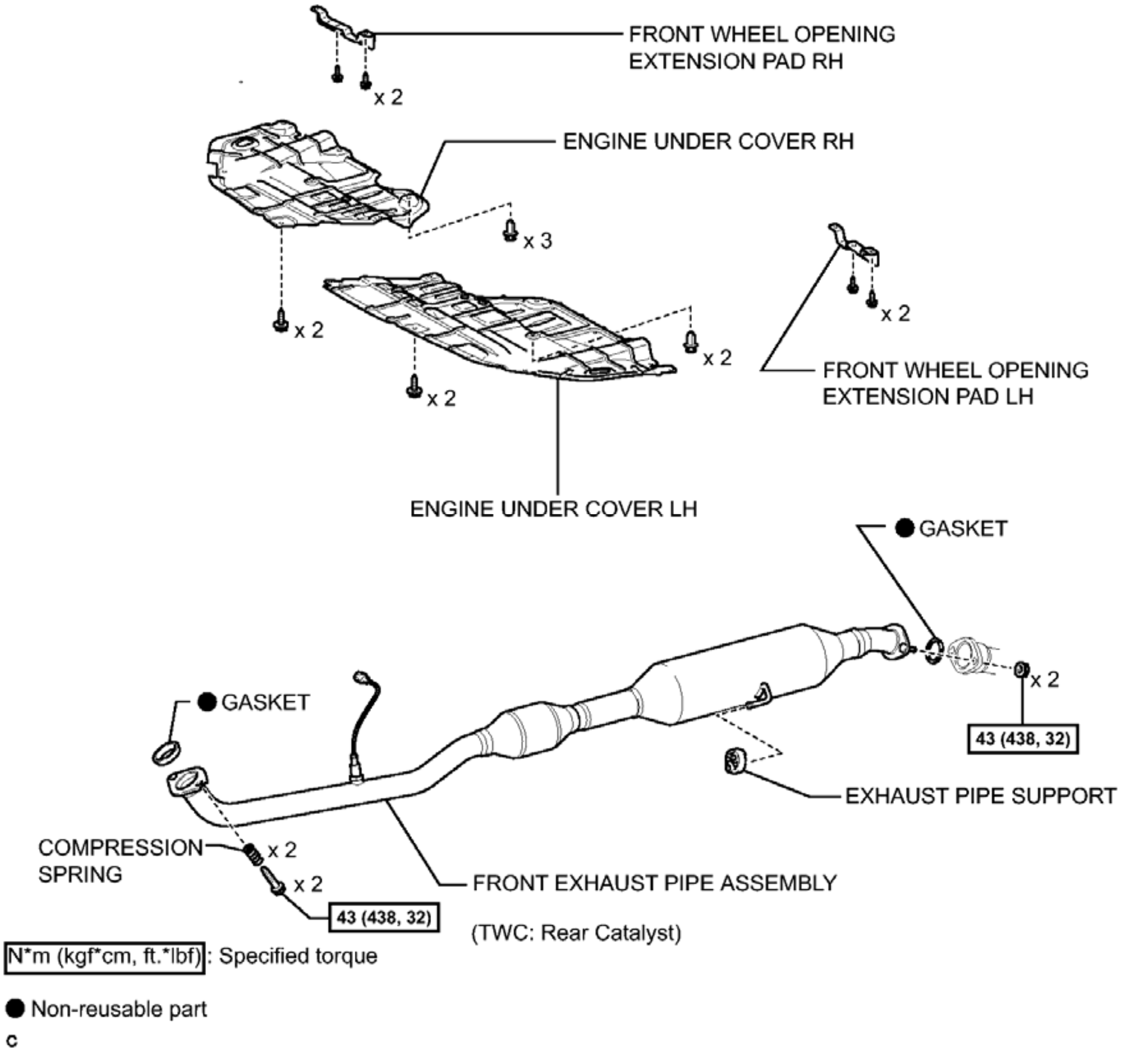
FRONT WHEEL OPENING EXTENSION PAD RH
x 2
ENGINE UNDER COVER RH
x 3
FRONT WHEEL OPENING EXTENSION PAD LH
x 2
x 2
x 2
x 2
ENGINE UNDER COVER LH
● GASKET
x 2
43 (438, 32)
● GASKET
EXHAUST PIPE SUPPORT
COMPRESSION SPRING
x 2
x 2
43 (438, 32)
FRONT EXHAUST PIPE ASSEMBLY
(TWC: Rear Catalyst)
N*m (kgf*cm, ft.*lbf): Specified torque
● Non-reusable part
c

Fig. 38: Identifying Exhaust Manifold Replacement Components With Torque Specifications (1 Of 3)
Courtesy of TOYOTA MOTOR SALES, U.S.A., INC.

ILLUSTRATION

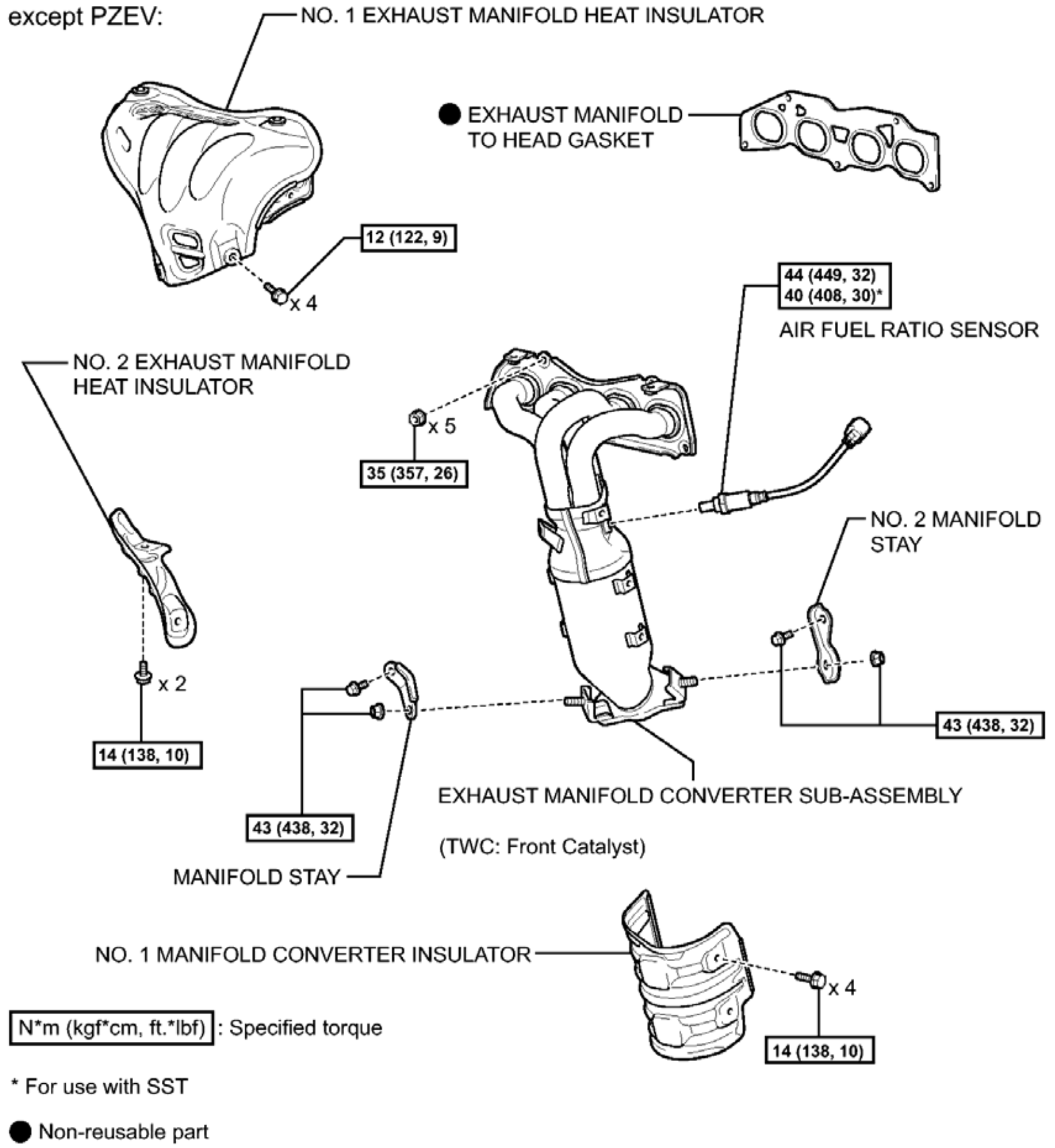
except PZEV:
NO. 1 EXHAUST MANIFOLD HEAT INSULATOR
EXHAUST MANIFOLD TO HEAD GASKET
12 (122, 9)
x 4
44 (449, 32)
40 (408, 30)*
AIR FUEL RATIO SENSOR
NO. 2 EXHAUST MANIFOLD HEAT INSULATOR
x 5
35 (357, 26)
NO. 2 MANIFOLD STAY
x 2
14 (138, 10)
43 (438, 32)
43 (438, 32)
EXHAUST MANIFOLD CONVERTER SUB-ASSEMBLY
(TWC: Front Catalyst)
MANIFOLD STAY
NO. 1 MANIFOLD CONVERTER INSULATOR
x 4
N*m (kgf*cm, ft.*lbf) : Specified torque
14 (138, 10)
* For use with SST
● Non-reusable part

Fig. 39: Identifying Exhaust Manifold Replacement Components With Torque Specifications (2 Of 3)
Courtesy of TOYOTA MOTOR SALES, U.S.A., INC.

ILLUSTRATION

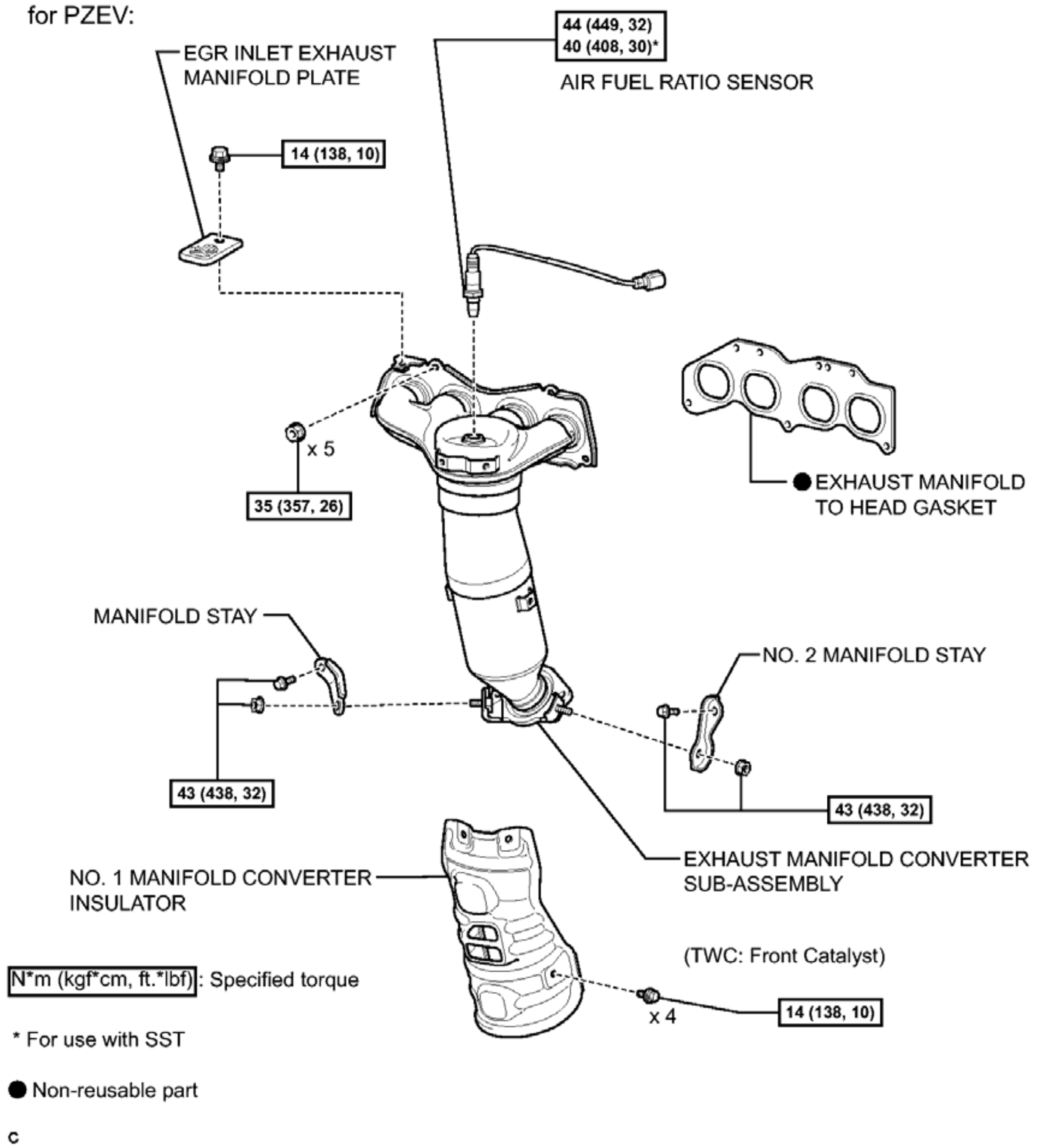
for PZEV:
EGR INLET EXHAUST MANIFOLD PLATE
44 (449, 32)
40 (408, 30)*
AIR FUEL RATIO SENSOR
14 (138, 10)
x 5
35 (357, 26)
● EXHAUST MANIFOLD TO HEAD GASKET
MANIFOLD STAY
NO. 2 MANIFOLD STAY
43 (438, 32)
43 (438, 32)
NO. 1 MANIFOLD CONVERTER INSULATOR
EXHAUST MANIFOLD CONVERTER SUB-ASSEMBLY
(TWC: Front Catalyst)
N*m (kgf*cm, ft.*lbf): Specified torque
x 4
14 (138, 10)
* For use with SST
● Non-reusable part
c

Fig. 40: Identifying Exhaust Manifold Replacement Components With Torque Specifications (3 Of 3)
Courtesy of TOYOTA MOTOR SALES, U.S.A., INC.

REMOVAL

REMOVAL

1. **REMOVE FRONT WHEEL OPENING EXTENSION PAD LH**
2. **REMOVE FRONT WHEEL OPENING EXTENSION PAD RH**
3. **REMOVE ENGINE UNDER COVER LH**
4. **REMOVE ENGINE UNDER COVER RH**
5. **REMOVE FRONT EXHAUST PIPE ASSEMBLY**

a. Disconnect the heated oxygen sensor connector.

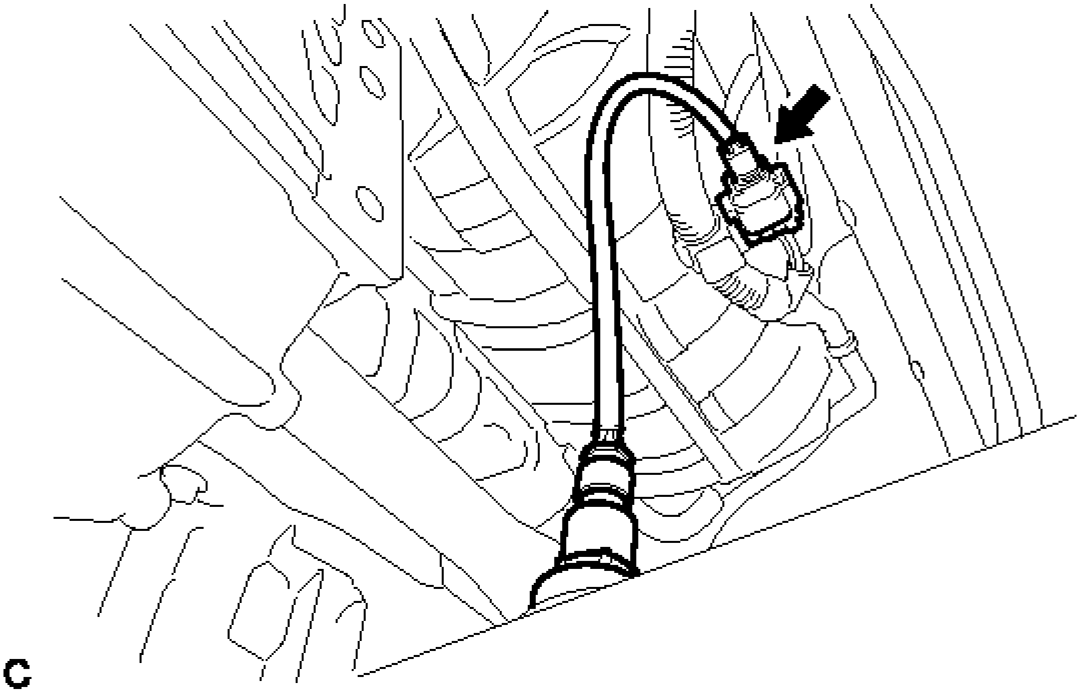

Fig. 41: Identifying Heated Oxygen Sensor Connector
Courtesy of TOYOTA MOTOR SALES, U.S.A., INC.

b. Remove the 2 bolts, 2 compression springs and 2 nuts.

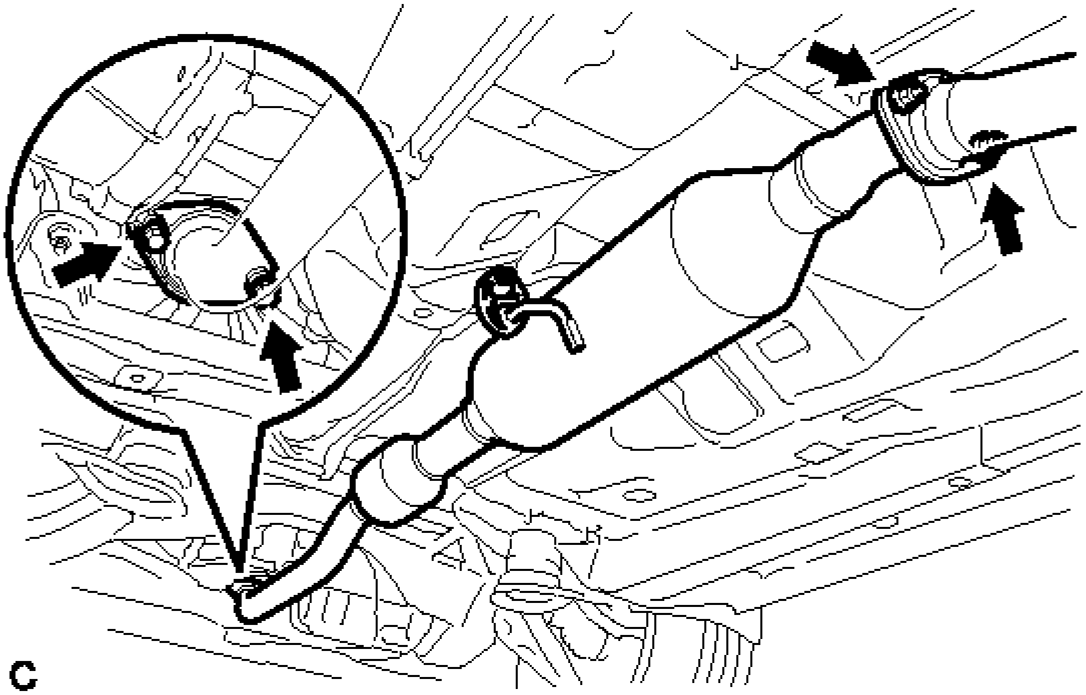

Fig. 42: Identifying Bolts, Compression Springs And Nuts
Courtesy of TOYOTA MOTOR SALES, U.S.A., INC.

c. Remove the front exhaust pipe assembly from the exhaust pipe support.
d. Remove the 2 gaskets from the exhaust manifold converter sub-assembly and front exhaust pipe assembly.

6. **REMOVE MANIFOLD STAY**
   a. Remove the bolt, nut and manifold stay.

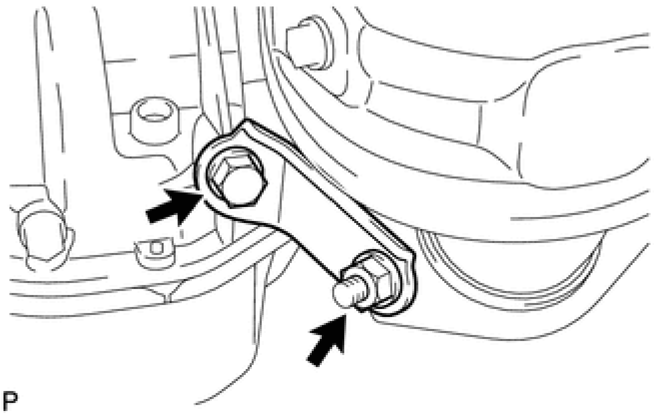

Fig. 43: Locating Manifold Stay Bolts
Courtesy of TOYOTA MOTOR SALES, U.S.A., INC.

7. **REMOVE NO. 2 MANIFOLD STAY**
   a. Remove the bolt, nut and No. 2 manifold stay.

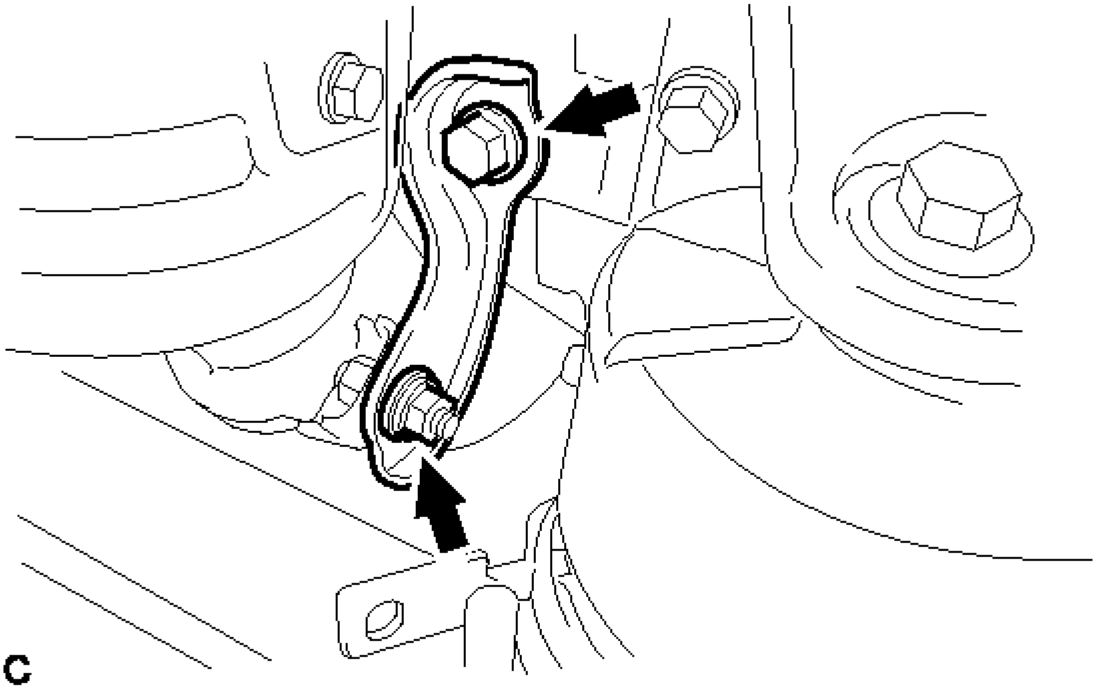

Fig. 44: Locating No. 2 Manifold Stay
Courtesy of TOYOTA MOTOR SALES, U.S.A., INC.

8. **REMOVE NO. 1 EXHAUST MANIFOLD HEAT INSULATOR (except PZEV)**
    a. Remove the 4 bolts and No. 1 exhaust manifold heat insulator.

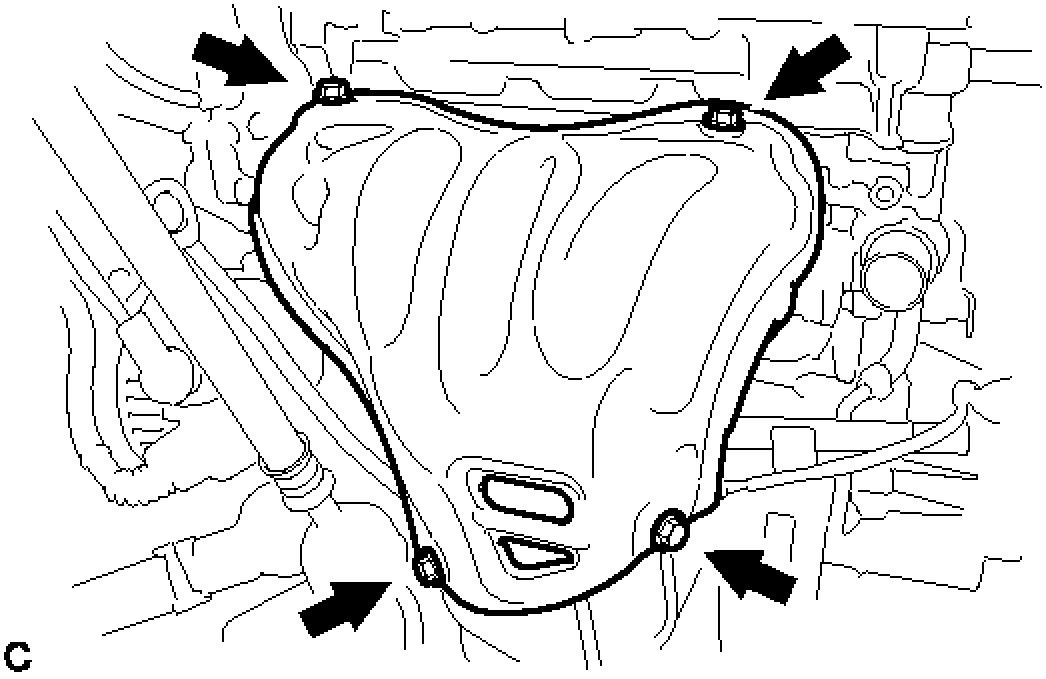

Fig. 45: Locating No. 1 Exhaust Manifold Heat Insulator And Bolt
Courtesy of TOYOTA MOTOR SALES, U.S.A., INC.

9. **REMOVE EGR INLET EXHAUST MANIFOLD PLATE (for PZEV)**
    a. Remove the bolt and EGR inlet exhaust manifold plate.

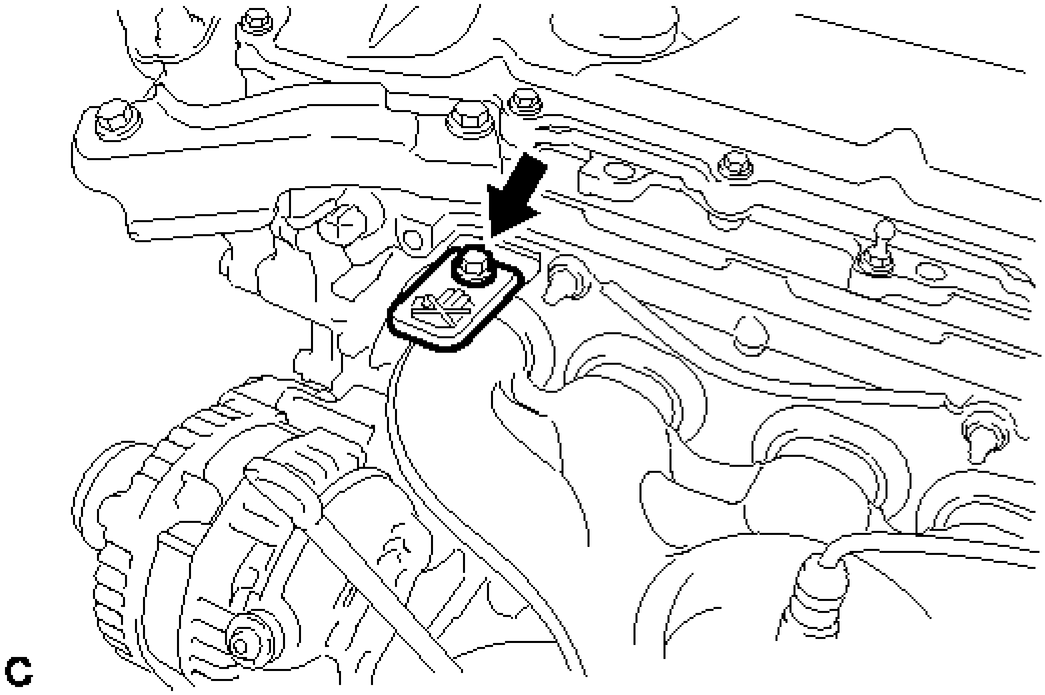

Fig. 46: Identifying EGR Inlet Exhaust Manifold Plate Bolt (For PZEV)
Courtesy of TOYOTA MOTOR SALES, U.S.A., INC.

10. **REMOVE AIR FUEL RATIO SENSOR**

    Refer to **REMOVAL**

11. **REMOVE EXHAUST MANIFOLD CONVERTER SUB-ASSEMBLY**
    a. Remove the 5 nuts and exhaust manifold converter sub-assembly (except PZEV).

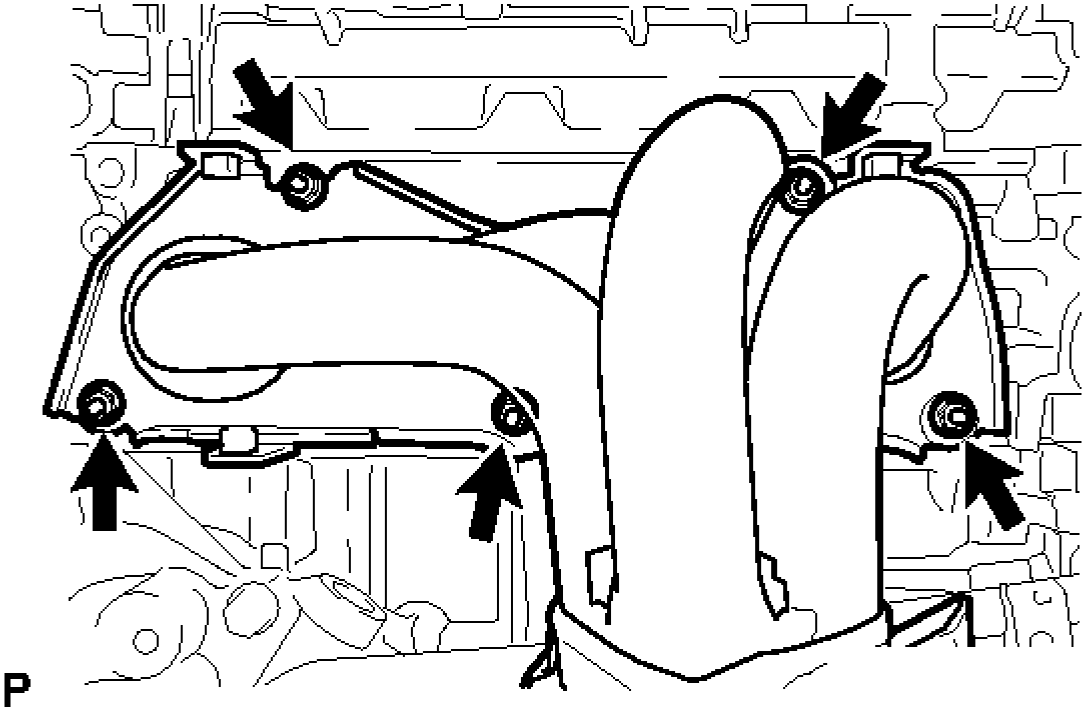

Fig. 47: Locating Exhaust Manifold Converter Sub-Assembly And Nut
Courtesy of TOYOTA MOTOR SALES, U.S.A., INC.

b. Remove the 5 nuts and exhaust manifold converter sub-assembly (for PZEV).

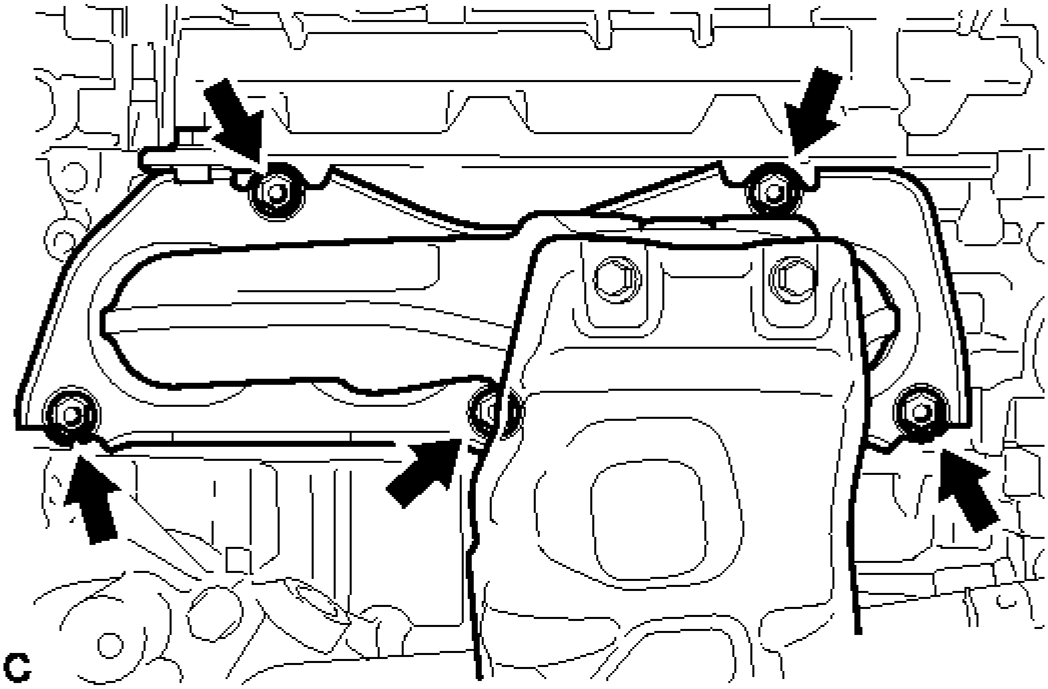

Fig. 48: Identifying Exhaust Manifold Converter Sub-Assembly Nuts (For PZEV)
Courtesy of TOYOTA MOTOR SALES, U.S.A., INC.

c. Remove the exhaust manifold to head gasket (except PZEV).

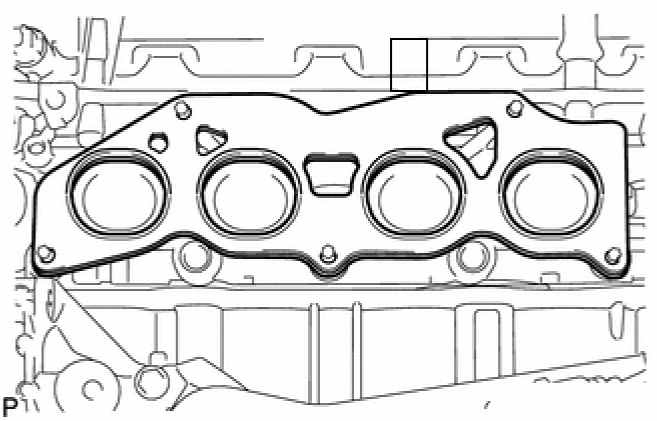

Fig. 49: Identifying Exhaust Manifold Head Gasket (Except PZEV)
Courtesy of TOYOTA MOTOR SALES, U.S.A., INC.

d. Remove the exhaust manifold to head gasket (for PZEV).

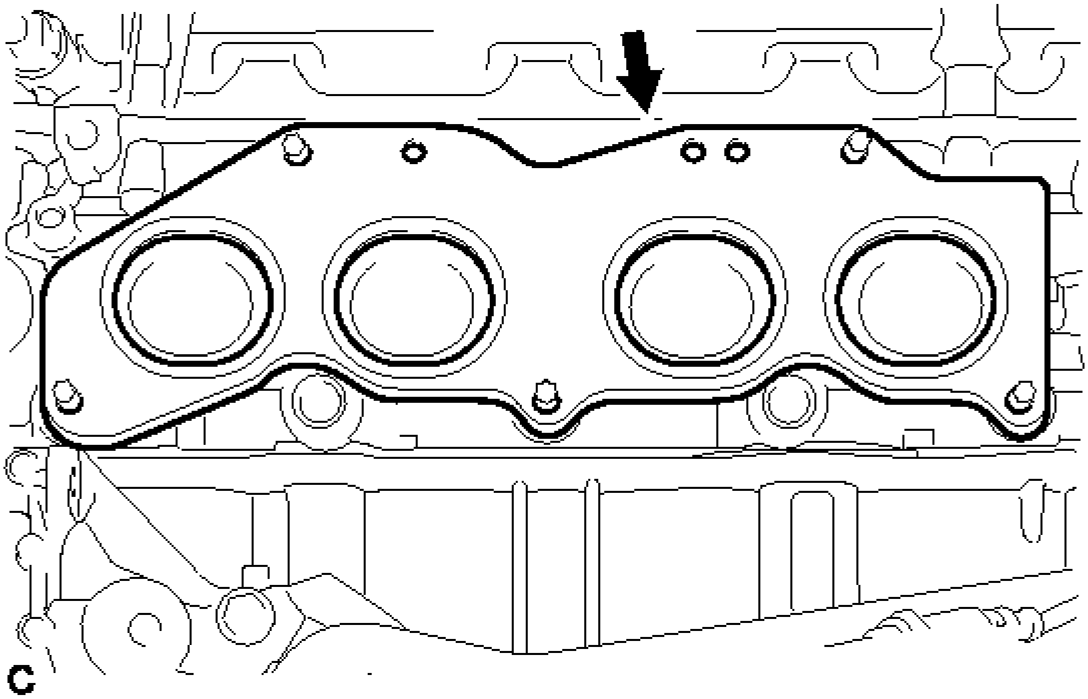

Fig. 50: Identifying Exhaust Manifold Head Gasket (For PZEV)
Courtesy of TOYOTA MOTOR SALES, U.S.A., INC.

12. **REMOVE NO. 2 EXHAUST MANIFOLD HEAT INSULATOR (except PZEV)**

a. Remove the 2 bolts and No. 2 exhaust manifold heat insulator.

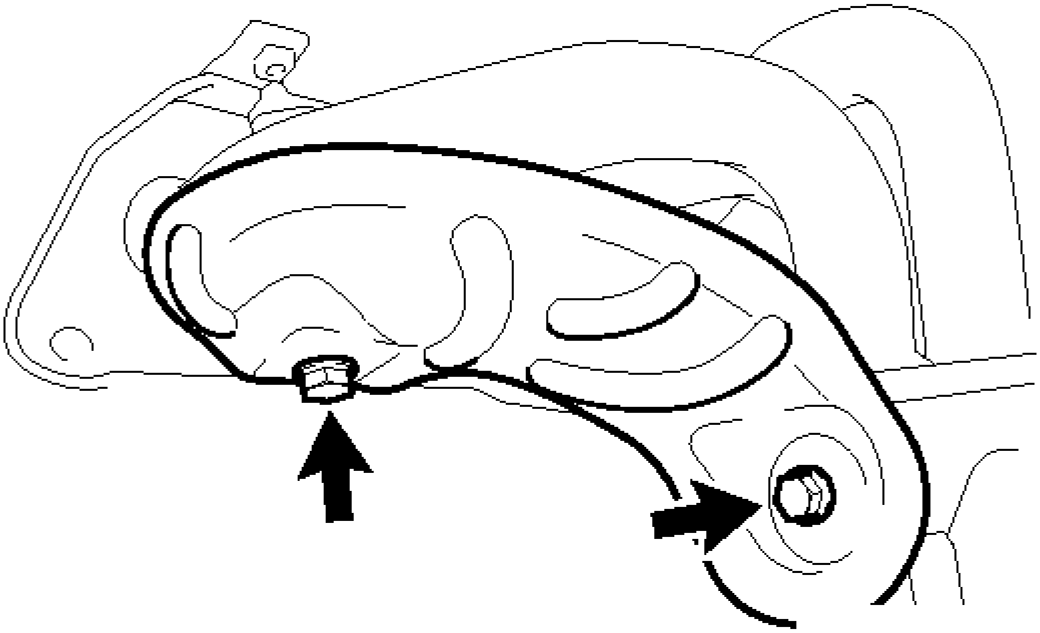

Fig. 51: Locating No. 2 Exhaust Manifold Heat Insulator And Bolt
Courtesy of TOYOTA MOTOR SALES, U.S.A., INC.

13. **REMOVE NO. 1 MANIFOLD CONVERTER INSULATOR**
    a. Remove the 4 bolts and No. 1 manifold converter insulator (except PZEV).

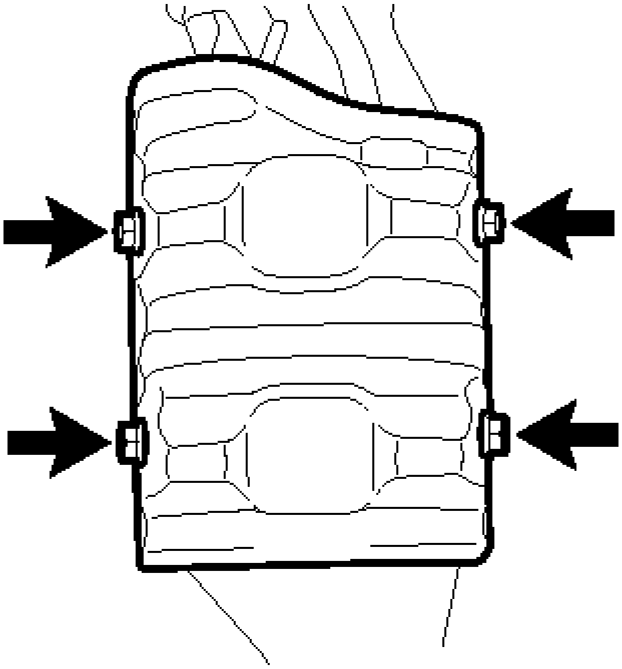

Fig. 52: Locating No. 1 Manifold Converter Insulator And Bolts (Except PZEV)

Courtesy of TOYOTA MOTOR SALES, U.S.A., INC.

b. Remove the 4 bolts and No. 1 manifold converter insulator (for PZEV).

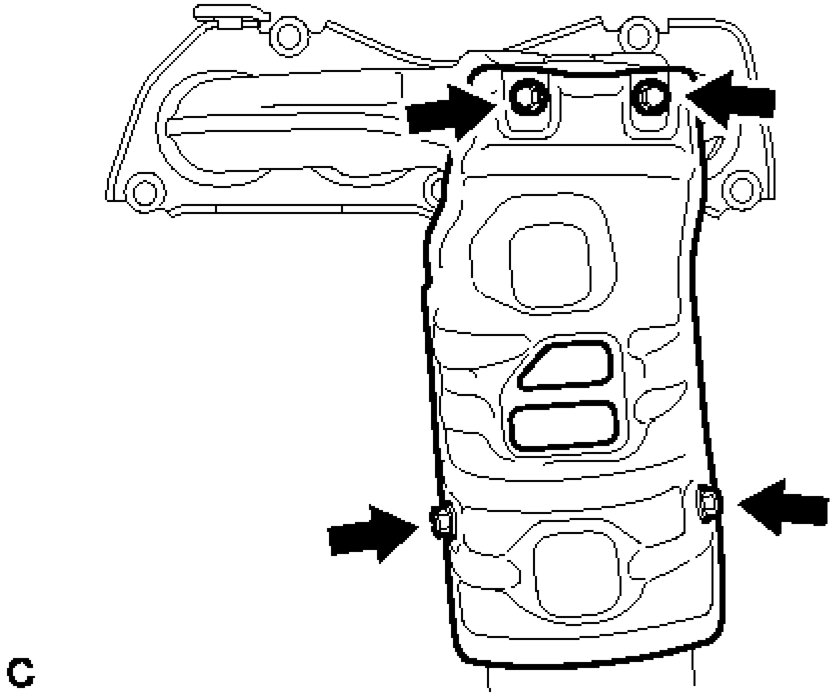

Fig. 53: Locating No. 1 Manifold Converter Insulator (For PZEV)
Courtesy of TOYOTA MOTOR SALES, U.S.A., INC.

INSTALLATION

INSTALLATION

1. **INSTALL NO. 1 MANIFOLD CONVERTER INSULATOR**
    a. Install the No. 1 manifold converter insulator with the 4 bolts.

    Torque: 14 N*m (38 kgf*cm, 10 ft.*lbf)

2. **INSTALL NO. 2 EXHAUST MANIFOLD HEAT INSULATOR (except PZEV)**
    a. Install the No. 2 exhaust manifold heat insulator with the 2 bolts.

    Torque: 14 N*m (38 kgf*cm, 10 ft.*lbf)

3. **INSTALL EXHAUST MANIFOLD CONVERTER SUB-ASSEMBLY**
    a. Install a new exhaust manifold to head gasket onto the cylinder head.
    b. Temporarily install the exhaust manifold converter sub-assembly with the 5 nuts.
    c. Tighten the 5 nuts in the sequence shown in the illustration (except PZEV).

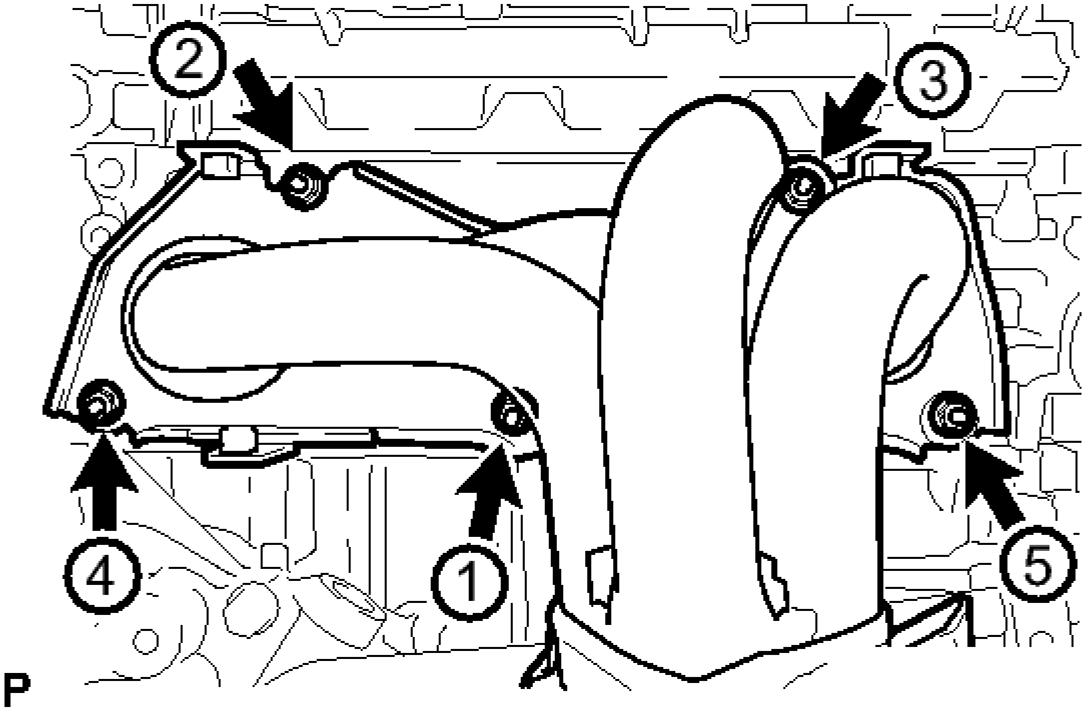

Fig. 54: Tightening Exhaust Manifold Converter Sub-Assembly Nuts In Sequence (Except PZEV)
Courtesy of TOYOTA MOTOR SALES, U.S.A., INC.

Torque: 35 N*m (57 kgf*cm, 26 ft.*lbf)

d. Tighten the 5 nuts in the sequence shown in the illustration (for PZEV).

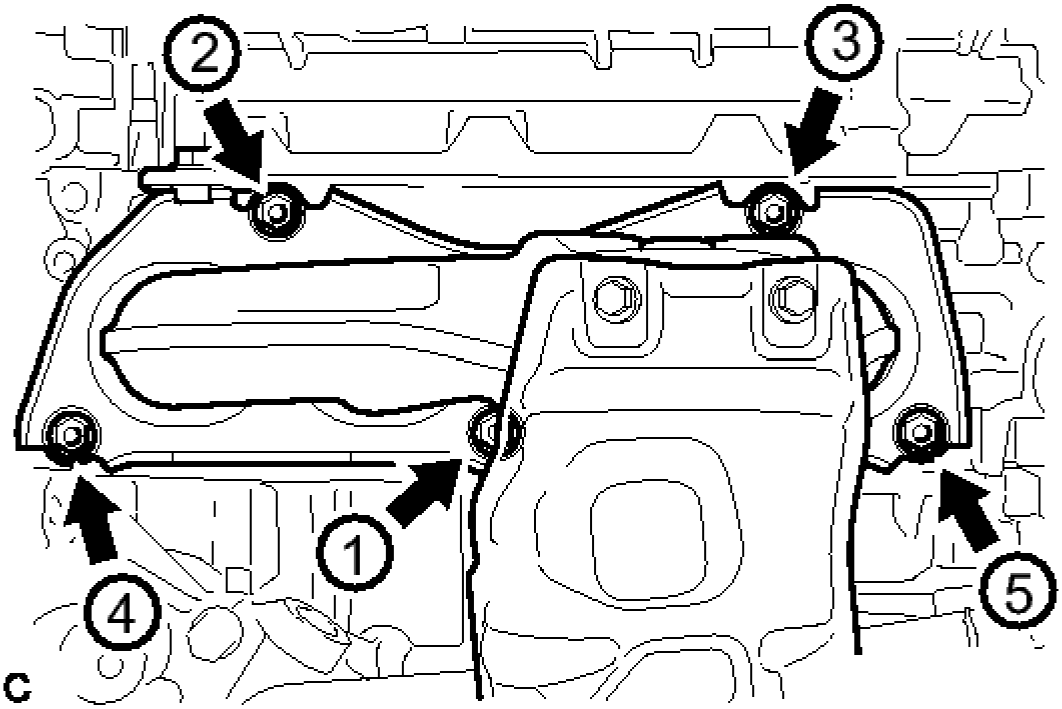

Fig. 55: Tightening Exhaust Manifold Converter Sub-Assembly Nuts In Sequence (For PZEV)
Courtesy of TOYOTA MOTOR SALES, U.S.A., INC.

Torque: 35 N*m (57 kgf*cm, 26 ft.*lbf)

4. **INSTALL NO. 1 EXHAUST MANIFOLD HEAT INSULATOR (except PZEV)**
    a. Install the No. 1 exhaust manifold heat insulator with the 4 bolts.

    Torque: 12 N*m (22 kgf*cm, 9 ft.*lbf)

5. **INSTALL EGR INLET EXHAUST MANIFOLD PLATE (for PZEV)**
    a. Install the EGR inlet exhaust manifold plate with the bolt.

    Torque: 14 N*m (38 kgf*cm, 10 ft.*lbf)

6. **INSTALL NO. 2 MANIFOLD STAY**
    a. Install the No. 2 manifold stay with the bolt and nut.

    Torque: 43 N*m (38 kgf*cm, 32 ft.*lbf)

7. **INSTALL MANIFOLD STAY**
    a. Install the manifold stay with the bolt and nut.

    Torque: 43 N*m (38 kgf*cm, 32 ft.*lbf)

8. **INSTALL FRONT EXHAUST PIPE ASSEMBLY**
   a. Using a vernier caliper, measure the free length of the compression spring.

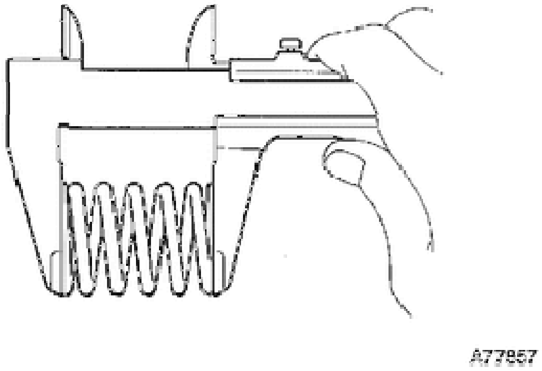

Fig. 56: Measuring Free Length Of Compression Spring
Courtesy of TOYOTA MOTOR SALES, U.S.A., INC.

Minimum	40.5 mm (1.60 in.)

HINT:

If the length is less than the minimum, replace the compression spring.

   b. Fully insert a new gasket to the exhaust manifold converter sub-assembly.
   c. Using a plastic hammer and wooden block, tap in the new gasket until its surface is flush with the exhaust manifold converter sub-assembly.

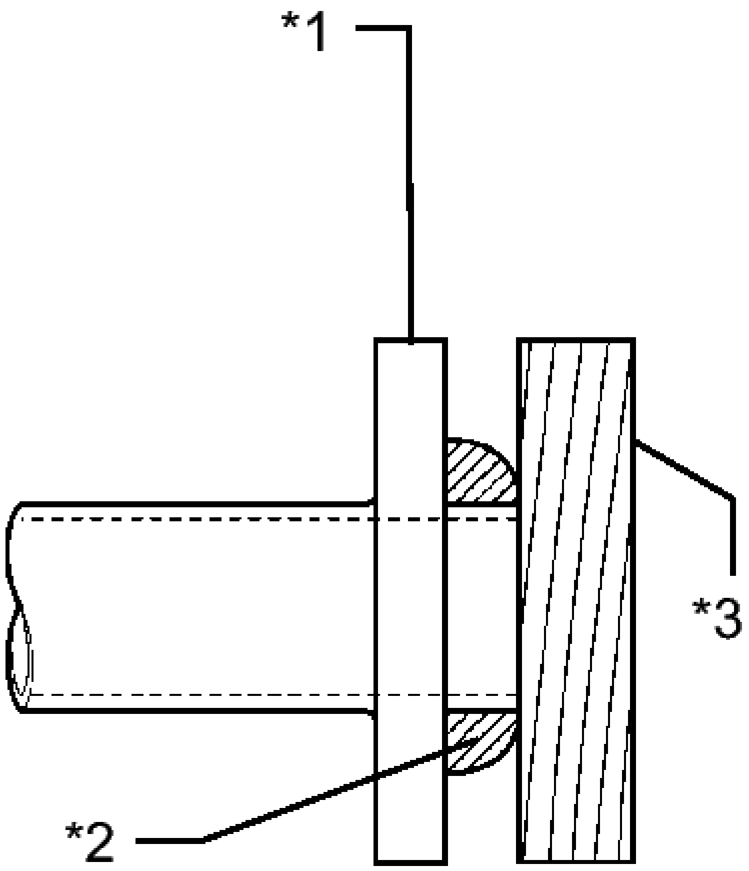

Fig. 57: Identifying Exhaust Manifold Converter Sub-Assembly, Wooden Block And Gasket
Courtesy of TOYOTA MOTOR SALES, U.S.A., INC.

TEXT IN ILLUSTRATION

*1	Exhaust Manifold Converter Sub-assembly
*2	Gasket
*3	Wooden Block

NOTE:

- **Be sure to install the gasket in the correct direction.**
- **Do not reuse the gasket.**

- **Do not damage the gasket.**
- **Do not push in the gasket by using the exhaust pipe when connecting it.**

d. Install a new gasket to the front exhaust pipe assembly.
e. Connect the front exhaust pipe assembly to the exhaust pipe support.
f. Install the front exhaust pipe assembly with the 2 compression springs, 2 bolts and 2 nuts.

Torque: 43 N*m (38 kgf*cm, 32 ft.*lbf)

g. Connect the heated oxygen sensor connector.

9. **INSTALL ENGINE UNDER COVER RH**
10. **INSTALL ENGINE UNDER COVER LH**
11. **INSTALL FRONT WHEEL OPENING EXTENSION PAD RH**
12. **INSTALL FRONT WHEEL OPENING EXTENSION PAD LH**
13. **INSTALL AIR FUEL RATIO SENSOR**

    Refer to **INSTALLATION**

14. **INSPECT FOR EXHAUST GAS LEAK**

EXHAUST PIPE

COMPONENTS

ILLUSTRATION

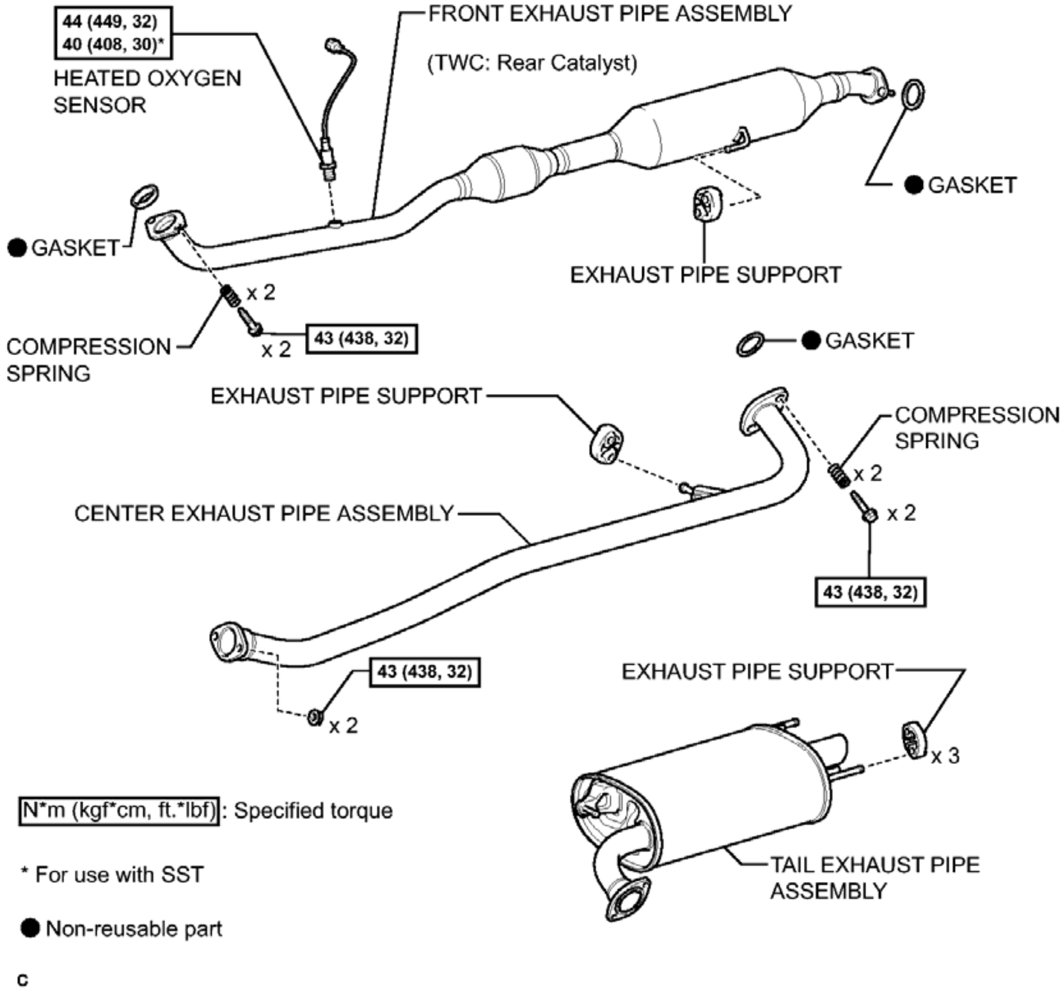
44 (449, 32)
40 (408, 30)*
HEATED OXYGEN SENSOR
FRONT EXHAUST PIPE ASSEMBLY
(TWC: Rear Catalyst)
● GASKET
● GASKET
EXHAUST PIPE SUPPORT
x 2
COMPRESSION SPRING
x 2
43 (438, 32)
● GASKET
EXHAUST PIPE SUPPORT
COMPRESSION SPRING
x 2
x 2
CENTER EXHAUST PIPE ASSEMBLY
43 (438, 32)
43 (438, 32)
x 2
EXHAUST PIPE SUPPORT
x 3
TAIL EXHAUST PIPE ASSEMBLY
N*m (kgf*cm, ft.*lbf): Specified torque
* For use with SST
● Non-reusable part
c

Fig. 58: Identifying Exhaust Pipe Replacement Components With Torque Specifications
Courtesy of TOYOTA MOTOR SALES, U.S.A., INC.

REMOVAL

REMOVAL

1. **REMOVE HEATED OXYGEN SENSOR**

   Refer to **REMOVAL**

2. **REMOVE TAIL EXHAUST PIPE ASSEMBLY**
   a. Remove the 2 bolts and 2 compression springs.

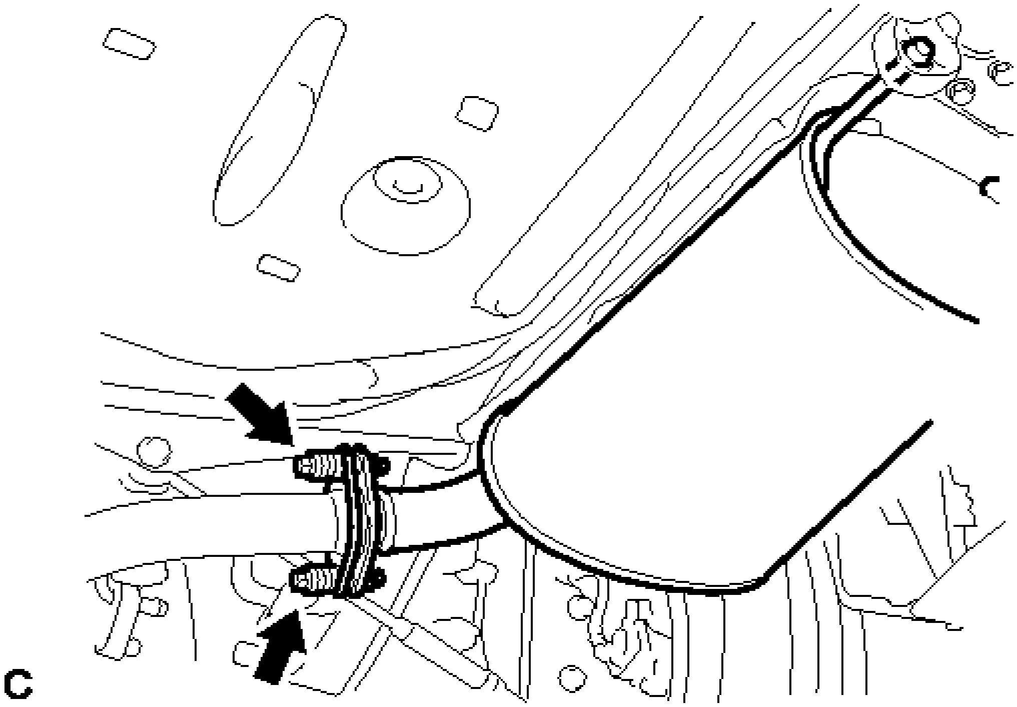

Fig. 59: Identifying Compression Springs Bolt
Courtesy of TOYOTA MOTOR SALES, U.S.A., INC.

b. Remove the tail exhaust pipe assembly from the 3 exhaust pipe supports.
c. Remove the gasket from the center exhaust pipe assembly.

3. **REMOVE CENTER EXHAUST PIPE ASSEMBLY**
    a. Remove the 2 nuts.

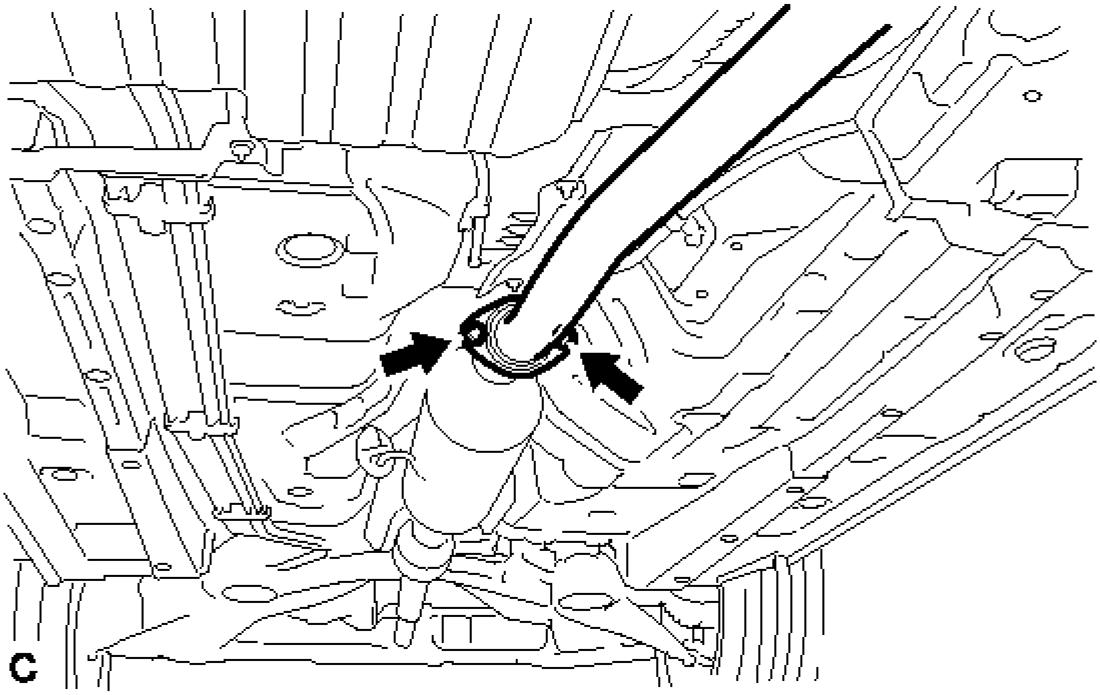

Fig. 60: Identifying Center Exhaust Pipe Assembly Nuts
Courtesy of TOYOTA MOTOR SALES, U.S.A., INC.

b. Remove the center exhaust pipe assembly from the exhaust pipe support.
c. Remove the gasket from the front exhaust pipe assembly.

4. **REMOVE FRONT EXHAUST PIPE ASSEMBLY**
   a. Remove the 2 bolts, 2 compression springs.

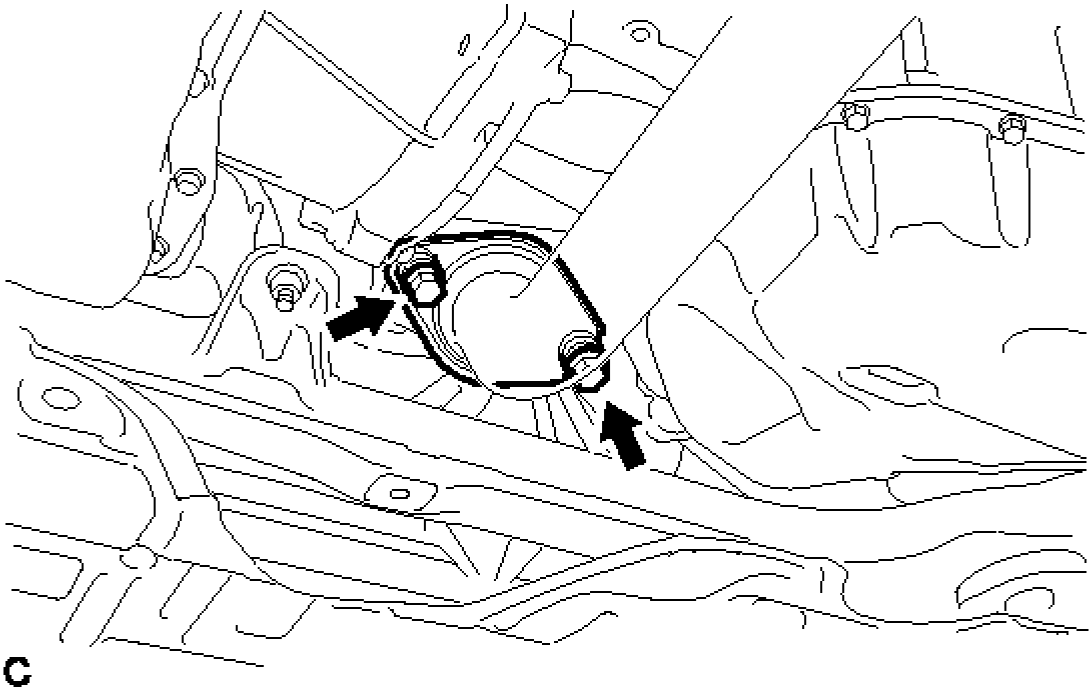

Fig. 61: Identifying Compression Springs Bolts
Courtesy of TOYOTA MOTOR SALES, U.S.A., INC.

b. Remove the front exhaust pipe assembly from the exhaust pipe support.
c. Remove the gasket from the exhaust manifold converter sub-assembly.

5. **REMOVE TAIL EXHAUST PIPE BAFFLE SUB-ASSEMBLY (w/ Tail Exhaust Pipe Baffle)**
   a. Remove the tail exhaust pipe baffle sub-assembly.

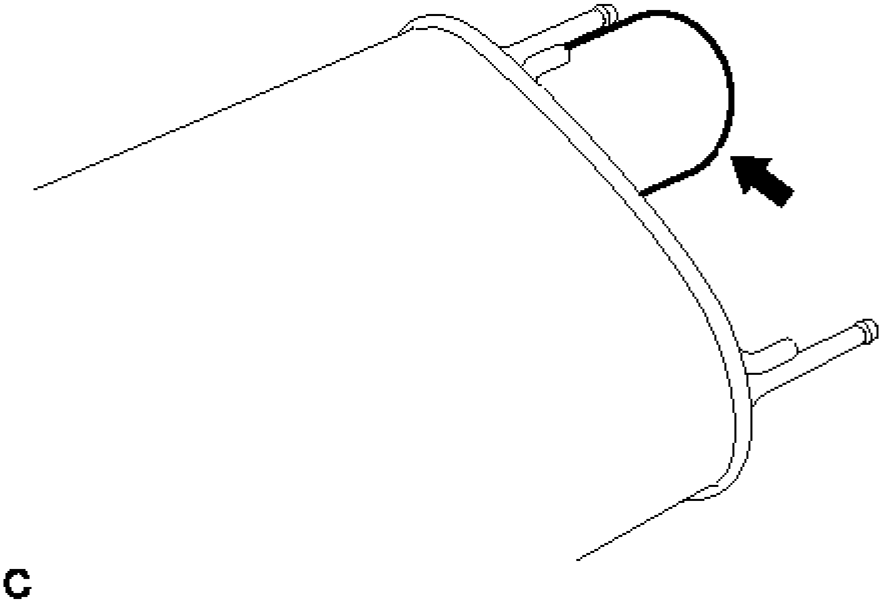

Fig. 62: Identifying Tail Exhaust Pipe Baffle Sub-Assembly (W/Tail Exhaust Pipe Baffle)
Courtesy of TOYOTA MOTOR SALES, U.S.A., INC.

INSTALLATION

INSTALLATION

1. **INSTALL TAIL EXHAUST PIPE BAFFLE SUB-ASSEMBLY (w/ Tail Exhaust Pipe Baffle)**
   a. Align the concave area of the baffle with the protruding part of the tail exhaust pipe assembly as shown in the illustration.

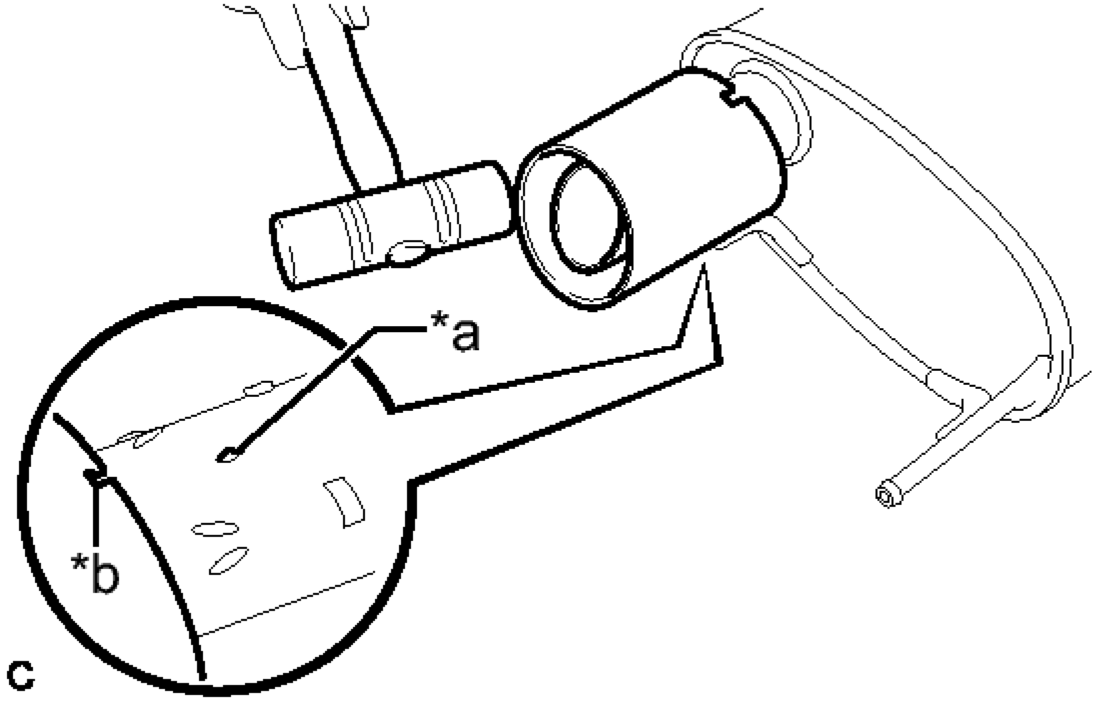

Fig. 63: Tapping Tail Exhaust Pipe Baffle Sub-Assembly To Tail Exhaust Pipe Assembly
Courtesy of TOYOTA MOTOR SALES, U.S.A., INC.

b. Using a plastic hammer, uniformly tap a new tail exhaust pipe baffle sub-assembly onto the tail exhaust pipe assembly.

TEXT IN ILLUSTRATION

*a	Protruding Part
*b	Concave

c. Check that the concave area of the baffle is aligned with the protruding part on the bottom of the tail exhaust pipe assembly as shown in the illustration.

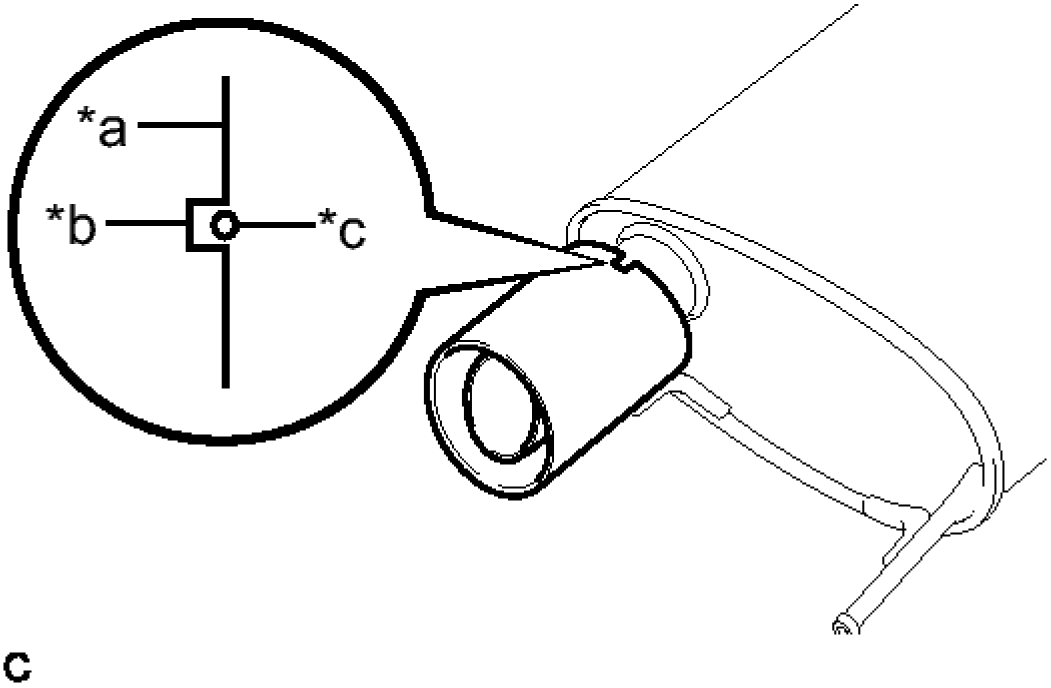

Fig. 64: Aligning Baffle Edge And Concave With Protruding Part Of Tail Exhaust Pipe Assembly
Courtesy of TOYOTA MOTOR SALES, U.S.A., INC.

TEXT IN ILLUSTRATION

*a	Baffle Edge
*b	Concave
*c	Protruding Part

2. **INSTALL FRONT EXHAUST PIPE ASSEMBLY**
   a. Using a vernier caliper, measure the free length of the compression springs.

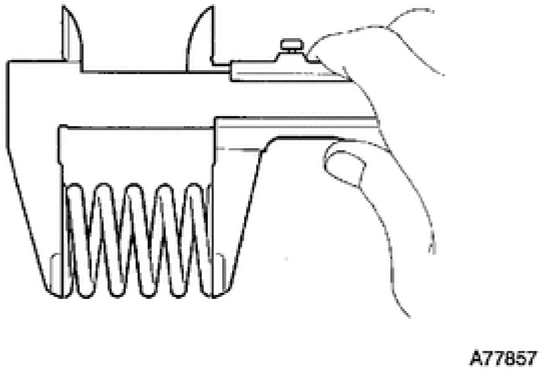

Fig. 65: Measuring Free Length Of Compression Spring

Courtesy of TOYOTA MOTOR SALES, U.S.A., INC.

Minimum	40.5 mm (1.60 in.)

HINT:

If the free length is less than minimum, replace the compression spring.

b. Fully insert a new gasket to the exhaust manifold converter sub-assembly.
c. Using a plastic hammer and wooden block, tap in the new gasket until its surface is flush with the exhaust manifold converter sub-assembly.

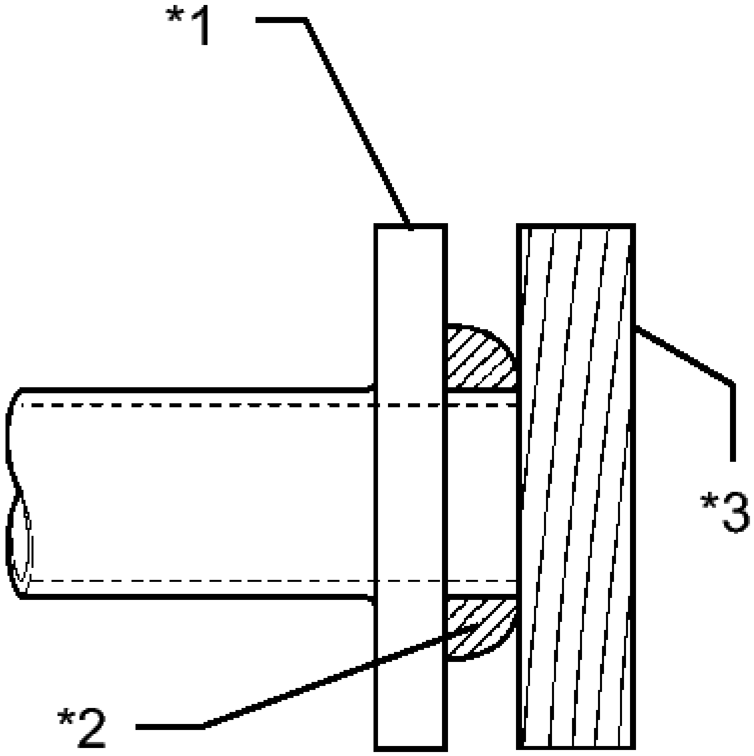

Fig. 66: Identifying Center Exhaust Pipe Assembly, Wooden Block And Gasket

Courtesy of TOYOTA MOTOR SALES, U.S.A., INC.

TEXT IN ILLUSTRATION

*1	Exhaust Manifold Converter Sub-assembly
*2	Gasket
*3	Wooden Block

NOTE:

- **Be careful with the installation direction of the gasket.**
- **Do not reuse the gasket.**
- **Do not damage the gasket.**
- **Do not push in the gasket by using the exhaust pipe when connecting it.**

d. Install the front exhaust pipe assembly with the 2 bolts and 2 compression springs.

Torque: 43 N*m (38 kgf*cm, 32 ft.*lbf)

e. Connect the front exhaust pipe assembly to the exhaust pipe support.

3. **INSTALL CENTER EXHAUST PIPE ASSEMBLY**

a. Install a new gasket to the front exhaust pipe assembly.
b. Connect the center exhaust pipe assembly to the exhaust pipe support.
c. Install the center exhaust pipe assembly with the 2 nuts.

Torque: 43 N*m (38 kgf*cm, 32 ft.*lbf)

4. **INSTALL TAIL EXHAUST PIPE ASSEMBLY**

a. Using a vernier caliper, measure the free length of the compression springs.

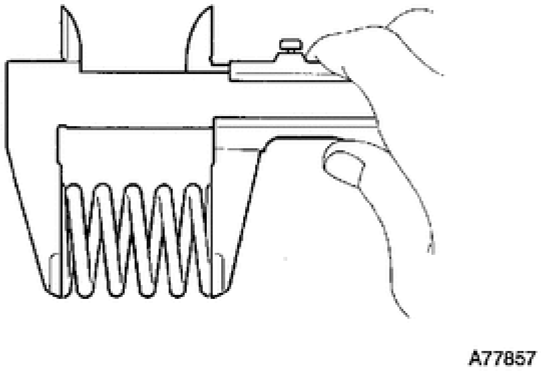

Fig. 67: Measuring Free Length Of Compression Spring
Courtesy of TOYOTA MOTOR SALES, U.S.A., INC.

Minimum	38.5 mm (1.52 in.)

HINT:

If the free length is less than minimum, replace the compression spring.

b. Fully insert a new gasket to the center exhaust pipe assembly.
c. Using a plastic hammer and wooden block, tap in the new gasket until its surface is flush with the center exhaust pipe assembly.

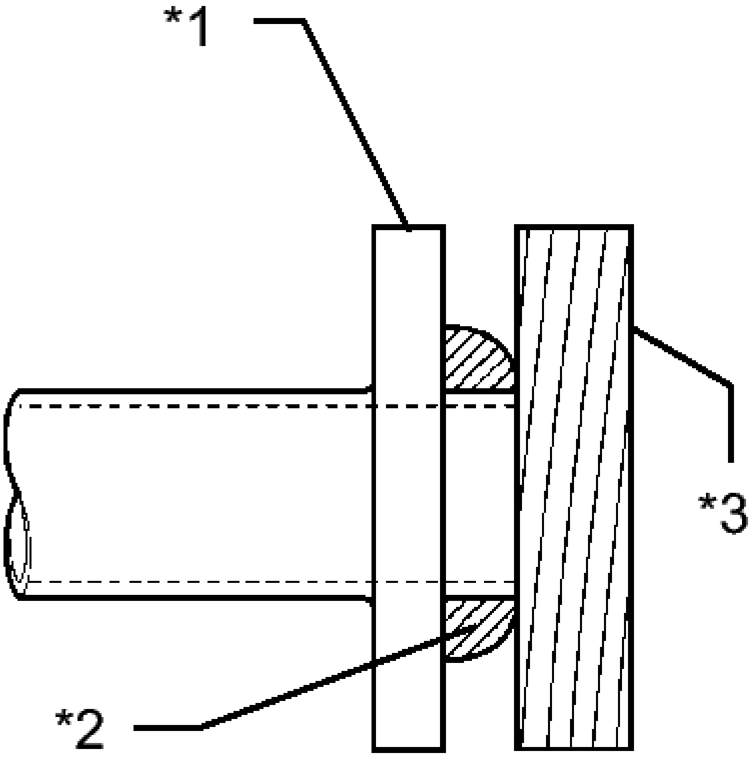

Fig. 68: Identifying Center Exhaust Pipe Assembly, Wooden Block And Gasket
Courtesy of TOYOTA MOTOR SALES, U.S.A., INC.

TEXT IN ILLUSTRATION

*1	Center Exhaust Pipe Assembly
*2	Gasket
*3	Wooden Block

NOTE:

- **Be careful with the installation direction of the gasket.**
- **Do not reuse the gasket.**
- **Do not damage the gasket.**

- **Do not push in the gasket by using the exhaust pipe when connecting it.**

d. Connect the tail exhaust pipe assembly to the 3 exhaust pipe supports.
e. Install the tail exhaust pipe assembly with the 2 bolts and 2 compression springs.

Torque: 43 N*m (38 kgf*cm, 32 ft.*lbf)

5. **INSTALL HEATED OXYGEN SENSOR**

Refer to **INSTALLATION**

6. **INSPECT FOR EXHAUST GAS LEAK**

INTAKE MANIFOLD

COMPONENTS

ILLUSTRATION

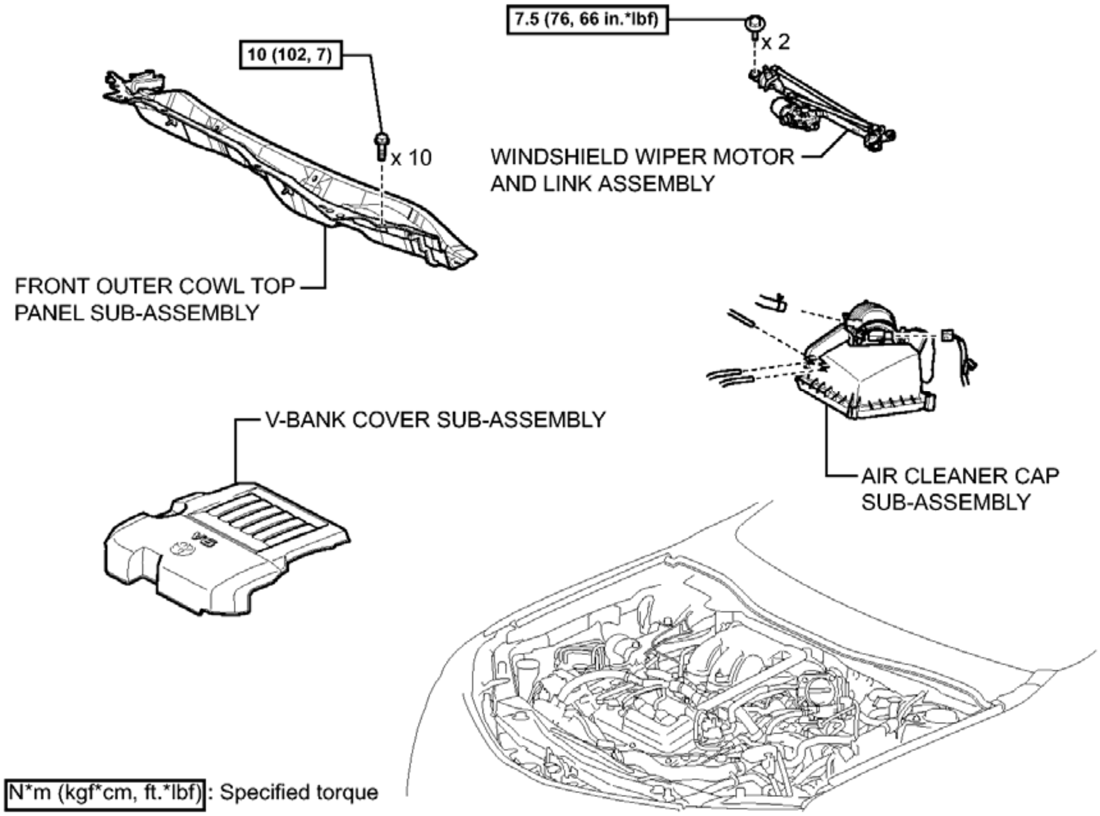
7.5 (76, 66 in.*lbf)
x 2
10 (102, 7)
x 10
WINDSHIELD WIPER MOTOR AND LINK ASSEMBLY
FRONT OUTER COWL TOP PANEL SUB-ASSEMBLY
V-BANK COVER SUB-ASSEMBLY
AIR CLEANER CAP SUB-ASSEMBLY
N*m (kgf*cm, ft.*lbf) : Specified torque

Fig. 1: Identifying Intake Manifold Replacement Components With Torque Specifications (1 Of 2)
Courtesy of TOYOTA MOTOR SALES, U.S.A., INC.

ILLUSTRATION

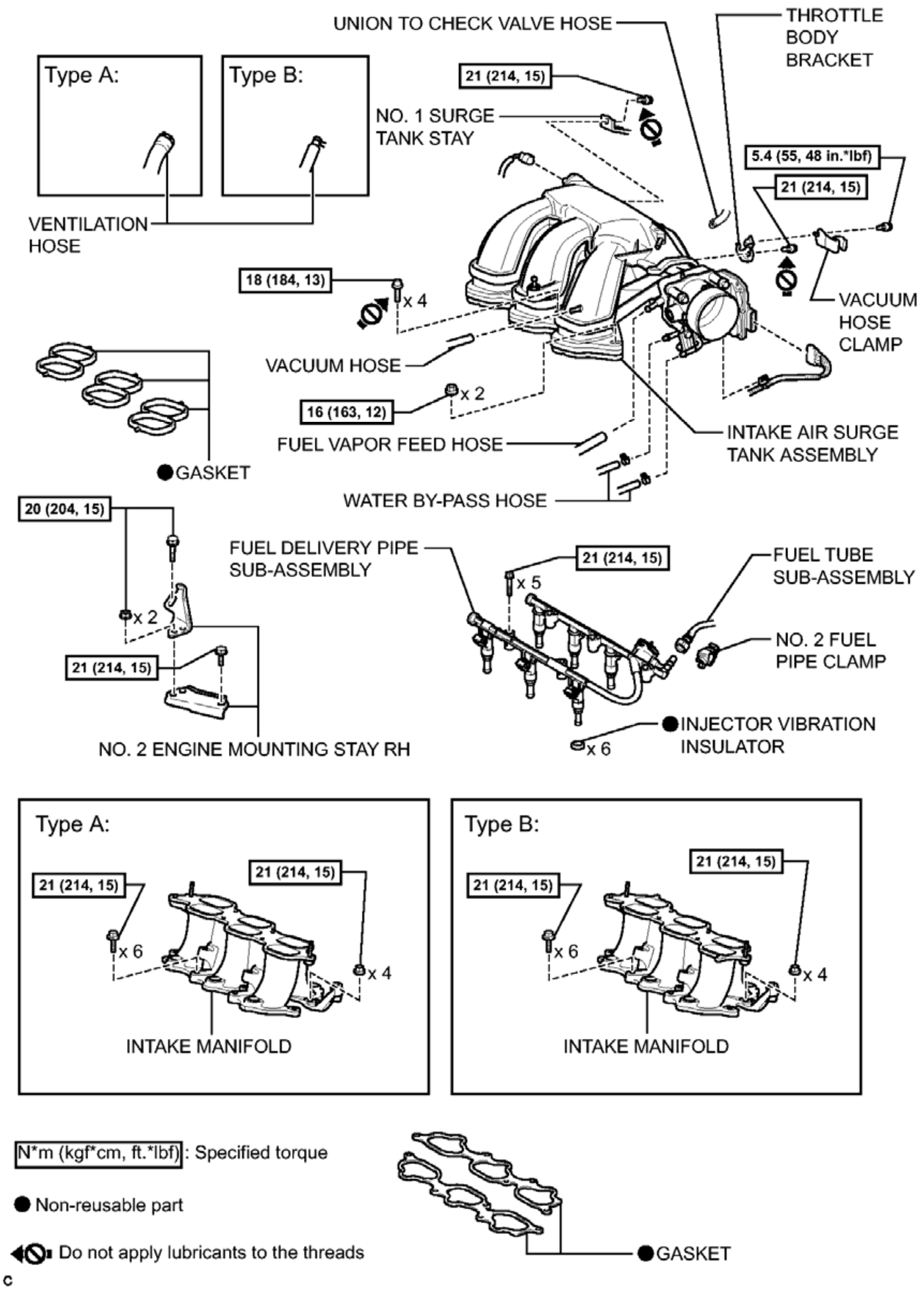
UNION TO CHECK VALVE HOSE
THROTTLE BODY BRACKET
Type A:
Type B:
21 (214, 15)
NO. 1 SURGE TANK STAY
5.4 (55, 48 in.*lbf)
21 (214, 15)
VENTILATION HOSE
18 (184, 13)
x 4
VACUUM HOSE CLAMP
VACUUM HOSE
16 (163, 12)
x 2
FUEL VAPOR FEED HOSE
INTAKE AIR SURGE TANK ASSEMBLY
GASKET
WATER BY-PASS HOSE
20 (204, 15)
FUEL DELIVERY PIPE SUB-ASSEMBLY
21 (214, 15)
x 5
FUEL TUBE SUB-ASSEMBLY
x 2
NO. 2 FUEL PIPE CLAMP
21 (214, 15)
INJECTOR VIBRATION INSULATOR
x 6
NO. 2 ENGINE MOUNTING STAY RH
Type A:
21 (214, 15)
21 (214, 15)
x 6
x 4
INTAKE MANIFOLD
Type B:
21 (214, 15)
21 (214, 15)
x 6
x 4
INTAKE MANIFOLD
N*m (kgf*cm, ft.*lbf) : Specified torque
● Non-reusable part
Do not apply lubricants to the threads
GASKET
c

Fig. 2: Identifying Intake Manifold Replacement Components With Torque Specifications (2 Of 2)
Courtesy of TOYOTA MOTOR SALES, U.S.A., INC.

REMOVAL

REMOVAL

1. **PRECAUTION**

   NOTE: After turning the engine switch off, waiting time may be required before disconnecting the cable from the negative (-) battery terminal. Therefore, make sure to read the disconnecting the cable from the negative (-) battery terminal notice before proceeding with work. Refer to PRECAUTION .

2. **DISCHARGE FUEL SYSTEM PRESSURE**

   Refer to **PRECAUTION**

3. **DISCONNECT CABLE FROM NEGATIVE BATTERY TERMINAL**

   NOTE: When disconnecting the cable, some systems need to be initialized after the cable is reconnected. Refer to INITIALIZATION .

4. **DRAIN ENGINE COOLANT** . Refer to **REPLACEMENT - Step 1**
5. **REMOVE WINDSHIELD WIPER MOTOR AND LINK ASSEMBLY**

   Refer to **REMOVAL**

6. **REMOVE FRONT OUTER COWL TOP PANEL SUB-ASSEMBLY** . Refer to **REMOVAL - Step 3**
7. **REMOVE V-BANK COVER SUB-ASSEMBLY** . Refer to **REMOVAL - Step 17**
8. **REMOVE AIR CLEANER CAP SUB-ASSEMBLY** . Refer to **REMOVAL - Step 7**
9. **REMOVE INTAKE AIR SURGE TANK ASSEMBLY**
   a. Disconnect the ventilation hose.

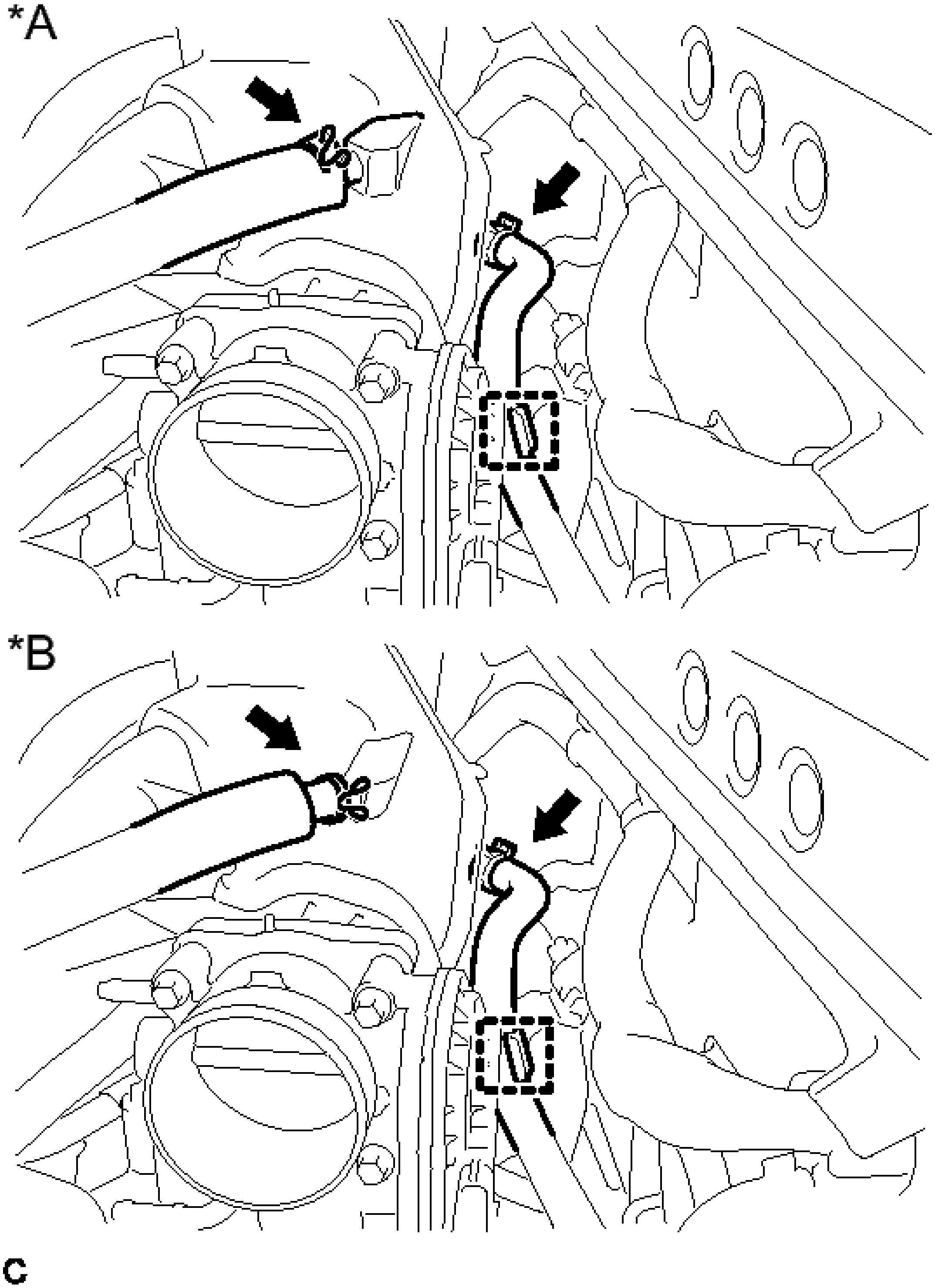

Fig. 3: Identifying Ventilation Hose
Courtesy of TOYOTA MOTOR SALES, U.S.A., INC.

TEXT IN ILLUSTRATION

	Type

*A	A
*B	Type B

b. Disconnect the hose clamp and union to check valve hose.

c. Disconnect the connector and wire harness clamp.

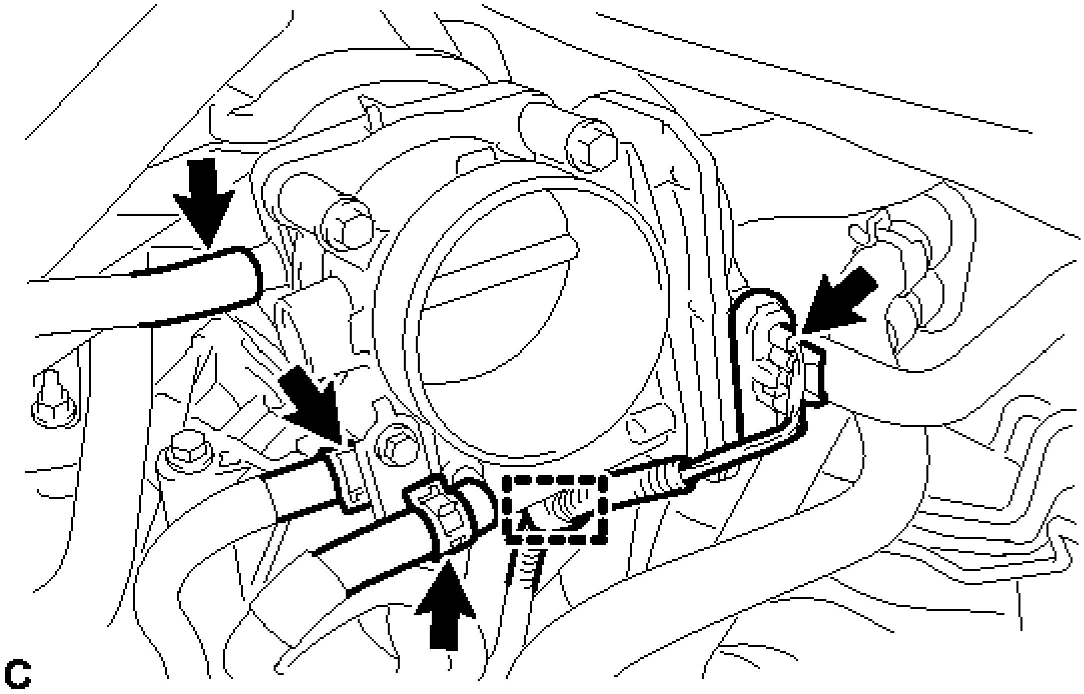

Fig. 4: Identifying Intake Air Surge Tank Connector And Wire Harness Clamp
Courtesy of TOYOTA MOTOR SALES, U.S.A., INC.

d. Disconnect the 2 water by-pass hoses and fuel vapor feed hose.

e. Disconnect the connector from the intake air control valve assembly.

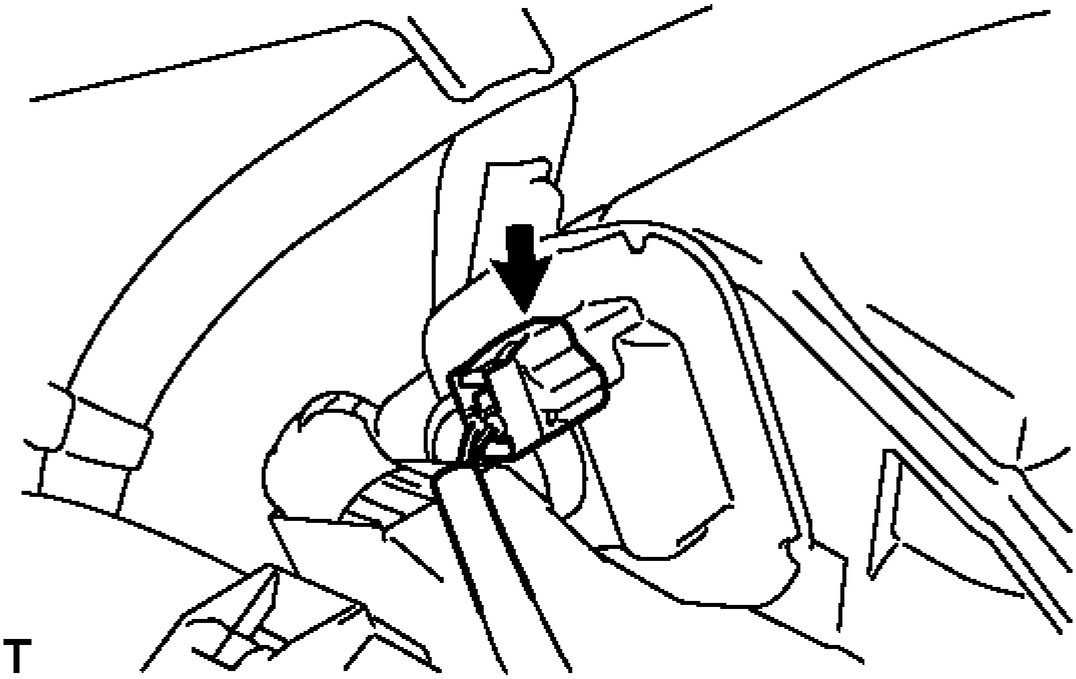

Fig. 5: Locating Connector
Courtesy of TOYOTA MOTOR SALES, U.S.A., INC.

f. Remove the bolt and vacuum hose clamp.

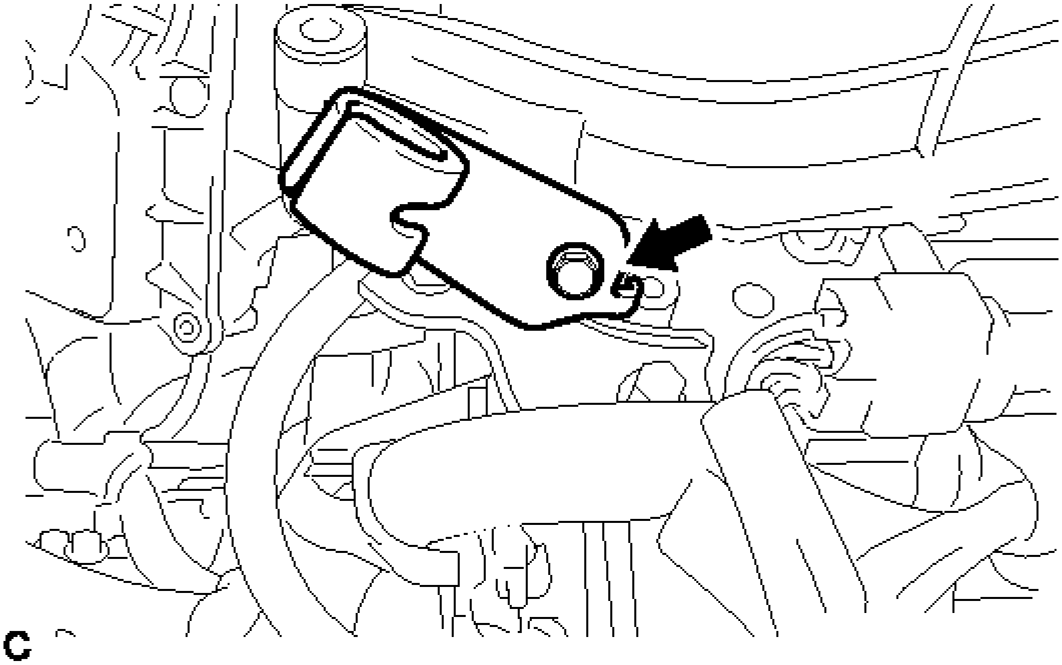

Fig. 6: Identifying Vacuum Hose Clamp Bolts
Courtesy of TOYOTA MOTOR SALES, U.S.A., INC.

g. Remove the bolt and separate the throttle body bracket from the intake air surge tank assembly.

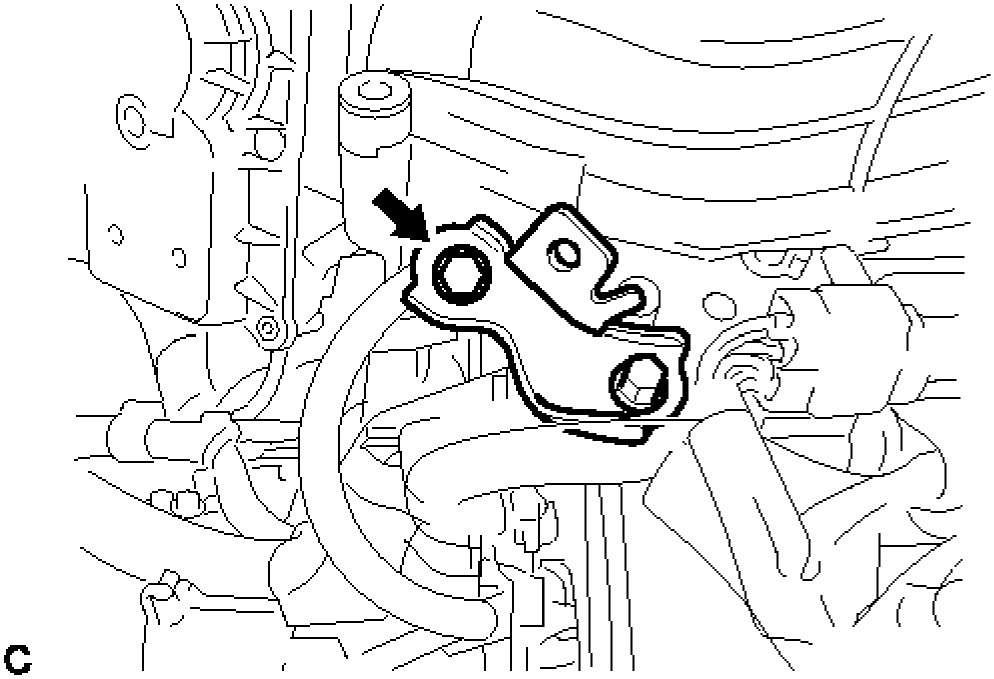

Fig. 7: Identifying Throttle Body Bracket Bolt
Courtesy of TOYOTA MOTOR SALES, U.S.A., INC.

h. Remove the bolt and separate the No. 1 surge tank stay from the intake air surge tank assembly.

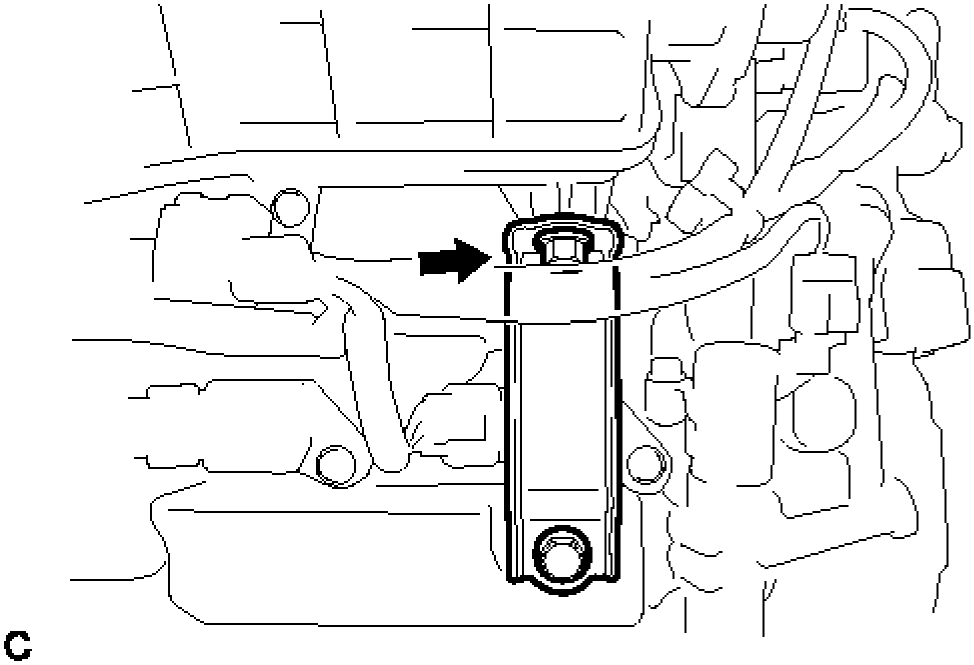

Fig. 8: Identifying No. 1 Surge Tank Stay Bolt
Courtesy of TOYOTA MOTOR SALES, U.S.A., INC.

i. Remove the 2 nuts from the intake air surge tank assembly.

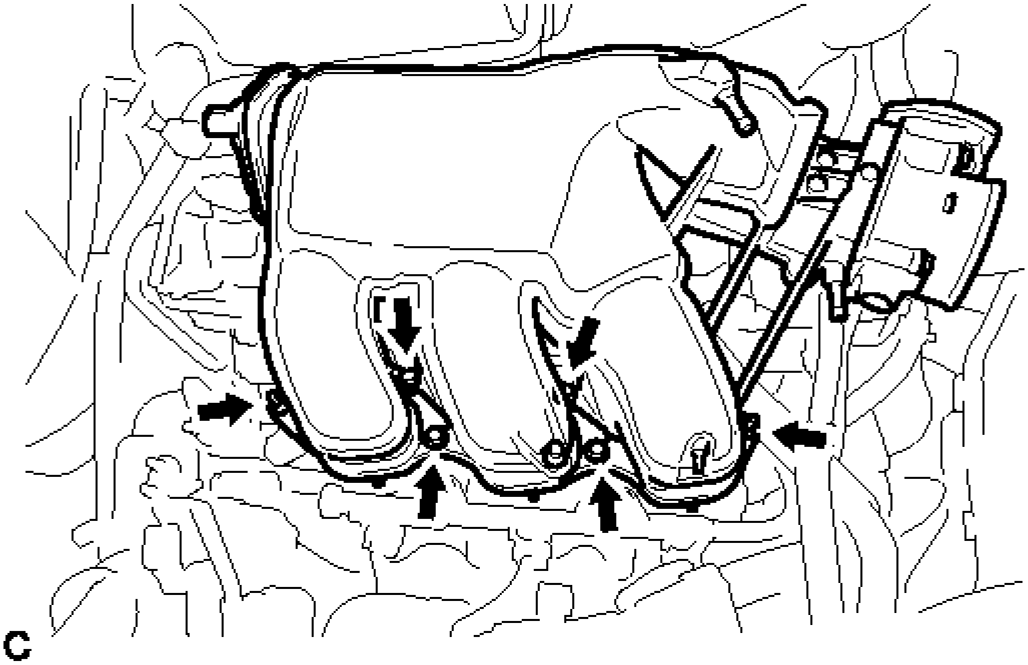

Fig. 9: Identifying Intake Air Surge Tank Assembly Nuts
Courtesy of TOYOTA MOTOR SALES, U.S.A., INC.

j. Using a 5 mm socket hexagon wrench, remove the 4 bolts.
k. Remove the intake air surge tank assembly and 3 gaskets.

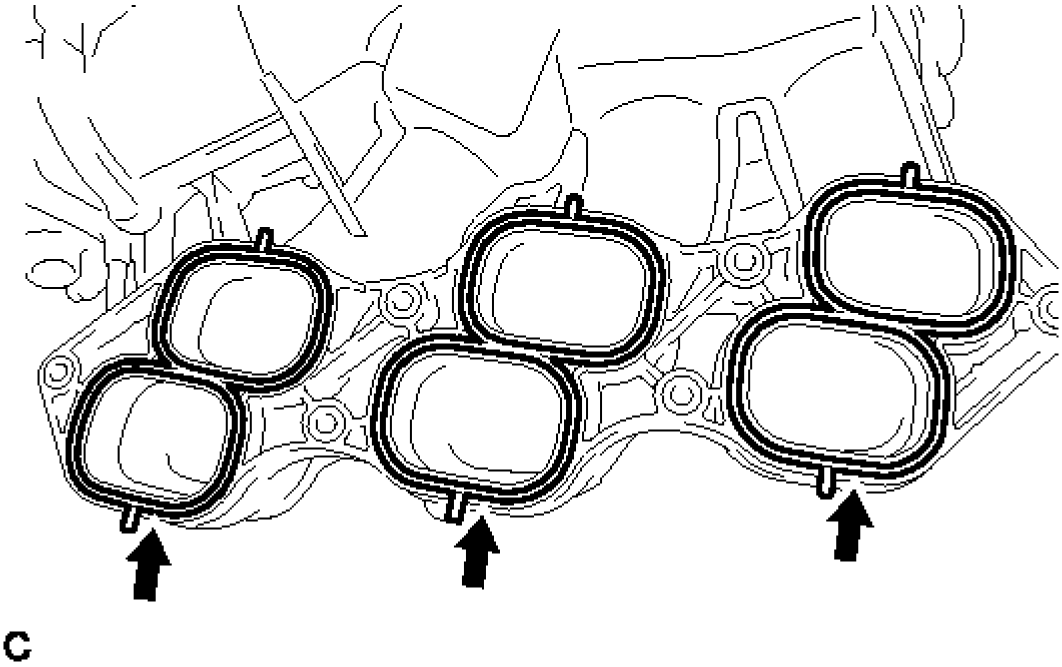

Fig. 10: Identifying Intake Air Surge Tank Assembly Gaskets
Courtesy of TOYOTA MOTOR SALES, U.S.A., INC.

10. **REMOVE NO. 2 ENGINE MOUNTING STAY RH (for Engine Mounting stay Side)** . Refer to **REMOVAL - Step 25**
11. **REMOVE NO. 2 ENGINE MOUNTING STAY RH (for Intake Manifold Side)** . Refer to **REMOVAL - Step 6**
12. **DISCONNECT FUEL TUBE SUB-ASSEMBLY** . Refer to **REMOVAL - Step 5**
13. **REMOVE FUEL DELIVERY PIPE SUB-ASSEMBLY** . Refer to **REMOVAL - Step 6**
14. **REMOVE INTAKE MANIFOLD**
    a. Remove the 6 bolts, 4 nuts and intake manifold.

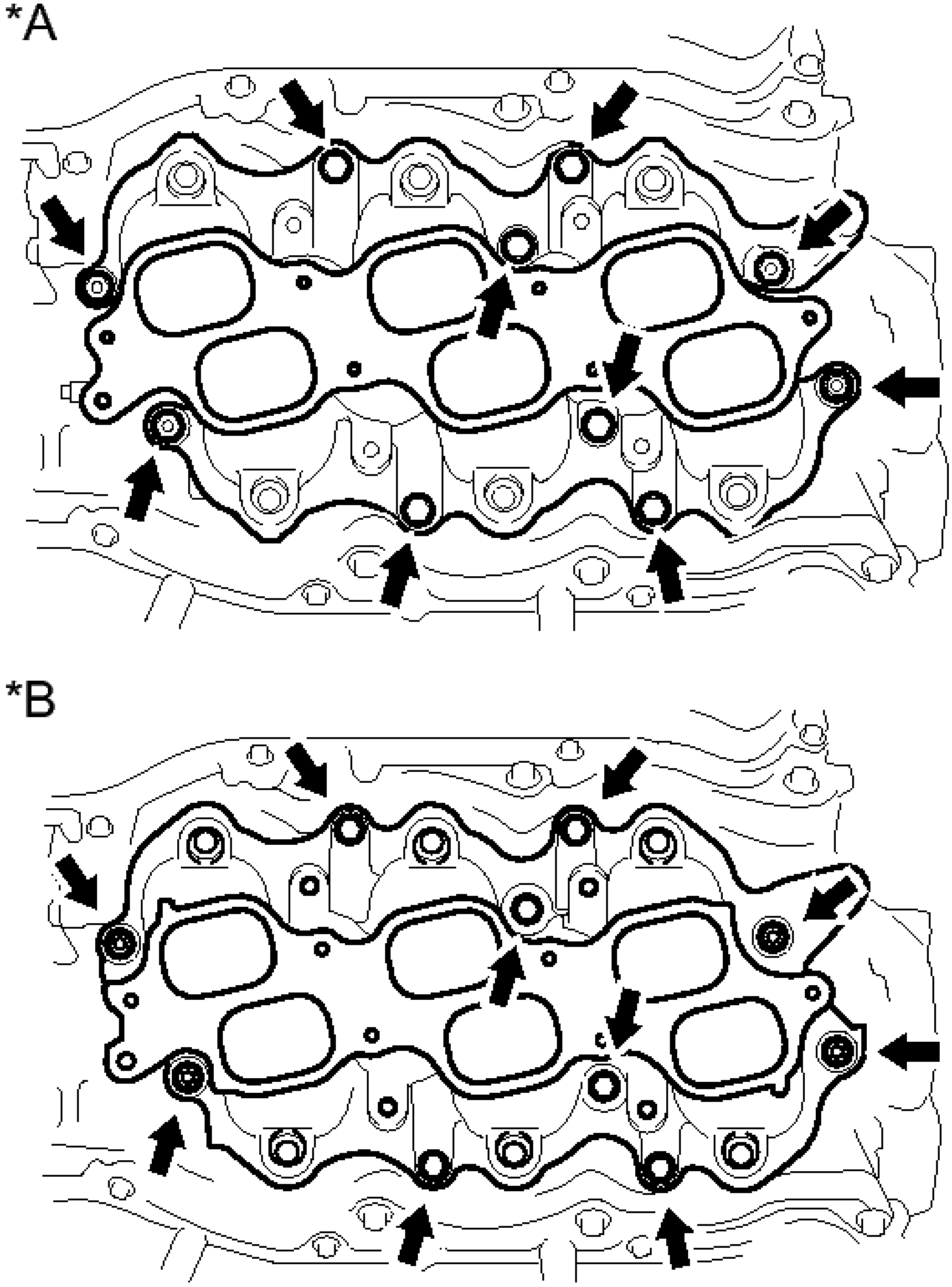

Fig. 11: Identifying Intake Manifold Bolts And Nuts
Courtesy of TOYOTA MOTOR SALES, U.S.A., INC.

TEXT IN ILLUSTRATION

	Type

*A	A
*B	Type B

b. Remove the 2 gaskets.

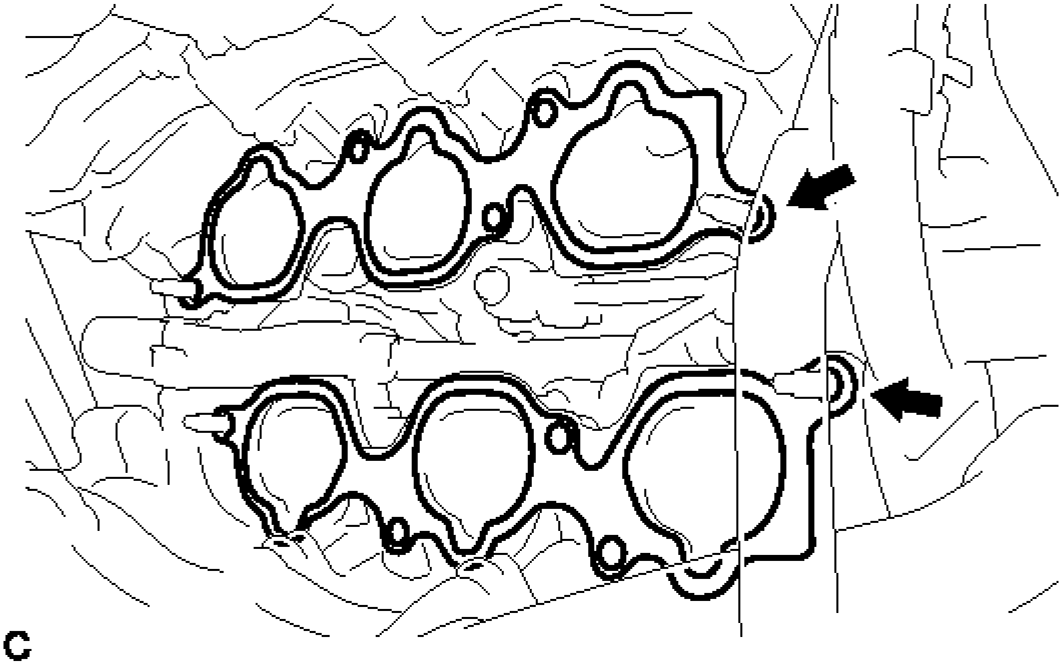

Fig. 12: Identifying Intake Manifold Gaskets
Courtesy of TOYOTA MOTOR SALES, U.S.A., INC.

INSTALLATION

INSTALLATION

1. **INSTALL INTAKE MANIFOLD**
    a. Set 2 new gaskets on each cylinder head sub-assembly.

    NOTE:

    - **Align the port holes of the gaskets and cylinder head sub-assembly.**
    - **Make sure that the gaskets are installed in the correct direction.**

    b. Set the intake manifold on the cylinder head sub-assembly.

    c. Install and tighten the 6 bolts and 4 nuts uniformly in several steps.

    Torque: 21 N*m (214 kgf*cm, 15 ft.*lbf)

2. **INSTALL FUEL DELIVERY PIPE SUB-ASSEMBLY** . Refer to **INSTALLATION - Step 2**

3. **CONNECT FUEL TUBE SUB-ASSEMBLY** . Refer to **INSTALLATION - Step 3**
4. **INSTALL NO. 2 ENGINE MOUNTING STAY RH (for Intake Manifold Side)** . Refer to **INSTALLATION - Step 16**
5. **INSTALL NO. 2 ENGINE MOUNTING STAY RH (for Engine Mounting Stay Side)** . Refer to **INSTALLATION - Step 52**
6. **INSTALL INTAKE AIR SURGE TANK ASSEMBLY**

NOTE: **DO NOT apply oil to the bolts as listed below**

Oil Application Prohibited Bolt
Intake Air Surge Tank Assembly and Intake Manifold
No. 1 Surge Tank Stay and Intake Air Surge Tank Assembly
Throttle Body Bracket and Intake Air Surge Tank Assembly

a. Install 3 new gaskets to the intake air surge tank assembly.
b. Temporarily install the intake air surge tank assembly with the 4 bolts and 2 nuts.
c. Using a 5 mm hexagon socket wrench, in several steps, uniformly tighten the 4 bolts and 2 nuts in the order shown in the illustration.

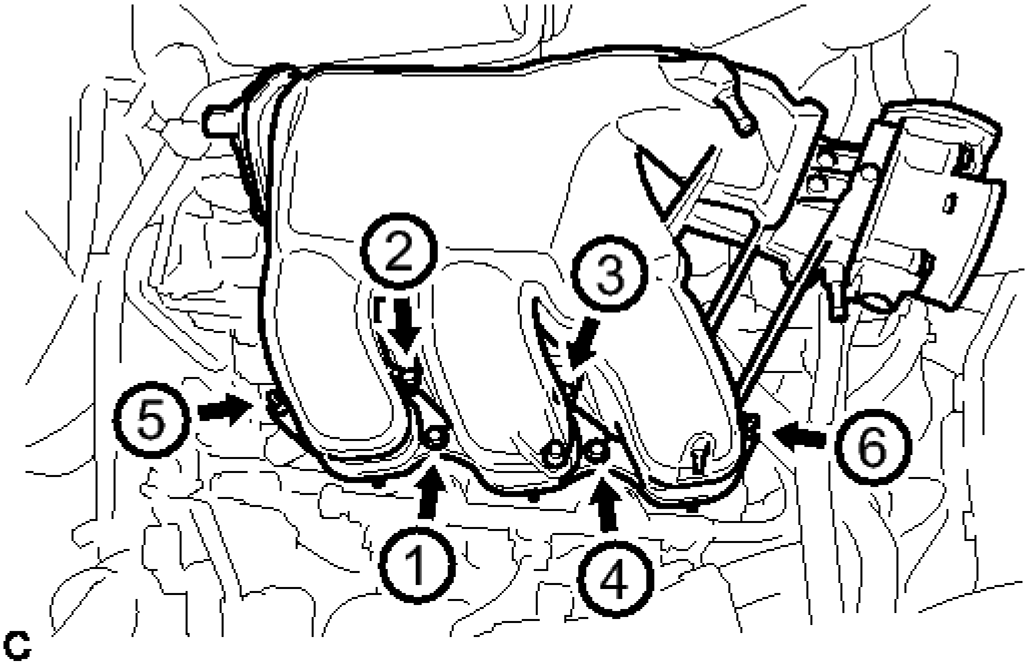

Fig. 13: Tightening Intake Surge Tank Bolts And Nuts In Sequence
Courtesy of TOYOTA MOTOR SALES, U.S.A., INC.

Bolt

Torque: 18 N*m (184 kgf*cm, 13 ft.*lbf)

Nut

Torque: 16 N*m (163 kgf*cm, 12 ft.*lbf)

d. Install the throttle body bracket and No. 1 surge tank stay with the 2 bolts.

   Torque: 21 N*m (214 kgf*cm, 15 ft.*lbf)

e. Install the vacuum hose clamp with the bolt.

   Torque: 5.4 N*m (55 kgf*cm, 48 in.*lbf)

f. Connect the connector to the intake air control valve assembly.
g. Connect the 2 water by-pass hoses and fuel vapor feed hose.
h. Connect the connector and wire harness clamp to the throttle body assembly.
i. Connect the hose clamp and union to check valve hose.
j. Connect the ventilation hose.

7. **INSTALL AIR CLEANER CAP SUB-ASSEMBLY** . Refer to **INSTALLATION - Step 2**
8. **INSTALL FRONT OUTER COWL TOP PANEL SUB-ASSEMBLY** . Refer to **INSTALLATION -**

Step 14

9. **INSTALL WINDSHIELD WIPER MOTOR AND LINK ASSEMBLY**

   Refer to **INSTALLATION**

10. **CONNECT CABLE TO NEGATIVE BATTERY TERMINAL**

    NOTE: When disconnecting the cable, some systems need to be initialized after the cable is reconnected. Refer to INITIALIZATION .

11. **ADD ENGINE COOLANT** . Refer to **REPLACEMENT - Step 2**
12. **INSPECT FOR COOLANT LEAK** . Refer to **ON-VEHICLE INSPECTION - Step 1**
13. **INSPECT FOR FUEL LEAK** . Refer to **ON-VEHICLE INSPECTION - Step 1**
14. **INSTALL V-BANK COVER SUB-ASSEMBLY** . Refer to **INSTALLATION - Step 82**

INTAKE AIR CONTROL VALVE (FOR ACIS)

ON-VEHICLE INSPECTION

ON-VEHICLE INSPECTION

1. **INSPECT INTAKE AIR CONTROL VALVE (for ACIS)**
   a. Perform the following inspection procedure when using the Techstream:
      1. Stop the engine.
      2. Remove the V-bank cover assembly. Refer to **REMOVAL - Step 17** .
      3. Connect the Techstream to the DLC3.
      4. Start the engine and turn the Techstream on.
      5. Enter the following menus: Powertrain / Engine and ECT / Active Test / Active the VSV for Intake Control.
      6. Make sure that a clicking sound is heard from the intake air control valve when current flows.

         If the intake air control valve does not operate, check the ACIS control circuit. Refer to **ACIS Control Circuit** .

      7. Install the V-bank cover assembly. Refer to **INSTALLATION - Step 82** .
   b. Perform the following inspection procedure when applying voltage between the terminals:
      1. Remove the V-bank cover assembly. Refer to **REMOVAL - Step 17** .
      2. Disconnect the connector from the intake air control valve.

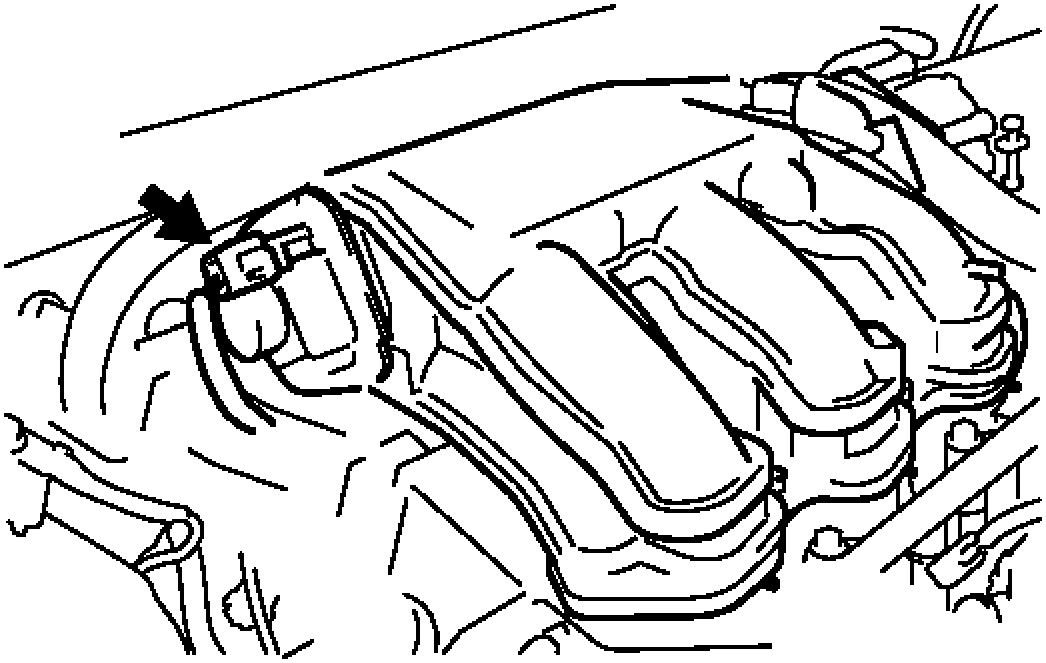

Fig. 14: Locating Intake Air Control Valve
Courtesy of TOYOTA MOTOR SALES, U.S.A., INC.

3. Apply battery voltage between terminals 2 (+) and 1 (-) of the intake air control valve. Check that a clicking sound is heard from the intake air control valve.

   If the operation is not as specified, replace the intake air surge tank assembly.

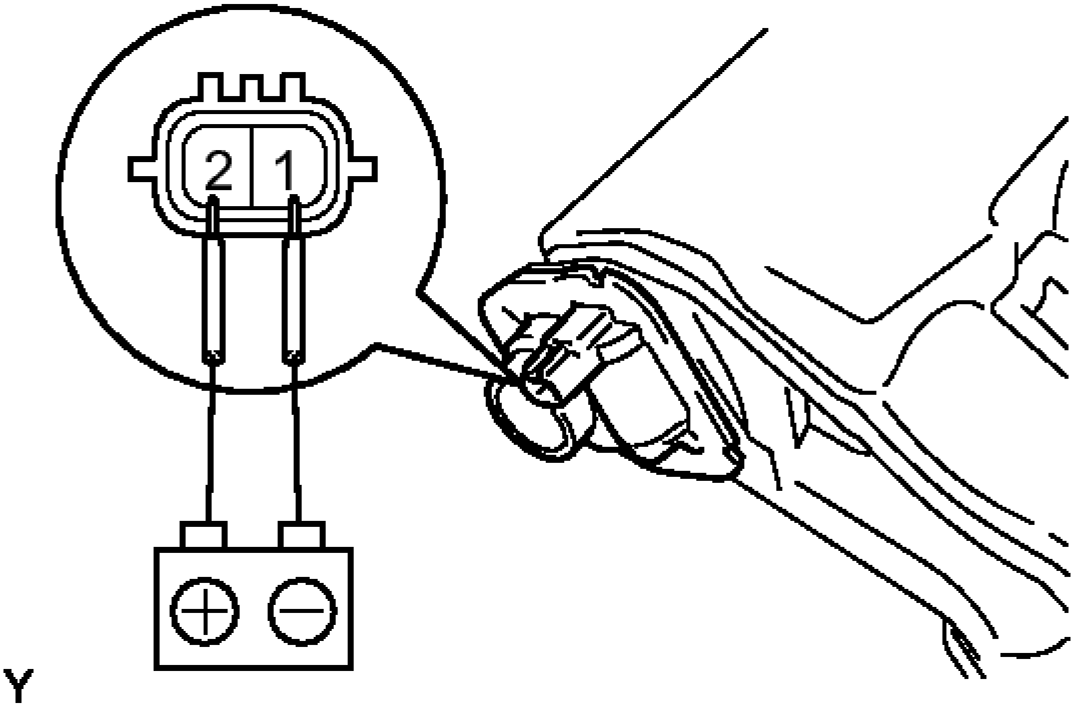

Fig. 15: Applying Battery Voltage Between Terminals
Courtesy of TOYOTA MOTOR SALES, U.S.A., INC.

4. Install the V-bank cover assembly. Refer to **INSTALLATION - Step 82** .

VACUUM TANK

ON-VEHICLE INSPECTION

ON-VEHICLE INSPECTION

1. **INSPECT VACUUM TANK**
   a. Using a vacuum pump, apply 80 kPa (600 mmHg, 23.6 in.Hg) or higher of vacuum to the vacuum tank. Wait for 1 minute and check that the needle of the vacuum pump does not lower.

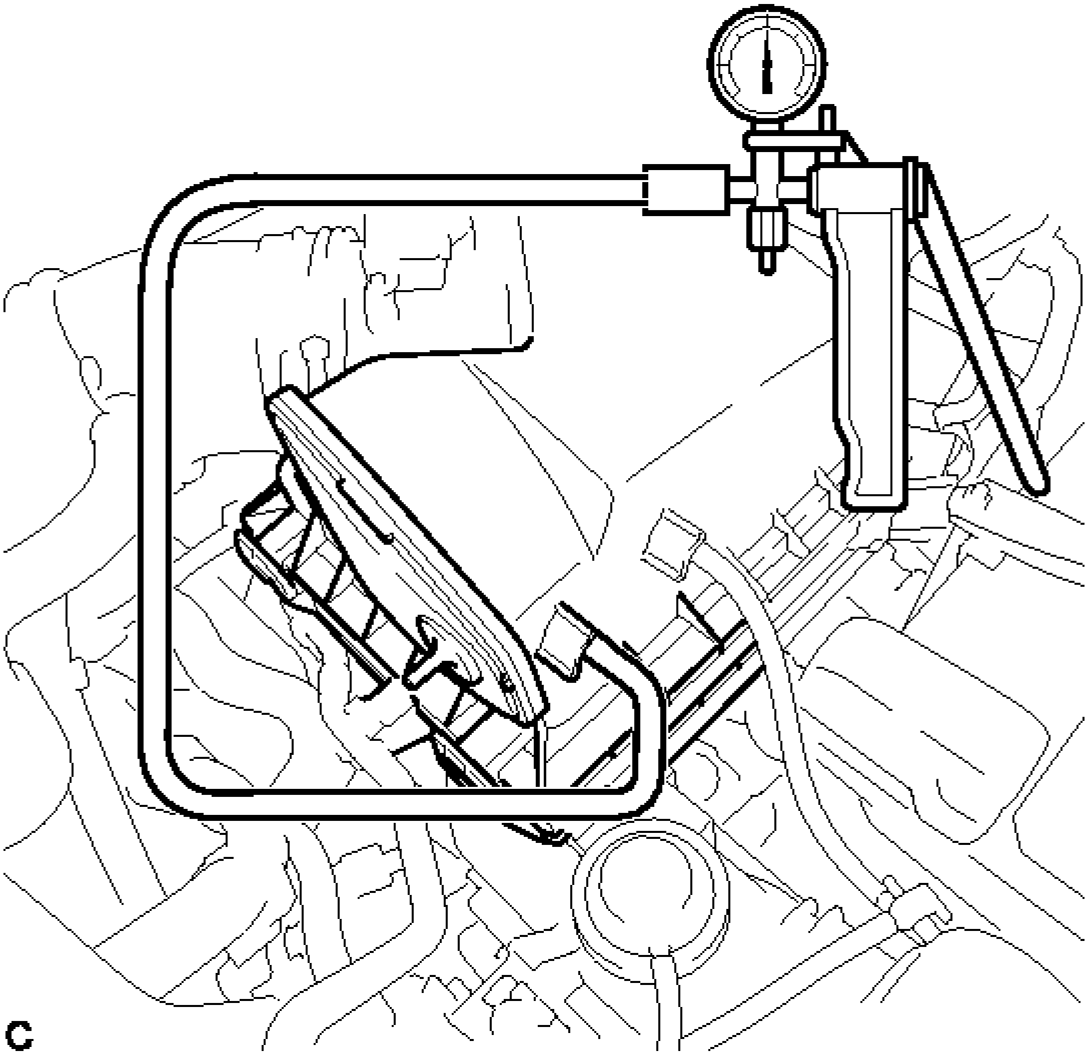

Fig. 16: Inspecting Vacuum Tank Using Vacuum Pump

Courtesy of TOYOTA MOTOR SALES, U.S.A., INC.

If the result is not as specified, replace the air cleaner cap sub-assembly.

EXHAUST MANIFOLD

COMPONENTS

ILLUSTRATION

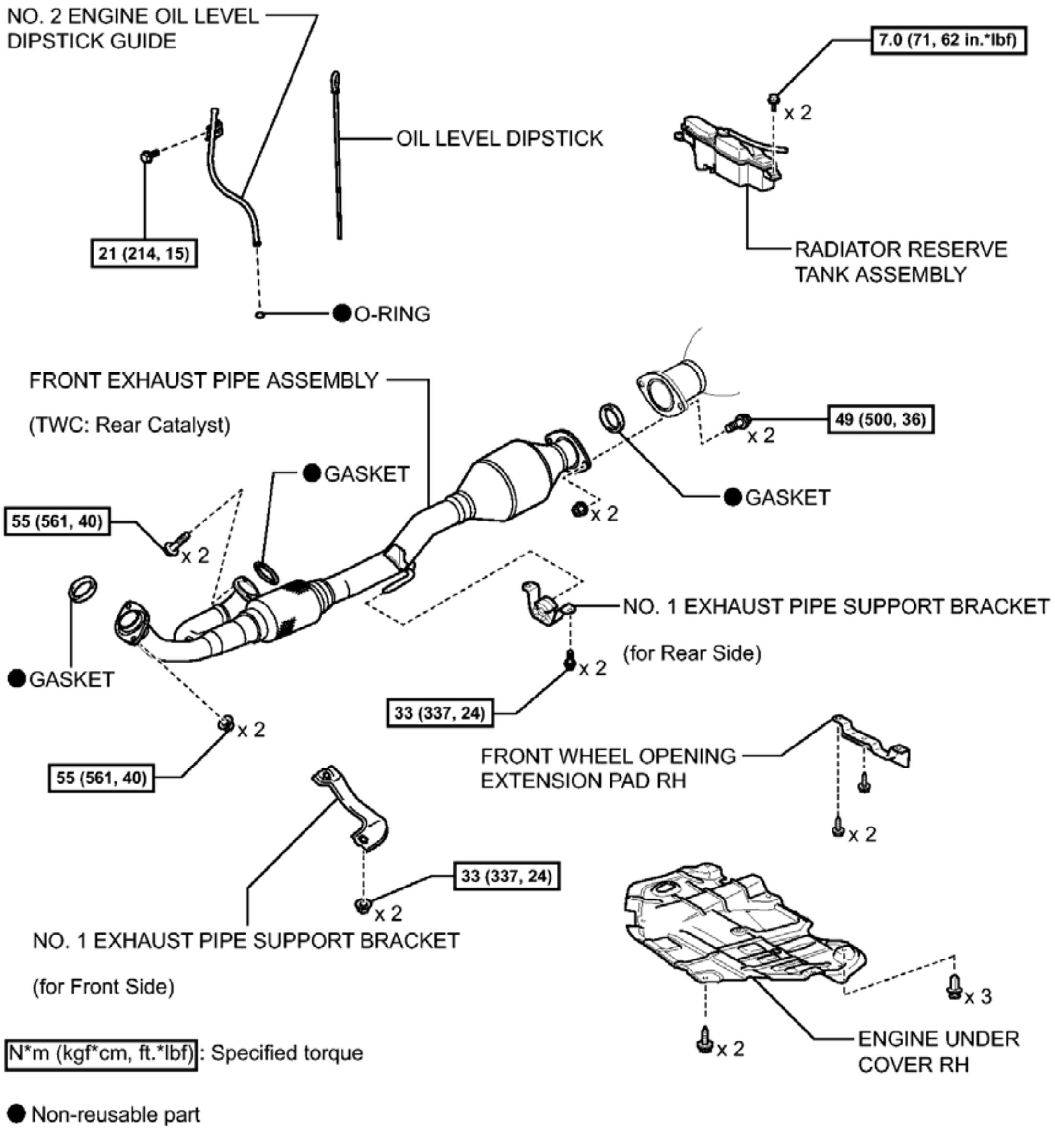
NO. 2 ENGINE OIL LEVEL DIPSTICK GUIDE
21 (214, 15)
OIL LEVEL DIPSTICK
● O-RING
7.0 (71, 62 in.*lbf)
x 2
RADIATOR RESERVE TANK ASSEMBLY
FRONT EXHAUST PIPE ASSEMBLY
(TWC: Rear Catalyst)
● GASKET
55 (561, 40)
x 2
49 (500, 36)
x 2
● GASKET
x 2
● GASKET
NO. 1 EXHAUST PIPE SUPPORT BRACKET
(for Rear Side)
x 2
33 (337, 24)
x 2
55 (561, 40)
FRONT WHEEL OPENING EXTENSION PAD RH
x 2
33 (337, 24)
x 2
NO. 1 EXHAUST PIPE SUPPORT BRACKET
(for Front Side)
x 3
x 2
ENGINE UNDER COVER RH
N*m (kgf*cm, ft.*lbf) : Specified torque
● Non-reusable part

Fig. 17: Identifying Exhaust Manifold Replacement Components With Torque Specifications (1 Of 2)
Courtesy of TOYOTA MOTOR SALES, U.S.A., INC.

ILLUSTRATION

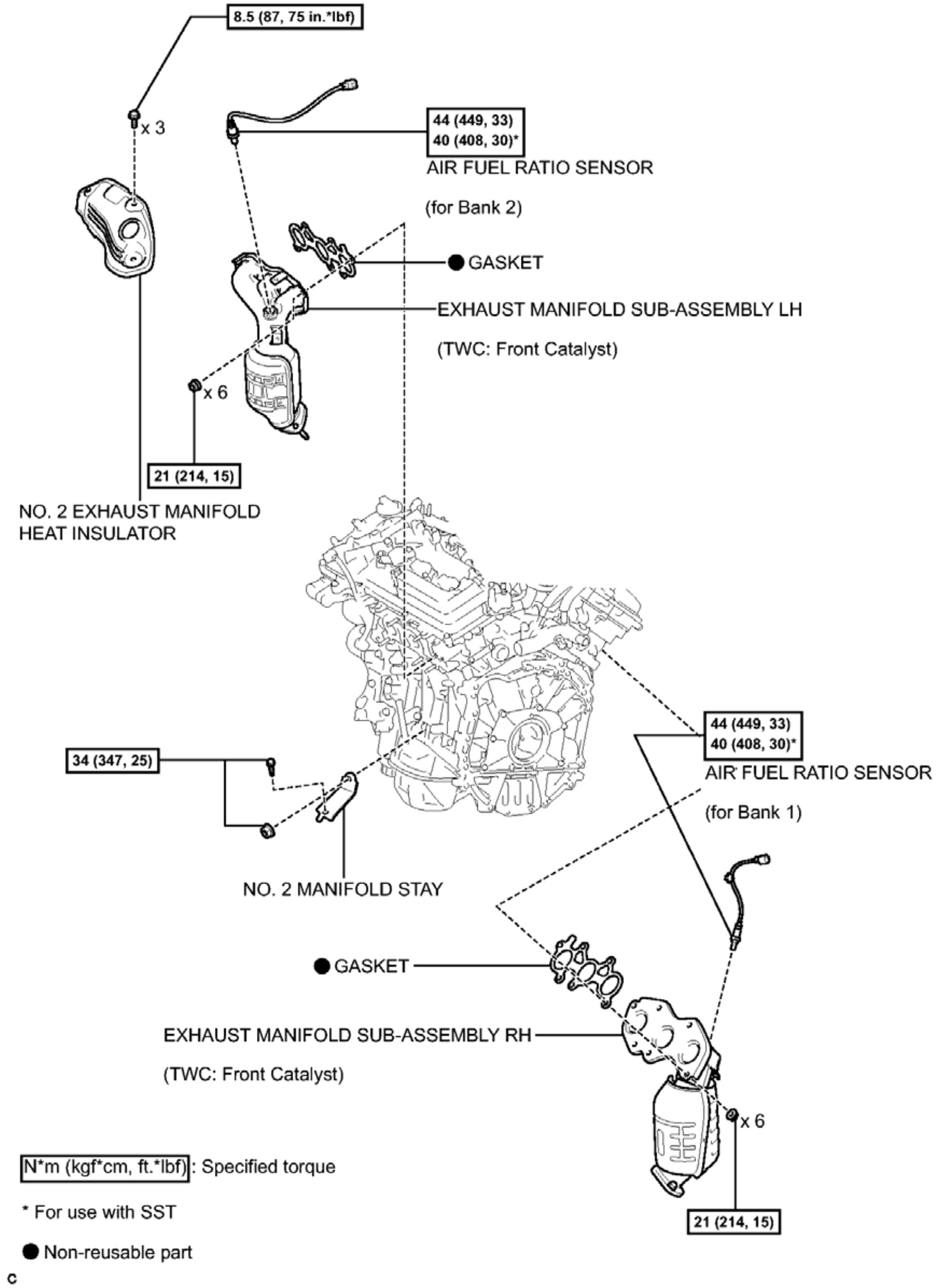
8.5 (87, 75 in.*lbf)
x 3
44 (449, 33)
40 (408, 30)*
AIR FUEL RATIO SENSOR
(for Bank 2)
● GASKET
EXHAUST MANIFOLD SUB-ASSEMBLY LH
(TWC: Front Catalyst)
x 6
21 (214, 15)
NO. 2 EXHAUST MANIFOLD
HEAT INSULATOR
44 (449, 33)
40 (408, 30)*
AIR FUEL RATIO SENSOR
(for Bank 1)
34 (347, 25)
NO. 2 MANIFOLD STAY
● GASKET
EXHAUST MANIFOLD SUB-ASSEMBLY RH
(TWC: Front Catalyst)
x 6
21 (214, 15)
N*m (kgf*cm, ft.*lbf) : Specified torque
* For use with SST
● Non-reusable part
c

Fig. 18: Identifying Exhaust Manifold Replacement Components With Torque Specifications (2 Of 2)
Courtesy of TOYOTA MOTOR SALES, U.S.A., INC.

REMOVAL

REMOVAL

1. **REMOVE FRONT WHEEL OPENING EXTENSION PAD RH**
2. **REMOVE ENGINE UNDER COVER RH**
3. **REMOVE RADIATOR RESERVE TANK ASSEMBLY** . Refer to **REMOVAL - Step 13**
4. **REMOVE NO. 1 EXHAUST PIPE SUPPORT BRACKET (for Front Side)** See step 7
5. **REMOVE FRONT EXHAUST PIPE ASSEMBLY**
    a. Disconnect the 2 wire harnesses from the clamp.

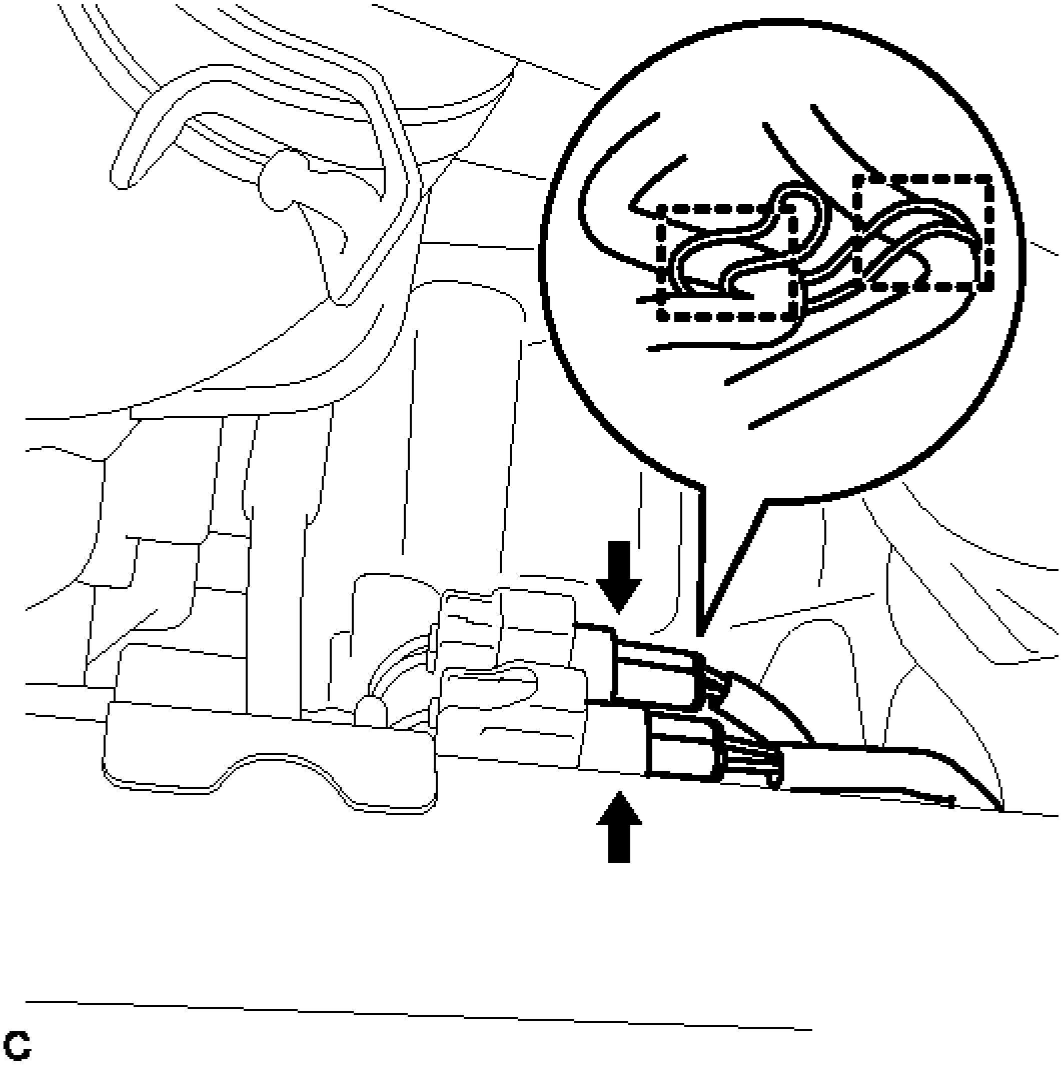

Fig. 19: Identifying Wire Harnesses Clamp And Oxygen Sensor Connectors
Courtesy of TOYOTA MOTOR SALES, U.S.A., INC.

    b. Disconnect the 2 heated oxygen sensor connectors.

c. Remove the 2 bolts and No. 1 exhaust pipe support bracket (for Rear Side).

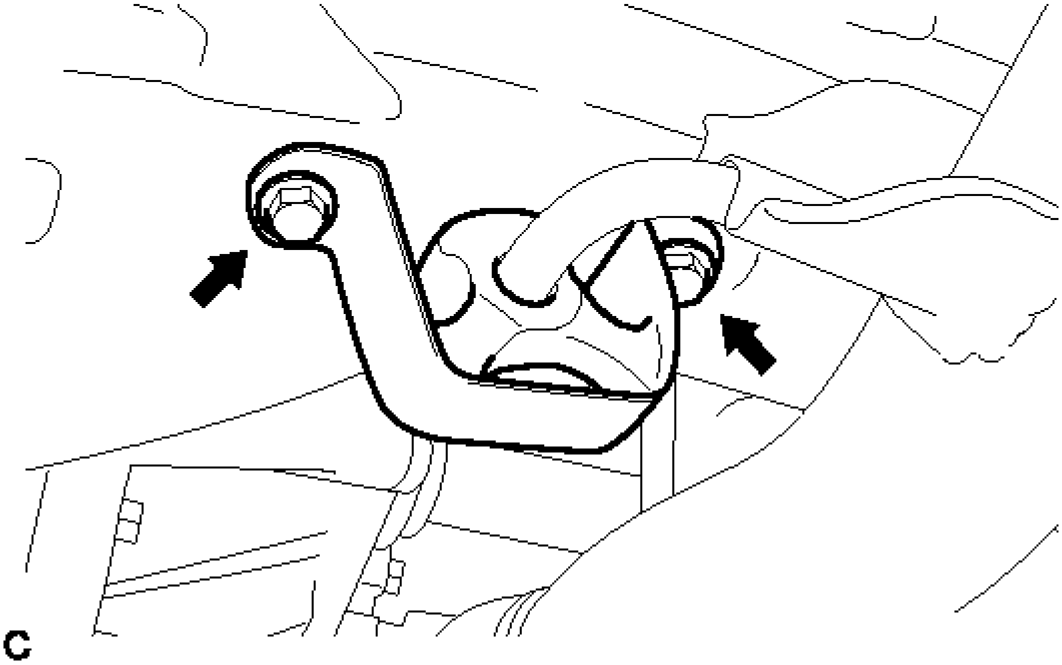

Fig. 20: Identifying No. 1 Exhaust Pipe Support Bracket Bolts (For Rear Side)
Courtesy of TOYOTA MOTOR SALES, U.S.A., INC.

d. Remove the 4 bolts, 4 nuts and front exhaust pipe assembly.

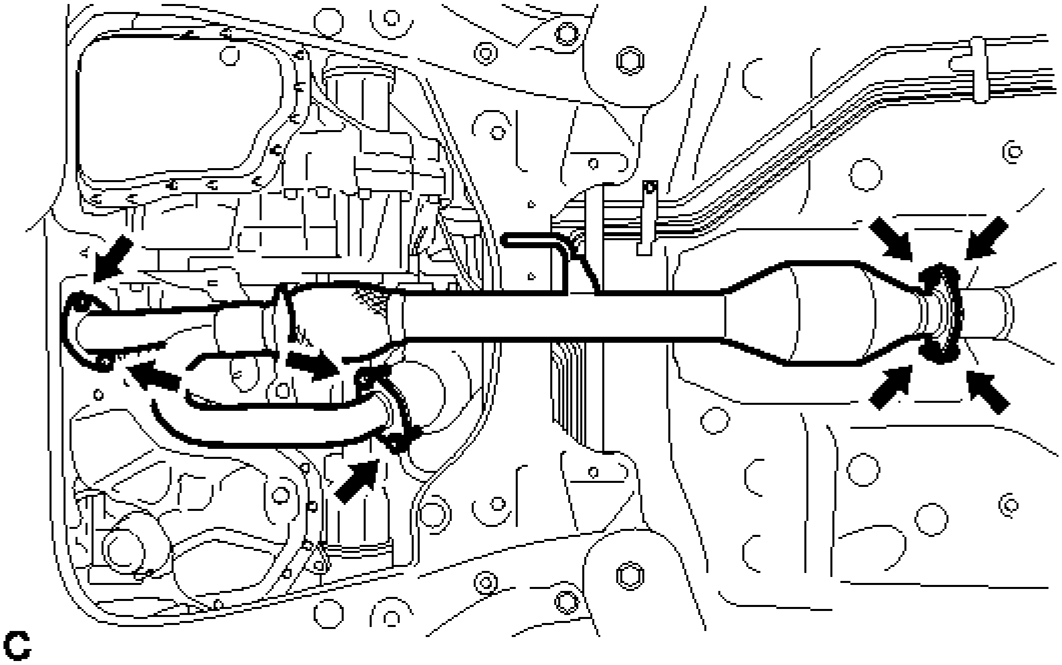

Fig. 21: Identifying Front Exhasut Pipe Bolts, Nuts And Gaskets
Courtesy of TOYOTA MOTOR SALES, U.S.A., INC.

   e. Remove the 3 gaskets from the front exhaust pipe assembly.

6. **REMOVE AIR FUEL RATIO SENSOR (for Bank 1)** . Refer to **REMOVAL - Step 5**
7. **REMOVE EXHAUST MANIFOLD SUB-ASSEMBLY RH**
   a. Using a 12 mm deep socket wrench, remove the 6 nuts and exhaust manifold sub-assembly RH.

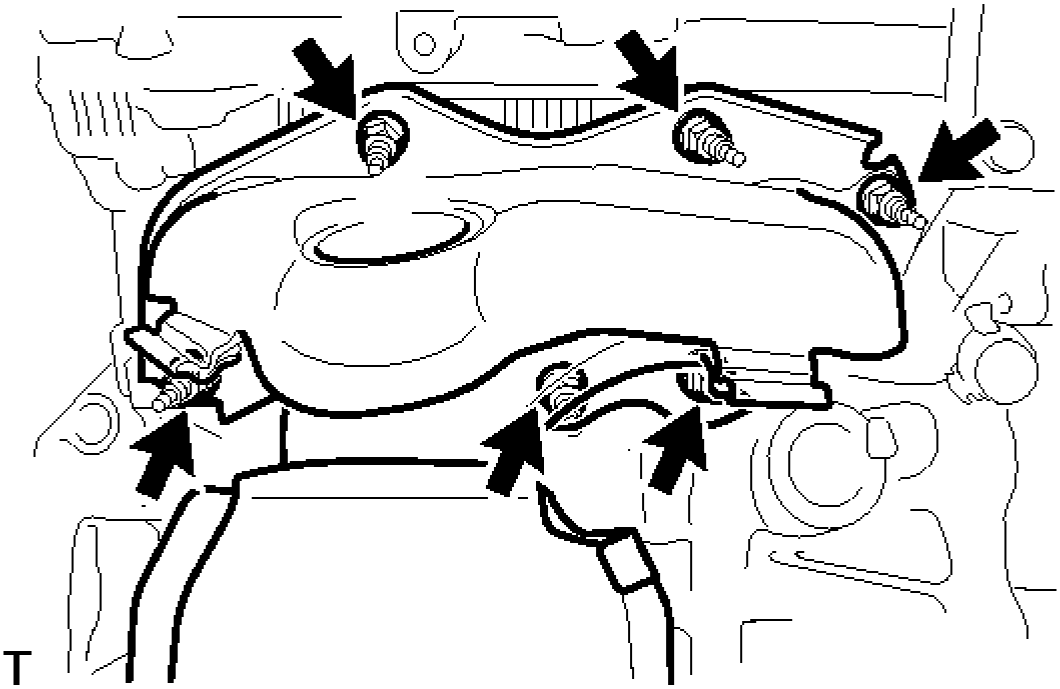

Fig. 22: Identifying Exhaust Manifold Sub-Assembly Nuts RH
Courtesy of TOYOTA MOTOR SALES, U.S.A., INC.

   b. Remove the gasket from the cylinder head sub-assembly.

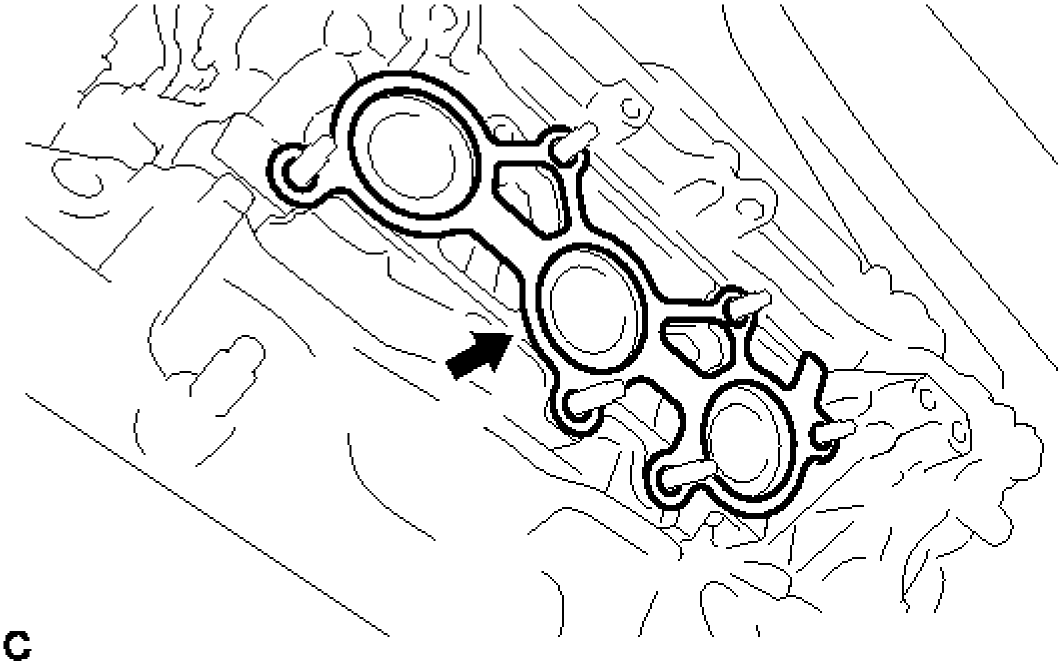

Fig. 23: Identifying Cylinder Head Sub-Assembly Gasket RH
Courtesy of TOYOTA MOTOR SALES, U.S.A., INC.

8. **REMOVE AIR FUEL RATIO SENSOR (for Bank 2)** . Refer to **REMOVAL - Step 3**
9. **REMOVE NO. 2 ENGINE OIL LEVEL DIPSTICK GUIDE** . Refer to **REMOVAL - Step 9**
10. **REMOVE NO. 2 EXHAUST MANIFOLD HEAT INSULATOR**
    a. Remove the 3 bolts and No. 2 exhaust manifold heat insulator.

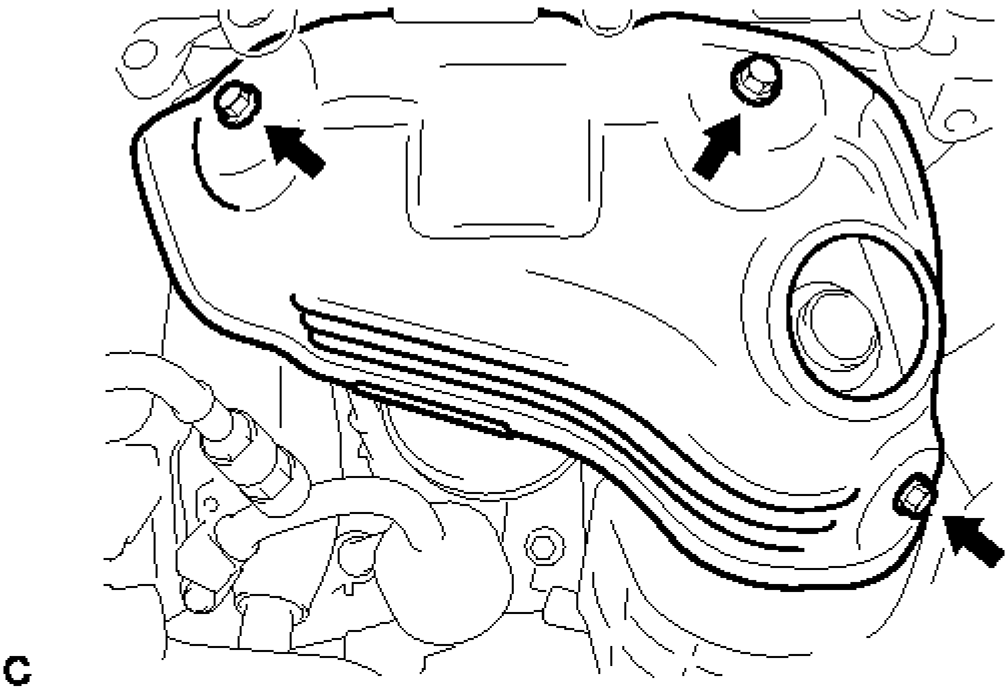

Fig. 24: Locating No. 2 Exhaust Manifold Heat Insulator And Bolt
Courtesy of TOYOTA MOTOR SALES, U.S.A., INC.

11. **REMOVE NO. 2 MANIFOLD STAY**
    a. Remove the bolt, nut and No. 2 manifold stay.

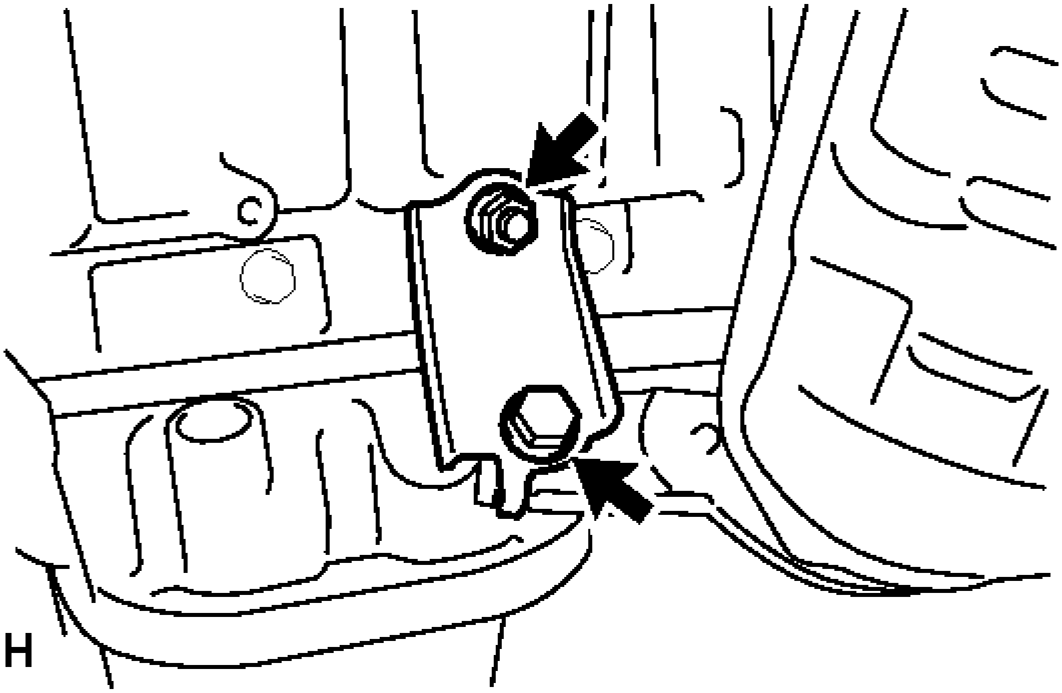

Fig. 25: Locating No. 2 Manifold Stay With Bolt And Nut

Courtesy of TOYOTA MOTOR SALES, U.S.A., INC.

12. REMOVE EXHAUST MANIFOLD SUB-ASSEMBLY LH

a. Using a 12 mm deep socket wrench, remove the 6 nuts and exhaust manifold sub-assembly LH.

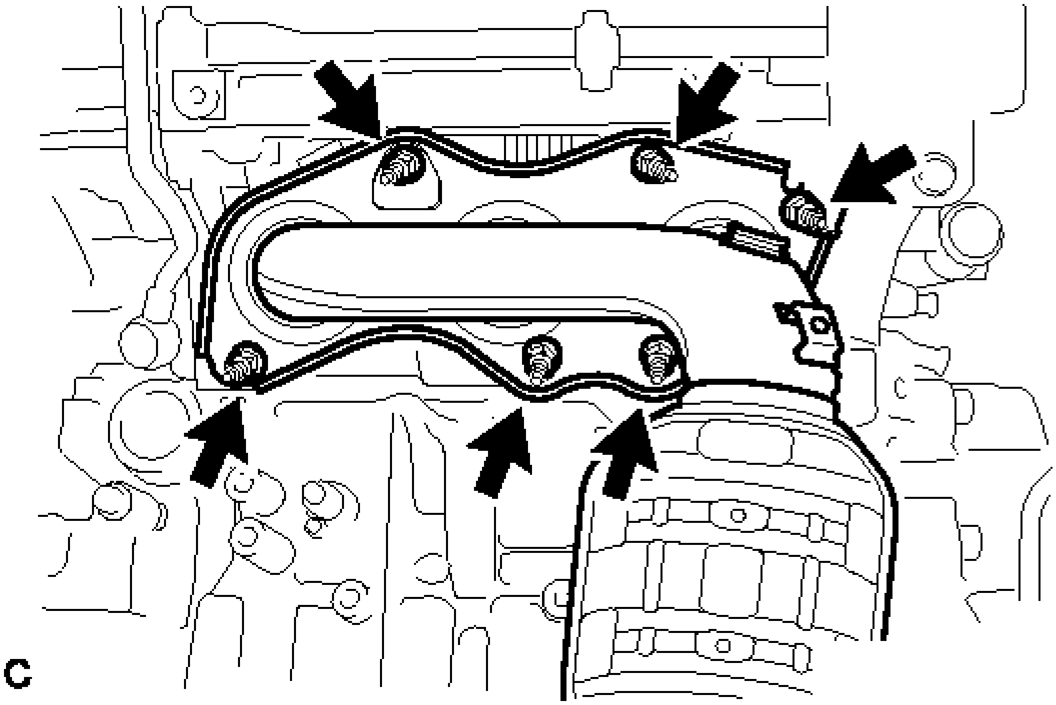

Fig. 26: Locating Exhaust Manifold Sub-Assembly Nut LH
Courtesy of TOYOTA MOTOR SALES, U.S.A., INC.

b. Remove the gasket from the cylinder head sub-assembly.

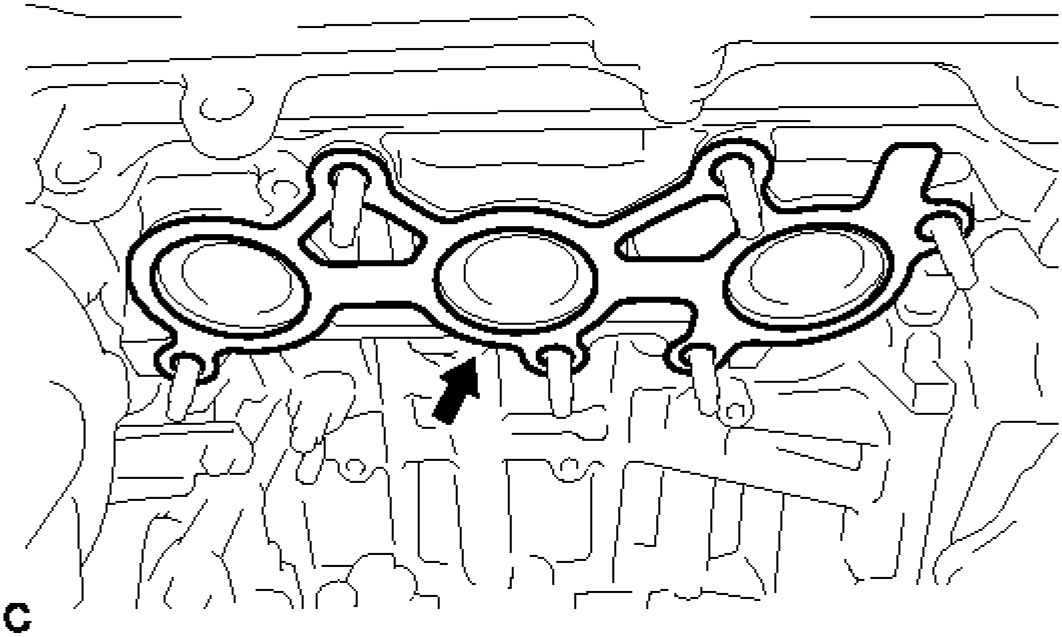

Fig. 27: Identifying Cylinder head Sub-Assembly Gasket LH
Courtesy of TOYOTA MOTOR SALES, U.S.A., INC.

INSTALLATION

INSTALLATION

1. **INSTALL EXHAUST MANIFOLD SUB-ASSEMBLY LH**
    a. Set a new gasket to the cylinder head sub-assembly.
    b. Temporarily install the exhaust manifold sub-assembly LH with the 6 nuts.
    c. Temporarily install the No. 2 manifold stay with the bolt and nut.
    d. Using a 12 mm deep socket wrench, in several steps, uniformly tighten the 6 nuts in the order shown in the illustration.

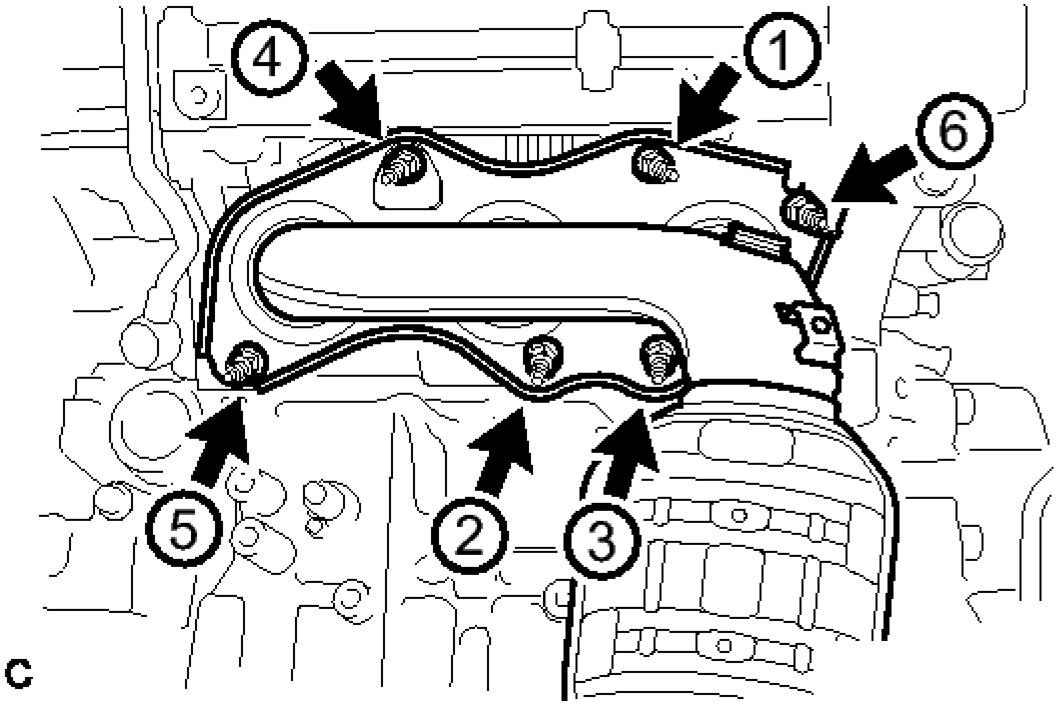

Fig. 28: Tightening Exhaust Manifold Sub-Assembly Nuts In Sequence
Courtesy of TOYOTA MOTOR SALES, U.S.A., INC.

Torque: 21 N*m (214 kgf*cm, 15 ft.*lbf)

2. **INSTALL NO. 2 MANIFOLD STAY**
    a. Tighten the bolt and nut in the order shown in the illustration.

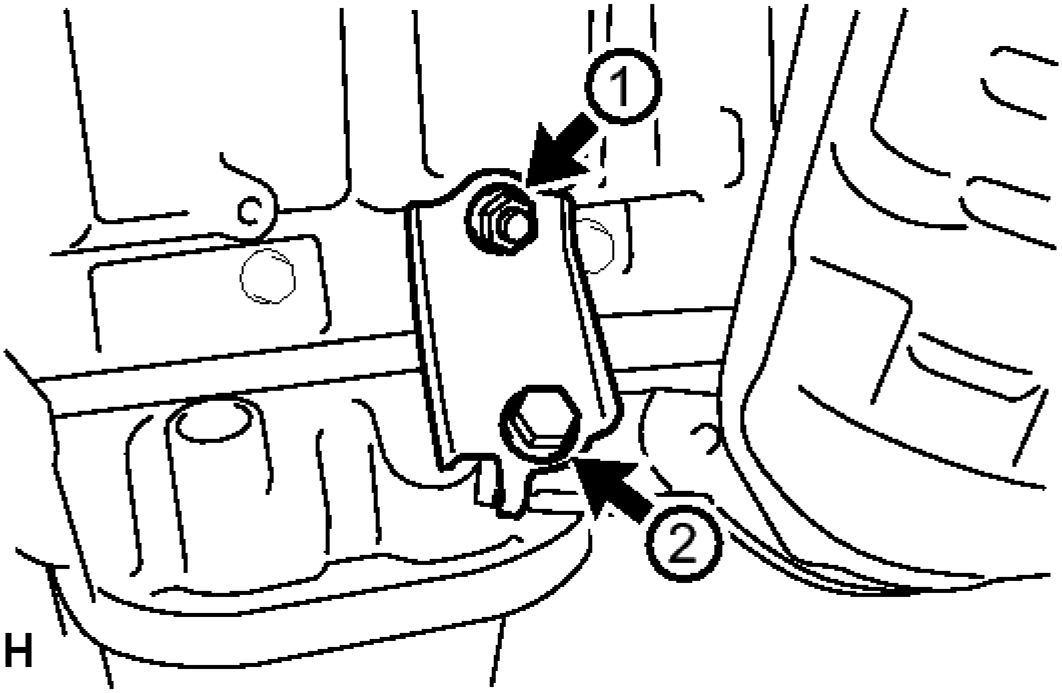

Fig. 29: Tightening No. 2 Manifold Stay Bolt And Nut In Sequence
Courtesy of TOYOTA MOTOR SALES, U.S.A., INC.

Torque: 34 N*m (347 kgf*cm, 25 ft.*lbf)

3. **INSTALL NO. 2 EXHAUST MANIFOLD HEAT INSULATOR**
    a. Install the No. 2 exhaust manifold heat insulator with the 3 bolts.

    Torque: 8.5 N*m (87 kgf*cm, 75 in.*lbf)

4. **INSTALL NO. 2 ENGINE OIL LEVEL DIPSTICK GUIDE** . Refer to **INSTALLATION - Step 13**
5. **INSTALL AIR FUEL RATIO SENSOR (for Bank 2)** . Refer to **INSTALLATION - Step 3**
6. **INSTALL EXHAUST MANIFOLD SUB-ASSEMBLY RH**
    a. Set a new gasket to the cylinder head sub-assembly.
    b. Using a 12 mm deep socket wrench, install the exhaust manifold sub-assembly RH by tightening the 6 nuts in the order shown in the illustration.

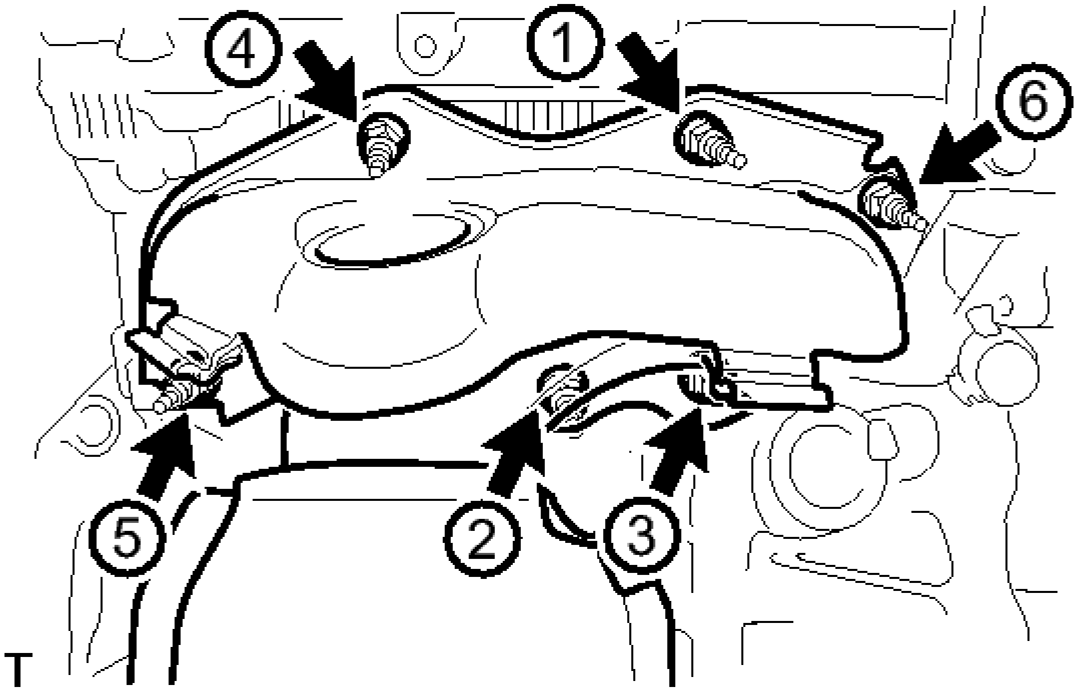

Fig. 30: Tightening Exhaust Manifold Sub-Assembly In Sequence
Courtesy of TOYOTA MOTOR SALES, U.S.A., INC.

Torque: 21 N*m (214 kgf*cm, 15 ft.*lbf)

7. **INSTALL AIR FUEL RATIO SENSOR (for Bank 1)** . Refer to **INSTALLATION - Step 1**
8. **INSTALL FRONT EXHAUST PIPE ASSEMBLY**
   a. Install 3 new gaskets to the front exhaust pipe assembly.
   b. Install the front exhaust pipe assembly with the 4 bolts and 4 nuts.

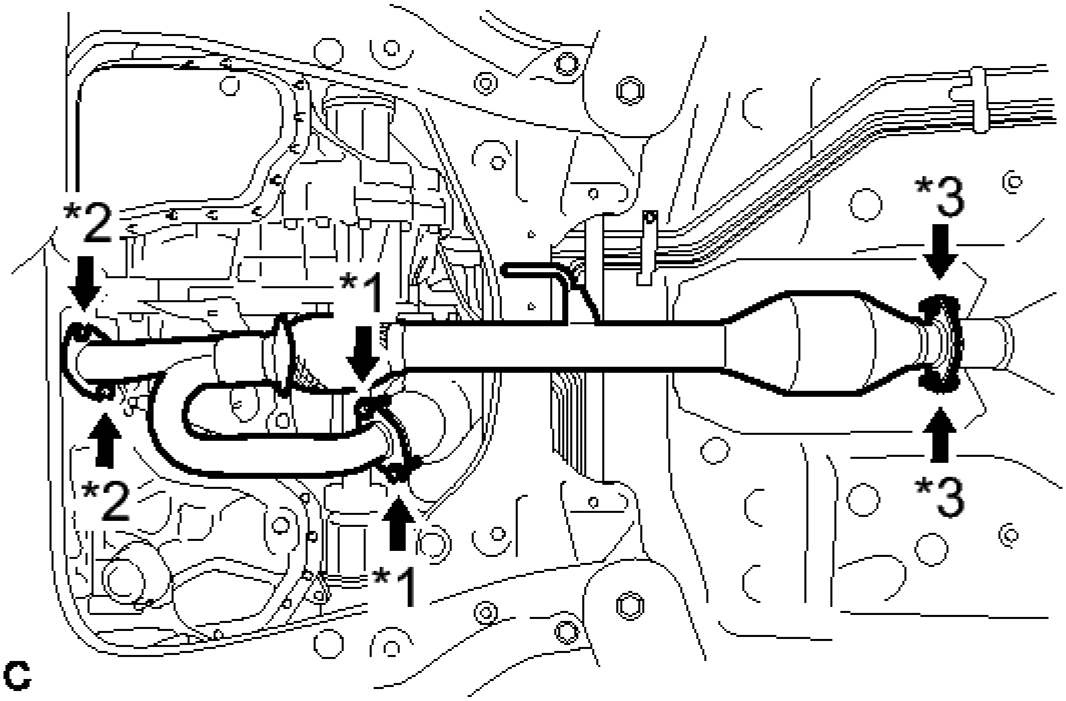

Fig. 31: Identifying Exhaust Pipe Assembly Bolts And Nuts
Courtesy of TOYOTA MOTOR SALES, U.S.A., INC.

TEXT IN ILLUSTRATION

*1	Bolt
*2	Nut
*3	Bolt and Nut

Bolt

Torque: 55 N*m (561 kgf*cm, 40 ft.*lbf)

Nut

Torque: 55 N*m (561 kgf*cm, 40 ft.*lbf)

Bolt and Nut

Torque: 49 N*m (500 kgf*cm, 36 ft.*lbf)

c. Install the No. 1 exhaust pipe support bracket with the 2 bolts (for Rear Side).

   Torque: 33 N*m (337 kgf*cm, 24 ft.*lbf)

d. Connect the 2 heated oxygen sensor connectors.

   e. Install the 2 wire harnesses to the clamp.
9. **INSTALL NO. 1 EXHAUST PIPE SUPPORT BRACKET (for Front Side)** See step 4
10. **INSTALL RADIATOR RESERVE TANK ASSEMBLY** . Refer to **INSTALLATION - Step 6**
11. **INSTALL ENGINE UNDER COVER RH**
12. **INSTALL FRONT WHEEL OPENING EXTENSION PAD RH**
13. **INSPECT FOR EXHAUST GAS LEAK**

EXHAUST PIPE

COMPONENTS

ILLUSTRATION

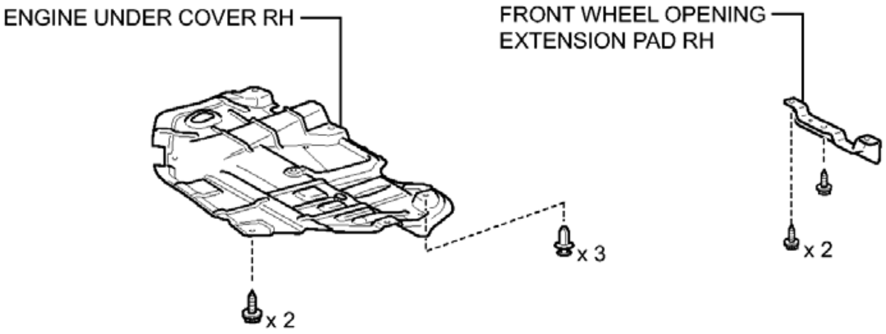
ENGINE UNDER COVER RH
FRONT WHEEL OPENING EXTENSION PAD RH
x 3
x 2
x 2

Fig. 32: Identifying Exhaust Pipe Replacement Components With Torque Specifications (1 Of 2)
Courtesy of TOYOTA MOTOR SALES, U.S.A., INC.

ILLUSTRATION

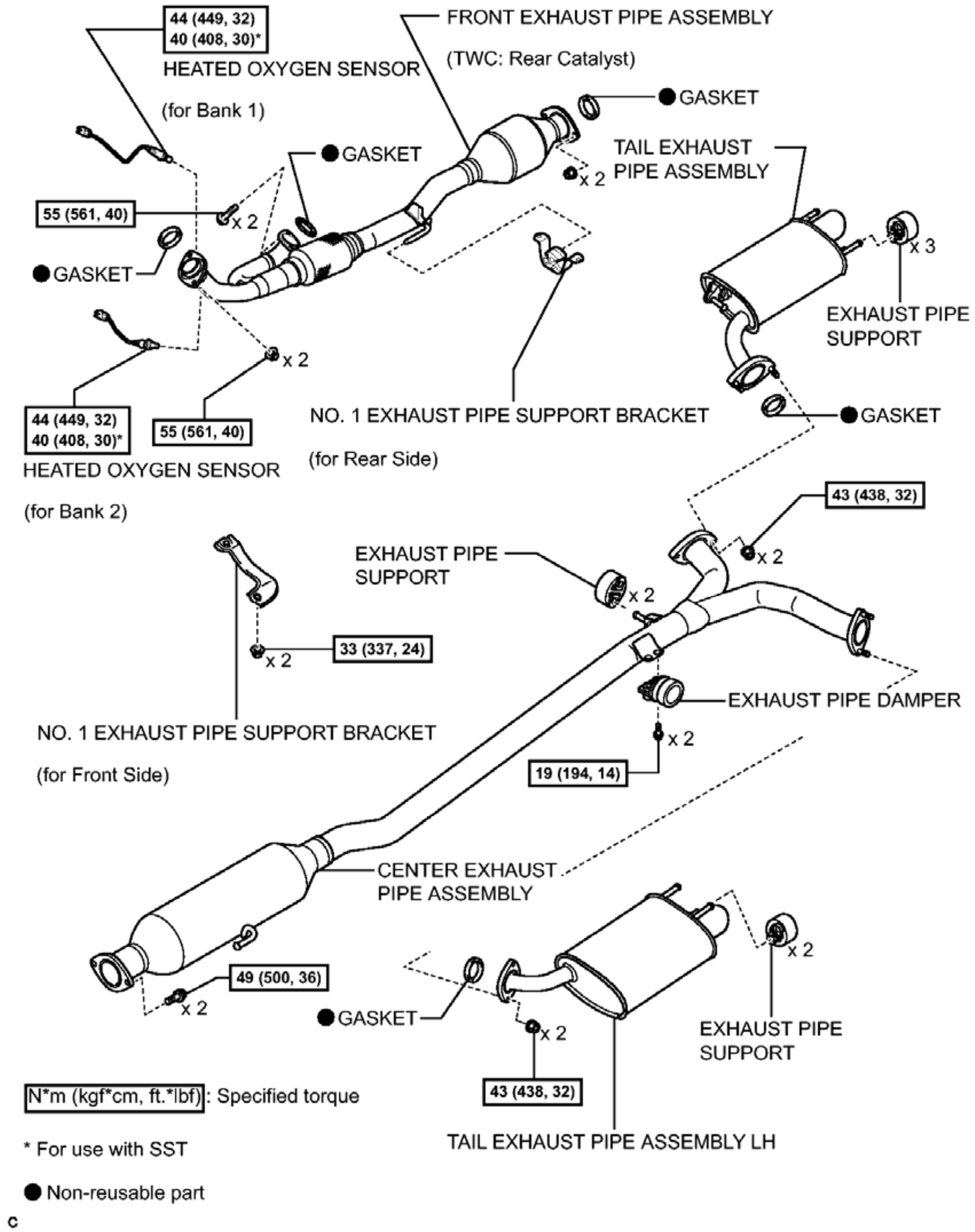
44 (449, 32)
40 (408, 30)*
HEATED OXYGEN SENSOR
(for Bank 1)
FRONT EXHAUST PIPE ASSEMBLY
(TWC: Rear Catalyst)
GASKET
GASKET
TAIL EXHAUST PIPE ASSEMBLY
x 2
55 (561, 40)
x 2
GASKET
x 3
EXHAUST PIPE SUPPORT
x 2
44 (449, 32)
40 (408, 30)*
55 (561, 40)
NO. 1 EXHAUST PIPE SUPPORT BRACKET
(for Rear Side)
GASKET
HEATED OXYGEN SENSOR
(for Bank 2)
43 (438, 32)
x 2
EXHAUST PIPE SUPPORT
x 2
x 2
33 (337, 24)
EXHAUST PIPE DAMPER
x 2
NO. 1 EXHAUST PIPE SUPPORT BRACKET
(for Front Side)
19 (194, 14)
CENTER EXHAUST PIPE ASSEMBLY
x 2
49 (500, 36)
x 2
GASKET
x 2
EXHAUST PIPE SUPPORT
43 (438, 32)
TAIL EXHAUST PIPE ASSEMBLY LH
N*m (kgf*cm, ft.*lbf): Specified torque
* For use with SST
● Non-reusable part
c

Fig. 33: Identifying Exhaust Pipe Replacement Components With Torque Specifications (2 Of 2)
Courtesy of TOYOTA MOTOR SALES, U.S.A., INC.

REMOVAL

REMOVAL

1. **REMOVE TAIL EXHAUST PIPE ASSEMBLY LH**

a. Remove the 2 nuts.

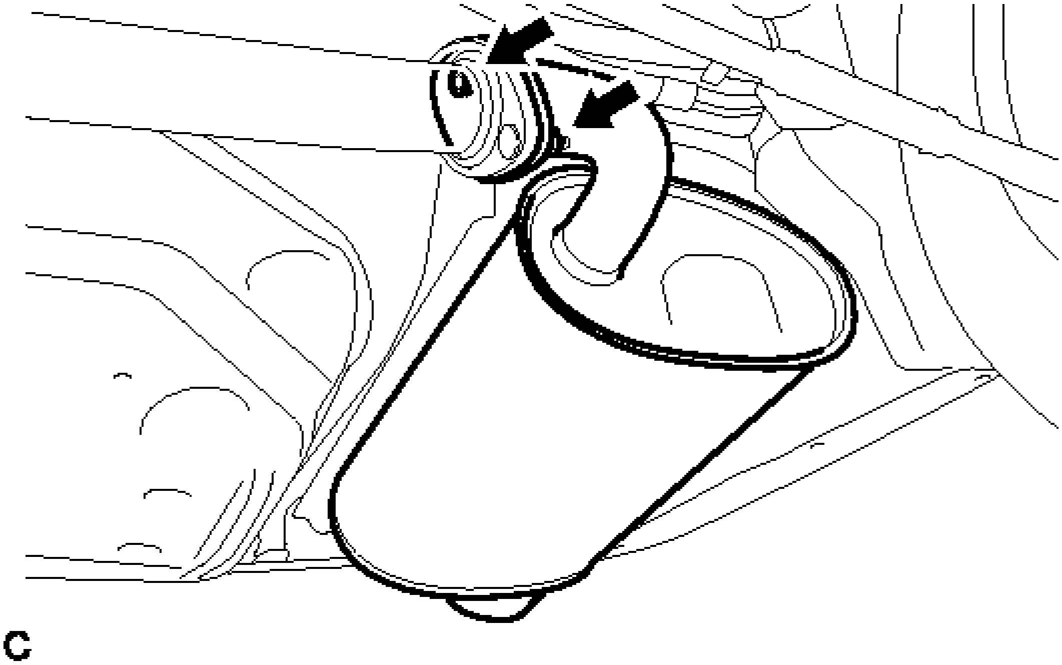

Fig. 34: Identifying Tail Exhaust Pipe Assembly Nuts LH
Courtesy of TOYOTA MOTOR SALES, U.S.A., INC.

b. Remove the tail exhaust pipe assembly LH from the 2 exhaust pipe supports.

c. Remove the gasket from the center exhaust pipe assembly.

2. **REMOVE TAIL EXHAUST PIPE ASSEMBLY**

a. Remove the 2 nuts.

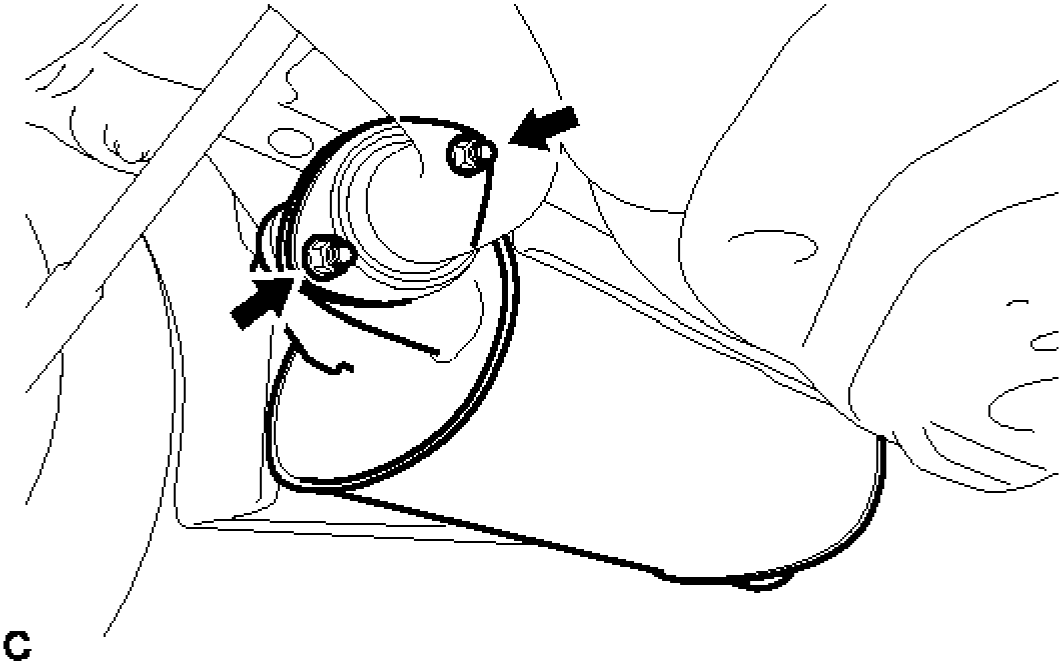

Fig. 35: Identifying Tail Exhaust Pipe Assembly Nuts
Courtesy of TOYOTA MOTOR SALES, U.S.A., INC.

b. Remove the tail exhaust pipe assembly from the 3 exhaust pipe supports.
c. Remove the gasket from the center exhaust pipe assembly.

3. **REMOVE EXHAUST PIPE DAMPER**
   a. Remove the 2 bolts and exhaust pipe damper.

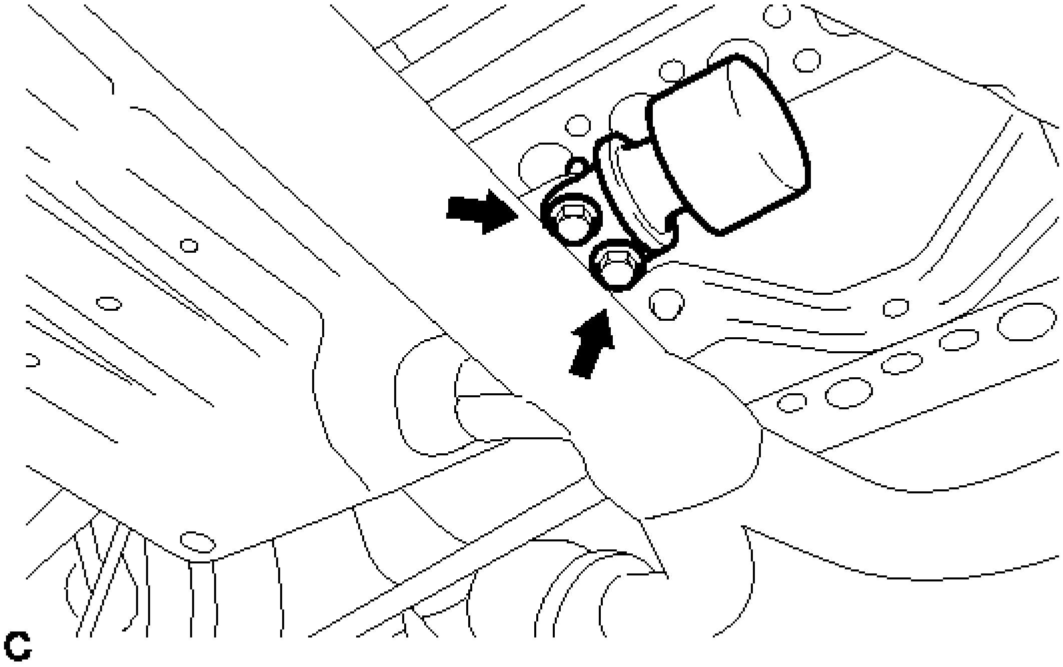

Fig. 36: Identifying Exhaust Pipe Damper Bolts
Courtesy of TOYOTA MOTOR SALES, U.S.A., INC.

4. **REMOVE CENTER EXHAUST PIPE ASSEMBLY**
   a. Remove the 2 bolts and 2 nuts.

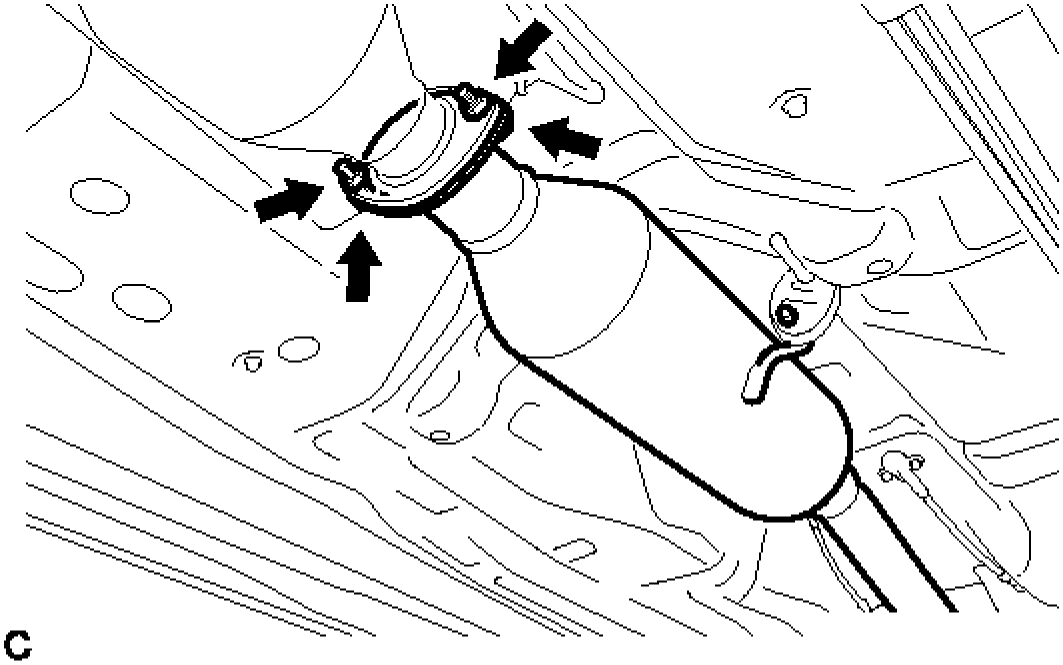

Fig. 37: Identifying Center Exhaust Pipe Assembly Bolts And Nuts

Courtesy of TOYOTA MOTOR SALES, U.S.A., INC.

   b. Remove the center exhaust pipe assembly from the 2 exhaust pipe supports.
   c. Remove the gasket from the front exhaust pipe assembly.
5. **REMOVE FRONT WHEEL OPENING EXTENSION PAD RH**
6. **REMOVE ENGINE UNDER COVER RH**
7. **REMOVE NO. 1 EXHAUST PIPE SUPPORT BRACKET (for Front Side)**
   a. Remove the 2 nuts and No. 1 exhaust pipe support bracket (for Front Side).

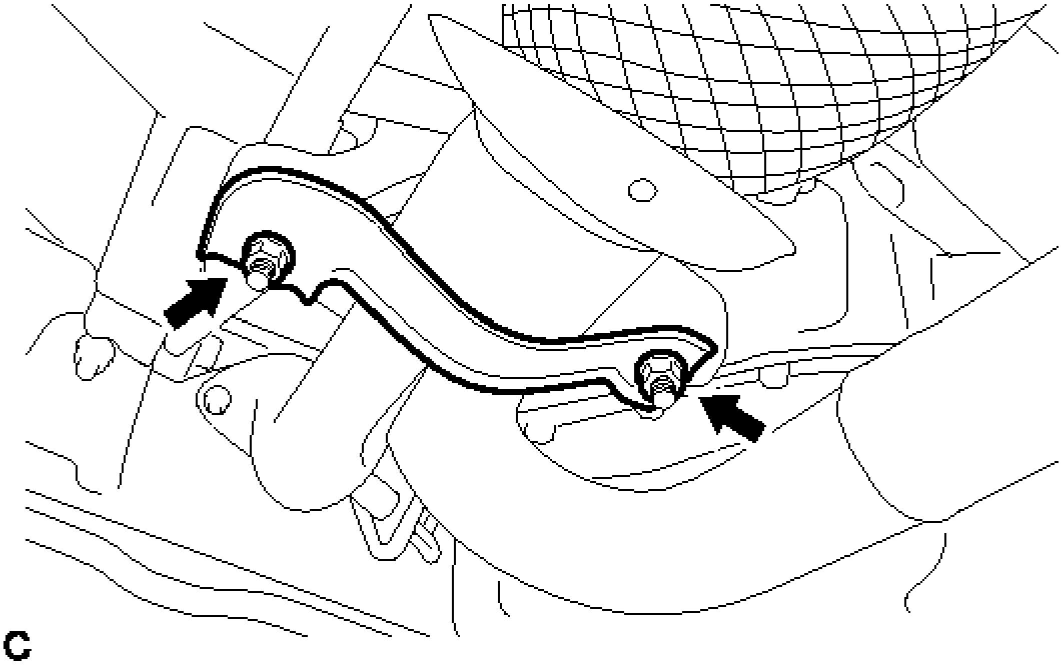

Fig. 38: Identifying No. 1 Exhaust Pipe Support Bracket Nuts (For Front Side)
Courtesy of TOYOTA MOTOR SALES, U.S.A., INC.

8. **REMOVE FRONT EXHAUST PIPE ASSEMBLY**
   a. Disconnect the 2 wire harnesses from the clamp.

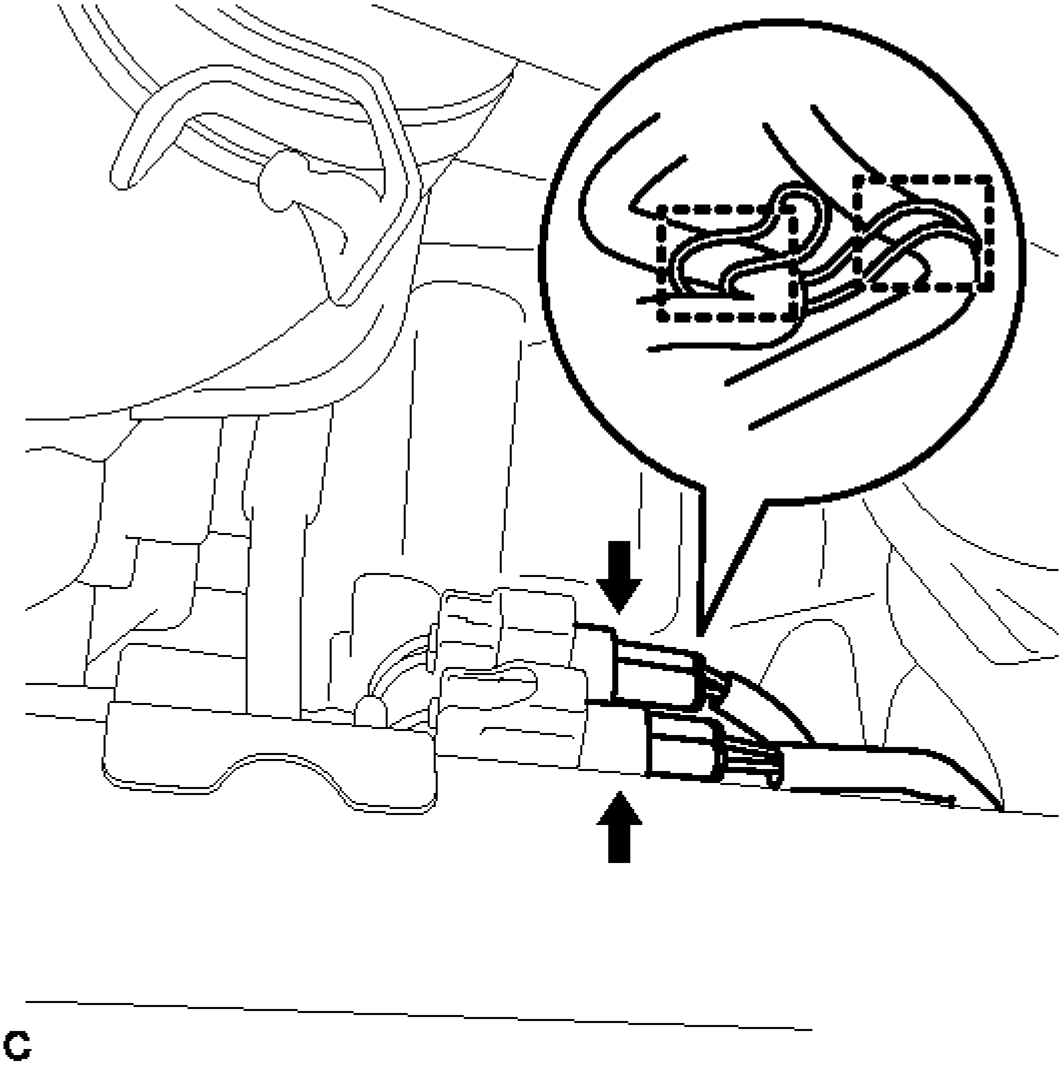

Fig. 39: Identifying Front Exhaust Pipe Assembly Wire Harness And Clamp
Courtesy of TOYOTA MOTOR SALES, U.S.A., INC.

b. Disconnect the 2 heated oxygen sensor connectors.
c. Remove the 2 bolts and 2 nuts.

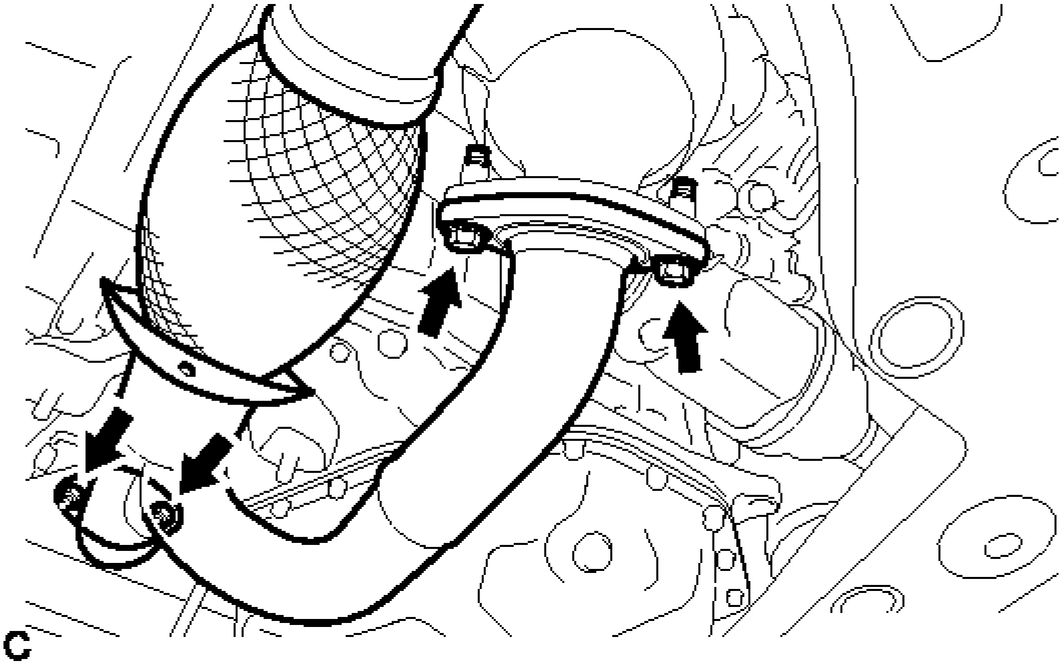

Fig. 40: Identifying Front Exhaust Pipe Assembly Bolts And Nuts
Courtesy of TOYOTA MOTOR SALES, U.S.A., INC.

   d. Remove the front exhaust pipe assembly from the No. 1 exhaust pipe support bracket (for Rear Side).
   e. Remove the 2 gaskets from the front exhaust pipe assembly.
9. **REMOVE HEATED OXYGEN SENSOR (for Bank 1)** . Refer to **REMOVAL - Step 2**
10. **REMOVE HEATED OXYGEN SENSOR (for Bank 2)** . Refer to **REMOVAL - Step 3**

INSTALLATION

INSTALLATION

1. **INSTALL HEATED OXYGEN SENSOR (for Bank 2)** . Refer to **INSTALLATION - Step 1**
2. **INSTALL HEATED OXYGEN SENSOR (for Bank 1)** . Refer to **INSTALLATION - Step 2**
3. **INSTALL FRONT EXHAUST PIPE ASSEMBLY**
   a. Install 2 new gaskets to the front exhaust pipe assembly.
   b. Connect the front exhaust pipe assembly to the No. 1 exhaust pipe support bracket (for Rear Side).
   c. Install the front exhaust pipe assembly with the 2 bolts and 2 nuts.

      Torque: 55 N*m (561 kgf*cm, 40 ft.*lbf)

   d. Connect the 2 heated oxygen sensor connectors.
   e. Install the 2 wire harnesses to the clamp.
4. **INSTALL NO. 1 EXHAUST PIPE SUPPORT BRACKET (for Front Side)**

    a. Install the No. 1 exhaust pipe support bracket with the 2 nuts (for Front Side).

    Torque: 33 N*m (337 kgf*cm, 24 ft.*lbf)

5. **INSTALL ENGINE UNDER COVER RH**
6. **INSTALL FRONT WHEEL OPENING EXTENSION PAD RH**
7. **INSTALL CENTER EXHAUST PIPE ASSEMBLY**
    a. Install a new gasket to the front exhaust pipe assembly.
    b. Connect the center exhaust pipe assembly to the exhaust pipe supports.
    c. Install the center exhaust pipe assembly with the 2 bolts and 2 nuts.

    Torque: 49 N*m (500 kgf*cm, 36 ft.*lbf)

8. **INSTALL EXHAUST PIPE DAMPER**
    a. Install the exhaust pipe damper with the 2 bolts.

    Torque: 19 N*m (194 kgf*cm, 14 ft.*lbf)

9. **INSTALL TAIL EXHAUST PIPE ASSEMBLY**
    a. Install a new gasket to the center exhaust pipe assembly.
    b. Connect the tail exhaust pipe assembly to the 3 exhaust pipe supports.
    c. Install the tail exhaust pipe assembly with the 2 nuts.

    Torque: 43 N*m (438 kgf*cm, 32 ft.*lbf)

10. **INSTALL TAIL EXHAUST PIPE ASSEMBLY LH**
    a. Install a new gasket to the center exhaust pipe assembly.
    b. Connect the tail exhaust pipe assembly LH to the 2 exhaust pipe supports.
    c. Install the tail exhaust pipe assembly LH with the 2 nuts.

    Torque: 43 N*m (438 kgf*cm, 32 ft.*lbf)

11. **INSPECT FOR EXHAUST GAS LEAK**

INTAKE MANIFOLD

COMPONENTS

ILLUSTRATION

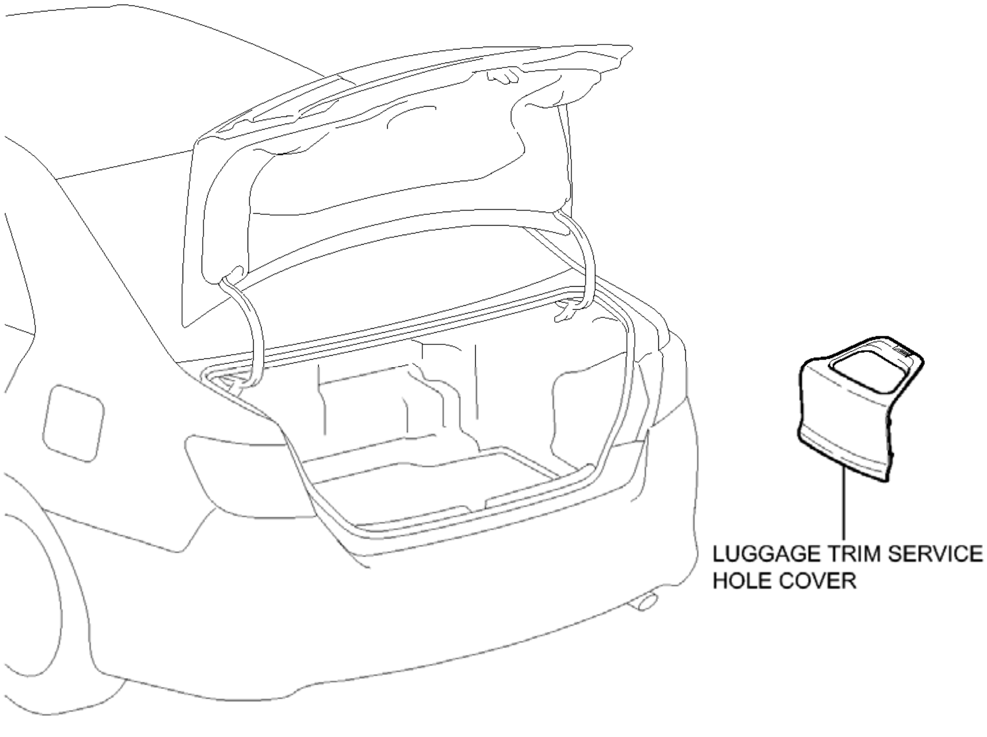
LUGGAGE TRIM SERVICE HOLE COVER
P

Fig. 1: Identifying Intake Manifold Replacement Components (1 Of 3)
Courtesy of TOYOTA MOTOR SALES, U.S.A., INC.

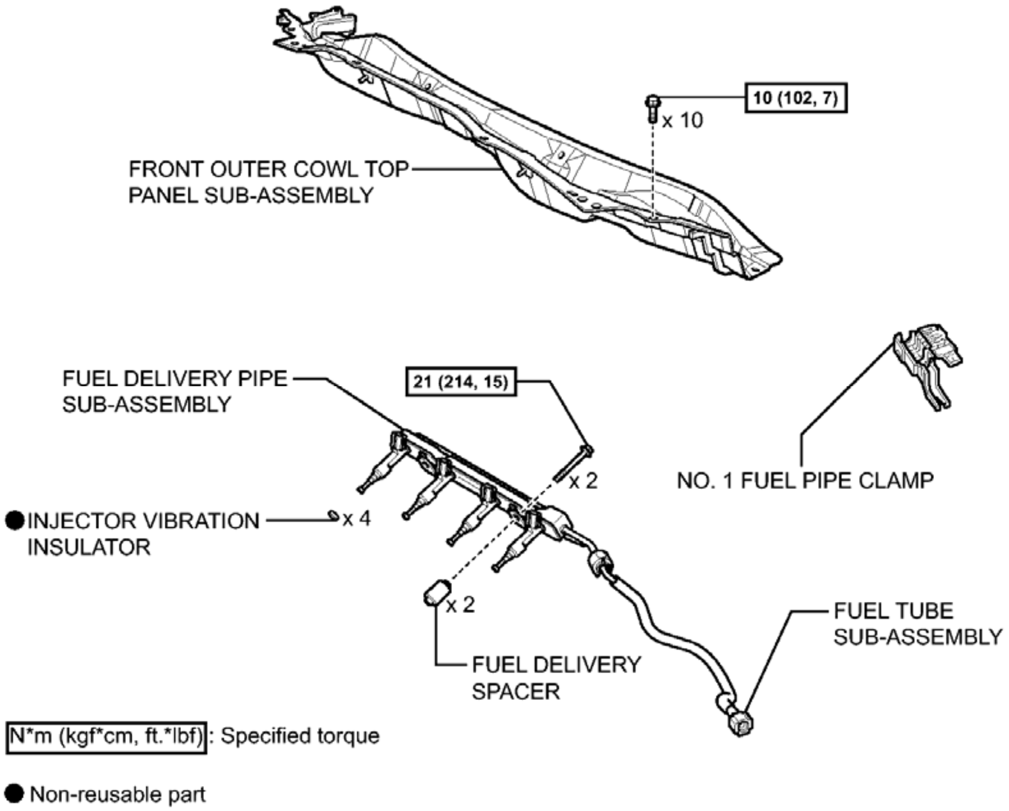
10 (102, 7)
x 10
FRONT OUTER COWL TOP PANEL SUB-ASSEMBLY
FUEL DELIVERY PIPE SUB-ASSEMBLY
21 (214, 15)
x 2
NO. 1 FUEL PIPE CLAMP
● INJECTOR VIBRATION INSULATOR
x 4
x 2
FUEL TUBE SUB-ASSEMBLY
FUEL DELIVERY SPACER
N*m (kgf*cm, ft.*lbf) : Specified torque
● Non-reusable part

Fig. 2: Identifying Intake Manifold Replacement Components With Torque Specifications (2 Of 3)
Courtesy of TOYOTA MOTOR SALES, U.S.A., INC.

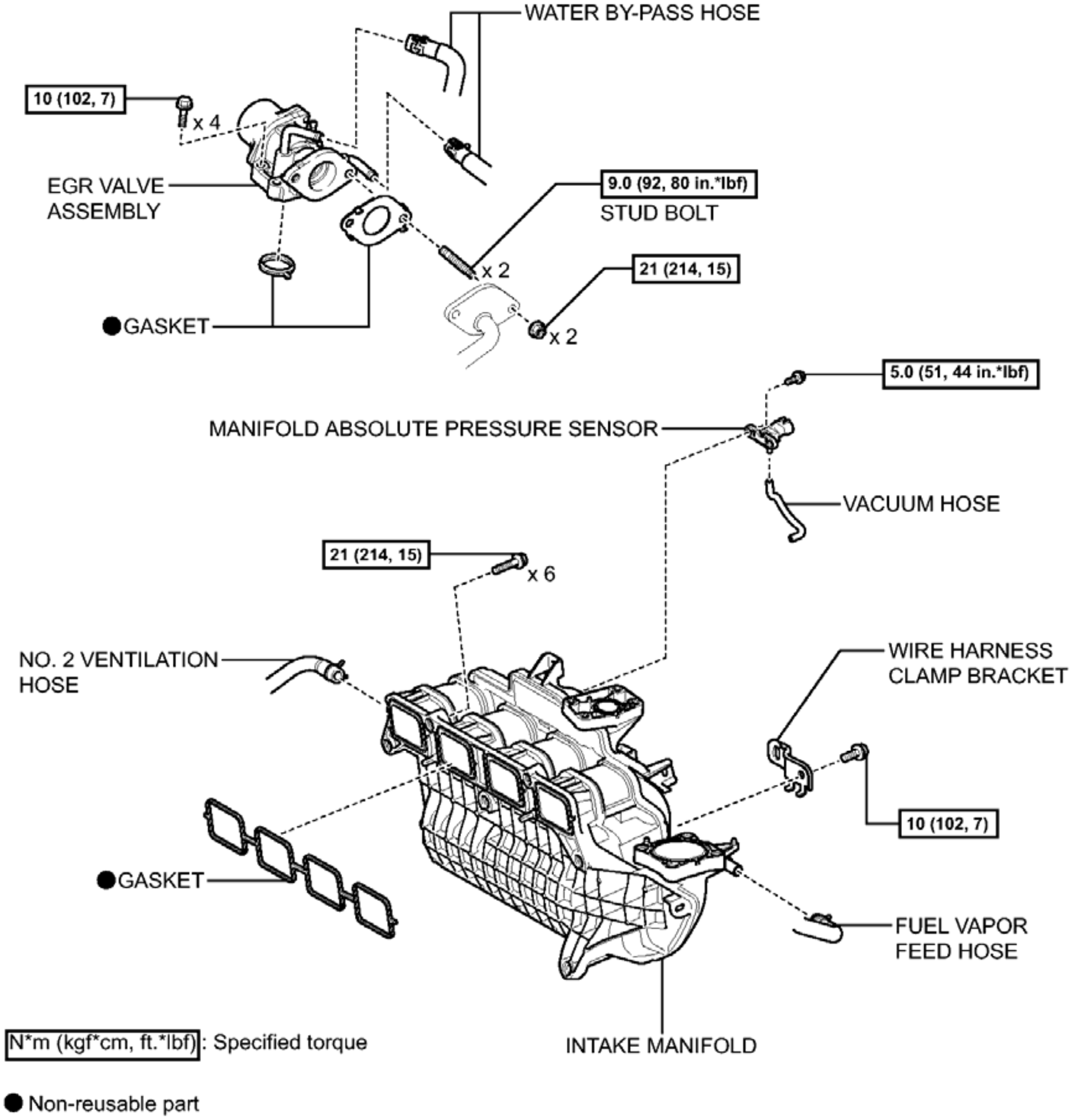
WATER BY-PASS HOSE
10 (102, 7)
x 4
EGR VALVE ASSEMBLY
9.0 (92, 80 in.*lbf)
STUD BOLT
x 2
21 (214, 15)
●GASKET
x 2
5.0 (51, 44 in.*lbf)
MANIFOLD ABSOLUTE PRESSURE SENSOR
VACUUM HOSE
21 (214, 15)
x 6
NO. 2 VENTILATION HOSE
WIRE HARNESS CLAMP BRACKET
10 (102, 7)
●GASKET
FUEL VAPOR FEED HOSE
N*m (kgf*cm, ft.*lbf): Specified torque
INTAKE MANIFOLD
● Non-reusable part

Fig. 3: Identifying Intake Manifold Replacement Components With Torque Specifications (3 Of 3)
Courtesy of TOYOTA MOTOR SALES, U.S.A., INC.

REMOVAL

REMOVAL

1. **PRECAUTION**

NOTE: **After turning the power switch off, waiting time may be required before disconnecting the cable from the negative (-) auxiliary battery terminal. Therefore, make sure to read the disconnecting the cable from the negative (-) auxiliary battery terminal notice before proceeding with work.**

Refer to PRECAUTION .

2. **DISCHARGE FUEL SYSTEM PRESSURE**

   Refer to **PRECAUTION**

3. **REMOVE LUGGAGE TRIM SERVICE HOLE COVER** . Refer to **REMOVAL - Step 2**
4. **DISCONNECT CABLE FROM NEGATIVE AUXILIARY BATTERY TERMINAL**

   NOTE: **When disconnecting the cable, some systems need to be initialized after the cable is reconnected. Refer to INITIALIZATION .**

5. **REMOVE THROTTLE WITH MOTOR BODY ASSEMBLY**

   Refer to **REMOVAL**

6. **REMOVE WINDSHIELD WIPER MOTOR AND LINK ASSEMBLY**

   Refer to **REMOVAL**

7. **REMOVE FRONT OUTER COWL TOP PANEL SUB-ASSEMBLY** . Refer to **REMOVAL - Step 4**
8. **REMOVE EGR VALVE ASSEMBLY** . Refer to **REMOVAL - Step 4**
9. **REMOVE MANIFOLD ABSOLUTE PRESSURE SENSOR** . Refer to **REMOVAL - Step 2**
10. **SEPARATE INTAKE MANIFOLD**
    a. Disconnect the No. 2 ventilation hose.

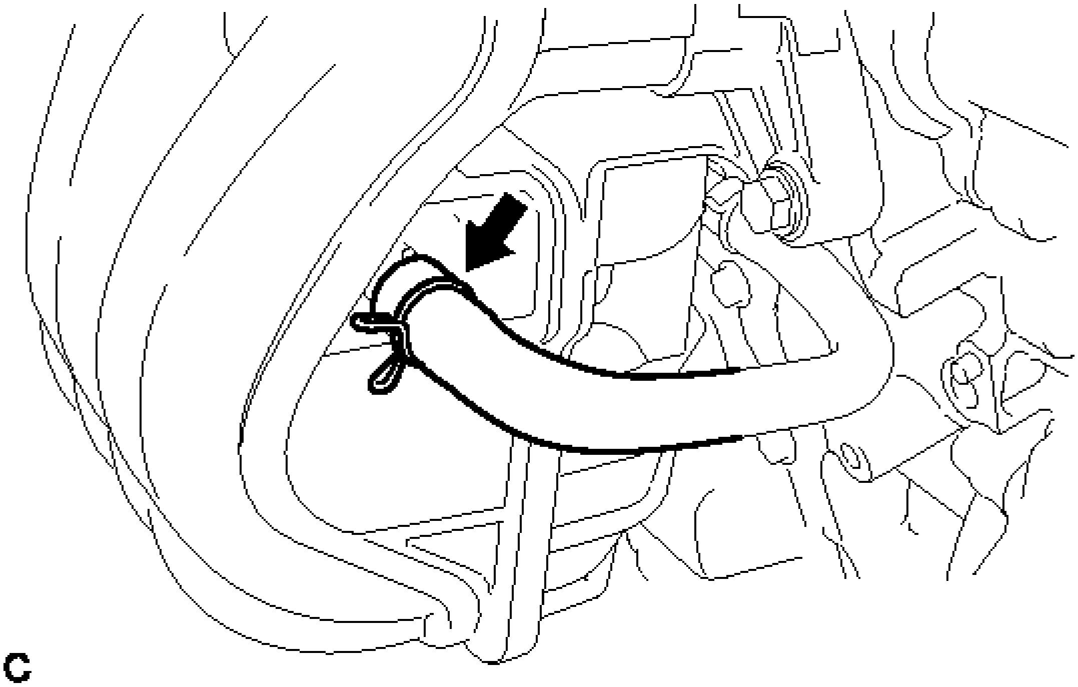

Fig. 4: Disconnecting No. 2 Ventilation Hose
Courtesy of TOYOTA MOTOR SALES, U.S.A., INC.

b. Disconnect the heated oxygen sensor connector.

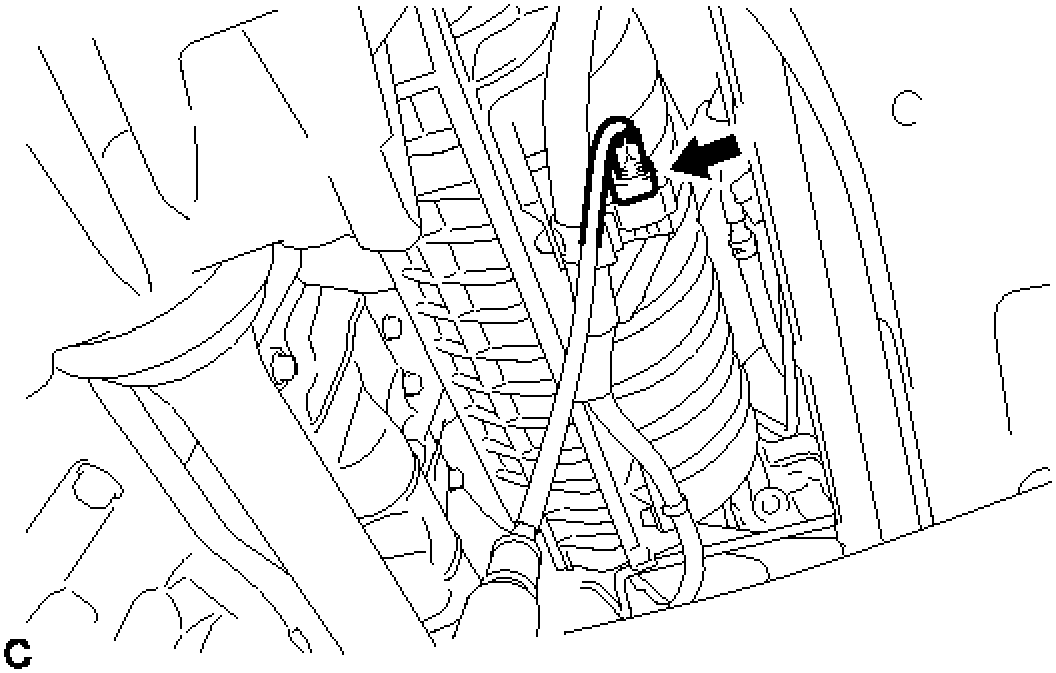

Fig. 5: Identifying Heated Oxygen Sensor Connector
Courtesy of TOYOTA MOTOR SALES, U.S.A., INC.

c. Disconnect the 6 wire harness clamps.

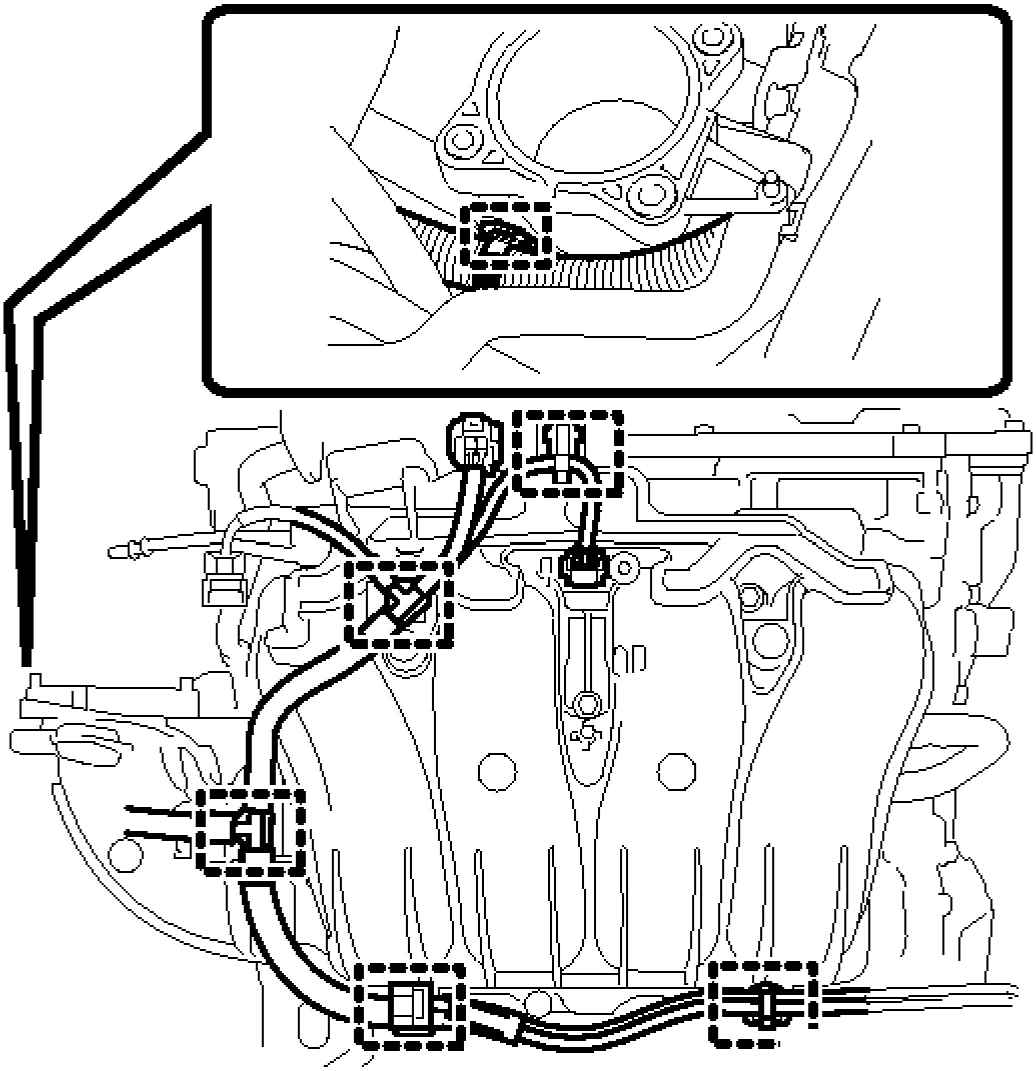

Fig. 6: Identifying Wire Harness Clamps
Courtesy of TOYOTA MOTOR SALES, U.S.A., INC.

d. Remove the 6 bolts to separate the intake manifold from the engine assembly.

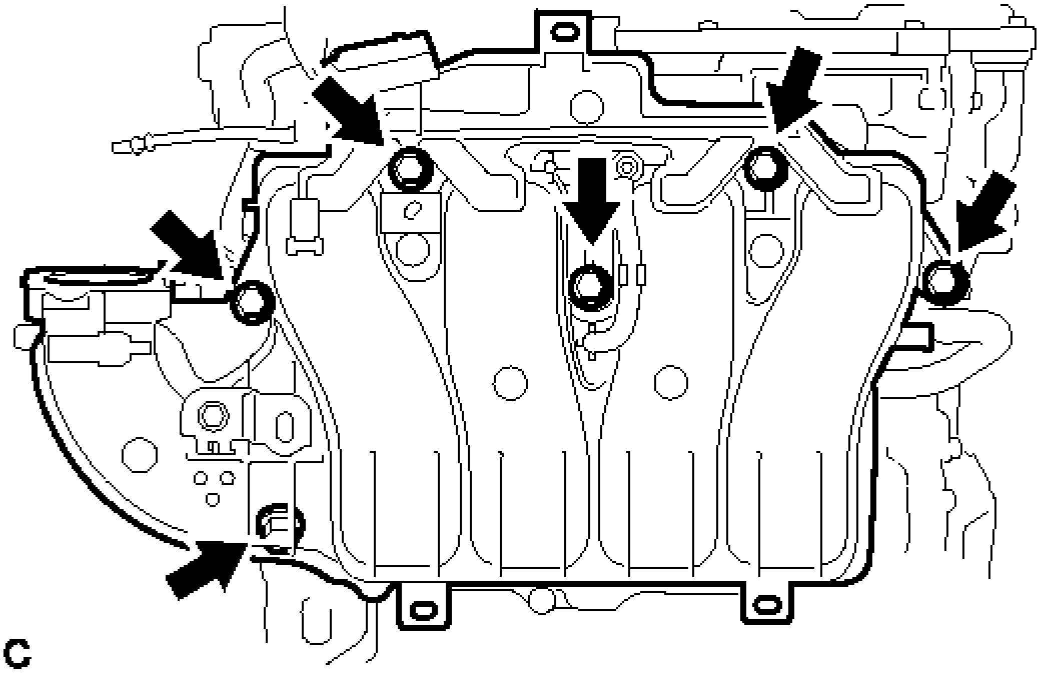

Fig. 7: Identifying Intake Manifold Bolts
Courtesy of TOYOTA MOTOR SALES, U.S.A., INC.

11. **DISCONNECT FUEL TUBE SUB-ASSEMBLY** . Refer to **REMOVAL - Step 6**
12. **REMOVE FUEL DELIVERY PIPE SUB-ASSEMBLY** . Refer to **REMOVAL - Step 7**
13. **REMOVE INTAKE MANIFOLD**
    a. Remove the intake manifold from the vehicle.
    b. Remove the gasket from the intake manifold.

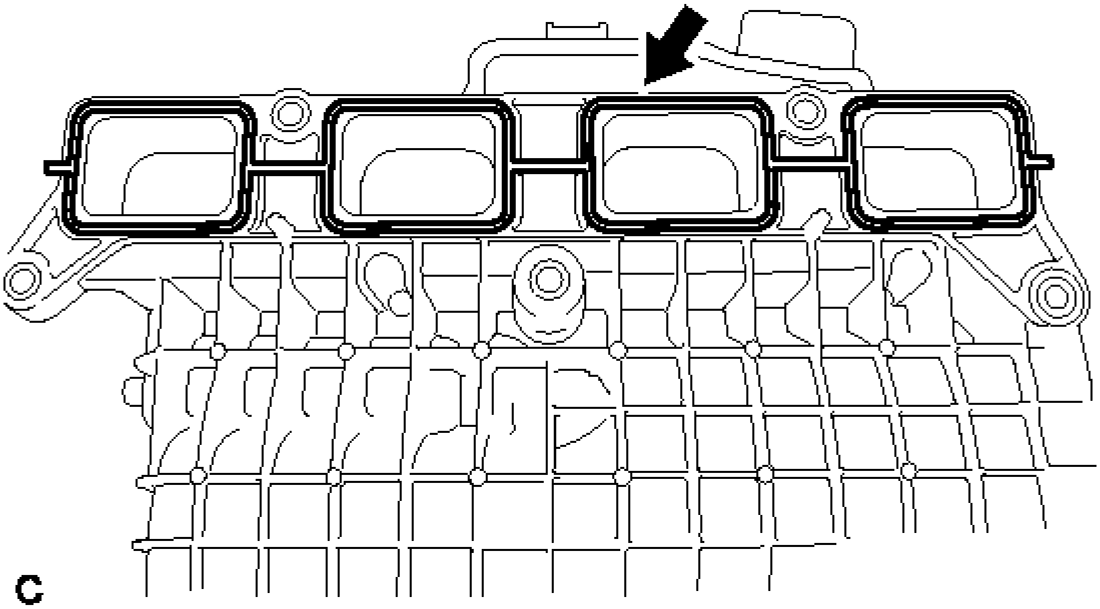

Fig. 8: Identifying Intake Manifold Gasket
Courtesy of TOYOTA MOTOR SALES, U.S.A., INC.

c. Remove the bolt and wire harness clamp bracket.

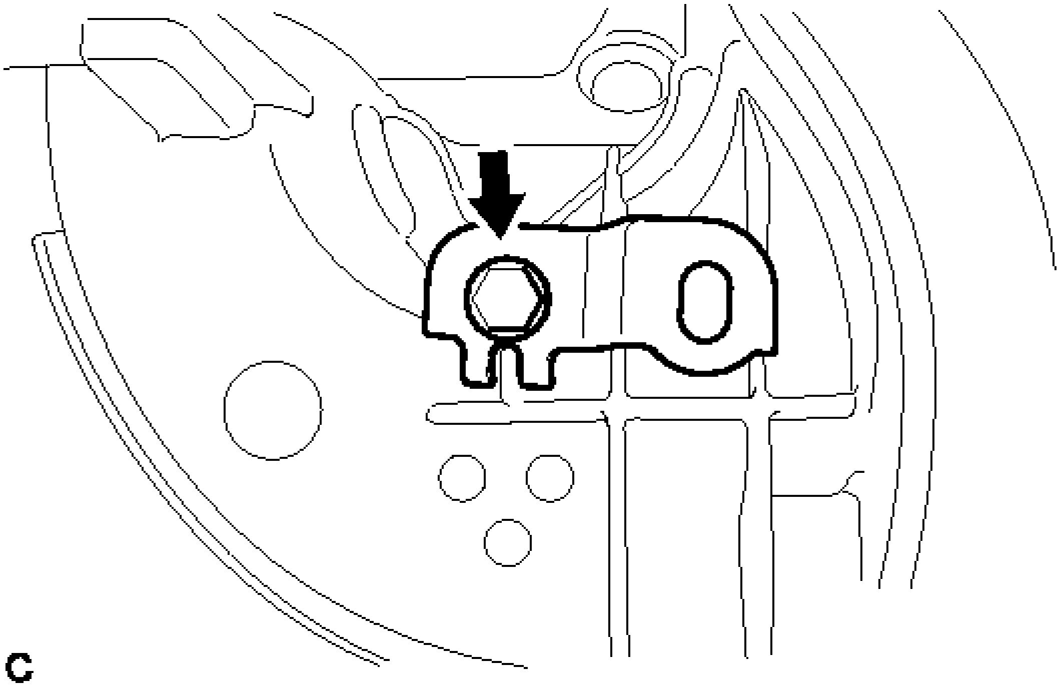

Fig. 9: Identifying Wire Harness Clamp Bracket
Courtesy of TOYOTA MOTOR SALES, U.S.A., INC.

d. Remove the vacuum hose from the intake manifold.

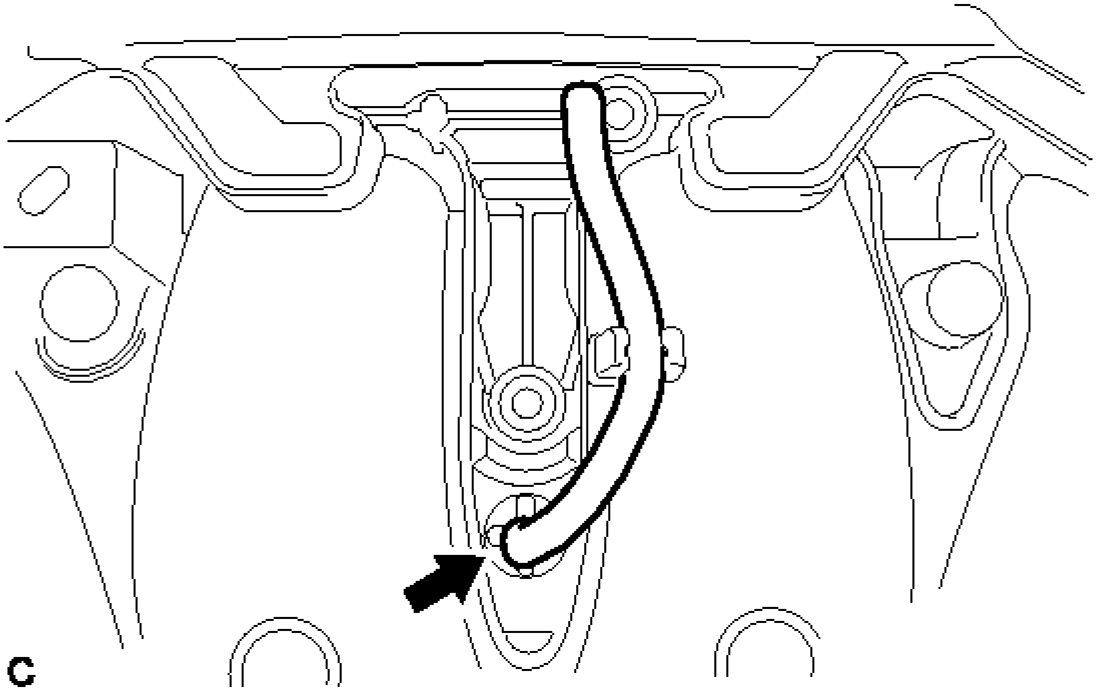

Fig. 10: Identifying Intake Manifold Vacuum Hose
Courtesy of TOYOTA MOTOR SALES, U.S.A., INC.

e. Remove the fuel vapor feed hose from the intake manifold.

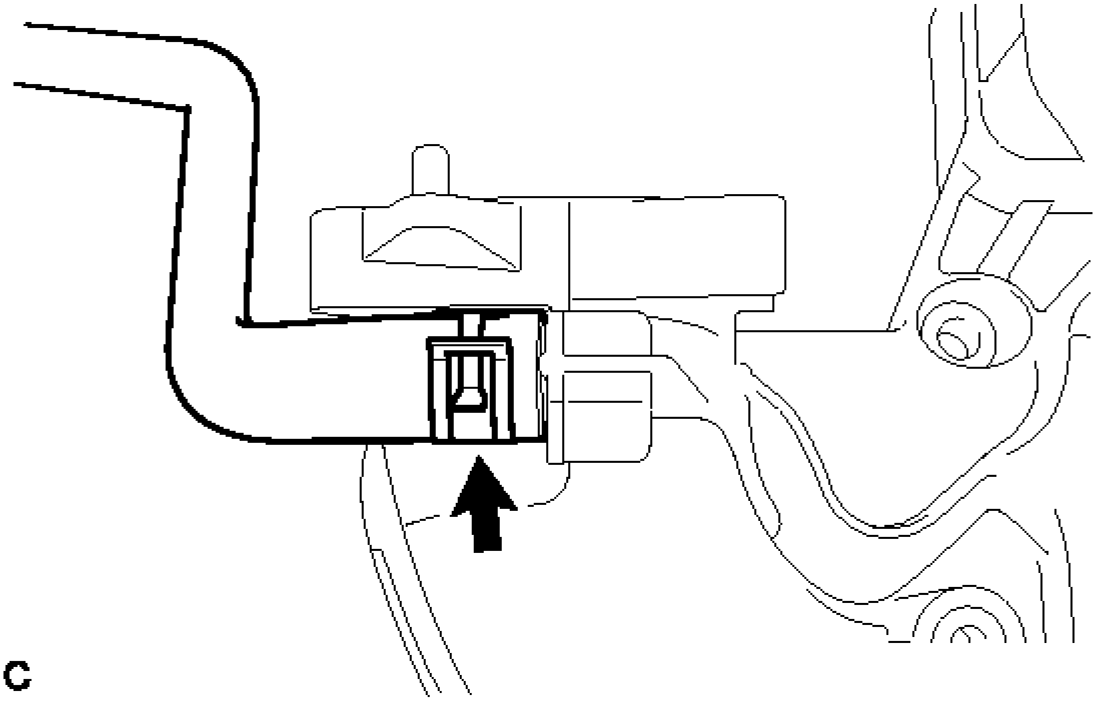

Fig. 11: Identifying Intake Manifold Fuel Vapor Feed Hose
Courtesy of TOYOTA MOTOR SALES, U.S.A., INC.

INSTALLATION

INSTALLATION

1. **SET INTAKE MANIFOLD**
   a. Install the fuel vapor feed hose to the intake manifold.
   b. Install the vacuum hose to the intake manifold.
   c. Install the wire harness clamp bracket with the bolt.

   Torque: 10 N*m (102 kgf*cm, 7 ft.*lbf)

   d. Install a new gasket to the intake manifold.
   e. Set the intake manifold on the engine assembly.
2. **INSTALL FUEL DELIVERY PIPE SUB-ASSEMBLY** . Refer to **INSTALLATION - Step 2**
3. **CONNECT FUEL TUBE SUB-ASSEMBLY** . Refer to **INSTALLATION - Step 3**
4. **INSTALL INTAKE MANIFOLD**
   a. Temporarily install the intake manifold with the 6 bolts.
   b. Tighten the 6 bolts in the order shown in the illustration.

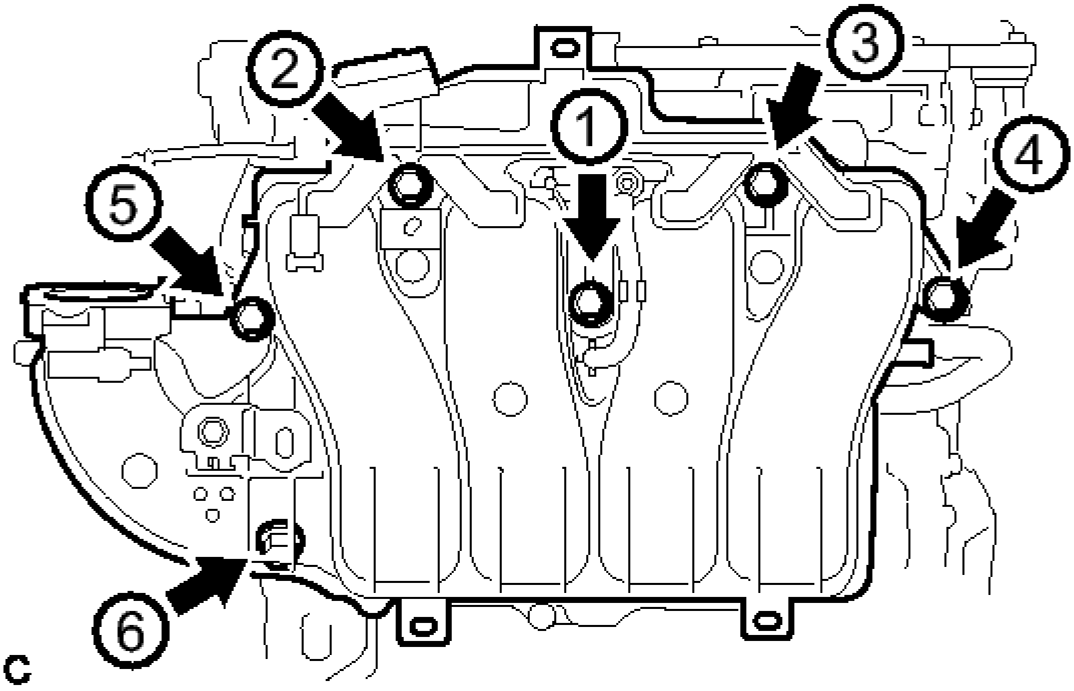

Fig. 12: Intake Manifold Bolt Tightening Order
Courtesy of TOYOTA MOTOR SALES, U.S.A., INC.

Torque: 21 N*m (214 kgf*cm, 15 ft.*lbf)

c. Connect the 6 wire harness clamps.
d. Connect the heated oxygen sensor connector.
e. Connect the No. 2 ventilation hose.

5. **INSTALL MANIFOLD ABSOLUTE PRESSURE SENSOR** . Refer to **INSTALLATION - Step 1**
6. **INSTALL EGR VALVE ASSEMBLY** . Refer to **INSTALLATION - Step 1**
7. **INSTALL FRONT OUTER COWL TOP PANEL SUB-ASSEMBLY** . Refer to **INSTALLATION - Step 18**
8. **INSTALL WINDSHIELD WIPER MOTOR AND LINK ASSEMBLY**

   Refer to **INSTALLATION**

9. **INSTALL THROTTLE WITH MOTOR BODY ASSEMBLY**

   Refer to **INSTALLATION**

10. **CONNECT CABLE FROM NEGATIVE AUXILIARY BATTERY TERMINAL**

    NOTE: **When disconnecting the cable, some systems need to be initialized after the cable is reconnected. Refer to INITIALIZATION .**

11. **INSTALL LUGGAGE TRIM SERVICE HOLE COVER** . Refer to **INSTALLATION - Step 3**
12. **INSPECT FOR FUEL LEAK** . Refer to **ON-VEHICLE INSPECTION - Step 1**

EXHAUST MANIFOLD

COMPONENTS

ILLUSTRATION

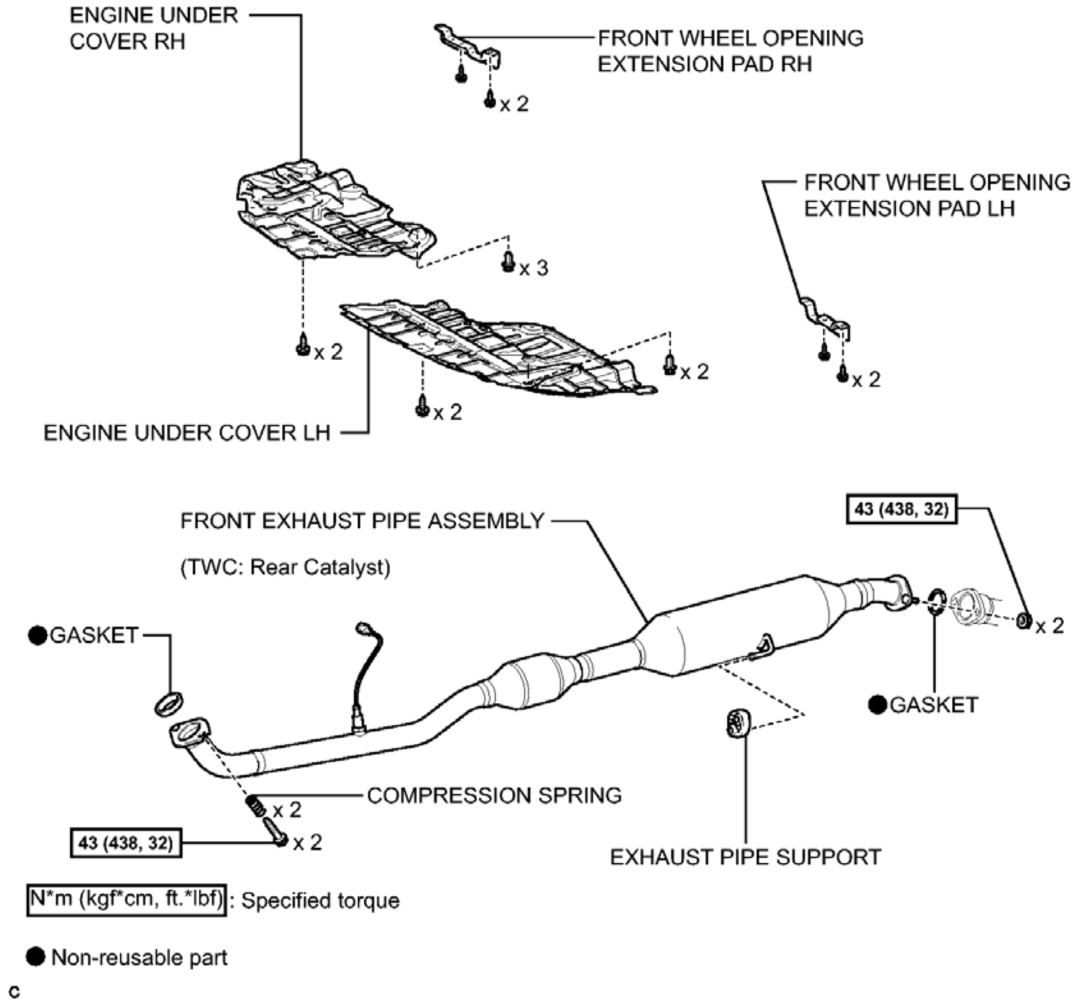
ENGINE UNDER COVER RH
FRONT WHEEL OPENING EXTENSION PAD RH
x 2
FRONT WHEEL OPENING EXTENSION PAD LH
x 3
x 2
x 2
x 2
x 2
ENGINE UNDER COVER LH
FRONT EXHAUST PIPE ASSEMBLY
(TWC: Rear Catalyst)
43 (438, 32)
x 2
●GASKET
●GASKET
COMPRESSION SPRING
x 2
43 (438, 32)
x 2
EXHAUST PIPE SUPPORT
N*m (kgf*cm, ft.*lbf) : Specified torque
● Non-reusable part
c

Fig. 13: Identifying Exhaust Manifold Replacement Components With Torque Specifications (1 Of 2)
Courtesy of TOYOTA MOTOR SALES, U.S.A., INC.

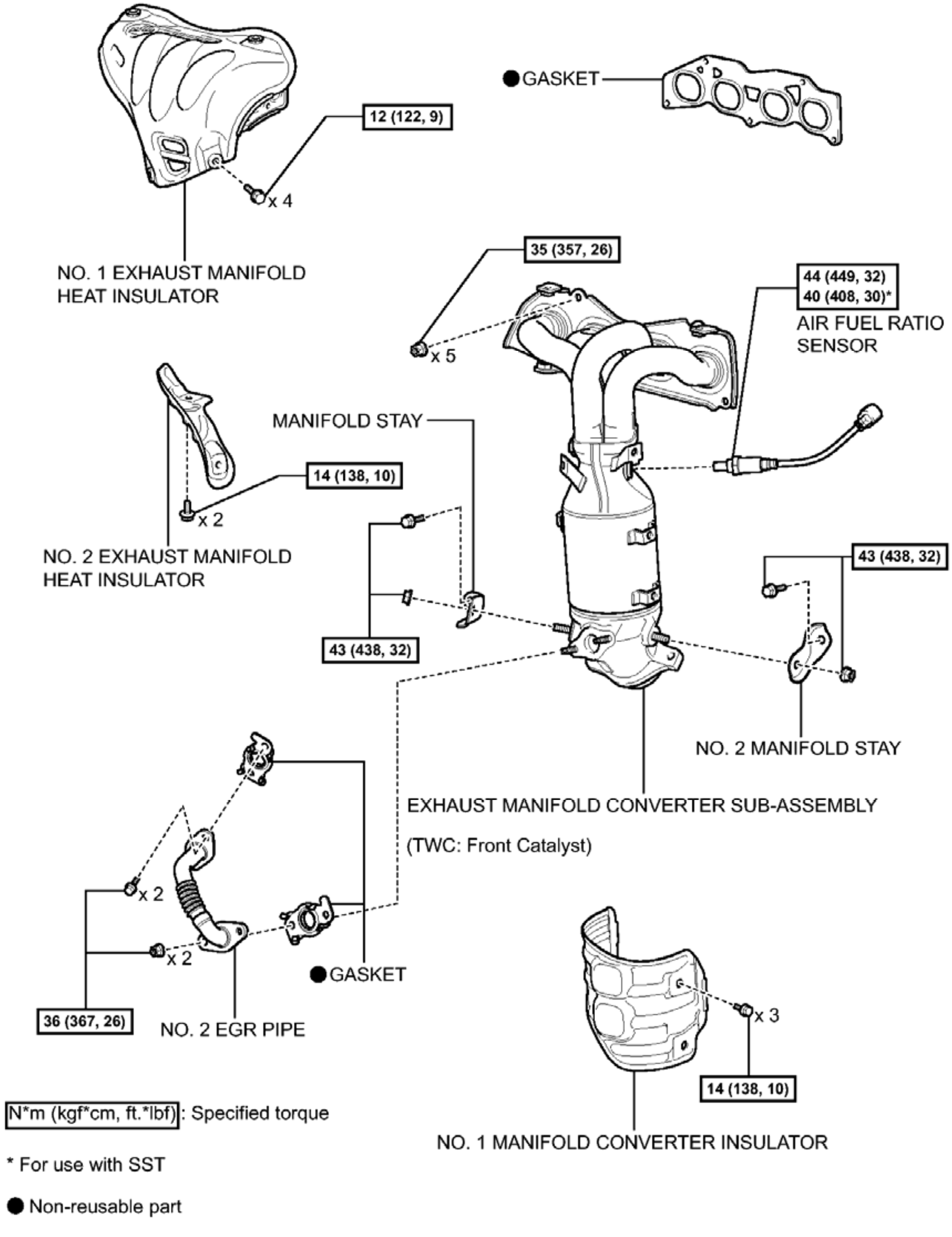
●GASKET
12 (122, 9)
x 4
NO. 1 EXHAUST MANIFOLD HEAT INSULATOR
35 (357, 26)
x 5
44 (449, 32)
40 (408, 30)*
AIR FUEL RATIO SENSOR
MANIFOLD STAY
14 (138, 10)
x 2
NO. 2 EXHAUST MANIFOLD HEAT INSULATOR
43 (438, 32)
43 (438, 32)
NO. 2 MANIFOLD STAY
EXHAUST MANIFOLD CONVERTER SUB-ASSEMBLY
(TWC: Front Catalyst)
x 2
x 2
●GASKET
36 (367, 26)
NO. 2 EGR PIPE
x 3
14 (138, 10)
NO. 1 MANIFOLD CONVERTER INSULATOR
N*m (kgf*cm, ft.*lbf): Specified torque
* For use with SST
● Non-reusable part
c

Fig. 14: Identifying Exhaust Manifold Replacement Components With Torque Specifications (2 Of 2)
Courtesy of TOYOTA MOTOR SALES, U.S.A., INC.

REMOVAL

REMOVAL

1. **REMOVE FRONT WHEEL OPENING EXTENSION PAD RH**
2. **REMOVE ENGINE UNDER COVER RH**
3. **REMOVE FRONT WHEEL OPENING EXTENSION PAD LH**
4. **REMOVE ENGINE UNDER COVER LH**
5. **REMOVE FRONT EXHAUST PIPE ASSEMBLY**
   a. Disconnect the heated oxygen sensor connector.

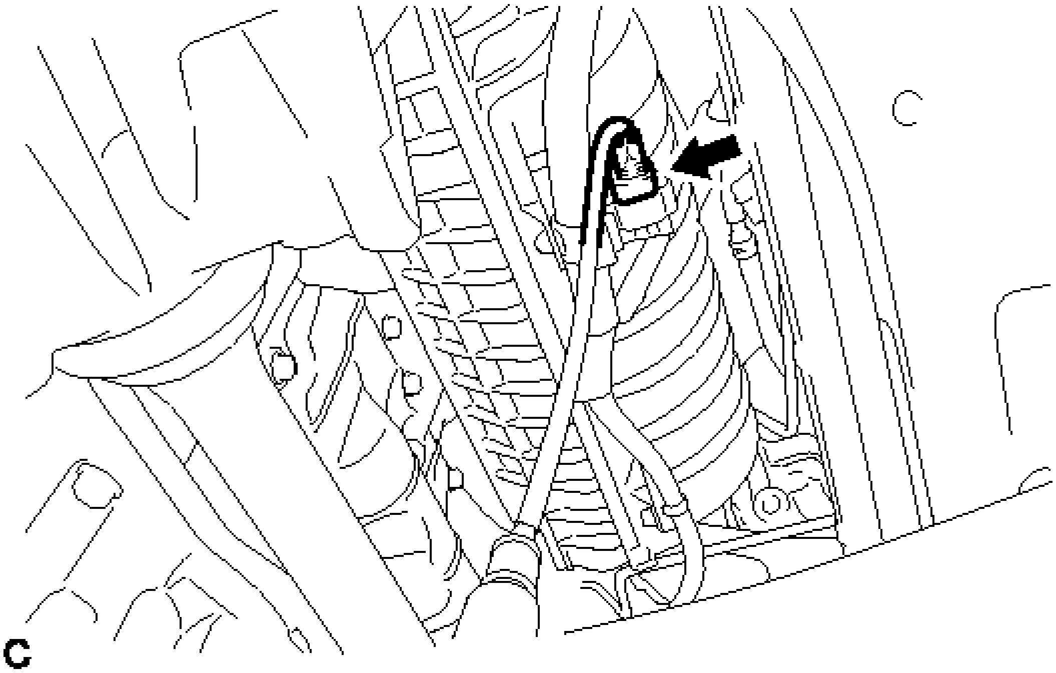

Fig. 15: Identifying Heated Oxygen Sensor Connector
Courtesy of TOYOTA MOTOR SALES, U.S.A., INC.

   b. Remove the 2 bolts, 2 compression springs and 2 nuts.

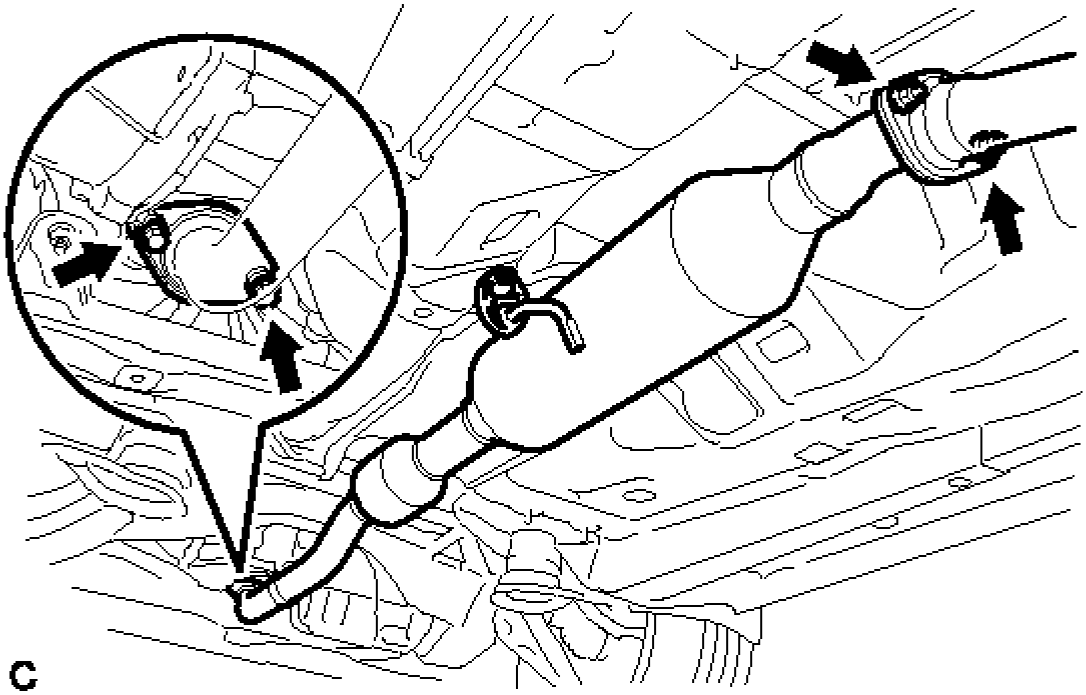

Fig. 16: Identifying Front Exhaust Pipe Assembly Nuts And Bolts
Courtesy of TOYOTA MOTOR SALES, U.S.A., INC.

c. Remove the front exhaust pipe assembly from the exhaust pipe support.
d. Remove the 2 gaskets from the exhaust manifold converter sub-assembly and front exhaust pipe assembly.

6. **REMOVE NO. 1 EXHAUST MANIFOLD HEAT INSULATOR**
   a. Remove the 4 bolts and No. 1 exhaust manifold heat insulator.

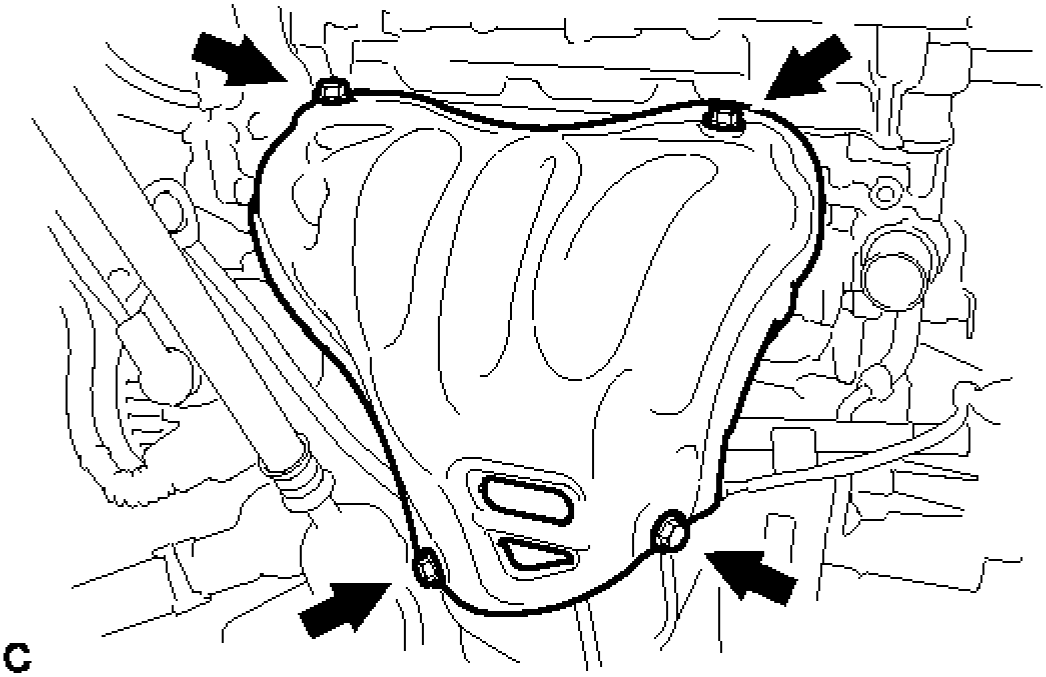

Fig. 17: Locating No. 1 Exhaust Manifold Heat Insulator And Bolt
Courtesy of TOYOTA MOTOR SALES, U.S.A., INC.

7. **REMOVE AIR FUEL RATIO SENSOR** . Refer to **REMOVAL - Step 2**
8. **REMOVE NO. 1 MANIFOLD CONVERTER INSULATOR**
   a. Remove the 3 bolts and No. 1 manifold converter insulator.

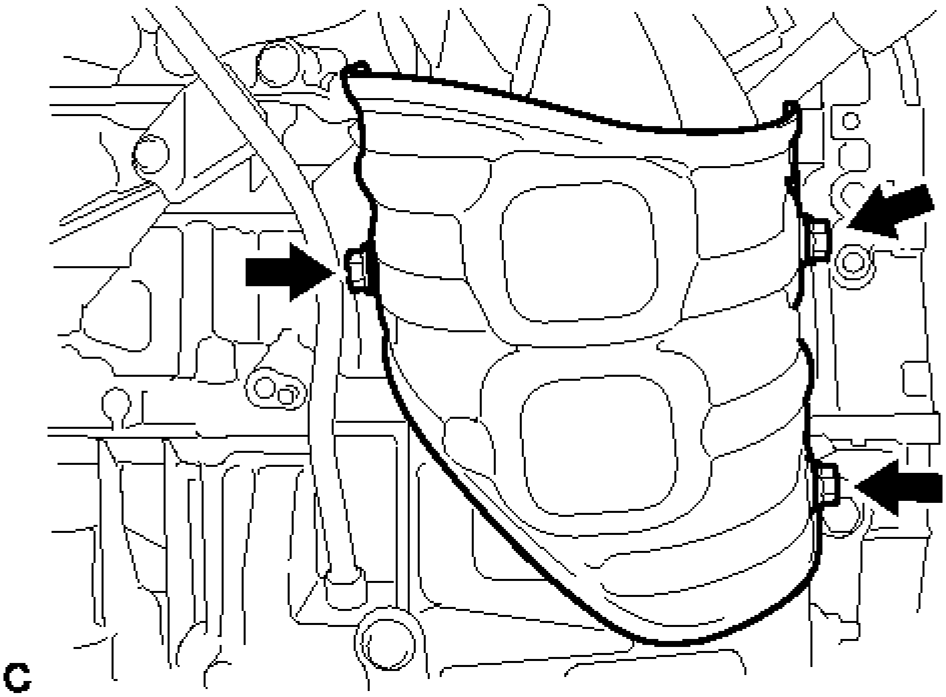

Fig. 18: Identifying No. 1 Manifold Converter Insulator Bolts
Courtesy of TOYOTA MOTOR SALES, U.S.A., INC.

9. **REMOVE NO. 2 EGR PIPE**
    a. Remove the 2 bolts, 2 nuts and No. 2 EGR pipe.

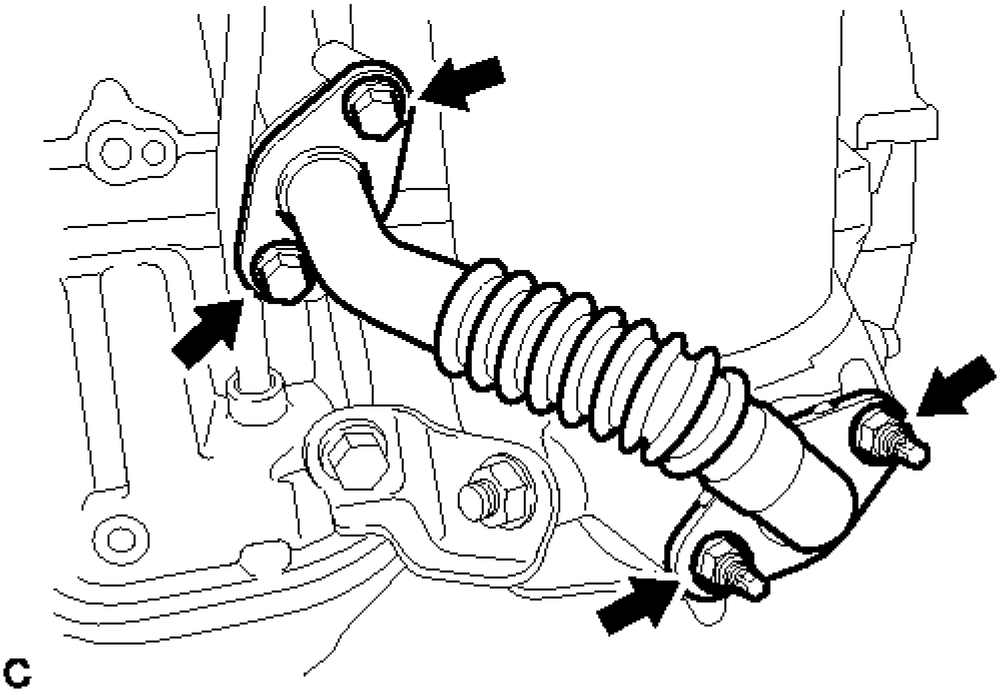

Fig. 19: Identifying No. 2 EGR Pipe Nuts And Bolts
Courtesy of TOYOTA MOTOR SALES, U.S.A., INC.

    b. Remove the 2 gaskets.
10. **REMOVE NO. 2 MANIFOLD STAY**
    a. Remove the bolt, nut and No. 2 manifold stay.

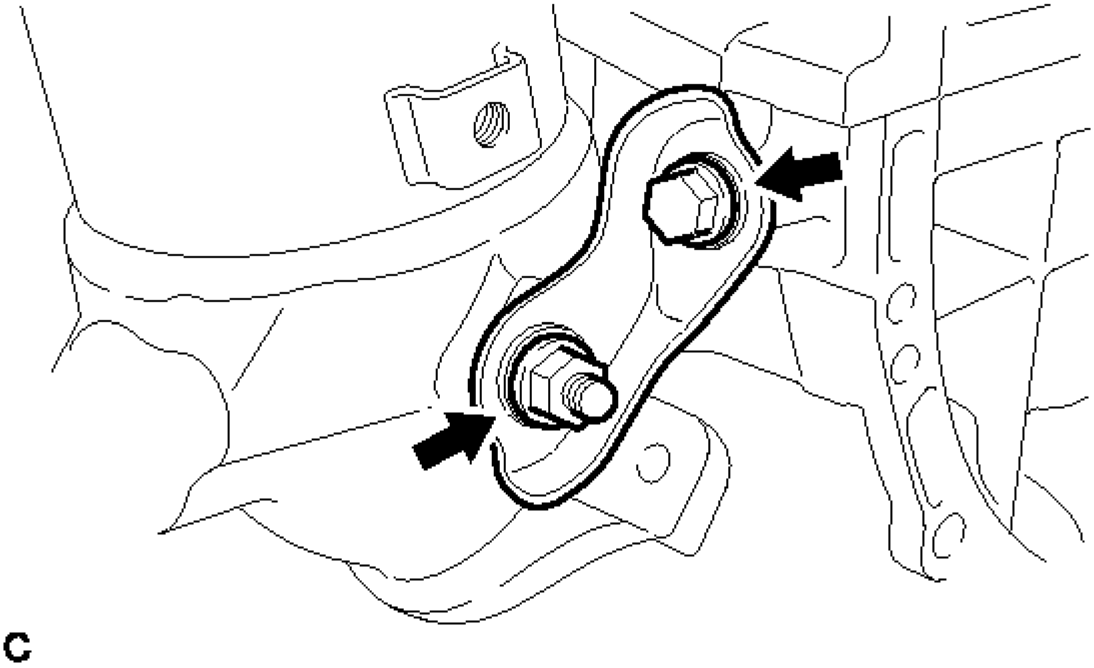

Fig. 20: Identifying No. 2 Manifold Stay Nut And Bolt
Courtesy of TOYOTA MOTOR SALES, U.S.A., INC.

11. **REMOVE MANIFOLD STAY**
    a. Remove the bolt, nut and manifold stay.

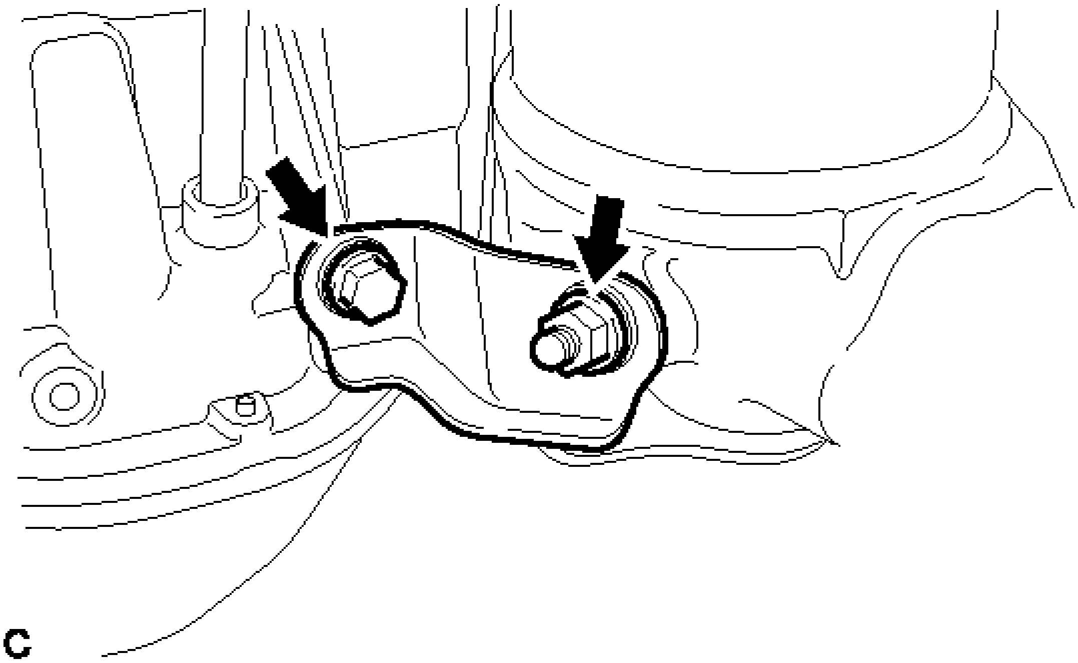

Fig. 21: Identifying Manifold Stay Nut And Bolt

Courtesy of TOYOTA MOTOR SALES, U.S.A., INC.

12. **REMOVE EXHAUST MANIFOLD CONVERTER SUB-ASSEMBLY**
    a. Remove the 5 nuts and exhaust manifold converter sub-assembly.

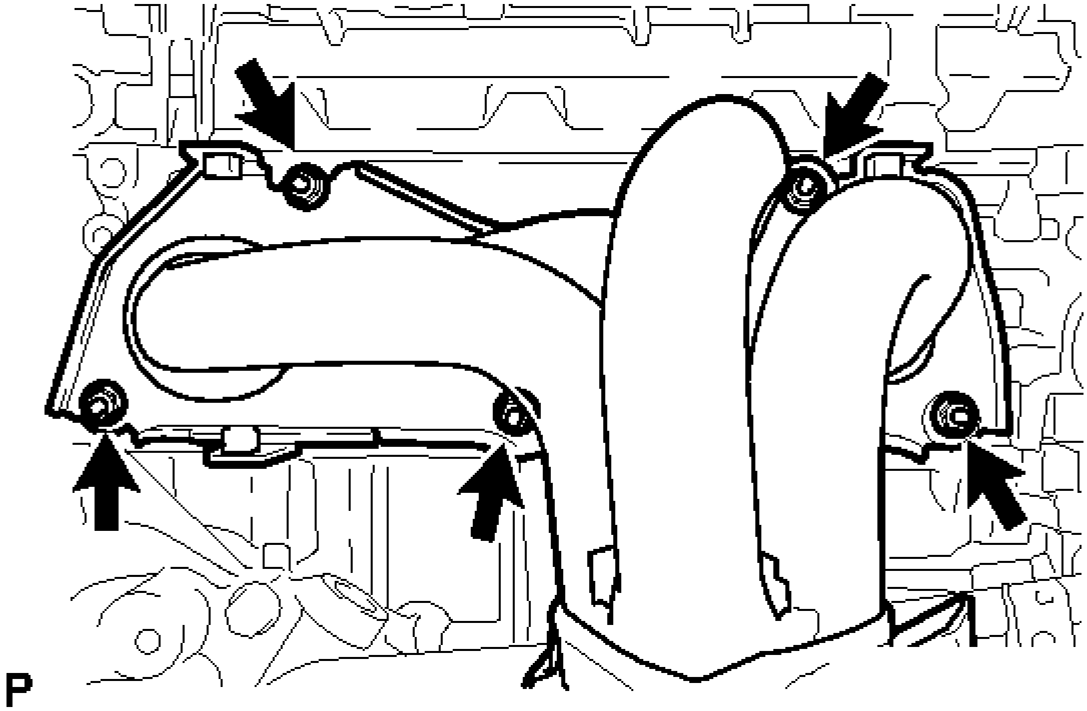

Fig. 22: Locating Exhaust Manifold Converter Sub-Assembly And Nut
Courtesy of TOYOTA MOTOR SALES, U.S.A., INC.

    b. Remove the gasket.

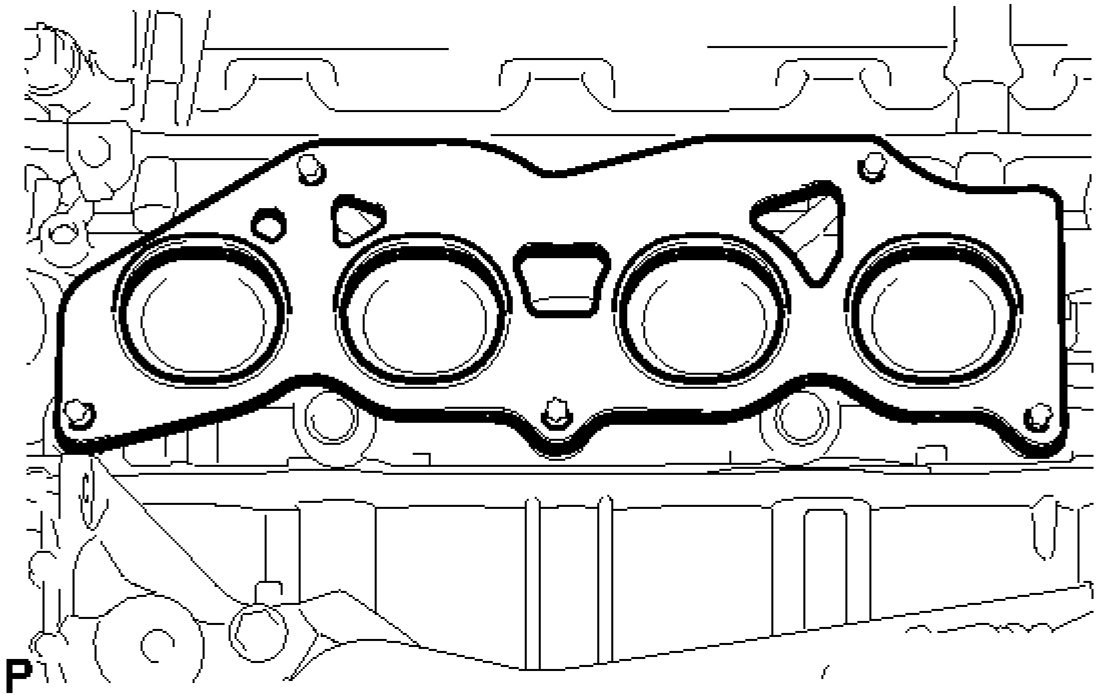

Fig. 23: Identifying Cylinder Head Gasket
Courtesy of TOYOTA MOTOR SALES, U.S.A., INC.

13. **REMOVE NO. 2 EXHAUST MANIFOLD HEAT INSULATOR**
    a. Remove the 2 bolts and No. 2 exhaust manifold heat insulator.

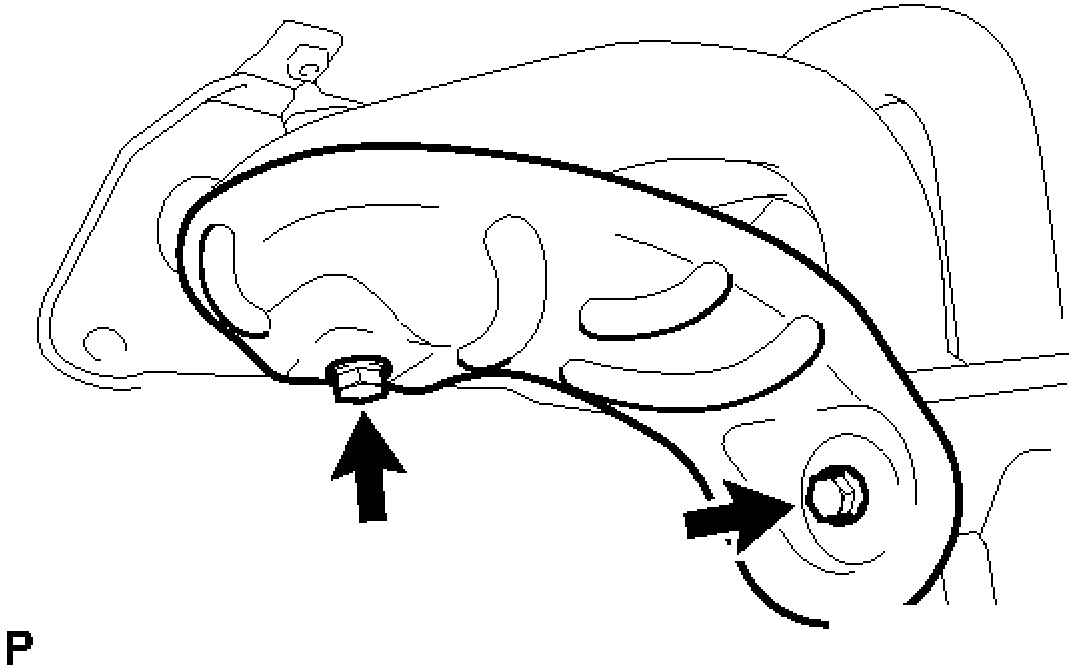

Fig. 24: Locating No. 2 Exhaust Manifold Heat Insulator And Bolt

Courtesy of TOYOTA MOTOR SALES, U.S.A., INC.

INSTALLATION

INSTALLATION

1. **INSTALL NO. 2 EXHAUST MANIFOLD HEAT INSULATOR**
    a. Install the No. 2 exhaust manifold heat insulator with the 2 bolts.

    Torque: 14 N*m (138 kgf*cm, 10 ft.*lbf)

2. **INSTALL EXHAUST MANIFOLD CONVERTER SUB-ASSEMBLY**
    a. Set a new gasket to the cylinder head sub-assembly.
    b. Temporarily install the exhaust manifold converter sub-assembly with the 5 nuts.
    c. Temporarily install the No. 2 manifold stay and manifold stay with the 2 bolts and 2 nuts.
    d. Tighten the 5 nuts in the order shown in the illustration.

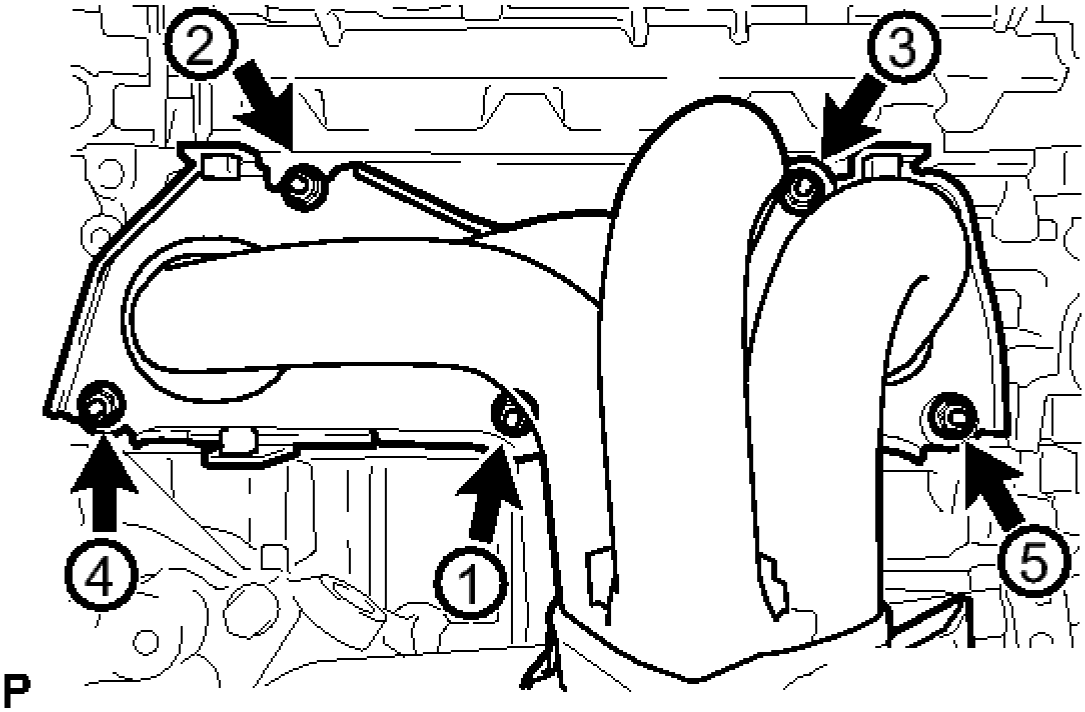

Fig. 25: Locating Manifold Converter Nuts
Courtesy of TOYOTA MOTOR SALES, U.S.A., INC.

Torque: 35 N*m (357 kgf*cm, 26 ft.*lbf)

3. **INSTALL MANIFOLD STAY**
    a. Tighten the bolt and nut in the order shown in the illustration.

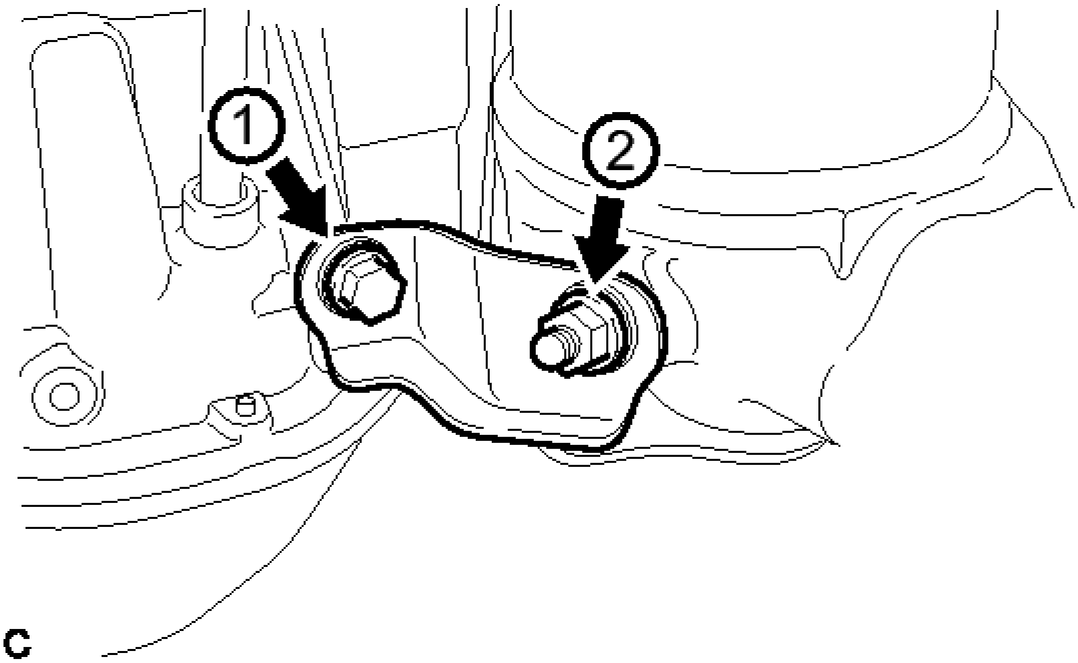

Fig. 26: Identifying Manifold Stay Nut And Bolt
Courtesy of TOYOTA MOTOR SALES, U.S.A., INC.

Torque: 43 N*m (438 kgf*cm, 32 ft.*lbf)

4. **INSTALL NO. 2 MANIFOLD STAY**
   a. Tighten the bolt and nut in the order shown in the illustration.

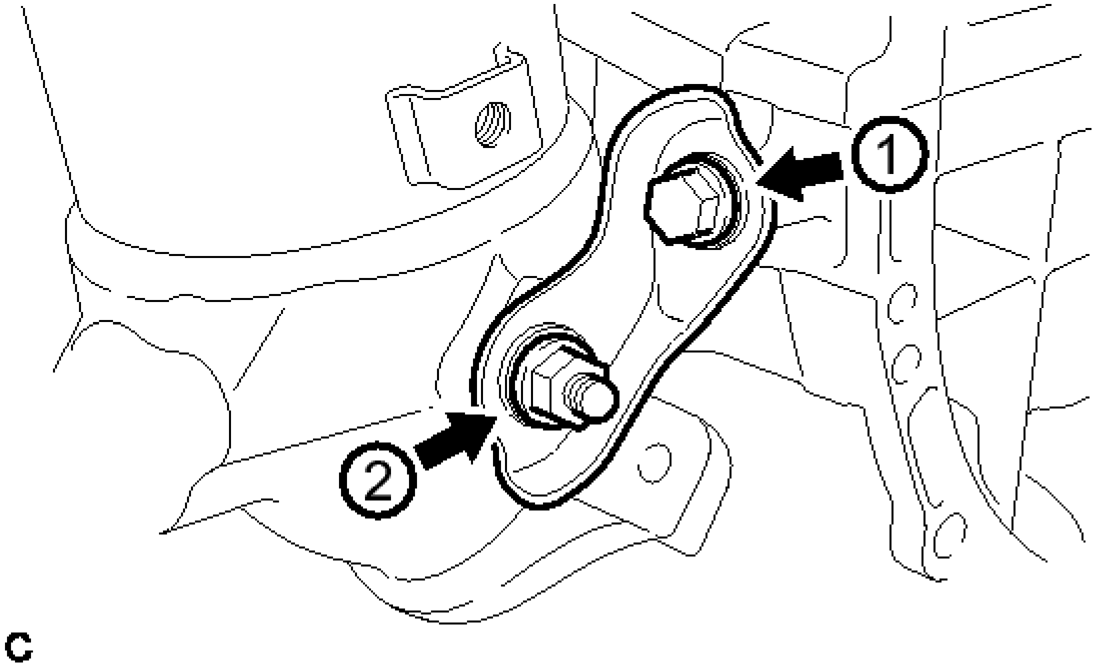

Fig. 27: Identifying No. 2 Manifold Stay Nut And Bolt
Courtesy of TOYOTA MOTOR SALES, U.S.A., INC.

Torque: 43 N*m (438 kgf*cm, 32 ft.*lbf)

5. **INSTALL NO. 2 EGR PIPE**
    a. Install 2 new gaskets to the No. 2 EGR pipe.
    b. Install the No. 2 EGR pipe with the 2 bolts and 2 nuts.

    Torque: 36 N*m (367 kgf*cm, 26 ft.*lbf)

6. **INSTALL NO. 1 MANIFOLD CONVERTER INSULATOR**
    a. Install the No. 1 manifold converter insulator with the 3 bolts.

    Torque: 14 N*m (138 kgf*cm, 10 ft.*lbf)

7. **INSTALL AIR FUEL RATIO SENSOR** . Refer to **INSTALLATION - Step 1**
8. **INSTALL NO. 1 EXHAUST MANIFOLD HEAT INSULATOR**
    a. Install the No. 1 exhaust manifold heat insulator with the 4 bolts.

    Torque: 12 N*m (122 kgf*cm, 9 ft.*lbf)

9. **INSTALL FRONT EXHAUST PIPE ASSEMBLY**
    a. Using a vernier caliper, measure the free length of the compression spring.

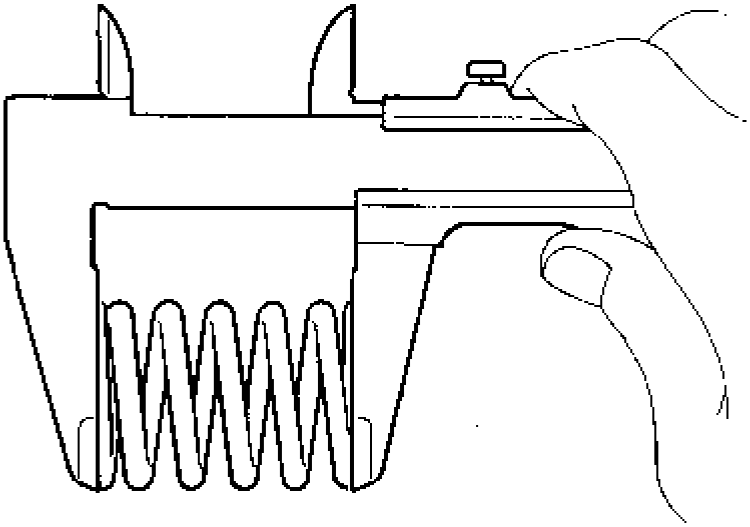

Fig. 28: Measuring Free Length Of Compression Spring
Courtesy of TOYOTA MOTOR SALES, U.S.A., INC.

Standard	42.0 mm (1.65 in.)
Minimum	40.5 mm (1.60 in.)

HINT:

If the length is less than the minimum, replace the compression spring.

b. Fully insert a new gasket to the exhaust manifold converter sub-assembly.
c. Using a plastic hammer and wooden block, tap in the new gasket until its surface is flush with the exhaust manifold converter sub-assembly.

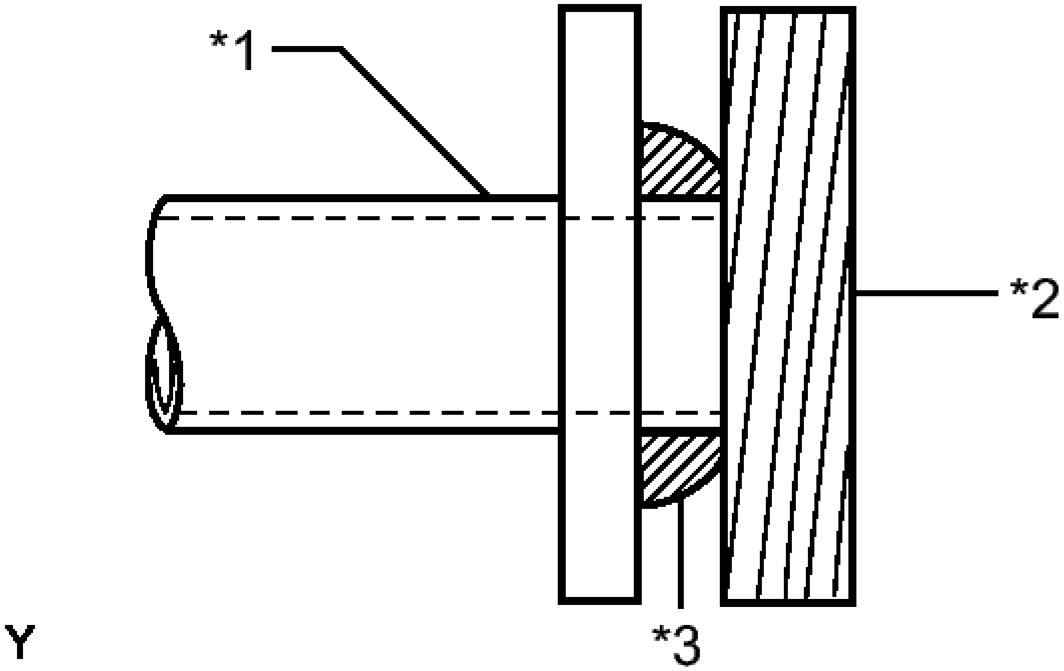

Fig. 29: Identifying Exhaust Manifold Converter Sub-Assembly Gasket
Courtesy of TOYOTA MOTOR SALES, U.S.A., INC.

TEXT IN ILLUSTRATION

*1	Exhaust Manifold Converter Sub-assembly
*2	Wooden Block
*3	Gasket

NOTE:

- **Be sure to install the gasket in the correct direction.**
- **Do not reuse the gasket.**
- **Do not damage the gasket.**
- **Do not push in the gasket by using the exhaust pipe when connecting it.**

d. Install a new gasket to the front exhaust pipe assembly.
e. Connect the front exhaust pipe assembly to the exhaust pipe support.
f. Install the front exhaust pipe assembly with the 2 compression springs, 2 bolts and 2 nuts.

Torque: 43 N*m (438 kgf*cm, 32 ft.*lbf)

HINT:

After the installation, check that the gaps between the flanges of the exhaust manifold converter sub-assembly and front exhaust pipe assembly are consistent front-to-rear and left-to-right.

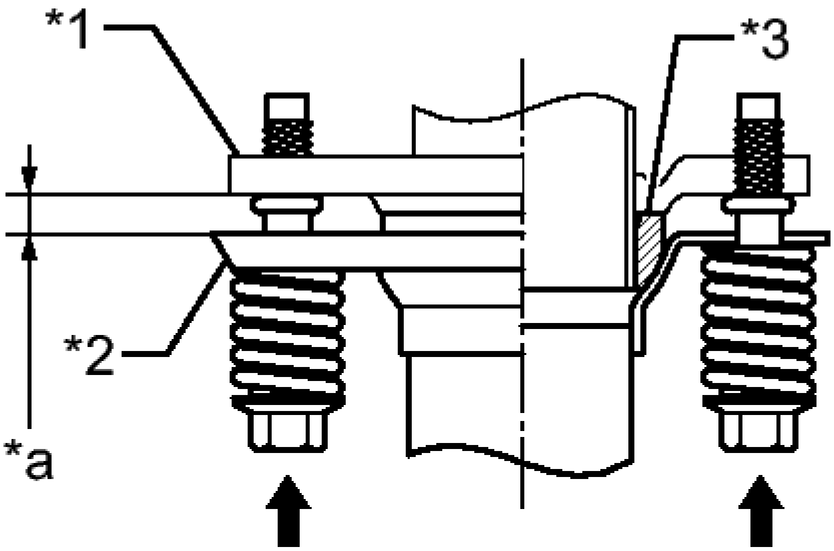

Fig. 30: Gaps Between The Flanges Of The Exhaust Manifold And Front Exhaust Pipe Assembly
Courtesy of TOYOTA MOTOR SALES, U.S.A., INC.

TEXT IN ILLUSTRATION

*1	Exhaust Manifold Converter Sub-assembly
*2	Front Exhaust Pipe Assembly
*3	Gasket
*a	Space between flanges: 8.5 mm (0.335 in.)

   g. Connect the heated oxygen sensor connector.

10. **INSTALL ENGINE UNDER COVER LH**
11. **INSTALL FRONT WHEEL OPENING EXTENSION PAD LH**
12. **INSTALL ENGINE UNDER COVER RH**
13. **INSTALL FRONT WHEEL OPENING EXTENSION PAD RH**
14. **INSPECT FOR EXHAUST GAS LEAK**

EXHAUST PIPE

COMPONENTS

ILLUSTRATION

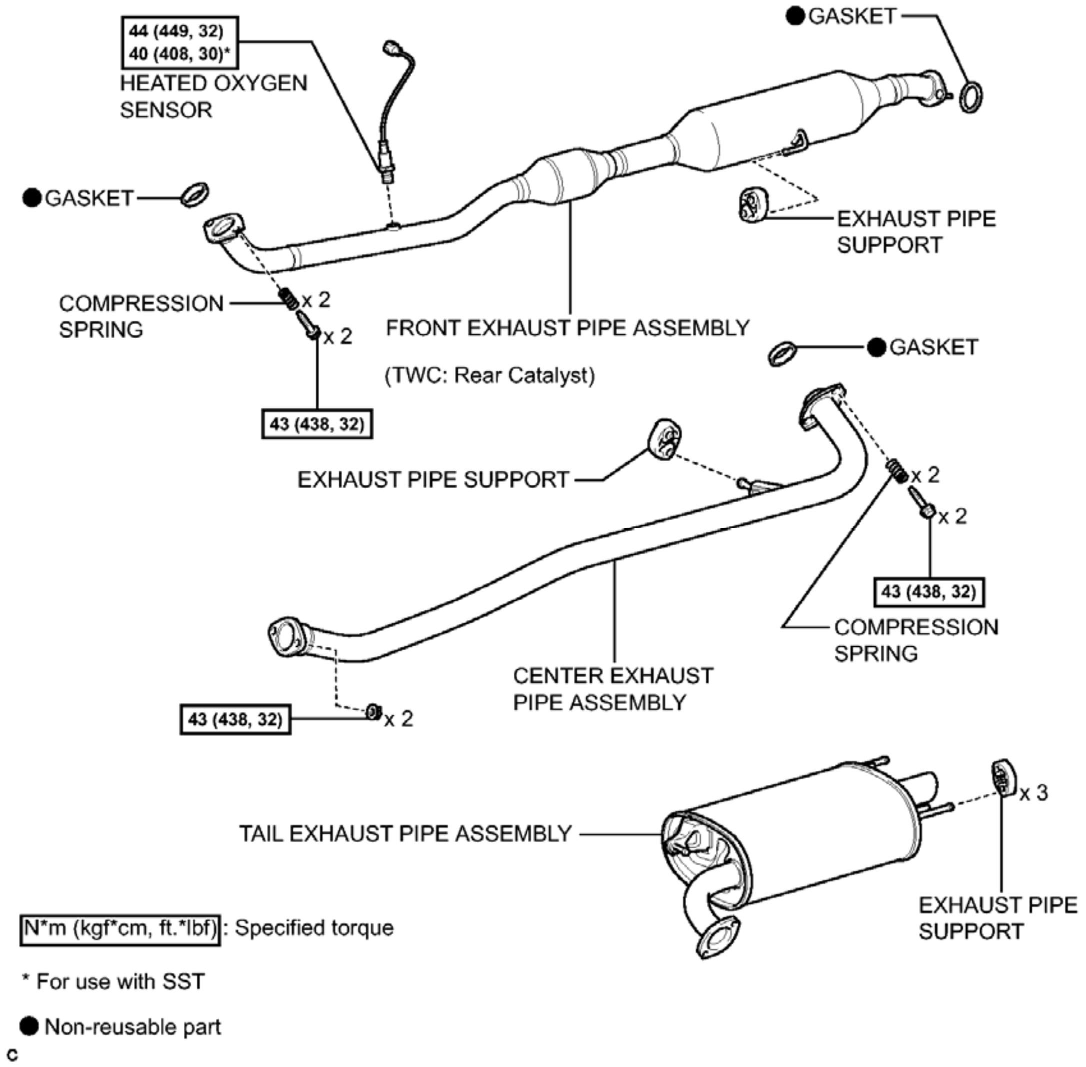
44 (449, 32)
40 (408, 30)*
HEATED OXYGEN SENSOR
● GASKET
● GASKET
EXHAUST PIPE SUPPORT
COMPRESSION SPRING
x 2
x 2
FRONT EXHAUST PIPE ASSEMBLY
(TWC: Rear Catalyst)
43 (438, 32)
● GASKET
EXHAUST PIPE SUPPORT
x 2
x 2
43 (438, 32)
COMPRESSION SPRING
CENTER EXHAUST PIPE ASSEMBLY
43 (438, 32)
x 2
TAIL EXHAUST PIPE ASSEMBLY
x 3
EXHAUST PIPE SUPPORT
N*m (kgf*cm, ft.*lbf): Specified torque
* For use with SST
● Non-reusable part
c

Fig. 31: Identifying Exhaust Pipe Replacement Components With Torque Specifications
Courtesy of TOYOTA MOTOR SALES, U.S.A., INC.

REMOVAL

REMOVAL

1. **REMOVE HEATED OXYGEN SENSOR** . Refer to **REMOVAL - Step 1**
2. **REMOVE TAIL EXHAUST PIPE ASSEMBLY**
    a. Remove the 2 bolts and 2 compression springs.

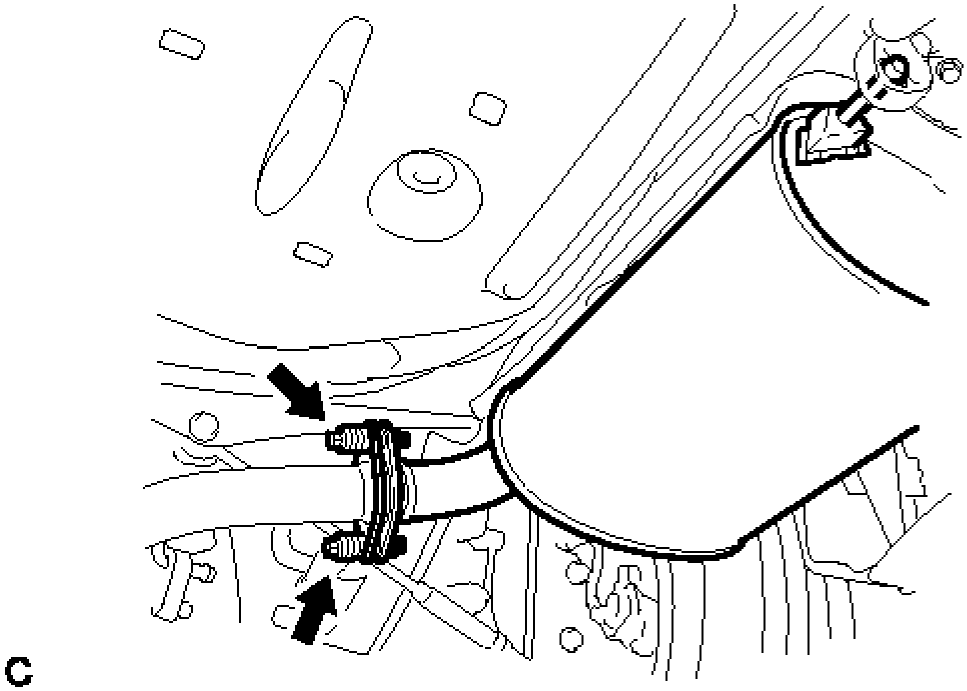

Fig. 32: Identifying Tail Exhaust Pipe Assembly Bolts And Compression Springs
Courtesy of TOYOTA MOTOR SALES, U.S.A., INC.

    b. Remove the tail exhaust pipe assembly from the 3 exhaust pipe supports.
    c. Remove the gasket from the center exhaust pipe assembly.
3. **REMOVE CENTER EXHAUST PIPE ASSEMBLY**
    a. Remove the 2 nuts.

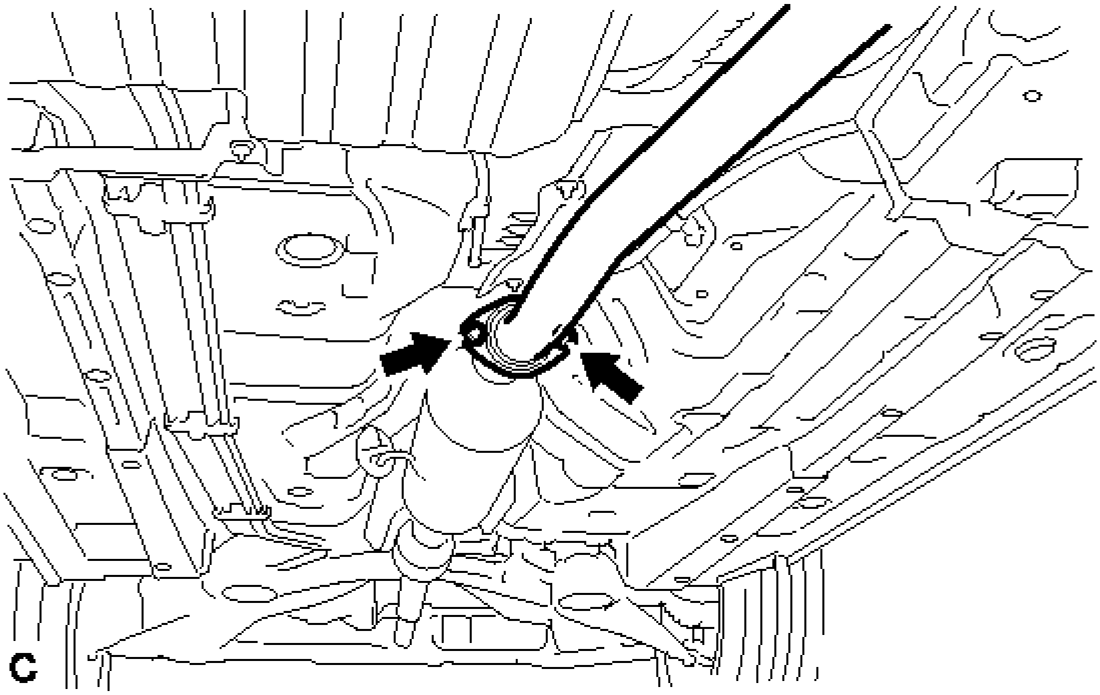

Fig. 33: Identifying Center Exhaust Pipe Assembly Nuts
Courtesy of TOYOTA MOTOR SALES, U.S.A., INC.

b. Remove the center exhaust pipe assembly from the exhaust pipe support.
c. Remove the gasket from the front exhaust pipe assembly.

4. **REMOVE FRONT EXHAUST PIPE ASSEMBLY**
    a. Remove the 2 bolts and 2 compression springs.

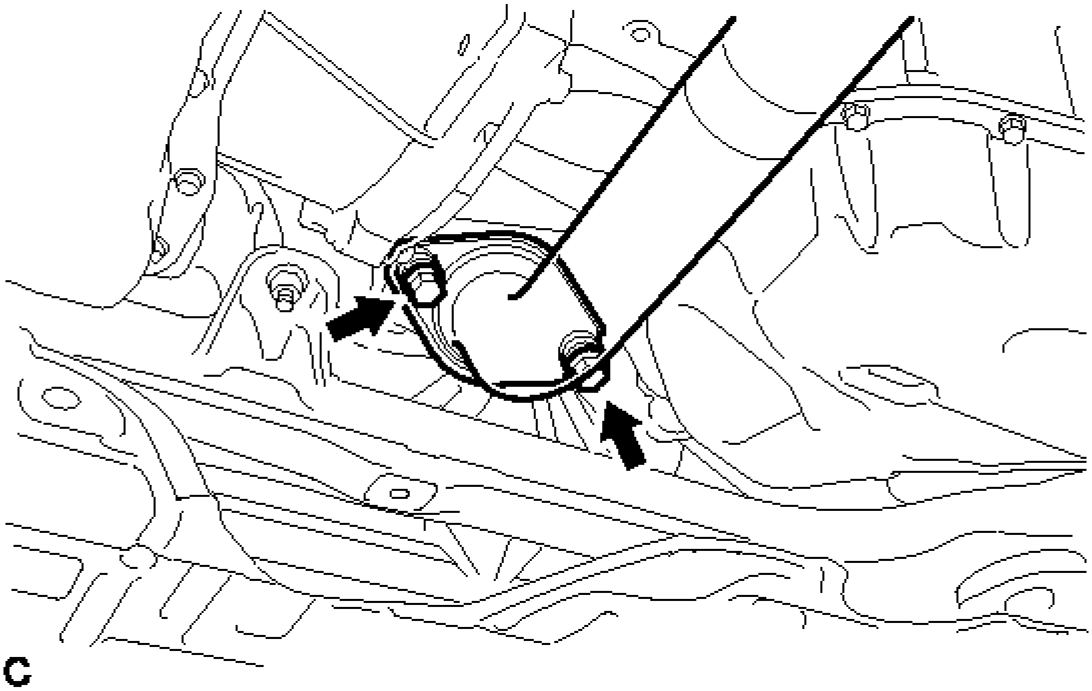

Fig. 34: Identifying Front Exhaust Pipe Assembly Bolts And Compression Springs
Courtesy of TOYOTA MOTOR SALES, U.S.A., INC.

b. Remove the front exhaust pipe assembly from the exhaust pipe support.
c. Remove the gasket from the exhaust manifold converter sub-assembly.

INSTALLATION

INSTALLATION

1. **INSTALL FRONT EXHAUST PIPE ASSEMBLY**
    a. Using a vernier caliper, measure the free length of the compression spring.

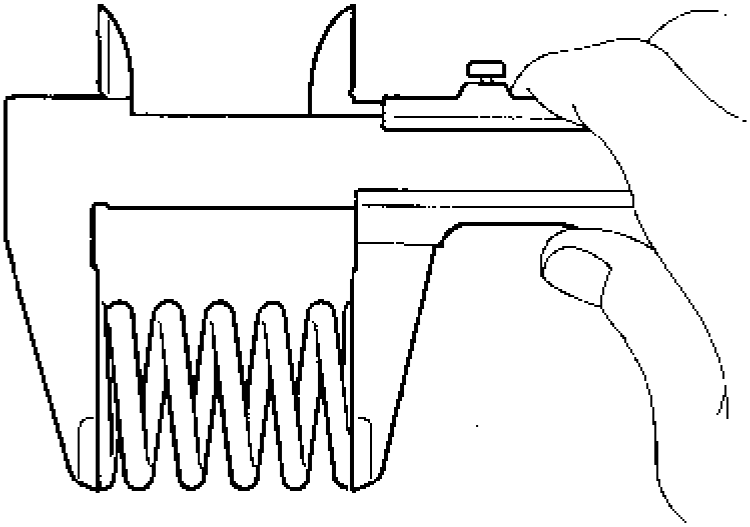

Fig. 35: Measuring Free Length Of Compression Spring
Courtesy of TOYOTA MOTOR SALES, U.S.A., INC.

Standard	42.0 mm (1.65 in.)
Minimum	40.5 mm (1.60 in.)

HINT:

If the length is less than the minimum, replace the compression spring.

b. Fully insert a new gasket to the exhaust manifold converter sub-assembly.
c. Using a plastic hammer and wooden block, tap in the new gasket until its surface is flush with the exhaust manifold converter sub-assembly.

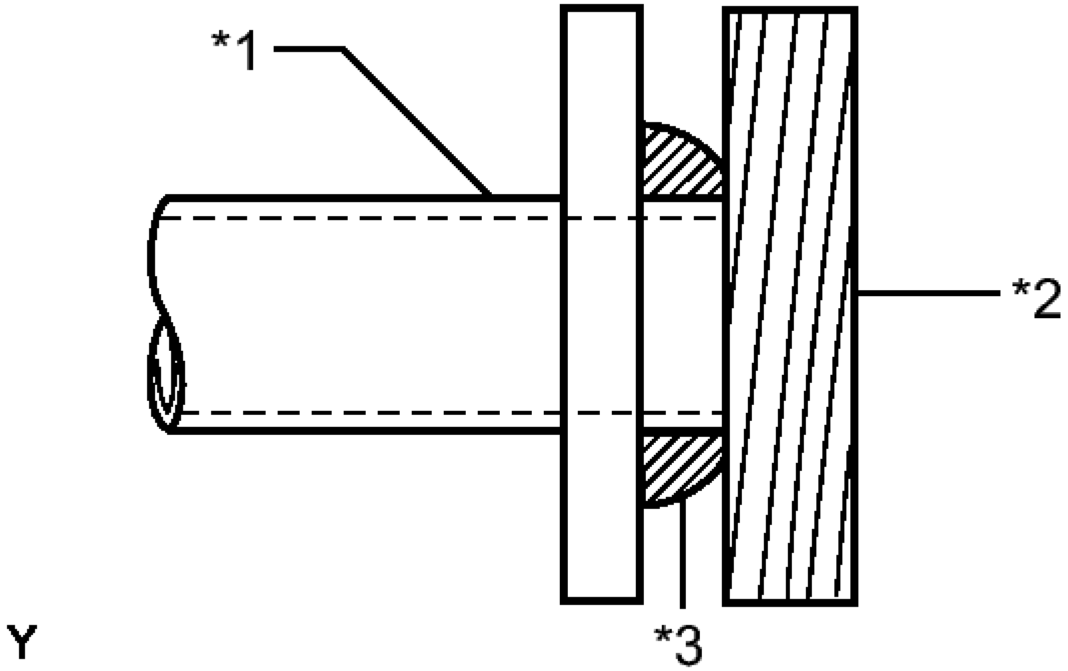

Fig. 36: Identifying Exhaust Manifold Converter Sub-Assembly Gasket
Courtesy of TOYOTA MOTOR SALES, U.S.A., INC.

TEXT IN ILLUSTRATION

*1	Exhaust Manifold Converter Sub-assembly
*2	Wooden Block
*3	Gasket

NOTE:

- **Be sure to install the gasket in the correct direction.**
- **Do not reuse the gasket.**
- **Do not damage the gasket.**
- **Do not push in the gasket by using the exhaust pipe when connecting it.**

d. Connect the front exhaust pipe assembly to the exhaust pipe support.

e. Install the front exhaust pipe assembly with the 2 compression springs and 2 bolts.

Torque: 43 N*m (438 kgf*cm, 32 ft.*lbf)

HINT:

After the installation, check that the gaps between the flanges of the exhaust manifold converter sub-assembly and front exhaust pipe assembly are consistent front-to-rear and left-to-right.

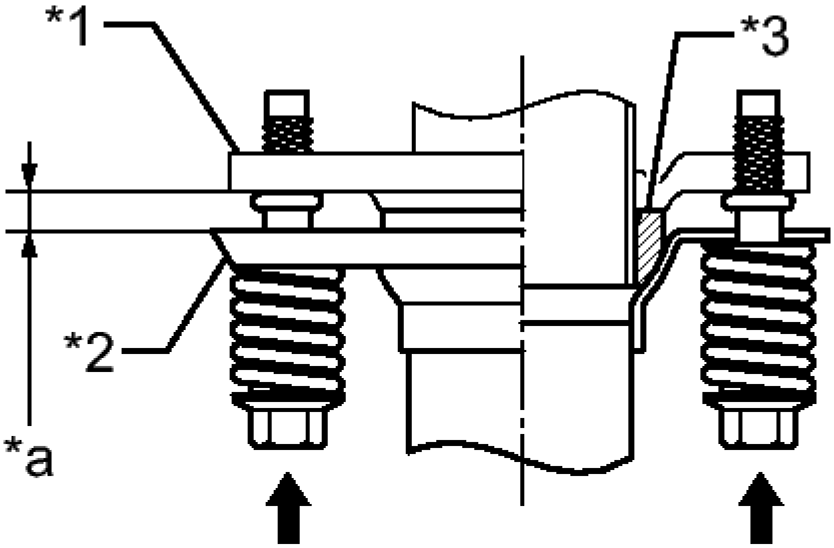

Fig. 37: Gaps Between The Flanges Of The Exhaust Manifold And Front Exhaust Pipe Assembly
Courtesy of TOYOTA MOTOR SALES, U.S.A., INC.

TEXT IN ILLUSTRATION

*1	Exhaust Manifold Converter Sub-assembly
*2	Front Exhaust Pipe Assembly
*3	Gasket
*a	Space between flanges: 8.5 mm (0.335 in.)

2. **INSTALL CENTER EXHAUST PIPE ASSEMBLY**
    a. Install a new gasket to the front exhaust pipe assembly.

b. Connect the center exhaust pipe assembly to the exhaust pipe support.

c. Install the center exhaust pipe assembly with the 2 nuts.

Torque: 43 N*m (438 kgf*cm, 32 ft.*lbf)

3. **INSTALL TAIL EXHAUST PIPE ASSEMBLY**

a. Using a vernier caliper, measure the free length of the compression spring.

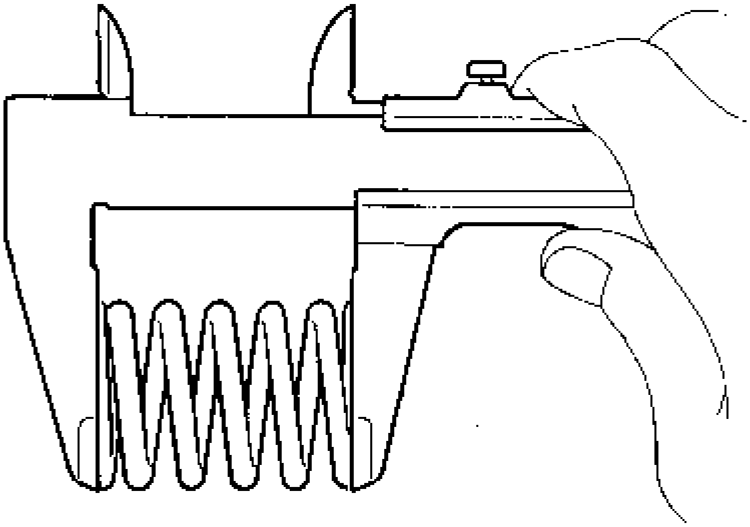

Fig. 38: Measuring Free Length Of Compression Spring
Courtesy of TOYOTA MOTOR SALES, U.S.A., INC.

Standard	40.0 mm (1.57 in.)
Minimum	38.5 mm (1.52 in.)

HINT:

If the length is less than the minimum, replace the compression spring.

b. Fully insert a new gasket to the center exhaust pipe assembly.

c. Using a plastic hammer and wooden block, tap in the new gasket until its surface is flush with the center exhaust pipe assembly.

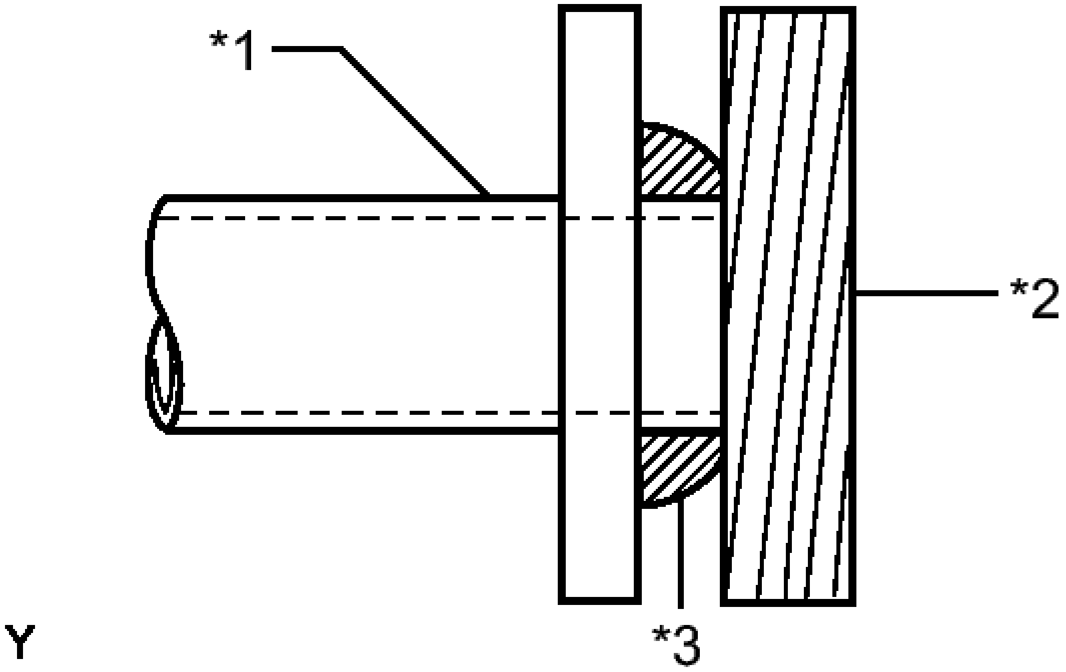

Fig. 39: Identifying Center Exhaust Pipe Assembly Gasket
Courtesy of TOYOTA MOTOR SALES, U.S.A., INC.

TEXT IN ILLUSTRATION

*1	Center Exhaust Pipe Assembly
*2	Wooden Block
*3	Gasket

NOTE:

- **Be sure to install the gasket in the correct direction.**
- **Do not reuse the gasket.**
- **Do not damage the gasket.**
- **Do not push in the gasket by using the exhaust pipe when connecting it.**

d. Connect the tail exhaust pipe assembly to the 3 exhaust pipe supports.
e. Install the tail exhaust pipe assembly with the 2 compression springs and 2 bolts.

Torque: 43 N*m (438 kgf*cm, 32 ft.*lbf)

HINT:

After the installation, check that the gaps between the flanges of the exhaust manifold converter sub-assembly and front exhaust pipe assembly are consistent front-to-rear and left-to-right.

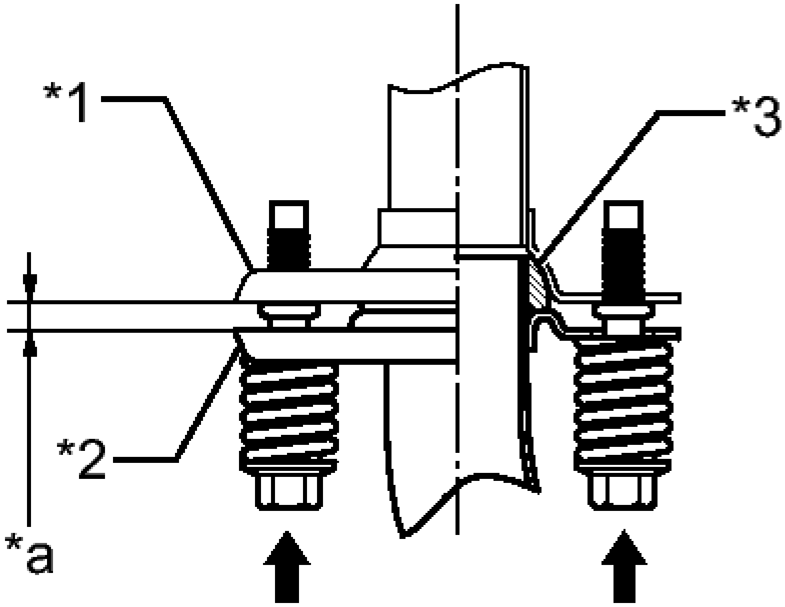

Fig. 40: Checking The Gaps Between The Flanges Of The Exhaust Manifold Converter Sub-Assembly And Front Exhaust Pipe Assembly
Courtesy of TOYOTA MOTOR SALES, U.S.A., INC.

TEXT IN ILLUSTRATION

*1	Tail Exhaust Pipe Assembly
*2	Center Exhaust Pipe Assembly
*3	Gasket
*a	Space between flanges: 6.5 mm (0.256 in.)

4. **INSTALL HEATED OXYGEN SENSOR** . Refer to **INSTALLATION - Step 1**

5. **INSPECT FOR EXHAUST GAS LEAK**

FRONT BUMPER

COMPONENTS

ILLUSTRATION

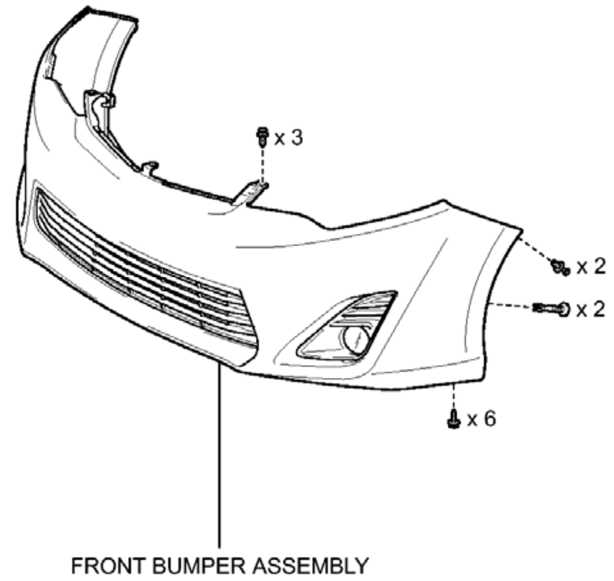
x 3
x 2
x 2
x 6
FRONT BUMPER ASSEMBLY

P

Fig. 1: Identifying Front Bumper Replacement Components (1 Of 4)
Courtesy of TOYOTA MOTOR SALES, U.S.A., INC.

w/ Intuitive Parking Assist System:

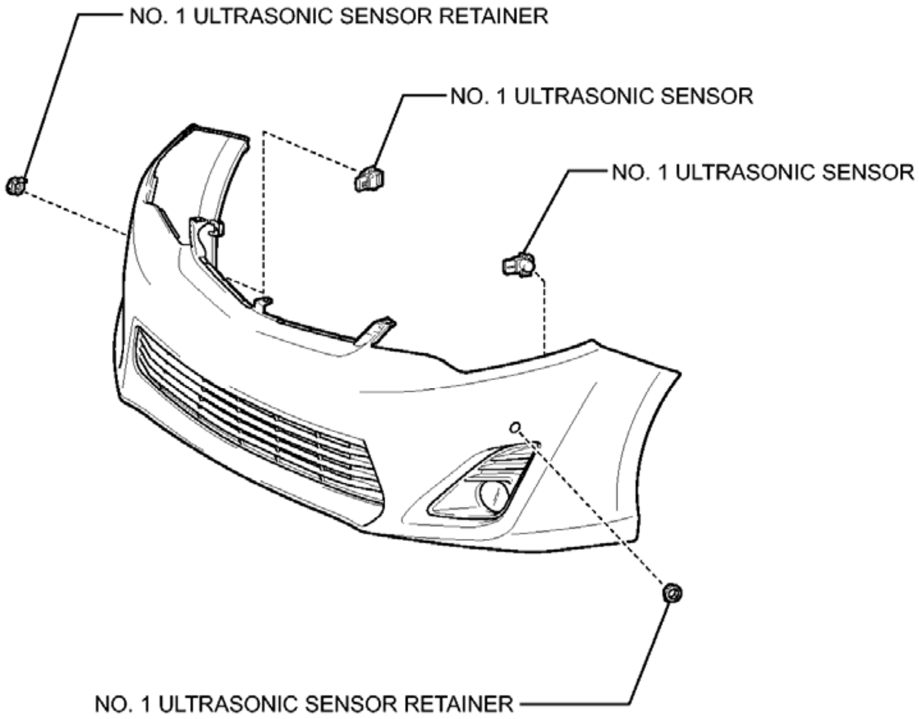
NO. 1 ULTRASONIC SENSOR RETAINER
NO. 1 ULTRASONIC SENSOR
NO. 1 ULTRASONIC SENSOR
NO. 1 ULTRASONIC SENSOR RETAINER

P

Fig. 2: Identifying Front Bumper Replacement Components (2 Of 4)

Courtesy of TOYOTA MOTOR SALES, U.S.A., INC.

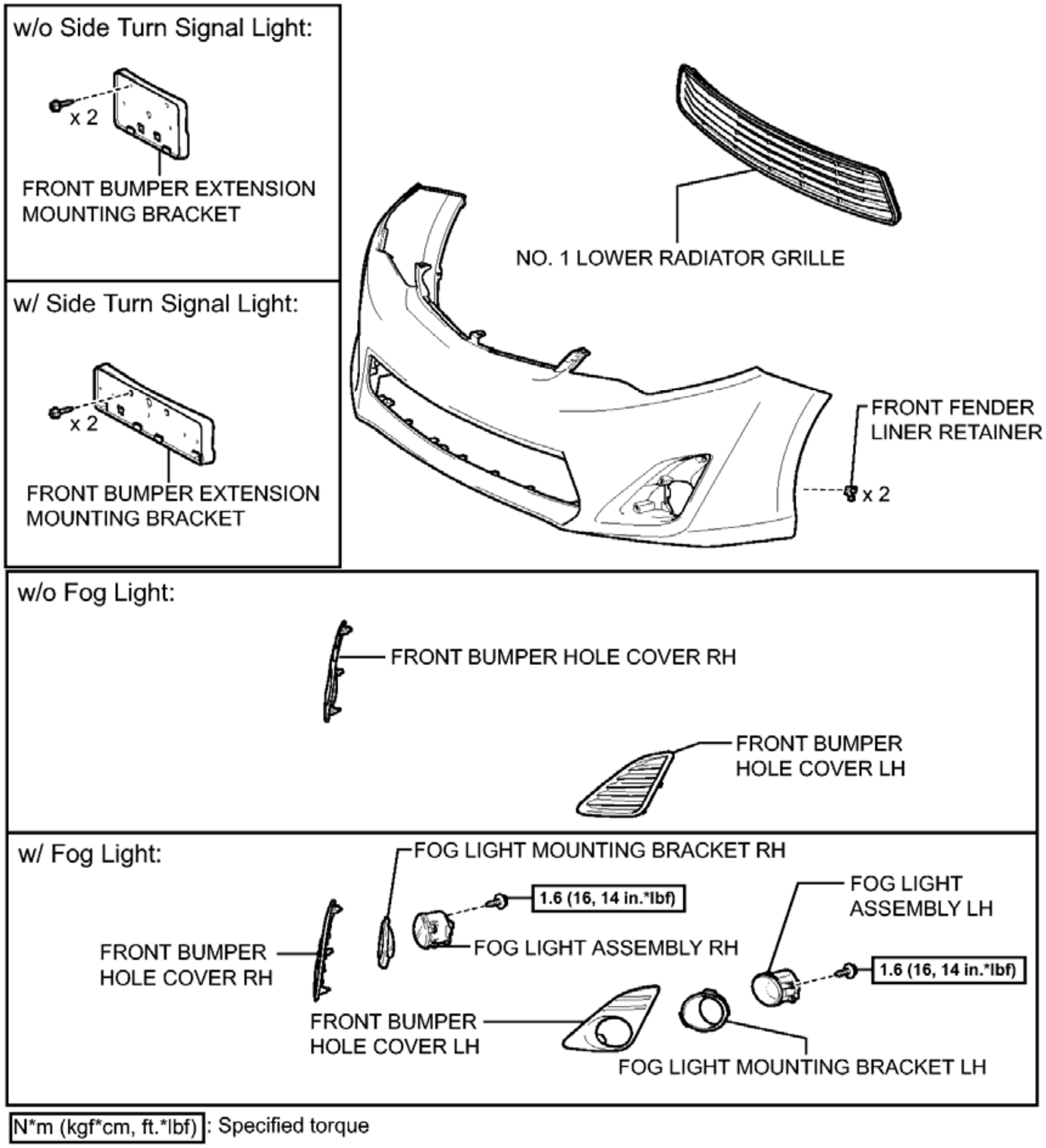
w/o Side Turn Signal Light:
x 2
FRONT BUMPER EXTENSION MOUNTING BRACKET
w/ Side Turn Signal Light:
x 2
FRONT BUMPER EXTENSION MOUNTING BRACKET
NO. 1 LOWER RADIATOR GRILLE
FRONT FENDER LINER RETAINER
x 2
w/o Fog Light:
FRONT BUMPER HOLE COVER RH
FRONT BUMPER HOLE COVER LH
w/ Fog Light:
FOG LIGHT MOUNTING BRACKET RH
1.6 (16, 14 in.*lbf)
FOG LIGHT ASSEMBLY RH
FOG LIGHT ASSEMBLY LH
1.6 (16, 14 in.*lbf)
FRONT BUMPER HOLE COVER RH
FRONT BUMPER HOLE COVER LH
FOG LIGHT MOUNTING BRACKET LH
N*m (kgf*cm, ft.*lbf) : Specified torque

P

Fig. 3: Identifying Front Bumper Replacement Components With Torque Specifications (3 Of 4)

Courtesy of TOYOTA MOTOR SALES, U.S.A., INC.

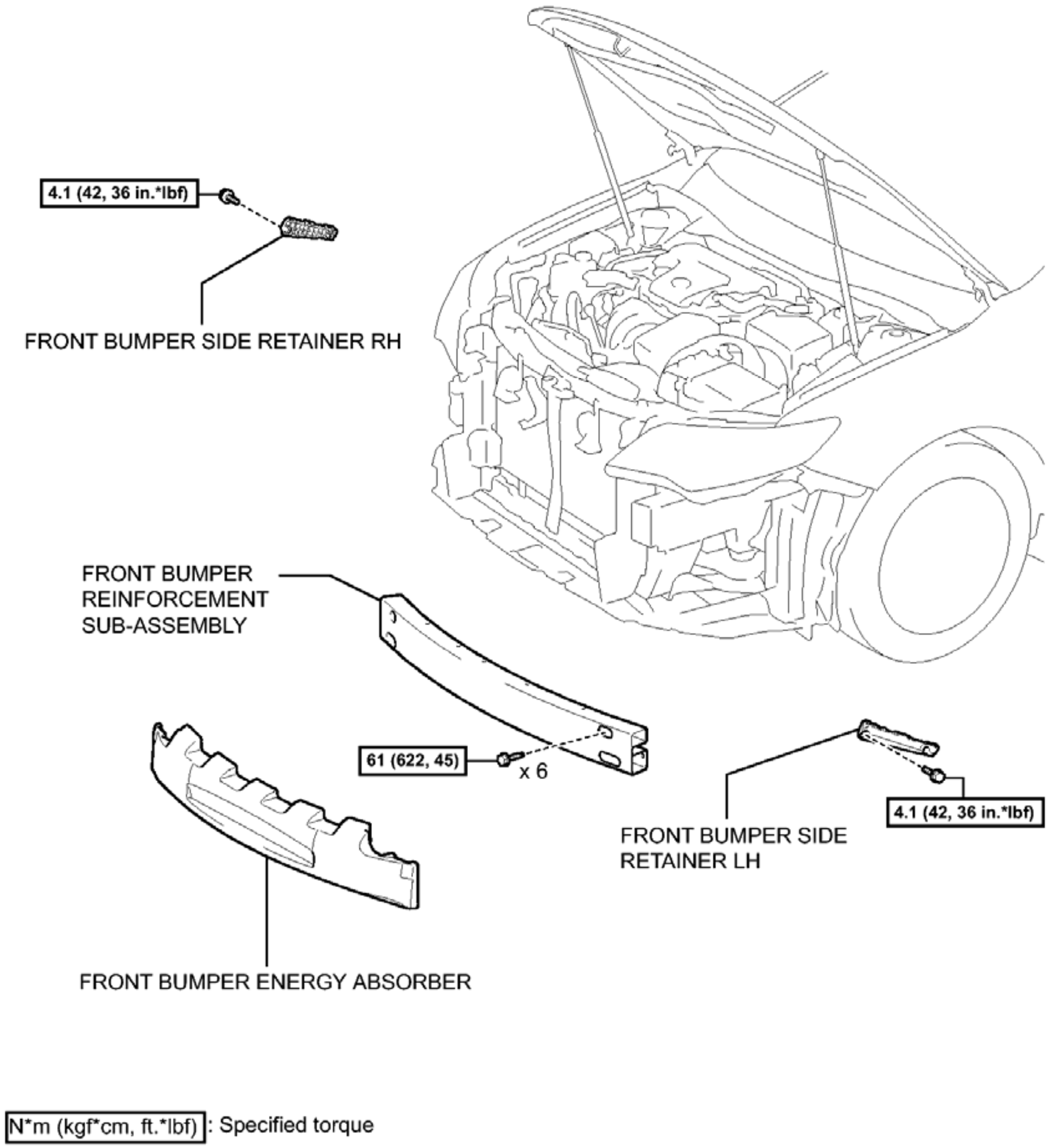
4.1 (42, 36 in.*lbf)
FRONT BUMPER SIDE RETAINER RH
FRONT BUMPER REINFORCEMENT SUB-ASSEMBLY
61 (622, 45)
x 6
4.1 (42, 36 in.*lbf)
FRONT BUMPER SIDE RETAINER LH
FRONT BUMPER ENERGY ABSORBER
N*m (kgf*cm, ft.*lbf) : Specified torque
P

Fig. 4: Identifying Front Bumper Replacement Components With Torque Specifications (4 Of 4)
Courtesy of TOYOTA MOTOR SALES, U.S.A., INC.

REMOVAL

REMOVAL

1. **REMOVE RADIATOR GRILLE SUB-ASSEMBLY**

   Refer to **REMOVAL**

2. **REMOVE FRONT BUMPER ASSEMBLY**
   a. Put protective tape around the front bumper assembly.

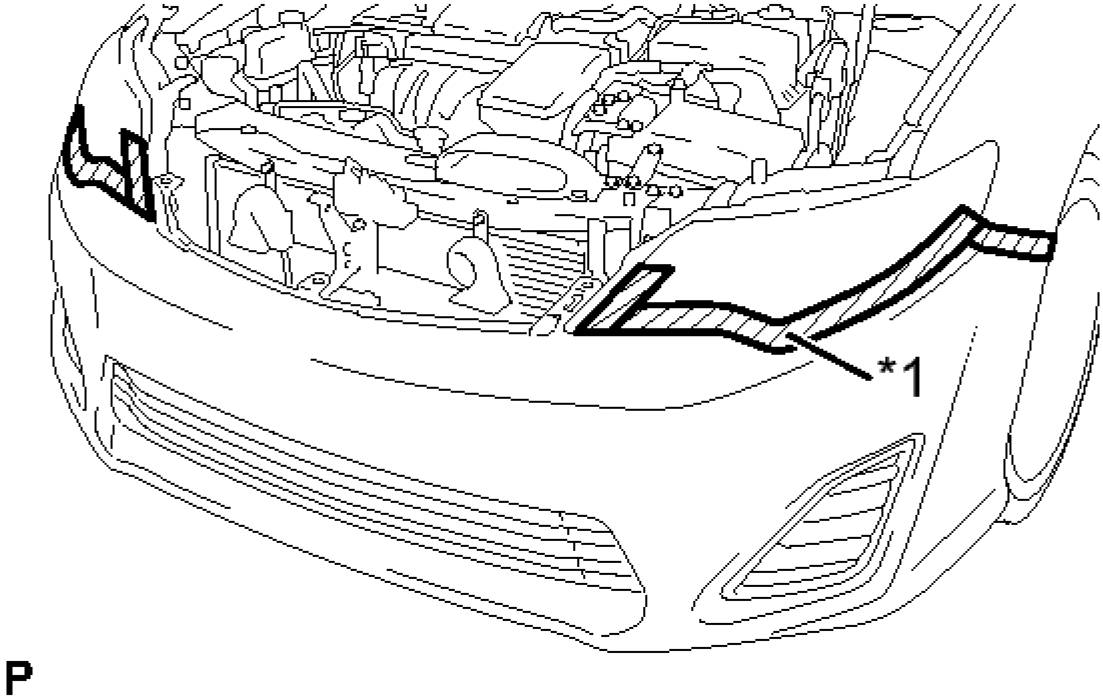

Fig. 5: Applying Protective Tape Around The Front Bumper Assembly
Courtesy of TOYOTA MOTOR SALES, U.S.A., INC.

TEXT IN ILLUSTRATION

*1	Protective Tape

HINT:

Use the same procedure for the RH side and LH side.

b. Using a screwdriver, turn the pins 90 degrees and remove the pin hold clip.

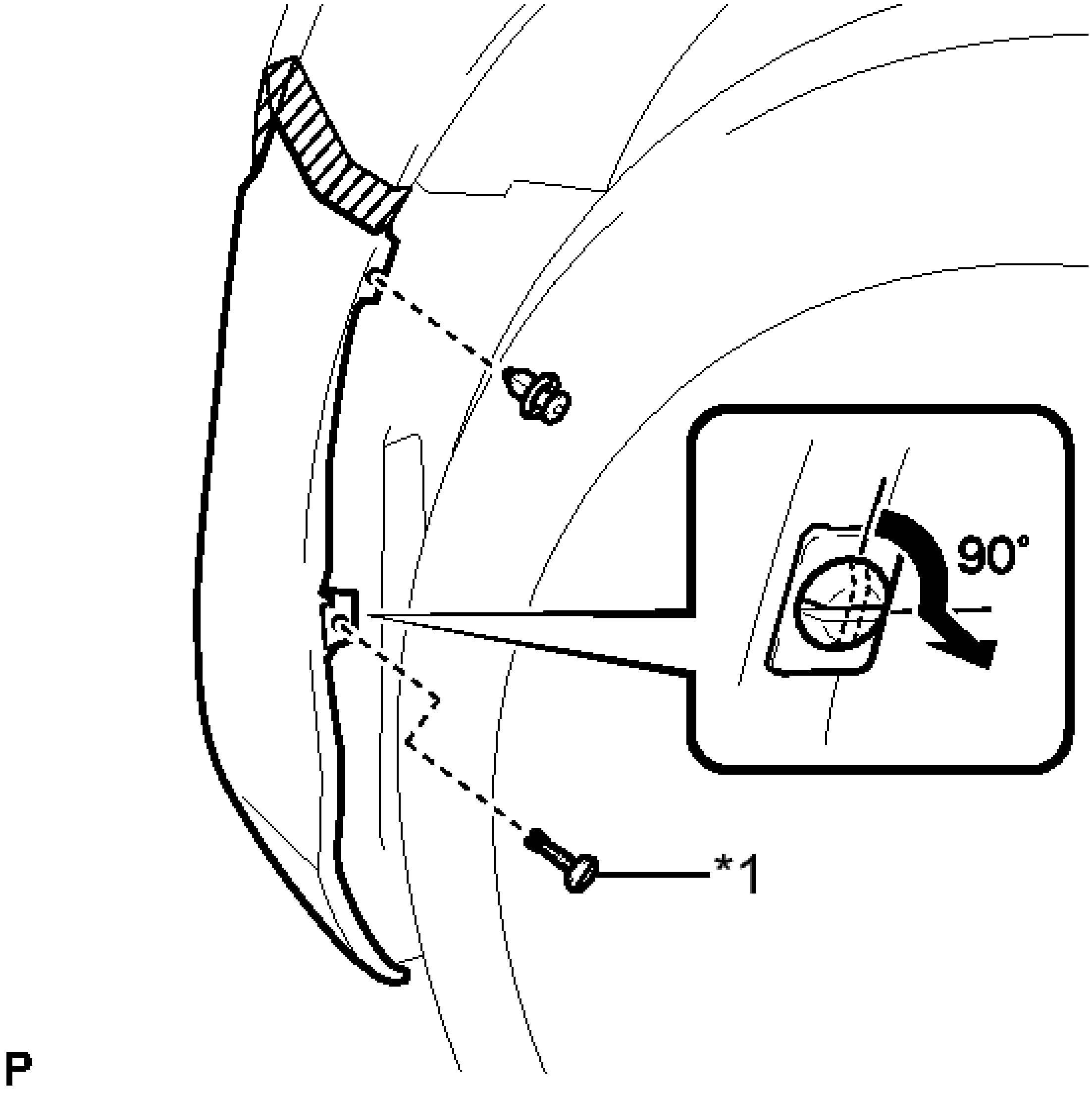

Fig. 6: Removing Pin Hold Clip
Courtesy of TOYOTA MOTOR SALES, U.S.A., INC.

TEXT IN ILLUSTRATION

*1	Pin Hold Clip

HINT:

Use the same procedure for the RH side and LH side.

c. Remove the clip.

HINT:

Use the same procedure for the RH side and LH side.

d. Remove the 6 screws.

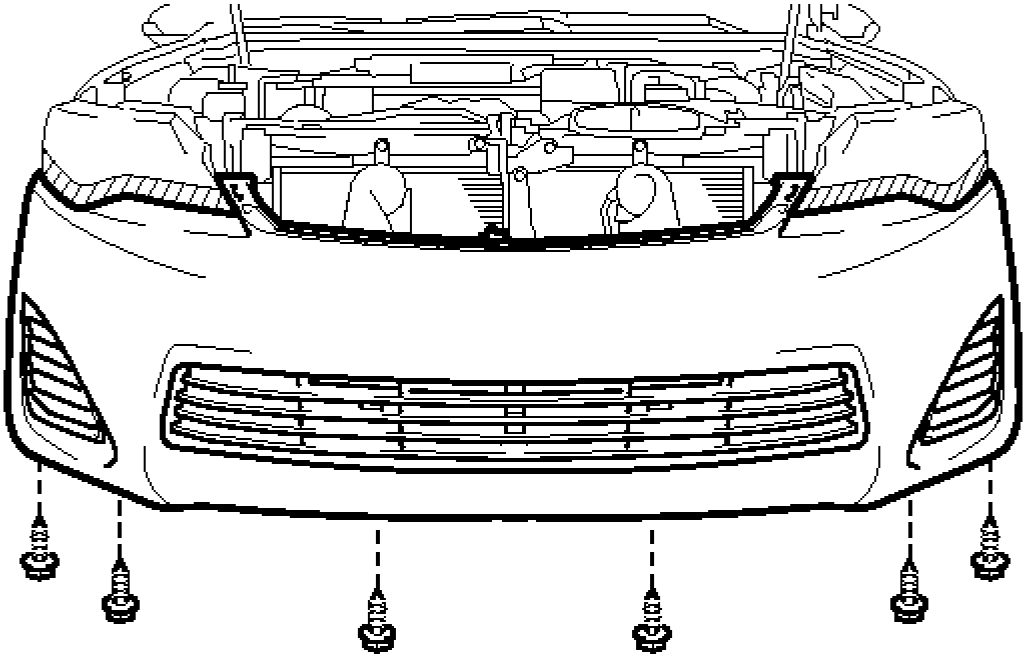

P

Fig. 7: Identifying Front Bumper Assembly Screws
Courtesy of TOYOTA MOTOR SALES, U.S.A., INC.

e. Disengage the 3 claws.

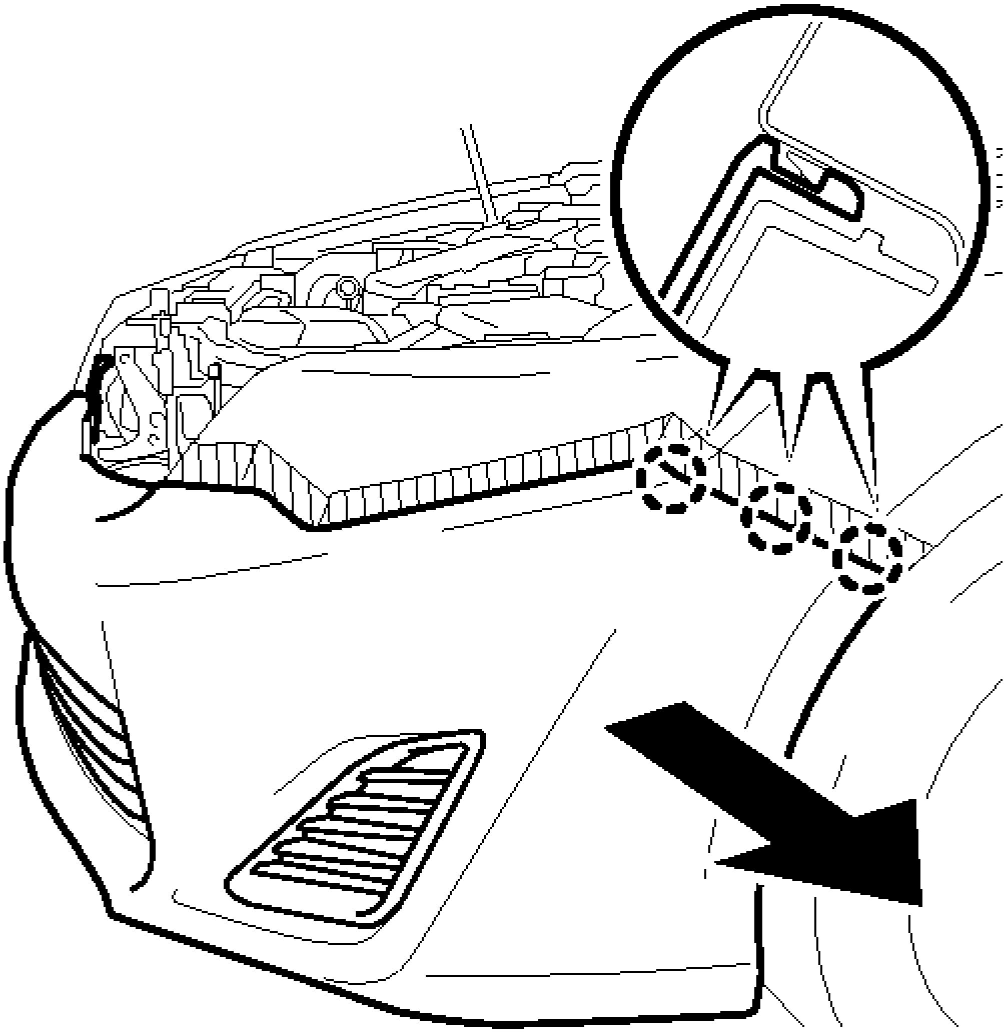

P

Fig. 8: Identifying Front Bumper Assembly Claws
Courtesy of TOYOTA MOTOR SALES, U.S.A., INC.

HINT:

Use the same procedure for the RH side and LH side.

f. Pull back the side of the front bumper assembly as shown in the illustration and disconnect each connector.

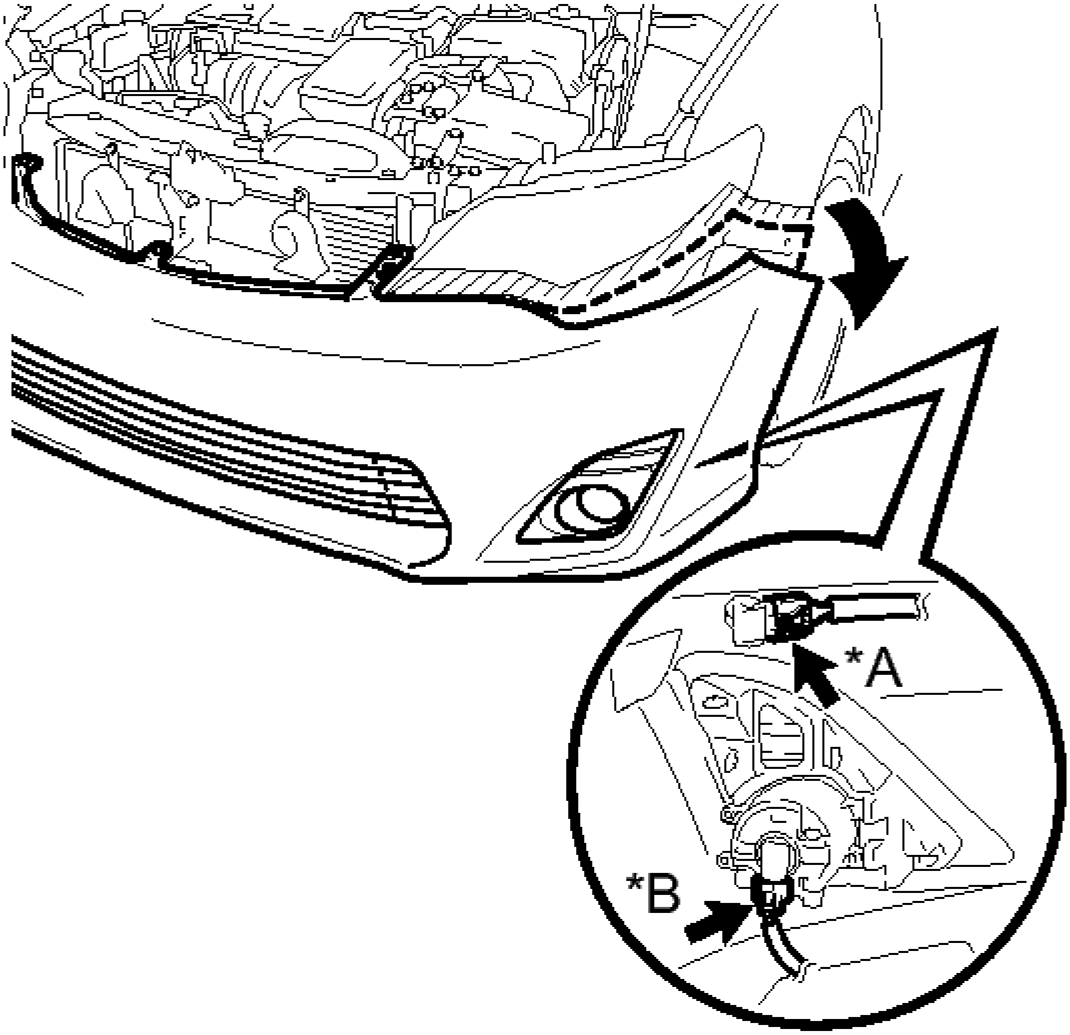

P

Fig. 9: Identifying Intuitive Parking Assist System And Fog Light Connectors
Courtesy of TOYOTA MOTOR SALES, U.S.A., INC.

TEXT IN ILLUSTRATION

*A	w/ Intuitive Parking Assist System
*B	w/ Fog Light

NOTE: **Do not apply excessive force when separating the front bumper assembly.**

HINT:

Use the same procedure for the RH side and LH side.

g. Using a clip remover, remove the 3 clips.

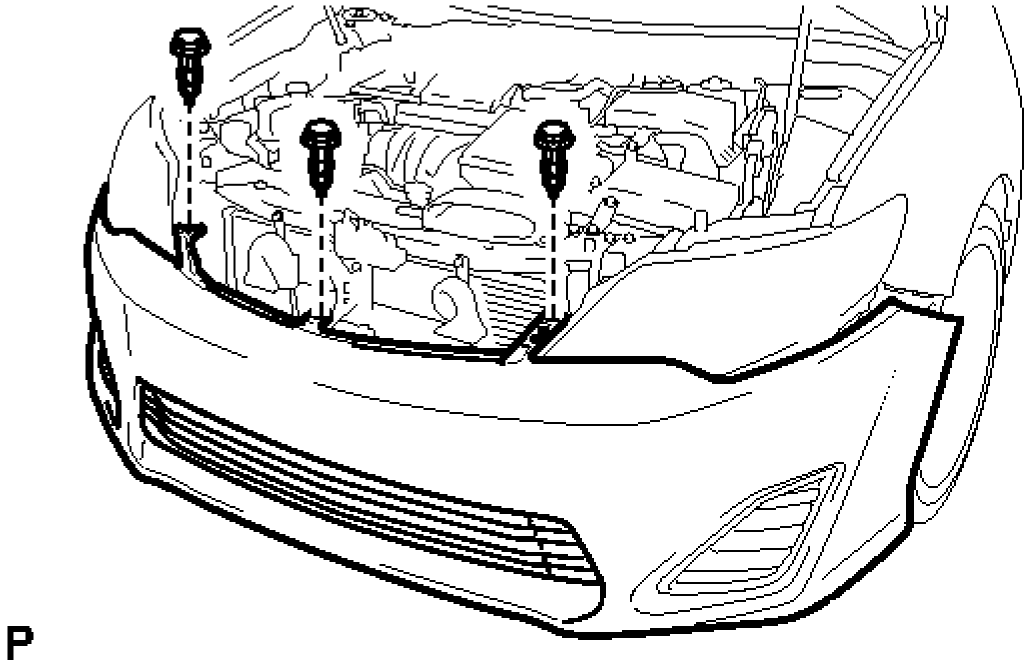

Fig. 10: Identifying Front Bumper Assembly Clips
Courtesy of TOYOTA MOTOR SALES, U.S.A., INC.

h. Remove the front bumper assembly.

DISASSEMBLY

DISASSEMBLY

1. **REMOVE NO. 1 ULTRASONIC SENSOR (w/ Intuitive Parking Assist System)** . Refer to **REMOVAL - Step 2**
2. **REMOVE NO. 1 ULTRASONIC SENSOR RETAINER (w/ Intuitive Parking Assist System)** . Refer to **REMOVAL - Step 3**
3. **REMOVE FOG LIGHT ASSEMBLY LH (w/ Fog Light)** . Refer to **REMOVAL - Step 2**
4. **REMOVE FOG LIGHT ASSEMBLY RH (w/ Fog Light)**

   HINT:

   Use the same procedure as for the LH side.

5. **REMOVE FRONT BUMPER EXTENSION MOUNTING BRACKET**
   a. w/o Side Turn Signal Light:

1. Remove the 2 screws.

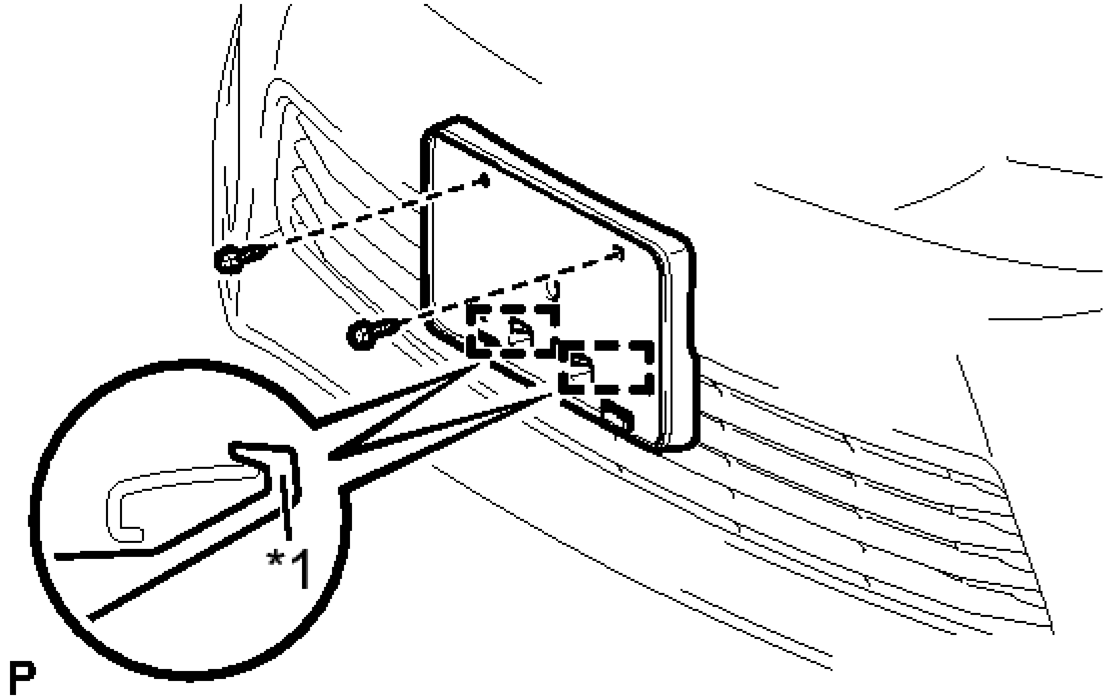

Fig. 11: Identifying Front Bumper Extension Mounting Bracket Screws And Hook (W/O Side Turn Signal Light)
Courtesy of TOYOTA MOTOR SALES, U.S.A., INC.

TEXT IN ILLUSTRATION

*1	Hook

2. Disengage the 2 hooks and remove the front bumper extension mounting bracket.

b. w/ Side Turn Signal Light:

1. Remove the 2 screws.

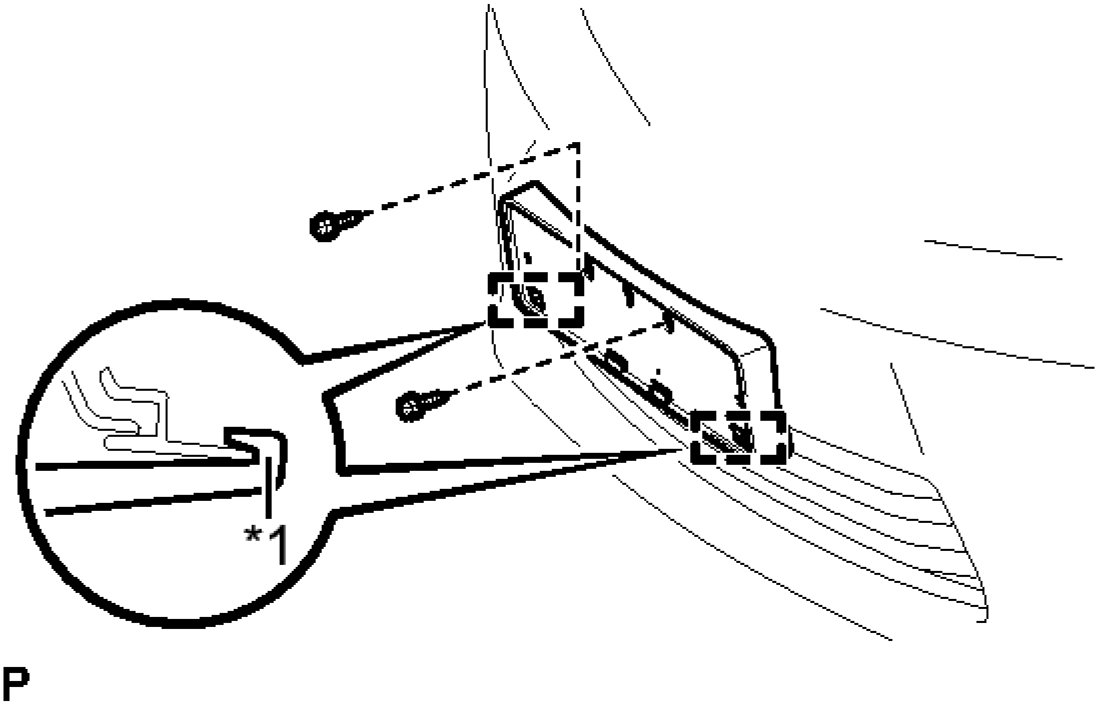

Fig. 12: Identifying Front Bumper Extension Mounting Bracket Screws And Hook (W/ Side Turn Signal Light)
Courtesy of TOYOTA MOTOR SALES, U.S.A., INC.

TEXT IN ILLUSTRATION

*1	Hook

2. Disengage the 2 hooks and remove the front bumper extension mounting bracket.

6. **REMOVE FRONT FENDER LINER RETAINER**
    a. Disengage the claw and remove the front fender liner retainer.

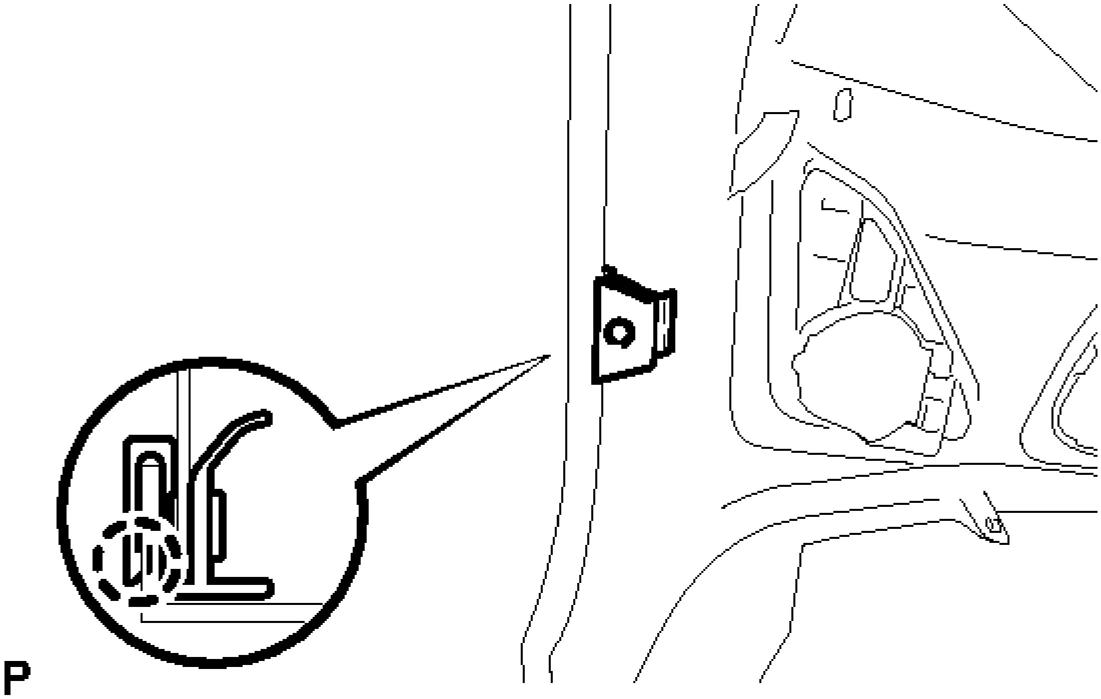

Fig. 13: Identifying Front Fender Liner Retainer Claw
Courtesy of TOYOTA MOTOR SALES, U.S.A., INC.

HINT:

Use the same procedure for the RH side and LH side.

7. **REMOVE FRONT BUMPER HOLE COVER LH**
    1. Disengage the 5 claws and remove the front bumper hole cover LH.

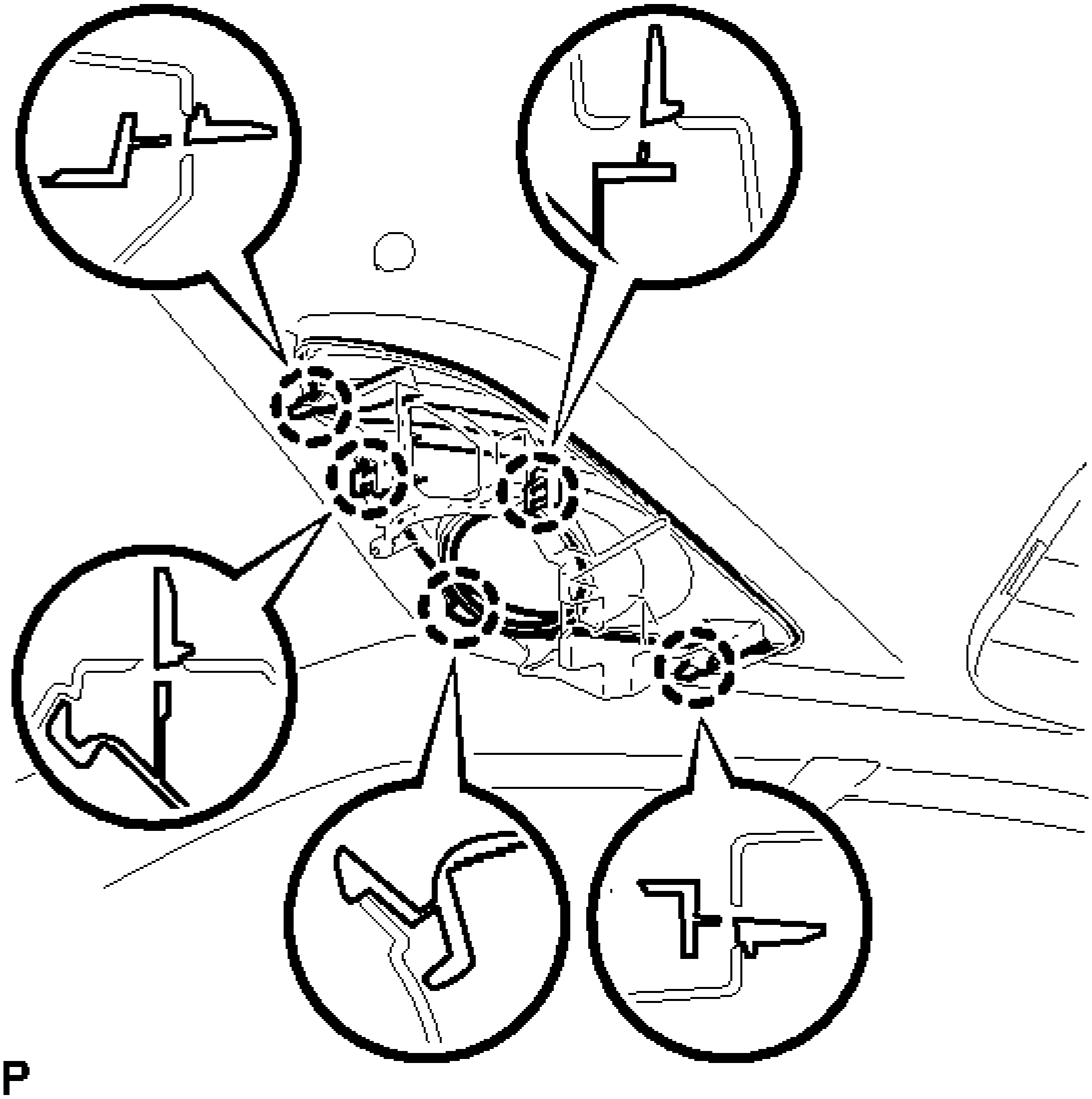

Fig. 14: Identifying Front Bumper Hole Cover LH Claws
Courtesy of TOYOTA MOTOR SALES, U.S.A., INC.

b. w/ Fog Light:
    1. Disengage the 2 claws and 2 guides, and remove the fog light mounting bracket LH.

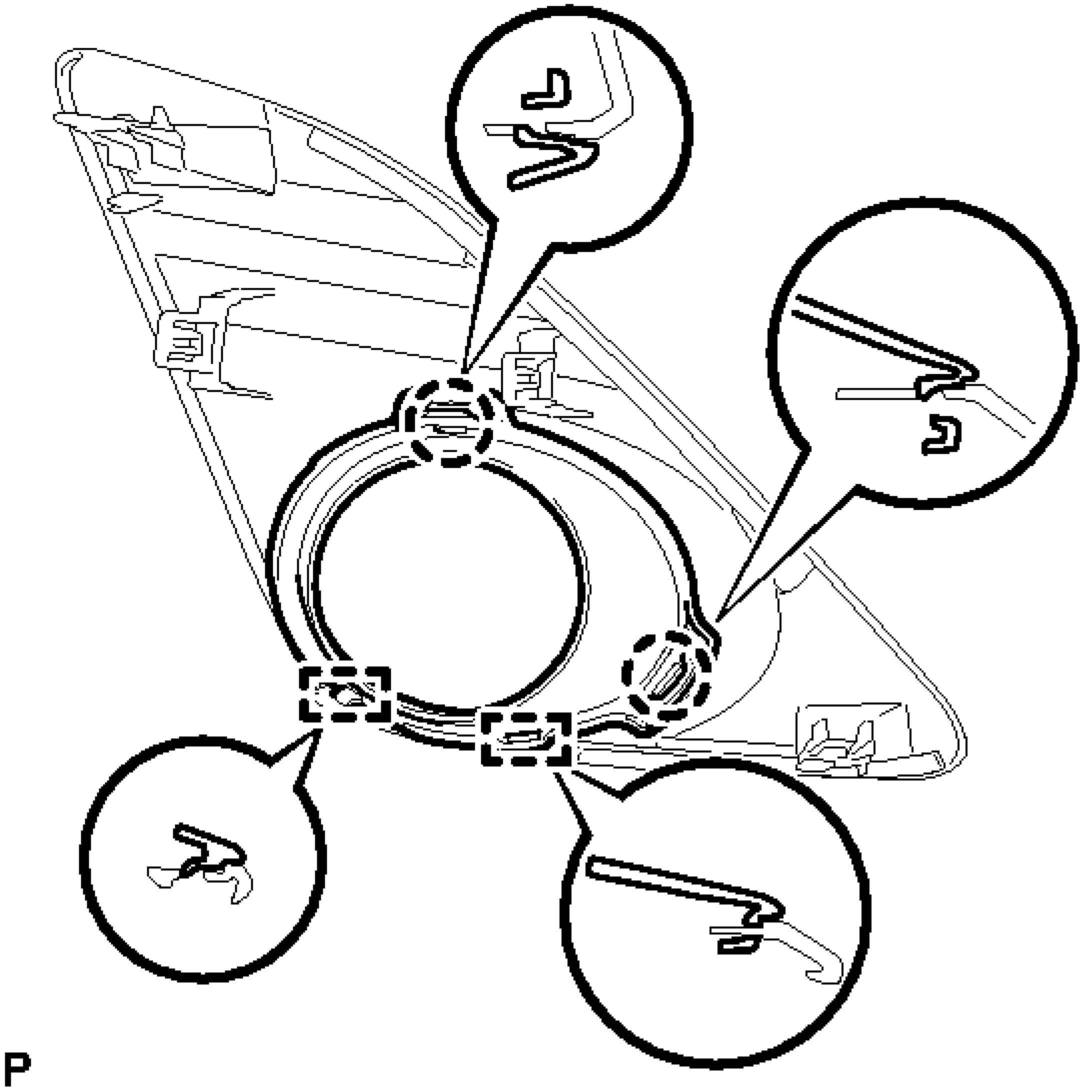

Fig. 15: Identifying Fog Light Mounting Bracket LH Claws And Guides
Courtesy of TOYOTA MOTOR SALES, U.S.A., INC.

8. **REMOVE FRONT BUMPER HOLE COVER RH**

   HINT:

   Use the same procedure as for the LH side.

9. **REMOVE NO. 1 LOWER RADIATOR GRILLE**
   1. Disengage the 16 claws and 2 guides, and remove the No. 1 lower radiator grille.

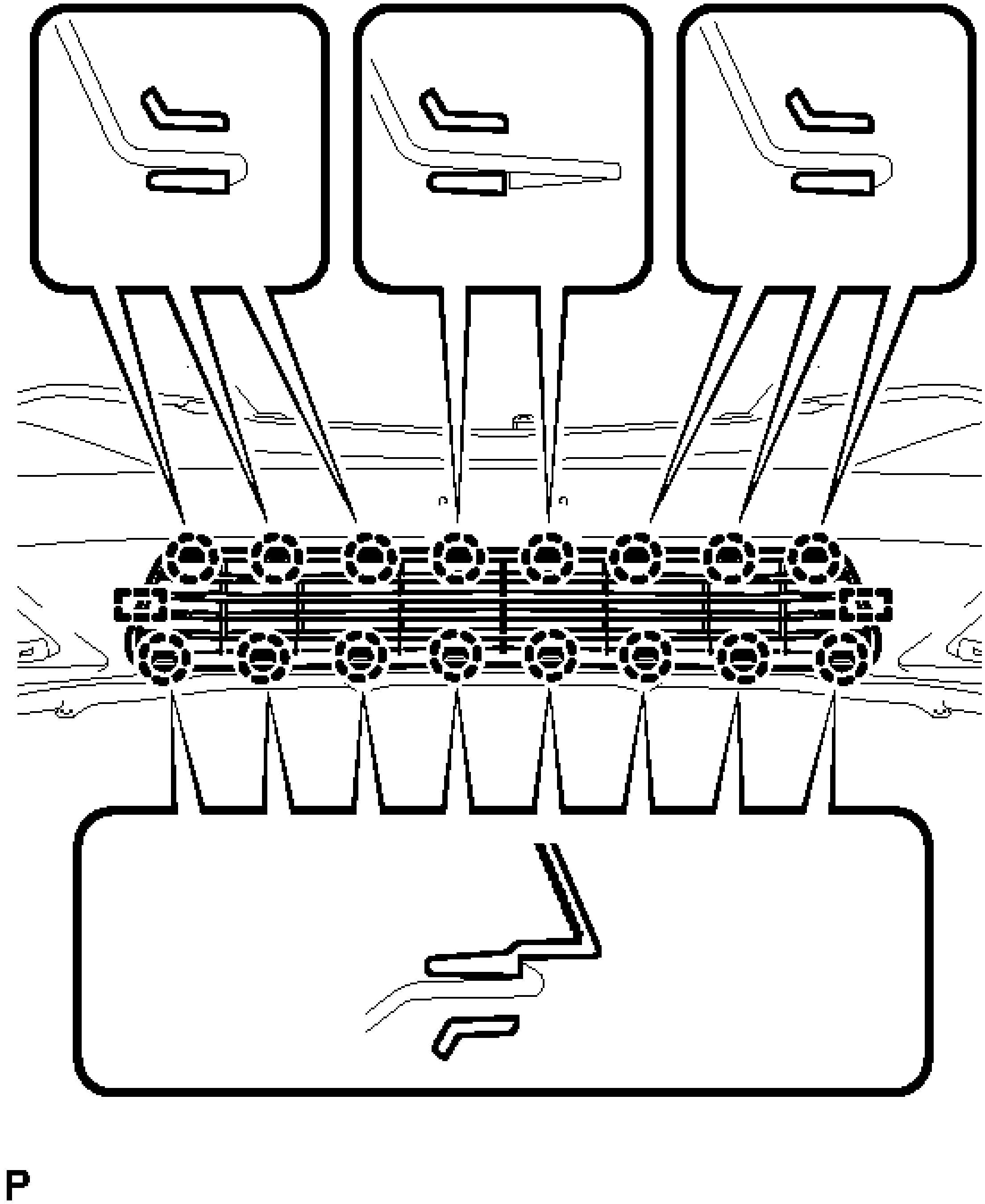

Fig. 16: Identifying No. 1 Lower Radiator Grille Claws And Guides
Courtesy of TOYOTA MOTOR SALES, U.S.A., INC.

10. **REMOVE FRONT BUMPER ENERGY ABSORBER**
    a. Disengage the 2 guides and remove the front bumper energy absorber.

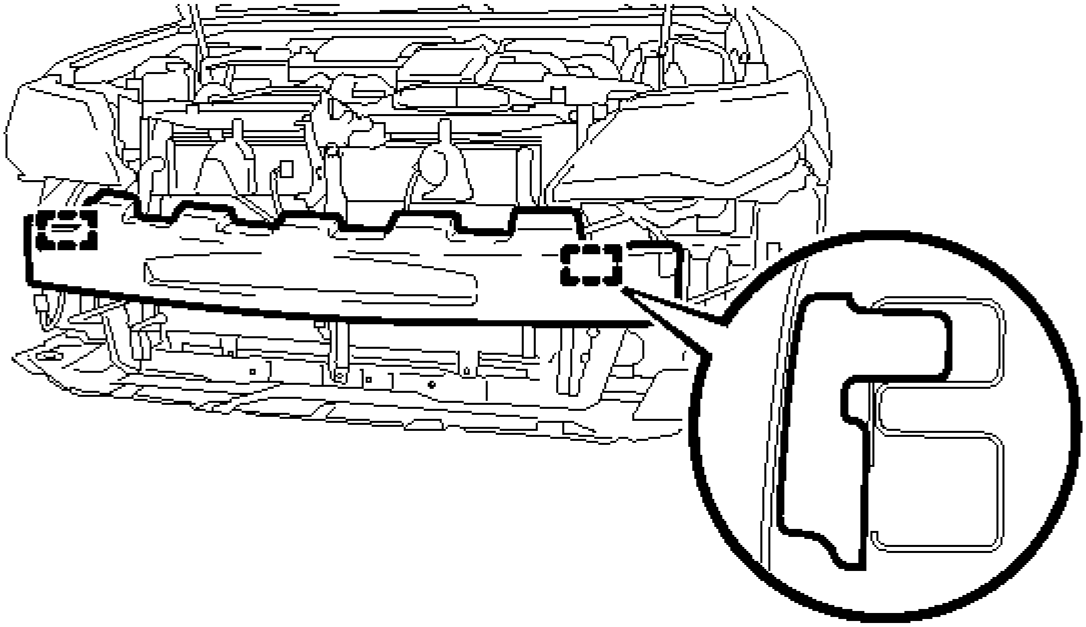

P

Fig. 17: Identifying Front Bumper Energy Absorber Guides
Courtesy of TOYOTA MOTOR SALES, U.S.A., INC.

11. **REMOVE FRONT BUMPER REINFORCEMENT SUB-ASSEMBLY**
    a. Disengage the 5 clamps.

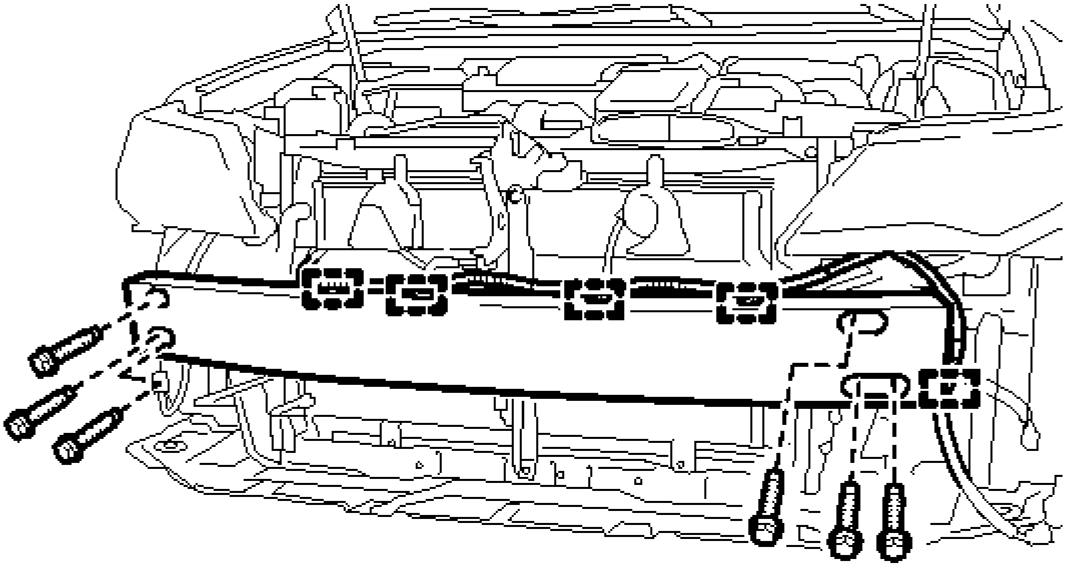

P

Fig. 18: Identifying Front Bumper Reinforcement Sub-Assembly Bolts And Clamps

Courtesy of TOYOTA MOTOR SALES, U.S.A., INC.

b. Remove the 6 bolts and front bumper reinforcement sub-assembly.

12. **REMOVE FRONT BUMPER SIDE RETAINER LH**

a. Remove the bolt.

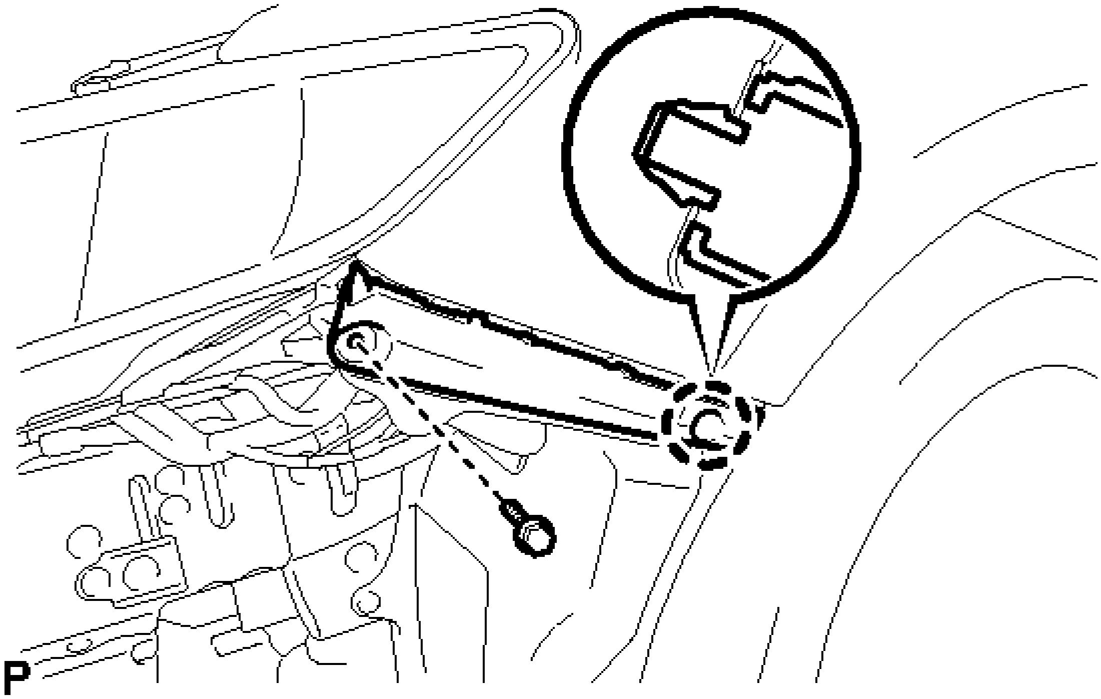

Fig. 19: Identifying Front Bumper Side Retainer LH Bolt
Courtesy of TOYOTA MOTOR SALES, U.S.A., INC.

b. Disengage the claw and remove the front bumper side retainer LH.

13. **REMOVE FRONT BUMPER SIDE RETAINER RH**

HINT:

Use the same procedure as for the LH side.

REASSEMBLY

REASSEMBLY

1. **INSTALL FRONT BUMPER SIDE RETAINER LH**

a. Engage the claw.

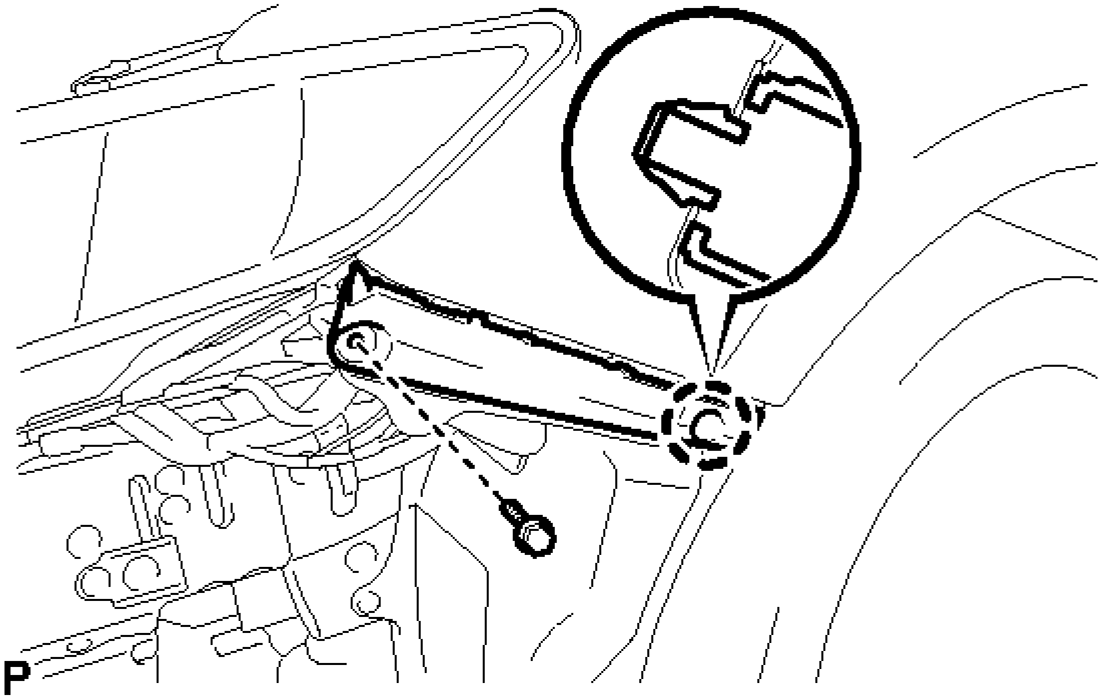

Fig. 20: Identifying Front Bumper Side Retainer LH Bolt
Courtesy of TOYOTA MOTOR SALES, U.S.A., INC.

b. Install the front bumper side retainer LH with the bolt.

   Torque: 4.1 N*m (42 kgf*cm, 36 in.*lbf)

2. **INSTALL FRONT BUMPER SIDE RETAINER RH**

   HINT:

   Use the same procedure as for the LH side.

3. **INSTALL FRONT BUMPER REINFORCEMENT SUB-ASSEMBLY**
   a. Install the front bumper reinforcement sub-assembly with the 6 bolts.

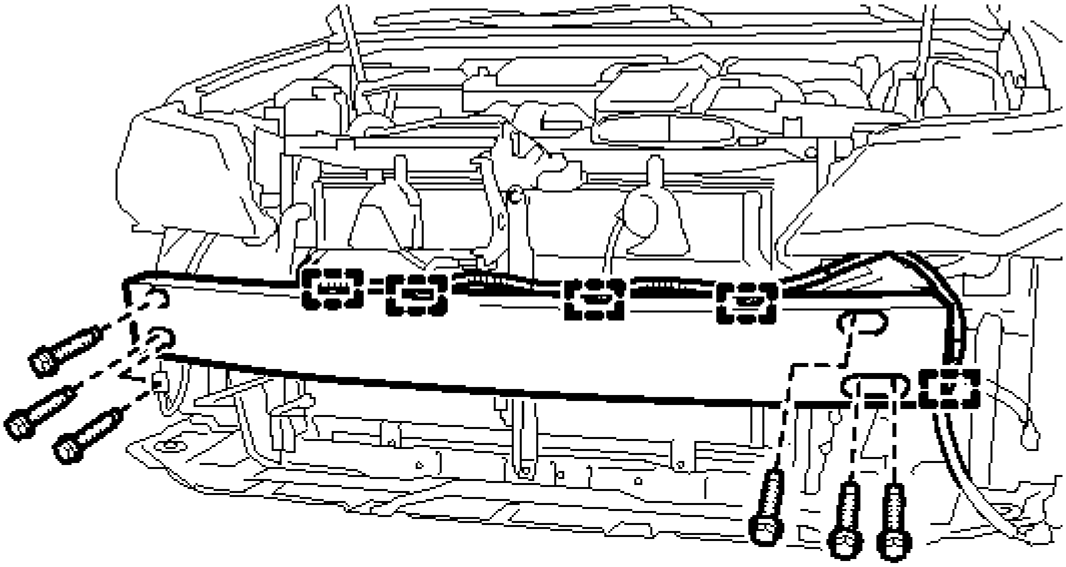

Fig. 21: Identifying Front Bumper Reinforcement Sub-Assembly Bolts And Clamps
Courtesy of TOYOTA MOTOR SALES, U.S.A., INC.

Torque: 61 N*m (622 kgf*cm, 45 ft.*lbf)

b. Engage the 5 clamps.

4. **INSTALL FRONT BUMPER ENERGY ABSORBER**
    a. Engage the 2 guides to install the front bumper energy absorber.

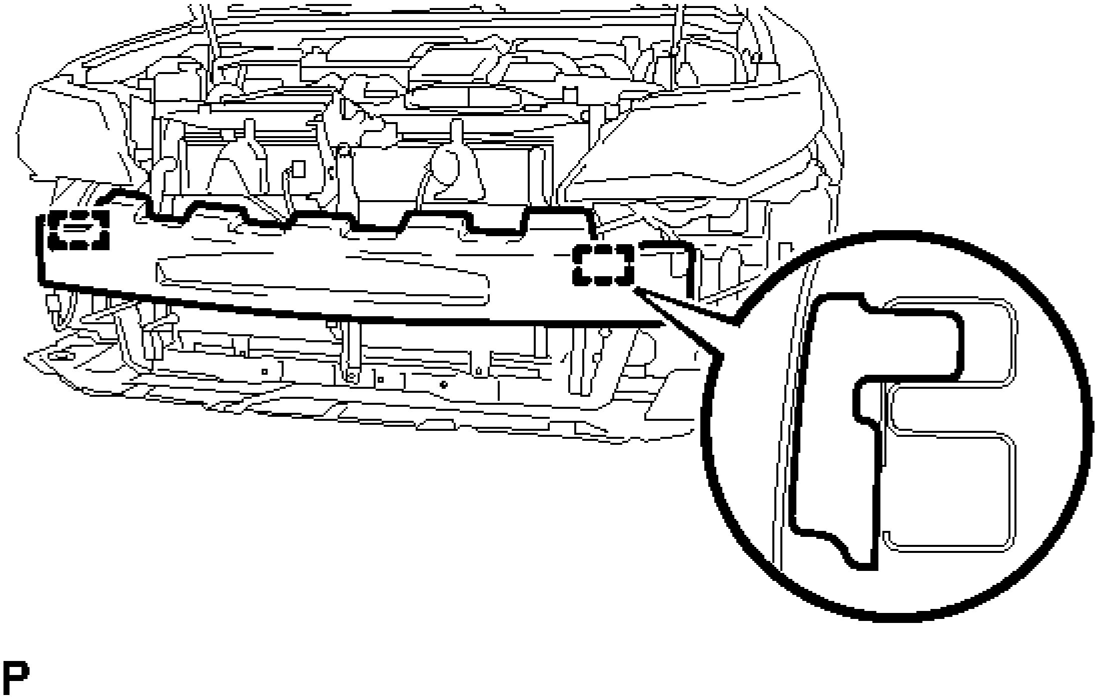

Fig. 22: Identifying Front Bumper Energy Absorber Guides
Courtesy of TOYOTA MOTOR SALES, U.S.A., INC.

5. **INSTALL NO. 1 LOWER RADIATOR GRILLE**
   a. Engage the 2 guides and 16 claws to install the No. 1 lower radiator grille.

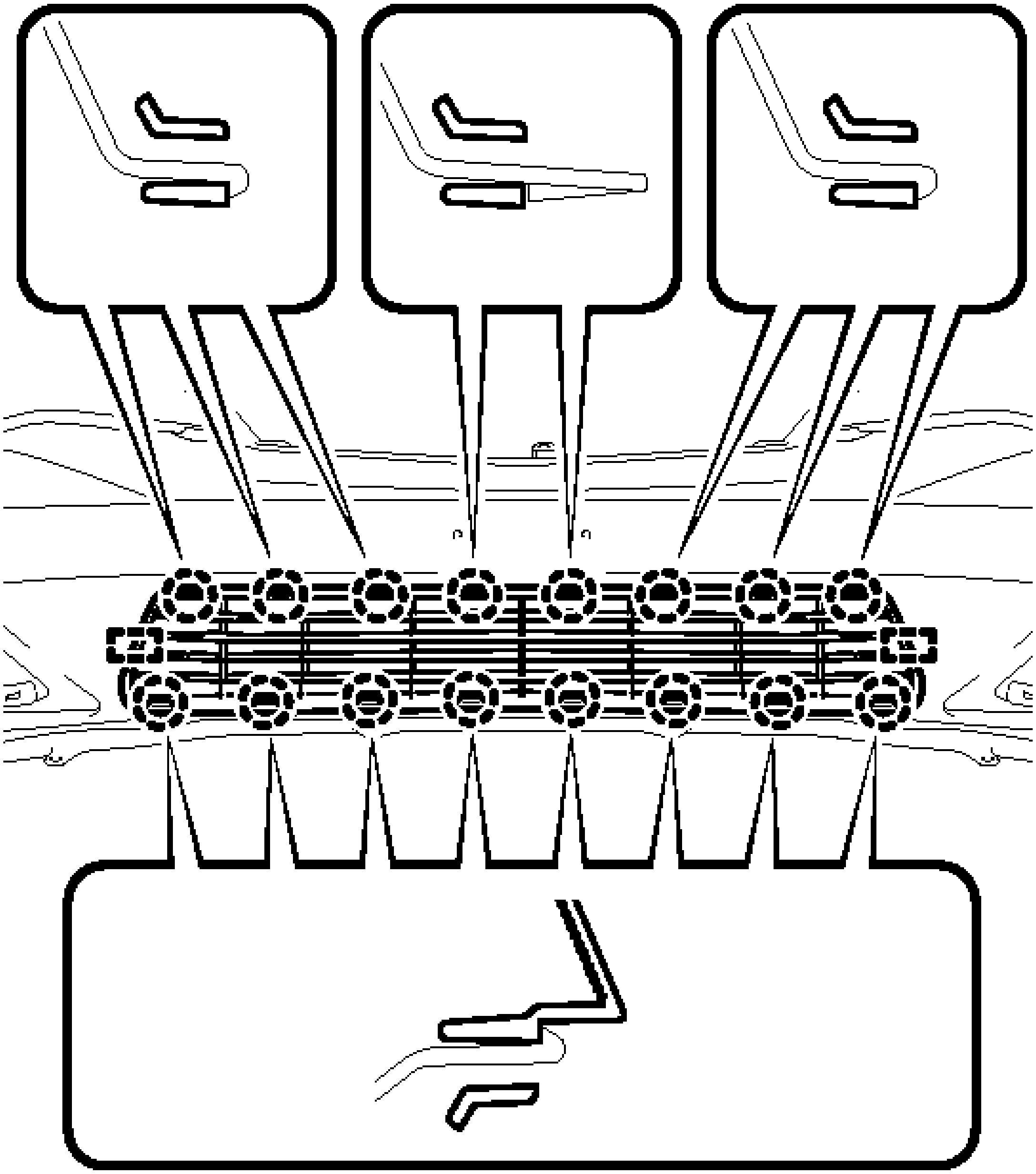

Fig. 23: Identifying No. 1 Lower Radiator Grille Claws And Guides
Courtesy of TOYOTA MOTOR SALES, U.S.A., INC.

6. **INSTALL FRONT BUMPER HOLE COVER LH**
    a. w/ Fog Light:

1. Engage the 2 claws and 2 guides to install the fog light mounting bracket LH.

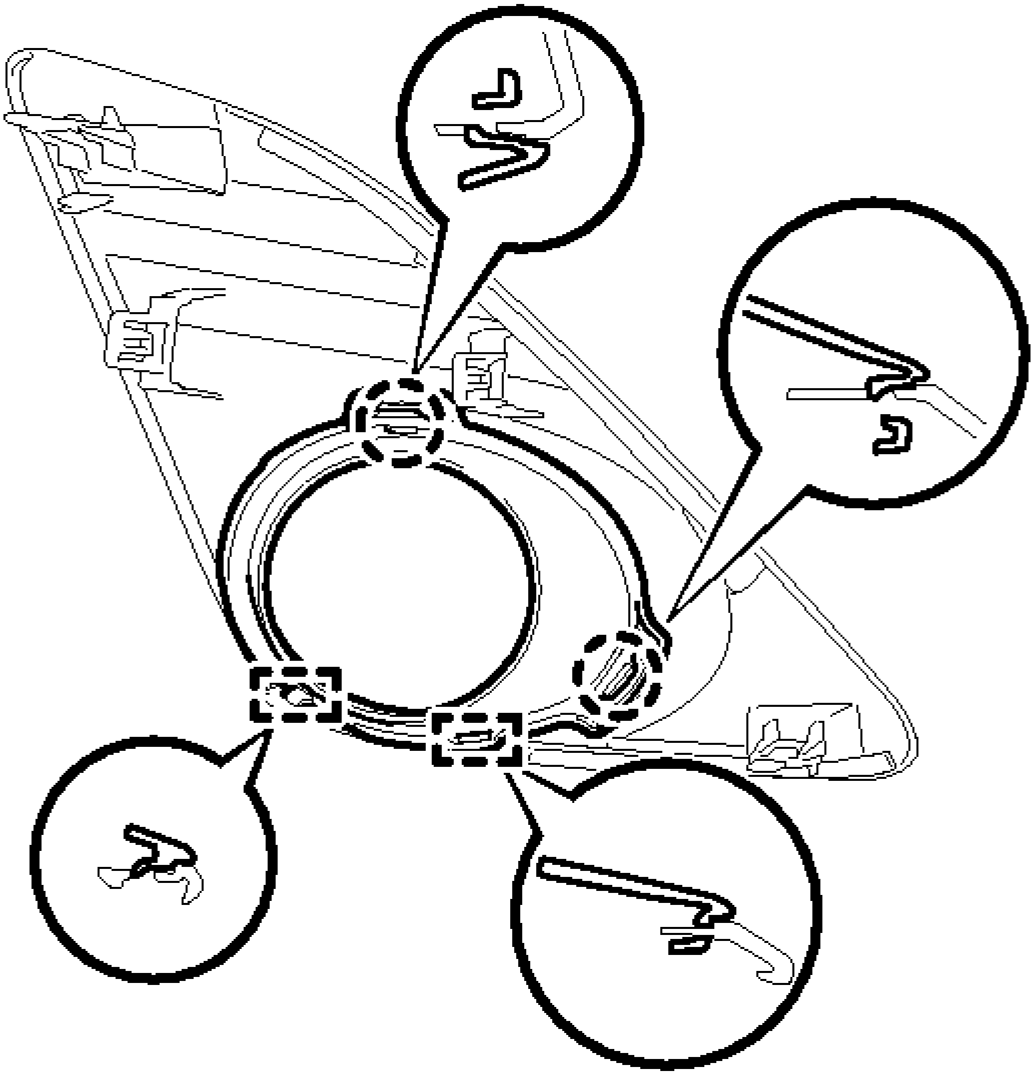

Fig. 24: Identifying Fog Light Mounting Bracket LH Claws And Guides
Courtesy of TOYOTA MOTOR SALES, U.S.A., INC.

b. Engage the 5 claws to install the front bumper hole cover LH.

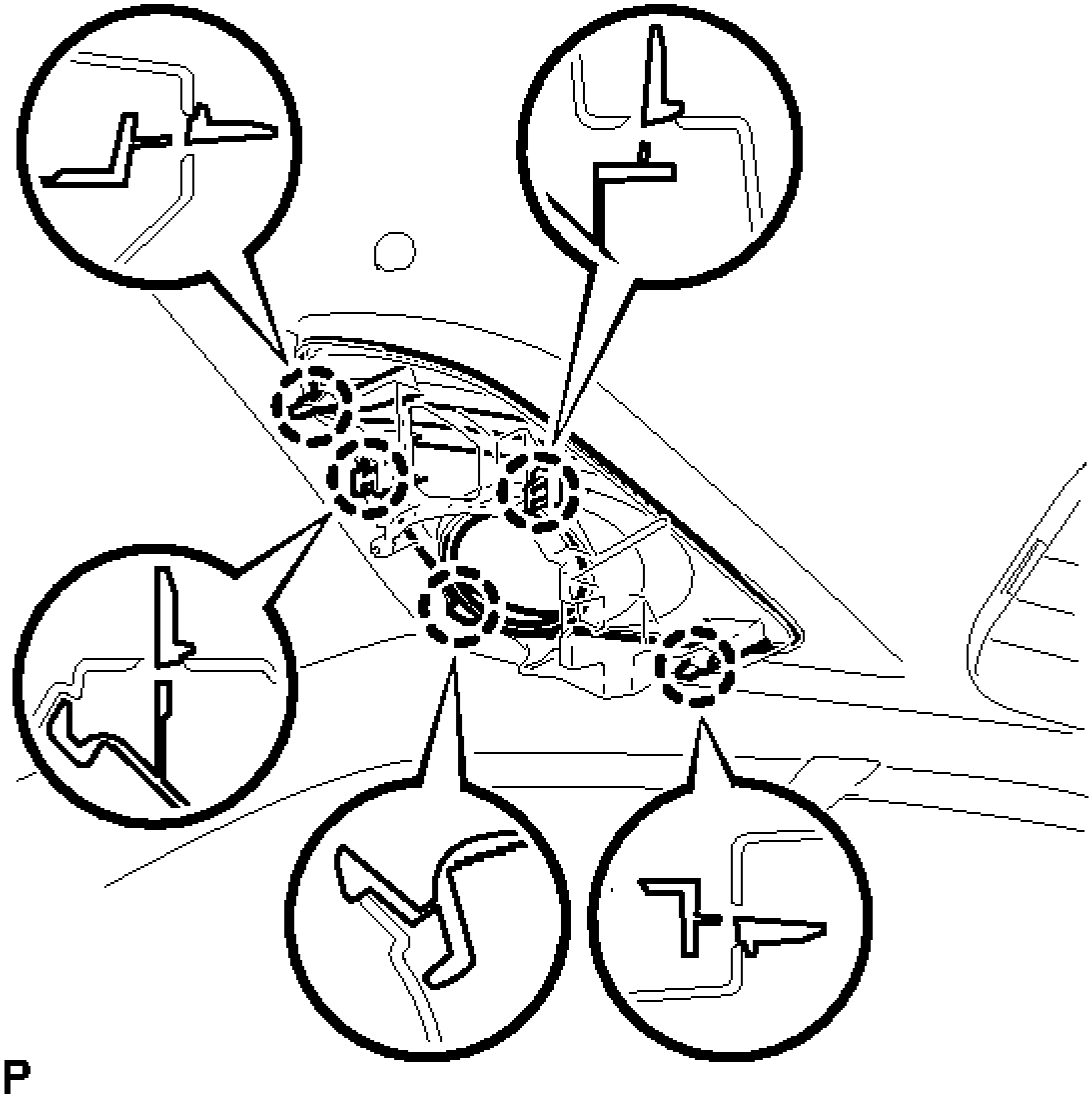

Fig. 25: Identifying Front Bumper Hole Cover LH Claws
Courtesy of TOYOTA MOTOR SALES, U.S.A., INC.

7. **INSTALL FRONT BUMPER HOLE COVER RH**

   HINT:

   Use the same procedure as for the LH side.

8. **INSTALL FRONT FENDER LINER RETAINER**
   a. Engage the claw to install the front fender liner retainer.

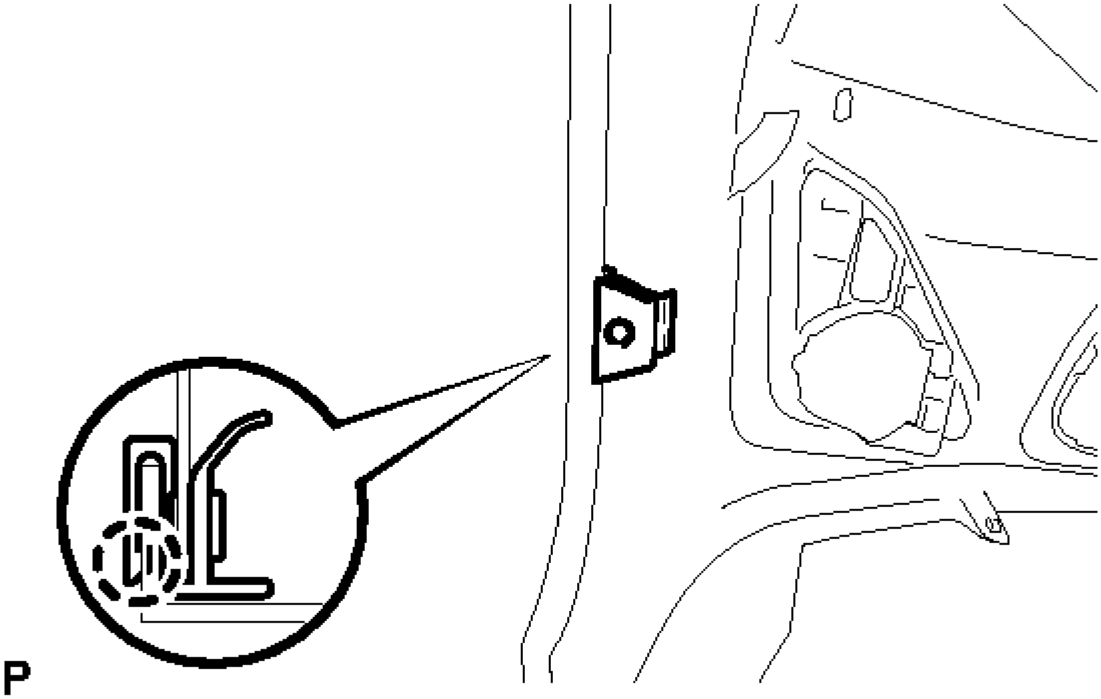

Fig. 26: Identifying Front Fender Liner Retainer Claw
Courtesy of TOYOTA MOTOR SALES, U.S.A., INC.

HINT:

Use the same procedure for the RH side and LH side.

9. **INSTALL FRONT BUMPER EXTENSION MOUNTING BRACKET**
    a. w/o Side Turn Signal Light:
        1. Engage the 2 hooks.

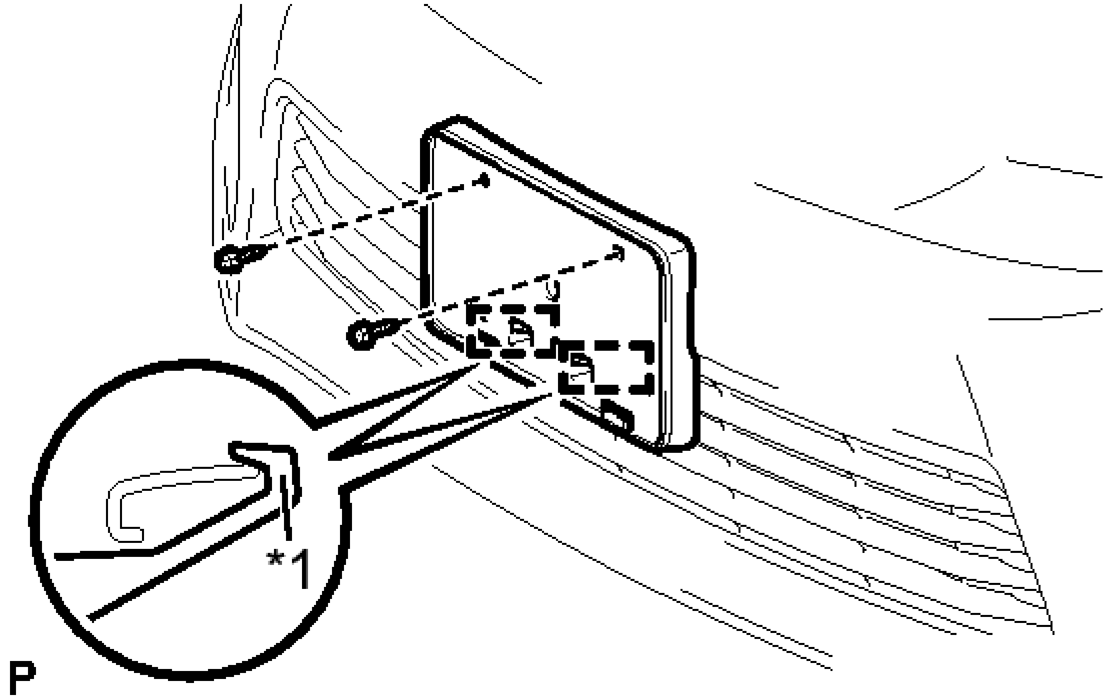

Fig. 27: Identifying Front Bumper Extension Mounting Bracket Screws And Hook (W/O Side Turn Signal Light)
Courtesy of TOYOTA MOTOR SALES, U.S.A., INC.

TEXT IN ILLUSTRATION

*1	Hook

2. Install the front bumper extension mounting bracket with the 2 screws.

b. w/ Side Turn Signal Light:
    1. Engage the 2 hooks.

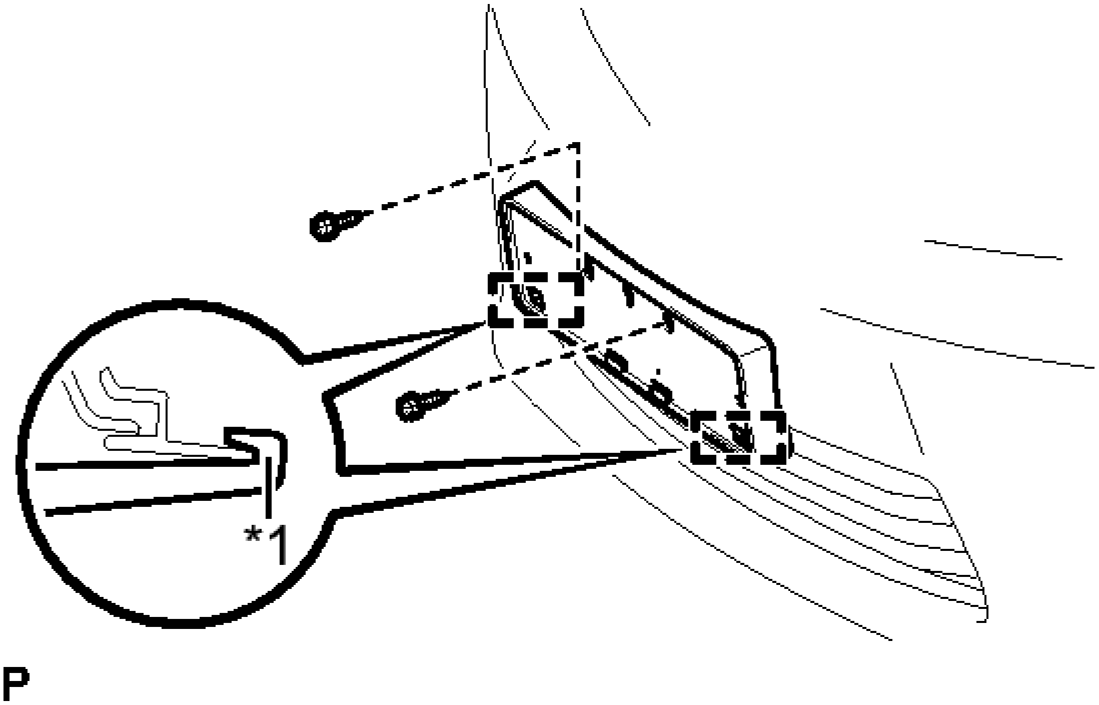

Fig. 28: Identifying Front Bumper Extension Mounting Bracket Screws And Hook (W/ Side Turn Signal Light)
Courtesy of TOYOTA MOTOR SALES, U.S.A., INC.

TEXT IN ILLUSTRATION

*1	Hook

2. Install the front bumper extension mounting bracket with the 2 screws.

10. **INSTALL FOG LIGHT ASSEMBLY LH (w/ Fog Light)** . Refer to **INSTALLATION - Step 1**
11. **INSTALL FOG LIGHT ASSEMBLY RH (w/ Fog Light)**

    HINT:

    Use the same procedure as for the LH side.

12. **INSTALL NO. 1 ULTRASONIC SENSOR RETAINER (w/ Intuitive Parking Assist System)** . Refer to **INSTALLATION - Step 1**
13. **INSTALL NO. 1 ULTRASONIC SENSOR (w/ Intuitive Parking Assist System)** . Refer to **INSTALLATION - Step 2**

INSTALLATION

INSTALLATION

1. **INSTALL FRONT BUMPER ASSEMBLY**
    a. Move the front bumper assembly into position and install the 3 clips.

b. Pull back the side of the front bumper assembly and connect each connector.

NOTE: Do not apply excessive force when pulling back the side of the front bumper assembly.

HINT:

Use the same procedure for the RH side and LH side.

c. Engage the 3 claws to install the front bumper assembly.

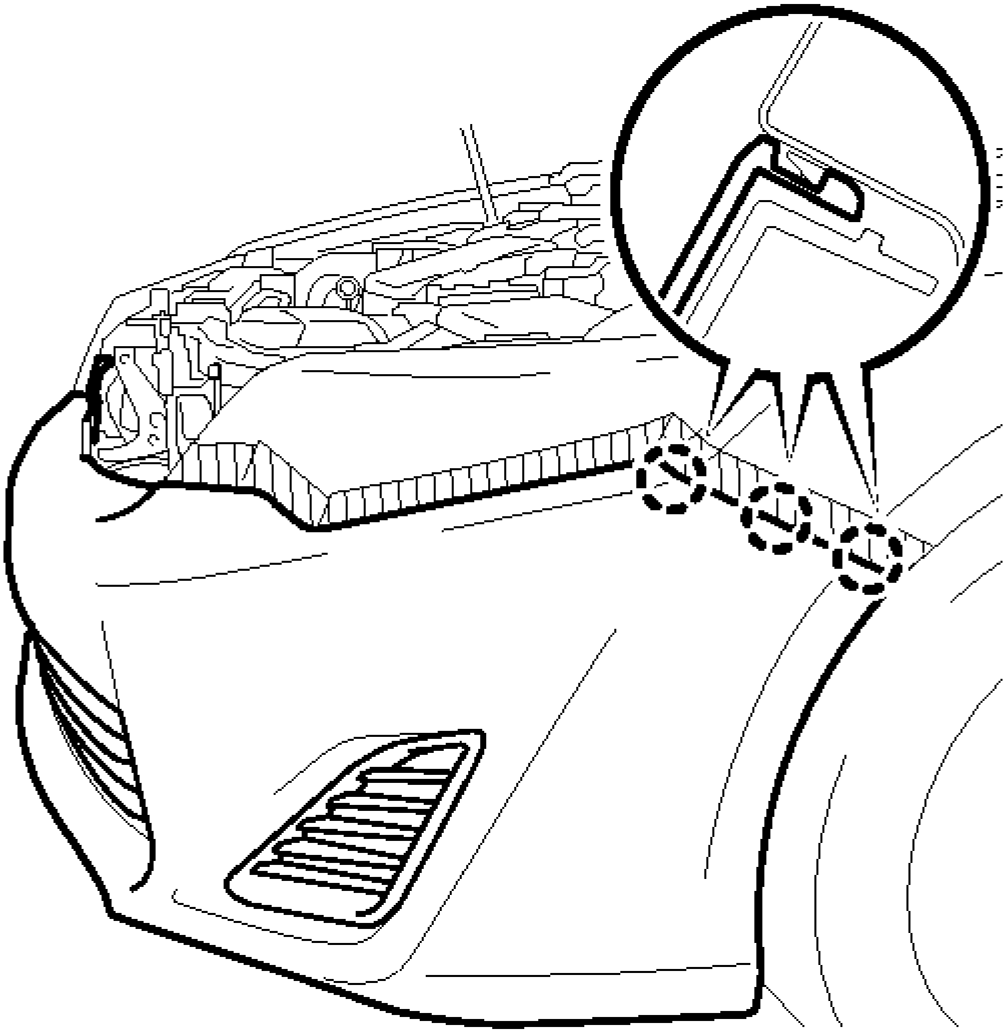

Fig. 29: Identifying Front Bumper Assembly Clips
Courtesy of TOYOTA MOTOR SALES, U.S.A., INC.

HINT:

Use the same procedure for the RH side and LH side.

d. Install the 6 screws.
e. Install the pin hold clip as shown in the illustration.

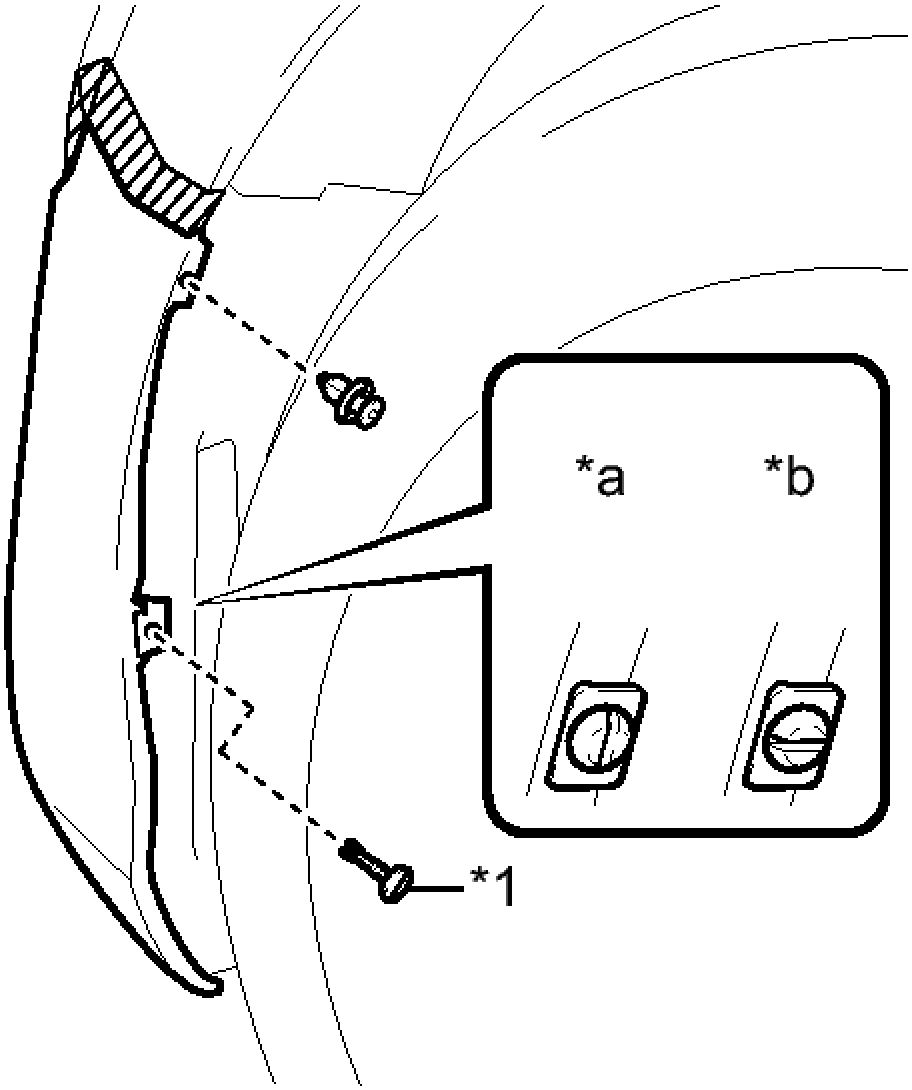

Fig. 30: Installing Pin Hold Clip
Courtesy of TOYOTA MOTOR SALES, U.S.A., INC.

TEXT IN ILLUSTRATION

*1	Pin Hold Clip
*a	Correct
*b	Incorrect

NOTE: **Insert the pin hold clip with the slot aligned vertically. Do not rotate**

the clip after inserting it. After installation, confirm that the slot is aligned vertically.

HINT:

Use the same procedure for the RH side and LH side.

f. Install the clip.

HINT:

Use the same procedure for the RH side and LH side.

2. **INSTALL RADIATOR GRILLE SUB-ASSEMBLY**

   Refer to **INSTALLATION**

3. **ADJUST FOG LIGHT ASSEMBLY (w/ Fog Light)**

   Refer to **ADJUSTMENT**

REAR BUMPER

COMPONENTS

ILLUSTRATION

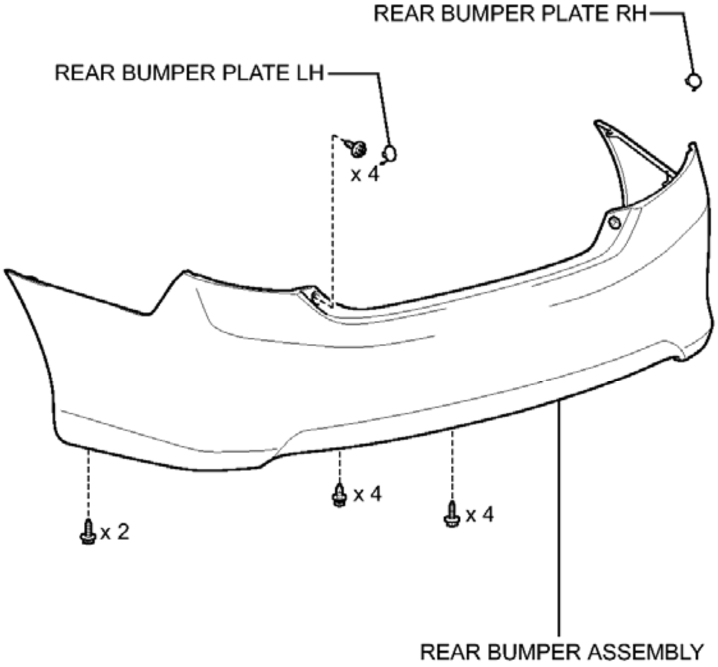
REAR BUMPER PLATE RH
REAR BUMPER PLATE LH
x 4
x 4
x 4
x 2
REAR BUMPER ASSEMBLY

P

Fig. 31: Identifying Rear Bumper Replacement Components (1 Of 3)
Courtesy of TOYOTA MOTOR SALES, U.S.A., INC.

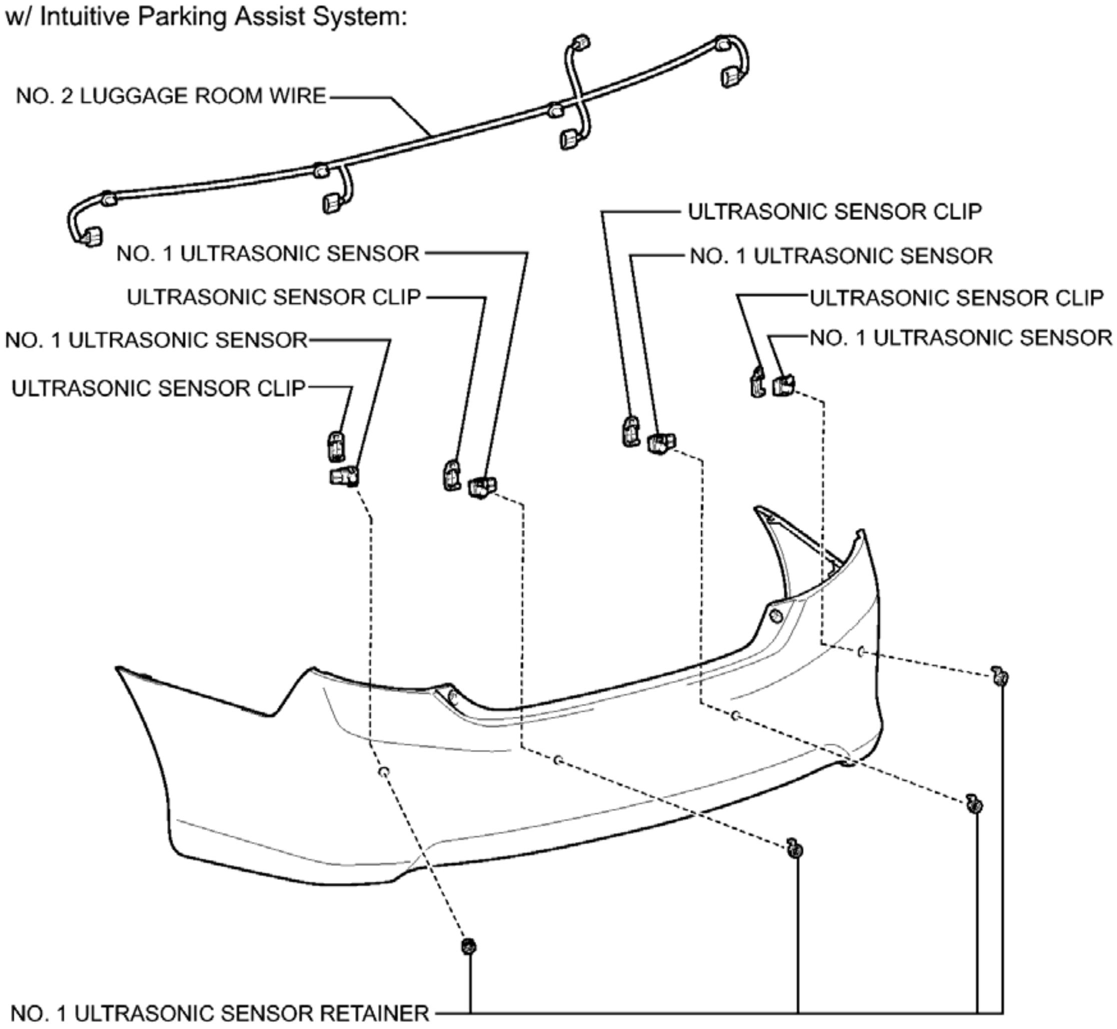
w/ Intuitive Parking Assist System:
NO. 2 LUGGAGE ROOM WIRE
ULTRASONIC SENSOR CLIP
NO. 1 ULTRASONIC SENSOR
NO. 1 ULTRASONIC SENSOR
ULTRASONIC SENSOR CLIP
ULTRASONIC SENSOR CLIP
NO. 1 ULTRASONIC SENSOR
NO. 1 ULTRASONIC SENSOR
ULTRASONIC SENSOR CLIP
NO. 1 ULTRASONIC SENSOR RETAINER
P

Fig. 32: Identifying Rear Bumper Replacement Components (2 Of 3)
Courtesy of TOYOTA MOTOR SALES, U.S.A., INC.

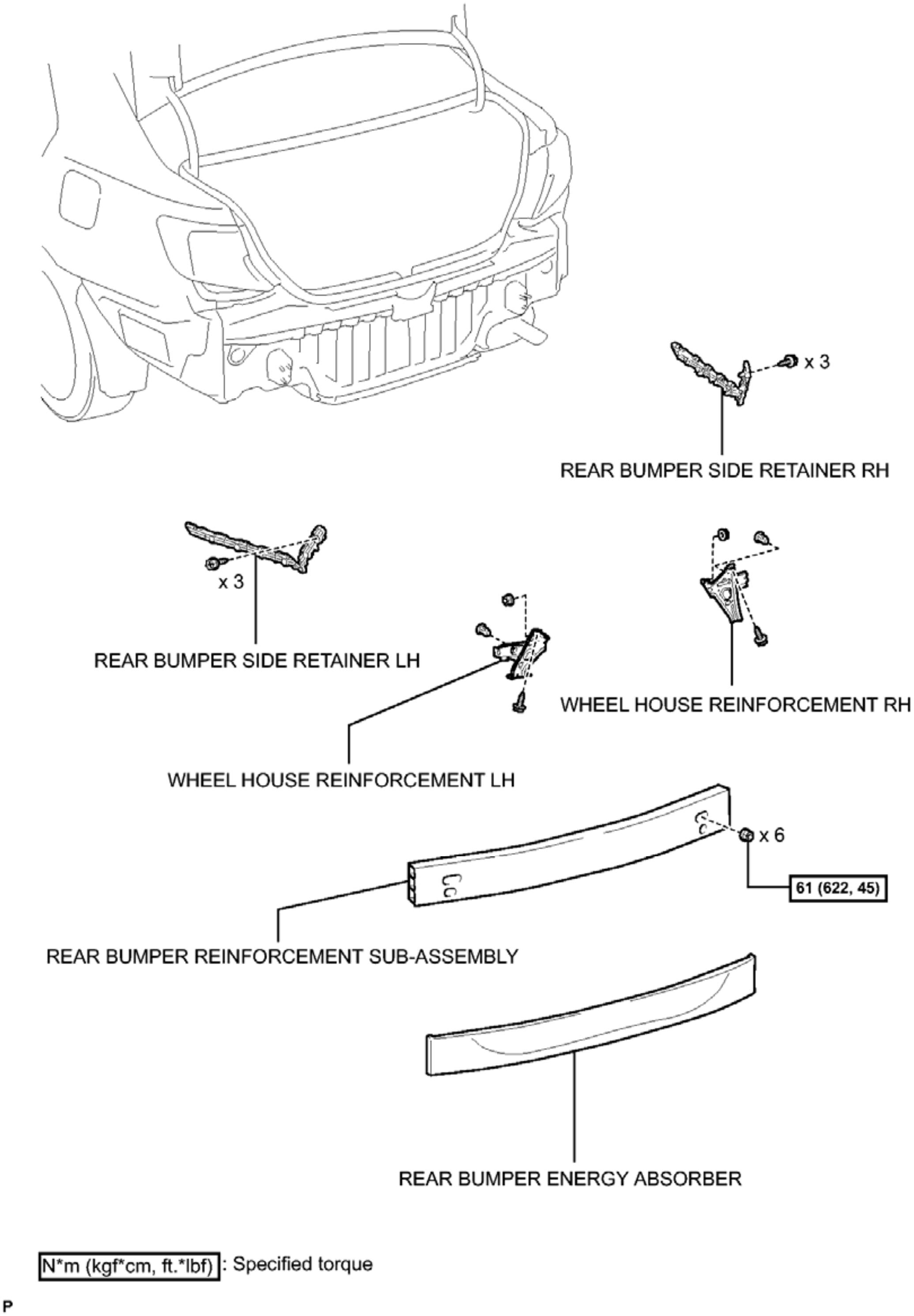
x 3
REAR BUMPER SIDE RETAINER RH
x 3
REAR BUMPER SIDE RETAINER LH
WHEEL HOUSE REINFORCEMENT RH
WHEEL HOUSE REINFORCEMENT LH
x 6
61 (622, 45)
REAR BUMPER REINFORCEMENT SUB-ASSEMBLY
REAR BUMPER ENERGY ABSORBER
N*m (kgf*cm, ft.*lbf) : Specified torque
P

Fig. 33: Identifying Rear Bumper Replacement Components With Torque Specifications (3 Of 3)
Courtesy of TOYOTA MOTOR SALES, U.S.A., INC.

REMOVAL

REMOVAL

1. **REMOVE REAR BUMPER PLATE LH**
    a. Using a screwdriver with the tip wrapped with protective tape, disengage the 2 claws.

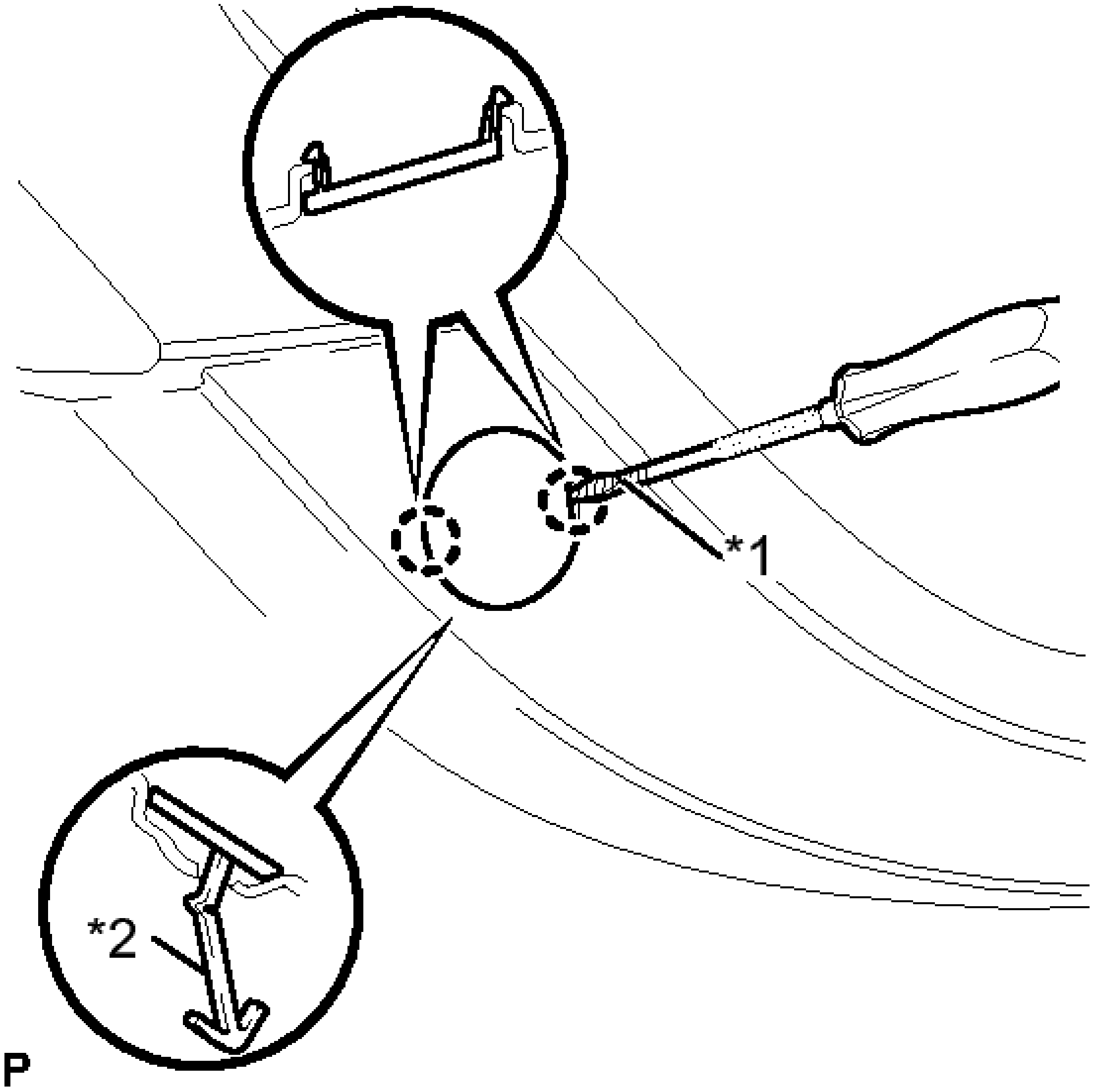

Fig. 34: Identifying Rear Bumper Plate LH Claws
Courtesy of TOYOTA MOTOR SALES, U.S.A., INC.

TEXT IN ILLUSTRATION

*1	Protective Tape
*2	Hook

HINT:

Tape the screwdriver tip before use.

b. Disengage the hook and remove the rear bumper plate LH.

2. **REMOVE REAR BUMPER PLATE RH**

   HINT:

   Use the same procedure as for the LH side.

3. **REMOVE REAR BUMPER ASSEMBLY**

   a. Put protective tape around the rear bumper assembly.

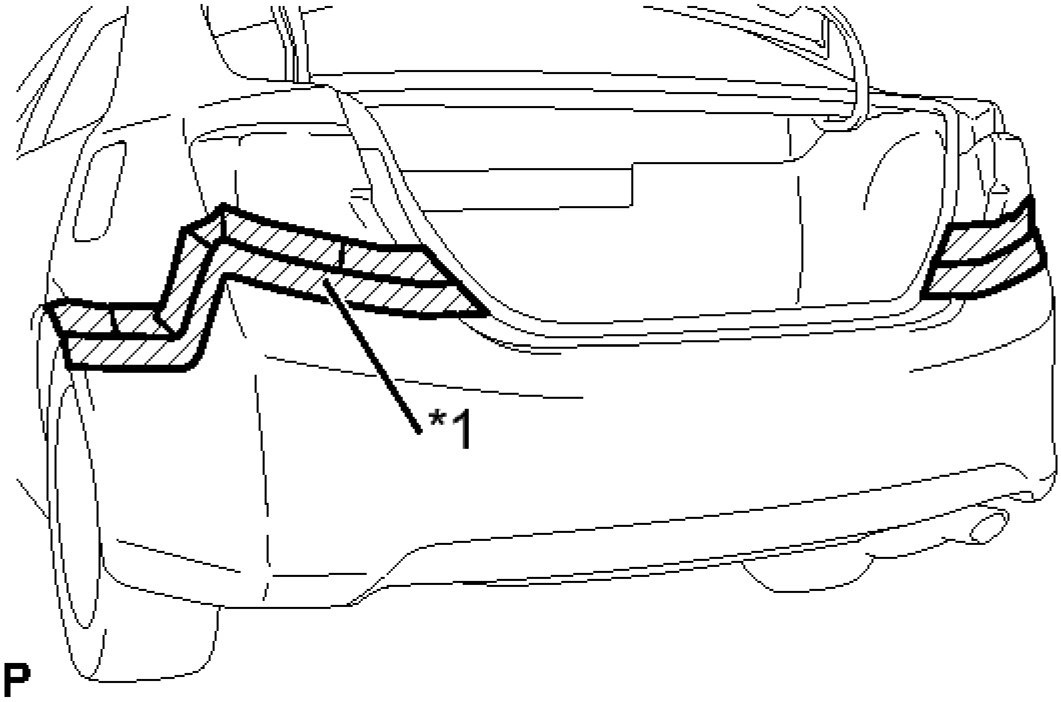

Fig. 35: Rear Bumper Assembly Protective Tape Placement
Courtesy of TOYOTA MOTOR SALES, U.S.A., INC.

TEXT IN ILLUSTRATION

*1	Protective Tape

   b. Using a clip remover, remove the 4 clips.

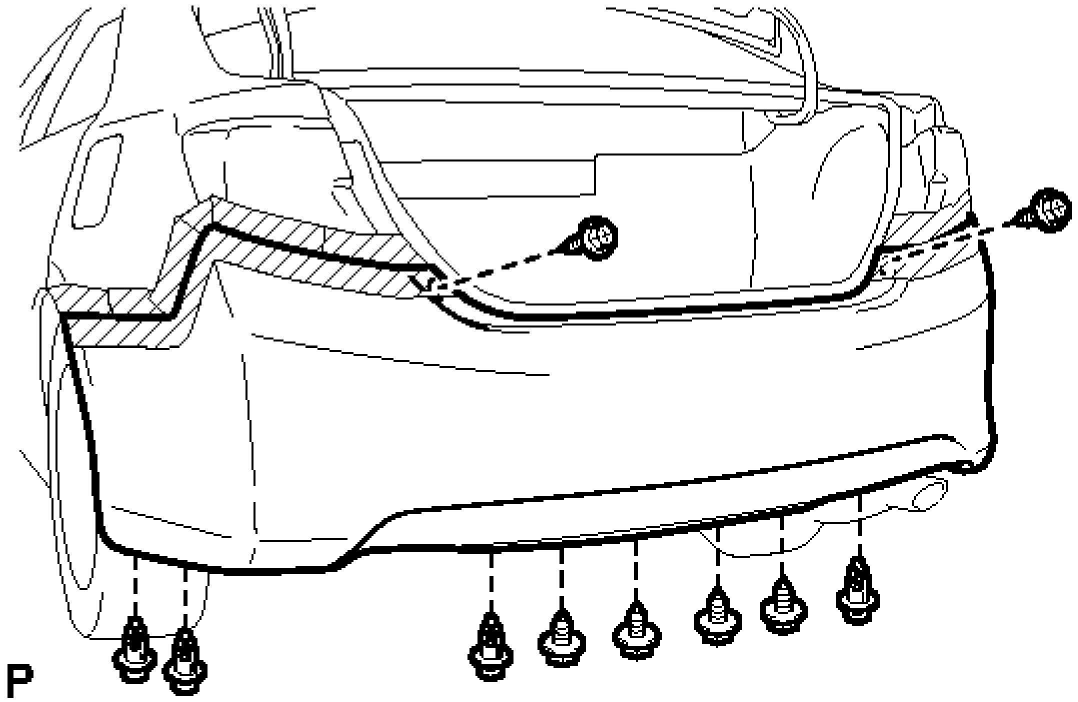

Fig. 36: Identifying Rear Bumper Assembly Clips And Screws
Courtesy of TOYOTA MOTOR SALES, U.S.A., INC.

c. Remove the 6 screws.
d. Remove the 2 screws.

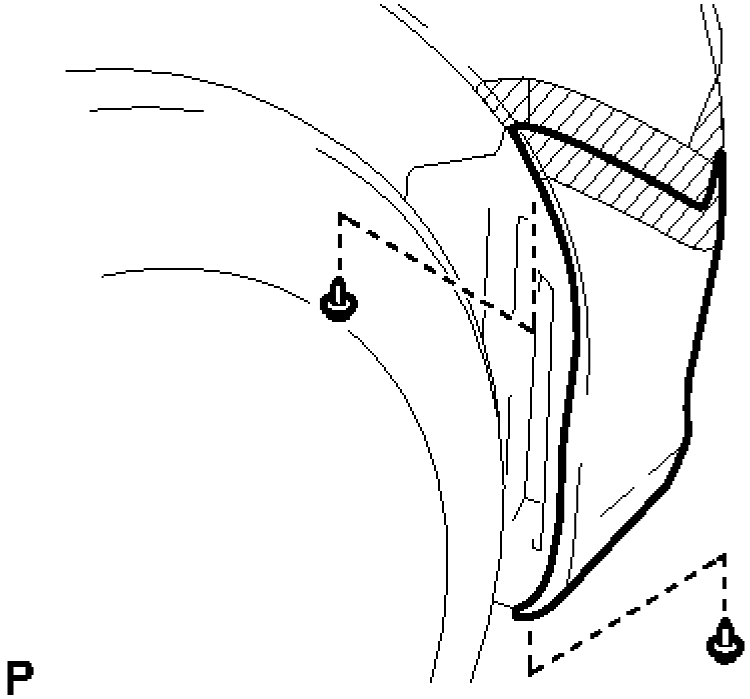

Fig. 37: Identifying Rear Bumper Assembly Screws

Courtesy of TOYOTA MOTOR SALES, U.S.A., INC.

HINT:

Use the same procedure for the RH side and LH side.

e. Disengage the 7 claws as shown in the illustration.

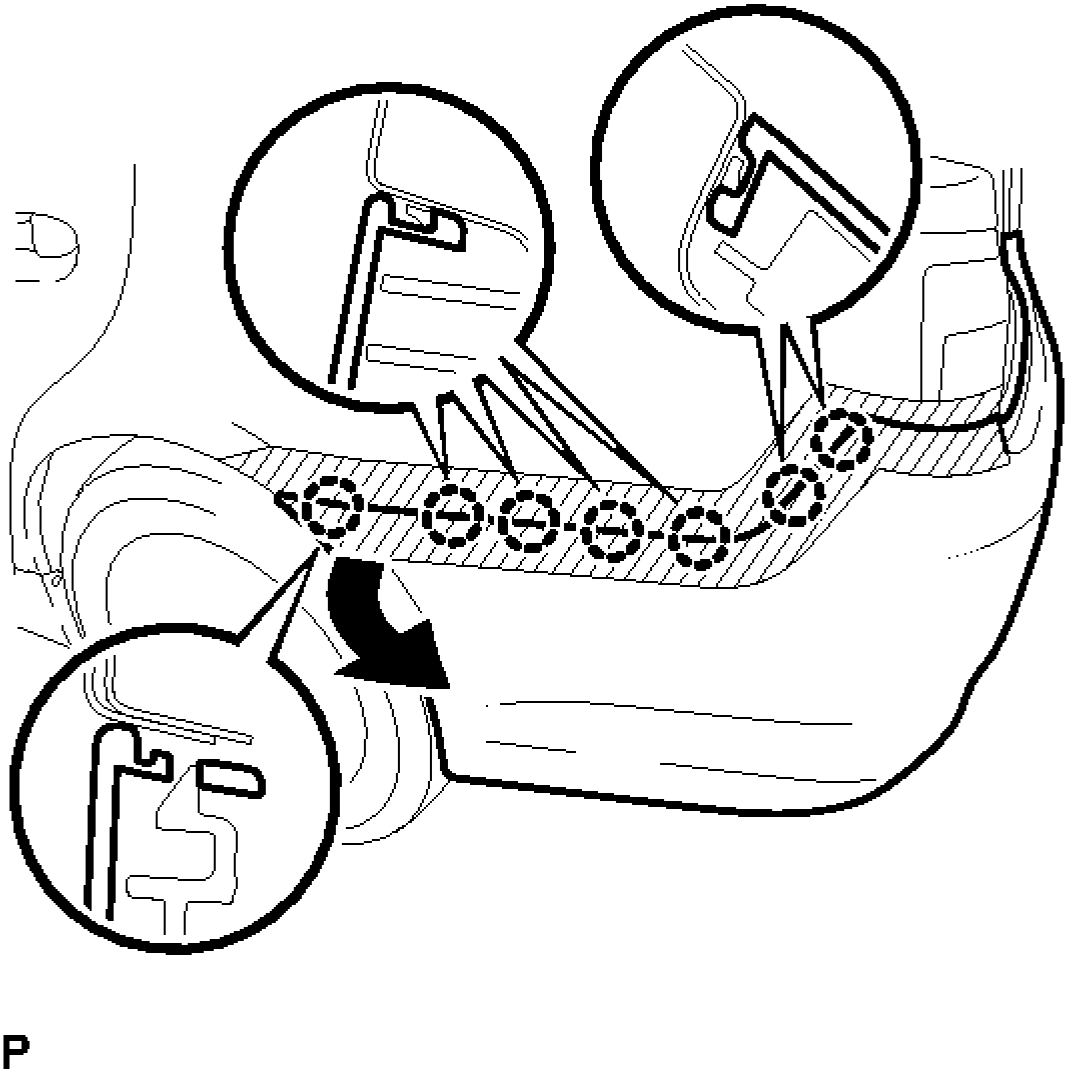

Fig. 38: Identifying Rear Bumper Assembly Claws
Courtesy of TOYOTA MOTOR SALES, U.S.A., INC.

HINT:

Use the same procedure for the RH side and LH side.

f. Disengage the 6 claws as shown in the illustration.

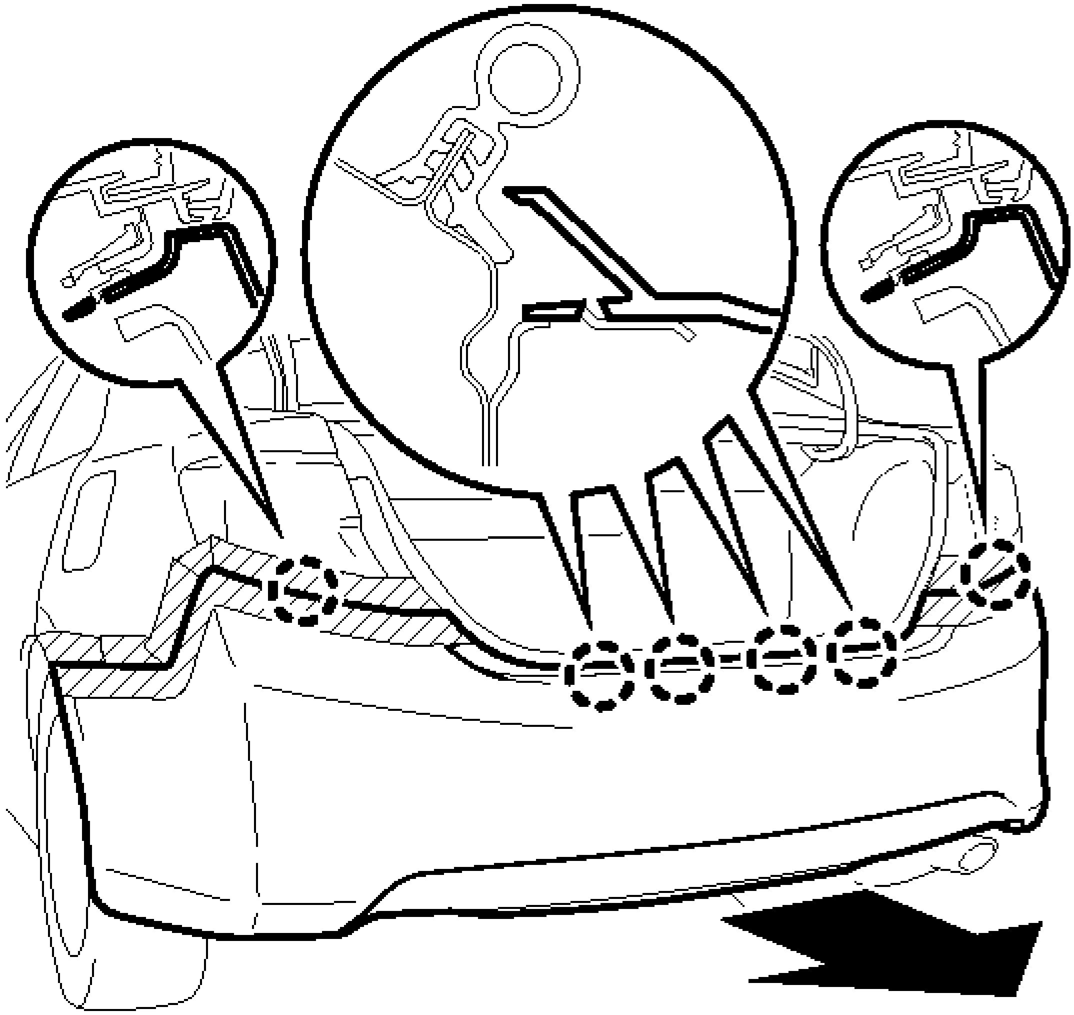

Fig. 39: Identifying Rear Bumper Assembly Claws
Courtesy of TOYOTA MOTOR SALES, U.S.A., INC.

g. w/ Intuitive Parking Assist System:
    1. Disconnect the connector.
h. Remove the rear bumper assembly.

DISASSEMBLY

DISASSEMBLY

1. **REMOVE NO. 2 LUGGAGE ROOM WIRE (w/ Intuitive Parking Assist System)**
    a. Disengage the 4 clamps.

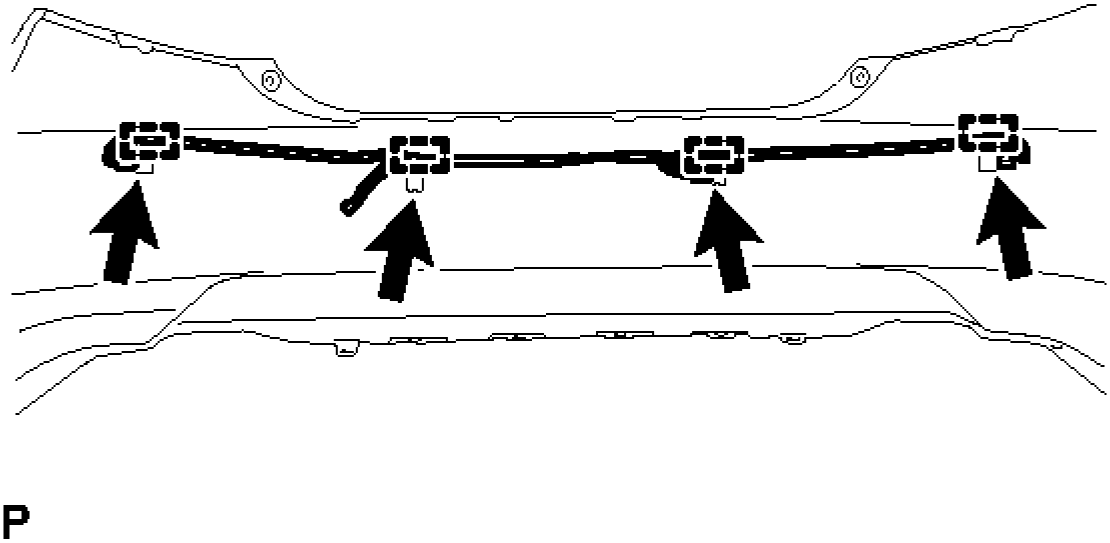

Fig. 40: Identifying No. 2 Luggage Room Wire Clamps
Courtesy of TOYOTA MOTOR SALES, U.S.A., INC.

   b. Disconnect the connector and remove the No. 2 luggage room wire.

2. **REMOVE ULTRASONIC SENSOR CLIP (w/ Intuitive Parking Assist System)** . Refer to **REMOVAL - Step 2**
3. **REMOVE NO. 1 ULTRASONIC SENSOR (w/ Intuitive Parking Assist System)** . Refer to **REMOVAL - Step 3**
4. **REMOVE NO. 1 ULTRASONIC SENSOR RETAINER (w/ Intuitive Parking Assist System)** . Refer to **REMOVAL - Step 4**
5. **REMOVE REAR BUMPER SIDE RETAINER LH**
   a. Remove the 3 screws.

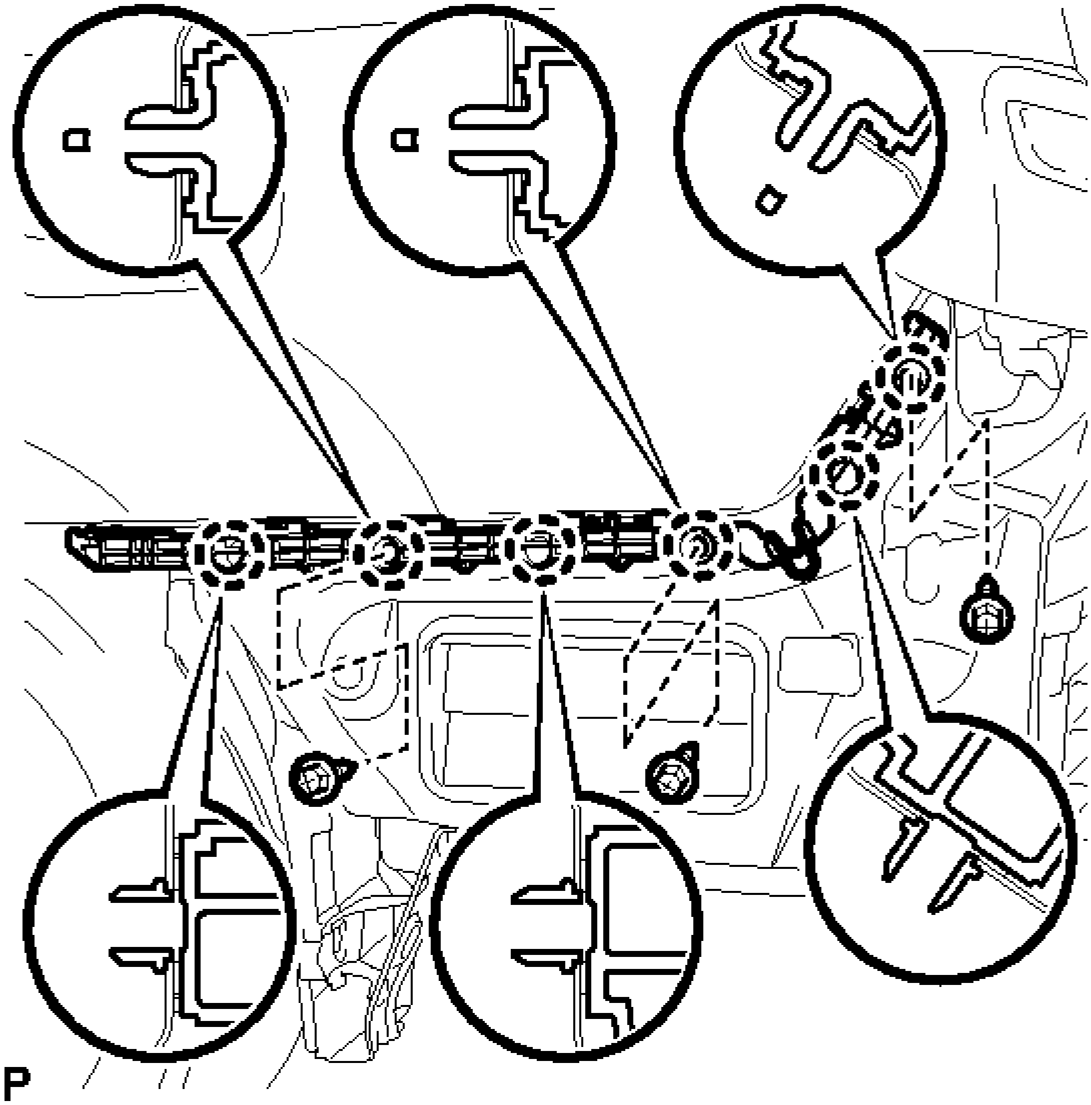

Fig. 41: Identifying Rear Bumper Side Retainer LH Claws And Screws
Courtesy of TOYOTA MOTOR SALES, U.S.A., INC.

  b. Disengage the 6 claws and remove the rear bumper side retainer LH.

6. **REMOVE REAR BUMPER SIDE RETAINER RH**

   HINT:

   Use the same procedure as for the LH side.

7. **REMOVE WHEEL HOUSE REINFORCEMENT LH**
   a. Disengage the clip.
   b. Remove the screw.

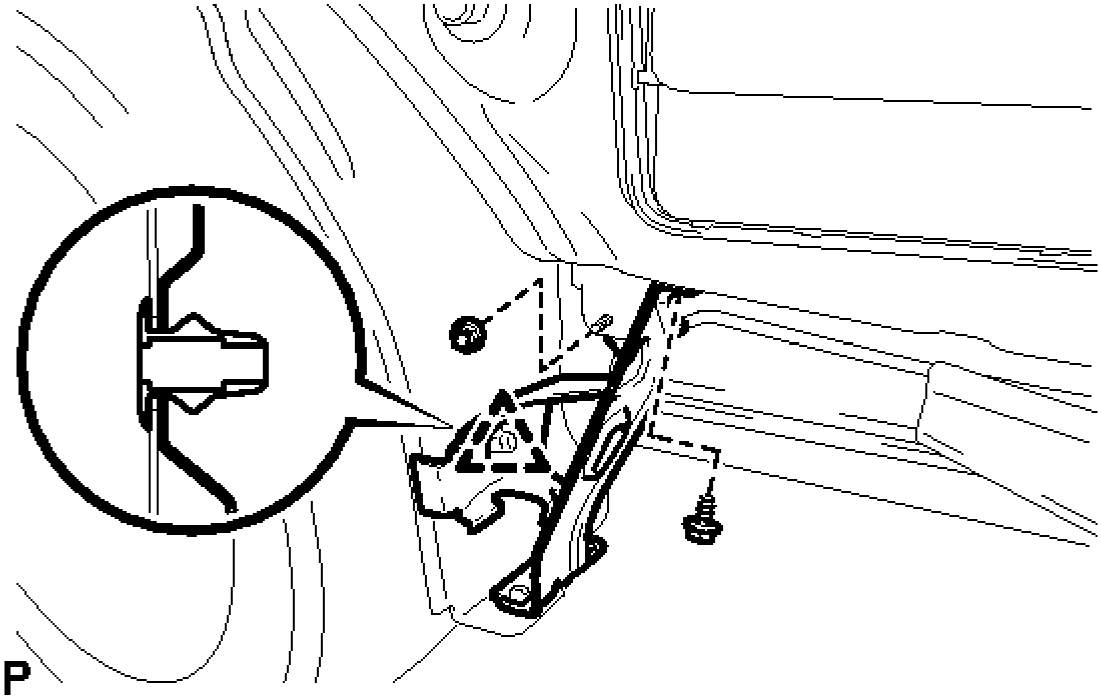

Fig. 42: Identifying Wheel House Reinforcement LH Clip, Screw, And Nut
Courtesy of TOYOTA MOTOR SALES, U.S.A., INC.

   c. Remove the nut and wheel house reinforcement LH.

8. **REMOVE WHEEL HOUSE REINFORCEMENT RH**

   HINT:

   Use the same procedure as for the LH side.

9. **REMOVE REAR BUMPER ENERGY ABSORBER**
   a. Disengage the 2 guides and remove the rear bumper energy absorber.

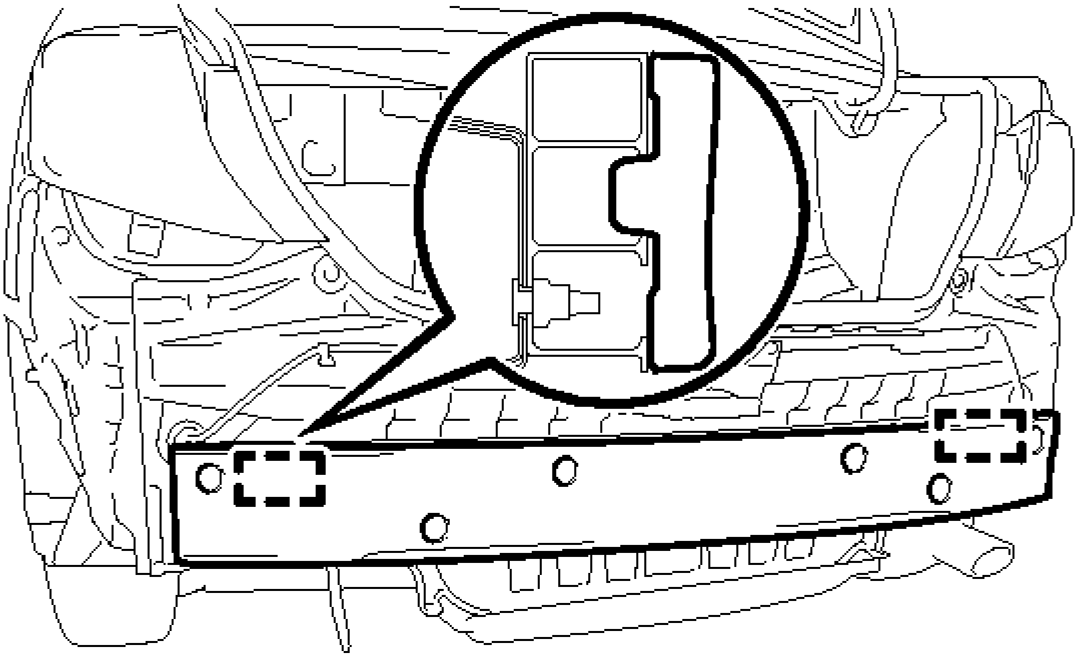

Fig. 43: Identifying Rear Bumper Energy Absorber Guides
Courtesy of TOYOTA MOTOR SALES, U.S.A., INC.

10. **REMOVE REAR BUMPER REINFORCEMENT SUB-ASSEMBLY**
    a. Remove the 6 nuts and rear bumper reinforcement sub-assembly.

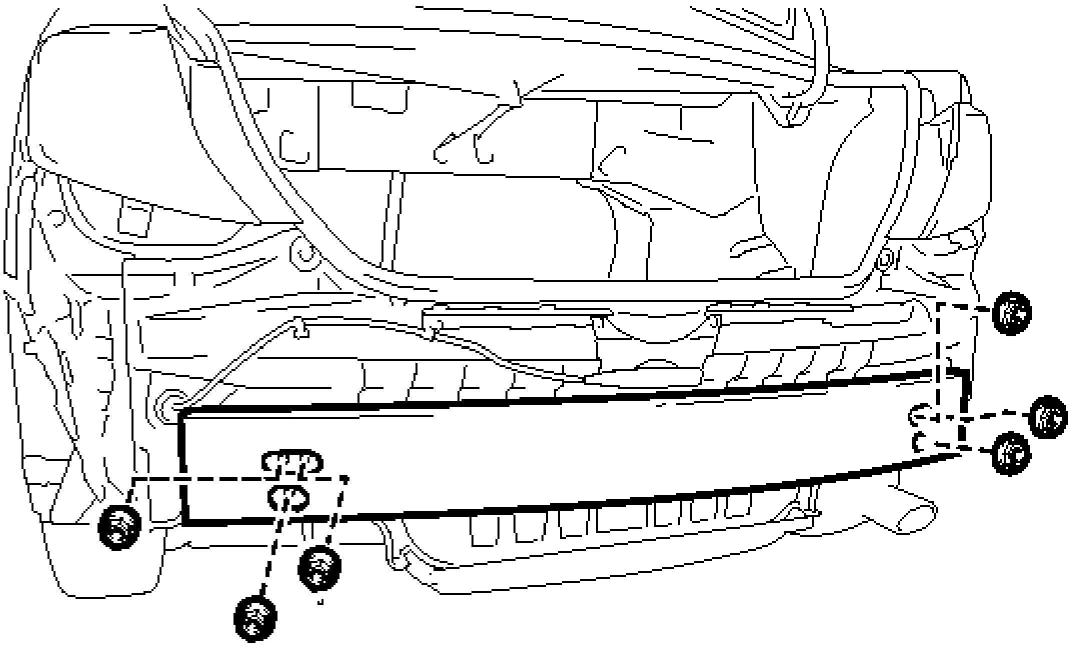

Fig. 44: Identifying Rear Bumper Reinforcement Sub-Assembly Nuts

Courtesy of TOYOTA MOTOR SALES, U.S.A., INC.

REASSEMBLY

REASSEMBLY

1. **INSTALL REAR BUMPER REINFORCEMENT SUB-ASSEMBLY**
    a. Install the rear bumper reinforcement sub-assembly with the 6 nuts.

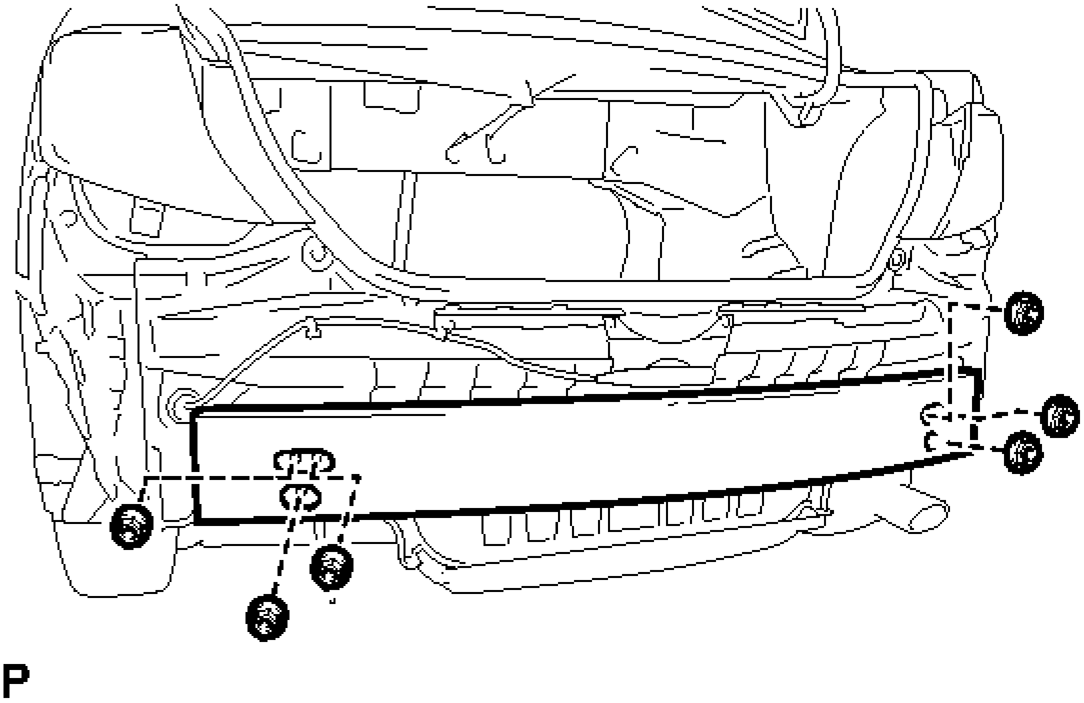

Fig. 45: Identifying Rear Bumper Reinforcement Sub-Assembly Nuts
Courtesy of TOYOTA MOTOR SALES, U.S.A., INC.

Torque: 61 N*m (622 kgf*cm, 45 ft.*lbf)

2. **INSTALL REAR BUMPER ENERGY ABSORBER**
    a. Engage the 2 guides to install the rear bumper energy absorber.

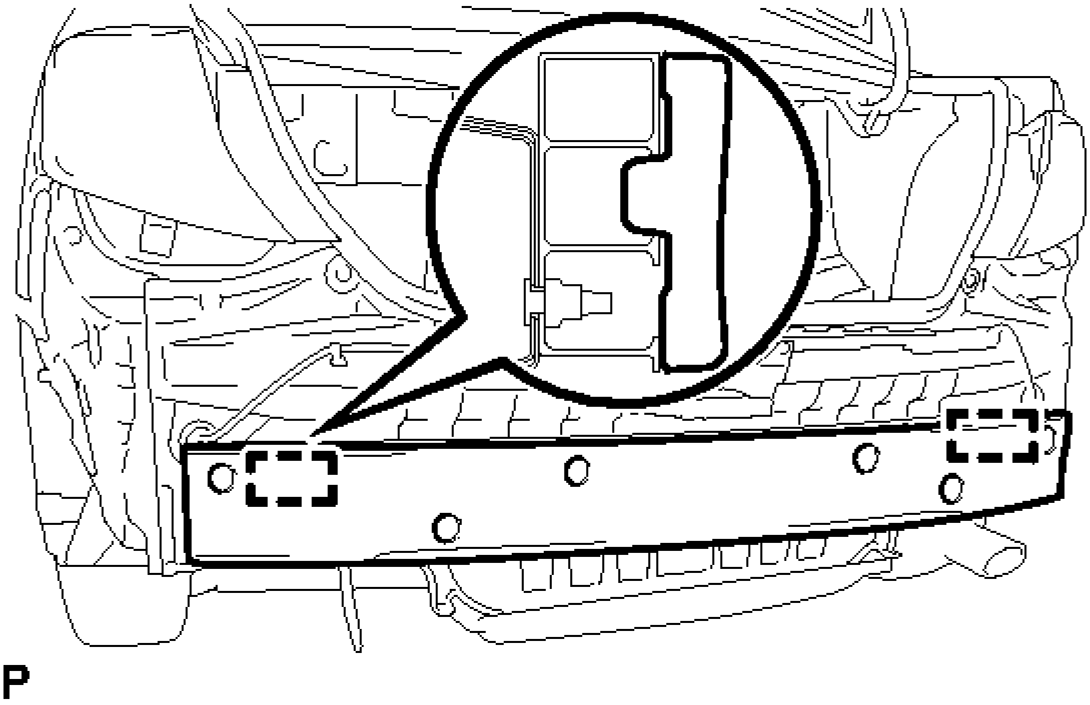

Fig. 46: Identifying Rear Bumper Energy Absorber Guides
Courtesy of TOYOTA MOTOR SALES, U.S.A., INC.

3. **INSTALL WHEEL HOUSE REINFORCEMENT LH**
   a. Install the wheel house reinforcement LH with the screw and nut.

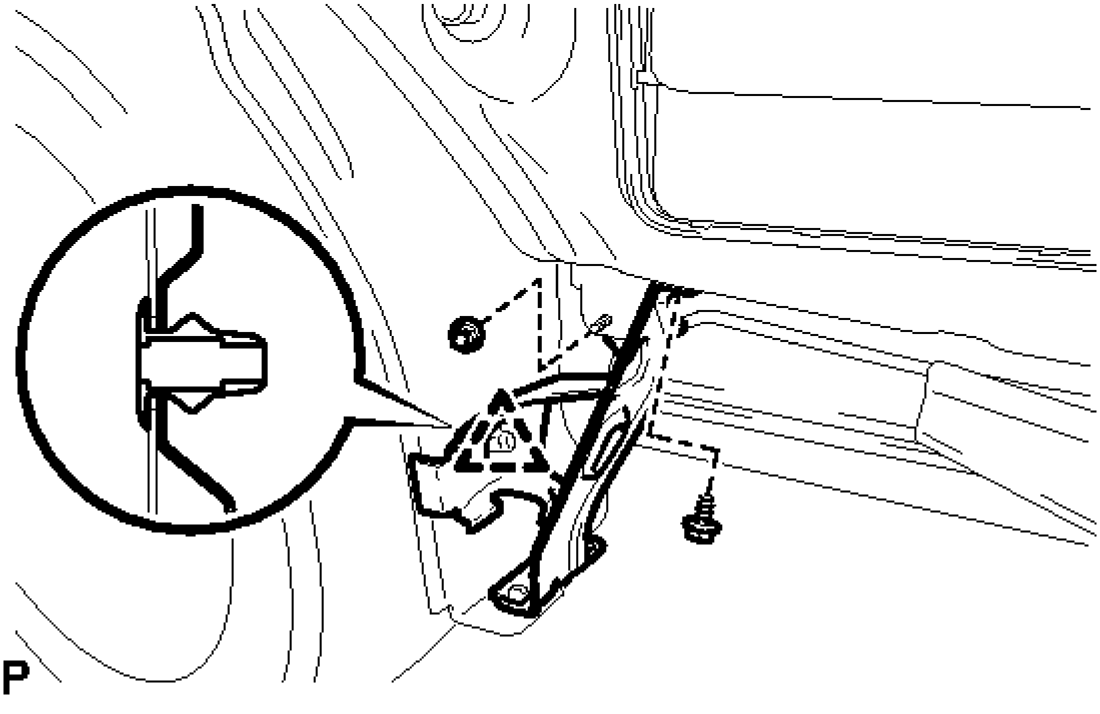

Fig. 47: Identifying Wheel House Reinforcement LH Clip, Screw, And Nut

Courtesy of TOYOTA MOTOR SALES, U.S.A., INC.

b. Engage the clip.

4. **INSTALL WHEEL HOUSE REINFORCEMENT RH**

   HINT:

   Use the same procedure as for the LH side.

5. **INSTALL REAR BUMPER SIDE RETAINER LH**

   a. Engage the 6 claws.

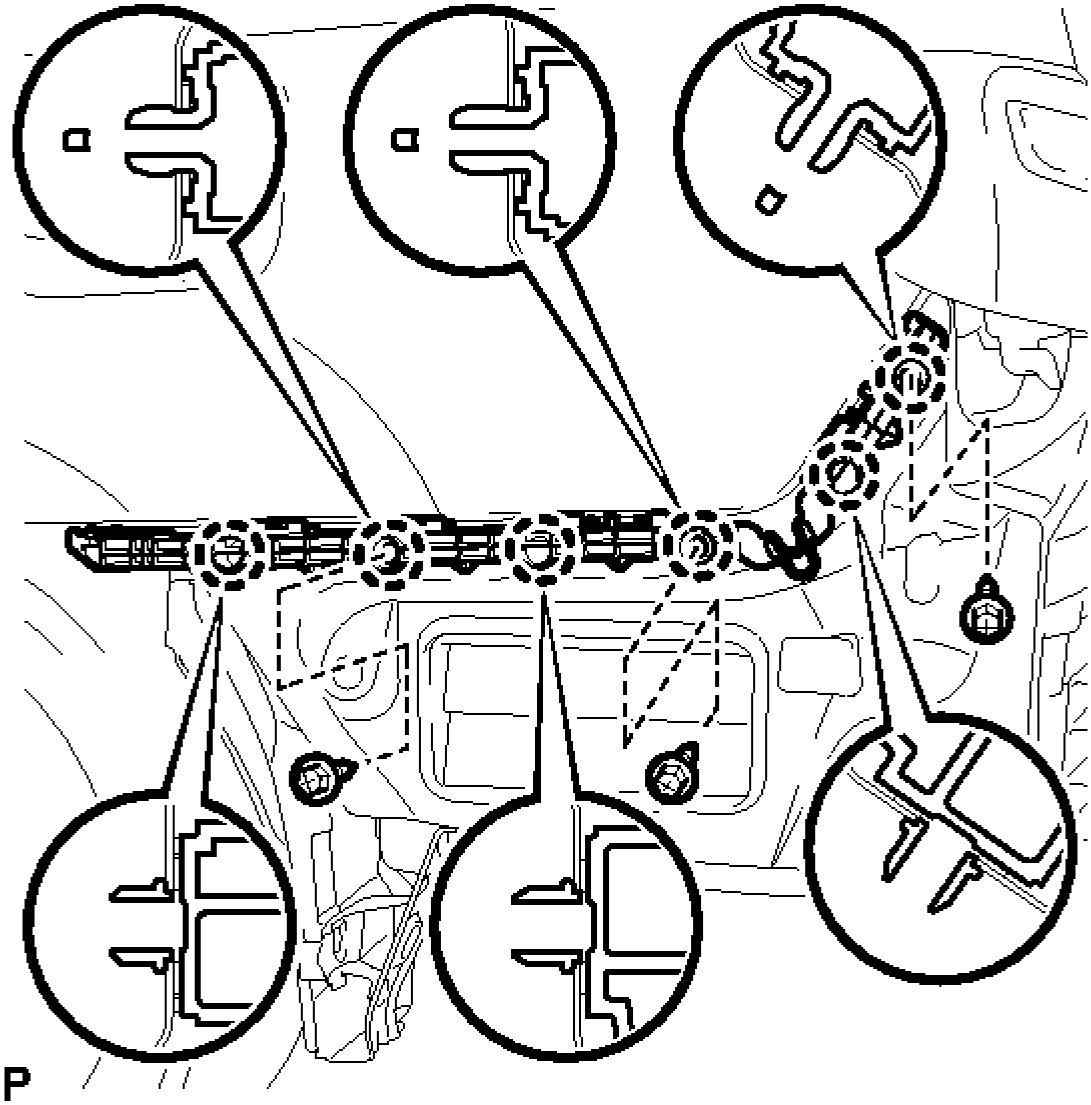

Fig. 48: Identifying Rear Bumper Side Retainer LH Claws And Screws
Courtesy of TOYOTA MOTOR SALES, U.S.A., INC.

b. Install the rear bumper side retainer LH with the 3 screws.

6. **INSTALL REAR BUMPER SIDE RETAINER RH**

   HINT:

   Use the same procedure as for the LH side.

7. **INSTALL NO. 1 ULTRASONIC SENSOR RETAINER (w/ Intuitive Parking Assist System)** . Refer to **INSTALLATION - Step 1**
8. **INSTALL NO. 1 ULTRASONIC SENSOR (w/ Intuitive Parking Assist System)** . Refer to **INSTALLATION - Step 2**
9. **INSTALL ULTRASONIC SENSOR CLIP (w/ Intuitive Parking Assist System)** . Refer to **INSTALLATION - Step 3**
10. **INSTALL NO. 2 LUGGAGE ROOM WIRE (w/ Intuitive Parking Assist System)**
    a. Connect the 4 connectors.

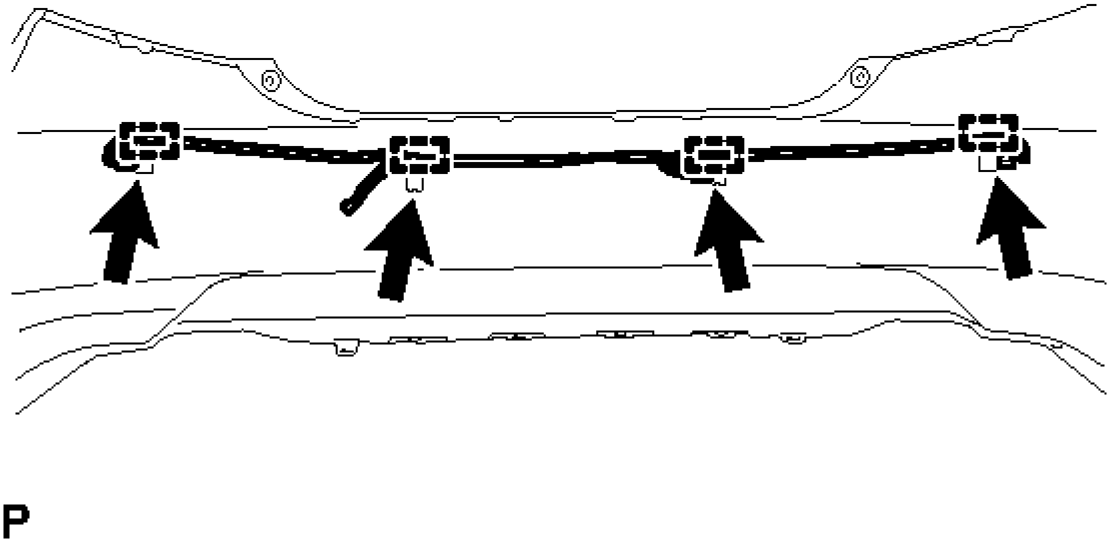

Fig. 49: Identifying No. 2 Luggage Room Wire Clamps
Courtesy of TOYOTA MOTOR SALES, U.S.A., INC.

    b. Engage the 4 clamps to install the No. 2 luggage room wire.

INSTALLATION

INSTALLATION

1. **INSTALL REAR BUMPER ASSEMBLY**
   a. w/ Intuitive Parking Assist System:

1. Connect the connector.

b. Engage the 6 claws.

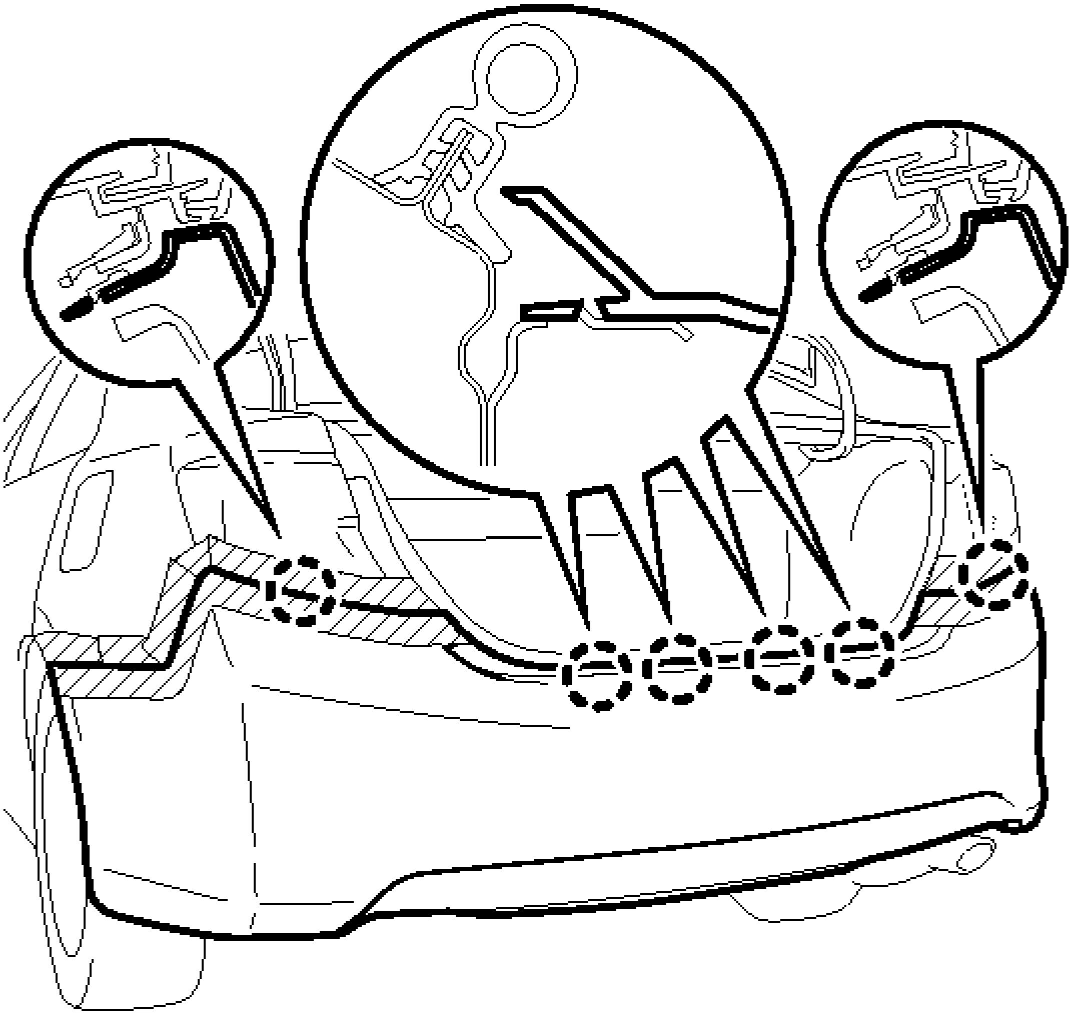

Fig. 50: Identifying Rear Bumper Assembly Claws
Courtesy of TOYOTA MOTOR SALES, U.S.A., INC.

c. Engage the 7 claws and install the rear bumper assembly as shown in the illustration.

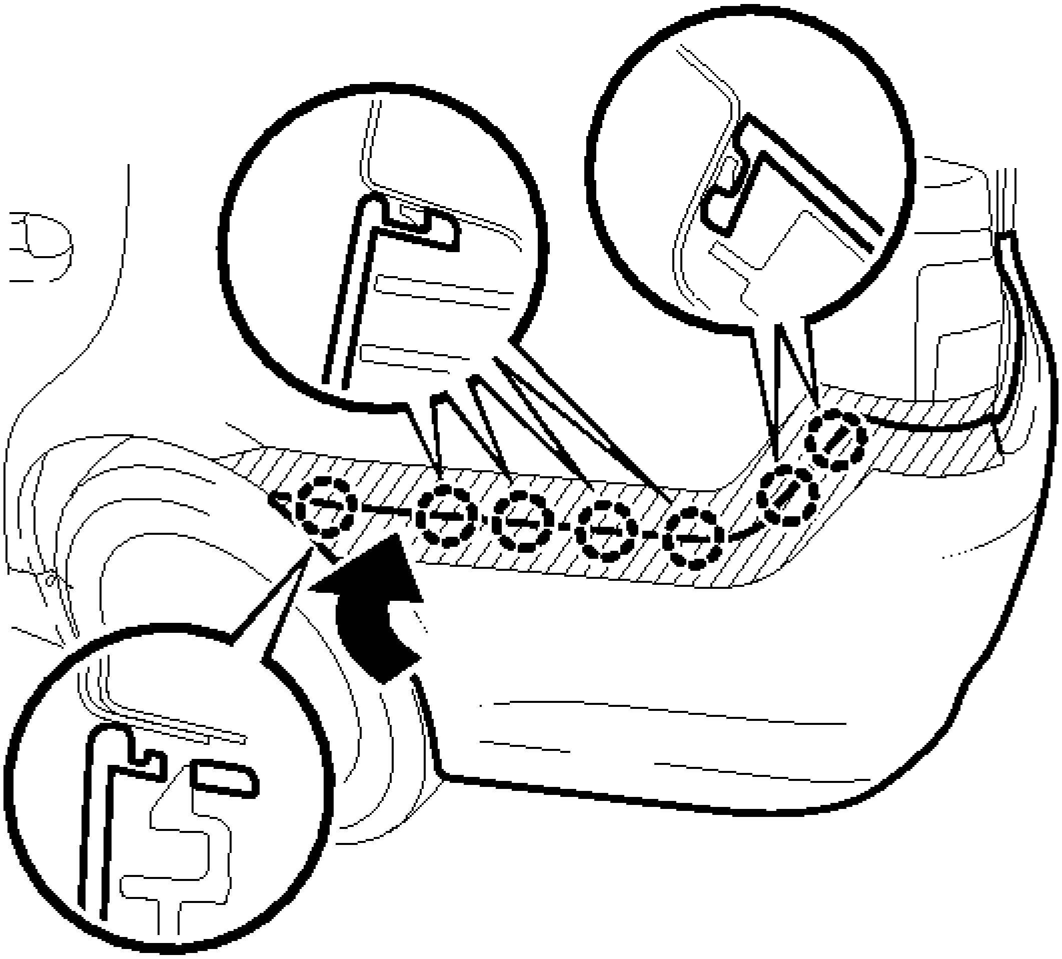

Fig. 51: Identifying Rear Bumper Assembly Claws
Courtesy of TOYOTA MOTOR SALES, U.S.A., INC.

HINT:

Use the same procedure for the RH side and LH side.

d. Install the 10 screws.
e. Install the 4 clips.

2. **INSTALL REAR BUMPER PLATE LH**
   a. Engage the hook.

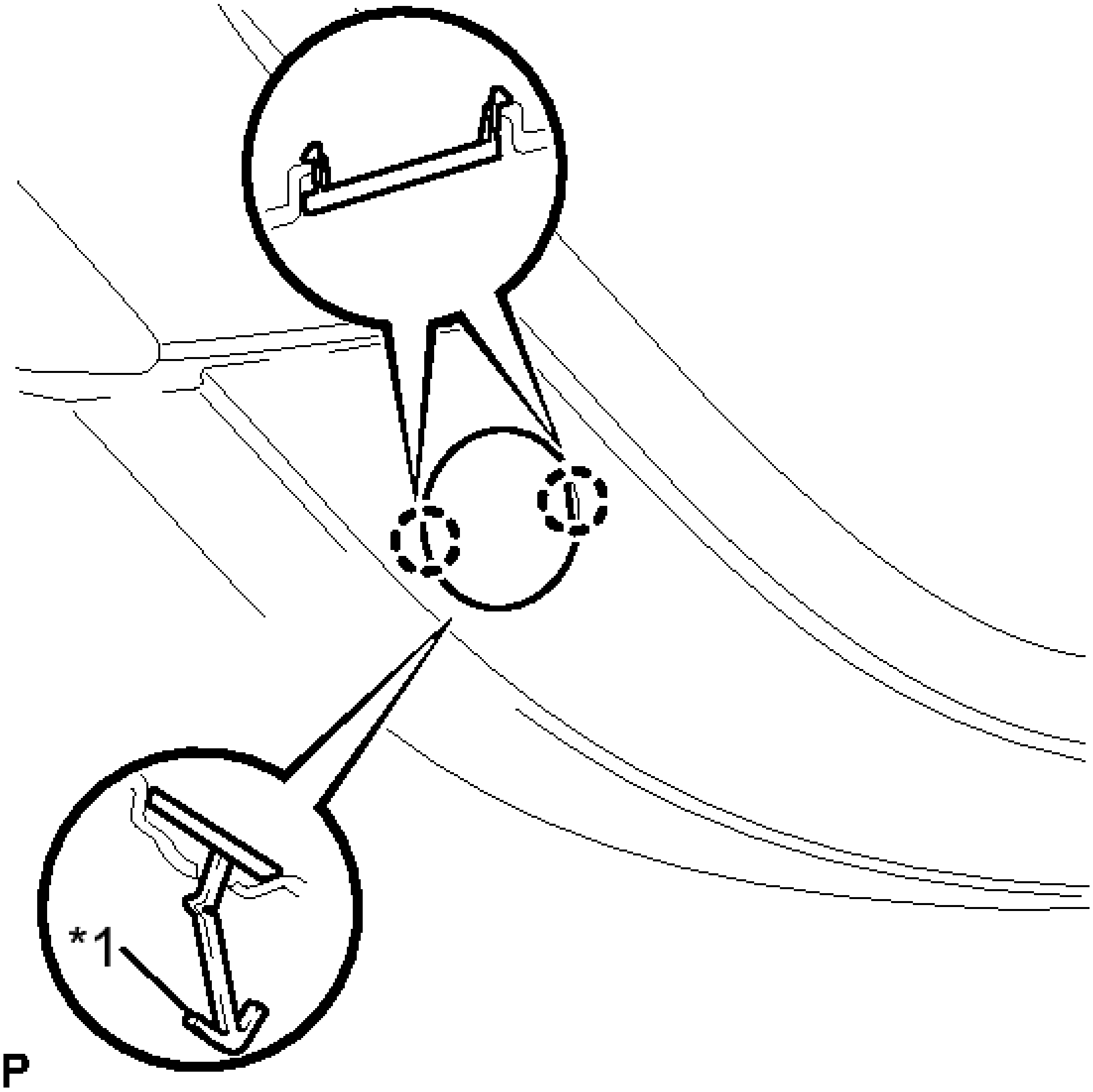

Fig. 52: Identifying Rear Bumper Plate LH Claws
Courtesy of TOYOTA MOTOR SALES, U.S.A., INC.

TEXT IN ILLUSTRATION

*1	Hook

b. Engage the 2 claws to install the rear bumper plate LH.

3. **INSTALL REAR BUMPER PLATE RH**

   HINT:

   Use the same procedure as for the LH side.

REAR SPOILER

COMPONENTS

ILLUSTRATION

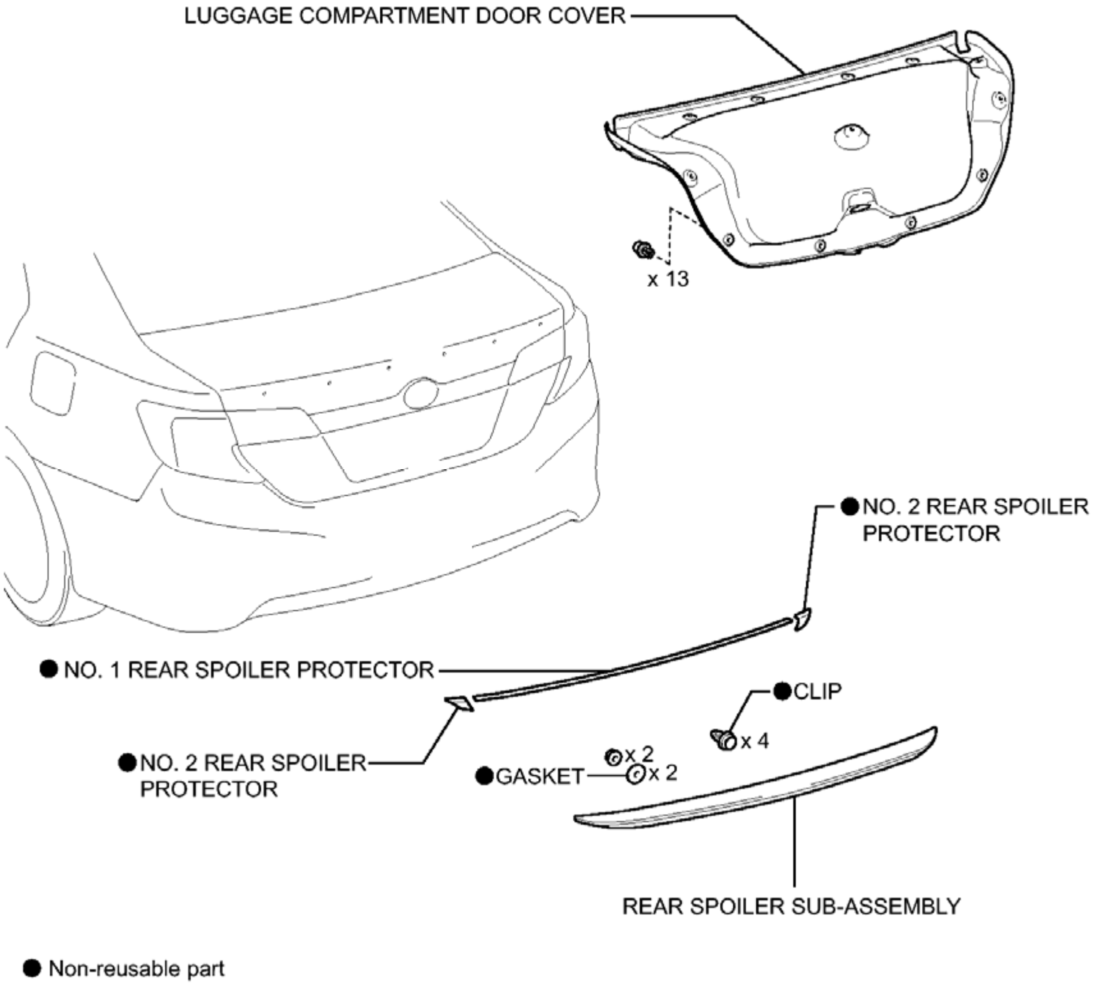
LUGGAGE COMPARTMENT DOOR COVER
x 13
● NO. 2 REAR SPOILER PROTECTOR
● NO. 1 REAR SPOILER PROTECTOR
● CLIP
x 4
● NO. 2 REAR SPOILER PROTECTOR
x 2
● GASKET
x 2
REAR SPOILER SUB-ASSEMBLY
● Non-reusable part
P

Fig. 53: Identifying Rear Spoiler Replacement Components (1 Of 2)
Courtesy of TOYOTA MOTOR SALES, U.S.A., INC.

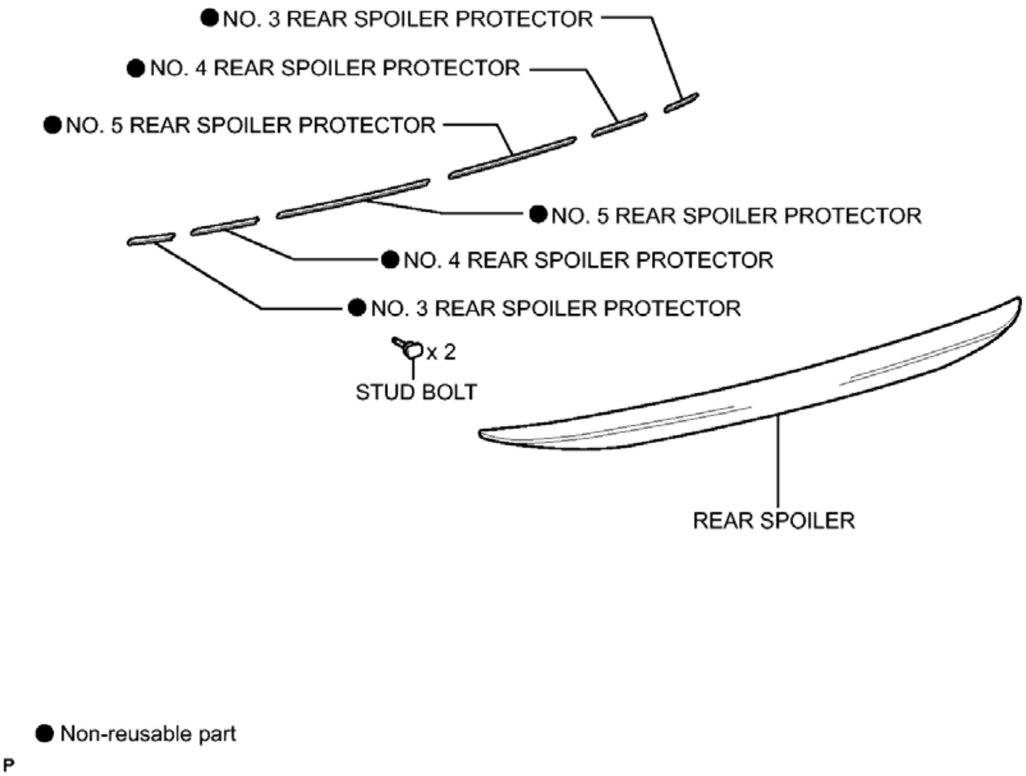
● NO. 3 REAR SPOILER PROTECTOR
● NO. 4 REAR SPOILER PROTECTOR
● NO. 5 REAR SPOILER PROTECTOR
● NO. 5 REAR SPOILER PROTECTOR
● NO. 4 REAR SPOILER PROTECTOR
● NO. 3 REAR SPOILER PROTECTOR
x 2
STUD BOLT
REAR SPOILER
● Non-reusable part
P

Fig. 54: Identifying Rear Spoiler Replacement Components (2 Of 2)
Courtesy of TOYOTA MOTOR SALES, U.S.A., INC.

REMOVAL

REMOVAL

1. **REMOVE LUGGAGE COMPARTMENT DOOR COVER** . Refer to **DISASSEMBLY - Step 1**
2. **REMOVE REAR SPOILER SUB-ASSEMBLY**

   HINT:

   When removing the rear spoiler sub-assembly, heat the vehicle body and rear spoiler sub-assembly using a heat light.

   Heating Temperature

Item	Temperature
Vehicle Body	40 to 60°C (104 to 140° F)

Rear Spoiler	20 to 30°C (68 to 86°F)

NOTE: Do not heat the vehicle body, rear spoiler sub-assembly excessively.

a. Put protective tape around the rear spoiler sub-assembly.

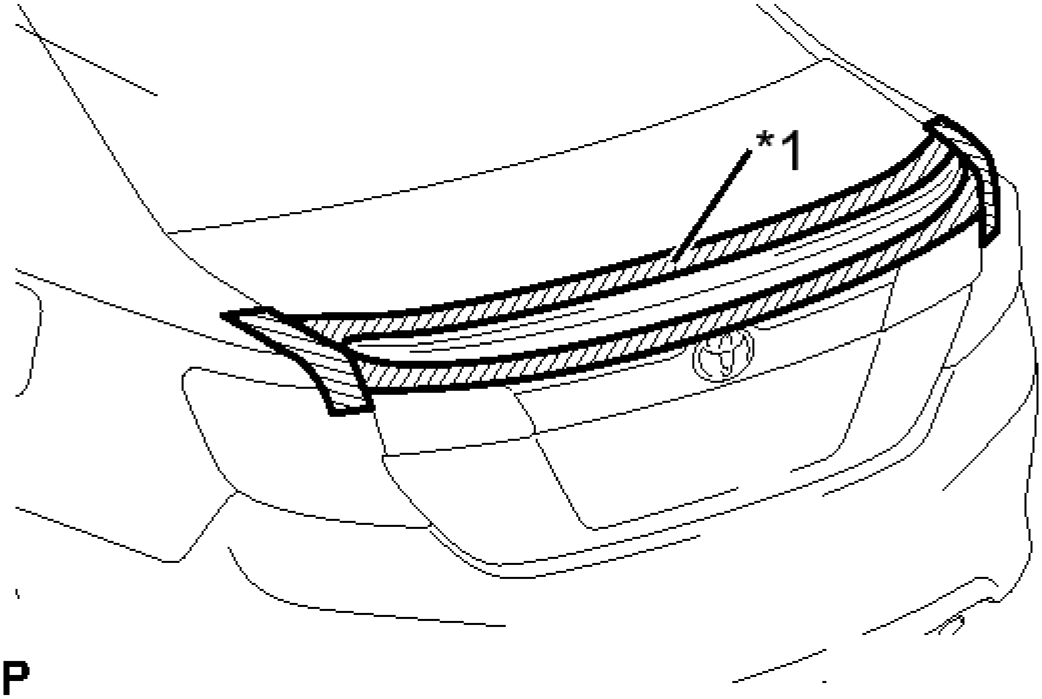

Fig. 55: Rear Spoiler Sub-Assembly Protective Tape Placement
Courtesy of TOYOTA MOTOR SALES, U.S.A., INC.

TEXT IN ILLUSTRATION

*1	Protective Tape

b. Remove the 2 nuts.

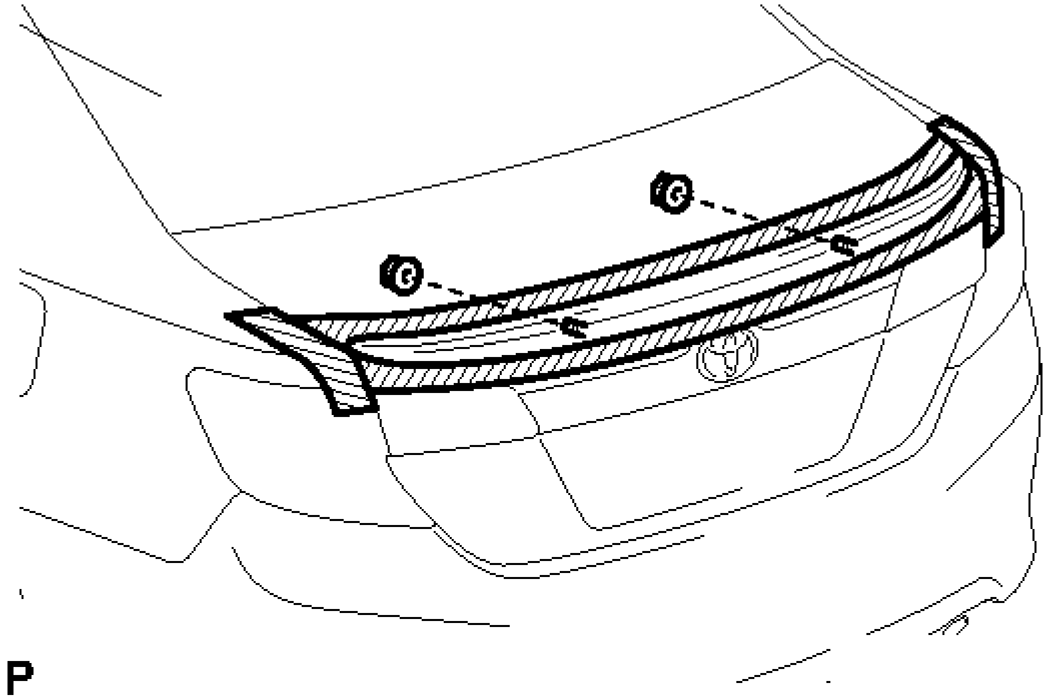

Fig. 56: Identifying Rear Spoiler Sub-Assembly Nuts
Courtesy of TOYOTA MOTOR SALES, U.S.A., INC.

c. Insert a piano wire between the vehicle body and rear spoiler sub-assembly.

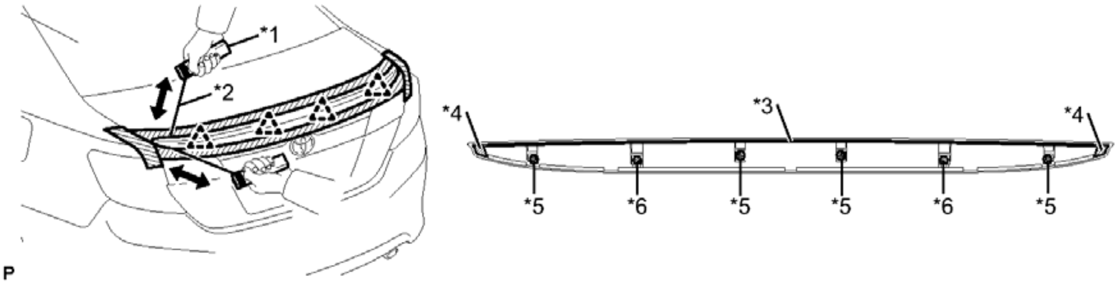

Fig. 57: Inserting Piano Wire Between Vehicle Body And Rear Spoiler Sub-Assembly
Courtesy of TOYOTA MOTOR SALES, U.S.A., INC.

TEXT IN ILLUSTRATION

*1	Wooden Block	*2	Piano Wire
*3	No. 1 Rear Spoiler Protector	*4	No. 2 Rear Spoiler Protector
*5	Clip	*6	Stud Bolt

d. Tie objects that can serve as handles (for example, wooden blocks) to both wire ends.

e. Pull the piano wire and scrape off the No. 1 rear spoiler protector and 2 No. 2 rear spoiler protectors that holds the rear spoiler sub-assembly to the vehicle body.

NOTE: Be careful not to damage the vehicle body.

f. Disengage the 4 clips and remove the rear spoiler sub-assembly.

g. Remove the No. 1 rear spoiler protector.

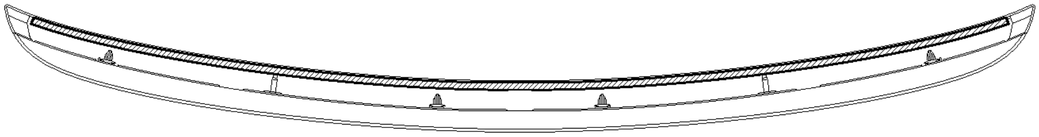

Fig. 58: Identifying No. 1 Rear Spoiler Protector
Courtesy of TOYOTA MOTOR SALES, U.S.A., INC.

h. Remove the No. 2 rear spoiler protector.

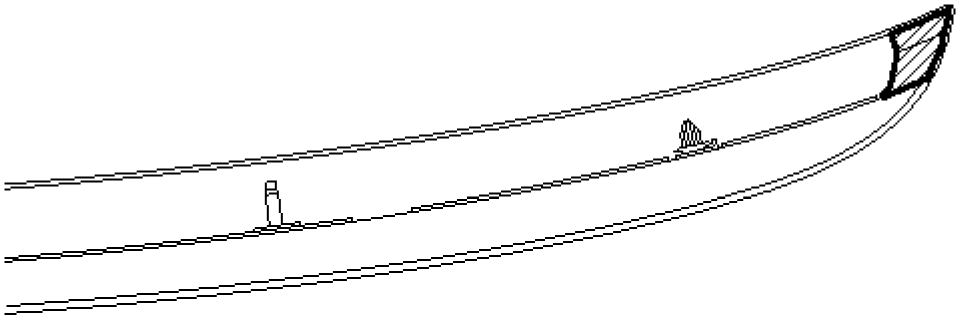

Fig. 59: Identifying No. 2 Rear Spoiler Protector
Courtesy of TOYOTA MOTOR SALES, U.S.A., INC.

HINT:

Use the same procedure for the RH side and LH side.

i. Remove the 4 clips from the rear spoiler.
j. Remove the 2 gaskets from the rear spoiler.
k. When replacing the rear spoiler with a new one:
    1. Remove the 2 stud bolts from the rear spoiler.

3. **REMOVE NO. 3 REAR SPOILER PROTECTOR**
    a. Remove the 2 No. 3 rear spoiler protectors.

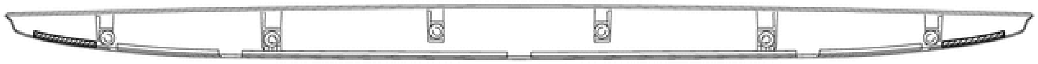

Fig. 60: Identifying No. 3 Rear Spoiler Protector
Courtesy of TOYOTA MOTOR SALES, U.S.A., INC.

4. **REMOVE NO. 4 REAR SPOILER PROTECTOR**
    a. Remove the 2 No. 4 rear spoiler protectors.

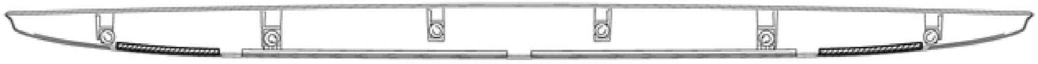

Fig. 61: Identifying No. 4 Rear Spoiler Protector
Courtesy of TOYOTA MOTOR SALES, U.S.A., INC.

5. **REMOVE NO. 5 REAR SPOILER PROTECTOR**
    a. Remove the 2 No. 5 rear spoiler protectors.

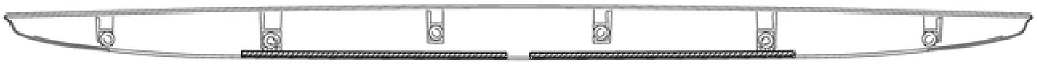

Fig. 62: Identifying No. 5 Rear Spoiler Protector
Courtesy of TOYOTA MOTOR SALES, U.S.A., INC.

INSTALLATION

INSTALLATION

1. **INSTALL NO. 3 REAR SPOILER PROTECTOR**
    a. Clean the rear spoiler.
        1. Remove any double-sided tape from the rear spoiler.

        2. Wipe off any tape adhesive residue with cleaner.
    b. Install 2 new No. 3 rear spoiler protectors.
        1. Remove the release paper from the 2 No. 3 rear spoiler protectors.

           HINT:

           After removing the release paper, keep the exposed adhesive free from foreign matter.

        2. Install 2 new No. 3 rear spoiler protectors.

2. **INSTALL NO. 4 REAR SPOILER PROTECTOR**
    a. Clean the rear spoiler.
        1. Remove any double-sided tape from the rear spoiler.
        2. Wipe off any tape adhesive residue with cleaner.
    b. Install 2 new No. 4 rear spoiler protectors.
        1. Remove the release paper from the 2 No. 4 rear spoiler protectors.

           HINT:

           After removing the release paper, keep the exposed adhesive free from foreign matter.

        2. Install 2 new No. 4 rear spoiler protectors as shown in the illustration.

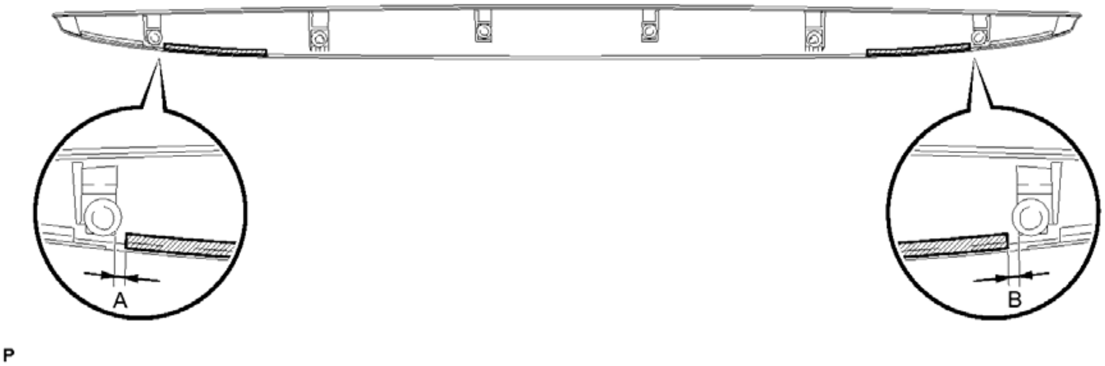

Fig. 63: Identifying No. 4 Rear Spoiler Protector Spacing
Courtesy of TOYOTA MOTOR SALES, U.S.A., INC.

STANDARD MEASUREMENT

Dimension	Measurement	Dimension	Measurement
A	5.2 mm (0.205 in.)	B	5.2 mm (0.205 in.)

3. **INSTALL NO. 5 REAR SPOILER PROTECTOR**
    a. Clean the rear spoiler.

    1. Remove any double-sided tape from the rear spoiler.
    2. Wipe off any tape adhesive residue with cleaner.
  b. Install 2 new No. 5 rear spoiler protectors.
    1. Remove the release paper from the 2 No. 5 rear spoiler protectors.

       HINT:

       After removing the release paper, keep the exposed adhesive free from foreign matter.

    2. Install 2 new No. 5 rear spoiler protectors as shown in the illustration.

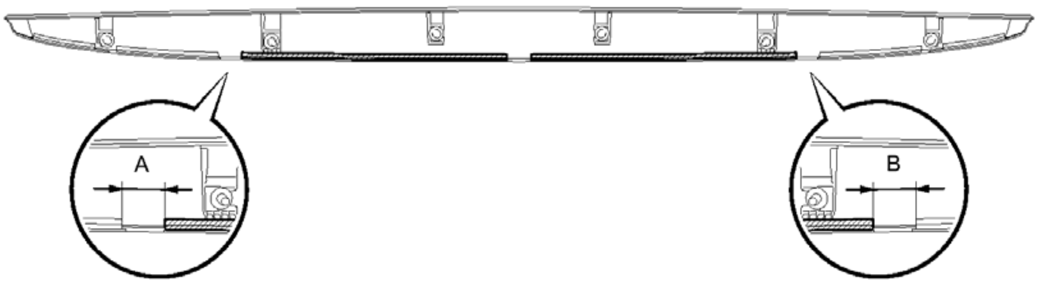

Fig. 64: Identifying No. 5 Rear Spoiler Protector Spacing
Courtesy of TOYOTA MOTOR SALES, U.S.A., INC.

STANDARD MEASUREMENT

Dimension	Measurement	Dimension	Measurement
A	38.0 mm (1.50 in.)	B	38.0 mm (1.50 in.)

4. **INSTALL REAR SPOILER SUB-ASSEMBLY**
  a. When replacing the rear spoiler with a new one:
    1. Install the 2 stud bolts to the rear spoiler.
  b. Install 2 new gaskets to the rear spoiler.
  c. Install 4 new clips to the rear spoiler.
  d. Clean the rear spoiler.
    1. Remove any double-sided tape from the rear spoiler.
    2. Wipe off any tape adhesive residue with cleaner.
  e. Install a new No. 2 rear spoiler protector.
    1. Remove the release paper from the No. 2 rear spoiler protector.

       HINT:

After removing the release paper, keep the exposed adhesive free from foreign matter.

2. Install a new No. 2 rear spoiler protector.

   HINT:

   Use the same procedure for the RH side and LH side.

f. Install the No. 1 rear spoiler protector.
   1. Remove the release paper from the No. 1 rear spoiler protector.

      HINT:

      After removing the release paper, keep the exposed adhesive free from foreign matter.

   2. Install the No. 1 rear spoiler protector as shown in the illustration.

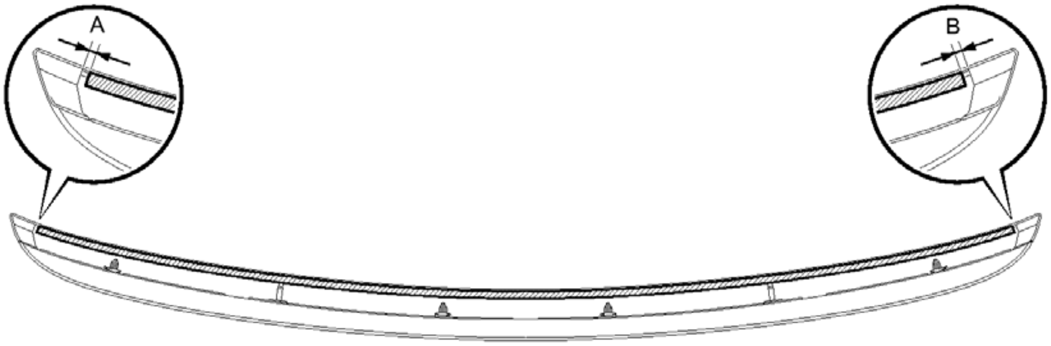

P

Fig. 65: Identifying No. 1 Rear Spoiler Protector Spacing
Courtesy of TOYOTA MOTOR SALES, U.S.A., INC.

STANDARD MEASUREMENT

Dimension	Measurement	Dimension	Measurement
A	5.0 mm (0.197 in.)	B	5.0 mm (0.197 in.)

g. Clean the vehicle body surface.
   1. Using a heat light, heat the vehicle body surface.
   2. Remove the double-sided tape from the vehicle body.
   3. Wipe off any tape adhesive residue with cleaner.
h. Install the rear spoiler sub-assembly.
   1. Using a heat light, heat the vehicle body and rear spoiler sub-assembly.
   2. Remove the release paper from the rear spoiler sub-assembly.

HINT:

After removing the release paper, keep the exposed adhesive free from foreign matter.

3. Engage the 4 clips.

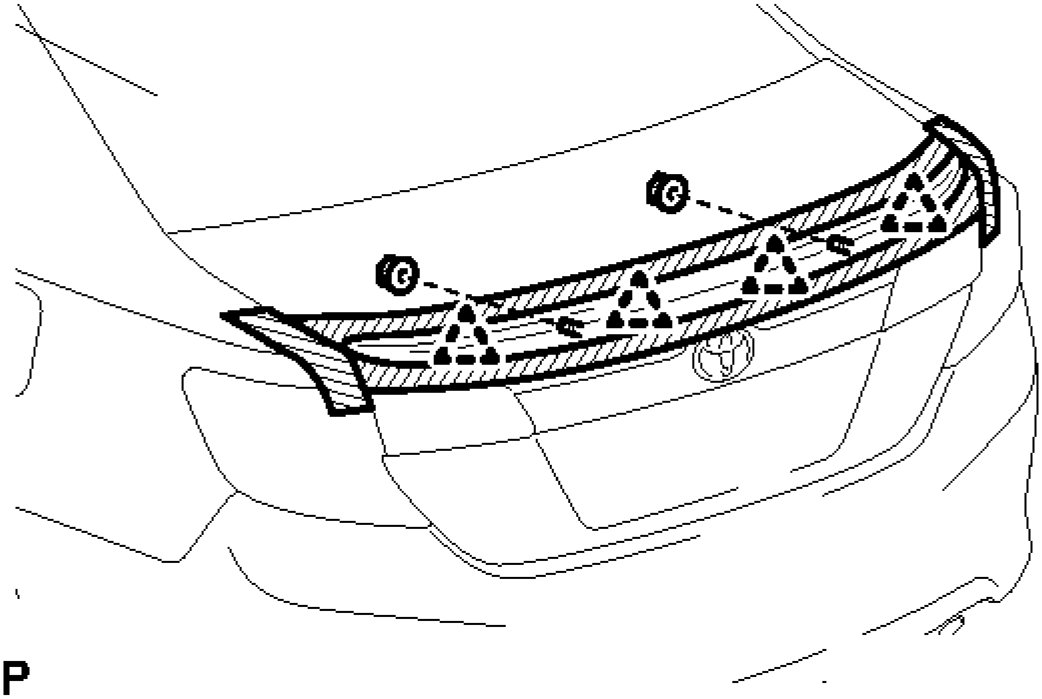

Fig. 66: Identifying Rear Spoiler Sub-Assembly Clips And Nuts
Courtesy of TOYOTA MOTOR SALES, U.S.A., INC.

4. Install the rear spoiler sub-assembly with the 2 nuts.

5. **INSTALL LUGGAGE COMPARTMENT DOOR COVER** . Refer to **REASSEMBLY - Step 10**

RADIATOR GRILLE

COMPONENTS

ILLUSTRATION

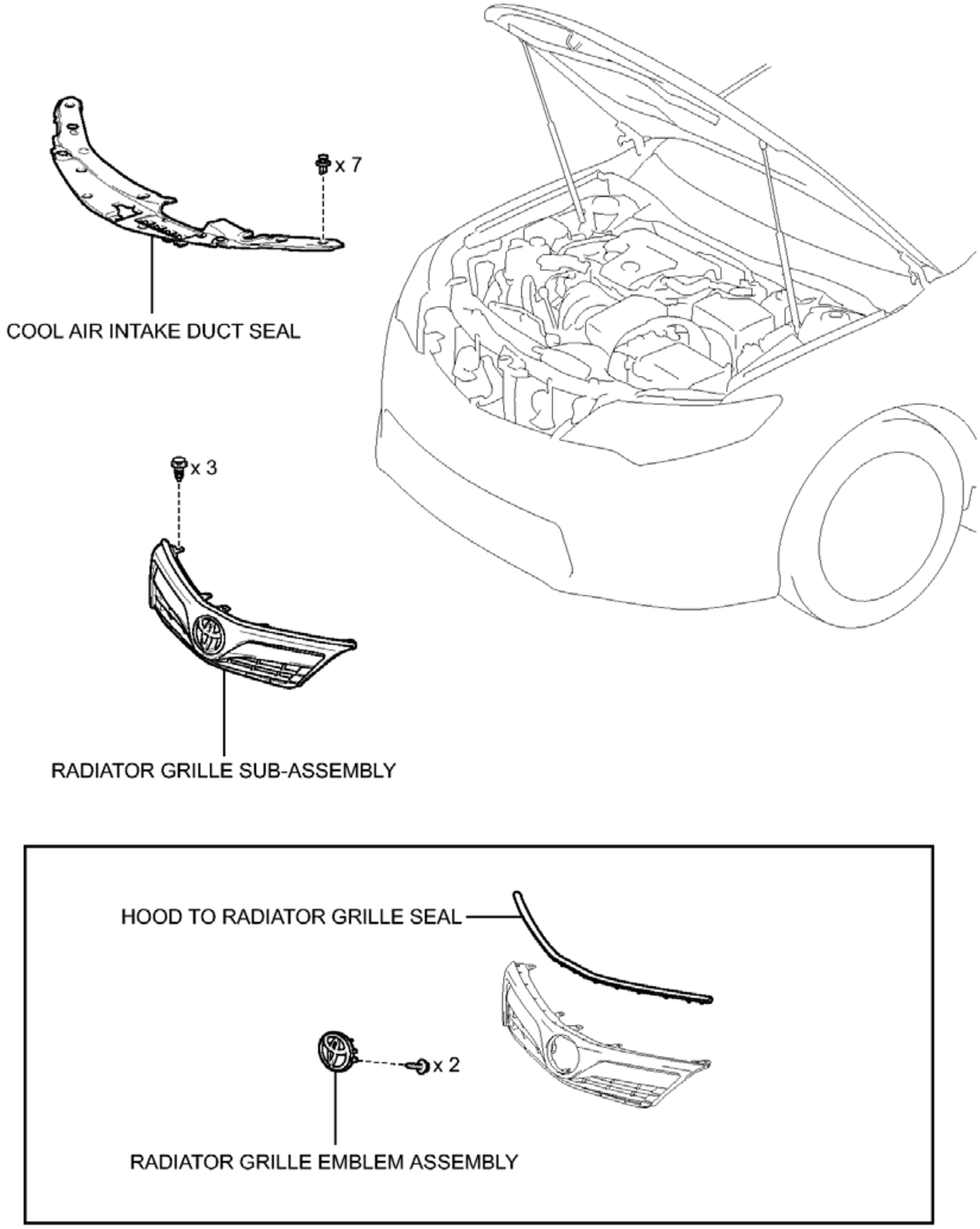
x 7
COOL AIR INTAKE DUCT SEAL
x 3
RADIATOR GRILLE SUB-ASSEMBLY
HOOD TO RADIATOR GRILLE SEAL
x 2
RADIATOR GRILLE EMBLEM ASSEMBLY

P

Fig. 67: Identifying Radiator Grille Replacement Components
Courtesy of TOYOTA MOTOR SALES, U.S.A., INC.

REMOVAL

REMOVAL

1. **REMOVE COOL AIR INTAKE DUCT SEAL**

a. Remove the 7 clips and cool air intake duct seal.

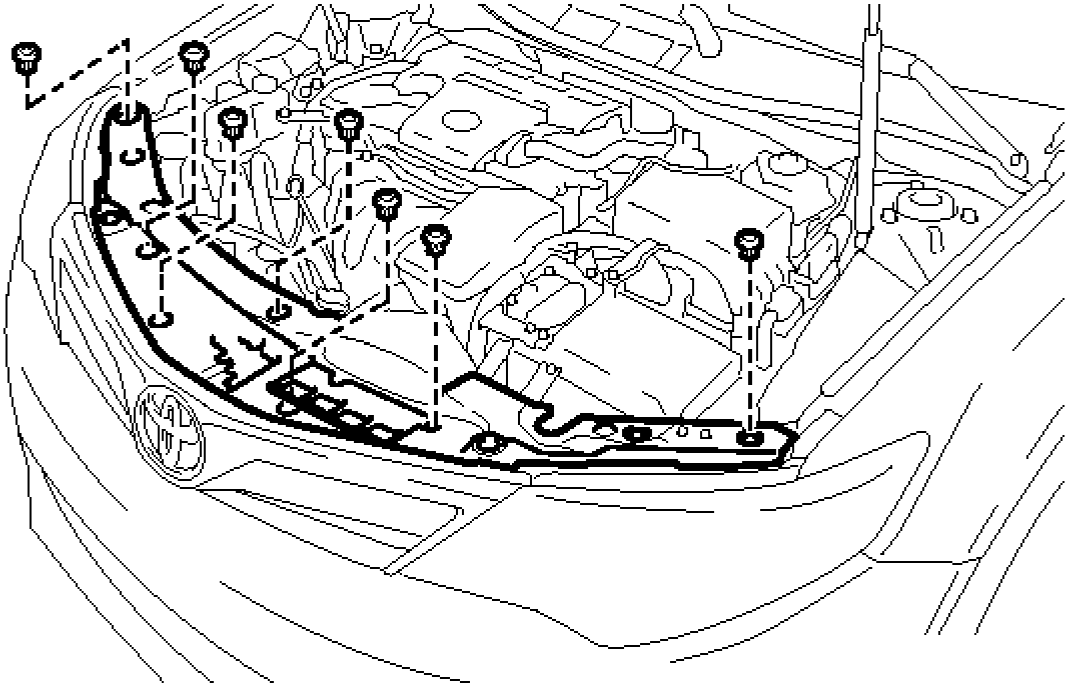

Fig. 68: Identifying Cool Air Intake Duct Seal Clips
Courtesy of TOYOTA MOTOR SALES, U.S.A., INC.

2. **REMOVE RADIATOR GRILLE SUB-ASSEMBLY**
   a. Put protective tape around the radiator grille sub-assembly.

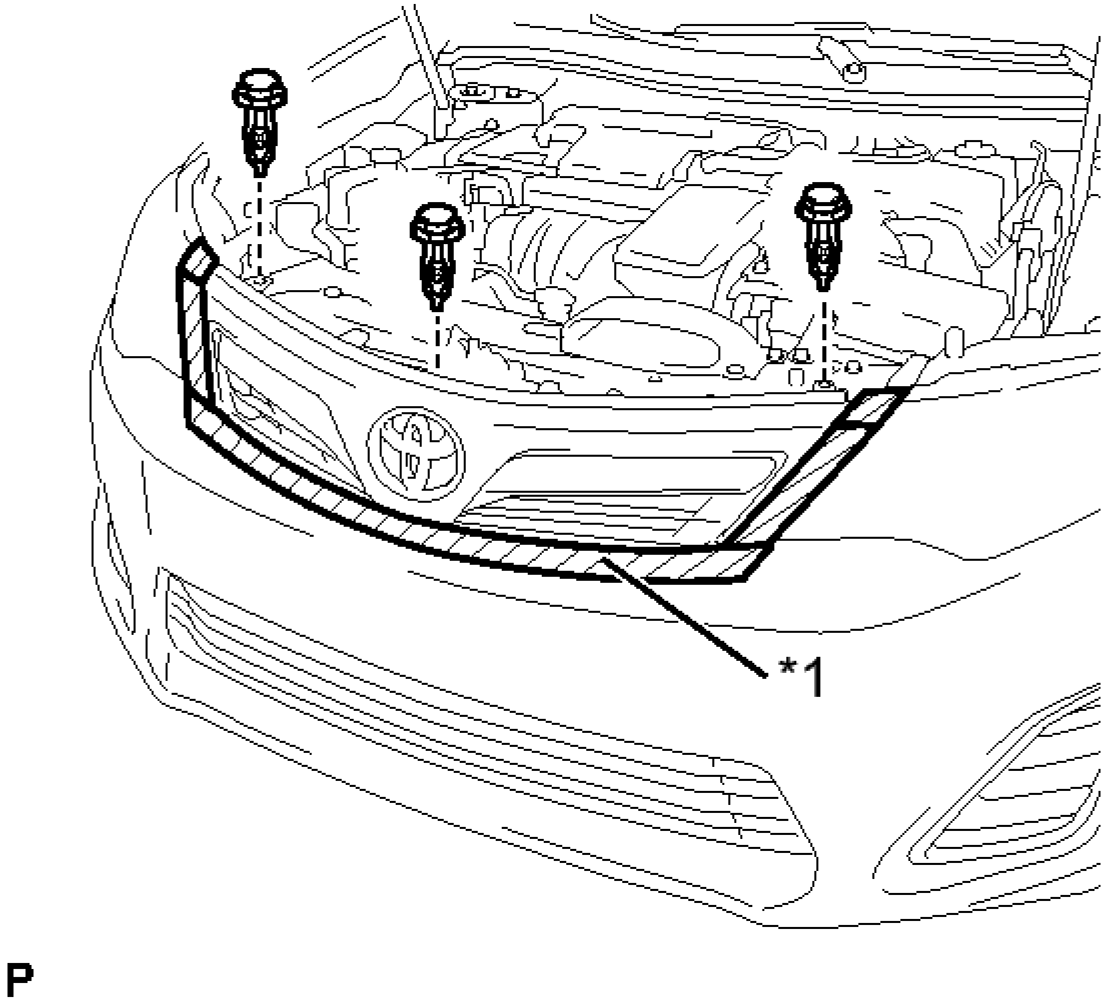

Fig. 69: Radiator Grille Sub-Assembly Protective Tape Placement
Courtesy of TOYOTA MOTOR SALES, U.S.A., INC.

TEXT IN ILLUSTRATION

*1	Protective Tape

b. Remove the 3 clips.
c. Disengage the 8 claws and remove the radiator grille sub-assembly.

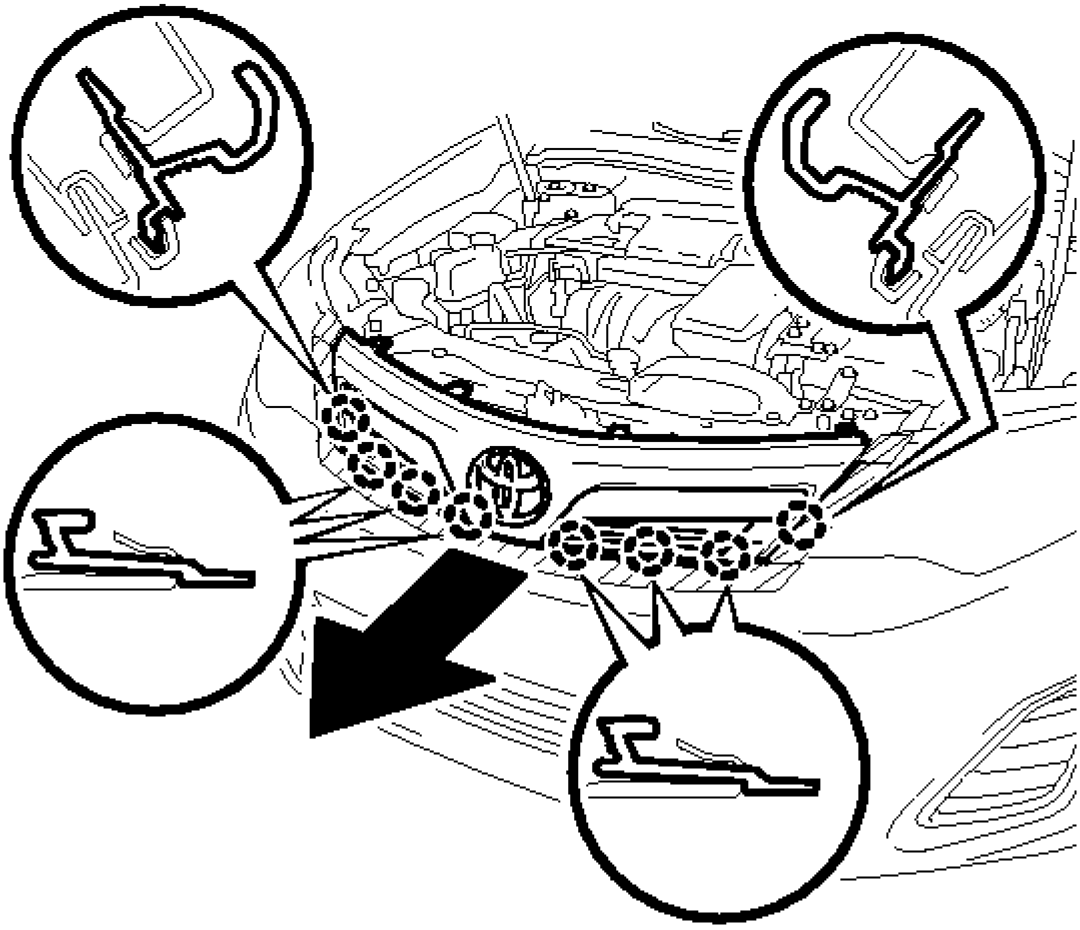

Fig. 70: Identifying Radiator Grille Sub-Assembly Claws
Courtesy of TOYOTA MOTOR SALES, U.S.A., INC.

3. **REMOVE HOOD TO RADIATOR GRILLE SEAL**
    a. Disengage the 15 clips to remove the hood to radiator grille seal.

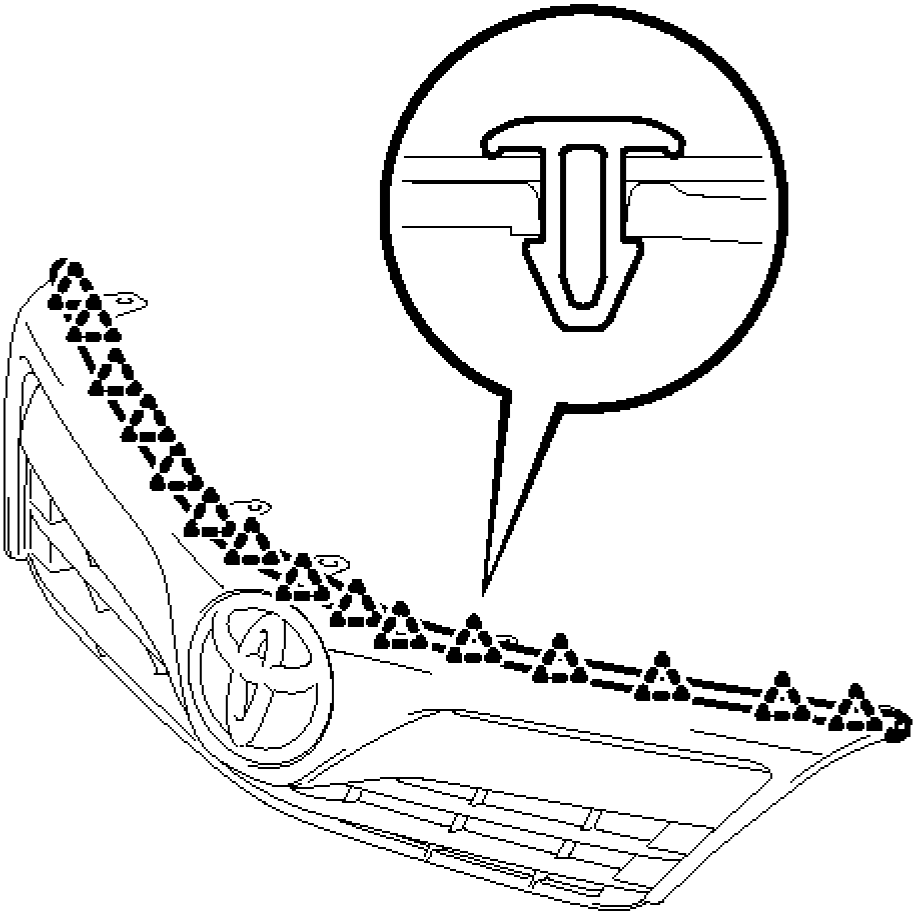

P

Fig. 71: Identifying Radiator Grille Seal Clips
Courtesy of TOYOTA MOTOR SALES, U.S.A., INC.

4. **REMOVE RADIATOR GRILLE EMBLEM ASSEMBLY**
    a. Remove the 2 screws.

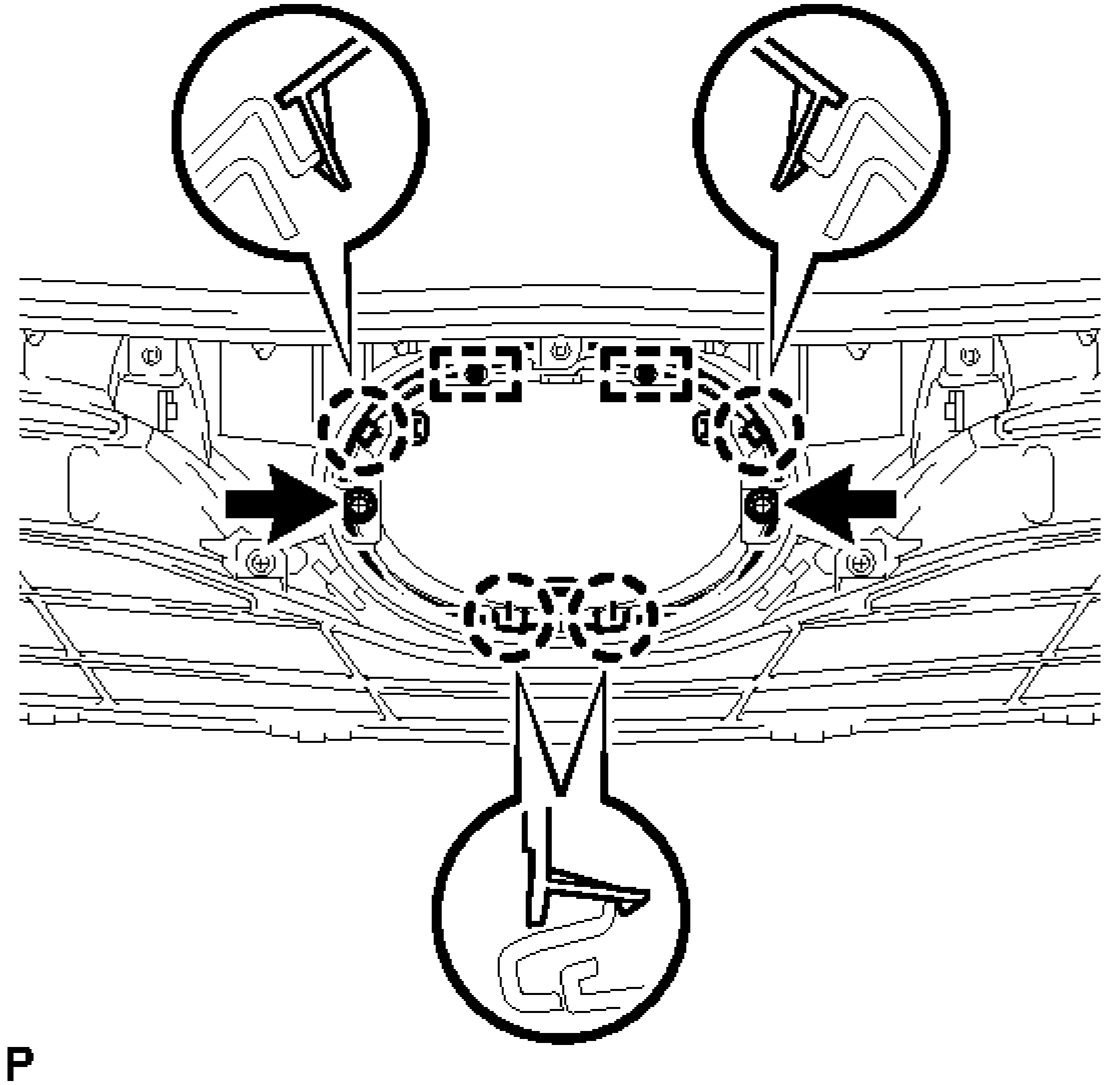

Fig. 72: Identifying Radiator Grille Emblem Assembly Screws, Claws, And Guides
Courtesy of TOYOTA MOTOR SALES, U.S.A., INC.

b. Disengage the 4 claws and 2 guides, and remove the radiator grille emblem assembly.

INSTALLATION

INSTALLATION

1. **INSTALL RADIATOR GRILLE EMBLEM ASSEMBLY**
    a. Engage the 2 guides and 4 claws, and install the radiator grille emblem assembly.
    b. Install the 2 screws.
2. **INSTALL HOOD TO RADIATOR GRILLE SEAL**
    a. Engage the 15 clips to install the hood to radiator grille seal.
3. **INSTALL RADIATOR GRILLE SUB-ASSEMBLY**

a. Engage the 8 claws to install the radiator grille sub-assembly.

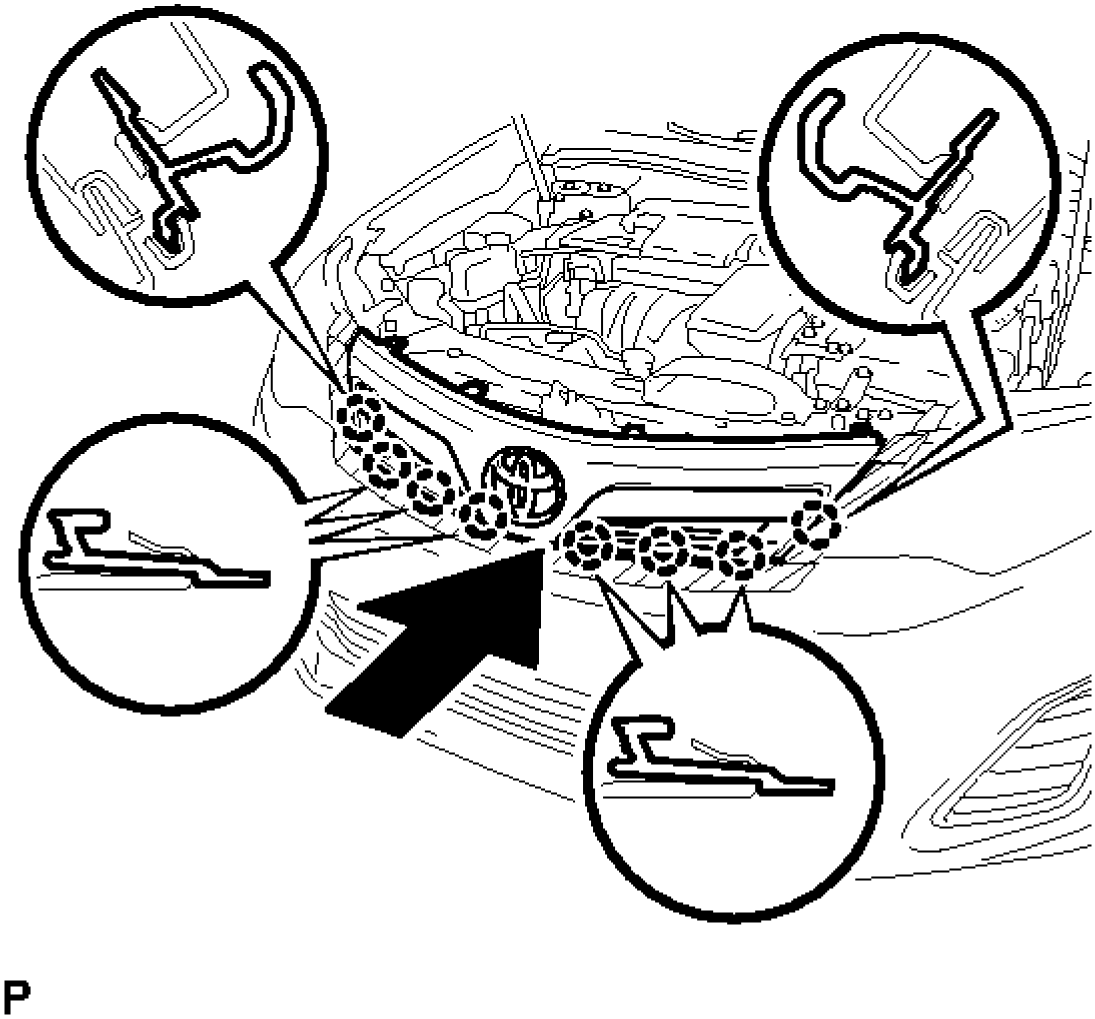

Fig. 73: Identifying Radiator Grille Sub-Assembly Claws
Courtesy of TOYOTA MOTOR SALES, U.S.A., INC.

b. Install the 3 clips.

4. **INSTALL COOL AIR INTAKE DUCT SEAL**
    a. Install the cool air intake duct seal with the 7 clips.

NAME PLATE

COMPONENTS

ILLUSTRATION

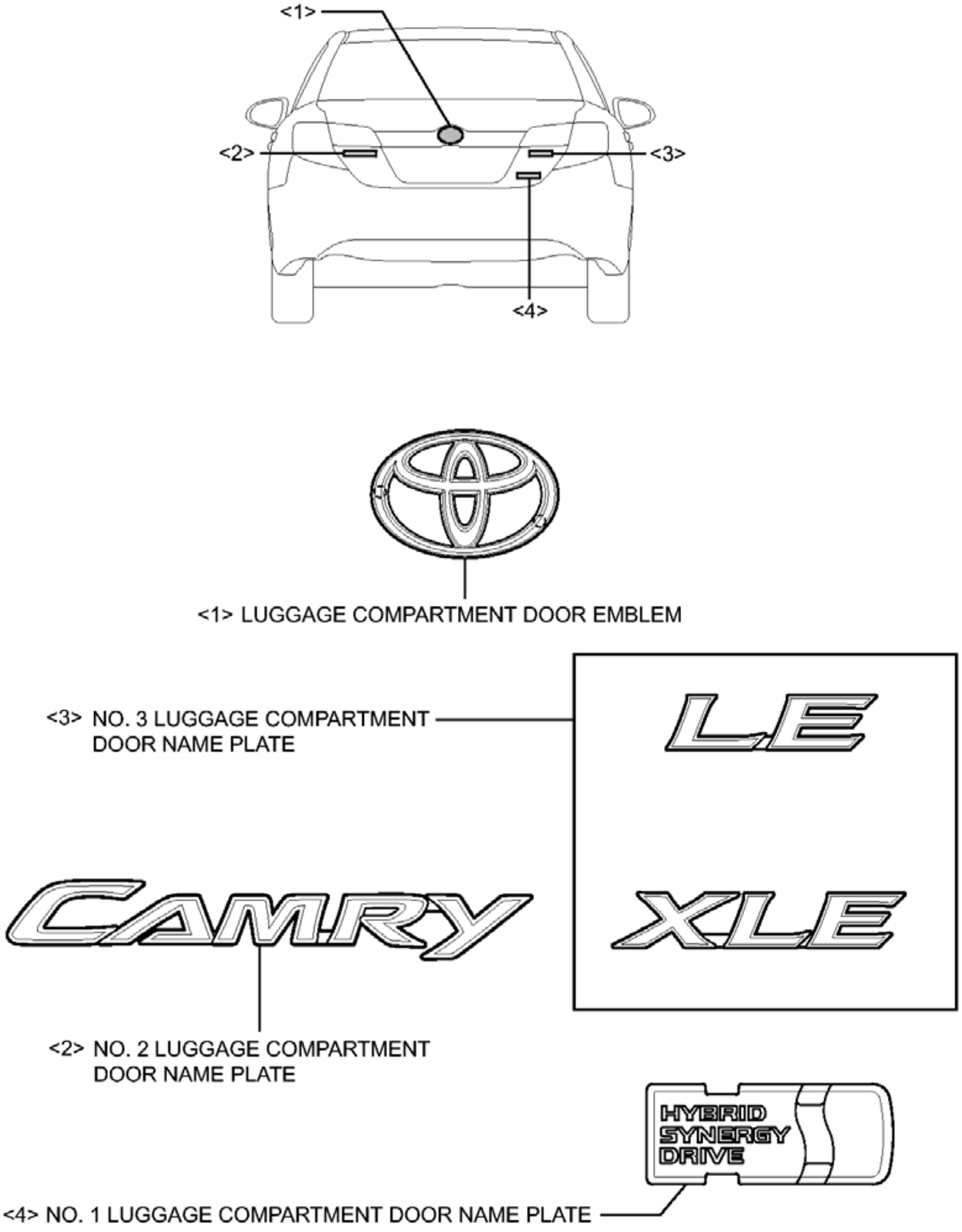
<1>
<2>
<3>
<4>
<1> LUGGAGE COMPARTMENT DOOR EMBLEM
<3> NO. 3 LUGGAGE COMPARTMENT DOOR NAME PLATE
LE
XLE
CAMRY
<2> NO. 2 LUGGAGE COMPARTMENT DOOR NAME PLATE
HYBRID SYNERGY DRIVE
<4> NO. 1 LUGGAGE COMPARTMENT DOOR NAME PLATE

P

Fig. 74: Identifying Name Plate Replacement Components (1 Of 2)
Courtesy of TOYOTA MOTOR SALES, U.S.A., INC.

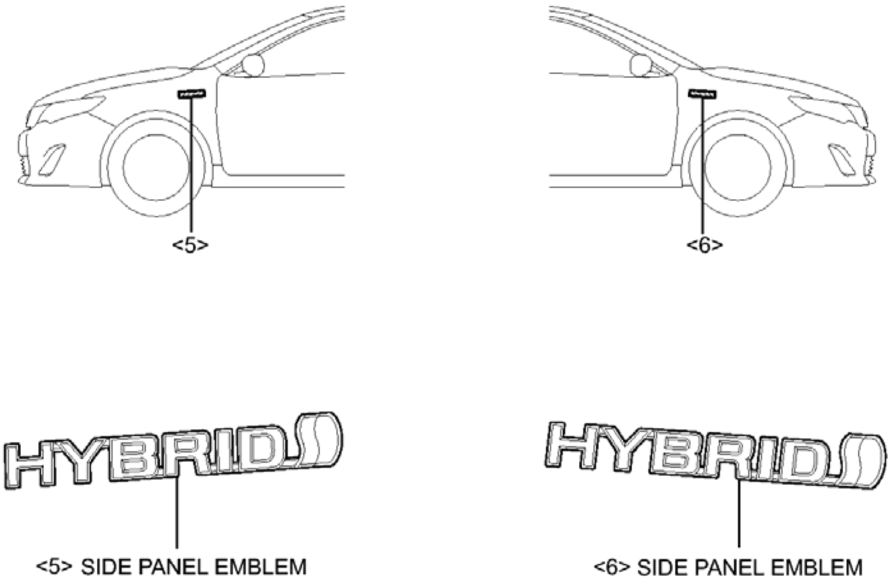

P

Fig. 75: Identifying Name Plate Replacement Components (2 Of 2)
Courtesy of TOYOTA MOTOR SALES, U.S.A., INC.

REMOVAL

REMOVAL

HINT:

When removing the name plates or emblem, heat the vehicle body and name plates or emblem using a heat light.

HEATING TEMPERATURE

Item	Temperature
Vehicle Body	40 to 60°C (104 to 140°F)
Name Plate or Emblem	20 to 30°C (68 to 86°F)

NOTE: Do not heat the vehicle body, name plates or emblem excessively.

1. **REMOVE LUGGAGE COMPARTMENT DOOR EMBLEM**
    a. Put protective tape around the luggage compartment door emblem.

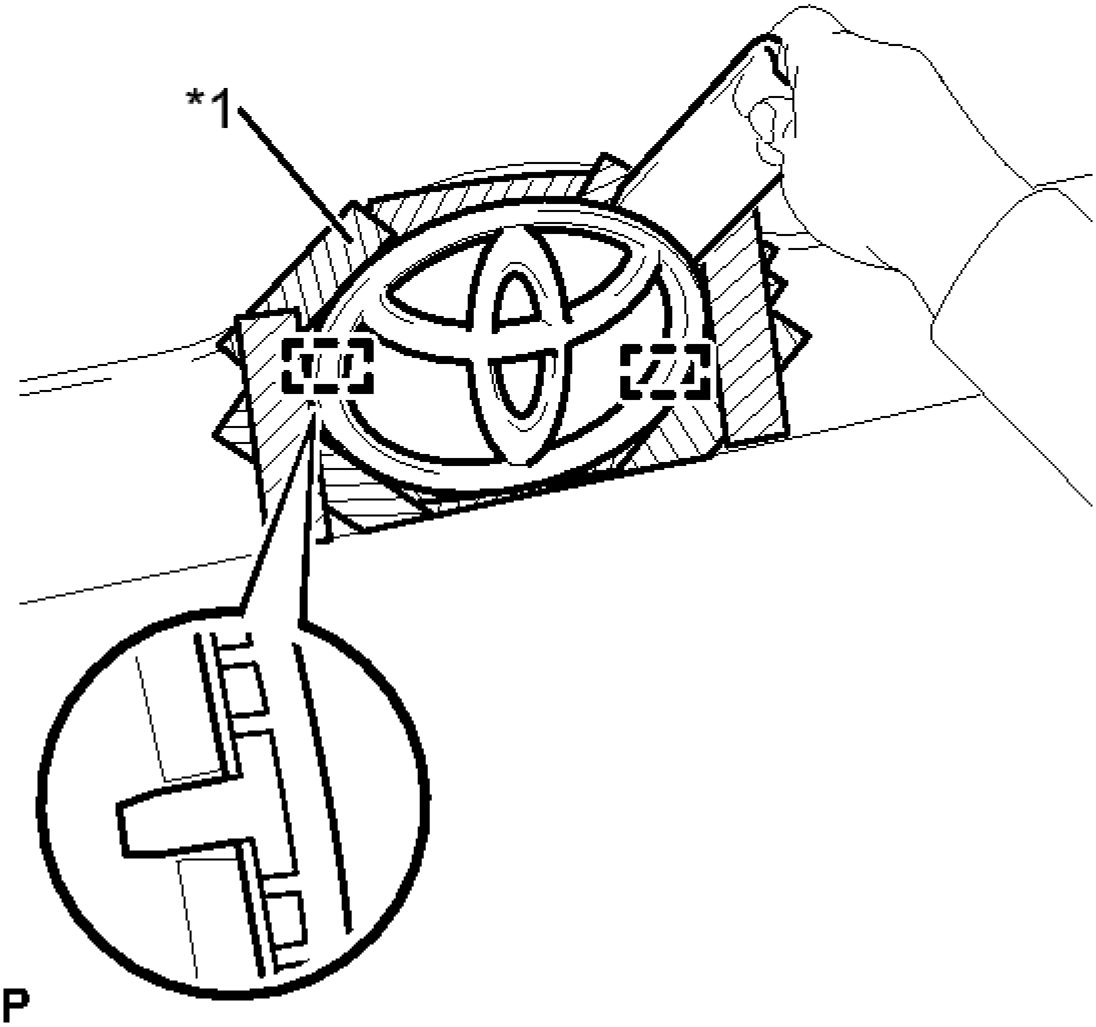

Fig. 76: Luggage Compartment Door Emblem Protective Tape Placement
Courtesy of TOYOTA MOTOR SALES, U.S.A., INC.

TEXT IN ILLUSTRATION

*1	Protective Tape

b. Using a molding remover, separate the double-sided tape and disengage the 2 pins to remove the luggage compartment door emblem.

NOTE:

- **If reusing the luggage compartment door emblem, take care not to damage the symbol emblem.**
- **Be careful not to damage the vehicle body.**

2. **REMOVE NO. 2 LUGGAGE COMPARTMENT DOOR NAME PLATE**

a. Put protective tape around the No. 2 luggage compartment door name plate.

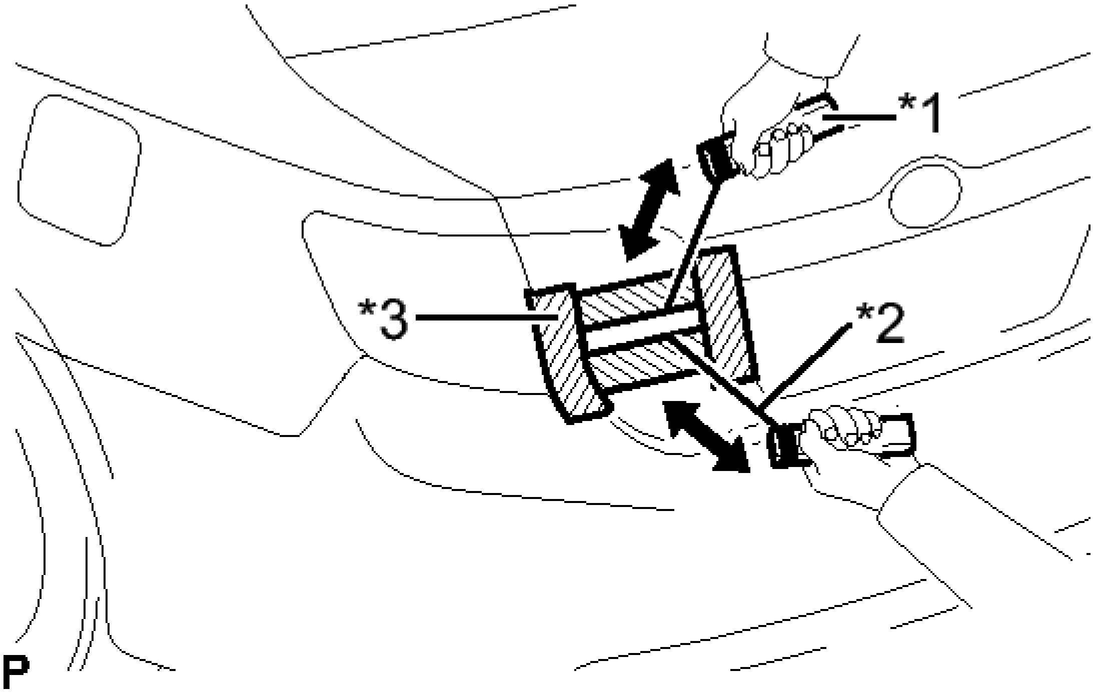

Fig. 77: NO. 2 Luggage Compartment Door Name Plate Protective Tape Placement
Courtesy of TOYOTA MOTOR SALES, U.S.A., INC.

TEXT IN ILLUSTRATION

*1	Wooden Block
*2	Piano Wire
*3	Protective Tape

b. Insert a piano wire between the vehicle body and No. 2 luggage compartment door name plate.

c. Tie objects that can serve as handles (for example, wooden blocks) to both wire ends.

d. Pull the piano wire to separate the double-sided tape that holds the No. 2 luggage compartment door name plate to the vehicle body.

NOTE:

- **If reusing the No. 2 luggage compartment door name plate, take care not to damage the No. 2 luggage compartment door name plate.**
- **Be careful not to damage the vehicle body.**

e. Remove the No. 2 luggage compartment door name plate.

3. **REMOVE NO. 3 LUGGAGE COMPARTMENT DOOR NAME PLATE**

a. Put protective tape around the No. 3 luggage compartment door name plate.

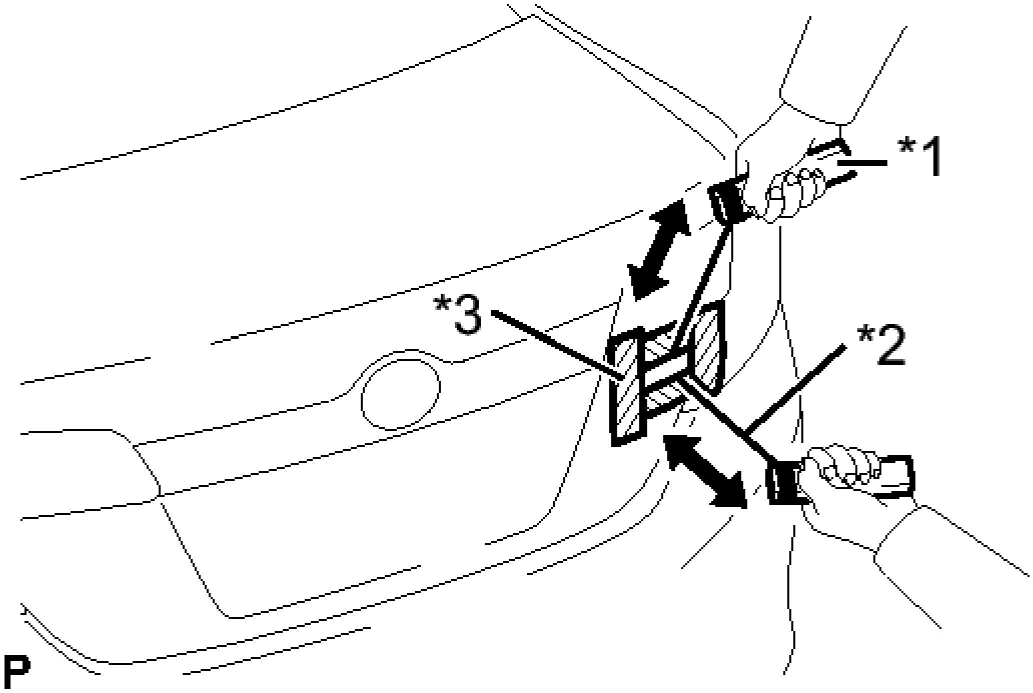

Fig. 78: NO. 3 Luggage Compartment Door Name Plate Protective Tape Placement
Courtesy of TOYOTA MOTOR SALES, U.S.A., INC.

TEXT IN ILLUSTRATION

*1	Wooden Block
*2	Piano Wire
*3	Protective Tape

b. Insert a piano wire between the vehicle body and No. 3 luggage compartment door name plate.

c. Tie objects that can serve as handles (for example, wooden blocks) to both wire ends.

d. Pull the piano wire to separate the double-sided tape that holds the No. 3 luggage compartment door name plate to the vehicle body.

NOTE:

- **If reusing the No. 3 luggage compartment door name plate, take care not to damage the No. 3 luggage compartment door name plate.**
- **Be careful not to damage the vehicle body.**

e. Remove the No. 3 luggage compartment door name plate.

4. **REMOVE NO. 1 LUGGAGE COMPARTMENT DOOR NAME PLATE**

a. Put protective tape around the No. 1 luggage compartment door name plate.

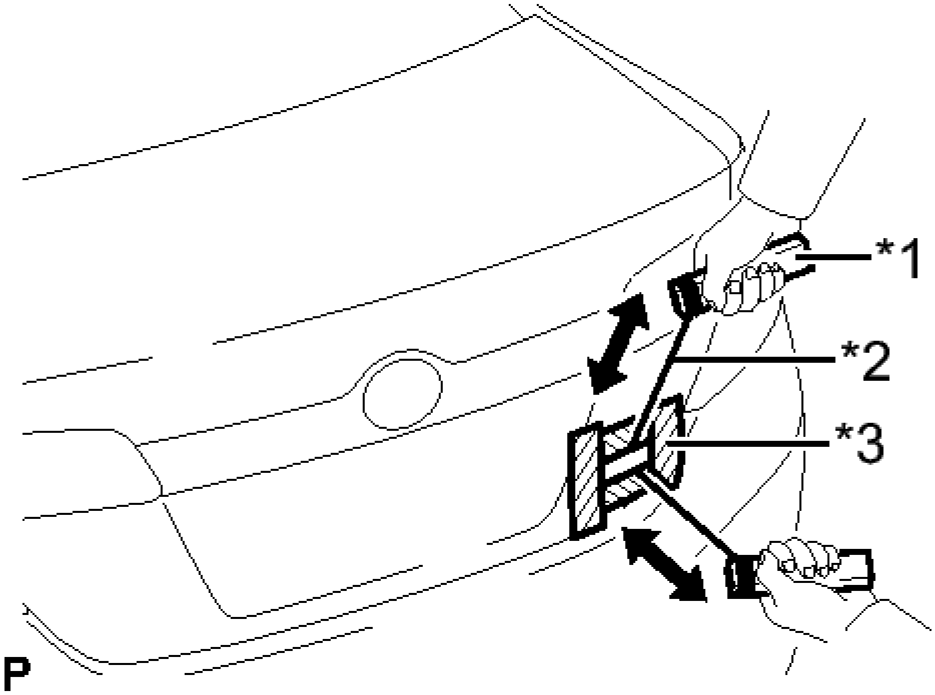

Fig. 79: NO. 1 Luggage Compartment Door Name Plate Protective Tape Placement
Courtesy of TOYOTA MOTOR SALES, U.S.A., INC.

TEXT IN ILLUSTRATION

*1	Wooden Block
*2	Piano Wire
*3	Protective Tape

b. Insert a piano wire between the vehicle body and No. 1 luggage compartment door name plate.
c. Tie objects that can serve as handles (for example, wooden blocks) to both wire ends.
d. Pull the piano wire and cut the double-sided tape that holds the No. 1 luggage compartment door name plate to the vehicle body.

NOTE:

- **If reusing the No. 1 luggage compartment door name plate, take care not to damage the No. 1 luggage compartment door name plate.**
- **Be careful not to damage the vehicle body.**

e. Remove the No. 1 luggage compartment door name plate.

5. **REMOVE SIDE PANEL EMBLEM (for LH Side)**

a. Put protective tape around the side panel emblem.

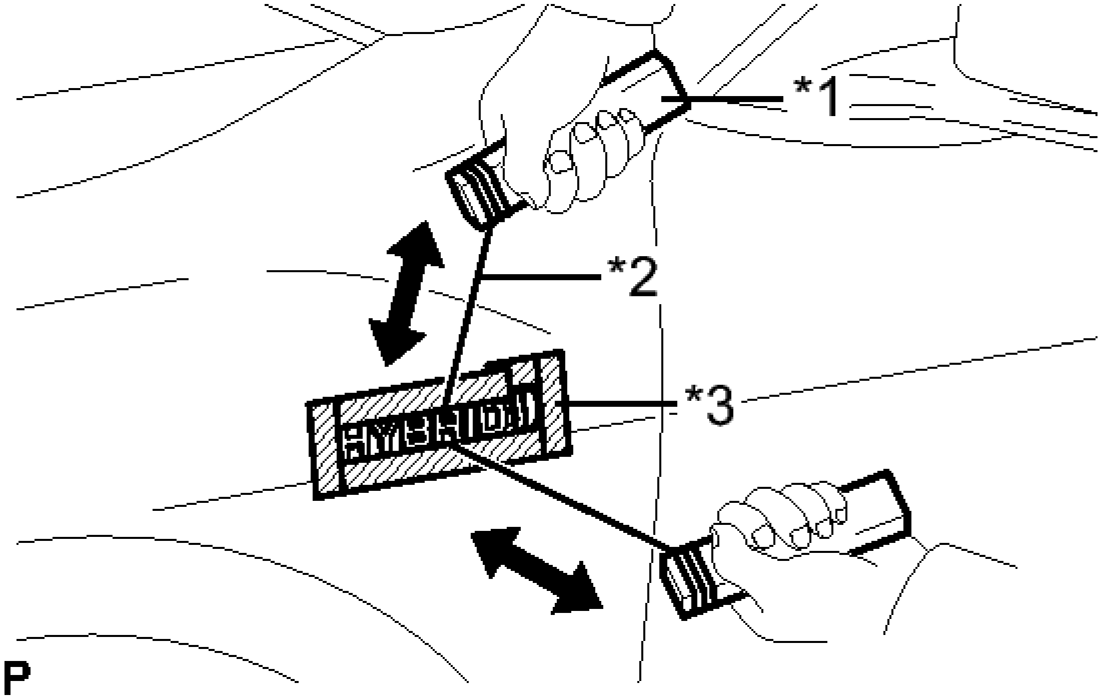

Fig. 80: Side Panel Emblem (For LH Side) Protective Tape Placement
Courtesy of TOYOTA MOTOR SALES, U.S.A., INC.

TEXT IN ILLUSTRATION

*1	Wooden Block
*2	Piano Wire
*3	Protective Tape

b. Insert a piano wire between the vehicle body and side panel emblem.

c. Tie objects that can serve as handles (for example, wooden blocks) to both wire ends.

d. Pull the piano wire and cut the double-sided tape that holds the side panel emblem to the vehicle body.

NOTE:

- **If reusing the side panel emblem, take care not to damage the side panel emblem.**
- **Be careful not to damage the vehicle body.**

e. Remove the side panel emblem.

6. **REMOVE SIDE PANEL EMBLEM (for RH Side)**

a. Put protective tape around the side panel emblem.

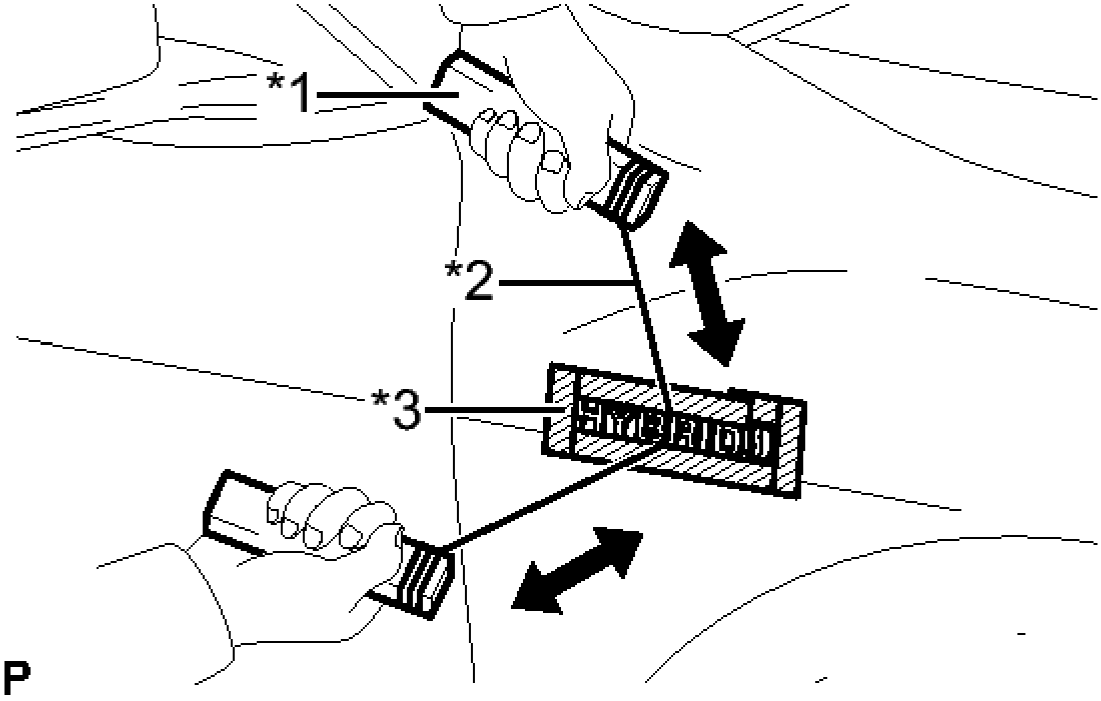

Fig. 81: Side Panel Emblem (For RH Side) Protective Tape Placement
Courtesy of TOYOTA MOTOR SALES, U.S.A., INC.

TEXT IN ILLUSTRATION

*1	Wooden Block
*2	Piano Wire
*3	Protective Tape

b. Insert a piano wire between the vehicle body and side panel emblem.
c. Tie objects that can serve as handles (for example, wooden blocks) to both wire ends.
d. Pull the piano wire and cut the double-sided tape that holds the side panel emblem to the vehicle body.

NOTE:

- **If reusing the side panel emblem, take care not to damage the side panel emblem.**
- **Be careful not to damage the vehicle body.**

e. Remove the side panel emblem.

INSTALLATION

INSTALLATION

HINT:

When installing the name plates or emblem, heat the vehicle body and name plates or emblem using a heat light.

HEATING TEMPERATURE

Item	Temperature
Vehicle Body	40 to 60°C (104 to 140°F)
Name Plate or Emblem	20 to 30°C (68 to 86°F)

NOTE: Do not heat the vehicle body, name plates or emblem excessively.

1. **INSTALL LUGGAGE COMPARTMENT DOOR EMBLEM**
    a. Clean the vehicle body surface.
        1. Using a heat light, heat the vehicle body surface.
        2. Remove the double-sided tape from the vehicle body.
        3. Wipe off any tape adhesive residue with cleaner.

    b. Clean the luggage compartment door emblem. (If reusing the luggage compartment door emblem)
        1. Using a heat light, heat the luggage compartment door emblem.
        2. Remove the double-sided tape from the luggage compartment door emblem.
        3. Wipe off any tape adhesive residue with cleaner.
        4. Apply new double-sided tape to the luggage compartment door emblem.

    c. Install the luggage compartment door emblem.
        1. Using a heat light, heat the vehicle body and luggage compartment door emblem.
        2. Remove the release paper from the luggage compartment door emblem.

            HINT:

            After removing the release paper, keep the exposed adhesive free from foreign matter.

        3. Engage the 2 pins and install the luggage compartment door emblem as shown in the illustration.

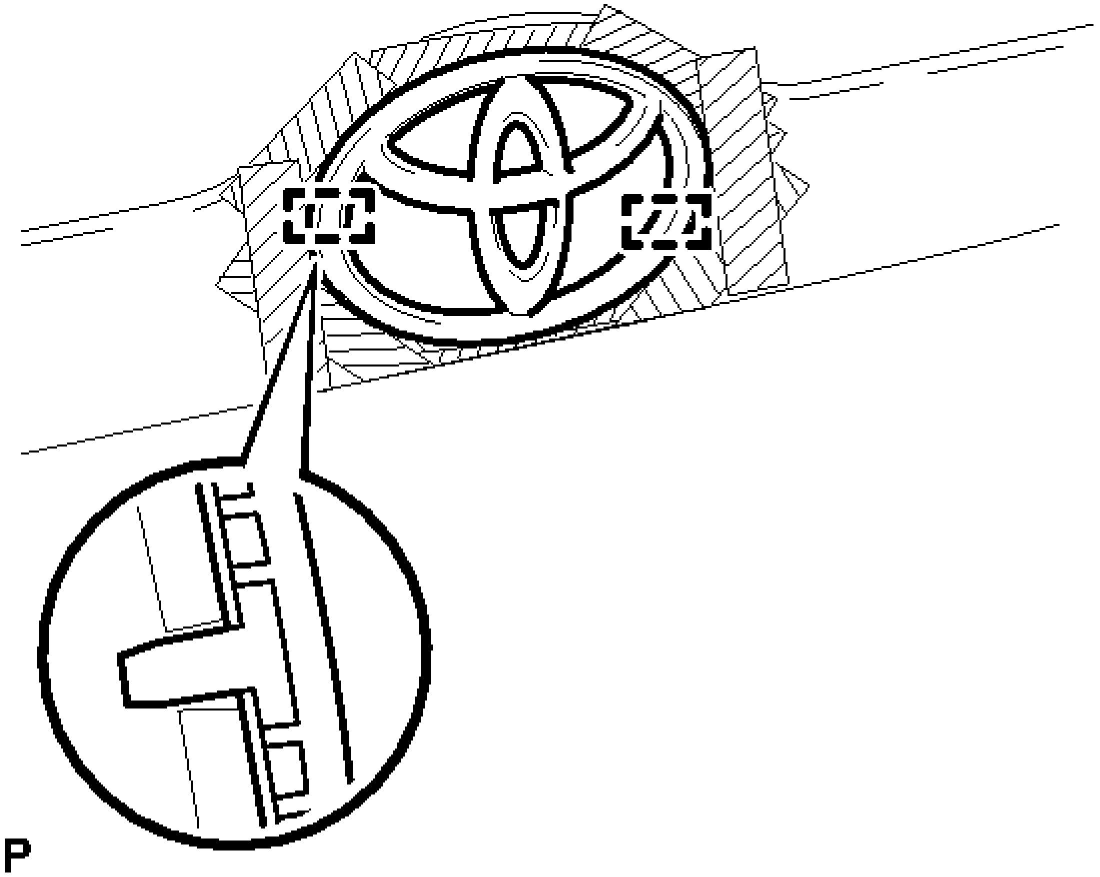

Fig. 82: Identifying Luggage Compartment Door Emblem Pins
Courtesy of TOYOTA MOTOR SALES, U.S.A., INC.

2. **INSTALL NO. 2 LUGGAGE COMPARTMENT DOOR NAME PLATE**
    a. Clean the vehicle body surface.
        1. Using a heat light, heat the vehicle body surface.
        2. Remove the double-sided tape from the vehicle body.
        3. Wipe off any tape adhesive residue with cleaner.
    b. Clean the No. 2 luggage compartment door name plate. (If reusing the No. 2 luggage compartment door name plate)
        1. Using a heat light, heat the No. 2 luggage compartment door name plate.
        2. Remove the double-sided tape from the No. 2 luggage compartment door name plate.
        3. Wipe off any tape adhesive residue with cleaner.
        4. Apply new double-sided tape to the No. 2 luggage compartment door name plate.

c. Install the No. 2 luggage compartment door name plate.
    1. Using a heat light, heat the vehicle body and No. 2 luggage compartment door name plate.
    2. Remove the release paper from the No. 2 luggage compartment door name plate.

       HINT:

       After removing the release paper, keep the exposed adhesive free from foreign matter.

    3. Install the No. 2 luggage compartment door name plate.

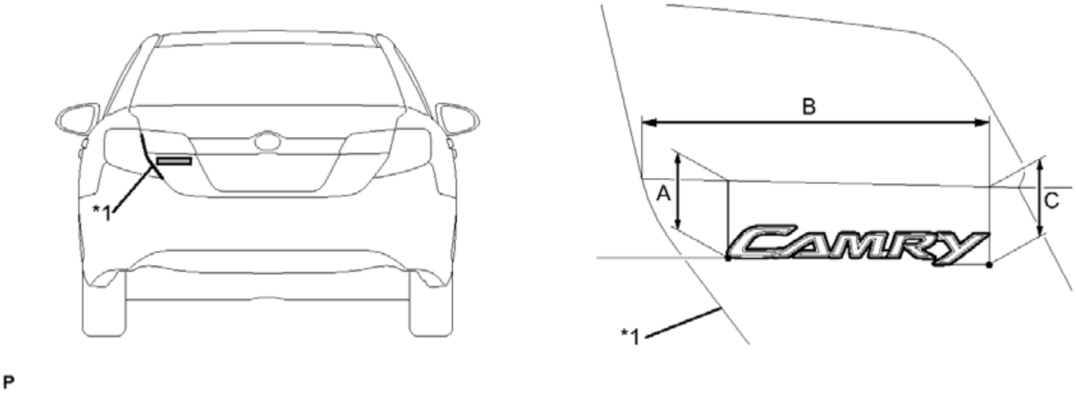

Fig. 83: No. 2 Luggage Compartment Door Name Plate Measurements
Courtesy of TOYOTA MOTOR SALES, U.S.A., INC.

TEXT IN ILLUSTRATION

*1	Profile of Luggage Compartment Door Panel	-	-

Reference Measurement

Area	Measurement
A	51.7 mm (2.04 in.)
B	223.0 mm (8.78 in.)
C	52.9 mm (2.08 in.)

3. **INSTALL NO. 3 LUGGAGE COMPARTMENT DOOR NAME PLATE**
    a. Clean the vehicle body surface.
        1. Using a heat light, heat the vehicle body surface.

    2. Remove the double-sided tape from the vehicle body.
    3. Wipe off any tape adhesive residue with cleaner.

b. Clean the No. 3 luggage compartment door name plate. (If reusing the No. 3 luggage compartment door name plate)
    1. Using a heat light, heat the No. 3 luggage compartment door name plate.
    2. Remove the double-sided tape from the No. 3 luggage compartment door name plate.
    3. Wipe off any tape adhesive residue with cleaner.
    4. Apply new double-sided tape to the No. 3 luggage compartment door name plate.

c. Install the No. 3 luggage compartment door name plate.
    1. Using a heat light, heat the vehicle body and No. 3 luggage compartment door name plate.
    2. Remove the release paper from the No. 3 luggage compartment door name plate.

        HINT:

        After removing the release paper, keep the exposed adhesive free from foreign matter.

    3. Install the No. 3 luggage compartment door name plate.

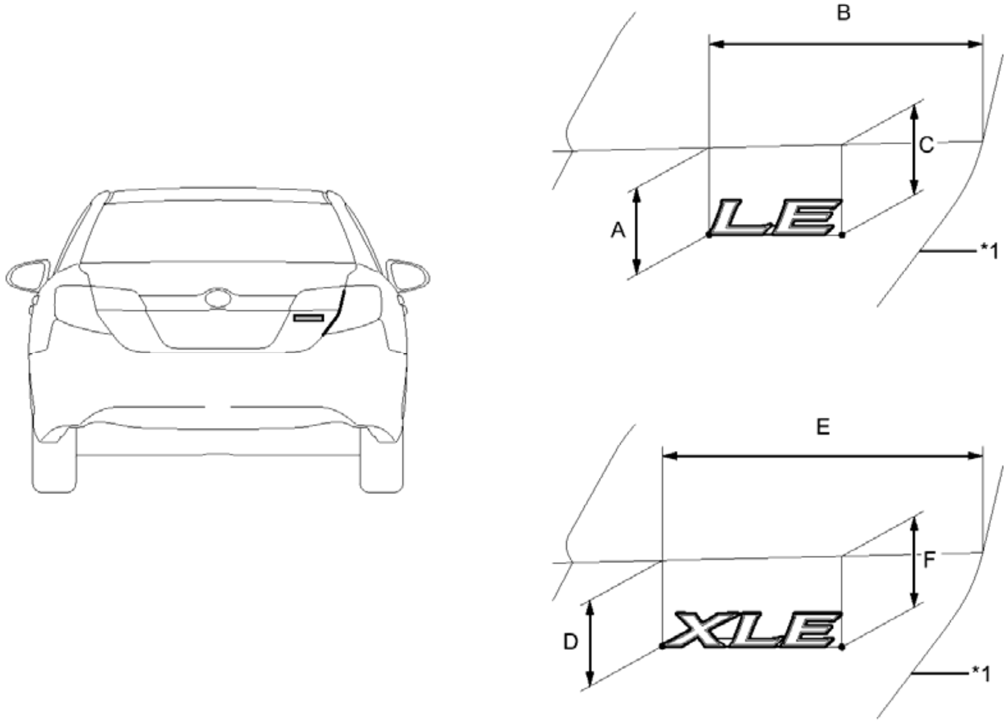

Fig. 84: No. 3 Luggage Compartment Door Name Plate Measurements

Courtesy of TOYOTA MOTOR SALES, U.S.A., INC.

TEXT IN ILLUSTRATION

*1	Profile of Luggage Compartment Door Panel	-	-

Reference Measurement

Area	Measurement
A	47.4 mm (1.87 in.)
B	140.8 mm (5.54 in.)
C	48.0 mm (1.89 in.)
D	47.1 mm (1.85 in.)
E	165.5 mm (6.52 in.)
F	47.9 mm (1.89 in.)

4. **INSTALL NO. 1 LUGGAGE COMPARTMENT DOOR NAME PLATE**
   a. Clean the vehicle body surface.
      1. Using a heat light, heat the vehicle body surface.
      2. Remove the double-sided tape from the vehicle body.
      3. Wipe off any tape adhesive residue with cleaner.
   b. Clean the No. 1 luggage compartment door name plate. (If reusing the No. 1 luggage compartment door name plate)
      1. Using a heat light, heat the No. 1 luggage compartment door name plate.
      2. Remove the double-sided tape from the No. 1 luggage compartment door name plate.
      3. Wipe off any tape adhesive residue with cleaner.
      4. Apply new double-sided tape to the No. 1 luggage compartment door name plate.
   c. Install the No. 1 luggage compartment door name plate.
      1. Using a heat light, heat the vehicle body and No. 1 luggage compartment door name plate.
      2. Remove the release paper from the No. 1 luggage compartment door name plate.

HINT:

After removing the release paper, keep the exposed adhesive free from foreign matter.

3. Install the No. 1 luggage compartment door name plate as shown in the illustration.

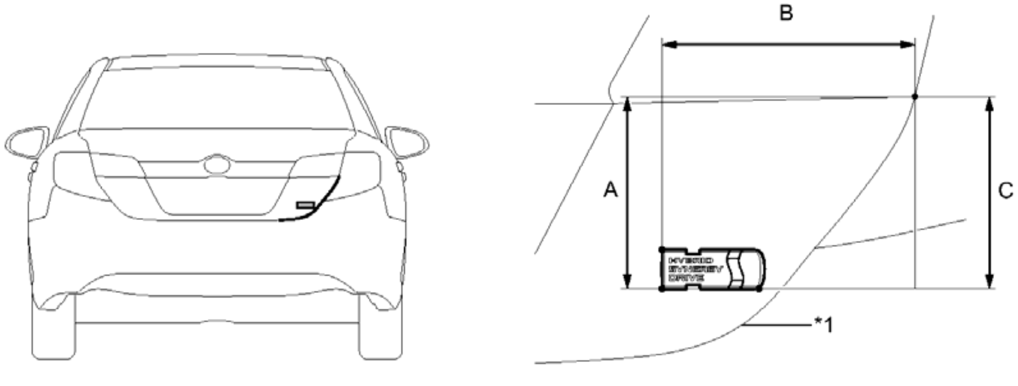

Fig. 85: No. 1 Luggage Compartment Door Name Plate Measurements
Courtesy of TOYOTA MOTOR SALES, U.S.A., INC.

TEXT IN ILLUSTRATION

*1	Profile of Luggage Compartment Door Panel	-	-

Reference Measurement

Area	Measurement
A	155.9 mm (6.14 in.)
B	203.6 mm (8.02 in.)
C	155.9 mm (6.14 in.)

5. **INSTALL SIDE PANEL EMBLEM (for LH Side)**
   a. Clean the vehicle body surface.
      1. Using a heat light, heat the vehicle body surface.
      2. Remove the double-sided tape from the vehicle body.
      3. Wipe off any tape adhesive residue with cleaner.
   b. Clean the side panel emblem. (If reusing the side panel emblem)
      1. Using a heat light, heat the side panel emblem.
      2. Remove the double-sided tape from the side panel emblem.
      3. Wipe off any tape adhesive residue with cleaner.
      4. Apply new double-sided tape to the side panel emblem.

c. Install the side panel emblem.
    1. Using a heat light, heat the vehicle body and side panel emblem.
    2. Remove the release paper from the side panel emblem.

       HINT:

       After removing the release paper, keep the exposed adhesive free from foreign matter.

    3. Install the side panel emblem as shown in the illustration.

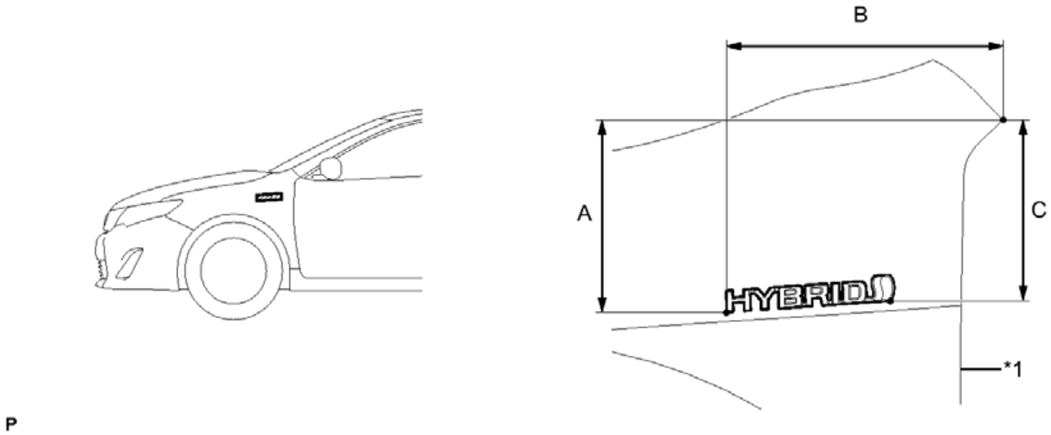

Fig. 86: Side Panel Emblem Measurements
Courtesy of TOYOTA MOTOR SALES, U.S.A., INC.

TEXT IN ILLUSTRATION

*1	Profile of Fender Panel	-	-

Reference Measurement

Area	Measurement
A	163.0 mm (6.42 in.)
B	241.1 mm (9.49 in.)
C	152.4 mm (6.00 in.)

6. **INSTALL SIDE PANEL EMBLEM (for RH Side)**
    a. Clean the vehicle body surface.
        1. Using a heat light, heat the vehicle body surface.

    2. Remove the double-sided tape from the vehicle body.
    3. Wipe off any tape adhesive residue with cleaner.
- b. Clean the side panel emblem. (If reusing the side panel emblem)
    1. Using a heat light, heat the side panel emblem.
    2. Remove the double-sided tape from the side panel emblem.
    3. Wipe off any tape adhesive residue with cleaner.
    4. Apply new double-sided tape to the side panel emblem.
- c. Install the side panel emblem.
    1. Using a heat light, heat the vehicle body and side panel emblem.
    2. Remove the release paper from the side panel emblem.

       HINT:

       After removing the release paper, keep the exposed adhesive free from foreign matter.

    3. Install the side panel emblem as shown in the illustration.

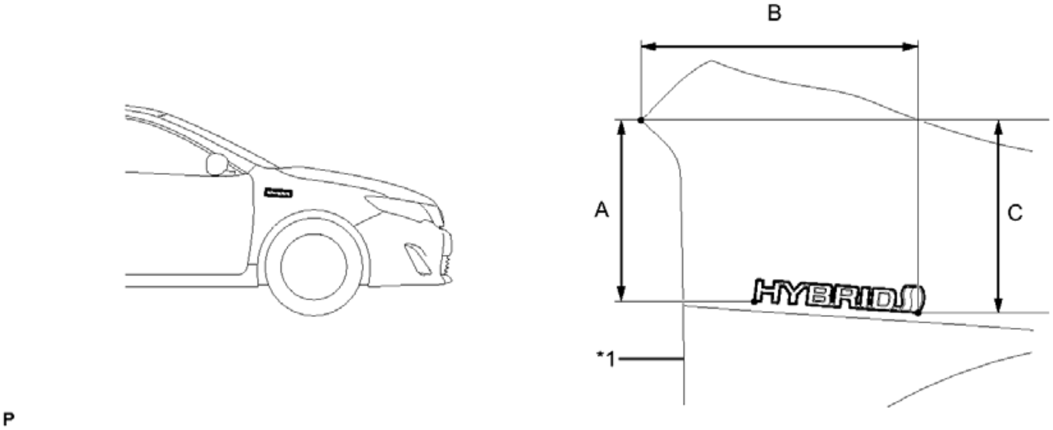

Fig. 87: Side Panel Emblem Measurements
Courtesy of TOYOTA MOTOR SALES, U.S.A., INC.

TEXT IN ILLUSTRATION

*1	Profile of Fender Panel	-	-

Reference Measurement

Area	Measurement
A	152.4 mm (6.00 in.)

B	240.9 mm (9.48 in.)
C	163.0 mm (6.42 in.)

FRONT DOOR BELT MOLDING

COMPONENTS

ILLUSTRATION

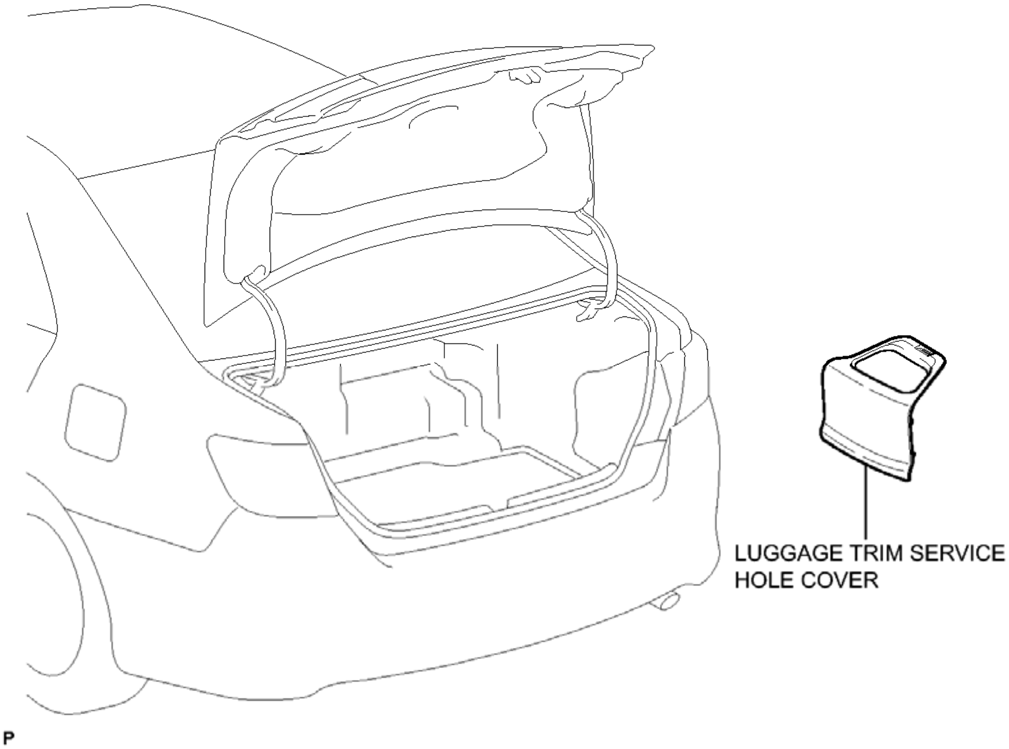
LUGGAGE TRIM SERVICE HOLE COVER
P

Fig. 88: Identifying Front Door Belt Molding Replacement Components (1 Of 2)
Courtesy of TOYOTA MOTOR SALES, U.S.A., INC.

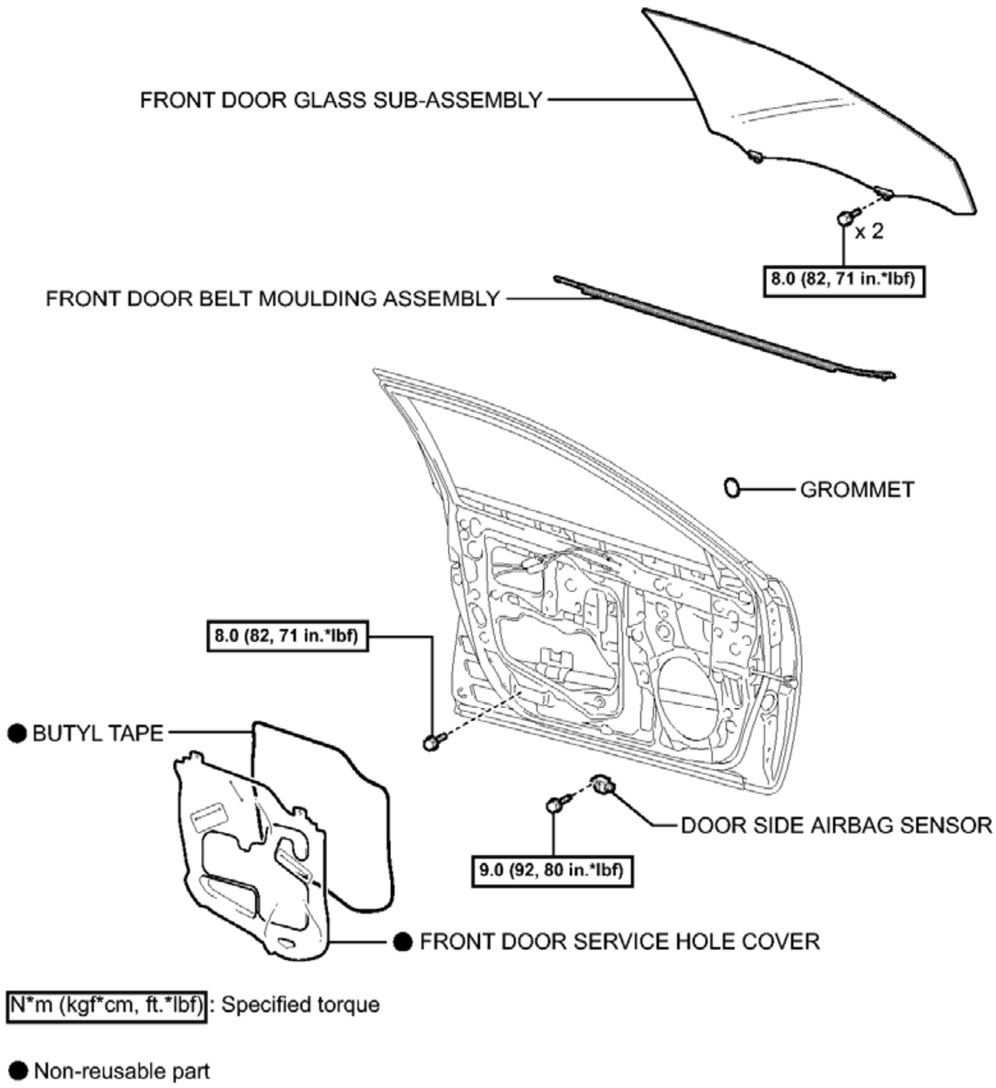
FRONT DOOR GLASS SUB-ASSEMBLY
x 2
8.0 (82, 71 in.*lbf)
FRONT DOOR BELT MOULDING ASSEMBLY
GROMMET
8.0 (82, 71 in.*lbf)
● BUTYL TAPE
DOOR SIDE AIRBAG SENSOR
9.0 (92, 80 in.*lbf)
● FRONT DOOR SERVICE HOLE COVER
N*m (kgf*cm, ft.*lbf) : Specified torque
● Non-reusable part
P

Fig. 89: Identifying Front Door Belt Molding Replacement Components With Torque Specifications (2 Of 2)
Courtesy of TOYOTA MOTOR SALES, U.S.A., INC.

REMOVAL

REMOVAL

1. **PRECAUTION**

NOTE: **After turning the power switch off, waiting time may be required before disconnecting the cable from the negative (-) auxiliary battery terminal. Therefore, make sure to read the disconnecting the cable from the**

negative (-) auxiliary battery terminal notices before proceeding with work. Refer to PRECAUTION .

2. **REMOVE LUGGAGE TRIM SERVICE HOLE COVER** . Refer to **REMOVAL - Step 2**
3. **DISCONNECT CABLE FROM AUXILIARY BATTERY NEGATIVE TERMINAL**

WARNING: **Wait at least 90 seconds after disconnecting the cable from the negative (-) auxiliary battery terminal to disable the SRS system.**

NOTE: **When disconnecting the cable, some systems need to be initialized after the cable is reconnected. Refer to INITIALIZATION .**

4. **REMOVE OUTER REAR VIEW MIRROR ASSEMBLY**

   Refer to **REMOVAL**

5. **REMOVE DOOR SIDE AIRBAG SENSOR** . Refer to **REMOVAL - Step 11**
6. **REMOVE FRONT DOOR SERVICE HOLE COVER** . Refer to **DISASSEMBLY - Step 16**
7. **REMOVE FRONT DOOR GLASS SUB-ASSEMBLY** . Refer to **DISASSEMBLY - Step 17**
8. **REMOVE FRONT DOOR BELT MOLDING ASSEMBLY**
   a. Put protective tape around the front door belt molding assembly.

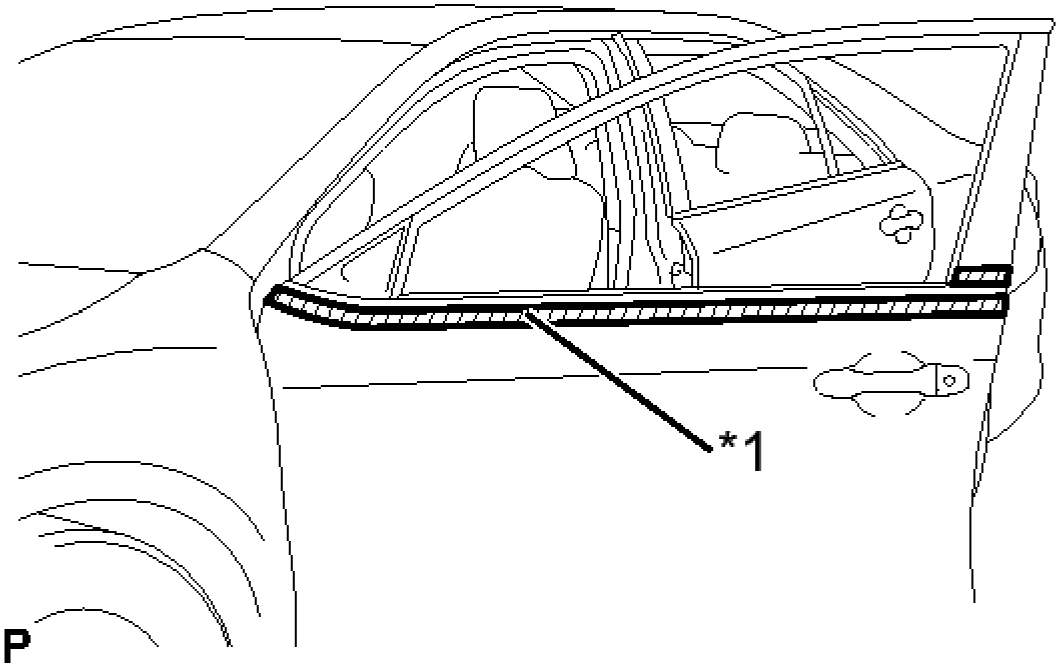

Fig. 90: Front Door Belt Molding Protective Tape Placement
Courtesy of TOYOTA MOTOR SALES, U.S.A., INC.

TEXT IN ILLUSTRATION

*1	Protective Tape

b. Using a screwdriver with the tip wrapped with protective tape, disengage the 6 claws and remove the front door belt molding assembly.

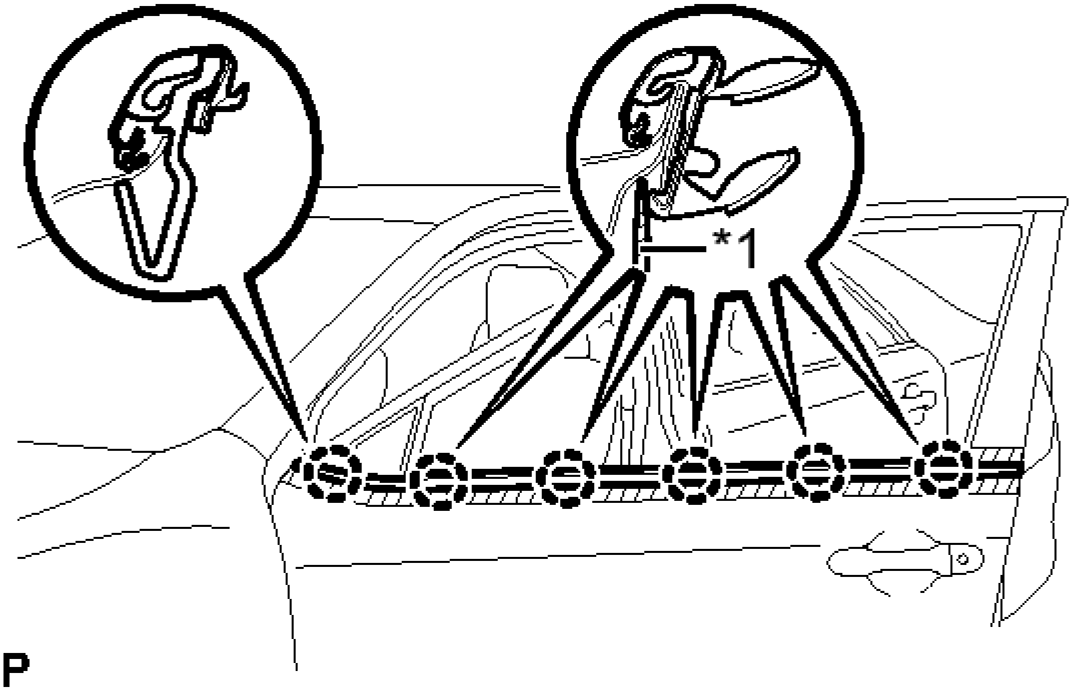

Fig. 91: Identifying Front Door Belt Molding Claws
Courtesy of TOYOTA MOTOR SALES, U.S.A., INC.

TEXT IN ILLUSTRATION

*1	Protective Tape

HINT:

Tape the screwdriver tip before use.

INSTALLATION

INSTALLATION

1. **PRECAUTION**

NOTE: **After turning the power switch off, waiting time may be required before disconnecting the cable from the negative (-) auxiliary battery terminal.**

Therefore, make sure to read the disconnecting the cable from the negative (-) auxiliary battery terminal notices before proceeding with work. Refer to PRECAUTION .

2. **INSTALL FRONT DOOR BELT MOLDING ASSEMBLY**
    a. Engage the 6 claws to install the front door belt molding assembly.

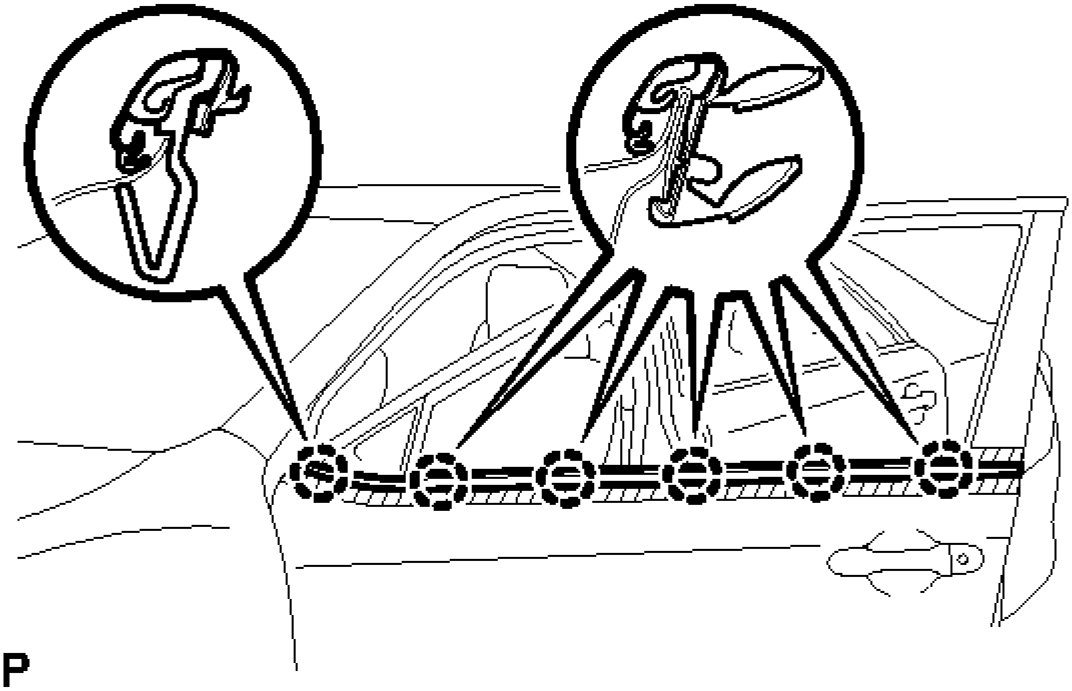

Fig. 92: Identifying Front Door Belt Molding Claws
Courtesy of TOYOTA MOTOR SALES, U.S.A., INC.

3. **INSTALL FRONT DOOR GLASS SUB-ASSEMBLY** . Refer to **REASSEMBLY - Step 32**
4. **INSTALL FRONT DOOR SERVICE HOLE COVER** . Refer to **REASSEMBLY - Step 33**
5. **INSTALL DOOR SIDE AIRBAG SENSOR** . Refer to **INSTALLATION - Step 1**
6. **INSTALL OUTER REAR VIEW MIRROR ASSEMBLY**

    Refer to **INSTALLATION**

7. **CONNECT CABLE TO AUXILIARY BATTERY NEGATIVE TERMINAL**

    NOTE: **When disconnecting the cable, some systems need to be initialized after the cable is reconnected. Refer to INITIALIZATION .**

8. **INSTALL LUGGAGE TRIM SERVICE HOLE COVER** . Refer to **INSTALLATION - Step 3**
9. **INITIALIZE POWER WINDOW CONTROL SYSTEM (for Driver Side)**

Refer to **INITIALIZATION**

10. **INSPECT POWER WINDOW OPERATION**

    Refer to **OPERATION CHECK**

11. **INSPECT SRS WARNING LIGHT**

    for Separate Type Yaw Rate Sensor: Refer to **DIAGNOSIS SYSTEM**

    for Built-in Type Yaw Rate Sensor: Refer to **DIAGNOSIS SYSTEM**

REAR DOOR BELT MOLDING

COMPONENTS

ILLUSTRATION

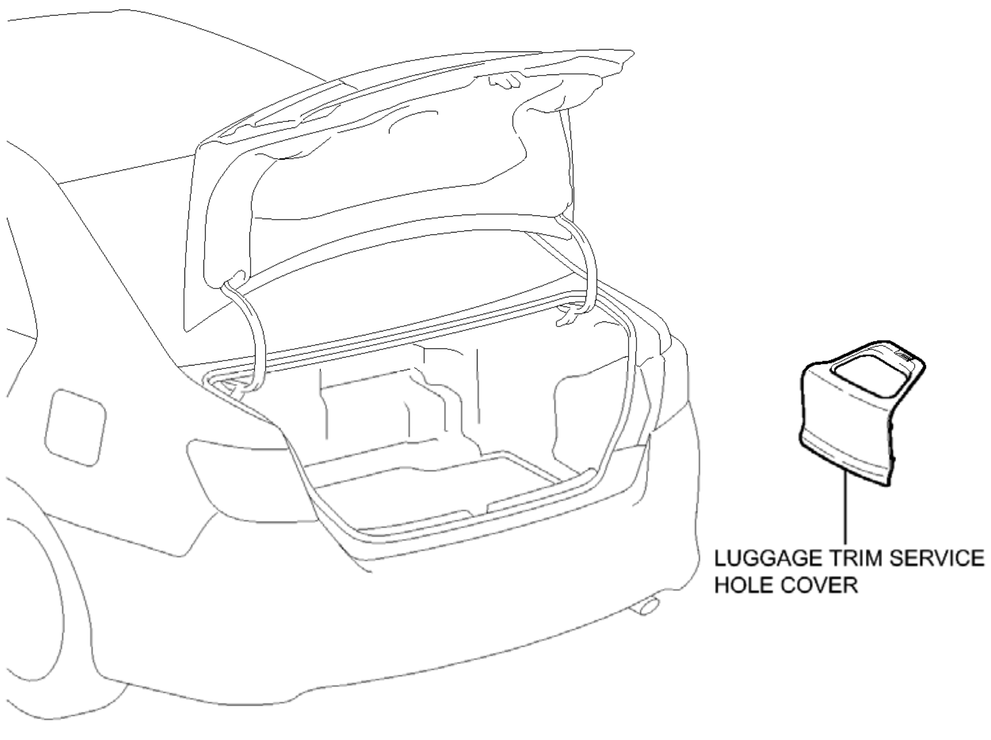

Fig. 93: Identifying Rear Door Belt Molding Replacement Components (1 Of 3)
Courtesy of TOYOTA MOTOR SALES, U.S.A., INC.

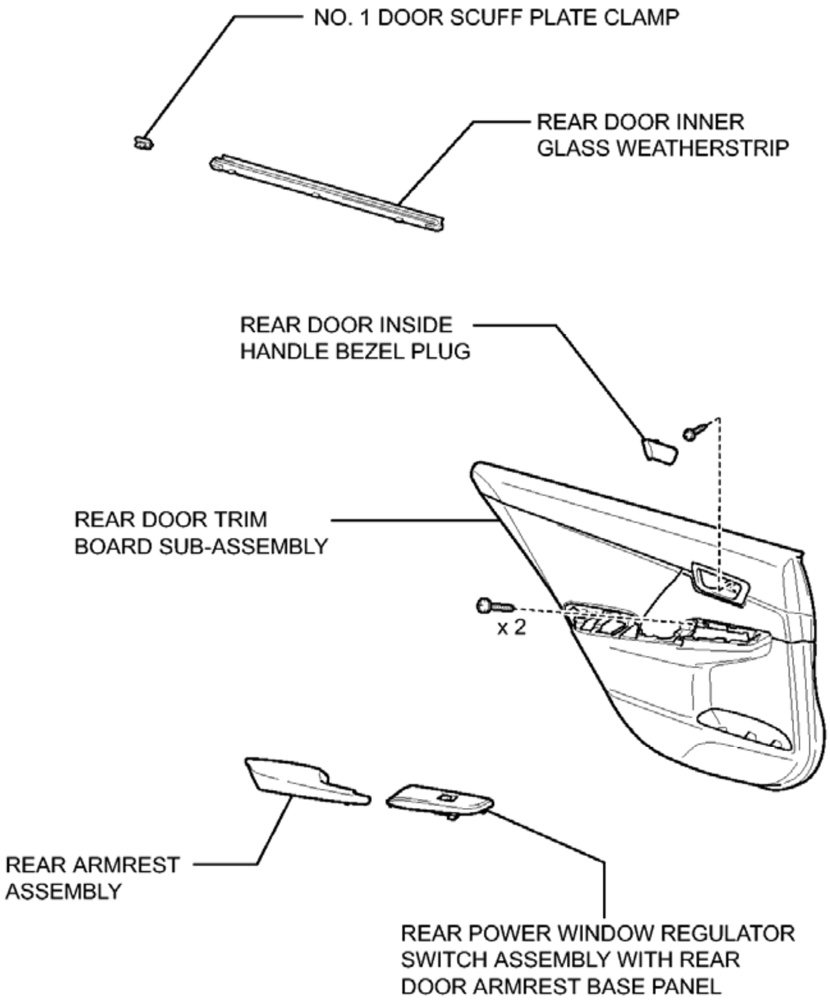
NO. 1 DOOR SCUFF PLATE CLAMP
REAR DOOR INNER GLASS WEATHERSTRIP
REAR DOOR INSIDE HANDLE BEZEL PLUG
REAR DOOR TRIM BOARD SUB-ASSEMBLY
x 2
REAR ARMREST ASSEMBLY
REAR POWER WINDOW REGULATOR SWITCH ASSEMBLY WITH REAR DOOR ARMREST BASE PANEL
P

Fig. 94: Identifying Rear Door Belt Molding Replacement Components (2 Of 3)
Courtesy of TOYOTA MOTOR SALES, U.S.A., INC.

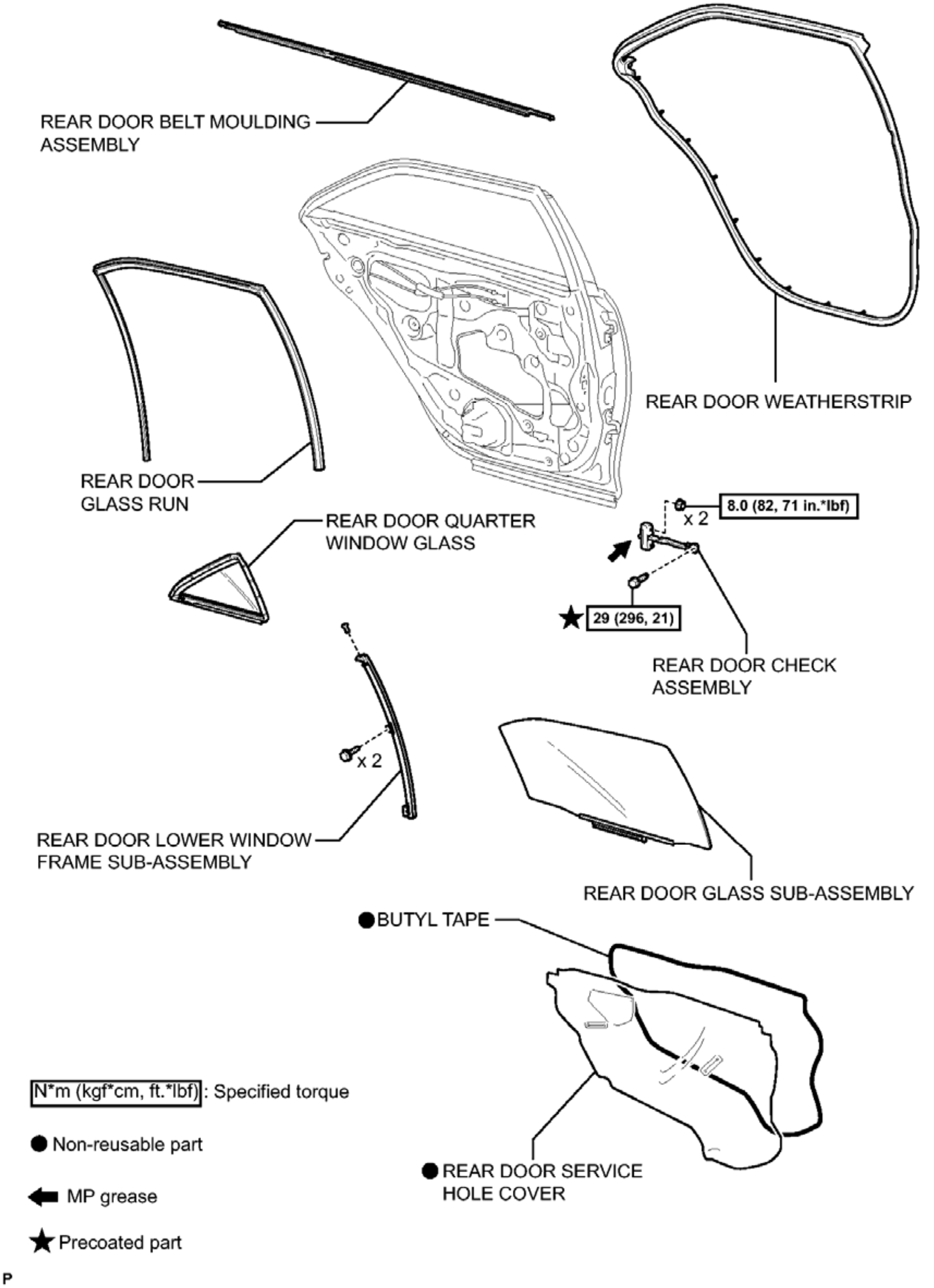
REAR DOOR BELT MOULDING ASSEMBLY
REAR DOOR WEATHERSTRIP
REAR DOOR GLASS RUN
REAR DOOR QUARTER WINDOW GLASS
x 2
8.0 (82, 71 in.*lbf)
★ 29 (296, 21)
REAR DOOR CHECK ASSEMBLY
x 2
REAR DOOR LOWER WINDOW FRAME SUB-ASSEMBLY
REAR DOOR GLASS SUB-ASSEMBLY
● BUTYL TAPE
N*m (kgf*cm, ft.*lbf) : Specified torque
● Non-reusable part
● REAR DOOR SERVICE HOLE COVER
⬅ MP grease
★ Precoated part
P

Fig. 95: Identifying Rear Door Belt Molding Replacement Components With Torque Specifications (3 Of 3)

Courtesy of TOYOTA MOTOR SALES, U.S.A., INC.

REMOVAL

REMOVAL

1. **PRECAUTION**

   NOTE: **After turning the power switch off, waiting time may be required before disconnecting the cable from the negative (-) auxiliary battery terminal. Therefore, make sure to read the disconnecting the cable from the negative (-) auxiliary battery terminal notices before proceeding with work. Refer to PRECAUTION .**

2. **REMOVE LUGGAGE TRIM SERVICE HOLE COVER** . Refer to **REMOVAL - Step 2**
3. **DISCONNECT CABLE FROM AUXILIARY BATTERY NEGATIVE TERMINAL**

   NOTE: **When disconnecting the cable, some systems need to be initialized after the cable is reconnected. Refer to INITIALIZATION .**

4. **REMOVE REAR DOOR INSIDE HANDLE BEZEL PLUG** . Refer to **DISASSEMBLY - Step 4**
5. **REMOVE REAR POWER WINDOW REGULATOR SWITCH ASSEMBLY WITH REAR DOOR ARMREST BASE PANEL** . Refer to **DISASSEMBLY - Step 5**
6. **REMOVE REAR ARMREST ASSEMBLY** . Refer to **DISASSEMBLY - Step 6**
7. **REMOVE REAR DOOR TRIM BOARD SUB-ASSEMBLY** . Refer to **DISASSEMBLY - Step 7**
8. **REMOVE REAR DOOR INNER GLASS WEATHERSTRIP** . Refer to **DISASSEMBLY - Step 9**
9. **REMOVE REAR DOOR SERVICE HOLE COVER** . Refer to **DISASSEMBLY - Step 10**
10. **REMOVE REAR DOOR CHECK ASSEMBLY** . Refer to **DISASSEMBLY - Step 11**
11. **REMOVE REAR DOOR WEATHERSTRIP** . Refer to **DISASSEMBLY - Step 12**
12. **REMOVE REAR DOOR GLASS RUN** . Refer to **DISASSEMBLY - Step 13**
13. **REMOVE REAR DOOR LOWER WINDOW FRAME SUB-ASSEMBLY** . Refer to **DISASSEMBLY - Step 14**
14. **REMOVE REAR DOOR QUARTER WINDOW GLASS** . Refer to **DISASSEMBLY - Step 15**
15. **REMOVE REAR DOOR GLASS SUB-ASSEMBLY** . Refer to **DISASSEMBLY - Step 15**
16. **REMOVE REAR DOOR BELT MOLDING ASSEMBLY**
    a. Put protective tape around the rear door belt molding assembly.

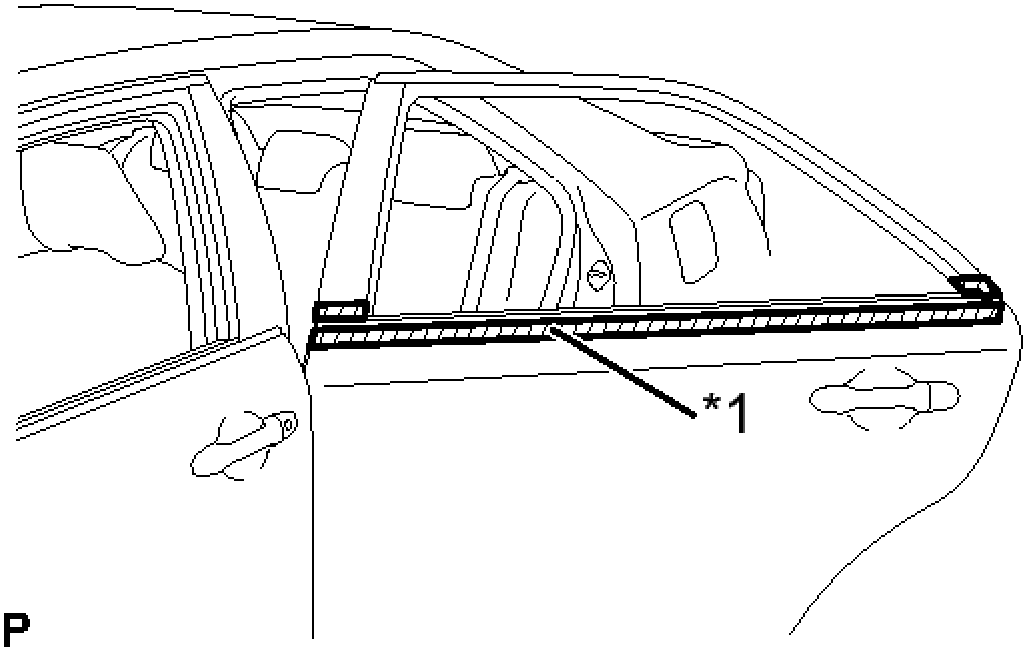

Fig. 96: Rear Door Belt Molding Protective Tape Placement
Courtesy of TOYOTA MOTOR SALES, U.S.A., INC.

TEXT IN ILLUSTRATION

*1	Protective Tape

b. Using a screwdriver with the tip wrapped with protective tape, disengage the 6 claws to remove the rear door belt molding assembly as shown in the illustration.

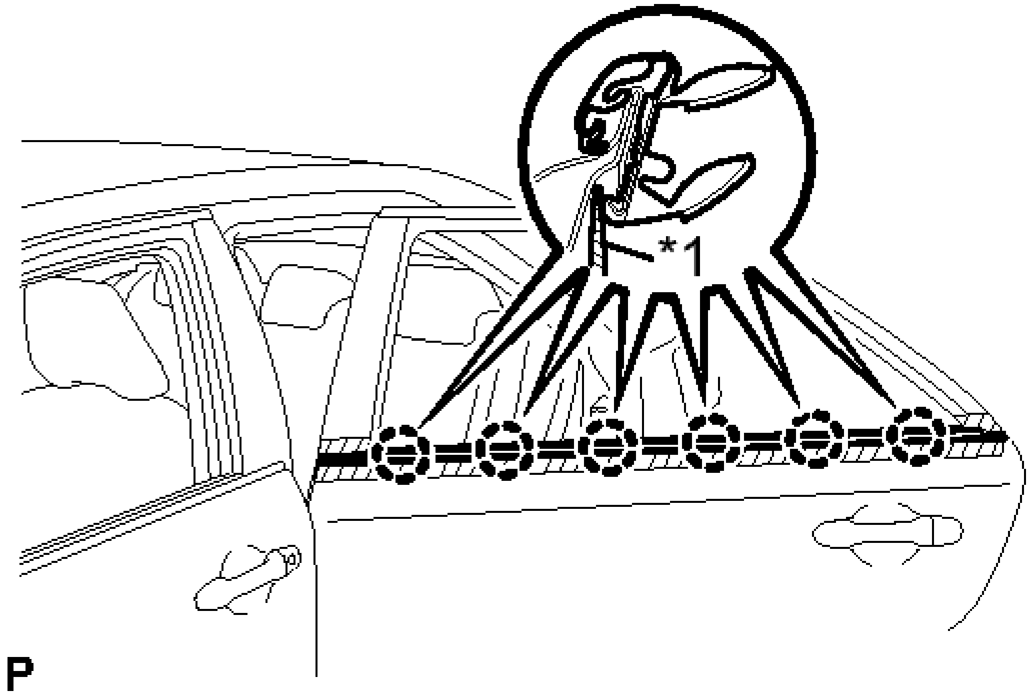

Fig. 97: Identifying Rear Door Belt Molding Claws
Courtesy of TOYOTA MOTOR SALES, U.S.A., INC.

TEXT IN ILLUSTRATION

*1	Protective Tape

HINT:

Tape the screwdriver tip before use.

INSTALLATION

INSTALLATION

1. **INSTALL REAR DOOR BELT MOLDING ASSEMBLY**
    a. Engage the 6 claws to install the rear door belt molding assembly as shown in the illustration.

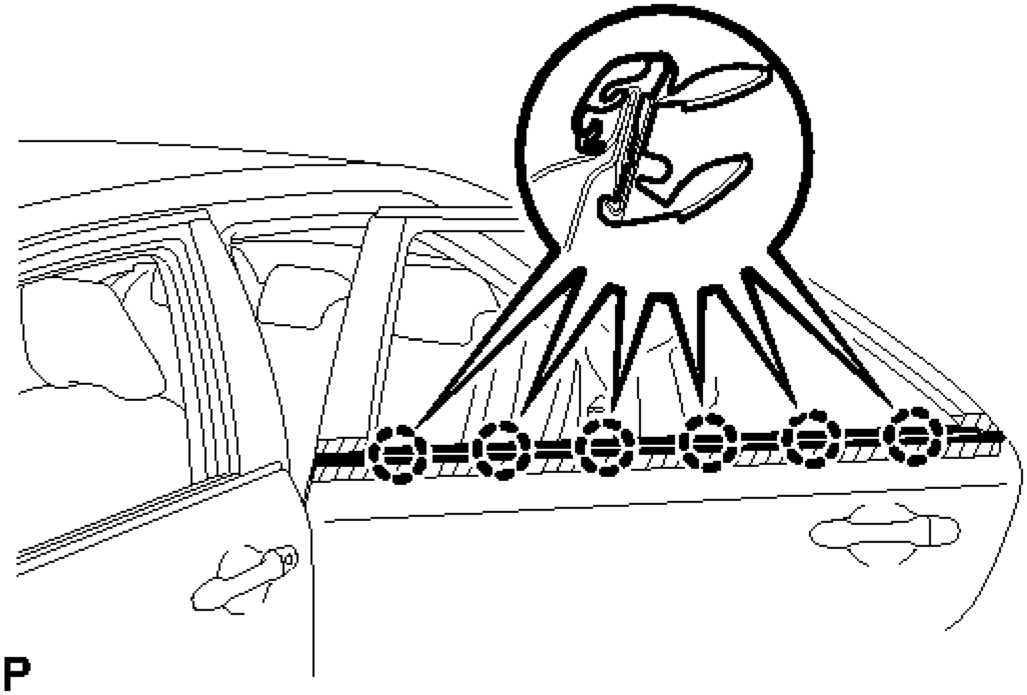

Fig. 98: Identifying Rear Door Belt Molding Claws
Courtesy of TOYOTA MOTOR SALES, U.S.A., INC.

2. **INSTALL REAR DOOR GLASS SUB-ASSEMBLY** . Refer to **REASSEMBLY - Step 21**
3. **INSTALL REAR DOOR QUARTER WINDOW GLASS** . Refer to **REASSEMBLY - Step 22**
4. **INSTALL REAR DOOR LOWER WINDOW FRAME SUB-ASSEMBLY** . Refer to **REASSEMBLY - Step 23**
5. **INSTALL REAR DOOR GLASS RUN** . Refer to **REASSEMBLY - Step 24**
6. **INSTALL REAR DOOR WEATHERSTRIP** . Refer to **REASSEMBLY - Step 25**
7. **INSTALL REAR DOOR CHECK ASSEMBLY** . Refer to **REASSEMBLY - Step 26**
8. **INSTALL REAR DOOR SERVICE HOLE COVER** . Refer to **REASSEMBLY - Step 27**
9. **INSTALL REAR DOOR INNER GLASS WEATHERSTRIP** . Refer to **REASSEMBLY - Step 28**
10. **INSTALL REAR DOOR TRIM BOARD SUB-ASSEMBLY** . Refer to **REASSEMBLY - Step 30**
11. **INSTALL REAR ARMREST ASSEMBLY** . Refer to **REASSEMBLY - Step 31**
12. **INSTALL REAR POWER WINDOW REGULATOR SWITCH ASSEMBLY WITH REAR DOOR ARMREST BASE PANEL** . Refer to **REASSEMBLY - Step 32**
13. **INSTALL REAR DOOR INSIDE HANDLE BEZEL PLUG** . Refer to **REASSEMBLY - Step 33**
14. **CONNECT CABLE TO AUXILIARY BATTERY NEGATIVE TERMINAL**

NOTE: **When disconnecting the cable, some systems need to be initialized after the cable is reconnected. Refer to INITIALIZATION .**

15. **INSTALL LUGGAGE TRIM SERVICE HOLE COVER** . Refer to **INSTALLATION - Step 3**
16. **INSPECT POWER WINDOW OPERATION**

Refer to **OPERATION CHECK**

ROCKER PANEL MOLDING

COMPONENTS

ILLUSTRATION

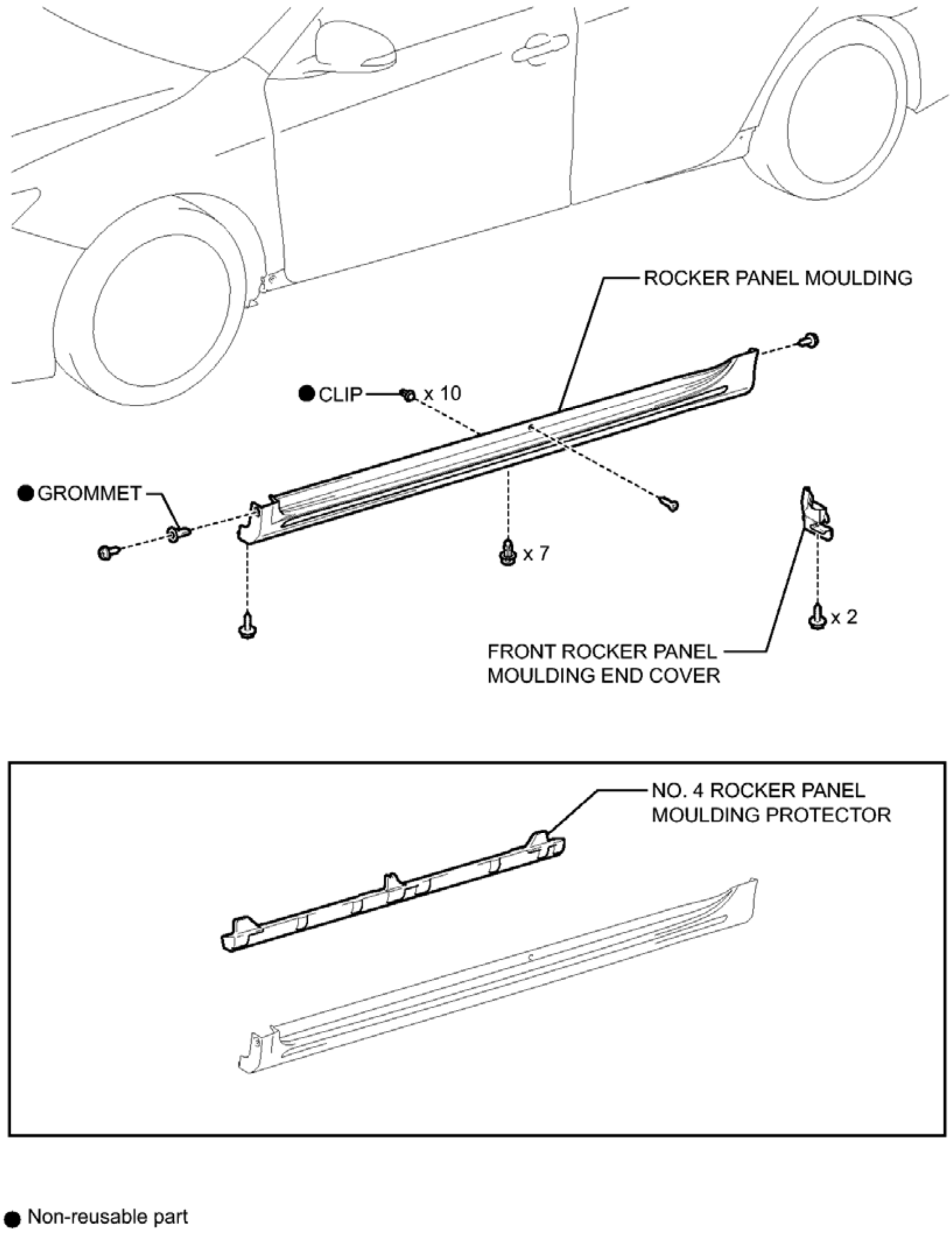
ROCKER PANEL MOULDING
● CLIP
x 10
● GROMMET
x 7
x 2
FRONT ROCKER PANEL MOULDING END COVER
NO. 4 ROCKER PANEL MOULDING PROTECTOR
● Non-reusable part
P

Fig. 99: Identifying Rocker Panel Molding Replacement Components
Courtesy of TOYOTA MOTOR SALES, U.S.A., INC.

REMOVAL

REMOVAL

1. **REMOVE FRONT ROCKER PANEL MOLDING END COVER** See step 1
2. **REMOVE ROCKER PANEL MOLDING**
   a. Put protective tape around the rocker panel molding and door.

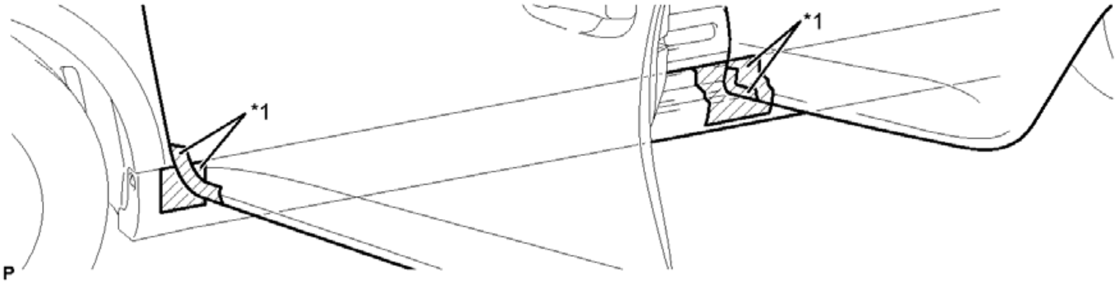

Fig. 100: Rocker Panel Molding And Door Protective Tape Placement
Courtesy of TOYOTA MOTOR SALES, U.S.A., INC.

TEXT IN ILLUSTRATION

*1	Protective Tape	-	-

   b. Remove the 2 screws and grommet.

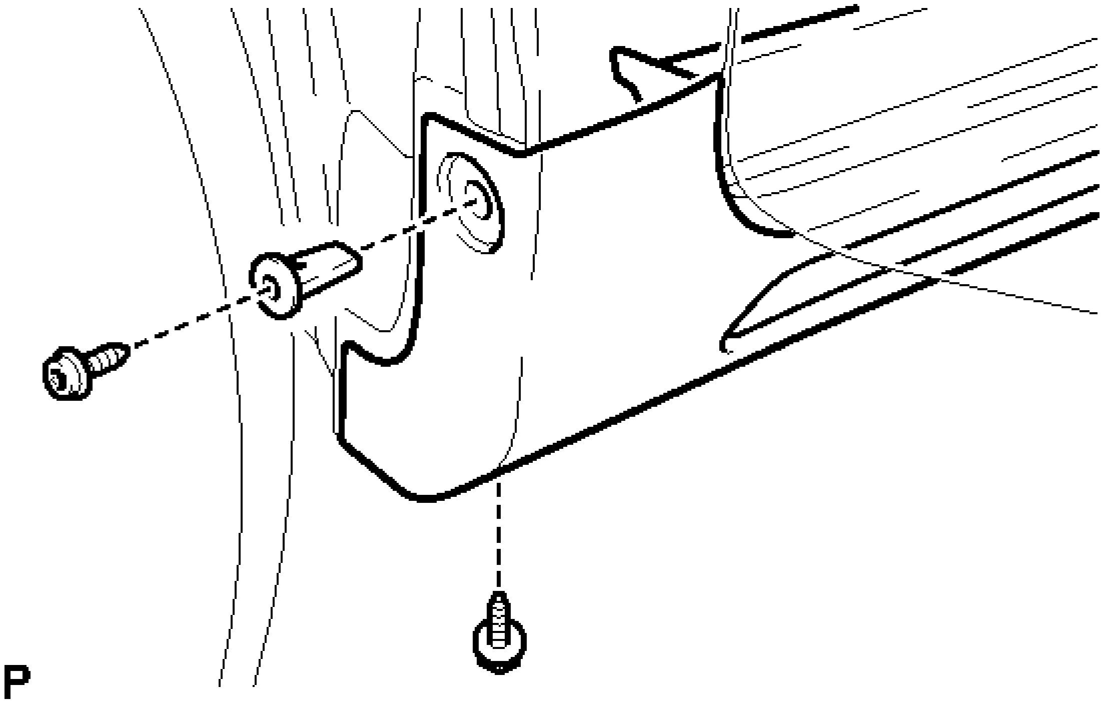

Fig. 101: Identifying Rocker Panel Molding Screws And Grommet
Courtesy of TOYOTA MOTOR SALES, U.S.A., INC.

c. Remove the screw.

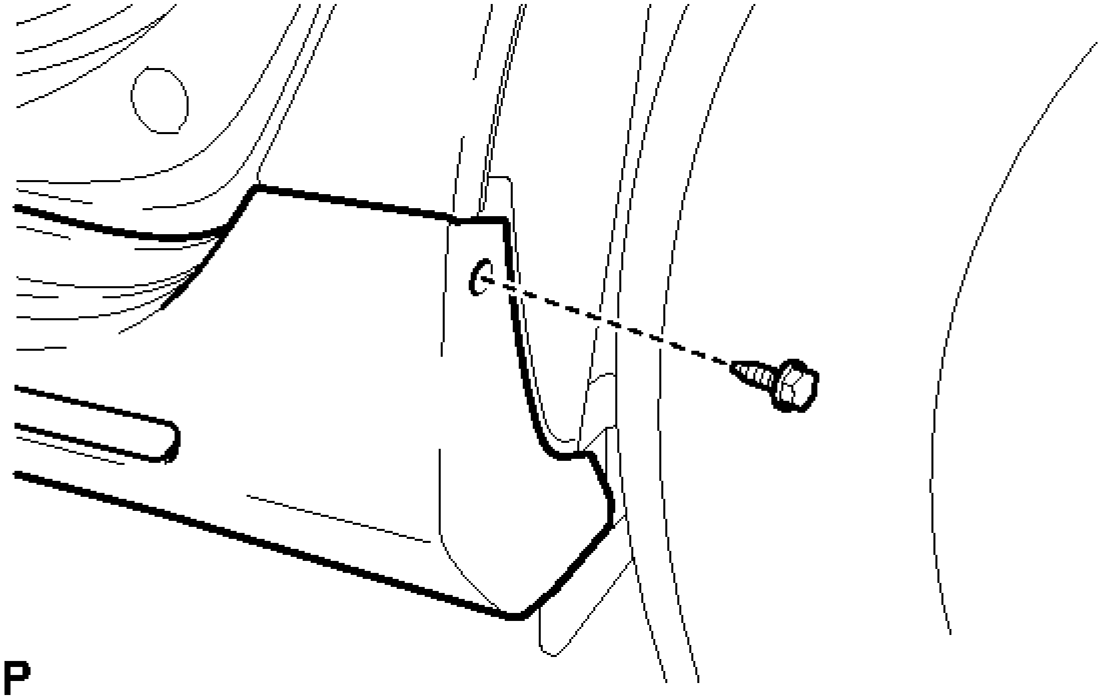

Fig. 102: Identifying Rocker Panel Molding Screw
Courtesy of TOYOTA MOTOR SALES, U.S.A., INC.

d. Remove the 7 clips.

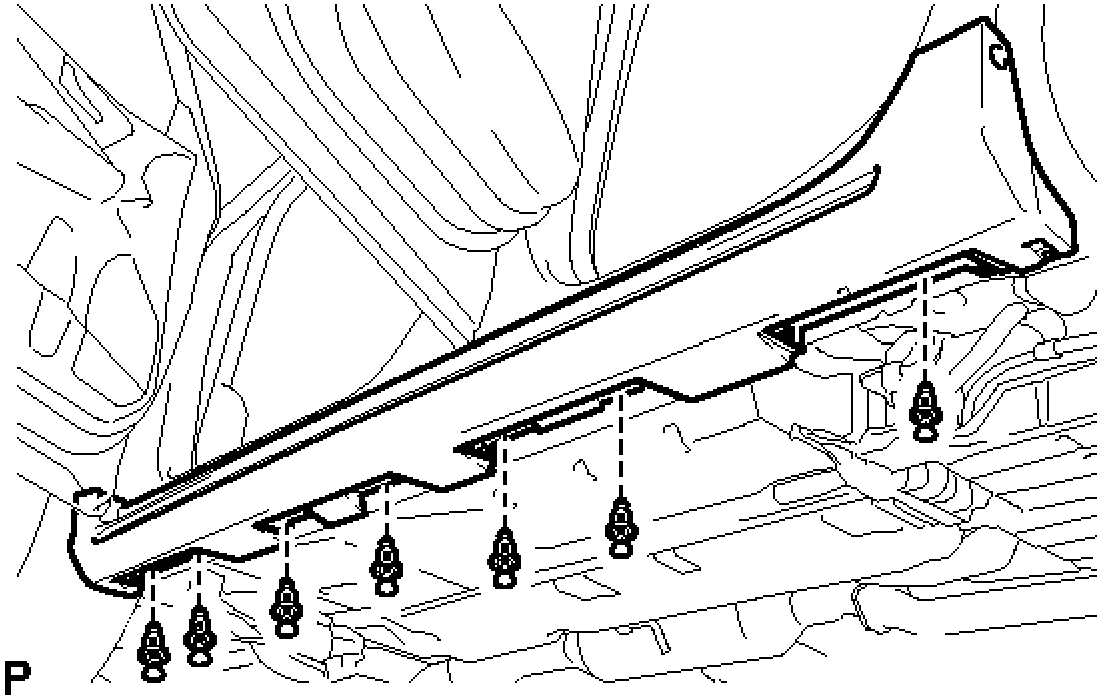

Fig. 103: Identifying Rocker Panel Molding Clips
Courtesy of TOYOTA MOTOR SALES, U.S.A., INC.

e. Remove the screw.

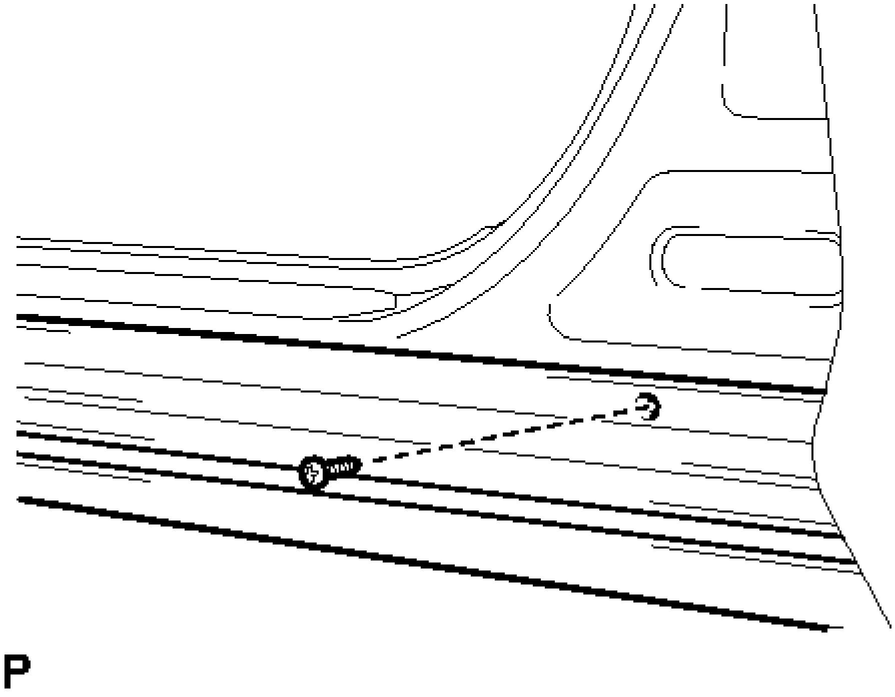

Fig. 104: Identifying Rocker Panel Molding Screw
Courtesy of TOYOTA MOTOR SALES, U.S.A., INC.

f. Disengage the 10 clips and remove the rocker panel molding.

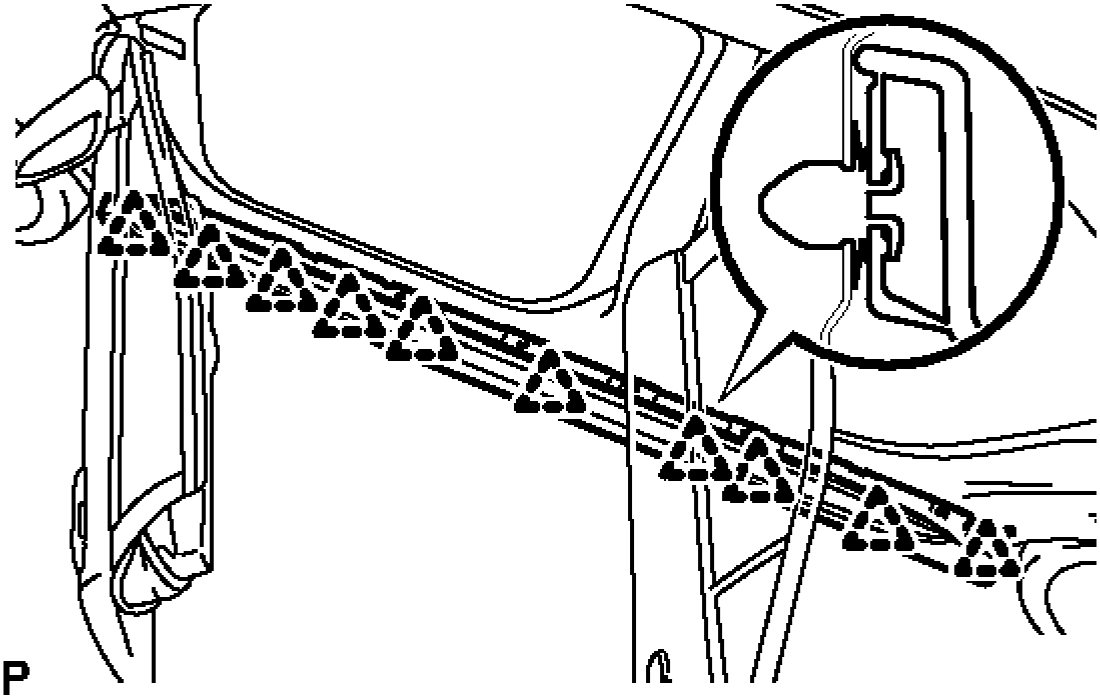

Fig. 105: Identifying Rocker Panel Molding Clips
Courtesy of TOYOTA MOTOR SALES, U.S.A., INC.

g. Remove the 10 clips from the rocker panel molding.

DISASSEMBLY

DISASSEMBLY

1. **REMOVE NO. 4 ROCKER PANEL MOLDING PROTECTOR**
    a. Remove the No. 4 rocker panel molding protector.

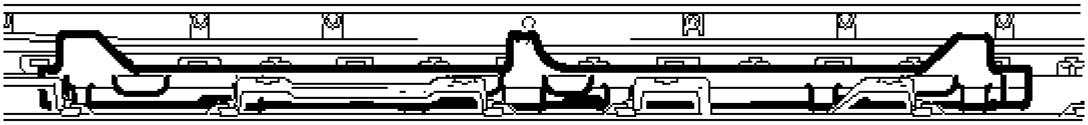

Fig. 106: Identifying No. 4 Rocker Panel Molding Protector
Courtesy of TOYOTA MOTOR SALES, U.S.A., INC.

REASSEMBLY

REASSEMBLY

1. **INSTALL NO. 4 ROCKER PANEL MOLDING PROTECTOR**
    a. Install the No. 4 rocker panel molding protector.

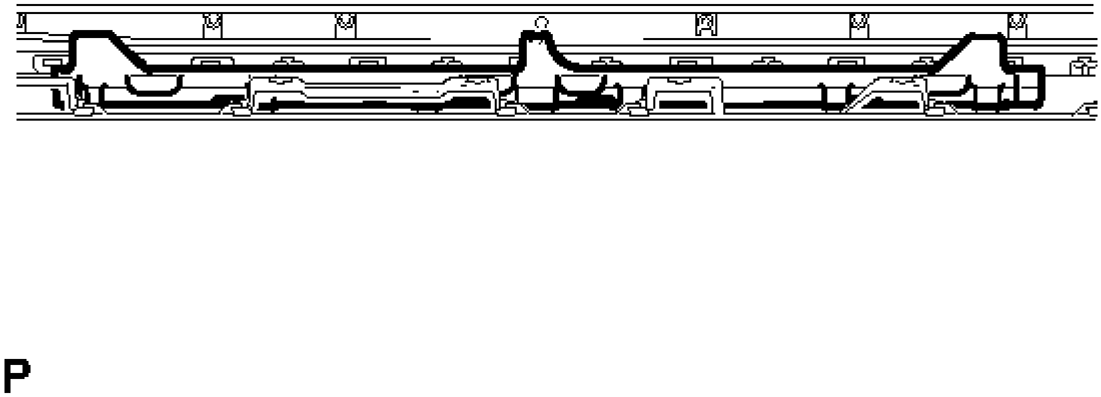

Fig. 107: Identifying No. 4 Rocker Panel Molding Protector
Courtesy of TOYOTA MOTOR SALES, U.S.A., INC.

INSTALLATION

INSTALLATION

1. **INSTALL ROCKER PANEL MOLDING**
    a. Install the new 10 clips to the rocker panel molding.
    b. Engage the 10 clips and install the rocker panel molding.
    c. Install the screw.
    d. Install the 7 clips.
    e. Install the screw.
    f. Install a new grommet and 2 screws.
2. **INSTALL FRONT ROCKER PANEL MOLDING END COVER** See step 1

FRONT DOOR WINDOW FRAME MOLDING

COMPONENTS

ILLUSTRATION

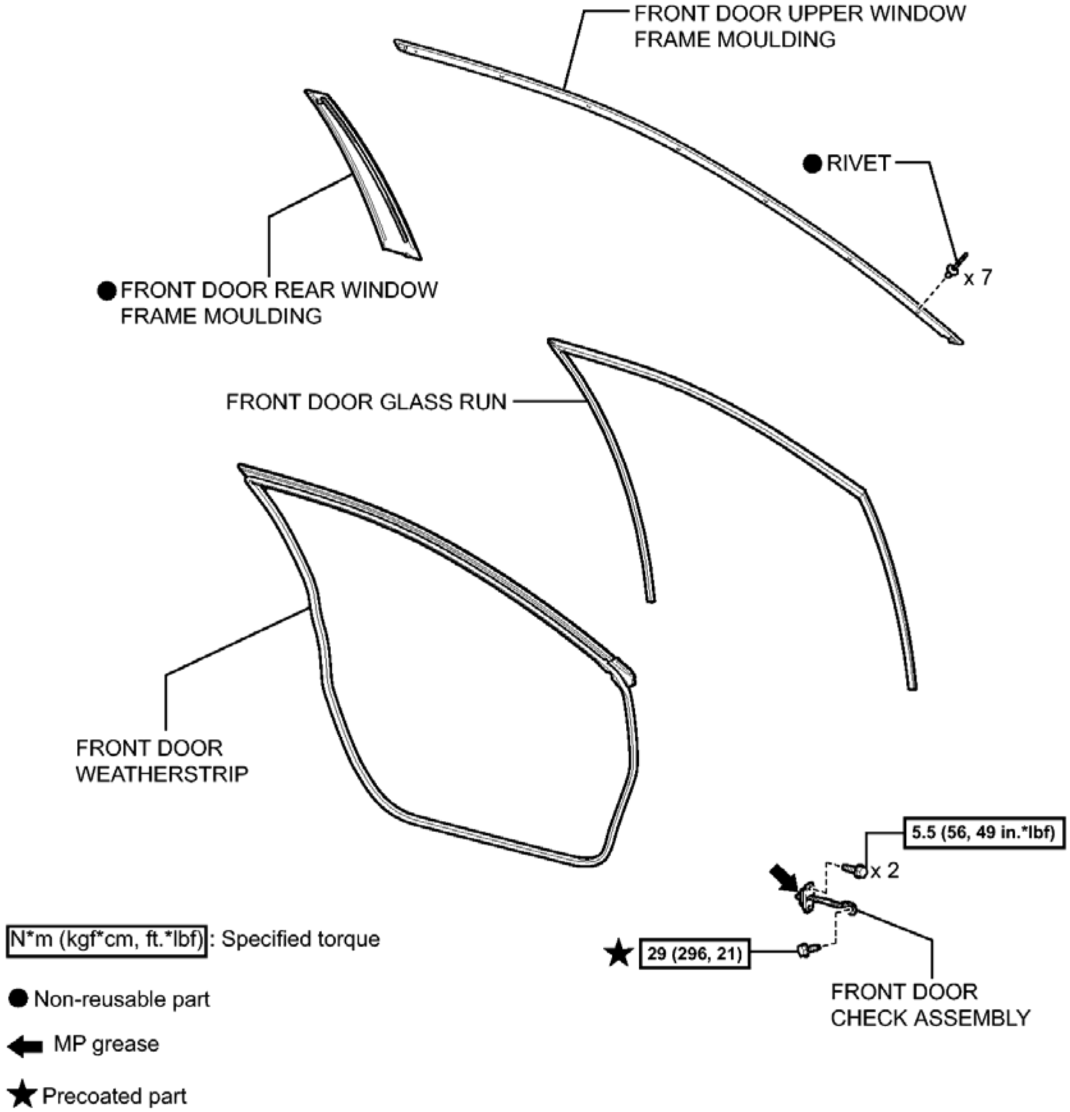
FRONT DOOR UPPER WINDOW FRAME MOULDING
RIVET
x 7
FRONT DOOR REAR WINDOW FRAME MOULDING
FRONT DOOR GLASS RUN
FRONT DOOR WEATHERSTRIP
5.5 (56, 49 in.*lbf)
x 2
29 (296, 21)
FRONT DOOR CHECK ASSEMBLY
N*m (kgf*cm, ft.*lbf): Specified torque
● Non-reusable part
MP grease
★ Precoated part

P

Fig. 108: Identifying Front Door Window Frame Molding Replacement Components With Torque Specifications
Courtesy of TOYOTA MOTOR SALES, U.S.A., INC.

REMOVAL

REMOVAL

1. **REMOVE FRONT DOOR BELT MOLDING ASSEMBLY**

   Refer to **REMOVAL**

2. **REMOVE FRONT DOOR GLASS RUN** . Refer to **DISASSEMBLY - Step 21**

3. **REMOVE FRONT DOOR CHECK ASSEMBLY** . Refer to **DISASSEMBLY - Step 36**
4. **REMOVE FRONT DOOR WEATHERSTRIP** . Refer to **DISASSEMBLY - Step 37**
5. **REMOVE FRONT DOOR REAR WINDOW FRAME MOLDING**

HINT:

When removing the front door rear window frame molding, heat the vehicle body and front door rear window frame molding using a heat light.

HEATING TEMPERATURE

Item	Temperature
Vehicle Body	40 to 60°C (104 to 140°F)
Molding	20 to 30°C (68 to 86°F)

NOTE: **Do not heat the vehicle body or molding excessively.**

a. Using a heat light, heat the front door rear window frame molding.
b. Using a molding remover, disengage the clip and remove the front door rear window frame molding.

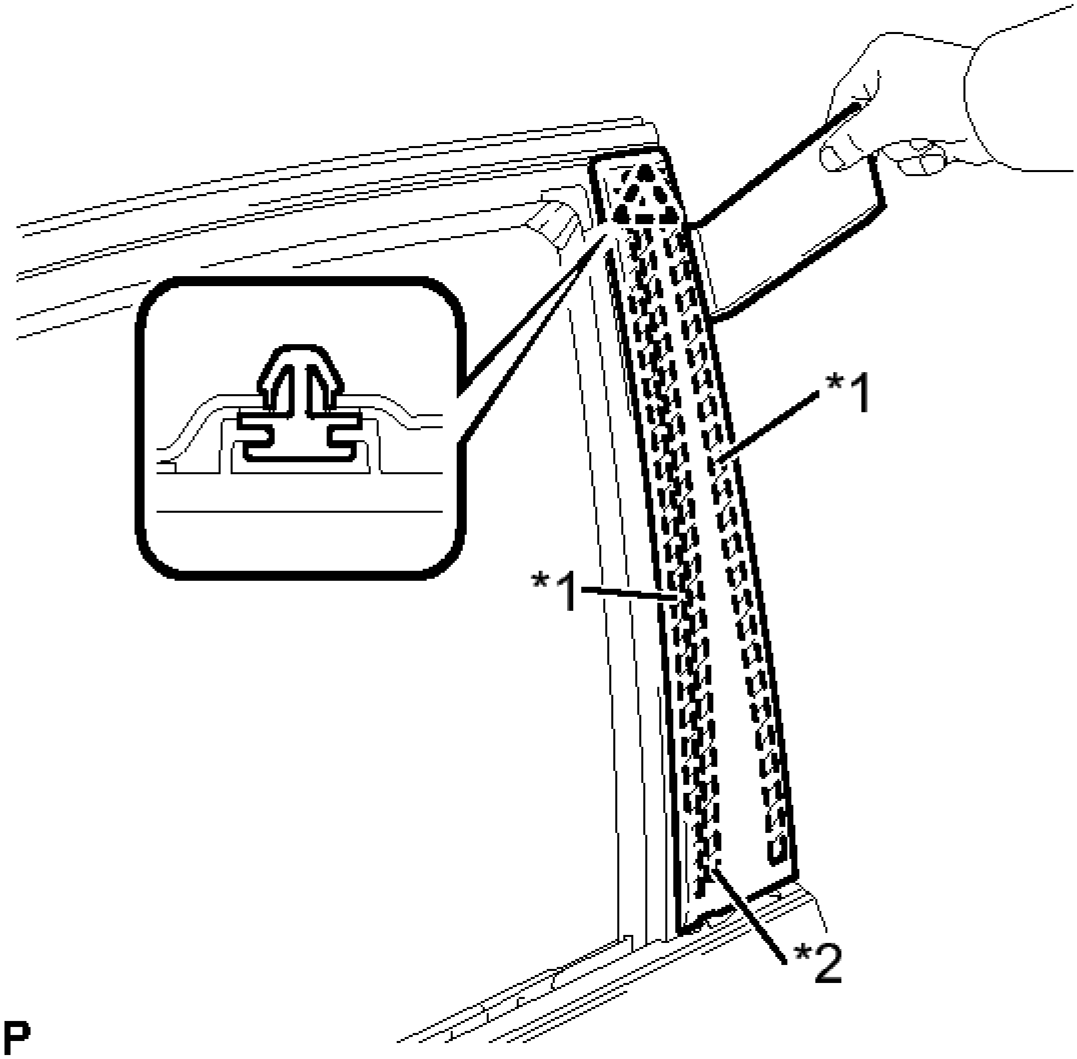

Fig. 109: Identifying Front Door Rear Window Frame Molding Clip
Courtesy of TOYOTA MOTOR SALES, U.S.A., INC.

TEXT IN ILLUSTRATION

*1	Double-sided Tape
*2	Caulking Sponge

6. **REMOVE FRONT DOOR UPPER WINDOW FRAME MOLDING**
    a. Insert a 4.0 mm (0.157 in.) drill bit into a drill.
    b. Tape a 4.0 mm (0.157 in.) drill bit 5.0 mm (0.197 in.) from the tip as shown in the illustration.

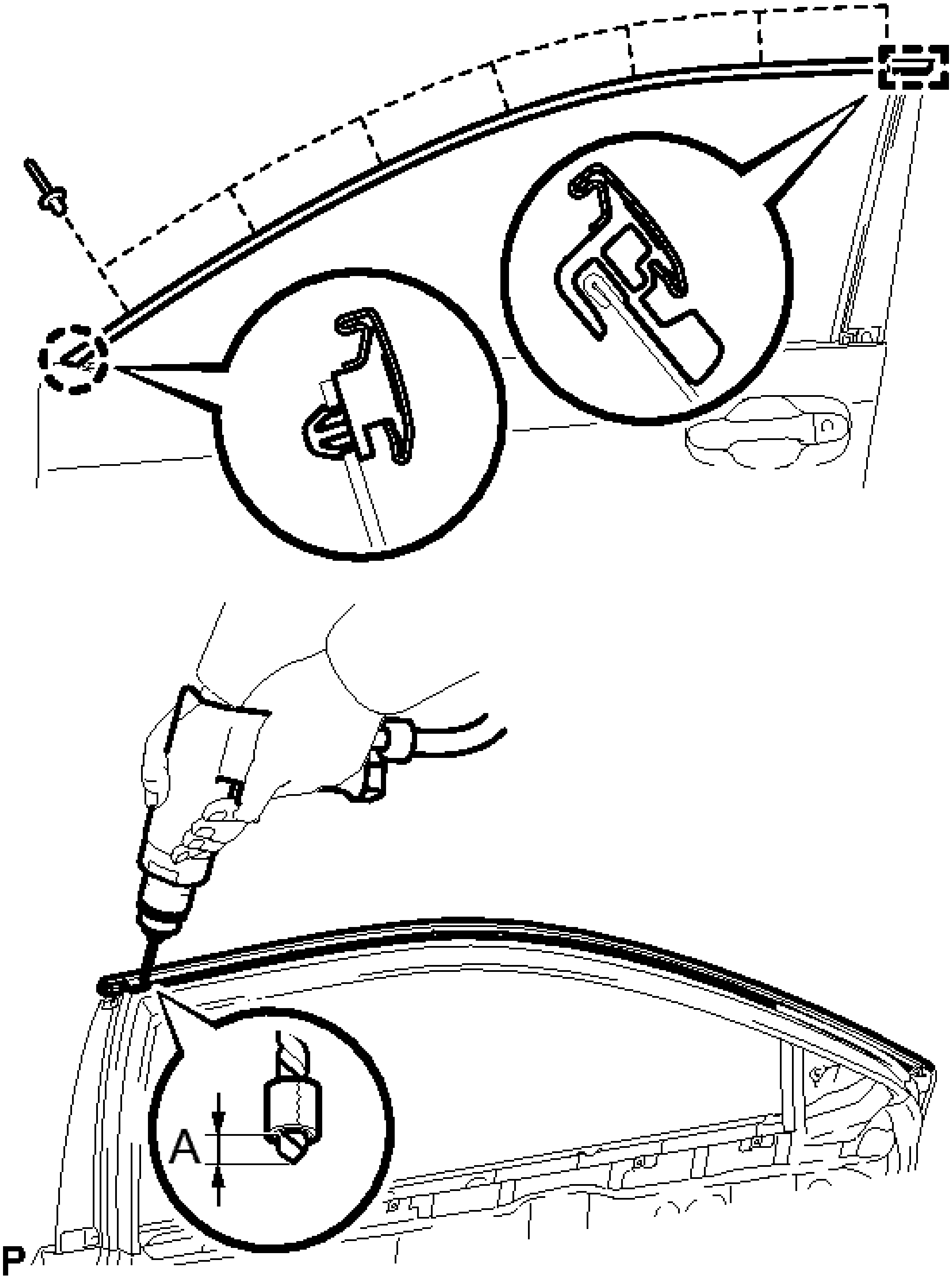

Fig. 110: Removing Front Door Upper Window Frame Molding
Courtesy of TOYOTA MOTOR SALES, U.S.A., INC.

Area	Dimension
A	5.0 mm

NOTE: **Tape the 4.0 mm (0.157 in.) drill bit to prevent the drill bit from going too deep.**

c. Lightly press the drill against the rivets to drill off the rivet flanges, and remove the 7 rivets.

NOTE:

- **Pressing the drill too firmly will cause the rivet to turn and result in the rivet not being drilled through.**
- **Prying the rivets with the drill may damage the rivet installation holes or drill bit.**
- **Be careful of the drilled rivets, as they may be hot.**

d. Using a vacuum cleaner, remove the rivet fragments and shavings from the drilled areas.

e. Disengage the claw and guide, and remove the front door upper window frame molding from the door frame.

INSTALLATION

INSTALLATION

1. **INSTALL FRONT DOOR UPPER WINDOW FRAME MOLDING**
   a. Engage the claw and guide of the front door upper window frame molding to the door frame.

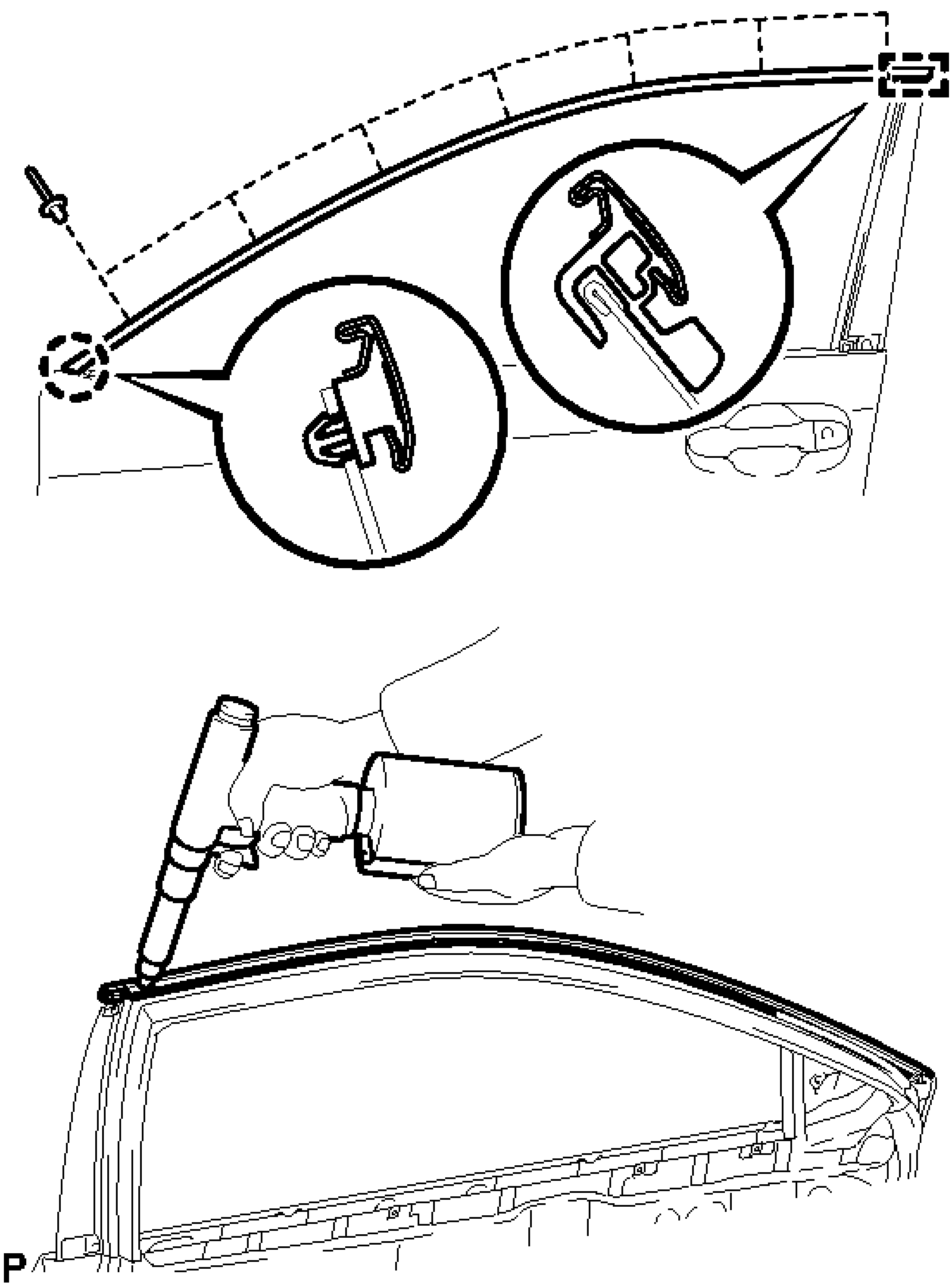

Fig. 111: Installing Front Door Upper Window Frame Molding
Courtesy of TOYOTA MOTOR SALES, U.S.A., INC.

b. Using an air riveter or hand riveter with a nose piece, install the front door upper window frame molding with 7 new rivets.

HINT:

If the mandrel of the rivet does not come off on the first operation of the rivet gun, slide the rivet gun forward on the mandrel and operate it again.

NOTE:

- **Do not pry the rivet with the riveter, as this will cause damage to the riveter and mandrel.**

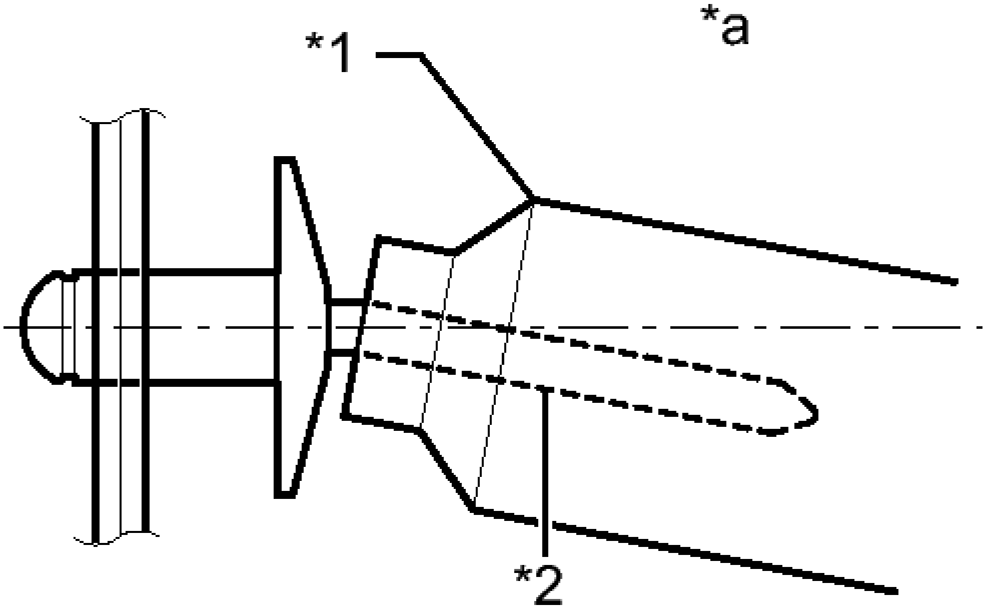

P

Fig. 112: Installing The Rear Door Upper Window Frame Molding With 7 New Rivets
Courtesy of TOYOTA MOTOR SALES, U.S.A., INC.

TEXT IN ILLUSTRATION

*1	Riveter
*2	Mandrel
*a	Incorrect

- **Confirm that the rivets are seated properly against the molding. Do not tilt the riveter when installing the rivet to the molding. Do not leave any space between the rivet head and molding.**

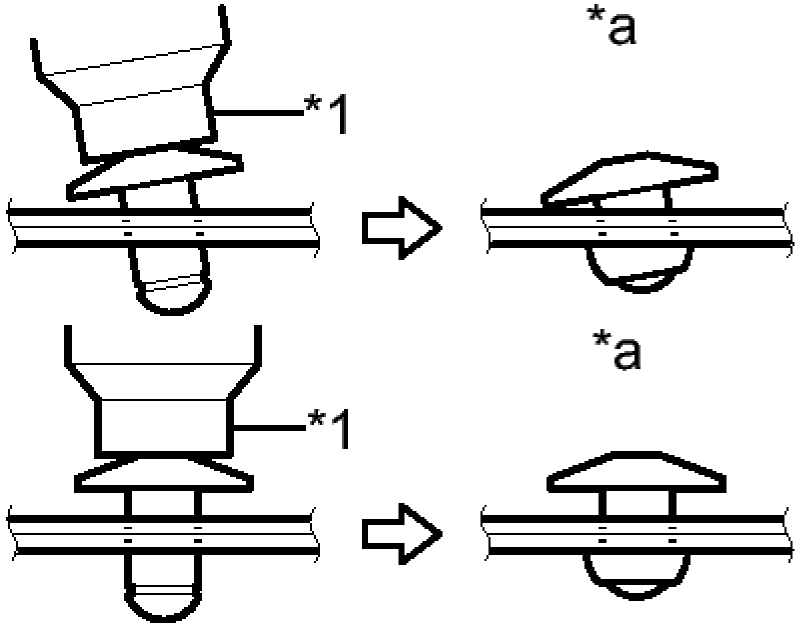

P

Fig. 113: Installing The Rivet To The Molding
Courtesy of TOYOTA MOTOR SALES, U.S.A., INC.

TEXT IN ILLUSTRATION

*1	Riveter
*a	Incorrect

- Do not leave any space between the molding and door frame. Firmly hc the 2 items together while installing the rivet.

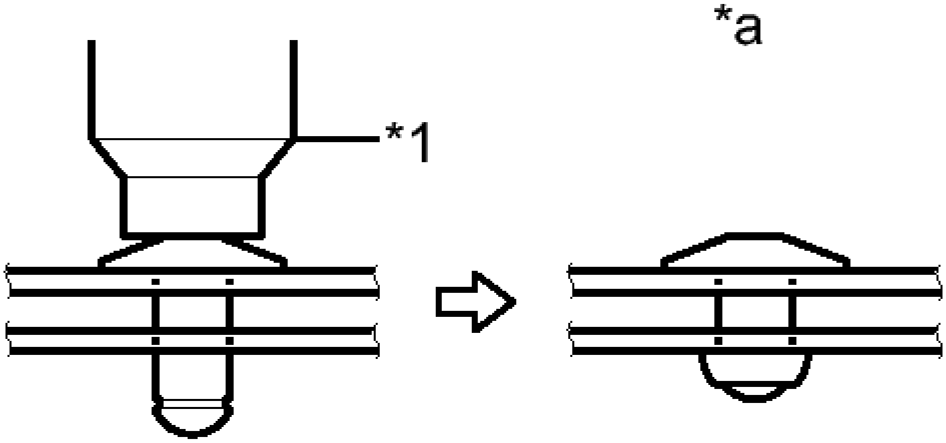

P

Fig. 114: Firmly Hold The 2 Items Together While Installing The Rivet
Courtesy of TOYOTA MOTOR SALES, U.S.A., INC.

TEXT IN ILLUSTRATION

*1	Riveter
*a	Incorrect

2. **INSTALL FRONT DOOR REAR WINDOW FRAME MOLDING**

HINT:

When installing a new front door rear window frame molding, heat the vehicle body and front door rear window frame molding using a heat light.

HEATING TEMPERATURE

Item	Temperature
Vehicle Body	40 to 60°C (104 to 140°F)
Molding	20 to 30°C (68 to 86°F)

NOTE: **Do not heat the vehicle body or front door rear window frame molding excessively.**

a. Clean the vehicle body surface.

1. Using a heat light, heat the vehicle body surface.
2. Remove the double-sided tape from the vehicle body.
3. Wipe off any tape adhesive residue with cleaner.

b. Install a new front door rear window frame molding.

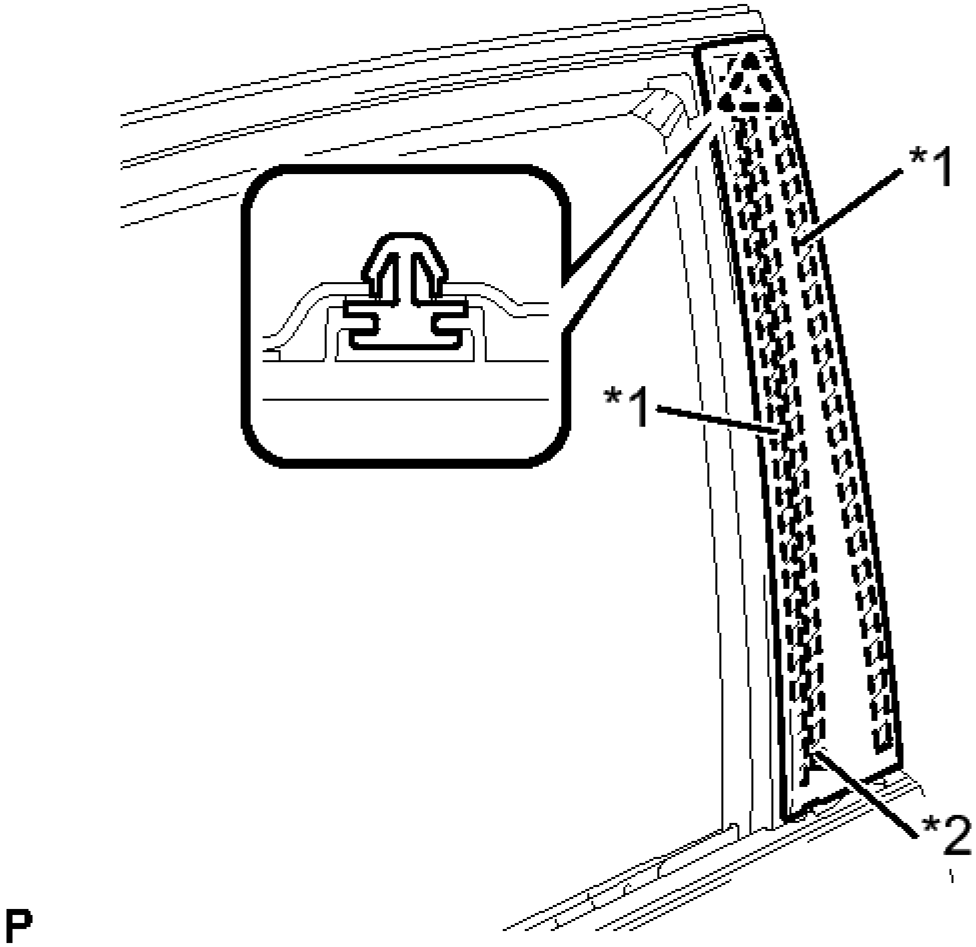

Fig. 115: Identifying Front Door Rear Window Frame Molding Clip
Courtesy of TOYOTA MOTOR SALES, U.S.A., INC.

TEXT IN ILLUSTRATION

*1	Double-sided Tape
*2	Caulking Sponge

   1. Using a heat light, heat the vehicle body and front door rear window frame molding.
   2. Remove the release paper from the face of the front door rear window frame molding.

      HINT:

      After removing the release paper, keep the exposed adhesive free from foreign matter.

   3. Install the front door rear window frame molding with the clip.
3. **INSTALL FRONT DOOR WEATHERSTRIP** . Refer to **REASSEMBLY - Step 12**
4. **INSTALL FRONT DOOR CHECK ASSEMBLY** . Refer to **REASSEMBLY - Step 13**
5. **INSTALL FRONT DOOR GLASS RUN** . Refer to **REASSEMBLY - Step 28**
6. **INSTALL FRONT DOOR BELT MOLDING ASSEMBLY**

   Refer to **INSTALLATION**

REAR DOOR WINDOW FRAME MOLDING

COMPONENTS

ILLUSTRATION

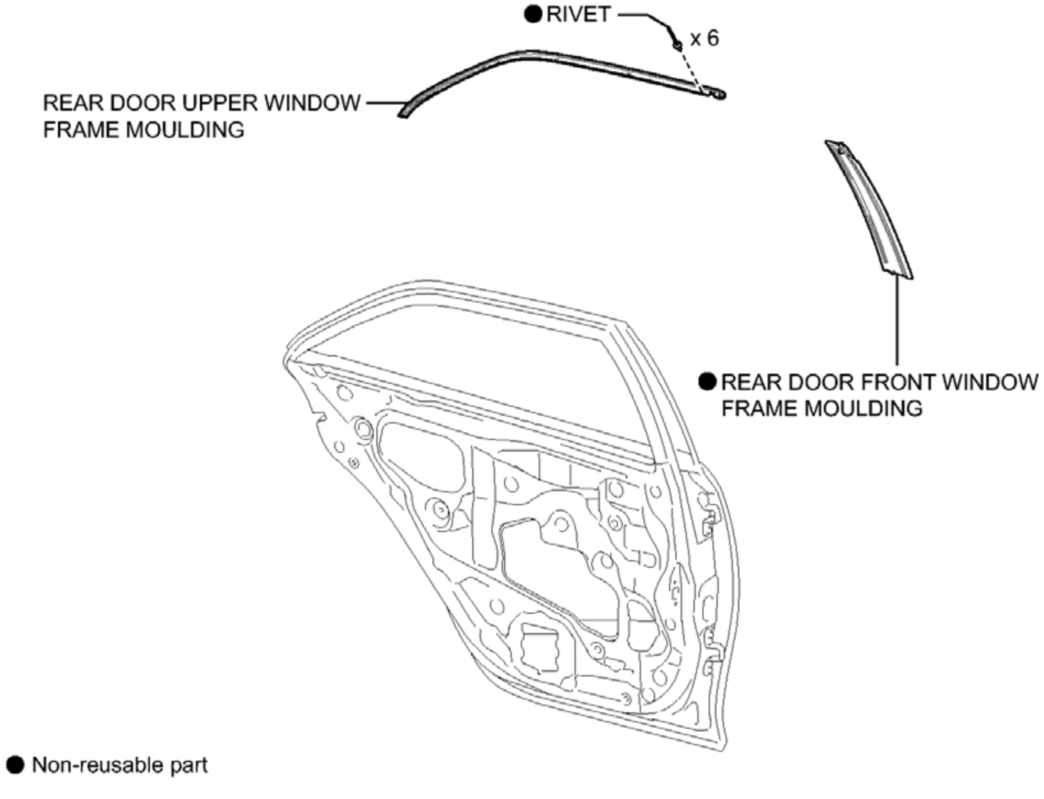
● RIVET
x 6
REAR DOOR UPPER WINDOW FRAME MOULDING
● REAR DOOR FRONT WINDOW FRAME MOULDING
● Non-reusable part
P

Fig. 116: Identifying Rear Door Window Frame Molding Replacement Components
Courtesy of TOYOTA MOTOR SALES, U.S.A., INC.

REMOVAL

REMOVAL

1. **REMOVE REAR DOOR BELT MOLDING ASSEMBLY**

   Refer to **REMOVAL**

2. **REMOVE REAR DOOR FRONT WINDOW FRAME MOLDING**

   HINT:

   When removing the rear door front window frame molding, heat the vehicle body and rear door front window frame molding using a heat light.

   HEATING TEMPERATURE

Item	Temperature
Vehicle	40 to 60°C

Body	(104 to 140° F)
Molding	20 to 30°C (68 to 86°F)

NOTE: **Do not heat the vehicle body or molding excessively.**

a. Using a heat light, heat the rear door front window frame molding.
b. Using a molding remover, disengage the clip and remove the rear door front window frame molding.

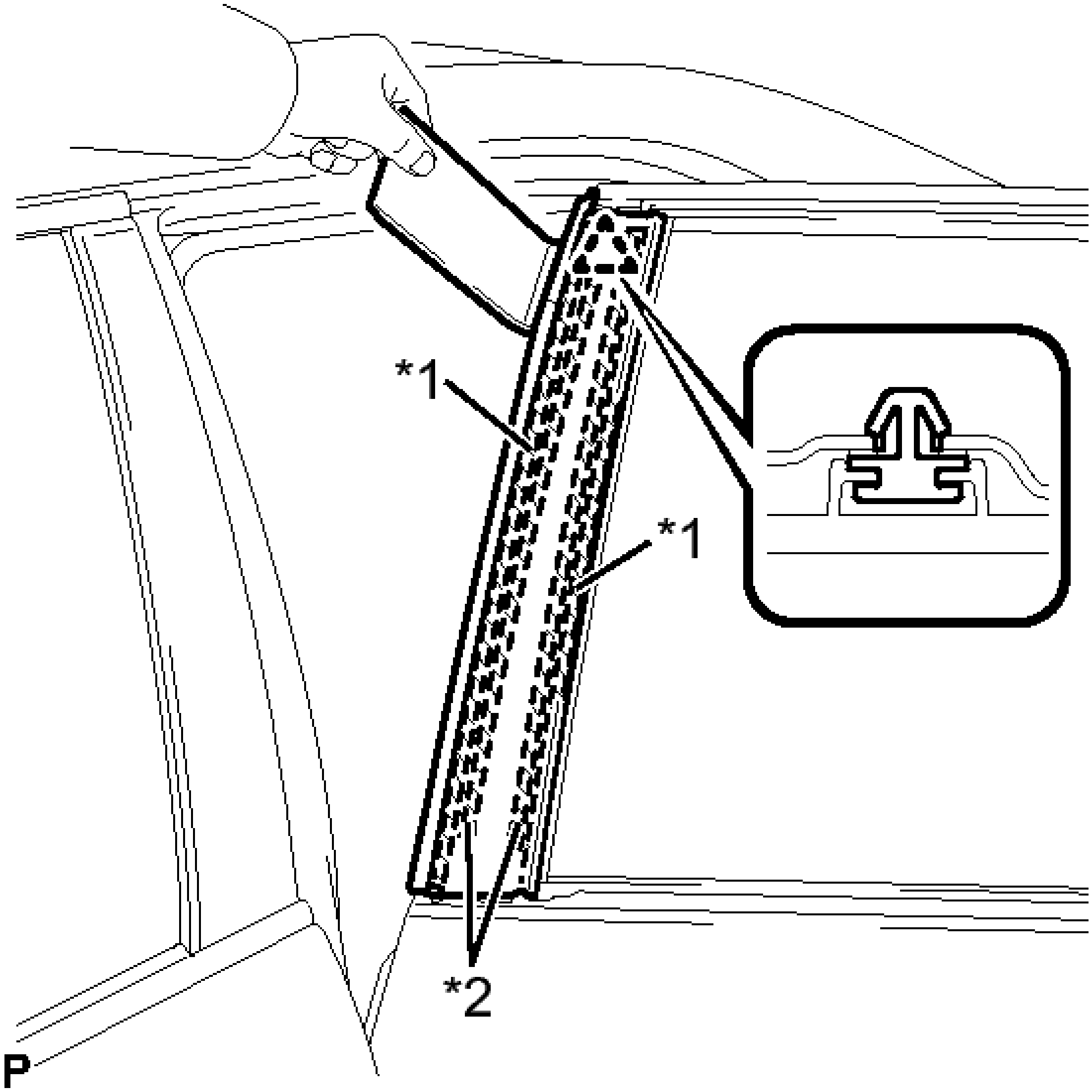

Fig. 117: Identifying Rear Door Front Window Frame Molding Clip
Courtesy of TOYOTA MOTOR SALES, U.S.A., INC.

TEXT IN ILLUSTRATION

*1	Double-sided Tape
*2	Caulking Sponge

3. **REMOVE REAR DOOR UPPER WINDOW FRAME MOLDING**
    a. Insert a 4.0 mm (0.157 in.) drill bit into a drill.
    b. Tape a 4.0 mm (0.157 in.) drill bit 5.0 mm (0.197 in.) from the tip as shown in the illustration.

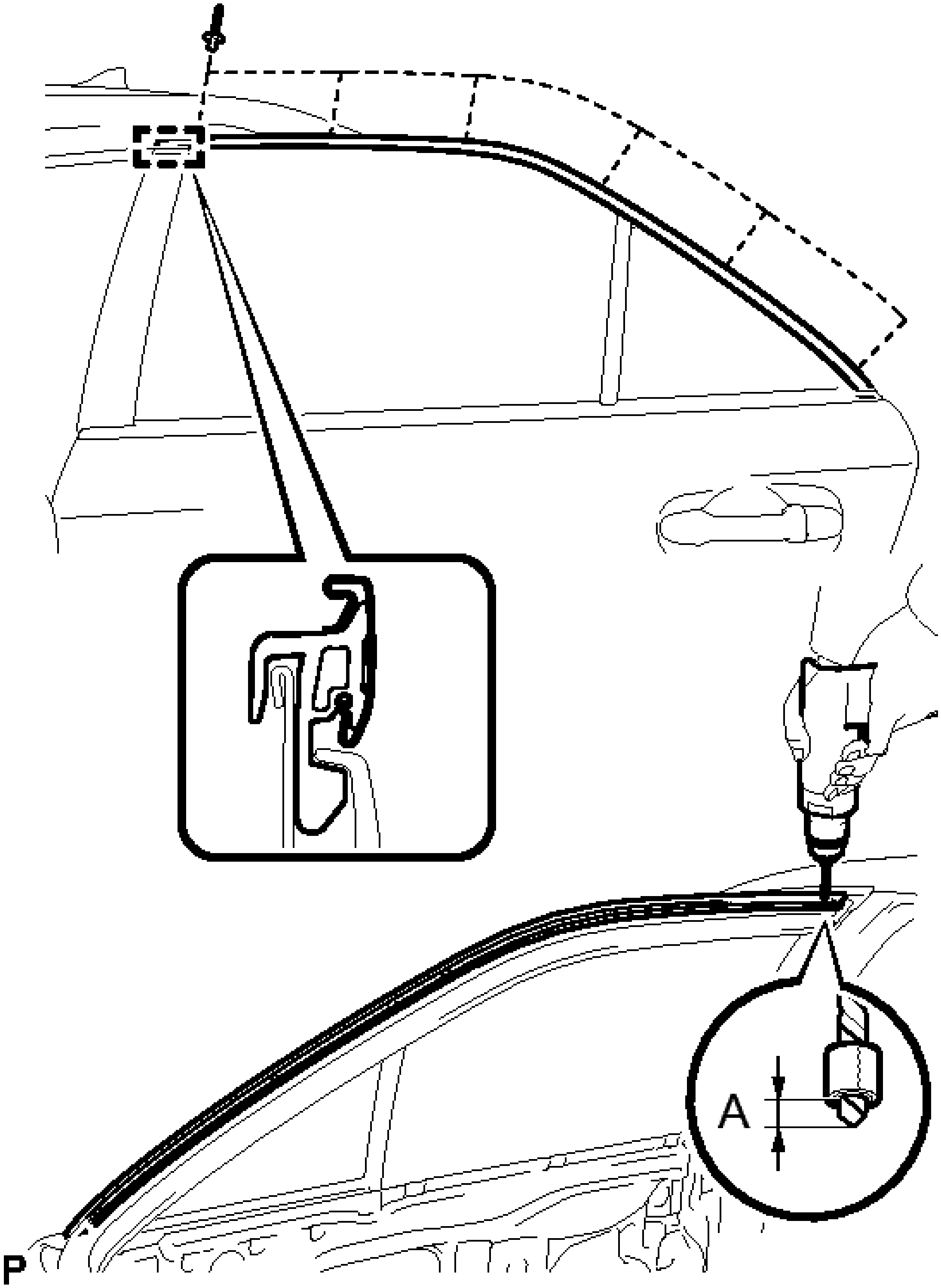

Fig. 118: Removing Rear Door Upper Window Frame Molding
Courtesy of TOYOTA MOTOR SALES, U.S.A., INC.

Area	Dimension
A	5.0 mm

NOTE: **Tape the 4.0 mm (0.157 in.) drill bit to prevent the drill bit from going too deep.**

c. Lightly press the drill bit against the rivets to drill off the rivet flanges, and remove the 6 rivets.

NOTE:

- **Pressing the drill too firmly will cause the rivet to turn and result in the rivet not being drilled through.**
- **Prying the rivets with the drill may damage the rivet installation holes or drill bit.**
- **Be careful of the drilled rivets, as they may be hot.**

d. Using a vacuum cleaner, remove the rivet fragments and shavings from the drilled areas.

e. Disengage the guide, remove the rear door upper window frame molding from the door frame.

INSTALLATION

INSTALLATION

1. **INSTALL REAR DOOR UPPER WINDOW FRAME MOLDING**
    a. Engage the guide of the rear door upper window frame molding to the door frame.

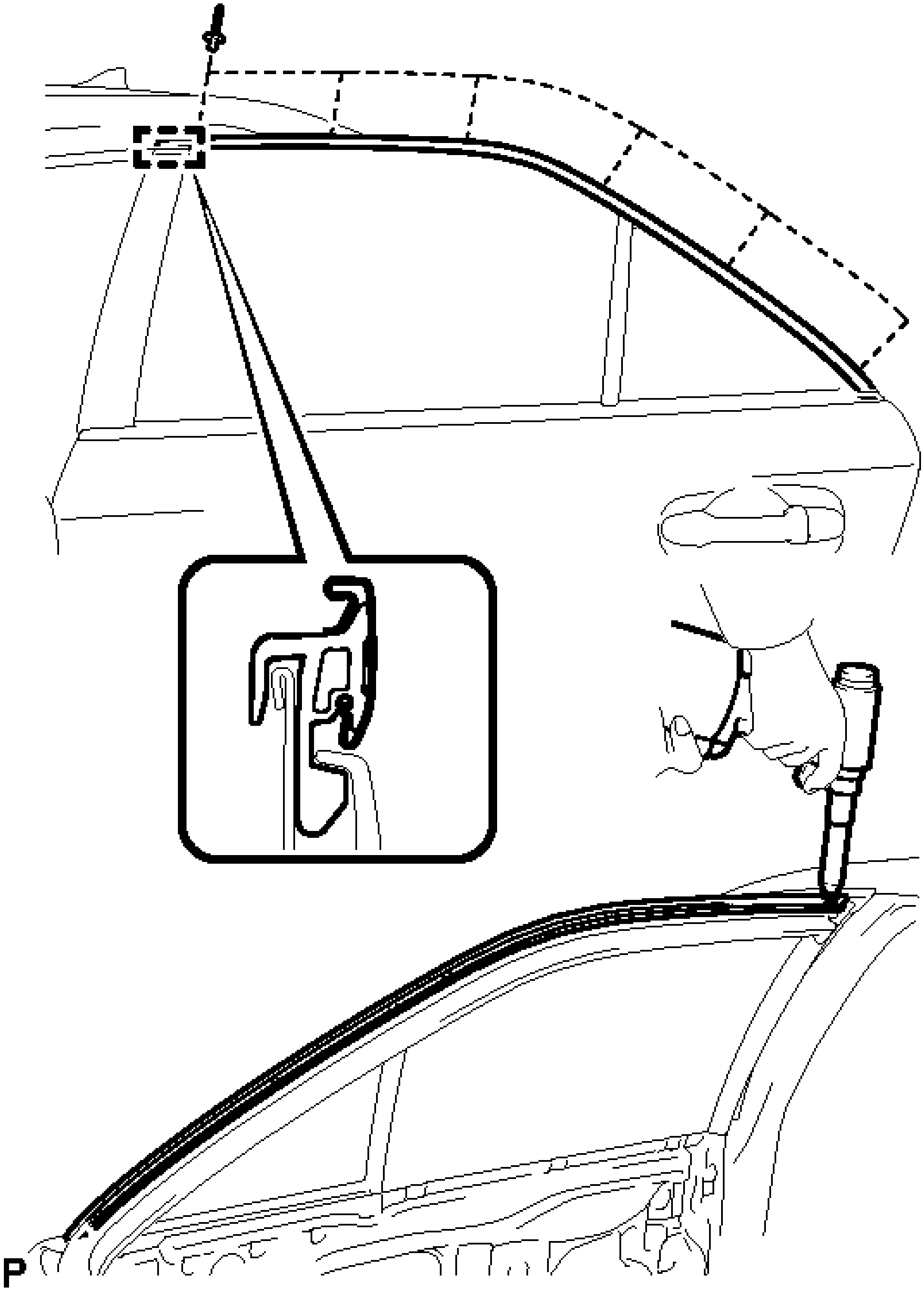

Fig. 119: Installing Rear Door Upper Window Frame Molding
Courtesy of TOYOTA MOTOR SALES, U.S.A., INC.

b. Using an air riveter or hand riveter with a nose piece, install the rear door upper window frame molding with 6 new rivets.

HINT:

If the mandrel of the rivet does not come off on the first operation of the rivet gun, slide the rivet gun forward on the mandrel and operate it again.

NOTE:

- **Do not pry the rivet with the riveter, as this will cause damage to the riveter and mandrel.**

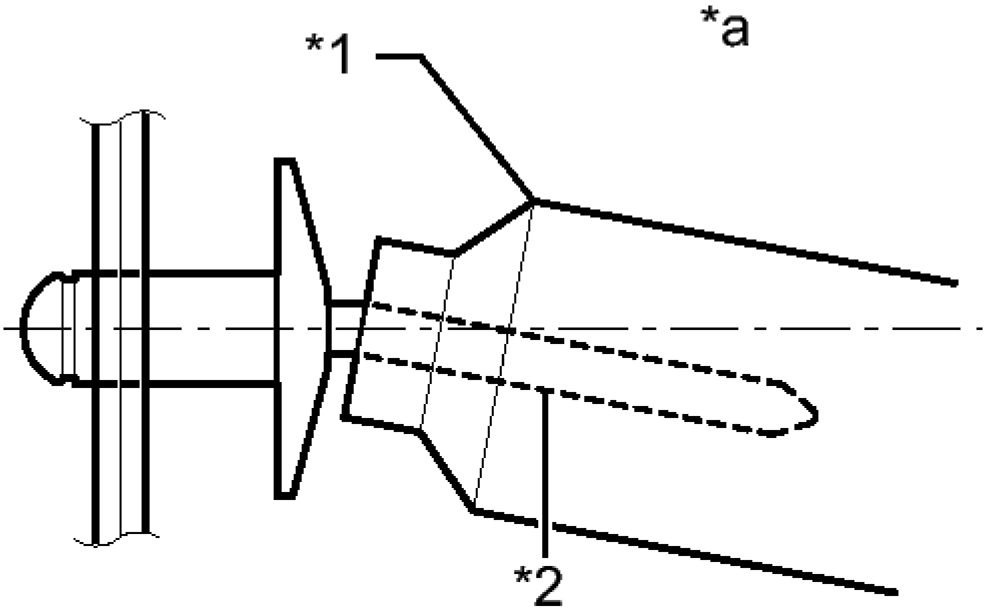

P

Fig. 120: Installing The Rear Door Upper Window Frame Molding With 7 New Rivets
Courtesy of TOYOTA MOTOR SALES, U.S.A., INC.

TEXT IN ILLUSTRATION

*1	Riveter
*2	Mandrel
*a	Incorrect

- **Confirm that the rivets are seated properly against the molding. Do not tilt the riveter when installing the rivet to the molding. Do not leave any space between the rivet head and molding.**

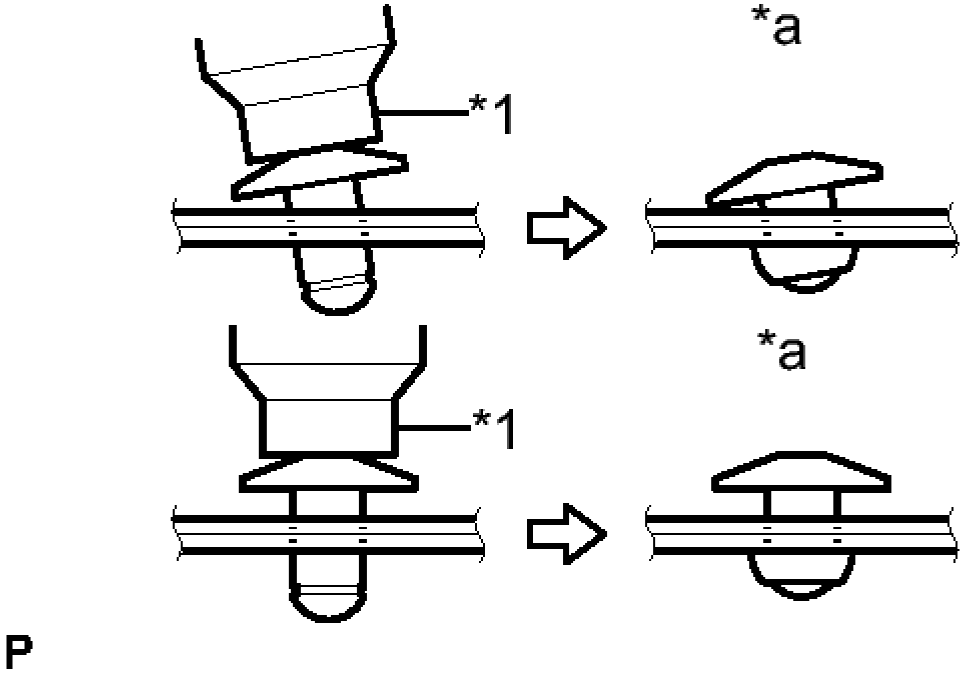

Fig. 121: Installing The Rivet To The Molding
Courtesy of TOYOTA MOTOR SALES, U.S.A., INC.

TEXT IN ILLUSTRATION

*1	Riveter
*a	Incorrect

- **Do not leave any space between the molding and door frame. Firmly ho the 2 items together while installing the rivet.**

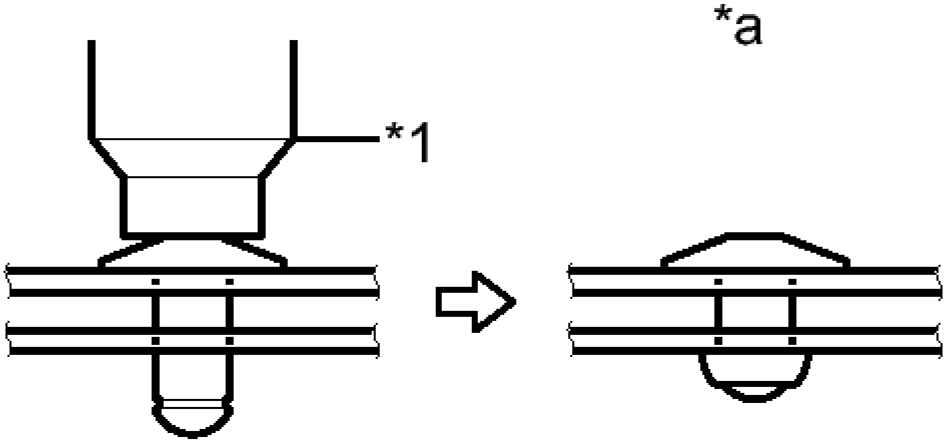

P

Fig. 122: Firmly Hold The 2 Items Together While Installing The Rivet
Courtesy of TOYOTA MOTOR SALES, U.S.A., INC.

TEXT IN ILLUSTRATION

***1**	**Riveter**
***a**	**Incorrect**

2. **INSTALL REAR DOOR FRONT WINDOW FRAME MOLDING**

HINT:

When installing a new rear door front window frame molding, heat the vehicle body and rear door front window frame molding using a heat light.

HEATING TEMPERATURE

Item	Temperature
Vehicle Body	40 to 60°C (104 to 140°F)
Molding	20 to 30°C (68 to 86°F)

NOTE: **Do not heat the vehicle body or rear door front window frame molding excessively.**

a. Clean the vehicle body surface.

    1. Using a heat light, heat the vehicle body surface.
    2. Remove the double-sided tape from the vehicle body.
    3. Wipe off any tape adhesive residue with cleaner.
- b. Install a new rear door front window frame molding.

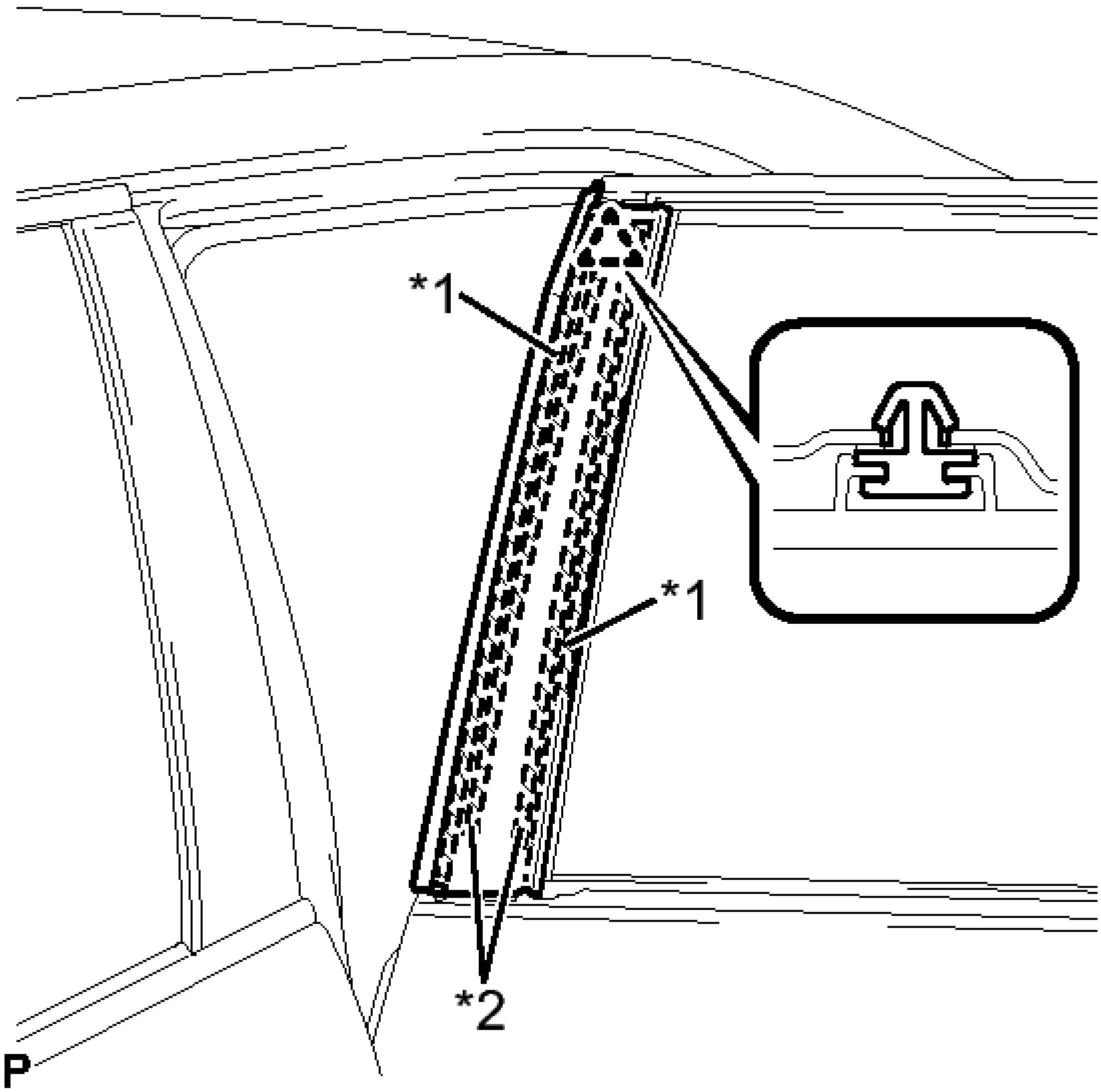

Fig. 123: Identifying New Rear Door Front Window Frame Molding Clip
Courtesy of TOYOTA MOTOR SALES, U.S.A., INC.

TEXT IN ILLUSTRATION

*1	Double-sided Tape
*2	Caulking Sponge

1. Using a heat light, heat the vehicle body and rear door front window frame molding.
2. Remove the release paper from the rear door front window frame molding.

   HINT:

   After removing the release paper, keep the exposed adhesive free from foreign matter.

3. Install the rear door front window frame molding with the clip.

3. **INSTALL REAR DOOR BELT MOLDING ASSEMBLY**

   Refer to **REASSEMBLY**

ROOF DRIP SIDE FINISH MOLDING

COMPONENTS

ILLUSTRATION

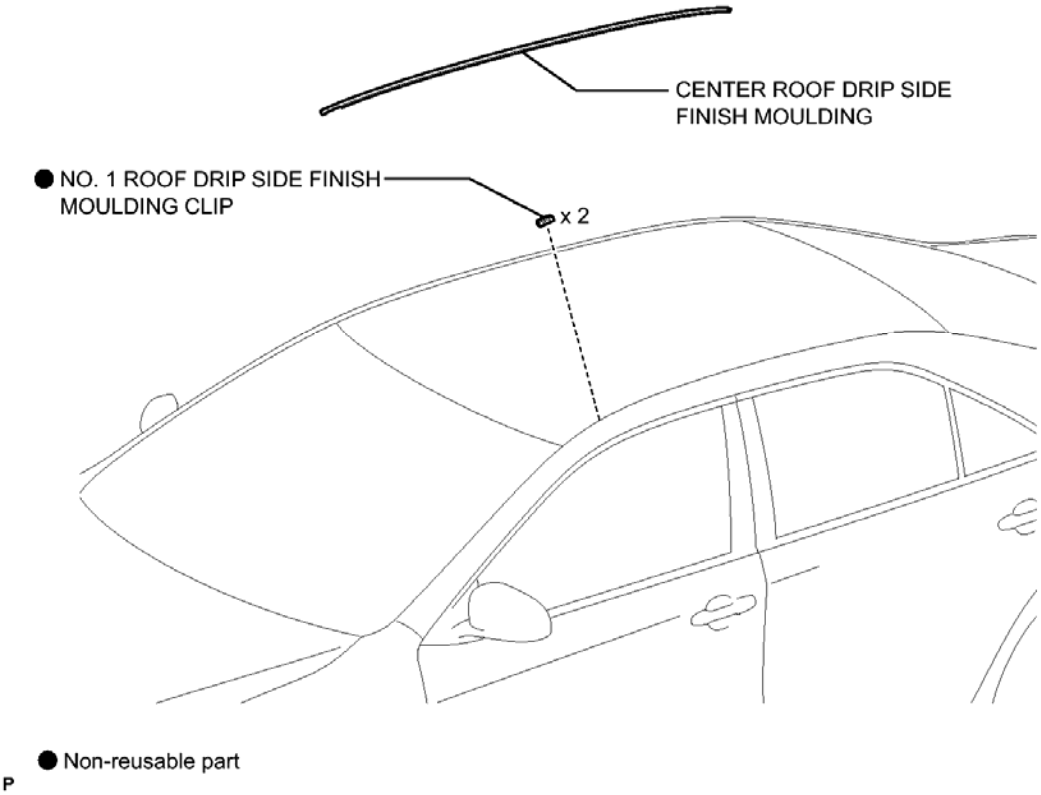
CENTER ROOF DRIP SIDE FINISH MOULDING
● NO. 1 ROOF DRIP SIDE FINISH MOULDING CLIP
x 2
● Non-reusable part
P

Fig. 124: Identifying Roof Drip Side Finish Molding Replacement Components
Courtesy of TOYOTA MOTOR SALES, U.S.A., INC.

REMOVAL

REMOVAL

1. **REMOVE CENTER ROOF DRIP SIDE FINISH MOLDING**
    1. Put protective tape around the center roof drip side finish molding.

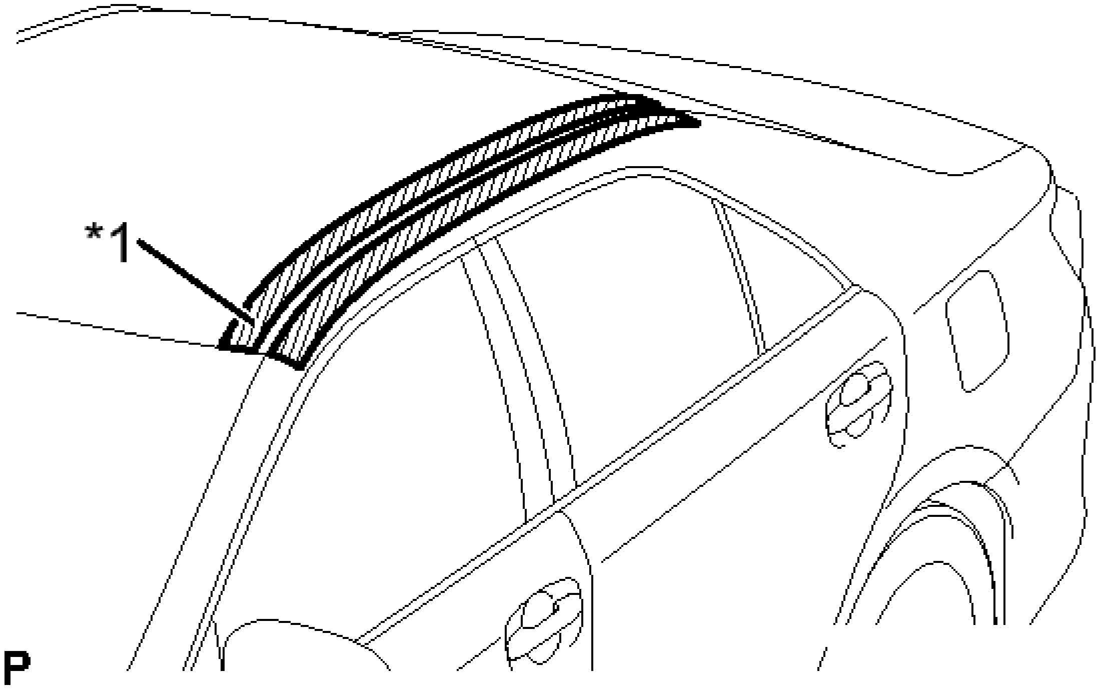

Fig. 125: Center Roof Drip Side Finish Molding Protective Tape Placement
Courtesy of TOYOTA MOTOR SALES, U.S.A., INC.

TEXT IN ILLUSTRATION

*1	Protective Tape

    2. Using a molding remover, disengage the 2 clips and remove the center roof drip side finish molding.

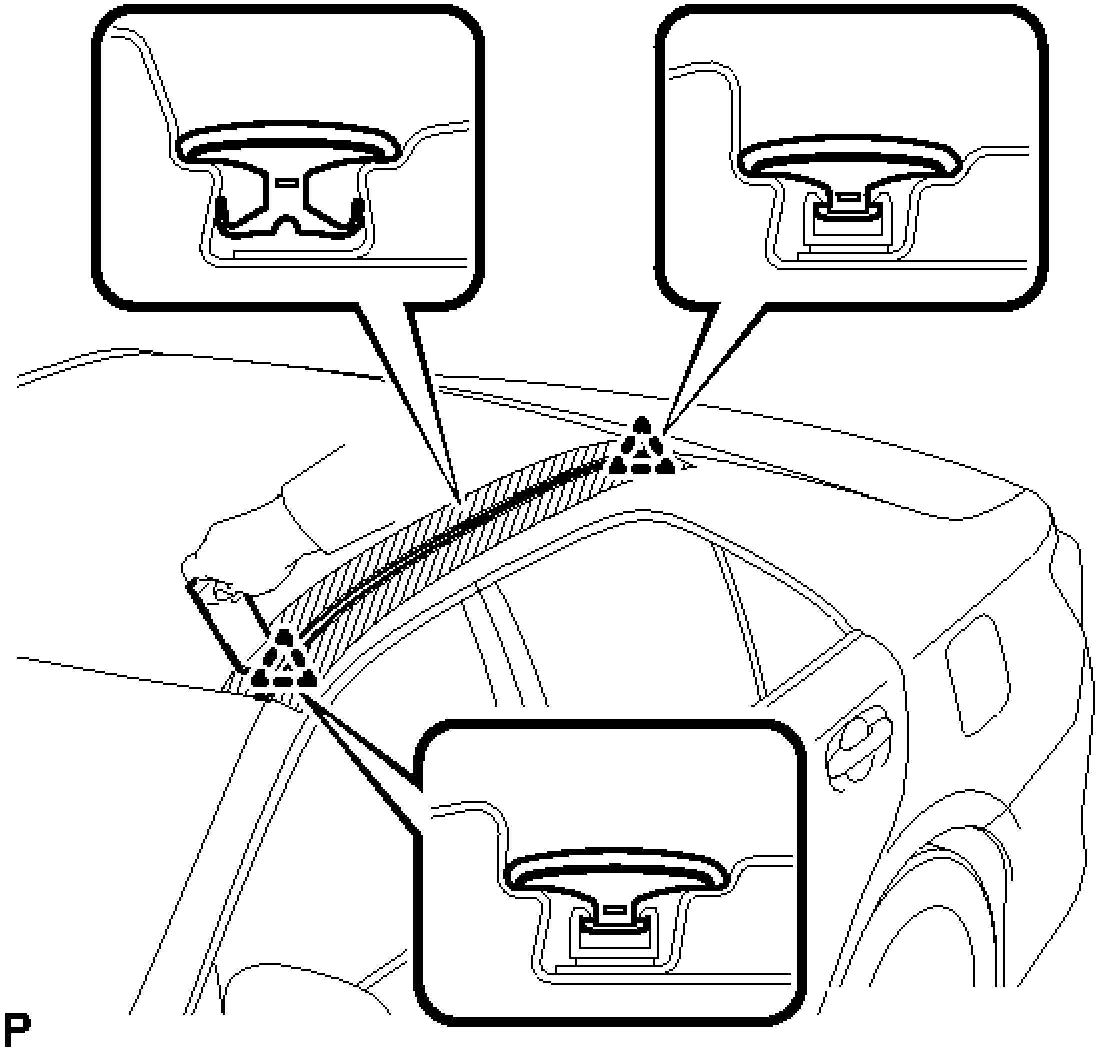

Fig. 126: Identifying Center Roof Drip Side Finish Molding Clips
Courtesy of TOYOTA MOTOR SALES, U.S.A., INC.

NOTE:

- **Do not remove the clips.**
- **If any clip is damaged or falls out, replace it with a new one.**

INSTALLATION

INSTALLATION

1. **INSTALL NO. 1 ROOF DRIP SIDE FINISH MOLDING CLIP**

NOTE: **When installing new clips, remove the double-sided tape remaining where the clips will be installed on the body and clean the body with a non-residue solvent.**

a. Apply a 2 to 3 mm (0.0787 to 0.118 in.) bead of adhesive (3M DP-105 or equivalent) to new No. 1 roof drip side finish molding clips.

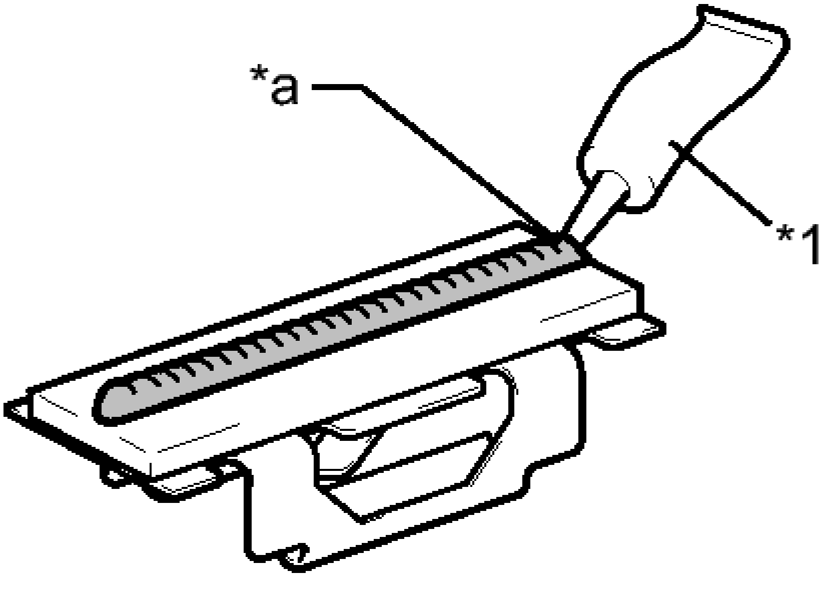

Fig. 127: Applying A 2 To 3 Mm (0.0787 To 0.118 In.) Bead Of Adhesive (3M Dp-105 Or Equivalent)
Courtesy of TOYOTA MOTOR SALES, U.S.A., INC.

TEXT IN ILLUSTRATION

*1	Adhesive
*a	2 to 3 mm Bead of Adhesive

HINT:

Adhesive strength (tensile strength): 13.7 MPa (140.0 kgf/cm^2 , 1987 psi) or more (when the temperature is 23°C (73°F))

b. Press and install the 2 No. 1 roof drip side finish molding clips.

c. Install the clips to the positions on the roof panel shown in the illustration. Determine the locations and firmly press and install the 2 No. 1 roof drip side finish molding clips after lightly applying adhesive (3M DP-105 or equivalent).

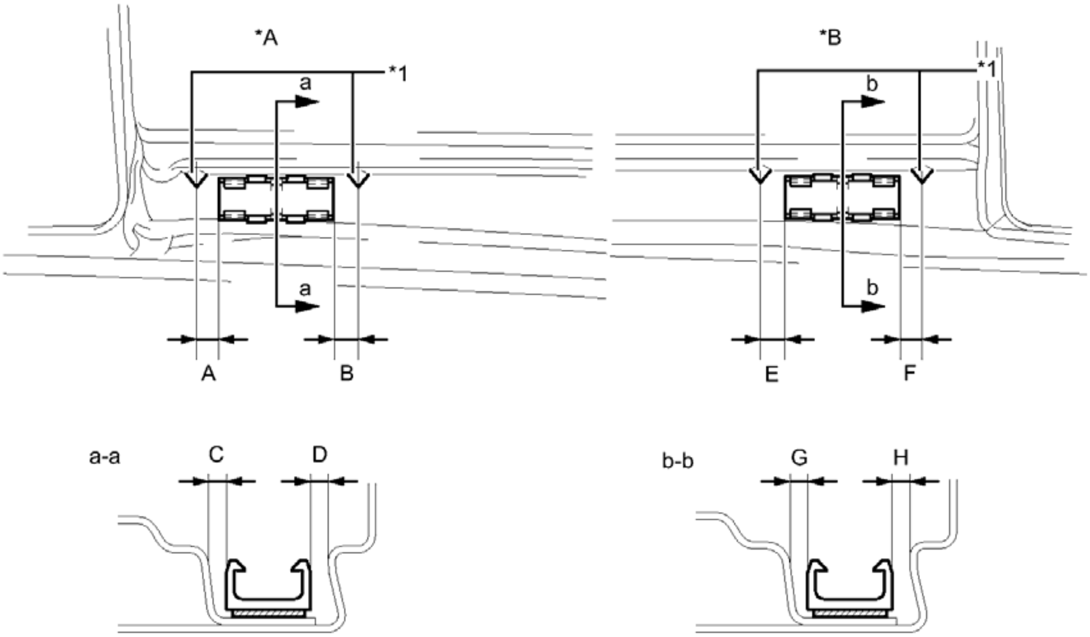

P

Fig. 128: Installing No. 1 Roof Drip Side Finish Molding
Courtesy of TOYOTA MOTOR SALES, U.S.A., INC.

TEXT IN ILLUSTRATION

*A	for Front	*B	for Rear
*1	Protruding Part	-	-

STANDARD DIMENSION

Installation Area	Dimension	Measurement
for Front	A	4.0 mm (0.157 in.)
	B	4.0 mm (0.157 in.)
	C	1.8 mm (0.0709 in.)
	D	1.8 mm (0.0709 in.)
for Rear	E	4.0 mm (0.157 in.)
	F	4.0 mm (0.157 in.)

	G	1.8 mm (0.0709 in.)
	H	1.8 mm (0.0709 in.)

d. Install the roof drip center side finish molding when 20 minutes or more have elapsed after pressing and installing 2 new No. 1 roof drip side finish molding clips.

HINT:

- Initial hardening time: 20 minutes
- Complete hardening time: 48 hours

2. **INSTALL CENTER ROOF DRIP SIDE FINISH MOLDING**

a. Engage the 2 clips and install the center roof drip side finish molding.

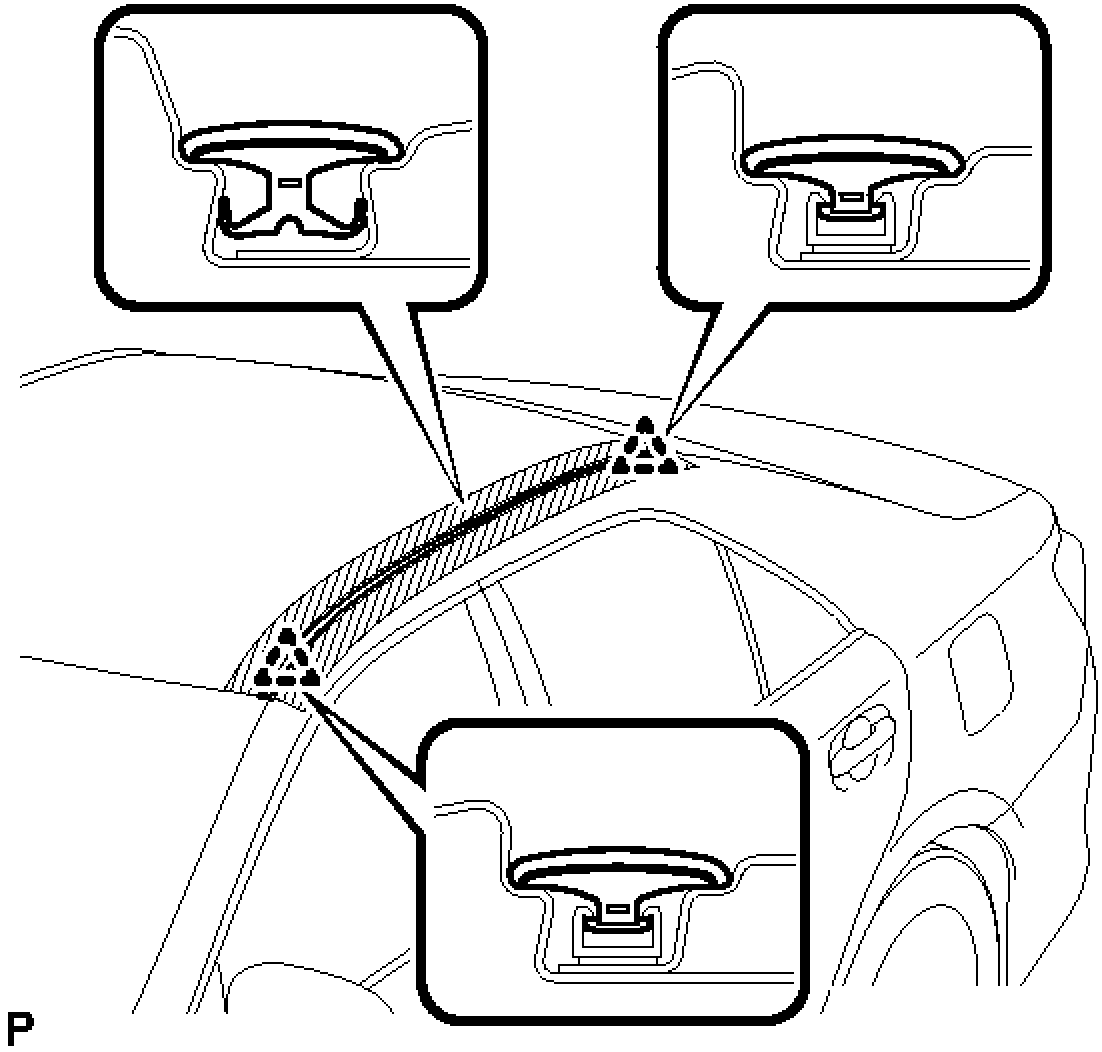

Fig. 129: Identifying Center Roof Drip Side Finish Molding Clips
Courtesy of TOYOTA MOTOR SALES, U.S.A., INC.

LUGGAGE COMPARTMENT DOOR OUTSIDE GARNISH

COMPONENTS

ILLUSTRATION

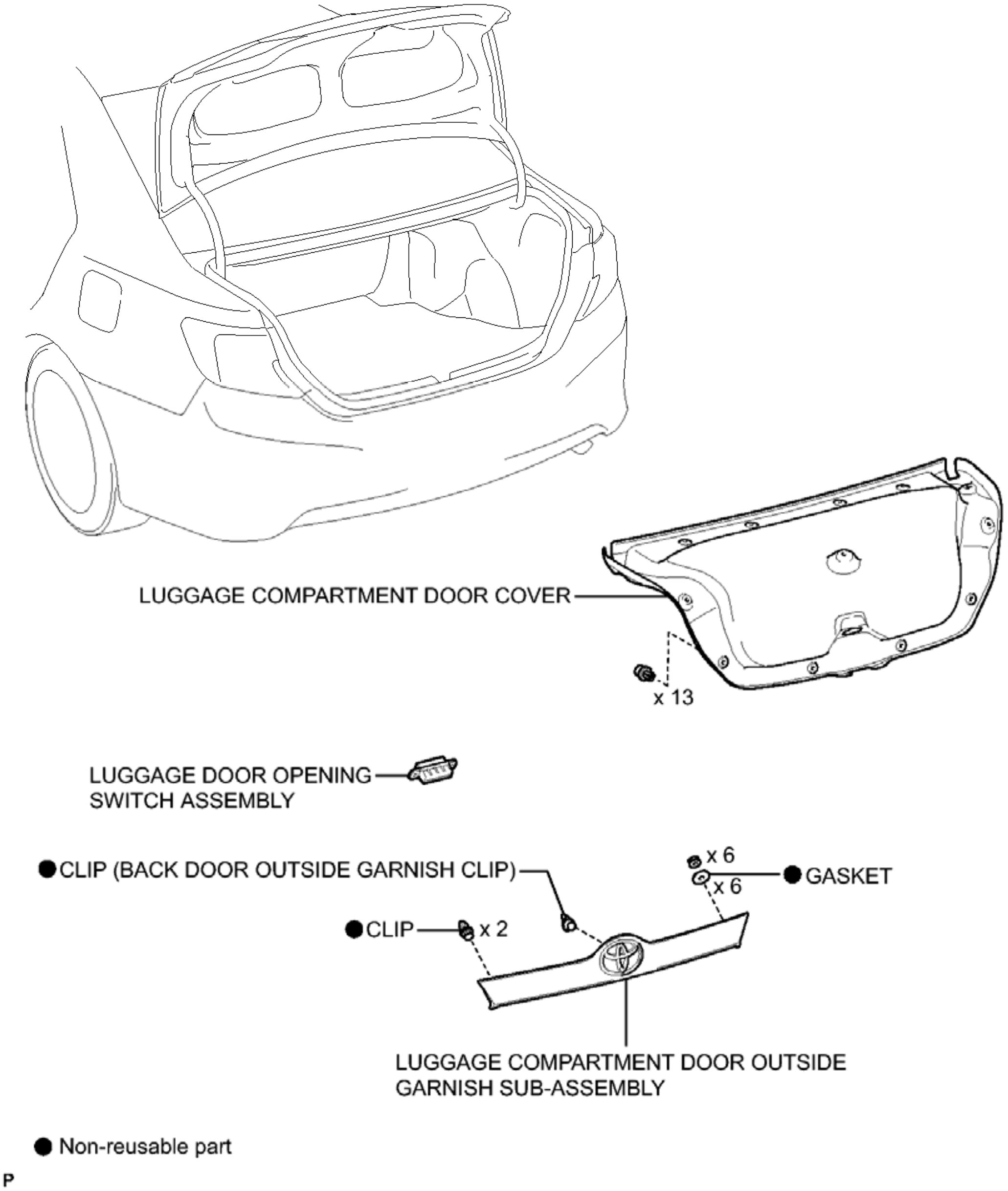
LUGGAGE COMPARTMENT DOOR COVER
x 13
LUGGAGE DOOR OPENING SWITCH ASSEMBLY
● CLIP (BACK DOOR OUTSIDE GARNISH CLIP)
x 6
x 6
● GASKET
● CLIP
x 2
LUGGAGE COMPARTMENT DOOR OUTSIDE GARNISH SUB-ASSEMBLY
● Non-reusable part
P

Fig. 130: Identifying Luggage Compartment Door Outside Garnish Replacement Components (1 Of 2)
Courtesy of TOYOTA MOTOR SALES, U.S.A., INC.

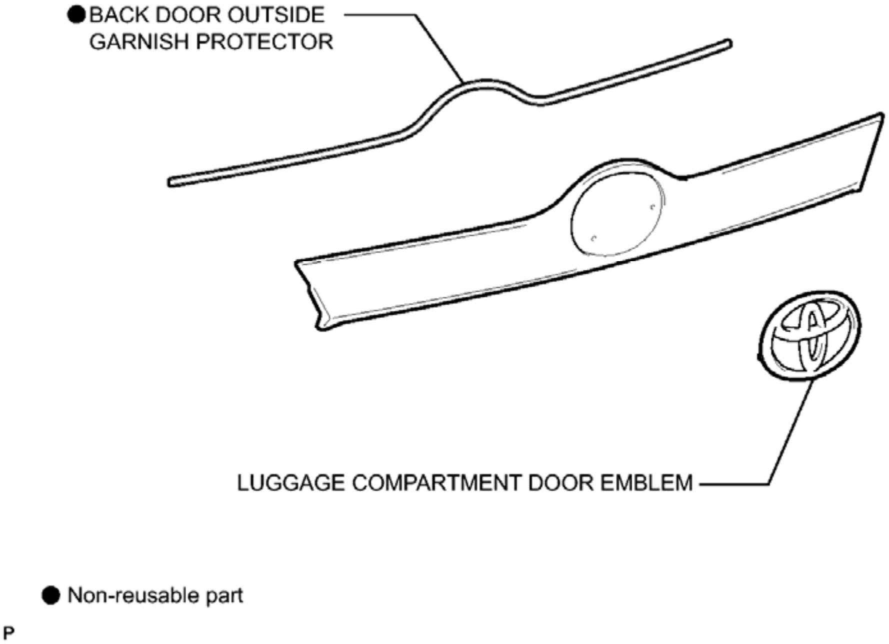
●BACK DOOR OUTSIDE GARNISH PROTECTOR
LUGGAGE COMPARTMENT DOOR EMBLEM
● Non-reusable part
P

Fig. 131: Identifying Luggage Compartment Door Outside Garnish Replacement Components (2 Of 2)
Courtesy of TOYOTA MOTOR SALES, U.S.A., INC.

REMOVAL

REMOVAL

1. **REMOVE LUGGAGE COMPARTMENT DOOR COVER** . Refer to **DISASSEMBLY - Step 1**
2. **REMOVE LUGGAGE COMPARTMENT DOOR OUTSIDE GARNISH SUB-ASSEMBLY**
    a. Disconnect the connector.
    b. Remove the 6 nuts.

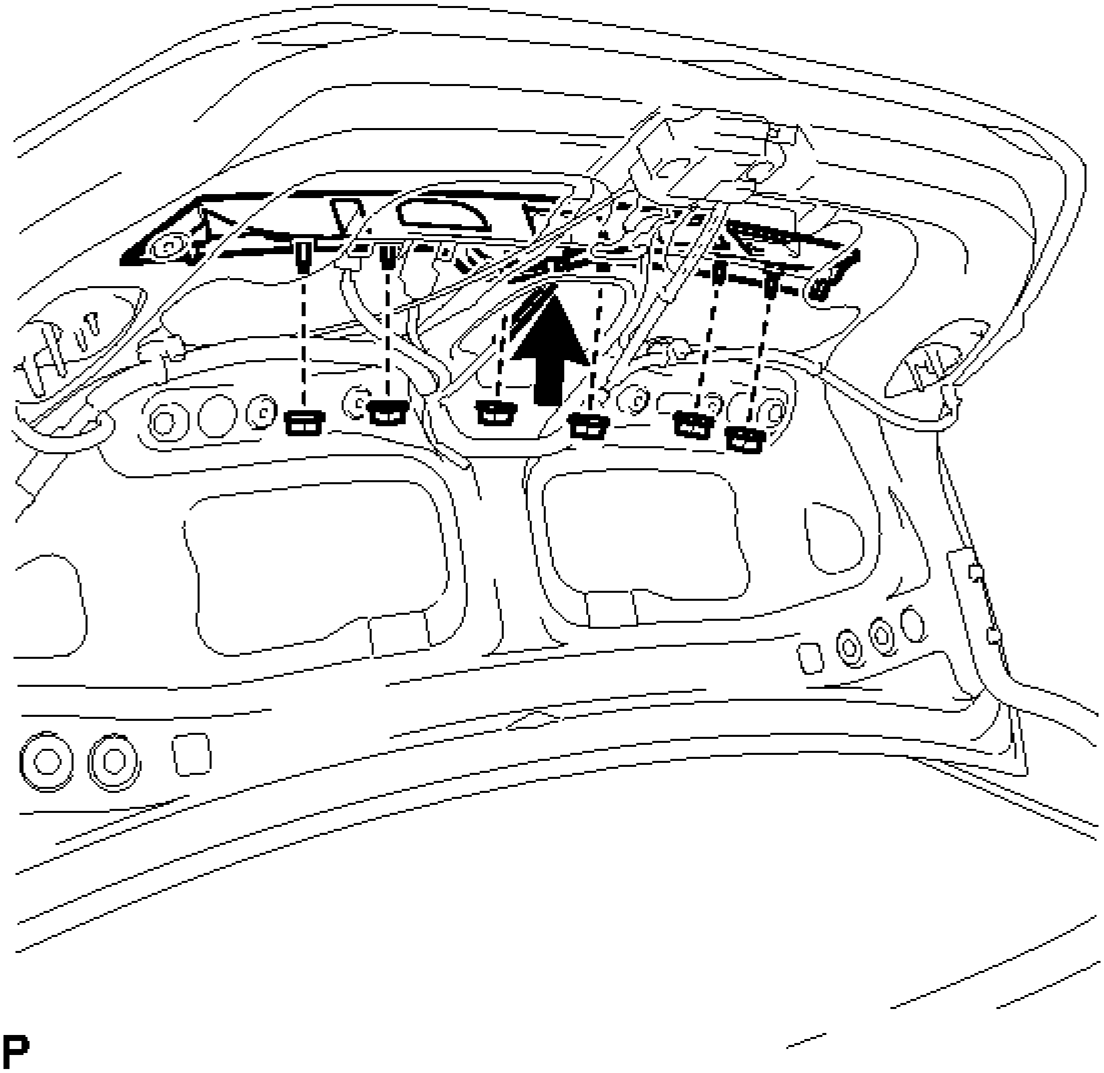

Fig. 132: Identifying Luggage Compartment Door Outside Garnish Sub-Assembly Nuts
Courtesy of TOYOTA MOTOR SALES, U.S.A., INC.

c. Put protective tape around the luggage compartment door outside garnish sub-assembly.

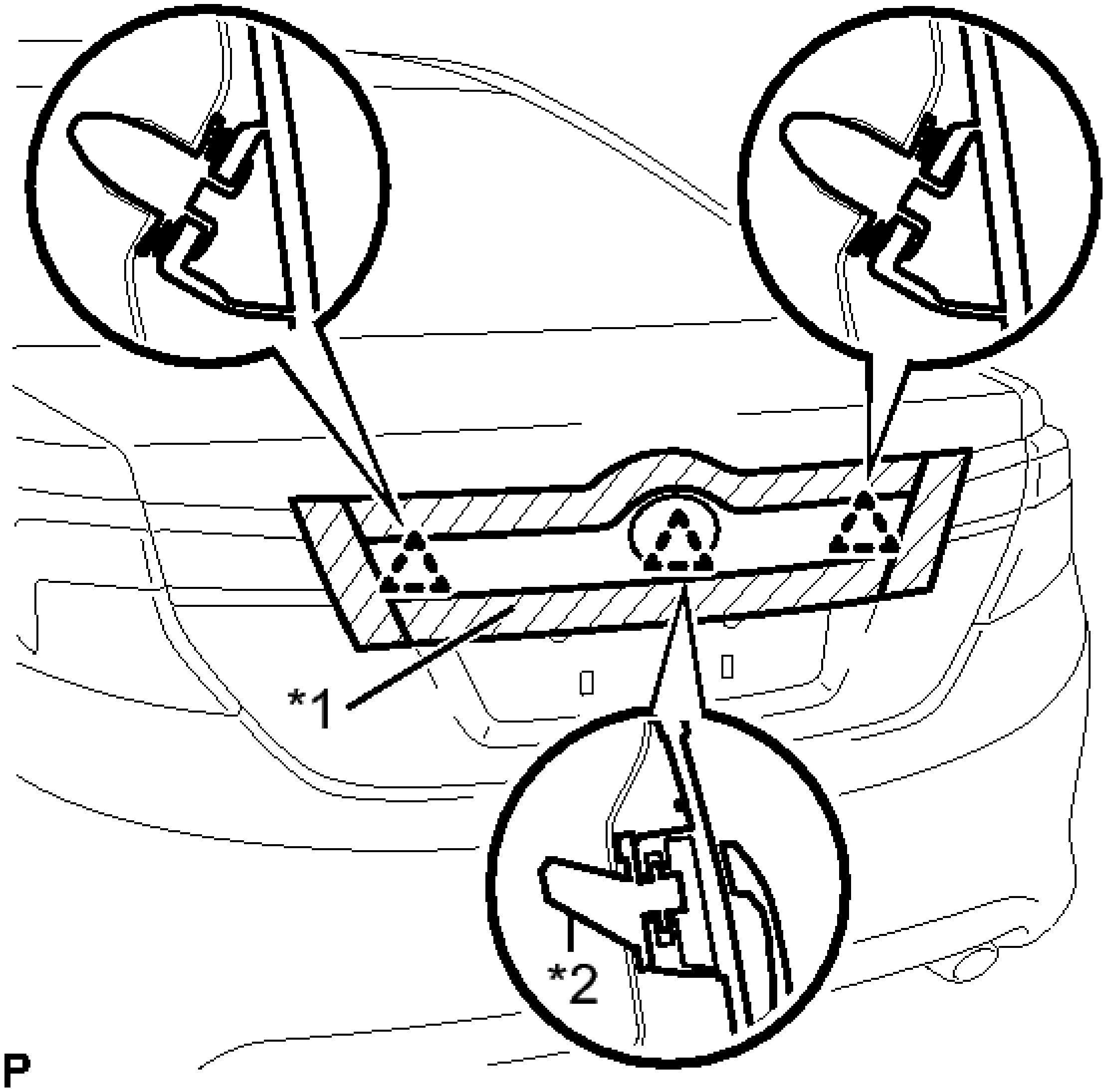

Fig. 133: Luggage Compartment Door Outside Garnish Protective Tape Placement
Courtesy of TOYOTA MOTOR SALES, U.S.A., INC.

TEXT IN ILLUSTRATION

*1	Protective Tape
*2	Back Door Outside Garnish Clip

d. Disengage the 3 clips and remove the luggage compartment door outside garnish sub-assembly.

e. Remove the clip (back door outside garnish clip) and 2 clips from the luggage compartment door outside garnish sub-assembly.

    f. Remove the 6 gaskets from the luggage compartment door outside garnish sub-assembly.

3. **REMOVE LUGGAGE DOOR OPENING SWITCH ASSEMBLY** . Refer to **REMOVAL - Step 2**
4. **REMOVE LUGGAGE COMPARTMENT DOOR EMBLEM** See step 1
5. **REMOVE BACK DOOR OUTSIDE GARNISH PROTECTOR**
    a. Remove the back door outside garnish protector.

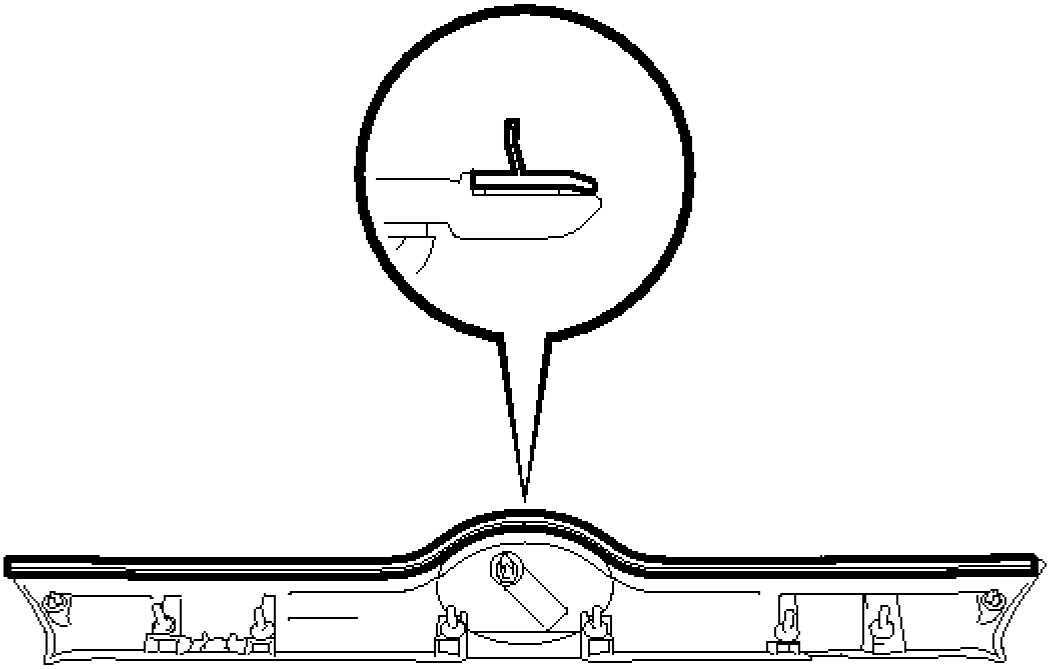

Fig. 134: Identifying Back Door Outside Garnish Protector
Courtesy of TOYOTA MOTOR SALES, U.S.A., INC.

INSTALLATION

INSTALLATION

1. **INSTALL BACK DOOR OUTSIDE GARNISH PROTECTOR**
    a. Clean the luggage compartment door outside garnish sub-assembly.

   1. Remove any double-sided tape from the luggage compartment door outside garnish sub-assembly.
   2. Wipe off any tape adhesive residue with cleaner.
- b. Install a new back door outside garnish protector.
   1. Remove the release paper from the back door outside garnish protector.

      HINT:

      After removing the release paper, keep the exposed adhesive free from foreign matter.

- c. Install a new back door outside garnish protector shown in the illustration.

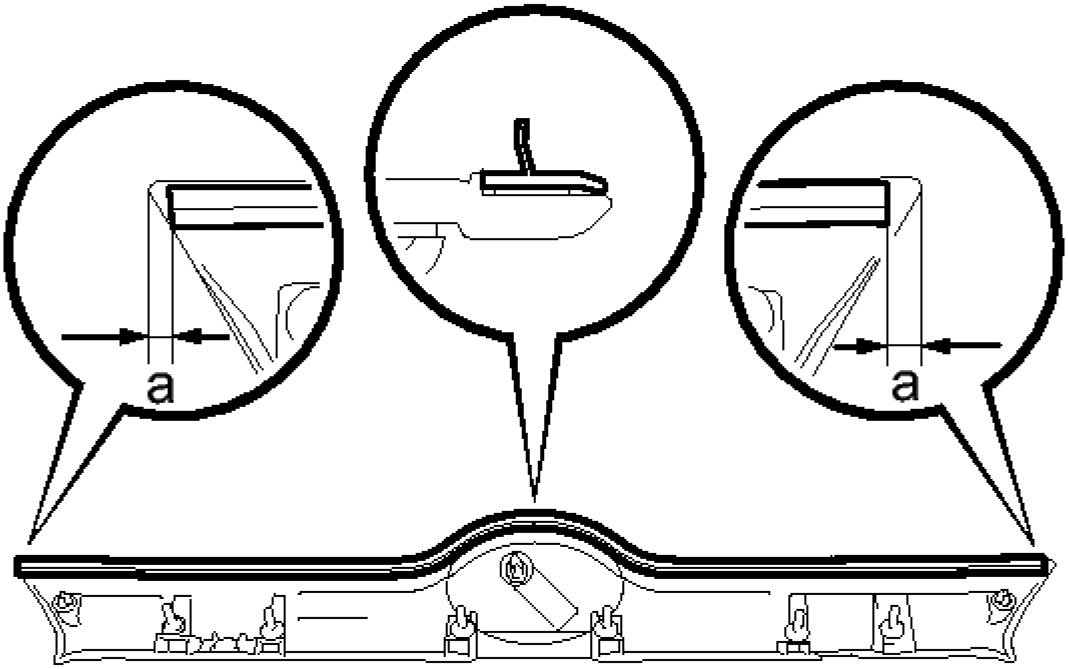

P

Fig. 135: Back Door Outside Garnish Protector Measurements
Courtesy of TOYOTA MOTOR SALES, U.S.A., INC.

STANDARD MEASUREMENT

Dimension	Measurement
a	5.9 mm (0.232 in.)

2. **INSTALL LUGGAGE COMPARTMENT DOOR EMBLEM** See step 1
3. **INSTALL LUGGAGE DOOR OPENING SWITCH ASSEMBLY** . Refer to **INSTALLATION - Step 1**
4. **INSTALL LUGGAGE COMPARTMENT DOOR OUTSIDE GARNISH SUB-ASSEMBLY**
   a. Install 6 new gaskets to the luggage compartment door outside garnish sub-assembly.
   b. Install a new clip (back door outside garnish clip) and 2 new clips to the luggage compartment door outside garnish sub-assembly.
   c. Engage the 3 clips to install the luggage compartment door outside garnish sub-assembly.

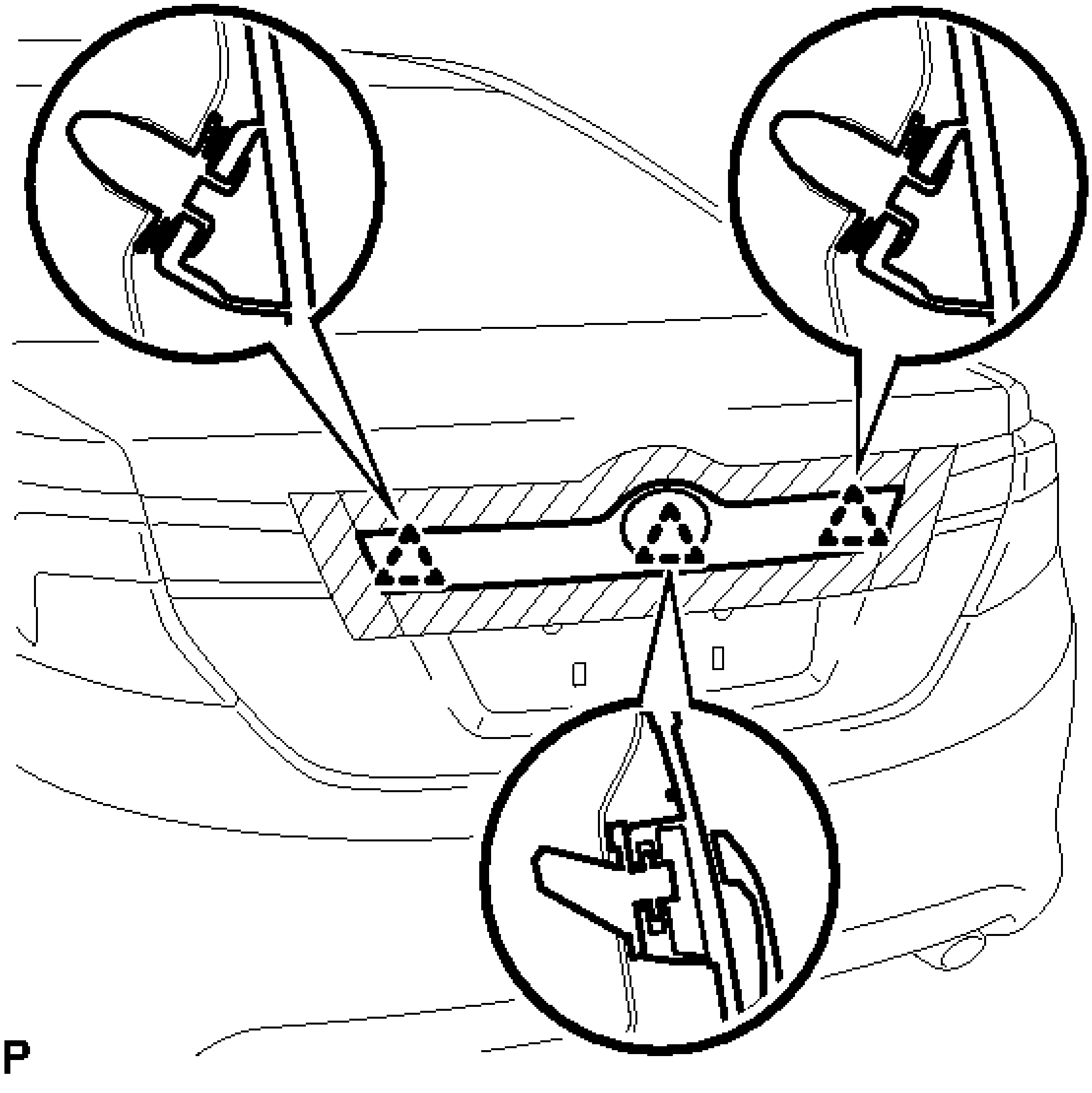

Fig. 136: Identifying Luggage Compartment Door Outside Garnish Sub-Assembly Clips

Courtesy of TOYOTA MOTOR SALES, U.S.A., INC.

d. Install the 6 nuts.
e. Connect the connector.

5. **INSTALL LUGGAGE COMPARTMENT DOOR COVER** . Refer to **REASSEMBLY - Step 10**

REAR WHEEL HOUSE PLATE

COMPONENTS

ILLUSTRATION

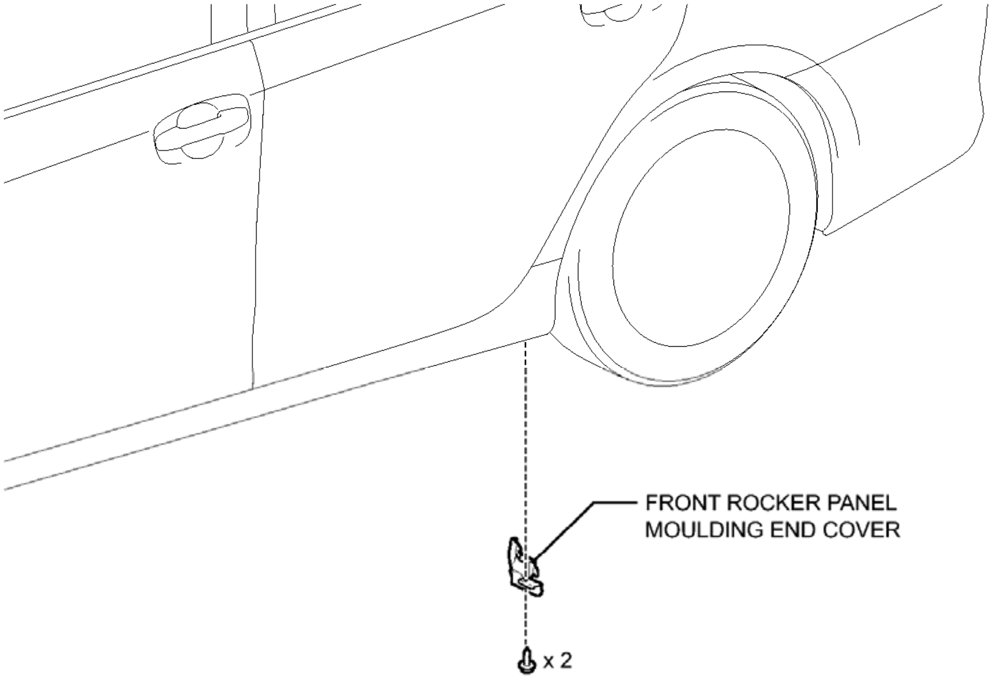

P

Fig. 137: Identifying Rear Wheel House Plate Replacement Components
Courtesy of TOYOTA MOTOR SALES, U.S.A., INC.

REMOVAL

REMOVAL

1. **REMOVE FRONT ROCKER PANEL MOLDING END COVER**
    a. Remove the 2 screws and front rocker panel molding end cover.

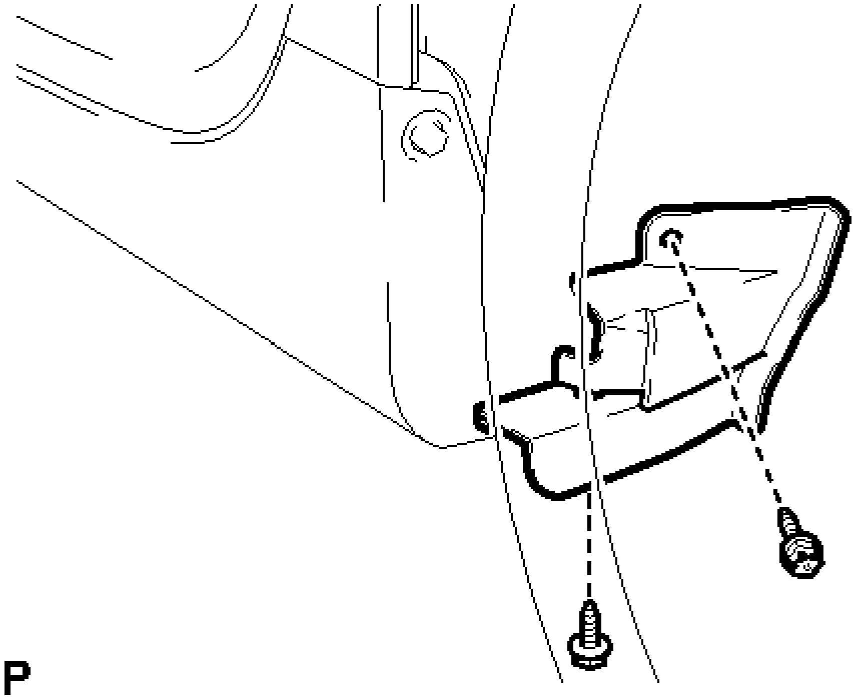

Fig. 138: Identifying Front Rocker Panel Molding End Cover Screws
Courtesy of TOYOTA MOTOR SALES, U.S.A., INC.

INSTALLATION

INSTALLATION

1. **INSTALL FRONT ROCKER PANEL MOLDING END COVER**
    a. Install the front rocker panel molding end cover with the 2 screws.

BLACK OUT TAPE (FOR FRONT DOOR)

COMPONENTS

ILLUSTRATION

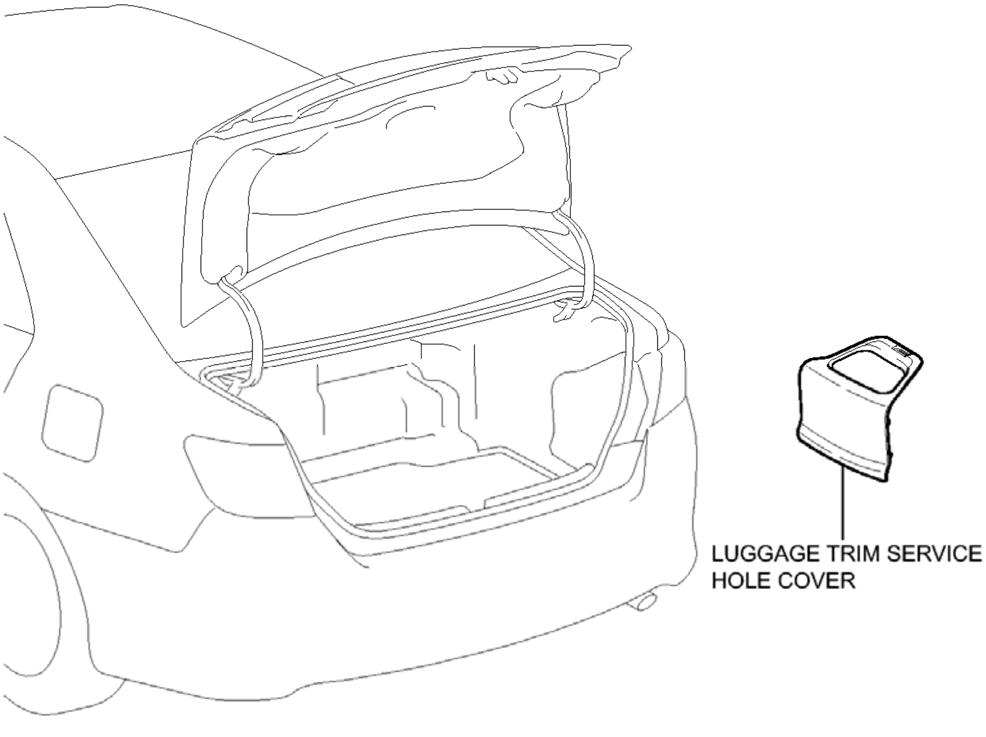
LUGGAGE TRIM SERVICE HOLE COVER
P

Fig. 139: Identifying Black Out Tape (For Front Door) Replacement Components (1 Of 3)
Courtesy of TOYOTA MOTOR SALES, U.S.A., INC.

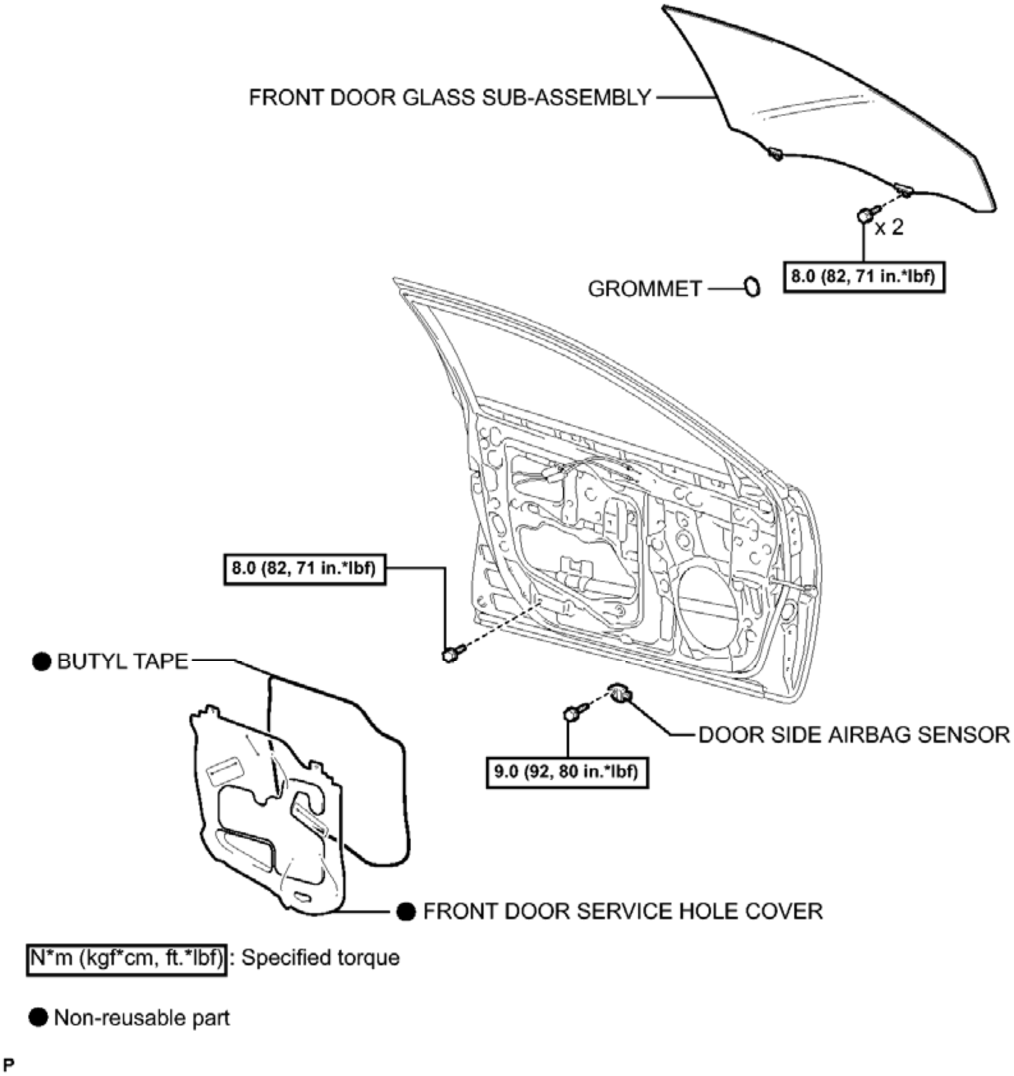
FRONT DOOR GLASS SUB-ASSEMBLY
x 2
GROMMET
8.0 (82, 71 in.*lbf)
8.0 (82, 71 in.*lbf)
● BUTYL TAPE
DOOR SIDE AIRBAG SENSOR
9.0 (92, 80 in.*lbf)
● FRONT DOOR SERVICE HOLE COVER
N*m (kgf*cm, ft.*lbf): Specified torque
● Non-reusable part
P

Fig. 140: Identifying Black Out Tape (For Front Door) Replacement Components With Torque Specifications (2 Of 3)
Courtesy of TOYOTA MOTOR SALES, U.S.A., INC.

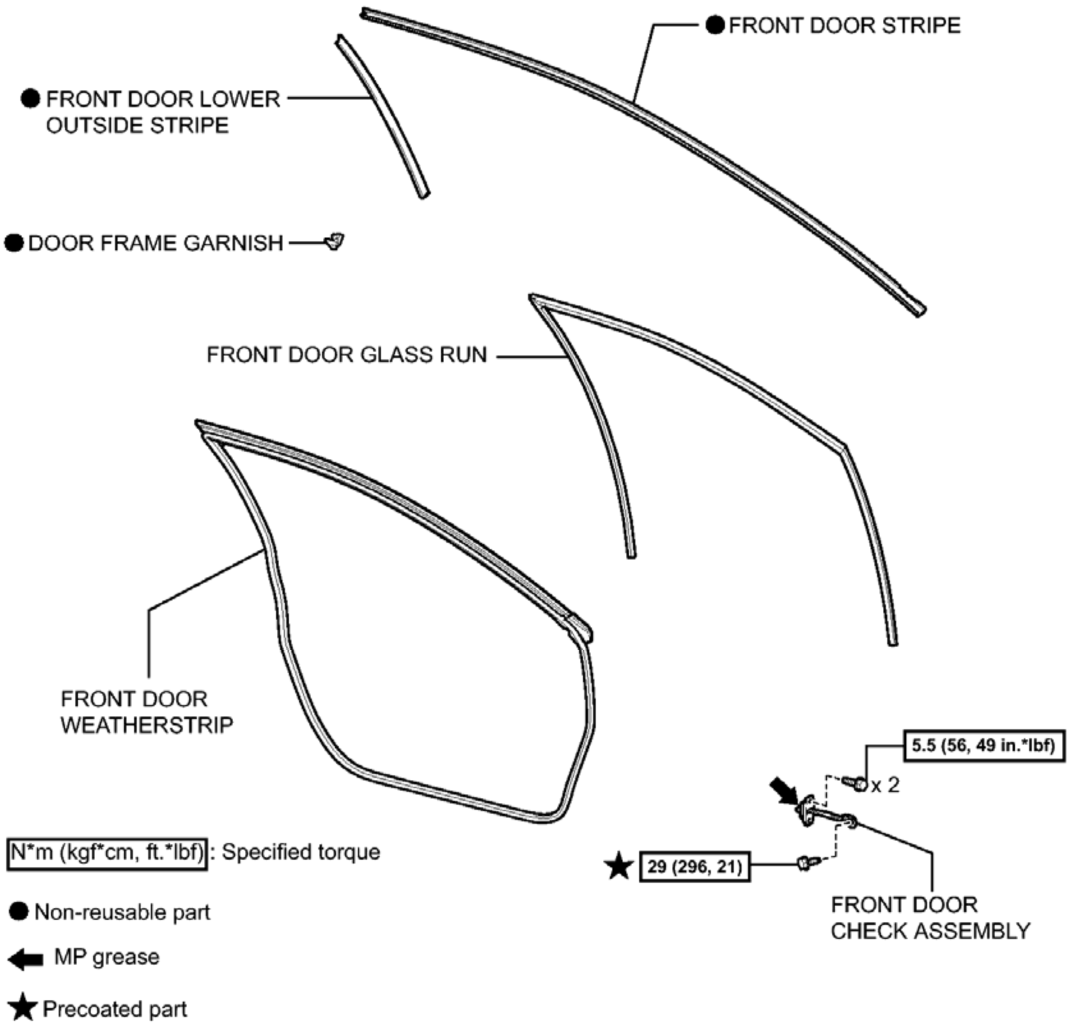
● FRONT DOOR STRIPE
● FRONT DOOR LOWER OUTSIDE STRIPE
● DOOR FRAME GARNISH
FRONT DOOR GLASS RUN
FRONT DOOR WEATHERSTRIP
5.5 (56, 49 in.*lbf)
x 2
★ 29 (296, 21)
FRONT DOOR CHECK ASSEMBLY
N*m (kgf*cm, ft.*lbf): Specified torque
● Non-reusable part
MP grease
★ Precoated part
P

Fig. 141: Identifying Black Out Tape (For Front Door) Replacement Components With Torque Specifications (3 Of 3)
Courtesy of TOYOTA MOTOR SALES, U.S.A., INC.

REMOVAL

REMOVAL

1. **PRECAUTION**

NOTE: **After turning the power switch off, waiting time may be required before disconnecting the cable from the negative (-) auxiliary battery terminal. Therefore, make sure to read the disconnecting the cable from the**

negative (-) auxiliary battery terminal notices before proceeding with work. Refer to PRECAUTION .

2. **REMOVE LUGGAGE TRIM SERVICE HOLE COVER** . Refer to **REMOVAL - Step 2**
3. **DISCONNECT CABLE FROM AUXILIARY BATTERY NEGATIVE TERMINAL**

WARNING: **Wait at least 90 seconds after disconnecting the cable from the negative (-) auxiliary battery terminal to disable the SRS system.**

NOTE: **When disconnecting the cable, some systems need to be initialized after the cable is reconnected. Refer to INITIALIZATION .**

4. **REMOVE OUTER REAR VIEW MIRROR ASSEMBLY**

   Refer to **REMOVAL**

5. **REMOVE DOOR SIDE AIRBAG SENSOR** . Refer to **REMOVAL - Step 11**
6. **REMOVE FRONT DOOR SERVICE HOLE COVER** . Refer to **DISASSEMBLY - Step 16**
7. **REMOVE FRONT DOOR GLASS SUB-ASSEMBLY** . Refer to **DISASSEMBLY - Step 17**
8. **REMOVE FRONT DOOR GLASS RUN** . Refer to **DISASSEMBLY - Step 17**
9. **REMOVE FRONT DOOR CHECK ASSEMBLY** . Refer to **DISASSEMBLY - Step 36**
10. **REMOVE FRONT DOOR WEATHERSTRIP** . Refer to **DISASSEMBLY - Step 37**
11. **REMOVE DOOR FRAME GARNISH** . Refer to **DISASSEMBLY - Step 38**
12. **REMOVE FRONT DOOR STRIPE**
    a. Using a heat light, heat the front door stripe and vehicle body.

HEATING TEMPERATURE

Item	Temperature
Vehicle Body and Front Door Outside Stripe	40 to 60°C (104 to 140° F)

NOTE: **Do not heat the vehicle body excessively.**

    b. Pull back on one of the ends of the front door stripe to remove it.

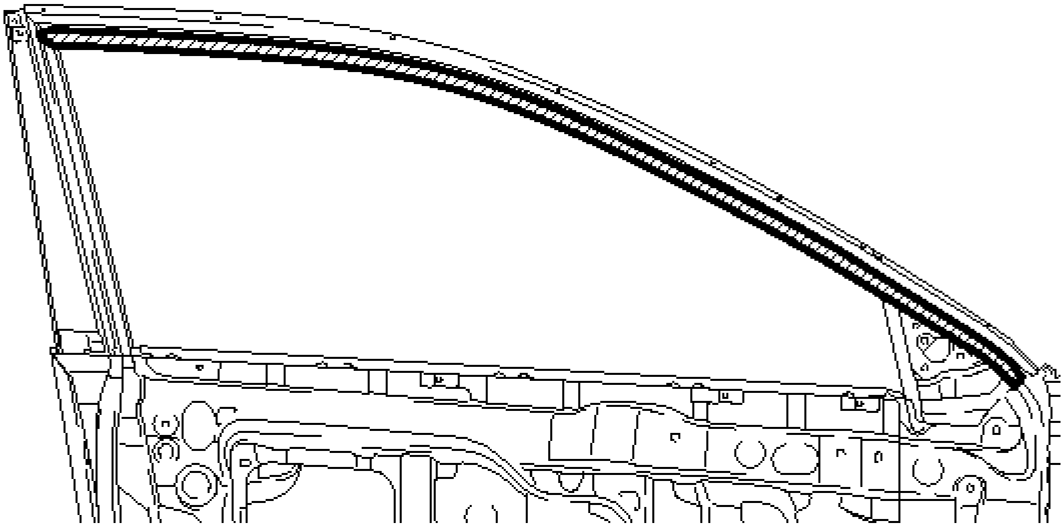

Fig. 142: Identifying Front Door Stripe
Courtesy of TOYOTA MOTOR SALES, U.S.A., INC.

HINT:

When pulling on the stripe, pull it parallel to the body.

13. **REMOVE FRONT DOOR LOWER OUTSIDE STRIPE**
    a. Using a heat light, heat the front door lower outside stripe and vehicle body.

HEATING TEMPERATURE

Item	Temperature
Vehicle Body and Front Door Rear Outside Stripe	40 to 60°C (104 to 140° F)

NOTE: **Do not heat the vehicle body excessively.**

    b. Pull back on one of the ends of the front door lower outside stripe to remove it.

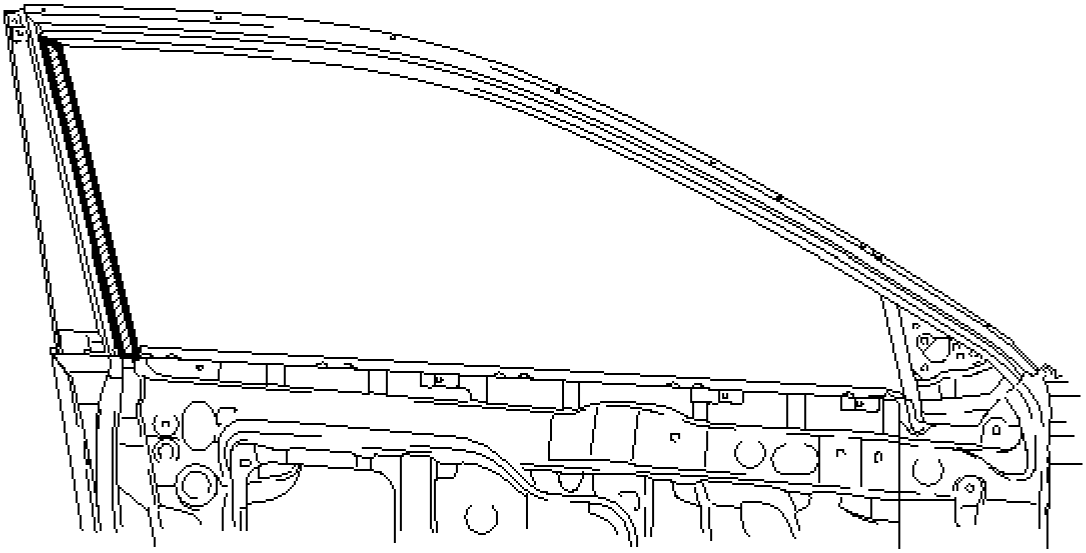

Fig. 143: Identifying Front Door Lower Outside Stripe
Courtesy of TOYOTA MOTOR SALES, U.S.A., INC.

HINT:

When pulling on the stripe, pull it parallel to the body.

INSTALLATION

INSTALLATION

1. **PRECAUTION**

NOTE: **After turning the power switch off, waiting time may be required before disconnecting the cable from the negative (-) auxiliary battery terminal. Therefore, make sure to read the disconnecting the cable from the negative (-) auxiliary battery terminal notices before proceeding with work. Refer to PRECAUTION .**

2. **REPAIR INSTRUCTION**
   a. Clean the vehicle body surface.
      1. Using a heat light, heat the vehicle body surface.

HEATING TEMPERATURE

Item	Temperature
Vehicle	40 to 60°C

Body	(104 to 140° F)

NOTE: **Do not heat the vehicle body excessively.**

2. Wipe off any tape adhesive residue with cleaner.

b. Installation temperature

   1. When the ambient temperature is below 15°C (59°F), perform the installation procedure after warming the vehicle body surface (installation surface of the door frame) and tape up to between 20 and 30°C (68 and 86°F) using a heat light. When the ambient temperature is above 35°C (95°F), cool the vehicle body surface (installation surface of the door frame) and tape down to between 20 and 30°C (68 and 86°F) prior to installation.

   HINT:

   - The most appropriate temperature for installing the tape is 25°C (77°F).
   - When the temperature is low, the tape turns stiff and comes off easily. When the temperature is high, the tape elasticity increases.

c. Before installation

   1. Remove any coating roughness or dirt on and around the vehicle body surface where the tape will be installed (installation surface of the door frame). If any roughness or dirt remains when pressing the tape onto the surface, air will be trapped under the tape and result in a poor appearance.

   HINT:

   Spray water on the shop floor to settle any dust.

d. Key points for handling the tape

   1. The tape bends and rolls up easily. Store the tape between flat pieces of cardboard or other similar objects and keep it dry and flat.

   NOTE: **Do not bend the tape or leave it in high temperature places.**

e. Key points for installation of the tape (how to use a squeegee and installation procedure for flat surfaces)

NOTE:

- **Position the tape accurately to achieve a neat finish and to avoid peeling.**
- **The tape cannot be reused because it deforms and will not fit any more after being removed.**

   1. To avoid air bubbles, slightly raise the part of the tape that is going to be applied so that its adhesive surface does not touch the vehicle body while applying the tape. Tilt the squeegee at

40 to 50° (pressing forward) or 30 to 45° (pulling) to the vehicle body surface and press the tape onto the vehicle body surface with a force of 20 to 30 N (2 to 3 kgf, 4.5 to 6.7 lbf) at a constant slow speed of 30 to 70 mm (1.18 to 2.76 in.) per second.

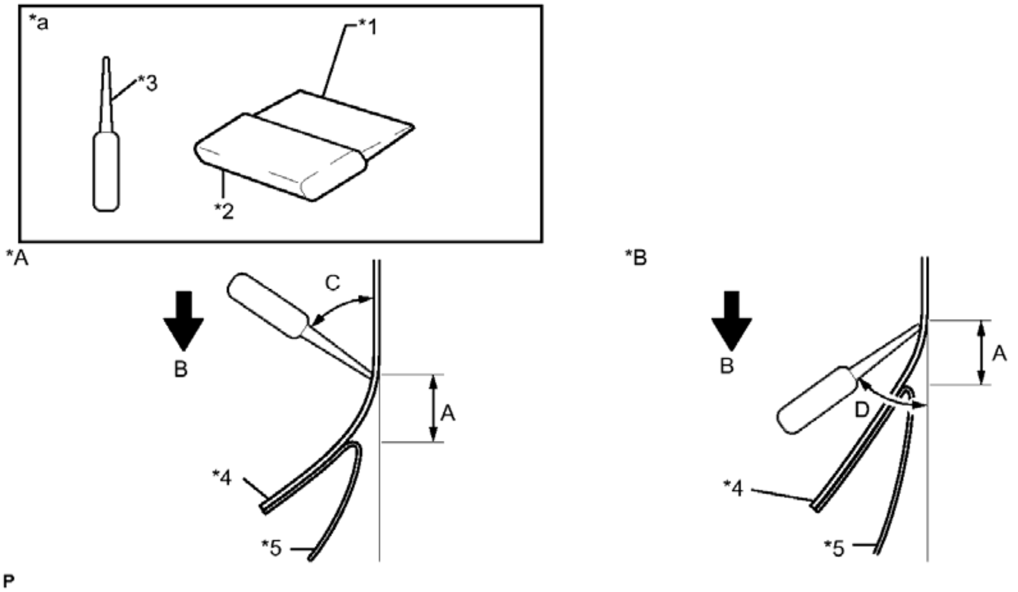

Fig. 144: Slightly Raise The Part Of The Tape
Courtesy of TOYOTA MOTOR SALES, U.S.A., INC.

TEXT IN ILLUSTRATION

*A	Pressing Forward	*B	Pulling
*1	Non-padded Side	*2	Padded Side
*3	Squeegee	*4	Black Out Tape
*5	Release Paper	-	-
*a	Side View	-	-

REFERENCE MEASUREMENT

Area	Measurement
A	10 to 20 mm (0.393 to 0.787 in.)
B	30 to 70 mm/sec. (1.18 to 2.76

	in./sec.)
C	40 to 50° (for pressing forward)
D	30 to 45° (for pulling)

NOTE: **Be sure to observe the specified pressing speed, force and angle of the squeegee to avoid wrinkles or air bubbles.**

HINT:

- Either angle of the squeegee (pressing forward or pulling) is acceptable.
- Be sure to apply the tape while removing the release paper 10 to 20 mm (0.394 to 0.787 in.) from the edge of the squeegee.

f. Key points for installation of the tape (how to use a squeegee and installation procedure for hemmed surfaces)
   1. If it is difficult to apply the tape, install it in several steps as shown in the illustration. Use your fingers or the padded surface of a squeegee to slowly apply the tape to the hem of the vehicle, especially for a small hem.

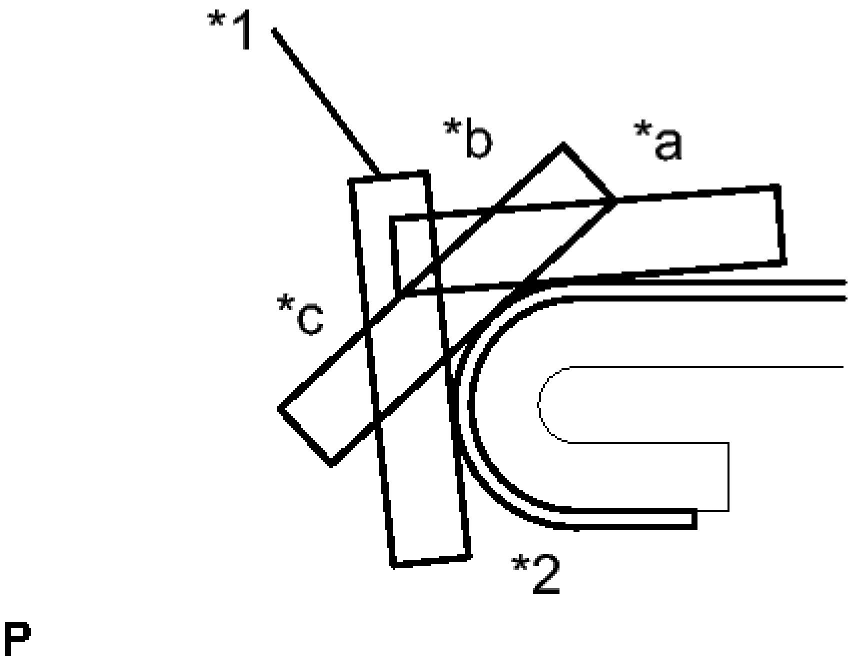

Fig. 145: Difficult To Apply The Tape, Install It In Several Steps
Courtesy of TOYOTA MOTOR SALES, U.S.A., INC.

TEXT IN ILLUSTRATION

*1	Squeegee
*2	Hem
*a	First
*b	Second
*c	Third

HINT:

When applying tape to the backside of a hem, remove the release paper and use your fingers or the padded surface of a squeegee.

g. Key points for installation of the tape (how to use a squeegee and installation procedure for corners)
    1. Remove the release paper and apply the tape carefully with your fingers.
    2. Before applying the tape to each corner, heat the tape using a heat light and gradually apply it, avoiding wrinkles on the tape to achieve a neat finish.

h. Check after installation
    1. After completing the application, check if the tape is applied neatly. If the tape is not applied neatly, reapply using new tape.

NOTE: **Do not reuse the tape.**

3. **INSTALL FRONT DOOR LOWER OUTSIDE STRIPE**

a. Refer to the illustration to position the front door lower outside stripe.

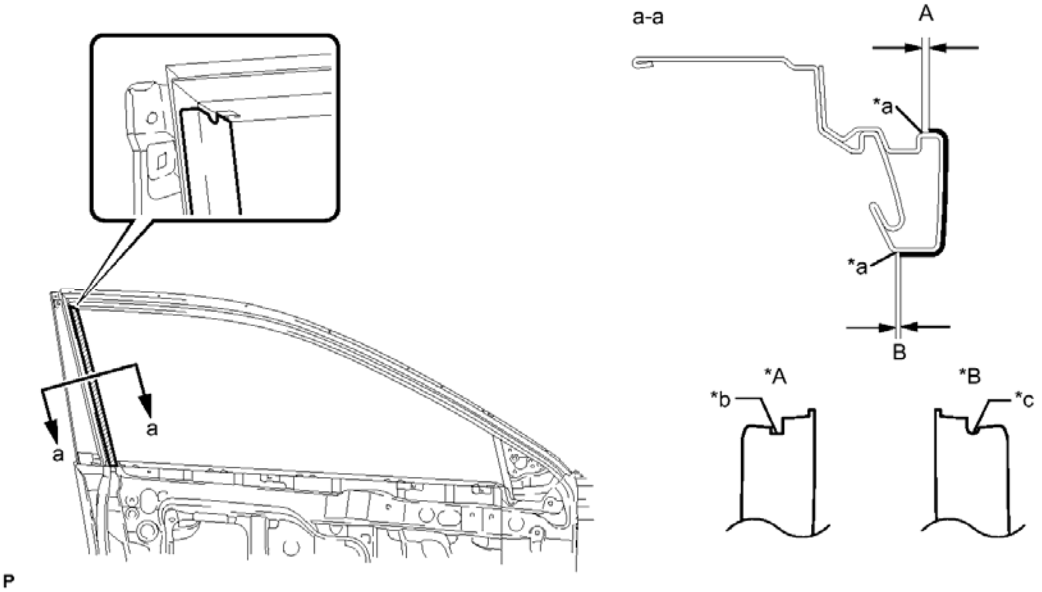

Fig. 146: Installing Front Door Lower Outside Stripe
Courtesy of TOYOTA MOTOR SALES, U.S.A., INC.

TEXT IN ILLUSTRATION

*A	LH Side	*B	RH Side
*a	Edge of Curved Surface	*b	Square
*c	Round	-	-

STANDARD MEASUREMENT

Dimension	Measurement
A	1.5 mm (0.0591 in.)
B	1.0 mm (0.0394 in.)

b. Remove the release paper and apply the stripe.

4. **INSTALL FRONT DOOR STRIPE**

   a. Refer to the illustration to position a new front door stripe.

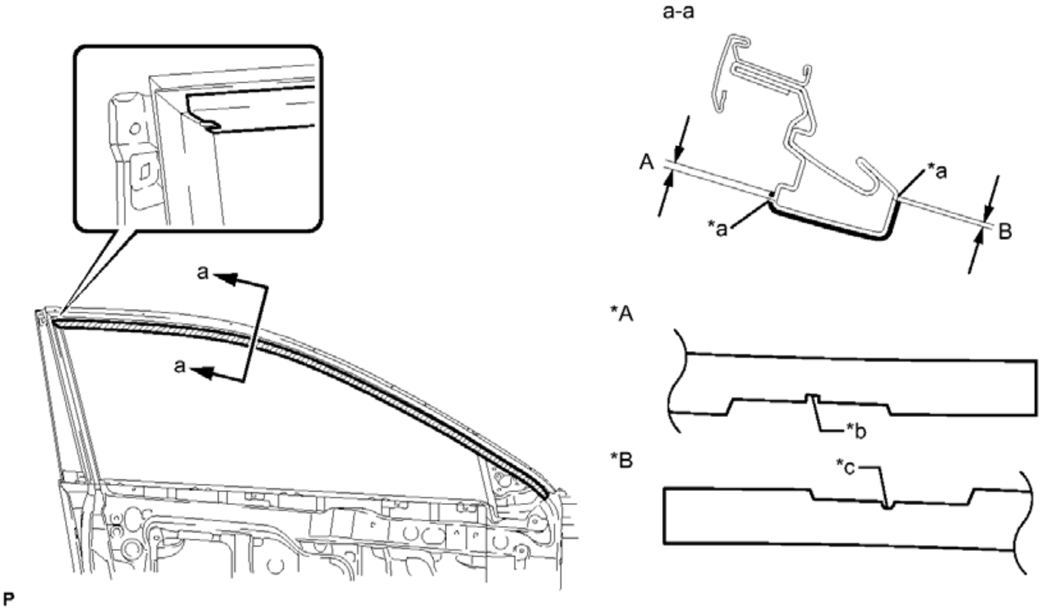

Fig. 147: Installing Front Door Stripe
Courtesy of TOYOTA MOTOR SALES, U.S.A., INC.

TEXT IN ILLUSTRATION

*A	LH Side	*B	RH Side
*a	Edge of	*b	Square

	Curved Surface		
*c	Round	-	-

STANDARD MEASUREMENT

Dimension	Measurement
A	1.5 mm (0.0591 in.)
B	1.0 mm (0.0394 in.)

b. Remove the release paper and apply the stripe.

5. **INSTALL DOOR FRAME GARNISH** . Refer to **REASSEMBLY - Step 11**
6. **INSTALL FRONT DOOR WEATHERSTRIP** . Refer to **REASSEMBLY - Step 12**
7. **INSTALL FRONT DOOR CHECK ASSEMBLY** . Refer to **REASSEMBLY - Step 13**
8. **INSTALL FRONT DOOR GLASS RUN** . Refer to **REASSEMBLY - Step 28**
9. **INSTALL FRONT DOOR GLASS SUB-ASSEMBLY** . Refer to **REASSEMBLY - Step 32**
10. **INSTALL FRONT DOOR SERVICE HOLE COVER** . Refer to **REASSEMBLY - Step 33**
11. **INSTALL DOOR SIDE AIRBAG SENSOR** . Refer to **INSTALLATION - Step 1**
12. **INSTALL OUTER REAR VIEW MIRROR ASSEMBLY**

    Refer to **INSTALLATION**

13. **CONNECT CABLE TO AUXILIARY BATTERY NEGATIVE TERMINAL**

    NOTE: **When disconnecting the cable, some systems need to be initialized after the cable is reconnected. Refer to INITIALIZATION .**

14. **INSTALL LUGGAGE TRIM SERVICE HOLE COVER** . Refer to **INSTALLATION - Step 3**
15. **INITIALIZE POWER WINDOW CONTROL SYSTEM (for Driver Side)**

    Refer to **INITIALIZATION**

16. **INSPECT POWER WINDOW OPERATION**

    Refer to **OPERATION CHECK**

17. **INSPECT SRS WARNING LIGHT**

    for Separate Type Yaw Rate Sensor: Refer to **DIAGNOSIS SYSTEM**

    for Built-in Type Yaw Rate Sensor: Refer to **DIAGNOSIS SYSTEM**

BLACK OUT TAPE (FOR REAR DOOR)

COMPONENTS

ILLUSTRATION

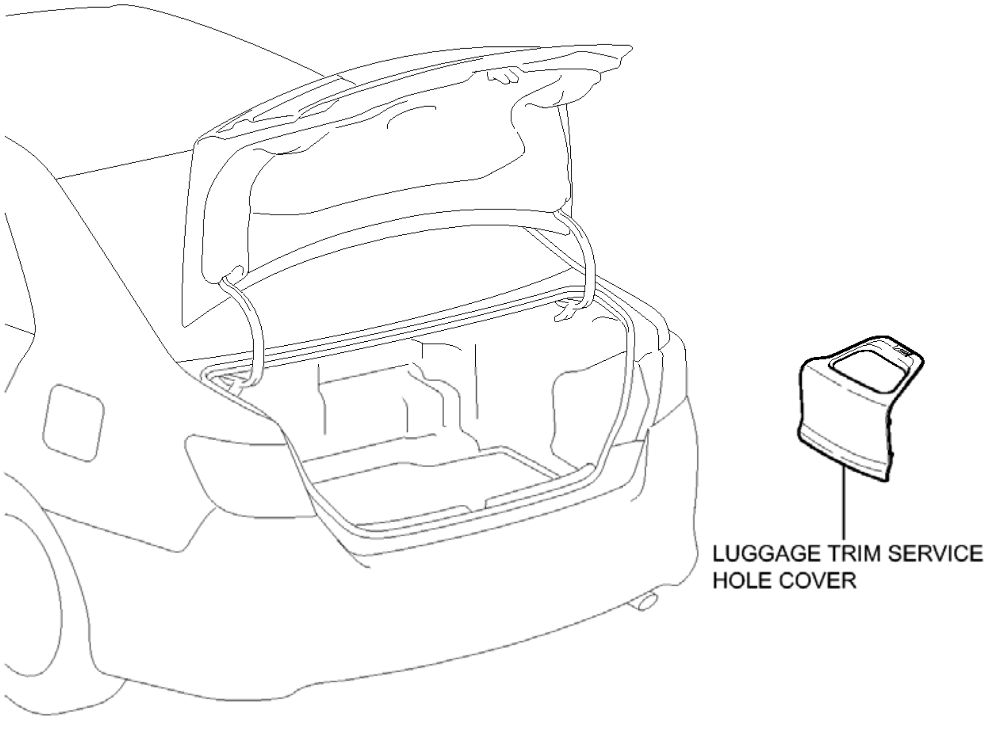
LUGGAGE TRIM SERVICE HOLE COVER
P

Fig. 148: Identifying Black Out Tape (For Rear Door) Replacement Components (1 Of 4)
Courtesy of TOYOTA MOTOR SALES, U.S.A., INC.

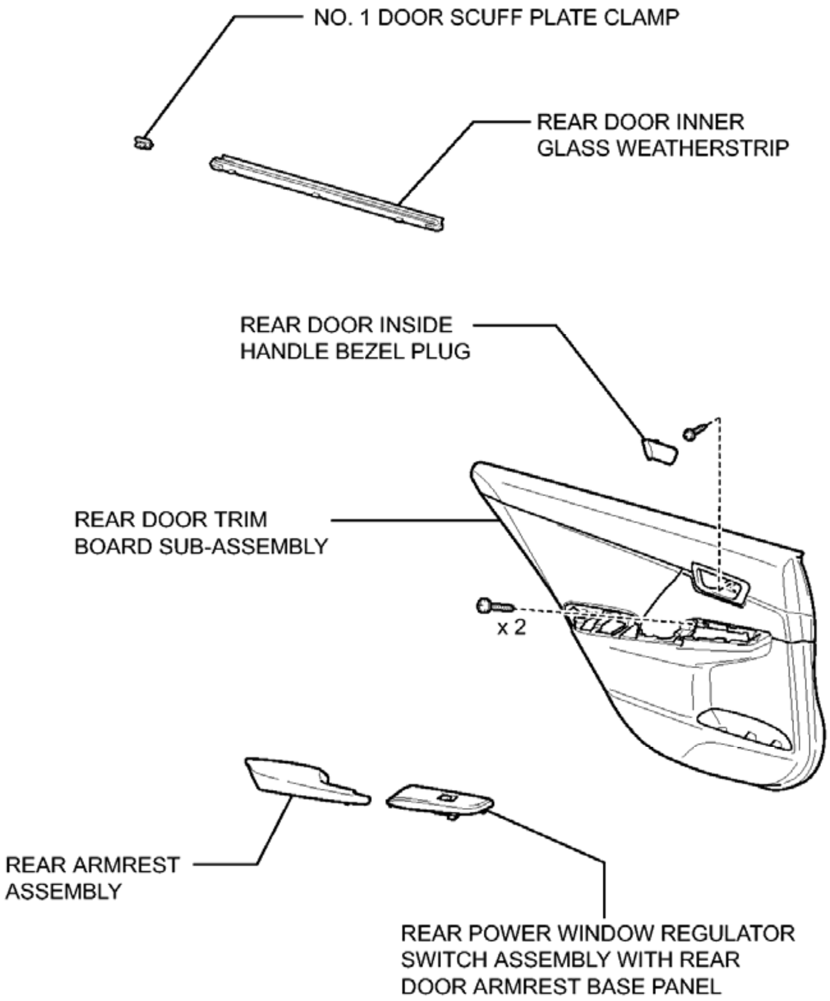
NO. 1 DOOR SCUFF PLATE CLAMP
REAR DOOR INNER GLASS WEATHERSTRIP
REAR DOOR INSIDE HANDLE BEZEL PLUG
REAR DOOR TRIM BOARD SUB-ASSEMBLY
x 2
REAR ARMREST ASSEMBLY
REAR POWER WINDOW REGULATOR SWITCH ASSEMBLY WITH REAR DOOR ARMREST BASE PANEL

P

Fig. 149: Identifying Black Out Tape (For Rear Door) Replacement Components (2 Of 4)
Courtesy of TOYOTA MOTOR SALES, U.S.A., INC.

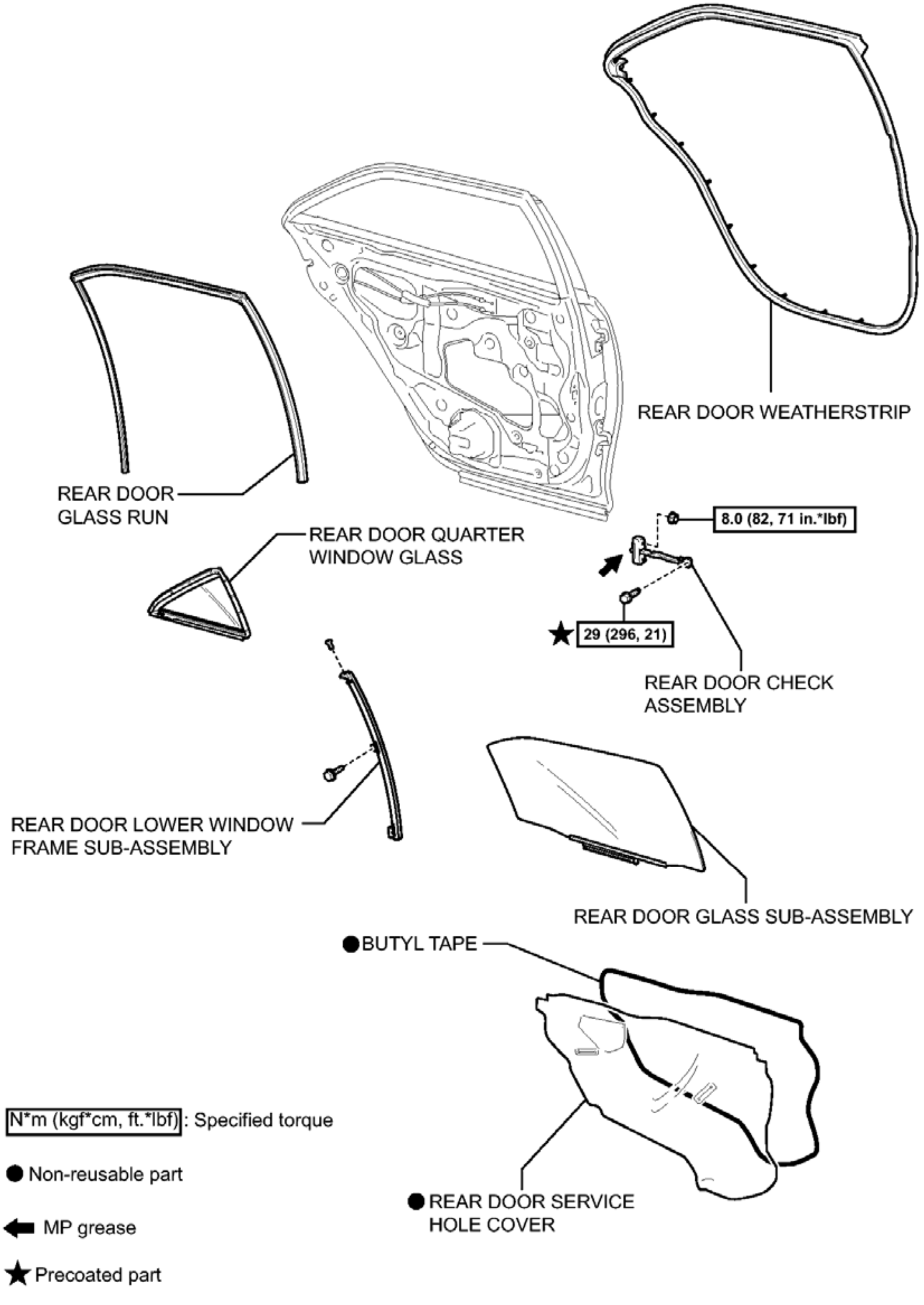
REAR DOOR WEATHERSTRIP
REAR DOOR GLASS RUN
8.0 (82, 71 in.*lbf)
REAR DOOR QUARTER WINDOW GLASS
★ 29 (296, 21)
REAR DOOR CHECK ASSEMBLY
REAR DOOR LOWER WINDOW FRAME SUB-ASSEMBLY
REAR DOOR GLASS SUB-ASSEMBLY
● BUTYL TAPE
● REAR DOOR SERVICE HOLE COVER
N*m (kgf*cm, ft.*lbf) : Specified torque
● Non-reusable part
⬅ MP grease
★ Precoated part
P

Fig. 150: Identifying Black Out Tape (For Rear Door) Replacement Components With Torque Specifications (3 Of 4)

Courtesy of TOYOTA MOTOR SALES, U.S.A., INC.

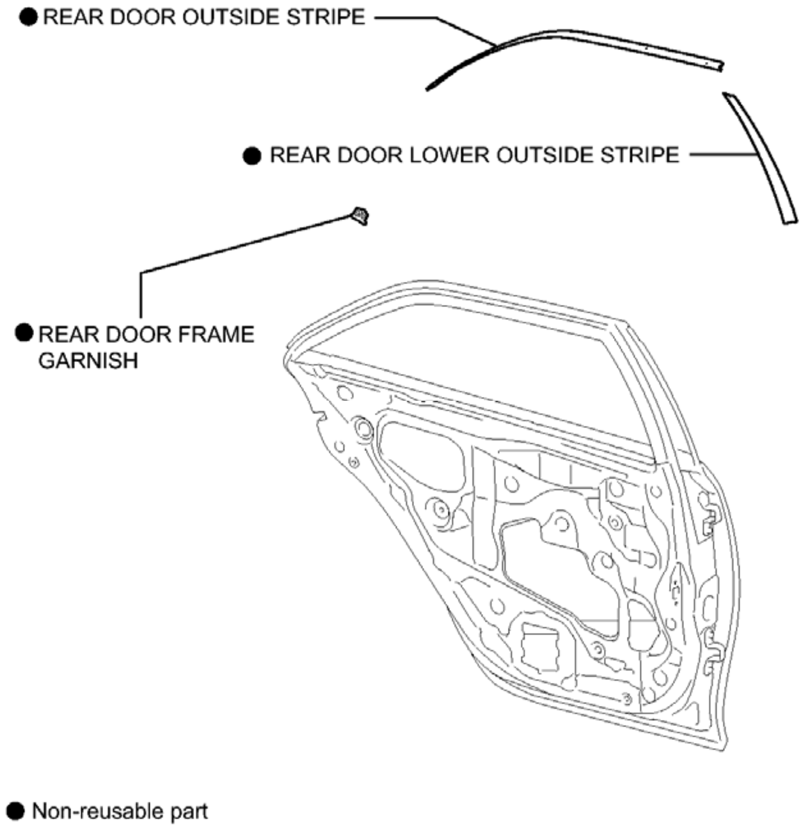
● REAR DOOR OUTSIDE STRIPE
● REAR DOOR LOWER OUTSIDE STRIPE
● REAR DOOR FRAME GARNISH
● Non-reusable part
P

Fig. 151: Identifying Black Out Tape (For Rear Door) Replacement Components (4 Of 4)
Courtesy of TOYOTA MOTOR SALES, U.S.A., INC.

REMOVAL

REMOVAL

1. **PRECAUTION**

   NOTE: **After turning the power switch off, waiting time may be required before disconnecting the cable from the negative (-) auxiliary battery terminal. Therefore, make sure to read the disconnecting the cable from the negative (-) auxiliary battery terminal notices before proceeding with work. Refer to PRECAUTION .**

2. **REMOVE LUGGAGE TRIM SERVICE HOLE COVER** . Refer to **REMOVAL - Step 2**
3. **DISCONNECT CABLE FROM AUXILIARY BATTERY NEGATIVE TERMINAL**

   NOTE: **When disconnecting the cable, some systems need to be initialized after the cable is reconnected. Refer to INITIALIZATION .**

4. **REMOVE REAR DOOR INSIDE HANDLE BEZEL PLUG** . Refer to **DISASSEMBLY - Step 4**
5. **REMOVE REAR POWER WINDOW REGULATOR SWITCH ASSEMBLY WITH REAR DOOR ARMREST BASE PANEL** . Refer to **DISASSEMBLY - Step 5**
6. **REMOVE REAR ARMREST ASSEMBLY** . Refer to **DISASSEMBLY - Step 6**
7. **REMOVE REAR DOOR TRIM BOARD SUB-ASSEMBLY** . Refer to **DISASSEMBLY - Step 7**
8. **REMOVE REAR DOOR INNER GLASS WEATHERSTRIP** . Refer to **DISASSEMBLY - Step 9**
9. **REMOVE REAR DOOR SERVICE HOLE COVER** . Refer to **DISASSEMBLY - Step 10**
10. **REMOVE REAR DOOR CHECK ASSEMBLY** . Refer to **DISASSEMBLY - Step 11**
11. **REMOVE REAR DOOR WEATHERSTRIP** . Refer to **DISASSEMBLY - Step 12**
12. **REMOVE REAR DOOR GLASS RUN** . Refer to **DISASSEMBLY - Step 13**
13. **REMOVE REAR DOOR LOWER WINDOW FRAME SUB-ASSEMBLY** . Refer to **DISASSEMBLY - Step 14**
14. **REMOVE REAR DOOR QUARTER WINDOW GLASS** . Refer to **DISASSEMBLY - Step 15**
15. **REMOVE REAR DOOR GLASS SUB-ASSEMBLY** . Refer to **DISASSEMBLY - Step 16**
16. **REMOVE REAR DOOR FRAME GARNISH** . Refer to **DISASSEMBLY - Step 17**
17. **REMOVE REAR DOOR OUTSIDE STRIPE**
    a. Using a heat light, heat the rear door outside stripe and vehicle body.

    HEATING TEMPERATURE

Item	Temperature
Vehicle Body and Rear Door Outside Stripe	40 to 60°C (104 to 140° F)

    NOTE: **Do not heat the vehicle body excessively.**

    b. Pull back on one of the ends of the rear door outside stripe to remove it.

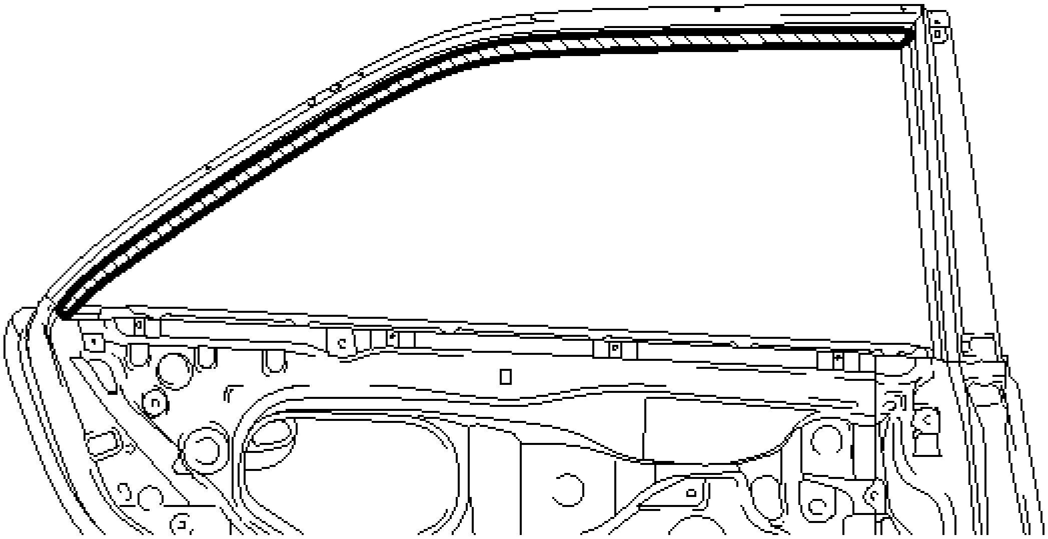

Fig. 152: Identifying Rear Door Outside Stripe
Courtesy of TOYOTA MOTOR SALES, U.S.A., INC.

HINT:

When pulling on the stripe, pull it parallel to the body.

18. **REMOVE REAR DOOR LOWER OUTSIDE STRIPE**
    a. Using a heat light, heat the rear door lower outside stripe and vehicle body.

HEATING TEMPERATURE

Item	Temperature
Vehicle Body and Rear Door Lower Outside Stripe	40 to 60°C (104 to 140°F)

NOTE: **Do not heat the vehicle body excessively.**

b. Pull back on one of the ends of the rear door lower outside stripe to remove it.

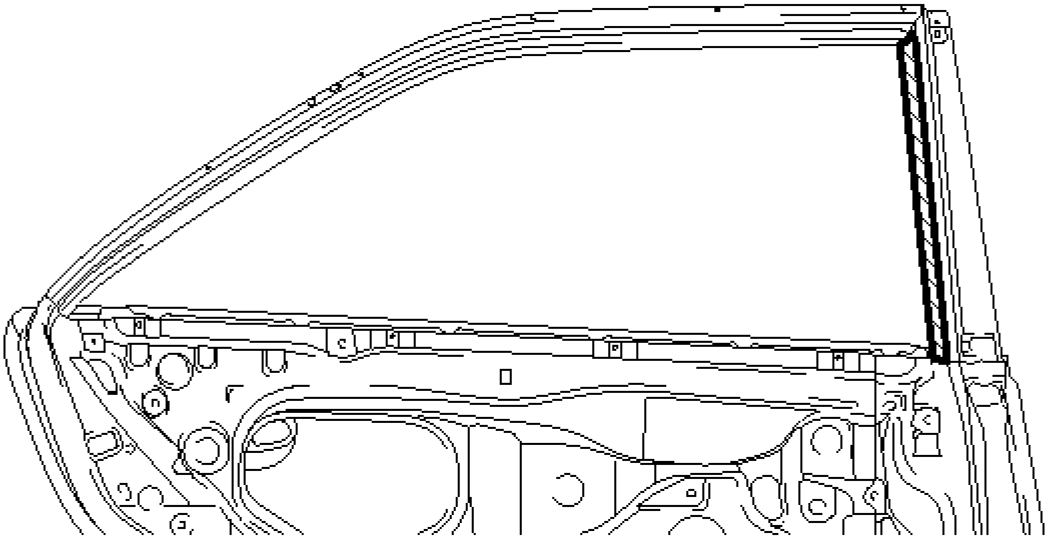

P

Fig. 153: Identifying Rear Door Lower Outside Stripe
Courtesy of TOYOTA MOTOR SALES, U.S.A., INC.

HINT:

When pulling on the stripe, pull it parallel to the body.

INSTALLATION

INSTALLATION

1. **REPAIR INSTRUCTION** See step 2
2. **INSTALL REAR DOOR LOWER OUTSIDE STRIPE**
    a. Refer to the illustration to position a new rear door lower outside stripe.

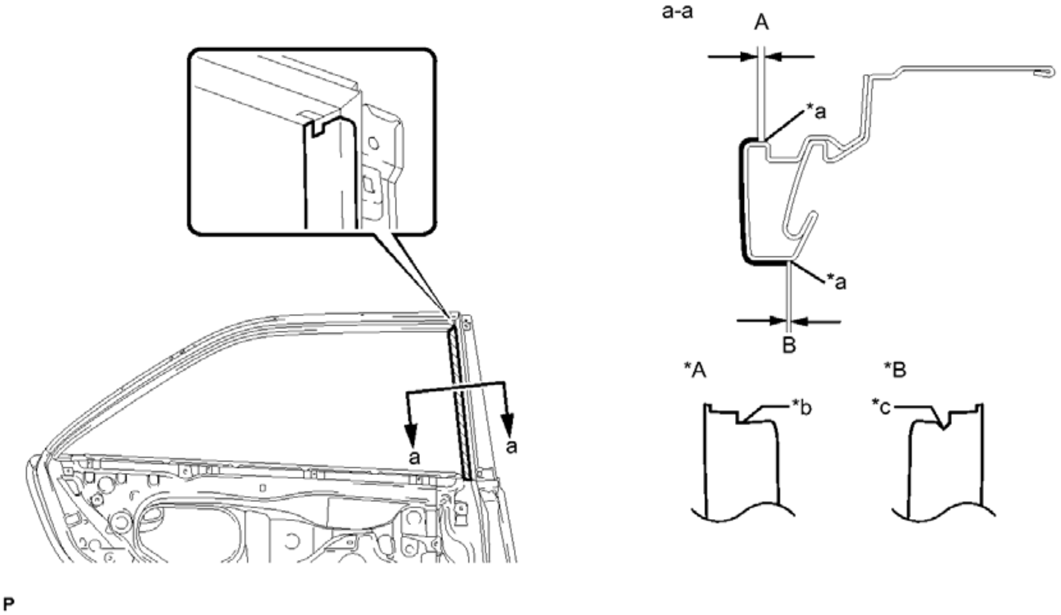

Fig. 154: Installing Rear Door Lower Outside Stripe
Courtesy of TOYOTA MOTOR SALES, U.S.A., INC.

TEXT IN ILLUSTRATION

*A	LH Side	*B	RH Side
*a	Edge of Curved Surface	*b	Straight
*c	Triangle	-	-

STANDARD MEASUREMENT

Dimension	Measurement
A	1.5 mm (0.0591 in.)
B	1.0 mm (0.0394 in.)

b. Remove the release paper and apply the stripe.

3. **INSTALL REAR DOOR OUTSIDE STRIPE**

   a. Refer to the illustration to position a new rear door outside stripe.

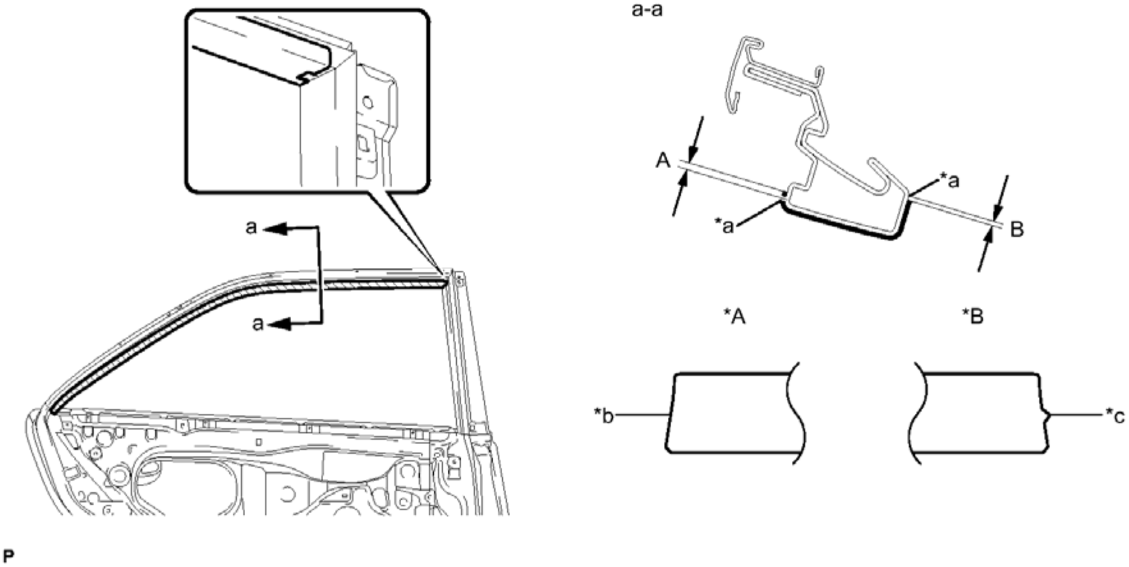

Fig. 155: Installing Rear Door Outside Stripe
Courtesy of TOYOTA MOTOR SALES, U.S.A., INC.

TEXT IN ILLUSTRATION

*A	LH Side	*B	RH Side
*a	Edge of Curved Surface	*b	Straight
*c	Triangle	-	-

STANDARD MEASUREMENT

Dimension	Measurement
A	1.5 mm (0.0591 in.)
B	1.0 mm (0.0394 in.)

b. Remove the release paper and apply the stripe.

4. **INSTALL REAR DOOR FRAME GARNISH** . Refer to **REASSEMBLY - Step 20**
5. **INSTALL REAR DOOR GLASS SUB-ASSEMBLY** . Refer to **REASSEMBLY - Step 21**
6. **INSTALL REAR DOOR QUARTER WINDOW GLASS** . Refer to **REASSEMBLY - Step 22**
7. **INSTALL REAR DOOR LOWER WINDOW FRAME SUB-ASSEMBLY** . Refer to **REASSEMBLY - Step 23**
8. **INSTALL REAR DOOR GLASS RUN** . Refer to **REASSEMBLY - Step 24**
9. **INSTALL REAR DOOR WEATHERSTRIP** . Refer to **REASSEMBLY - Step 25**
10. **INSTALL REAR DOOR CHECK ASSEMBLY** . Refer to **REASSEMBLY - Step 26**
11. **INSTALL REAR DOOR SERVICE HOLE COVER** . Refer to **REASSEMBLY - Step 27**

12. **INSTALL REAR DOOR INNER GLASS WEATHERSTRIP** . Refer to **REASSEMBLY - Step 28**
13. **INSTALL REAR DOOR TRIM BOARD SUB-ASSEMBLY** . Refer to **REASSEMBLY - Step 30**
14. **INSTALL REAR ARMREST ASSEMBLY** . Refer to **REASSEMBLY - Step 31**
15. **INSTALL REAR POWER WINDOW REGULATOR SWITCH ASSEMBLY WITH REAR DOOR ARMREST BASE PANEL** . Refer to **REASSEMBLY - Step 32**
16. **INSTALL REAR DOOR INSIDE HANDLE BEZEL PLUG** . Refer to **REASSEMBLY - Step 33**
17. **CONNECT CABLE TO AUXILIARY BATTERY NEGATIVE TERMINAL**

    NOTE: **When disconnecting the cable, some systems need to be initialized after the cable is reconnected. Refer to INITIALIZATION .**

18. **INSTALL LUGGAGE TRIM SERVICE HOLE COVER** . Refer to **INSTALLATION - Step 3**
19. **INSPECT POWER WINDOW OPERATION**

    Refer to **OPERATION CHECK**

FRONT BUMPER

COMPONENTS

ILLUSTRATION

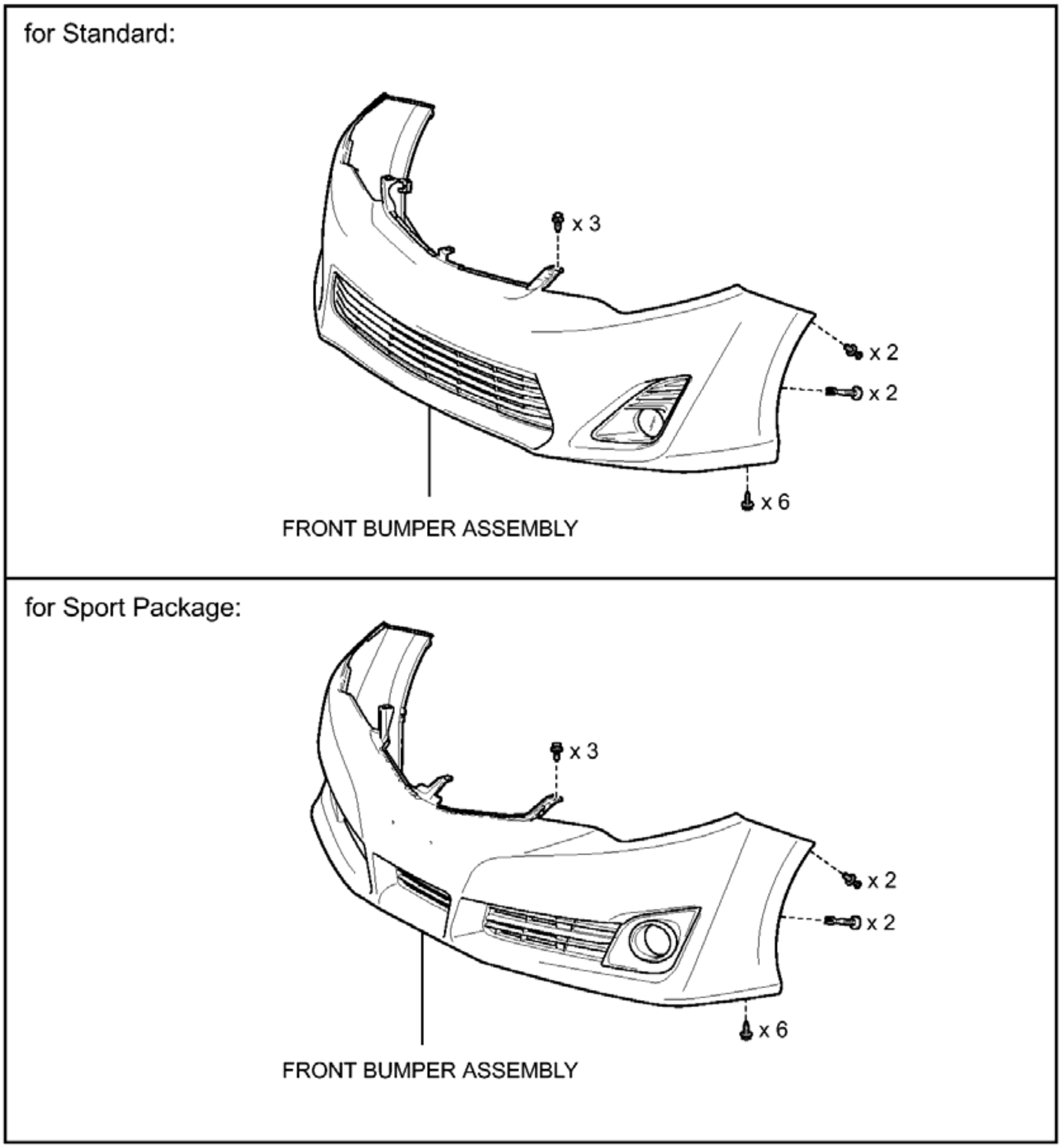
for Standard:
x 3
x 2
x 2
x 6
FRONT BUMPER ASSEMBLY
for Sport Package:
x 3
x 2
x 2
x 6
FRONT BUMPER ASSEMBLY

P

Fig. 1: Identifying Front Bumper Replacement Components (1 Of 5)
Courtesy of TOYOTA MOTOR SALES, U.S.A., INC.

ILLUSTRATION

w/ Intuitive Parking Assist System:

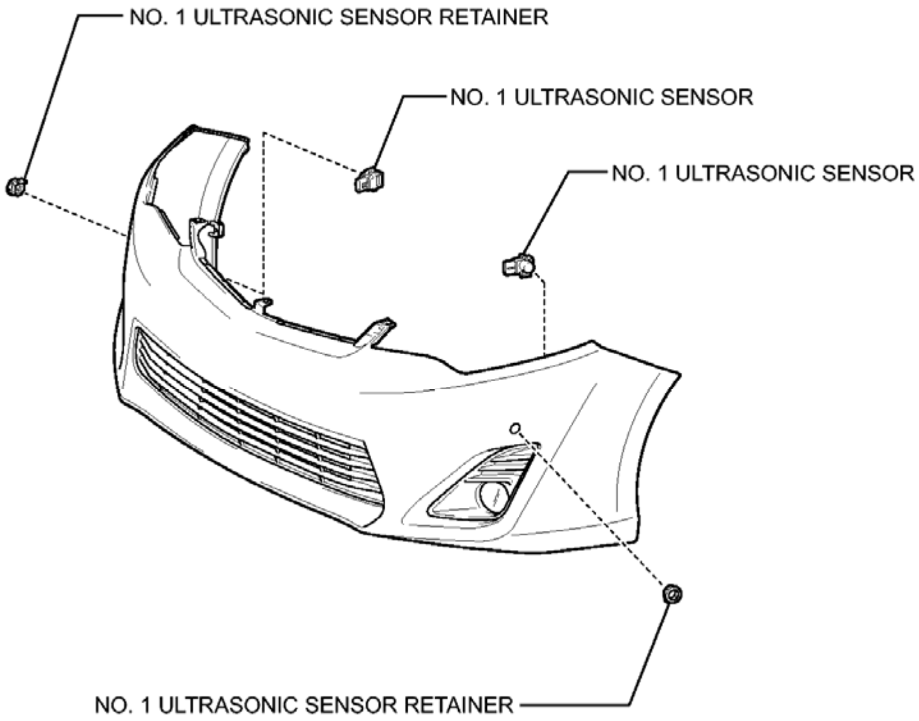
NO. 1 ULTRASONIC SENSOR RETAINER
NO. 1 ULTRASONIC SENSOR
NO. 1 ULTRASONIC SENSOR
NO. 1 ULTRASONIC SENSOR RETAINER
P

Fig. 2: Identifying Front Bumper Replacement Components (2 Of 5)
Courtesy of TOYOTA MOTOR SALES, U.S.A., INC.

ILLUSTRATION

for Standard:

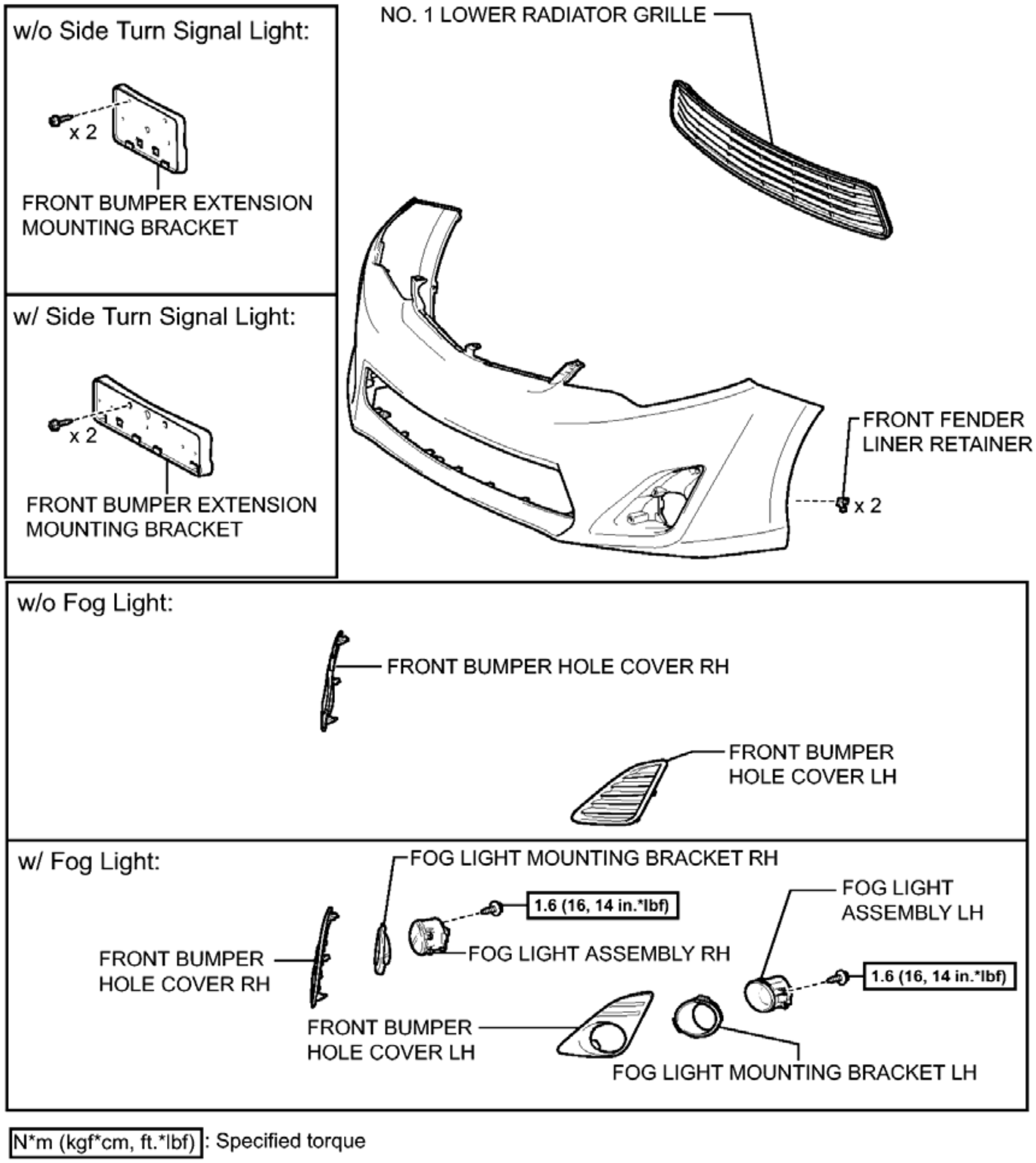
w/o Side Turn Signal Light:
x 2
FRONT BUMPER EXTENSION MOUNTING BRACKET
w/ Side Turn Signal Light:
x 2
FRONT BUMPER EXTENSION MOUNTING BRACKET
NO. 1 LOWER RADIATOR GRILLE
FRONT FENDER LINER RETAINER
x 2
w/o Fog Light:
FRONT BUMPER HOLE COVER RH
FRONT BUMPER HOLE COVER LH
w/ Fog Light:
FOG LIGHT MOUNTING BRACKET RH
1.6 (16, 14 in.*lbf)
FRONT BUMPER HOLE COVER RH
FOG LIGHT ASSEMBLY RH
FOG LIGHT ASSEMBLY LH
1.6 (16, 14 in.*lbf)
FRONT BUMPER HOLE COVER LH
FOG LIGHT MOUNTING BRACKET LH
N*m (kgf*cm, ft.*lbf) : Specified torque

P

Fig. 3: Identifying Front Bumper Replacement Components With Torque Specifications (3 Of 5)
Courtesy of TOYOTA MOTOR SALES, U.S.A., INC.

ILLUSTRATION

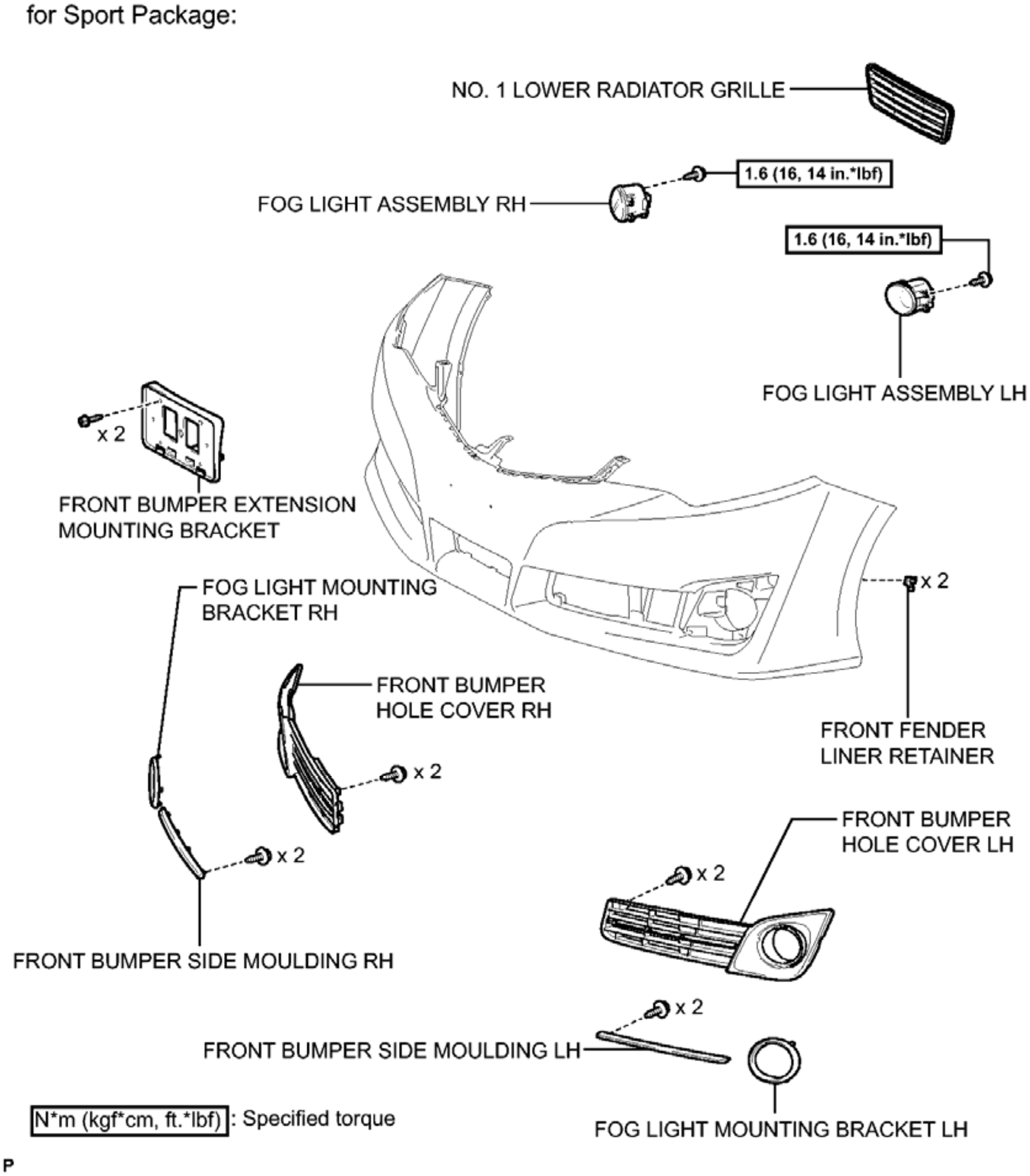
for Sport Package:
NO. 1 LOWER RADIATOR GRILLE
1.6 (16, 14 in.*lbf)
FOG LIGHT ASSEMBLY RH
1.6 (16, 14 in.*lbf)
FOG LIGHT ASSEMBLY LH
x 2
FRONT BUMPER EXTENSION MOUNTING BRACKET
FOG LIGHT MOUNTING BRACKET RH
x 2
FRONT BUMPER HOLE COVER RH
FRONT FENDER LINER RETAINER
x 2
x 2
FRONT BUMPER HOLE COVER LH
x 2
FRONT BUMPER SIDE MOULDING RH
x 2
FRONT BUMPER SIDE MOULDING LH
N*m (kgf*cm, ft.*lbf) : Specified torque
FOG LIGHT MOUNTING BRACKET LH
P

Fig. 4: Identifying Front Bumper Replacement Components With Torque Specifications (4 Of 5)
Courtesy of TOYOTA MOTOR SALES, U.S.A., INC.

ILLUSTRATION

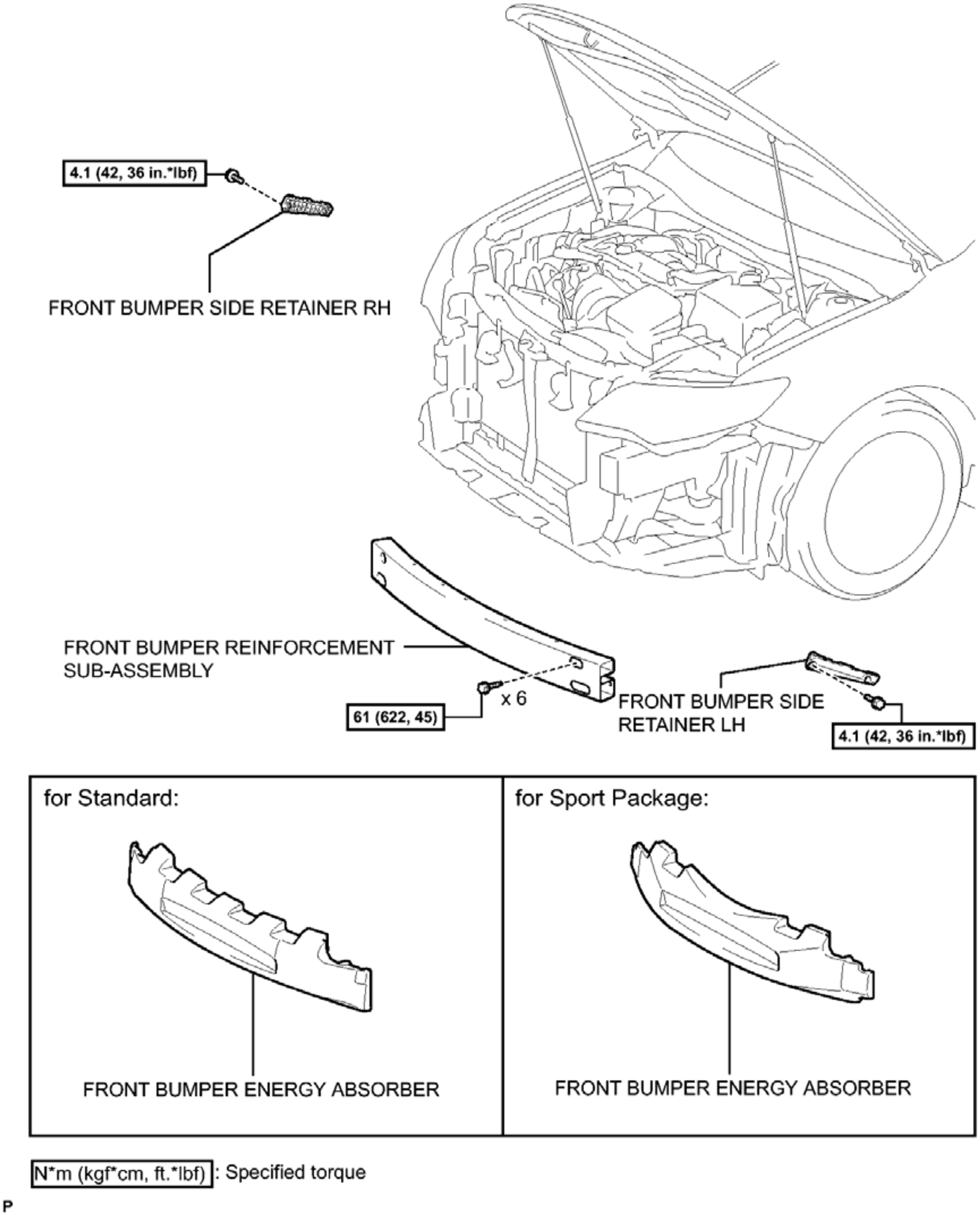
4.1 (42, 36 in.*lbf)
FRONT BUMPER SIDE RETAINER RH
FRONT BUMPER REINFORCEMENT SUB-ASSEMBLY
x 6
61 (622, 45)
FRONT BUMPER SIDE RETAINER LH
4.1 (42, 36 in.*lbf)
for Standard:
FRONT BUMPER ENERGY ABSORBER
for Sport Package:
FRONT BUMPER ENERGY ABSORBER
N*m (kgf*cm, ft.*lbf) : Specified torque
P

Fig. 5: Identifying Front Bumper Replacement Components With Torque Specifications (5 Of 5)
Courtesy of TOYOTA MOTOR SALES, U.S.A., INC.

REMOVAL

REMOVAL

1. **REMOVE RADIATOR GRILLE SUB-ASSEMBLY**

Refer to **REMOVAL**.

2. **REMOVE FRONT BUMPER ASSEMBLY**
    a. Put protective tape around the front bumper assembly.

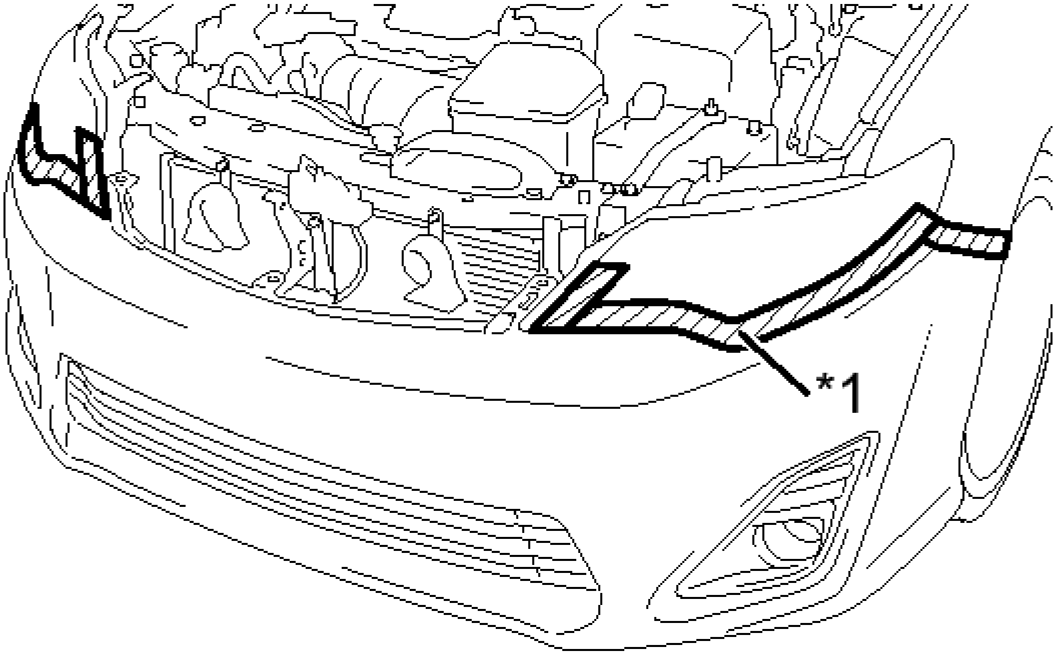

Fig. 6: Identifying Protective Tape On Front Bumper Assembly
Courtesy of TOYOTA MOTOR SALES, U.S.A., INC.

TEXT IN ILLUSTRATION

*1	Protective Tape

HINT:

Use the same procedure for the RH side and LH side.

    b. Using a screwdriver, turn the pins 90 degrees and remove the pin hold clip.

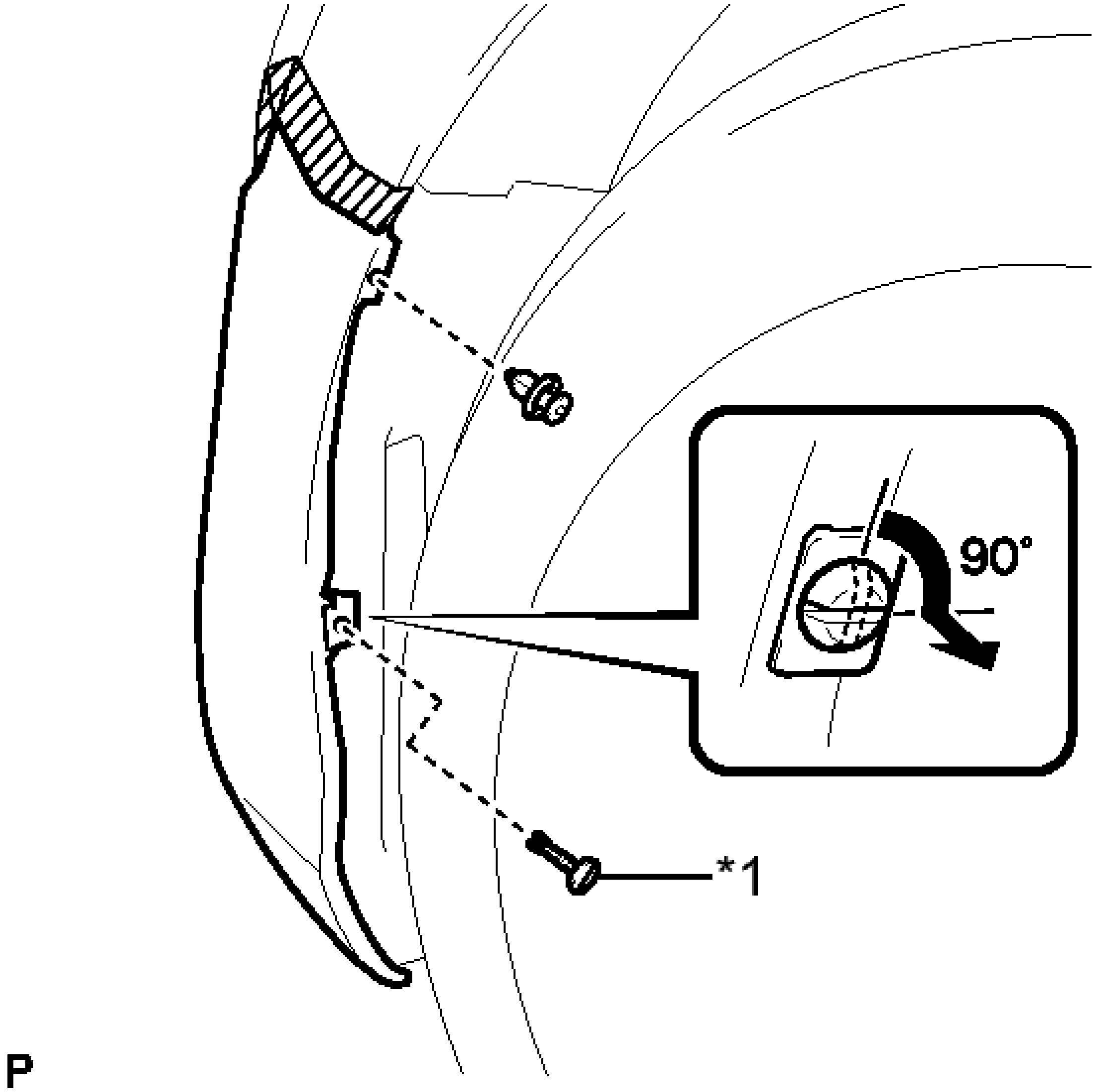

Fig. 7: Removing Front Bumper Assembly Pin Holding Clip
Courtesy of TOYOTA MOTOR SALES, U.S.A., INC.

TEXT IN ILLUSTRATION

*1	Pin Hold Clip

HINT:

Use the same procedure for the RH side and LH side.

c. Remove the clip.

HINT:

Use the same procedure for the RH side and LH side.

d. Remove the 6 screws.

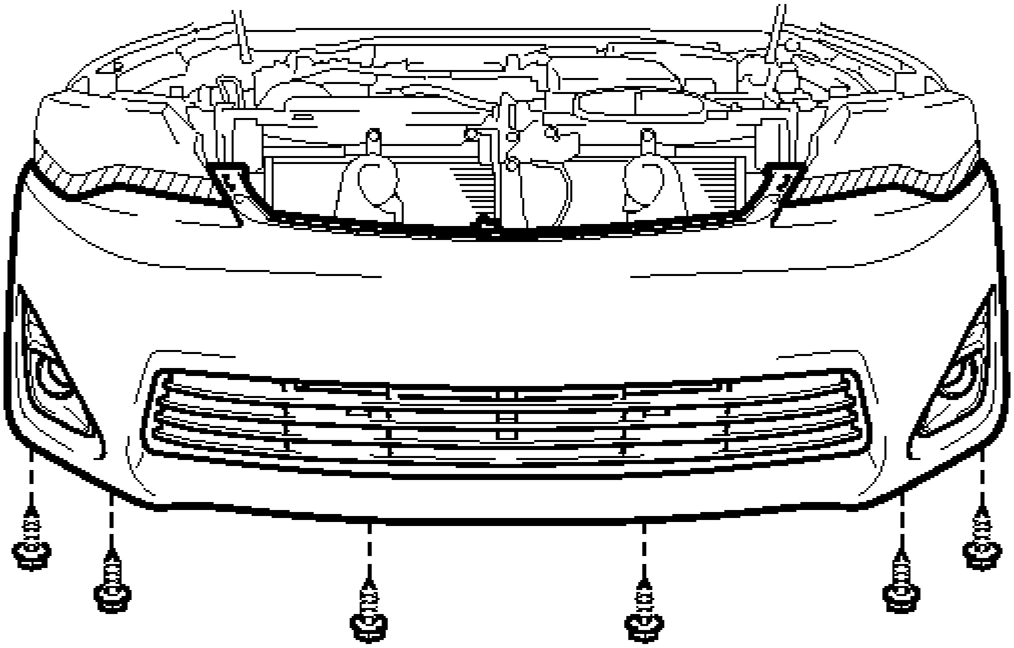

Fig. 8: Identifying Front Bumper Assembly Lower Fasteners
Courtesy of TOYOTA MOTOR SALES, U.S.A., INC.

e. Disengage the 3 claws.

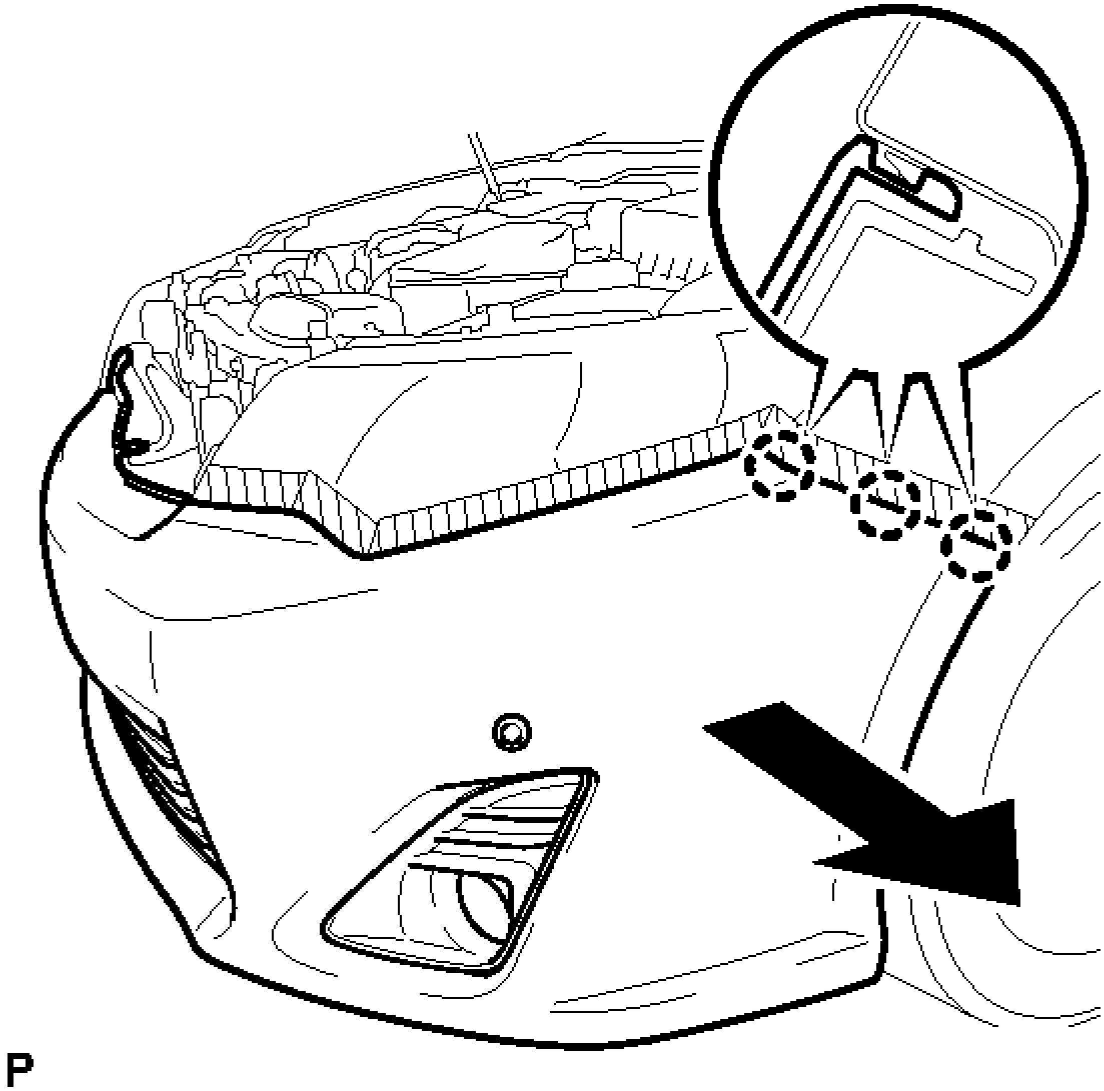

Fig. 9: Disengaging Front Bumper Assembly Claws
Courtesy of TOYOTA MOTOR SALES, U.S.A., INC.

HINT:

Use the same procedure for the RH side and LH side.

f. Pull back the side of the front bumper assembly as shown in the illustration and disconnect each connector.

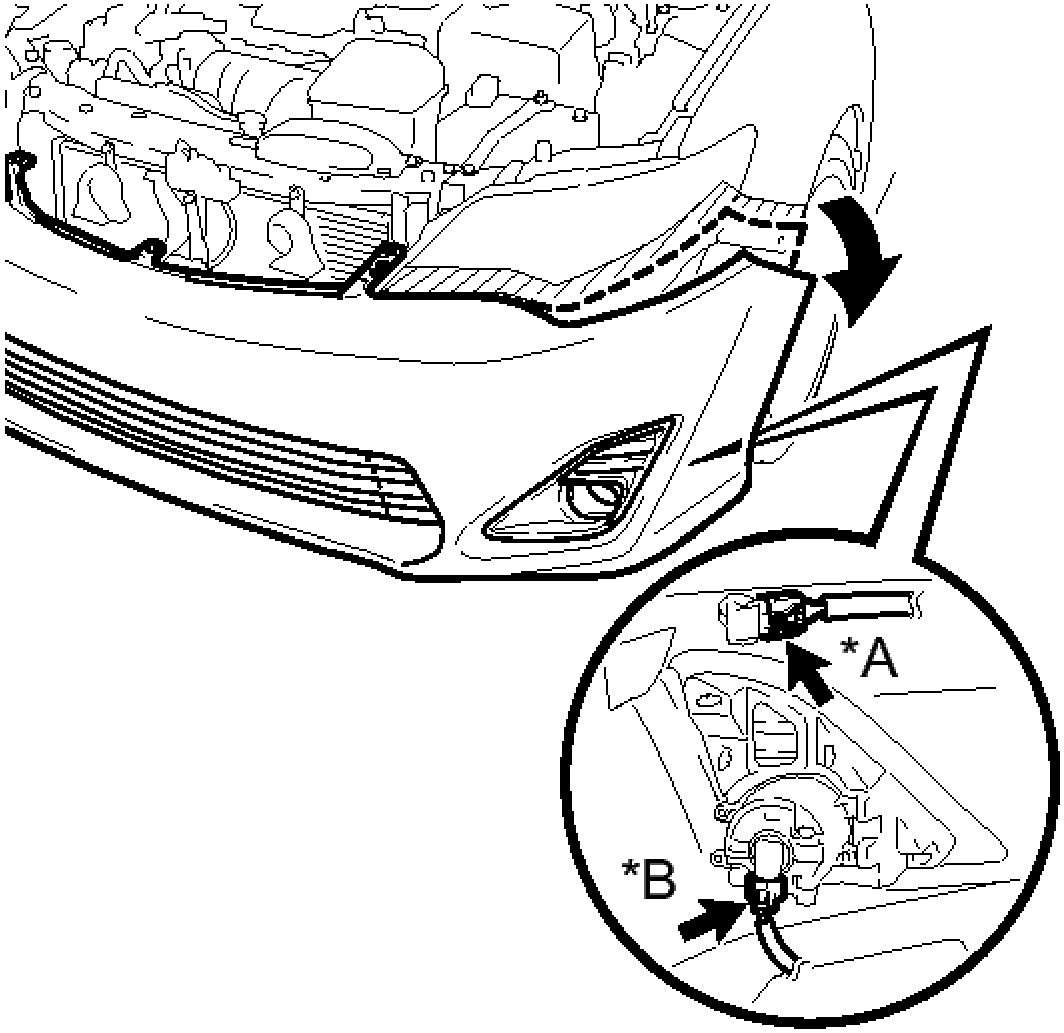

P

Fig. 10: Pulling Back Side Of Front Bumper Assembly
Courtesy of TOYOTA MOTOR SALES, U.S.A., INC.

TEXT IN ILLUSTRATION

*A	w/ Intuitive Parking Assist System
*B	w/ Fog Light

NOTE: Do not apply excessive force when separating the front bumper assembly.

HINT:

Use the same procedure for the RH side and LH side.

g. Using a clip remover, remove the 3 clips.

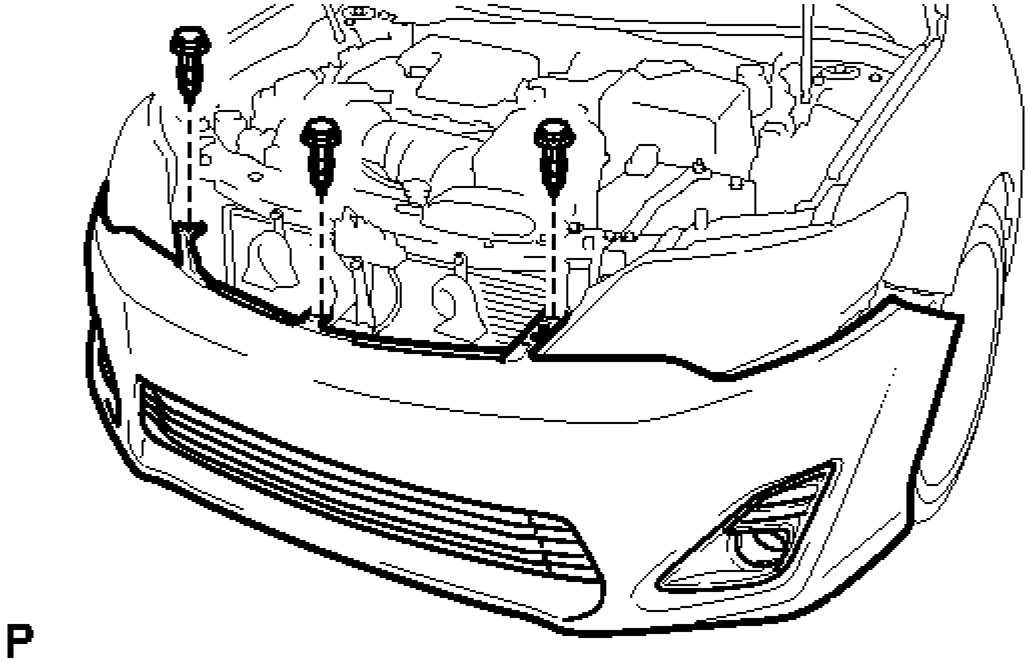

Fig. 11: Identifying Front Bumper Assembly Upper Fasteners
Courtesy of TOYOTA MOTOR SALES, U.S.A., INC.

h. Remove the front bumper assembly.

DISASSEMBLY

DISASSEMBLY

1. **REMOVE NO. 1 ULTRASONIC SENSOR (w/ Intuitive Parking Assist System)** . Refer to **REMOVAL - Step 2** .
2. **REMOVE NO. 1 ULTRASONIC SENSOR RETAINER (w/ Intuitive Parking Assist System)** . Refer to **REMOVAL - Step 3** .
3. **REMOVE FOG LIGHT ASSEMBLY LH (w/ Fog Light)** . Refer to **REMOVAL - Step 2** .
4. **REMOVE FOG LIGHT ASSEMBLY RH (w/ Fog Light)**

   HINT:

   Use the same procedure as for the LH side.

5. **REMOVE FRONT BUMPER EXTENSION MOUNTING BRACKET (for Standard)**
   a. w/o Side Turn Signal Light:

1. Remove the 2 screws.

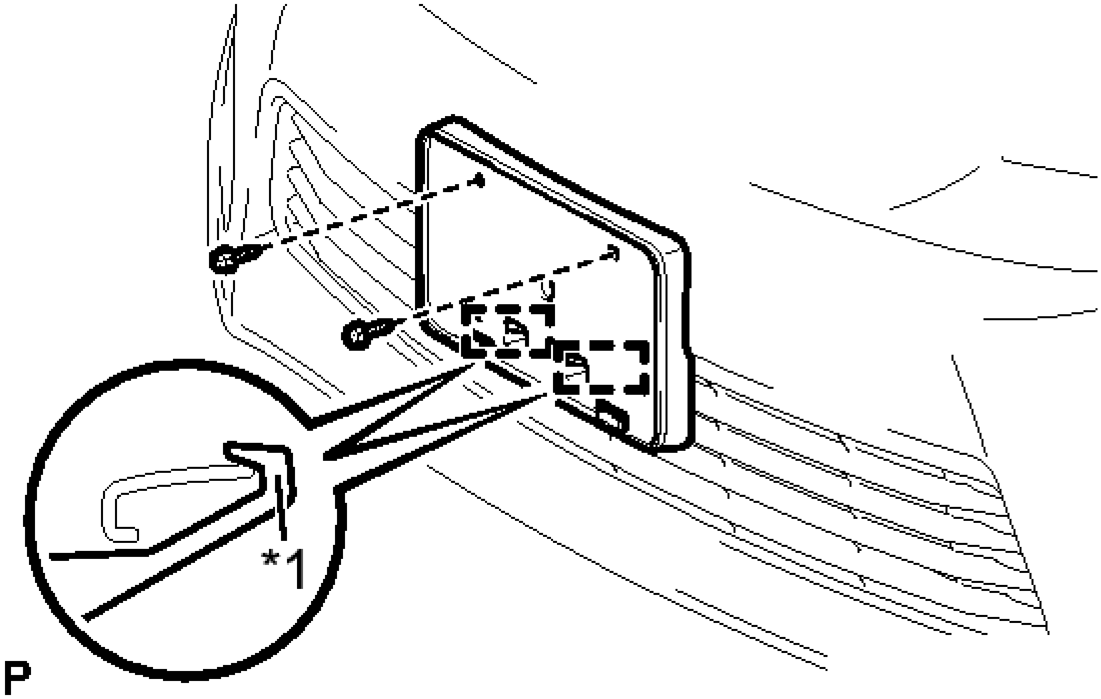

Fig. 12: Identifying Front Bumper Extension Mounting Bracket (For Standard) w/o Side Turn Signal Light
Courtesy of TOYOTA MOTOR SALES, U.S.A., INC.

TEXT IN ILLUSTRATION

*1	Hook

2. Disengage the 2 hooks and remove the front bumper extension mounting bracket.

b. w/ Side Turn Signal Light:

1. Remove the 2 screws.

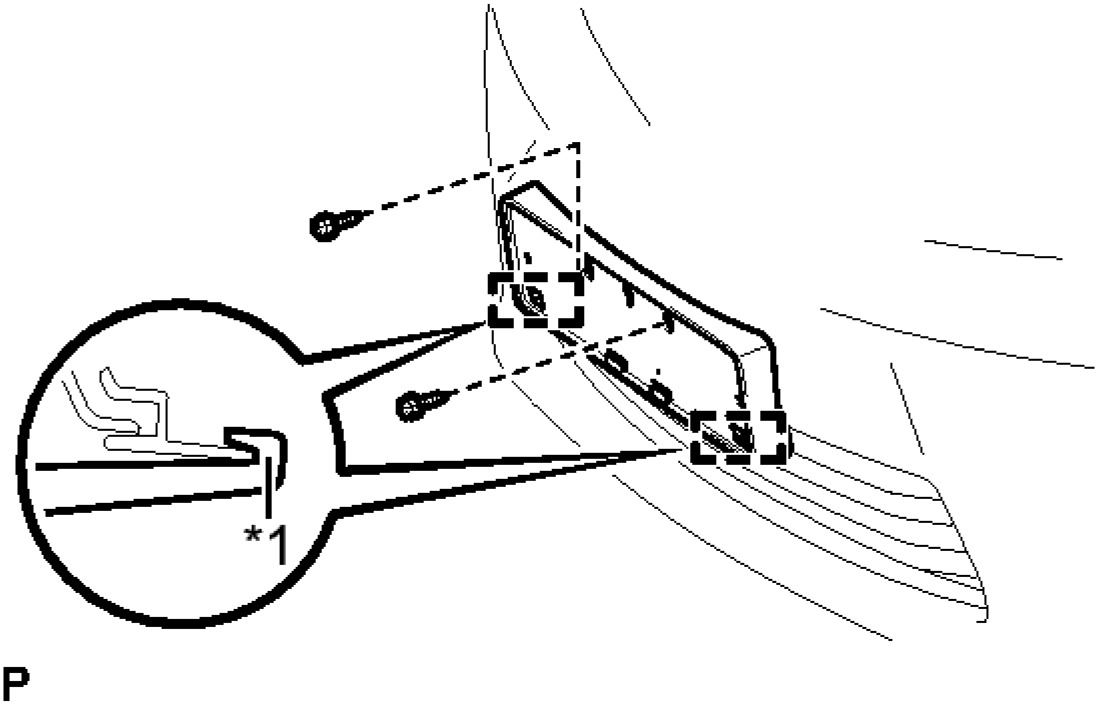

Fig. 13: Identifying Front Bumper Extension Mounting Bracket (For Standard) w/ Side Turn Signal Light
Courtesy of TOYOTA MOTOR SALES, U.S.A., INC.

TEXT IN ILLUSTRATION

*1	Hook

2. Disengage the 2 hooks and remove the front bumper extension mounting bracket.

6. **REMOVE FRONT BUMPER EXTENSION MOUNTING BRACKET (for Sport Package)**
   a. Remove the 2 screws.

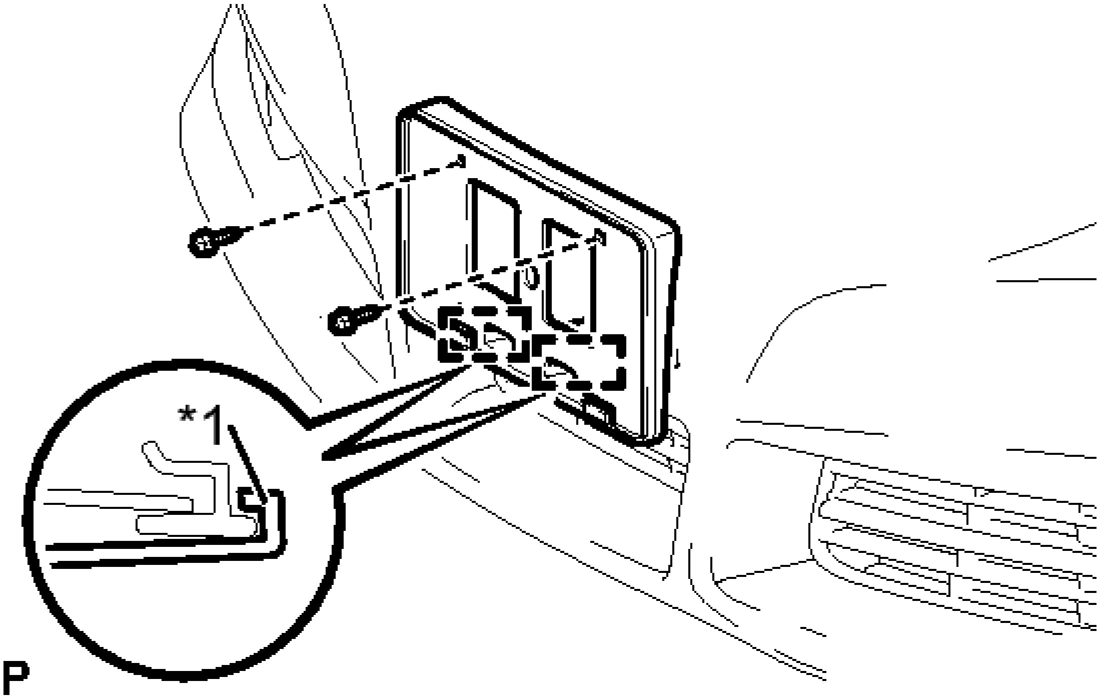

Fig. 14: Identifying Front Bumper Extension Mounting Bracket (For Sport Package)
Courtesy of TOYOTA MOTOR SALES, U.S.A., INC.

TEXT IN ILLUSTRATION

*1	Hook

b. Disengage the 2 hooks and remove the front bumper extension mounting bracket.

7. **REMOVE FRONT FENDER LINER RETAINER**
    a. Disengage the claw and remove the front fender liner retainer.

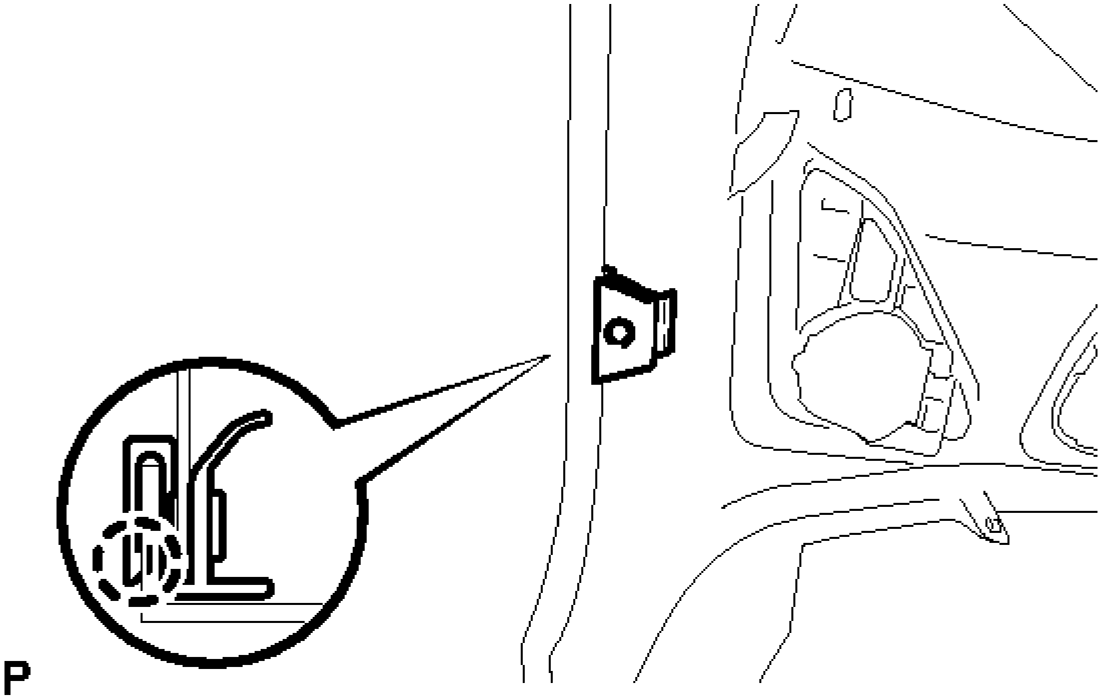

Fig. 15: Identifying Front Fender Liner Retainer
Courtesy of TOYOTA MOTOR SALES, U.S.A., INC.

HINT:

Use the same procedure for the RH side and LH side.

8. **REMOVE FRONT BUMPER HOLE COVER LH (for Standard)**
    a. Disengage the 5 claws and remove the front bumper hole cover LH.

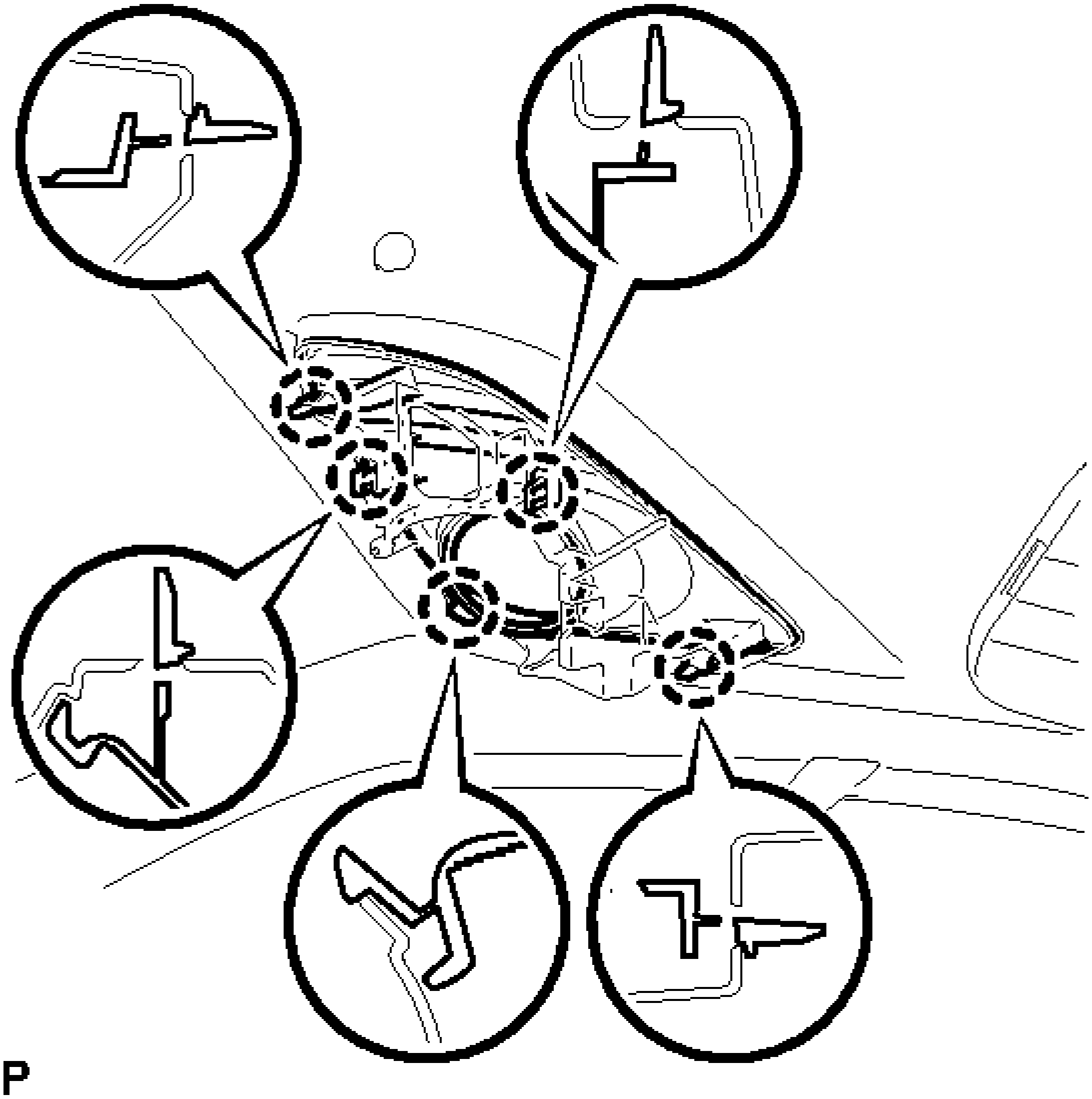

Fig. 16: Identifying Front Bumper Hole Cover LH (For Standard) Fasteners
Courtesy of TOYOTA MOTOR SALES, U.S.A., INC.

b. w/ Fog Light:
   1. Disengage the 2 claws and 2 guides, and remove the fog light mounting bracket LH.

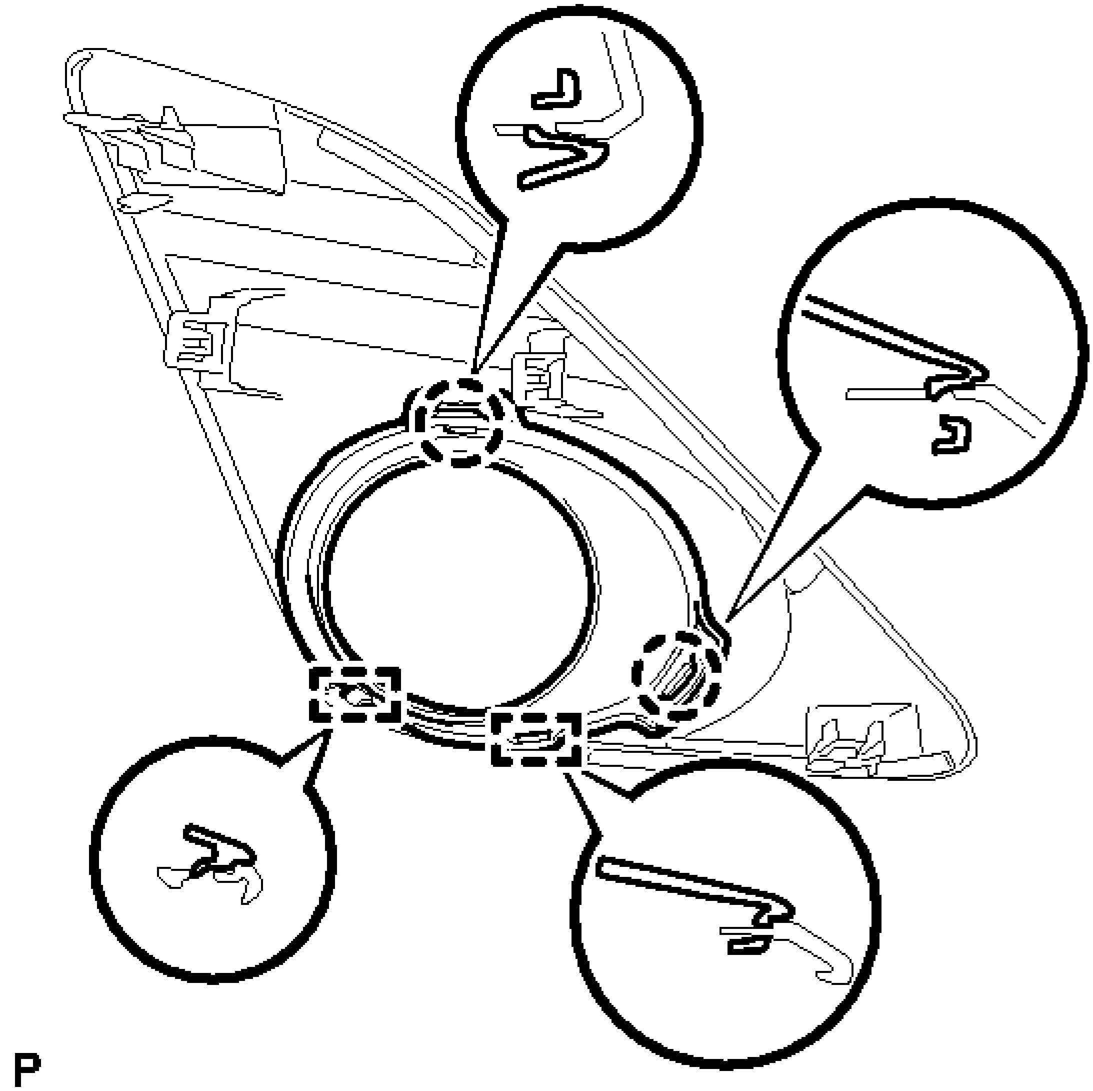

Fig. 17: Identifying Front Bumper Hole Cover LH (For Standard) Claws w/ Fog Light
Courtesy of TOYOTA MOTOR SALES, U.S.A., INC.

9. **REMOVE FRONT BUMPER HOLE COVER RH (for Standard)**

   HINT:

   Use the same procedure as for the LH side.

10. **REMOVE FRONT BUMPER HOLE COVER LH (for Sport Package)**
    a. Remove the 2 screws.

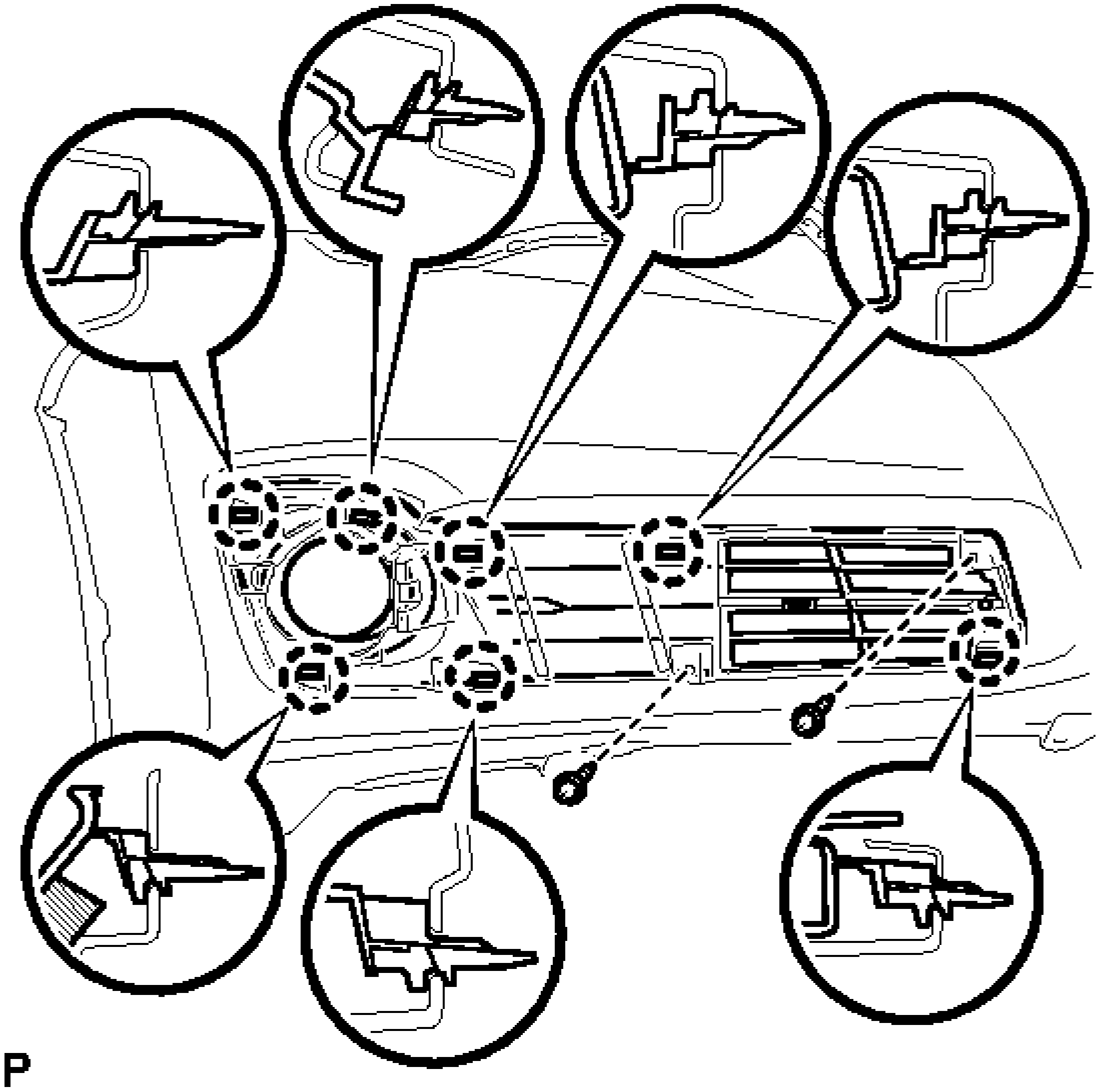

Fig. 18: Identifying Front Bumper Hole Cover LH (For Sport Package) Fasteners
Courtesy of TOYOTA MOTOR SALES, U.S.A., INC.

b. Disengage the 7 claws and remove the front bumper hole cover LH.
c. Remove the 2 screws.

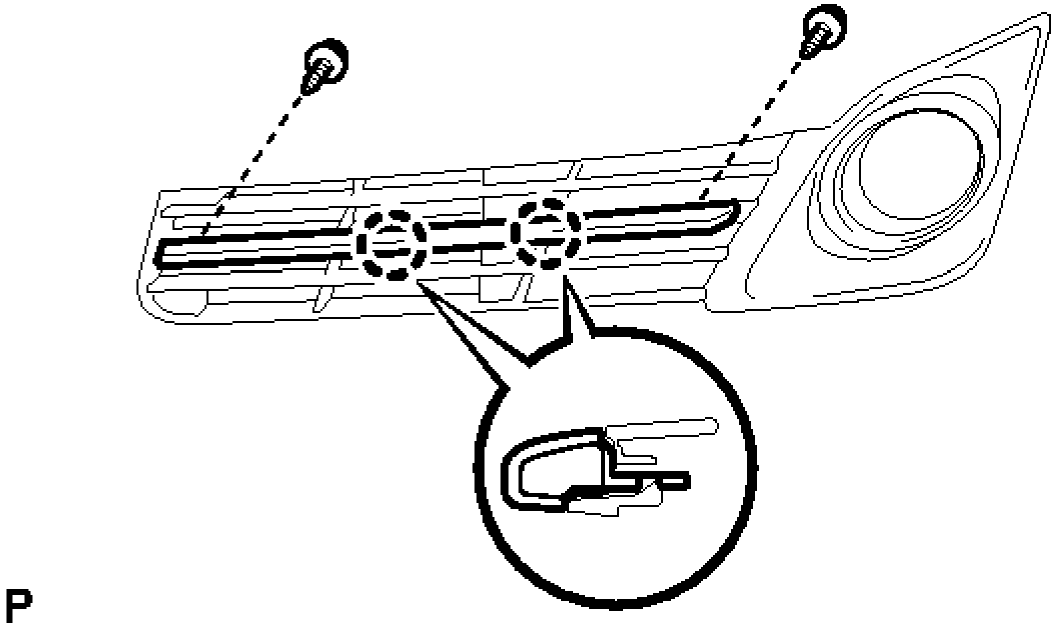

Fig. 19: Identifying Front Bumper Hole Cover LH (For Sport Package) Fasteners
Courtesy of TOYOTA MOTOR SALES, U.S.A., INC.

d. Disengage the 2 claws and remove the front bumper side moulding LH.
e. Disengage the 3 claws and guide to remove the fog light mounting bracket LH.

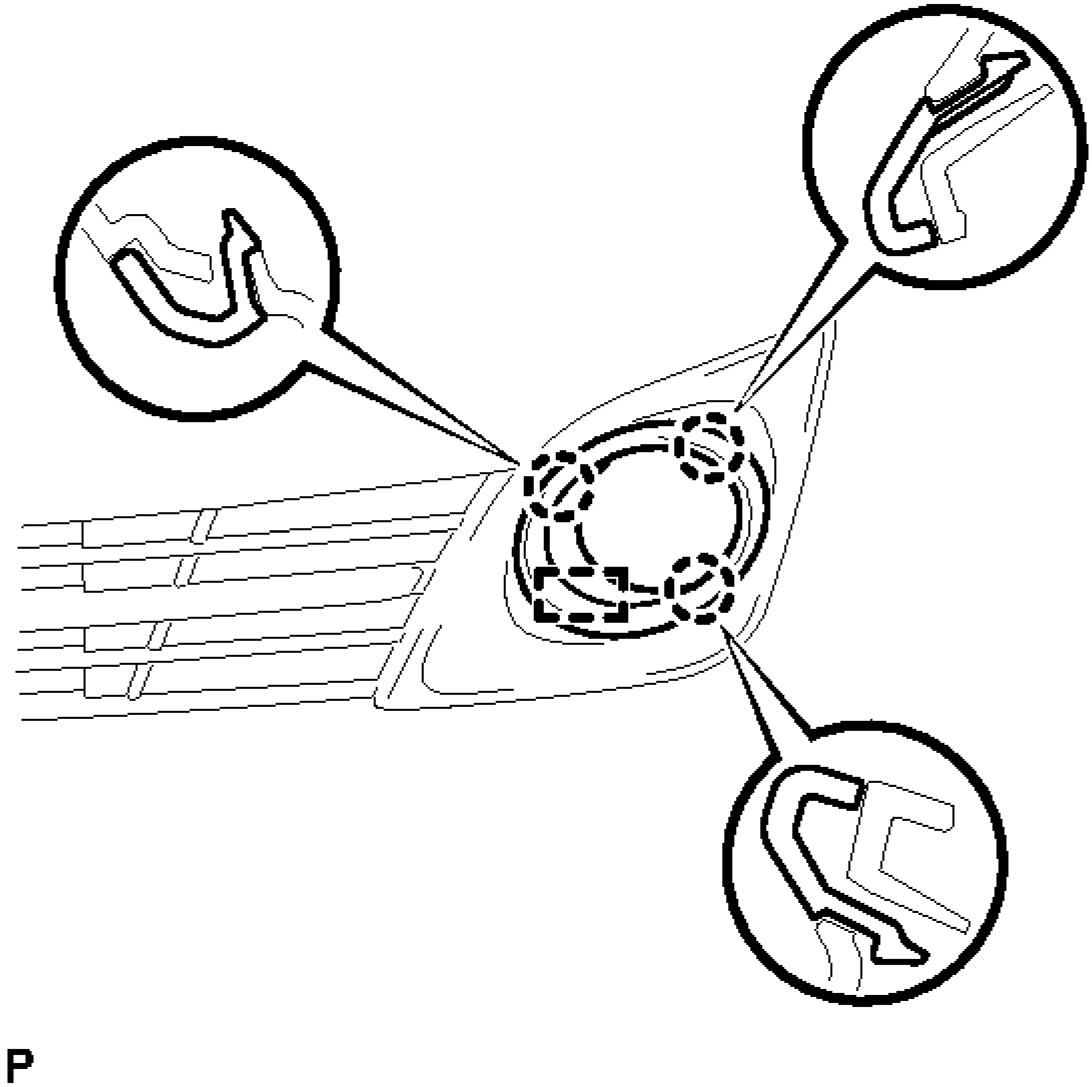

Fig. 20: Identifying Fog Light Mounting Bracket LH (For Sport Package) Claws
Courtesy of TOYOTA MOTOR SALES, U.S.A., INC.

11. **REMOVE FRONT BUMPER HOLE COVER RH (for Sport Package)**

    HINT:

    Use the same procedure as for the LH side.

12. **REMOVE NO. 1 LOWER RADIATOR GRILLE**
    a. for Standard:
        1. Disengage the 16 claws and 2 guides, and remove the No. 1 lower radiator grille.

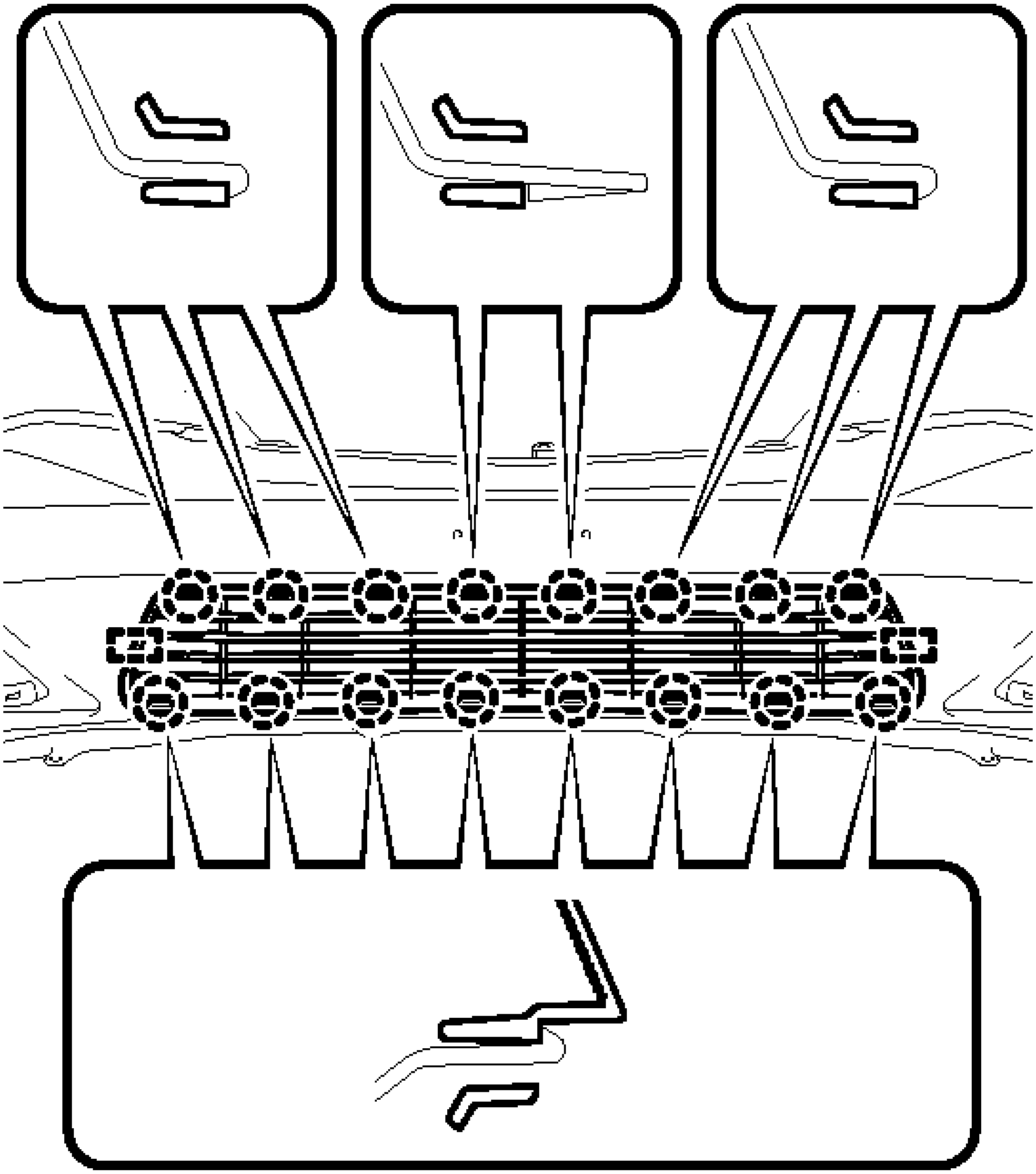

Fig. 21: Identifying No. 1 Lower Radiator Grille Claws And Guides (For Standard)
Courtesy of TOYOTA MOTOR SALES, U.S.A., INC.

b. for Sport Package:
   1. Disengage the 6 claws and 2 guides, and remove the No. 1 lower radiator grille.

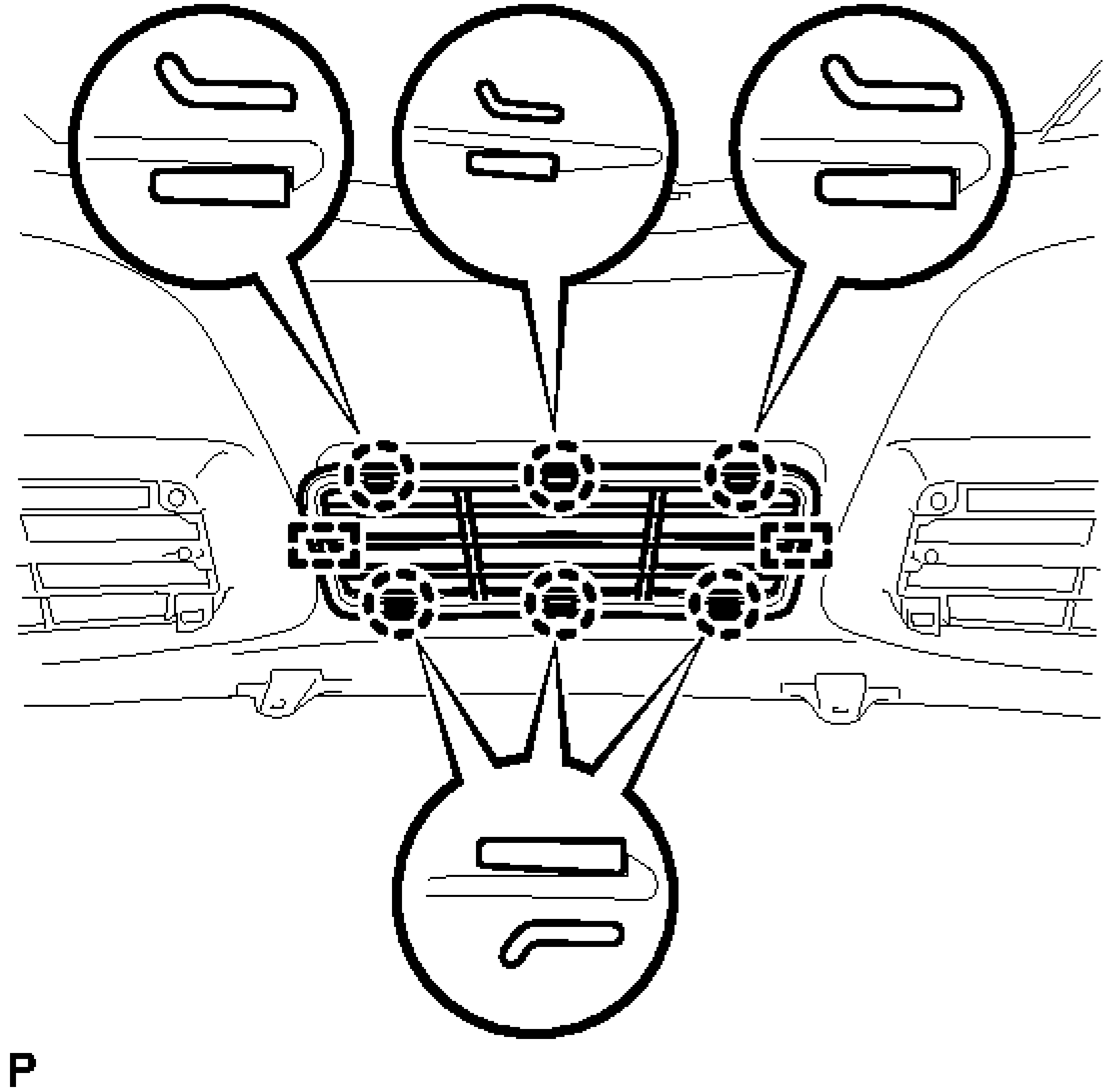

Fig. 22: Identifying No. 1 Lower Radiator Grille Claws And Guides (For Sport Package)
Courtesy of TOYOTA MOTOR SALES, U.S.A., INC.

13. **REMOVE FRONT BUMPER ENERGY ABSORBER**
    a. Disengage the 2 guides and remove the front bumper energy absorber.

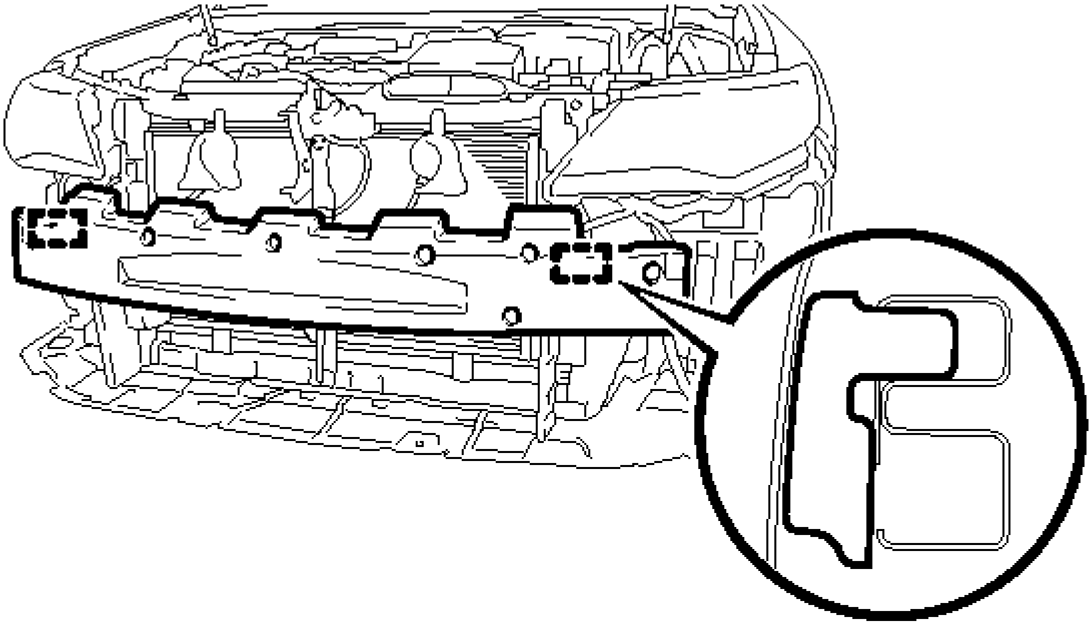

Fig. 23: Identifying Front Bumper Energy Absorber Guides
Courtesy of TOYOTA MOTOR SALES, U.S.A., INC.

14. **REMOVE FRONT BUMPER REINFORCEMENT SUB-ASSEMBLY**
    a. Disengage the 5 clamps.

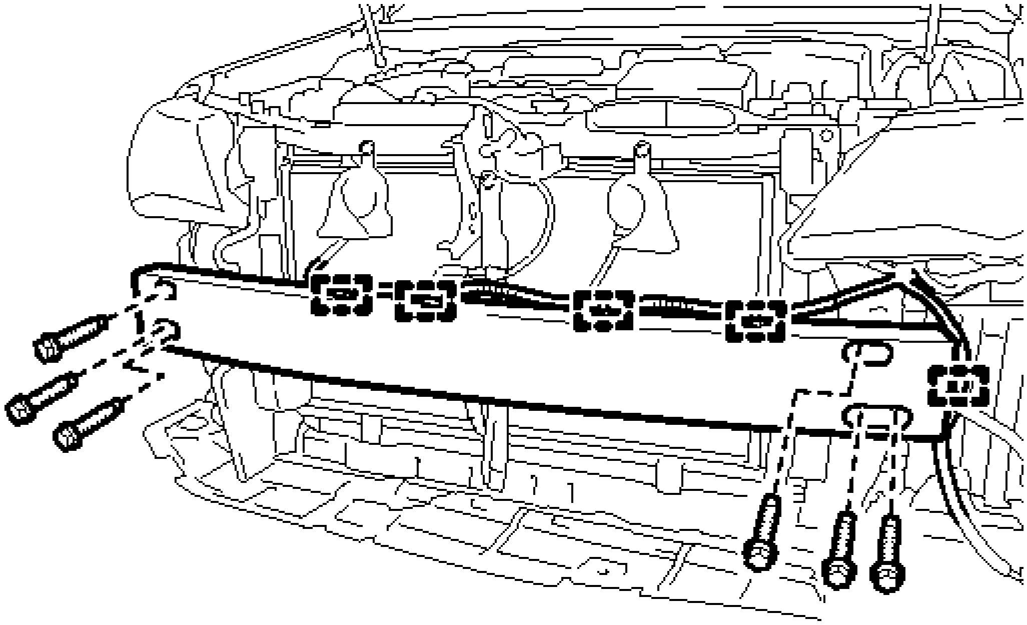

Fig. 24: Identifying Front Bumper Reinforcement Sub-Assembly Fasteners

Courtesy of TOYOTA MOTOR SALES, U.S.A., INC.

b. Remove the 6 bolts and front bumper reinforcement sub-assembly.

15. **REMOVE FRONT BUMPER SIDE RETAINER LH**

   a. Remove the bolt.

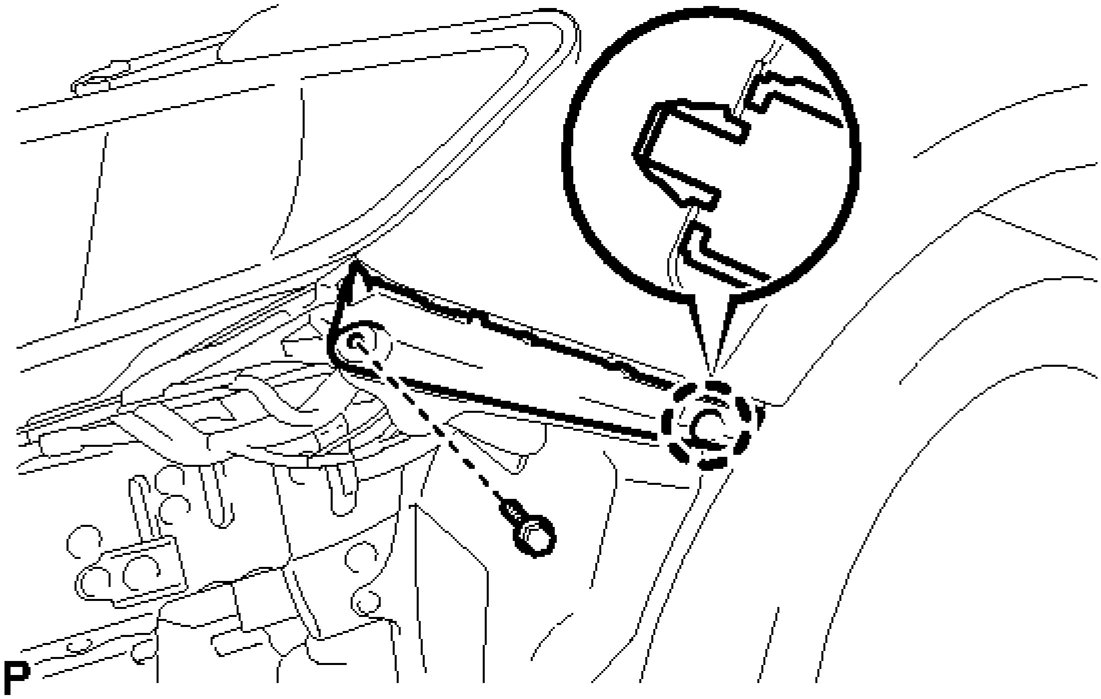

Fig. 25: Identifying Front Bumper Side Retainer LH Fasteners
Courtesy of TOYOTA MOTOR SALES, U.S.A., INC.

   b. Disengage the claw and remove the front bumper side retainer LH.

16. **REMOVE FRONT BUMPER SIDE RETAINER RH**

   HINT:

   Use the same procedure as for the LH side.

REASSEMBLY

REASSEMBLY

1. **INSTALL FRONT BUMPER SIDE RETAINER LH**

   a. Engage the claw.

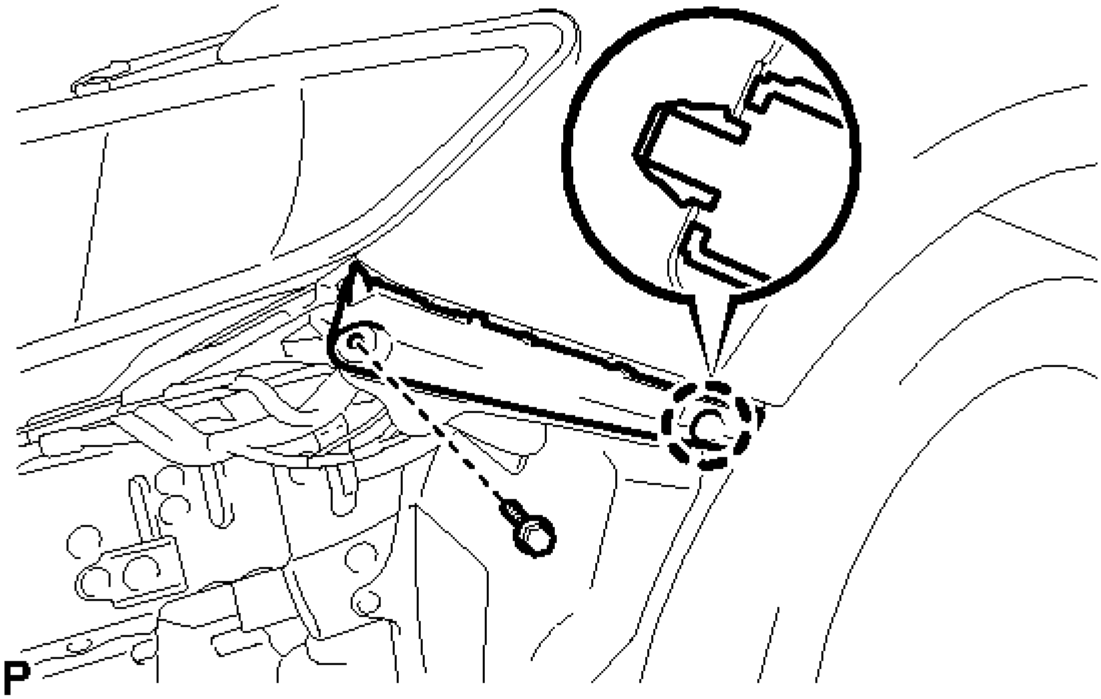

Fig. 26: Identifying Front Bumper Side Retainer LH Fasteners
Courtesy of TOYOTA MOTOR SALES, U.S.A., INC.

b. Install the front bumper side retainer LH with the bolt.

Torque: 4.1 N*m (42 kgf*cm, 36 in.*lbf)

2. **INSTALL FRONT BUMPER SIDE RETAINER RH**

HINT:

Use the same procedure as for the LH side.

3. **INSTALL FRONT BUMPER REINFORCEMENT SUB-ASSEMBLY**
   a. Install the front bumper reinforcement sub-assembly with the 6 bolts.

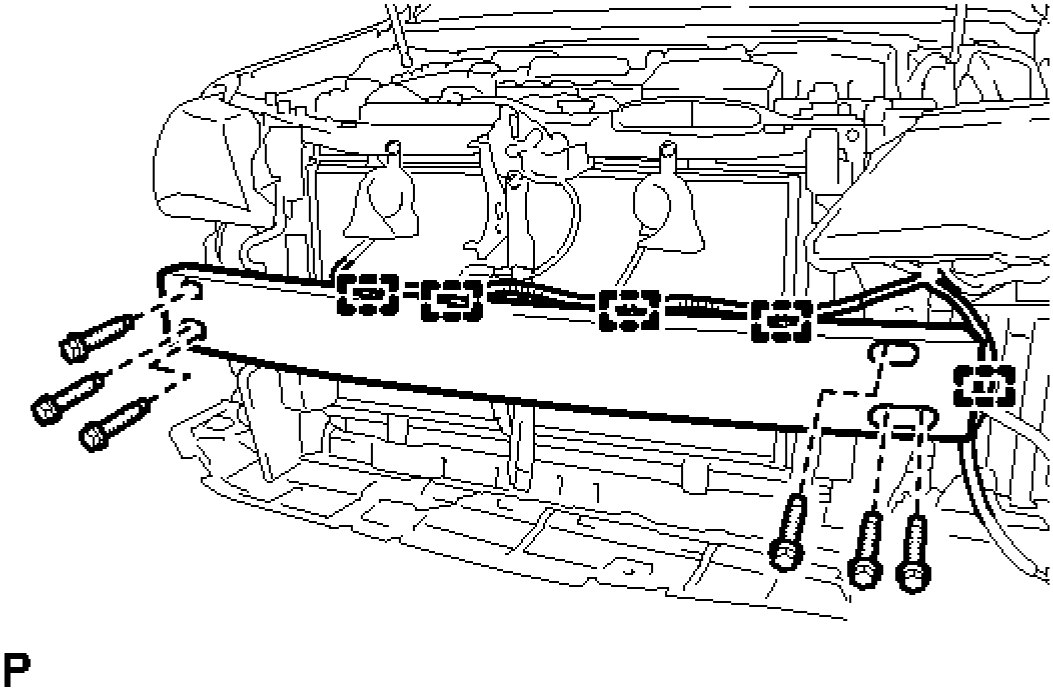

Fig. 27: Identifying Front Bumper Reinforcement Sub-Assembly Fasteners
Courtesy of TOYOTA MOTOR SALES, U.S.A., INC.

Torque: 61 N*m (622 kgf*cm, 45 ft.*lbf)

b. Engage the 5 clamps.

4. **INSTALL FRONT BUMPER ENERGY ABSORBER**
   a. Engage the 2 guides to install the front bumper energy absorber.

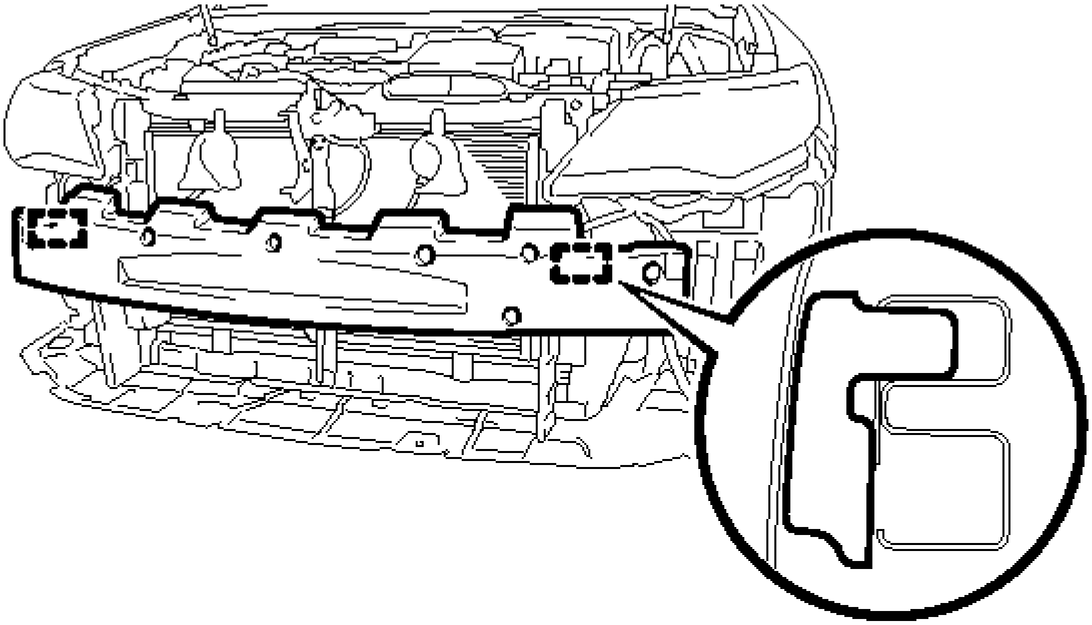

Fig. 28: Identifying Front Bumper Energy Absorber Guides
Courtesy of TOYOTA MOTOR SALES, U.S.A., INC.

5. **INSTALL NO. 1 LOWER RADIATOR GRILLE**
   a. for Standard:
      1. Engage the 2 guides and 16 claws to install the No. 1 lower radiator grille.

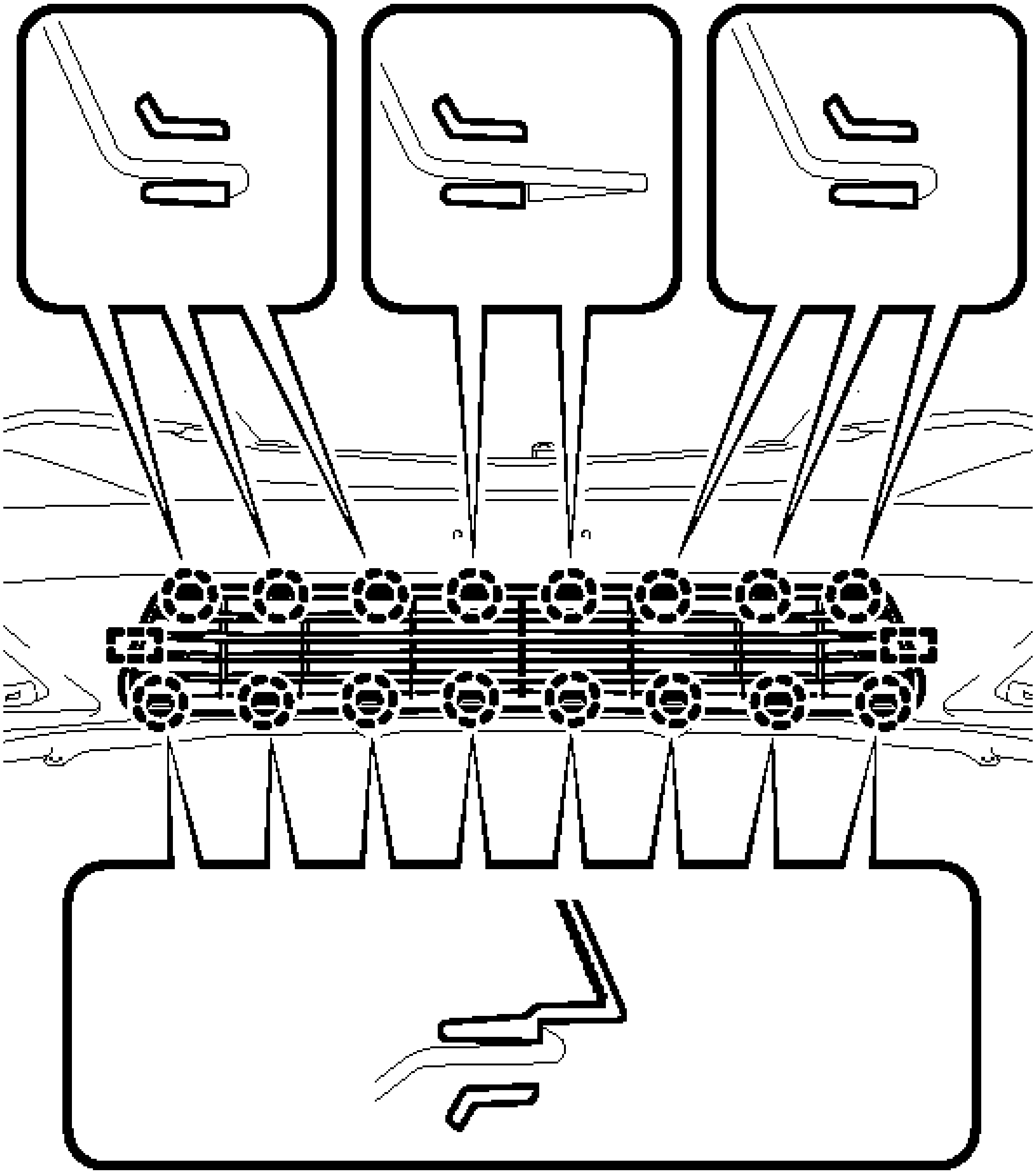

Fig. 29: Identifying No. 1 Lower Radiator Grille Claws And Guides (For Standard)
Courtesy of TOYOTA MOTOR SALES, U.S.A., INC.

b. for Sport Package:

   1. Engage the 2 guides and 6 claws to install the No. 1 lower radiator grille.

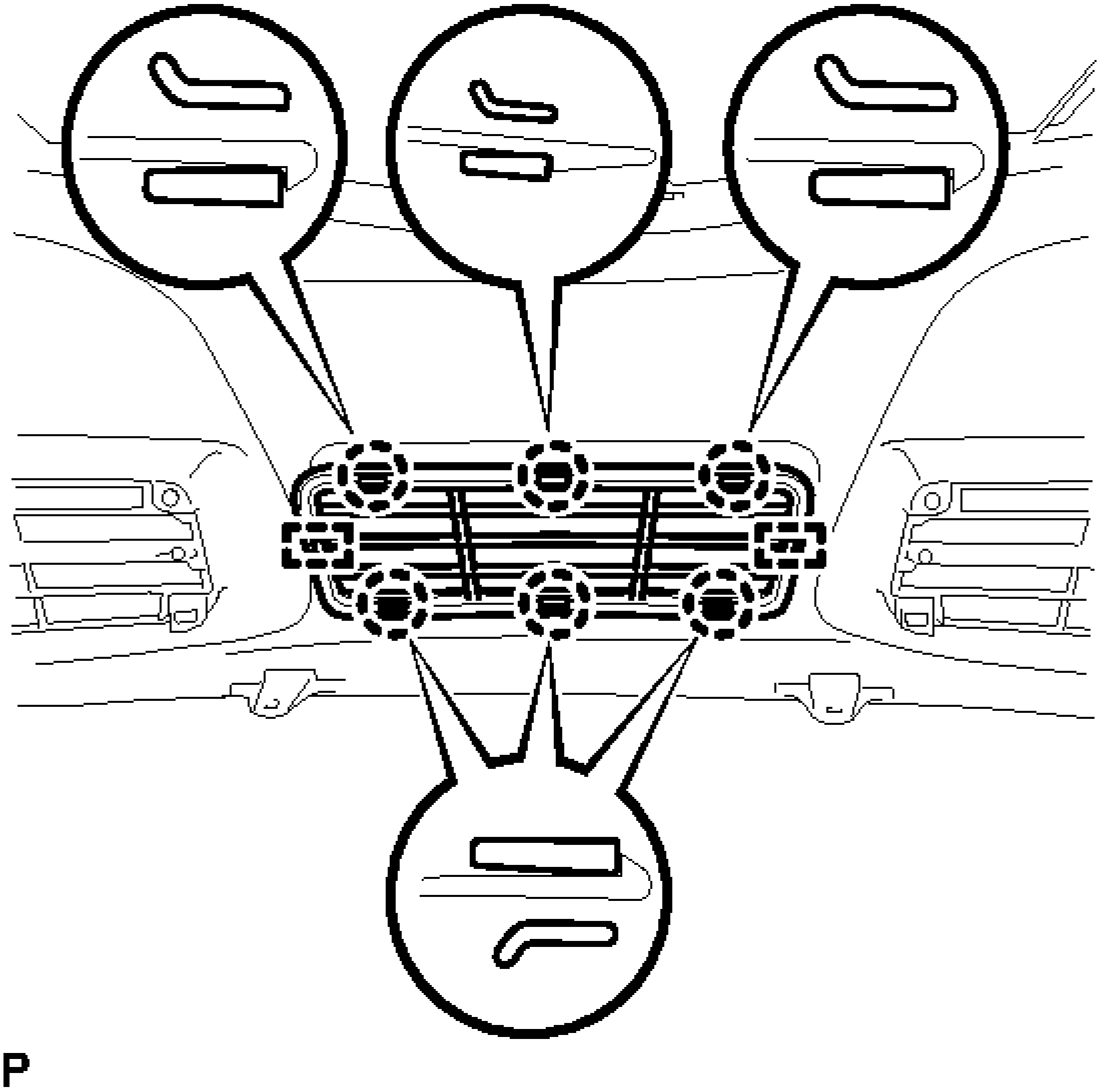

Fig. 30: Identifying No. 1 Lower Radiator Grille Claws And Guides (For Sport Package)
Courtesy of TOYOTA MOTOR SALES, U.S.A., INC.

6. **INSTALL FRONT BUMPER HOLE COVER LH (for Standard)**
   a. w/ Fog Light:
      1. Engage the 2 claws and 2 guides to install the fog light mounting bracket LH.

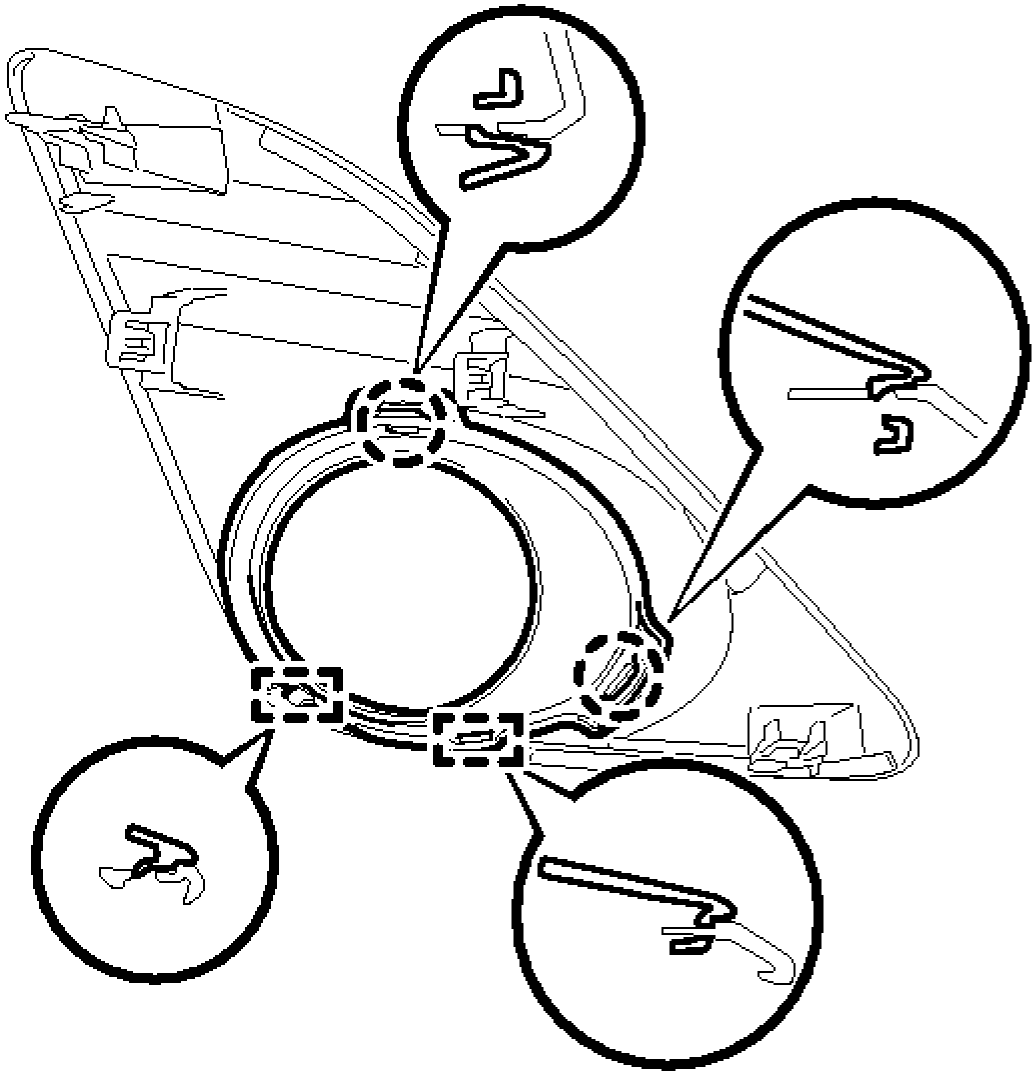

Fig. 31: Identifying Front Bumper Hole Cover LH (For Standard) Claws w/ Fog Light
Courtesy of TOYOTA MOTOR SALES, U.S.A., INC.

b. Engage the 5 claws to install the front bumper hole cover LH.

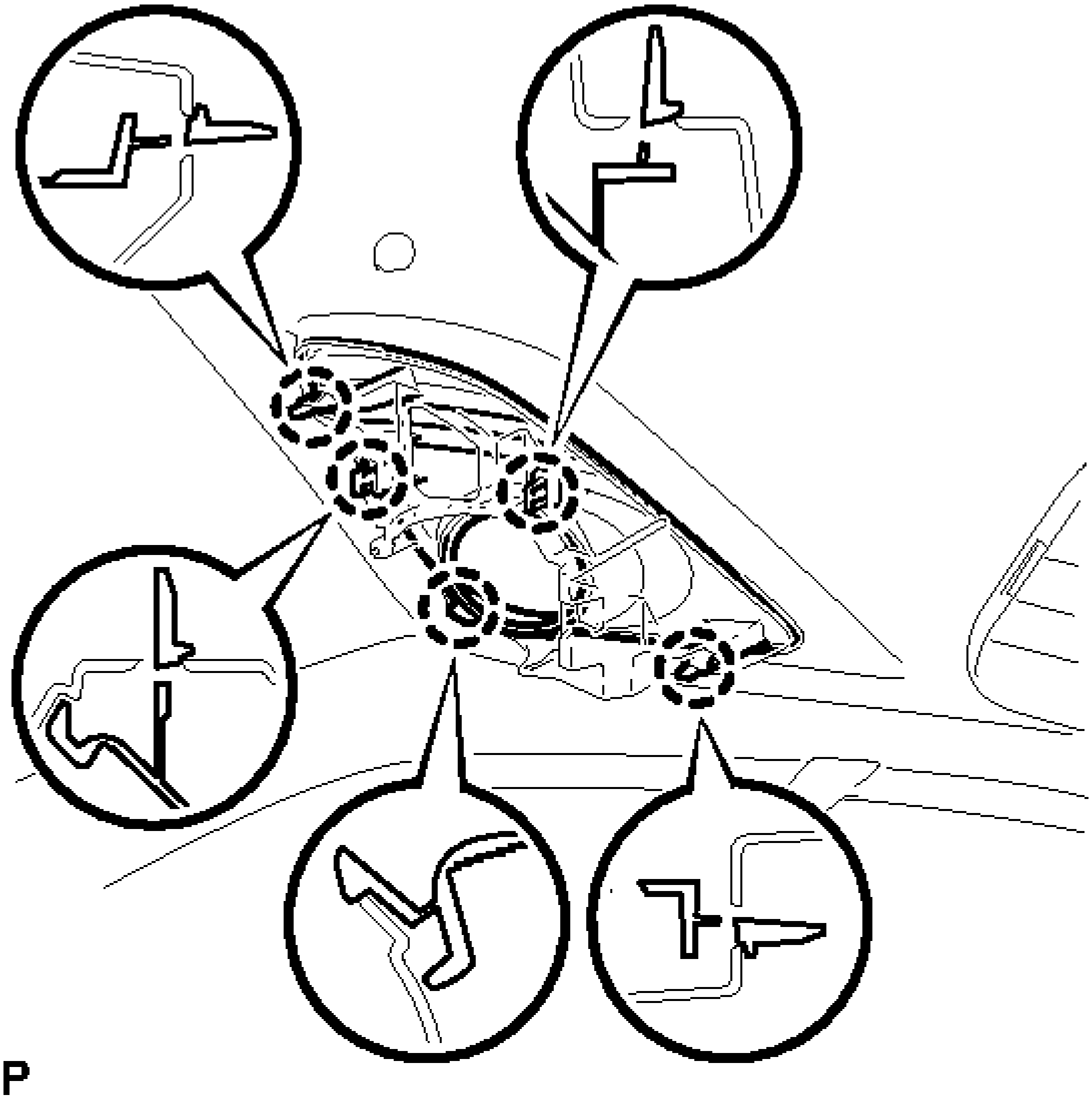

Fig. 32: Identifying Front Bumper Hole Cover LH (For Standard) Fasteners
Courtesy of TOYOTA MOTOR SALES, U.S.A., INC.

7. **INSTALL FRONT BUMPER HOLE COVER RH (for Standard)**

   HINT:

   Use the same procedure as for the LH side.

8. **INSTALL FRONT BUMPER HOLE COVER LH (for Sport Package)**
   a. Engage the 3 claws and guide to install the fog light mounting bracket LH.

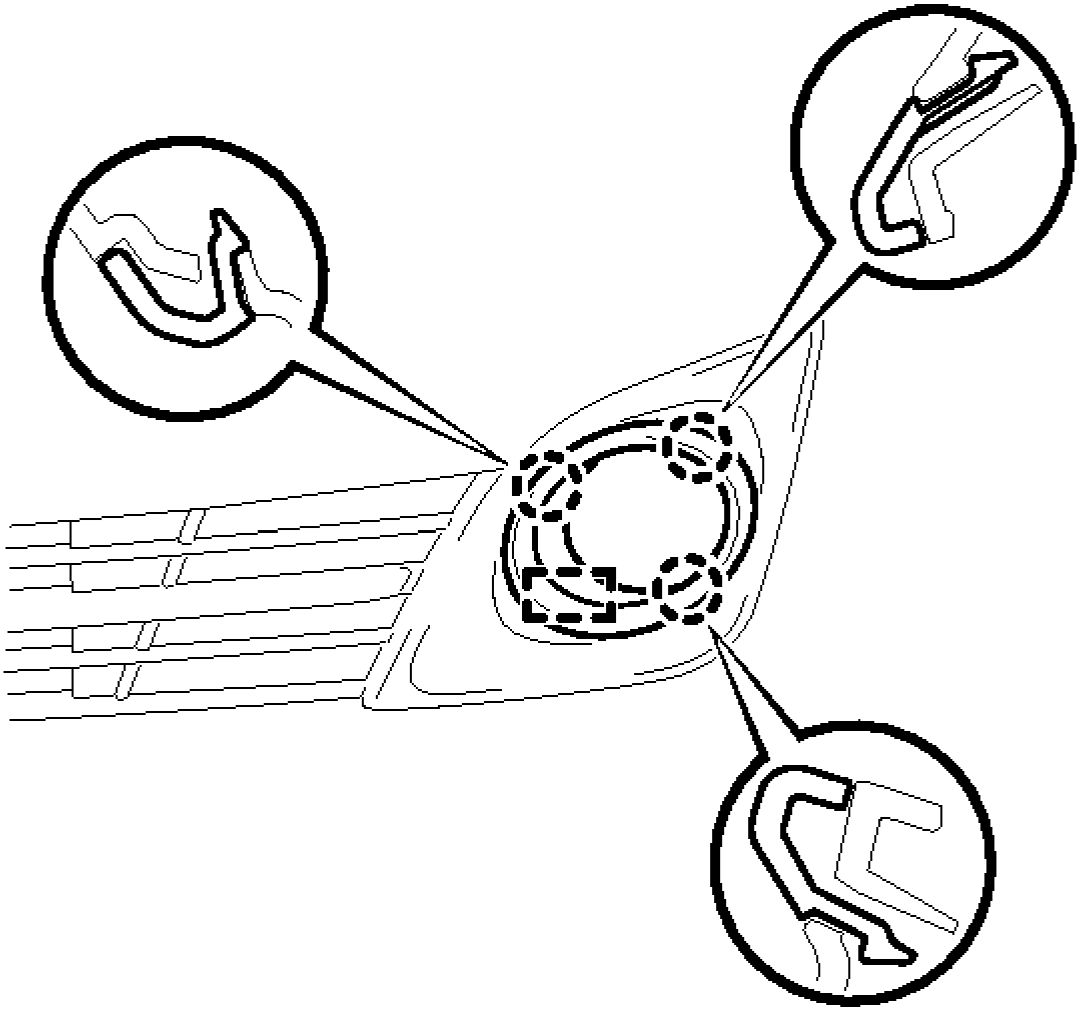

Fig. 33: Identifying Fog Light Mounting Bracket LH (For Sport Package) Claws
Courtesy of TOYOTA MOTOR SALES, U.S.A., INC.

b. Engage the 2 claws to install the front bumper side moulding LH.

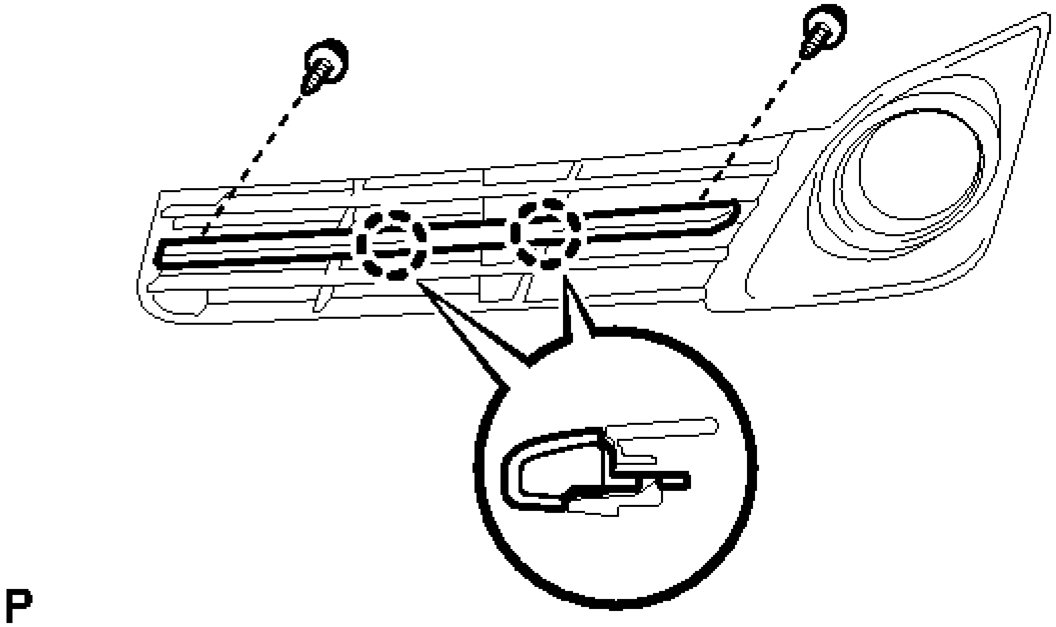

Fig. 34: Identifying Front Bumper Hole Cover LH (For Sport Package) Fasteners
Courtesy of TOYOTA MOTOR SALES, U.S.A., INC.

c. Install the 2 screws.

d. Engage the 7 claws to install the front bumper hole cover LH.

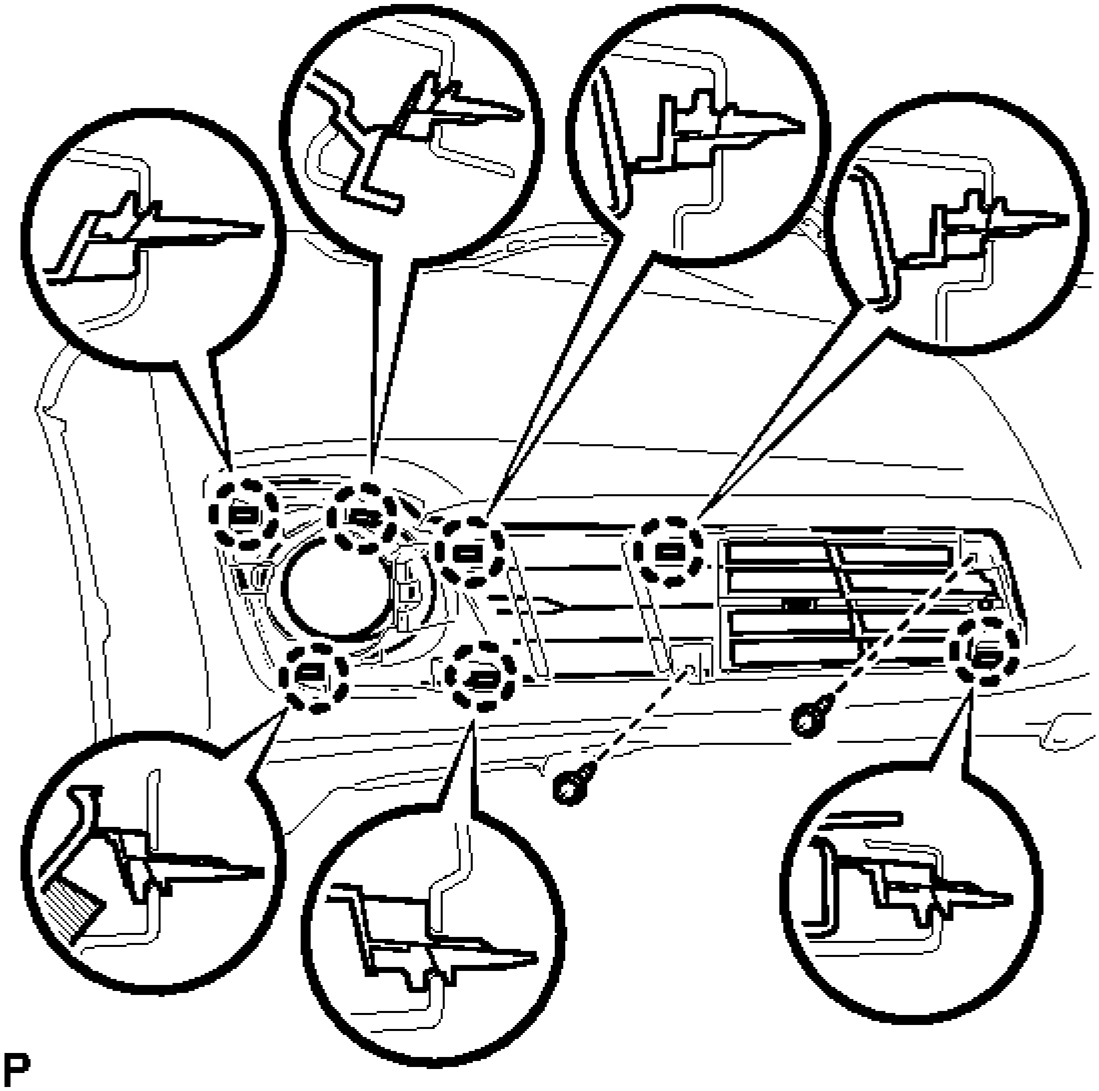

Fig. 35: Identifying Front Bumper Hole Cover LH (For Sport Package) Fasteners
Courtesy of TOYOTA MOTOR SALES, U.S.A., INC.

   e. Install the 2 screws.

9. **INSTALL FRONT BUMPER HOLE COVER RH (for Sport Package)**

   HINT:

   Use the same procedure as for the LH side.

10. **INSTALL FRONT FENDER LINER RETAINER**
    a. Engage the claw to install the front fender liner retainer.

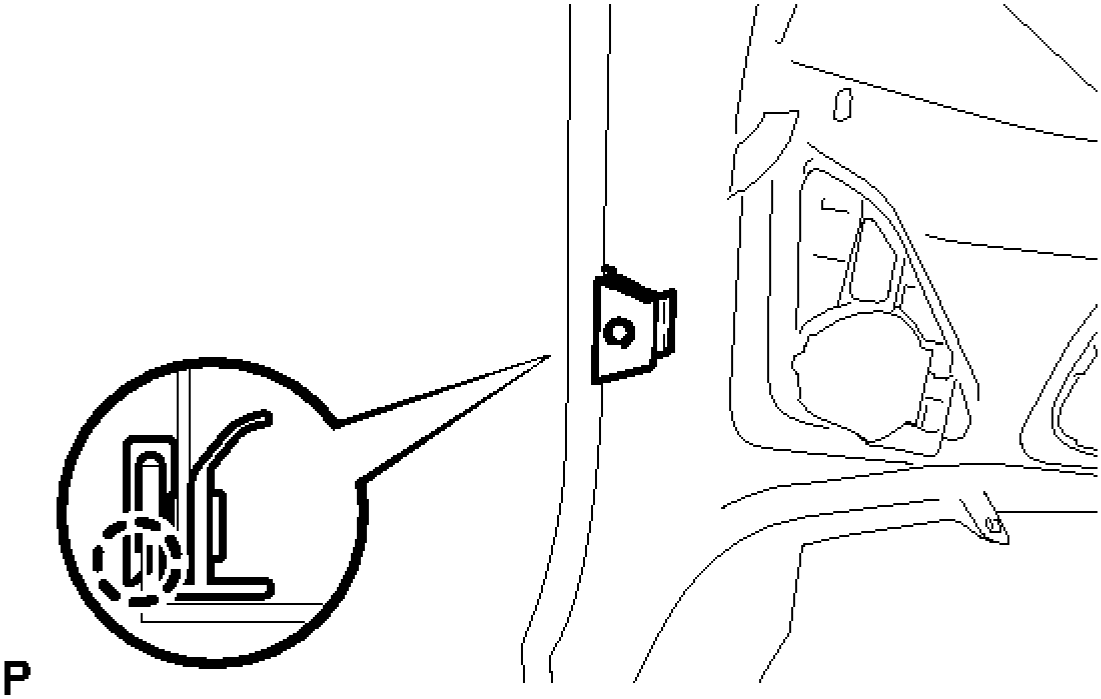

Fig. 36: Identifying Front Fender Liner Retainer
Courtesy of TOYOTA MOTOR SALES, U.S.A., INC.

HINT:

Use the same procedure for the RH side and LH side.

11. **INSTALL FRONT BUMPER EXTENSION MOUNTING BRACKET (for Standard)**
    a. w/o Side Turn Signal Light:
        1. Engage the 2 hooks.

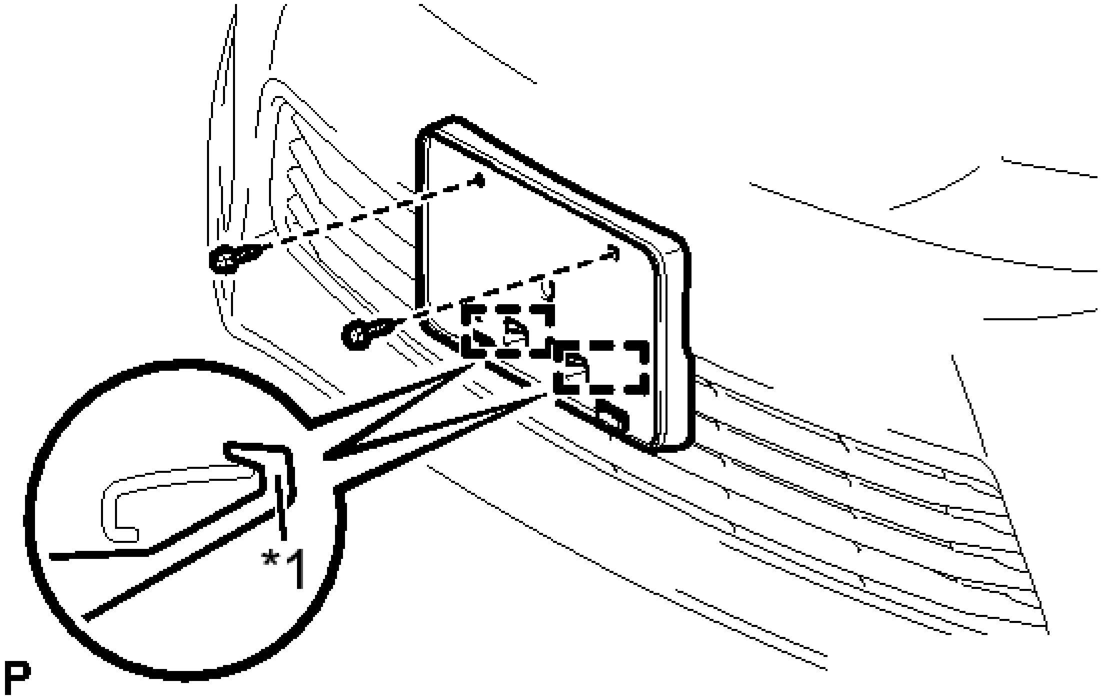

Fig. 37: Identifying Front Bumper Extension Mounting Bracket (For Standard) w/o Side Turn Signal Light
Courtesy of TOYOTA MOTOR SALES, U.S.A., INC.

TEXT IN ILLUSTRATION

*1	Hook

2. Install the front bumper extension mounting bracket with the 2 screws.

b. w/ Side Turn Signal Light:
   1. Engage the 2 hooks.

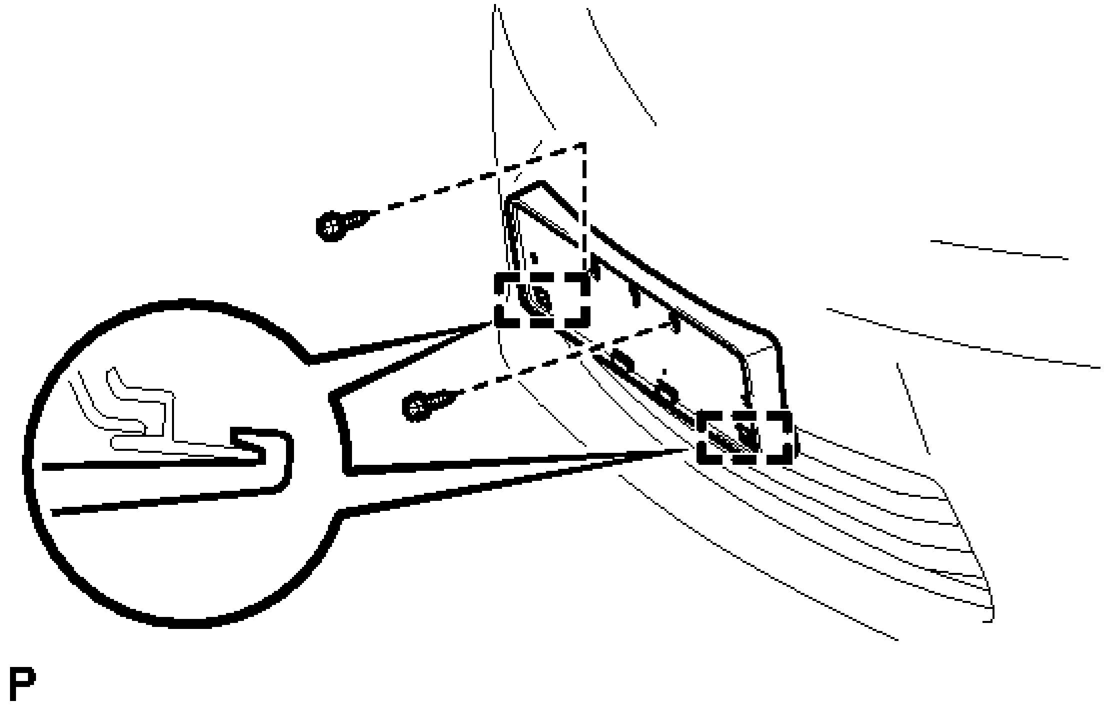

Fig. 38: Identifying Front Bumper Extension Mounting Bracket (For Standard) w/ Side Turn Signal Light
Courtesy of TOYOTA MOTOR SALES, U.S.A., INC.

TEXT IN ILLUSTRATION

*1	Hook

2. Install the front bumper extension mounting bracket with the 2 screws.

12. **INSTALL FRONT BUMPER EXTENSION MOUNTING BRACKET (for Sport Package)**
    a. Engage the 2 hooks.

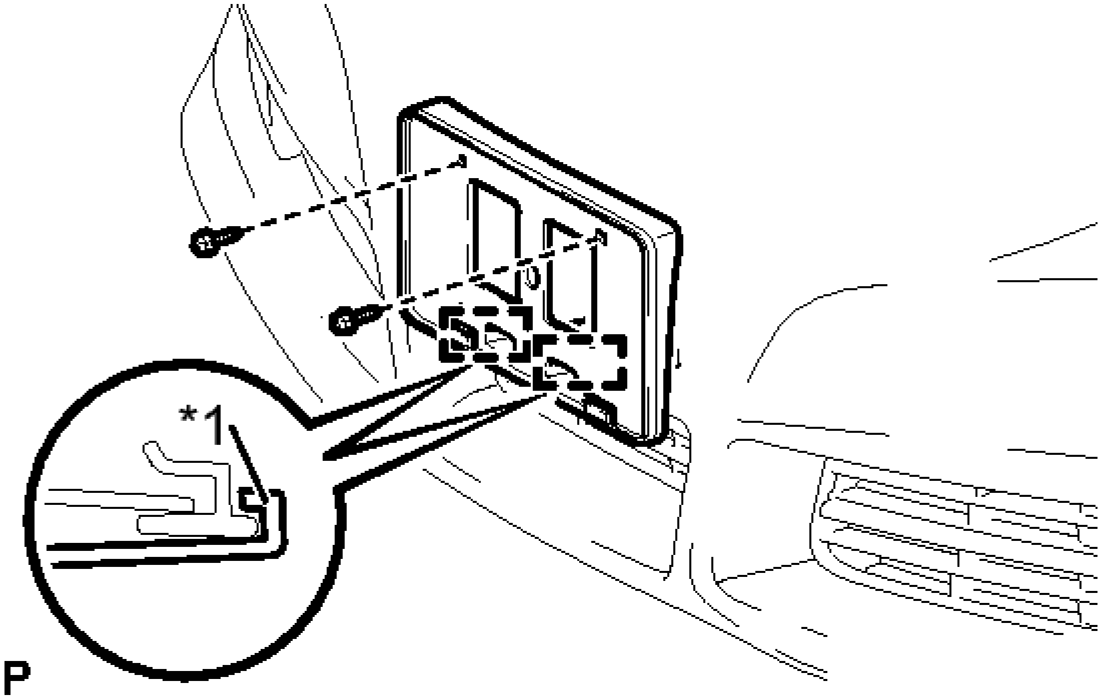

Fig. 39: Identifying Front Bumper Extension Mounting Bracket (For Sport Package)
Courtesy of TOYOTA MOTOR SALES, U.S.A., INC.

TEXT IN ILLUSTRATION

*1	Hook

- b. Install the front bumper extension mounting bracket with the 2 screws.

13. **INSTALL FOG LIGHT ASSEMBLY LH (w/ Fog Light)** . Refer to **INSTALLATION - Step 1** .
14. **INSTALL FOG LIGHT ASSEMBLY RH (w/ Fog Light)**

    HINT:

    Use the same procedure as for the LH side.

15. **INSTALL NO. 1 ULTRASONIC SENSOR RETAINER (w/ Intuitive Parking Assist System)** . Refer to **INSTALLATION - Step 1** .
16. **INSTALL NO. 1 ULTRASONIC SENSOR (w/ Intuitive Parking Assist System)** . Refer to **INSTALLATION - Step 2** .

INSTALLATION

INSTALLATION

1. **INSTALL FRONT BUMPER ASSEMBLY**
    - a. Move the front bumper assembly into position and install the 3 clips.
    - b. Pull back the side of the front bumper assembly and connect each connector.

NOTE: Do not apply excessive force when pulling back the side of the front bumper assembly.

HINT:

Use the same procedure for the RH side and LH side.

c. Engage the 3 claws to install the front bumper assembly.

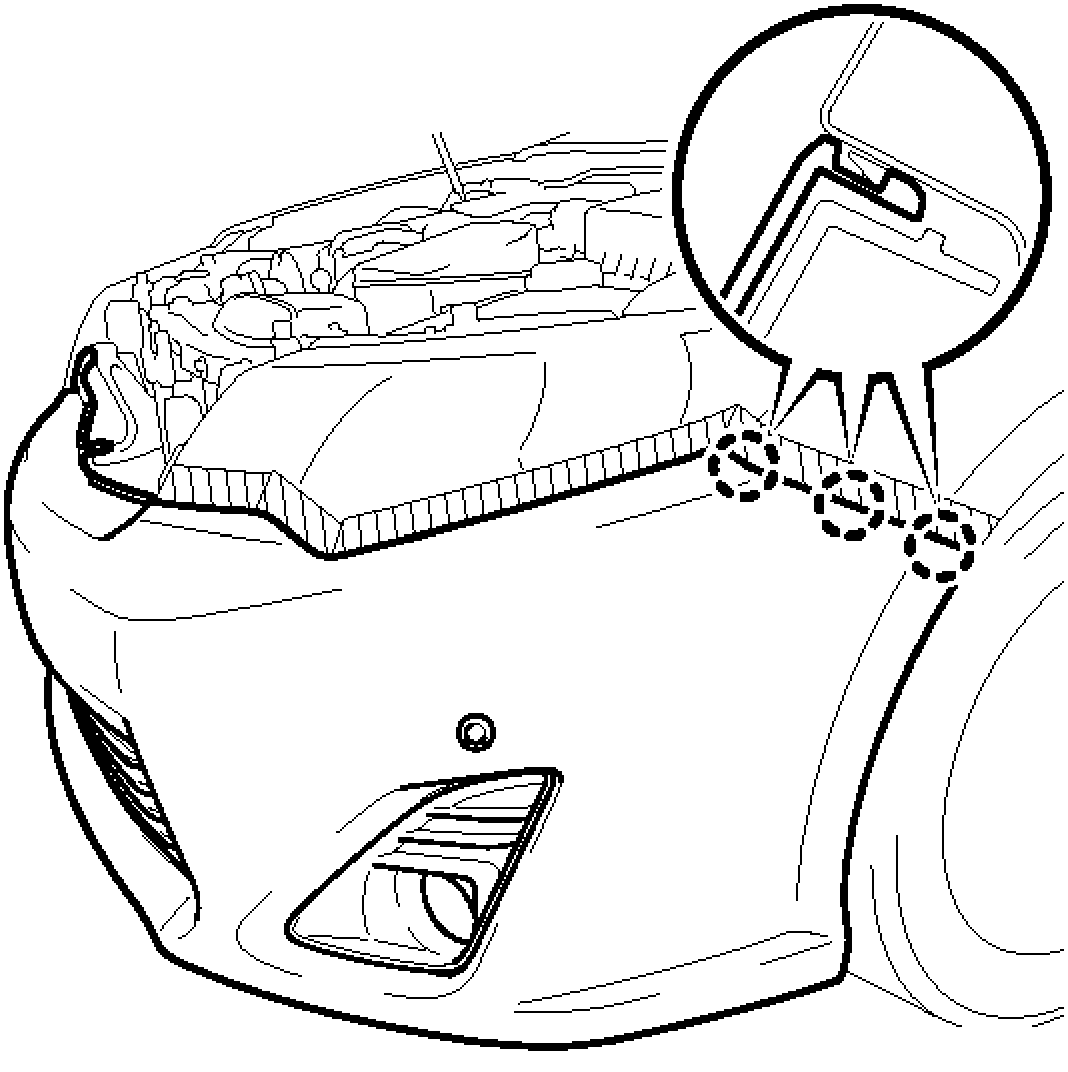

Fig. 40: Engaging Front Bumper Assembly Claws
Courtesy of TOYOTA MOTOR SALES, U.S.A., INC.

HINT:

Use the same procedure for the RH side and LH side.

d. Install the 6 screws.

e. Install the pin hold clip as shown in the illustration.

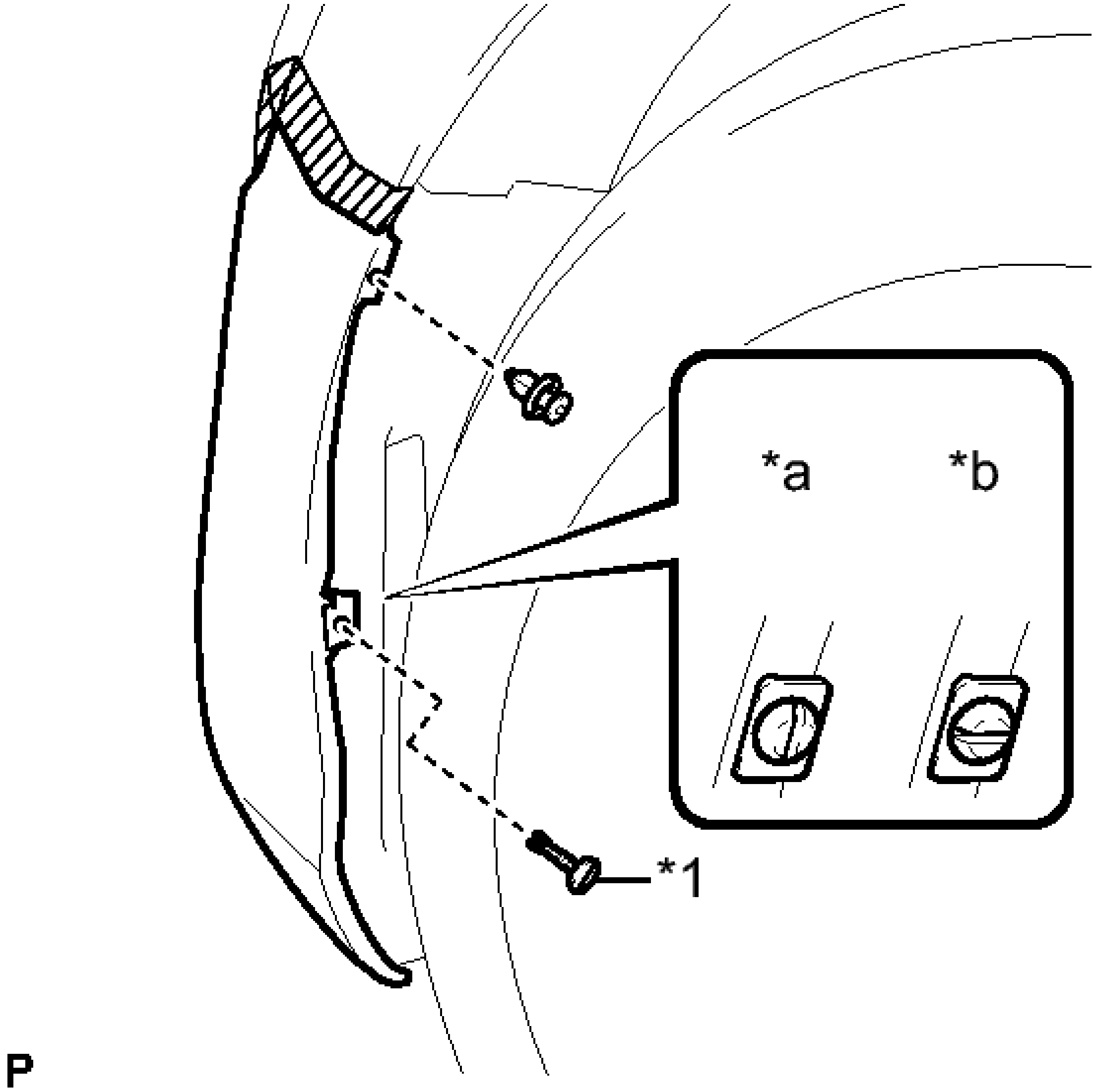

Fig. 41: Installing Front Bumper Assembly Pin Holding Clip
Courtesy of TOYOTA MOTOR SALES, U.S.A., INC.

TEXT IN ILLUSTRATION

*1	Pin Hold Clip
*a	Correct
*b	Incorrect

NOTE: **Insert the pin hold clip with the slot aligned vertically. Do not rotate the clip after inserting it. After installation, confirm that the slot is aligned vertically.**

HINT:

Use the same procedure for the RH side and LH side.

f. Install the clip.

HINT:

Use the same procedure for the RH side and LH side.

2. **INSTALL RADIATOR GRILLE SUB-ASSEMBLY**

   Refer to **INSTALLATION**.

3. **ADJUST FOG LIGHT ASSEMBLY (w/ Fog Light)**

   Refer to **ADJUSTMENT** .

REAR BUMPER

COMPONENTS

ILLUSTRATION

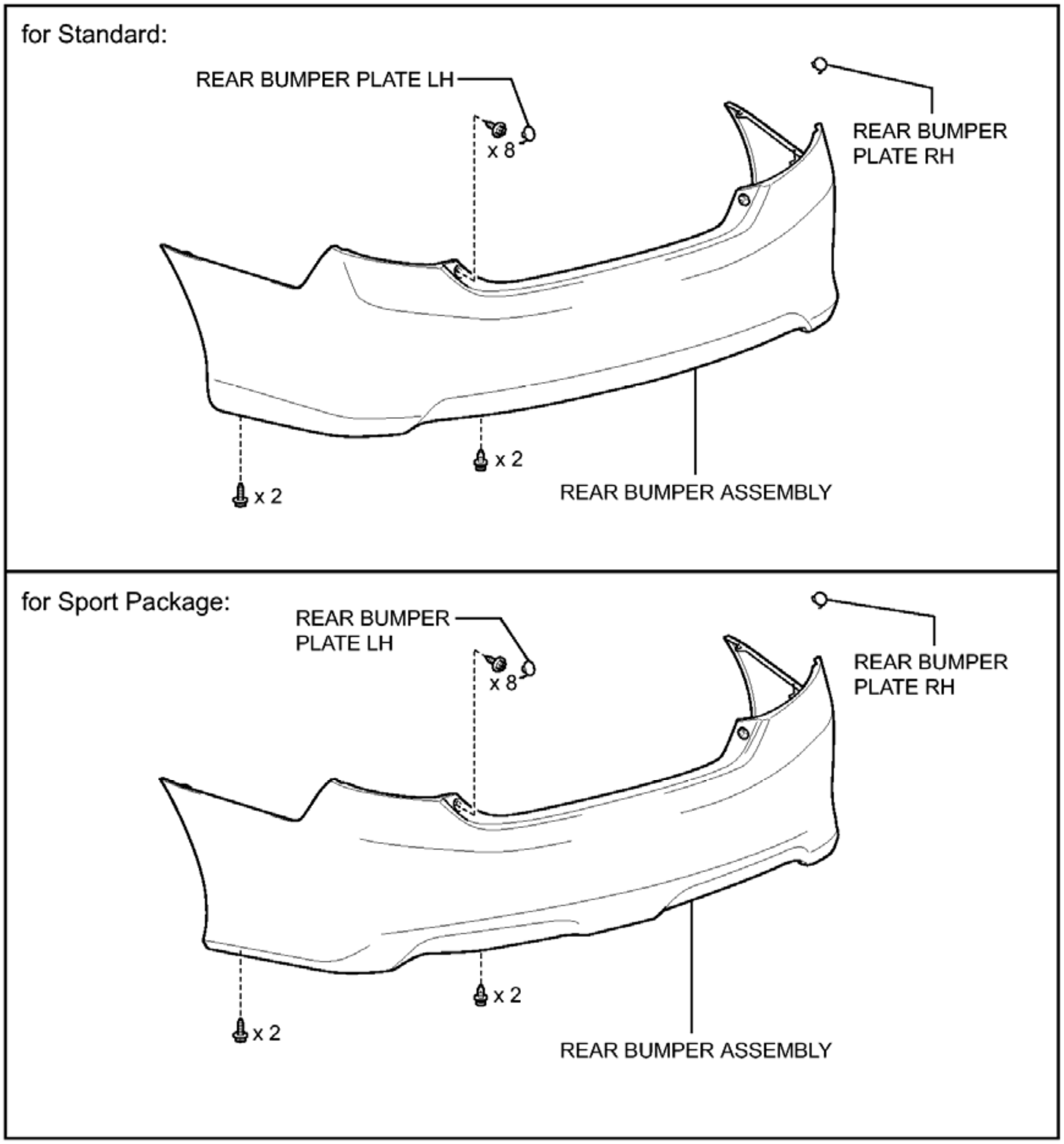
for Standard:
REAR BUMPER PLATE LH
x 8
REAR BUMPER PLATE RH
x 2
x 2
REAR BUMPER ASSEMBLY
for Sport Package:
REAR BUMPER PLATE LH
x 8
REAR BUMPER PLATE RH
x 2
x 2
REAR BUMPER ASSEMBLY

P

Fig. 42: Identifying Rear Bumper Replacement Components (1 Of 3)
Courtesy of TOYOTA MOTOR SALES, U.S.A., INC.

ILLUSTRATION

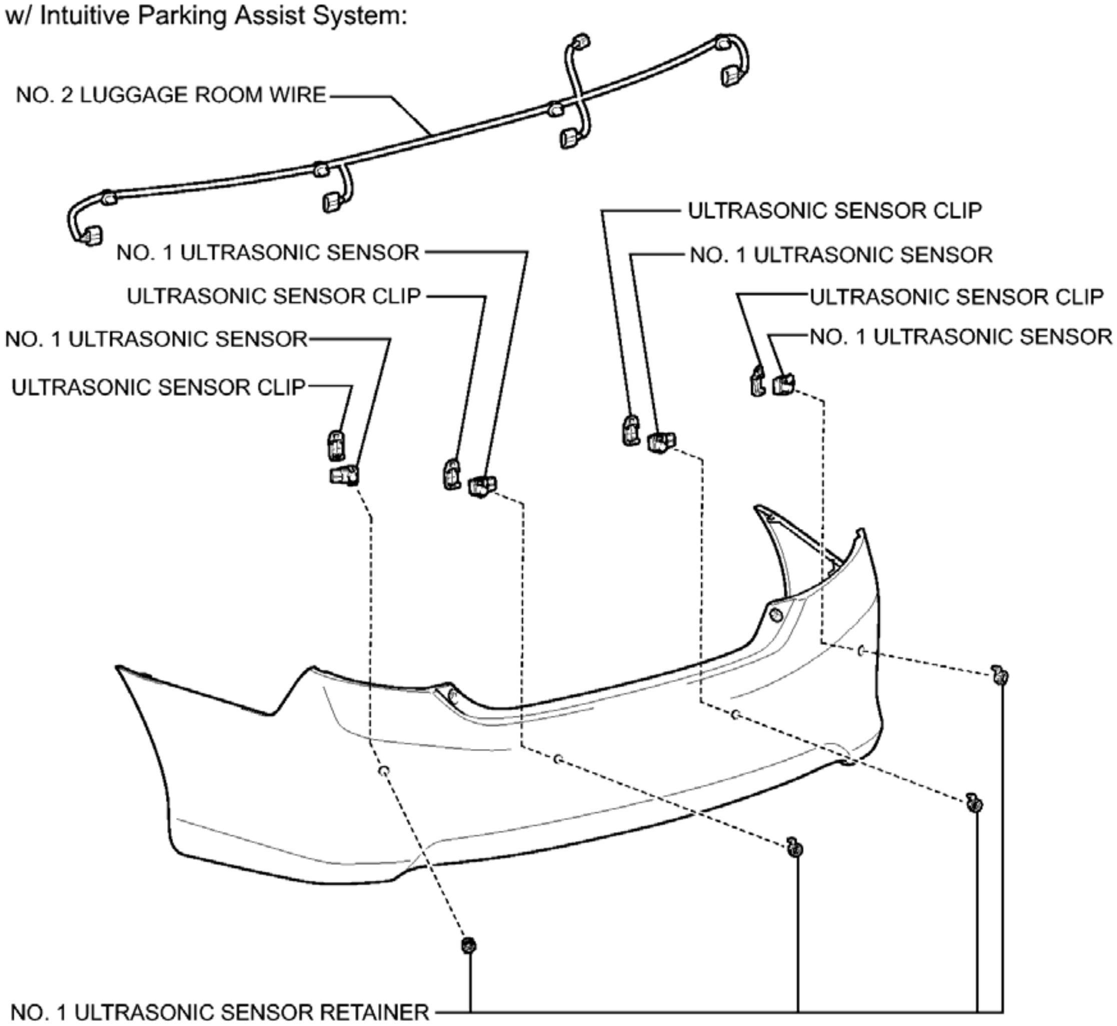
w/ Intuitive Parking Assist System:
NO. 2 LUGGAGE ROOM WIRE
ULTRASONIC SENSOR CLIP
NO. 1 ULTRASONIC SENSOR
NO. 1 ULTRASONIC SENSOR
ULTRASONIC SENSOR CLIP
ULTRASONIC SENSOR CLIP
NO. 1 ULTRASONIC SENSOR
NO. 1 ULTRASONIC SENSOR
NO. 1 ULTRASONIC SENSOR
ULTRASONIC SENSOR CLIP
NO. 1 ULTRASONIC SENSOR RETAINER
P

Fig. 43: Identifying Rear Bumper Replacement Components (2 Of 3)
Courtesy of TOYOTA MOTOR SALES, U.S.A., INC.

ILLUSTRATION

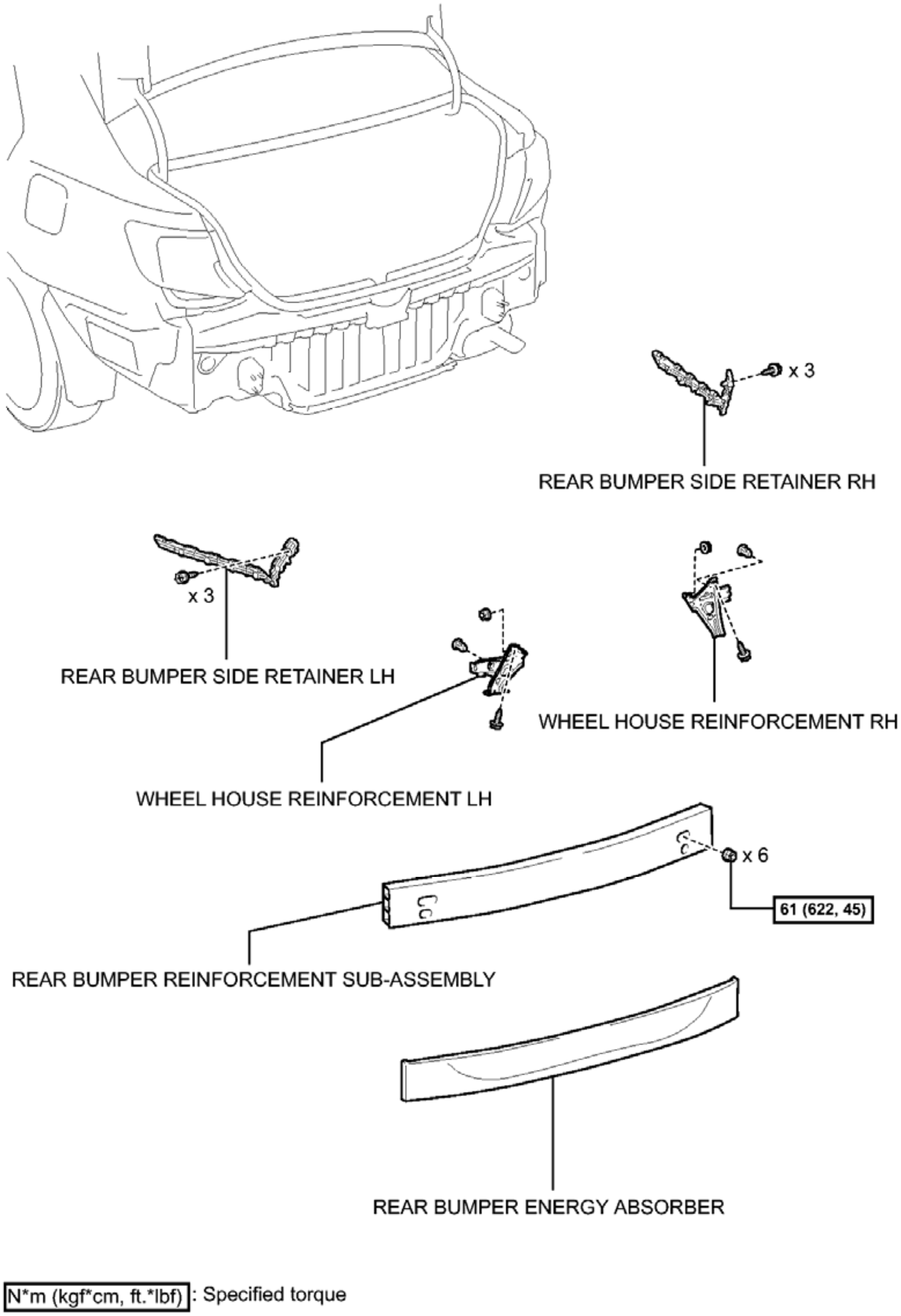
x 3
REAR BUMPER SIDE RETAINER RH
x 3
REAR BUMPER SIDE RETAINER LH
WHEEL HOUSE REINFORCEMENT RH
WHEEL HOUSE REINFORCEMENT LH
x 6
61 (622, 45)
REAR BUMPER REINFORCEMENT SUB-ASSEMBLY
REAR BUMPER ENERGY ABSORBER
N*m (kgf*cm, ft.*lbf) : Specified torque
P

Fig. 44: Identifying Rear Bumper Replacement Components With Torque Specifications (3 Of 3)
Courtesy of TOYOTA MOTOR SALES, U.S.A., INC.

REMOVAL

REMOVAL

1. **REMOVE REAR BUMPER PLATE LH**
   a. Using a screwdriver with the tip wrapped with protective tape, disengage the 2 claws.

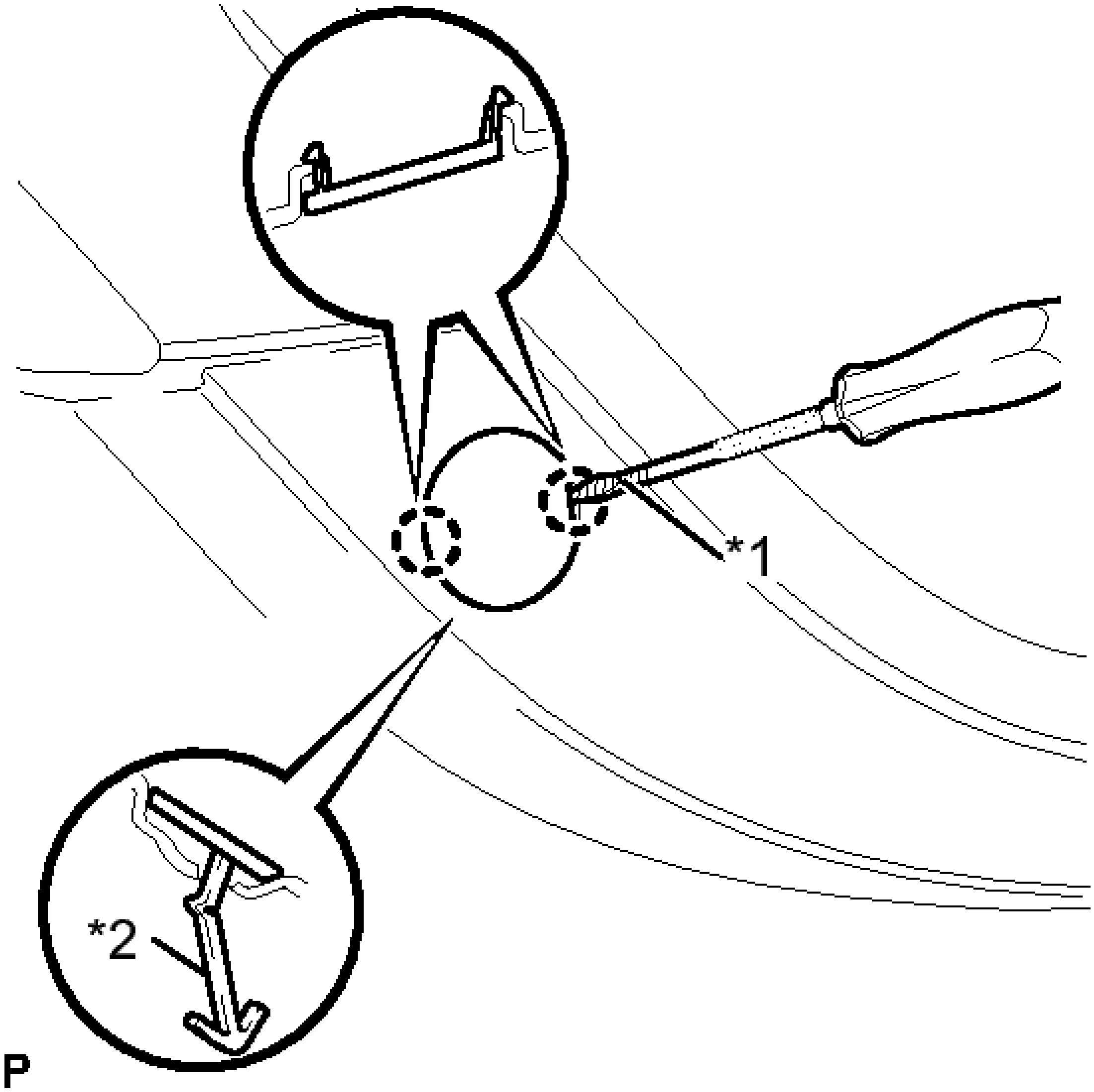

Fig. 45: Removing Rear Bumper Plate LH
Courtesy of TOYOTA MOTOR SALES, U.S.A., INC.

TEXT IN ILLUSTRATION

*1	Protective Tape
*2	Hook

HINT:

Tape the screwdriver tip before use.

b. Disengage the hook and remove the rear bumper plate LH.

2. **REMOVE REAR BUMPER PLATE RH**

HINT:

Use the same procedure as for the LH side.

3. **REMOVE REAR BUMPER ASSEMBLY**

a. Put protective tape around the rear bumper assembly.

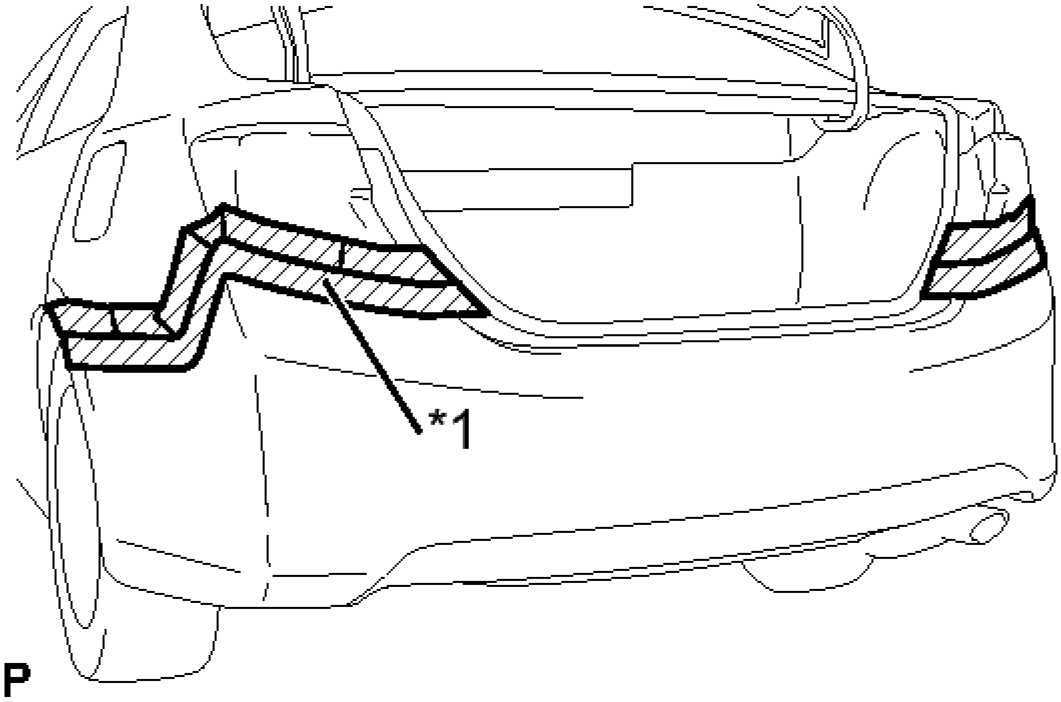

Fig. 46: Identifying Protective Tape On Rear Bumper Assembly
Courtesy of TOYOTA MOTOR SALES, U.S.A., INC.

TEXT IN ILLUSTRATION

*1	Protective Tape

b. Using a clip remover, remove the 2 clips.

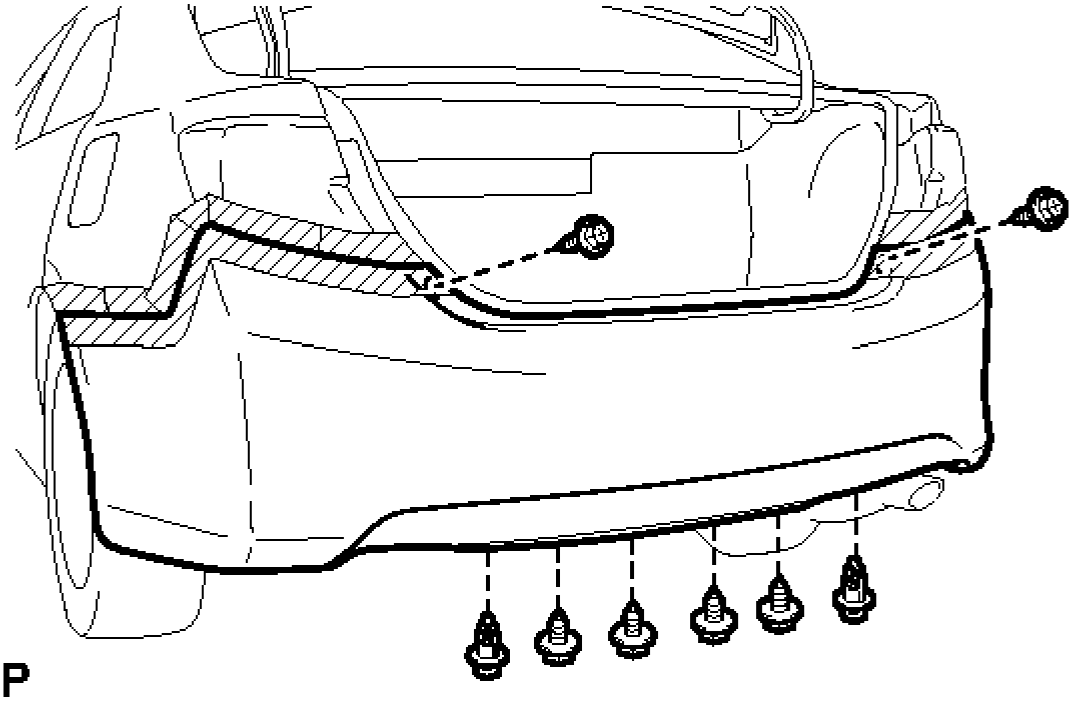

Fig. 47: Identifying Rear Bumper Assembly Rear Fasteners
Courtesy of TOYOTA MOTOR SALES, U.S.A., INC.

c. Remove the 6 screws.
d. Remove the 2 screws.

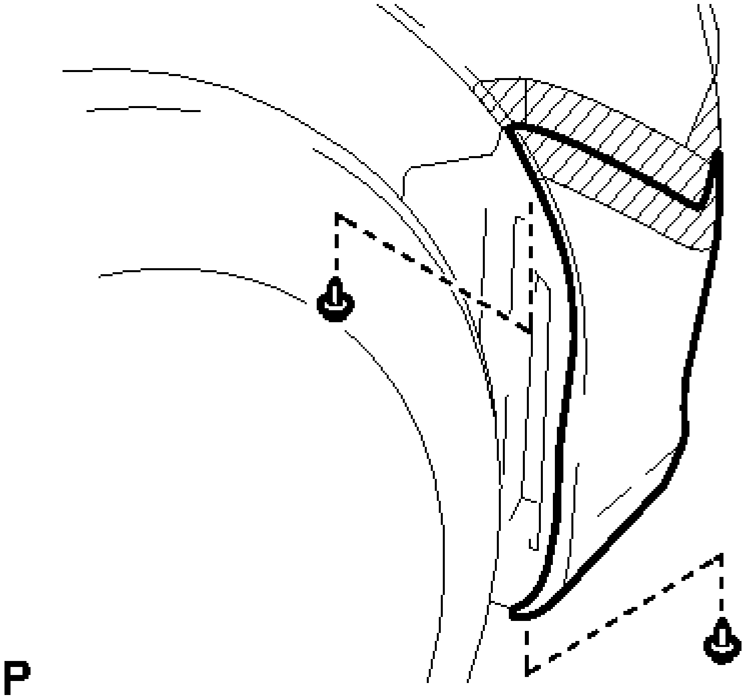

Fig. 48: Identifying Rear Bumper Assembly Side Fasteners

Courtesy of TOYOTA MOTOR SALES, U.S.A., INC.

HINT:

Use the same procedure for the RH side and LH side.

e. Disengage the 7 claws as shown in the illustration.

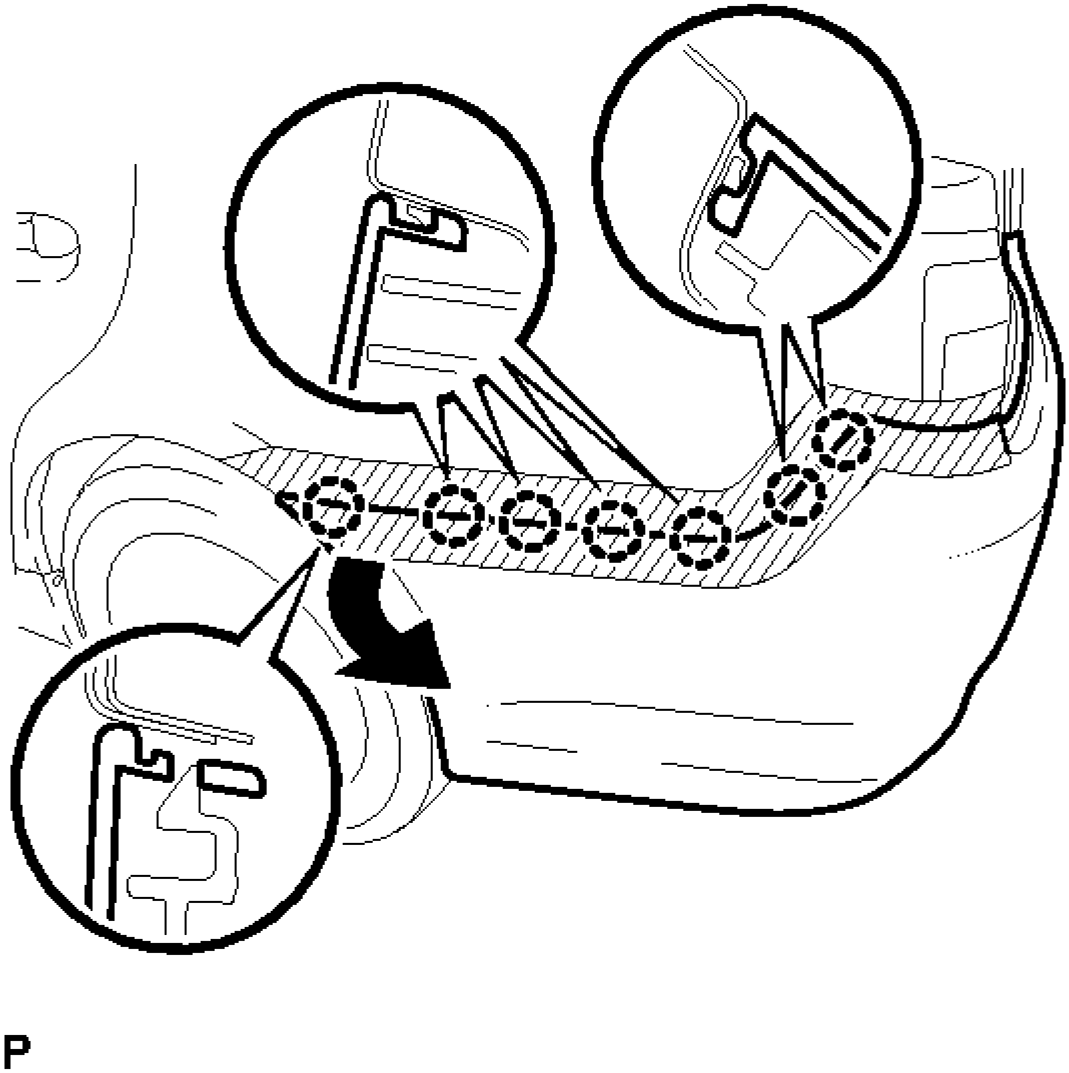

Fig. 49: Disengaging Rear Bumper Assembly Side Claws
Courtesy of TOYOTA MOTOR SALES, U.S.A., INC.

HINT:

Use the same procedure for the RH side and LH side.

f. Disengage the 6 claws as shown in the illustration.

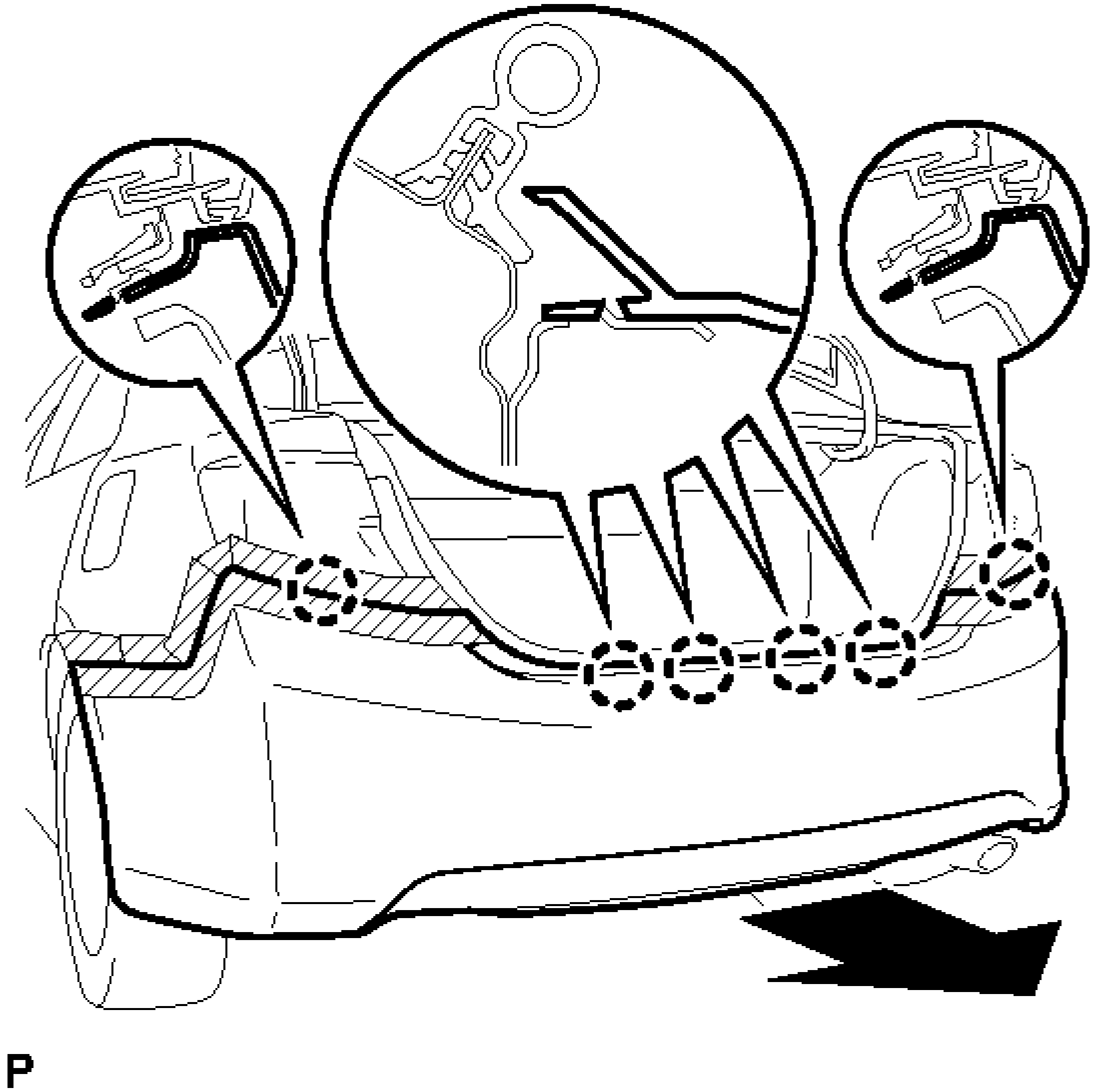

Fig. 50: Disengaging Rear Bumper Assembly Rear Claws
Courtesy of TOYOTA MOTOR SALES, U.S.A., INC.

g. w/ Intuitive Parking Assist System:
    1. Disconnect the connector.
h. Remove the rear bumper assembly.

DISASSEMBLY

DISASSEMBLY

1. **REMOVE NO. 2 LUGGAGE ROOM WIRE (w/ Intuitive Parking Assist System)**
    a. Disengage the 4 clamps.

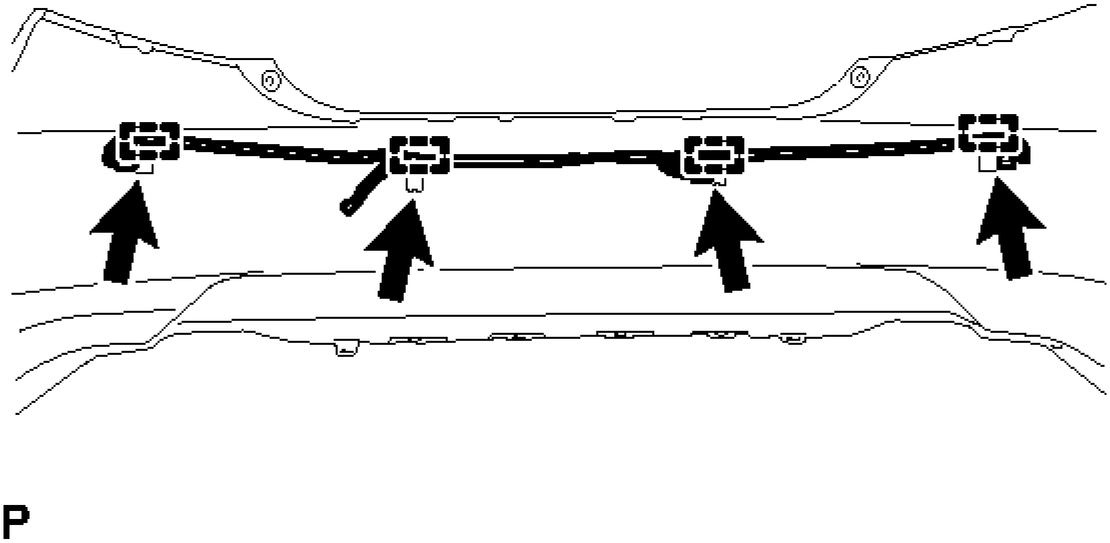

Fig. 51: Identifying No. 2 Luggage Room Wire Clamps (w/ Intuitive Parking Assist System)
Courtesy of TOYOTA MOTOR SALES, U.S.A., INC.

   b. Disconnect the connector and remove the No. 2 luggage room wire.

2. **REMOVE ULTRASONIC SENSOR CLIP (w/ Intuitive Parking Assist System)** . Refer to **REMOVAL - Step 2** .
3. **REMOVE NO. 1 ULTRASONIC SENSOR (w/ Intuitive Parking Assist System)** . Refer to **REMOVAL - Step 3** .
4. **REMOVE NO. 1 ULTRASONIC SENSOR RETAINER (w/ Intuitive Parking Assist System)** . Refer to **REMOVAL - Step 4** .
5. **REMOVE REAR BUMPER SIDE RETAINER LH**
   a. Remove the 3 screws.

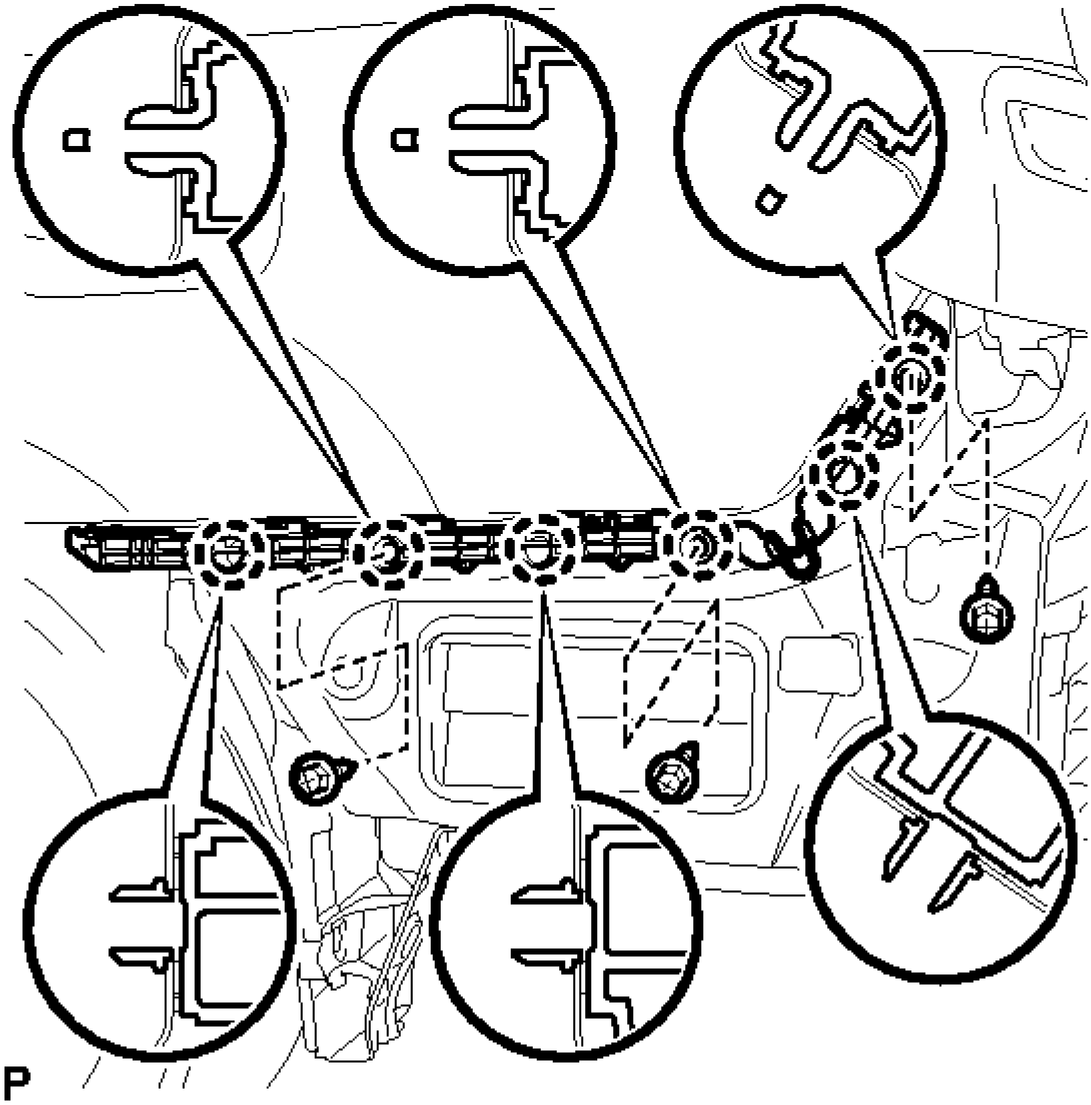

Fig. 52: Identifying Rear Bumper Side Retainer LH Fasteners
Courtesy of TOYOTA MOTOR SALES, U.S.A., INC.

   b. Disengage the 6 claws and remove the rear bumper side retainer LH.

6. **REMOVE REAR BUMPER SIDE RETAINER RH**

   HINT:

   Use the same procedure as for the LH side.

7. **REMOVE WHEEL HOUSE REINFORCEMENT LH**
   a. Disengage the clip.
   b. Remove the screw.

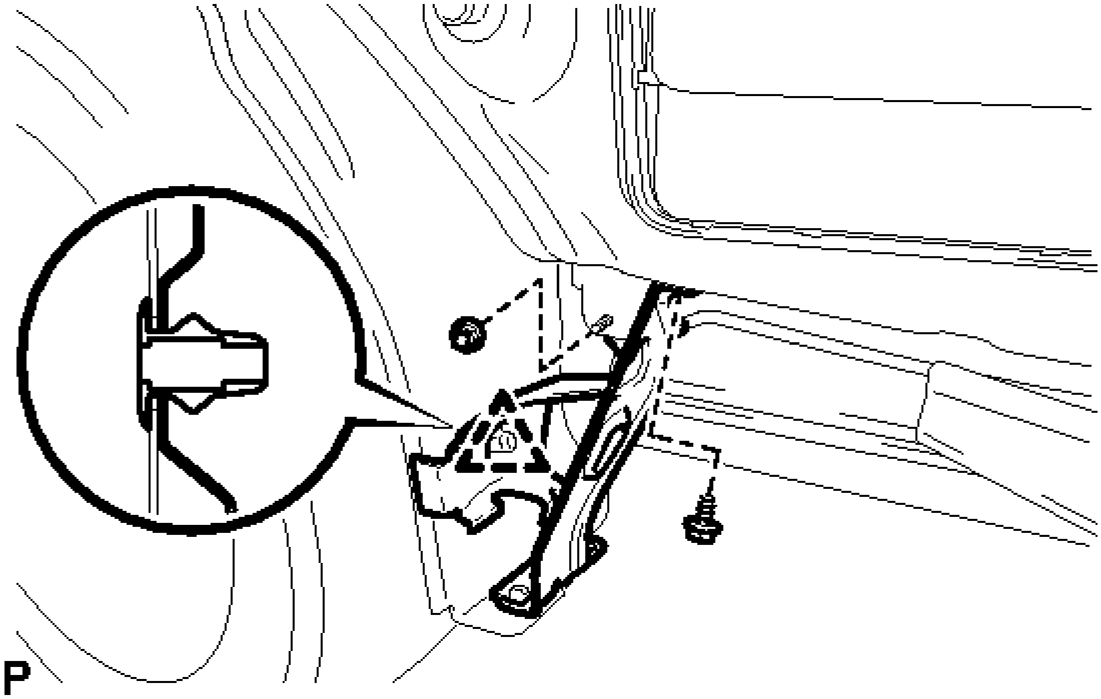

Fig. 53: Identifying Wheel House Reinforcement LH Fasteners
Courtesy of TOYOTA MOTOR SALES, U.S.A., INC.

c. Remove the nut and wheel house reinforcement LH.

8. **REMOVE WHEEL HOUSE REINFORCEMENT RH**

   HINT:

   Use the same procedure as for the LH side.

9. **REMOVE REAR BUMPER ENERGY ABSORBER**
   a. Disengage the 2 guides and remove the rear bumper energy absorber.

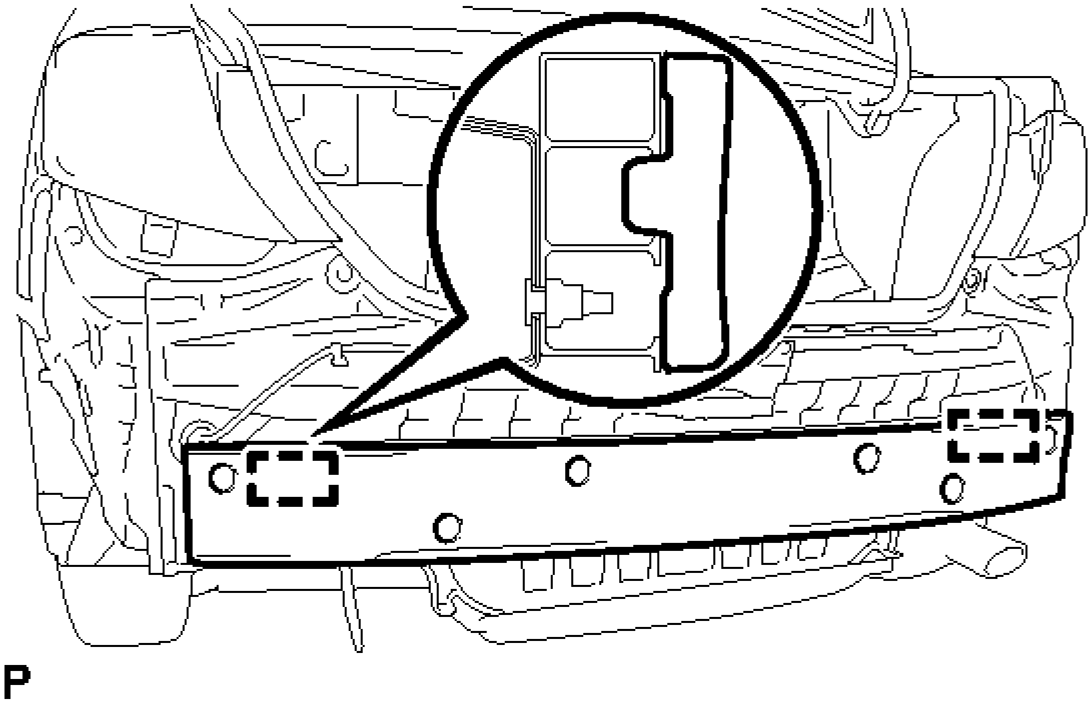

Fig. 54: Locating Rear Bumper Energy Absorber Guides
Courtesy of TOYOTA MOTOR SALES, U.S.A., INC.

10. **REMOVE REAR BUMPER REINFORCEMENT SUB-ASSEMBLY**
    a. Remove the 6 nuts and rear bumper reinforcement sub-assembly.

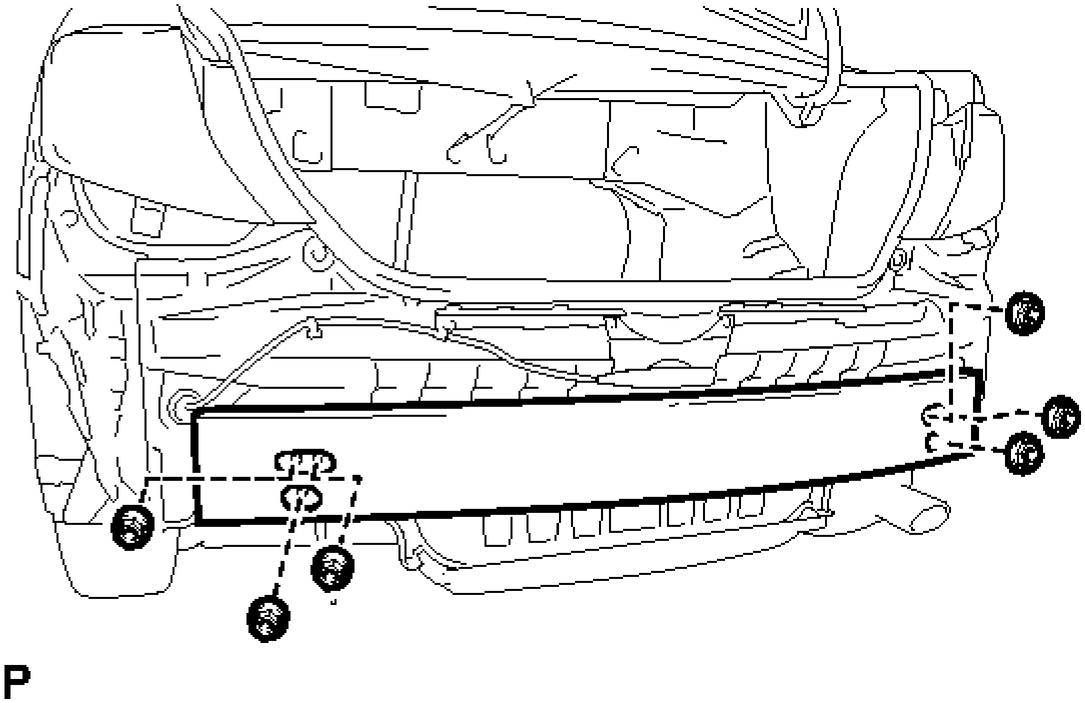

Fig. 55: Identifying Rear Bumper Reinforcement Sub-Assembly Fasteners

Courtesy of TOYOTA MOTOR SALES, U.S.A., INC.

REASSEMBLY

REASSEMBLY

1. **INSTALL REAR BUMPER REINFORCEMENT SUB-ASSEMBLY**
    a. Install the rear bumper reinforcement sub-assembly with the 6 nuts.

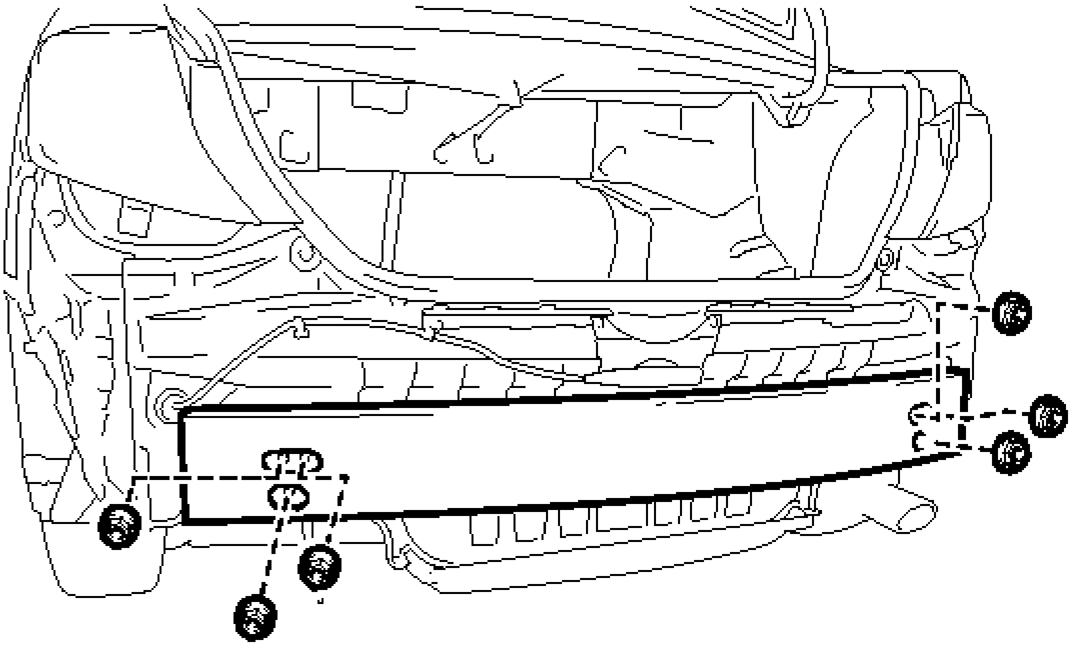

Fig. 56: Identifying Rear Bumper Reinforcement Sub-Assembly Fasteners
Courtesy of TOYOTA MOTOR SALES, U.S.A., INC.

Torque: 61 N*m (622 kgf*cm, 45 ft.*lbf)

2. **INSTALL REAR BUMPER ENERGY ABSORBER**
    a. Engage the 2 guides to install the rear bumper energy absorber.

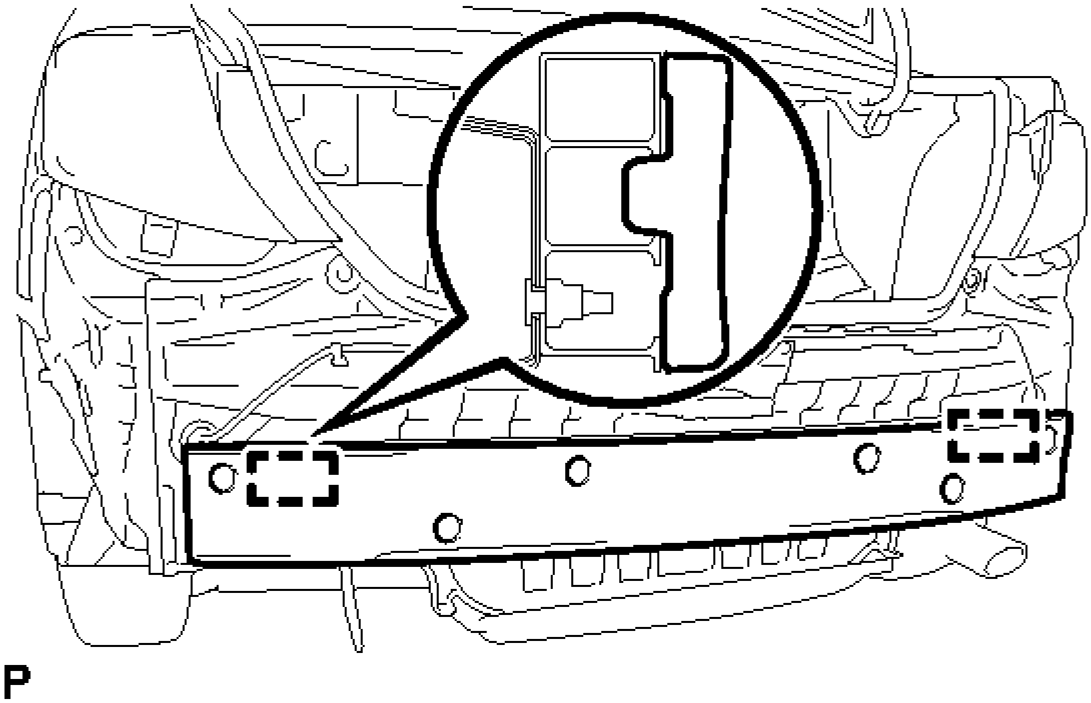

Fig. 57: Locating Rear Bumper Energy Absorber Guides
Courtesy of TOYOTA MOTOR SALES, U.S.A., INC.

3. **INSTALL WHEEL HOUSE REINFORCEMENT LH**
    a. Install the wheel house reinforcement LH with the screw and nut.

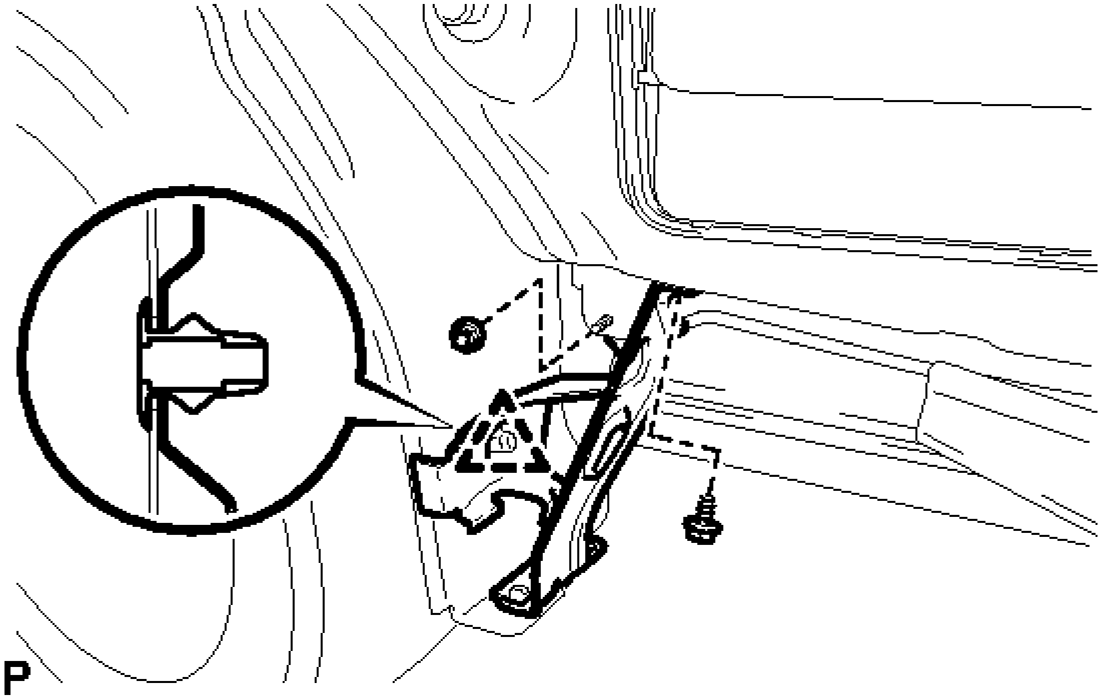

Fig. 58: Identifying Wheel House Reinforcement LH Fasteners

Courtesy of TOYOTA MOTOR SALES, U.S.A., INC.

b. Engage the clip.

4. **INSTALL WHEEL HOUSE REINFORCEMENT RH**

HINT:

Use the same procedure as for the LH side.

5. **INSTALL REAR BUMPER SIDE RETAINER LH**

a. Engage the 6 claws.

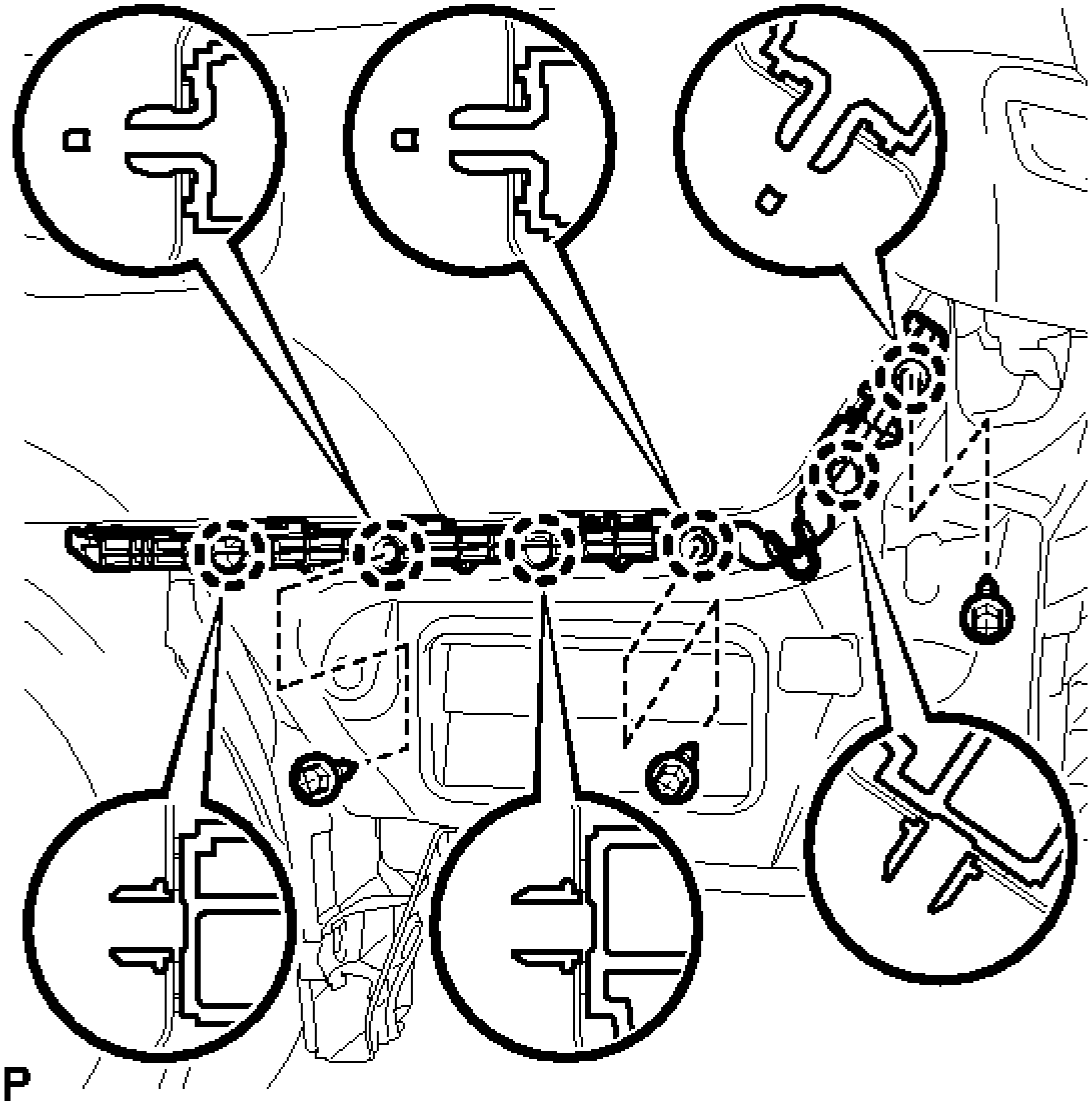

Fig. 59: Identifying Rear Bumper Side Retainer LH Fasteners
Courtesy of TOYOTA MOTOR SALES, U.S.A., INC.

b. Install the rear bumper side retainer LH with the 3 screws.

6. **INSTALL REAR BUMPER SIDE RETAINER RH**

   HINT:

   Use the same procedure as for the LH side.

7. **INSTALL NO. 1 ULTRASONIC SENSOR RETAINER (w/ Intuitive Parking Assist System)** . Refer to **INSTALLATION - Step 1** .
8. **INSTALL NO. 1 ULTRASONIC SENSOR (w/ Intuitive Parking Assist System)** . Refer to **INSTALLATION - Step 2** .
9. **INSTALL ULTRASONIC SENSOR CLIP (w/ Intuitive Parking Assist System)** . Refer to **INSTALLATION - Step 3** .
10. **INSTALL NO. 2 LUGGAGE ROOM WIRE (w/ Intuitive Parking Assist System)**
    a. Connect the 4 connectors.

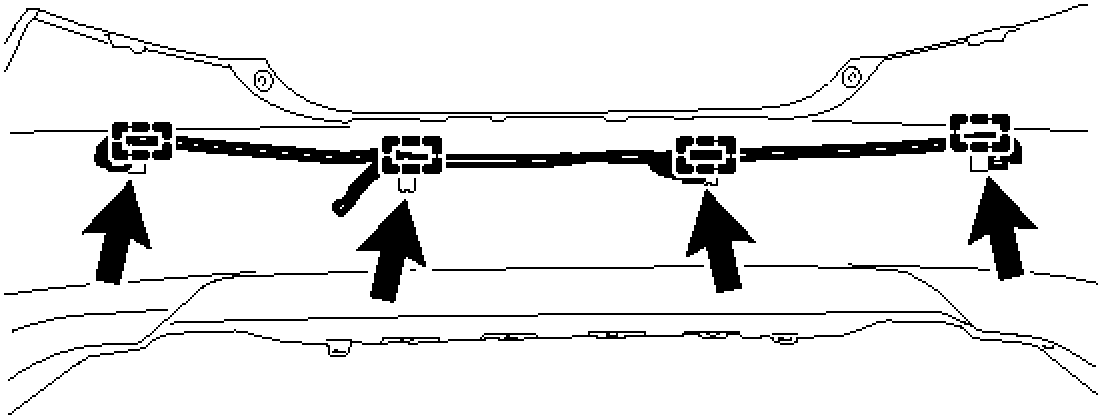

Fig. 60: Identifying No. 2 Luggage Room Wire Clamps (w/ Intuitive Parking Assist System)
Courtesy of TOYOTA MOTOR SALES, U.S.A., INC.

    b. Engage the 4 clamps to install the No. 2 luggage room wire.

INSTALLATION

INSTALLATION

1. **INSTALL REAR BUMPER ASSEMBLY**
   a. w/ Intuitive Parking Assist System:

1. Connect the connector.

b. Engage the 6 claws.

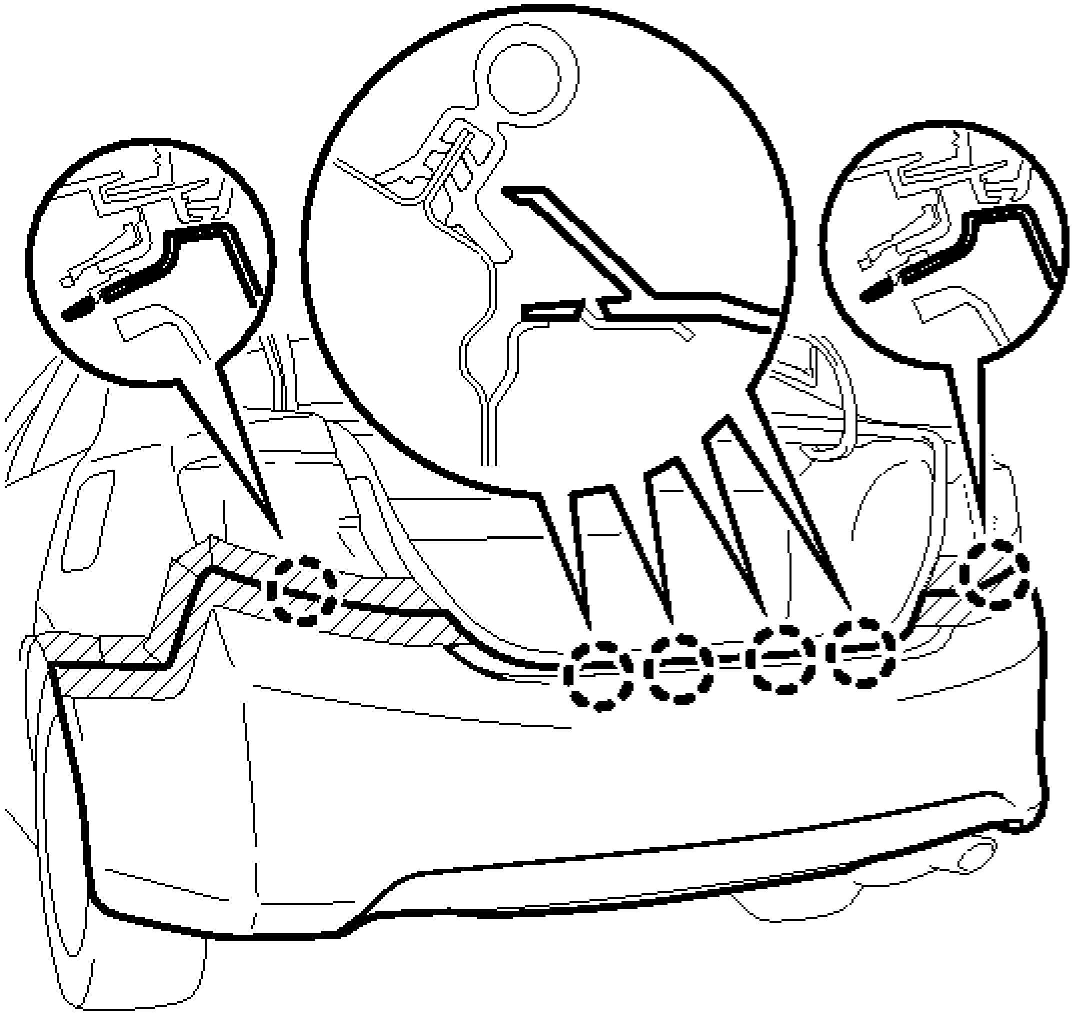

Fig. 61: Identifying Rear Bumper Assembly Rear Claws
Courtesy of TOYOTA MOTOR SALES, U.S.A., INC.

c. Engage the 7 claws and install the rear bumper assembly as shown in the illustration.

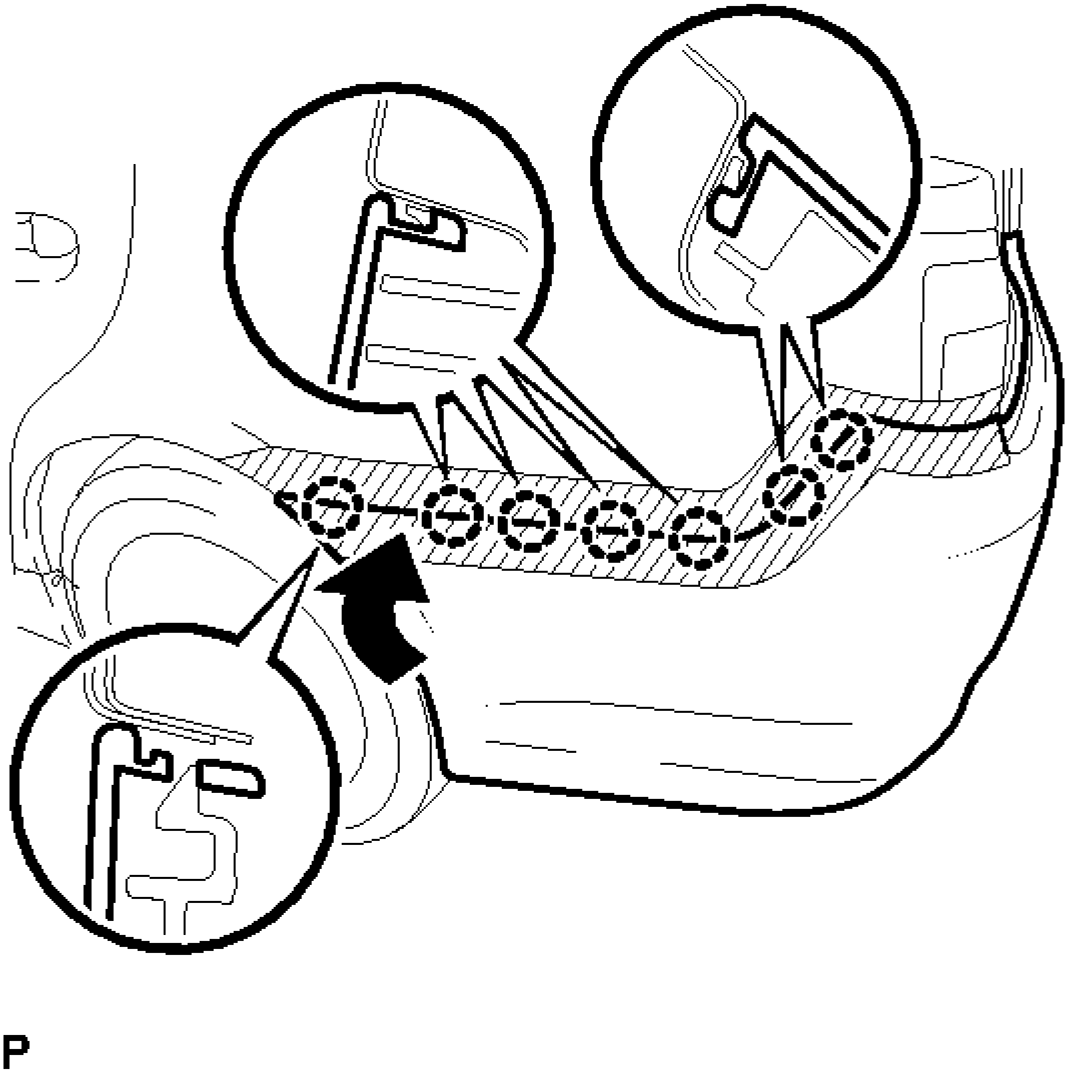

Fig. 62: Engaging Rear Bumper Assembly Side Claws
Courtesy of TOYOTA MOTOR SALES, U.S.A., INC.

HINT:

Use the same procedure for the RH side and LH side.

   d. Install the 10 screws.
   e. Install the 2 clips.

2. **INSTALL REAR BUMPER PLATE LH**
   a. Engage the hook.

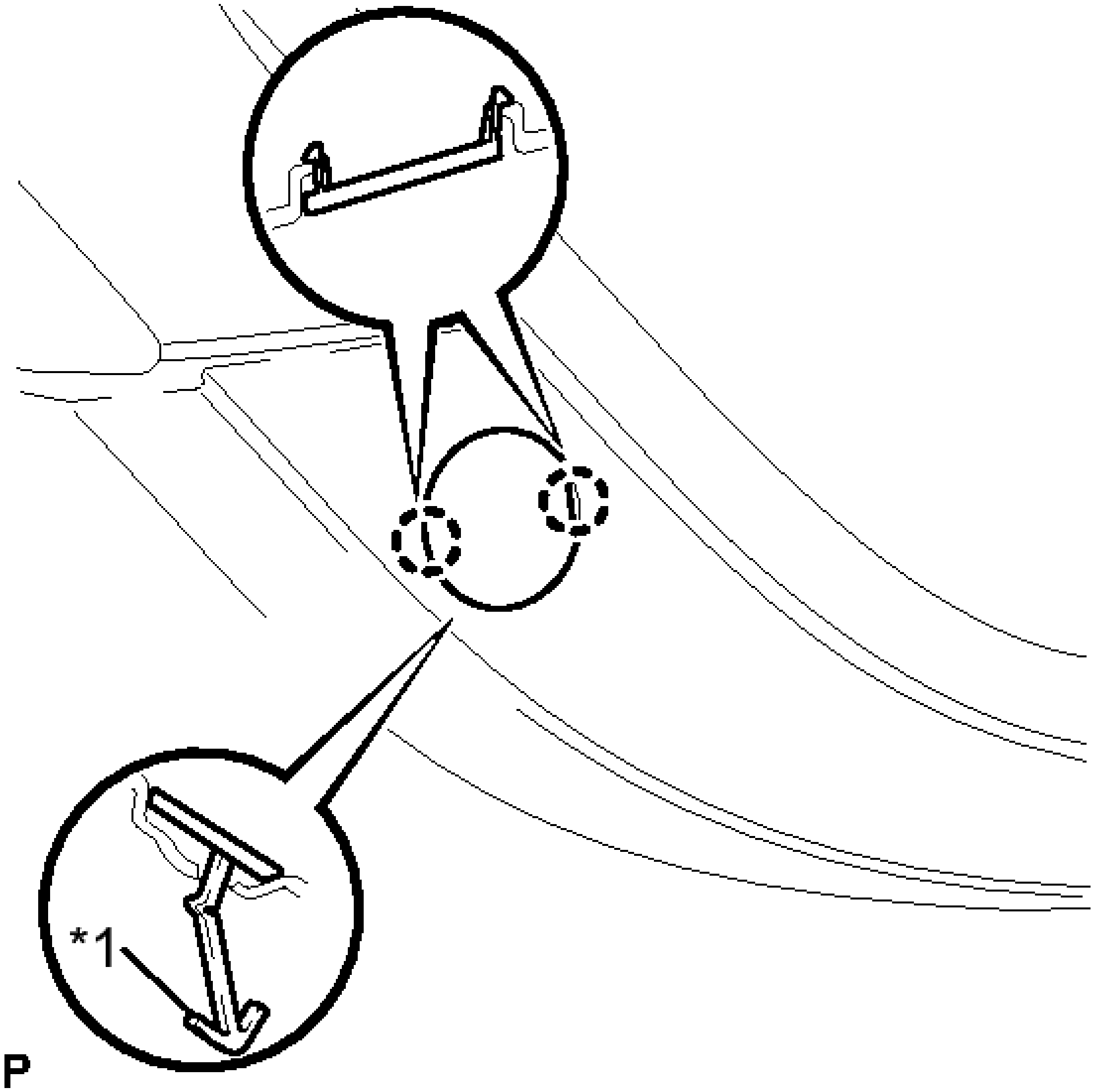

Fig. 63: Identifying Rear Bumper Plate LH
Courtesy of TOYOTA MOTOR SALES, U.S.A., INC.

TEXT IN ILLUSTRATION

*1	Hook

b. Engage the 2 claws to install the rear bumper plate LH.

3. **INSTALL REAR BUMPER PLATE RH**

   HINT:

   Use the same procedure as for the LH side.

REAR SPOILER

COMPONENTS

ILLUSTRATION

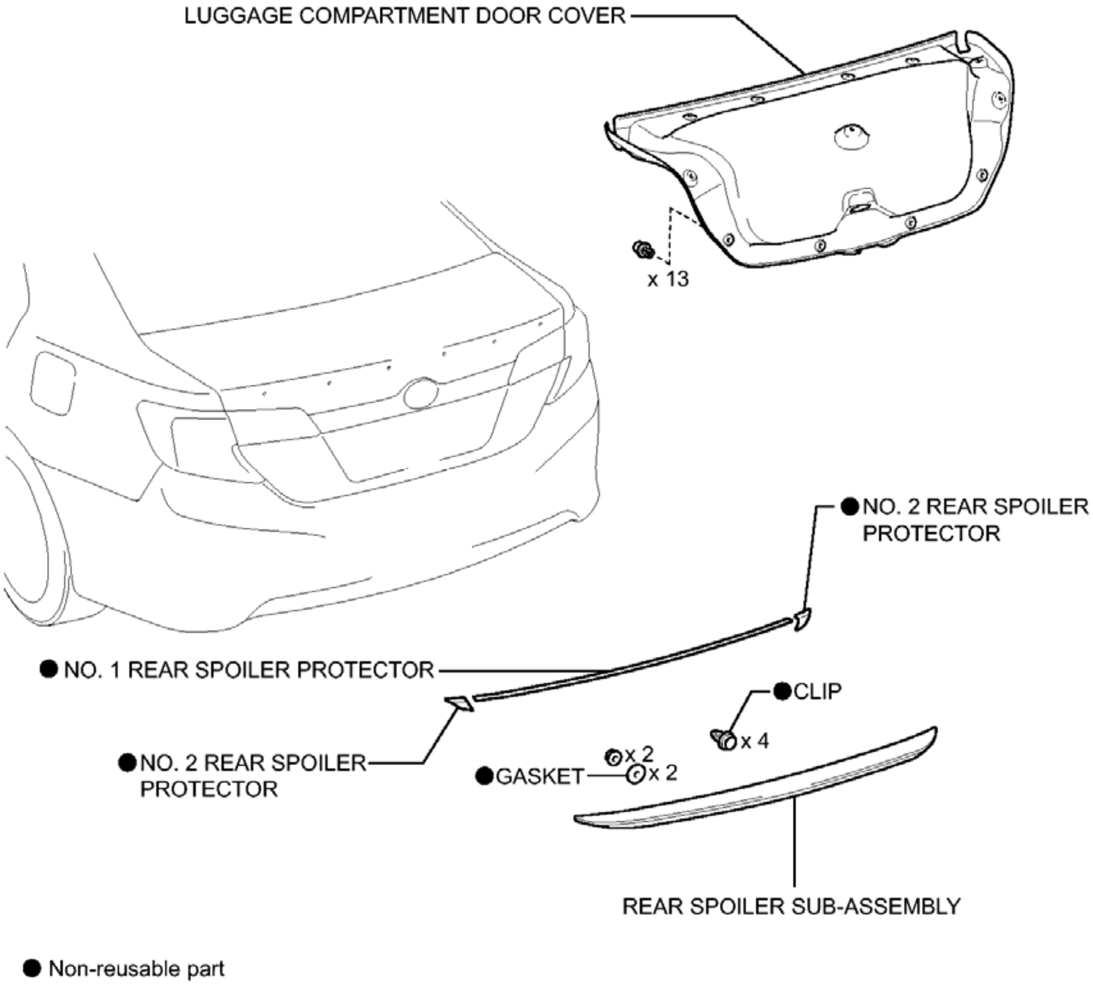
LUGGAGE COMPARTMENT DOOR COVER
x 13
● NO. 2 REAR SPOILER PROTECTOR
● NO. 1 REAR SPOILER PROTECTOR
● CLIP
x 4
● NO. 2 REAR SPOILER PROTECTOR
x 2
● GASKET
x 2
REAR SPOILER SUB-ASSEMBLY
● Non-reusable part
P

Fig. 64: Identifying Rear Spoiler Replacement Components (1 Of 2)
Courtesy of TOYOTA MOTOR SALES, U.S.A., INC.

ILLUSTRATION

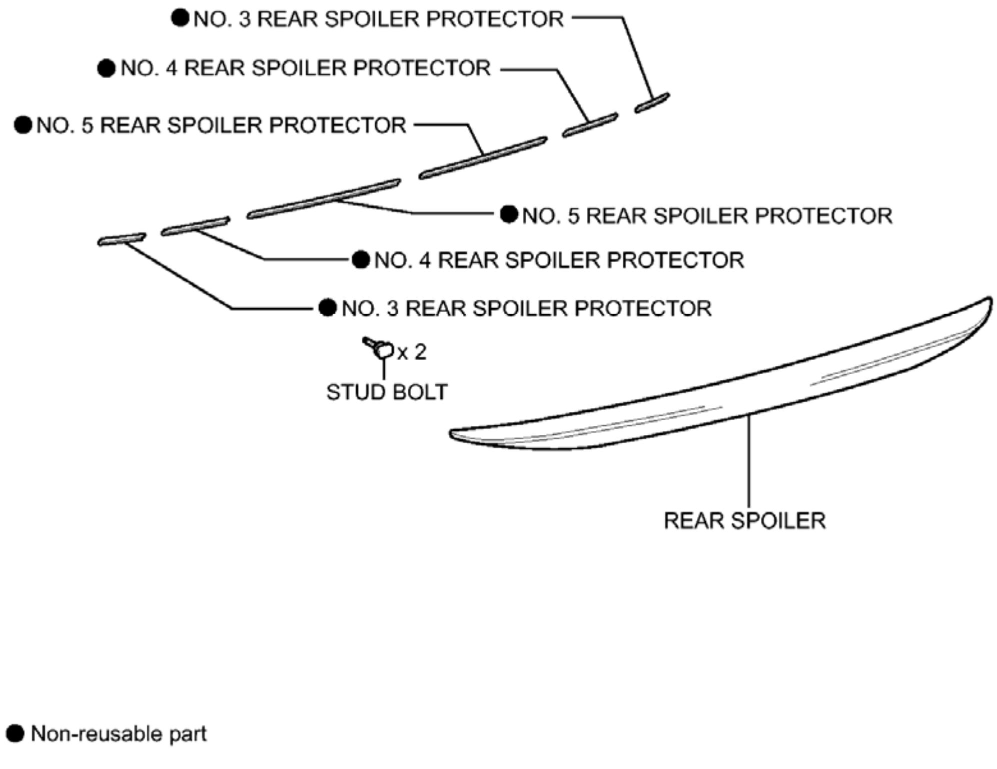
● NO. 3 REAR SPOILER PROTECTOR
● NO. 4 REAR SPOILER PROTECTOR
● NO. 5 REAR SPOILER PROTECTOR
● NO. 5 REAR SPOILER PROTECTOR
● NO. 4 REAR SPOILER PROTECTOR
● NO. 3 REAR SPOILER PROTECTOR
x 2
STUD BOLT
REAR SPOILER
● Non-reusable part
P

Fig. 65: Identifying Rear Spoiler Replacement Components (2 Of 2)
Courtesy of TOYOTA MOTOR SALES, U.S.A., INC.

REMOVAL

REMOVAL

1. **REMOVE LUGGAGE COMPARTMENT DOOR COVER** . Refer to **DISASSEMBLY - Step 1** .
2. **REMOVE REAR SPOILER SUB-ASSEMBLY**

   HINT:

   When removing the rear spoiler sub-assembly, heat the vehicle body and rear spoiler sub-assembly using a heat light.

   Heating Temperature

Item	Temperature
Vehicle Body	40 to 60°C (104 to 140°F)

Rear Spoiler	20 to 30°C (68 to 86°F)

NOTE: Do not heat the vehicle body, rear spoiler sub-assembly excessively.

a. Put protective tape around the rear spoiler sub-assembly.

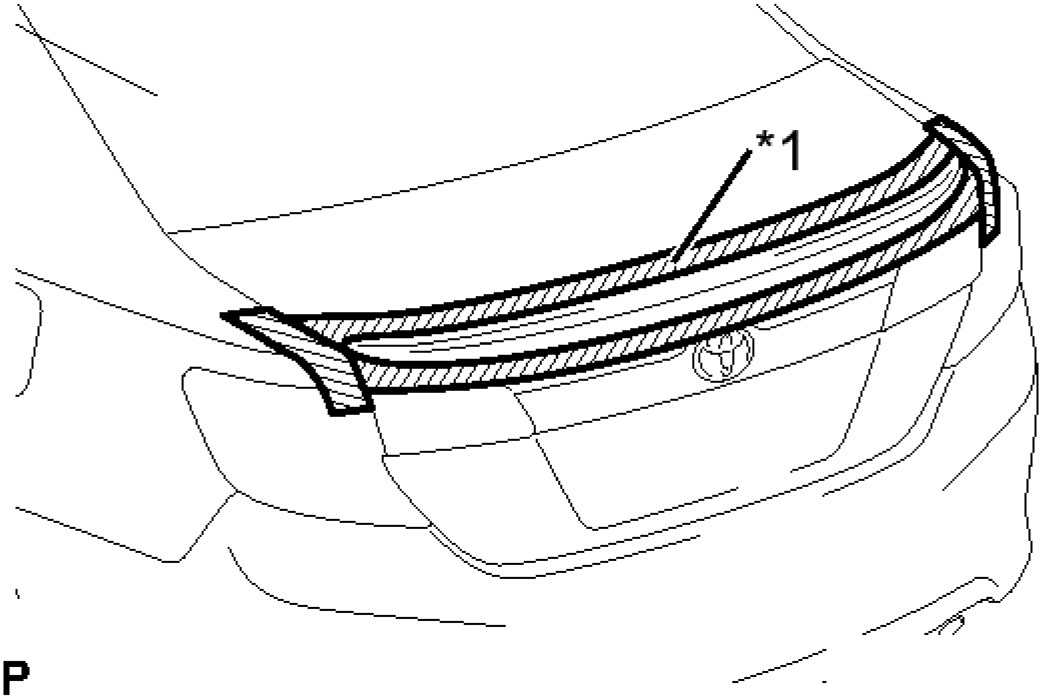

Fig. 66: Identifying Protective Tape On Rear Spoiler Sub-Assembly
Courtesy of TOYOTA MOTOR SALES, U.S.A., INC.

TEXT IN ILLUSTRATION

*1	Protective Tape

b. Remove the 2 nuts.

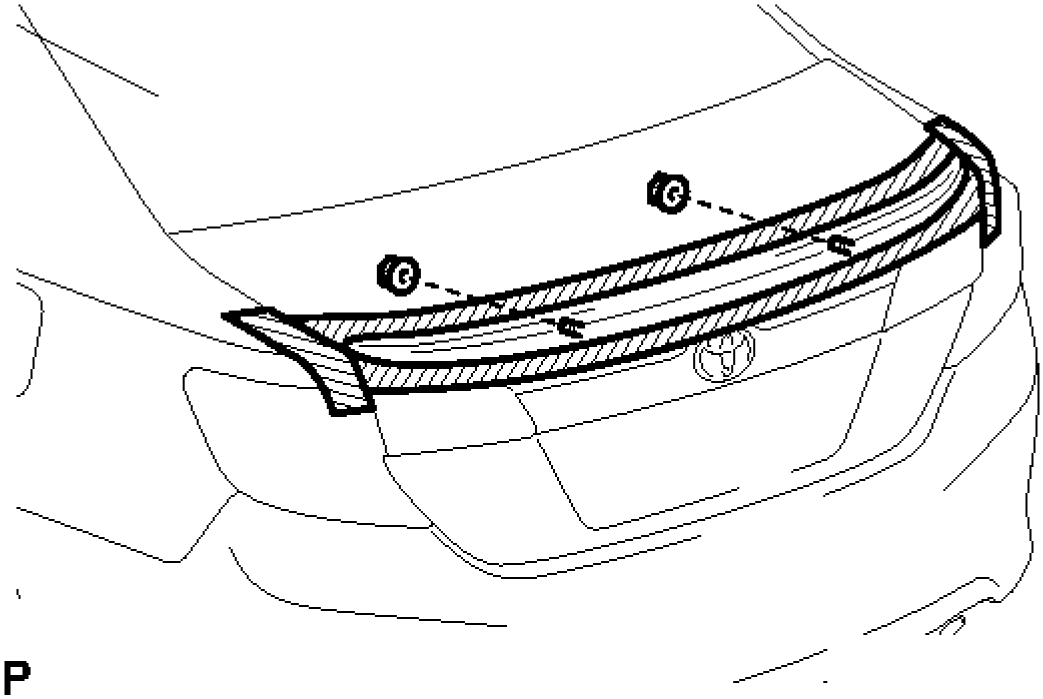

Fig. 67: Identifying Rear Spoiler Sub-Assembly Fasteners
Courtesy of TOYOTA MOTOR SALES, U.S.A., INC.

c. Insert a piano wire between the vehicle body and rear spoiler sub-assembly.

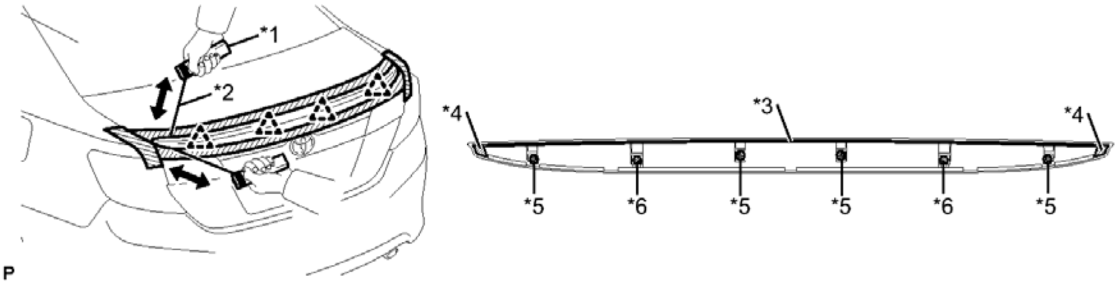

Fig. 68: Removing Rear Spoiler Sub-Assembly
Courtesy of TOYOTA MOTOR SALES, U.S.A., INC.

TEXT IN ILLUSTRATION

*1	Wooden Block	*2	Piano Wire
*3	No. 1 Rear Spoiler Protector	*4	No. 2 Rear Spoiler Protector
*5	Clip	*6	Stud Bolt

d. Tie objects that can serve as handles (for example, wooden blocks) to both wire ends.

e. Pull the piano wire and scrape off the No. 1 rear spoiler protector and 2 No. 2 rear spoiler protectors that holds the rear spoiler sub-assembly to the vehicle body.

NOTE: Be careful not to damage the vehicle body.

f. Disengage the 4 clips and remove the rear spoiler sub-assembly.

g. Remove the No. 1 rear spoiler protector.

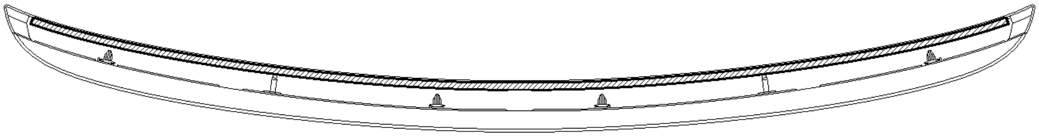

P

Fig. 69: Identifying No. 1 Rear Spoiler Protector
Courtesy of TOYOTA MOTOR SALES, U.S.A., INC.

h. Remove the No. 2 rear spoiler protector.

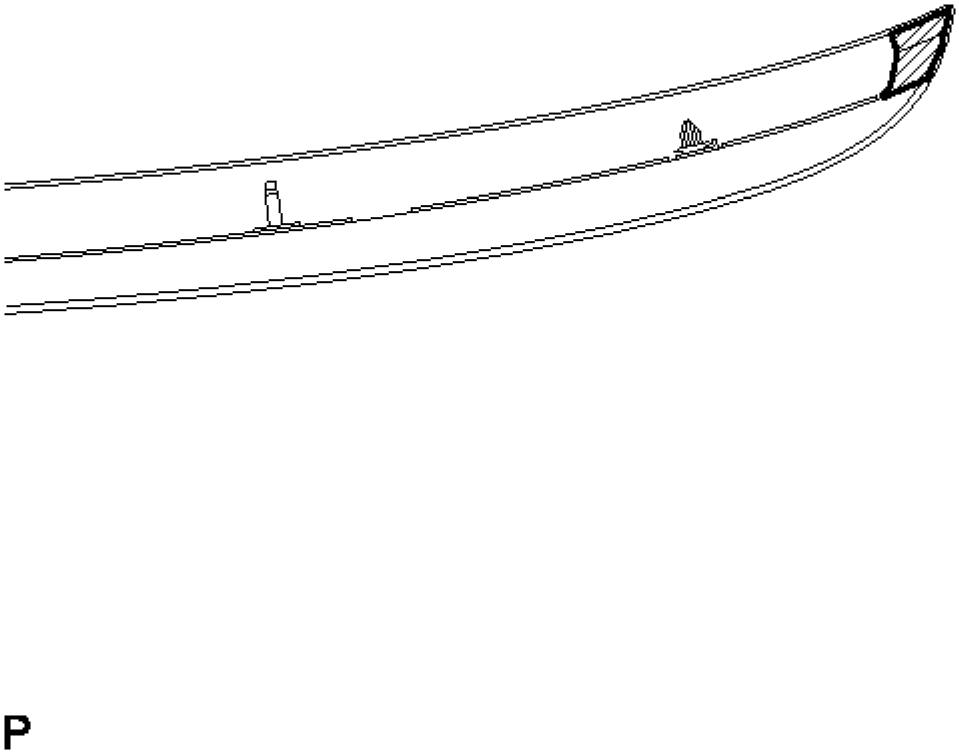

Fig. 70: Identifying No. 2 Rear Spoiler Protector
Courtesy of TOYOTA MOTOR SALES, U.S.A., INC.

HINT:

Use the same procedure for the RH side and LH side.

i. Remove the 4 clips from the rear spoiler.
j. Remove the 2 gaskets from the rear spoiler.
k. When replacing the rear spoiler with a new one:
    1. Remove the 2 stud bolts from the rear spoiler.

3. **REMOVE NO. 3 REAR SPOILER PROTECTOR**
    a. Remove the 2 No. 3 rear spoiler protectors.

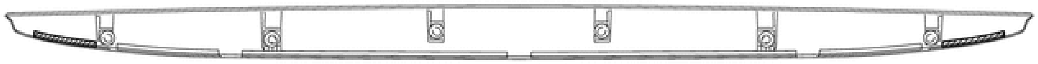

Fig. 71: Identifying No. 3 Rear Spoiler Protectors
Courtesy of TOYOTA MOTOR SALES, U.S.A., INC.

4. **REMOVE NO. 4 REAR SPOILER PROTECTOR**
    a. Remove the 2 No. 4 rear spoiler protectors.

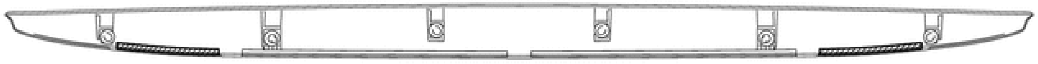

Fig. 72: Identifying No. 4 Rear Spoiler Protectors
Courtesy of TOYOTA MOTOR SALES, U.S.A., INC.

5. **REMOVE NO. 5 REAR SPOILER PROTECTOR**
    a. Remove the 2 No. 5 rear spoiler protectors.

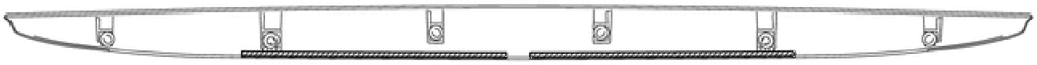

Fig. 73: Identifying No. 5 Rear Spoiler Protectors
Courtesy of TOYOTA MOTOR SALES, U.S.A., INC.

INSTALLATION

INSTALLATION

1. **INSTALL NO. 3 REAR SPOILER PROTECTOR**
    a. Clean the rear spoiler.
        1. Remove any double-sided tape from the rear spoiler.

    2. Wipe off any tape adhesive residue with cleaner.
  - b. Install 2 new No. 3 rear spoiler protectors.
    1. Remove the release paper from the 2 No. 3 rear spoiler protectors.

       HINT:

       After removing the release paper, keep the exposed adhesive free from foreign matter.

    2. Install a 2 new No. 3 rear spoiler protectors.

2. **INSTALL NO. 4 REAR SPOILER PROTECTOR**
   - a. Clean the rear spoiler.
     1. Remove any double-sided tape from the rear spoiler.
     2. Wipe off any tape adhesive residue with cleaner.
   - b. Install 2 new No. 4 rear spoiler protectors.
     1. Remove the release paper from the 2 No. 4 rear spoiler protectors.

        HINT:

        After removing the release paper, keep the exposed adhesive free from foreign matter.

     2. Install 2 new No. 4 rear spoiler protectors as shown in the illustration.

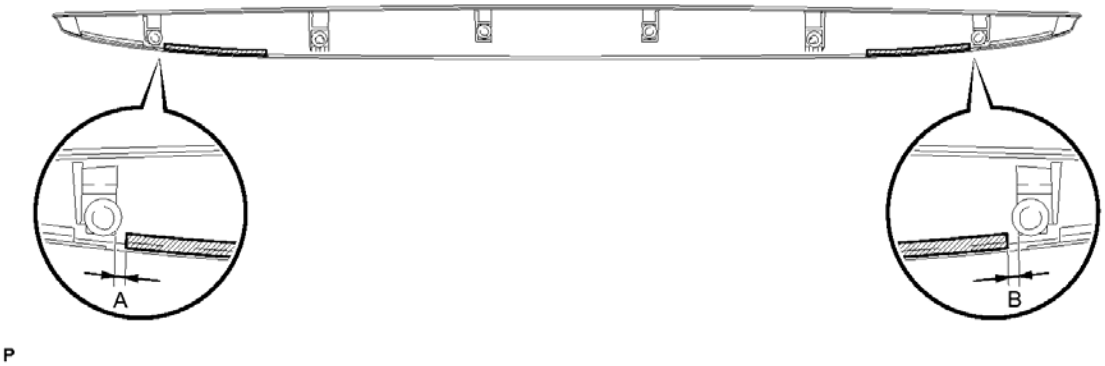

Fig. 74: Identifying No. 4 Rear Spoiler Protectors
Courtesy of TOYOTA MOTOR SALES, U.S.A., INC.

STANDARD MEASUREMENT

Dimension	Measurement	Dimension	Measurement
A	5.2 mm (0.205 in.)	B	5.2 mm (0.205 in.)

3. **INSTALL NO. 5 REAR SPOILER PROTECTOR**
   - a. Clean the rear spoiler.

        1. Remove any double-sided tape from the rear spoiler.
        2. Wipe off any tape adhesive residue with cleaner.
    b. Install 2 new No. 5 rear spoiler protectors.
        1. Remove the release paper from the 2 No. 5 rear spoiler protectors.

           HINT:

           After removing the release paper, keep the exposed adhesive free from foreign matter.

        2. Install a 2 new No. 5 rear spoiler protectors as shown in the illustration.

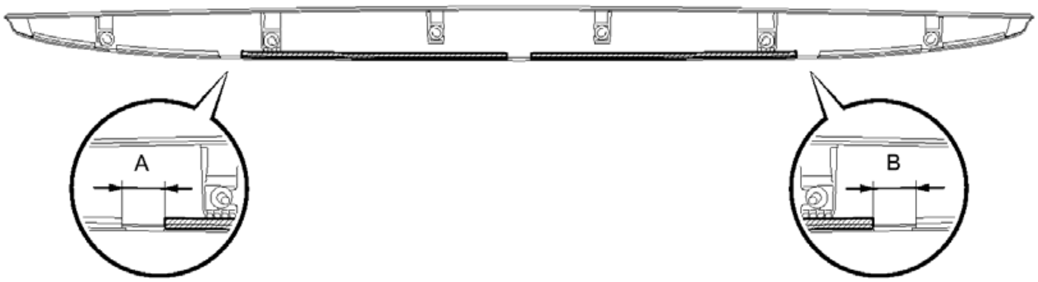

Fig. 75: Identifying No. 5 Rear Spoiler Protectors
Courtesy of TOYOTA MOTOR SALES, U.S.A., INC.

STANDARD MEASUREMENT

Dimension	Measurement	Dimension	Measurement
A	38.0 mm (1.5 in.)	B	38.0 mm (1.5 in.)

4. **INSTALL REAR SPOILER SUB-ASSEMBLY**
    a. When replacing the rear spoiler with a new one:
        1. Install the 2 stud bolts to the rear spoiler.
    b. Install 2 new gaskets to the rear spoiler.
    c. Install 4 new clips to the rear spoiler.
    d. Clean the rear spoiler.
        1. Remove any double-sided tape from the rear spoiler.
        2. Wipe off any tape adhesive residue with cleaner.
    e. Install a new No. 2 rear spoiler protector.
        1. Remove the release paper from the No. 2 rear spoiler protector.

           HINT:

    After removing the release paper, keep the exposed adhesive free from foreign matter.

  2. Install a new No. 2 rear spoiler protector.

     HINT:

     Use the same procedure for the RH side and LH side.

f. Install the No. 1 rear spoiler protector.
  1. Remove the release paper from the No. 1 rear spoiler protector.

     HINT:

     After removing the release paper, keep the exposed adhesive free from foreign matter.

  2. Install the No. 1 rear spoiler protector as shown in the illustration.

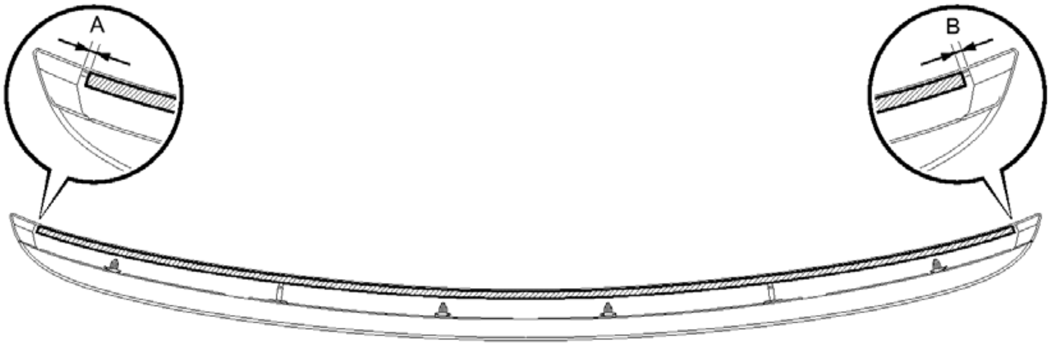

P

Fig. 76: Identifying No. 1 Rear Spoiler Protector
Courtesy of TOYOTA MOTOR SALES, U.S.A., INC.

STANDARD MEASUREMENT

Dimension	Measurement	Dimension	Measurement
A	5.0 mm (0.197 in.)	B	5.0 mm (0.197 in.)

g. Clean the vehicle body surface.
  1. Using a heat light, heat the vehicle body surface.
  2. Remove the double-sided tape from the vehicle body.
  3. Wipe off any tape adhesive residue with cleaner.

h. Install the rear spoiler sub-assembly.
  1. Using a heat light, heat the vehicle body and rear spoiler sub-assembly.
  2. Remove the release paper from the rear spoiler sub-assembly.

HINT:

After removing the release paper, keep the exposed adhesive free from foreign matter.

3. Engage the 4 clips.

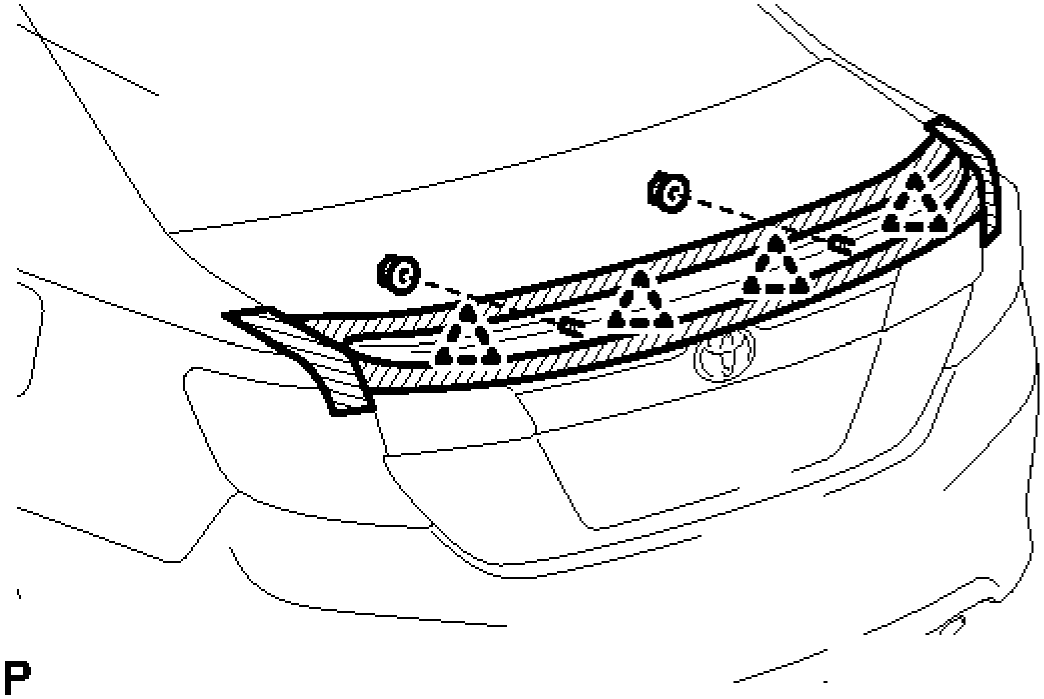

Fig. 77: Identifying Rear Spoiler Sub-Assembly Fasteners
Courtesy of TOYOTA MOTOR SALES, U.S.A., INC.

4. Install the rear spoiler sub-assembly with the 2 nuts.

5. **INSTALL LUGGAGE COMPARTMENT DOOR COVER** . Refer to **REASSEMBLY - Step 12** .

RADIATOR GRILLE

COMPONENTS

ILLUSTRATION

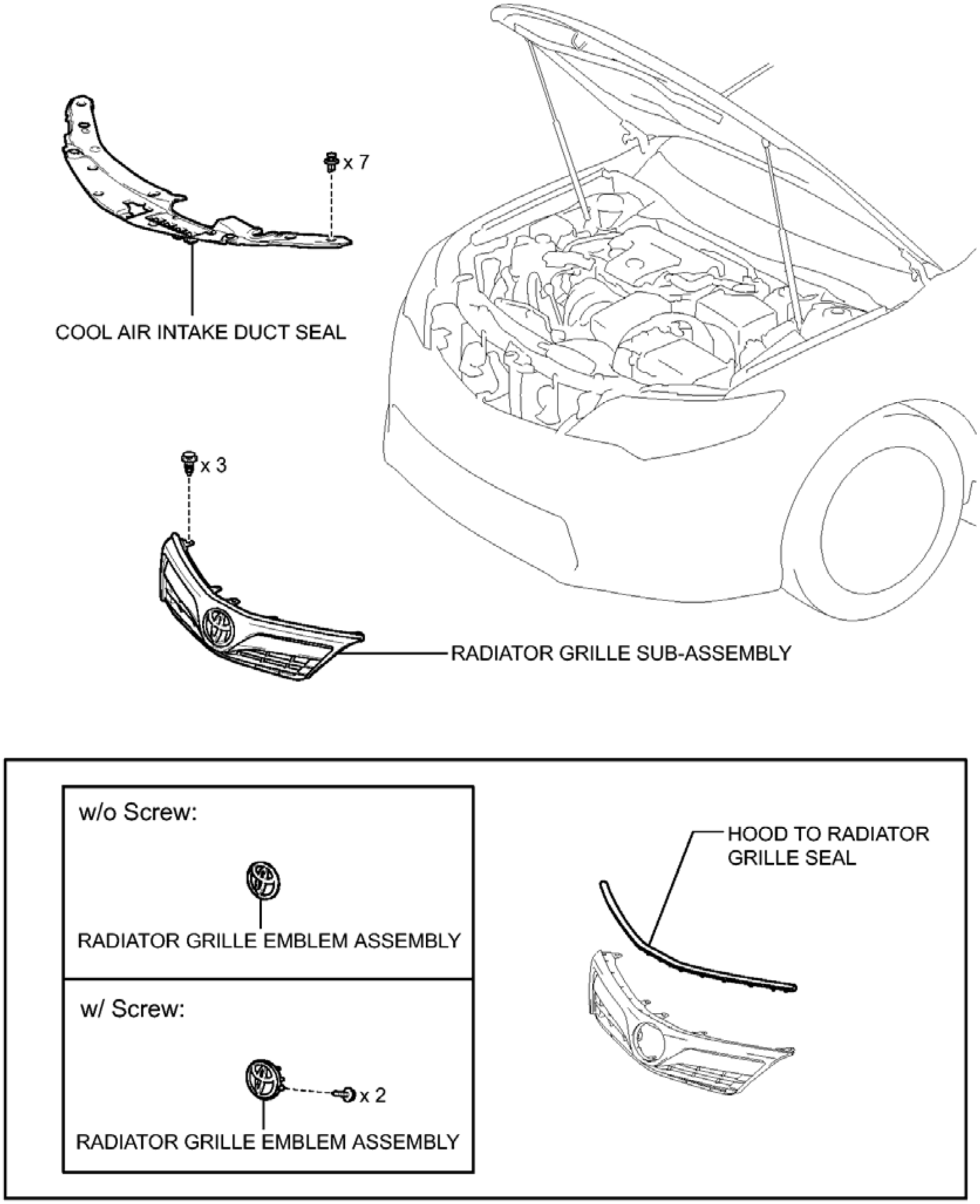
x 7
COOL AIR INTAKE DUCT SEAL
x 3
RADIATOR GRILLE SUB-ASSEMBLY
w/o Screw:
RADIATOR GRILLE EMBLEM ASSEMBLY
w/ Screw:
x 2
RADIATOR GRILLE EMBLEM ASSEMBLY
HOOD TO RADIATOR
GRILLE SEAL
P

Fig. 78: Identifying Radiator Grille Replacement Components
Courtesy of TOYOTA MOTOR SALES, U.S.A., INC.

REMOVAL

REMOVAL

1. **REMOVE COOL AIR INTAKE DUCT SEAL**

a. Remove the 7 clips and cool air intake duct seal.

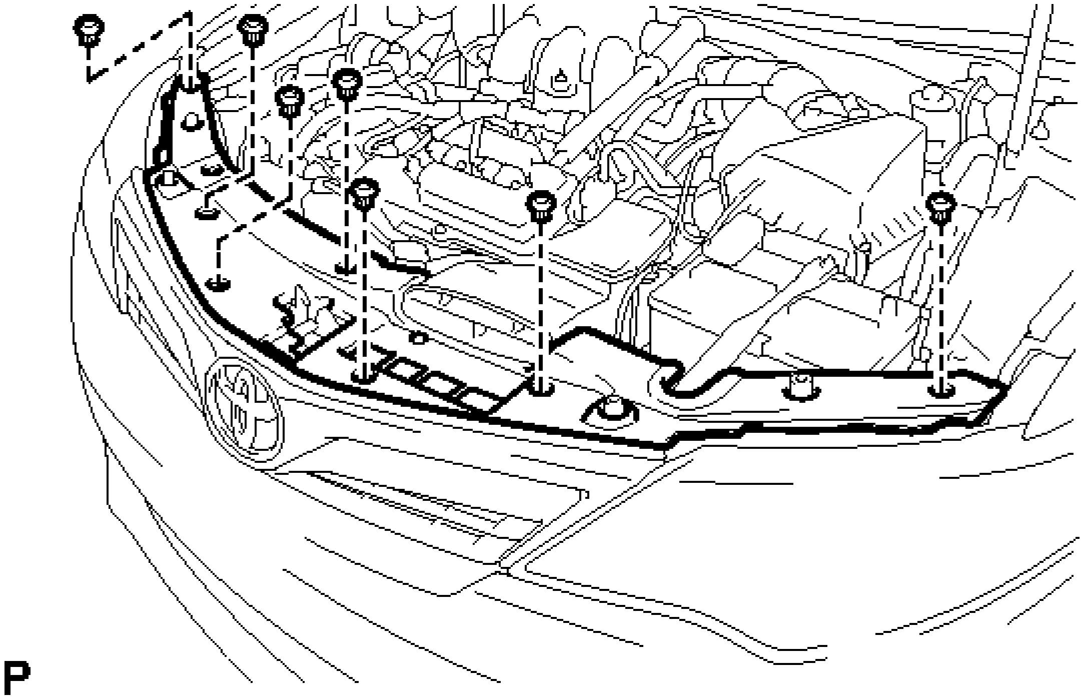

Fig. 79: Identifying Cool Air Intake Duct Seal Clips
Courtesy of TOYOTA MOTOR SALES, U.S.A., INC.

2. **REMOVE RADIATOR GRILLE SUB-ASSEMBLY**
    a. Put protective tape around the radiator grille sub-assembly.

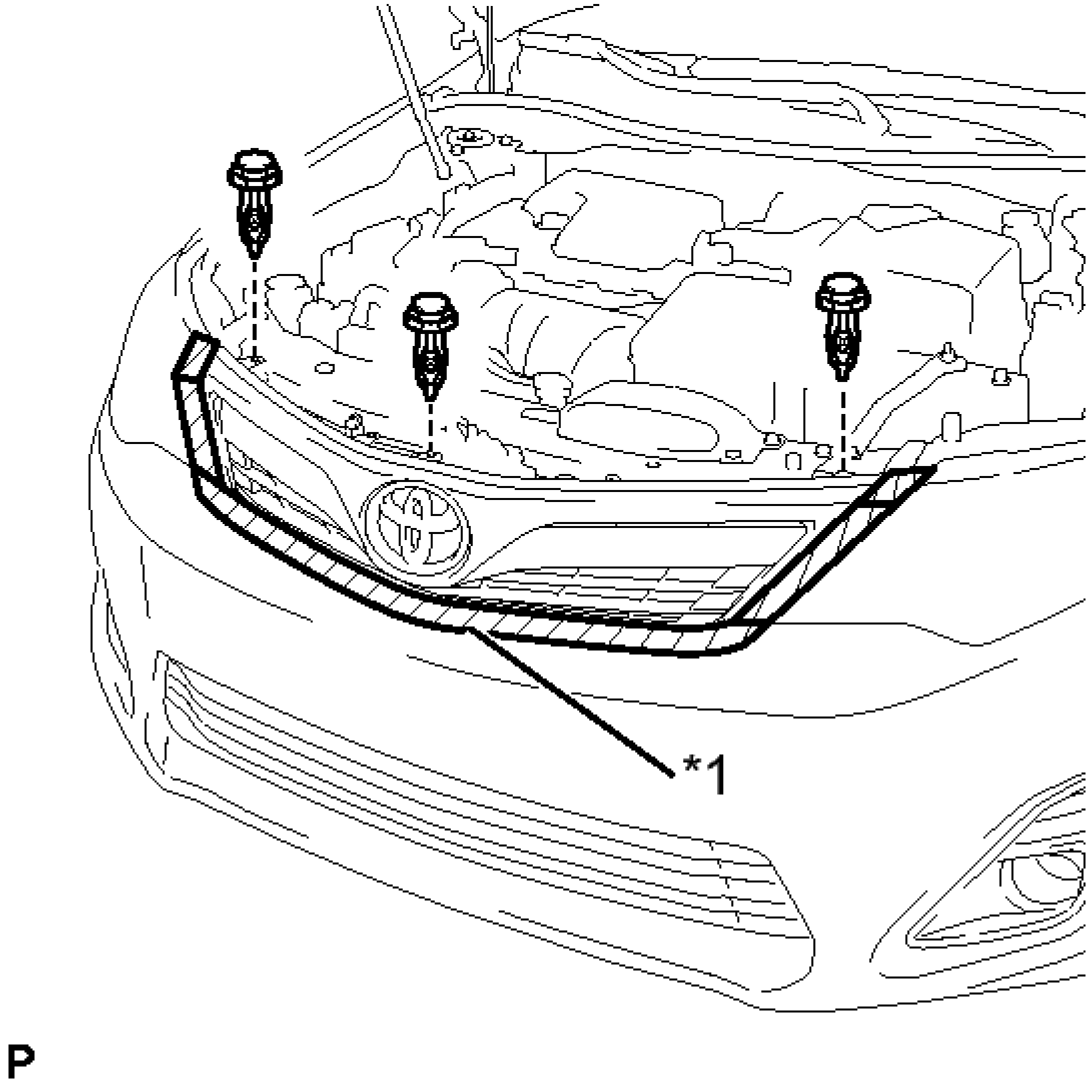

Fig. 80: Identifying Protective Tape On Radiator Grille Sub-Assembly And Clips
Courtesy of TOYOTA MOTOR SALES, U.S.A., INC.

TEXT IN ILLUSTRATION

*1	Protective Tape

b. Remove the 3 clips.
c. Disengage the 8 claws, and remove the radiator grille sub-assembly.

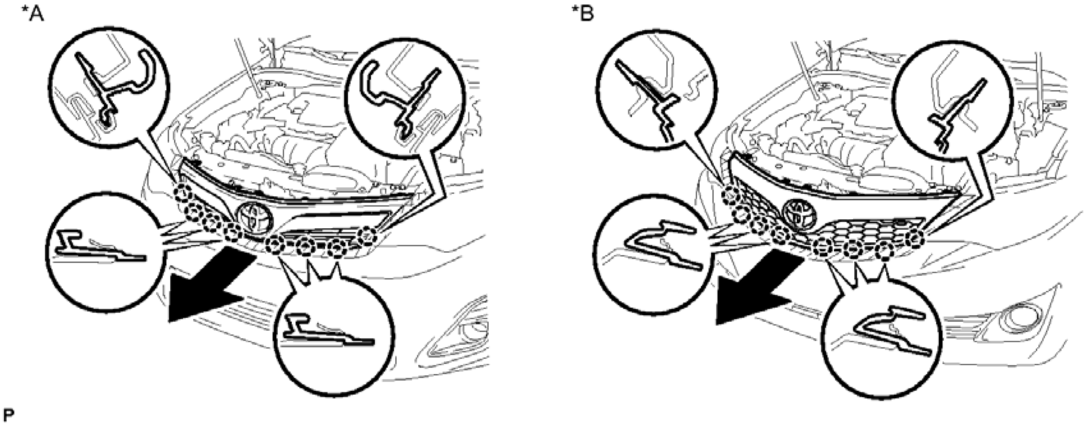

Fig. 81: Removing Radiator Grille Sub-Assembly
Courtesy of TOYOTA MOTOR SALES, U.S.A., INC.

TEXT IN ILLUSTRATION

*A	for Standard	*B	for Sport Package

3. **REMOVE HOOD TO RADIATOR GRILLE SEAL**
    a. Disengage the 15 clips to remove the hood to radiator grille seal.

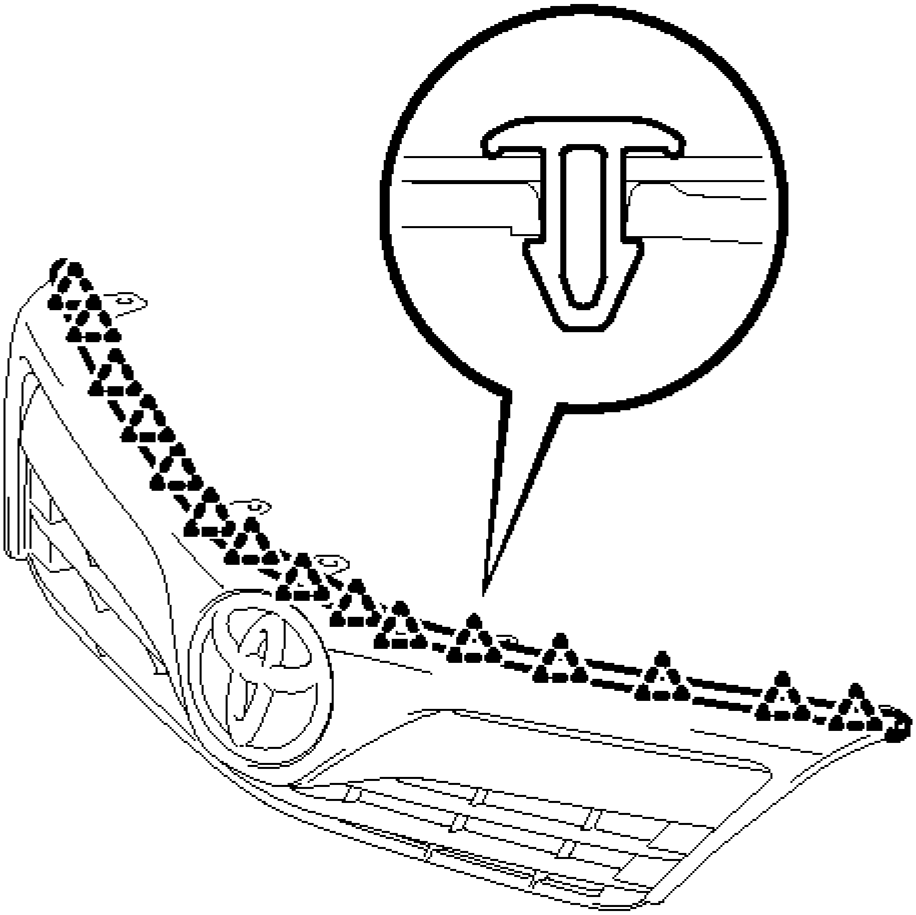

P

Fig. 82: Identifying Hood To Radiator Grille Seal
Courtesy of TOYOTA MOTOR SALES, U.S.A., INC.

4. **REMOVE RADIATOR GRILLE EMBLEM ASSEMBLY**
   a. w/o Screw:
      1. Disengage the 3 claws and guide, and remove the radiator grille emblem assembly.

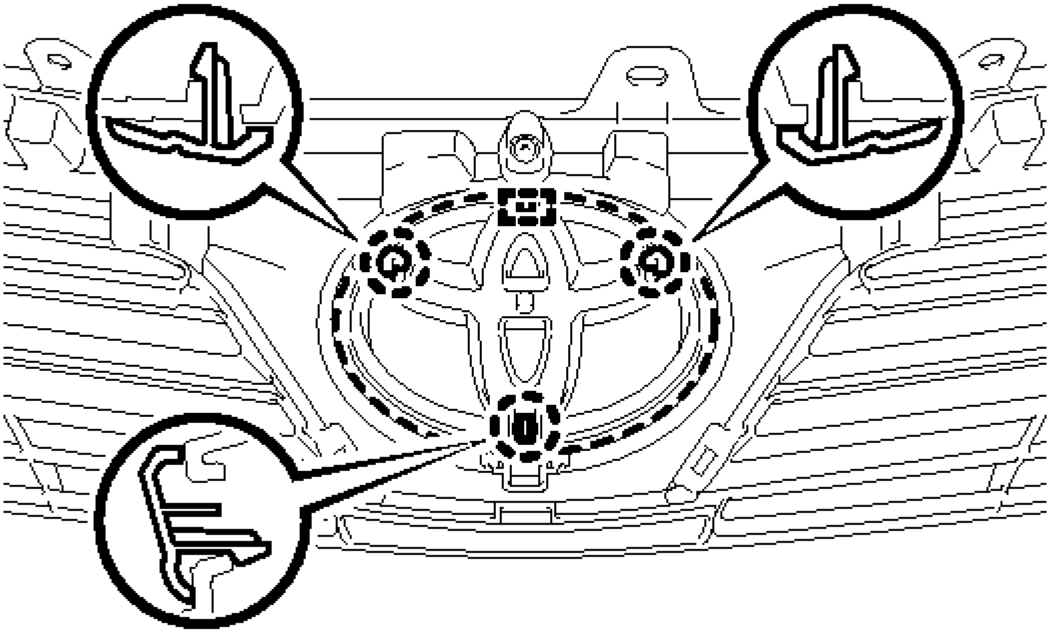

P

Fig. 83: Identifying Radiator Grille Emblem Assembly w/o Screw
Courtesy of TOYOTA MOTOR SALES, U.S.A., INC.

b. w/ Screw:
   1. Remove the 2 screws.

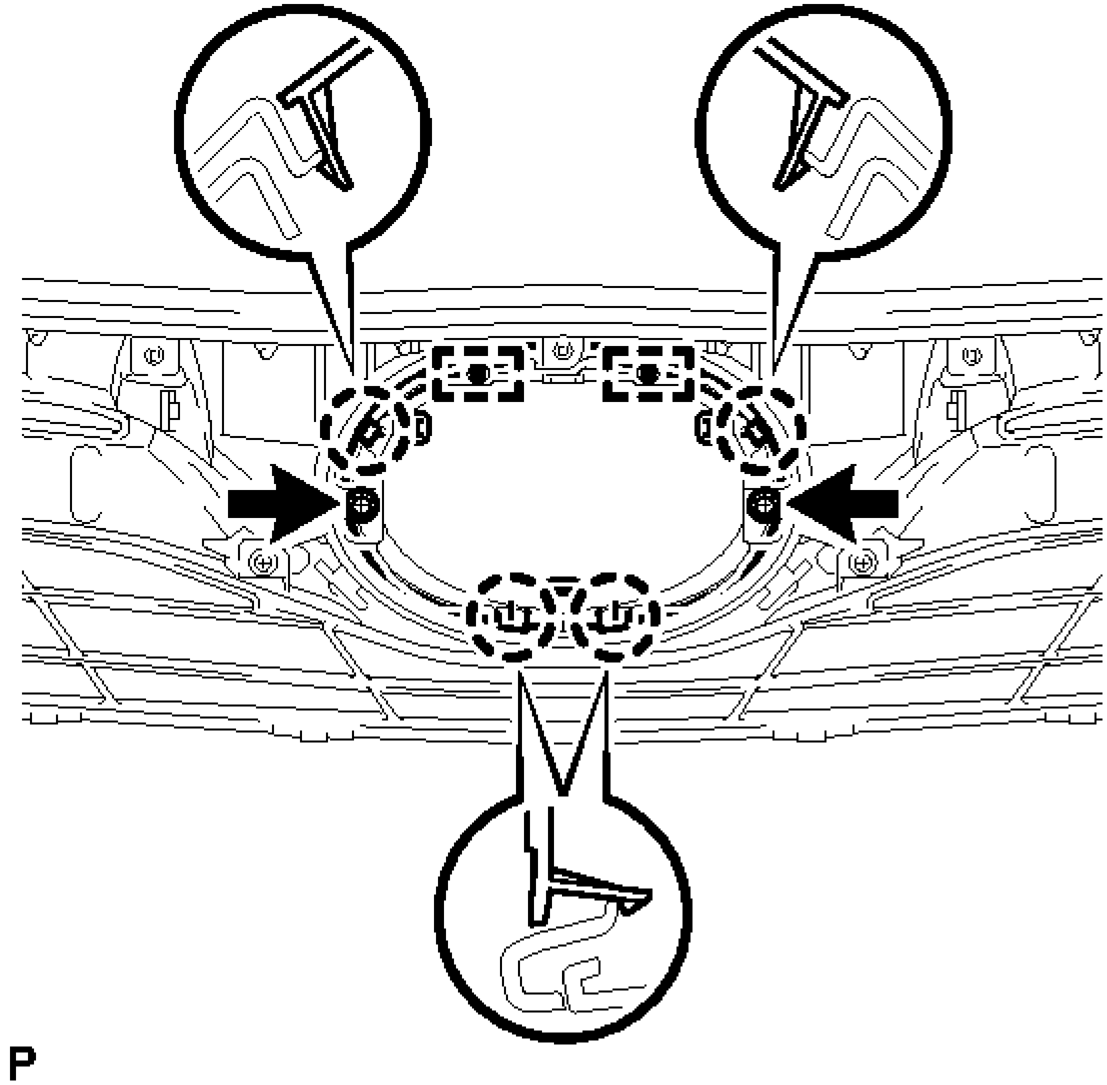

Fig. 84: Identifying Radiator Grille Emblem Assembly w/ Screw
Courtesy of TOYOTA MOTOR SALES, U.S.A., INC.

2. Disengage the 4 claws and 2 guides, and remove the radiator grille emblem assembly.

INSTALLATION

INSTALLATION

1. **INSTALL RADIATOR GRILLE EMBLEM ASSEMBLY**
    a. w/o Screw:
        1. Engage the guide and 3 claws to install the radiator grille emblem assembly.
    b. w/ Screw:
        1. Engage the 2 guides and 4 claws, and remove the radiator grille emblem assembly.
        2. Install the 2 screws.

2. **INSTALL HOOD TO RADIATOR GRILLE SEAL**
    a. Engage the 15 clips to install the hood to radiator grille seal.
3. **INSTALL RADIATOR GRILLE SUB-ASSEMBLY**
    a. Engage the 8 claws to install the radiator grille sub-assembly.

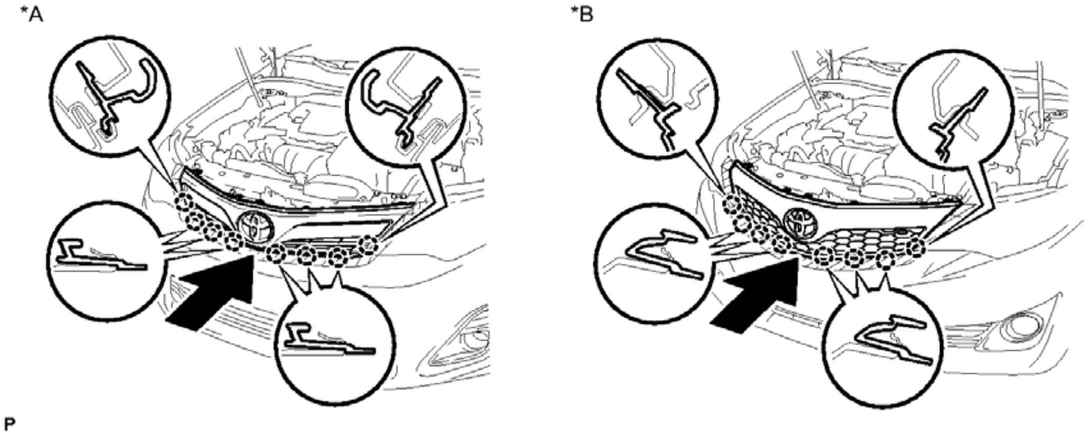

Fig. 85: Installing Radiator Grille Sub-Assembly
Courtesy of TOYOTA MOTOR SALES, U.S.A., INC.

TEXT IN ILLUSTRATION

*A	for Standard	*B	for Sport Package

    b. Install the 3 clips.
4. **INSTALL COOL AIR INTAKE DUCT SEAL**
    a. Install the cool air intake duct seal with the 7 clips.

NAME PLATE

COMPONENTS

ILLUSTRATION

HINT:

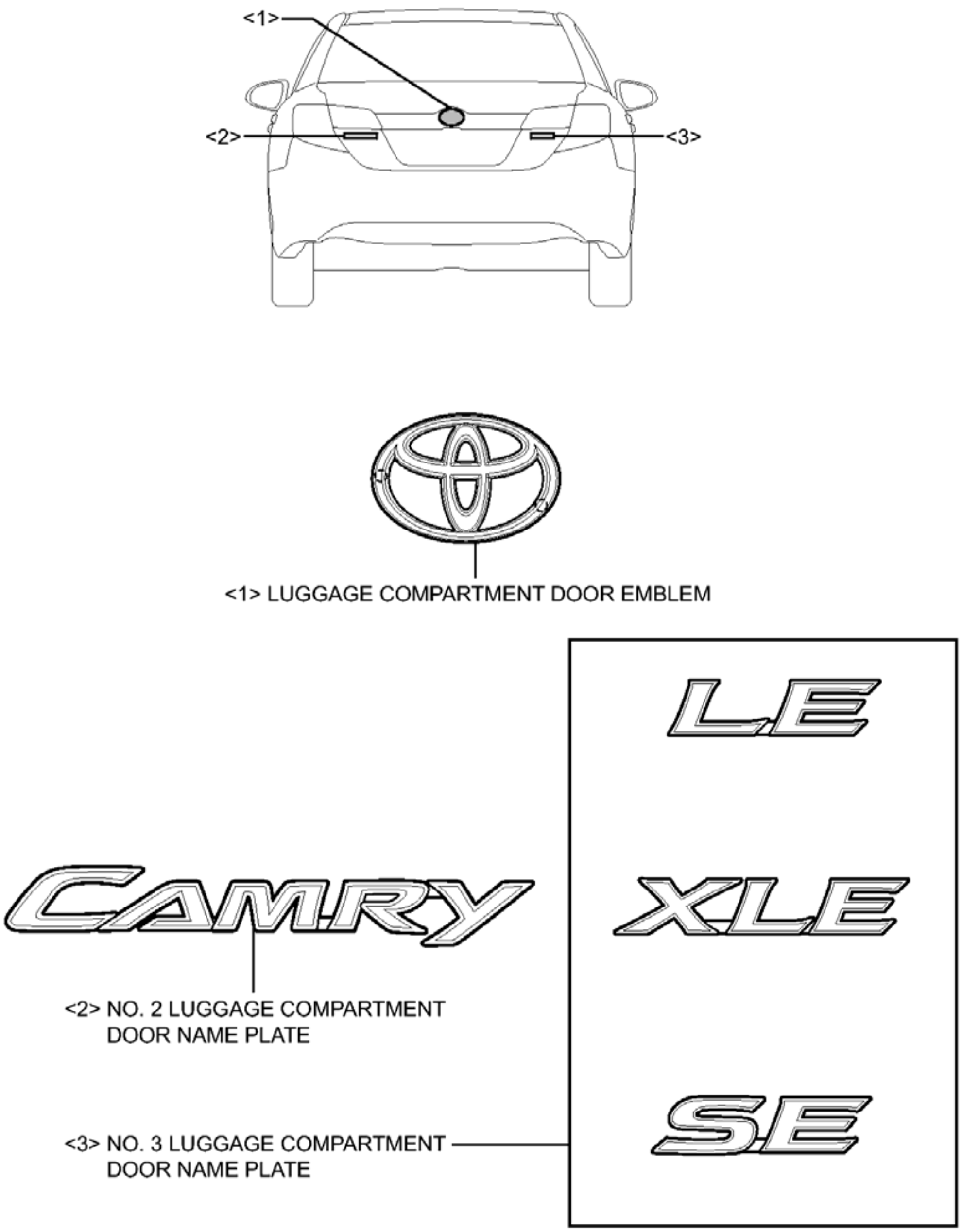

<1>
<2>
<3>
<1> LUGGAGE COMPARTMENT DOOR EMBLEM
CAMRY
<2> NO. 2 LUGGAGE COMPARTMENT DOOR NAME PLATE
L.E
XLE
S.E
<3> NO. 3 LUGGAGE COMPARTMENT DOOR NAME PLATE

P

Fig. 86: Identifying Name Plate Replacement Components
Courtesy of TOYOTA MOTOR SALES, U.S.A., INC.

REMOVAL

REMOVAL

HINT:

When removing the name plates or emblem, heat the vehicle body and name plates or emblem using a heat light.

HEATING TEMPERATURE

Item	Temperature
Vehicle Body	40 to 60°C (104 to 140°F)
Name Plate or Emblem	20 to 30°C (68 to 86°F)

NOTE: Do not heat the vehicle body, name plates or emblem excessively.

1. **REMOVE LUGGAGE COMPARTMENT DOOR EMBLEM**
    a. Put protective tape around the luggage compartment door emblem.

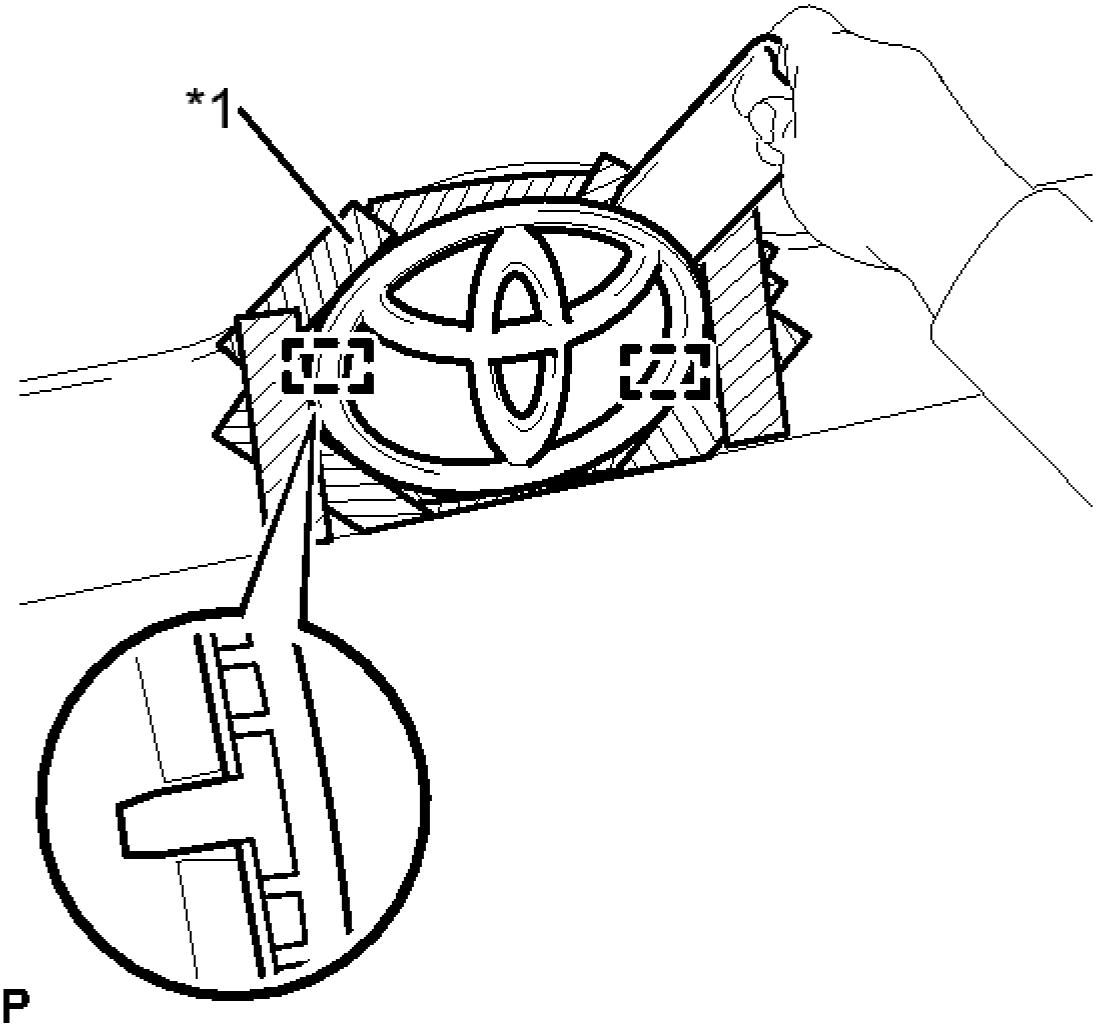

Fig. 87: Identifying Protective Tape On Luggage Compartment Door Emblem
Courtesy of TOYOTA MOTOR SALES, U.S.A., INC.

TEXT IN ILLUSTRATION

*1	Protective Tape

b. Using a moulding remover, separate the double-sided tape and disengage the 2 pins to remove the luggage compartment door emblem.

NOTE:

- **If reusing the luggage compartment door emblem, take care not to damage the symbol emblem.**
- **Be careful not to damage the vehicle body.**

2. **REMOVE NO. 2 LUGGAGE COMPARTMENT DOOR NAME PLATE**

a. Put protective tape around the No. 2 luggage compartment door name plate.

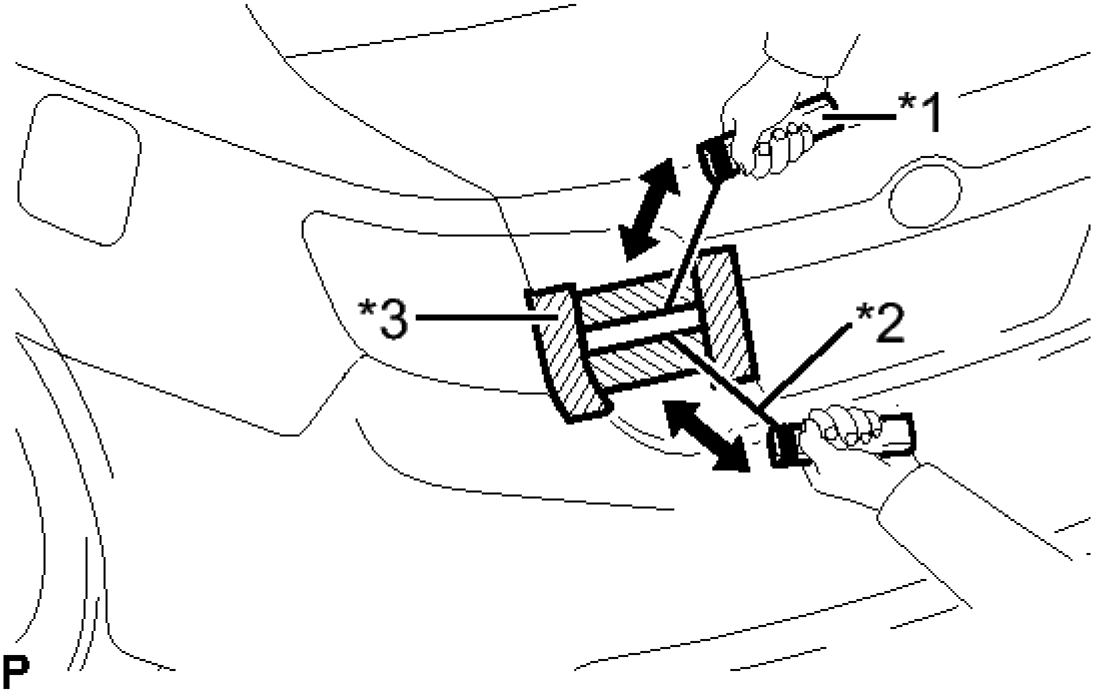

Fig. 88: Removing No. 2 Luggage Compartment Door Name Plate
Courtesy of TOYOTA MOTOR SALES, U.S.A., INC.

TEXT IN ILLUSTRATION

*1	Wooden Block
*2	Piano Wire
*3	Protective Tape

b. Insert a piano wire between the vehicle body and No. 2 luggage compartment door name plate.

c. Tie objects that can serve as handles (for example, wooden blocks) to both wire ends.

d. Pull the piano wire to separate the double-sided tape that holds the No. 2 luggage compartment door name plate to the vehicle body.

NOTE:

- **If reusing the No. 2 luggage compartment door name plate, take care not to damage the No. 2 luggage compartment door name plate.**
- **Be careful not to damage the vehicle body.**

e. Remove the No. 2 luggage compartment door name plate.

3. **REMOVE NO. 3 LUGGAGE COMPARTMENT DOOR NAME PLATE**

a. Put protective tape around the No. 3 luggage compartment door name plate.

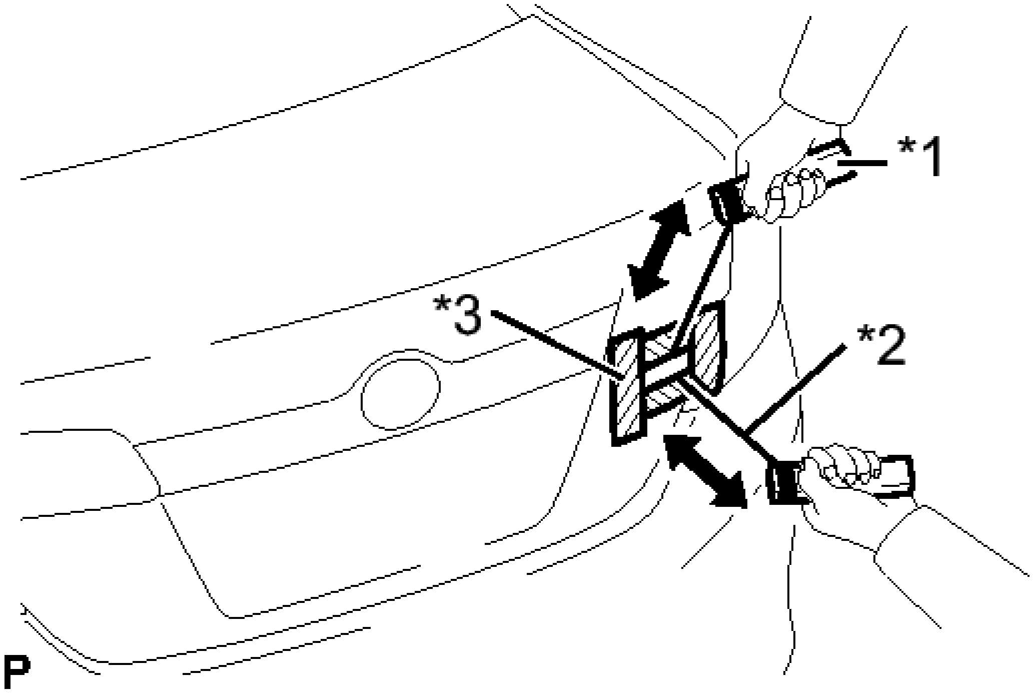

Fig. 89: Removing No. 3 Luggage Compartment Door Name Plate
Courtesy of TOYOTA MOTOR SALES, U.S.A., INC.

TEXT IN ILLUSTRATION

*1	Wooden Block
*2	Piano Wire
*3	Protective Tape

b. Insert a piano wire between the vehicle body and No. 3 luggage compartment door name plate.
c. Tie objects that can serve as handles (for example, wooden blocks) to both wire ends.
d. Pull the piano wire to separate the double-sided tape that holds the No. 3 luggage compartment door name plate to the vehicle body.

NOTE:

- **If reusing the No. 3 luggage compartment door name plate, take care not to damage the No. 3 luggage compartment door name plate.**
- **Be careful not to damage the vehicle body.**

e. Remove the No. 3 luggage compartment door name plate.

INSTALLATION

INSTALLATION

HINT:

When installing the name plates or emblem, heat the vehicle body and name plates or emblem using a heat light.

HEATING TEMPERATURE

Item	Temperature
Vehicle Body	40 to 60°C (104 to 140°F)
Name Plate or Emblem	20 to 30°C (68 to 86°F)

NOTE: **Do not heat the vehicle body, name plates or emblem excessively.**

1. **INSTALL LUGGAGE COMPARTMENT DOOR EMBLEM**
   a. Clean the vehicle body surface.
      1. Using a heat light, heat the vehicle body surface.
      2. Remove the double-sided tape from the vehicle body.
      3. Wipe off any tape adhesive residue with cleaner.
   b. Clean the luggage compartment door emblem. (If reusing the luggage compartment door emblem)
      1. Using a heat light, heat the luggage compartment door emblem.
      2. Remove the double-sided tape from the luggage compartment door emblem.
      3. Wipe off any tape adhesive residue with cleaner.
      4. Apply new double-sided tape to the luggage compartment door emblem.
   c. Install the luggage compartment door emblem.
      1. Using a heat light, heat the vehicle body and luggage compartment door emblem.
      2. Remove the release paper from the luggage compartment door emblem.

HINT:

After removing the release paper, keep the exposed adhesive free from foreign matter.

3. Engage the 2 pins and install the luggage compartment door emblem as shown in the illustration.

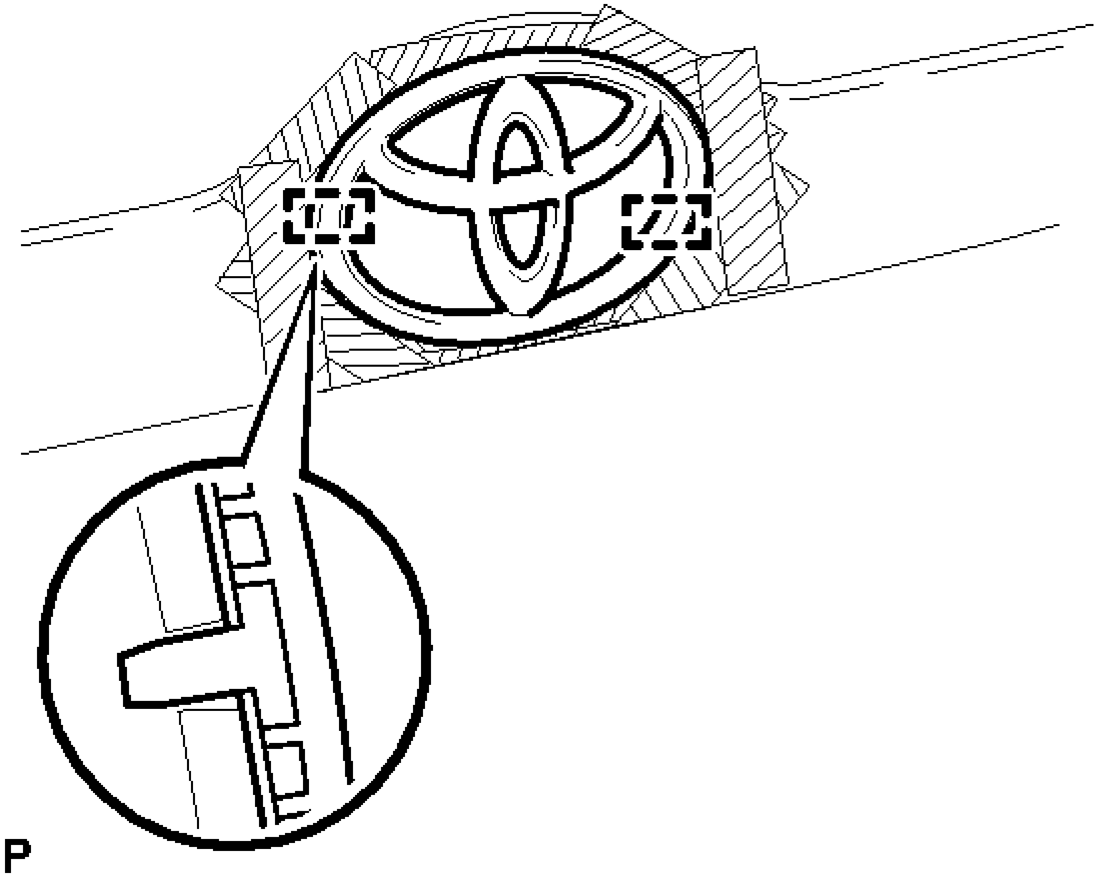

Fig. 90: Identifying Luggage Compartment Door Emblem
Courtesy of TOYOTA MOTOR SALES, U.S.A., INC.

2. **INSTALL NO. 2 LUGGAGE COMPARTMENT DOOR NAME PLATE**
    a. Clean the vehicle body surface.
        1. Using a heat light, heat the vehicle body surface.
        2. Remove the double-sided tape from the vehicle body.
        3. Wipe off any tape adhesive residue with cleaner.

b. Clean the No. 2 luggage compartment door name plate. (If reusing the No. 2 luggage compartment door name plate)
    1. Using a heat light, heat the No. 2 luggage compartment door name plate.
    2. Remove the double-sided tape from the No. 2 luggage compartment door name plate.
    3. Wipe off any tape adhesive residue with cleaner.
    4. Apply new double-sided tape to the No. 2 luggage compartment door name plate.

c. Install the No. 2 luggage compartment door name plate.
    1. Using a heat light, heat the vehicle body and No. 2 luggage compartment door name plate.
    2. Remove the release paper from the No. 2 luggage compartment door name plate.

        HINT:

        After removing the release paper, keep the exposed adhesive free from foreign matter.

    3. Install the No. 2 luggage compartment door name plate.

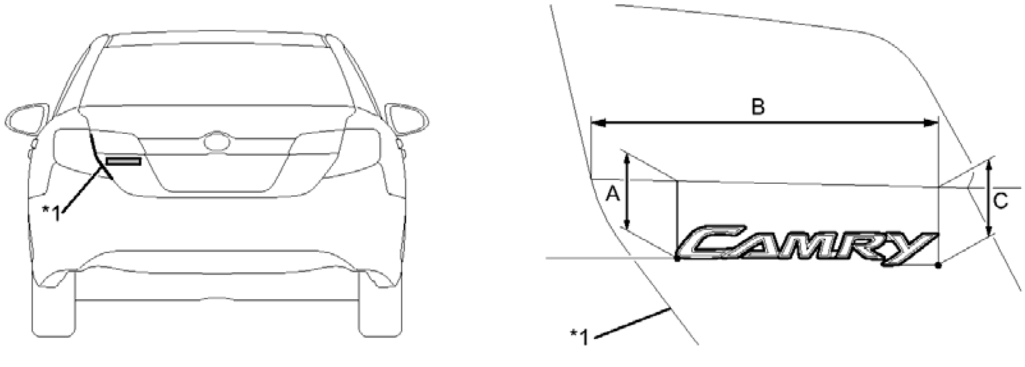

Fig. 91: Identifying No. 2 Luggage Compartment Door Name Plate
Courtesy of TOYOTA MOTOR SALES, U.S.A., INC.

TEXT IN ILLUSTRATION

*1	Profile of Luggage Compartment Door Panel	-	-

Reference Measurement

Area	Measurement
A	51.7 mm (2.04 in.)
B	223.0 mm (8.78 in.)

C	52.9 mm (2.08 in.)

3. **INSTALL NO. 3 LUGGAGE COMPARTMENT DOOR NAME PLATE**
   a. Clean the vehicle body surface.
      1. Using a heat light, heat the vehicle body surface.
      2. Remove the double-sided tape from the vehicle body.
      3. Wipe off any tape adhesive residue with cleaner.
   b. Clean the No. 3 luggage compartment door name plate. (If reusing the No. 3 luggage compartment door name plate)
      1. Using a heat light, heat the No. 3 luggage compartment door name plate.
      2. Remove the double-sided tape from the No. 3 luggage compartment door name plate.
      3. Wipe off any tape adhesive residue with cleaner.
      4. Apply new double-sided tape to the No. 3 luggage compartment door name plate.
   c. Install the No. 3 luggage compartment door name plate.
      1. Using a heat light, heat the vehicle body and No. 3 luggage compartment door name plate.
      2. Remove the release paper from the No. 3 luggage compartment door name plate.

         HINT:

         After removing the release paper, keep the exposed adhesive free from foreign matter.

      3. Install the No. 3 luggage compartment door name plate.

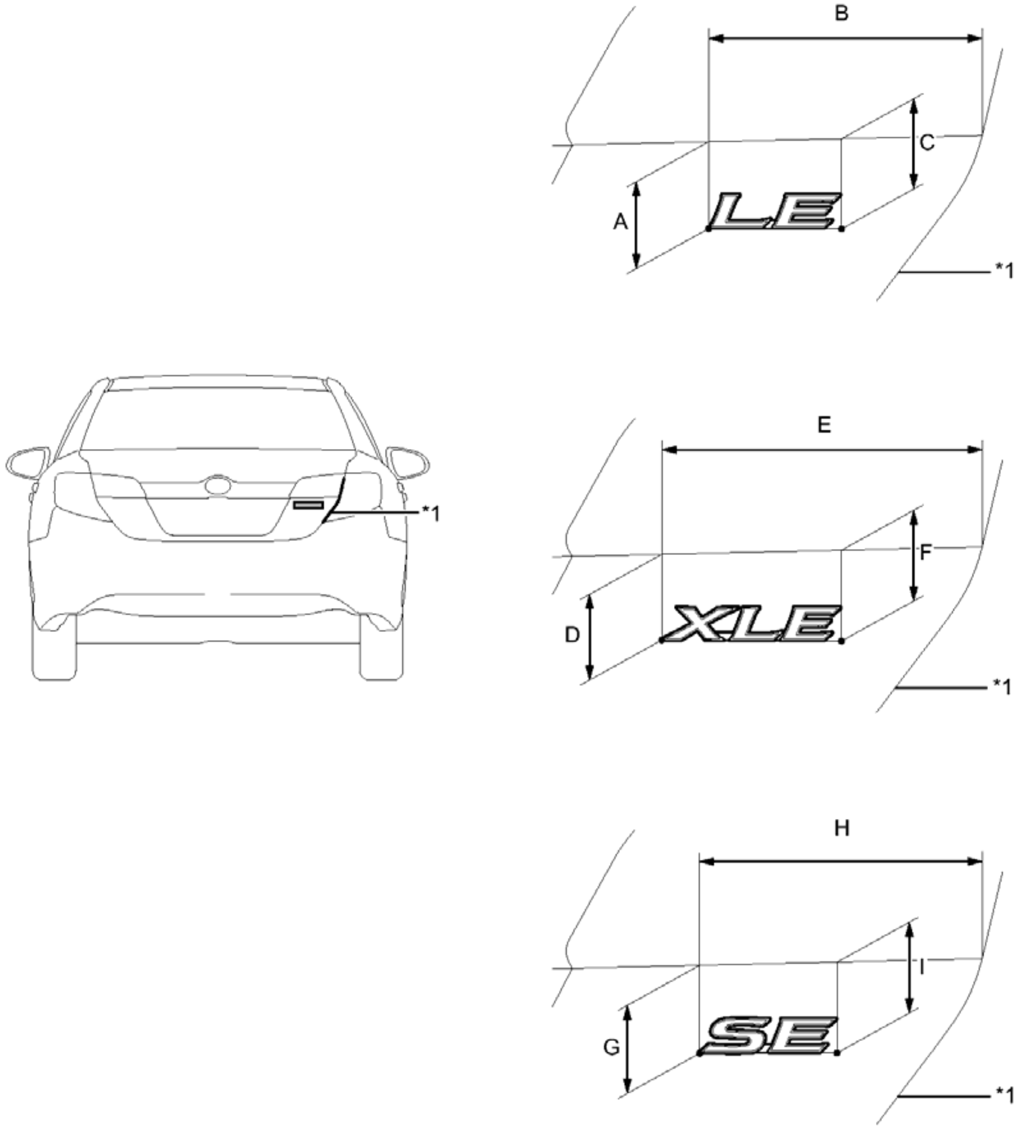
B
C
A
LE
*1
*1
E
F
D
XLE
*1
H
I
G
SE
*1

P

Fig. 92: Identifying No. 3 Luggage Compartment Door Name Plate
Courtesy of TOYOTA MOTOR SALES, U.S.A., INC.

TEXT IN ILLUSTRATION

*1	Profile of Luggage Compartment Door Panel	-	-

Reference Measurement

Area	Measurement

A	47.4 mm (1.87 in.)
B	140.8 mm (5.54 in.)
C	48.0 mm (1.89 in.)
D	47.1 mm (1.85 in.)
E	165.5 mm (6.52 in.)
F	47.9 mm (1.89 in.)
G	47.6 mm (1.87 in.)
H	142.8 mm (5.62 in.)
I	48.2 mm (1.90 in.)

FRONT DOOR BELT MOULDING

COMPONENTS

ILLUSTRATION

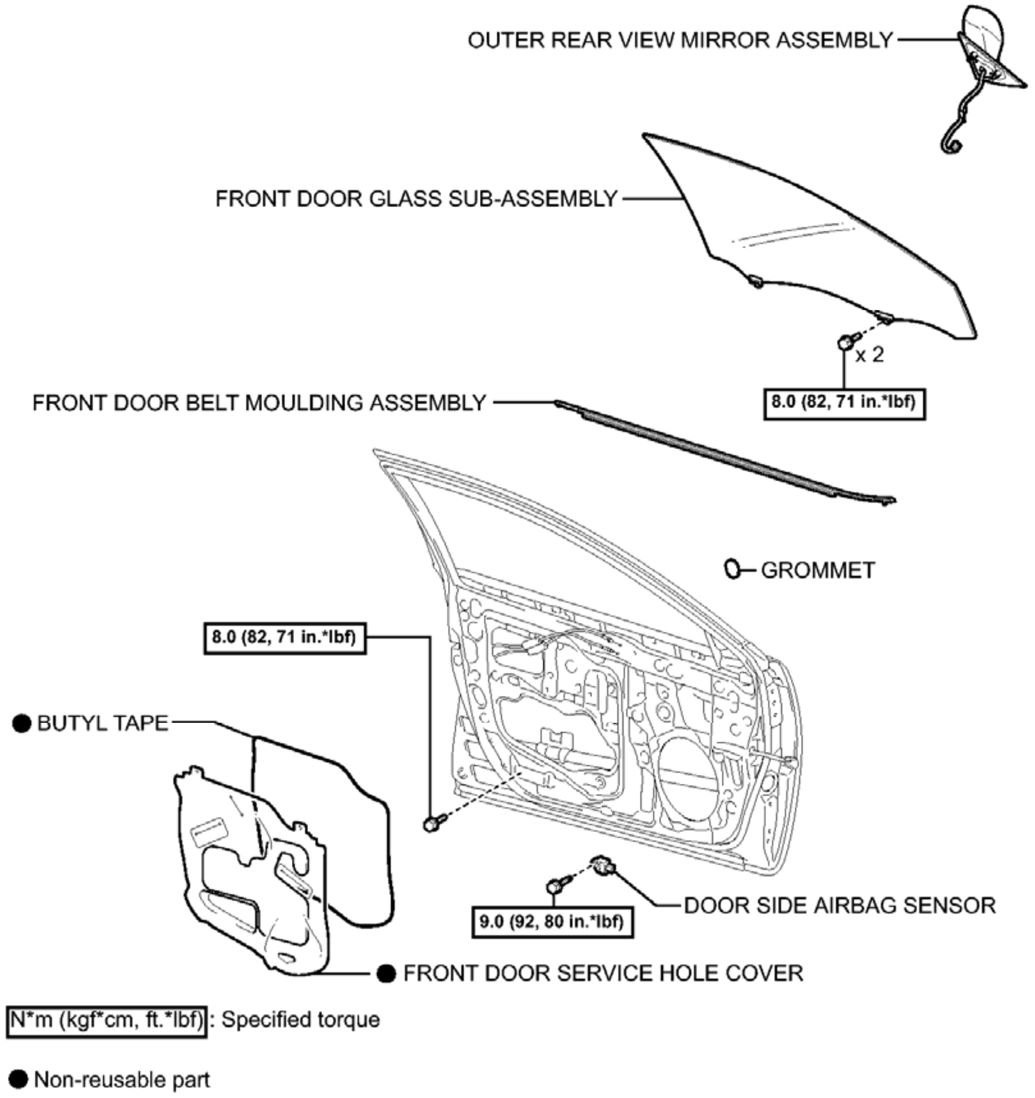
OUTER REAR VIEW MIRROR ASSEMBLY
FRONT DOOR GLASS SUB-ASSEMBLY
x 2
8.0 (82, 71 in.*lbf)
FRONT DOOR BELT MOULDING ASSEMBLY
GROMMET
8.0 (82, 71 in.*lbf)
● BUTYL TAPE
9.0 (92, 80 in.*lbf)
DOOR SIDE AIRBAG SENSOR
● FRONT DOOR SERVICE HOLE COVER
N*m (kgf*cm, ft.*lbf): Specified torque
● Non-reusable part

P

Fig. 93: Identifying Front Door Belt Moulding Replacement Components With Torque Specifications
Courtesy of TOYOTA MOTOR SALES, U.S.A., INC.

REMOVAL

REMOVAL

1. **PRECAUTION**

NOTE: **After turning the ignition switch off, waiting time may be required before disconnecting the cable from the negative (-) battery terminal. Therefore, make sure to read the disconnecting the cable from the negative (-) battery terminal notices before proceeding with work. Refer to PRECAUTION .**

2. **DISCONNECT CABLE FROM NEGATIVE BATTERY TERMINAL**

> WARNING: **Wait at least 90 seconds after disconnecting the cable from the negative (-) battery terminal to disable the SRS system.**

> **NOTE: When disconnecting the cable, some systems need to be initialized after the cable is reconnected. Refer to INITIALIZATION .**

3. **REMOVE OUTER REAR VIEW MIRROR ASSEMBLY**

   Refer to **REMOVAL** .

4. **REMOVE DOOR SIDE AIRBAG SENSOR** . Refer to **REMOVAL - Step 10** .
5. **REMOVE FRONT DOOR SERVICE HOLE COVER** . Refer to **DISASSEMBLY - Step 15** .
6. **REMOVE FRONT DOOR GLASS SUB-ASSEMBLY** . Refer to **DISASSEMBLY - Step 16** .
7. **REMOVE FRONT DOOR BELT MOULDING ASSEMBLY**
   a. Put protective tape around the front door belt moulding assembly.

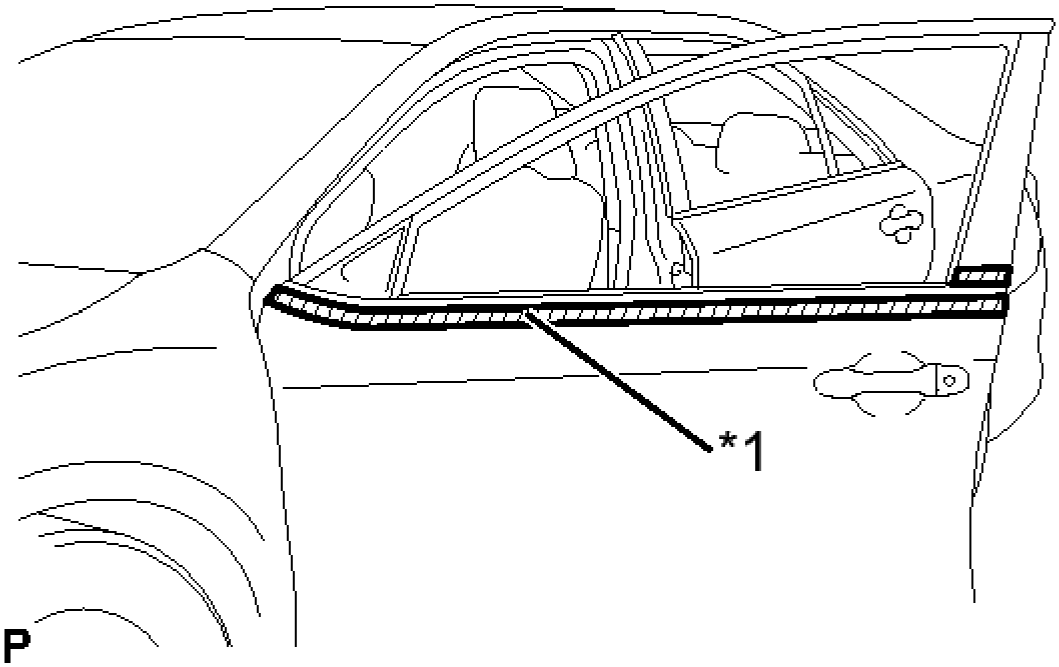

Fig. 94: Identifying Protective Tape On Front Door Belt Moulding Assembly
Courtesy of TOYOTA MOTOR SALES, U.S.A., INC.

TEXT IN ILLUSTRATION

*1	Protective Tape

b. Using a screwdriver with the tip wrapped with protective tape, disengage the 6 claws and remove the front door belt moulding assembly.

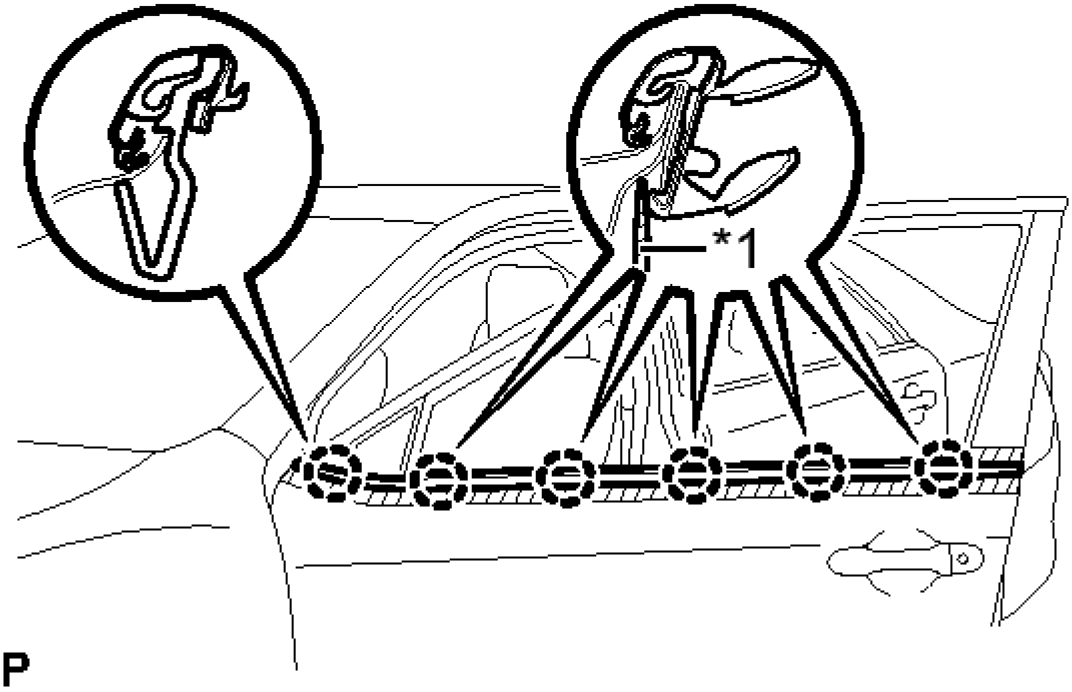

Fig. 95: Identifying Front Door Belt Moulding Assembly Claws
Courtesy of TOYOTA MOTOR SALES, U.S.A., INC.

TEXT IN ILLUSTRATION

*1	Protective Tape

HINT:

Tape the screwdriver tip before use.

INSTALLATION

INSTALLATION

1. **PRECAUTION**

NOTE: **After turning the ignition switch off, waiting time may be required before disconnecting the cable from the negative (-) battery terminal. Therefore, make sure to read the disconnecting the cable from the negative (-) battery terminal notices before proceeding with work. Refer to PRECAUTION .**

2. **INSTALL FRONT DOOR BELT MOULDING ASSEMBLY**

a. Engage the 6 claws to install the front door belt moulding assembly.

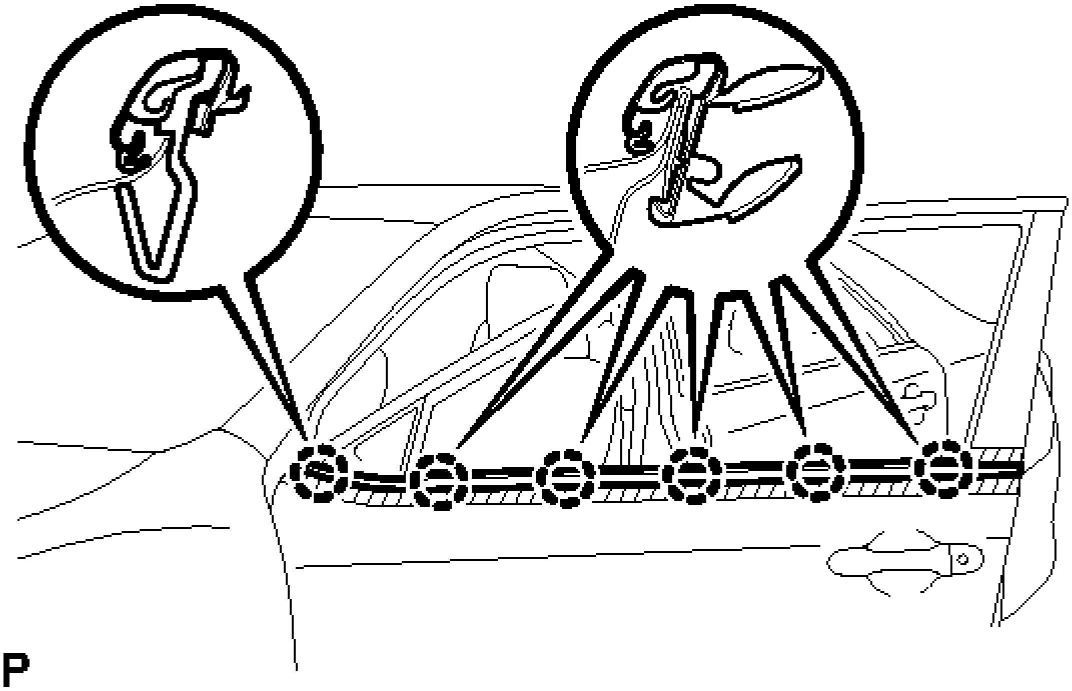

Fig. 96: Identifying Front Door Belt Moulding Assembly Claws
Courtesy of TOYOTA MOTOR SALES, U.S.A., INC.

3. **INSTALL FRONT DOOR GLASS SUB-ASSEMBLY** . Refer to **REASSEMBLY - Step 33** .
4. **INSTALL FRONT DOOR SERVICE HOLE COVER** . Refer to **REASSEMBLY - Step 34** .
5. **INSTALL DOOR SIDE AIRBAG SENSOR** . Refer to **INSTALLATION - Step 1** .
6. **INSTALL OUTER REAR VIEW MIRROR ASSEMBLY**

   Refer to **INSTALLATION** .

7. **CONNECT CABLE TO NEGATIVE BATTERY TERMINAL**

   NOTE: **When disconnecting the cable, some systems need to be initialized after the cable is reconnected. Refer to INITIALIZATION .**

8. **INITIALIZE POWER WINDOW CONTROL SYSTEM (for Driver Side)**

   Refer to **INITIALIZATION** .

9. **INSPECT POWER WINDOW OPERATION**

   Refer to **OPERATION CHECK** .

10. **INSPECT SRS WARNING LIGHT**

For Separate Type Yaw Rate Sensor: Refer to **DIAGNOSIS SYSTEM** .

For Built-in Type Yaw Rate Sensor: Refer to **DIAGNOSIS SYSTEM** .

REAR DOOR BELT MOULDING

COMPONENTS

ILLUSTRATION

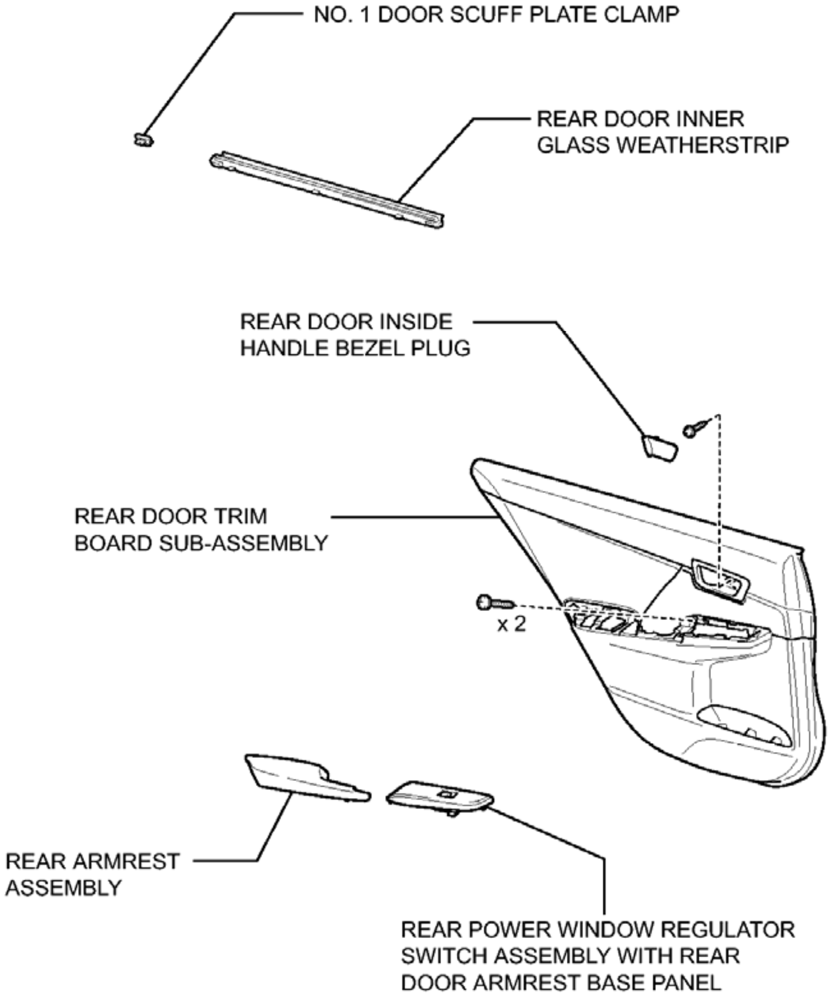
NO. 1 DOOR SCUFF PLATE CLAMP
REAR DOOR INNER GLASS WEATHERSTRIP
REAR DOOR INSIDE HANDLE BEZEL PLUG
REAR DOOR TRIM BOARD SUB-ASSEMBLY
x 2
REAR ARMREST ASSEMBLY
REAR POWER WINDOW REGULATOR SWITCH ASSEMBLY WITH REAR DOOR ARMREST BASE PANEL

P

Fig. 97: Identifying Rear Door Belt Moulding Replacement Components (1 Of 2)
Courtesy of TOYOTA MOTOR SALES, U.S.A., INC.

ILLUSTRATION

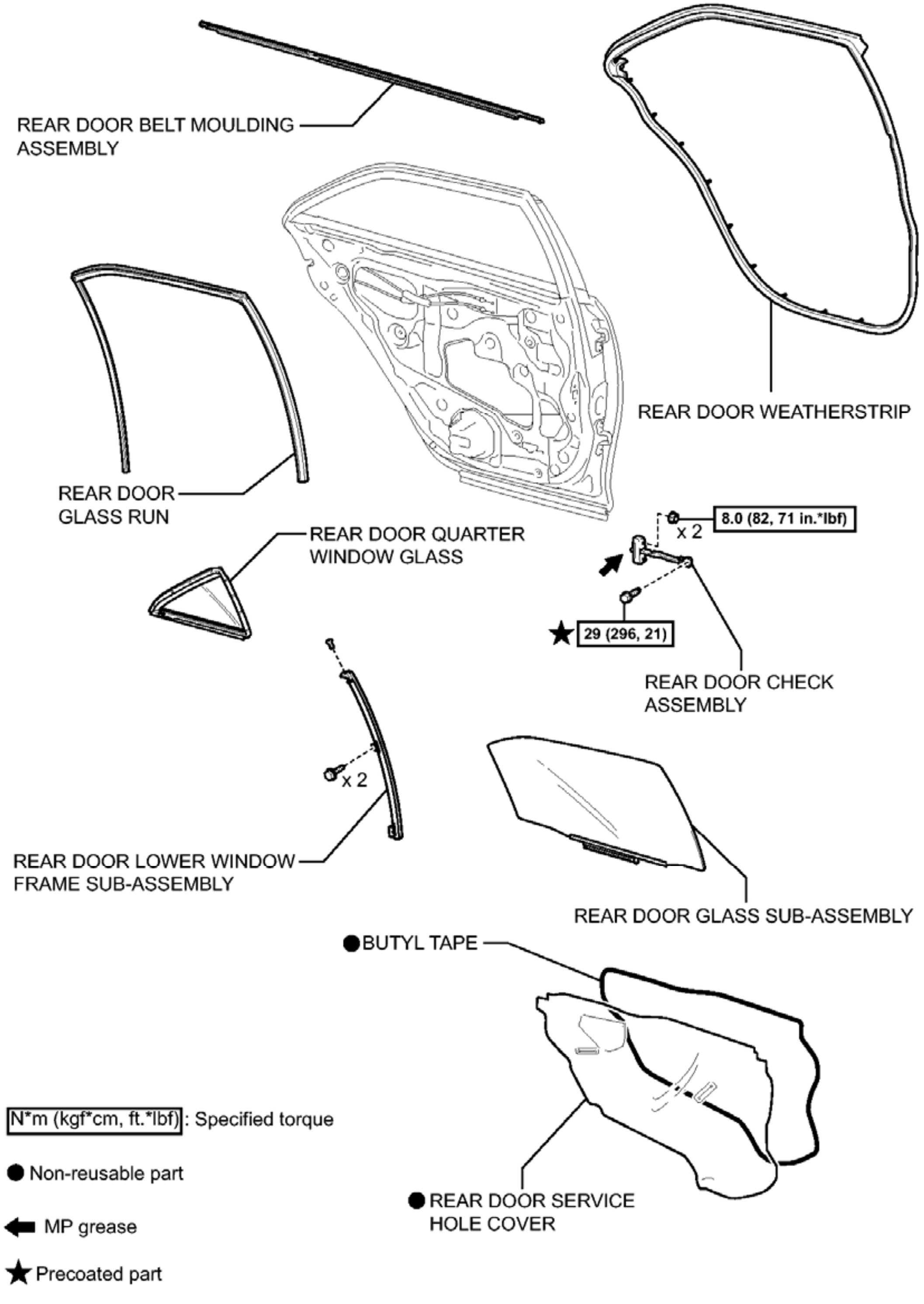
REAR DOOR BELT MOULDING ASSEMBLY
REAR DOOR WEATHERSTRIP
REAR DOOR GLASS RUN
REAR DOOR QUARTER WINDOW GLASS
x 2
8.0 (82, 71 in.*lbf)
★ 29 (296, 21)
REAR DOOR CHECK ASSEMBLY
x 2
REAR DOOR LOWER WINDOW FRAME SUB-ASSEMBLY
REAR DOOR GLASS SUB-ASSEMBLY
● BUTYL TAPE
● REAR DOOR SERVICE HOLE COVER
N*m (kgf*cm, ft.*lbf) : Specified torque
● Non-reusable part
⬅ MP grease
★ Precoated part
P

Fig. 98: Identifying Rear Door Belt Moulding Replacement Components With Torque Specifications (2 Of 2)

Courtesy of TOYOTA MOTOR SALES, U.S.A., INC.

REMOVAL

REMOVAL

1. **PRECAUTION**

   NOTE: After turning the ignition switch off, waiting time may be required before disconnecting the cable from the negative (-) battery terminal. Therefore, make sure to read the disconnecting the cable from the negative (-) battery terminal notices before proceeding with work. Refer to PRECAUTION .

2. **DISCONNECT CABLE FROM NEGATIVE BATTERY TERMINAL**

   NOTE: When disconnecting the cable, some systems need to be initialized after the cable is reconnected. Refer to INITIALIZATION .

3. **REMOVE REAR DOOR INSIDE HANDLE BEZEL PLUG** . Refer to **DISASSEMBLY - Step 3** .
4. **REMOVE REAR POWER WINDOW REGULATOR SWITCH ASSEMBLY WITH REAR DOOR ARMREST BASE PANEL** . Refer to **DISASSEMBLY - Step 4** .
5. **REMOVE REAR ARMREST ASSEMBLY** . Refer to **DISASSEMBLY - Step 5** .
6. **REMOVE REAR DOOR TRIM BOARD SUB-ASSEMBLY** . Refer to **DISASSEMBLY - Step 6** .
7. **REMOVE REAR DOOR INNER GLASS WEATHERSTRIP** . Refer to **DISASSEMBLY - Step 8** .
8. **REMOVE REAR DOOR SERVICE HOLE COVER** . Refer to **DISASSEMBLY - Step 9** .
9. **REMOVE REAR DOOR CHECK ASSEMBLY** . Refer to **DISASSEMBLY - Step 10** .
10. **REMOVE REAR DOOR WEATHERSTRIP** . Refer to **DISASSEMBLY - Step 11** .
11. **REMOVE REAR DOOR GLASS RUN** . Refer to **DISASSEMBLY - Step 12** .
12. **REMOVE REAR DOOR LOWER WINDOW FRAME SUB-ASSEMBLY** . Refer to **DISASSEMBLY - Step 13** .
13. **REMOVE REAR DOOR QUARTER WINDOW GLASS** . Refer to **DISASSEMBLY - Step 14** .
14. **REMOVE REAR DOOR GLASS SUB-ASSEMBLY** . Refer to **DISASSEMBLY - Step 15** .
15. **REMOVE REAR DOOR BELT MOULDING ASSEMBLY**
    a. Put protective tape around the rear door belt moulding assembly.

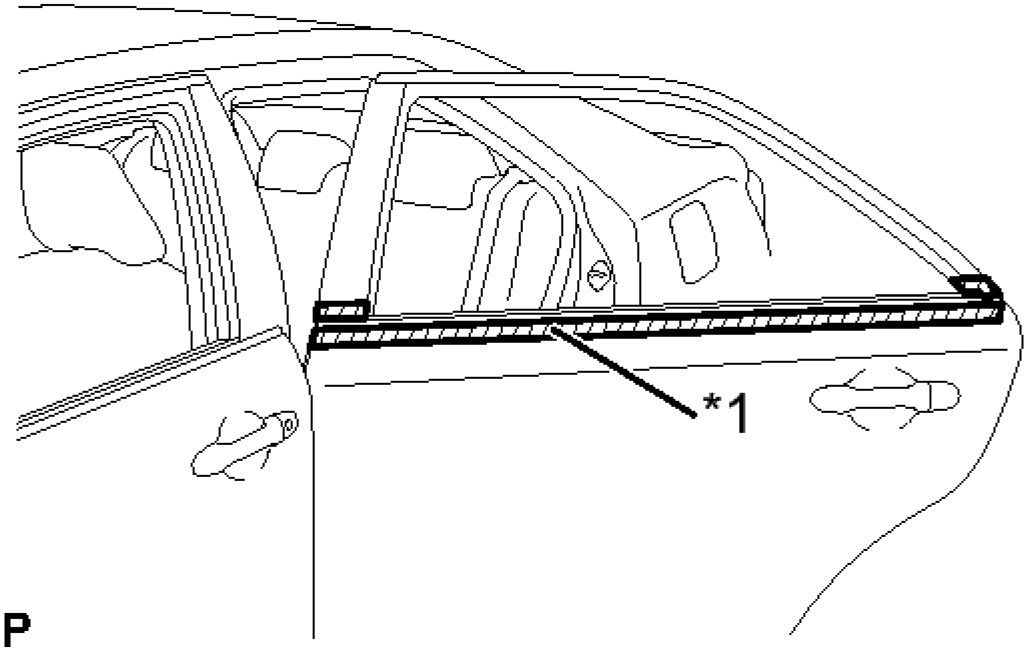

Fig. 99: Identifying Protective Tape On Rear Door Belt Moulding Assembly
Courtesy of TOYOTA MOTOR SALES, U.S.A., INC.

TEXT IN ILLUSTRATION

*1	Protective Tape

b. Using a screwdriver with the tip wrapped with protective tape, disengage the 6 claws to remove the rear door belt moulding assembly as shown in the illustration.

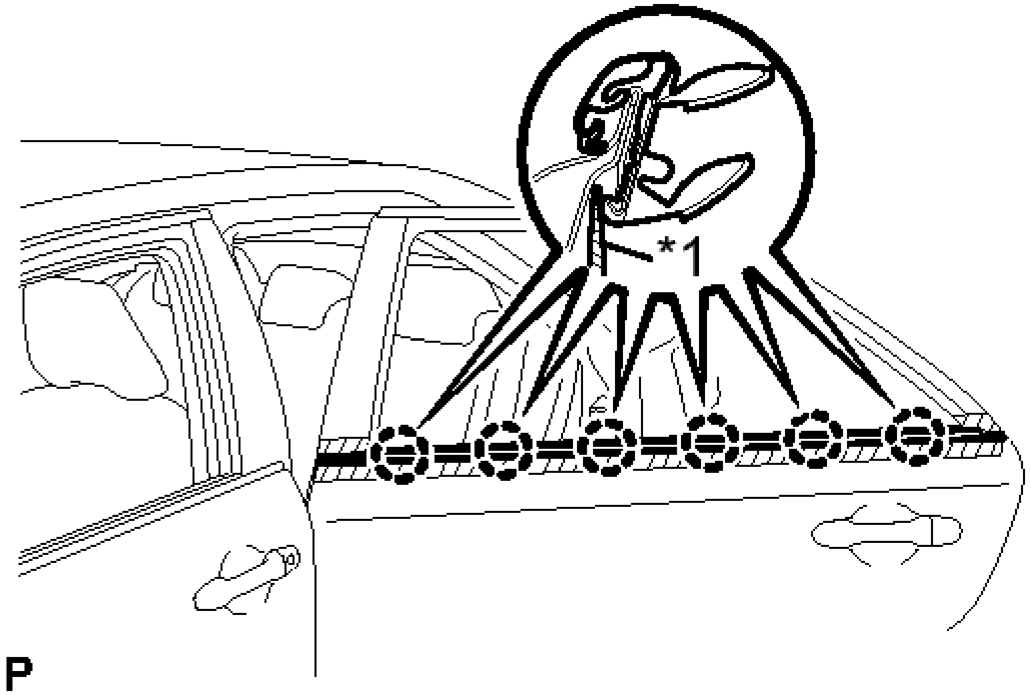

Fig. 100: Identifying Rear Door Belt Moulding Assembly Claws
Courtesy of TOYOTA MOTOR SALES, U.S.A., INC.

TEXT IN ILLUSTRATION

*1	Protective Tape

HINT:

Tape the screwdriver tip before use.

INSTALLATION

INSTALLATION

1. **INSTALL REAR DOOR BELT MOULDING ASSEMBLY**
    a. Engage the 6 claws to install the rear door belt moulding assembly as shown in the illustration.

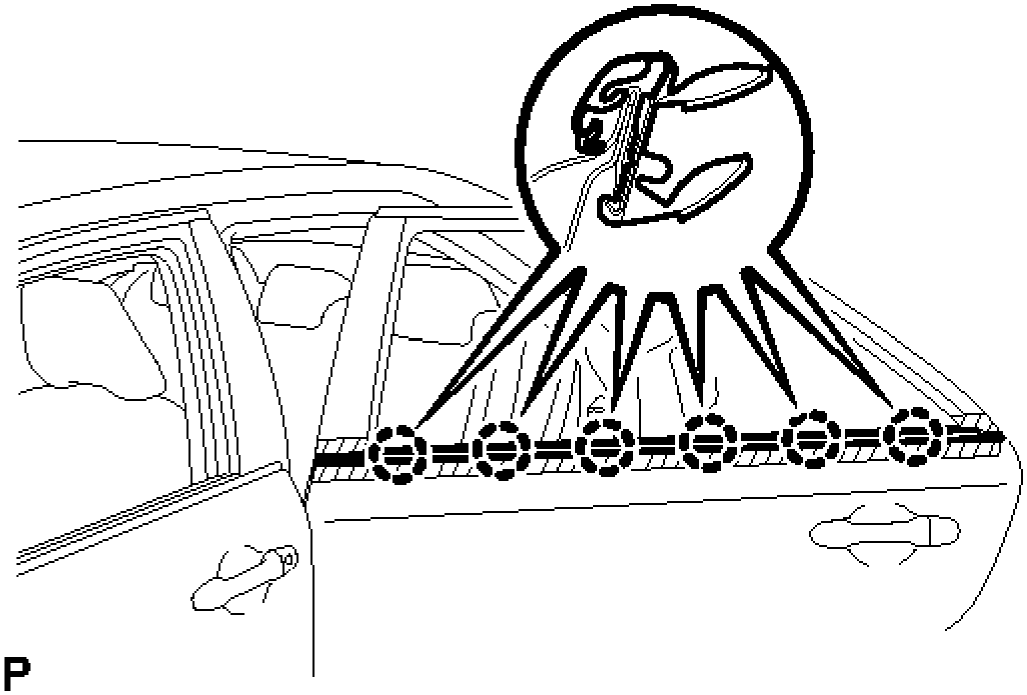

Fig. 101: Identifying Rear Door Belt Moulding Assembly Claws
Courtesy of TOYOTA MOTOR SALES, U.S.A., INC.

2. **INSTALL REAR DOOR GLASS SUB-ASSEMBLY** . Refer to **REASSEMBLY - Step 21** .
3. **INSTALL REAR DOOR QUARTER WINDOW GLASS** . Refer to **REASSEMBLY - Step 22** .
4. **INSTALL REAR DOOR LOWER WINDOW FRAME SUB-ASSEMBLY** . Refer to **REASSEMBLY - Step 23** .
5. **INSTALL REAR DOOR GLASS RUN** . Refer to **REASSEMBLY - Step 24** .
6. **INSTALL REAR DOOR WEATHERSTRIP** . Refer to **REASSEMBLY - Step 25** .
7. **INSTALL REAR DOOR CHECK ASSEMBLY** . Refer to **REASSEMBLY - Step 26** .
8. **INSTALL REAR DOOR SERVICE HOLE COVER** . Refer to **REASSEMBLY - Step 27** .
9. **INSTALL REAR DOOR INNER GLASS WEATHERSTRIP** . Refer to **REASSEMBLY - Step 28** .
10. **INSTALL REAR DOOR TRIM BOARD SUB-ASSEMBLY** . Refer to **REASSEMBLY - Step 30** .
11. **INSTALL REAR ARMREST ASSEMBLY** . Refer to **REASSEMBLY - Step 31** .
12. **INSTALL REAR POWER WINDOW REGULATOR SWITCH ASSEMBLY WITH REAR DOOR ARMREST BASE PANEL** . Refer to **REASSEMBLY - Step 32** .
13. **INSTALL REAR DOOR INSIDE HANDLE BEZEL PLUG** . Refer to **REASSEMBLY - Step 33** .
14. **CONNECT CABLE TO NEGATIVE BATTERY TERMINAL**

NOTE: **When disconnecting the cable, some systems need to be initialized after the cable is reconnected. Refer to INITIALIZATION .**

15. **INSPECT POWER WINDOW OPERATION**

Refer to **OPERATION CHECK** .

ROCKER PANEL MOULDING

COMPONENTS

ILLUSTRATION

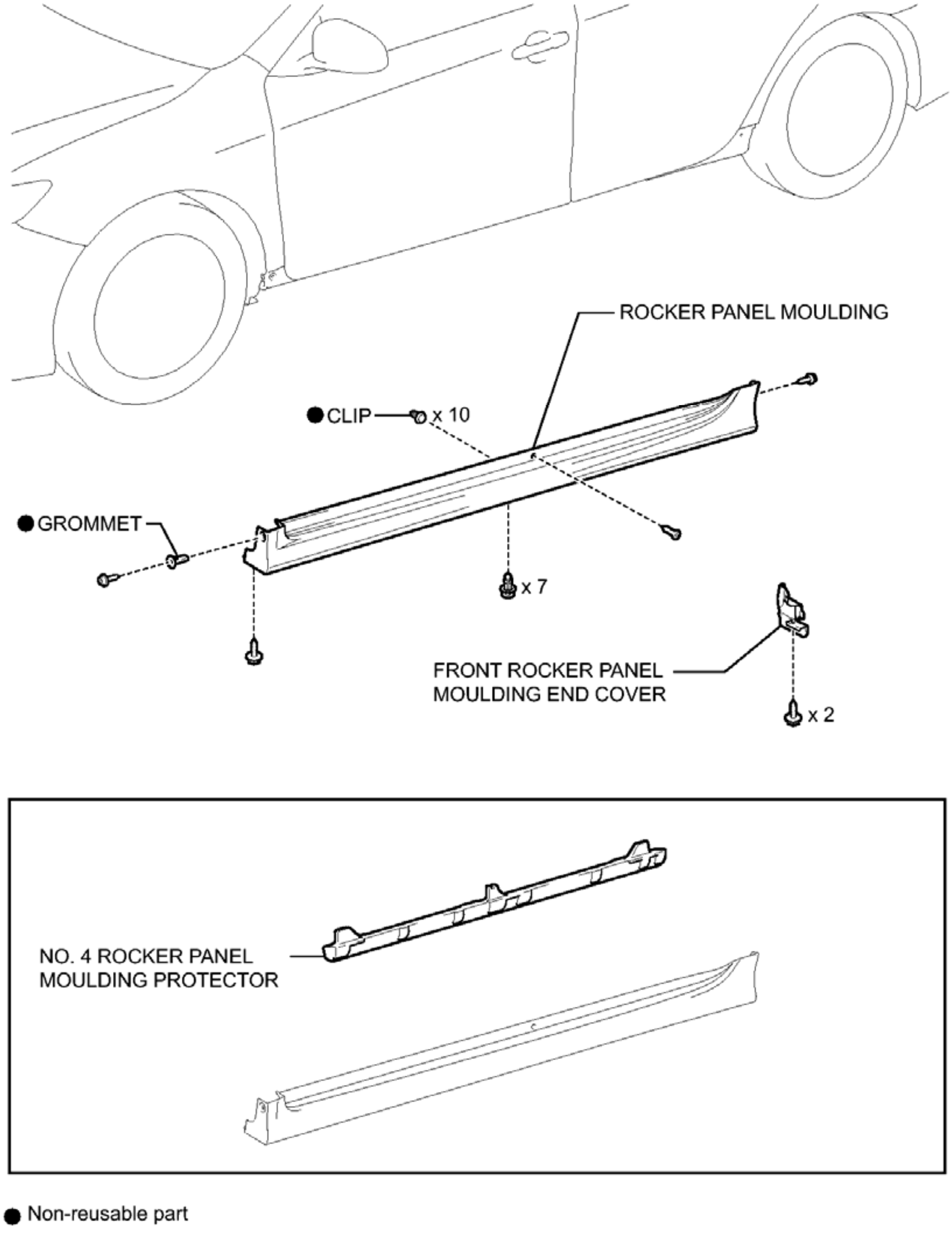
ROCKER PANEL MOULDING
● CLIP
x 10
● GROMMET
x 7
FRONT ROCKER PANEL MOULDING END COVER
x 2
NO. 4 ROCKER PANEL MOULDING PROTECTOR
● Non-reusable part
P

Fig. 102: Identifying Rocker Panel Moulding Replacement Components
Courtesy of TOYOTA MOTOR SALES, U.S.A., INC.

REMOVAL

REMOVAL

1. **REMOVE FRONT ROCKER PANEL MOULDING END COVER** . See step 1.
2. **REMOVE ROCKER PANEL MOULDING**
   a. Put protective tape around the rocker panel moulding and door.

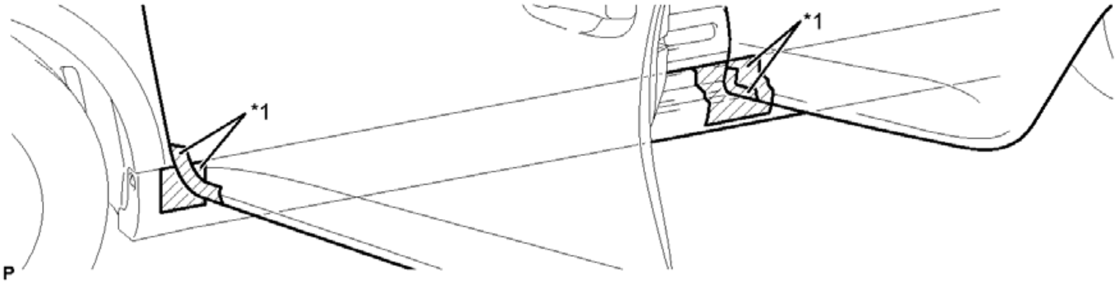

Fig. 103: Identifying Protective Tape On Rocker Panel Moulding
Courtesy of TOYOTA MOTOR SALES, U.S.A., INC.

TEXT IN ILLUSTRATION

*1	Protective Tape	-	-

   b. Remove the 2 screws and grommet.

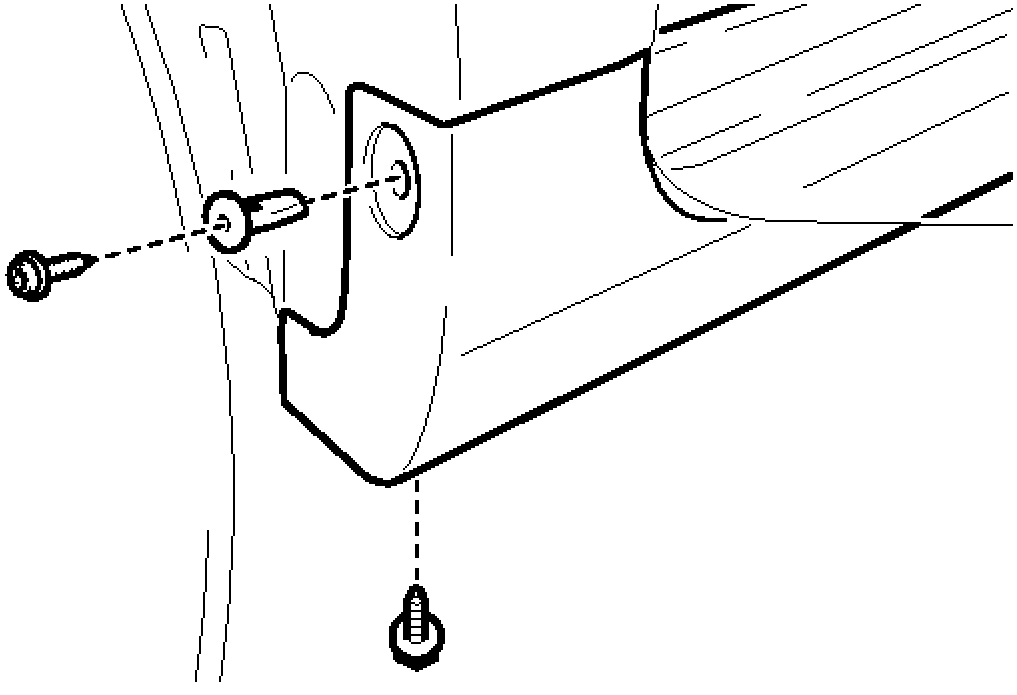

Fig. 104: Identifying Rocker Panel Moulding Front Fasteners
Courtesy of TOYOTA MOTOR SALES, U.S.A., INC.

c. Remove the screw.

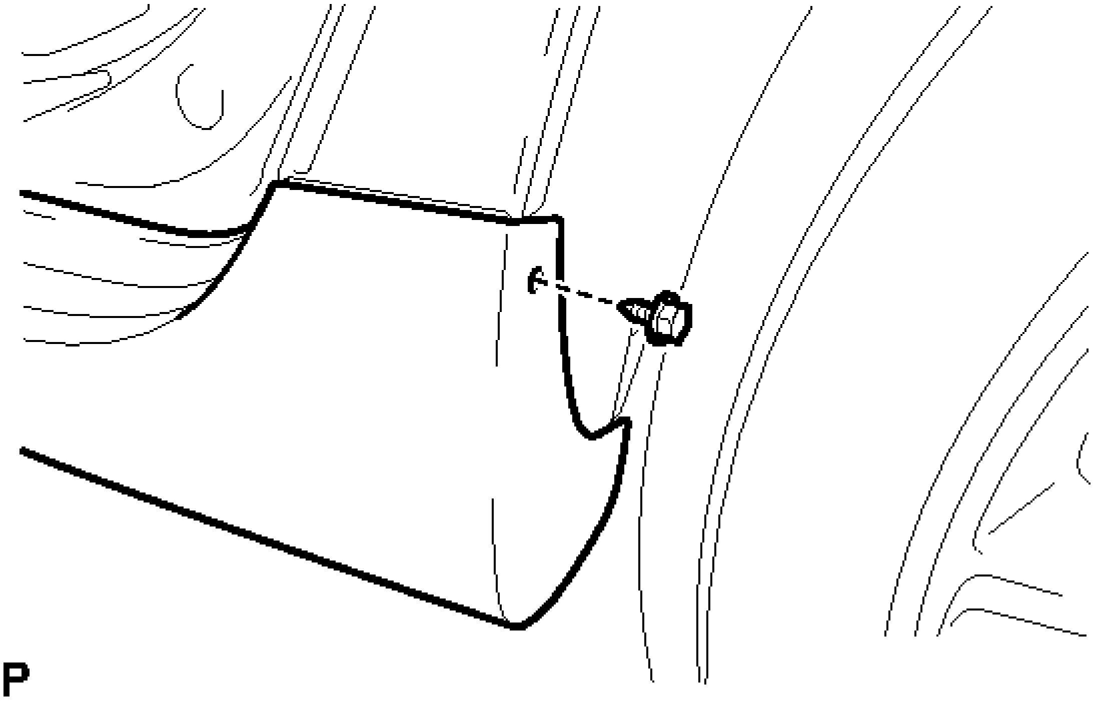

Fig. 105: Identifying Rocker Panel Moulding Rear Fastener
Courtesy of TOYOTA MOTOR SALES, U.S.A., INC.

d. Remove the 7 clips.

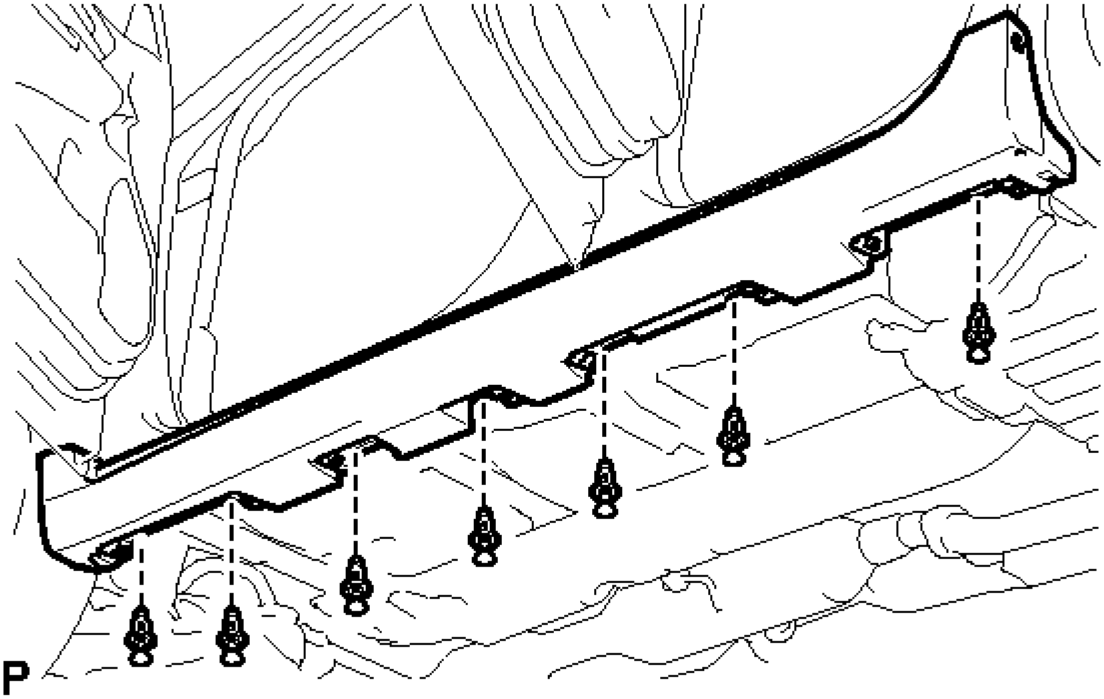

Fig. 106: Identifying Rocker Panel Moulding Lower Fasteners
Courtesy of TOYOTA MOTOR SALES, U.S.A., INC.

e. Remove the screw.

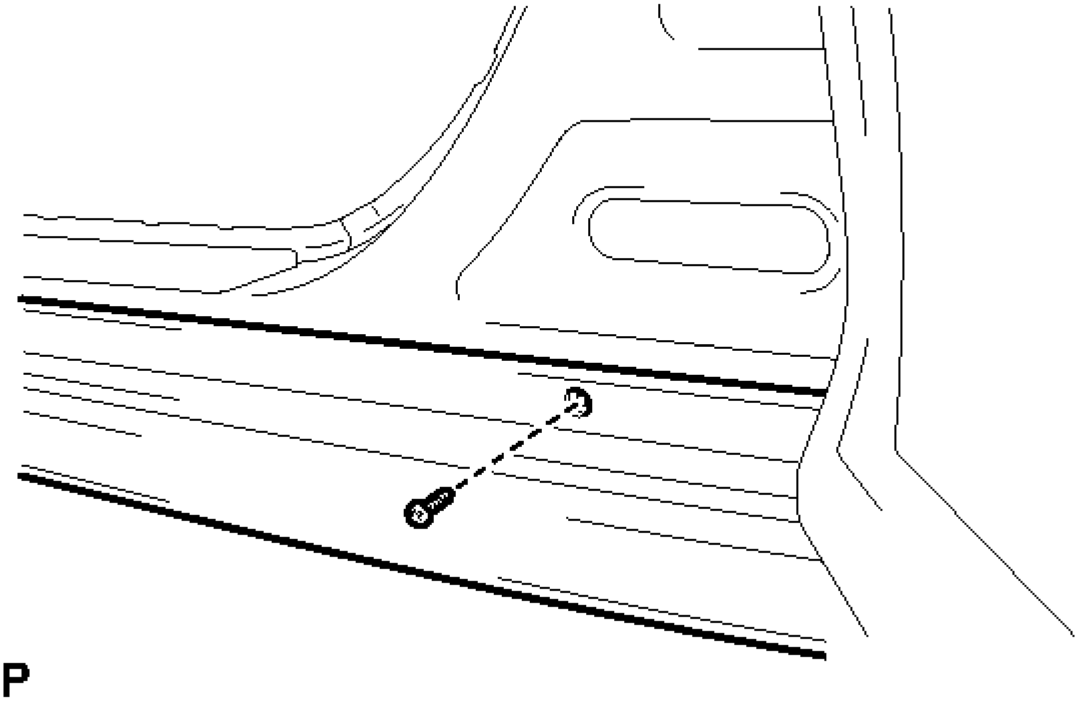

Fig. 107: Identifying Rocker Panel Moulding Front Screw
Courtesy of TOYOTA MOTOR SALES, U.S.A., INC.

f. Disengage the 10 clips and remove the rocker panel moulding.

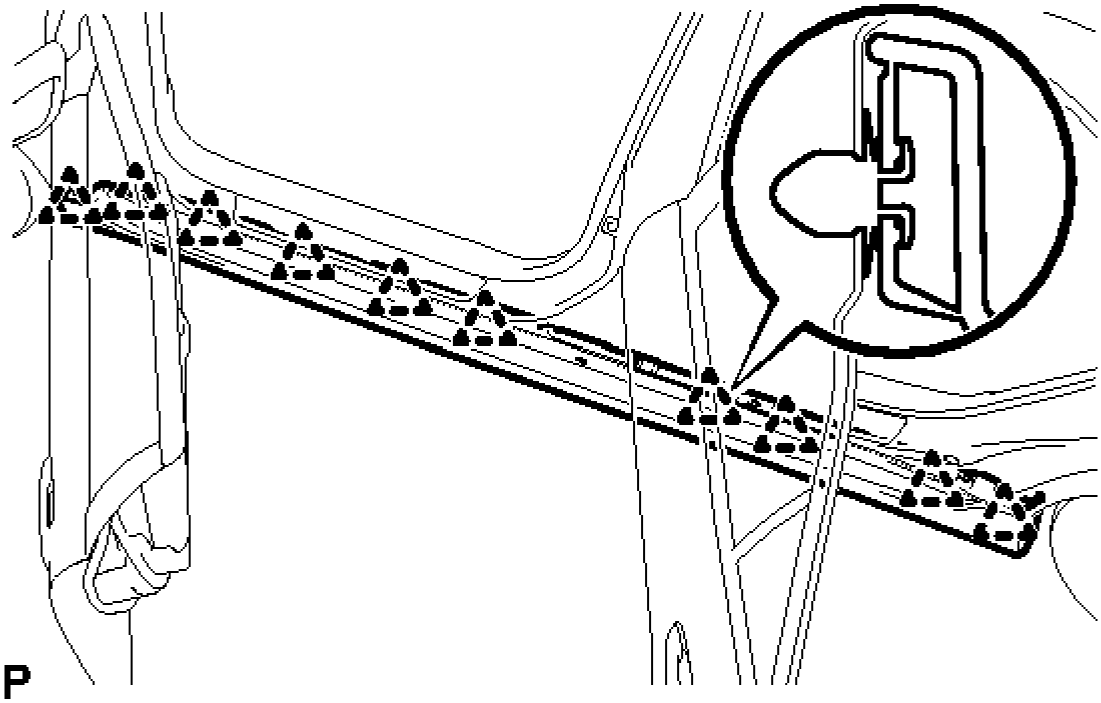

Fig. 108: Identifying Rocker Panel Moulding Front Clips
Courtesy of TOYOTA MOTOR SALES, U.S.A., INC.

g. Remove the 10 clips from the rocker panel moulding.

DISASSEMBLY

DISASSEMBLY

1. **REMOVE NO. 4 ROCKER PANEL MOULDING PROTECTOR**
   a. Remove the No. 4 rocker panel moulding protector.

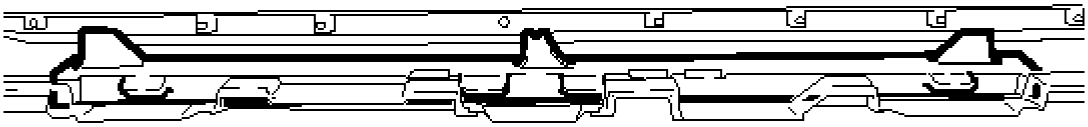

Fig. 109: Identifying No. 4 Rocker Panel Moulding Protector
Courtesy of TOYOTA MOTOR SALES, U.S.A., INC.

REASSEMBLY

REASSEMBLY

1. **INSTALL NO. 4 ROCKER PANEL MOULDING PROTECTOR**
    a. Install the No. 4 rocker panel moulding protector.

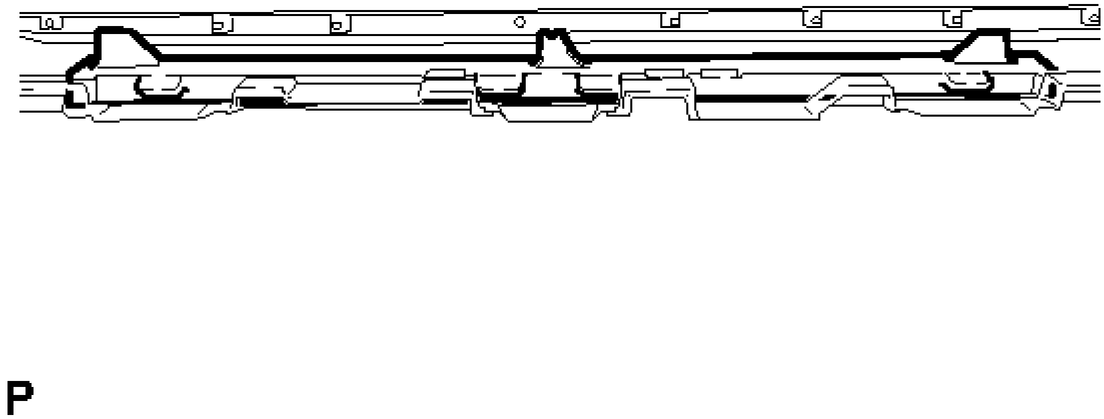

Fig. 110: Identifying No. 4 Rocker Panel Moulding Protector
Courtesy of TOYOTA MOTOR SALES, U.S.A., INC.

INSTALLATION

INSTALLATION

1. **INSTALL ROCKER PANEL MOULDING**
   - a. Install new 10 clips to the rocker panel moulding.
   - b. Engage the 10 clips and install the rocker panel moulding.
   - c. Install the screw.
   - d. Install the 7 clips.
   - e. Install the screw.
   - f. Install a new grommet and 2 screws.
2. **INSTALL FRONT ROCKER PANEL MOULDING END COVER** . See step 1.

FRONT DOOR WINDOW FRAME MOULDING

COMPONENTS

ILLUSTRATION

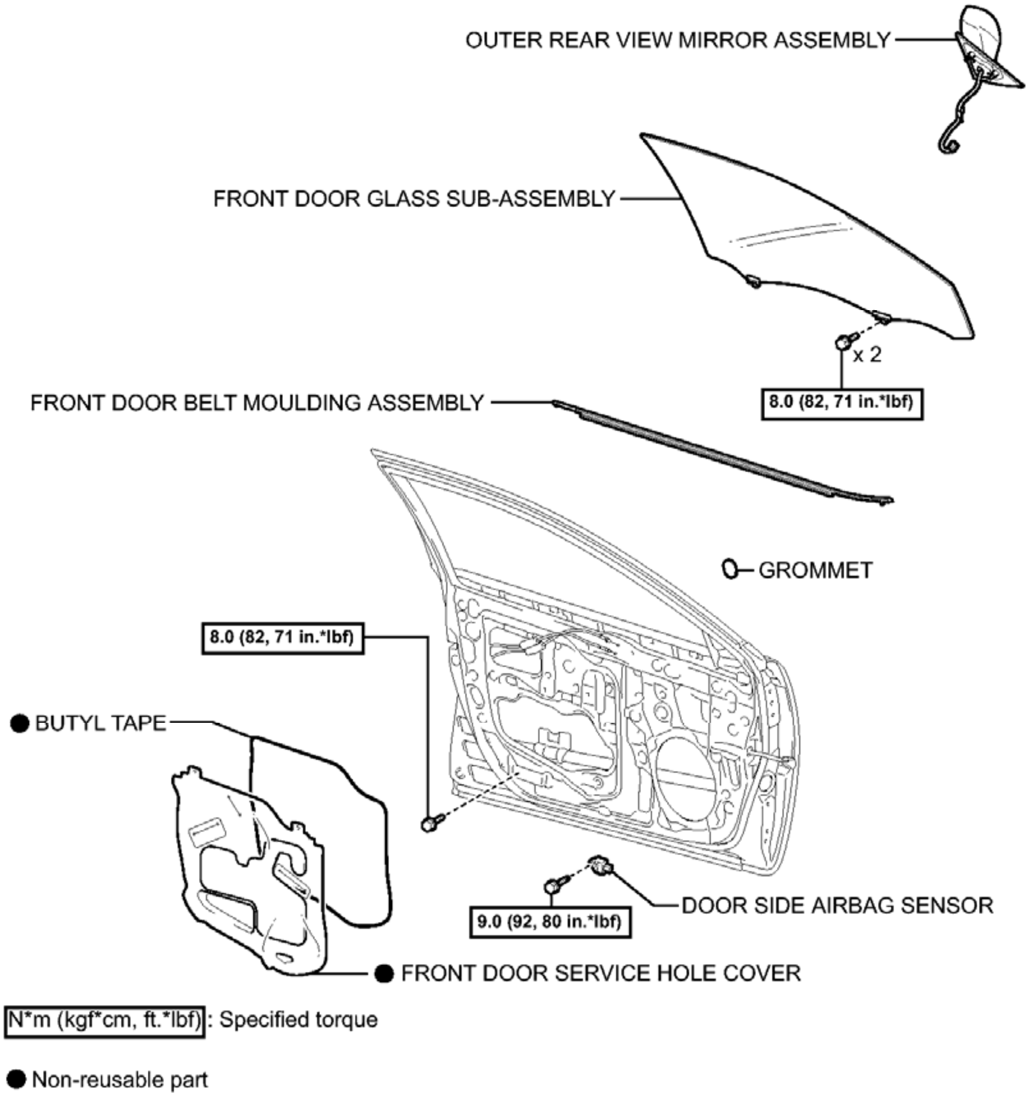
OUTER REAR VIEW MIRROR ASSEMBLY
FRONT DOOR GLASS SUB-ASSEMBLY
x 2
8.0 (82, 71 in.*lbf)
FRONT DOOR BELT MOULDING ASSEMBLY
GROMMET
8.0 (82, 71 in.*lbf)
● BUTYL TAPE
9.0 (92, 80 in.*lbf)
DOOR SIDE AIRBAG SENSOR
● FRONT DOOR SERVICE HOLE COVER
N*m (kgf*cm, ft.*lbf): Specified torque
● Non-reusable part
P

Fig. 111: Identifying Front Door Window Frame Moulding Replacement Components With Torque Specifications (1 Of 2)
Courtesy of TOYOTA MOTOR SALES, U.S.A., INC.

ILLUSTRATION

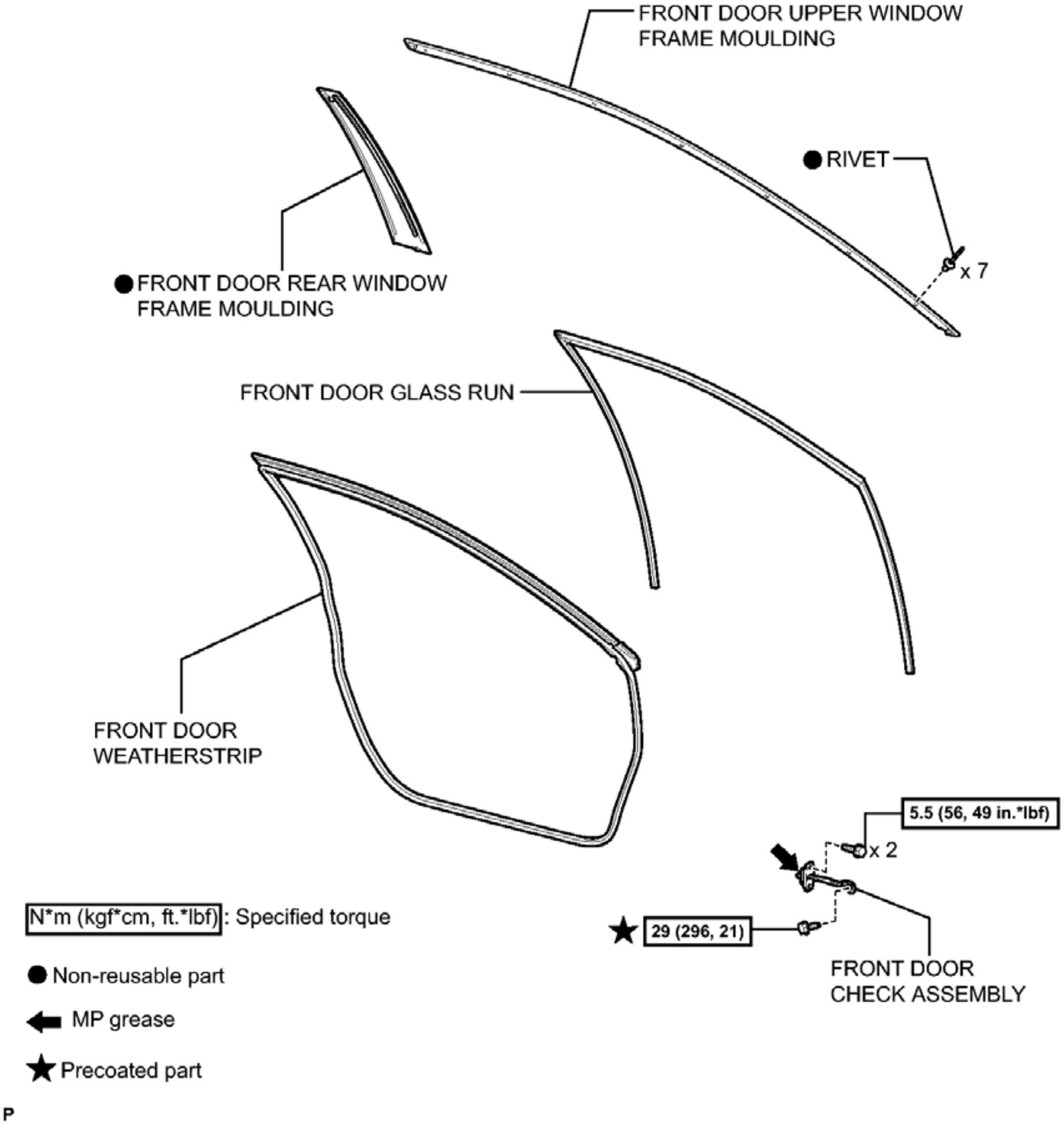
FRONT DOOR UPPER WINDOW FRAME MOULDING
● RIVET
x 7
● FRONT DOOR REAR WINDOW FRAME MOULDING
FRONT DOOR GLASS RUN
FRONT DOOR WEATHERSTRIP
5.5 (56, 49 in.*lbf)
x 2
★ 29 (296, 21)
FRONT DOOR CHECK ASSEMBLY
N*m (kgf*cm, ft.*lbf): Specified torque
● Non-reusable part
MP grease
★ Precoated part
P

Fig. 112: Identifying Front Door Window Frame Moulding Replacement Components With Torque Specifications (2 Of 2)
Courtesy of TOYOTA MOTOR SALES, U.S.A., INC.

REMOVAL

REMOVAL

1. **PRECAUTION**

NOTE: **After turning the ignition switch off, waiting time may be required before disconnecting the cable from the negative (-) battery terminal. Therefore, make sure to read the disconnecting the cable from the negative (-) battery**

terminal notices before proceeding with work. Refer to PRECAUTION .

2. **DISCONNECT CABLE FROM NEGATIVE BATTERY TERMINAL**

   WARNING: **Wait at least 90 seconds after disconnecting the cable from the negative (-) battery terminal to disable the SRS system.**

   NOTE: When disconnecting the cable, some systems need to be initialized after the cable is reconnected. Refer to INITIALIZATION .

3. **REMOVE OUTER REAR VIEW MIRROR ASSEMBLY**

   Refer to **REMOVAL** .

4. **REMOVE DOOR SIDE AIRBAG SENSOR** . Refer to **REMOVAL - Step 10** .
5. **REMOVE FRONT DOOR SERVICE HOLE COVER** . Refer to **DISASSEMBLY - Step 15** .
6. **REMOVE FRONT DOOR GLASS SUB-ASSEMBLY** . Refer to **DISASSEMBLY - Step 16** .
7. **REMOVE FRONT DOOR GLASS RUN** . Refer to **DISASSEMBLY - Step 20** .
8. **REMOVE FRONT DOOR BELT MOULDING ASSEMBLY** . See step 7.
9. **REMOVE FRONT DOOR CHECK ASSEMBLY** . Refer to **DISASSEMBLY - Step 36** .
10. **REMOVE FRONT DOOR WEATHERSTRIP** . Refer to **DISASSEMBLY - Step 37** .
11. **REMOVE FRONT DOOR REAR WINDOW FRAME MOULDING**

    HINT:

    When removing the front door rear window frame moulding, heat the vehicle body and front door rear window frame moulding using a heat light.

    HEATING TEMPERATURE

Item	Temperature
Vehicle Body	40 to 60°C (104 to 140°F)
Moulding	20 to 30°C (68 to 86°F)

    NOTE: Do not heat the vehicle body or moulding excessively.

    a. Using a heat light, heat the front door rear window frame moulding.
    b. Using a moulding remover, disengage the clip and remove the front door rear window frame moulding.

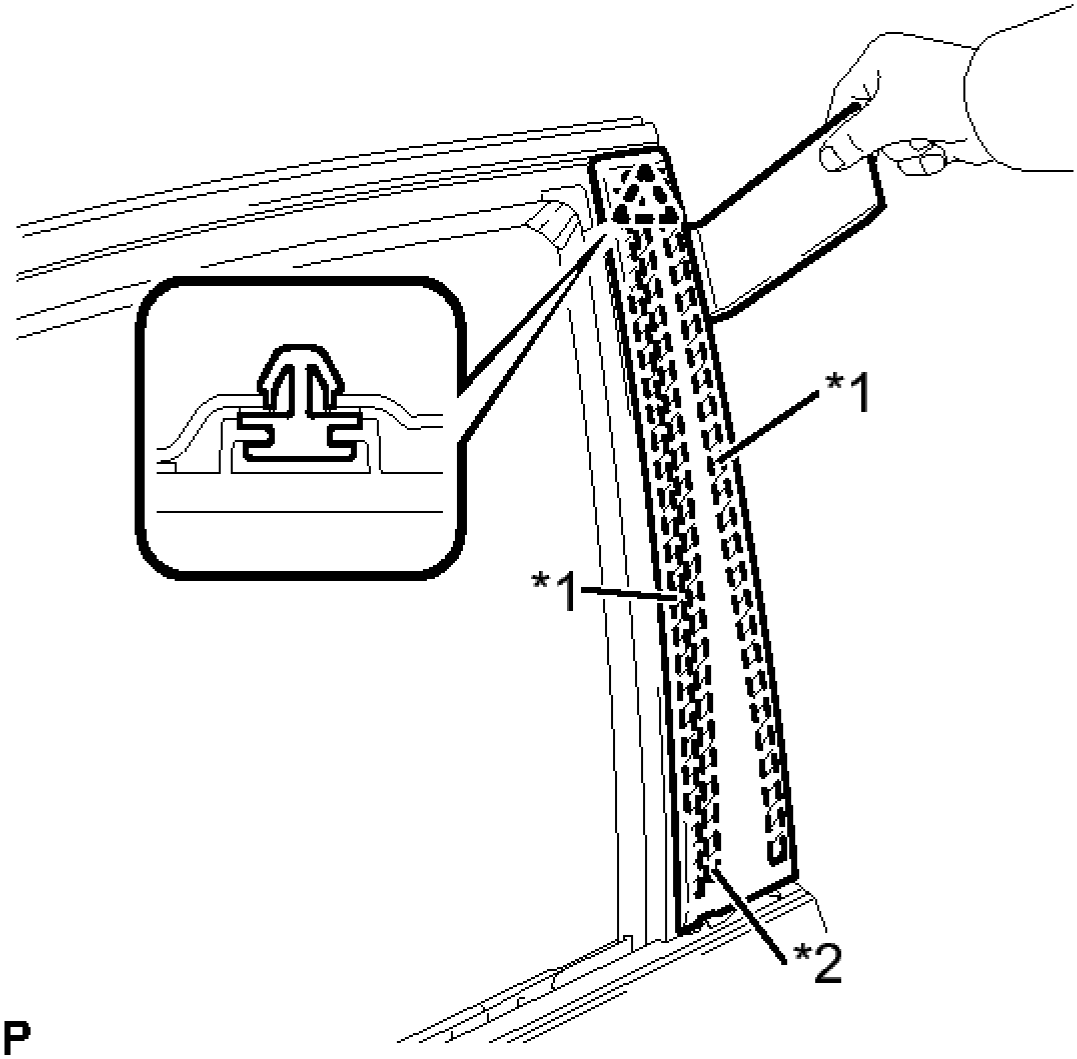

Fig. 113: Identifying Front Door Rear Window Frame Molding Clip
Courtesy of TOYOTA MOTOR SALES, U.S.A., INC.

TEXT IN ILLUSTRATION

*1	Double-sided Tape
*2	Caulking Sponge

12. **REMOVE FRONT DOOR UPPER WINDOW FRAME MOULDING**
    a. Insert a 4.0 mm (0.157 in.) drill bit into a drill.
    b. Tape a 4.0 mm (0.157 in.) drill bit 5.0 mm (0.197 in.) from the tip as shown in the illustration.

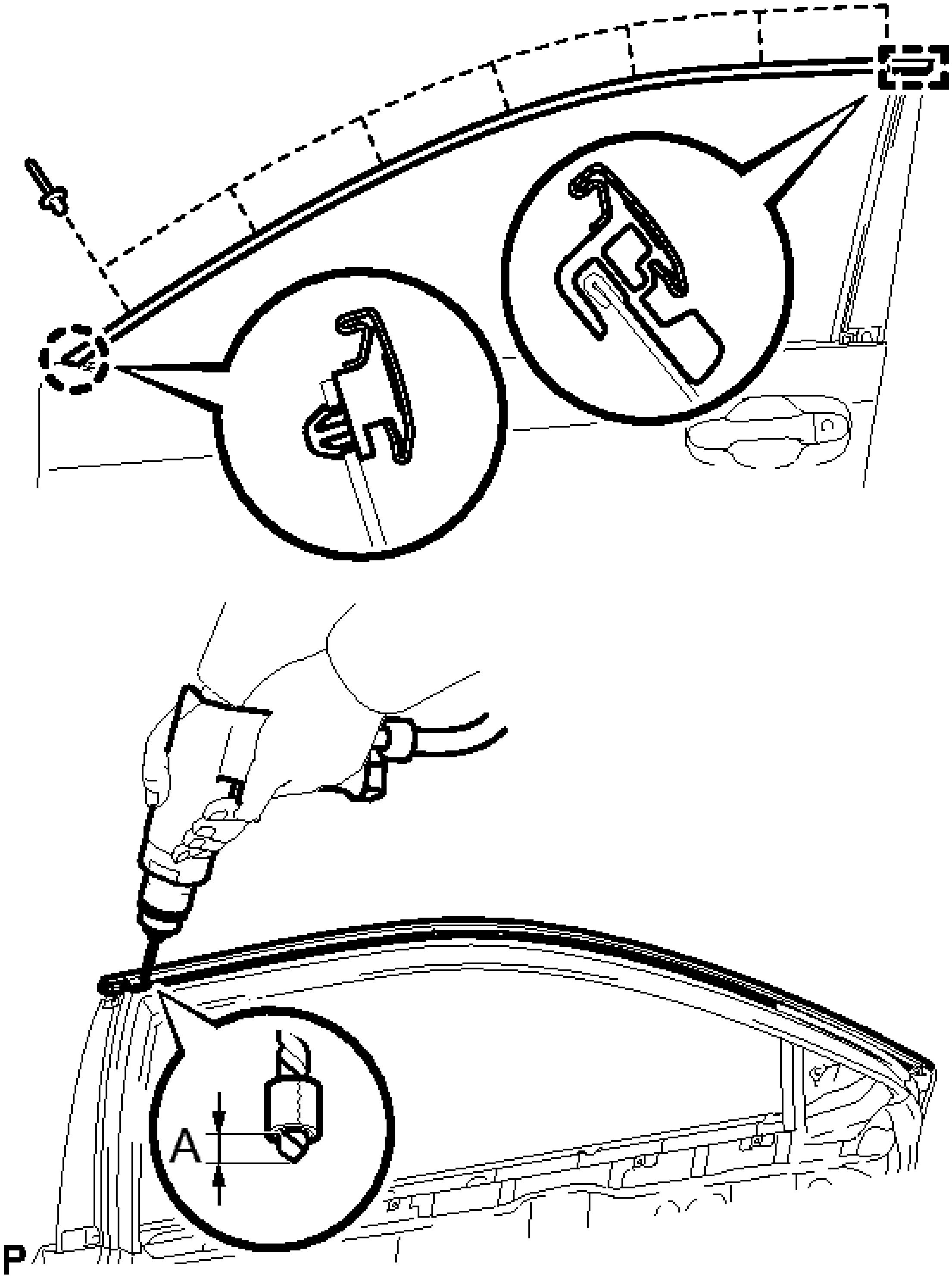

Fig. 114: Removing Front Door Upper Window Frame Molding
Courtesy of TOYOTA MOTOR SALES, U.S.A., INC.

Area	Dimension
A	5.0 mm

NOTE: **Tape the 4.0 mm (0.157 in.) drill bit to prevent the drill bit from going too deep.**

c. Lightly press the drill against the rivets to drill off the rivet flanges, and remove the 7 rivets.

NOTE:

- **Pressing the drill too firmly will cause the rivet to turn and result in the rivet not being drilled through.**
- **Prying the rivets with the drill may damage the rivet installation holes or drill bit.**
- **Be careful of the drilled rivets, as they may be hot.**

d. Using a vacuum cleaner, remove the rivet fragments and shavings from the drilled areas.
e. Disengage the claw and guide, and remove the front door upper window frame moulding from the door frame.

INSTALLATION

INSTALLATION

1. **PRECAUTION**

NOTE: **After turning the ignition switch off, waiting time may be required before disconnecting the cable from the negative (-) battery terminal. Therefore, make sure to read the disconnecting the cable from the negative (-) battery terminal notices before proceeding with work. Refer to PRECAUTION .**

2. **INSTALL FRONT DOOR UPPER WINDOW FRAME MOULDING**
   a. Engage the claw and guide of the front door upper window frame moulding to the door frame.

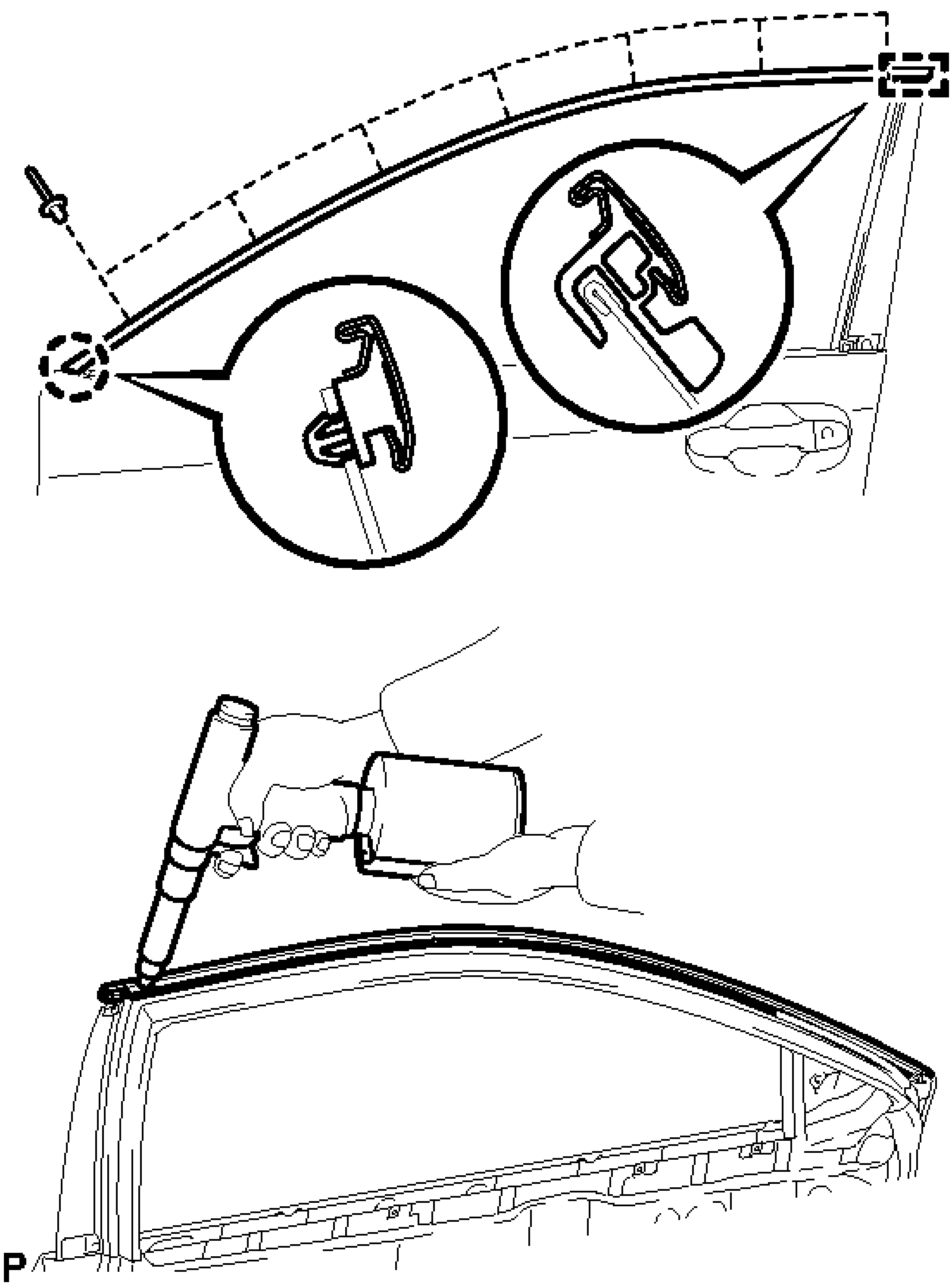

Fig. 115: Installing Front Door Upper Window Frame Molding
Courtesy of TOYOTA MOTOR SALES, U.S.A., INC.

b. Using an air riveter or hand riveter with a nose piece, install the front door upper window frame moulding with 7 new rivets.

HINT:

If the mandrel of the rivet does not come off on the first operation of the rivet gun, slide the rivet gun forward on the mandrel and operate it again.

NOTE:

- **Do not pry the rivet with the riveter, as this will cause damage to the riveter and mandrel.**

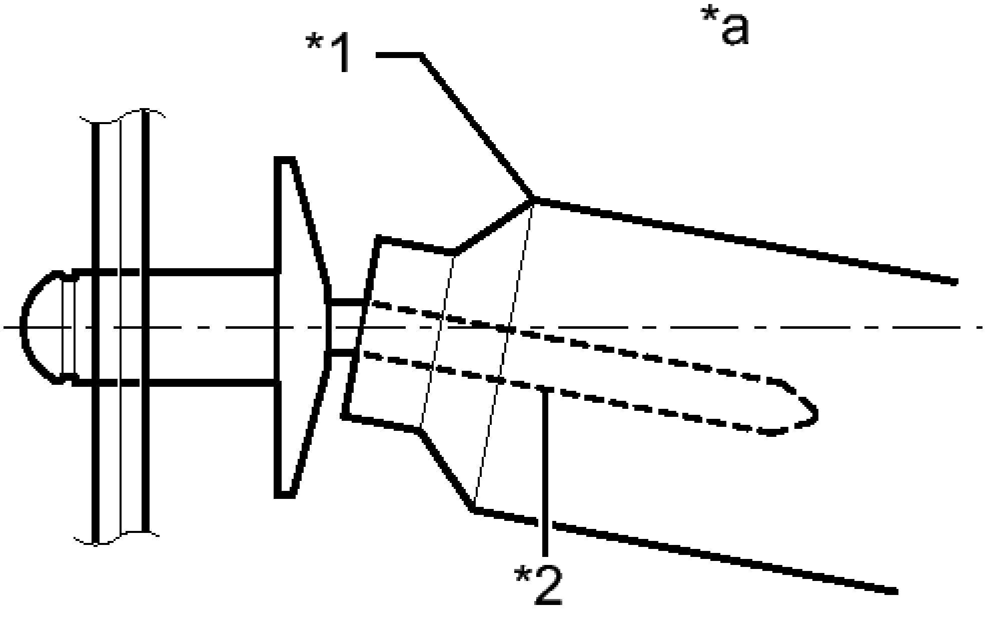

Fig. 116: Do Not Pry The Rivet With The Riveter
Courtesy of TOYOTA MOTOR SALES, U.S.A., INC.

TEXT IN ILLUSTRATION

*1	Riveter
*2	Mandrel
*a	Incorrect

- **Confirm that the rivets are seated properly against the moulding. Do no tilt the riveter when installing the rivet to the moulding. Do not leave an space between the rivet head and moulding.**

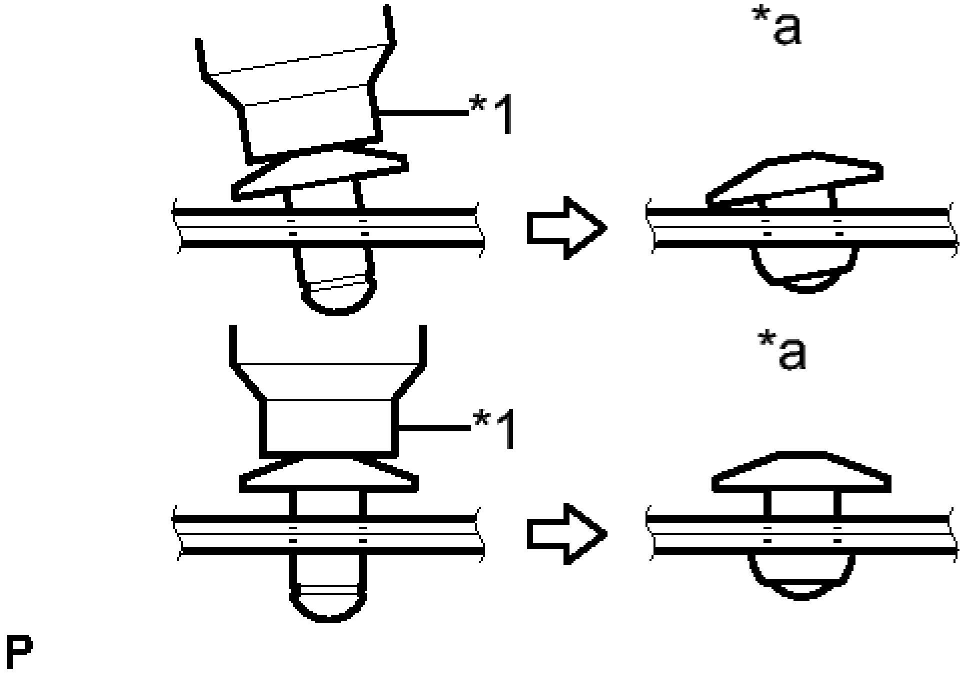

Fig. 117: Confirming That The Rivets Are Seated Properly
Courtesy of TOYOTA MOTOR SALES, U.S.A., INC.

TEXT IN ILLUSTRATION

*1	Riveter
*a	Incorrect

- Do not leave any space between the moulding and door frame. Firmly hold the 2 items together while installing the rivet.

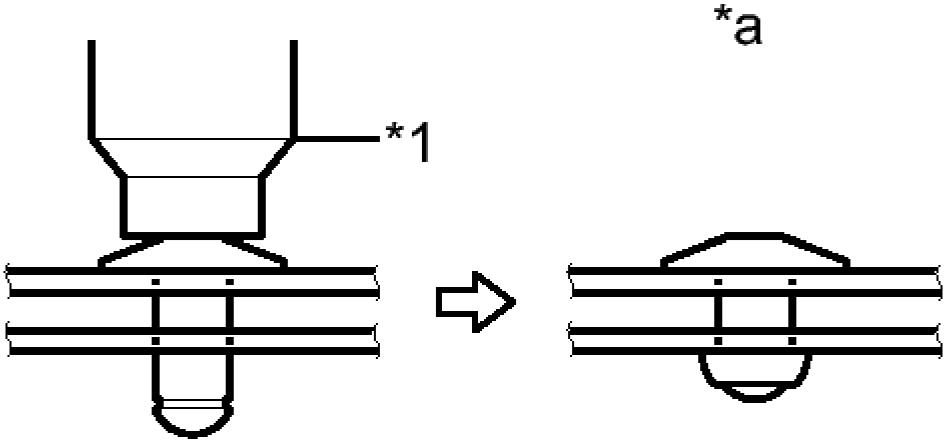

P

Fig. 118: Firmly Hold The 2 Items Together While Installing The Rivet
Courtesy of TOYOTA MOTOR SALES, U.S.A., INC.

TEXT IN ILLUSTRATION

***1**	**Riveter**
***a**	**Incorrect**

3. **INSTALL FRONT DOOR REAR WINDOW FRAME MOULDING**

HINT:

When installing a new front door rear window frame moulding, heat the vehicle body and front door rear window frame moulding using a heat light.

HEATING TEMPERATURE

Item	Temperature
Vehicle Body	40 to 60°C (104 to 140°F)
Moulding	20 to 30°C (68 to 86°F)

NOTE: **Do not heat the vehicle body or front door rear window frame moulding excessively.**

a. Clean the vehicle body surface.

   1. Using a heat light, heat the vehicle body surface.
   2. Remove the double-sided tape from the vehicle body.
   3. Wipe off any tape adhesive residue with cleaner.

b. Install a new front door rear window frame moulding.

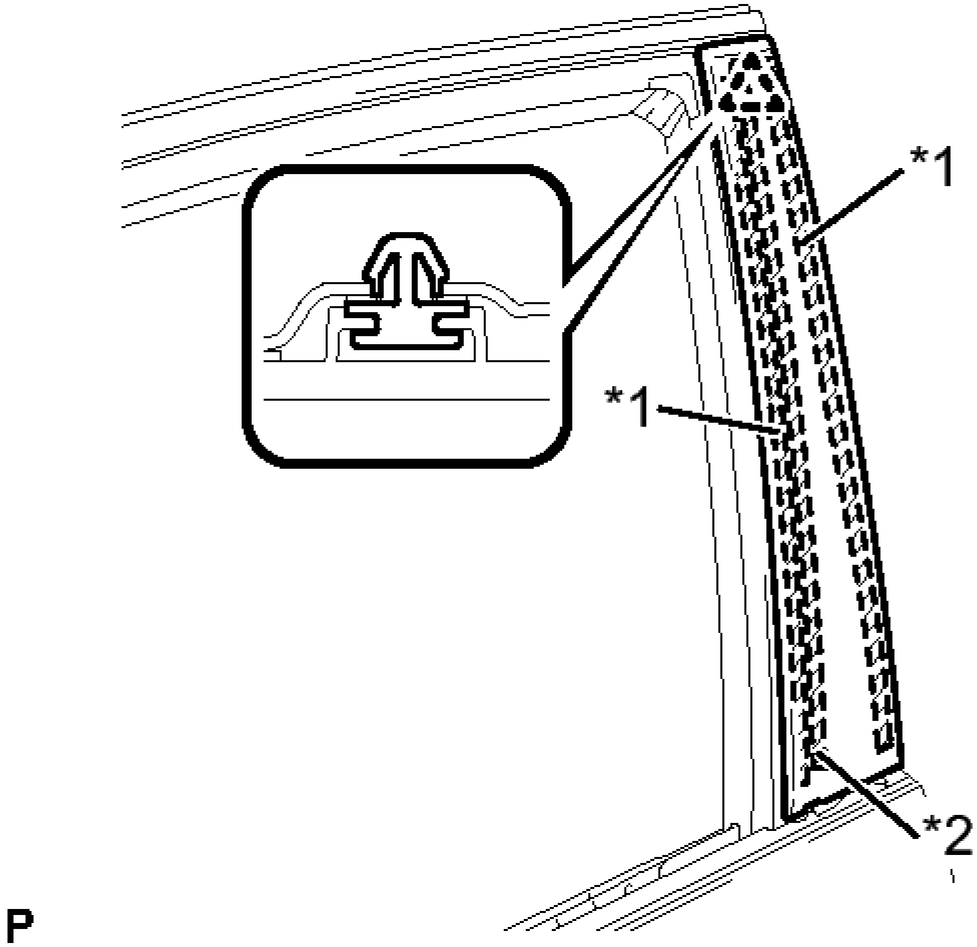

Fig. 119: Identifying Front Door Rear Window Frame Molding Clip
Courtesy of TOYOTA MOTOR SALES, U.S.A., INC.

TEXT IN ILLUSTRATION

*1	Double-sided Tape
*2	Caulking Sponge

   1. Using a heat light, heat the vehicle body and front door rear window frame moulding.
   2. Remove the release paper from the face of the front door rear window frame moulding.

      HINT:

      After removing the release paper, keep the exposed adhesive free from foreign matter.

   3. Install the front door rear window frame moulding with the clip.

4. **INSTALL FRONT DOOR WEATHERSTRIP** . Refer to **REASSEMBLY - Step 12** .
5. **INSTALL FRONT DOOR CHECK ASSEMBLY** . Refer to **REASSEMBLY - Step 13** .
6. **INSTALL FRONT DOOR BELT MOULDING ASSEMBLY** . See step 2.
7. **INSTALL FRONT DOOR GLASS RUN** . Refer to **REASSEMBLY - Step 29** .
8. **INSTALL FRONT DOOR GLASS SUB-ASSEMBLY** . Refer to **REASSEMBLY - Step 33** .
9. **INSTALL FRONT DOOR SERVICE HOLE COVER** . Refer to **REASSEMBLY - Step 34** .
10. **INSTALL DOOR SIDE AIRBAG SENSOR** . Refer to **INSTALLATION - Step 1** .
11. **INSTALL OUTER REAR VIEW MIRROR ASSEMBLY**

    Refer to **INSTALLATION** .

12. **CONNECT CABLE TO NEGATIVE BATTERY TERMINAL**

    NOTE: **When disconnecting the cable, some systems need to be initialized after the cable is reconnected. Refer to INITIALIZATION .**

13. **INITIALIZE POWER WINDOW CONTROL SYSTEM (for Driver Side)**

    Refer to **INITIALIZATION** .

14. **INSPECT POWER WINDOW OPERATION**

    Refer to **OPERATION CHECK** .

15. **INSPECT SRS WARNING LIGHT**

    For Separate Type Yaw Rate Sensor: Refer to **DIAGNOSIS SYSTEM** .

    For Built-in Type Yaw Rate Sensor: Refer to **DIAGNOSIS SYSTEM** .

REAR DOOR WINDOW FRAME MOULDING

COMPONENTS

ILLUSTRATION

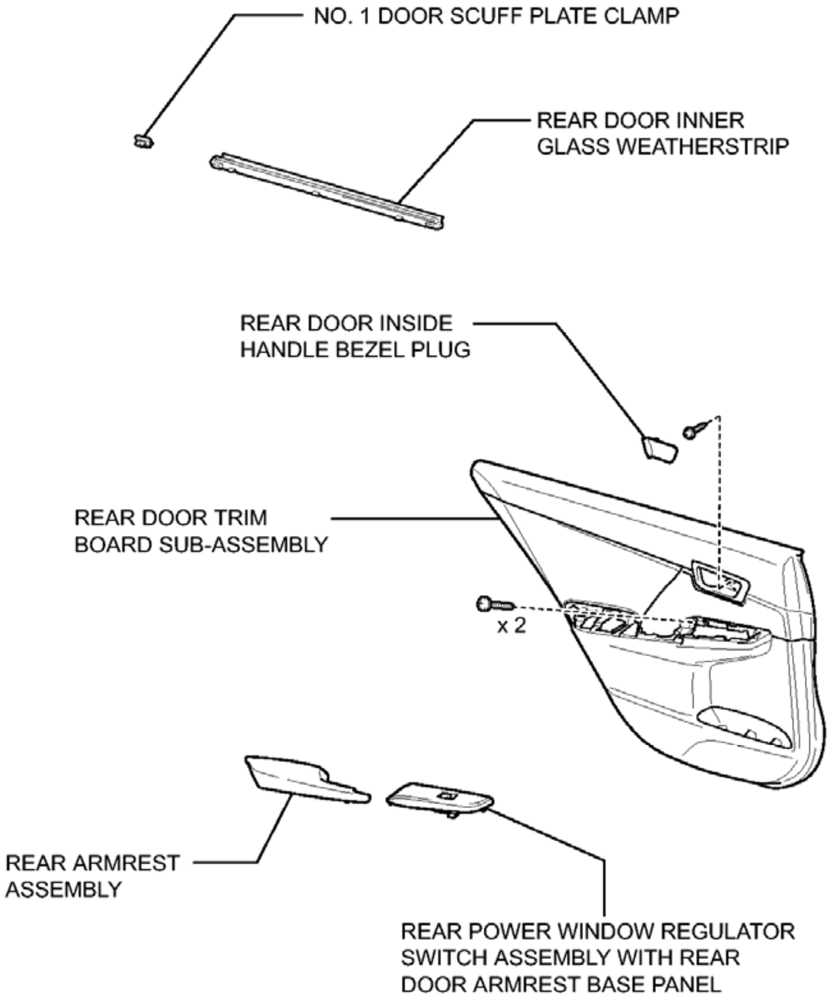
NO. 1 DOOR SCUFF PLATE CLAMP
REAR DOOR INNER GLASS WEATHERSTRIP
REAR DOOR INSIDE HANDLE BEZEL PLUG
REAR DOOR TRIM BOARD SUB-ASSEMBLY
x 2
REAR ARMREST ASSEMBLY
REAR POWER WINDOW REGULATOR SWITCH ASSEMBLY WITH REAR DOOR ARMREST BASE PANEL
P

Fig. 120: Identifying Rear Door Window Frame Moulding Replacement Components (1 Of 3)
Courtesy of TOYOTA MOTOR SALES, U.S.A., INC.

ILLUSTRATION

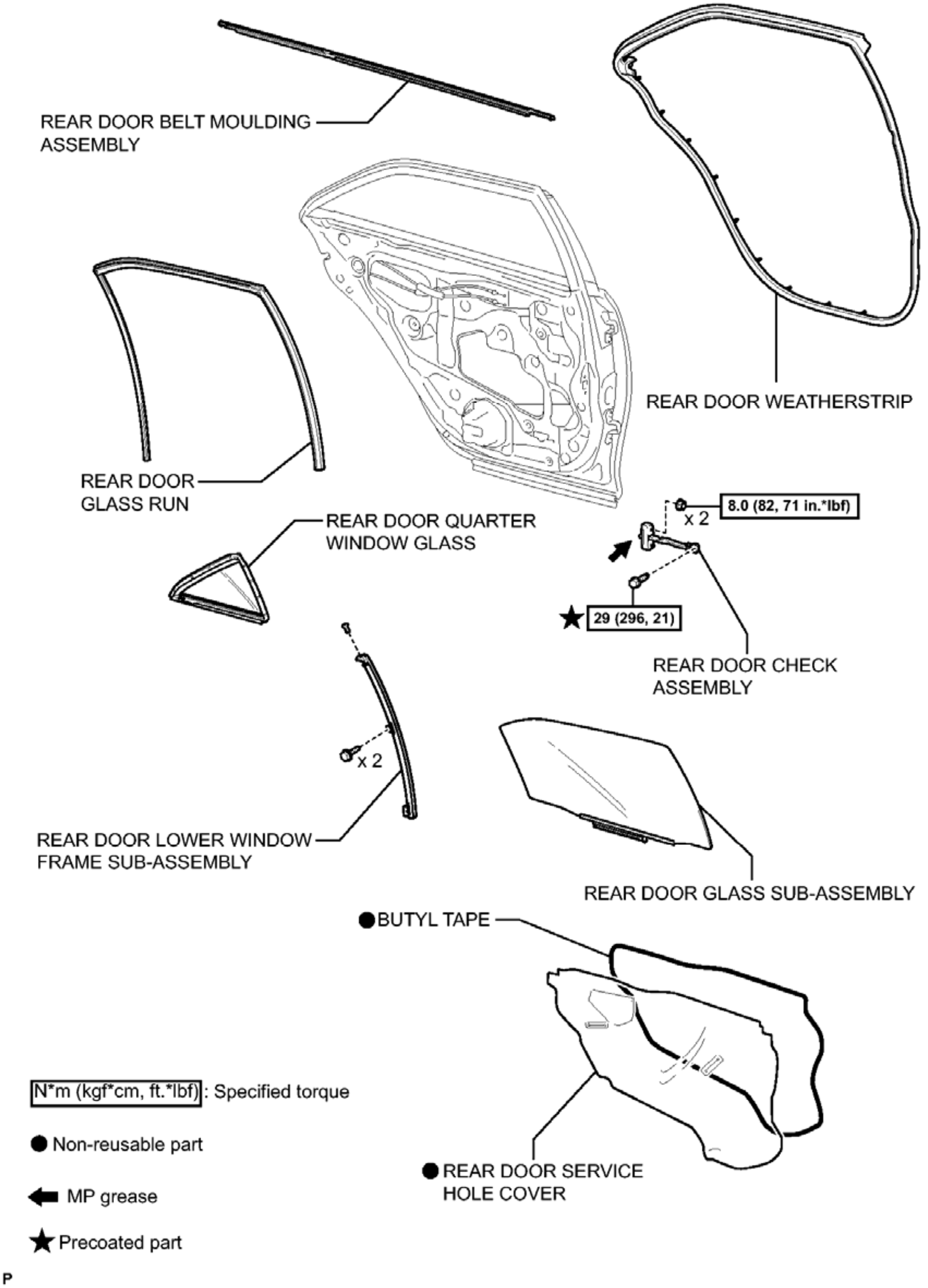
REAR DOOR BELT MOULDING ASSEMBLY
REAR DOOR WEATHERSTRIP
REAR DOOR GLASS RUN
REAR DOOR QUARTER WINDOW GLASS
x 2
8.0 (82, 71 in.*lbf)
★ 29 (296, 21)
REAR DOOR CHECK ASSEMBLY
x 2
REAR DOOR LOWER WINDOW FRAME SUB-ASSEMBLY
REAR DOOR GLASS SUB-ASSEMBLY
● BUTYL TAPE
● REAR DOOR SERVICE HOLE COVER
N*m (kgf*cm, ft.*lbf) : Specified torque
● Non-reusable part
⬅ MP grease
★ Precoated part
P

Fig. 121: Identifying Rear Door Window Frame Moulding Replacement Components With Torque Specifications (2 Of 3)

Courtesy of TOYOTA MOTOR SALES, U.S.A., INC.

ILLUSTRATION

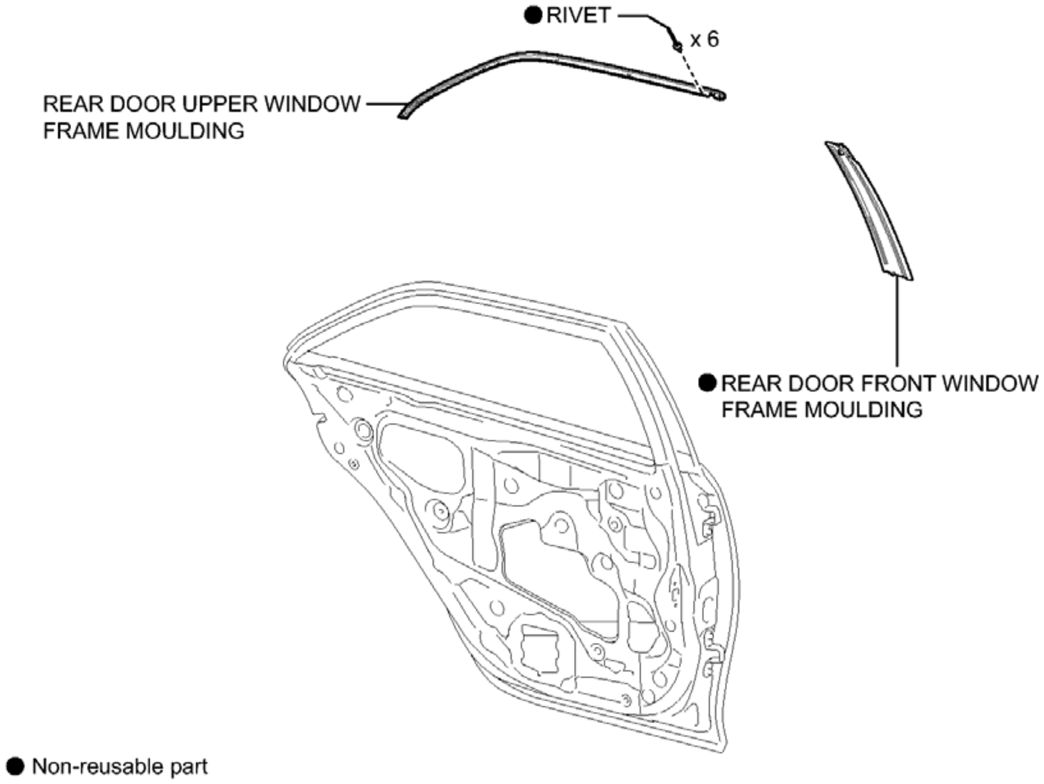
● RIVET
x 6
REAR DOOR UPPER WINDOW FRAME MOULDING
● REAR DOOR FRONT WINDOW FRAME MOULDING
● Non-reusable part

P

Fig. 122: Identifying Rear Door Window Frame Moulding Replacement Components (3 Of 3)
Courtesy of TOYOTA MOTOR SALES, U.S.A., INC.

REMOVAL

REMOVAL

1. **PRECAUTION**

    NOTE: **After turning the ignition switch off, waiting time may be required before disconnecting the cable from the negative (-) battery terminal. Therefore, make sure to read the disconnecting the cable from the negative (-) battery terminal notices before proceeding with work. Refer to PRECAUTION .**

2. **DISCONNECT CABLE FROM NEGATIVE BATTERY TERMINAL**

    NOTE: **When disconnecting the cable, some systems need to be initialized after the cable is reconnected. Refer to INITIALIZATION .**

3. **REMOVE REAR DOOR INSIDE HANDLE BEZEL PLUG** . Refer to **DISASSEMBLY - Step 3** .
4. **REMOVE REAR POWER WINDOW REGULATOR SWITCH ASSEMBLY WITH REAR DOOR ARMREST BASE PANEL** . Refer to **DISASSEMBLY - Step 4** .
5. **REMOVE REAR ARMREST ASSEMBLY** . Refer to **DISASSEMBLY - Step 5** .
6. **REMOVE REAR DOOR TRIM BOARD SUB-ASSEMBLY** . Refer to **DISASSEMBLY - Step 6** .
7. **REMOVE REAR DOOR INNER GLASS WEATHERSTRIP** . Refer to **DISASSEMBLY - Step 8** .
8. **REMOVE REAR DOOR SERVICE HOLE COVER** . Refer to **DISASSEMBLY - Step 9** .
9. **REMOVE REAR DOOR CHECK ASSEMBLY** . Refer to **DISASSEMBLY - Step 10** .
10. **REMOVE REAR DOOR WEATHERSTRIP** . Refer to **DISASSEMBLY - Step 11** .
11. **REMOVE REAR DOOR GLASS RUN** . Refer to **DISASSEMBLY - Step 12** .
12. **REMOVE REAR DOOR LOWER WINDOW FRAME SUB-ASSEMBLY** . Refer to **DISASSEMBLY - Step 13** .
13. **REMOVE REAR DOOR QUARTER WINDOW GLASS** . Refer to **DISASSEMBLY - Step 14** .
14. **REMOVE REAR DOOR GLASS SUB-ASSEMBLY** . Refer to **DISASSEMBLY - Step 15** .
15. **REMOVE REAR DOOR BELT MOULDING ASSEMBLY** . See step 15.
16. **REMOVE REAR DOOR FRONT WINDOW FRAME MOULDING**

HINT:

When removing the rear door front window frame moulding, heat the vehicle body and rear door front window frame moulding using a heat light.

HEATING TEMPERATURE

Item	Temperature
Vehicle Body	40 to 60°C (104 to 140°F)
Moulding	20 to 30°C (68 to 86°F)

NOTE: **Do not heat the vehicle body or moulding excessively.**

a. Using a heat light, heat the rear door front window frame moulding.
b. Using a moulding remover, disengage the clip and remove the rear door front window frame moulding.

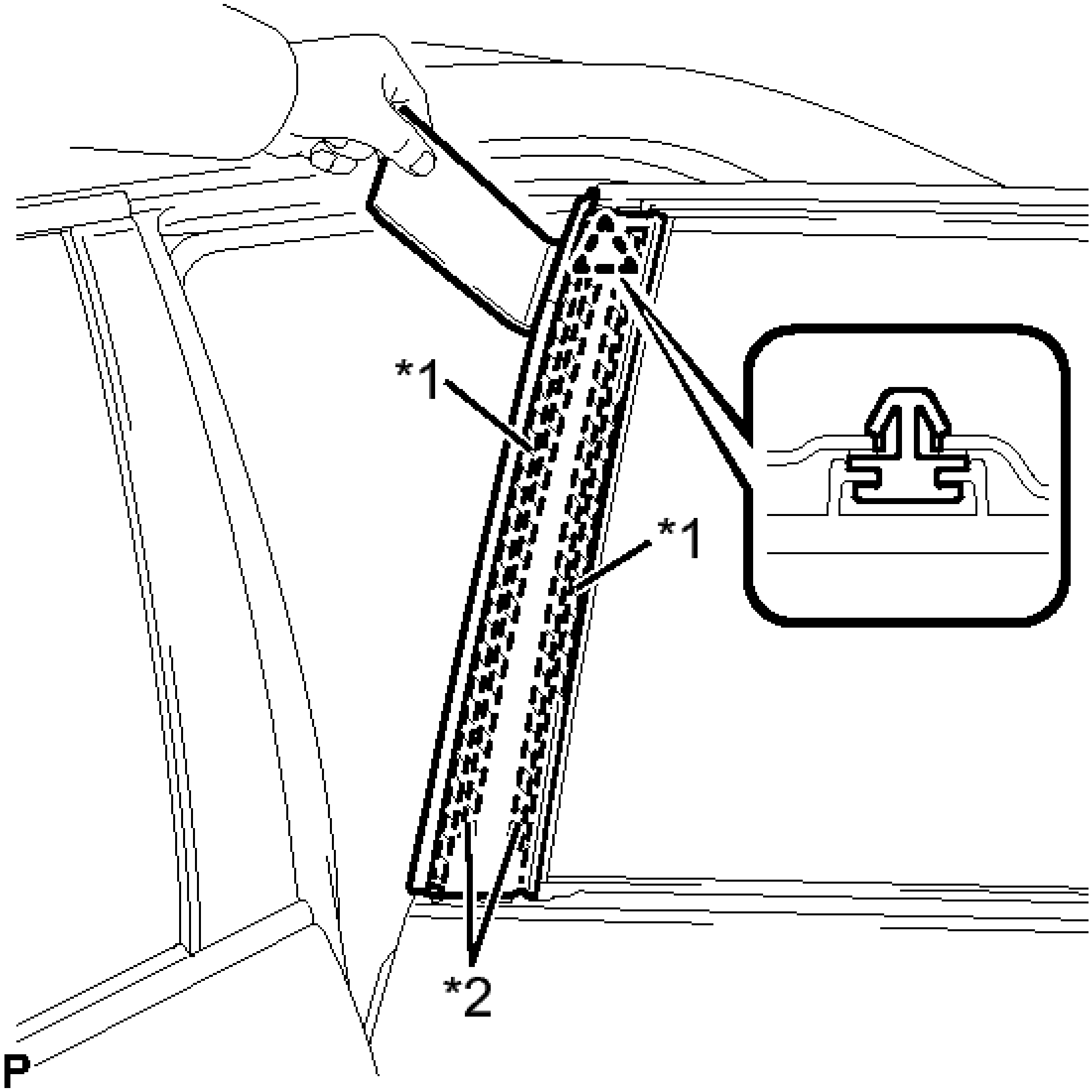

Fig. 123: Identifying Rear Door Front Window Frame Molding Clip
Courtesy of TOYOTA MOTOR SALES, U.S.A., INC.

TEXT IN ILLUSTRATION

*1	Double-sided Tape
*2	Caulking Sponge

17. **REMOVE REAR DOOR UPPER WINDOW FRAME MOULDING**
    a. Insert a 4.0 mm (0.157 in.) drill bit into a drill.
    b. Tape a 4.0 mm (0.157 in.) drill bit 5.0 mm (0.197 in.) from the tip as shown in the illustration.

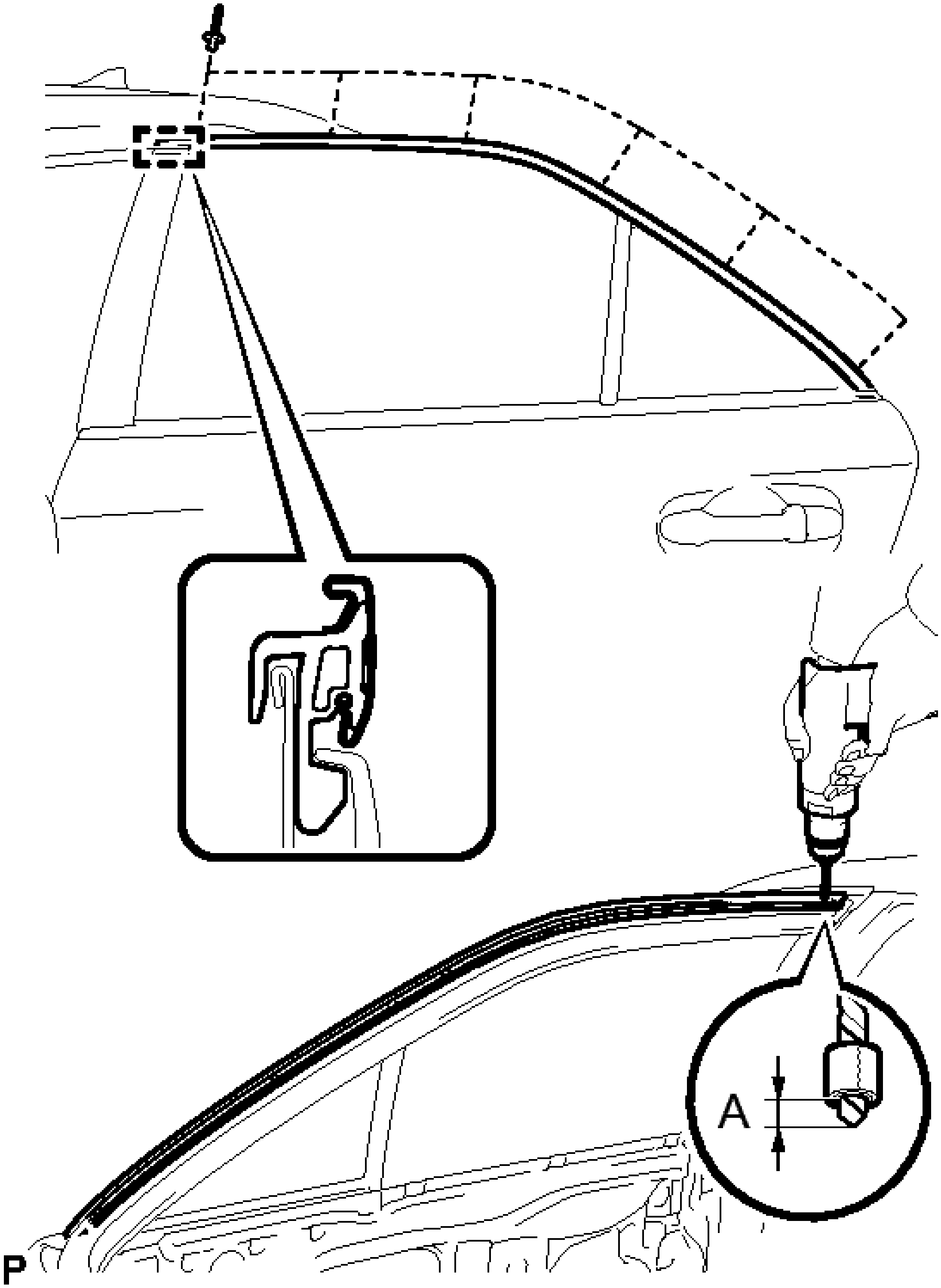

Fig. 124: Removing Rear Door Upper Window Frame Molding
Courtesy of TOYOTA MOTOR SALES, U.S.A., INC.

Area	Dimension
A	5.0 mm

NOTE: **Tape the 4.0 mm (0.157 in.) drill bit to prevent the drill bit from going too deep.**

c. Lightly press the drill bit against the rivets to drill off the rivet flanges, and remove the 6 rivets.

NOTE:

- **Pressing the drill too firmly will cause the rivet to turn and result in the rivet not being drilled through.**
- **Prying the rivets with the drill may damage the rivet installation holes or drill bit.**
- **Be careful of the drilled rivets, as they may be hot.**

d. Using a vacuum cleaner, remove the rivet fragments and shavings from the drilled areas.
e. Disengage the guide, remove the rear door upper window frame moulding from the door frame.

INSTALLATION

INSTALLATION

1. **INSTALL REAR DOOR UPPER WINDOW FRAME MOULDING**
    a. Engage the guide of the rear door upper window frame moulding to the door frame.

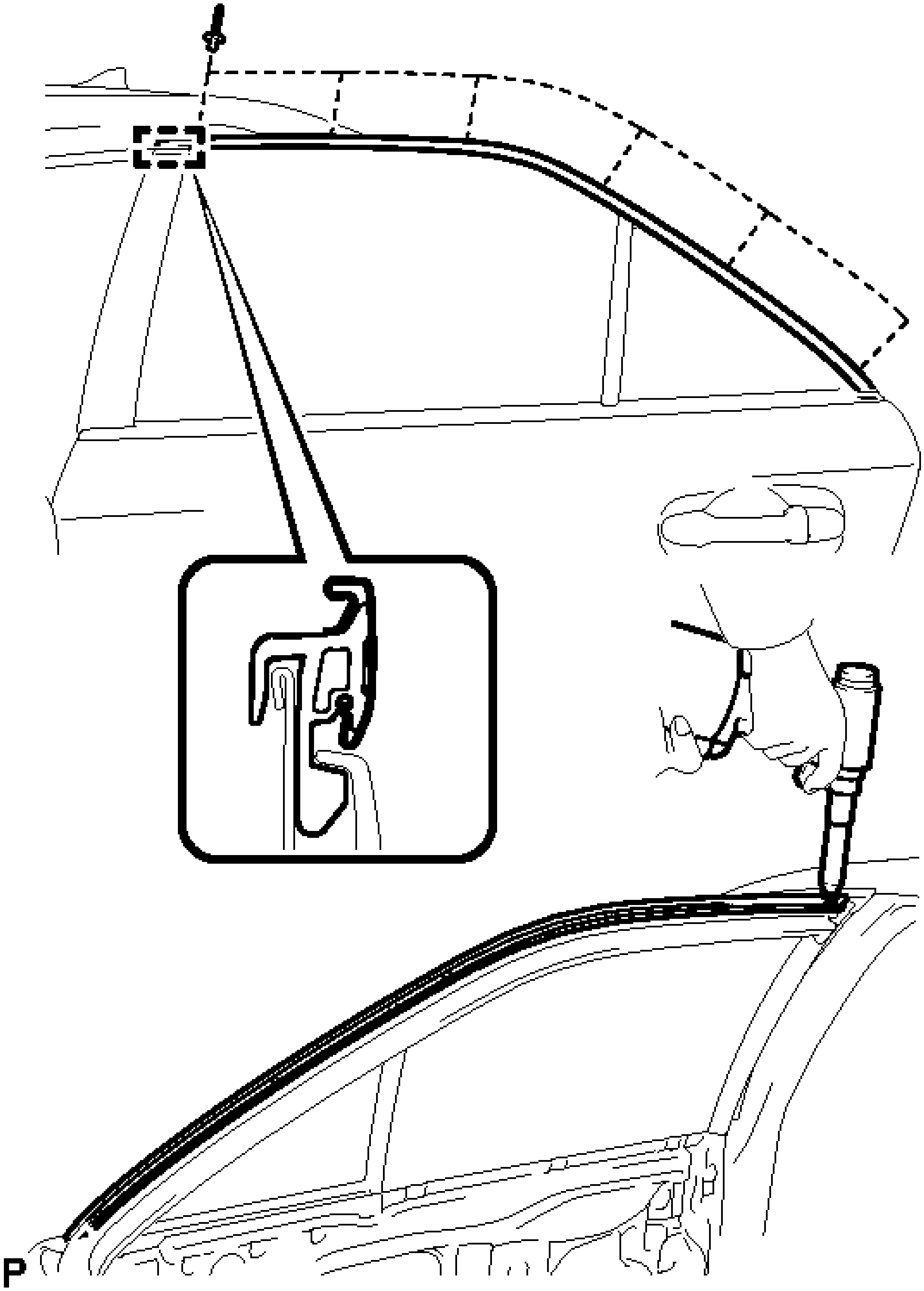

Fig. 125: Installing Rear Door Upper Window Frame Molding
Courtesy of TOYOTA MOTOR SALES, U.S.A., INC.

b. Using an air riveter or hand riveter with a nose piece, install the rear door upper window frame moulding with 6 new rivets.

HINT:

If the mandrel of the rivet does not come off on the first operation of the rivet gun, slide the rivet gun forward on the mandrel and operate it again.

NOTE:

- **Do not pry the rivet with the riveter, as this will cause damage to the riveter and mandrel.**

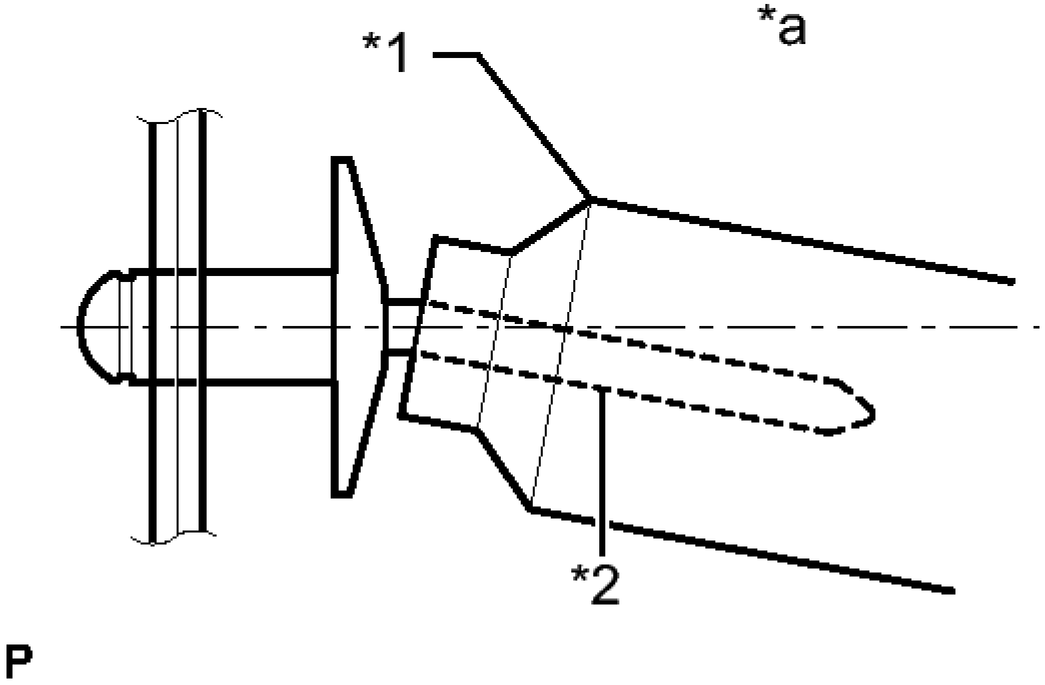

Fig. 126: Do Not Pry The Rivet With The Riveter
Courtesy of TOYOTA MOTOR SALES, U.S.A., INC.

TEXT IN ILLUSTRATION

*1	Riveter
*2	Mandrel
*a	Incorrect

- **Confirm that the rivets are seated properly against the moulding. Do no tilt the riveter when installing the rivet to the moulding. Do not leave an space between the rivet head and moulding.**

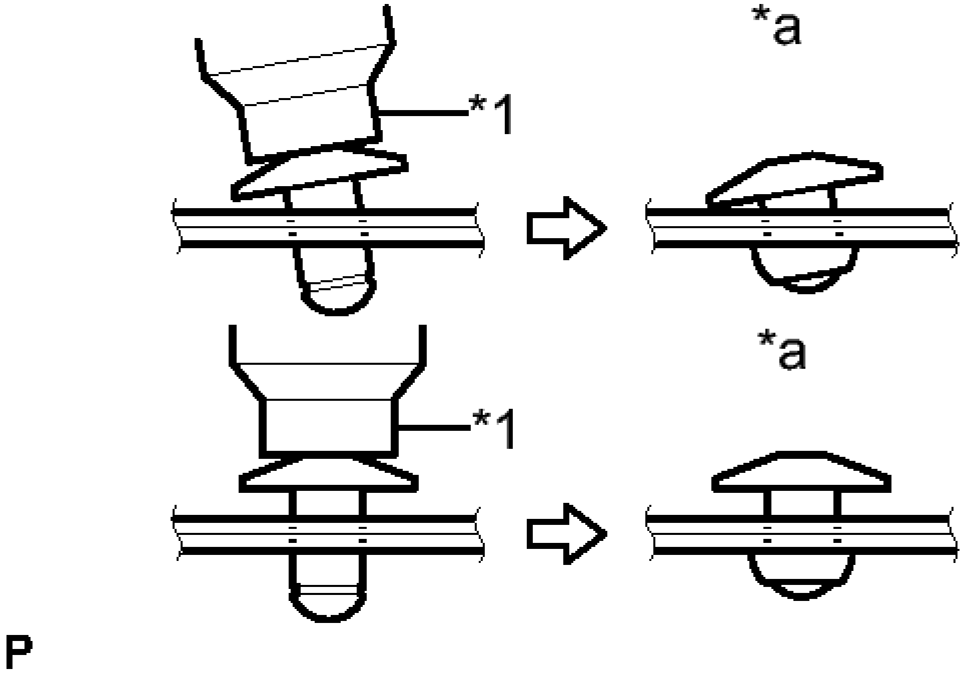

Fig. 127: Confirming That The Rivets Are Seated Properly
Courtesy of TOYOTA MOTOR SALES, U.S.A., INC.

TEXT IN ILLUSTRATION

*1	Riveter
*a	Incorrect

- **Do not leave any space between the moulding and door frame. Firmly hold the 2 items together while installing the rivet.**

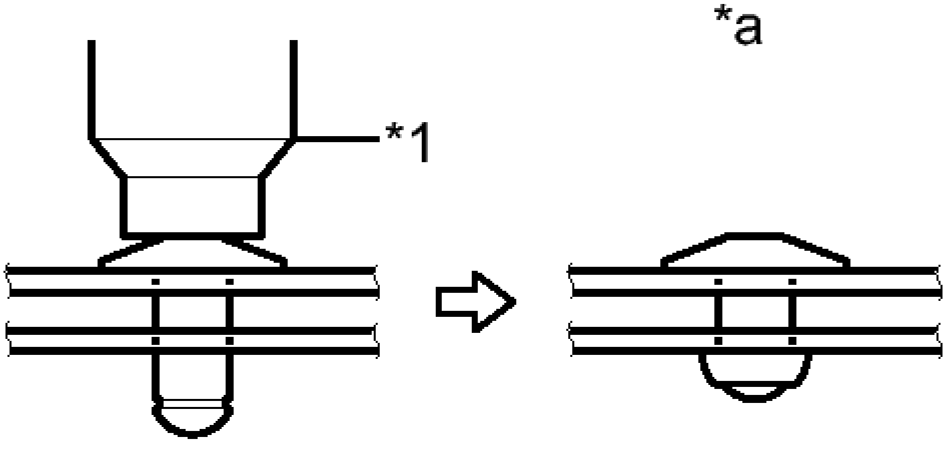

Fig. 128: Firmly Hold The 2 Items Together While Installing The Rivet
Courtesy of TOYOTA MOTOR SALES, U.S.A., INC.

TEXT IN ILLUSTRATION

***1**	**Riveter**
***a**	**Incorrect**

2. **INSTALL REAR DOOR FRONT WINDOW FRAME MOULDING**

HINT:

When installing a new rear door front window frame moulding, heat the vehicle body and rear door front window frame moulding using a heat light.

HEATING TEMPERATURE

Item	Temperature
Vehicle Body	40 to 60°C (104 to 140°F)
Moulding	20 to 30°C (68 to 86°F)

NOTE: **Do not heat the vehicle body or rear door front window frame moulding excessively.**

a. Clean the vehicle body surface.

   1. Using a heat light, heat the vehicle body surface.
   2. Remove the double-sided tape from the vehicle body.
   3. Wipe off any tape adhesive residue with cleaner.

b. Install a new rear door front window frame moulding.

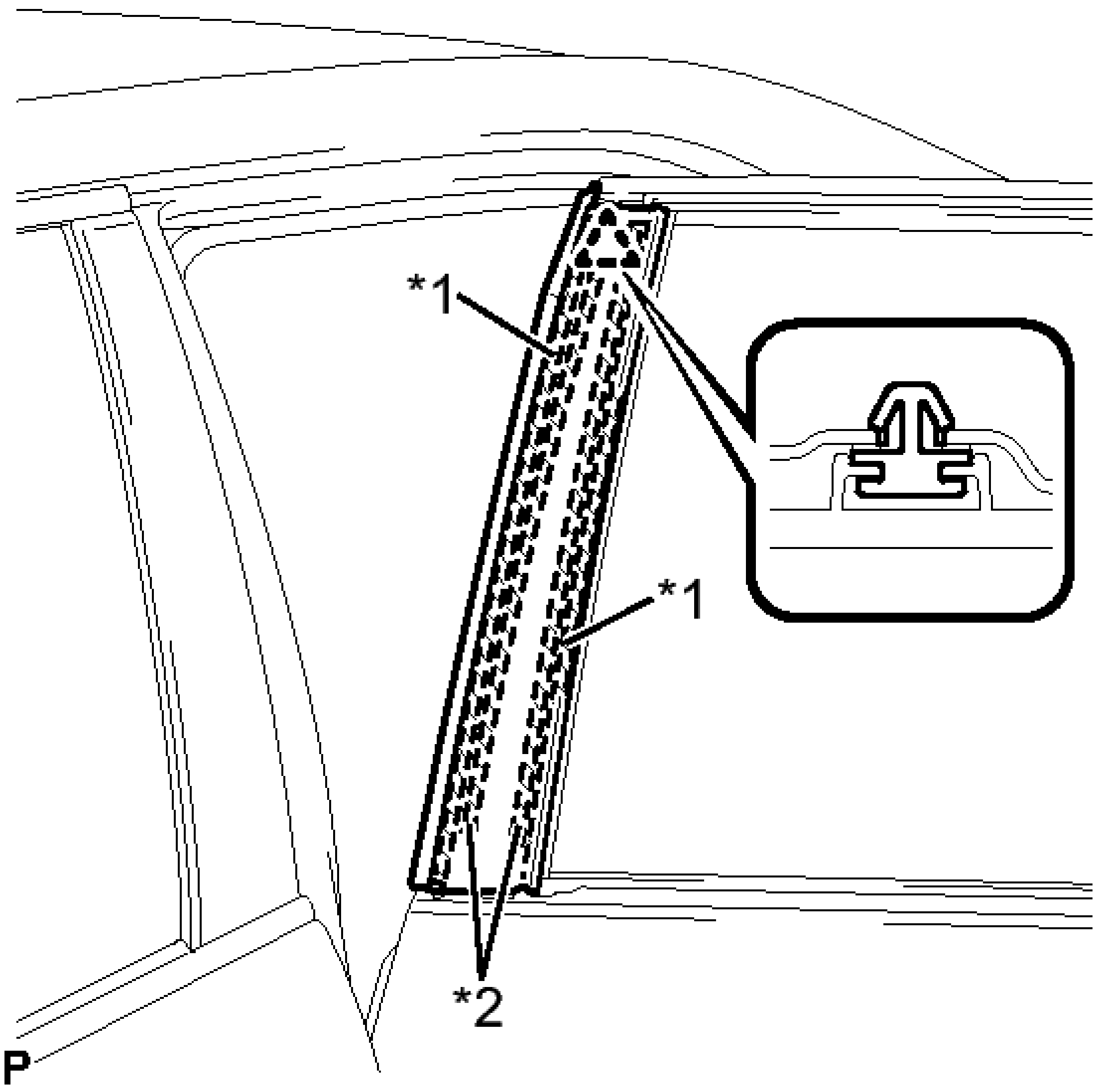

Fig. 129: Identifying New Rear Door Front Window Frame Molding Clip
Courtesy of TOYOTA MOTOR SALES, U.S.A., INC.

TEXT IN ILLUSTRATION

*1	Double-sided Tape
*2	Caulking Sponge

    1. Using a heat light, heat the vehicle body and rear door front window frame moulding.
    2. Remove the release paper from the rear door front window frame moulding.

       HINT:

       After removing the release paper, keep the exposed adhesive free from foreign matter.

    3. Install the rear door front window frame moulding with the clip.
3. **INSTALL REAR DOOR BELT MOULDING ASSEMBLY** . See step 1.
4. **INSTALL REAR DOOR GLASS SUB-ASSEMBLY** . Refer to **REASSEMBLY - Step 21** .
5. **INSTALL REAR DOOR QUARTER WINDOW GLASS** . Refer to **REASSEMBLY - Step 22** .
6. **INSTALL REAR DOOR LOWER WINDOW FRAME SUB-ASSEMBLY** . Refer to **REASSEMBLY - Step 23** .
7. **INSTALL REAR DOOR GLASS RUN** . Refer to **REASSEMBLY - Step 24** .
8. **INSTALL REAR DOOR WEATHERSTRIP** . Refer to **REASSEMBLY - Step 25** .
9. **INSTALL REAR DOOR CHECK ASSEMBLY** . Refer to **REASSEMBLY - Step 26** .
10. **INSTALL REAR DOOR SERVICE HOLE COVER** . Refer to **REASSEMBLY - Step 27** .
11. **INSTALL REAR DOOR INNER GLASS WEATHERSTRIP** . Refer to **REASSEMBLY - Step 28** .
12. **INSTALL REAR DOOR TRIM BOARD SUB-ASSEMBLY** . Refer to **REASSEMBLY - Step 30** .
13. **INSTALL REAR ARMREST ASSEMBLY** . Refer to **REASSEMBLY - Step 31** .
14. **INSTALL REAR POWER WINDOW REGULATOR SWITCH ASSEMBLY WITH REAR DOOR ARMREST BASE PANEL** . Refer to **REASSEMBLY - Step 32** .
15. **INSTALL REAR DOOR INSIDE HANDLE BEZEL PLUG** . Refer to **REASSEMBLY - Step 33** .
16. **CONNECT CABLE TO NEGATIVE BATTERY TERMINAL**

    NOTE: **When disconnecting the cable, some systems need to be initialized after the cable is reconnected. Refer to INITIALIZATION .**

17. **INSPECT POWER WINDOW OPERATION**

    Refer to **OPERATION CHECK** .

ROOF DRIP SIDE FINISH MOULDING

COMPONENTS

ILLUSTRATION

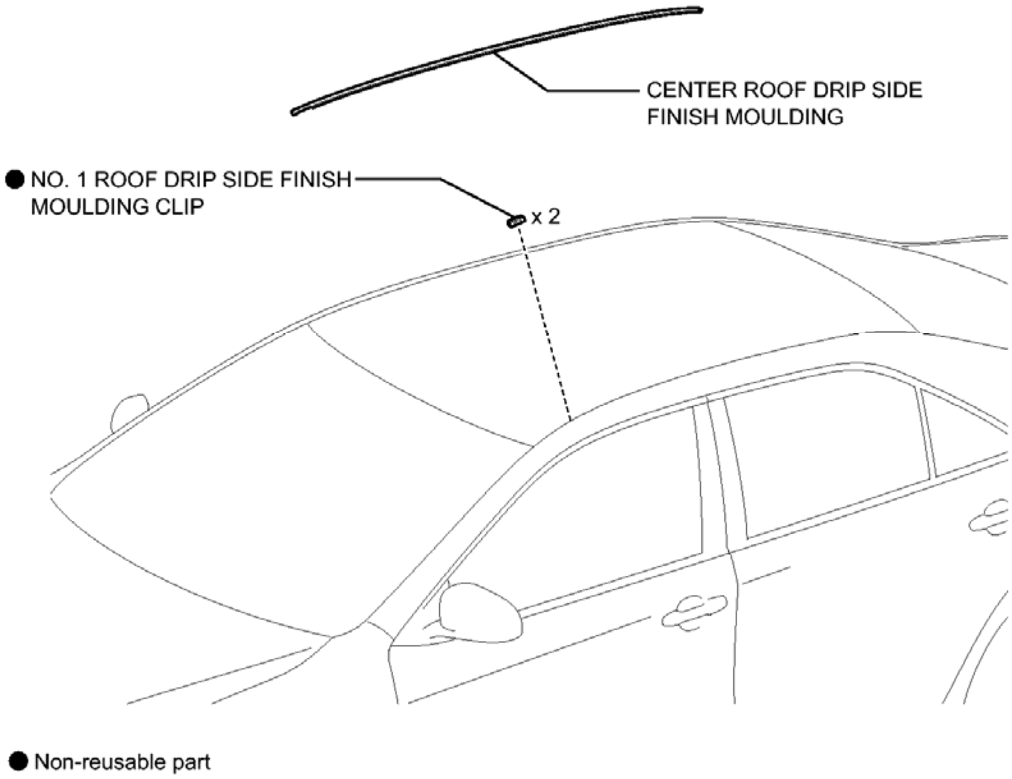
CENTER ROOF DRIP SIDE FINISH MOULDING
● NO. 1 ROOF DRIP SIDE FINISH MOULDING CLIP
x 2
● Non-reusable part
P

Fig. 130: Identifying Roof Drip Side Finish Moulding Replacement Components
Courtesy of TOYOTA MOTOR SALES, U.S.A., INC.

REMOVAL

REMOVAL

1. **REMOVE CENTER ROOF DRIP SIDE FINISH MOULDING**
    a. Put protective tape around the center roof drip side finish moulding.

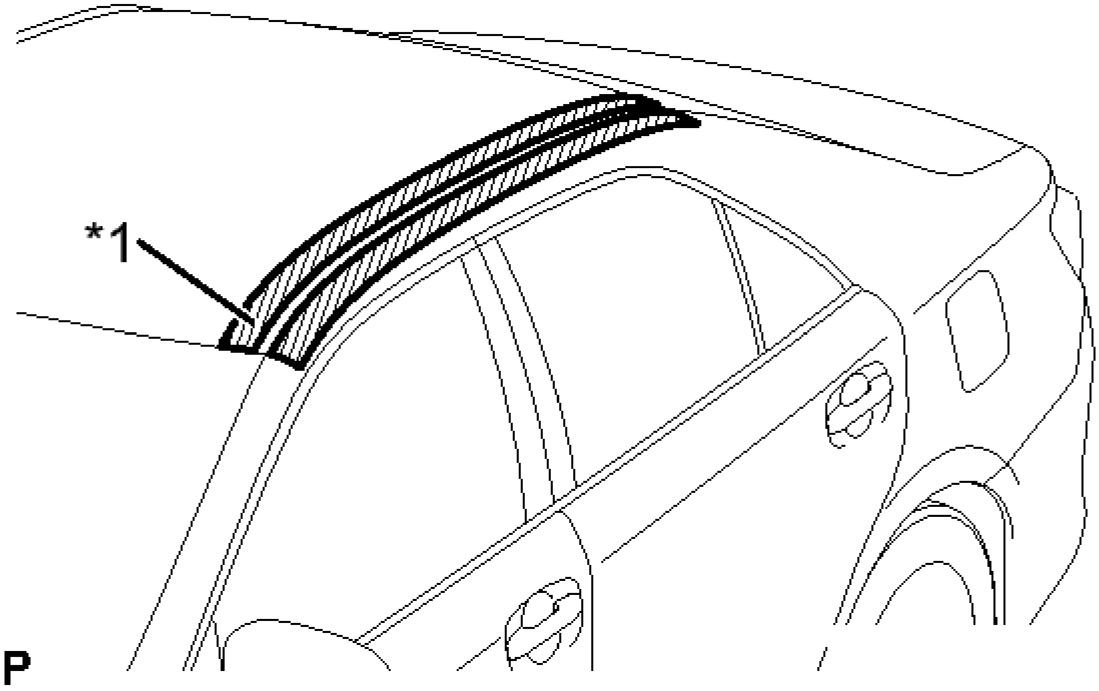

Fig. 131: Identifying Protective Tape On Center Roof Drip Side Finish Moulding
Courtesy of TOYOTA MOTOR SALES, U.S.A., INC.

TEXT IN ILLUSTRATION

*1	Protective Tape

b. Using a moulding remover, disengage the 2 clips and remove the center roof drip side finish moulding.

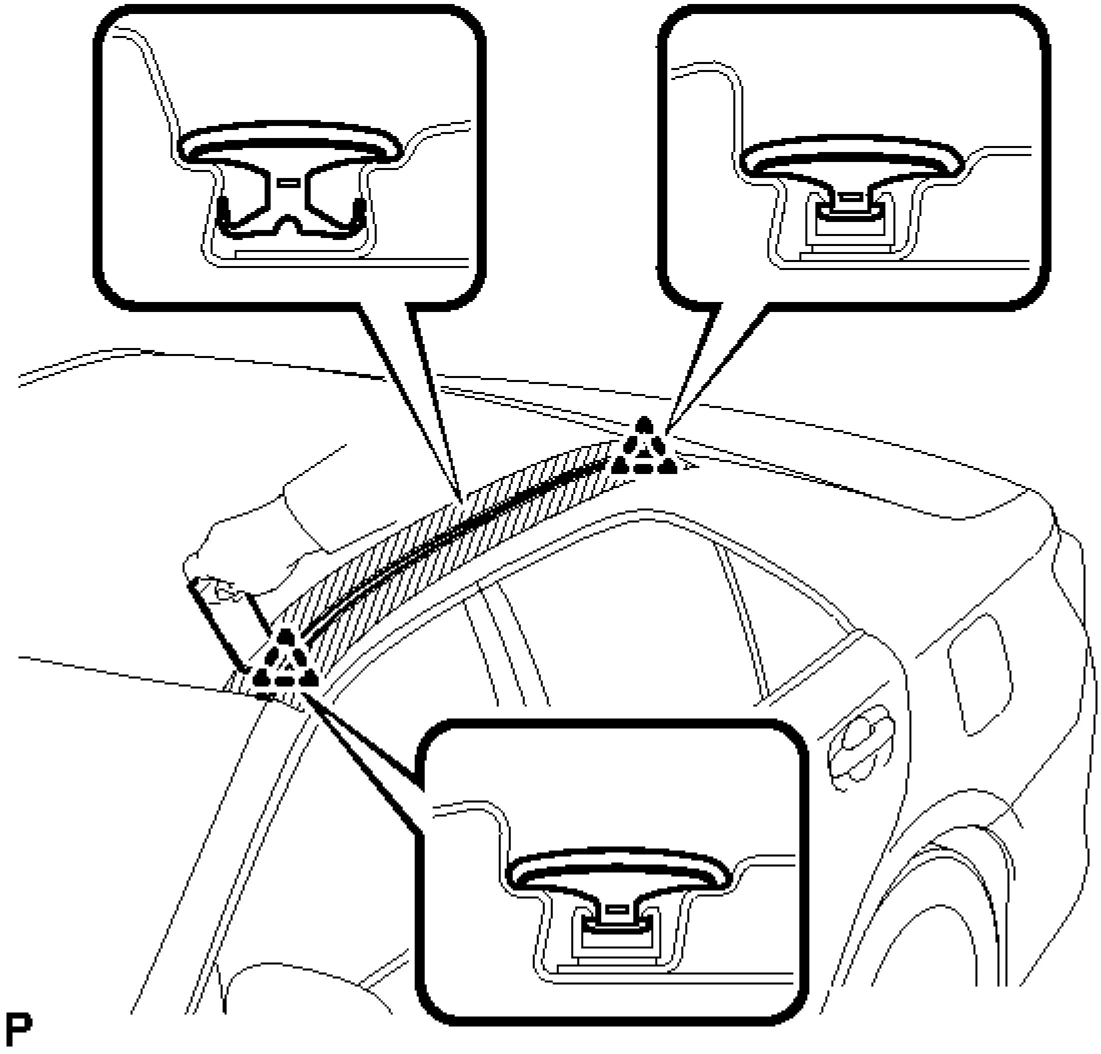

Fig. 132: Identifying Center Roof Drip Side Finish Molding Clips
Courtesy of TOYOTA MOTOR SALES, U.S.A., INC.

NOTE:

- **Do not remove the clips.**
- **If any clip is damaged or falls out, replace it with a new one.**

INSTALLATION

INSTALLATION

1. **INSTALL NO. 1 ROOF DRIP SIDE FINISH MOULDING CLIP**

NOTE: **When installing new clips, remove the double-sided tape remaining where the clips will be installed on the body and clean the body with a non-residue solvent.**

a. Apply a 2 to 3 mm (0.0787 to 0.118 in.) bead of adhesive (3M DP-105 or equivalent) to new No. 1 roof drip side finish moulding clips.

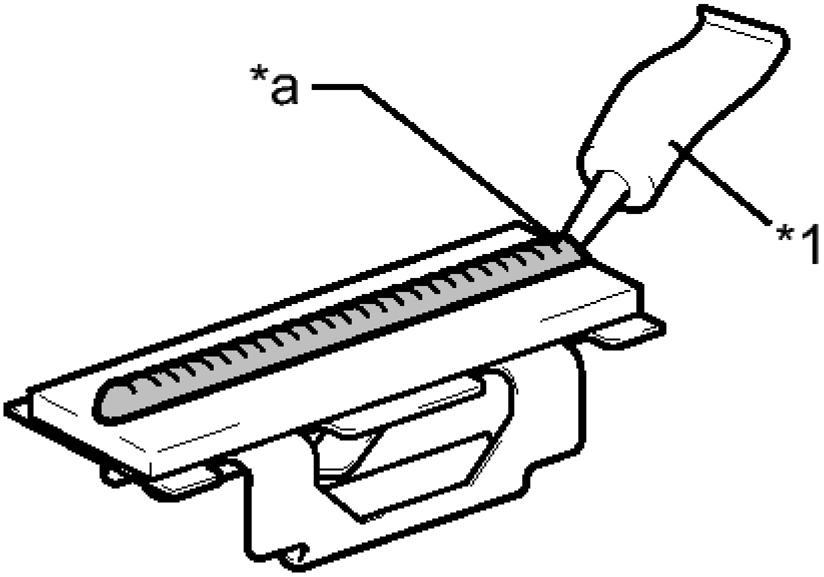

P

Fig. 133: Applying 2 To 3 mm (0.0787 To 0.118 In.) Bead Of Adhesive (3M DP-105 Or Equivalent)
Courtesy of TOYOTA MOTOR SALES, U.S.A., INC.

TEXT IN ILLUSTRATION

*1	Adhesive
*a	2 to 3 mm Bead of Adhesive

HINT:

Adhesive strength (tensile strength): 13.7 MPa (140.0 kgf/cm^2 , 1987 psi) or more (when the temperature is 23°C (73°F))

b. Press and install the 2 No. 1 roof drip side finish moulding clips.

c. Install the clips to the positions on the roof panel shown in the illustration. Determine the locations and firmly press and install the 2 No. 1 roof drip side finish moulding clips after lightly applying adhesive (3M DP-105 or equivalent).

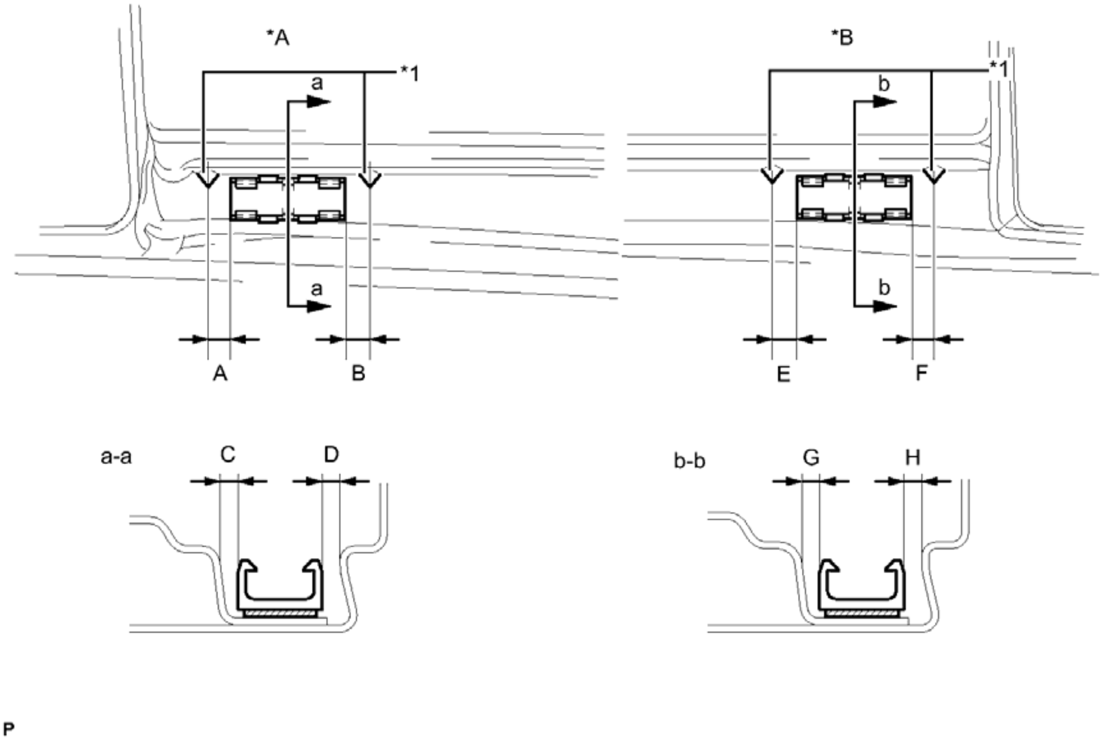

Fig. 134: Installing No. 1 Roof Drip Side Finish Molding
Courtesy of TOYOTA MOTOR SALES, U.S.A., INC.

TEXT IN ILLUSTRATION

*A	for Front	*B	for Rear
*1	Protruding Part	-	-

STANDARD DIMENSION

Installation Area	Dimension	Measurement
for Front	A	4.0 mm (0.157 in.)
	B	4.0 mm (0.157 in.)
	C	1.8 mm (0.0709 in.)
	D	1.8 mm (0.0709 in.)
for Rear	E	4.0 mm (0.157 in.)
	F	4.0 mm (0.157 in.)

	G	1.8 mm (0.0709 in.)
	H	1.8 mm (0.0709 in.)

d. Install the roof drip center side finish moulding when 20 minutes or more have elapsed after pressing and installing 2 new No. 1 roof drip side finish moulding clips.

HINT:

- Initial hardening time: 20 minutes
- Complete hardening time: 48 hours

2. **INSTALL CENTER ROOF DRIP SIDE FINISH MOULDING**

a. Engage the 2 clips and install the center roof drip side finish moulding.

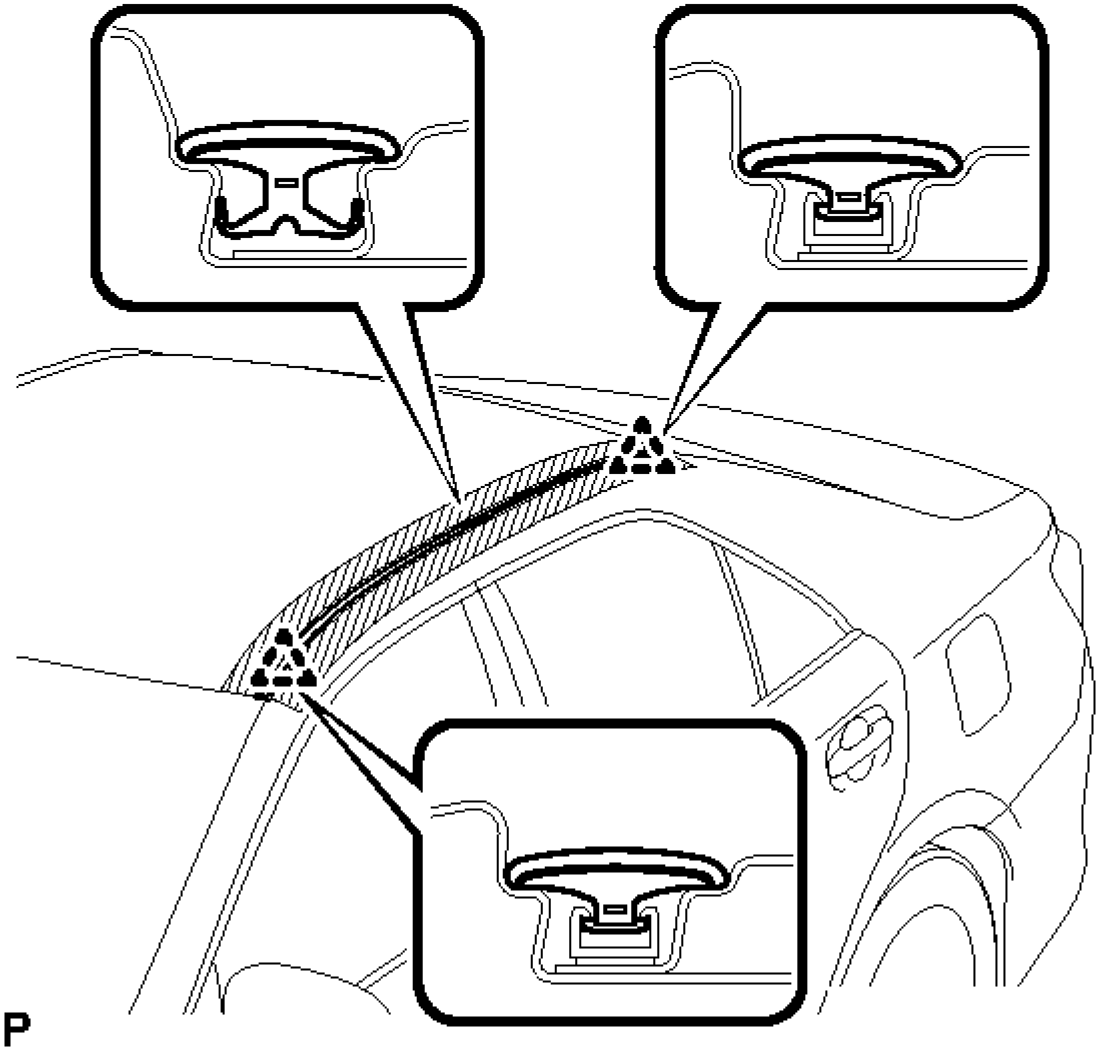

Fig. 135: Identifying Center Roof Drip Side Finish Molding Clips
Courtesy of TOYOTA MOTOR SALES, U.S.A., INC.

LUGGAGE COMPARTMENT DOOR OUTSIDE GARNISH

COMPONENTS

ILLUSTRATION

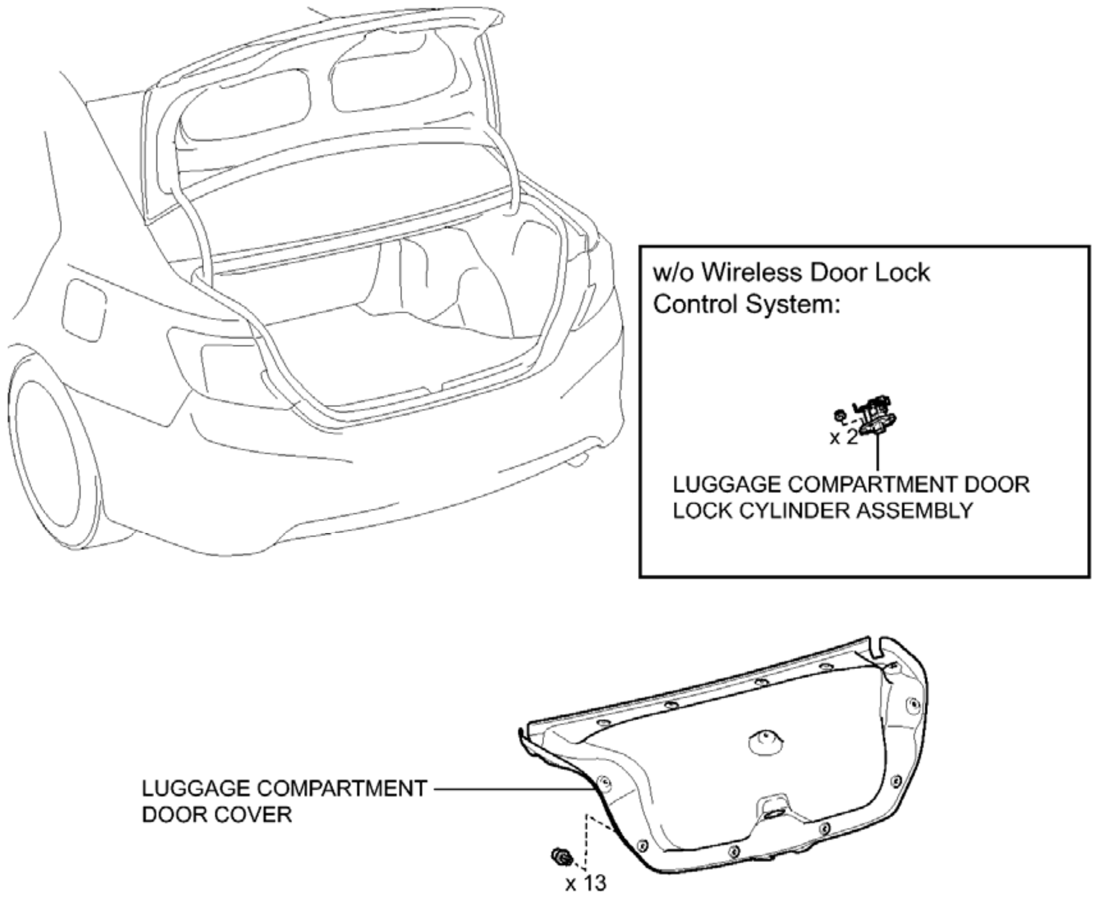
w/o Wireless Door Lock Control System:
x 2
LUGGAGE COMPARTMENT DOOR LOCK CYLINDER ASSEMBLY
LUGGAGE COMPARTMENT DOOR COVER
x 13
P

Fig. 136: Identifying Luggage Compartment Door Outside Garnish Replacement Components (1 Of 3)
Courtesy of TOYOTA MOTOR SALES, U.S.A., INC.

ILLUSTRATION

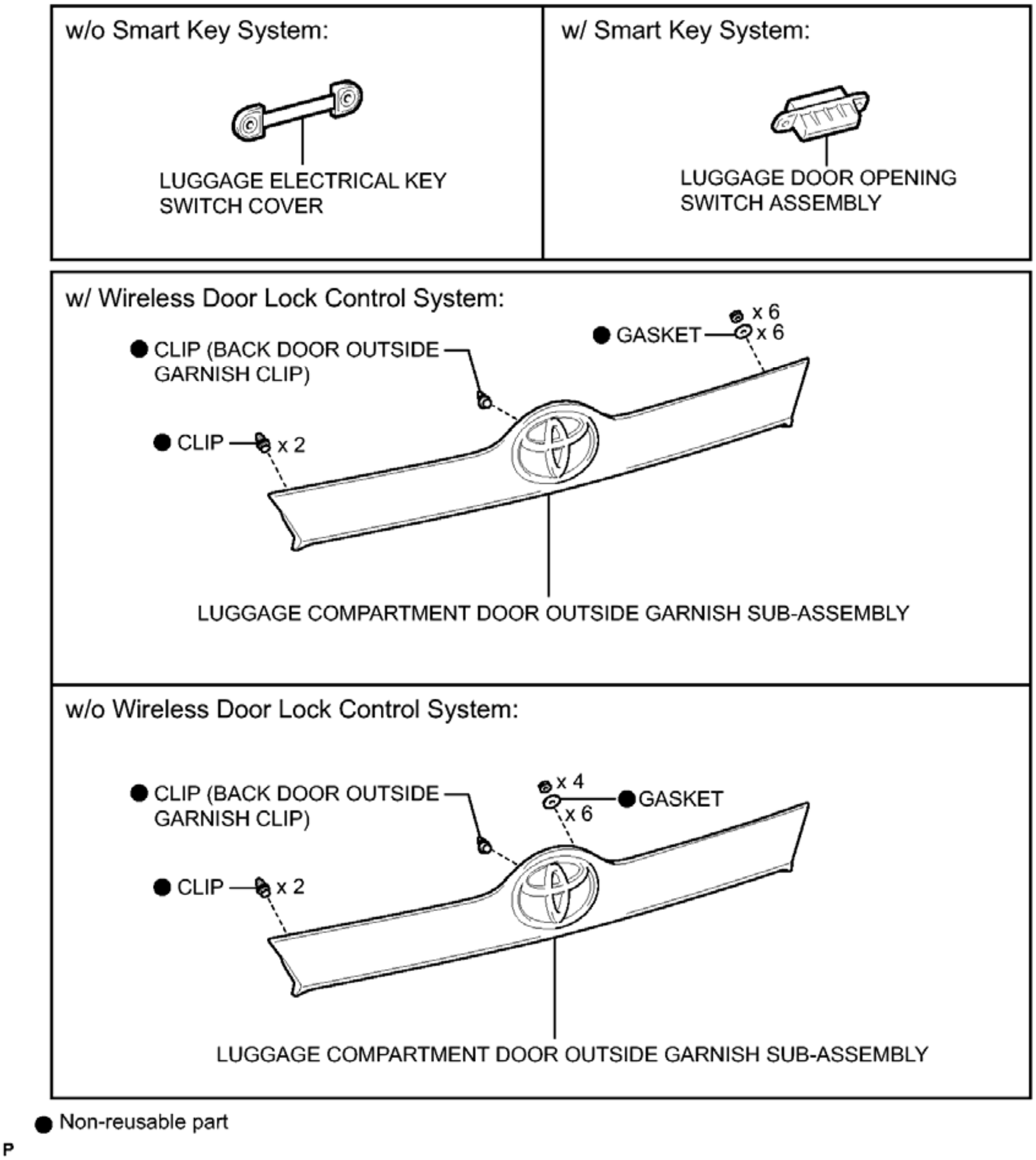
w/o Smart Key System:
LUGGAGE ELECTRICAL KEY SWITCH COVER
w/ Smart Key System:
LUGGAGE DOOR OPENING SWITCH ASSEMBLY
w/ Wireless Door Lock Control System:
● CLIP (BACK DOOR OUTSIDE GARNISH CLIP)
● GASKET
x 6
x 6
● CLIP
x 2
LUGGAGE COMPARTMENT DOOR OUTSIDE GARNISH SUB-ASSEMBLY
w/o Wireless Door Lock Control System:
● CLIP (BACK DOOR OUTSIDE GARNISH CLIP)
x 4
● GASKET
x 6
● CLIP
x 2
LUGGAGE COMPARTMENT DOOR OUTSIDE GARNISH SUB-ASSEMBLY
● Non-reusable part
P

Fig. 137: Identifying Luggage Compartment Door Outside Garnish Replacement Components (2 Of 3)
Courtesy of TOYOTA MOTOR SALES, U.S.A., INC.

ILLUSTRATION

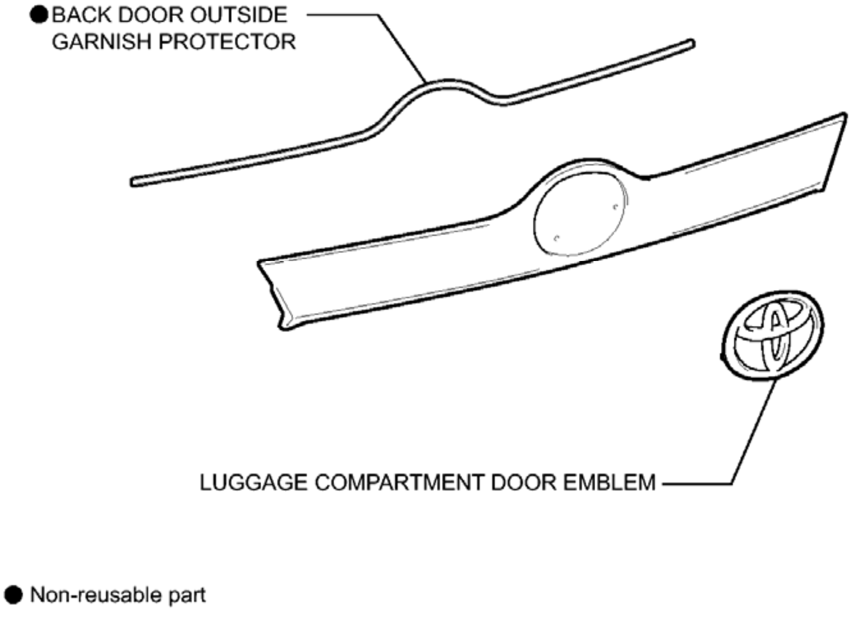
● BACK DOOR OUTSIDE GARNISH PROTECTOR
LUGGAGE COMPARTMENT DOOR EMBLEM
● Non-reusable part
P

Fig. 138: Identifying Luggage Compartment Door Outside Garnish Replacement Components (3 Of 3)
Courtesy of TOYOTA MOTOR SALES, U.S.A., INC.

REMOVAL

REMOVAL

1. **REMOVE LUGGAGE COMPARTMENT DOOR COVER** . Refer to **DISASSEMBLY - Step 1** .
2. **REMOVE LUGGAGE COMPARTMENT DOOR LOCK CYLINDER ASSEMBLY (w/o Wireless Door Lock Control System)** . Refer to **DISASSEMBLY - Step 5** .
3. **REMOVE LUGGAGE COMPARTMENT DOOR OUTSIDE GARNISH SUB-ASSEMBLY**
   a. w/ Smart Key System:
      1. Disconnect the connector.
   b. w/ Wireless Door Lock Control System:
      1. Remove the 6 nuts.

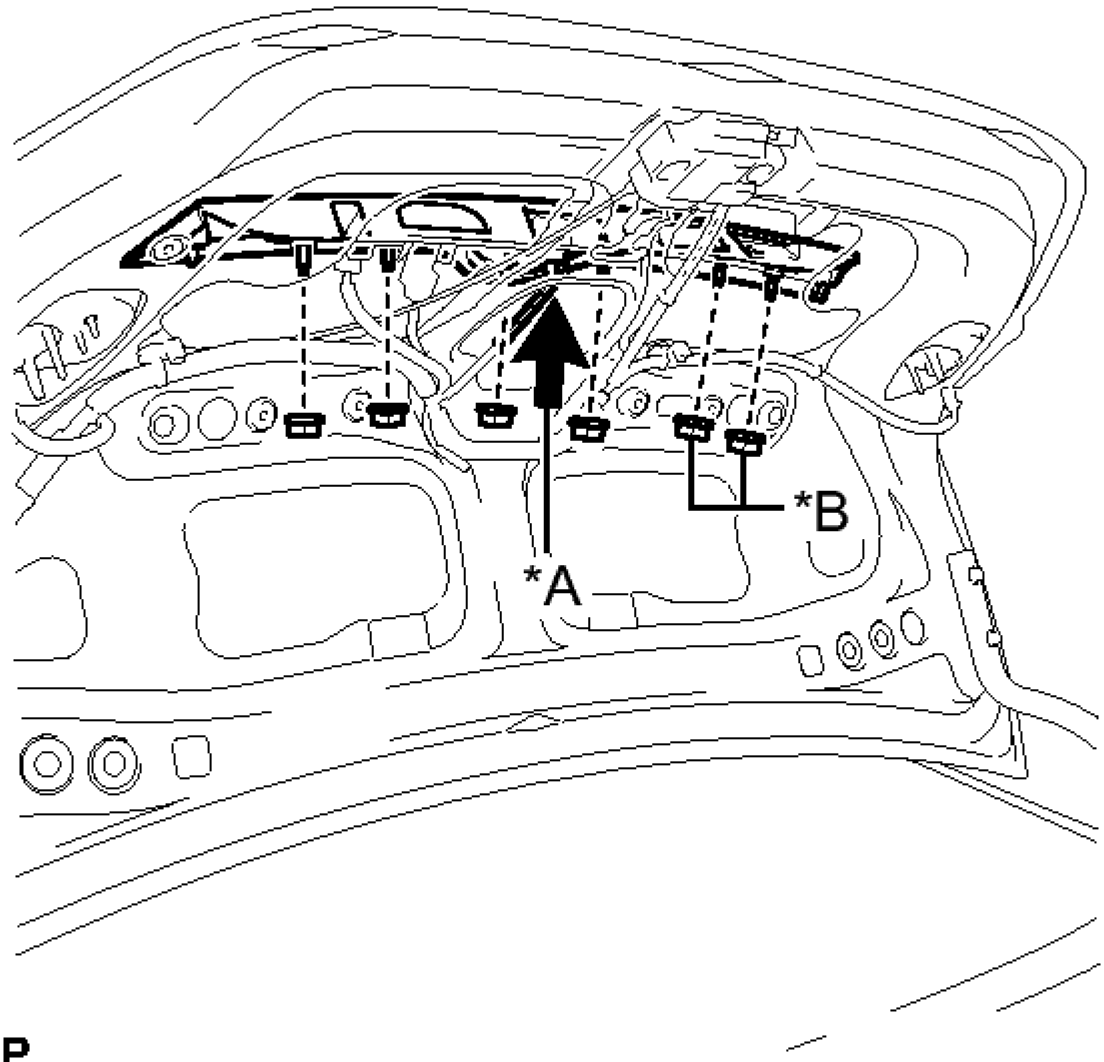

Fig. 139: Identifying Luggage Compartment Door Outside Garnish Sub-Assembly Fasteners
Courtesy of TOYOTA MOTOR SALES, U.S.A., INC.

TEXT IN ILLUSTRATION

*A	w/ Smart Key System
*B	w/ Wireless Door Lock Control System

c. w/o Wireless Door Lock Control System:
    1. Remove the 4 nuts.
d. Put protective tape around the luggage compartment door outside garnish sub-assembly.

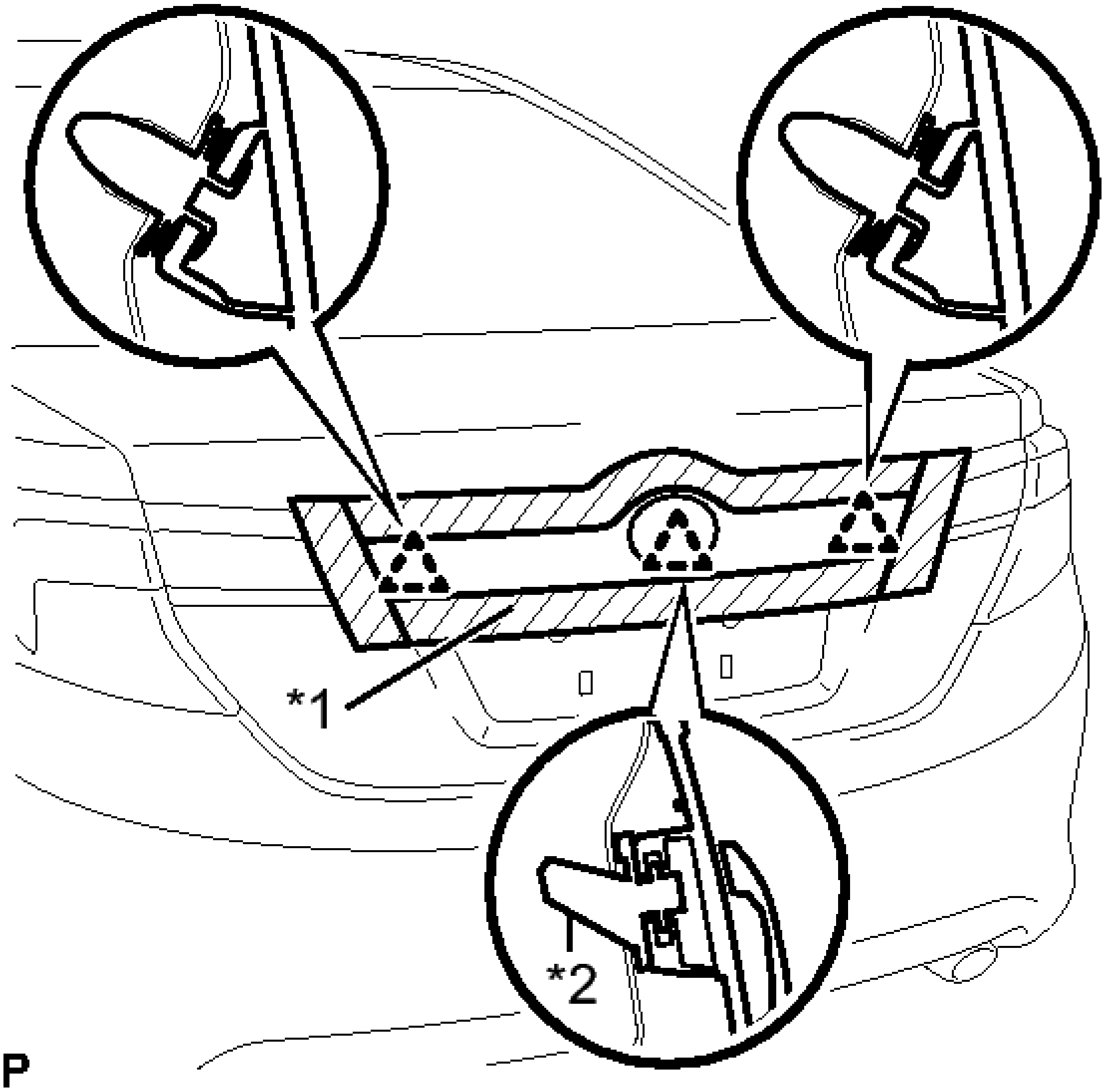

Fig. 140: Identifying Protective Tape On Luggage Compartment Door Outside Garnish Sub-Assembly
Courtesy of TOYOTA MOTOR SALES, U.S.A., INC.

TEXT IN ILLUSTRATION

*1	Protective Tape
*2	Back Door Outside Garnish

	Clip

e. Disengage the 3 clips and remove the luggage compartment door outside garnish sub-assembly.
f. Remove the clip (back door outside garnish clip) and 2 clips from the luggage compartment door outside garnish sub-assembly.
g. Remove the 6 gaskets from the luggage compartment door outside garnish sub-assembly.

4. **REMOVE LUGGAGE ELECTRICAL KEY SWITCH COVER (w/o Smart Key System)**
   a. Remove the luggage electrical key switch cover.

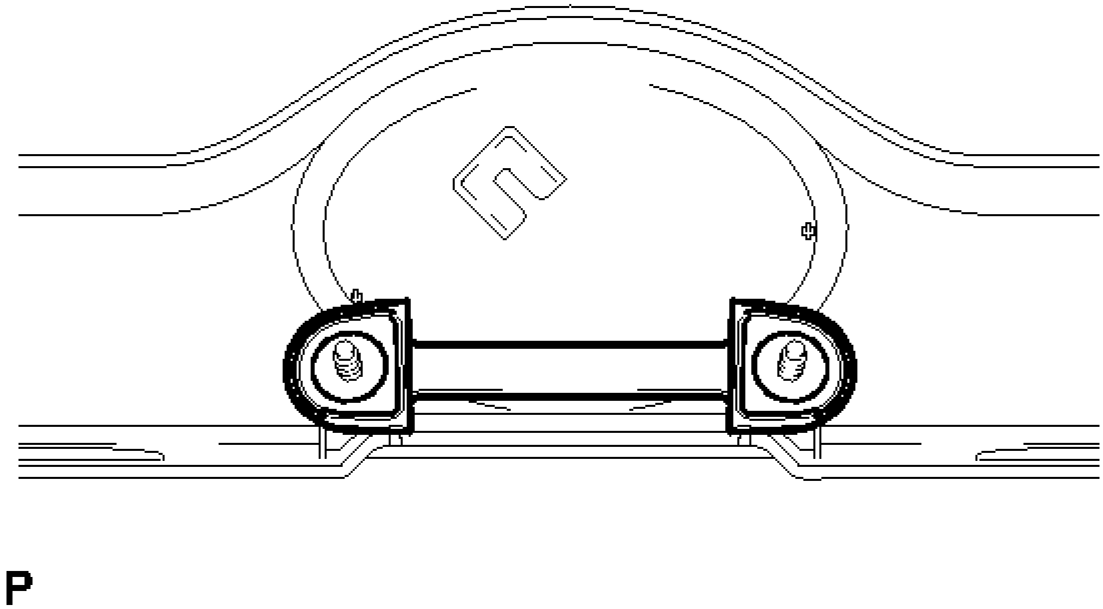

Fig. 141: Identifying Luggage Electrical Key Switch Cover (w/o Smart Key System)
Courtesy of TOYOTA MOTOR SALES, U.S.A., INC.

5. **REMOVE LUGGAGE DOOR OPENING SWITCH ASSEMBLY (w/ Smart Key System)** . Refer to **REMOVAL - Step 2** .
6. **REMOVE LUGGAGE COMPARTMENT DOOR EMBLEM** . See step 1.
7. **REMOVE BACK DOOR OUTSIDE GARNISH PROTECTOR**
   a. Remove the back door outside garnish protector.

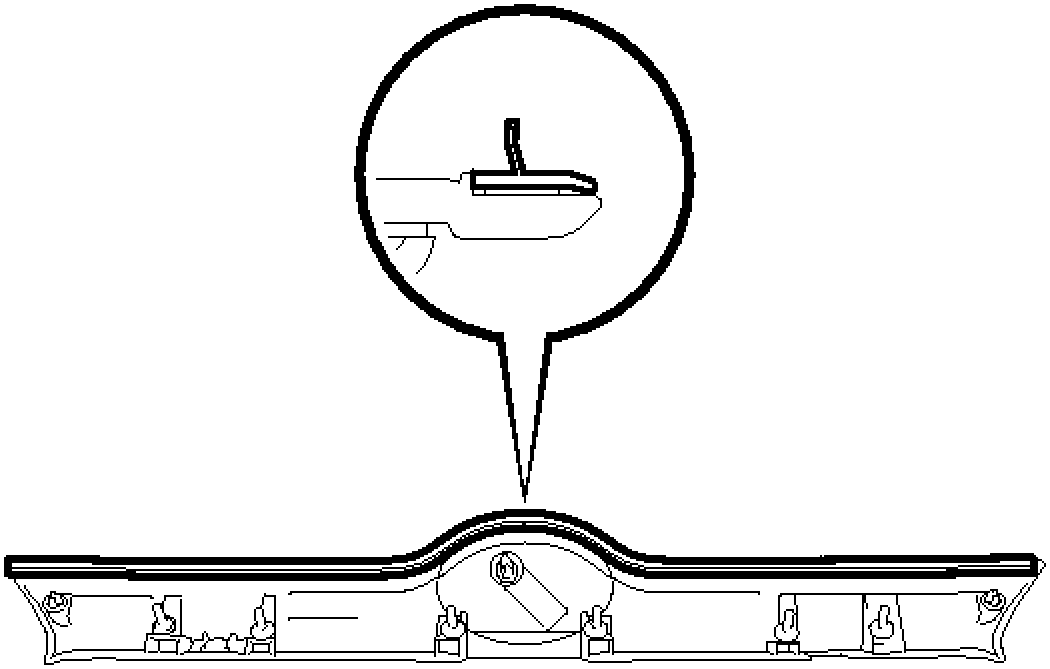

Fig. 142: Identifying Back Door Outside Garnish Protector
Courtesy of TOYOTA MOTOR SALES, U.S.A., INC.

INSTALLATION

INSTALLATION

1. **INSTALL BACK DOOR OUTSIDE GARNISH PROTECTOR**
    a. Clean the luggage compartment door outside garnish sub-assembly.
        1. Remove any double-sided tape from the luggage compartment door outside garnish sub-assembly.
        2. Wipe off any tape adhesive residue with cleaner.

    b. Install a new back door outside garnish protector.
        1. Remove the release paper from the back door outside garnish protector.

HINT:

After removing the release paper, keep the exposed adhesive free from foreign matter.

c. Install a new back door outside garnish protector shown in the illustration.

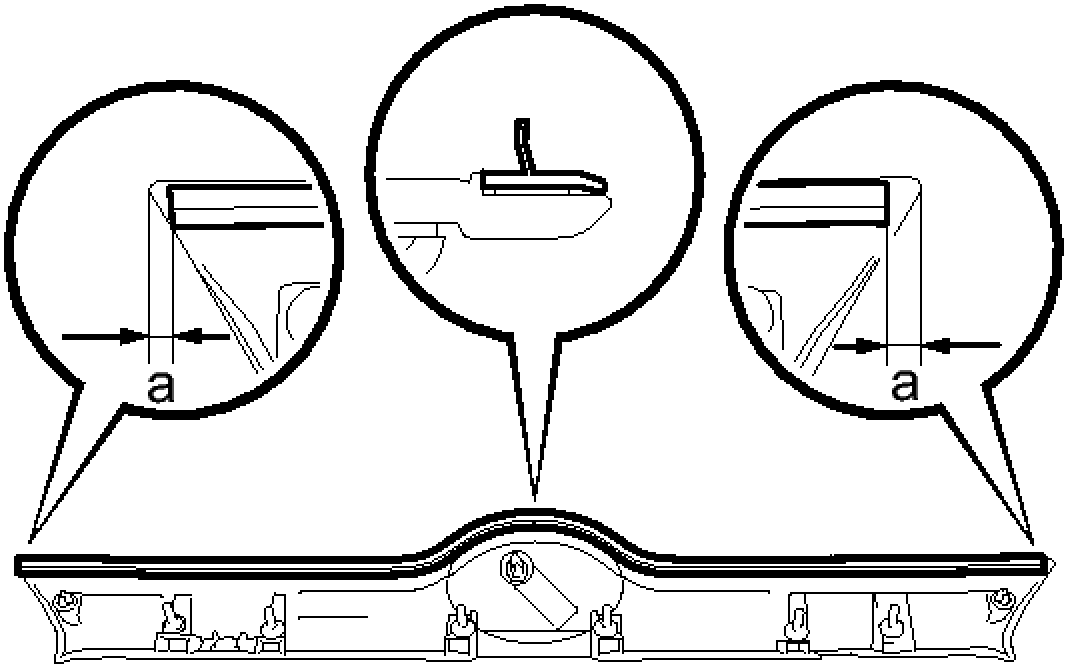

P

Fig. 143: Identifying Back Door Outside Garnish Protector Measurements
Courtesy of TOYOTA MOTOR SALES, U.S.A., INC.

STANDARD MEASUREMENT

Dimension	**Measurement**
a	5.9 mm (0.232 in.)

2. **INSTALL LUGGAGE COMPARTMENT DOOR EMBLEM** . See step 1.

3. **INSTALL LUGGAGE ELECTRICAL KEY SWITCH COVER (w/o Smart Key System)**
    a. Install the luggage electrical key switch cover.
4. **INSTALL LUGGAGE DOOR OPENING SWITCH ASSEMBLY (w/ Smart Key System)** . Refer to **INSTALLATION - Step 1** .
5. **INSTALL LUGGAGE COMPARTMENT DOOR OUTSIDE GARNISH SUB-ASSEMBLY**
    a. Install 6 new gaskets to the luggage compartment door outside garnish sub-assembly.
    b. Install new clip (back door outside garnish clip) and 2 new clips to the luggage compartment door outside garnish sub-assembly.
    c. Engage the 3 clips to install the luggage compartment door outside garnish sub-assembly.

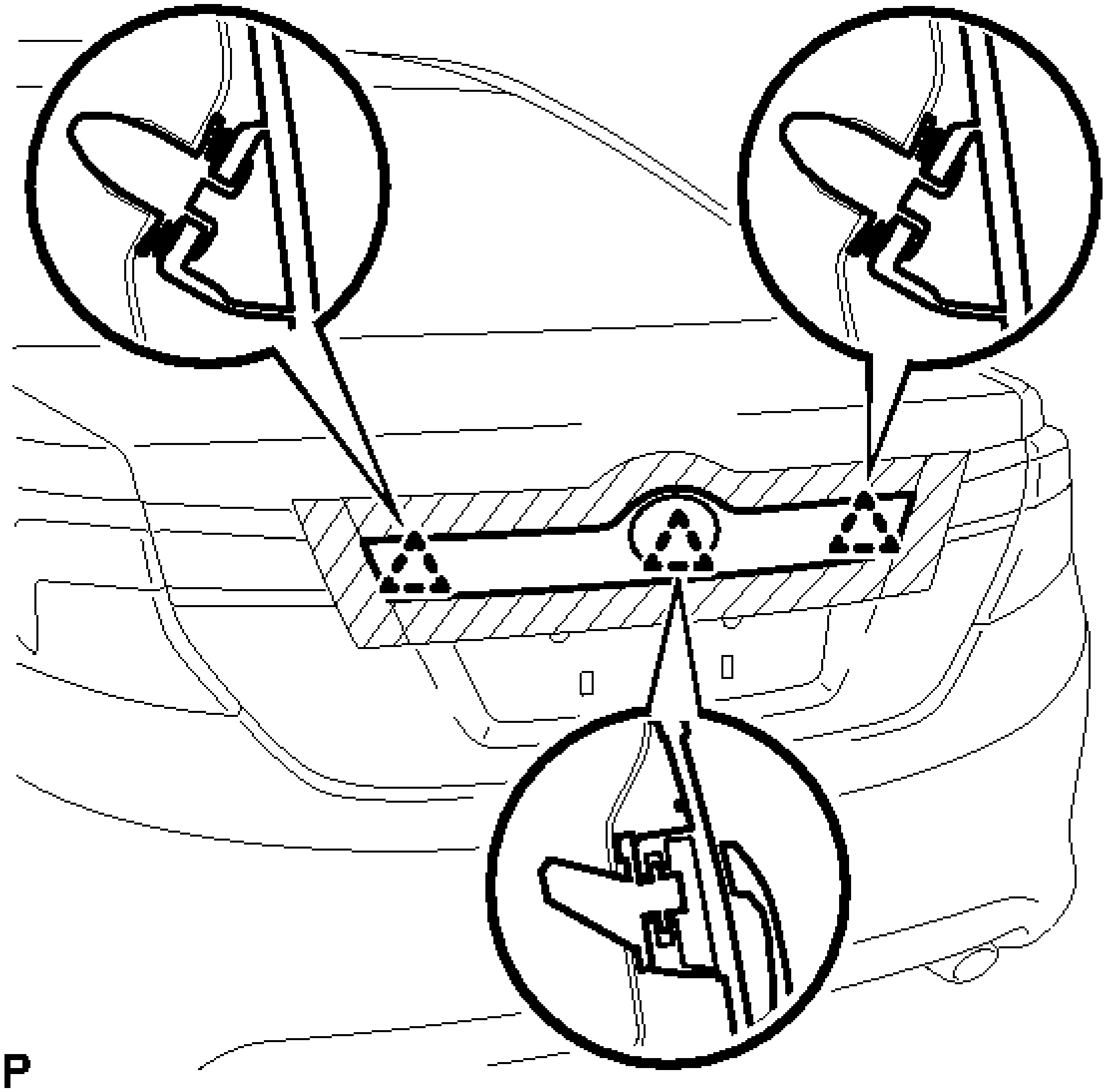

Fig. 144: Identifying Luggage Compartment Door Outside Garnish Sub-Assembly Clips
Courtesy of TOYOTA MOTOR SALES, U.S.A., INC.

d. w/ Wireless Door Lock Control System:

        1. Install the 6 nuts.
    e. w/o Wireless Door Lock Control System:
        1. Install the 4 nuts.
    f. w/ Smart Key System:
        1. Connect the connector.
6. **INSTALL LUGGAGE COMPARTMENT DOOR LOCK CYLINDER ASSEMBLY (w/o Wireless Door Lock Control System)** . Refer to **REASSEMBLY - Step 8** .
7. **INSTALL LUGGAGE COMPARTMENT DOOR COVER** . Refer to **REASSEMBLY - Step 12** .

REAR WHEEL HOUSE PLATE

COMPONENTS

ILLUSTRATION

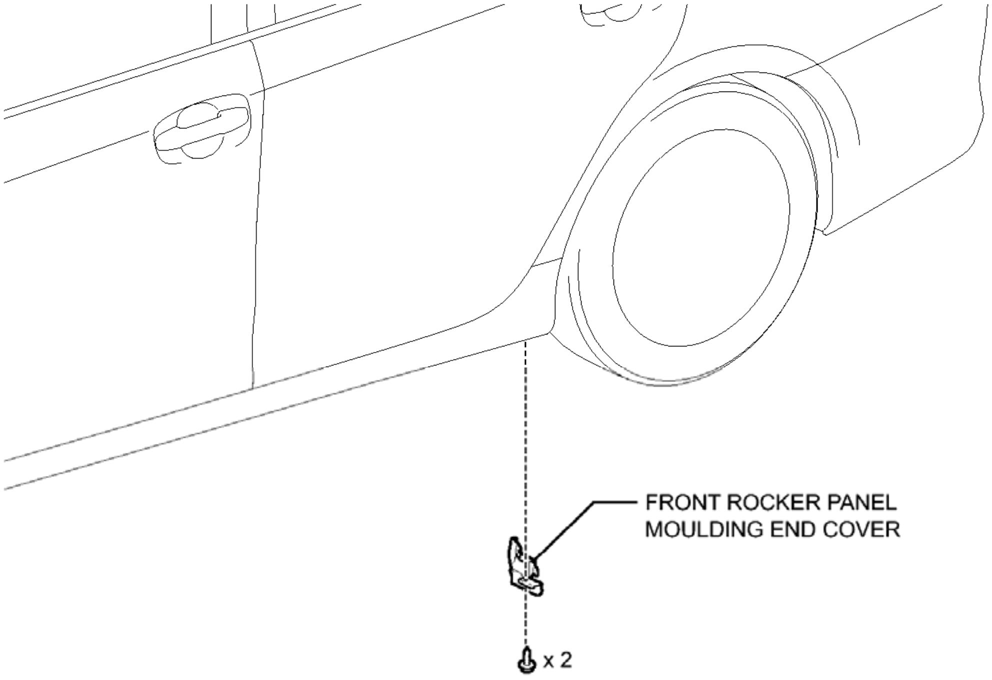

P

Fig. 145: Identifying Rear Wheel House Plate Replacement Components
Courtesy of TOYOTA MOTOR SALES, U.S.A., INC.

REMOVAL

REMOVAL

1. **REMOVE FRONT ROCKER PANEL MOULDING END COVER**
    a. Remove the 2 screws and front rocker panel moulding end cover.

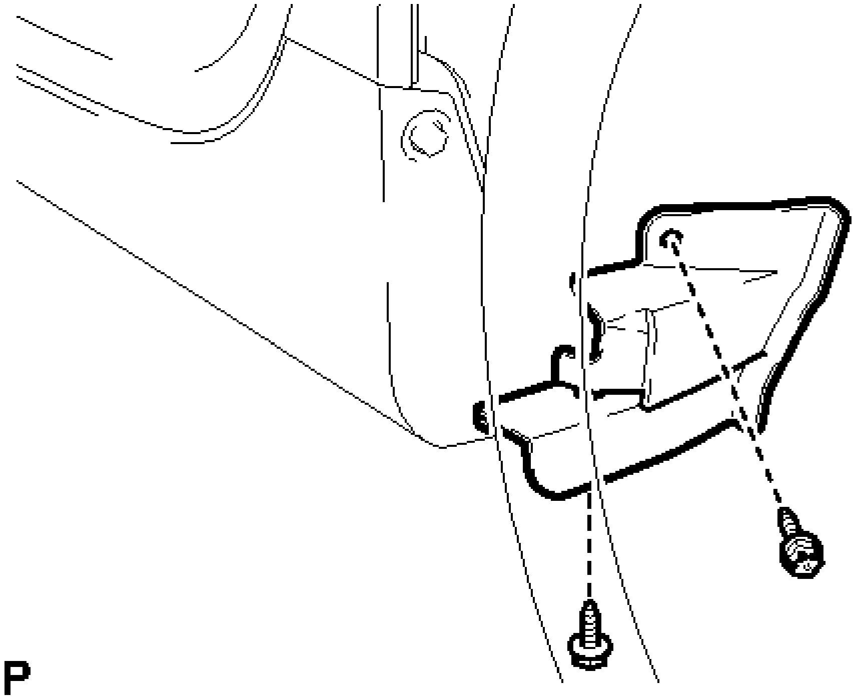

Fig. 146: Identifying Front Rocker Panel Molding End Cover Screws
Courtesy of TOYOTA MOTOR SALES, U.S.A., INC.

INSTALLATION

INSTALLATION

1. **INSTALL FRONT ROCKER PANEL MOULDING END COVER**
    a. Install the front rocker panel moulding end cover with the 2 screws.

BLACK OUT TAPE (FOR FRONT DOOR)

COMPONENTS

ILLUSTRATION

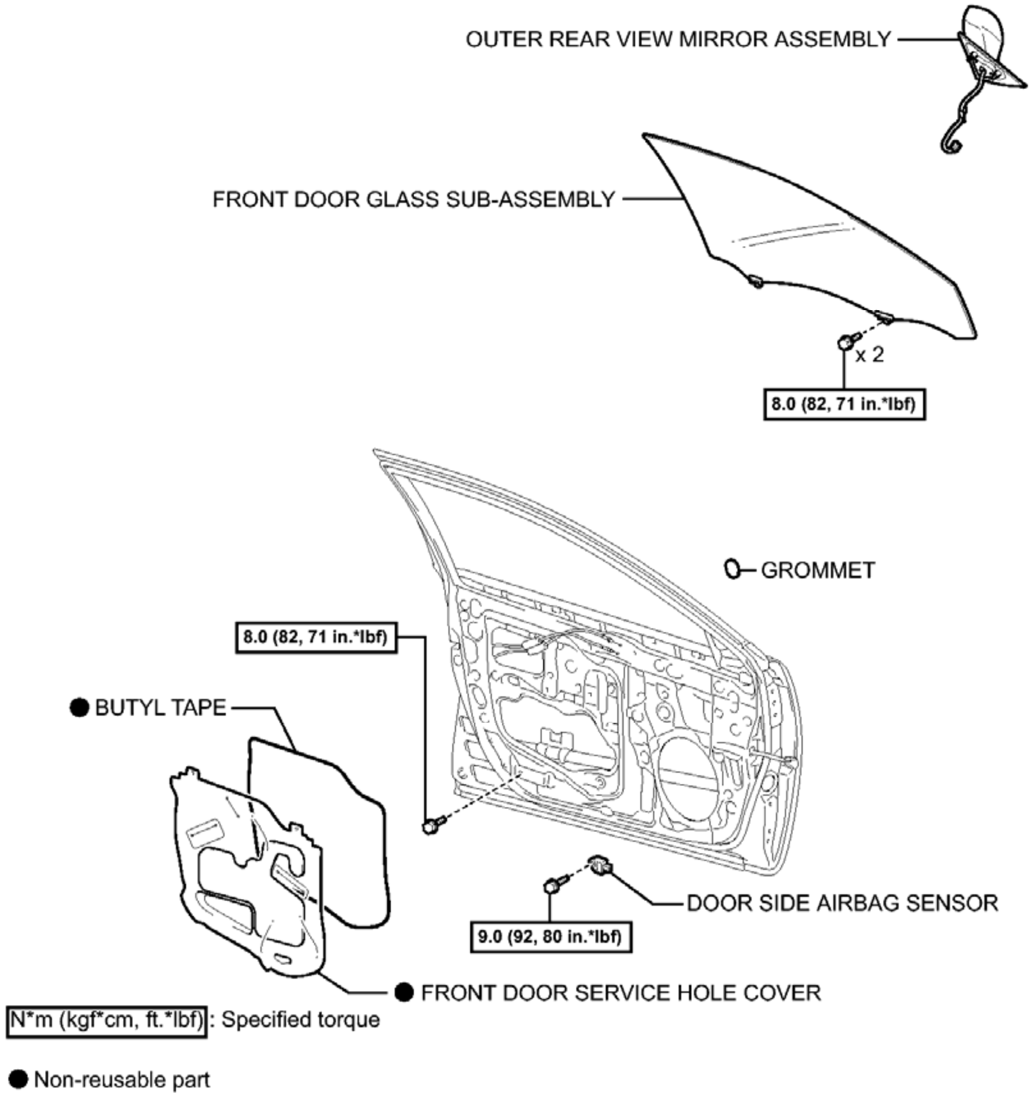
OUTER REAR VIEW MIRROR ASSEMBLY
FRONT DOOR GLASS SUB-ASSEMBLY
x 2
8.0 (82, 71 in.*lbf)
GROMMET
8.0 (82, 71 in.*lbf)
● BUTYL TAPE
DOOR SIDE AIRBAG SENSOR
9.0 (92, 80 in.*lbf)
● FRONT DOOR SERVICE HOLE COVER
N*m (kgf*cm, ft.*lbf): Specified torque
● Non-reusable part
P

Fig. 147: Identifying Black Out Tape (For Front Door) Replacement Components With Torque Specifications (1 Of 2)
Courtesy of TOYOTA MOTOR SALES, U.S.A., INC.

ILLUSTRATION

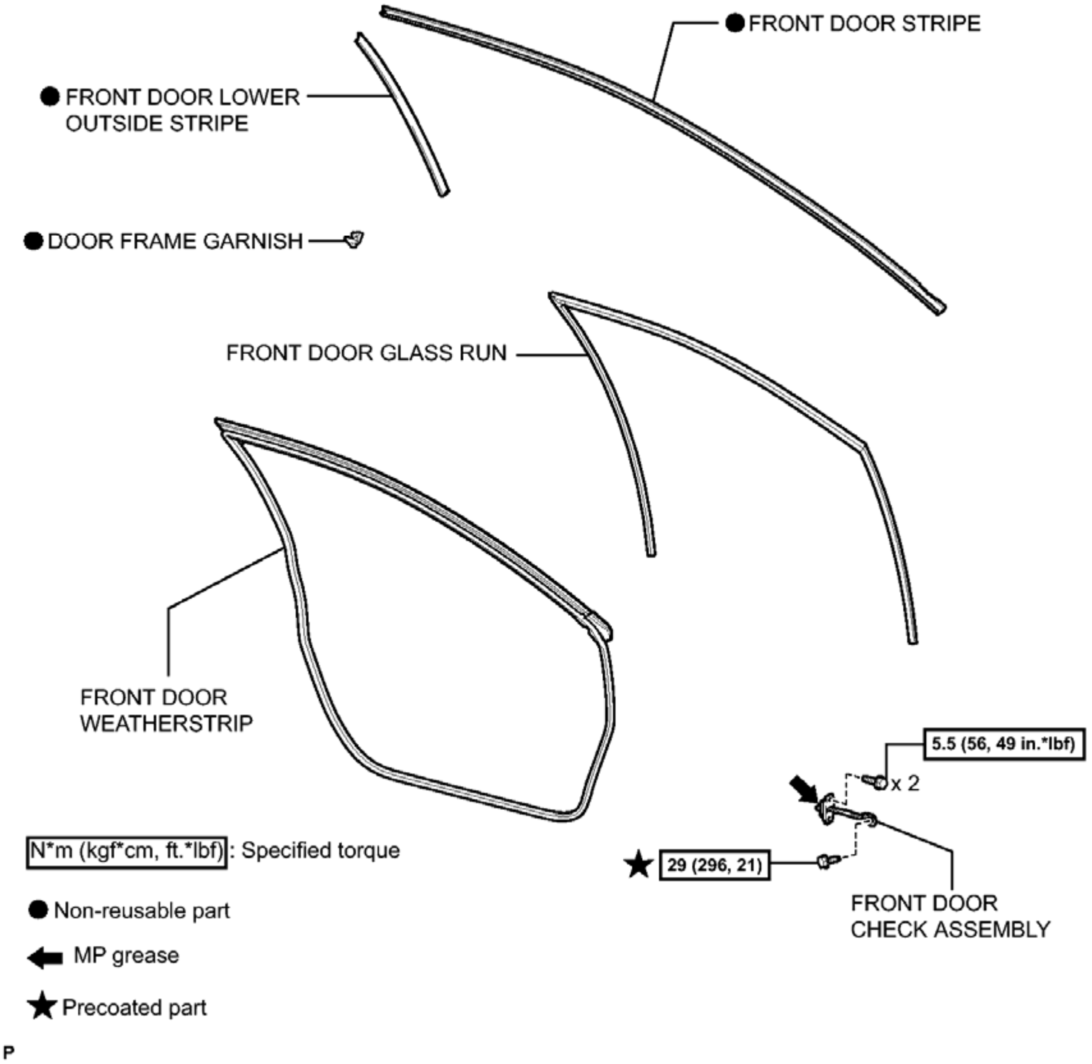
● FRONT DOOR STRIPE
● FRONT DOOR LOWER OUTSIDE STRIPE
● DOOR FRAME GARNISH
FRONT DOOR GLASS RUN
FRONT DOOR WEATHERSTRIP
5.5 (56, 49 in.*lbf)
x 2
★ 29 (296, 21)
FRONT DOOR CHECK ASSEMBLY
N*m (kgf*cm, ft.*lbf): Specified torque
● Non-reusable part
MP grease
★ Precoated part
P

Fig. 148: Identifying Black Out Tape (For Front Door) Replacement Components With Torque Specifications (2 Of 2)
Courtesy of TOYOTA MOTOR SALES, U.S.A., INC.

REMOVAL

REMOVAL

1. **PRECAUTION**

NOTE: **After turning the ignition switch off, waiting time may be required before disconnecting the cable from the negative (-) battery terminal. Therefore, make sure to read the disconnecting the cable from the negative (-) battery**

terminal notices before proceeding with work. Refer to PRECAUTION .

2. **DISCONNECT CABLE FROM NEGATIVE BATTERY TERMINAL**

   WARNING: **Wait at least 90 seconds after disconnecting the cable from the negative (-) battery terminal to disable the SRS system.**

   NOTE: **When disconnecting the cable, some systems need to be initialized after the cable is reconnected. Refer to INITIALIZATION .**

3. **REMOVE OUTER REAR VIEW MIRROR ASSEMBLY**

   Refer to **REMOVAL** .

4. **REMOVE DOOR SIDE AIRBAG SENSOR** . Refer to **REMOVAL - Step 10** .
5. **REMOVE FRONT DOOR SERVICE HOLE COVER** . Refer to **DISASSEMBLY - Step 15** .
6. **REMOVE FRONT DOOR GLASS SUB-ASSEMBLY** . Refer to **DISASSEMBLY - Step 16** .
7. **REMOVE FRONT DOOR GLASS RUN** . Refer to **DISASSEMBLY - Step 20** .
8. **REMOVE FRONT DOOR CHECK ASSEMBLY** . Refer to **DISASSEMBLY - Step 36** .
9. **REMOVE FRONT DOOR WEATHERSTRIP** . Refer to **DISASSEMBLY - Step 37** .
10. **REMOVE DOOR FRAME GARNISH** . Refer to **DISASSEMBLY - Step 38** .
11. **REMOVE FRONT DOOR STRIPE**
    1. Using a heat light, heat the front door stripe and vehicle body.

HEATING TEMPERATURE

Item	Temperature
Vehicle Body and Front Door Outside Stripe	40 to 60°C (104 to 140°F)

NOTE: **Do not heat the vehicle body excessively.**

b. Pull back on one of the ends of the front door stripe to remove it.

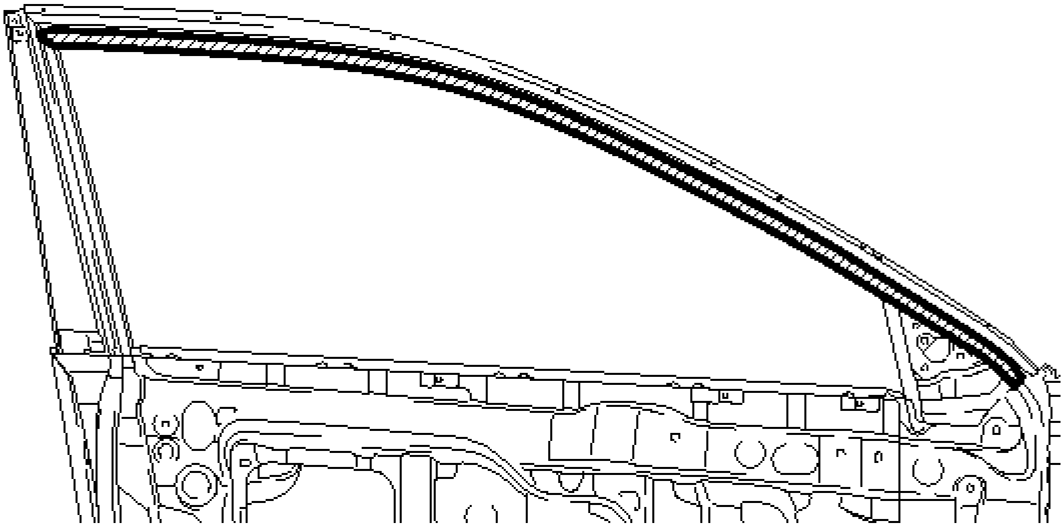

Fig. 149: Identifying Front Door Stripe
Courtesy of TOYOTA MOTOR SALES, U.S.A., INC.

HINT:

When pulling on the stripe, pull it parallel to the body.

12. **REMOVE FRONT DOOR LOWER OUTSIDE STRIPE**
    a. Using a heat light, heat the front door lower outside stripe and vehicle body.

    HEATING TEMPERATURE

Item	Temperature
Vehicle Body and Front Door Rear Outside Stripe	40 to 60°C (104 to 140° F)

    NOTE: **Do not heat the vehicle body excessively.**

    b. Pull back on one of the ends of the front door lower outside stripe to remove it.

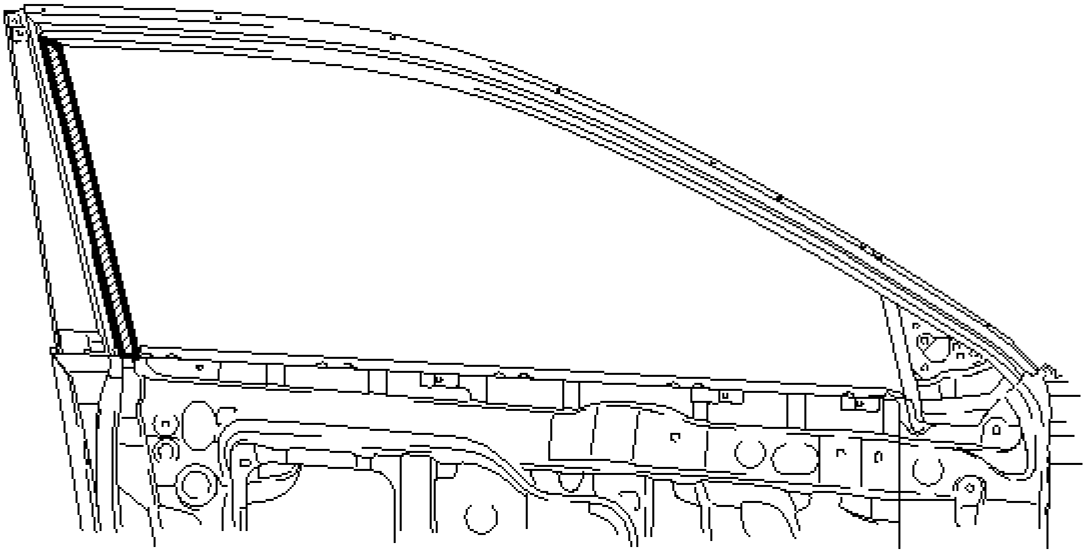

Fig. 150: Identifying Front Door Lower Outside Stripe
Courtesy of TOYOTA MOTOR SALES, U.S.A., INC.

HINT:

When pulling on the stripe, pull it parallel to the body.

INSTALLATION

INSTALLATION

1. **PRECAUTION**

NOTE: **After turning the ignition switch off, waiting time may be required before disconnecting the cable from the negative (-) battery terminal. Therefore, make sure to read the disconnecting the cable from the negative (-) battery terminal notices before proceeding with work. Refer to PRECAUTION .**

2. **REPAIR INSTRUCTION**
    a. Clean the vehicle body surface.
        1. Using a heat light, heat the vehicle body surface.

HEATING TEMPERATURE

Item	Temperature
Vehicle Body	40 to 60°C (104 to 140°

	F)

NOTE: **Do not heat the vehicle body excessively.**

2. Wipe off any tape adhesive residue with cleaner.

b. Installation temperature

1. When the ambient temperature is below 15°C (59°F), perform the installation procedure after warming the vehicle body surface (installation surface of the door frame) and tape up to between 20 and 30°C (68 and 86°F) using a heat light. When the ambient temperature is above 35°C (95°F), cool the vehicle body surface (installation surface of the door frame) and tape down to between 20 and 30°C (68 and 86°F) prior to installation.

   HINT:

   - The most appropriate temperature for installing the tape is 25°C (77°F).
   - When the temperature is low, the tape turns stiff and comes off easily. When the temperature is high, the tape elasticity increases.

c. Before installation

1. Remove any coating roughness or dirt on and around the vehicle body surface where the tape will be installed (installation surface of the door frame). If any roughness or dirt remains when pressing the tape onto the surface, air will be trapped under the tape and result in a poor appearance.

   HINT:

   Spray water on the shop floor to settle any dust.

d. Key points for handling the tape

1. The tape bends and rolls up easily. Store the tape between flat pieces of cardboard or other similar objects and keep it dry and flat.

NOTE: **Do not bend the tape or leave it in high temperature places.**

e. Key points for installation of the tape (how to use a squeegee and installation procedure for flat surfaces)

NOTE:

- **Position the tape accurately to achieve a neat finish and to avoid peeling.**
- **The tape cannot be reused because it deforms and will not fit any more after being removed.**

1. To avoid air bubbles, slightly raise the part of the tape that is going to be applied so that its adhesive surface does not touch the vehicle body while applying the tape. Tilt the squeegee at 40 to 50° (pressing forward) or 30 to 45° (pulling) to the vehicle body surface and press the

tape onto the vehicle body surface with a force of 20 to 30 N (2 to 3 kgf, 4.5 to 6.7 lbf) at a constant slow speed of 30 to 70 mm (1.18 to 2.76 in.) per second.

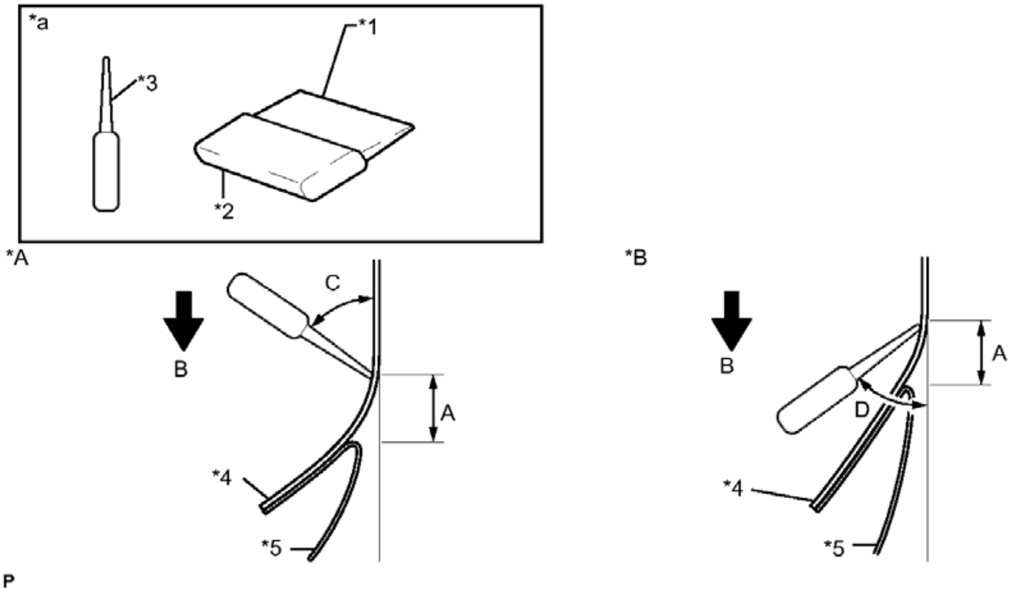

Fig. 151: Identifying Proper Tape Installation
Courtesy of TOYOTA MOTOR SALES, U.S.A., INC.

TEXT IN ILLUSTRATION

*A	Pressing Forward	*B	Pulling
*1	Non-padded Side	*2	Padded Side
*3	Squeegee	*4	Black Out Tape
*5	Release Paper	-	-
*a	Side View	-	-

REFERENCE MEASUREMENT

Area	Measurement
A	10 to 20 mm (0.393 to 0.787 in.)
B	30 to 70 mm/sec. (1.18 to 2.76 in./sec.)

C	40 to 50° (for pressing forward)
D	30 to 45° (for pulling)

NOTE: **Be sure to observe the specified pressing speed, force and angle of the squeegee to avoid wrinkles or air bubbles.**

HINT:

- Either angle of the squeegee (pressing forward or pulling) is acceptable.
- Be sure to apply the tape while removing the release paper 10 to 20 mm (0.394 to 0.787 in.) from the edge of the squeegee.

f. Key points for installation of the tape (how to use a squeegee and installation procedure for hemmed surfaces)

  1. If it is difficult to apply the tape, install it in several steps as shown in the illustration. Use your fingers or the padded surface of a squeegee to slowly apply the tape to the hem of the vehicle, especially for a small hem.

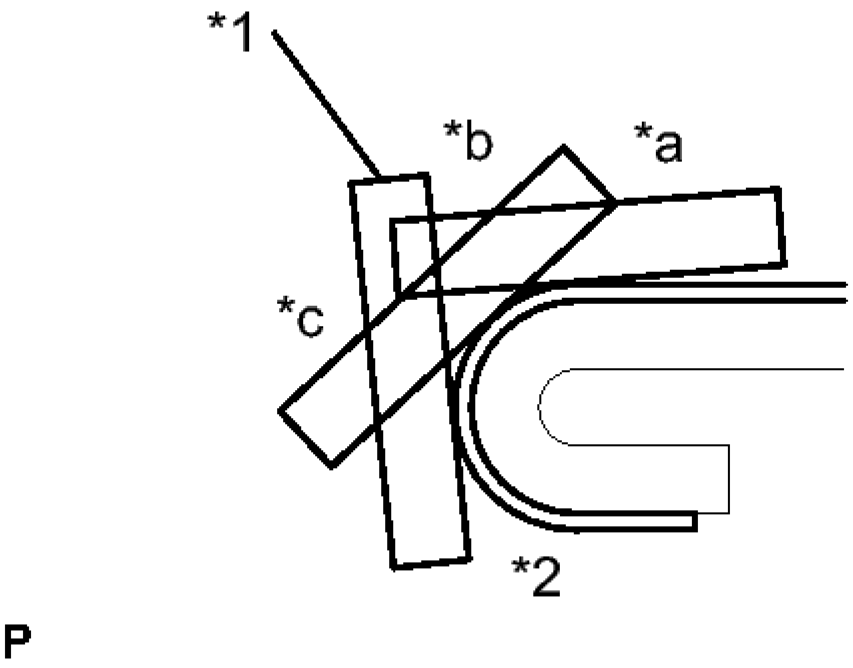

Fig. 152: Example Of Applying Tape In Several Steps
Courtesy of TOYOTA MOTOR SALES, U.S.A., INC.

TEXT IN ILLUSTRATION

*1	Squeegee

*2	Hem
*a	First
*b	Second
*c	Third

HINT:

When applying tape to the backside of a hem, remove the release paper and use your fingers or the padded surface of a squeegee.

g. Key points for installation of the tape (how to use a squeegee and installation procedure for corners)
    1. Remove the release paper and apply the tape carefully with your fingers.
    2. Before applying the tape to each corner, heat the tape using a heat light and gradually apply it, avoiding wrinkles on the tape to achieve a neat finish.

h. Check after installation
    1. After completing the application, check if the tape is applied neatly. If the tape is not applied neatly, reapply using new tape.

NOTE: **Do not reuse the tape.**

3. **INSTALL FRONT DOOR LOWER OUTSIDE STRIPE**

a. Refer to the illustration to position the front door lower outside stripe.

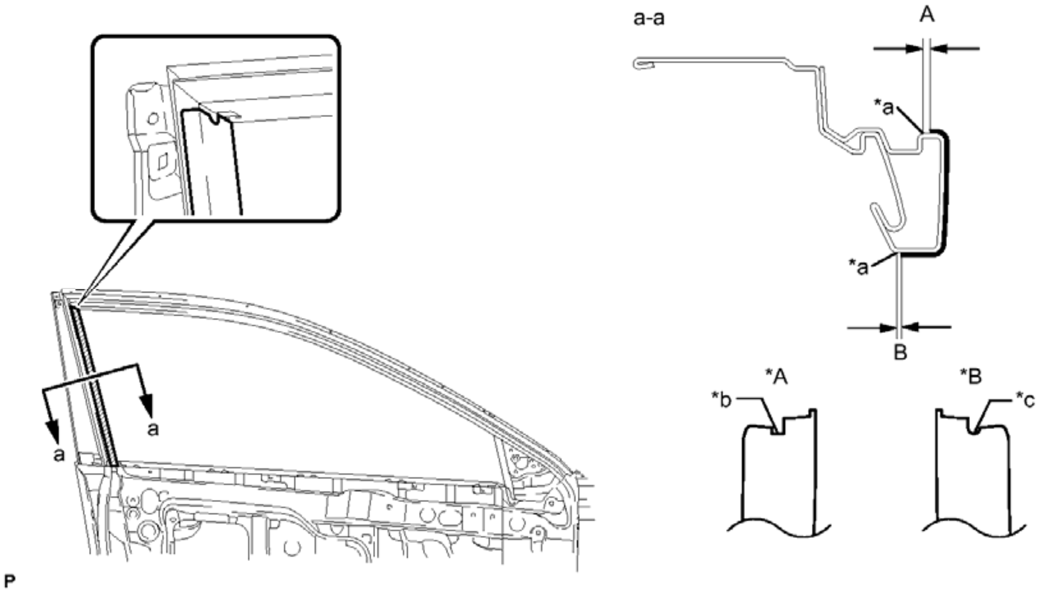

Fig. 153: Installing Front Door Lower Outside Stripe
Courtesy of TOYOTA MOTOR SALES, U.S.A., INC.

TEXT IN ILLUSTRATION

*A	LH Side	*B	RH Side
*a	Edge of Curved Surface	*b	Square
*c	Round	-	-

STANDARD MEASUREMENT

Dimension	Measurement
A	1.5 mm (0.0591 in.)
B	1.0 mm (0.0394 in.)

b. Remove the release paper and apply the stripe.

4. **INSTALL FRONT DOOR STRIPE**
   a. Refer to the illustration to position a new front door stripe.

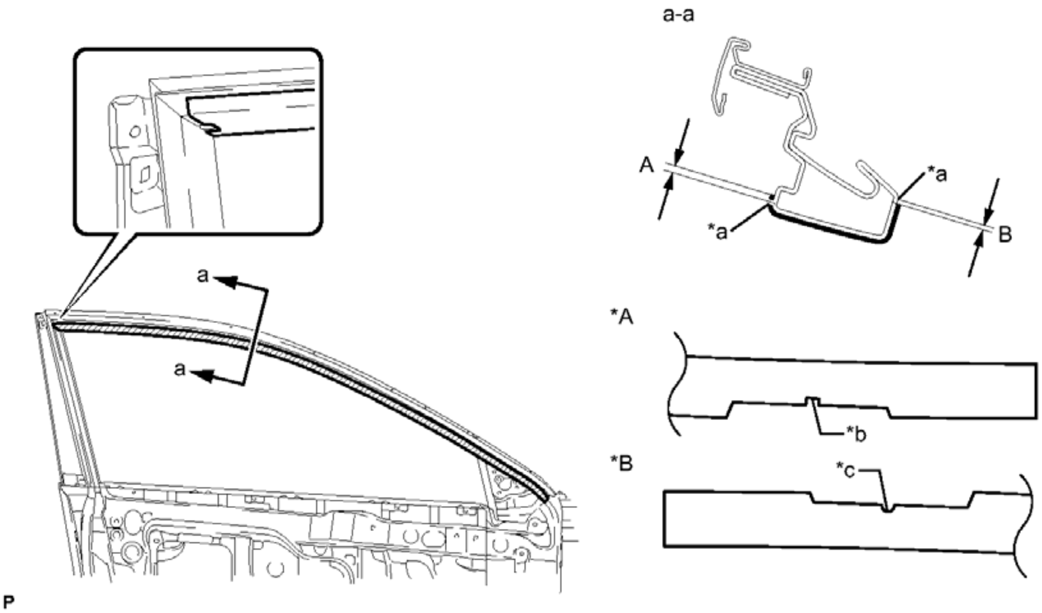

Fig. 154: Installing Front Door Stripe
Courtesy of TOYOTA MOTOR SALES, U.S.A., INC.

TEXT IN ILLUSTRATION

*A	LH Side	*B	RH Side
*a	Edge of Curved	*b	Square

	Surface		
*c	Round	-	-

STANDARD MEASUREMENT

Dimension	Measurement
A	1.5 mm (0.0591 in.)
B	1.0 mm (0.0394 in.)

b. Remove the release paper and apply the stripe.

5. **INSTALL DOOR FRAME GARNISH** . Refer to **REASSEMBLY - Step 11** .
6. **INSTALL FRONT DOOR WEATHERSTRIP** . Refer to **REASSEMBLY - Step 12** .
7. **INSTALL FRONT DOOR CHECK ASSEMBLY** . Refer to **REASSEMBLY - Step 13** .
8. **INSTALL FRONT DOOR GLASS RUN** . Refer to **REASSEMBLY - Step 29** .
9. **INSTALL FRONT DOOR GLASS SUB-ASSEMBLY** . Refer to **REASSEMBLY - Step 33** .
10. **INSTALL FRONT DOOR SERVICE HOLE COVER** . Refer to **REASSEMBLY - Step 34** .
11. **INSTALL DOOR SIDE AIRBAG SENSOR** . Refer to **INSTALLATION - Step 1** .
12. **INSTALL OUTER REAR VIEW MIRROR ASSEMBLY**

    Refer to **INSTALLATION** .

13. **CONNECT CABLE TO NEGATIVE BATTERY TERMINAL**

    NOTE: **When disconnecting the cable, some systems need to be initialized after the cable is reconnected. Refer to INITIALIZATION .**

14. **INITIALIZE POWER WINDOW CONTROL SYSTEM (for Driver Side)**

    Refer to **INITIALIZATION** .

15. **INSPECT POWER WINDOW OPERATION**

    Refer to **OPERATION CHECK** .

16. **INSPECT SRS WARNING LIGHT**

    For Separate Type Yaw Rate Sensor: Refer to **DIAGNOSIS SYSTEM** .

    For Built-in Type Yaw Rate Sensor: Refer to **DIAGNOSIS SYSTEM** .

BLACK OUT TAPE (FOR REAR DOOR)

COMPONENTS

ILLUSTRATION

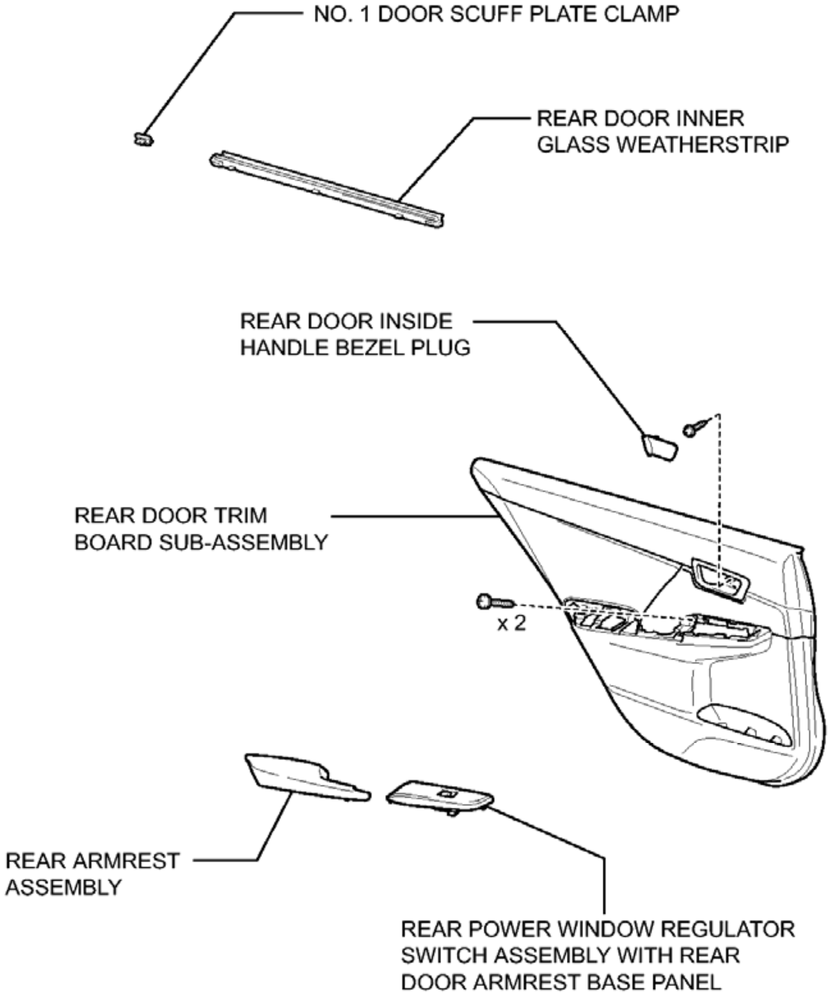
NO. 1 DOOR SCUFF PLATE CLAMP
REAR DOOR INNER GLASS WEATHERSTRIP
REAR DOOR INSIDE HANDLE BEZEL PLUG
REAR DOOR TRIM BOARD SUB-ASSEMBLY
x 2
REAR ARMREST ASSEMBLY
REAR POWER WINDOW REGULATOR SWITCH ASSEMBLY WITH REAR DOOR ARMREST BASE PANEL

P

Fig. 155: Identifying Black Out Tape (For Rear Door) Replacement Components (1 Of 3)
Courtesy of TOYOTA MOTOR SALES, U.S.A., INC.

ILLUSTRATION

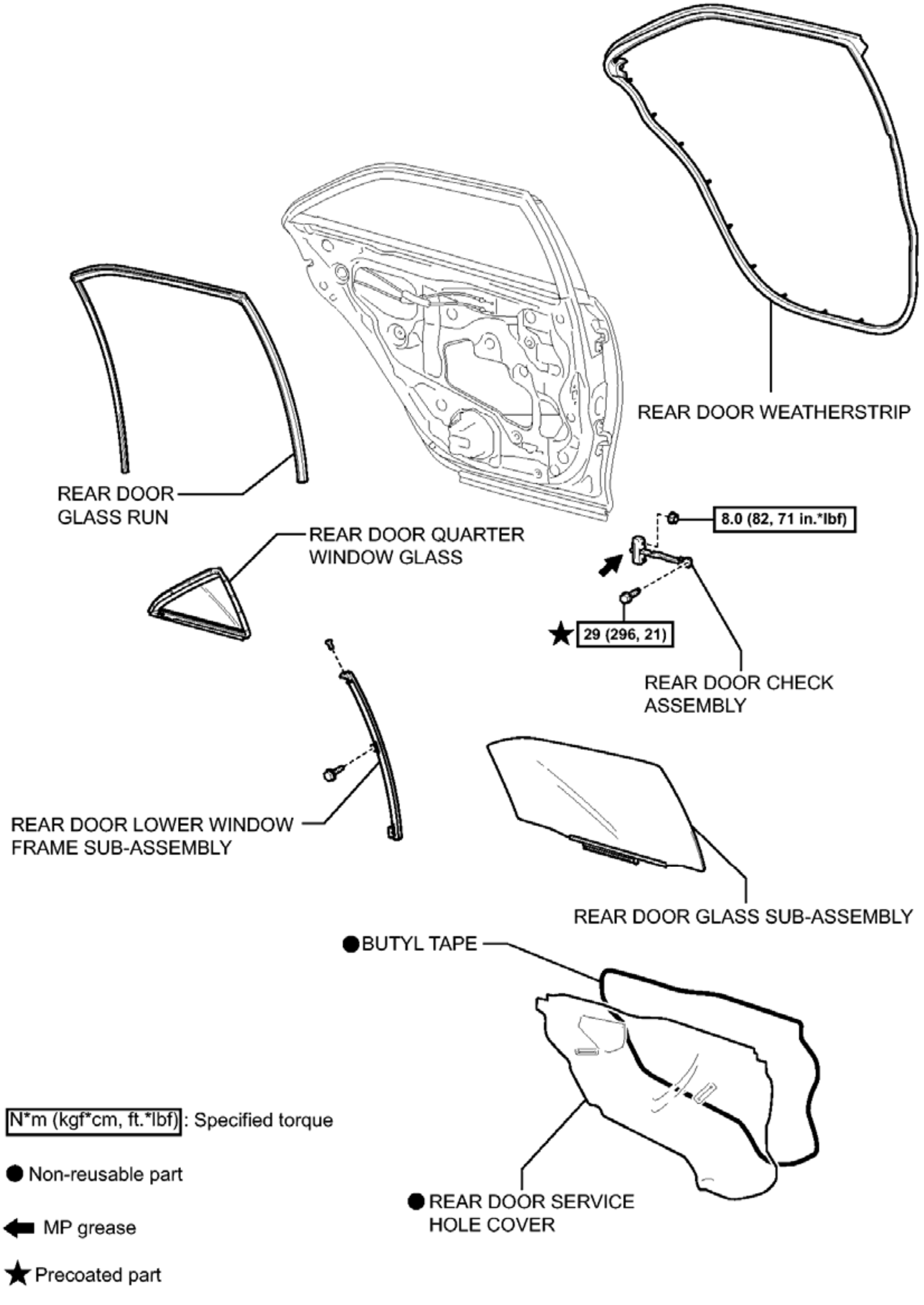
REAR DOOR WEATHERSTRIP
REAR DOOR GLASS RUN
REAR DOOR QUARTER WINDOW GLASS
8.0 (82, 71 in.*lbf)
29 (296, 21)
REAR DOOR CHECK ASSEMBLY
REAR DOOR LOWER WINDOW FRAME SUB-ASSEMBLY
REAR DOOR GLASS SUB-ASSEMBLY
● BUTYL TAPE
● REAR DOOR SERVICE HOLE COVER
N*m (kgf*cm, ft.*lbf) : Specified torque
● Non-reusable part
⬅ MP grease
★ Precoated part
P

Fig. 156: Identifying Black Out Tape (For Rear Door) Replacement Components With Torque Specifications (2 Of 3)

Courtesy of TOYOTA MOTOR SALES, U.S.A., INC.

ILLUSTRATION

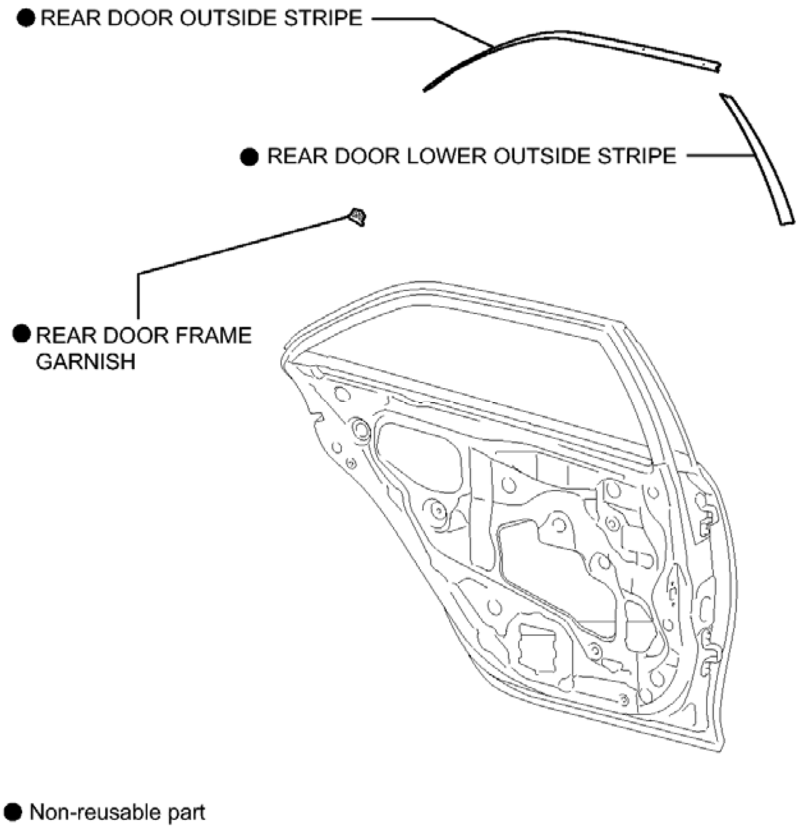
● REAR DOOR OUTSIDE STRIPE
● REAR DOOR LOWER OUTSIDE STRIPE
● REAR DOOR FRAME GARNISH
● Non-reusable part
P

Fig. 157: Identifying Black Out Tape (For Rear Door) Replacement Components (3 Of 3)
Courtesy of TOYOTA MOTOR SALES, U.S.A., INC.

REMOVAL

REMOVAL

1. **PRECAUTION**

NOTE: After turning the ignition switch off, waiting time may be required before disconnecting the cable from the negative (-) battery terminal. Therefore, make sure to read the disconnecting the cable from the negative (-) battery terminal notices before proceeding with work. Refer to PRECAUTION .

2. **DISCONNECT CABLE FROM NEGATIVE BATTERY TERMINAL**

NOTE: When disconnecting the cable, some systems need to be initialized after the cable is reconnected. Refer to INITIALIZATION .

3. **REMOVE REAR DOOR INSIDE HANDLE BEZEL PLUG** . Refer to **DISASSEMBLY - Step 3** .
4. **REMOVE REAR POWER WINDOW REGULATOR SWITCH ASSEMBLY WITH REAR DOOR ARMREST BASE PANEL** . Refer to **DISASSEMBLY - Step 4** .
5. **REMOVE REAR ARMREST ASSEMBLY** . Refer to **DISASSEMBLY - Step 5** .
6. **REMOVE REAR DOOR TRIM BOARD SUB-ASSEMBLY** . Refer to **DISASSEMBLY - Step 6** .
7. **REMOVE REAR DOOR INNER GLASS WEATHERSTRIP** . Refer to **DISASSEMBLY - Step 8** .
8. **REMOVE REAR DOOR SERVICE HOLE COVER** . Refer to **DISASSEMBLY - Step 9** .
9. **REMOVE REAR DOOR CHECK ASSEMBLY** . Refer to **DISASSEMBLY - Step 10** .
10. **REMOVE REAR DOOR WEATHERSTRIP** . Refer to **DISASSEMBLY - Step 11** .
11. **REMOVE REAR DOOR GLASS RUN** . Refer to **DISASSEMBLY - Step 12** .
12. **REMOVE REAR DOOR LOWER WINDOW FRAME SUB-ASSEMBLY** . Refer to **DISASSEMBLY - Step 13** .
13. **REMOVE REAR DOOR QUARTER WINDOW GLASS** . Refer to **DISASSEMBLY - Step 14** .
14. **REMOVE REAR DOOR GLASS SUB-ASSEMBLY** . Refer to **DISASSEMBLY - Step 15** .
15. **REMOVE REAR DOOR FRAME GARNISH** . Refer to **DISASSEMBLY - Step 16** .
16. **REMOVE REAR DOOR OUTSIDE STRIPE**
    a. Using a heat light, heat the rear door outside stripe and vehicle body.

HEATING TEMPERATURE

Item	Temperature
Vehicle Body and Rear Door Outside Stripe	40 to 60°C (104 to 140° F)

NOTE: Do not heat the vehicle body excessively.

    b. Pull back on one of the ends of the rear door outside stripe to remove it.

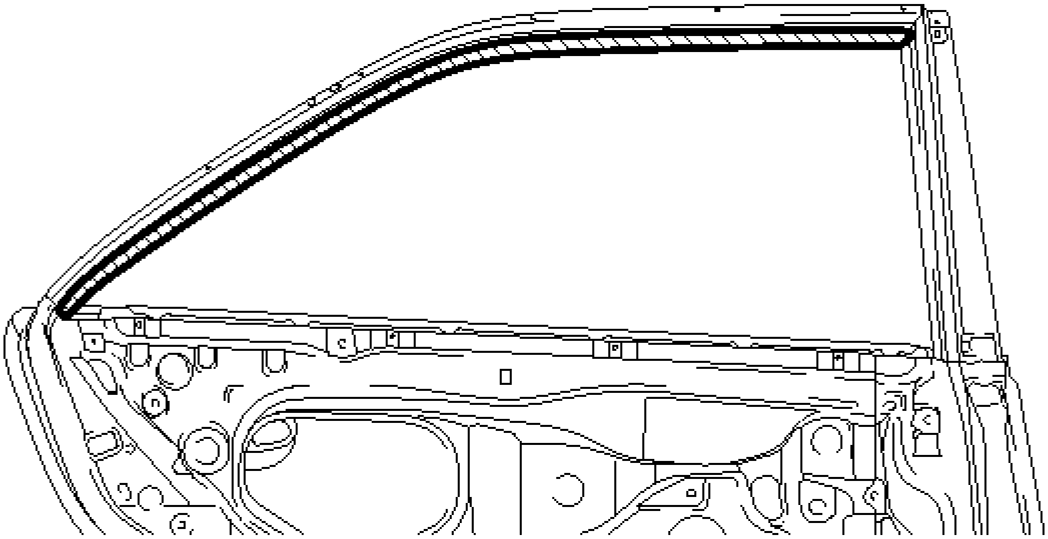

Fig. 158: Identifying Rear Door Outside Stripe
Courtesy of TOYOTA MOTOR SALES, U.S.A., INC.

HINT:

When pulling on the stripe, pull it parallel to the body.

17. **REMOVE REAR DOOR LOWER OUTSIDE STRIPE**
    a. Using a heat light, heat the rear door lower outside stripe and vehicle body.

    HEATING TEMPERATURE

Item	Temperature
Vehicle Body and Rear Door Lower Outside Stripe	40 to 60°C (104 to 140°F)

    NOTE: **Do not heat the vehicle body excessively.**

    b. Pull back on one of the ends of the rear door lower outside stripe to remove it.

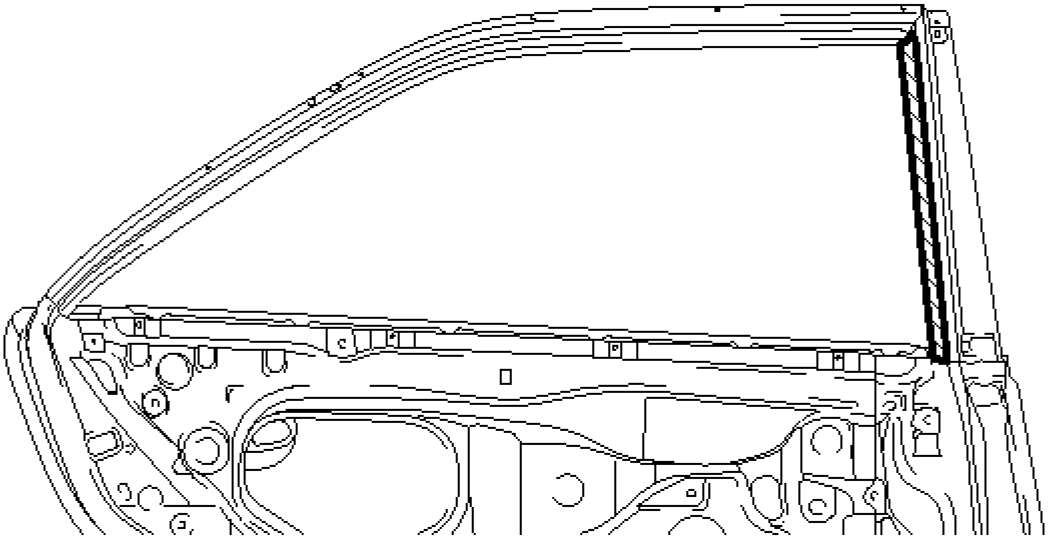

Fig. 159: Identifying Rear Door Lower Outside Stripe
Courtesy of TOYOTA MOTOR SALES, U.S.A., INC.

HINT:

When pulling on the stripe, pull it parallel to the body.

INSTALLATION

INSTALLATION

1. **REPAIR INSTRUCTION** . See step 2.
2. **INSTALL REAR DOOR LOWER OUTSIDE STRIPE**
    a. Refer to the illustration to position a new rear door lower outside stripe.

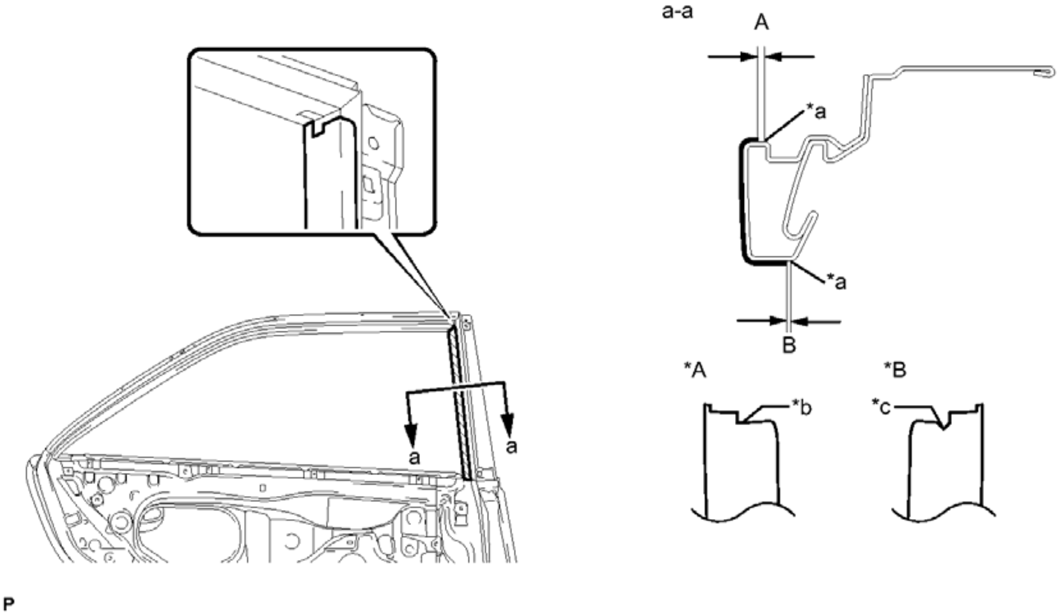

Fig. 160: Installing Rear Door Lower Outside Stripe
Courtesy of TOYOTA MOTOR SALES, U.S.A., INC.

TEXT IN ILLUSTRATION

*A	LH Side	*B	RH Side
*a	Edge of Curved Surface	*b	Straight
*c	Triangle	-	-

STANDARD MEASUREMENT

Dimension	Measurement
A	1.5 mm (0.0591 in.)
B	1.0 mm (0.0394 in.)

b. Remove the release paper and apply the stripe.

3. **INSTALL REAR DOOR OUTSIDE STRIPE**

a. Refer to the illustration to position a new rear door outside stripe.

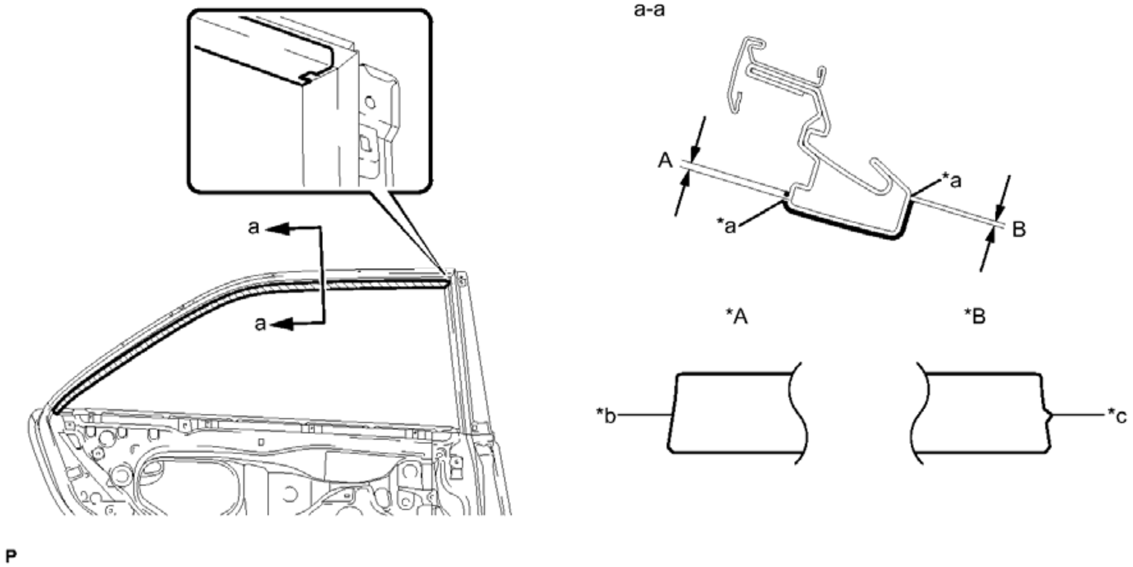

Fig. 161: Installing Rear Door Outside Stripe
Courtesy of TOYOTA MOTOR SALES, U.S.A., INC.

TEXT IN ILLUSTRATION

*A	LH Side	*B	RH Side
*a	Edge of Curved Surface	*b	Straight
*c	Triangle	-	-

STANDARD MEASUREMENT

Dimension	**Measurement**
A	1.5 mm (0.0591 in.)
B	1.0 mm (0.0394 in.)

b. Remove the release paper and apply the stripe.

4. **INSTALL REAR DOOR FRAME GARNISH** . Refer to **REASSEMBLY - Step 20** .
5. **INSTALL REAR DOOR GLASS SUB-ASSEMBLY** . Refer to **REASSEMBLY - Step 21** .
6. **INSTALL REAR DOOR QUARTER WINDOW GLASS** . Refer to **REASSEMBLY - Step 22** .
7. **INSTALL REAR DOOR LOWER WINDOW FRAME SUB-ASSEMBLY** . Refer to **REASSEMBLY - Step 23** .
8. **INSTALL REAR DOOR GLASS RUN** . Refer to **REASSEMBLY - Step 24** .
9. **INSTALL REAR DOOR WEATHERSTRIP** . Refer to **REASSEMBLY - Step 25** .
10. **INSTALL REAR DOOR CHECK ASSEMBLY** . Refer to **REASSEMBLY - Step 26** .
11. **INSTALL REAR DOOR SERVICE HOLE COVER** . Refer to **REASSEMBLY - Step 27** .

12. **INSTALL REAR DOOR INNER GLASS WEATHERSTRIP** . Refer to **REASSEMBLY - Step 28** .
13. **INSTALL REAR DOOR TRIM BOARD SUB-ASSEMBLY** . Refer to **REASSEMBLY - Step 30** .
14. **INSTALL REAR ARMREST ASSEMBLY** . Refer to **REASSEMBLY - Step 31** .
15. **INSTALL REAR POWER WINDOW REGULATOR SWITCH ASSEMBLY WITH REAR DOOR ARMREST BASE PANEL** . Refer to **REASSEMBLY - Step 32** .
16. **INSTALL REAR DOOR INSIDE HANDLE BEZEL PLUG** . Refer to **REASSEMBLY - Step 33** .
17. **CONNECT CABLE TO NEGATIVE BATTERY TERMINAL**

    NOTE: **When disconnecting the cable, some systems need to be initialized after the cable is reconnected. Refer to INITIALIZATION .**

18. **INSPECT POWER WINDOW OPERATION**

    Refer to **OPERATION CHECK** .

2012-2017 SUSPENSION

Front Suspension (Service Information) (Hybrid)

FRONT SHOCK ABSORBER

COMPONENTS

ILLUSTRATION

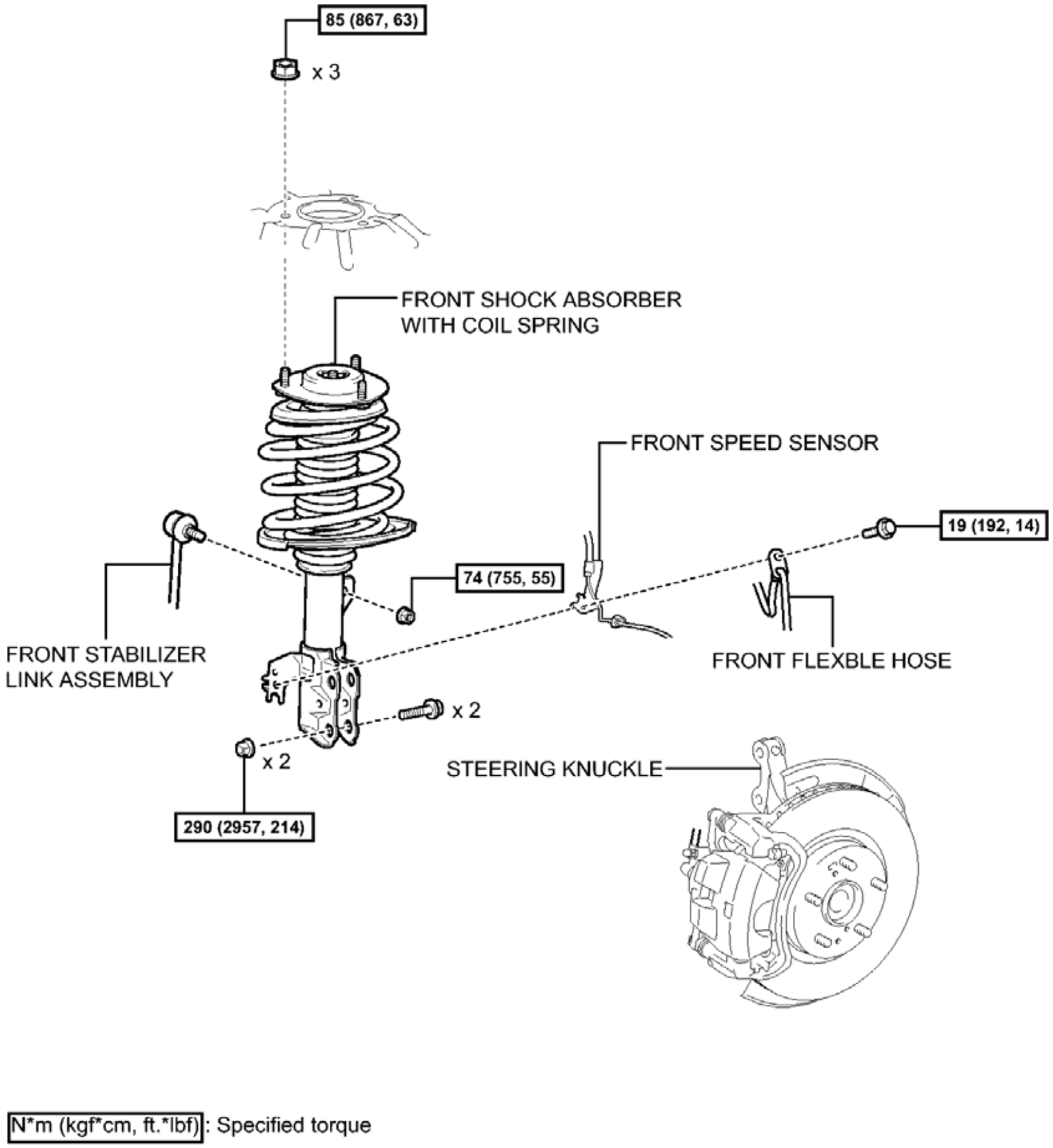
85 (867, 63)
x 3
FRONT SHOCK ABSORBER
WITH COIL SPRING
FRONT SPEED SENSOR
19 (192, 14)
74 (755, 55)
FRONT STABILIZER
LINK ASSEMBLY
FRONT FLEXBLE HOSE
x 2
x 2
STEERING KNUCKLE
290 (2957, 214)
N*m (kgf*cm, ft.*lbf): Specified torque

c

Fig. 1: Identifying Front Shock Absorber Replacement Components With Torque Specifications (1 Of 2)
Courtesy of TOYOTA MOTOR SALES, U.S.A., INC.

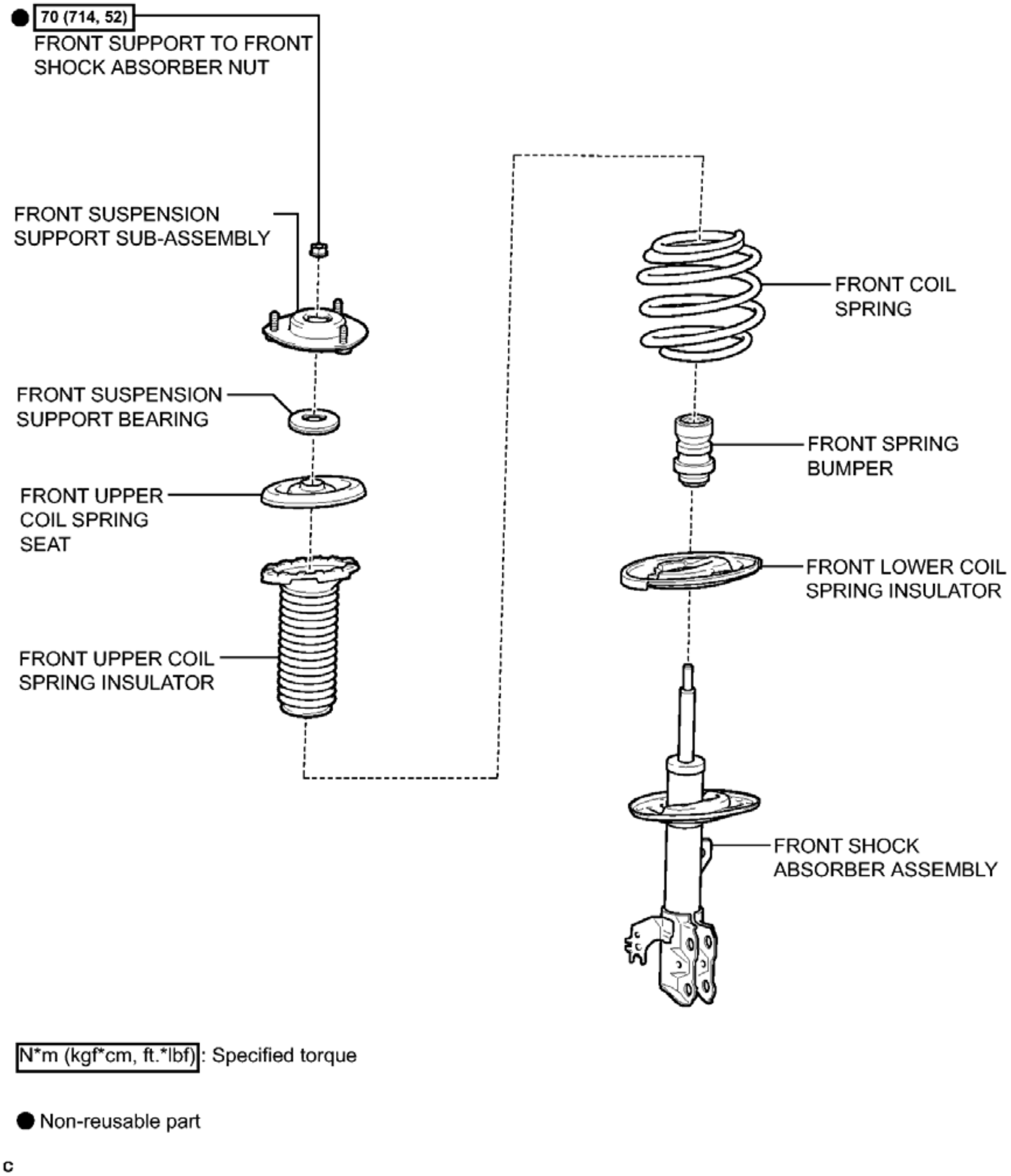
● 70 (714, 52)
FRONT SUPPORT TO FRONT SHOCK ABSORBER NUT
FRONT SUSPENSION SUPPORT SUB-ASSEMBLY
FRONT SUSPENSION SUPPORT BEARING
FRONT UPPER COIL SPRING SEAT
FRONT UPPER COIL SPRING INSULATOR
FRONT COIL SPRING
FRONT SPRING BUMPER
FRONT LOWER COIL SPRING INSULATOR
FRONT SHOCK ABSORBER ASSEMBLY
N*m (kgf*cm, ft.*lbf): Specified torque
● Non-reusable part
c

Fig. 2: Identifying Front Shock Absorber Replacement Components With Torque Specifications (2 Of 2)
Courtesy of TOYOTA MOTOR SALES, U.S.A., INC.

REMOVAL

REMOVAL

HINT:

- Use the same procedure for the RH side and LH side.
- The procedure listed below is for the LH side.

1. **REMOVE FRONT WHEEL**
2. **LOOSEN FRONT SUPPORT TO FRONT SHOCK ABSORBER NUT**
    a. Loosen the front support to front shock absorber nut.

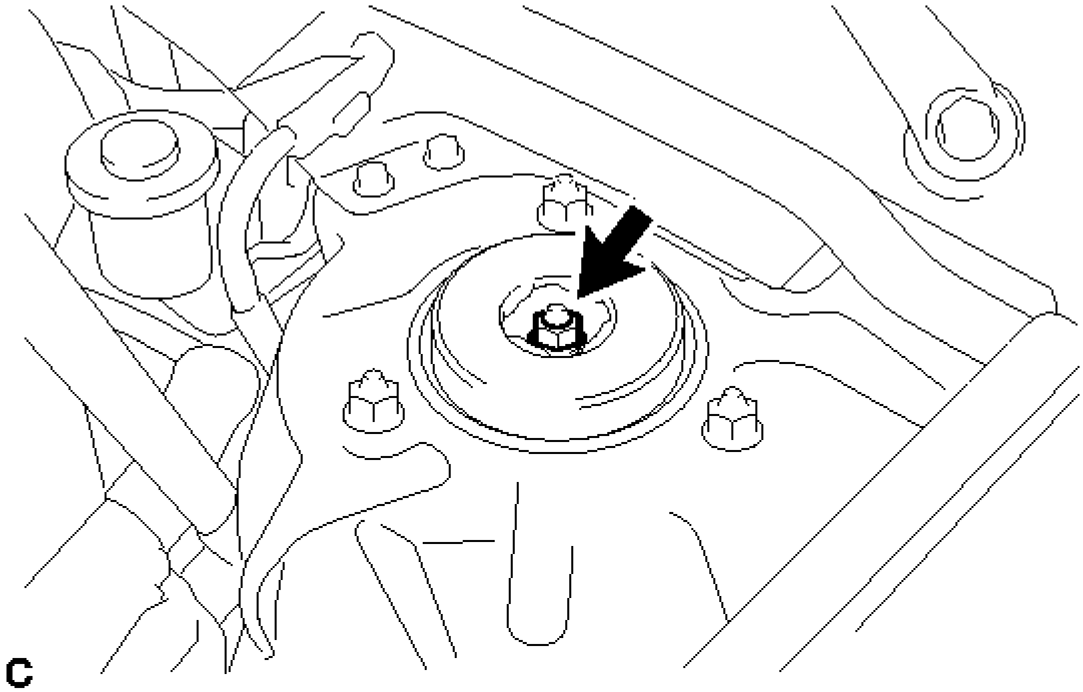

Fig. 3: Identifying Front Shock Absorber Nut
Courtesy of TOYOTA MOTOR SALES, U.S.A., INC.

NOTE:

- **Do not remove the front support to front shock absorber nut.**
- **Loosen the front support to front shock absorber nut only when the front shock absorber with coil spring needs to be disassembled.**

3. **SEPARATE FRONT SPEED SENSOR**
    a. Remove the bolt and clamp, and separate the front speed sensor and front flexible hose from the front shock absorber assembly.

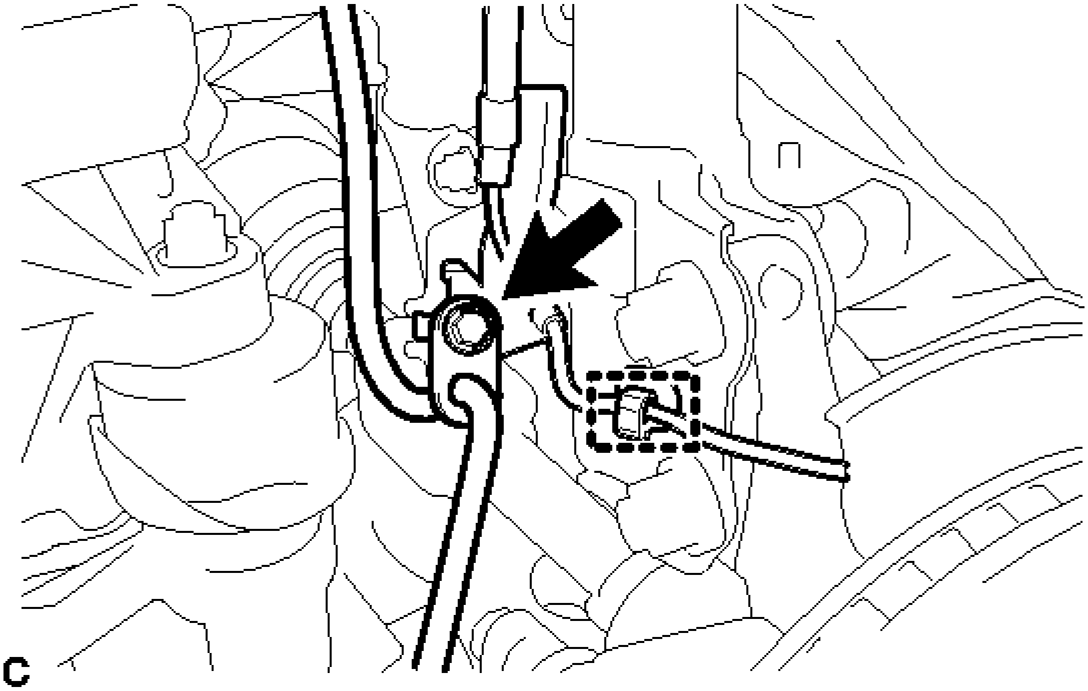

Fig. 4: Locating Front Speed Sensor Clamp And Front Flexible Hose Bolt
Courtesy of TOYOTA MOTOR SALES, U.S.A., INC.

NOTE: **Be sure to separate the front speed sensor from the front shock absorber assembly completely.**

4. **SEPARATE FRONT STABILIZER LINK ASSEMBLY**
   a. Remove the nut and separate the front stabilizer link assembly from the front shock absorber assembly.

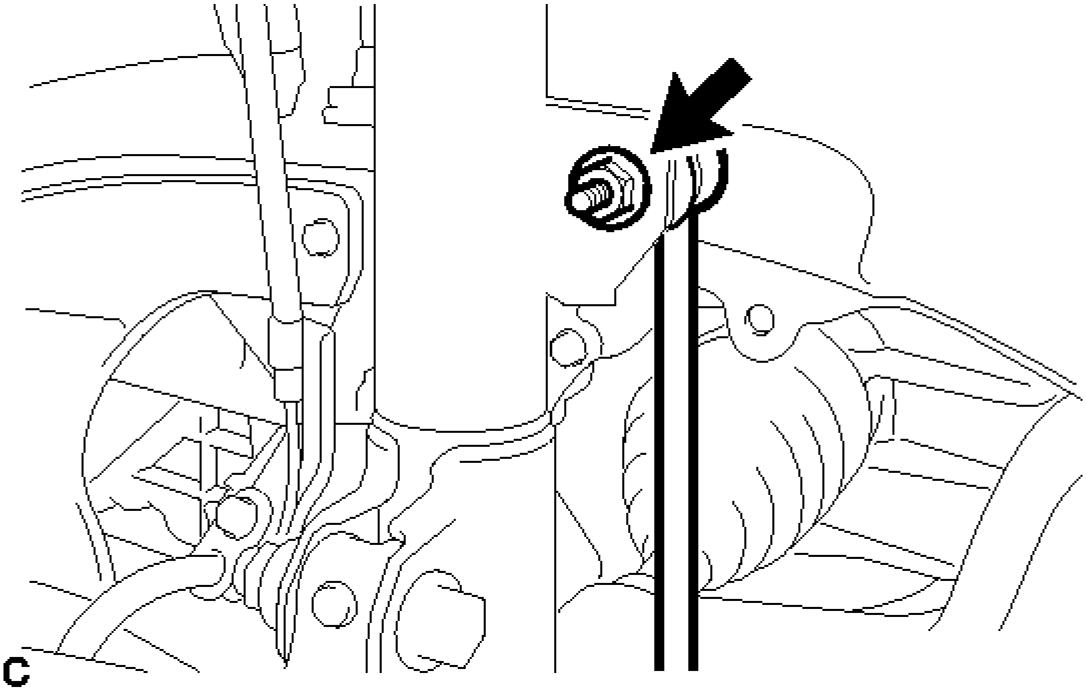

Fig. 5: Identifying Front Stabilizer Link Nut
Courtesy of TOYOTA MOTOR SALES, U.S.A., INC.

If the ball joint turns together with the nut, use a hexagon wrench to hold the stud bolt.

5. **REMOVE FRONT SHOCK ABSORBER WITH COIL SPRING**
    a. Support the front axle using a jack and wooden block.

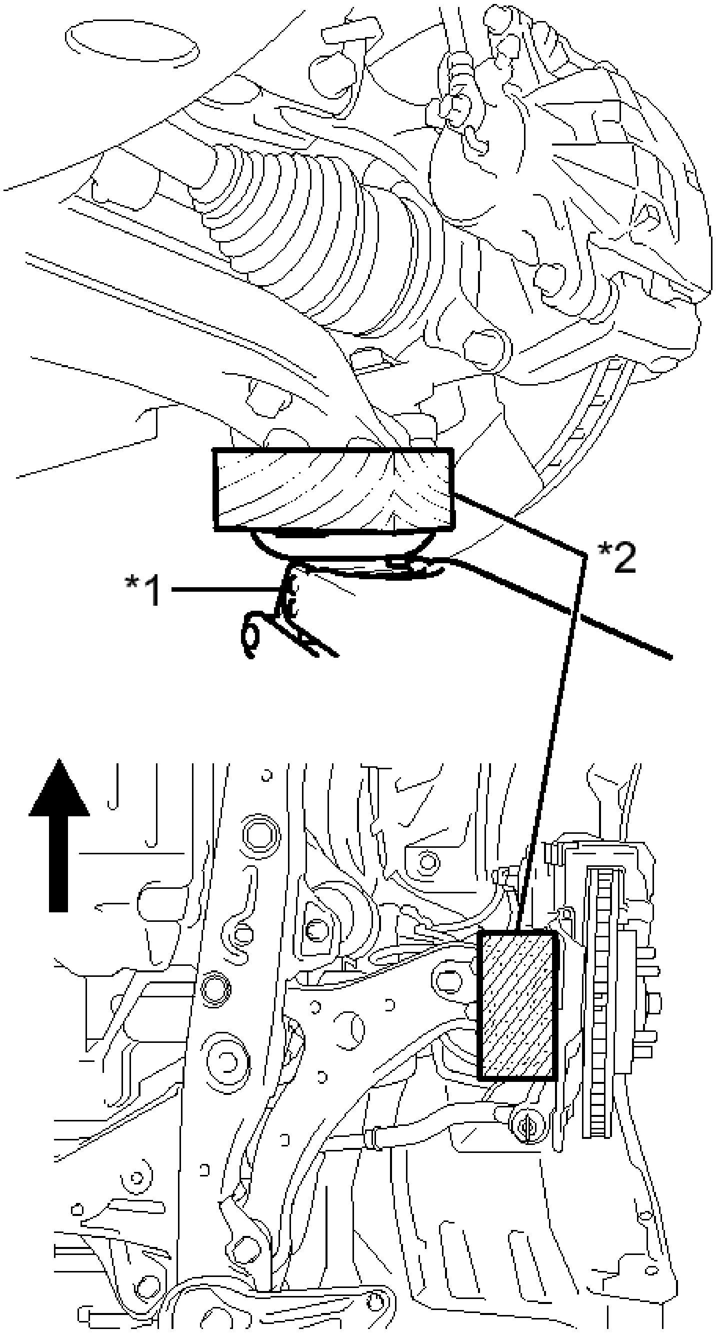

C

Fig. 6: Identifying Jack Placement
Courtesy of TOYOTA MOTOR SALES, U.S.A., INC.

TEXT IN ILLUSTRATION

*1	Jack
*2	Wooden Block
→	Front of the Vehicle

b. Remove the 2 bolts and 2 nuts, and separate the front shock absorber with coil spring (lower side) from the steering knuckle.

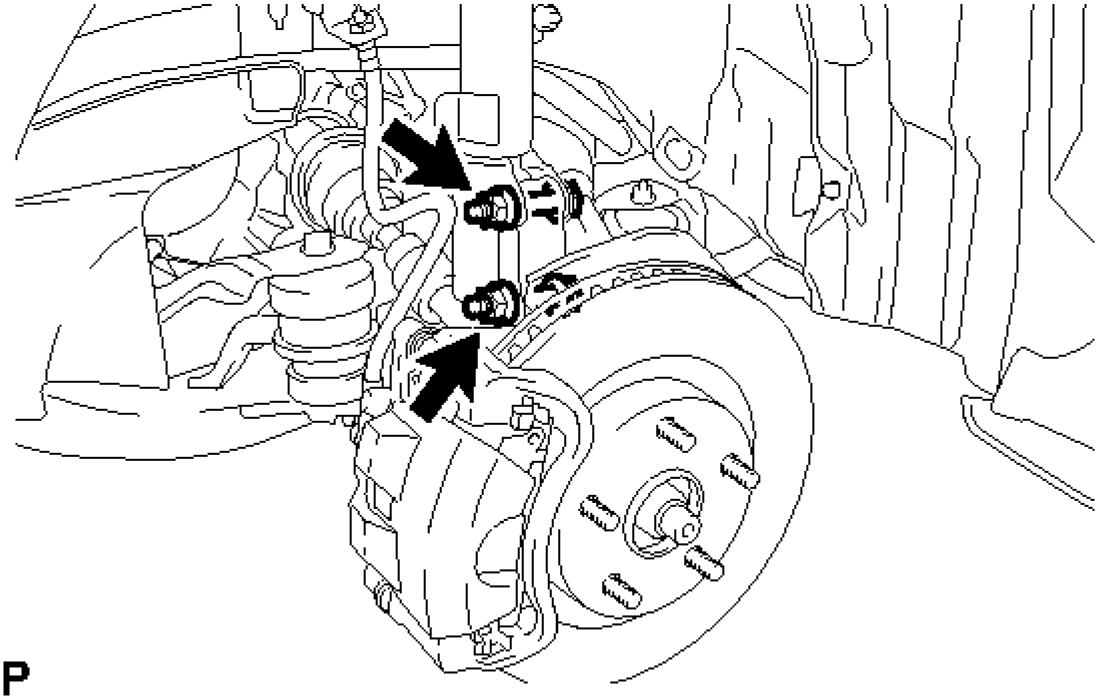

Fig. 7: Locating Front Axle Assembly Nuts And Bolts
Courtesy of TOYOTA MOTOR SALES, U.S.A., INC.

NOTE: **When removing the nuts, keep the bolts from rotating.**

c. Remove the 3 nuts and front shock absorber with coil spring.

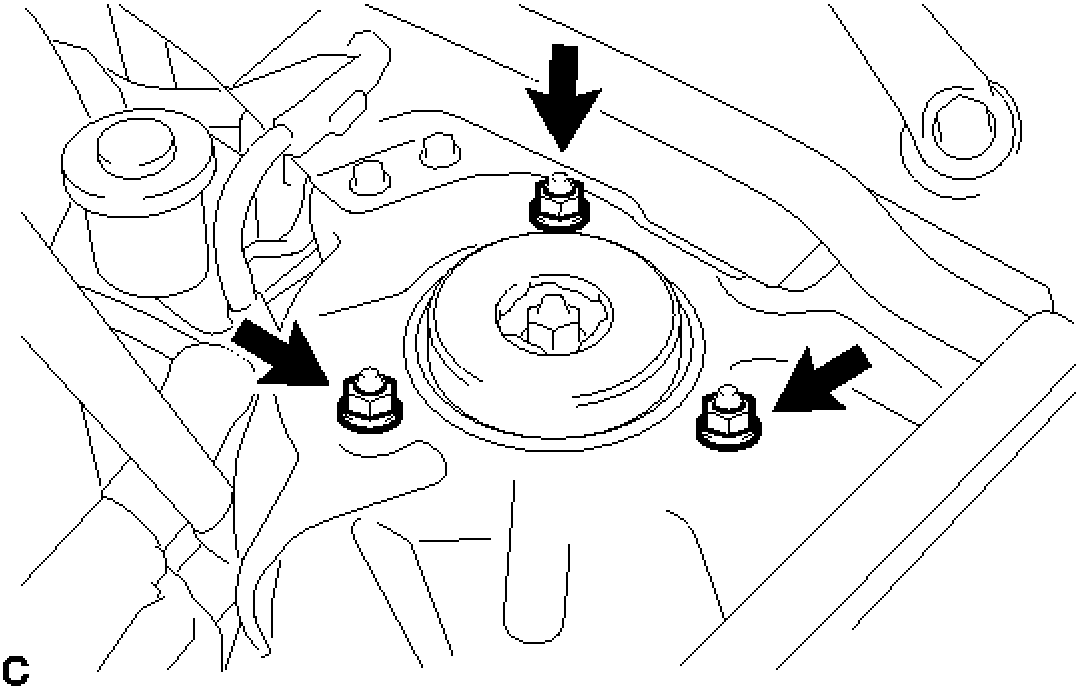

Fig. 8: Identifying Front Shock Absorber Nuts
Courtesy of TOYOTA MOTOR SALES, U.S.A., INC.

NOTE: **Make sure that the front speed sensor is completely separated from the front shock absorber with coil spring.**

6. **SECURE FRONT SHOCK ABSORBER WITH COIL SPRING**
   a. Install SST to the front coil spring with the hooks spread as far apart as possible from each other.
      - **SST: 09727-30021**
        09727-00010
        09727-00021
        09727-00031

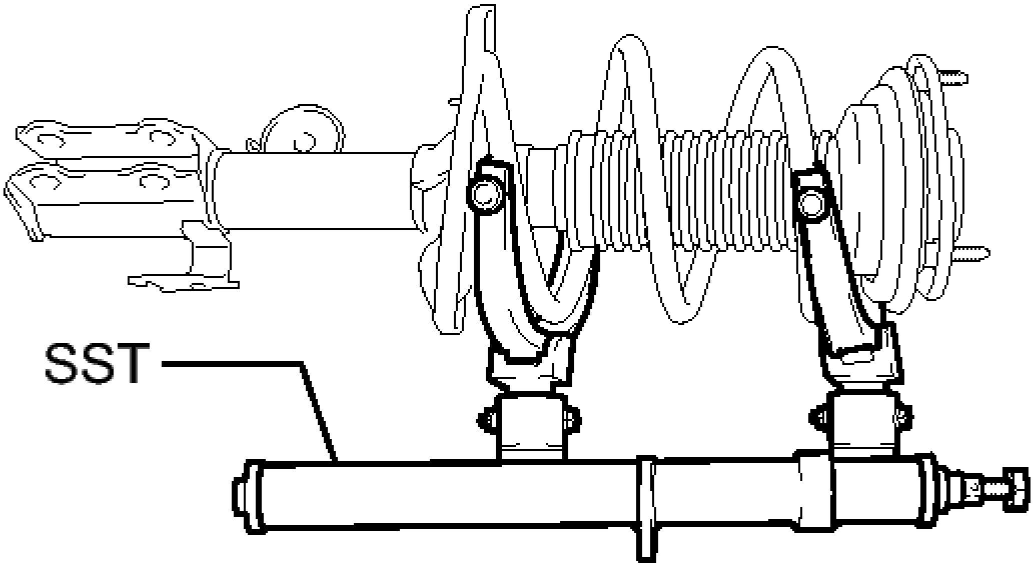

Fig. 9: Identifying SST To The Front Coil Spring
Courtesy of TOYOTA MOTOR SALES, U.S.A., INC.

NOTE: **Make sure that the claws on the hooks are securely engaged to the spring.**

b. Install the bolt and nut to the front shock absorber assembly as shown in the illustration and secure the front shock absorber assembly in a vise using aluminum plates.

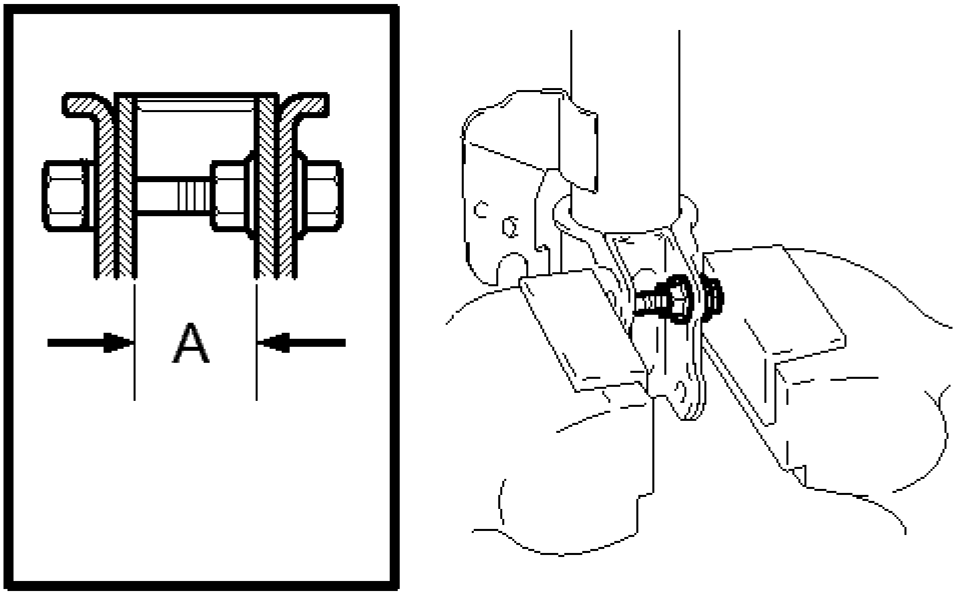

Fig. 10: Installing Bolt And Nut To Front Shock Absorber
Courtesy of TOYOTA MOTOR SALES, U.S.A., INC.

Standard length A

28 mm (1.10 in.)

7. **REMOVE FRONT SUPPORT TO FRONT SHOCK ABSORBER NUT**
    a. Using SST, compress the front coil spring.
        - **SST: 09727-30021**
          09727-00010
          09727-00021
          09727-00031

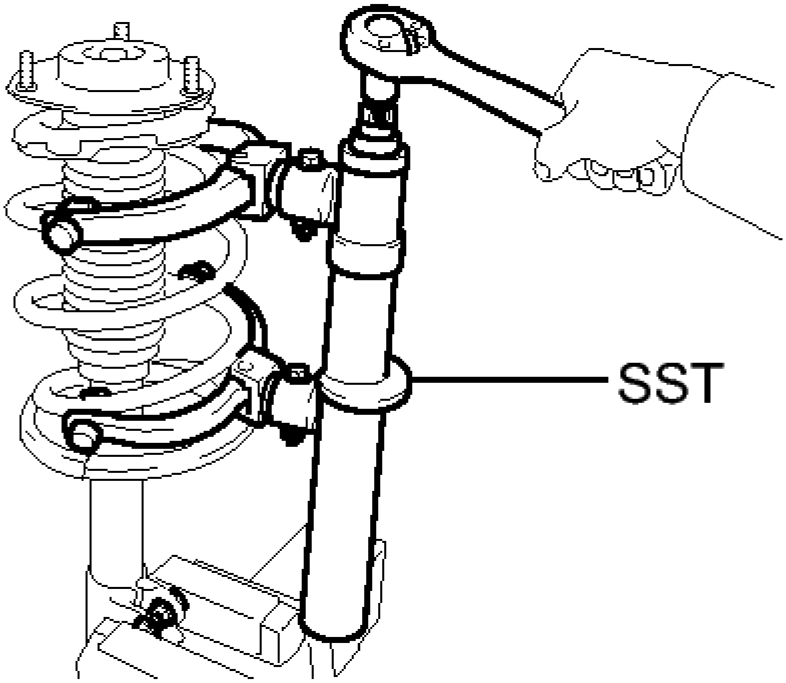

Fig. 11: Compressing Front Coil Spring
Courtesy of TOYOTA MOTOR SALES, U.S.A., INC.

NOTE: **Do not use an impact wrench. It will damage SST.**

If the front coil spring is compressed at an angle, using 2 SST will make the work easier.

b. Check that the front coil spring is sufficiently compressed.
c. Remove the front support to front shock absorber nut.

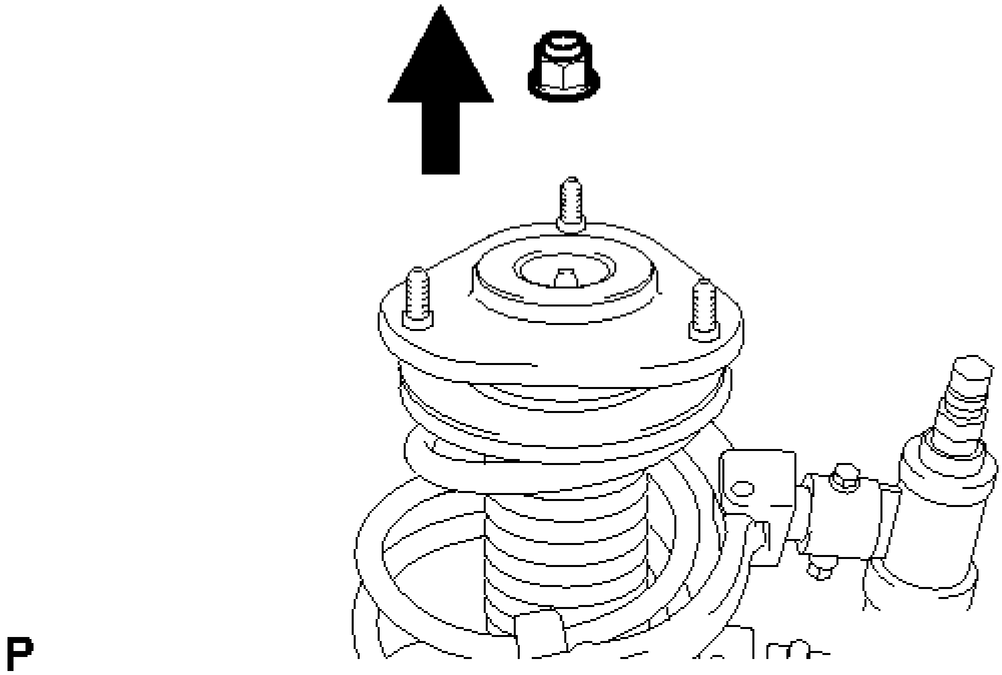

Fig. 12: Identifying Front Support To Front Shock Absorber Nut
Courtesy of TOYOTA MOTOR SALES, U.S.A., INC.

8. **REMOVE FRONT SUSPENSION SUPPORT SUB-ASSEMBLY**
9. **REMOVE FRONT SUSPENSION SUPPORT BEARING**
10. **REMOVE FRONT UPPER COIL SPRING SEAT**
11. **REMOVE FRONT UPPER COIL SPRING INSULATOR**
12. **REMOVE FRONT COIL SPRING**
13. **REMOVE FRONT SPRING BUMPER**
14. **REMOVE FRONT LOWER COIL SPRING INSULATOR**
15. **REMOVE FRONT SHOCK ABSORBER ASSEMBLY**

INSPECTION

INSPECTION

1. **INSPECT FRONT SHOCK ABSORBER ASSEMBLY**
    a. Compress and extend the shock absorber rod 4 or more times.

       Standard

       There is no abnormal resistance or sound and operation resistance is normal.

       If there is any abnormality, replace the front shock absorber assembly with a new one.

INSTALLATION

INSTALLATION

HINT:

- Use the same procedure for the RH side and LH side.
- The procedure listed below is for the LH side.

1. **SECURE FRONT SHOCK ABSORBER ASSEMBLY**
    a. Install the bolt and nut to the front shock absorber assembly as shown in the illustration and secure the front shock absorber assembly in a vise using aluminum plates.

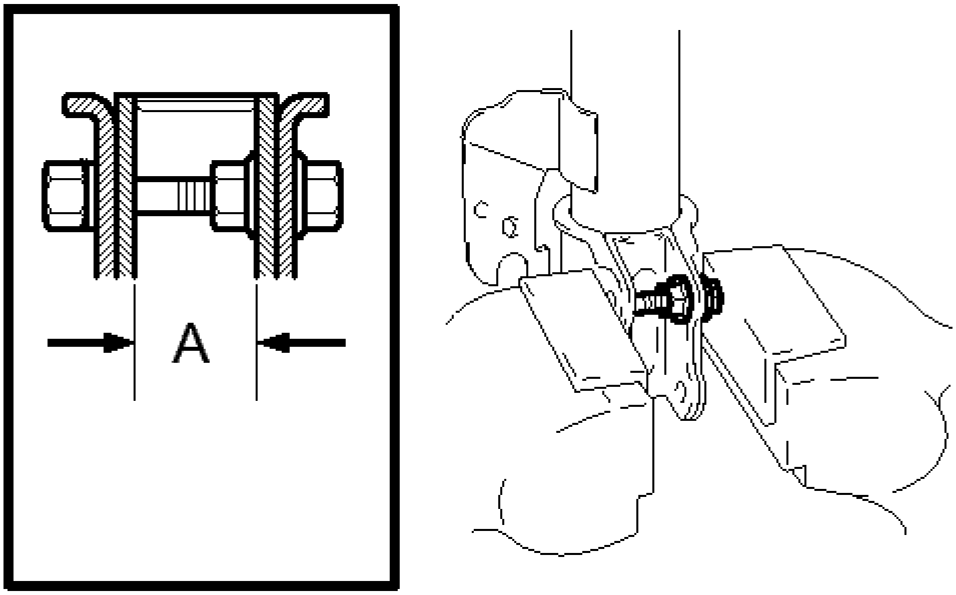

P

Fig. 13: Installing Bolt And Nut To Front Shock Absorber
Courtesy of TOYOTA MOTOR SALES, U.S.A., INC.

Standard length A

28 mm (1.10 in.)

2. **INSTALL FRONT LOWER COIL SPRING INSULATOR**
    a. Install the front lower coil spring insulator to the front shock absorber assembly.

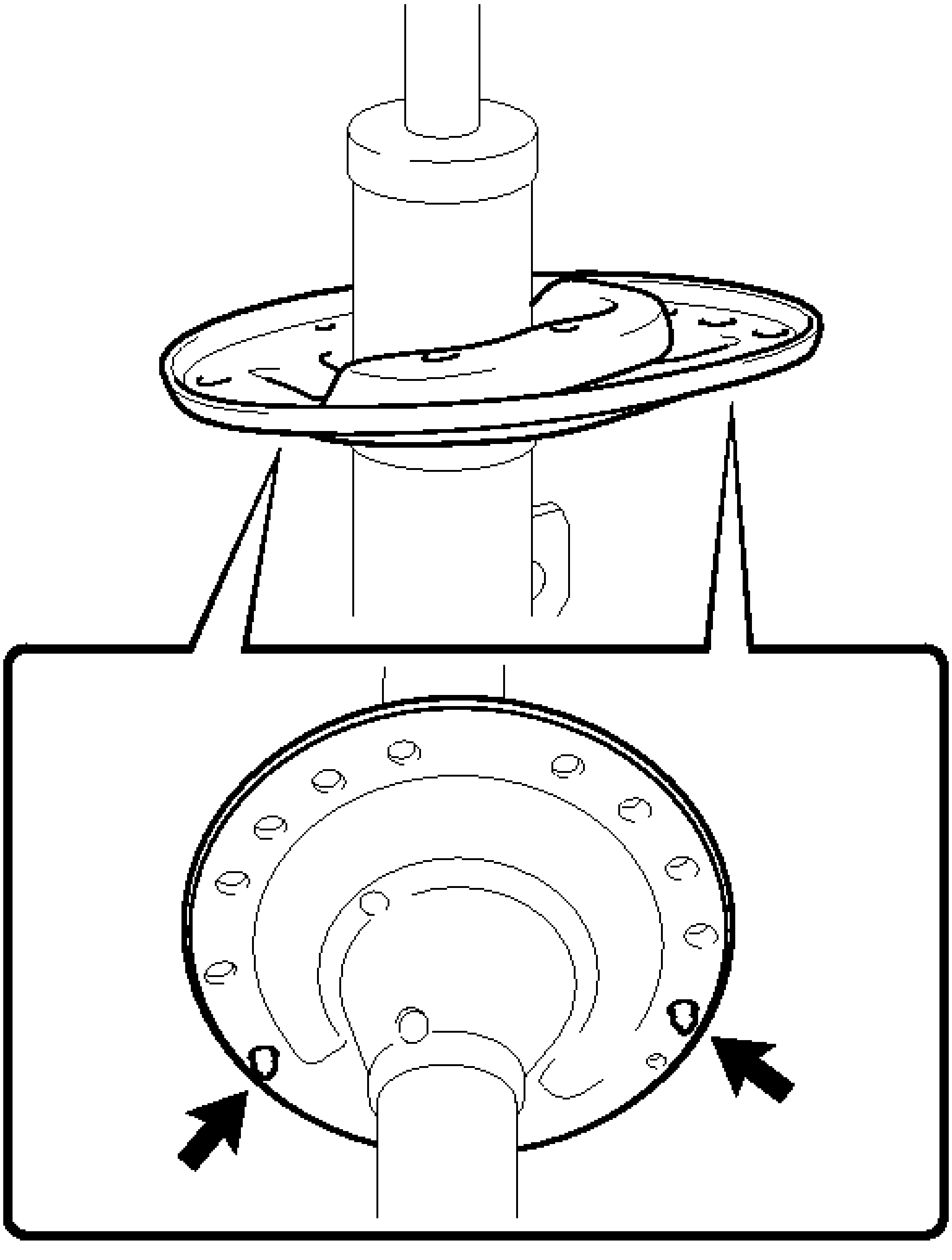

Fig. 14: Identifying Front Lower Coil Spring Insulator Positioning Pins
Courtesy of TOYOTA MOTOR SALES, U.S.A., INC.

TEXT IN ILLUSTRATION

	Positioning

Pin

NOTE: **Make sure that the positioning pins on the front lower coil spring insulator are inserted into the holes in the front shock absorber assembly.**

3. **INSTALL FRONT SPRING BUMPER**
   a. Install the front spring bumper to the front shock absorber assembly.

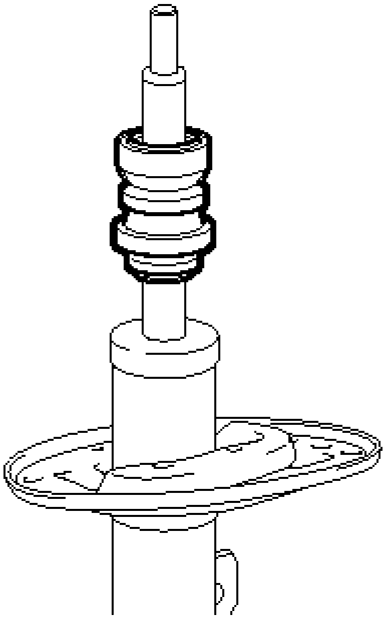

Fig. 15: Identifying Front Spring Bumper
Courtesy of TOYOTA MOTOR SALES, U.S.A., INC.

NOTE: **Face the smaller diameter end of the front spring bumper downward.**

4. **INSTALL FRONT COIL SPRING**
   a. Install SST to the front coil spring with the hooks spread as far apart as possible from each other.
      - **SST: 09727-30021**
        09727-00010
        09727-00021
        09727-00031

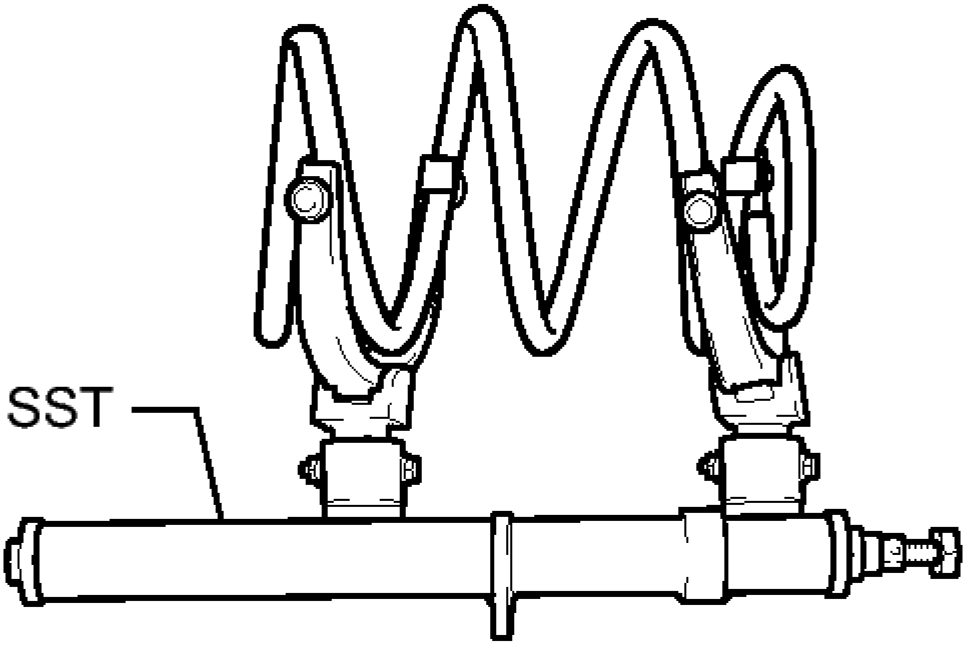

Fig. 16: Compressing Front Coil Spring
Courtesy of TOYOTA MOTOR SALES, U.S.A., INC.

NOTE: Make sure that the claws on the hooks are securely engaged to the spring.

If the front coil spring is compressed at an angle, using 2 SST will make the work easier.

b. Using SST, compress the front coil spring.

- **SST: 09727-30021**
  09727-00010
  09727-00021
  09727-00031

NOTE: Do not use an impact wrench. It will damage SST.

c. Install the front coil spring to the front shock absorber assembly.

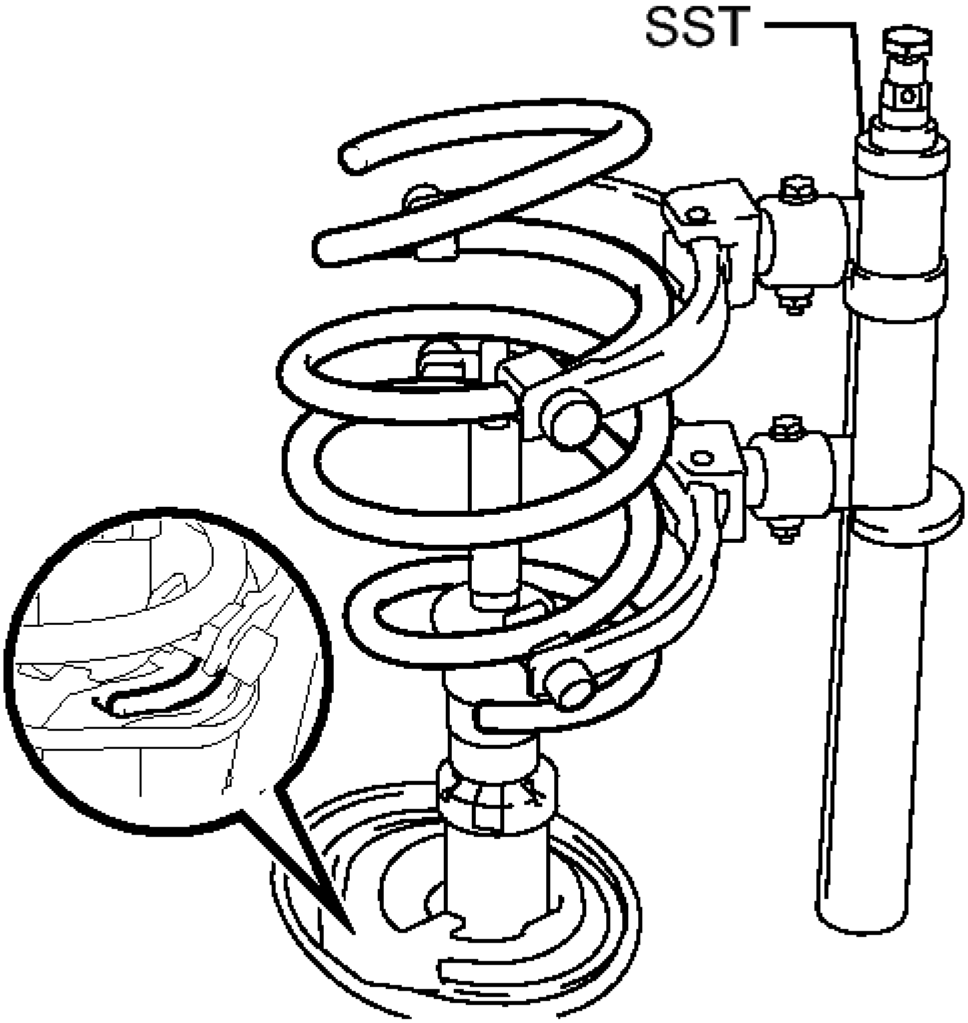

P

Fig. 17: Identifying Front Coil Spring & Front Shock Absorber
Courtesy of TOYOTA MOTOR SALES, U.S.A., INC.

NOTE: **Make sure that the end of the front coil spring is positioned in the depression of the front lower coil spring insulator.**

5. **INSTALL FRONT UPPER COIL SPRING INSULATOR**
    a. Install the front upper coil spring insulator as shown in the illustration.

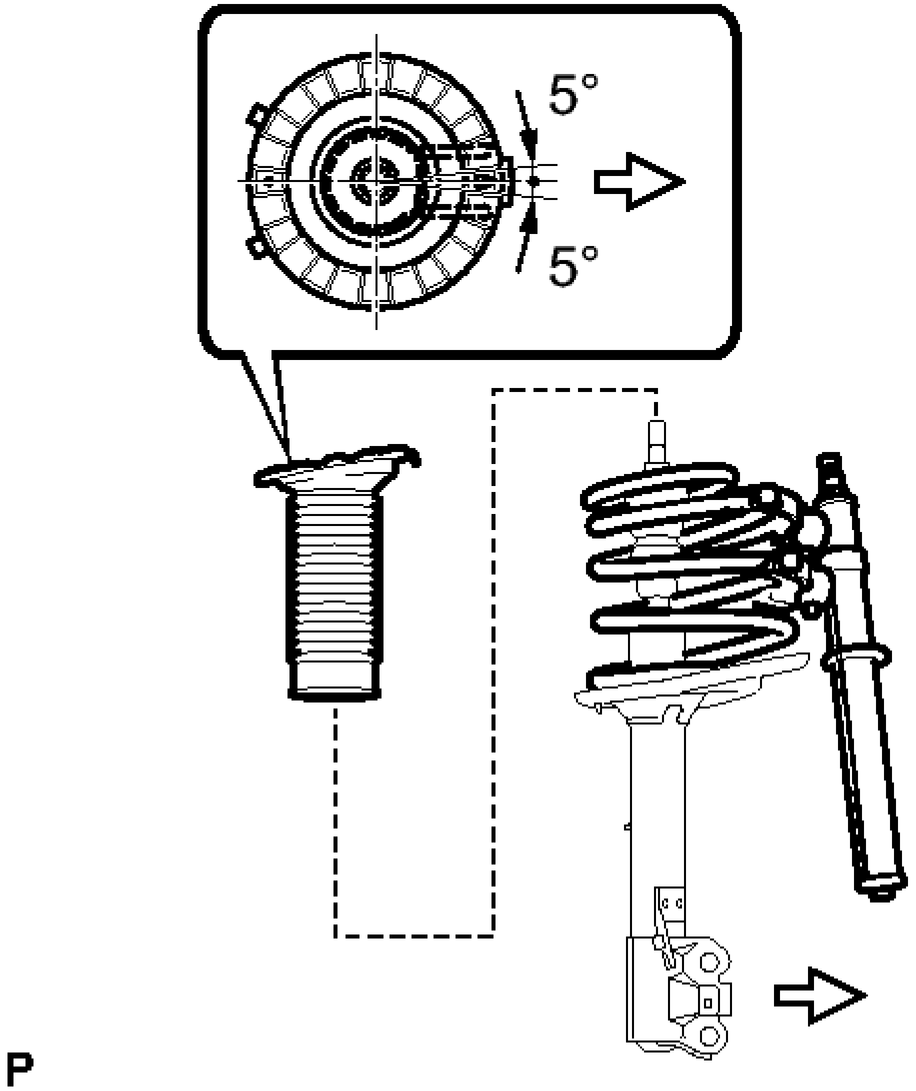

Fig. 18: Installing Front Upper Coil Spring Insulator
Courtesy of TOYOTA MOTOR SALES, U.S.A., INC.

TEXT IN ILLUSTRATION

⇨	Outside of the Vehicle

NOTE: **Any misalignment between the front shock absorber lower bracket and the alignment mark must be +/- 5°.**

6. **INSTALL FRONT UPPER COIL SPRING SEAT**
   a. Install the front upper coil spring seat with the mark facing the outside of the vehicle.

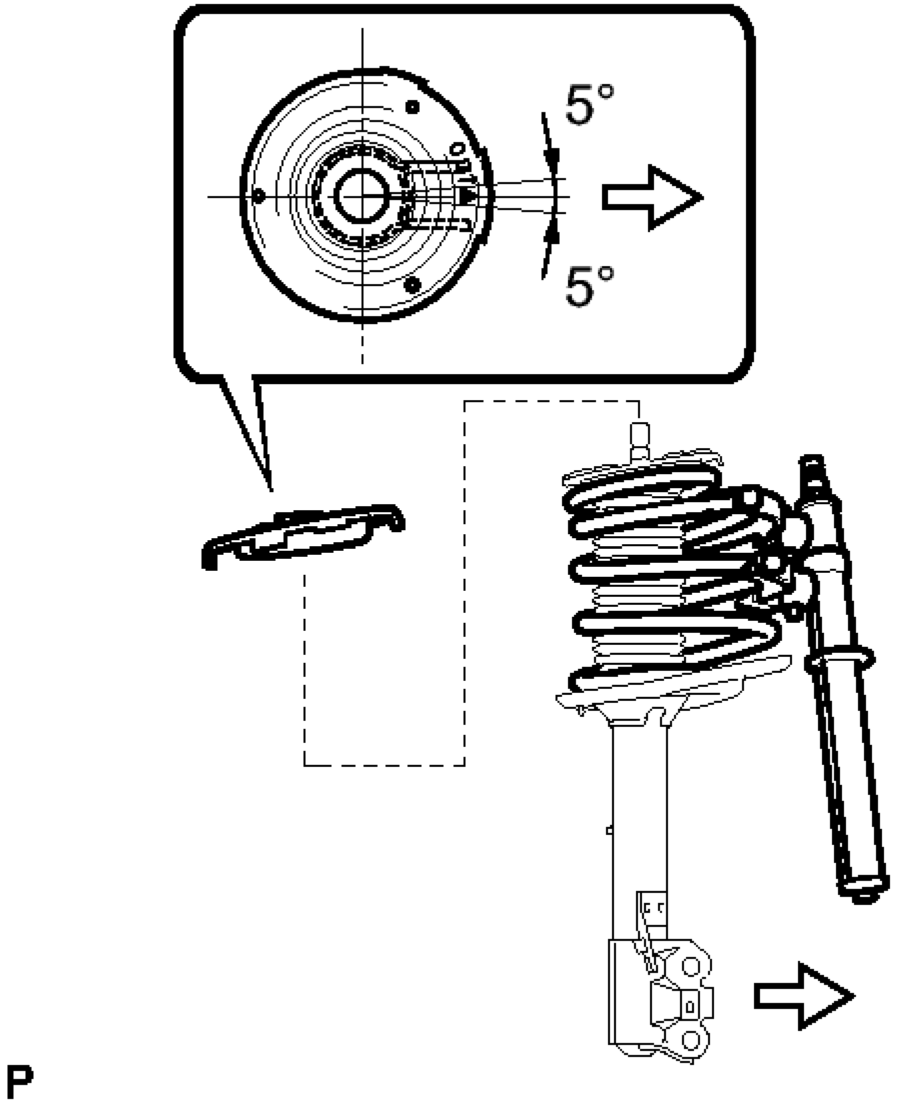

Fig. 19: Installing Front Upper Coil Spring Seat
Courtesy of TOYOTA MOTOR SALES, U.S.A., INC.

TEXT IN ILLUSTRATION

	Outside of the Vehicle

NOTE: **Any misalignment between the front shock absorber lower bracket and the alignment mark must be +/- 5°.**

7. **INSTALL FRONT SUSPENSION SUPPORT BEARING**
   a. Install the front suspension support bearing as shown in the illustration.

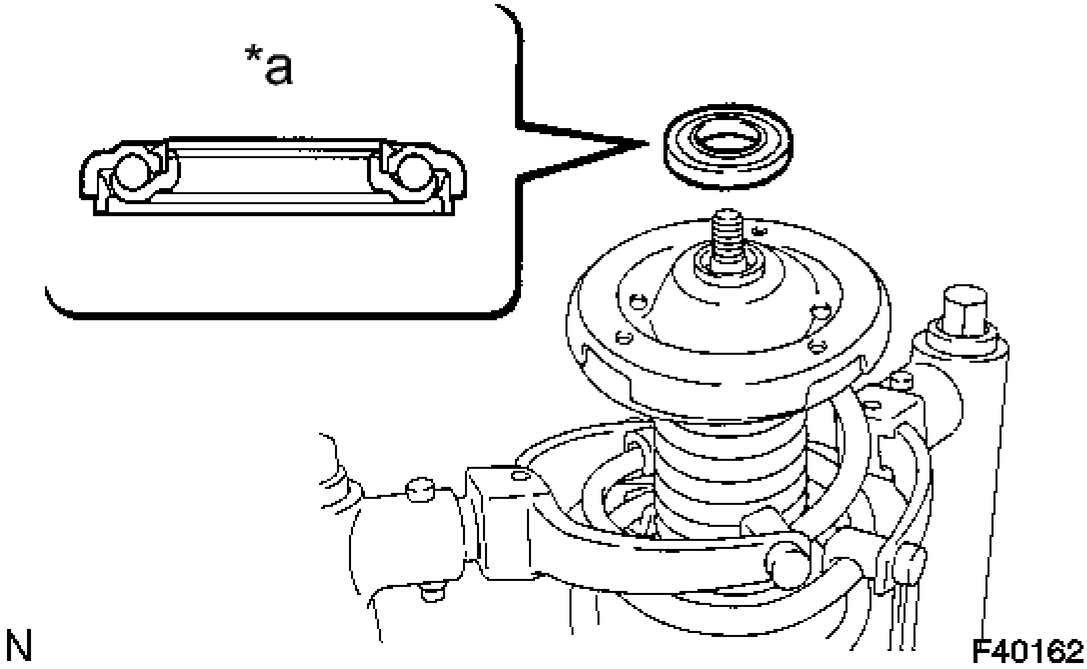

Fig. 20: Identifying Front Suspension Support Bearing
Courtesy of TOYOTA MOTOR SALES, U.S.A., INC.

TEXT IN ILLUSTRATION

*a	Upper Side

NOTE: **Do not install the bearing upside down.**

8. **INSTALL FRONT SUSPENSION SUPPORT SUB-ASSEMBLY**
    a. Install the front suspension support sub-assembly as shown in the illustration.

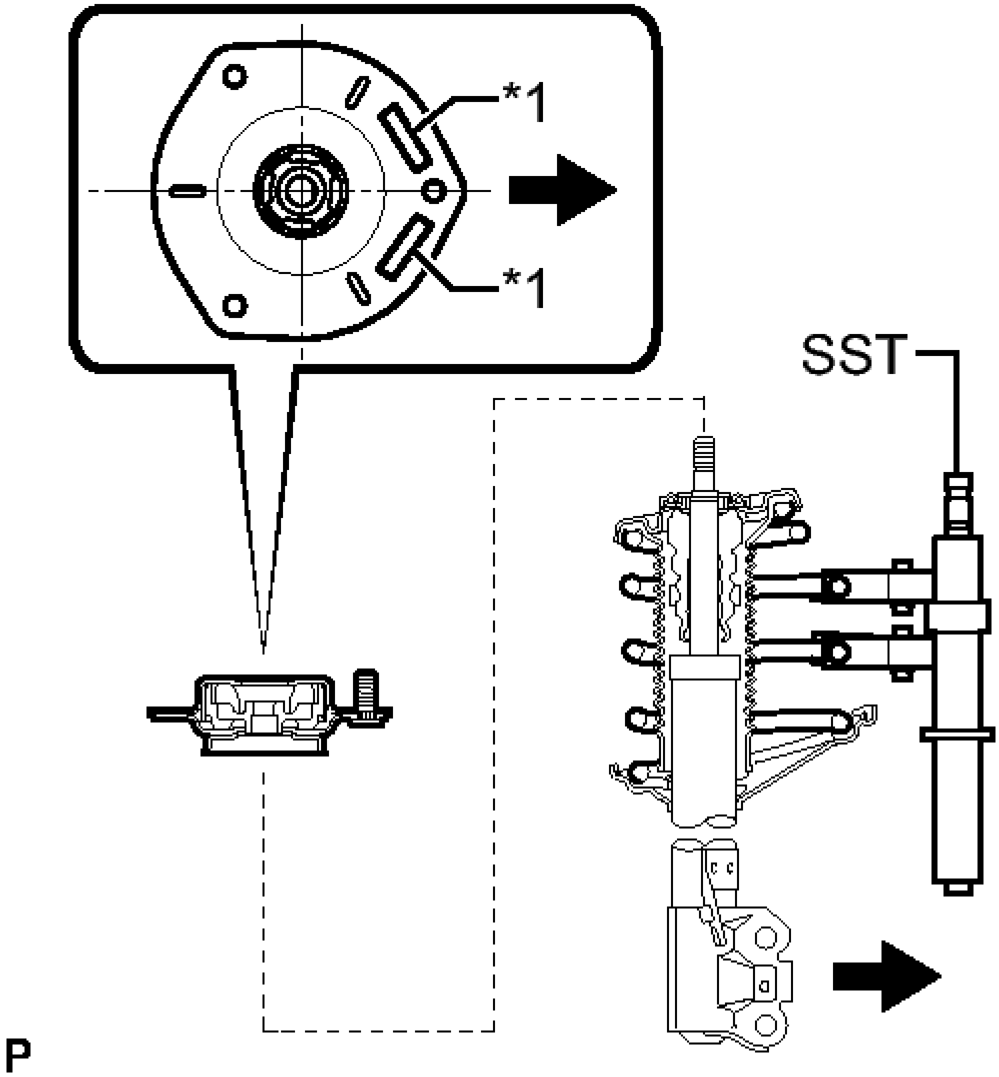

Fig. 21: Installing Front Suspension Support Sub-Assembly
Courtesy of TOYOTA MOTOR SALES, U.S.A., INC.

TEXT IN ILLUSTRATION

*1	Rubber Foam
·	Outside of the Vehicle

HINT:

Check that the slot on the piston rod and the slot on the front suspension support sub-assembly are aligned.

b. Temporarily tighten a new front support to front shock absorber nut.

c. While aligning the stud bolt of the front suspension support sub-assembly and the front shock absorber lower bracket, remove SST from the front coil spring.

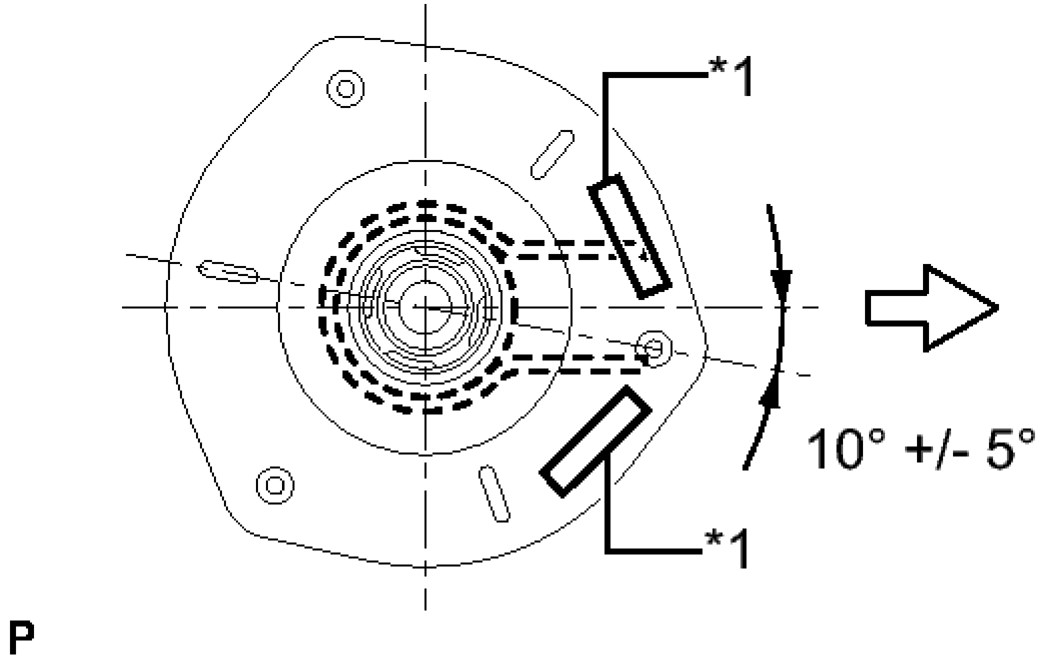

Fig. 22: Aligning The Stud Bolt
Courtesy of TOYOTA MOTOR SALES, U.S.A., INC.

TEXT IN ILLUSTRATION

*1	Rubber Foam
⇨	Outside of the Vehicle

NOTE:

- **When reassembling the front suspension support sub-assembly, ensure that any misalignment between the absorber lower bracket and the stud bolt is within +/- 5°. Use the stud bolt that is closest to the outside of the vehicle.**
- **Do not use an impact wrench. It will damage SST.**

9. **INSTALL FRONT SHOCK ABSORBER WITH COIL SPRING**
   a. Install the front shock absorber with coil spring (upper side) with the 3 nuts.

      Torque: 85 N*m (867 kgf*cm, 63 ft.*lbf)

   b. Install the front shock absorber with coil spring (lower side) to the steering knuckle and insert the 2 bolts and 2 nuts.

Torque: 290 N*m (2957 kgf*cm, 214 ft.*lbf)

NOTE: While keeping the bolts from rotating, tighten the nuts.

10. **INSTALL FRONT STABILIZER LINK ASSEMBLY**
    a. Install the front stabilizer link assembly to the front shock absorber assembly with the nut.

    Torque: 74 N*m (755 kgf*cm, 55 ft.*lbf)

    If the ball joint turns together with the nut, use a hexagon wrench to hold the stud bolt.

11. **INSTALL FRONT SPEED SENSOR**
    a. Install the front speed sensor and front flexible hose to the front shock absorber assembly with the bolt and clamp.

    Torque: 19 N*m (192 kgf*cm, 14 ft.*lbf)

    NOTE: Do not twist the front speed sensor when installing it.

    HINT:

    Install the speed sensor harness bracket first and then the front flexible hose.

12. **FULLY TIGHTEN FRONT SUPPORT TO FRONT SHOCK ABSORBER NUT**
    a. Fully tighten the front support to front shock absorber nut.

    Torque: 70 N*m (714 kgf*cm, 52 ft.*lbf)

    NOTE: Perform this step only when the front shock absorber with coil spring has been disassembled.

13. **INSTALL FRONT WHEEL**

    Torque: 103 N*m (1049 kgf*cm, 76 ft.*lbf)

14. **STABILIZE SUSPENSION**
    a. Lower the vehicle and bounce it up and down several times to stabilize the front suspension.
15. **INSPECT AND ADJUST FRONT WHEEL ALIGNMENT**

    Refer to **ADJUSTMENT**

DISPOSAL

DISPOSAL

1. **DISPOSE OF FRONT SHOCK ABSORBER ASSEMBLY**
    a. Position the front shock absorber assembly level with the piston rod fully extended. Using a drill, make a hole in the cylinder between A and B as shown in the illustration to discharge the gas inside.

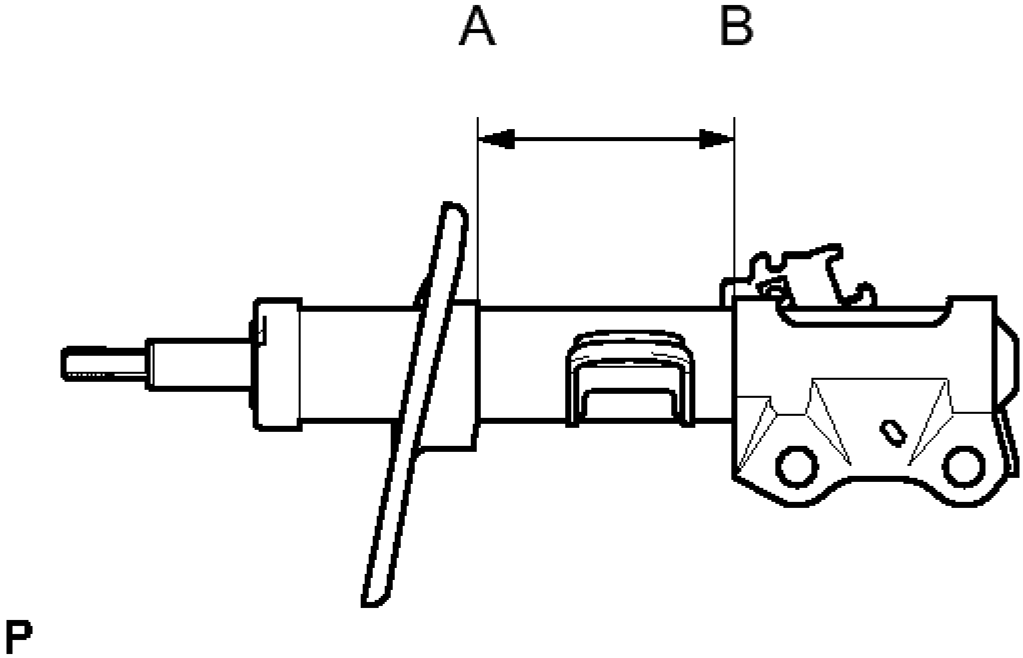

Fig. 23: Drilling Hole In Cylinder Between A And B
Courtesy of TOYOTA MOTOR SALES, U.S.A., INC.

WARNING: **Always use proper safety equipment and be careful when drilling because shards of metal may fly about.**

HINT:

The gas is colorless, odorless and non-poisonous.

FRONT LOWER SUSPENSION ARM

COMPONENTS

ILLUSTRATION

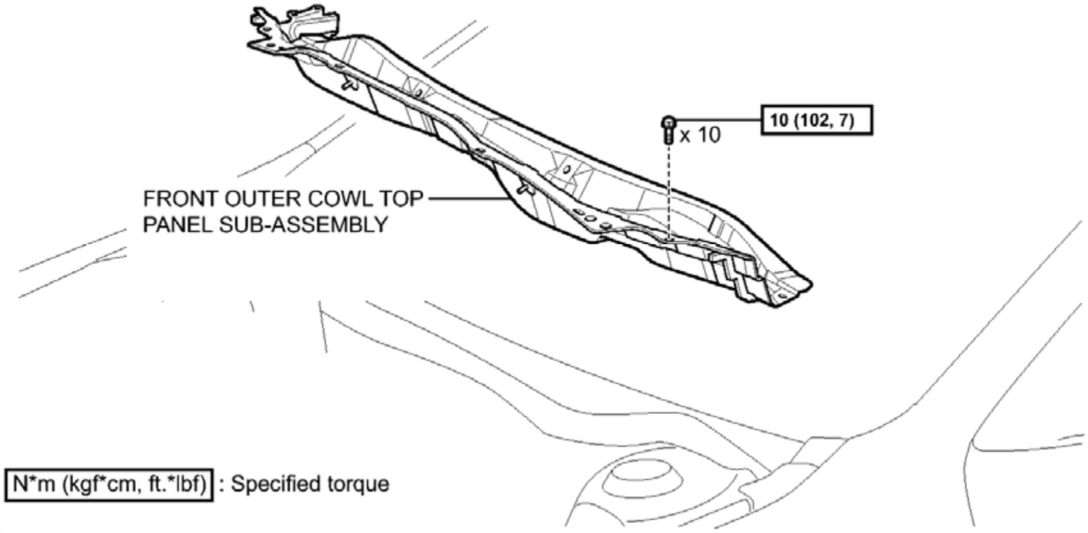
10 (102, 7)
x 10
FRONT OUTER COWL TOP PANEL SUB-ASSEMBLY
N*m (kgf*cm, ft.*lbf) : Specified torque
c

Fig. 24: Identifying Front Lower Suspension Arm Replacement Components With Torque Specifications (1 Of 5)

Courtesy of TOYOTA MOTOR SALES, U.S.A., INC.

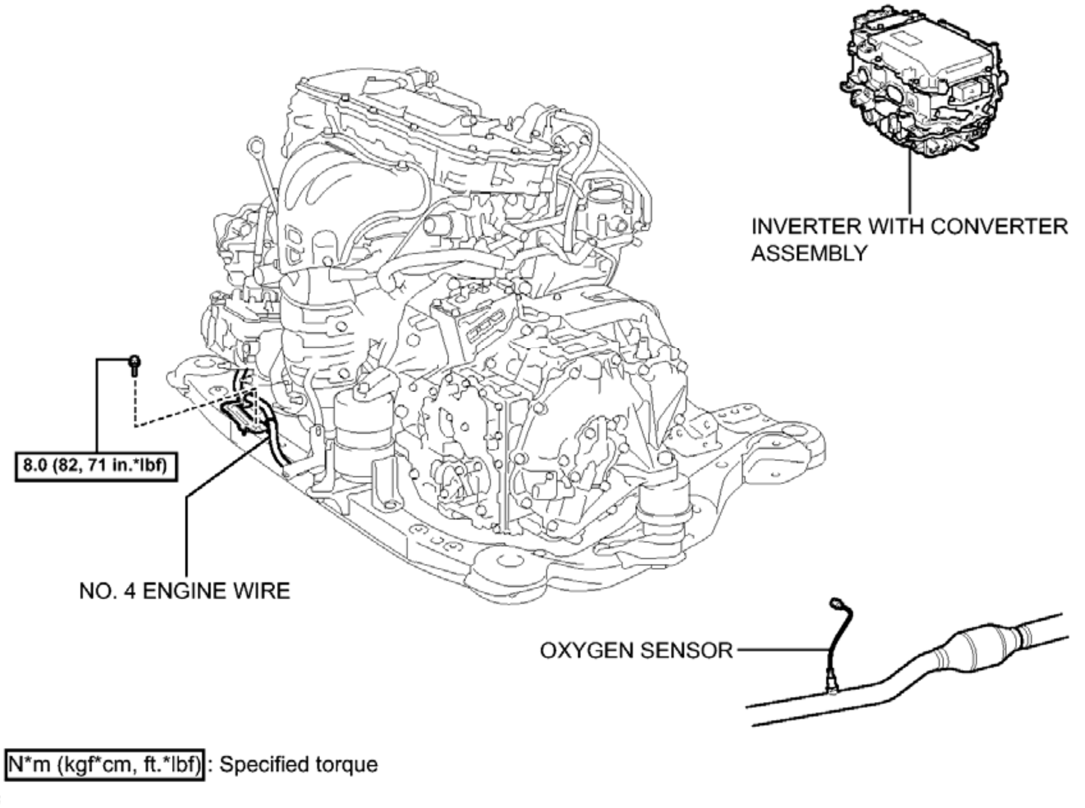
INVERTER WITH CONVERTER ASSEMBLY
8.0 (82, 71 in.*lbf)
NO. 4 ENGINE WIRE
OXYGEN SENSOR
N*m (kgf*cm, ft.*lbf) : Specified torque
c

Fig. 25: Identifying Front Lower Suspension Arm Replacement Components With Torque Specifications

(2 Of 5)

Courtesy of TOYOTA MOTOR SALES, U.S.A., INC.

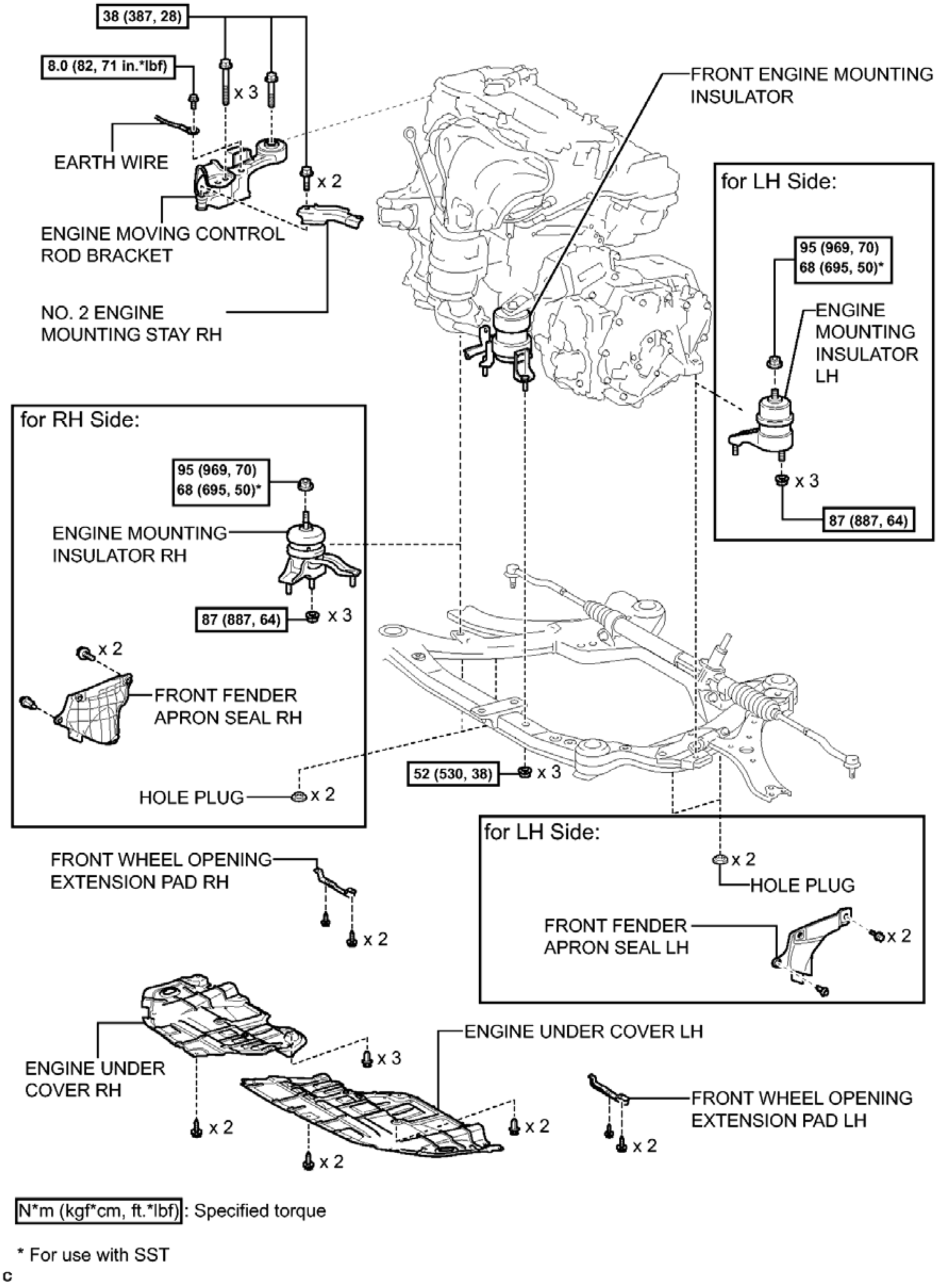
38 (387, 28)
8.0 (82, 71 in.*lbf)
x 3
EARTH WIRE
x 2
ENGINE MOVING CONTROL ROD BRACKET
NO. 2 ENGINE MOUNTING STAY RH
FRONT ENGINE MOUNTING INSULATOR
for LH Side:
95 (969, 70)
68 (695, 50)*
ENGINE MOUNTING INSULATOR LH
x 3
87 (887, 64)
for RH Side:
95 (969, 70)
68 (695, 50)*
ENGINE MOUNTING INSULATOR RH
87 (887, 64)
x 3
x 2
FRONT FENDER APRON SEAL RH
HOLE PLUG
x 2
52 (530, 38)
x 3
for LH Side:
x 2
HOLE PLUG
FRONT FENDER APRON SEAL LH
x 2
FRONT WHEEL OPENING EXTENSION PAD RH
x 2
ENGINE UNDER COVER LH
ENGINE UNDER COVER RH
x 3
x 2
x 2
x 2
FRONT WHEEL OPENING EXTENSION PAD LH
x 2
N*m (kgf*cm, ft.*lbf) : Specified torque
* For use with SST
c

Fig. 26: Identifying Front Lower Suspension Arm Replacement Components With Torque Specifications

(3 Of 5)
Courtesy of TOYOTA MOTOR SALES, U.S.A., INC.

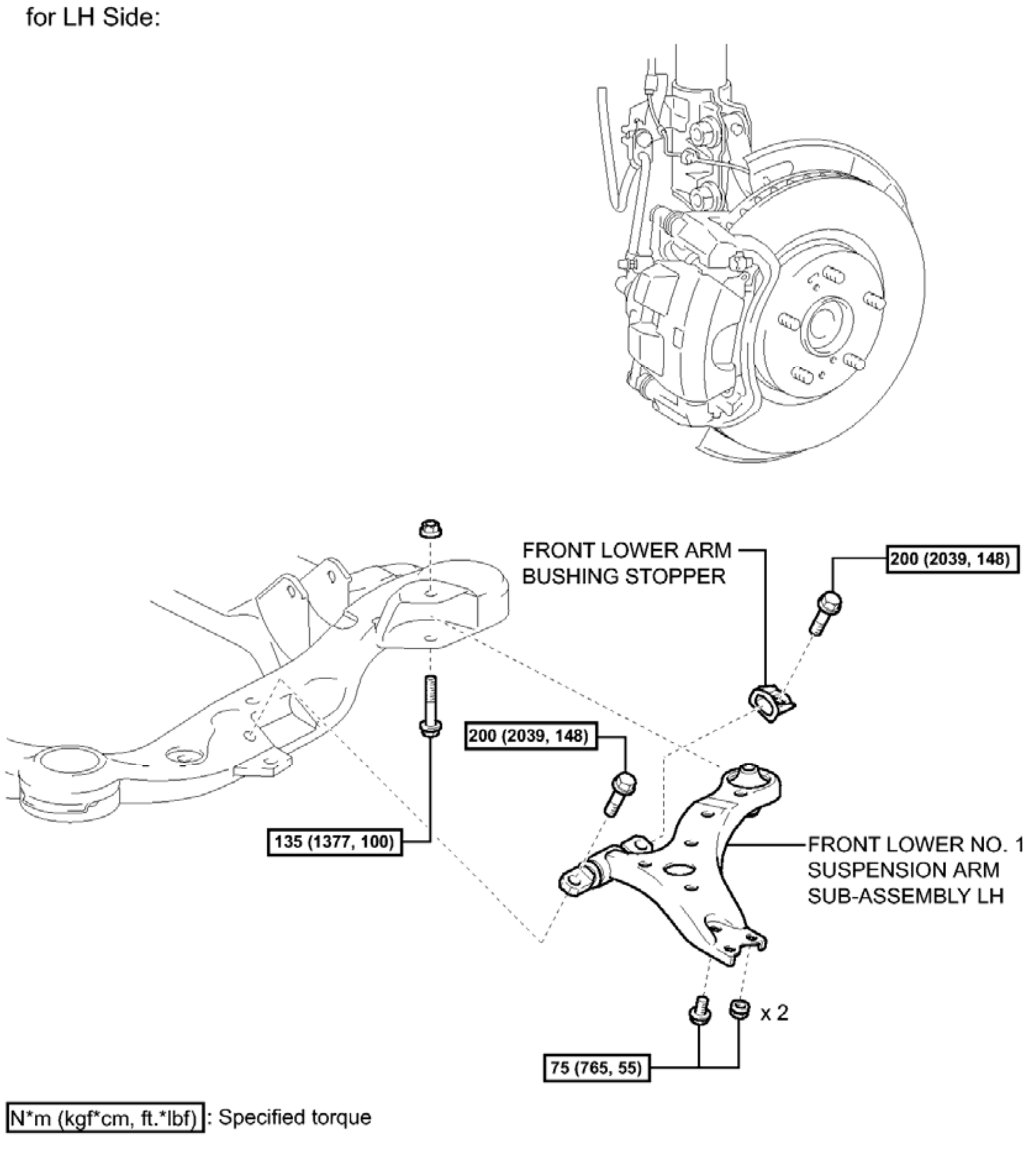
for LH Side:
FRONT LOWER ARM BUSHING STOPPER
200 (2039, 148)
200 (2039, 148)
135 (1377, 100)
FRONT LOWER NO. 1 SUSPENSION ARM SUB-ASSEMBLY LH
x 2
75 (765, 55)
N*m (kgf*cm, ft.*lbf) : Specified torque
c

Fig. 27: Identifying Front Lower Suspension Arm Replacement Components With Torque Specifications (4 Of 5)
Courtesy of TOYOTA MOTOR SALES, U.S.A., INC.

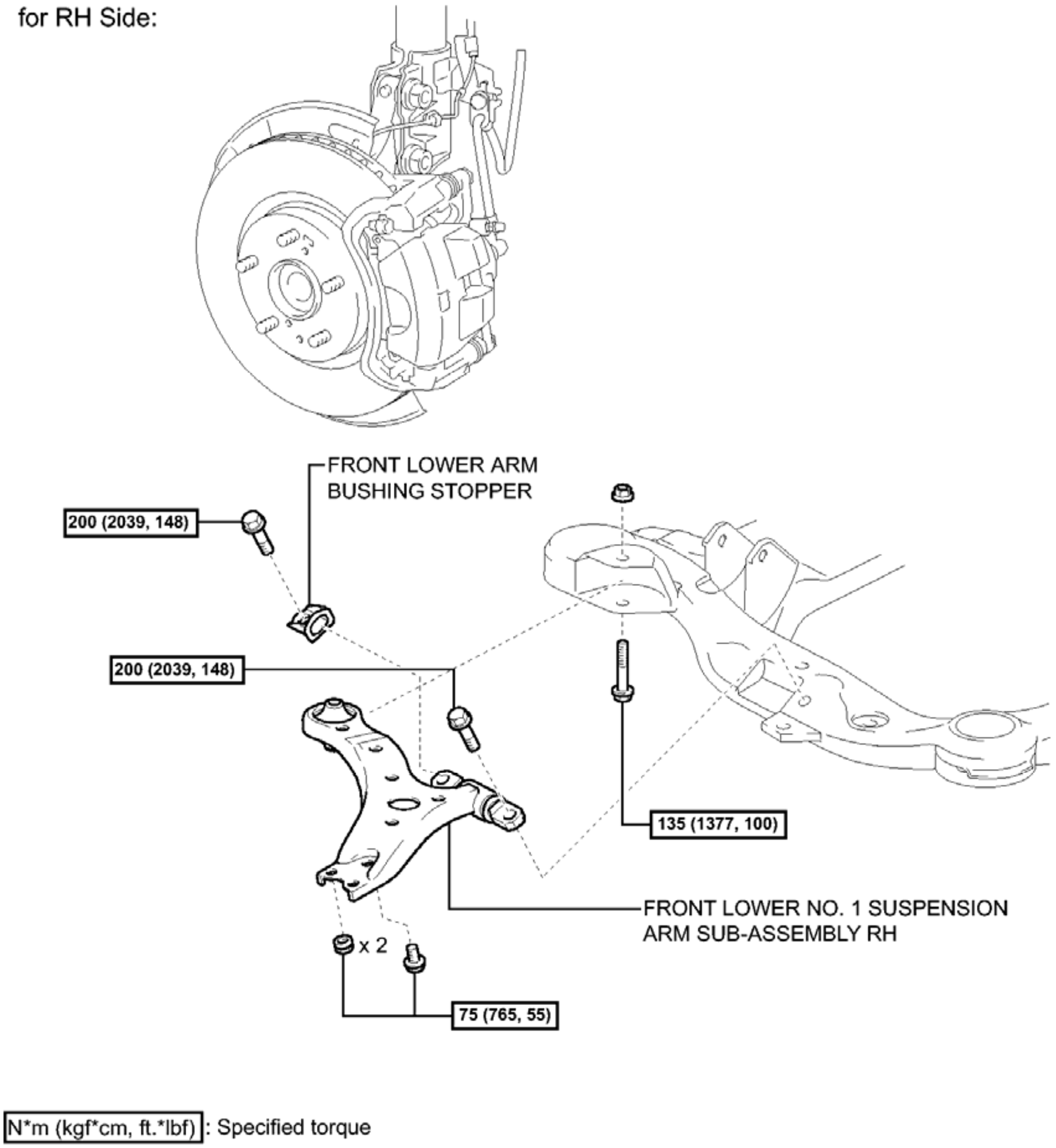
for RH Side:
FRONT LOWER ARM BUSHING STOPPER
200 (2039, 148)
200 (2039, 148)
135 (1377, 100)
FRONT LOWER NO. 1 SUSPENSION ARM SUB-ASSEMBLY RH
x 2
75 (765, 55)
N*m (kgf*cm, ft.*lbf) : Specified torque
c

Fig. 28: Identifying Front Lower Suspension Arm Replacement Components With Torque Specifications (5 Of 5)
Courtesy of TOYOTA MOTOR SALES, U.S.A., INC.

REMOVAL

REMOVAL

1. **PRECAUTION**

NOTE: **After turning the power switch off, waiting time may be required before disconnecting the cable from the negative (-) auxiliary battery terminal. Therefore, make sure to read the disconnecting the cable from the**

negative (-) auxiliary battery terminal notices before proceeding with work. Refer to PRECAUTION .

2. **REMOVE INVERTER WITH CONVERTER ASSEMBLY**

   Refer to **REMOVAL**

3. **REMOVE FRONT WHEELS**
4. **REMOVE WINDSHIELD WIPER MOTOR AND LINK ASSEMBLY**

   Refer to **REMOVAL**

5. **REMOVE FRONT OUTER COWL TOP PANEL SUB-ASSEMBLY** . Refer to **REMOVAL - Step 4**
6. **SEPARATE EARTH WIRE** . Refer to **REMOVAL - Step 59**
7. **REMOVE NO. 2 ENGINE MOUNTING STAY RH** . Refer to **REMOVAL - Step 58**
8. **REMOVE ENGINE MOVING CONTROL ROD BRACKET** . Refer to **REMOVAL - Step 60**
9. **REMOVE FRONT WHEEL OPENING EXTENSION PAD LH**
10. **REMOVE FRONT WHEEL OPENING EXTENSION PAD RH**
11. **REMOVE ENGINE UNDER COVER LH**
12. **REMOVE ENGINE UNDER COVER RH**
13. **REMOVE FRONT FENDER APRON SEAL LH (for LH Side)**
14. **REMOVE FRONT FENDER APRON SEAL RH (for RH Side)**
15. **SEPARATE NO. 4 ENGINE WIRE**
    a. Remove the bolt and separate the No. 4 engine wire from the front frame assembly.

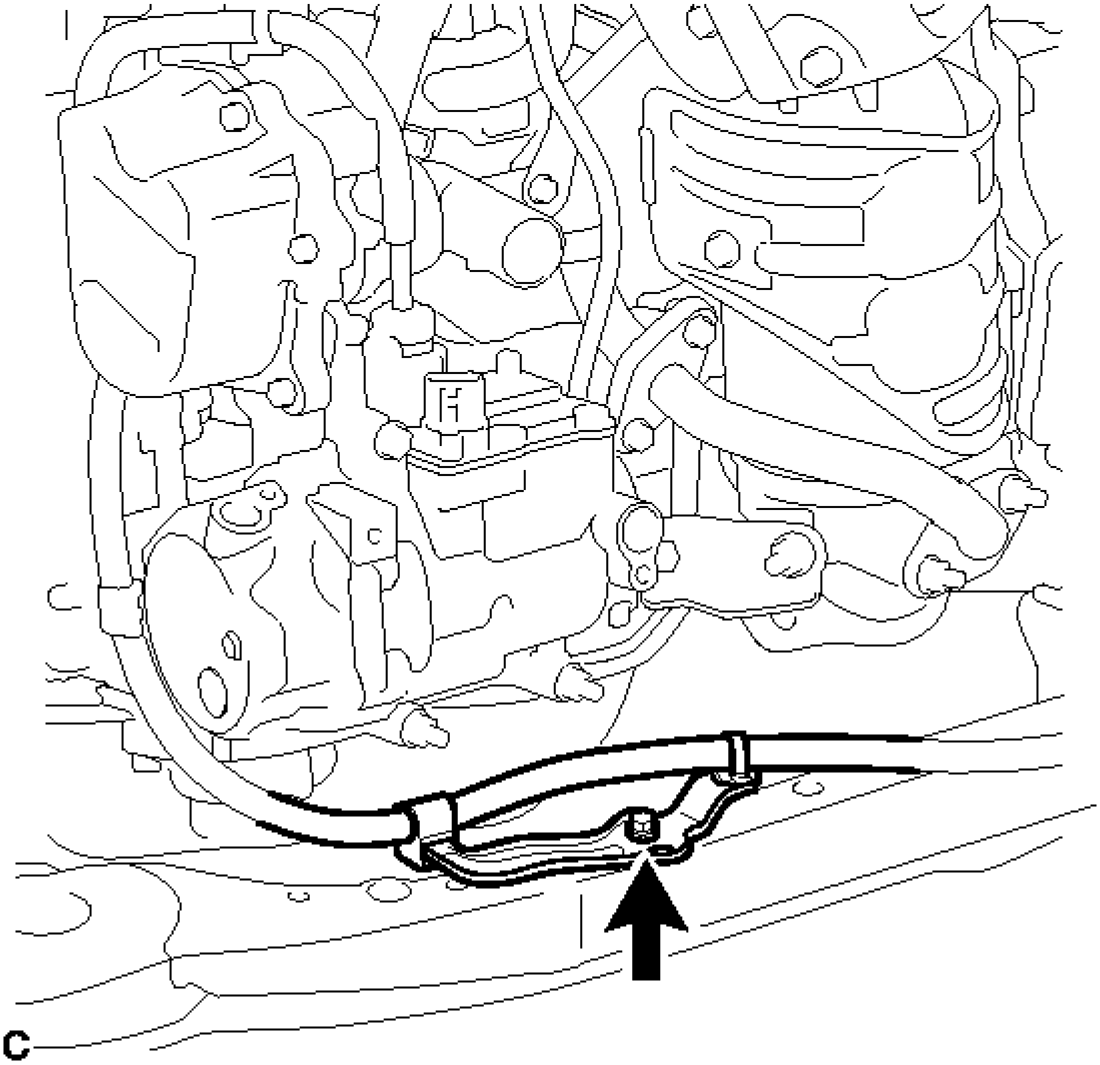

Fig. 29: Identifying No. 4 Engine Wire Bolt
Courtesy of TOYOTA MOTOR SALES, U.S.A., INC.

16. **DISCONNECT OXYGEN SENSOR**
    a. Disconnect the oxygen sensor connector.

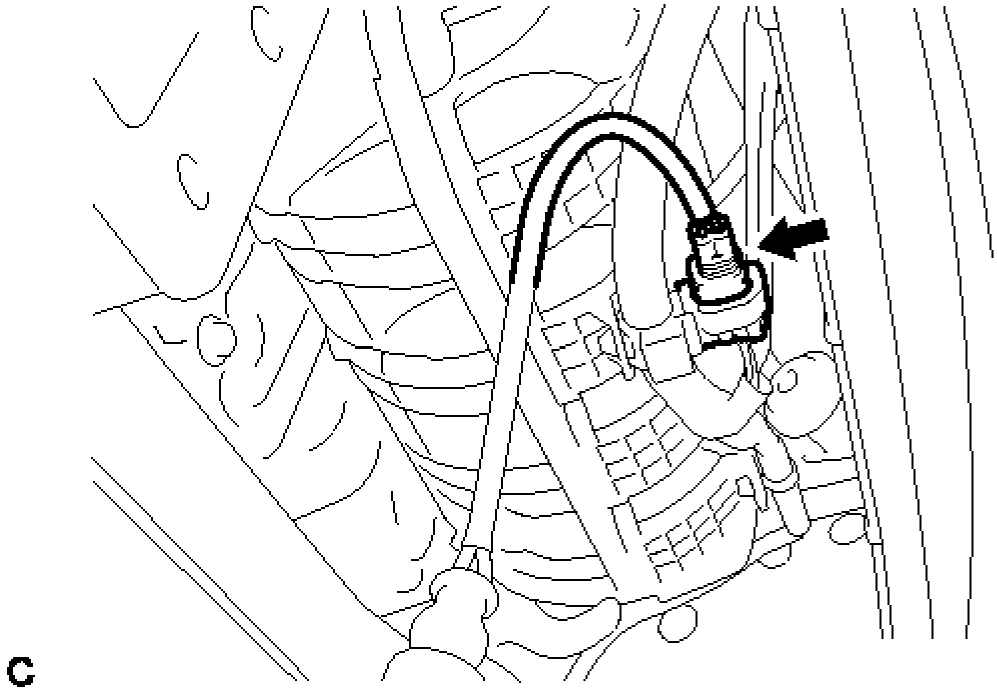

Fig. 30: Identifying Oxygen Sensor Connector
Courtesy of TOYOTA MOTOR SALES, U.S.A., INC.

17. **SEPARATE FRONT ENGINE MOUNTING INSULATOR**
    a. Remove the 3 nuts to separate the front engine mounting insulator from the front frame assembly.

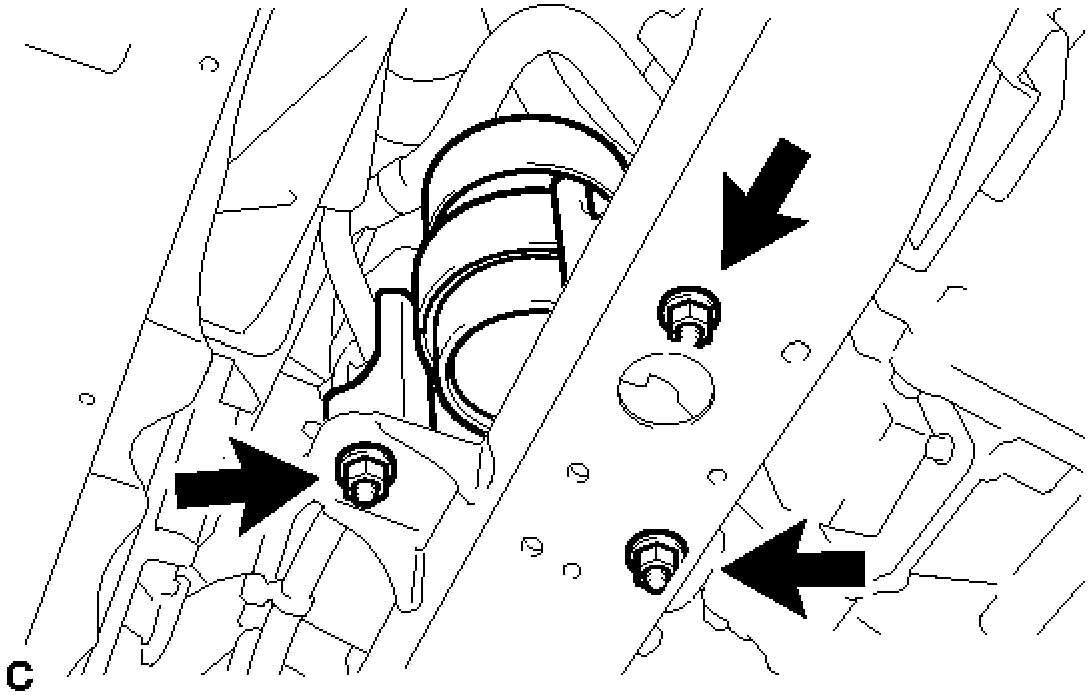

Fig. 31: Identifying Front Engine Mounting Insulator Nuts

Courtesy of TOYOTA MOTOR SALES, U.S.A., INC.

18. **REMOVE ENGINE MOUNTING INSULATOR LH (for LH Side)**
    a. Remove the 2 hole plugs.

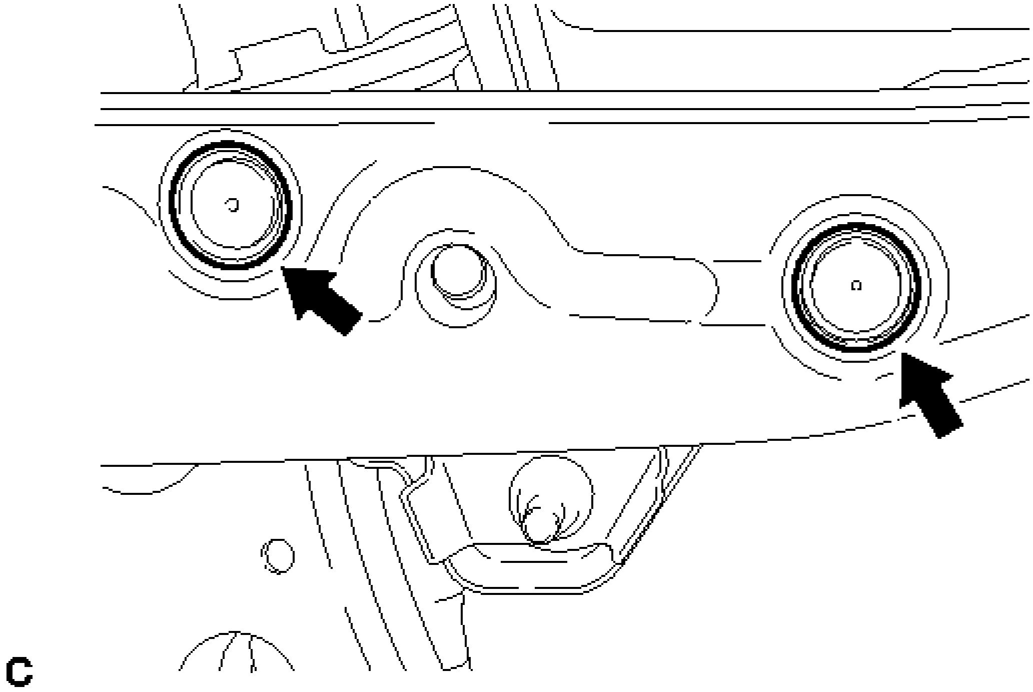

Fig. 32: Identifying Engine Mounting Insulator LH (For LH Side) Hole Plugs
Courtesy of TOYOTA MOTOR SALES, U.S.A., INC.

    b. Remove the 4 nuts from the engine mounting insulator LH.

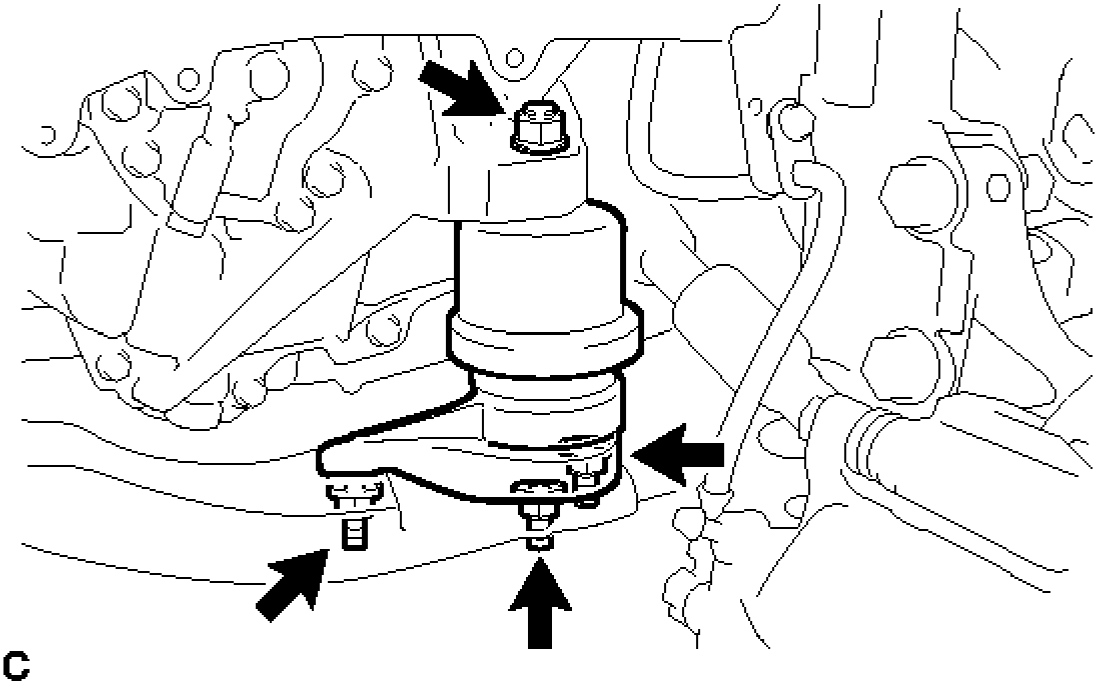

Fig. 33: Identifying Engine Mounting Insulator LH Nuts
Courtesy of TOYOTA MOTOR SALES, U.S.A., INC.

c. Using a jack and a wooden block, support the engine assembly with transaxle at the position shown in the illustration. While ensuring that there is no interference from the components surrounding the engine, tilt the engine assembly with transaxle to a position that allows the engine mounting insulator LH to be removed.

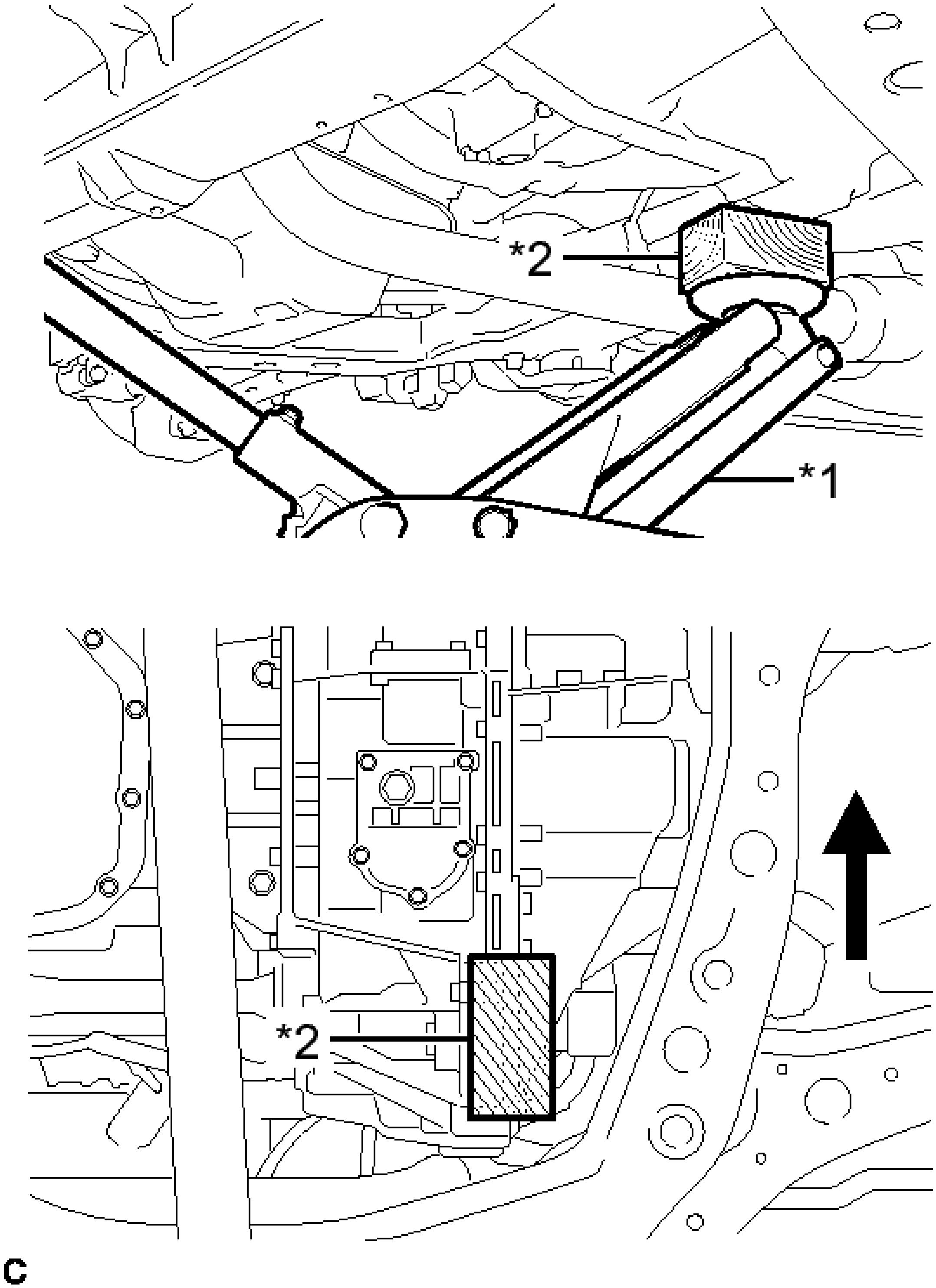

Fig. 34: Identifying Jack Placement
Courtesy of TOYOTA MOTOR SALES, U.S.A., INC.

TEXT IN ILLUSTRATION

*1	Jack

*2	Wooden Block
·	Front of the Vehicle

NOTE:

- **Do not position the wooden block on the oil pan.**
- **Do not damage the components surrounding the engine assembly with transaxle.**
- **Tilt the engine assembly with transaxle as little as possible.**
- **Ensure that the jack and wooden block are stable.**
- **Keep the engine assembly with transaxle supported until installation of the engine mounting insulator LH is complete.**

d. Remove the engine mounting insulator LH from the front frame assembly.

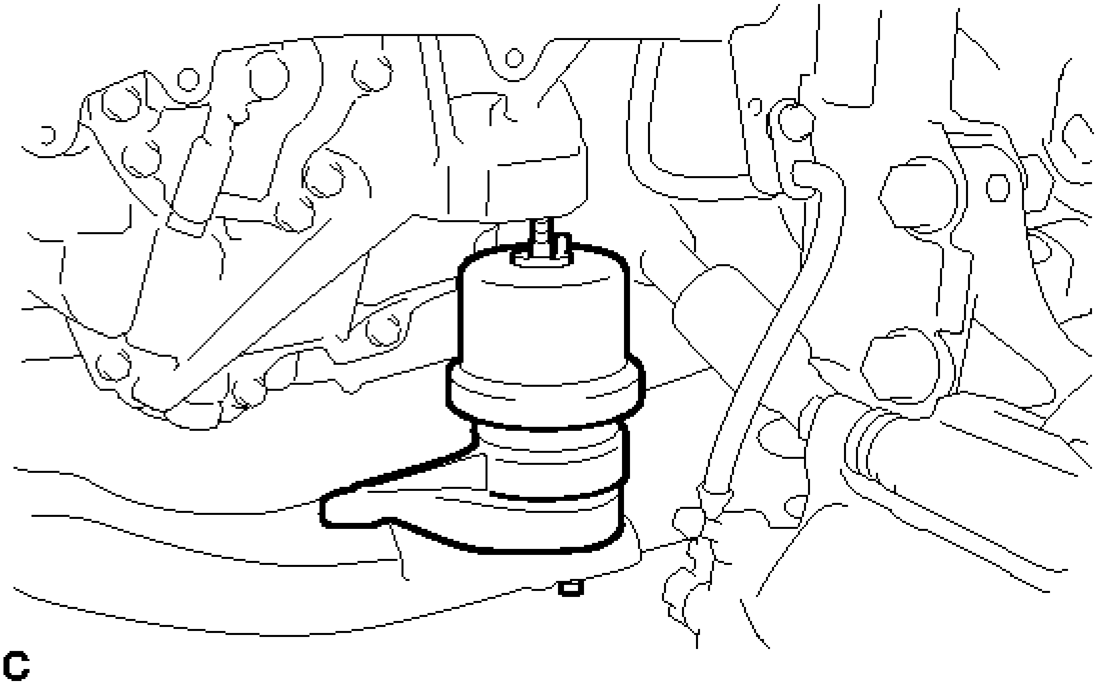

Fig. 35: Identifying Engine Mounting Insulator LH
Courtesy of TOYOTA MOTOR SALES, U.S.A., INC.

19. **REMOVE FRONT LOWER NO. 1 SUSPENSION ARM SUB-ASSEMBLY LH (for LH Side)**

a. Remove the bolt and 2 nuts, and separate the front lower No. 1 suspension arm sub-assembly LH from the front lower ball joint assembly.

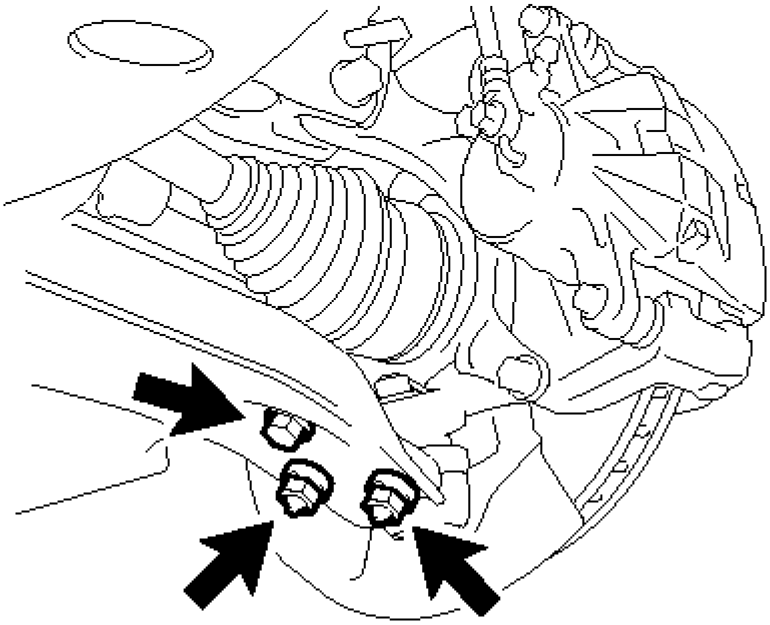

Fig. 36: Identifying Front Lower No. 1 Suspension Arm Sub-Assembly LH (For LH Side) Bolt And Nuts
Courtesy of TOYOTA MOTOR SALES, U.S.A., INC.

b. Remove the 3 bolts, nut and front lower No. 1 suspension arm sub-assembly LH from the front frame assembly.

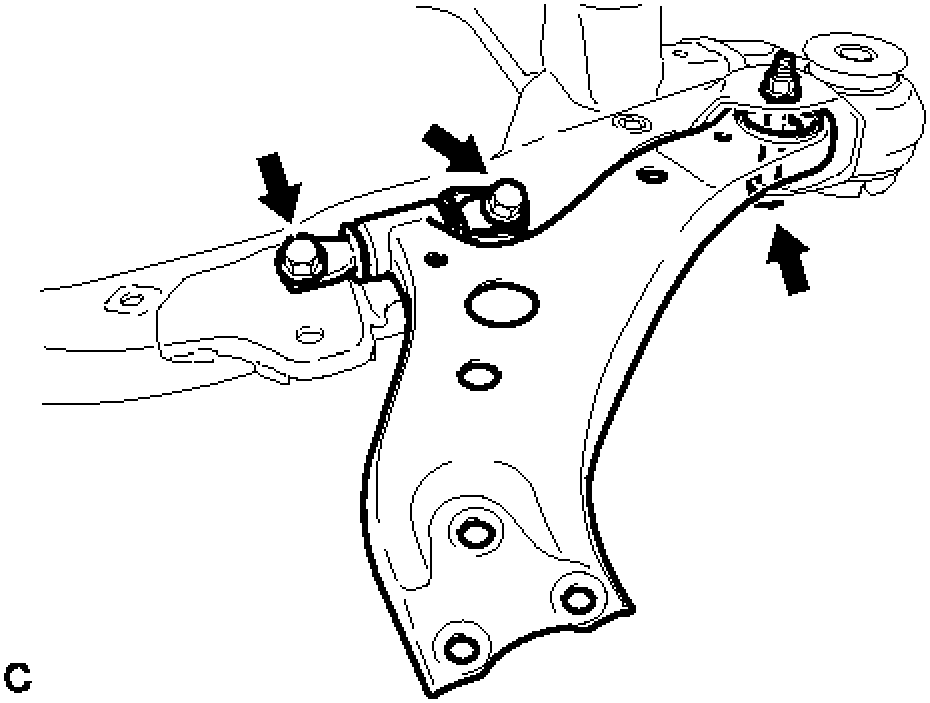

Fig. 37: Locating Front Lower Suspension Arm Bolts And Nut
Courtesy of TOYOTA MOTOR SALES, U.S.A., INC.

NOTE: **When removing the bolt, keep the nut from rotating.**

c. Remove the front lower arm bushing stopper from the front lower No. 1 suspension arm sub-assembly LH.

20. **REMOVE ENGINE MOUNTING INSULATOR RH (for RH Side)**

a. Remove the 2 hole plugs.

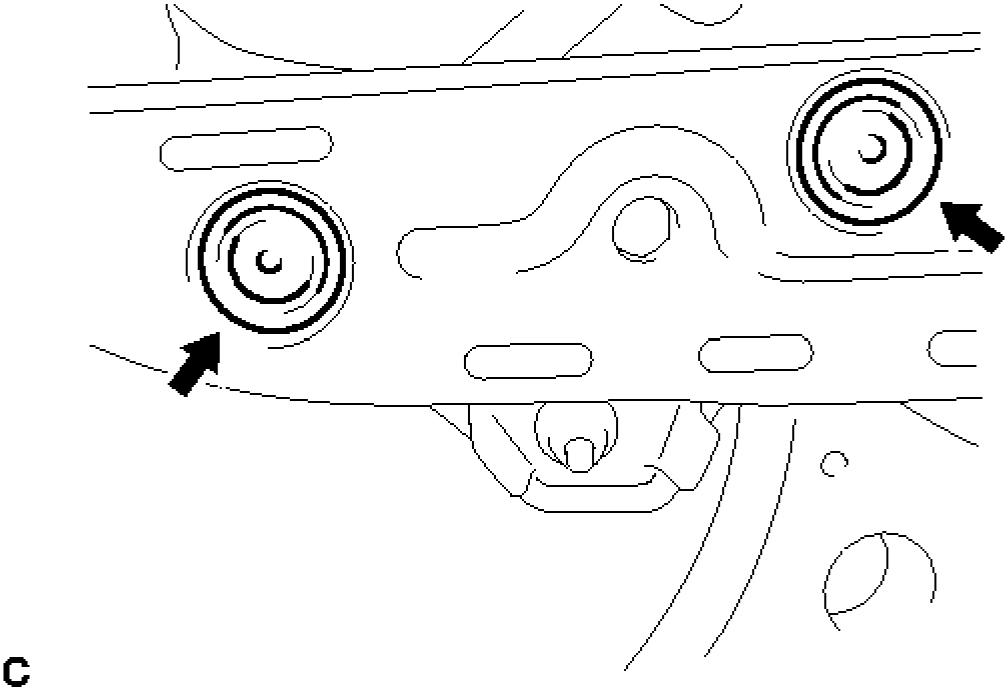

Fig. 38: Identifying Engine Mounting Insulator RH (For RH Side) Hole Plugs
Courtesy of TOYOTA MOTOR SALES, U.S.A., INC.

b. Remove the 4 nuts from the engine mounting insulator RH.

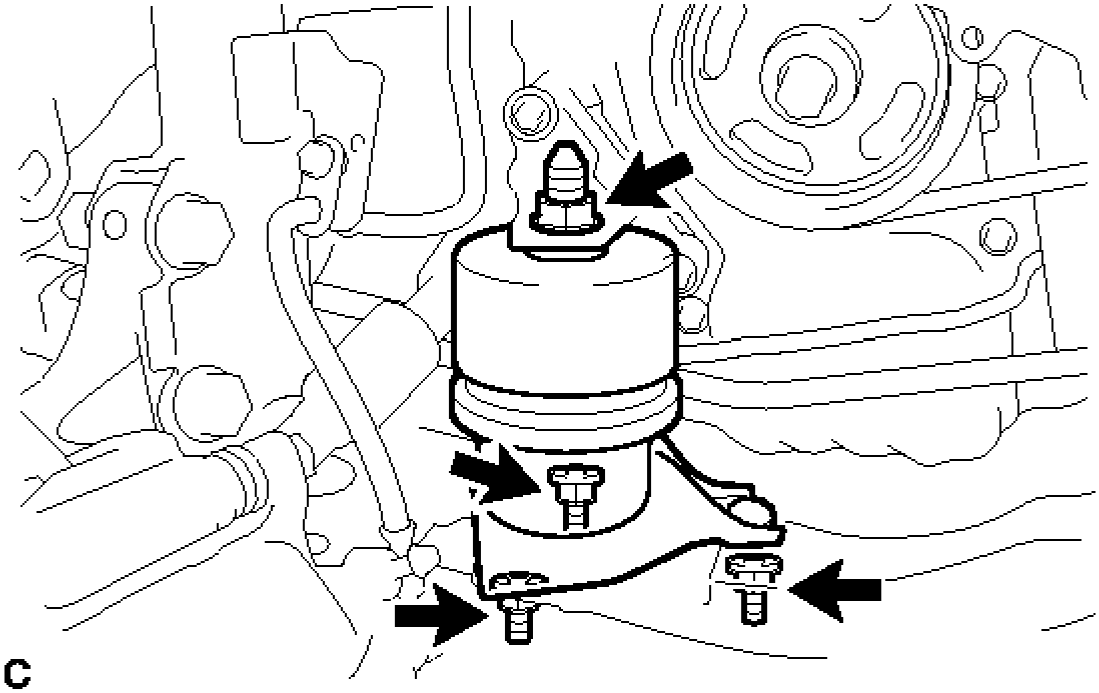

Fig. 39: Identifying Engine Mounting Insulator RH Nuts
Courtesy of TOYOTA MOTOR SALES, U.S.A., INC.

c. Using a jack and a wooden block, support the engine assembly with transaxle at the position shown in the illustration. While ensuring that there is no interference from the components surrounding the engine, tilt the engine assembly with transaxle to a position that allows the engine mounting insulator RH to be removed.

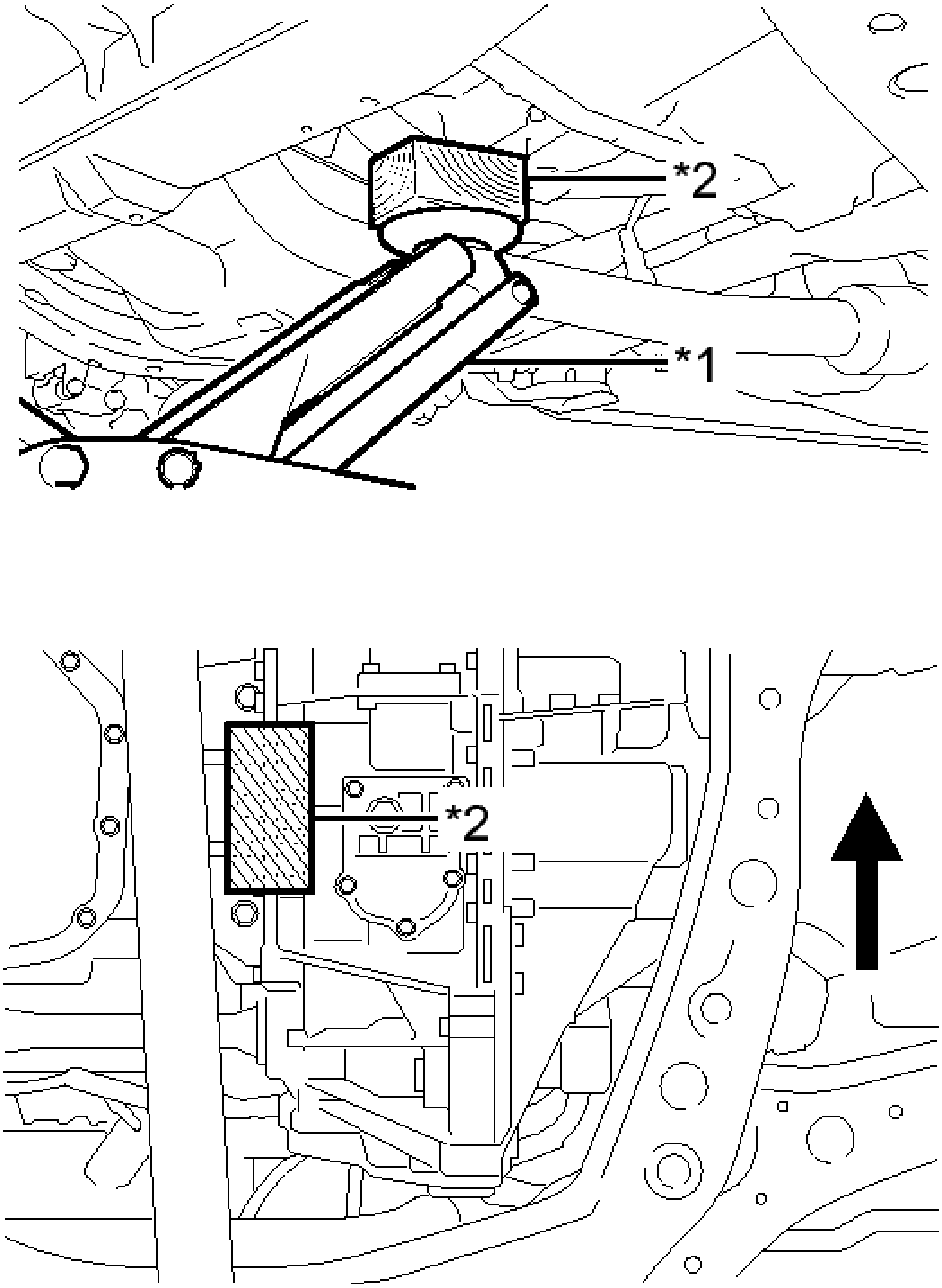

Fig. 40: Identifying Jack Placement
Courtesy of TOYOTA MOTOR SALES, U.S.A., INC.

TEXT IN ILLUSTRATION

*1	Jack

*2	Wooden Block
	Front of the Vehicle

NOTE:

- **Do not position the wooden block on the oil pan.**
- **Do not damage the components surrounding the engine assembly with transaxle.**
- **Tilt the engine assembly with transaxle as little as possible.**
- **Ensure that the jack and wooden block are stable.**
- **Keep the engine assembly with transaxle supported until installation of the engine mounting insulator RH is complete.**

d. Remove the engine mounting insulator RH from the front frame assembly.

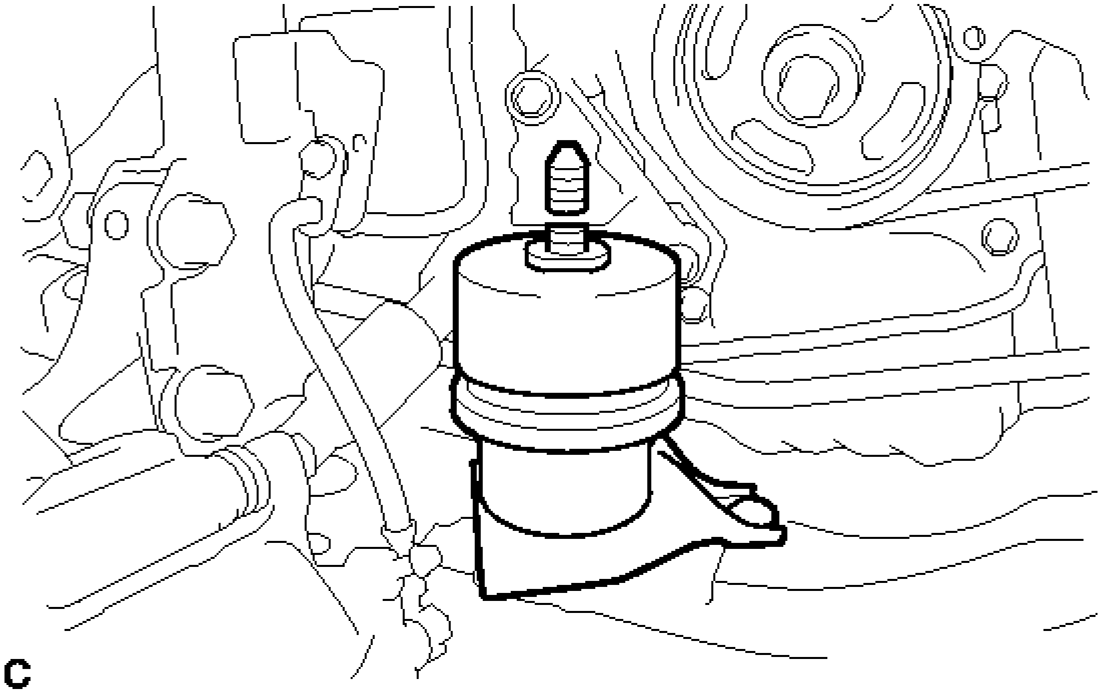

Fig. 41: Identifying Engine Mounting Insulator RH
Courtesy of TOYOTA MOTOR SALES, U.S.A., INC.

21. **REMOVE FRONT LOWER NO. 1 SUSPENSION ARM SUB-ASSEMBLY RH (for RH Side)**

a. Remove the bolt and 2 nuts, and separate the front lower No. 1 suspension arm sub-assembly RH from the front lower ball joint assembly.

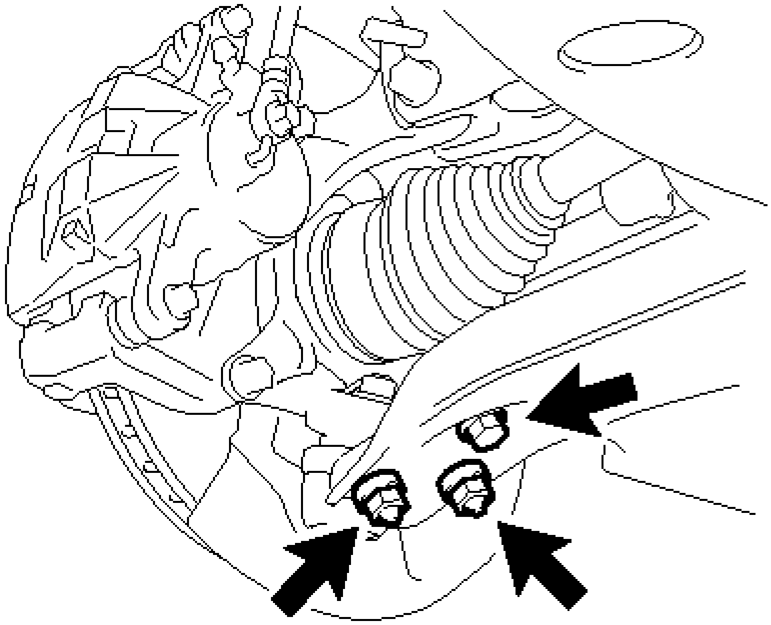

Fig. 42: Identifying Front Lower No. 1 Suspension Arm Sub-Assembly RH (For RH Side) Nuts And Bolt
Courtesy of TOYOTA MOTOR SALES, U.S.A., INC.

b. Remove the 3 bolts, nut and front lower No. 1 suspension arm sub-assembly RH from the front frame assembly.

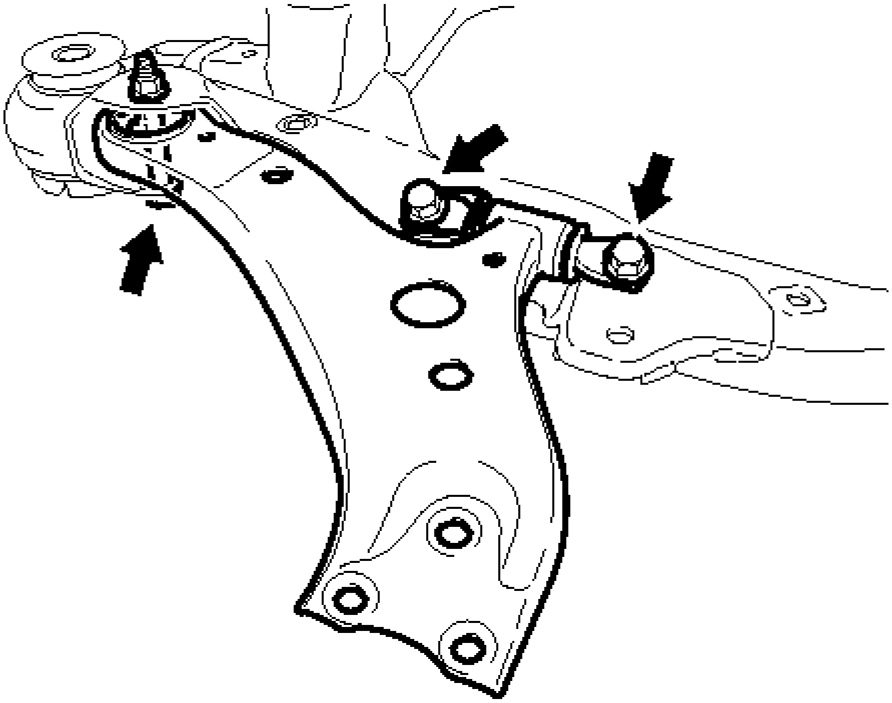

Fig. 43: Locating Front Lower Suspension Arm Bolts And Nut
Courtesy of TOYOTA MOTOR SALES, U.S.A., INC.

NOTE: When removing the bolt, keep the nut from rotating.

c. Remove the front lower arm bushing stopper from the front lower No. 1 suspension arm sub-assembly RH.

INSTALLATION

INSTALLATION

1. **INSTALL FRONT LOWER NO. 1 SUSPENSION ARM SUB-ASSEMBLY LH (for LH Side)**
    a. Install the front lower arm bushing stopper to the front lower No. 1 suspension arm sub-assembly LH.
    b. Install the front lower No. 1 suspension arm sub-assembly LH to the front frame assembly with the 3 bolts and nut in the order shown in the illustration.

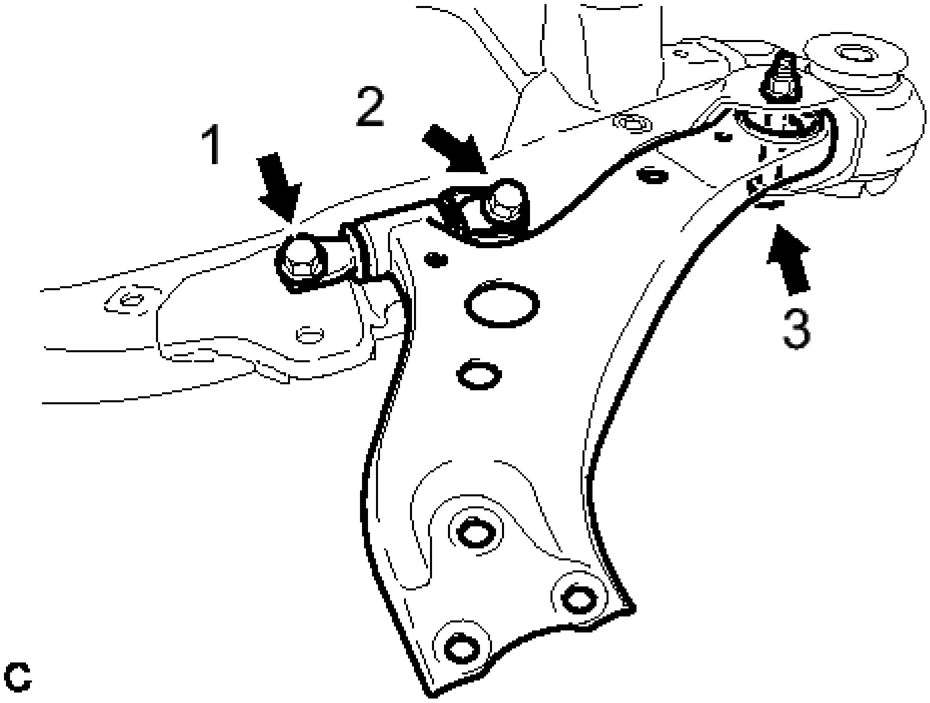

Fig. 44: Identifying Bolts Tightening Sequence
Courtesy of TOYOTA MOTOR SALES, U.S.A., INC.

Bolt 1, 2

Torque: 200 N*m (2039 kgf*cm, 148 ft.*lbf)

Bolt 3

Torque: 135 N*m (1377 kgf*cm, 100 ft.*lbf)

NOTE: **While keeping the nut from rotating, tighten the bolt.**

c. Install the front lower No. 1 suspension arm sub-assembly LH to the front lower ball joint assembly with the bolt and 2 nuts.

Torque: 75 N*m (765 kgf*cm, 55 ft.*lbf)

2. **INSTALL ENGINE MOUNTING INSULATOR LH (for LH Side)**

a. Set the engine mounting insulator LH on the front frame assembly.

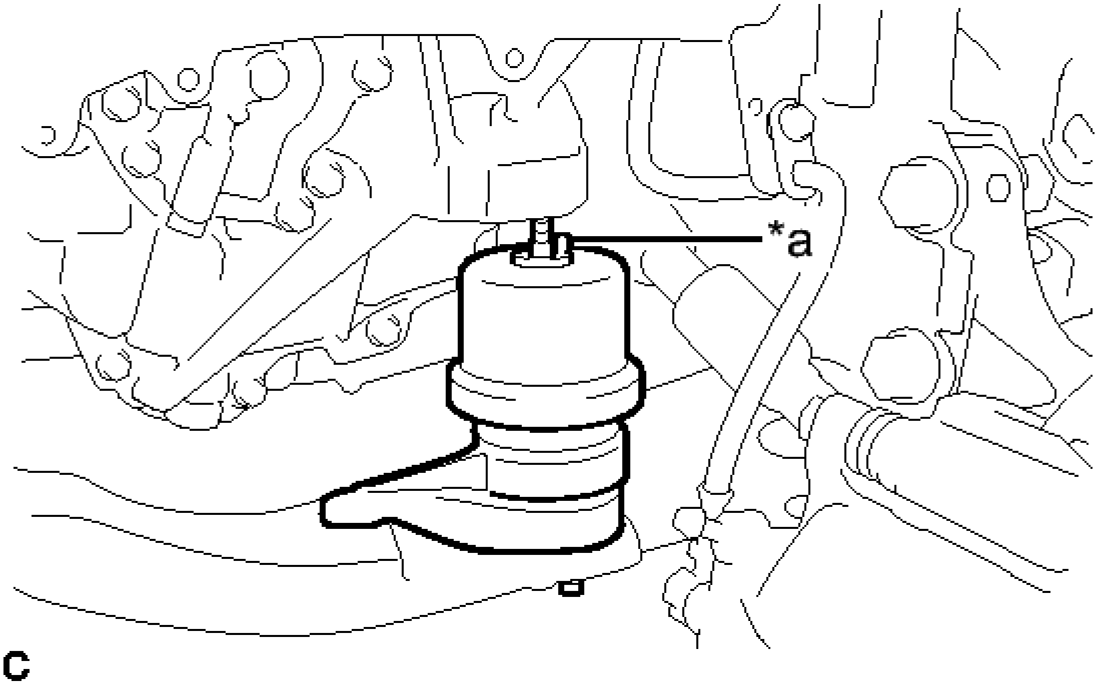

Fig. 45: Identifying Engine Mounting Insulator LH
Courtesy of TOYOTA MOTOR SALES, U.S.A., INC.

TEXT IN ILLUSTRATION

*a	Pin

b. Slowly lower the engine assembly with transaxle using a jack and a wooden block.

NOTE:

- **Match the position of the pin (stopper).**
- **Do not position the wooden block on the oil pan.**
- **Do not damage the components surrounding the engine assembly with transaxle.**
- **Ensure that the jack and wooden block are stable.**

c. Using SST, install the nut to the engine mounting insulator LH.

- **SST: 09961-00950**

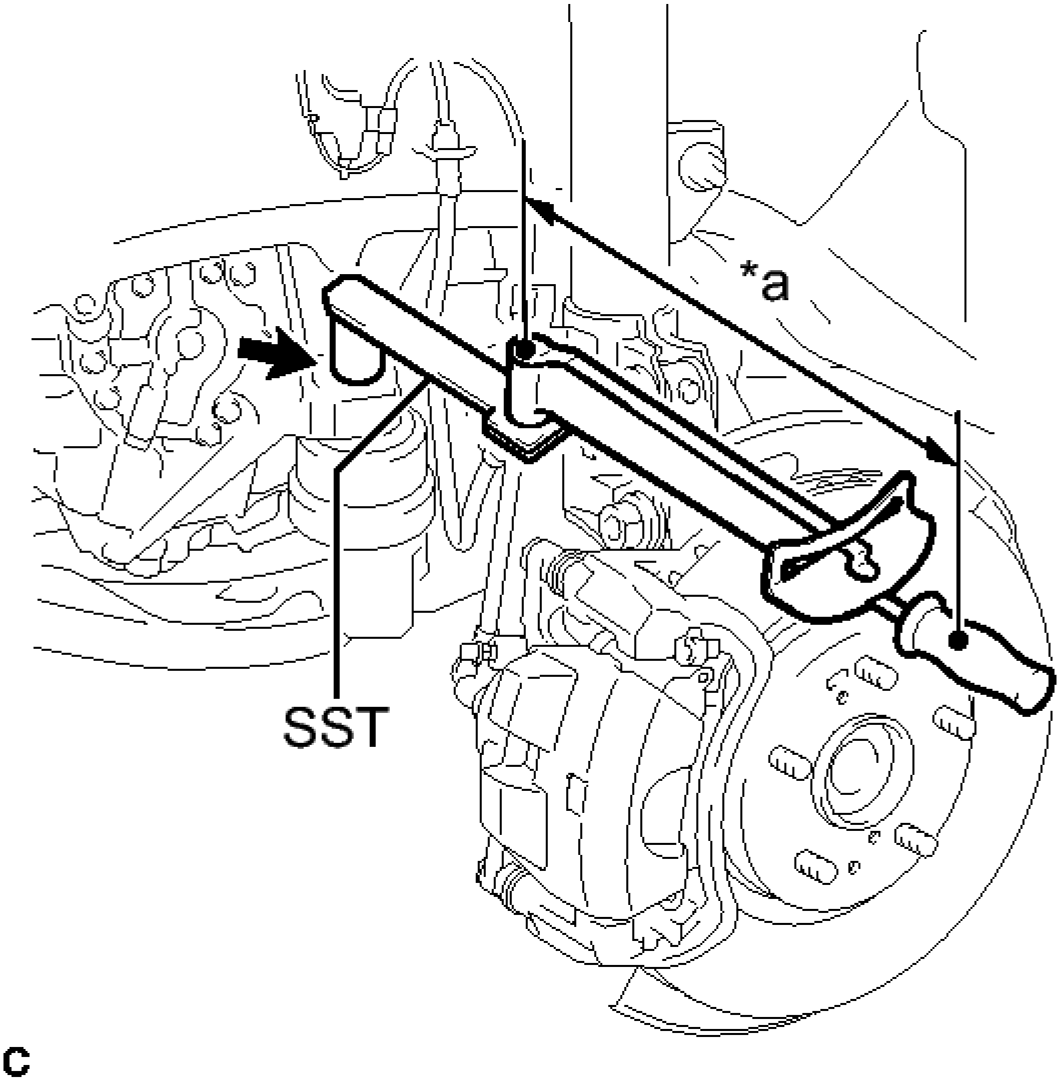

Fig. 46: Installing Engine Mounting Insulator LH Nut
Courtesy of TOYOTA MOTOR SALES, U.S.A., INC.

TEXT IN ILLUSTRATION

*a	Fulcrum Length

without SST

Torque: 95 N*m (969 kgf*cm, 70 ft.*lbf)

with SST

Torque: 68 N*m (695 kgf*cm, 50 ft.*lbf)

NOTE:	
NOTE:	• **Use a torque wrench with a fulcrum length of 380 mm (1.25 ft.).** • **This torque value is effective when SST is parallel to the torque wrench.**

d. Install the engine mounting insulator LH with the 3 nuts.

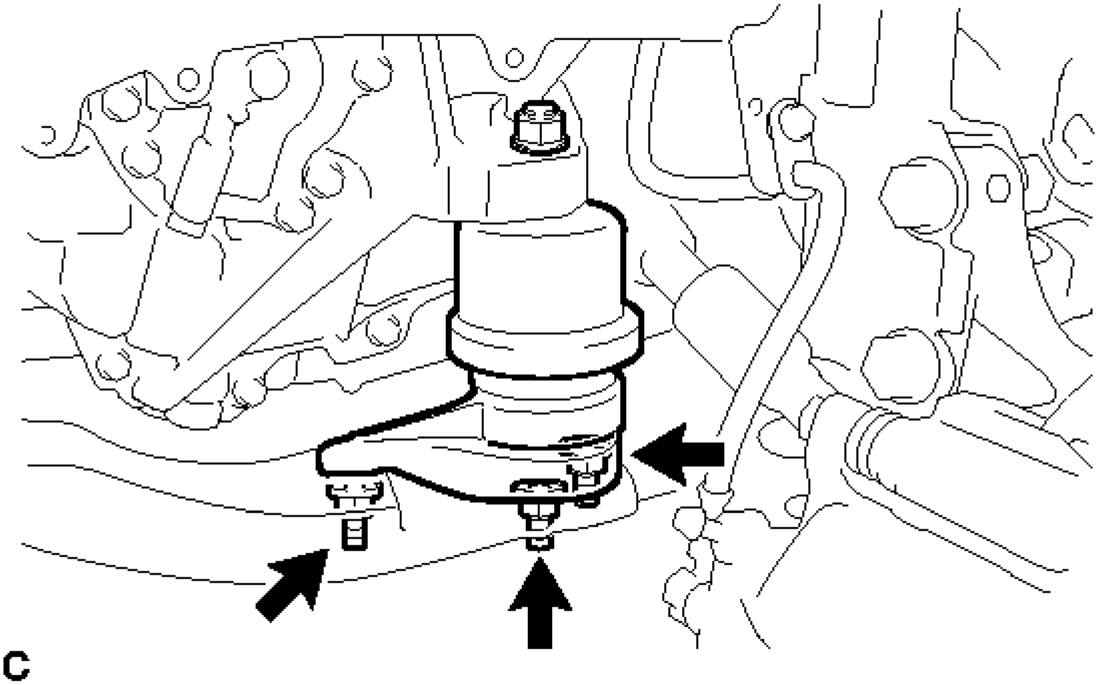

Fig. 47: Identifying Engine Mounting Insulator LH Nuts
Courtesy of TOYOTA MOTOR SALES, U.S.A., INC.

Torque: 87 N*m (887 kgf*cm, 64 ft.*lbf)

e. Install the 2 hole plugs.

3. **INSTALL FRONT LOWER NO. 1 SUSPENSION ARM SUB-ASSEMBLY RH (for RH Side)**
    a. Install the front lower arm bushing stopper to the front lower No. 1 suspension arm sub-assembly RH.
    b. Install the front lower No. 1 suspension arm sub-assembly RH to the front frame assembly with the 3 bolts and nut in the order shown in the illustration.

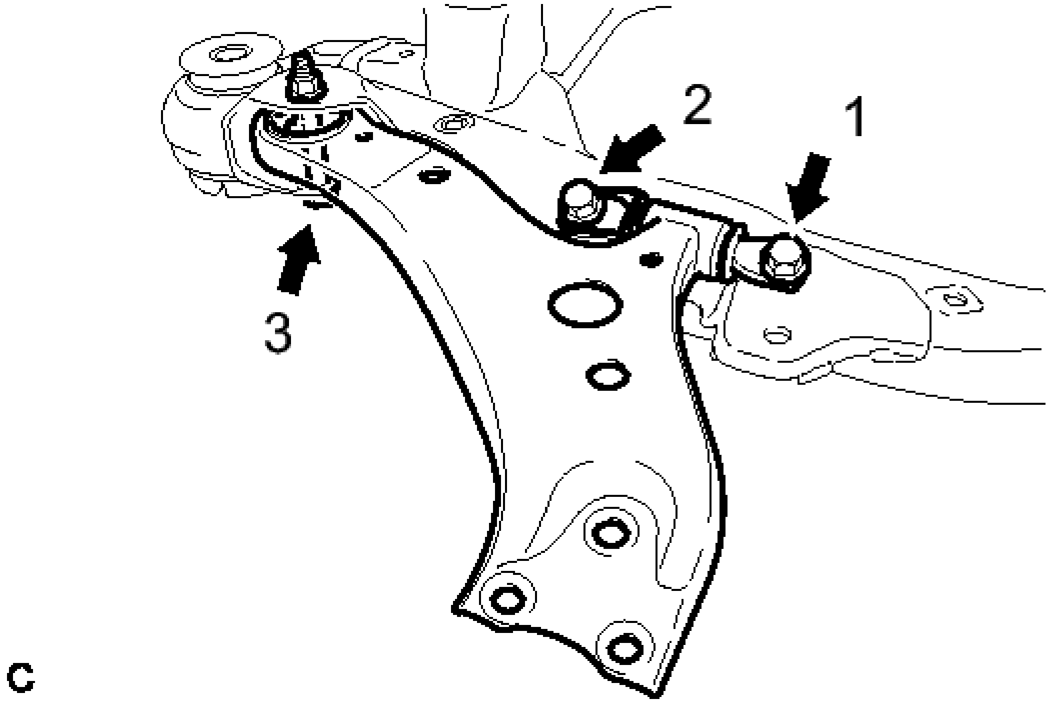

Fig. 48: Locating Front Lower Suspension Arm Bolts And Nut
Courtesy of TOYOTA MOTOR SALES, U.S.A., INC.

Bolt 1, 2

Torque: 200 N*m (2039 kgf*cm, 148 ft.*lbf)

Bolt 3

Torque: 135 N*m (1377 kgf*cm, 100 ft.*lbf)

NOTE: **While keeping the nut from rotating, tighten the bolt.**

c. Install the front lower No. 1 suspension arm sub-assembly RH to the front lower ball joint assembly with the bolt and 2 nuts.

Torque: 75 N*m (765 kgf*cm, 55 ft.*lbf)

4. **INSTALL ENGINE MOUNTING INSULATOR RH (for RH Side)**
   a. Set the engine mounting insulator RH on the front frame assembly.

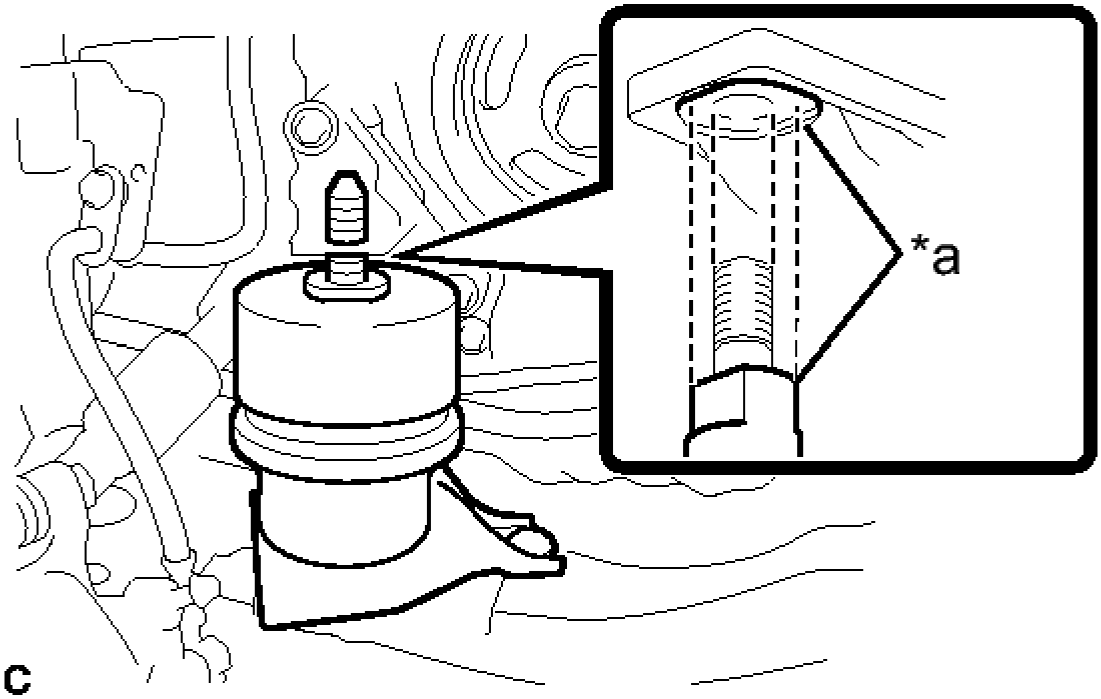

Fig. 49: Installing Engine Mounting Insulator RH
Courtesy of TOYOTA MOTOR SALES, U.S.A., INC.

TEXT IN ILLUSTRATION

*a	Cutout

b. Slowly lower the engine assembly with transaxle using a jack and a wooden block.

NOTE:

- **Match the position of the cutout (stopper).**
- **Do not position the wooden block on the oil pan.**
- **Do not damage the components surrounding the engine assembly with transaxle.**
- **Ensure that the jack and wooden block are stable.**

c. Using SST, install the nut to the engine mounting insulator RH.

- **SST: 09961-00950**

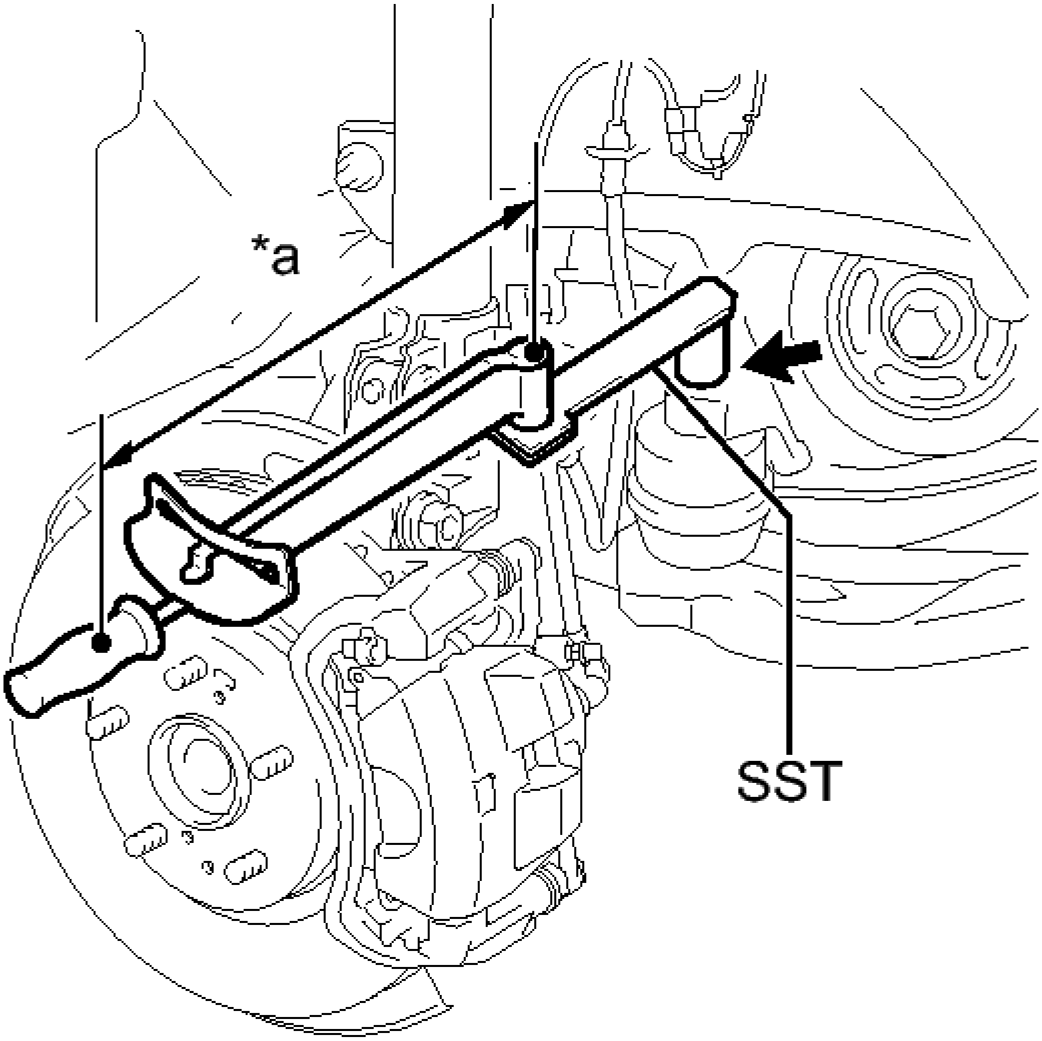

Fig. 50: Installing Engine Mounting Insulator RH Nut
Courtesy of TOYOTA MOTOR SALES, U.S.A., INC.

TEXT IN ILLUSTRATION

*a	Fulcrum Length

without SST

Torque: 95 N*m (969 kgf*cm, 70 ft.*lbf)

with SST

Torque: 68 N*m (695 kgf*cm, 50 ft.*lbf)

NOTE:

- **Use a torque wrench with a fulcrum length of 380 mm (1.25 ft.).**
- **This torque value is effective when SST is parallel to the torque wrench.**

d. Install the engine mounting insulator RH with the 3 nuts.

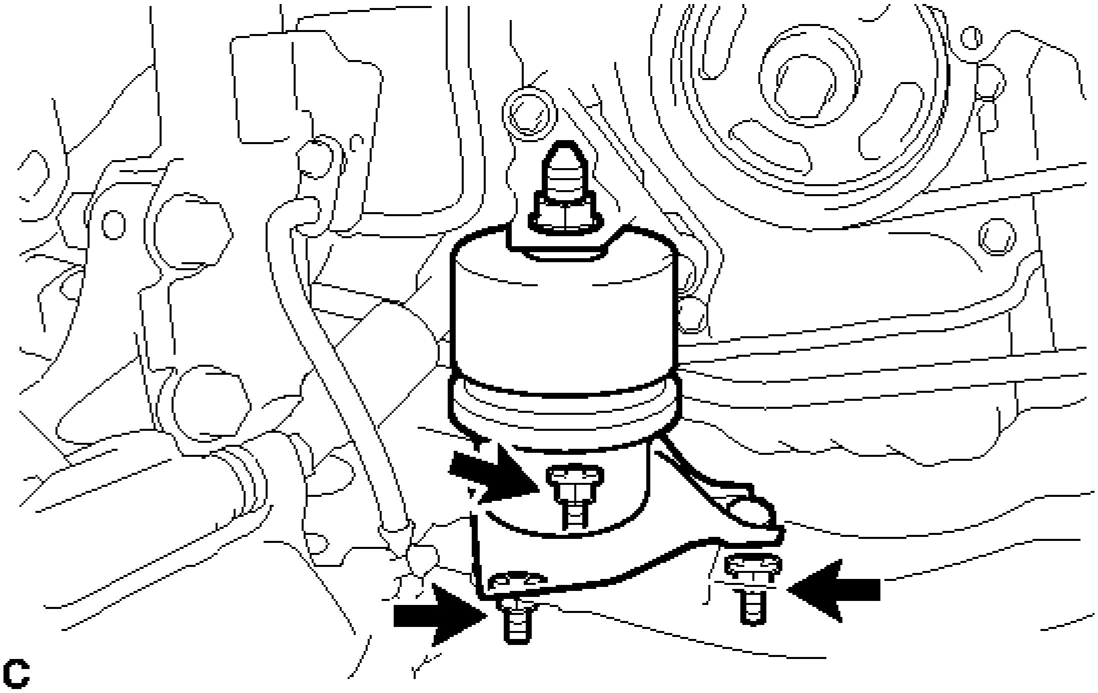

Fig. 51: Identifying Engine Mounting Insulator RH Nuts
Courtesy of TOYOTA MOTOR SALES, U.S.A., INC.

Torque: 87 N*m (887 kgf*cm, 64 ft.*lbf)

e. Install the 2 hole plugs.

5. **INSTALL FRONT ENGINE MOUNTING INSULATOR**
   a. Install the front engine mounting insulator to the front frame assembly with the 3 nuts.

   Torque: 52 N*m (530 kgf*cm, 38 ft.*lbf)

6. **CONNECT OXYGEN SENSOR**
   a. Connect the oxygen sensor connector.
7. **CONNECT NO. 4 ENGINE WIRE**
   a. Connect the No. 4 engine wire to the front frame assembly with the bolt.

   Torque: 8.0 N*m (82 kgf*cm, 71 in.*lbf)

8. **INSTALL FRONT FENDER APRON SEAL LH (for LH Side)**

9. **INSTALL FRONT FENDER APRON SEAL RH (for RH Side)**
10. **INSTALL ENGINE UNDER COVER LH**
11. **INSTALL ENGINE UNDER COVER RH**
12. **INSTALL FRONT WHEEL OPENING EXTENSION PAD LH**
13. **INSTALL FRONT WHEEL OPENING EXTENSION PAD RH**
14. **INSTALL ENGINE MOVING CONTROL ROD BRACKET**
    a. Temporarily install the engine moving control rod bracket with the 4 bolts.

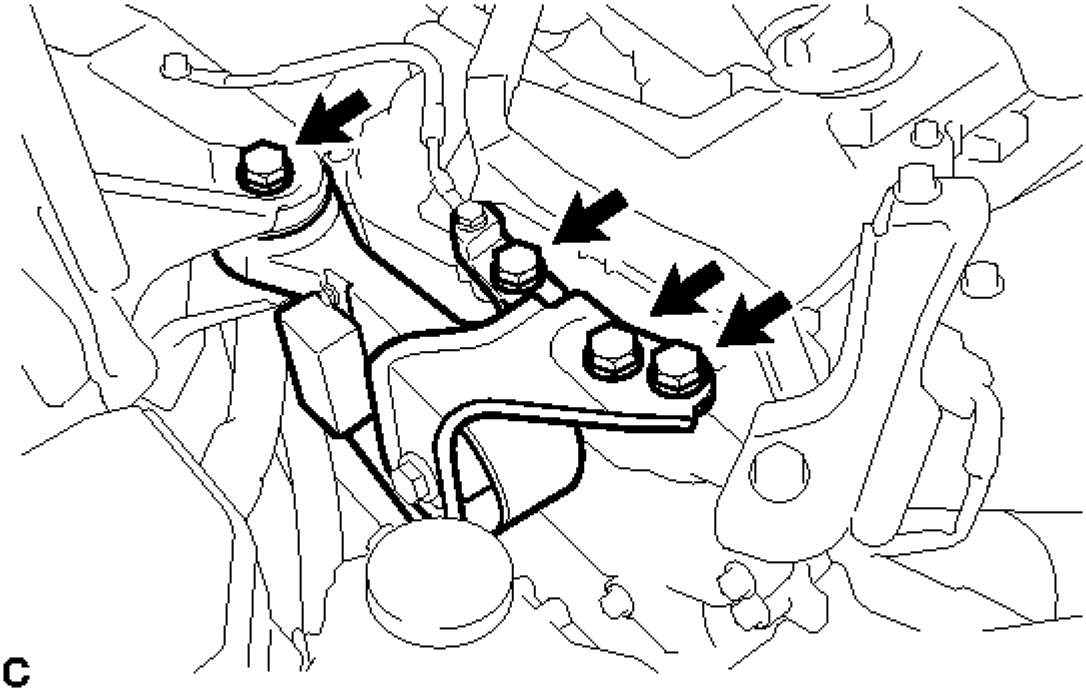

Fig. 52: Identifying Engine Moving Control Rod Bracket Bolts
Courtesy of TOYOTA MOTOR SALES, U.S.A., INC.

    b. Fully tighten the engine moving control rod bracket with the 4 bolts.

    Torque: 38 N*m (387 kgf*cm, 28 ft.*lbf)

15. **INSTALL NO. 2 ENGINE MOUNTING STAY RH** . Refer to **INSTALLATION - Step 34**
16. **INSTALL EARTH WIRE** . Refer to **INSTALLATION - Step 33**
17. **INSTALL FRONT OUTER COWL TOP PANEL SUB-ASSEMBLY** . Refer to **INSTALLATION - Step 18**
18. **INSTALL WINDSHIELD WIPER MOTOR AND LINK ASSEMBLY**

    Refer to **INSTALLATION - Step 2**

19. **INSTALL FRONT WHEELS**

Torque: 103 N*m (1049 kgf*cm, 76 ft.*lbf)

20. **INSTALL INVERTER WITH CONVERTER ASSEMBLY**

    Refer to **INSTALLATION - Step 11**

21. **INSPECT AND ADJUST FRONT WHEEL ALIGNMENT**

    Refer to **ADJUSTMENT**

FRONT LOWER BALL JOINT

COMPONENTS

ILLUSTRATION

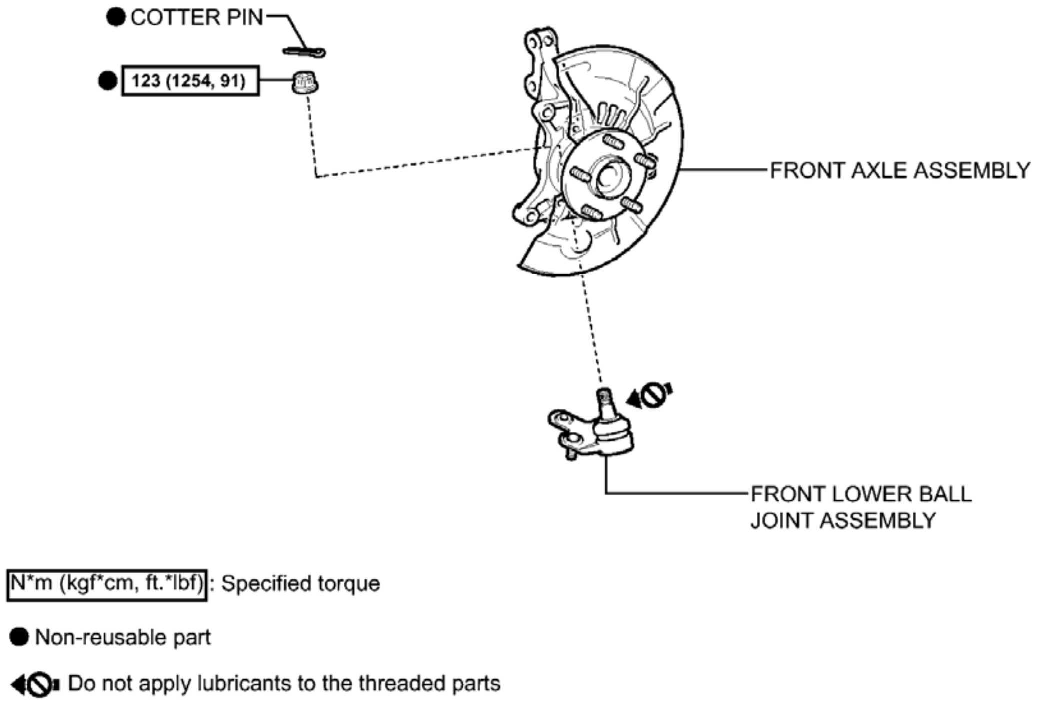
● COTTER PIN
● 123 (1254, 91)
FRONT AXLE ASSEMBLY
FRONT LOWER BALL JOINT ASSEMBLY
N*m (kgf*cm, ft.*lbf): Specified torque
● Non-reusable part
Do not apply lubricants to the threaded parts

c

Fig. 53: Identifying Front Lower Ball Joint Replacement Components With Torque Specifications
Courtesy of TOYOTA MOTOR SALES, U.S.A., INC.

REMOVAL

REMOVAL

HINT:

- Use the same procedure for the RH side and LH side.
- The procedure listed below is for the LH side.

1. **REMOVE FRONT AXLE ASSEMBLY**

   Refer to **REMOVAL**

2. **REMOVE FRONT LOWER BALL JOINT ASSEMBLY**
   a. Secure the front axle assembly in a vise using aluminum plates.

   NOTE: When using a vise, do not overtighten it.

   b. Remove the cotter pin and nut.

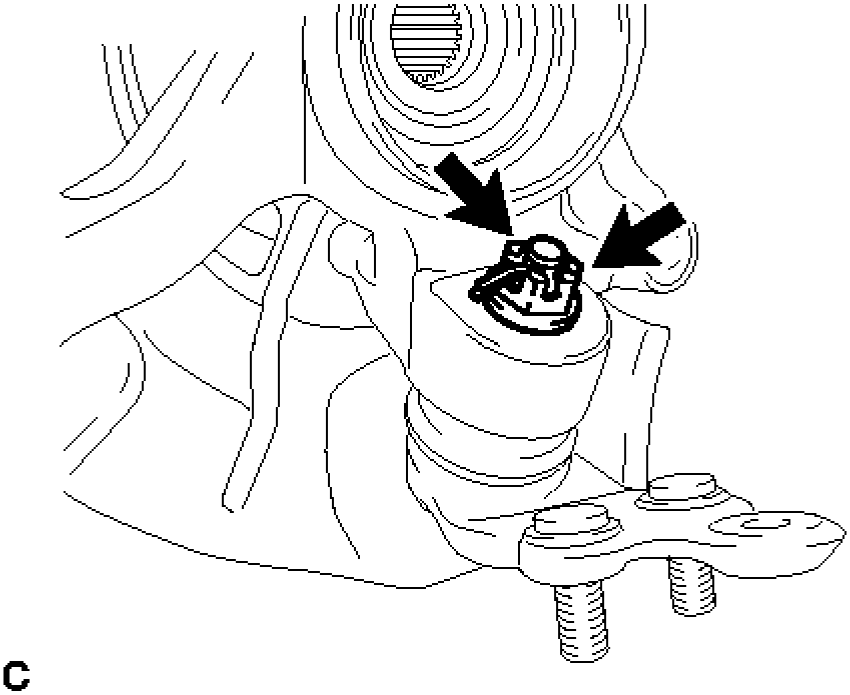

Fig. 54: Locating Front Lower Ball Joint Assembly Fasteners.
Courtesy of TOYOTA MOTOR SALES, U.S.A., INC.

   c. Install SST to the front lower ball joint assembly as shown in the illustration.
      - **SST: 09960-20010**
        09961-02050
        09961-02050

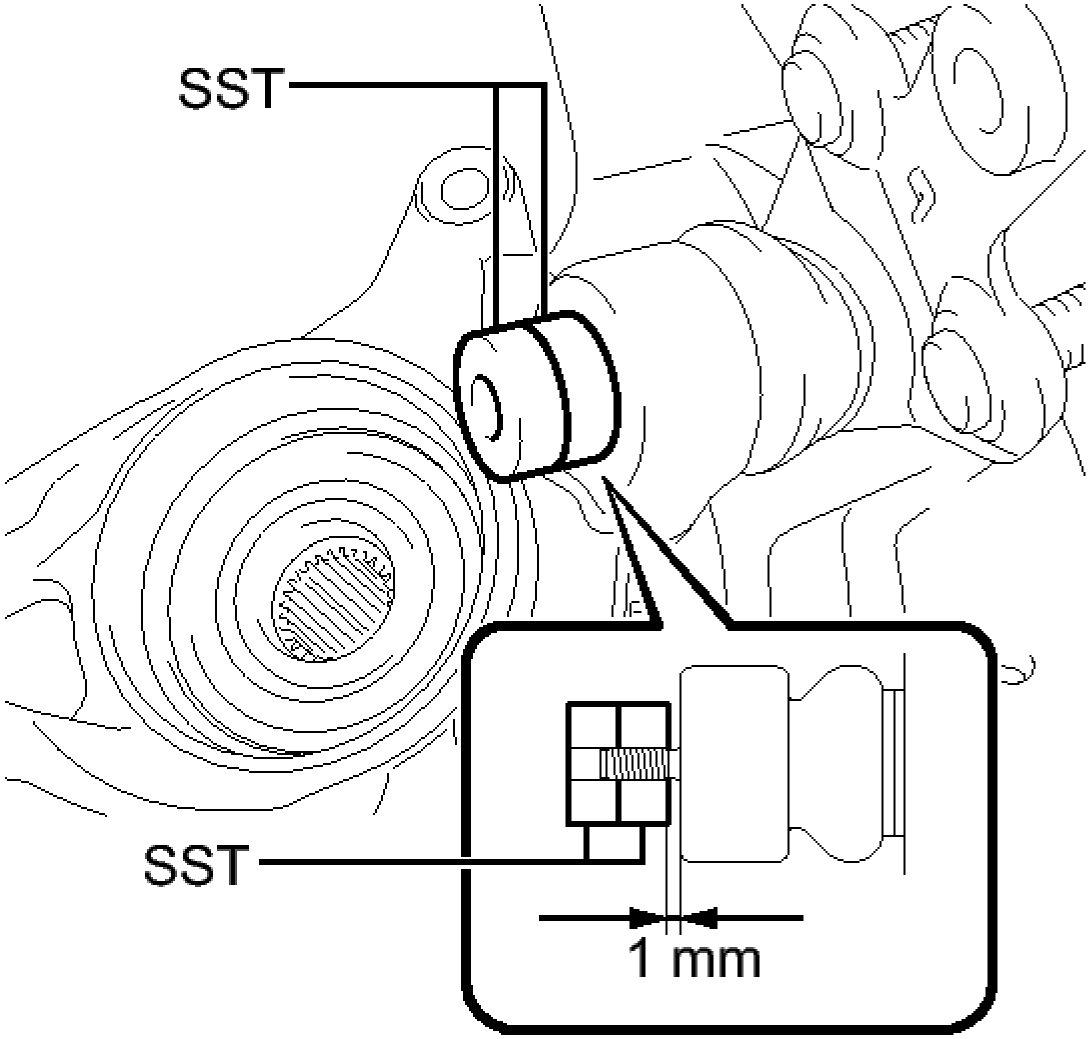

Fig. 55: Identifying Clearance Between SST And Front Axle Assembly
Courtesy of TOYOTA MOTOR SALES, U.S.A., INC.

NOTE: **Check that the clearance measurement between SST and the front axle assembly is 1 mm (0.0394 in.).**

d. Using SST, remove the front lower ball joint assembly from the front axle assembly as shown in the illustration.

- **SST: 09960-20010**

  09961-02010

  09961-02050

  09961-02050

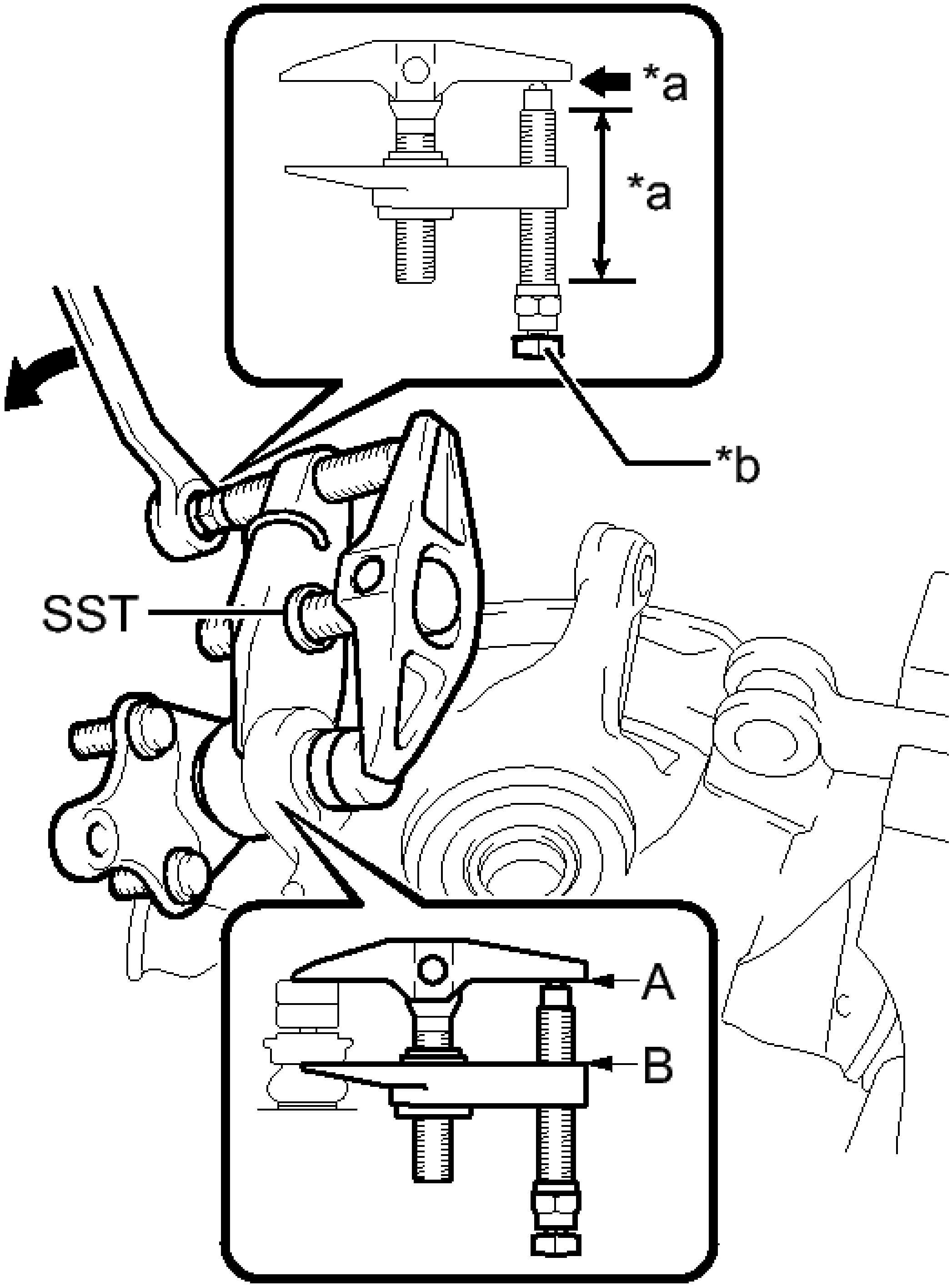

c

Fig. 56: Removing Front Lower Ball Joint Assembly
Courtesy of TOYOTA MOTOR SALES, U.S.A., INC.

TEXT IN ILLUSTRATION

	Apply

*a	grease
*b	Place wrench here

WARNING: **Apply grease to the threads and end of the SST bolt.**

NOTE:

- **Install SST so that A and B are parallel.**
- **Be sure to place a wrench on the part indicated in the illustration.**
- **Do not damage the front lower ball joint dust cover.**

INSPECTION

INSPECTION

1. **INSPECT FRONT LOWER BALL JOINT ASSEMBLY**
   a. Inspect the turning torque of the ball joint.

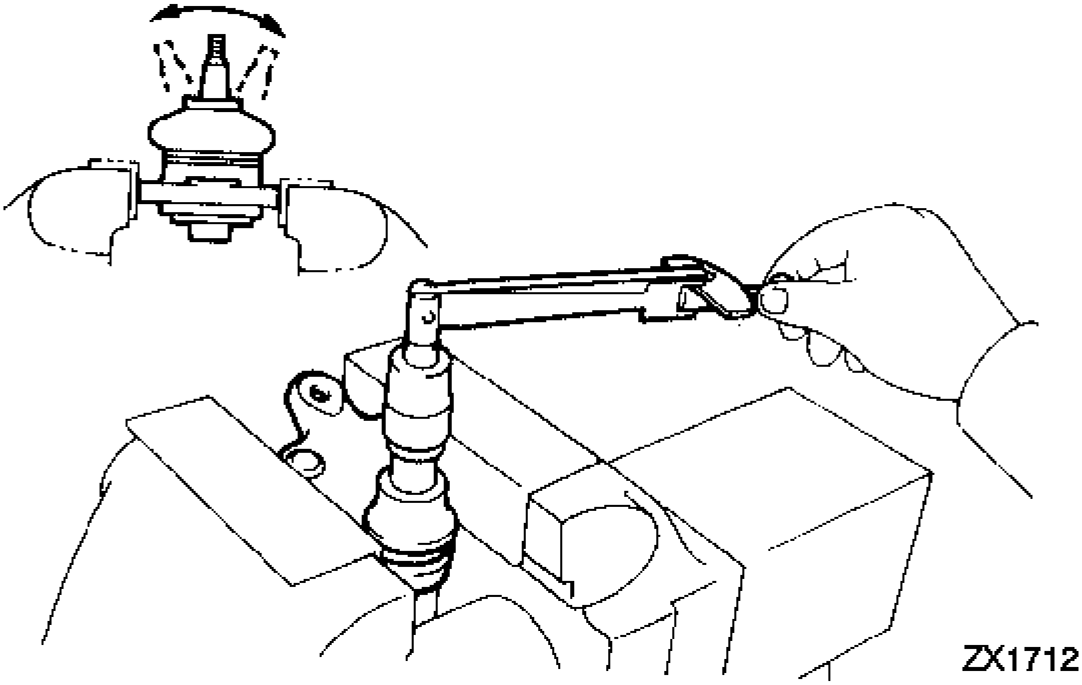

Fig. 57: Inspecting Lower Ball Joint Assembly Front LH
Courtesy of TOYOTA MOTOR SALES, U.S.A., INC.

1. Secure the front lower ball joint assembly in a vise using aluminum plates.
2. Install the nut to the front lower ball joint assembly stud.

3. Using a torque wrench, turn the stud continuously at a rate of 3 to 5 seconds per turn and take the torque reading on the 5th turn.

   Turning torque

   0.98 to 3.43 N*m (10 to 34 kgf*cm, 9 to 30 in.*lbf)

   If the turning torque is not within the specified range, replace the front lower ball joint assembly with a new one.

b. Inspect the dust cover.
   1. Check that the dust cover is not cracked and that there is no grease on it.

      If the dust cover is cracked or there is grease on it, replace the front lower ball joint assembly with a new one.

INSTALLATION

INSTALLATION

HINT:

- Use the same procedure for the RH side and LH side.
- The procedure listed below is for the LH side.

1. **INSTALL FRONT LOWER BALL JOINT ASSEMBLY**
   a. Secure the front axle assembly in a vise using aluminum plates.

      NOTE: When using a vise, do not overtighten it.

   b. Install the front lower ball joint assembly to the front axle assembly with a new nut.

      Torque: 123 N*m (1254 kgf*cm, 91 ft.*lbf)

      NOTE: Prevent oil from adhering to the threaded and tapered parts.

   c. Install a new cotter pin.

      NOTE: Further tighten the nut up to 60° if the holes for the cotter pin are not aligned.

2. **INSTALL FRONT AXLE ASSEMBLY**

   Refer to **INSTALLATION - Step 6**

FRONT STABILIZER BAR

COMPONENTS

ILLUSTRATION

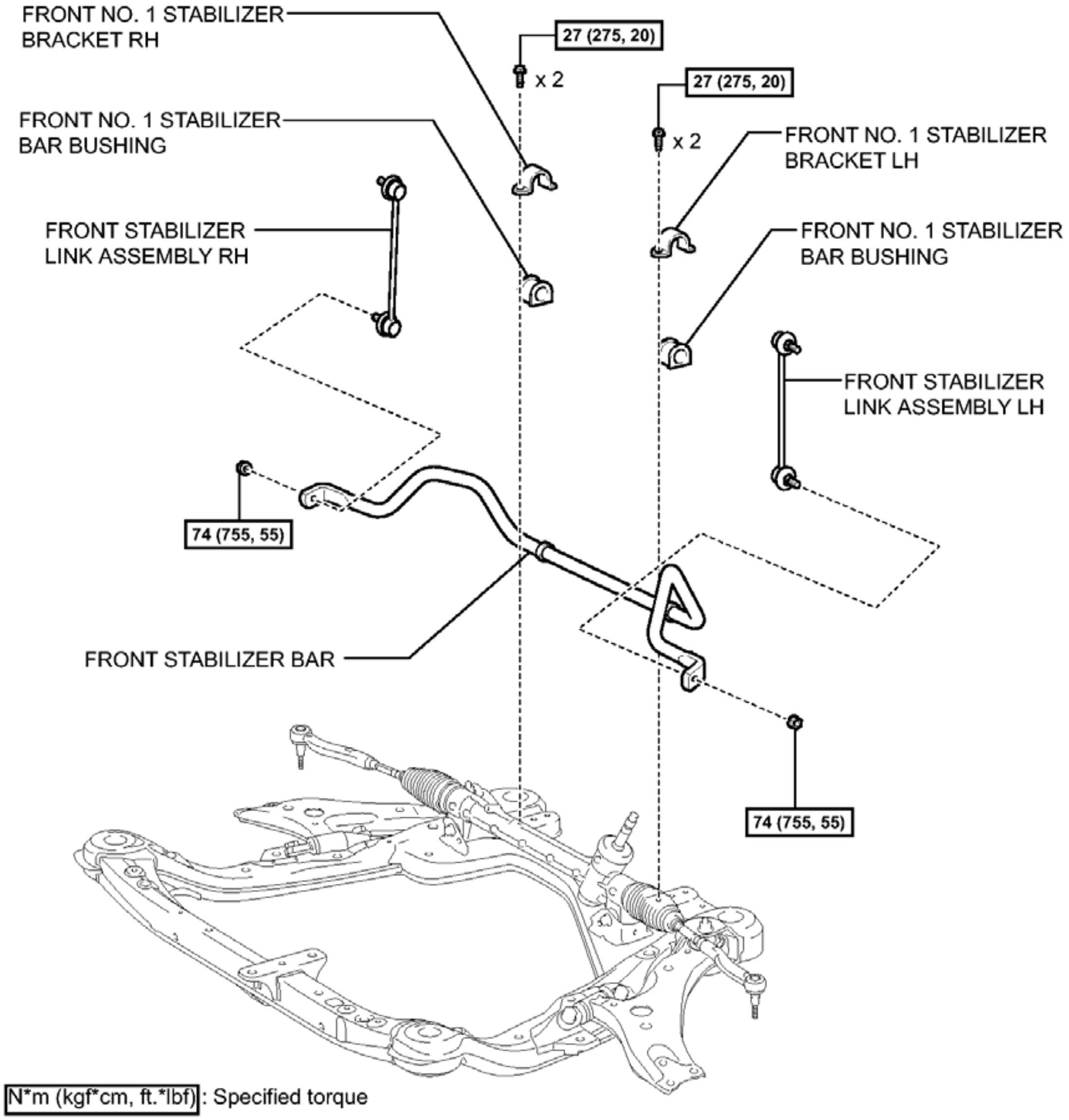

FRONT NO. 1 STABILIZER BRACKET RH
27 (275, 20)
x 2
27 (275, 20)
FRONT NO. 1 STABILIZER BAR BUSHING
x 2
FRONT NO. 1 STABILIZER BRACKET LH
FRONT STABILIZER LINK ASSEMBLY RH
FRONT NO. 1 STABILIZER BAR BUSHING
FRONT STABILIZER LINK ASSEMBLY LH
74 (755, 55)
FRONT STABILIZER BAR
74 (755, 55)
N*m (kgf*cm, ft.*lbf) : Specified torque
c

Fig. 58: Identifying Front Stabilizer Bar Replacement Components With Torque Specifications
Courtesy of TOYOTA MOTOR SALES, U.S.A., INC.

REMOVAL

REMOVAL

1. **REMOVE ENGINE ASSEMBLY WITH TRANSAXLE**

   Refer to **REMOVAL**

2. **REMOVE FRONT STABILIZER LINK ASSEMBLY LH**
   1. Remove the nut and front stabilizer link assembly LH from the front stabilizer bar.

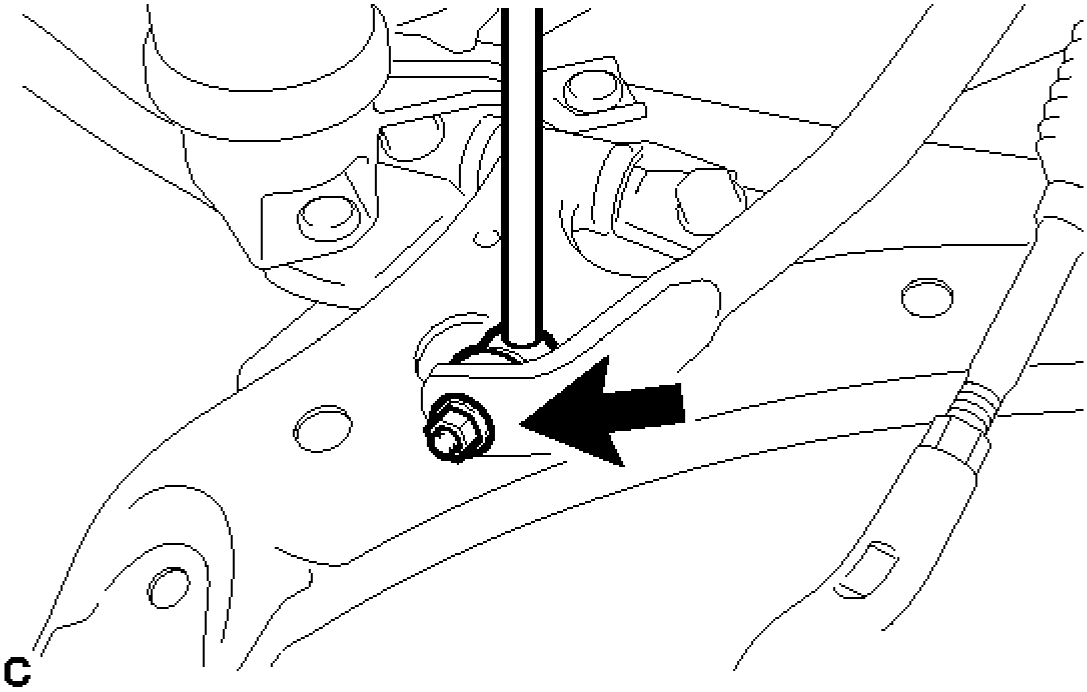

Fig. 59: Identifying Front Stabilizer Link Assembly LH Nut
Courtesy of TOYOTA MOTOR SALES, U.S.A., INC.

If the ball joint turns together with the nut, use a hexagon wrench to hold the stud bolt.

3. **REMOVE FRONT STABILIZER LINK ASSEMBLY RH**

   HINT:

   Perform the same procedure as the LH side.

4. **REMOVE FRONT NO. 1 STABILIZER BRACKET LH**
   1. Remove the 2 bolts and front No. 1 stabilizer bracket LH from the front frame assembly.

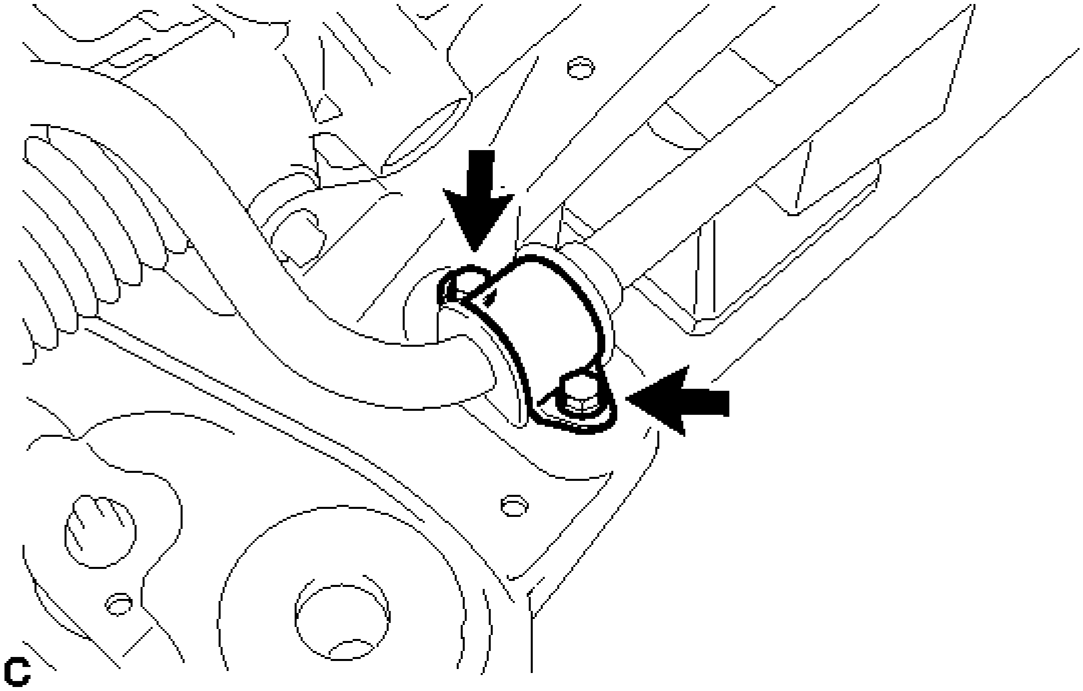

Fig. 60: Identifying No. 1 Stabilizer Bracket LH Bolts
Courtesy of TOYOTA MOTOR SALES, U.S.A., INC.

5. **REMOVE FRONT NO. 1 STABILIZER BRACKET RH**

   HINT:

   Perform the same procedure as the LH side.

6. **REMOVE FRONT STABILIZER BAR**
   a. Remove the front stabilizer bar from the front frame assembly.
7. **REMOVE FRONT NO. 1 STABILIZER BAR BUSHING**
   a. Remove the 2 front No. 1 stabilizer bar bushings from the front stabilizer bar.

INSPECTION

INSPECTION

1. **INSPECT FRONT STABILIZER LINK ASSEMBLY**
   a. Inspect the turning torque of the ball joint.

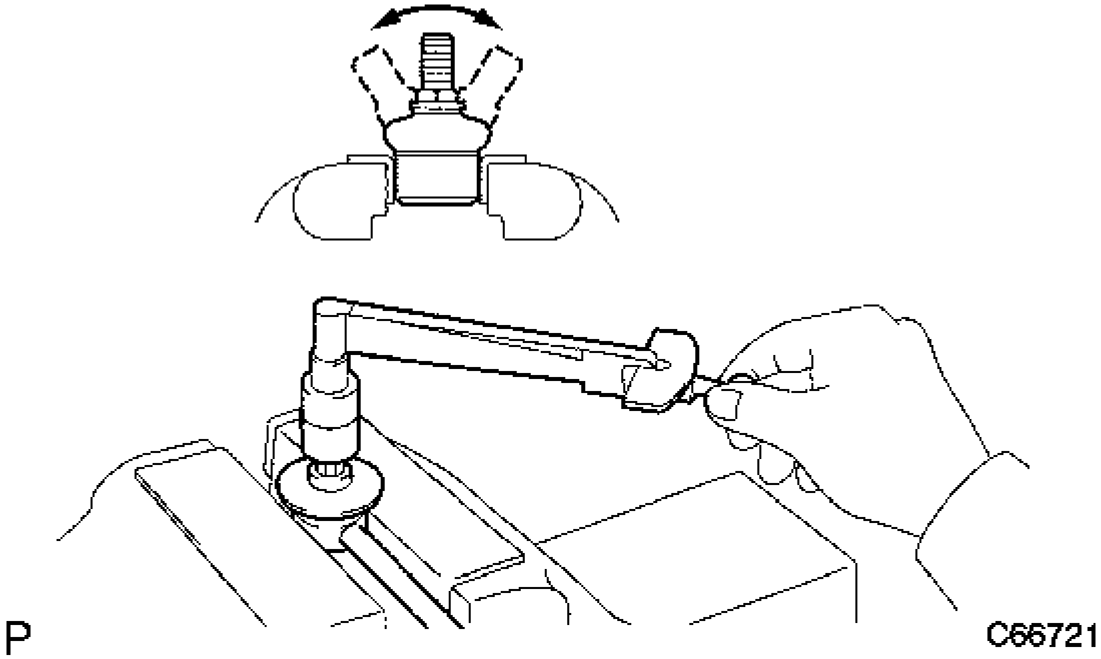

Fig. 61: Inspecting Front Stabilizer Link Assembly
Courtesy of TOYOTA MOTOR SALES, U.S.A., INC.

1. Secure the front stabilizer link assembly in a vise using aluminum plates.
2. Install the nut to the front stabilizer link assembly stud.
3. Using a torque wrench, turn the stud continuously at a rate of 3 to 5 seconds per turn and take the torque reading on the 5th turn.

   Turning torque

   0.05 to 1.96 N*m (0.6 to 19 kgf*cm, 0.5 to 17 in.*lbf)

   If the turning torque is not within the specified range, replace the front stabilizer link assembly with a new one.

b. Inspect the dust cover.

1. Check that the dust cover is not cracked and that there is no grease on it.

   If the dust cover is cracked or there is grease on it, replace the front stabilizer link assembly with a new one.

INSTALLATION

INSTALLATION

1. **INSTALL FRONT NO. 1 STABILIZER BAR BUSHING**

a. Install the 2 front No. 1 stabilizer bar bushings to the front stabilizer bar as shown in the

illustration.

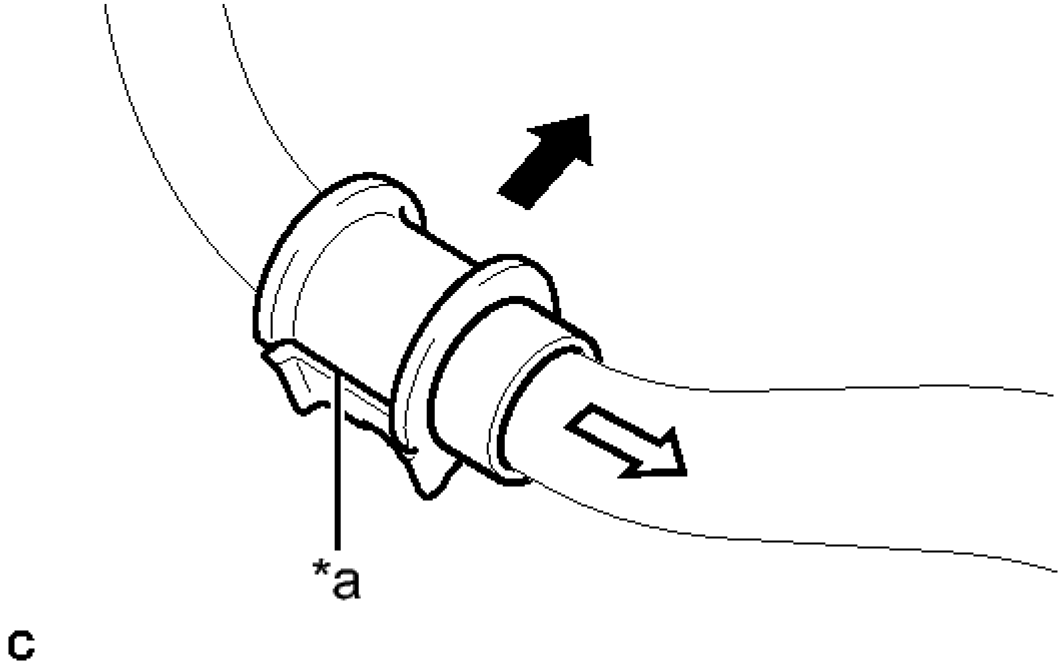

Fig. 62: Installing Front No. 1 Stabilizer Bar Bushing
Courtesy of TOYOTA MOTOR SALES, U.S.A., INC.

TEXT IN ILLUSTRATION

*a	Cutout
·	Front of the Vehicle
·	Inside of the Vehicle

NOTE: **When installing the front No. 1 stabilizer bar bushings, make sure that the cutout faces the rear of the vehicle.**

2. **INSTALL FRONT STABILIZER BAR**
    a. Install the front stabilizer bar to the front frame assembly.
3. **INSTALL FRONT NO. 1 STABILIZER BRACKET LH**
    a. Install the front No. 1 stabilizer bracket LH to the front frame assembly with the 2 bolts.

    Torque: 27 N*m (275 kgf*cm, 20 ft.*lbf)
4. **INSTALL FRONT NO. 1 STABILIZER BRACKET RH**

HINT:

Perform the same procedure as the LH side.

5. **INSTALL FRONT STABILIZER LINK ASSEMBLY LH**
    a. Install the front stabilizer link assembly LH to the front stabilizer bar with the nut.

       Torque: 74 N*m (755 kgf*cm, 55 ft.*lbf)

       If the ball joint turns together with the nut, use a hexagon wrench to hold the stud bolt.

6. **INSTALL FRONT STABILIZER LINK ASSEMBLY RH**

   HINT:

   Perform the same procedure as the LH side.

7. **INSTALL ENGINE ASSEMBLY WITH TRANSAXLE**

   Refer to **INSTALLATION - Step 15**

FRONT SUSPENSION MEMBER

COMPONENTS

ILLUSTRATION

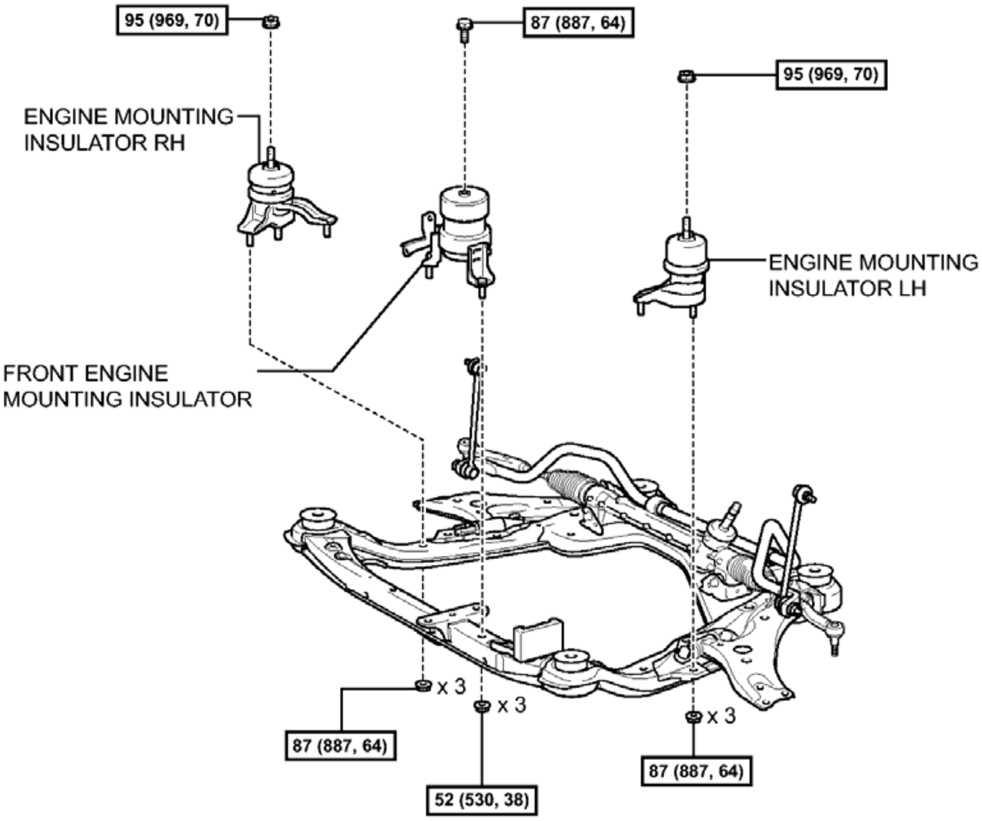
95 (969, 70)
87 (887, 64)
95 (969, 70)
ENGINE MOUNTING INSULATOR RH
ENGINE MOUNTING INSULATOR LH
FRONT ENGINE MOUNTING INSULATOR
x 3
x 3
x 3
87 (887, 64)
52 (530, 38)
87 (887, 64)

N*m (kgf*cm, ft.*lbf): Specified torque

c

Fig. 63: Identifying Front Suspension Member Replacement Components With Torque Specifications (1 Of 3)

Courtesy of TOYOTA MOTOR SALES, U.S.A., INC.

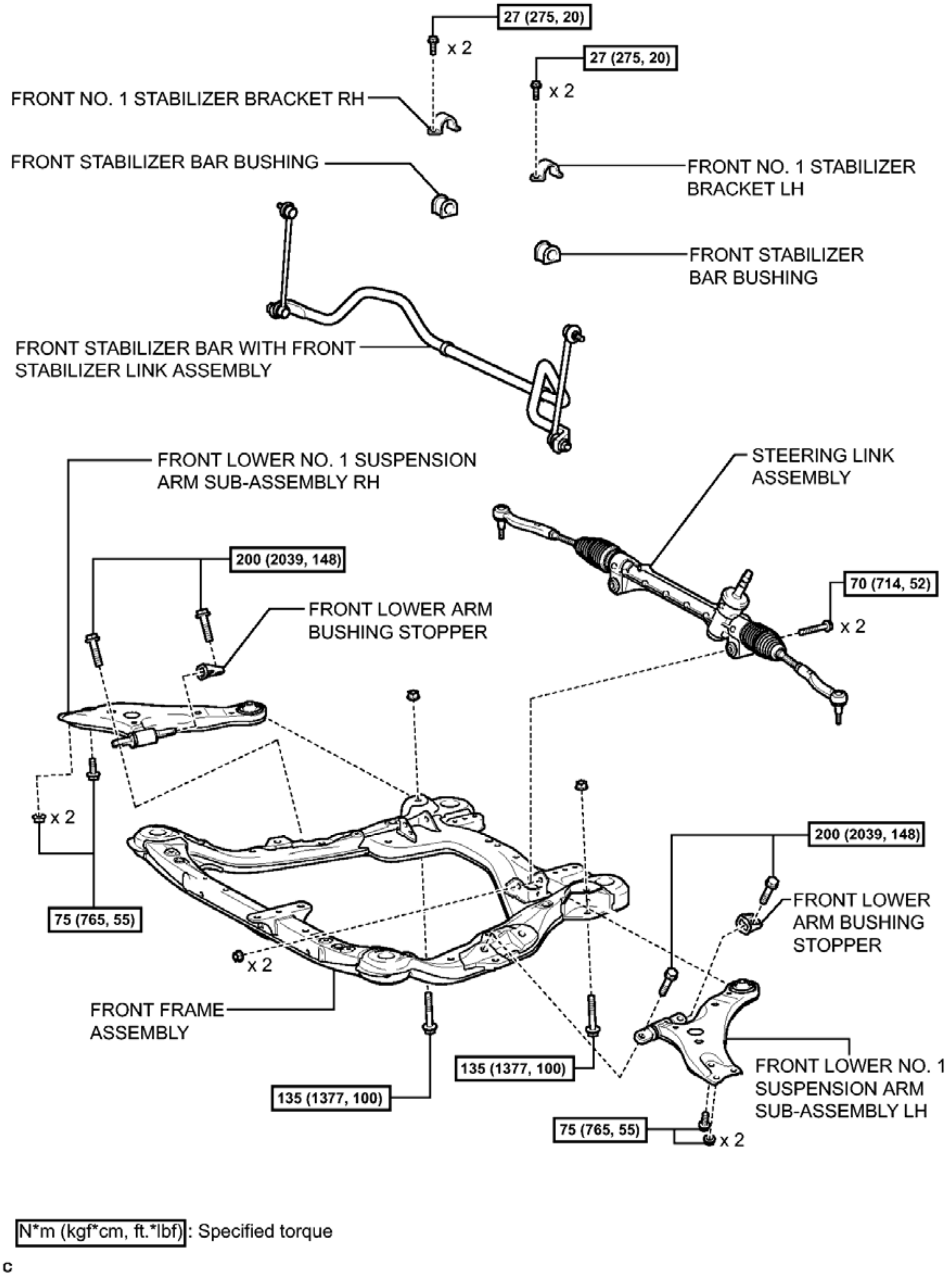
27 (275, 20)
x 2
27 (275, 20)
x 2
FRONT NO. 1 STABILIZER BRACKET RH
FRONT STABILIZER BAR BUSHING
FRONT NO. 1 STABILIZER BRACKET LH
FRONT STABILIZER BAR BUSHING
FRONT STABILIZER BAR WITH FRONT STABILIZER LINK ASSEMBLY
FRONT LOWER NO. 1 SUSPENSION ARM SUB-ASSEMBLY RH
STEERING LINK ASSEMBLY
200 (2039, 148)
FRONT LOWER ARM BUSHING STOPPER
70 (714, 52)
x 2
x 2
75 (765, 55)
200 (2039, 148)
FRONT LOWER ARM BUSHING STOPPER
x 2
FRONT FRAME ASSEMBLY
135 (1377, 100)
135 (1377, 100)
FRONT LOWER NO. 1 SUSPENSION ARM SUB-ASSEMBLY LH
75 (765, 55)
x 2
N*m (kgf*cm, ft.*lbf): Specified torque
c

Fig. 64: Identifying Front Suspension Member Replacement Components With Torque Specifications (2 Of 3)

Courtesy of TOYOTA MOTOR SALES, U.S.A., INC.

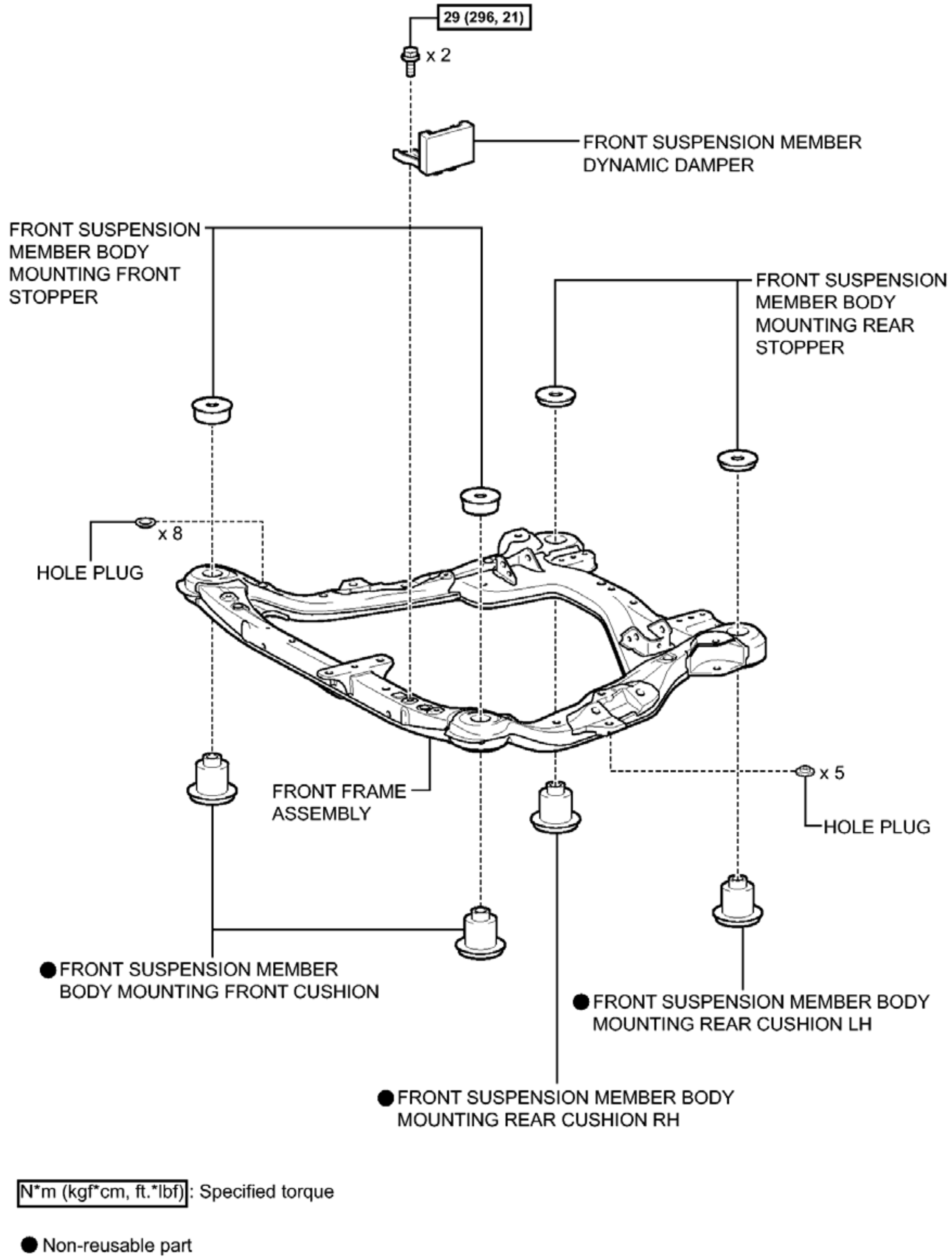
29 (296, 21)
x 2
FRONT SUSPENSION MEMBER DYNAMIC DAMPER
FRONT SUSPENSION MEMBER BODY MOUNTING FRONT STOPPER
FRONT SUSPENSION MEMBER BODY MOUNTING REAR STOPPER
x 8
HOLE PLUG
FRONT FRAME ASSEMBLY
x 5
HOLE PLUG
● FRONT SUSPENSION MEMBER BODY MOUNTING FRONT CUSHION
● FRONT SUSPENSION MEMBER BODY MOUNTING REAR CUSHION LH
● FRONT SUSPENSION MEMBER BODY MOUNTING REAR CUSHION RH
N*m (kgf*cm, ft.*lbf): Specified torque
● Non-reusable part
c

Fig. 65: Identifying Front Suspension Member Replacement Components With Torque Specifications (3 Of 3)

Courtesy of TOYOTA MOTOR SALES, U.S.A., INC.

REMOVAL

REMOVAL

1. **REMOVE FRONT FRAME ASSEMBLY**

   Refer to **REMOVAL**

2. **REMOVE FRONT ENGINE MOUNTING INSULATOR** . Refer to **REMOVAL - Step 86**
3. **REMOVE ENGINE MOUNTING INSULATOR LH** . Refer to **REMOVAL - Step 87**
4. **REMOVE ENGINE MOUNTING INSULATOR RH** . Refer to **REMOVAL - Step 88**
5. **REMOVE FRONT NO. 1 STABILIZER BRACKET LH** See step 4
6. **REMOVE FRONT NO. 1 STABILIZER BRACKET RH**

   HINT:

   Perform the same procedure as the LH side.

7. **REMOVE FRONT STABILIZER BAR WITH FRONT STABILIZER LINK ASSEMBLY**
   a. Remove the front stabilizer bar with 2 front stabilizer link assemblies from the front frame assembly.
8. **REMOVE STEERING LINK ASSEMBLY** . Refer to **REMOVAL - Step 11**
9. **REMOVE FRONT LOWER NO. 1 SUSPENSION ARM SUB-ASSEMBLY LH**
   a. Remove the 3 bolts, nut and front lower No. 1 suspension arm sub-assembly from the front frame assembly.

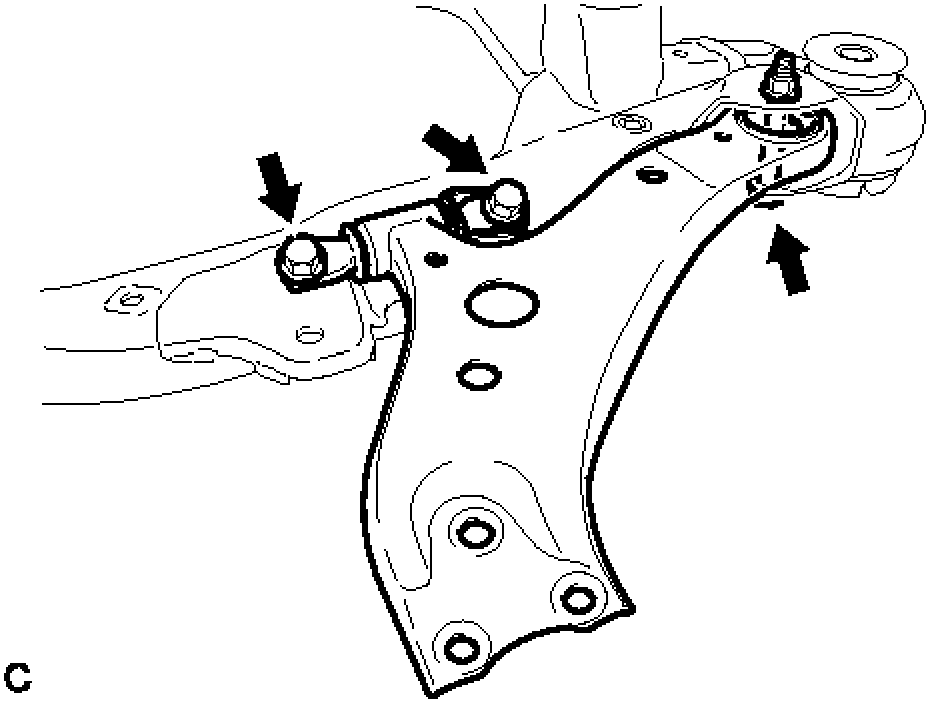

Fig. 66: Locating Front Lower Suspension Arm Bolts And Nut
Courtesy of TOYOTA MOTOR SALES, U.S.A., INC.

NOTE: When removing the bolt, keep the nut from rotating.

b. Remove the front lower arm bushing stopper from the front lower No. 1 suspension arm sub-assembly.

10. REMOVE FRONT LOWER NO. 1 SUSPENSION ARM SUB-ASSEMBLY RH

HINT:

Perform the same procedure as the LH side.

11. REMOVE FRONT SUSPENSION MEMBER DYNAMIC DAMPER

a. Remove the 2 bolts and front suspension member dynamic damper from the front frame assembly.

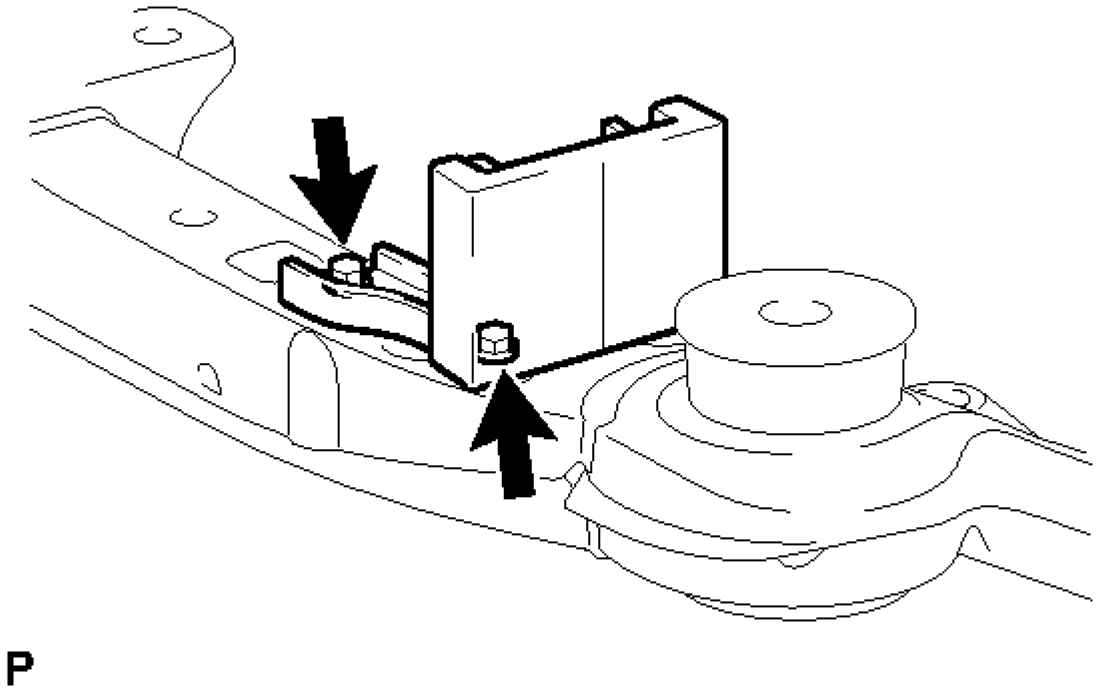

Fig. 67: Locating Front Suspension Member Dynamic Damper & Fasteners
Courtesy of TOYOTA MOTOR SALES, U.S.A., INC.

12. REMOVE FRONT SUSPENSION MEMBER BODY MOUNTING FRONT STOPPER

a. Remove the 2 front suspension member body mounting front stoppers from the front frame assembly.

13. REMOVE FRONT SUSPENSION MEMBER BODY MOUNTING REAR STOPPER

a. Remove the 2 front suspension member body mounting rear stoppers from the front frame assembly.

14. REMOVE FRONT SUSPENSION MEMBER BODY MOUNTING FRONT CUSHION

a. Install SST as shown in the illustration.

- **SST: 09830-10010**

  09830-01010

  09830-01040

  09830-01050
- **SST: 09950-40011**

  09951-04020

  09952-04010

  09954-04010

  09955-04011

  09958-04011

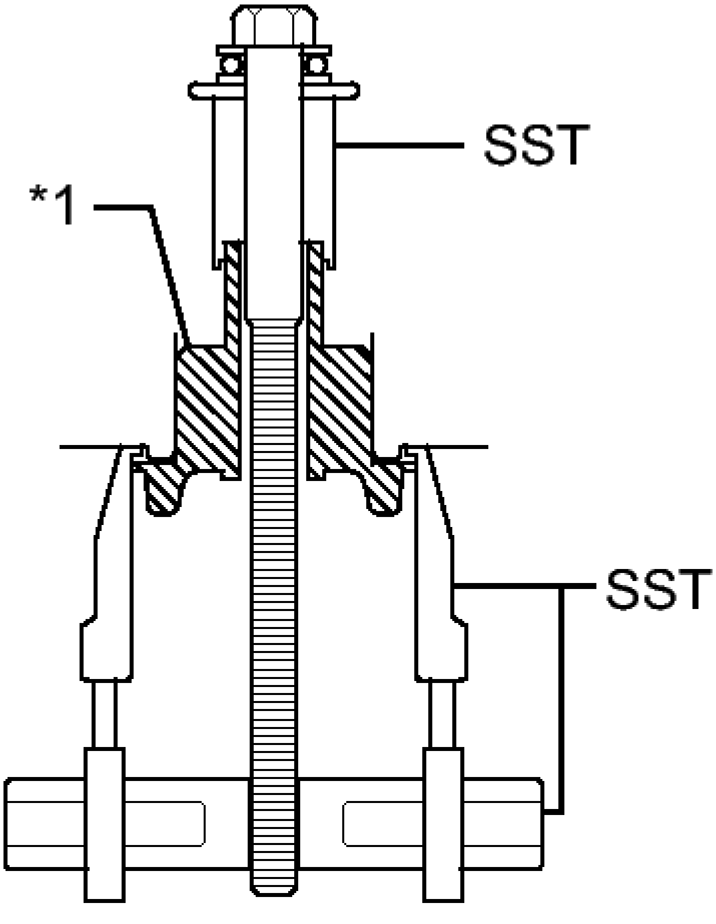

Fig. 68: Identifying Front Suspension Member Body Mounting Front Cushion & SST
Courtesy of TOYOTA MOTOR SALES, U.S.A., INC.

TEXT IN ILLUSTRATION

*1	Front Suspension Member Body Mounting Front Cushion

b. Using SST, remove the front suspension member body mounting front cushion from the front frame assembly.

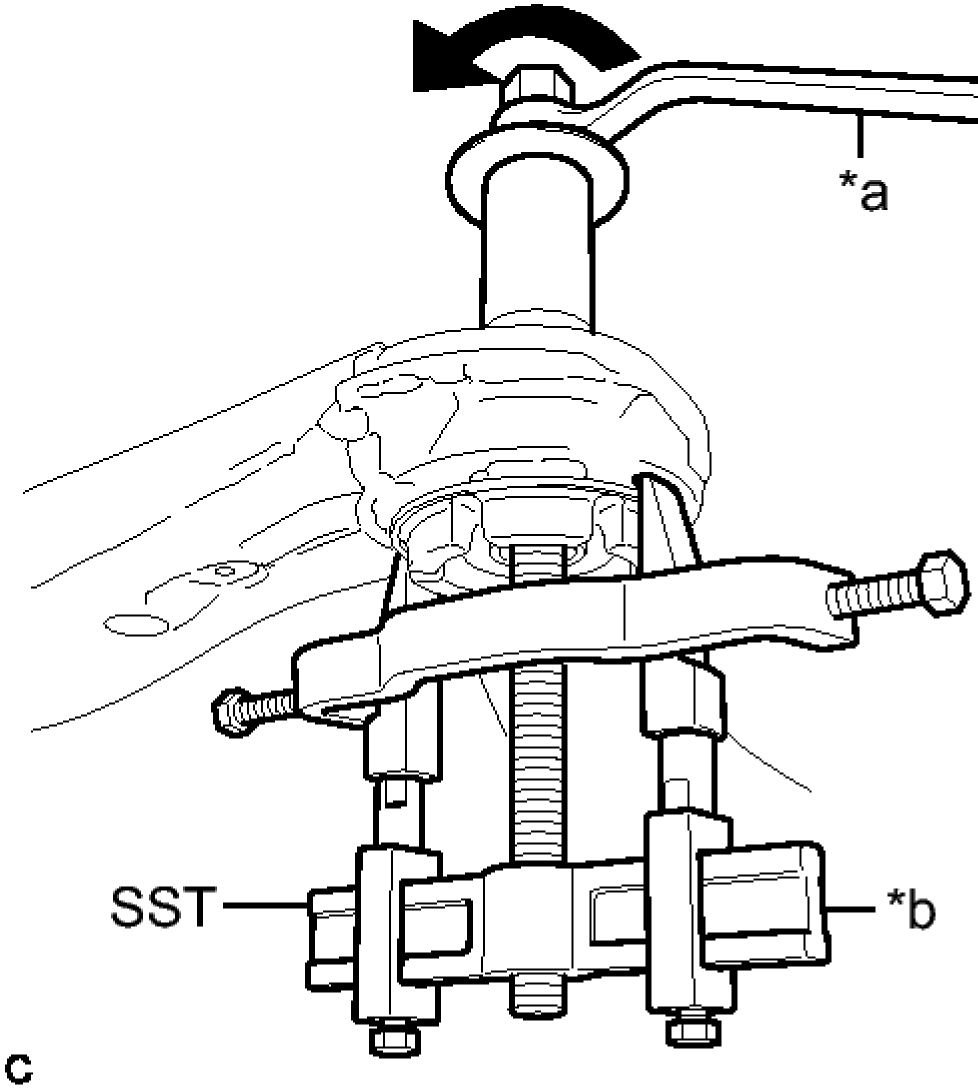

Fig. 69: Removing Front Suspension Member Body Mounting Front Cushion

Courtesy of TOYOTA MOTOR SALES, U.S.A., INC.

TEXT IN ILLUSTRATION

*a	Turn
*b	Hold

NOTE:

- **Make sure that the claws of SST are securely hung onto the mounting cushion.**
- **Tighten SST slowly and evenly.**
- **Be careful as the mounting cushion may fly out.**
- **The mounting cushion cannot be reused.**

15. REMOVE FRONT SUSPENSION MEMBER BODY MOUNTING REAR CUSHION LH

a. Install SST as shown in the illustration.

- **SST: 09830-10010**
  09830-01010
  09830-01040
  09830-01050
- **SST: 09950-40011**
  09951-04020
  09952-04010
  09954-04010
  09955-04011
  09958-04011

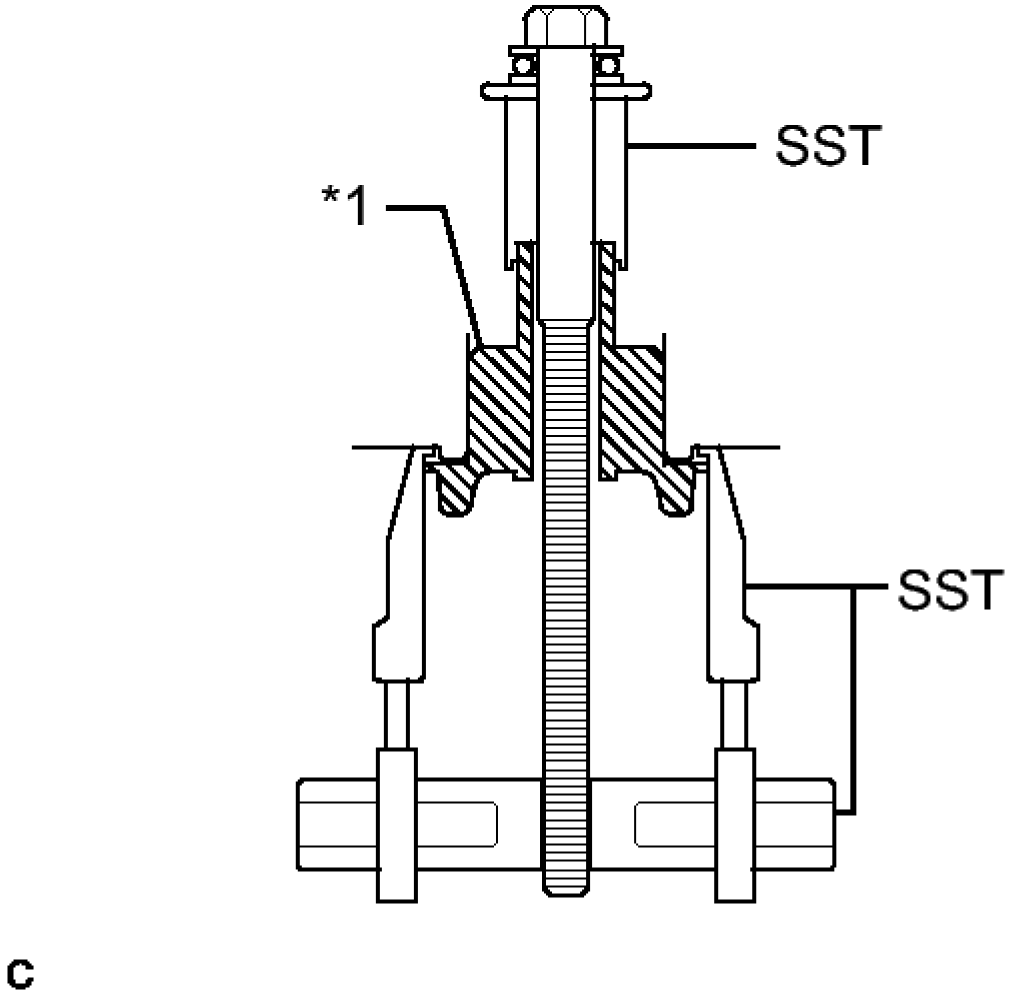

Fig. 70: Identifying Front Suspension Member Body Mounting Front Cushion & SST
Courtesy of TOYOTA MOTOR SALES, U.S.A., INC.

TEXT IN ILLUSTRATION

*1	Front Suspension Member Body Mounting Rear Cushion LH

b. Using SST, remove the front suspension member body mounting rear cushion LH from the front frame assembly.

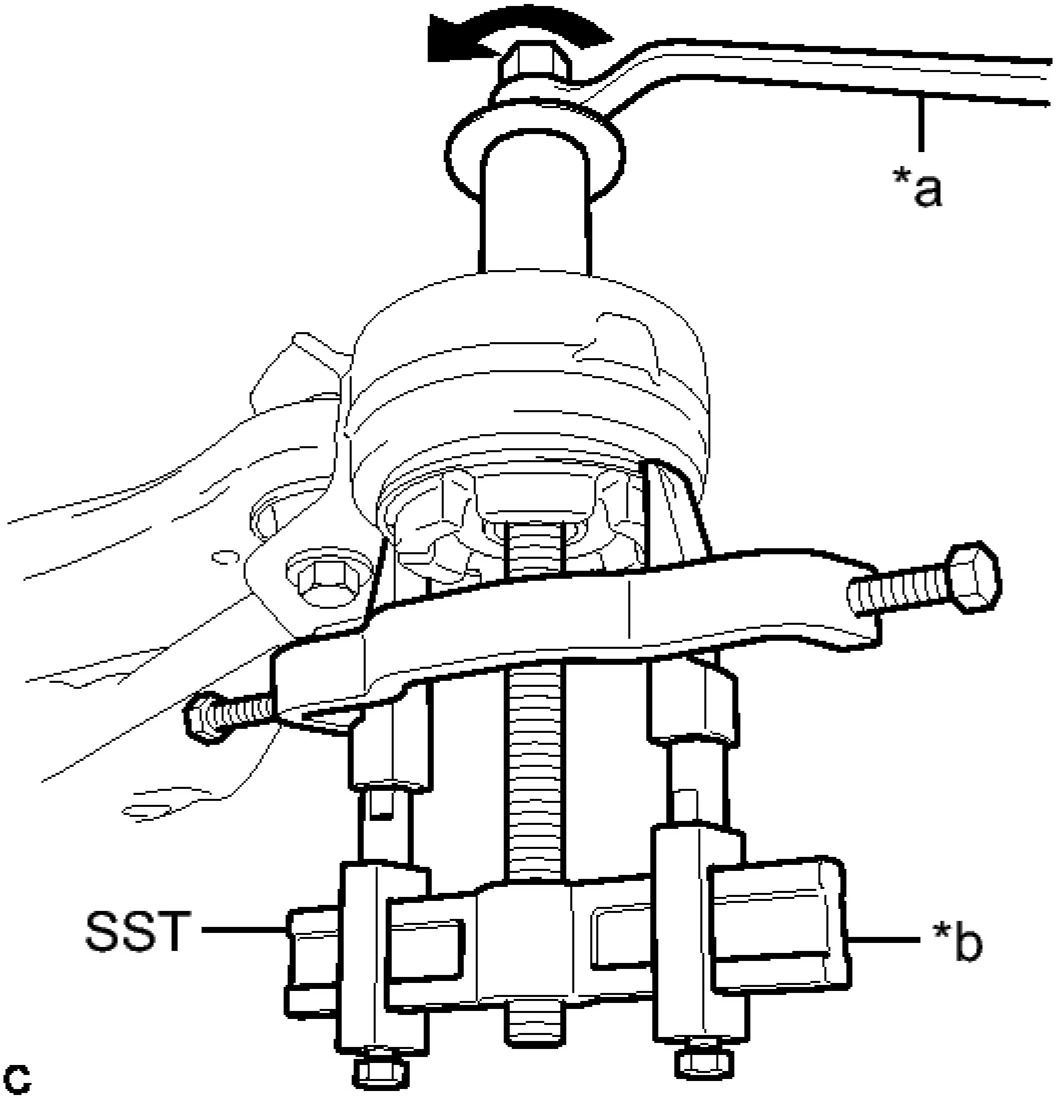

Fig. 71: Removing Front Suspension Member Body Mounting Front Cushion LH
Courtesy of TOYOTA MOTOR SALES, U.S.A., INC.

TEXT IN ILLUSTRATION

*a	Turn
*b	Hold

NOTE:

- **Make sure that the claws of SST are securely hung onto the mounting cushion.**
- **Tighten SST slowly and evenly.**
- **Be careful as the mounting cushion may fly out.**
- **The mounting cushion cannot be reused.**

16. **REMOVE FRONT SUSPENSION MEMBER BODY MOUNTING REAR CUSHION RH**

HINT:

Perform the same procedure as the LH side.

17. **REMOVE HOLE PLUG**
    a. Remove each hole plug from the front frame assembly.

INSTALLATION

INSTALLATION

1. **INSTALL HOLE PLUG**
    a. Install each hole plug to the front frame assembly.
2. **INSTALL FRONT SUSPENSION MEMBER BODY MOUNTING REAR CUSHION LH**
    a. Temporarily install a new front suspension member body mounting rear cushion LH while confirming the installation direction.

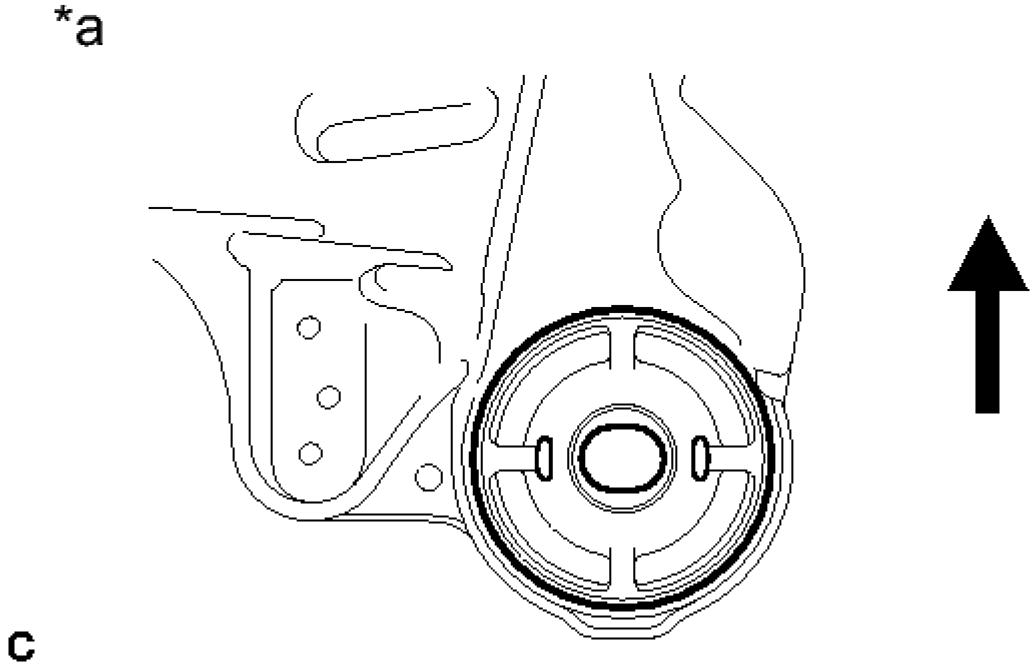

Fig. 72: Confirming Front Suspension Member Body Mounting Rear Cushion LH Direction
Courtesy of TOYOTA MOTOR SALES, U.S.A., INC.

TEXT IN ILLUSTRATION

*a	View from Underneath
·	Front of the Vehicle

NOTE: **Position the front suspension member body mounting rear cushion LH in the correct direction.**

b. Install SST as shown in the illustration.

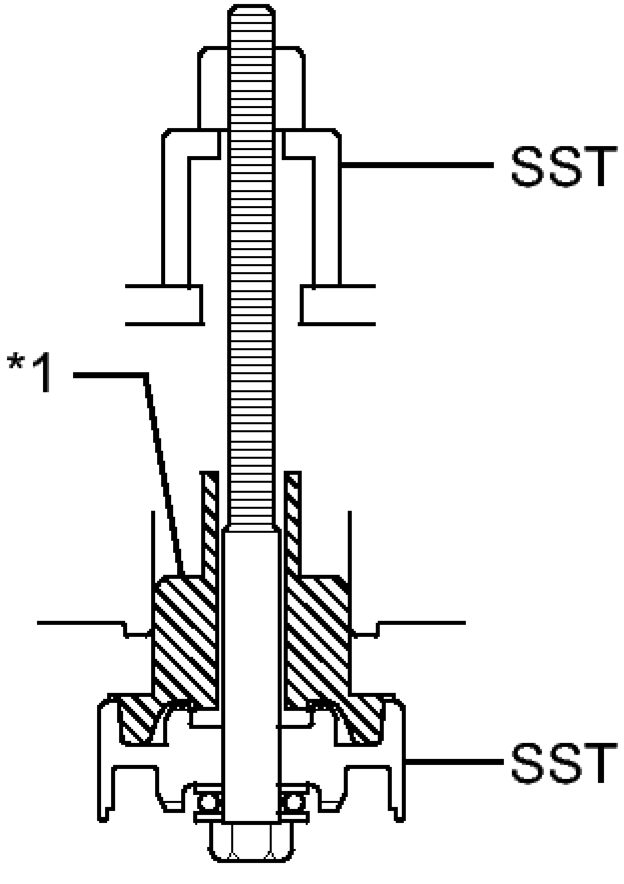

Fig. 73: Identifying SST On Mounting Cushion
Courtesy of TOYOTA MOTOR SALES, U.S.A., INC.

TEXT IN ILLUSTRATION

*1	Front Suspension Member Body Mounting Rear Cushion

	LH

- **SST: 09830-10010**
  09830-01010
  09830-01020
  09830-01030
  09830-01060

c. Using SST, install the front suspension member body mounting rear cushion LH as shown in the illustration.

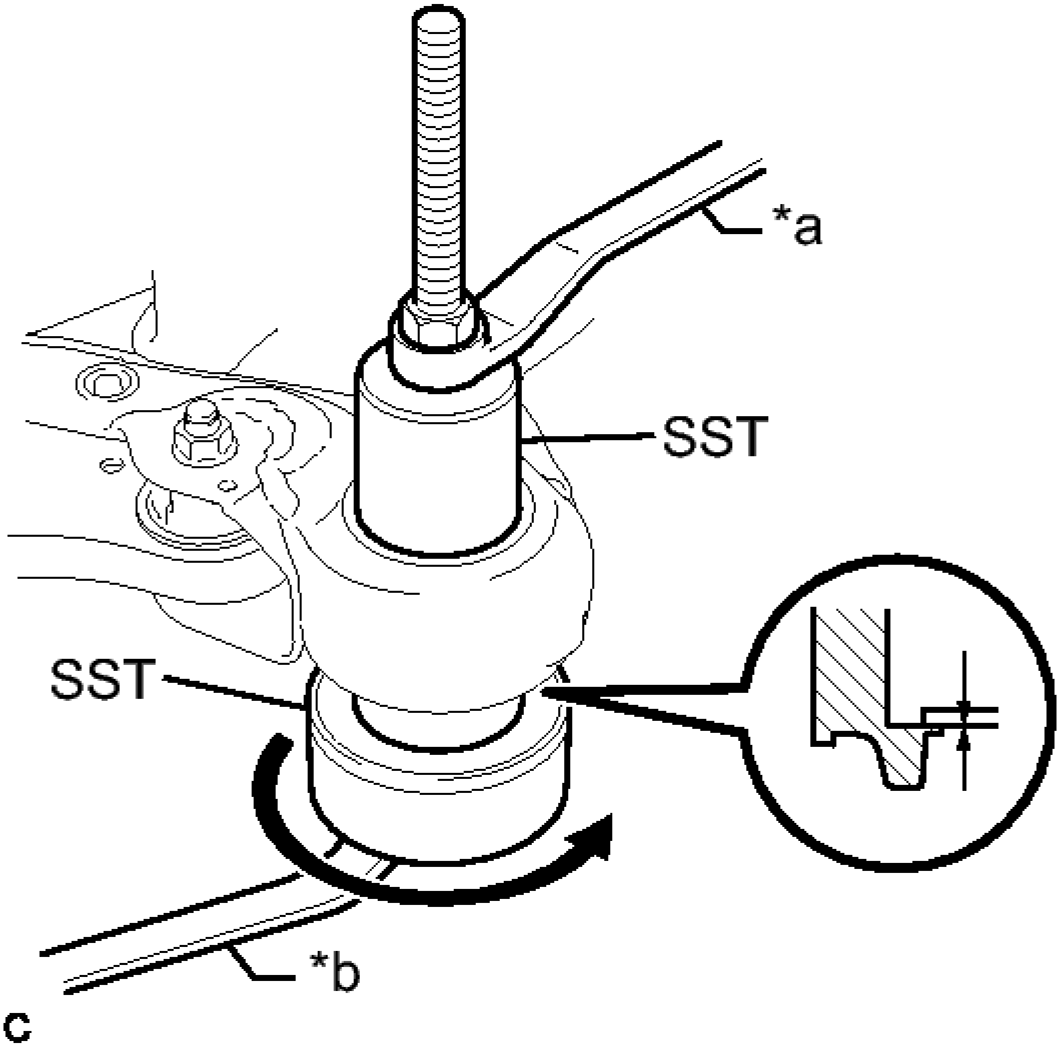

Fig. 74: Installing Front Suspension Member Body Mounting Rear Cushion LH
Courtesy of TOYOTA MOTOR SALES, U.S.A., INC.

TEXT IN ILLUSTRATION

*a	Hold
*b	Turn

NOTE: **Check that there is no clearance between the front suspension member and the front suspension member body mounting rear cushion LH.**

3. INSTALL FRONT SUSPENSION MEMBER BODY MOUNTING REAR CUSHION RH

a. Temporarily install a new front suspension member body mounting rear cushion RH while confirming the installation direction.

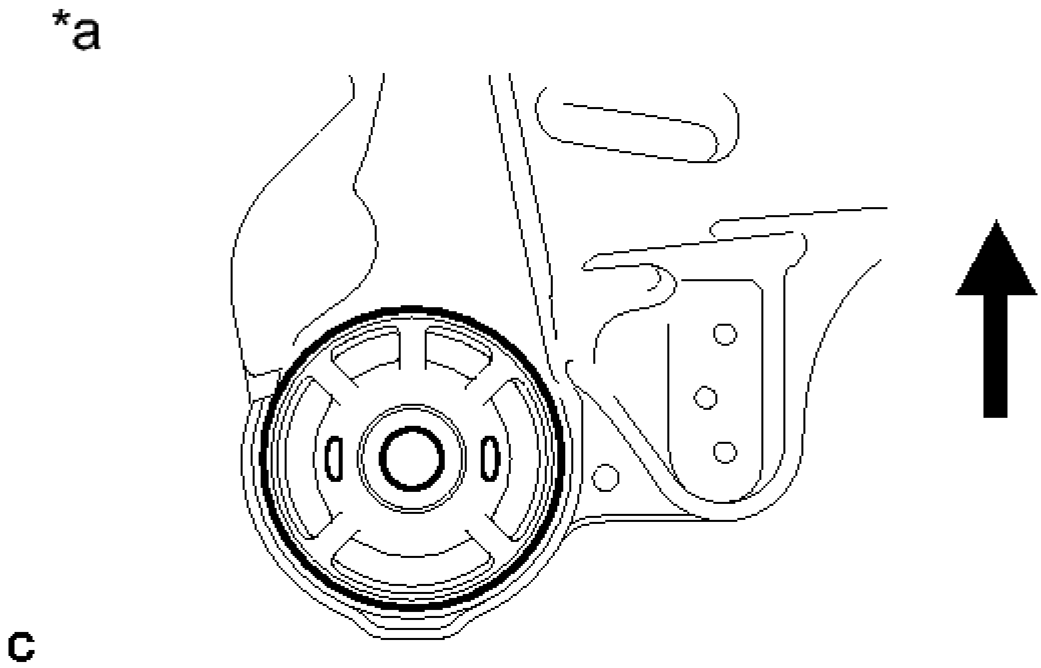

Fig. 75: Confirming Front Suspension Member Body Mounting Rear Cushion RH Direction
Courtesy of TOYOTA MOTOR SALES, U.S.A., INC.

TEXT IN ILLUSTRATION

*a	View from Underneath
·	Front of the Vehicle

NOTE: **Position the front suspension member body mounting rear cushion RH in the correct direction.**

b. Install SST using the same procedure as the front suspension member body mounting rear cushion LH.

- **SST: 09830-10010**
  09830-01010
  09830-01020
  09830-01030
  09830-01060

c. Using SST, install the front suspension member body mounting rear cushion RH.

- **SST: 09830-10010**
  09830-01010
  09830-01020
  09830-01030
  09830-01060

HINT:

Perform the same procedure as the LH side.

4. INSTALL FRONT SUSPENSION MEMBER BODY MOUNTING FRONT CUSHION

a. Temporarily install a new front suspension member body mounting front cushion while confirming the installation direction.

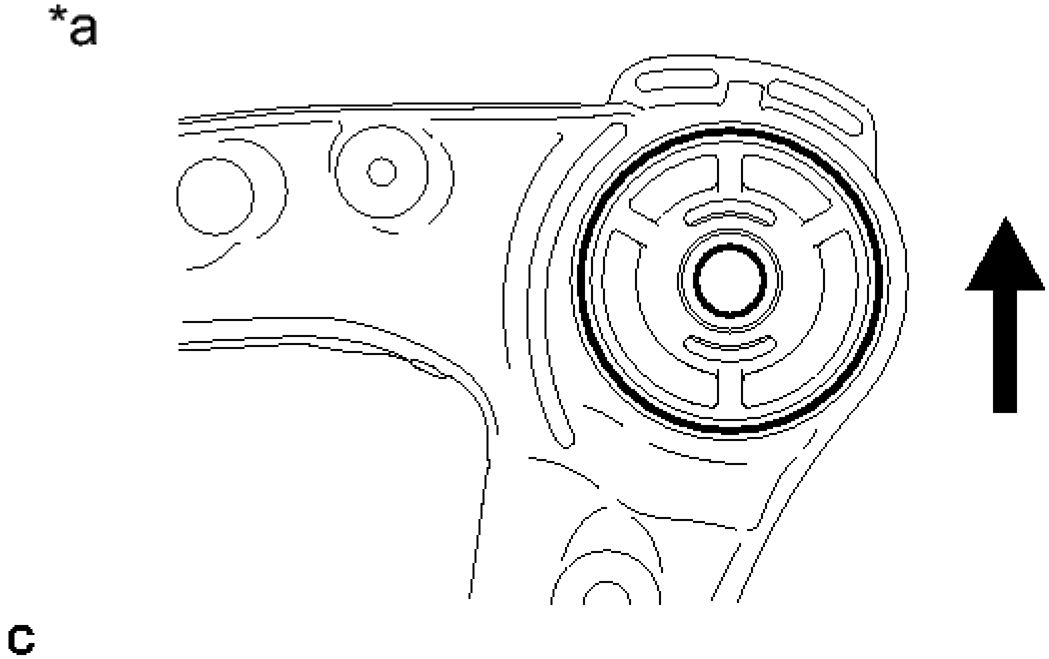

Fig. 76: Confirming Front Suspension Member Body Mounting Front Cushion Direction
Courtesy of TOYOTA MOTOR SALES, U.S.A., INC.

TEXT IN ILLUSTRATION

*a	View from Underneath
→	Front of the Vehicle

NOTE: **Position the front suspension member body mounting front cushion in the correct direction.**

b. Install SST using the same procedure as the front suspension member body mounting rear cushion LH.

  - **SST: 09830-10010**

    09830-01010

    09830-01020

    09830-01030

    09830-01060

c. Using SST, install the front suspension member body mounting front cushion as shown in the illustration.

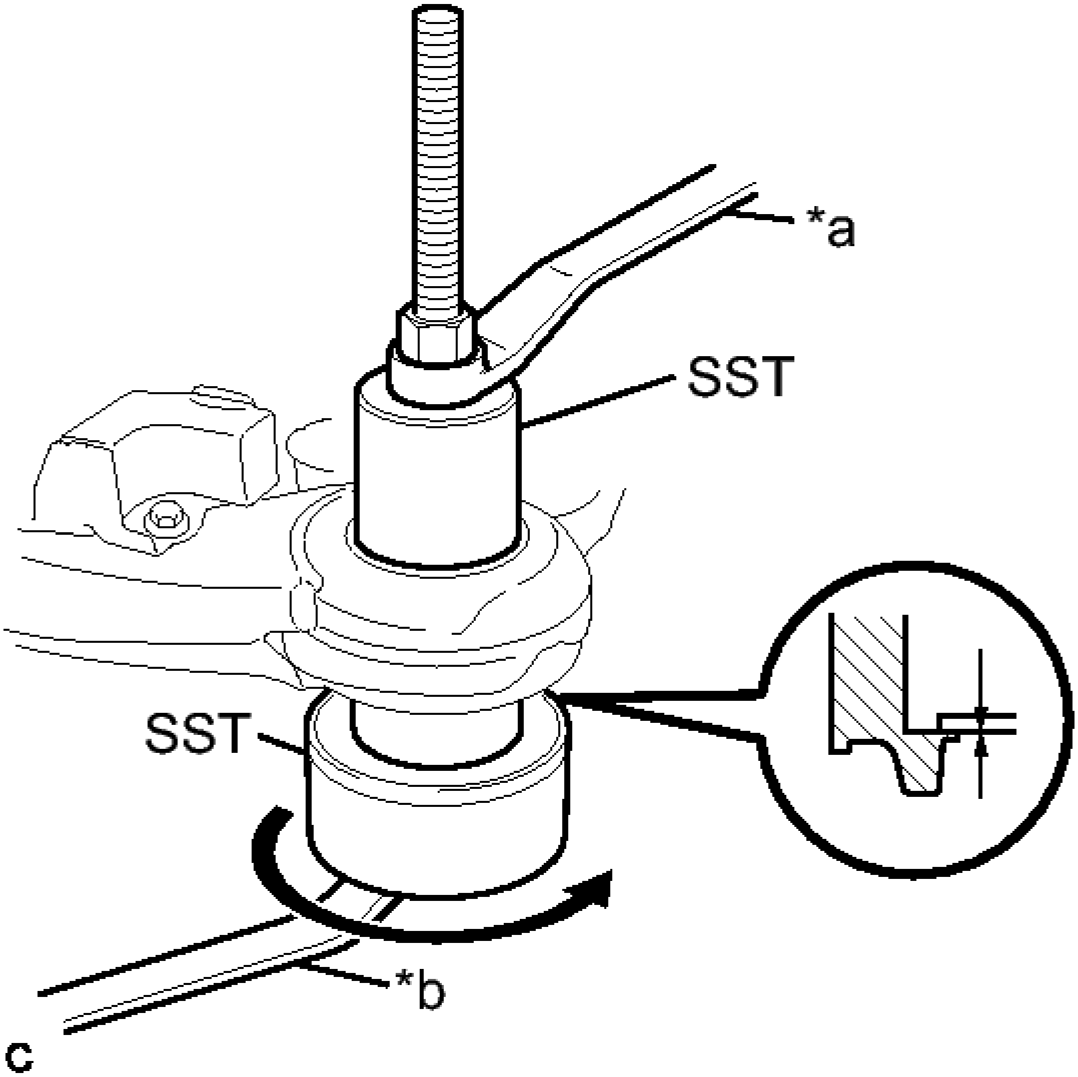

Fig. 77: Installing Front Suspension Member Body Mounting Front Cushion LH
Courtesy of TOYOTA MOTOR SALES, U.S.A., INC.

TEXT IN ILLUSTRATION

*a	Hold
*b	Turn

- **SST: 09830-10010**
  09830-01010
  09830-01020
  09830-01030
  09830-01060

NOTE: **Check that there is no clearance between the front suspension**

member and the front suspension member body mounting front cushion.

5. **INSTALL FRONT SUSPENSION MEMBER BODY MOUNTING REAR STOPPER**
    a. Install the 2 front suspension member body mounting rear stoppers to the front frame assembly.
6. **INSTALL FRONT SUSPENSION MEMBER BODY MOUNTING FRONT STOPPER**
    a. Install the 2 front suspension member body mounting front stoppers to the front frame assembly.
7. **INSTALL FRONT SUSPENSION MEMBER DYNAMIC DAMPER**
    a. Install the front suspension member dynamic damper to the front frame assembly with the 2 bolts.

    Torque: 29 N*m (296 kgf*cm, 21 ft.*lbf)

8. **INSTALL FRONT LOWER NO. 1 SUSPENSION ARM SUB-ASSEMBLY LH**
    a. Install the front lower arm bushing stopper to the front lower No. 1 suspension arm sub-assembly.
    b. Install the front lower No. 1 suspension arm sub-assembly to the front frame assembly with the 3 bolts and nut in the order shown in the illustration.

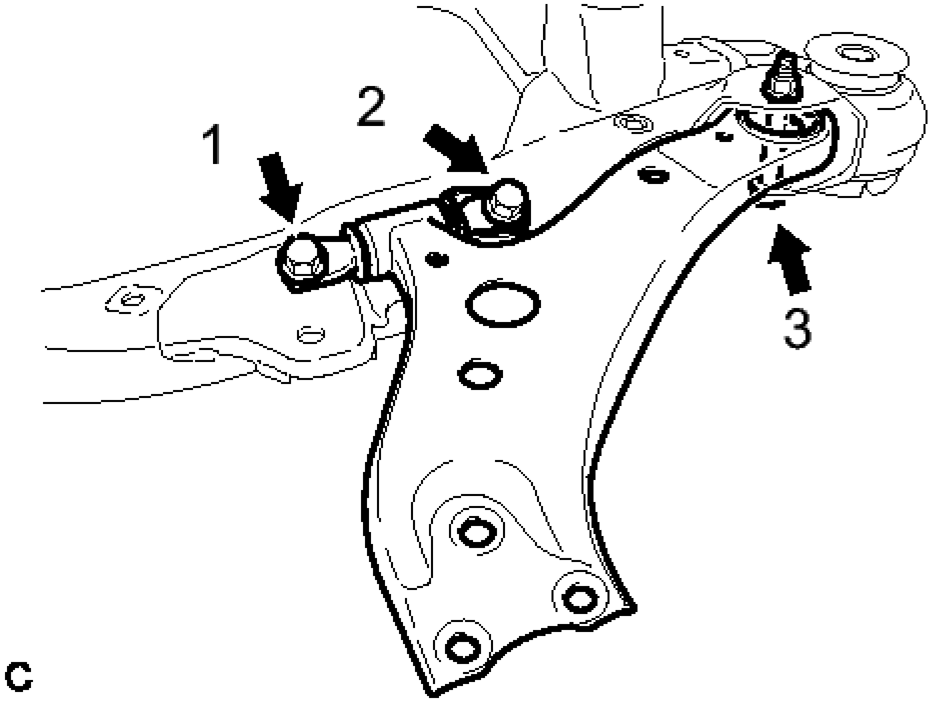

Fig. 78: Identifying Bolts Tightening Sequence
Courtesy of TOYOTA MOTOR SALES, U.S.A., INC.

Bolt 1, 2

Torque: 200 N*m (2039 kgf*cm, 148 ft.*lbf)

Bolt 3

Torque: 135 N*m (1377 kgf*cm, 100 ft.*lbf)

NOTE: While keeping the nut from rotating, tighten the bolt.

9. **INSTALL FRONT LOWER NO. 1 SUSPENSION ARM SUB-ASSEMBLY RH**

   HINT:

   Perform the same procedure as the LH side.

10. **INSTALL STEERING LINK ASSEMBLY** . Refer to **INSTALLATION - Step 3**
11. **INSTALL FRONT STABILIZER BAR WITH FRONT STABILIZER LINK ASSEMBLY**
    a. Install the front stabilizer bar with 2 front stabilizer link assemblies to the front frame assembly.
12. **INSTALL FRONT NO. 1 STABILIZER BRACKET LH** See step 3
13. **INSTALL FRONT NO. 1 STABILIZER BRACKET RH**

    HINT:

    Perform the same procedure as the LH side.

14. **INSTALL ENGINE MOUNTING INSULATOR LH** . Refer to **INSTALLATION - Step 9**
15. **INSTALL ENGINE MOUNTING INSULATOR RH** . Refer to **INSTALLATION - Step 10**
16. **INSTALL FRONT ENGINE MOUNTING INSULATOR** . Refer to **INSTALLATION - Step 8**
17. **INSTALL FRONT FRAME ASSEMBLY**

    Refer to **INSTALLATION - Step 11**

FRONT SHOCK ABSORBER

COMPONENTS

ILLUSTRATION

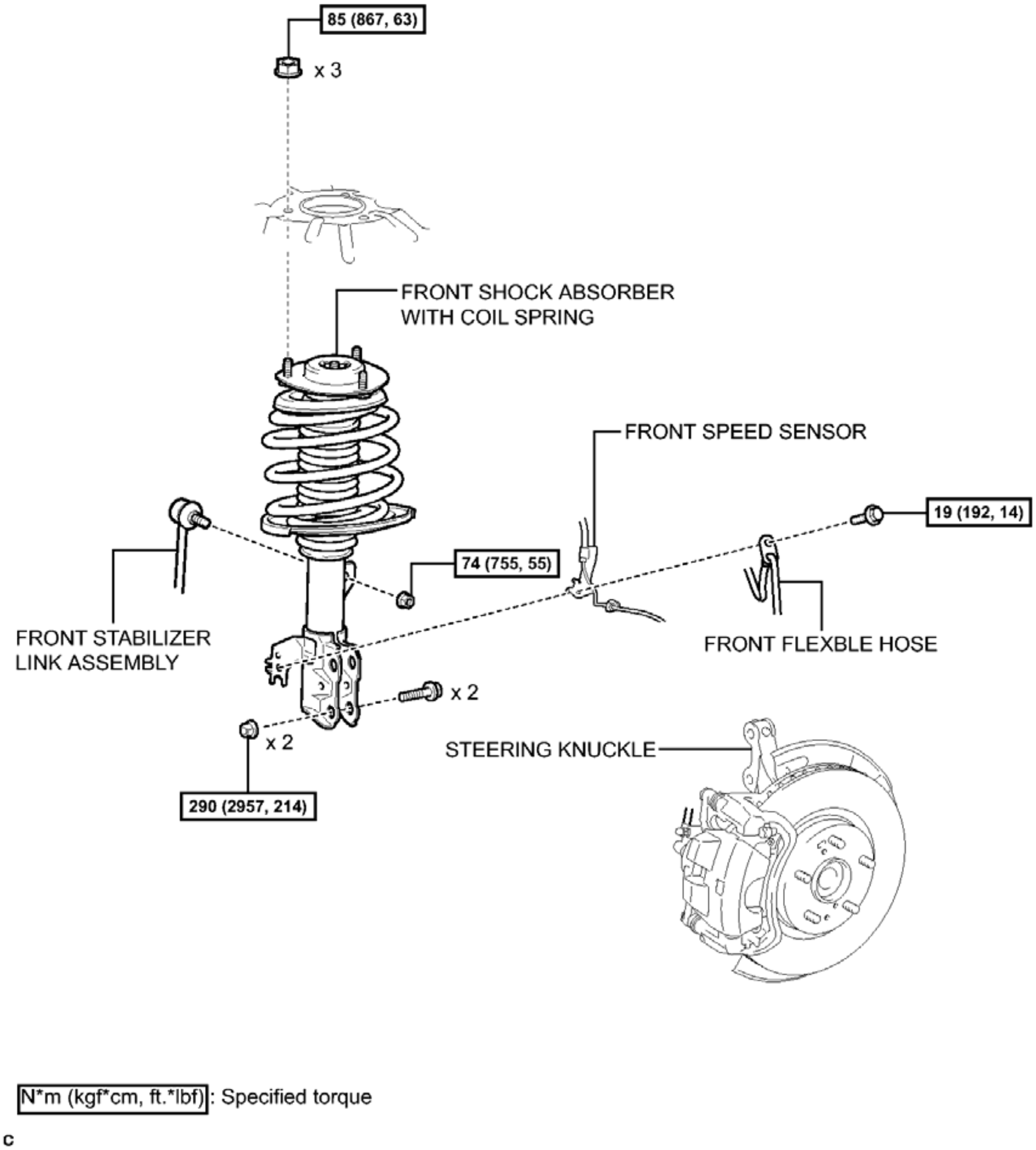
85 (867, 63)
x 3
FRONT SHOCK ABSORBER WITH COIL SPRING
FRONT SPEED SENSOR
19 (192, 14)
74 (755, 55)
FRONT STABILIZER LINK ASSEMBLY
FRONT FLEXBLE HOSE
x 2
x 2
STEERING KNUCKLE
290 (2957, 214)
N*m (kgf*cm, ft.*lbf): Specified torque
c

Fig. 1: Identifying Front Shock Absorber Replacement Components With Torque Specifications (1 Of 2)
Courtesy of TOYOTA MOTOR SALES, U.S.A., INC.

ILLUSTRATION

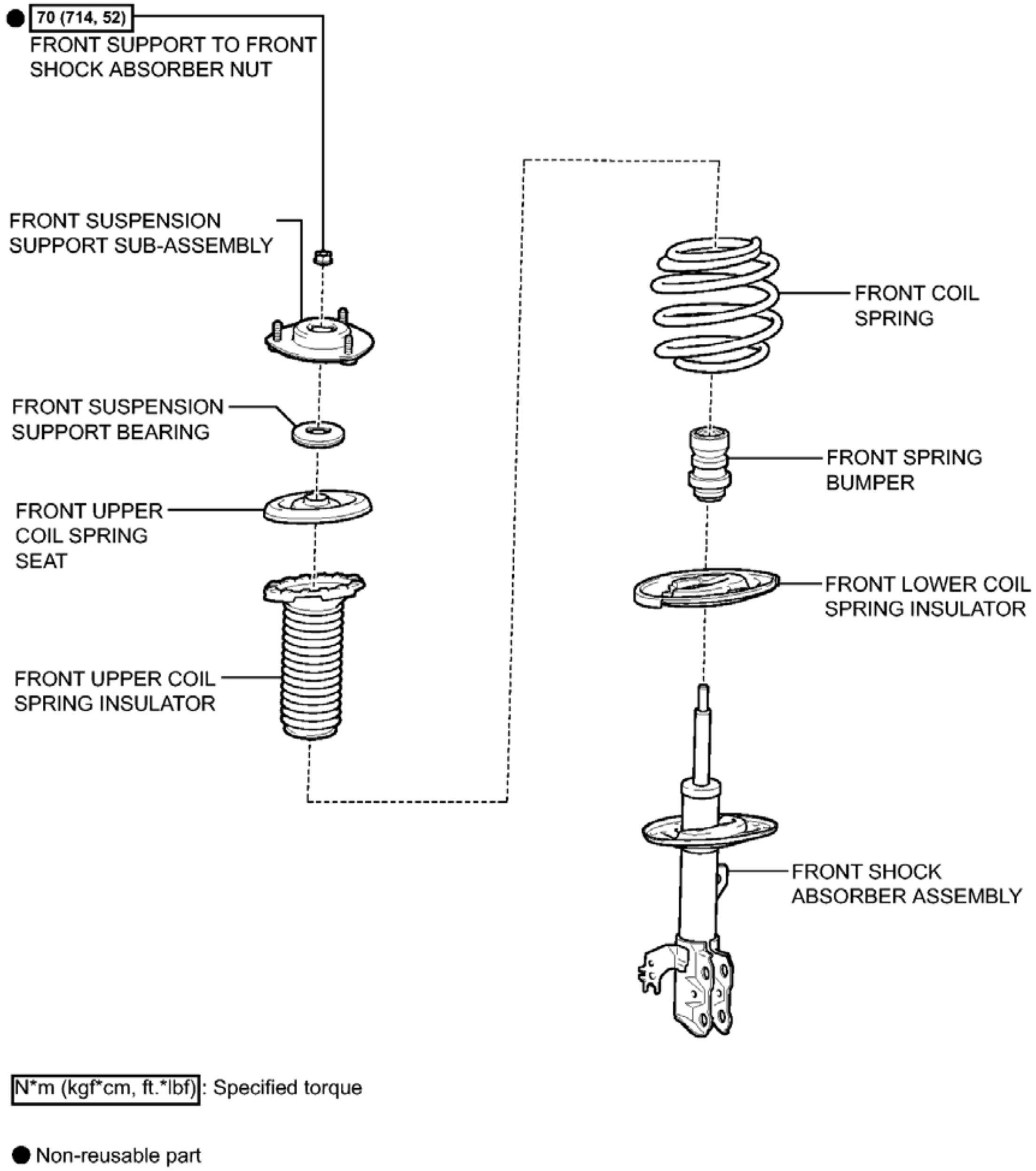
● 70 (714, 52)
FRONT SUPPORT TO FRONT SHOCK ABSORBER NUT
FRONT SUSPENSION SUPPORT SUB-ASSEMBLY
FRONT SUSPENSION SUPPORT BEARING
FRONT UPPER COIL SPRING SEAT
FRONT UPPER COIL SPRING INSULATOR
FRONT COIL SPRING
FRONT SPRING BUMPER
FRONT LOWER COIL SPRING INSULATOR
FRONT SHOCK ABSORBER ASSEMBLY
N*m (kgf*cm, ft.*lbf): Specified torque
● Non-reusable part

c

Fig. 2: Identifying Front Shock Absorber Replacement Components With Torque Specifications (2 Of 2)
Courtesy of TOYOTA MOTOR SALES, U.S.A., INC.

REMOVAL

REMOVAL

HINT:

- Use the same procedure for the RH side and LH side.
- The procedure listed below is for the LH side.

1. **REMOVE FRONT WHEEL**
2. **LOOSEN FRONT SUPPORT TO FRONT SHOCK ABSORBER NUT**
    a. Loosen the front support to front shock absorber nut.

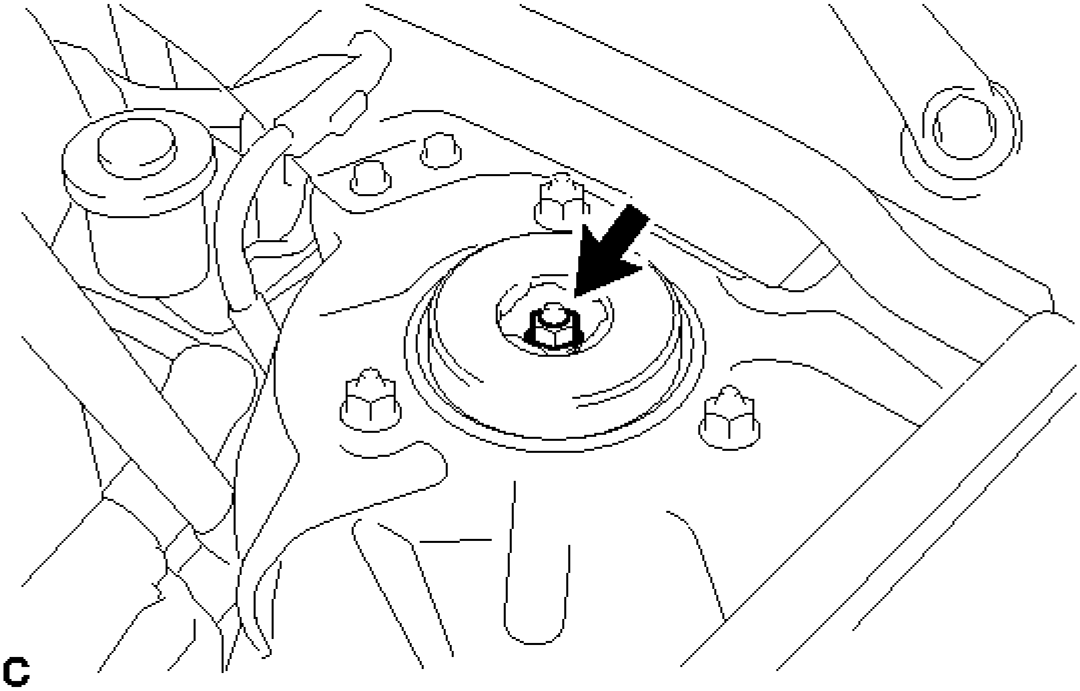

Fig. 3: Identifying Front Shock Absorber Nut
Courtesy of TOYOTA MOTOR SALES, U.S.A., INC.

NOTE:

- **Do not remove the front support to front shock absorber nut.**
- **Loosen the front support to front shock absorber nut only when the front shock absorber with coil spring needs to be disassembled.**

3. **SEPARATE FRONT SPEED SENSOR**
    a. Remove the bolt and clamp, and separate the front speed sensor and front flexible hose from the front shock absorber assembly.

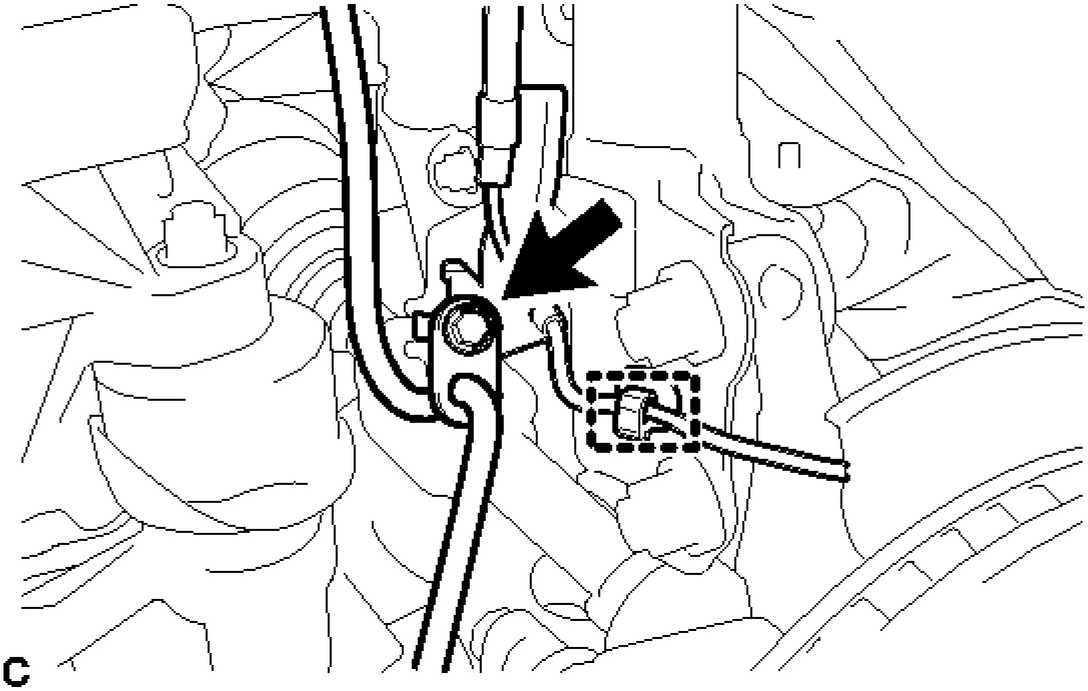

Fig. 4: Locating Front Speed Sensor Clamp And Front Flexible Hose Bolt
Courtesy of TOYOTA MOTOR SALES, U.S.A., INC.

NOTE: **Be sure to separate the front speed sensor from the front shock absorber assembly completely.**

4. **SEPARATE FRONT STABILIZER LINK ASSEMBLY**
   a. Remove the nut and separate the front stabilizer link assembly from the front shock absorber assembly.

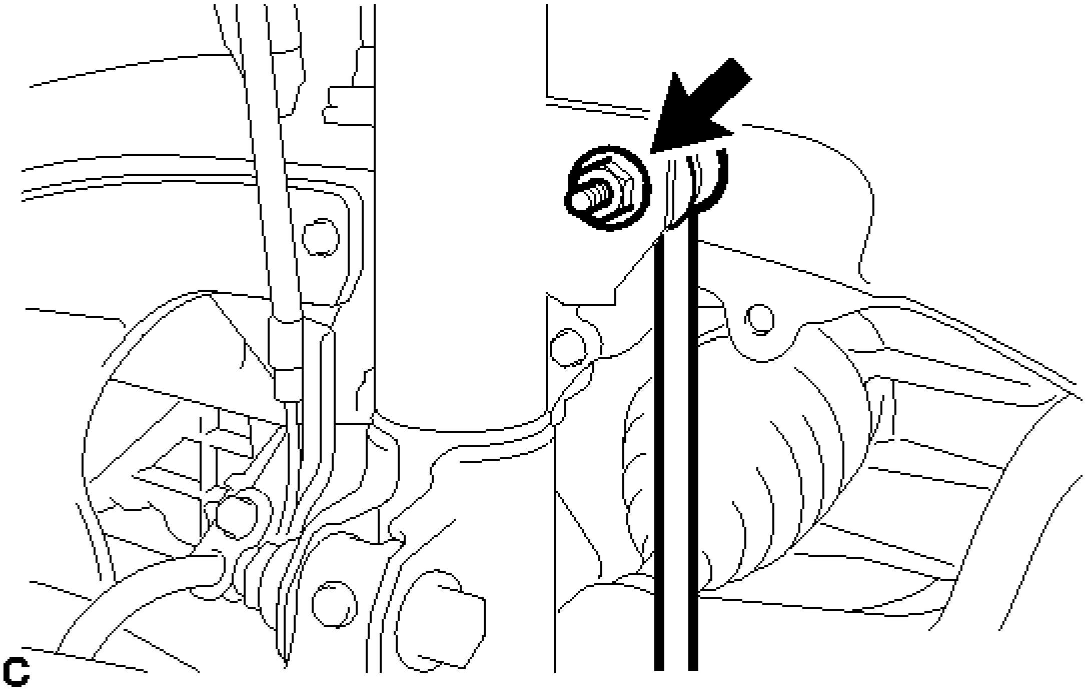

Fig. 5: Identifying Front Stabilizer Link Nut
Courtesy of TOYOTA MOTOR SALES, U.S.A., INC.

If the ball joint turns together with the nut, use a hexagon wrench to hold the stud bolt.

5. **REMOVE FRONT SHOCK ABSORBER WITH COIL SPRING**
    a. Support the front axle using a jack and wooden block.

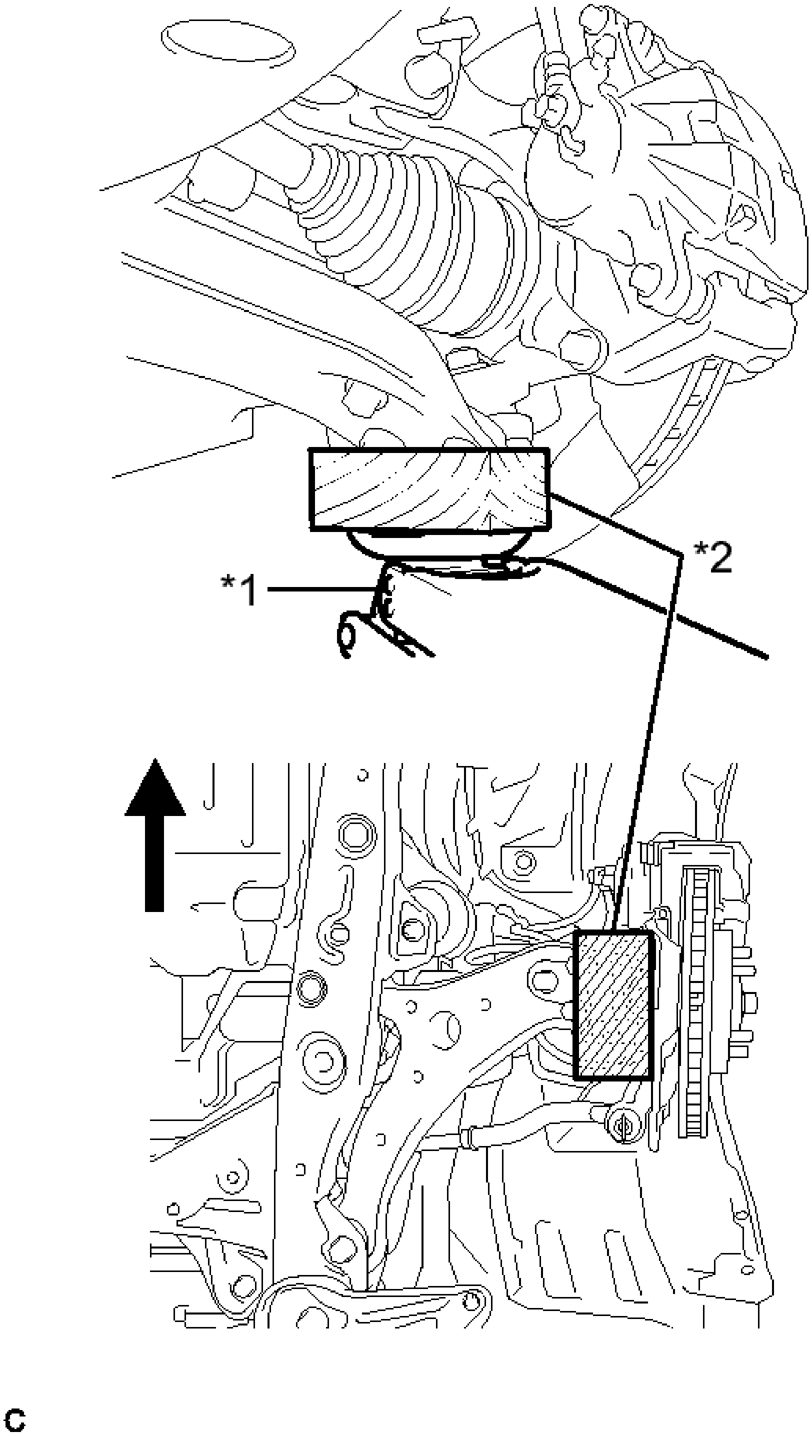

Fig. 6: Identifying Jack Placement
Courtesy of TOYOTA MOTOR SALES, U.S.A., INC.

TEXT IN ILLUSTRATION

*1	Jack
*2	Wooden Block
	Front of the Vehicle

b. Remove the 2 bolts and 2 nuts, and separate the front shock absorber with coil spring (lower side) from the steering knuckle.

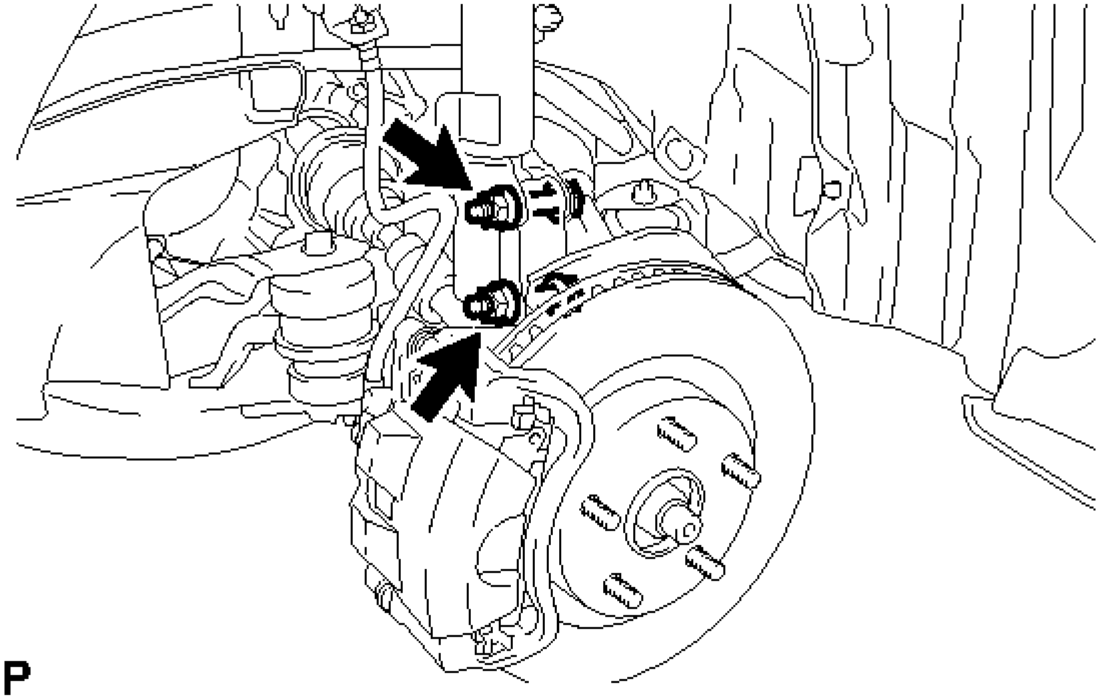

Fig. 7: Locating Front Axle Assembly Nuts And Bolts
Courtesy of TOYOTA MOTOR SALES, U.S.A., INC.

NOTE: **When removing the nuts, keep the bolts from rotating.**

c. Remove the 3 nuts and front shock absorber with coil spring.

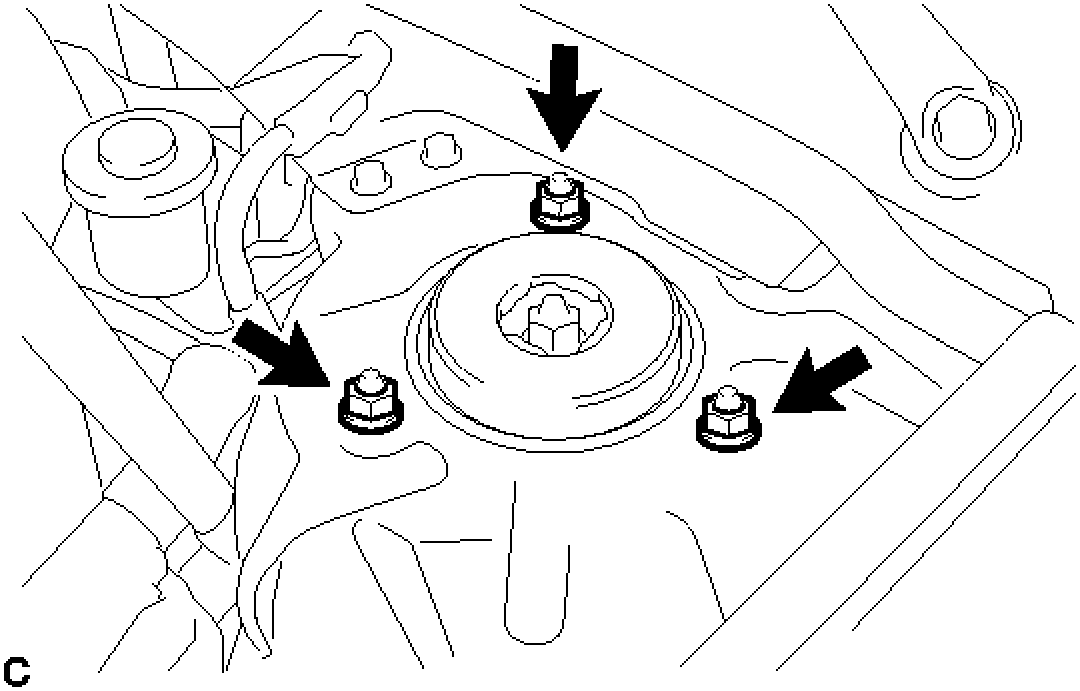

Fig. 8: Identifying Front Shock Absorber Nuts
Courtesy of TOYOTA MOTOR SALES, U.S.A., INC.

NOTE: **Make sure that the front speed sensor is completely separated from the front shock absorber with coil spring.**

6. **SECURE FRONT SHOCK ABSORBER WITH COIL SPRING**
   a. Install SST to the front coil spring with the hooks spread as far apart as possible from each other.
      - **SST: 09727-30021**
        09727-00010
        09727-00021
        09727-00031

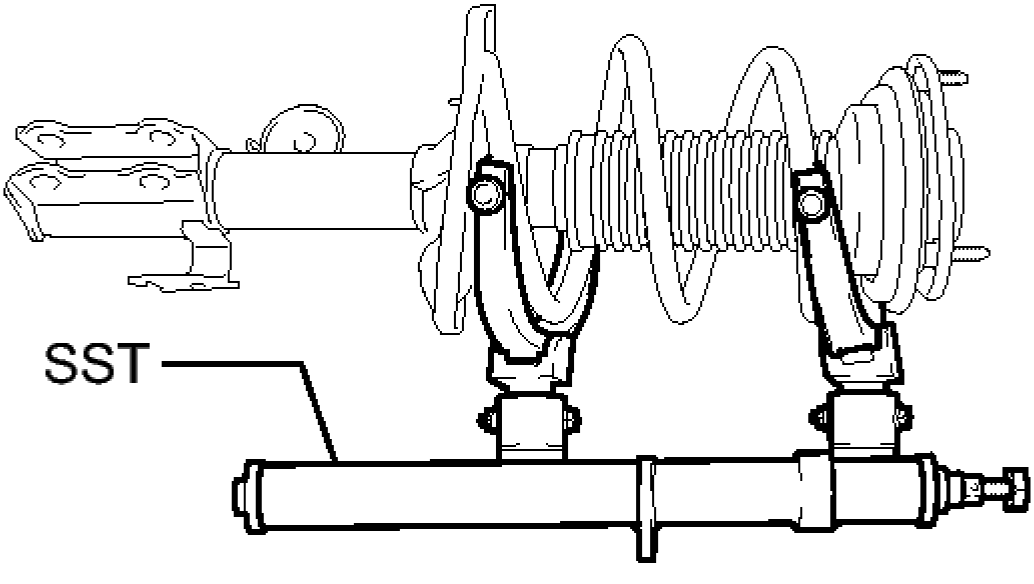

Fig. 9: Identifying SST To Front Coil Spring
Courtesy of TOYOTA MOTOR SALES, U.S.A., INC.

NOTE: **Make sure that the claws on the hooks are securely engaged to the spring.**

b. Install the bolt and nut to the front shock absorber assembly as shown in the illustration and secure the front shock absorber assembly in a vise using aluminum plates.

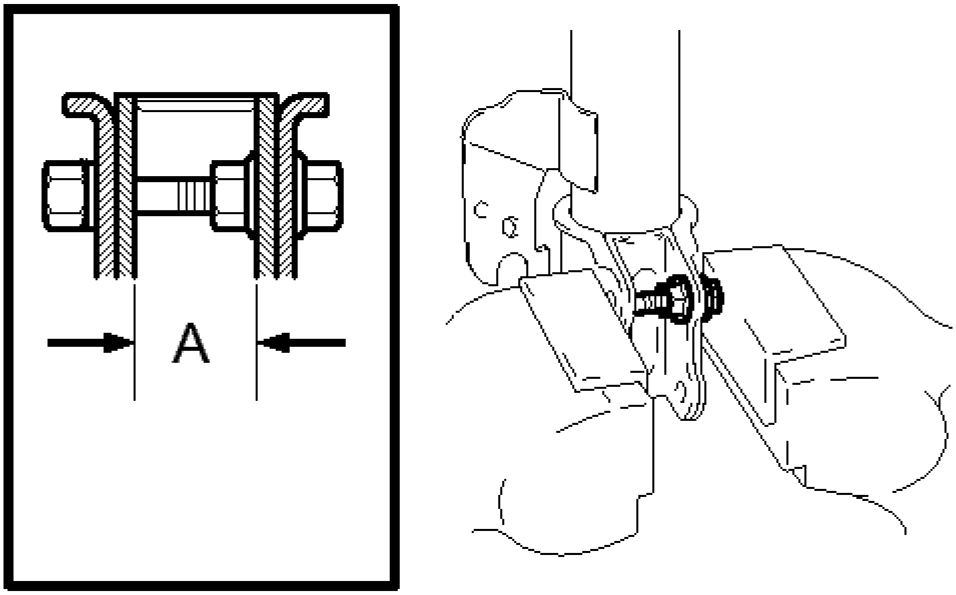

P

Fig. 10: Identifying Standard Length A
Courtesy of TOYOTA MOTOR SALES, U.S.A., INC.

Standard length A

28 mm (1.10 in.)

7. **REMOVE FRONT SUPPORT TO FRONT SHOCK ABSORBER NUT**
   a. Using SST, compress the front coil spring.
      - **SST: 09727-30021**
        09727-00010
        09727-00021
        09727-00031

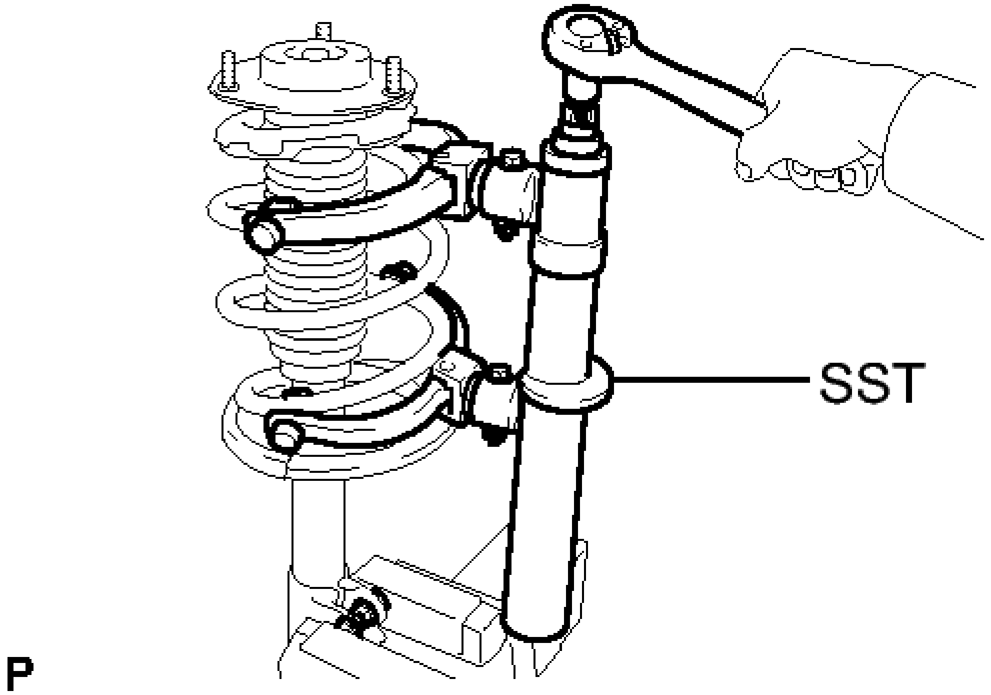

Fig. 11: Compressing Front Coil Spring
Courtesy of TOYOTA MOTOR SALES, U.S.A., INC.

NOTE: **Do not use an impact wrench. It will damage SST.**

If the front coil spring is compressed at an angle, using 2 SST will make the work easier.

b. Check that the front coil spring is sufficiently compressed.
c. Remove the front support to front shock absorber nut.

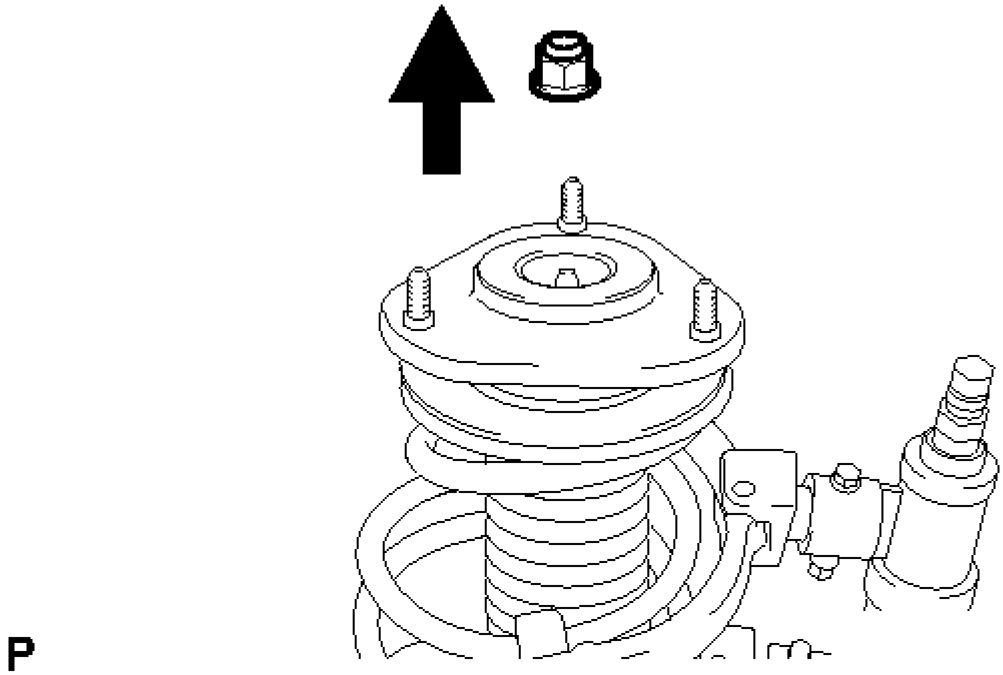

Fig. 12: Identifying Front Support To Front Shock Absorber Nut
Courtesy of TOYOTA MOTOR SALES, U.S.A., INC.

8. **REMOVE FRONT SUSPENSION SUPPORT SUB-ASSEMBLY**
9. **REMOVE FRONT SUSPENSION SUPPORT BEARING**
10. **REMOVE FRONT UPPER COIL SPRING SEAT**
11. **REMOVE FRONT UPPER COIL SPRING INSULATOR**
12. **REMOVE FRONT COIL SPRING**
13. **REMOVE FRONT SPRING BUMPER**
14. **REMOVE FRONT LOWER COIL SPRING INSULATOR**
15. **REMOVE FRONT SHOCK ABSORBER ASSEMBLY**

INSPECTION

INSPECTION

1. **INSPECT FRONT SHOCK ABSORBER ASSEMBLY**
    a. Compress and extend the shock absorber rod 4 or more times.

       Standard

       There is no abnormal resistance or sound and operation resistance is normal.

       If there is any abnormality, replace the front shock absorber assembly with a new one.

INSTALLATION

INSTALLATION

HINT:

- Use the same procedure for the RH side and LH side.
- The procedure listed below is for the LH side.

1. **SECURE FRONT SHOCK ABSORBER ASSEMBLY**
    a. Install the bolt and nut to the front shock absorber assembly as shown in the illustration and secure the front shock absorber assembly in a vise using aluminum plates.

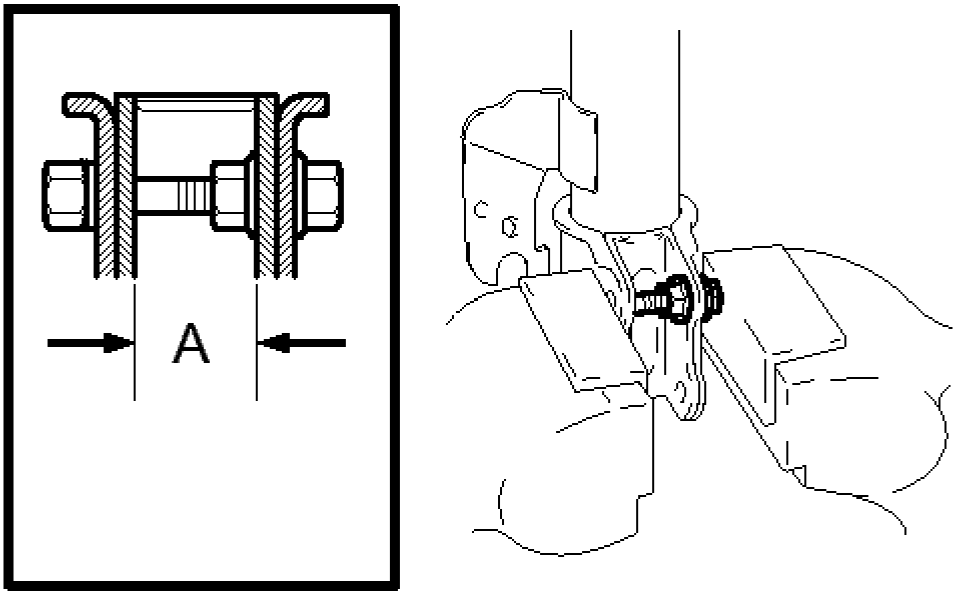

P

Fig. 13: Identifying Standard Length A
Courtesy of TOYOTA MOTOR SALES, U.S.A., INC.

Standard length A

28 mm (1.10 in.)

2. **INSTALL FRONT LOWER COIL SPRING INSULATOR**
    a. Install the front lower coil spring insulator to the front shock absorber assembly.

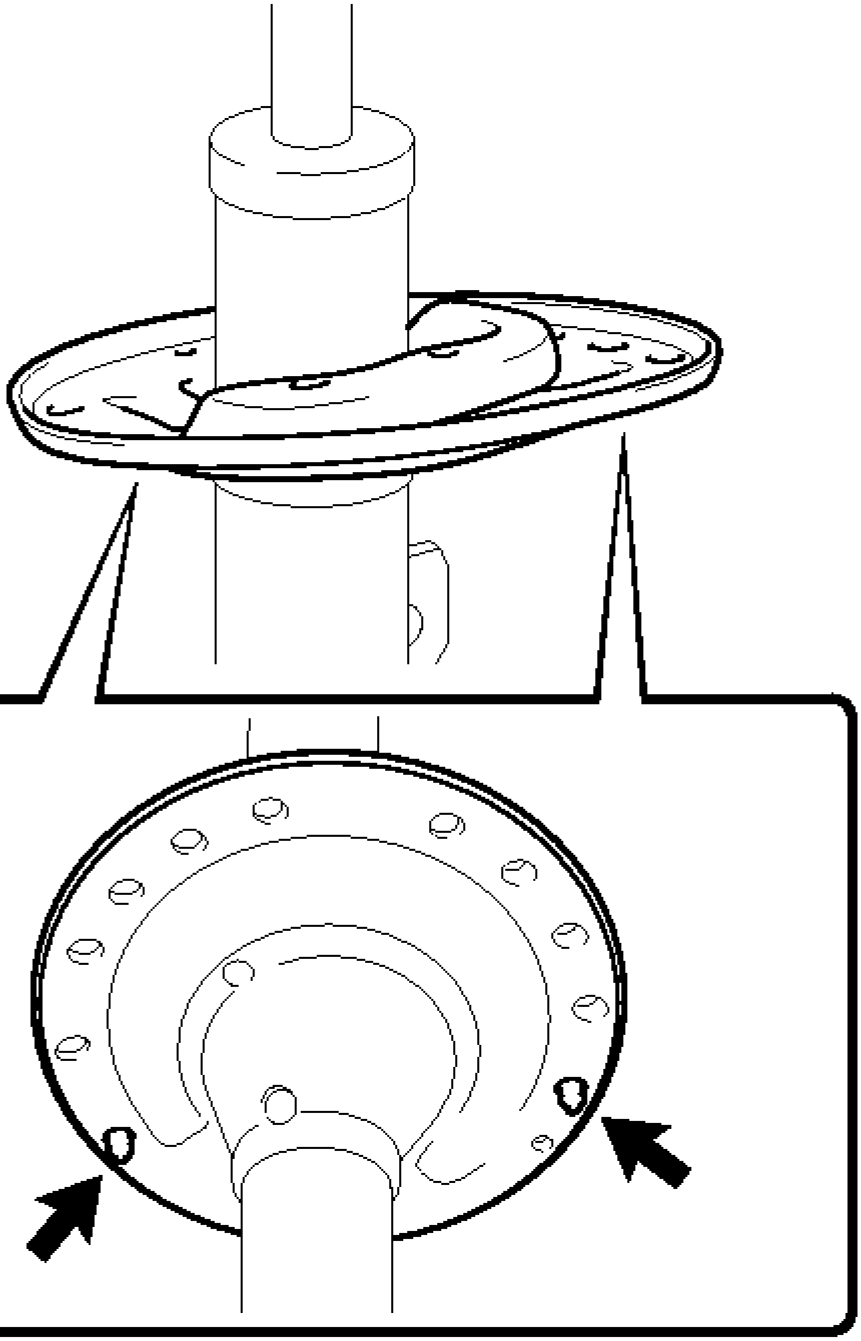

C

Fig. 14: Identifying Front Lower Coil Spring Insulator Positioning Pins
Courtesy of TOYOTA MOTOR SALES, U.S.A., INC.

TEXT IN ILLUSTRATION

	Positioning

Pin

NOTE: **Make sure that the positioning pins on the front lower coil spring insulator are inserted into the holes in the front shock absorber assembly.**

3. **INSTALL FRONT SPRING BUMPER**
    a. Install the front spring bumper to the front shock absorber assembly.

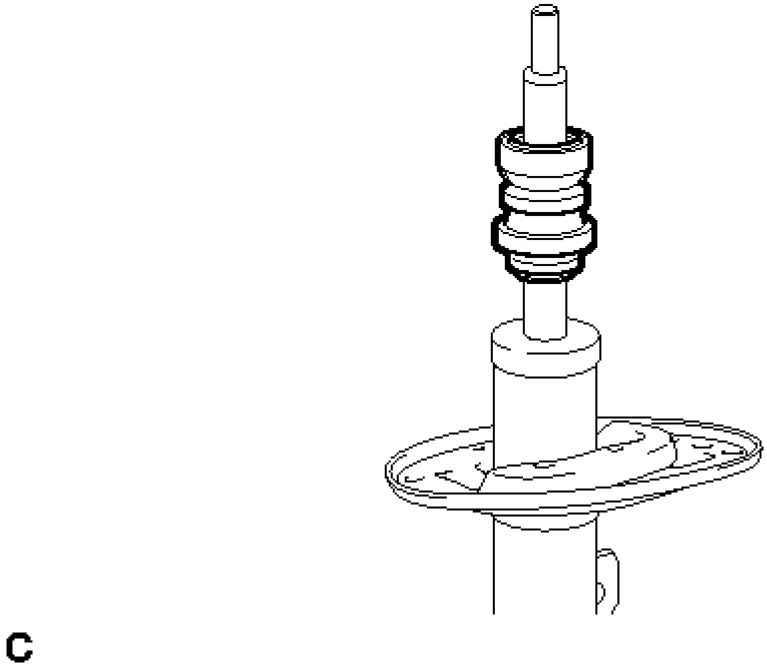

Fig. 15: Identifying Front Spring Bumper
Courtesy of TOYOTA MOTOR SALES, U.S.A., INC.

NOTE: **Face the smaller diameter end of the front spring bumper downward.**

4. **INSTALL FRONT COIL SPRING**
    a. Install SST to the front coil spring with the hooks spread as far apart as possible from each other.
        - **SST: 09727-30021**
          09727-00010
          09727-00021
          09727-00031

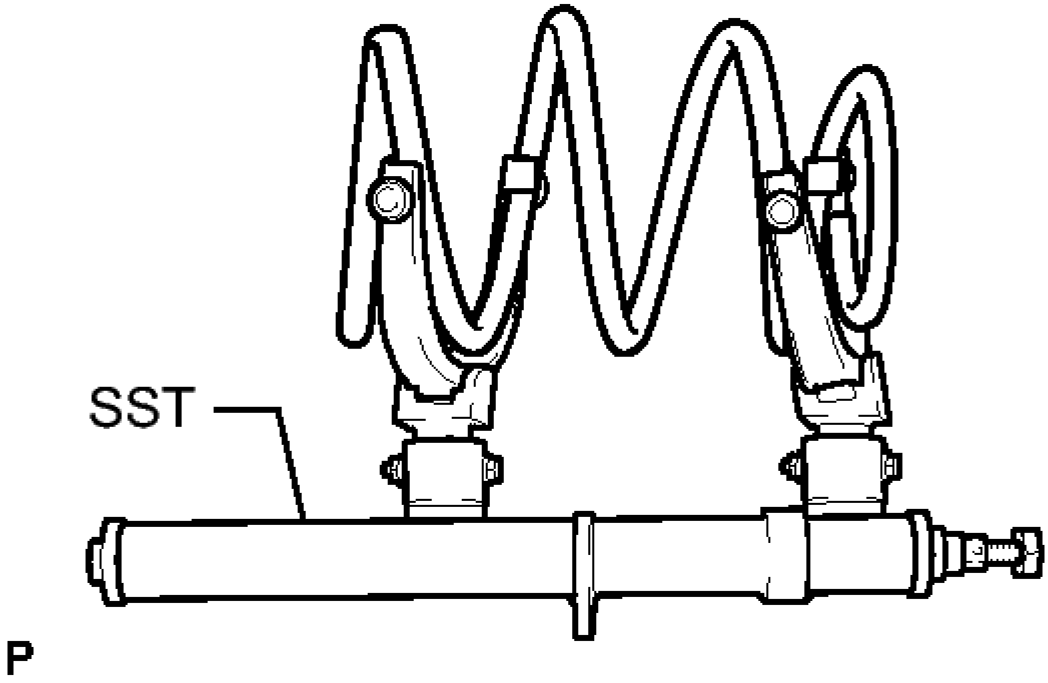

Fig. 16: Compressing Front Coil Spring
Courtesy of TOYOTA MOTOR SALES, U.S.A., INC.

NOTE: **Make sure that the claws on the hooks are securely engaged to the spring.**

If the front coil spring is compressed at an angle, using 2 SST will make the work easier.

b. Using SST, compress the front coil spring.
   - **SST: 09727-30021**
     09727-00010
     09727-00021
     09727-00031

NOTE: **Do not use an impact wrench. It will damage SST.**

c. Install the front coil spring to the front shock absorber assembly.

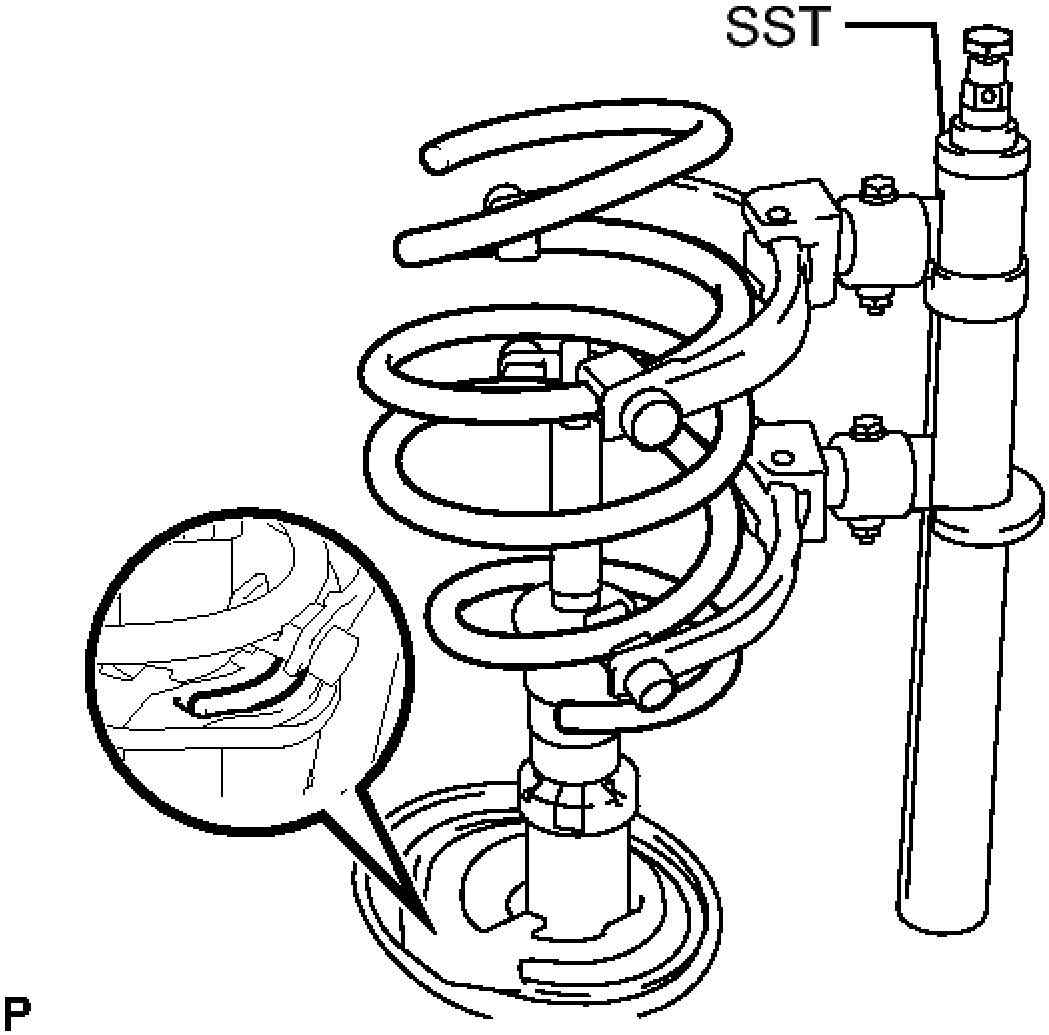

Fig. 17: Identifying Front Coil Spring & Front Shock Absorber
Courtesy of TOYOTA MOTOR SALES, U.S.A., INC.

NOTE: **Make sure that the end of the front coil spring is positioned in the depression of the front lower coil spring insulator.**

5. **INSTALL FRONT UPPER COIL SPRING INSULATOR**
    a. Install the front upper coil spring insulator as shown in the illustration.

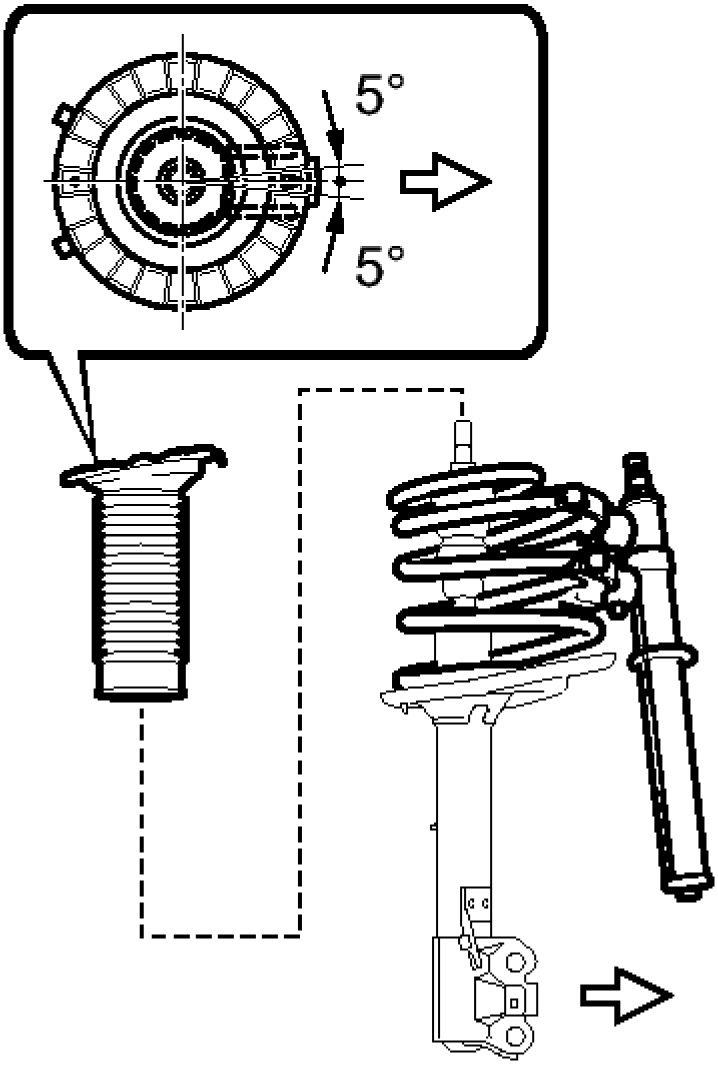

Fig. 18: Installing Front Upper Coil Spring Insulator
Courtesy of TOYOTA MOTOR SALES, U.S.A., INC.

TEXT IN ILLUSTRATION

Outside of the Vehicle

NOTE: **Any misalignment between the front shock absorber lower bracket and the alignment mark must be +/- 5°.**

6. **INSTALL FRONT UPPER COIL SPRING SEAT**
    a. Install the front upper coil spring seat with the mark facing the outside of the vehicle.

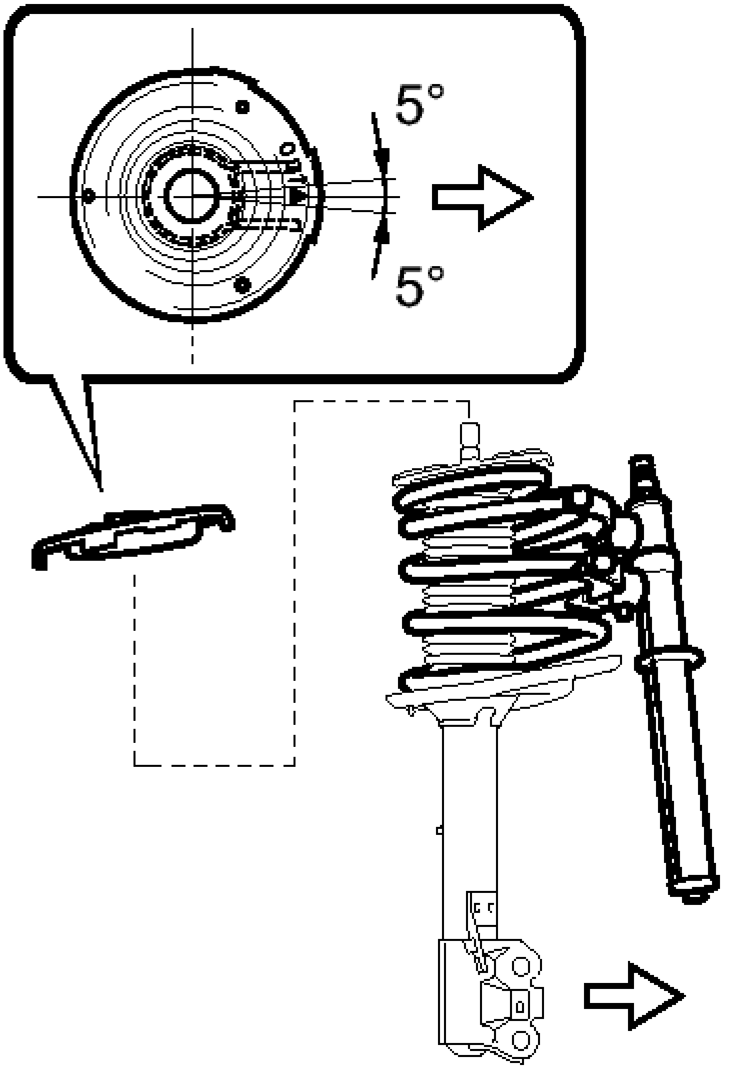

Fig. 19: Installing Front Upper Coil Spring Seat
Courtesy of TOYOTA MOTOR SALES, U.S.A., INC.

TEXT IN ILLUSTRATION

	Outside of the Vehicle

NOTE: **Any misalignment between the front shock absorber lower bracket and the alignment mark must be +/- 5°.**

7. **INSTALL FRONT SUSPENSION SUPPORT BEARING**
   a. Install the front suspension support bearing as shown in the illustration.

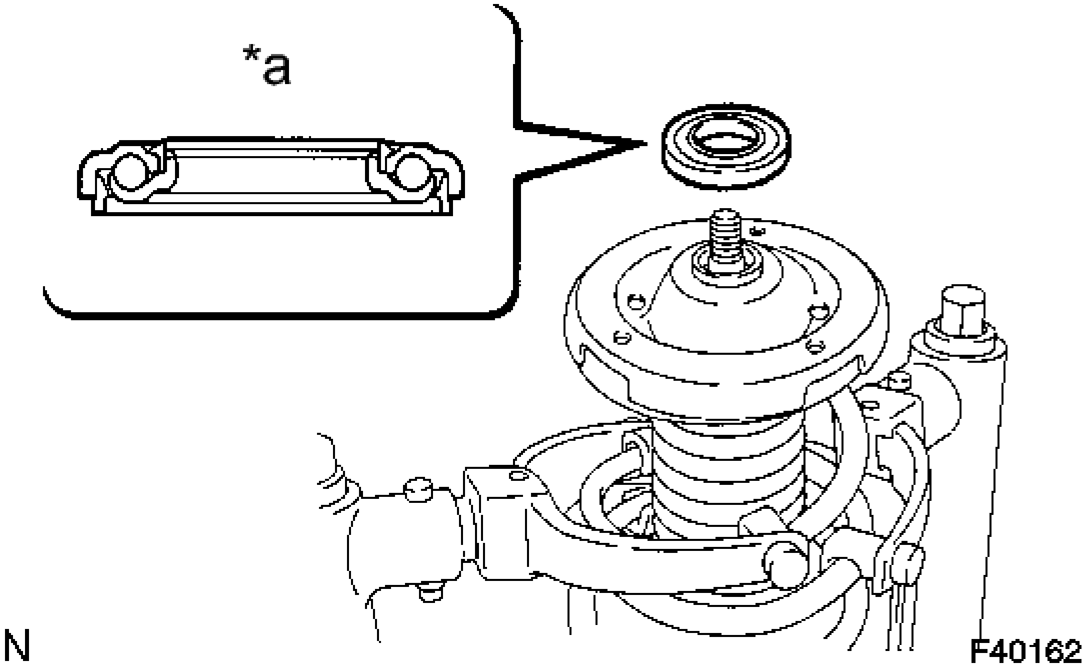

Fig. 20: Identifying Front Suspension Support Bearing
Courtesy of TOYOTA MOTOR SALES, U.S.A., INC.

TEXT IN ILLUSTRATION

*a	Upper Side

NOTE: **Do not install the bearing upside down.**

8. **INSTALL FRONT SUSPENSION SUPPORT SUB-ASSEMBLY**
    a. Install the front suspension support sub-assembly as shown in the illustration.

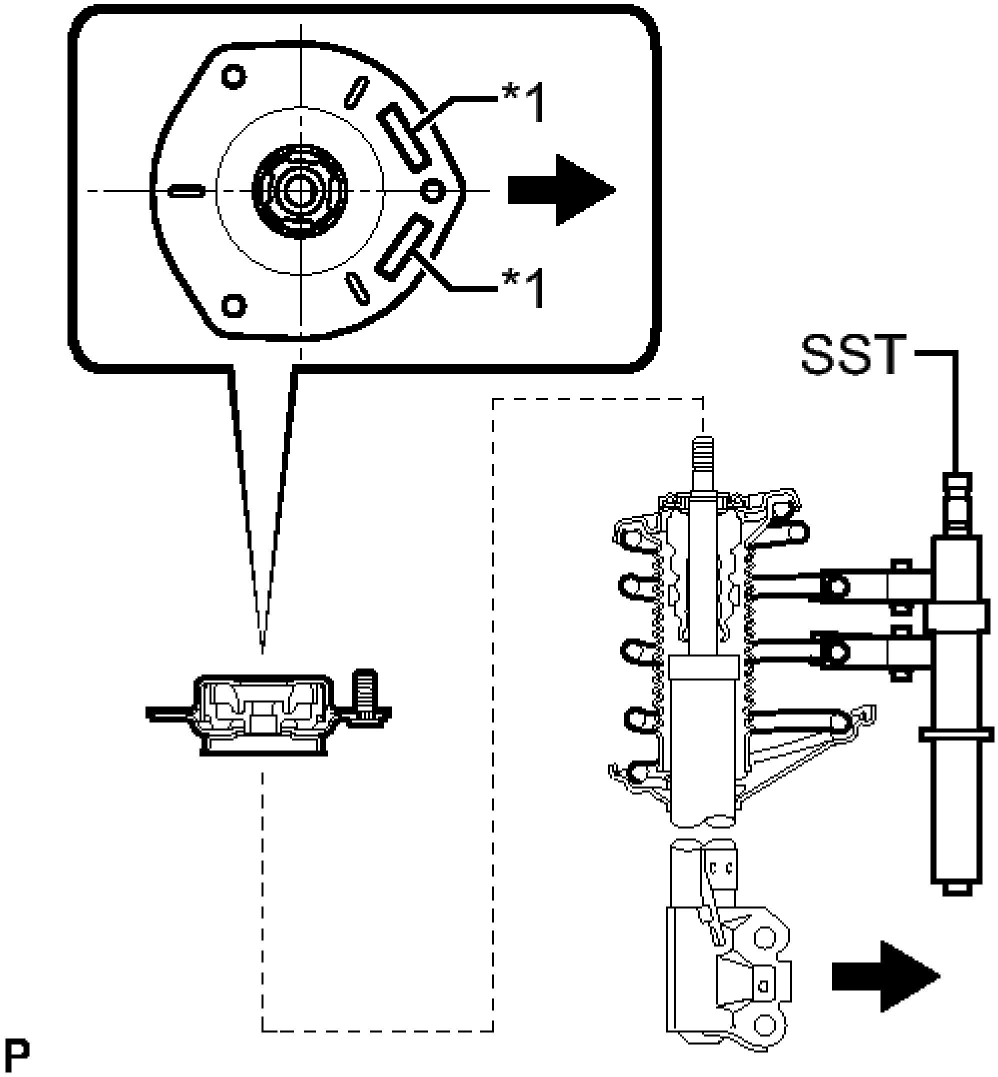

Fig. 21: Installing Front Suspension Support Sub-Assembly
Courtesy of TOYOTA MOTOR SALES, U.S.A., INC.

TEXT IN ILLUSTRATION

*1	Rubber Foam
·	Outside of the Vehicle

HINT:

Check that the slot on the piston rod and the slot on the front suspension support sub-assembly are aligned.

b. Temporarily tighten a new front support to front shock absorber nut.

c. While aligning the stud bolt of the front suspension support sub-assembly and the front shock absorber lower bracket, remove SST from the front coil spring.

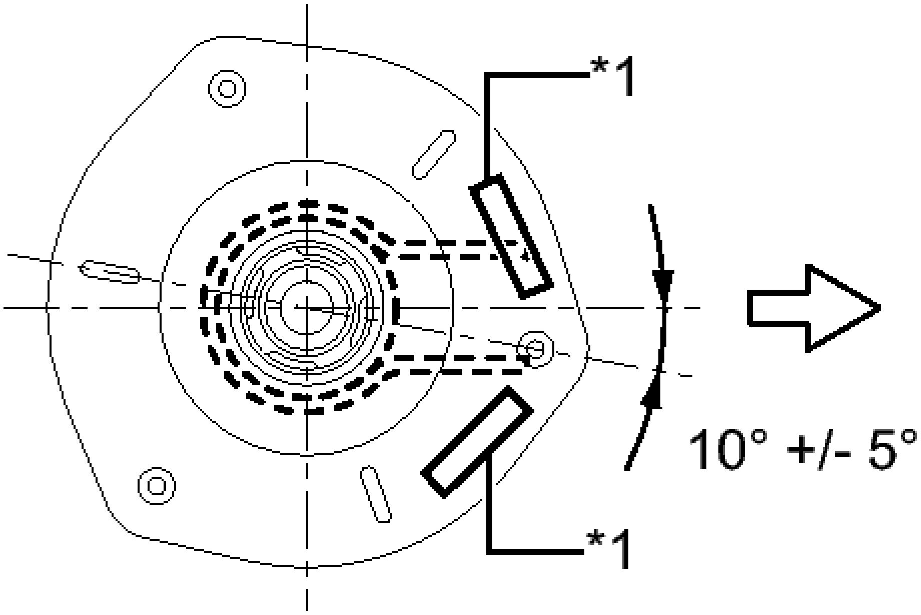

P

Fig. 22: Aligning The Stud Bolt
Courtesy of TOYOTA MOTOR SALES, U.S.A., INC.

TEXT IN ILLUSTRATION

*1	Rubber Foam
	Outside of the Vehicle

NOTE:

- **When reassembling the front suspension support sub-assembly, ensure that any misalignment between the absorber lower bracket and the stud bolt is within +/- 5°. Use the stud bolt that is closest to the outside of the vehicle.**
- **Do not use an impact wrench. It will damage SST.**

9. **INSTALL FRONT SHOCK ABSORBER WITH COIL SPRING**
   a. Install the front shock absorber with coil spring (upper side) with the 3 nuts.

      Torque: 85 N*m (867 kgf*cm, 63 ft.*lbf)

   b. Install the front shock absorber with coil spring (lower side) to the steering knuckle and insert the 2 bolts and 2 nuts.

Torque: 290 N*m (2957 kgf*cm, 214 ft.*lbf)

NOTE: **While keeping the bolts from rotating, tighten the nuts.**

10. **INSTALL FRONT STABILIZER LINK ASSEMBLY**
    a. Install the front stabilizer link assembly to the front shock absorber assembly with the nut.

    Torque: 74 N*m (755 kgf*cm, 55 ft.*lbf)

    If the ball joint turns together with the nut, use a hexagon wrench to hold the stud bolt.

11. **INSTALL FRONT SPEED SENSOR**
    a. Install the front speed sensor and front flexible hose to the front shock absorber assembly with the bolt and clamp.

    Torque: 19 N*m (192 kgf*cm, 14 ft.*lbf)

    NOTE: **Do not twist the front speed sensor when installing it.**

    HINT:

    Install the speed sensor harness bracket first and then the front flexible hose.

12. **FULLY TIGHTEN FRONT SUPPORT TO FRONT SHOCK ABSORBER NUT**
    a. Fully tighten the front support to front shock absorber nut.

    Torque: 70 N*m (714 kgf*cm, 52 ft.*lbf)

    NOTE: **Perform this step only when the front shock absorber with coil spring has been disassembled.**

13. **INSTALL FRONT WHEEL**

    Torque: 103 N*m (1049 kgf*cm, 76 ft.*lbf)

14. **STABILIZE SUSPENSION**
    a. Lower the vehicle and bounce it up and down several times to stabilize the front suspension.
15. **INSPECT AND ADJUST FRONT WHEEL ALIGNMENT**

    Refer to **ADJUSTMENT**

DISPOSAL

DISPOSAL

1. **DISPOSE OF FRONT SHOCK ABSORBER ASSEMBLY**
    1. Position the front shock absorber assembly level with the piston rod fully extended. Using a drill, make a hole in the cylinder between A and B as shown in the illustration to discharge the gas inside.

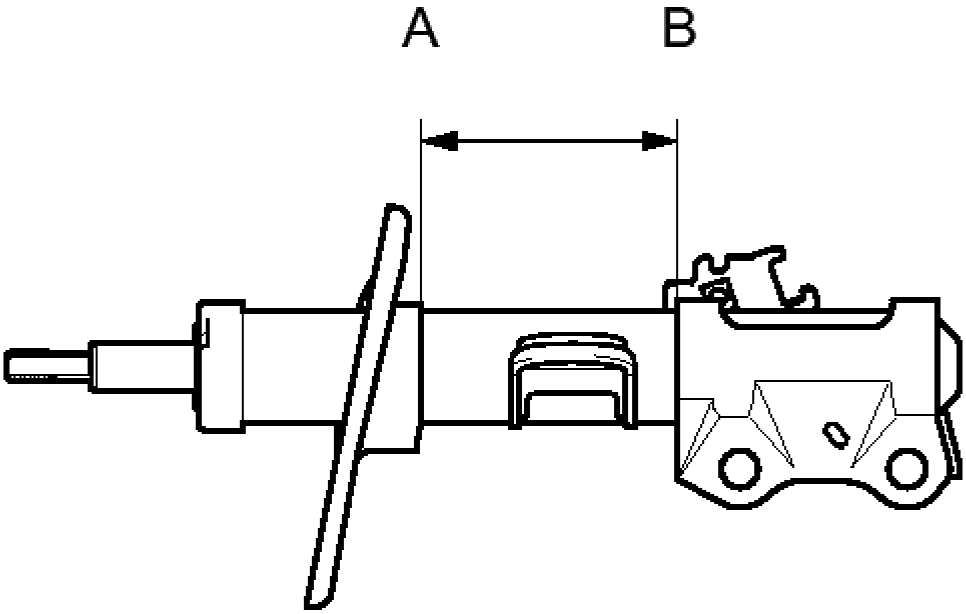

P

Fig. 23: Drilling Hole In Cylinder Between A And B
Courtesy of TOYOTA MOTOR SALES, U.S.A., INC.

WARNING: **Always use proper safety equipment and be careful when drilling because shards of metal may fly about.**

HINT:

The gas is colorless, odorless and non-poisonous.

FRONT LOWER SUSPENSION ARM (FOR 2AR-FE)

COMPONENTS

ILLUSTRATION

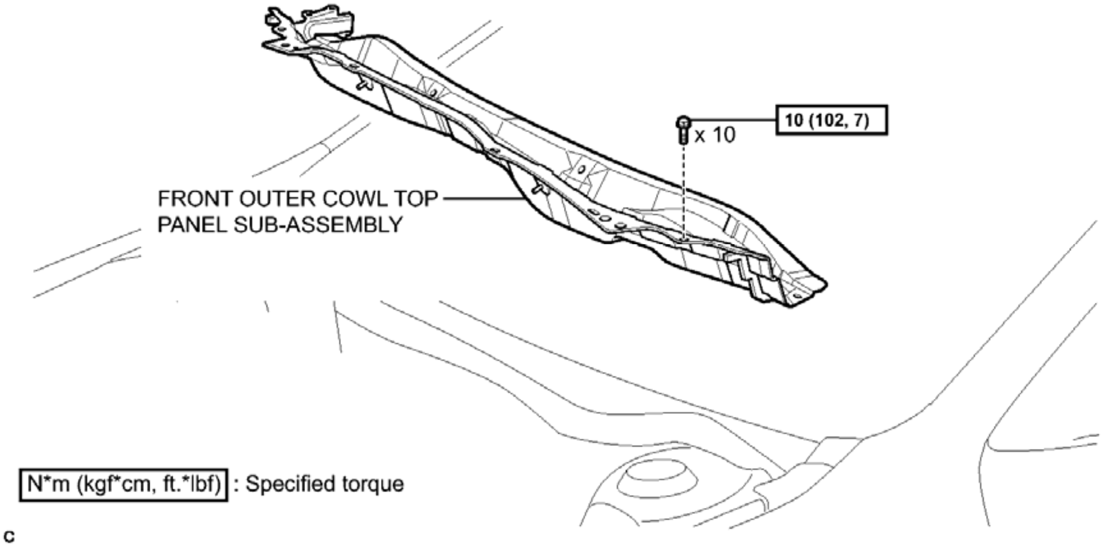
10 (102, 7)
x 10
FRONT OUTER COWL TOP PANEL SUB-ASSEMBLY
N*m (kgf*cm, ft.*lbf) : Specified torque
c

Fig. 24: Identifying Front Lower Suspension Arm Replacement Components With Torque Specifications (2AR-FE) (1 Of 5)
Courtesy of TOYOTA MOTOR SALES, U.S.A., INC.

ILLUSTRATION

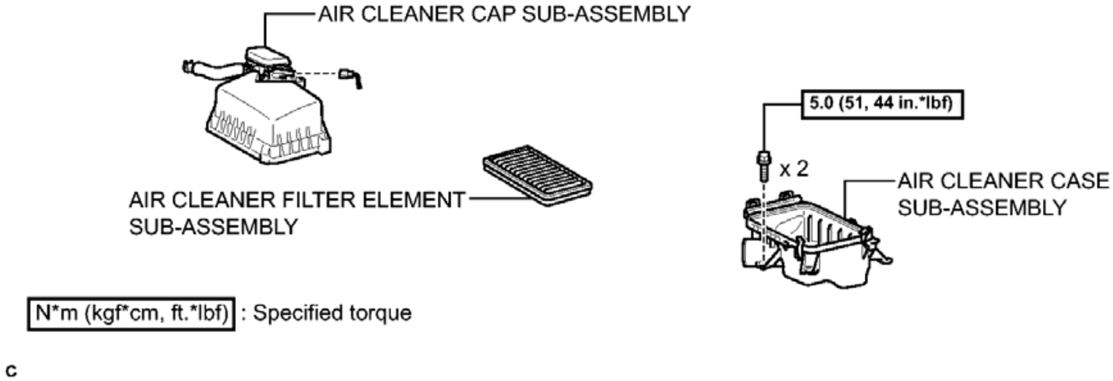
AIR CLEANER CAP SUB-ASSEMBLY
5.0 (51, 44 in.*lbf)
x 2
AIR CLEANER CASE SUB-ASSEMBLY
AIR CLEANER FILTER ELEMENT SUB-ASSEMBLY
N*m (kgf*cm, ft.*lbf) : Specified torque
c

Fig. 25: Identifying Front Lower Suspension Arm Replacement Components With Torque Specifications (2AR-FE) (2 Of 5)
Courtesy of TOYOTA MOTOR SALES, U.S.A., INC.

ILLUSTRATION

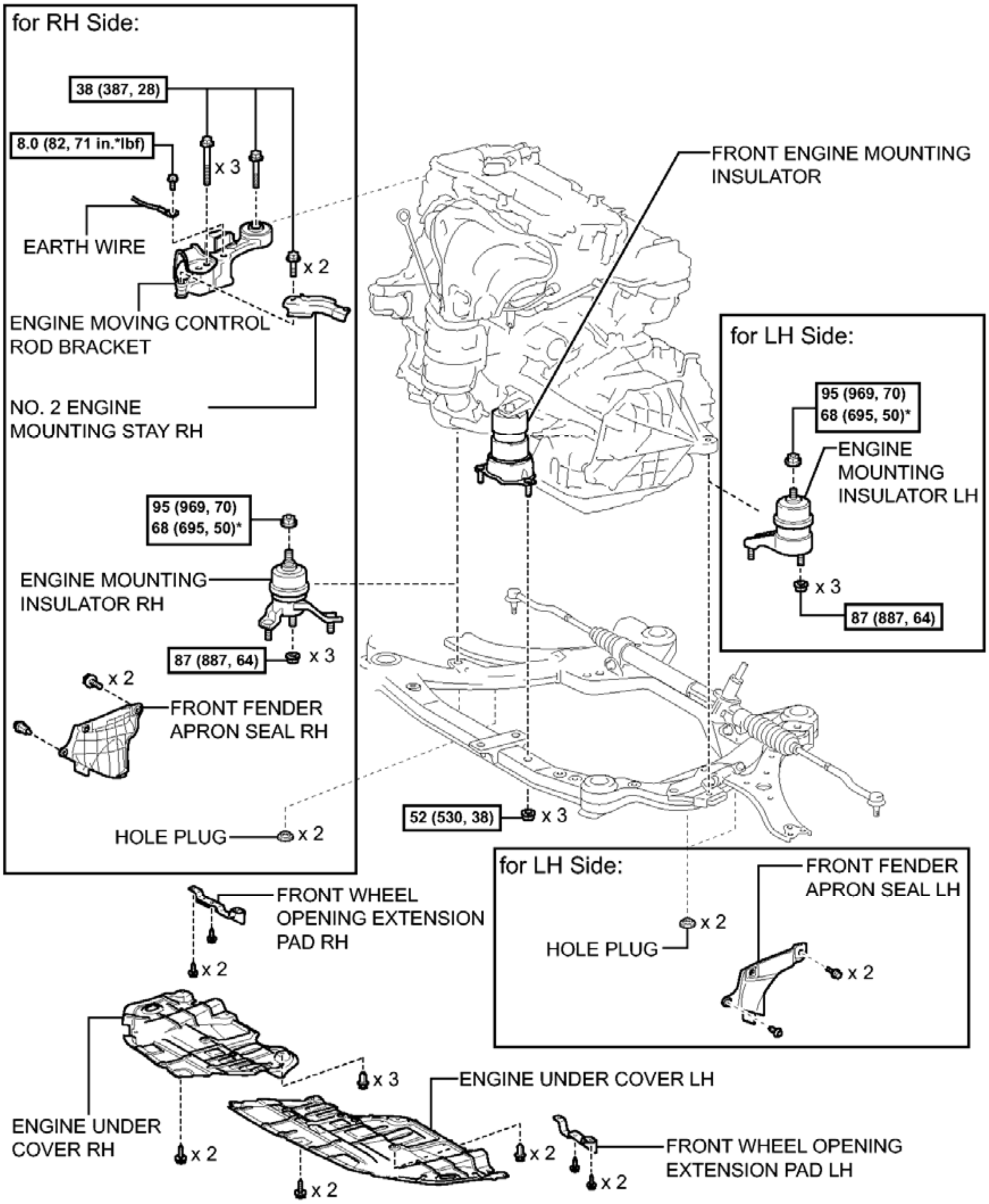
for RH Side:
38 (387, 28)
8.0 (82, 71 in.*lbf)
x 3
EARTH WIRE
x 2
ENGINE MOVING CONTROL ROD BRACKET
NO. 2 ENGINE MOUNTING STAY RH
95 (969, 70)
68 (695, 50)*
ENGINE MOUNTING INSULATOR RH
87 (887, 64)
x 3
x 2
FRONT FENDER APRON SEAL RH
HOLE PLUG
x 2
FRONT ENGINE MOUNTING INSULATOR
for LH Side:
95 (969, 70)
68 (695, 50)*
ENGINE MOUNTING INSULATOR LH
x 3
87 (887, 64)
52 (530, 38)
x 3
FRONT WHEEL OPENING EXTENSION PAD RH
x 2
for LH Side:
FRONT FENDER APRON SEAL LH
x 2
HOLE PLUG
x 2
ENGINE UNDER COVER LH
x 3
ENGINE UNDER COVER RH
x 2
x 2
x 2
FRONT WHEEL OPENING EXTENSION PAD LH
x 2

N*m (kgf*cm, ft.*lbf) : Specified torque

* For use with SST

c

Fig. 26: Identifying Front Lower Suspension Arm Replacement Components With Torque Specifications (2AR-FE) (3 Of 5)

Courtesy of TOYOTA MOTOR SALES, U.S.A., INC.

ILLUSTRATION

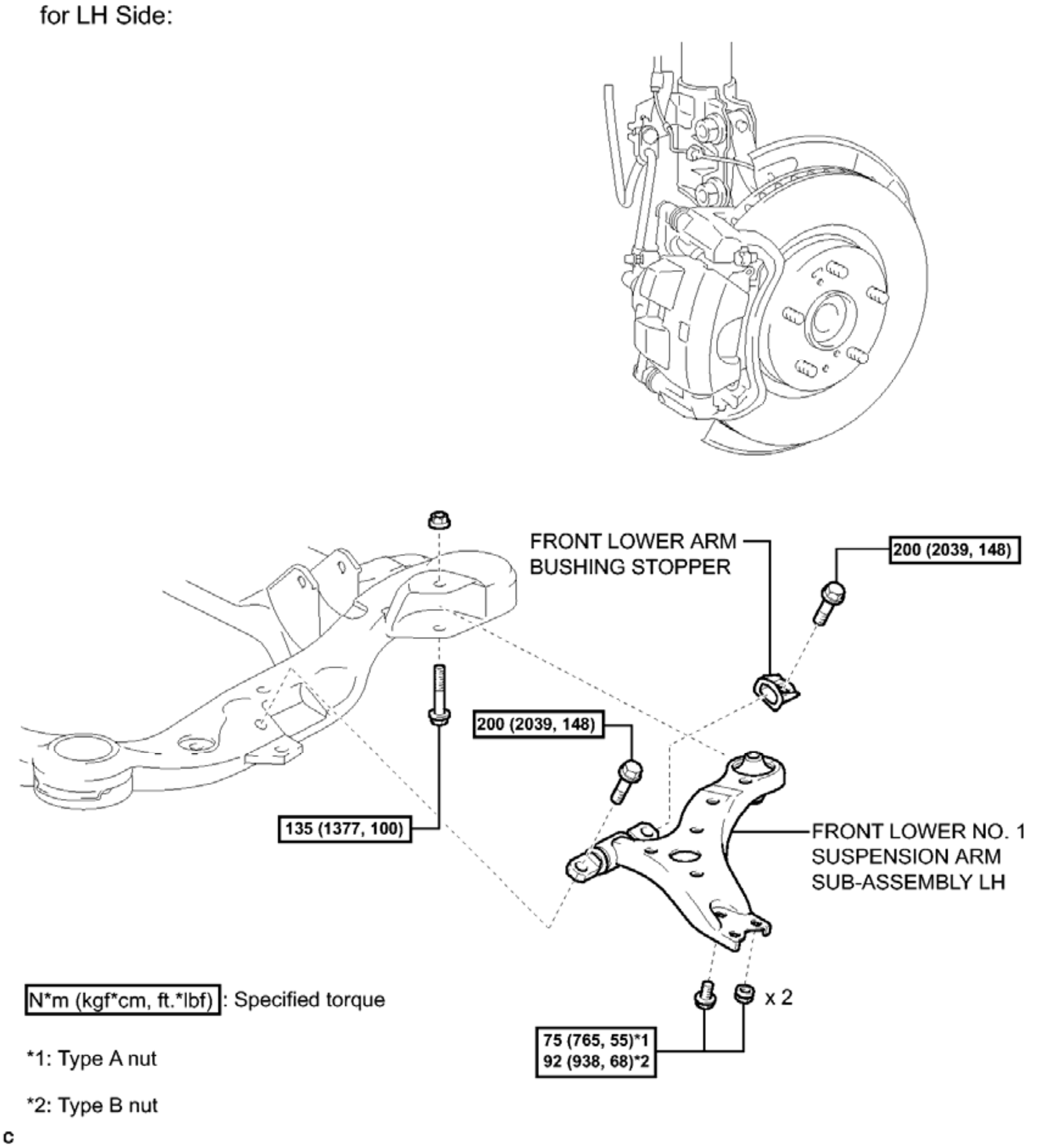
for LH Side:
FRONT LOWER ARM BUSHING STOPPER
200 (2039, 148)
200 (2039, 148)
135 (1377, 100)
FRONT LOWER NO. 1 SUSPENSION ARM SUB-ASSEMBLY LH
x 2
N*m (kgf*cm, ft.*lbf) : Specified torque
75 (765, 55)*1
92 (938, 68)*2
*1: Type A nut
*2: Type B nut
c

Fig. 27: Identifying Front Lower Suspension Arm Replacement Components With Torque Specifications (2AR-FE) (4 Of 5)
Courtesy of TOYOTA MOTOR SALES, U.S.A., INC.

ILLUSTRATION

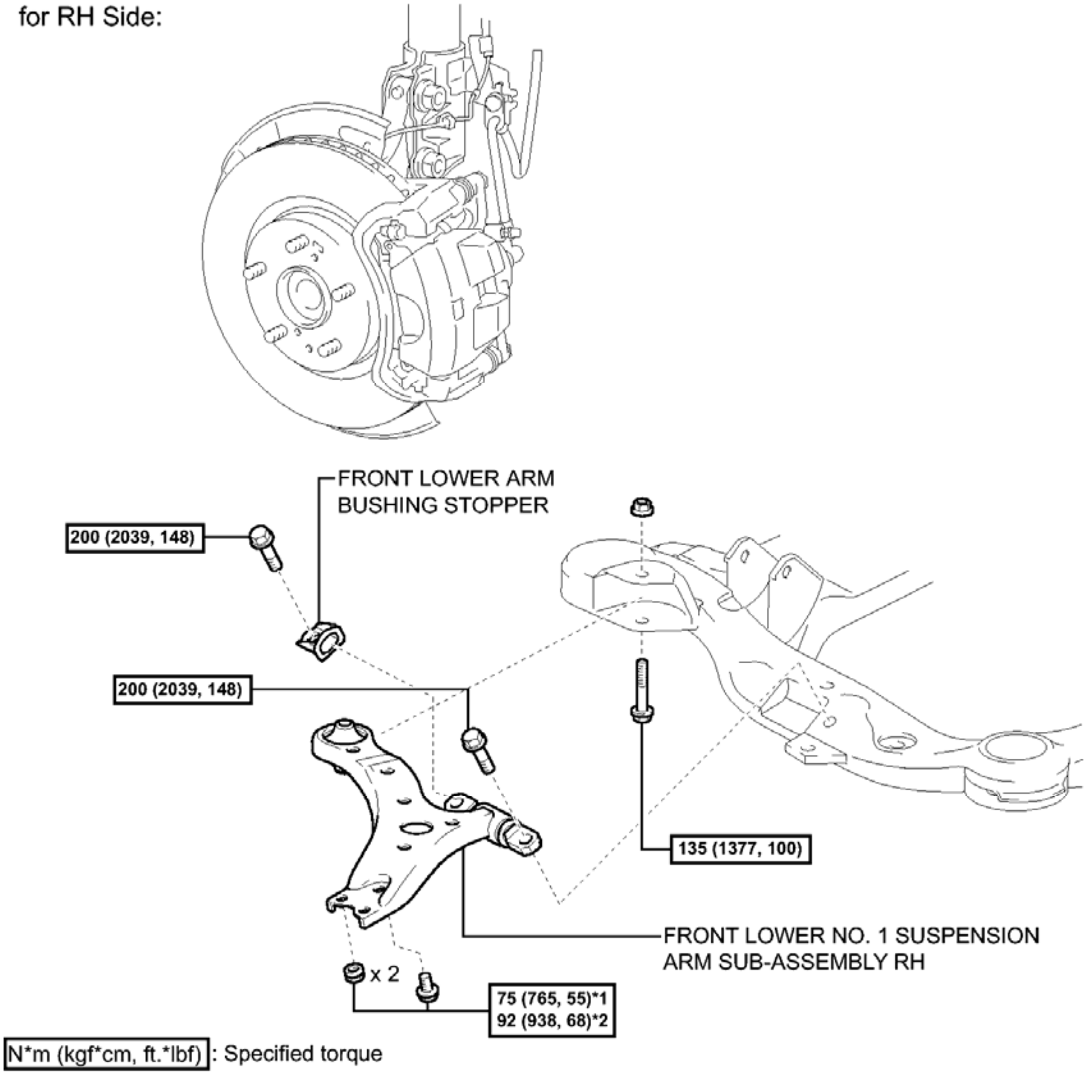
for RH Side:
FRONT LOWER ARM BUSHING STOPPER
200 (2039, 148)
200 (2039, 148)
135 (1377, 100)
FRONT LOWER NO. 1 SUSPENSION ARM SUB-ASSEMBLY RH
x 2
75 (765, 55)*1
92 (938, 68)*2
N*m (kgf*cm, ft.*lbf) : Specified torque

*1: Type A nut

*2: Type B nut

c

Fig. 28: Identifying Front Lower Suspension Arm Replacement Components With Torque Specifications (2AR-FE) (5 Of 5)
Courtesy of TOYOTA MOTOR SALES, U.S.A., INC.

REMOVAL

REMOVAL

1. **PRECAUTION**

NOTE: **After turning the ignition switch off, waiting time may be required before disconnecting the cable from the negative (-) battery terminal. Therefore, make sure to read the disconnecting the cable from the negative (-) battery**

terminal notices before proceeding with work. Refer to PRECAUTION .

2. **DISCONNECT CABLE FROM NEGATIVE BATTERY TERMINAL**

   NOTE: **When disconnecting the cable, some systems need to be initialized after the cable is reconnected. Refer to INITIALIZATION .**

3. **REMOVE FRONT WHEELS**
4. **REMOVE WINDSHIELD WIPER MOTOR AND LINK ASSEMBLY**

   Refer to **REMOVAL**

5. **REMOVE FRONT OUTER COWL TOP PANEL SUB-ASSEMBLY** . Refer to **REMOVAL - Step 3**
6. **REMOVE AIR CLEANER CAP SUB-ASSEMBLY** . Refer to **REMOVAL - Step 7**
7. **REMOVE AIR CLEANER FILTER ELEMENT SUB-ASSEMBLY**
8. **REMOVE AIR CLEANER CASE SUB-ASSEMBLY** . Refer to **REMOVAL - Step 22**
9. **REMOVE FRONT WHEEL OPENING EXTENSION PAD LH**
10. **REMOVE FRONT WHEEL OPENING EXTENSION PAD RH**
11. **REMOVE ENGINE UNDER COVER LH**
12. **REMOVE ENGINE UNDER COVER RH**
13. **REMOVE FRONT FENDER APRON SEAL LH (for LH Side)**
14. **REMOVE FRONT FENDER APRON SEAL RH (for RH Side)**
15. **SEPARATE FRONT ENGINE MOUNTING INSULATOR**
    a. Remove the 3 nuts to separate the front engine mounting insulator from the front frame assembly.

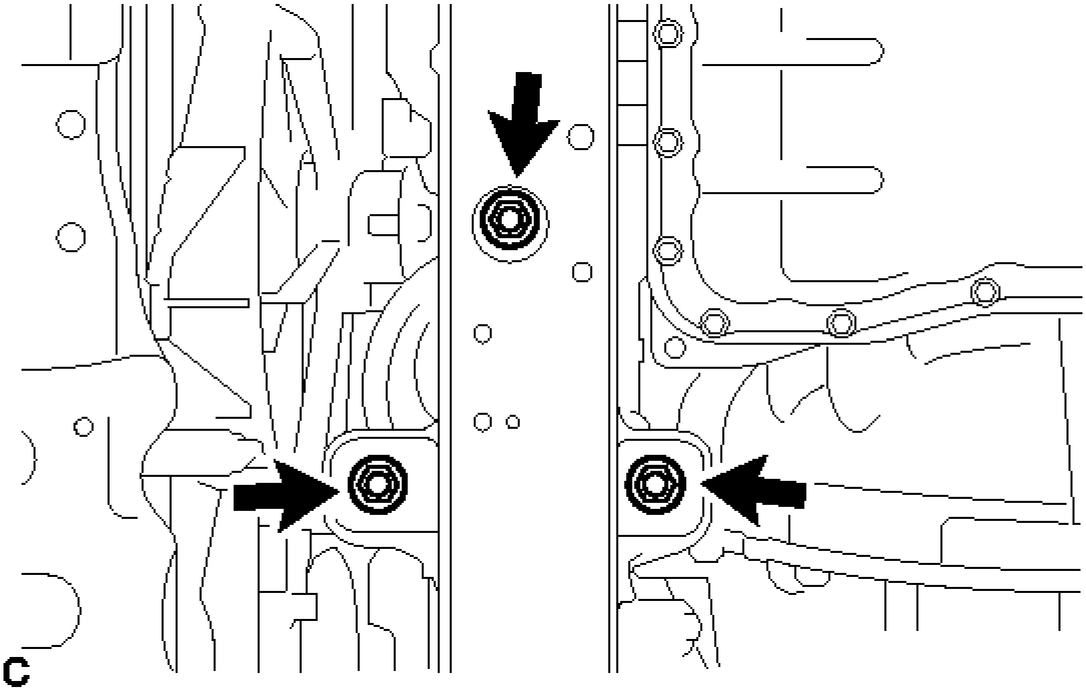

Fig. 29: Identifying Front Engine Mounting Insulator Nuts
Courtesy of TOYOTA MOTOR SALES, U.S.A., INC.

16. **REMOVE ENGINE MOUNTING INSULATOR LH (for LH Side)**
    a. Remove the 2 hole plugs.

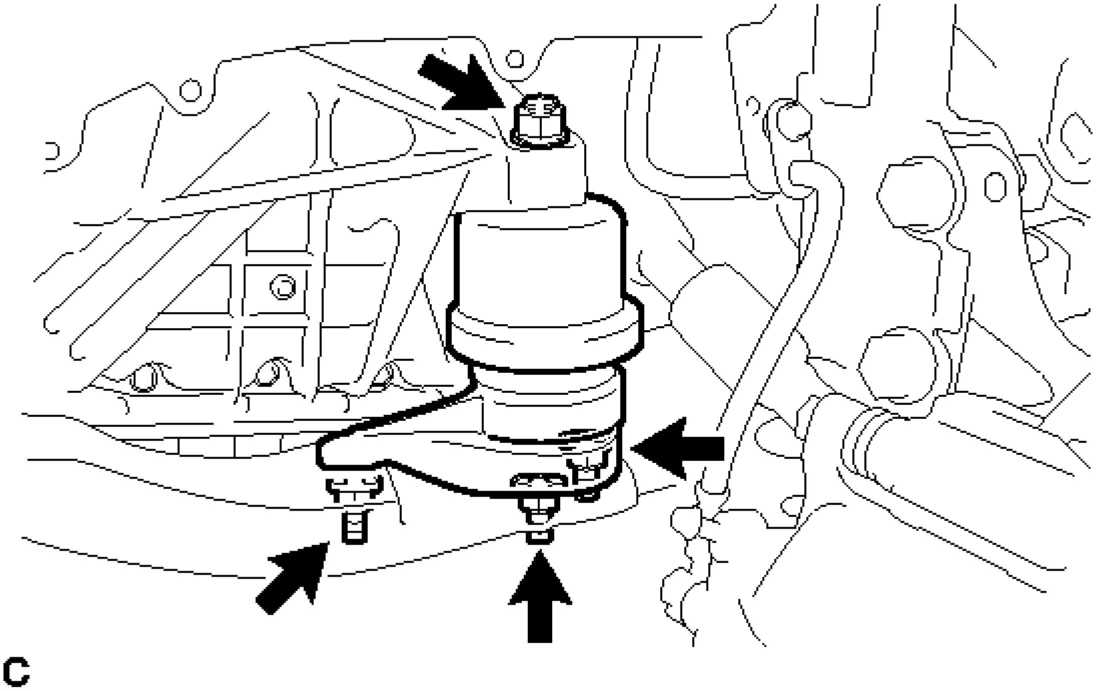

Fig. 30: Identifying Engine Mounting Insulator Fasteners

Courtesy of TOYOTA MOTOR SALES, U.S.A., INC.

b. Remove the 4 nuts from the engine mounting insulator LH.

c. Using a jack and a wooden block, support the engine assembly with transaxle at the position shown in the illustration. While ensuring that there is no interference from the components surrounding the engine, tilt the engine assembly with transaxle to a position that allows the engine mounting insulator LH to be removed.

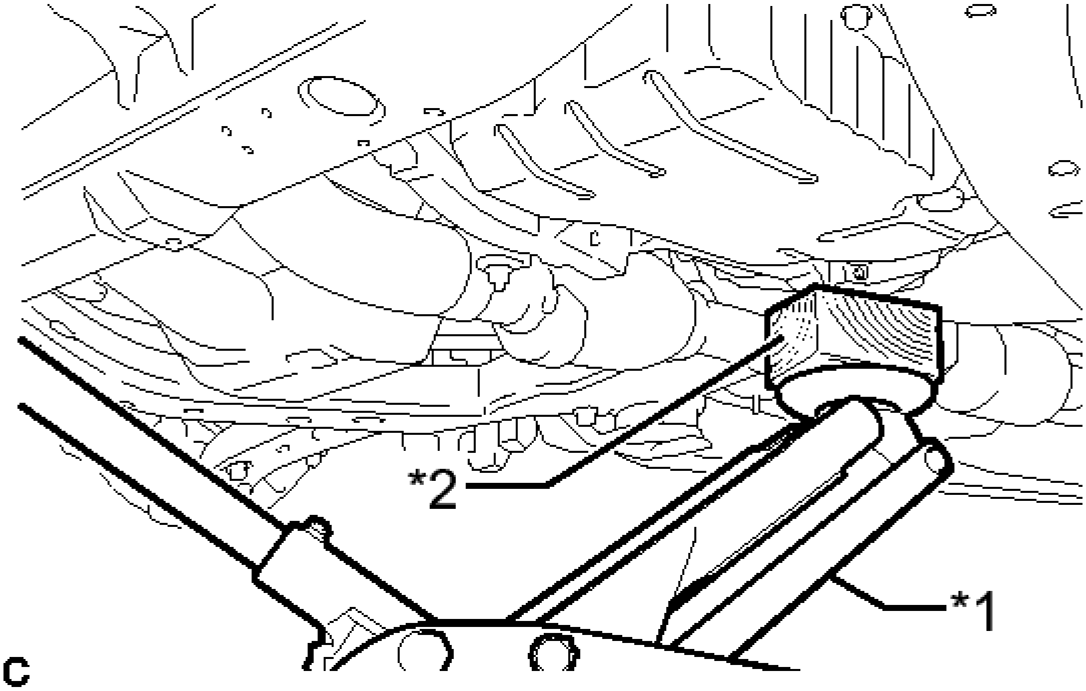

Fig. 31: Identifying Jack And Wooden Block
Courtesy of TOYOTA MOTOR SALES, U.S.A., INC.

TEXT IN ILLUSTRATION

*1	Jack
*2	Wooden Block

NOTE:

- **Do not position the wooden block on the oil pan.**
- **Do not damage the components surrounding the engine assembly with transaxle.**
- **Tilt the engine assembly with transaxle as little as possible.**
- **Ensure that the jack and wooden block are stable.**
- **Keep the engine assembly with transaxle supported until installation of the engine mounting insulator LH is complete.**

d. Remove the engine mounting insulator LH from the front frame assembly.

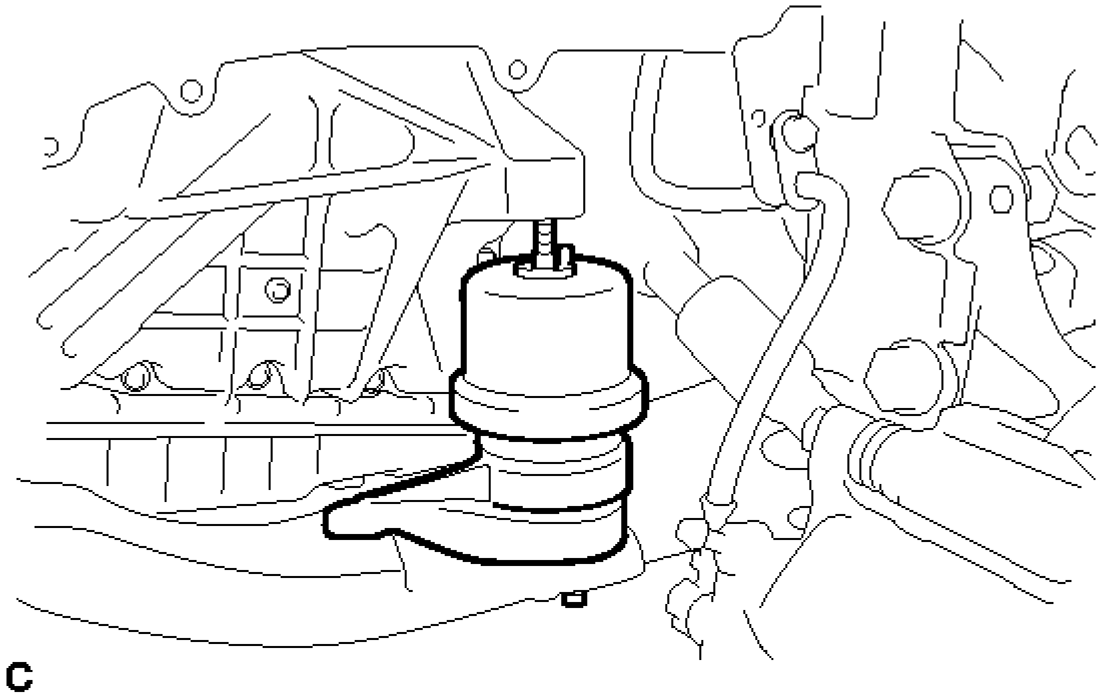

Fig. 32: Identifying Engine Mounting Insulator Component LH
Courtesy of TOYOTA MOTOR SALES, U.S.A., INC.

17. **REMOVE FRONT LOWER NO. 1 SUSPENSION ARM SUB-ASSEMBLY LH (for LH Side)**
    a. Remove the bolt and 2 nuts, and separate the front lower No. 1 suspension arm sub-assembly LH from the front lower ball joint assembly.

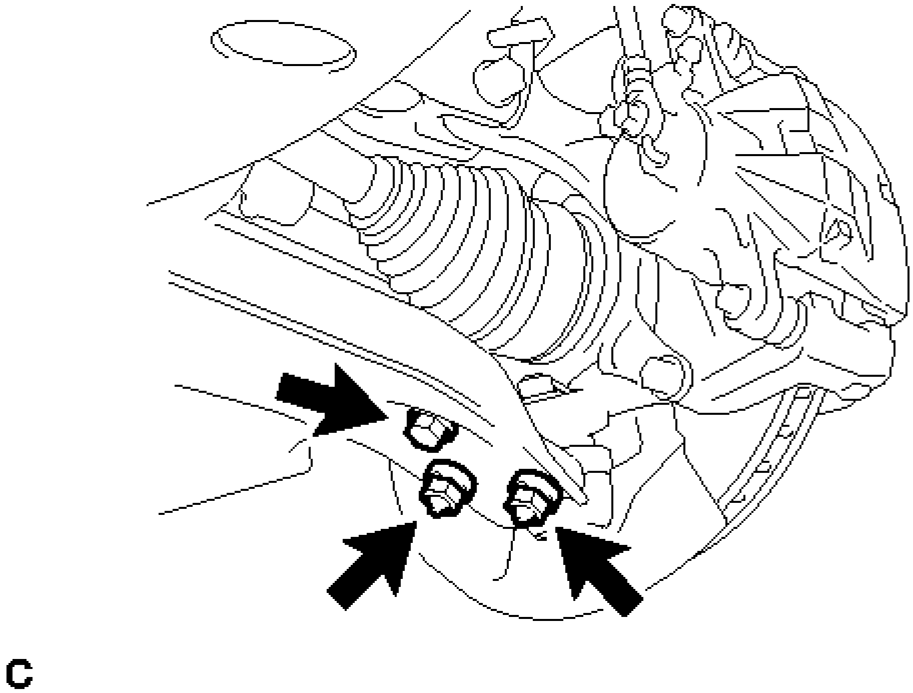

Fig. 33: Identifying Front Lower No. 1 Suspension Arm Sub-Assembly Bolt And Nuts LH
Courtesy of TOYOTA MOTOR SALES, U.S.A., INC.

b. Remove the 3 bolts, nut and front lower No. 1 suspension arm sub-assembly LH from the front frame assembly.

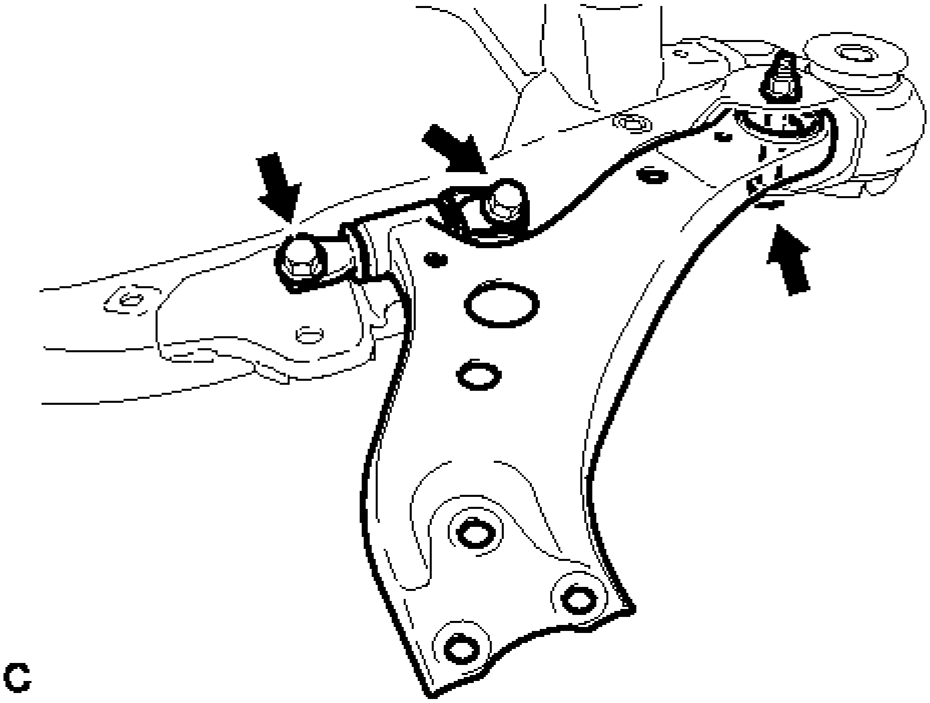

Fig. 34: Locating Front Lower Suspension Arm Bolts And Nut
Courtesy of TOYOTA MOTOR SALES, U.S.A., INC.

NOTE: **When removing the bolt, keep the nut from rotating.**

c. Remove the front lower arm bushing stopper from the front lower No. 1 suspension arm sub-assembly LH.

18. **SEPARATE EARTH WIRE (for RH Side)** . Refer to **REMOVAL - Step 33**
19. **REMOVE NO. 2 ENGINE MOUNTING STAY RH (for RH Side)** . Refer to **REMOVAL - Step 32**
20. **REMOVE ENGINE MOVING CONTROL ROD BRACKET (for RH Side)** . Refer to **REMOVAL - Step 34**
21. **REMOVE ENGINE MOUNTING INSULATOR RH (for RH Side)**

    a. Remove the 2 hole plugs.

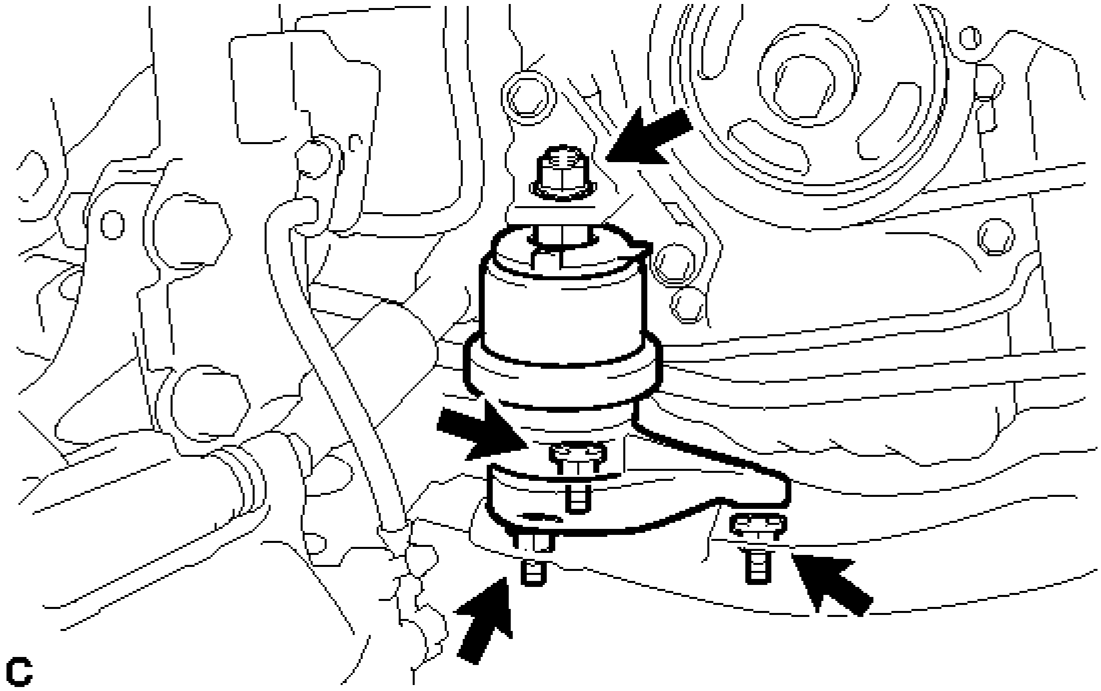

Fig. 35: Identifying engine Mounting Insulator Nuts RH
Courtesy of TOYOTA MOTOR SALES, U.S.A., INC.

b. Remove the 4 nuts from the engine mounting insulator RH.
c. Using a jack and a wooden block, support the engine assembly with transaxle at the position shown in the illustration. While ensuring that there is no interference from the components surrounding the engine, tilt the engine assembly with transaxle to a position that allows the engine mounting insulator RH to be removed.

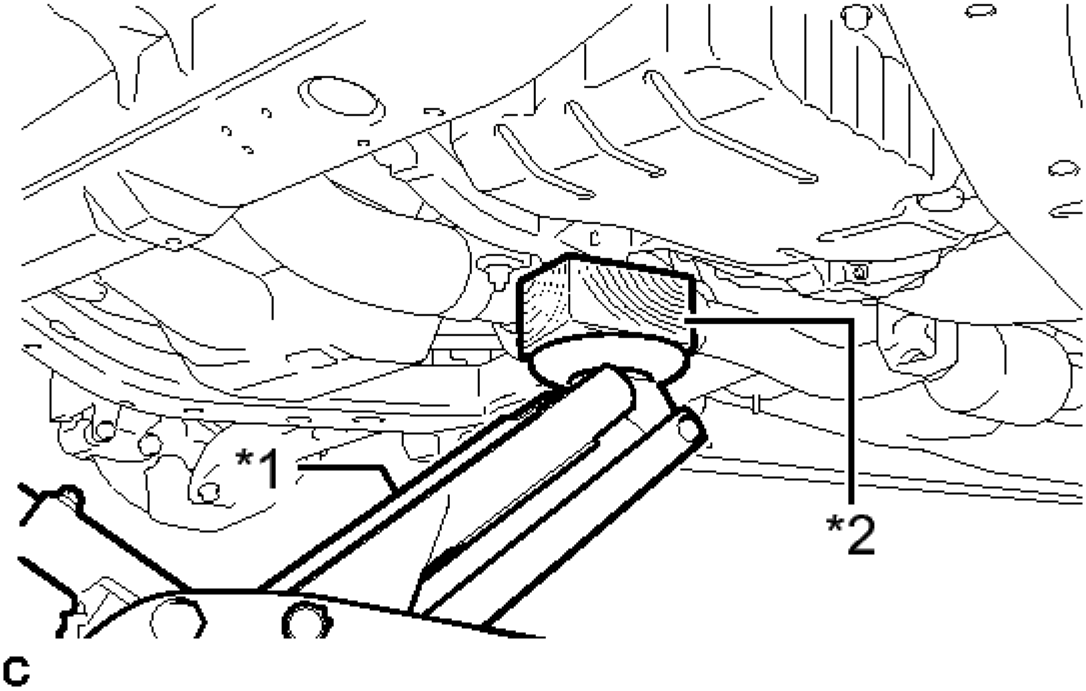

Fig. 36: Identifying Jack And Wooden Block
Courtesy of TOYOTA MOTOR SALES, U.S.A., INC.

TEXT IN ILLUSTRATION

*1	Jack
*2	Wooden Block

NOTE:

- **Do not position the wooden block on the oil pan.**
- **Do not damage the components surrounding the engine assembly with transaxle.**
- **Tilt the engine assembly with transaxle as little as possible.**
- **Ensure that the jack and wooden block are stable.**
- **Keep the engine assembly with transaxle supported until installation of the engine mounting insulator RH is complete.**

d. Remove the engine mounting insulator RH from the front frame assembly.

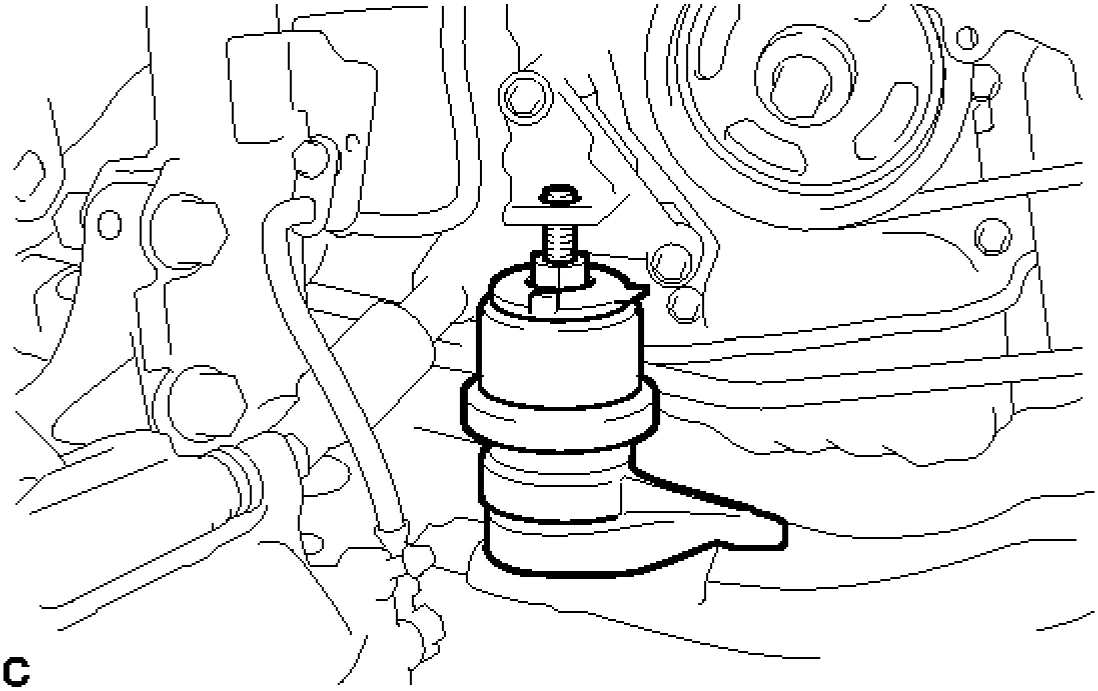

Fig. 37: Identifying The Engine Mounting Insulator Component RH
Courtesy of TOYOTA MOTOR SALES, U.S.A., INC.

22. **REMOVE FRONT LOWER NO. 1 SUSPENSION ARM SUB-ASSEMBLY RH (for RH Side)**
    a. Remove the bolt and 2 nuts, and separate the front lower No. 1 suspension arm sub-assembly RH from the front lower ball joint assembly.

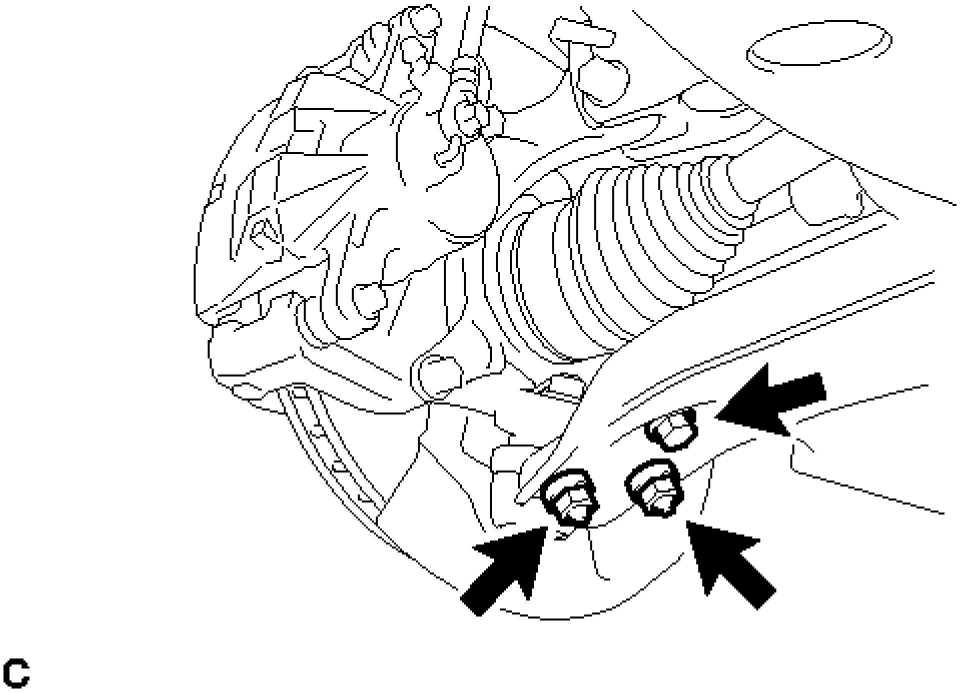

Fig. 38: Identifying Front Lower No. 1 Suspension Arm Sub-Assembly Nuts And Bolt RH
Courtesy of TOYOTA MOTOR SALES, U.S.A., INC.

b. Remove the 3 bolts, nut and front lower No. 1 suspension arm sub-assembly RH from the front frame assembly.

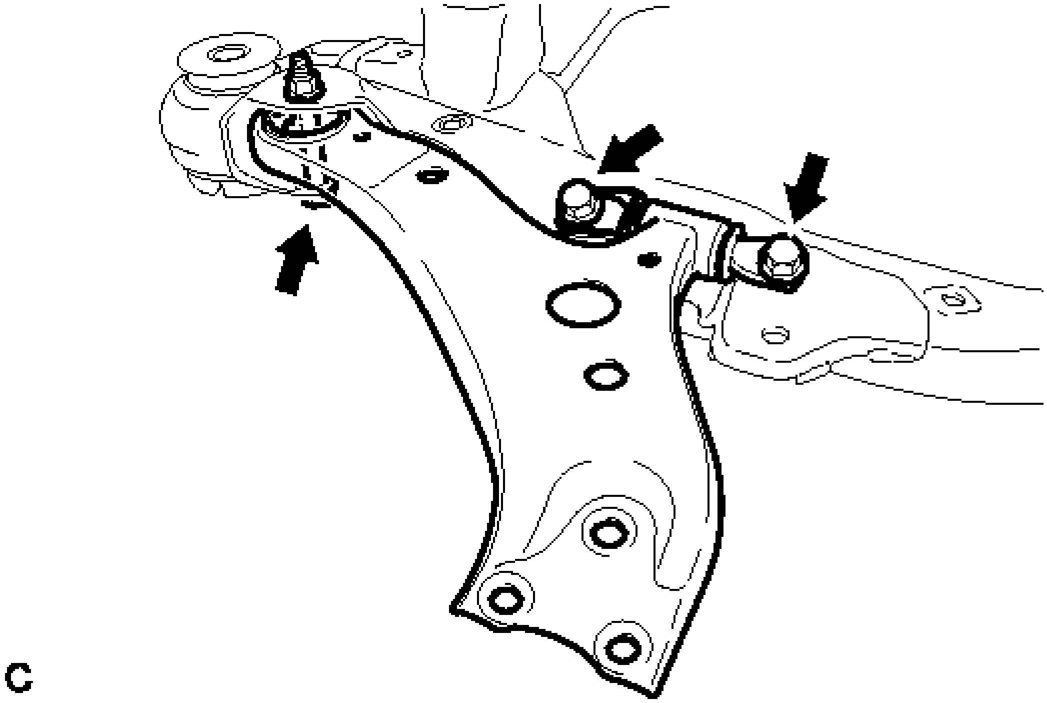

Fig. 39: Locating Front Lower Suspension Arm Bolts And Nut
Courtesy of TOYOTA MOTOR SALES, U.S.A., INC.

NOTE: **When removing the bolt, keep the nut from rotating.**

c. Remove the front lower arm bushing stopper from the front lower No. 1 suspension arm sub-assembly RH.

INSTALLATION

INSTALLATION

1. **INSTALL FRONT LOWER NO. 1 SUSPENSION ARM SUB-ASSEMBLY LH (for LH Side)**
   a. Install the front lower arm bushing stopper to the front lower No. 1 suspension arm sub-assembly LH.
   b. Install the front lower No. 1 suspension arm sub-assembly LH to the front frame assembly with the 3 bolts and nut in the order shown in the illustration.

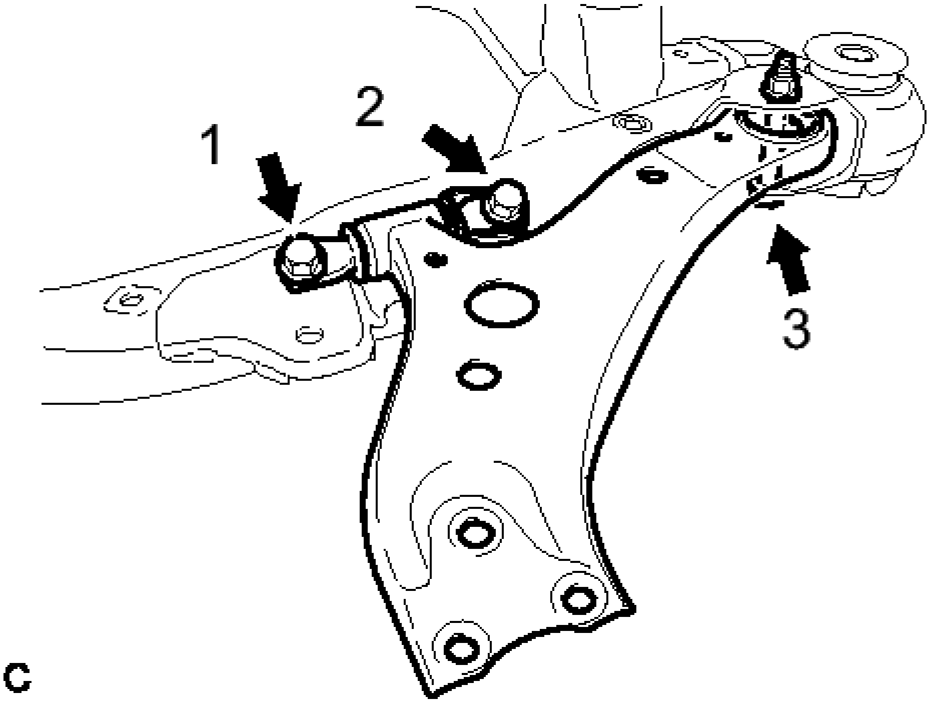

Fig. 40: Identifying Bolts Tightening Sequence
Courtesy of TOYOTA MOTOR SALES, U.S.A., INC.

Bolt 1, 2

Torque: 200 N*m (2039 kgf*cm, 148 ft.*lbf)

Bolt 3

Torque: 135 N*m (1377 kgf*cm, 100 ft.*lbf)

NOTE: **While keeping the nut from rotating, tighten the bolt.**

c. Install the front lower No. 1 suspension arm sub-assembly LH to the front lower ball joint assembly with the bolt and 2 nuts.

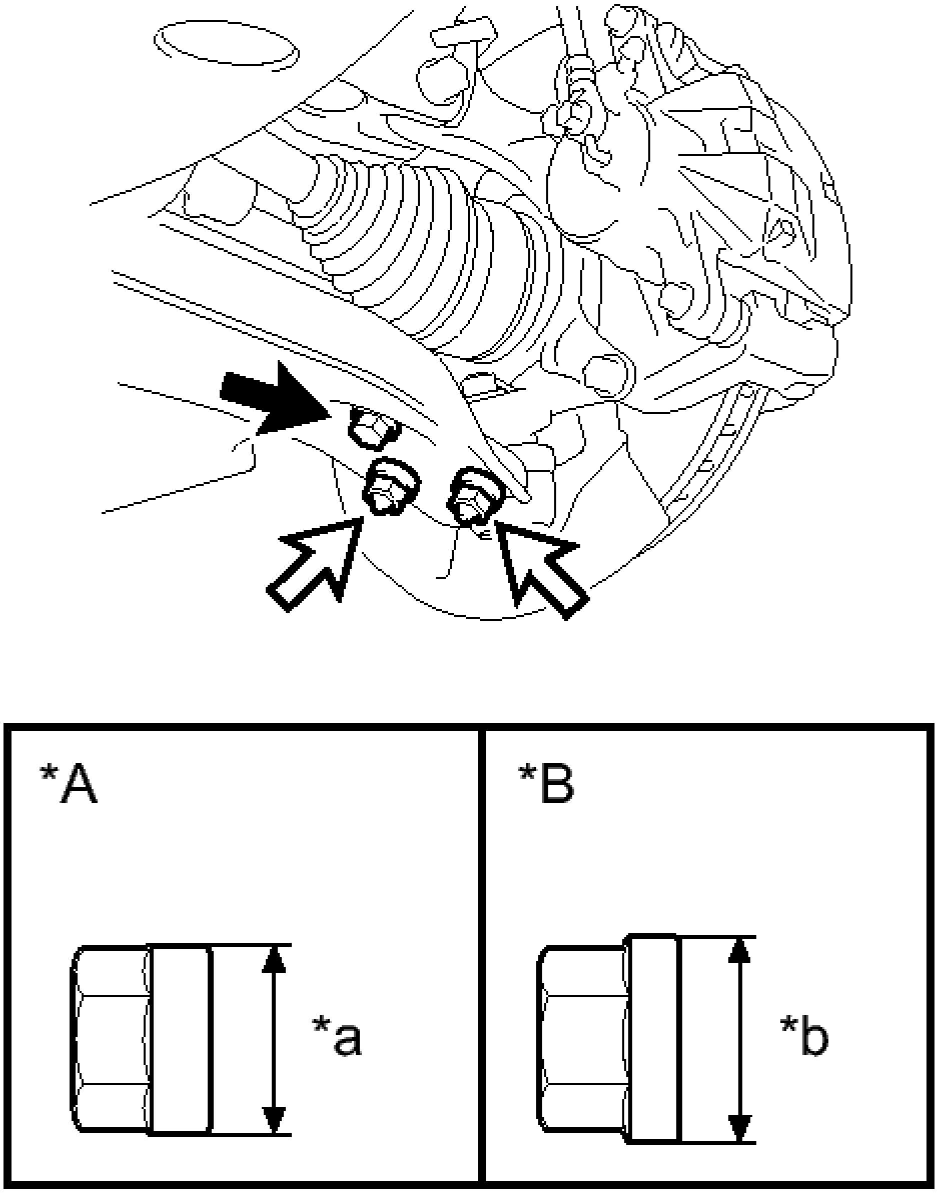

C

Fig. 41: Identifying Front Lower Ball Joint Assembly Bolt And Nuts
Courtesy of TOYOTA MOTOR SALES, U.S.A., INC.

TEXT IN ILLUSTRATION

	Type

*A	A Nut
*B	Type B Nut
*a	20 mm (0.787 in.)
*b	22 mm (0.866 in.)
·	Bolt
·	Nut

Type A Nut and Bolt

Torque: 75 N*m (765 kgf*cm, 55 ft.*lbf)

Type B Nut and Bolt

Torque: 92 N*m (938 kgf*cm, 68 ft.*lbf)

NOTE:

- **The tightening torque for the bolt differs depending on the type of nut.**
- **Make sure to tighten the bolt to the same torque as the nuts.**

2. **INSTALL ENGINE MOUNTING INSULATOR LH (for LH Side)**
    a. Set the engine mounting insulator LH on the front frame assembly.

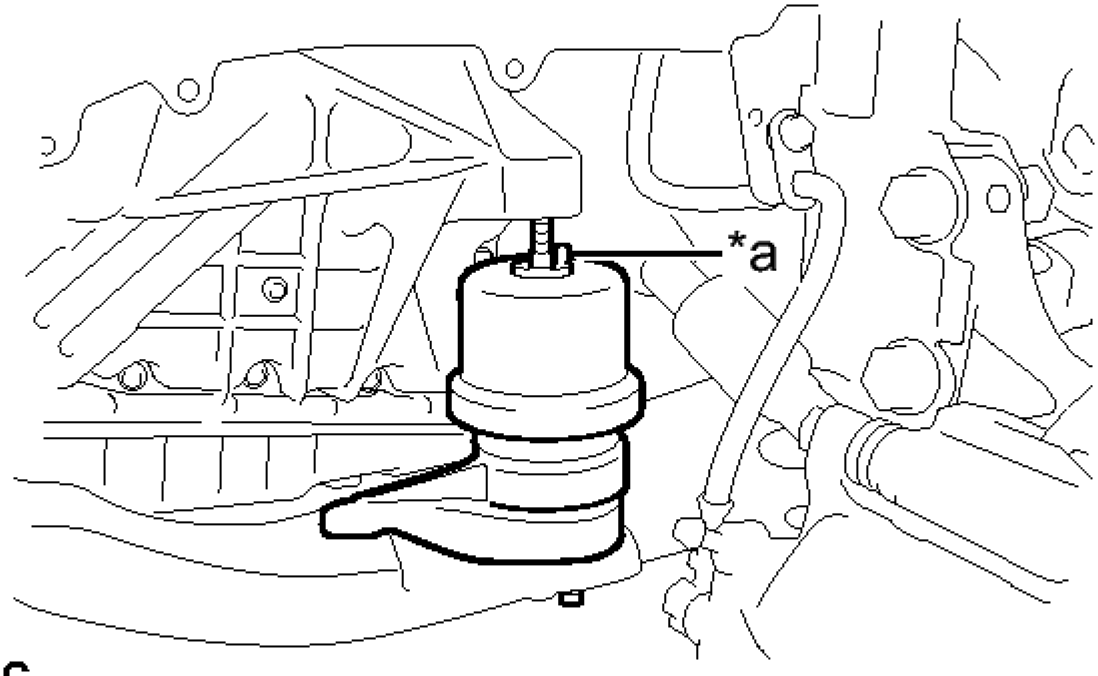

Fig. 42: Identifying Engine Mounting Insulator LH
Courtesy of TOYOTA MOTOR SALES, U.S.A., INC.

TEXT IN ILLUSTRATION

*a	Pin

b. Slowly lower the engine assembly with transaxle using a jack and a wooden block.

NOTE:	- **Match the position of the pin (stopper).** - **Do not position the wooden block on the oil pan.** - **Do not damage the components surrounding the engine assembly with transaxle.** - **Ensure that the jack and wooden block are stable.**

c. Using SST, install the nut to the engine mounting insulator LH.

- **SST: 09961-00950**

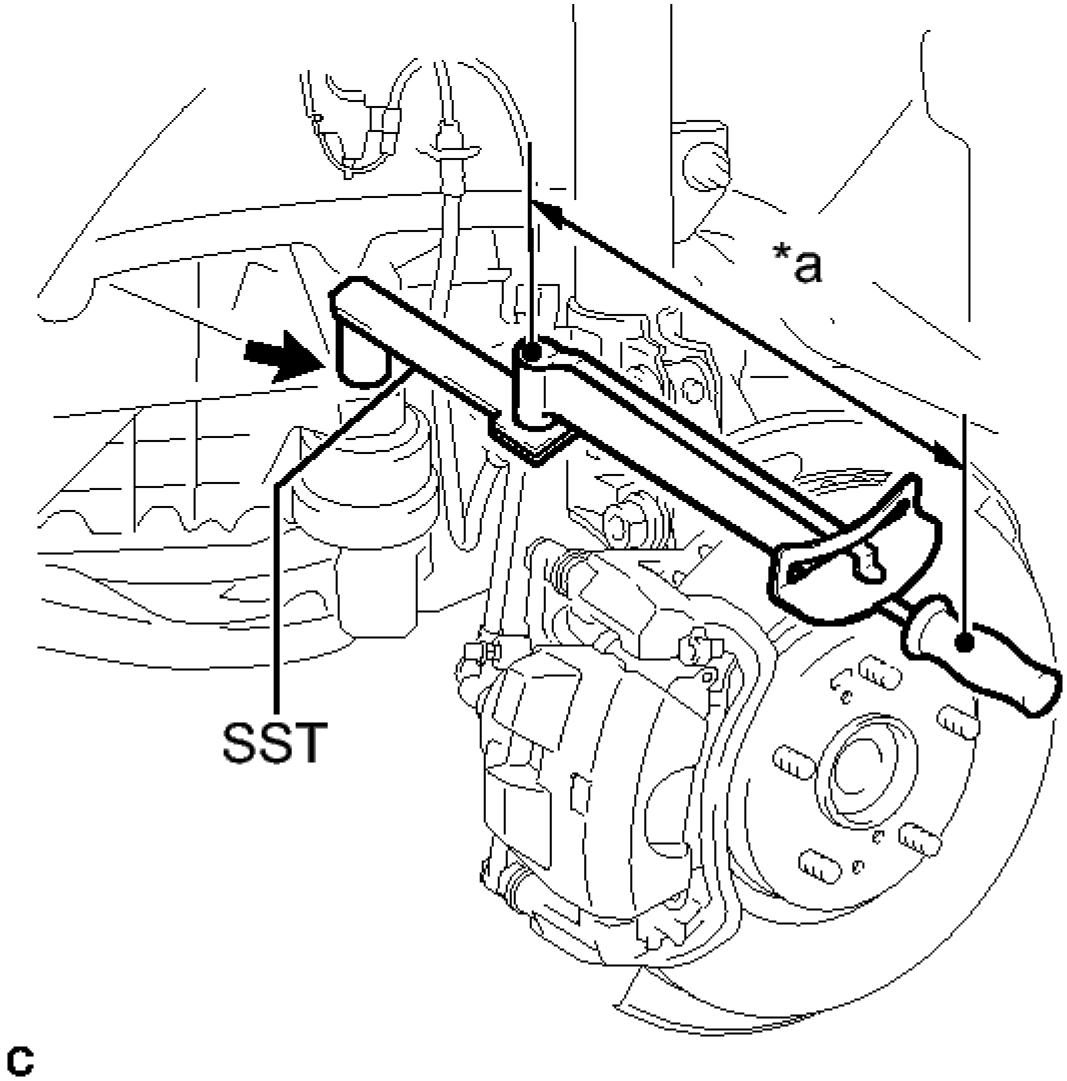

Fig. 43: Identifying Engine Mounting Insulator Nut With Fulcrum Length
Courtesy of TOYOTA MOTOR SALES, U.S.A., INC.

TEXT IN ILLUSTRATION

*a	Fulcrum Length

without SST

Torque: 95 N*m (969 kgf*cm, 70 ft.*lbf)

with SST

Torque: 68 N*m (695 kgf*cm, 50 ft.*lbf)

NOTE:

- **Use a torque wrench with a fulcrum length of 380 mm (1.25 ft.).**
- **This torque value is effective when SST is parallel to the torque wrench.**

d. Install the engine mounting insulator LH with the 3 nuts.

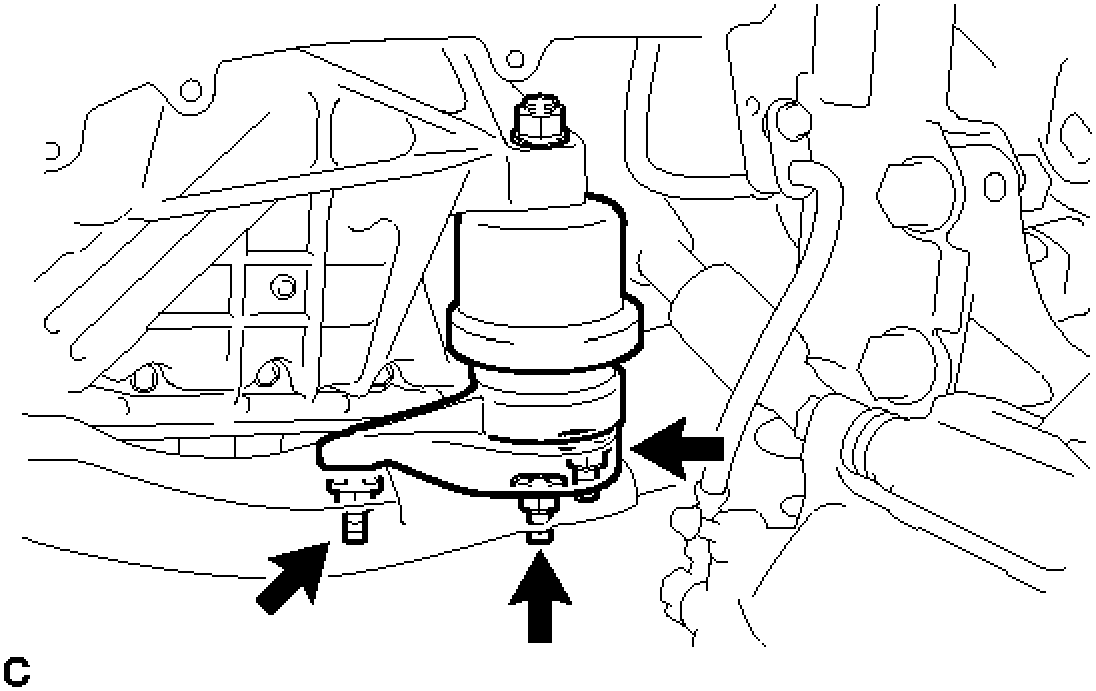

Fig. 44: Identifying Engine Mounting Insulator Nuts
Courtesy of TOYOTA MOTOR SALES, U.S.A., INC.

Torque: 87 N*m (887 kgf*cm, 64 ft.*lbf)

e. Install the 2 hole plugs.

3. **INSTALL FRONT LOWER NO. 1 SUSPENSION ARM SUB-ASSEMBLY RH (for RH Side)**

a. Install the front lower arm bushing stopper to the front lower No. 1 suspension arm sub-assembly RH.

b. Install the front lower No. 1 suspension arm sub-assembly RH to the front frame assembly with the 3 bolts and nut in the order shown in the illustration.

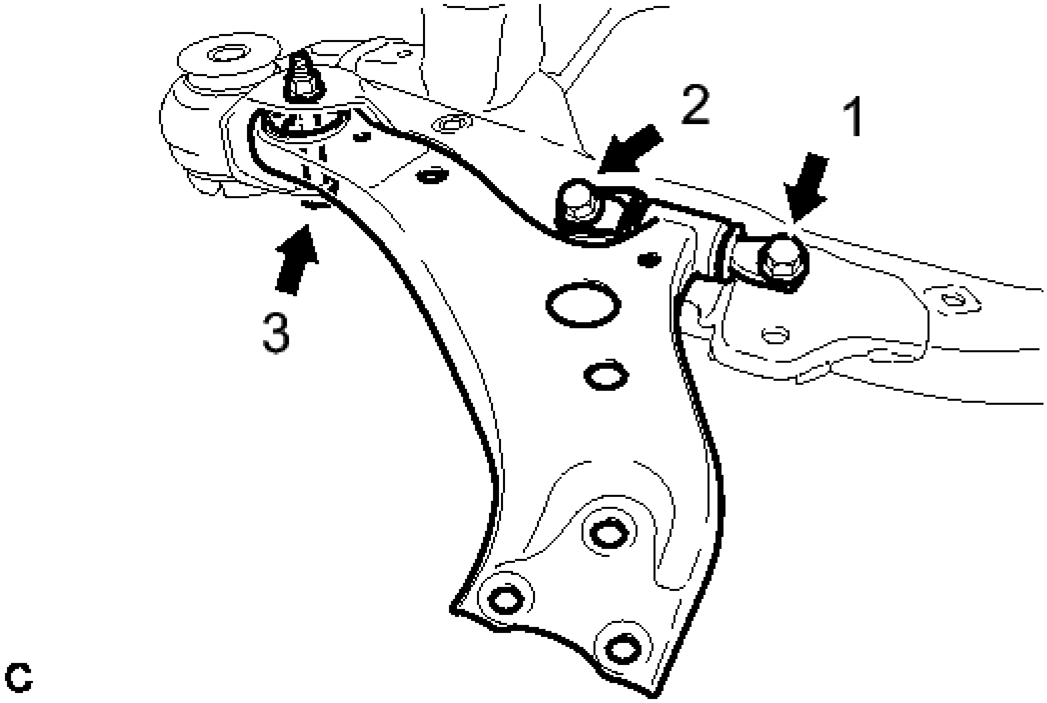

Fig. 45: Locating Front Lower Suspension Arm Bolts And Nut
Courtesy of TOYOTA MOTOR SALES, U.S.A., INC.

Bolt 1, 2

Torque: 200 N*m (2039 kgf*cm, 148 ft.*lbf)

Bolt 3

Torque: 135 N*m (1377 kgf*cm, 100 ft.*lbf)

NOTE: **While keeping the nut from rotating, tighten the bolt.**

c. Install the front lower No. 1 suspension arm sub-assembly RH to the front lower ball joint assembly with the bolt and 2 nuts.

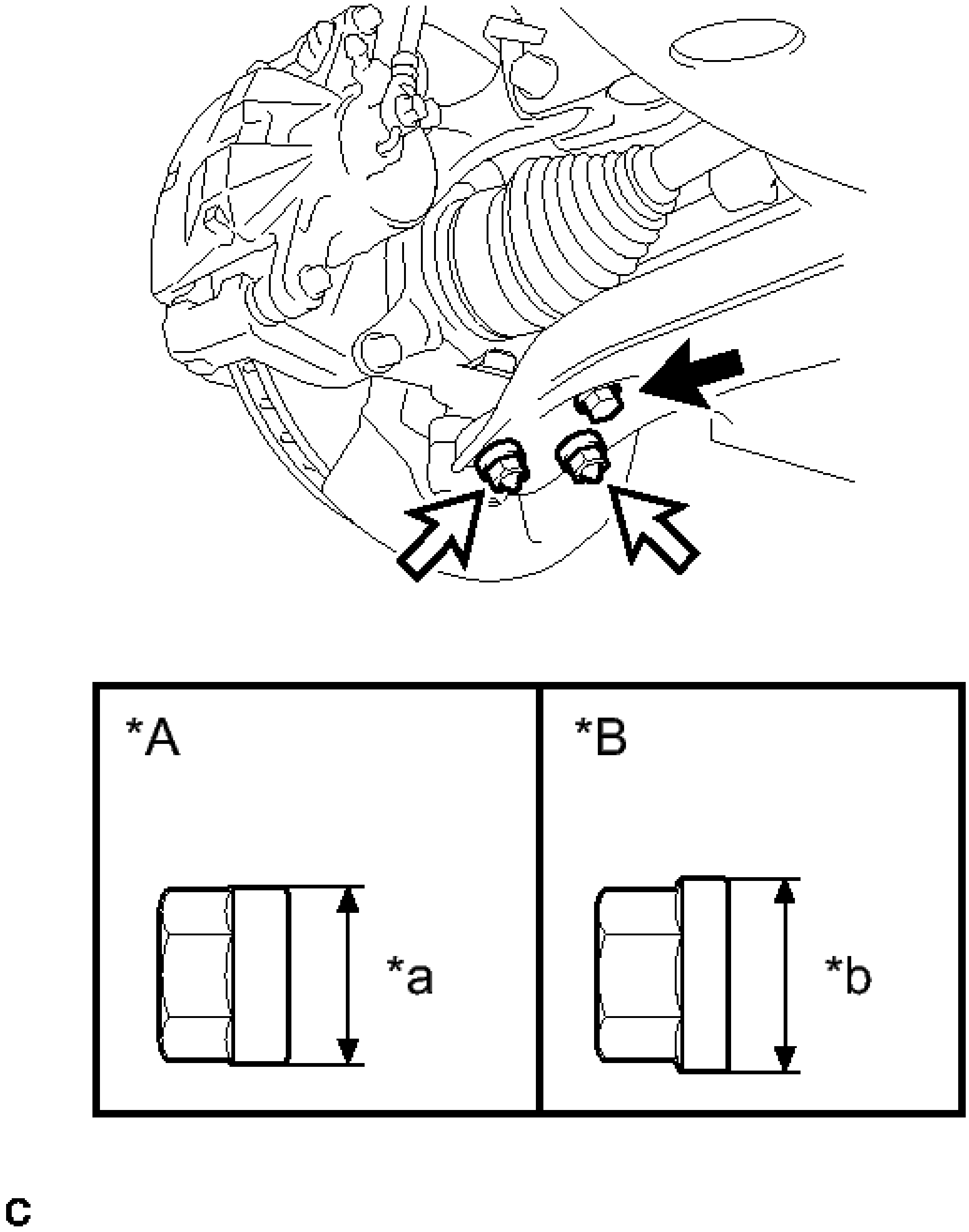

Fig. 46: Identifying Front Lower Ball Joint Assembly Bolt And Nuts
Courtesy of TOYOTA MOTOR SALES, U.S.A., INC.

TEXT IN ILLUSTRATION

	Type

*A	A Nut
*B	Type B Nut
*a	20 mm (0.787 in.)
*b	22 mm (0.866 in.)
·	Bolt
·	Nut

Type A Nut and Bolt

Torque: 75 N*m (765 kgf*cm, 55 ft.*lbf)

Type B Nut and Bolt

Torque: 92 N*m (938 kgf*cm, 68 ft.*lbf)

NOTE:

- **The tightening torque for the bolt differs depending on the type of nut.**
- **Make sure to tighten the bolt to the same torque as the nuts.**

4. **INSTALL ENGINE MOUNTING INSULATOR RH (for RH Side)**
    a. Set the engine mounting insulator RH on the front frame assembly.

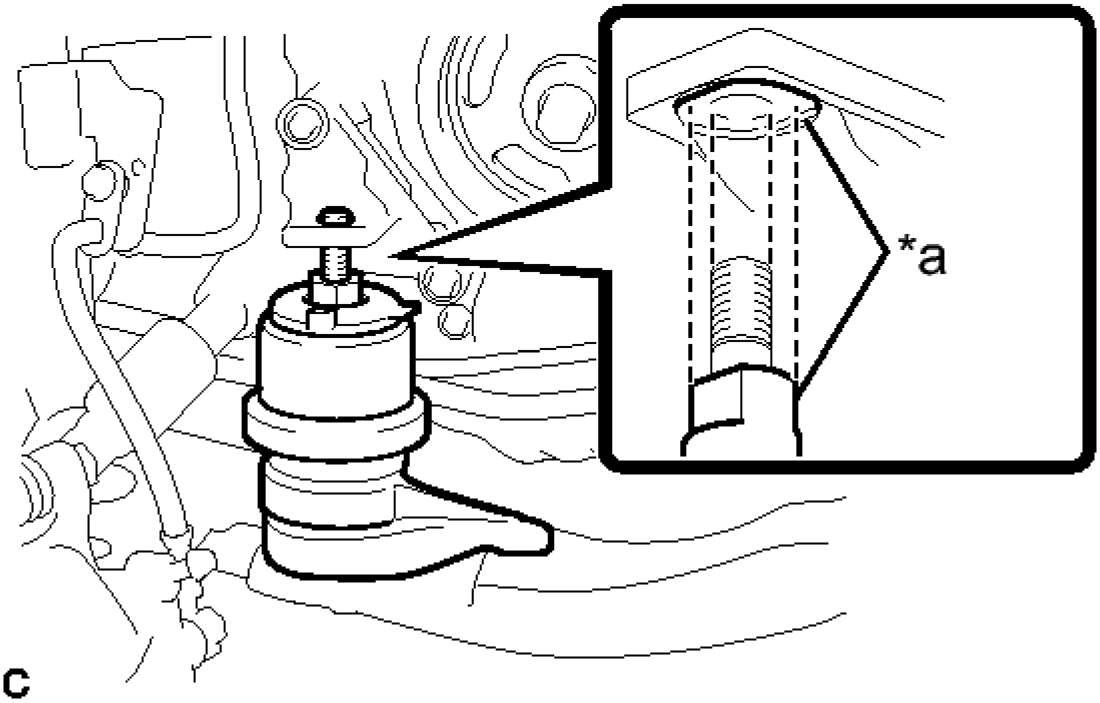

Fig. 47: Identifying Engine Mounting Insulator RH
Courtesy of TOYOTA MOTOR SALES, U.S.A., INC.

TEXT IN ILLUSTRATION

*a	Cutout

b. Slowly lower the engine assembly with transaxle using a jack and a wooden block.

NOTE:

- **Match the position of the cutout (stopper).**
- **Do not position the wooden block on the oil pan.**
- **Do not damage the components surrounding the engine assembly with transaxle.**
- **Ensure that the jack and wooden block are stable.**

c. Using SST, install the nut to the engine mounting insulator RH.

- **SST: 09961-00950**

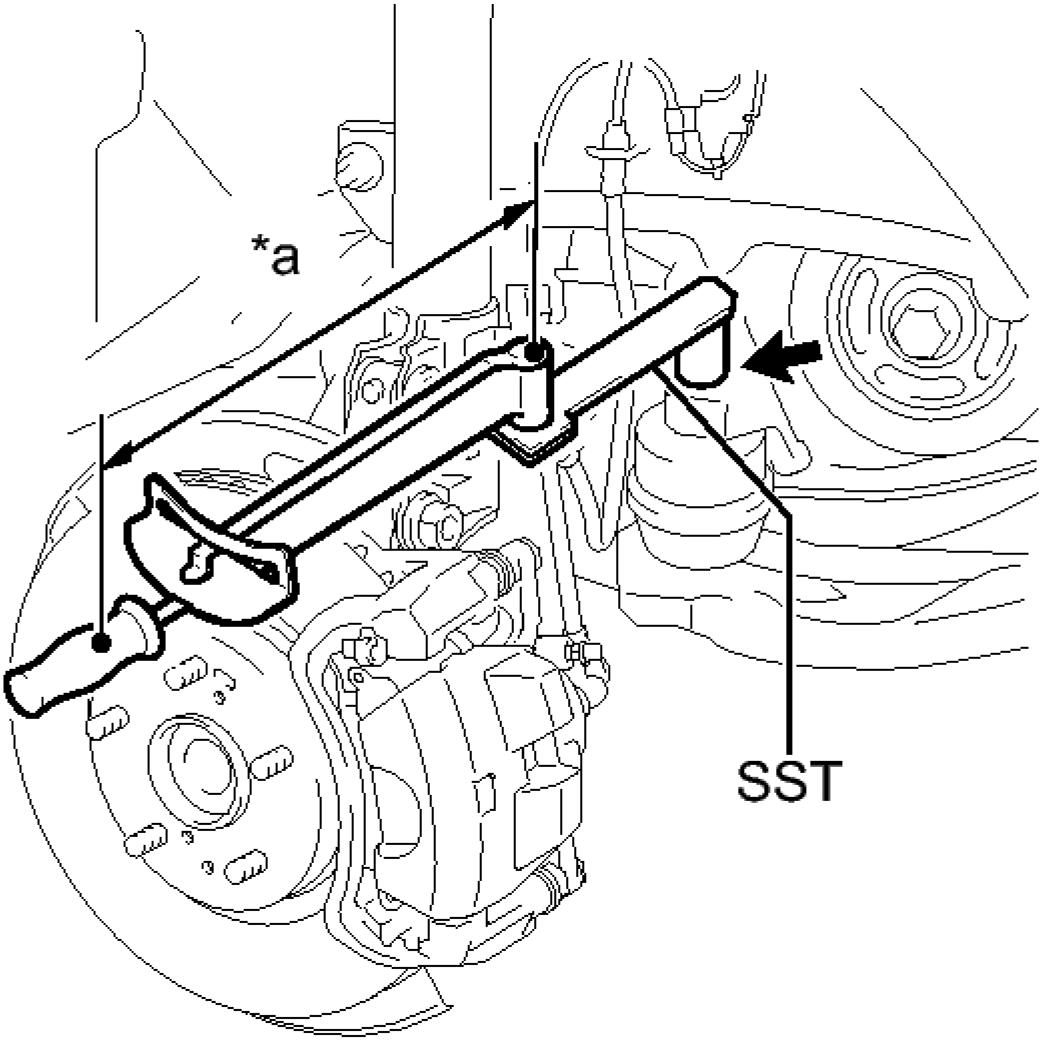

C

Fig. 48: Installing Engine Mounting Insulator Nut RH
Courtesy of TOYOTA MOTOR SALES, U.S.A., INC.

TEXT IN ILLUSTRATION

*a	Fulcrum Length

without SST

Torque: 95 N*m (969 kgf*cm, 70 ft.*lbf)

with SST

Torque: 68 N*m (695 kgf*cm, 50 ft.*lbf)

NOTE:

- **Use a torque wrench with a fulcrum length of 380 mm (1.25 ft.).**
- **This torque value is effective when SST is parallel to the torque wrench.**

d. Install the engine mounting insulator RH with the 3 nuts.

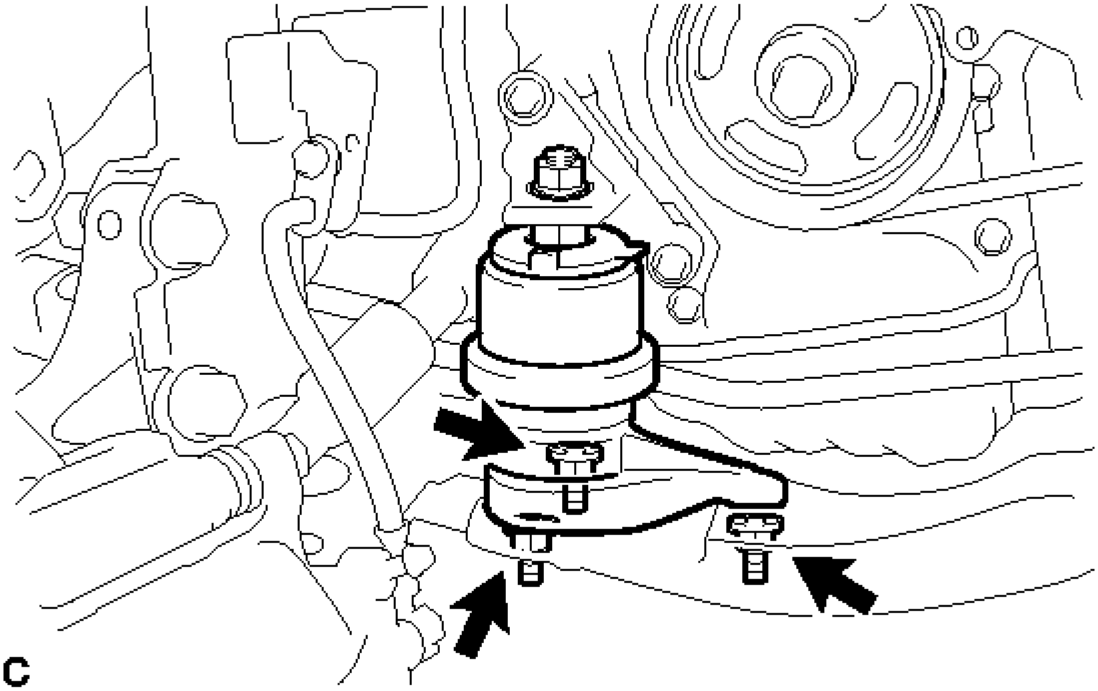

Fig. 49: Identifying Engine Mounting Insulator Nuts RH
Courtesy of TOYOTA MOTOR SALES, U.S.A., INC.

Torque: 87 N*m (887 kgf*cm, 64 ft.*lbf)

e. Install the 2 hole plugs.

5. **INSTALL ENGINE MOVING CONTROL ROD BRACKET (for RH Side)**
    a. Temporarily install the engine moving control rod bracket with the 4 bolts.

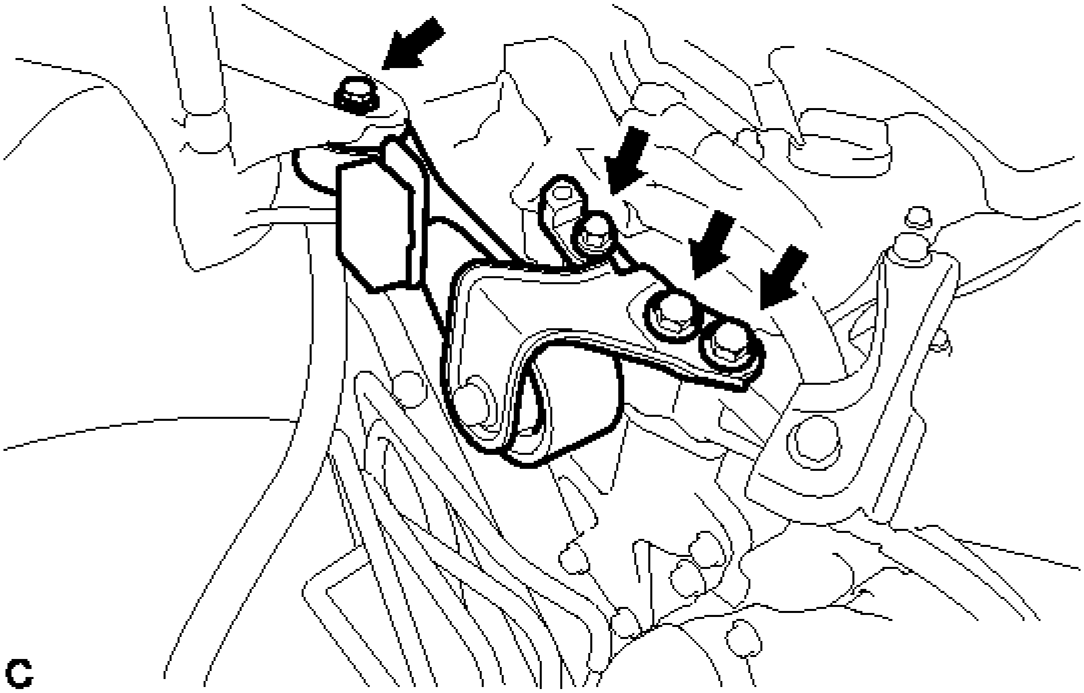

Fig. 50: Identifying Moving Control Rod Bracket Bolts
Courtesy of TOYOTA MOTOR SALES, U.S.A., INC.

b. Fully tighten the engine moving control rod bracket with the 4 bolts.

Torque: 38 N*m (387 kgf*cm, 28 ft.*lbf)

6. **INSTALL NO. 2 ENGINE MOUNTING STAY RH (for RH Side)** . Refer to **INSTALLATION - Step 40**
7. **INSTALL EARTH WIRE (for RH Side)** . Refer to **INSTALLATION - Step 39**
8. **INSTALL FRONT ENGINE MOUNTING INSULATOR**
    a. Install the front engine mounting insulator to the front frame assembly with the 3 nuts.

    Torque: 52 N*m (530 kgf*cm, 38 ft.*lbf)

9. **INSTALL FRONT FENDER APRON SEAL LH (for LH Side)**
10. **INSTALL FRONT FENDER APRON SEAL RH (for RH Side)**
11. **INSTALL ENGINE UNDER COVER LH**
12. **INSTALL ENGINE UNDER COVER RH**
13. **INSTALL FRONT WHEEL OPENING EXTENSION PAD LH**
14. **INSTALL FRONT WHEEL OPENING EXTENSION PAD RH**
15. **INSTALL AIR CLEANER CASE SUB-ASSEMBLY** . Refer to **INSTALLATION - Step 50**
16. **INSTALL AIR CLEANER FILTER ELEMENT SUB-ASSEMBLY**
17. **INSTALL AIR CLEANER CAP SUB-ASSEMBLY** . Refer to **INSTALLATION - Step 2**

18. **INSTALL FRONT OUTER COWL TOP PANEL SUB-ASSEMBLY** . Refer to **INSTALLATION - Step 14**
19. **INSTALL WINDSHIELD WIPER MOTOR AND LINK ASSEMBLY**

    Refer to **INSTALLATION - Step 2**

20. **INSTALL FRONT WHEELS**

    Torque: 103 N*m (1049 kgf*cm, 76 ft.*lbf)

21. **CONNECT CABLE TO NEGATIVE BATTERY TERMINAL**

    NOTE: **When disconnecting the cable, some systems need to be initialized after the cable is reconnected. Refer to INITIALIZATION .**

22. **INSPECT AND ADJUST FRONT WHEEL ALIGNMENT**

    Refer to **ADJUSTMENT**

FRONT LOWER SUSPENSION ARM (FOR 2GR-FE)

COMPONENTS

ILLUSTRATION

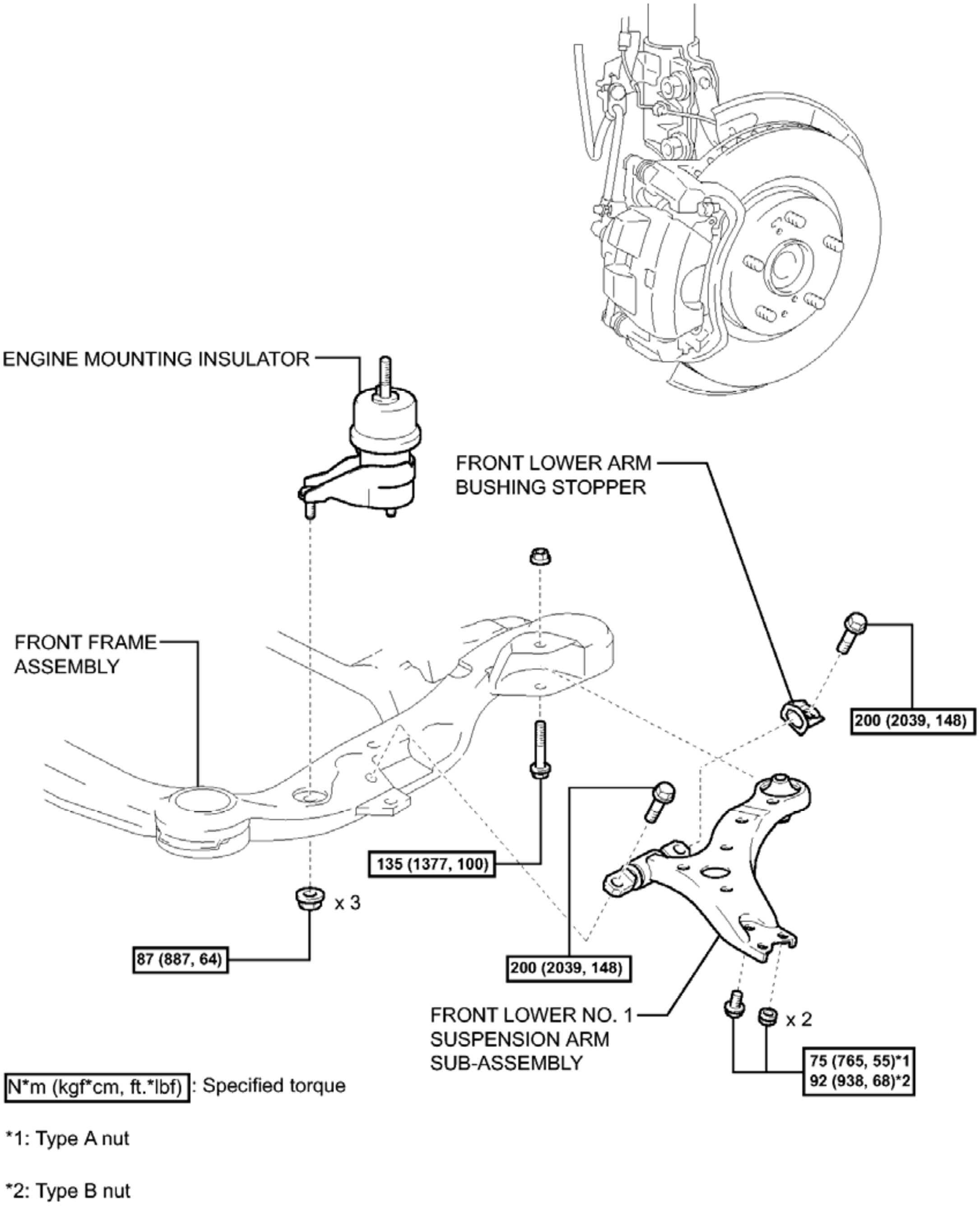
ENGINE MOUNTING INSULATOR
FRONT LOWER ARM
BUSHING STOPPER
FRONT FRAME
ASSEMBLY
200 (2039, 148)
135 (1377, 100)
x 3
87 (887, 64)
200 (2039, 148)
FRONT LOWER NO. 1
SUSPENSION ARM
SUB-ASSEMBLY
x 2
75 (765, 55)*1
92 (938, 68)*2
N*m (kgf*cm, ft.*lbf) : Specified torque
*1: Type A nut
*2: Type B nut
P

Fig. 51: Identifying Front Lower Suspension Arm Replacement Components With Torque Specifications (2GR-FE)
Courtesy of TOYOTA MOTOR SALES, U.S.A., INC.

REMOVAL

REMOVAL

HINT:

- Use the same procedure for the RH side and LH side.
- The procedure listed is for the LH side.

1. **REMOVE FRONT FRAME ASSEMBLY**

   Refer to **REMOVAL**

2. **REMOVE ENGINE MOUNTING INSULATOR** . Refer to **REMOVAL - Step 71**
3. **REMOVE FRONT LOWER NO. 1 SUSPENSION ARM SUB-ASSEMBLY**
   a. Remove the 3 bolts, nut and front lower No. 1 suspension arm sub-assembly from the front frame assembly.

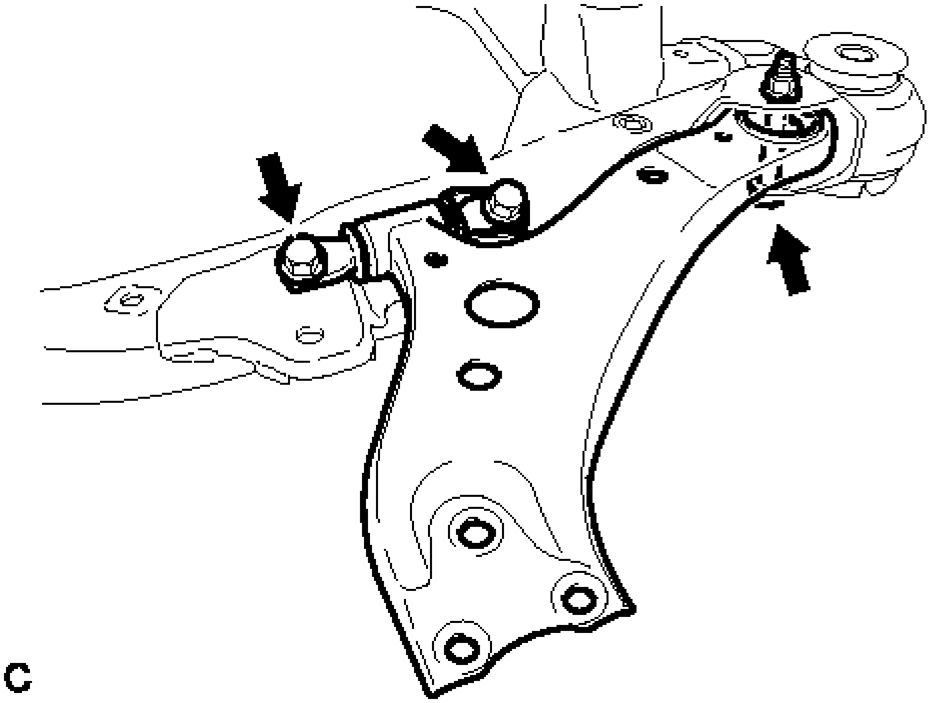

Fig. 52: Locating Front Lower Suspension Arm Bolts And Nut
Courtesy of TOYOTA MOTOR SALES, U.S.A., INC.

NOTE: When removing the bolt, keep the nut from rotating.

   b. Remove the front lower arm bushing stopper from the front lower No. 1 suspension arm sub-assembly.

INSTALLATION

INSTALLATION

HINT:

- Use the same procedure for the RH side and LH side.
- The procedure listed below is for the LH side.

1. **INSTALL FRONT LOWER NO. 1 SUSPENSION ARM SUB-ASSEMBLY**
    a. Install the front lower arm bushing stopper to the front lower No. 1 suspension arm sub-assembly.
    b. Install the front lower No. 1 suspension arm sub-assembly to the front frame assembly with the 3 bolts and nut in the order shown in the illustration.

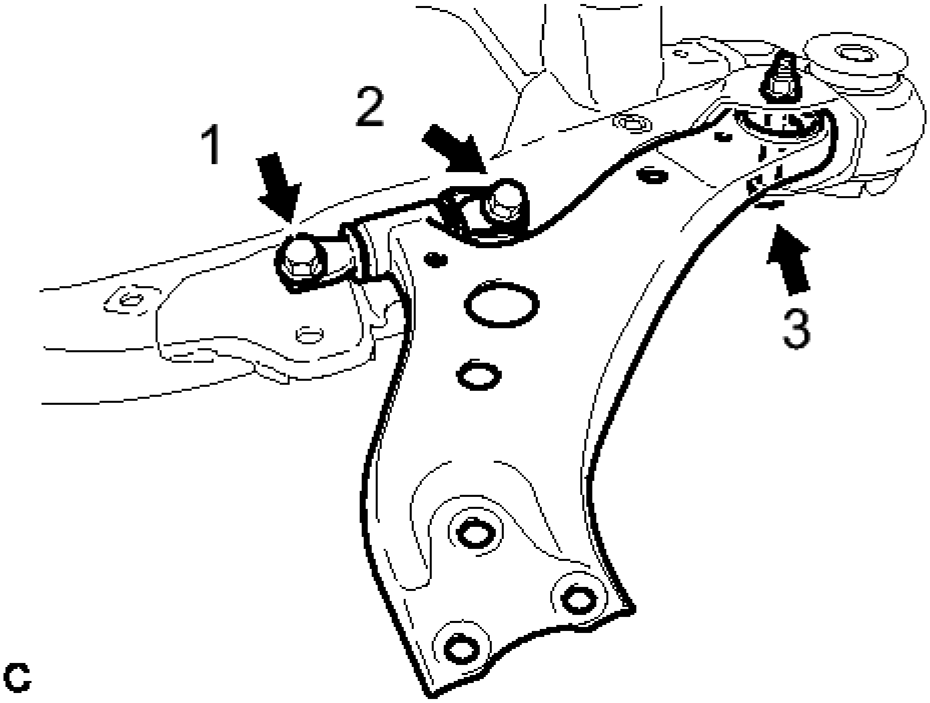

Fig. 53: Identifying Bolts Tightening Sequence
Courtesy of TOYOTA MOTOR SALES, U.S.A., INC.

Bolt 1, 2

Torque: 200 N*m (2039 kgf*cm, 148 ft.*lbf)

Bolt 3

Torque: 135 N*m (1377 kgf*cm, 100 ft.*lbf)

NOTE: **While keeping the nut from rotating, tighten the bolt.**

2. **INSTALL ENGINE MOUNTING INSULATOR** . Refer to **INSTALLATION - Step 8**
3. **INSTALL FRONT FRAME ASSEMBLY**

    Refer to **INSTALLATION - Step 10**

FRONT LOWER BALL JOINT

COMPONENTS

ILLUSTRATION

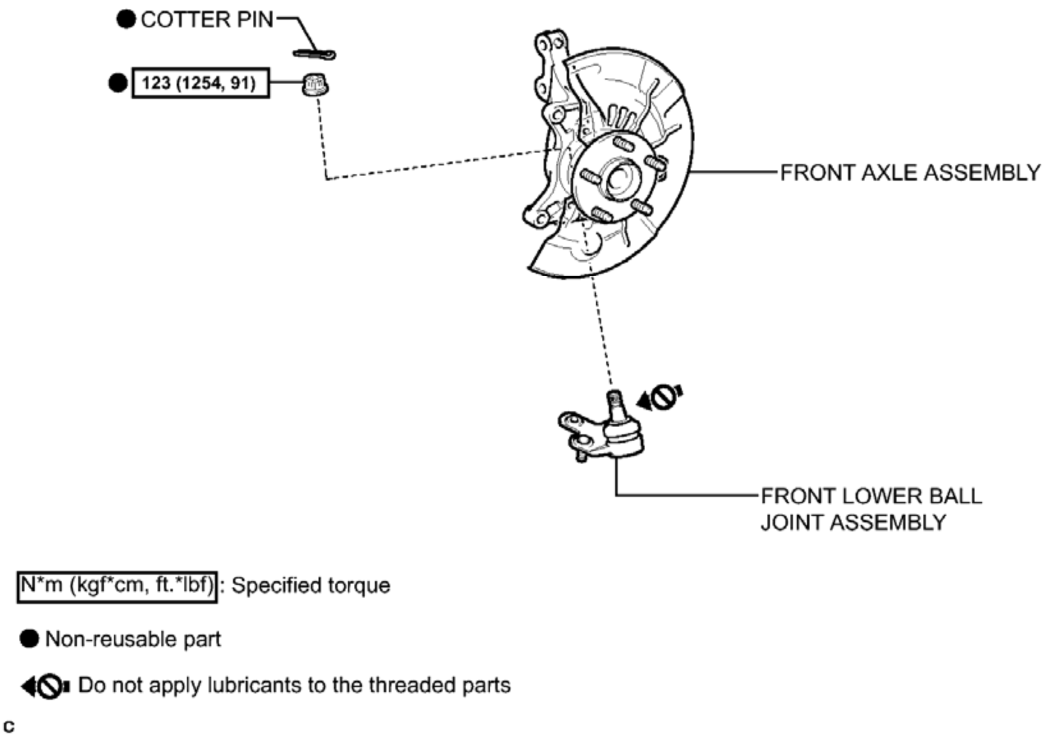
● COTTER PIN
● 123 (1254, 91)
FRONT AXLE ASSEMBLY
FRONT LOWER BALL JOINT ASSEMBLY
N*m (kgf*cm, ft.*lbf) : Specified torque
● Non-reusable part
Do not apply lubricants to the threaded parts
c

Fig. 54: Identifying Front Lower Ball Joint Replacement Components With Torque Specifications
Courtesy of TOYOTA MOTOR SALES, U.S.A., INC.

REMOVAL

REMOVAL

HINT:

- Use the same procedure for the RH side and LH side.
- The procedure listed below is for the LH side.

1. **REMOVE FRONT AXLE ASSEMBLY**

   Refer to **REMOVAL**

2. **REMOVE FRONT LOWER BALL JOINT ASSEMBLY**
   a. Secure the front axle assembly in a vise using aluminum plates.

      NOTE: When using a vise, do not overtighten it.

   b. Remove the cotter pin and nut.

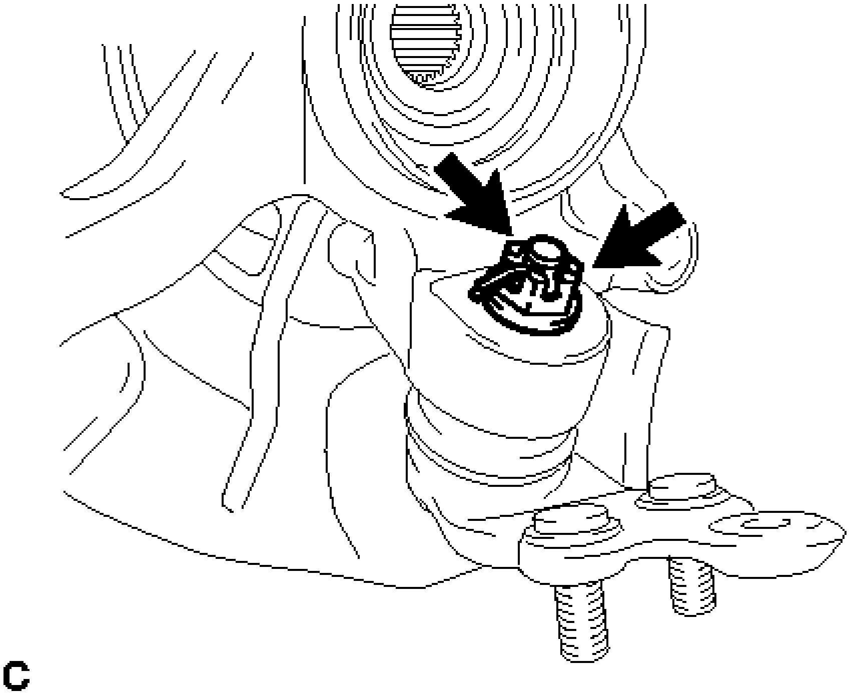

Fig. 55: Locating Front Lower Ball Joint Assembly Fasteners
Courtesy of TOYOTA MOTOR SALES, U.S.A., INC.

   c. Install SST to the front lower ball joint assembly as shown in the illustration.
      - **SST: 09960-20010**
        09961-02050
        09961-02050

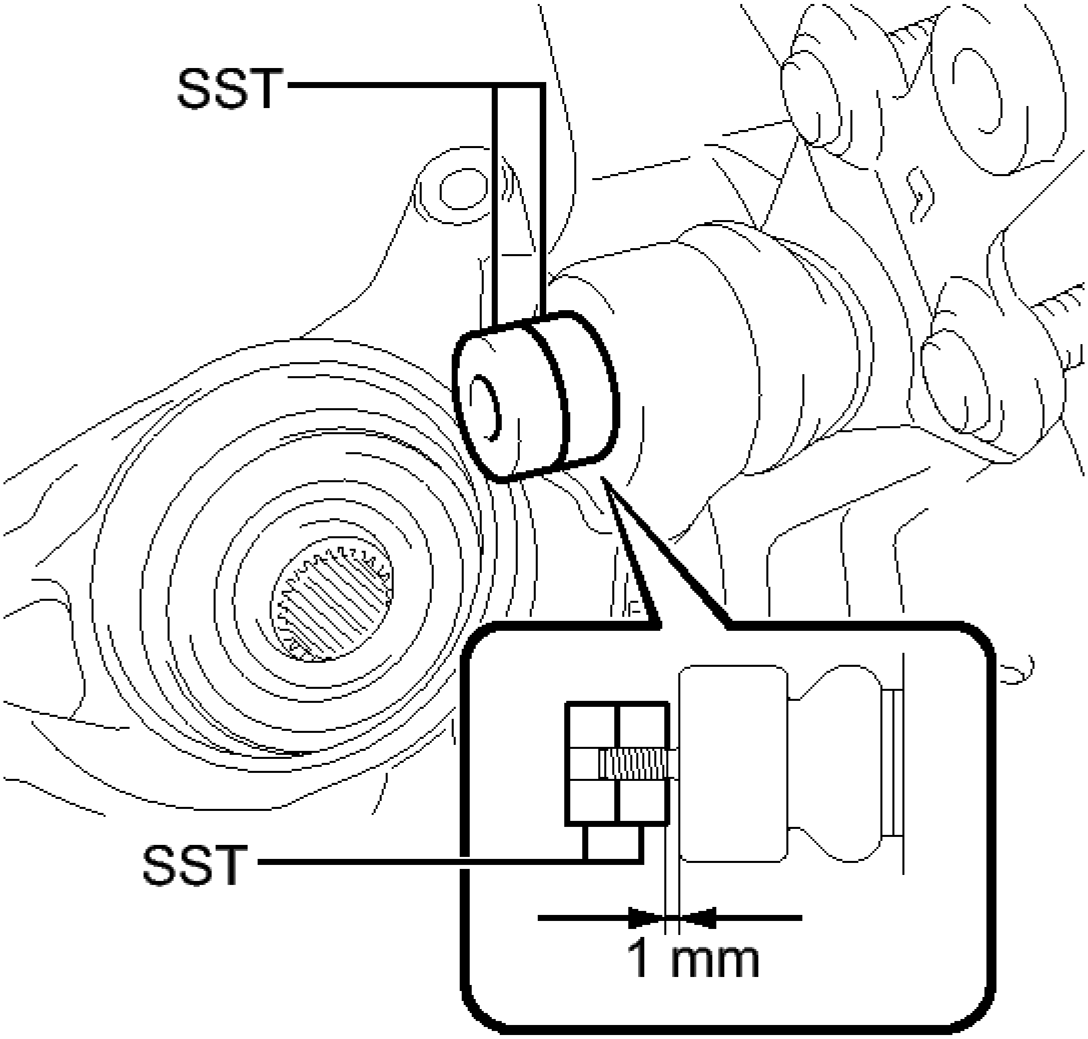

P

Fig. 56: Identifying Clearance Between SST And Front Axle Assembly
Courtesy of TOYOTA MOTOR SALES, U.S.A., INC.

NOTE: **Check that the clearance measurement between SST and the front axle assembly is 1 mm (0.0394 in.).**

d. Using SST, remove the front lower ball joint assembly from the front axle assembly as shown in the illustration.
   - **SST: 09960-20010**

     09961-02010

     09961-02050

     09961-02050

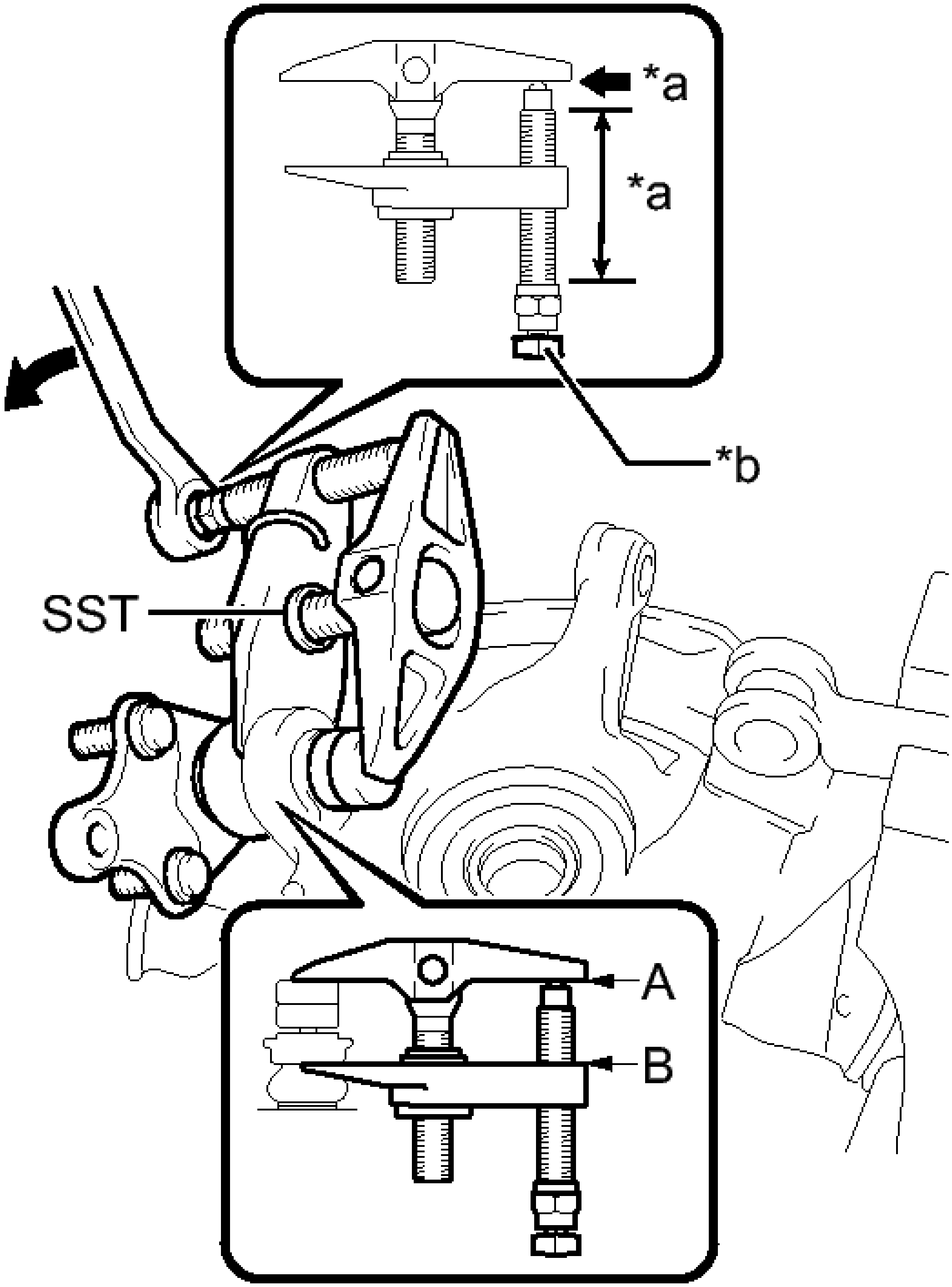

c

Fig. 57: Removing Front Lower Ball Joint Assembly

Courtesy of TOYOTA MOTOR SALES, U.S.A., INC.

TEXT IN ILLUSTRATION

	Apply

*a	grease
*b	Place wrench here

WARNING: **Apply grease to the threads and end of the SST bolt.**

NOTE:

- **Install SST so that A and B are parallel.**
- **Be sure to place a wrench on the part indicated in the illustration.**
- **Do not damage the front lower ball joint dust cover.**

INSPECTION

INSPECTION

1. **INSPECT FRONT LOWER BALL JOINT ASSEMBLY**
    a. Inspect the turning torque of the ball joint.

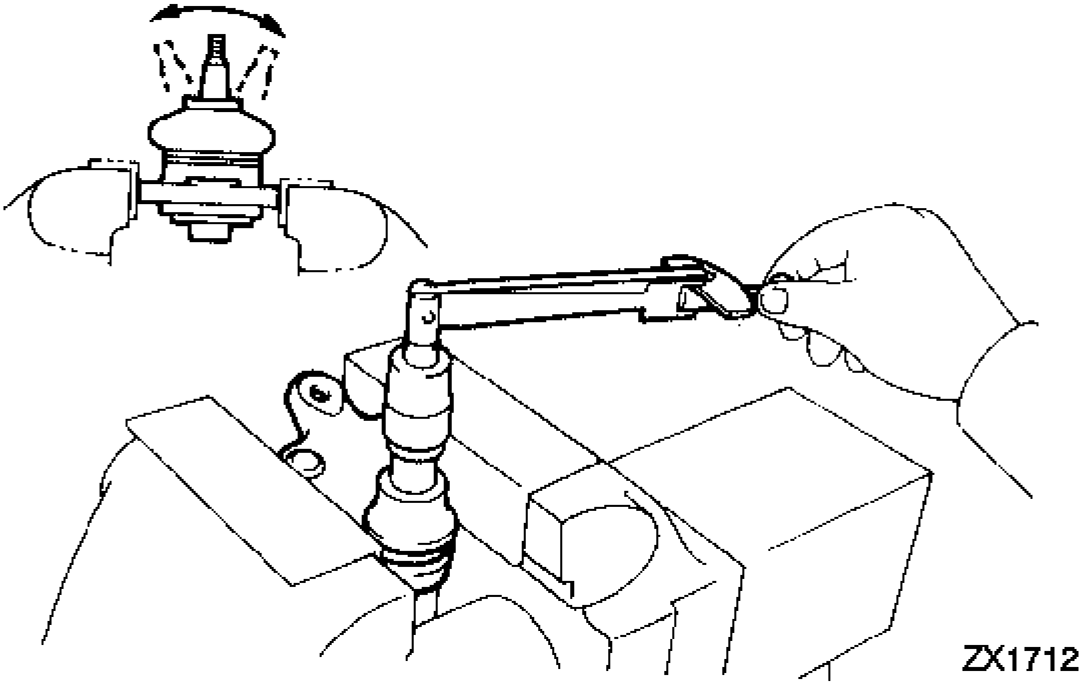

Fig. 58: Inspecting Lower Ball Joint Assembly Front LH
Courtesy of TOYOTA MOTOR SALES, U.S.A., INC.

1. Secure the front lower ball joint assembly in a vise using aluminum plates.
2. Install the nut to the front lower ball joint assembly stud.

3. Using a torque wrench, turn the stud continuously at a rate of 3 to 5 seconds per turn and take the torque reading on the 5th turn.

   Turning torque

   0.98 to 3.43 N*m (10 to 34 kgf*cm, 9 to 30 in.*lbf)

   If the turning torque is not within the specified range, replace the front lower ball joint assembly with a new one.

b. Inspect the dust cover.
   1. Check that the dust cover is not cracked and that there is no grease on it.

      If the dust cover is cracked or there is grease on it, replace the front lower ball joint assembly with a new one.

INSTALLATION

INSTALLATION

HINT:

- Use the same procedure for the RH side and LH side.
- The procedure listed below is for the LH side.

1. **INSTALL FRONT LOWER BALL JOINT ASSEMBLY**
   a. Secure the front axle assembly in a vise using aluminum plates.

      NOTE: When using a vise, do not overtighten it.

   b. Install the front lower ball joint assembly to the front axle assembly with a new nut.

      Torque: 123 N*m (1254 kgf*cm, 91 ft.*lbf)

      NOTE: Prevent oil from adhering to the threaded and tapered parts.

   c. Install a new cotter pin.

      NOTE: Further tighten the nut up to 60° if the holes for the cotter pin are not aligned.

2. **INSTALL FRONT AXLE ASSEMBLY**

   Refer to **INSTALLATION - Step 6**

FRONT STABILIZER BAR

COMPONENTS

ILLUSTRATION

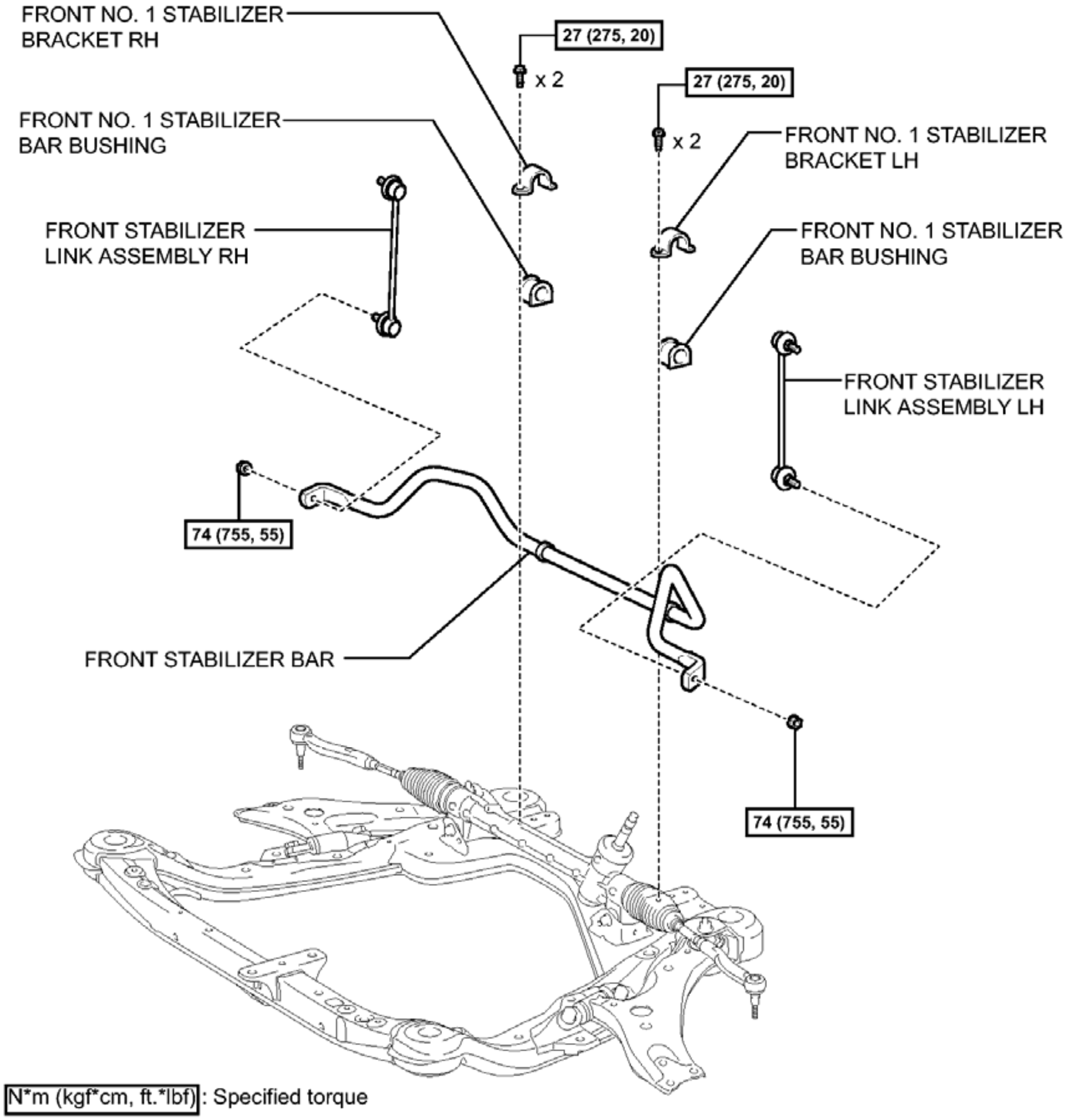
FRONT NO. 1 STABILIZER BRACKET RH
27 (275, 20)
x 2
27 (275, 20)
x 2
FRONT NO. 1 STABILIZER BAR BUSHING
FRONT NO. 1 STABILIZER BRACKET LH
FRONT STABILIZER LINK ASSEMBLY RH
FRONT NO. 1 STABILIZER BAR BUSHING
FRONT STABILIZER LINK ASSEMBLY LH
74 (755, 55)
FRONT STABILIZER BAR
74 (755, 55)
N*m (kgf*cm, ft.*lbf) : Specified torque

c

Fig. 59: Identifying Front Stabilizer Bar Replacement Components With Torque Specifications
Courtesy of TOYOTA MOTOR SALES, U.S.A., INC.

REMOVAL

REMOVAL

1. **REMOVE ENGINE ASSEMBLY WITH TRANSAXLE**

   for 2GR-FE: Refer to **REMOVAL**

   for 2AR-FE: Refer to **REMOVAL**

2. **REMOVE FRONT STABILIZER LINK ASSEMBLY LH**
   a. Remove the nut and front stabilizer link assembly LH from the front stabilizer bar.

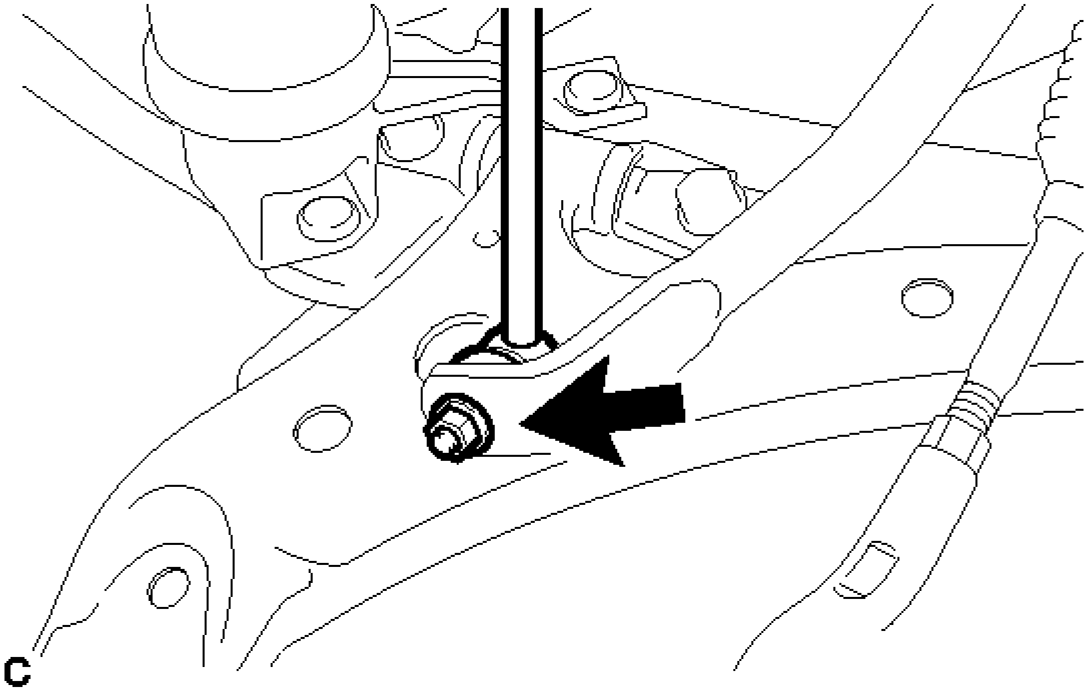

Fig. 60: Identifying Front Stabilizer Link Assembly Nut LH
Courtesy of TOYOTA MOTOR SALES, U.S.A., INC.

If the ball joint turns together with the nut, use a hexagon wrench to hold the stud bolt.

3. **REMOVE FRONT STABILIZER LINK ASSEMBLY RH**

   HINT:

   Perform the same procedure as the LH side.

4. **REMOVE FRONT NO. 1 STABILIZER BRACKET LH**
   a. Remove the 2 bolts and front No. 1 stabilizer bracket LH from the front frame assembly.

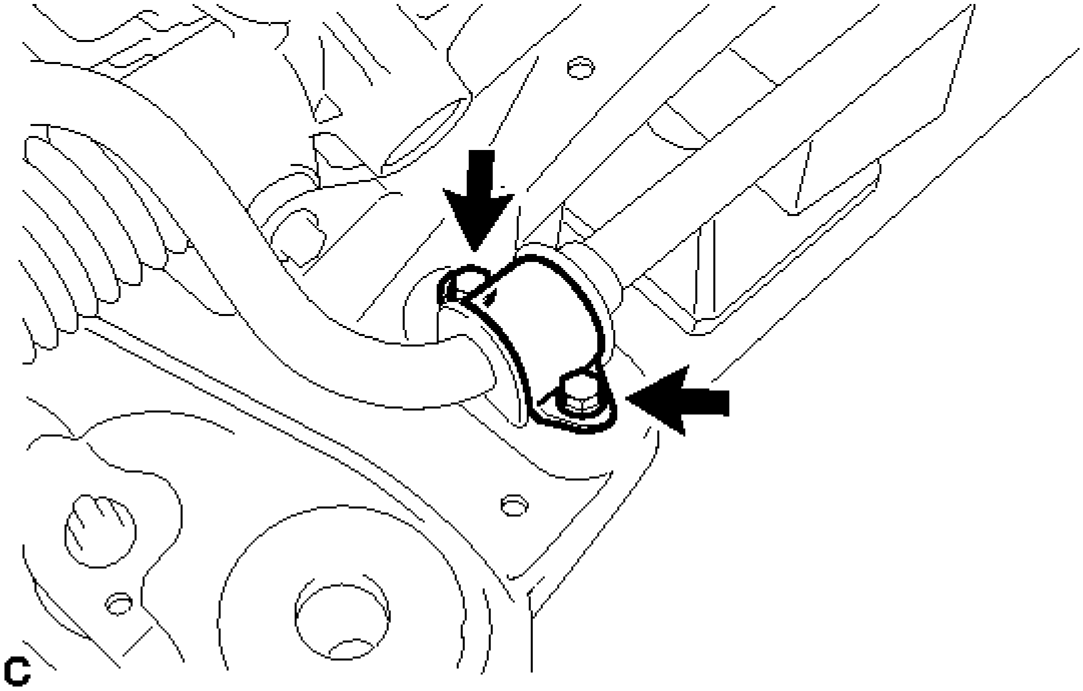

Fig. 61: Identifying No. 1 Stabilizer Bracket Bolts LH
Courtesy of TOYOTA MOTOR SALES, U.S.A., INC.

5. **REMOVE FRONT NO. 1 STABILIZER BRACKET RH**

   HINT:

   Perform the same procedure as the LH side.

6. **REMOVE FRONT STABILIZER BAR**
   a. Remove the front stabilizer bar from the front frame assembly.
7. **REMOVE FRONT NO. 1 STABILIZER BAR BUSHING**
   a. Remove the 2 front No. 1 stabilizer bar bushings from the front stabilizer bar.

INSPECTION

INSPECTION

1. **INSPECT FRONT STABILIZER LINK ASSEMBLY**
   a. Inspect the turning torque of the ball joint.

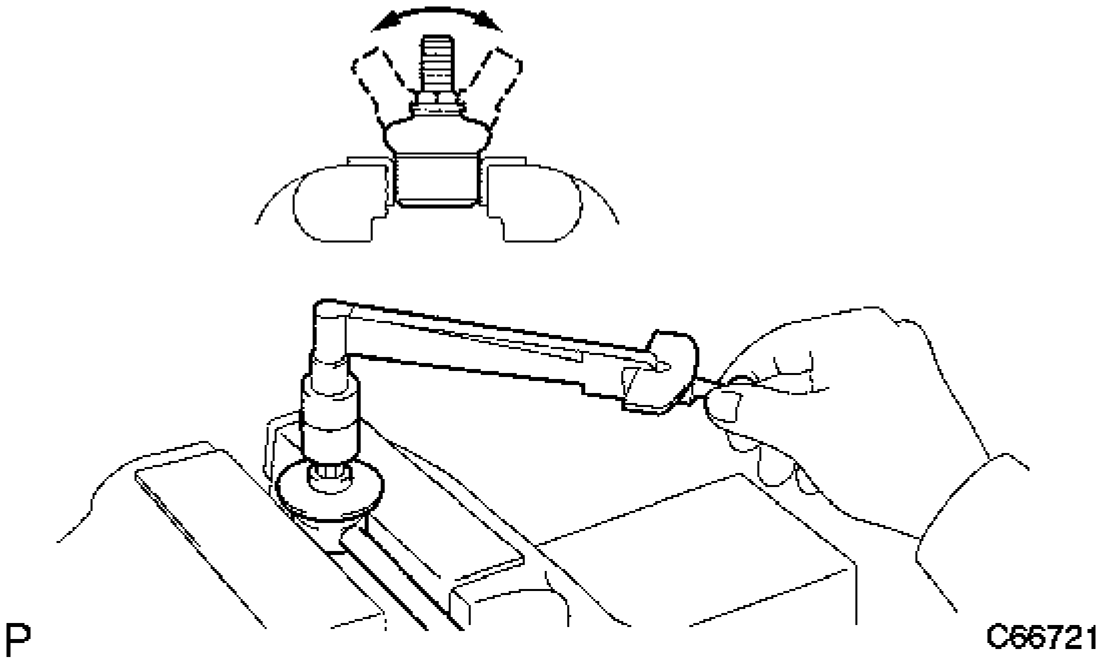

Fig. 62: Inspecting Front Stabilizer Link Assembly
Courtesy of TOYOTA MOTOR SALES, U.S.A., INC.

1. Secure the front stabilizer link assembly in a vise using aluminum plates.
2. Install the nut to the front stabilizer link assembly stud.
3. Using a torque wrench, turn the stud continuously at a rate of 3 to 5 seconds per turn and take the torque reading on the 5th turn.

   Turning torque

   0.05 to 1.96 N*m (0.6 to 19 kgf*cm, 0.5 to 17 in.*lbf)

   If the turning torque is not within the specified range, replace the front stabilizer link assembly with a new one.

b. Inspect the dust cover.
   1. Check that the dust cover is not cracked and that there is no grease on it.

      If the dust cover is cracked or there is grease on it, replace the front stabilizer link assembly with a new one.

INSTALLATION

INSTALLATION

1. **INSTALL FRONT NO. 1 STABILIZER BAR BUSHING**
   a. Install the 2 front No. 1 stabilizer bar bushings to the front stabilizer bar as shown in the

illustration.

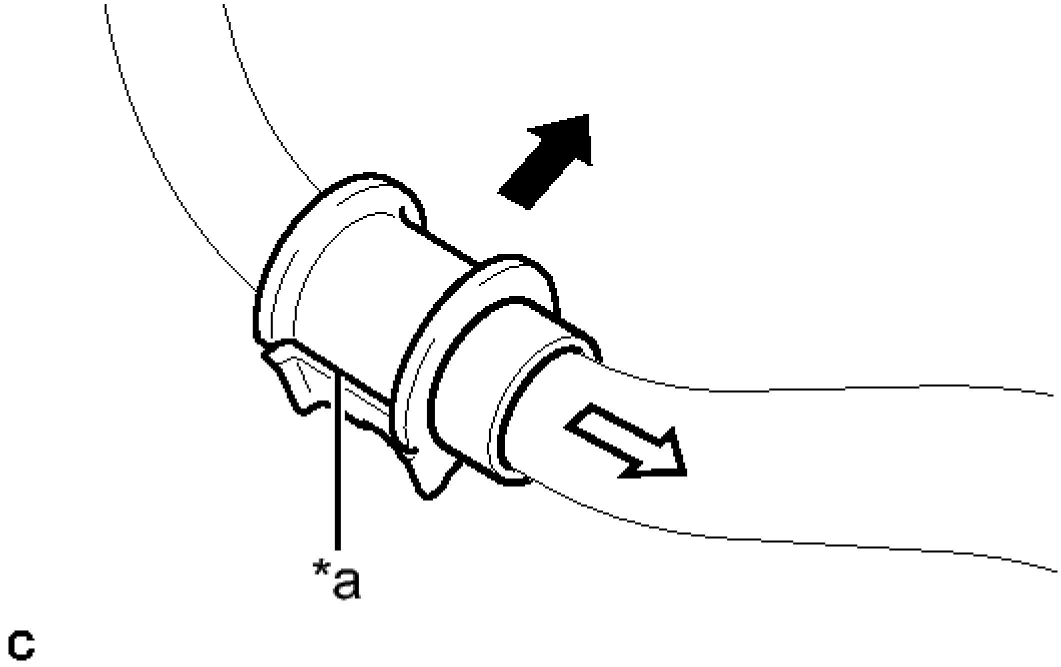

Fig. 63: Installing Front No. 1 Stabilizer Bar Bushing
Courtesy of TOYOTA MOTOR SALES, U.S.A., INC.

TEXT IN ILLUSTRATION

*a	Cutout
·	Front of the Vehicle
·	Inside of the Vehicle

NOTE: **When installing the front No. 1 stabilizer bar bushings, make sure that the cutout faces the rear of the vehicle.**

2. **INSTALL FRONT STABILIZER BAR**
    a. Install the front stabilizer bar to the front frame assembly.
3. **INSTALL FRONT NO. 1 STABILIZER BRACKET LH**
    a. Install the front No. 1 stabilizer bracket LH to the front frame assembly with the 2 bolts.

    Torque: 27 N*m (275 kgf*cm, 20 ft.*lbf)

4. **INSTALL FRONT NO. 1 STABILIZER BRACKET RH**

HINT:

Perform the same procedure as the LH side.

5. **INSTALL FRONT STABILIZER LINK ASSEMBLY LH**
   a. Install the front stabilizer link assembly LH to the front stabilizer bar with the nut.

      Torque: 74 N*m (755 kgf*cm, 55 ft.*lbf)

      If the ball joint turns together with the nut, use a hexagon wrench to hold the stud bolt.

6. **INSTALL FRONT STABILIZER LINK ASSEMBLY RH**

   HINT:

   Perform the same procedure as the LH side.

7. **INSTALL ENGINE ASSEMBLY WITH TRANSAXLE**

   for 2GR-FE: Refer to **INSTALLATION - Step 15**

   for 2AR-FE: Refer to **INSTALLATION - Step 17**

FRONT SUSPENSION MEMBER

COMPONENTS

ILLUSTRATION

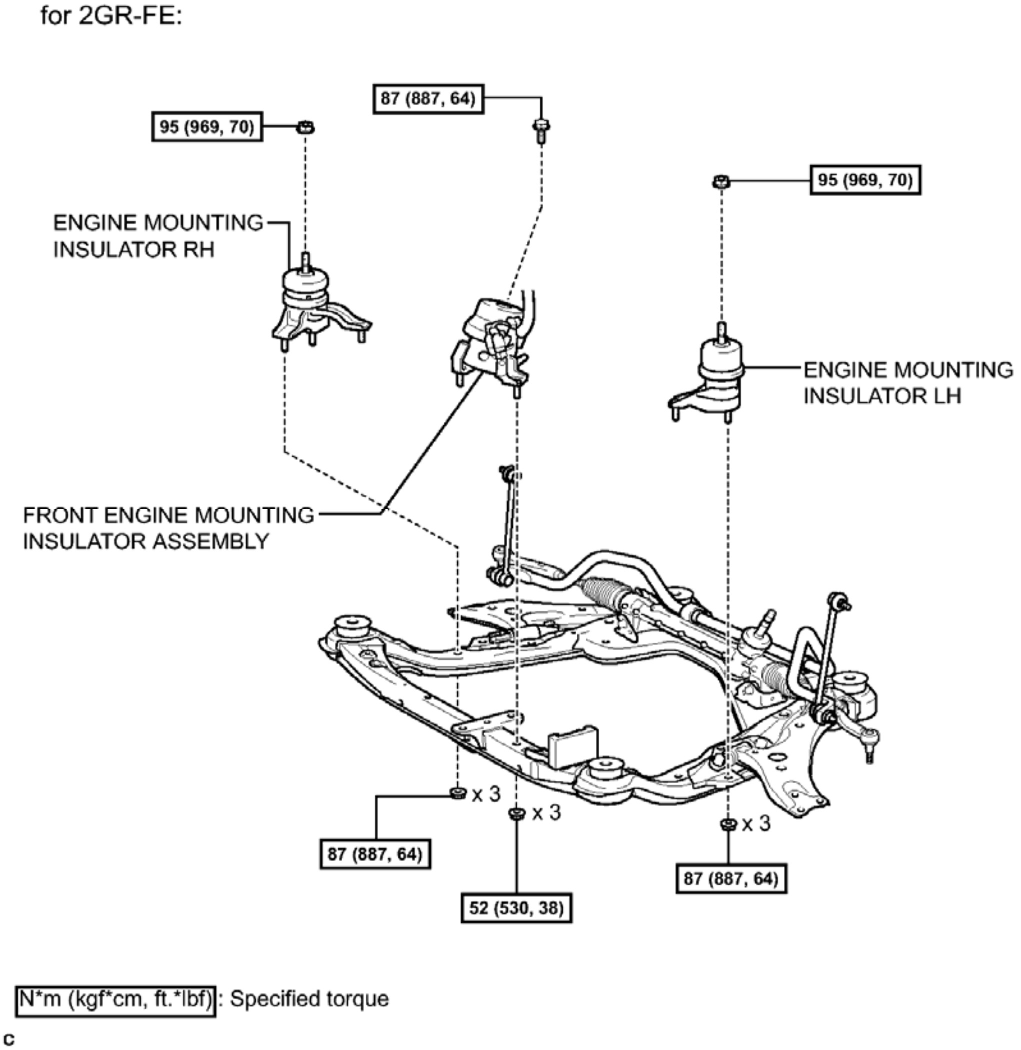
for 2GR-FE:
87 (887, 64)
95 (969, 70)
95 (969, 70)
ENGINE MOUNTING INSULATOR RH
ENGINE MOUNTING INSULATOR LH
FRONT ENGINE MOUNTING INSULATOR ASSEMBLY
x 3
x 3
x 3
87 (887, 64)
52 (530, 38)
87 (887, 64)
N*m (kgf*cm, ft.*lbf): Specified torque
c

Fig. 64: Identifying Front Suspension Member Replacement Components With Torque Specifications (1 Of 4)

Courtesy of TOYOTA MOTOR SALES, U.S.A., INC.

ILLUSTRATION

for 2AR-FE:

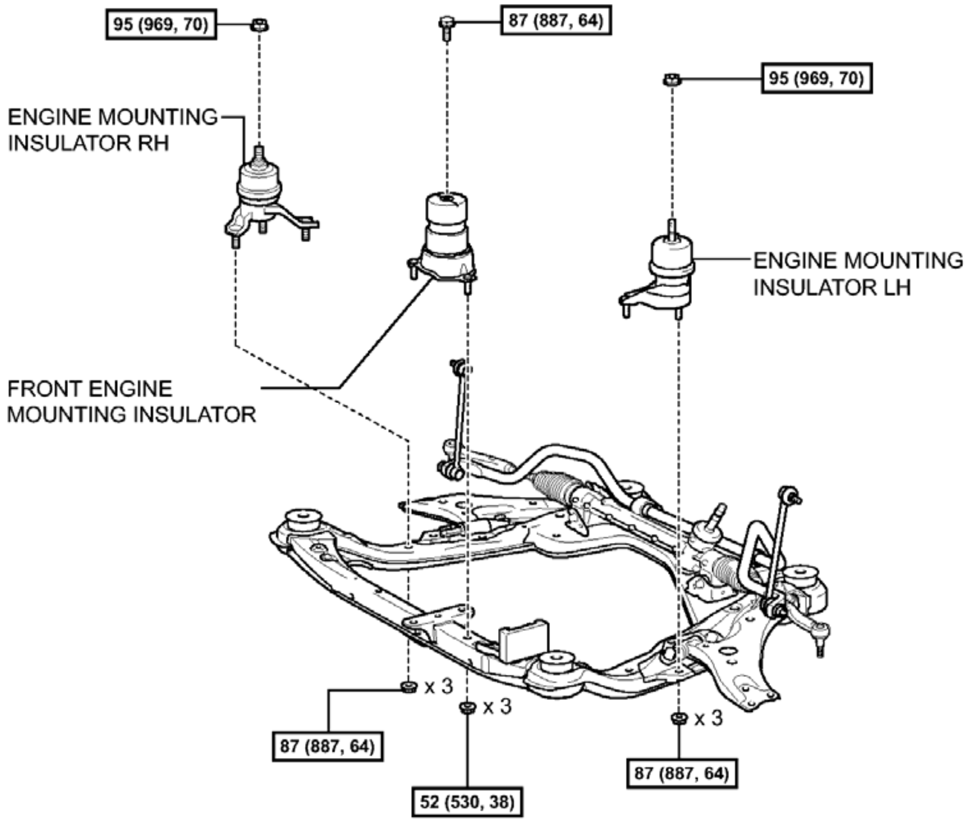
95 (969, 70)
87 (887, 64)
95 (969, 70)
ENGINE MOUNTING INSULATOR RH
ENGINE MOUNTING INSULATOR LH
FRONT ENGINE MOUNTING INSULATOR
x 3
x 3
x 3
87 (887, 64)
52 (530, 38)
87 (887, 64)

N*m (kgf*cm, ft.*lbf): Specified torque

c

Fig. 65: Identifying Front Suspension Member Replacement Components With Torque Specifications (2 Of 4)

Courtesy of TOYOTA MOTOR SALES, U.S.A., INC.

ILLUSTRATION

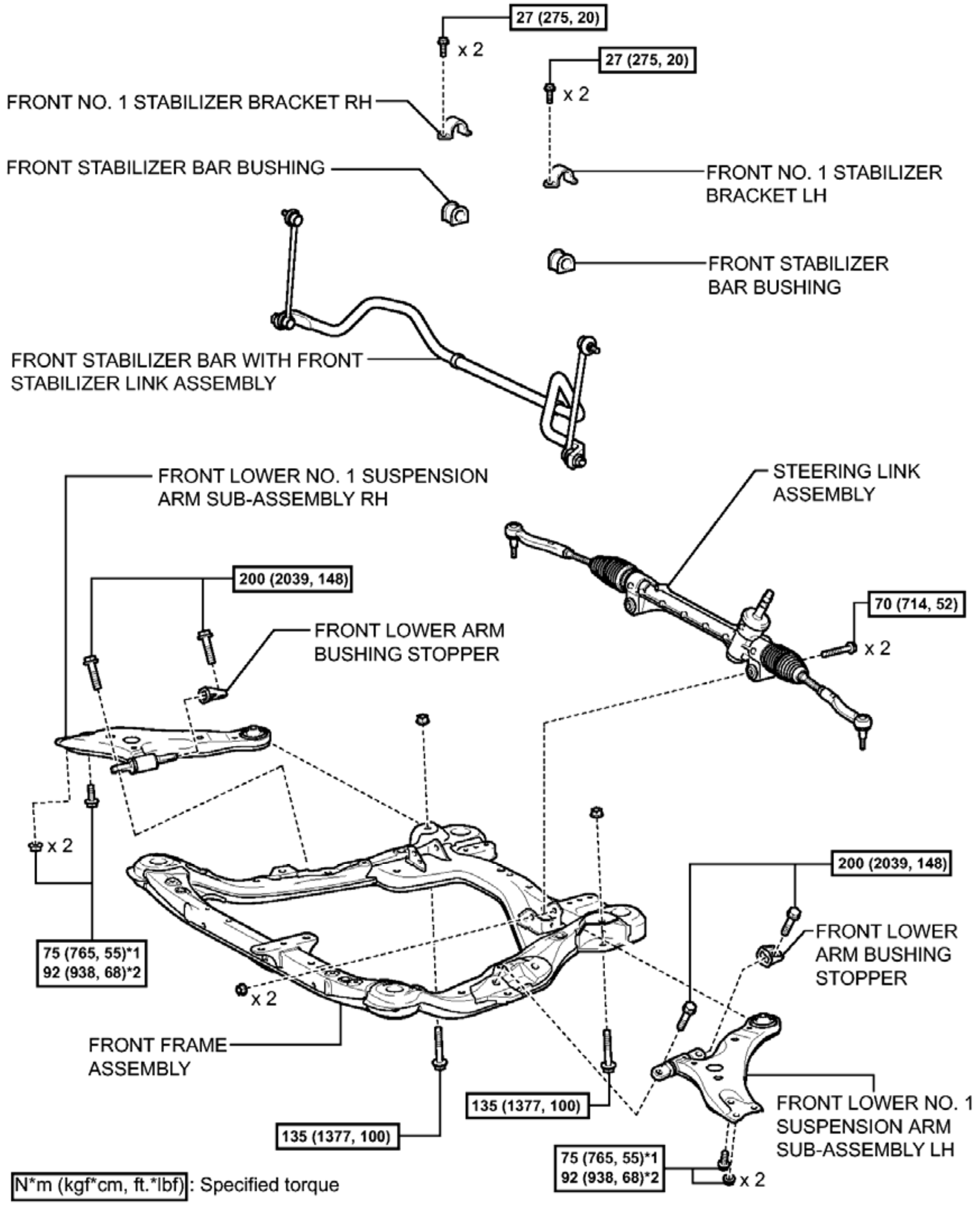
27 (275, 20)
x 2
27 (275, 20)
x 2
FRONT NO. 1 STABILIZER BRACKET RH
FRONT STABILIZER BAR BUSHING
FRONT NO. 1 STABILIZER BRACKET LH
FRONT STABILIZER BAR BUSHING
FRONT STABILIZER BAR WITH FRONT STABILIZER LINK ASSEMBLY
FRONT LOWER NO. 1 SUSPENSION ARM SUB-ASSEMBLY RH
STEERING LINK ASSEMBLY
200 (2039, 148)
FRONT LOWER ARM BUSHING STOPPER
70 (714, 52)
x 2
x 2
75 (765, 55)*1
92 (938, 68)*2
200 (2039, 148)
FRONT LOWER ARM BUSHING STOPPER
x 2
FRONT FRAME ASSEMBLY
135 (1377, 100)
135 (1377, 100)
FRONT LOWER NO. 1 SUSPENSION ARM SUB-ASSEMBLY LH
75 (765, 55)*1
92 (938, 68)*2
x 2
N*m (kgf*cm, ft.*lbf): Specified torque

*1: Type A nut

*2: Type B nut

c

Fig. 66: Identifying Front Suspension Member Replacement Components With Torque Specifications (3 Of 4)

Courtesy of TOYOTA MOTOR SALES, U.S.A., INC.

ILLUSTRATION

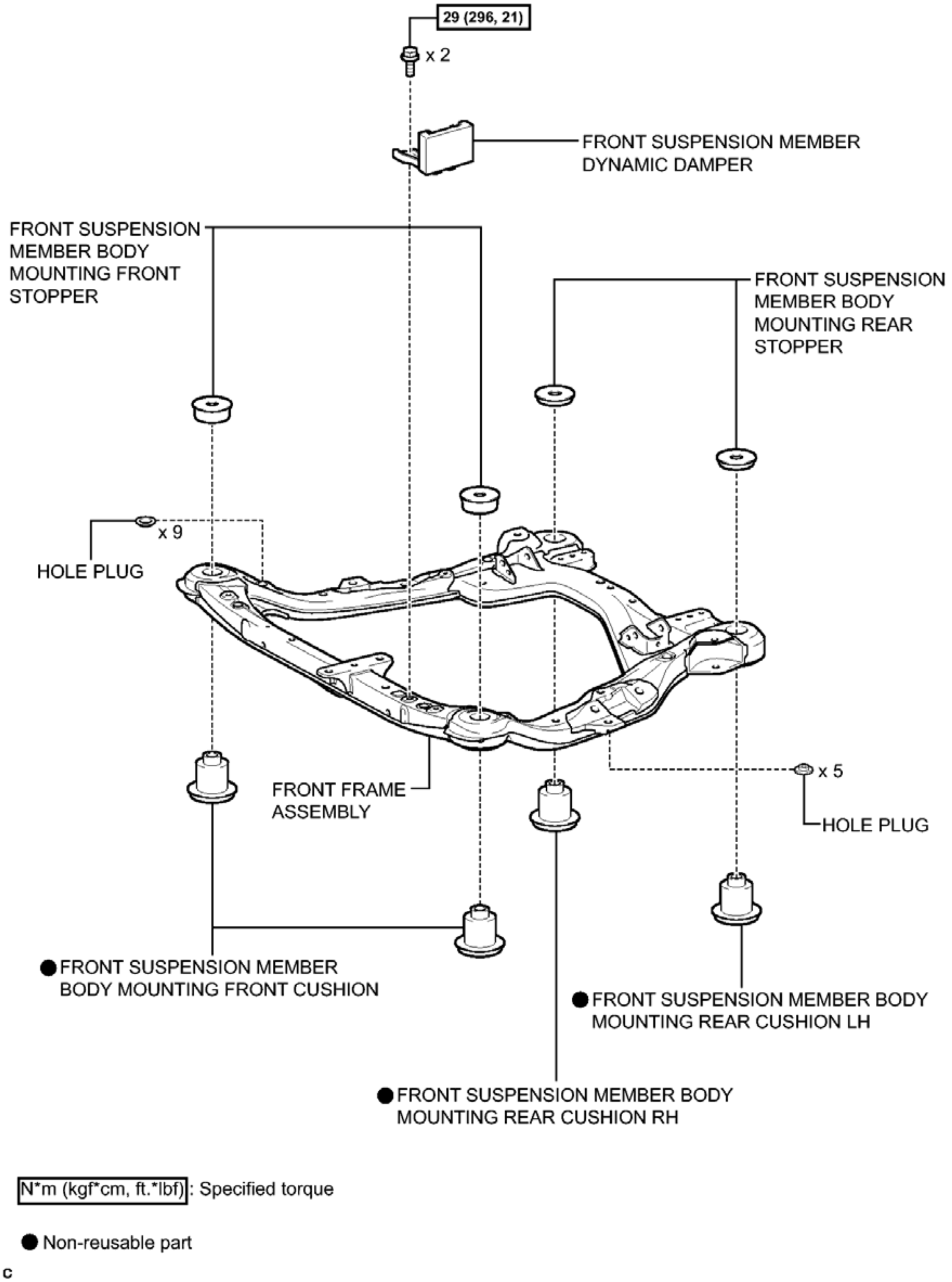
29 (296, 21)
x 2
FRONT SUSPENSION MEMBER DYNAMIC DAMPER
FRONT SUSPENSION MEMBER BODY MOUNTING FRONT STOPPER
FRONT SUSPENSION MEMBER BODY MOUNTING REAR STOPPER
x 9
HOLE PLUG
FRONT FRAME ASSEMBLY
x 5
HOLE PLUG
● FRONT SUSPENSION MEMBER BODY MOUNTING FRONT CUSHION
● FRONT SUSPENSION MEMBER BODY MOUNTING REAR CUSHION LH
● FRONT SUSPENSION MEMBER BODY MOUNTING REAR CUSHION RH
N*m (kgf*cm, ft.*lbf): Specified torque
● Non-reusable part
c

Fig. 67: Identifying Front Suspension Member Replacement Components With Torque Specifications (4 Of 4)

Courtesy of TOYOTA MOTOR SALES, U.S.A., INC.

REMOVAL

REMOVAL

1. **REMOVE FRONT FRAME ASSEMBLY**

   for 2GR-FE: Refer to **REMOVAL**

   for 2AR-FE: Refer to **REMOVAL**

2. **REMOVE FRONT ENGINE MOUNTING INSULATOR ASSEMBLY (for 2GR-FE)**

   Refer to **REMOVAL - Step 70**

3. **REMOVE FRONT ENGINE MOUNTING INSULATOR (for 2AR-FE)**

   Refer to **REMOVAL - Step 66**

4. **REMOVE ENGINE MOUNTING INSULATOR LH**

   for 2GR-FE: Refer to **REMOVAL - Step 71**

   for 2AR-FE: Refer to **REMOVAL - Step 67**

5. **REMOVE ENGINE MOUNTING INSULATOR RH**

   for 2GR-FE: Refer to **REMOVAL - Step 72**

   for 2AR-FE: Refer to **REMOVAL - Step 68**

6. **REMOVE FRONT NO. 1 STABILIZER BRACKET LH** See step 4
7. **REMOVE FRONT NO. 1 STABILIZER BRACKET RH**

   HINT:

   Perform the same procedure as the LH side.

8. **REMOVE FRONT STABILIZER BAR WITH FRONT STABILIZER LINK ASSEMBLY**
   1. Remove the front stabilizer bar with 2 front stabilizer link assemblies from the front frame assembly.
9. **REMOVE STEERING LINK ASSEMBLY** . Refer to **REMOVAL - Step 11**
10. **REMOVE FRONT LOWER NO. 1 SUSPENSION ARM SUB-ASSEMBLY LH** See step 3
11. **REMOVE FRONT LOWER NO. 1 SUSPENSION ARM SUB-ASSEMBLY RH**

HINT:

Perform the same procedure as the LH side.

12. **REMOVE FRONT SUSPENSION MEMBER DYNAMIC DAMPER**
    a. Remove the 2 bolts and front suspension member dynamic damper from the front frame assembly.

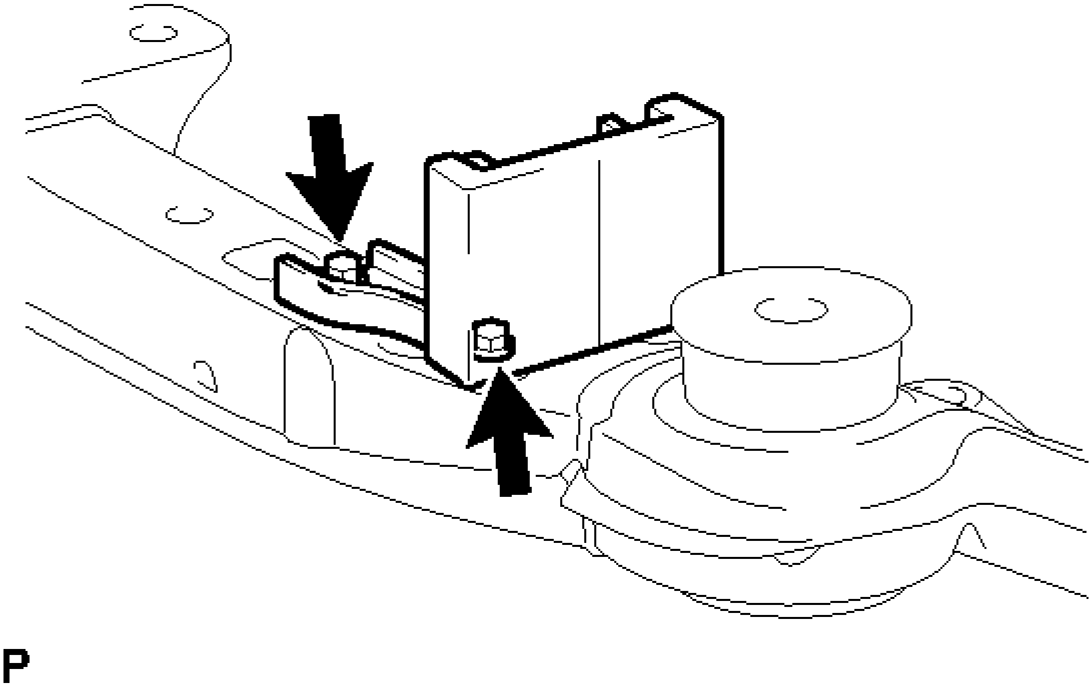

Fig. 68: Locating Front Suspension Member Dynamic Damper & Fasteners
Courtesy of TOYOTA MOTOR SALES, U.S.A., INC.

13. **REMOVE FRONT SUSPENSION MEMBER BODY MOUNTING FRONT STOPPER**
    a. Remove the 2 front suspension member body mounting front stoppers from the front frame assembly.
14. **REMOVE FRONT SUSPENSION MEMBER BODY MOUNTING REAR STOPPER**
    a. Remove the 2 front suspension member body mounting rear stoppers from the front frame assembly.
15. **REMOVE FRONT SUSPENSION MEMBER BODY MOUNTING FRONT CUSHION**
    a. Install SST as shown in the illustration.
       - **SST: 09830-10010**

         09830-01010

         09830-01040

         09830-01050
       - **SST: 09950-40011**

         09951-04020

09952-04010

09954-04010

09955-04011

09958-04011

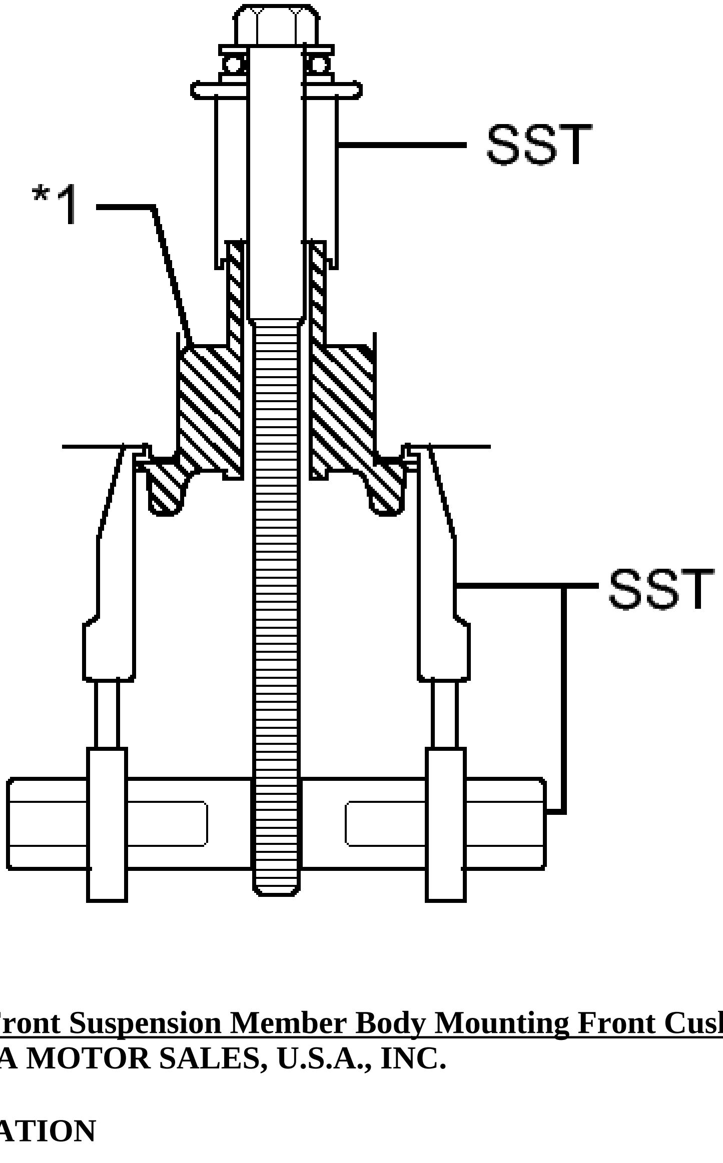

Fig. 69: Identifying Front Suspension Member Body Mounting Front Cushion & SST
Courtesy of TOYOTA MOTOR SALES, U.S.A., INC.

TEXT IN ILLUSTRATION

*1	Front Suspension Member Body Mounting Front

	Cushion

b. Using SST, remove the front suspension member body mounting front cushion from the front frame assembly.

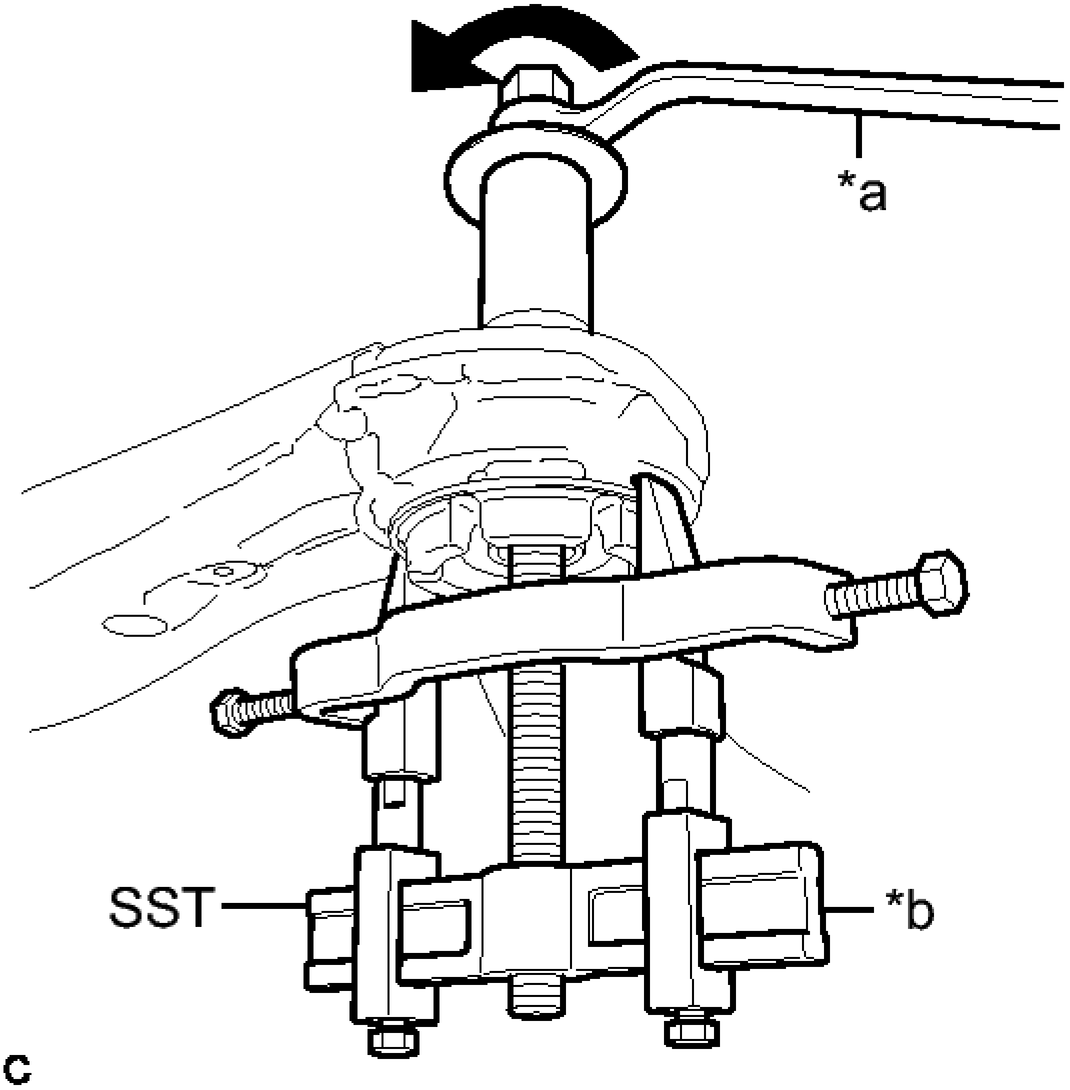

Fig. 70: Removing Front Suspension Member Body Mounting Front Cushion
Courtesy of TOYOTA MOTOR SALES, U.S.A., INC.

TEXT IN ILLUSTRATION

*a	Turn
*b	Hold

NOTE:

- **Make sure that the claws of SST are securely hung onto the mounting cushion.**
- **Tighten SST slowly and evenly.**

- **Be careful as the mounting cushion may fly out.**
- **The mounting cushion cannot be reused.**

16. **REMOVE FRONT SUSPENSION MEMBER BODY MOUNTING REAR CUSHION LH**
    a. Install SST as shown in the illustration.
        - **SST: 09830-10010**
          09830-01010
          09830-01040
          09830-01050
        - **SST: 09950-40011**
          09951-04020
          09952-04010
          09954-04010
          09955-04011
          09958-04011

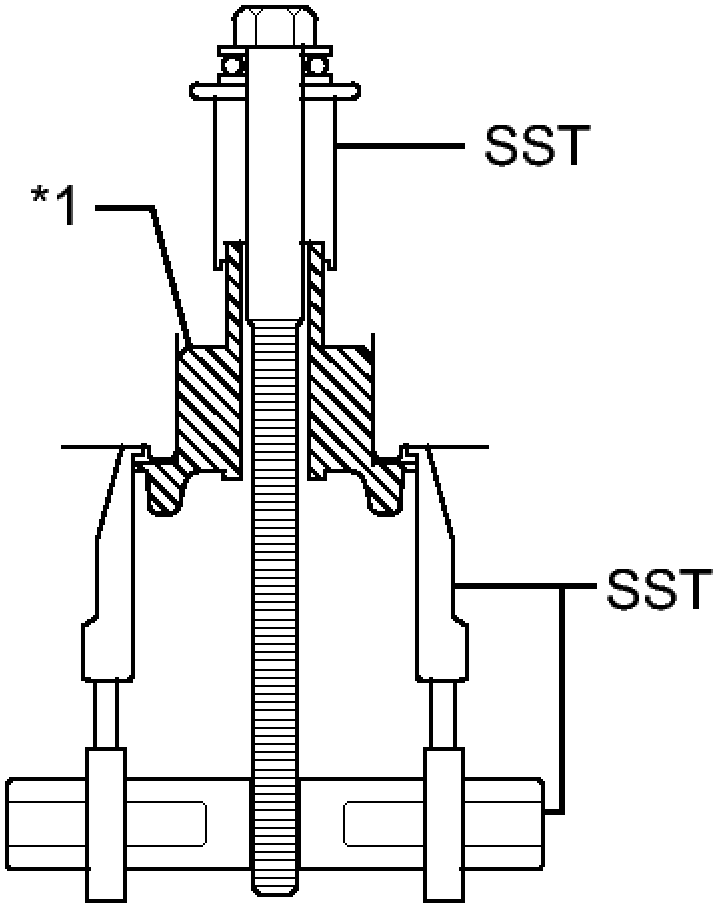

C

Fig. 71: Identifying Front Suspension Member Body Mounting Front Cushion & SST
Courtesy of TOYOTA MOTOR SALES, U.S.A., INC.

TEXT IN ILLUSTRATION

*1	Front Suspension Member Body Mounting Rear Cushion LH

b. Using SST, remove the front suspension member body mounting rear cushion LH from the front frame assembly.

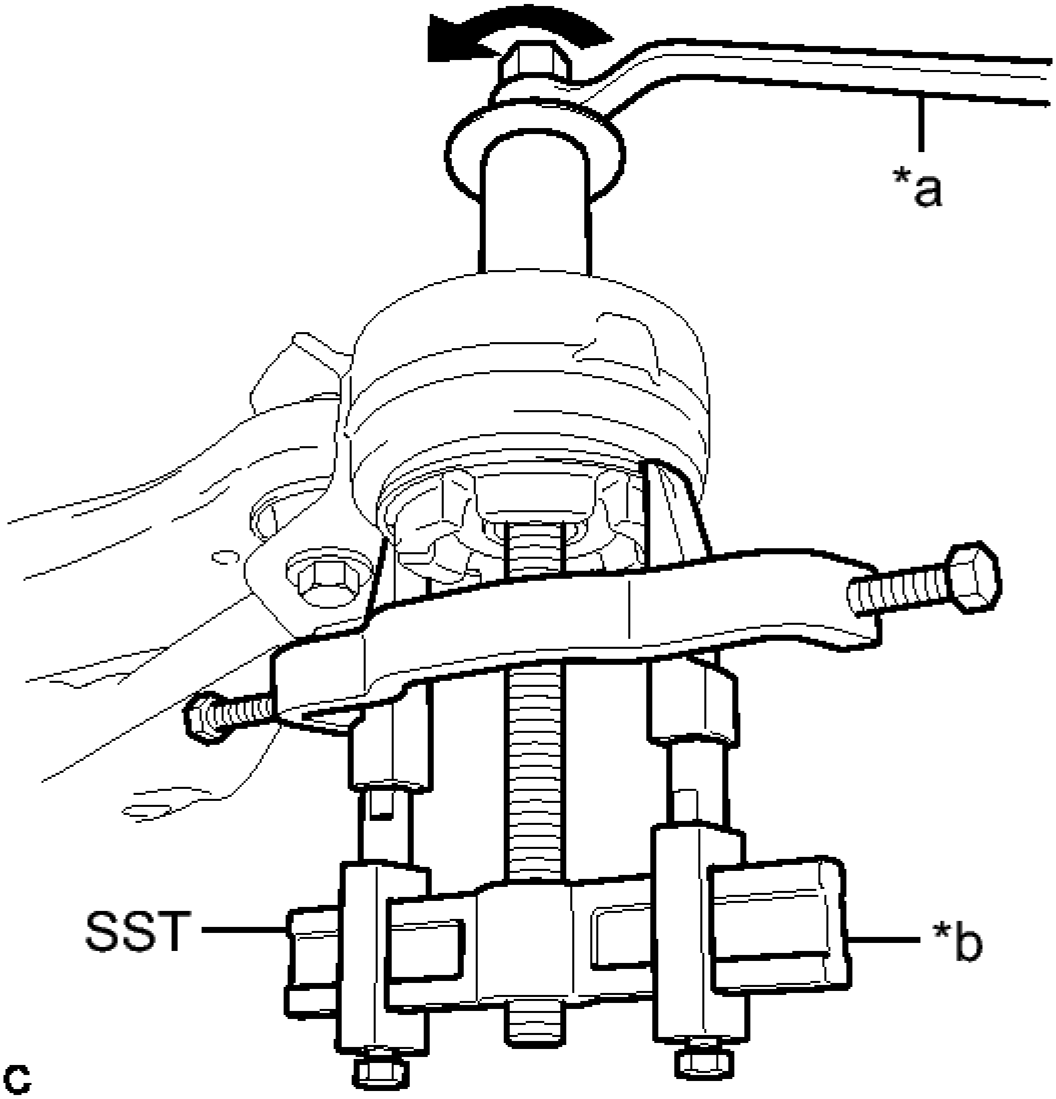

Fig. 72: Removing Front Suspension Member Body Mounting Front Cushion LH
Courtesy of TOYOTA MOTOR SALES, U.S.A., INC.

TEXT IN ILLUSTRATION

*a	Turn
*b	Hold

NOTE:

- **Make sure that the claws of SST are securely hung onto the mounting cushion.**
- **Tighten SST slowly and evenly.**
- **Be careful as the mounting cushion may fly out.**
- **The mounting cushion cannot be reused.**

17. **REMOVE FRONT SUSPENSION MEMBER BODY MOUNTING REAR CUSHION RH**

HINT:

Perform the same procedure as the LH side.

18. **REMOVE HOLE PLUG**
    a. Remove each hole plug from the front frame assembly.

INSTALLATION

INSTALLATION

1. **INSTALL HOLE PLUG**
    a. Install each hole plug to the front frame assembly.
2. **INSTALL FRONT SUSPENSION MEMBER BODY MOUNTING REAR CUSHION LH**
    a. Temporarily install a new front suspension member body mounting rear cushion LH while confirming the installation direction.

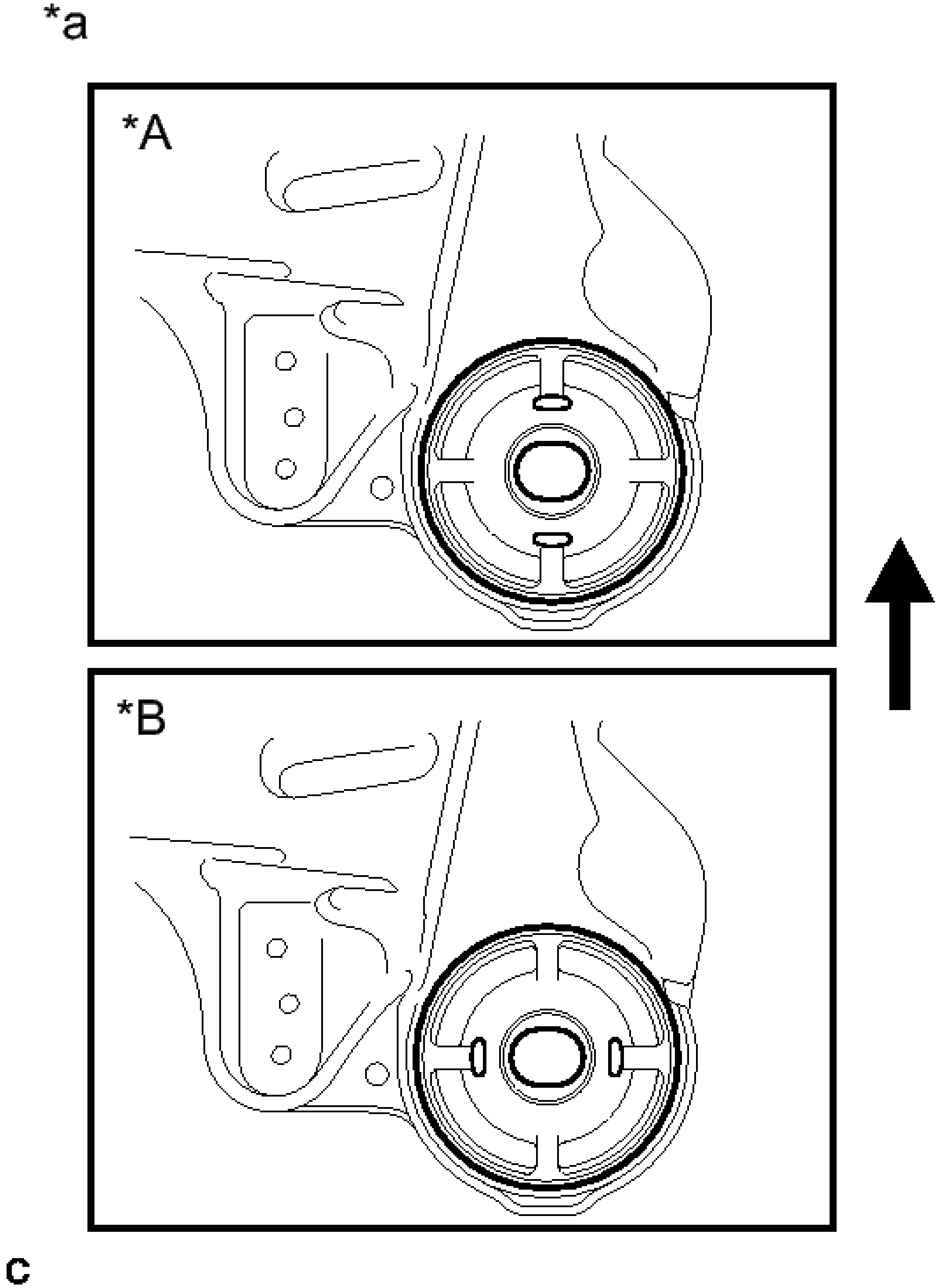

Fig. 73: Identifying Front Suspension Member Body Mounting Rear Cushion LH
Courtesy of TOYOTA MOTOR SALES, U.S.A., INC.

TEXT IN ILLUSTRATION

*A	Type A

*B	Type B
*a	View from Underneath
	Front of the Vehicle

NOTE: **Position the front suspension member body mounting rear cushion LH in the correct direction.**

b. Install SST as shown in the illustration.

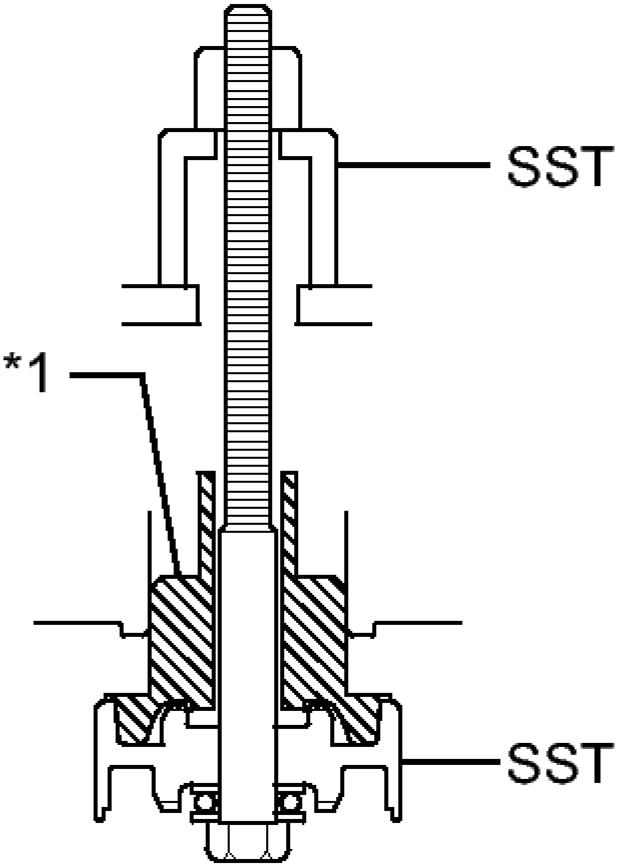

C

Fig. 74: Identifying SST On Mounting Cushion
Courtesy of TOYOTA MOTOR SALES, U.S.A., INC.

TEXT IN ILLUSTRATION

*1	Front Suspension Member Body Mounting Rear Cushion LH

- **SST: 09830-10010**

  09830-01010

  09830-01020

  09830-01030

  09830-01060

c. Using SST, install the front suspension member body mounting rear cushion LH as shown in the illustration.

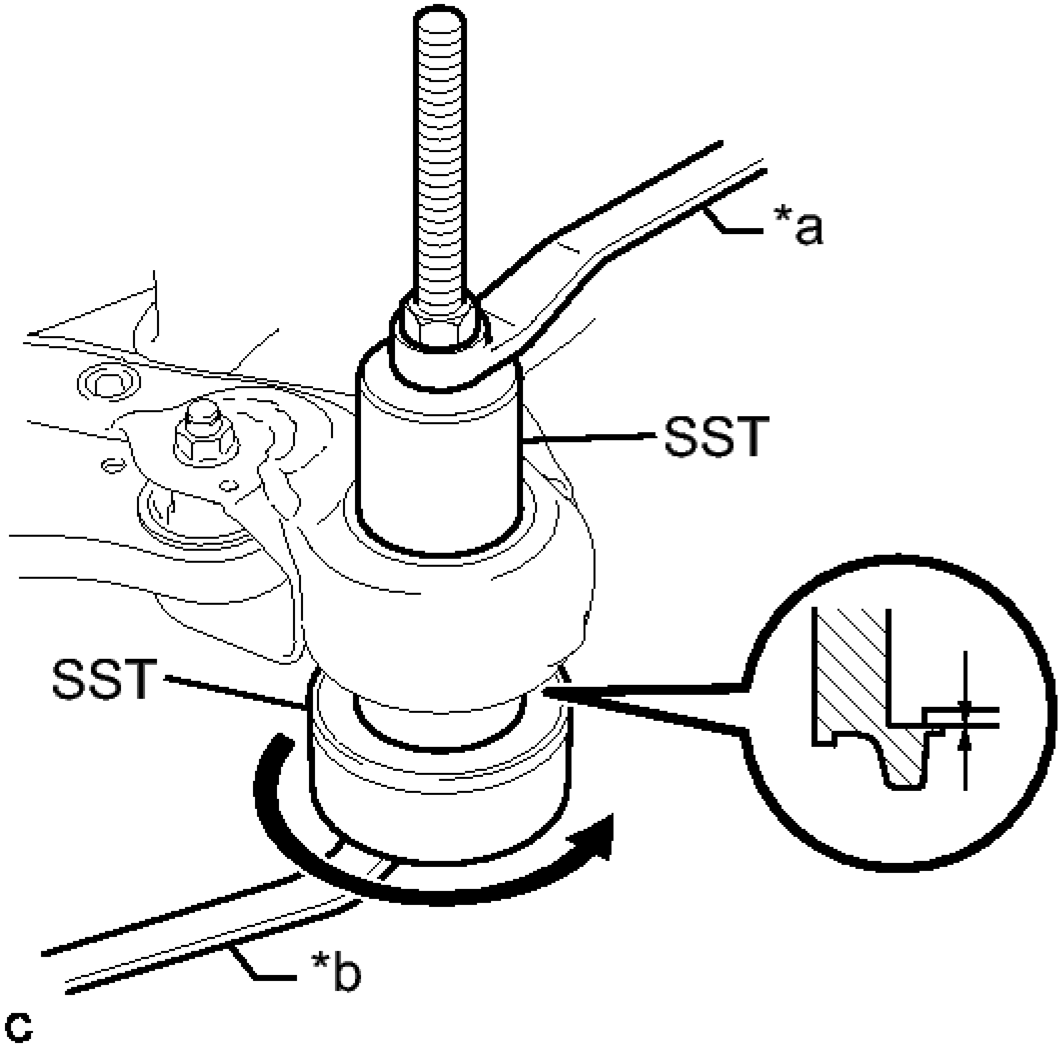

Fig. 75: Installing Front Suspension Member Body Mounting Rear Cushion LH
Courtesy of TOYOTA MOTOR SALES, U.S.A., INC.

TEXT IN ILLUSTRATION

*a	Hold
*b	Turn

NOTE: **Check that there is no clearance between the front suspension member and the front suspension member body mounting rear cushion LH.**

3. **INSTALL FRONT SUSPENSION MEMBER BODY MOUNTING REAR CUSHION RH**
   a. Temporarily install a new front suspension member body mounting rear cushion RH while confirming the installation direction.

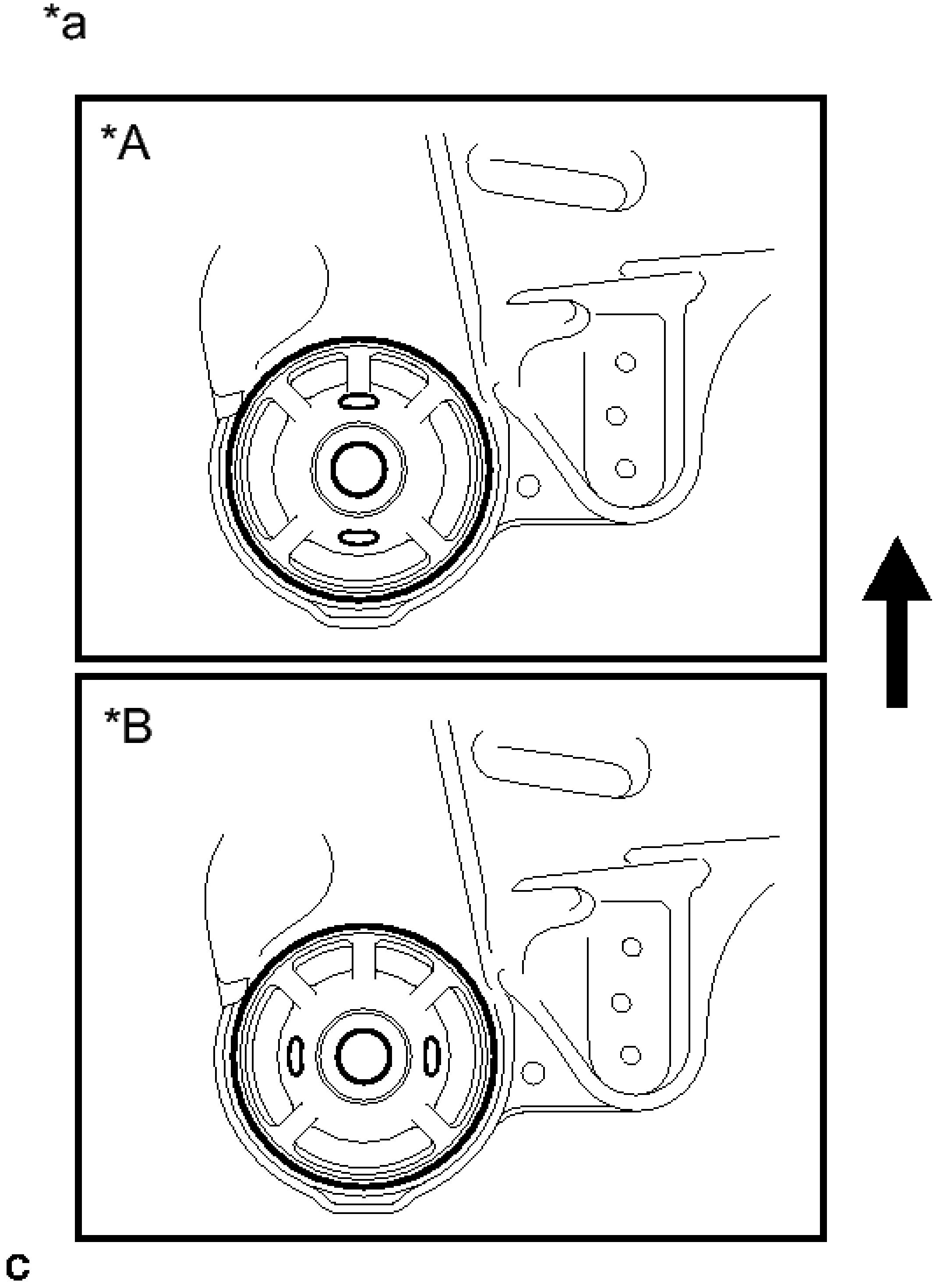

Fig. 76: Identifying Front Suspension Member Body Mounting Rear Cushion RH
Courtesy of TOYOTA MOTOR SALES, U.S.A., INC.

TEXT IN ILLUSTRATION

*A	Type A

*B	Type B
*a	View from Underneath
·	Front of the Vehicle

NOTE: **Position the front suspension member body mounting rear cushion RH in the correct direction.**

b. Install SST using the same procedure as the front suspension member body mounting rear cushion LH.

- **SST: 09830-10010**

  09830-01010

  09830-01020

  09830-01030

  09830-01060

c. Using SST, install the front suspension member body mounting rear cushion RH.

- **SST: 09830-10010**

  09830-01010

  09830-01020

  09830-01030

  09830-01060

HINT:

Perform the same procedure as the LH side.

4. **INSTALL FRONT SUSPENSION MEMBER BODY MOUNTING FRONT CUSHION**

a. Temporarily install a new front suspension member body mounting front cushion while confirming the installation direction.

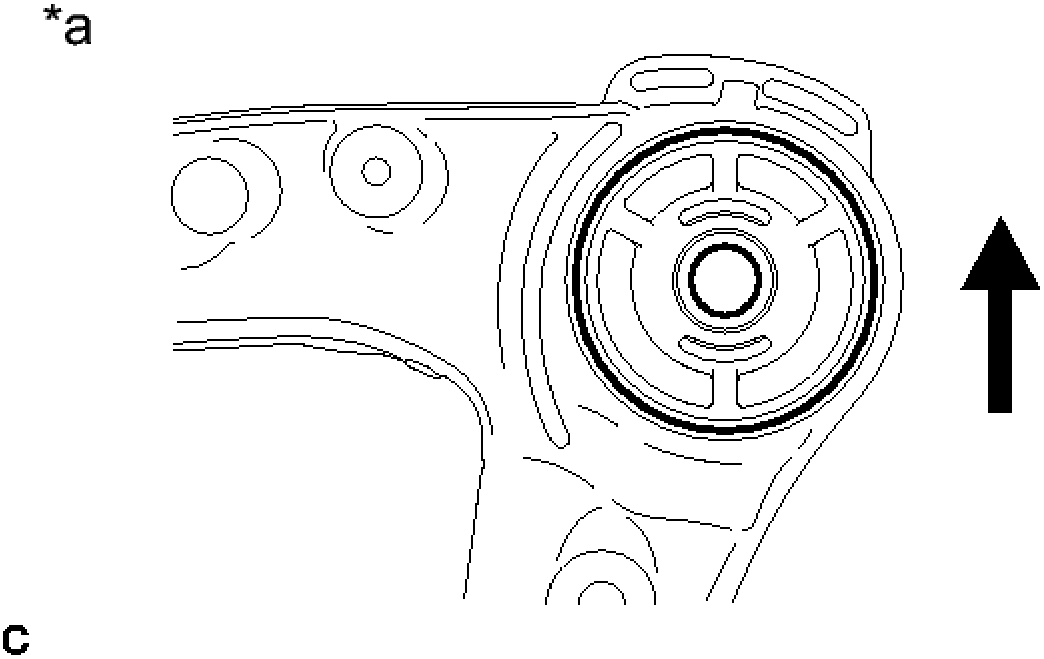

Fig. 77: Confirming Front Suspension Member Body Mounting Front Cushion Direction
Courtesy of TOYOTA MOTOR SALES, U.S.A., INC.

TEXT IN ILLUSTRATION

*a	View from Underneath
	Front of the Vehicle

NOTE: **Position the front suspension member body mounting front cushion in the correct direction.**

b. Install SST using the same procedure as the front suspension member body mounting rear cushion LH.

- **SST: 09830-10010**
  09830-01010
  09830-01020
  09830-01030
  09830-01060

c. Using SST, install the front suspension member body mounting front cushion as shown in the illustration.

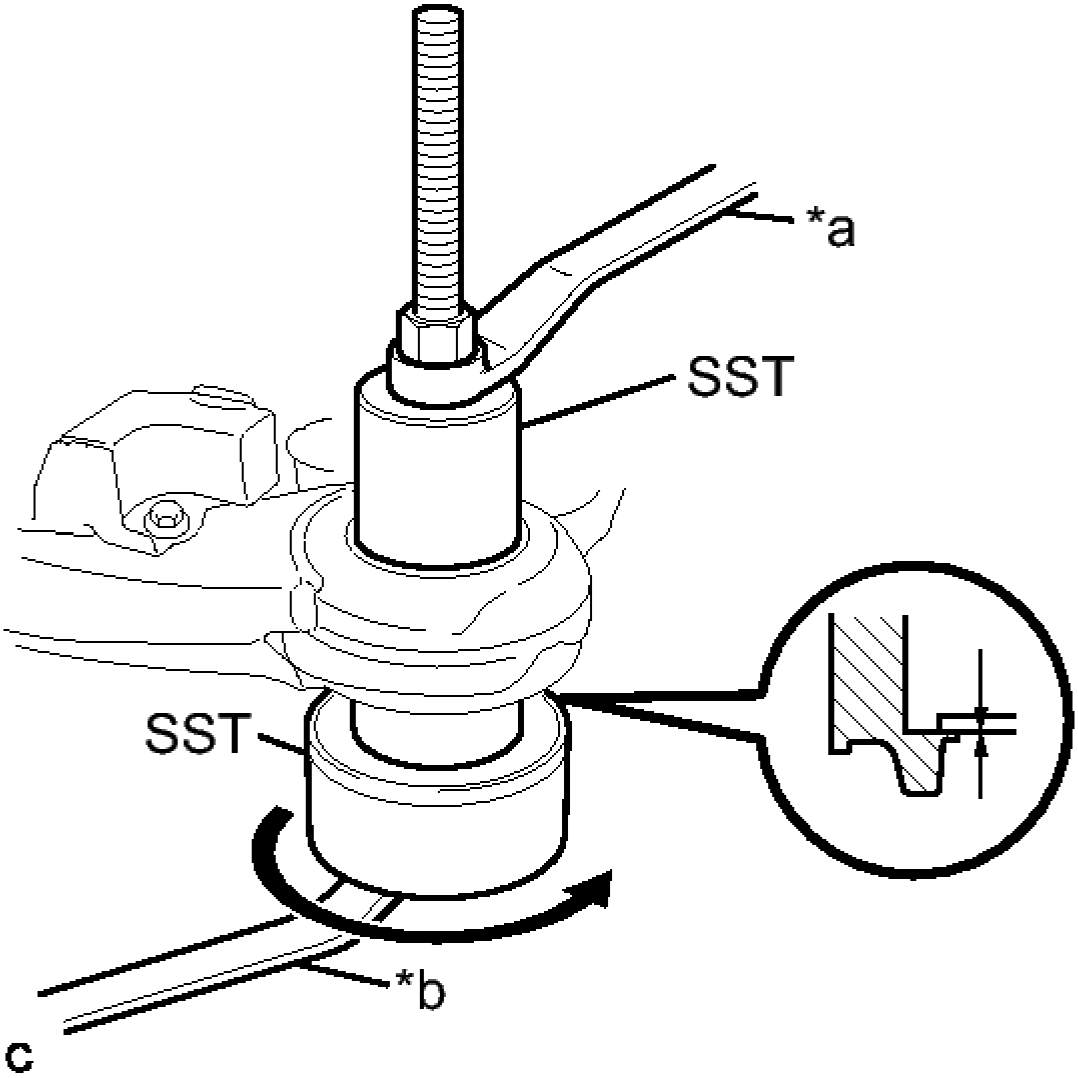

Fig. 78: Installing Front Suspension Member Body Mounting Front Cushion LH
Courtesy of TOYOTA MOTOR SALES, U.S.A., INC.

TEXT IN ILLUSTRATION

*a	Hold
*b	Turn

- **SST: 09830-10010**
  09830-01010
  09830-01020
  09830-01030
  09830-01060

NOTE: **Check that there is no clearance between the front suspension**

member and the front suspension member body mounting front cushion.

5. **INSTALL FRONT SUSPENSION MEMBER BODY MOUNTING REAR STOPPER**
    a. Install the 2 front suspension member body mounting rear stoppers to the front frame assembly.
6. **INSTALL FRONT SUSPENSION MEMBER BODY MOUNTING FRONT STOPPER**
    a. Install the 2 front suspension member body mounting front stoppers to the front frame assembly.
7. **INSTALL FRONT SUSPENSION MEMBER DYNAMIC DAMPER**
    a. Install the front suspension member dynamic damper to the front frame assembly with the 2 bolts.

    Torque: 29 N*m (296 kgf*cm, 21 ft.*lbf)

8. **INSTALL FRONT LOWER NO. 1 SUSPENSION ARM SUB-ASSEMBLY LH** See step 1
9. **INSTALL FRONT LOWER NO. 1 SUSPENSION ARM SUB-ASSEMBLY RH**

    HINT:

    Perform the same procedure as the LH side.

10. **INSTALL STEERING LINK ASSEMBLY** . Refer to **INSTALLATION - Step 3**
11. **INSTALL FRONT STABILIZER BAR WITH FRONT STABILIZER LINK ASSEMBLY**
    a. Install the front stabilizer bar with 2 front stabilizer link assemblies to the front frame assembly.
12. **INSTALL FRONT NO. 1 STABILIZER BRACKET LH** See step 3
13. **INSTALL FRONT NO. 1 STABILIZER BRACKET RH**

    HINT:

    Perform the same procedure as the LH side.

14. **INSTALL ENGINE MOUNTING INSULATOR LH**

    for 2GR-FE: Refer to **INSTALLATION - Step 8**

    for 2AR-FE: Refer to **INSTALLATION - Step 7**

15. **INSTALL ENGINE MOUNTING INSULATOR RH**

    for 2GR-FE: Refer to **INSTALLATION - Step 9**

    for 2AR-FE: Refer to **INSTALLATION - Step 8**

16. **INSTALL FRONT ENGINE MOUNTING INSULATOR ASSEMBLY (for 2GR-FE)**

    Refer to **INSTALLATION - Step 7**

17. **INSTALL FRONT ENGINE MOUNTING INSULATOR (for 2AR-FE)**

Refer to **INSTALLATION - Step 6**

18. **INSTALL FRONT FRAME ASSEMBLY**

for 2GR-FE: Refer to **INSTALLATION - Step 10**

for 2AR-FE: Refer to **INSTALLATION - Step 9**

2012-2017 ENGINE

Fuel System (Service Information) - Camry (2AR-FE)

FUEL INJECTOR

COMPONENTS

ILLUSTRATION

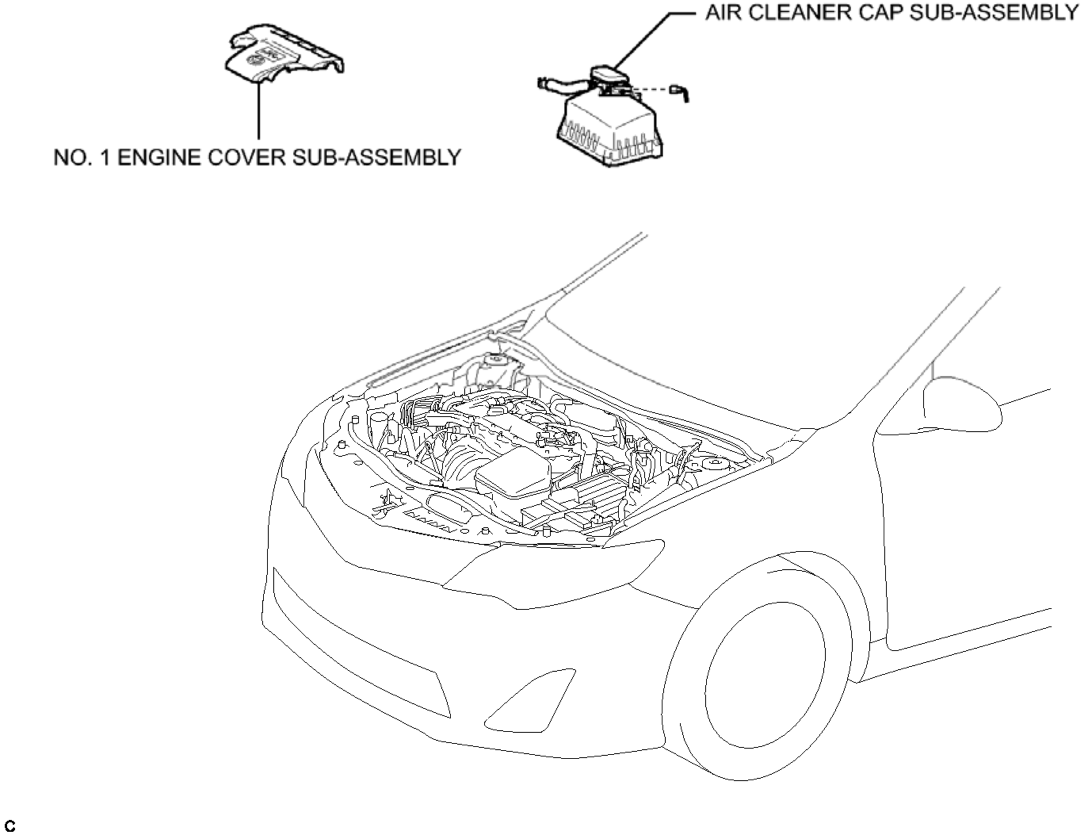
AIR CLEANER CAP SUB-ASSEMBLY
NO. 1 ENGINE COVER SUB-ASSEMBLY
C

Fig. 1: Identifying Fuel Injector Replacement Components With Torque Specifications (1 Of 2)
Courtesy of TOYOTA MOTOR SALES, U.S.A., INC.

ILLUSTRATION

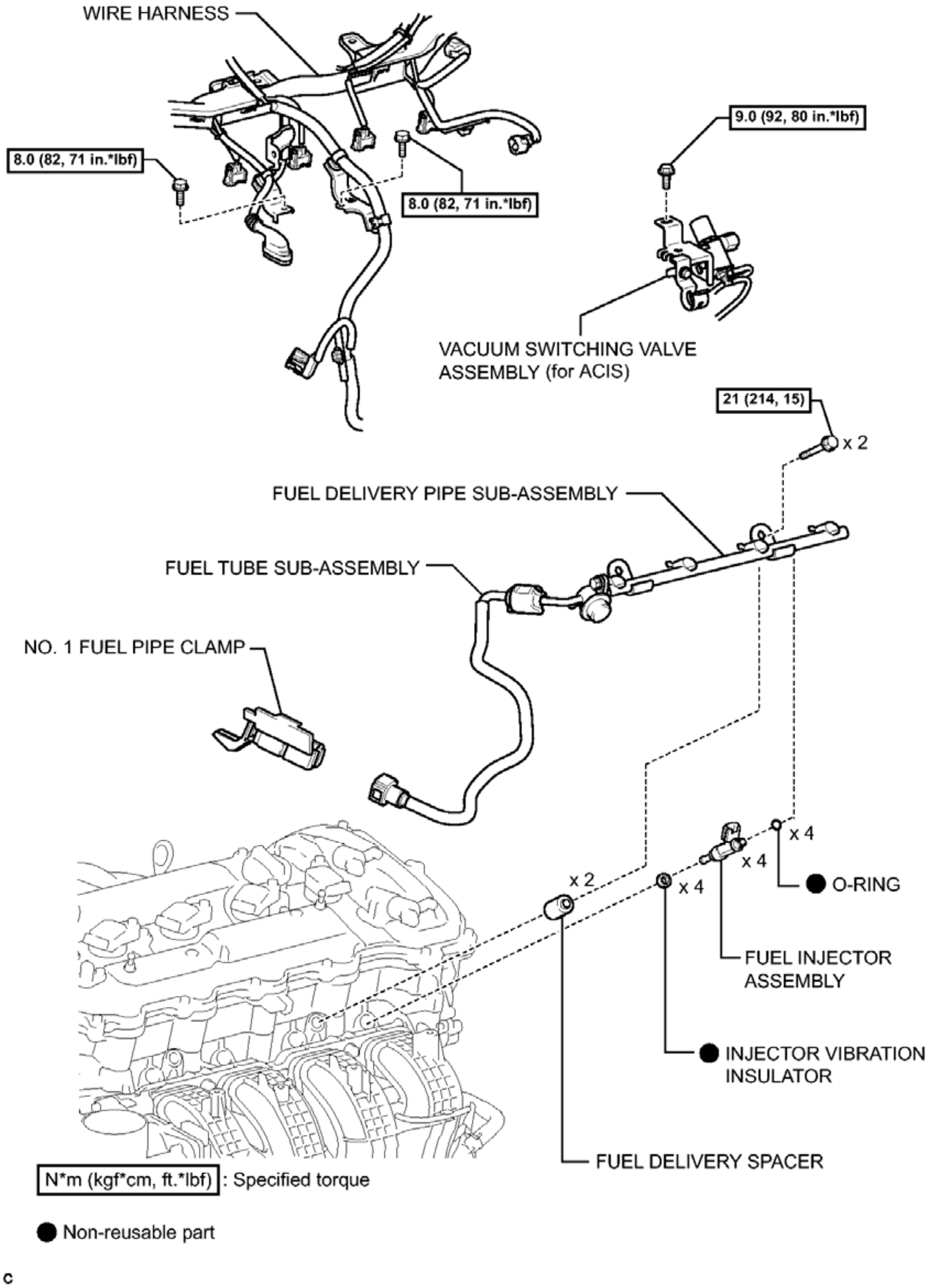
WIRE HARNESS
8.0 (82, 71 in.*lbf)
8.0 (82, 71 in.*lbf)
9.0 (92, 80 in.*lbf)
VACUUM SWITCHING VALVE ASSEMBLY (for ACIS)
21 (214, 15)
x 2
FUEL DELIVERY PIPE SUB-ASSEMBLY
FUEL TUBE SUB-ASSEMBLY
NO. 1 FUEL PIPE CLAMP
x 4
x 4
● O-RING
x 2
x 4
FUEL INJECTOR ASSEMBLY
● INJECTOR VIBRATION INSULATOR
FUEL DELIVERY SPACER
N*m (kgf*cm, ft.*lbf) : Specified torque
● Non-reusable part
c

Fig. 2: Identifying Fuel Injector Replacement Components With Torque Specifications (2 Of 2)
Courtesy of TOYOTA MOTOR SALES, U.S.A., INC.

REMOVAL

REMOVAL

HINT:

Perform "Inspection After Repair" after replacing the fuel injector assembly. Refer to **INITIALIZATION** .

1. **PRECAUTION**

   NOTE: **After turning the ignition switch off, waiting time may be required before disconnecting the cable from the negative (-) battery terminal. Therefore, make sure to read the disconnecting the cable from the negative (-) battery terminal notice before proceeding with work. Refer to PRECAUTION .**

2. **DISCHARGE FUEL SYSTEM PRESSURE**

   Refer to **PRECAUTION**

3. **DISCONNECT CABLE FROM NEGATIVE BATTERY TERMINAL**

   NOTE: **When disconnecting the cable, some systems need to be initialized after the cable is reconnected. Refer to INITIALIZATION .**

4. **REMOVE NO. 1 ENGINE COVER SUB-ASSEMBLY** . Refer to **REMOVAL - Step 18**
5. **REMOVE AIR CLEANER CAP SUB-ASSEMBLY** . Refer to **REMOVAL - Step 7**
6. **DISCONNECT FUEL TUBE SUB-ASSEMBLY**
   a. Remove the No. 1 fuel pipe clamp.

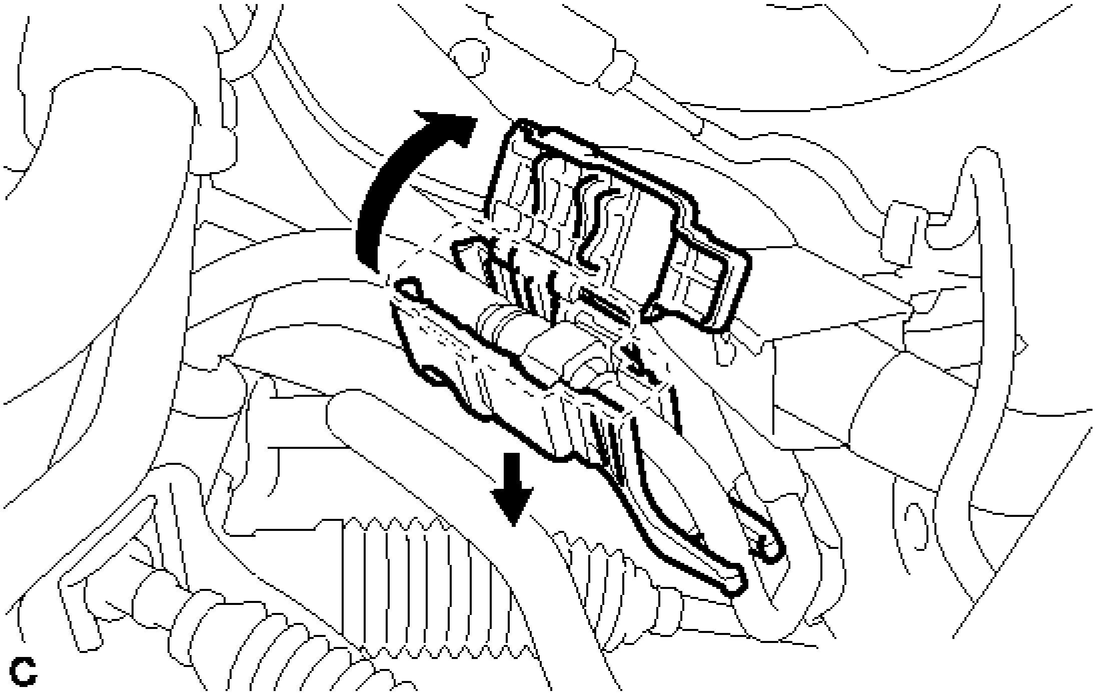

Fig. 3: Identifying No. 1 Fuel Pipe Clamp
Courtesy of TOYOTA MOTOR SALES, U.S.A., INC.

b. Pinch the retainer of the fuel tube connector, and then pull the fuel tube connector off of the fuel pipe.

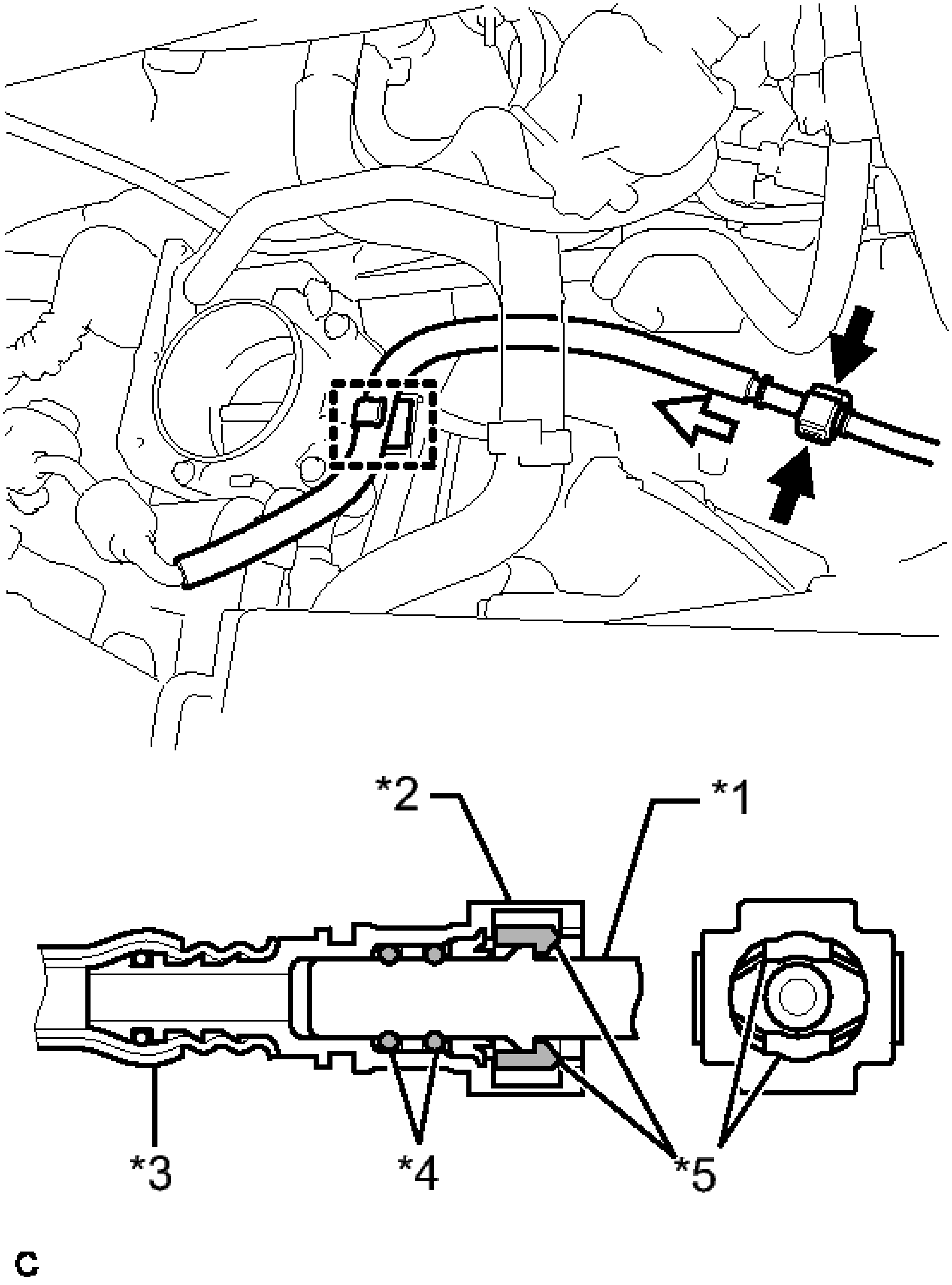

Fig. 4: Identifying Fuel Tube Connector And Fuel Pipe
Courtesy of TOYOTA MOTOR SALES, U.S.A., INC.

TEXT IN ILLUSTRATION

*1	Fuel Pipe

*2	Fuel Tube Connector
*3	Nylon Tube
*4	O-ring
*5	Retainer
	Pinch
	Pull

NOTE:

- **Check for foreign matter on the fuel tube around the fuel tube connector. Clean it if necessary. Foreign matter can affect the ability of the O-ring to seal the fuel tube connector and fuel pipe.**
- **Do not use any tools to separate the fuel tube connector and fuel pipe.**
- **Do not forcefully bend, kink or twist the nylon tube.**
- **Keep the fuel tube connector and fuel pipe free from foreign matter.**
- **If the fuel tube connector and fuel pipe are stuck, push and pull to release them.**
- **Put the fuel tube connector and fuel pipe in plastic bags to prevent damage and contamination.**

c. Remove the fuel tube sub-assembly from the fuel hose clamp.

7. **REMOVE VACUUM SWITCHING VALVE ASSEMBLY (for ACIS)** . Refer to **REMOVAL - Step 7**
8. **DISCONNECT WIRE HARNESS**

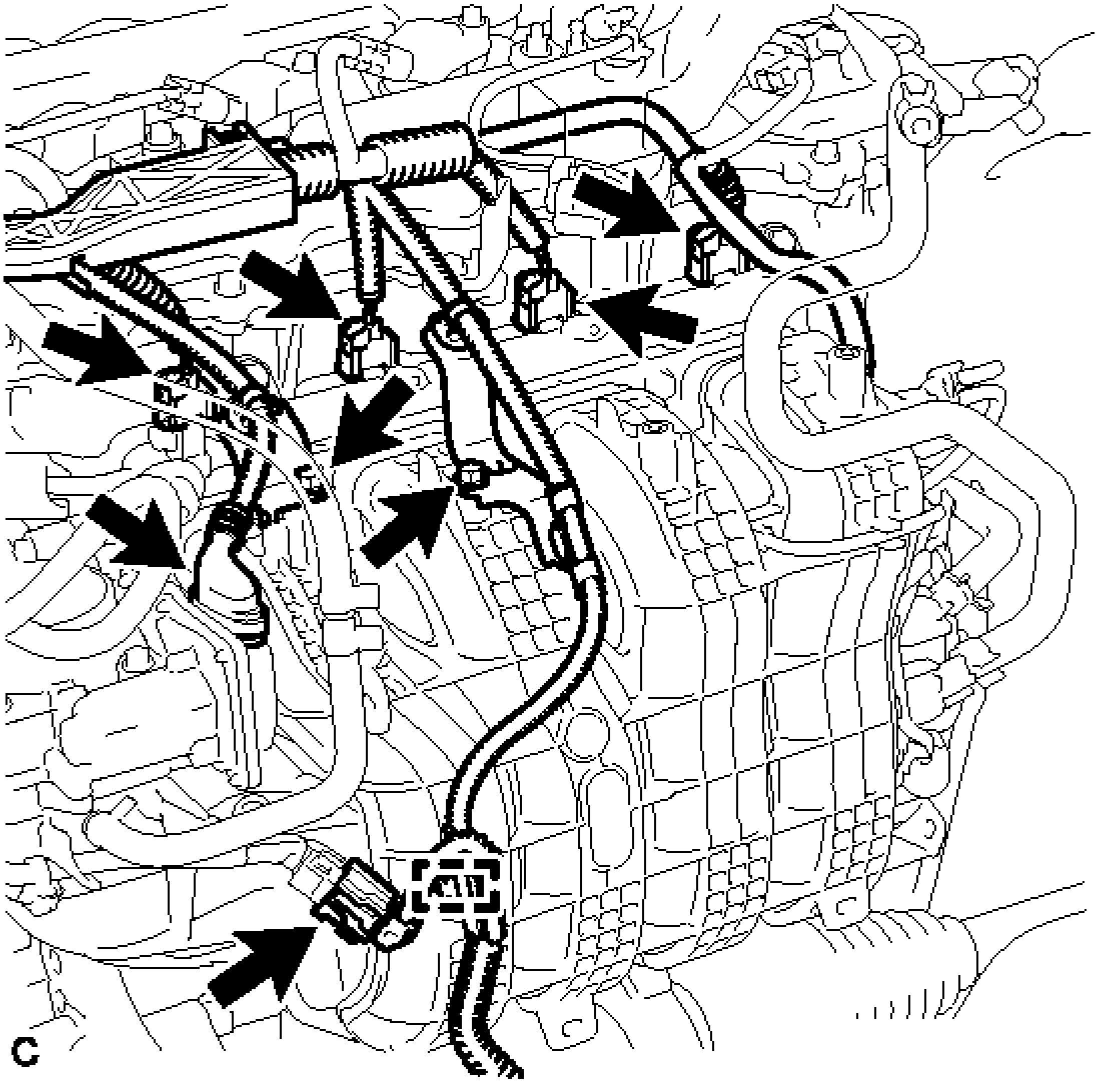

Fig. 5: Identifying Fuel Injectors Connectors, Connectors, Bolts, Clamp And Wire Harness
Courtesy of TOYOTA MOTOR SALES, U.S.A., INC.

a. Disconnect the 4 fuel injector connectors.
b. Disconnect the 2 connectors.
c. Remove the 2 bolts and separate the 2 wire harness brackets.
d. Disengage the clamp to disconnect the wire harness.

9. **REMOVE FUEL DELIVERY PIPE SUB-ASSEMBLY**
   a. Remove the 2 bolts, and then remove the fuel delivery pipe together with the 4 fuel injectors.

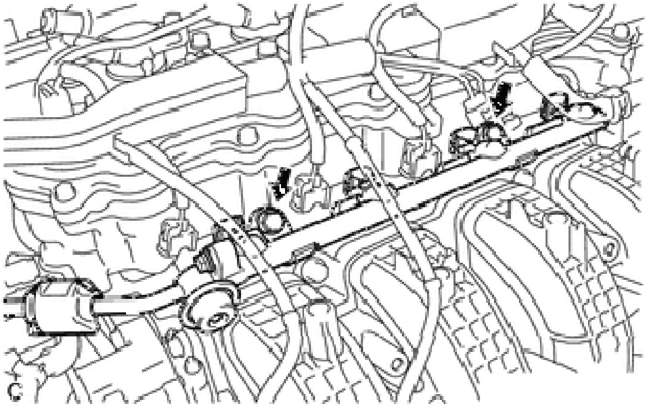

Fig. 6: Identifying Fuel Deliver Pipe Fuel Injectors
Courtesy of TOYOTA MOTOR SALES, U.S.A., INC.

NOTE: **Be careful not to drop the fuel injectors when removing the fuel delivery pipe.**

b. Remove the 2 fuel delivery spacers from the cylinder head.

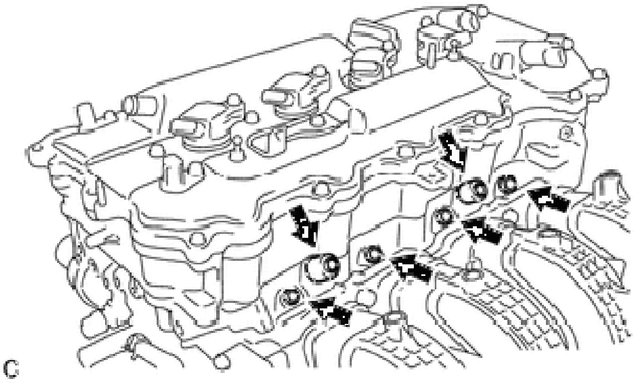

Fig. 7: Locating Fuel Delivery Spacers And Injector Vibration Insulators
Courtesy of TOYOTA MOTOR SALES, U.S.A., INC.

c. Remove the 4 injector vibration insulators from the cylinder head.

10. **REMOVE FUEL INJECTOR ASSEMBLY**
    a. Pull the 4 fuel injectors out of the fuel delivery pipe.

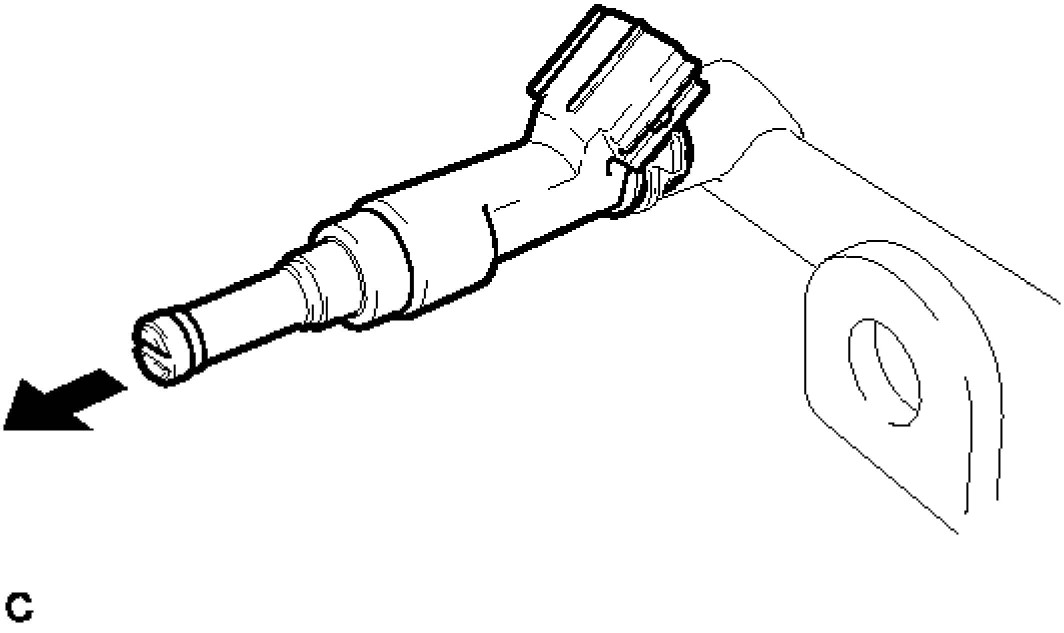

Fig. 8: Identifying Fuel Injector
Courtesy of TOYOTA MOTOR SALES, U.S.A., INC.

b. Remove the O-ring from each fuel injector.
c. For reinstallation, attach a tag or label to each injector shaft.

NOTE: **Prevent entry of foreign matter by covering the fuel injectors with plastic bags.**

INSPECTION

INSPECTION

1. **INSPECT FUEL INJECTOR ASSEMBLY**
    a. Measure the resistance according to the value(s) in the table below.

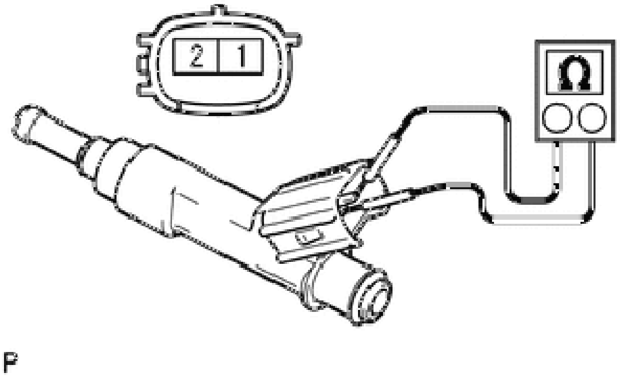

Fig. 9: Measuring Resistance Between Fuel Injector Assembly Connector Terminal Identification
Courtesy of TOYOTA MOTOR SALES, U.S.A., INC.

Standard Resistance

Tester Connection	Condition	Specified Condition
1 - 2	20°C (68° F)	11.6 to 12.4 ohms

If the result is not as specified, replace the fuel injector assembly.

b. Inspect the injector injection.

WARNING: **Keep the injector away from sparks during the test.**

1. Connect SST (fuel tube connector) to SST (hose) with SST (hose band), and then connect them to the fuel pipe (vehicle side).

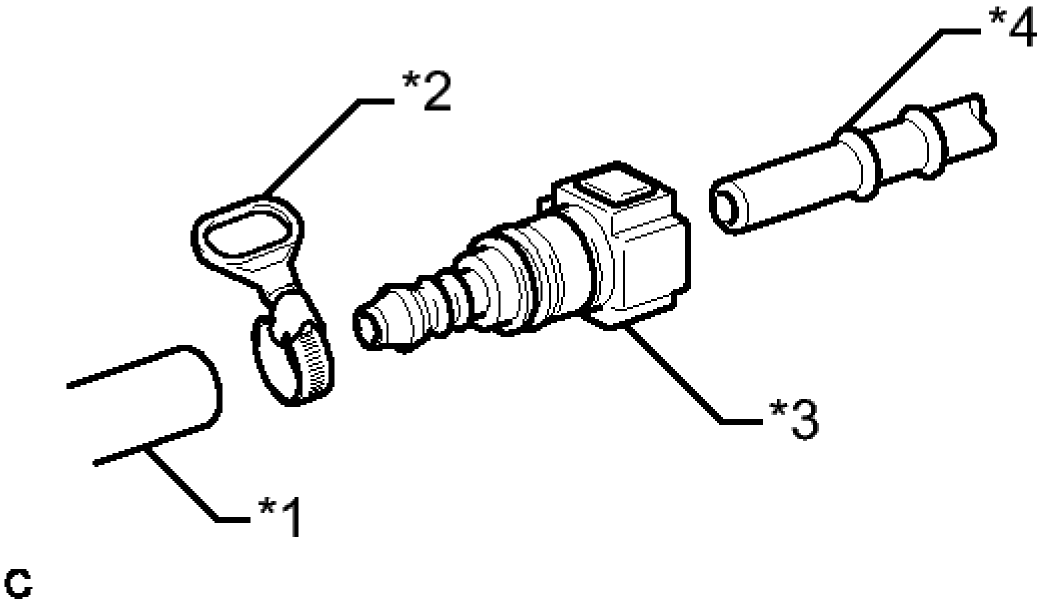

Fig. 10: Identifying Fuel Tube Connector To SST
Courtesy of TOYOTA MOTOR SALES, U.S.A., INC.

- **SST: 09268-31014**
  09268-41500
  09268-41700
  95336-08070

TEXT IN ILLUSTRATION

*1	SST (Hose)
*2	SST (Hose Band)
*3	SST (Fuel Tube Connector)
*4	Fuel Pipe (Vehicle Side)

2. Install a new O-ring to the fuel injector.

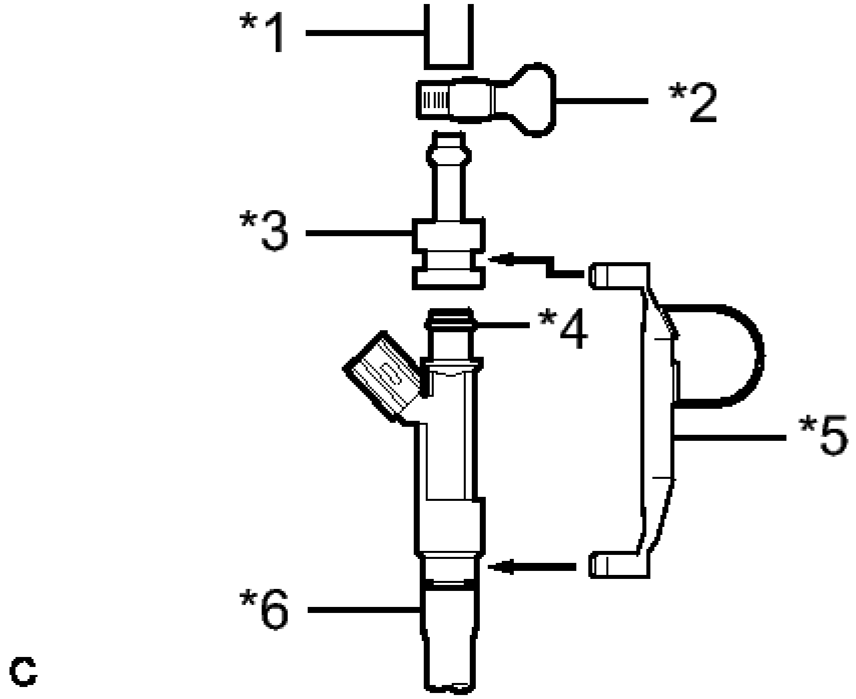

Fig. 11: Identifying Hose, Fuel Pipe, SST And Retainer
Courtesy of TOYOTA MOTOR SALES, U.S.A., INC.

- **SST: 09268-31014**
  09268-41110
  09268-41300
  09268-41700
  95336-08070

TEXT IN ILLUSTRATION

*1	SST (Hose)
*2	SST (Hose Band)
*3	SST (Adapter)
*4	O-ring
*5	SST (Clamp)
*6	Vinyl Tube

3. Connect SST (adapter and hose) to the injector, and hold the injector and union with SST (clamp).

4. Tie the clamp and adapter together with a tie band as shown in the illustration.

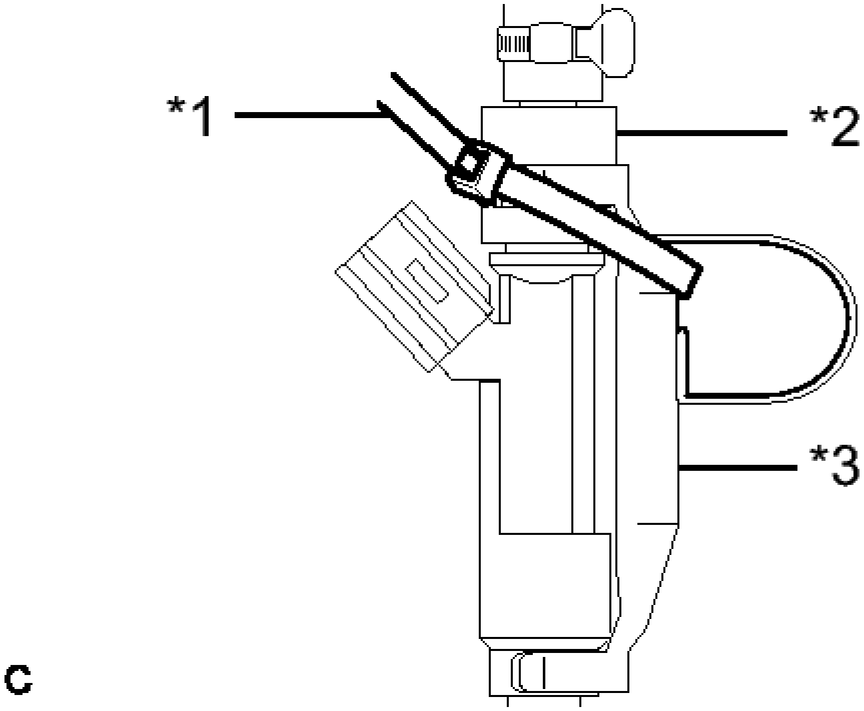

Fig. 12: Tying SST (Clamp And Adapter) Together With SST (Tie Band)
Courtesy of TOYOTA MOTOR SALES, U.S.A., INC.

- **SST: 09268-31014**
  09268-41110
  09268-41300
  09268-41800

TEXT IN ILLUSTRATION

*1	SST (Tie Band)
*2	SST (Adapter)
*3	SST (Clamp)

5. Install a vinyl tube onto the injector.

WARNING: **Install a suitable vinyl tube onto the injector to contain any gasoline spray.**

6. Put the injector into the graduated cylinder.

7. Operate the fuel pump.
8. Connect SST (wire) to the injector and the battery for 15 seconds, and measure the injection volume with the graduated cylinder. Test each injector 2 or 3 times.

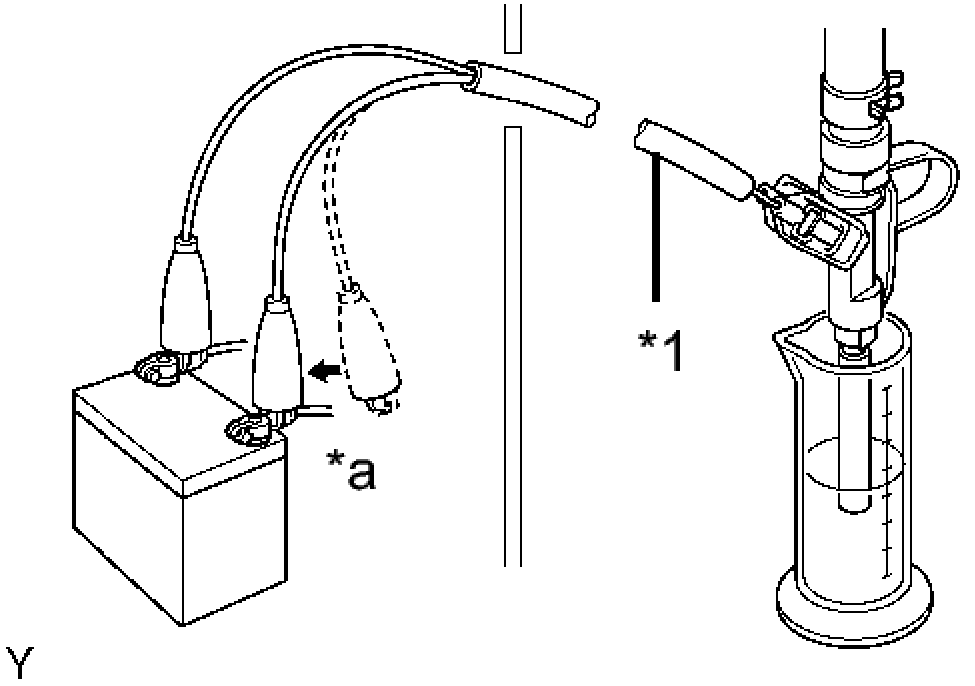

Fig. 13: Connecting SST (Wire), Injector Assembly & Battery
Courtesy of TOYOTA MOTOR SALES, U.S.A., INC.

TEXT IN ILLUSTRATION

*1	SST (Wire)
*a	Connect

- **SST: 09842-30080**

NOTE: **Always switch the voltage on and off at the battery side, not the injector side.**

Standard Injection Volume

Tester Connection	Condition	Specified Condition
Positive terminal - Ground terminal	Per 15 seconds	87 to 105 cc (5.3 to 6.4 cu.in.)

Difference between each injector

18 cc (1.1 cu.in.) or less

If the result is not as specified, replace the fuel injector assembly.

c. Check for fuel drop.
   1. In the condition above, disconnect the tester probes of SST (wire) from the battery and check for fuel drop from the injector.

      Standard fuel drop

      1 drop or less per 20 minutes

      If fuel drop is not as specified, replace the fuel injector assembly.

INSTALLATION

INSTALLATION

1. **INSTALL FUEL INJECTOR ASSEMBLY**
   a. Apply a light coat of gasoline or spindle oil to new O-rings, and then install one onto each fuel injector.

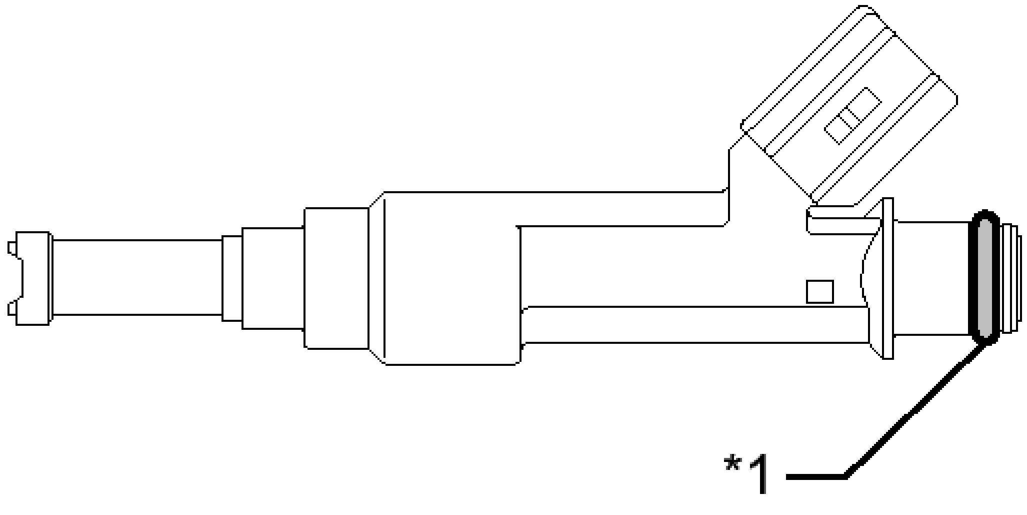

Fig. 14: Identifying Fuel Injector O-Ring
Courtesy of TOYOTA MOTOR SALES, U.S.A., INC.

TEXT IN ILLUSTRATION

*1	O-ring

b. Apply a light coat of gasoline or spindle oil to the contact surfaces of the new O-ring on each fuel injector assembly.

c. While turning the fuel injector assembly left and right, install it onto the fuel delivery pipe sub-assembly.

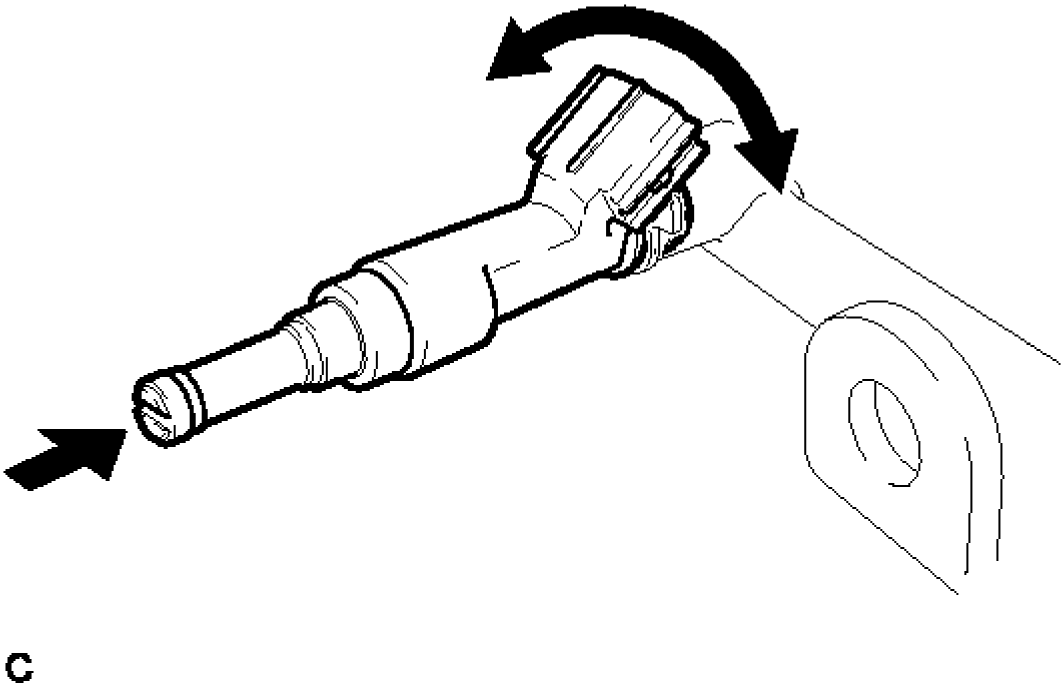

Fig. 15: Turning Fuel Injector Assembly To Install
Courtesy of TOYOTA MOTOR SALES, U.S.A., INC.

NOTE: **Make sure that the O-ring is not cracked or jammed when installing the injector. Refer to PRECAUTION .**

HINT:

Perform "Inspection After Repair" after replacing the fuel injector assembly. Refer to **INITIALIZATION** .

d. Check that the fuel injector rotates smoothly. If the fuel injector does not rotate, replace the O-ring.

2. **INSTALL FUEL DELIVERY PIPE SUB-ASSEMBLY**
   a. Install 4 new injector vibration insulators to the cylinder head.

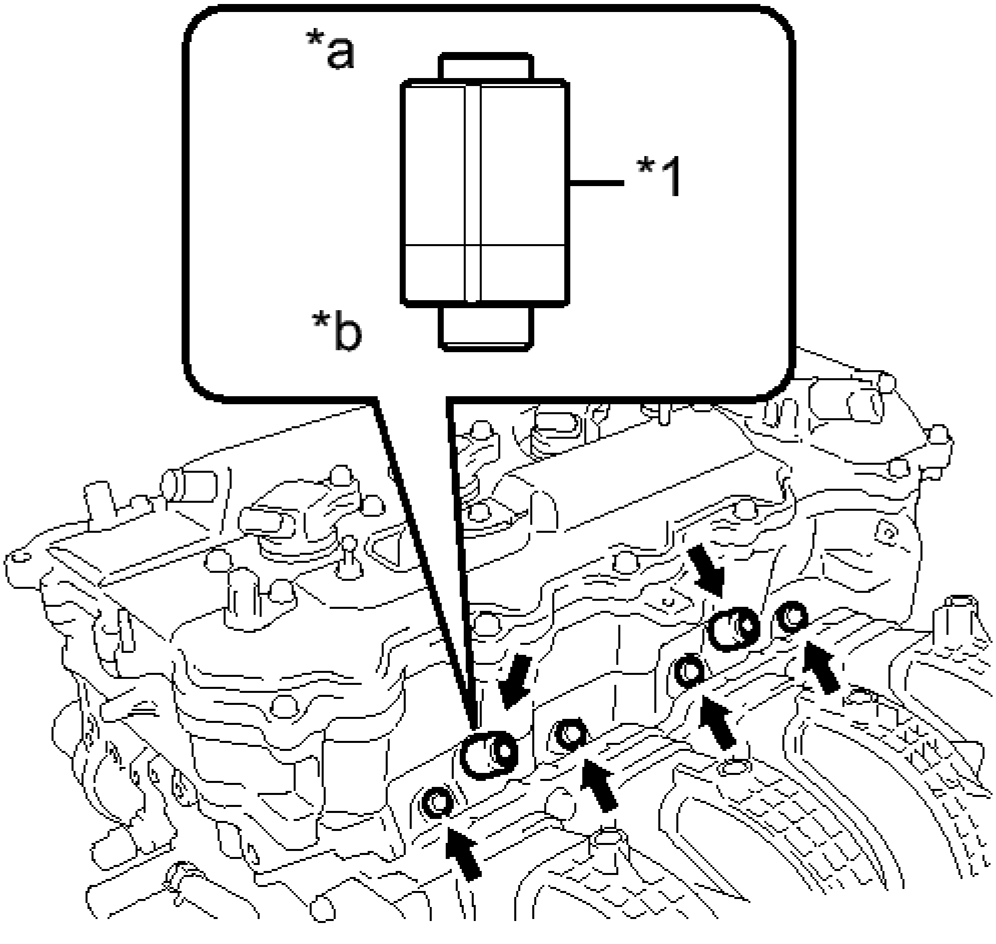

Fig. 16: Identifying Fuel Delivery Space, Fuel Delivery Pipe Side And Cylinder Head Side
Courtesy of TOYOTA MOTOR SALES, U.S.A., INC.

TEXT IN ILLUSTRATION

*1	Fuel Delivery Spacer
*a	Fuel Delivery Pipe Side
*b	Cylinder Head Side

b. Install the 2 fuel delivery spacers onto the cylinder head.

HINT:

Install the fuel delivery spacer so that the longer protrusion is on the cylinder head side.

c. Install the fuel delivery pipe sub-assembly with the 4 fuel injector assemblies and install the 2 bolts.

Torque: 21 N*m (214 kgf*cm, 15 ft.*lbf)

NOTE:

- **Do not drop the fuel injectors when installing the fuel delivery pipe sub-assembly.**
- **Check that the fuel injector assemblies rotate smoothly after installing the fuel delivery pipe sub-assembly.**

3. **CONNECT WIRE HARNESS**

   a. Install the 2 wire harness brackets with the 2 bolts.

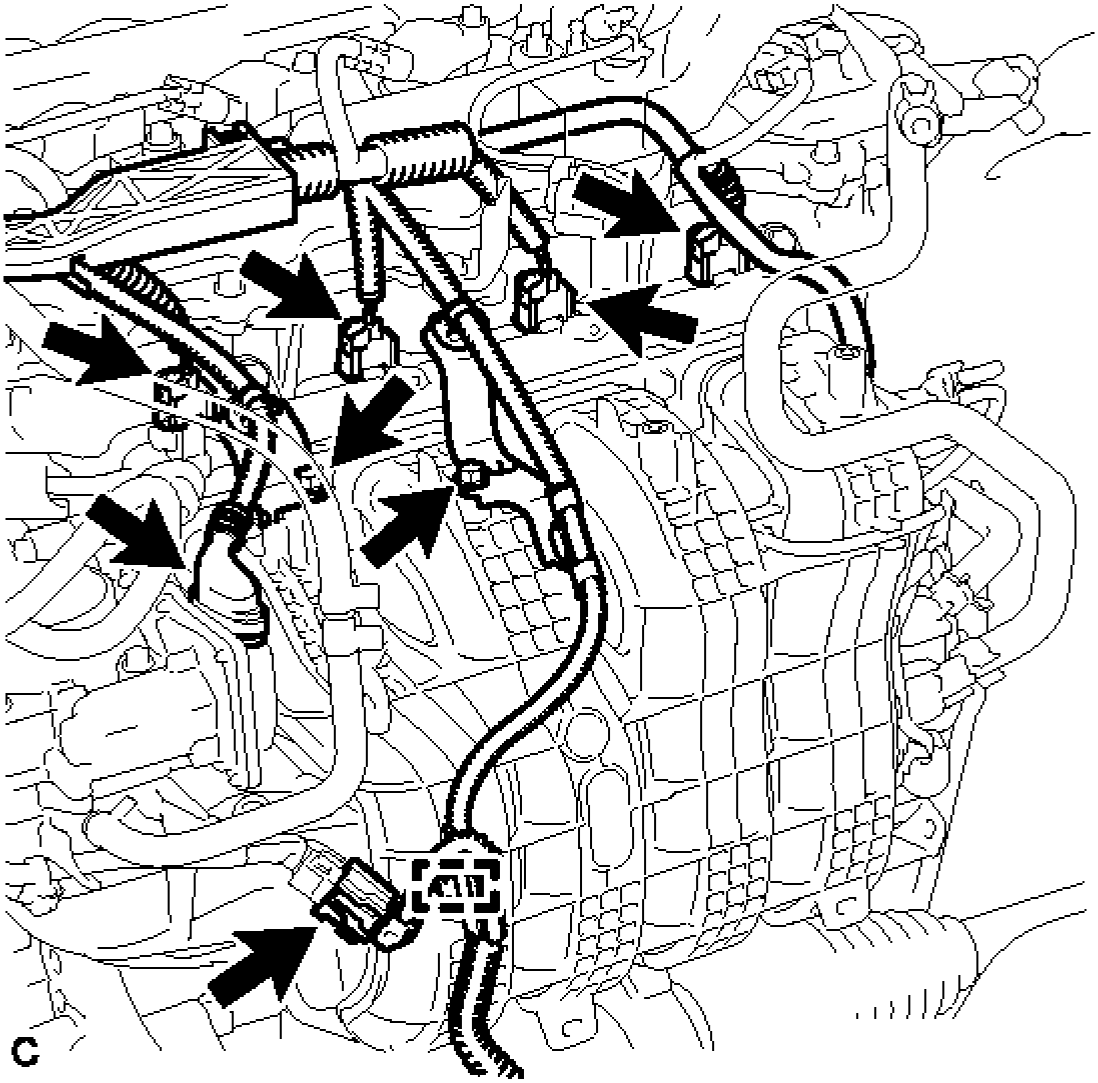

Fig. 17: Identifying Wire Harness, Connectors, Fuel Injector Connectors, Bolts, Clamp And Wire Harness
Courtesy of TOYOTA MOTOR SALES, U.S.A., INC.

Torque: 8.0 N*m (82 kgf*cm, 71 in.*lbf)

- b. Connect the 2 connectors.
- c. Connect the 4 fuel injector connectors.
- d. Engage the clamp to connect the wire harness.

4. **INSTALL VACUUM SWITCHING VALVE ASSEMBLY (for ACIS)** . Refer to **INSTALLATION - Step 6**
5. **CONNECT FUEL TUBE SUB-ASSEMBLY**
    - a. Push the fuel tube connector to the fuel pipe until the fuel tube connector makes a "click" sound.

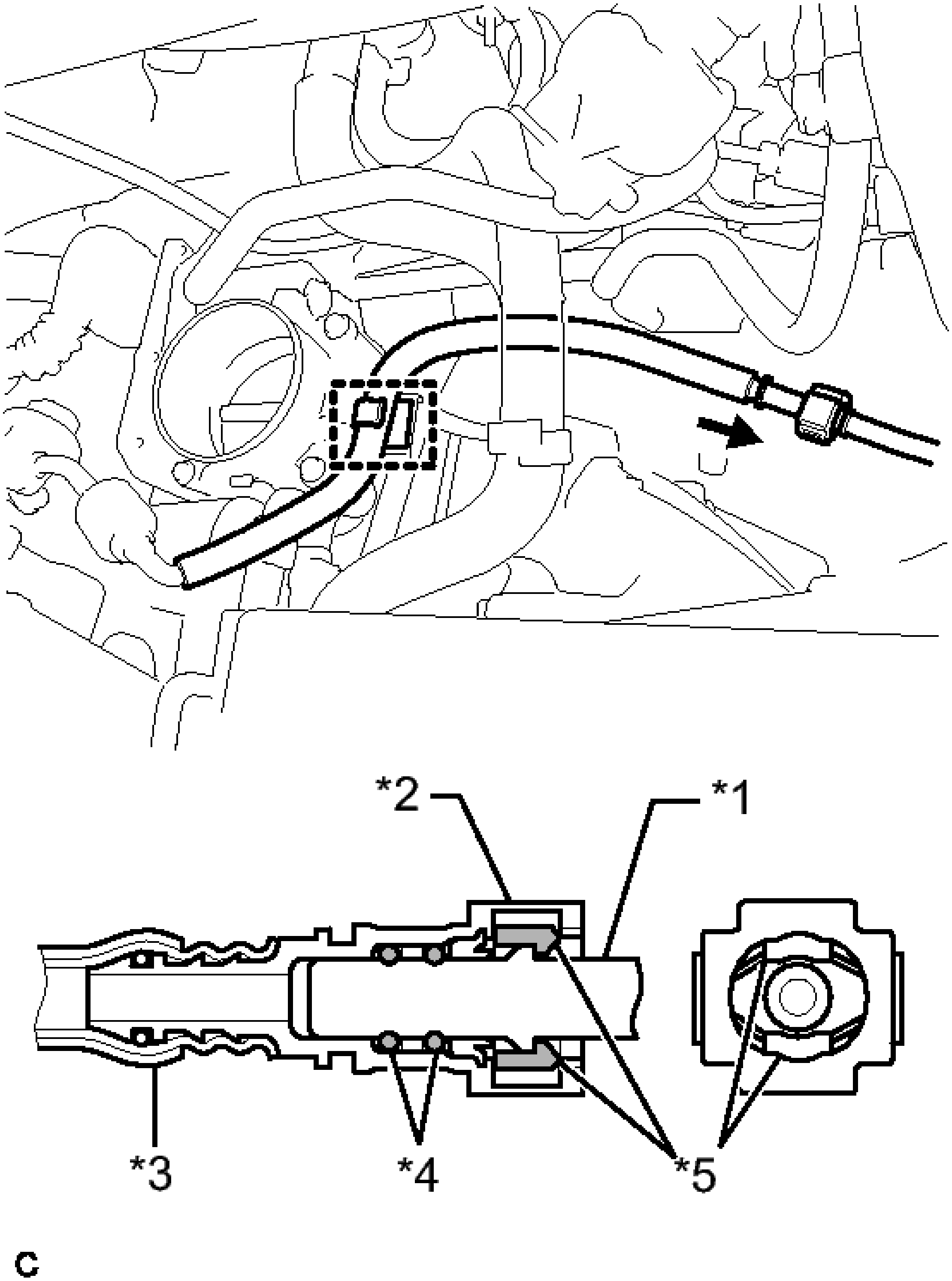

Fig. 18: Identifying Fuel Pipe, Fuel Tube Connector, Nylon Tube And O-Ring
Courtesy of TOYOTA MOTOR SALES, U.S.A., INC.

TEXT IN ILLUSTRATION

*1	Fuel Pipe

*2	Fuel Tube Connector
*3	Nylon Tube
*4	O-ring
*5	Retainer

NOTE:

- **Before connecting the fuel tube connector and fuel pipe, check that there is no damage or foreign matter on the connecting part of the fuel pipe.**
- **After connecting the fuel tube connector and fuel pipe, check that they are securely connected by trying to pull them apart.**

b. Install the No. 1 fuel pipe clamp.

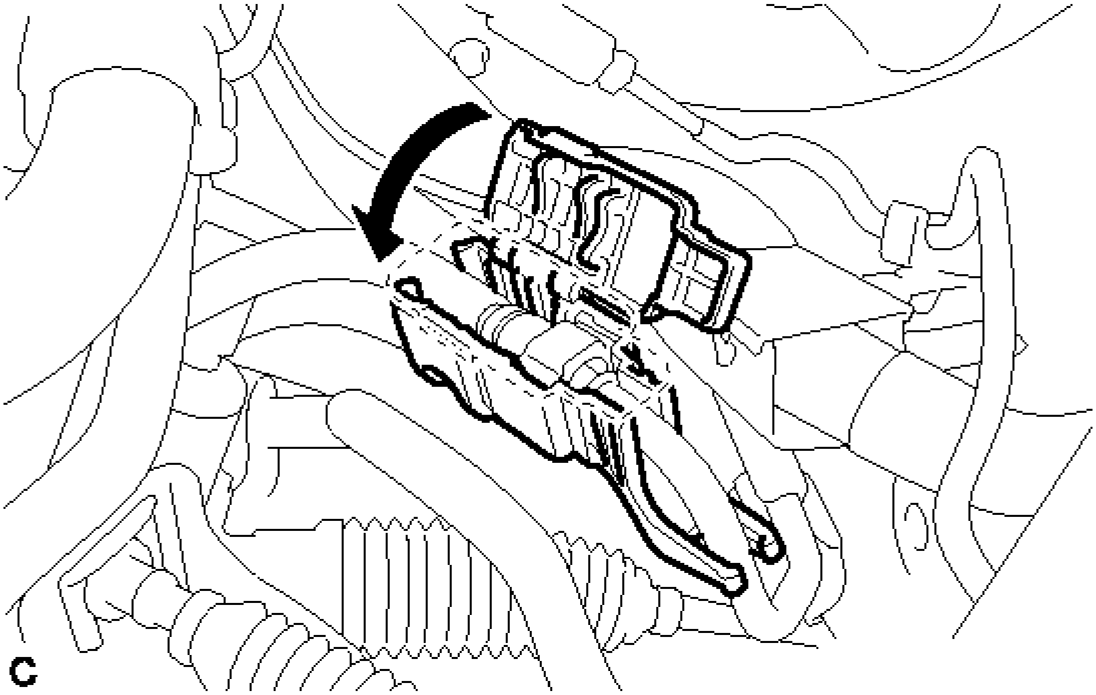

Fig. 19: Identifying No. 1 Fuel Pipe Clamp
Courtesy of TOYOTA MOTOR SALES, U.S.A., INC.

c. Install the fuel tube sub-assembly to the fuel hose clamp.

6. **INSTALL AIR CLEANER CAP SUB-ASSEMBLY** . Refer to **INSTALLATION - Step 2**
7. **CONNECT CABLE TO NEGATIVE BATTERY TERMINAL**

NOTE: **When disconnecting the cable, some systems need to be initialized after the cable is reconnected. Refer to INITIALIZATION .**

8. **INSPECT FOR FUEL LEAK** . Refer to **ON-VEHICLE INSPECTION - Step 1**
9. **INSTALL NO. 1 ENGINE COVER SUB-ASSEMBLY** . Refer to **INSTALLATION - Step 68**

FUEL PRESSURE REGULATOR

COMPONENTS

ILLUSTRATION

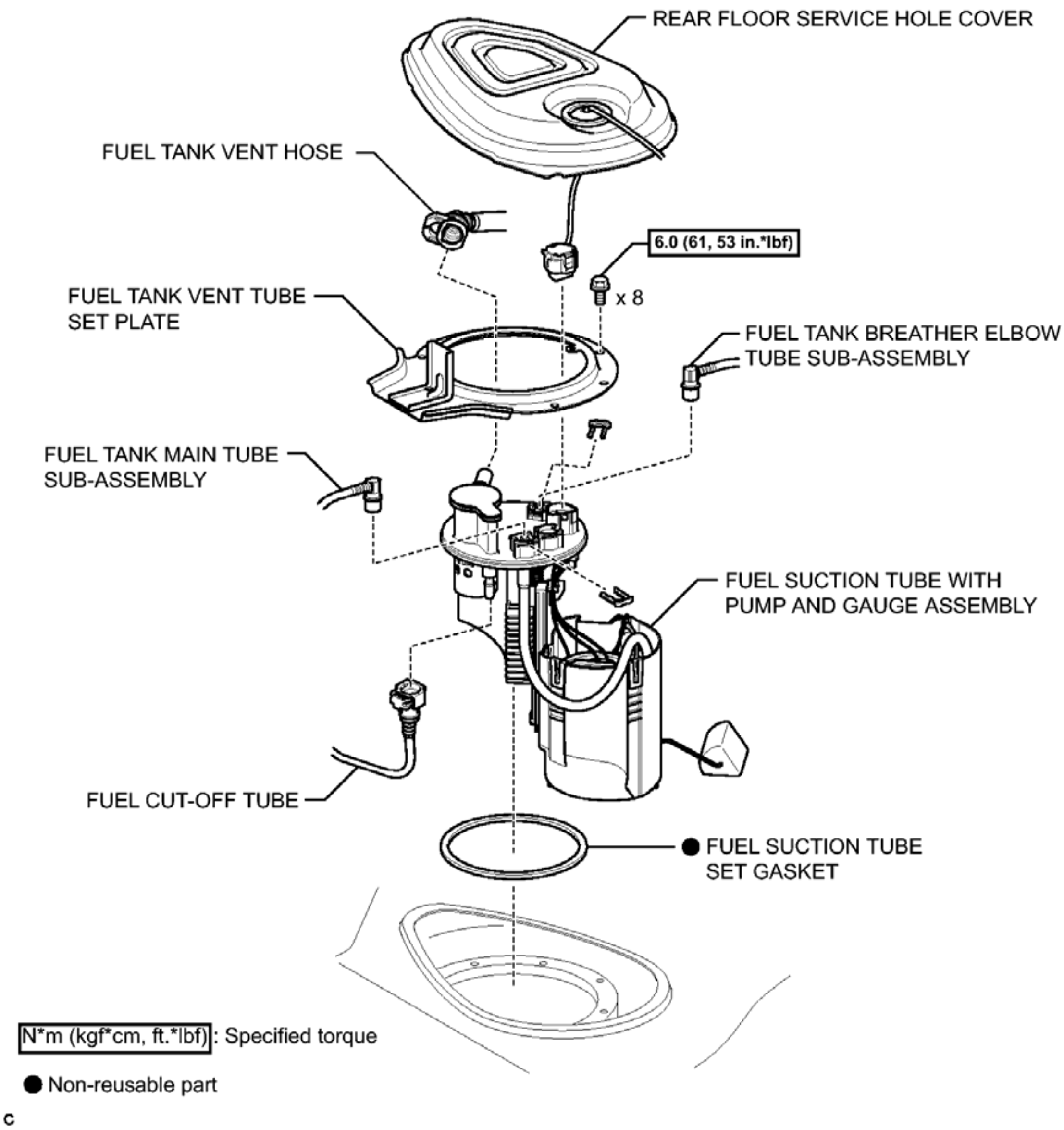
REAR FLOOR SERVICE HOLE COVER
FUEL TANK VENT HOSE
6.0 (61, 53 in.*lbf)
x 8
FUEL TANK VENT TUBE SET PLATE
FUEL TANK BREATHER ELBOW TUBE SUB-ASSEMBLY
FUEL TANK MAIN TUBE SUB-ASSEMBLY
FUEL SUCTION TUBE WITH PUMP AND GAUGE ASSEMBLY
FUEL CUT-OFF TUBE
● FUEL SUCTION TUBE SET GASKET
N*m (kgf*cm, ft.*lbf) : Specified torque
● Non-reusable part
C

Fig. 20: Identifying Fuel Pressure Regulator Replacement Components With Torque Specifications (1 Of 2)
Courtesy of TOYOTA MOTOR SALES, U.S.A., INC.

ILLUSTRATION

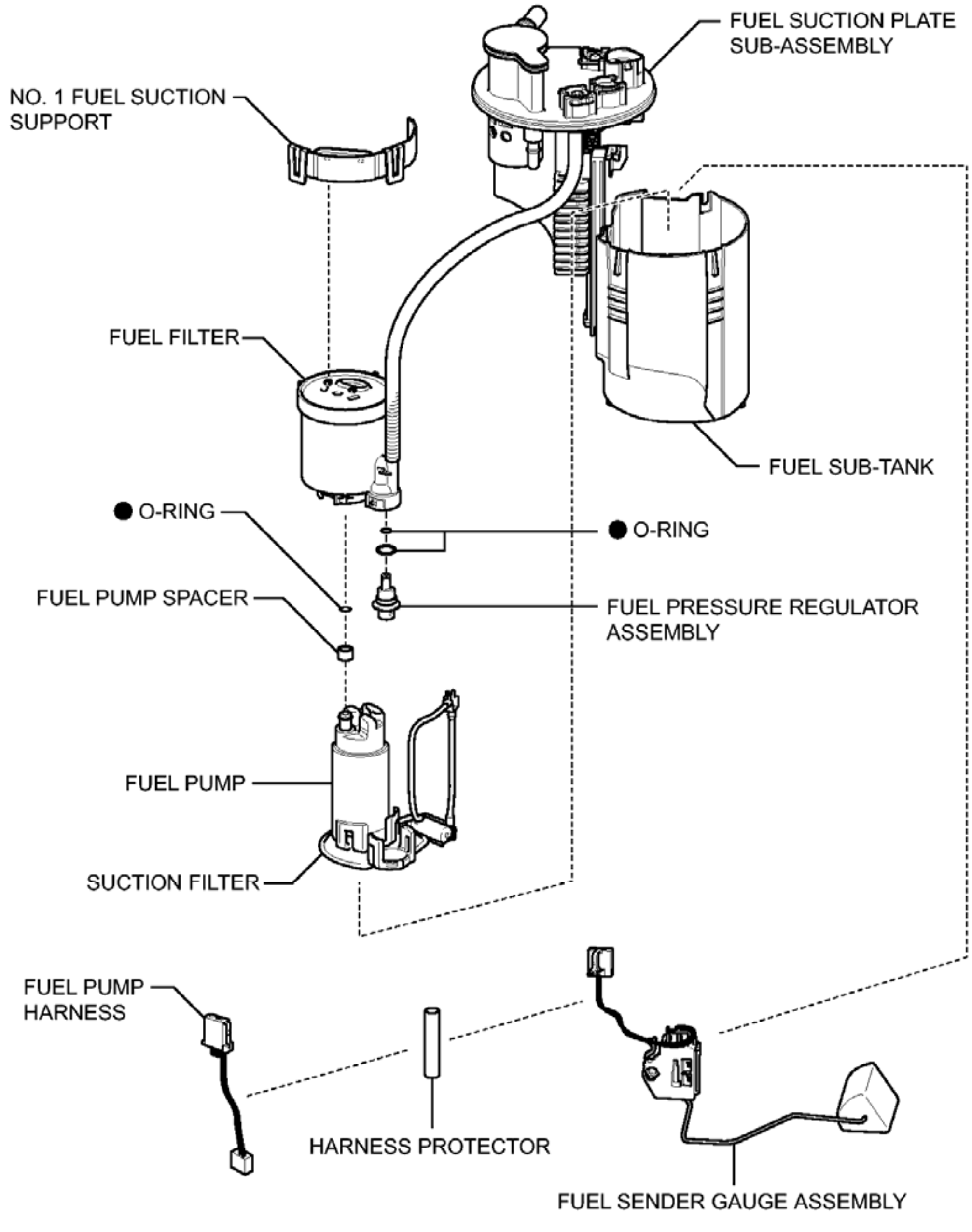
FUEL SUCTION PLATE SUB-ASSEMBLY
NO. 1 FUEL SUCTION SUPPORT
FUEL FILTER
FUEL SUB-TANK
● O-RING
● O-RING
FUEL PUMP SPACER
FUEL PRESSURE REGULATOR ASSEMBLY
FUEL PUMP
SUCTION FILTER
FUEL PUMP HARNESS
HARNESS PROTECTOR
FUEL SENDER GAUGE ASSEMBLY

c ● Non-reusable part

Fig. 21: Identifying Fuel Pressure Regulator Replacement Components With Torque Specifications (2 Of 2)
Courtesy of TOYOTA MOTOR SALES, U.S.A., INC.

REMOVAL

REMOVAL

1. **REMOVE FUEL SUCTION TUBE WITH PUMP AND GAUGE ASSEMBLY**

   Refer to **REMOVAL**

2. **REMOVE FUEL SENDER GAUGE ASSEMBLY** See step 2
3. **REMOVE FUEL PUMP**
   1. Disconnect the connector of the fuel pump harness.

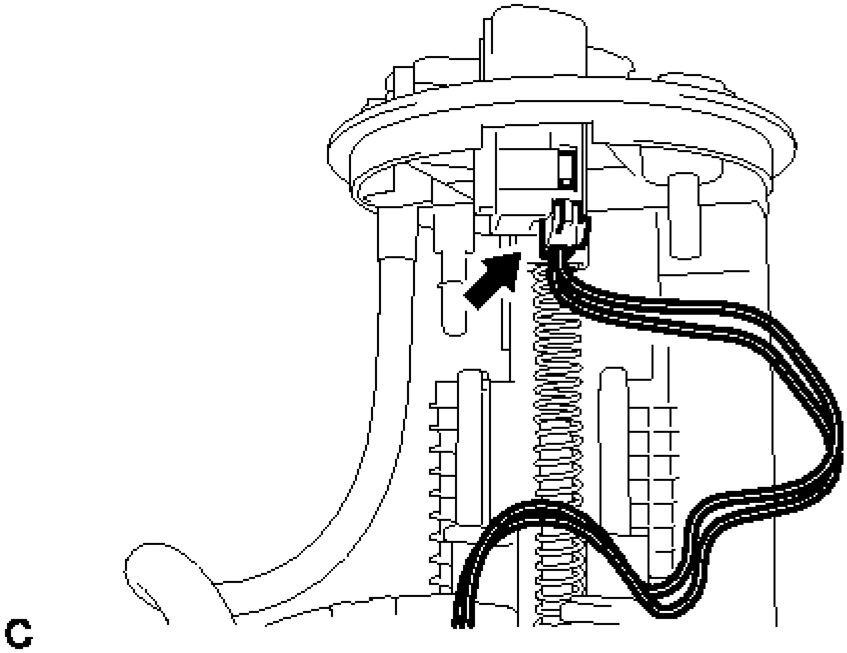

Fig. 22: Identifying Fuel Pump Harness Connector
Courtesy of TOYOTA MOTOR SALES, U.S.A., INC.

   2. Disconnect the fuel pump filter hose.

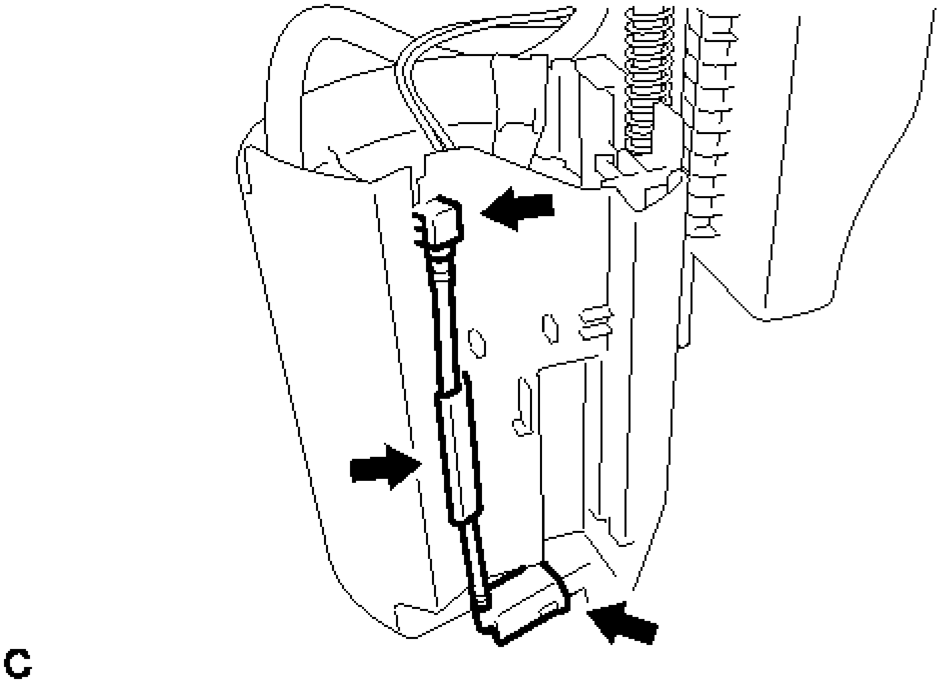

Fig. 23: Identifying Fuel Pump Filter Hose
Courtesy of TOYOTA MOTOR SALES, U.S.A., INC.

c. Using a screwdriver with its tip wrapped in protective tape, disengage the 2 claws, and remove the fuel filter and fuel pump from the fuel sub-tank.

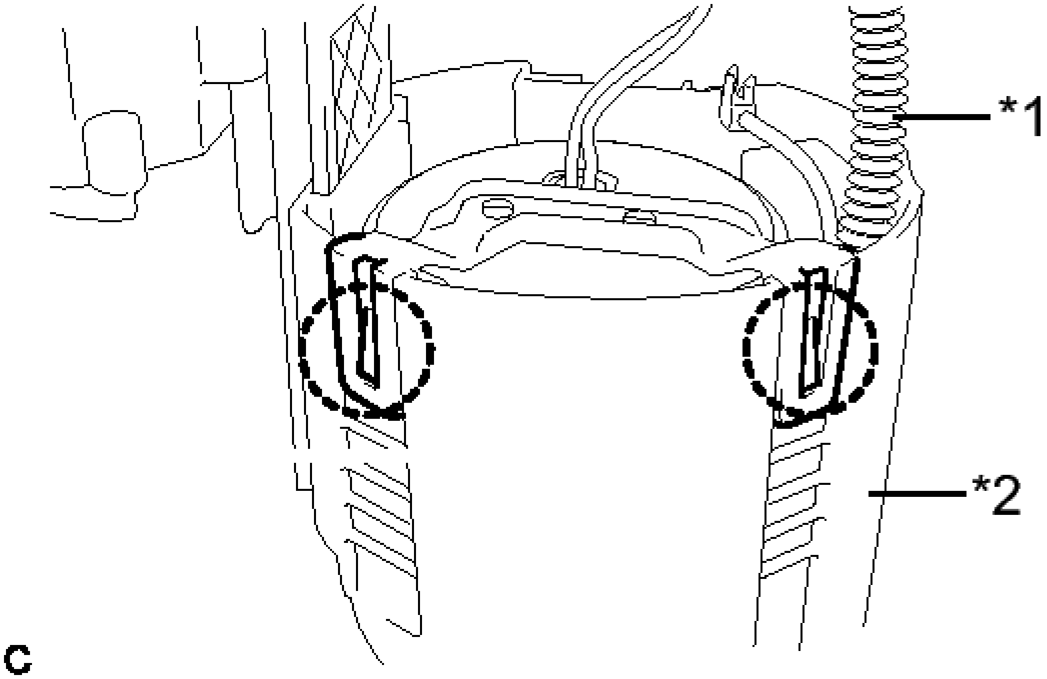

Fig. 24: Identifying Fuel Tube And Fuel Sub-Tank

Courtesy of TOYOTA MOTOR SALES, U.S.A., INC.

TEXT IN ILLUSTRATION

*1	Fuel Tube
*2	Fuel Sub-tank

NOTE: **Do not do anything which may separate the fuel tube from either the fuel suction plate or fuel filter assembly, such as applying excessive force to the tube. Refer to PRECAUTION .**

d. Using a screwdriver with its tip wrapped in protective tape, disengage the 2 claws and remove the No. 1 fuel suction support.

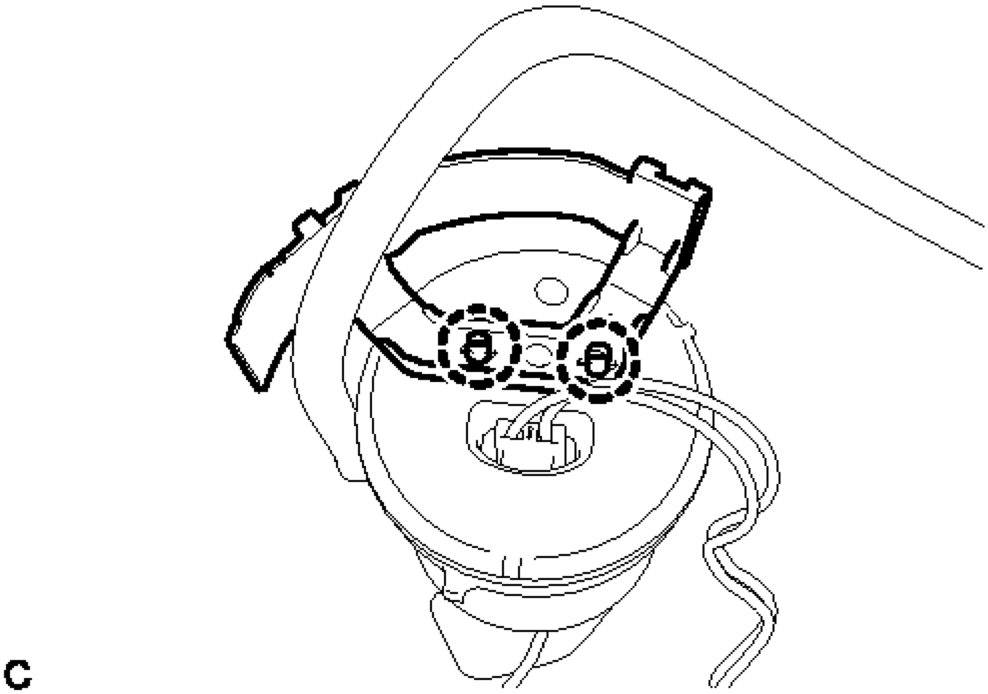

Fig. 25: Identifying No. 1 Fuel Suction Support Claws
Courtesy of TOYOTA MOTOR SALES, U.S.A., INC.

e. Using a screwdriver with its tip wrapped in protective tape, disengage the 5 claws, and remove the fuel pump from the fuel filter.

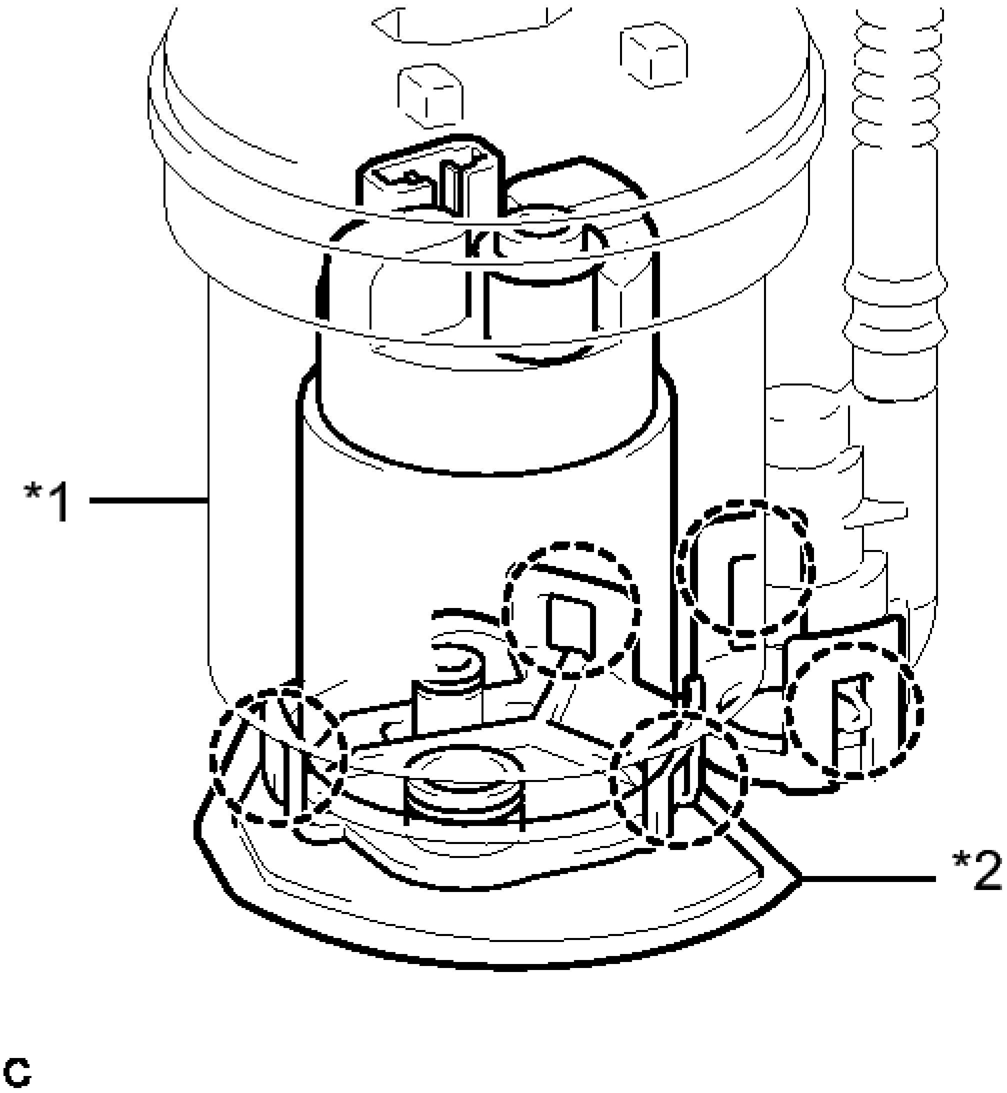

Fig. 26: Identifying Fuel Filter, Fuel Pump Filter & Claws
Courtesy of TOYOTA MOTOR SALES, U.S.A., INC.

TEXT IN ILLUSTRATION

*1	Fuel Filter
*2	Suction Filter

NOTE:

- **Do not damage the fuel filter.**
- **Do not remove the suction filter.**
- **Do not use either the fuel pump or the suction filter if the suction filter is removed from the fuel pump.**

f. Disconnect the fuel pump harness connector.

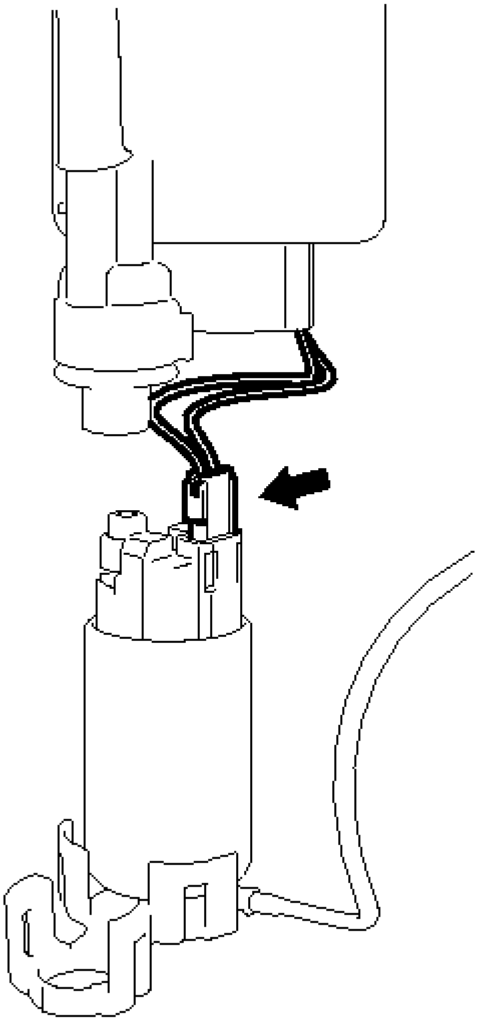

Fig. 27: Identifying Fuel Pump Harness Connector
Courtesy of TOYOTA MOTOR SALES, U.S.A., INC.

g. Remove the O-ring and spacer from the fuel pump.

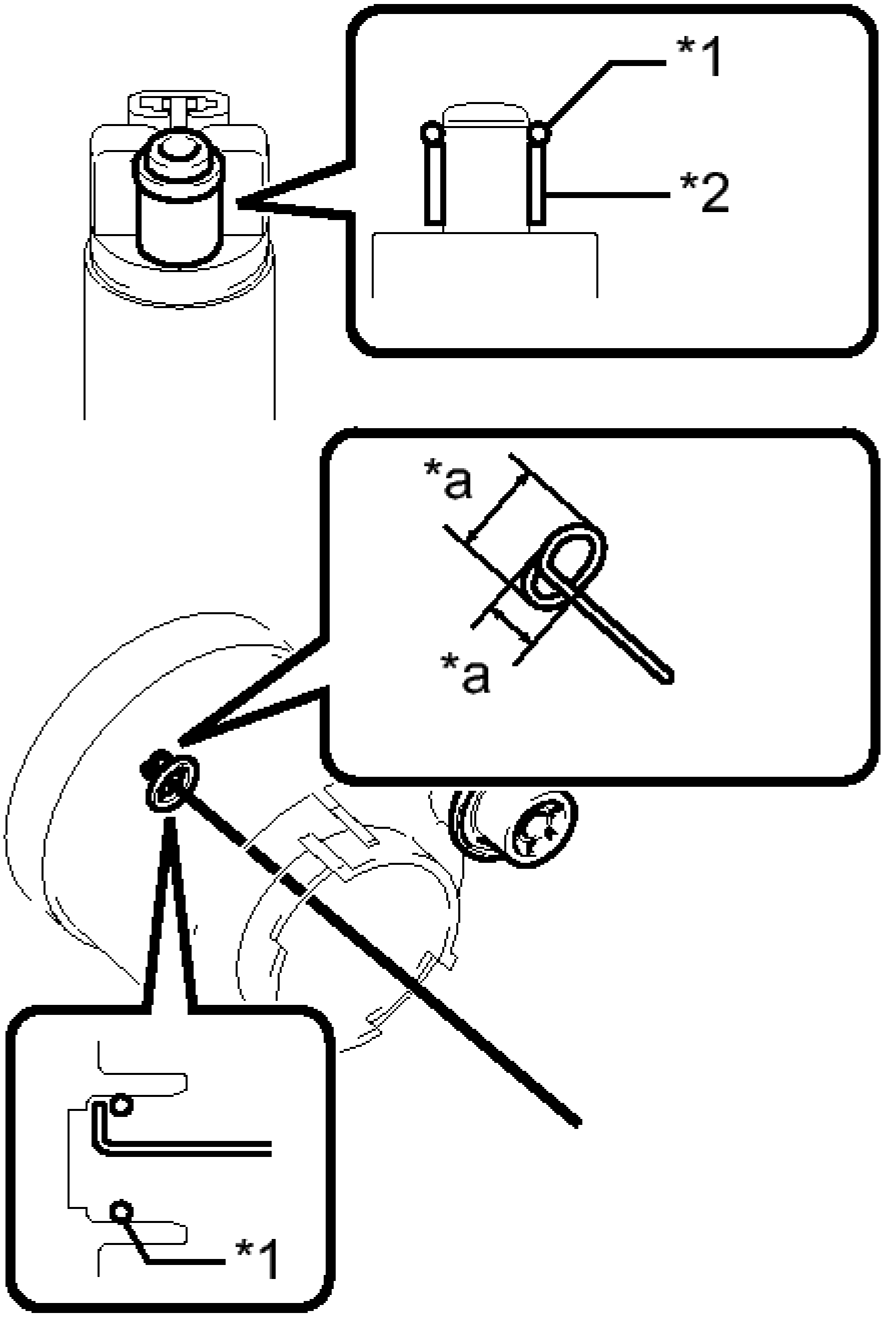

Fig. 28: Identifying Fuel Pump, O-Ring & Spacer
Courtesy of TOYOTA MOTOR SALES, U.S.A., INC.

TEXT IN ILLUSTRATION

*1	O-ring

*2	Spacer
*a	5.0 mm (0.197 in.)

NOTE: **Be careful not to damage the sealing surface.**

HINT:

If the O-ring still remains in the fuel filter, remove it using a wire tip (1 mm diameter) that is formed as shown in the illustration.

4. **REMOVE FUEL PRESSURE REGULATOR ASSEMBLY**
   a. Using a screwdriver with its tip wrapped in protective tape, remove the fuel pressure regulator assembly.

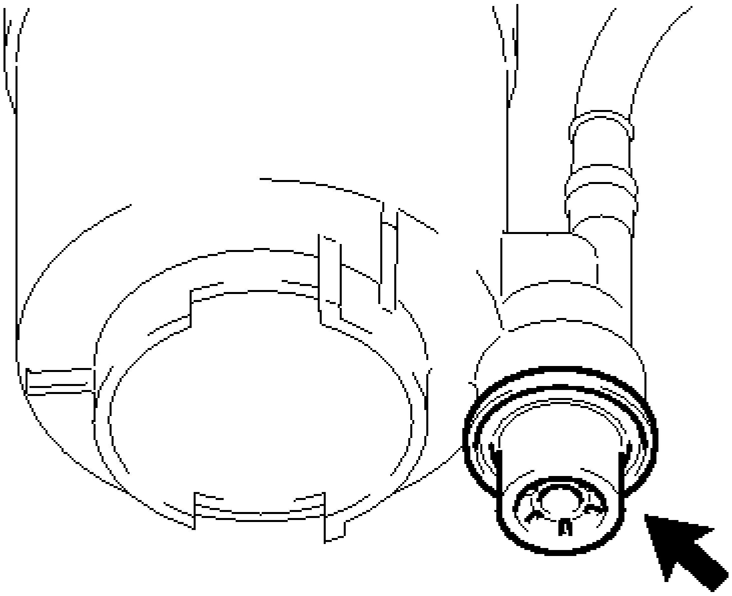

P

Fig. 29: Locating Fuel Pressure Regulator Assembly
Courtesy of TOYOTA MOTOR SALES, U.S.A., INC.

NOTE: **Slowly pull out the fuel pressure regulator assembly because the O-ring is firmly installed between the fuel pressure regulator assembly and the fuel filter.**

   b. Remove the 2 O-rings from the pressure regulator assembly.

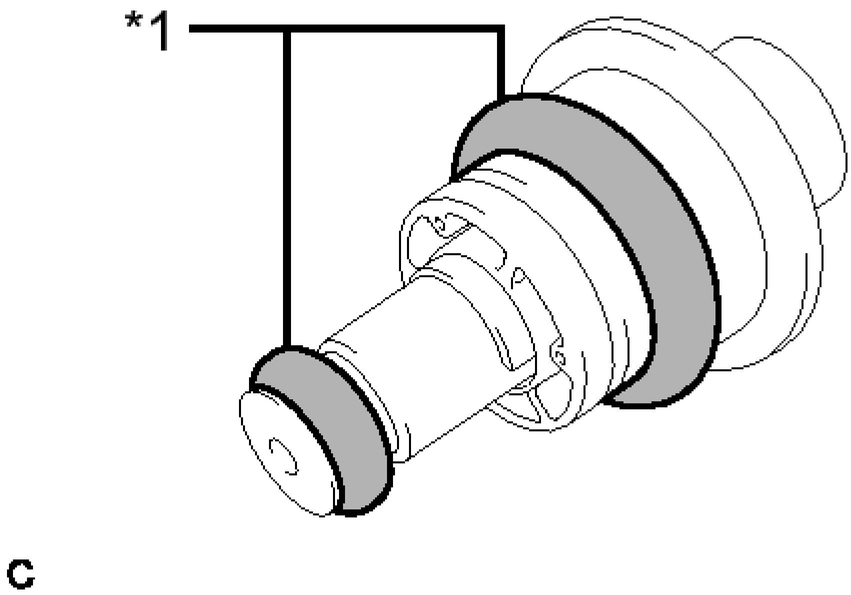

Fig. 30: Identifying Pressure Regulator Assembly & O-Rings
Courtesy of TOYOTA MOTOR SALES, U.S.A., INC.

TEXT IN ILLUSTRATION

*1	O-ring

INSTALLATION

INSTALLATION

1. **INSTALL FUEL PRESSURE REGULATOR ASSEMBLY**
    a. Apply gasoline to 2 new O-rings and then install them to the fuel pressure regulator assembly.
2. **INSTALL FUEL PUMP** See step 1
3. **INSTALL FUEL SENDER GAUGE ASSEMBLY** See step 1
4. **INSTALL FUEL SUCTION TUBE WITH PUMP AND GAUGE ASSEMBLY**

    Refer to **INSTALLATION**

FUEL PRESSURE PULSATION DAMPER

COMPONENTS

ILLUSTRATION

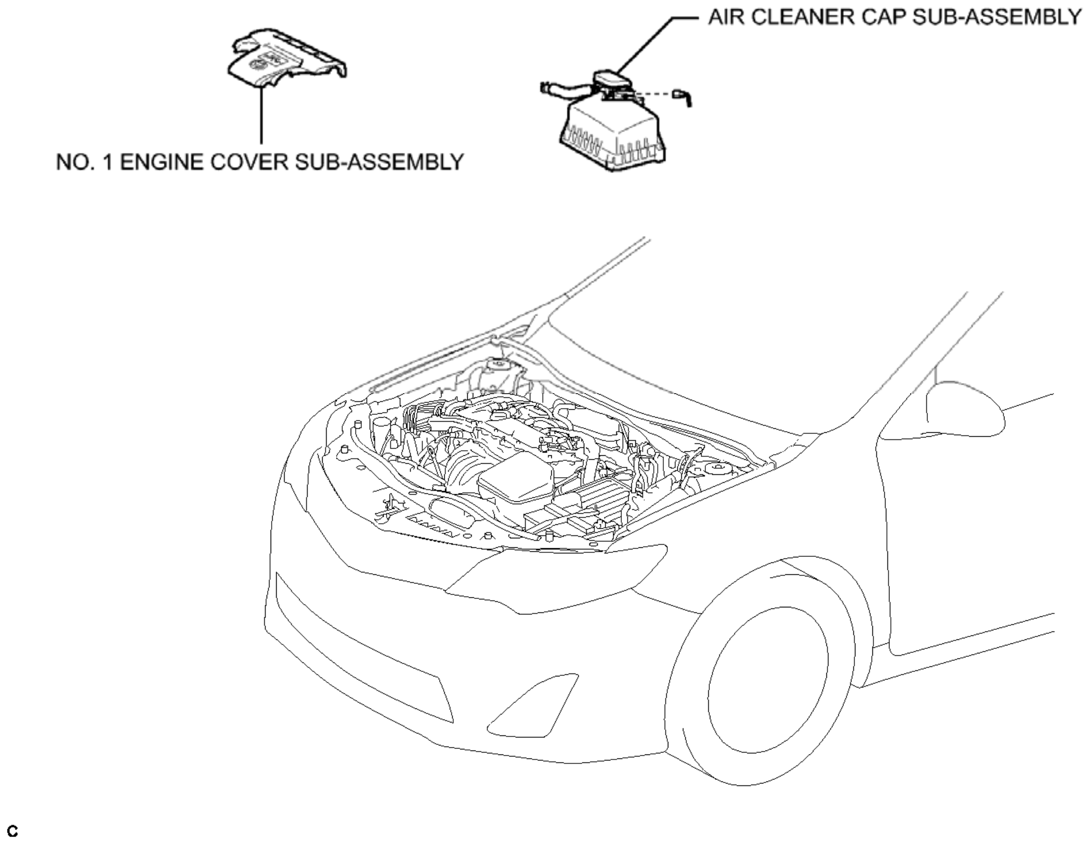
AIR CLEANER CAP SUB-ASSEMBLY
NO. 1 ENGINE COVER SUB-ASSEMBLY
C

Fig. 31: Identification Fuel Pressure Pulsation Damper Replacement Components With Torque Specifications (1 Of 2)
Courtesy of TOYOTA MOTOR SALES, U.S.A., INC.

ILLUSTRATION

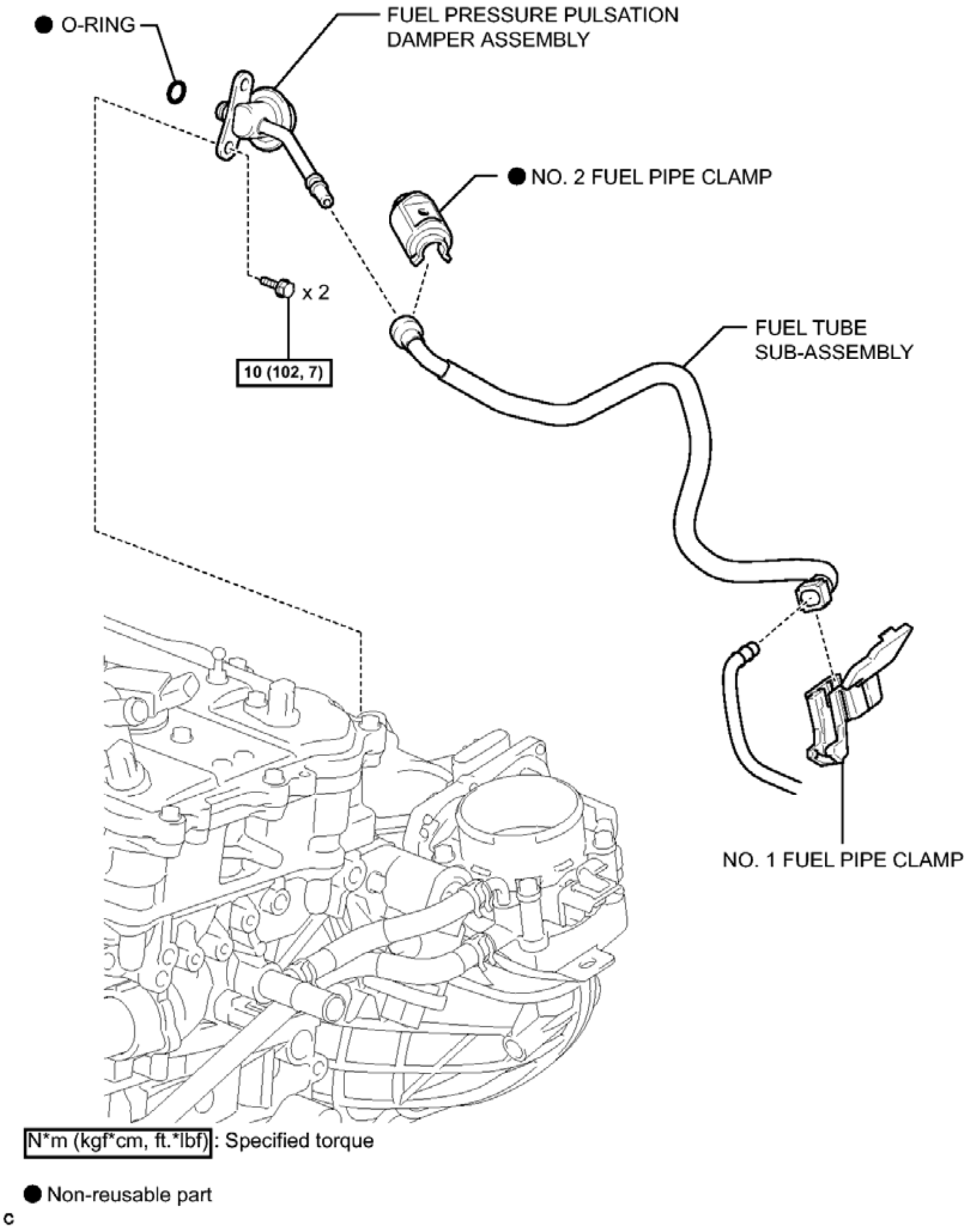
● O-RING
FUEL PRESSURE PULSATION DAMPER ASSEMBLY
● NO. 2 FUEL PIPE CLAMP
x 2
10 (102, 7)
FUEL TUBE SUB-ASSEMBLY
NO. 1 FUEL PIPE CLAMP
N*m (kgf*cm, ft.*lbf) : Specified torque
● Non-reusable part
c

Fig. 32: Identification Fuel Pressure Pulsation Damper Replacement Components With Torque Specifications (2 Of 2)
Courtesy of TOYOTA MOTOR SALES, U.S.A., INC.

REMOVAL

REMOVAL

1. **PRECAUTION**

NOTE: **After turning the ignition switch off, waiting time may be required before disconnecting the cable from the negative (-) battery terminal. Therefore, make sure to read the disconnecting the cable from the negative (-) battery terminal notice before proceeding with work. Refer to PRECAUTION .**

2. **DISCHARGE FUEL SYSTEM PRESSURE**

   Refer to **PRECAUTION**

3. **DISCONNECT CABLE FROM NEGATIVE BATTERY TERMINAL**

   NOTE: **When disconnecting the cable, some systems need to be initialized after the cable is reconnected. Refer to INITIALIZATION .**

4. **REMOVE NO. 1 ENGINE COVER SUB-ASSEMBLY** . Refer to **REMOVAL - Step 18**
5. **REMOVE AIR CLEANER CAP SUB-ASSEMBLY** . Refer to **REMOVAL - Step 7**
6. **REMOVE FUEL TUBE SUB-ASSEMBLY**

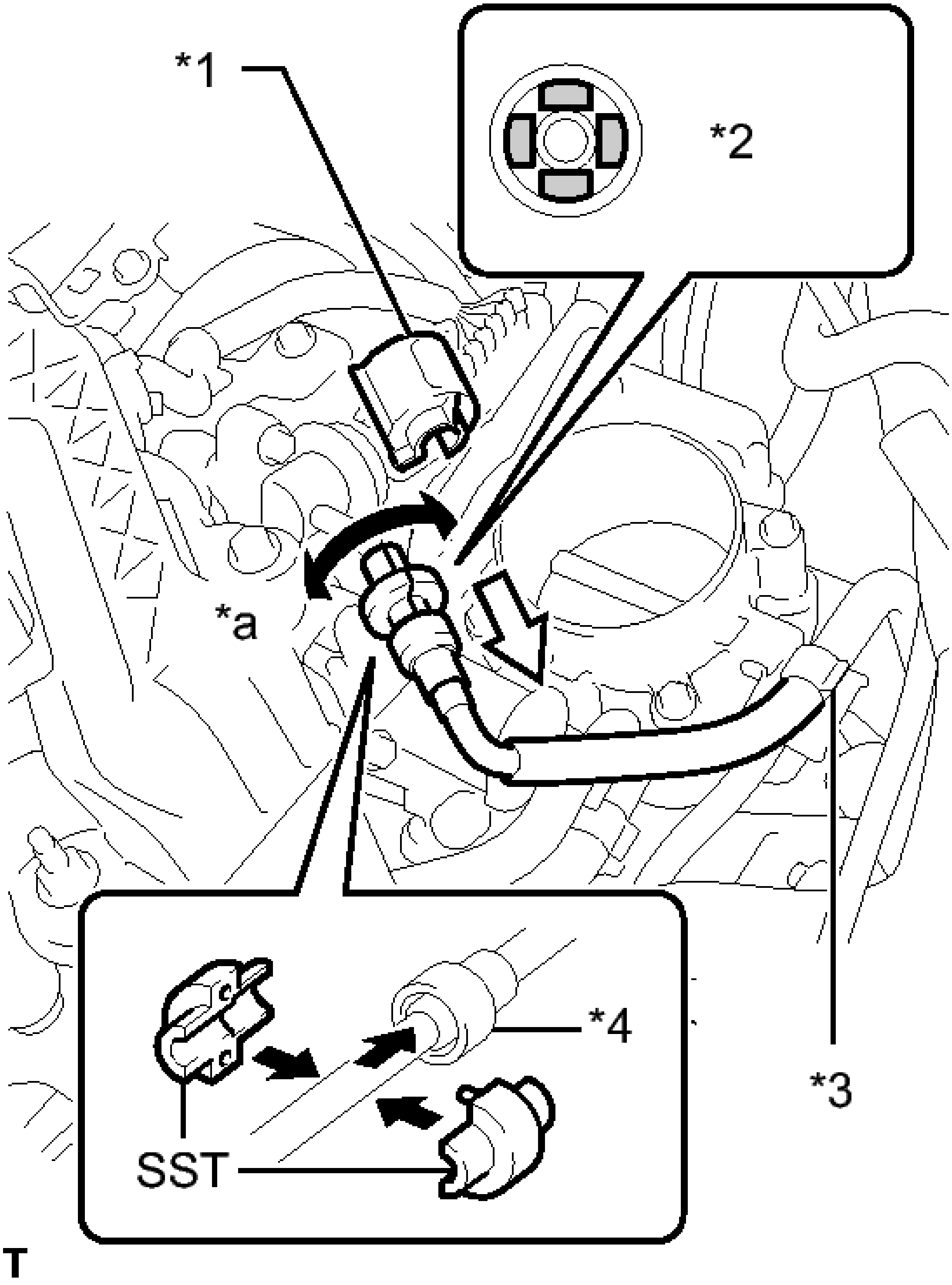

Fig. 33: Removing Fuel Tube Sub-Assembly
Courtesy of TOYOTA MOTOR SALES, U.S.A., INC.

TEXT IN ILLUSTRATION

	No. 2

*1	Fuel Pipe Clamp
*2	Retainer
*3	Fuel Hose Clamp
*4	Fuel Tube Connector
*a	Turn

NOTE: Do not forcibly bend, kink or twist the fuel tube.

a. Remove the fuel tube from the fuel hose clamp.
b. Remove the No. 2 fuel pipe clamp.
c. Wipe off any dirt on the fuel tube connector.
d. Hold the fuel tube connector, and then install SST.
    - **SST: 09268-21011**
e. Turn SST to align the retainer inside the fuel tube connector with the chamfered part of SST.
f. Insert SST into the fuel tube connector and hold it. Then push the fuel tube connector toward SST.
g. Mount the retainer of the fuel tube connector onto the chamfered part of SST.
h. Slide SST and the fuel tube connector together toward the fuel tube until they make a "click" sound, and then disconnect the fuel tube.

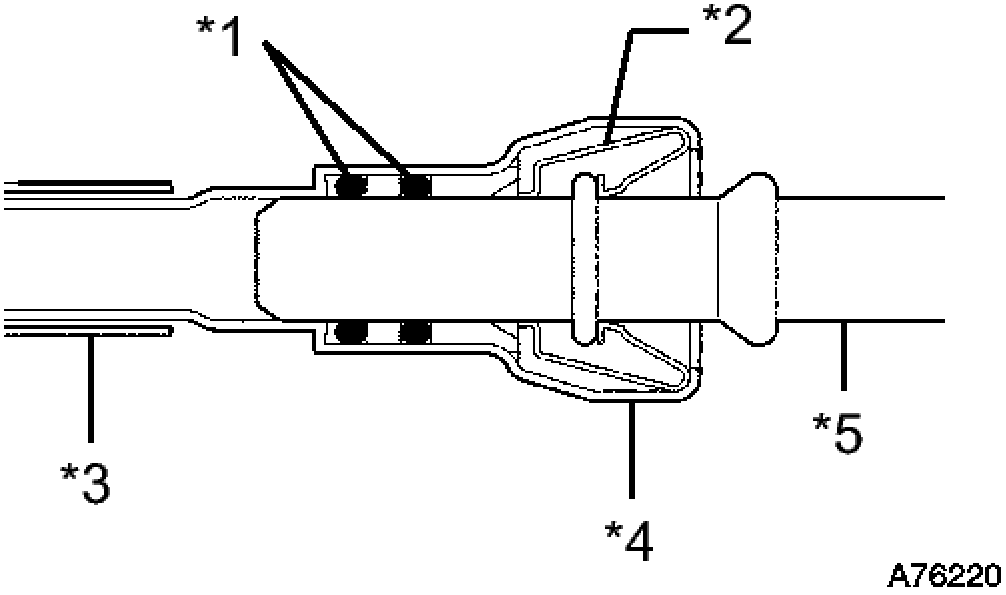

Fig. 34: Identifying Fuel Tube
Courtesy of TOYOTA MOTOR SALES, U.S.A., INC.

TEXT IN ILLUSTRATION

*1	O-ring
*2	Retainer
*3	Fuel Tube
*4	Fuel Tube Connector
*5	Fuel Pipe

NOTE:

- **Check for foreign matter in the fuel tube around the fuel tube connector. Clean it if necessary. Foreign matter can affect the ability of the O-rings to seal the fuel tube connector and fuel pipe.**
- **Do not use any tools to separate the fuel tube connector and fuel pipe.**
- **Do not forcefully bend, kink or twist the fuel tube.**
- **Keep the fuel tube connector and fuel pipe free from foreign matter.**
- **If the fuel tube connector and fuel pipe are stuck together, pinch the fuel tube connector and turn it carefully to disconnect it.**
- **Put the fuel tube connector and fuel pipe in plastic bags to prevent damage and contamination.**

7. **REMOVE FUEL PRESSURE PULSATION DAMPER ASSEMBLY**
   a. Remove the 2 bolts and fuel pressure pulsation damper.

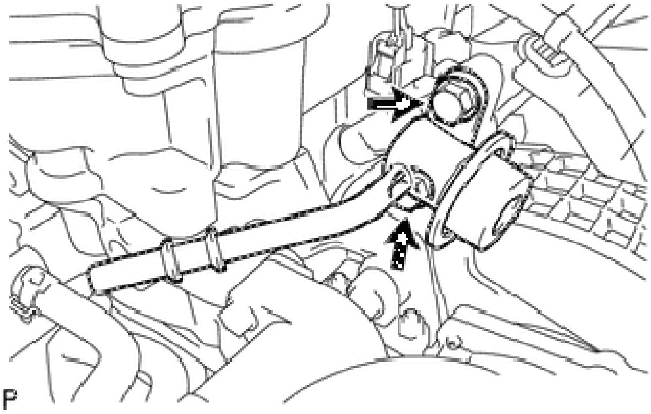

Fig. 35: Locating Fuel Pressure Pulsation Damper Bolts
Courtesy of TOYOTA MOTOR SALES, U.S.A., INC.

   b. Remove the O-ring from the fuel pressure pulsation damper.

INSTALLATION

INSTALLATION

1. **INSTALL FUEL PRESSURE PULSATION DAMPER ASSEMBLY**
    a. Apply a light coat of gasoline or spindle oil to a new O-ring.

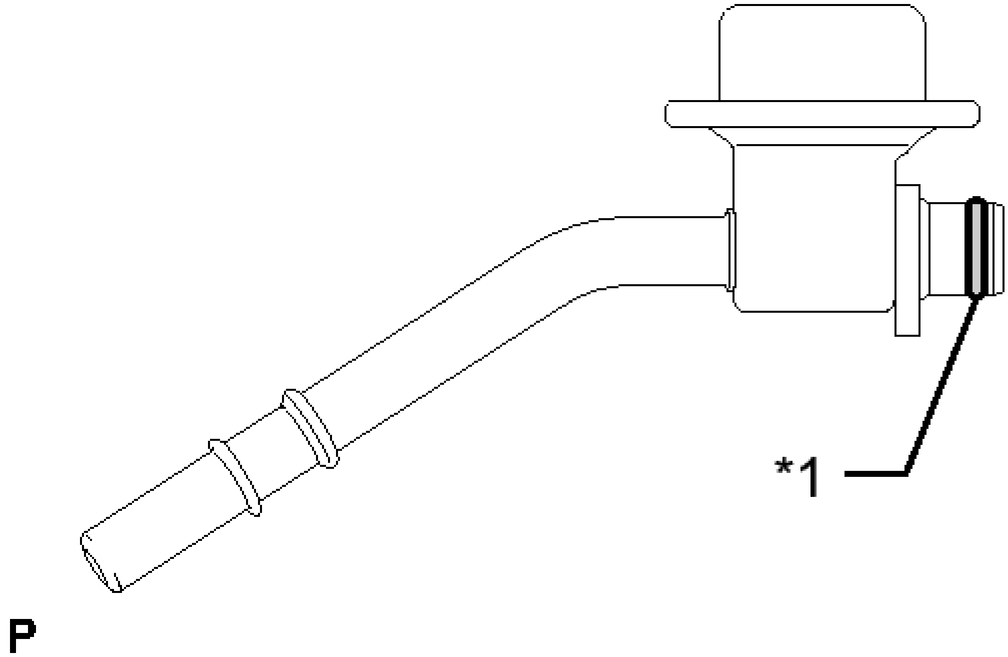

Fig. 36: Identifying Fuel Pressure Pulsation Damper O-Ring
Courtesy of TOYOTA MOTOR SALES, U.S.A., INC.

TEXT IN ILLUSTRATION

*1	O-ring

    b. Install the O-ring to the fuel pressure pulsation damper.
    c. Install the fuel pressure pulsation damper with the 2 bolts.

Torque: 10 N*m (102 kgf*cm, 7 ft.*lbf)

NOTE: Make sure that the O-ring is not cracked or jammed when installing the damper.

2. **INSTALL FUEL TUBE SUB-ASSEMBLY**

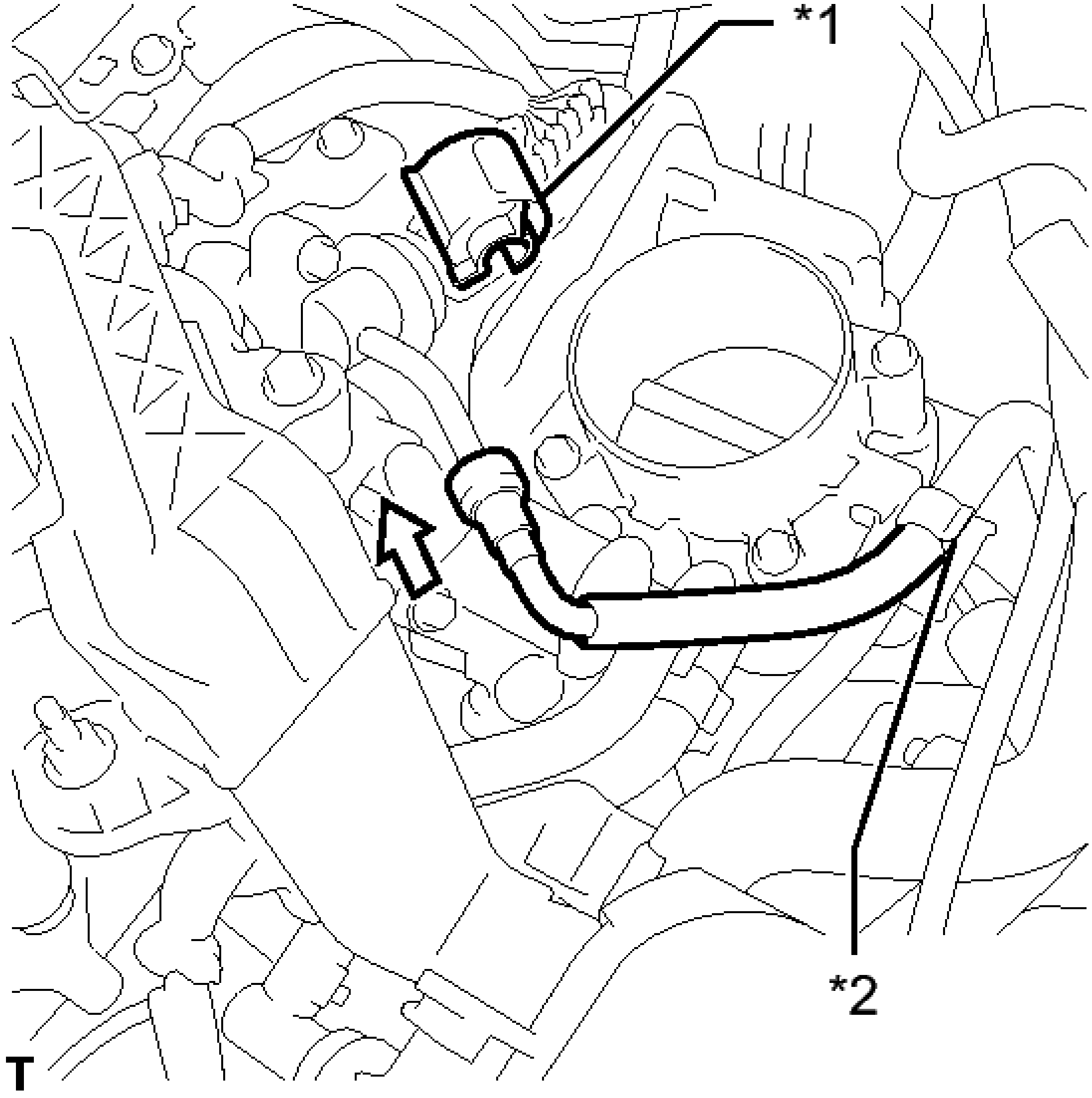

Fig. 37: Identifying No. 2 Fuel Pipe Clamp And Fuel Hose Clamp
Courtesy of TOYOTA MOTOR SALES, U.S.A., INC.

TEXT IN ILLUSTRATION

*1	No. 2 Fuel Pipe Clamp
*2	Fuel Hose Clamp

a. Connect the fuel tube.
b. Push the fuel tube connector until it makes a "click" sound.
c. Install a new No. 2 fuel pipe clamp.

3. **INSTALL AIR CLEANER CAP SUB-ASSEMBLY** . Refer to **INSTALLATION - Step 2**
4. **CONNECT CABLE TO NEGATIVE BATTERY TERMINAL**

NOTE:	**When disconnecting the cable, some systems need to be initialized after the cable is reconnected. Refer to INITIALIZATION .**

5. **INSPECT FOR FUEL LEAK** . Refer to **ON-VEHICLE INSPECTION - Step 1**
6. **INSTALL NO. 1 ENGINE COVER SUB-ASSEMBLY** . Refer to **INSTALLATION - Step 68**

FUEL PUMP

COMPONENTS

ILLUSTRATION

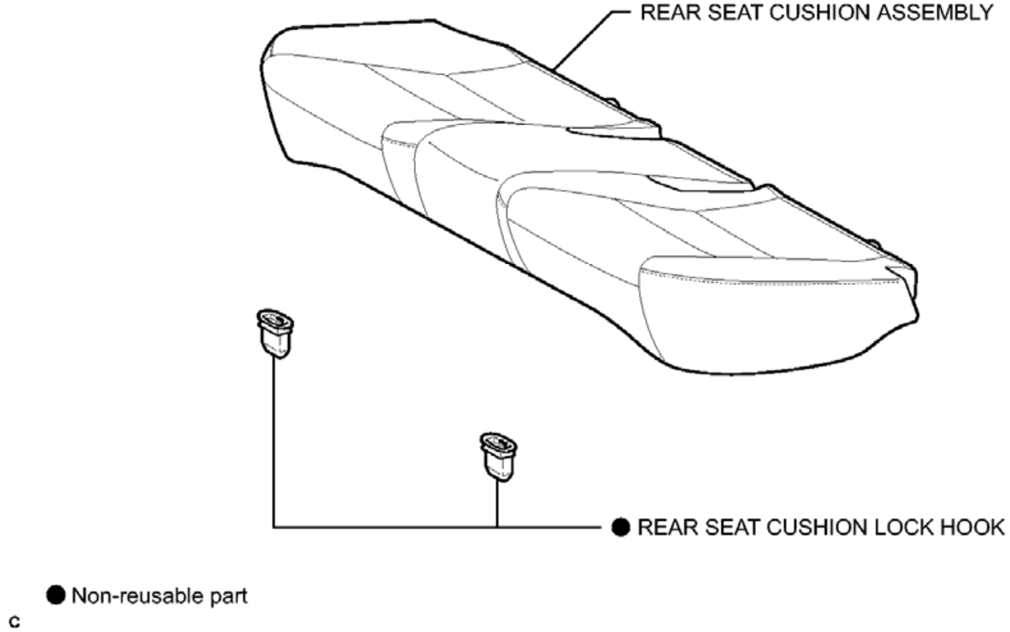
REAR SEAT CUSHION ASSEMBLY
● REAR SEAT CUSHION LOCK HOOK
● Non-reusable part
C

Fig. 38: Identifying Fuel Pump Replacement Components With Torque Specifications (1 Of 3)
Courtesy of TOYOTA MOTOR SALES, U.S.A., INC.

ILLUSTRATION

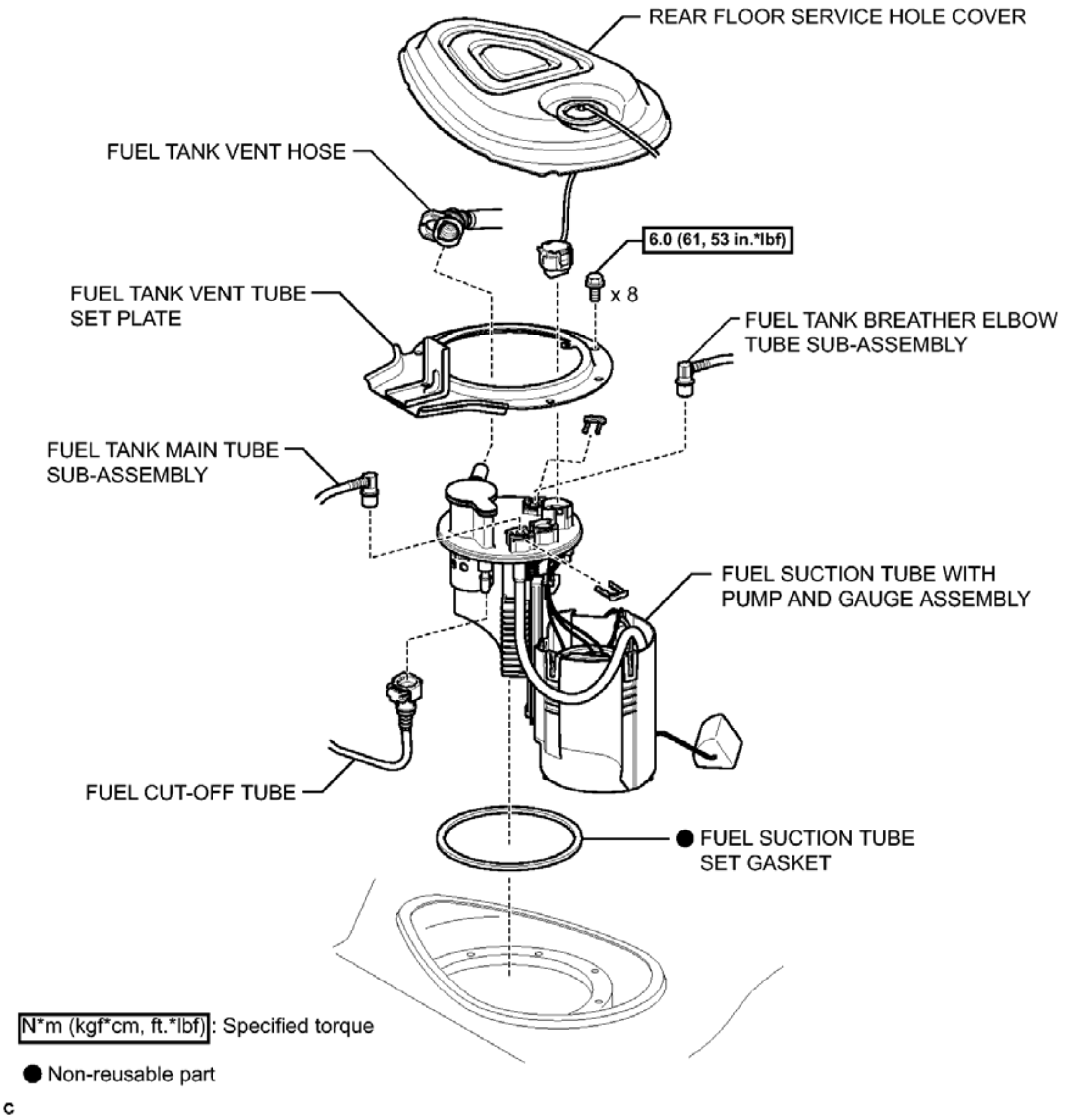
REAR FLOOR SERVICE HOLE COVER
FUEL TANK VENT HOSE
6.0 (61, 53 in.*lbf)
x 8
FUEL TANK VENT TUBE SET PLATE
FUEL TANK BREATHER ELBOW TUBE SUB-ASSEMBLY
FUEL TANK MAIN TUBE SUB-ASSEMBLY
FUEL SUCTION TUBE WITH PUMP AND GAUGE ASSEMBLY
FUEL CUT-OFF TUBE
● FUEL SUCTION TUBE SET GASKET
N*m (kgf*cm, ft.*lbf): Specified torque
● Non-reusable part
c

Fig. 39: Identifying Fuel Pump Replacement Components With Torque Specifications (2 Of 3)
Courtesy of TOYOTA MOTOR SALES, U.S.A., INC.

ILLUSTRATION

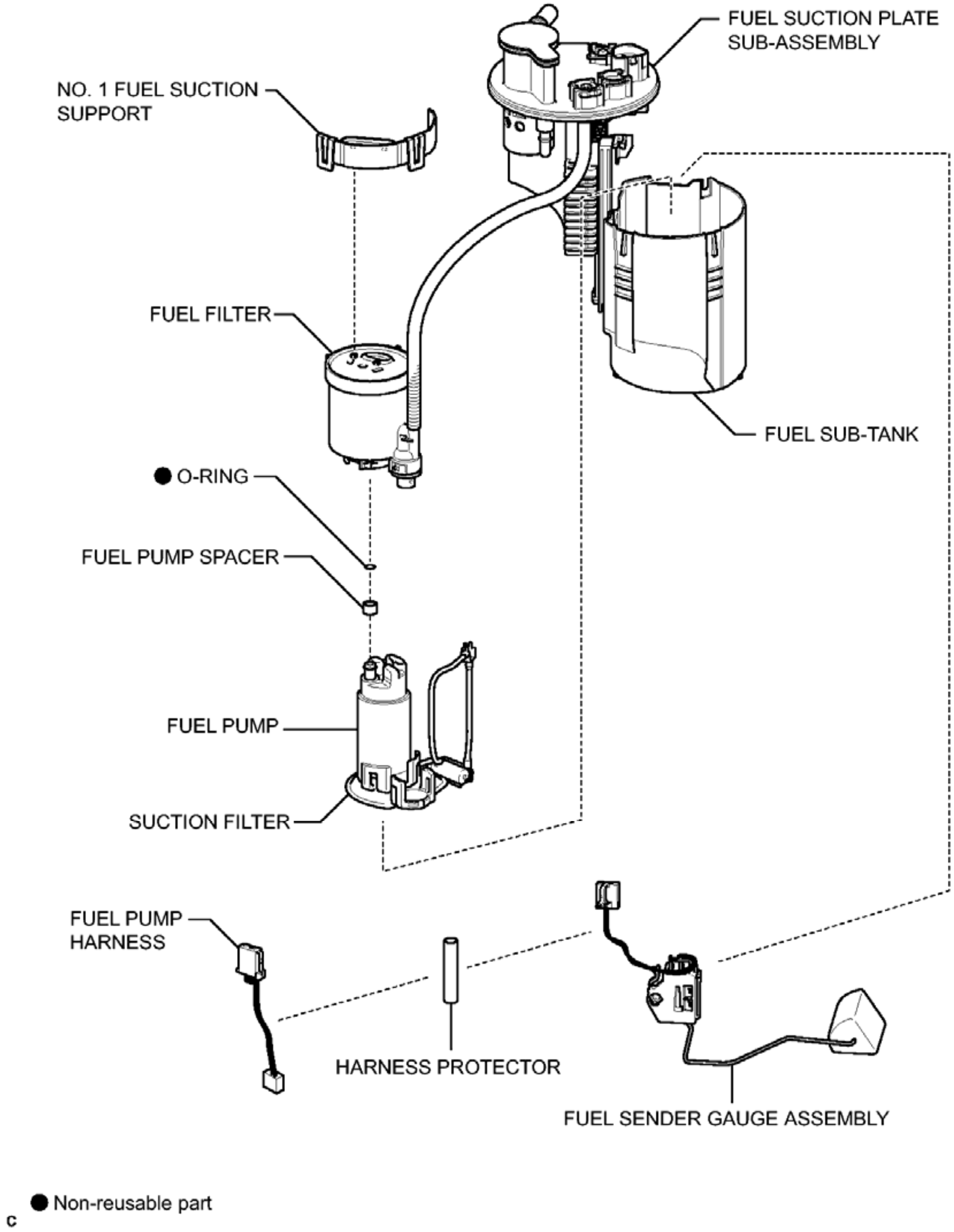
FUEL SUCTION PLATE SUB-ASSEMBLY
NO. 1 FUEL SUCTION SUPPORT
FUEL FILTER
FUEL SUB-TANK
● O-RING
FUEL PUMP SPACER
FUEL PUMP
SUCTION FILTER
FUEL PUMP HARNESS
HARNESS PROTECTOR
FUEL SENDER GAUGE ASSEMBLY
● Non-reusable part
C

Fig. 40: Identifying Fuel Pump Replacement Components With Torque Specifications (3 Of 3)
Courtesy of TOYOTA MOTOR SALES, U.S.A., INC.

REMOVAL

REMOVAL

HINT:

Perform "Inspection After Repair" after replacing the fuel pump assembly. Refer to **INITIALIZATION** .

1. **PRECAUTION**

   NOTE: **After turning the ignition switch off, waiting time may be required before disconnecting the cable from the negative (-) battery terminal. Therefore, make sure to read the disconnecting the cable from the negative (-) battery terminal notice before proceeding with work. Refer to PRECAUTION .**

2. **DISCHARGE FUEL SYSTEM PRESSURE**

   Refer to **PRECAUTION**

3. **DISCONNECT CABLE FROM NEGATIVE BATTERY TERMINAL**
4. **REMOVE REAR SEAT CUSHION ASSEMBLY** . Refer to **REMOVAL - Step 3**
5. **REMOVE REAR SEAT CUSHION LOCK HOOK** . Refer to **REMOVAL - Step 4**
6. **REMOVE REAR FLOOR SERVICE HOLE COVER**
   a. Remove the rear floor service hole cover.

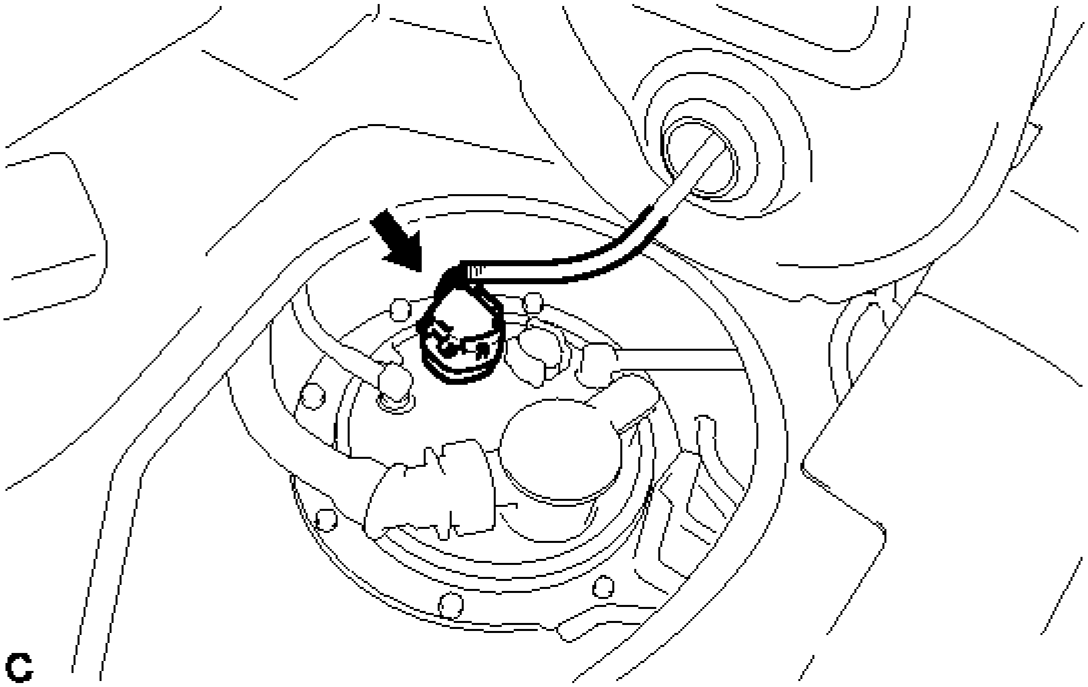

Fig. 41: Identifying Fuel Pump Connector
Courtesy of TOYOTA MOTOR SALES, U.S.A., INC.

   b. Disconnect the fuel pump connector.

7. **DISCONNECT FUEL TANK VENT HOSE**
   a. Pull the tabs of the retainer to disengage the lock claws and pull out the fuel tank vent hose.

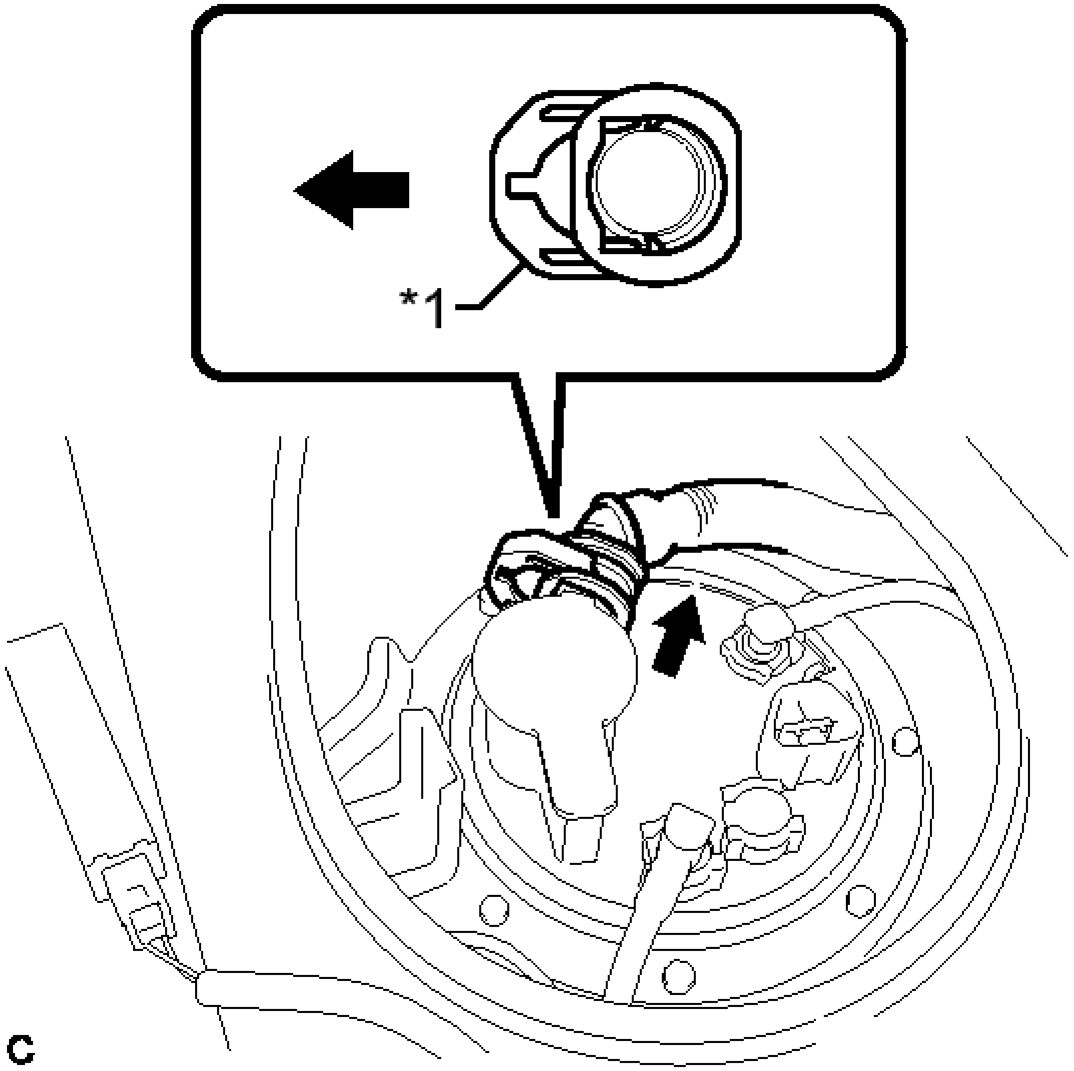

Fig. 42: Identifying Retainer
Courtesy of TOYOTA MOTOR SALES, U.S.A., INC.

TEXT IN ILLUSTRATION

*1	Retainer

NOTE:

- **Remove any dirt or foreign matter on the fuel tank vent hose connector before performing this work.**
- **Do not allow any scratches or foreign matter on the parts when disconnecting them as the fuel tank vent hose connector has an O-ring that seals the pipe.**
- **Only disconnect the joint by hand.**
- **Do not forcibly bend, twist or turn the fuel tank vent hose.**
- **Protect the disconnected part by covering it with a plastic bag**

after disconnecting the fuel tank vent hose.

- **If the vent hose connector and pipe are stuck, push and pull to release them.**

8. **DISCONNECT FUEL TANK BREATHER ELBOW TUBE SUB-ASSEMBLY**
    a. Remove the tube joint clip, and pull out the fuel tube joint of the fuel tank breather elbow tube sub-assembly.

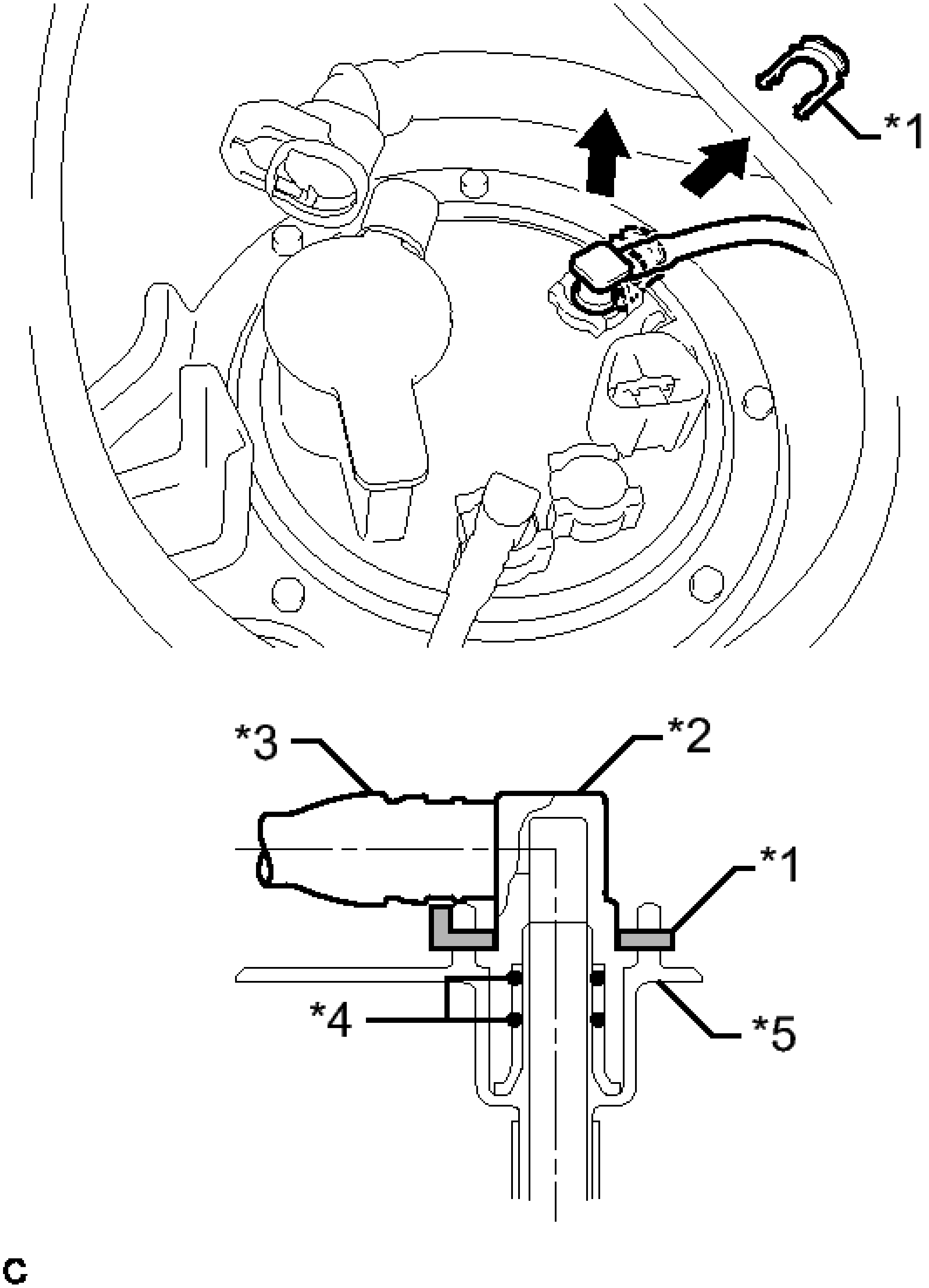

Fig. 43: Identifying Tube Joint Clip, Fuel Tube Joint, Fuel Tank Breather Elbow Tube And O-Ring
Courtesy of TOYOTA MOTOR SALES, U.S.A., INC.

TEXT IN ILLUSTRATION

*1	Tube Joint Clip
*2	Fuel Tube Joint
*3	Fuel Tank Breather Elbow Tube
*4	O-ring
*5	Fuel Suction Plate

NOTE:

- **Remove any dirt or foreign matter on the fuel tube joint before performing this work.**
- **Do not allow any scratches or foreign matter to get on the parts when disconnecting them as the fuel tube joint has an O-ring that seals the pipe.**
- **Only disconnect the fuel tube joint by hand.**
- **Do not forcibly bend, twist or turn the fuel tank breather elbow tube.**
- **Protect the disconnected part by covering it with a plastic bag after disconnecting the fuel tube joint.**
- **If the fuel tube joint and fuel suction plate are stuck, push and pull to release them.**

9. DISCONNECT FUEL TANK MAIN TUBE SUB-ASSEMBLY

a. Remove the tube joint clip, and pull out the fuel tube joint of the fuel tank main tube sub-assembly.

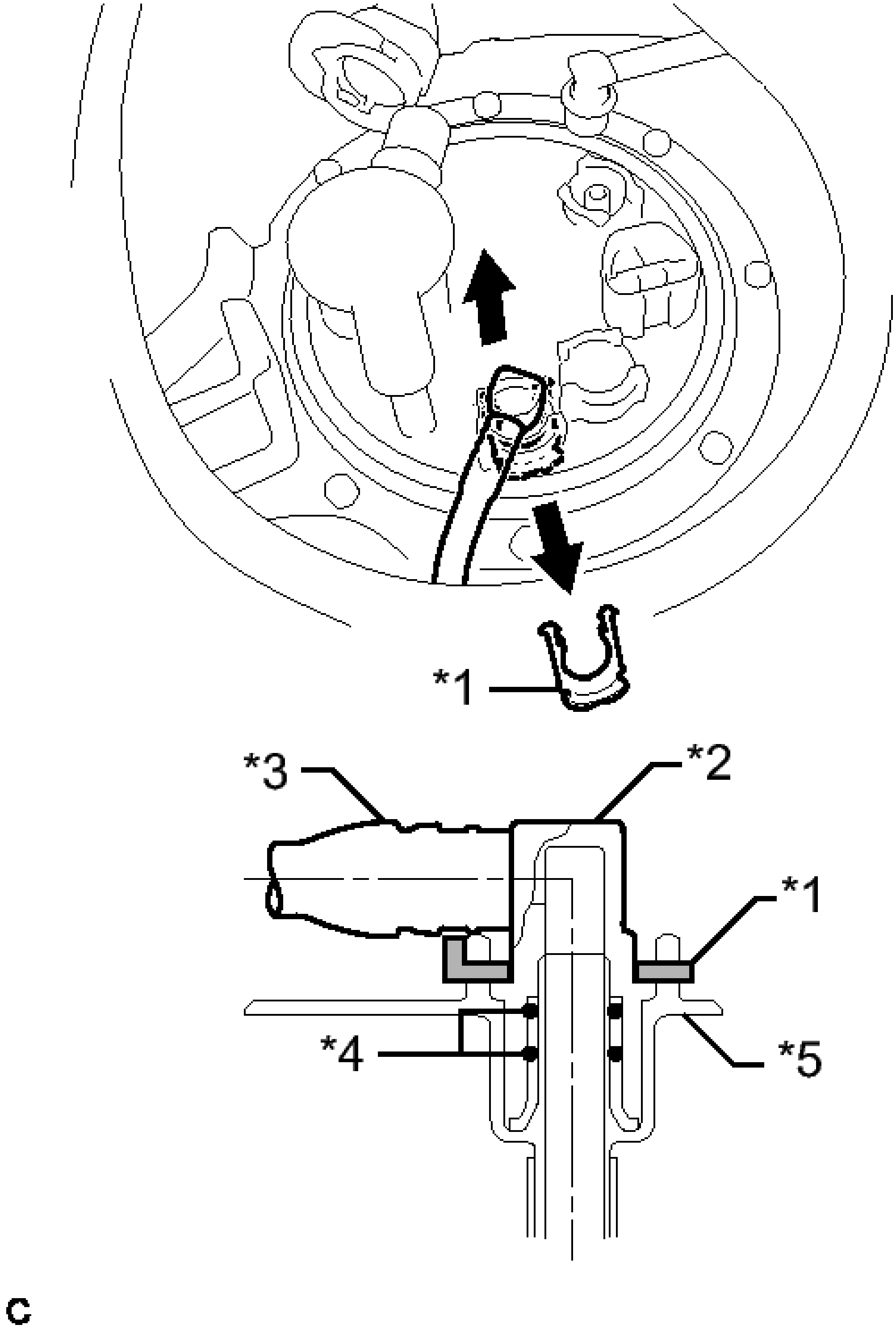

Fig. 44: Identifying Tube Joint Clip And Fuel Tube Joint
Courtesy of TOYOTA MOTOR SALES, U.S.A., INC.

TEXT IN ILLUSTRATION

	Tube

*1	Joint Clip
*2	Fuel Tube Joint
*3	Fuel Tank Main Tube
*4	O-ring
*5	Fuel Suction Plate

NOTE:

- **Remove any dirt or foreign matter on the fuel tube joint before performing this work.**
- **Do not allow any scratches or foreign matter to get on the parts when disconnecting them as the fuel tube joint has an O-ring that seals the pipe.**
- **Only disconnect the fuel tube joint by hand.**
- **Do not forcibly bend, twist or turn the fuel tank main tube.**
- **Protect the disconnected part by covering it with a plastic bag after disconnecting the fuel tube joint.**
- **If the fuel tube joint and fuel suction plate are stuck, push and pull to release them.**

10. **REMOVE FUEL TANK VENT TUBE SET PLATE**
    a. Remove the 8 bolts and set plate.

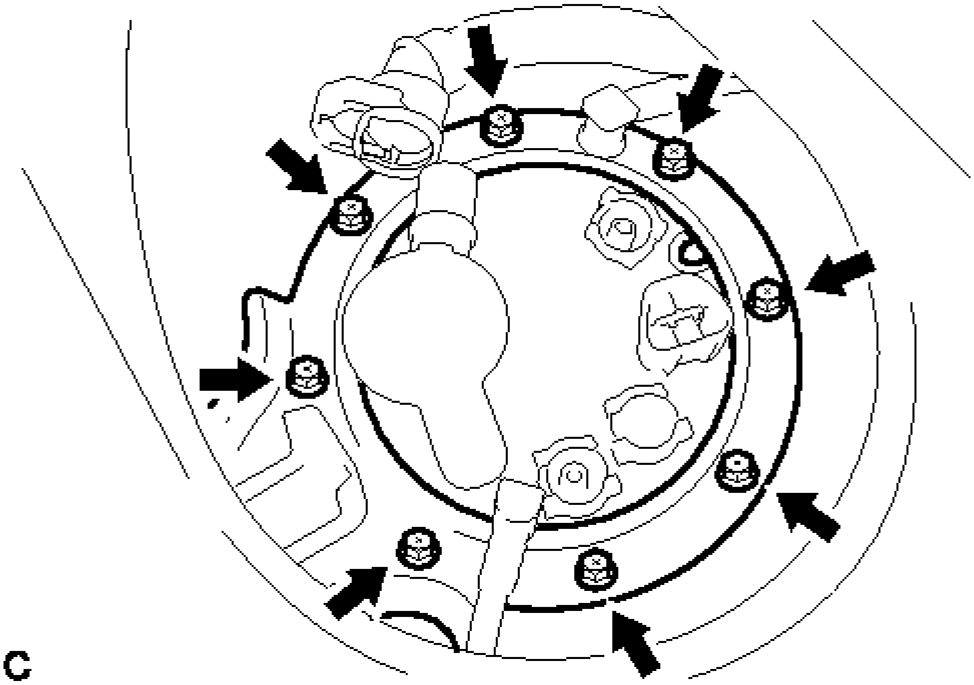

Fig. 45: Identifying Set Plate Bolts
Courtesy of TOYOTA MOTOR SALES, U.S.A., INC.

11. **REMOVE FUEL SUCTION TUBE WITH PUMP AND GAUGE ASSEMBLY**
    a. Using a screwdriver with its tip wrapped in protective tape, pull the tabs of the retainer to disengage the lock claws and pull out the fuel cut-off tube.

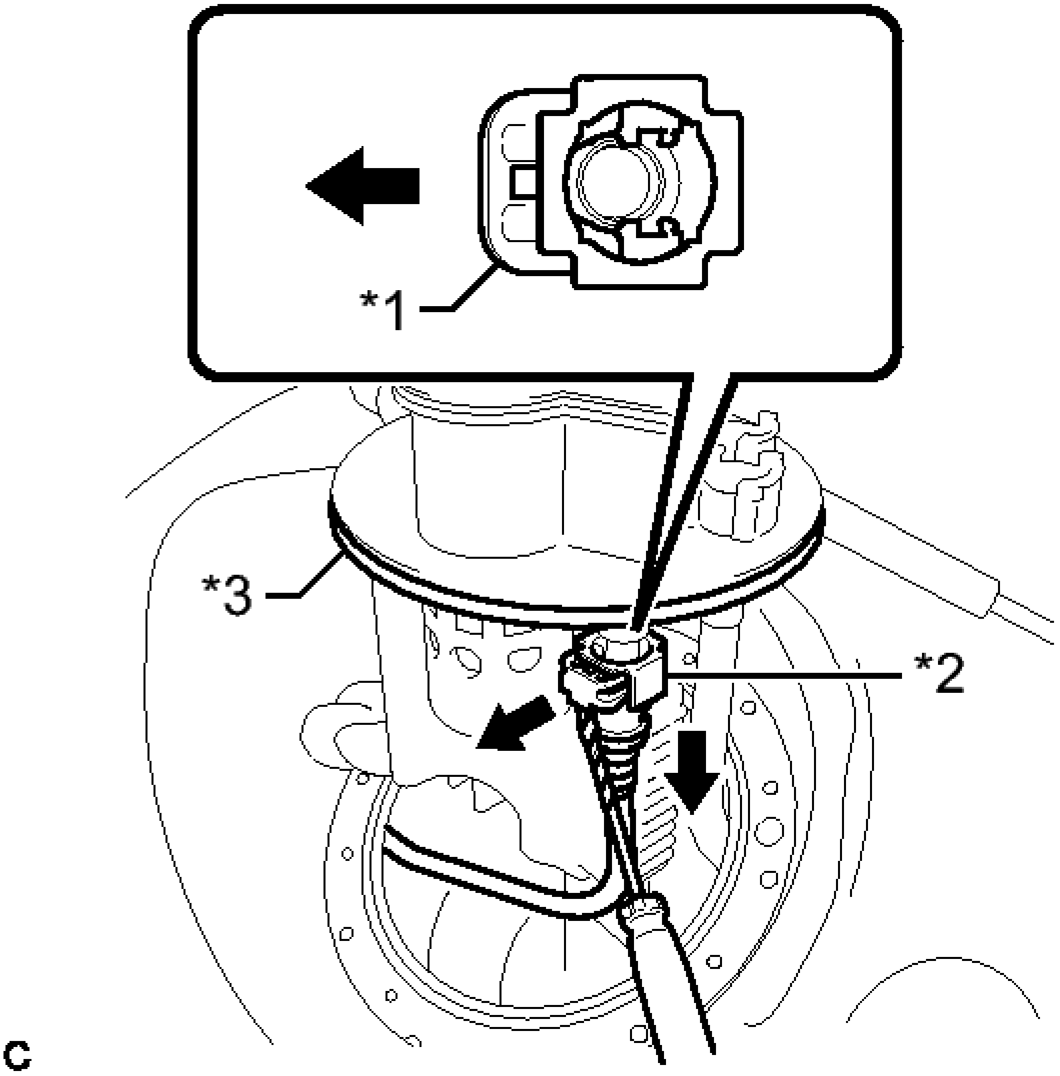

Fig. 46: Identifying Retainer, Fuel Cut-Off Tube And Fuel Suction Tube Set Gasket
Courtesy of TOYOTA MOTOR SALES, U.S.A., INC.

TEXT IN ILLUSTRATION

*1	Retainer
*2	Fuel Cut-off Tube
*3	Fuel Suction Tube Set Gasket

b. Remove the fuel suction tube with pump and gauge assembly from the fuel tank.

NOTE: Make sure that the fuel sender gauge arm does not bend.

c. Remove the fuel suction tube set gasket from the fuel suction tube assembly.

DISASSEMBLY

DISASSEMBLY

1. **REMOVE FUEL SENDER GAUGE ASSEMBLY** See step 2
2. **REMOVE FUEL PUMP**
    a. Disconnect the connector of the fuel pump harness.

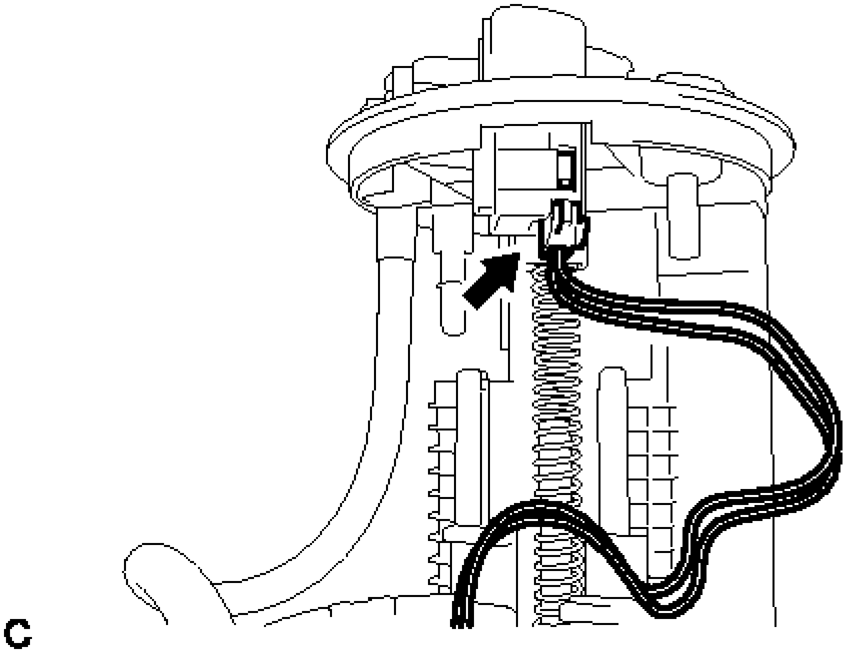

Fig. 47: Identifying Fuel Pump Harness Connector
Courtesy of TOYOTA MOTOR SALES, U.S.A., INC.

b. Disconnect the fuel pump filter hose.

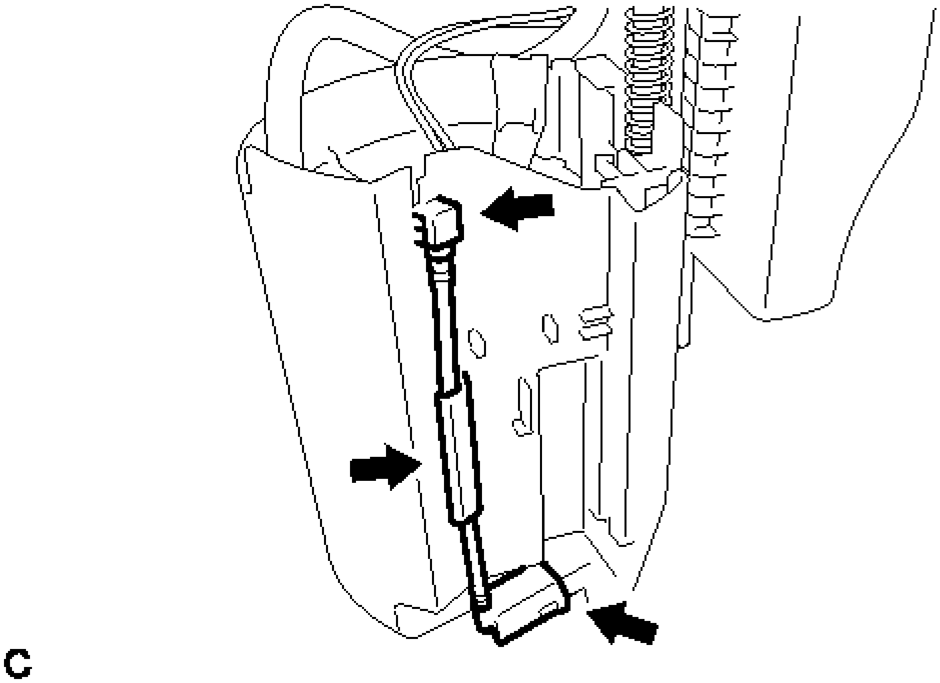

Fig. 48: Identifying Fuel Pump Filter Hose
Courtesy of TOYOTA MOTOR SALES, U.S.A., INC.

c. Using a screwdriver with its tip wrapped in protective tape, disengage the 2 claws, and remove the fuel filter and fuel pump from the fuel sub-tank.

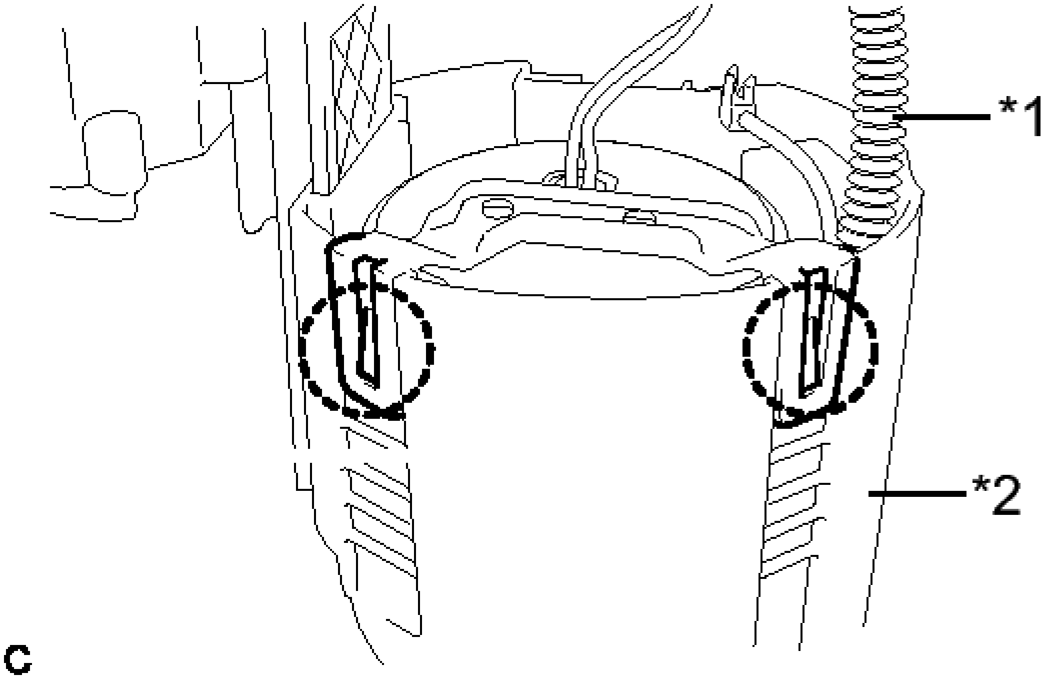

Fig. 49: Identifying Fuel Tube And Fuel Sub-Tank

Courtesy of TOYOTA MOTOR SALES, U.S.A., INC.

TEXT IN ILLUSTRATION

*1	Fuel Tube
*2	Fuel Sub-tank

NOTE: **Do not do anything which may separate the fuel tube from either the fuel suction plate or fuel filter assembly, such as applying excessive force to the tube. Refer to PRECAUTION .**

d. Using a screwdriver with its tip wrapped in protective tape, disengage the 2 claws and remove the No. 1 fuel suction support.

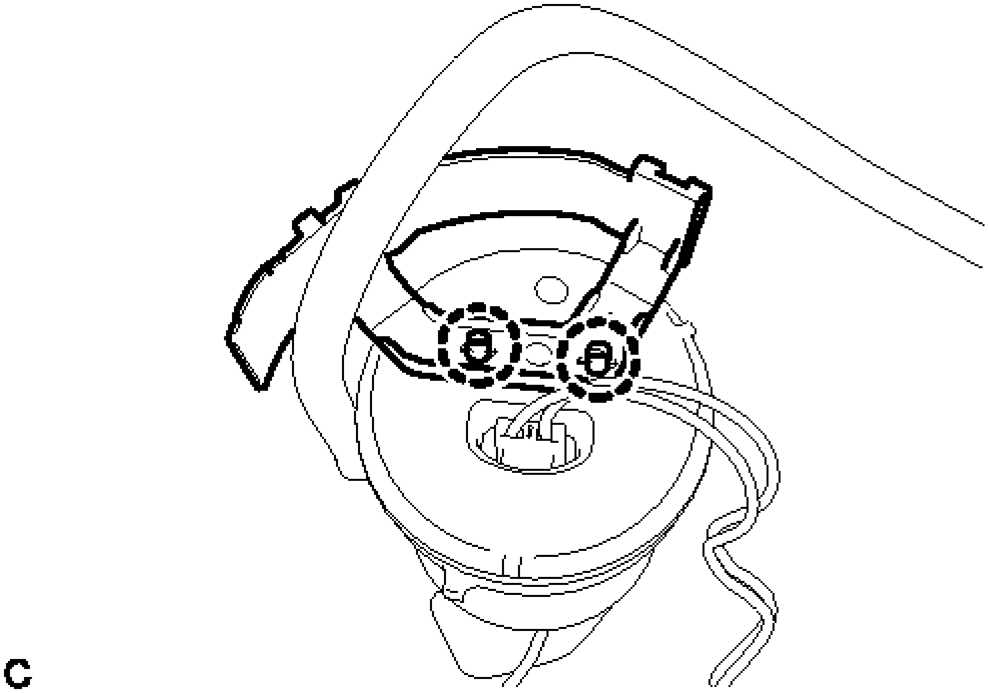

Fig. 50: Identifying No. 1 Fuel Suction Support Claws
Courtesy of TOYOTA MOTOR SALES, U.S.A., INC.

e. Using a screwdriver with its tip wrapped in protective tape, disengage the 5 claws, and remove the fuel pump from the fuel filter.

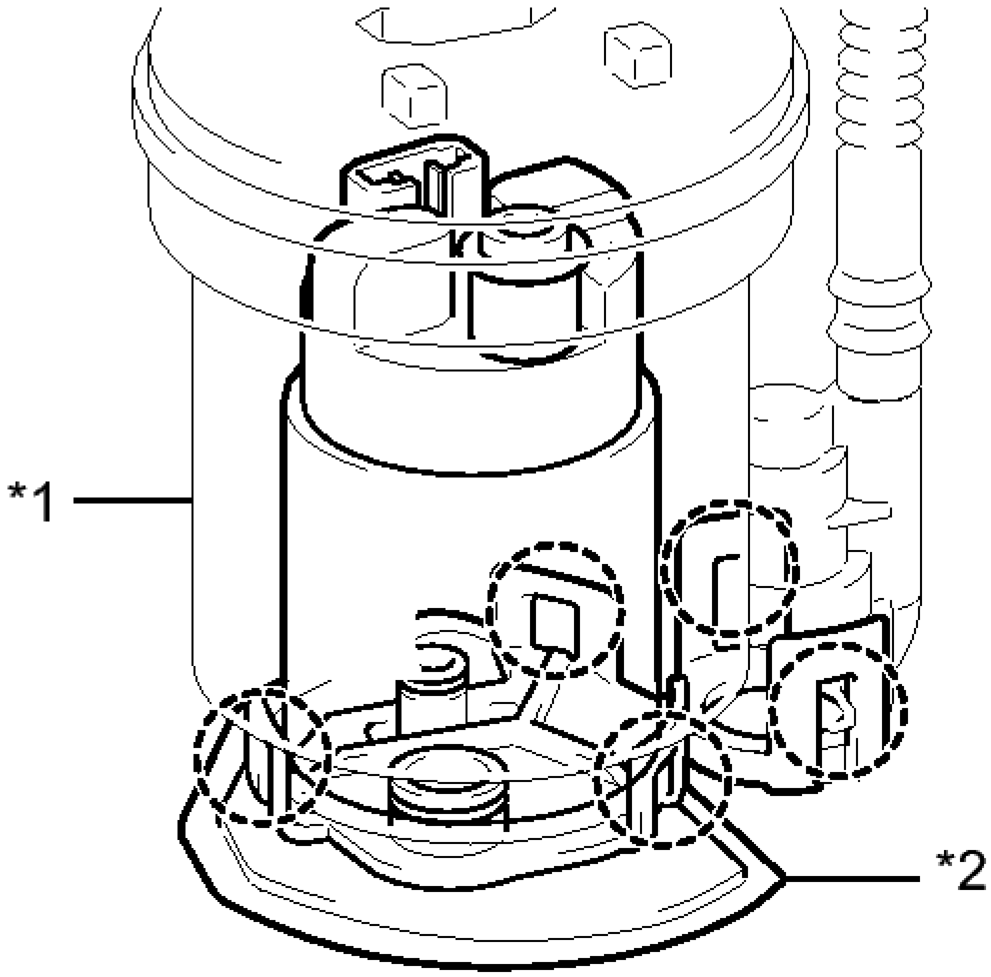

Fig. 51: Identifying Fuel Filter, Fuel Pump Filter & Claws
Courtesy of TOYOTA MOTOR SALES, U.S.A., INC.

TEXT IN ILLUSTRATION

*1	Fuel Filter
*2	Suction Filter

NOTE:

- **Do not damage the fuel filter.**
- **Do not remove the suction filter.**
- **Do not use either the fuel pump or the suction filter if the suction filter is removed from the fuel pump.**

f. Disconnect the fuel pump harness connector.

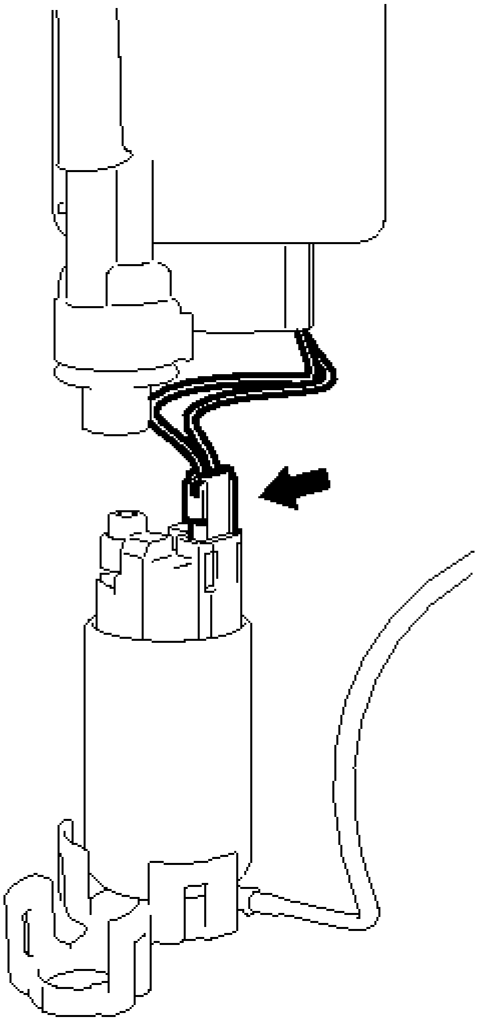

Fig. 52: Identifying Fuel Pump Harness Connector
Courtesy of TOYOTA MOTOR SALES, U.S.A., INC.

g. Remove the O-ring and spacer from the fuel pump.

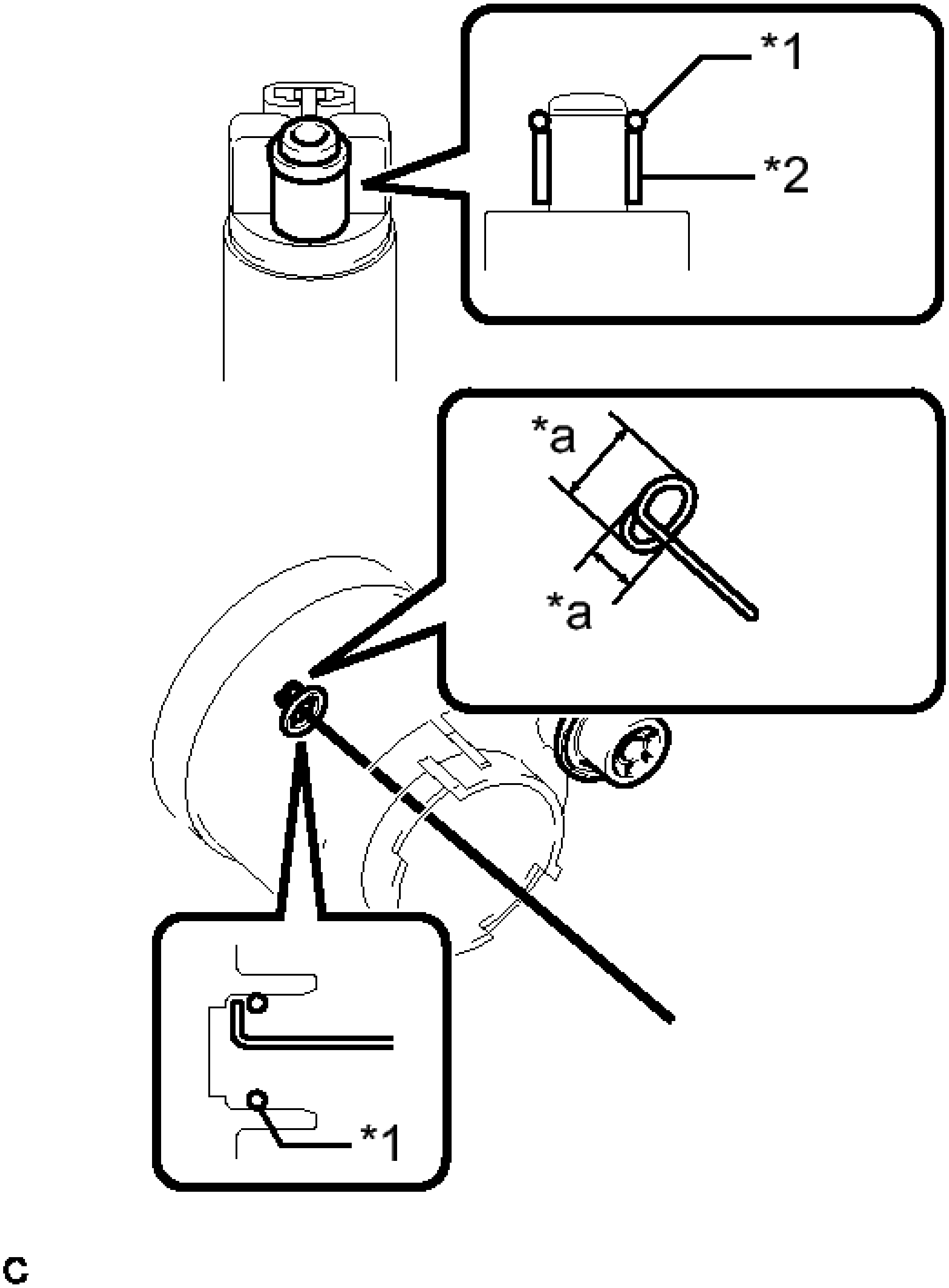

Fig. 53: Identifying Fuel Pump, O-Ring & Spacer
Courtesy of TOYOTA MOTOR SALES, U.S.A., INC.

TEXT IN ILLUSTRATION

*1	O-ring

*2	Spacer
*a	5.0 mm (0.197 in.)

NOTE: **Be careful not to damage the sealing surface.**

HINT:

If the O-ring still remains in the fuel filter, remove it using a wire tip (1 mm diameter) that is formed as shown in the illustration.

INSPECTION

INSPECTION

1. **INSPECT FUEL PUMP**
    a. Check the fuel pump resistance.

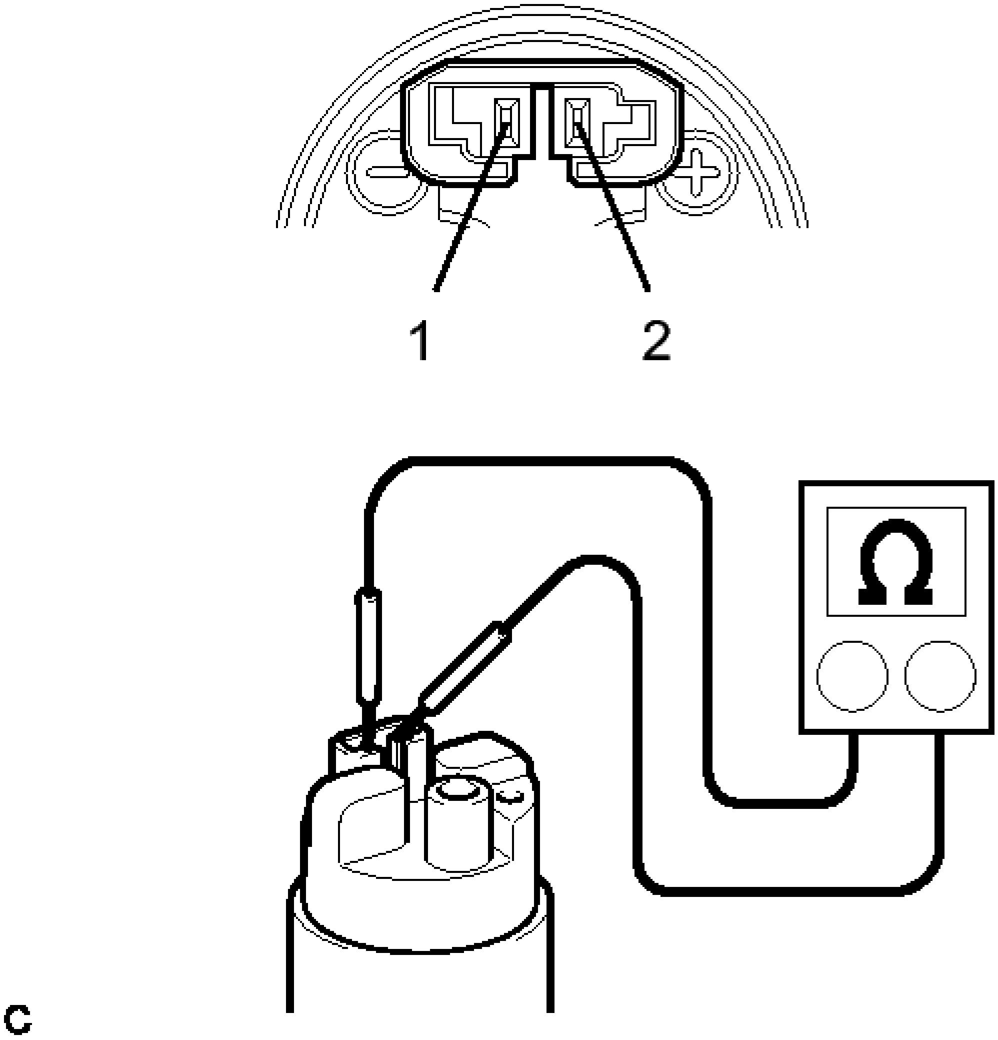

Fig. 54: Connecting Battery Positive (+) Lead To Terminal 2 Of Connector, And Negative (-) Lead To Terminal 1
Courtesy of TOYOTA MOTOR SALES, U.S.A., INC.

1. Using an ohmmeter, measure the resistance according to the value(s) in the table below.

   Standard Resistance

Tester Connection	Condition	Specified Condition
1 - 2	20°C (68°F)	0.2 to 3.0 ohms

   If the result is not as specified, replace the fuel pump.

b. Check fuel pump operation.

1. Apply battery voltage to terminals 1 and 2. Check that the pump operates.

NOTE:

- **These tests must be done quickly (within 10 seconds) to prevent the coil from burning out.**
- **Keep the fuel pump as far away from the battery as possible.**
- **Always switch the voltage on and off on the battery side, not the fuel pump side.**

If the pump does not operate, replace the fuel pump.

REASSEMBLY

REASSEMBLY

1. **INSTALL FUEL PUMP**
   a. Apply gasoline to a new O-ring. Then install the O-ring and spacer to the fuel pump.

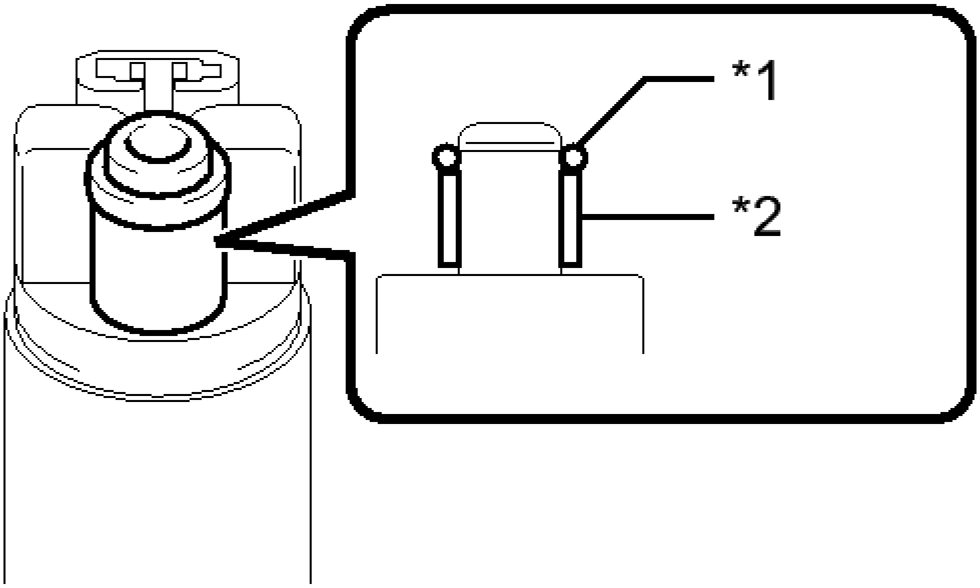

Fig. 55: Identifying Fuel Pump O-Ring And Spacer
Courtesy of TOYOTA MOTOR SALES, U.S.A., INC.

TEXT IN ILLUSTRATION

*1	O-ring
*2	Spacer

b. Engage the 5 claws of the fuel pump.

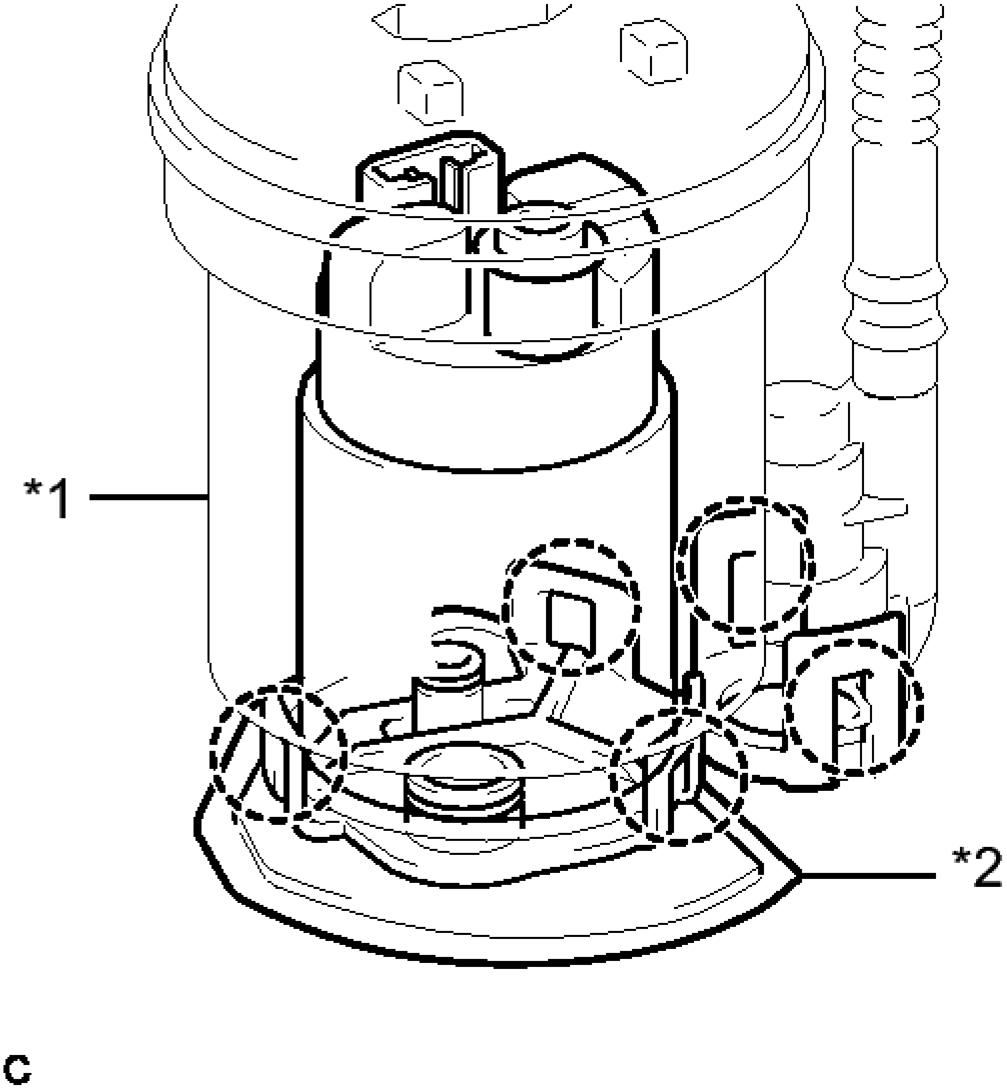

Fig. 56: Identifying Fuel Filter, Fuel Pump Filter & Claws
Courtesy of TOYOTA MOTOR SALES, U.S.A., INC.

TEXT IN ILLUSTRATION

*1	Fuel Filter
*2	Suction Filter

NOTE:

- **Make sure that the O-ring is not cut or pinched during the installation.**
- **Engage the claws securely.**

- **Do not remove the suction filter.**

HINT:

Perform "Inspection After Repair" after replacing the fuel pump assembly. Refer to **INITIALIZATION** .

c. Engage the 2 claws of the No. 1 fuel suction support.

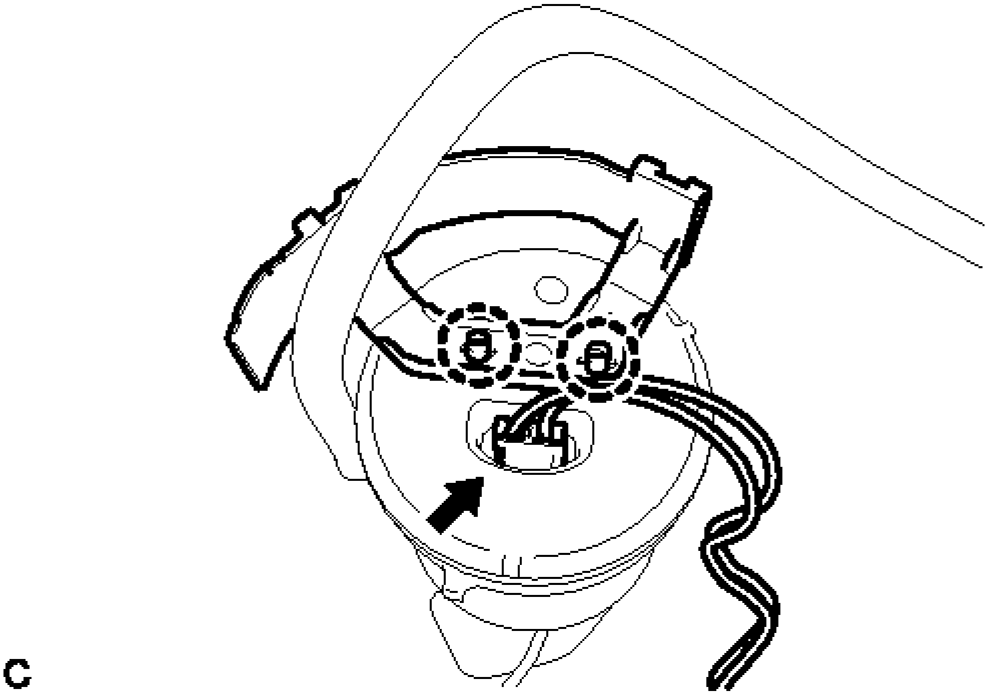

Fig. 57: Identifying No. 1 Fuel Suction Support Claws And Fuel Pump Harness Connector
Courtesy of TOYOTA MOTOR SALES, U.S.A., INC.

d. Connect the fuel pump harness connector.
e. Engage the 2 claws of the No. 1 fuel suction support and install the fuel filter and the fuel pump onto the fuel sub-tank.

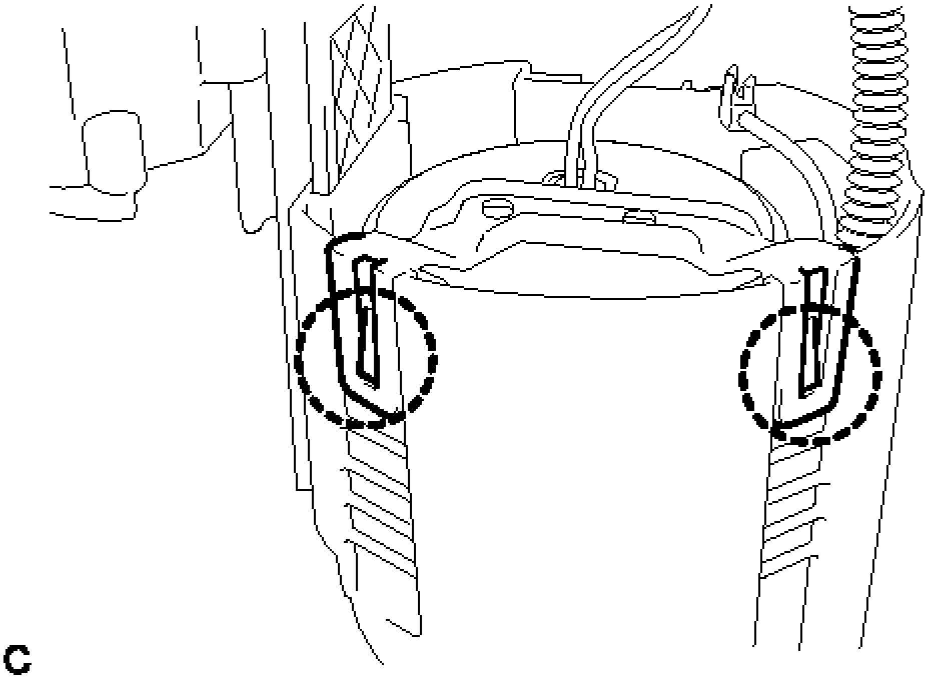

Fig. 58: Identifying Fuel Suction Support Claws
Courtesy of TOYOTA MOTOR SALES, U.S.A., INC.

f. Align the groove of the fuel pump filter hose with the cutout of the fuel sub-tank and install the hose.

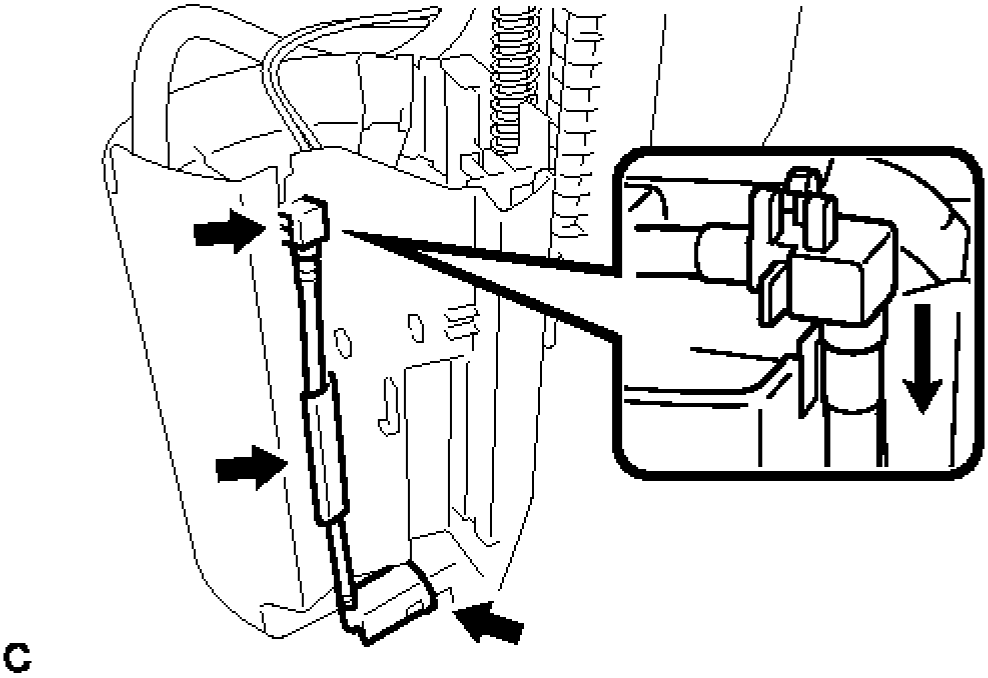

Fig. 59: Identifying Fuel Pump Filter Hose And Fuel Sub-Tank

Courtesy of TOYOTA MOTOR SALES, U.S.A., INC.

NOTE: **Do not apply excessive force to the fuel tube or the suction support.**

g. Connect the connector of the fuel pump harness.

2. **INSTALL FUEL SENDER GAUGE ASSEMBLY** See step 1

INSTALLATION

INSTALLATION

1. **INSTALL FUEL SUCTION TUBE WITH PUMP AND GAUGE ASSEMBLY**
   a. Install a new fuel suction tube set gasket to the fuel suction tube.

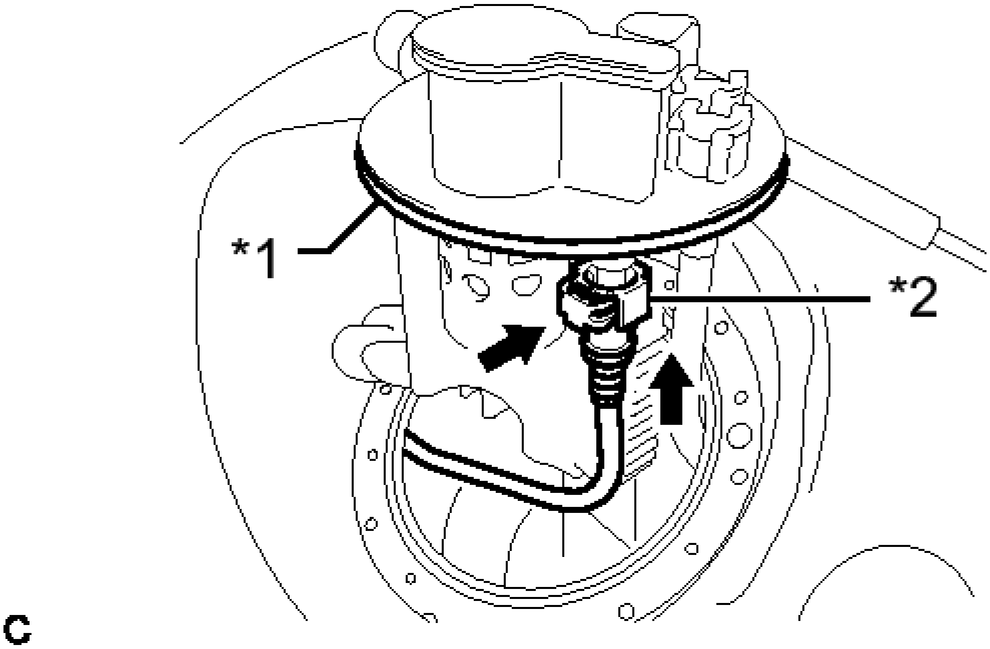

Fig. 60: Identifying Fuel Suction Tube Set Gasket And Fuel Cut-Off Tube
Courtesy of TOYOTA MOTOR SALES, U.S.A., INC.

TEXT IN ILLUSTRATION

*1	Fuel Suction Tube Set Gasket
*2	Fuel Cut-off Tube

b. Push in the fuel cut-off tube connector to the fuel suction tube assembly and push the retainer so that the claws engage.

c. Install the fuel suction tube with pump and gauge assembly to the fuel tank.

NOTE: Be careful that the arm of the sender gauge does not bend.

2. **INSTALL FUEL TANK VENT TUBE SET PLATE**

a. Align the protrusion of the fuel suction tube assembly and the cutout of the fuel tank vent tube set plate.

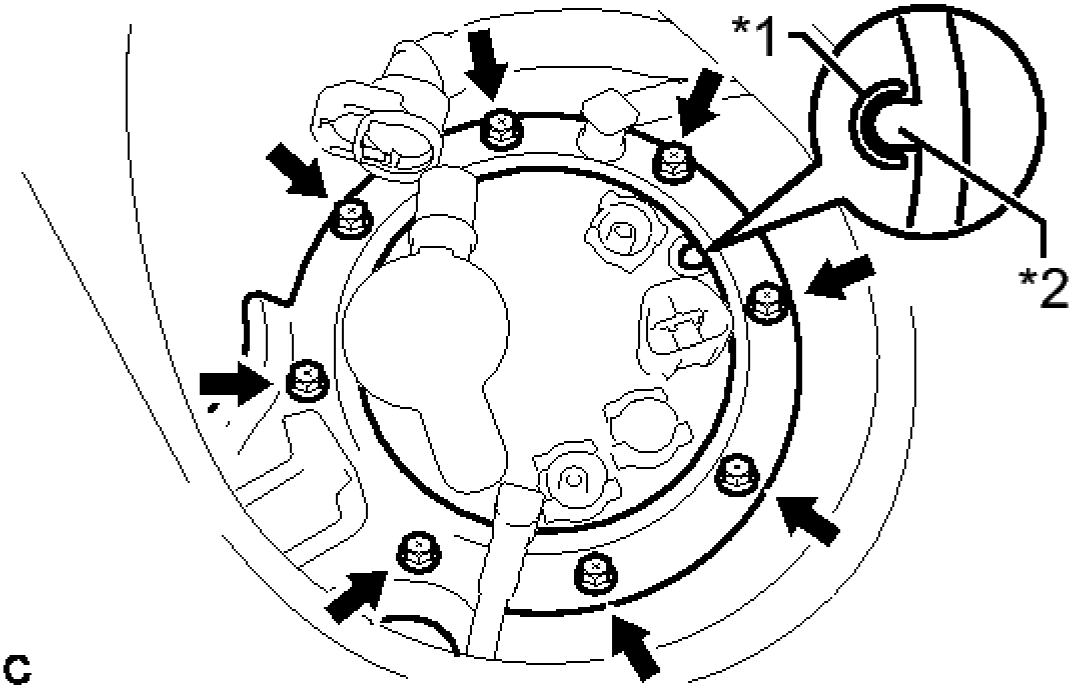

Fig. 61: Identifying Fuel Tank Vent Tube Set Plate
Courtesy of TOYOTA MOTOR SALES, U.S.A., INC.

TEXT IN ILLUSTRATION

*1	Cutout
*2	Protrusion

b. Install the set plate with the 8 bolts.

Torque: 6.0 N*m (61 kgf*cm, 53 in.*lbf)

3. **CONNECT FUEL TANK MAIN TUBE SUB-ASSEMBLY**

a. Push the fuel tube joint in the plug of the fuel suction plate, then install the tube joint clip.

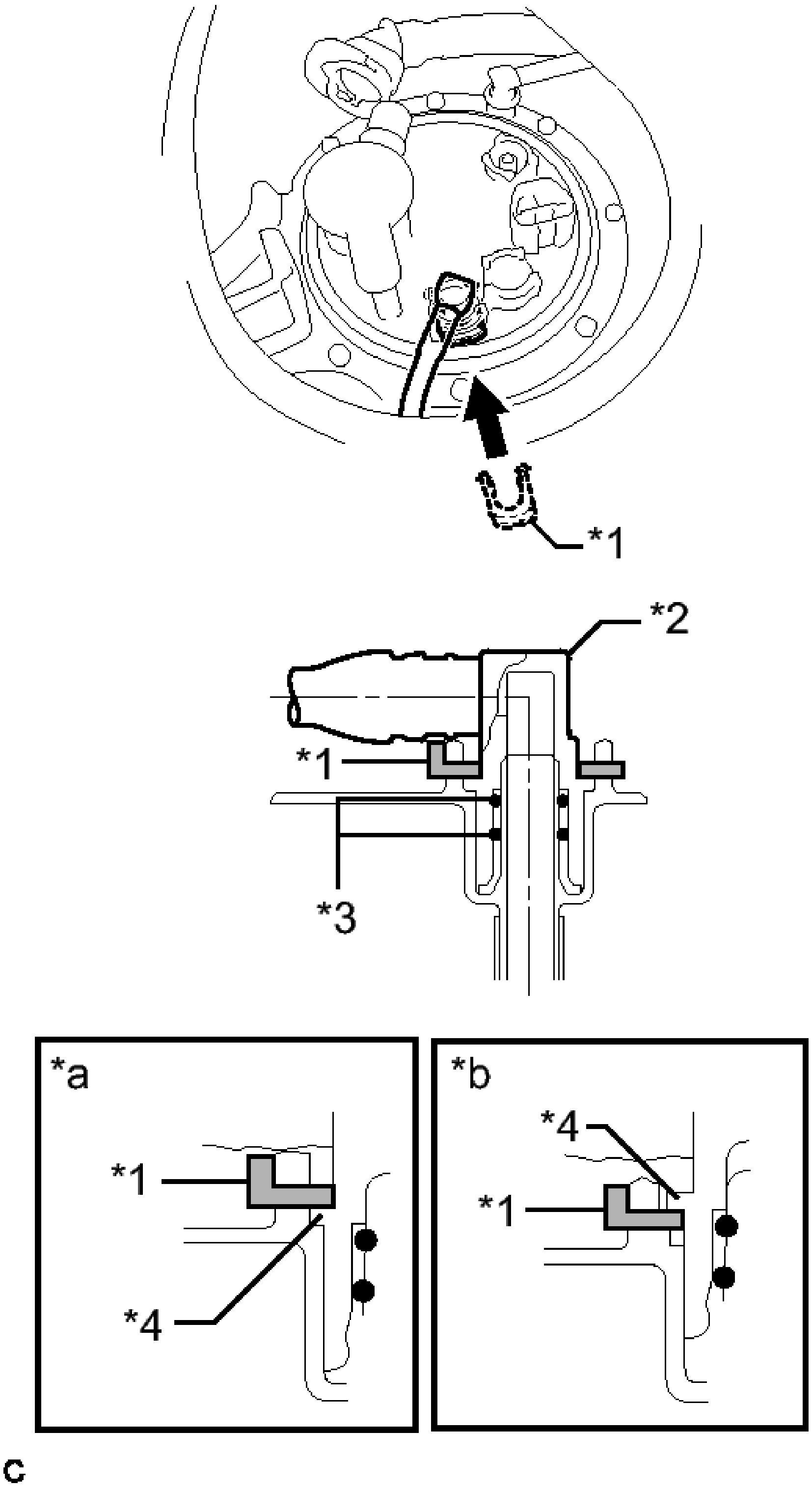
*1
*2
*1
*3
*a
*1
*4
*b
*4
*1
c

Fig. 62: Identifying Fuel Tank Main Tube Sub-Assembly
Courtesy of TOYOTA MOTOR SALES, U.S.A., INC.

TEXT IN ILLUSTRATION

*1	Tube Joint Clip
*2	Fuel Tube Joint
*3	O-ring
*4	Collar
*a	CORRECT
*b	INCORRECT

NOTE:

- **Check that there are no scratches or foreign matter around the connected part of the fuel tube joint and plug before performing this work.**
- **Check that the fuel tube joint is securely inserted to the end.**
- **Check that the tube joint clip is on the collar of the fuel tube joint.**
- **After installing the tube joint clip, check that the fuel tube joint cannot be pulled out.**

4. **CONNECT FUEL TANK BREATHER ELBOW TUBE SUB-ASSEMBLY**
   a. Push the fuel tube joint in the plug of the fuel suction plate, then install the tube joint clip.

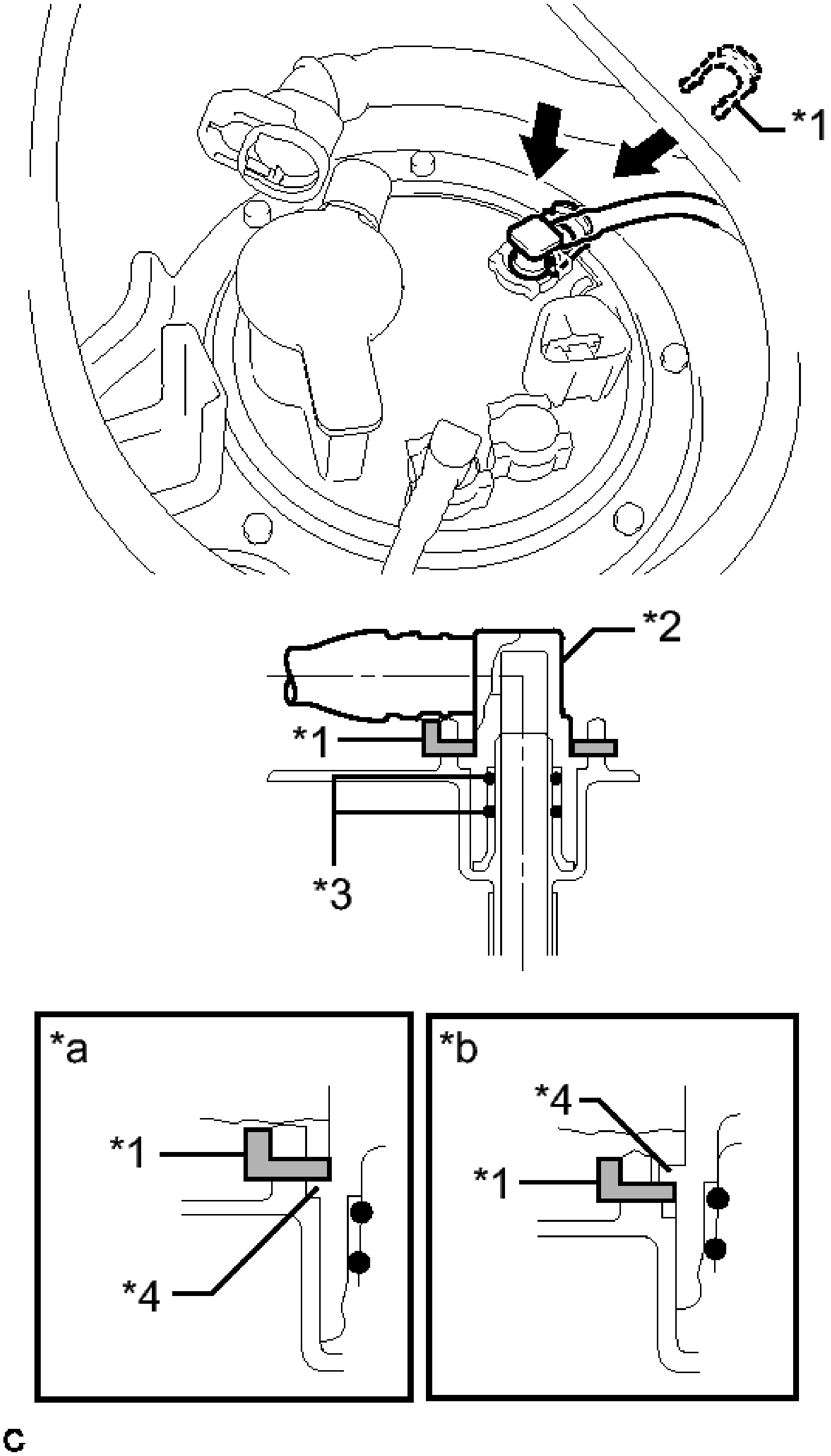
*1
*2
*1
*3
*a
*1
*4
*b
*4
*1
c

Fig. 63: Identifying Tube Joint Clip And Fuel Tube Joint
Courtesy of TOYOTA MOTOR SALES, U.S.A., INC.

TEXT IN ILLUSTRATION

*1	Tube Joint Clip
*2	Fuel Tube Joint
*3	O-ring
*4	Collar
*a	CORRECT
*b	INCORRECT

NOTE:

- **Check that there are no scratches or foreign matter around the connected part of the fuel tube joint and plug before performing this work.**
- **Check that the fuel tube joint is securely inserted to the end.**
- **Check that the tube joint clip is on the collar of the fuel tube joint.**
- **After installing the tube joint clip, check that the fuel tank breather tube cannot be pulled out.**

5. **CONNECT FUEL TANK VENT HOSE**
    a. Push in the fuel tank vent hose connector to the fuel suction tube assembly and push the retainer so that the claws engage.

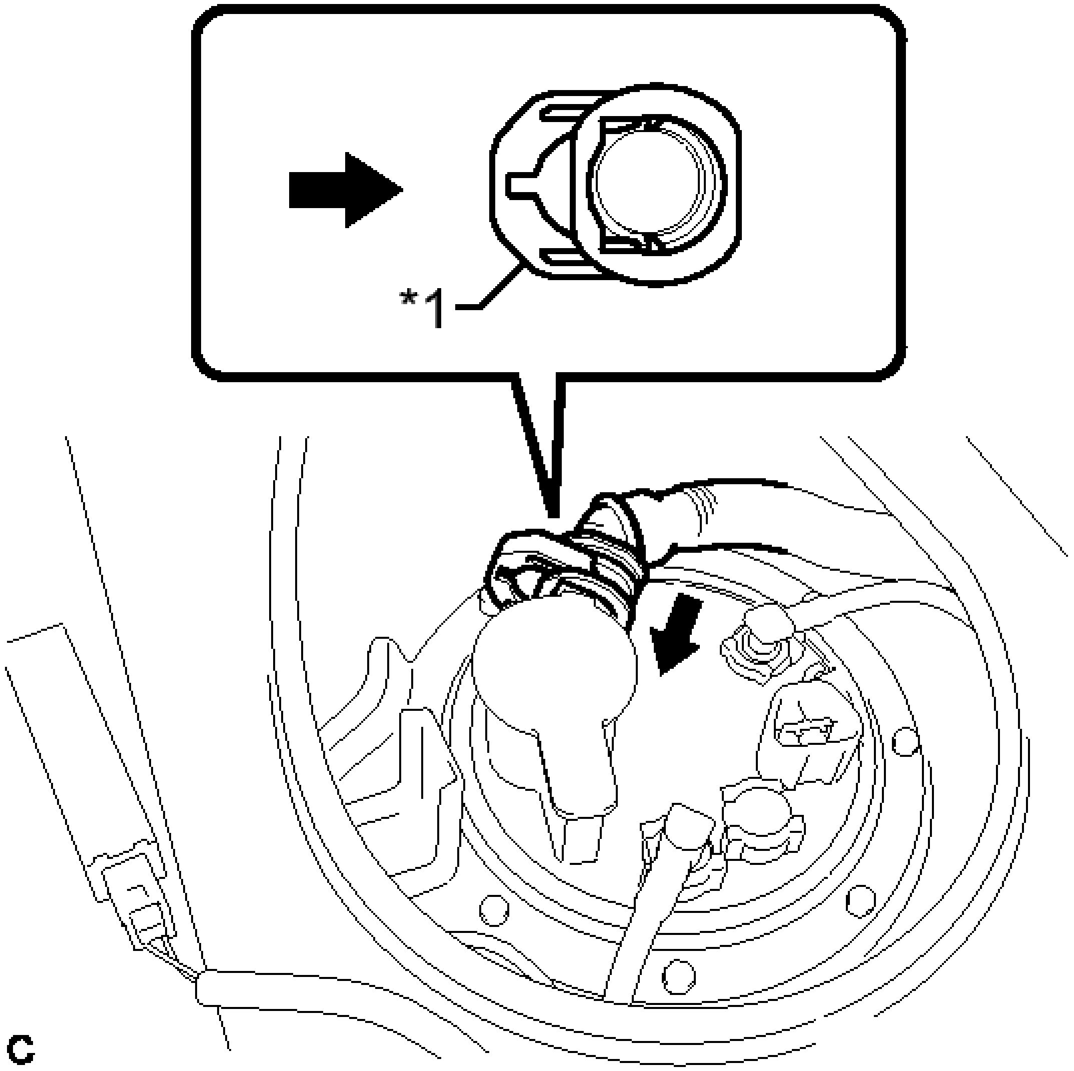

Fig. 64: Identifying Fuel Tank Vent Hose Connector
Courtesy of TOYOTA MOTOR SALES, U.S.A., INC.

TEXT IN ILLUSTRATION

*1	Retainer

NOTE:	- **Check that there are no scratches or foreign matter around the connected parts of the fuel tank vent hose connector and fuel suction tube assembly before performing this work.** - **After connecting the fuel tank vent hose, check that the fuel tank vent hose is securely connected by pulling on the fuel tank vent hose connector.**

b. Connect the fuel pump connector.

6. **CONNECT CABLE TO NEGATIVE BATTERY TERMINAL**

NOTE: **When disconnecting the cable, some systems need to be initialized after the cable is reconnected. Refer to INITIALIZATION .**

7. **INSPECT FOR FUEL LEAK** . Refer to **ON-VEHICLE INSPECTION - Step 1**
8. **INSTALL REAR FLOOR SERVICE HOLE COVER**
   a. Install the rear floor service hole cover with new butyl tape.

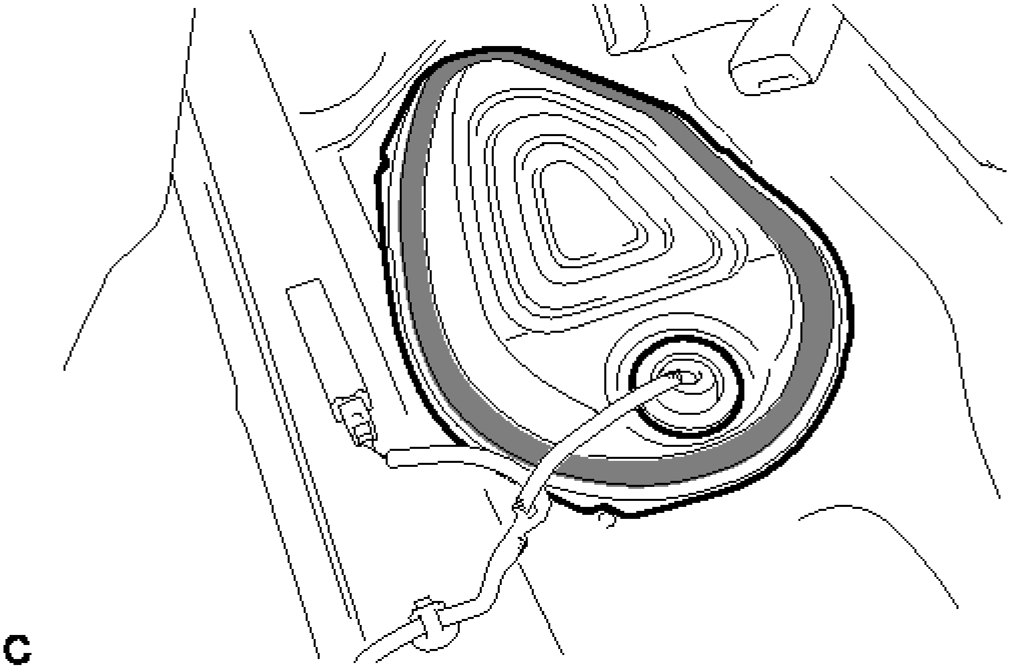

Fig. 65: Identifying Rear Floor Service Hole Cover And Butyl Tape
Courtesy of TOYOTA MOTOR SALES, U.S.A., INC.

TEXT IN ILLUSTRATION

▨	Butyl Tape

9. **INSTALL REAR SEAT CUSHION LOCK HOOK** . Refer to **INSTALLATION - Step 6**
10. **INSTALL REAR SEAT CUSHION ASSEMBLY** . Refer to **INSTALLATION - Step 7**

FUEL TANK

COMPONENTS

ILLUSTRATION

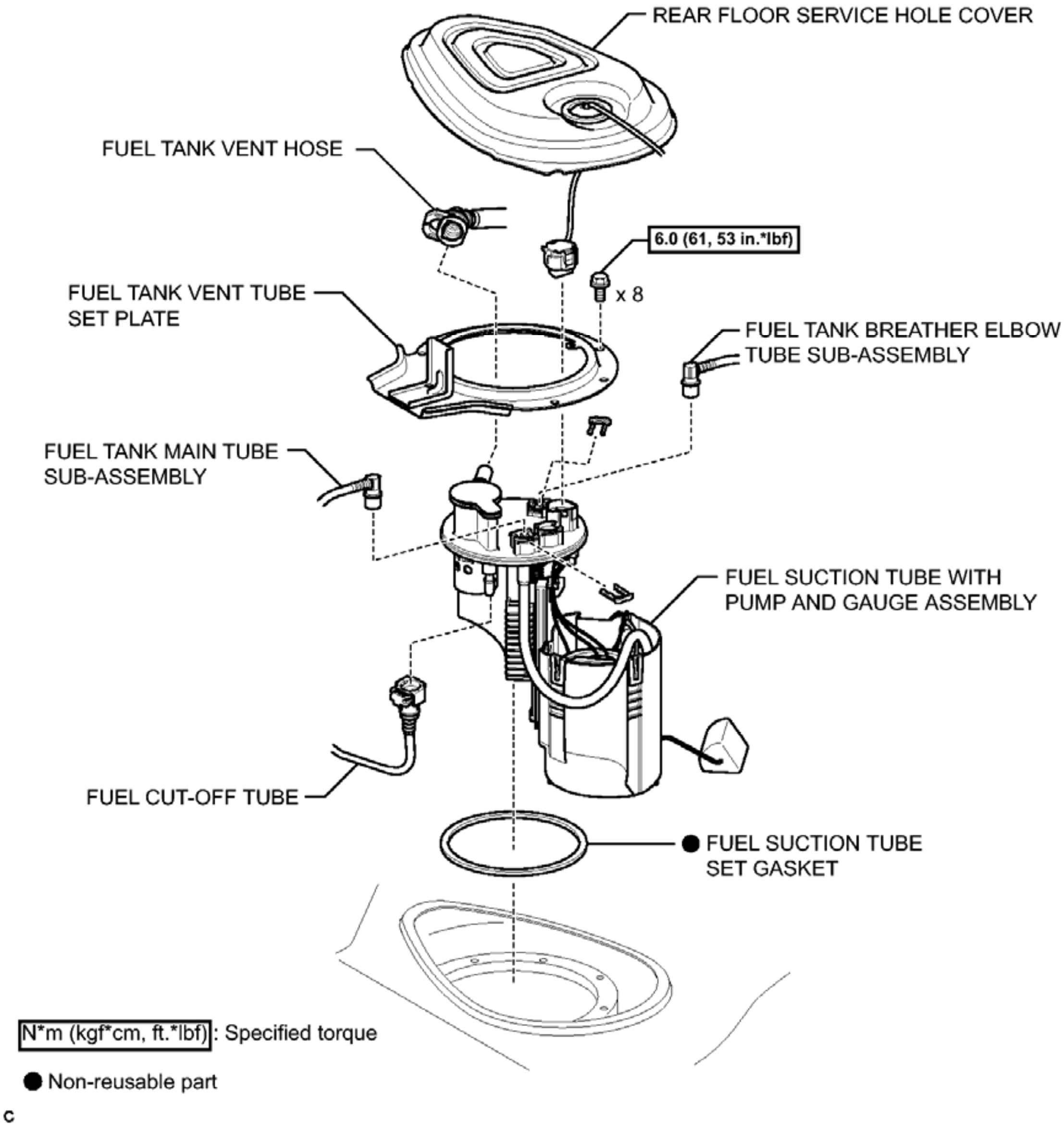
REAR FLOOR SERVICE HOLE COVER
FUEL TANK VENT HOSE
6.0 (61, 53 in.*lbf)
x 8
FUEL TANK VENT TUBE SET PLATE
FUEL TANK BREATHER ELBOW TUBE SUB-ASSEMBLY
FUEL TANK MAIN TUBE SUB-ASSEMBLY
FUEL SUCTION TUBE WITH PUMP AND GAUGE ASSEMBLY
FUEL CUT-OFF TUBE
● FUEL SUCTION TUBE SET GASKET
N*m (kgf*cm, ft.*lbf): Specified torque
● Non-reusable part
c

Fig. 66: Identifying Fuel Tank Replacement Components With Torque Specifications (1 Of 4)
Courtesy of TOYOTA MOTOR SALES, U.S.A., INC.

ILLUSTRATION

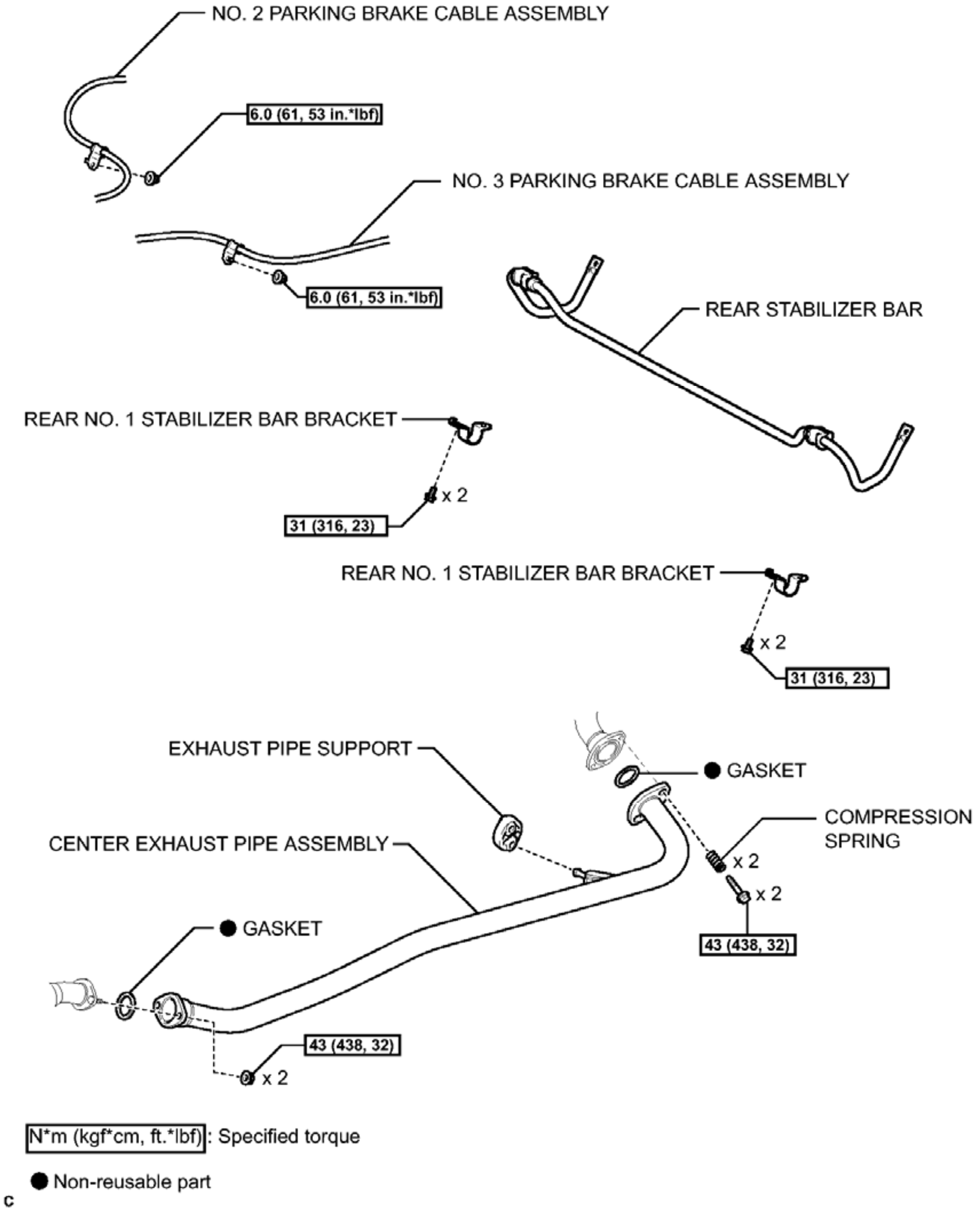
NO. 2 PARKING BRAKE CABLE ASSEMBLY
6.0 (61, 53 in.*lbf)
NO. 3 PARKING BRAKE CABLE ASSEMBLY
6.0 (61, 53 in.*lbf)
REAR STABILIZER BAR
REAR NO. 1 STABILIZER BAR BRACKET
x 2
31 (316, 23)
REAR NO. 1 STABILIZER BAR BRACKET
x 2
31 (316, 23)
EXHAUST PIPE SUPPORT
● GASKET
COMPRESSION SPRING
x 2
CENTER EXHAUST PIPE ASSEMBLY
x 2
43 (438, 32)
● GASKET
43 (438, 32)
x 2
N*m (kgf*cm, ft.*lbf): Specified torque
● Non-reusable part
c

Fig. 67: Identifying Fuel Tank Replacement Components With Torque Specifications (2 Of 4)
Courtesy of TOYOTA MOTOR SALES, U.S.A., INC.

ILLUSTRATION

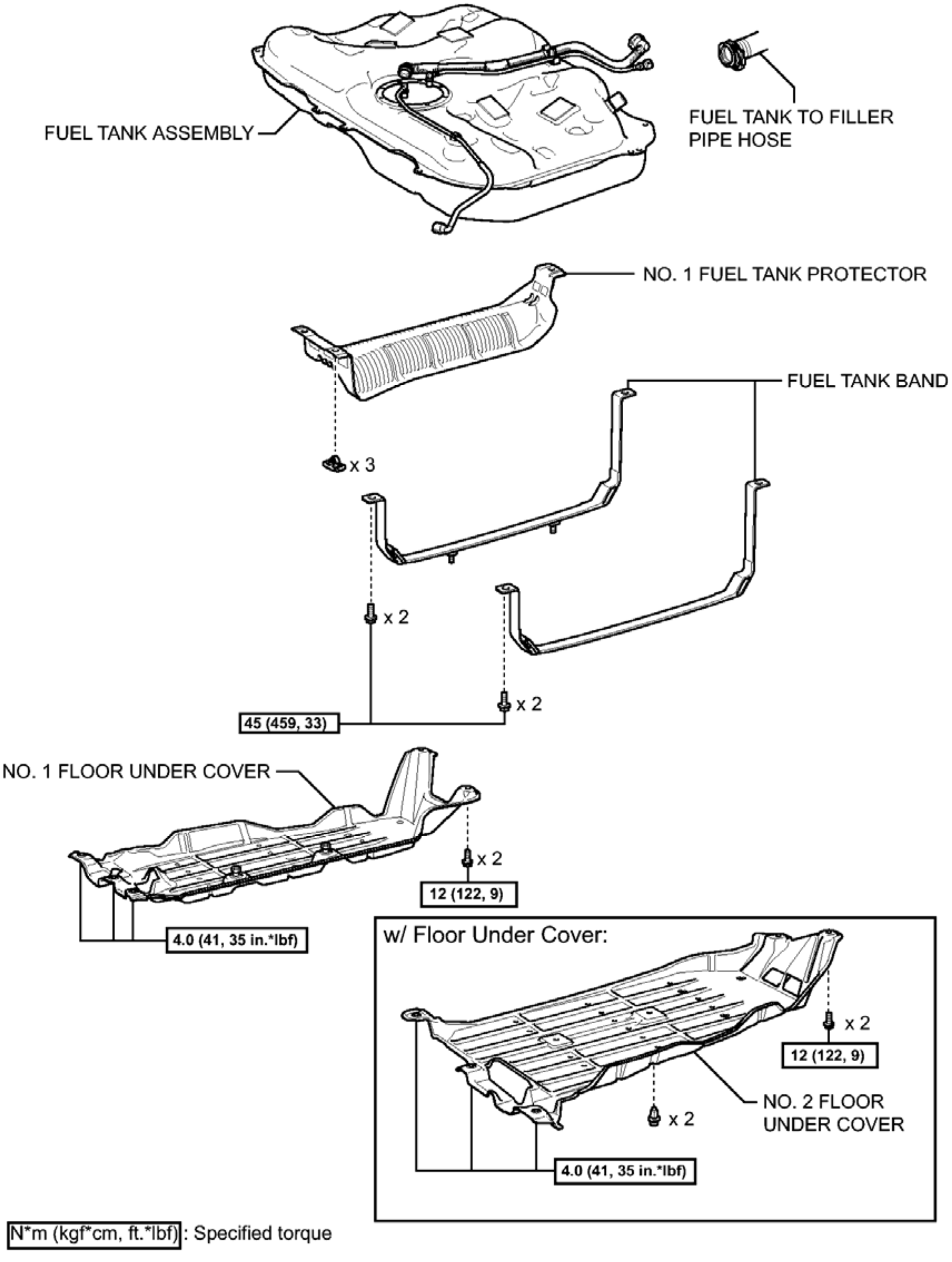
FUEL TANK ASSEMBLY
FUEL TANK TO FILLER PIPE HOSE
NO. 1 FUEL TANK PROTECTOR
FUEL TANK BAND
x 3
x 2
x 2
45 (459, 33)
NO. 1 FLOOR UNDER COVER
x 2
12 (122, 9)
4.0 (41, 35 in.*lbf)
w/ Floor Under Cover:
x 2
12 (122, 9)
NO. 2 FLOOR UNDER COVER
x 2
4.0 (41, 35 in.*lbf)
N*m (kgf*cm, ft.*lbf) : Specified torque
c

Fig. 68: Identifying Fuel Tank Replacement Components With Torque Specifications (3 Of 4)
Courtesy of TOYOTA MOTOR SALES, U.S.A., INC.

ILLUSTRATION

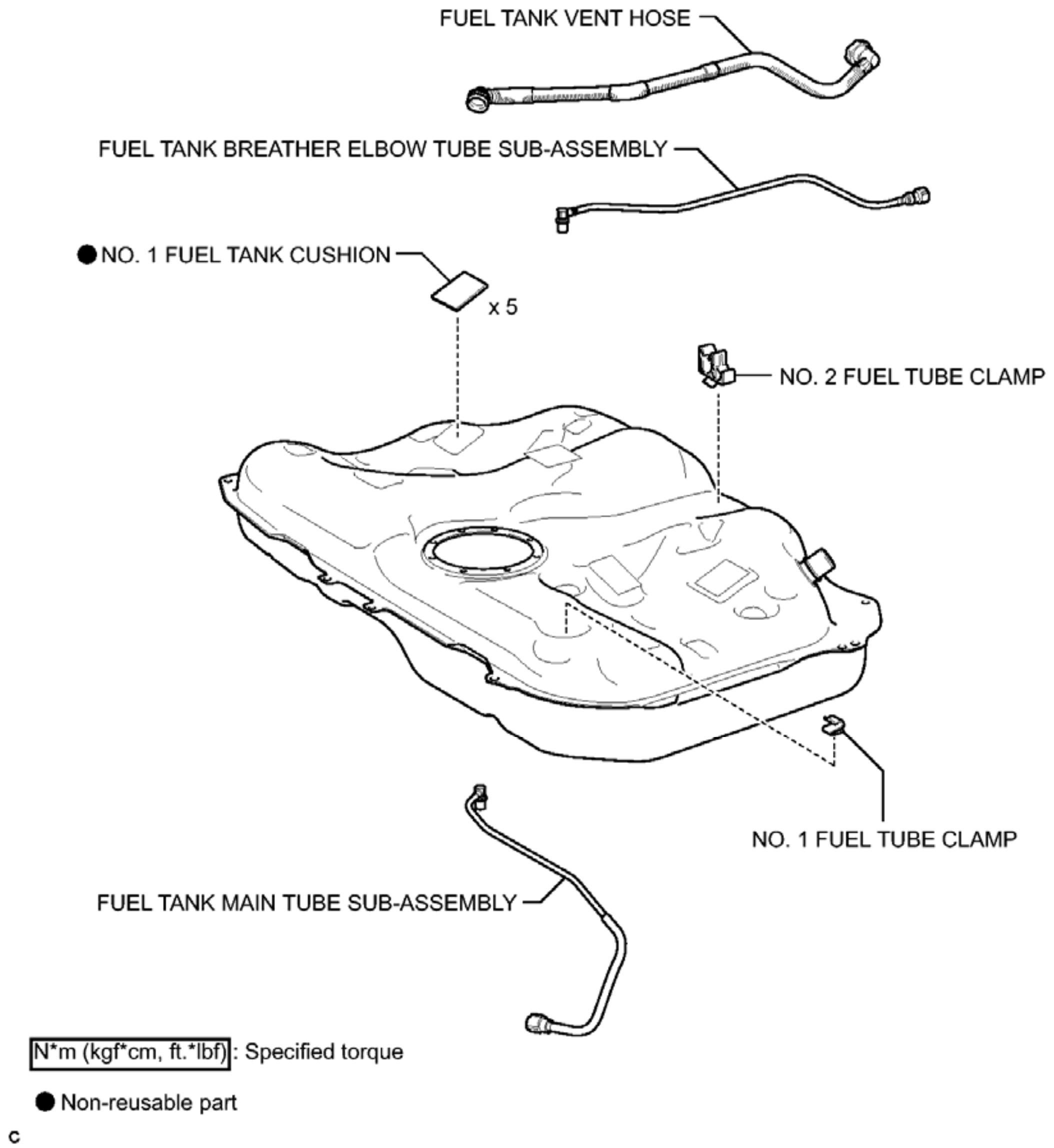
FUEL TANK VENT HOSE
FUEL TANK BREATHER ELBOW TUBE SUB-ASSEMBLY
● NO. 1 FUEL TANK CUSHION
x 5
NO. 2 FUEL TUBE CLAMP
NO. 1 FUEL TUBE CLAMP
FUEL TANK MAIN TUBE SUB-ASSEMBLY
N*m (kgf*cm, ft.*lbf) : Specified torque
● Non-reusable part
C

Fig. 69: Identifying Fuel Tank Replacement Components With Torque Specifications (4 Of 4)
Courtesy of TOYOTA MOTOR SALES, U.S.A., INC.

REMOVAL

REMOVAL

1. **REMOVE FUEL SUCTION TUBE WITH PUMP AND GAUGE ASSEMBLY**

   Refer to **REMOVAL**

2. **DRAIN FUEL**
3. **REMOVE CENTER EXHAUST PIPE ASSEMBLY**

Refer to **REMOVAL**

4. **REMOVE NO. 1 FLOOR UNDER COVER** . Refer to **REMOVAL - Step 3**
5. **REMOVE NO. 2 FLOOR UNDER COVER (w/ Floor Under Cover)** . Refer to **REMOVAL - Step 2**
6. **DISCONNECT NO. 2 PARKING BRAKE CABLE ASSEMBLY**
   a. Remove the nut and disconnect the No. 2 parking brake cable assembly.

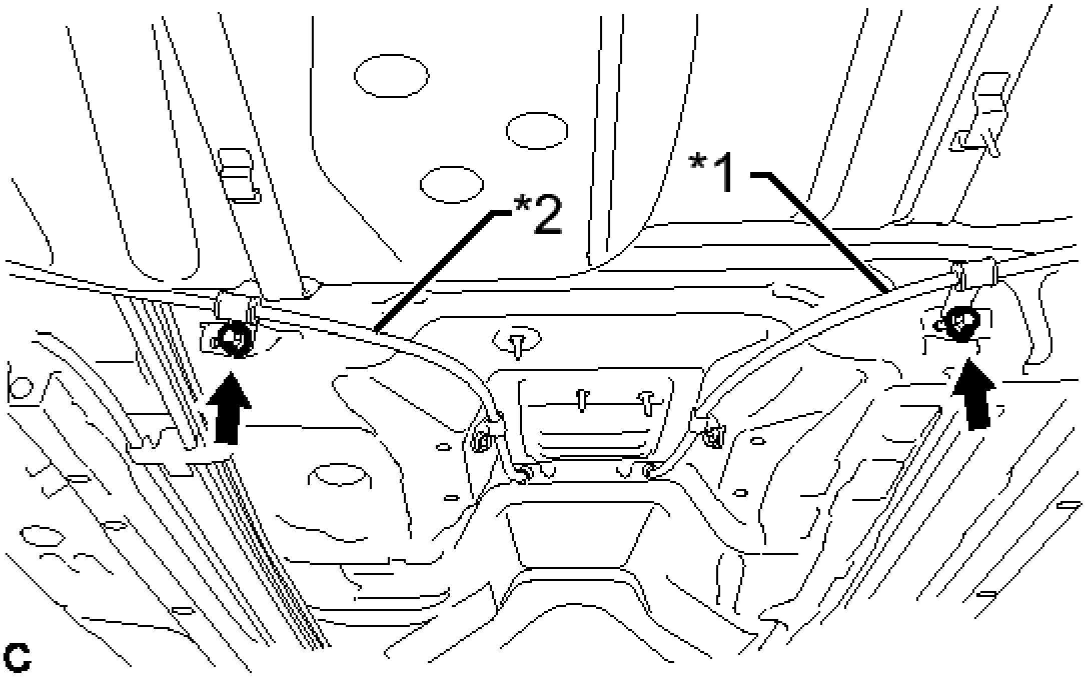

Fig. 70: Identifying No. 2 Parking Brake Cable Assembly And No. 3 Parking Brake Cable Assembly
Courtesy of TOYOTA MOTOR SALES, U.S.A., INC.

TEXT IN ILLUSTRATION

*1	No. 2 Parking Brake Cable Assembly
*2	No. 3 Parking Brake Cable Assembly

7. **DISCONNECT NO. 3 PARKING BRAKE CABLE ASSEMBLY**
   a. Remove the nut and disconnect the No. 3 parking brake cable assembly.
8. **REMOVE REAR NO. 1 STABILIZER BAR BRACKET**

a. Remove the 4 bolts and 2 rear No. 1 stabilizer bar brackets.

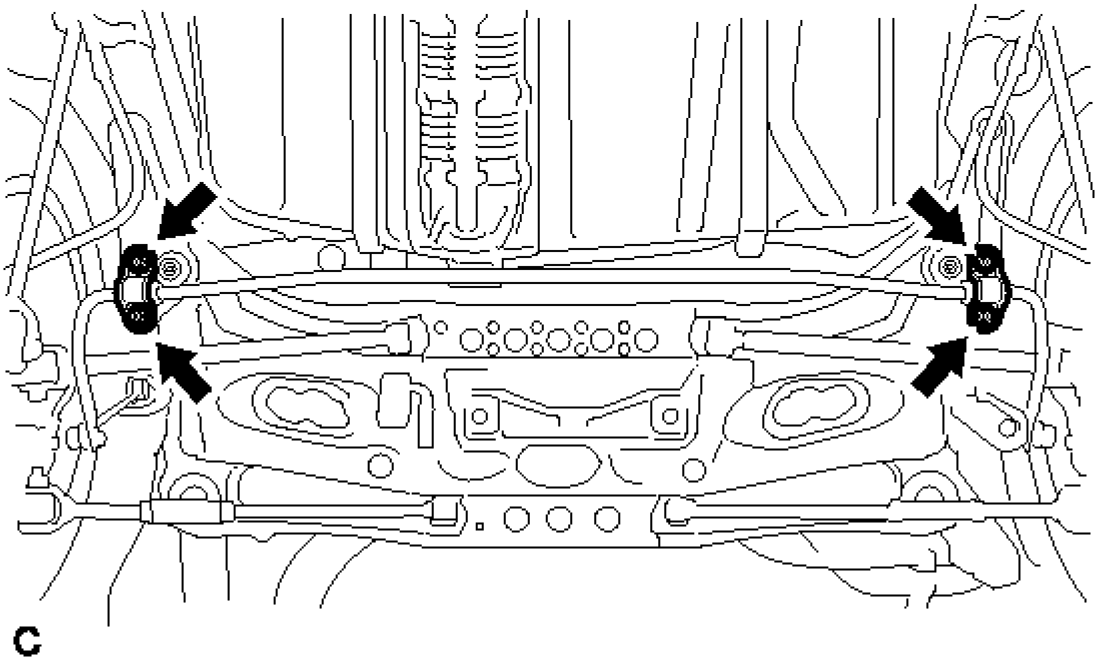

Fig. 71: Identifying No. Stabilizer Bar Bracket Bolts
Courtesy of TOYOTA MOTOR SALES, U.S.A., INC.

9. **REMOVE NO. 1 FUEL TANK PROTECTOR**
    a. Remove the 3 clips and No. 1 fuel tank protector.

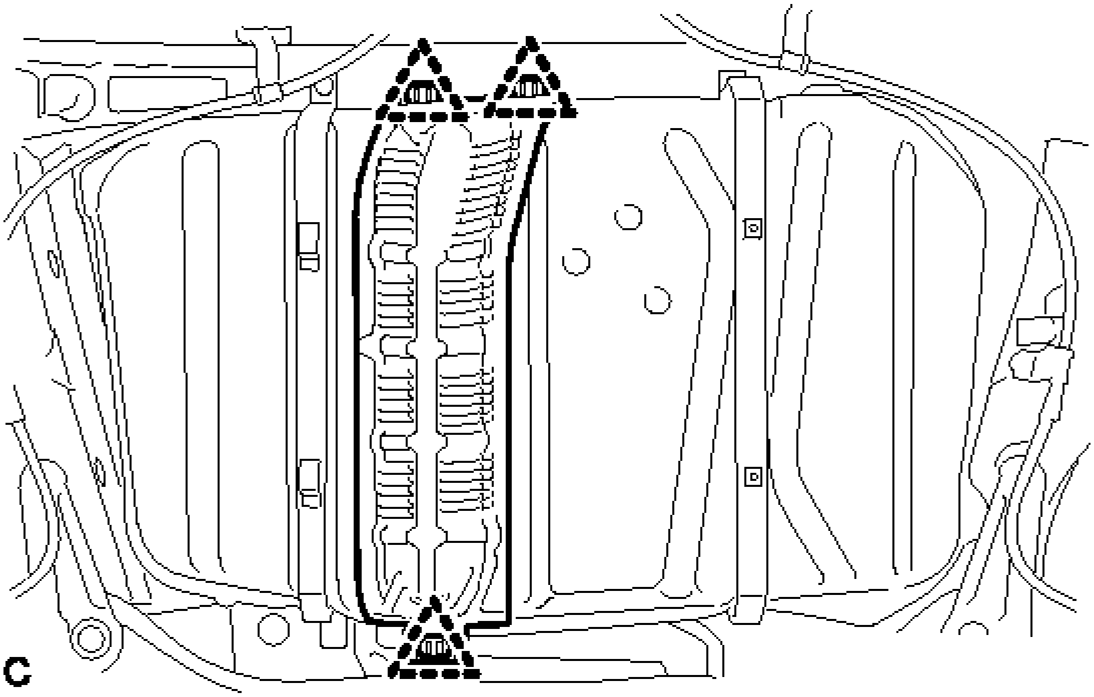

Fig. 72: Identifying No. 1 Fuel Tank Protector Clips
Courtesy of TOYOTA MOTOR SALES, U.S.A., INC.

10. **DISCONNECT FUEL TANK MAIN TUBE SUB-ASSEMBLY**
    a. Pinch the tabs of the retainer to remove the lock claws and pull it down as shown in the illustration.

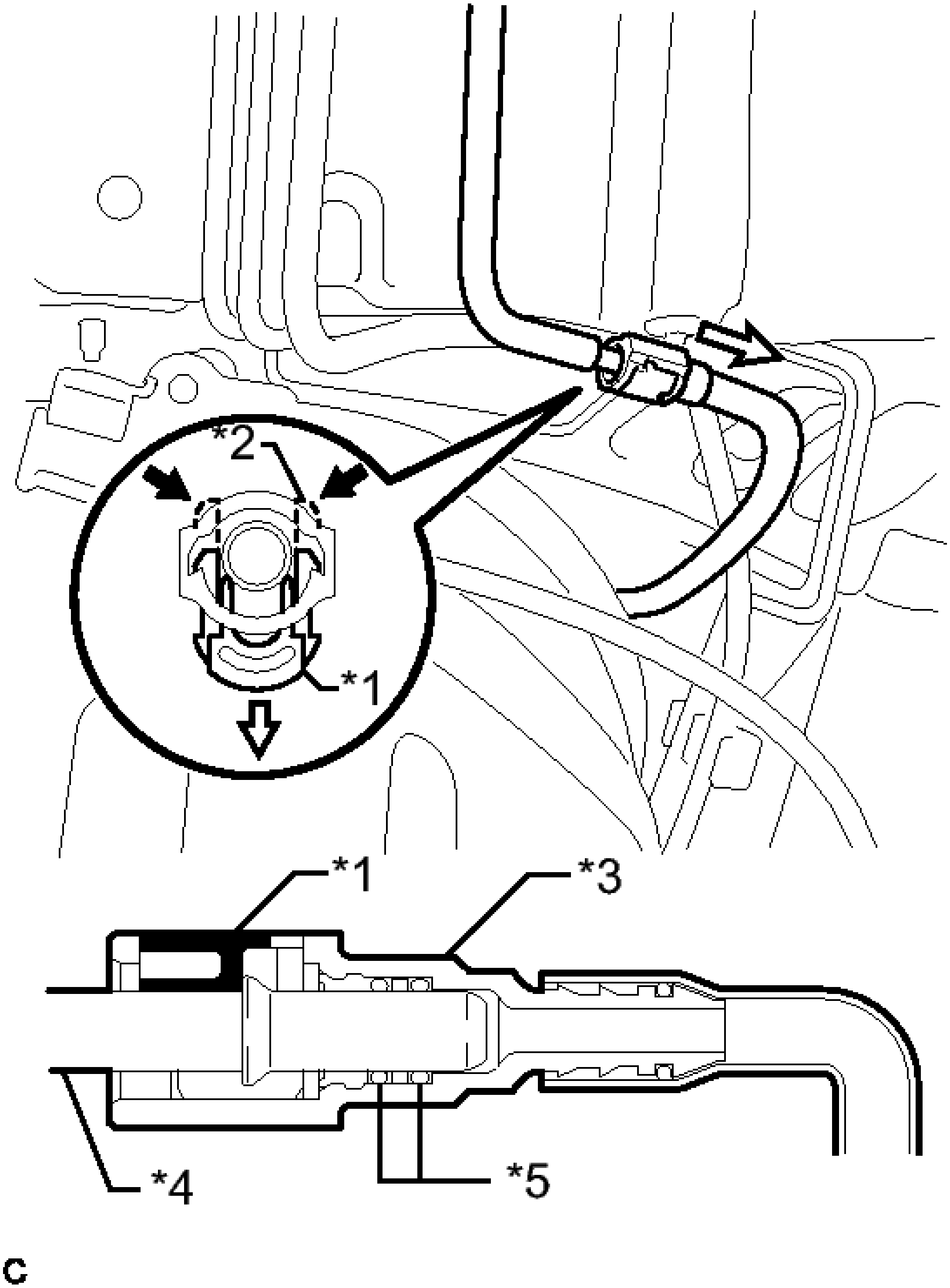

Fig. 73: Identifying Fuel Tank Main Tube Sub-Assembly
Courtesy of TOYOTA MOTOR SALES, U.S.A., INC.

TEXT IN ILLUSTRATION

*1	Retainer

*2	Tab
*3	Fuel Tube Connector
*4	Fuel Pipe
*5	O-ring
➡	Pinch
⇨	Pull

b. Pull out the fuel tank main tube sub-assembly.

NOTE:

- **Check that there are no scratches or foreign matter around the connected part of the fuel tube connector and fuel pipe before performing this work.**
- **Do not allow any scratches or foreign matter to get on the parts when disconnecting them as the fuel tube connector has O-rings that seal the fuel pipe.**
- **Only disconnect the fuel tube connector by hand.**
- **Do not forcibly bend, twist or turn the fuel tank main tube.**
- **Protect the disconnected part by covering it with plastic bags after disconnecting the fuel tube connector.**
- **If the fuel tube connector and fuel pipe are stuck, push and pull to release them.**

11. DISCONNECT FUEL TANK BREATHER ELBOW TUBE SUB-ASSEMBLY

a. Pinch the tabs of the retainer to remove the lock claws and pull it down as shown in the illustration.

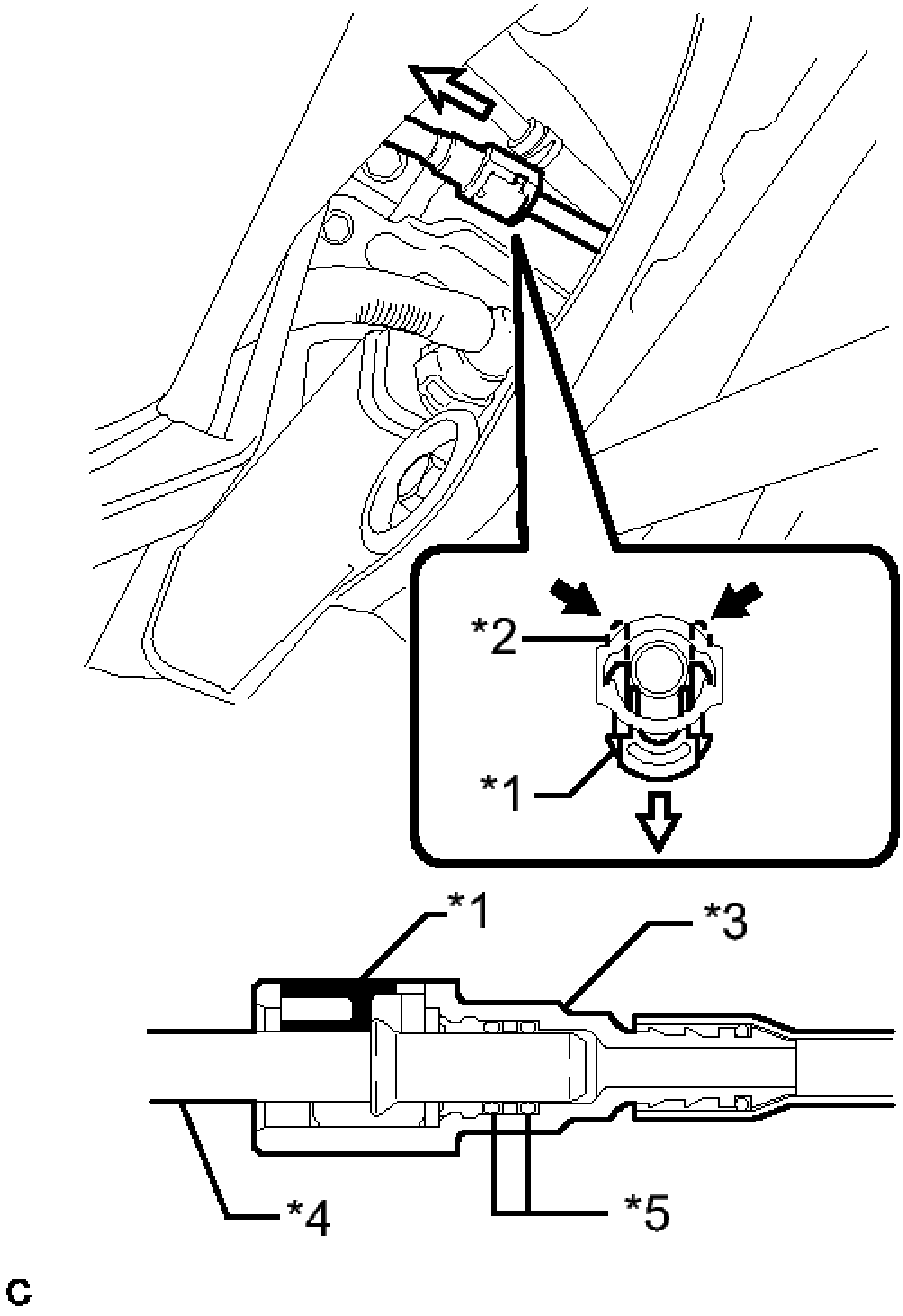

Fig. 74: Identifying Fuel Tank Breather Elbow Tube Sub-Assembly
Courtesy of TOYOTA MOTOR SALES, U.S.A., INC.

TEXT IN ILLUSTRATION

*1	Retainer

*2	Tab
*3	Fuel Tube Connector
*4	Fuel Pipe
*5	O-ring
➡	Pinch
⇨	Pull

b. Pull out the fuel tank breather elbow tube sub-assembly.

NOTE:

- **Remove any dirt or foreign matter on the fuel tube connector and fuel pipe before performing this work.**
- **Do not allow any scratches or foreign matter to get on the parts when disconnecting them as the fuel tube connector has O-rings that seal the fuel pipe.**
- **Only disconnect the fuel tube connector by hand.**
- **Do not forcibly bend, twist or turn the fuel tank breather tube.**
- **Protect the disconnected part by covering it with plastic bags after disconnecting the fuel tube connector.**
- **If the fuel tube connector and fuel pipe are stuck, push and pull to release them.**

12. DISCONNECT FUEL TANK VENT HOSE

a. Pinch the tabs of the retainer to remove the lock claws and pull it down as shown in the illustration.

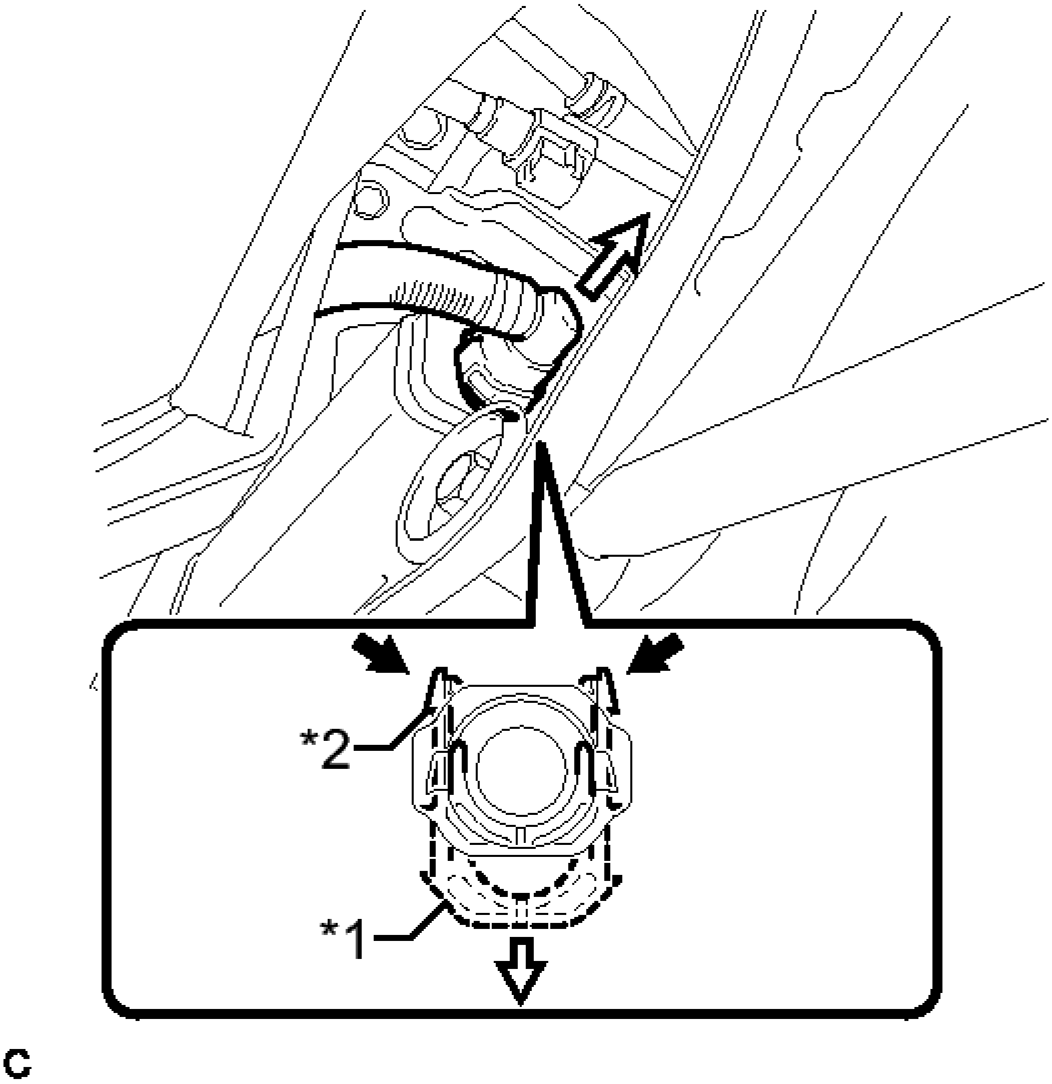

Fig. 75: Identifying Fuel Tank Vent Hose
Courtesy of TOYOTA MOTOR SALES, U.S.A., INC.

TEXT IN ILLUSTRATION

*1	Retainer
*2	Tab
·	Pinch
·	Pull

NOTE:

- **Remove any dirt or foreign matter on the fuel tank vent hose connector before performing this work.**
- **Do not allow any scratches or foreign matter to get on the parts when disconnecting them as the fuel tank vent hose connector has an O-ring that seals the fuel pipe.**

- **Only disconnect the vent hose connector by hand.**
- **Do not forcibly bend, twist or turn the fuel tank vent hose.**
- **Protect the disconnected part by covering it with plastic bags after disconnecting the fuel tank vent hose.**
- **If the vent hose connector and charcoal canister are stuck, push and pull to release them.**

b. Pull out the fuel tank vent hose.

13. **DISCONNECT FUEL TANK TO FILLER PIPE HOSE**

a. Pull the tabs of the retainer to disengage the lock claws and pull out the fuel tank to filler pipe hose.

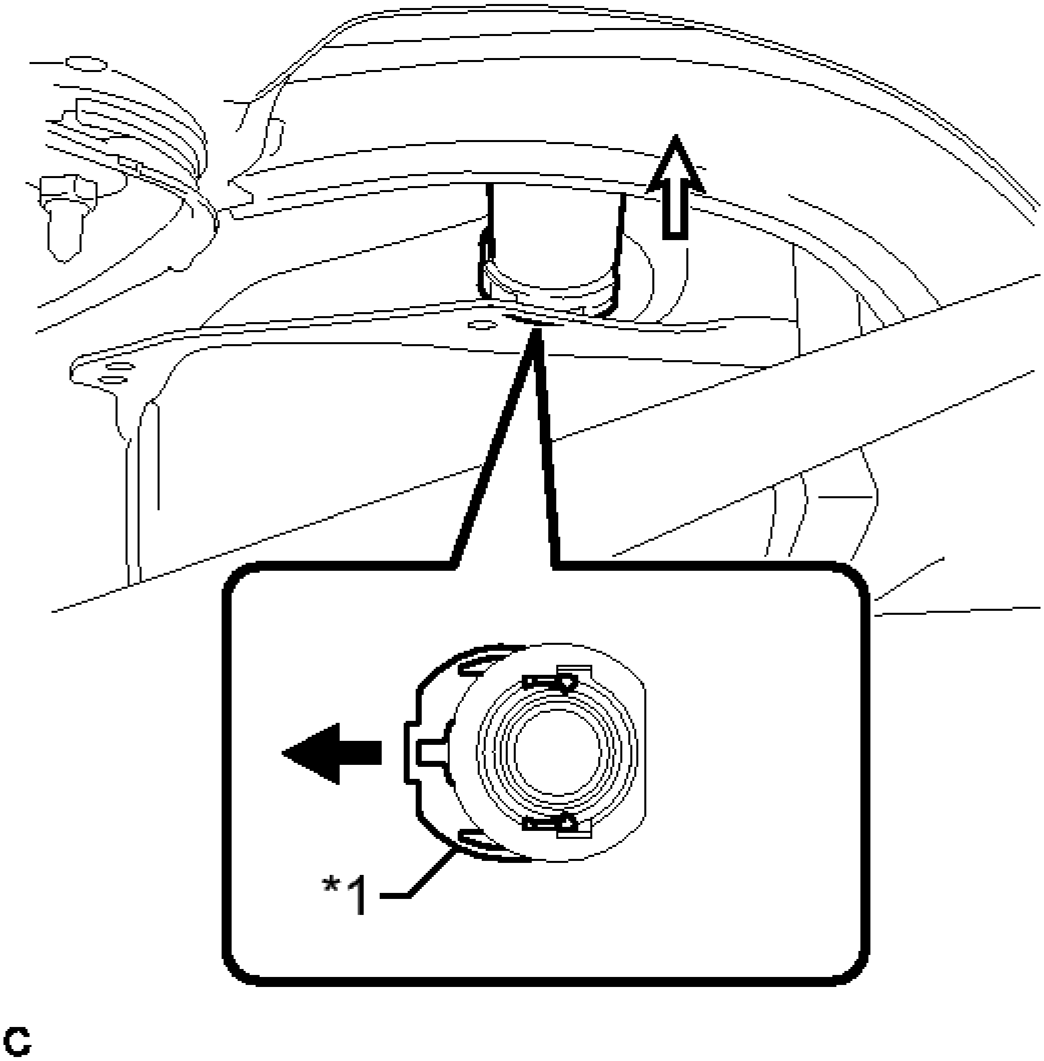

Fig. 76: Identifying Fuel Tank To Filler Pipe Hose
Courtesy of TOYOTA MOTOR SALES, U.S.A., INC.

TEXT IN ILLUSTRATION

*1	Retainer
·	Pull
·	Pull Out

NOTE:

- **Remove any dirt or foreign matter on the fuel tank to filler pipe hose connector before performing this work.**
- **Do not allow any scratches or foreign matter to get on the parts when disconnecting them as the fuel tank to filler pipe hose connector has an O-ring that seals the fuel tank.**
- **Only disconnect the filler pipe hose connector by hand.**
- **Do not forcibly bend, twist or turn the fuel tank to filler pipe hose.**
- **Protect the disconnected part by covering it with plastic bags after disconnecting the fuel tank to filler pipe hose.**
- **If the fuel tank to filler pipe hose connector and fuel tank are stuck, push and pull to release them.**

14. **REMOVE FUEL TANK ASSEMBLY**

a. Support the fuel tank using an engine lifter.

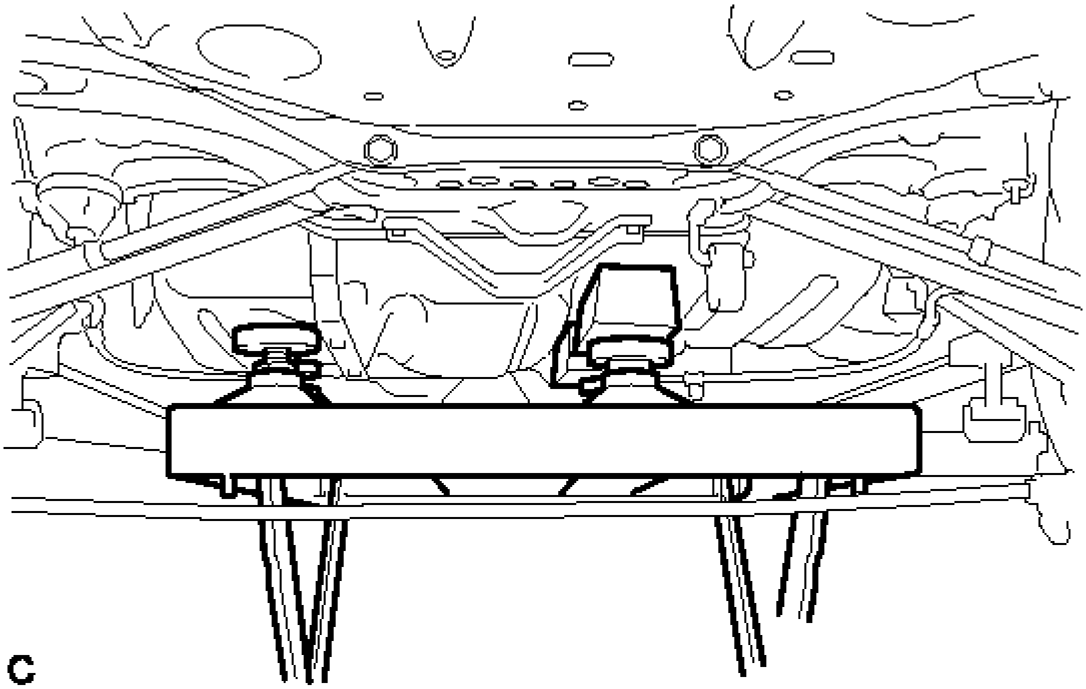

Fig. 77: Identifying Fuel Tank Support Using Engine Lift
Courtesy of TOYOTA MOTOR SALES, U.S.A., INC.

b. Remove the 4 bolts of the 2 fuel tank bands.

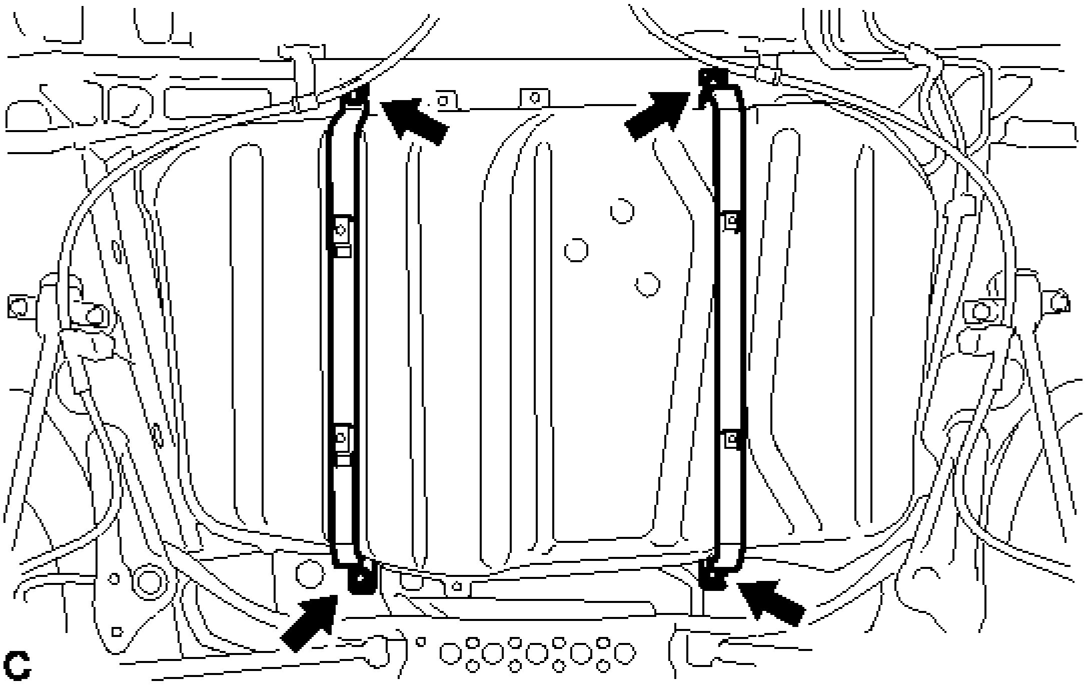

Fig. 78: Identifying Fuel Tank Bands And Bolts
Courtesy of TOYOTA MOTOR SALES, U.S.A., INC.

c. Lower the engine lifter to remove the fuel tank.

NOTE:

- **Slowly operate the engine lifter to lower the fuel tank.**
- **Do not drop the fuel tank.**
- **When removing the fuel tank, tilt it slightly to prevent it from interfering with the suspension arm or other surrounding parts.**

15. **REMOVE FUEL TANK MAIN TUBE SUB-ASSEMBLY**

a. Disconnect the No. 1 fuel tube clamp and remove the fuel tank main tube sub-assembly.

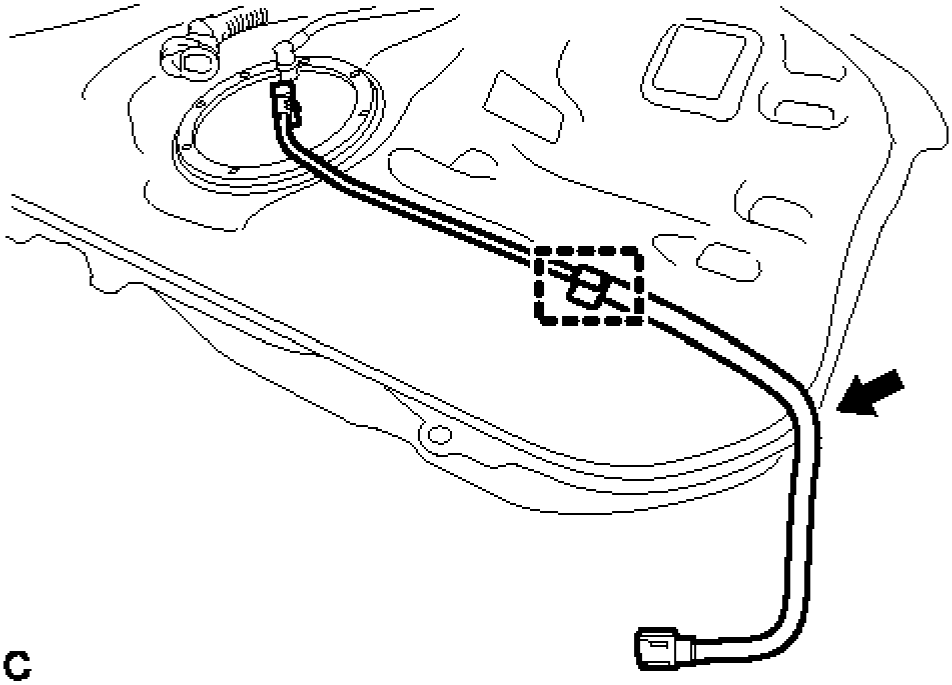

Fig. 79: Identifying Fuel Tank Main Tube Sub-Assembly
Courtesy of TOYOTA MOTOR SALES, U.S.A., INC.

16. **REMOVE FUEL TANK BREATHER ELBOW TUBE SUB-ASSEMBLY**
    a. Disconnect the No. 2 fuel tube clamp and remove the fuel tank breather elbow tube sub-assembly.

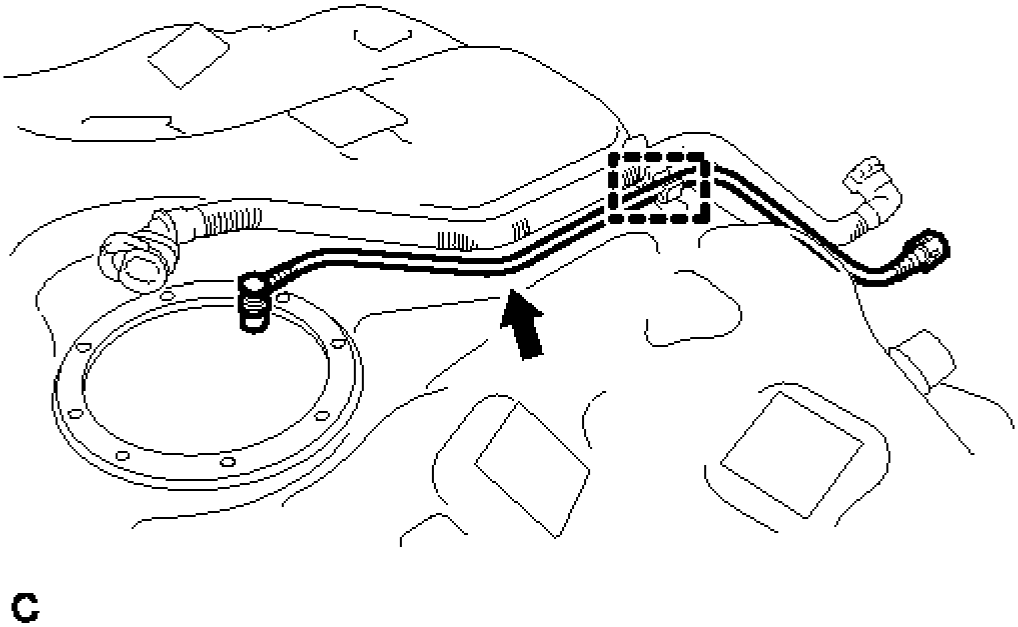

Fig. 80: Identifying Fuel Tank Breather Elbow Tube Sub-Assembly And No. 2 Fuel Tube

Clamp
Courtesy of TOYOTA MOTOR SALES, U.S.A., INC.

17. **REMOVE FUEL TANK VENT HOSE**
    a. Disconnect the No. 2 fuel tube clamp and remove the fuel tank vent hose sub-assembly.

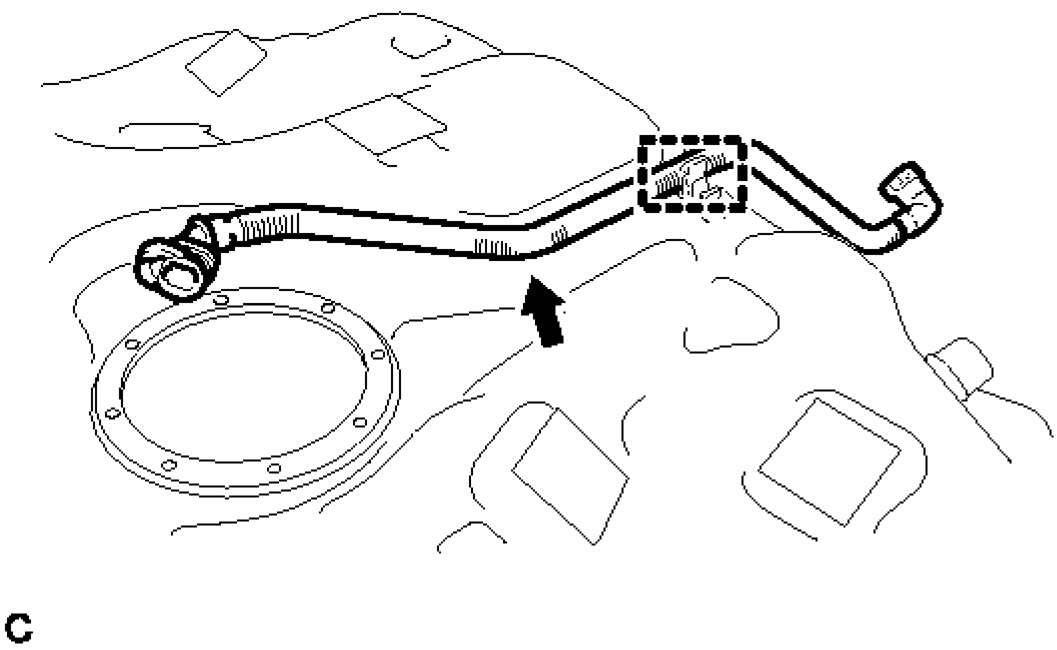

Fig. 81: Identifying Fuel Tank Vent Hose Sub-Assembly And No. 2 Fuel Tube Clamp
Courtesy of TOYOTA MOTOR SALES, U.S.A., INC.

18. **REMOVE NO. 1 FUEL TUBE CLAMP**
    a. Remove the No. 1 fuel tube clamp.

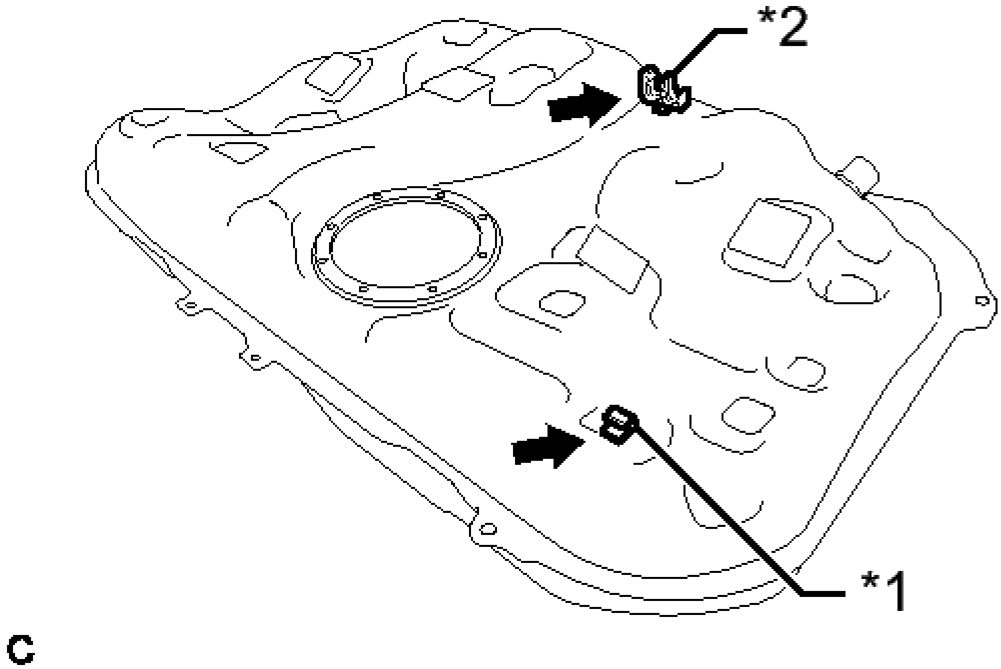

Fig. 82: Identifying No. 1 Fuel Tube Clamp And No. 2 Fuel Tube Clamp
Courtesy of TOYOTA MOTOR SALES, U.S.A., INC.

TEXT IN ILLUSTRATION

*1	No. 1 Fuel Tube Clamp
*2	No. 2 Fuel Tube Clamp

19. **REMOVE NO. 2 FUEL TUBE CLAMP**
    a. Remove the No. 2 fuel tube clamp.
20. **REMOVE NO. 1 FUEL TANK CUSHION**
    a. Remove the 5 No. 1 fuel tank cushions.

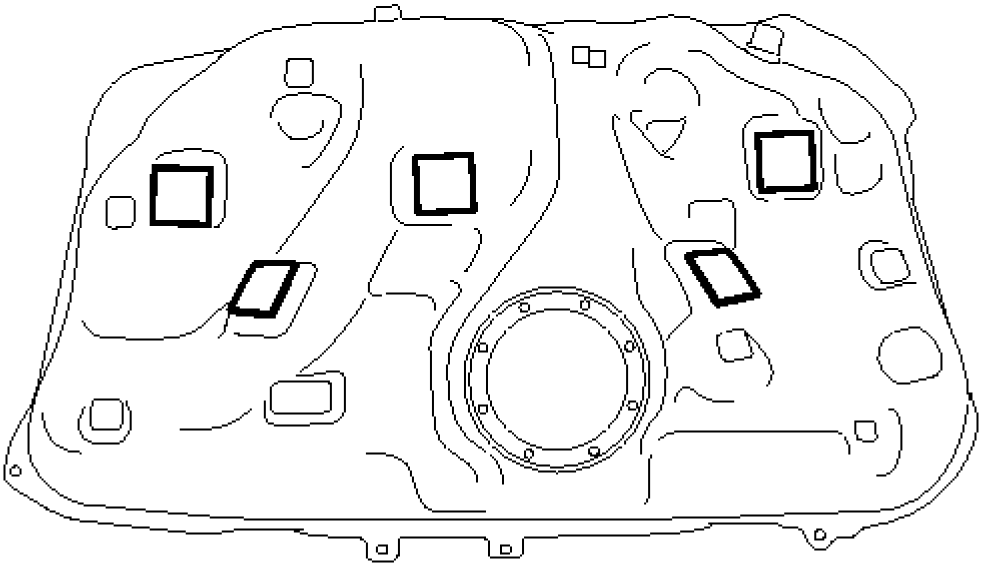

Fig. 83: Identifying No. 1 Fuel Tank Cushions
Courtesy of TOYOTA MOTOR SALES, U.S.A., INC.

INSTALLATION

INSTALLATION

1. **INSTALL NO. 1 FUEL TANK CUSHION**
    a. Install 5 new No. 1 fuel tank cushions as shown in the illustration.

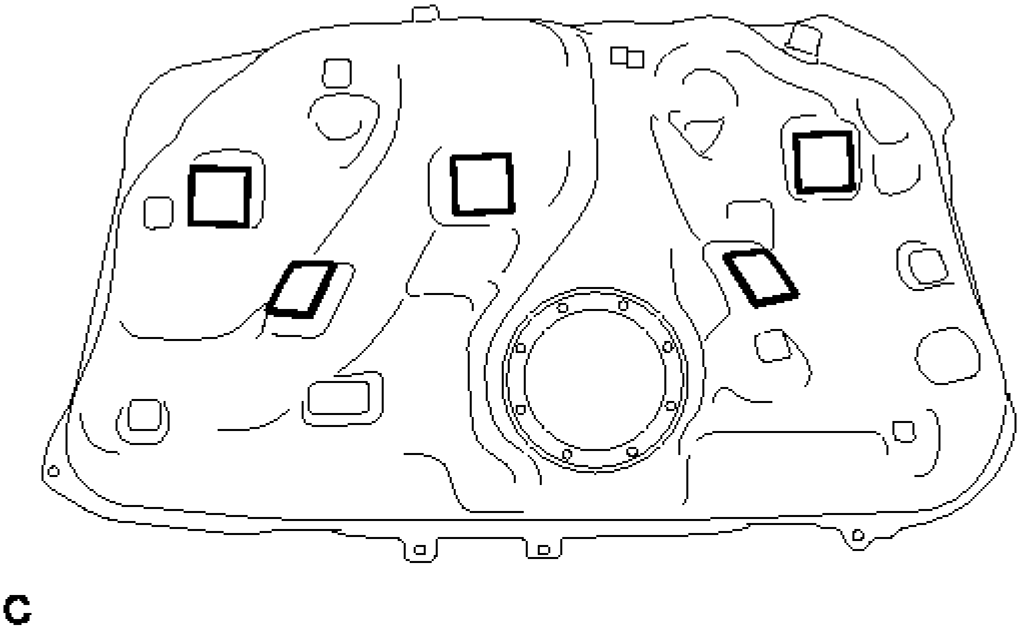

Fig. 84: Identifying No. 1 Fuel Tank Cushions
Courtesy of TOYOTA MOTOR SALES, U.S.A., INC.

2. **INSTALL NO. 1 FUEL TUBE CLAMP**
    a. Install the No. 1 fuel tube clamp.
3. **INSTALL NO. 2 FUEL TUBE CLAMP**
    a. Install the No. 2 fuel tube clamp.
4. **INSTALL FUEL TANK VENT HOSE**
    a. Install the fuel tank vent hose to the No. 2 fuel tube clamp.
5. **INSTALL FUEL TANK BREATHER ELBOW TUBE SUB-ASSEMBLY**
    a. Install the fuel tank breather elbow tube sub-assembly to the No. 2 fuel tube clamp.
6. **INSTALL FUEL TANK MAIN TUBE SUB-ASSEMBLY**
    a. Install the fuel tank main tube sub-assembly to the No. 1 fuel tube clamp.
7. **INSTALL FUEL TANK ASSEMBLY**
    a. Support the fuel tank using an engine lifter.
    b. Raise the engine lifter, then install the fuel tank to the vehicle.

NOTE:

- **Do not drop the fuel tank.**
- **When installing the fuel tank, tilt it slightly to prevent it from interfering with the suspension arm or other surrounding parts.**

    c. Tighten the 4 bolts of the 2 fuel tank bands.

Torque: 45 N*m (459 kgf*cm, 33 ft.*lbf)

8. **CONNECT FUEL TANK TO FILLER PIPE HOSE**
    a. Push in the fuel tank to filler pipe hose connector to the fuel tank assembly and push the retainer so that the claws engage.

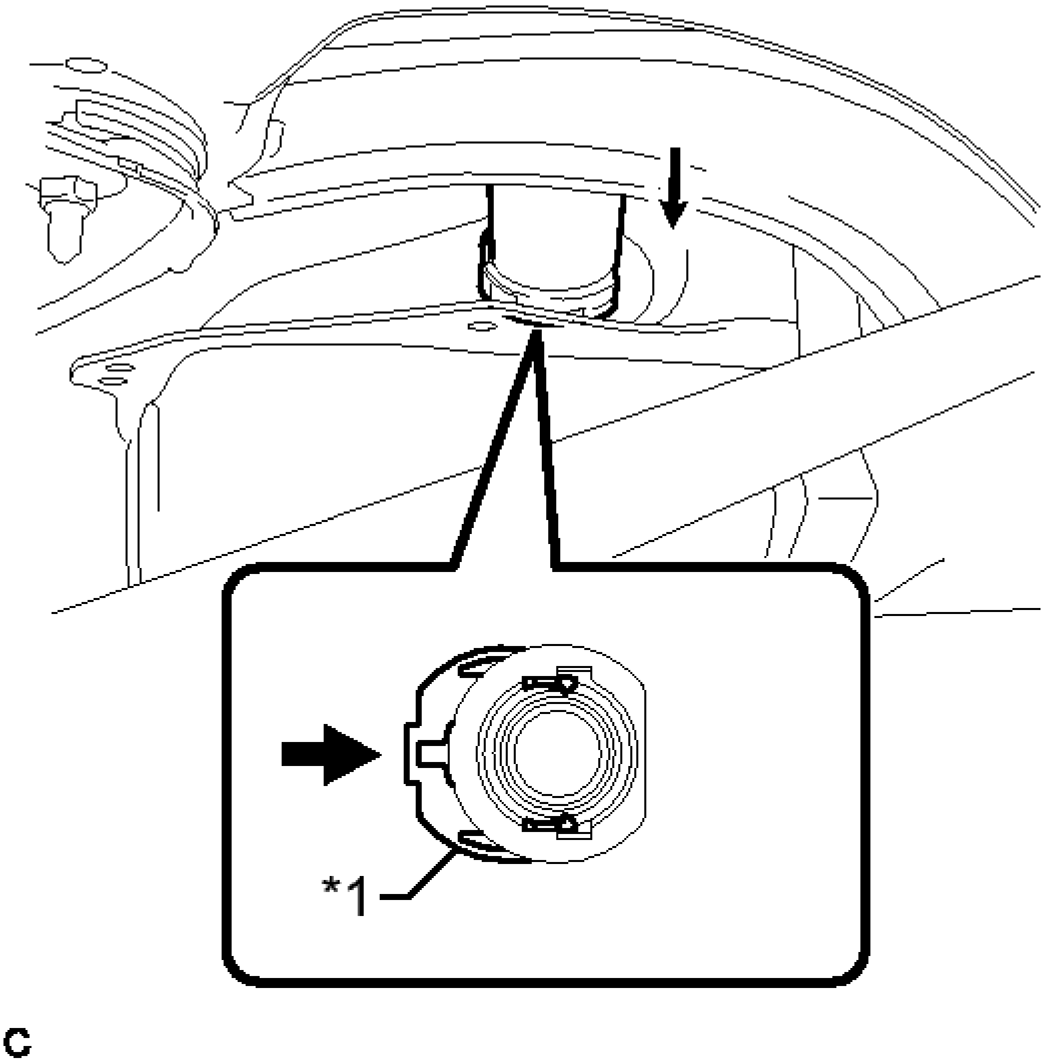

Fig. 85: Identifying Retainer
Courtesy of TOYOTA MOTOR SALES, U.S.A., INC.

TEXT IN ILLUSTRATION

*1	Retainer
·	Push

NOTE:

- **Check that there are no scratches or foreign matter around the connected parts of the fuel tank to filler pipe hose connector**

and tank before performing this work.

- **After connecting the fuel tank to filler pipe hose, check that the fuel tank to filler pipe hose is securely connected by pulling on the fuel tank to filler pipe hose connector.**

9. **CONNECT FUEL TANK VENT HOSE**
   a. Push in the fuel tank vent hose connector to the charcoal canister and push up the retainer so that the claws engage.

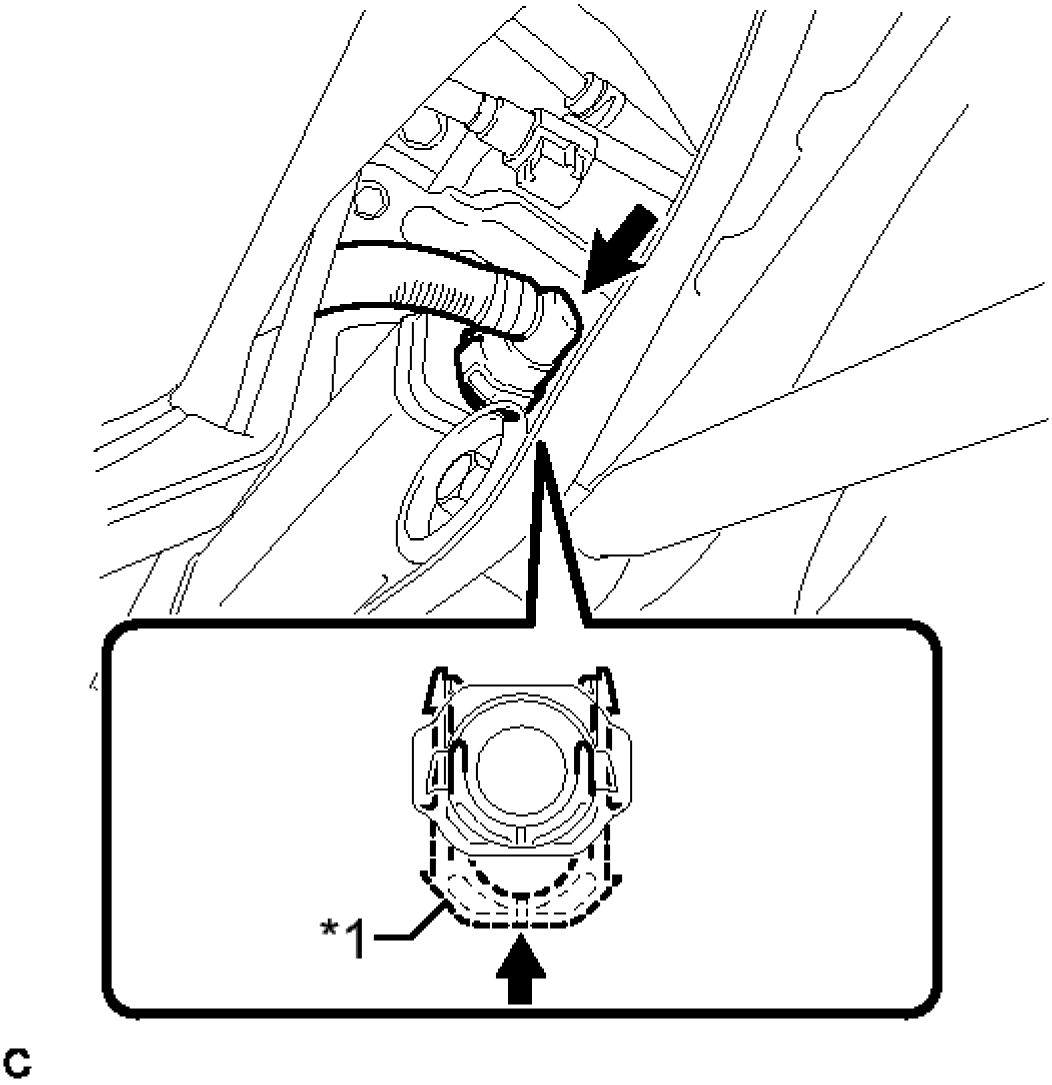

Fig. 86: Identifying Retainer
Courtesy of TOYOTA MOTOR SALES, U.S.A., INC.

TEXT IN ILLUSTRATION

*1	Retainer
·	Push

NOTE:

- **Check that there are no scratches or foreign matter around the connected part of the fuel tank vent hose connector and charcoal canister before performing this work.**
- **After connecting the fuel tank vent hose, check that the fuel tank vent hose is securely connected by pulling on the fuel tank vent hose connector and the charcoal canister.**

10. **CONNECT FUEL TANK BREATHER ELBOW TUBE SUB-ASSEMBLY**

    a. Push in the fuel tube connector to the pipe and push up the retainer so that the claws engage.

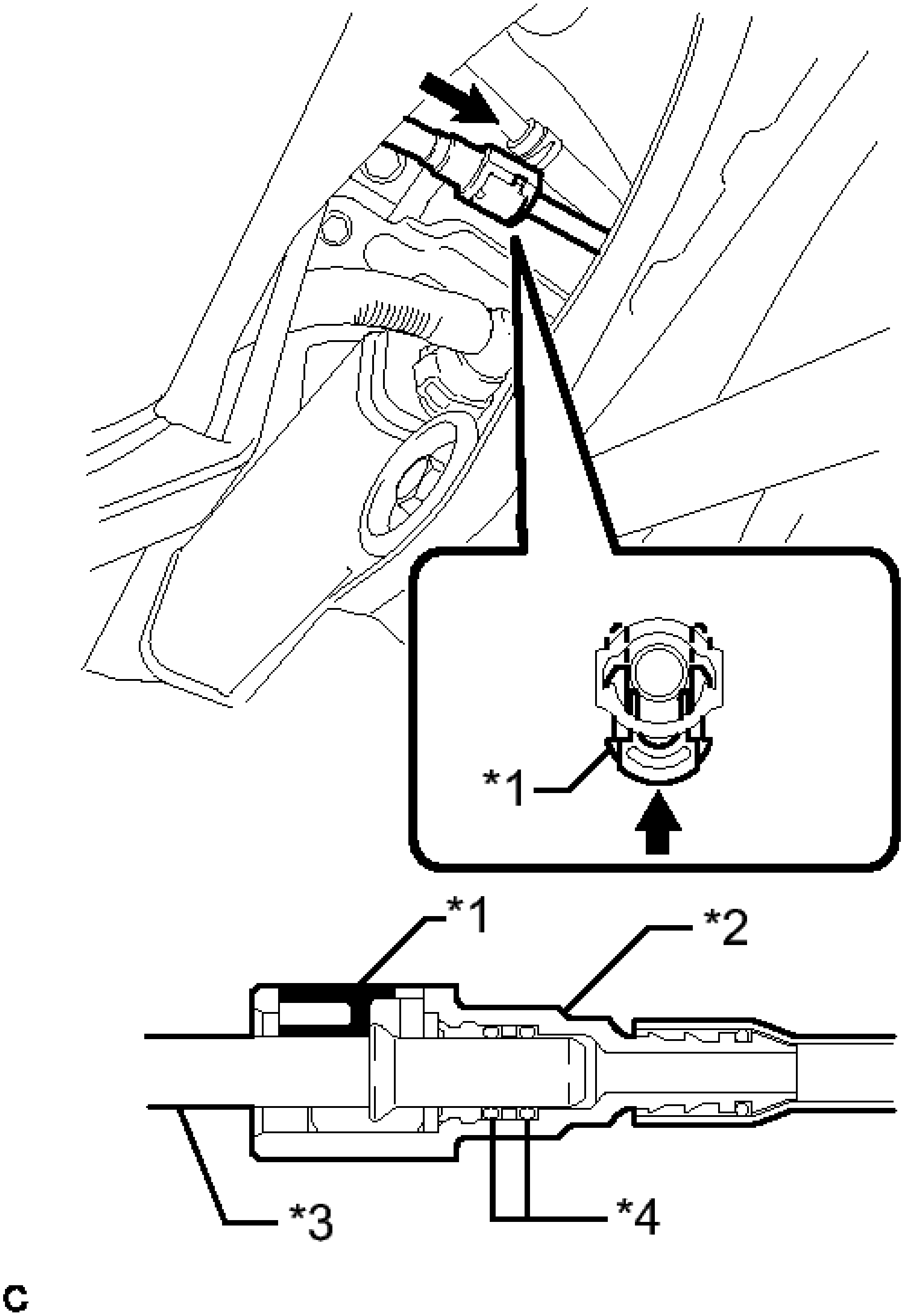

Fig. 87: Identifying Fuel Tank Breather Elbow Tube Sub-Assembly
Courtesy of TOYOTA MOTOR SALES, U.S.A., INC.

TEXT IN ILLUSTRATION

*1	Retainer

*2	Fuel Tube Connector
*3	Fuel Pipe
*4	O-ring
·	Push

NOTE:

- **Check that there are no scratches or foreign matter around the connected part of the fuel tube connector and fuel pipe before starting this step.**
- **After connecting the fuel tube connector, check that the fuel tube connector is securely connected by pulling on the fuel tube connector.**

11. **CONNECT FUEL TANK MAIN TUBE SUB-ASSEMBLY**
    a. Push in the fuel tube connector to the fuel pipe and push up the retainer so that the claws engage.

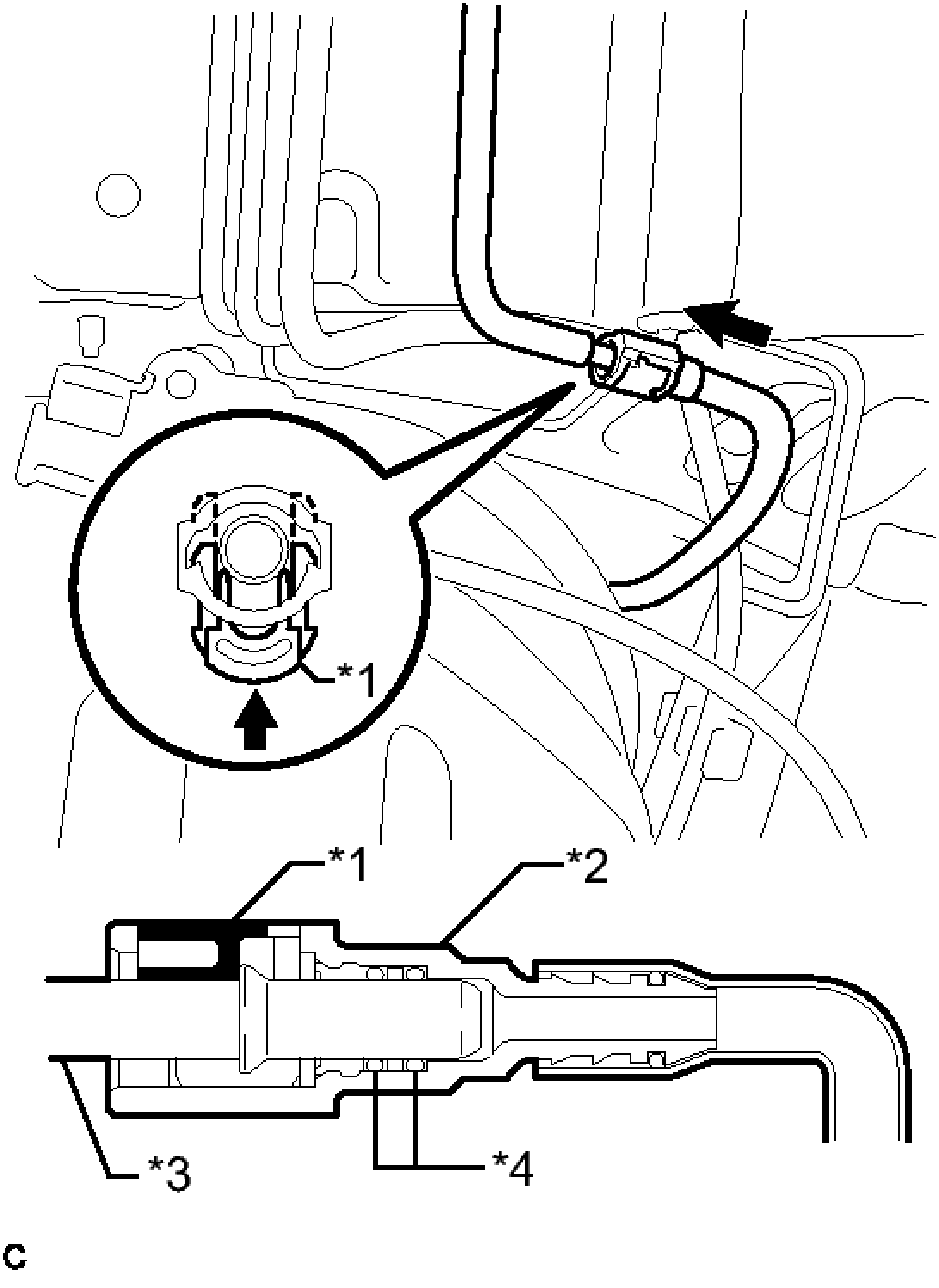

Fig. 88: Identifying Fuel Tank Main Tube Sub-Assembly
Courtesy of TOYOTA MOTOR SALES, U.S.A., INC.

TEXT IN ILLUSTRATION

*1	Retainer

*2	Fuel Tube Connector
*3	Fuel Pipe
*4	O-ring
·	Push

NOTE:

- **Check that there are no scratches or foreign matter around the connected part of the fuel tube connector and fuel pipe before starting this step.**
- **After connecting the fuel tube connector, check that the fuel tube connector is securely connected by pulling on the fuel tube connector.**

12. **INSTALL NO. 1 FUEL TANK PROTECTOR**
    a. Install the lower center fuel tank protector with the 3 clips.
13. **INSTALL REAR NO. 1 STABILIZER BAR BRACKET**
    a. Install the 2 rear No. 1 stabilizer bar brackets with the 4 bolts.

    Torque: 31 N*m (316 kgf*cm, 23 ft.*lbf)

14. **INSTALL NO. 3 PARKING BRAKE CABLE ASSEMBLY**
    a. Install the No. 3 parking brake cable assembly with the nut.

    Torque: 6.0 N*m (61 kgf*cm, 53 in.*lbf)

15. **INSTALL NO. 2 PARKING BRAKE CABLE ASSEMBLY**
    a. Install the No. 2 parking brake cable assembly with the nut.

    Torque: 6.0 N*m (61 kgf*cm, 53 in.*lbf)

16. **INSTALL NO. 1 FLOOR UNDER COVER** . Refer to **INSTALLATION - Step 11**
17. **INSTALL NO. 2 FLOOR UNDER COVER (w/ Floor Under Cover)** . Refer to **INSTALLATION - Step 10**
18. **INSTALL CENTER EXHAUST PIPE ASSEMBLY**

    Refer to **INSTALLATION**

19. **INSTALL FUEL SUCTION TUBE WITH PUMP AND GAUGE ASSEMBLY**

    Refer to **INSTALLATION**

20. **ADD FUEL**
21. **INSPECT FOR EXHAUST GAS LEAK**

FUEL SENDER GAUGE ASSEMBLY

COMPONENTS

ILLUSTRATION

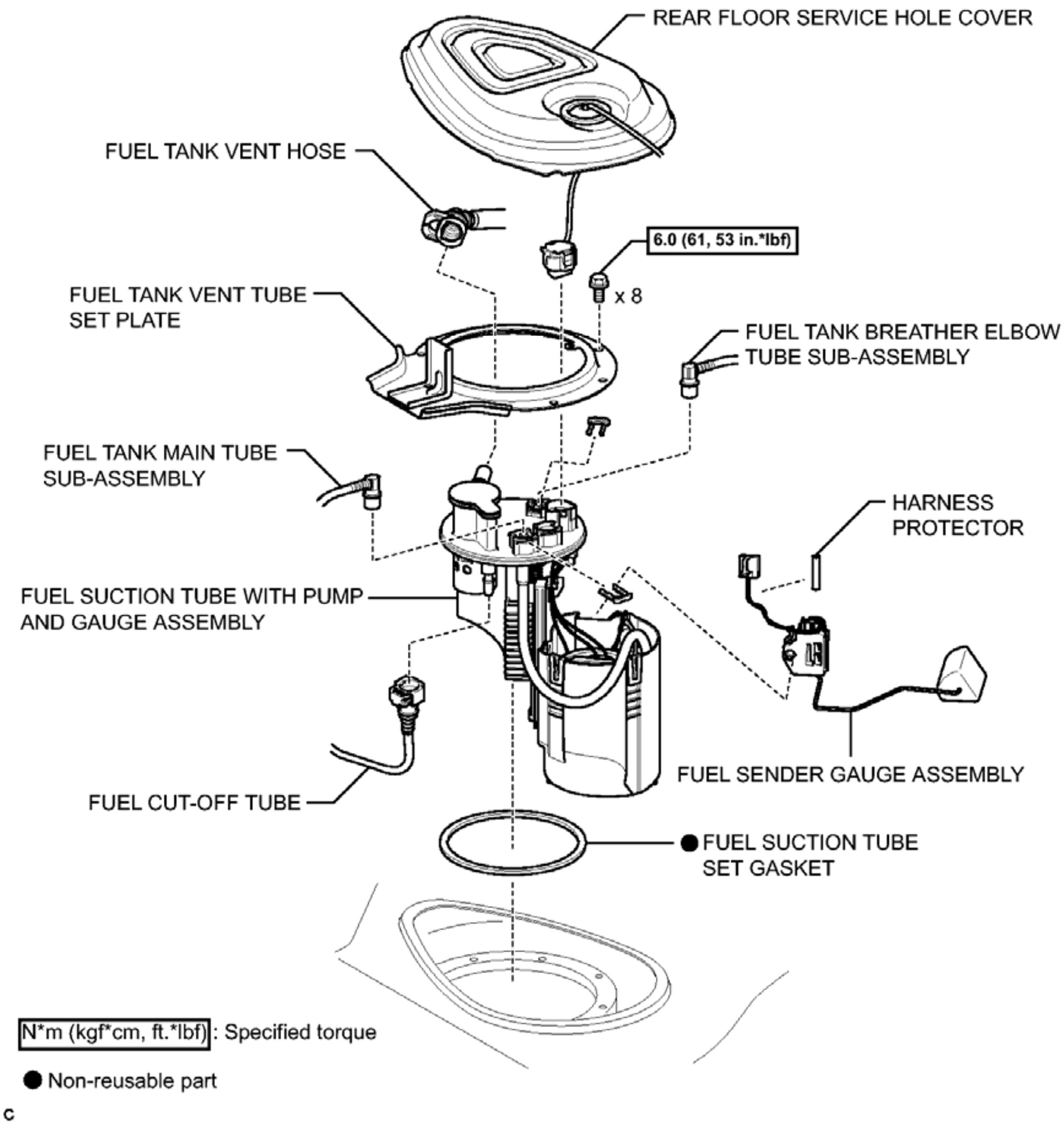
REAR FLOOR SERVICE HOLE COVER
FUEL TANK VENT HOSE
6.0 (61, 53 in.*lbf)
x 8
FUEL TANK VENT TUBE SET PLATE
FUEL TANK BREATHER ELBOW TUBE SUB-ASSEMBLY
FUEL TANK MAIN TUBE SUB-ASSEMBLY
HARNESS PROTECTOR
FUEL SUCTION TUBE WITH PUMP AND GAUGE ASSEMBLY
FUEL SENDER GAUGE ASSEMBLY
FUEL CUT-OFF TUBE
● FUEL SUCTION TUBE SET GASKET
N*m (kgf*cm, ft.*lbf) : Specified torque
● Non-reusable part
C

Fig. 89: Identifying Fuel Sender Gauge Assembly Replacement Components With Torque Specifications
Courtesy of TOYOTA MOTOR SALES, U.S.A., INC.

REMOVAL

REMOVAL

1. **REMOVE FUEL SUCTION TUBE WITH PUMP AND GAUGE ASSEMBLY**

   Refer to **REMOVAL**

2. **REMOVE FUEL SENDER GAUGE ASSEMBLY**
   a. Disconnect the 3 harness clamps.

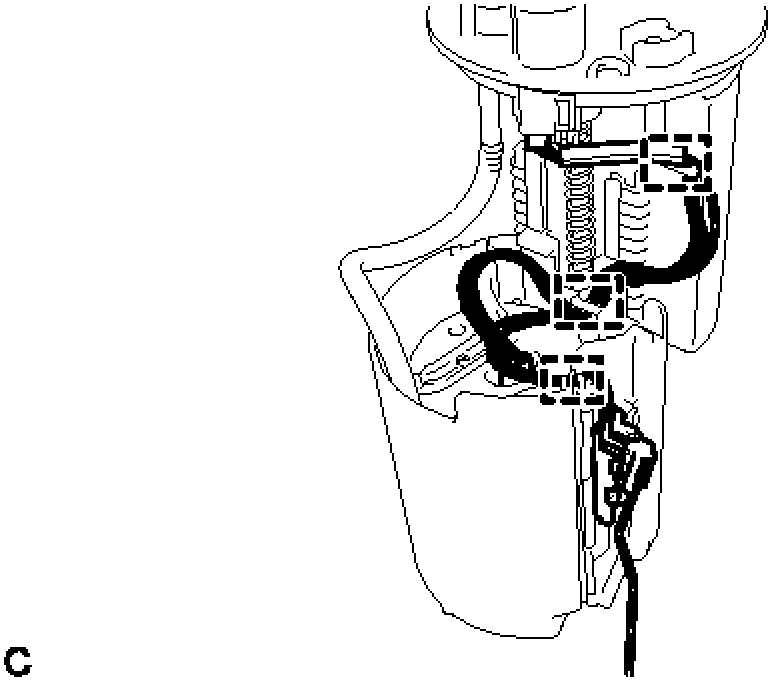

Fig. 90: Identifying Fuel Sender Gauge Harness Clamps
Courtesy of TOYOTA MOTOR SALES, U.S.A., INC.

NOTE: Do not damage the wire harness.

   b. Remove the harness protector from the wire harness.

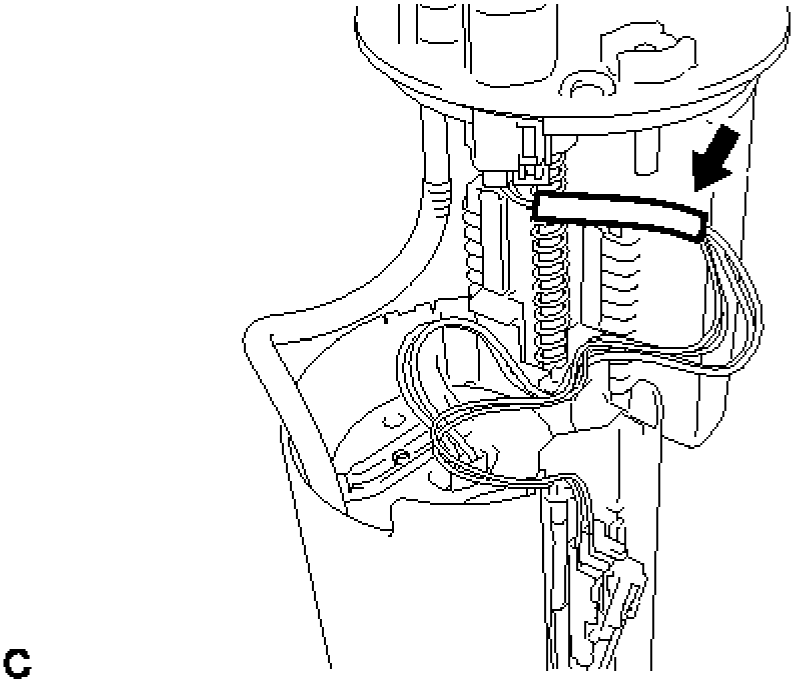

Fig. 91: Identifying Harness Protector
Courtesy of TOYOTA MOTOR SALES, U.S.A., INC.

NOTE: **Do not damage the wire harness.**

c. Disconnect the connector of the fuel sender gauge assembly.

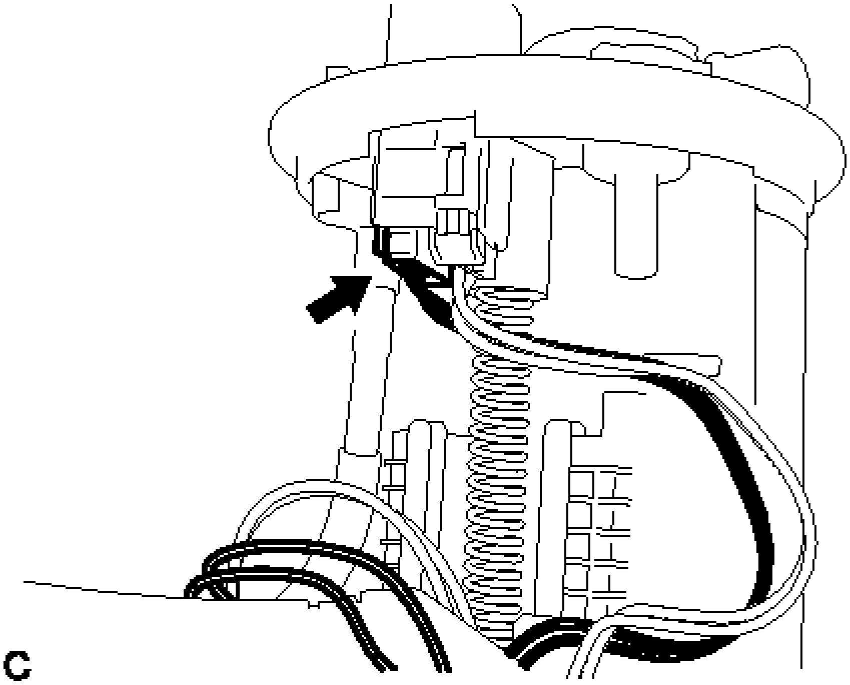

Fig. 92: Identifying Fuel Sender Gauge Assembly Connector
Courtesy of TOYOTA MOTOR SALES, U.S.A., INC.

d. Release the lock as shown in the illustration and slide the fuel sender gauge assembly to remove it.

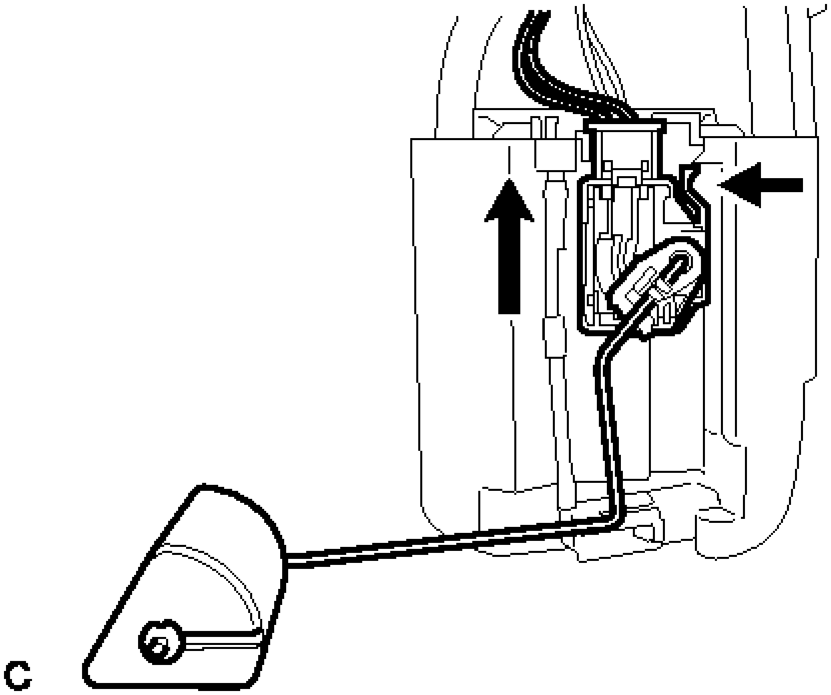

Fig. 93: Identifying Fuel Sender Gauge Assembly Lock
Courtesy of TOYOTA MOTOR SALES, U.S.A., INC.

INSPECTION

INSPECTION

1. **INSPECT FUEL SENDER GAUGE ASSEMBLY**
    a. Check that the float moves smoothly between F and E.

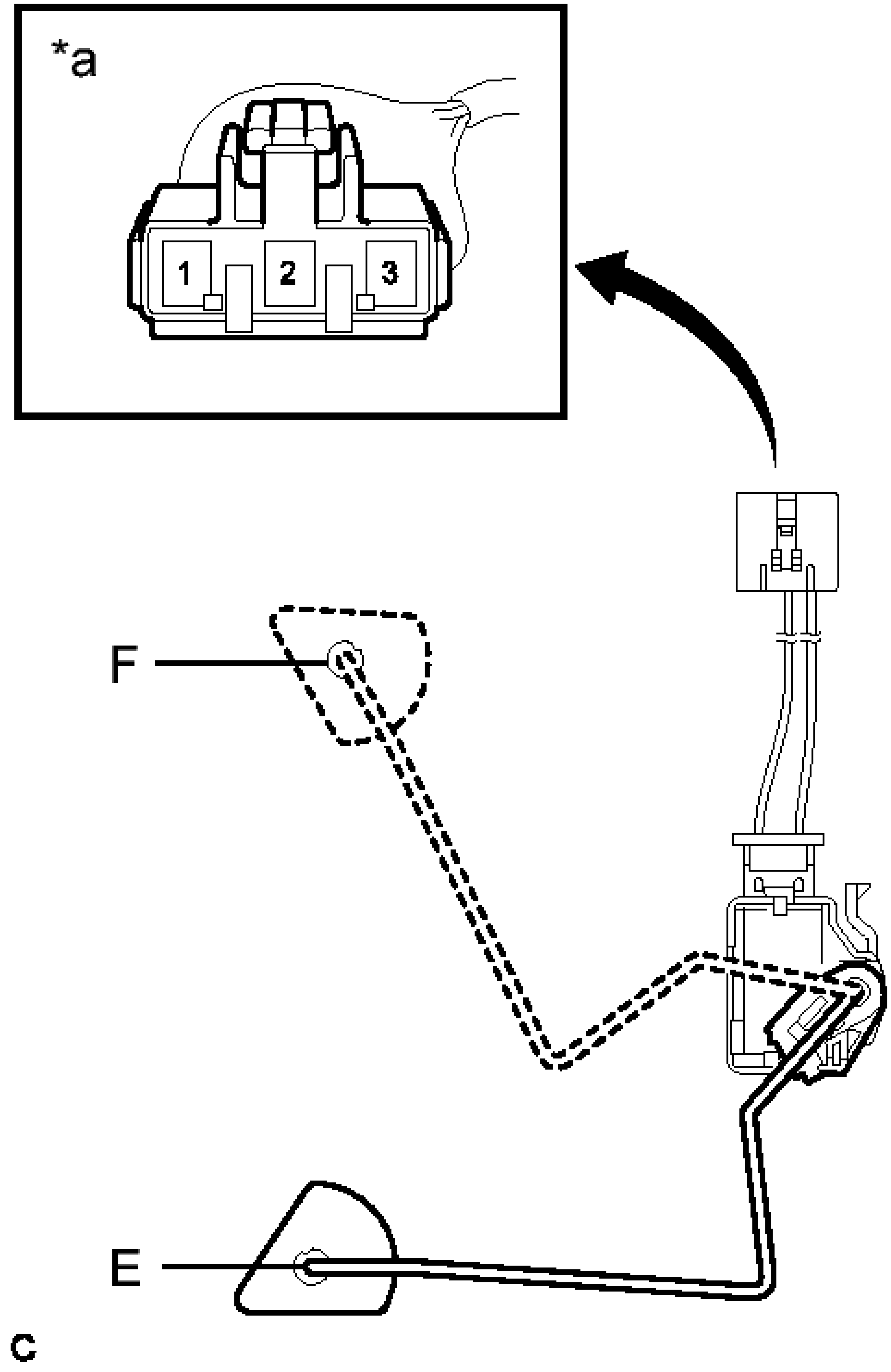

Fig. 94: Identifying Fuel Sender Gauge Moves Smoothly
Courtesy of TOYOTA MOTOR SALES, U.S.A., INC.

TEXT IN ILLUSTRATION

	Front

*a	view of wire harness connector (to Fuel Sender Gauge Assembly)

b. Measure the resistance between terminals 1 and 2 of the connector according to the value(s) in the table below.

Standard Resistance

Float Level	Resistance (ohms)
F	13.5 to 16.5
Between E and F	13.5 to 414.5 (Gradually changes)
E	405.5 to 414.5

If the value is not as specified, replace the fuel sender gauge assembly.

INSTALLATION

INSTALLATION

1. **INSTALL FUEL SENDER GAUGE ASSEMBLY**
   a. Install the fuel sender gauge assembly by sliding it downward.

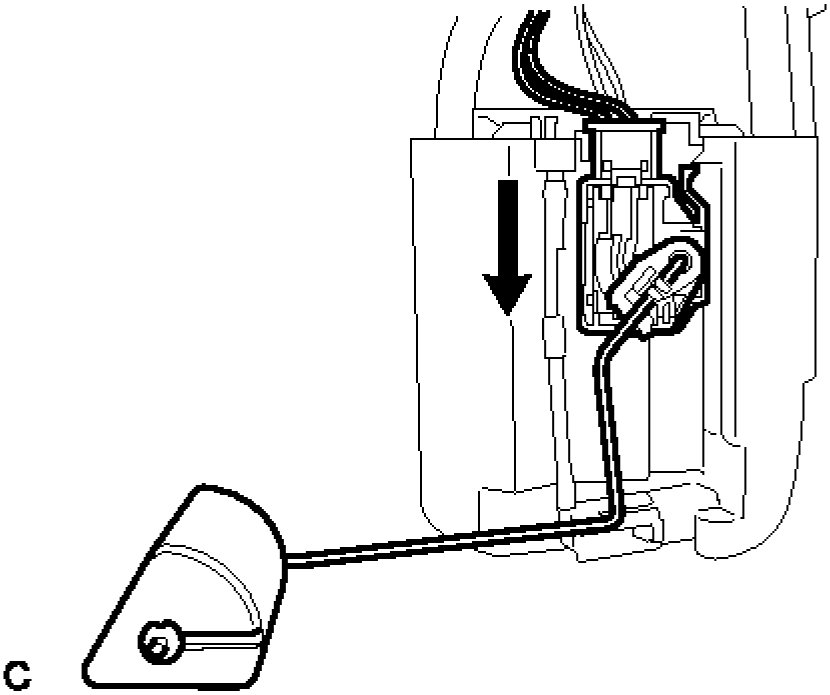

Fig. 95: Identifying Fuel Sender Gauge Assembly Slides Downward
Courtesy of TOYOTA MOTOR SALES, U.S.A., INC.

b. Connect the connector of the fuel sender gauge assembly.
c. Install the harness protector.

NOTE: Do not damage the wire harness.

d. Connect the 3 harness clamps.

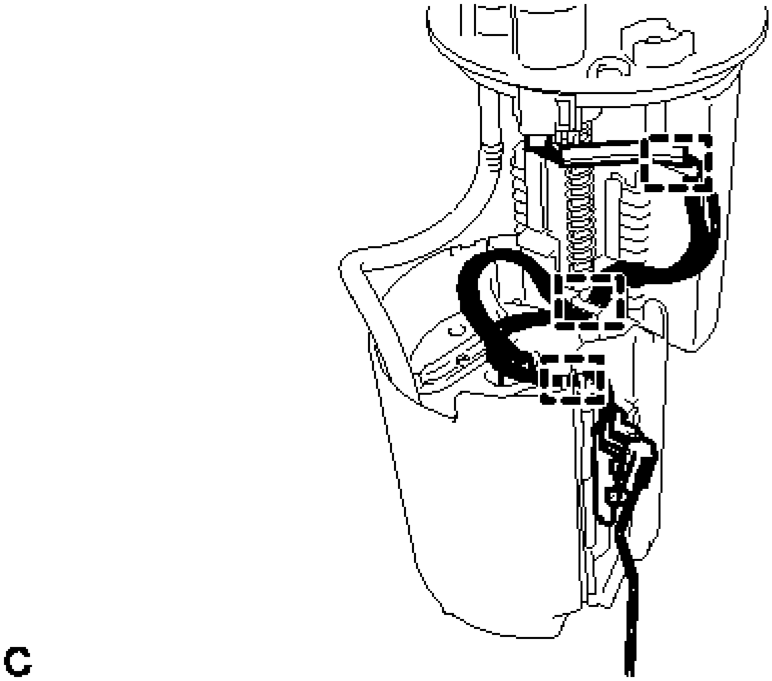

Fig. 96: Identifying Fuel Sender Gauge Harness Clamps
Courtesy of TOYOTA MOTOR SALES, U.S.A., INC.

NOTE: Do not damage the wire harness.

2. **INSTALL FUEL SUCTION TUBE WITH PUMP AND GAUGE ASSEMBLY**

   Refer to **INSTALLATION**

2012-2017 ENGINE

Fuel System (Service Information) - Camry (2GR-FE)

FUEL INJECTOR

COMPONENTS

ILLUSTRATION

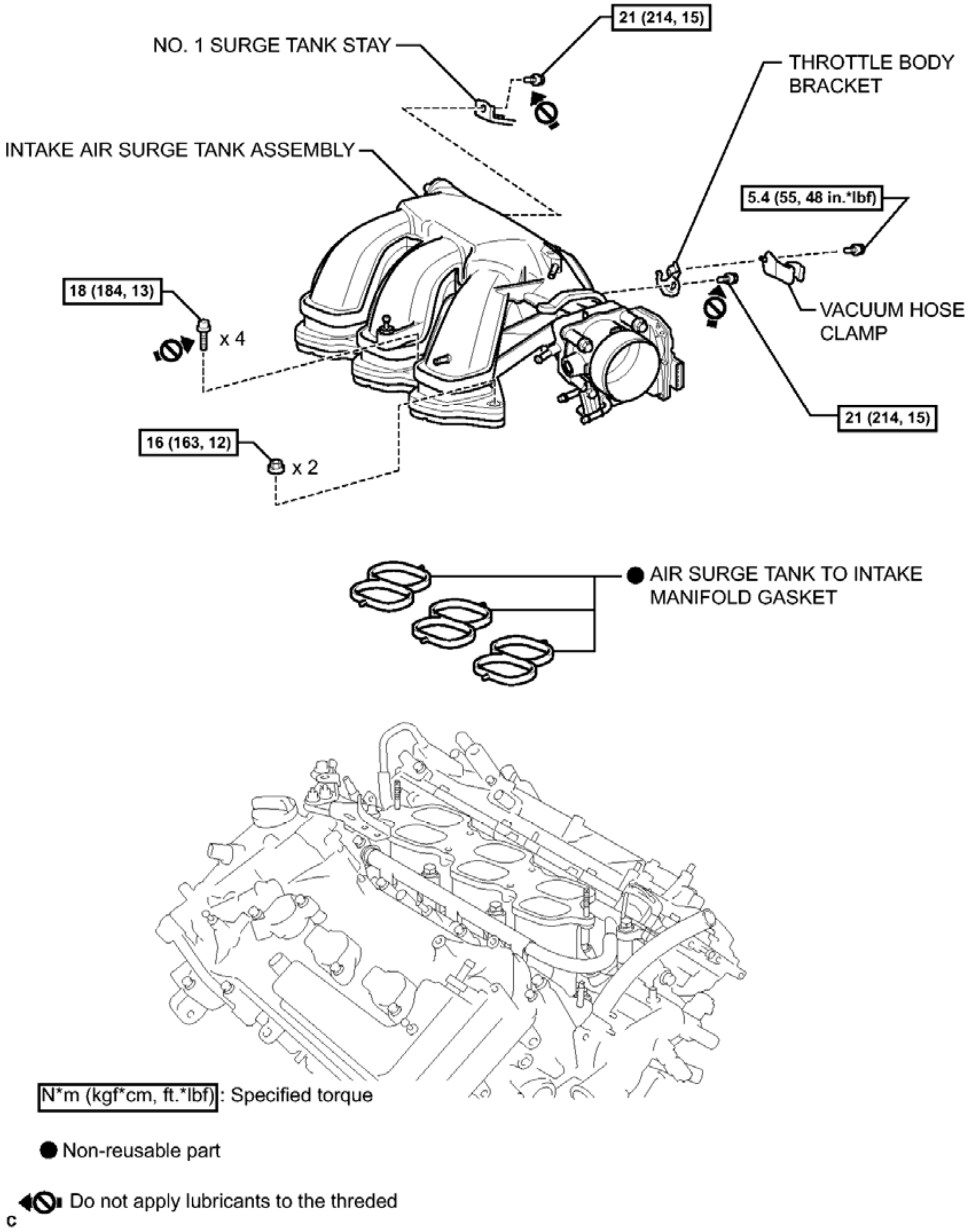
21 (214, 15)
NO. 1 SURGE TANK STAY
THROTTLE BODY BRACKET
INTAKE AIR SURGE TANK ASSEMBLY
5.4 (55, 48 in.*lbf)
18 (184, 13)
x 4
VACUUM HOSE CLAMP
21 (214, 15)
16 (163, 12)
x 2
● AIR SURGE TANK TO INTAKE MANIFOLD GASKET
N*m (kgf*cm, ft.*lbf) : Specified torque
● Non-reusable part
Do not apply lubricants to the threded
c

Fig. 1: Identifying Fuel Injector Replacement Components With Torque Specifications (1 Of 2)
Courtesy of TOYOTA MOTOR SALES, U.S.A., INC.

ILLUSTRATION

HINT:

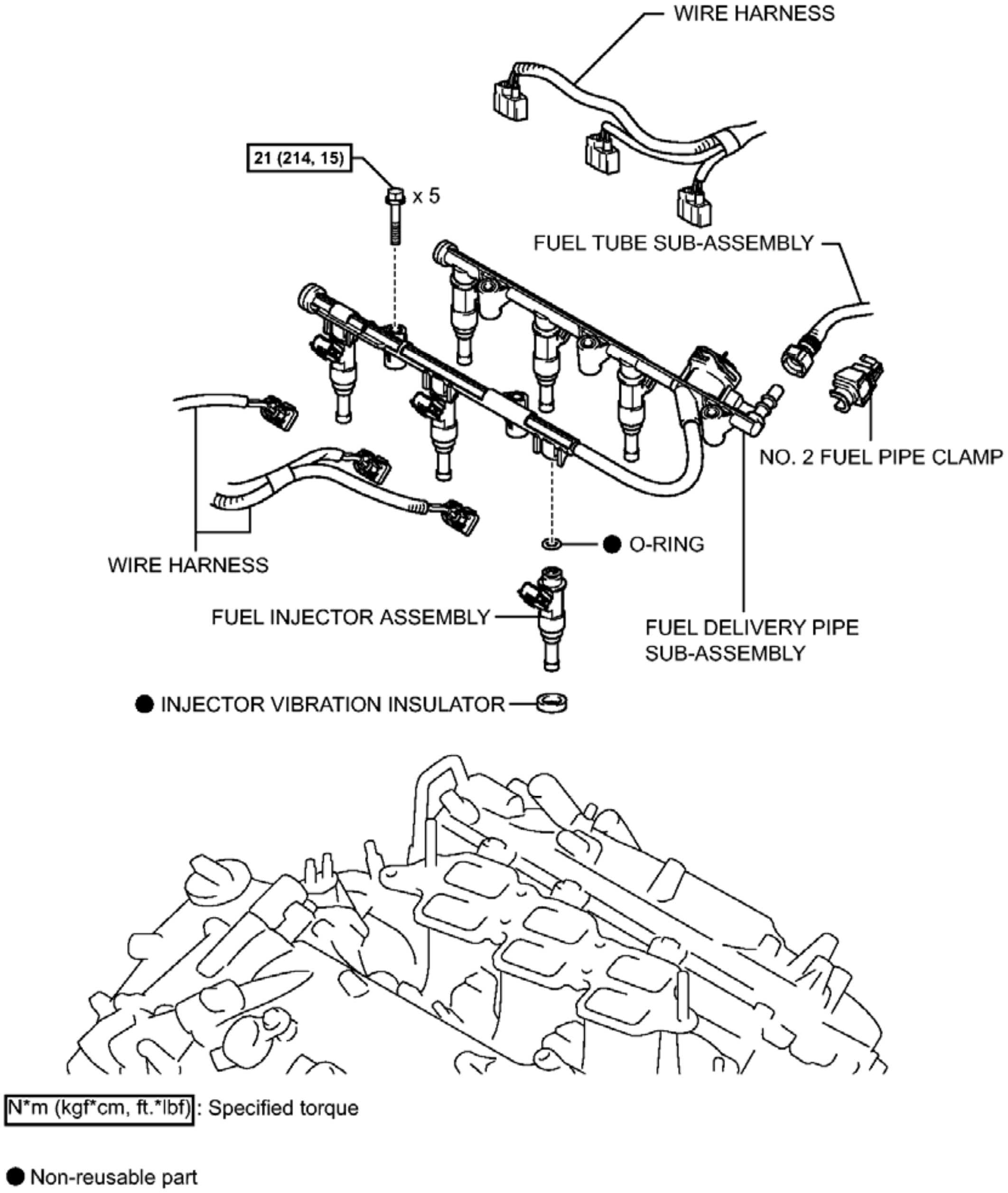
WIRE HARNESS
21 (214, 15)
x 5
FUEL TUBE SUB-ASSEMBLY
NO. 2 FUEL PIPE CLAMP
WIRE HARNESS
O-RING
FUEL INJECTOR ASSEMBLY
FUEL DELIVERY PIPE SUB-ASSEMBLY
INJECTOR VIBRATION INSULATOR
N*m (kgf*cm, ft.*lbf): Specified torque
Non-reusable part

Fig. 2: Identifying Fuel Injector Replacement Components With Torque Specifications (2 Of 2)
Courtesy of TOYOTA MOTOR SALES, U.S.A., INC.

REMOVAL

REMOVAL

HINT:

Perform "Inspection After Repair" after replacing the fuel injector assembly. Refer to **INITIALIZATION** .

1. **PRECAUTION**

   NOTE: After turning the engine switch off, waiting time may be required before disconnecting the cable from the negative (-) battery terminal. Therefore, make sure to read the disconnecting the cable from the negative (-) battery terminal notice before proceeding with work. Refer to PRECAUTION .

2. **DISCHARGE FUEL SYSTEM PRESSURE**

   Refer to **PRECAUTION**

3. **DISCONNECT CABLE FROM NEGATIVE BATTERY TERMINAL**

   NOTE: When disconnecting the cable, some systems need to be initialized after the cable is reconnected. Refer to INITIALIZATION .

4. **REMOVE INTAKE AIR SURGE TANK ASSEMBLY**

   Refer to **REMOVAL**

5. **DISCONNECT FUEL TUBE SUB-ASSEMBLY**
   1. Remove the No. 2 fuel pipe clamp.

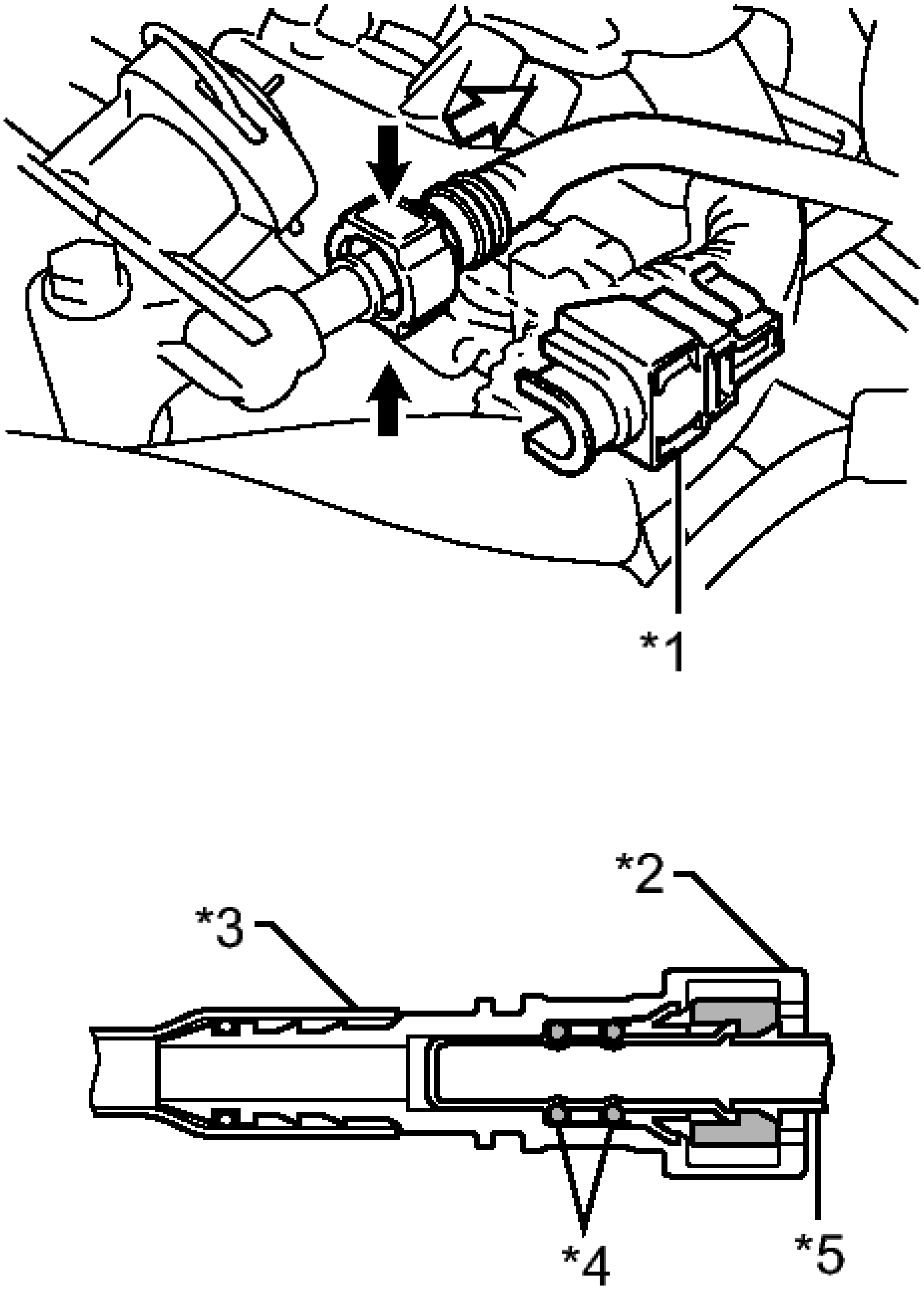

Fig. 3: Identifying No. 2 Fuel Pipe Clamp
Courtesy of TOYOTA MOTOR SALES, U.S.A., INC.

TEXT IN ILLUSTRATION

	No. 2

*1	Fuel Pipe Clamp
*2	Fuel Tube Connector
*3	Nylon Tube
*4	O-ring
*5	Fuel Pipe
➡	Pinch
⇨	Pull

b. Pinch the fuel tube connector and pull out the fuel pipe.

NOTE:

- **Check that there is no dirt or other foreign objects around the fuel tube connector when disconnecting it. Clean the fuel tube connector as necessary.**
- **It is necessary to prevent dirt or foreign objects from entering the fuel tube connector. If dirt or foreign objects get in the fuel tube connector, the O-rings may not seal properly.**
- **Only disconnect the fuel tube connector by hand.**
- **Do not bend, kink or twist the nylon tubes.**
- **Protect the fuel tube connector by covering it with plastic bags.**
- **If the fuel pipe and the fuel tube connector are stuck, carefully try wiggling or pushing and pulling on the fuel tube connector to release it. Pull the fuel tube connector off carefully.**

6. REMOVE FUEL DELIVERY PIPE SUB-ASSEMBLY

a. Disconnect the 6 fuel injector connectors.

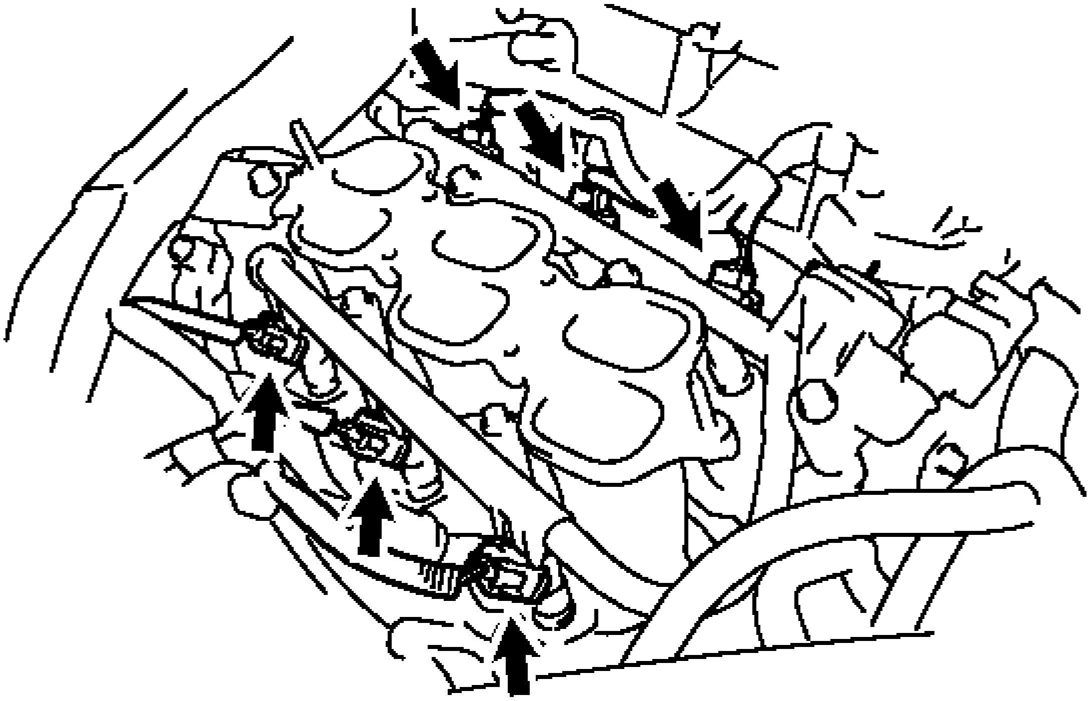

Fig. 4: Locating Fuel Injector Connectors
Courtesy of TOYOTA MOTOR SALES, U.S.A., INC.

b. Remove the 5 bolts and fuel delivery pipe sub-assembly together with the 6 fuel injectors.

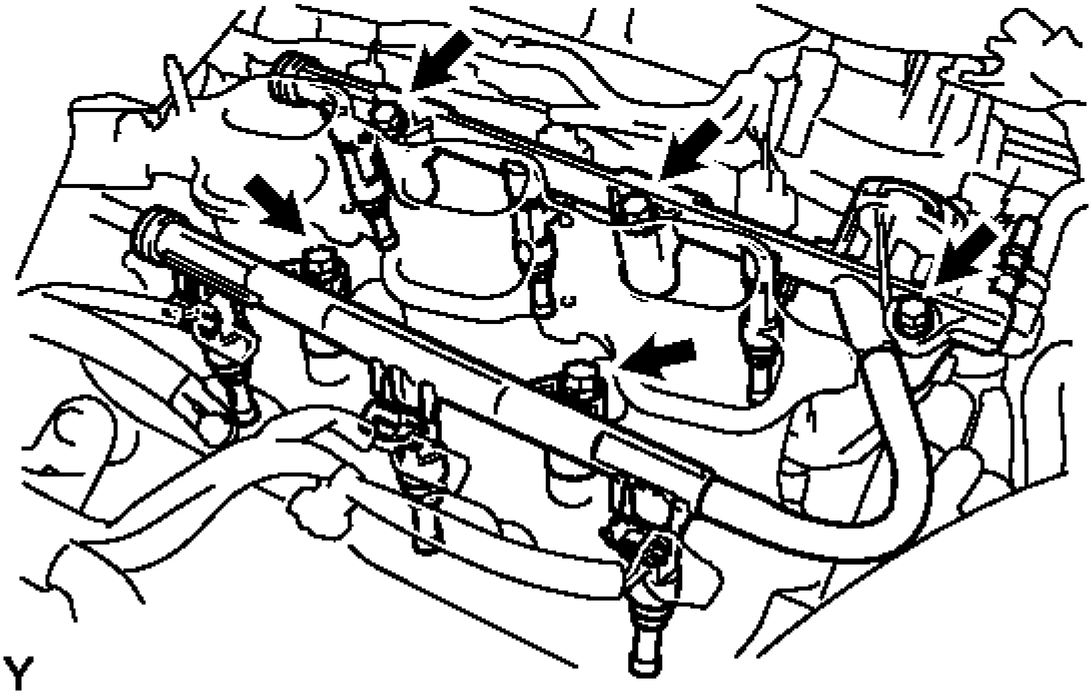

Fig. 5: Locating Fuel Delivery Pipe And Fuel Injectors
Courtesy of TOYOTA MOTOR SALES, U.S.A., INC.

NOTE: Be careful not to drop the fuel injectors when removing the fuel delivery pipe.

c. Remove the 6 injector vibration insulators from the intake manifold.

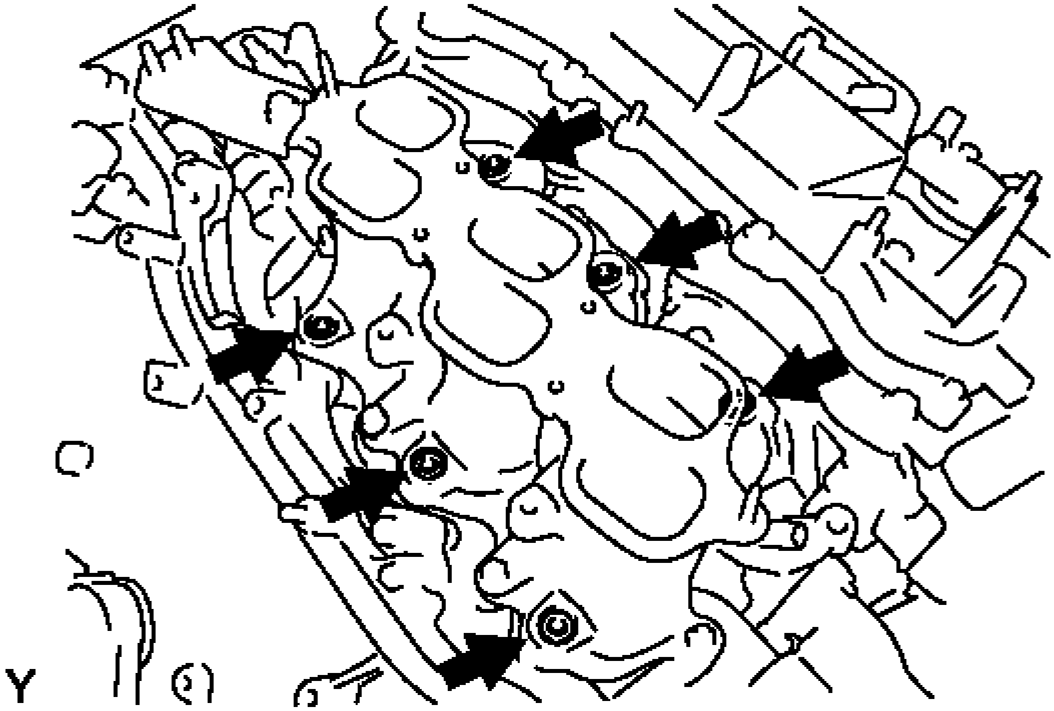

Fig. 6: Locating Injector Vibration Insulators And Intake Manifold
Courtesy of TOYOTA MOTOR SALES, U.S.A., INC.

7. **REMOVE FUEL INJECTOR ASSEMBLY**
   a. Pull the 6 fuel injector assemblies out of the fuel delivery pipe sub-assembly.

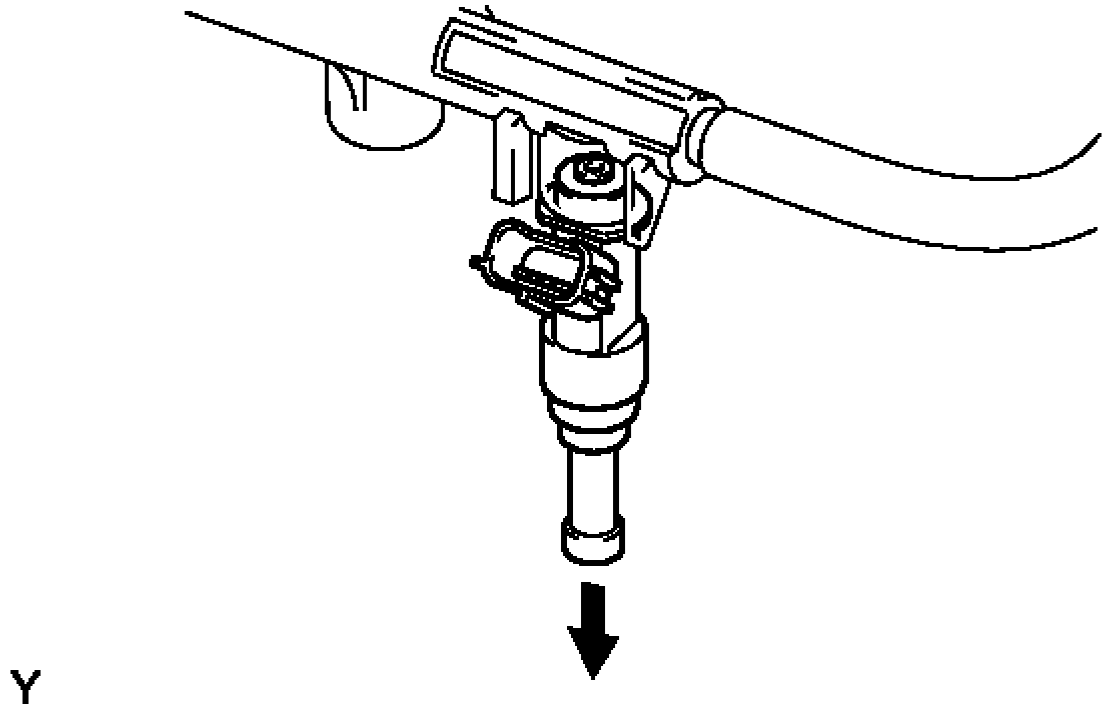

Fig. 7: Pulling Out Fuel Injector From Fuel Delivery Pipe
Courtesy of TOYOTA MOTOR SALES, U.S.A., INC.

NOTE: **If the injectors are to be reused, reinstall them to the same cylinder they came from.**

b. Remove the O-ring from each fuel injector assembly.

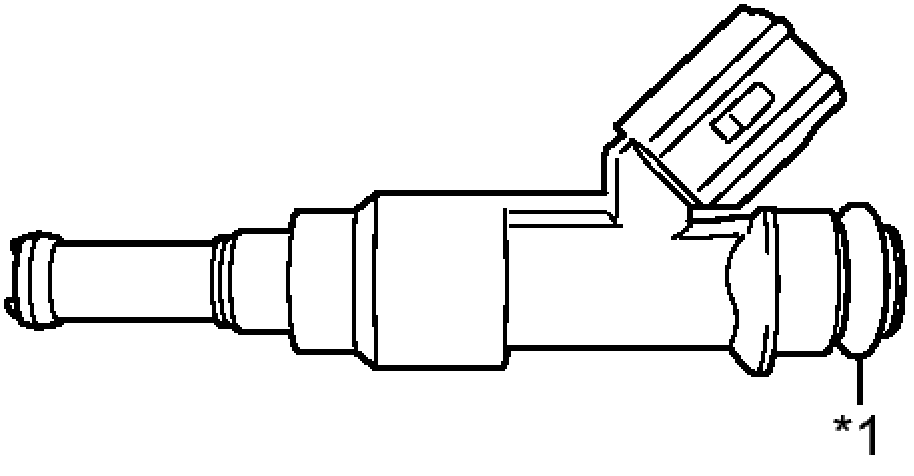

Fig. 8: Identifying O-ring Location
Courtesy of TOYOTA MOTOR SALES, U.S.A., INC.

TEXT IN ILLUSTRATION

*1	O-ring

c. For reinstallation, attach a tag or label to each injector shaft.

NOTE: **Prevent entry of foreign matter by covering the fuel injectors with plastic bags.**

INSPECTION

INSPECTION

1. **INSPECT FUEL INJECTOR ASSEMBLY**
    a. Check the resistance.

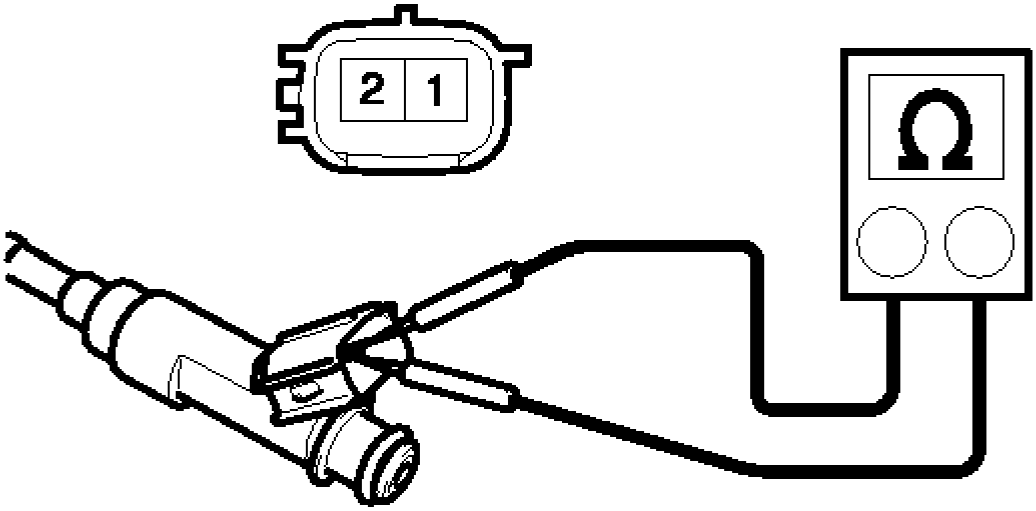

Fig. 9: Inspecting Fuel Injector Assembly
Courtesy of TOYOTA MOTOR SALES, U.S.A., INC.

1. Using an ohmmeter, measure the resistance according to the value(s) in the table below.

   Standard Resistance

Tester Connection	Condition	Specified Condition
1 - 2	20°C (68° F)	11.6 to 12.4 ohms

   If the result is not as specified, replace the injector assembly.

b. Check the operation.

WARNING: **Perform the inspection in a well-ventilated area.**

Do not perform the inspection near a naked flame.

1. Connect SST (fuel tube connector) to SST (hose) with SST (hose band), and then connect them to the fuel pipe (vehicle side).

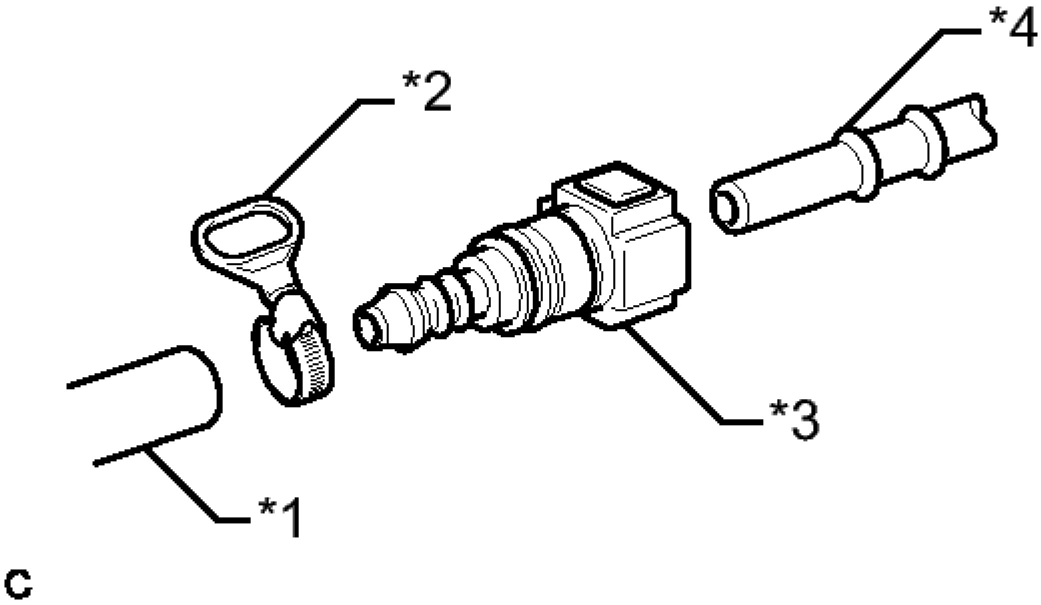

Fig. 10: Identifying Fuel Tube Connector To SST
Courtesy of TOYOTA MOTOR SALES, U.S.A., INC.

TEXT IN ILLUSTRATION

*1	SST (Hose)
*2	SST (Hose Band)
*3	SST (Fuel Tube Connector)
*4	Fuel Pipe (Vehicle Side)

- **SST: 09268-31014**

  09268-41500

  09268-41700

  95336-08070

2. Install a new O-ring onto the fuel injector assembly.
3. Connect SST (adapter and hose) to the injector assembly, and hold the injector assembly and union with SST (clamp).

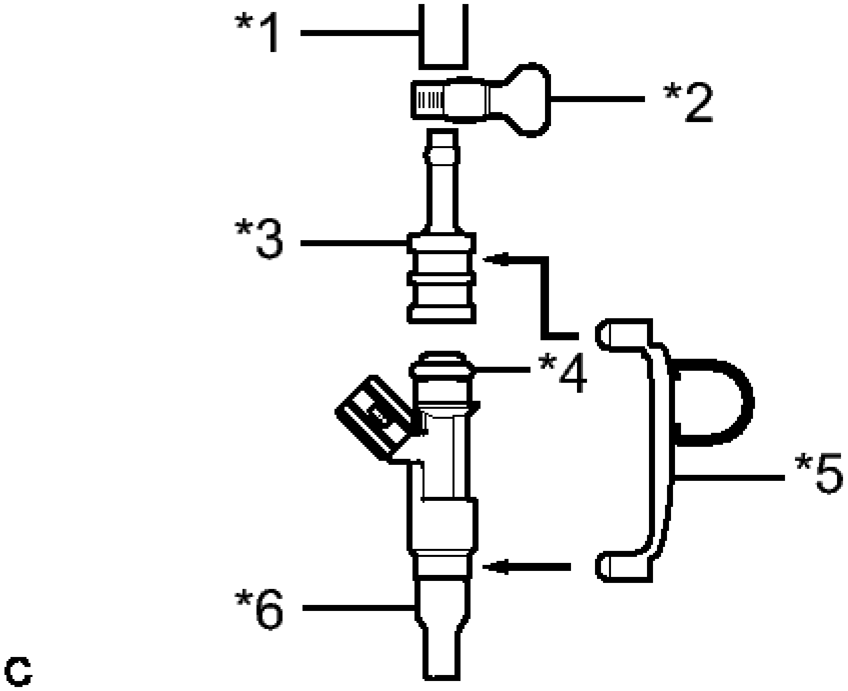

Fig. 11: Identifying Fuel Pipe Components
Courtesy of TOYOTA MOTOR SALES, U.S.A., INC.

TEXT IN ILLUSTRATION

*1	SST (Hose)
*2	SST (Hose Band)
*3	SST (Adapter)
*4	O-ring
*5	SST (Clamp)
*6	Vinyl Tube

- **SST: 09268-31014**
  09268-41141
  09268-41410
  09268-41700
  95336-08070

4. Tie the clamp and adapter together with a tie band as shown in the illustration.

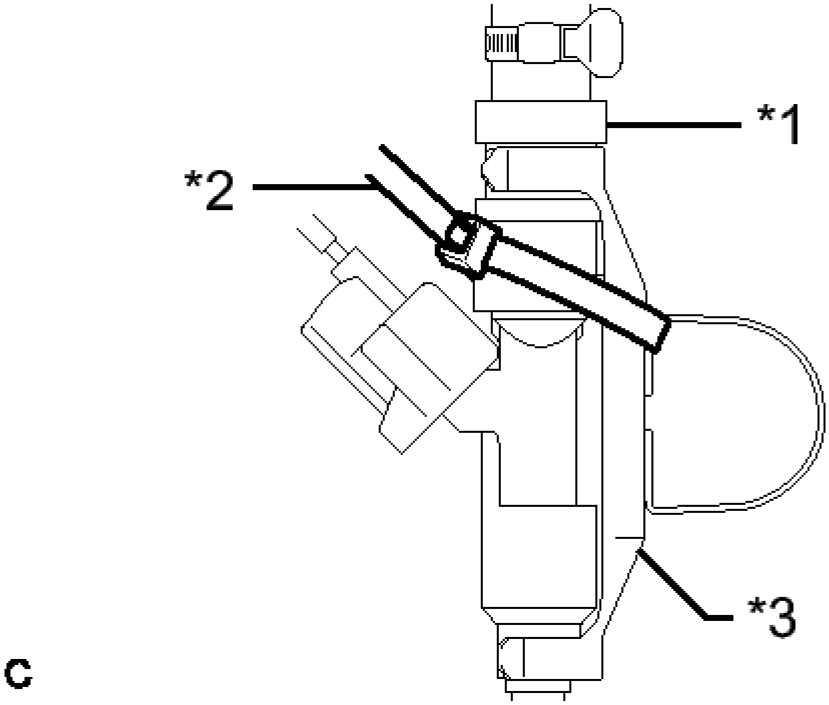

Fig. 12: Identifying Fuel Pipe Components
Courtesy of TOYOTA MOTOR SALES, U.S.A., INC.

TEXT IN ILLUSTRATION

*1	SST (Adapter)
*2	SST (Tie Band)
*3	SST (Clamp)

- **SST: 09268-31014**

  09268-41141

  09268-41410

  09268-41800

5. Set the injector assembly in a graduated cylinder.

WARNING: **Install a suitable vinyl tube onto the injector assembly to prevent gasoline from spraying.**

6. Operate the fuel pump. Refer to **ON-VEHICLE INSPECTION - Step 1** .
7. Connect SST (wire) to the injector assembly and the battery for 15 seconds, and measure the injection volume with the graduated cylinder. Test each injector 2 or 3 times.

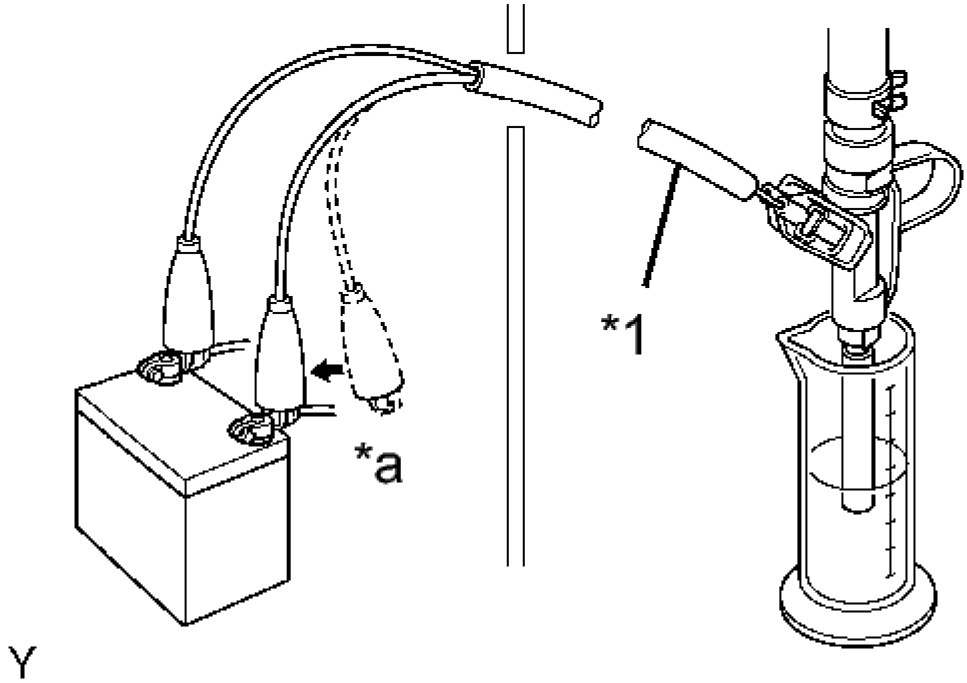

Fig. 13: Connecting SST To Battery
Courtesy of TOYOTA MOTOR SALES, U.S.A., INC.

TEXT IN ILLUSTRATION

*1	SST (Wire)
*a	Connect

- **SST: 09842-30080**

Standard Injection Volume

Tester Connection	Condition	Specified Condition
Positive (+) terminal - Ground terminal	Per 15 seconds	76 to 91 cc (4.6 to 5.6 cu.in.)

Difference between each injector

15 cc (0.9 cu.in.) or less

NOTE: **Always switch the voltage on and off on the battery side, not the injector side.**

If the injection volume is not as specified, replace the injector assembly.

c. Check for leaks.
   1. Disconnect the tester probes of SST (wire) from the battery and check for fuel leaks from the injector.

      Standard fuel drop

      1 drop or less every 35 minutes

INSTALLATION

INSTALLATION

1. **INSTALL FUEL INJECTOR ASSEMBLY**
   a. Apply a light coat of spindle oil or gasoline to new O-rings, and install them to each injector.

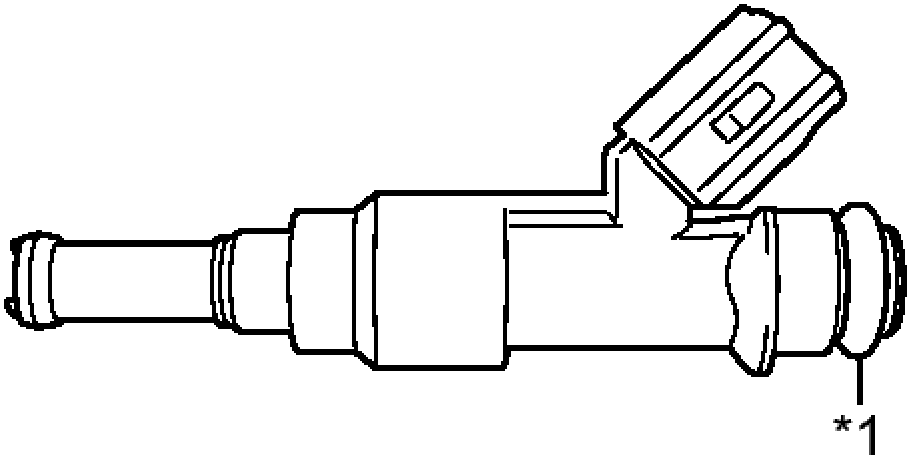

Fig. 14: Identifying O-ring Location
Courtesy of TOYOTA MOTOR SALES, U.S.A., INC.

TEXT IN ILLUSTRATION

*1	O-ring

   b. Apply a light coat of spindle oil or gasoline where the fuel delivery pipe contacts each O-ring.

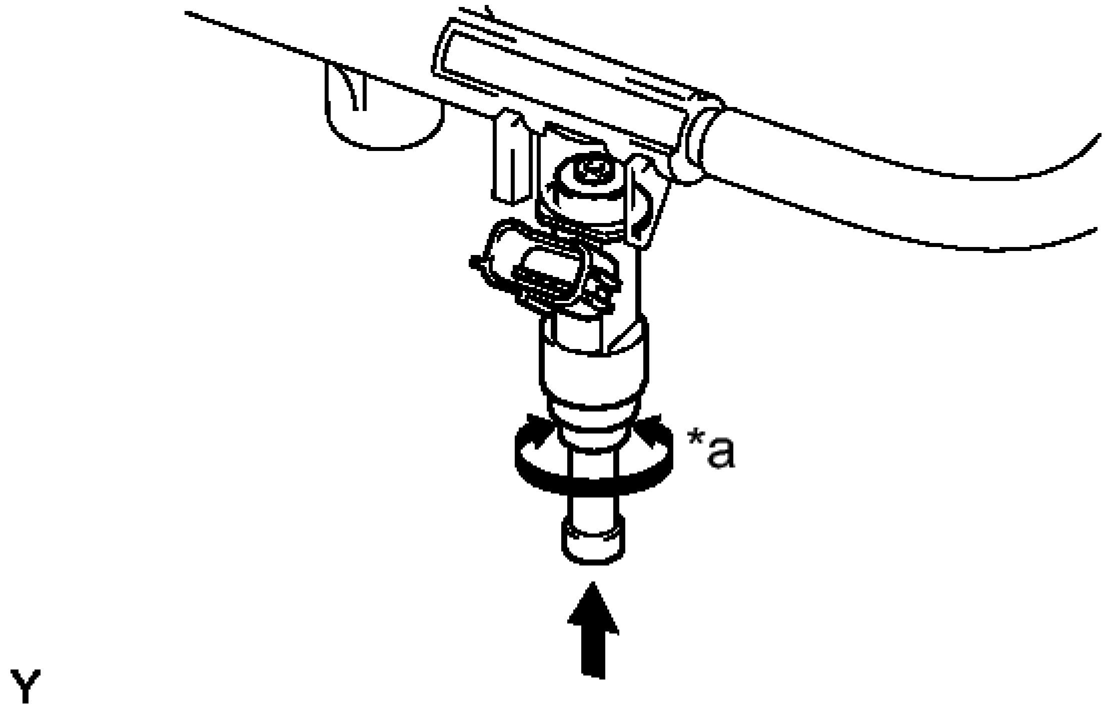

Fig. 15: Identifying Fuel Injector
Courtesy of TOYOTA MOTOR SALES, U.S.A., INC.

TEXT IN ILLUSTRATION

*a	Turn
·	Push

c. Push and twist each fuel injector to install them into the fuel delivery pipe.
d. Position each fuel injector connector outward.

NOTE:

- **Be careful not to twist the O-rings.**
- **After installing a fuel injector, check that it turns smoothly. If not, reinstall it with a new O-ring.**

HINT:

Perform "Inspection After Repair" after replacing the fuel injector assembly. Refer to **INITIALIZATION** .

2. **INSTALL FUEL DELIVERY PIPE SUB-ASSEMBLY**
   a. Install 6 new injector vibration insulators to the intake manifold.

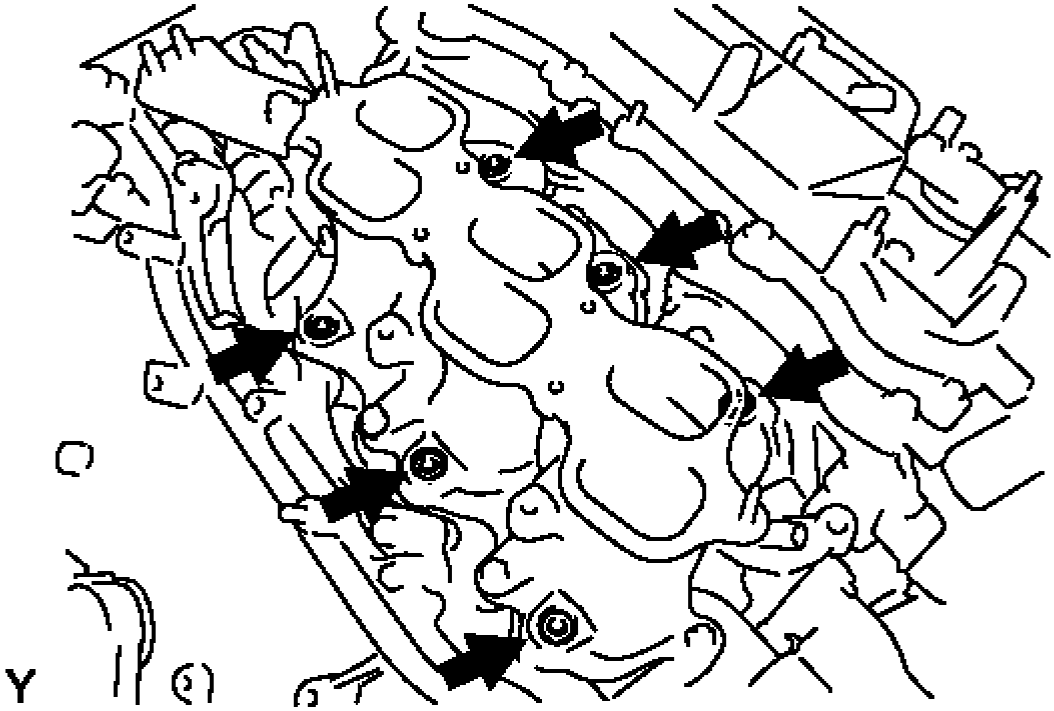

Fig. 16: Locating Injector Vibration Insulators And Intake Manifold
Courtesy of TOYOTA MOTOR SALES, U.S.A., INC.

b. Place the fuel delivery pipe with the 6 fuel injectors in position on the intake manifold.

NOTE: **Be careful not to drop the fuel injectors when installing the fuel delivery pipe.**

c. Temporarily install the 5 bolts which are used to hold the fuel delivery pipe to the intake manifold.

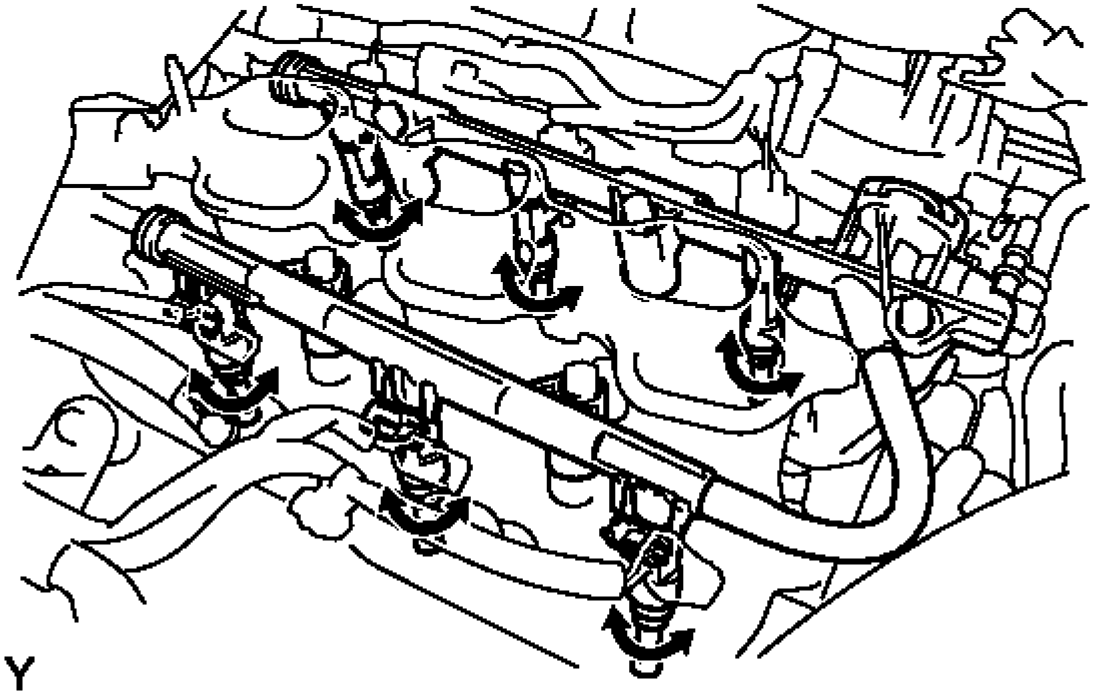

Fig. 17: Identifying Fuel Delivery Pipe And Fuel Injectors
Courtesy of TOYOTA MOTOR SALES, U.S.A., INC.

NOTE: **After installing the fuel injectors, check that they turn smoothly. If not, reinstall the injectors with new O-rings.**

d. Tighten the 5 bolts which are used to hold the fuel delivery pipe to the intake manifold.

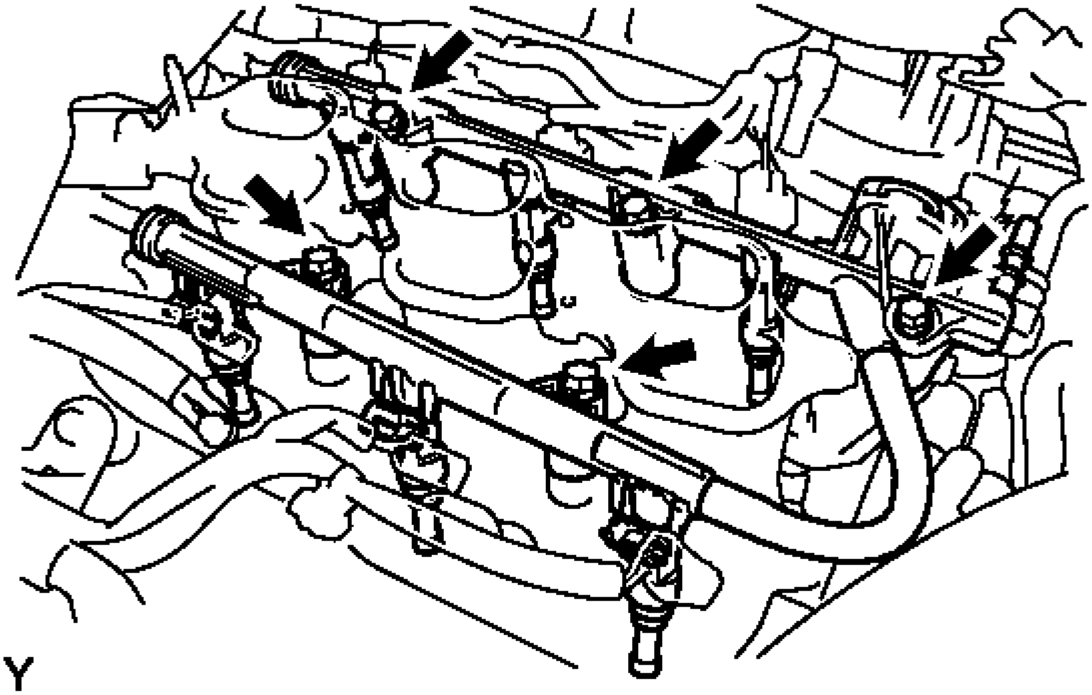

Fig. 18: Locating Fuel Delivery Pipe And Fuel Injectors
Courtesy of TOYOTA MOTOR SALES, U.S.A., INC.

Torque: 21 N*m (214 kgf*cm, 15 ft.*lbf)

e. Connect the 6 fuel injector connectors.

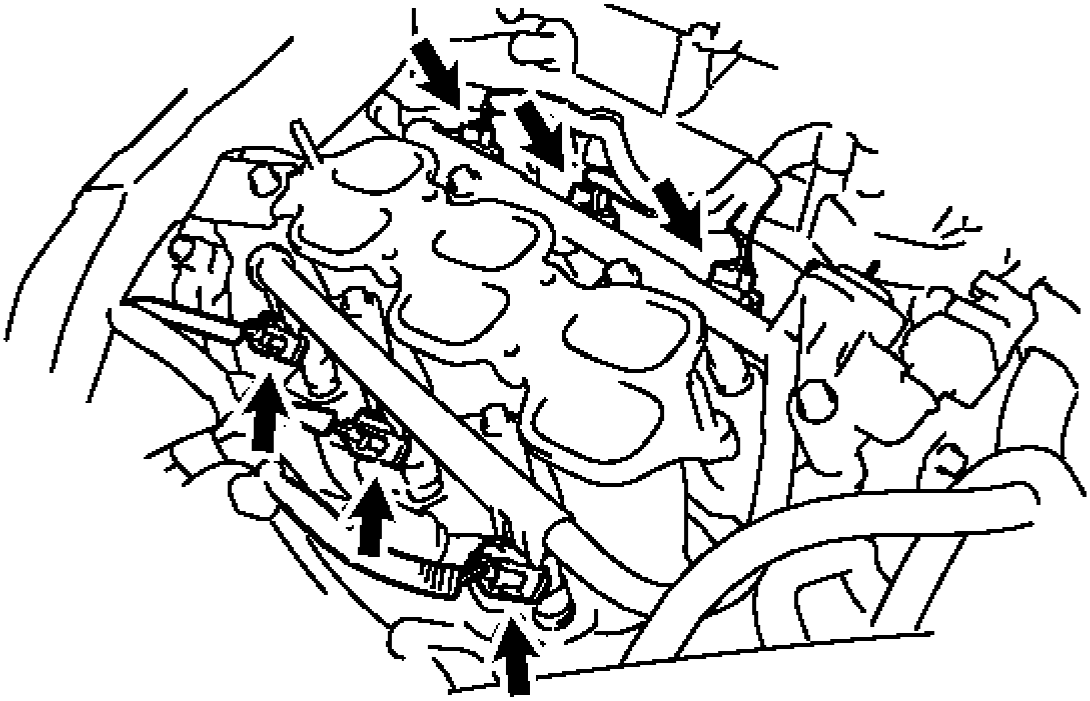

Fig. 19: Locating Fuel Injector Connectors
Courtesy of TOYOTA MOTOR SALES, U.S.A., INC.

3. **CONNECT FUEL TUBE SUB-ASSEMBLY**
    a. Push in the fuel tube connector onto the pipe until the fuel tube connector makes a "click" sound.

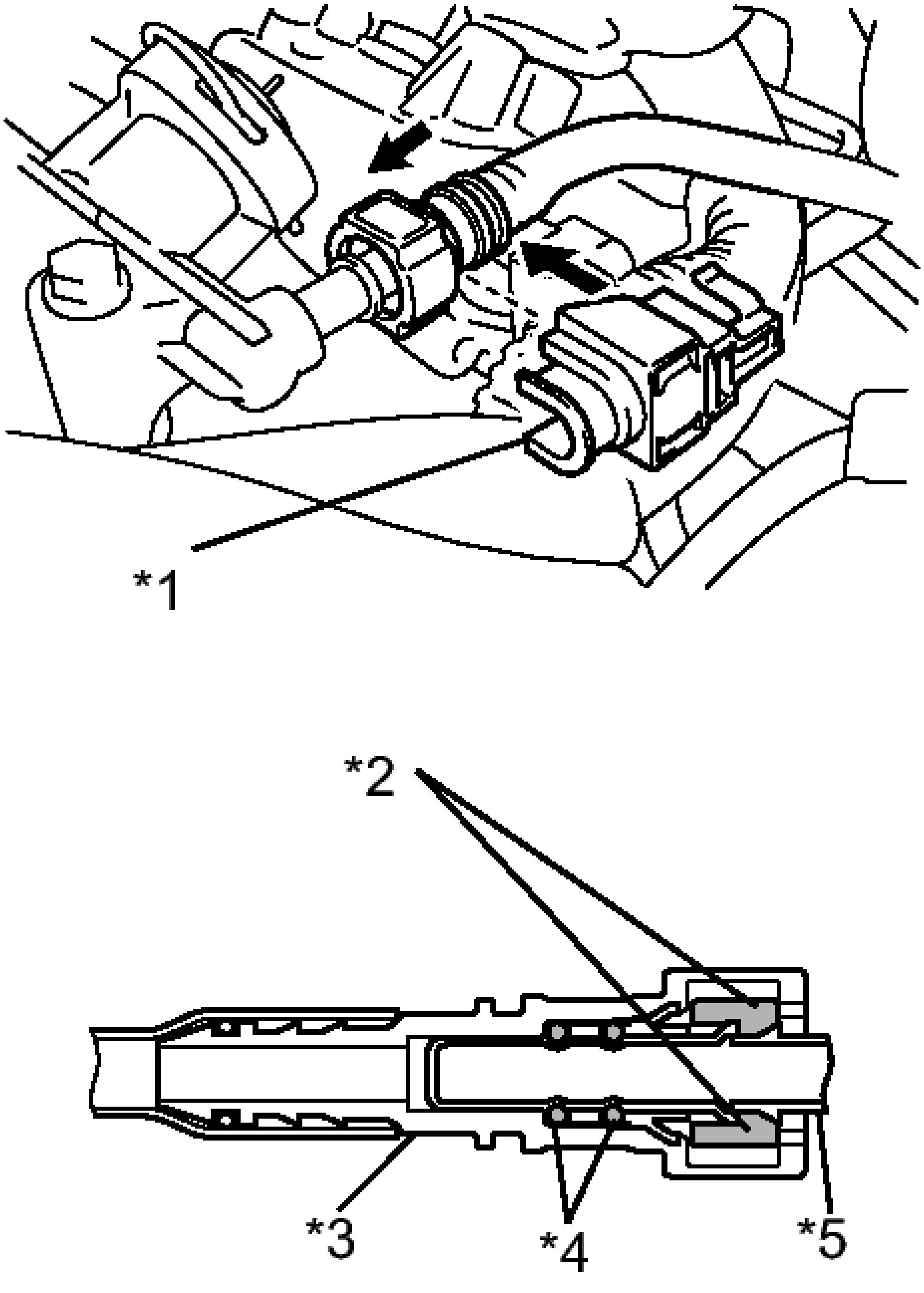

Fig. 20: Identifying Intake Air Surge Tank Assembly
Courtesy of TOYOTA MOTOR SALES, U.S.A., INC.

TEXT IN ILLUSTRATION

	No. 2

*1	Fuel Pipe Clamp
*2	Retainer
*3	Fuel Tube Connector
*4	O-ring
*5	Fuel Pipe
→	Push

NOTE:

- **Before connecting the fuel tube connector and fuel pipe, check that there is no damage or foreign matter on the connecting part of the fuel pipe.**
- **After connecting the fuel tube connector and fuel pipe, check that they are securely connected by trying to pull them apart.**

b. Install the No. 2 fuel pipe clamp.

4. **INSTALL INTAKE AIR SURGE TANK ASSEMBLY**

   Refer to **INSTALLATION**

5. **CONNECT CABLE TO NEGATIVE BATTERY TERMINAL**

   NOTE: **When disconnecting the cable, some systems need to be initialized after the cable is reconnected. Refer to INITIALIZATION .**

6. **INSPECT FOR FUEL LEAK** . Refer to **ON-VEHICLE INSPECTION - Step 1**

FUEL PRESSURE REGULATOR

COMPONENTS

ILLUSTRATION

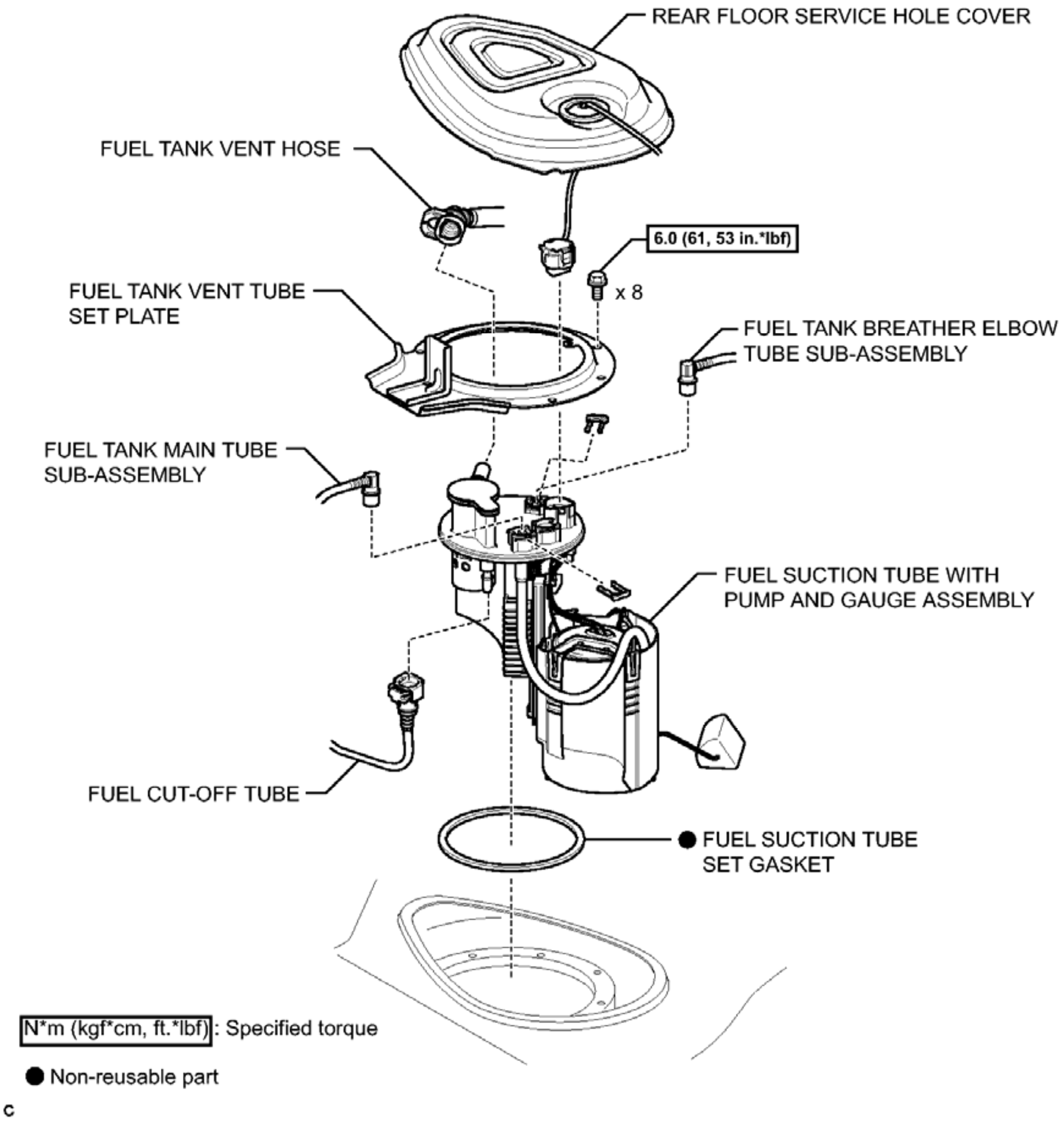
REAR FLOOR SERVICE HOLE COVER
FUEL TANK VENT HOSE
6.0 (61, 53 in.*lbf)
x 8
FUEL TANK VENT TUBE SET PLATE
FUEL TANK BREATHER ELBOW TUBE SUB-ASSEMBLY
FUEL TANK MAIN TUBE SUB-ASSEMBLY
FUEL SUCTION TUBE WITH PUMP AND GAUGE ASSEMBLY
FUEL CUT-OFF TUBE
● FUEL SUCTION TUBE SET GASKET
N*m (kgf*cm, ft.*lbf): Specified torque
● Non-reusable part
C

Fig. 21: Identifying Fuel Pressure Regulator Replacement Components With Torque Specifications (1 Of 2)
Courtesy of TOYOTA MOTOR SALES, U.S.A., INC.

ILLUSTRATION

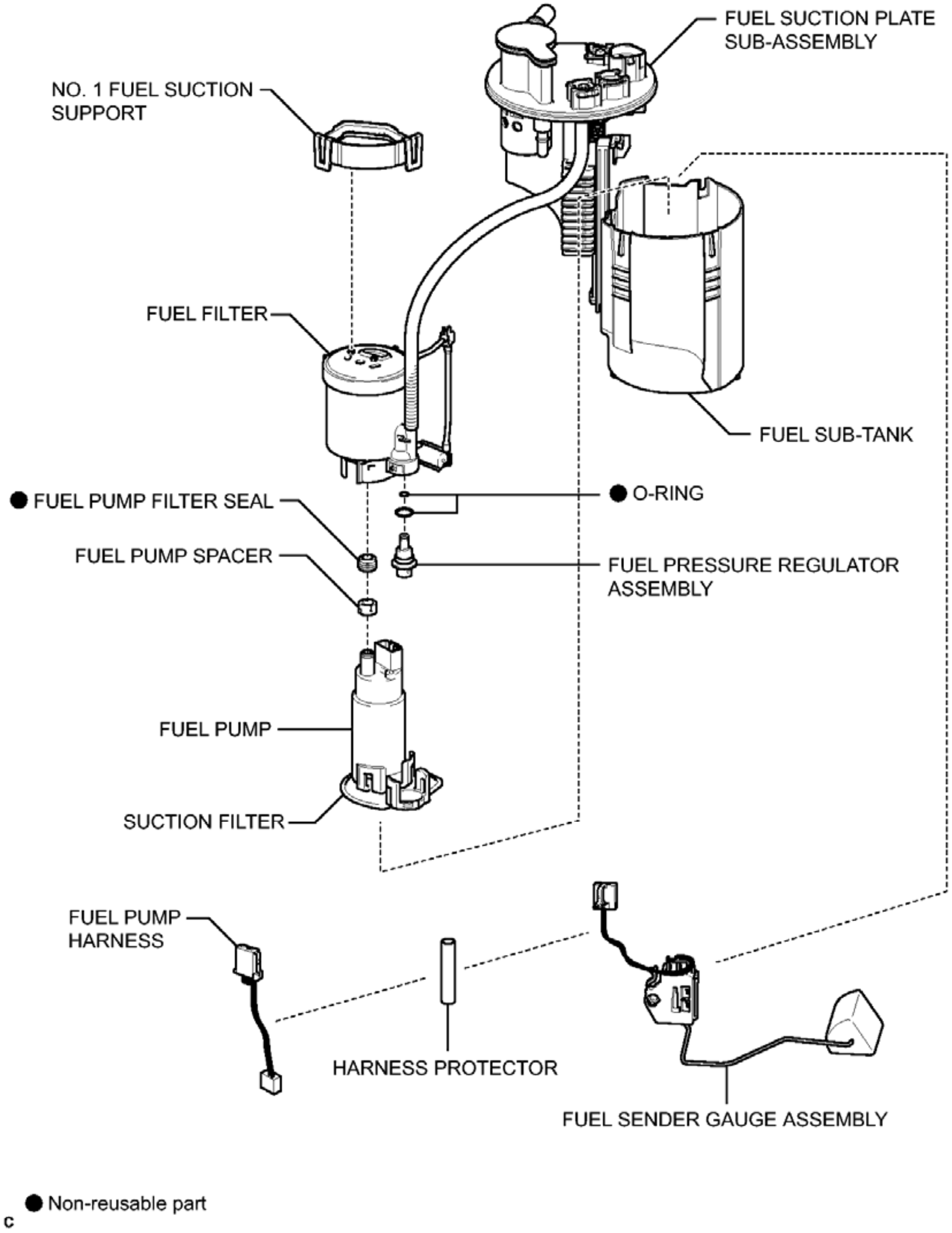
FUEL SUCTION PLATE SUB-ASSEMBLY
NO. 1 FUEL SUCTION SUPPORT
FUEL FILTER
FUEL SUB-TANK
● FUEL PUMP FILTER SEAL
● O-RING
FUEL PUMP SPACER
FUEL PRESSURE REGULATOR ASSEMBLY
FUEL PUMP
SUCTION FILTER
FUEL PUMP HARNESS
HARNESS PROTECTOR
FUEL SENDER GAUGE ASSEMBLY
C
● Non-reusable part

Fig. 22: Identifying Fuel Pressure Regulator Replacement Components With Torque Specifications (2 Of 2)
Courtesy of TOYOTA MOTOR SALES, U.S.A., INC.

REMOVAL

REMOVAL

1. **REMOVE FUEL SUCTION TUBE WITH PUMP AND GAUGE ASSEMBLY**

Refer to **REMOVAL**

2. **REMOVE FUEL SENDER GAUGE ASSEMBLY** See step 2
3. **REMOVE FUEL PUMP**
    a. Disconnect the connector of the fuel pump harness.

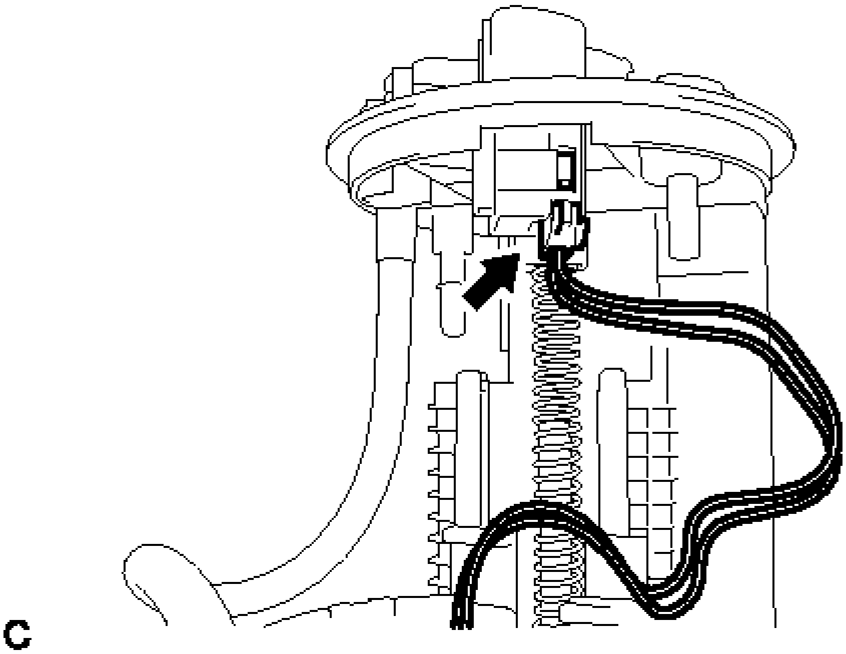

Fig. 23: Identifying Fuel Pump Harness Connector
Courtesy of TOYOTA MOTOR SALES, U.S.A., INC.

b. Disconnect the fuel pump filter hose.

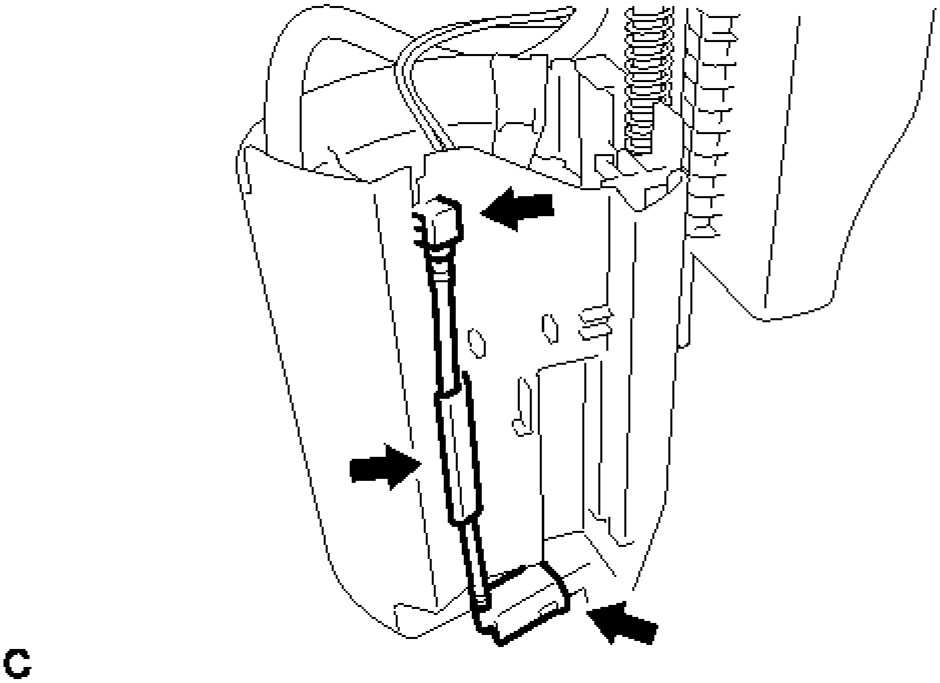

Fig. 24: Identifying Fuel Pump Filter Hose
Courtesy of TOYOTA MOTOR SALES, U.S.A., INC.

c. Using a screwdriver with its tip wrapped in protective tape, disengage the 2 claws, and remove the fuel filter and fuel pump from the fuel sub-tank.

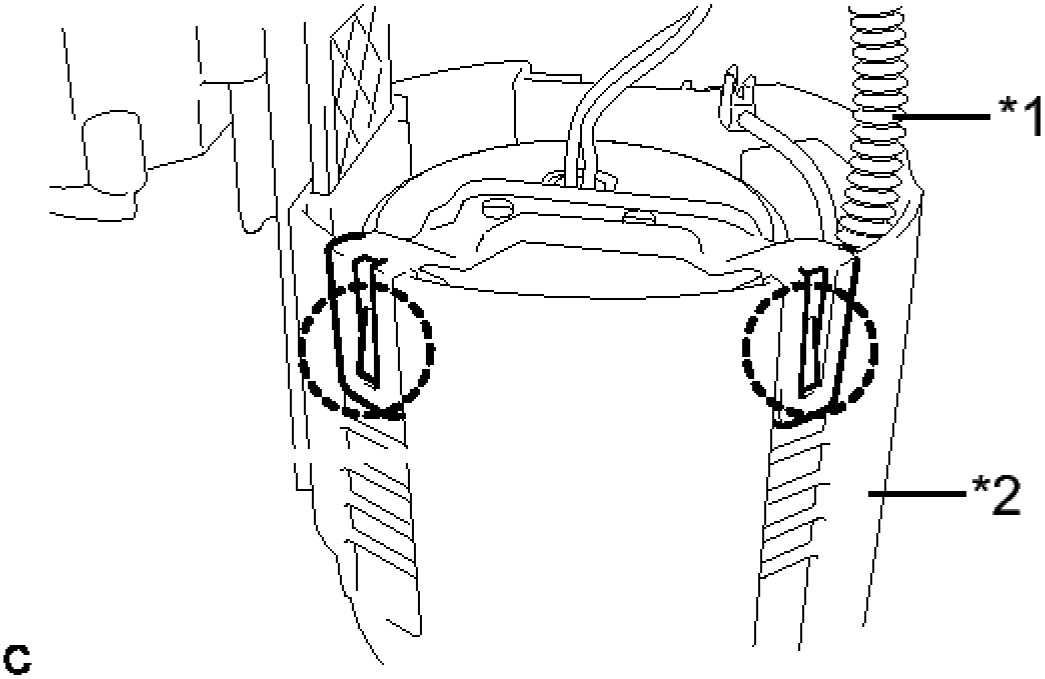

Fig. 25: Identifying Fuel Tube And Fuel Sub-Tank

Courtesy of TOYOTA MOTOR SALES, U.S.A., INC.

TEXT IN ILLUSTRATION

*1	Fuel Tube
*2	Fuel Sub-tank

NOTE: **Do not do anything which may separate the fuel tube from either the fuel suction plate or fuel filter assembly, such as applying excessive force to the tube. Refer to PRECAUTION .**

d. Using a screwdriver with its tip wrapped in protective tape, disengage the 2 claws and remove the No. 1 fuel suction support.

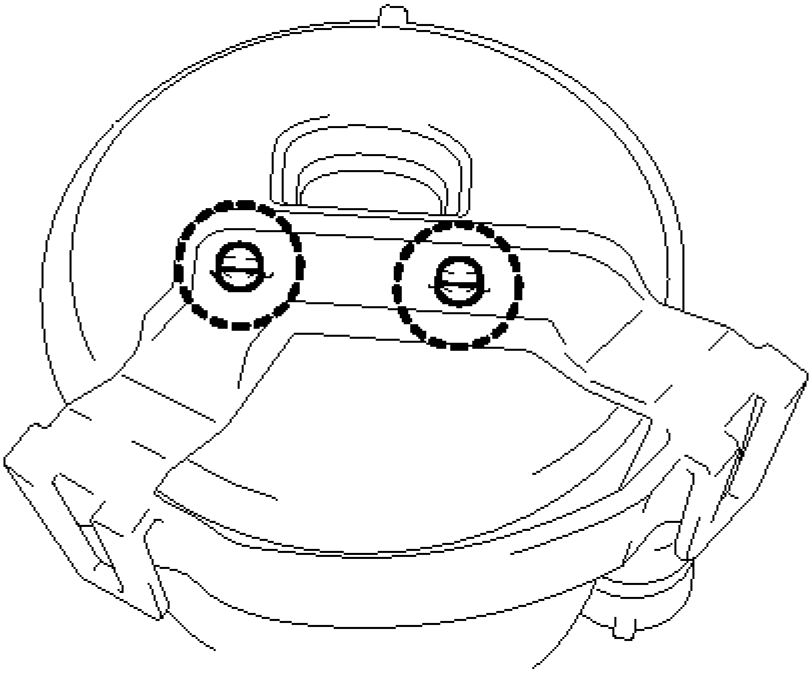

Fig. 26: Identifying No. 1 Fuel Suction Support Claws
Courtesy of TOYOTA MOTOR SALES, U.S.A., INC.

e. Using a screwdriver with its tip wrapped in protective tape, disengage the 5 claws, and remove the fuel pump from the fuel filter.

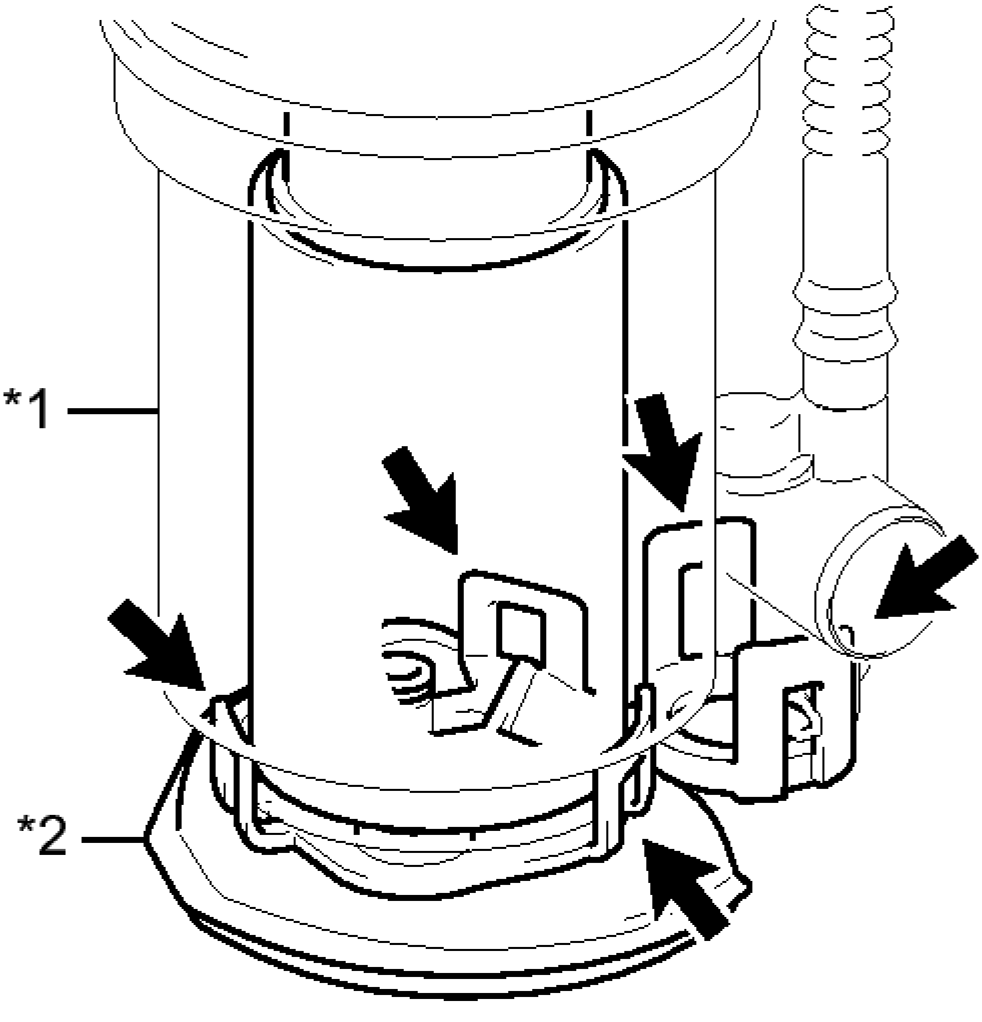

Fig. 27: Identifying Fuel Filter And Suction Filter
Courtesy of TOYOTA MOTOR SALES, U.S.A., INC.

TEXT IN ILLUSTRATION

*1	Fuel Filter
*2	Suction Filter

NOTE:

- **Do not damage the fuel filter.**
- **Do not remove the suction filter.**
- **Do not use either the fuel pump or the suction filter if the suction filter is removed from the fuel pump.**

f. Disconnect the fuel pump harness connector.

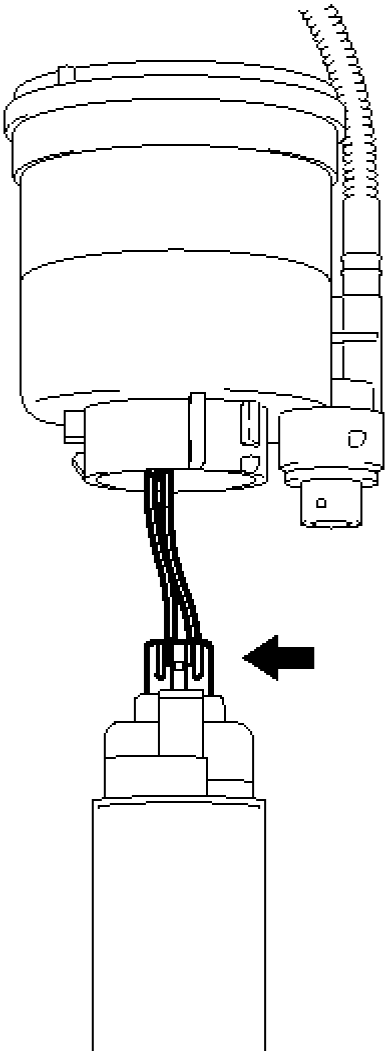

Fig. 28: Identifying Fuel Pump Connector
Courtesy of TOYOTA MOTOR SALES, U.S.A., INC.

g. Remove the fuel pump filter seal from the fuel pump. If the fuel pump filter seal still remains in the fuel filter element, remove it using a wire tip (1 mm) that is formed as shown in the illustration.

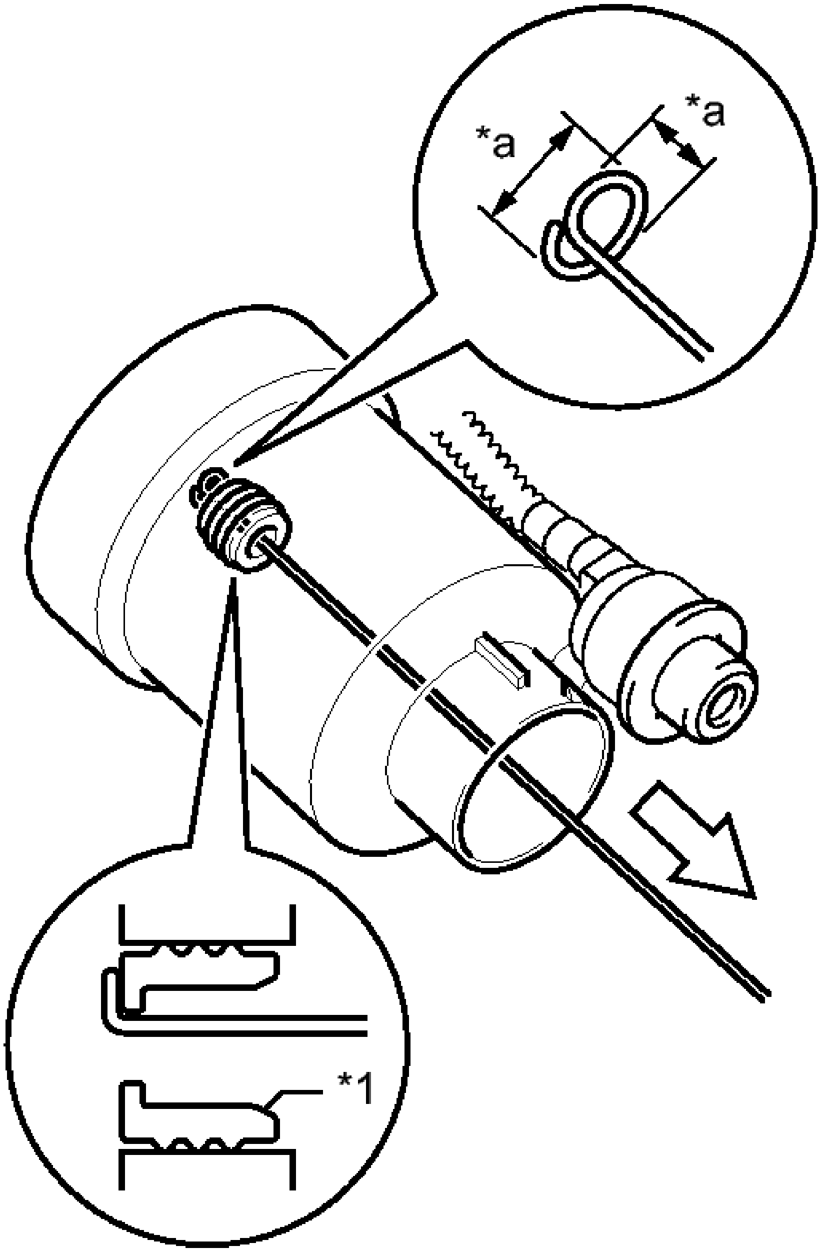

T

Fig. 29: Identifying Fuel Pump Filter Seal
Courtesy of TOYOTA MOTOR SALES, U.S.A., INC.

TEXT IN ILLUSTRATION

*1	Fuel Pump Filter Seal
*a	5.0 mm (0.197 in.)

NOTE: Be careful not to damage the sealing surface.

h. Remove the fuel pump spacer from the fuel pump.

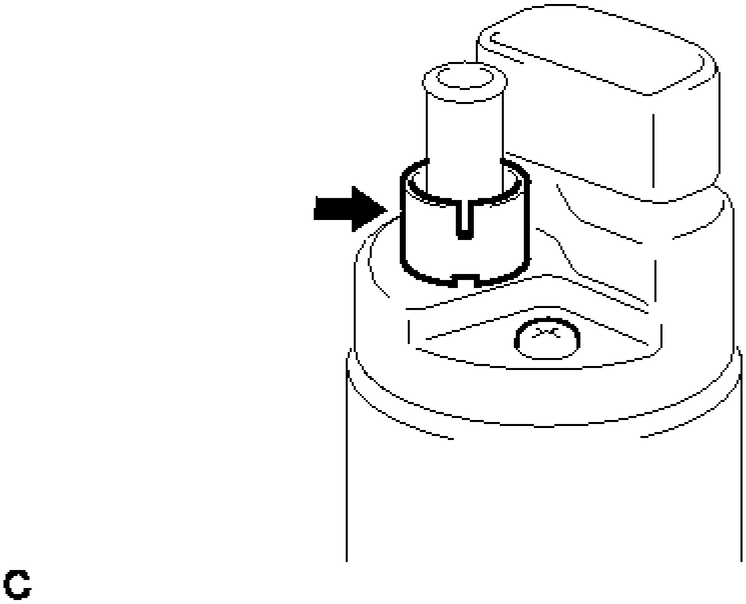

Fig. 30: Identifying Fuel Pump Spacer
Courtesy of TOYOTA MOTOR SALES, U.S.A., INC.

4. **REMOVE FUEL PRESSURE REGULATOR ASSEMBLY**
   a. Using a screwdriver with its tip wrapped in protective tape, remove the fuel pressure regulator assembly.

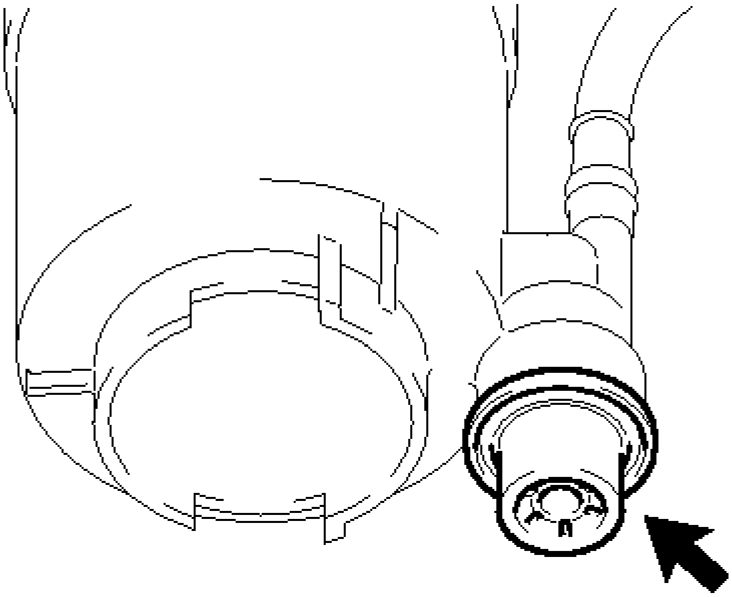

P

Fig. 31: Locating Fuel Pressure Regulator Assembly
Courtesy of TOYOTA MOTOR SALES, U.S.A., INC.

NOTE: **Slowly pull out the fuel pressure regulator assembly because the O-ring is firmly installed between the fuel pressure regulator assembly and the fuel filter.**

b. Remove the 2 O-rings from the pressure regulator assembly.

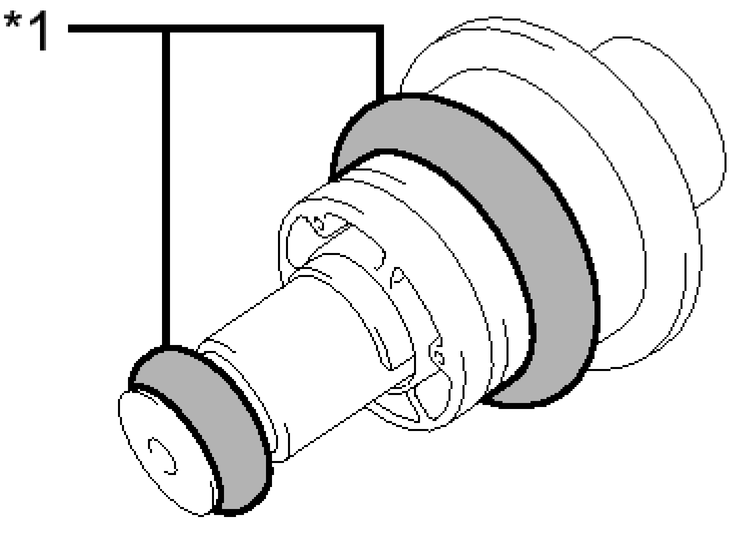

Fig. 32: Identifying Pressure Regulator Assembly & O - Rings
Courtesy of TOYOTA MOTOR SALES, U.S.A., INC.

TEXT IN ILLUSTRATION

*1	O-ring

INSTALLATION

INSTALLATION

1. **INSTALL FUEL PRESSURE REGULATOR ASSEMBLY**
    a. Apply gasoline to 2 new O-rings and then install them to the fuel pressure regulator assembly.
2. **INSTALL FUEL PUMP** See step 1
3. **INSTALL FUEL SENDER GAUGE ASSEMBLY** See step 1
4. **INSTALL FUEL SUCTION TUBE WITH PUMP AND GAUGE ASSEMBLY**

    Refer to **INSTALLATION**

FUEL PUMP

COMPONENTS

ILLUSTRATION

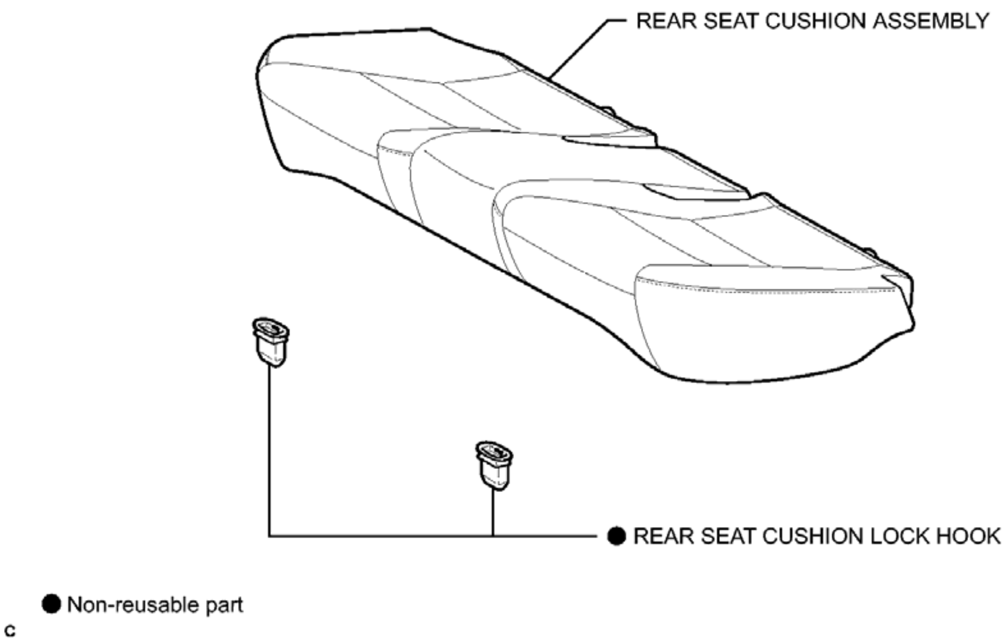
REAR SEAT CUSHION ASSEMBLY
● REAR SEAT CUSHION LOCK HOOK
● Non-reusable part
c

Fig. 33: Identifying Fuel Pump Replacement Components With Torque Specifications (1 Of 3)
Courtesy of TOYOTA MOTOR SALES, U.S.A., INC.

ILLUSTRATION

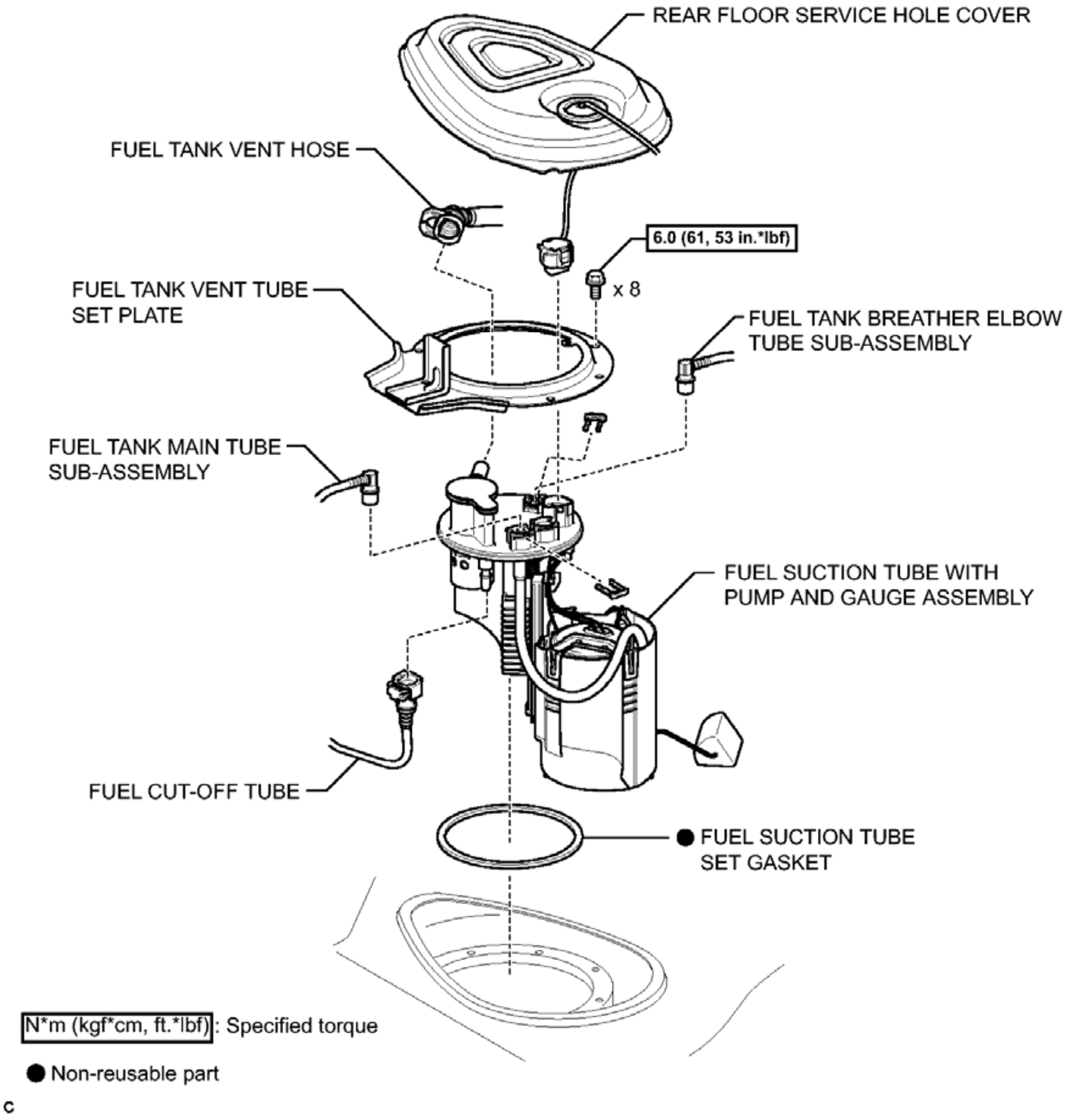
REAR FLOOR SERVICE HOLE COVER
FUEL TANK VENT HOSE
6.0 (61, 53 in.*lbf)
x 8
FUEL TANK VENT TUBE SET PLATE
FUEL TANK BREATHER ELBOW TUBE SUB-ASSEMBLY
FUEL TANK MAIN TUBE SUB-ASSEMBLY
FUEL SUCTION TUBE WITH PUMP AND GAUGE ASSEMBLY
FUEL CUT-OFF TUBE
● FUEL SUCTION TUBE SET GASKET
N*m (kgf*cm, ft.*lbf): Specified torque
● Non-reusable part
C

Fig. 34: Identifying Fuel Pump Replacement Components With Torque Specifications (2 Of 3)
Courtesy of TOYOTA MOTOR SALES, U.S.A., INC.

ILLUSTRATION

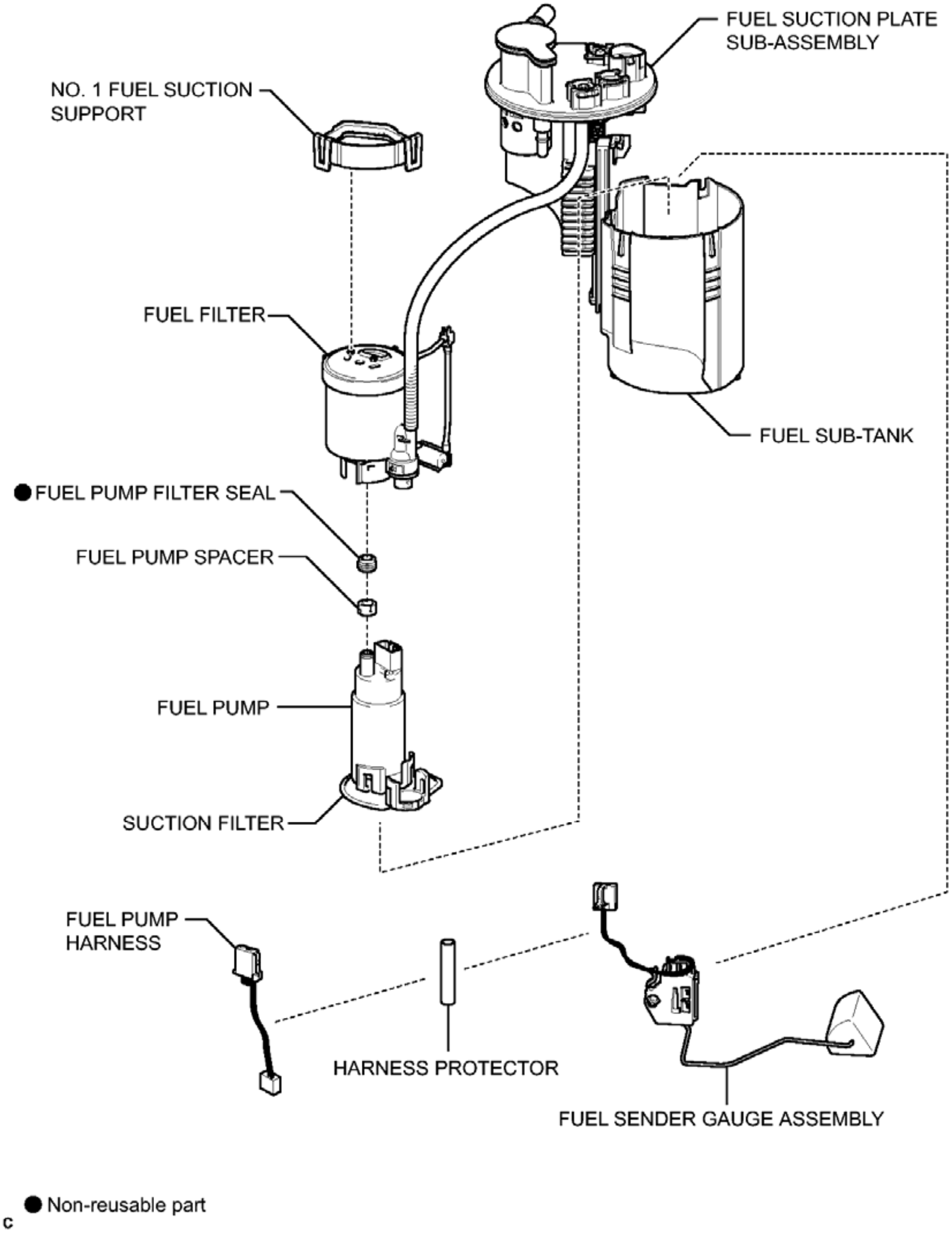
FUEL SUCTION PLATE SUB-ASSEMBLY
NO. 1 FUEL SUCTION SUPPORT
FUEL FILTER
FUEL SUB-TANK
● FUEL PUMP FILTER SEAL
FUEL PUMP SPACER
FUEL PUMP
SUCTION FILTER
FUEL PUMP HARNESS
HARNESS PROTECTOR
FUEL SENDER GAUGE ASSEMBLY
● Non-reusable part
c

Fig. 35: Identifying Fuel Pump Replacement Components With Torque Specifications (3 Of 3)
Courtesy of TOYOTA MOTOR SALES, U.S.A., INC.

REMOVAL

REMOVAL

HINT:

- If a malfunction such as pump lock occurs and the fuel pump is damaged, excessive current may be continuously applied to the fuel pump control ECU, damaging its internal parts. Make sure to replace the fuel pump control ECU at the same time when replacing the fuel pump.
- Perform "Inspection After Repair" after replacing the fuel pump assembly. Refer to **INITIALIZATION** .

1. **PRECAUTION**

   NOTE: **After turning the engine switch off, waiting time may be required before disconnecting the cable from the negative (-) battery terminal. Therefore, make sure to read the disconnecting the cable from the negative (-) battery terminal notice before proceeding with work. Refer to PRECAUTION .**

2. **DISCHARGE FUEL SYSTEM PRESSURE**

   Refer to **PRECAUTION**

3. **DISCONNECT CABLE FROM NEGATIVE BATTERY TERMINAL**

   NOTE: **When disconnecting the cable, some systems need to be initialized after the cable is reconnected. Refer to INITIALIZATION .**

4. **REMOVE REAR SEAT CUSHION ASSEMBLY** . Refer to **REMOVAL - Step 3**
5. **REMOVE REAR SEAT CUSHION LOCK HOOK** . Refer to **REMOVAL - Step 4**
6. **REMOVE REAR FLOOR SERVICE HOLE COVER**
   a. Remove the rear floor service hole cover.

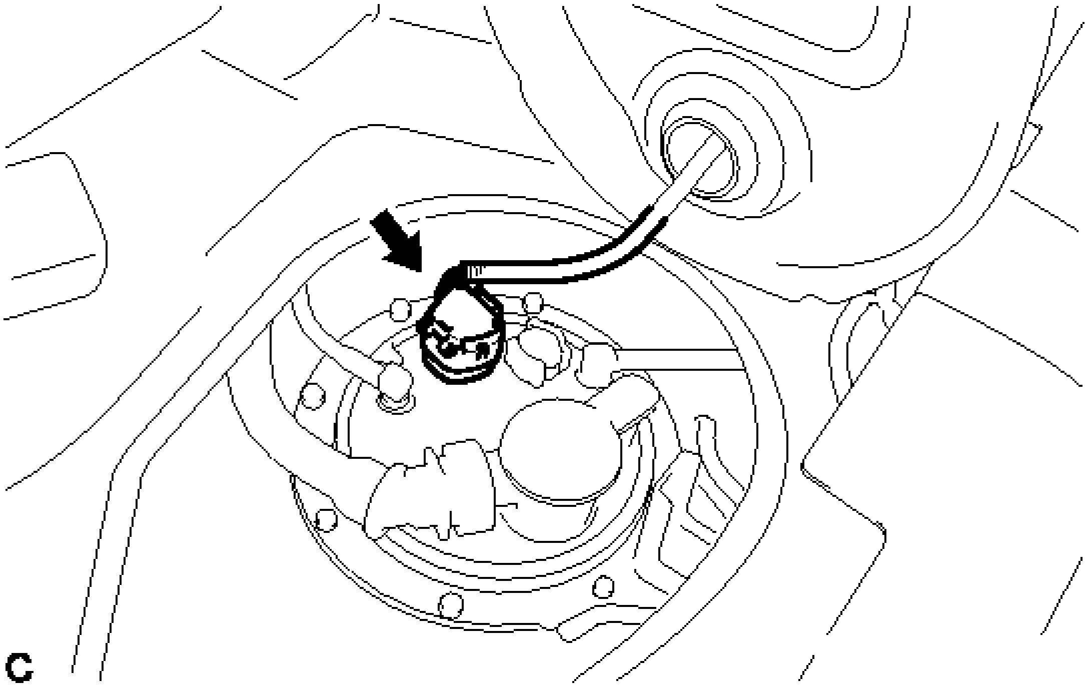

Fig. 36: Identifying Fuel Pump Connector
Courtesy of TOYOTA MOTOR SALES, U.S.A., INC.

b. Disconnect the fuel pump connector.

7. **DISCONNECT FUEL TANK VENT HOSE**

a. Pull the tabs of the retainer to disengage the lock claws and pull out the fuel tank vent hose.

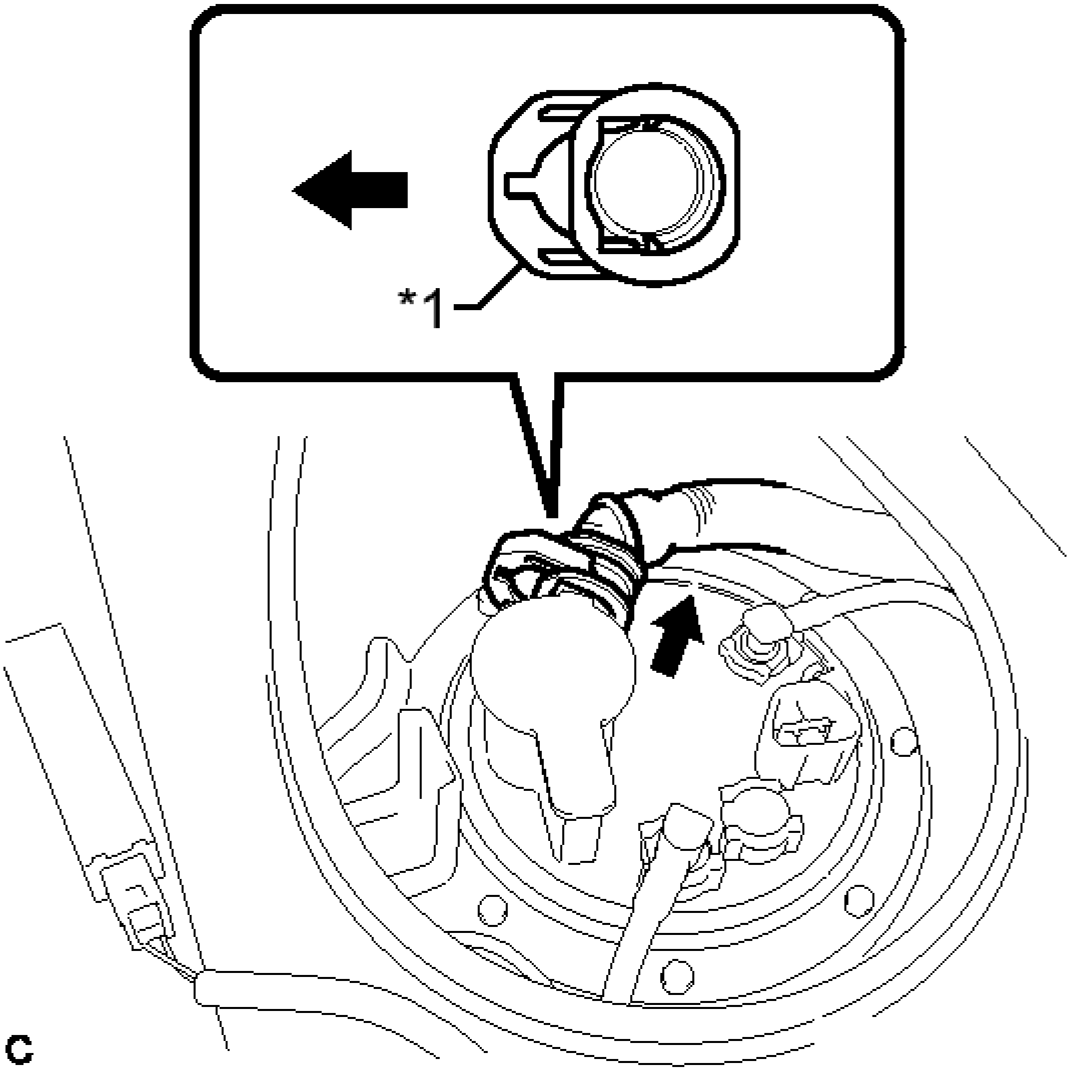

Fig. 37: Identifying Retainer
Courtesy of TOYOTA MOTOR SALES, U.S.A., INC.

TEXT IN ILLUSTRATION

*1	Retainer

NOTE:

- **Remove any dirt or foreign matter on the fuel tank vent hose connector before performing this work.**

- **Do not allow any scratches or foreign matter on the parts when disconnecting them as the fuel tank vent hose connector has an O-ring that seals the pipe.**
- **Only disconnect the joint by hand.**
- **Do not forcibly bend, twist or turn the fuel tank vent hose.**
- **Protect the disconnected part by covering it with a plastic bag after disconnecting the fuel tank vent hose.**
- **If the vent hose connector and pipe are stuck, push and pull to release them.**

8. **DISCONNECT FUEL TANK BREATHER ELBOW TUBE SUB-ASSEMBLY**
    a. Remove the tube joint clip, and pull out the fuel tube joint of the fuel tank breather elbow tube sub-assembly.

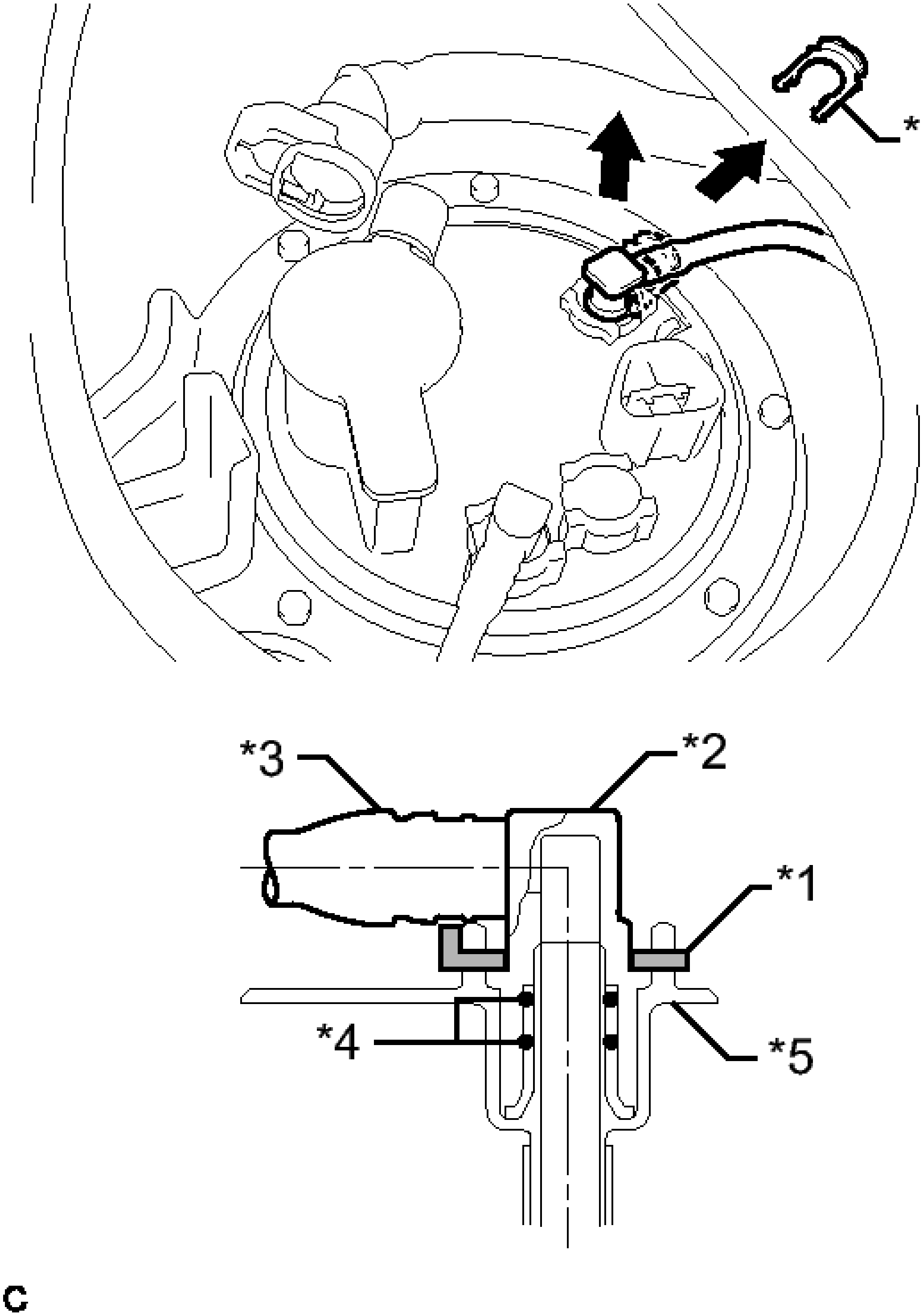

Fig. 38: Identifying Fuel Tube Joint And Fuel Tank Breather Tube
Courtesy of TOYOTA MOTOR SALES, U.S.A., INC.

TEXT IN ILLUSTRATION

	Tube

*1	Joint Clip
*2	Fuel Tube Joint
*3	Fuel Tank Breather Tube
*4	O-ring
*5	Fuel Suction Plate

NOTE:

- **Remove any dirt or foreign matter on the fuel tube joint before performing this work.**
- **Do not allow any scratches or foreign matter to get on the parts when disconnecting them as the fuel tube joint has an O-ring that seals the pipe.**
- **Only disconnect the fuel tube joint by hand.**
- **Do not forcibly bend, twist or turn the fuel tank breather tube.**
- **Protect the disconnected part by covering it with a plastic bag after disconnecting the fuel tube joint.**
- **If the fuel tube joint and fuel suction plate are stuck, push and pull to release them.**

9. **DISCONNECT FUEL TANK MAIN TUBE SUB-ASSEMBLY**
   a. Remove the tube joint clip, and pull out the fuel tube joint of the fuel tank main tube sub-assembly.

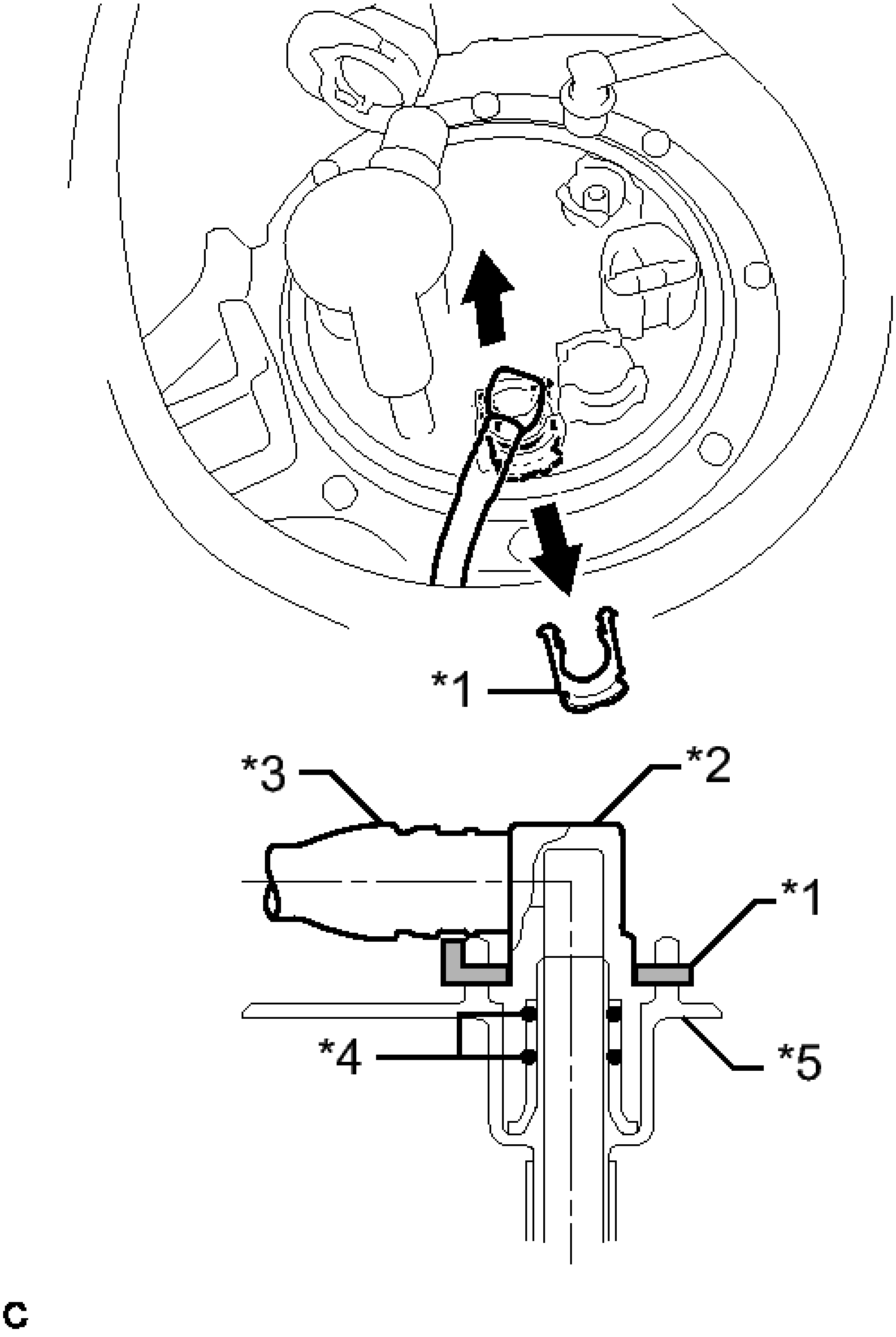

Fig. 39: Identifying Tube Joint Clip, Fuel Tube Joint And Fuel Tank Main Tube
Courtesy of TOYOTA MOTOR SALES, U.S.A., INC.

TEXT IN ILLUSTRATION

	Tube

*1	Joint Clip
*2	Fuel Tube Joint
*3	Fuel Tank Main Tube
*4	O-ring
*5	Fuel Suction Plate

NOTE:

- **Remove any dirt or foreign matter on the fuel tube joint before performing this work.**
- **Do not allow any scratches or foreign matter to get on the parts when disconnecting them as the fuel tube joint has an O-ring that seals the pipe.**
- **Only disconnect the fuel tube joint by hand.**
- **Do not forcibly bend, twist or turn the fuel tank main tube.**
- **Protect the disconnected part by covering it with a plastic bag after disconnecting the fuel tube joint.**
- **If the fuel tube joint and fuel suction plate are stuck, push and pull to release them.**

10. **REMOVE FUEL TANK VENT TUBE SET PLATE**
    a. Remove the 8 bolts and set plate.

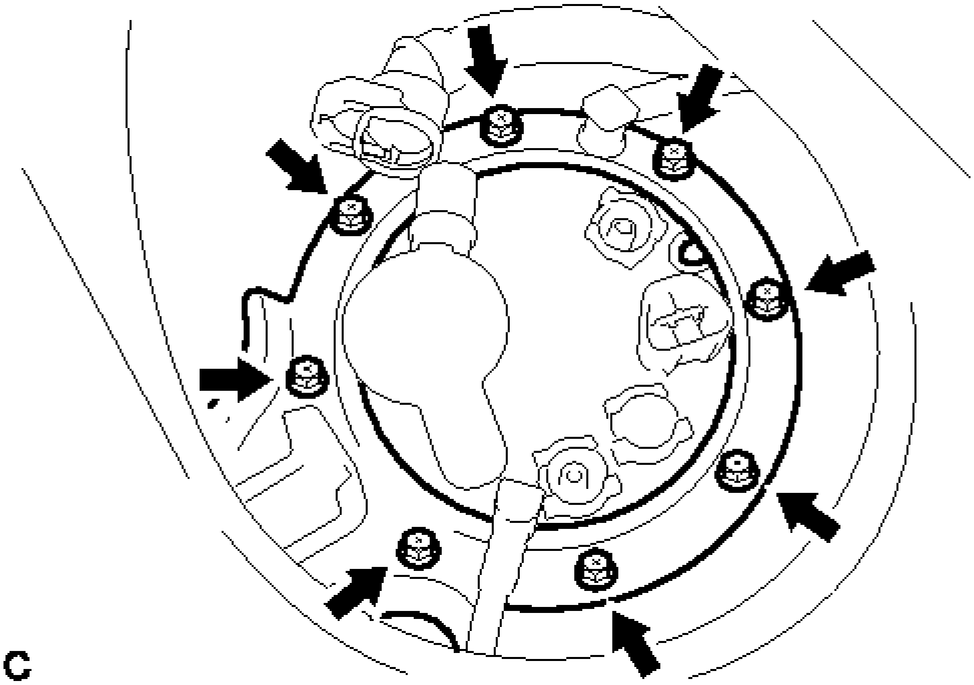

Fig. 40: Identifying Set Plate Bolts
Courtesy of TOYOTA MOTOR SALES, U.S.A., INC.

11. **REMOVE FUEL SUCTION TUBE WITH PUMP AND GAUGE ASSEMBLY**
    a. Using a screwdriver with its tip wrapped in protective tape, pull the tabs of the retainer to disengage the lock claws and pull out the fuel cut-off tube.

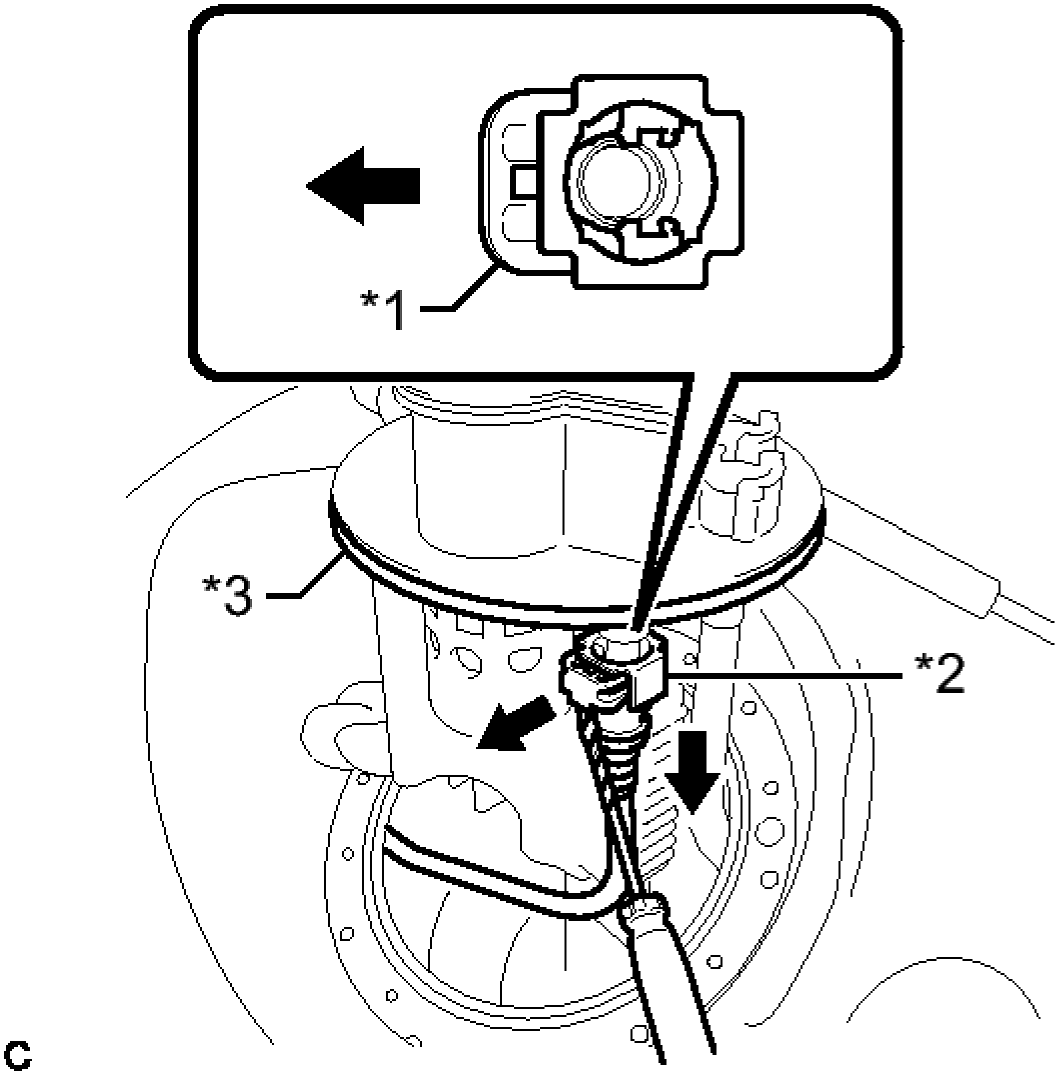

Fig. 41: Identifying Fuel Cut-Off Tube And Fuel Suction Tube Set Gasket
Courtesy of TOYOTA MOTOR SALES, U.S.A., INC.

TEXT IN ILLUSTRATION

*1	Retainer
*2	Fuel Cut-off Tube
*3	Fuel Suction Tube Set Gasket

b. Remove the fuel suction tube with pump and gauge assembly from the fuel tank.

NOTE: Make sure that the fuel sender gauge arm does not bend.

   c. Remove the fuel suction tube set gasket from the fuel suction tube assembly.

DISASSEMBLY

DISASSEMBLY

1. **REMOVE FUEL SENDER GAUGE ASSEMBLY** See step 2
2. **REMOVE FUEL PUMP**
   a. Disconnect the connector of the fuel pump harness.

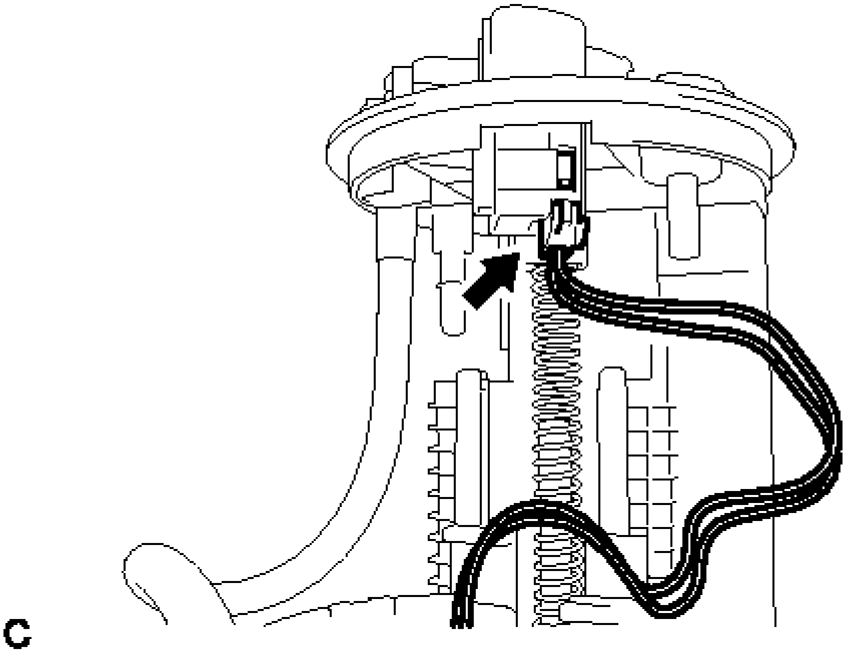

Fig. 42: Identifying Fuel Pump Harness Connector
Courtesy of TOYOTA MOTOR SALES, U.S.A., INC.

   b. Disconnect the fuel pump filter hose.

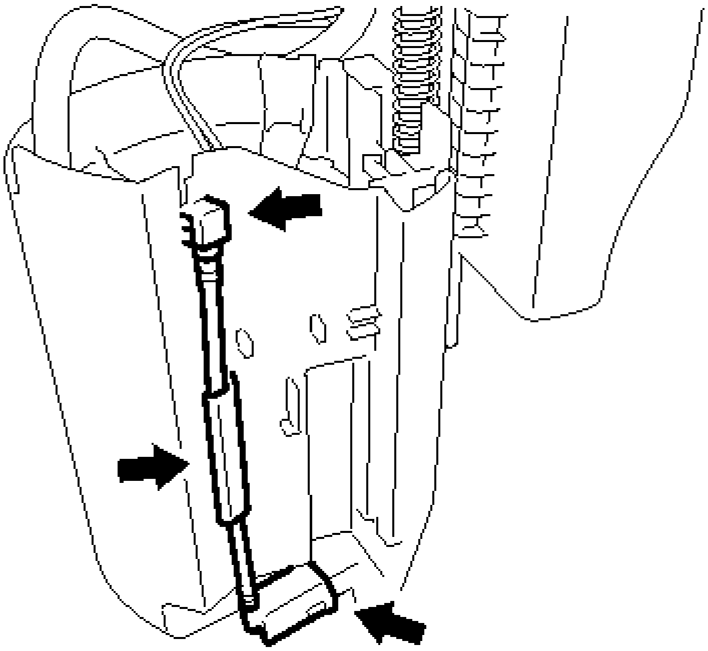

Fig. 43: Identifying Fuel Pump Filter Hose
Courtesy of TOYOTA MOTOR SALES, U.S.A., INC.

c. Using a screwdriver with its tip wrapped in protective tape, disengage the 2 claws, and remove the fuel filter and fuel pump from the fuel sub-tank.

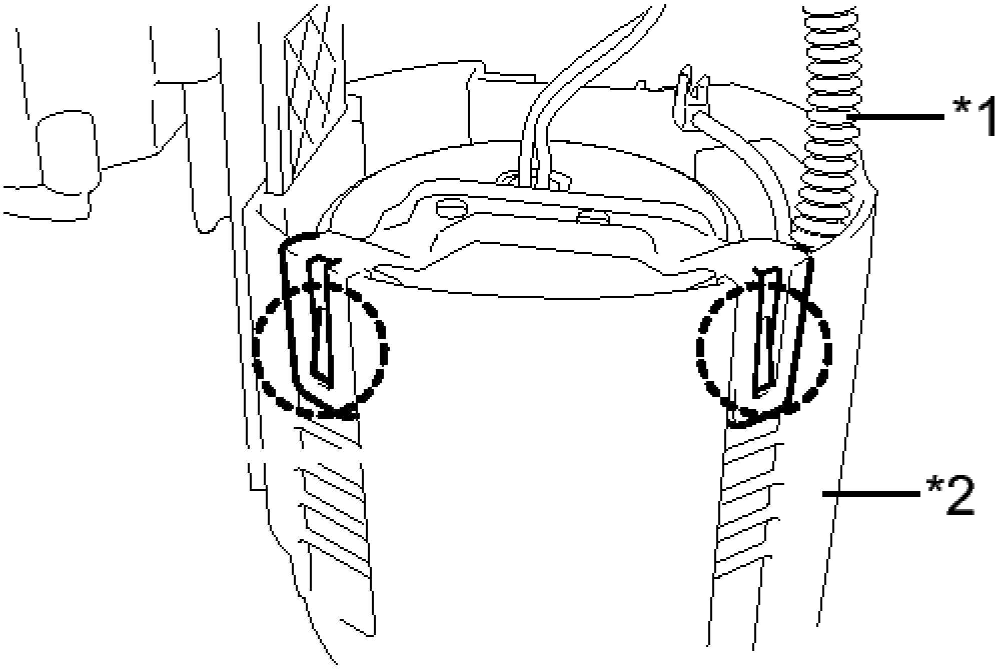

Fig. 44: Identifying Fuel Tube And Fuel Sub-Tank

Courtesy of TOYOTA MOTOR SALES, U.S.A., INC.

TEXT IN ILLUSTRATION

*1	Fuel Tube
*2	Fuel Sub-tank

NOTE: **Do not do anything which may separate the fuel tube from either the fuel suction plate or fuel filter assembly, such as applying excessive force to the tube. Refer to PRECAUTION .**

d. Using a screwdriver with its tip wrapped in protective tape, disengage the 2 claws and remove the No. 1 fuel suction support.

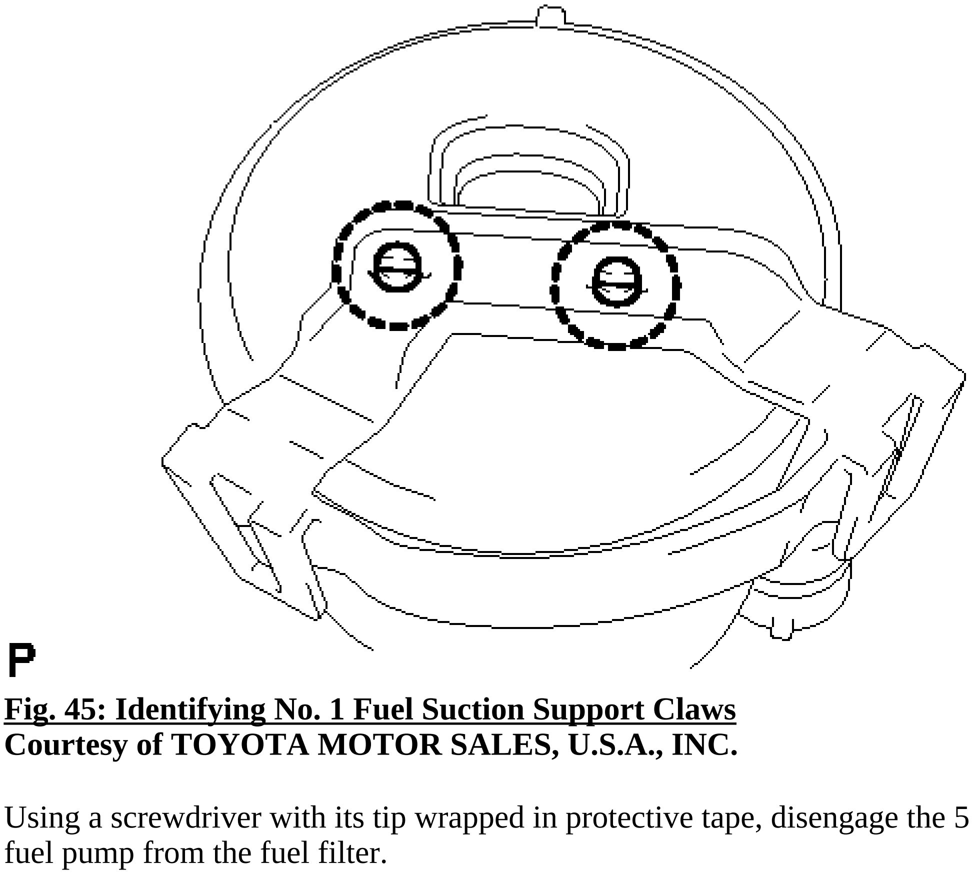

Fig. 45: Identifying No. 1 Fuel Suction Support Claws
Courtesy of TOYOTA MOTOR SALES, U.S.A., INC.

e. Using a screwdriver with its tip wrapped in protective tape, disengage the 5 claws, and remove the fuel pump from the fuel filter.

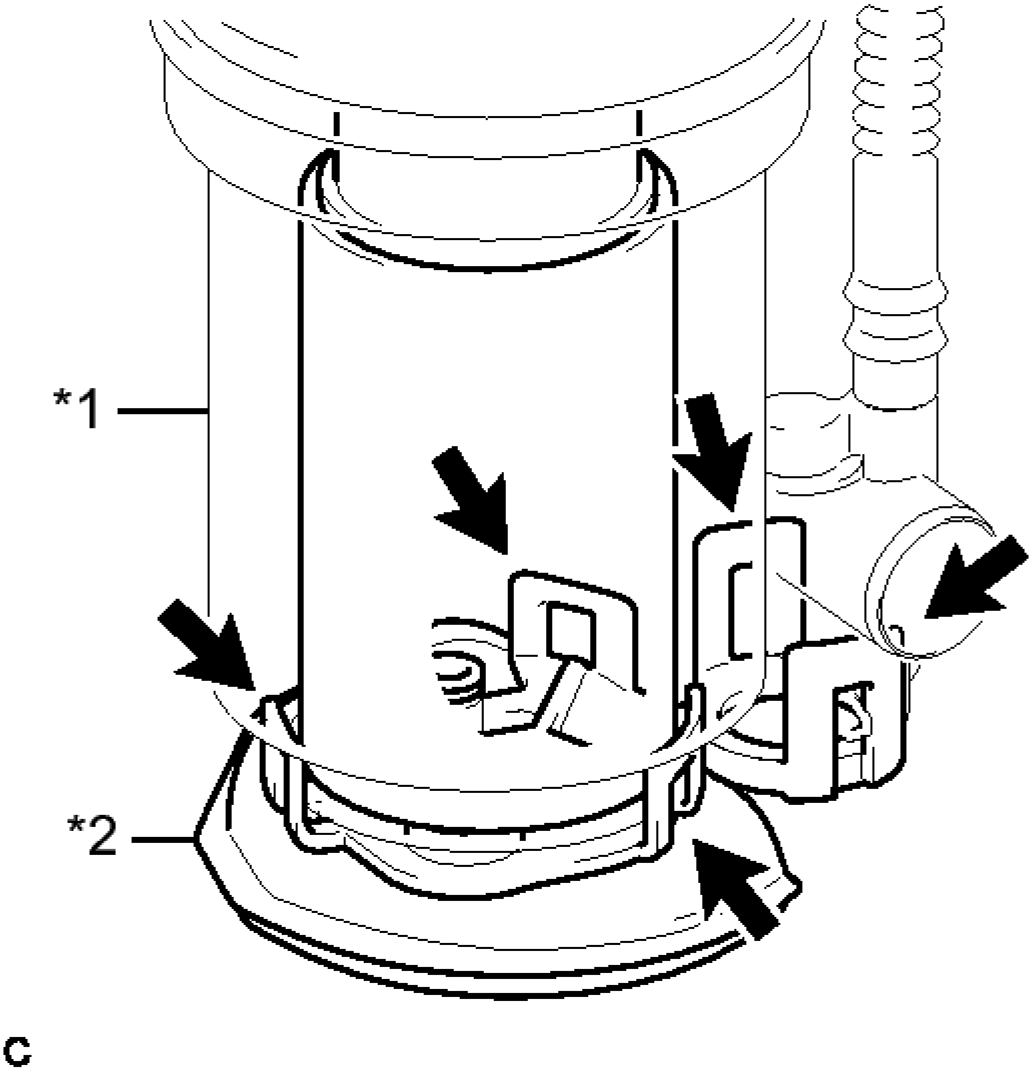

Fig. 46: Identifying Fuel Filter And Suction Filter
Courtesy of TOYOTA MOTOR SALES, U.S.A., INC.

TEXT IN ILLUSTRATION

*1	Fuel Filter
*2	Suction Filter

NOTE:

- **Do not damage the fuel filter.**
- **Do not remove the suction filter.**
- **Do not use either the fuel pump or the suction filter if the suction filter is removed from the fuel pump.**

f. Disconnect the fuel pump harness connector.

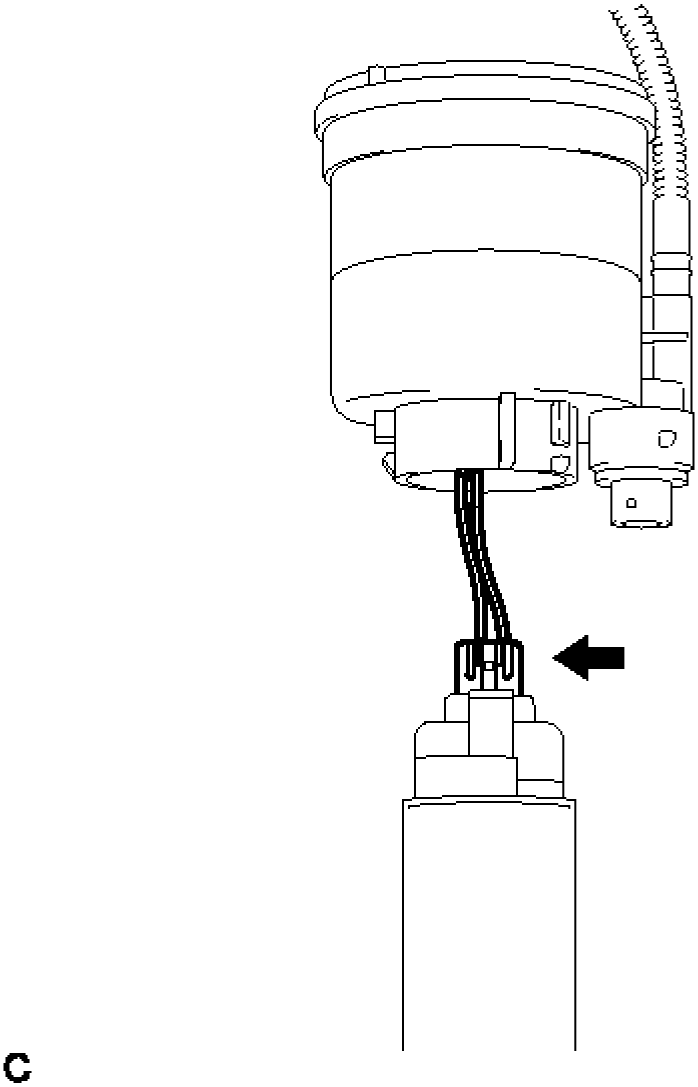

Fig. 47: Identifying Fuel Pump Connector
Courtesy of TOYOTA MOTOR SALES, U.S.A., INC.

g. Remove the fuel pump filter seal from the fuel pump. If the fuel pump filter seal still remains in the fuel filter element, remove it using a wire tip (1 mm) that is formed as shown in the illustration.

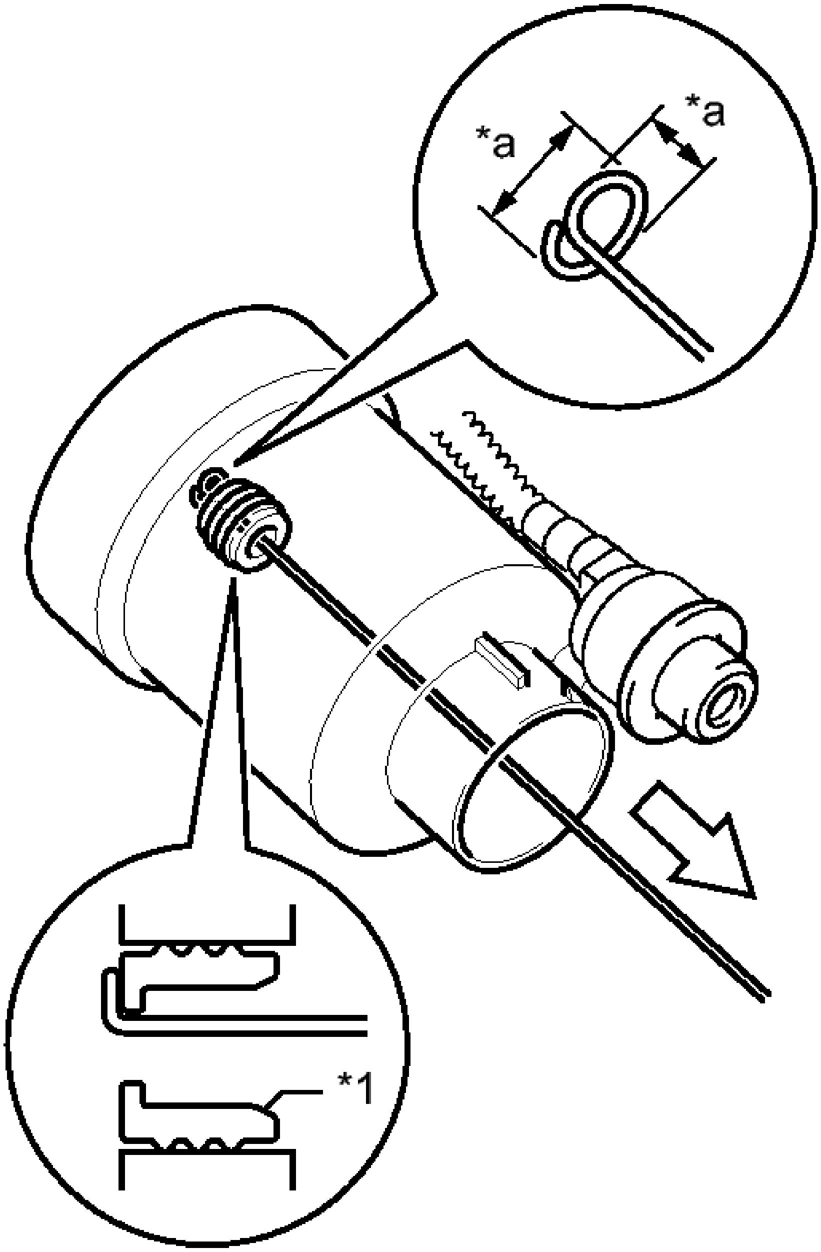

T

Fig. 48: Identifying Fuel Pump Filter Seal

Courtesy of TOYOTA MOTOR SALES, U.S.A., INC.

TEXT IN ILLUSTRATION

*1	Fuel Pump Filter Seal
*a	5.0 mm (0.197 in.)

NOTE: Be careful not to damage the sealing surface.

h. Remove the fuel pump spacer from the fuel pump.

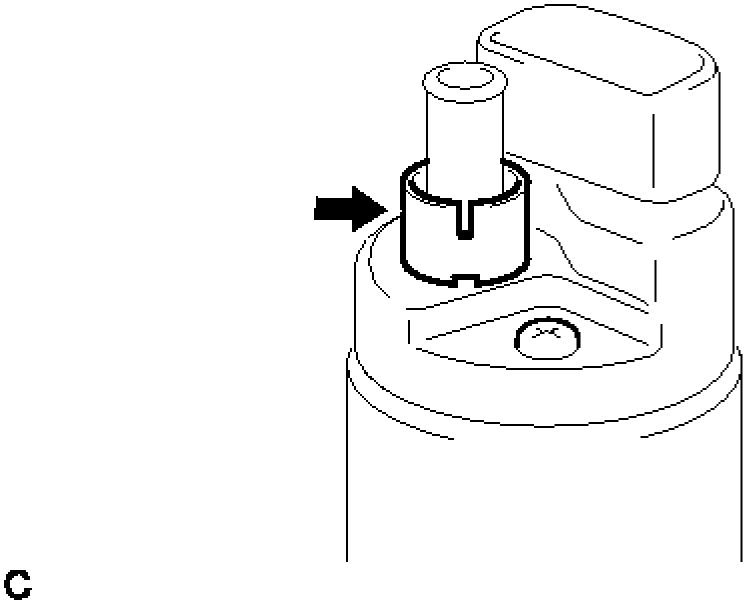

Fig. 49: Identifying Fuel Pump Spacer
Courtesy of TOYOTA MOTOR SALES, U.S.A., INC.

INSPECTION

INSPECTION

1. **INSPECT FUEL PUMP**
    a. Check the fuel pump resistance.

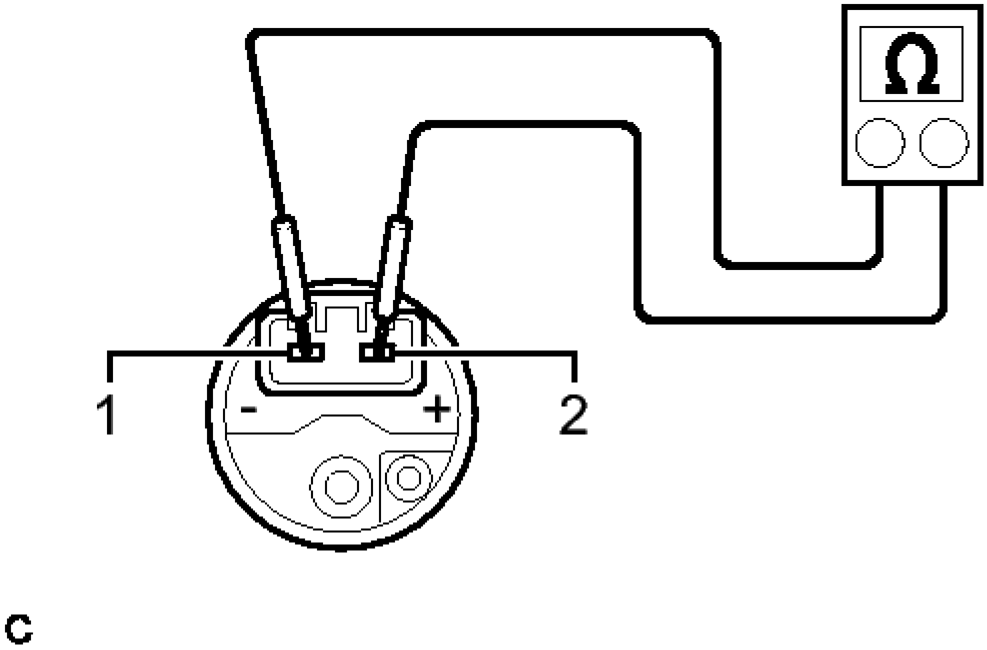

Fig. 50: Inspect Fuel Pump Resistance
Courtesy of TOYOTA MOTOR SALES, U.S.A., INC.

   1. Using an ohmmeter, measure the resistance according to the value(s) in the table below.

      Standard Resistance

Tester Connection	Condition	Specified Condition
1 - 2	20°C (68° F)	0.2 to 3.0 ohms

      If the result is not as specified, replace the fuel pump.

b. Check fuel pump operation.
   1. Apply battery voltage to terminals 1 and 2. Check that the pump operates.

      NOTE:

      - **These tests must be done quickly (within 10 seconds) to prevent the coil from burning out.**
      - **Keep the fuel pump as far away from the battery as possible.**
      - **Always switch the voltage on and off on the battery side, not the fuel pump side.**

      If the pump does not operate, replace the fuel pump.

REASSEMBLY

REASSEMBLY

1. **INSTALL FUEL PUMP**
    a. Install the fuel pump spacer onto the fuel pump.

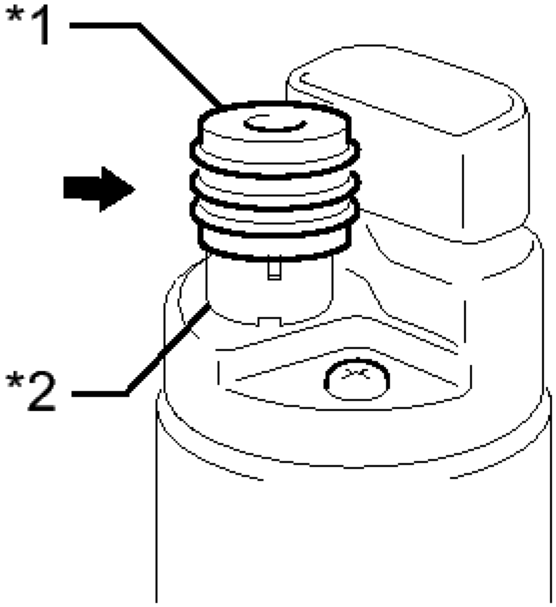

Fig. 51: Identifying Fuel Pump Filter Seal And Fuel Pump Spacer
Courtesy of TOYOTA MOTOR SALES, U.S.A., INC.

TEXT IN ILLUSTRATION

*1	Fuel Pump Filter Seal
*2	Fuel Pump Spacer

    b. Install a new fuel pump filter seal onto the fuel pump.
    c. Apply a coat of gasoline to the fuel pump filter seal.
    d. Engage the 5 claws of the fuel pump.

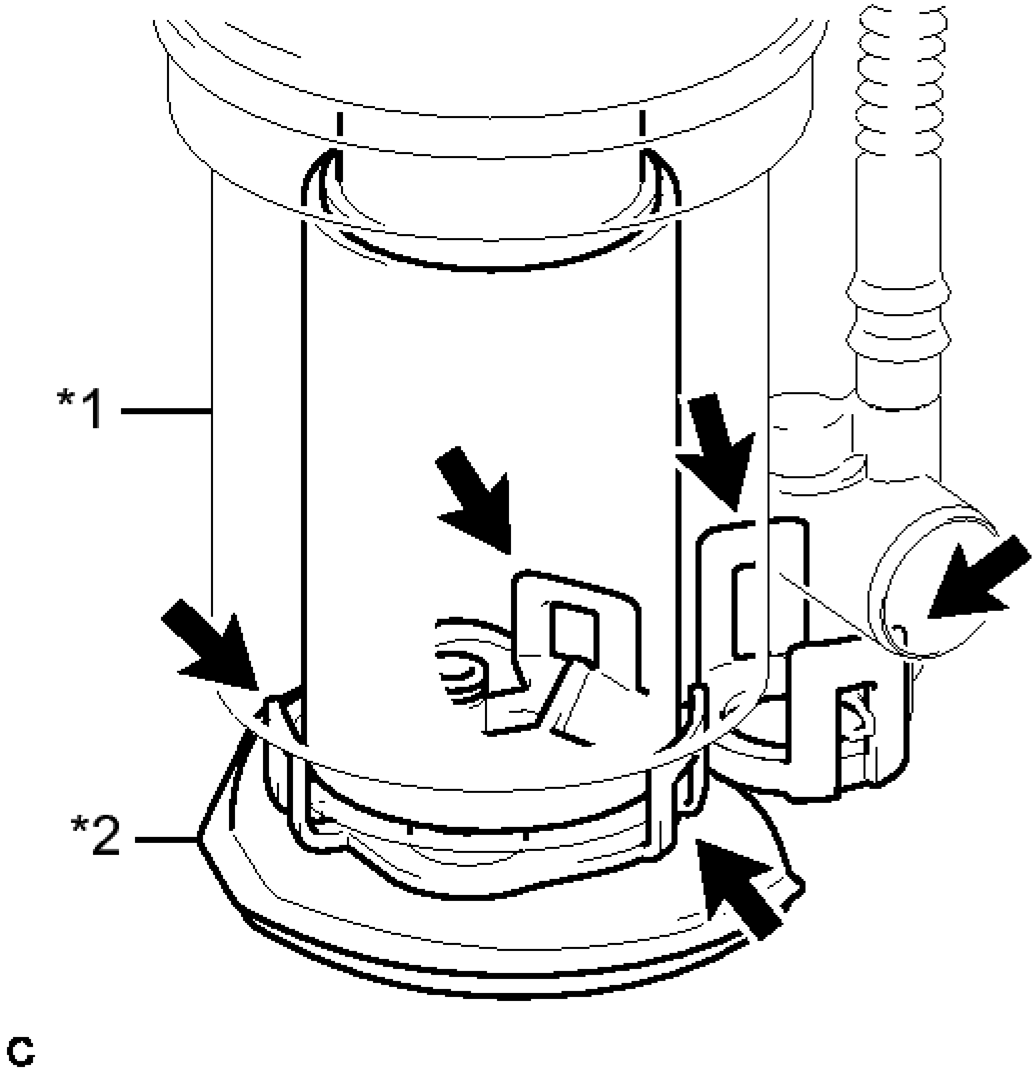

Fig. 52: Identifying Fuel Filter And Suction Filter
Courtesy of TOYOTA MOTOR SALES, U.S.A., INC.

TEXT IN ILLUSTRATION

*1	Fuel Filter
*2	Suction Filter

NOTE:

- **Engage the claws securely.**
- **Do not remove the suction filter.**

HINT:

Perform "Inspection After Repair" after replacing the fuel pump assembly. Refer to

INITIALIZATION .

e. Engage the 2 claws of the No. 1 fuel suction support.

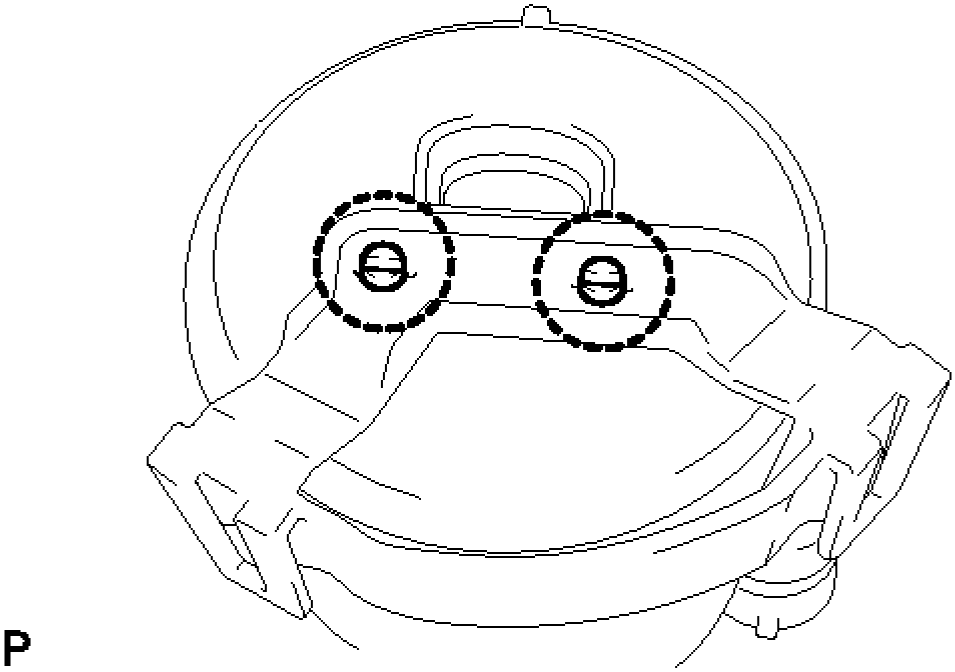

Fig. 53: Identifying Claws Of No. 1 Fuel Suction Support
Courtesy of TOYOTA MOTOR SALES, U.S.A., INC.

f. Connect the fuel pump harness connector.
g. Engage the 2 claws of the No. 1 fuel suction support and install the fuel filter and the fuel pump onto the fuel sub-tank.

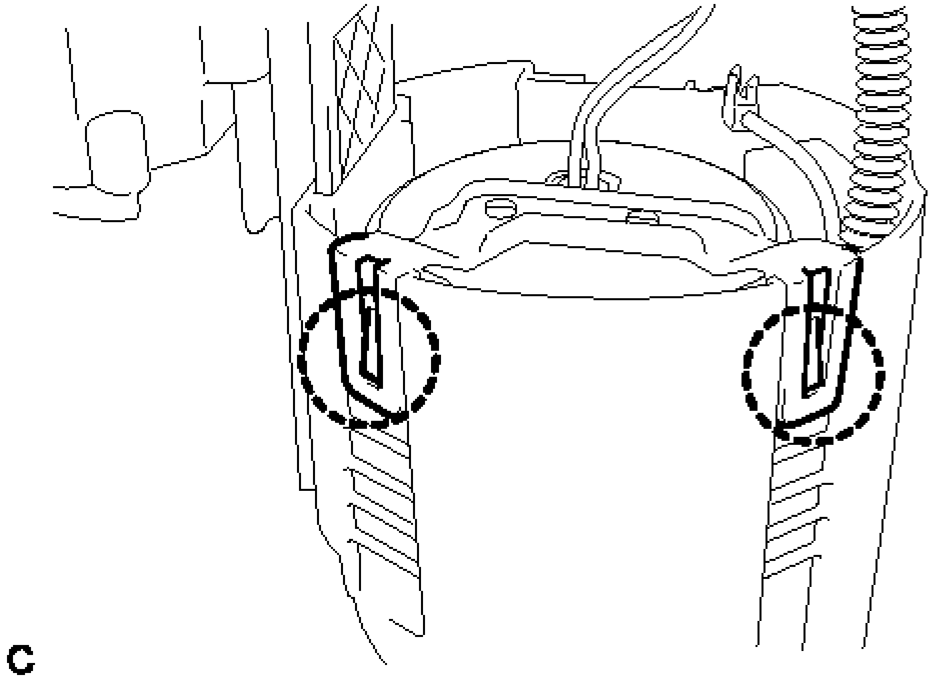

Fig. 54: Identifying Fuel Suction Support Claws
Courtesy of TOYOTA MOTOR SALES, U.S.A., INC.

h. Align the groove of the fuel pump filter hose with the cutout of the fuel sub-tank and install the hose.

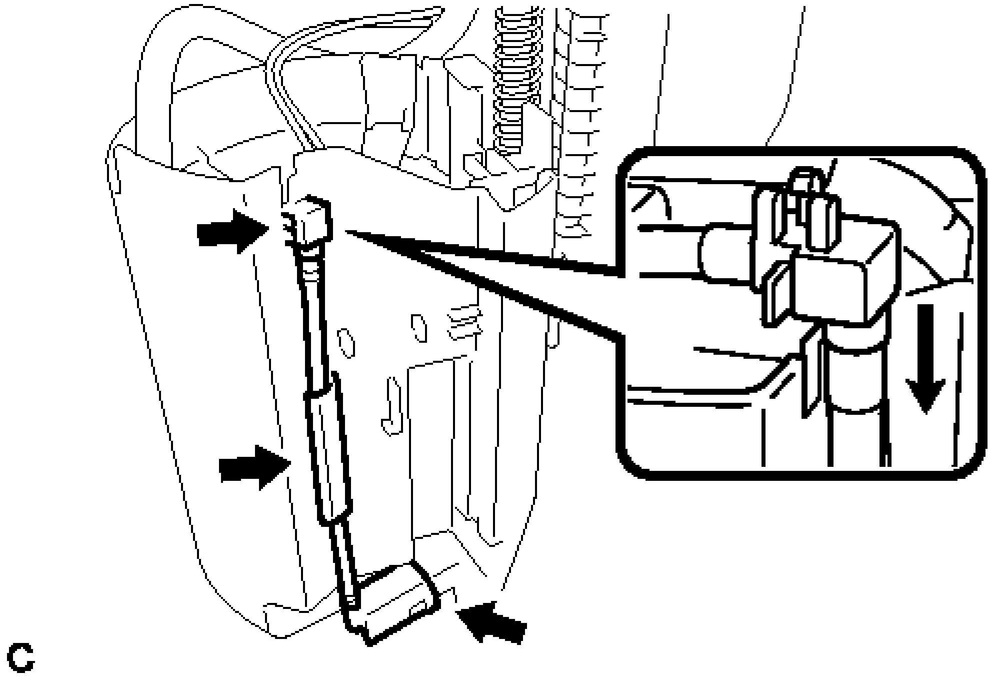

Fig. 55: Aligning Groove Of Fuel Pump Filter And Cutout Of Fuel Sub-Tank

Courtesy of TOYOTA MOTOR SALES, U.S.A., INC.

NOTE: Do not apply excessive force to the fuel tube or the suction support.

i. Connect the connector of the fuel pump harness.

2. **INSTALL FUEL SENDER GAUGE ASSEMBLY** See step 1

INSTALLATION

INSTALLATION

1. **INSTALL FUEL SUCTION TUBE WITH PUMP AND GAUGE ASSEMBLY**
   a. Install a new fuel suction tube set gasket to the fuel suction tube.

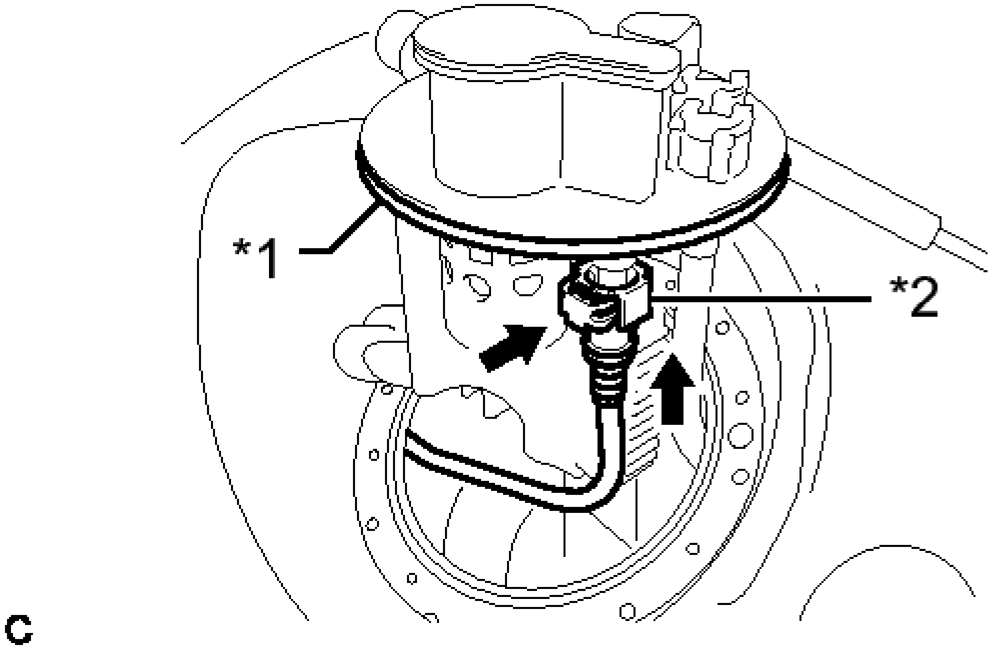

Fig. 56: Identifying Fuel Suction Tube Set Gasket And Fuel Cut-Off Tube
Courtesy of TOYOTA MOTOR SALES, U.S.A., INC.

TEXT IN ILLUSTRATION

*1	Fuel Suction Tube Set Gasket
*2	Fuel Cut-off Tube

b. Push in the fuel cut-off tube connector to the fuel suction tube assembly and push the retainer so that the claws engage.

c. Install the fuel suction tube with pump and gauge assembly to the fuel tank.

NOTE: Be careful that the arm of the sender gauge does not bend.

2. **INSTALL FUEL TANK VENT TUBE SET PLATE**

a. Align the protrusion of the fuel suction tube assembly and the cutout of the fuel tank vent tube set plate.

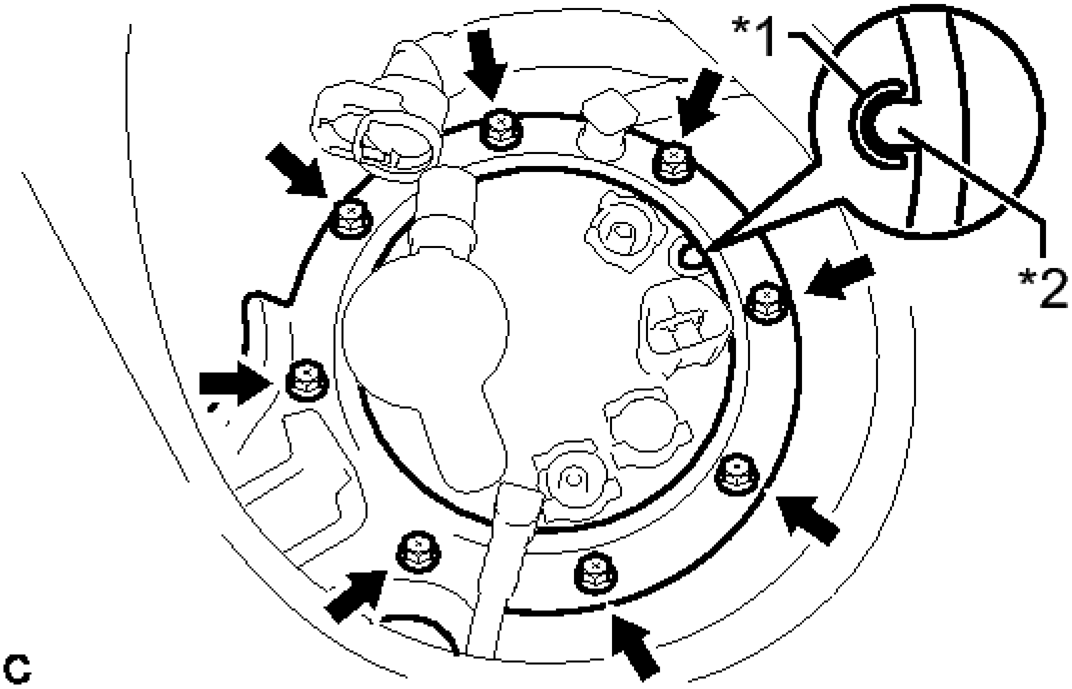

Fig. 57: Identifying Fuel Tank Vent Tube Set Plate
Courtesy of TOYOTA MOTOR SALES, U.S.A., INC.

TEXT IN ILLUSTRATION

*1	Cutout
*2	Protrusion

b. Install the set plate with the 8 bolts.

Torque: 6.0 N*m (61 kgf*cm, 53 in.*lbf)

3. **CONNECT FUEL TANK MAIN TUBE SUB-ASSEMBLY**

a. Push the fuel tube joint in the plug of the fuel suction plate, then install the tube joint clip.

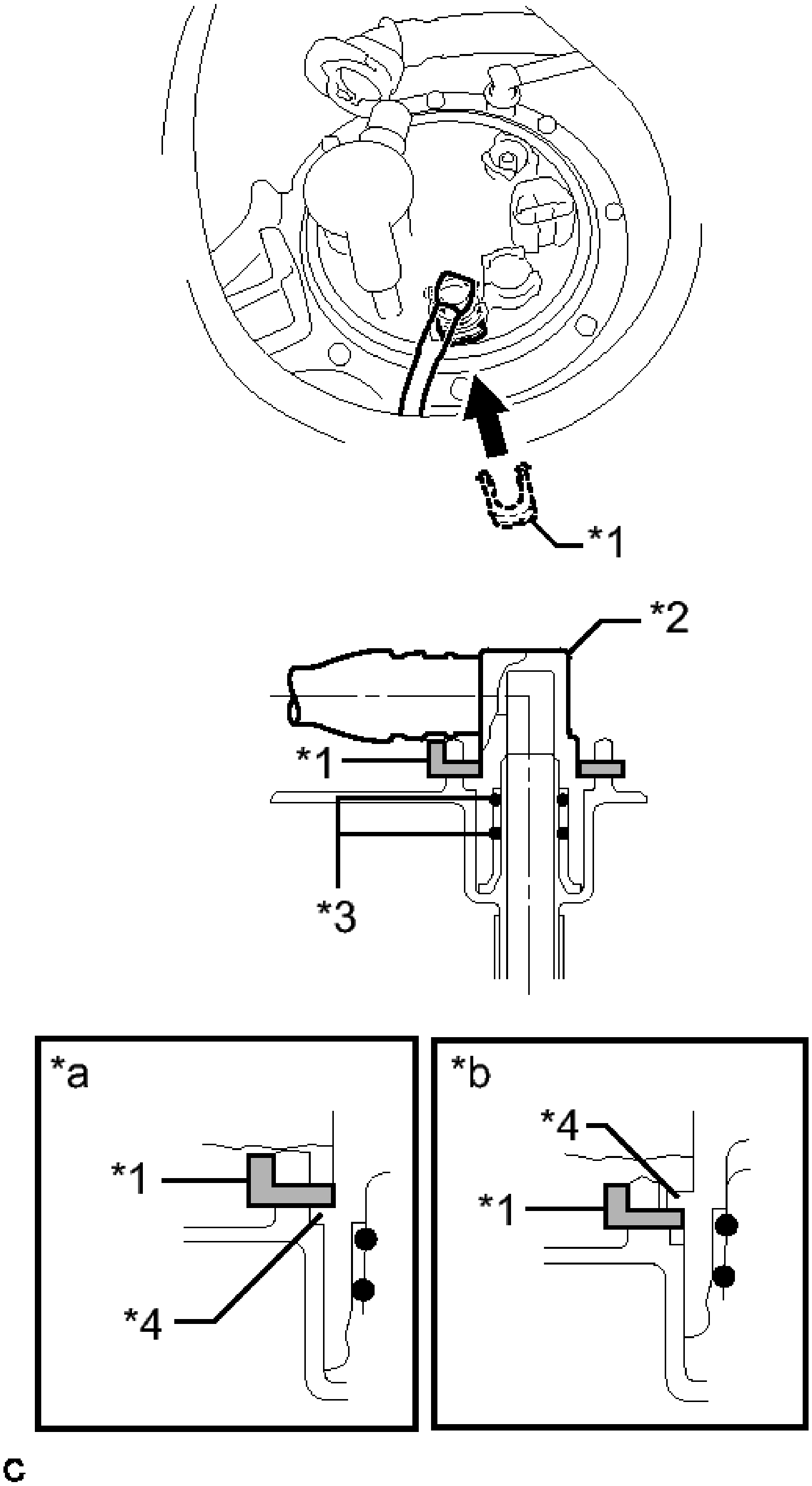
*1
*2
*1
*3
*a
*1
*4
*b
*4
*1
c

Fig. 58: Identifying Fuel Tank Main Tube Sub-Assembly
Courtesy of TOYOTA MOTOR SALES, U.S.A., INC.

TEXT IN ILLUSTRATION

*1	Tube Joint Clip
*2	Fuel Tube Joint
*3	O-ring
*4	Collar
*a	CORRECT
*b	INCORRECT

NOTE:

- **Check that there are no scratches or foreign matter around the connected part of the fuel tube joint and plug before performing this work.**
- **Check that the fuel tube joint is securely inserted to the end.**
- **Check that the tube joint clip is on the collar of the fuel tube joint.**
- **After installing the tube joint clip, check that the fuel tank main tube cannot be pulled out.**

4. **CONNECT FUEL TANK BREATHER ELBOW TUBE SUB-ASSEMBLY**
    a. Push the fuel tube joint in the plug of the fuel suction plate, then install the tube joint clip.

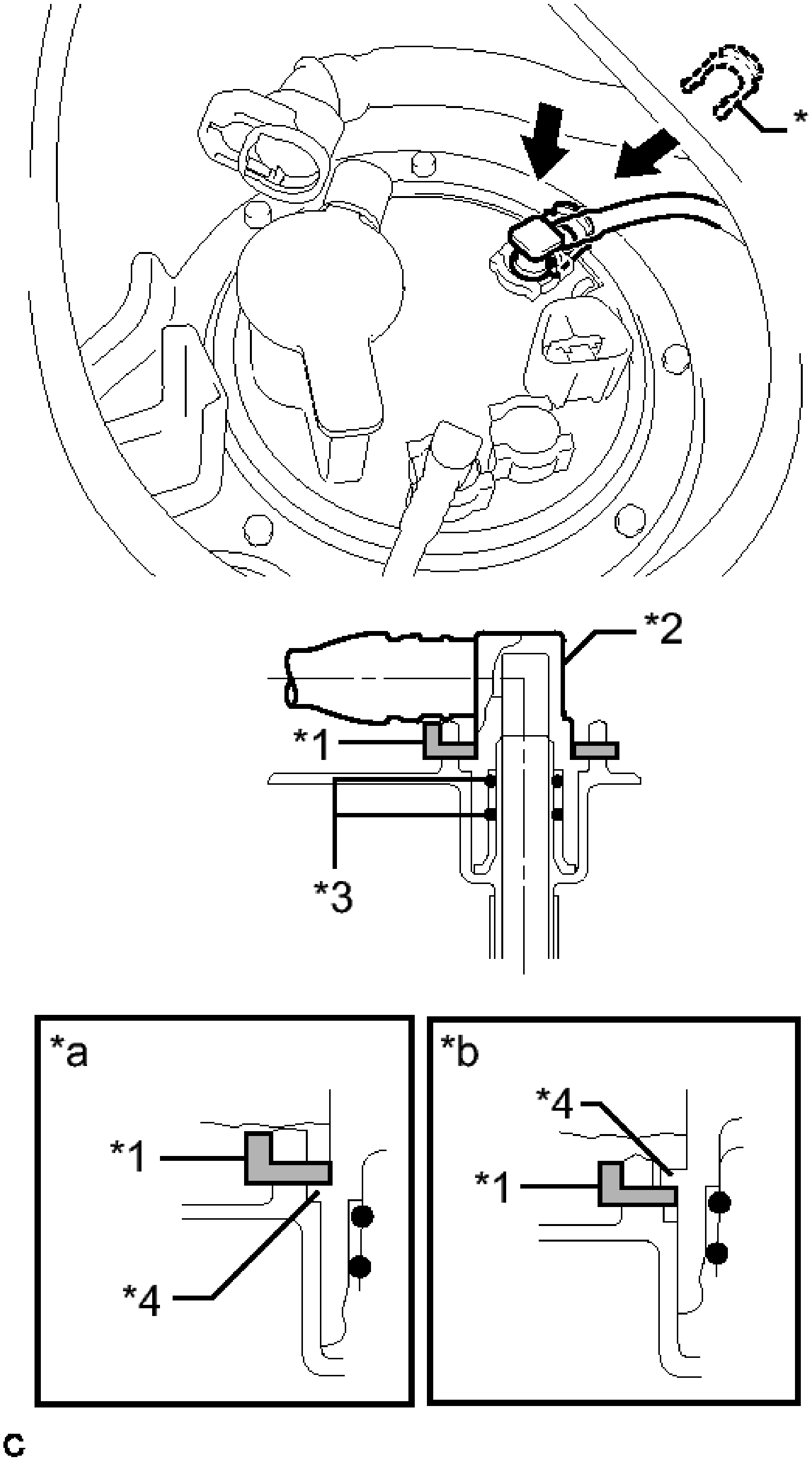

Fig. 59: Identifying Fuel Tank Breather Elbow Tube Sub-Assembly
Courtesy of TOYOTA MOTOR SALES, U.S.A., INC.

TEXT IN ILLUSTRATION

*1	Tube Joint Clip
*2	Fuel Tube Joint
*3	O-ring
*4	Collar
*a	CORRECT
*b	INCORRECT

NOTE:

- **Check that there are no scratches or foreign matter around the connected part of the fuel tube joint and plug before performing this work.**
- **Check that the fuel tube joint is securely inserted to the end.**
- **Check that the tube joint clip is on the collar of the fuel tube joint.**
- **After installing the tube joint clip, check that the fuel tube joint cannot be pulled out.**

5. **CONNECT FUEL TANK VENT HOSE**
    a. Push in the fuel tank vent hose connector to the fuel suction tube assembly and push the retainer so that the claws engage.

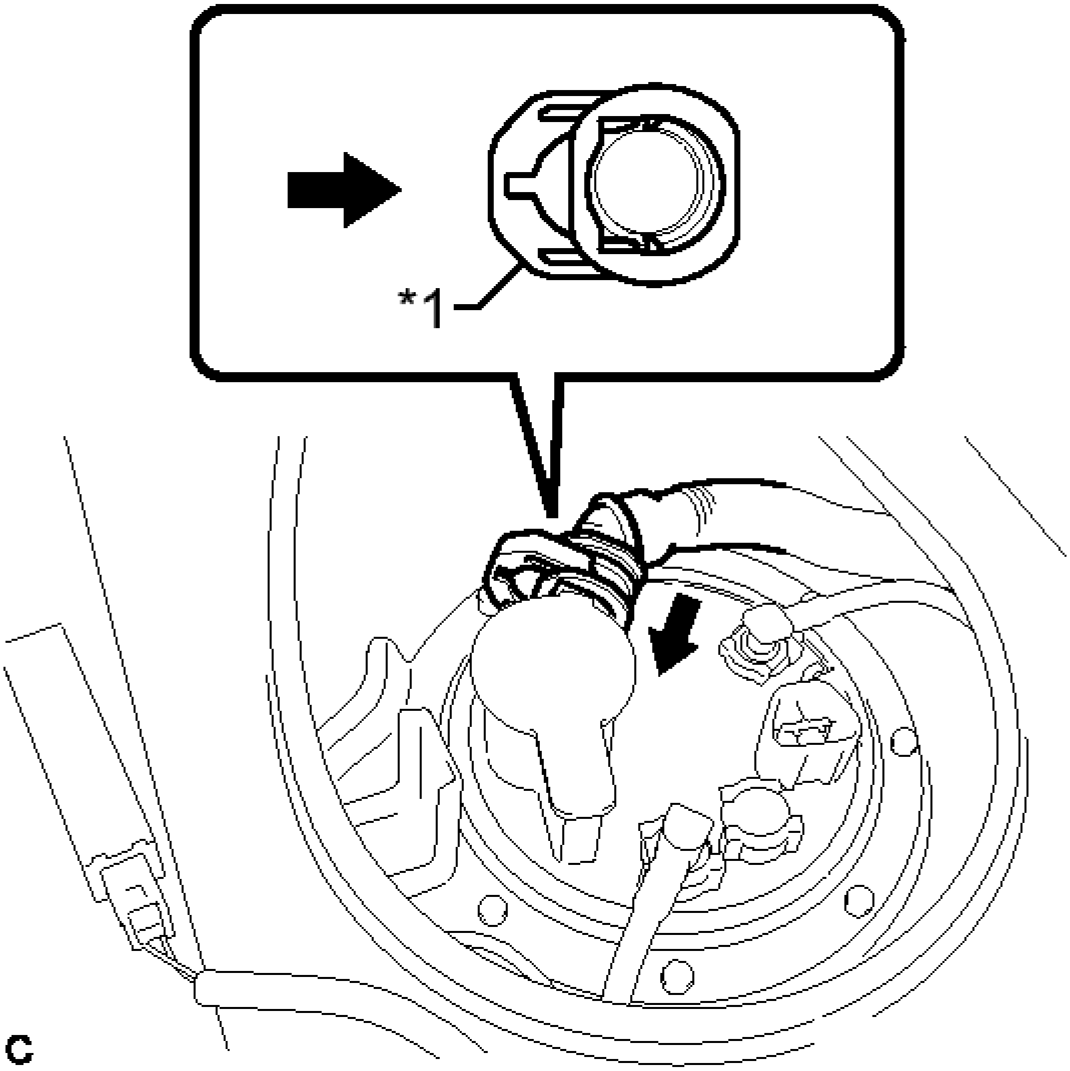

Fig. 60: Identifying Fuel Tank Vent Hose
Courtesy of TOYOTA MOTOR SALES, U.S.A., INC.

TEXT IN ILLUSTRATION

*1	Retainer

NOTE:

- **Check that there are no scratches or foreign matter around the connected parts of the fuel tank vent hose connector and fuel suction tube assembly before performing this work.**
- **After connecting the fuel tank vent hose sub-assembly, check that the fuel tank vent hose sub-assembly is securely connected by pulling on the fuel tank vent hose connector.**

b. Connect the fuel pump connector.

6. **CONNECT CABLE TO NEGATIVE BATTERY TERMINAL**

NOTE: **When disconnecting the cable, some systems need to be initialized after the cable is reconnected. Refer to INITIALIZATION .**

7. **INSTALL REAR FLOOR SERVICE HOLE COVER**
   a. Install the rear floor service hole cover with new butyl tape.

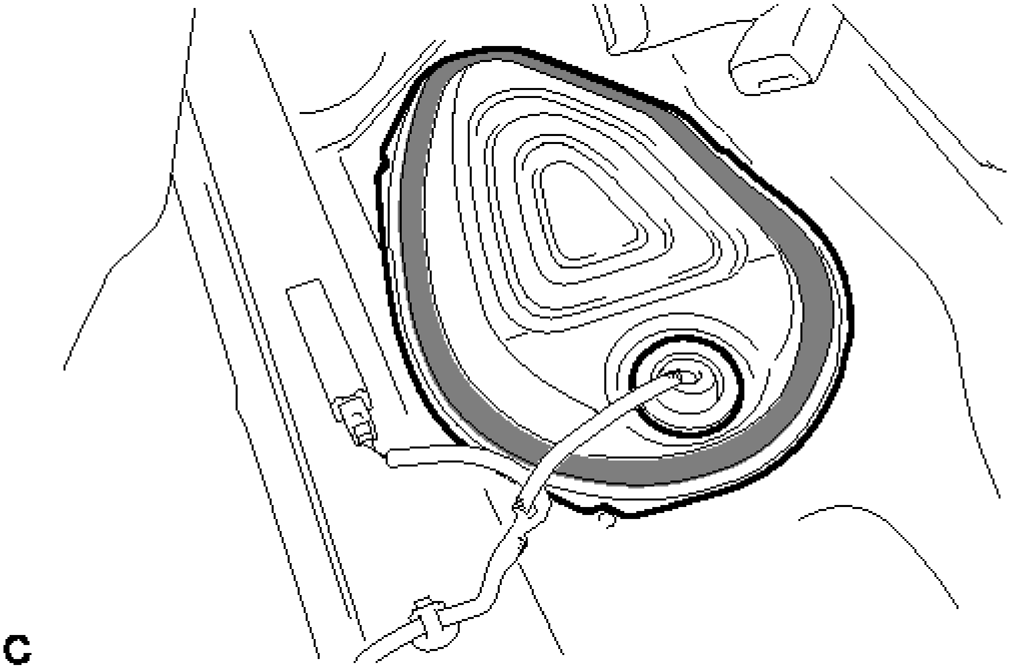

Fig. 61: Identifying Rear Floor Service Hole Cover And Butyl Tape
Courtesy of TOYOTA MOTOR SALES, U.S.A., INC.

TEXT IN ILLUSTRATION

	Butyl Tape

8. **INSPECT FOR FUEL LEAK** . Refer to **ON-VEHICLE INSPECTION - Step 1**
9. **INSTALL REAR SEAT CUSHION LOCK HOOK** . Refer to **INSTALLATION - Step 6**
10. **INSTALL REAR SEAT CUSHION ASSEMBLY** . Refer to **INSTALLATION - Step 7**

FUEL PUMP ECU

COMPONENTS

ILLUSTRATION

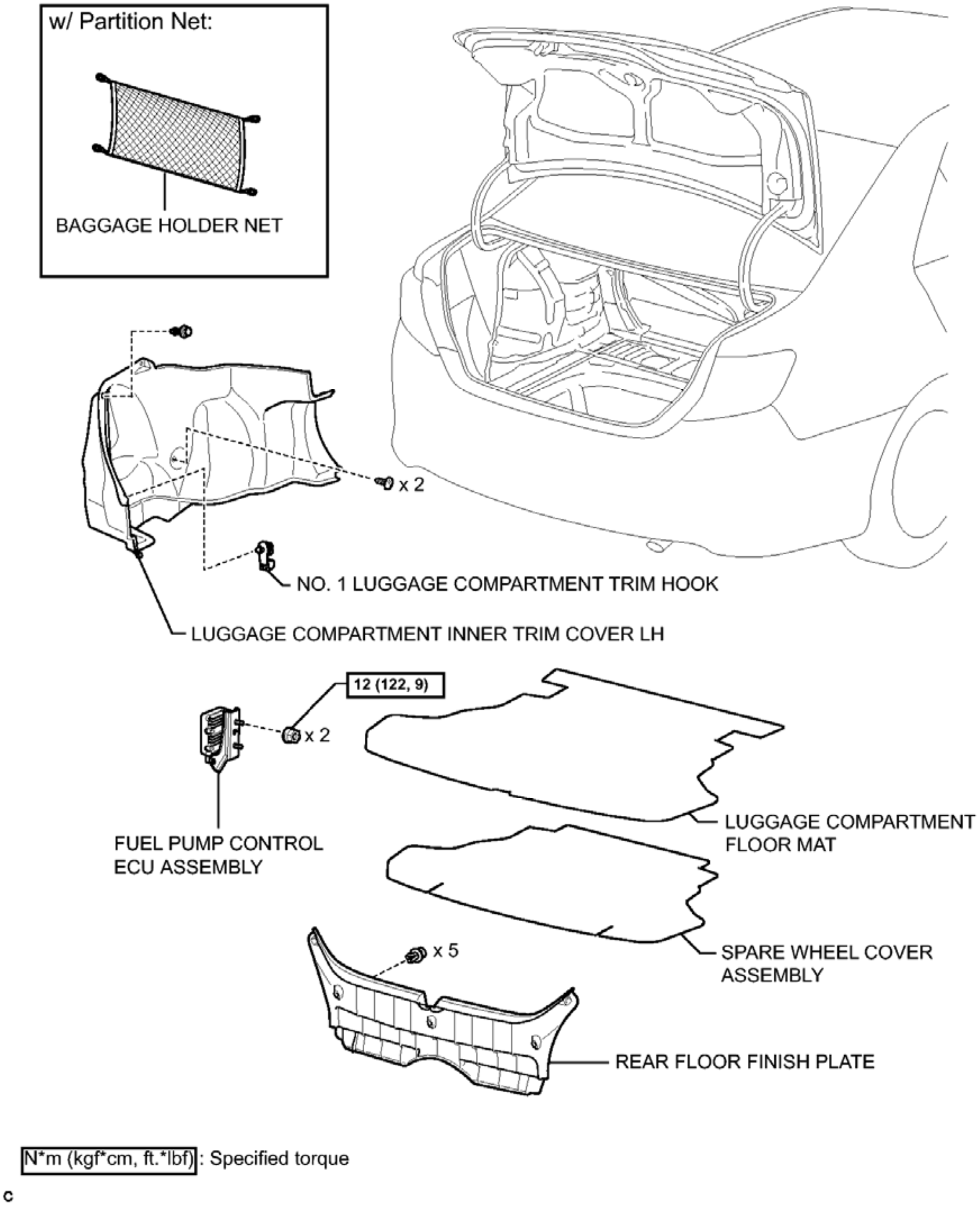
w/ Partition Net:
BAGGAGE HOLDER NET
x 2
NO. 1 LUGGAGE COMPARTMENT TRIM HOOK
LUGGAGE COMPARTMENT INNER TRIM COVER LH
12 (122, 9)
x 2
LUGGAGE COMPARTMENT FLOOR MAT
FUEL PUMP CONTROL ECU ASSEMBLY
SPARE WHEEL COVER ASSEMBLY
x 5
REAR FLOOR FINISH PLATE
N*m (kgf*cm, ft.*lbf): Specified torque
c

Fig. 62: Identifying Fuel Pump ECU Replacement Components With Torque Specifications
Courtesy of TOYOTA MOTOR SALES, U.S.A., INC.

REMOVAL

REMOVAL

1. **PRECAUTION**

NOTE: After turning the engine switch off, waiting time may be required before disconnecting the cable from the negative (-) battery terminal. Therefore, make sure to read the disconnecting the cable from the negative (-) battery terminal notice before proceeding with work. Refer to PRECAUTION .

2. **DISCONNECT CABLE FROM NEGATIVE BATTERY TERMINAL**

NOTE: When disconnecting the cable, some systems need to be initialized after the cable is reconnected. Refer to INITIALIZATION .

3. **REMOVE LUGGAGE COMPARTMENT FLOOR MAT**
4. **REMOVE SPARE WHEEL COVER ASSEMBLY**
5. **REMOVE BAGGAGE HOLDER NET (w/ Partition Net)** . Refer to **REMOVAL - Step 3**
6. **REMOVE REAR FLOOR FINISH PLATE** . Refer to **REMOVAL - Step 4**
7. **REMOVE NO. 1 LUGGAGE COMPARTMENT TRIM HOOK** . Refer to **REMOVAL - Step 5**
8. **REMOVE LUGGAGE COMPARTMENT INNER TRIM COVER LH** . Refer to **REMOVAL - Step 6**
9. **REMOVE FUEL PUMP CONTROL ECU ASSEMBLY**
   a. Disconnect the connector and clamp from the fuel pump control ECU assembly.

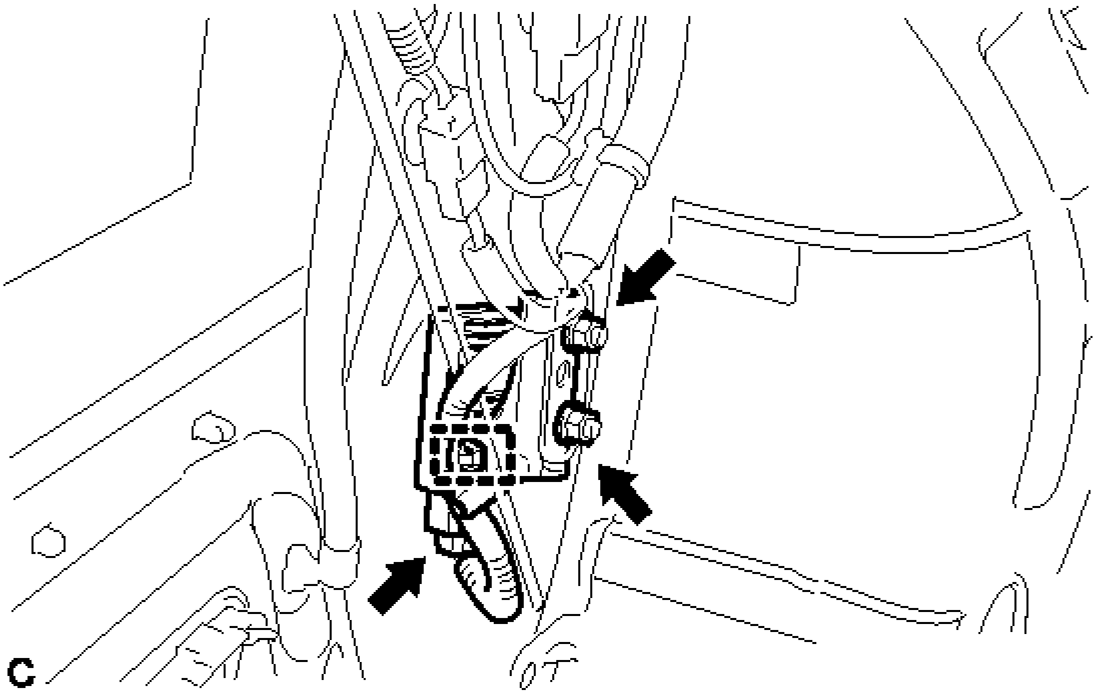

Fig. 63: Identifying Fuel Pump Control ECU Assembly Connector, Clamp And Nuts
Courtesy of TOYOTA MOTOR SALES, U.S.A., INC.

   b. Remove the 2 nuts and fuel pump control ECU assembly.

NOTE: **Do not reuse the fuel pump control ECU if it has been dropped or subjected to a severe impact.**

HINT:

If a malfunction such as pump lock occurs and the fuel pump is damaged, excessive current may be continuously applied to the fuel pump control ECU, damaging its internal parts. Make sure to replace the fuel pump control ECU at the same time when replacing the fuel pump.

INSTALLATION

INSTALLATION

1. **INSTALL FUEL PUMP CONTROL ECU ASSEMBLY**
    a. Connect the connector and clamp.
    b. Install the fuel pump control ECU assembly with the 2 nuts.

    Torque: 12 N*m (122 kgf*cm, 9 ft.*lbf)

2. **INSTALL LUGGAGE COMPARTMENT INNER TRIM COVER LH** . Refer to **INSTALLATION - Step 6**
3. **INSTALL NO. 1 LUGGAGE COMPARTMENT TRIM HOOK** . Refer to **INSTALLATION - Step 8**
4. **INSTALL REAR FLOOR FINISH PLATE** . Refer to **INSTALLATION - Step 9**
5. **INSTALL BAGGAGE HOLDER NET (w/ Partition Net)** . Refer to **INSTALLATION - Step 10**
6. **INSTALL SPARE WHEEL COVER ASSEMBLY**
7. **INSTALL LUGGAGE COMPARTMENT FLOOR MAT**
8. **CONNECT CABLE TO NEGATIVE BATTERY TERMINAL**

NOTE: **When disconnecting the cable, some systems need to be initialized after the cable is reconnected. Refer to INITIALIZATION .**

FUEL TANK

COMPONENTS

ILLUSTRATION

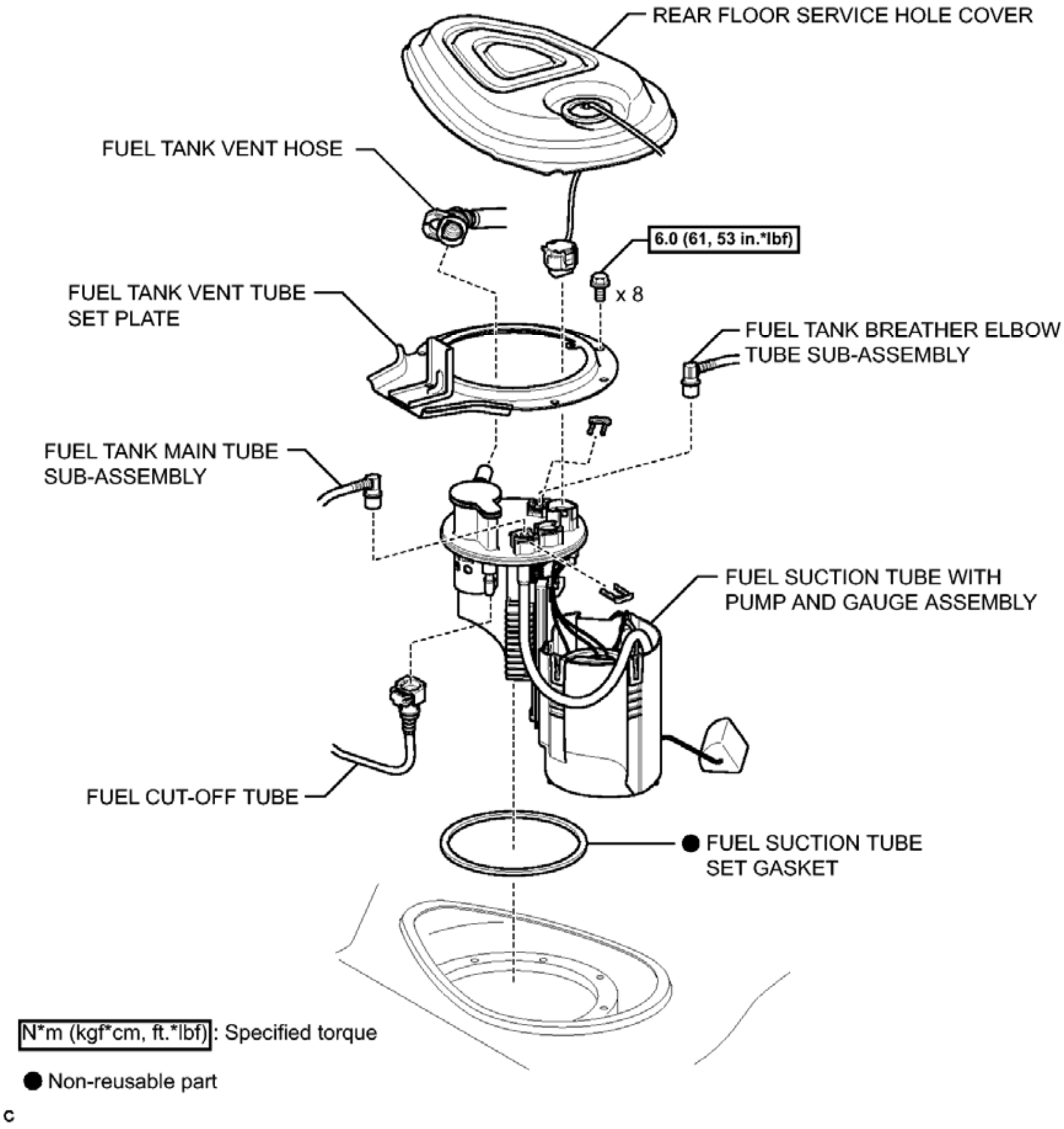
REAR FLOOR SERVICE HOLE COVER
FUEL TANK VENT HOSE
6.0 (61, 53 in.*lbf)
x 8
FUEL TANK VENT TUBE SET PLATE
FUEL TANK BREATHER ELBOW TUBE SUB-ASSEMBLY
FUEL TANK MAIN TUBE SUB-ASSEMBLY
FUEL SUCTION TUBE WITH PUMP AND GAUGE ASSEMBLY
FUEL CUT-OFF TUBE
● FUEL SUCTION TUBE SET GASKET
N*m (kgf*cm, ft.*lbf): Specified torque
● Non-reusable part
C

Fig. 64: Identifying Fuel Tank Replacement Components With Torque Specifications (1 Of 4)
Courtesy of TOYOTA MOTOR SALES, U.S.A., INC.

ILLUSTRATION

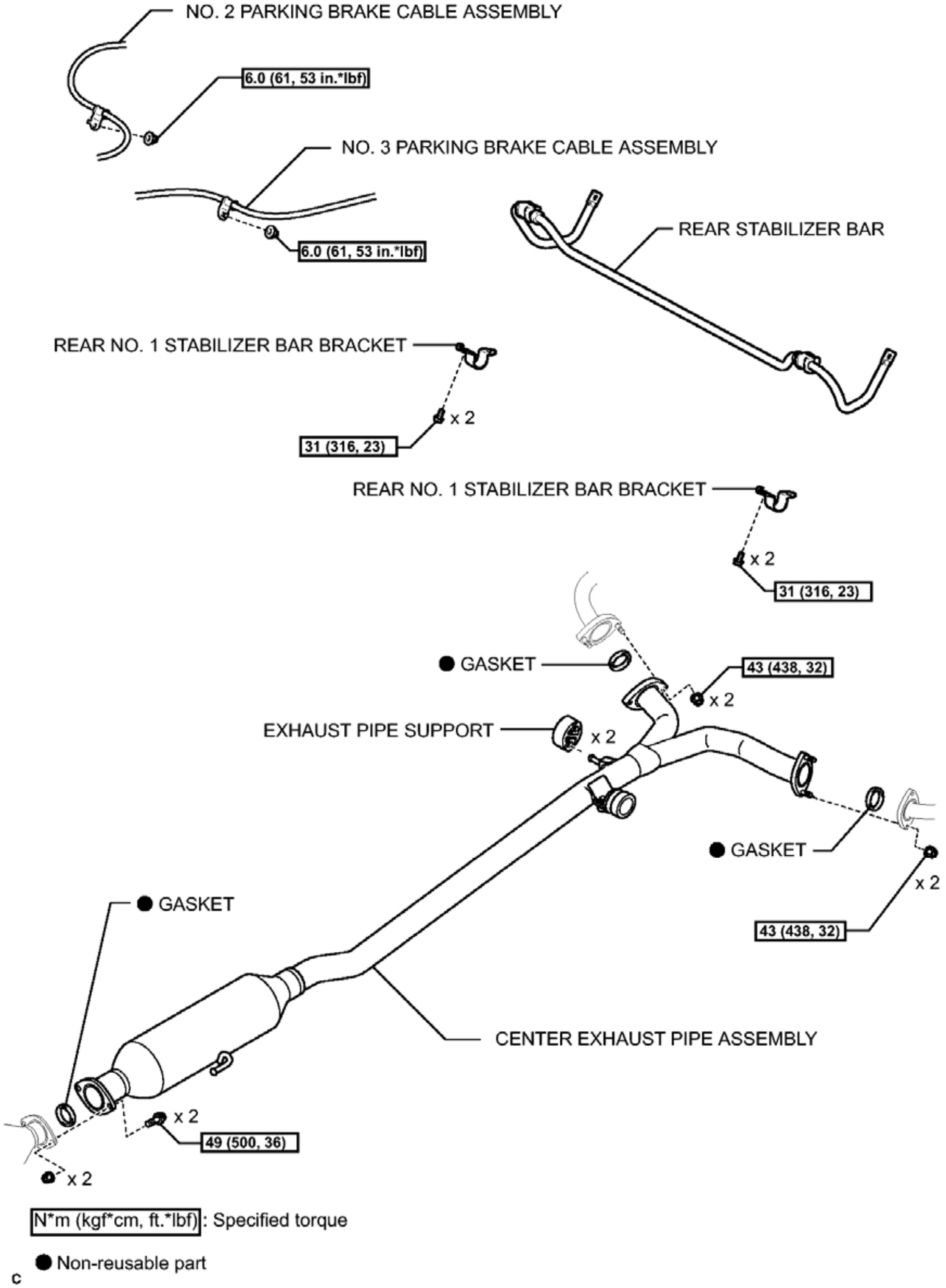
NO. 2 PARKING BRAKE CABLE ASSEMBLY
6.0 (61, 53 in.*lbf)
NO. 3 PARKING BRAKE CABLE ASSEMBLY
6.0 (61, 53 in.*lbf)
REAR STABILIZER BAR
REAR NO. 1 STABILIZER BAR BRACKET
x 2
31 (316, 23)
REAR NO. 1 STABILIZER BAR BRACKET
x 2
31 (316, 23)
● GASKET
43 (438, 32)
x 2
EXHAUST PIPE SUPPORT
x 2
● GASKET
x 2
43 (438, 32)
● GASKET
CENTER EXHAUST PIPE ASSEMBLY
x 2
49 (500, 36)
x 2
N*m (kgf*cm, ft.*lbf) : Specified torque
● Non-reusable part
c

Fig. 65: Identifying Fuel Tank Replacement Components With Torque Specifications (2 Of 4)
Courtesy of TOYOTA MOTOR SALES, U.S.A., INC.

ILLUSTRATION

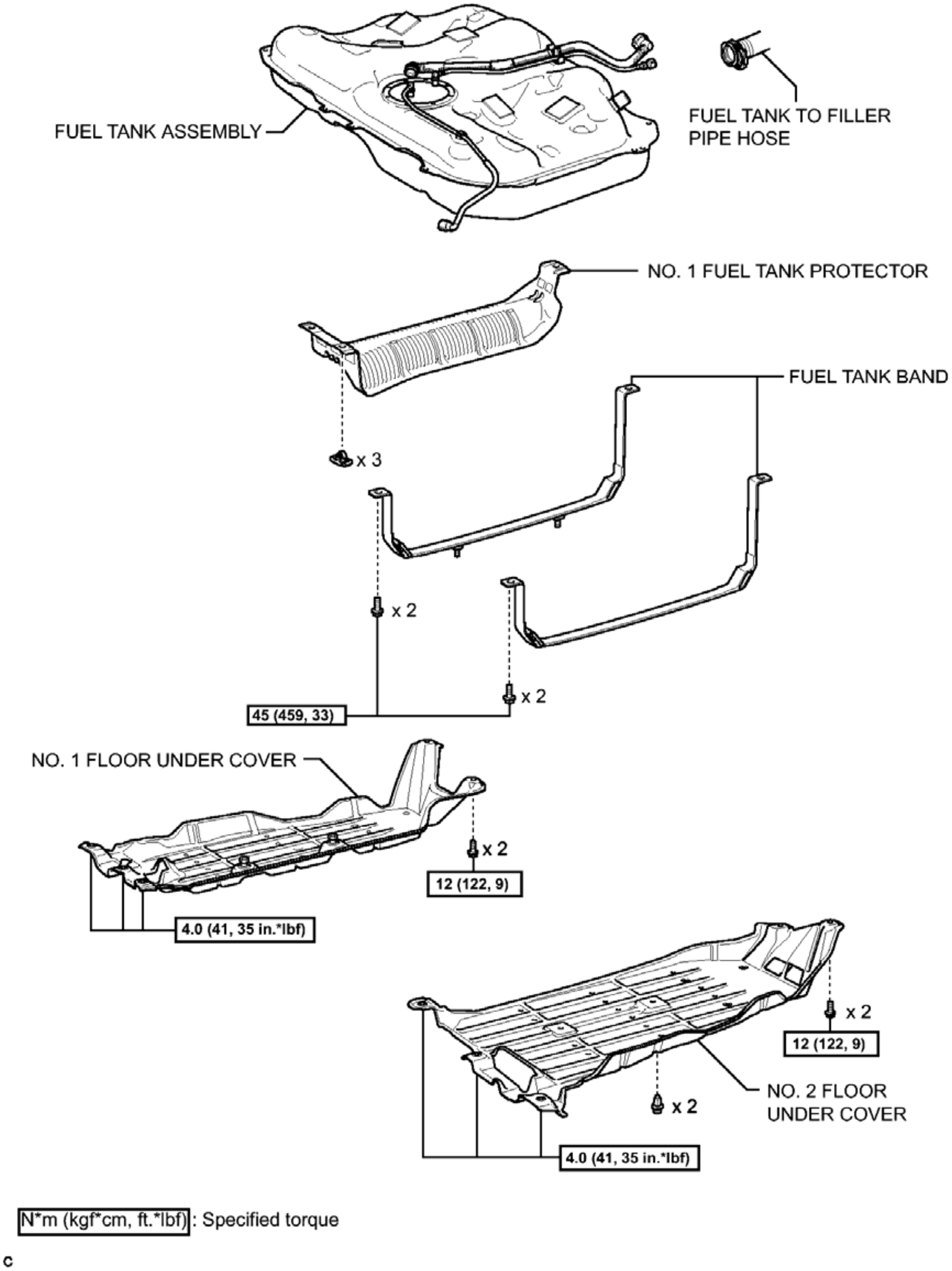
FUEL TANK ASSEMBLY
FUEL TANK TO FILLER PIPE HOSE
NO. 1 FUEL TANK PROTECTOR
FUEL TANK BAND
x 3
x 2
x 2
45 (459, 33)
NO. 1 FLOOR UNDER COVER
x 2
12 (122, 9)
4.0 (41, 35 in.*lbf)
x 2
12 (122, 9)
x 2
NO. 2 FLOOR UNDER COVER
4.0 (41, 35 in.*lbf)
N*m (kgf*cm, ft.*lbf) : Specified torque
c

Fig. 66: Identifying Fuel Tank Replacement Components With Torque Specifications (3 Of 4)
Courtesy of TOYOTA MOTOR SALES, U.S.A., INC.

ILLUSTRATION

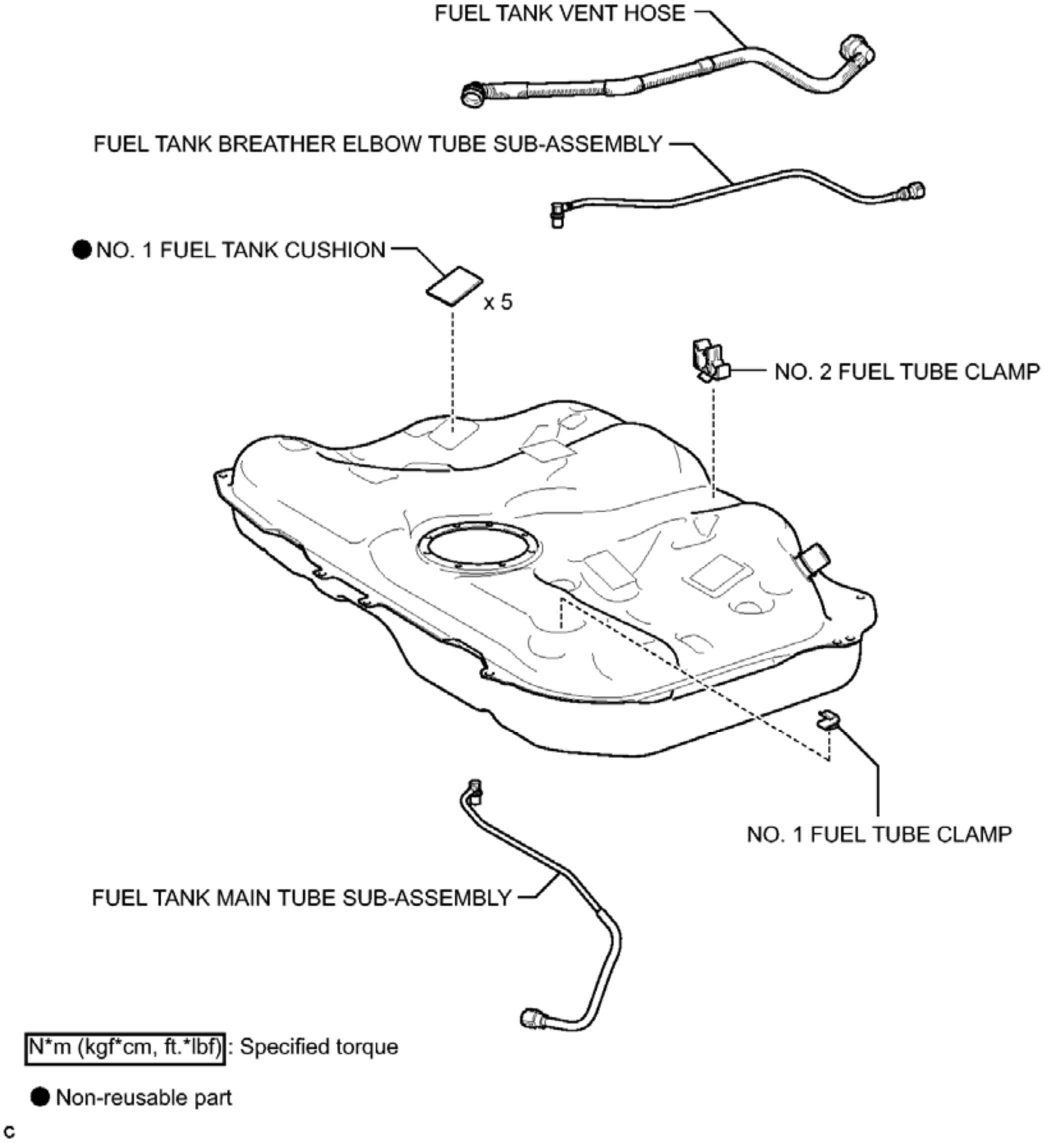
FUEL TANK VENT HOSE
FUEL TANK BREATHER ELBOW TUBE SUB-ASSEMBLY
● NO. 1 FUEL TANK CUSHION
x 5
NO. 2 FUEL TUBE CLAMP
NO. 1 FUEL TUBE CLAMP
FUEL TANK MAIN TUBE SUB-ASSEMBLY
N*m (kgf*cm, ft.*lbf) : Specified torque
● Non-reusable part
c

Fig. 67: Identifying Fuel Tank Replacement Components With Torque Specifications (4 Of 4)
Courtesy of TOYOTA MOTOR SALES, U.S.A., INC.

REMOVAL

REMOVAL

1. **REMOVE FUEL SUCTION TUBE WITH PUMP AND GAUGE ASSEMBLY**

   Refer to REMOVAL

2. **DRAIN FUEL**
3. **REMOVE CENTER EXHAUST PIPE ASSEMBLY**

Refer to **REMOVAL**

4. **REMOVE NO. 1 FLOOR UNDER COVER** . Refer to **REMOVAL - Step 3**
5. **REMOVE NO. 2 FLOOR UNDER COVER** . Refer to **REMOVAL - Step 2**
6. **DISCONNECT NO. 2 PARKING BRAKE CABLE ASSEMBLY**
    a. Remove the nut and disconnect the No. 2 parking brake cable assembly.

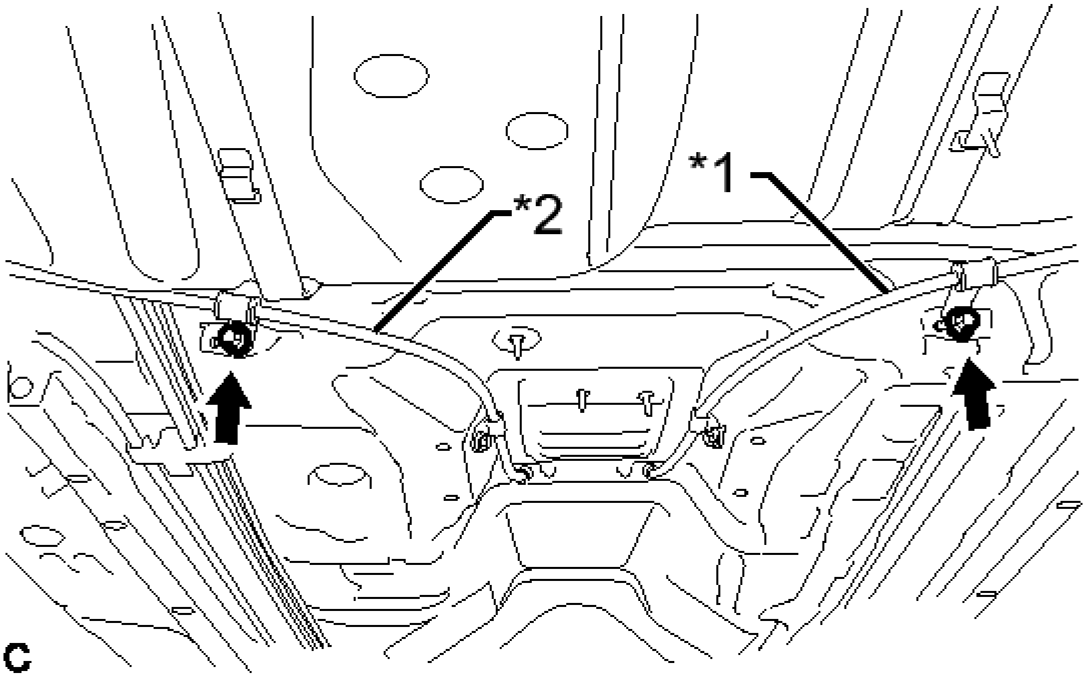

Fig. 68: Identifying No. 2 Parking Brake Cable Assembly And No. 3 Parking Brake Cable Assembly
Courtesy of TOYOTA MOTOR SALES, U.S.A., INC.

TEXT IN ILLUSTRATION

*1	No. 2 Parking Brake Cable Assembly
*2	No. 3 Parking Brake Cable Assembly

7. **DISCONNECT NO. 3 PARKING BRAKE CABLE ASSEMBLY**
    a. Remove the nut and disconnect the No. 3 parking brake cable assembly.
8. **REMOVE REAR NO. 1 STABILIZER BAR BRACKET**

a. Remove the 4 bolts and 2 rear No. 1 stabilizer bar brackets.

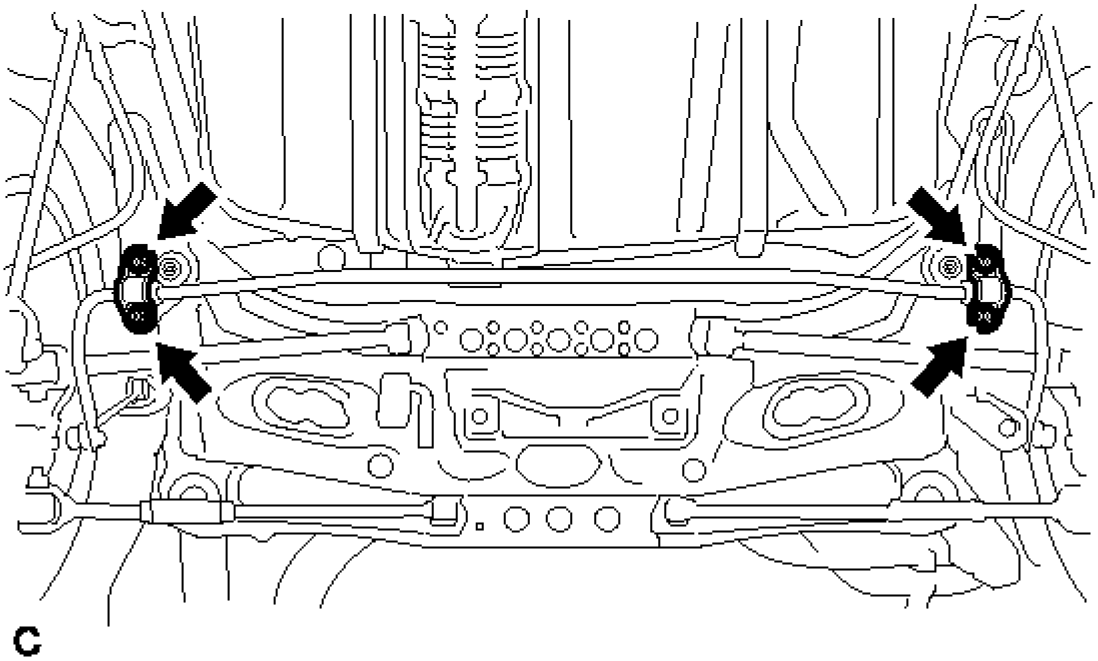

Fig. 69: Identifying No. 1 Stabilizer Bar Bracket Bolts
Courtesy of TOYOTA MOTOR SALES, U.S.A., INC.

9. **REMOVE NO. 1 FUEL TANK PROTECTOR**
   a. Remove the 3 clips and No. 1 fuel tank protector.

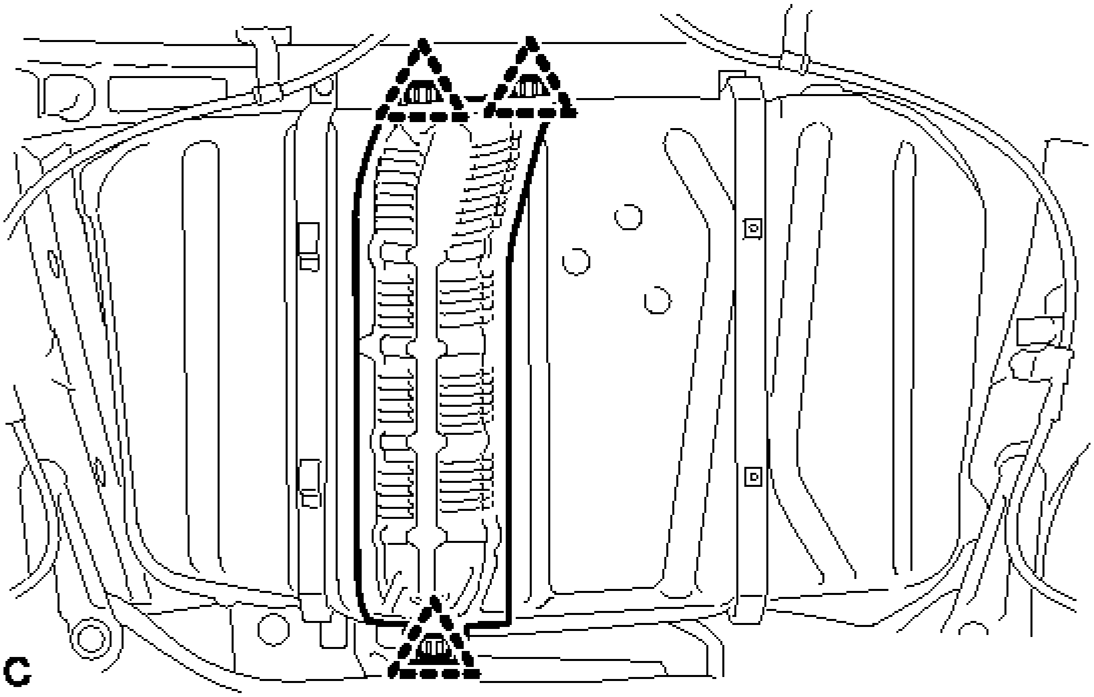

Fig. 70: Identifying No. 1 Fuel Tank Protector Clips
Courtesy of TOYOTA MOTOR SALES, U.S.A., INC.

10. **DISCONNECT FUEL TANK MAIN TUBE SUB-ASSEMBLY**
    a. Pinch the tabs of the retainer to remove the lock claws and pull it down as shown in the illustration.

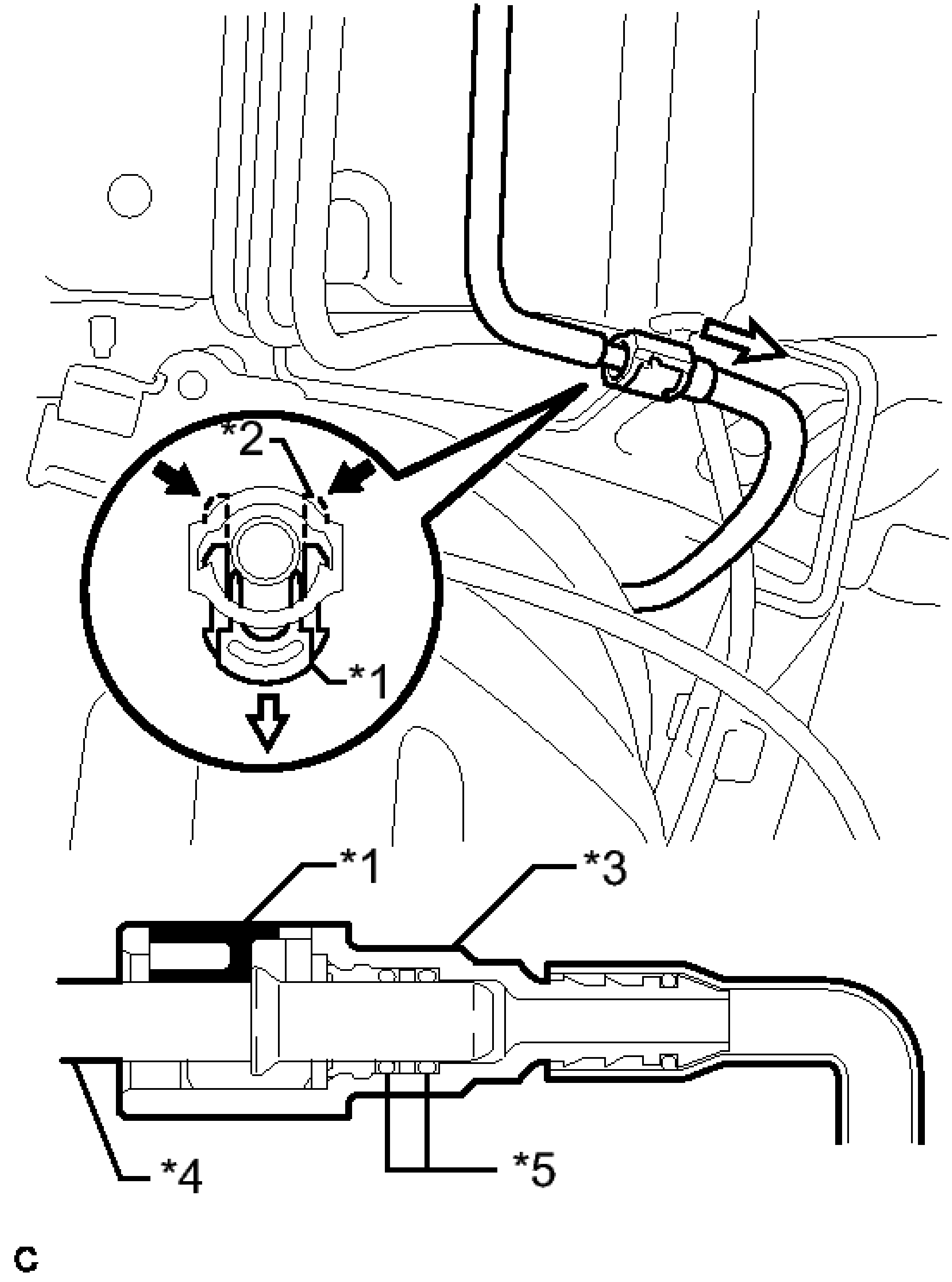

Fig. 71: Identifying Fuel Tank Main Tube Sub-Assembly
Courtesy of TOYOTA MOTOR SALES, U.S.A., INC.

TEXT IN ILLUSTRATION

*1	Retainer

*2	Tab
*3	Fuel Tube Connector
*4	Fuel Pipe
*5	O-ring
➡	Pinch
⇨	Pull

b. Pull out the fuel tank main tube sub-assembly.

NOTE:

- **Check that there are no scratches or foreign matter around the connected part of the fuel tube connector and fuel pipe before performing this work.**
- **Do not allow any scratches or foreign matter to get on the parts when disconnecting them as the fuel tube connector has O-rings that seal the fuel pipe.**
- **Only disconnect the fuel tube connector by hand.**
- **Do not forcibly bend, twist or turn the fuel tank main tube.**
- **Protect the disconnected part by covering it with plastic bags after disconnecting the fuel tube connector.**
- **If the fuel tube connector and fuel pipe are stuck, push and pull to release them.**

11. DISCONNECT FUEL TANK BREATHER ELBOW TUBE SUB-ASSEMBLY

a. Pinch the tabs of the retainer to remove the lock claws and pull it down as shown in the illustration.

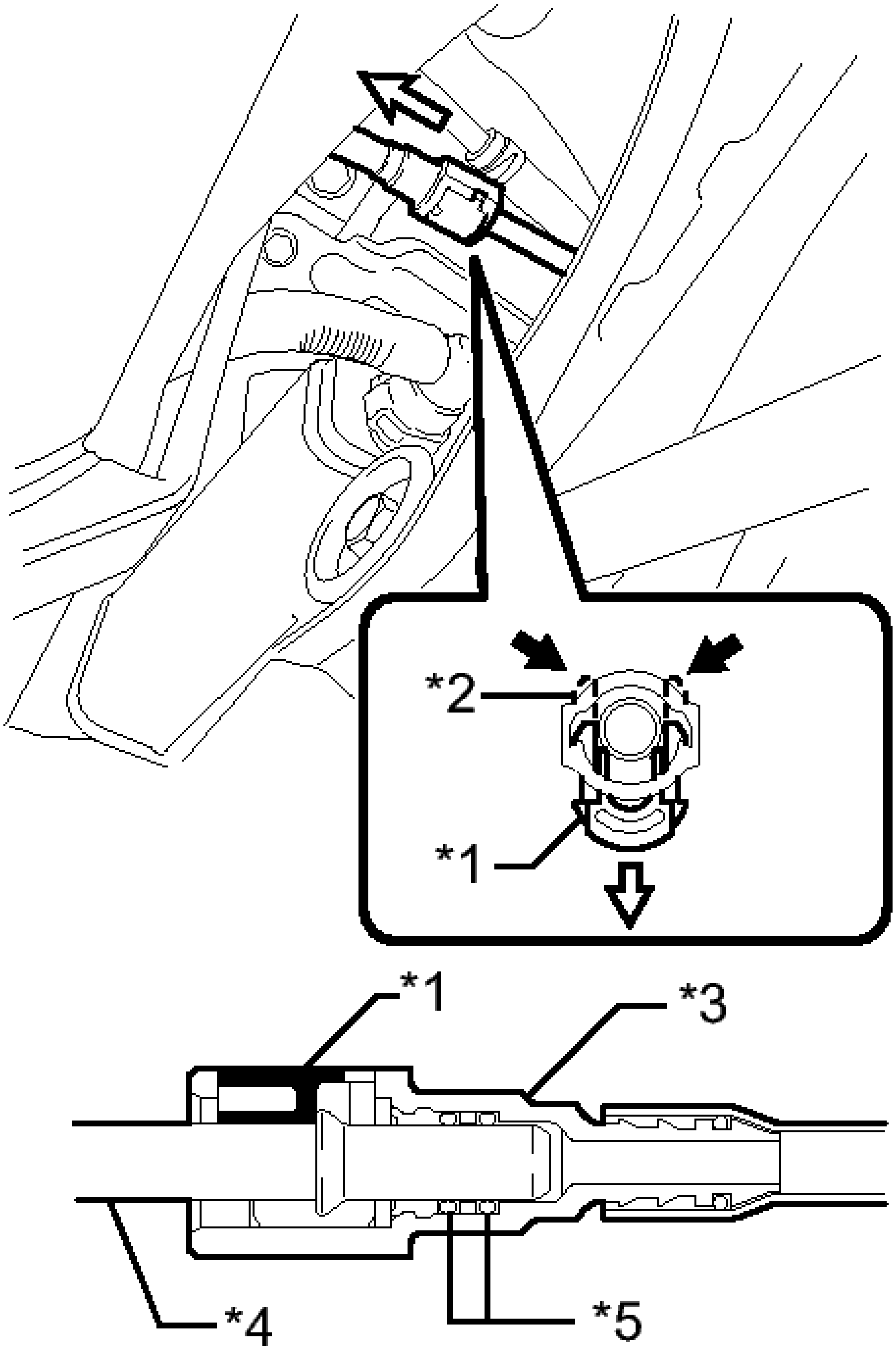

Fig. 72: Identifying Fuel Tank Breather Elbow Tube Sub-Assembly
Courtesy of TOYOTA MOTOR SALES, U.S.A., INC.

TEXT IN ILLUSTRATION

*1	Retainer

*2	Tab
*3	Fuel Tube Connector
*4	Fuel Pipe
*5	O-ring
➡	Pinch
⇨	Pull

b. Pull out the fuel tank breather elbow tube sub-assembly.

NOTE:

- **Remove any dirt or foreign matter on the fuel tube connector and fuel pipe before performing this work.**
- **Do not allow any scratches or foreign matter to get on the parts when disconnecting them as the fuel tube connector has O-rings that seal the fuel pipe.**
- **Only disconnect the fuel tube connector by hand.**
- **Do not forcibly bend, twist or turn the fuel tank breather tube.**
- **Protect the disconnected part by covering it with plastic bags after disconnecting the fuel tube connector.**
- **If the fuel tube connector and fuel pipe are stuck, push and pull to release them.**

12. DISCONNECT FUEL TANK VENT HOSE

a. Pinch the tabs of the retainer to remove the lock claws and pull it down as shown in the illustration.

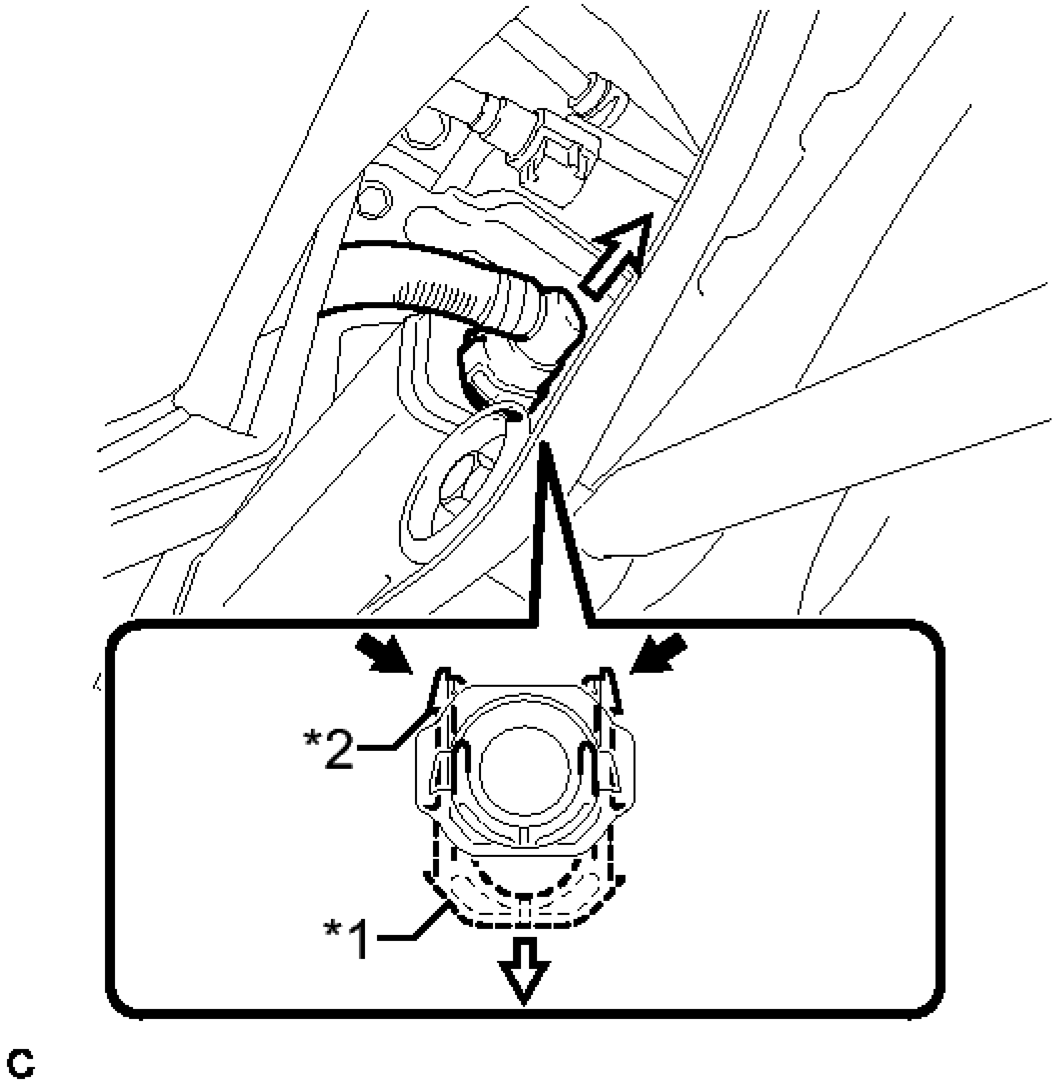

Fig. 73: Identifying Fuel Tank Vent Hose
Courtesy of TOYOTA MOTOR SALES, U.S.A., INC.

TEXT IN ILLUSTRATION

*1	Retainer
*2	Tab
·	Pinch
·	Pull

NOTE:

- **Remove any dirt or foreign matter on the fuel tank vent hose connector before performing this work.**
- **Do not allow any scratches or foreign matter to get on the parts when disconnecting them as the fuel tank vent hose connector has an O-ring that seals the pipe.**

- **Only disconnect the vent hose connector by hand.**
- **Do not forcibly bend, twist or turn the fuel tank vent hose.**
- **Protect the disconnected part by covering it with plastic bags after disconnecting the fuel tank vent hose.**
- **If the vent hose connector and charcoal canister are stuck, push and pull to release them.**

b. Pull out the fuel tank vent hose.

13. **DISCONNECT FUEL TANK TO FILLER PIPE HOSE**

a. Pull the tabs of the retainer to disengage the lock claws and pull out the fuel tank to filler pipe hose.

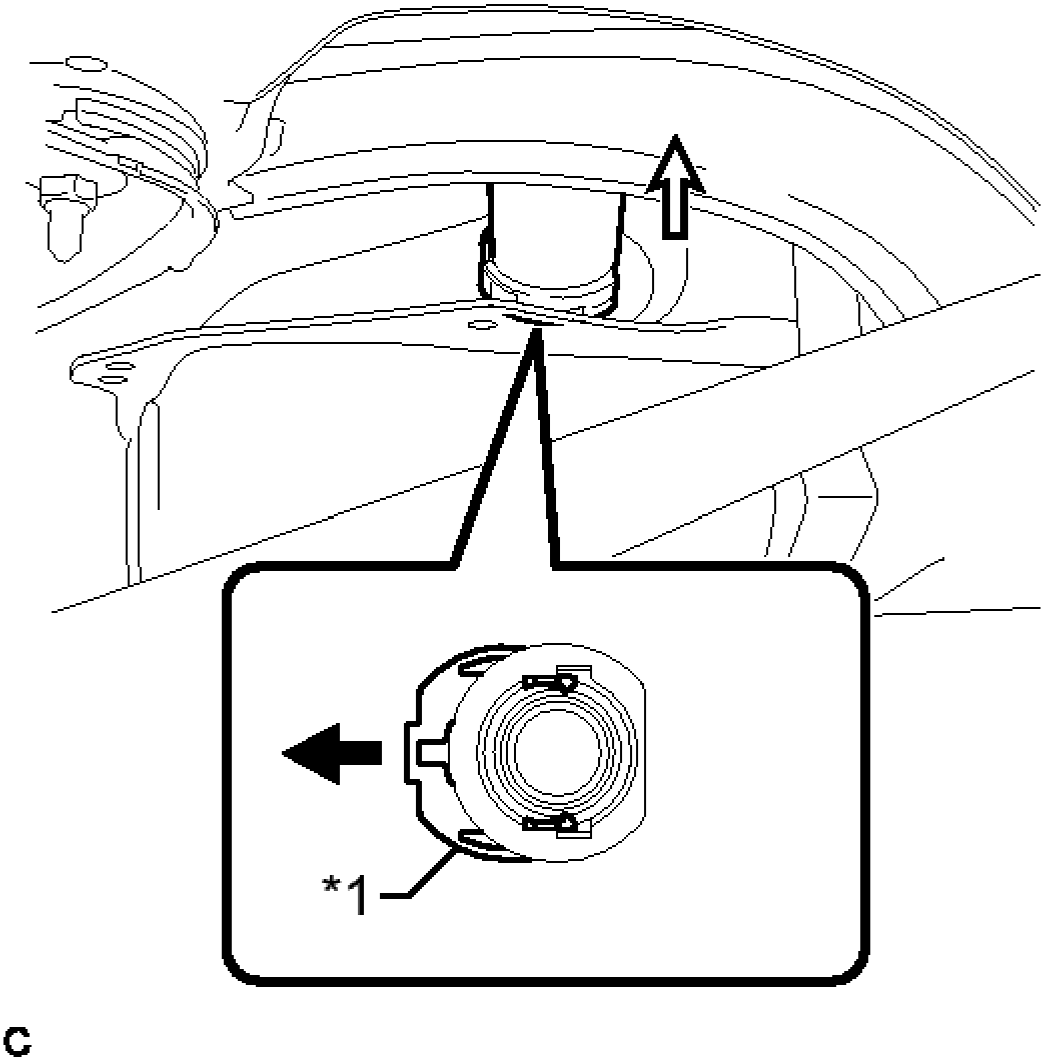

Fig. 74: Identifying Fuel Tank And Filler Pipe Hose
Courtesy of TOYOTA MOTOR SALES, U.S.A., INC.

TEXT IN ILLUSTRATION

*1	Retainer
·	Pull
·	Pull Out

NOTE:

- **Remove any dirt or foreign matter on the fuel tank to filler pipe hose connector before performing this work.**
- **Do not allow any scratches or foreign matter to get on the parts when disconnecting them as the fuel tank to filler pipe hose connector has an O-ring that seals the fuel tank.**
- **Only disconnect the filler pipe hose connector by hand.**
- **Do not forcibly bend, twist or turn the fuel tank to filler pipe hose.**
- **Protect the disconnected part by covering it with plastic bags after disconnecting the fuel tank to filler pipe hose.**
- **If the fuel tank to filler pipe hose connector and fuel tank are stuck, push and pull to release them.**

14. **REMOVE FUEL TANK ASSEMBLY**

a. Support the fuel tank using an engine lifter.

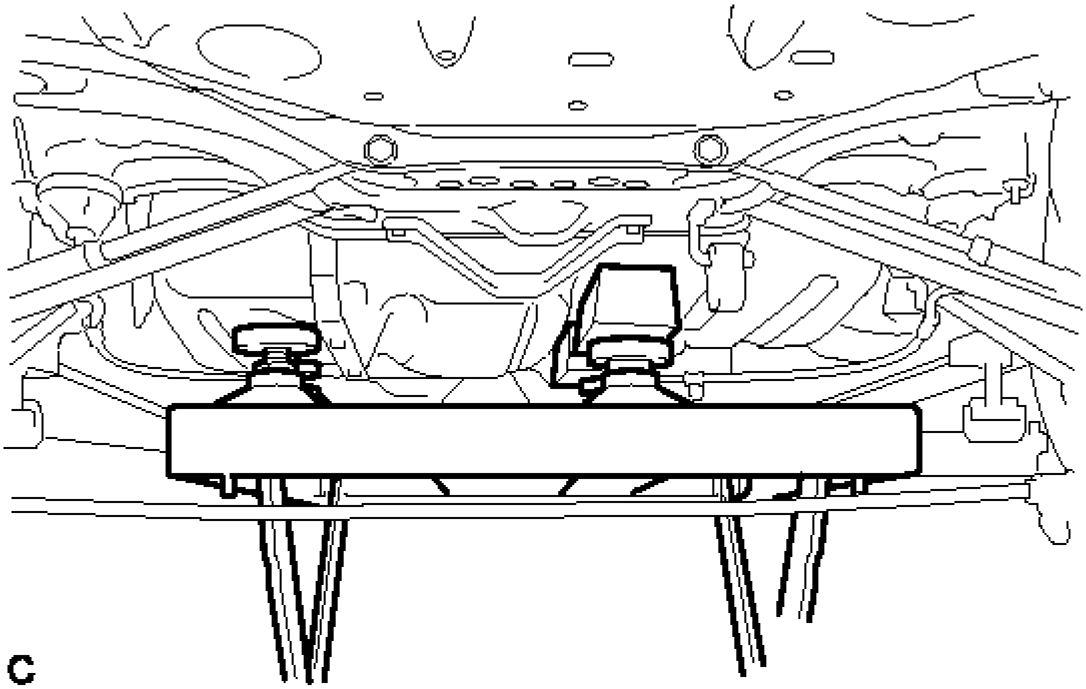

Fig. 75: Support Fuel Tank Using Engine Lifter
Courtesy of TOYOTA MOTOR SALES, U.S.A., INC.

b. Remove the 4 bolts of the 2 fuel tank bands.

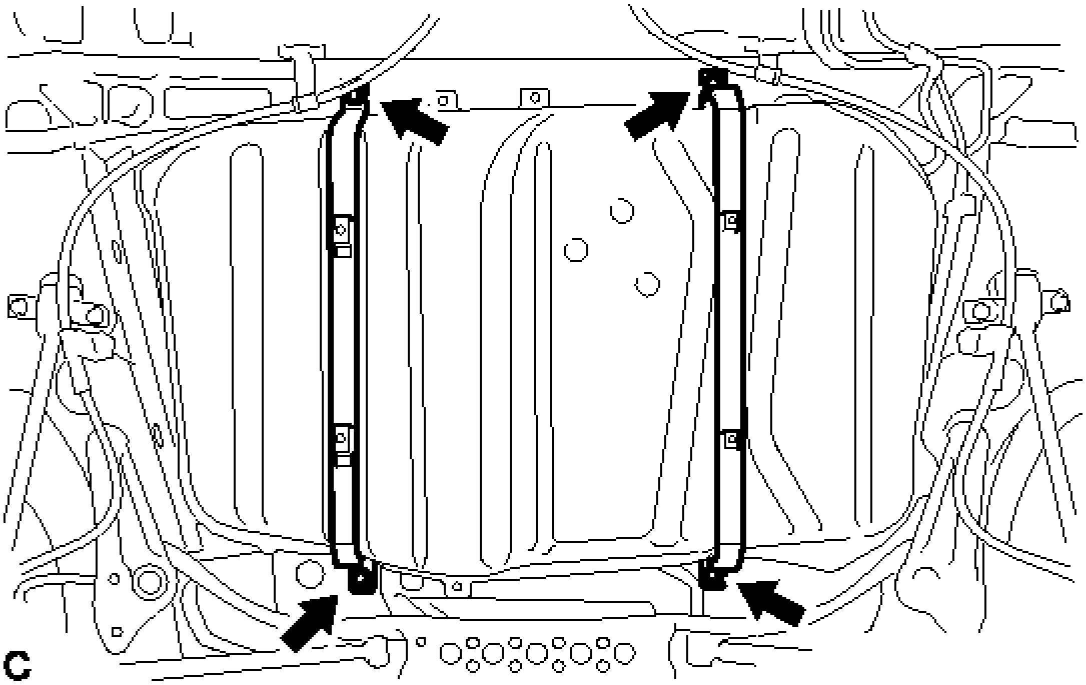

Fig. 76: Identifying Fuel Tank Band Bolts
Courtesy of TOYOTA MOTOR SALES, U.S.A., INC.

c. Lower the engine lifter to remove the fuel tank.

NOTE:

- **Slowly operate the engine lifter to lower the fuel tank.**
- **Do not drop the fuel tank.**
- **When removing the fuel tank, tilt it slightly to prevent it from interfering with the suspension arm or other surrounding parts.**

15. **REMOVE FUEL TANK MAIN TUBE SUB-ASSEMBLY**

a. Disconnect the No. 1 fuel tube clamp and remove the fuel tank main tube sub-assembly.

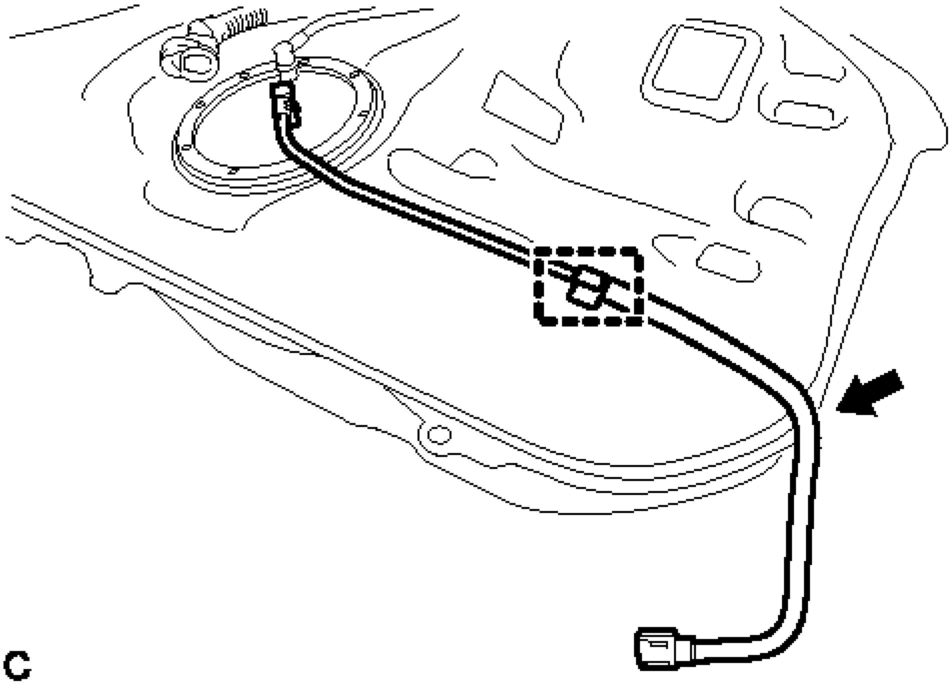

Fig. 77: Identifying Fuel Tank Main Tube Sub-Assembly
Courtesy of TOYOTA MOTOR SALES, U.S.A., INC.

16. **REMOVE FUEL TANK BREATHER ELBOW TUBE SUB-ASSEMBLY**
    a. Disconnect the No. 2 fuel tube clamp and remove the fuel tank breather elbow tube sub-assembly.

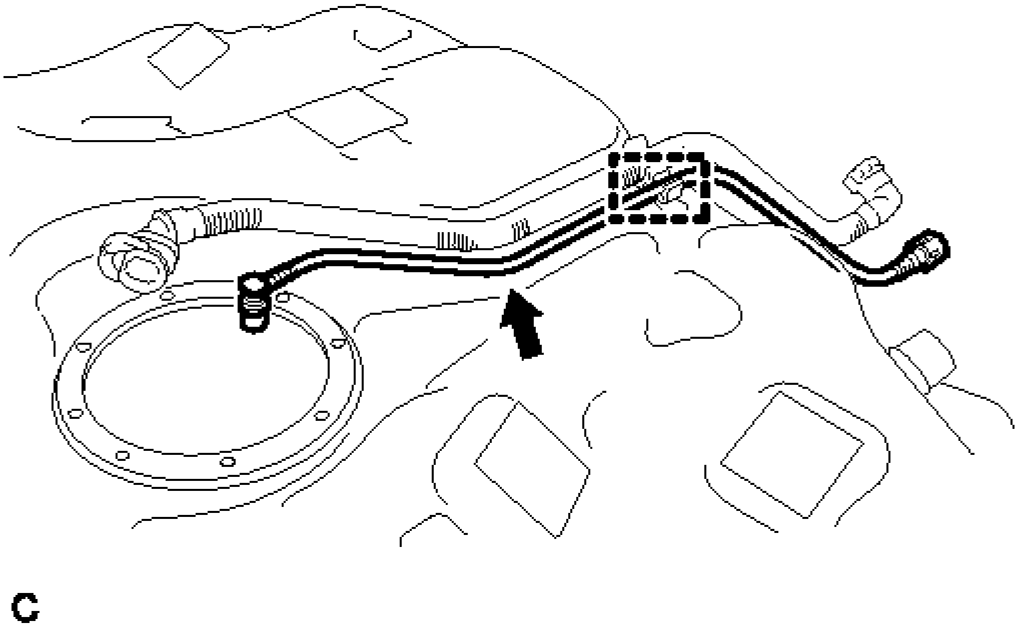

Fig. 78: Identifying Fuel Tank Breather Elbow Tube Sub-Assembly

Courtesy of TOYOTA MOTOR SALES, U.S.A., INC.

17. **REMOVE FUEL TANK VENT HOSE**
    a. Disconnect the No. 2 fuel tube clamp and remove the fuel tank vent hose sub-assembly.

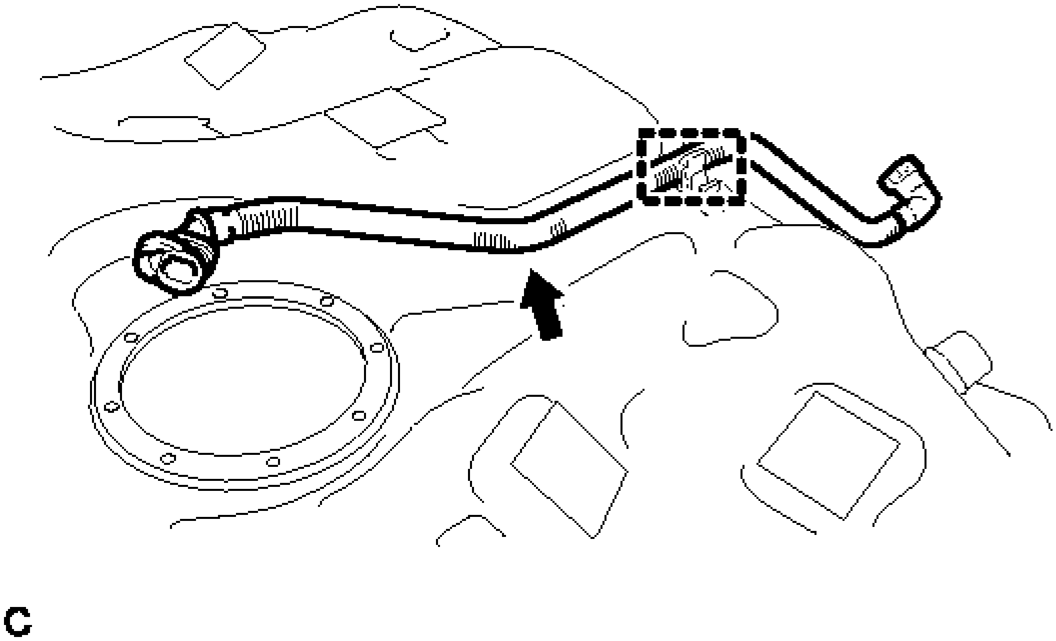

Fig. 79: Identifying Fuel Tank Vent Hose
Courtesy of TOYOTA MOTOR SALES, U.S.A., INC.

18. **REMOVE NO. 1 FUEL TUBE CLAMP**
    a. Remove the No. 1 fuel tube clamp.

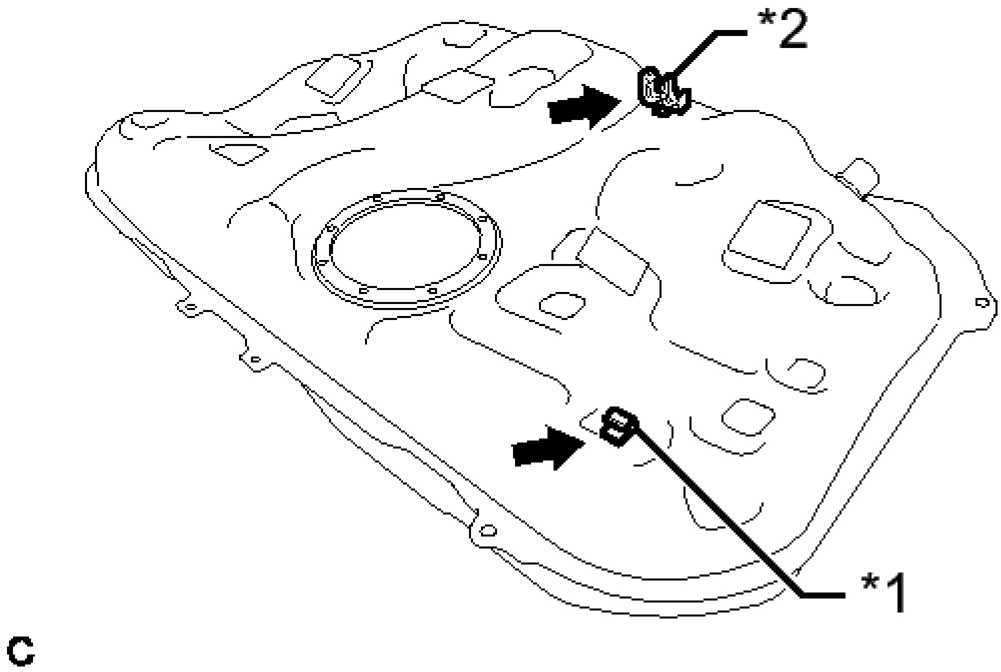

Fig. 80: Identifying Fuel Tube Clamp
Courtesy of TOYOTA MOTOR SALES, U.S.A., INC.

TEXT IN ILLUSTRATION

*1	No. 1 Fuel Tube Clamp
*2	No. 2 Fuel Tube Clamp

19. **REMOVE NO. 2 FUEL TUBE CLAMP**
    a. Remove the No. 2 fuel tube clamp.
20. **REMOVE NO. 1 FUEL TANK CUSHION**
    a. Remove the 5 No. 1 fuel tank cushions.

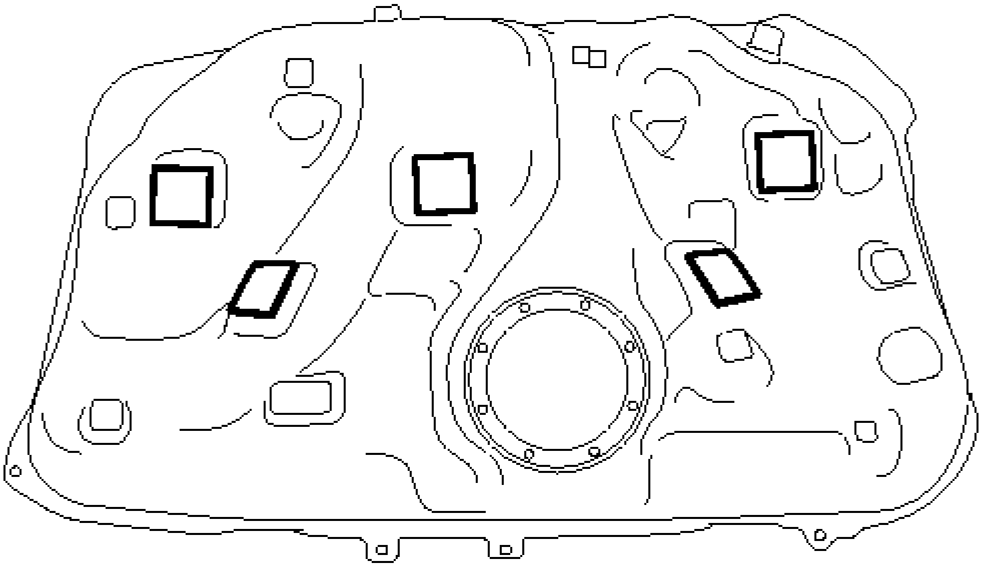

Fig. 81: Identifying No. 1 Fuel Tank Cushions
Courtesy of TOYOTA MOTOR SALES, U.S.A., INC.

INSTALLATION

INSTALLATION

1. **INSTALL NO. 1 FUEL TANK CUSHION**
    a. Install 5 new No. 1 fuel tank cushions as shown in the illustration.

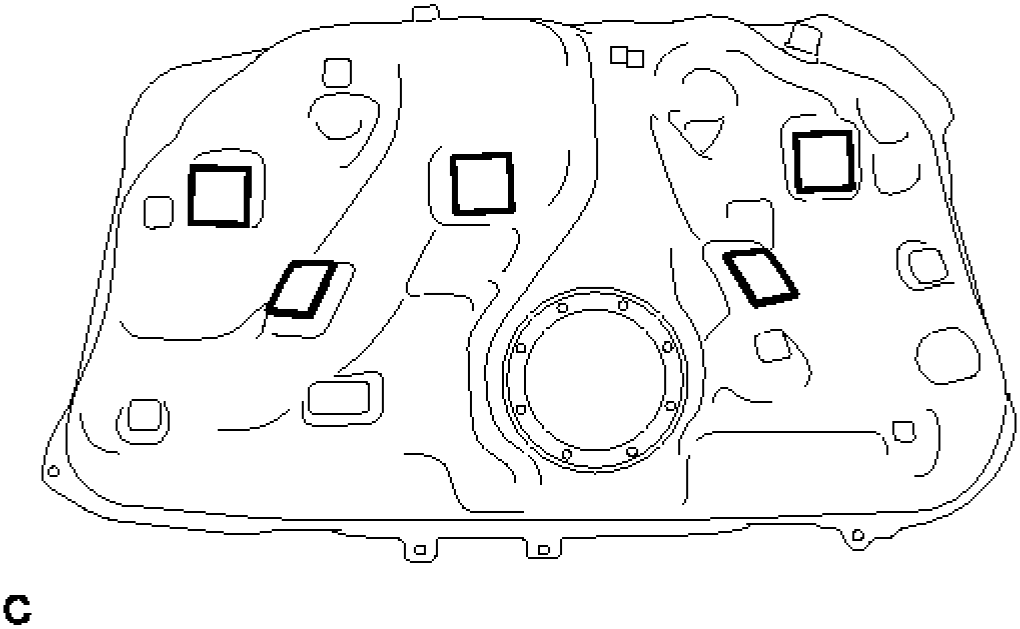

Fig. 82: Identifying No. 1 Fuel Tank Cushions
Courtesy of TOYOTA MOTOR SALES, U.S.A., INC.

2. **INSTALL NO. 1 FUEL TUBE CLAMP**
    a. Install the No. 1 fuel tube clamp.
3. **INSTALL NO. 2 FUEL TUBE CLAMP**
    a. Install the No. 2 fuel tube clamp.
4. **INSTALL FUEL TANK VENT HOSE**
    a. Install the fuel tank vent hose to the No. 2 fuel tube clamp.
5. **INSTALL FUEL TANK BREATHER ELBOW TUBE SUB-ASSEMBLY**
    a. Install the fuel tank breather elbow tube sub-assembly to the No. 2 fuel tube clamp.
6. **INSTALL FUEL TANK MAIN TUBE SUB-ASSEMBLY**
    a. Install the fuel tank main tube sub-assembly to the No. 1 fuel tube clamp.
7. **INSTALL FUEL TANK ASSEMBLY**
    a. Support the fuel tank using an engine lifter.
    b. Raise the engine lifter, then install the fuel tank to the vehicle.

NOTE:

- **Do not drop the fuel tank.**
- **When installing the fuel tank, tilt it slightly to prevent it from interfering with the suspension arm or other surrounding parts.**

    c. Tighten the 4 bolts of the 2 fuel tank bands.

Torque: 45 N*m (459 kgf*cm, 33 ft.*lbf)

8. **CONNECT FUEL TANK TO FILLER PIPE HOSE**
   1. Push in the fuel tank to filler pipe hose connector to the fuel tank assembly and push the retainer so that the claws engage.

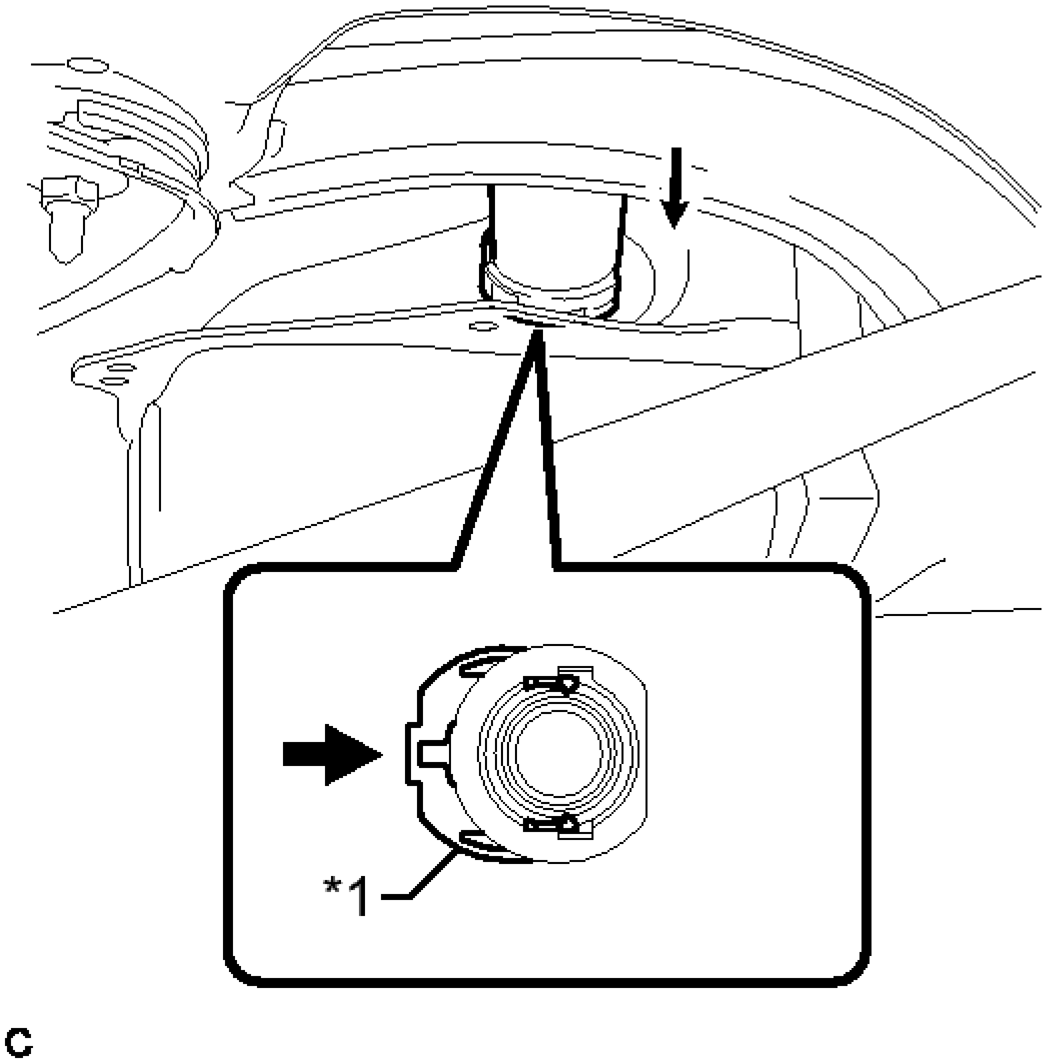

Fig. 83: Identifying Fuel Tank To Filler Pipe Hose
Courtesy of TOYOTA MOTOR SALES, U.S.A., INC.

TEXT IN ILLUSTRATION

*1	Retainer
·	Push

NOTE:

- **Check that there are no scratches or foreign matter around the connected parts of the fuel tank to filler pipe hose connector**

and tank before performing this work.

- **After connecting the fuel tank to filler pipe hose, check that the fuel tank to filler pipe hose is securely connected by pulling on the fuel tank to filler pipe hose connector.**

9. CONNECT FUEL TANK VENT HOSE

a. Push in the fuel tank vent hose connector to the charcoal canister and push up the retainer so that the claws engage.

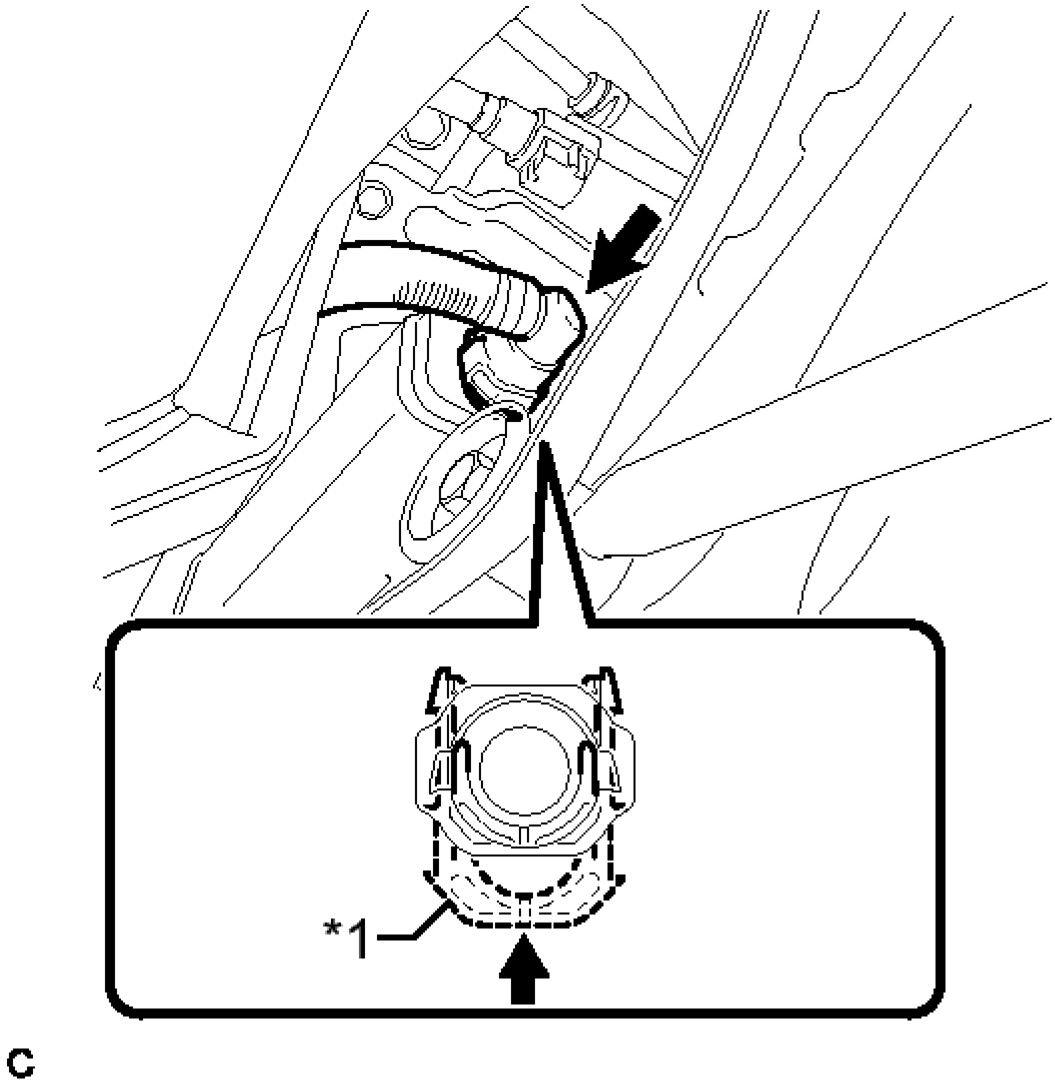

Fig. 84: Identifying Fuel Tank Vent Hose Retainer
Courtesy of TOYOTA MOTOR SALES, U.S.A., INC.

TEXT IN ILLUSTRATION

*1	Retainer
·	Push

NOTE:

- **Check that there are no scratches or foreign matter around the connected part of the fuel tank vent hose connector and charcoal canister before performing this work.**
- **After connecting the fuel tank vent hose, check that the fuel tank vent hose is securely connected by pulling on the fuel tank vent hose connector and the charcoal canister.**

10. CONNECT FUEL TANK BREATHER ELBOW TUBE SUB-ASSEMBLY

a. Push in the fuel tank breather elbow tube connector to the pipe and push up the retainer so that the claws engage.

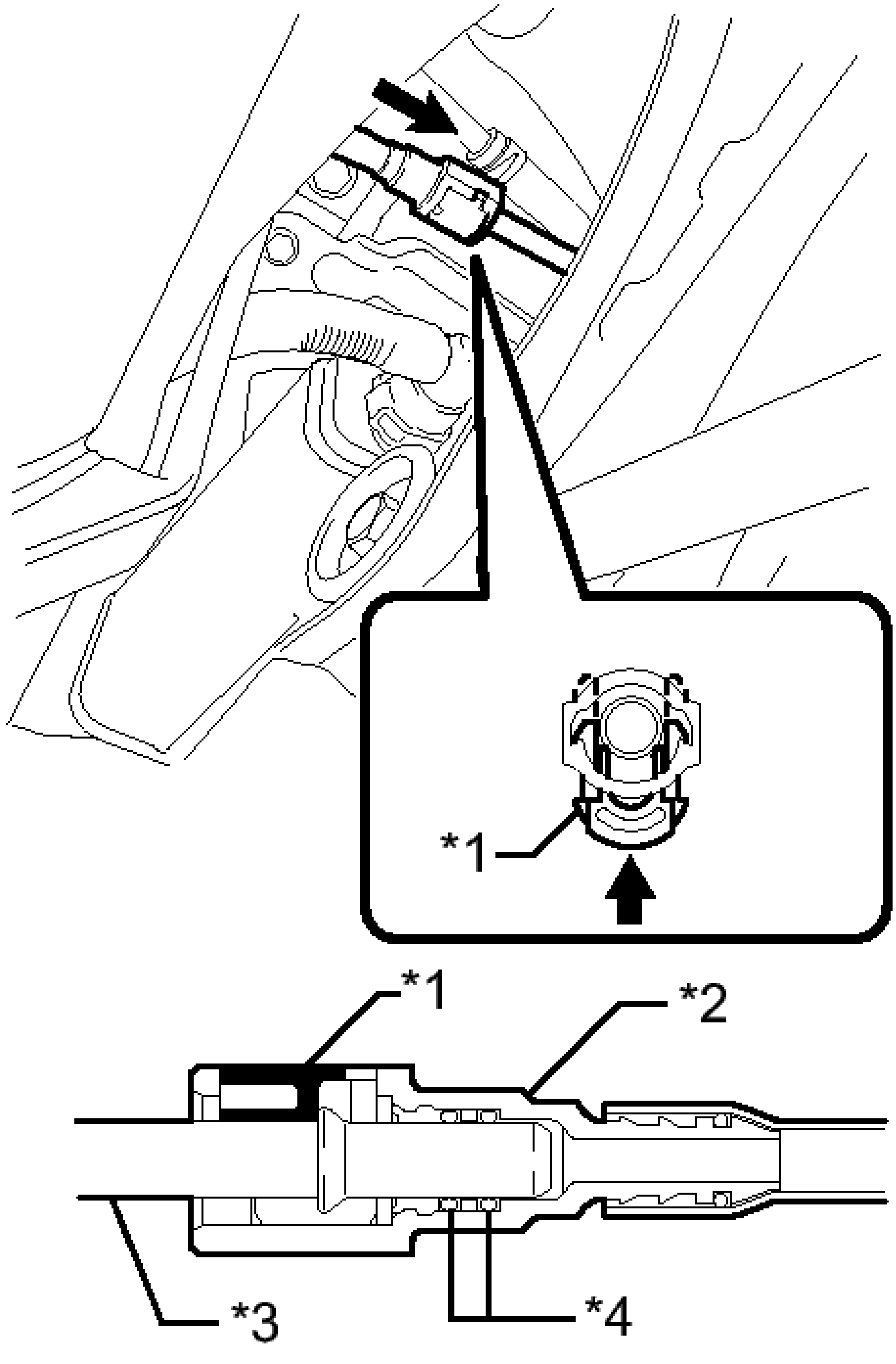

Fig. 85: Identifying Fuel Tank Breather Elbow Tube Sub-Assembly
Courtesy of TOYOTA MOTOR SALES, U.S.A., INC.

TEXT IN ILLUSTRATION

*1	Retainer

*2	Quick Connector
*3	Pipe
*4	O-ring
·	Push

NOTE:

- **Check that there are no scratches or foreign matter around the connected part of the fuel tank breather elbow tube connector and pipe before starting this step.**
- **After connecting the fuel tank breather elbow tube connector, check that the fuel tank breather elbow tube connector is securely connected by pulling on the fuel tank breather elbow tube connector.**

11. CONNECT FUEL TANK MAIN TUBE SUB-ASSEMBLY

a. Push in the fuel tank main tube connector to the pipe and push up the retainer so that the claws engage.

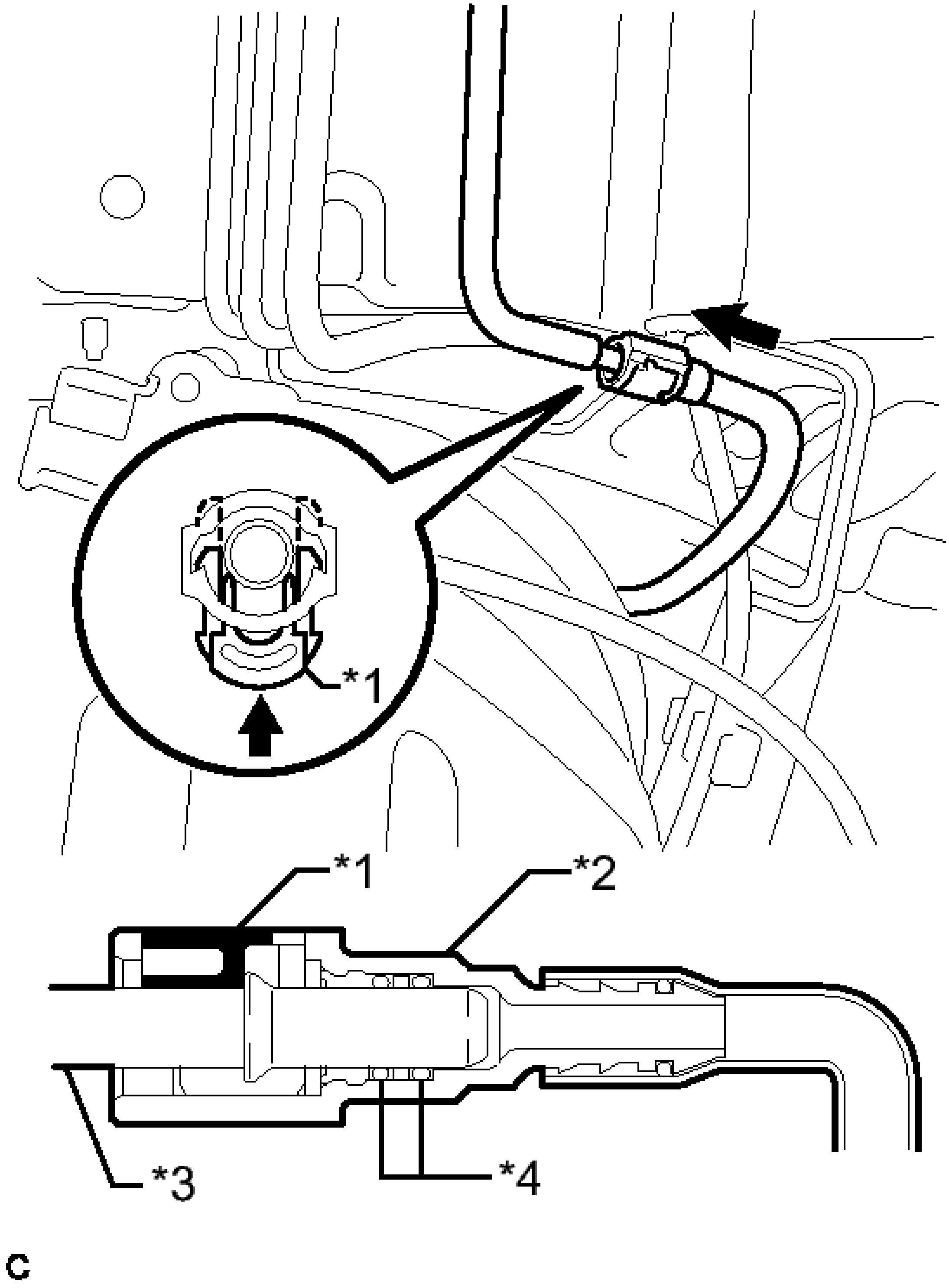

Fig. 86: Identifying Fuel Tank Main Tube Sub-Assembly
Courtesy of TOYOTA MOTOR SALES, U.S.A., INC.

TEXT IN ILLUSTRATION

*1	Retainer

*2	Quick Connector
*3	Pipe
*4	O-ring
→	Push

NOTE:

- **Check that there are no scratches or foreign matter around the connected part of the fuel tank main tube connector and pipe before starting this step.**
- **After connecting the fuel tank main tube connector, check that the fuel tank main tube connector is securely connected by pulling on the fuel tube connector.**

12. **INSTALL NO. 1 FUEL TANK PROTECTOR**
    a. Install the lower center fuel tank protector with the 3 clips.
13. **INSTALL REAR NO. 1 STABILIZER BAR BRACKET**
    a. Install the 2 rear No. 1 stabilizer bar brackets with the 4 bolts.

    Torque: 31 N*m (316 kgf*cm, 23 ft.*lbf)

14. **INSTALL NO. 3 PARKING BRAKE CABLE ASSEMBLY**
    a. Install the No. 3 parking brake cable assembly with the nut.

    Torque: 6.0 N*m (61 kgf*cm, 53 in.*lbf)

15. **INSTALL NO. 2 PARKING BRAKE CABLE ASSEMBLY**
    a. Install the No. 2 parking brake cable assembly with the nut.

    Torque: 6.0 N*m (61 kgf*cm, 53 in.*lbf)

16. **INSTALL NO. 1 FLOOR UNDER COVER** . Refer to **INSTALLATION - Step 11**
17. **INSTALL NO. 2 FLOOR UNDER COVER** . Refer to **INSTALLATION - Step 10**
18. **INSTALL CENTER EXHAUST PIPE ASSEMBLY**

    Refer to **INSTALLATION**

19. **INSTALL FUEL SUCTION TUBE WITH PUMP AND GAUGE ASSEMBLY**

    Refer to **INSTALLATION**

20. **ADD FUEL**
21. **INSPECT FOR EXHAUST GAS LEAK**

FUEL SENDER GAUGE ASSEMBLY

COMPONENTS

ILLUSTRATION

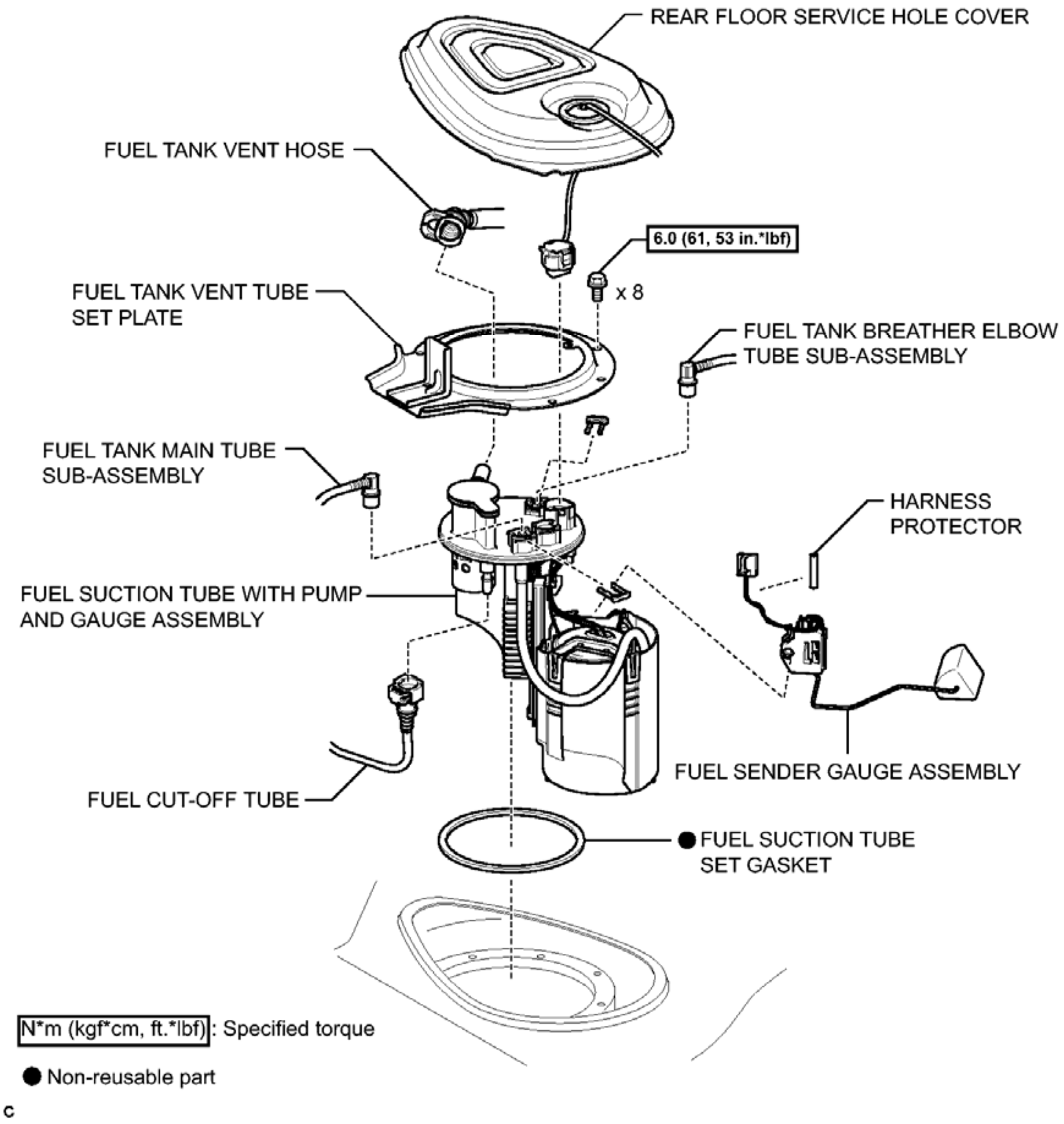
REAR FLOOR SERVICE HOLE COVER
FUEL TANK VENT HOSE
6.0 (61, 53 in.*lbf)
x 8
FUEL TANK VENT TUBE SET PLATE
FUEL TANK BREATHER ELBOW TUBE SUB-ASSEMBLY
FUEL TANK MAIN TUBE SUB-ASSEMBLY
HARNESS PROTECTOR
FUEL SUCTION TUBE WITH PUMP AND GAUGE ASSEMBLY
FUEL SENDER GAUGE ASSEMBLY
FUEL CUT-OFF TUBE
● FUEL SUCTION TUBE SET GASKET
N*m (kgf*cm, ft.*lbf): Specified torque
● Non-reusable part
c

Fig. 87: Identifying Fuel Sender Gauge Assembly Replacement Components With Torque Specifications
Courtesy of TOYOTA MOTOR SALES, U.S.A., INC.

REMOVAL

REMOVAL

1. **REMOVE FUEL SUCTION TUBE WITH PUMP AND GAUGE ASSEMBLY**

   Refer to **REMOVAL**

2. **REMOVE FUEL SENDER GAUGE ASSEMBLY**
   a. Disconnect the 3 harness clamps.

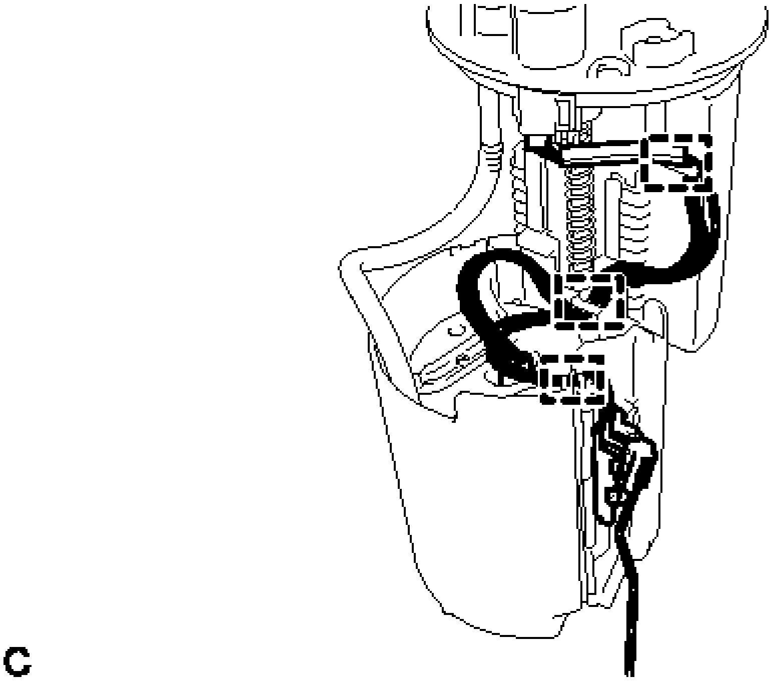

Fig. 88: Identifying Fuel Sender Gauge Harness Clamps
Courtesy of TOYOTA MOTOR SALES, U.S.A., INC.

NOTE: Do not damage the wire harness.

   b. Remove the harness protector from the wire harness.

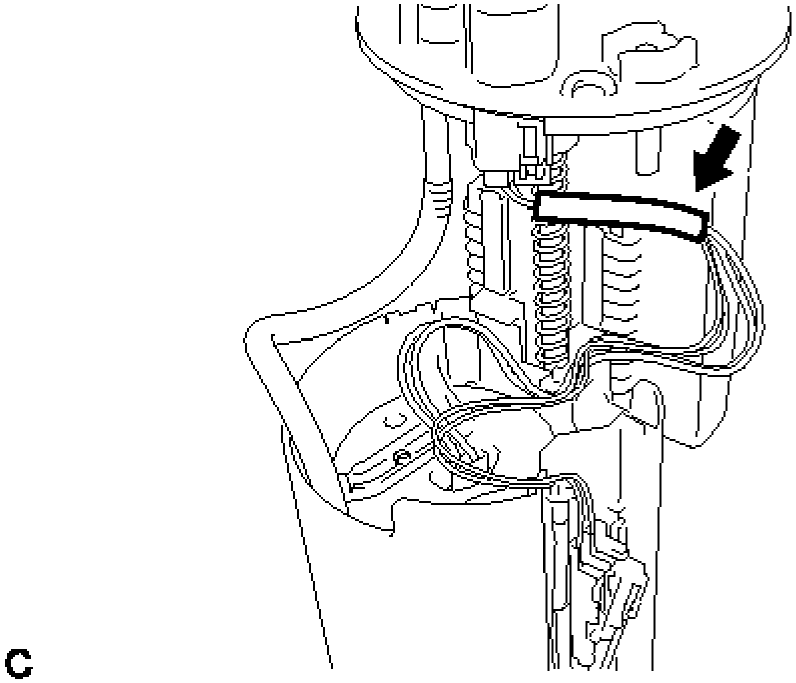

Fig. 89: Identifying Harness Protector
Courtesy of TOYOTA MOTOR SALES, U.S.A., INC.

NOTE: **Do not damage the wire harness.**

c. Disconnect the connector of the fuel sender gauge assembly.

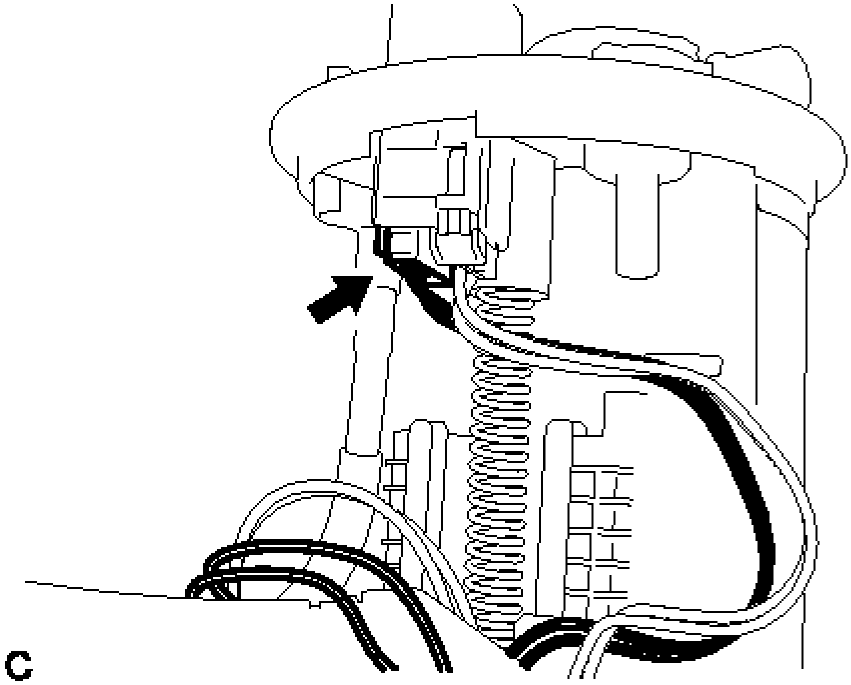

Fig. 90: Identifying Fuel Sender Gauge Assembly Connector
Courtesy of TOYOTA MOTOR SALES, U.S.A., INC.

d. Release the lock as shown in the illustration and slide the fuel sender gauge assembly to remove it.

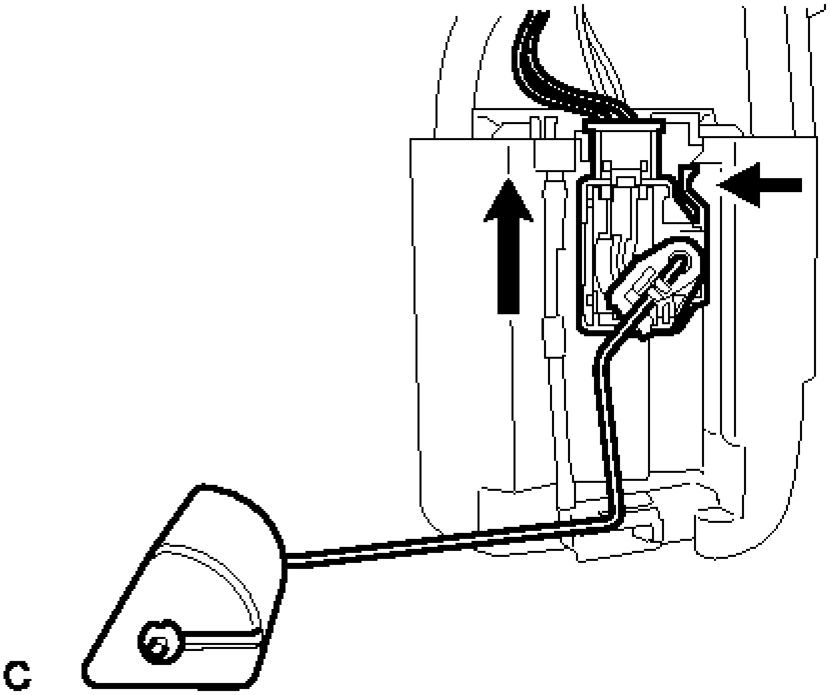

Fig. 91: Identifying Fuel Sender Gauge Assembly Lock
Courtesy of TOYOTA MOTOR SALES, U.S.A., INC.

INSPECTION

INSPECTION

1. **INSPECT FUEL SENDER GAUGE ASSEMBLY**
    a. Check that the float moves smoothly between F and E.

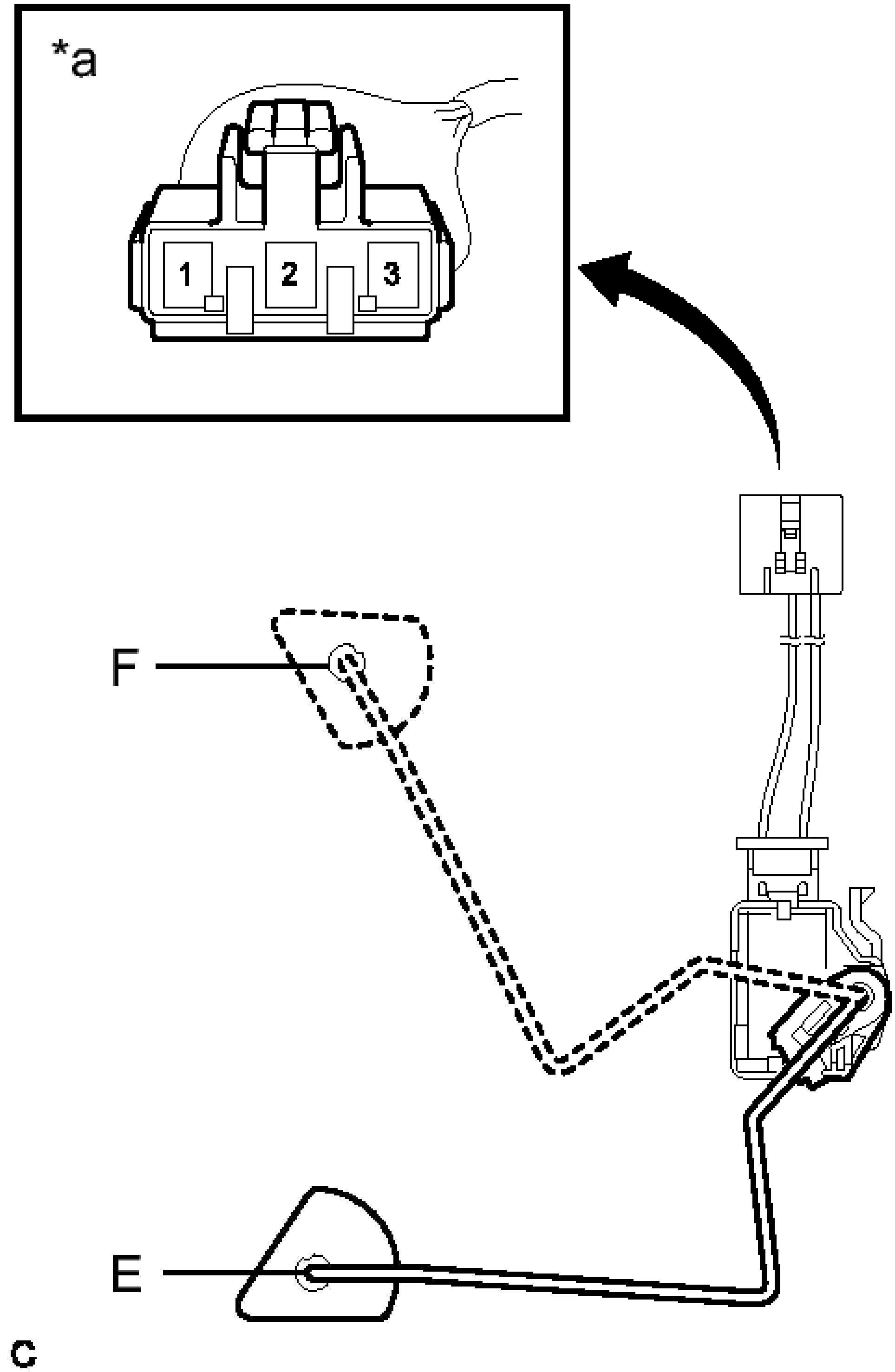

Fig. 92: Identifying Fuel Sender Gauge Assembly Connector Terminal Identification
Courtesy of TOYOTA MOTOR SALES, U.S.A., INC.

TEXT IN ILLUSTRATION

	Front

*a	view of wire harness connector (to Fuel Sender Gauge Assembly)

b. Measure the resistance between terminals 1 and 2 of the connector according to the value(s) in the table below.

Standard Resistance

Float Level	**Resistance (ohms)**
F	13.5 to 16.5
Between E and F	13.5 to 414.5 (Gradually changes)
E	405.5 to 414.5

If the value is not as specified, replace the fuel sender gauge assembly.

INSTALLATION

INSTALLATION

1. **INSTALL FUEL SENDER GAUGE ASSEMBLY**
   a. Install the fuel sender gauge assembly by sliding it downward.

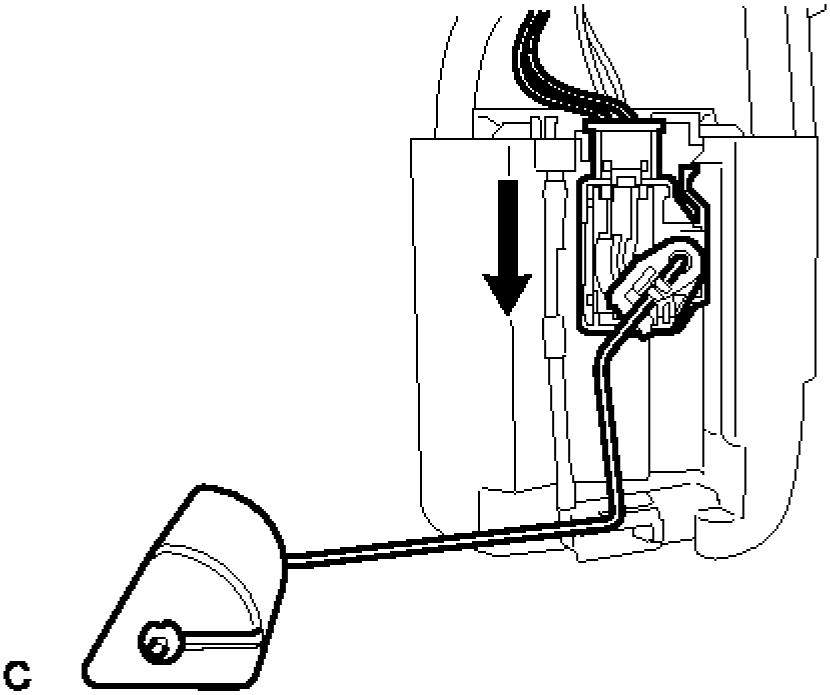

Fig. 93: Identifying Fuel Sender Gauge Assembly
Courtesy of TOYOTA MOTOR SALES, U.S.A., INC.

b. Connect the connector of the fuel sender gauge assembly.
c. Install the harness protector.

NOTE: Do not damage the wire harness.

d. Connect the 3 harness clamps.

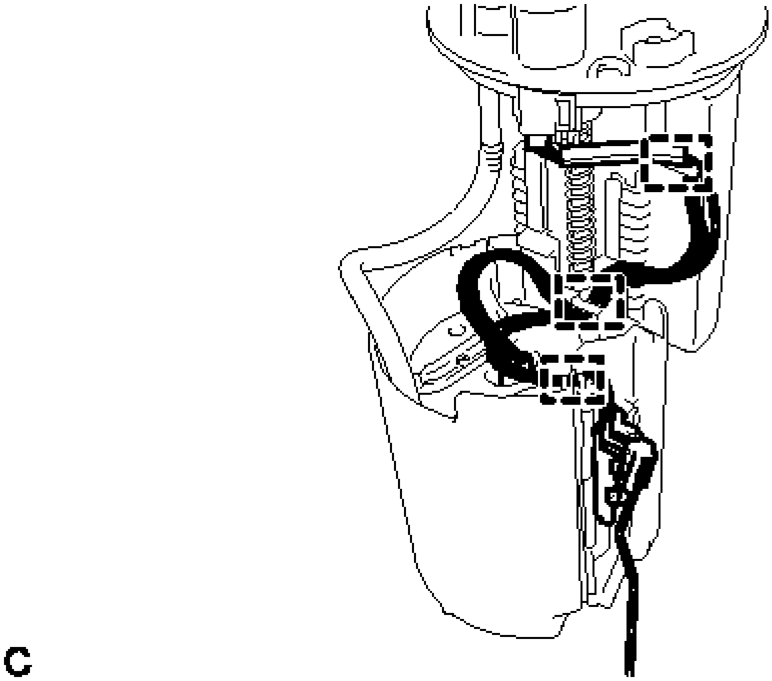

Fig. 94: Identifying Fuel Sender Gauge Harness Clamps
Courtesy of TOYOTA MOTOR SALES, U.S.A., INC.

NOTE: **Do not damage the wire harness.**

2. **INSTALL FUEL SUCTION TUBE WITH PUMP AND GAUGE ASSEMBLY**

   Refer to **INSTALLATION**

FUEL INJECTOR

COMPONENTS

ILLUSTRATION

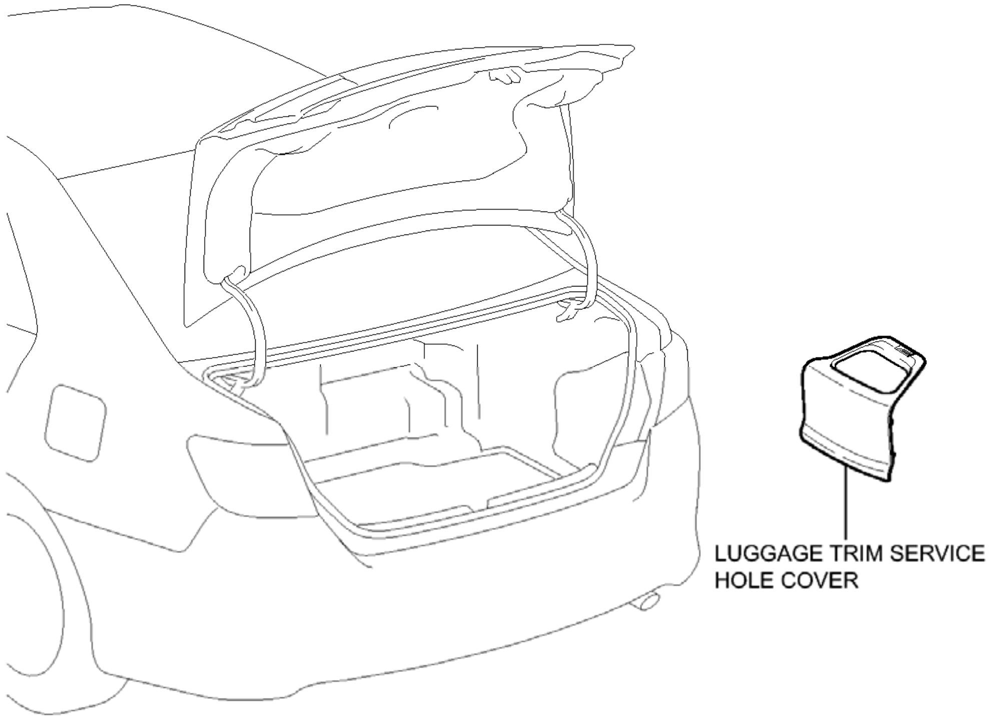
LUGGAGE TRIM SERVICE HOLE COVER

P

Fig. 1: Identifying Fuel Injector Replacement Components (1 Of 3)
Courtesy of TOYOTA MOTOR SALES, U.S.A., INC.

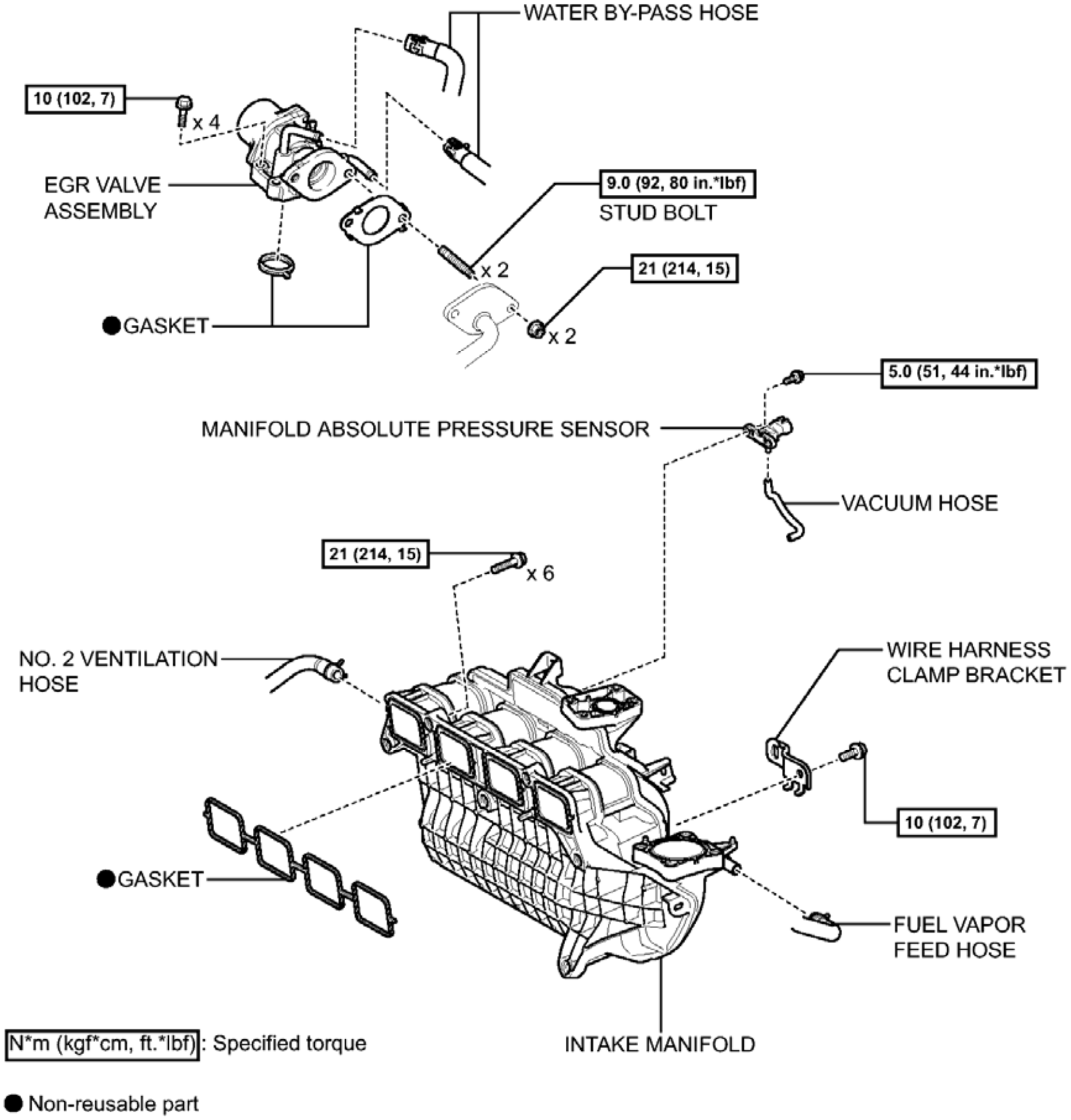
WATER BY-PASS HOSE
10 (102, 7)
x 4
EGR VALVE ASSEMBLY
9.0 (92, 80 in.*lbf)
STUD BOLT
x 2
21 (214, 15)
x 2
●GASKET
5.0 (51, 44 in.*lbf)
MANIFOLD ABSOLUTE PRESSURE SENSOR
VACUUM HOSE
21 (214, 15)
x 6
NO. 2 VENTILATION HOSE
WIRE HARNESS CLAMP BRACKET
10 (102, 7)
●GASKET
FUEL VAPOR FEED HOSE
N*m (kgf*cm, ft.*lbf): Specified torque
INTAKE MANIFOLD
● Non-reusable part

Fig. 2: Identifying Fuel Injector Replacement Components With Torque Specifications (2 Of 3)
Courtesy of TOYOTA MOTOR SALES, U.S.A., INC.

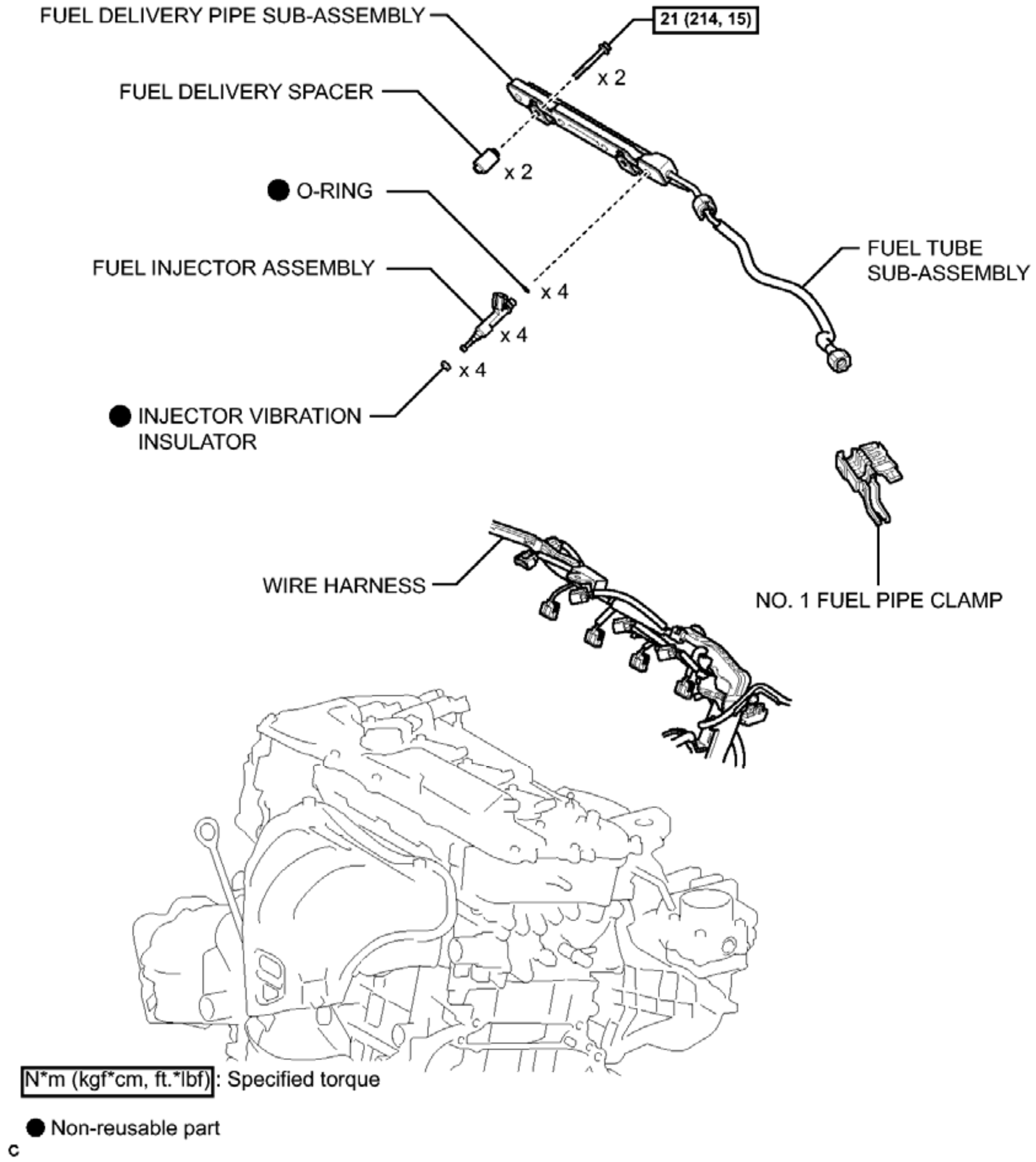
FUEL DELIVERY PIPE SUB-ASSEMBLY
21 (214, 15)
x 2
FUEL DELIVERY SPACER
x 2
● O-RING
x 4
FUEL INJECTOR ASSEMBLY
x 4
FUEL TUBE
SUB-ASSEMBLY
x 4
● INJECTOR VIBRATION
INSULATOR
WIRE HARNESS
NO. 1 FUEL PIPE CLAMP
N*m (kgf*cm, ft.*lbf): Specified torque
● Non-reusable part
C

Fig. 3: Identifying Fuel Injector Replacement Components With Torque Specifications (3 Of 3)
Courtesy of TOYOTA MOTOR SALES, U.S.A., INC.

REMOVAL

REMOVAL

HINT:

Perform "Inspection After Repair" after replacing the fuel injector assembly. Refer to **INITIALIZATION** .

1. **PRECAUTION**

NOTE: **After turning the power switch off, waiting time may be required before disconnecting the cable from the negative (-) auxiliary battery terminal. Therefore, make sure to read the disconnecting the cable from the negative (-) auxiliary battery terminal notice before proceeding with work. Refer to PRECAUTION .**

2. **DISCHARGE FUEL SYSTEM PRESSURE**

   Refer to **PRECAUTION**

3. **REMOVE LUGGAGE TRIM SERVICE HOLE COVER** . Refer to **REMOVAL - Step 2**
4. **DISCONNECT CABLE FROM NEGATIVE AUXILIARY BATTERY TERMINAL**

NOTE: **When disconnecting the cable, some systems need to be initialized after the cable is reconnected. Refer to INITIALIZATION .**

5. **SEPARATE INTAKE MANIFOLD**

   Refer to **REMOVAL**

6. **DISCONNECT FUEL TUBE SUB-ASSEMBLY**
   a. Remove the No. 1 fuel pipe clamp.

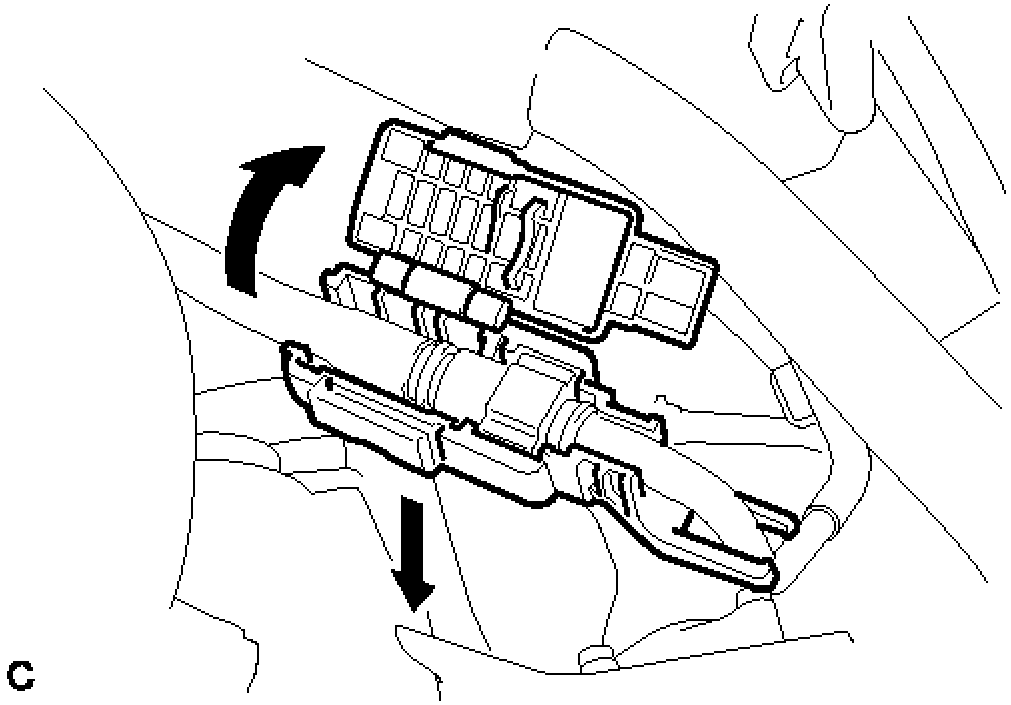

Fig. 4: Removing No. 1 Fuel Pipe Clamp
Courtesy of TOYOTA MOTOR SALES, U.S.A., INC.

b. Pinch the retainer of the fuel tube connector, and then pull the fuel tube connector off of the fuel pipe.

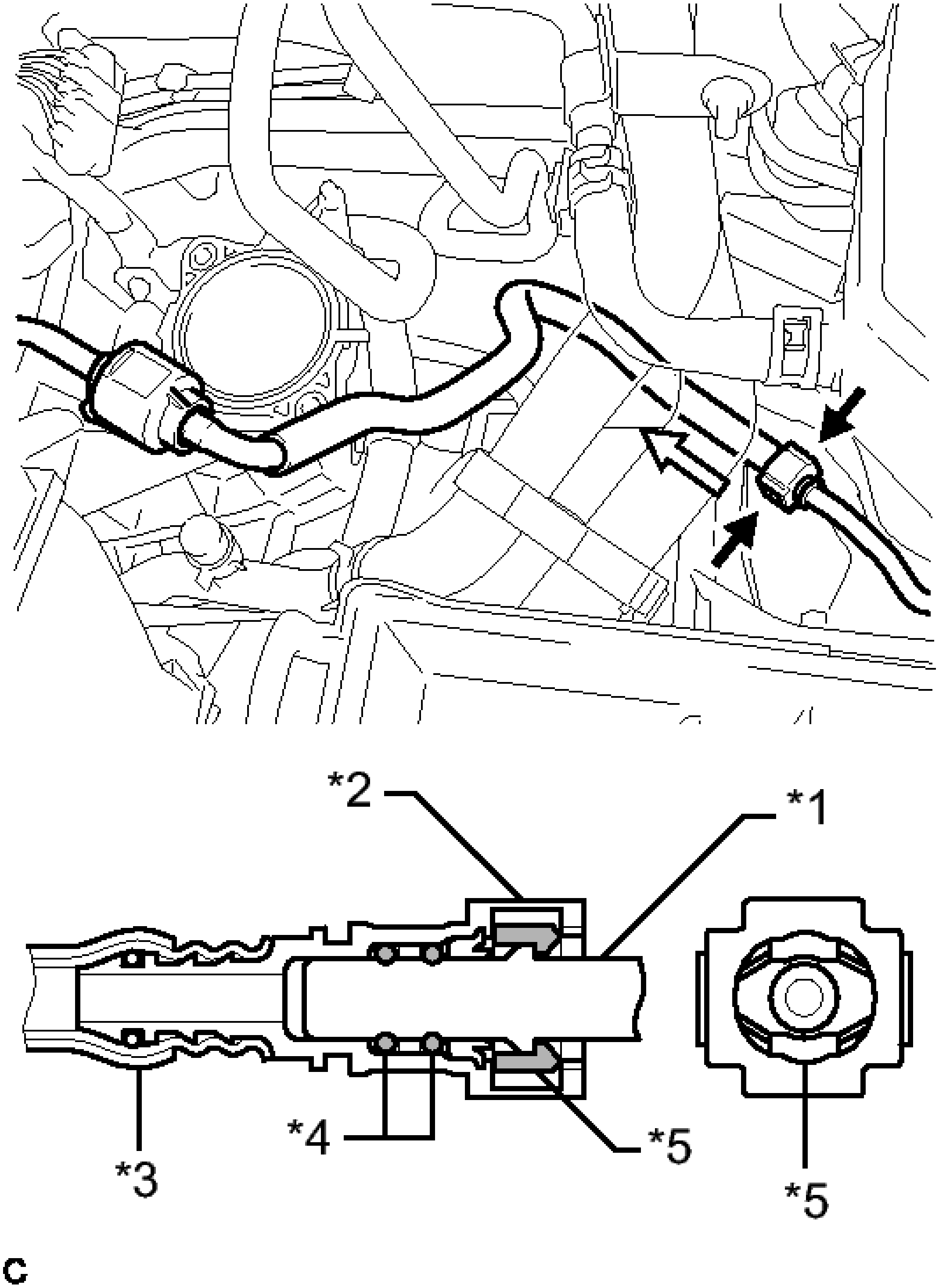

Fig. 5: Pulling Fuel Tube Connector Off Fuel Pipe
Courtesy of TOYOTA MOTOR SALES, U.S.A., INC.

TEXT IN ILLUSTRATION

*1	Fuel Pipe
*2	Fuel Tube Connector
*3	Nylon Tube
*4	O-ring
*5	Retainer
➡	Pinch
⇨	Pull

NOTE:

- **Check for foreign matter on the fuel tube around the fuel tube connector. Clean it if necessary. Foreign matter can affect the ability of the O-ring to seal the fuel tube connector and fuel pipe.**
- **Do not use any tools to separate the fuel tube connector and fuel pipe.**
- **Do not forcefully bend, kink or twist the nylon tube.**
- **Keep the fuel tube connector and fuel pipe free from foreign matter.**
- **If the fuel tube connector and fuel pipe are stuck, push and pull to release them.**
- **Put the fuel tube connector and fuel pipe in plastic bags to prevent damage and contamination.**

c. Remove the fuel tube sub-assembly from the fuel hose clamp.

7. **REMOVE FUEL DELIVERY PIPE SUB-ASSEMBLY**

a. Disconnect the 4 fuel injector connectors.

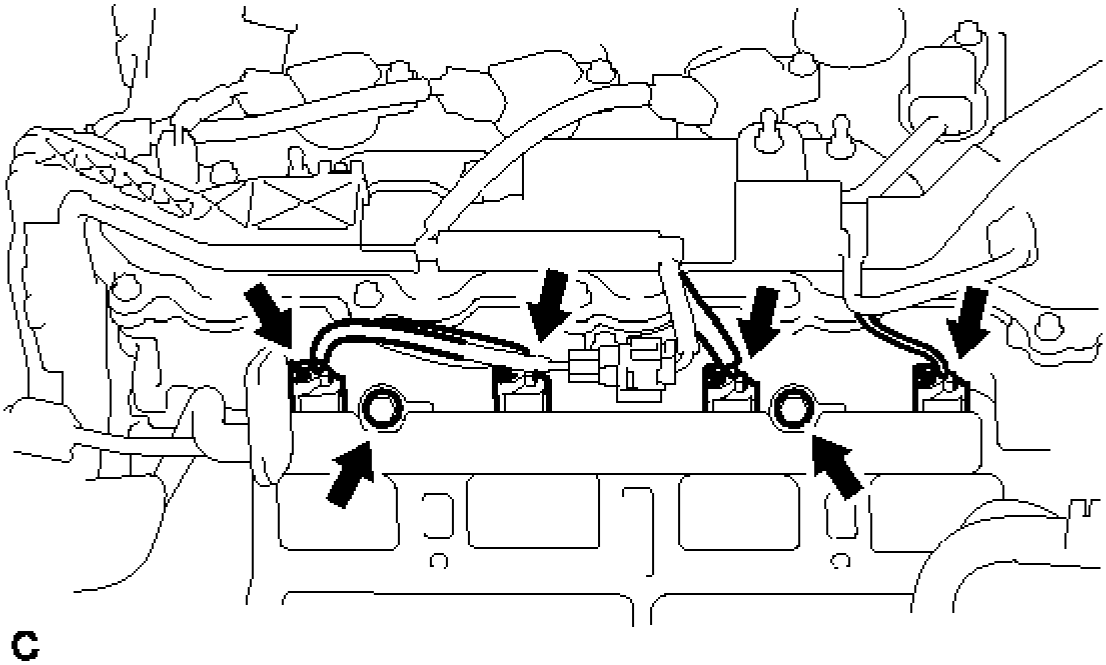

Fig. 6: Identifying Fuel Injector Connectors
Courtesy of TOYOTA MOTOR SALES, U.S.A., INC.

b. Remove the 2 bolts, and then remove the fuel delivery pipe together with the 4 fuel injectors.

NOTE: Be careful not to drop the fuel injectors when removing the fuel delivery pipe.

c. Remove the 2 fuel delivery spacers from the cylinder head.

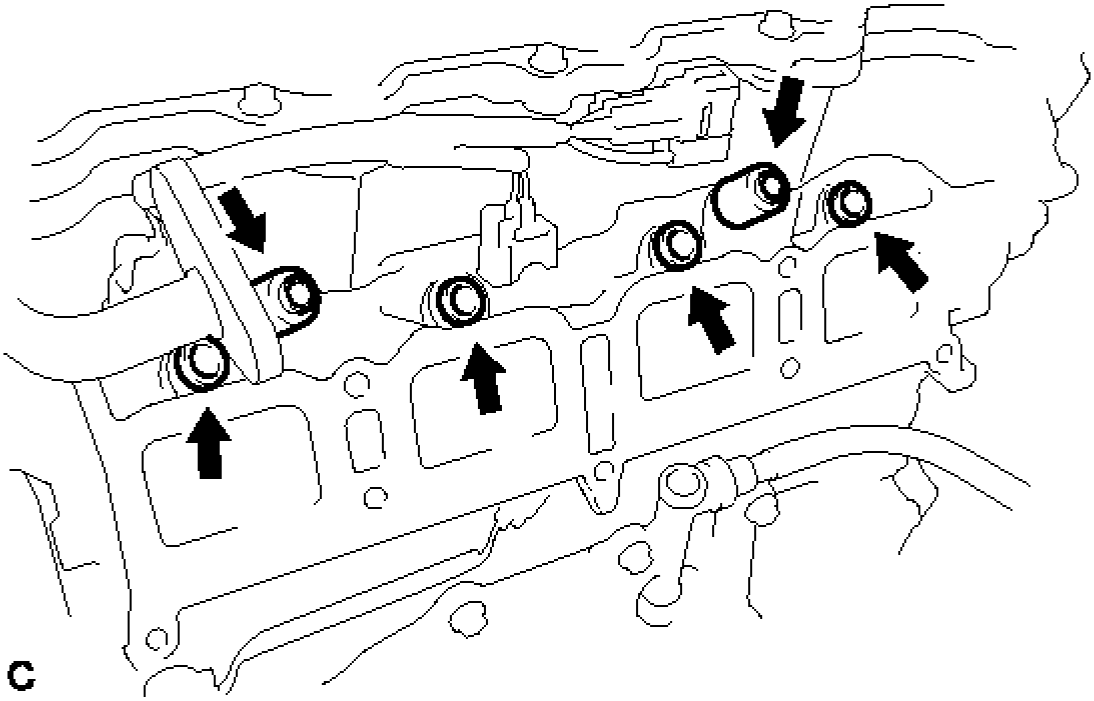

Fig. 7: Identifying Fuel Delivery Spacers And Injector Vibration Insulators
Courtesy of TOYOTA MOTOR SALES, U.S.A., INC.

d. Remove the 4 injector vibration insulators from the cylinder head.

8. **REMOVE FUEL INJECTOR ASSEMBLY**
   a. Pull the 4 fuel injectors out of the fuel delivery pipe.

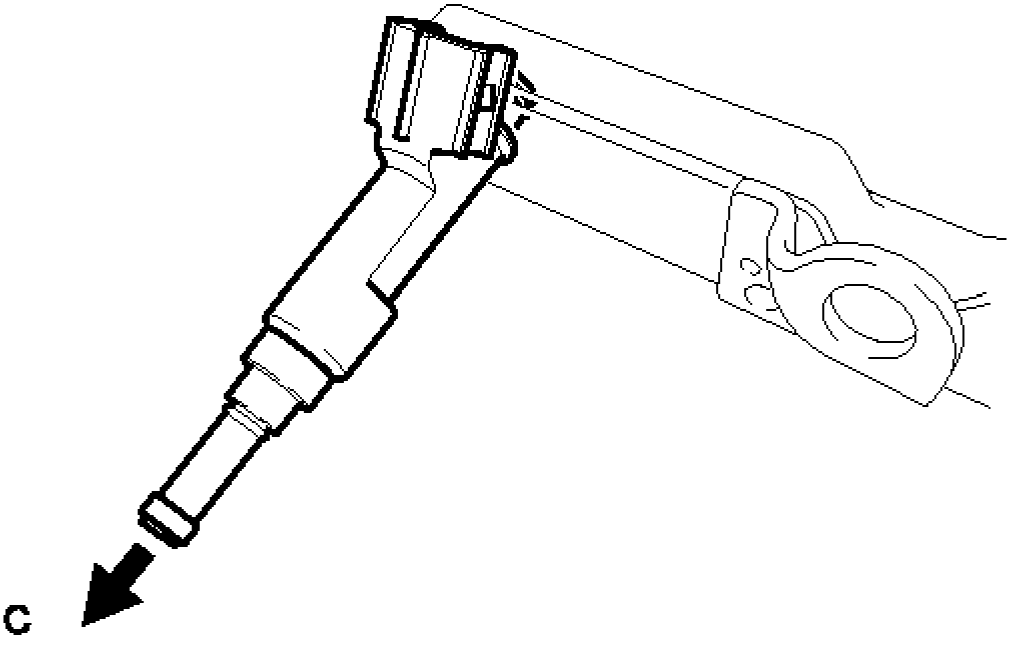

Fig. 8: Removing Fuel Injectors Out Of Fuel Delivery Pipe
Courtesy of TOYOTA MOTOR SALES, U.S.A., INC.

b. Remove the O-ring from each fuel injector.
c. For reinstallation, attach a tag or label to each injector shaft.

NOTE: **Prevent entry of foreign matter by covering the fuel injectors with plastic bags.**

INSPECTION

INSPECTION

1. **INSPECT FUEL INJECTOR ASSEMBLY**
    a. Measure the resistance according to the value(s) in the table below.

    Standard Resistance

Tester Connection	Condition	Specified Condition
1 - 2	20°C (68° F)	11.6 to 12.4 ohms

If the result is not as specified, replace the fuel injector assembly.

b. Inspect the injector injection.

WARNING: **Keep the injector away from sparks during the test.**

1. Connect SST (fuel tube connector) to SST (hose) with SST (hose band), and then connect them to the fuel pipe (vehicle side).

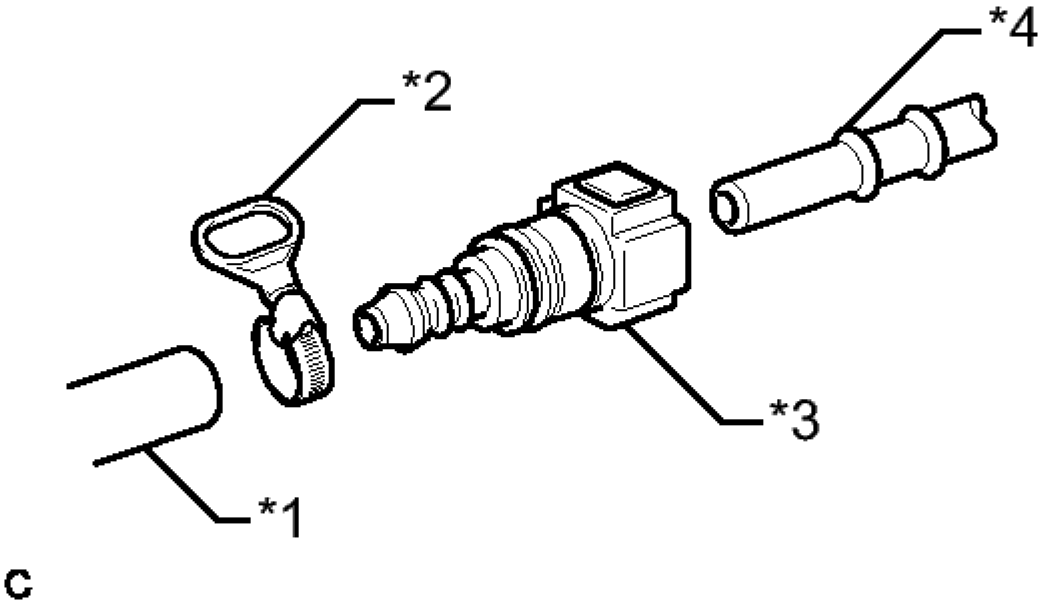

Fig. 9: Identifying Fuel Pipe Components
Courtesy of TOYOTA MOTOR SALES, U.S.A., INC.

TEXT IN ILLUSTRATION

*1	SST (Hose)
*2	SST (Hose Band)
*3	SST (Fuel Tube Connector)
*4	Fuel Pipe (Vehicle Side)

- **SST: 09268-31014**
  09268-41500
  09268-41700
  95336-08070

2. Install a new O-ring to the fuel injector.

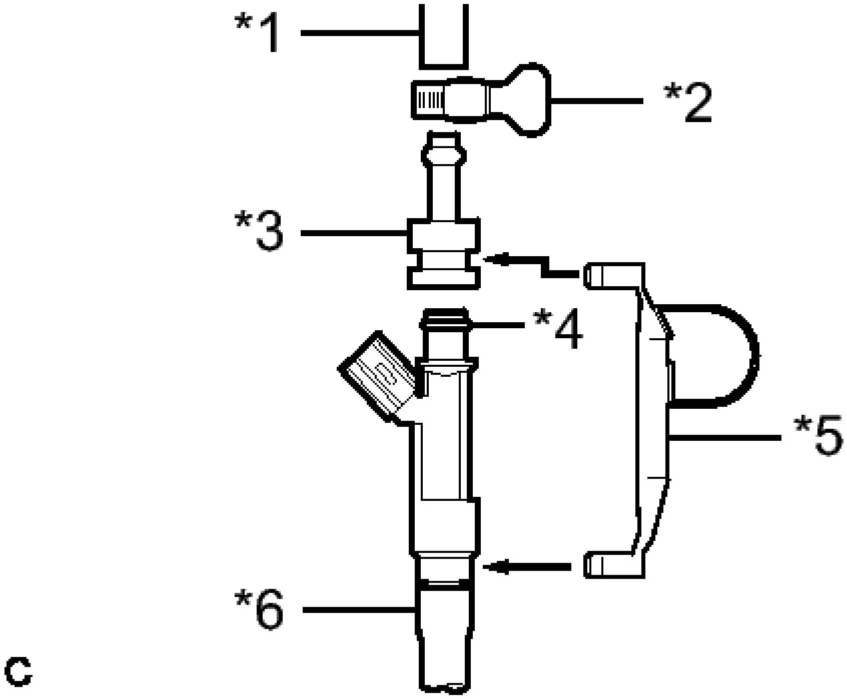

Fig. 10: Identifying Hose, Fuel Pipe, SST And Retainer
Courtesy of TOYOTA MOTOR SALES, U.S.A., INC.

TEXT IN ILLUSTRATION

*1	SST (Hose)
*2	SST (Hose Band)
*3	SST (Adapter)
*4	O-ring
*5	SST (Clamp)
*6	Vinyl Tube

- **SST: 09268-31014**
  09268-41110
  09268-41300
  09268-41700
  95336-08070

3. Connect SST (adapter and hose) to the injector, and hold the injector and union with SST (clamp).
4. Install a vinyl tube onto the injector.

WARNING: Install a suitable vinyl tube onto the injector to contain any gasoline spray.

5. Tie the clamp and adapter together with a tie band as shown in the illustration.

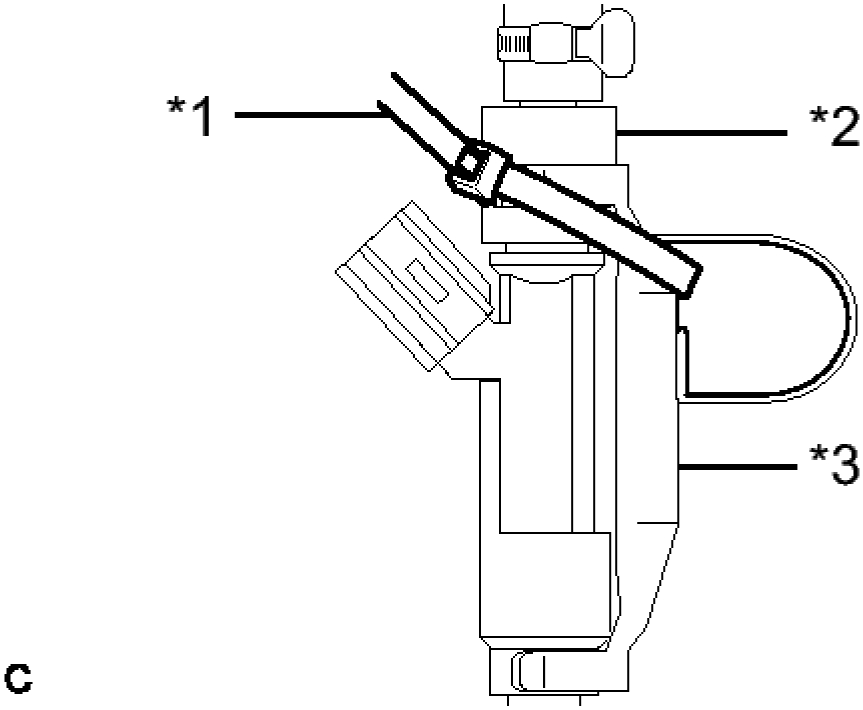

Fig. 11: Tying SST (Clamp And Adapter) Together With SST (Tie Band)
Courtesy of TOYOTA MOTOR SALES, U.S.A., INC.

TEXT IN ILLUSTRATION

*1	SST (Tie Band)
*2	SST (Adapter)
*3	SST (Clamp)

- **SST: 09268-31014**
  09268-41110
  09268-41300
  09268-41800

6. Put the injector into the graduated cylinder.
7. Operate the fuel pump. Refer to **ON-VEHICLE INSPECTION - Step 1** .
8. Connect SST (wire) to the injector and the auxiliary battery for 15 seconds, and measure the injection volume with the graduated cylinder. Test each injector 2 or 3 times.

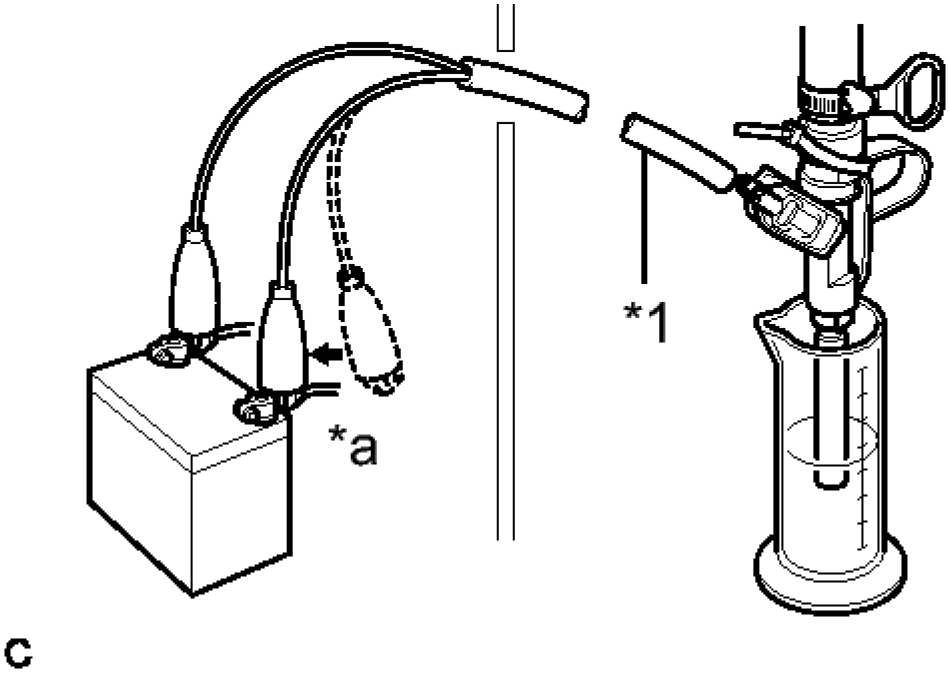

Fig. 12: Connecting SST To Injector Assembly And Battery
Courtesy of TOYOTA MOTOR SALES, U.S.A., INC.

TEXT IN ILLUSTRATION

*1	SST (Wire)
*a	Connect

- **SST: 09842-30080**

NOTE: **Always switch the voltage on and off at the auxiliary battery side, not the injector side.**

Standard Injection Volume

Tester Connection	Condition	Specified Condition
Positive terminal - Ground terminal	Per 15 seconds	87 to 105 cc (5.3 to 6.4 cu.in.)

Difference between each injector

18 cc (1.1 cu.in.) or less

If the result is not as specified, replace the fuel injector assembly.

c. Check for fuel drop.
   1. In the condition above, disconnect the tester probes of SST (wire) from the auxiliary battery and check for fuel drop from the injector.

      Standard fuel drop

      1 drop or less per 20 minutes

      If fuel drop is not as specified, replace the fuel injector assembly.

INSTALLATION

INSTALLATION

1. **INSTALL FUEL INJECTOR ASSEMBLY**
   a. Apply a light coat of gasoline or spindle oil to new O-rings, and then install one onto each fuel injector.

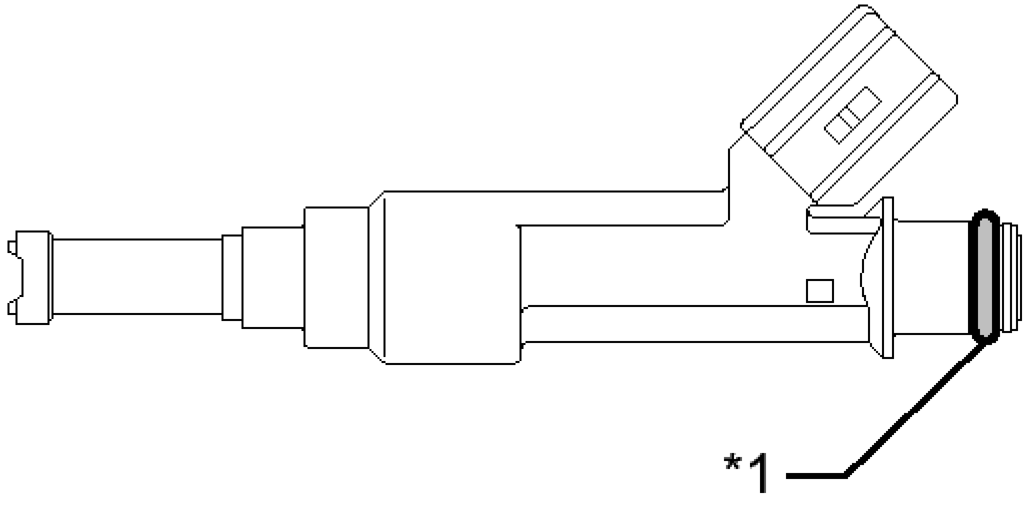

Fig. 13: Identifying Fuel Injector O-Ring
Courtesy of TOYOTA MOTOR SALES, U.S.A., INC.

TEXT IN ILLUSTRATION

*1	O-ring

b. Apply a light coat of gasoline or spindle oil to the contact surfaces of the new O-ring on each fuel injector assembly.
c. While turning the fuel injector assembly left and right, install it onto the fuel delivery pipe sub-assembly.

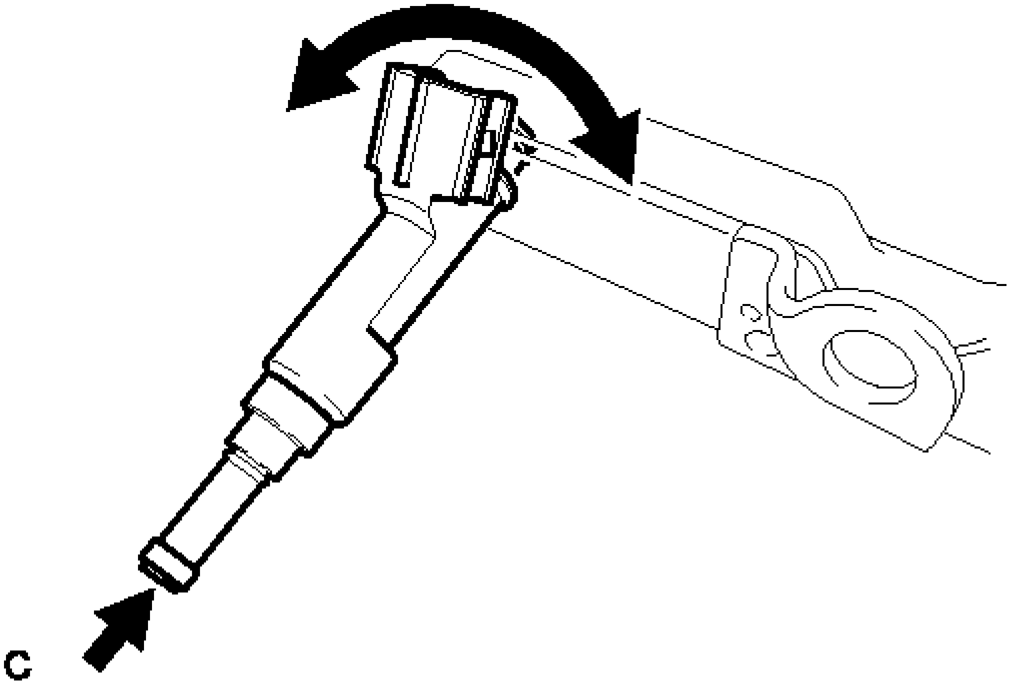

Fig. 14: Installing Fuel Injector Assembly Onto Fuel Delivery Pipe
Courtesy of TOYOTA MOTOR SALES, U.S.A., INC.

NOTE: **Make sure that the O-ring is not cracked or jammed when installing the injector. Refer to PRECAUTION .**

HINT:

Perform "Inspection After Repair" after replacing the fuel injector assembly. Refer to **INITIALIZATION** .

d. Check that the fuel injector rotates smoothly. If the fuel injector does not rotate, replace the O-ring.

2. **INSTALL FUEL DELIVERY PIPE SUB-ASSEMBLY**
   a. Install 4 new injector vibration insulators to the cylinder head.

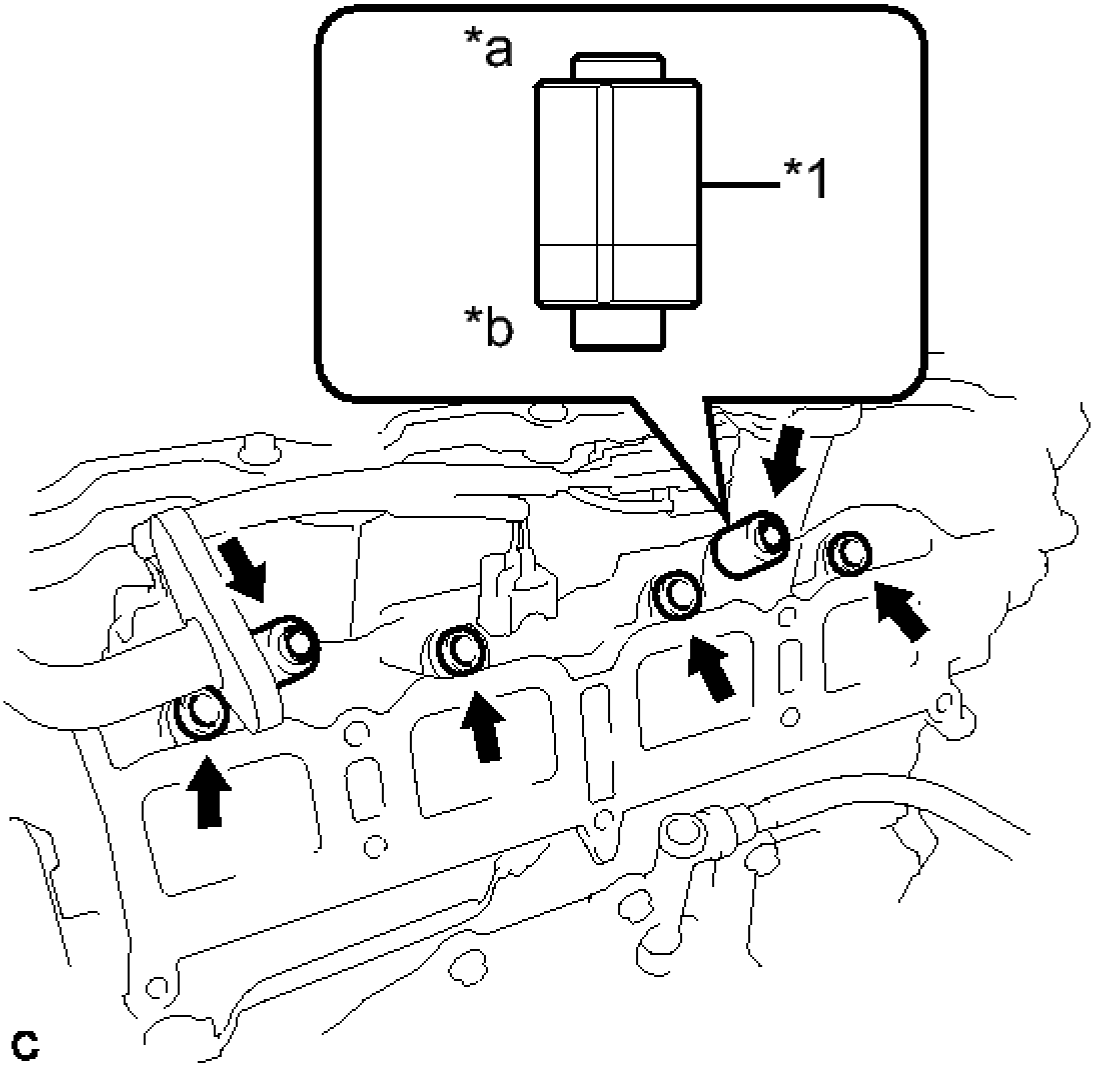

Fig. 15: Identifying Injector Vibration Insulators And Fuel Delivery Spacers
Courtesy of TOYOTA MOTOR SALES, U.S.A., INC.

TEXT IN ILLUSTRATION

*1	Fuel Delivery Spacer
*a	Fuel Delivery Pipe Side
*b	Cylinder Head Side

b. Install the 2 fuel delivery spacers onto the cylinder head.

HINT:

Install the fuel delivery spacer so that the longer protrusion is on the cylinder head side.

c. Install the fuel delivery pipe sub-assembly with the 4 fuel injector assemblies and install the 2 bolts.

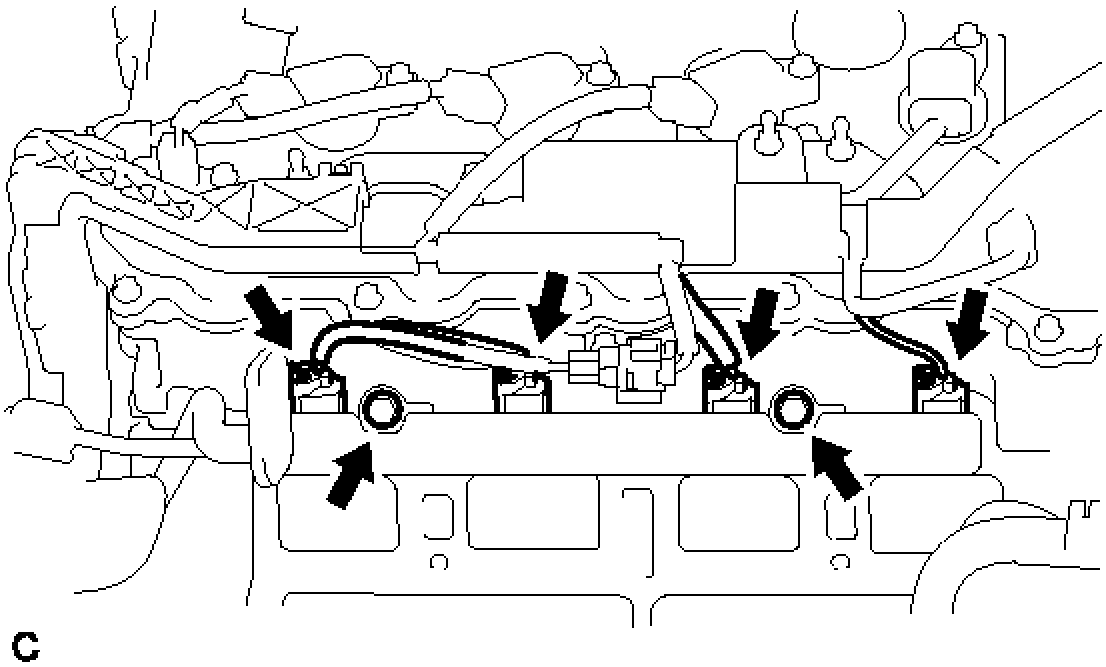

Fig. 16: Identifying Fuel Injector Connectors
Courtesy of TOYOTA MOTOR SALES, U.S.A., INC.

Torque: 21 N*m (214 kgf*cm, 15 ft.*lbf)

NOTE:

- **Do not drop the fuel injectors when installing the fuel delivery pipe sub-assembly.**
- **Check that the fuel injector assemblies rotate smoothly after installing the fuel delivery pipe sub-assembly.**

d. Connect the 4 fuel injector connectors.

3. **CONNECT FUEL TUBE SUB-ASSEMBLY**
   a. Push the tube connector onto the pipe until the tube connector makes a "click" sound.

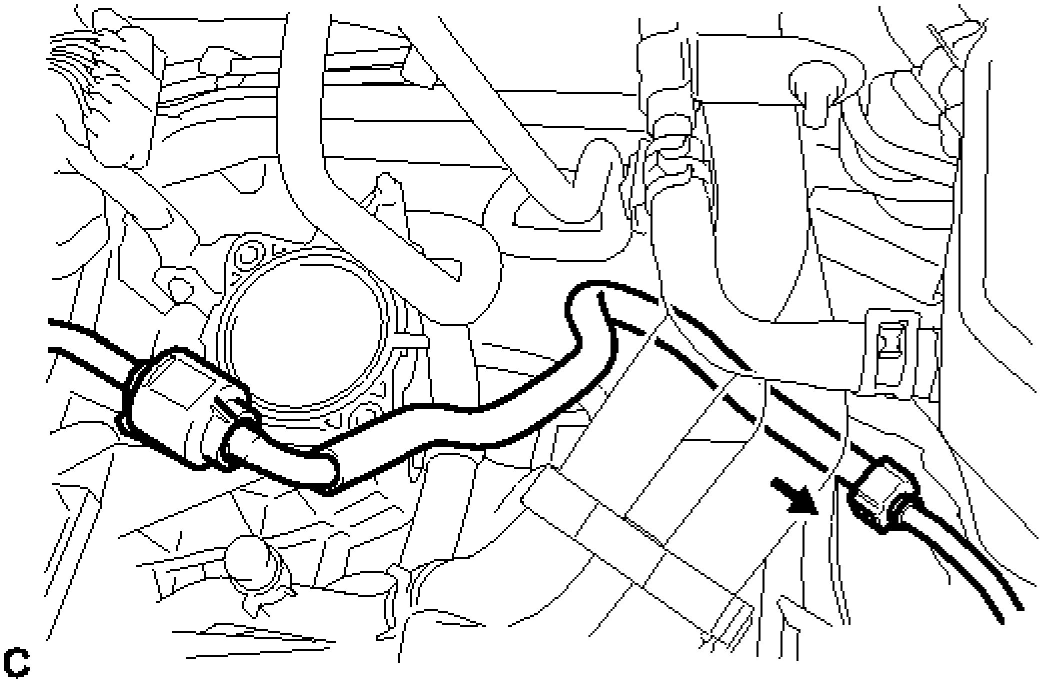

Fig. 17: Pushing Tube Connector Onto The Pipe
Courtesy of TOYOTA MOTOR SALES, U.S.A., INC.

NOTE:	**Before connecting the fuel tube connector and fuel pipe, check that there is no damage or foreign matter on the connecting part of the fuel pipe.** **After connecting the fuel tube connector and fuel pipe, check that they are securely connected by trying to pull them apart.**

b. Install the No. 1 fuel pipe clamp.

4. **INSTALL INTAKE MANIFOLD**

   Refer to **INSTALLATION**

5. **CONNECT CABLE TO NEGATIVE AUXILIARY BATTERY TERMINAL**

   NOTE: **When disconnecting the cable, some systems need to be initialized after the cable is reconnected. Refer to INITIALIZATION .**

6. **INSTALL LUGGAGE TRIM SERVICE HOLE COVER** . Refer to **INSTALLATION - Step 3**
7. **INSPECT FOR FUEL LEAK** . Refer to **ON-VEHICLE INSPECTION - Step 1**

FUEL PRESSURE REGULATOR

COMPONENTS

ILLUSTRATION

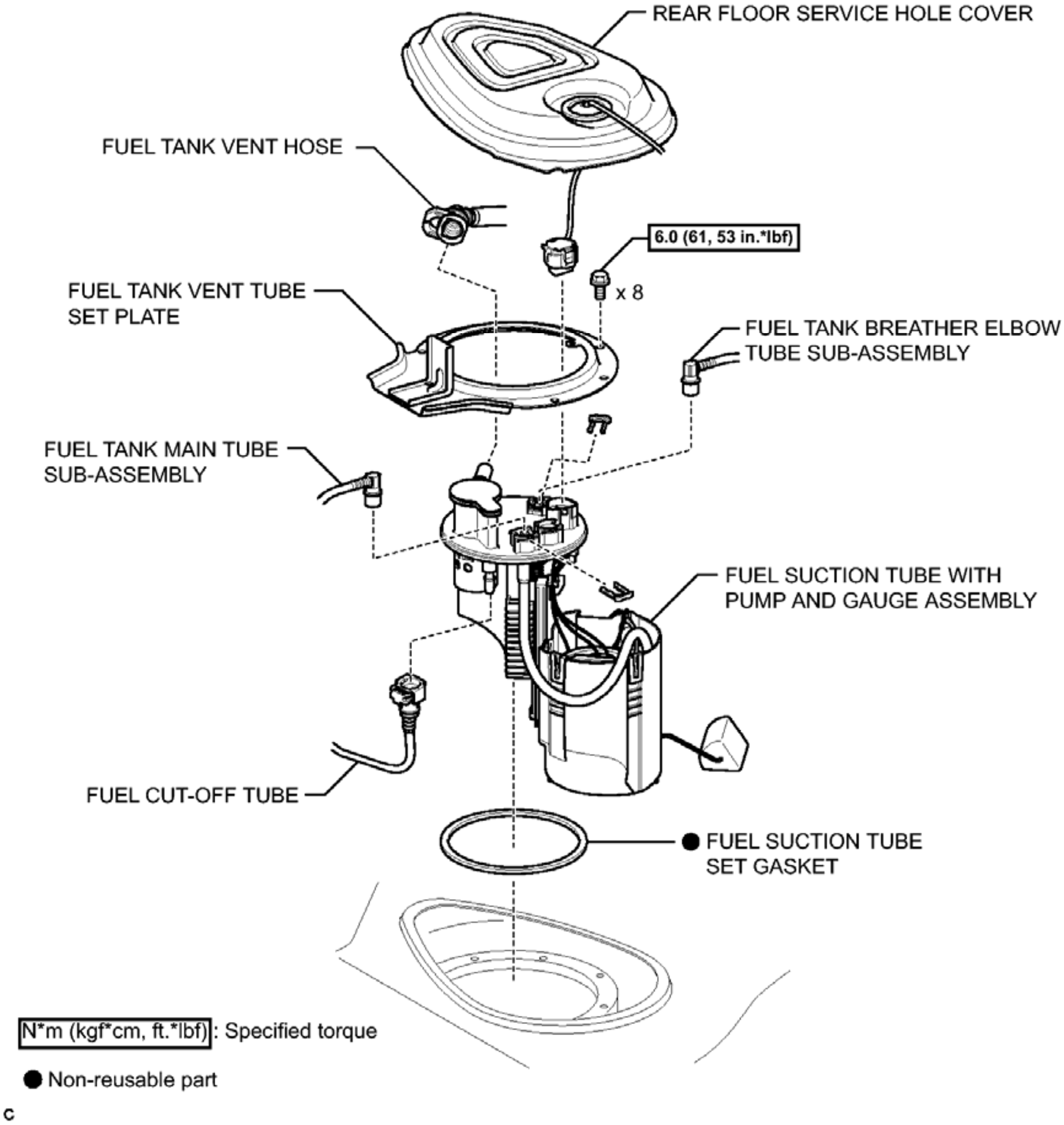
REAR FLOOR SERVICE HOLE COVER
FUEL TANK VENT HOSE
6.0 (61, 53 in.*lbf)
x 8
FUEL TANK VENT TUBE SET PLATE
FUEL TANK BREATHER ELBOW TUBE SUB-ASSEMBLY
FUEL TANK MAIN TUBE SUB-ASSEMBLY
FUEL SUCTION TUBE WITH PUMP AND GAUGE ASSEMBLY
FUEL CUT-OFF TUBE
● FUEL SUCTION TUBE SET GASKET
N*m (kgf*cm, ft.*lbf): Specified torque
● Non-reusable part
C

Fig. 18: Identifying Fuel Pressure Regulator Replacement Components With Torque Specifications (1 Of 2)

Courtesy of TOYOTA MOTOR SALES, U.S.A., INC.

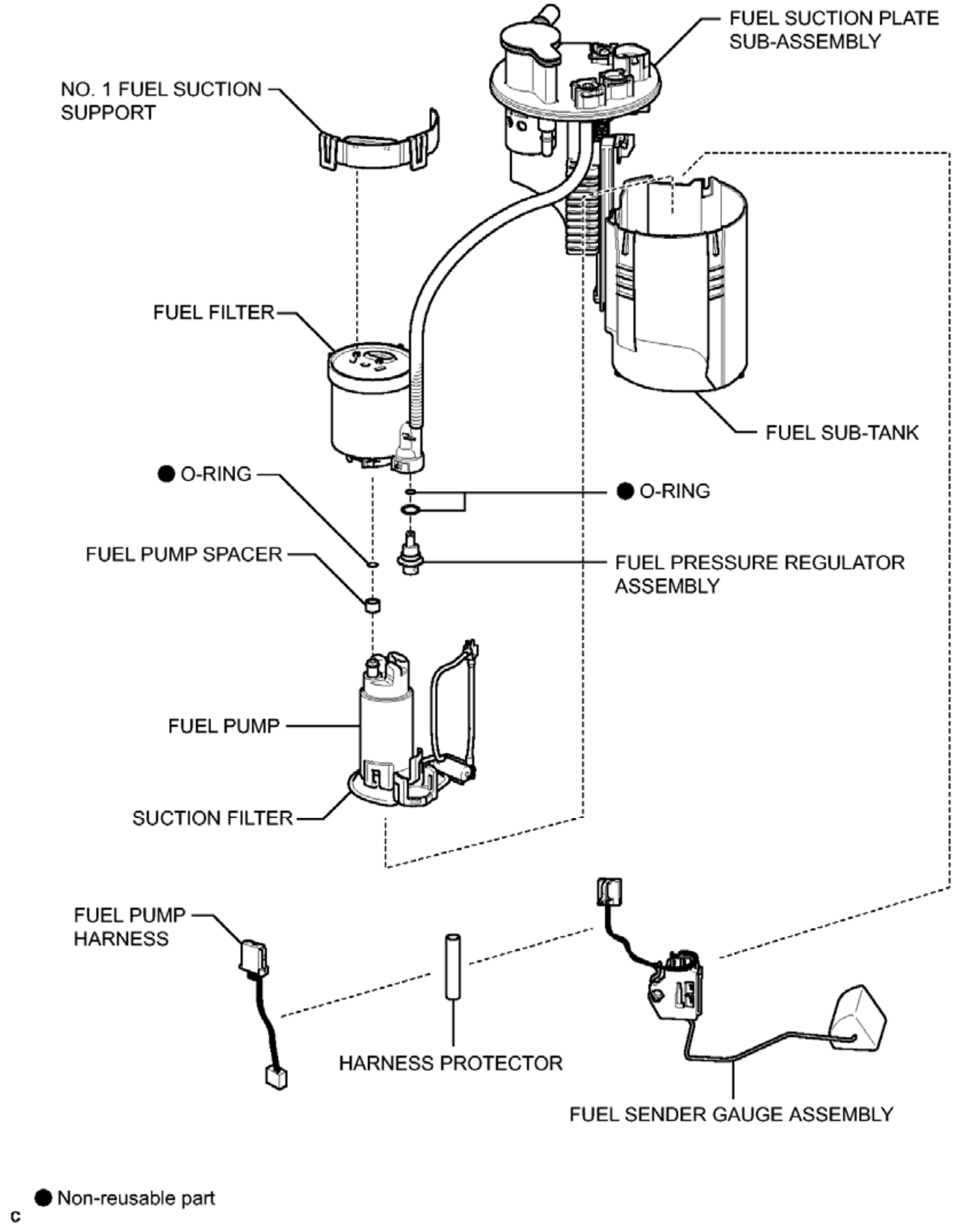
FUEL SUCTION PLATE SUB-ASSEMBLY
NO. 1 FUEL SUCTION SUPPORT
FUEL FILTER
FUEL SUB-TANK
● O-RING
● O-RING
FUEL PUMP SPACER
FUEL PRESSURE REGULATOR ASSEMBLY
FUEL PUMP
SUCTION FILTER
FUEL PUMP HARNESS
HARNESS PROTECTOR
FUEL SENDER GAUGE ASSEMBLY
● Non-reusable part
c

Fig. 19: Identifying Fuel Pressure Regulator Replacement Components (2 Of 2)
Courtesy of TOYOTA MOTOR SALES, U.S.A., INC.

REMOVAL

REMOVAL

1. **REMOVE FUEL SUCTION TUBE WITH PUMP AND GAUGE ASSEMBLY**

Refer to **REMOVAL**

2. **REMOVE FUEL SENDER GAUGE ASSEMBLY** See step 2
3. **REMOVE FUEL PUMP**
   a. Disconnect the connector of the fuel pump harness.

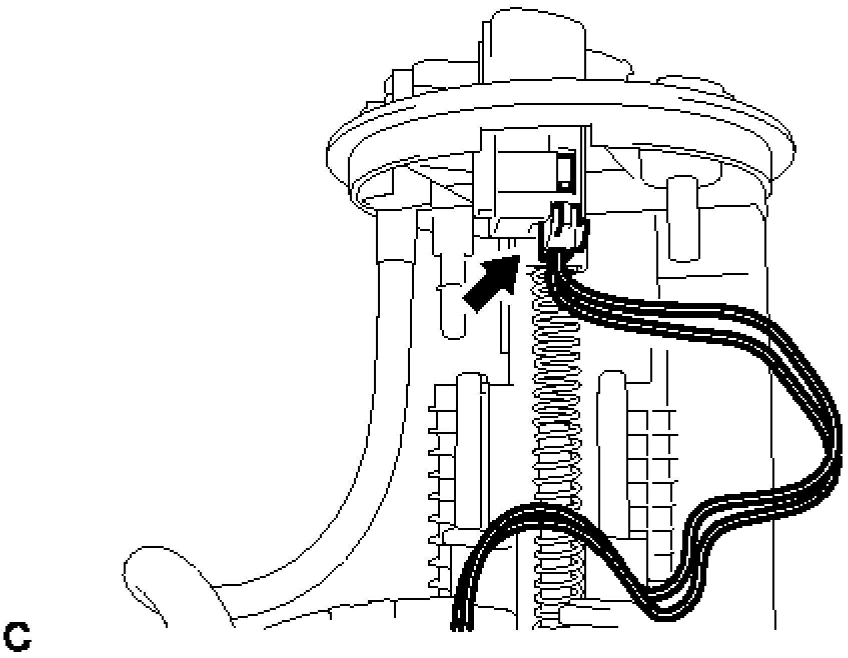

Fig. 20: Identifying Fuel Pump Harness Connector
Courtesy of TOYOTA MOTOR SALES, U.S.A., INC.

   b. Disconnect the fuel pump filter hose.

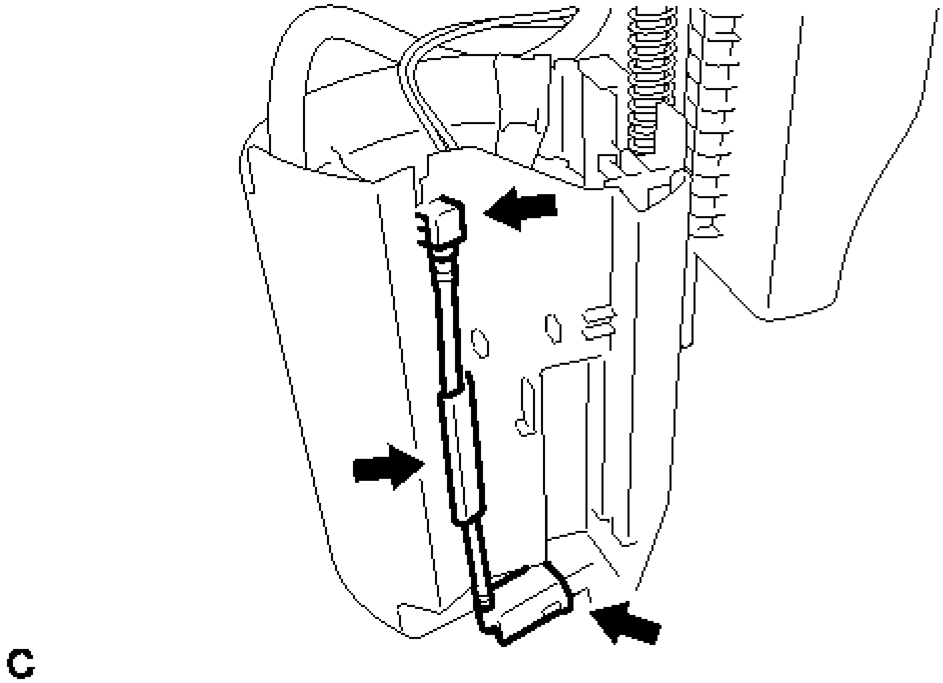

Fig. 21: Identifying Fuel Pump Filter Hose
Courtesy of TOYOTA MOTOR SALES, U.S.A., INC.

c. Using a screwdriver with its tip wrapped in protective tape, disengage the 2 claws, and remove the fuel filter and fuel pump from the fuel sub-tank.

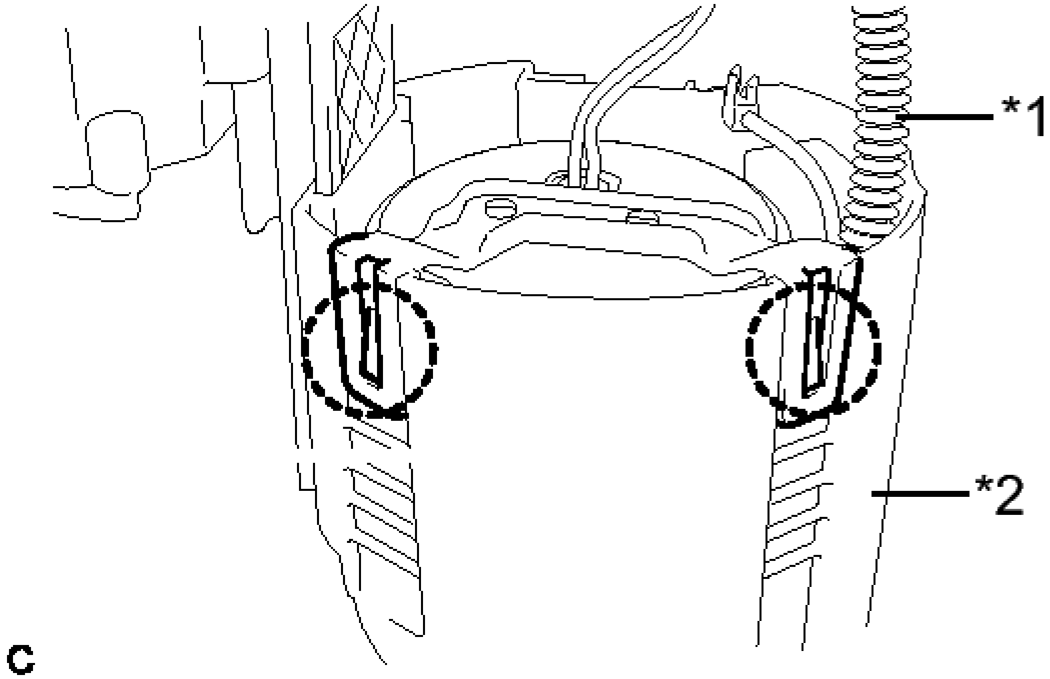

Fig. 22: Identifying Fuel Tube And Fuel Sub-Tank

Courtesy of TOYOTA MOTOR SALES, U.S.A., INC.

TEXT IN ILLUSTRATION

*1	Fuel Tube
*2	Fuel Sub-tank

NOTE: **Do not do anything which may separate the fuel tube from either the fuel suction plate or fuel filter assembly, such as applying excessive force to the tube. Refer to PRECAUTION .**

d. Using a screwdriver with its tip wrapped in protective tape, disengage the 2 claws and remove the No. 1 fuel suction support.

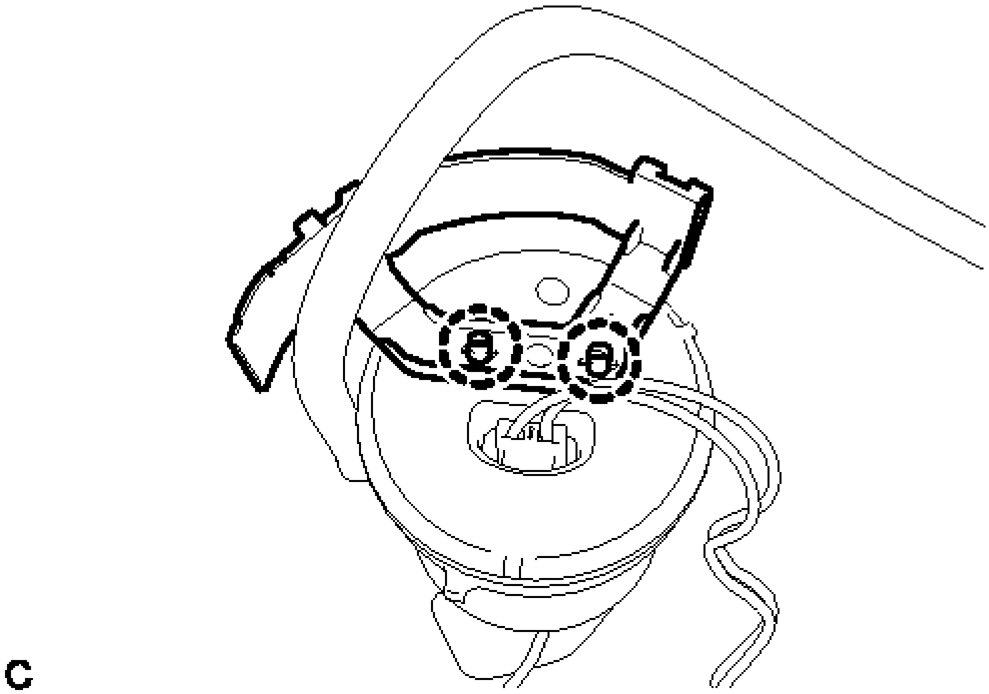

Fig. 23: Identifying No. 1 Fuel Suction Support Claws
Courtesy of TOYOTA MOTOR SALES, U.S.A., INC.

e. Using a screwdriver with its tip wrapped in protective tape, disengage the 5 claws, and remove the fuel pump from the fuel filter.

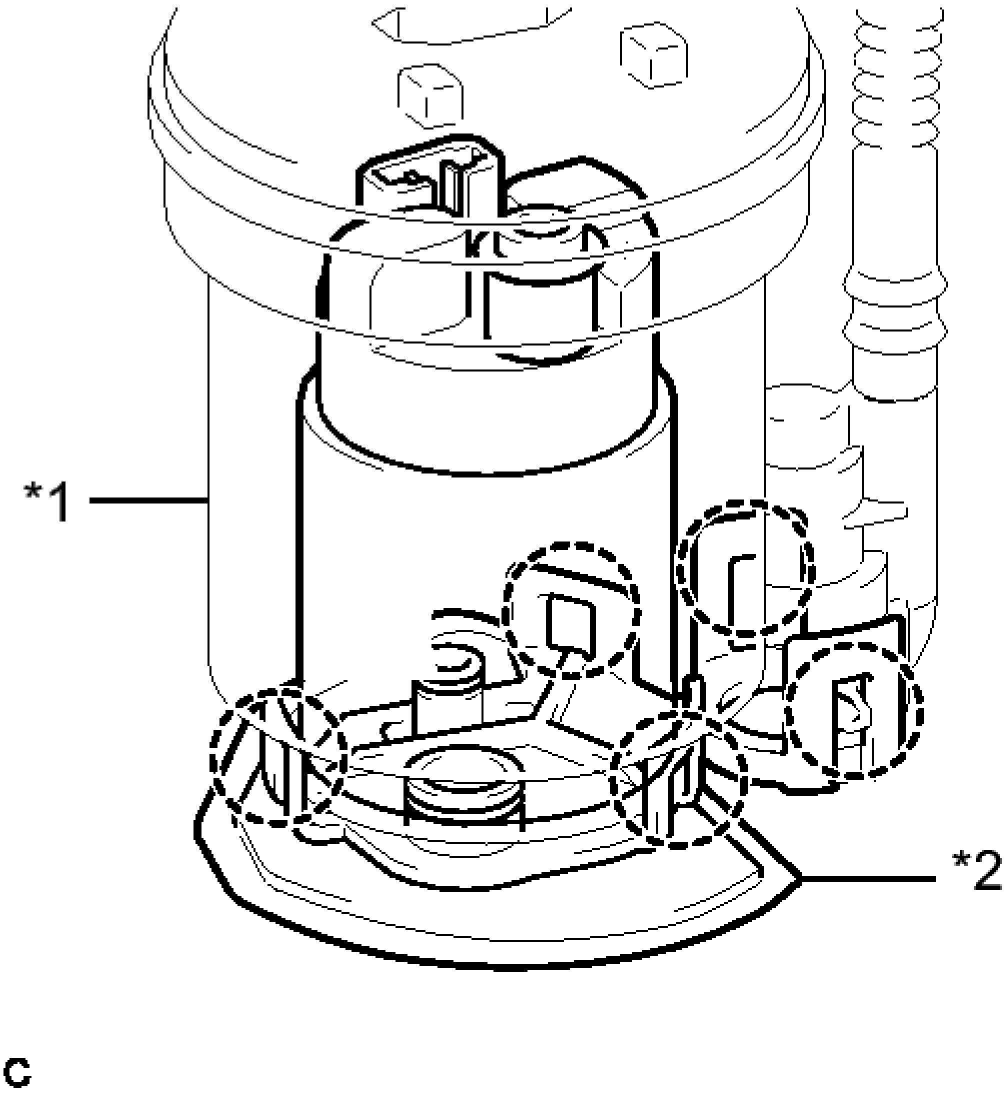

Fig. 24: Identifying Fuel Filter, Fuel Pump Filter & Claws
Courtesy of TOYOTA MOTOR SALES, U.S.A., INC.

TEXT IN ILLUSTRATION

*1	Fuel Filter
*2	Suction Filter

NOTE:

- **Do not damage the fuel filter.**
- **Do not remove the suction filter.**
- **Do not use either the fuel pump or the suction filter if the suction filter is removed from the fuel pump.**

f. Disconnect the fuel pump harness connector.

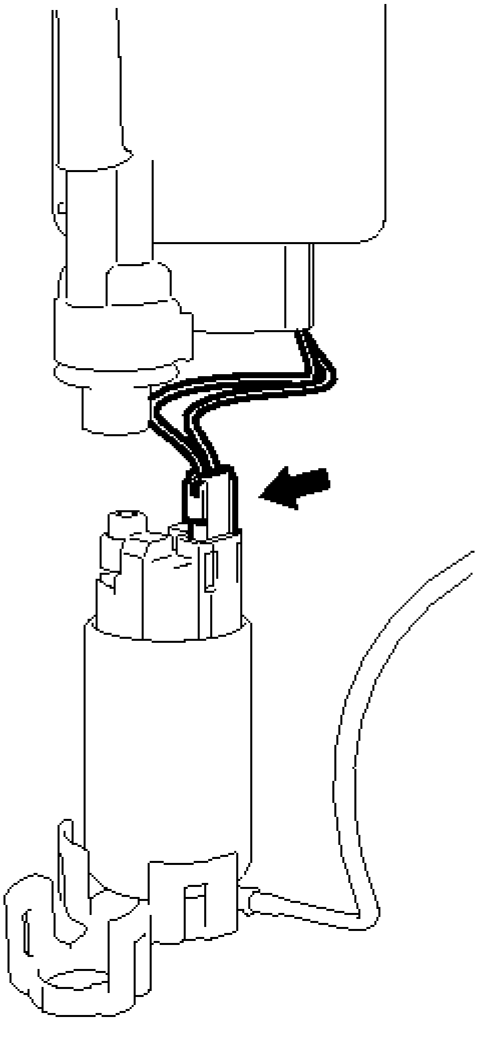

Fig. 25: Identifying Fuel Pump Harness Connector
Courtesy of TOYOTA MOTOR SALES, U.S.A., INC.

g. Remove the O-ring and spacer from the fuel pump.

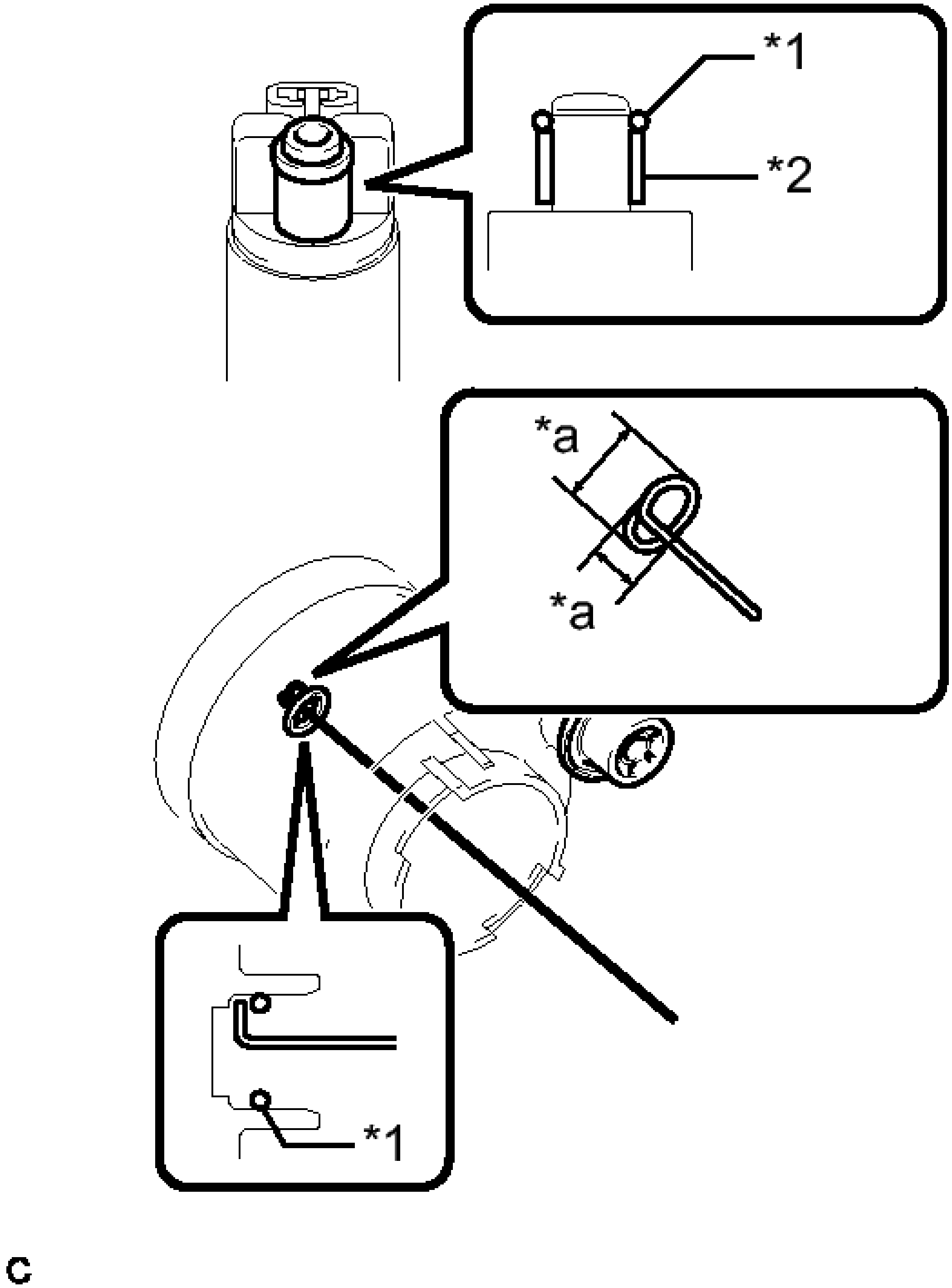

Fig. 26: Identifying Fuel Pump, O - Ring & Spacer
Courtesy of TOYOTA MOTOR SALES, U.S.A., INC.

TEXT IN ILLUSTRATION

*1	O-ring

*2	Spacer
*a	5.0 mm (0.197 in.)

NOTE: **Be careful not to damage the sealing surface.**

HINT:

If the O-ring still remains in the fuel filter, remove it using a wire tip (1 mm diameter) that is formed as shown in the illustration.

4. **REMOVE FUEL PRESSURE REGULATOR ASSEMBLY**
   a. Using a screwdriver with its tip wrapped in protective tape, remove the fuel pressure regulator assembly.

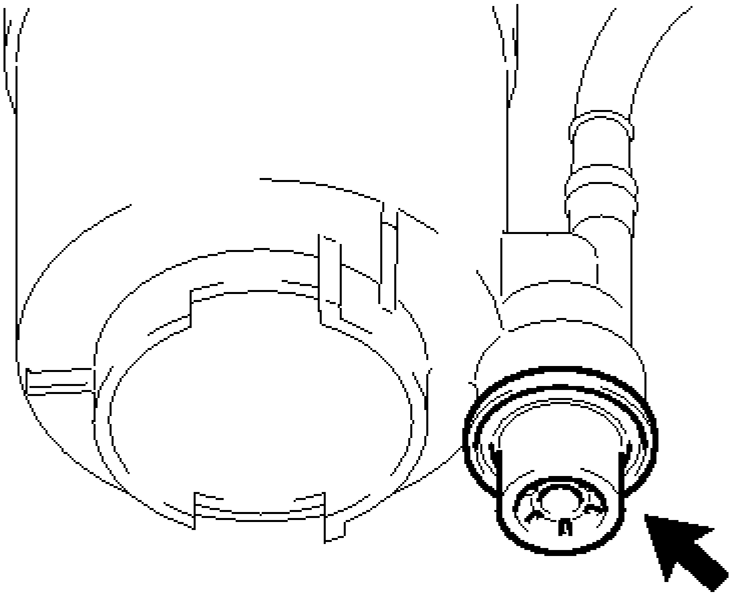

Fig. 27: Locating Fuel Pressure Regulator Assembly
Courtesy of TOYOTA MOTOR SALES, U.S.A., INC.

NOTE: **Slowly pull out the fuel pressure regulator assembly because the O-ring is firmly installed between the regulator and the fuel filter.**

   b. Remove the 2 O-rings from the pressure regulator assembly.

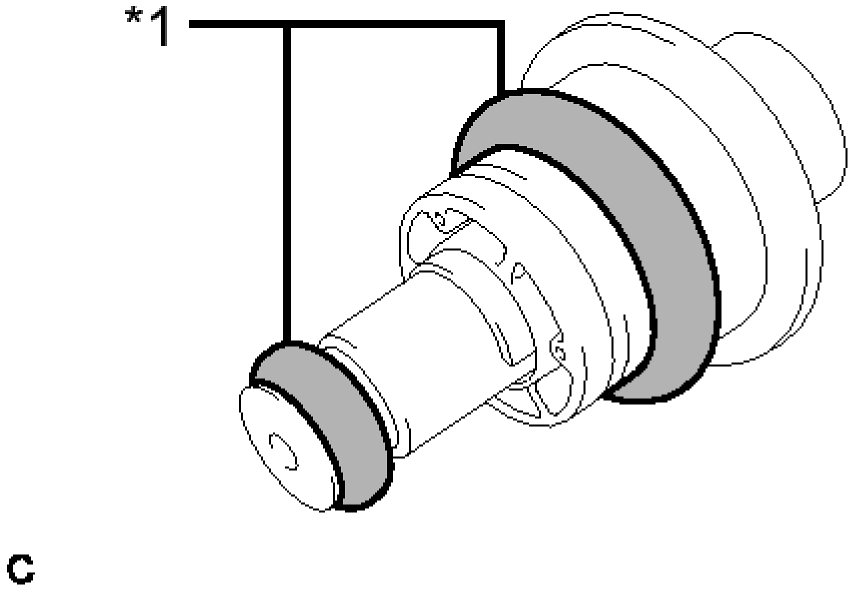

Fig. 28: Identifying Pressure Regulator O-rings
Courtesy of TOYOTA MOTOR SALES, U.S.A., INC.

TEXT IN ILLUSTRATION

*1	O-ring

INSTALLATION

INSTALLATION

1. **INSTALL FUEL PRESSURE REGULATOR ASSEMBLY**
    a. Apply gasoline to 2 new O-rings and then install them to the fuel pressure regulator assembly.
2. **INSTALL FUEL PUMP** See step 1
3. **INSTALL FUEL SENDER GAUGE ASSEMBLY** See step 1
4. **INSTALL FUEL SUCTION TUBE WITH PUMP AND GAUGE ASSEMBLY**

    Refer to **INSTALLATION**

FUEL PUMP

COMPONENTS

ILLUSTRATION

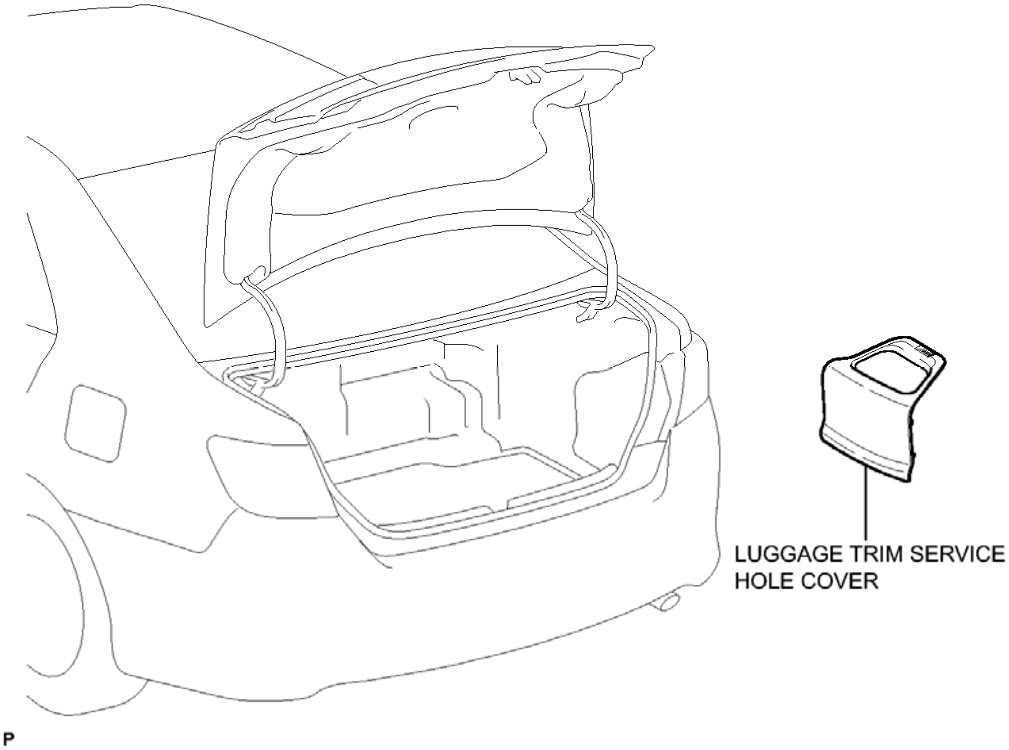
LUGGAGE TRIM SERVICE HOLE COVER
P

Fig. 29: Identifying Fuel Pump Replacement Components (1 Of 4)
Courtesy of TOYOTA MOTOR SALES, U.S.A., INC.

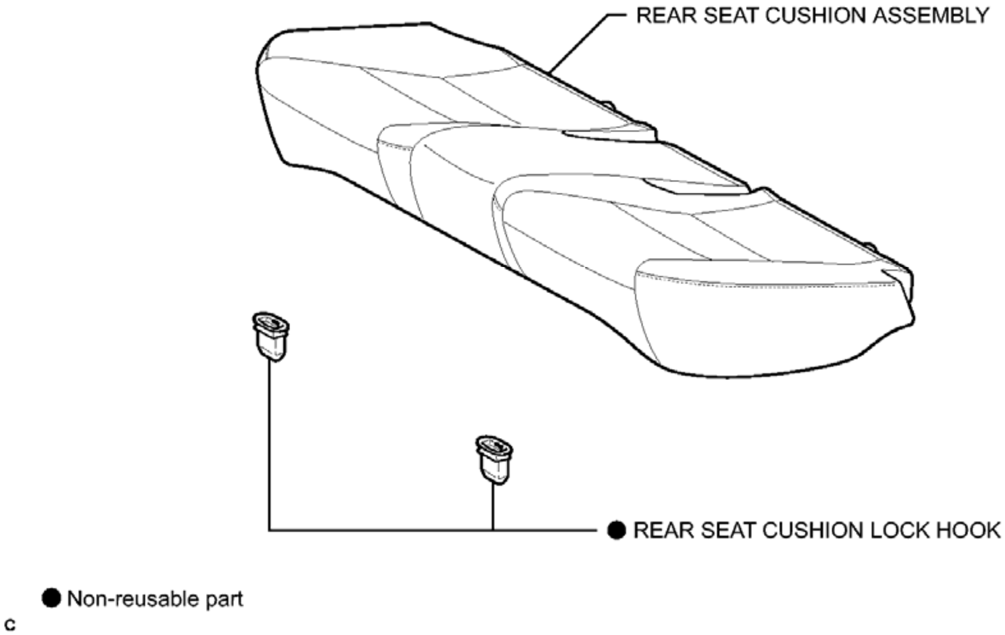
REAR SEAT CUSHION ASSEMBLY
● REAR SEAT CUSHION LOCK HOOK
● Non-reusable part
C

Fig. 30: Identifying Fuel Pump Replacement Components (2 Of 4)
Courtesy of TOYOTA MOTOR SALES, U.S.A., INC.

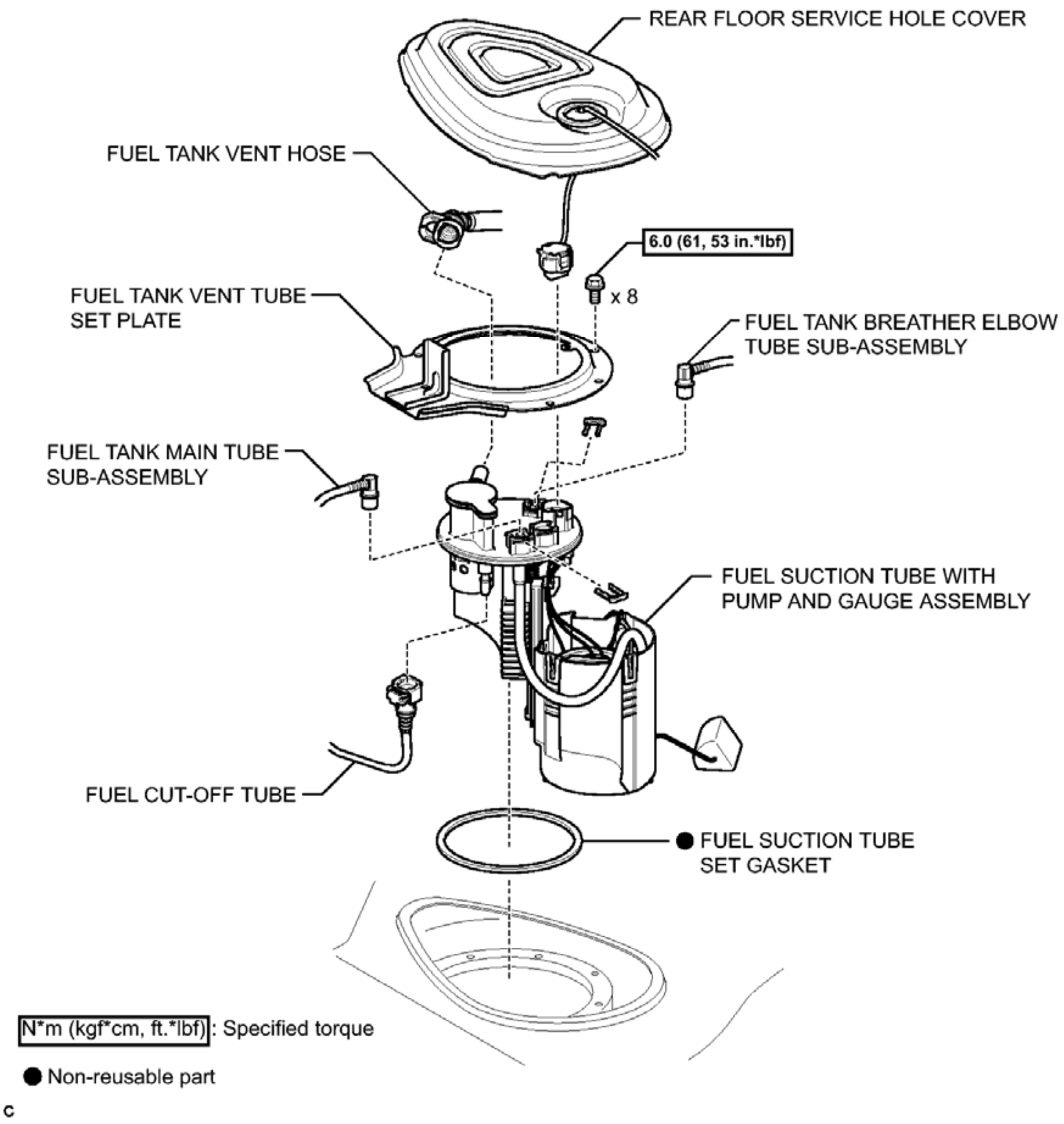
REAR FLOOR SERVICE HOLE COVER
FUEL TANK VENT HOSE
6.0 (61, 53 in.*lbf)
x 8
FUEL TANK VENT TUBE SET PLATE
FUEL TANK BREATHER ELBOW TUBE SUB-ASSEMBLY
FUEL TANK MAIN TUBE SUB-ASSEMBLY
FUEL SUCTION TUBE WITH PUMP AND GAUGE ASSEMBLY
FUEL CUT-OFF TUBE
● FUEL SUCTION TUBE SET GASKET
N*m (kgf*cm, ft.*lbf): Specified torque
● Non-reusable part
C

Fig. 31: Identifying Fuel Pump Replacement Components With Torque Specifications (3 Of 4)
Courtesy of TOYOTA MOTOR SALES, U.S.A., INC.

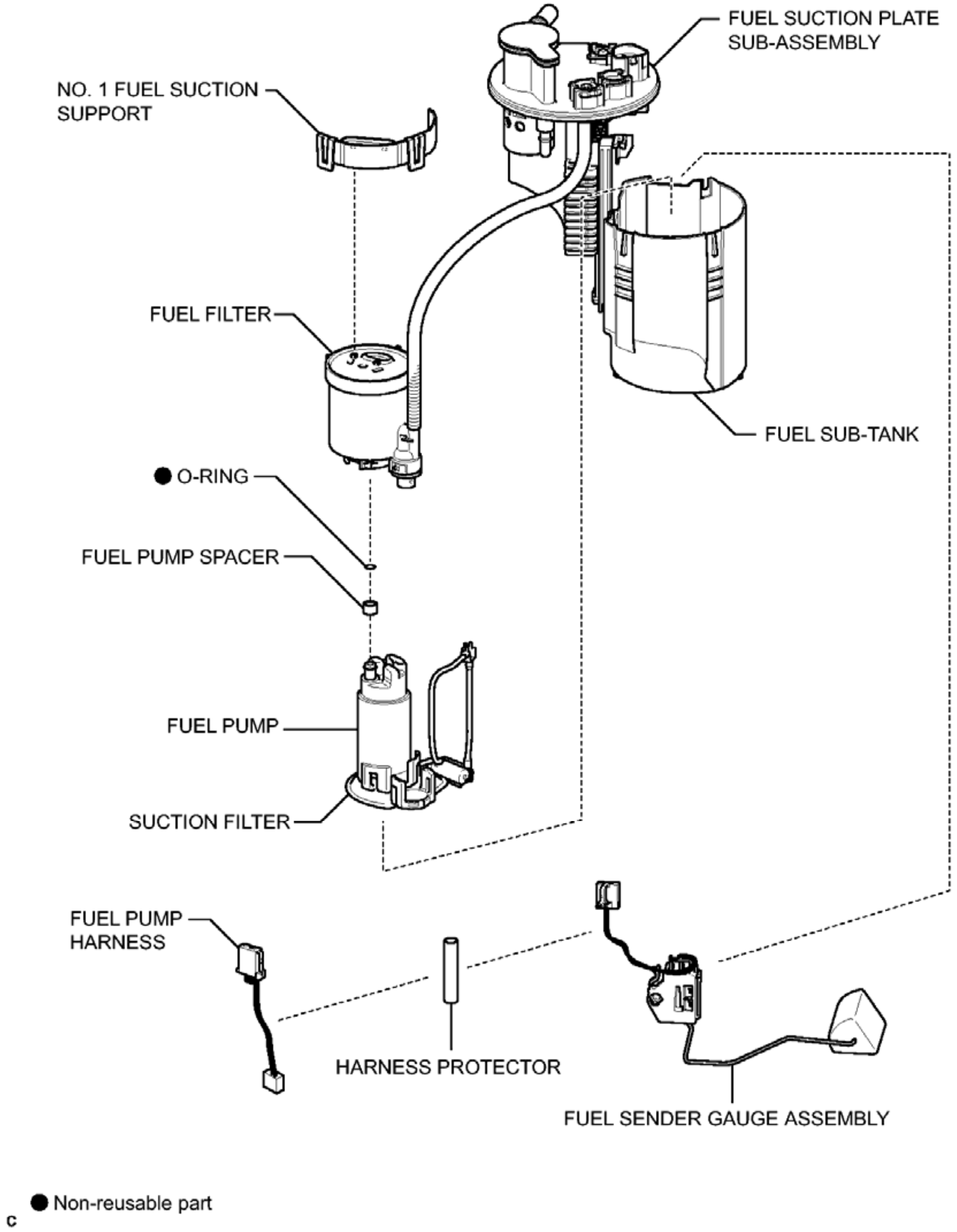
FUEL SUCTION PLATE SUB-ASSEMBLY
NO. 1 FUEL SUCTION SUPPORT
FUEL FILTER
FUEL SUB-TANK
● O-RING
FUEL PUMP SPACER
FUEL PUMP
SUCTION FILTER
FUEL PUMP HARNESS
HARNESS PROTECTOR
FUEL SENDER GAUGE ASSEMBLY
● Non-reusable part
c

Fig. 32: Identifying Fuel Pump Replacement Components (4 Of 4)
Courtesy of TOYOTA MOTOR SALES, U.S.A., INC.

REMOVAL

REMOVAL

HINT:

Perform "Inspection After Repair" after replacing the fuel pump assembly. Refer to **INITIALIZATION** .

1. **PRECAUTION**

   NOTE: **After turning the power switch off, waiting time may be required before disconnecting the cable from the negative (-) auxiliary battery terminal. Therefore, make sure to read the disconnecting the cable from the negative (-) auxiliary battery terminal notice before proceeding with work. Refer to PRECAUTION .**

2. **DISCHARGE FUEL SYSTEM PRESSURE**

   Refer to **PRECAUTION**

3. **REMOVE LUGGAGE TRIM SERVICE HOLE COVER** . Refer to **REMOVAL - Step 2**
4. **DISCONNECT CABLE FROM NEGATIVE AUXILIARY BATTERY TERMINAL**

   NOTE: **When disconnecting the cable, some systems need to be initialized after the cable is reconnected. Refer to INITIALIZATION .**

5. **REMOVE REAR SEAT CUSHION ASSEMBLY** . Refer to **REMOVAL - Step 4**
6. **REMOVE REAR SEAT CUSHION LOCK HOOK** . Refer to **REMOVAL - Step 5**
7. **REMOVE REAR FLOOR SERVICE HOLE COVER**
   1. Remove the rear floor service hole cover.

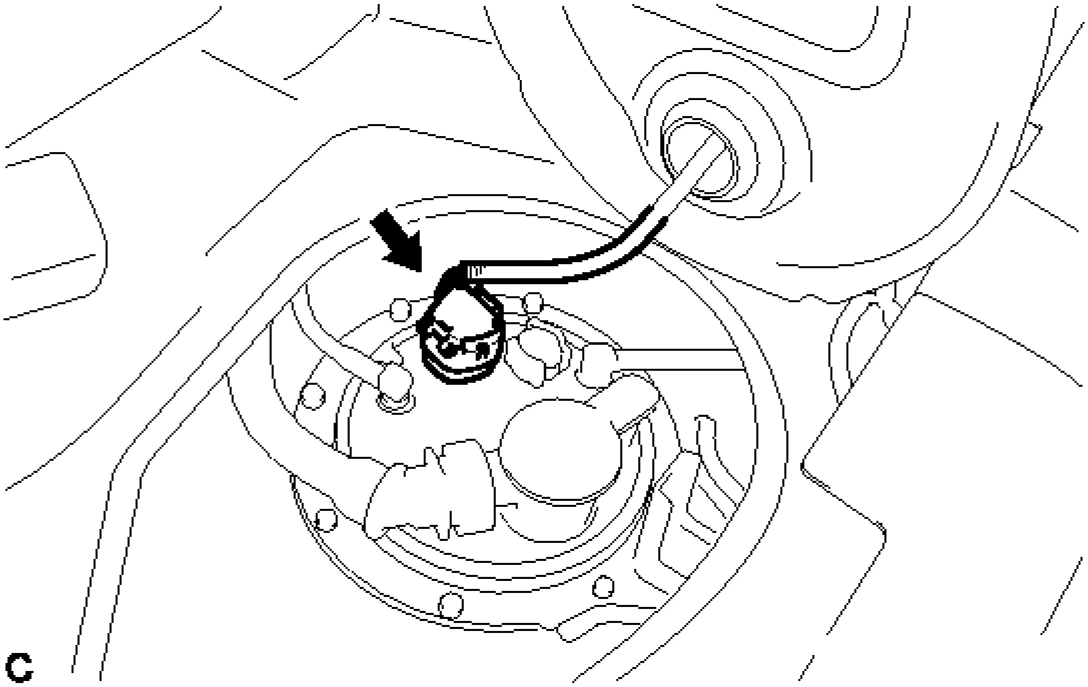

Fig. 33: Identifying Fuel Pump Connector

Courtesy of TOYOTA MOTOR SALES, U.S.A., INC.

b. Disconnect the fuel pump connector.

8. **DISCONNECT FUEL TANK VENT HOSE**

a. Pull the tabs of the retainer to disengage the lock claws and pull out the fuel tank vent hose.

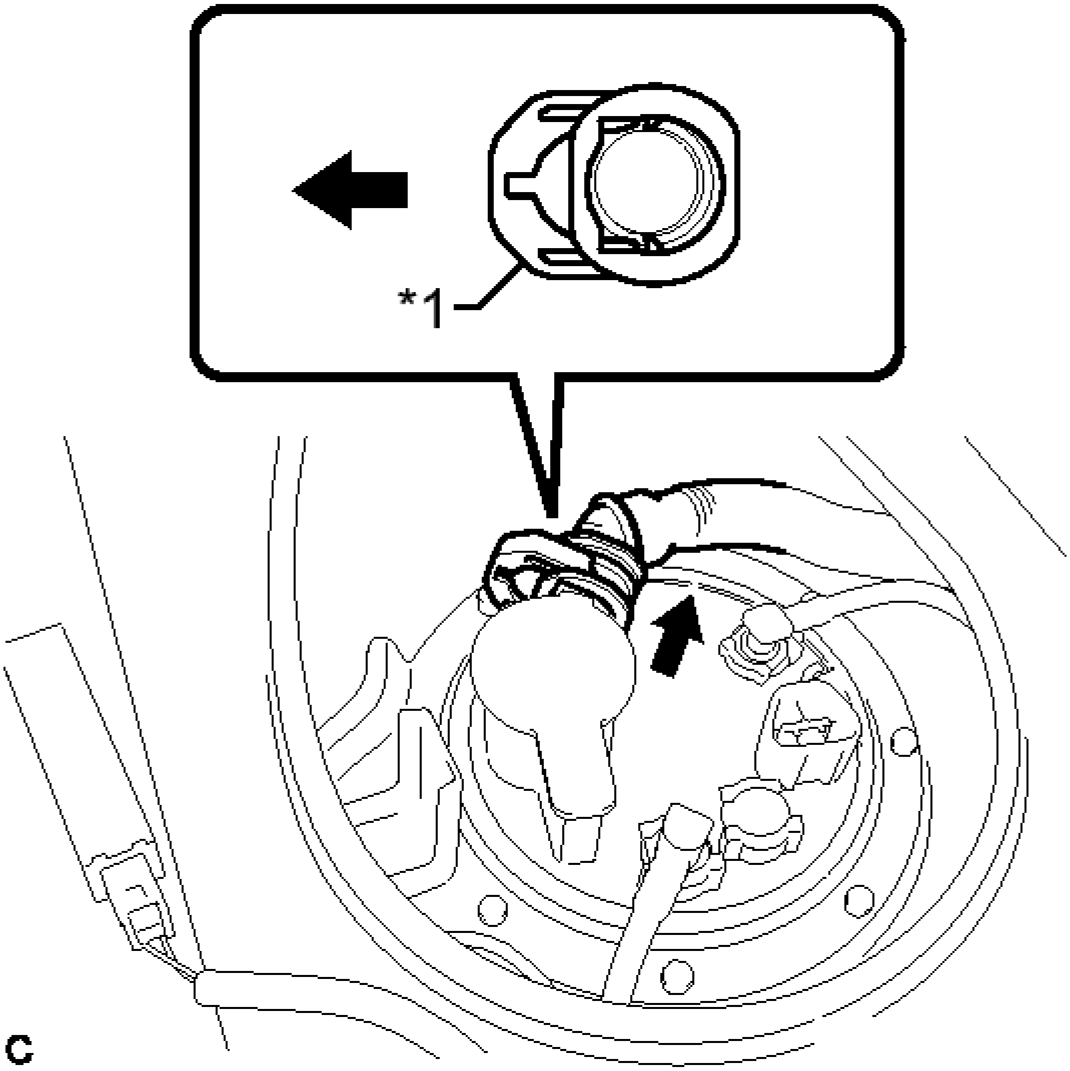

Fig. 34: Disconnecting Fuel Tank Vent Hose
Courtesy of TOYOTA MOTOR SALES, U.S.A., INC.

TEXT IN ILLUSTRATION

*1	Retainer

NOTE:

- **Remove any dirt or foreign matter on the fuel tank vent hose connector before performing this work.**
- **Do not allow any scratches or foreign matter on the parts when**

disconnecting them as the fuel tank vent hose connector has an O-ring that seals the pipe.

- **Only disconnect the joint by hand.**
- **Do not forcibly bend, twist or turn the fuel tank vent hose.**
- **Protect the disconnected part by covering it with a plastic bag after disconnecting the fuel tank vent hose.**
- **If the vent hose connector and pipe are stuck, push and pull to release them.**

9. DISCONNECT FUEL TANK BREATHER ELBOW TUBE SUB-ASSEMBLY

a. Remove the tube joint clip, and pull out the fuel tube joint of the fuel tank breather elbow tube sub-assembly.

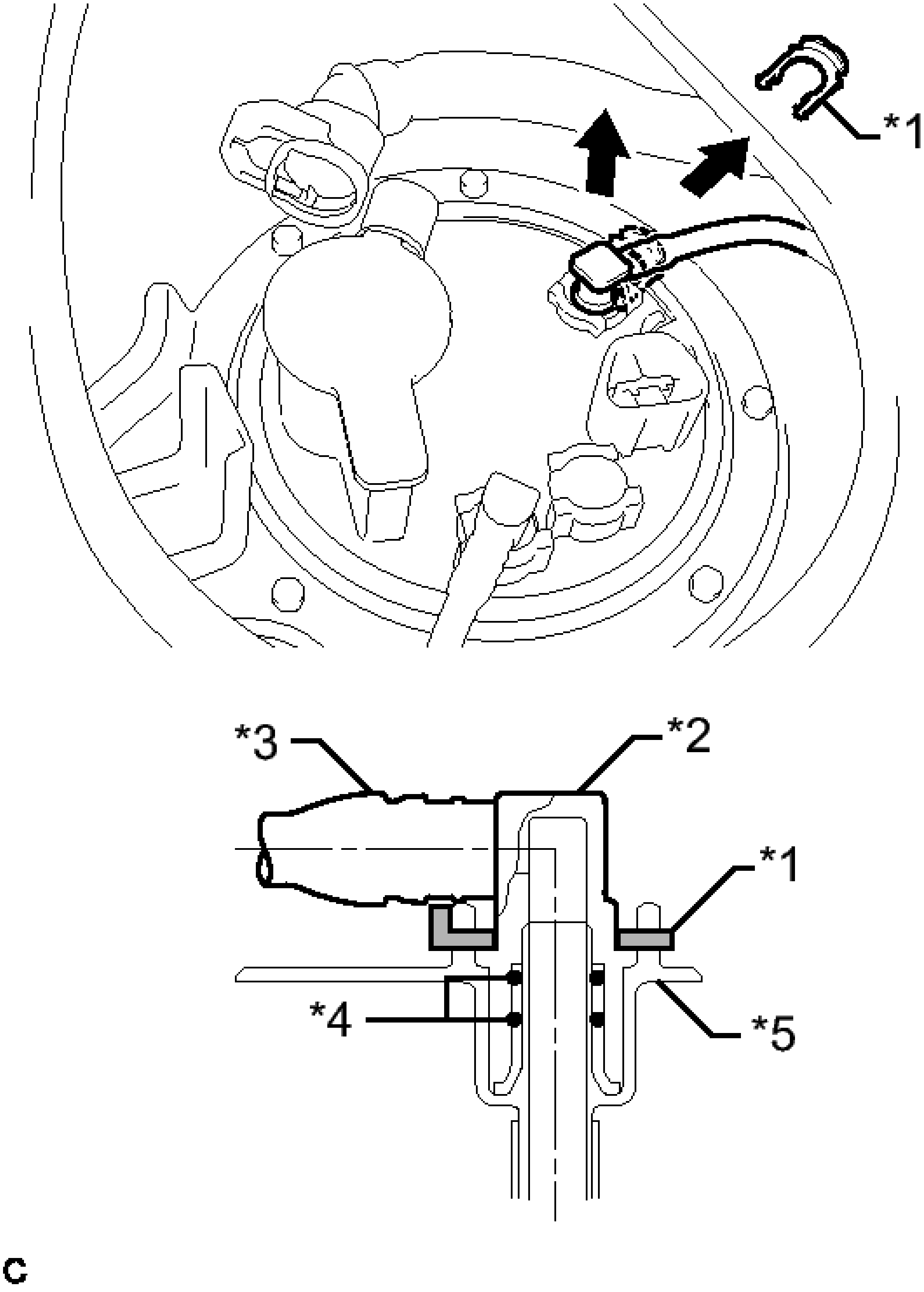

Fig. 35: Disconnecting Fuel Tank Breather Elbow Tube
Courtesy of TOYOTA MOTOR SALES, U.S.A., INC.

TEXT IN ILLUSTRATION

	Tube

*1	Joint Clip
*2	Fuel Tube Joint
*3	Fuel Tank Breather Elbow Tube
*4	O-ring
*5	Fuel Suction Plate

NOTE:

- **Remove any dirt or foreign matter on the fuel tube joint before performing this work.**
- **Do not allow any scratches or foreign matter to get on the parts when disconnecting them as the fuel tube joint has an O-ring that seals the pipe.**
- **Only disconnect the fuel tube joint by hand.**
- **Do not forcibly bend, twist or turn the fuel tank breather elbow tube.**
- **Protect the disconnected part by covering it with a plastic bag after disconnecting the fuel tube joint.**
- **If the fuel tube joint and fuel suction plate are stuck, push and pull to release them.**

10. **DISCONNECT FUEL TANK MAIN TUBE SUB-ASSEMBLY**
    a. Remove the tube joint clip, and pull out the fuel tube joint of the fuel tank main tube sub-assembly.

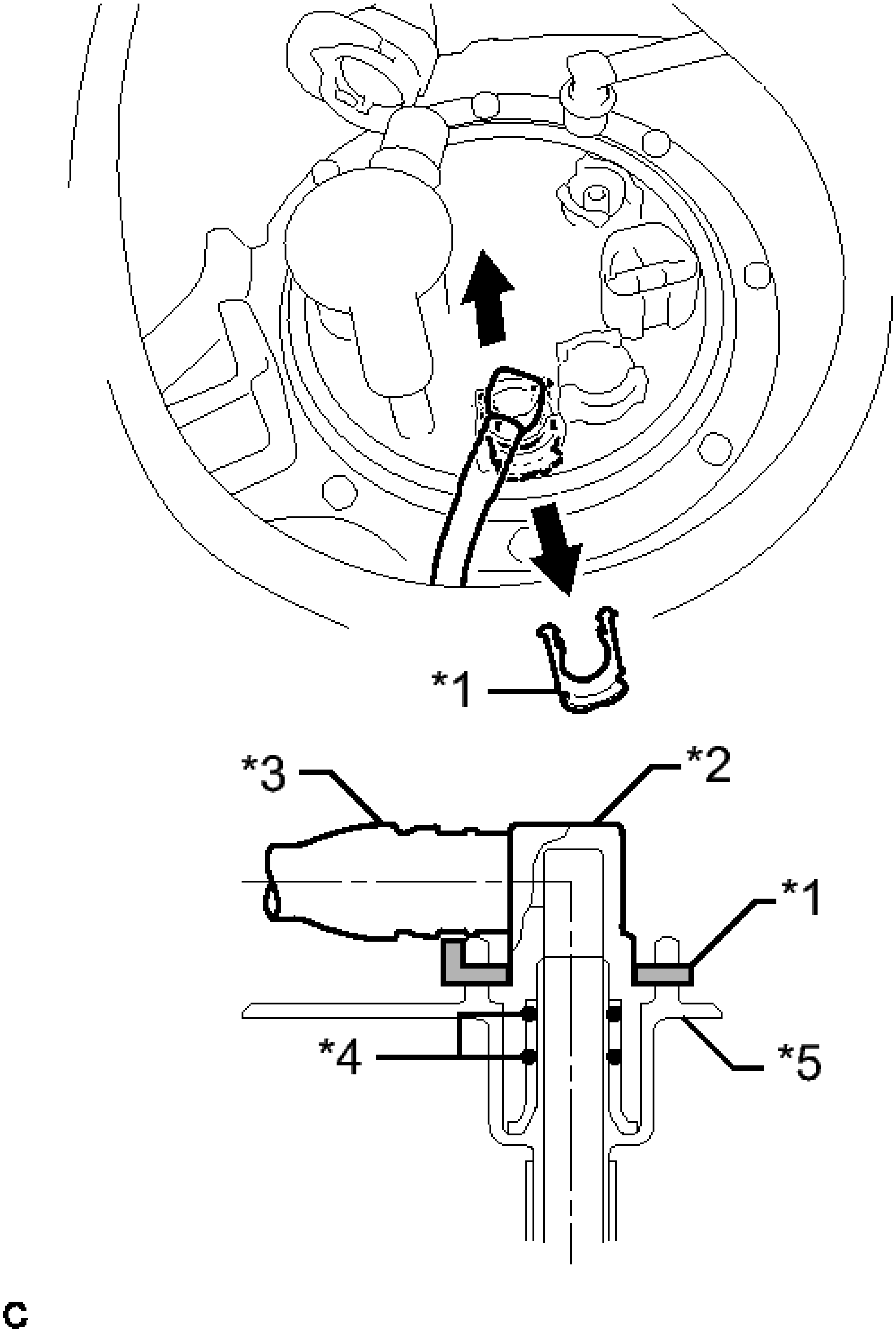

Fig. 36: Disconnecting Fuel Tank Main Tube
Courtesy of TOYOTA MOTOR SALES, U.S.A., INC.

TEXT IN ILLUSTRATION

	Tube

*1	Joint Clip
*2	Fuel Tube Joint
*3	Fuel Tank Main Tube
*4	O-ring
*5	Fuel Suction Plate

NOTE:

- **Remove any dirt or foreign matter on the fuel tube joint before performing this work.**
- **Do not allow any scratches or foreign matter to get on the parts when disconnecting them as the fuel tube joint has an O-ring that seals the pipe.**
- **Only disconnect the fuel tube joint by hand.**
- **Do not forcibly bend, twist or turn the fuel tank main tube.**
- **Protect the disconnected part by covering it with a plastic bag after disconnecting the fuel tube joint.**
- **If the fuel tube joint and fuel suction plate are stuck, push and pull to release them.**

11. REMOVE FUEL TANK VENT TUBE SET PLATE

a. Remove the 8 bolts and set plate.

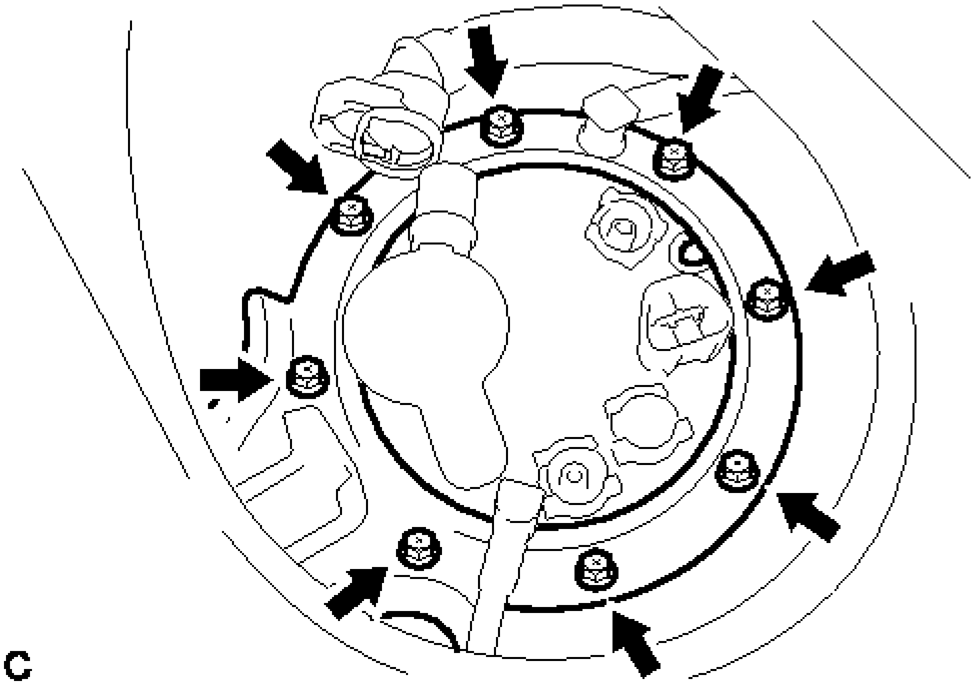

Fig. 37: Identifying Fuel Tank Vent Tube Set Plate Bolts
Courtesy of TOYOTA MOTOR SALES, U.S.A., INC.

12. **REMOVE FUEL SUCTION TUBE WITH PUMP AND GAUGE ASSEMBLY**
    a. Using a screwdriver with its tip wrapped in protective tape, pull the tabs of the retainer to disengage the lock claws and pull out the fuel cut-off tube.

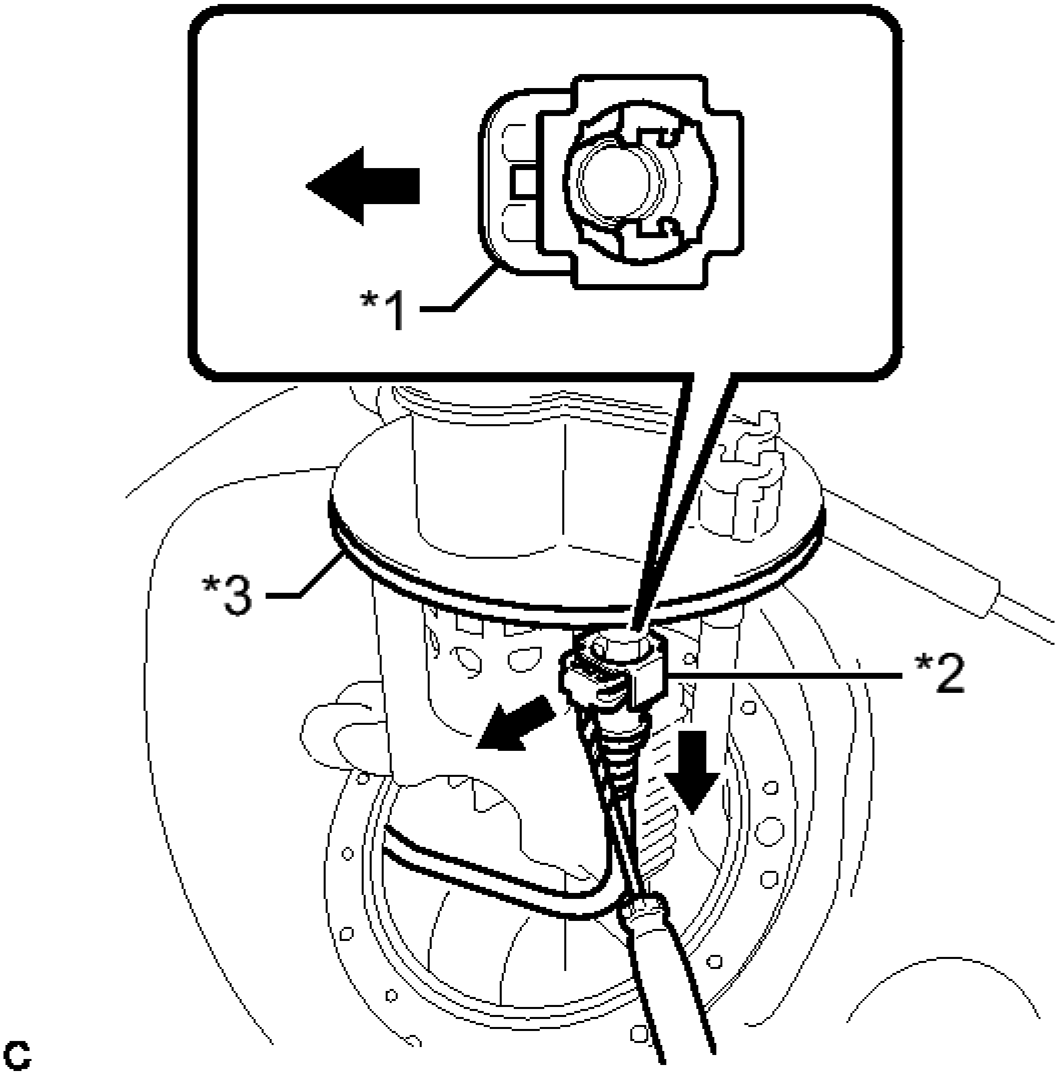

Fig. 38: Removing Fuel Cut-Off Tube
Courtesy of TOYOTA MOTOR SALES, U.S.A., INC.

TEXT IN ILLUSTRATION

*1	Retainer
*2	Fuel Cut-off Tube
*3	Fuel Suction Tube Set Gasket

b. Remove the fuel suction tube with pump and gauge assembly from the fuel tank.

NOTE: **Make sure that the fuel sender gauge arm does not bend.**

c. Remove the fuel suction tube set gasket from the fuel suction tube assembly.

DISASSEMBLY

DISASSEMBLY

1. **REMOVE FUEL SENDER GAUGE ASSEMBLY** See step 2
2. **REMOVE FUEL PUMP**
   a. Disconnect the connector of the fuel pump harness.

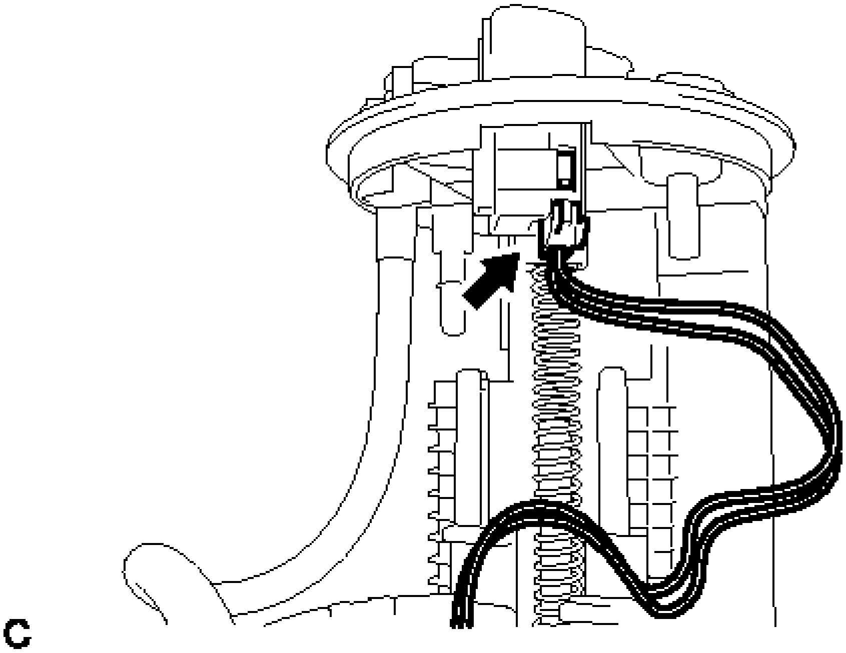

Fig. 39: Identifying Fuel Pump Harness Connector
Courtesy of TOYOTA MOTOR SALES, U.S.A., INC.

b. Disconnect the fuel pump filter hose.

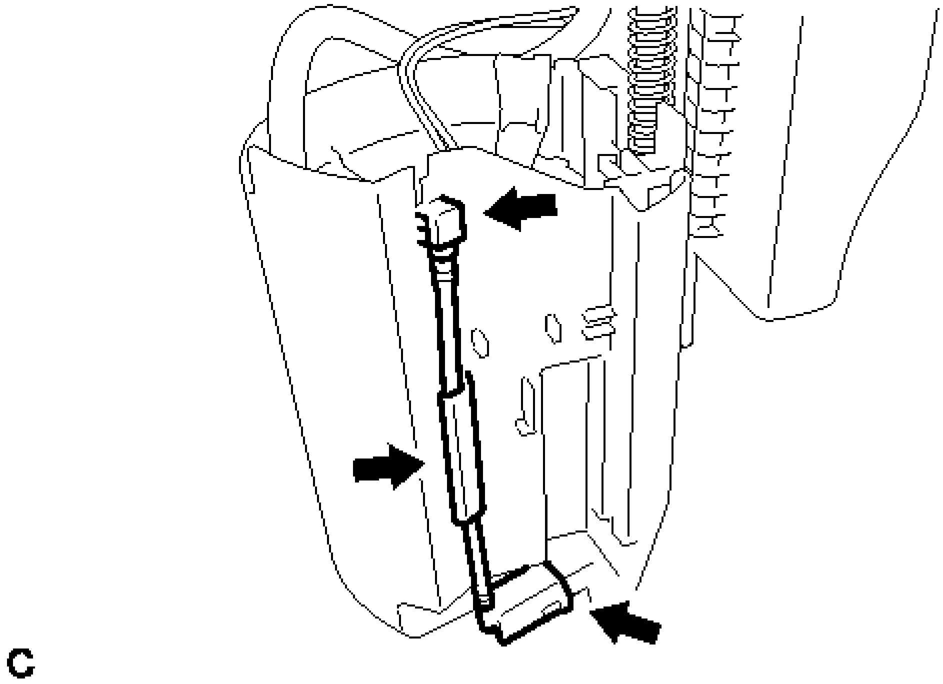

Fig. 40: Identifying Fuel Pump Filter Hose
Courtesy of TOYOTA MOTOR SALES, U.S.A., INC.

c. Using a screwdriver with its tip wrapped in protective tape, disengage the 2 claws, and remove the fuel filter and fuel pump from the fuel sub-tank.

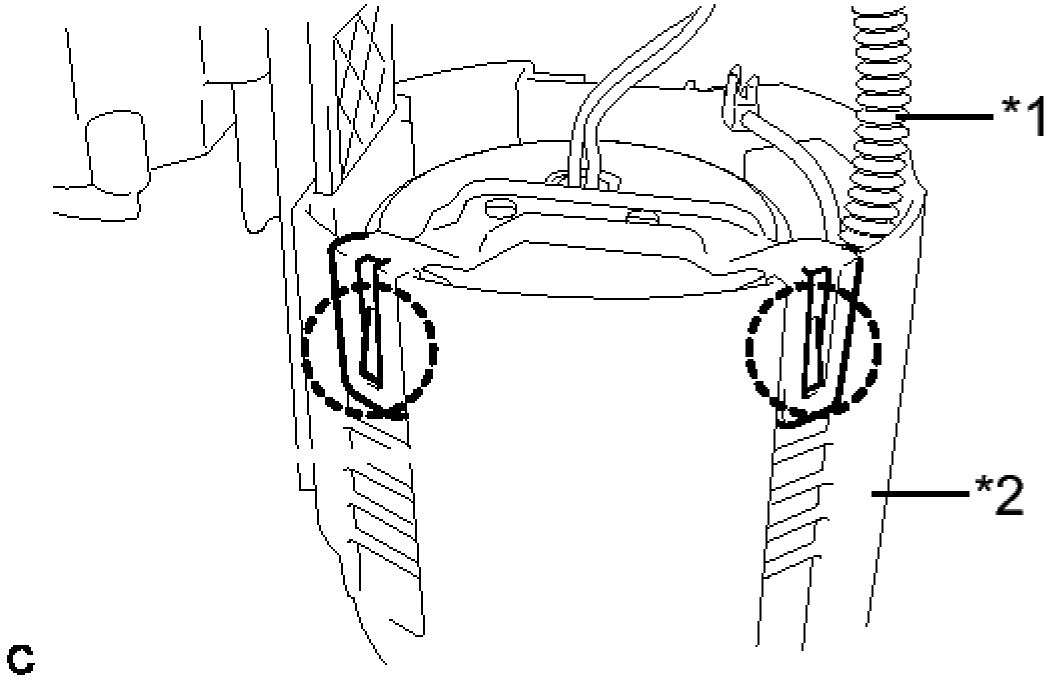

Fig. 41: Identifying Fuel Tube And Fuel Sub-Tank

Courtesy of TOYOTA MOTOR SALES, U.S.A., INC.

TEXT IN ILLUSTRATION

*1	Fuel Tube
*2	Fuel Sub-tank

NOTE: **Do not do anything which may separate the fuel tube from either the fuel suction plate or fuel filter assembly, such as applying excessive force to the tube. Refer to PRECAUTION .**

d. Using a screwdriver with its tip wrapped in protective tape, disengage the 2 claws and remove the No. 1 fuel suction support.

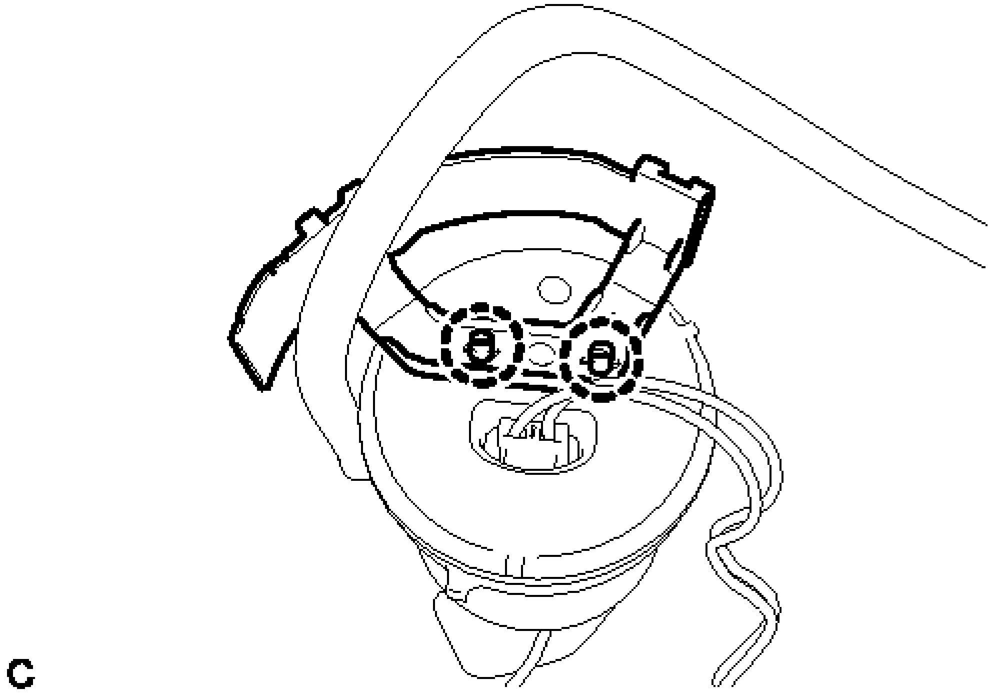

Fig. 42: Identifying No. 1 Fuel Suction Support Claws
Courtesy of TOYOTA MOTOR SALES, U.S.A., INC.

e. Using a screwdriver with its tip wrapped in protective tape, disengage the 5 claws, and remove the fuel pump from the fuel filter.

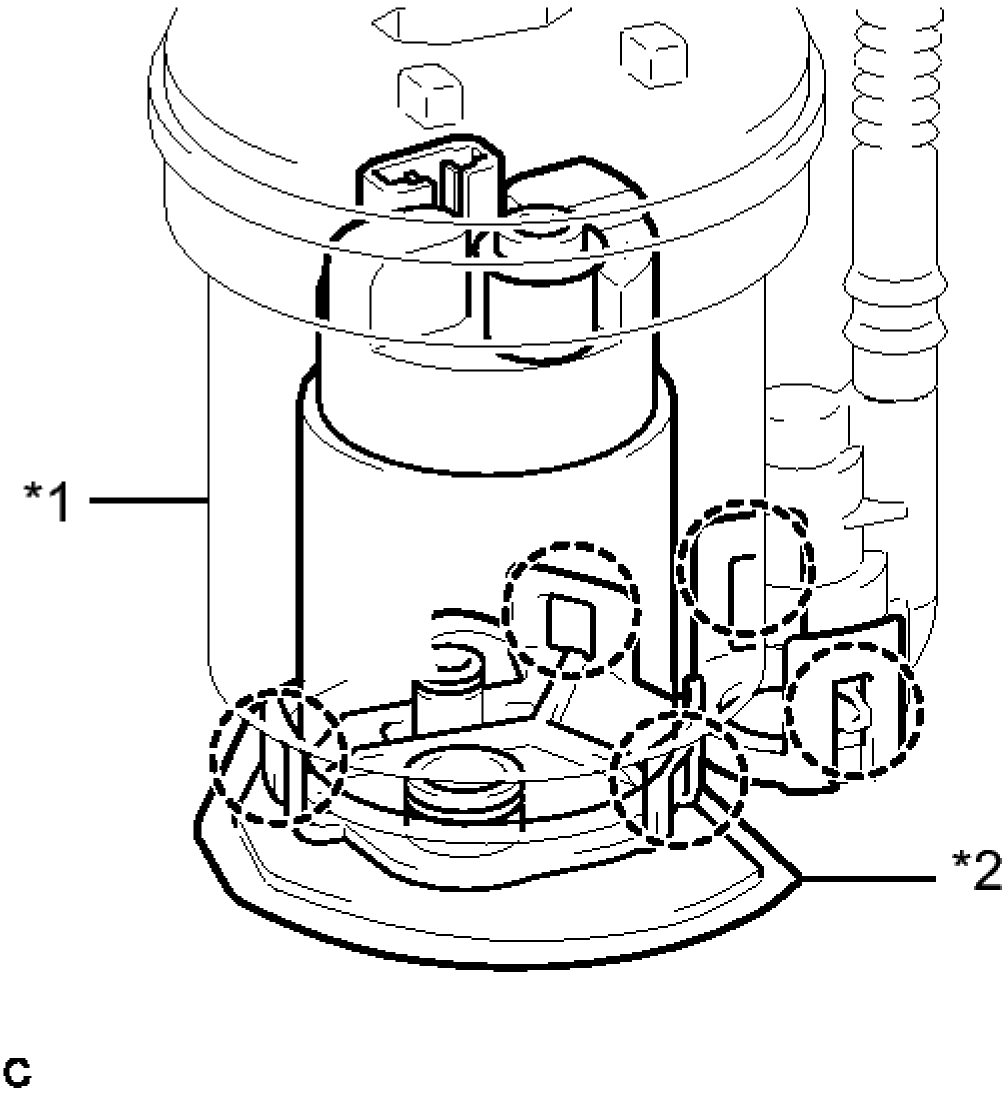

Fig. 43: Identifying Fuel Filter, Fuel Pump Filter & Claws
Courtesy of TOYOTA MOTOR SALES, U.S.A., INC.

TEXT IN ILLUSTRATION

*1	Fuel Filter
*2	Suction Filter

NOTE:

- **Do not damage the fuel filter.**
- **Do not remove the suction filter.**
- **Do not use either the fuel pump or the suction filter if the suction filter is removed from the fuel pump.**

f. Disconnect the fuel pump harness connector.

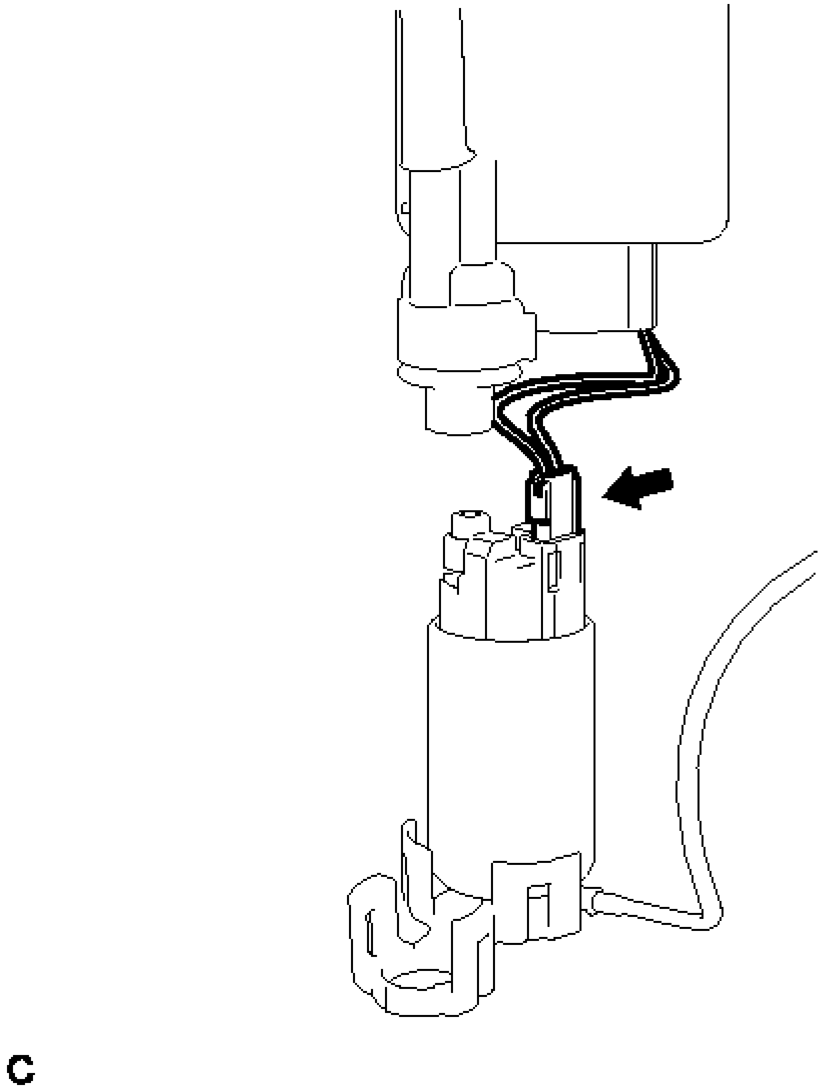

Fig. 44: Identifying Fuel Pump Harness Connector
Courtesy of TOYOTA MOTOR SALES, U.S.A., INC.

g. Remove the O-ring and spacer from the fuel pump.

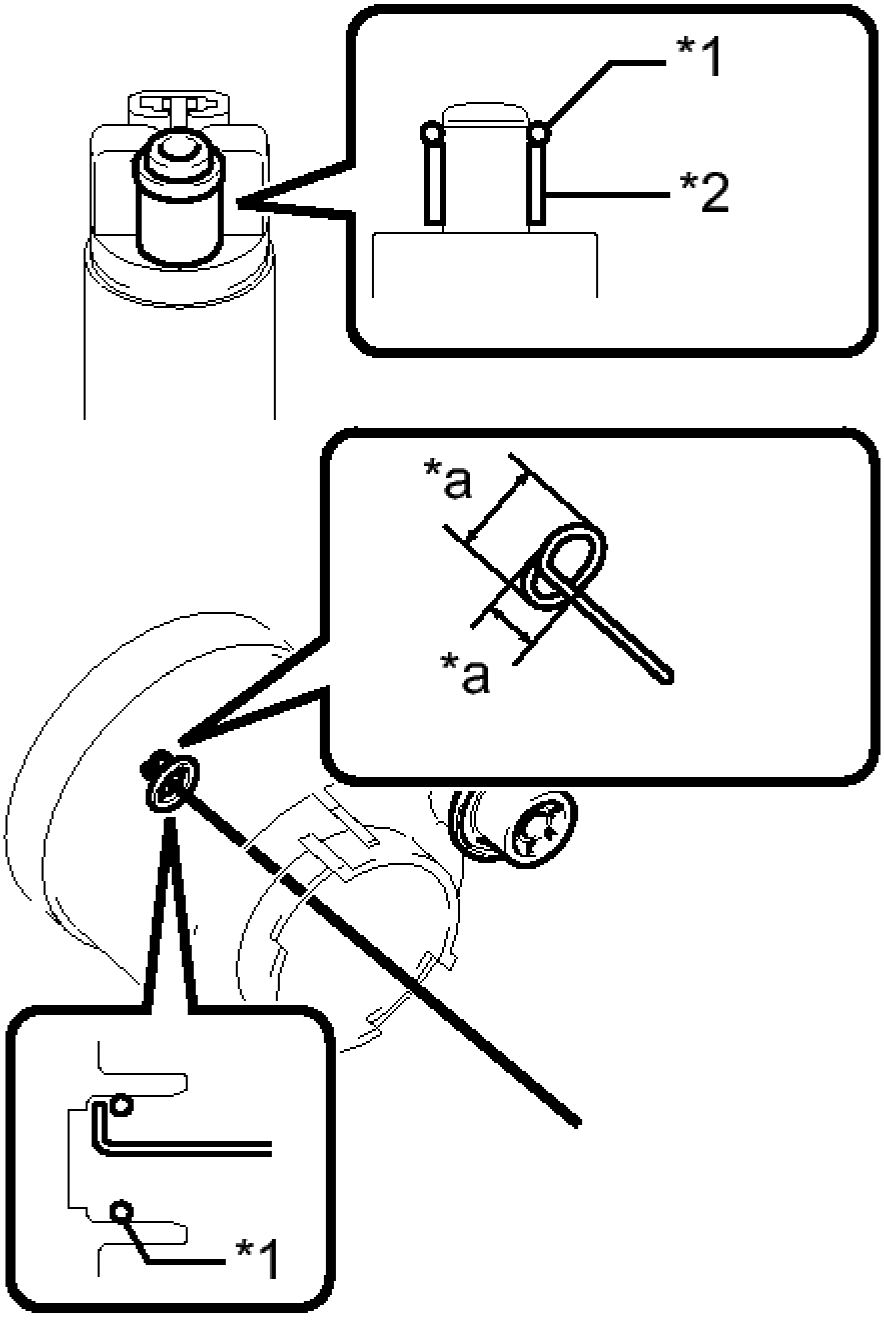

Fig. 45: Identifying Fuel Pump, O - Ring & Spacer
Courtesy of TOYOTA MOTOR SALES, U.S.A., INC.

TEXT IN ILLUSTRATION

*1	O-ring

*2	Spacer
*a	5.0 mm (0.197 in.)

NOTE: **Be careful not to damage the sealing surface.**

HINT:

If the O-ring still remains in the fuel filter, remove it using a wire tip (1 mm diameter) that is formed as shown in the illustration.

INSPECTION

INSPECTION

1. **INSPECT FUEL PUMP**
    a. Check the fuel pump resistance.

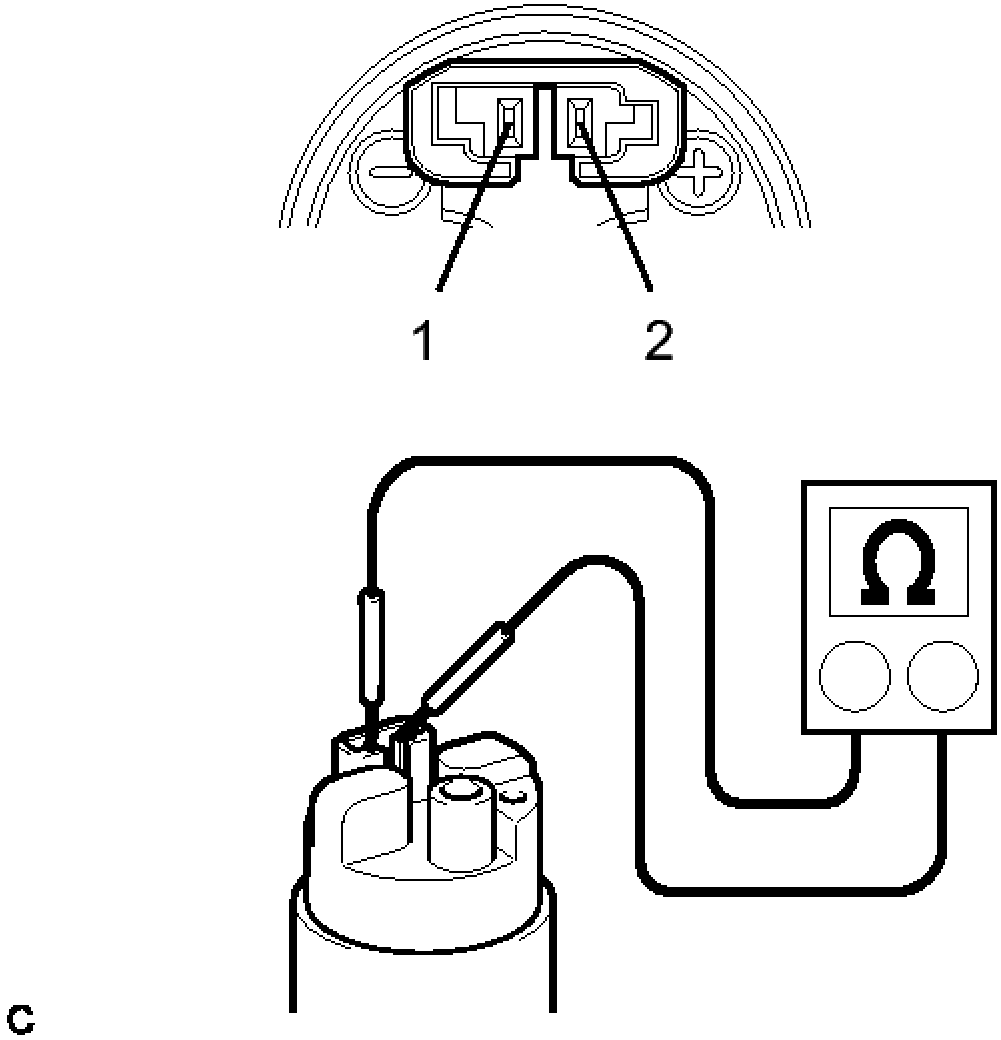

Fig. 46: Connecting Battery Positive (+) Lead To Terminal 2 Of Connector, And Negative (-) Lead To Terminal 1
Courtesy of TOYOTA MOTOR SALES, U.S.A., INC.

1. Using an ohmmeter, measure the resistance according to the value(s) in the table below.

   Standard Resistance

Tester Connection	Condition	Specified Condition
1 - 2	20°C (68°F)	0.2 to 3.0 ohms

   If the result is not as specified, replace the fuel pump.

b. Check fuel pump operation.

1. Apply auxiliary battery voltage to terminals 1 and 2. Check that the pump operates.

NOTE:

- **These tests must be done quickly (within 10 seconds) to prevent the coil from burning out.**
- **Keep the fuel pump as far away from the auxiliary battery as possible.**
- **Always switch the voltage on and off on the auxiliary battery side, not the fuel pump side.**

If the pump does not operate, replace the fuel pump.

REASSEMBLY

REASSEMBLY

1. **INSTALL FUEL PUMP**
   a. Apply gasoline to a new O-ring. Then install the O-ring and spacer to the fuel pump.

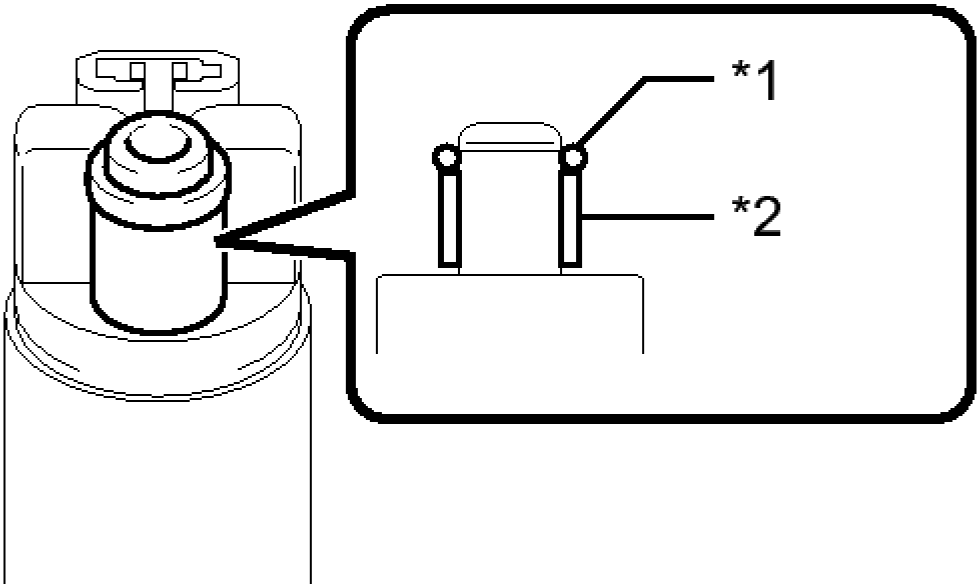

Fig. 47: Identifying Fuel Pump O-Ring And Spacer
Courtesy of TOYOTA MOTOR SALES, U.S.A., INC.

TEXT IN ILLUSTRATION

*1	O-ring
*2	Spacer

b. Engage the 5 claws of the fuel pump.

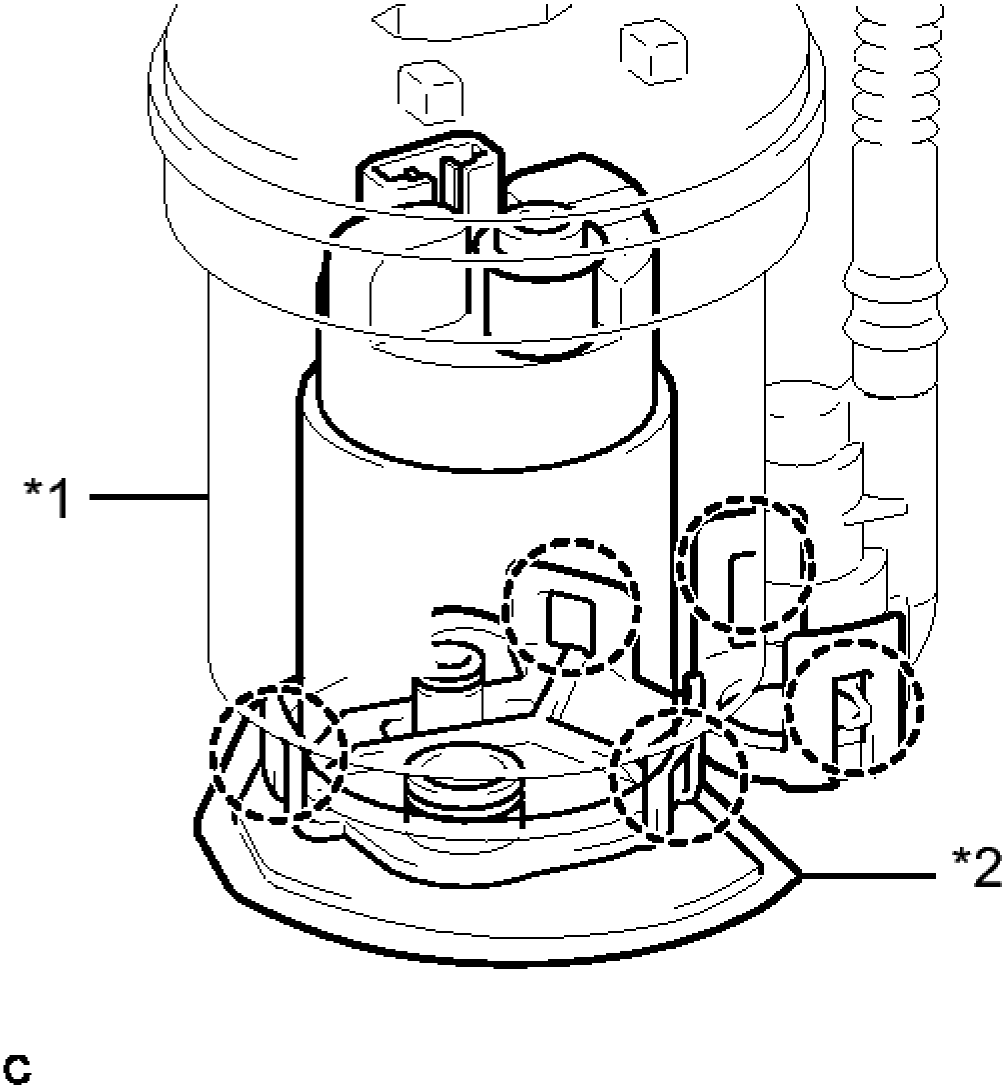

Fig. 48: Identifying Fuel Filter, Fuel Pump Filter & Claws
Courtesy of TOYOTA MOTOR SALES, U.S.A., INC.

TEXT IN ILLUSTRATION

*1	Fuel Filter
*2	Suction Filter

NOTE:

- **Make sure that the O-ring is not cut or pinched during the installation.**
- **Engage the claws securely.**

- **Do not remove the suction filter.**

HINT:

Perform "Inspection After Repair" after replacing the fuel pump assembly. Refer to **INITIALIZATION** .

c. Engage the 2 claws of the No. 1 fuel suction support.

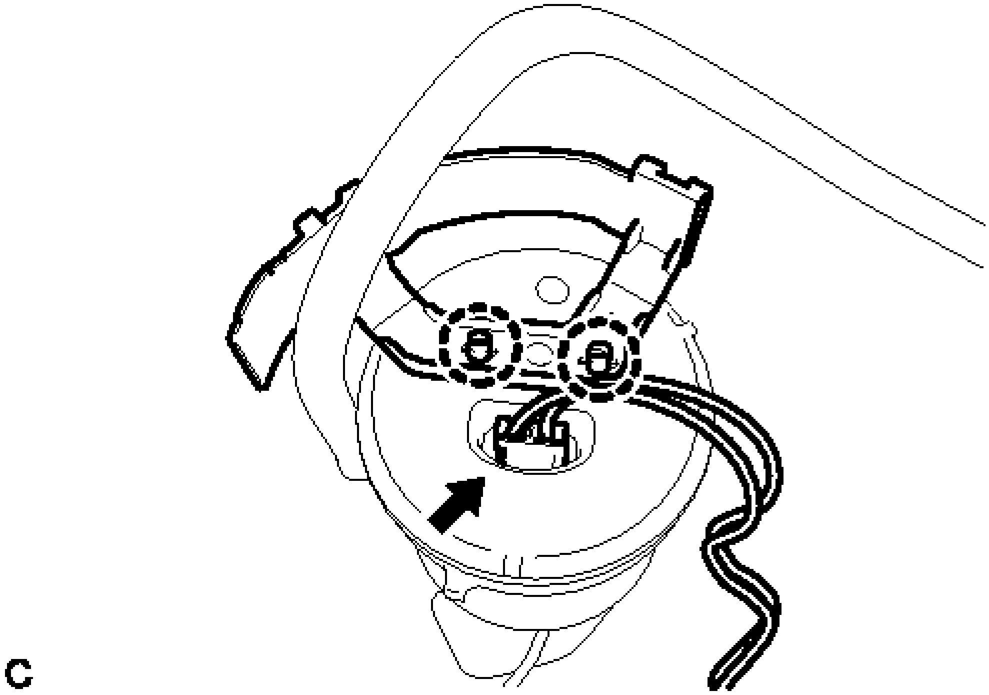

Fig. 49: Identifying No. 1 Fuel Suction Support Claws And Fuel Pump Harness Connector
Courtesy of TOYOTA MOTOR SALES, U.S.A., INC.

d. Connect the fuel pump harness connector.
e. Engage the 2 claws of the No. 1 fuel suction support and install the fuel filter and the fuel pump onto the fuel sub-tank.

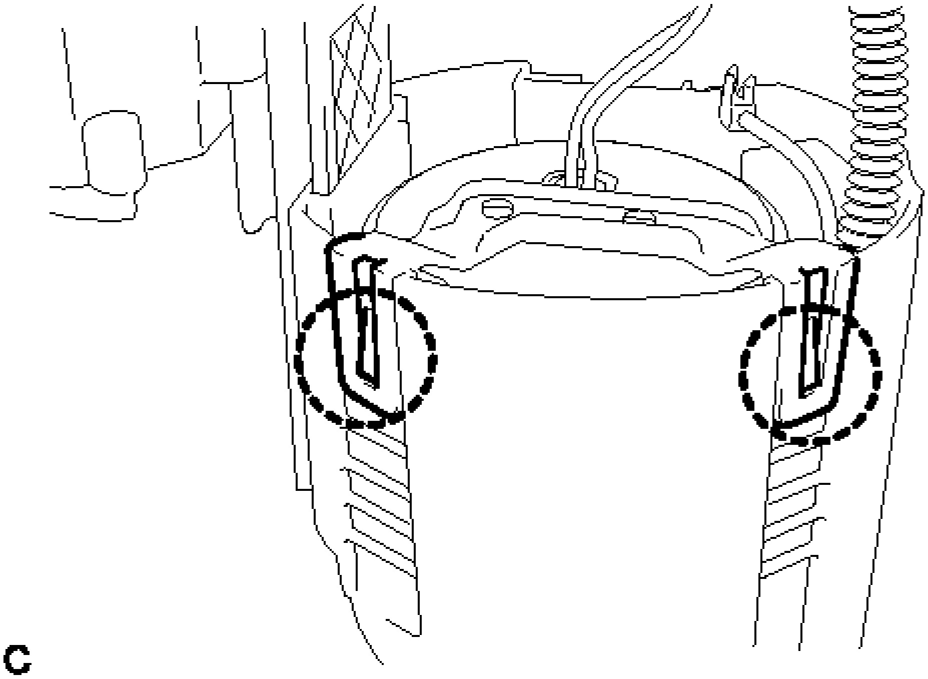

Fig. 50: Identifying Fuel Suction Support Claws
Courtesy of TOYOTA MOTOR SALES, U.S.A., INC.

f. Align the groove of the fuel pump filter hose with the cutout of the fuel sub-tank and install the hose.

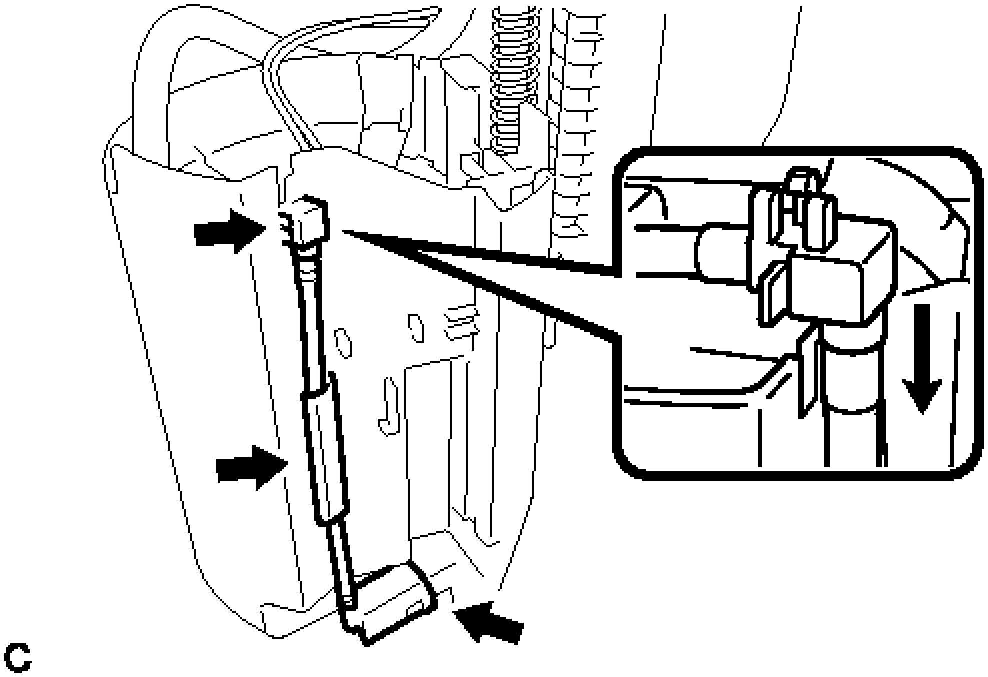

Fig. 51: Installing Fuel Pump Filter Hose

Courtesy of TOYOTA MOTOR SALES, U.S.A., INC.

NOTE: Do not apply excessive force to the fuel tube or the suction support.

g. Connect the connector of the fuel pump harness.

2. **INSTALL FUEL SENDER GAUGE ASSEMBLY** See step 1

INSTALLATION

INSTALLATION

1. **INSTALL FUEL SUCTION TUBE WITH PUMP AND GAUGE ASSEMBLY**
   a. Install a new fuel suction tube set gasket to the fuel suction tube.

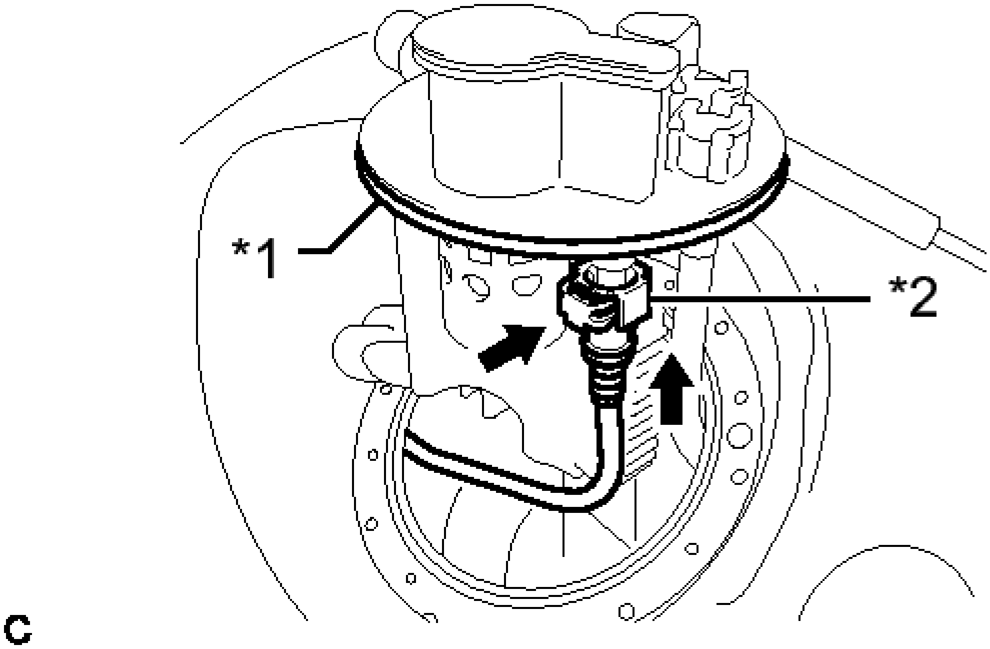

Fig. 52: Identifying Fuel Suction Tube Set Gasket and Fuel Cut-Off Tube
Courtesy of TOYOTA MOTOR SALES, U.S.A., INC.

TEXT IN ILLUSTRATION

*1	Fuel Suction Tube Set Gasket
*2	Fuel Cut-off Tube

b. Push in the fuel cut-off tube connector to the fuel suction tube assembly and push the retainer so that the claws engage.
c. Install the fuel suction tube with pump and gauge assembly to the fuel tank.

NOTE: **Be careful that the arm of the sender gauge does not bend.**

2. **INSTALL FUEL TANK VENT TUBE SET PLATE**
    a. Align the protrusion of the fuel suction tube assembly and the cutout of the fuel tank vent tube set plate.

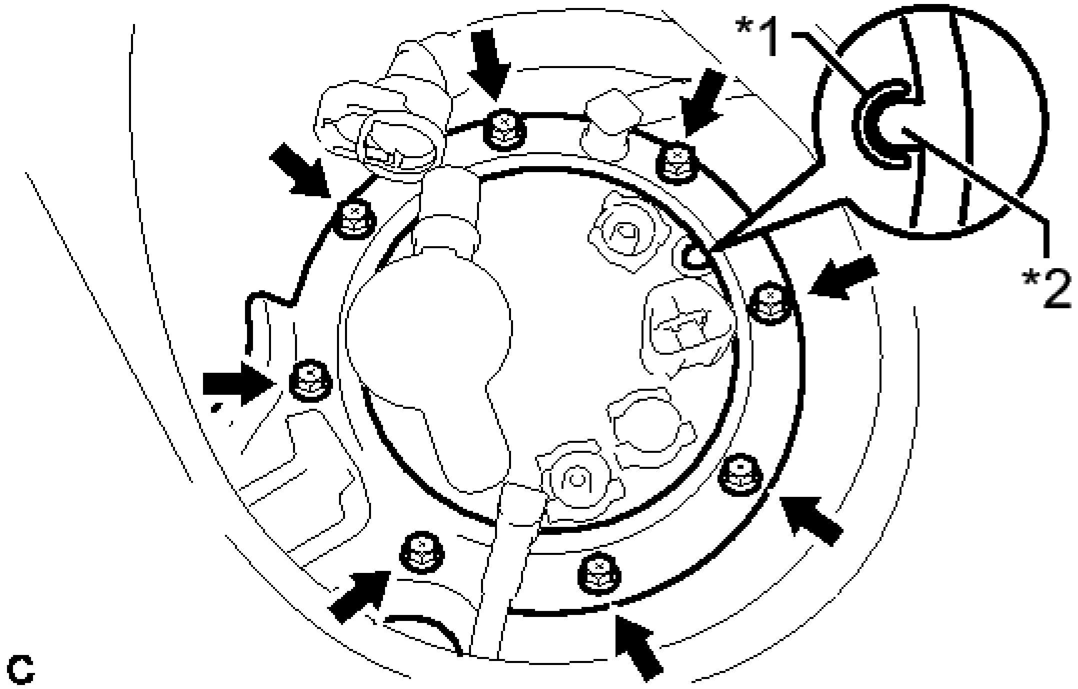

Fig. 53: Identifying Fuel Tank Vent Tube Set Plate Bolts And Protrusion
Courtesy of TOYOTA MOTOR SALES, U.S.A., INC.

TEXT IN ILLUSTRATION

*1	Cutout
*2	Protrusion

b. Install the set plate with the 8 bolts.

Torque: 6.0 N*m (61 kgf*cm, 53 in.*lbf)

3. **CONNECT FUEL TANK MAIN TUBE SUB-ASSEMBLY**
    a. Push the fuel tube joint in the plug of the fuel suction plate, then install the tube joint clip.

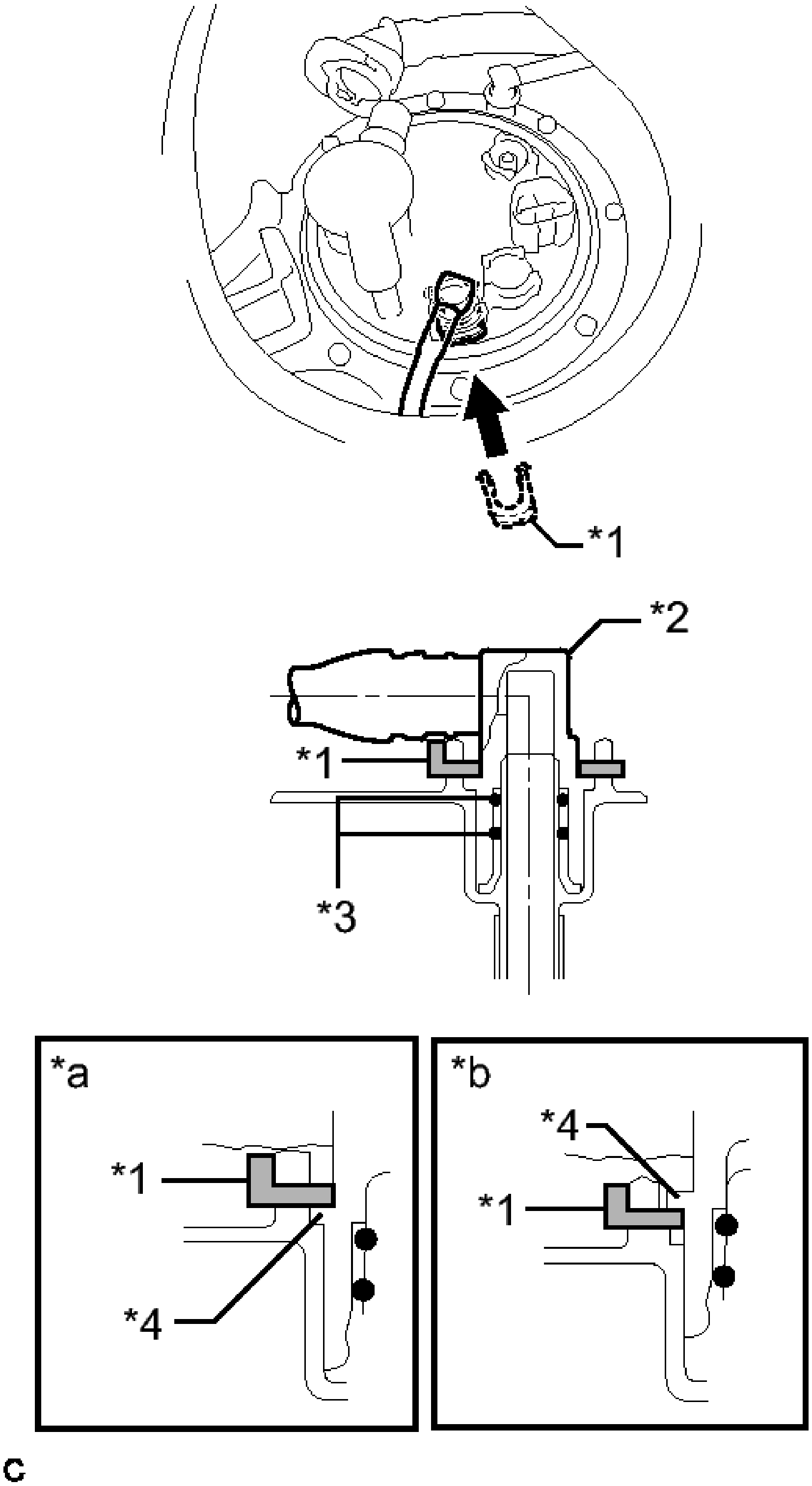
*1
*2
*1
*3
*a
*1
*4
*b
*4
*1
c

Fig. 54: Connecting Fuel Tank Main Tube
Courtesy of TOYOTA MOTOR SALES, U.S.A., INC.

TEXT IN ILLUSTRATION

*1	Tube Joint Clip
*2	Fuel Tube Joint
*3	O-ring
*4	Collar
*a	CORRECT
*b	INCORRECT

NOTE:

- **Check that there are no scratches or foreign matter around the connected part of the fuel tube joint and plug before performing this work.**
- **Check that the fuel tube joint is securely inserted to the end.**
- **Check that the tube joint clip is on the collar of the fuel tube joint.**
- **After installing the tube joint clip, check that the fuel tube joint cannot be pulled out.**

4. **CONNECT FUEL TANK BREATHER ELBOW TUBE SUB-ASSEMBLY**
   a. Push the fuel tube joint in the plug of the fuel suction plate, then install the tube joint clip.

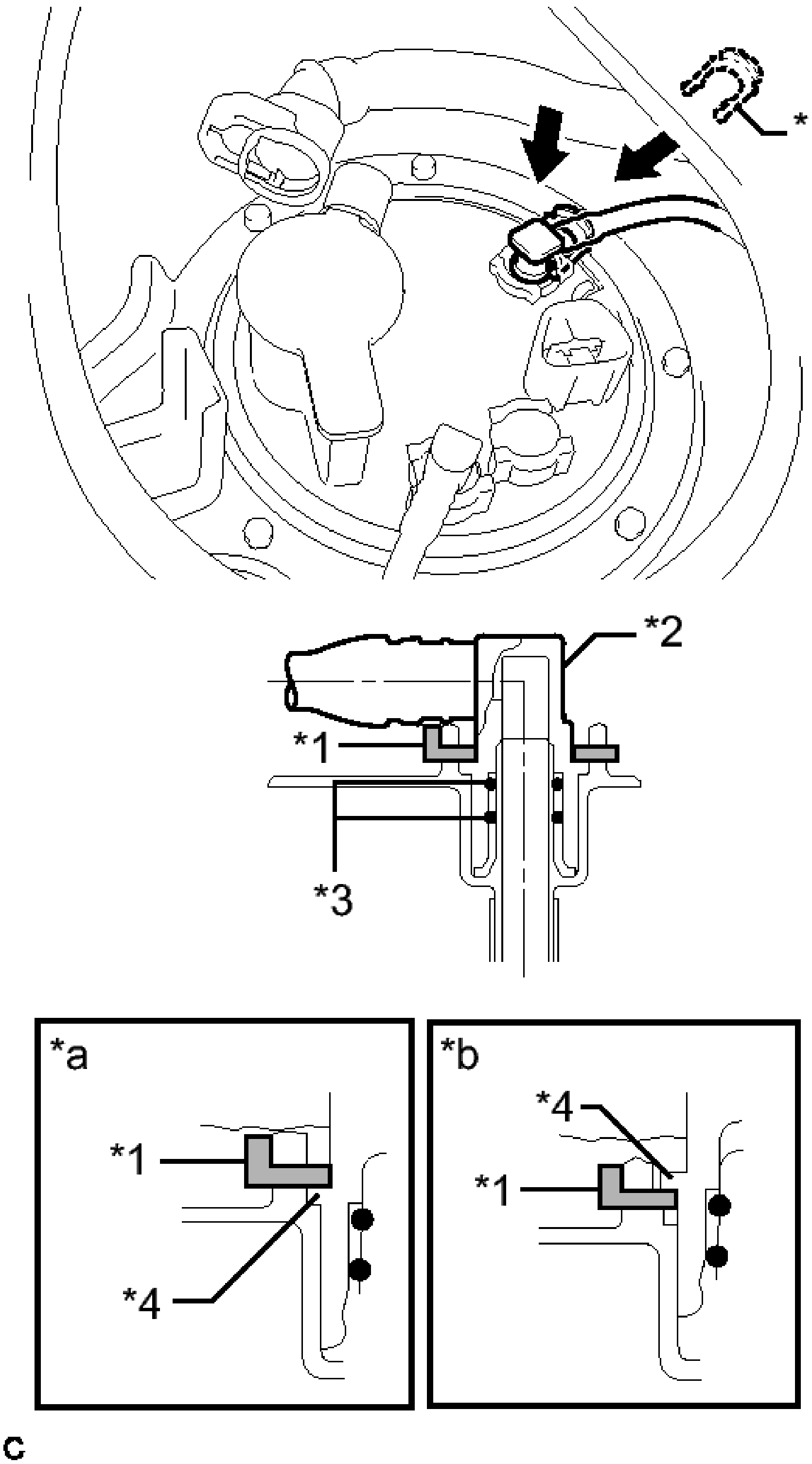
*1
*2
*1
*3
*a
*1
*4
*b
*4
*1
c

Fig. 55: Connecting Fuel Tank Breather Elbow Tube
Courtesy of TOYOTA MOTOR SALES, U.S.A., INC.

TEXT IN ILLUSTRATION

*1	Tube Joint Clip
*2	Fuel Tube Joint
*3	O-ring
*4	Collar
*a	CORRECT
*b	INCORRECT

NOTE:

- **Check that there are no scratches or foreign matter around the connected part of the fuel tube joint and plug before performing this work.**
- **Check that the fuel tube joint is securely inserted to the end.**
- **Check that the tube joint clip is on the collar of the fuel tube joint.**
- **After installing the tube joint clip, check that the fuel tank breather tube cannot be pulled out.**

5. **CONNECT FUEL TANK VENT HOSE**
   a. Push in the fuel tank vent hose connector to the fuel suction tube assembly and push the retainer so that the claws engage.

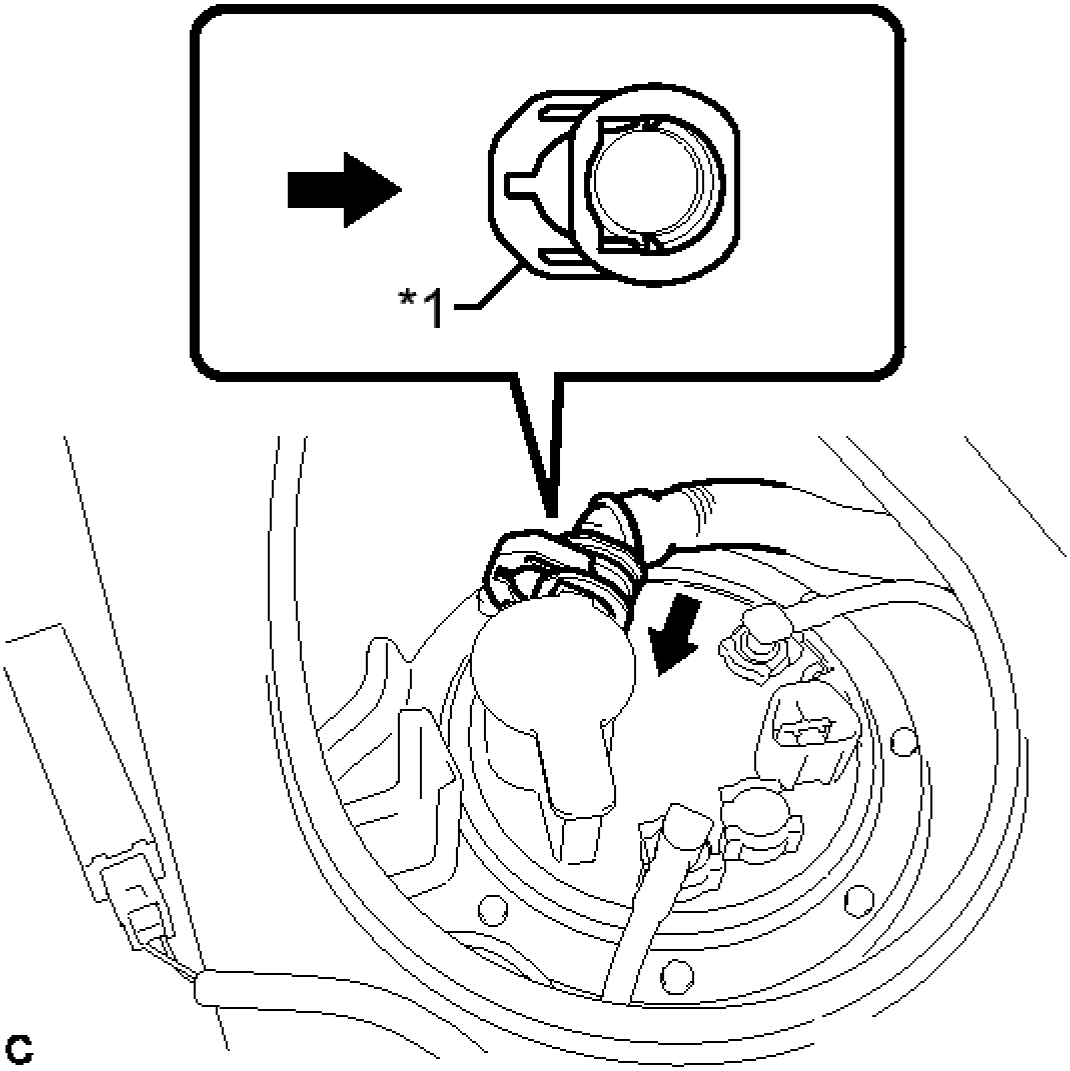

Fig. 56: Connecting Fuel Tank Vent Hose
Courtesy of TOYOTA MOTOR SALES, U.S.A., INC.

TEXT IN ILLUSTRATION

*1	Retainer

NOTE:	- **Check that there are no scratches or foreign matter around the connected parts of the fuel tank vent hose connector and fuel suction tube assembly before performing this work.** - **After connecting the fuel tank vent hose, check that the fuel tank vent hose is securely connected by pulling on the fuel tank vent hose connector.**

b. Connect the fuel pump connector.

6. **CONNECT CABLE TO NEGATIVE AUXILIARY BATTERY TERMINAL**

NOTE: **When disconnecting the cable, some systems need to be initialized after the cable is reconnected. Refer to INITIALIZATION .**

7. **INSTALL LUGGAGE TRIM SERVICE HOLE COVER** . Refer to **INSTALLATION - Step 3**
8. **INSPECT FOR FUEL LEAK** . Refer to **ON-VEHICLE INSPECTION - Step 1**
9. **INSTALL REAR FLOOR SERVICE HOLE COVER**
    a. Install the rear floor service hole cover with new butyl tape.

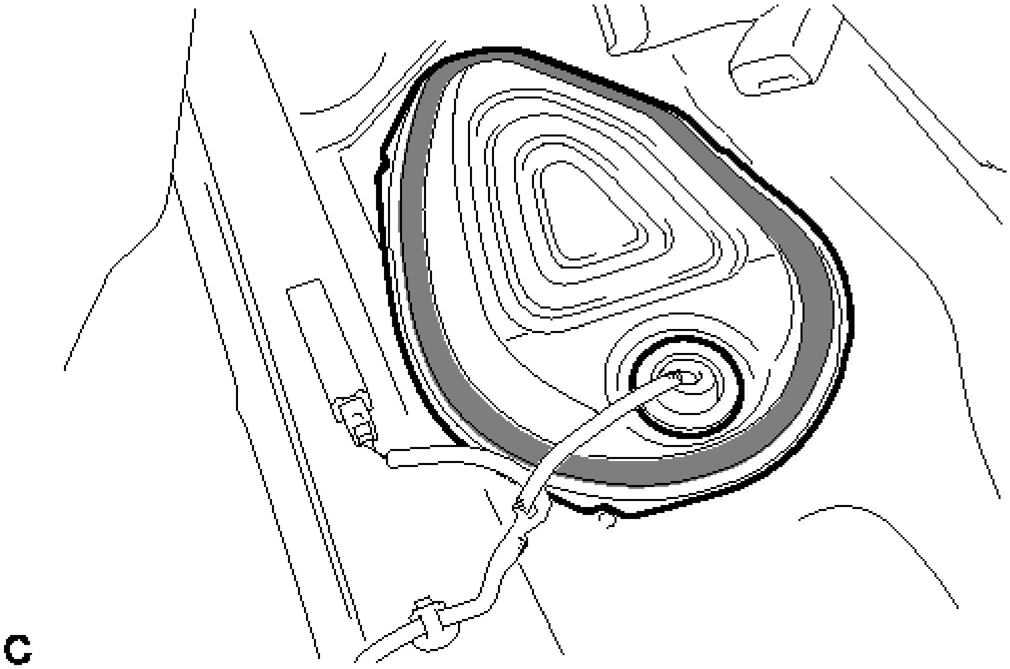

Fig. 57: Identifying Rear Floor Service Hole Cover Butyl Tape
Courtesy of TOYOTA MOTOR SALES, U.S.A., INC.

TEXT IN ILLUSTRATION

Butyl Tape

10. **INSTALL REAR SEAT CUSHION LOCK HOOK** . Refer to **INSTALLATION - Step 6**
11. **INSTALL REAR SEAT CUSHION ASSEMBLY** . Refer to **INSTALLATION - Step 7**

FUEL TANK

COMPONENTS

ILLUSTRATION

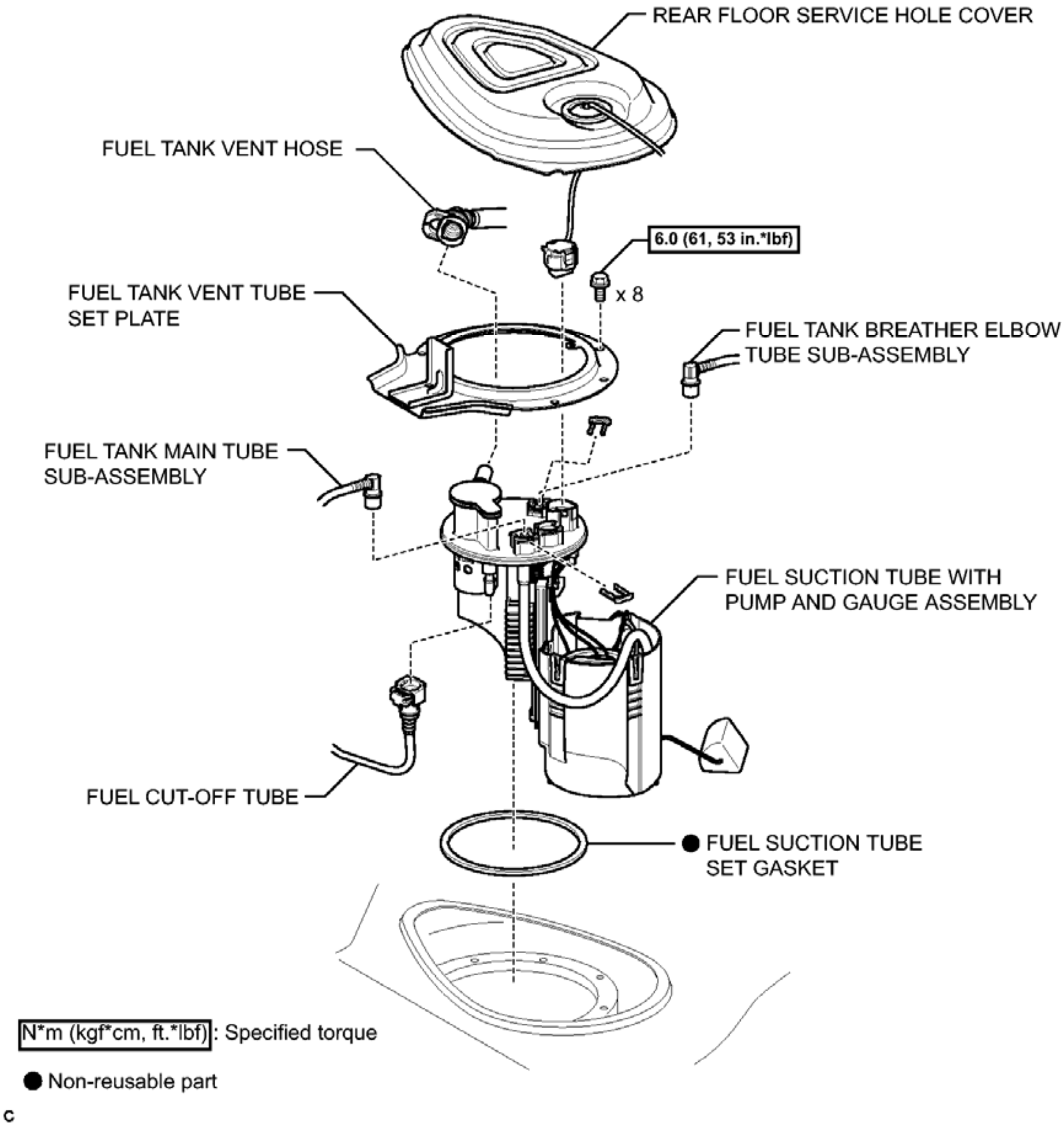
REAR FLOOR SERVICE HOLE COVER
FUEL TANK VENT HOSE
6.0 (61, 53 in.*lbf)
x 8
FUEL TANK VENT TUBE SET PLATE
FUEL TANK BREATHER ELBOW TUBE SUB-ASSEMBLY
FUEL TANK MAIN TUBE SUB-ASSEMBLY
FUEL SUCTION TUBE WITH PUMP AND GAUGE ASSEMBLY
FUEL CUT-OFF TUBE
● FUEL SUCTION TUBE SET GASKET
N*m (kgf*cm, ft.*lbf): Specified torque
● Non-reusable part
c

Fig. 58: Identifying Fuel Tank Replacement Components With Torque Specifications (1 Of 4)
Courtesy of TOYOTA MOTOR SALES, U.S.A., INC.

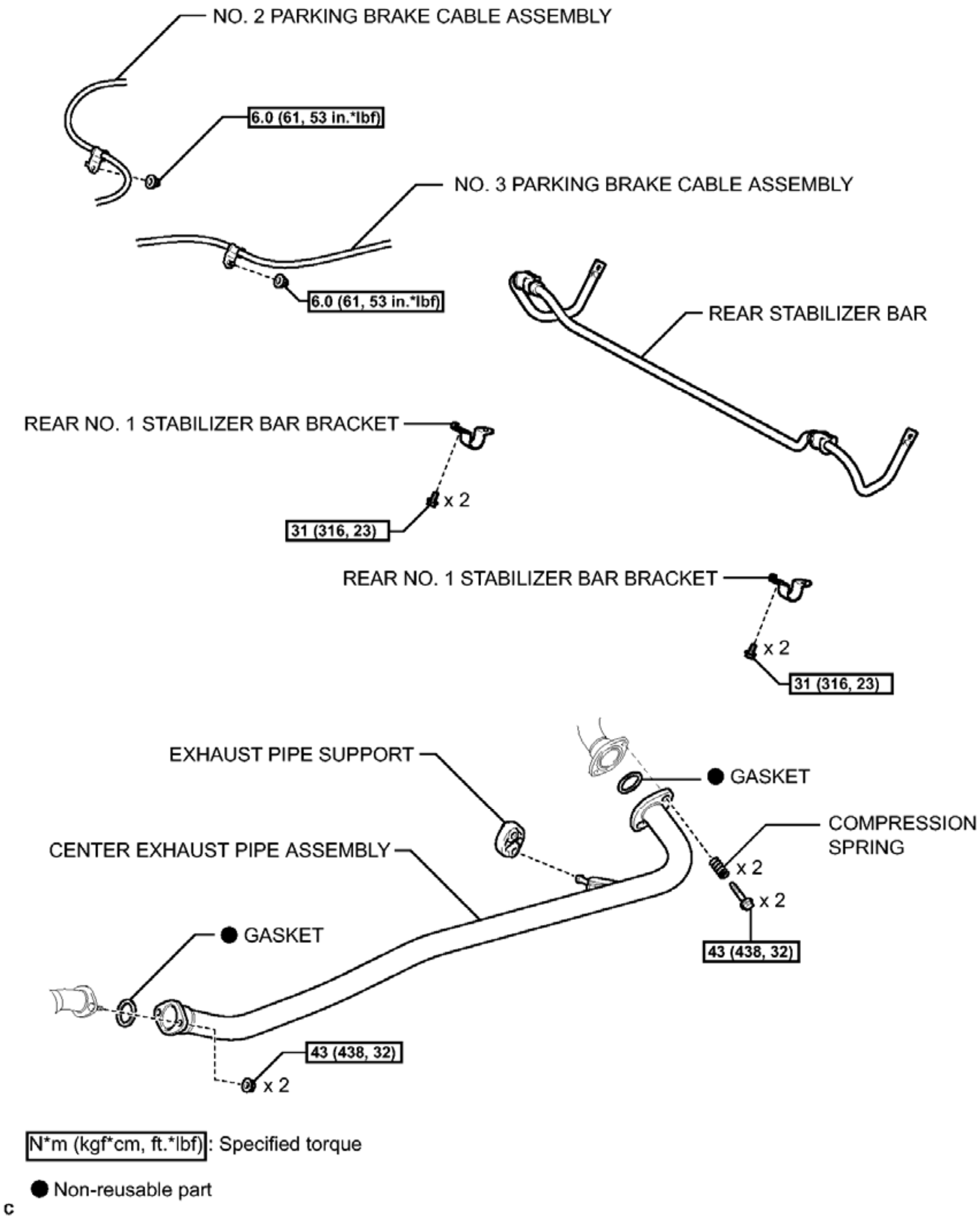
NO. 2 PARKING BRAKE CABLE ASSEMBLY
6.0 (61, 53 in.*lbf)
NO. 3 PARKING BRAKE CABLE ASSEMBLY
6.0 (61, 53 in.*lbf)
REAR STABILIZER BAR
REAR NO. 1 STABILIZER BAR BRACKET
x 2
31 (316, 23)
REAR NO. 1 STABILIZER BAR BRACKET
x 2
31 (316, 23)
EXHAUST PIPE SUPPORT
● GASKET
COMPRESSION SPRING
CENTER EXHAUST PIPE ASSEMBLY
x 2
x 2
43 (438, 32)
● GASKET
43 (438, 32)
x 2
N*m (kgf*cm, ft.*lbf): Specified torque
● Non-reusable part
c

Fig. 59: Identifying Fuel Tank Replacement Components With Torque Specifications (2 Of 4)
Courtesy of TOYOTA MOTOR SALES, U.S.A., INC.

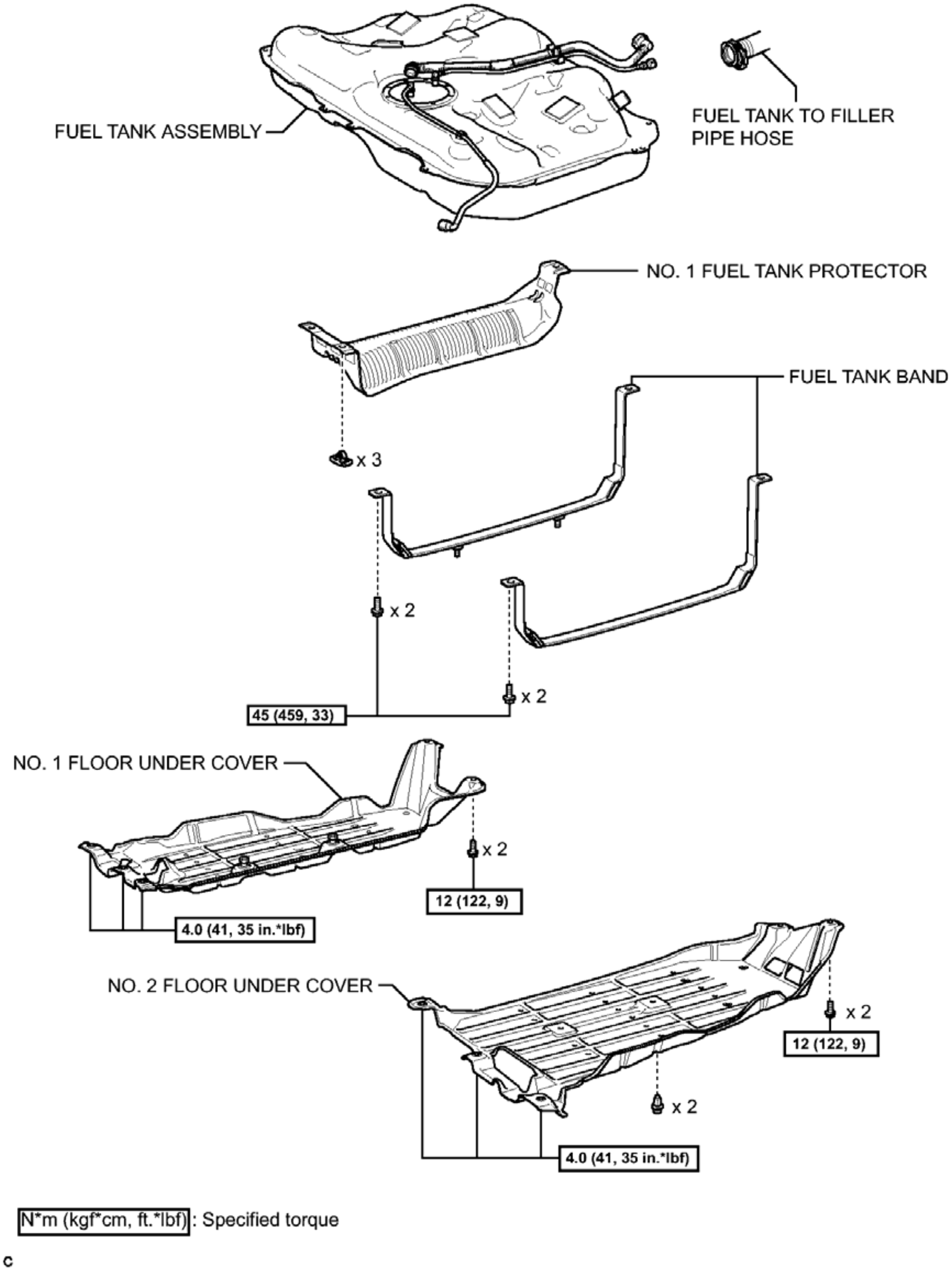
FUEL TANK ASSEMBLY
FUEL TANK TO FILLER PIPE HOSE
NO. 1 FUEL TANK PROTECTOR
FUEL TANK BAND
x 3
x 2
x 2
45 (459, 33)
NO. 1 FLOOR UNDER COVER
x 2
12 (122, 9)
4.0 (41, 35 in.*lbf)
NO. 2 FLOOR UNDER COVER
x 2
12 (122, 9)
x 2
4.0 (41, 35 in.*lbf)
N*m (kgf*cm, ft.*lbf) : Specified torque
c

Fig. 60: Identifying Fuel Tank Replacement Components With Torque Specifications (3 Of 4)
Courtesy of TOYOTA MOTOR SALES, U.S.A., INC.

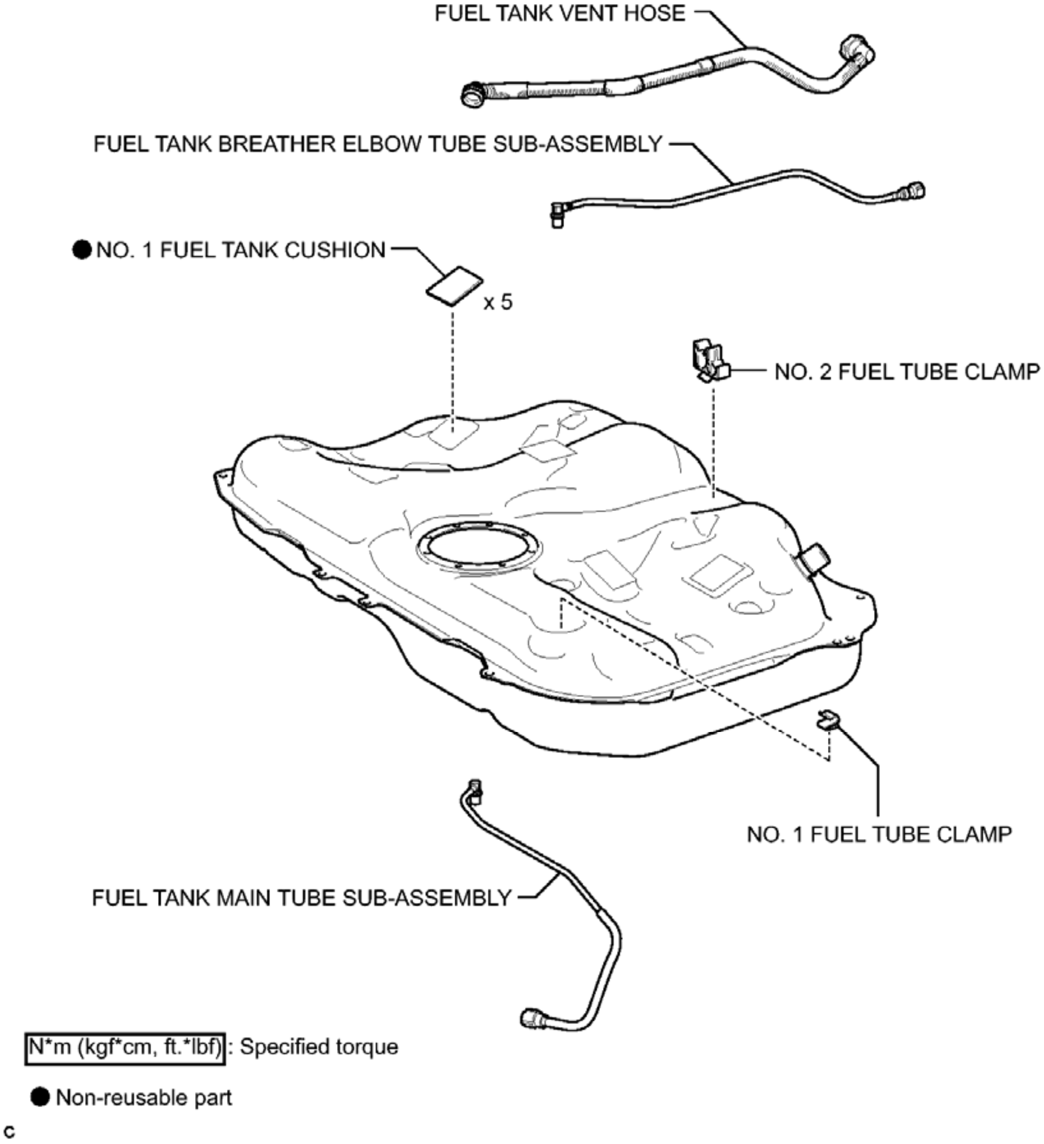
FUEL TANK VENT HOSE
FUEL TANK BREATHER ELBOW TUBE SUB-ASSEMBLY
● NO. 1 FUEL TANK CUSHION
x 5
NO. 2 FUEL TUBE CLAMP
NO. 1 FUEL TUBE CLAMP
FUEL TANK MAIN TUBE SUB-ASSEMBLY
N*m (kgf*cm, ft.*lbf) : Specified torque
● Non-reusable part
C

Fig. 61: Identifying Fuel Tank Replacement Components With Torque Specifications (4 Of 4)
Courtesy of TOYOTA MOTOR SALES, U.S.A., INC.

REMOVAL

REMOVAL

1. **REMOVE FUEL SUCTION TUBE WITH PUMP AND GAUGE ASSEMBLY**

   Refer to REMOVAL

2. **DRAIN FUEL**
3. **REMOVE CENTER EXHAUST PIPE ASSEMBLY**

Refer to **REMOVAL**

4. **REMOVE NO. 1 FLOOR UNDER COVER** . Refer to **REMOVAL - Step 3**
5. **REMOVE NO. 2 FLOOR UNDER COVER** . Refer to **REMOVAL - Step 2**
6. **DISCONNECT NO. 2 PARKING BRAKE CABLE ASSEMBLY**
    a. Remove the nut and disconnect the No. 2 parking brake cable assembly.

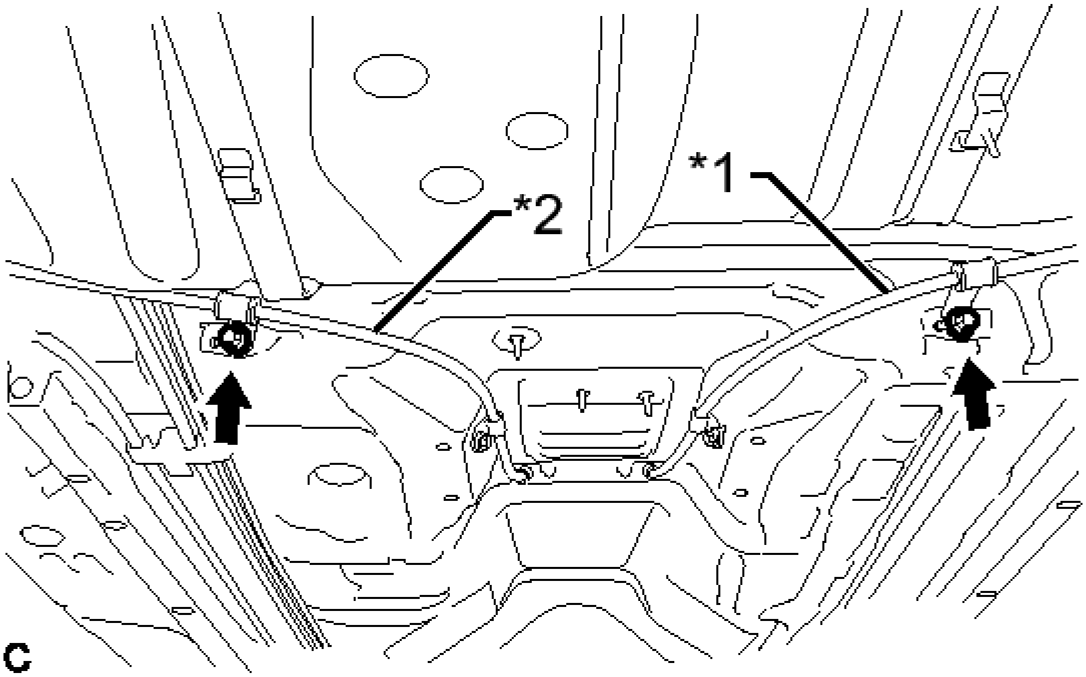

Fig. 62: Identifying No. 2 Parking Brake Cable And Nut
Courtesy of TOYOTA MOTOR SALES, U.S.A., INC.

TEXT IN ILLUSTRATION

*1	No. 2 Parking Brake Cable Assembly
*2	No. 3 Parking Brake Cable Assembly

7. **DISCONNECT NO. 3 PARKING BRAKE CABLE ASSEMBLY**
    a. Remove the nut and disconnect the No. 3 parking brake cable assembly.
8. **REMOVE REAR NO. 1 STABILIZER BAR BRACKET**

a. Remove the 4 bolts and 2 rear No. 1 stabilizer bar brackets.

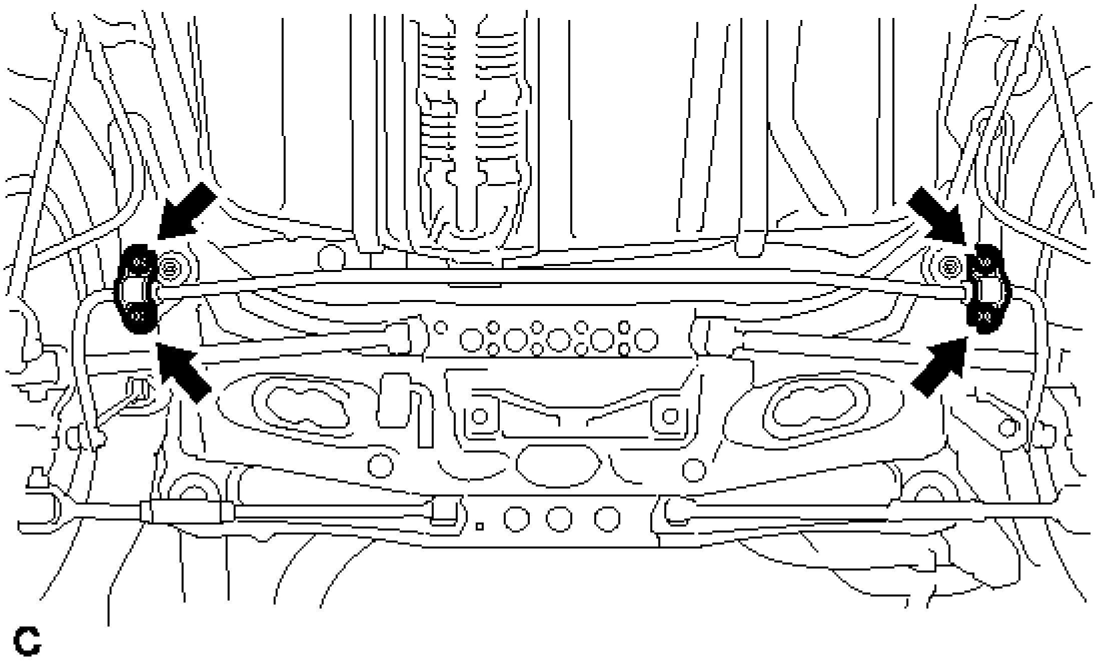

Fig. 63: Identifying Rear No. 1 Stabilizer Bar Brackets And Bolts
Courtesy of TOYOTA MOTOR SALES, U.S.A., INC.

9. **REMOVE NO. 1 FUEL TANK PROTECTOR**
   a. Remove the 3 clips and No. 1 fuel tank protector.

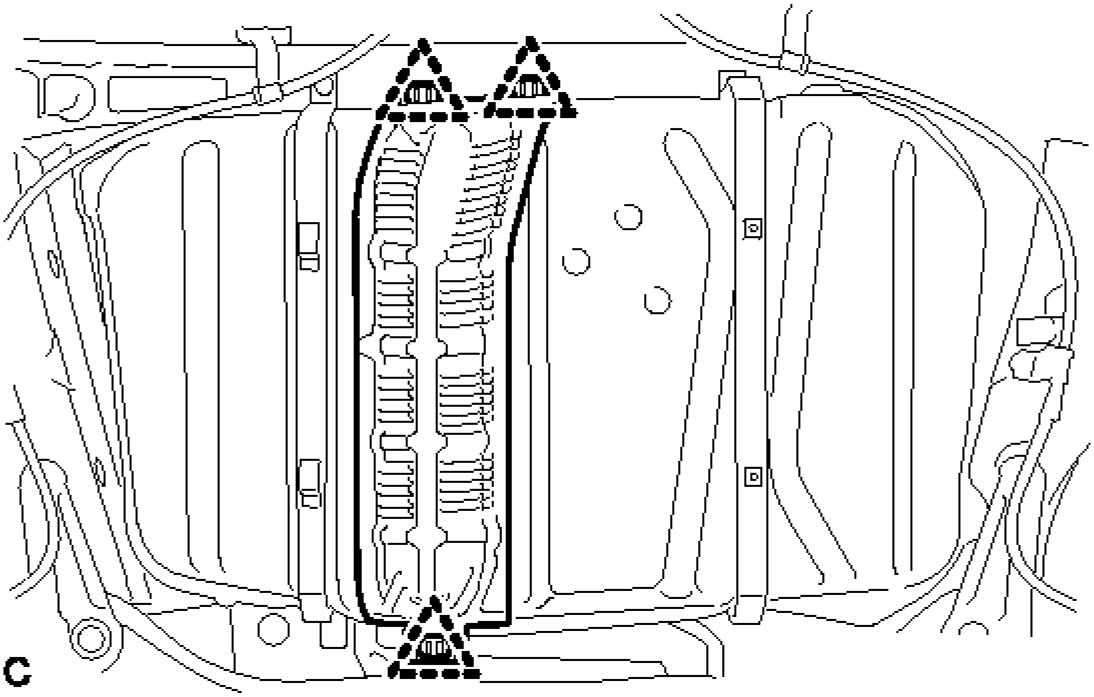

Fig. 64: Identifying No. 1 Fuel Tank Protector Clips
Courtesy of TOYOTA MOTOR SALES, U.S.A., INC.

10. **DISCONNECT FUEL TANK MAIN TUBE SUB-ASSEMBLY**
    a. Pinch the tabs of the retainer to remove the lock claws and pull it down as shown in the illustration.

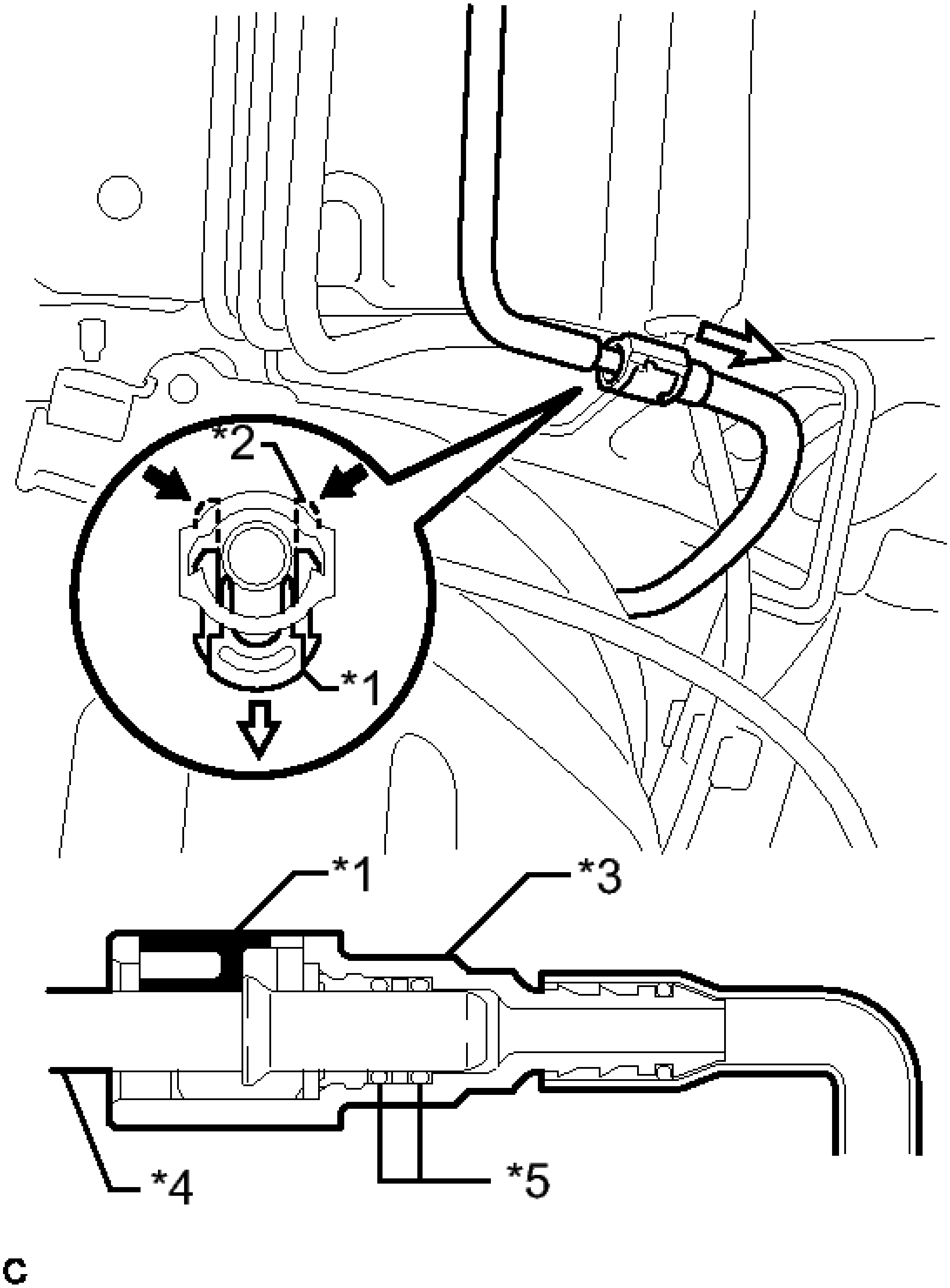

Fig. 65: Disconnecting Fuel Tank Main Tube
Courtesy of TOYOTA MOTOR SALES, U.S.A., INC.

TEXT IN ILLUSTRATION

*1	Retainer

*2	Tab
*3	Fuel Tube Connector
*4	Fuel Pipe
*5	O-ring
➡	Pinch
⇨	Pull

b. Pull out the fuel tank main tube sub-assembly.

NOTE:

- **Check that there are no scratches or foreign matter around the connected part of the fuel tube connector and fuel pipe before performing this work.**
- **Do not allow any scratches or foreign matter to get on the parts when disconnecting them as the fuel tube connector has O-rings that seal the fuel pipe.**
- **Only disconnect the fuel tube connector by hand.**
- **Do not forcibly bend, twist or turn the fuel pump tube.**
- **Protect the disconnected part by covering it with a plastic bag after disconnecting the fuel tube connector.**
- **If the fuel tube connector and fuel pipe are stuck, push and pull to release them.**

11. **DISCONNECT FUEL TANK BREATHER ELBOW TUBE SUB-ASSEMBLY**

a. Pinch the tabs of the retainer to remove the lock claws and pull it down as shown in the illustration.

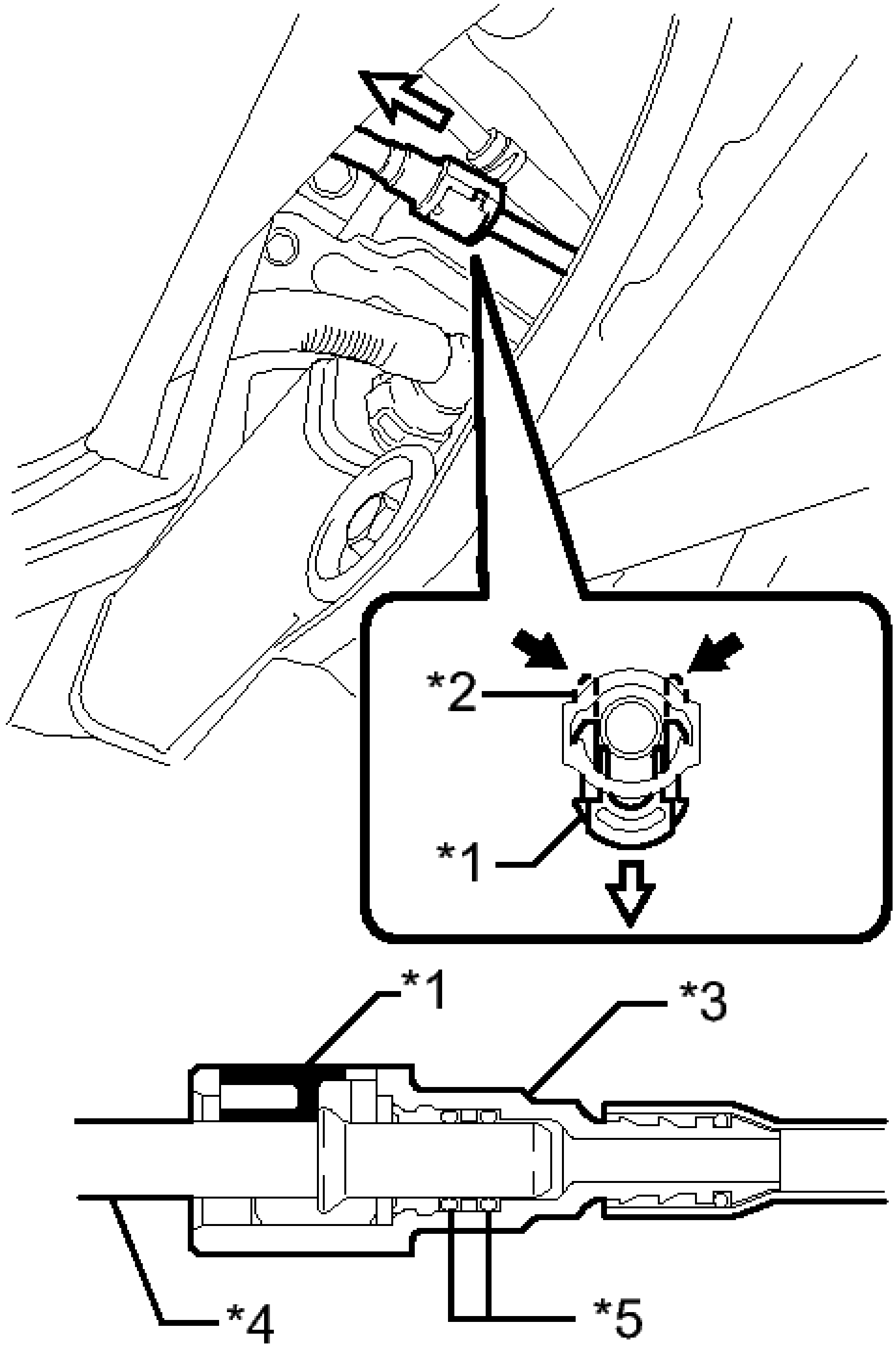

Fig. 66: Disconnecting Fuel Tank Breather Elbow Tube
Courtesy of TOYOTA MOTOR SALES, U.S.A., INC.

TEXT IN ILLUSTRATION

*1	Retainer

*2	Tab
*3	Fuel Tube Connector
*4	Fuel Pipe
*5	O-ring
➡	Pinch
⇨	Pull

b. Pull out the fuel tank breather elbow tube sub-assembly.

NOTE:

- **Remove any dirt or foreign matter on the fuel tube connector and fuel pipe before performing this work.**
- **Do not allow any scratches or foreign matter to get on the parts when disconnecting them as the fuel tube connector has O-rings that seal the fuel pipe.**
- **Only disconnect the fuel tube connector by hand.**
- **Do not forcibly bend, twist or turn the fuel tank breather tube.**
- **Protect the disconnected part by covering it with a plastic bag after disconnecting the fuel tube connector.**
- **If the fuel tube connector and fuel pipe are stuck, push and pull to release them.**

12. DISCONNECT FUEL TANK VENT HOSE

a. Pinch the tabs of the retainer to remove the lock claws and pull it down as shown in the illustration.

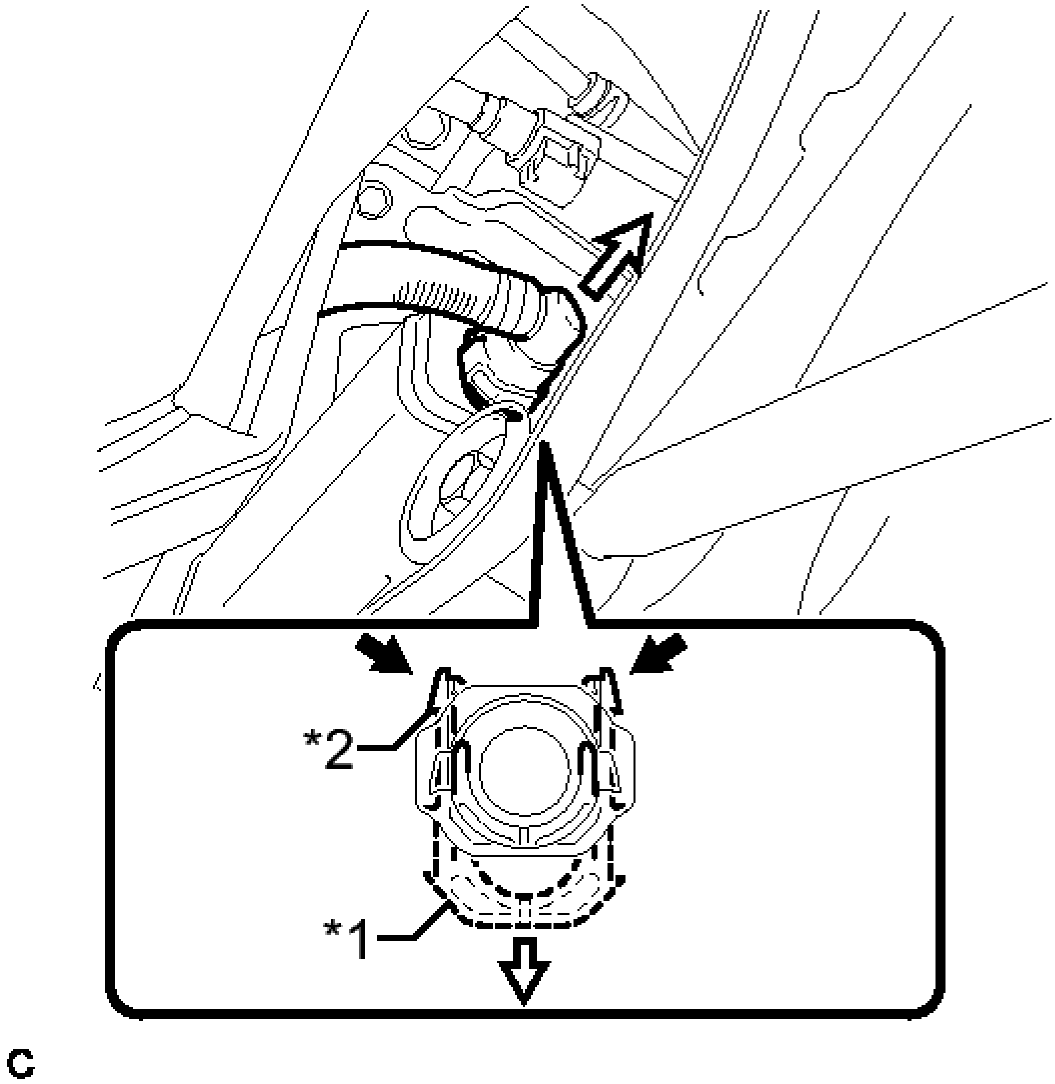

Fig. 67: Disconnecting Fuel Tank Vent Hose
Courtesy of TOYOTA MOTOR SALES, U.S.A., INC.

TEXT IN ILLUSTRATION

*1	Retainer
*2	Tab
·	Pinch
·	Pull

NOTE:

- **Remove any dirt or foreign matter on the fuel tank vent hose connector before performing this work.**
- **Do not allow any scratches or foreign matter to get on the parts when disconnecting them as the fuel tank vent hose connector has an O-ring that seals the pipe.**

- **Only disconnect the vent hose connector by hand.**
- **Do not forcibly bend, twist or turn the fuel tank vent hose.**
- **Protect the disconnected part by covering it with a plastic bag after disconnecting the fuel tank vent hose.**
- **If the vent hose connector and charcoal canister are stuck, push and pull to release them.**

b. Pull out the fuel tank vent hose.

13. **DISCONNECT FUEL TANK TO FILLER PIPE HOSE**

a. Pull the tabs of the retainer to disengage the lock claws and pull out the fuel tank to filler pipe hose.

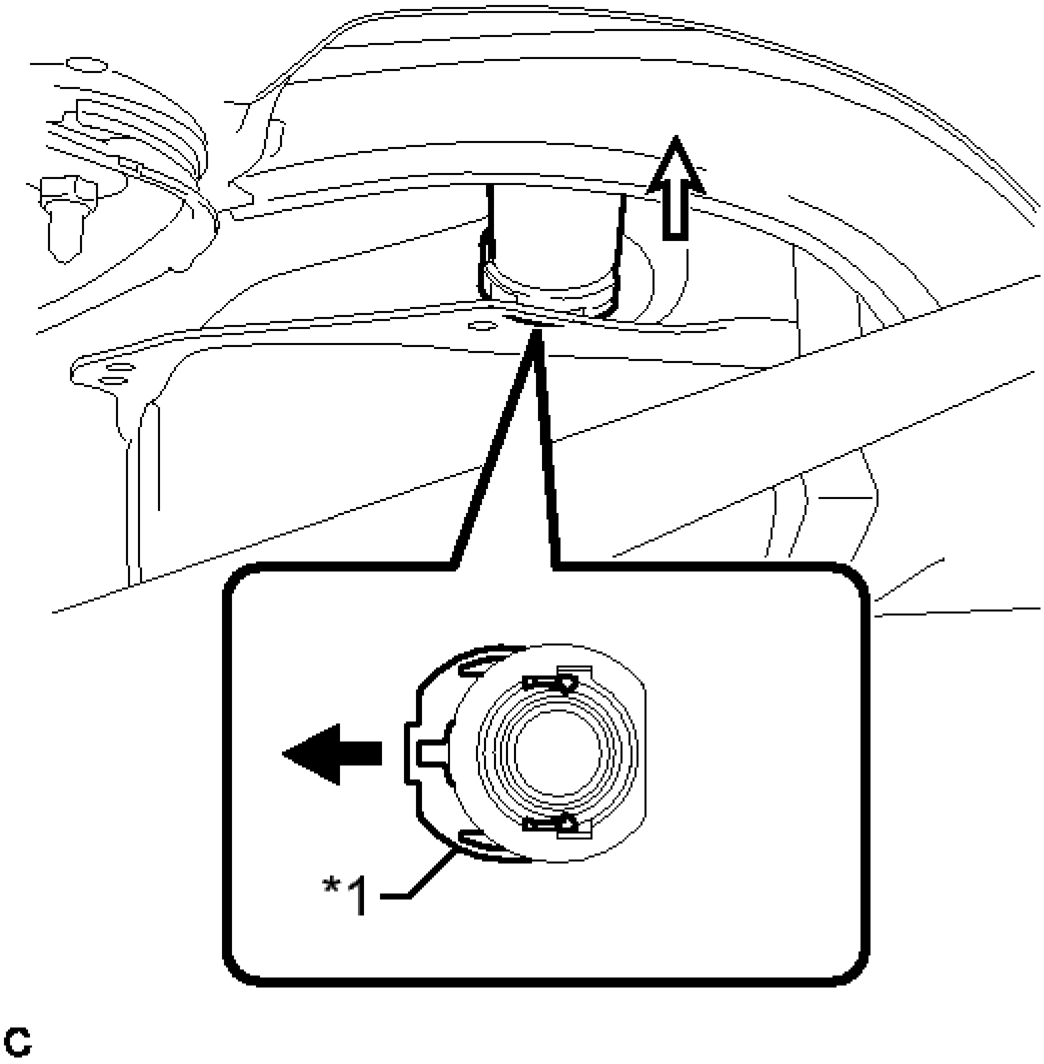

Fig. 68: Disconnecting Fuel Tank To Filler Pipe Hose
Courtesy of TOYOTA MOTOR SALES, U.S.A., INC.

TEXT IN ILLUSTRATION

*1	Retainer
·	Pull
·	Pull Out

NOTE:

- **Remove any dirt or foreign matter on the fuel tank to filler pipe hose connector before performing this work.**
- **Do not allow any scratches or foreign matter to get on the parts when disconnecting them as the fuel tank to filler pipe hose connector has an O-ring that seals the fuel tank.**
- **Only disconnect the filler pipe hose connector by hand.**
- **Do not forcibly bend, twist or turn the fuel tank to filler pipe hose.**
- **Protect the disconnected part by covering it with a plastic bag after disconnecting the fuel tank to filler pipe hose.**
- **If the fuel tank to filler pipe hose connector and fuel tank are stuck, push and pull to release them.**

14. **REMOVE FUEL TANK ASSEMBLY**
    a. Support the fuel tank using an engine lifter.

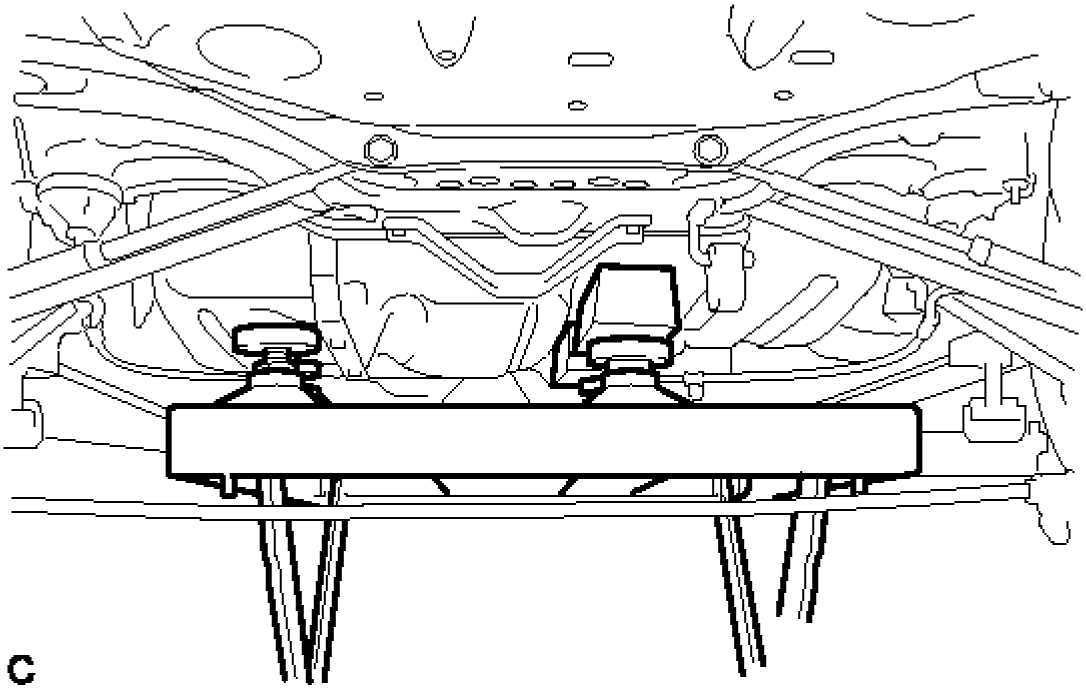

Fig. 69: Supporting Fuel Tank Using Engine Lifter
Courtesy of TOYOTA MOTOR SALES, U.S.A., INC.

    b. Remove the 4 bolts of the 2 fuel tank bands.

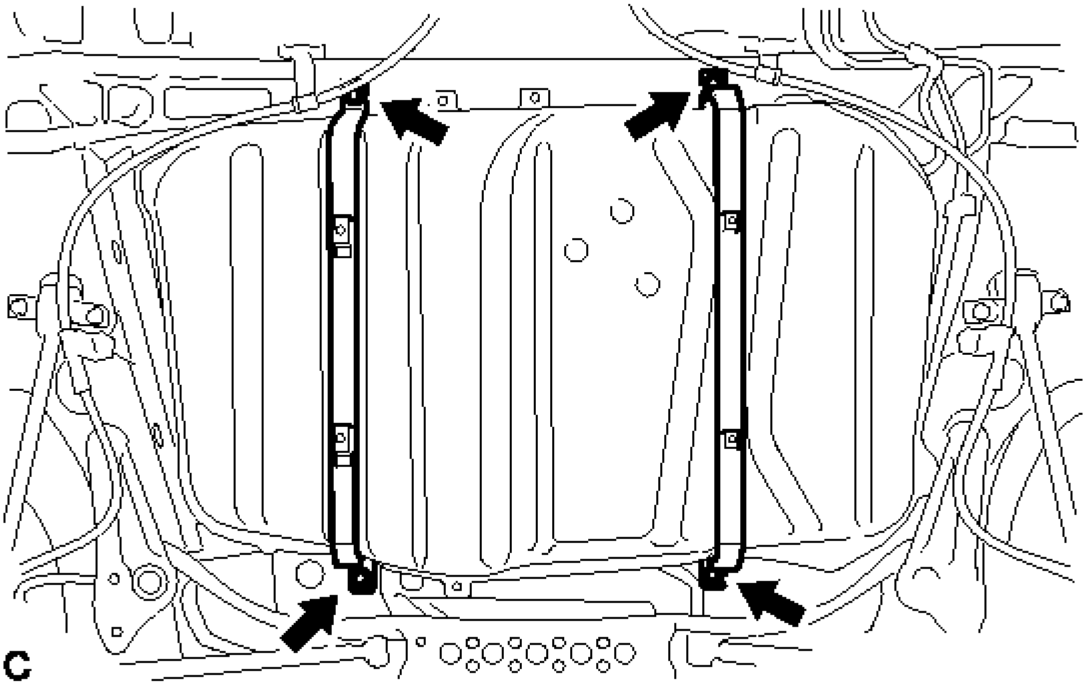

Fig. 70: Identifying Fuel Tank Bands And Bolts
Courtesy of TOYOTA MOTOR SALES, U.S.A., INC.

c. Lower the engine lifter to remove the fuel tank.

NOTE:

- **Slowly operate the engine lifter to lower the fuel tank.**
- **Do not drop the fuel tank.**
- **When removing the fuel tank, tilt it slightly to prevent it from interfering with the suspension arm or other surrounding parts.**

15. **REMOVE FUEL TANK MAIN TUBE SUB-ASSEMBLY**

a. Disconnect the No. 1 fuel tube clamp and remove the fuel tank main tube sub-assembly.

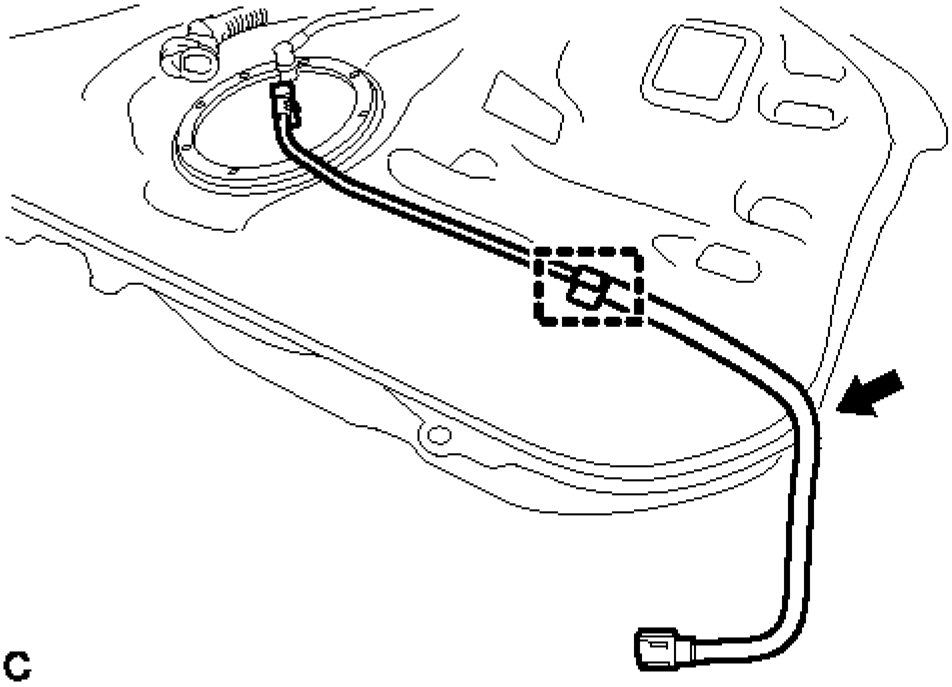

Fig. 71: Identifying Fuel Tank Main Tube Clamp
Courtesy of TOYOTA MOTOR SALES, U.S.A., INC.

16. **REMOVE FUEL TANK BREATHER ELBOW TUBE SUB-ASSEMBLY**
    a. Disconnect the No. 2 fuel tube clamp and remove the fuel tank breather elbow tube sub-assembly.

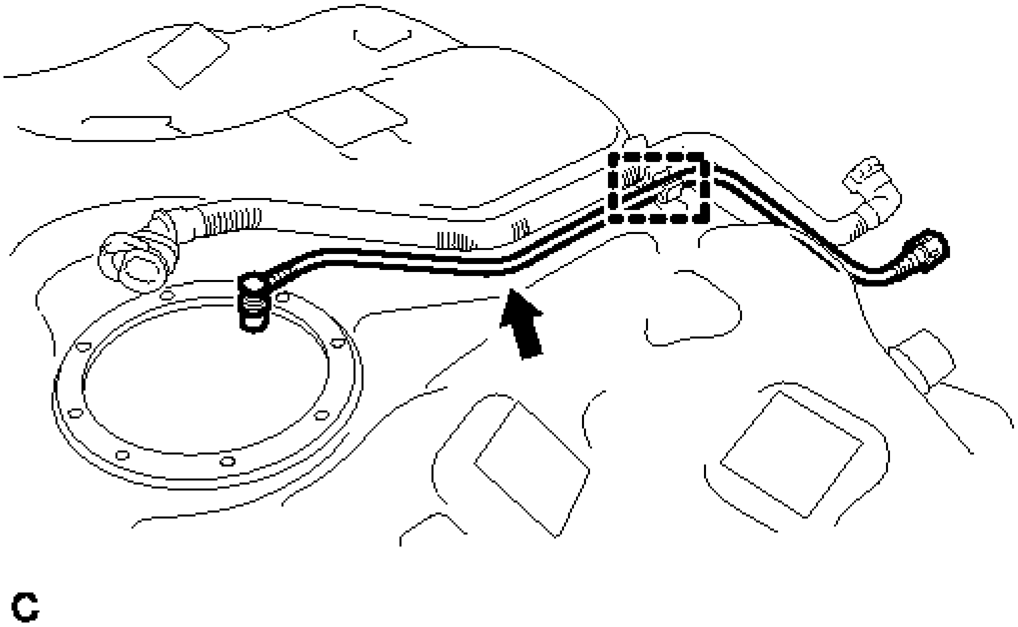

Fig. 72: Identifying Fuel Tank Breather Elbow Tube Clamp

Courtesy of TOYOTA MOTOR SALES, U.S.A., INC.

17. **REMOVE FUEL TANK VENT HOSE**
    a. Disconnect the No. 2 fuel tube clamp and remove the fuel tank vent hose sub-assembly.

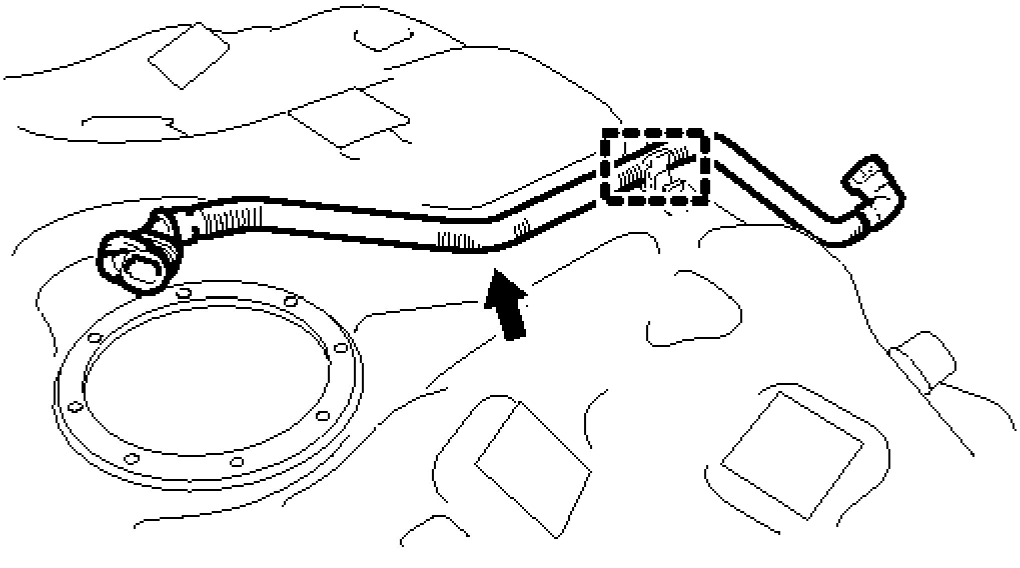

Fig. 73: Identifying Fuel Tank Vent Hose
Courtesy of TOYOTA MOTOR SALES, U.S.A., INC.

18. **REMOVE NO. 1 FUEL TUBE CLAMP**
    a. Remove the No. 1 fuel tube clamp.

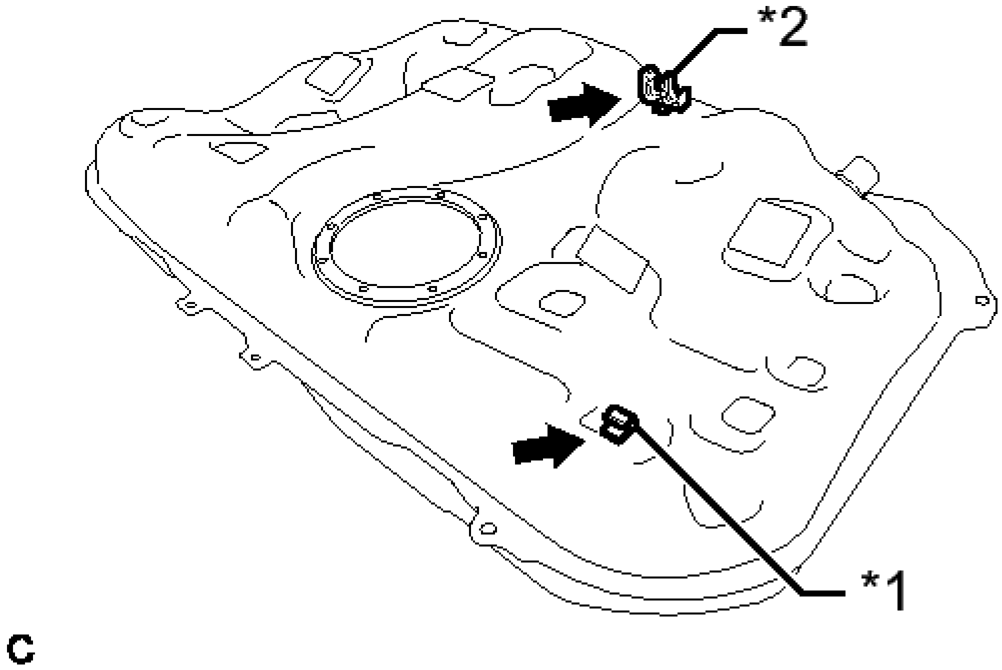

Fig. 74: Identifying No. 1 And No. 2 Fuel Tube Clamps
Courtesy of TOYOTA MOTOR SALES, U.S.A., INC.

TEXT IN ILLUSTRATION

*1	No. 1 Fuel Tube Clamp
*2	No. 2 Fuel Tube Clamp

19. **REMOVE NO. 2 FUEL TUBE CLAMP**
    a. Remove the No. 2 fuel tube clamp.
20. **REMOVE NO. 1 FUEL TANK CUSHION**
    a. Remove the 5 No. 1 fuel tank cushions.

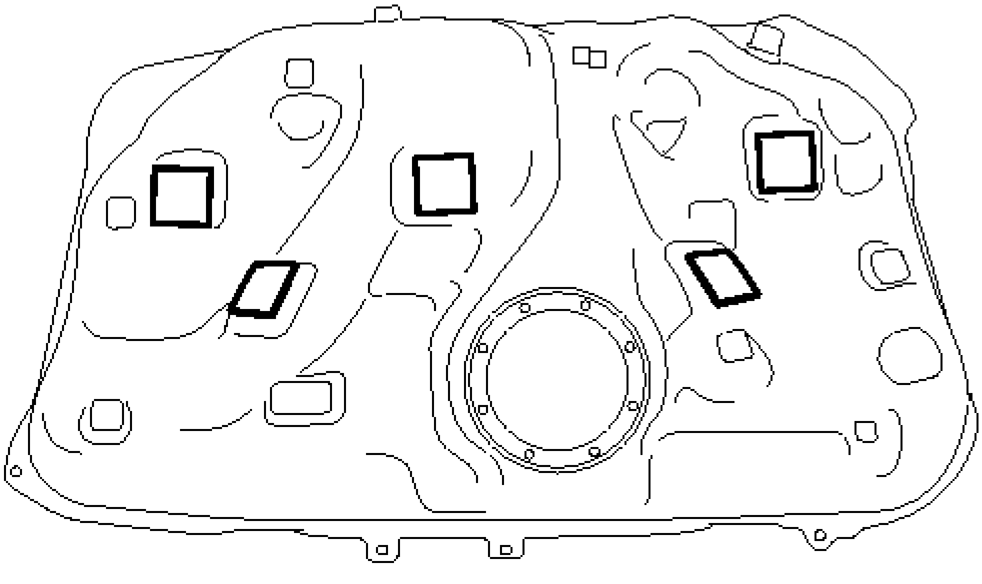

Fig. 75: Identifying No. 1 Fuel Tank Cushions
Courtesy of TOYOTA MOTOR SALES, U.S.A., INC.

INSTALLATION

INSTALLATION

1. **INSTALL NO. 1 FUEL TANK CUSHION**
    a. Install 5 new No. 1 fuel tank cushions as shown in the illustration.

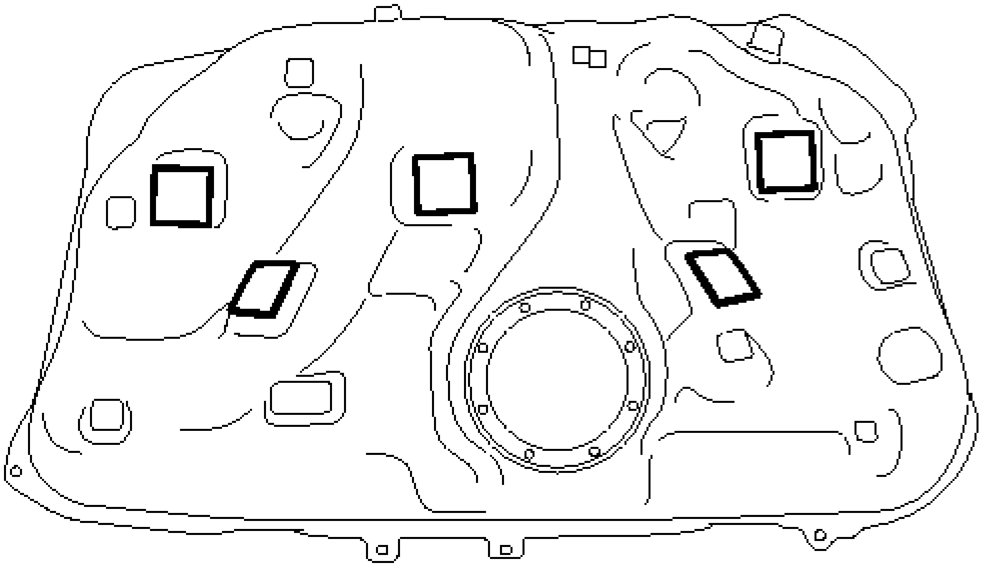

Fig. 76: Identifying No. 1 Fuel Tank Cushions
Courtesy of TOYOTA MOTOR SALES, U.S.A., INC.

2. **INSTALL NO. 1 FUEL TUBE CLAMP**
   a. Install the No. 1 fuel tube clamp.
3. **INSTALL NO. 2 FUEL TUBE CLAMP**
   a. Install the No. 2 fuel tube clamp.
4. **INSTALL FUEL TANK VENT HOSE**
   a. Install the fuel tank vent hose to the No. 2 fuel tube clamp.
5. **INSTALL FUEL TANK BREATHER ELBOW TUBE SUB-ASSEMBLY**
   a. Install the fuel tank breather elbow tube sub-assembly to the No. 2 fuel tube clamp.
6. **INSTALL FUEL TANK MAIN TUBE SUB-ASSEMBLY**
   a. Install the fuel tank main tube sub-assembly to the No. 1 fuel tube clamp.
7. **INSTALL FUEL TANK ASSEMBLY**
   a. Support the fuel tank using an engine lifter.
   b. Raise the engine lifter, then install the fuel tank to the vehicle.

NOTE:

- **Do not drop the fuel tank.**
- **When installing the fuel tank, tilt it slightly to prevent it from interfering with the suspension arm or other surrounding parts.**

   c. Tighten the 4 bolts of the 2 fuel tank bands.

Torque: 45 N*m (459 kgf*cm, 33 ft.*lbf)

8. **CONNECT FUEL TANK TO FILLER PIPE HOSE**
    1. Push in the fuel tank to filler pipe hose connector to the fuel tank assembly and push the retainer so that the claws engage.

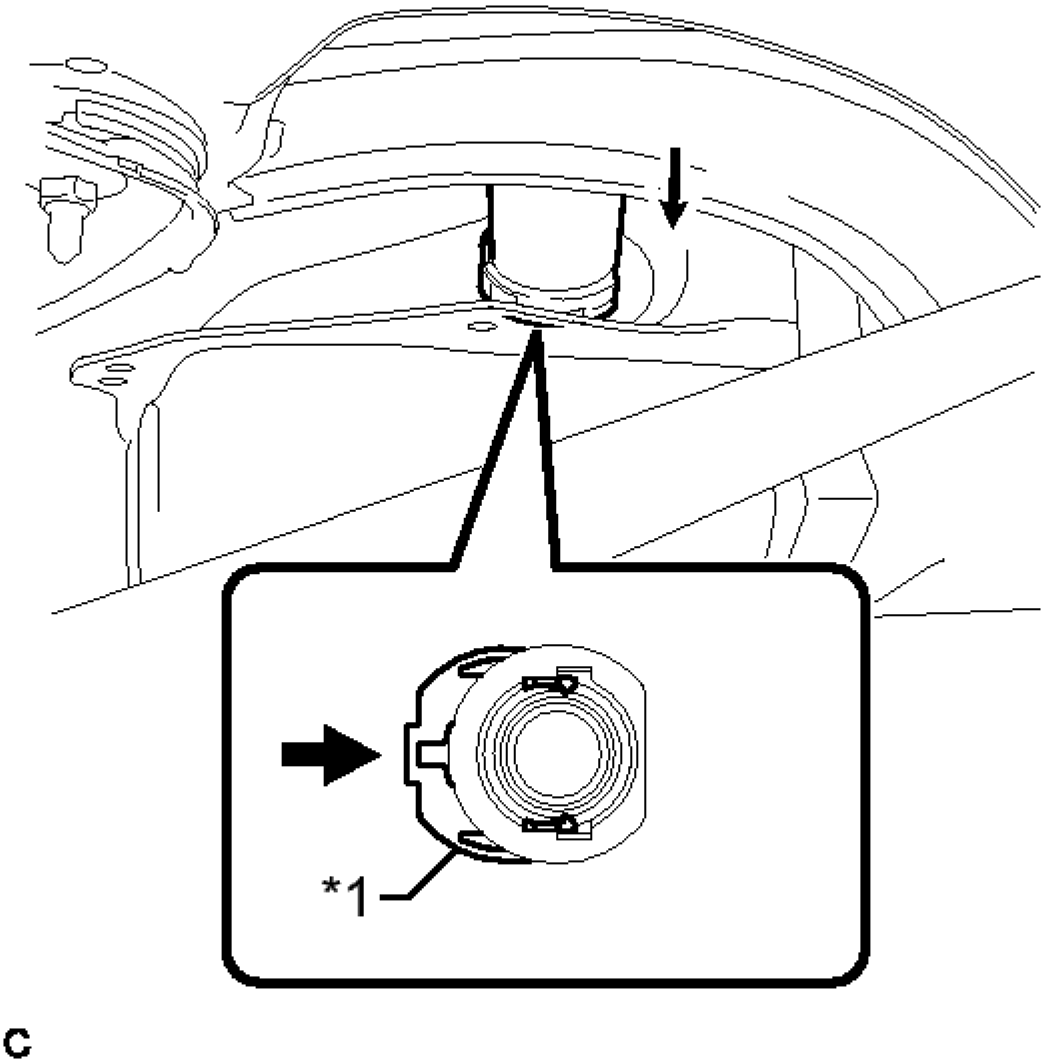

Fig. 77: Connecting Fuel Tank To Filler Pipe Hose
Courtesy of TOYOTA MOTOR SALES, U.S.A., INC.

TEXT IN ILLUSTRATION

*1	Retainer
·	Push

NOTE:

- **Check that there are no scratches or foreign matter around the connected parts of the fuel tank to filler pipe hose connector**

and tank before performing this work.

- **After connecting the fuel tank to filler pipe hose, check that the fuel tank to filler pipe hose is securely connected by pulling on the fuel tank to filler pipe hose connector.**

9. **CONNECT FUEL TANK VENT HOSE**
   a. Push in the fuel tank vent hose connector to the charcoal canister and push up the retainer so that the claws engage.

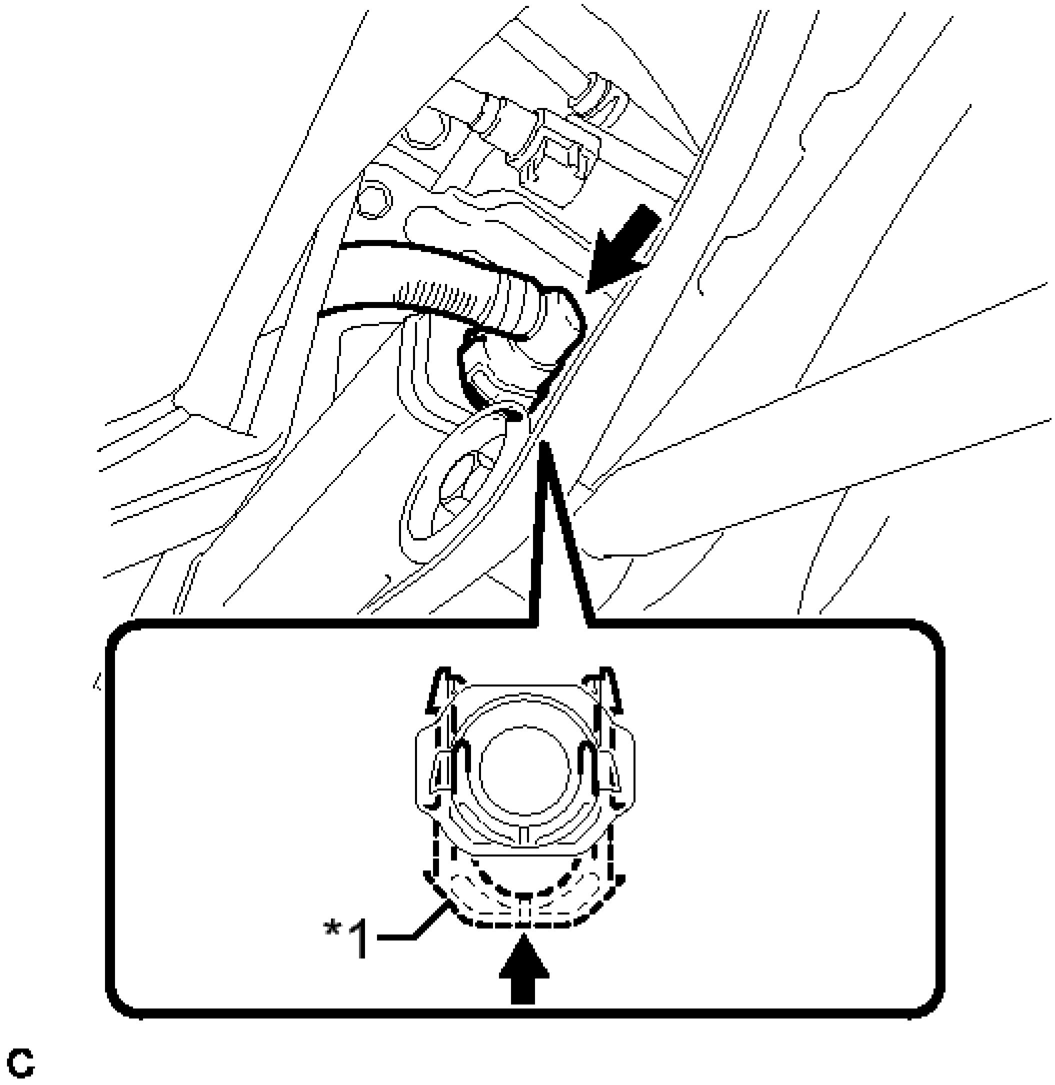

Fig. 78: Connecting Fuel Tank Vent Hose
Courtesy of TOYOTA MOTOR SALES, U.S.A., INC.

TEXT IN ILLUSTRATION

*1	Retainer
·	Push

NOTE:

- **Check that there are no scratches or foreign matter around the connected part of the fuel tank vent hose connector and charcoal canister before performing this work.**
- **After connecting the fuel tank vent hose, check that the fuel tank vent hose is securely connected by pulling on the fuel tank vent hose connector and the charcoal canister.**

10. CONNECT FUEL TANK BREATHER ELBOW TUBE SUB-ASSEMBLY

a. Push in the fuel tank breather elbow tube connector to the pipe and push up the retainer so that the claws engage.

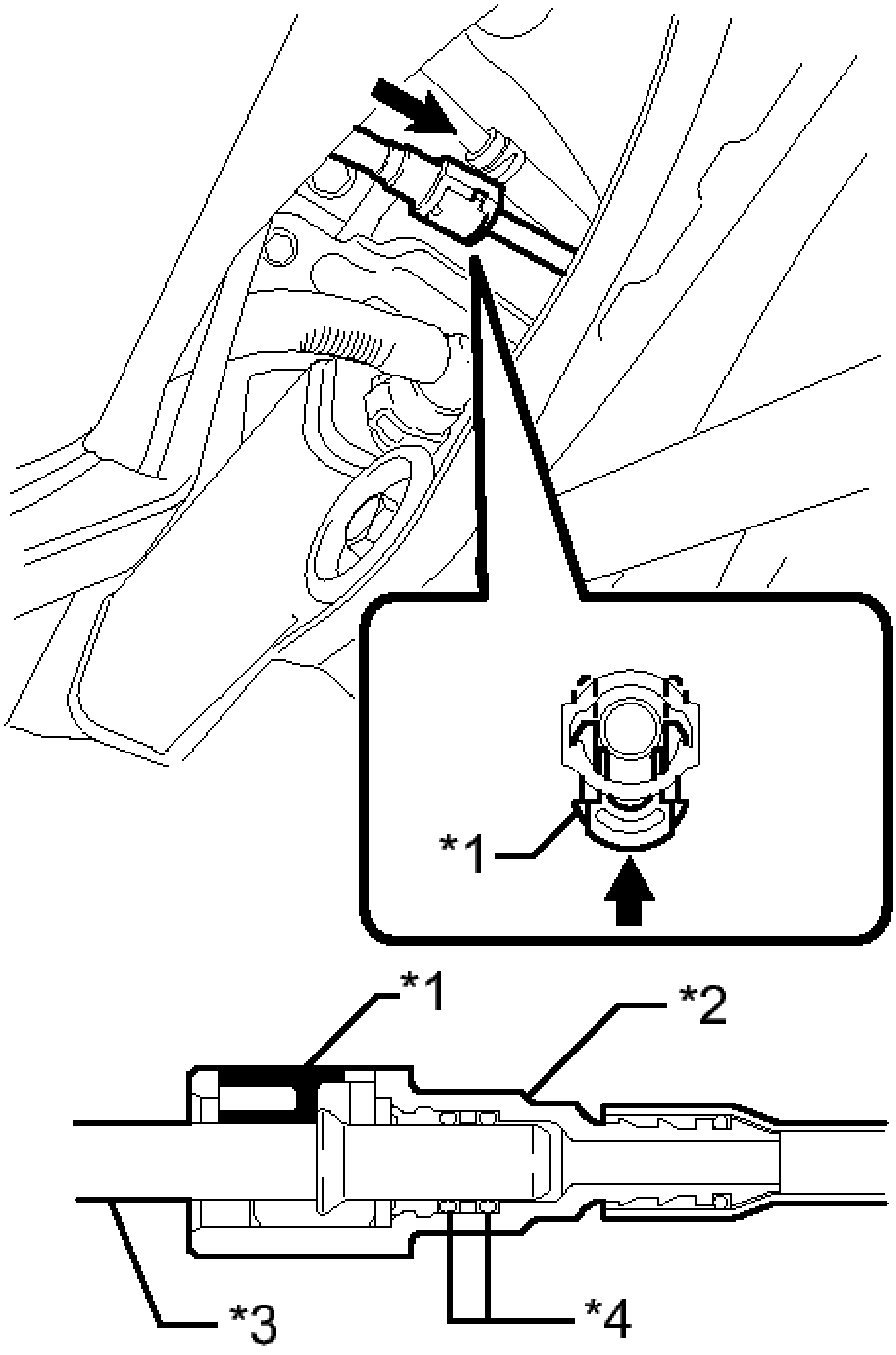

Fig. 79: Connecting Fuel Tank Breather Elbow Tube
Courtesy of TOYOTA MOTOR SALES, U.S.A., INC.

TEXT IN ILLUSTRATION

*1	Retainer

*2	Fuel Tube Connector
*3	Fuel Pipe
*4	O-ring
·	Push

NOTE:

- **Check that there are no scratches or foreign matter around the connected part of the fuel tank fuel tube connector and fuel pipe before starting this step.**
- **After connecting the fuel tube connector, check that the fuel tube connector is securely connected by pulling on the fuel tube connector.**

11. CONNECT FUEL TANK MAIN TUBE SUB-ASSEMBLY

a. Push in the fuel tank main tube connector to the pipe and push up the retainer so that the claws engage.

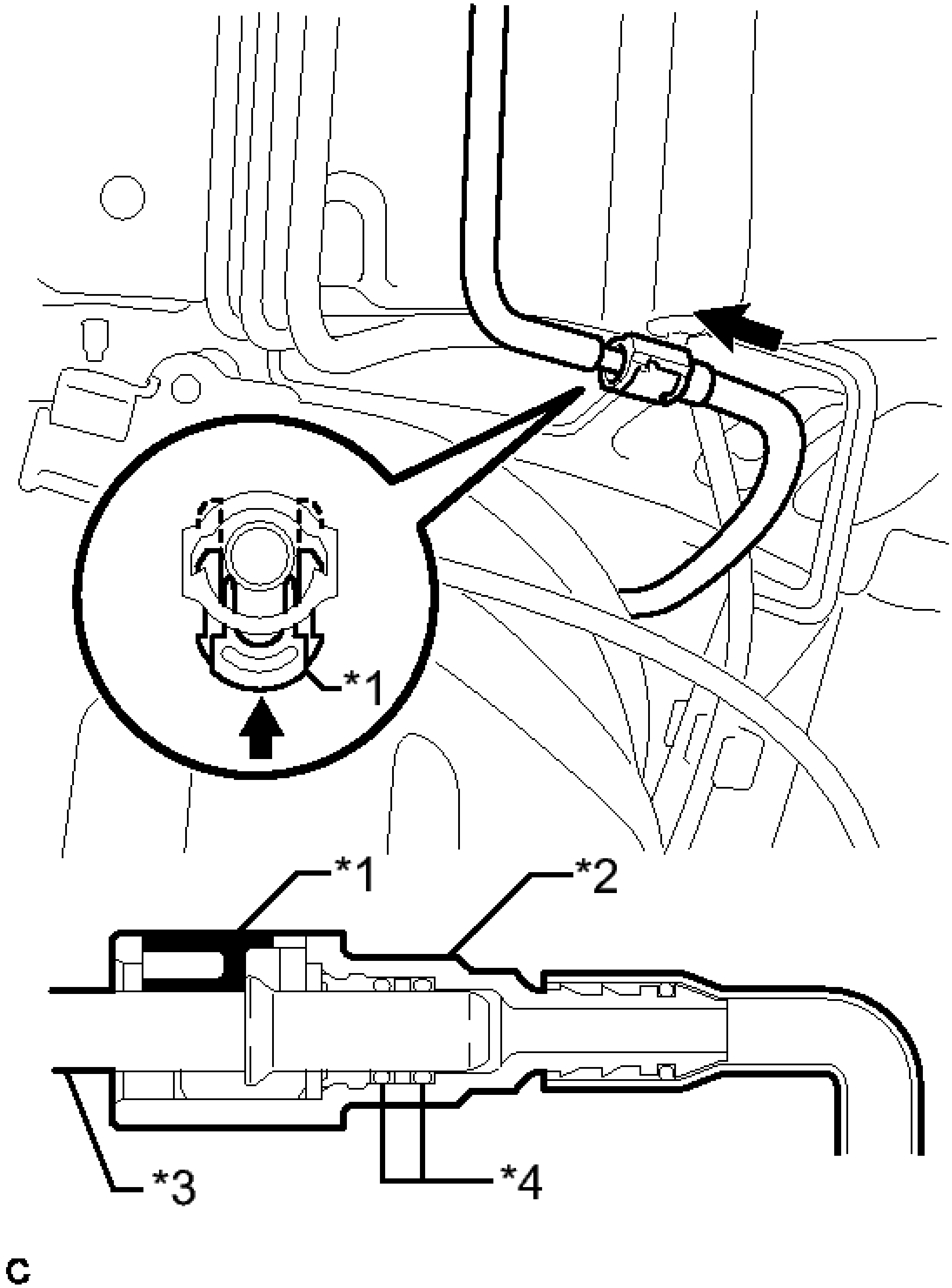

Fig. 80: Connecting Fuel Tank Main Tube
Courtesy of TOYOTA MOTOR SALES, U.S.A., INC.

TEXT IN ILLUSTRATION

*1	Retainer

*2	Fuel Tube Connector
*3	Fuel Pipe
*4	O-ring
·	Push

NOTE:

- **Check that there are no scratches or foreign matter around the connected part of the fuel tube connector and fuel pipe before starting this step.**
- **After connecting the fuel tube connector, check that the fuel tube connector is securely connected by pulling on the fuel tube connector.**

12. **INSTALL NO. 1 FUEL TANK PROTECTOR**
    a. Install the lower center fuel tank protector with the 3 clips.
13. **INSTALL REAR NO. 1 STABILIZER BAR BRACKET**
    a. Install the 2 rear No. 1 stabilizer bar brackets with the 4 bolts.

       Torque: 31 N*m (316 kgf*cm, 23 ft.*lbf)

14. **INSTALL NO. 3 PARKING BRAKE CABLE ASSEMBLY**
    a. Install the No. 3 parking brake cable assembly with the nut.

       Torque: 6.0 N*m (61 kgf*cm, 53 in.*lbf)

15. **INSTALL NO. 2 PARKING BRAKE CABLE ASSEMBLY**
    a. Install the No. 2 parking brake cable assembly with the nut.

       Torque: 6.0 N*m (61 kgf*cm, 53 in.*lbf)

16. **INSTALL NO. 1 FLOOR UNDER COVER** . Refer to **INSTALLATION - Step 11**
17. **INSTALL NO. 2 FLOOR UNDER COVER** . Refer to **INSTALLATION - Step 10**
18. **INSTALL CENTER EXHAUST PIPE ASSEMBLY**

    Refer to **INSTALLATION**

19. **INSTALL FUEL SUCTION TUBE WITH PUMP AND GAUGE ASSEMBLY**

    Refer to **INSTALLATION**

20. **ADD FUEL**
21. **INSPECT FOR EXHAUST GAS LEAK**

FUEL SENDER GAUGE ASSEMBLY

COMPONENTS

ILLUSTRATION

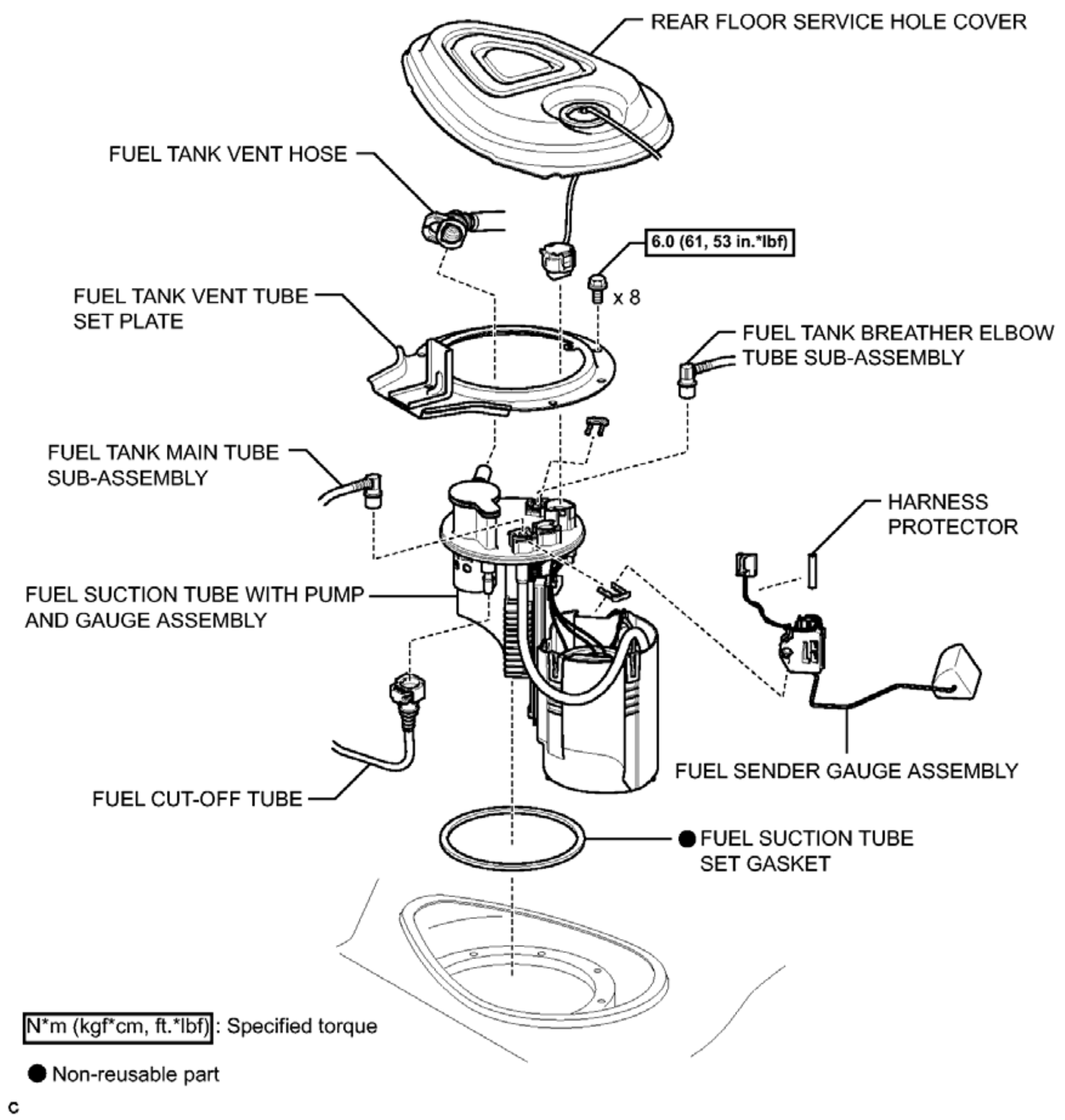
REAR FLOOR SERVICE HOLE COVER
FUEL TANK VENT HOSE
6.0 (61, 53 in.*lbf)
x 8
FUEL TANK VENT TUBE SET PLATE
FUEL TANK BREATHER ELBOW TUBE SUB-ASSEMBLY
FUEL TANK MAIN TUBE SUB-ASSEMBLY
HARNESS PROTECTOR
FUEL SUCTION TUBE WITH PUMP AND GAUGE ASSEMBLY
FUEL SENDER GAUGE ASSEMBLY
FUEL CUT-OFF TUBE
● FUEL SUCTION TUBE SET GASKET
N*m (kgf*cm, ft.*lbf) : Specified torque
● Non-reusable part
c

Fig. 81: Identifying Fuel Sender Gauge Assembly Replacement Components With Torque Specifications
Courtesy of TOYOTA MOTOR SALES, U.S.A., INC.

REMOVAL

REMOVAL

1. **REMOVE FUEL SUCTION TUBE WITH PUMP AND GAUGE ASSEMBLY**

   Refer to **REMOVAL**

2. **REMOVE FUEL SENDER GAUGE ASSEMBLY**
   1. Disconnect the 3 harness clamps.

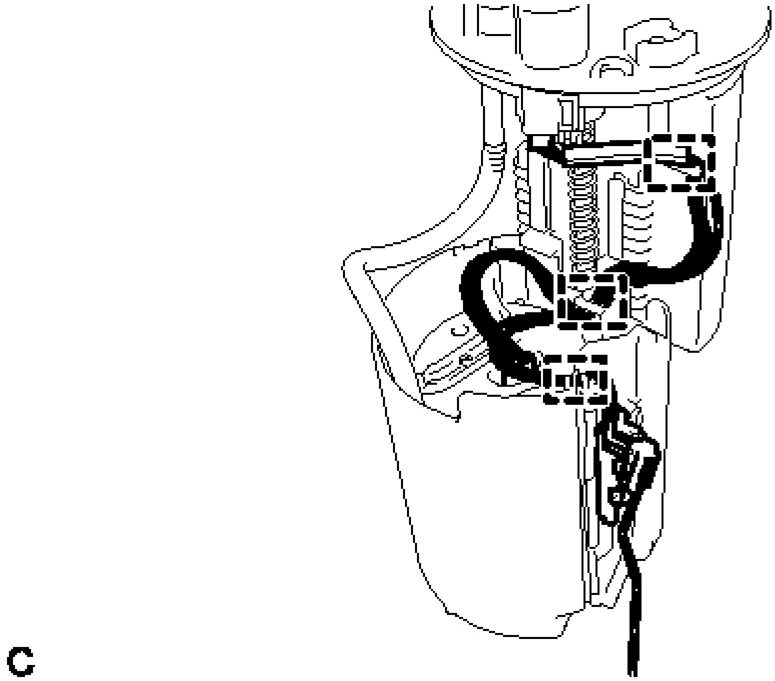

Fig. 82: Identifying Fuel Sender Gauge Harness Clamps
Courtesy of TOYOTA MOTOR SALES, U.S.A., INC.

NOTE: Do not damage the wire harness.

   2. Remove the harness protector from the wire harness.

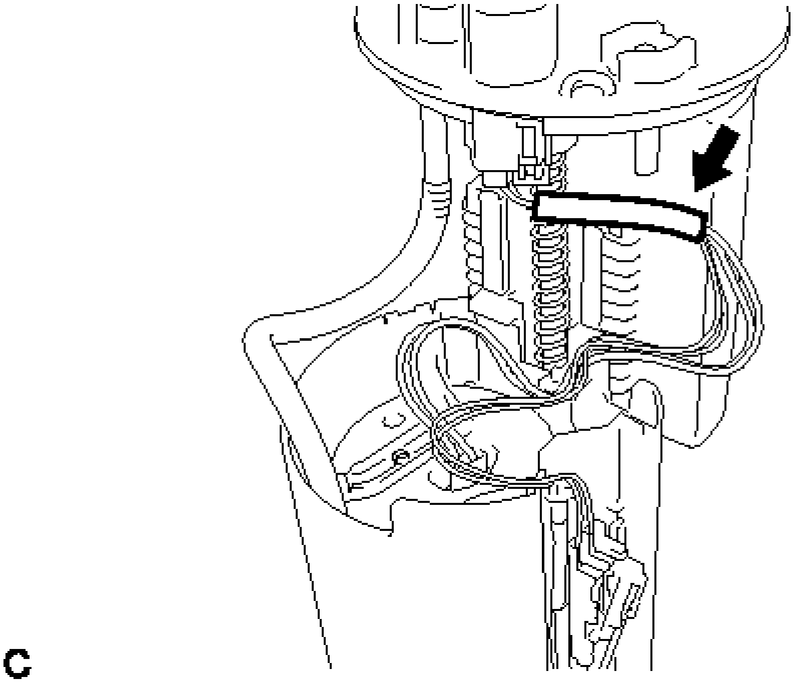

Fig. 83: Identifying Harness Protector
Courtesy of TOYOTA MOTOR SALES, U.S.A., INC.

NOTE: Do not damage the wire harness.

c. Disconnect the connector of the fuel sender gauge assembly.

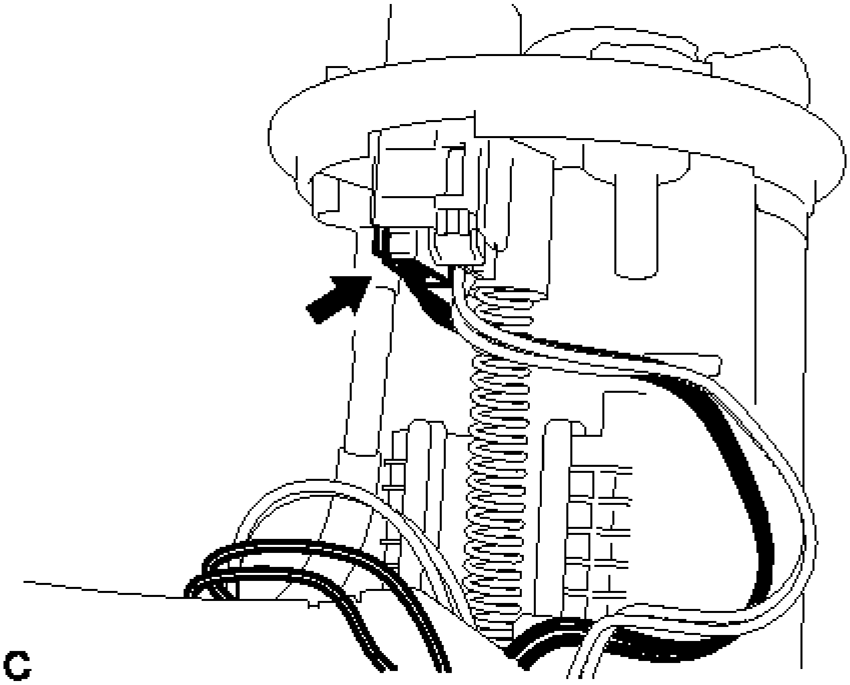

Fig. 84: Identifying Fuel Sender Gauge Connector
Courtesy of TOYOTA MOTOR SALES, U.S.A., INC.

d. Release the lock as shown in the illustration and slide the fuel sender gauge assembly to remove it.

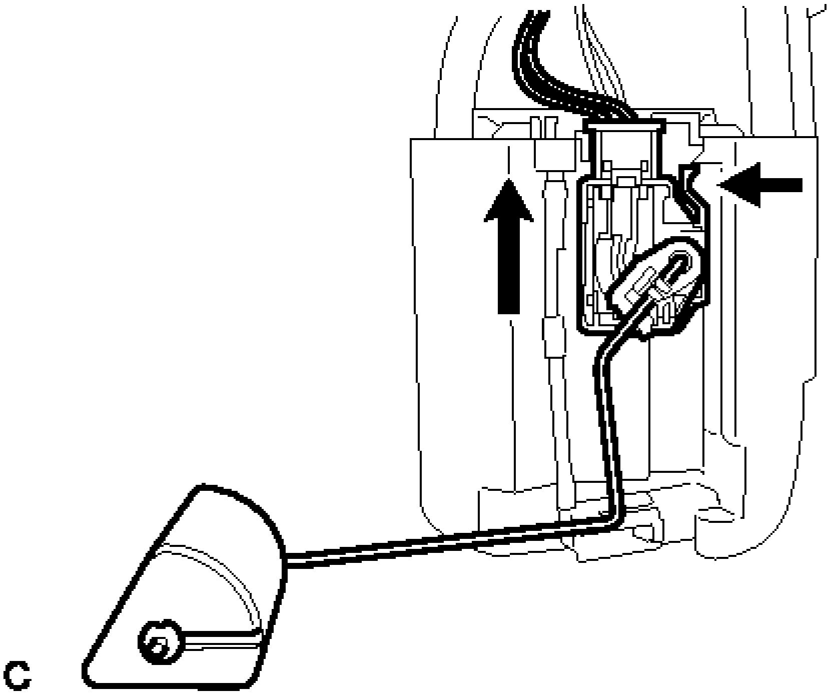

Fig. 85: Removing Fuel Sender Gauge Assembly
Courtesy of TOYOTA MOTOR SALES, U.S.A., INC.

INSPECTION

INSPECTION

1. **INSPECT FUEL SENDER GAUGE ASSEMBLY**
    a. Check that the float moves smoothly between F and E.

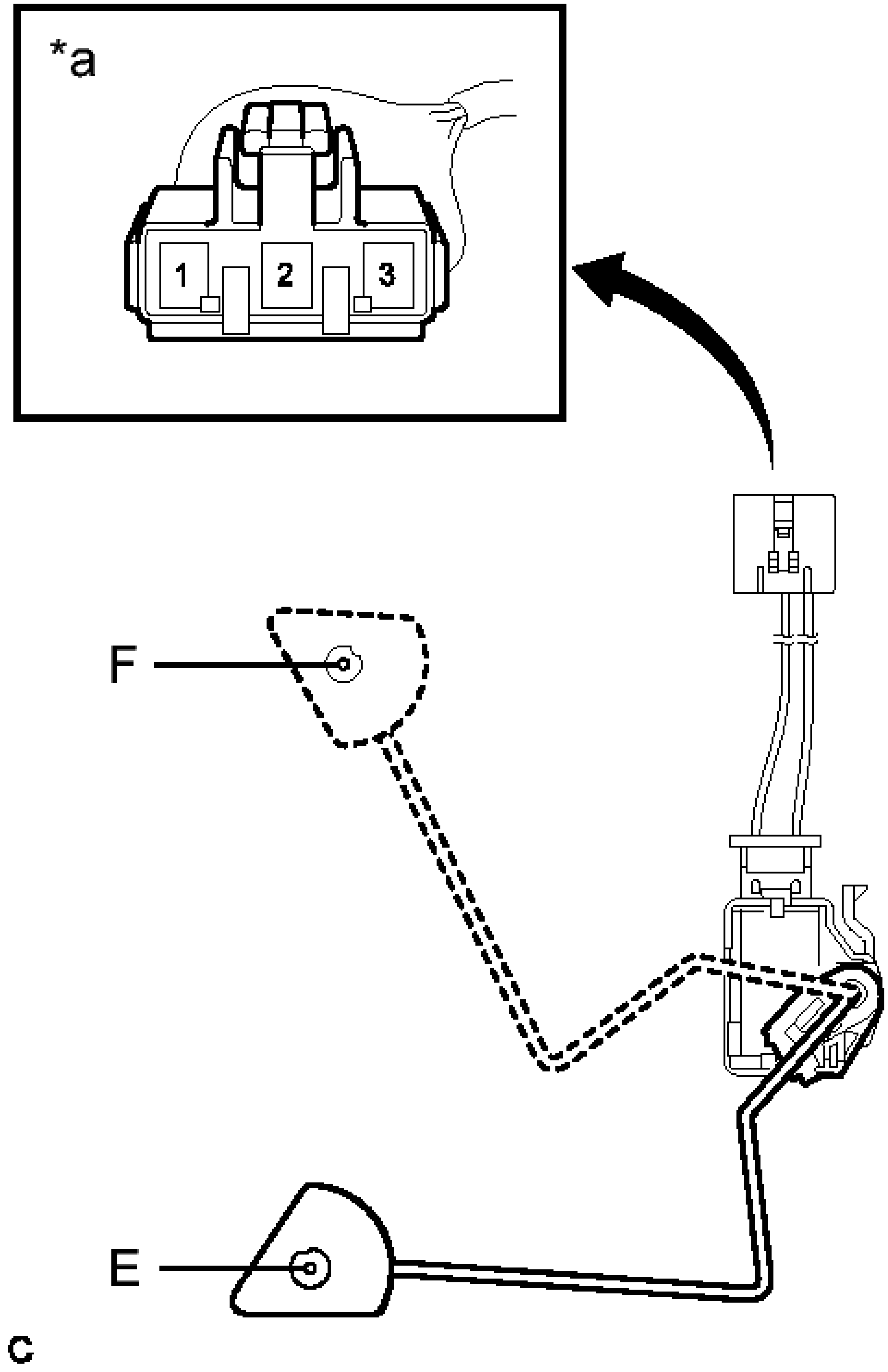

Fig. 86: Inspecting Fuel Sender Gauge Float
Courtesy of TOYOTA MOTOR SALES, U.S.A., INC.

TEXT IN ILLUSTRATION

	Front

*a	view of wire harness connector (to Fuel Sender Gauge Assembly)

b. Measure the resistance between terminals 1 and 2 of the connector according to the value(s) in the table below.

Standard Resistance

Float Level	Resistance (ohms)
F	13.5 to 16.5
Between E and F	13.5 to 414.5 (Gradually changes)
E	405.5 to 414.5

If the value is not as specified, replace the fuel sender gauge assembly.

INSTALLATION

INSTALLATION

1. **INSTALL FUEL SENDER GAUGE ASSEMBLY**
    a. Install the fuel sender gauge assembly by sliding it downward.

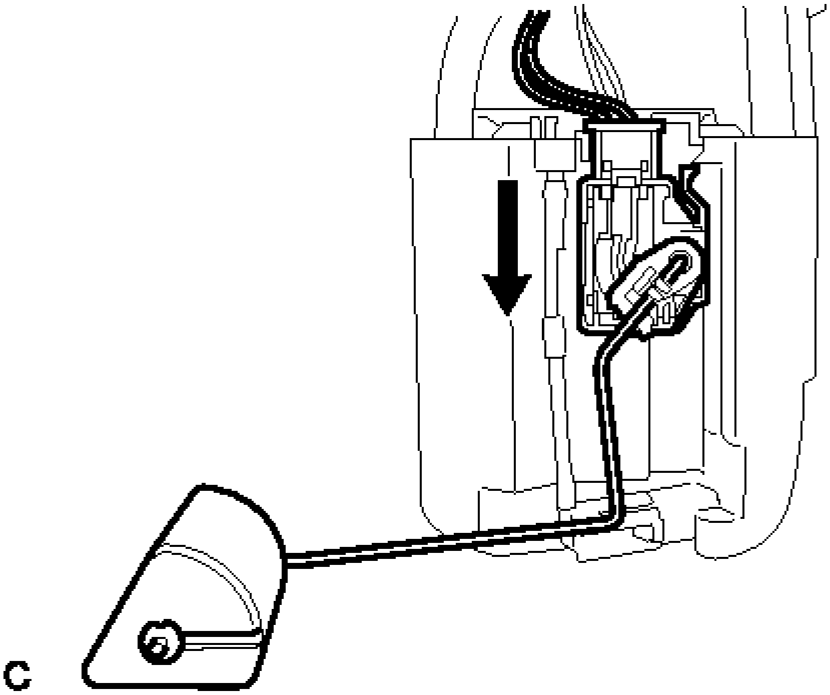

Fig. 87: Installing Fuel Sender Gauge Assembly
Courtesy of TOYOTA MOTOR SALES, U.S.A., INC.

b. Connect the connector of the fuel sender gauge assembly.
c. Install the harness protector.

NOTE: Do not damage the wire harness.

d. Connect the 3 harness clamps.

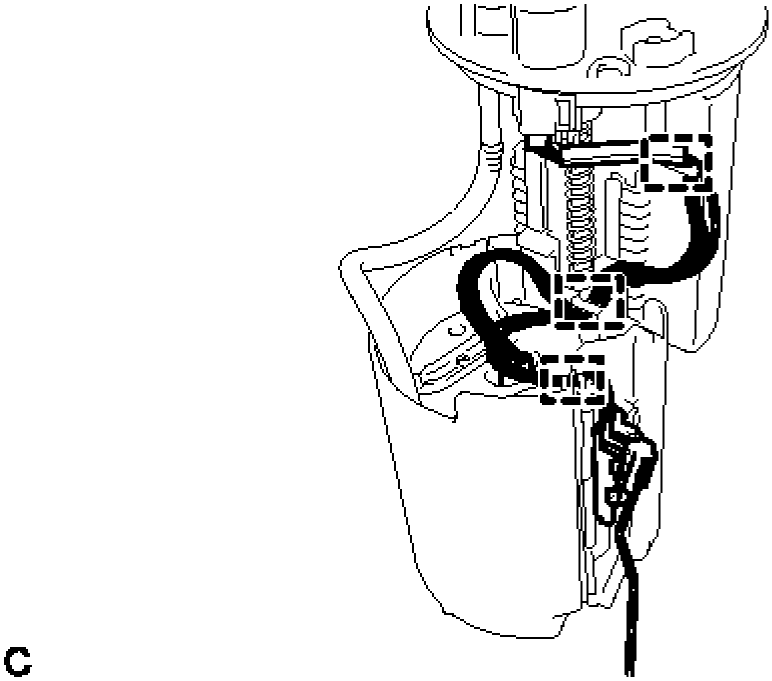

Fig. 88: Identifying Fuel Sender Gauge Harness Clamps
Courtesy of TOYOTA MOTOR SALES, U.S.A., INC.

NOTE: **Do not damage the wire harness.**

2. **INSTALL FUEL SUCTION TUBE WITH PUMP AND GAUGE ASSEMBLY**

   Refer to **INSTALLATION**

2012-2017 ACCESSORIES & EQUIPMENT

Garage Door Opener (Service Information) - Camry (Hybrid)

GARAGE DOOR OPENER SWITCH

COMPONENTS

ILLUSTRATION

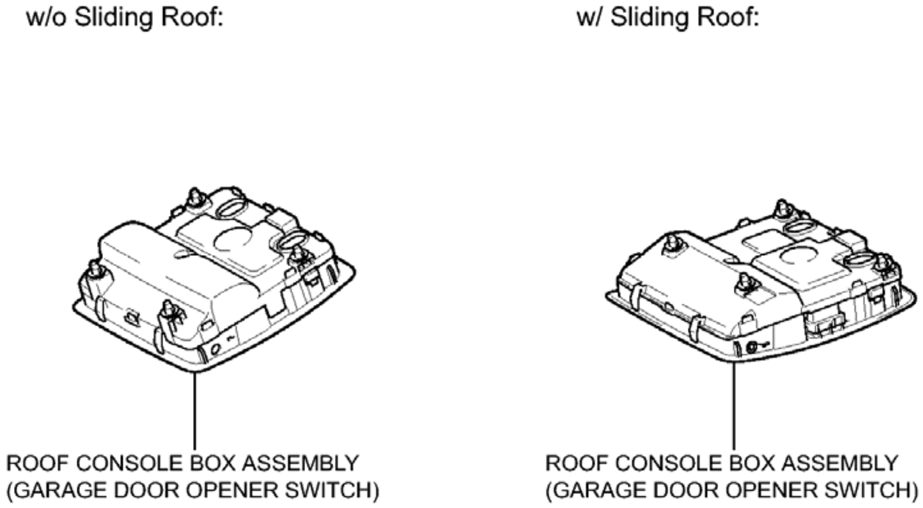
w/o Sliding Roof:
w/ Sliding Roof:
ROOF CONSOLE BOX ASSEMBLY
(GARAGE DOOR OPENER SWITCH)
ROOF CONSOLE BOX ASSEMBLY
(GARAGE DOOR OPENER SWITCH)

P

Fig. 1: Identifying Garage Door Opener Switch Components
Courtesy of TOYOTA MOTOR SALES, U.S.A., INC.

REMOVAL

REMOVAL

1. **REMOVE ROOF CONSOLE BOX ASSEMBLY (GARAGE DOOR OPENER SWITCH) (w/o Sliding Roof)** . Refer to **REMOVAL - Step 1**
2. **REMOVE ROOF CONSOLE BOX ASSEMBLY (GARAGE DOOR OPENER SWITCH) (w/ Sliding Roof)** . Refer to **REMOVAL - Step 2**

INSTALLATION

INSTALLATION

1. **INSTALL ROOF CONSOLE BOX ASSEMBLY (GARAGE DOOR OPENER SWITCH) (w/o Sliding Roof)** . Refer to **INSTALLATION - Step 2**
2. **INSTALL ROOF CONSOLE BOX ASSEMBLY (GARAGE DOOR OPENER SWITCH) (w/ Sliding Roof)** . Refer to **INSTALLATION - Step 3**

2012-2017 ACCESSORIES & EQUIPMENT

Garage Door Opener (Service Information) - Camry (Except Hybrid)

GARAGE DOOR OPENER SWITCH

COMPONENTS

ILLUSTRATION

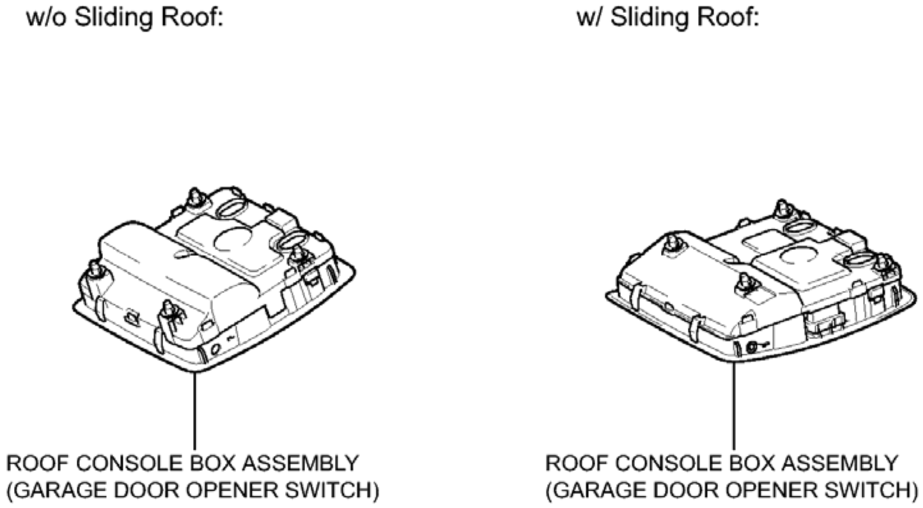
w/o Sliding Roof:
w/ Sliding Roof:
ROOF CONSOLE BOX ASSEMBLY (GARAGE DOOR OPENER SWITCH)
ROOF CONSOLE BOX ASSEMBLY (GARAGE DOOR OPENER SWITCH)

P

Fig. 1: Identifying Garage Door Opener Switch Components
Courtesy of TOYOTA MOTOR SALES, U.S.A., INC.

REMOVAL

REMOVAL

1. **REMOVE ROOF CONSOLE BOX ASSEMBLY (GARAGE DOOR OPENER SWITCH) (w/o Sliding Roof)** . Refer to **REMOVAL - Step 1**
2. **REMOVE ROOF CONSOLE BOX ASSEMBLY (GARAGE DOOR OPENER SWITCH) (w/ Sliding Roof)** . Refer to **REMOVAL - Step 2**

INSTALLATION

INSTALLATION

1. **INSTALL ROOF CONSOLE BOX ASSEMBLY (GARAGE DOOR OPENER SWITCH) (w/o Sliding Roof)** . Refer to **INSTALLATION - Step 2**
2. **INSTALL ROOF CONSOLE BOX ASSEMBLY (GARAGE DOOR OPENER SWITCH) (w/ Sliding Roof)** . Refer to **INSTALLATION - Step 3**

HORN

COMPONENTS

ILLUSTRATION

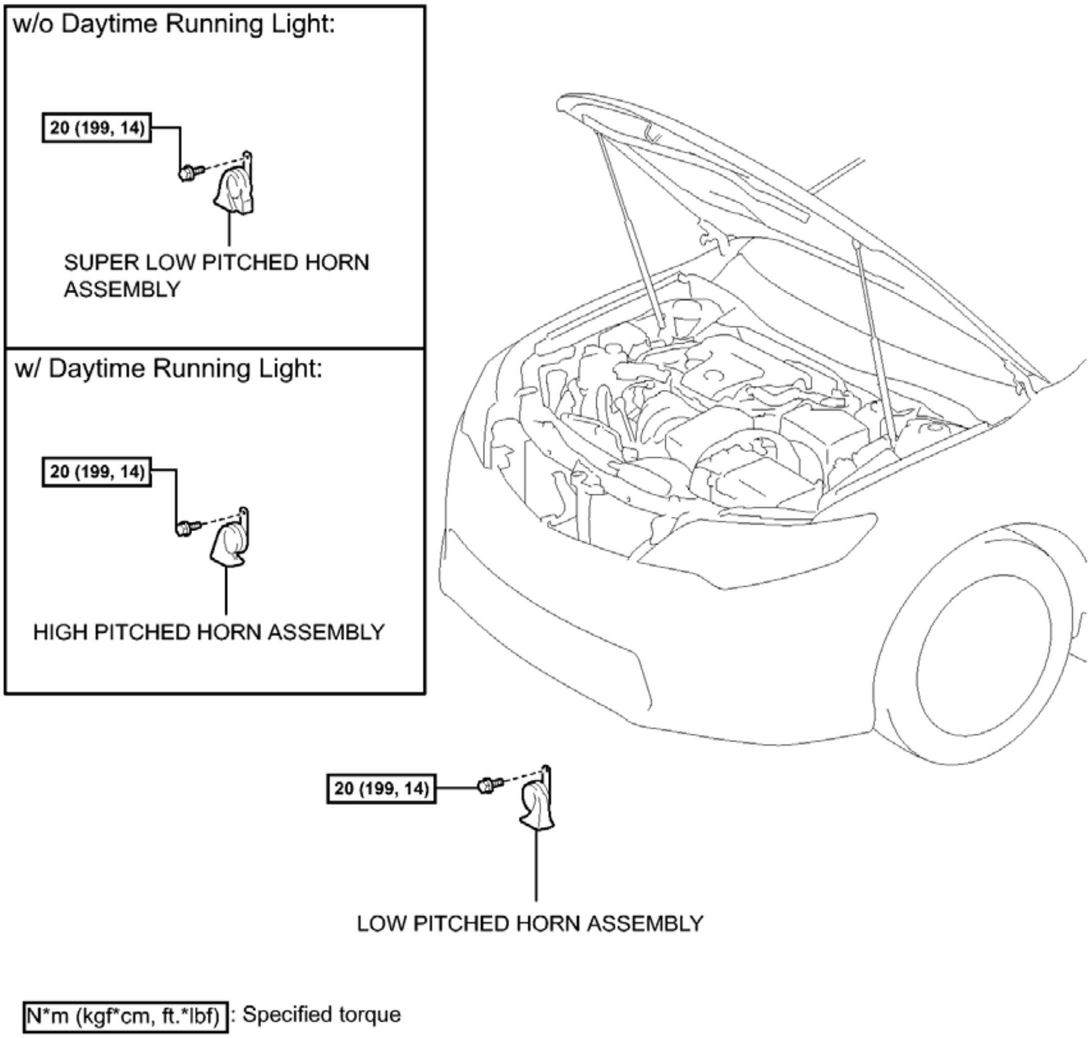
w/o Daytime Running Light:
20 (199, 14)
SUPER LOW PITCHED HORN ASSEMBLY
w/ Daytime Running Light:
20 (199, 14)
HIGH PITCHED HORN ASSEMBLY
20 (199, 14)
LOW PITCHED HORN ASSEMBLY
N*m (kgf*cm, ft.*lbf) : Specified torque

P

Fig. 1: Identifying Horn Replacement Components With Torque Specifications
Courtesy of TOYOTA MOTOR SALES, U.S.A., INC.

REMOVAL

REMOVAL

1. **REMOVE RADIATOR GRILLE SUB-ASSEMBLY**

   Refer to **REMOVAL**

2. **REMOVE LOW PITCHED HORN ASSEMBLY**
   1. Disconnect the connector.

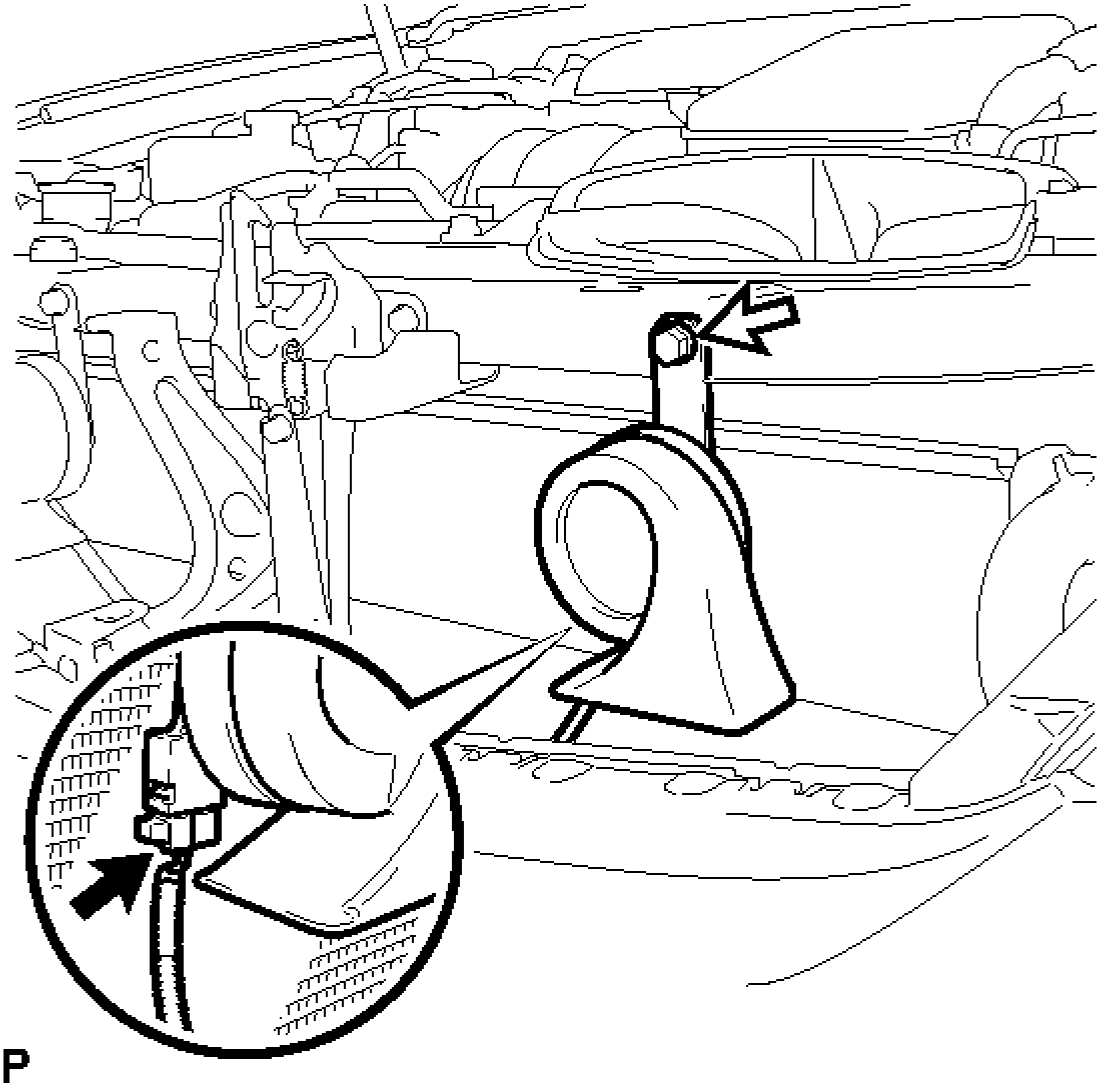

Fig. 2: Identifying Low Pitched Horn Bolt And Connector
Courtesy of TOYOTA MOTOR SALES, U.S.A., INC.

   2. Remove the bolt and low pitched horn assembly.

3. **REMOVE SUPER LOW PITCHED HORN ASSEMBLY (w/o Daytime Running Light)**
   1. Disconnect the connector.

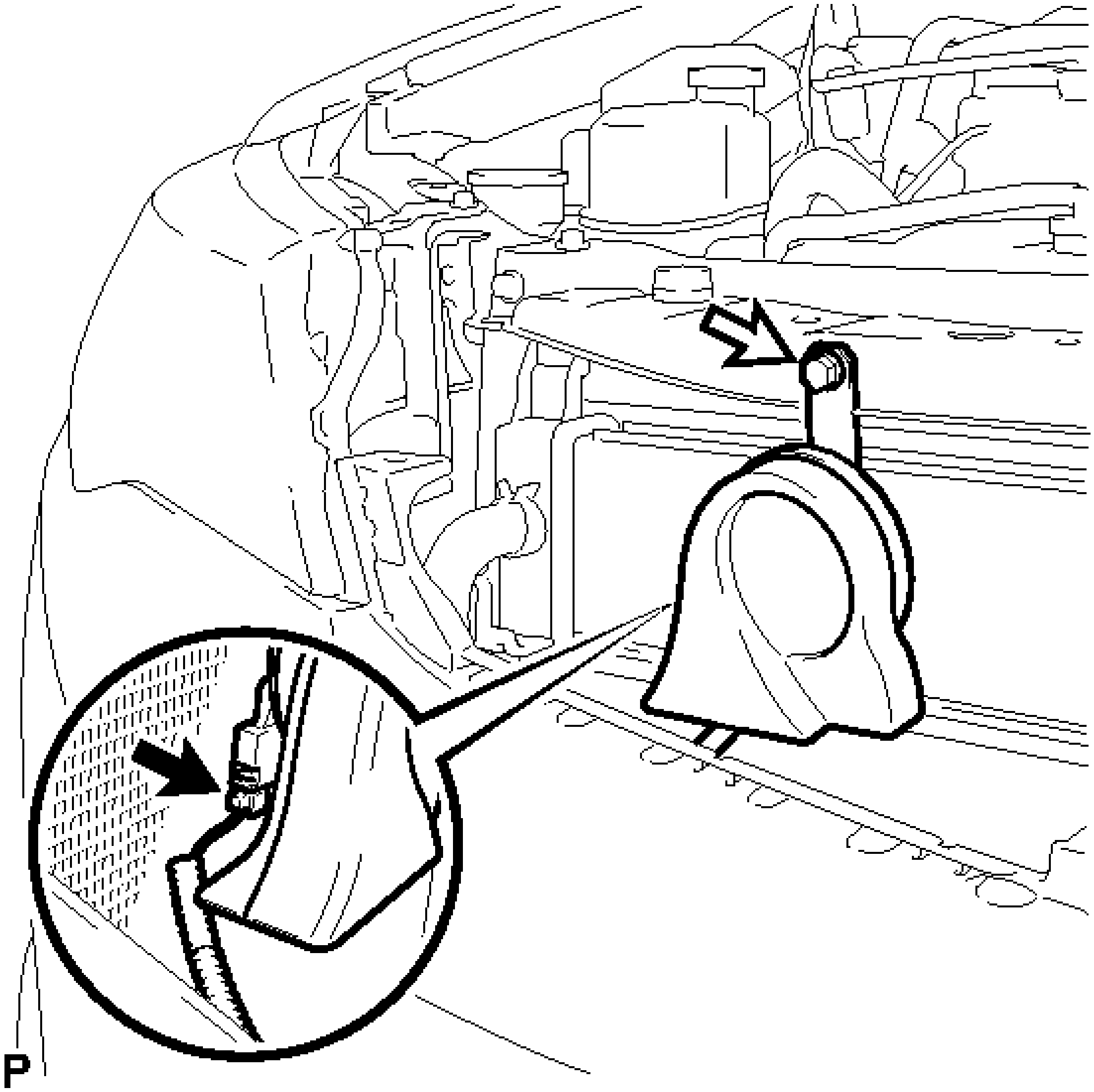

Fig. 3: Identifying Super Low Pitched Horn Bolt And Connector
Courtesy of TOYOTA MOTOR SALES, U.S.A., INC.

   b. Remove the bolt and super low pitched horn assembly.

4. **REMOVE HIGH PITCHED HORN ASSEMBLY (w/ Daytime Running Light)**

   a. Disconnect the connector.

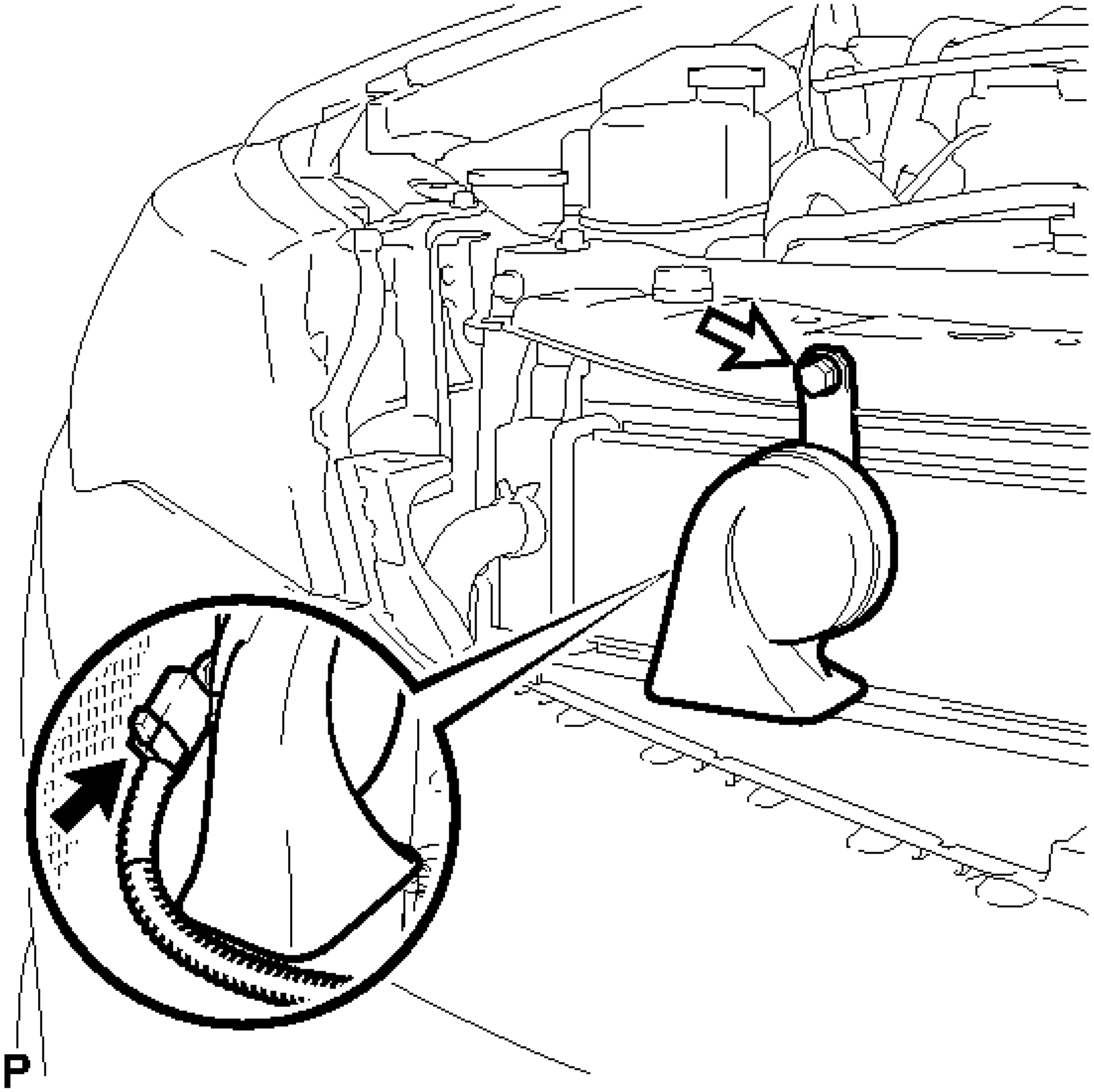

Fig. 4: Identifying High Low Pitched Horn Bolt And Connector
Courtesy of TOYOTA MOTOR SALES, U.S.A., INC.

b. Remove the bolt and high pitched horn assembly.

INSPECTION

INSPECTION

1. **INSPECT HIGH PITCHED HORN ASSEMBLY (w/ Daytime Running Light)**
    a. Apply an auxiliary battery voltage and check the operation of the horn according to the table below.

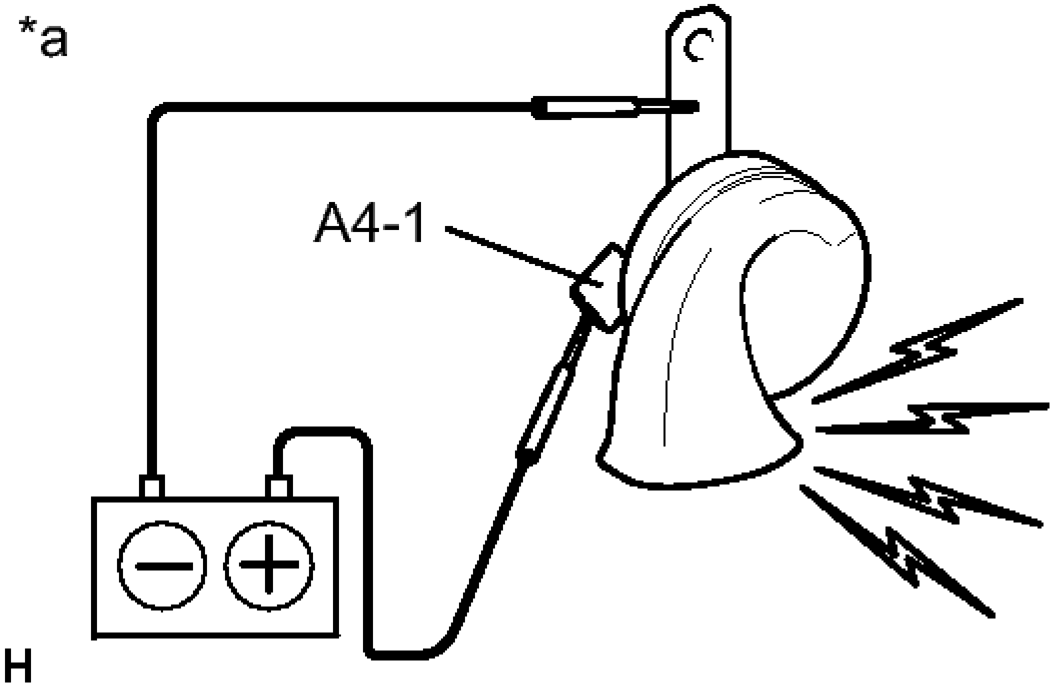

Fig. 5: Inspecting High Pitched Horn
Courtesy of TOYOTA MOTOR SALES, U.S.A., INC.

OK

Measurement Condition	Specified Condition
Auxiliary battery positive (+) --> Terminal A4-1 Auxiliary battery negative (-) --> Body ground	Horn sounds

TEXT IN ILLUSTRATION

*a	Component without harness connected (High Pitched Horn Assembly)

If the result is not as specified, replace the high pitched horn assembly.

2. **INSPECT LOW PITCHED HORN ASSEMBLY (w/ Daytime Running Light)**
    a. Apply an auxiliary battery voltage and check the operation of the horn according to the table below.

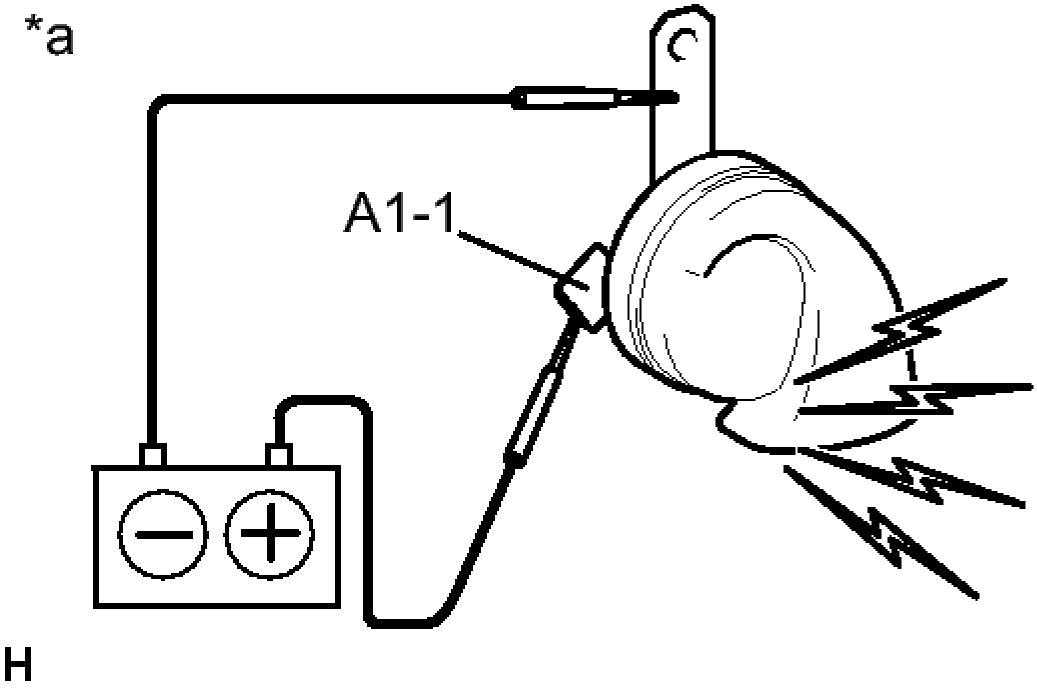

Fig. 6: Inspecting Low Pitched Horn
Courtesy of TOYOTA MOTOR SALES, U.S.A., INC.

OK

Measurement Condition	**Specified Condition**
Auxiliary battery positive (+) --> Terminal A1-1 Auxiliary battery negative (-) --> Body ground	Horn sounds

TEXT IN ILLUSTRATION

	Component without

*a	harness connected (Low Pitched Horn Assembly)

If the result is not as specified, replace the low pitched horn assembly.

3. **INSPECT LOW PITCHED HORN ASSEMBLY (w/o Daytime Running Light)**
    a. Apply an auxiliary voltage and check the operation of the horn according to the table below.

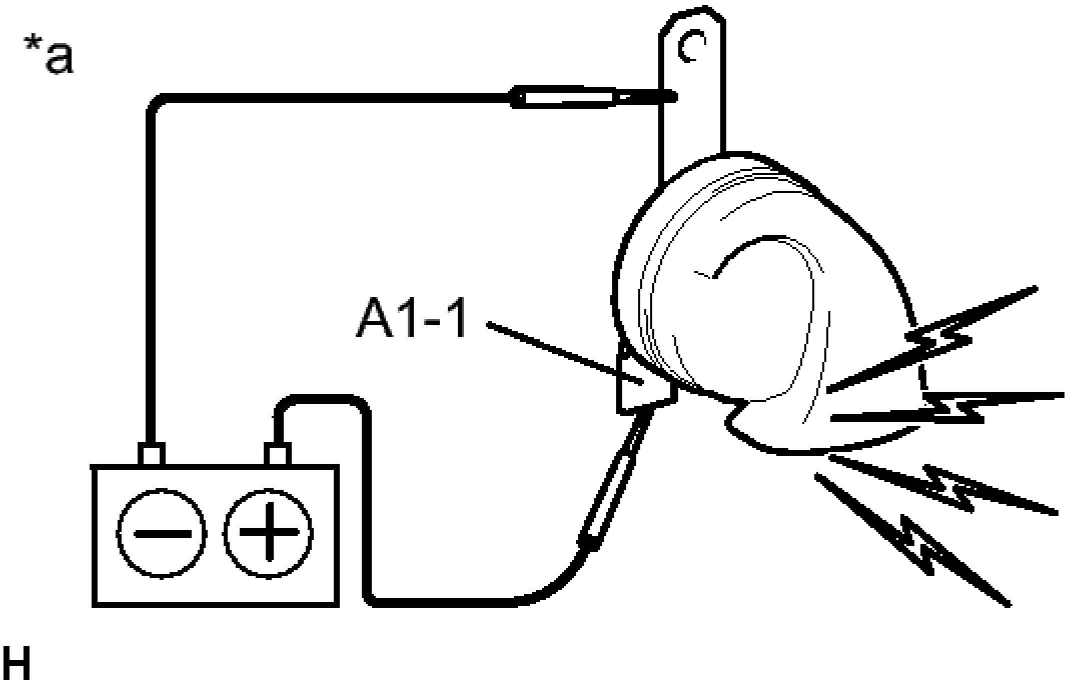

Fig. 7: Inspecting Low Pitched Horn
Courtesy of TOYOTA MOTOR SALES, U.S.A., INC.

OK

Measurement Condition	Specified Condition
Auxiliary battery positive (+) --> Terminal A1-1 Auxiliary battery	Horn sounds

negative (-) --> Body ground	

TEXT IN ILLUSTRATION

*a	Component without harness connected (Low Pitched Horn Assembly)

If the result is not as specified, replace the low pitched horn assembly.

4. **INSPECT SUPER LOW PITCHED HORN ASSEMBLY (w/o Daytime Running Light)**
   a. Apply an auxiliary voltage and check the operation of the horn according to the table below.

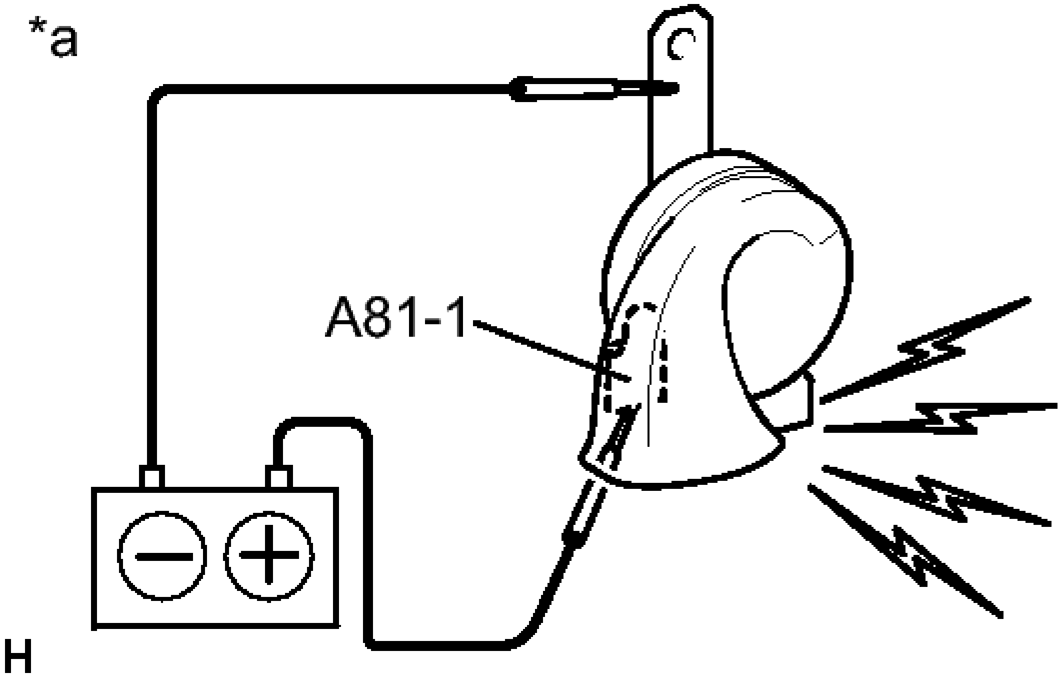

Fig. 8: Inspecting Super Low Pitched Horn
Courtesy of TOYOTA MOTOR SALES, U.S.A., INC.

OK

Measurement Condition	Specified Condition

Auxiliary battery positive (+) --> Terminal A81-1 Auxiliary battery negative (-) --> Body ground	Horn sounds

TEXT IN ILLUSTRATION

*a	Component without harness connected (Super Low Pitched Horn Assembly)

If the result is not as specified, replace the super low pitched horn assembly.

INSTALLATION

INSTALLATION

1. **INSTALL LOW PITCHED HORN ASSEMBLY**
    a. Install the low pitched horn assembly with the bolt.

       Torque: 20 N*m (199 kgf*cm, 14 ft.*lbf)

    b. Connect the connector.
2. **INSTALL SUPER LOW PITCHED HORN ASSEMBLY (w/o Daytime Running Light)**
    a. Install the super low pitched horn assembly with the bolt.

       Torque: 20 N*m (199 kgf*cm, 14 ft.*lbf)

    b. Connect the connector.
3. **INSTALL HIGH PITCHED HORN ASSEMBLY (w/ Daytime Running Light)**
    a. Install the high pitched horn assembly with the bolt.

       Torque: 20 N*m (199 kgf*cm, 14 ft.*lbf)

    b. Connect the connector.

4. **INSTALL RADIATOR GRILLE SUB-ASSEMBLY**

   Refer to **INSTALLATION**

RELAY

ON-VEHICLE INSPECTION

ON-VEHICLE INSPECTION

1. **INSPECT HORN RELAY**
   a. Remove the horn relay.

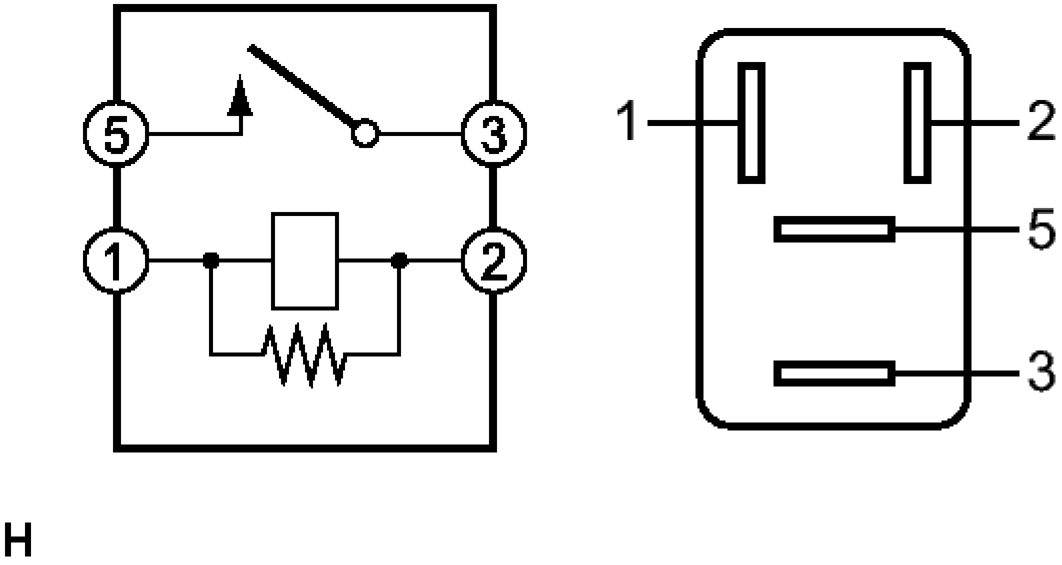

Fig. 9: Inspecting Horn Relay
Courtesy of TOYOTA MOTOR SALES, U.S.A., INC.

   b. Measure the resistance according to the value(s) in the table below.

   Standard Resistance

Tester Connection	Condition	Specified Condition
3 - 5	Voltage is not applied between	10 kohms or higher

	terminals 1 and 2	
3 - 5	Voltage is applied between terminals 1 and 2	Below 1 ohms

If the result is not as specified, replace the horn relay.

2012-2017 ACCESSORIES & EQUIPMENT

Horn (Service Information) - Camry (Except Hybrid)

HORN

COMPONENTS

ILLUSTRATION

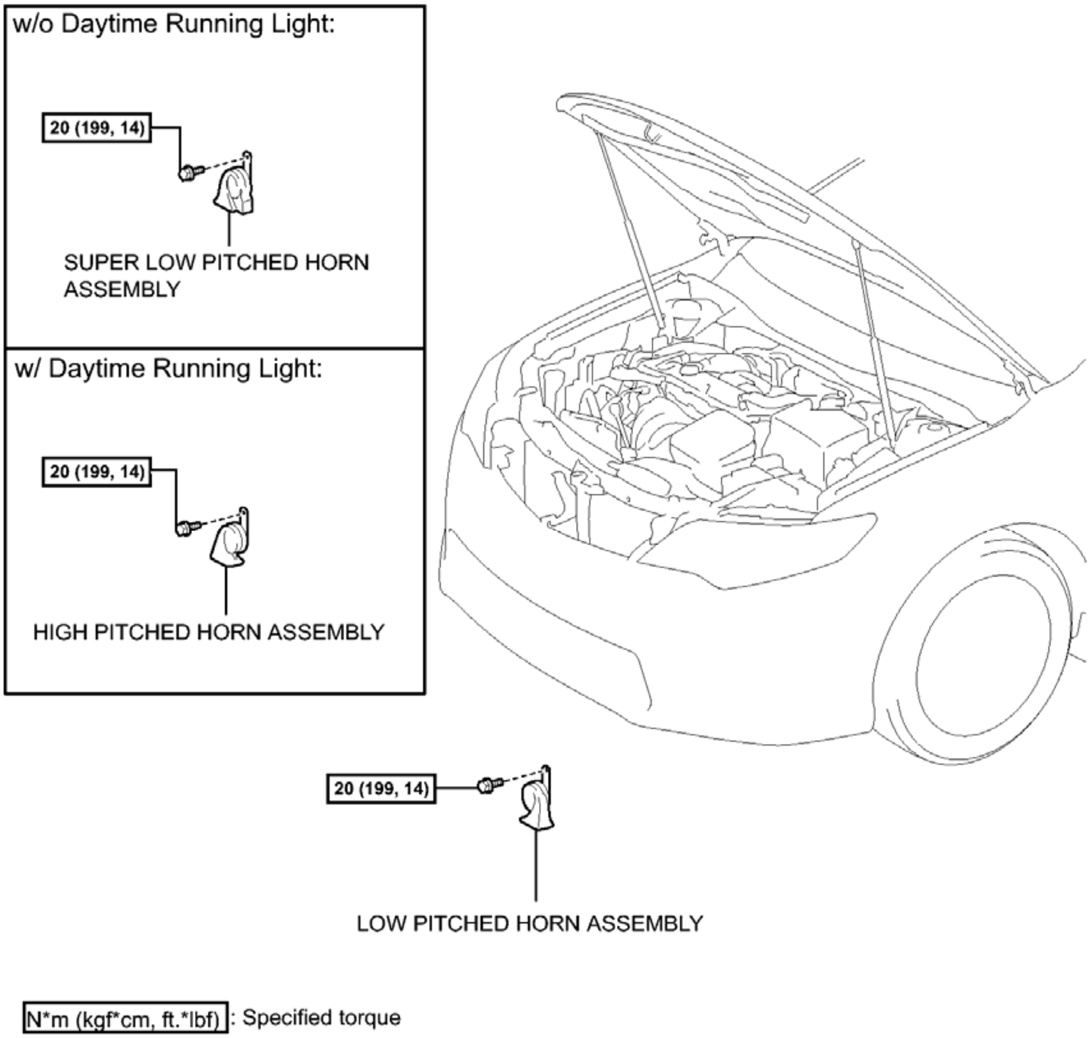
w/o Daytime Running Light:
20 (199, 14)
SUPER LOW PITCHED HORN ASSEMBLY
w/ Daytime Running Light:
20 (199, 14)
HIGH PITCHED HORN ASSEMBLY
20 (199, 14)
LOW PITCHED HORN ASSEMBLY
N*m (kgf*cm, ft.*lbf) : Specified torque

P

Fig. 1: Identifying Horn Replacement Components With Torque Specifications
Courtesy of TOYOTA MOTOR SALES, U.S.A., INC.

REMOVAL

REMOVAL

1. **REMOVE RADIATOR GRILLE SUB-ASSEMBLY**

   Refer to **REMOVAL**

2. **REMOVE LOW PITCHED HORN ASSEMBLY**
   1. Disconnect the connector.

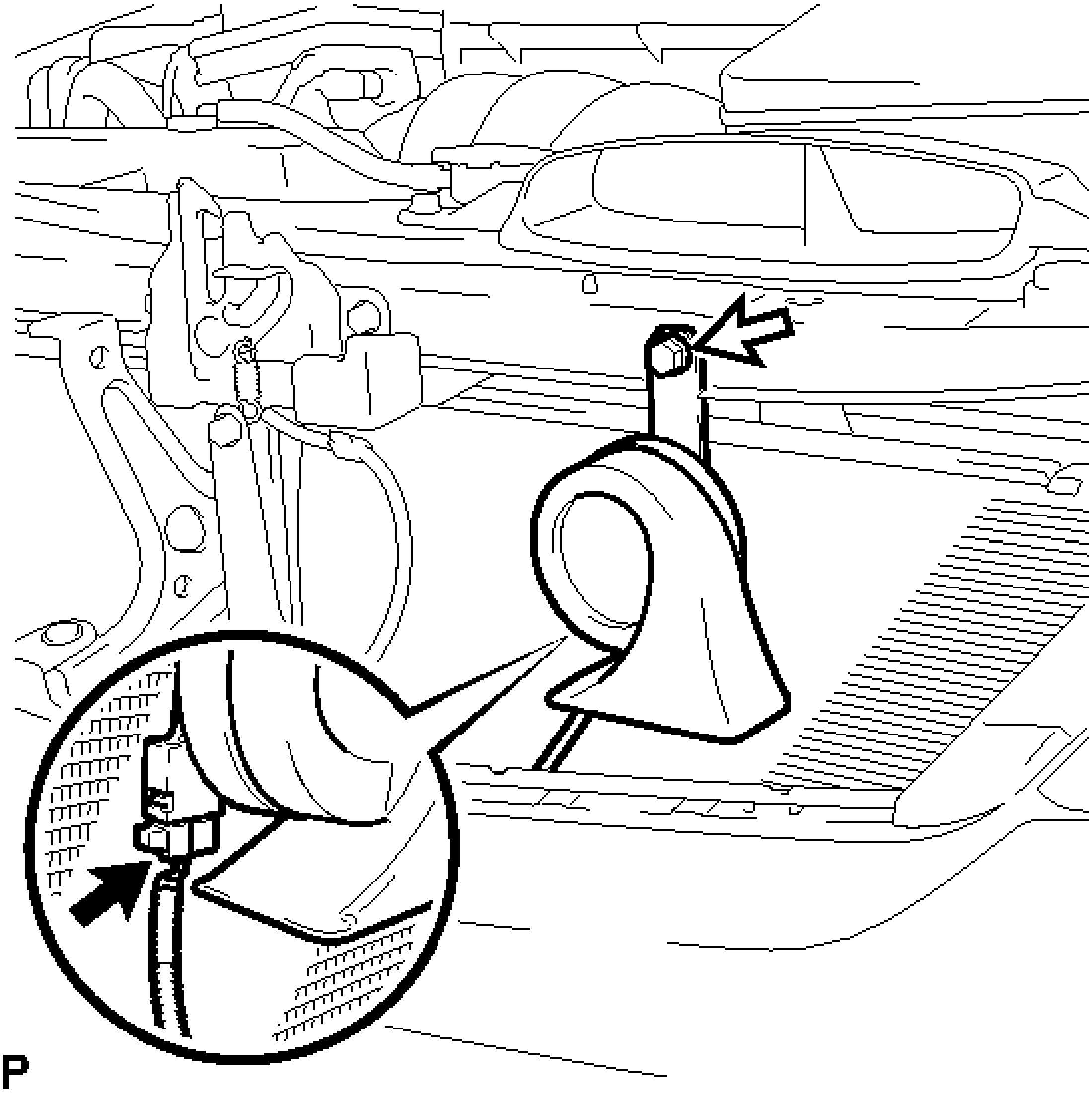

Fig. 2: Identifying Lower Pitched Horn Assembly Connector
Courtesy of TOYOTA MOTOR SALES, U.S.A., INC.

   2. Remove the bolt and low pitched horn assembly.

3. **REMOVE SUPER LOW PITCHED HORN ASSEMBLY (w/o Daytime Running Light)**
   1. Disconnect the connector.

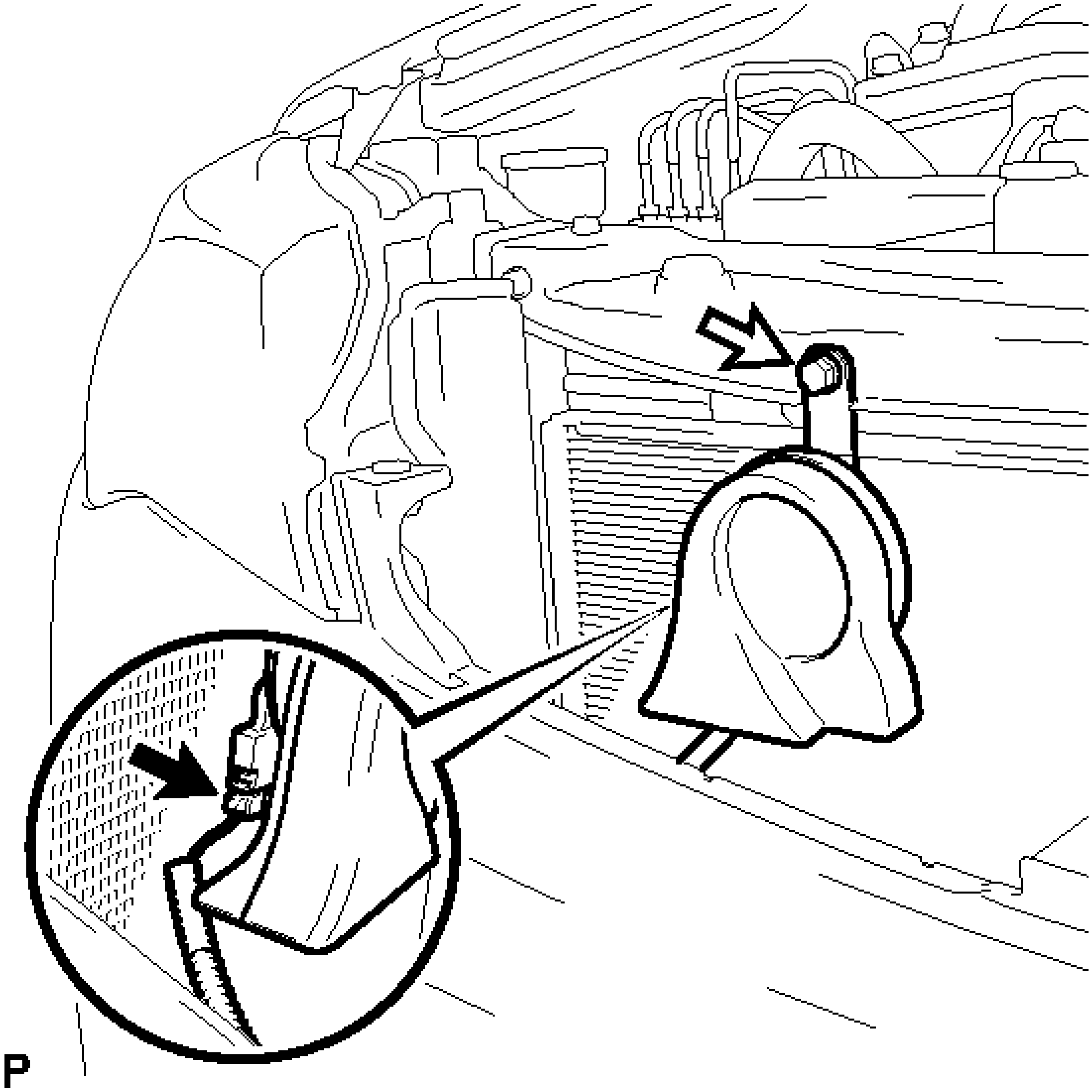

Fig. 3: Identifying Super Low Pitched Horn Assembly Connector (W/O Daytime Running Light)
Courtesy of TOYOTA MOTOR SALES, U.S.A., INC.

b. Remove the bolt and super low pitched horn assembly.

4. **REMOVE HIGH PITCHED HORN ASSEMBLY (w/ Daytime Running Light)**
    a. Disconnect the connector.

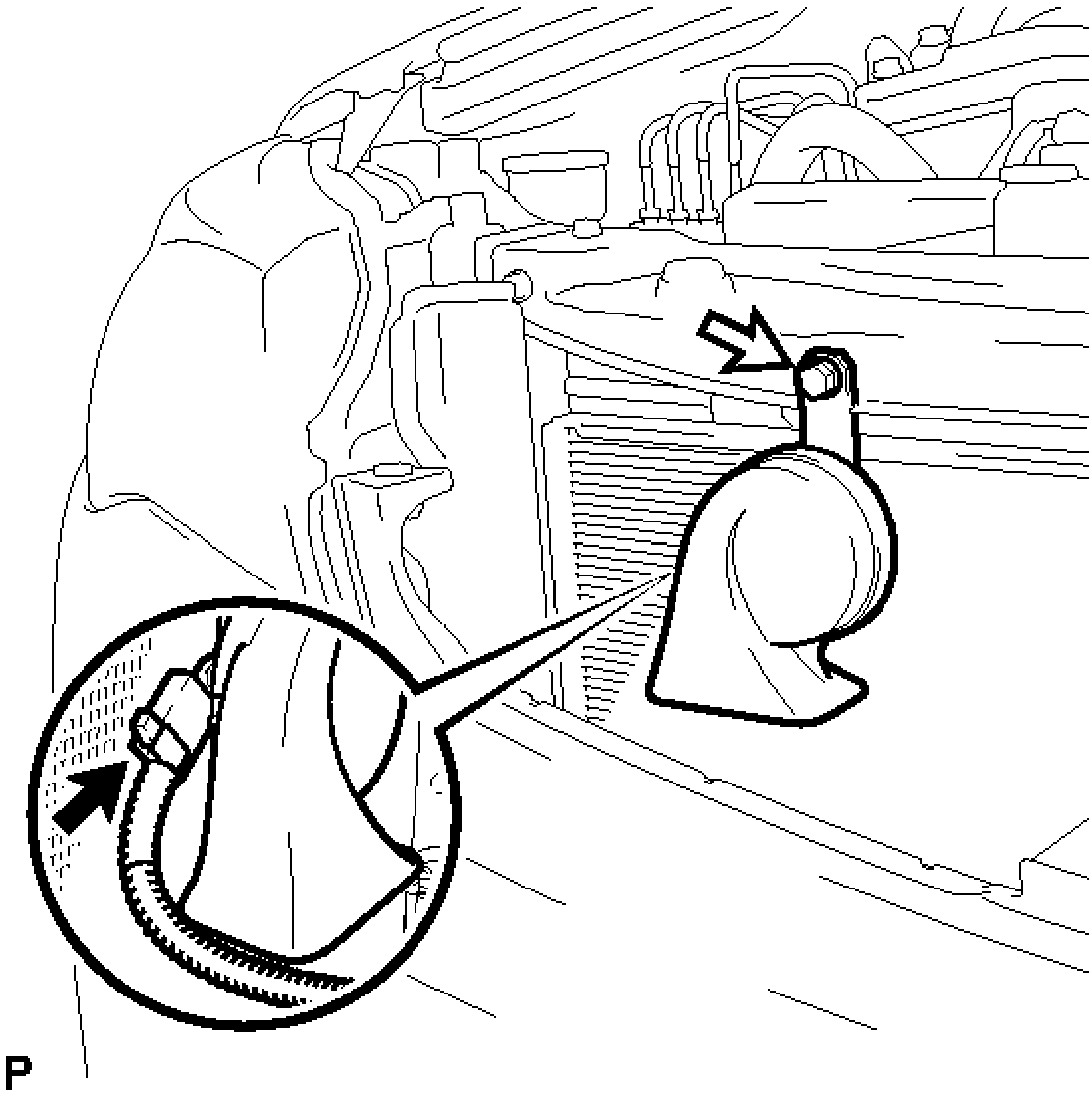

Fig. 4: Identifying High Pitched Horn Assembly Connector (W/Daytime Running Light)
Courtesy of TOYOTA MOTOR SALES, U.S.A., INC.

b. Remove the bolt and high pitched horn assembly.

INSPECTION

INSPECTION

1. **INSPECT HIGH PITCHED HORN ASSEMBLY (w/ Daytime Running Light)**
    a. Apply battery voltage and check the operation of the horn according to the table below.

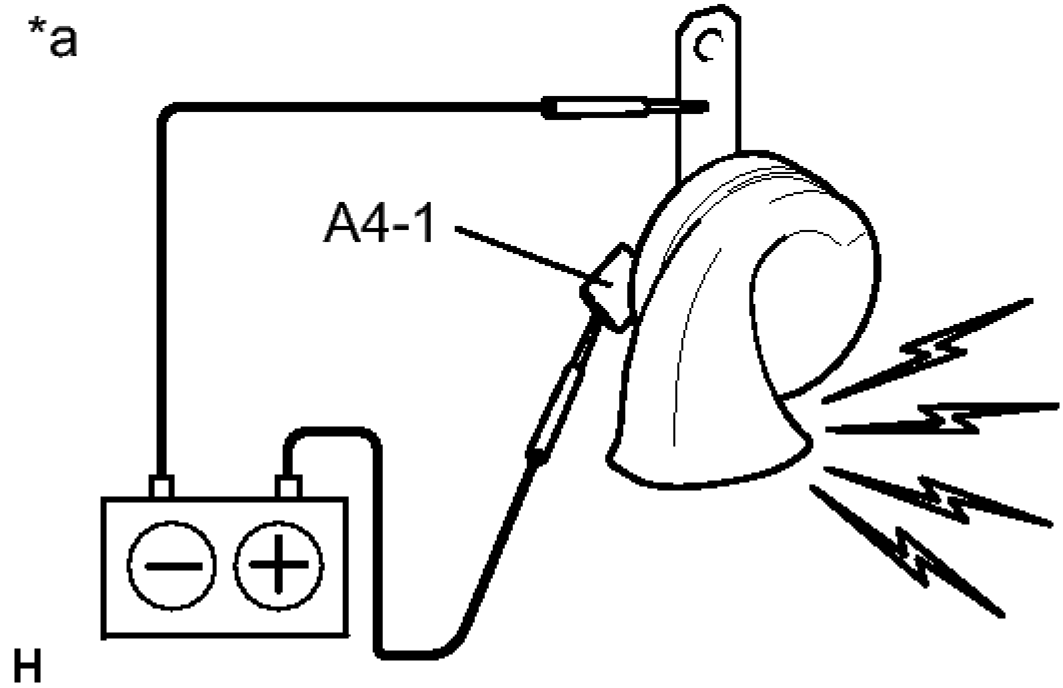

Fig. 5: Applying Voltage To High Pitched Horn Assembly (W/Daytime Running Light)
Courtesy of TOYOTA MOTOR SALES, U.S.A., INC.

OK

Measurement Condition	Specified Condition
Battery positive (+) --> Terminal A4-1 Battery negative (-) --> Body ground	Horn sounds

TEXT IN ILLUSTRATION

*a	Component without harness connected (High Pitched Horn Assembly)

If the result is not as specified, replace the high pitched horn assembly.

2. **INSPECT LOW PITCHED HORN ASSEMBLY (w/ Daytime Running Light)**
   1. Apply battery voltage and check the operation of the horn according to the table below.

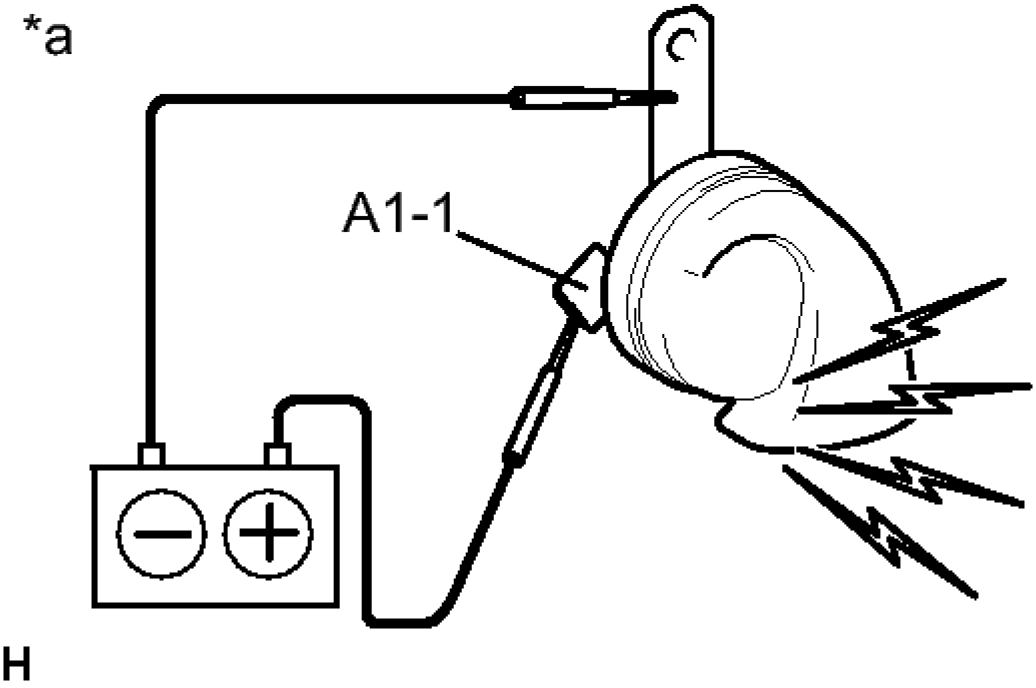

Fig. 6: Applying Battery Voltage To Low Pitched Horn Assembly (W/Daytime Running Light)
Courtesy of TOYOTA MOTOR SALES, U.S.A., INC.

OK

Measurement Condition	Specified Condition
Battery positive (+) --> Terminal A1-1 Battery negative (-) --> Body ground	Horn sounds

TEXT IN ILLUSTRATION

*a	Component without harness connected (Low

	Pitched Horn Assembly)

If the result is not as specified, replace the low pitched horn assembly.

3. **INSPECT LOW PITCHED HORN ASSEMBLY (w/o Daytime Running Light)**
    a. Apply battery voltage and check the operation of the horn according to the table below.

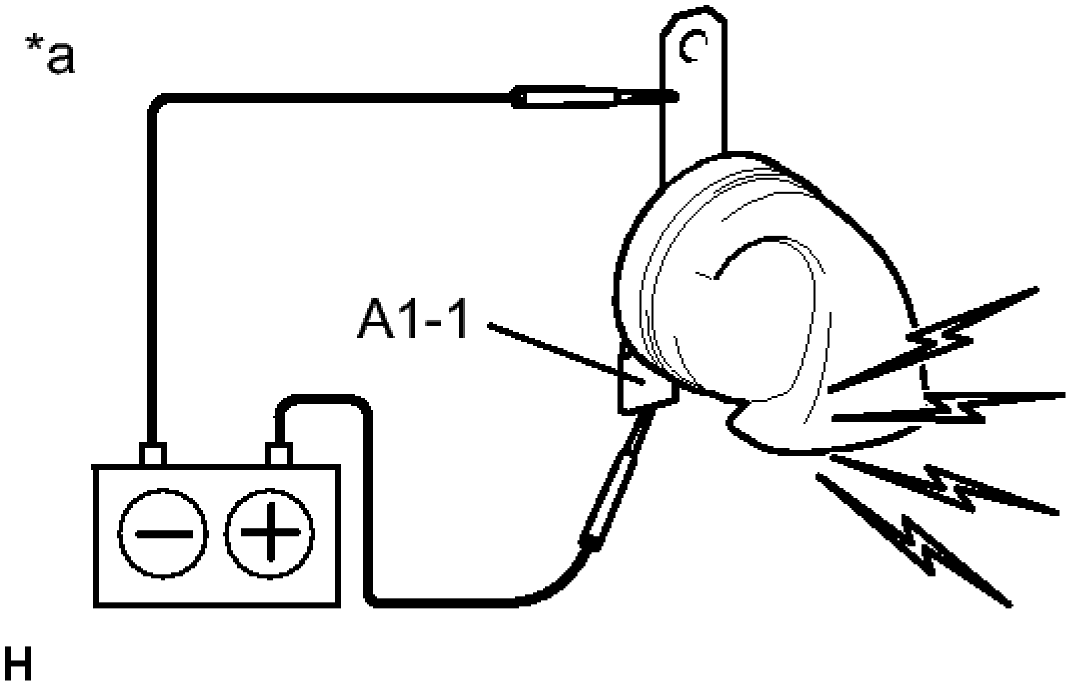

Fig. 7: Applying Battery Voltage To Low Pitched Horn Assembly (W/O Daytime Running Light)
Courtesy of TOYOTA MOTOR SALES, U.S.A., INC.

OK

Measurement Condition	Specified Condition
Battery positive (+) --> Terminal A1-1 Battery negative (-) --> Body ground	Horn sounds

TEXT IN ILLUSTRATION

*a	Component without harness connected (Low Pitched Horn Assembly)

If the result is not as specified, replace the low pitched horn assembly.

4. **INSPECT SUPER LOW PITCHED HORN ASSEMBLY (w/o Daytime Running Light)**
   a. Apply battery voltage and check the operation of the horn according to the table below.

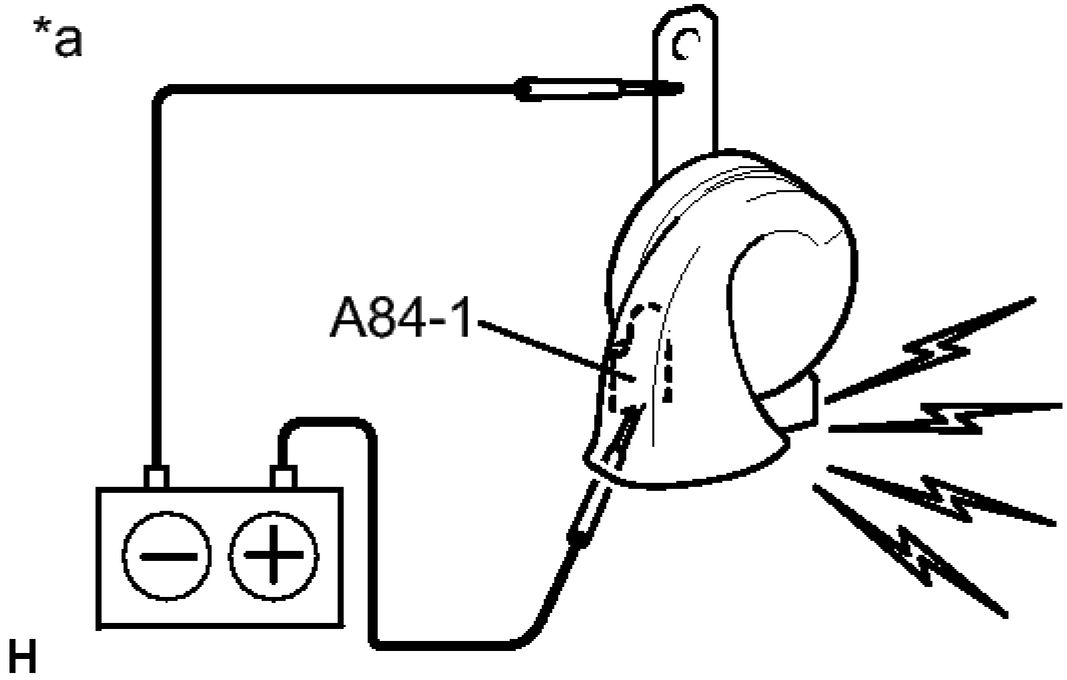

Fig. 8: Applying Battery Voltage To Super Low Pitched Horn Assembly (W/O Daytime Running Light)
Courtesy of TOYOTA MOTOR SALES, U.S.A., INC.

OK

Measurement Condition	Specified Condition
Battery positive (+) --> Terminal	

A84-1 Battery negative (-) --> Body ground	Horn sounds

TEXT IN ILLUSTRATION

*a	Component without harness connected (Super Low Pitched Horn Assembly)

If the result is not as specified, replace the super low pitched horn assembly.

INSTALLATION

INSTALLATION

1. **INSTALL LOW PITCHED HORN ASSEMBLY**
    a. Install the low pitched horn assembly with the bolt.

       Torque: 20 N*m (199 kgf*cm, 14 ft.*lbf)

    b. Connect the connector.
2. **INSTALL SUPER LOW PITCHED HORN ASSEMBLY (w/o Daytime Running Light)**
    a. Install the super low pitched horn assembly with the bolt.

       Torque: 20 N*m (199 kgf*cm, 14 ft.*lbf)

    b. Connect the connector.
3. **INSTALL HIGH PITCHED HORN ASSEMBLY (w/ Daytime Running Light)**
    a. Install the high pitched horn assembly with the bolt.

       Torque: 20 N*m (199 kgf*cm, 14 ft.*lbf)

    b. Connect the connector.
4. **INSTALL RADIATOR GRILLE SUB-ASSEMBLY**

   Refer to **INSTALLATION**

RELAY

ON-VEHICLE INSPECTION

ON-VEHICLE INSPECTION

1. **INSPECT HORN RELAY**
   a. Remove the horn relay.

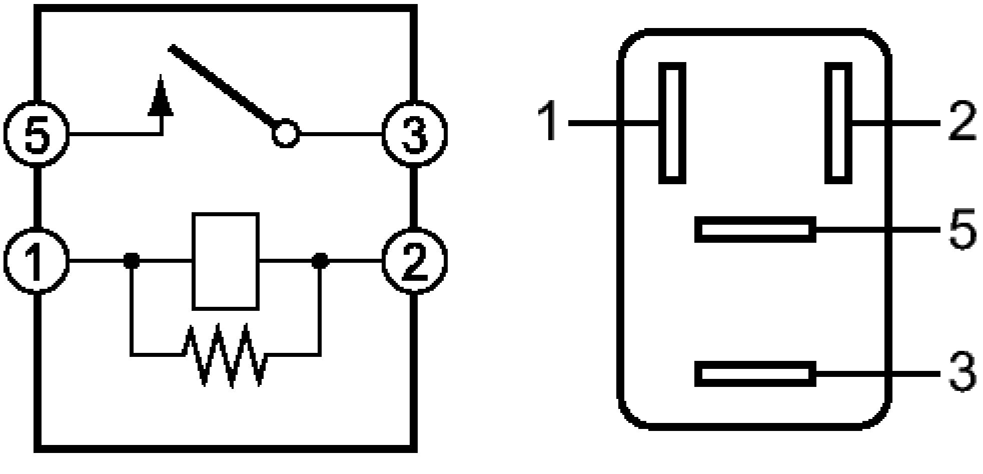

Fig. 9: Identifying Horn Relay
Courtesy of TOYOTA MOTOR SALES, U.S.A., INC.

   b. Measure the resistance according to the value(s) in the table below.

   Standard Resistance

Tester Connection	Condition	Specified Condition
3 - 5	Voltage is not applied between terminals 1 and 2	10 kohms or higher
	Voltage is applied	Below 1

3 - 5	between terminals 1 and 2	ohms

If the result is not as specified, replace the horn relay.

COOLANT (FOR INVERTER)

ON-VEHICLE INSPECTION

ON-VEHICLE INSPECTION

1. **INSPECT FOR COOLANT LEAK (for Inverter)**
    a. Remove the reserve tank cap.

    WARNING: To avoid the danger of being burned, do not remove the reserve tank cap while the coolant for the inverter is still hot.

    b. Install the radiator cap tester.

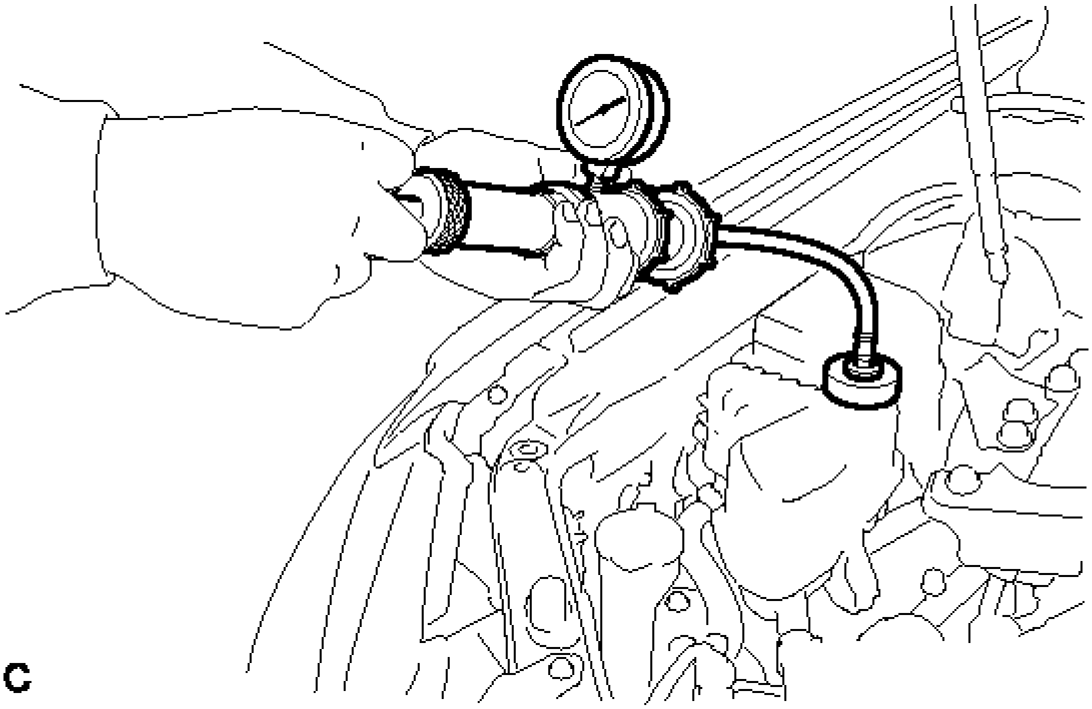

Fig. 1: Pressurizing Cooling System
Courtesy of TOYOTA MOTOR SALES, U.S.A., INC.

    c. Pump the radiator cap tester to 122 kPa (1.2 kgf/ cm^2 , 17 psi), and then check that the pressure does not drop.

    HINT:

If the pressure drops, check the hoses, radiator, water pump, inverter with converter, and hybrid vehicle transaxle assembly for leaks.

d. Reinstall the reserve tank cap.

2. **INSPECT COOLANT LEVEL IN RESERVE TANK (for Inverter)**
   a. The coolant should be between the LOW and FULL lines when the coolant for the inverter is cold.

   HINT:

   If the coolant level is low, check for leaks and add TOYOTA Super Long Life Coolant (SLLC) or similar high quality ethylene glycol based non-silicate, non-amine, non-nitrite, and non-borate coolant with long-life hybrid organic acid technology up to the FULL line.

3. **INSPECT COOLANT (for Inverter)**
   a. Remove the reserve tank cap.

   WARNING: **To avoid the danger of being burned, do not remove the reserve tank cap while the coolant for the inverter is still hot.**

   b. Check for excessive deposits of rust or scale on and around the reserve tank cap and its opening.

   HINT:

   If excessively dirty, replace the coolant for the inverter.

   c. Reinstall the reserve tank cap.
4. **INSPECT RESERVE TANK CAP (for Inverter)**
   a. Inspect the reserve tank cap.

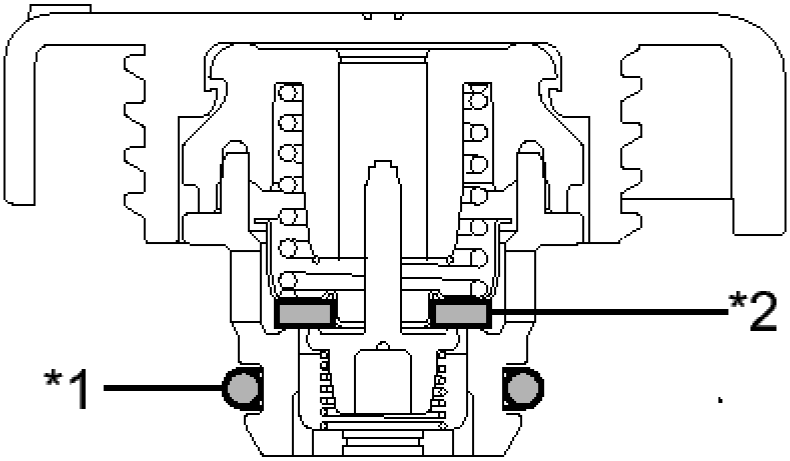

C

Fig. 2: Inspecting Reserve Tank Cap (For Inverter)
Courtesy of TOYOTA MOTOR SALES, U.S.A., INC.

TEXT IN ILLUSTRATION

*1	O-ring
*2	Rubber Packing

1. If there are water stains or foreign matter on the O-ring, clean it with water and finger scouring.

   NOTE: **Do not use any tools.**

2. Check that the O-ring is not deformed, cracked or damaged.
3. Check that the O-ring is not swollen.

b. Check the reserve tank cap operation.

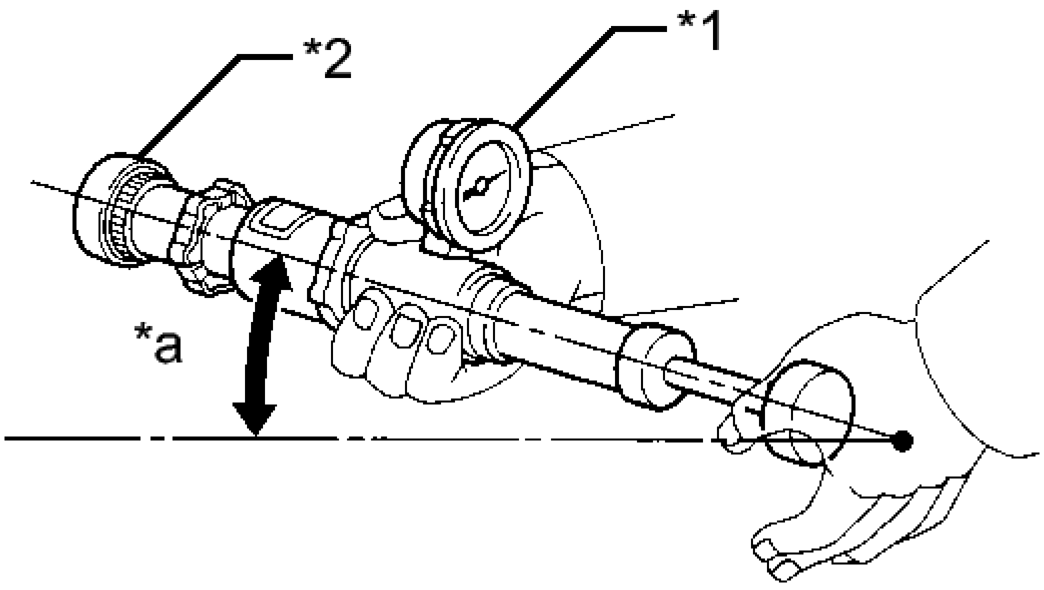

Fig. 3: Checking Operation Of Reserve Tank Cap
Courtesy of TOYOTA MOTOR SALES, U.S.A., INC.

TEXT IN ILLUSTRATION

*1	Reserve Tank Cap
*2	Radiator Cap Tester
*a	30° or more

1. Apply coolant (for inverter) to the O-ring and rubber packing before using a radiator cap tester.
2. Install the reserve tank cap to the radiator cap tester.
3. Pump the cap tester several times, and check the maximum pressure.

JUDGMENT CRITERION

Standard value (for brand-new cap)	94 to 122 kPa (1.0 to 1.2 kgf/cm^2 , 13.6 to 17.7 psi)
Minimum standard value (for used cap)	94 kPa (1.0 kgf/cm^2 , 13.6 psi)
Pump speed	1 pump per second

NOTE: When using the cap tester, tilt it upward 30° or more.

HINT:

If the maximum pressure is less than the minimum standard value, replace the reserve tank cap.

REPLACEMENT

REPLACEMENT

1. **DRAIN COOLANT (for Inverter)**

NOTE:

- **Do not reuse the drained coolant because it may contain foreign objects.**
- **Collect the drained coolant and measure its volume to establish a benchmark. When adding coolant, make sure to add more coolant than the measured amount.**

a. Remove the reserve tank cap.

WARNING: **To avoid the danger of being burned, do not remove the reserve tank cap while the coolant for the inverter is still hot.**

b. Using a hexagon wrench (10 mm), remove the drain plug indicated in the illustration and drain the coolant.

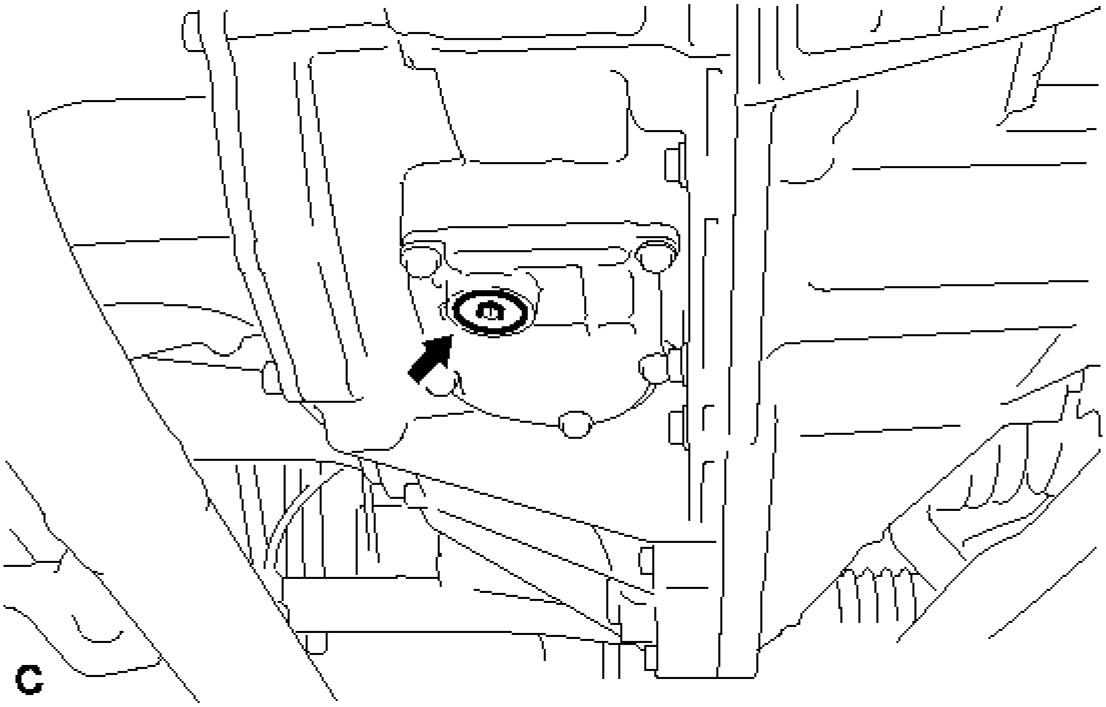

Fig. 4: Identifying Drain Plug
Courtesy of TOYOTA MOTOR SALES, U.S.A., INC.

WARNING: **Use caution when handling coolant immediately after driving or in summer because it may be hot.**

c. Install the plug with a new gasket.

Torque: 39 N*m (397 kgf*cm, 29 ft.*lbf)

2. **ADD COOLANT (for Inverter)**

NOTE:

- **Do not reuse the drained coolant because it may contain foreign objects.**
- **If the vehicle is driven with air in the inverter cooling system, damage may occur and the following DTCs may be set.**

DTC Code	Detection Item
P0A01-726	Motor Electronics Coolant Temperature Sensor Circuit Range / Performance
P0A04-725	Motor Electronics Coolant Temperature Sensor Circuit Intermittent
P0A08-264	DC / DC Converter Status Circuit
P0A78-284	Drive Motor "A" Inverter Performance
P0A78-286	Drive Motor "A" Inverter Performance
P0A7A-322	Generator Inverter Performance
P0A7A-324	Generator Inverter Performance
P0A93-346	Inverter Cooling System Performance
P0A94-553	DC / DC Converter Performance
P0A94-557	DC / DC Converter Performance
P0AEE-277	Motor Inverter Temperature Sensor "A" Circuit Range / Performance
P0AF1-276	Drive Motor Inverter Temperature Sensor "A" Circuit Intermittent / Erratic
P0BCD-315	Generator Inverter Temperature Sensor Circuit Range / Performance
P0BD0-314	Generator Inverter Temperature Sensor Circuit Intermittent / Erratic
P0C39-626	DC / DC Converter Temperature Sensor "A" Range / Performance
P0C3C-625	DC / DC Converter Temperature Sensor "A" Intermittent / Erratic

P0C3E-628	**DC / DC Converter Temperature Sensor "B" Range / Performance**
P0C41-627	**DC / DC Converter Temperature Sensor "B" Intermittent / Erratic**
P0C73-776	**Motor Electronics Coolant Pump "A" Control Performance**

a. Slowly pour coolant into the reserve tank until it reaches the FULL line.

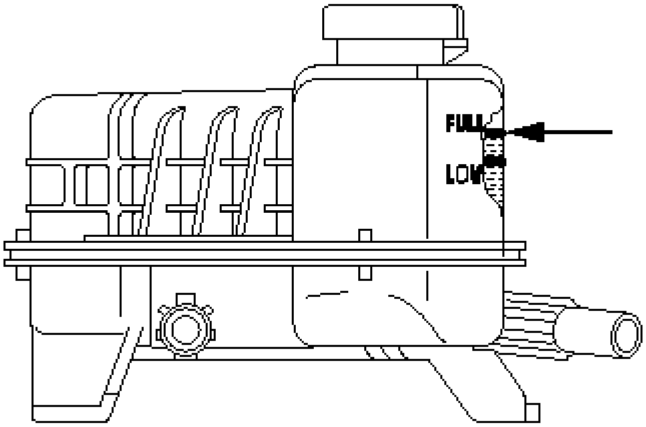

Fig. 5: Identifying Reserve Tank Full Line
Courtesy of TOYOTA MOTOR SALES, U.S.A., INC.

Coolant quantity

3.2 liters (3.4 US qts, 2.8 Imp. qts.)

NOTE: **To prevent foreign matter such as dust or dirt from entering the cooling system, make sure to confirm that the container used to add coolant is clean and free of foreign matter such as dust or dirt.**

b. When using the Techstream:
   1. Connect the Techstream to the DLC3.
   2. Turn the power switch on (IG).
   3. Enter the following menus: Powertrain / Hybrid Control / Active Test / Activate the Water Pump.

4. Keep the coolant at the FULL line in the reserve tank to compensate for the drop in coolant level when the air bleeds.

   Standard

   Air bleeding from the inverter cooling system is completed when the noise made by the inverter water pump assembly becomes smaller and the circulation of coolant in the reserve tank improves.

   HINT:

   - If free spinning of the inverter water pump is detected for approximately 5 seconds, failsafe control will be activated to suspend the operation of the pump for approximately 15 seconds and resume operation for approximately 4 seconds repeatedly. Operation of the inverter water pump will return to normal if coolant is added.
   - Loud noise made by the inverter water pump assembly and poor circulation of coolant in the reserve tank indicates that there is air in the cooling system.

   HINT:

   Loud noise made by the water pump and poor circulation of coolant in the reserve tank indicates that there is air in the cooling system.

c. When not using the Techstream:
   1. Turn the power switch on (READY).[*1]
   2. Turn the power switch off and add coolant to the FULL line because the coolant level drops as the air bleeds.[*2]

   NOTE:

   - **Be sure to turn the power switch off before adding SLLC.**
   - **Do not work on the components in the engine compartment while the vehicle is in the READY-on state because the engine is in intermittent operation.**

   3. Repeat steps [*1] and [*2] until air bleeding from the cooling system is completed.

   Standard

   Air bleeding from the inverter cooling system is completed when the noise made by the inverter water pump assembly becomes smaller and the circulation of coolant in the reserve tank improves.

   HINT:

   Loud noise made by the water pump and poor circulation of coolant in the reserve tank indicates that there is air in the cooling system.

d. After the air is completely bled from the cooling system, tighten the reserve tank cap.
e. Add coolant to the FULL line of the reserve tank.

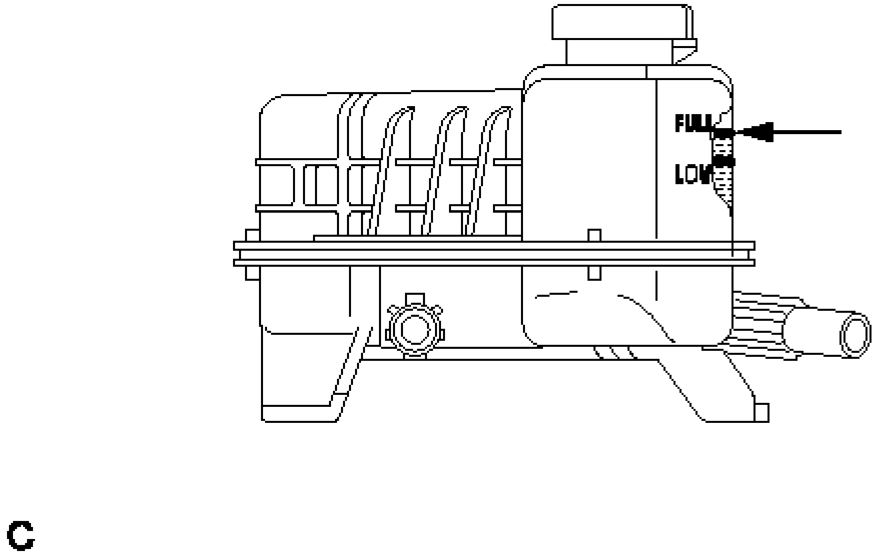

Fig. 6: Identifying Reserve Tank Full Line
Courtesy of TOYOTA MOTOR SALES, U.S.A., INC.

3. **INSPECT FOR COOLANT LEAK (for Inverter)** See step 1

INVERTER WITH CONVERTER

COMPONENTS

ILLUSTRATION

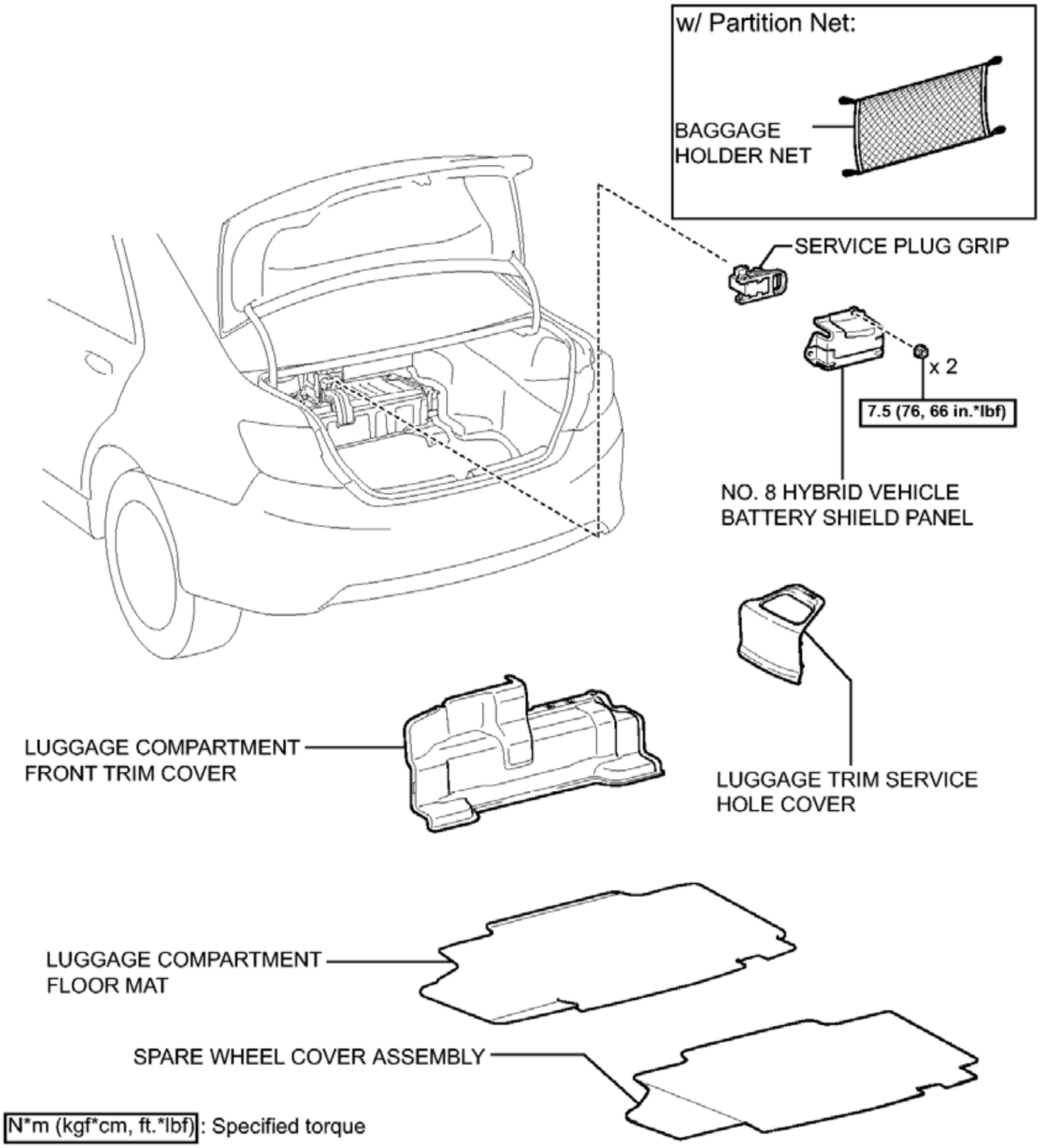
w/ Partition Net:
BAGGAGE HOLDER NET
SERVICE PLUG GRIP
x 2
7.5 (76, 66 in.*lbf)
NO. 8 HYBRID VEHICLE BATTERY SHIELD PANEL
LUGGAGE COMPARTMENT FRONT TRIM COVER
LUGGAGE TRIM SERVICE HOLE COVER
LUGGAGE COMPARTMENT FLOOR MAT
SPARE WHEEL COVER ASSEMBLY
N*m (kgf*cm, ft.*lbf) : Specified torque
C

Fig. 7: Identifying Inverter With Converter Replacement Components With Torque Specifications (1 Of 4)

Courtesy of TOYOTA MOTOR SALES, U.S.A., INC.

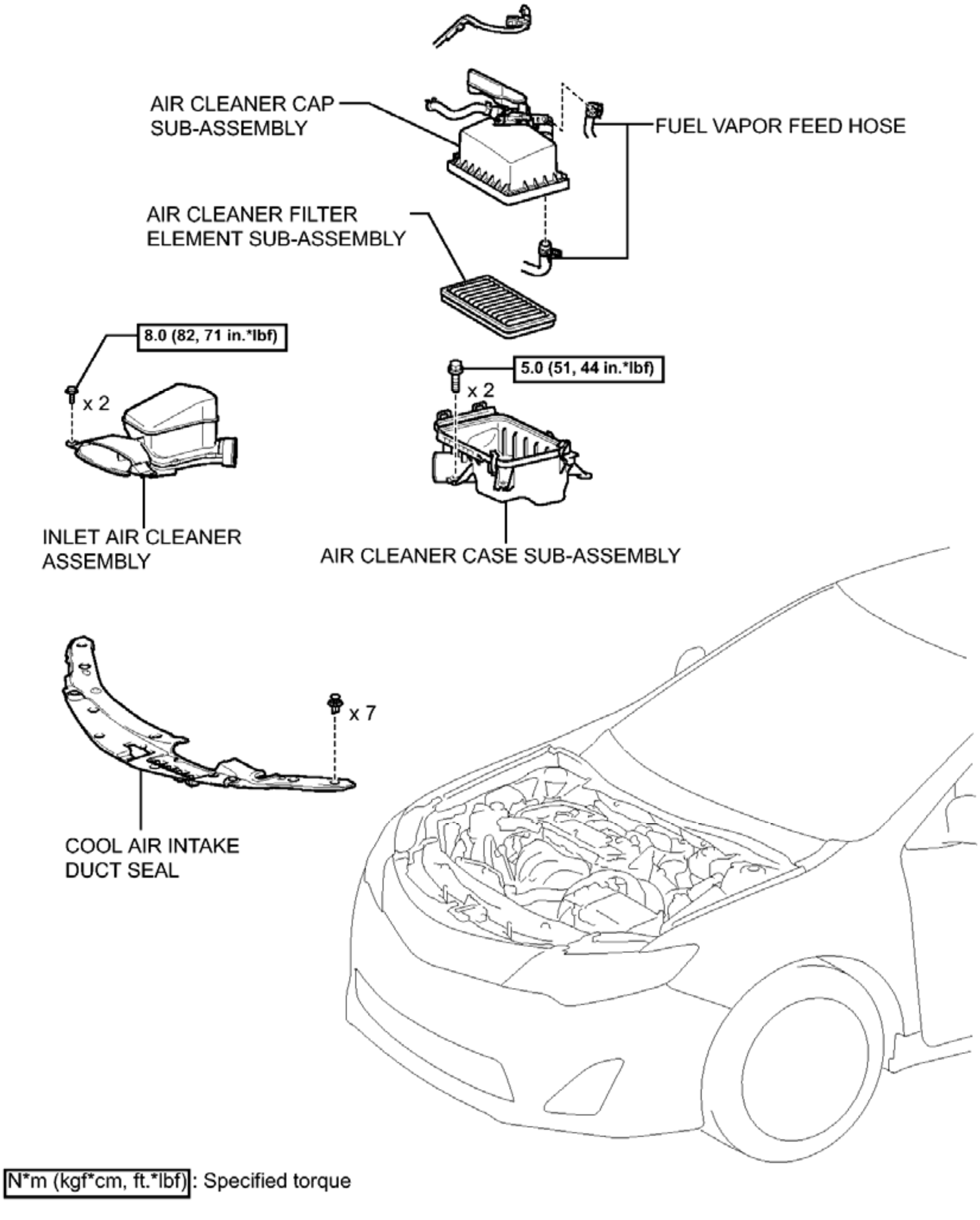
AIR CLEANER CAP
SUB-ASSEMBLY
FUEL VAPOR FEED HOSE
AIR CLEANER FILTER
ELEMENT SUB-ASSEMBLY
8.0 (82, 71 in.*lbf)
x 2
5.0 (51, 44 in.*lbf)
x 2
INLET AIR CLEANER
ASSEMBLY
AIR CLEANER CASE SUB-ASSEMBLY
x 7
COOL AIR INTAKE
DUCT SEAL
N*m (kgf*cm, ft.*lbf): Specified torque

Fig. 8: Identifying Inverter With Converter Replacement Components With Torque Specifications (2 Of 4)
Courtesy of TOYOTA MOTOR SALES, U.S.A., INC.

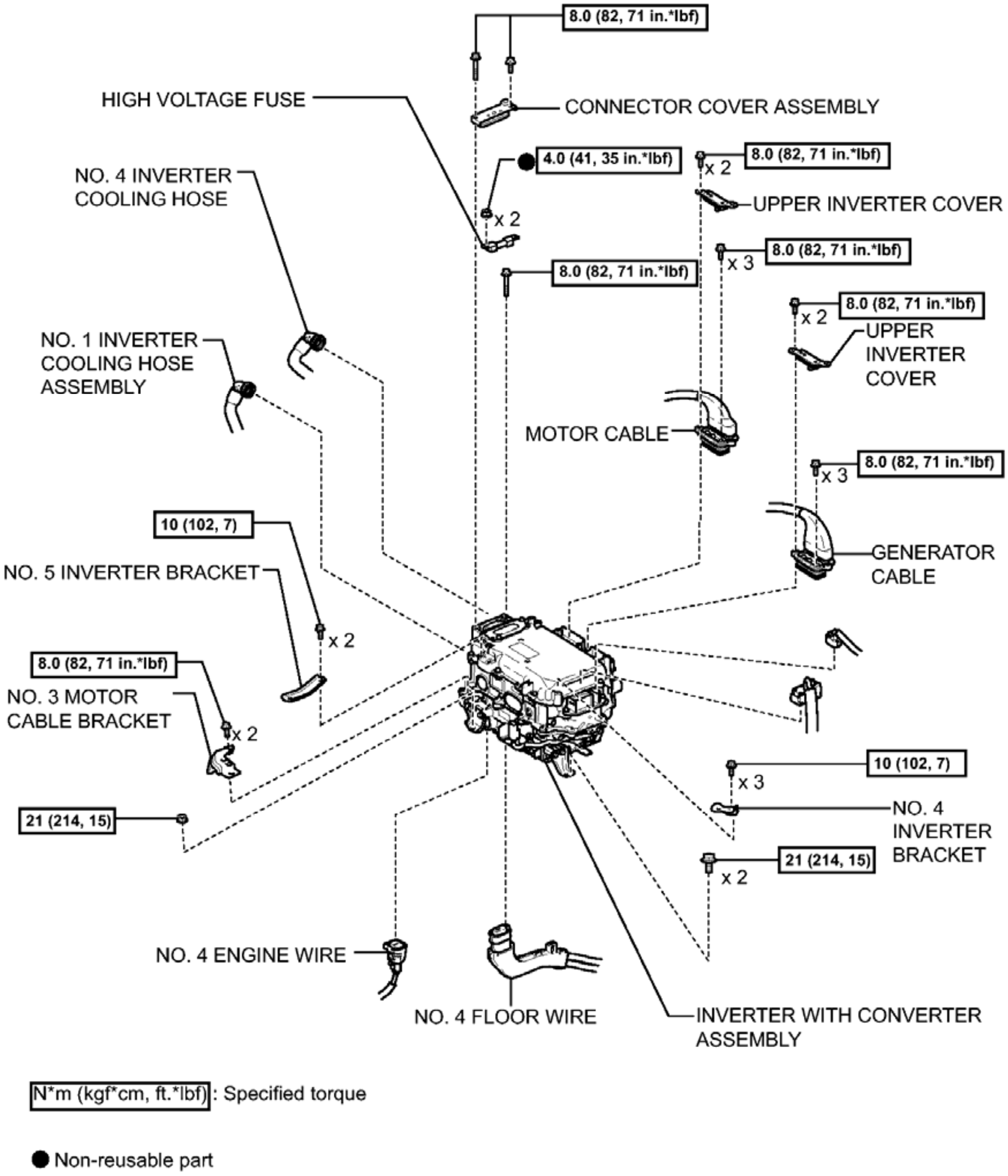
8.0 (82, 71 in.*lbf)
HIGH VOLTAGE FUSE
CONNECTOR COVER ASSEMBLY
4.0 (41, 35 in.*lbf)
8.0 (82, 71 in.*lbf)
x 2
NO. 4 INVERTER COOLING HOSE
x 2
UPPER INVERTER COVER
8.0 (82, 71 in.*lbf)
x 3
8.0 (82, 71 in.*lbf)
8.0 (82, 71 in.*lbf)
x 2
UPPER INVERTER COVER
NO. 1 INVERTER COOLING HOSE ASSEMBLY
MOTOR CABLE
8.0 (82, 71 in.*lbf)
x 3
10 (102, 7)
GENERATOR CABLE
NO. 5 INVERTER BRACKET
x 2
8.0 (82, 71 in.*lbf)
NO. 3 MOTOR CABLE BRACKET
x 2
10 (102, 7)
x 3
NO. 4 INVERTER BRACKET
21 (214, 15)
21 (214, 15)
x 2
NO. 4 ENGINE WIRE
NO. 4 FLOOR WIRE
INVERTER WITH CONVERTER ASSEMBLY
N*m (kgf*cm, ft.*lbf) : Specified torque
● Non-reusable part
c

Fig. 9: Identifying Inverter With Converter Replacement Components With Torque Specifications (3 Of 4)
Courtesy of TOYOTA MOTOR SALES, U.S.A., INC.

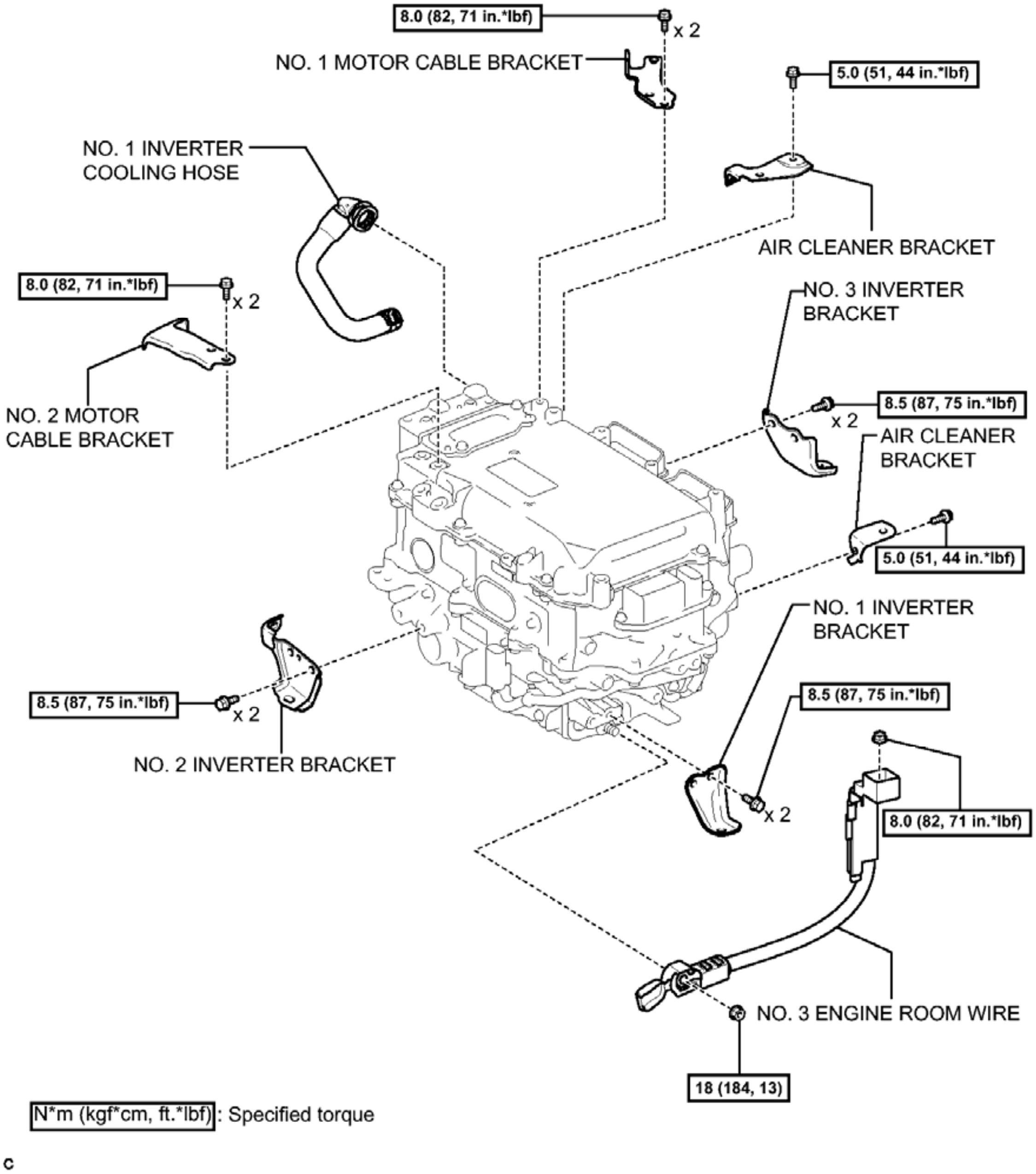
8.0 (82, 71 in.*lbf)
x 2
NO. 1 MOTOR CABLE BRACKET
5.0 (51, 44 in.*lbf)
NO. 1 INVERTER COOLING HOSE
AIR CLEANER BRACKET
8.0 (82, 71 in.*lbf)
x 2
NO. 3 INVERTER BRACKET
NO. 2 MOTOR CABLE BRACKET
8.5 (87, 75 in.*lbf)
x 2
AIR CLEANER BRACKET
5.0 (51, 44 in.*lbf)
NO. 1 INVERTER BRACKET
8.5 (87, 75 in.*lbf)
x 2
8.5 (87, 75 in.*lbf)
NO. 2 INVERTER BRACKET
x 2
8.0 (82, 71 in.*lbf)
NO. 3 ENGINE ROOM WIRE
18 (184, 13)
N*m (kgf*cm, ft.*lbf): Specified torque
c

Fig. 10: Identifying Inverter With Converter Replacement Components With Torque Specifications (4 Of 4)
Courtesy of TOYOTA MOTOR SALES, U.S.A., INC.

REMOVAL

REMOVAL

1. **PRECAUTION**

Refer to **PRECAUTION**

2. **REMOVE SERVICE PLUG GRIP**

   Refer to **REMOVAL**

3. **DRAIN COOLANT (for Inverter)** See step 1
4. **REMOVE CONNECTOR COVER ASSEMBLY**

WARNING:

- **Do not touch the high voltage connectors and terminals for 10 minutes after the service plug grip is removed.**
- **Wear insulated gloves.**

NOTE: **Do not start the hybrid system with the service plug grip removed because it may cause a malfunction.**

a. Remove the 2 bolts and connector cover assembly.

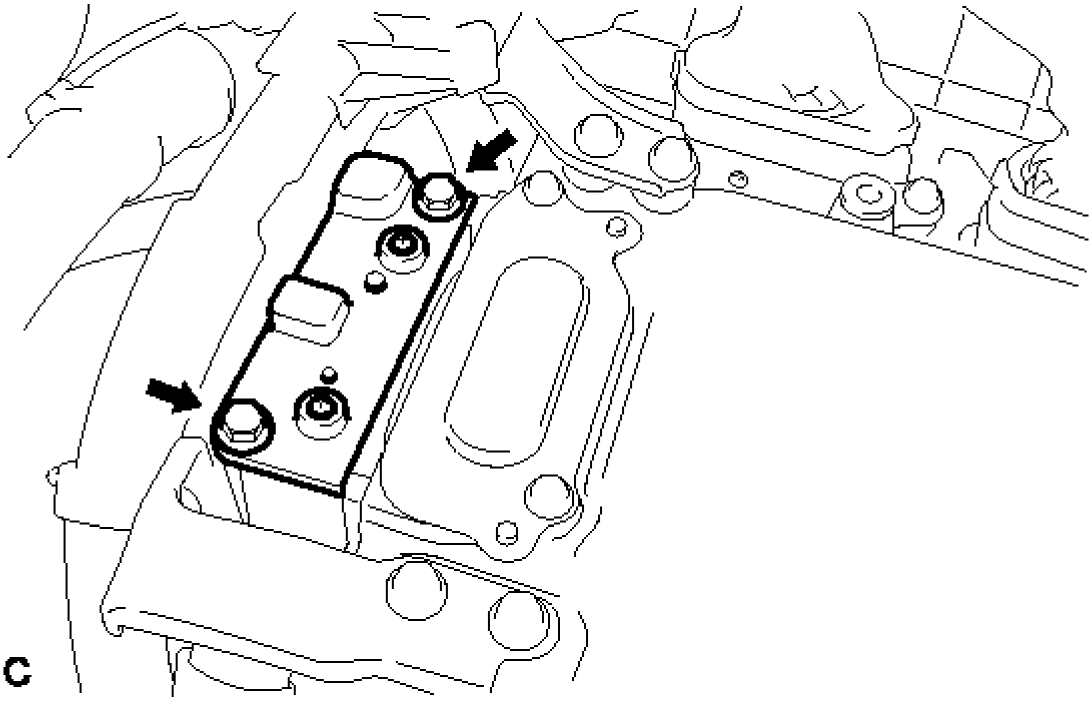

Fig. 11: Identifying Inverter Terminal Cover And Bolts
Courtesy of TOYOTA MOTOR SALES, U.S.A., INC.

NOTE:

- **Make sure to pull the connector cover assembly straight up, as a connector is connected to the bottom of the cover.**
- **Do not allow any foreign objects or water to enter the inverter with converter assembly.**

5. **CHECK TERMINAL VOLTAGE**

WARNING: **Wear insulated gloves.**

NOTE: Do not allow any foreign objects or water to enter the inverter with converter assembly.

a. Using a voltmeter, measure the voltage between the terminals of the 2 phase connectors.

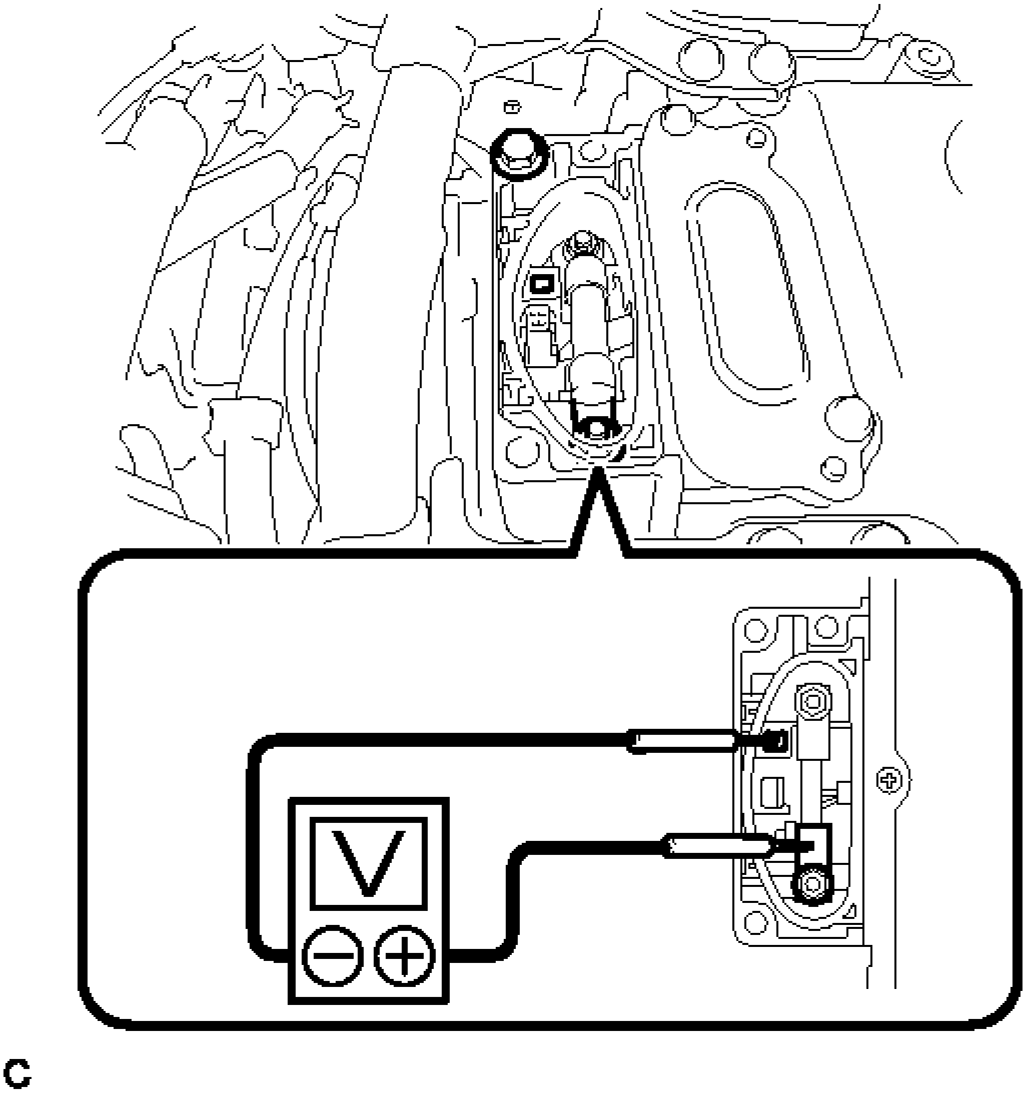

Fig. 12: Measuring Voltage Of Inverter Terminals With Voltmeter
Courtesy of TOYOTA MOTOR SALES, U.S.A., INC.

Standard voltage

0 V

HINT:

Use a measuring range of DC 750 V or more on the voltmeter.

6. **TEMPORARILY INSTALL CONNECTOR COVER ASSEMBLY**

WARNING: Wear insulated gloves.

a. Temporarily install the connector cover assembly with the bolt to prevent any foreign objects or water from entering the inverter with converter assembly.

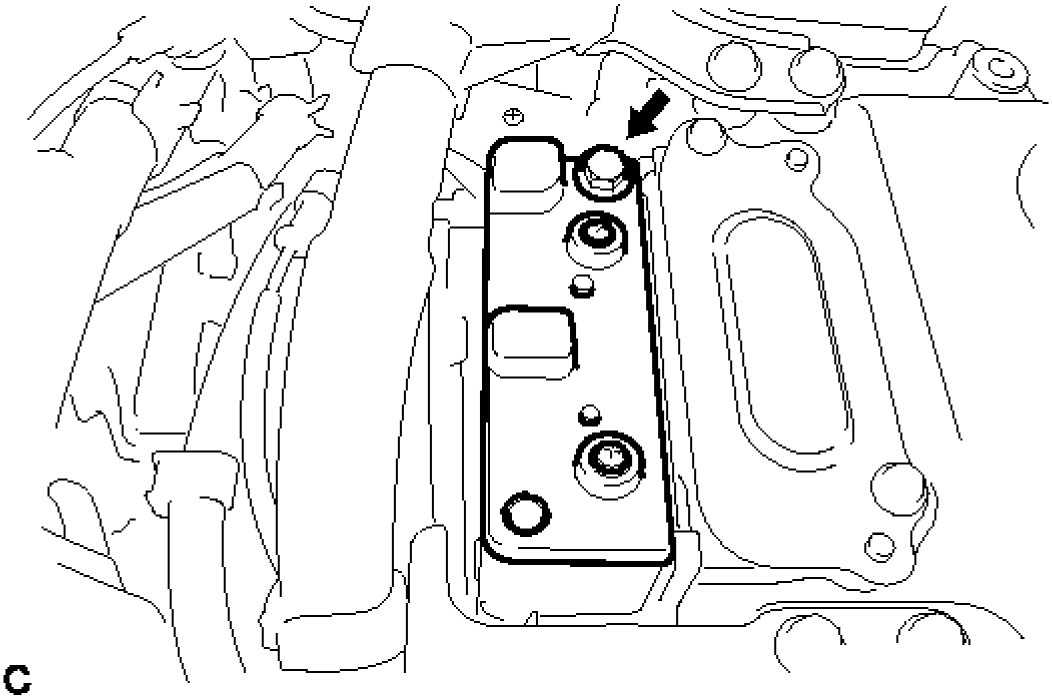

Fig. 13: Identifying Connector Cover Assembly Bolt
Courtesy of TOYOTA MOTOR SALES, U.S.A., INC.

7. **REMOVE COOL AIR INTAKE DUCT SEAL** . Refer to **REMOVAL - Step 1**
8. **REMOVE INLET AIR CLEANER ASSEMBLY** . Refer to **REMOVAL - Step 30**
9. **REMOVE AIR CLEANER CAP SUB-ASSEMBLY** . Refer to **REMOVAL - Step 3**
10. **REMOVE AIR CLEANER FILTER ELEMENT SUB-ASSEMBLY**
11. **REMOVE AIR CLEANER CASE SUB-ASSEMBLY** . Refer to **REMOVAL - Step 33**
12. **REMOVE NO. 5 INVERTER BRACKET**
    a. Remove the 2 bolts and No. 5 inverter bracket.

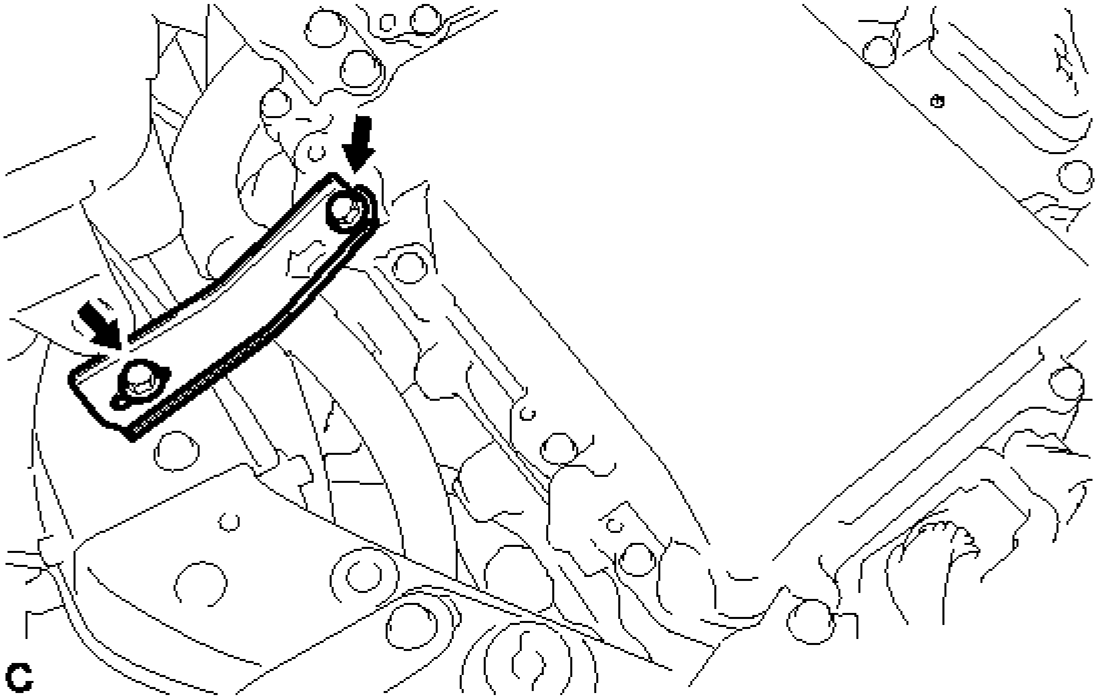

Fig. 14: Identifying No. 5 Inverter Bracket And Bolts
Courtesy of TOYOTA MOTOR SALES, U.S.A., INC.

13. **REMOVE NO. 4 INVERTER BRACKET**
    a. Remove the 3 bolts and No. 4 inverter bracket.

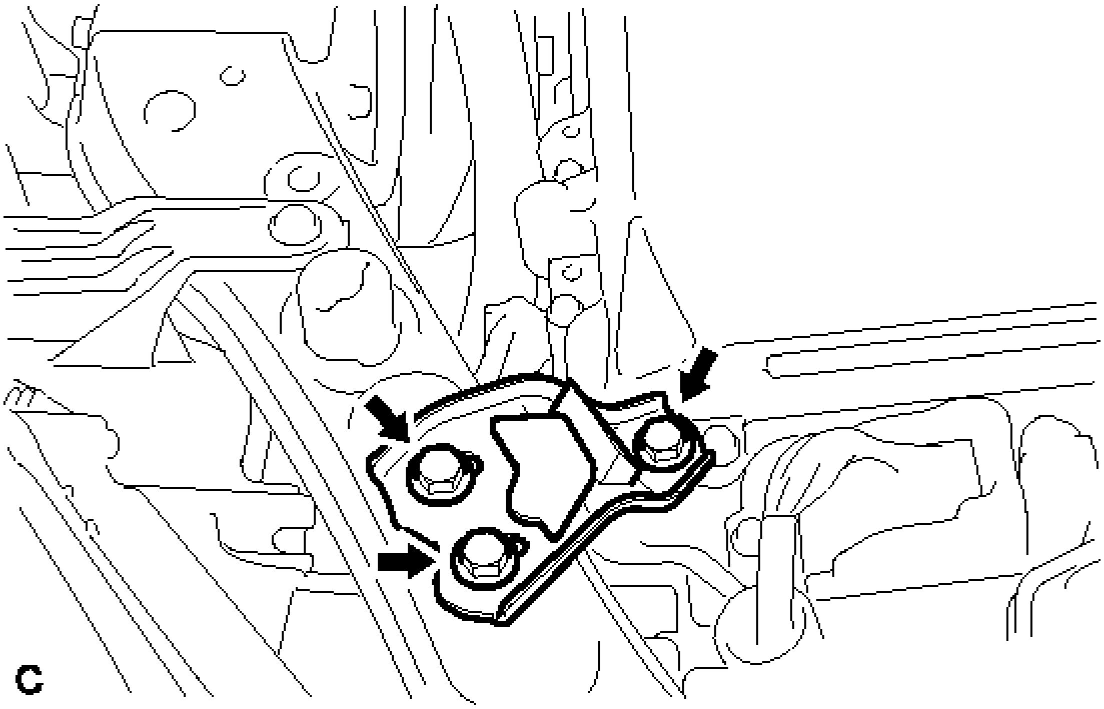

Fig. 15: Identifying No. 4 Inverter Bracket And Bolts

Courtesy of TOYOTA MOTOR SALES, U.S.A., INC.

14. REMOVE UPPER INVERTER COVER

WARNING: **Wear insulated gloves.**

a. Remove the 2 bolts and upper inverter cover (generator cable side).

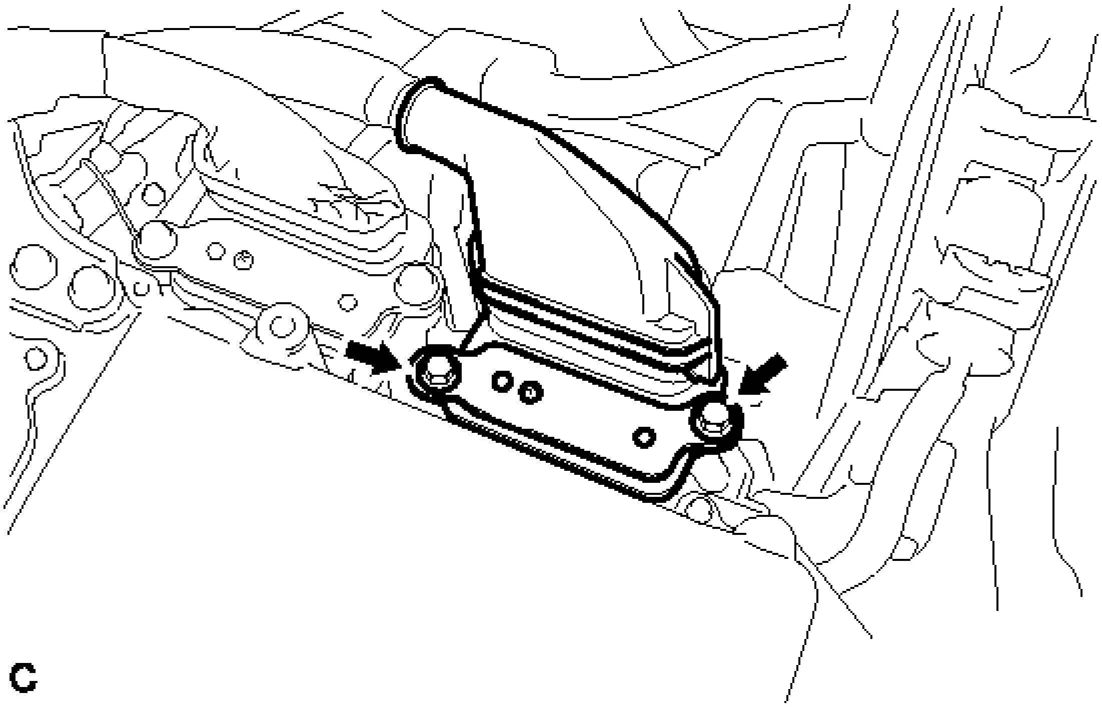

Fig. 16: Identifying Upper Inverter Cover Bolts
Courtesy of TOYOTA MOTOR SALES, U.S.A., INC.

NOTE:

- **Make sure to pull the upper inverter cover straight up, as a connector is connected to the bottom of the cover.**
- **Do not touch the upper inverter cover waterproofing rubber.**

15. DISCONNECT GENERATOR CABLE

WARNING: **Wear insulated gloves.**

a. Using an insulated tool, remove the 3 bolts.

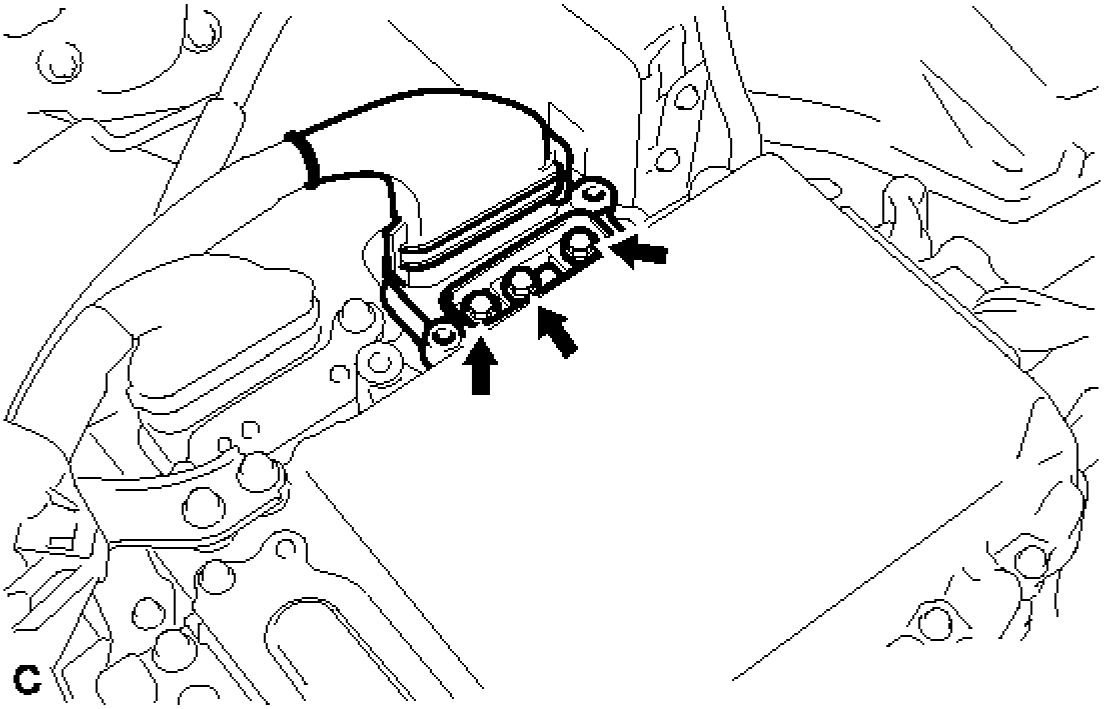

Fig. 17: Identifying Generator Cable Bolts
Courtesy of TOYOTA MOTOR SALES, U.S.A., INC.

b. Disconnect the 2 wire harness clamps and separate the generator cable.

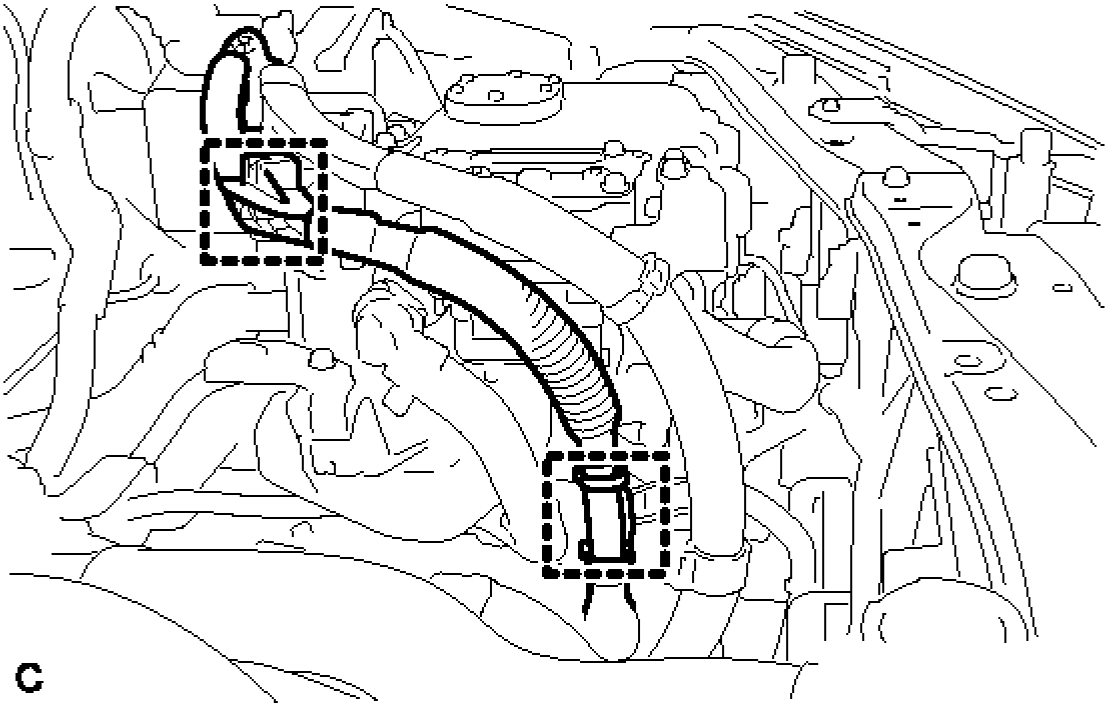

Fig. 18: Identifying Generator Cable Wire Harness Clamps
Courtesy of TOYOTA MOTOR SALES, U.S.A., INC.

NOTE:

- **Do not damage the terminals, connector housings or inverter with converter assembly when disconnecting them.**
- **Do not touch the connector waterproofing rubber or terminals.**
- **Insulate the removed terminals with insulating tape.**
- **Do not allow any foreign objects or water to enter the inverter with converter assembly.**

16. REMOVE UPPER INVERTER COVER

WARNING: **Wear insulated gloves.**

a. Remove the 2 bolts and upper inverter cover (motor cable side).

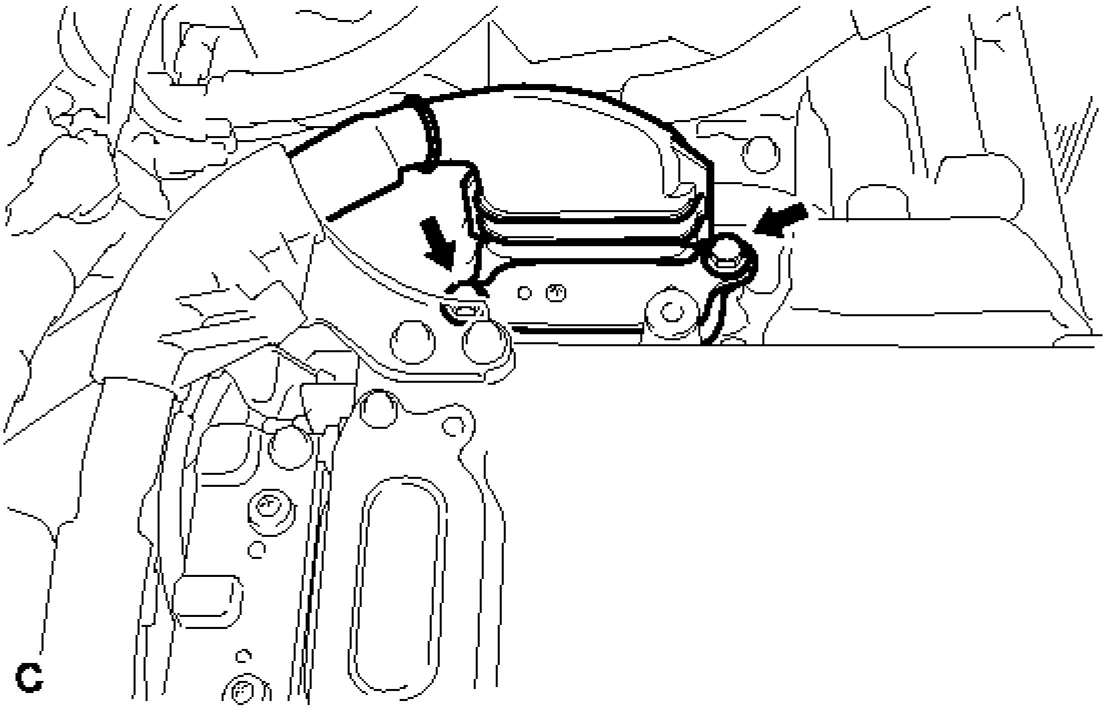

Fig. 19: Identifying Upper Inverter Cover Bolts
Courtesy of TOYOTA MOTOR SALES, U.S.A., INC.

NOTE:

- **Make sure to pull the upper inverter cover straight up, as a connector is connected to the bottom of the cover.**
- **Do not touch the upper inverter cover waterproofing rubber.**

17. DISCONNECT MOTOR CABLE

WARNING: **Wear insulated gloves.**

a. Using an insulated tool, remove the 3 bolts.

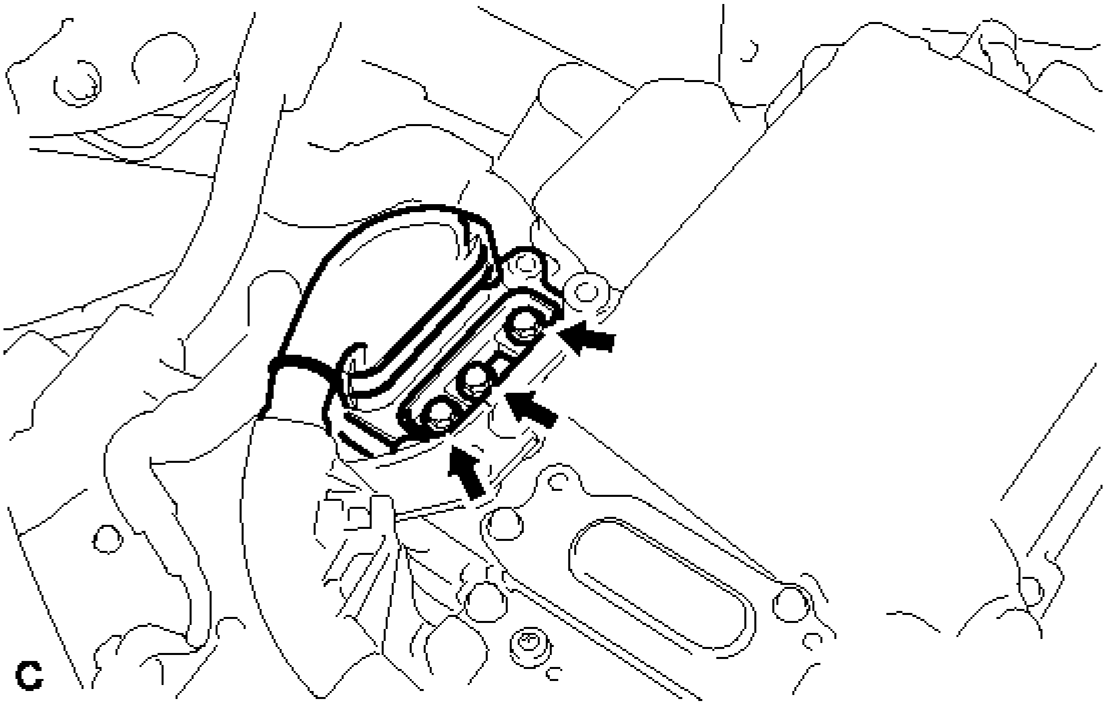

Fig. 20: Identifying Motor Cable Bolts
Courtesy of TOYOTA MOTOR SALES, U.S.A., INC.

b. Disconnect the 3 wire harness clamps and separate the motor cable.

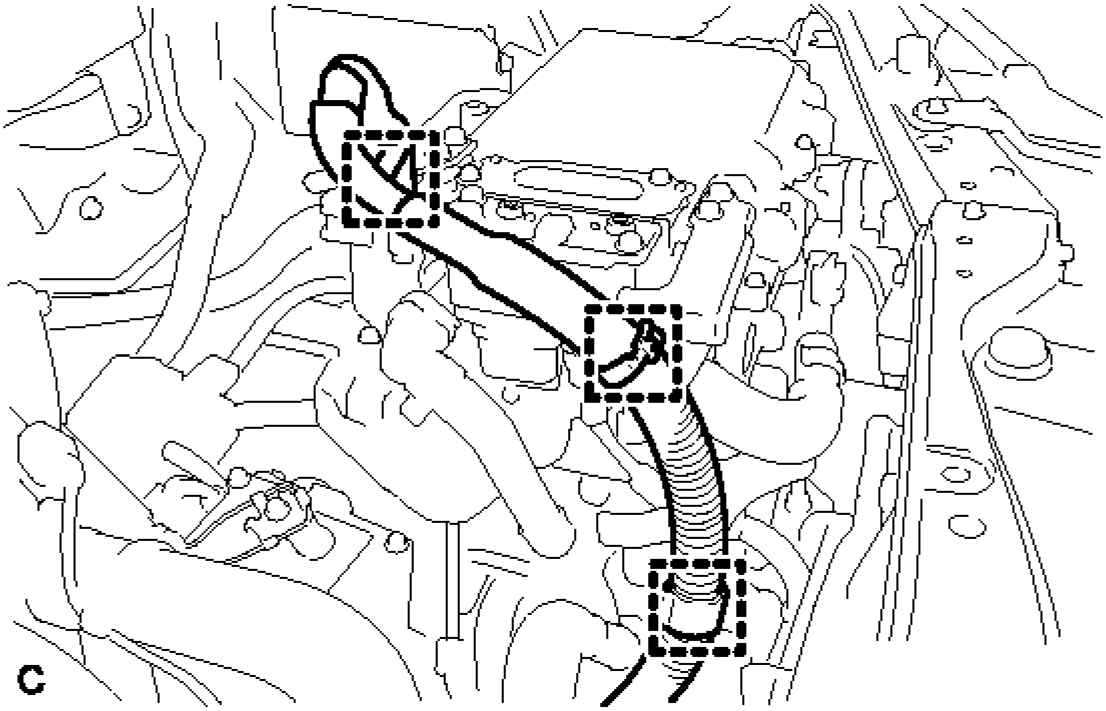

Fig. 21: Identifying Motor Cable Wire Harness Clamps
Courtesy of TOYOTA MOTOR SALES, U.S.A., INC.

NOTE:

- **Do not damage the terminals, connector housings or inverter with converter assembly when disconnecting them.**
- **Do not touch the connector waterproofing rubber or terminals.**
- **Insulate the removed terminals with insulating tape.**
- **Do not allow any foreign objects or water to enter the inverter with converter assembly.**

18. **REMOVE NO. 3 MOTOR CABLE BRACKET**
    a. Disconnect the hose clamp from the No. 3 motor cable bracket.

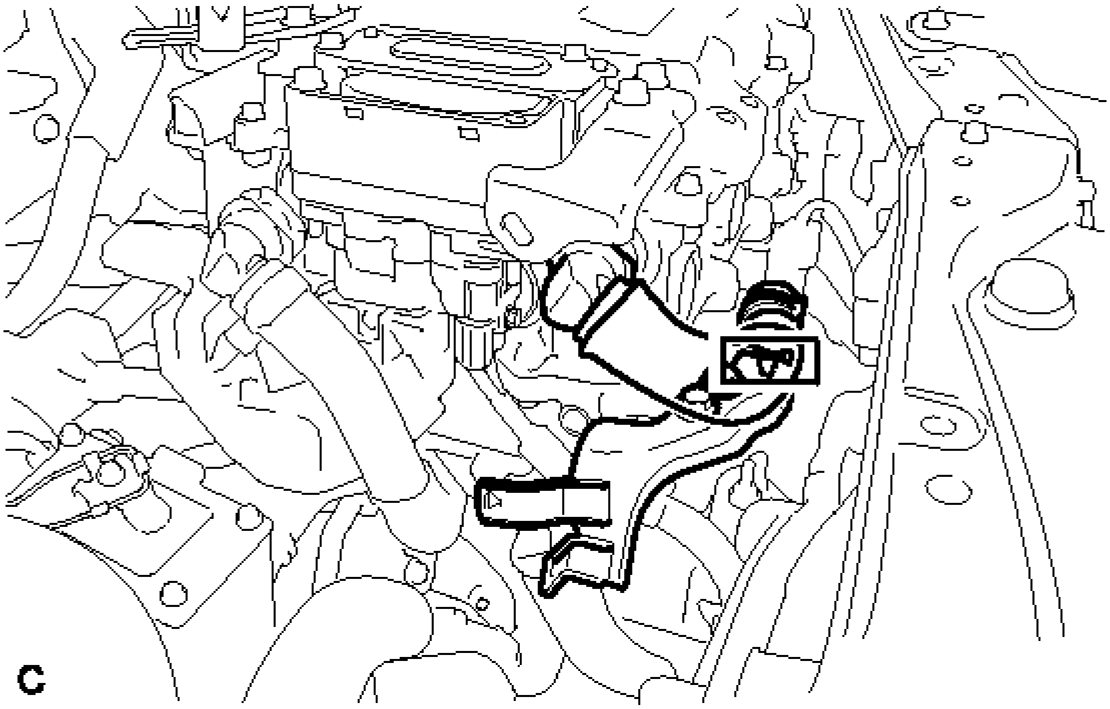

Fig. 22: Identifying No. 3 Motor Cable Bracket Hose Clamp
Courtesy of TOYOTA MOTOR SALES, U.S.A., INC.

HINT:

Do not remove the hose clamp from the hose.

b. Remove the 2 bolts and No. 3 motor cable bracket.

19. **REMOVE CONNECTOR COVER ASSEMBLY**

WARNING: Wear insulated gloves.

a. Remove the bolt and connector cover assembly.

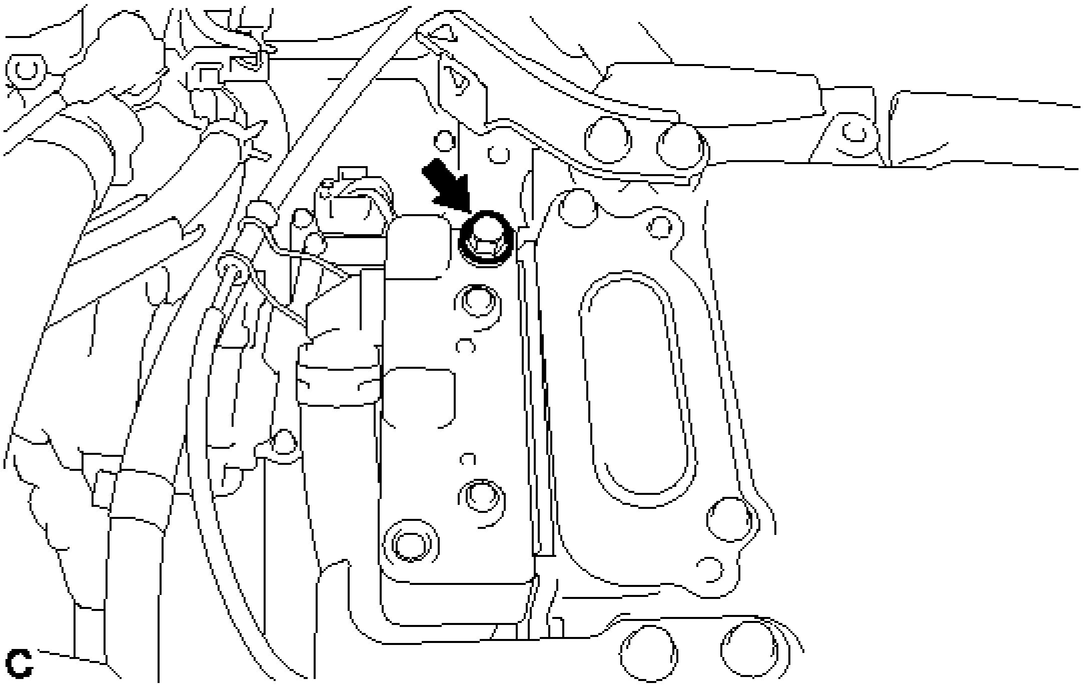

Fig. 23: Identifying Connector Cover Assembly Bolt
Courtesy of TOYOTA MOTOR SALES, U.S.A., INC.

NOTE:

- **Make sure to pull the connector cover assembly straight up, as a connector is connected to the bottom of the cover.**
- **Do not allow any foreign objects or water to enter the inverter with converter assembly.**

20. **DISCONNECT NO. 4 ENGINE WIRE**

WARNING: **Wear insulated gloves.**

a. Disconnect the No. 4 engine wire.

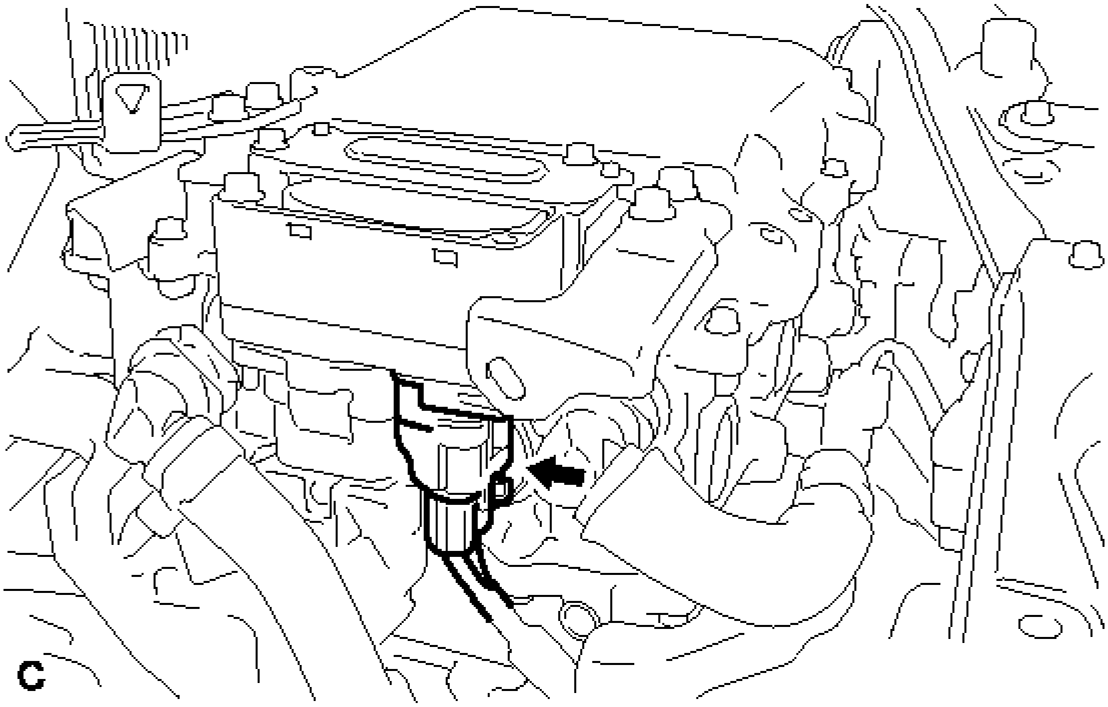

Fig. 24: Identifying No. 4 Engine Wire Connector
Courtesy of TOYOTA MOTOR SALES, U.S.A., INC.

NOTE:

- **Do not damage the terminals, connector housings or inverter with converter assembly when disconnecting them.**
- **Do not touch the connector waterproofing rubber or terminals.**
- **Insulate the removed terminals with insulating tape.**
- **Do not allow any foreign objects or water to enter the inverter with converter assembly.**

b. Disconnect the wire harness clamp.

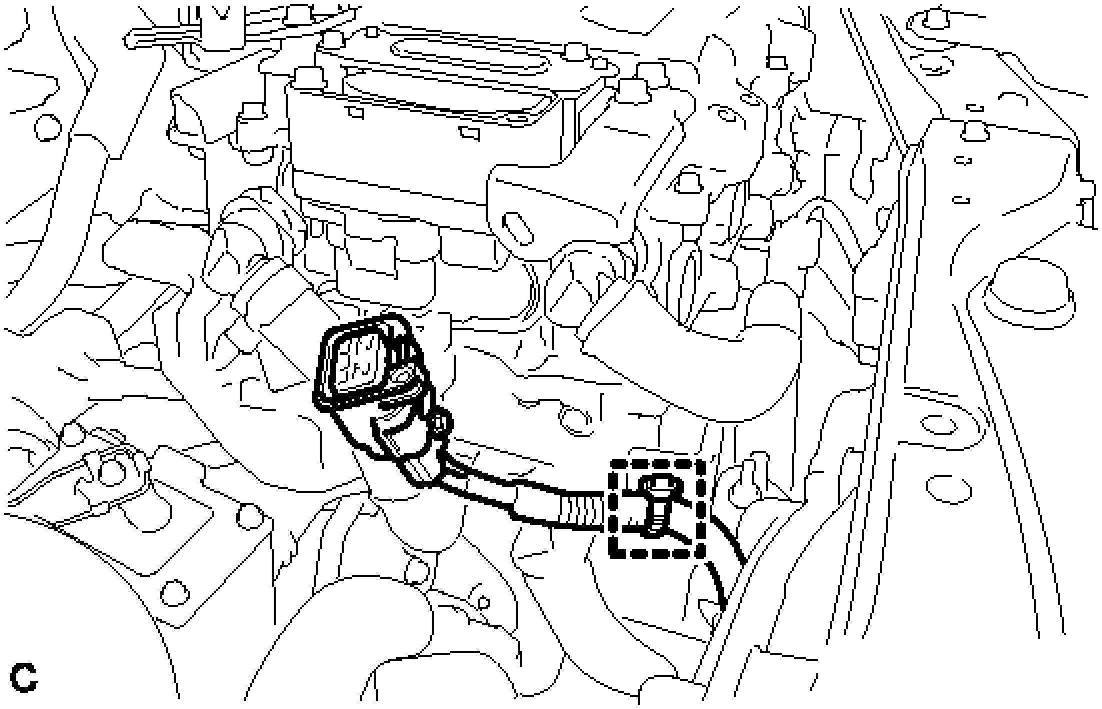

Fig. 25: Identifying No. 4 Engine Wire Harness Clamp
Courtesy of TOYOTA MOTOR SALES, U.S.A., INC.

21. **DISCONNECT NO. 4 FLOOR WIRE**

WARNING: Wear insulated gloves.

a. Remove the bolt.

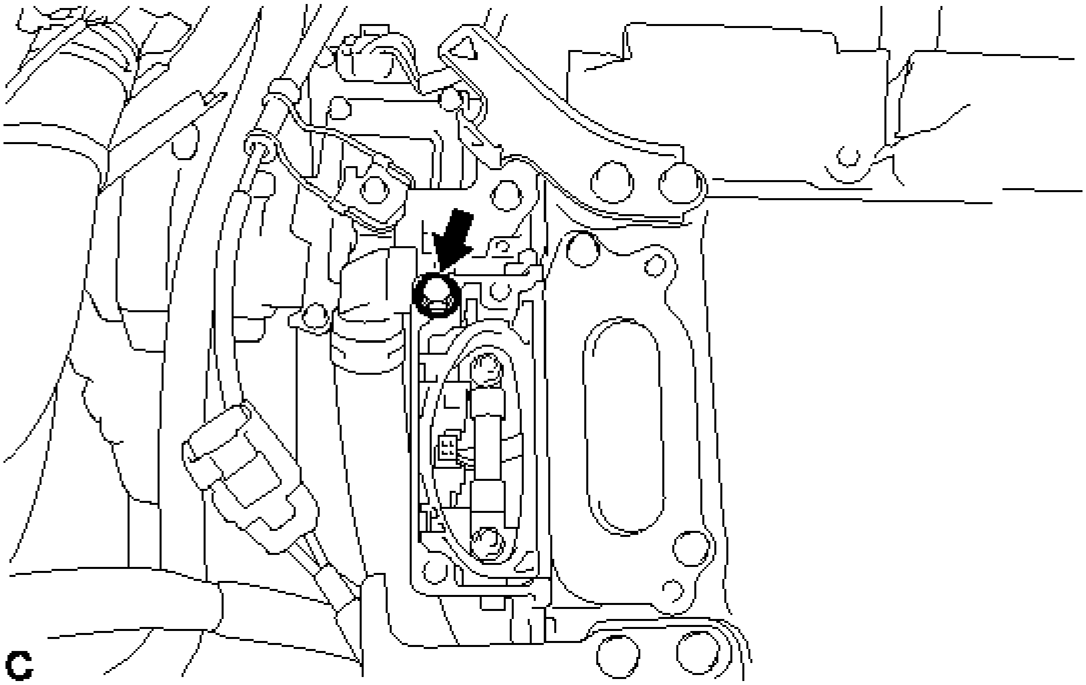

Fig. 26: Identifying No. 4 Floor Wire Bolt
Courtesy of TOYOTA MOTOR SALES, U.S.A., INC.

b. Disconnect the wire harness clamp and connector.

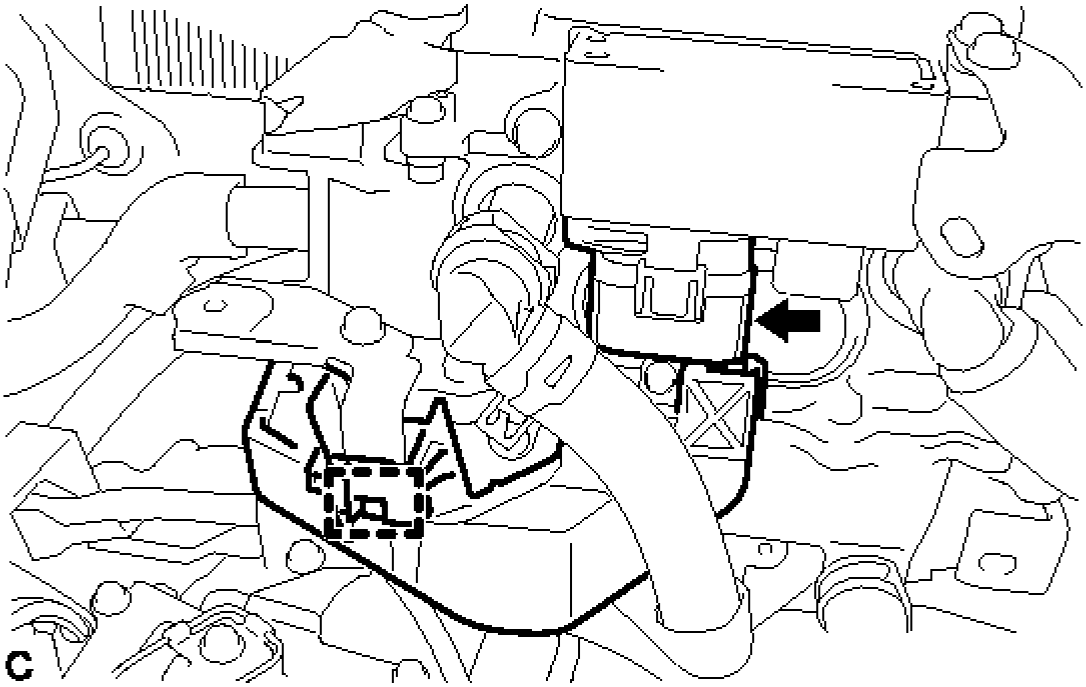

Fig. 27: Identifying No. 4 Floor Wire Harness Clamp And Connector
Courtesy of TOYOTA MOTOR SALES, U.S.A., INC.

NOTE:

- **Do not damage the terminals, connector housings or inverter with converter assembly when disconnecting them.**
- **Do not touch the connector waterproofing rubber or terminals.**
- **Insulate the removed terminals with insulating tape.**
- **Do not allow any foreign objects or water to enter the inverter with converter assembly.**

22. TEMPORARILY INSTALL CONNECTOR COVER ASSEMBLY

WARNING: Wear insulated gloves.

a. Temporarily install the connector cover assembly with the bolt to prevent any foreign objects or water from entering the inverter with converter assembly.

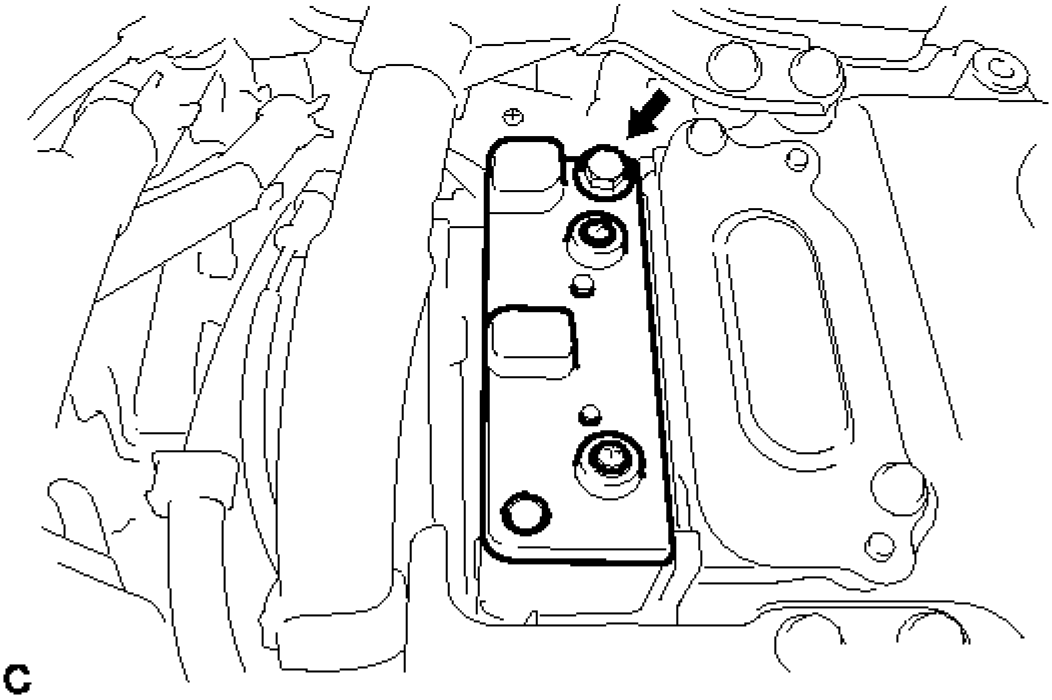

Fig. 28: Identifying Connector Cover Assembly Bolt
Courtesy of TOYOTA MOTOR SALES, U.S.A., INC.

23. DISCONNECT LOW VOLTAGE CONNECTOR

NOTE:

- **Insulate the removed terminals with insulating tape.**
- **Do not allow any foreign objects or water to enter the inverter with converter assembly.**

a. Raise the lock lever and disconnect the 3 low voltage connectors.

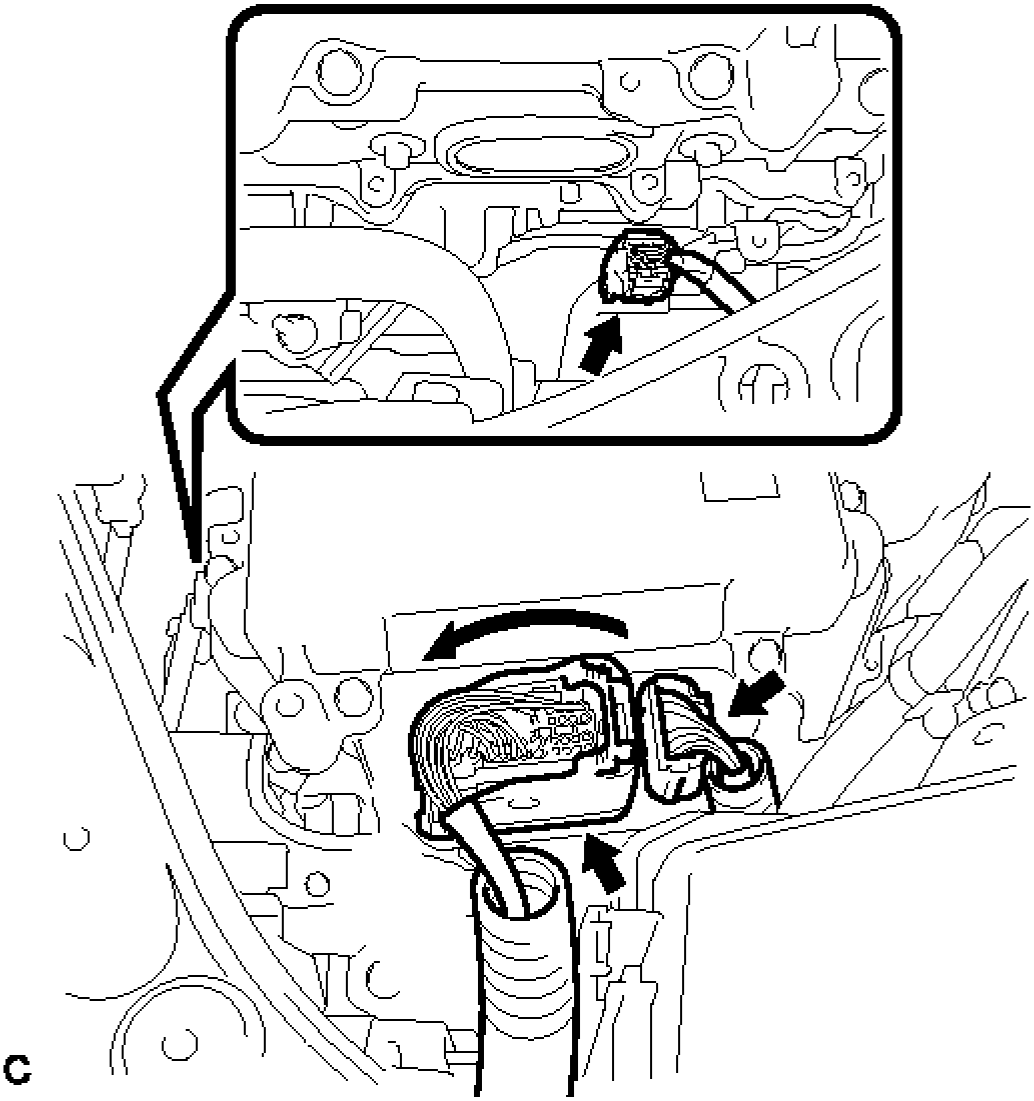

Fig. 29: Raising The Lock Lever And Identifying Low Voltage Connectors
Courtesy of TOYOTA MOTOR SALES, U.S.A., INC.

b. Disconnect the low voltage connector from the inverter with converter assembly.

24. **DISCONNECT NO. 3 ENGINE ROOM WIRE**
    a. Remove the relay block cover.
    b. Remove the nut.

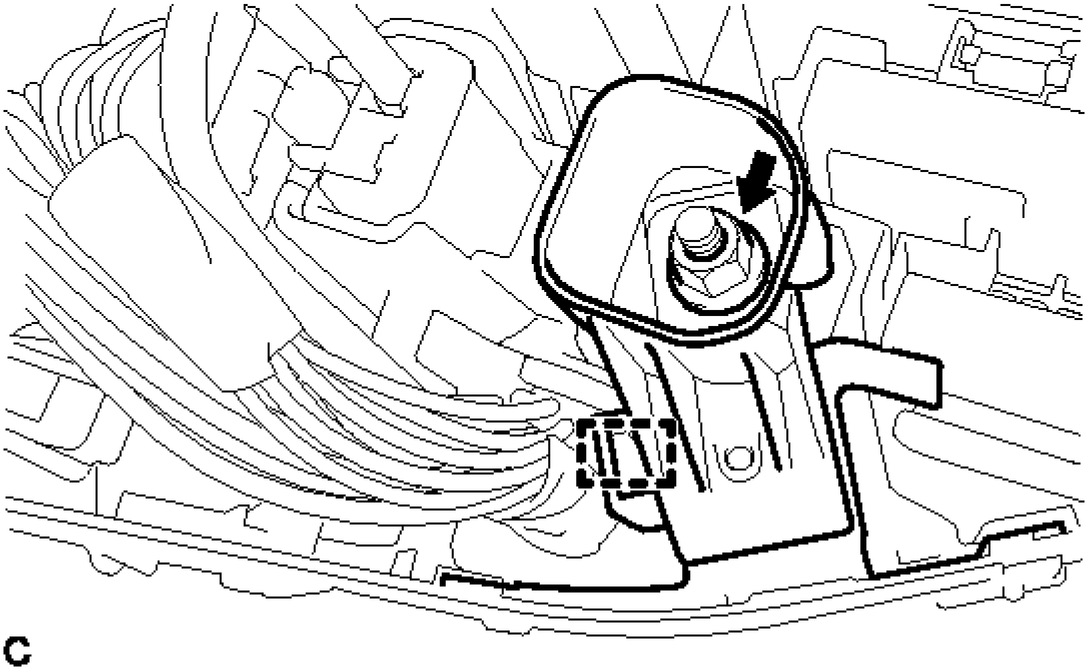

Fig. 30: Identifying Relay Block Cover Nut
Courtesy of TOYOTA MOTOR SALES, U.S.A., INC.

c. Disconnect the wire harness clamp and No. 3 engine room wire.

25. **REMOVE NO. 4 INVERTER COOLING HOSE**

a. Release the retainer and disconnect the No. 4 inverter cooling hose from the inverter with converter assembly.

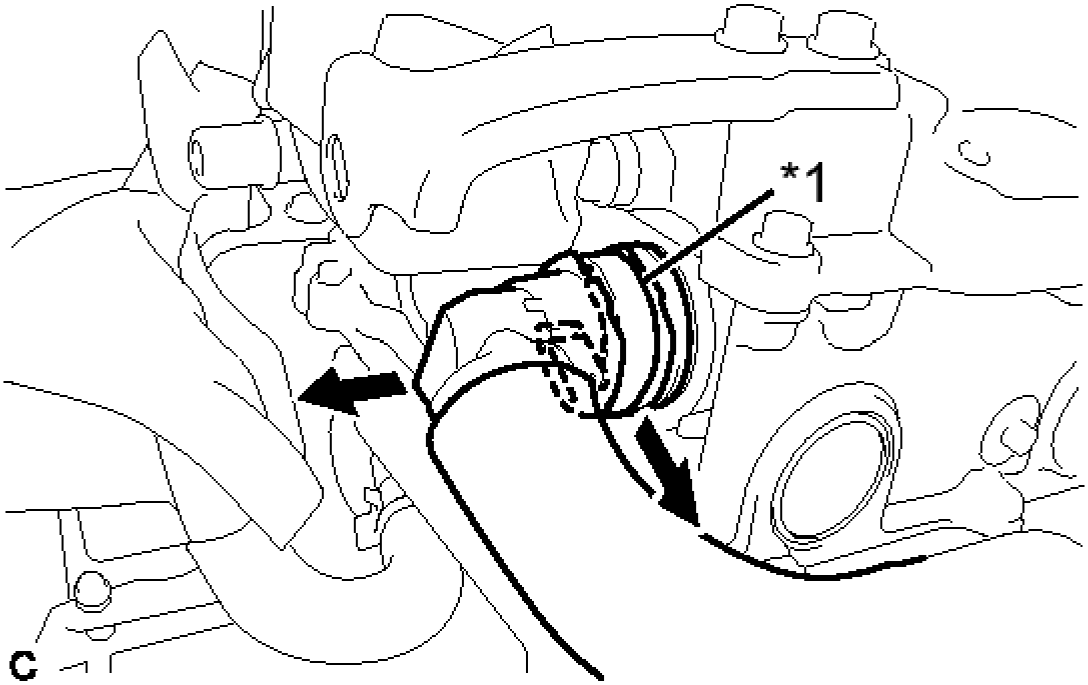

Fig. 31: Disconnecting No. 4 Inverter Cooling Hose
Courtesy of TOYOTA MOTOR SALES, U.S.A., INC.

TEXT IN ILLUSTRATION

*1	Retainer

b. Put pieces of cloth into the pipes and in the disconnected hoses, or cover the pipes and hoses with plastic bags as shown in the illustration to prevent foreign matter from entering the cooling system and to prevent coolant from spilling near the inverter with converter assembly.

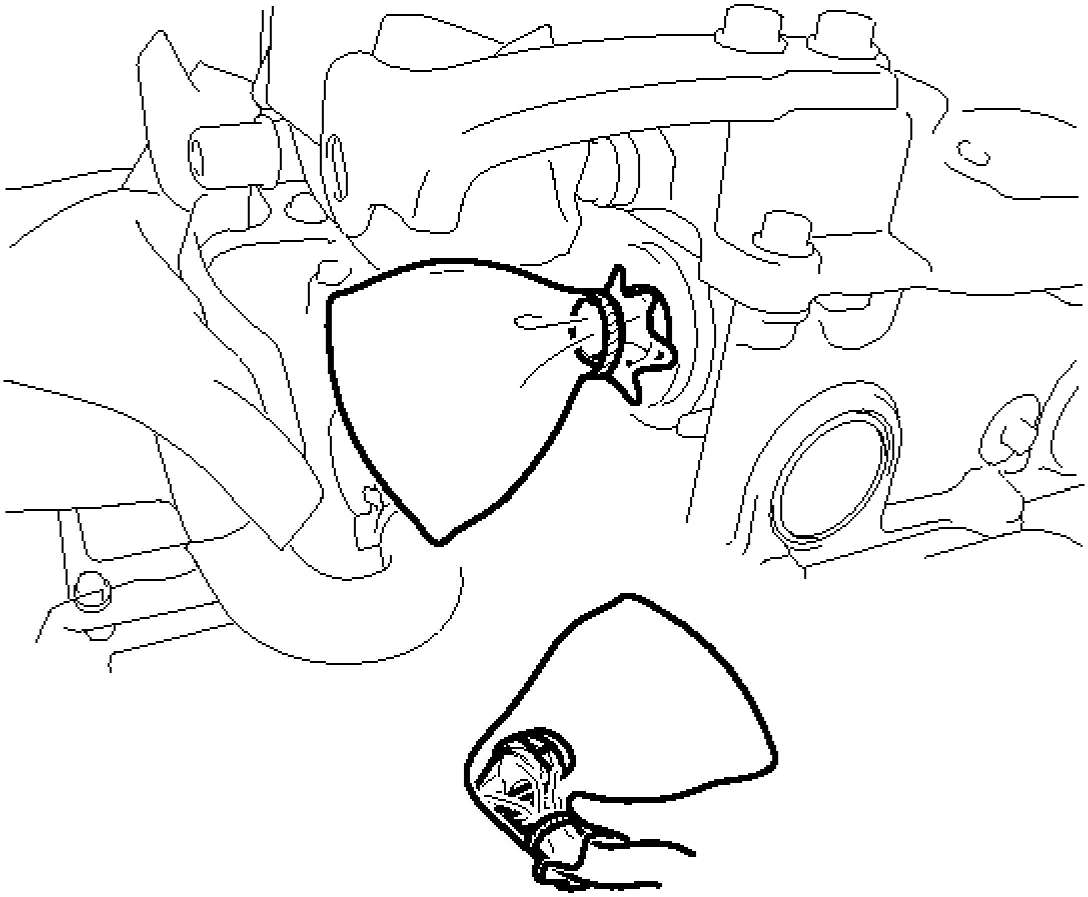

Fig. 32: Covering The Pipes And Hoses With Plastic Bags
Courtesy of TOYOTA MOTOR SALES, U.S.A., INC.

26. **REMOVE NO. 1 INVERTER COOLING HOSE ASSEMBLY**
    a. Release the retainer and disconnect the No. 1 inverter cooling hose from the inverter with converter assembly.

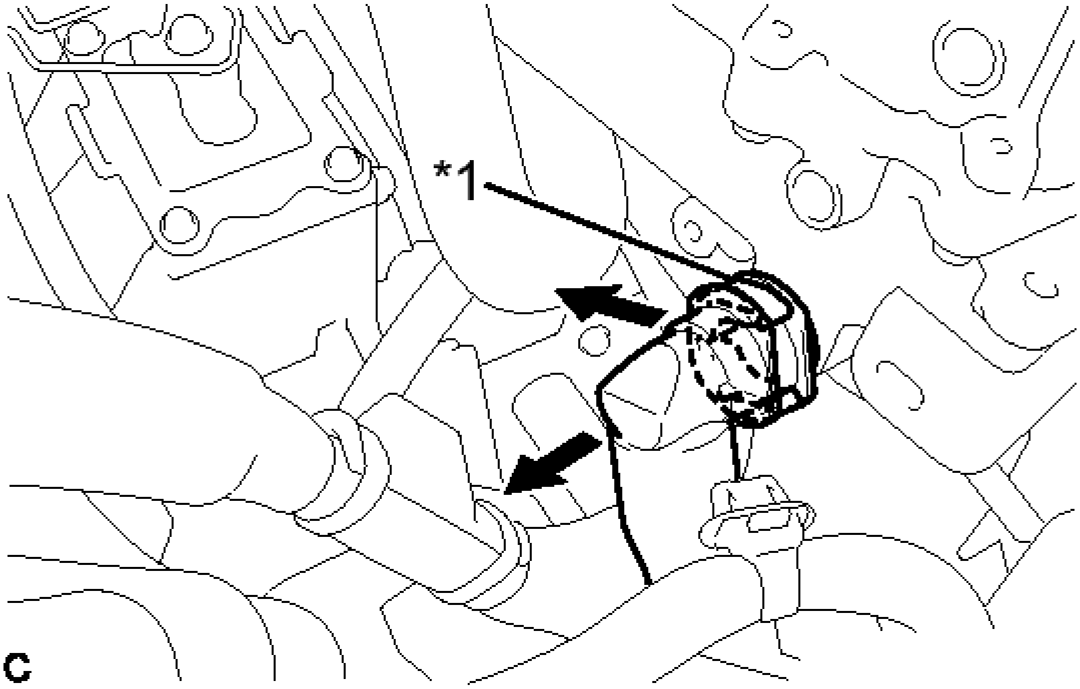

Fig. 33: Disconnecting No. 1 Inverter Cooling Hose
Courtesy of TOYOTA MOTOR SALES, U.S.A., INC.

TEXT IN ILLUSTRATION

*1	Retainer

b. Put pieces of cloth into the pipes and in the disconnected hoses, or cover the pipes and hoses with plastic bags as shown in the illustration to prevent foreign matter from entering the cooling system and to prevent coolant from spilling near the inverter with converter assembly.

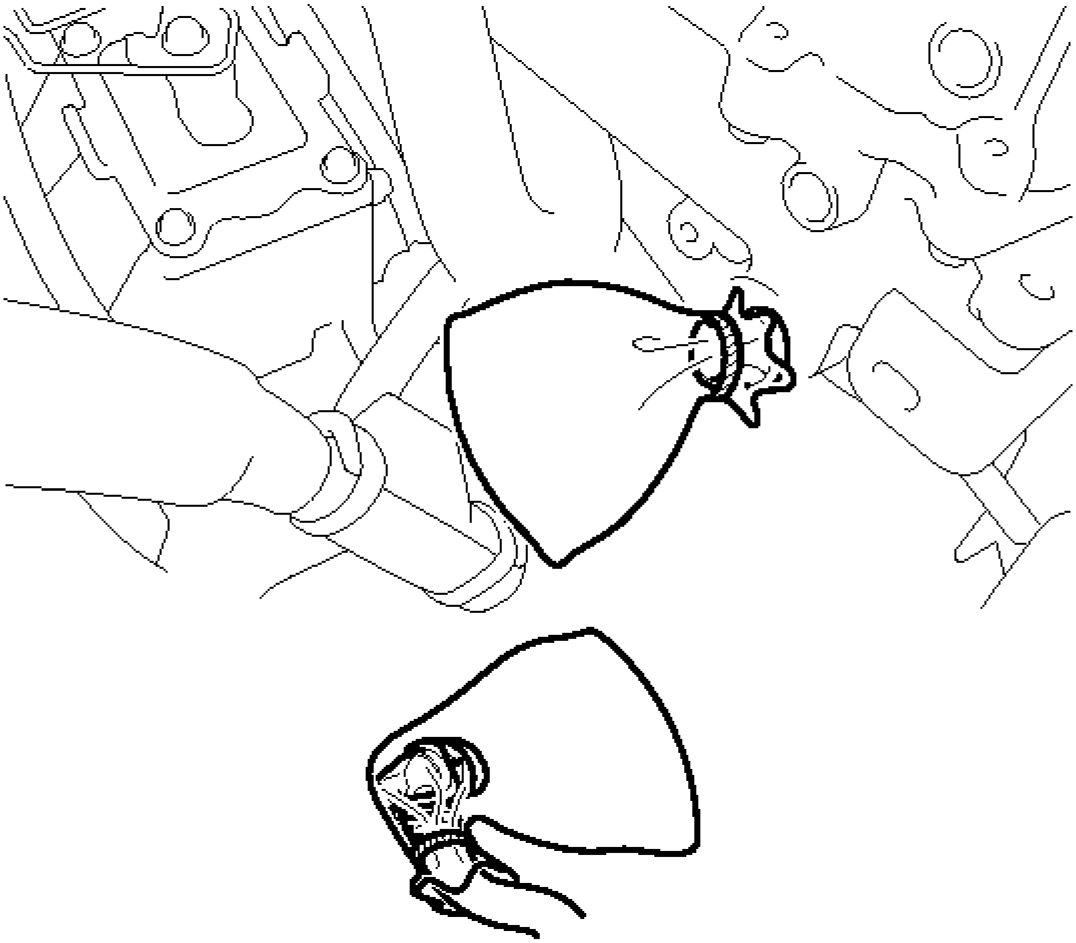

Fig. 34: Cover The Pipes And Hoses With Plastic Bags
Courtesy of TOYOTA MOTOR SALES, U.S.A., INC.

27. **REMOVE INVERTER WITH CONVERTER ASSEMBLY**

WARNING: Wear insulated gloves.

a. Temporarily secure the No. 3 engine room wire with the inverter with converter assembly hook as shown in the illustration.

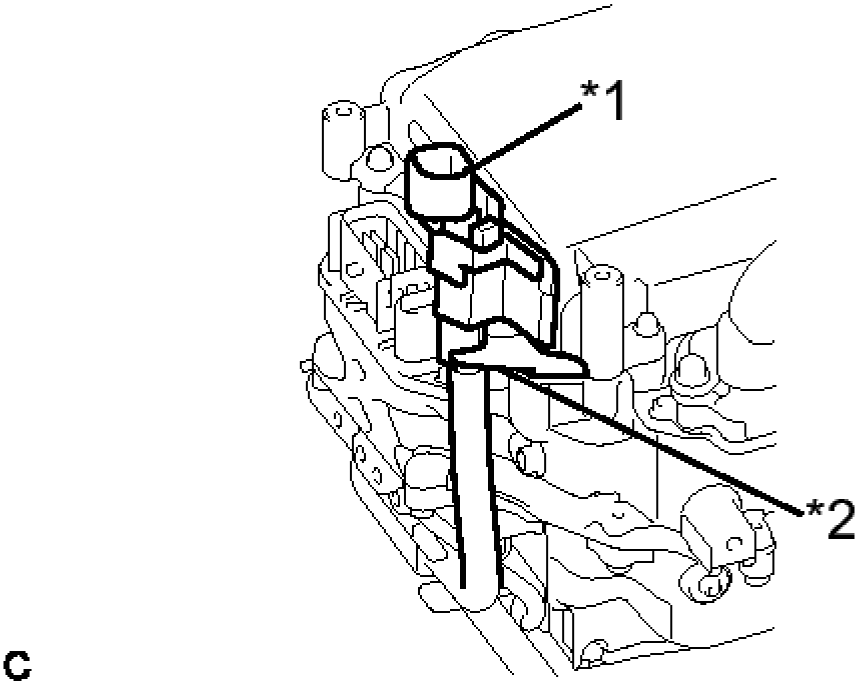

Fig. 35: Identifying No. 3 Engine Room Wire And Hook
Courtesy of TOYOTA MOTOR SALES, U.S.A., INC.

TEXT IN ILLUSTRATION

*1	No. 3 Engine Room Wire
*2	Hook

b. Remove the 2 bolts, nut and inverter with converter assembly.

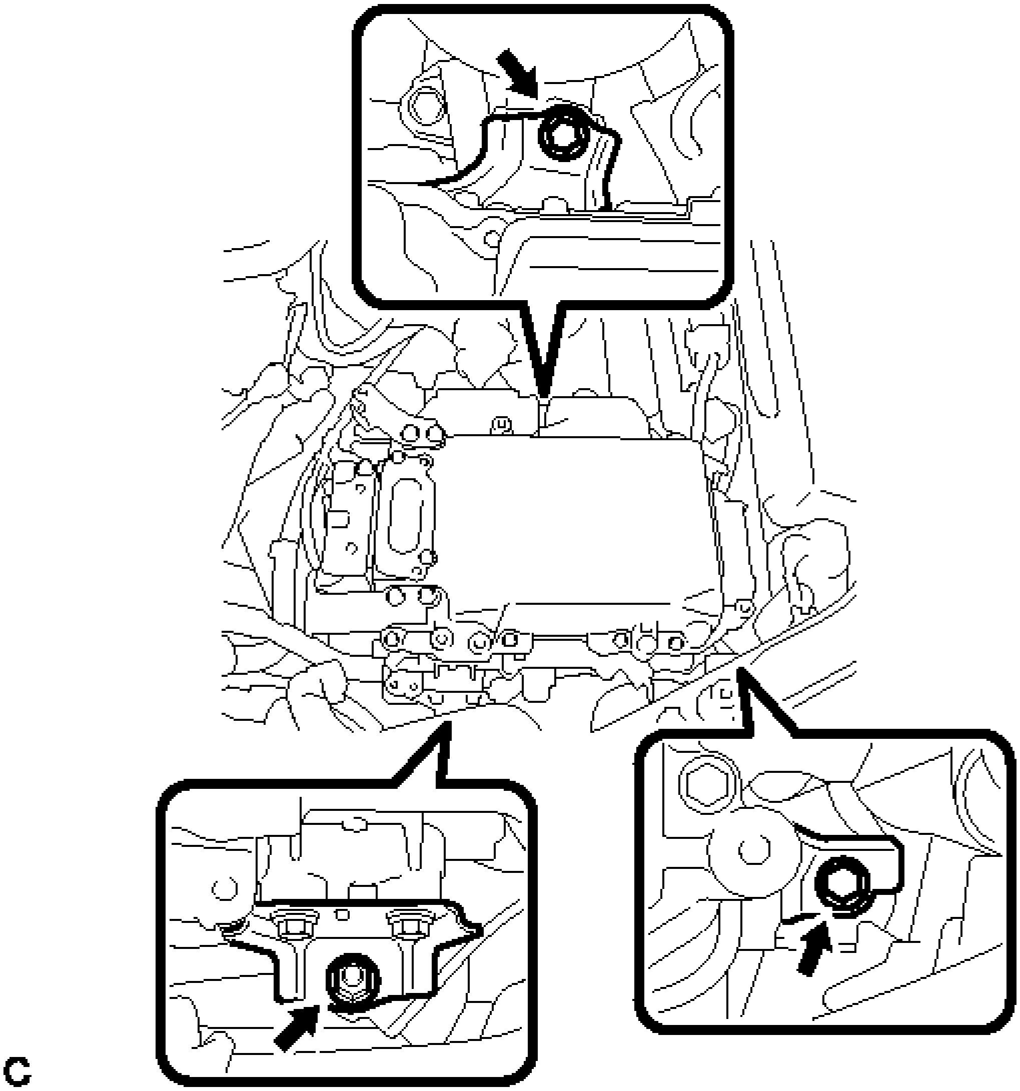

Fig. 36: Identifying Inverter With Converter Assembly Nut And Bolts
Courtesy of TOYOTA MOTOR SALES, U.S.A., INC.

NOTE:

- **Since the inverter with converter assembly is very heavy, 2 people are needed to remove the inverter with converter assembly. When removing the inverter with converter assembly, do not damage the parts around it.**
- **To prevent damage, do not hold the inverter with converter assembly by the connectors.**
- **To prevent damage due to static electricity, do not touch the terminals of the disconnected connectors.**

c. Even after the coolant is drained, coolant remains in the inverter with converter assembly due to its internal structure. Therefore, seal or cover the pipes when removing the inverter with converter to prevent coolant from spilling out or foreign matter from entering the inverter with converter.

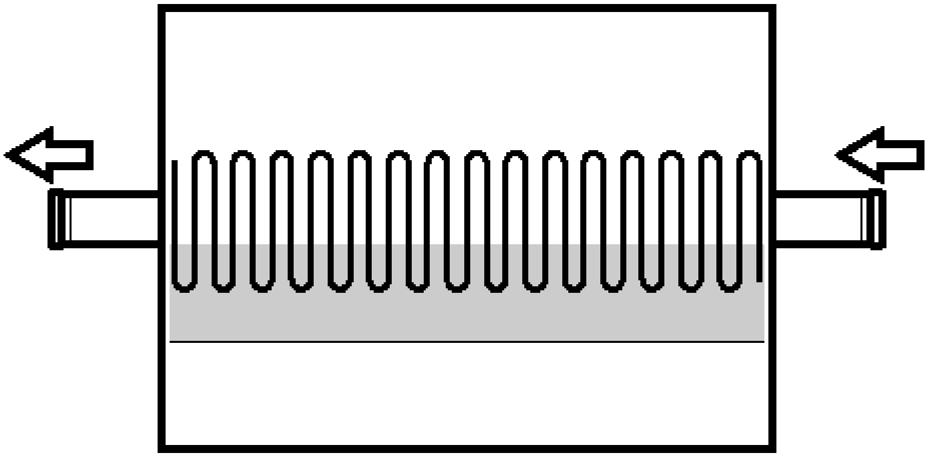

T

Fig. 37: View Of Remaining Coolant After Drainage
Courtesy of TOYOTA MOTOR SALES, U.S.A., INC.

28. REMOVE HIGH VOLTAGE FUSE

WARNING: **Wear insulated gloves.**

HINT:

Perform this procedure only when replacement of the high voltage fuse is necessary.

a. Remove the bolt and connector cover assembly.

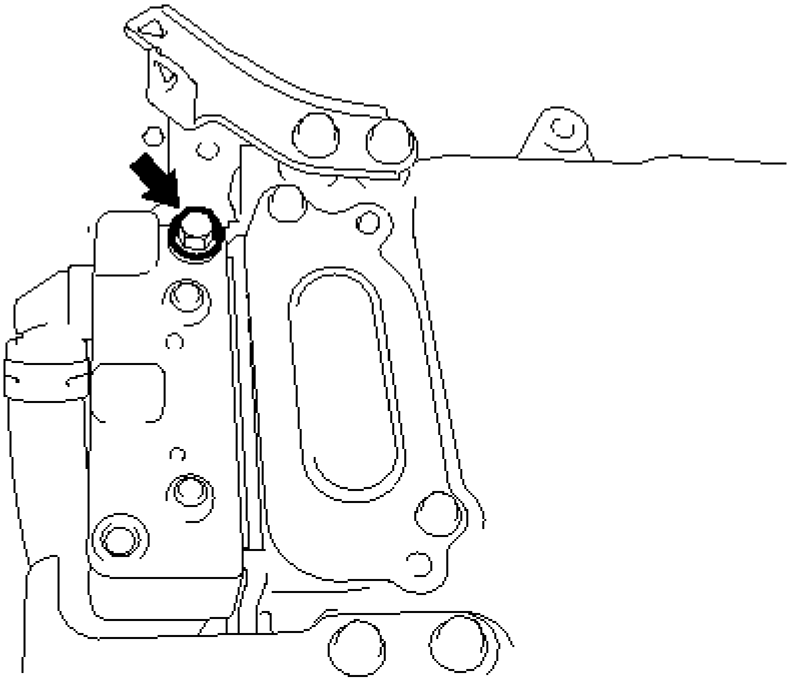

Fig. 38: Identifying Connector Cover Assembly Bolt
Courtesy of TOYOTA MOTOR SALES, U.S.A., INC.

NOTE:

- **Make sure to pull the connector cover assembly straight up, as a connector is connected to the bottom of the cover.**
- **Do not allow any foreign objects or water to enter the inverter with converter assembly.**

b. Remove the 2 nuts and high voltage fuse.

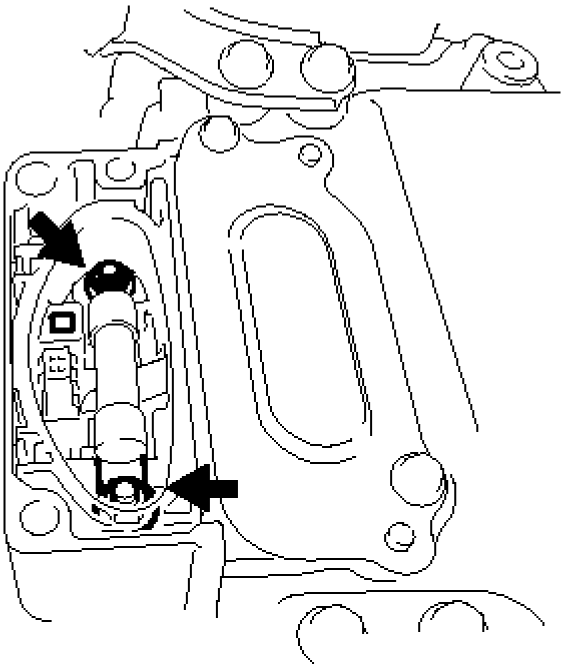

Fig. 39: Identifying High Voltage Fuse Nuts
Courtesy of TOYOTA MOTOR SALES, U.S.A., INC.

c. Temporarily install the connector cover assembly with the bolt to prevent any foreign objects or water from entering the inverter with converter assembly.

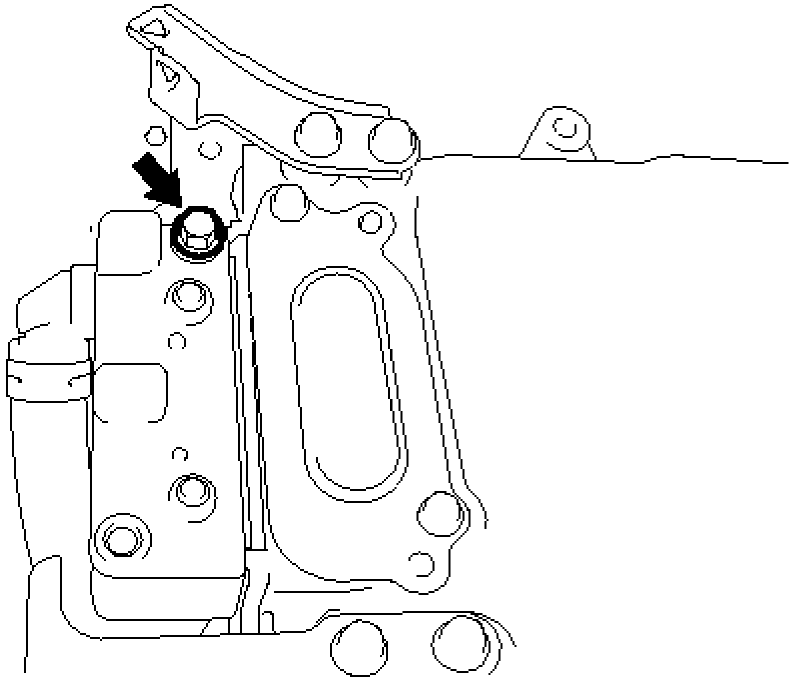

Fig. 40: Identifying Connector Cover Assembly Bolt

Courtesy of TOYOTA MOTOR SALES, U.S.A., INC.

29. **REMOVE AIR CLEANER BRACKET**
    a. Remove the bolt and air cleaner bracket.

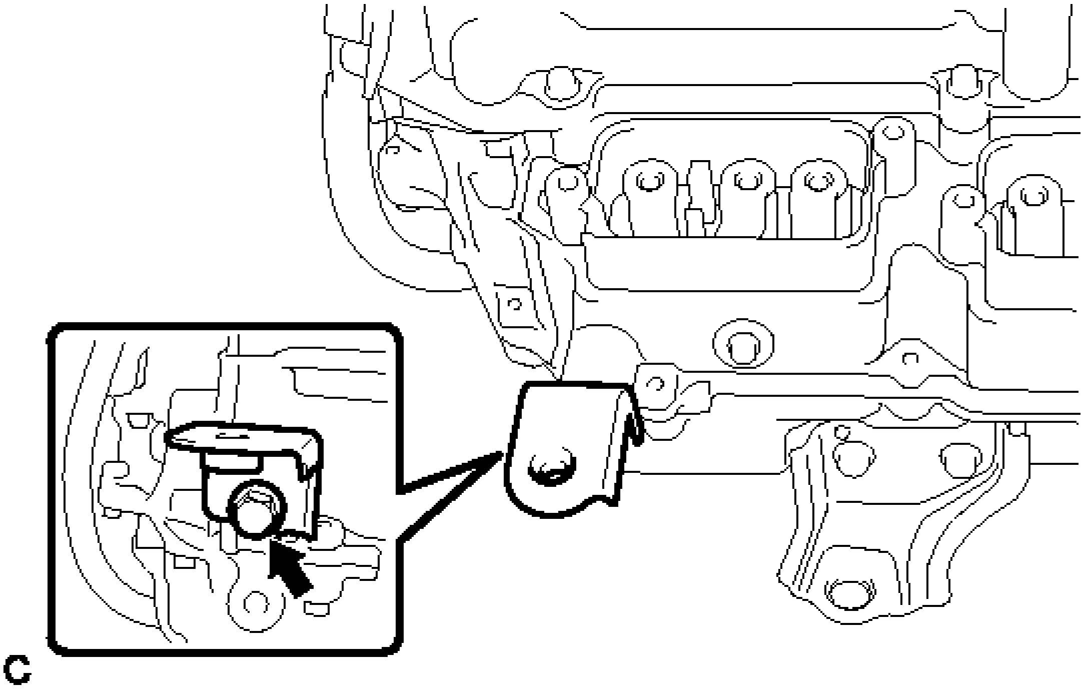

Fig. 41: Identifying Air Cleaner Bracket And Bolt
Courtesy of TOYOTA MOTOR SALES, U.S.A., INC.

30. **REMOVE AIR CLEANER BRACKET**
    a. Remove the bolt and air cleaner bracket.

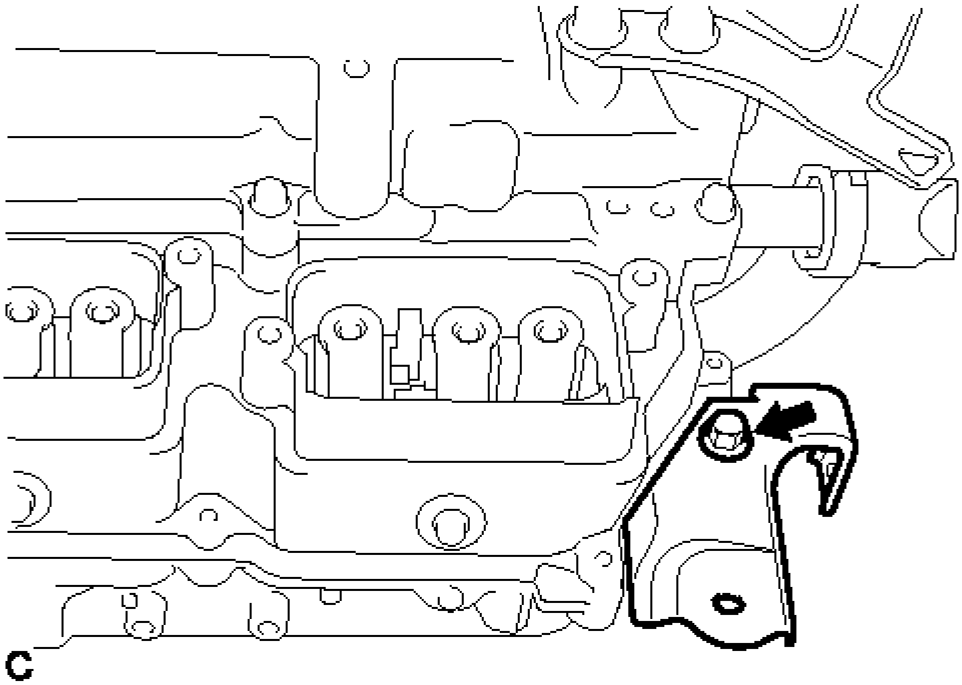

Fig. 42: Identifying Air Cleaner Bracket And Bolt
Courtesy of TOYOTA MOTOR SALES, U.S.A., INC.

31. **REMOVE NO. 1 INVERTER BRACKET**
    a. Remove the 2 bolts and No. 1 inverter bracket.

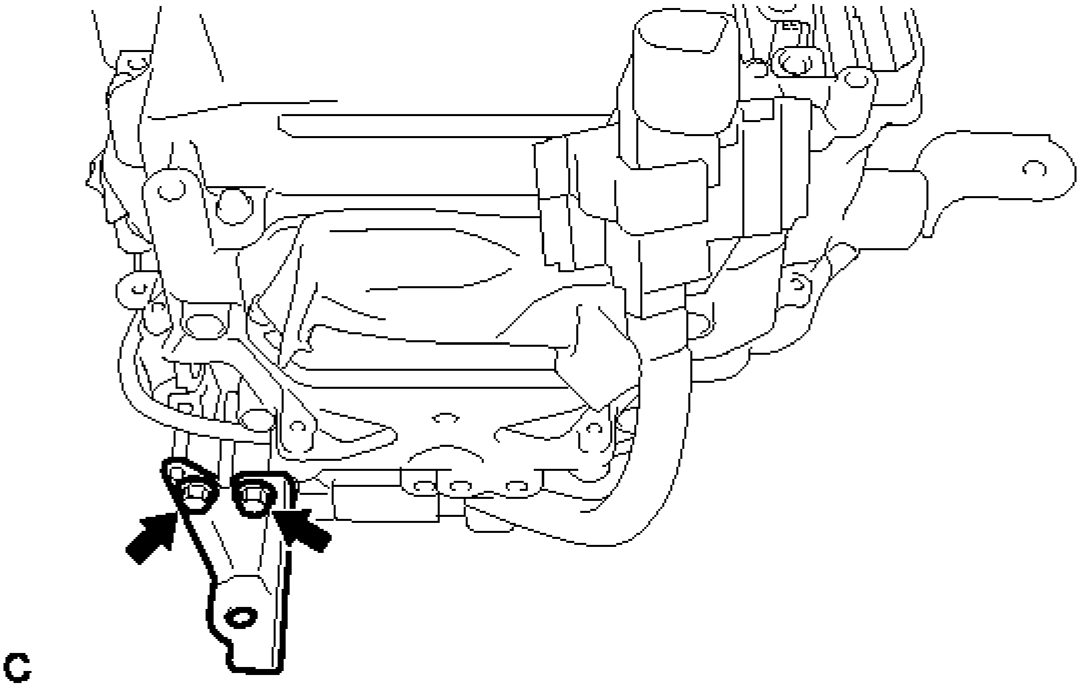

Fig. 43: Identifying No. 1 Inverter Bracket And Bolts

Courtesy of TOYOTA MOTOR SALES, U.S.A., INC.

32. REMOVE NO. 2 INVERTER BRACKET

a. Remove the 2 bolts and No. 2 inverter bracket.

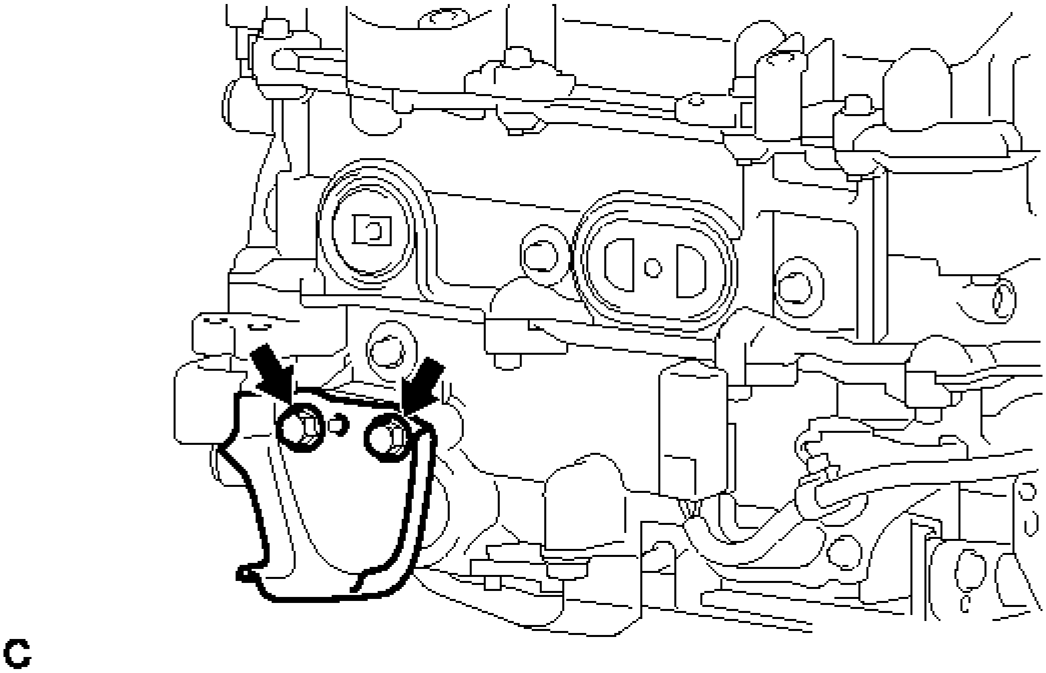

Fig. 44: Identifying No. 2 Inverter Bracket And Bolts
Courtesy of TOYOTA MOTOR SALES, U.S.A., INC.

33. REMOVE NO. 3 INVERTER BRACKET

a. Remove the 2 bolts and No. 3 inverter bracket.

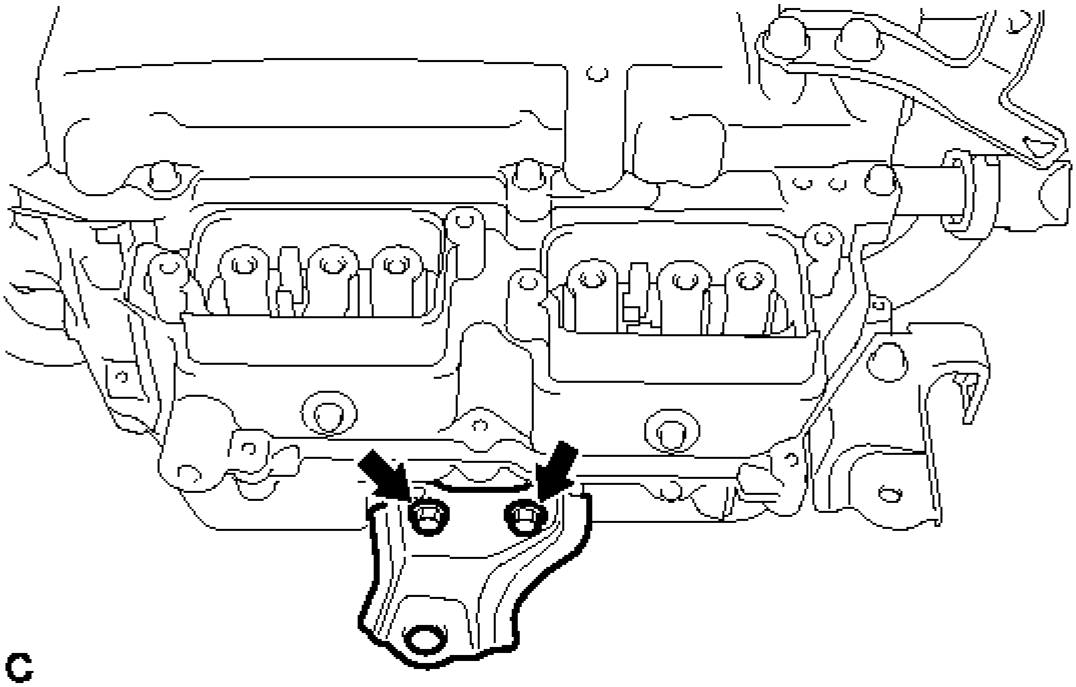

Fig. 45: Identifying No. 3 Inverter Bracket And Bolts
Courtesy of TOYOTA MOTOR SALES, U.S.A., INC.

34. **REMOVE NO. 1 MOTOR CABLE BRACKET**
    a. Remove the 2 bolts and No. 1 motor cable bracket.

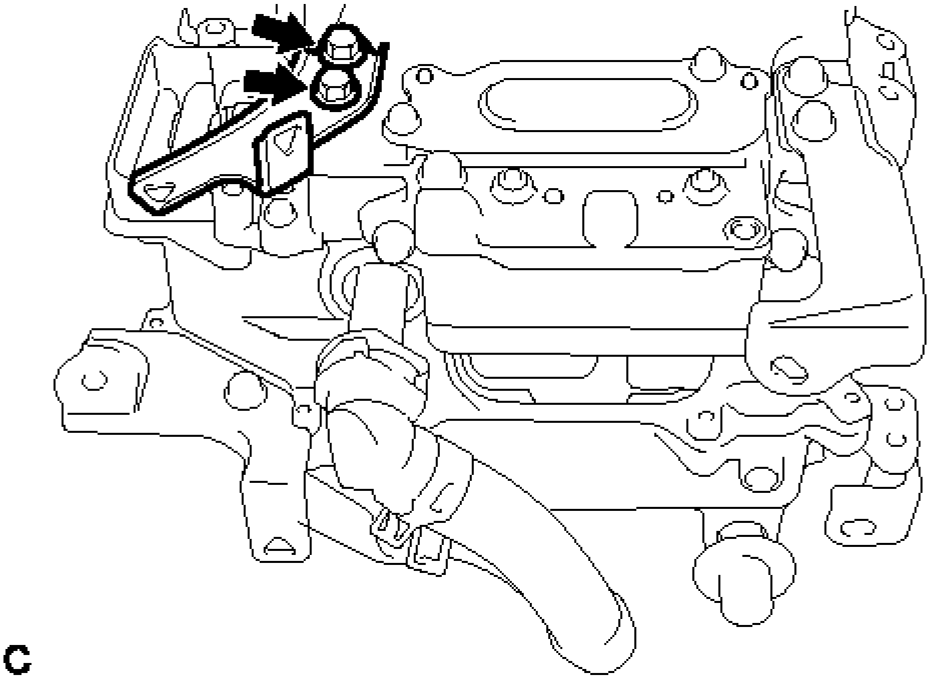

Fig. 46: Identifying No. 1 Motor Cable Bracket And Bolts

Courtesy of TOYOTA MOTOR SALES, U.S.A., INC.

35. **REMOVE NO. 2 MOTOR CABLE BRACKET**
    a. Remove the 2 bolts and No. 2 motor cable bracket.

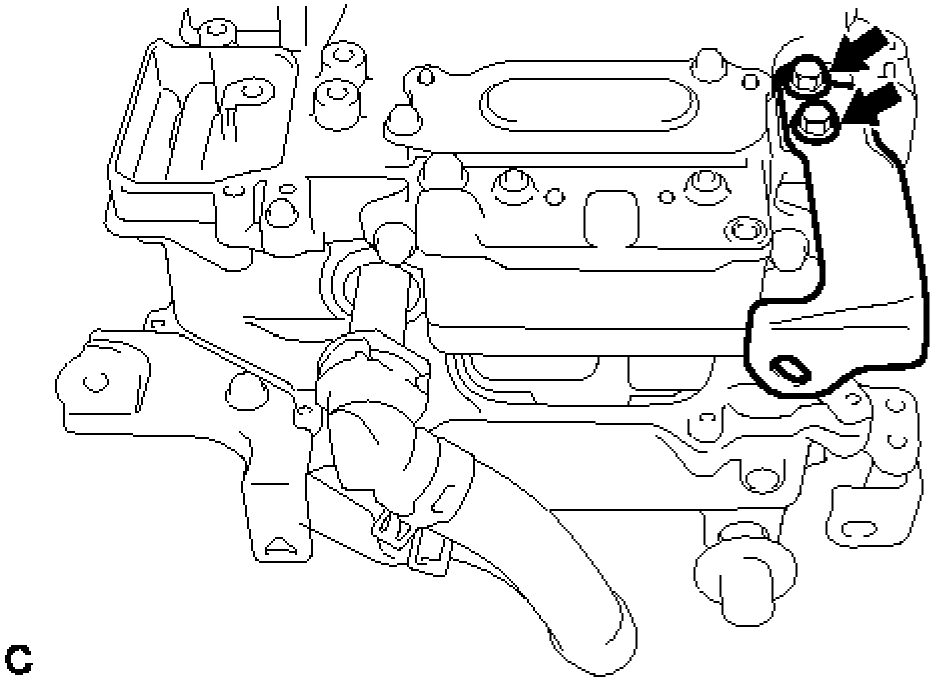

Fig. 47: Identifying No. 2 Motor Cable Bracket And Bolts
Courtesy of TOYOTA MOTOR SALES, U.S.A., INC.

36. **REMOVE NO. 1 INVERTER COOLING HOSE**
    a. Release the retainer and disconnect the No. 1 inverter cooling hose from the inverter with converter assembly.

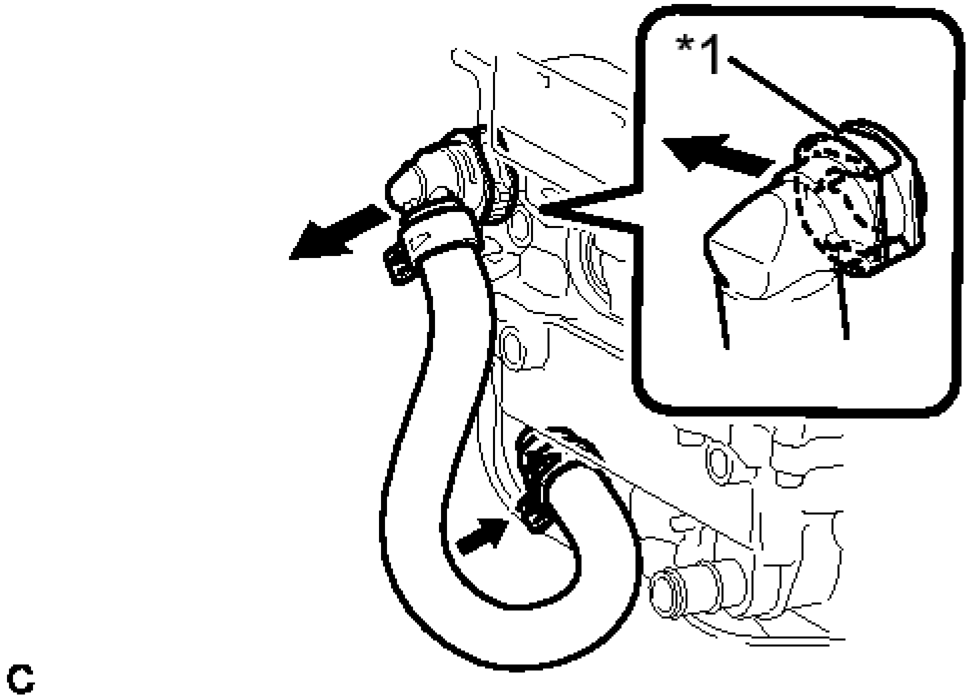

Fig. 48: Disconnecting No. 1 Inverter Cooling Hose
Courtesy of TOYOTA MOTOR SALES, U.S.A., INC.

TEXT IN ILLUSTRATION

*1	Retainer

b. Remove the No. 1 inverter cooling hose.

c. Put pieces of cloth into the pipes and in the disconnected hoses, or cover the pipes and hoses with plastic bags as shown in the illustration to prevent foreign matter from entering the cooling system and to prevent coolant from spilling near the inverter with converter assembly.

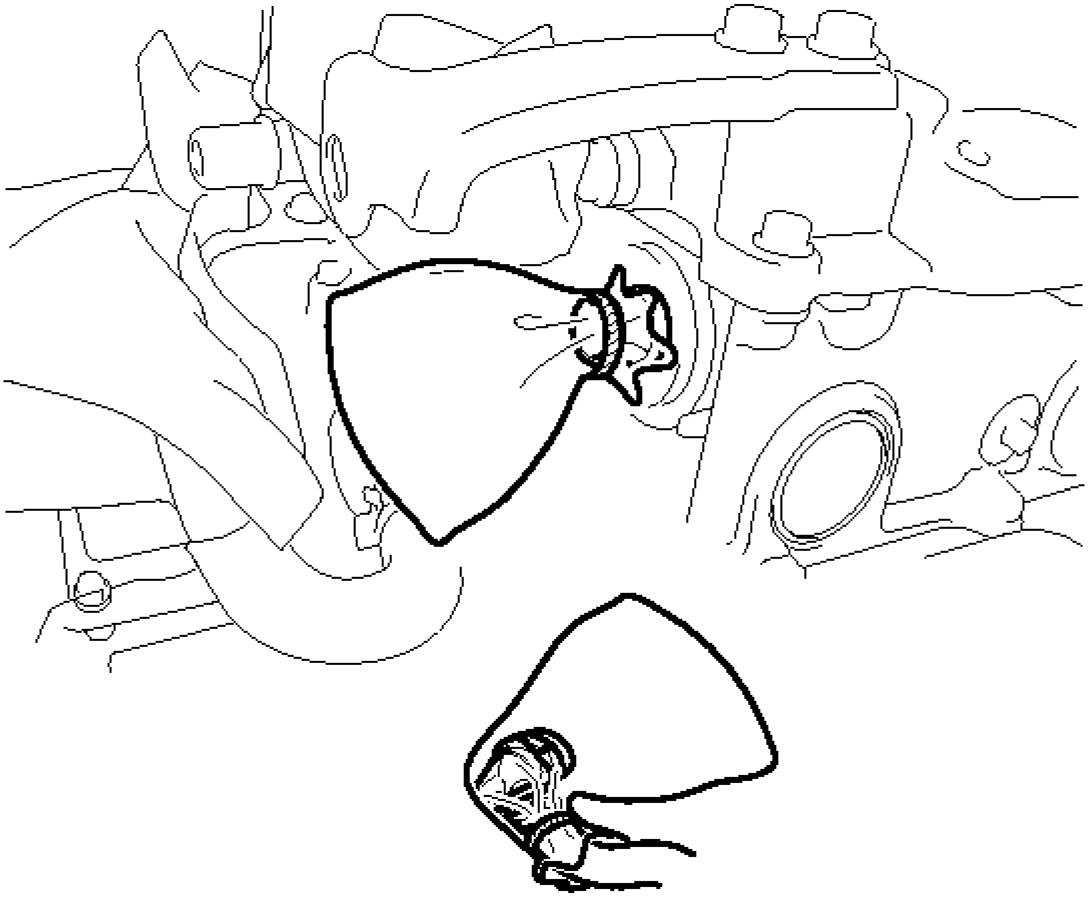

Fig. 49: Covering The Pipes And Hoses With Plastic Bags
Courtesy of TOYOTA MOTOR SALES, U.S.A., INC.

37. **REMOVE NO. 3 ENGINE ROOM WIRE**
    a. Open the cover.

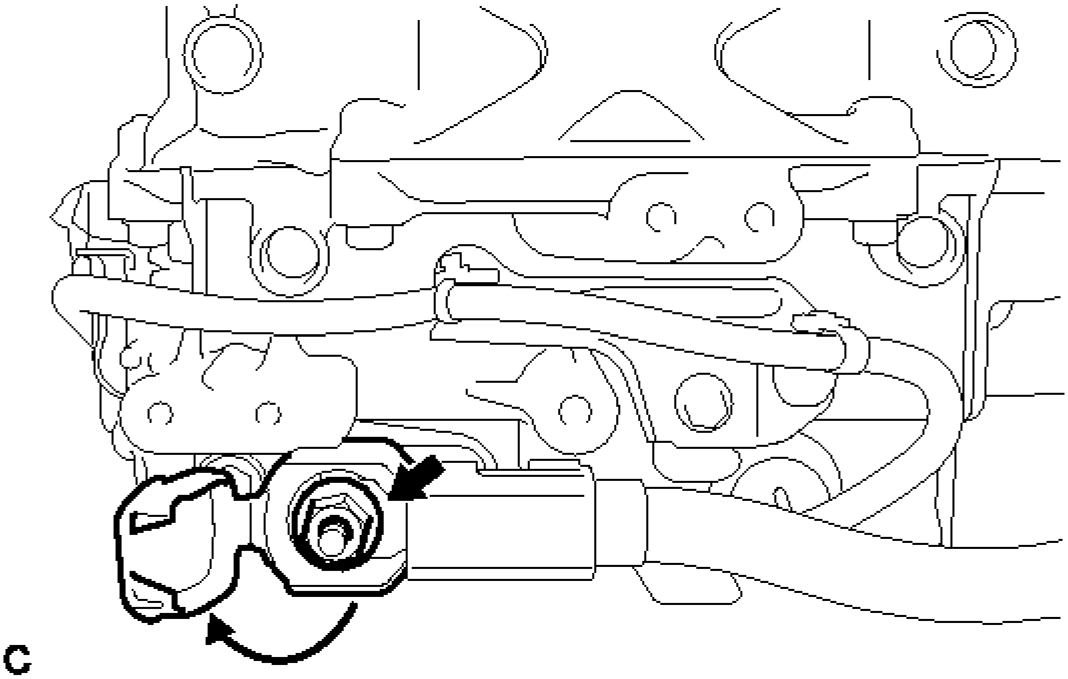

Fig. 50: Identifying No. 3 Engine Room Wire Nut
Courtesy of TOYOTA MOTOR SALES, U.S.A., INC.

NOTE: **Do not twist the cover excessively when opening it.**

b. Remove the nut and No. 3 engine room wire.

INSTALLATION

INSTALLATION

NOTE: **If the inverter with converter assembly has been replaced with a new one, make sure to lock the No. 1 inverter cooling hose retainer.**

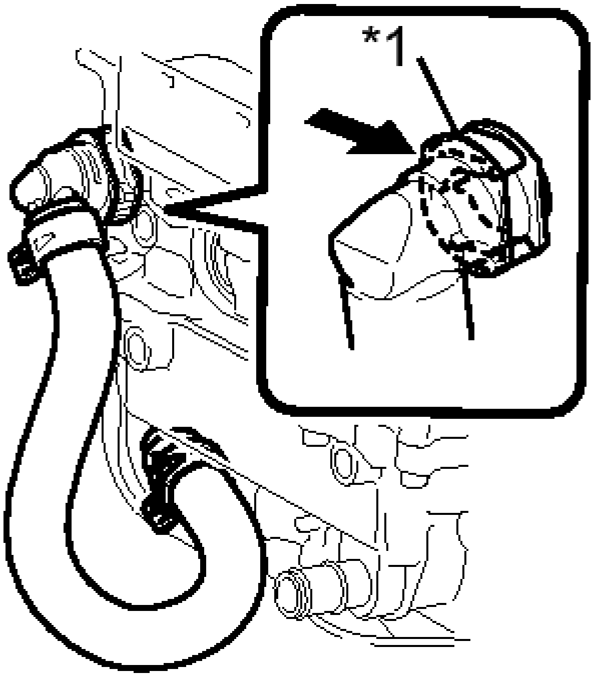

Fig. 51: Locking No. 1 Inverter Cooling Hose Retainer
Courtesy of TOYOTA MOTOR SALES, U.S.A., INC.

TEXT IN ILLUSTRATION

*1	Retainer

1. **INSTALL NO. 3 ENGINE ROOM WIRE**
    a. Temporarily install the No. 3 engine room wire with the nut.

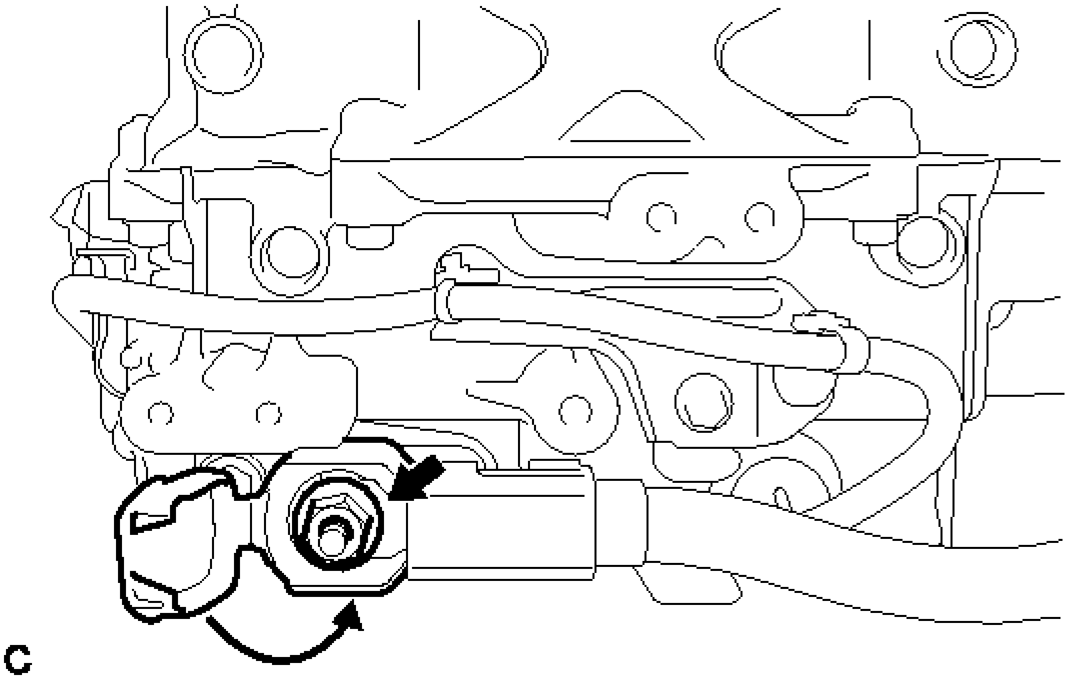

Fig. 52: Identifying No. 3 Engine Room Wire Nut
Courtesy of TOYOTA MOTOR SALES, U.S.A., INC.

b. Tighten the nut.

Torque: 18 N*m (184 kgf*cm, 13 ft.*lbf)

c. Close the cover.

2. **INSTALL NO. 1 INVERTER COOLING HOSE**

a. Connect the No. 1 inverter cooling hose to the inverter with converter assembly and lock the hose with the retainer.

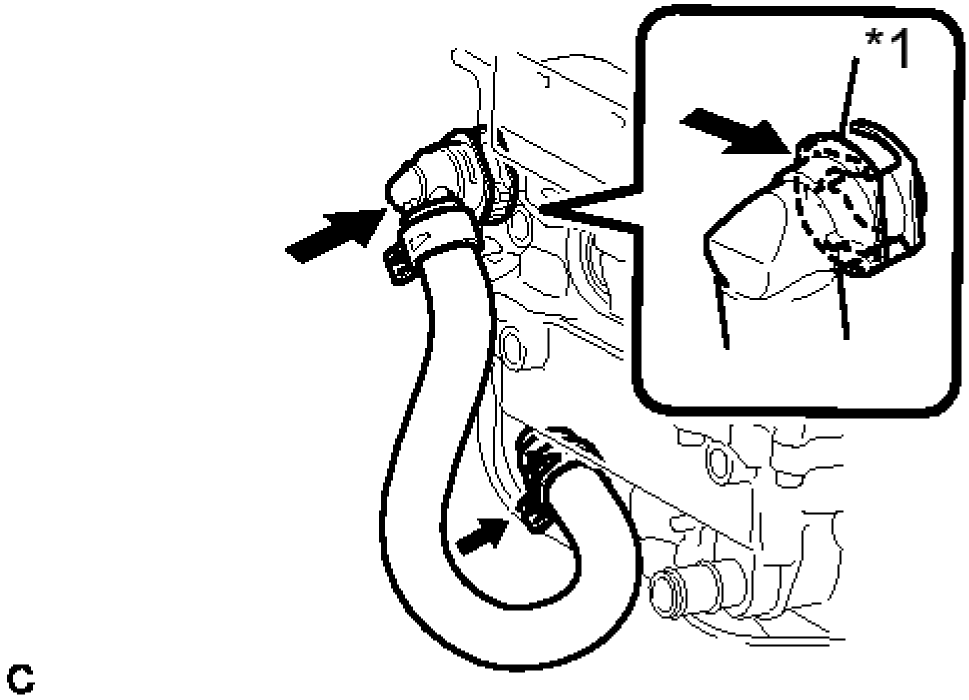

Fig. 53: Connecting No. 1 Inverter Cooling Hose
Courtesy of TOYOTA MOTOR SALES, U.S.A., INC.

TEXT IN ILLUSTRATION

*1	Retainer

NOTE:

- **Insert the retainer until a click sound is heard.**
- **Pull on the hose to confirm that the hose is securely connected.**
- **If there is foreign matter on the union or the O-ring, clean it with water and finger scouring.**
- **To prevent foreign matter from entering the cooling system, do not remove the pieces of cloth or plastic bags from the pipes and disconnected hoses until installation.**

b. Install the No. 1 inverter hose to the inverter with hose clamp.

3. **INSTALL NO. 2 MOTOR CABLE BRACKET**
   a. Install the No. 2 motor cable bracket with the 2 bolts.

   Torque: 8.0 N*m (82 kgf*cm, 71 in.*lbf)

4. **INSTALL NO. 1 MOTOR CABLE BRACKET**
   a. Install the No. 1 motor cable bracket with the 2 bolts.

   Torque: 8.0 N*m (82 kgf*cm, 71 in.*lbf)

5. **INSTALL NO. 3 INVERTER BRACKET**
    1. Temporarily install the No. 3 inverter bracket with the 2 bolts.
    2. Tighten the 2 bolts in the order shown in the illustration.

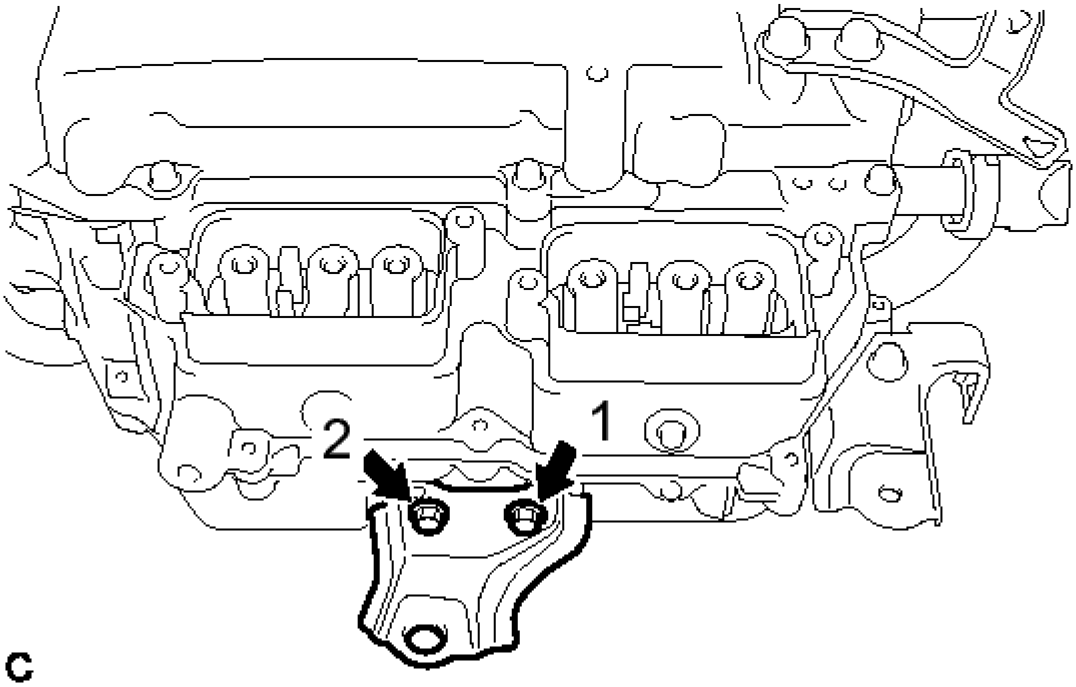

Fig. 54: Identifying No. 3 Inverter Bracket And Bolts
Courtesy of TOYOTA MOTOR SALES, U.S.A., INC.

Torque: 8.5 N*m (87 kgf*cm, 75 in.*lbf)

6. **INSTALL NO. 2 INVERTER BRACKET**
    1. Temporarily install the No. 2 inverter bracket with the 2 bolts.
    2. Tighten the 2 bolts in the order shown in the illustration.

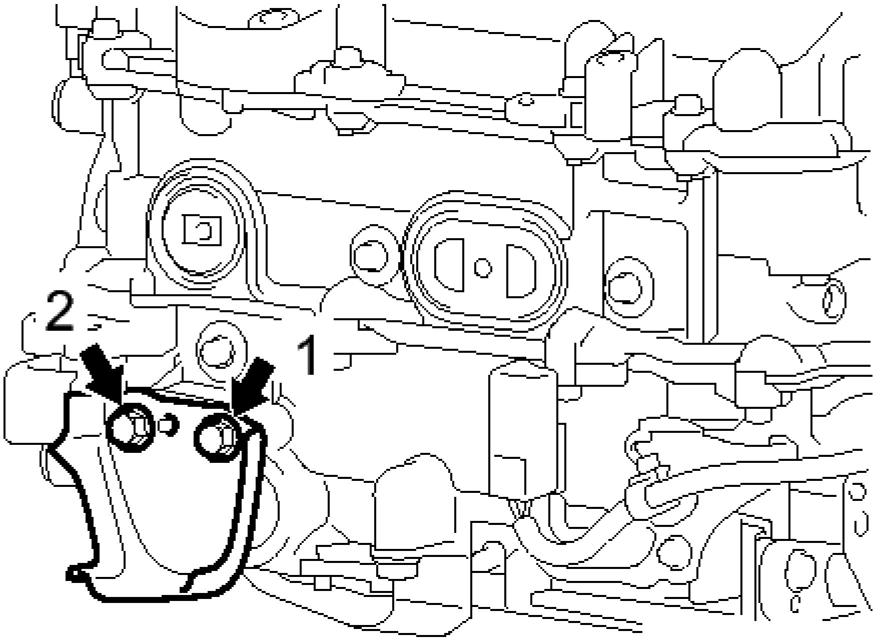

C

Fig. 55: Identifying No. 2 Inverter Bracket And Bolts
Courtesy of TOYOTA MOTOR SALES, U.S.A., INC.

Torque: 8.5 N*m (87 kgf*cm, 75 in.*lbf)

7. **INSTALL NO. 1 INVERTER BRACKET**
   a. Temporarily install the No. 1 inverter bracket with the 2 bolts.
   b. Tighten the 2 bolts in the order shown in the illustration.

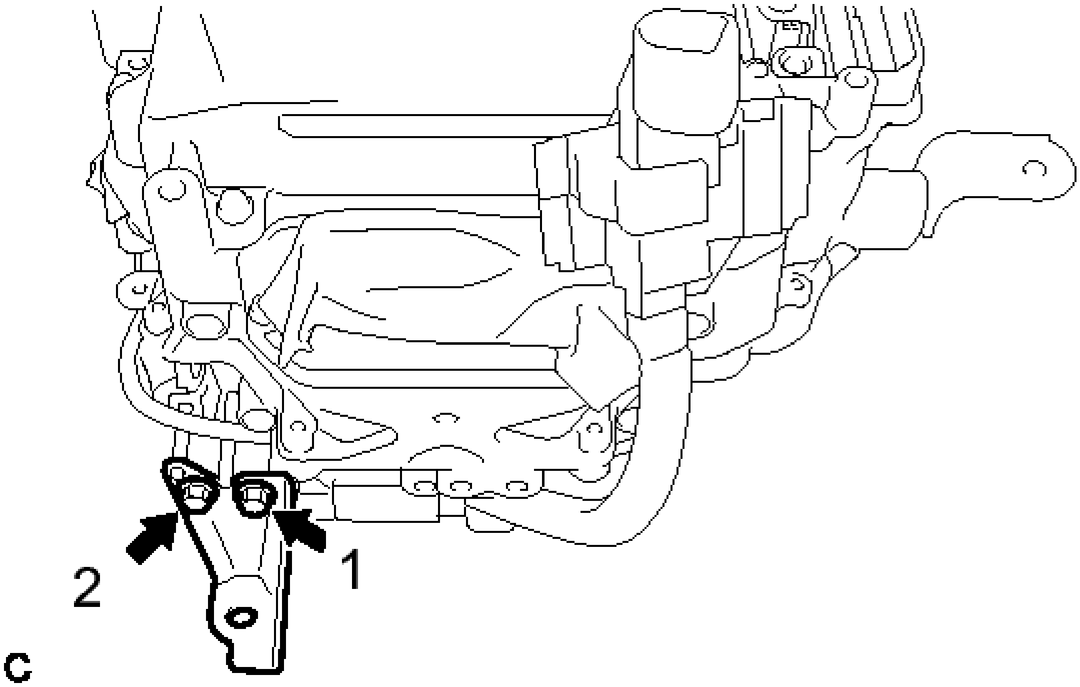

Fig. 56: Identifying No. 1 Inverter Bracket And Bolts
Courtesy of TOYOTA MOTOR SALES, U.S.A., INC.

Torque: 8.5 N*m (87 kgf*cm, 75 in.*lbf)

8. **INSTALL AIR CLEANER BRACKET**
    a. Install the air cleaner bracket with the bolt.

    Torque: 5.0 N*m (51 kgf*cm, 44 in.*lbf)

9. **INSTALL AIR CLEANER BRACKET**
    a. Install the air cleaner bracket with the bolt.

    Torque: 5.0 N*m (51 kgf*cm, 44 in.*lbf)

10. **INSTALL HIGH VOLTAGE FUSE**

WARNING: **Wear insulated gloves.**

HINT:

Perform this procedure only when replacement of the high voltage fuse is necessary.

a. Remove the bolt and connector cover assembly.

NOTE:

- **Make sure to pull the connector cover assembly straight up, as a connector is connected to the bottom of the cover.**
- **Do not allow any foreign objects or water to enter the inverter with converter assembly.**

b. Install the high voltage fuse with 2 new nuts.

Torque: 4.0 N*m (41 kgf*cm, 35 in.*lbf)

NOTE: **Be sure to use a torque wrench to tighten the nuts.**

c. Temporarily install the connector cover assembly with the bolt to prevent any foreign objects or water from entering the inverter with converter assembly.

11. INSTALL INVERTER WITH CONVERTER ASSEMBLY

WARNING: **Wear insulated gloves.**

a. Temporarily install the inverter with converter assembly with the 2 bolts and nut.

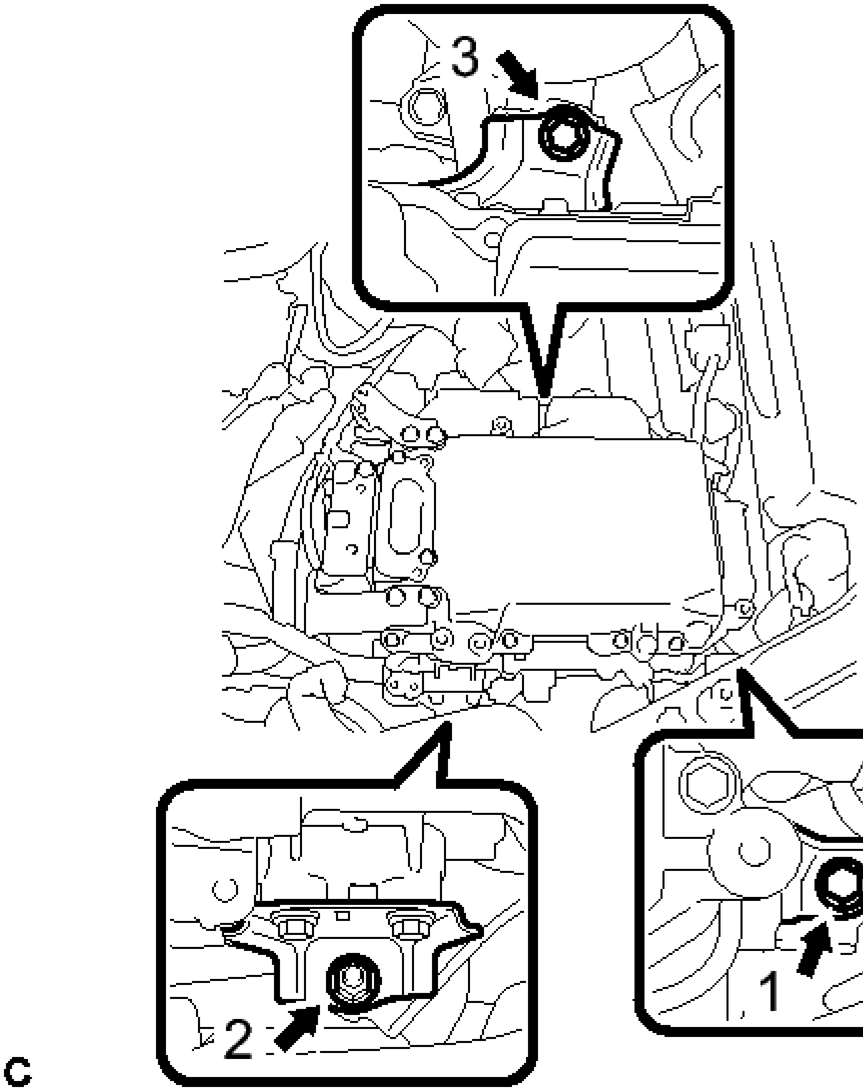

Fig. 57: Identifying Inverter With Converter Assembly Bolts And Nut
Courtesy of TOYOTA MOTOR SALES, U.S.A., INC.

NOTE:	- **Since the inverter with converter assembly is very heavy, 2 people are needed to install the inverter with converter assembly. When installing the inverter with converter assembly, do not damage the parts around it.** - **To prevent damage, do not hold the inverter with converter assembly by the connectors.** - **To prevent damage due to static electricity, do not touch the terminals of the disconnected connectors.**

b. Fully tighten the 2 bolts and nut in the order shown in the illustration.

Torque: 21 N*m (214 kgf*cm, 15 ft.*lbf)

12. **CONNECT NO. 1 INVERTER COOLING HOSE ASSEMBLY**

a. Connect the No. 1 inverter cooling hose assembly to the inverter with converter assembly and lock the hose with the retainer.

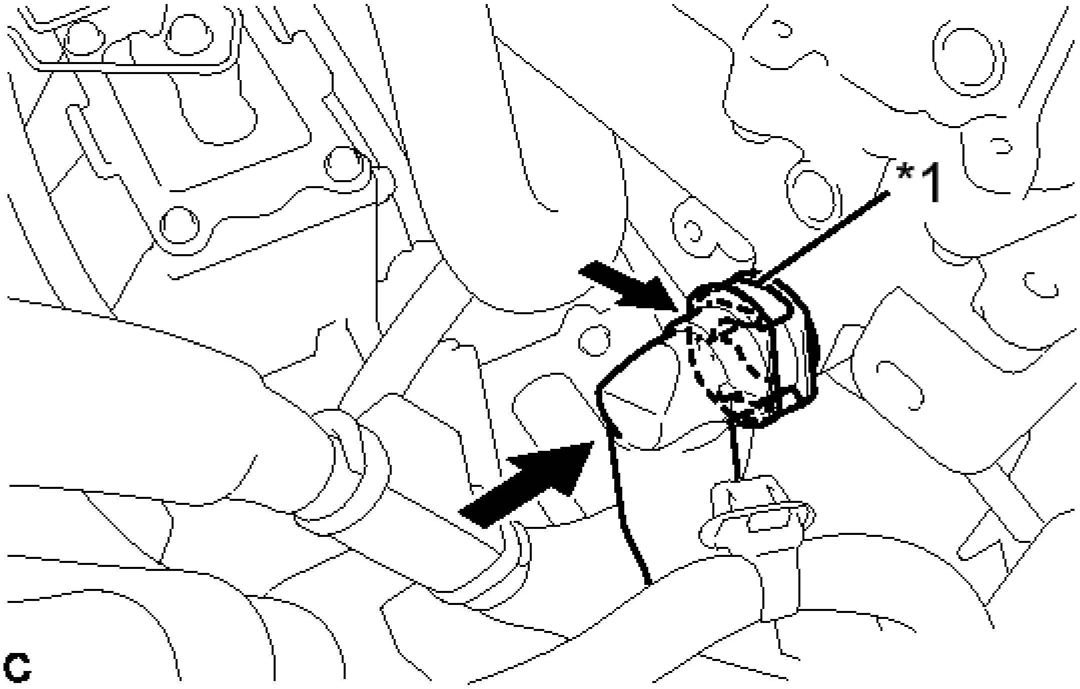

Fig. 58: Connecting No. 1 Inverter Cooling Hose
Courtesy of TOYOTA MOTOR SALES, U.S.A., INC.

TEXT IN ILLUSTRATION

*1	Retainer

NOTE:

- **Insert the retainer until a click sound is heard.**
- **Pull on the hose to confirm that the hose is securely connected.**
- **If there is foreign matter on the union or the O-ring, clean it with water and finger scouring.**
- **To prevent foreign matter from entering the cooling system, do not remove the pieces of cloth or plastic bags from the pipes and disconnected hoses until installation.**

13. **CONNECT NO. 4 INVERTER COOLING HOSE**

a. Connect the No. 4 inverter cooling hose assembly to the inverter with converter assembly and lock the hose with the retainer.

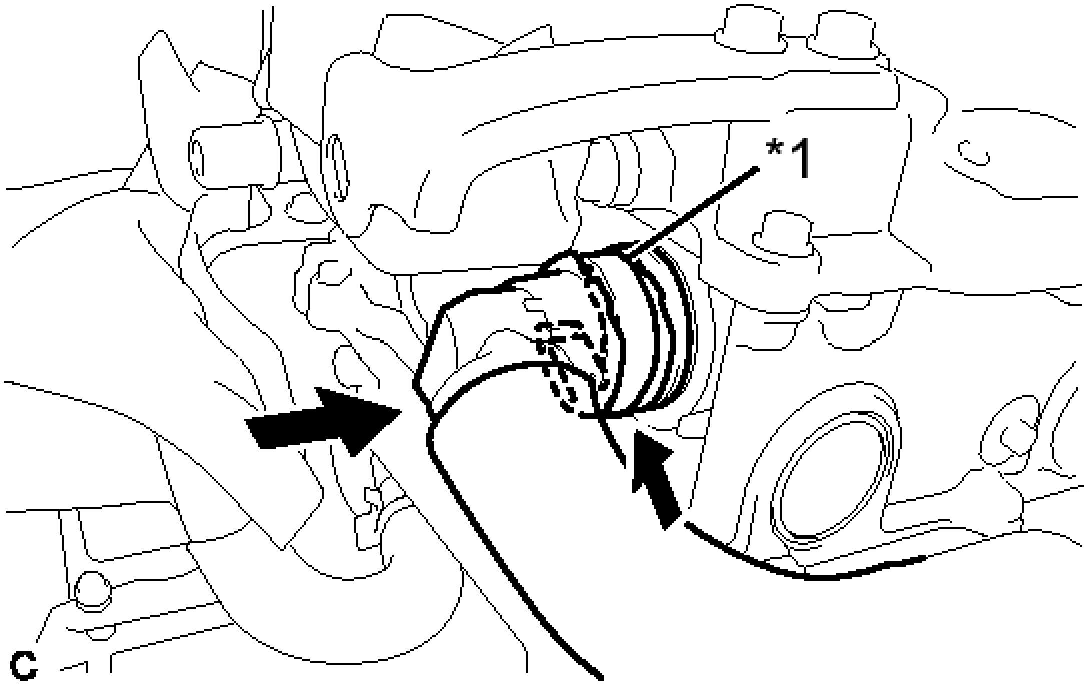

Fig. 59: Connecting No. 4 Inverter Cooling Hose
Courtesy of TOYOTA MOTOR SALES, U.S.A., INC.

TEXT IN ILLUSTRATION

*1	Retainer

NOTE:

- **Insert the retainer until a click sound is heard.**
- **Pull on the hose to confirm that the hose is securely connected.**
- **If there is foreign matter on the union or the O-ring, clean it with water and finger scouring.**
- **To prevent foreign matter from entering the cooling system, do not remove the pieces of cloth or plastic bags from the pipes and disconnected hoses until installation.**

14. **CONNECT NO. 3 ENGINE ROOM WIRE**
    a. Connect the clamp.
    b. Install the No. 3 engine room wire with the nut.

    Torque: 8.0 N*m (82 kgf*cm, 71 in.*lbf)

    c. Install the relay block cover.
15. **CONNECT LOW VOLTAGE CONNECTOR**
    a. Connect the 3 low voltage connectors and lock the connector with the lock lever.

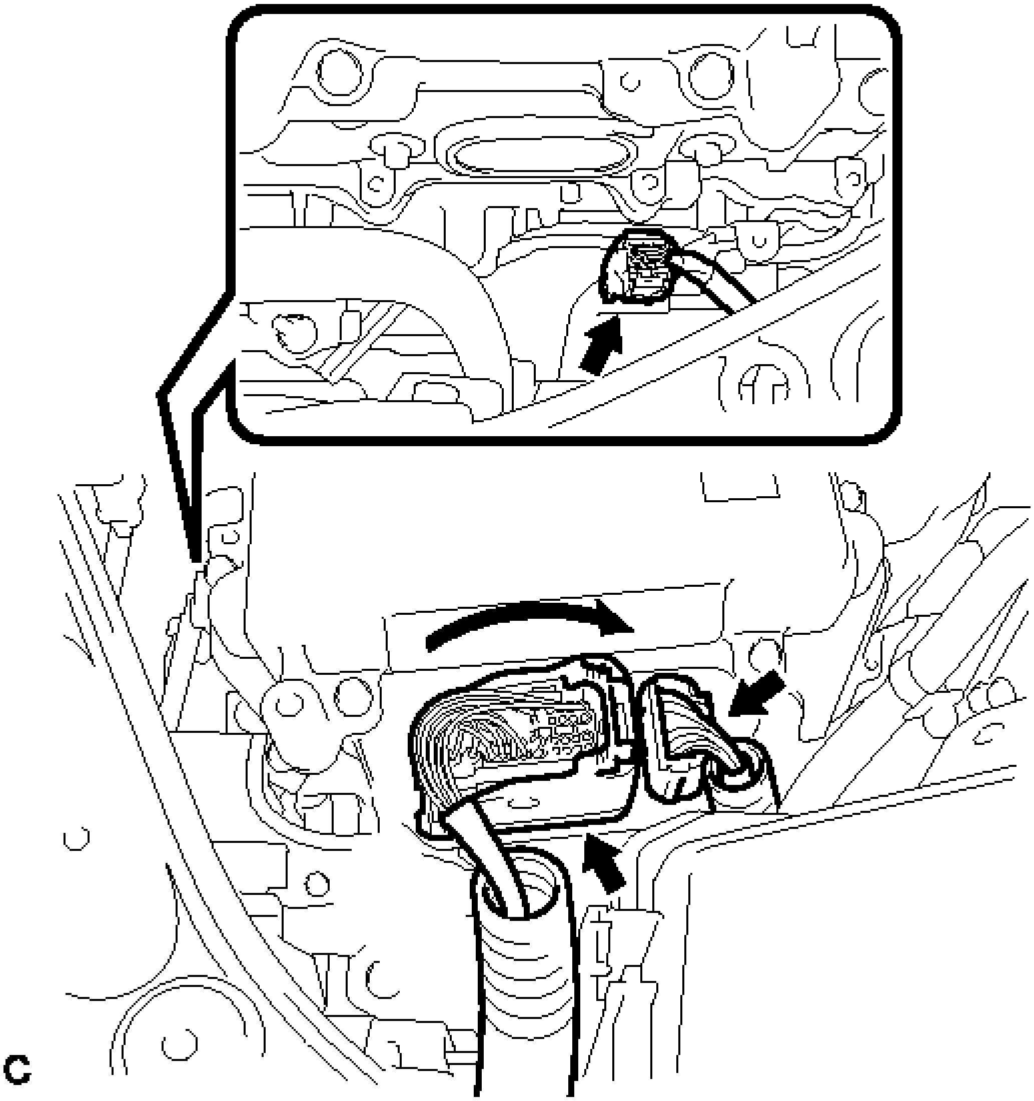

Fig. 60: Locking Low Voltage Connectors
Courtesy of TOYOTA MOTOR SALES, U.S.A., INC.

NOTE:

- **Do not allow any foreign objects or water to enter the inverter with converter assembly.**
- **Make sure that the connectors are fully engaged.**

16. **REMOVE CONNECTOR COVER ASSEMBLY** See step 19
17. **CONNECT NO. 4 FLOOR WIRE**

WARNING: **Wear insulated gloves.**

NOTE:

- **Do not damage the terminals, connector housings or inverter with**

- **converter assembly when connecting them.**
- **Do not touch the connector waterproofing rubber or terminals.**
- **Make sure that the connectors are fully engaged.**
- **Do not allow any foreign objects or water to enter the inverter with converter assembly.**
- **Make sure that the connector does not come out when its body is pulled.**

a. Connect the No. 4 floor wire and wire harness clamp to the inverter with converter assembly.
b. Secure the No. 4 floor wire to the inverter with converter assembly with the bolt.

Torque: 8.0 N*m (82 kgf*cm, 71 in.*lbf)

18. **CONNECT NO. 4 ENGINE WIRE**

WARNING: **Wear insulated gloves.**

NOTE:

- **Do not damage the terminals, connector housings or inverter with converter assembly when connecting them.**
- **Do not touch the connector waterproofing rubber or terminals.**
- **Make sure that the connectors are fully engaged.**
- **Do not allow any foreign objects or water to enter the inverter with converter assembly.**
- **Make sure that the connector does not come out when its body is pulled.**

a. Connect the No. 4 engine wire to the inverter with converter assembly.
b. Connect the wire harness clamp.

19. **INSTALL CONNECTOR COVER ASSEMBLY**

WARNING: **Wear insulated gloves.**

NOTE:

- **Make sure that the interlock is fully engaged.**
- **Do not allow any foreign objects or water to enter the inverter with converter assembly.**

a. Install the connector cover assembly with the 2 bolts.

Torque: 8.0 N*m (82 kgf*cm, 71 in.*lbf)

20. **INSTALL NO. 3 MOTOR CABLE BRACKET**

   a. Install the No. 3 motor cable bracket with the 2 bolts.

   Torque: 8.0 N*m (82 kgf*cm, 71 in.*lbf)

   b. Connect the hose clamp.

21. **CONNECT MOTOR CABLE**

WARNING: **Wear insulated gloves.**

NOTE:

- **Do not damage the terminals, connector housings or inverter with converter assembly when connecting them.**
- **Do not touch the connector waterproofing rubber or terminals.**
- **Do not allow any foreign objects or water to enter the inverter with converter assembly.**

   a. Connect the motor cable to the inverter with converter assembly.

   b. Connect the 3 wire harness clamps.

   c. Using an insulated tool, install the 3 bolts and motor cable to the inverter with converter assembly.

   Torque: 8.0 N*m (82 kgf*cm, 71 in.*lbf)

NOTE:

- **The connector should be connected securely.**
- **The bolts should be tightened securely.**

22. **INSTALL UPPER INVERTER COVER**

WARNING: **Wear insulated gloves.**

   a. Install the upper inverter cover (motor cable side) with the 2 bolts.

   Torque: 8.0 N*m (82 kgf*cm, 71 in.*lbf)

NOTE:

- **Do not touch the upper inverter cover waterproofing rubber.**
- **Visually confirm that the upper inverter cover waterproofing rubber is securely installed before installing the upper inverter cover.**
- **Make sure that the interlock is fully engaged.**

23. CONNECT GENERATOR CABLE

WARNING: Wear insulated gloves.

NOTE:

- **Do not damage the terminals, connector housings or inverter with converter assembly when connecting them.**
- **Do not touch the connector waterproofing rubber or terminals.**
- **Do not allow any foreign objects or water to enter the inverter with converter assembly.**

a. Connect the generator cable to the inverter with converter assembly.

b. Connect the 2 wire harness clamps.

c. Using a insulated tool, install the 3 bolts and generator cable to the inverter with converter assembly.

Torque: 8.0 N*m (82 kgf*cm, 71 in.*lbf)

NOTE:

- **The connector should be connected securely.**
- **The bolts should be tightend securely.**

24. INSTALL UPPER INVERTER COVER

WARNING: Wear insulated gloves.

a. Install the upper inverter cover (generator cable side) with the 2 bolts.

Torque: 8.0 N*m (82 kgf*cm, 71 in.*lbf)

NOTE:

- **Do not touch the upper inverter cover waterproofing rubber.**
- **Visually confirm that the upper inverter cover waterproofing rubber is securely installed before installing the upper inverter cover.**
- **Make sure that the interlock is fully engaged.**

25. INSTALL NO. 4 INVERTER BRACKET

a. Temporarily install the No. 4 inverter bracket with the 3 bolts.

b. Tighten the 3 bolts in the order shown in the illustration.

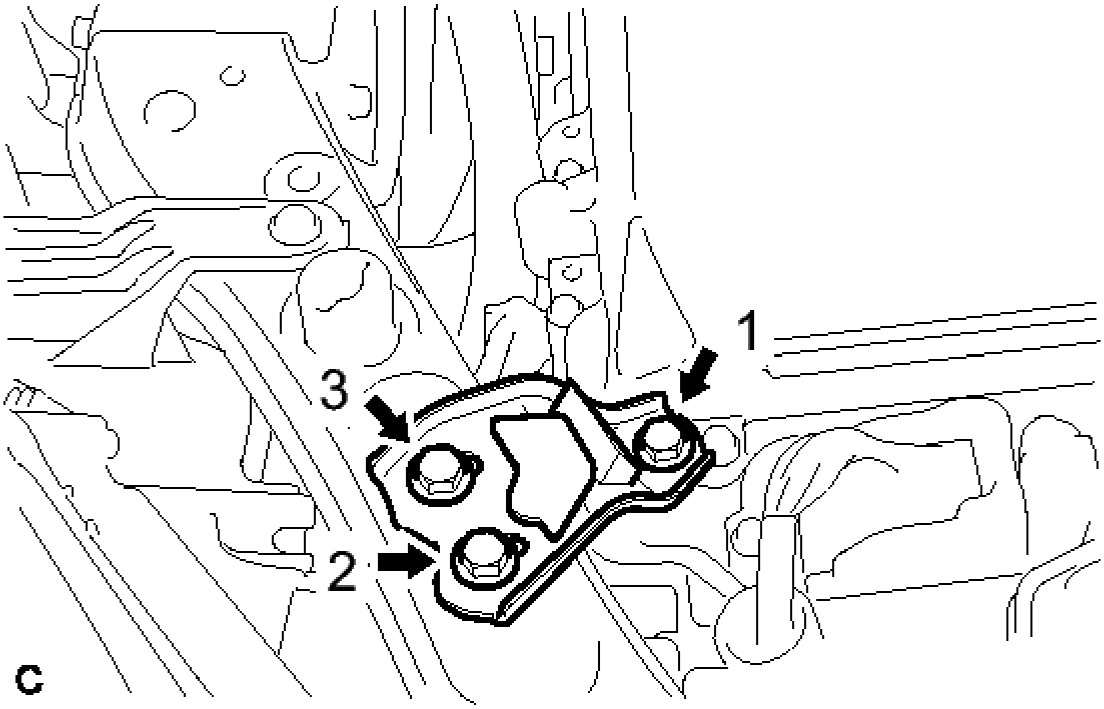

Fig. 61: Identifying No. 4 Inverter Bracket And Bolts
Courtesy of TOYOTA MOTOR SALES, U.S.A., INC.

Torque: 10 N*m (102 kgf*cm, 7 ft.*lbf)

26. **INSTALL NO. 5 INVERTER BRACKET**
    1. Temporarily install the No. 5 inverter bracket with the 2 bolts.
    2. Tighten the 2 bolts in the order shown in the illustration.

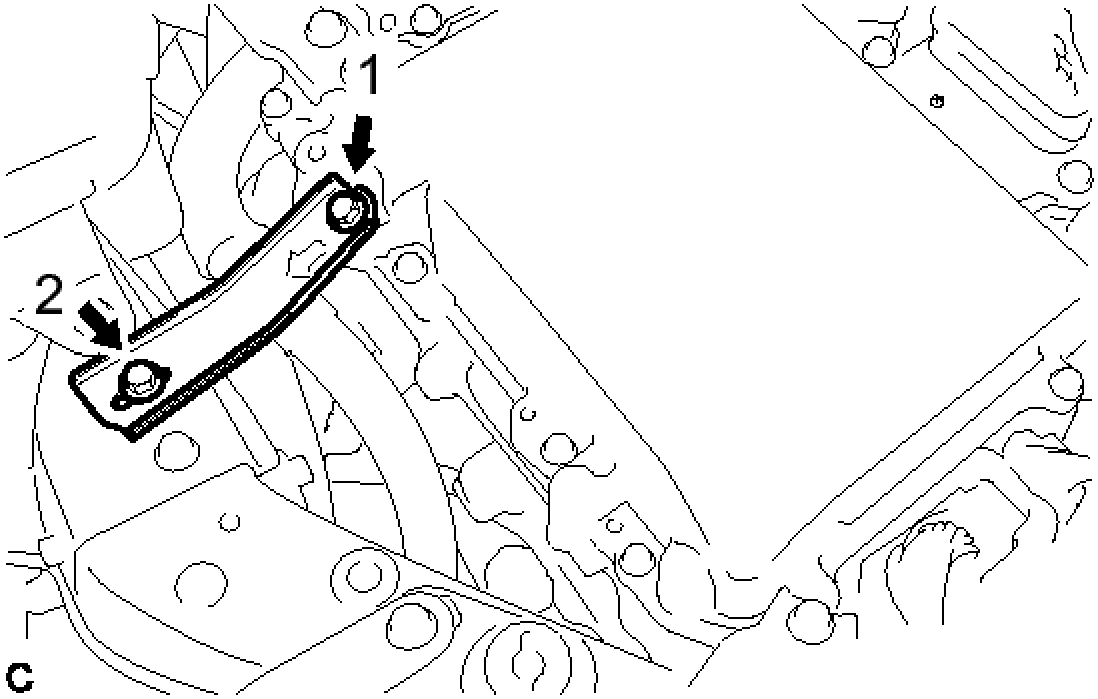

Fig. 62: Identifying No. 5 Inverter Bracket And Bolts
Courtesy of TOYOTA MOTOR SALES, U.S.A., INC.

Torque: 10 N*m (102 kgf*cm, 7 ft.*lbf)

27. **INSTALL AIR CLEANER CASE SUB-ASSEMBLY** . Refer to **INSTALLATION - Step 60**
28. **INSTALL AIR CLEANER FILTER ELEMENT SUB-ASSEMBLY**
29. **INSTALL AIR CLEANER CAP SUB-ASSEMBLY** . Refer to **INSTALLATION - Step 2**
30. **INSTALL INLET AIR CLEANER ASSEMBLY** . Refer to **INSTALLATION - Step 63**
31. **INSTALL COOL AIR INTAKE DUCT SEAL** . Refer to **INSTALLATION - Step 4**
32. **INSTALL SERVICE PLUG GRIP**

    Refer to **INSTALLATION**

33. **ADD COOLANT (for Inverter)** See step 2
34. **INSPECT FOR COOLANT LEAK (for Inverter)** See step 1

BATTERY SMART UNIT

COMPONENTS

ILLUSTRATION

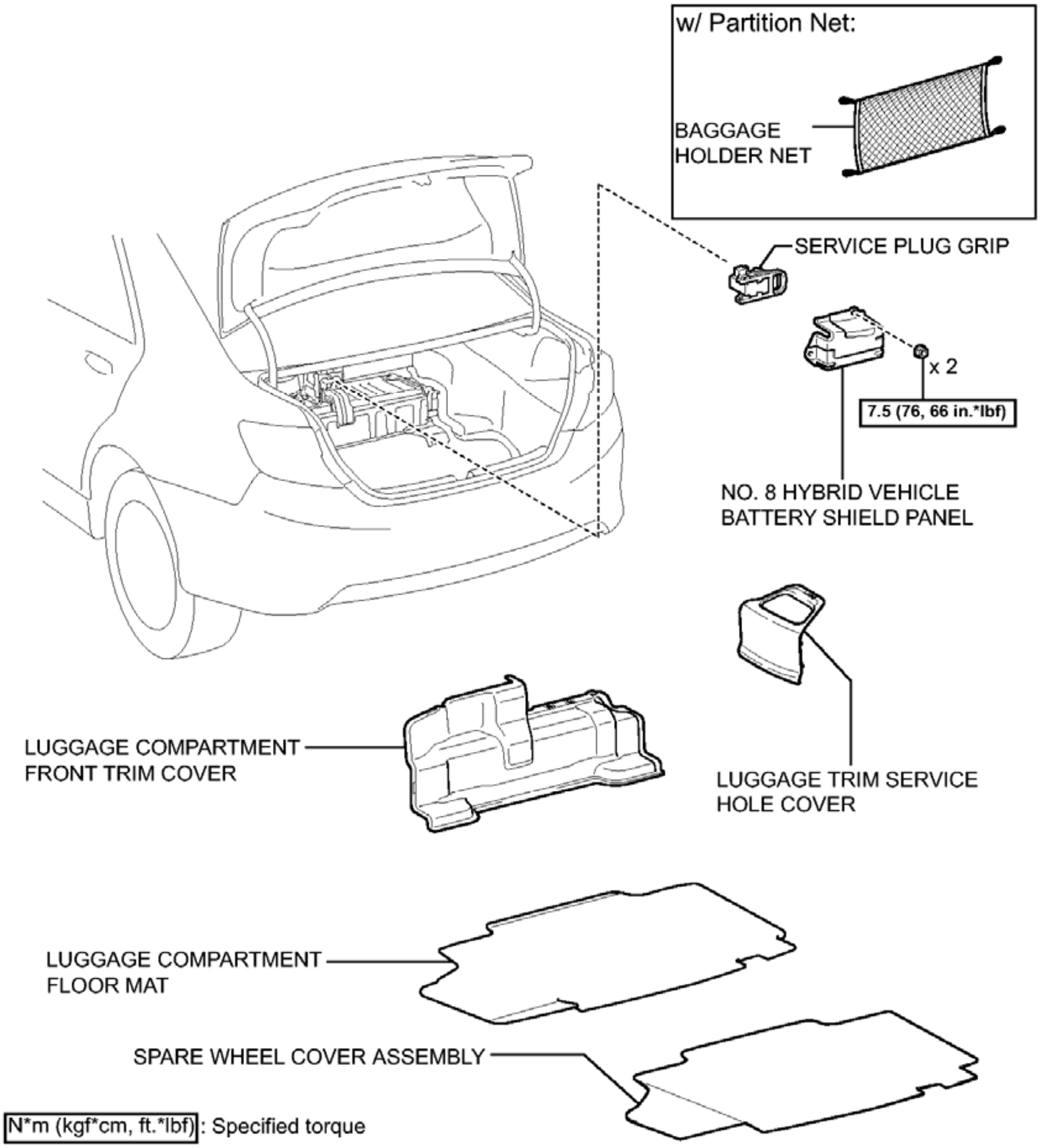
w/ Partition Net:
BAGGAGE HOLDER NET
SERVICE PLUG GRIP
x 2
7.5 (76, 66 in.*lbf)
NO. 8 HYBRID VEHICLE BATTERY SHIELD PANEL
LUGGAGE COMPARTMENT FRONT TRIM COVER
LUGGAGE TRIM SERVICE HOLE COVER
LUGGAGE COMPARTMENT FLOOR MAT
SPARE WHEEL COVER ASSEMBLY
N*m (kgf*cm, ft.*lbf) : Specified torque
C

Fig. 63: Identifying Battery Smart Unit Replacement Components With Torque Specifications (1 Of 5)
Courtesy of TOYOTA MOTOR SALES, U.S.A., INC.

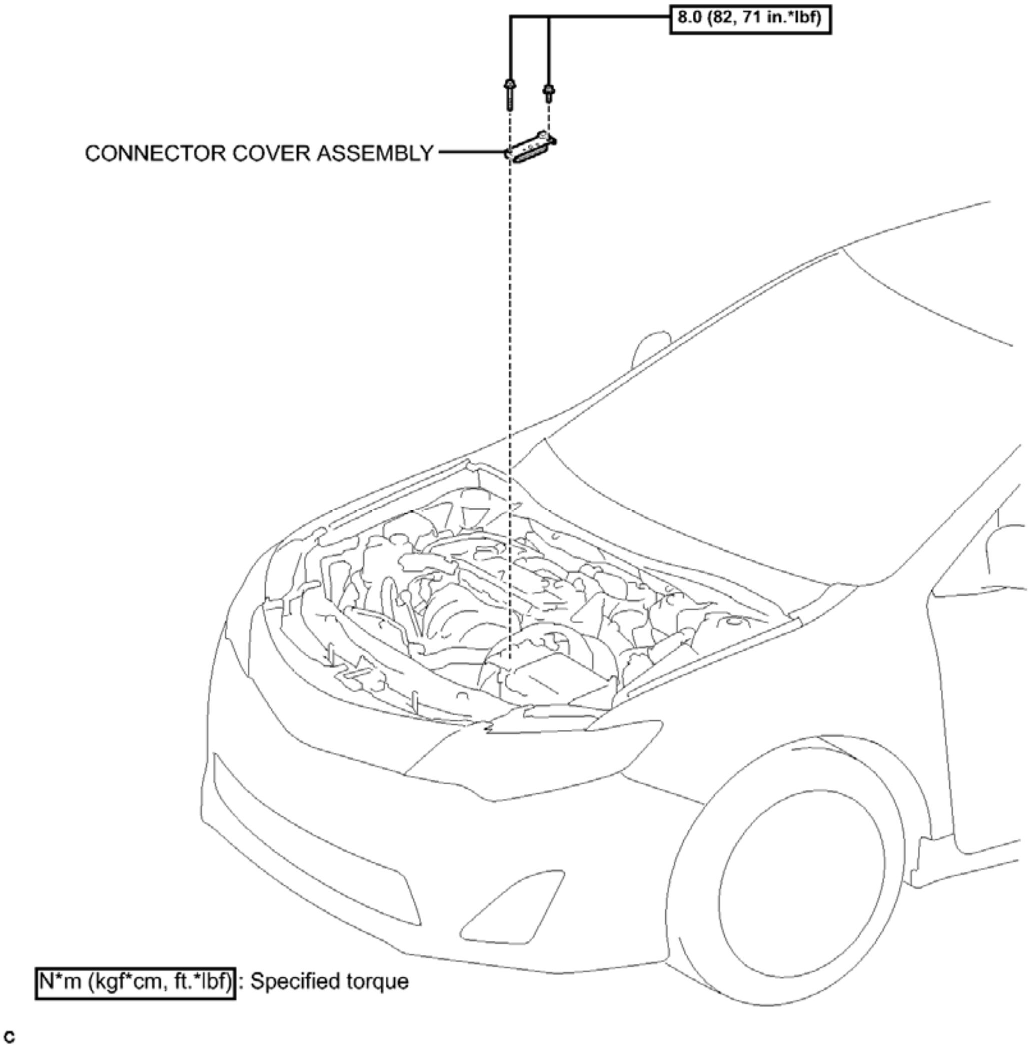
8.0 (82, 71 in.*lbf)
CONNECTOR COVER ASSEMBLY
N*m (kgf*cm, ft.*lbf): Specified torque
c

Fig. 64: Identifying Battery Smart Unit Replacement Components With Torque Specifications (2 Of 5)
Courtesy of TOYOTA MOTOR SALES, U.S.A., INC.

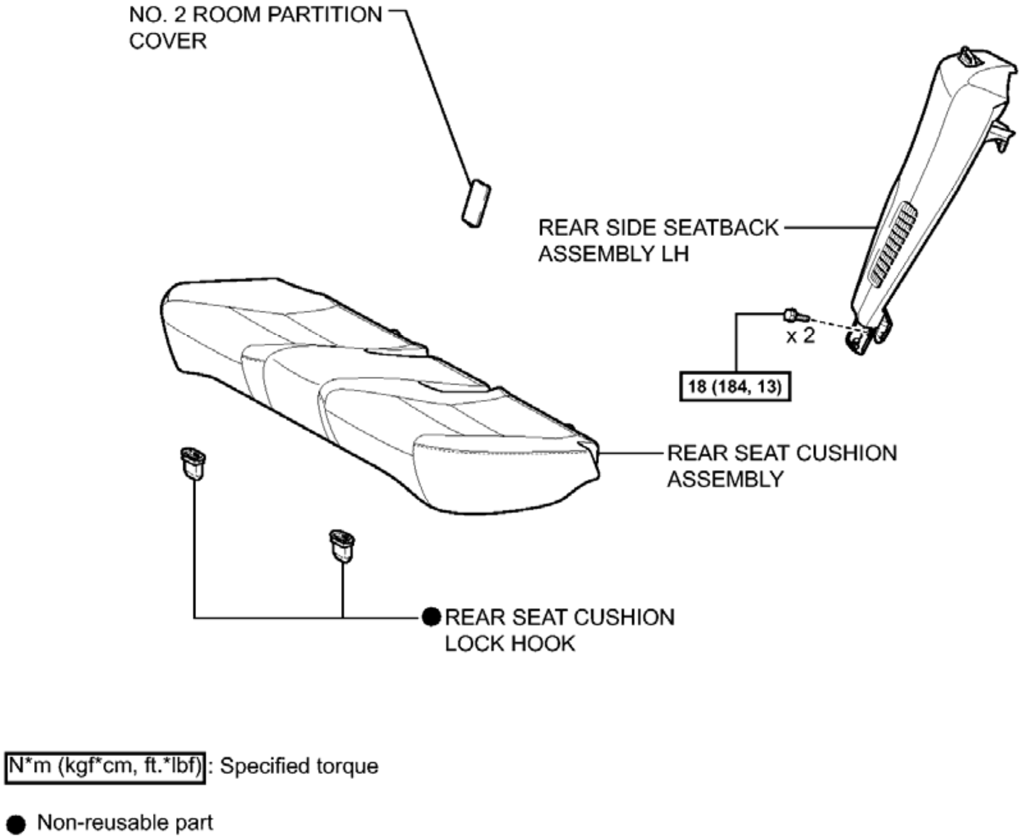
NO. 2 ROOM PARTITION COVER
REAR SIDE SEATBACK ASSEMBLY LH
x 2
18 (184, 13)
REAR SEAT CUSHION ASSEMBLY
● REAR SEAT CUSHION LOCK HOOK
N*m (kgf*cm, ft.*lbf) : Specified torque
● Non-reusable part

Fig. 65: Identifying Battery Smart Unit Replacement Components With Torque Specifications (3 Of 5)
Courtesy of TOYOTA MOTOR SALES, U.S.A., INC.

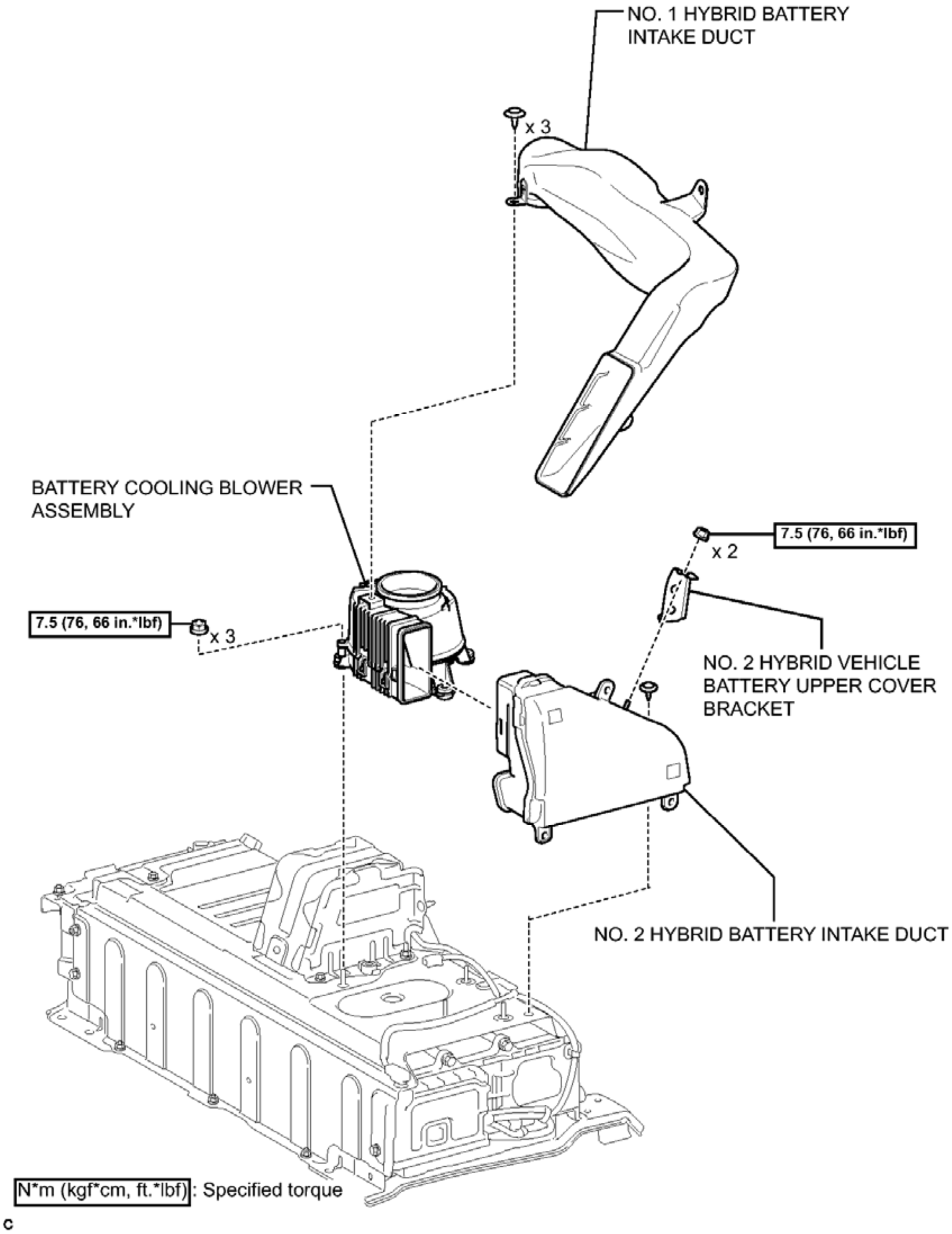
NO. 1 HYBRID BATTERY INTAKE DUCT
x 3
BATTERY COOLING BLOWER ASSEMBLY
7.5 (76, 66 in.*lbf)
x 2
7.5 (76, 66 in.*lbf)
x 3
NO. 2 HYBRID VEHICLE BATTERY UPPER COVER BRACKET
NO. 2 HYBRID BATTERY INTAKE DUCT
N*m (kgf*cm, ft.*lbf) : Specified torque
c

Fig. 66: Identifying Battery Smart Unit Replacement Components With Torque Specifications (4 Of 5)
Courtesy of TOYOTA MOTOR SALES, U.S.A., INC.

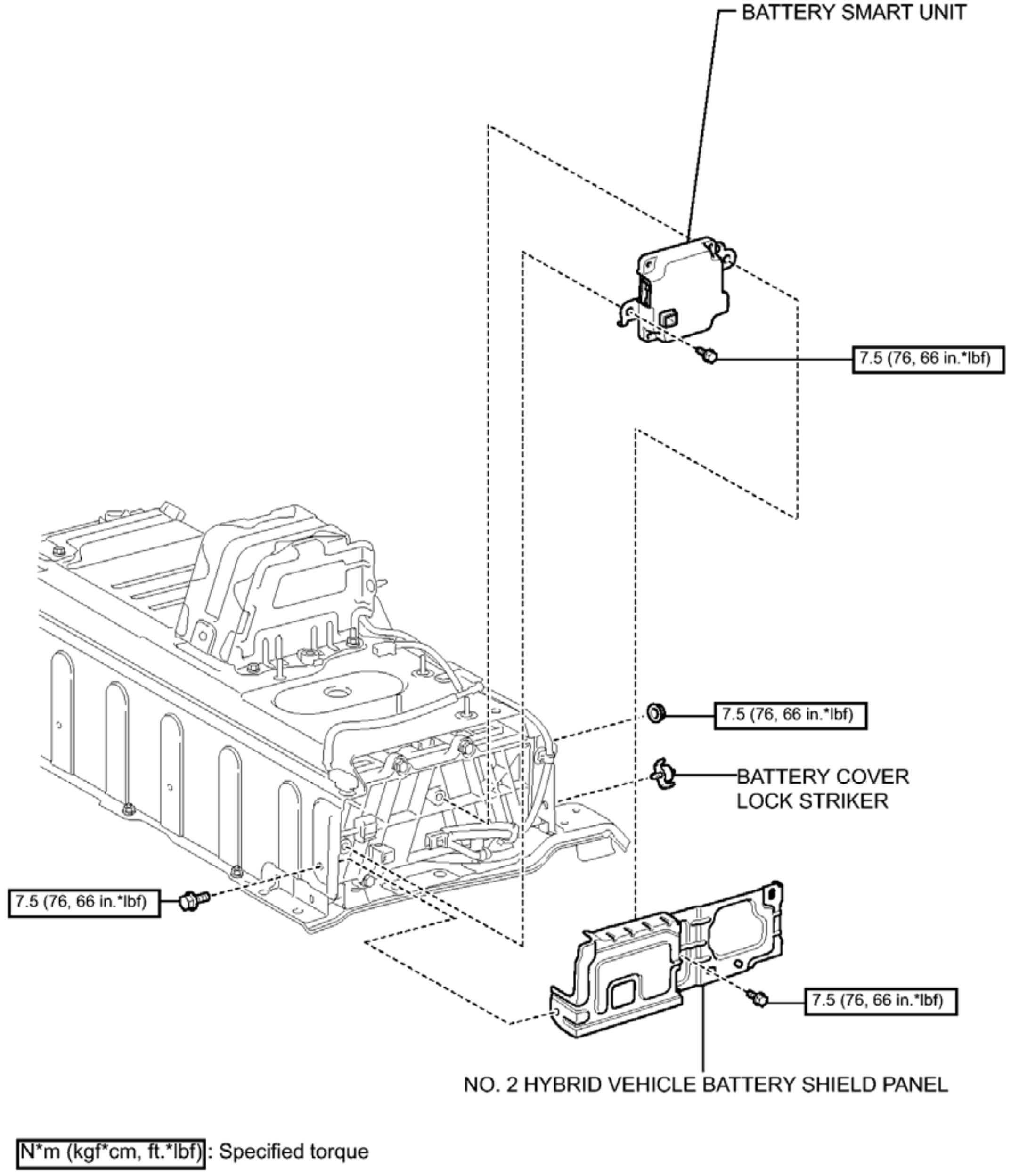
BATTERY SMART UNIT
7.5 (76, 66 in.*lbf)
7.5 (76, 66 in.*lbf)
BATTERY COVER
LOCK STRIKER
7.5 (76, 66 in.*lbf)
7.5 (76, 66 in.*lbf)
NO. 2 HYBRID VEHICLE BATTERY SHIELD PANEL
N*m (kgf*cm, ft.*lbf) : Specified torque
C

Fig. 67: Identifying Battery Smart Unit Replacement Components With Torque Specifications (5 Of 5)
Courtesy of TOYOTA MOTOR SALES, U.S.A., INC.

REMOVAL

REMOVAL

1. **PRECAUTION**

Refer to **PRECAUTION**

2. **REMOVE SERVICE PLUG GRIP**

   Refer to **REMOVAL**

3. **REMOVE CONNECTOR COVER ASSEMBLY** See step 4
4. **CHECK TERMINAL VOLTAGE** See step 5
5. **INSTALL CONNECTOR COVER ASSEMBLY** See step 19
6. **REMOVE REAR SEAT CUSHION ASSEMBLY** . Refer to **REMOVAL - Step 4**
7. **REMOVE REAR SEAT CUSHION LOCK HOOK** . Refer to **REMOVAL - Step 5**
8. **SEPARATE REAR SEATBACK ASSEMBLY**
   a. Fold down the rear seatback assembly RH.
   b. Using a molding remover, disengage the claw and guide, and remove the No. 2 room partition cover.

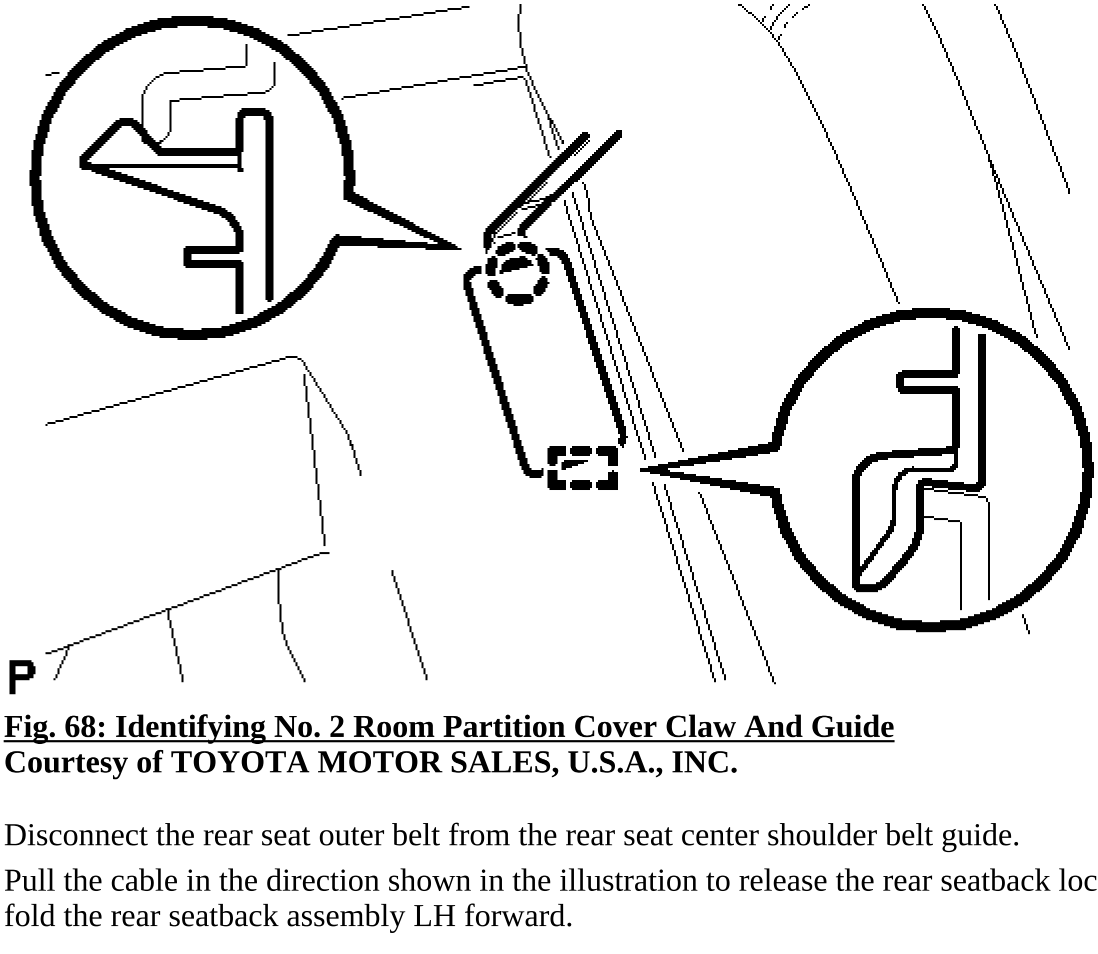

Fig. 68: Identifying No. 2 Room Partition Cover Claw And Guide
Courtesy of TOYOTA MOTOR SALES, U.S.A., INC.

   c. Disconnect the rear seat outer belt from the rear seat center shoulder belt guide.
   d. Pull the cable in the direction shown in the illustration to release the rear seatback lock and then fold the rear seatback assembly LH forward.

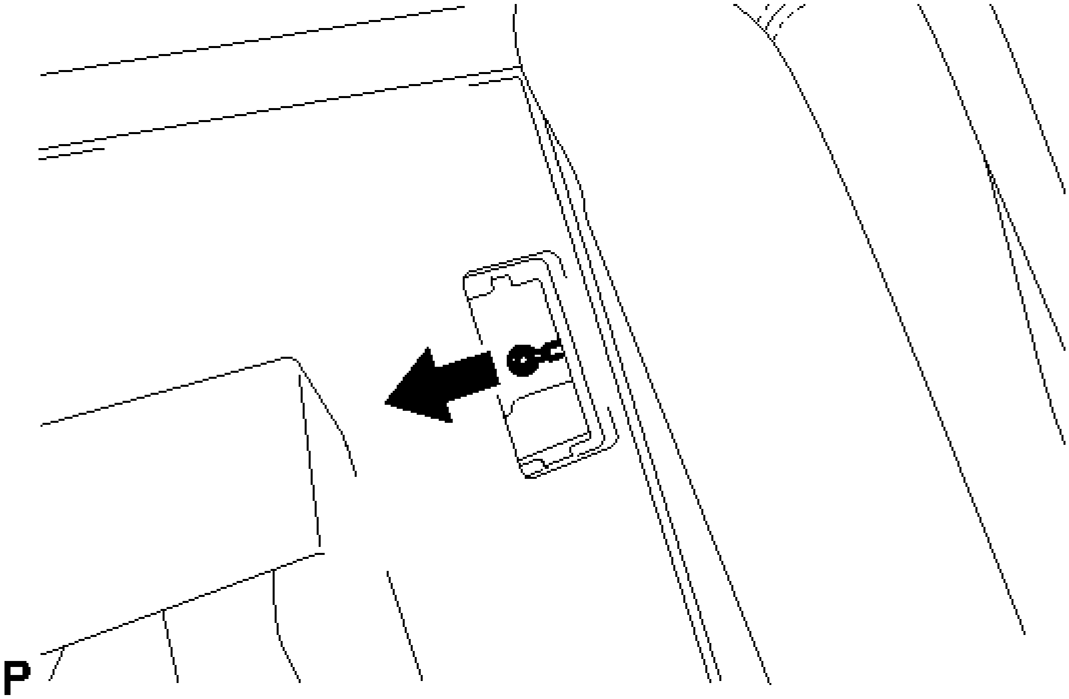

Fig. 69: Pulling Cable To Release The Rear Seatback Lock
Courtesy of TOYOTA MOTOR SALES, U.S.A., INC.

9. **REMOVE REAR SIDE SEATBACK ASSEMBLY LH** . Refer to **REMOVAL - Step 9**
10. **REMOVE NO. 1 HYBRID BATTERY INTAKE DUCT** See step 9
11. **REMOVE NO. 2 HYBRID VEHICLE BATTERY UPPER COVER BRACKET** See step 10
12. **SEPARATE NO. 2 HYBRID BATTERY INTAKE DUCT** See step 11
13. **REMOVE BATTERY COOLING BLOWER ASSEMBLY** See step 12
14. **REMOVE BATTERY SMART UNIT**

    WARNING: Wear insulated gloves.

    a. Using the service plug grip, remove the battery cover lock striker.

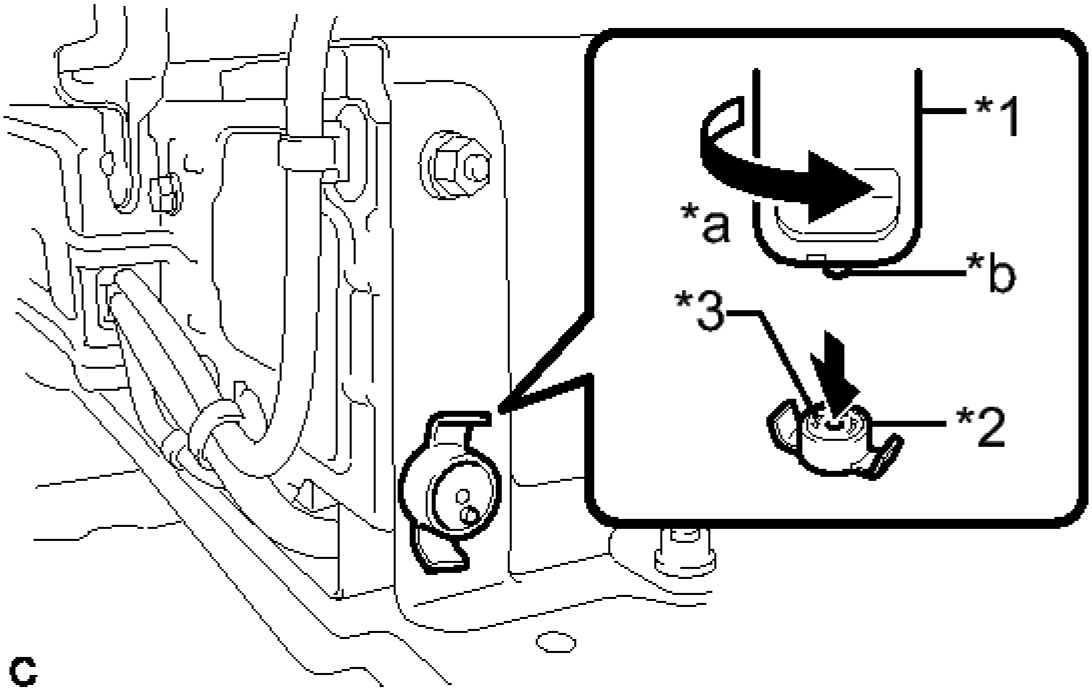

Fig. 70: Removing Battery Cover Lock Striker
Courtesy of TOYOTA MOTOR SALES, U.S.A., INC.

TEXT IN ILLUSTRATION

*1	Service Plug Grip
*2	Battery Cover Lock Striker
*3	Button
*a	Turn
*b	Projection

HINT:

Insert the projection part of the service plug grip, and turn the button of the battery cover lock striker counterclockwise, and release the lock.

b. Disconnect the 2 connectors.

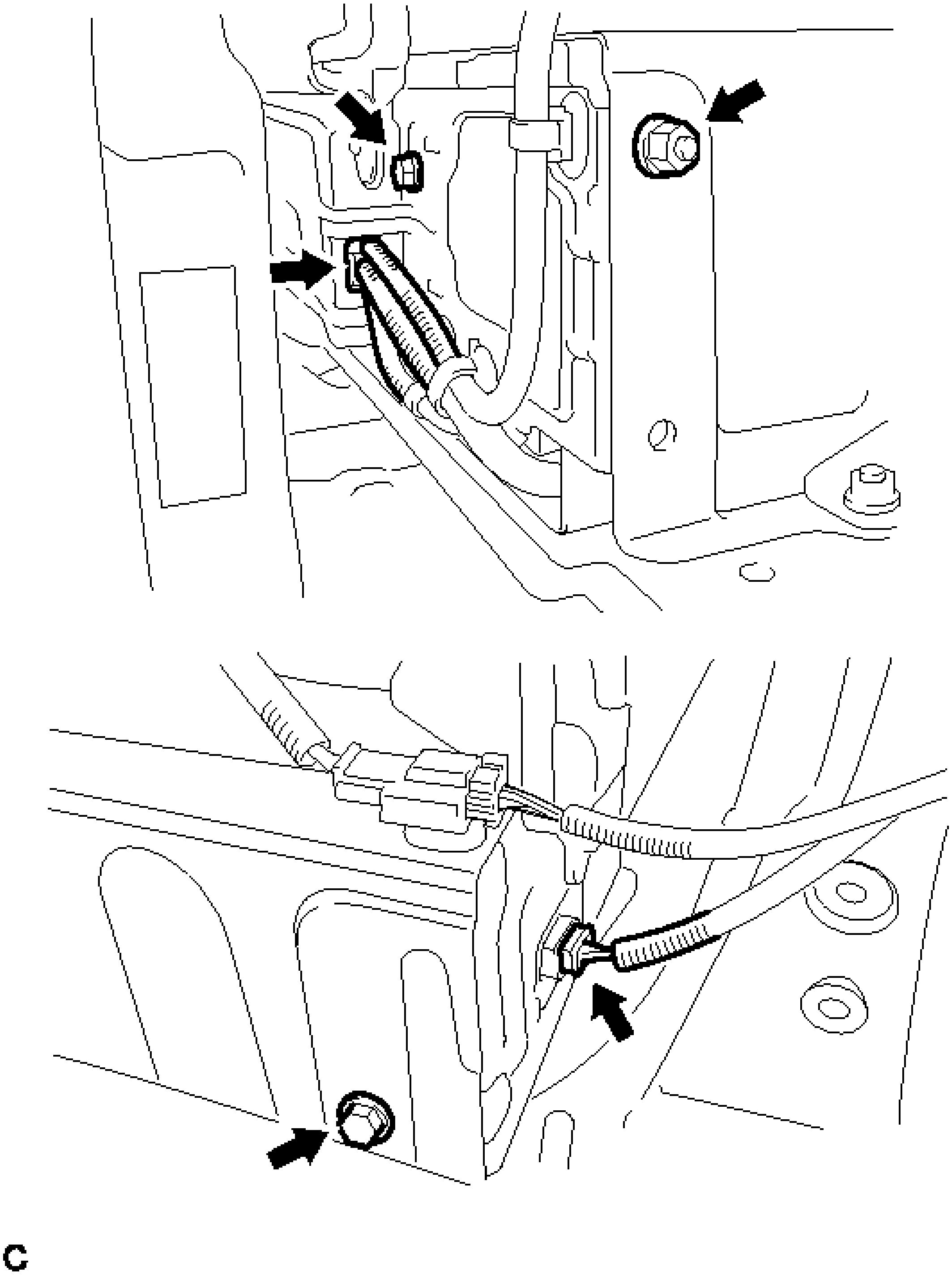

Fig. 71: Identifying Connectors And No. 2 Hybrid Vehicle Battery Shield Panel Nut And Bolts
Courtesy of TOYOTA MOTOR SALES, U.S.A., INC.

c. Remove the 2 bolts, nut and No. 2 hybrid vehicle battery shield panel.

d. Disconnect the 3 wire harness clamps.

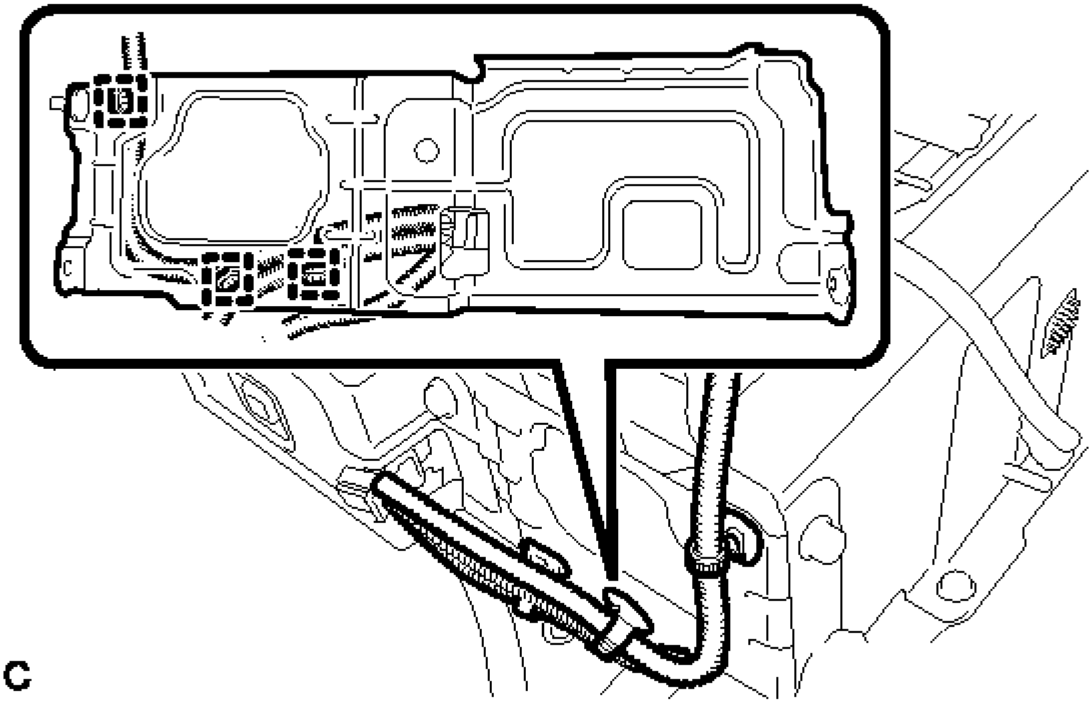

Fig. 72: Identifying Wire Harness Clamps
Courtesy of TOYOTA MOTOR SALES, U.S.A., INC.

e. Disconnect the connector.

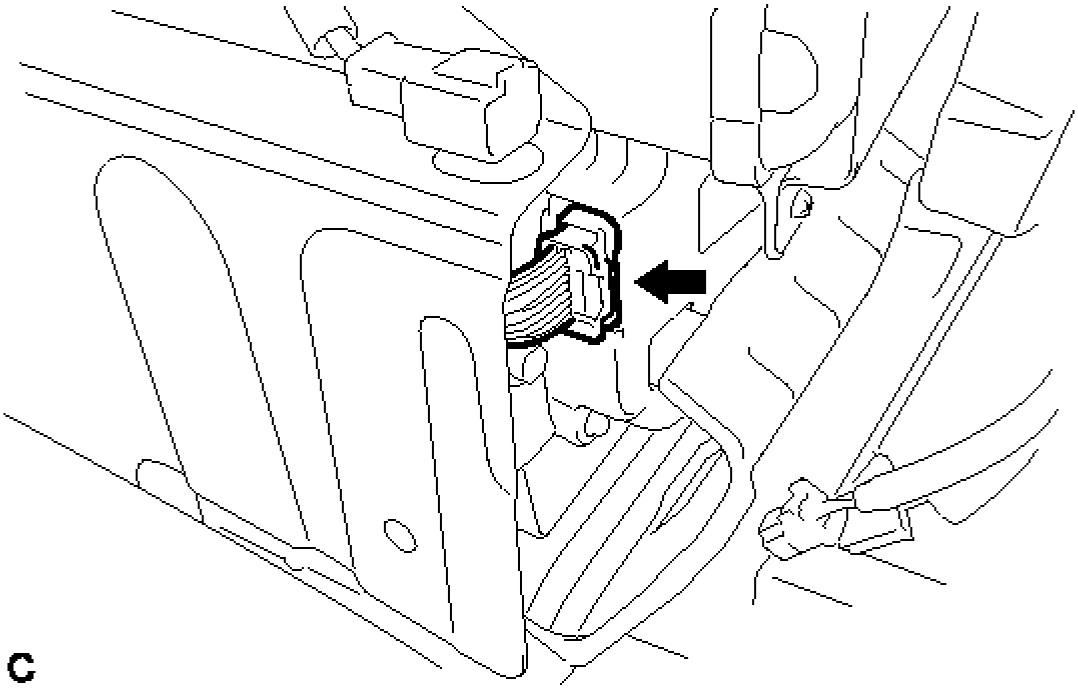

Fig. 73: Identifying Connector
Courtesy of TOYOTA MOTOR SALES, U.S.A., INC.

NOTE: Insulate the removed terminals with insulating tape.

f. Remove the bolt.

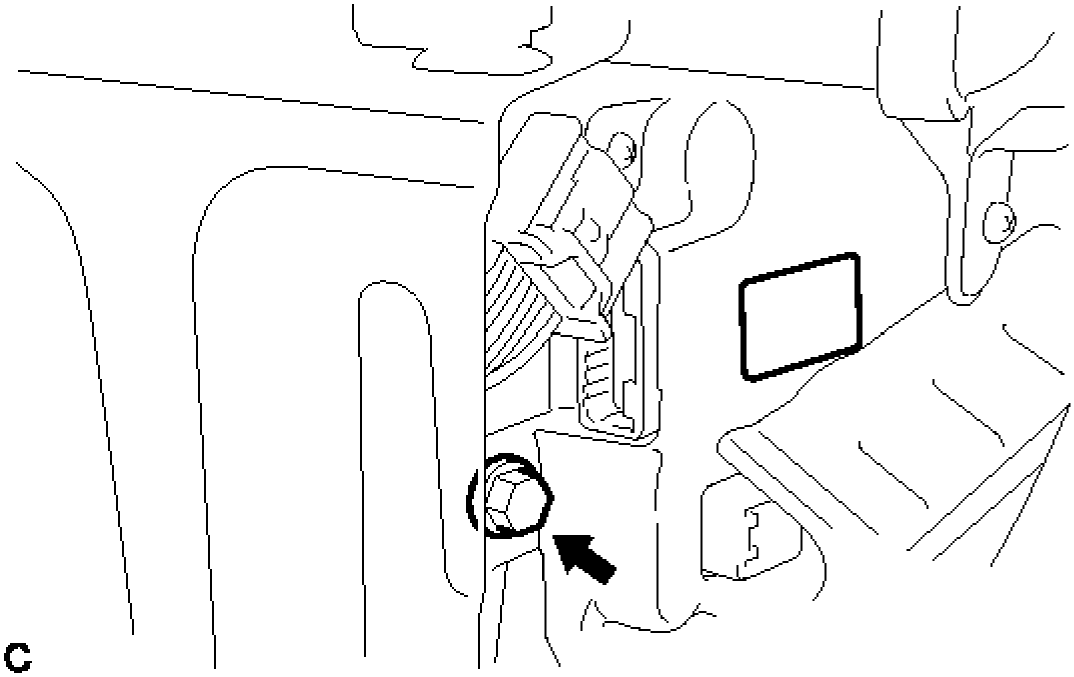

Fig. 74: Identifying Battery Smart Unit Bolt
Courtesy of TOYOTA MOTOR SALES, U.S.A., INC.

g. Remove the battery smart unit together with the No. 2 hybrid vehicle battery shield panel toward the rear of the vehicle.

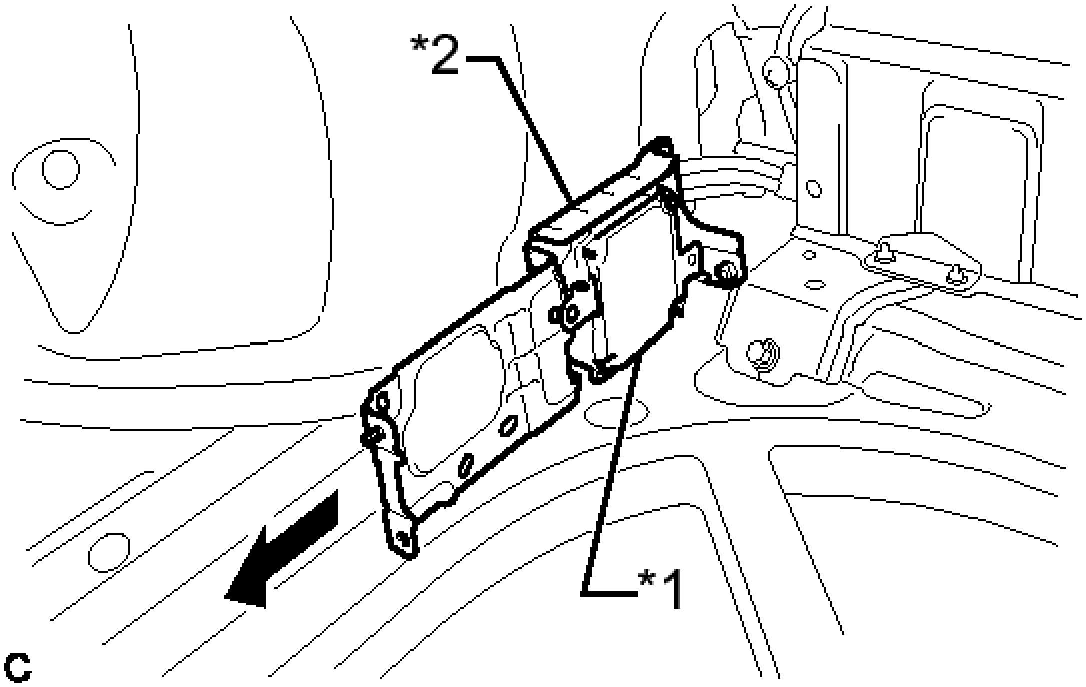

Fig. 75: Removing Battery Smart Unit And No. 2 Hybrid Vehicle Battery Shield Panel
Courtesy of TOYOTA MOTOR SALES, U.S.A., INC.

TEXT IN ILLUSTRATION

*1	Battery Smart Unit
*2	No. 2 Hybrid Vehicle Battery Shield Panel

HINT:

When removing the battery smart unit and No. 2 hybrid vehicle battery shield panel from the vehicle, they can only be removed together.

INSTALLATION

INSTALLATION

1. **INSTALL BATTERY SMART UNIT**

WARNING: **Wear insulated gloves.**

a. Install the battery smart unit together with the No. 2 hybrid vehicle battery shield panel to the side of the HV battery from the rear of the vehicle.

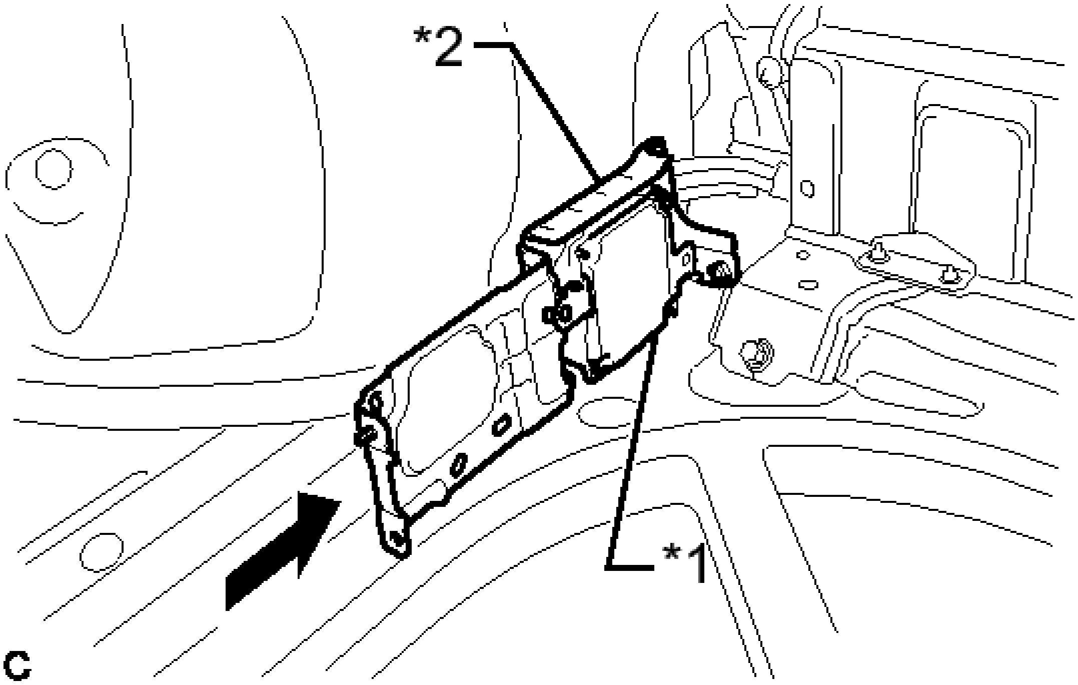

Fig. 76: Installing Battery Smart Unit And No. 2 Hybrid Vehicle Battery Shield Panel
Courtesy of TOYOTA MOTOR SALES, U.S.A., INC.

TEXT IN ILLUSTRATION

*1	Battery Smart Unit
*2	No. 2 Hybrid Vehicle Battery Shield Panel

HINT:

When installing the battery smart unit and No. 2 hybrid vehicle battery shield panel to the vehicle, they can only be installed together.

b. Install the battery smart unit with the bolt.

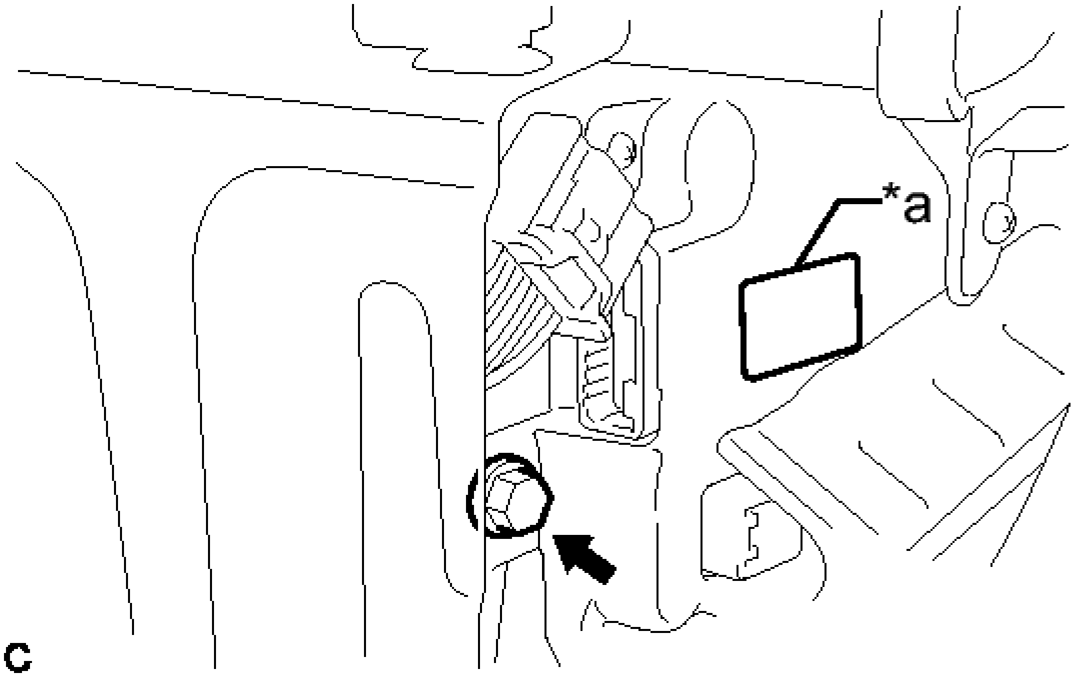

Fig. 77: Identifying Battery Smart Unit Bolt
Courtesy of TOYOTA MOTOR SALES, U.S.A., INC.

TEXT IN ILLUSTRATION

*a	Black Label

Torque: 7.5 N*m (76 kgf*cm, 66 in.*lbf)

NOTE: **Check color of the label.**

c. Connect the connector.

NOTE: **The connector should be connected securely.**

d. Install the No. 2 hybrid vehicle battery shield panel with the 2 bolts and nut.

Torque: 7.5 N*m (76 kgf*cm, 66 in.*lbf)

e. Connect the 3 wire harness clamps.
f. Connect the 2 connectors.

NOTE: **The connectors should be connected securely.**

g. Install the battery cover lock striker, then push the button to lock it.

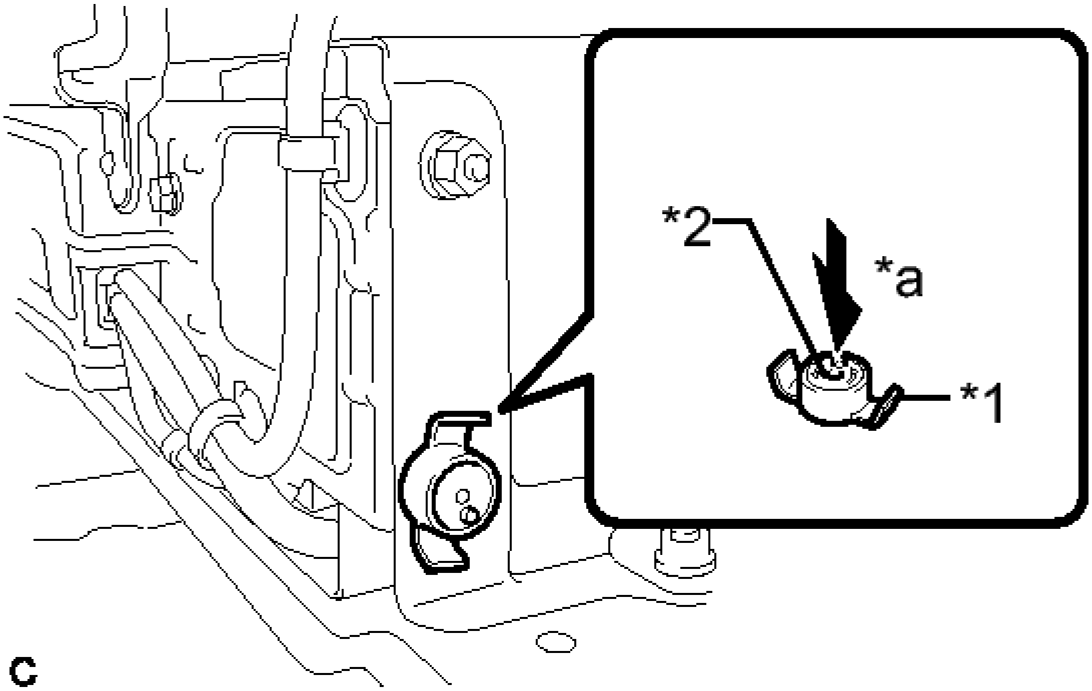

Fig. 78: Installing Battery Cover Lock Striker
Courtesy of TOYOTA MOTOR SALES, U.S.A., INC.

TEXT IN ILLUSTRATION

*1	Battery Cover Lock Striker
*2	Button
*a	Push

2. **INSTALL BATTERY COOLING BLOWER ASSEMBLY** See step 1
3. **INSTALL NO. 2 HYBRID BATTERY INTAKE DUCT** See step 2
4. **INSTALL NO. 2 HYBRID VEHICLE BATTERY UPPER COVER BRACKET** See step 3
5. **INSTALL NO. 1 HYBRID BATTERY INTAKE DUCT** See step 4
6. **INSTALL REAR SIDE SEATBACK ASSEMBLY LH** . Refer to **INSTALLATION - Step 1**
7. **INSTALL REAR SEATBACK ASSEMBLY**
   a. Lift the rear seat back assembly LH.
   b. Engage the guide and claw to install the No. 2 room partition cover.

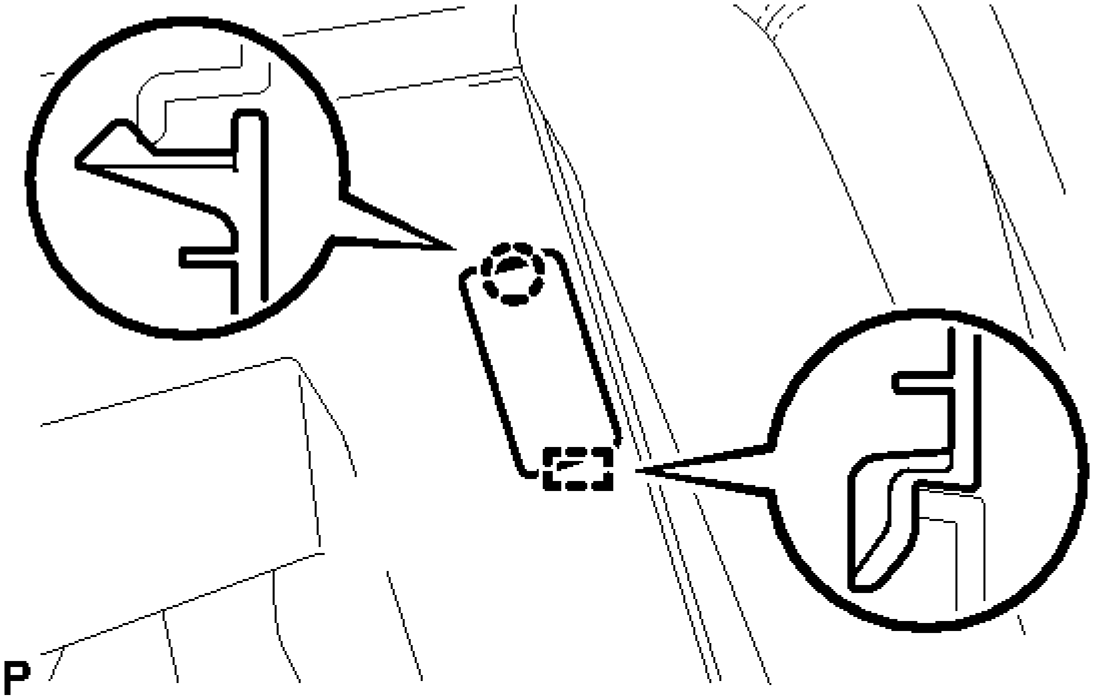

Fig. 79: Identifying No. 2 Room Partition Cover Claw And Guide
Courtesy of TOYOTA MOTOR SALES, U.S.A., INC.

c. Connect the rear seat outer belt to the rear seat center shoulder belt guide.
d. Lift the rear seat back assembly RH.

8. **INSTALL REAR SEAT CUSHION LOCK HOOK** . Refer to **INSTALLATION - Step 6**
9. **INSTALL REAR SEAT CUSHION ASSEMBLY** . Refer to **INSTALLATION - Step 7**
10. **INSTALL SERVICE PLUG GRIP**

    Refer to **INSTALLATION**

HV BATTERY

COMPONENTS

ILLUSTRATION

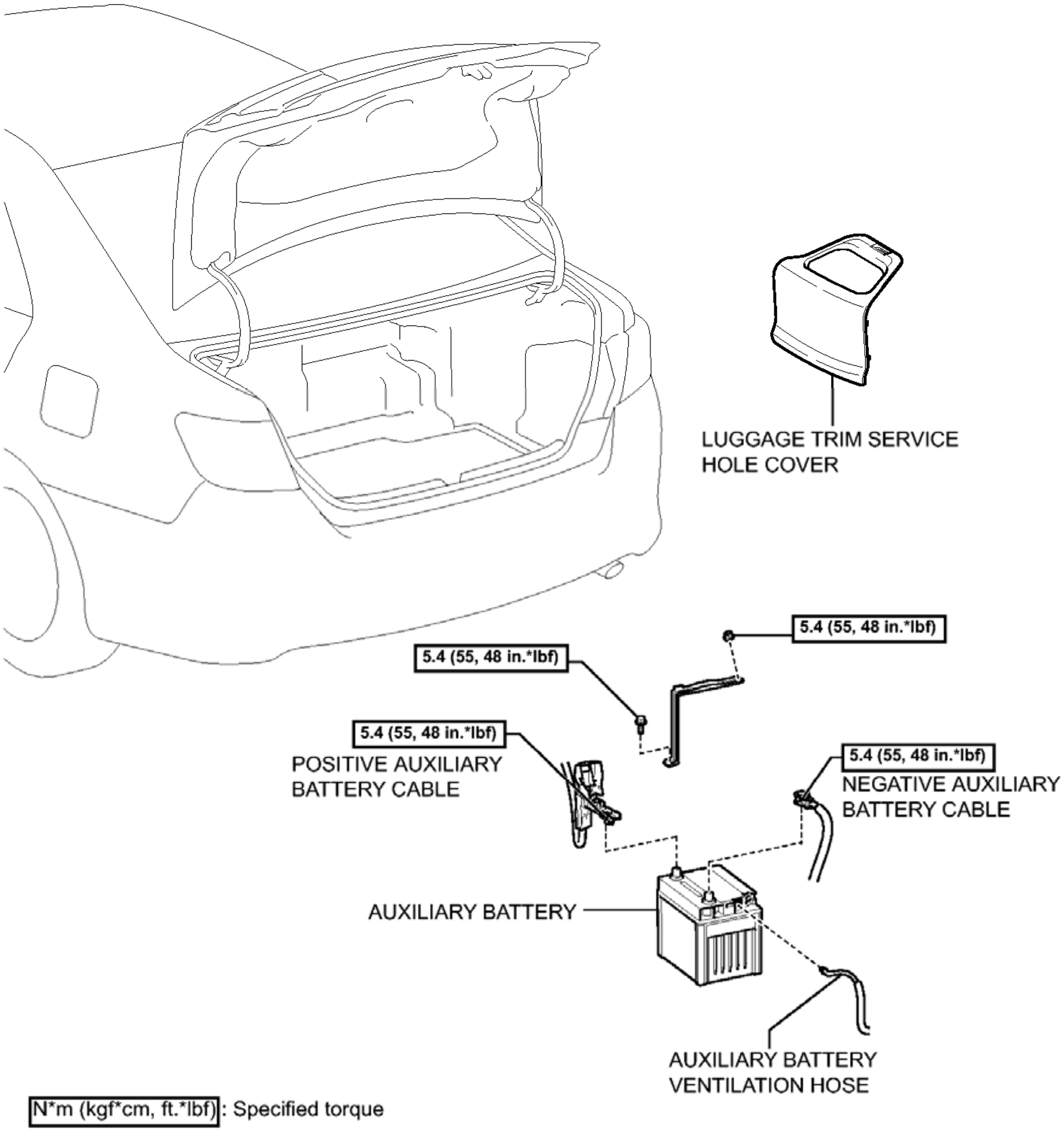
LUGGAGE TRIM SERVICE HOLE COVER
5.4 (55, 48 in.*lbf)
5.4 (55, 48 in.*lbf)
5.4 (55, 48 in.*lbf)
POSITIVE AUXILIARY BATTERY CABLE
5.4 (55, 48 in.*lbf)
NEGATIVE AUXILIARY BATTERY CABLE
AUXILIARY BATTERY
AUXILIARY BATTERY VENTILATION HOSE
N*m (kgf*cm, ft.*lbf) : Specified torque

Fig. 80: Identifying HV Battery Replacement Components With Torque Specifications (1 Of 8)
Courtesy of TOYOTA MOTOR SALES, U.S.A., INC.

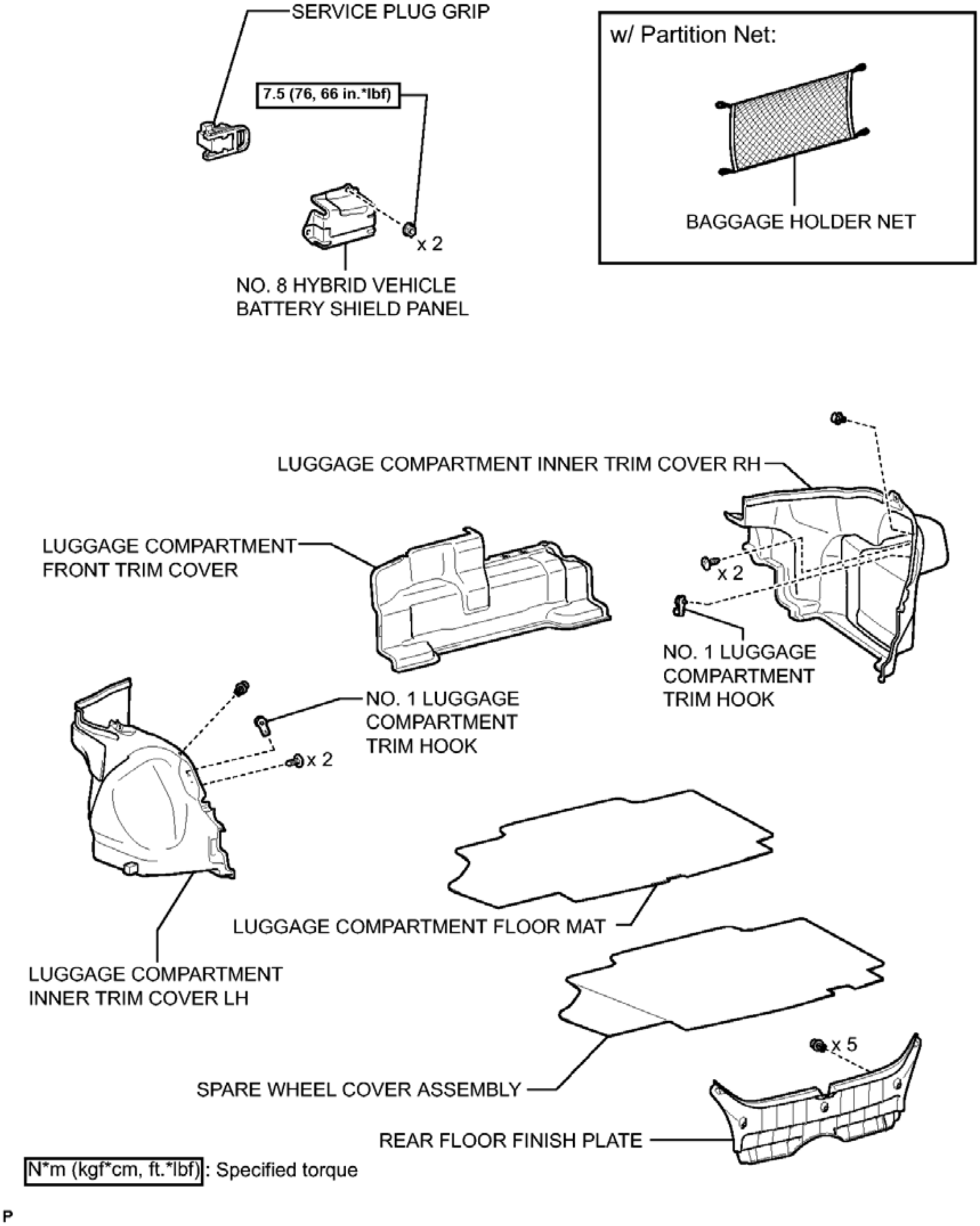
SERVICE PLUG GRIP
7.5 (76, 66 in.*lbf)
x 2
NO. 8 HYBRID VEHICLE BATTERY SHIELD PANEL
w/ Partition Net:
BAGGAGE HOLDER NET
LUGGAGE COMPARTMENT INNER TRIM COVER RH
LUGGAGE COMPARTMENT FRONT TRIM COVER
x 2
NO. 1 LUGGAGE COMPARTMENT TRIM HOOK
NO. 1 LUGGAGE COMPARTMENT TRIM HOOK
x 2
LUGGAGE COMPARTMENT FLOOR MAT
LUGGAGE COMPARTMENT INNER TRIM COVER LH
x 5
SPARE WHEEL COVER ASSEMBLY
REAR FLOOR FINISH PLATE
N*m (kgf*cm, ft.*lbf): Specified torque
P

Fig. 81: Identifying HV Battery Replacement Components With Torque Specifications (2 Of 8)

Courtesy of TOYOTA MOTOR SALES, U.S.A., INC.

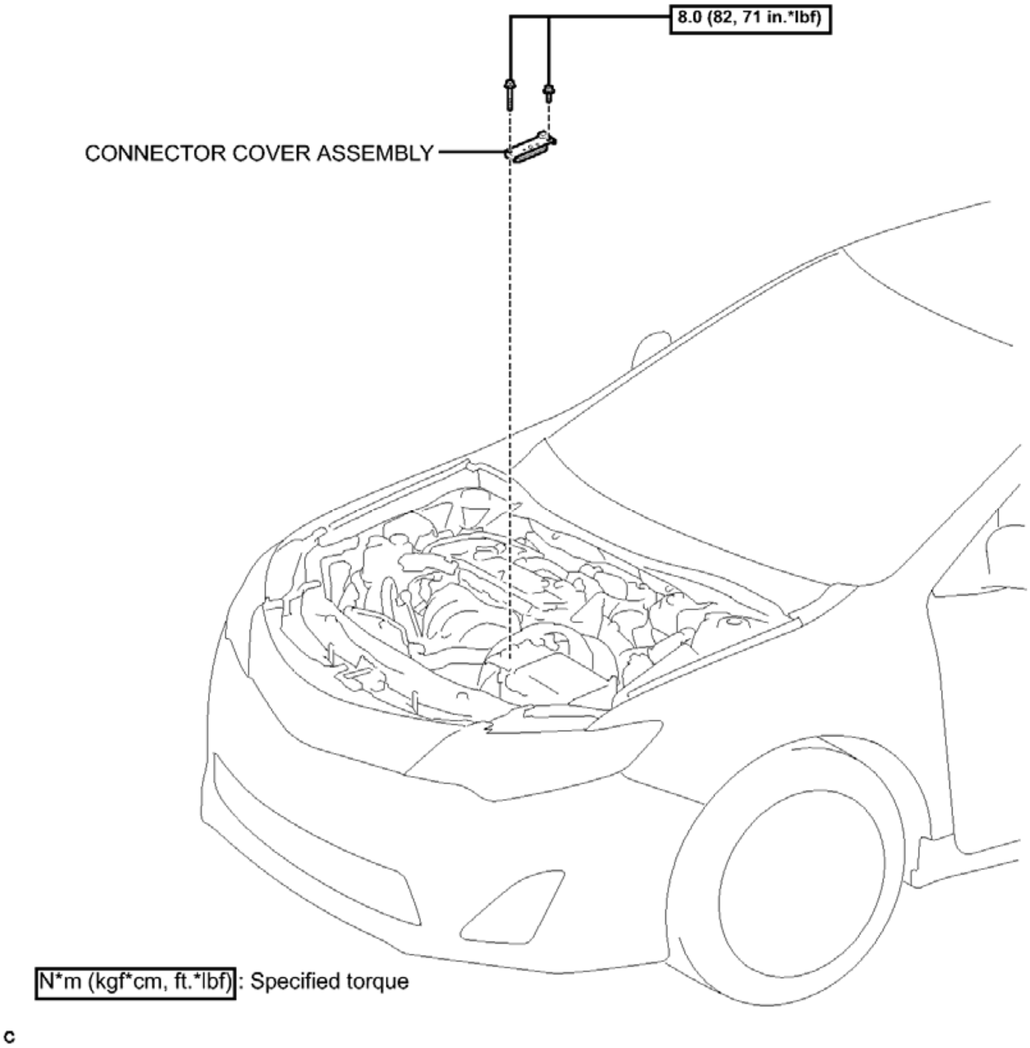
8.0 (82, 71 in.*lbf)
CONNECTOR COVER ASSEMBLY
N*m (kgf*cm, ft.*lbf): Specified torque
c

Fig. 82: Identifying HV Battery Replacement Components With Torque Specifications (3 Of 8)
Courtesy of TOYOTA MOTOR SALES, U.S.A., INC.

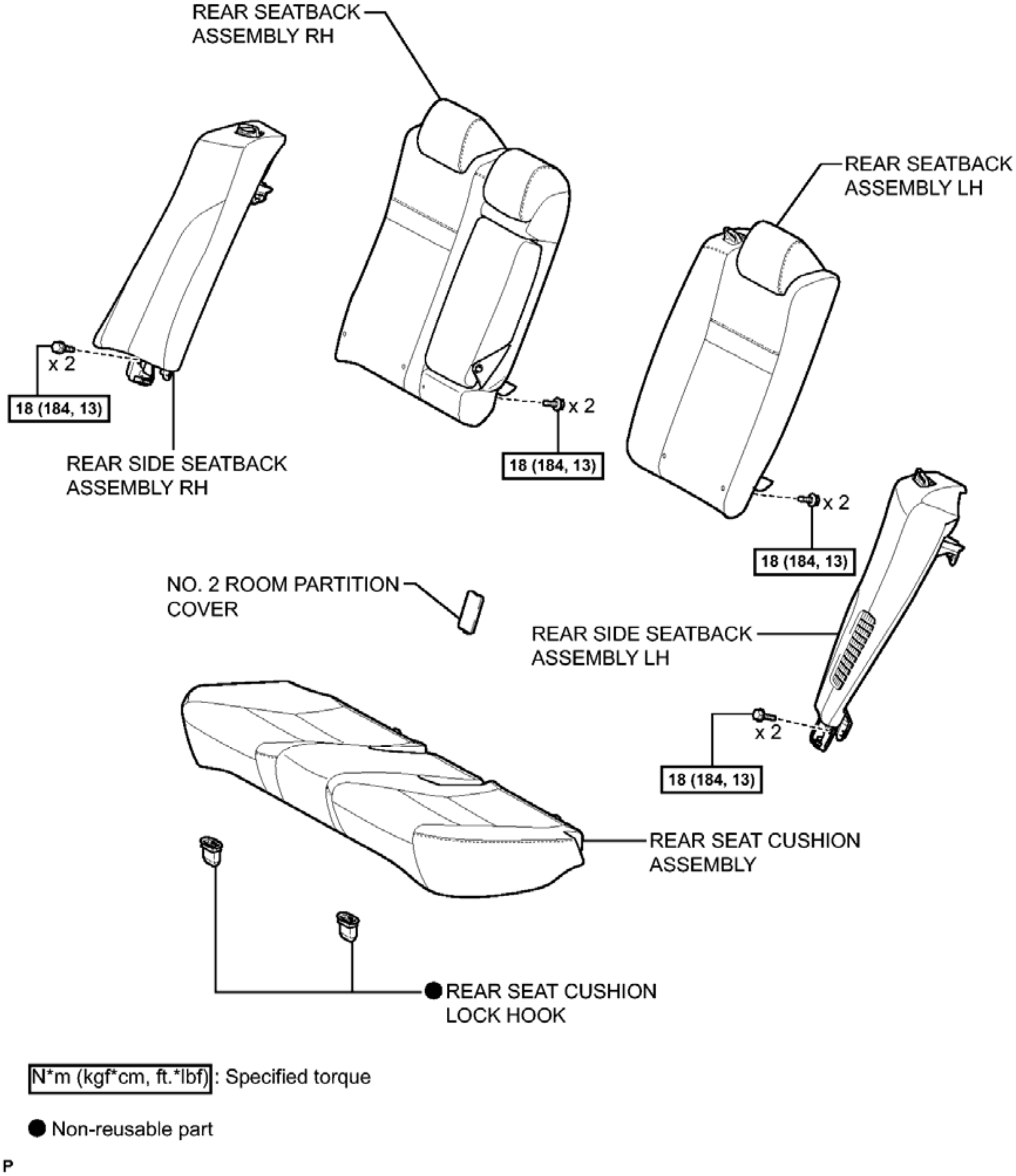
REAR SEATBACK ASSEMBLY RH
REAR SEATBACK ASSEMBLY LH
x 2
18 (184, 13)
REAR SIDE SEATBACK ASSEMBLY RH
x 2
18 (184, 13)
x 2
18 (184, 13)
NO. 2 ROOM PARTITION COVER
REAR SIDE SEATBACK ASSEMBLY LH
x 2
18 (184, 13)
REAR SEAT CUSHION ASSEMBLY
● REAR SEAT CUSHION LOCK HOOK
N*m (kgf*cm, ft.*lbf) : Specified torque
● Non-reusable part
P

Fig. 83: Identifying HV Battery Replacement Components With Torque Specifications (4 Of 8)
Courtesy of TOYOTA MOTOR SALES, U.S.A., INC.

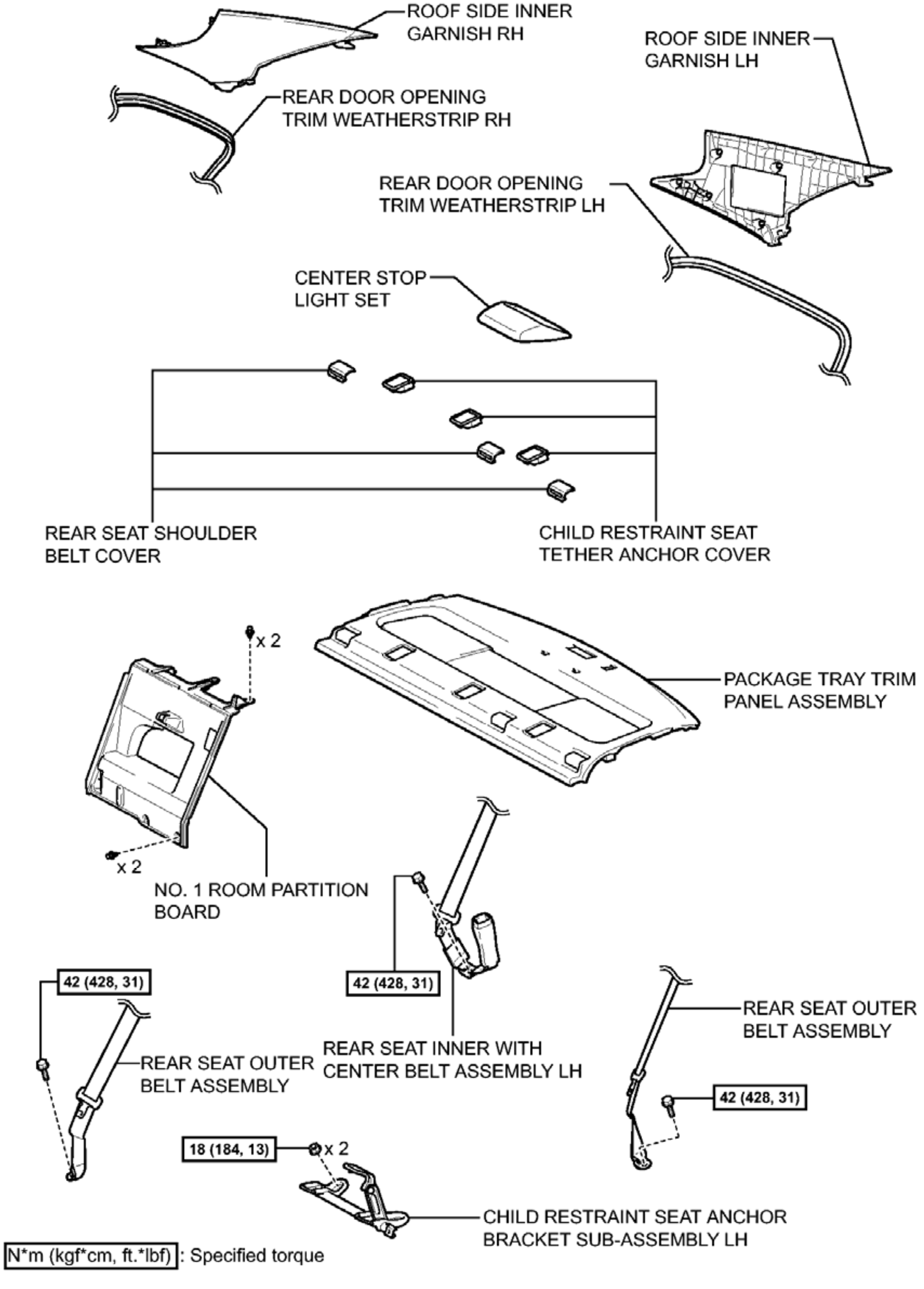
ROOF SIDE INNER GARNISH RH
ROOF SIDE INNER GARNISH LH
REAR DOOR OPENING TRIM WEATHERSTRIP RH
REAR DOOR OPENING TRIM WEATHERSTRIP LH
CENTER STOP LIGHT SET
REAR SEAT SHOULDER BELT COVER
CHILD RESTRAINT SEAT TETHER ANCHOR COVER
x 2
PACKAGE TRAY TRIM PANEL ASSEMBLY
x 2
NO. 1 ROOM PARTITION BOARD
42 (428, 31)
42 (428, 31)
REAR SEAT OUTER BELT ASSEMBLY
REAR SEAT OUTER BELT ASSEMBLY
REAR SEAT INNER WITH CENTER BELT ASSEMBLY LH
42 (428, 31)
18 (184, 13)
x 2
CHILD RESTRAINT SEAT ANCHOR BRACKET SUB-ASSEMBLY LH
N*m (kgf*cm, ft.*lbf) : Specified torque

Fig. 84: Identifying HV Battery Replacement Components With Torque Specifications (5 Of 8)
Courtesy of TOYOTA MOTOR SALES, U.S.A., INC.

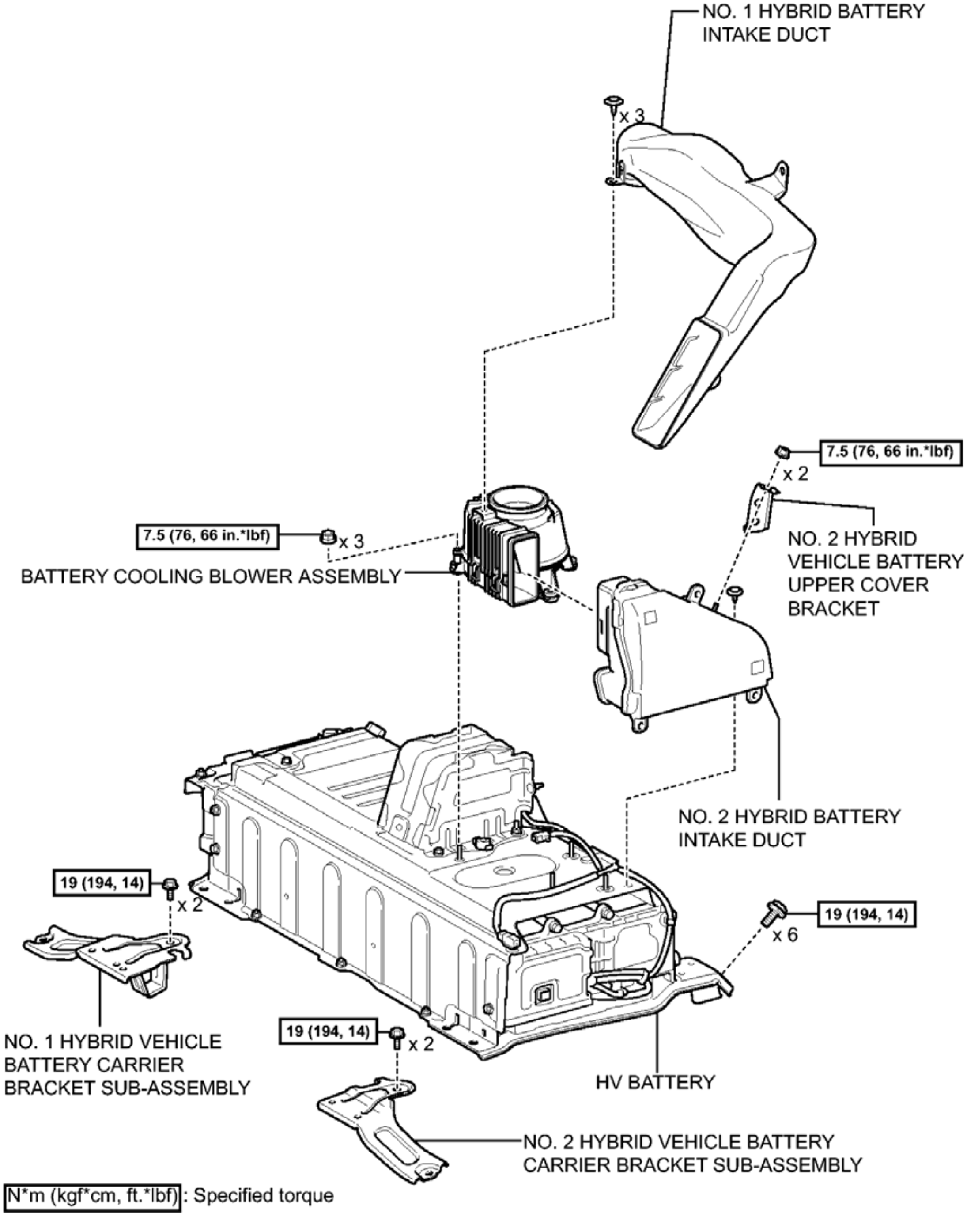
NO. 1 HYBRID BATTERY INTAKE DUCT
x 3
7.5 (76, 66 in.*lbf)
x 2
NO. 2 HYBRID VEHICLE BATTERY UPPER COVER BRACKET
7.5 (76, 66 in.*lbf)
x 3
BATTERY COOLING BLOWER ASSEMBLY
NO. 2 HYBRID BATTERY INTAKE DUCT
19 (194, 14)
x 2
19 (194, 14)
x 6
NO. 1 HYBRID VEHICLE BATTERY CARRIER BRACKET SUB-ASSEMBLY
19 (194, 14)
x 2
HV BATTERY
NO. 2 HYBRID VEHICLE BATTERY CARRIER BRACKET SUB-ASSEMBLY
N*m (kgf*cm, ft.*lbf): Specified torque
c

Fig. 85: Identifying HV Battery Replacement Components With Torque Specifications (6 Of 8)
Courtesy of TOYOTA MOTOR SALES, U.S.A., INC.

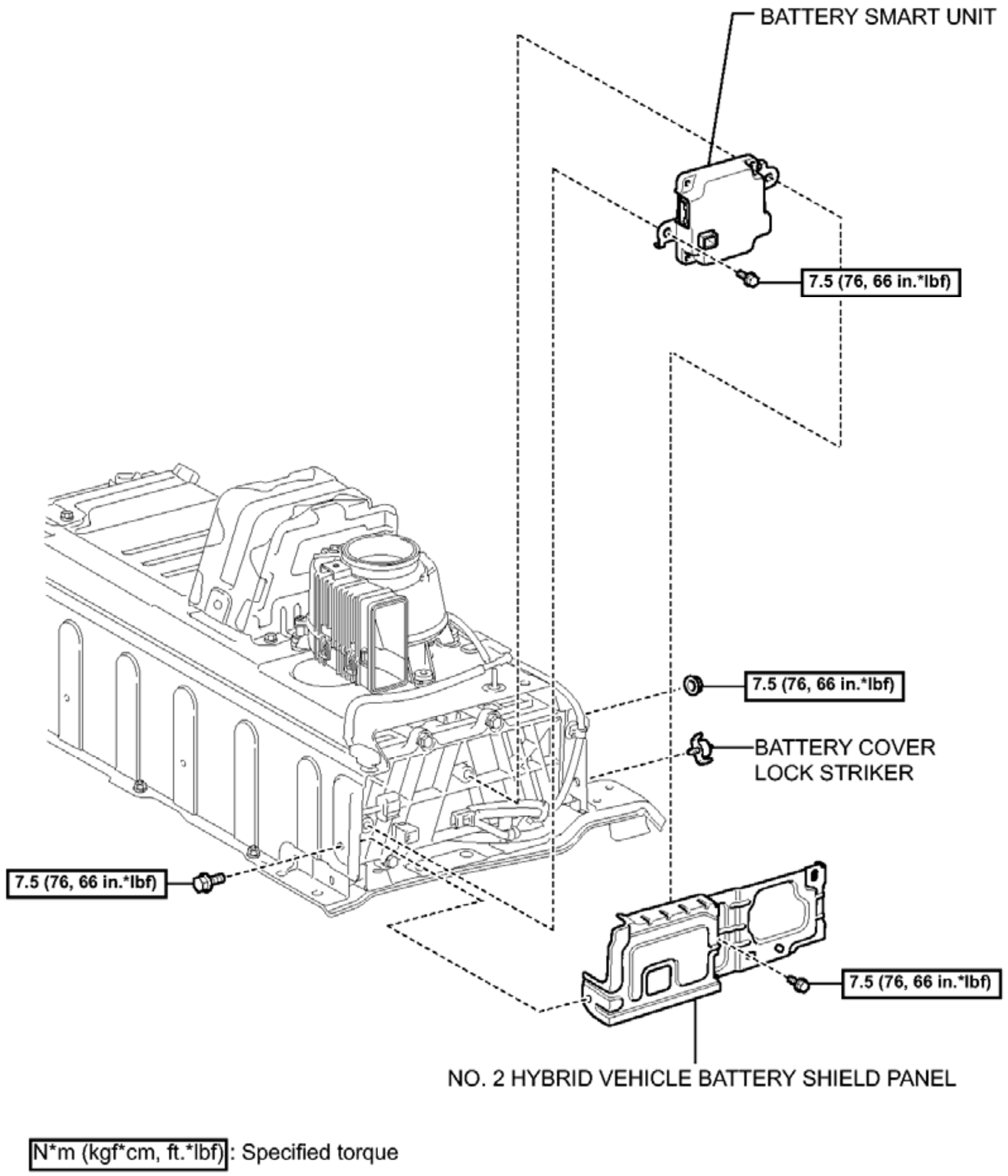
BATTERY SMART UNIT
7.5 (76, 66 in.*lbf)
7.5 (76, 66 in.*lbf)
BATTERY COVER
LOCK STRIKER
7.5 (76, 66 in.*lbf)
7.5 (76, 66 in.*lbf)
NO. 2 HYBRID VEHICLE BATTERY SHIELD PANEL
N*m (kgf*cm, ft.*lbf): Specified torque

c

Fig. 86: Identifying HV Battery Replacement Components With Torque Specifications (7 Of 8)
Courtesy of TOYOTA MOTOR SALES, U.S.A., INC.

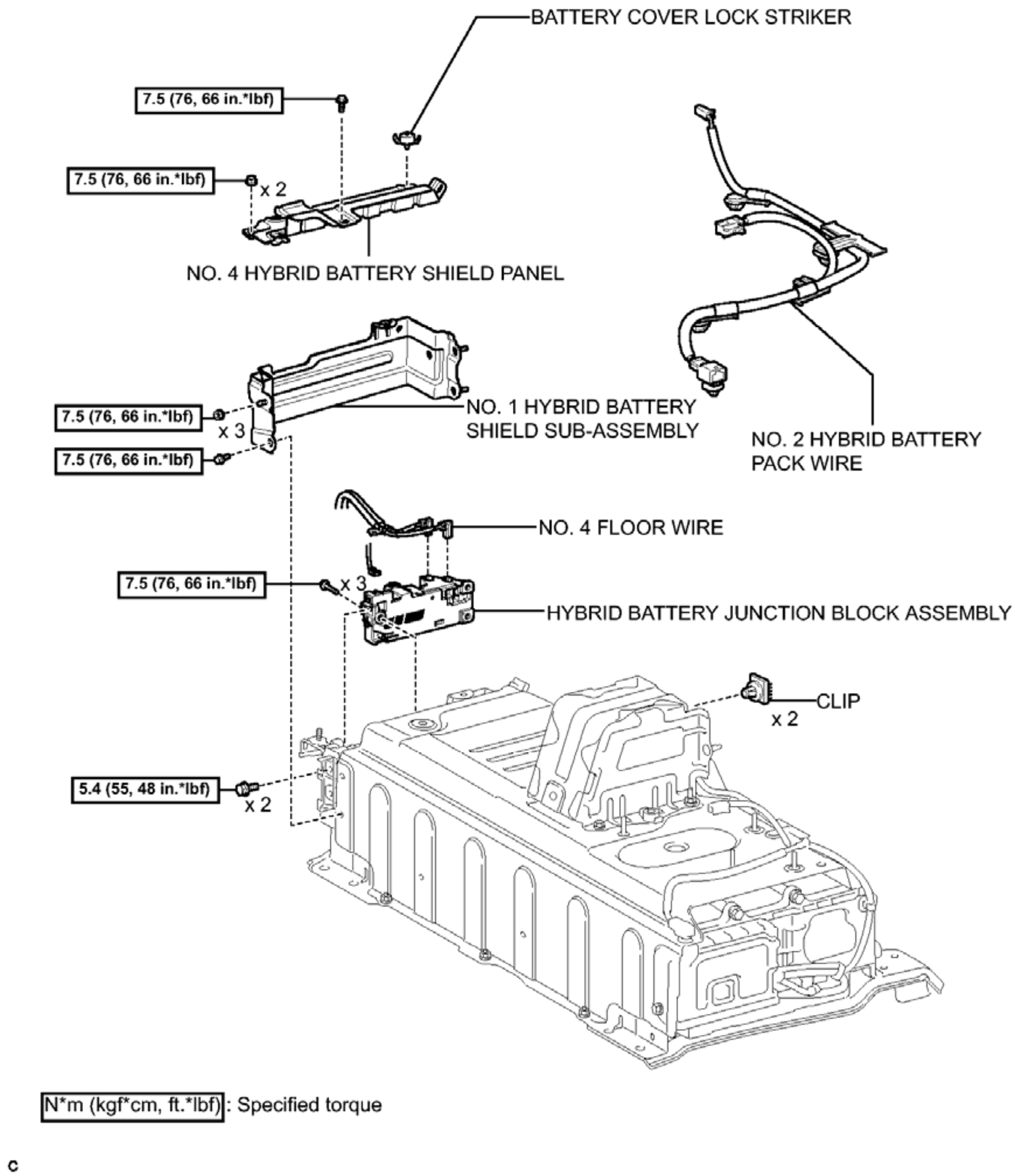
BATTERY COVER LOCK STRIKER
7.5 (76, 66 in.*lbf)
7.5 (76, 66 in.*lbf)
x 2
NO. 4 HYBRID BATTERY SHIELD PANEL
NO. 2 HYBRID BATTERY
PACK WIRE
7.5 (76, 66 in.*lbf)
x 3
NO. 1 HYBRID BATTERY
SHIELD SUB-ASSEMBLY
7.5 (76, 66 in.*lbf)
NO. 4 FLOOR WIRE
7.5 (76, 66 in.*lbf)
x 3
HYBRID BATTERY JUNCTION BLOCK ASSEMBLY
CLIP
x 2
5.4 (55, 48 in.*lbf)
x 2
N*m (kgf*cm, ft.*lbf) : Specified torque
c

Fig. 87: Identifying HV Battery Replacement Components With Torque Specifications (8 Of 8)
Courtesy of TOYOTA MOTOR SALES, U.S.A., INC.

REMOVAL

REMOVAL

1. **PRECAUTION**

Refer to **PRECAUTION**

2. **CHECK FOR DTCS**
    1. Check for DTCs. Refer to **DTC CHECK / CLEAR** .

NOTE: Confirm that P0AA6 (Hybrid Battery Voltage System Isolation Fault) is not output before doing removal or installation work HV battery. If this DTC is output, perform troubleshooting for this DTC first.

3. **REMOVE SERVICE PLUG GRIP**

    Refer to **REMOVAL**

4. **REMOVE CONNECTOR COVER ASSEMBLY** See step 4
5. **CHECK TERMINAL VOLTAGE** See step 5
6. **INSTALL CONNECTOR COVER ASSEMBLY** See step 19
7. **REMOVE AUXILIARY BATTERY** . Refer to **REMOVAL - Step 4**
8. **REMOVE REAR FLOOR FINISH PLATE** . Refer to **REMOVAL - Step 4**
9. **REMOVE NO. 1 LUGGAGE COMPARTMENT TRIM HOOK** . Refer to **REMOVAL - Step 5**
10. **REMOVE LUGGAGE COMPARTMENT INNER TRIM COVER LH** . Refer to **REMOVAL - Step 7**
11. **REMOVE LUGGAGE COMPARTMENT INNER TRIM COVER RH** . Refer to **REMOVAL - Step 8**
12. **REMOVE REAR SEAT CUSHION ASSEMBLY** . Refer to **REMOVAL - Step 4**
13. **REMOVE REAR SEAT CUSHION LOCK HOOK** . Refer to **REMOVAL - Step 5**
14. **REMOVE REAR SEATBACK ASSEMBLY RH** . Refer to **REMOVAL - Step 6**
15. **REMOVE NO. 2 ROOM PARTITION COVER** . Refer to **REMOVAL - Step 7**
16. **REMOVE REAR SEATBACK ASSEMBLY LH** . Refer to **REMOVAL - Step 8**
17. **REMOVE REAR SIDE SEATBACK ASSEMBLY LH** . Refer to **REMOVAL - Step 9**
18. **REMOVE REAR SIDE SEATBACK ASSEMBLY RH** . Refer to **REMOVAL - Step 10**
19. **DISCONNECT REAR DOOR OPENING TRIM WEATHERSTRIP LH** . Refer to **REMOVAL - Step 13**
20. **DISCONNECT REAR DOOR OPENING TRIM WEATHERSTRIP RH** . Refer to **REMOVAL - Step 14**
21. **DISCONNECT REAR SEAT OUTER BELT ASSEMBLY (for LH Side)** . Refer to **REMOVAL - Step 14**
22. **DISCONNECT REAR SEAT OUTER BELT ASSEMBLY (for RH Side)** . Refer to **REMOVAL - Step 15**
23. **REMOVE CHILD RESTRAINT SEAT ANCHOR BRACKET SUB-ASSEMBLY LH** . Refer to **REMOVAL - Step 11**
24. **DISCONNECT REAR SEAT INNER WITH CENTER BELT ASSEMBLY LH** . Refer to **REMOVAL - Step 20**

25. **REMOVE ROOF SIDE INNER GARNISH LH** . Refer to **REMOVAL - Step 25**
26. **REMOVE ROOF SIDE INNER GARNISH RH** . Refer to **REMOVAL - Step 32**
27. **REMOVE CENTER STOP LIGHT SET** . Refer to **REMOVAL - Step 1**
28. **REMOVE CHILD RESTRAINT SEAT TETHER ANCHOR COVER** . Refer to **REMOVAL - Step 19**
29. **REMOVE REAR SEAT SHOULDER BELT COVER** . Refer to **REMOVAL - Step 20**
30. **REMOVE PACKAGE TRAY TRIM PANEL ASSEMBLY** . Refer to **REMOVAL - Step 21**
31. **REMOVE NO. 1 ROOM PARTITION BOARD** . Refer to **REMOVAL - Step 23**
32. **REMOVE NO. 1 HYBRID BATTERY INTAKE DUCT** See step 9
33. **REMOVE NO. 4 HYBRID BATTERY SHIELD PANEL** See step 26
34. **DISCONNECT NO. 4 FLOOR WIRE** See step 27
35. **DISCONNECT LOW VOLTAGE CONNECTOR**
    a. Disconnect the connector and clamp.

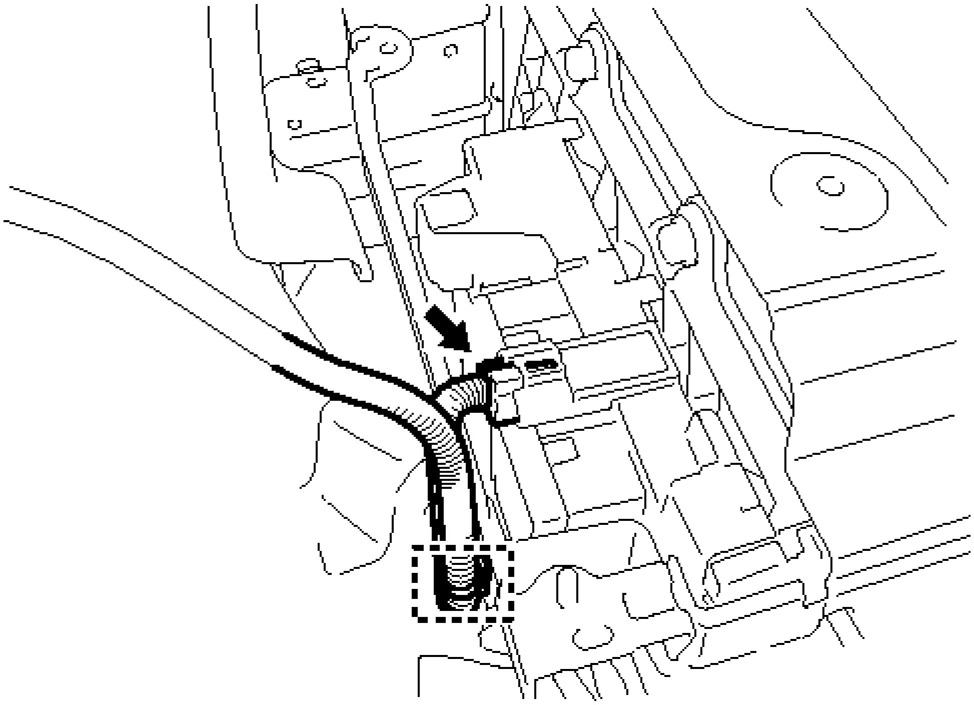

Fig. 88: Identifying Low Voltage Connector And Clamp
Courtesy of TOYOTA MOTOR SALES, U.S.A., INC.

    b. Disconnect the 2 connectors.

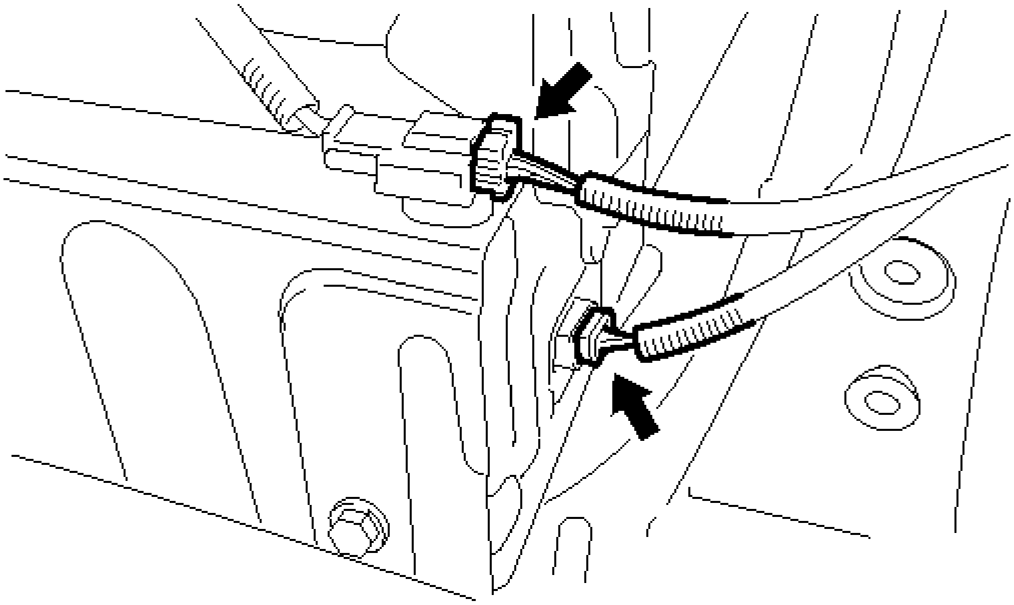

Fig. 89: Identifying Low Voltage Connectors
Courtesy of TOYOTA MOTOR SALES, U.S.A., INC.

36. **REMOVE HV BATTERY**

WARNING: Wear insulated gloves.

a. Remove the 6 bolts from the HV battery.

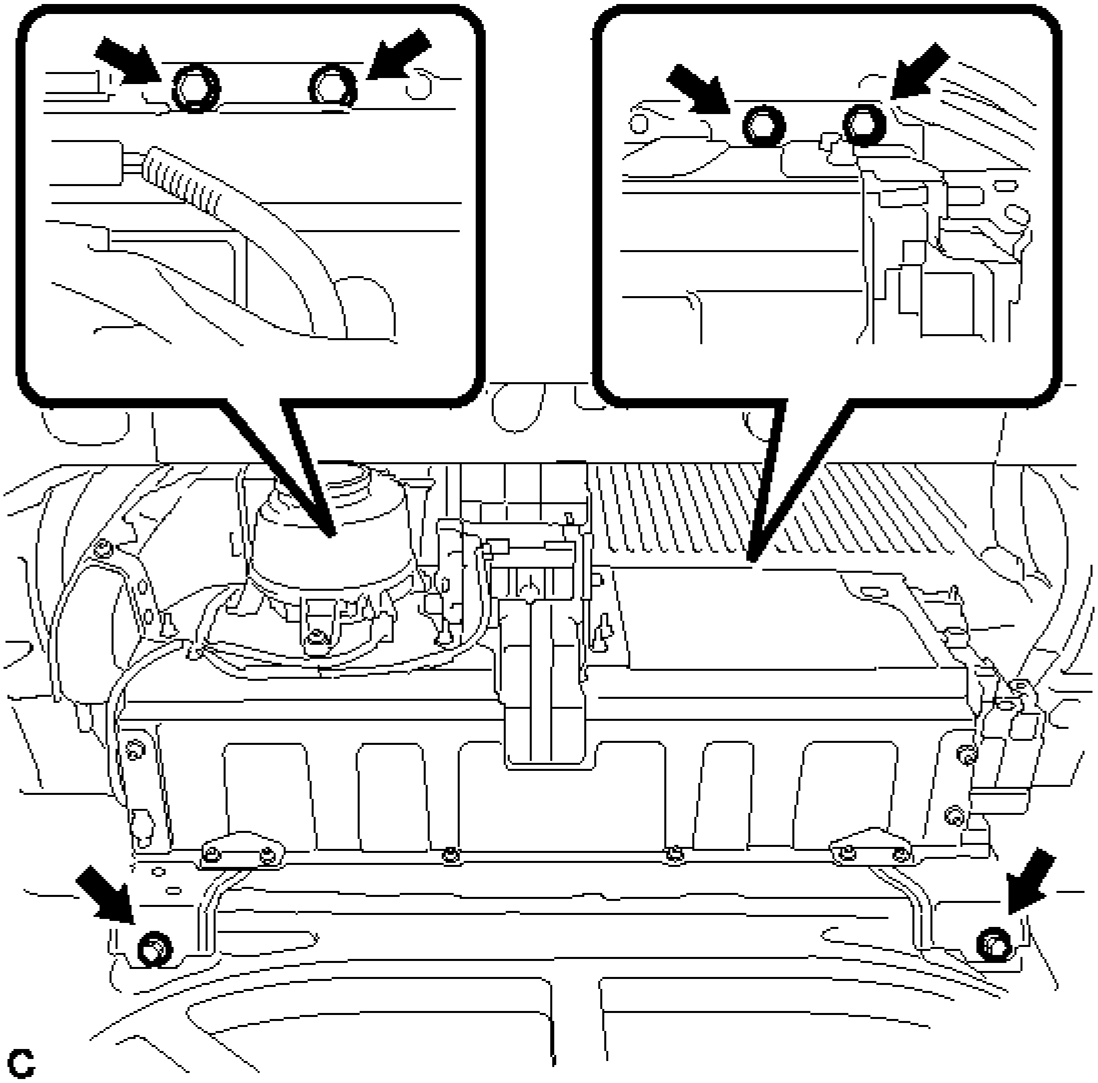

Fig. 90: Identifying HV Battery Bolts
Courtesy of TOYOTA MOTOR SALES, U.S.A., INC.

b. Install the spare wheel cover assembly upside down.

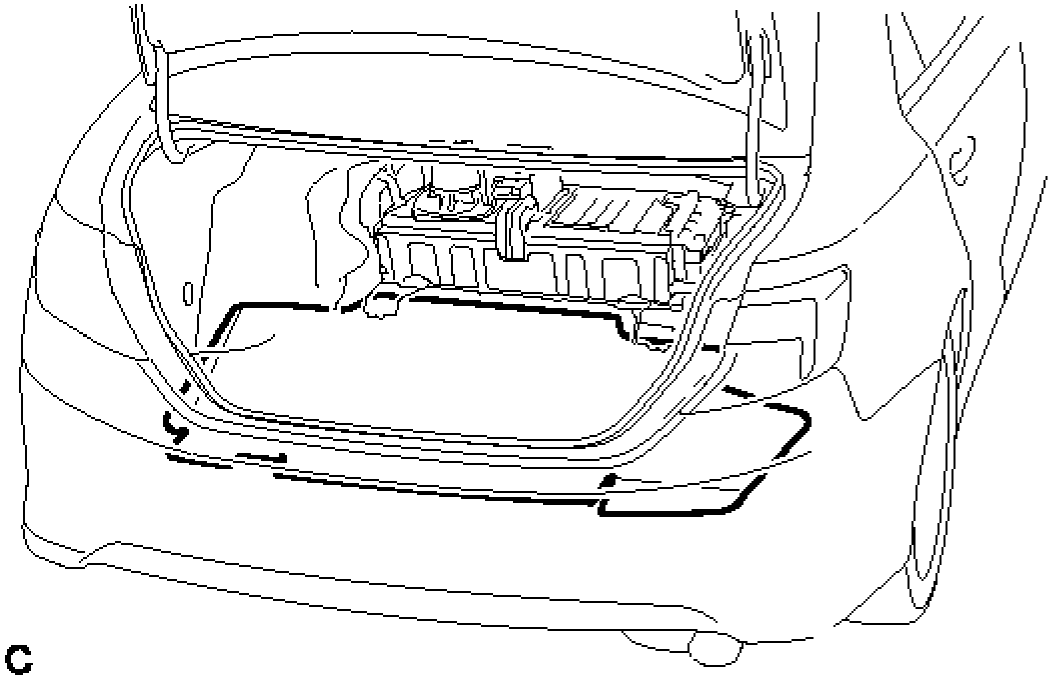

Fig. 91: Identifying Spare Wheel Cover
Courtesy of TOYOTA MOTOR SALES, U.S.A., INC.

c. Cut and shape a piece of cardboard so that it fits the area between the HV battery bolt attachment positions, and then insert it as shown in the illustration.

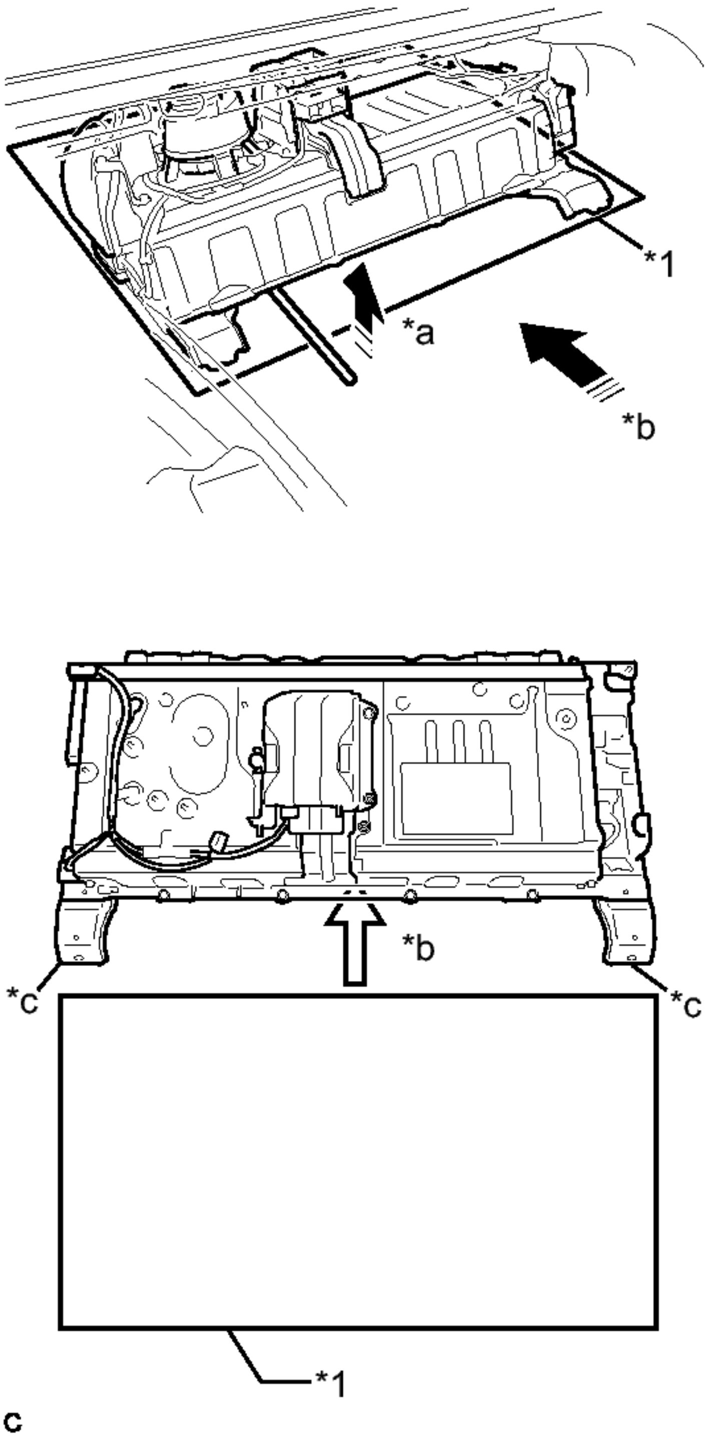

Fig. 92: Inserting Cardboard Between The HV Battery Bolt Attachment Positions
Courtesy of TOYOTA MOTOR SALES, U.S.A., INC.

TEXT IN ILLUSTRATION

*1	Cardboard
*a	Hold up
*b	Insert
*c	HV battery bolt attachment position

d. Using a tire lever to hold up the HV battery, insert the cardboard until it cannot be inserted any further.

NOTE: **Secure the No. 4 floor wire with electrical tape to prevent it from getting caught when moving the battery or other parts.**

HINT:

Attach tape to the feet and edges of the battery to protect tools and the vehicle body.

e. Pull the cardboard and HV battery together to the middle of the luggage compartment.

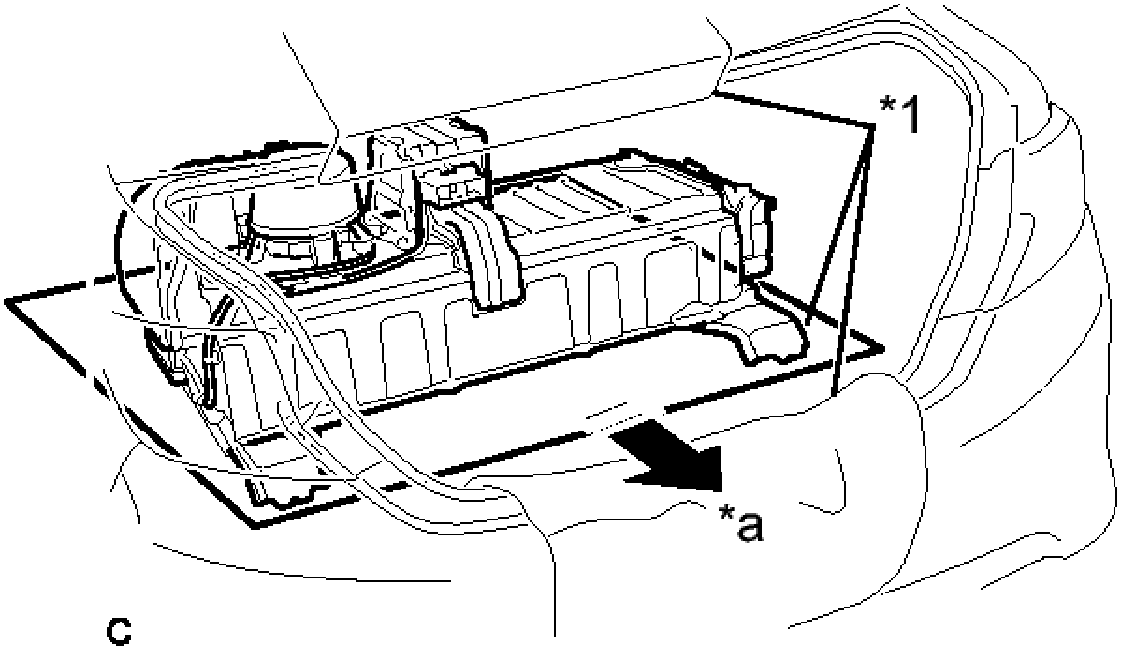

Fig. 93: Pulling Out Cardboard And HV Battery
Courtesy of TOYOTA MOTOR SALES, U.S.A., INC.

TEXT IN ILLUSTRATION

*1	Cardboard
*a	Pull

NOTE: **Use cardboard or other similar material to protect the HV battery and vehicle body from damage.**

f. Remove the 2 nuts and No. 2 hybrid vehicle battery upper cover bracket.

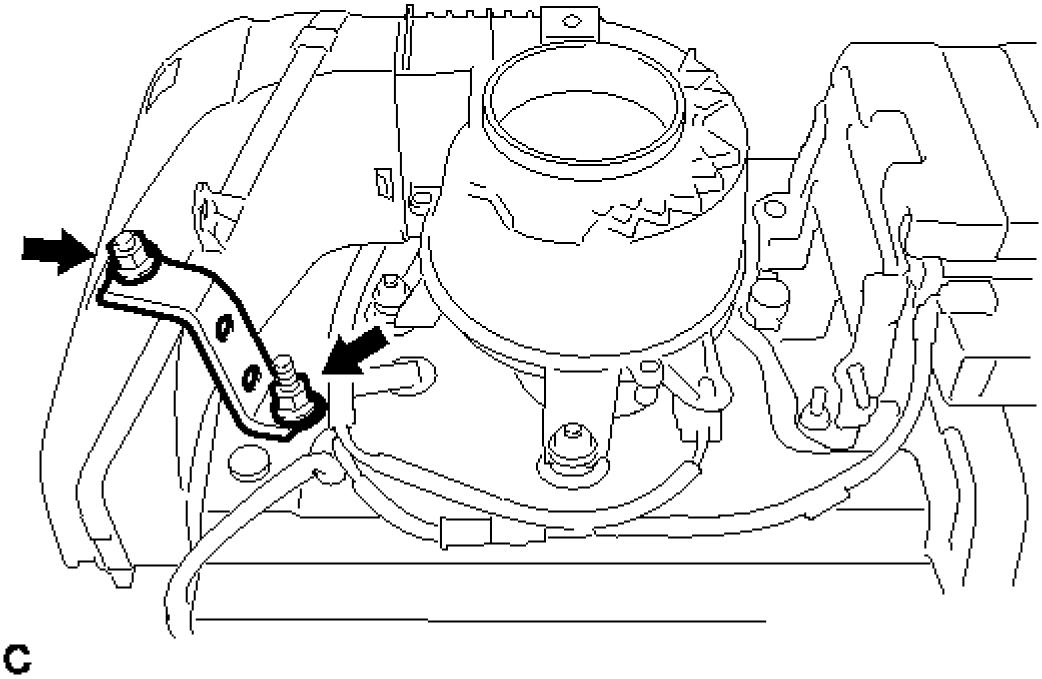

Fig. 94: Identifying Battery Upper Cover Bracket And Nuts
Courtesy of TOYOTA MOTOR SALES, U.S.A., INC.

g. Remove the clip.

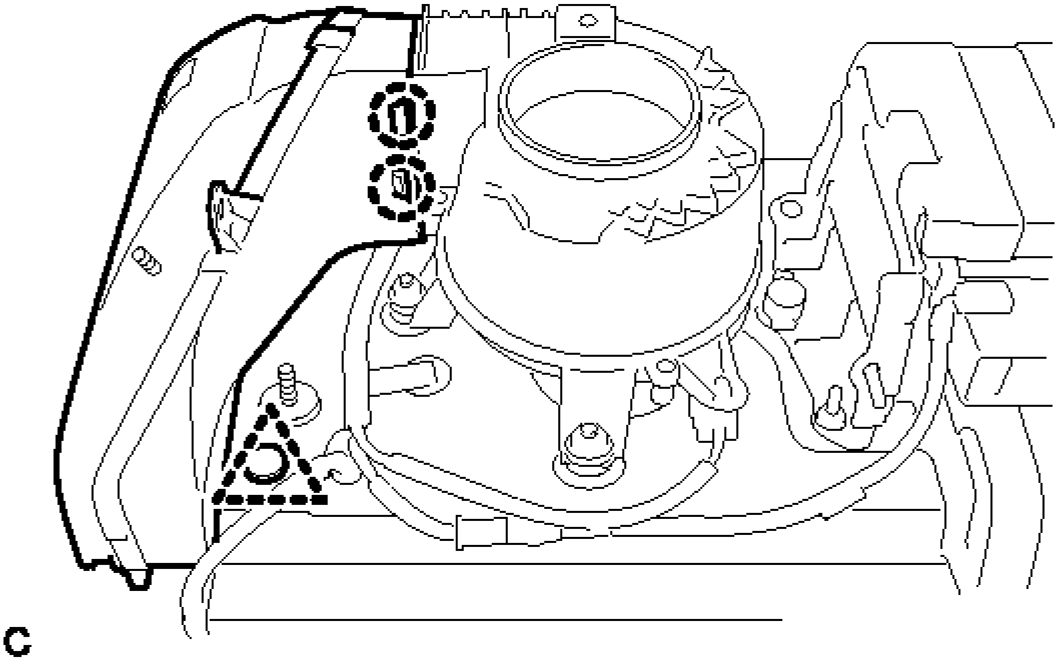

Fig. 95: Identifying Battery Upper Cover Clip And Claws
Courtesy of TOYOTA MOTOR SALES, U.S.A., INC.

h. Disengage the 2 claws and remove the No. 2 hybrid battery intake duct.
i. Disconnect the connector from the battery cooling blower assembly.

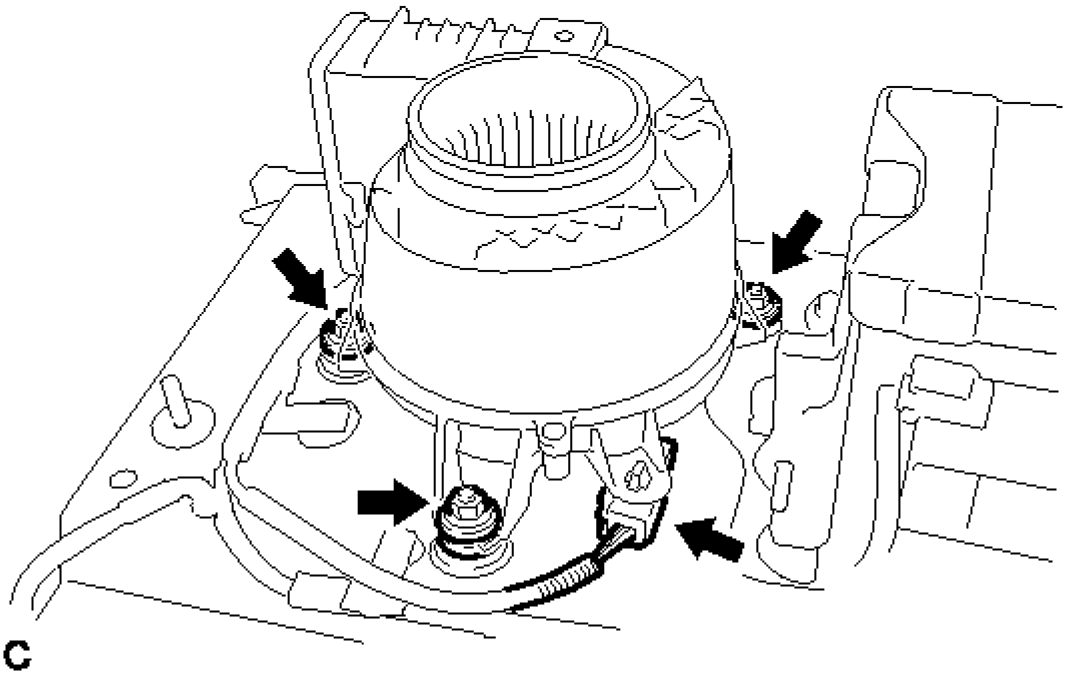

Fig. 96: Identifying Battery Cooling Blower Assembly Nuts And Connector
Courtesy of TOYOTA MOTOR SALES, U.S.A., INC.

j. Remove the 3 nuts and battery cooling blower assembly.

NOTE:

- **Be sure not to touch the fan part of the battery cooling blower assembly.**
- **Do not lift the battery cooling blower assembly using the wire harness.**

k. Remove the 2 clips.

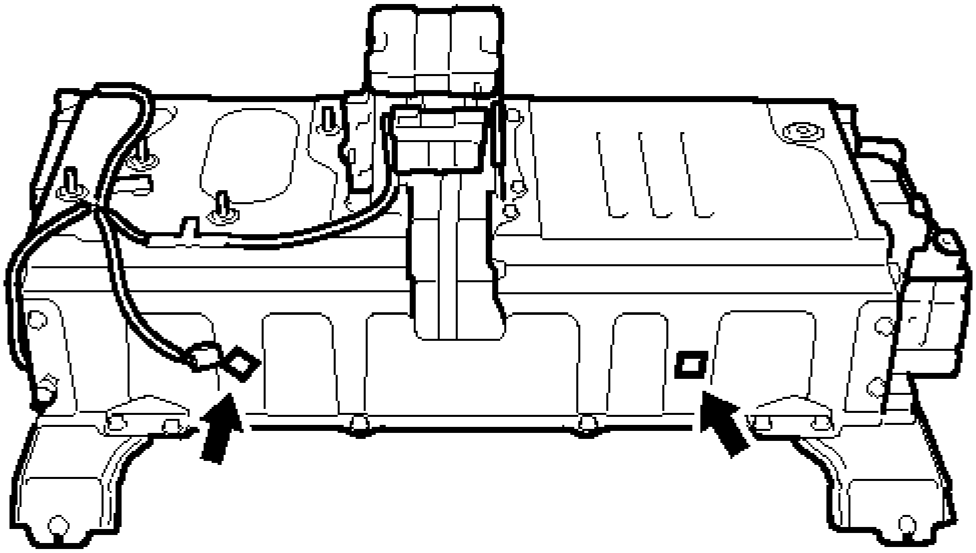

Fig. 97: Identifying HV battery Clips
Courtesy of TOYOTA MOTOR SALES, U.S.A., INC.

l. Turn the cardboard and HV battery 180° together.

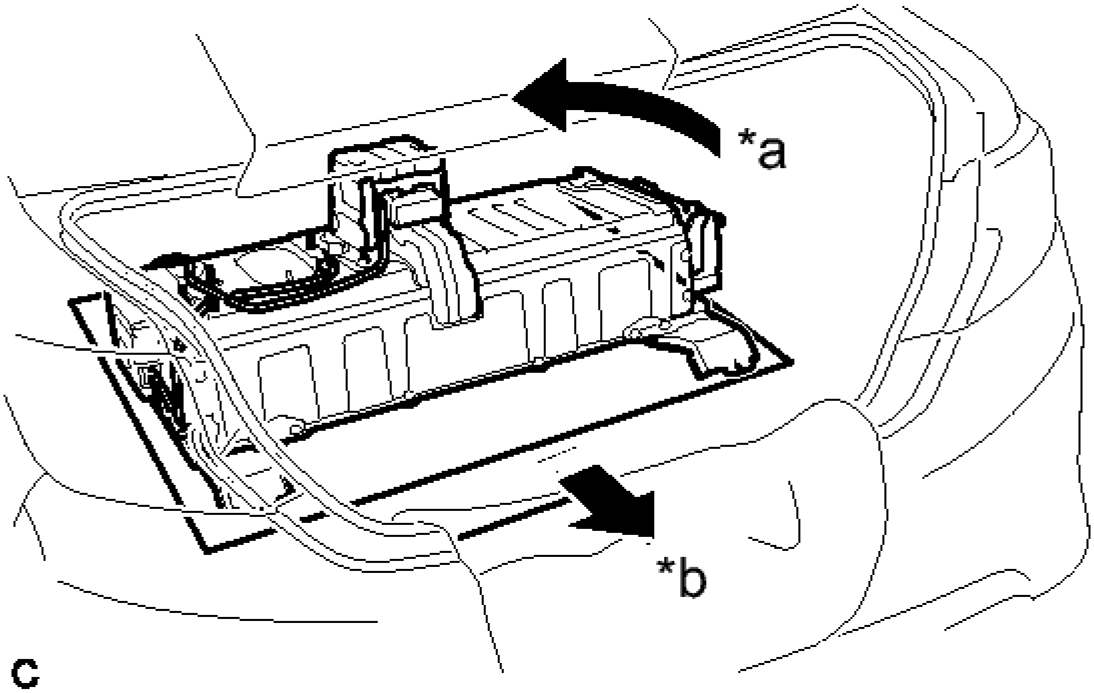

Fig. 98: Turning Cardboard And HV Battery
Courtesy of TOYOTA MOTOR SALES, U.S.A., INC.

TEXT IN ILLUSTRATION

*a	Turn 180°
*b	Pull

m. Pull the HV battery together with the cardboard toward the rear of the vehicle.

n. Using a suitable adaptor such as a rope, remove the HV battery while tilting it.

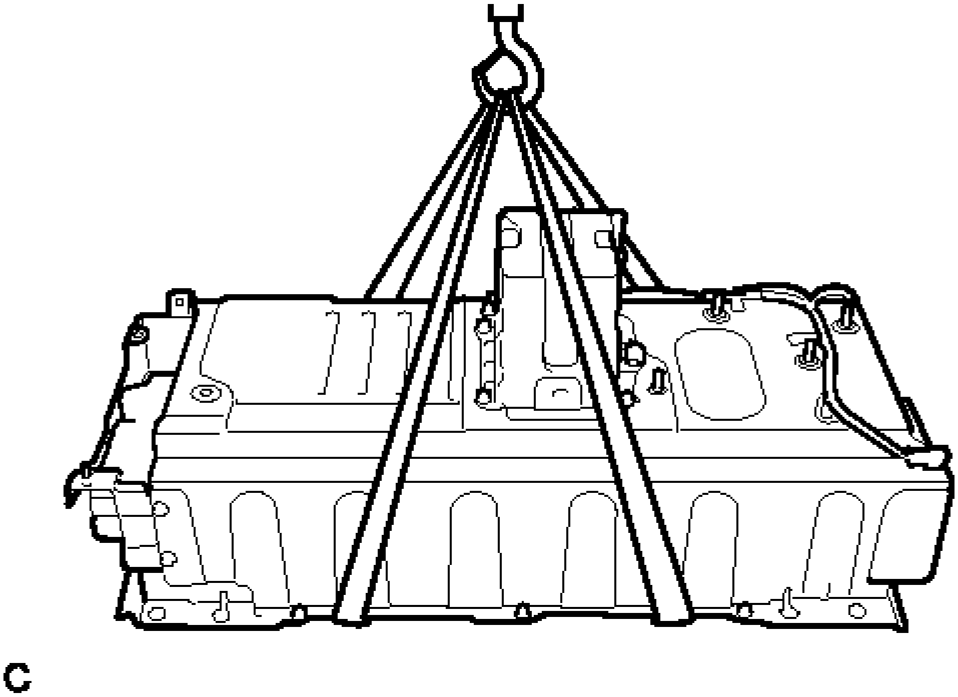

Fig. 99: Removing The HV Battery
Courtesy of TOYOTA MOTOR SALES, U.S.A., INC.

NOTE: **While lowering the HV battery from the vehicle, do not allow it to contact the vehicle.**

37. REMOVE NO. 2 HYBRID VEHICLE BATTERY SHIELD PANEL

WARNING: **Wear insulated gloves.**

a. Using the service plug grip, remove the battery cover lock striker.

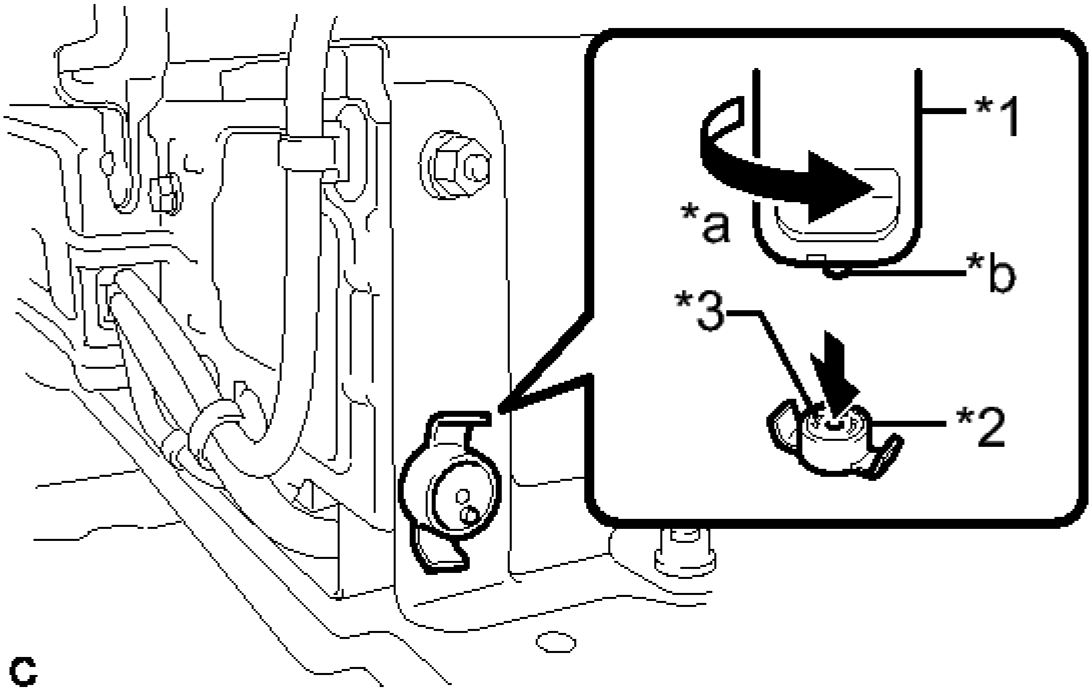

Fig. 100: Removing Battery Cover Lock Striker
Courtesy of TOYOTA MOTOR SALES, U.S.A., INC.

TEXT IN ILLUSTRATION

*1	Service Plug Grip
*2	Battery Cover Lock Striker
*3	Button
*a	Turn
*b	Projection

HINT:

Insert the projection part of the service plug grip, and turn the button of the battery cover lock striker counterclockwise, and release the lock.

b. Disconnect the connector.

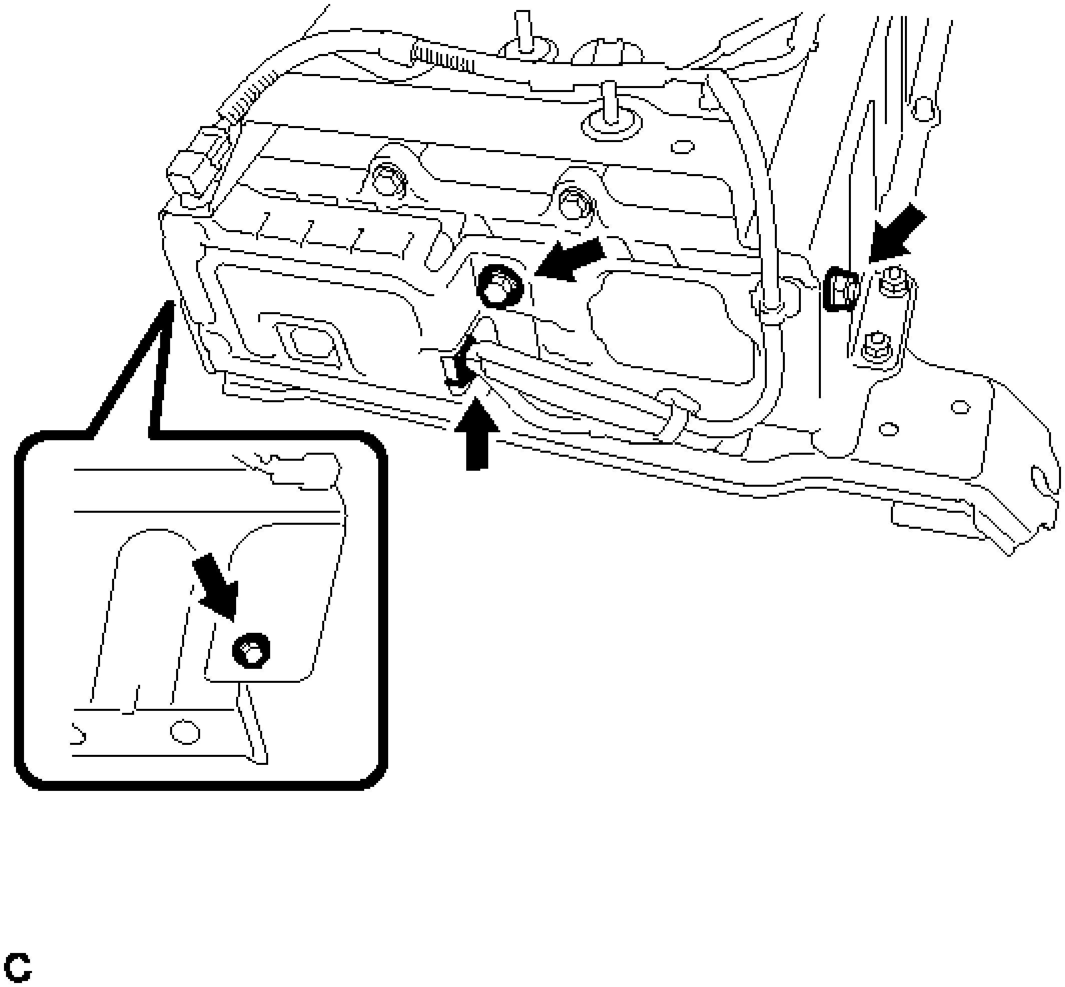

Fig. 101: Identifying No. 2 Hybrid Vehicle Battery Shield Panel Nut And Bolts
Courtesy of TOYOTA MOTOR SALES, U.S.A., INC.

c. Remove the 2 bolts, nut and No. 2 hybrid vehicle battery shield panel.
d. Disconnect the 3 wire harness clamps.

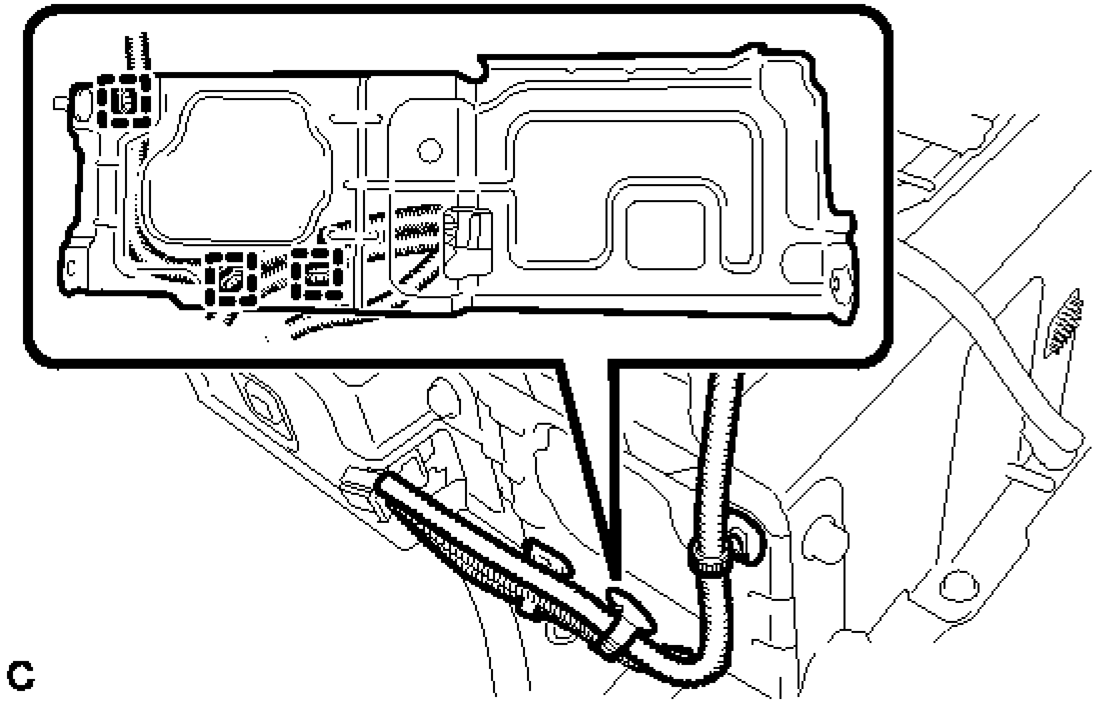

Fig. 102: Identifying Wire Harness Clamps
Courtesy of TOYOTA MOTOR SALES, U.S.A., INC.

38. **REMOVE BATTERY SMART UNIT**
    a. Disconnect the connector.

NOTE: **Insulate the removed connector with insulating tape.**

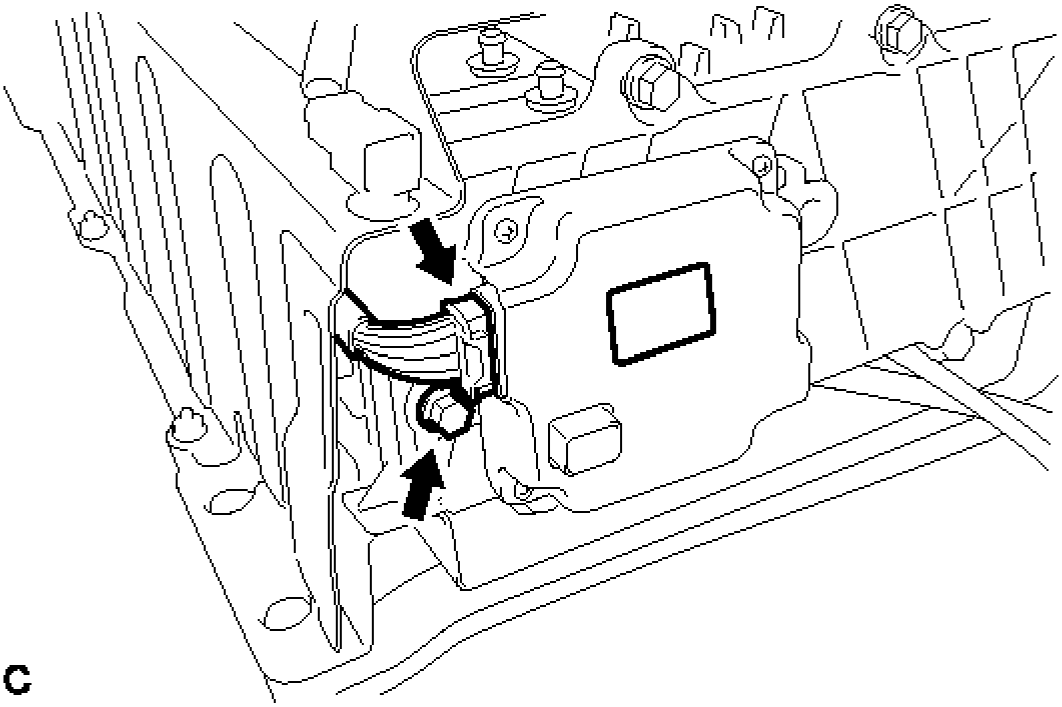

Fig. 103: Identifying Bolt And Battery Smart Unit
Courtesy of TOYOTA MOTOR SALES, U.S.A., INC.

b. Remove the bolt and battery smart unit.

39. **REMOVE NO. 1 HYBRID BATTERY SHIELD SUB-ASSEMBLY**

WARNING: **Wear insulated gloves.**

a. Remove the bolt, 3 nuts and No. 1 hybrid battery shield sub-assembly.

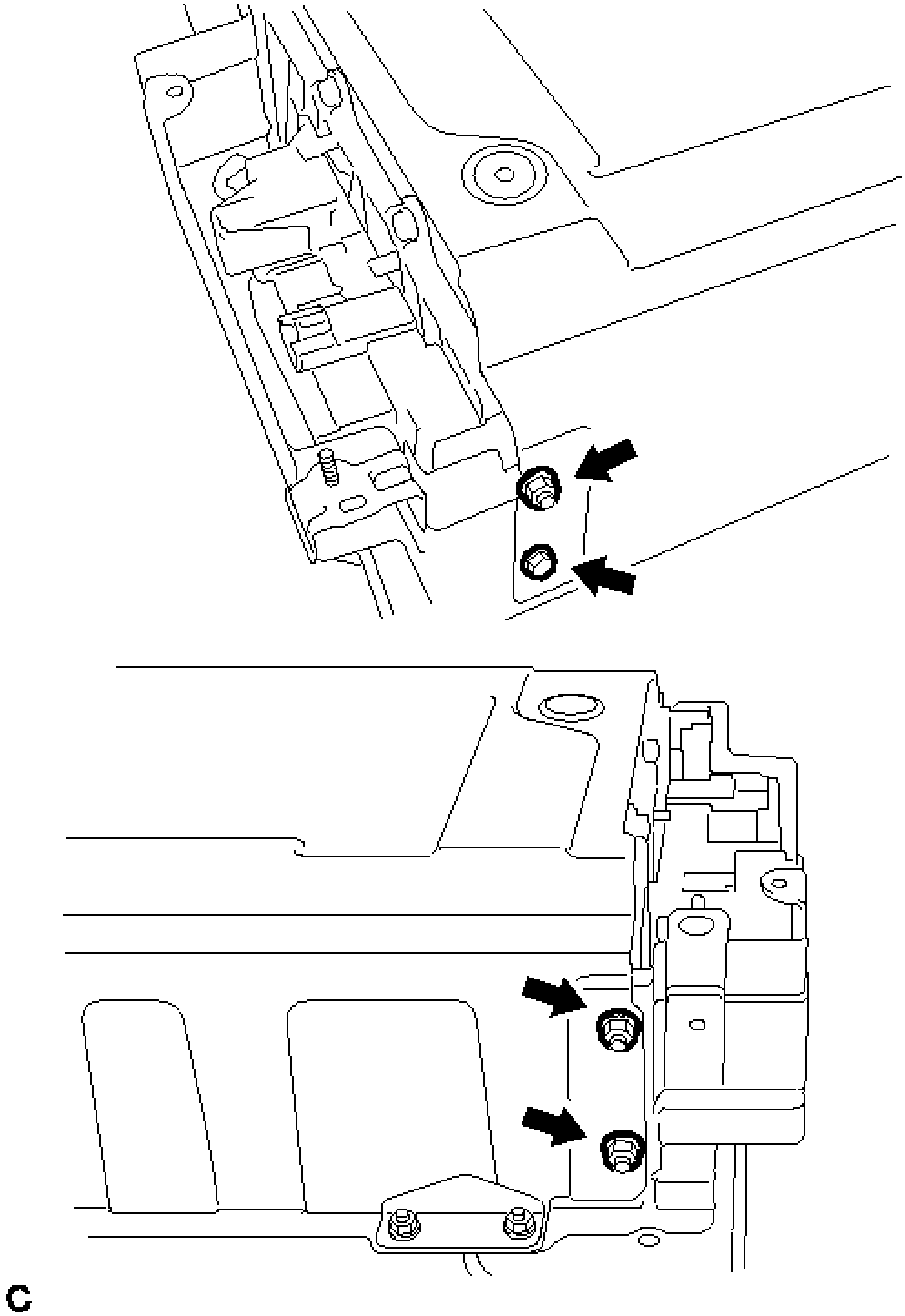

Fig. 104: Identifying No. 1 Hybrid Battery Shield Sub-Assembly Nuts And Bolt
Courtesy of TOYOTA MOTOR SALES, U.S.A., INC.

40. **REMOVE HYBRID BATTERY JUNCTION BLOCK ASSEMBLY** See step 29
41. **SEPARATE NO. 2 HYBRID BATTERY PACK WIRE**

WARNING: **Wear insulated gloves.**

a. Disconnect the connector and 5 clamps, and remove the No. 2 hybrid battery pack wire.

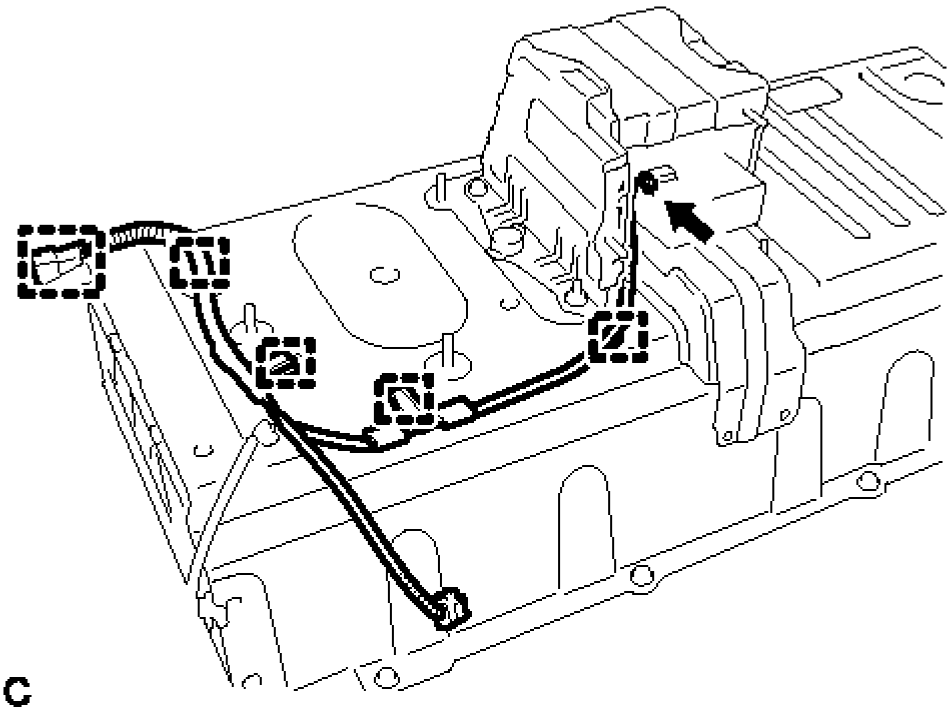

Fig. 105: Identifying No. 2 Hybrid Battery Pack Wire Connector And Clamps
Courtesy of TOYOTA MOTOR SALES, U.S.A., INC.

42. **REMOVE NO. 1 HYBRID VEHICLE BATTERY CARRIER BRACKET SUB-ASSEMBLY**
    a. Remove the 2 bolts and No. 1 hybrid vehicle battery carrier bracket sub-assembly.

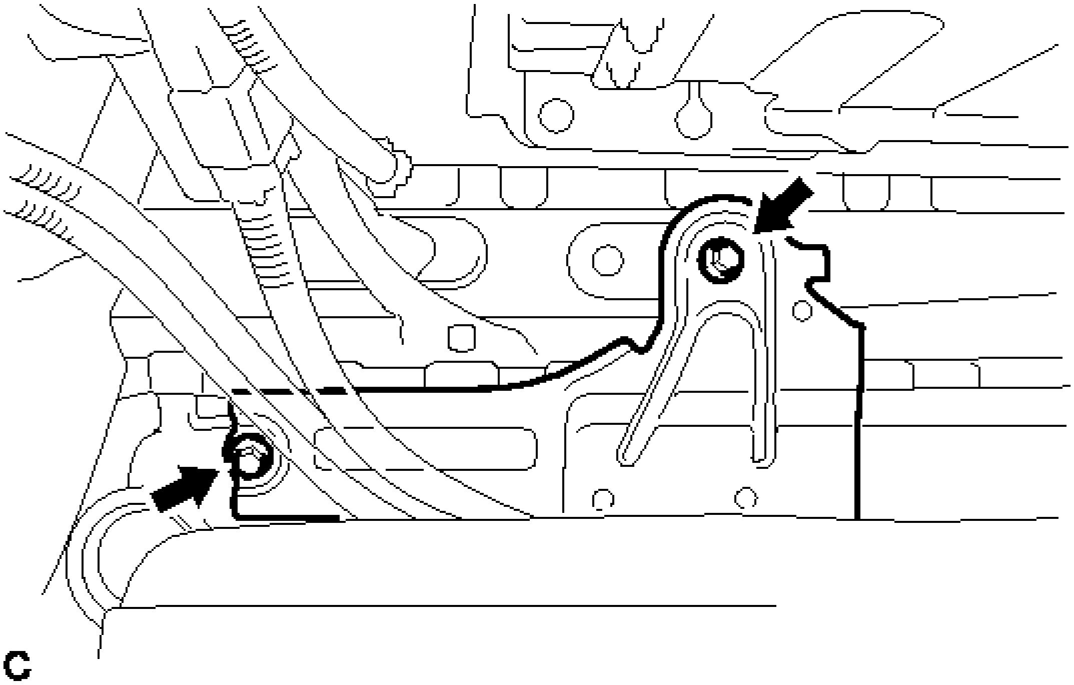

Fig. 106: Identifying No. 1 Hybrid Vehicle Battery Carrier Bracket And Bolts
Courtesy of TOYOTA MOTOR SALES, U.S.A., INC.

43. **REMOVE NO. 2 HYBRID VEHICLE BATTERY CARRIER BRACKET SUB-ASSEMBLY**
    a. Remove the 2 bolts and No. 2 hybrid vehicle battery carrier bracket sub-assembly.

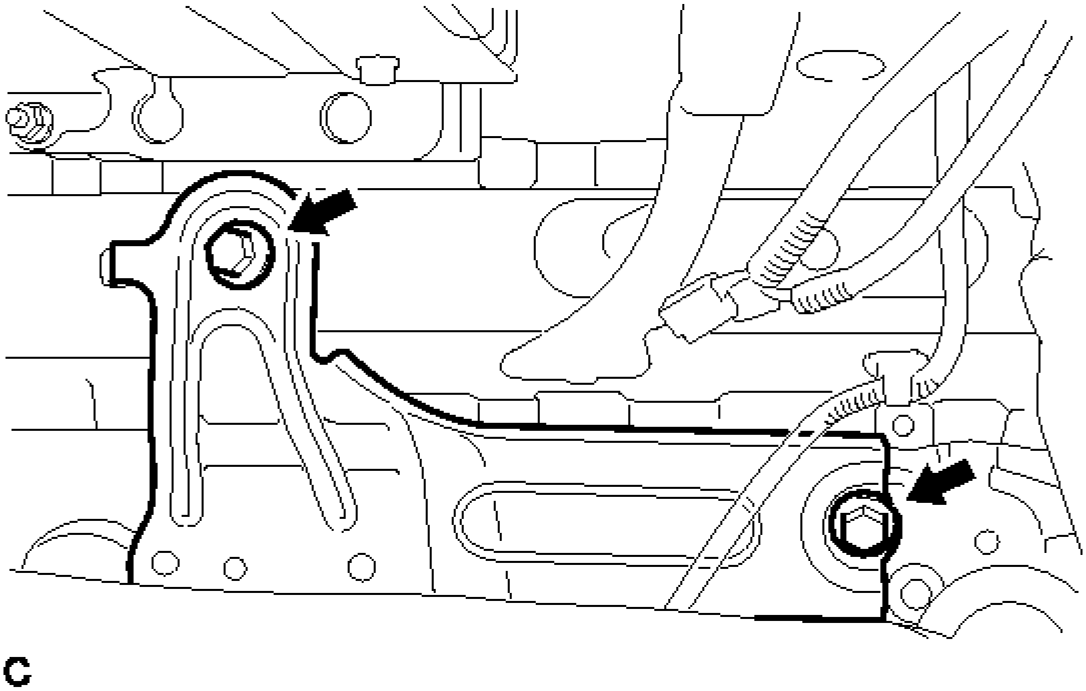

Fig. 107: Identifying No. 2 Hybrid Vehicle Battery Carrier Bracket And Bolts

Courtesy of TOYOTA MOTOR SALES, U.S.A., INC.

INSTALLATION

INSTALLATION

1. **INSTALL NO. 2 HYBRID VEHICLE BATTERY CARRIER BRACKET SUB-ASSEMBLY**
    a. Install the No. 2 hybrid vehicle battery carrier bracket with the 2 bolts.

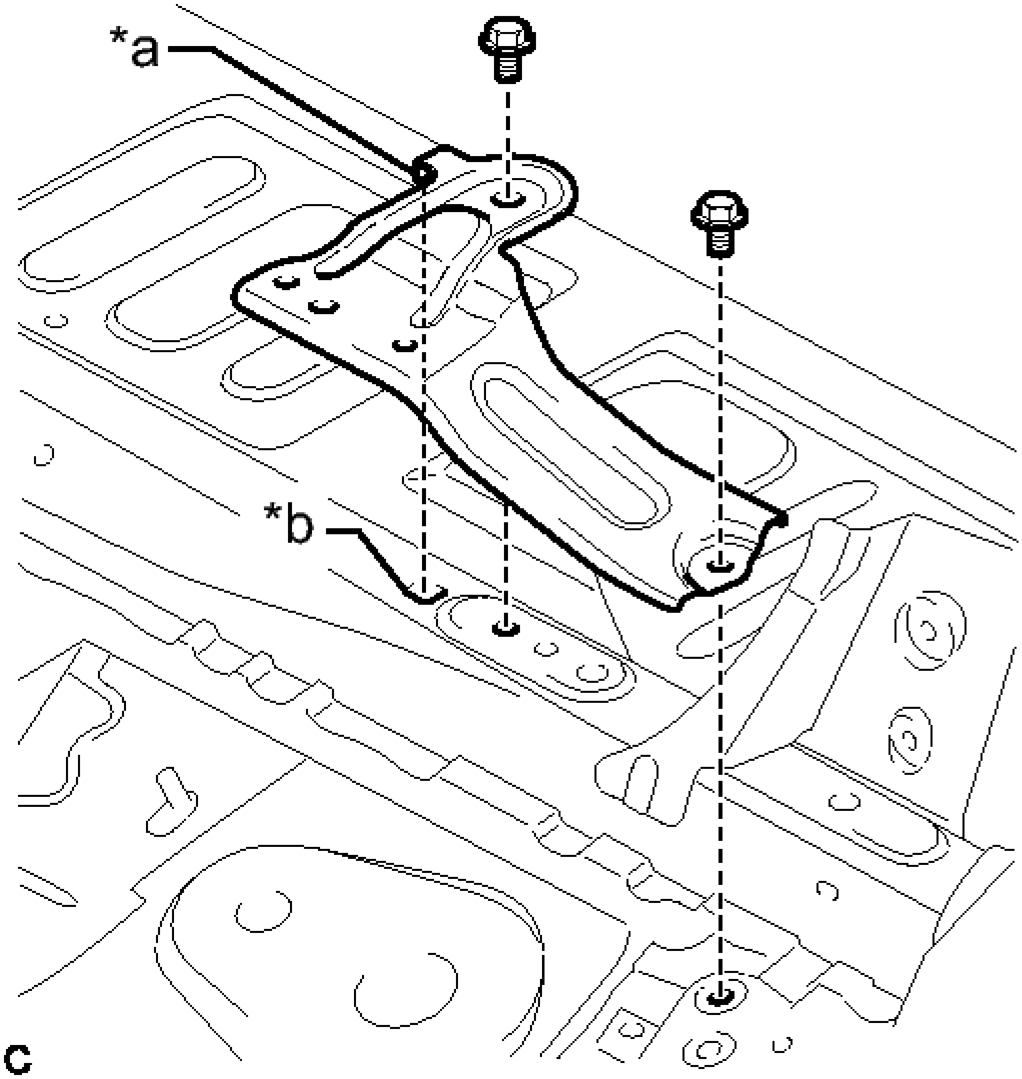

Fig. 108: Identifying No. 2 Hybrid Vehicle Battery Carrier Bracket And Bolts
Courtesy of TOYOTA MOTOR SALES, U.S.A., INC.

TEXT IN ILLUSTRATION

*a	Claw
*b	Hole

Torque: 19 N*m (194 kgf*cm, 14 ft.*lbf)

NOTE: **Be sure to align the claw of the No. 2 hybrid vehicle battery carrier bracket with the hole.**

2. **INSTALL NO. 1 HYBRID VEHICLE BATTERY CARRIER BRACKET SUB-ASSEMBLY**
   a. Install the No. 1 hybrid vehicle battery carrier bracket with the 2 bolts.

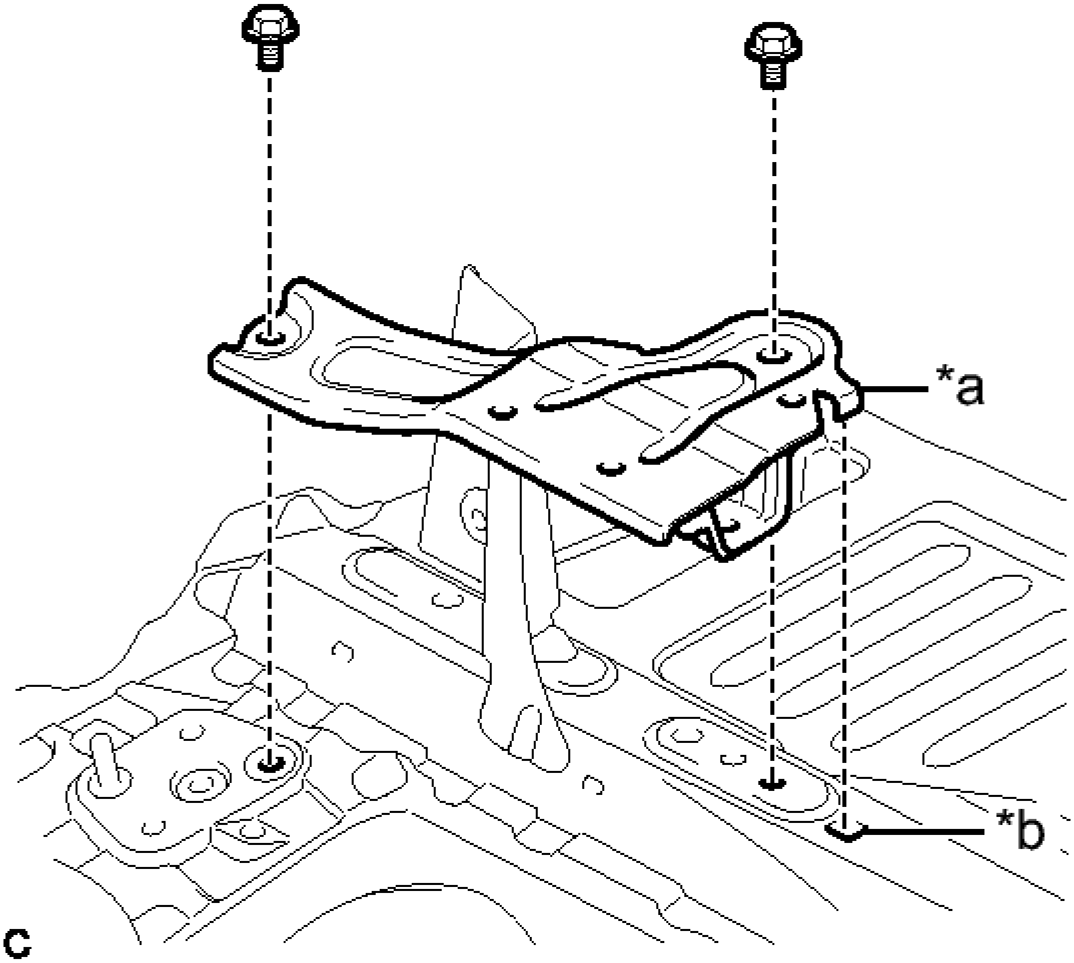

Fig. 109: Identifying No. 1 Hybrid Vehicle Battery Carrier Bracket And Bolts
Courtesy of TOYOTA MOTOR SALES, U.S.A., INC.

TEXT IN ILLUSTRATION

*a	Claw
*b	Hole

Torque: 19 N*m (194 kgf*cm, 14 ft.*lbf)

NOTE: **Be sure to align the claw of the No. 1 hybrid vehicle battery carrier bracket with the hole.**

3. **INSTALL NO. 2 HYBRID BATTERY PACK WIRE**

WARNING: **Wear insulated gloves.**

   a. Connect the connector and 5 clamps and install the No. 2 hybrid battery pack wire.

4. **INSTALL HYBRID BATTERY JUNCTION BLOCK ASSEMBLY** See step 1
5. **INSTALL NO. 1 HYBRID BATTERY SHIELD SUB-ASSEMBLY**

WARNING: **Wear insulated gloves.**

   a. Install the No. 1 hybrid battery shield sub-assembly with the bolt and 3 nuts.

Torque: 7.5 N*m (76 kgf*cm, 66 in.*lbf)

6. **INSTALL BATTERY SMART UNIT**

WARNING: **Wear insulated gloves.**

   a. Install the battery smart unit with the bolt.

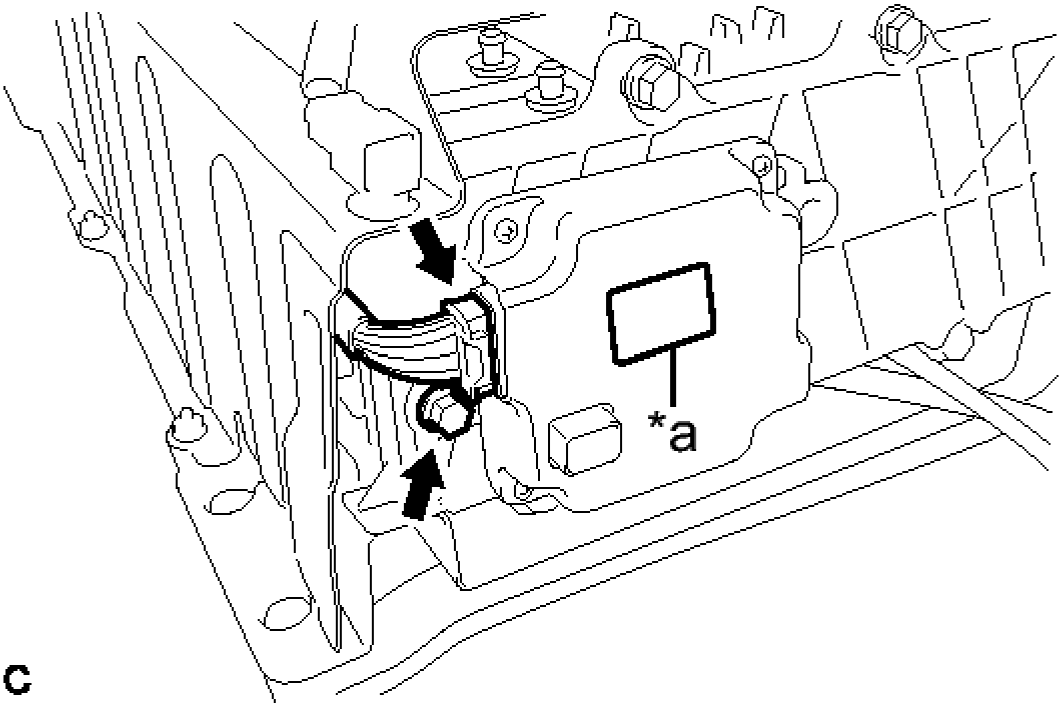

Fig. 110: Identifying Bolt And Battery Smart Unit
Courtesy of TOYOTA MOTOR SALES, U.S.A., INC.

TEXT IN ILLUSTRATION

*a	Black Label

Torque: 7.5 N*m (76 kgf*cm, 66 in.*lbf)

NOTE: **Check color of the label.**

b. Connect the connector.

NOTE: **The connectors should be connected securely.**

7. **INSTALL NO. 2 HYBRID VEHICLE BATTERY SHIELD PANEL**

WARNING: **Wear insulated gloves.**

a. Install the No. 2 hybrid vehicle battery shield panel with the 2 bolts and nut.

Torque: 7.5 N*m (76 kgf*cm, 66 in.*lbf)

b. Connect the 3 wire harness clamps.
c. Connect the connector.

d. Install the battery cover lock striker, then push the button to lock it.

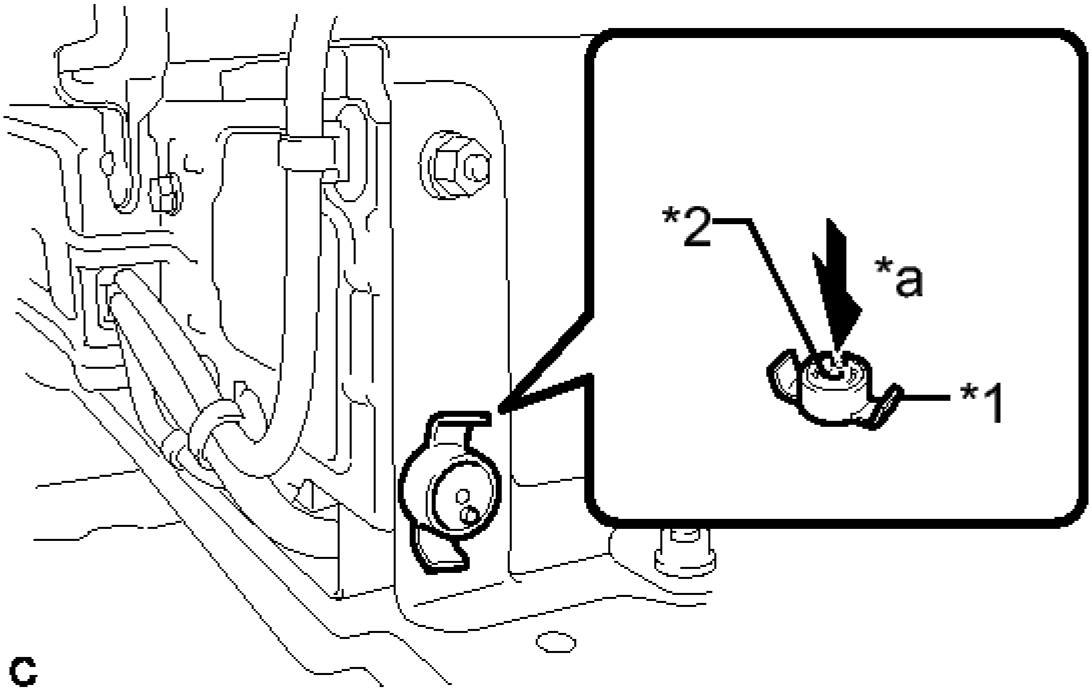

Fig. 111: Installing Battery Cover Lock Striker
Courtesy of TOYOTA MOTOR SALES, U.S.A., INC.

TEXT IN ILLUSTRATION

*1	Battery Cover Lock Striker
*2	Button
*a	Push

8. **INSTALL HV BATTERY**

WARNING: Wear insulated gloves.

a. Place a piece of cardboard in the luggage compartment.

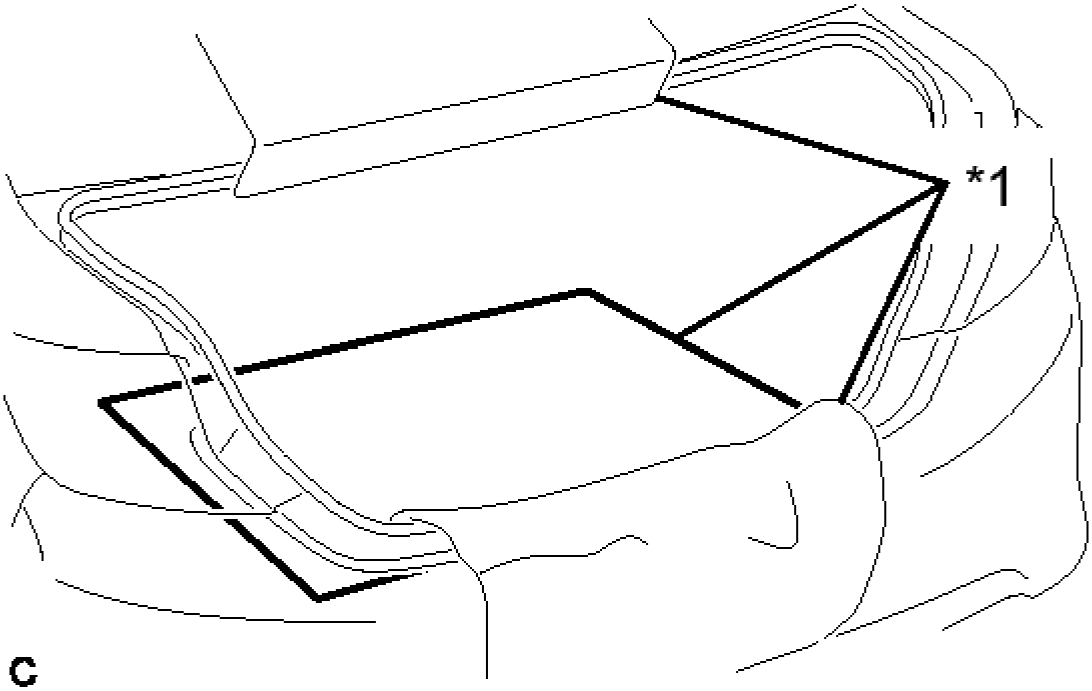

Fig. 112: Identifying Piece Of Cardboard
Courtesy of TOYOTA MOTOR SALES, U.S.A., INC.

TEXT IN ILLUSTRATION

*1	Cardboard

b. Using a suitable adaptor such as a rope, install the HV battery to the vehicle in the same direction it was facing during removal.

NOTE: Use cardboard or other similar material to protect the HV battery and vehicle body from damage.

c. Push the cardboard and HV battery together to the middle of the luggage compartment.

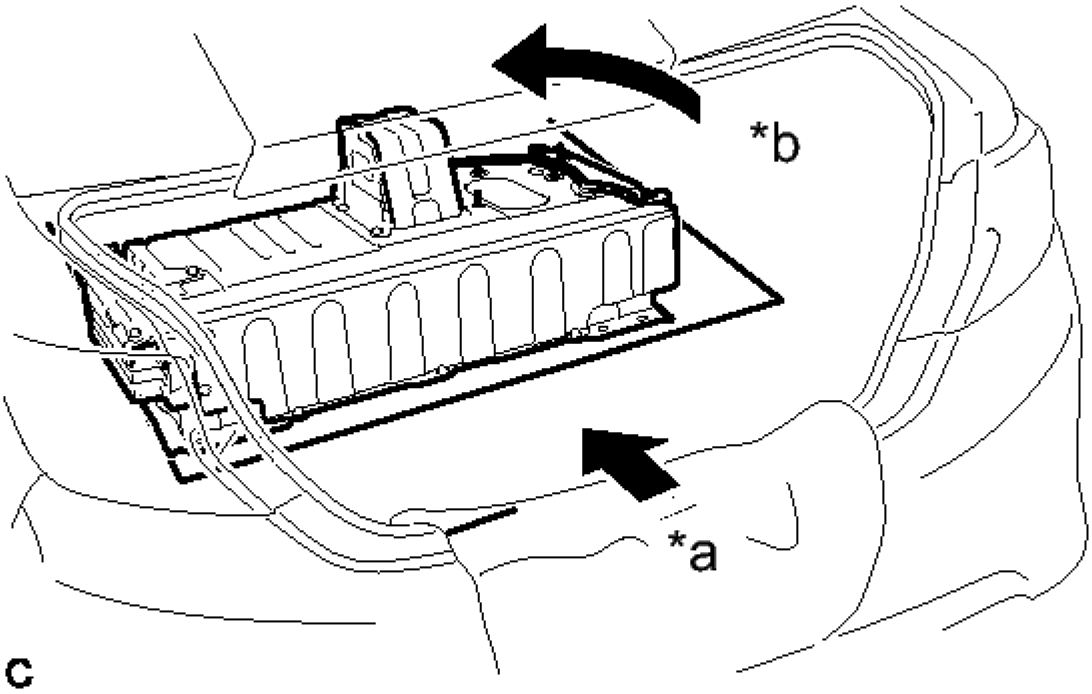

Fig. 113: Pushing In Cardboard And HV Battery
Courtesy of TOYOTA MOTOR SALES, U.S.A., INC.

TEXT IN ILLUSTRATION

*a	Push
*b	Turn 180°

d. Turn the cardboard and HV battery 180° together.
e. Install the 2 clips.
f. Install the battery cooling blower assembly with the 3 nuts.

Torque: 7.5 N*m (76 kgf*cm, 66 in.*lbf)

NOTE:

- **Be sure not to touch the fan part of the battery cooling blower assembly.**
- **Do not lift the battery cooling blower assembly using the wire harness.**

g. Connect the connector.
h. Engage the 2 claws to install the No. 2 hybrid battery intake duct.

NOTE: **Ensure that the duct is installed securely.**

i. Install the clip.
j. Install the No. 2 hybrid vehicle battery upper cover bracket with the 2 nuts.

Torque: 7.5 N*m (76 kgf*cm, 66 in.*lbf)

k. Push the HV battery together with the cardboard toward the front of the vehicle.

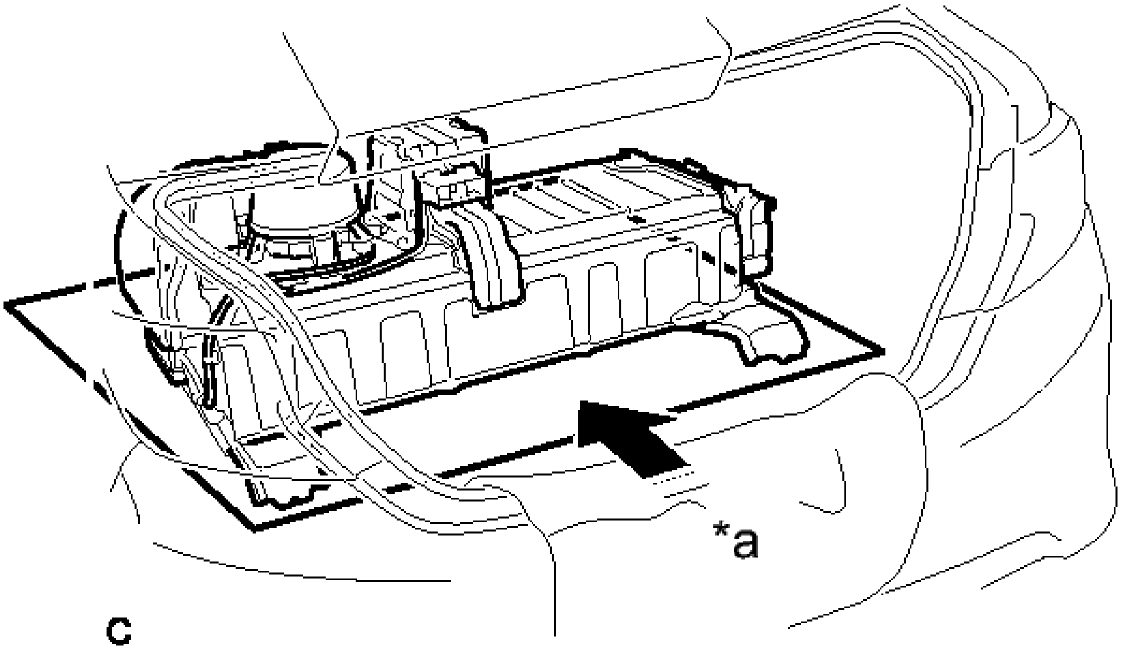

Fig. 114: Pushing In Cardboard And HV Battery
Courtesy of TOYOTA MOTOR SALES, U.S.A., INC.

TEXT IN ILLUSTRATION

*a	Push

NOTE: Align the holes for the HV battery holding bolts.

l. Use a tire lever to hold up the HV battery and pull out the cardboard.

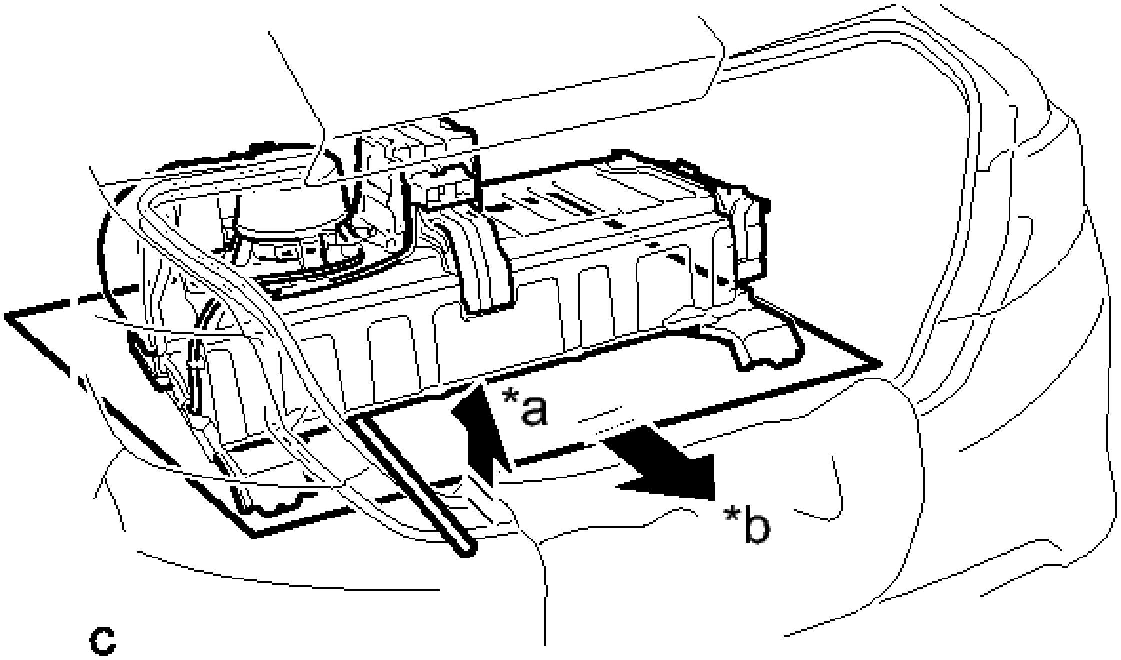

Fig. 115: Holding Up The HV Battery
Courtesy of TOYOTA MOTOR SALES, U.S.A., INC.

TEXT IN ILLUSTRATION

*a	Hold up
*b	Pull out

m. Remove the spare wheel cover assembly.
n. Install the HV battery with the 6 bolts.

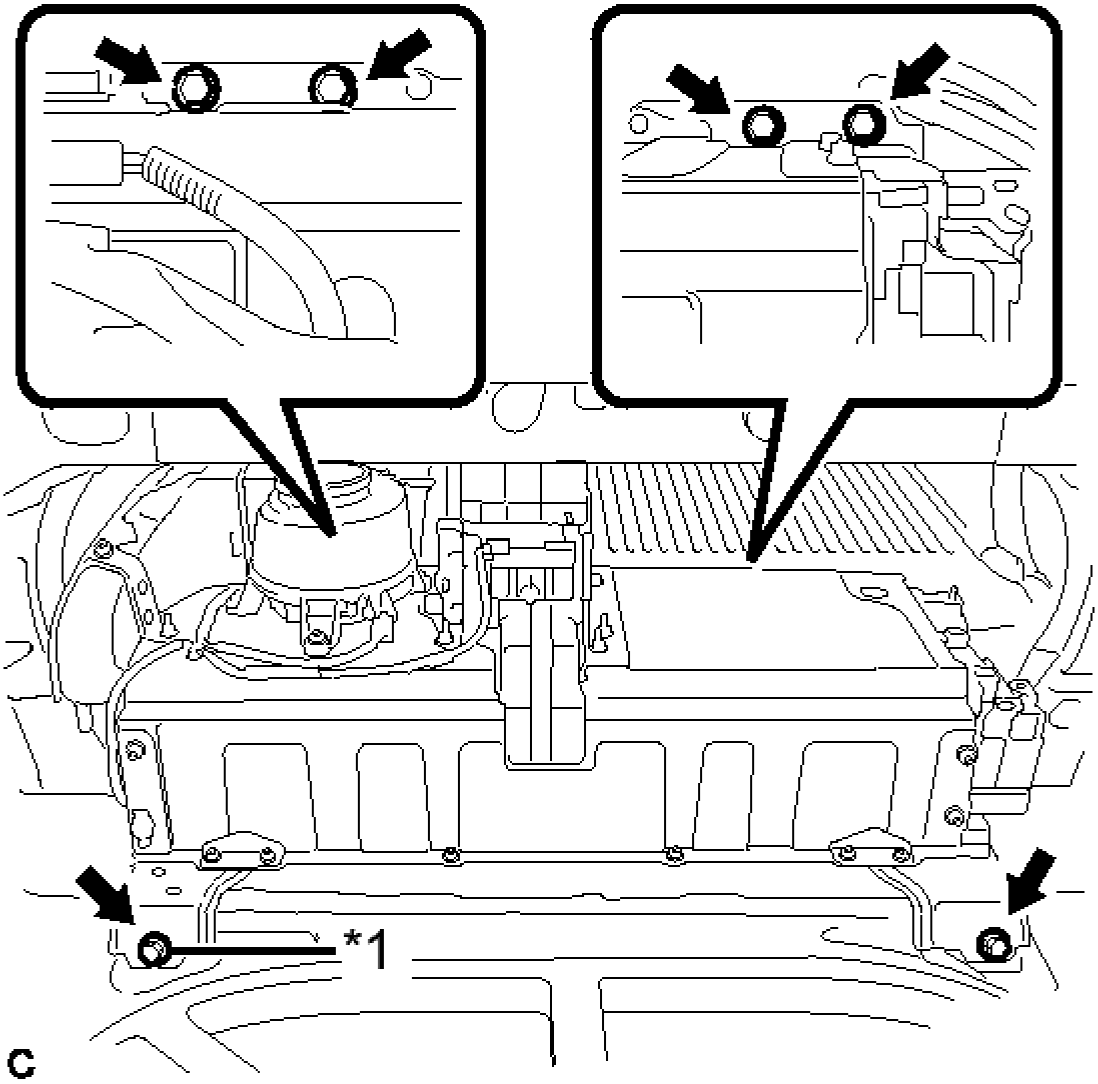

Fig. 116: Identifying HV Battery Bolts
Courtesy of TOYOTA MOTOR SALES, U.S.A., INC.

TEXT IN ILLUSTRATION

*1	Ground Bolt

Torque: 19 N*m (194 kgf*cm, 14 ft.*lbf)

HINT:

Install the ground bolts to the locations shown in the illustration.

9. **CONNECT LOW VOLTAGE CONNECTOR**
    a. Connect the 3 connectors and wire harness clamp.
10. **CONNECT NO. 4 FLOOR WIRE** See step 3

11. **INSTALL NO. 4 HYBRID BATTERY SHIELD PANEL** See step 4
12. **INSTALL NO. 1 HYBRID BATTERY INTAKE DUCT** See step 4
13. **INSTALL NO. 1 ROOM PARTITION BOARD** . Refer to **INSTALLATION - Step 3**
14. **INSTALL PACKAGE TRAY TRIM PANEL ASSEMBLY** . Refer to **INSTALLATION - Step 3**
15. **INSTALL REAR SEAT SHOULDER BELT COVER** . Refer to **INSTALLATION - Step 4**
16. **INSTALL CHILD RESTRAINT SEAT TETHER ANCHOR COVER** . Refer to **INSTALLATION - Step 5**
17. **INSTALL CENTER STOP LIGHT SET** . Refer to **INSTALLATION - Step 1**
18. **INSTALL ROOF SIDE INNER GARNISH LH** . Refer to **INSTALLATION - Step 21**
19. **INSTALL ROOF SIDE INNER GARNISH RH** . Refer to **INSTALLATION - Step 28**
20. **CONNECT REAR SEAT INNER WITH CENTER BELT ASSEMBLY LH** . Refer to **INSTALLATION - Step 2**
21. **INSTALL CHILD RESTRAINT SEAT ANCHOR BRACKET SUB-ASSEMBLY LH** . Refer to **INSTALLATION - Step 1**
22. **CONNECT REAR SEAT OUTER BELT ASSEMBLY (for LH Side)** . Refer to **INSTALLATION - Step 9**
23. **CONNECT REAR SEAT OUTER BELT ASSEMBLY (for RH Side)** . Refer to **INSTALLATION - Step 10**
24. **INSTALL REAR DOOR OPENING TRIM WEATHERSTRIP LH** . Refer to **INSTALLATION - Step 26**
25. **INSTALL REAR DOOR OPENING TRIM WEATHERSTRIP RH** . Refer to **INSTALLATION - Step 33**
26. **INSTALL REAR SIDE SEATBACK ASSEMBLY LH** . Refer to **INSTALLATION - Step 1**
27. **INSTALL REAR SIDE SEATBACK ASSEMBLY RH** . Refer to **INSTALLATION - Step 2**
28. **INSTALL REAR SEATBACK ASSEMBLY LH** . Refer to **INSTALLATION - Step 3**
29. **INSTALL NO. 2 ROOM PARTITION COVER** . Refer to **INSTALLATION - Step 4**
30. **INSTALL REAR SEATBACK ASSEMBLY RH** . Refer to **INSTALLATION - Step 5**
31. **INSTALL REAR SEAT CUSHION LOCK HOOK** . Refer to **INSTALLATION - Step 6**
32. **INSTALL REAR SEAT CUSHION ASSEMBLY** . Refer to **INSTALLATION - Step 7**
33. **INSTALL LUGGAGE COMPARTMENT INNER TRIM COVER LH** . Refer to **INSTALLATION - Step 6**
34. **INSTALL LUGGAGE COMPARTMENT INNER TRIM COVER RH** . Refer to **INSTALLATION - Step 7**
35. **INSTALL NO. 1 LUGGAGE COMPARTMENT TRIM HOOK** . Refer to **INSTALLATION - Step 8**
36. **INSTALL REAR FLOOR FINISH PLATE** . Refer to **INSTALLATION - Step 10**
37. **INSTALL AUXILIARY BATTERY** . Refer to **INSTALLATION - Step 1**
38. **INSTALL SERVICE PLUG GRIP**

    Refer to **INSTALLATION**

CHARGING

CHARGING

1. **INSPECT AUXILIARY BATTERY VOLTAGE**
   a. Measure the voltage between the terminals of the auxiliary battery.

      Standard voltage

      Approximately 11 V or more

      HINT:

      - The horn should sound clearly.
      - If the voltage is 10 V or less, either charge the auxiliary battery (charging usually takes about 1 hour), or replace it with an auxiliary battery that is already charged.

   b. Check the charge level of the HV battery.
      1. Check whether the HV battery warning message is shown in the multi-information display.

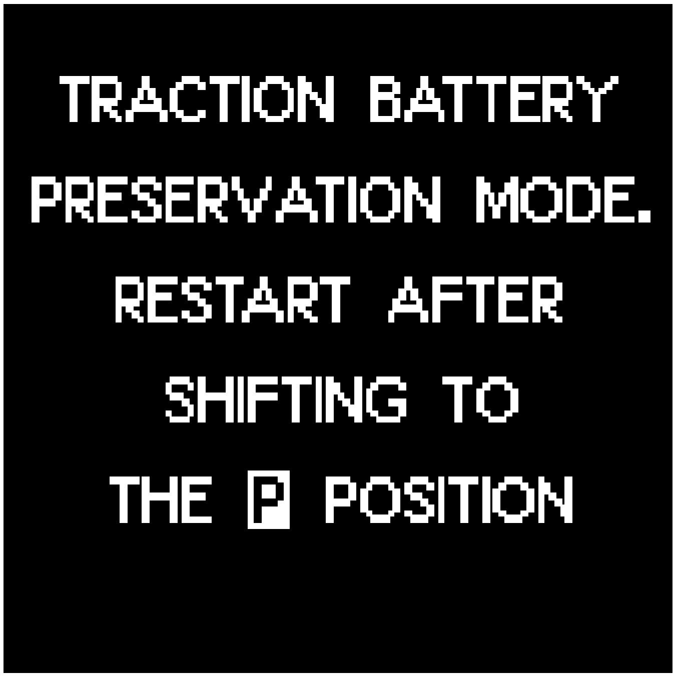

TRACTION BATTERY
PRESERVATION MODE.
RESTART AFTER
SHIFTING TO
THE P POSITION

Fig. 117: HV Battery Warning Message
Courtesy of TOYOTA MOTOR SALES, U.S.A., INC.

      2. Confirm if the engine starts. If the engine starts, leave it idling with park (P) selected until the engine stops (self charge has completed).

         If the engine cannot start, follow the procedure and charge the HV battery.

HINT:

- Before performing external charging, always use the Techstream to perform troubleshooting.
- Charging time using the THS charger is 10 minutes per charge cycle. The charging time when using a THS charger is a short charging time (when the battery temperature is 25°C (77°F), 10 minutes may be sufficient, if the battery temperature is 0°C (32°F), then three 10 minute charge cycles may be required) for putting the engine in a condition where it can be started (the system can enter the READY-on state). (The THS charger will automatically stop 10 minutes after charging starts.)

2. **PREPARATION FOR HV BATTERY CHARGING**

WARNING:

- **Wear insulated gloves when working on the high voltage system.**
- **After removing the service plug grip, do not turn the power switch on (READY) as this may cause a malfunction.**
- **After removing the service plug grip, put it in your pocket to prevent other technicians from accidentally reconnecting it while you are working on the high voltage system.**
- **After removing the service plug grip, wait 10 minutes before touching any of the high voltage connectors or terminals.**

HINT:

- Removing the service plug grip interrupts the high voltage circuit.
- High voltage wiring connectors are orange.

a. Remove the service plug grip. Refer to **REMOVAL**.
b. Remove the cool air intake duct seal. Refer to **REMOVAL - Step 1** .
c. Remove the inlet air cleaner assembly. Refer to **REMOVAL - Step 30** .
d. Remove the air cleaner cap sub-assembly. Refer to **REMOVAL - Step 3** .
e. Remove the air cleaner filter element sub-assembly.
f. Remove the air cleaner case sub-assembly. Refer to **REMOVAL - Step 33** .
g. Remove the 2 bolts and connector cover assembly.

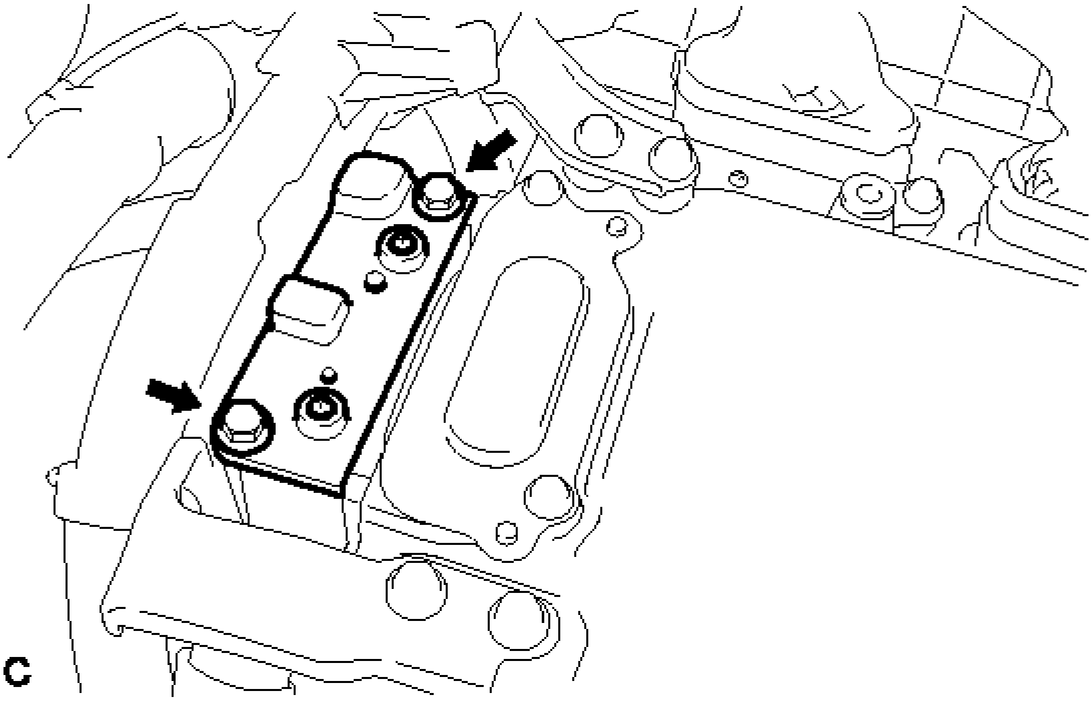

Fig. 118: Identifying Inverter Terminal Cover And Bolts
Courtesy of TOYOTA MOTOR SALES, U.S.A., INC.

NOTE: **Make sure to pull the connector cover assembly straight up, as a connector is connected to the bottom of the cover.**

h. Check terminal voltage See step 5.
i. Remove the bolt.

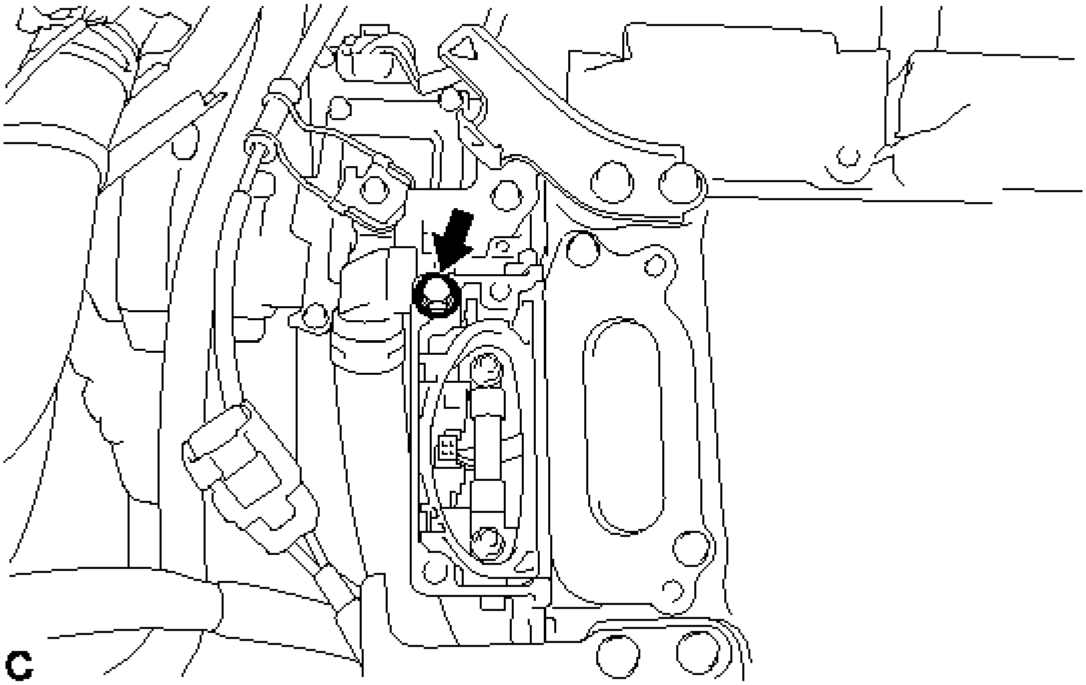

Fig. 119: Identifying No. 4 Floor Wire Bolt
Courtesy of TOYOTA MOTOR SALES, U.S.A., INC.

j. Disconnect the wire harness clamp and connector.

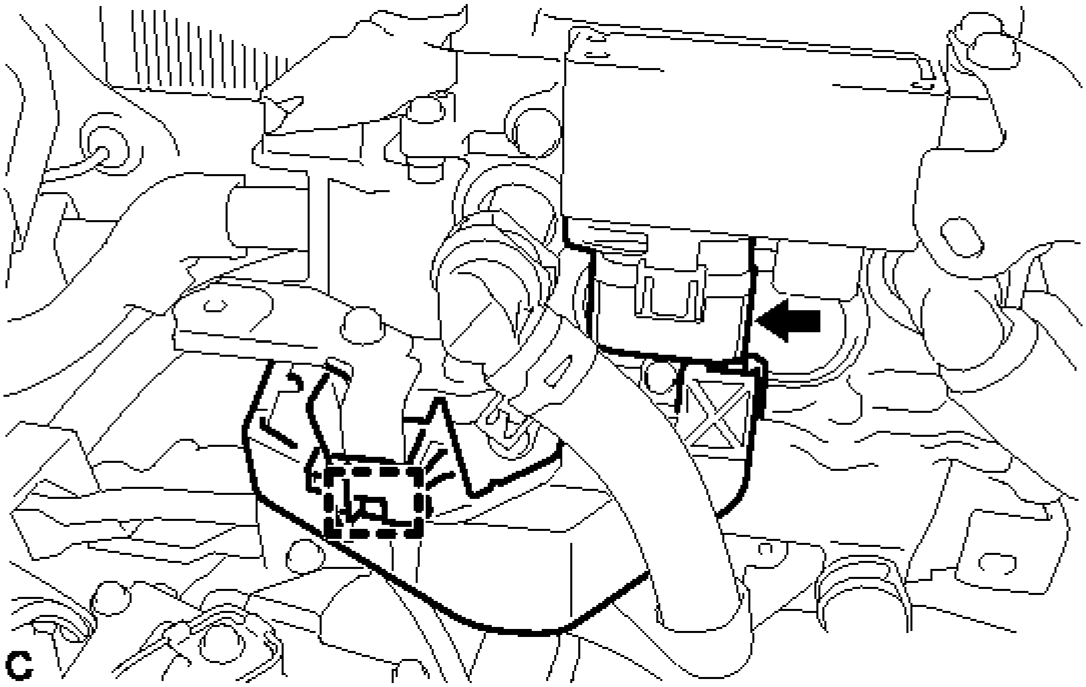

Fig. 120: Identifying No. 4 Floor Wire Harness Clamp And Connector
Courtesy of TOYOTA MOTOR SALES, U.S.A., INC.

k. Measure the resistance according to the value(s) in the table below.

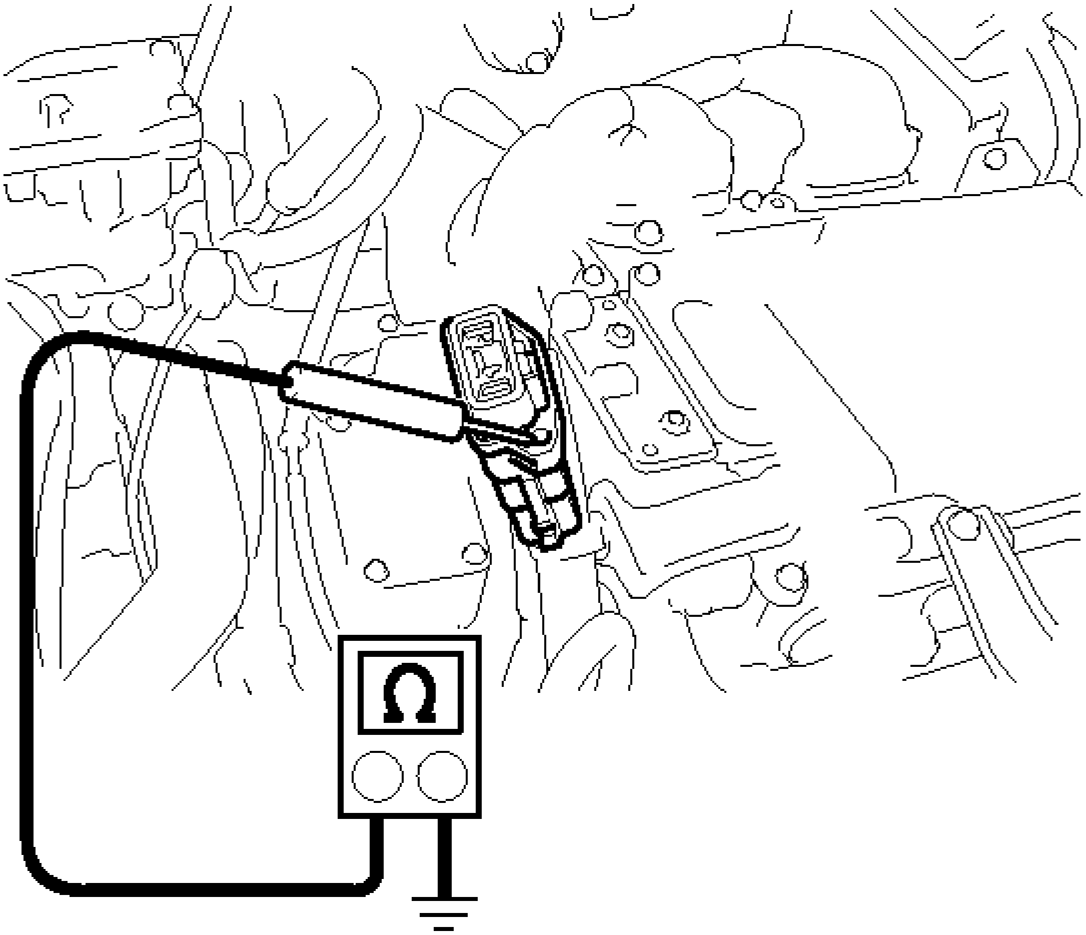

Fig. 121: Checking No. 4 Floor Wire Resistance
Courtesy of TOYOTA MOTOR SALES, U.S.A., INC.

HINT:

If the shield line of the No. 4 floor wire is not securely connected to body ground, the THS charger will not operate. The "FAULT" and "CABLE CONNECTION" warning lights will illuminate on the THS charger.

Standard Resistance

Tester Connection	Condition	Specified Condition
No. 4 floor wire connector	Always	Below 1 ohms

housing - Body ground		

l. If the result is not as specified, inspect the connection shown in the illustration for proper installation. Refer to **INSTALLATION**.

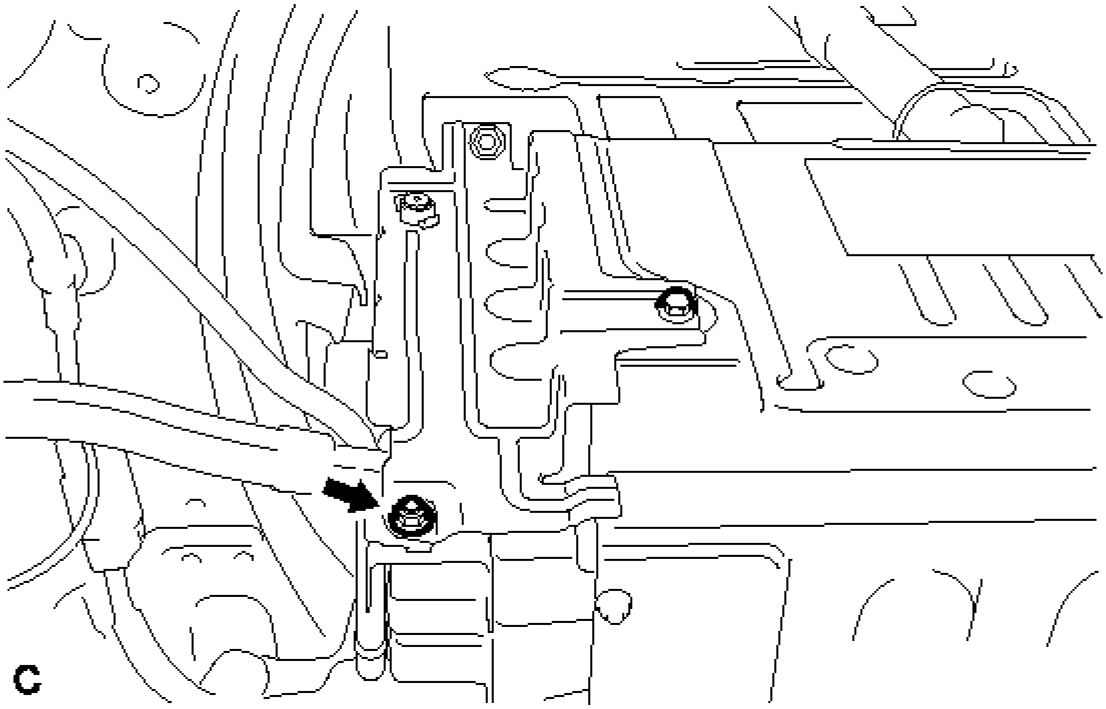

Fig. 122: Inspecting No. 4 Floor Wire Connector Housing - Body Ground Connection
Courtesy of TOYOTA MOTOR SALES, U.S.A., INC.

m. Temporarily install the connector cover assembly with the 2 bolts to prevent any foreign objects or water from entering the inverter with converter assembly.

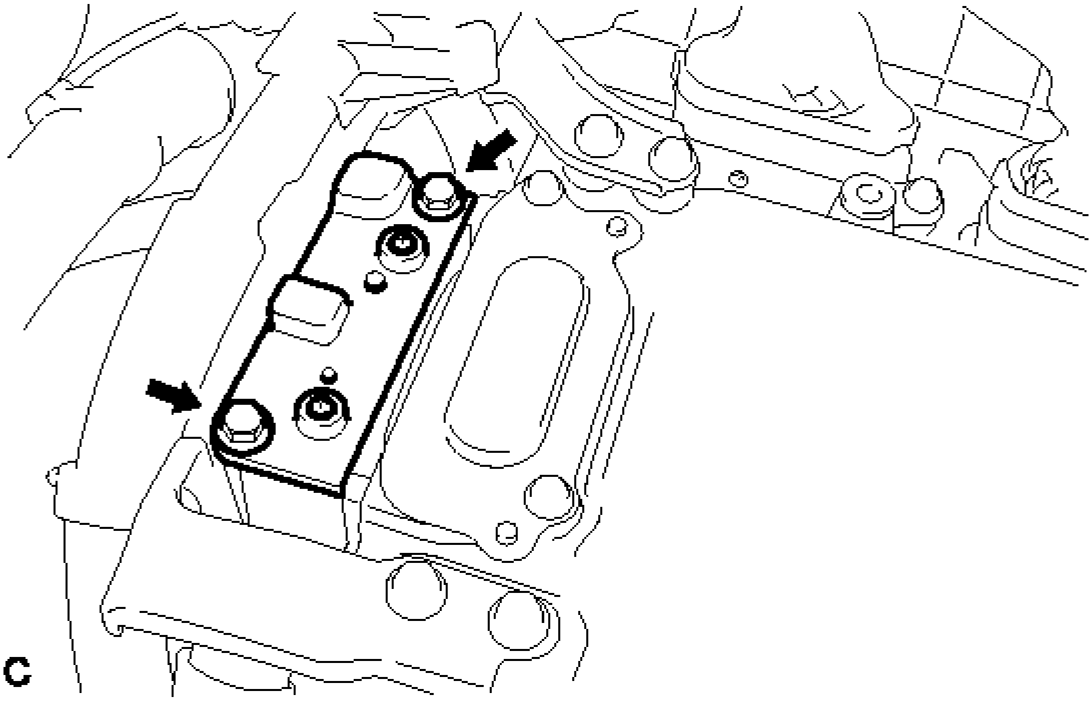

Fig. 123: Identifying Inverter Terminal Cover And Bolts
Courtesy of TOYOTA MOTOR SALES, U.S.A., INC.

n. Connect the THS charger in the order shown by the circled numbers in the illustration.

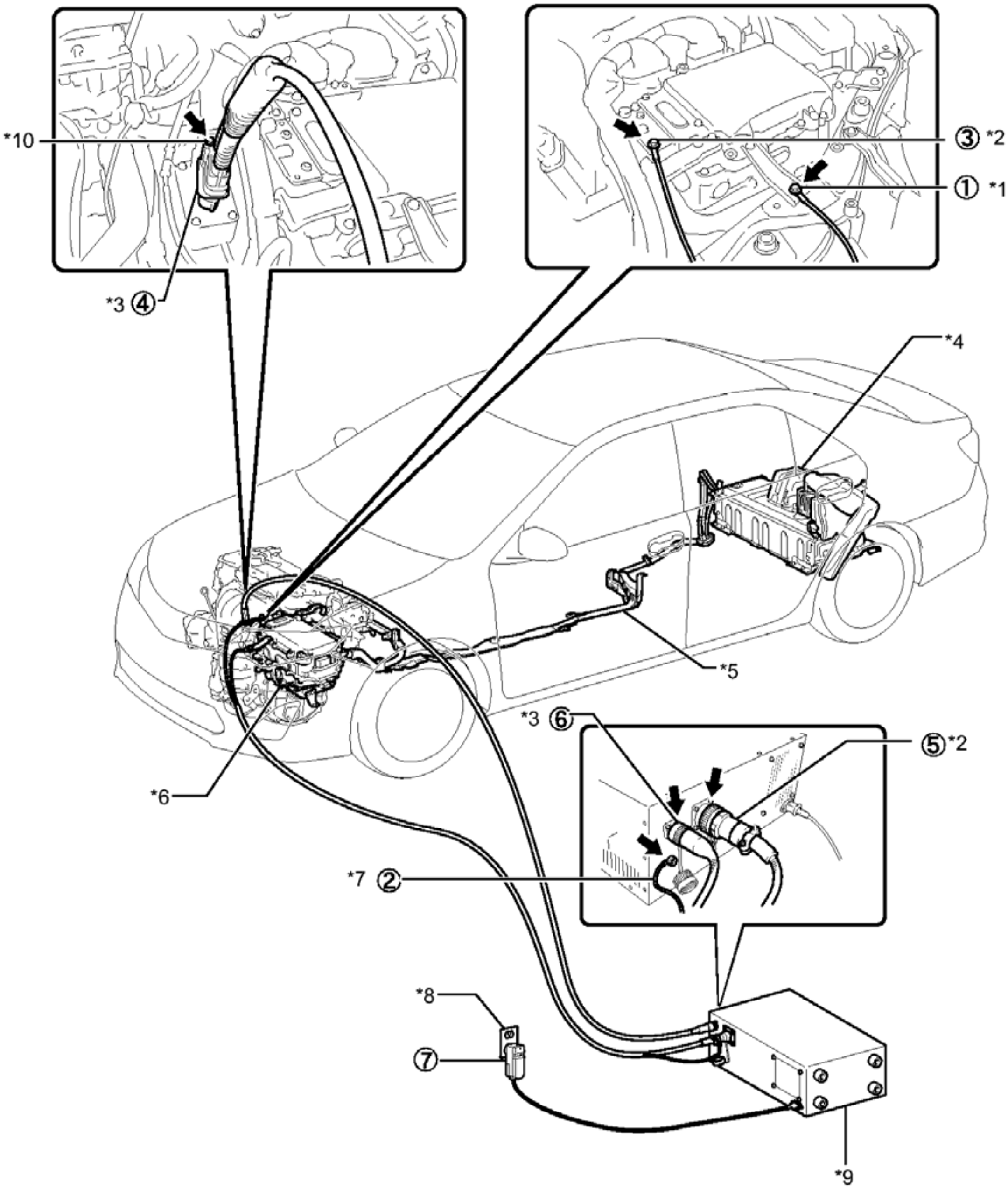

Fig. 124: Order To Connect THS Charger
Courtesy of TOYOTA MOTOR SALES, U.S.A., INC.

TEXT IN ILLUSTRATION

*1	EV Bonding Cable (Green Cable)	*2	Low Voltage Cable
*3	High Voltage Cable	*4	HV Battery
*5	No. 4 floor wire	*6	Inverter with Converter Assembly
*7	EV Bonding Cable	*8	Grounded AC 100 to 240 V Receptacle

*9	THS Charger	*10	Bolt (91553-80665)

- **SST: 09880-10021**
  09881-10041
- **SST: 09881-10081**
- **SST: 09881-10050**
- **SST: 09882-10040**
- **SST: 09882-10070**

NOTE:

- **Make sure to connect the EV bonding cable first to prevent electrical shock.**
- **Connect all THS charger cables in the order shown in the illustration to prevent electrical shock.**

o. Connect the EV bonding cable to the illustration bolt of the No. 5 inverter bracket.

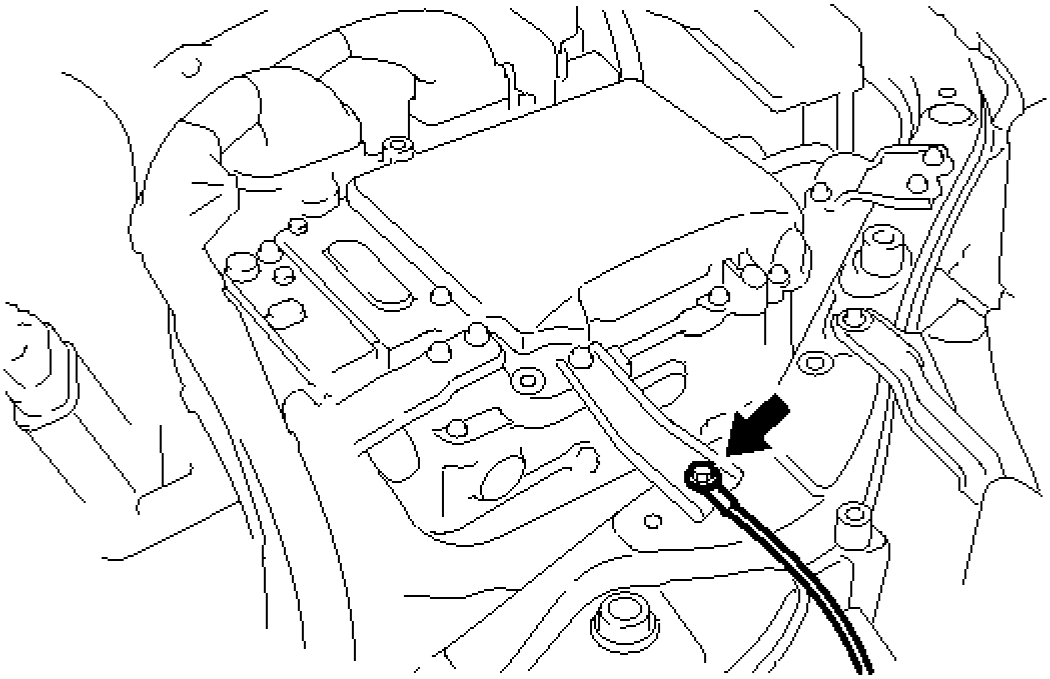

Fig. 125: Identifying No. 5 Inverter Bracket Bolt And EV Bonding Cable
Courtesy of TOYOTA MOTOR SALES, U.S.A., INC.

Torque: 8.5 N*m (87 kgf*cm, 75 in.*lbf)

p. Connect the EV bonding cable to the THS charger.

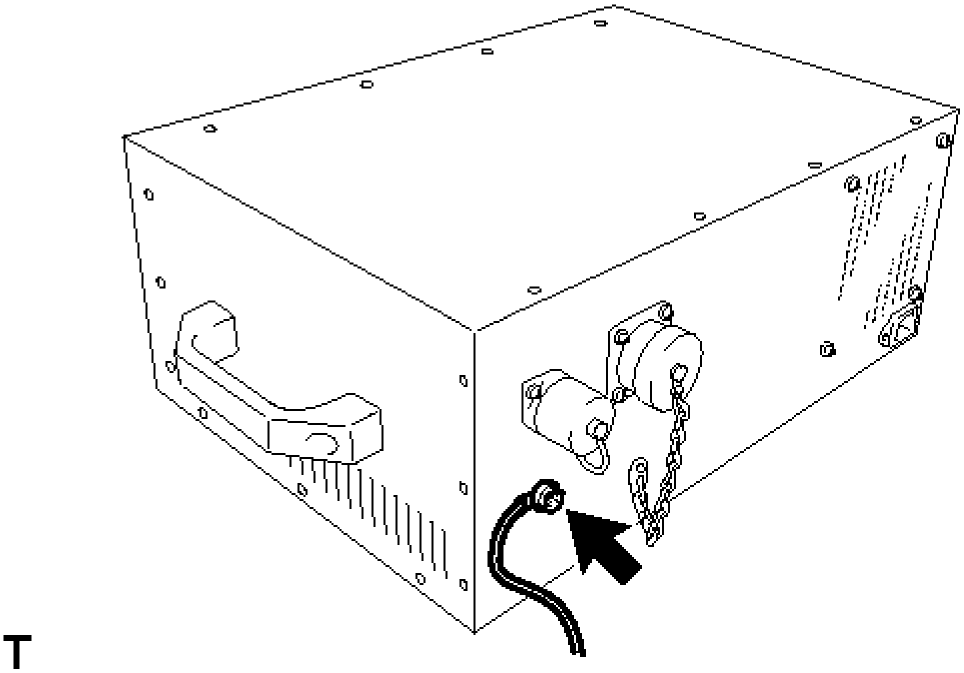

Fig. 126: Identifying THS Charger & EV Bonding Cable
Courtesy of TOYOTA MOTOR SALES, U.S.A., INC.

q. Connect the low voltage cable to the positions shown in the illustration, and then tighten the 2 bolts.

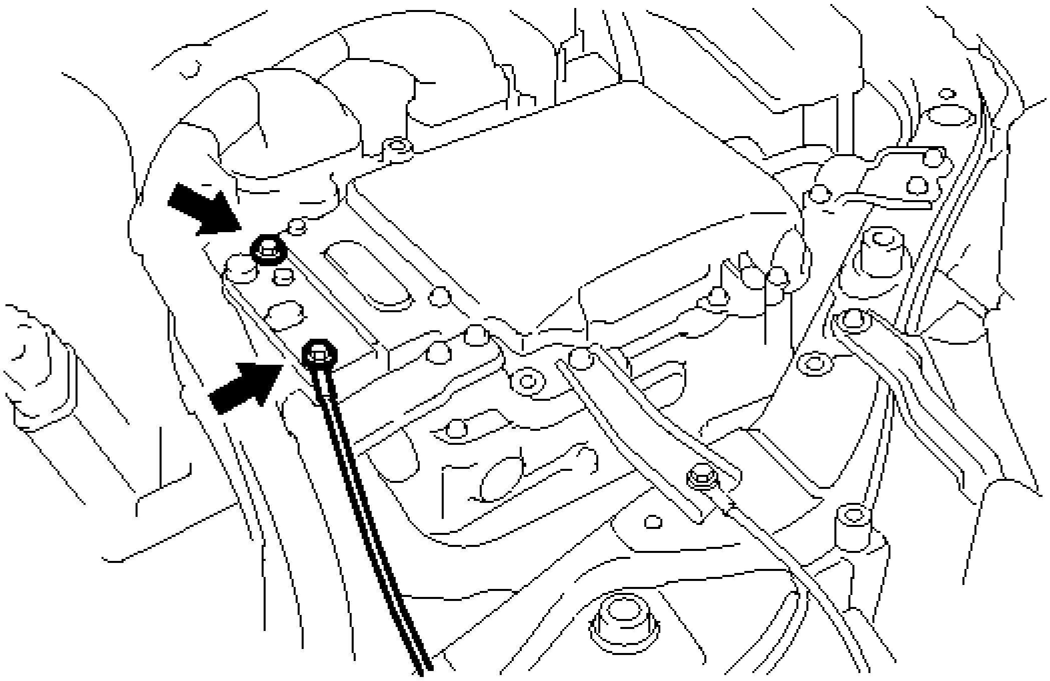

Fig. 127: Identifying Low Voltage Cable And Bolts

Courtesy of TOYOTA MOTOR SALES, U.S.A., INC.

Torque: 8.0 N*m (82 kgf*cm, 71 in.*lbf)

r. Connect the No. 4 floor wire to the high voltage cable with the bolt (91553-80665).

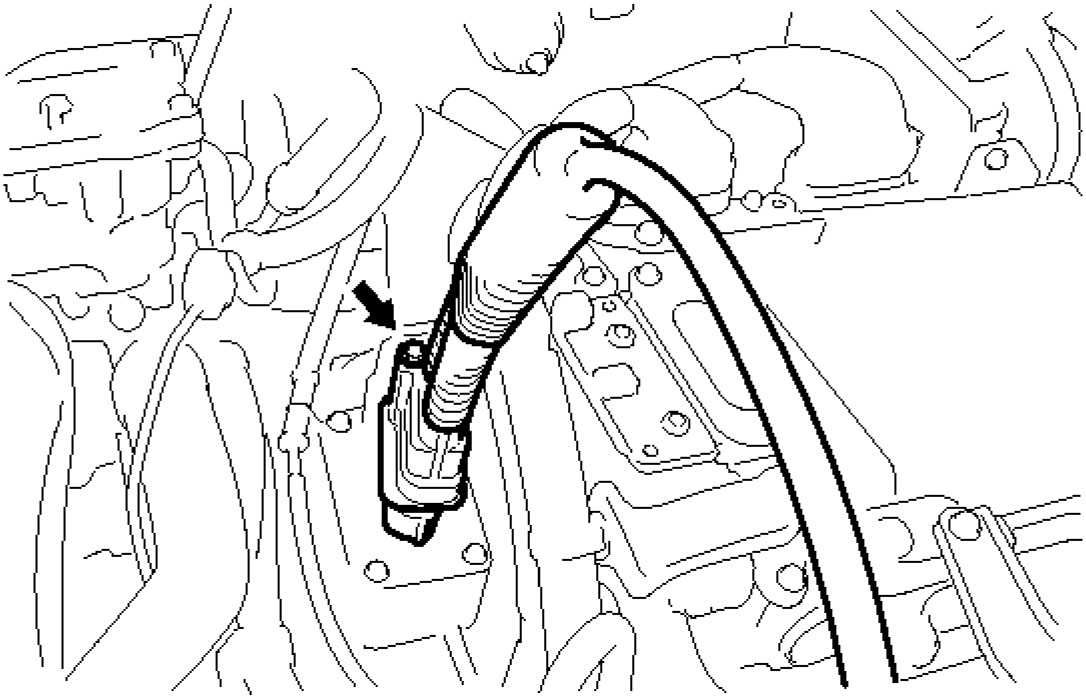

Fig. 128: Identifying No. 4 Floor Wire Connecting Bolt
Courtesy of TOYOTA MOTOR SALES, U.S.A., INC.

Torque: 8.0 N*m (82 kgf*cm, 71 in.*lbf)

NOTE:

- **The installation bolt that comes with the vehicle is too short to securely connect the No. 4 floor wire to the high voltage cable of the charger.**
- **Do not use the bolt (91553-80665) used for connecting the high voltage cable when reconnecting the No. 4 floor wire to the vehicle.**

HINT:

When connecting the high voltage cable, use a bolt with a nominal diameter of 6 mm, a shaft length of 69 mm and a pitch of 1.0 mm.

s. Connect the low voltage cable and high voltage cable to the THS charger in the order shown in the illustration.

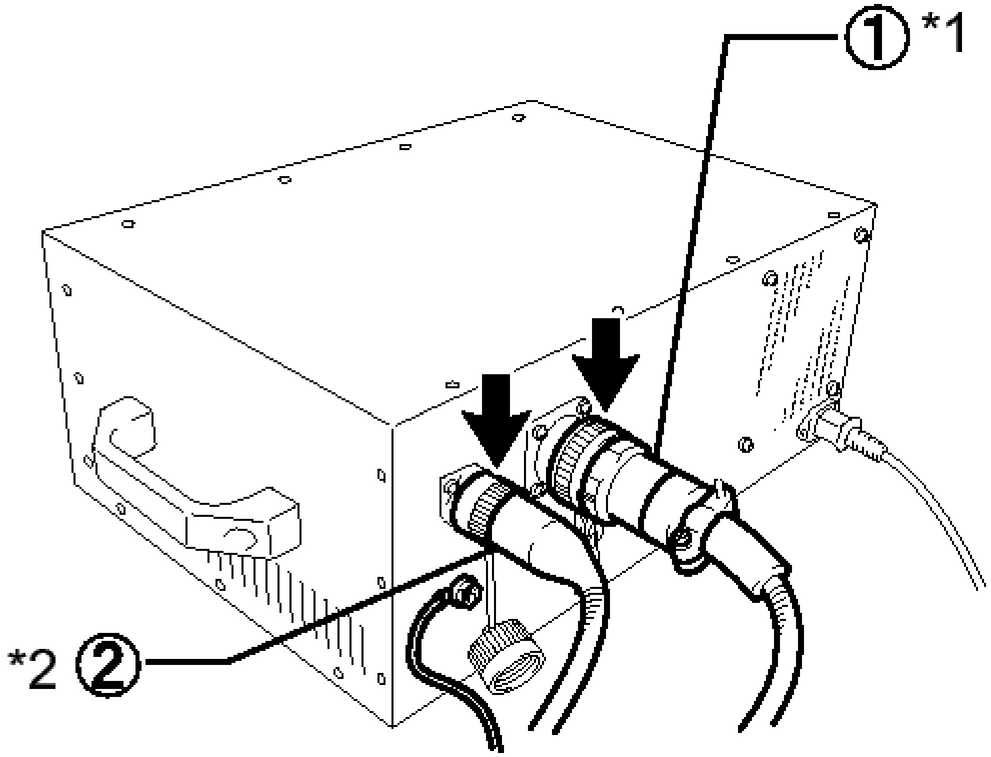

T

Fig. 129: Identifying THS Charger, Low Voltage Cable & High Voltage Cable With Connections Sequence
Courtesy of TOYOTA MOTOR SALES, U.S.A., INC.

TEXT IN ILLUSTRATION

*1	Low Voltage Cable
*2	High Voltage Cable

t. Install the service plug grip See step 1.
u. Connect the negative auxiliary battery terminal.
v. Connect the power input plug of the charger to a grounded AC 100 to 240 V receptacle.

NOTE: **Always use an AC 100 to 240 V receptacle with a properly functioning ground. The ground is designed to reduce the chance of electric shock if a malfunction occurs. Do not use the charger if any of the**

pins on its plug have been damaged or removed.

3. **HV BATTERY CHARGING**
   a. Turn the power switch of the vehicle on (IG).
   b. Connect the Techstream to the DLC3.
   c. Enter the following menus: Powertrain / Hybrid Control / Active Test / Battery Charge.

HINT:

- During the "Battery Charge" Active Test, check "System Main Relay Status - SMRB" and "System Main Relay Status - SMRG" in the Data List.
- If the Data List values are not as specified in the table below, turn the Techstream and the power switch off and then perform the Charge Battery procedure again.

"SMRB" and "SMRG" in Data List during "Battery Charge" Active Test

Step	Active Test Battery Charge	THS charger START switch	Data List System Main Relay Status - SMRB	Data List System Main Relay Status - SMRG
1	OFF	OFF	OFF	OFF
2	OFF --> ON	OFF	OFF --> ON	OFF --> ON
3	ON	OFF --> ON	ON	ON

   d. Make sure that the EMERGENCY STOP switch is in the reset condition (the switch is turned clockwise and released).
   e. Make sure that the BREAKER is in the ON position.
   f. Turn the THS charger MAIN switch on.

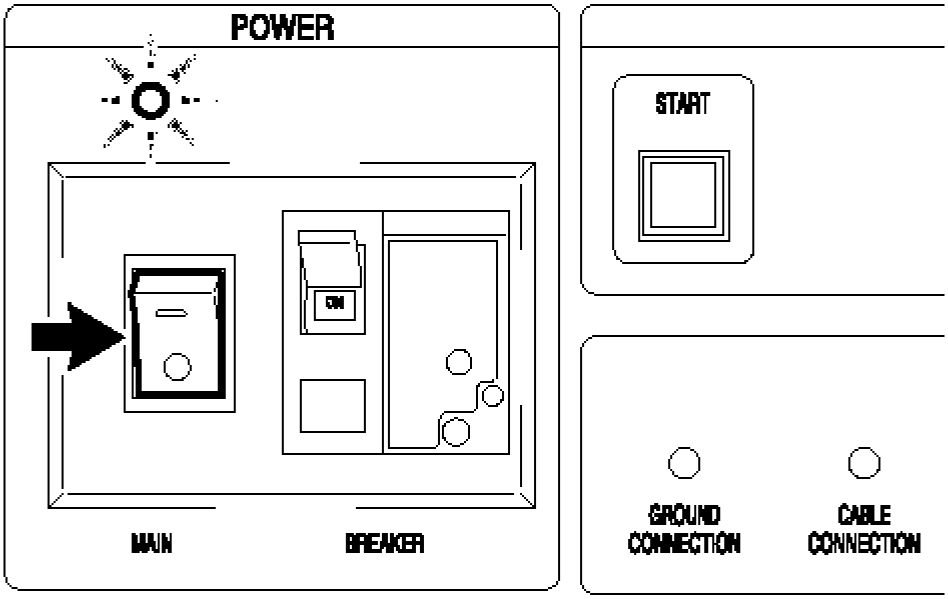
POWER
START
ON
MAIN
BREAKER
GROUND CONNECTION
CABLE CONNECTION

T

Fig. 130: Identifying THS Charger Main Switch
Courtesy of TOYOTA MOTOR SALES, U.S.A., INC.

HINT:

The MAIN indicator will illuminate green.

g. Press the START switch.

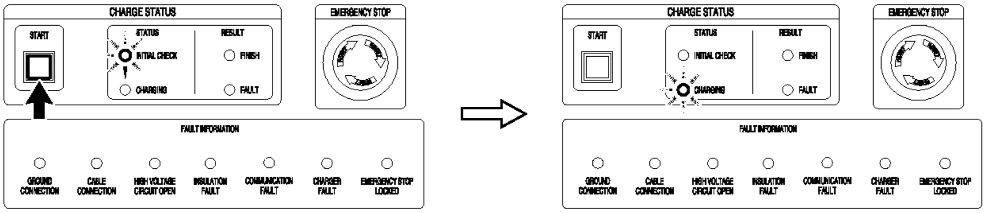
CHARGE STATUS
START
STATUS
RESULT
INITIAL CHECK
FINISH
CHARGING
FAULT
EMERGENCY STOP
FAULT INFORMATION
GROUND CONNECTION
CABLE CONNECTION
HIGH VOLTAGE CIRCUIT OPEN
INSULATION FAULT
COMMUNICATION FAULT
CHARGER FAULT
EMERGENCY STOP LOCKED

Fig. 131: Identifying Start Switch
Courtesy of TOYOTA MOTOR SALES, U.S.A., INC.

HINT:

- When the START switch is turned on, the INITIAL CHECK indicator illuminates and an initial check starts. When the initial check completes successfully, the INITIAL CHECK indicator turns off, the CHARGING indicator illuminates and charging will start at the same time.
- While the INITIAL CHECK indicator is illuminated, the insulation, 400 V output,

emergency stop switch, connector connections and ground connection are inspected.

h. Repeat the charge cycle 3 times. When the last cycle has finished, turn the THS charger MAIN switch off.

   HINT:

   - Charging time using the THS charger is 10 minutes per charge cycle. The charging time when using a THS charger is a short charging time (when the battery temperature is 25°C (77°F), 10 minutes may be sufficient, if the battery temperature is 0°C (32°F), then three 10 minute charge cycles may be required) for putting the engine in a condition where it can be started (the system can enter the READY-on state). (The THS charger will automatically stop 10 minutes after charging starts.)
   - There is very little chance of overcharging the HV battery during the second or third charging cycle. The SOC will not likely increase beyond the upper limit because it was low enough to prevent the engine from starting. Even if the SOC was to increase enough to exceed the limit, the hybrid vehicle control ECU will stop the active test to prevent overcharging.
   - Cranking the engine once causes the SOC to drop approximately 1%.
   - Charging the HV battery once (10 minutes) using the THS charger restores the SOC approximately 2%.

i. Turn the power switch off.

j. Remove the THS charger and install the No. 4 floor wire.

NOTE: Make sure to disconnect the EV bonding cable last.

1. Disconnect the power inlet plug of the charger from the receptacle.
2. Disconnect the negative terminal of the auxiliary battery.
3. Remove the service plug grip See step 9.
4. Disconnect the high voltage cable and low voltage cable from the THS charger in the order shown in the illustration.

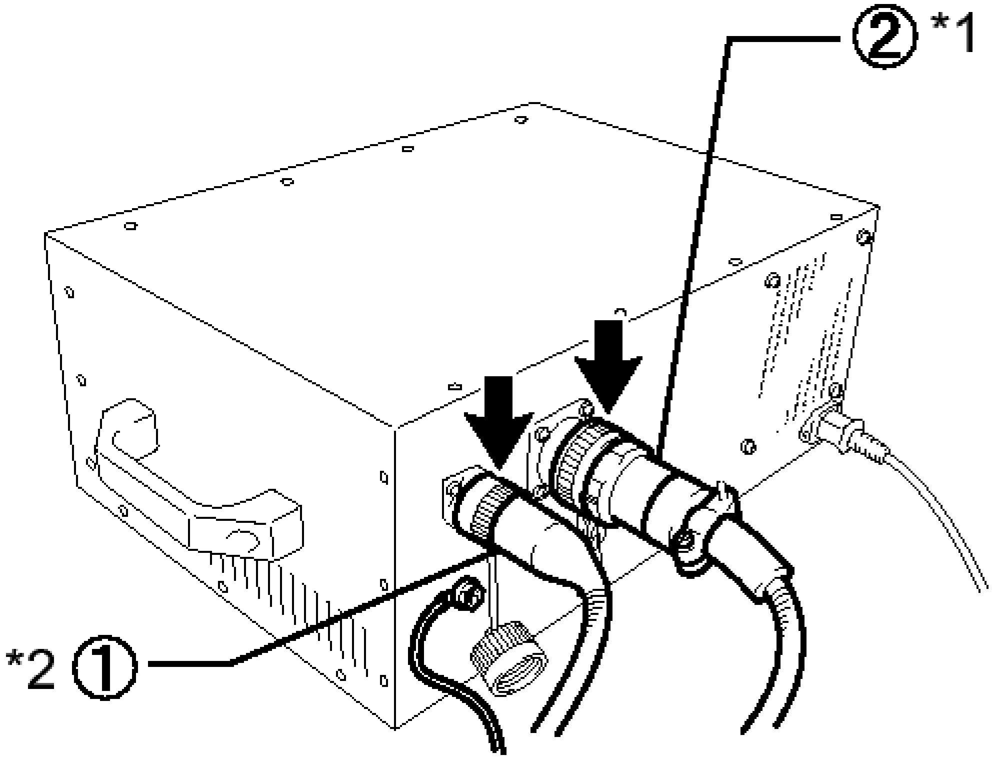

T

Fig. 132: Identifying THS Charger, Low Voltage Cable & High Voltage Cable With Disconnection Sequence
Courtesy of TOYOTA MOTOR SALES, U.S.A., INC.

TEXT IN ILLUSTRATION

*1	Low Voltage Cable
*2	High Voltage Cable

5. Remove the bolt (91553-80665) and disconnect the high voltage cable from the No. 4 floor wire.

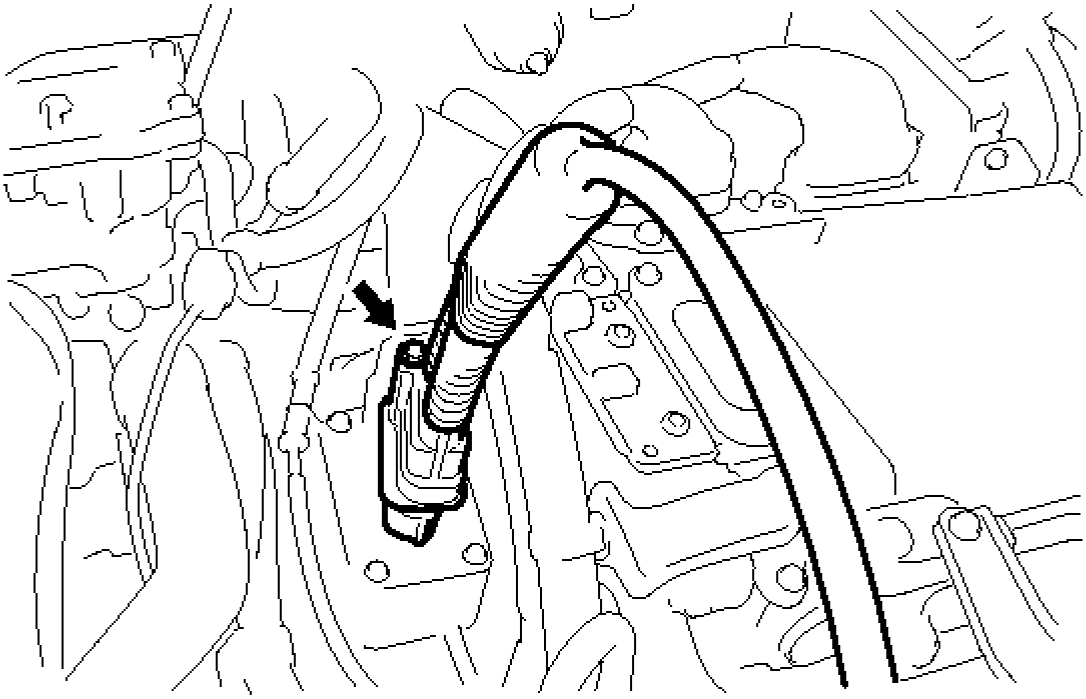

Fig. 133: Identifying No. 4 Floor Wire Connecting Bolt
Courtesy of TOYOTA MOTOR SALES, U.S.A., INC.

NOTE: **Do not use the bolt (91553-80665) used for connecting the high voltage cable when reconnecting the No. 4 floor wire to the vehicle.**

6. Remove the 2 bolts and disconnect the low voltage cable.

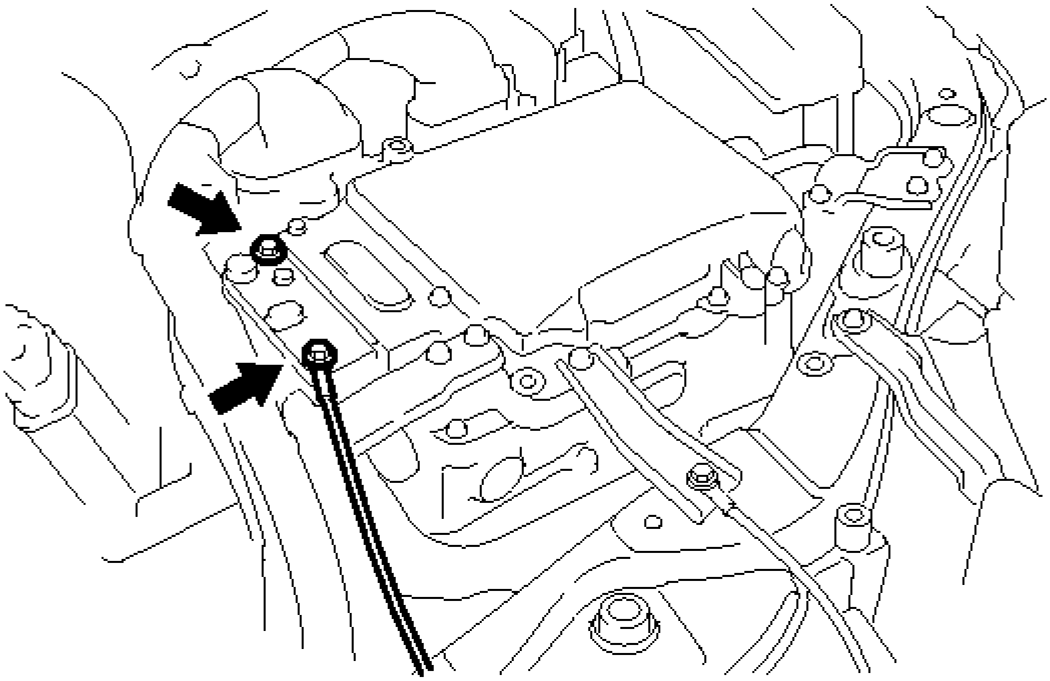

Fig. 134: Identifying Low Voltage Cable And Bolts
Courtesy of TOYOTA MOTOR SALES, U.S.A., INC.

7. Disconnect the EV bonding cable from the THS charger.

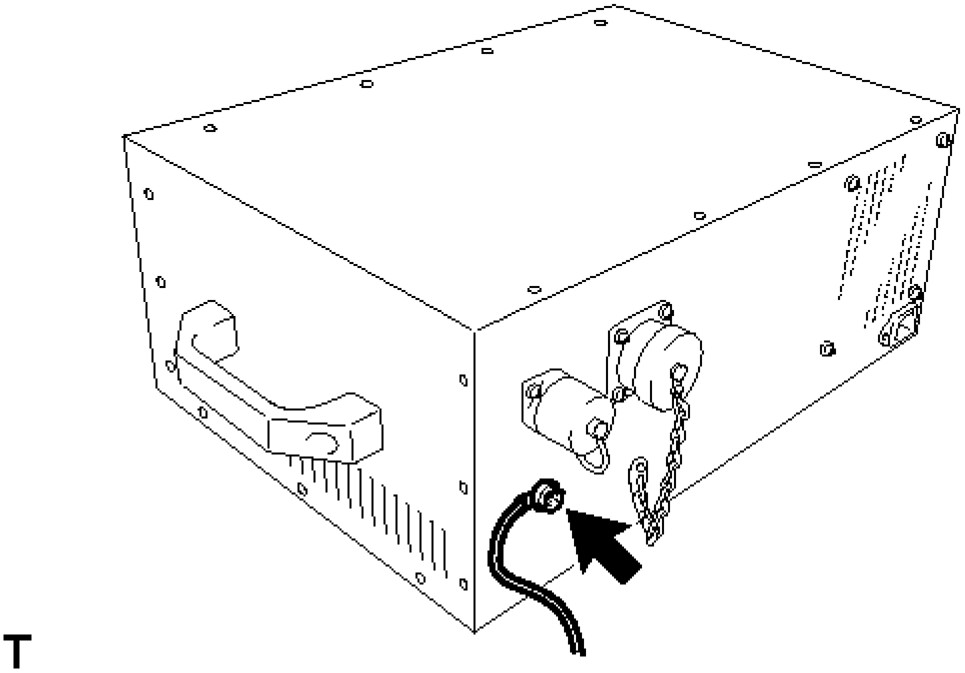

Fig. 135: Identifying THS Charger & EV Bonding Cable
Courtesy of TOYOTA MOTOR SALES, U.S.A., INC.

8. Disconnect the EV bonding cable from the installation bolt of the No. 5 inverter bracket.

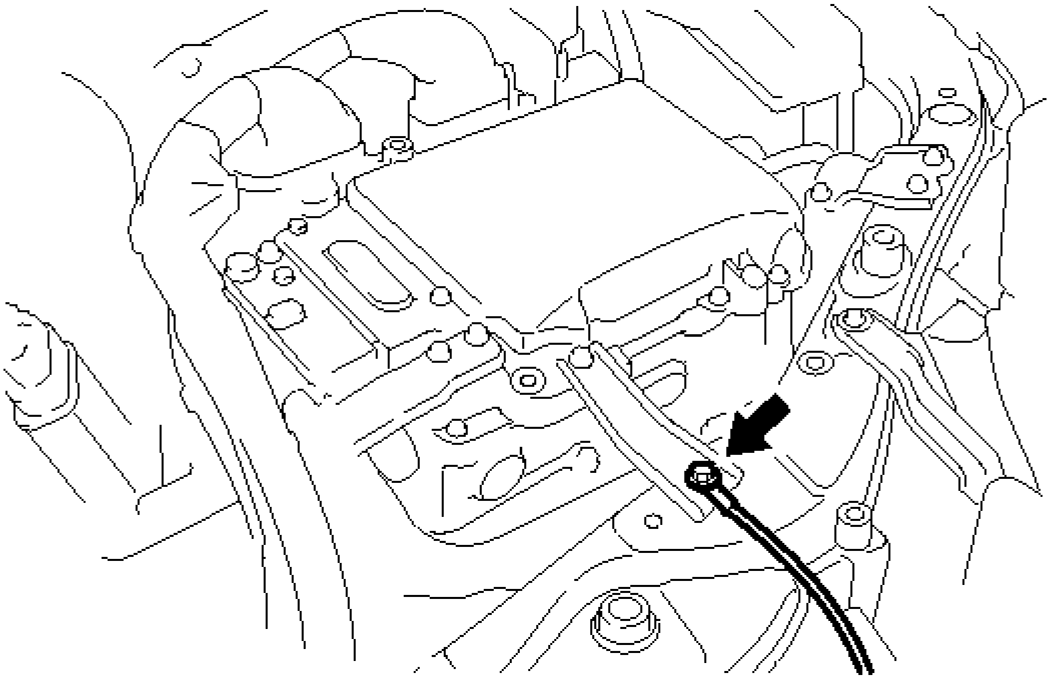

Fig. 136: Identifying No. 5 Inverter Bracket Bolt And EV Bonding Cable
Courtesy of TOYOTA MOTOR SALES, U.S.A., INC.

9. Tighten the bolt.

   Torque: 10 N*m (102 kgf*cm, 7 ft.*lbf)

10. Remove the connector cover assembly.
11. Connect the wire harness clamp and connector.

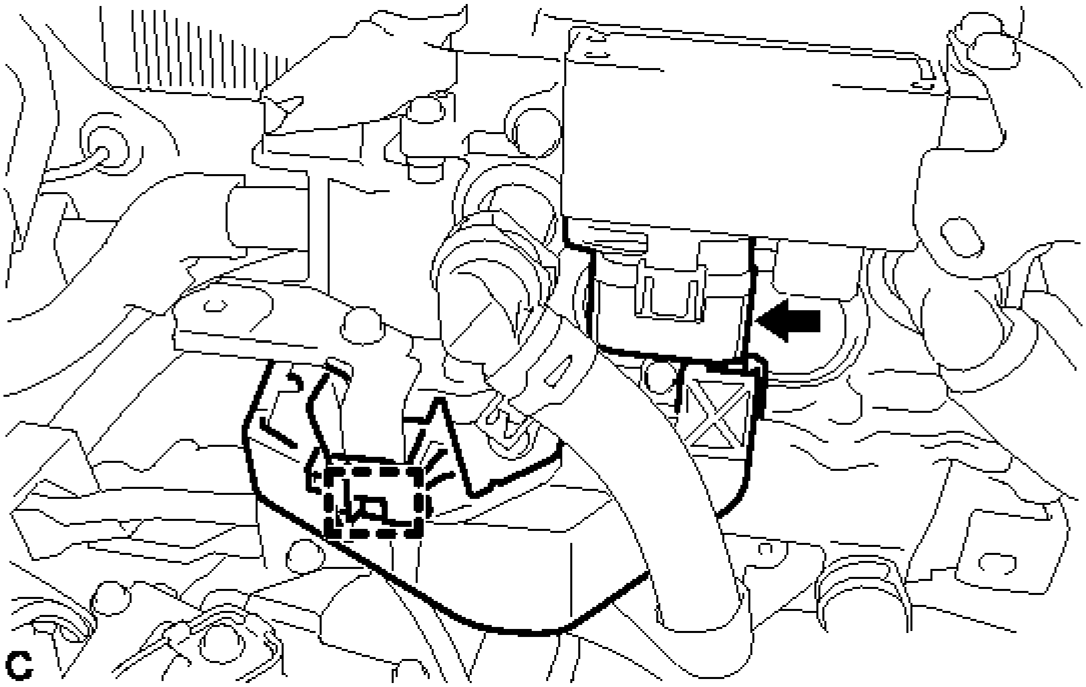

Fig. 137: Identifying No. 4 Floor Wire Harness Clamp And Connector
Courtesy of TOYOTA MOTOR SALES, U.S.A., INC.

12. Connect the No. 4 floor wire with the bolt.

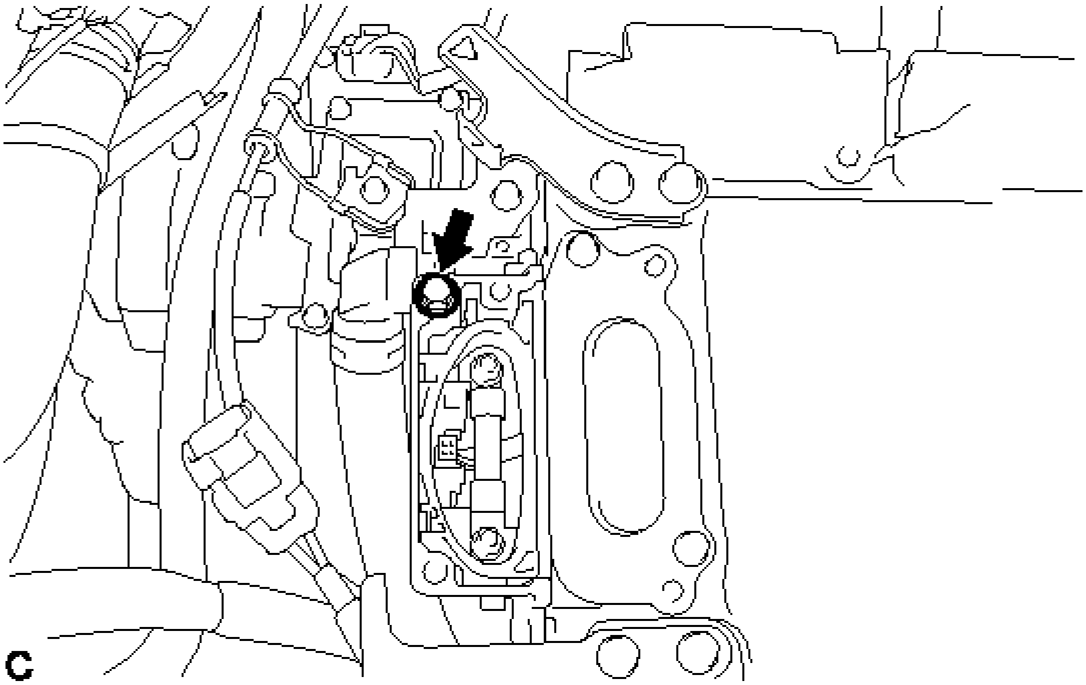

Fig. 138: Identifying No. 4 Floor Wire Bolt
Courtesy of TOYOTA MOTOR SALES, U.S.A., INC.

Torque: 8.0 N*m (82 kgf*cm, 71 in.*lbf)

NOTE: **Do not use the bolt (91553-80665) used for connecting the high voltage cable of the charger.**

13. Install the connector cover assembly with the 2 bolts.

    NOTE: **Make sure that the interlock is fully engaged.**

    Torque: 8.0 N*m (82 kgf*cm, 71 in.*lbf)

14. Install the air cleaner case sub-assembly. Refer to **INSTALLATION - Step 60** .
15. Install the air cleaner filter element sub-assembly.
16. Install the air cleaner cap sub-assembly. Refer to **INSTALLATION - Step 2** .
17. Install the inlet air cleaner assembly. Refer to **INSTALLATION - Step 63** .
18. Install the cool air intake duct seal. Refer to **INSTALLATION - Step 4** .
19. Install the service plug grip. Refer to **INSTALLATION**.

k. Check if the engine starts.

   HINT:

   If the engine does not start, perform the HV battery charging operation again.

4. **CHECK HV BATTERY AFTER HV BATTERY CHARGE**

   a. Check for DTCs.

   b. Perform the self-charging operation.

      1. Start the engine and leave park (P) selected until the engine stops idling.

         HINT:

         When the engine stops idling, this indicates that self-charging is complete. Perform any initialization required after the negative terminal of the auxiliary battery is disconnected and reconnected.

WATER PUMP WITH MOTOR

COMPONENTS

ILLUSTRATION

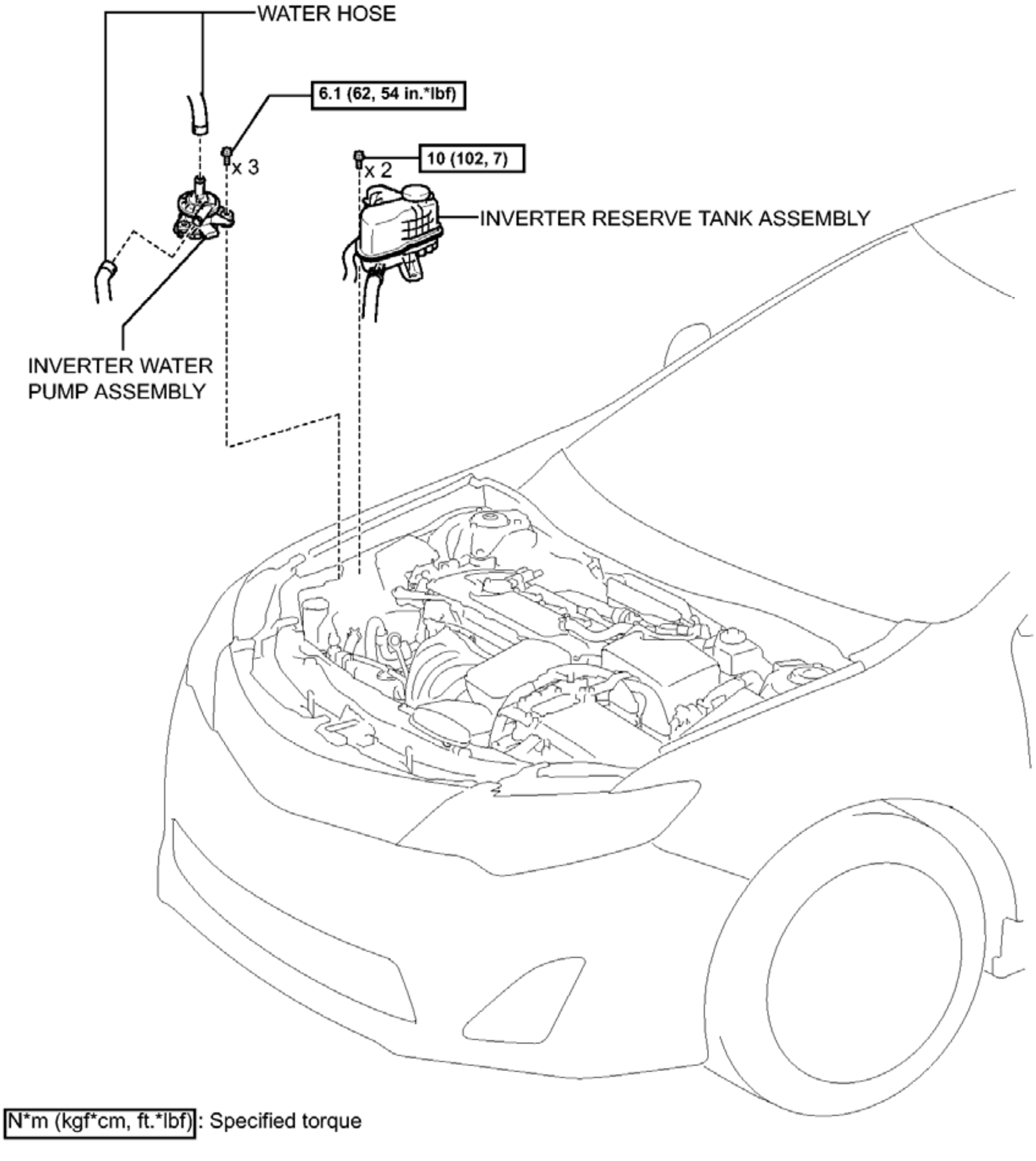
WATER HOSE
6.1 (62, 54 in.*lbf)
x 3
x 2
10 (102, 7)
INVERTER RESERVE TANK ASSEMBLY
INVERTER WATER PUMP ASSEMBLY
N*m (kgf*cm, ft.*lbf): Specified torque
c

Fig. 139: Identifying Water Pump With Motor Replacement Components With Torque Specifications
Courtesy of TOYOTA MOTOR SALES, U.S.A., INC.

REMOVAL

REMOVAL

1. **DRAIN COOLANT (for Inverter)** See step 1

2. **REMOVE INVERTER RESERVE TANK ASSEMBLY**
    a. Remove the 2 bolts and inverter reserve tank assembly.

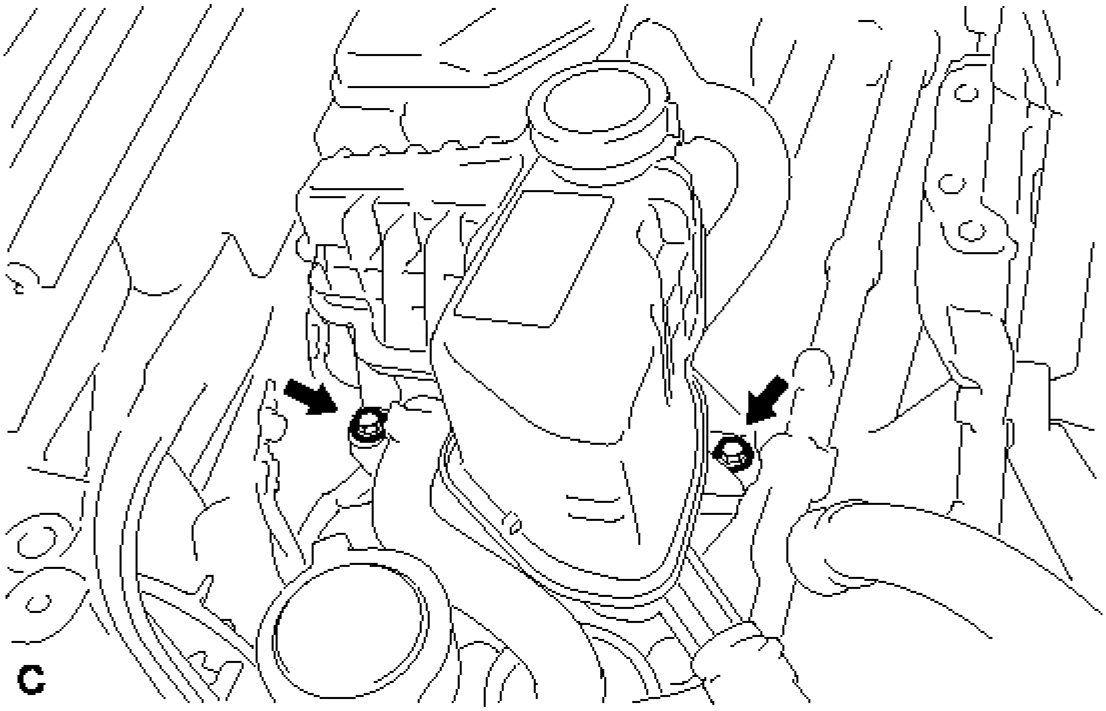

Fig. 140: Identifying Inverter Reserve Tank Bolts
Courtesy of TOYOTA MOTOR SALES, U.S.A., INC.

3. **REMOVE INVERTER WATER PUMP ASSEMBLY**
    a. Disconnect the water hose.

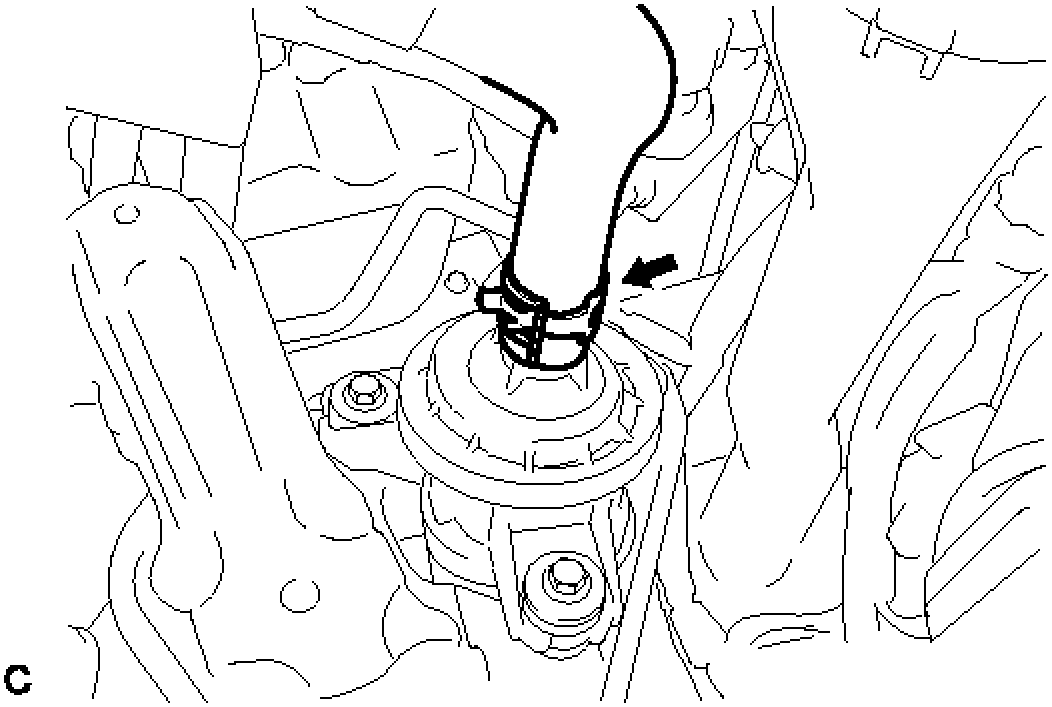

Fig. 141: Identifying Inverter Water Pump Top Hose Clamp
Courtesy of TOYOTA MOTOR SALES, U.S.A., INC.

NOTE: **Put pieces of cloth into the pipe and in the disconnected hose or cover the pipe and hose with plastic bags to prevent entry of foreign matter.**

b. Disconnect the connector.

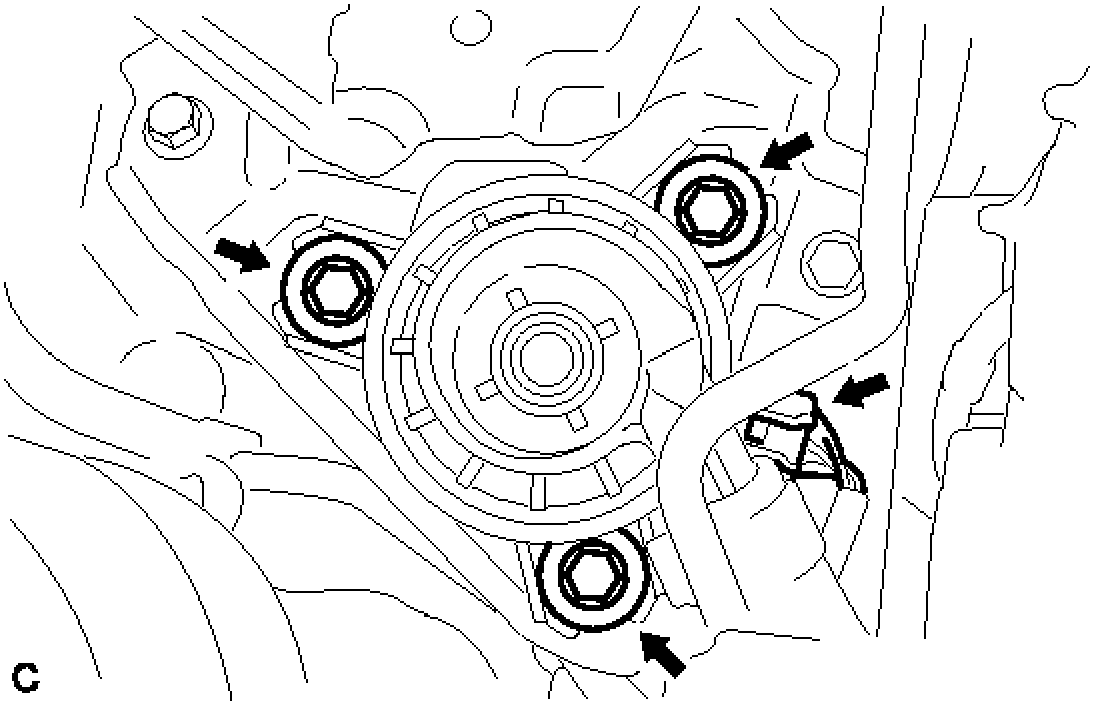

Fig. 142: Identifying Inverter Water Pump Connector And Bolts
Courtesy of TOYOTA MOTOR SALES, U.S.A., INC.

NOTE: **Apply insulating tape to the connectors of the wire harness and inverter water pump assembly to prevent the entry of coolant.**

c. Remove the 3 bolts.
d. Disconnect the water hose and remove the inverter water pump assembly.

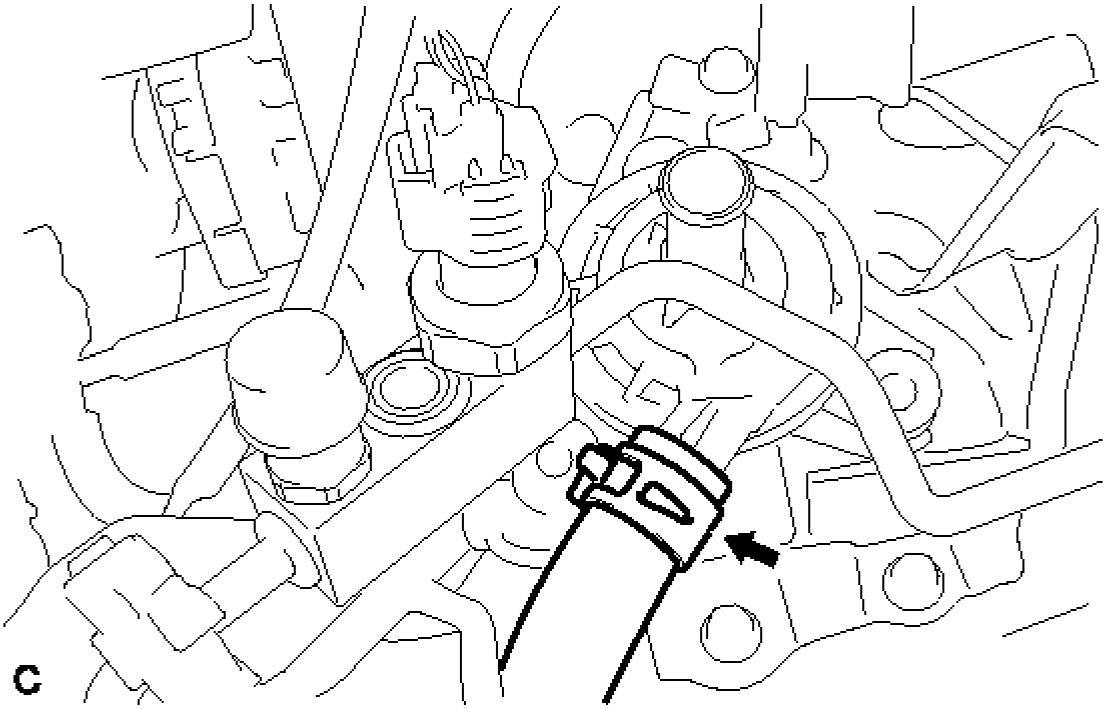

Fig. 143: Identifying Inverter Water Pump Side Hose Clamp
Courtesy of TOYOTA MOTOR SALES, U.S.A., INC.

NOTE: **Put pieces of cloth into the pipe and in the disconnected hose or cover the pipe and hose with plastic bags to prevent entry of foreign matter.**

INSTALLATION

INSTALLATION

1. **INSTALL INVERTER WATER PUMP ASSEMBLY**
    a. Connect the water hose.

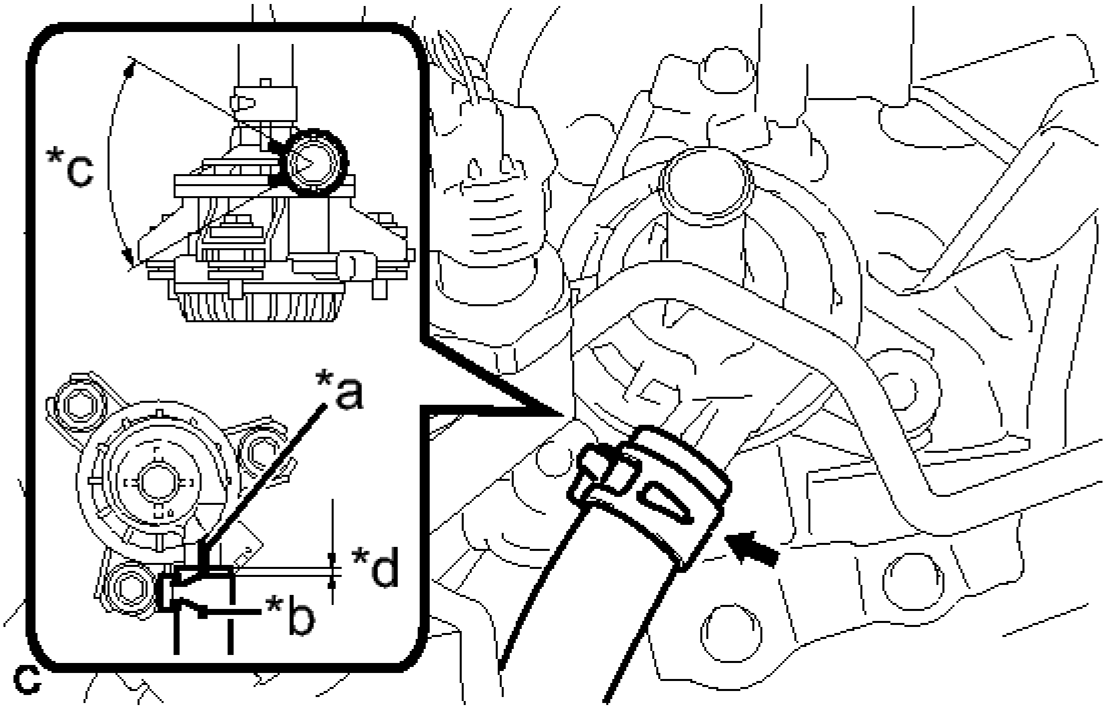

Fig. 144: Identifying Inverter Water Pump Side Hose Clamp
Courtesy of TOYOTA MOTOR SALES, U.S.A., INC.

TEXT IN ILLUSTRATION

*a	Rib
*b	Alignment Mark
*c	90°
*d	2 to 7 mm (0.0787 to 0.276 in.)

NOTE:

- **Make sure that the clip is positioned as shown in the illustration**
- **Make sure to align the alignment marks of the hoses with the ribs of the inverter water pump assembly.**
- **Do not remove the pieces of cloth or plastic bags from the pipes and disconnected hoses until installation.**

b. Install the inverter water pump assembly with the 3 bolts.

Torque: 6.1 N*m (62 kgf*cm, 54 in.*lbf)

NOTE: **Do not hold the inverter water pump assembly by the connector terminals when removing or installing it.**

c. Connect the connector.

d. Connect the water hose.

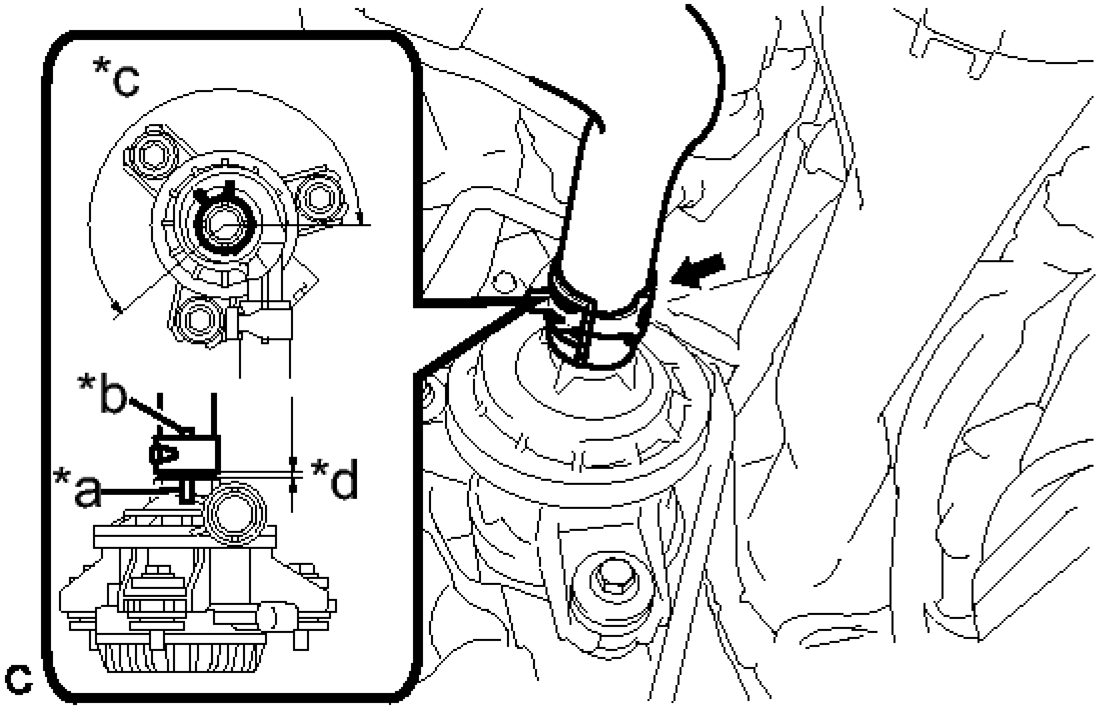

Fig. 145: Identifying Inverter Water Pump Top Hose Clamp
Courtesy of TOYOTA MOTOR SALES, U.S.A., INC.

TEXT IN ILLUSTRATION

*a	Rib
*b	Alignment Mark
*c	220°
*d	2 to 7 mm (0.0787 to 0.276 in.)

NOTE:

- **Make sure that the clip is positioned as shown in the illustration**
- **Make sure to align the alignment marks of the hoses with the ribs of the inverter water pump assembly.**
- **Do not remove the pieces of cloth or plastic bags from the pipes and disconnected hoses until installation.**

2. **INSTALL INVERTER RESERVE TANK ASSEMBLY**
    a. Temporarily install the inverter reserve tank assembly with the 2 bolts.
    b. Tighten the 2 bolts in the order shown in the illustration.

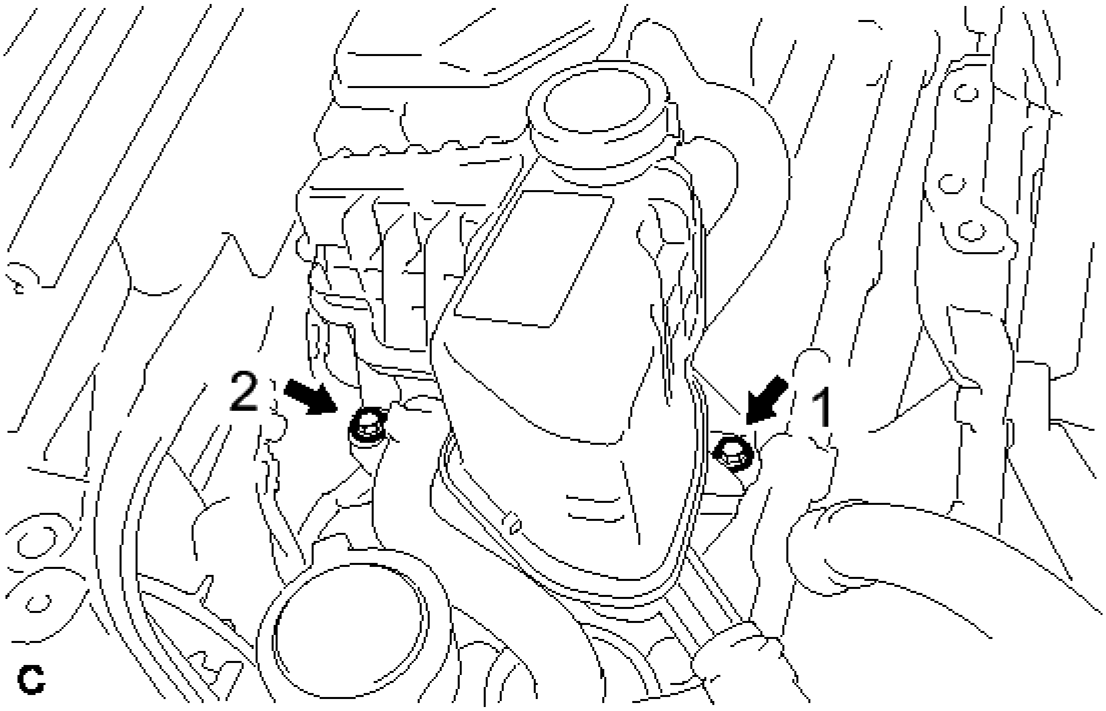

Fig. 146: Identifying Inverter Reserve Tank Bolts
Courtesy of TOYOTA MOTOR SALES, U.S.A., INC.

Torque: 10 N*m (102 kgf*cm, 7 ft.*lbf)

3. **ADD COOLANT (for Inverter)** See step 2
4. **INSPECT FOR COOLANT LEAK (for Inverter)** See step 1

SUB RADIATOR

COMPONENTS

ILLUSTRATION

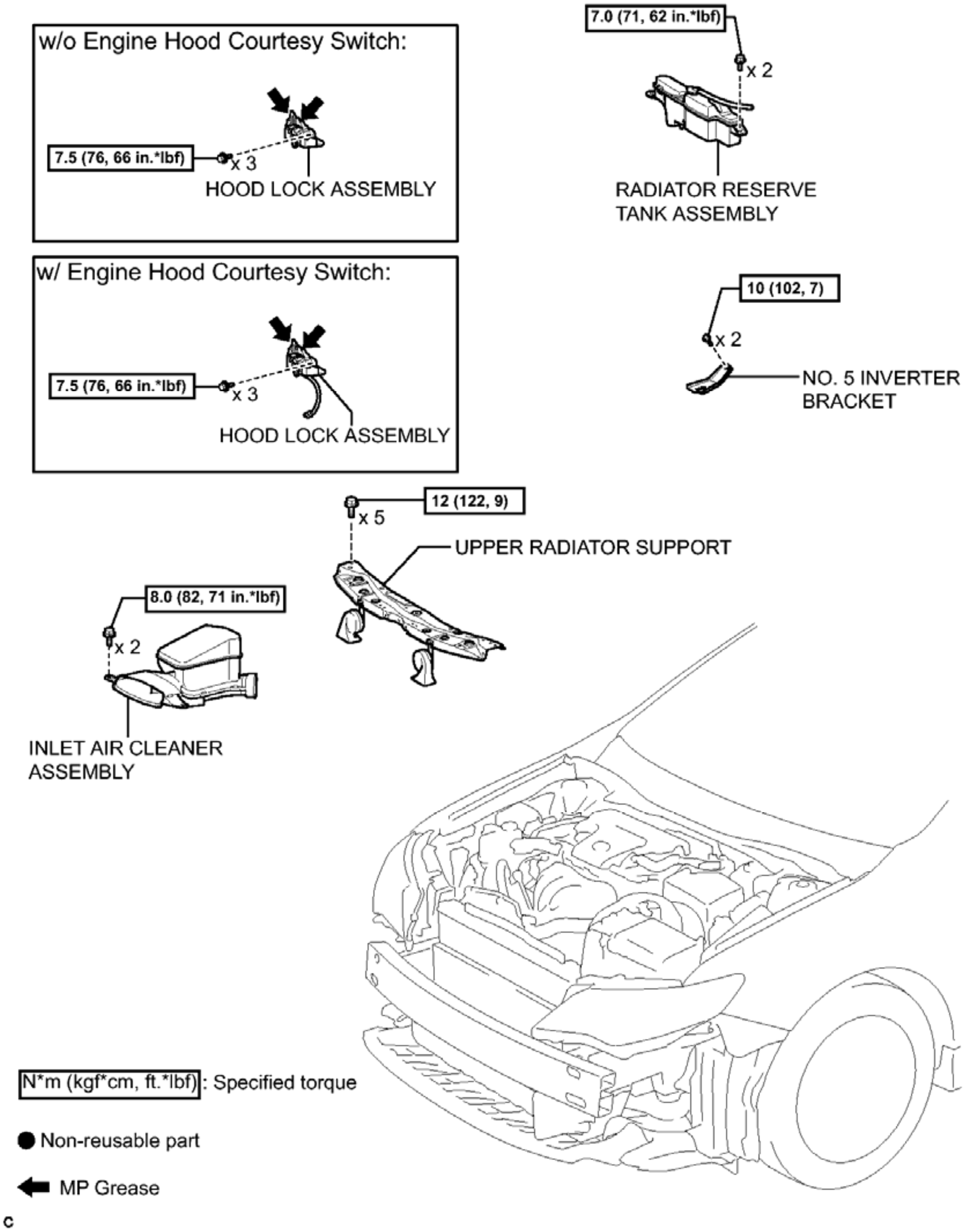
w/o Engine Hood Courtesy Switch:
7.5 (76, 66 in.*lbf)
x 3
HOOD LOCK ASSEMBLY
w/ Engine Hood Courtesy Switch:
7.5 (76, 66 in.*lbf)
x 3
HOOD LOCK ASSEMBLY
7.0 (71, 62 in.*lbf)
x 2
RADIATOR RESERVE TANK ASSEMBLY
10 (102, 7)
x 2
NO. 5 INVERTER BRACKET
12 (122, 9)
x 5
UPPER RADIATOR SUPPORT
8.0 (82, 71 in.*lbf)
x 2
INLET AIR CLEANER ASSEMBLY
N*m (kgf*cm, ft.*lbf): Specified torque
● Non-reusable part
MP Grease
c

Fig. 147: Identifying Sub Radiator Replacement Components With Torque Specifications (1 Of 2)

Courtesy of TOYOTA MOTOR SALES, U.S.A., INC.

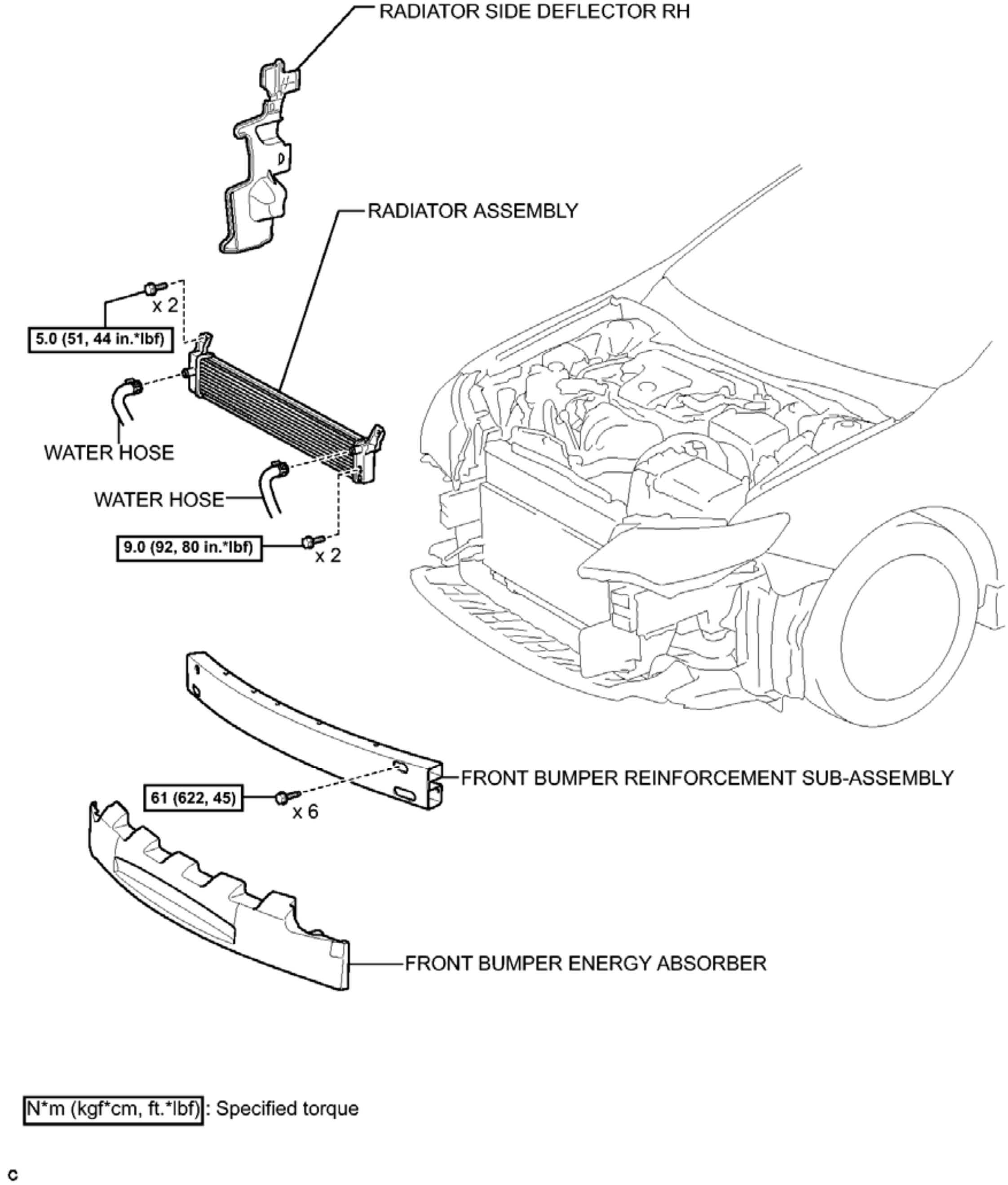
RADIATOR SIDE DEFLECTOR RH
RADIATOR ASSEMBLY
x 2
5.0 (51, 44 in.*lbf)
WATER HOSE
WATER HOSE
9.0 (92, 80 in.*lbf)
x 2
FRONT BUMPER REINFORCEMENT SUB-ASSEMBLY
61 (622, 45)
x 6
FRONT BUMPER ENERGY ABSORBER
N*m (kgf*cm, ft.*lbf): Specified torque
c

Fig. 148: Identifying Sub Radiator Replacement Components With Torque Specifications (2 Of 2)
Courtesy of TOYOTA MOTOR SALES, U.S.A., INC.

REMOVAL

REMOVAL

1. **DRAIN COOLANT (for Inverter)** See step 1

2. **REMOVE FRONT BUMPER ASSEMBLY**

   Refer to **REMOVAL**

3. **REMOVE FRONT BUMPER ENERGY ABSORBER** . Refer to **DISASSEMBLY - Step 10**
4. **REMOVE FRONT BUMPER REINFORCEMENT SUB-ASSEMBLY** . Refer to **DISASSEMBLY - Step 11**
5. **REMOVE INLET AIR CLEANER ASSEMBLY** . Refer to **REMOVAL - Step 30**
6. **REMOVE NO. 5 INVERTER BRACKET** See step 12
7. **REMOVE RADIATOR RESERVE TANK ASSEMBLY** . Refer to **REMOVAL - Step 13**
8. **REMOVE HOOD LOCK ASSEMBLY** . Refer to **REMOVAL - Step 9**
9. **REMOVE UPPER RADIATOR SUPPORT** . Refer to **REMOVAL - Step 18**
10. **REMOVE RADIATOR SIDE DEFLECTOR RH**
    a. Disengage the 3 claws and remove the radiator side deflector RH.

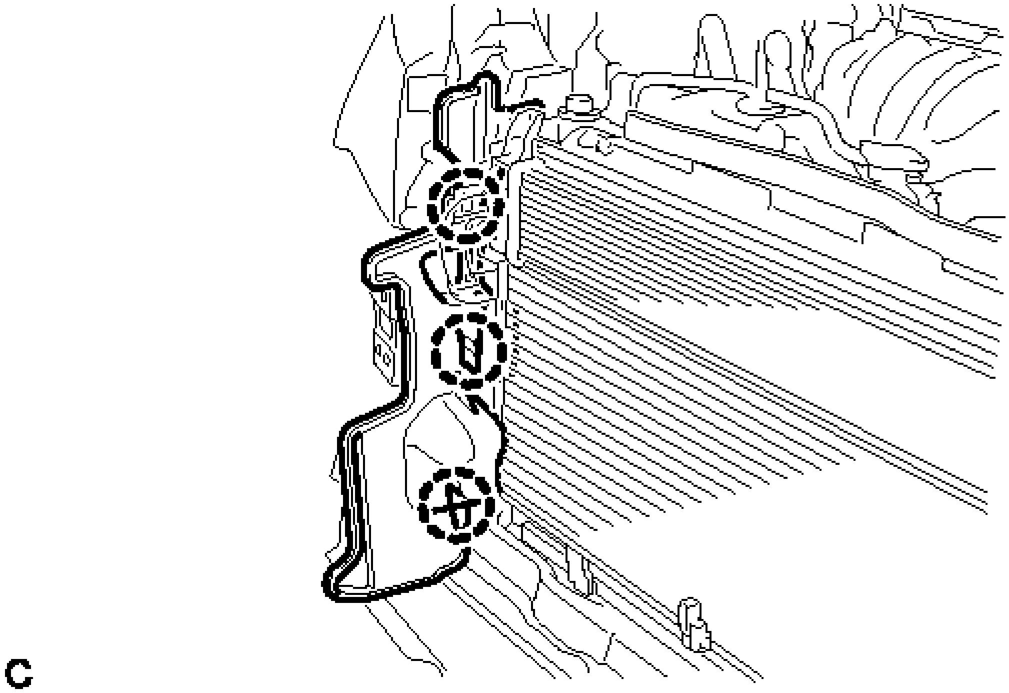

Fig. 149: Identifying Radiator Side Deflector RH Claws
Courtesy of TOYOTA MOTOR SALES, U.S.A., INC.

11. **REMOVE RADIATOR ASSEMBLY**
    a. Disconnect the 2 water hoses.

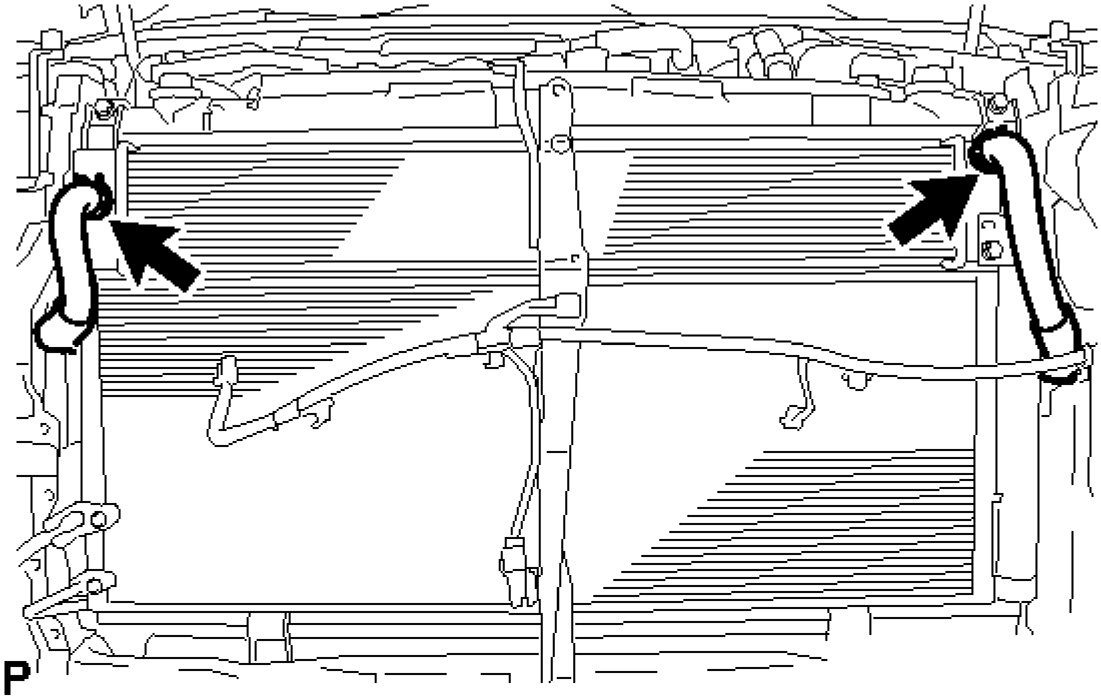

Fig. 150: Identifying Radiator Water Hose Clamps
Courtesy of TOYOTA MOTOR SALES, U.S.A., INC.

NOTE: **Put pieces of cloth into the pipes and in the disconnected hoses or cover the pipes and hoses with plastic bags to prevent entry of foreign matter.**

b. Remove the 4 bolts and radiator assembly.

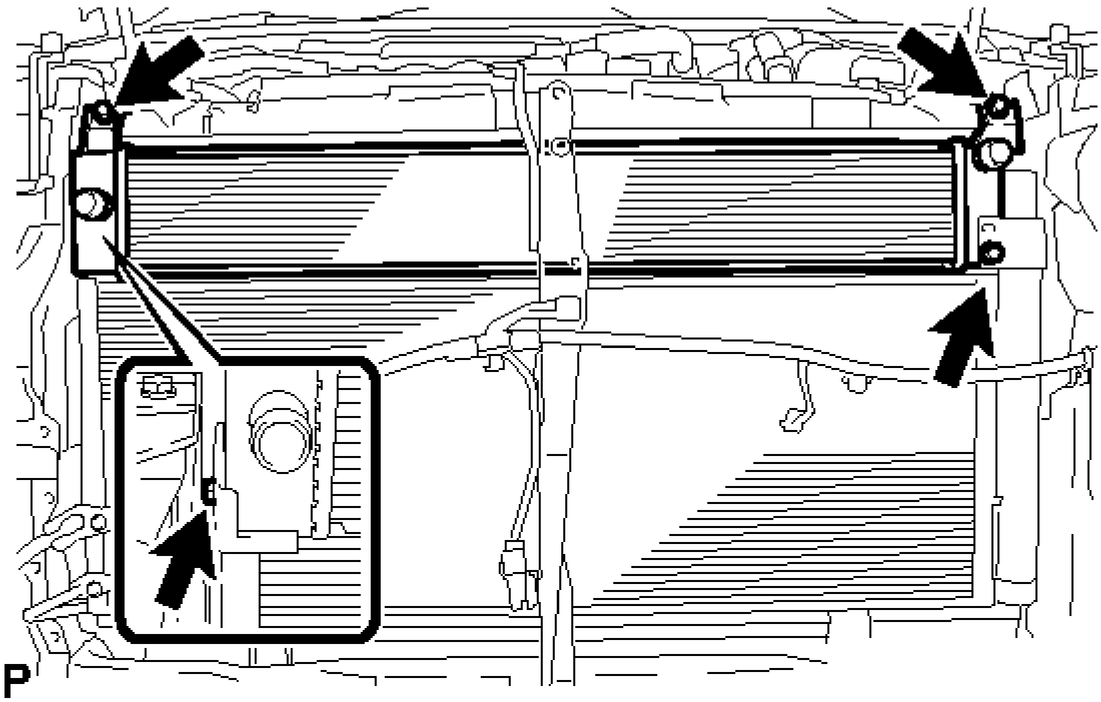

Fig. 151: Identifying Radiator Bolts
Courtesy of TOYOTA MOTOR SALES, U.S.A., INC.

INSTALLATION

INSTALLATION

1. **INSTALL RADIATOR ASSEMBLY**
    a. Install the radiator assembly with the 4 bolts.

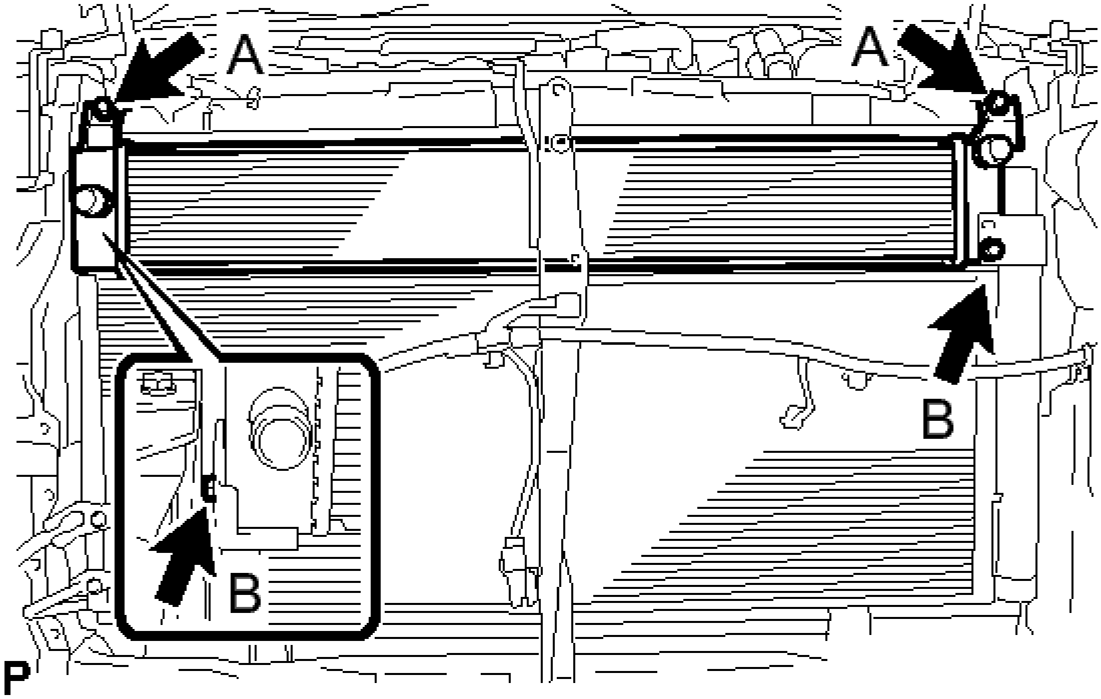

Fig. 152: Identifying Radiator Bolts
Courtesy of TOYOTA MOTOR SALES, U.S.A., INC.

Bolt A

Torque: 5.0 N*m (51 kgf*cm, 44 in.*lbf)

Bolt B

Torque: 9.0 N*m (92 kgf*cm, 80 in.*lbf)

b. Connect the 2 water hoses.

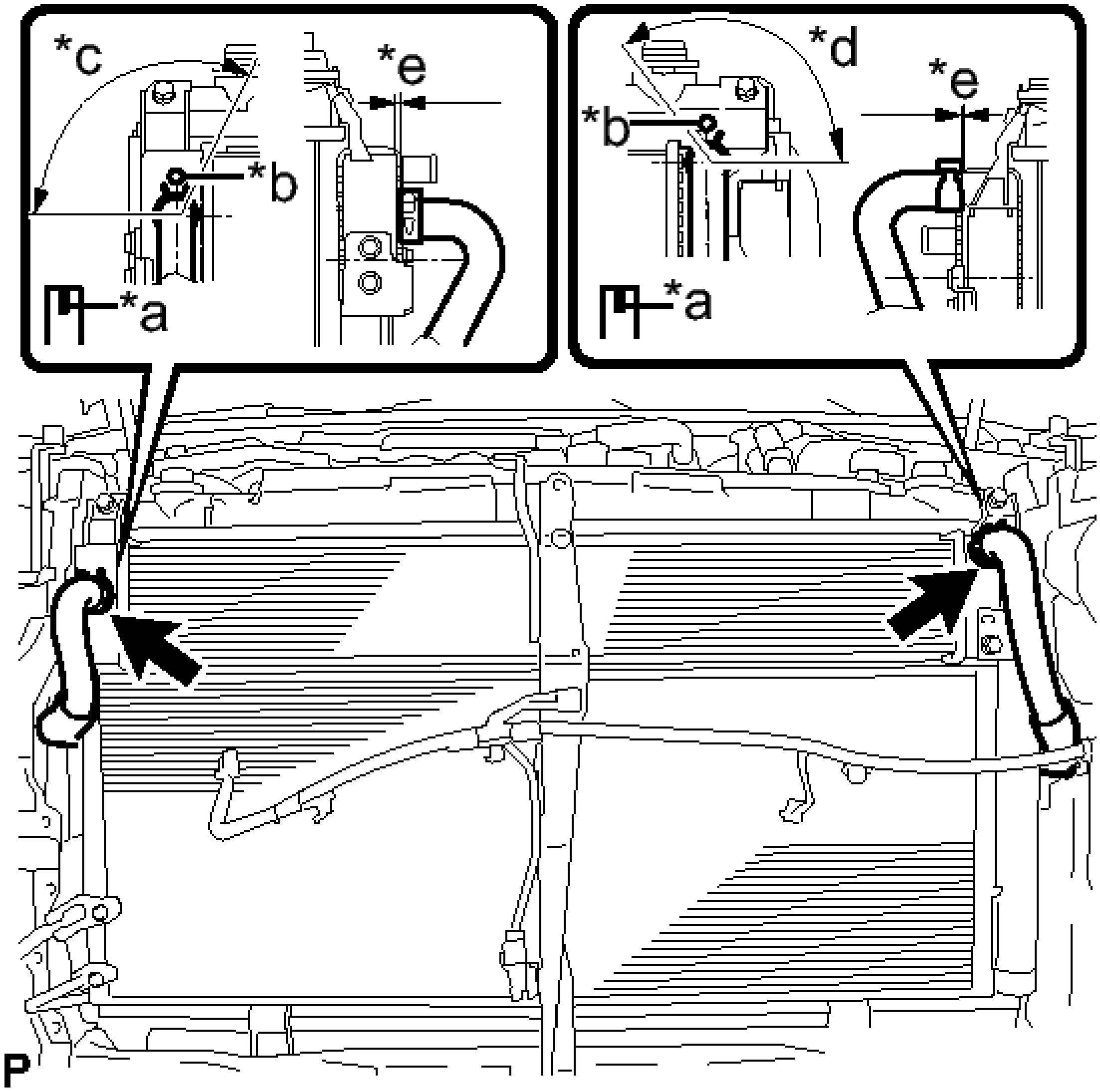

Fig. 153: Identifying Radiator Water Hose Clamps
Courtesy of TOYOTA MOTOR SALES, U.S.A., INC.

TEXT IN ILLUSTRATION

*a	Alignment Mark
*b	Rib
*c	120°
*d	135°
*e	1 to 5 mm (0.0394 to 0.197 in.)

NOTE:

- **Make sure that the clip is positioned as shown in the illustration.**
- **Make sure to align the alignment marks of the hoses with the ribs of the radiator assembly.**

- **Do not remove the pieces of cloth or plastic bags from the pipes and disconnected hoses until installation.**

2. **INSTALL RADIATOR SIDE DEFLECTOR RH**
    a. Engage the 3 claws to install the radiator side deflector RH.
3. **INSTALL UPPER RADIATOR SUPPORT** . Refer to **INSTALLATION - Step 2**
4. **INSTALL HOOD LOCK ASSEMBLY** . Refer to **INSTALLATION - Step 2**
5. **INSTALL RADIATOR RESERVE TANK ASSEMBLY** . Refer to **INSTALLATION - Step 7**
6. **INSTALL NO. 5 INVERTER BRACKET** See step 26
7. **INSTALL INLET AIR CLEANER ASSEMBLY** . Refer to **INSTALLATION - Step 63**
8. **INSTALL FRONT BUMPER REINFORCEMENT SUB-ASSEMBLY** . Refer to **REASSEMBLY - Step 3**
9. **INSTALL FRONT BUMPER ENERGY ABSORBER** . Refer to **REASSEMBLY - Step 4**
10. **INSTALL FRONT BUMPER ASSEMBLY**

    Refer to **INSTALLATION**

11. **ADD COOLANT (for Inverter)** See step 2
12. **INSPECT FOR COOLANT LEAK (for Inverter)** See step 1

FRAME WIRE

COMPONENTS

ILLUSTRATION

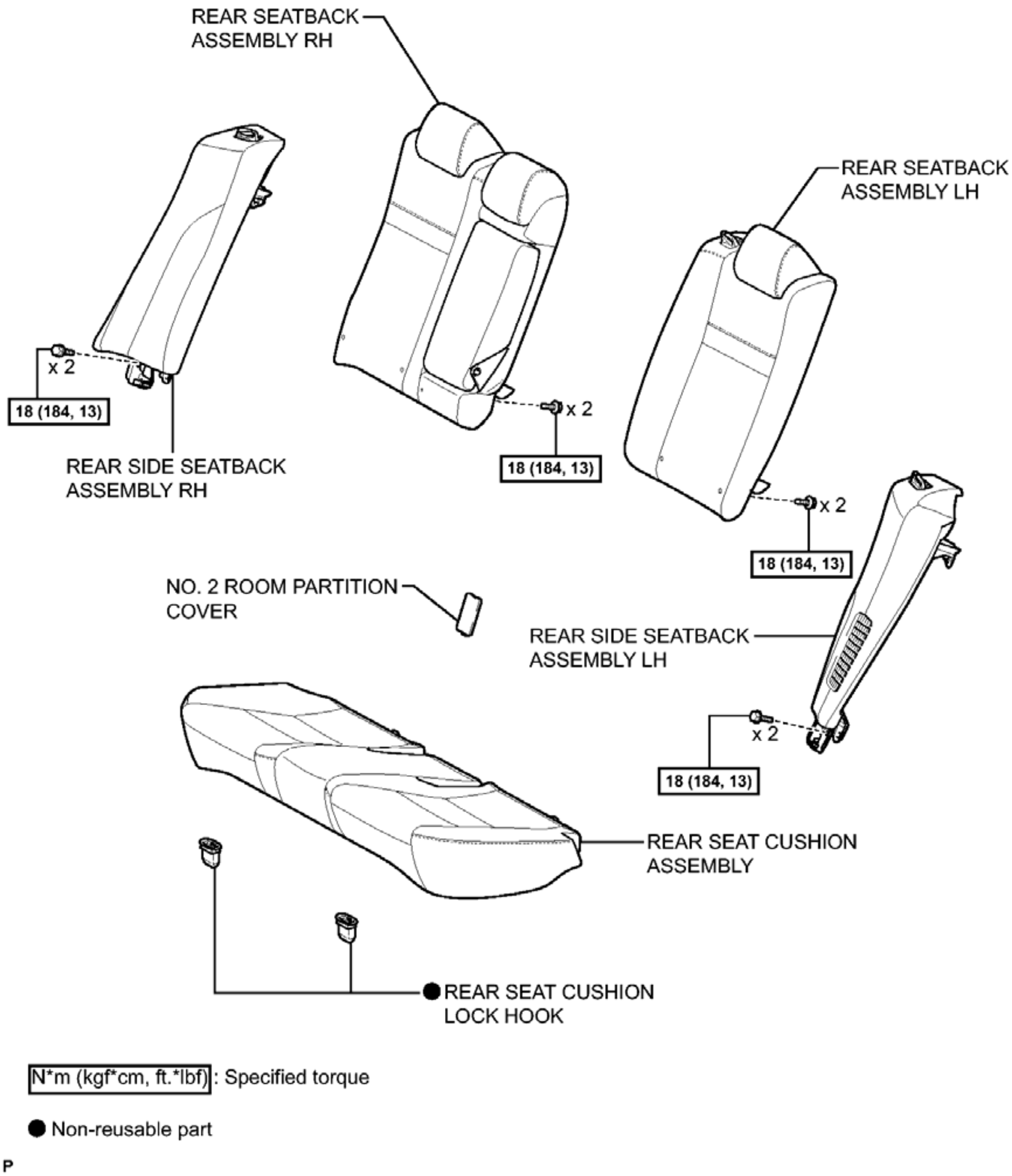
REAR SEATBACK ASSEMBLY RH
REAR SEATBACK ASSEMBLY LH
x 2
18 (184, 13)
REAR SIDE SEATBACK ASSEMBLY RH
x 2
18 (184, 13)
x 2
18 (184, 13)
NO. 2 ROOM PARTITION COVER
REAR SIDE SEATBACK ASSEMBLY LH
x 2
18 (184, 13)
REAR SEAT CUSHION ASSEMBLY
● REAR SEAT CUSHION LOCK HOOK
N*m (kgf*cm, ft.*lbf) : Specified torque
● Non-reusable part
P

Fig. 154: Identifying Frame Wire Replacement Components With Torque Specifications (1 Of 3)
Courtesy of TOYOTA MOTOR SALES, U.S.A., INC.

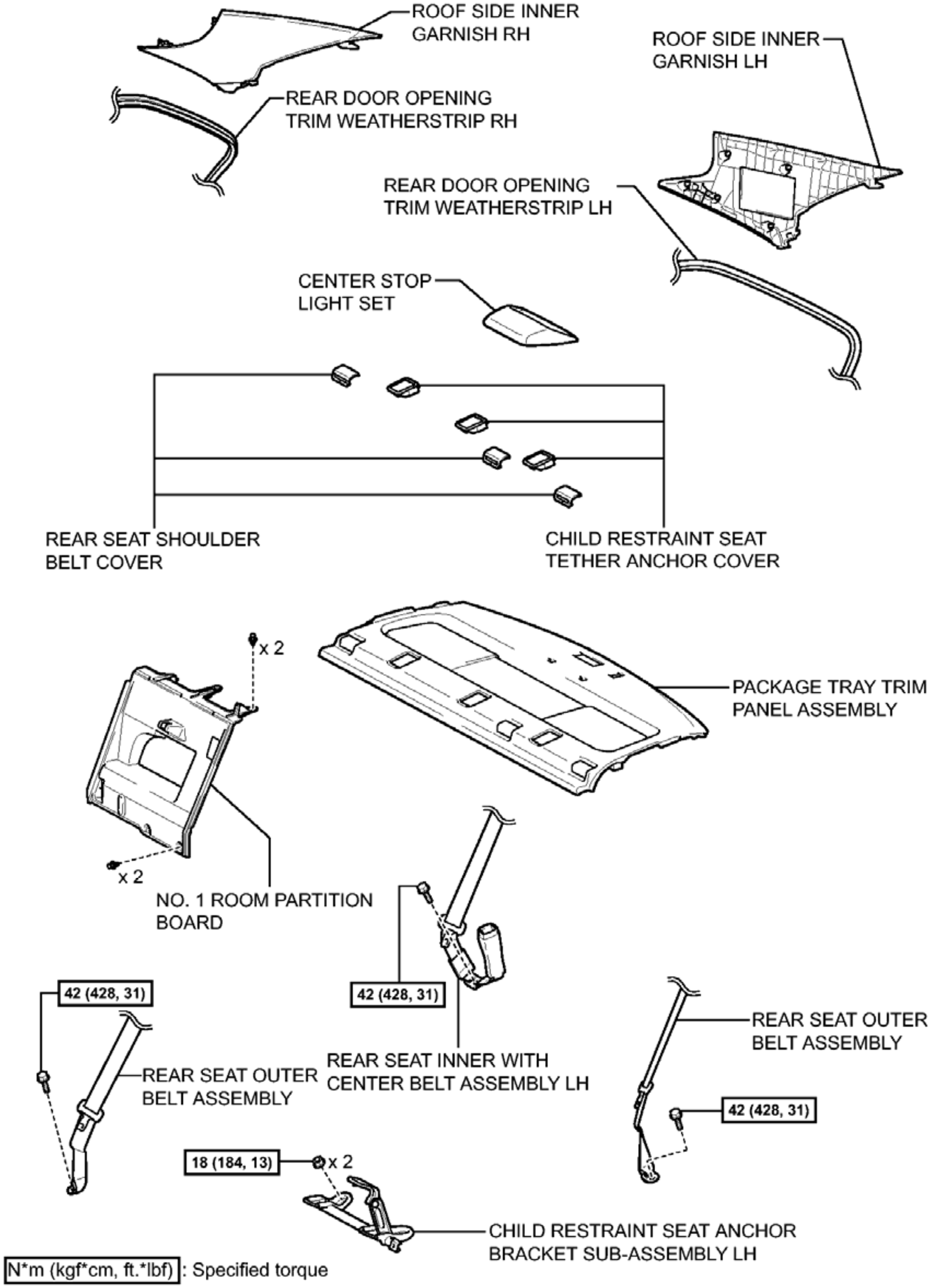
ROOF SIDE INNER GARNISH RH
ROOF SIDE INNER GARNISH LH
REAR DOOR OPENING TRIM WEATHERSTRIP RH
REAR DOOR OPENING TRIM WEATHERSTRIP LH
CENTER STOP LIGHT SET
REAR SEAT SHOULDER BELT COVER
CHILD RESTRAINT SEAT TETHER ANCHOR COVER
x 2
PACKAGE TRAY TRIM PANEL ASSEMBLY
x 2
NO. 1 ROOM PARTITION BOARD
42 (428, 31)
42 (428, 31)
REAR SEAT OUTER BELT ASSEMBLY
REAR SEAT INNER WITH CENTER BELT ASSEMBLY LH
REAR SEAT OUTER BELT ASSEMBLY
42 (428, 31)
18 (184, 13)
x 2
CHILD RESTRAINT SEAT ANCHOR BRACKET SUB-ASSEMBLY LH
N*m (kgf*cm, ft.*lbf) : Specified torque

Fig. 155: Identifying Frame Wire Replacement Components With Torque Specifications (2 Of 3)
Courtesy of TOYOTA MOTOR SALES, U.S.A., INC.

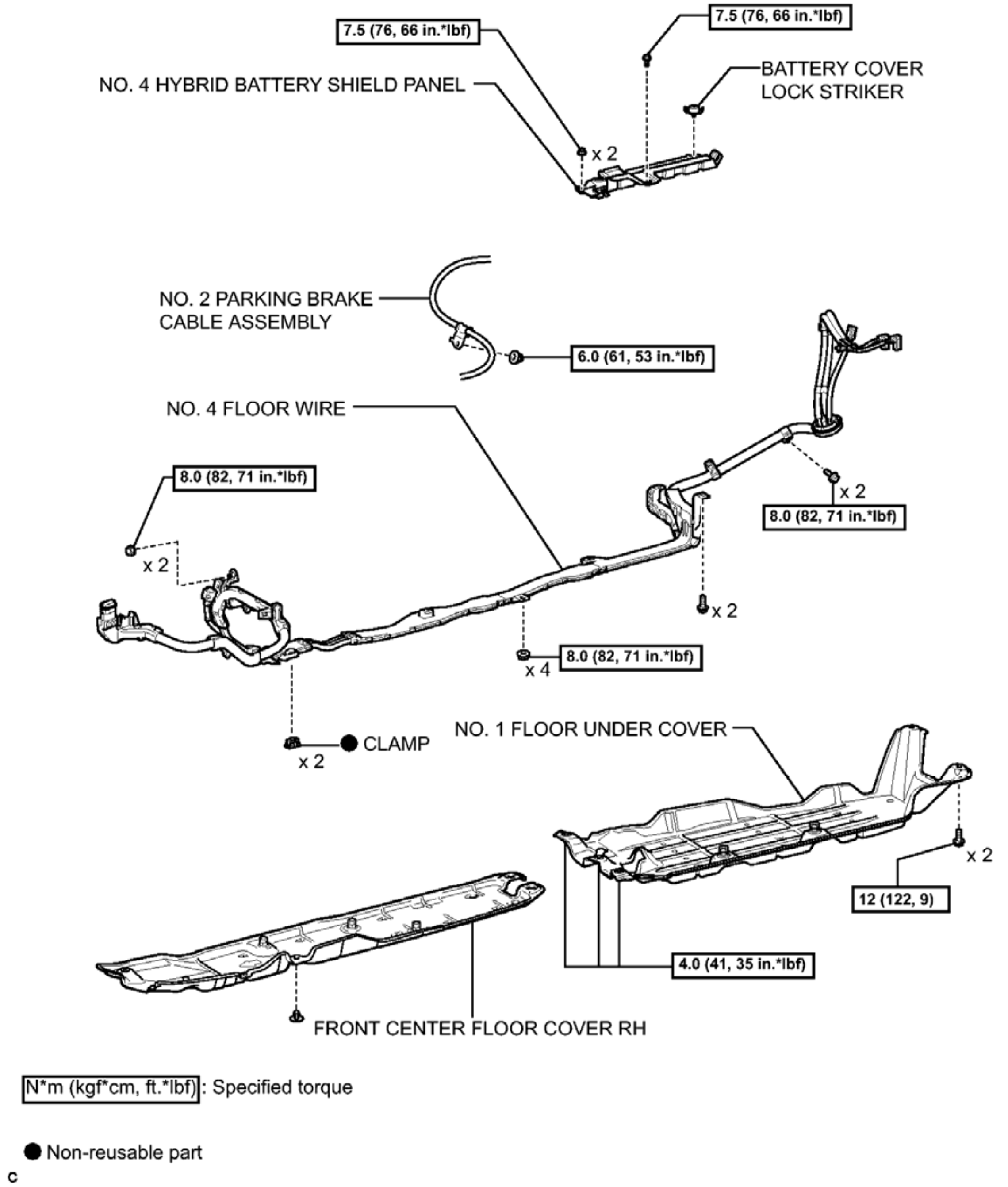
7.5 (76, 66 in.*lbf)
7.5 (76, 66 in.*lbf)
NO. 4 HYBRID BATTERY SHIELD PANEL
BATTERY COVER LOCK STRIKER
x 2
NO. 2 PARKING BRAKE CABLE ASSEMBLY
6.0 (61, 53 in.*lbf)
NO. 4 FLOOR WIRE
8.0 (82, 71 in.*lbf)
x 2
8.0 (82, 71 in.*lbf)
x 2
x 2
x 2
8.0 (82, 71 in.*lbf)
x 4
x 2
● CLAMP
NO. 1 FLOOR UNDER COVER
x 2
12 (122, 9)
4.0 (41, 35 in.*lbf)
FRONT CENTER FLOOR COVER RH
N*m (kgf*cm, ft.*lbf): Specified torque
● Non-reusable part
c

Fig. 156: Identifying Frame Wire Replacement Components With Torque Specifications (3 Of 3)
Courtesy of TOYOTA MOTOR SALES, U.S.A., INC.

REMOVAL

REMOVAL

1. **REMOVE ENGINE ASSEMBLY WITH TRANSAXLE**

Refer to **REMOVAL**

2. **REMOVE REAR SEAT CUSHION ASSEMBLY** . Refer to **REMOVAL - Step 4**
3. **REMOVE REAR SEAT CUSHION LOCK HOOK** . Refer to **REMOVAL - Step 5**
4. **REMOVE REAR SEATBACK ASSEMBLY RH** . Refer to **REMOVAL - Step 6**
5. **REMOVE NO. 2 ROOM PARTITION COVER** . Refer to **REMOVAL - Step 7**
6. **REMOVE REAR SEATBACK ASSEMBLY LH** . Refer to **REMOVAL - Step 8**
7. **REMOVE REAR SIDE SEATBACK ASSEMBLY LH** . Refer to **REMOVAL - Step 9**
8. **REMOVE REAR SIDE SEATBACK ASSEMBLY RH** . Refer to **REMOVAL - Step 10**
9. **DISCONNECT REAR DOOR OPENING TRIM WEATHERSTRIP LH** . Refer to **REMOVAL - Step 13**
10. **DISCONNECT REAR DOOR OPENING TRIM WEATHERSTRIP RH** . Refer to **REMOVAL - Step 14**
11. **DISCONNECT REAR SEAT OUTER BELT ASSEMBLY (for LH Side)** . Refer to **REMOVAL - Step 14**
12. **DISCONNECT REAR SEAT OUTER BELT ASSEMBLY (for RH Side)** . Refer to **REMOVAL - Step 15**
13. **REMOVE CHILD RESTRAINT SEAT ANCHOR BRACKET SUB-ASSEMBLY LH** . Refer to **REMOVAL - Step 11**
14. **DISCONNECT REAR SEAT INNER WITH CENTER BELT ASSEMBLY LH** . Refer to **REMOVAL - Step 20**
15. **REMOVE ROOF SIDE INNER GARNISH LH** . Refer to **REMOVAL - Step 25**
16. **REMOVE ROOF SIDE INNER GARNISH RH** . Refer to **REMOVAL - Step 32**
17. **REMOVE CENTER STOP LIGHT SET** . Refer to **REMOVAL - Step 1**
18. **REMOVE CHILD RESTRAINT SEAT TETHER ANCHOR COVER** . Refer to **REMOVAL - Step 19**
19. **REMOVE REAR SEAT SHOULDER BELT COVER** . Refer to **REMOVAL - Step 20**
20. **REMOVE PACKAGE TRAY TRIM PANEL ASSEMBLY** . Refer to **REMOVAL - Step 21**
21. **REMOVE NO. 1 ROOM PARTITION BOARD** . Refer to **REMOVAL - Step 23**
22. **REMOVE NO. 1 FLOOR UNDER COVER** . Refer to **REMOVAL - Step 3**
23. **REMOVE FRONT CENTER FLOOR COVER RH**
    a. Remove the 6 clips and front center floor cover RH.

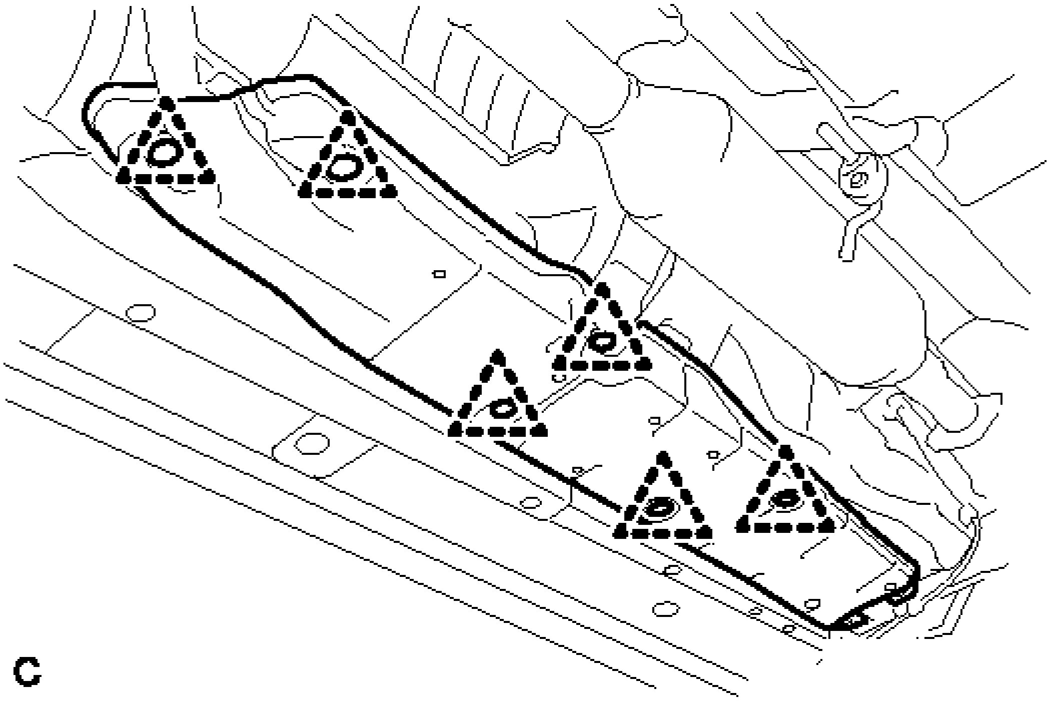

Fig. 157: Identifying Front Center Floor Cover RH
Courtesy of TOYOTA MOTOR SALES, U.S.A., INC.

24. **REMOVE NO. 2 PARKING BRAKE CABLE ASSEMBLY**
    a. Remove the nut and disconnect the No. 2 parking brake cable assembly.

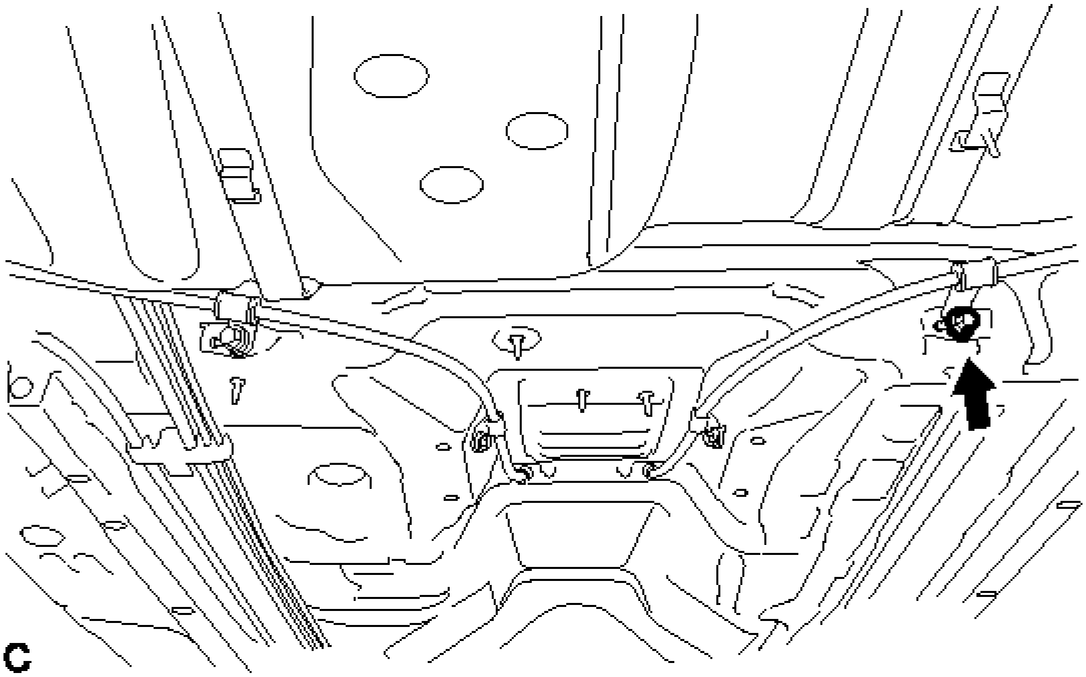

Fig. 158: Identifying No. 2 Parking Brake Cable Nut

Courtesy of TOYOTA MOTOR SALES, U.S.A., INC.

25. **REMOVE NO. 4 HYBRID BATTERY SHIELD PANEL** See step 26
26. **REMOVE NO. 4 FLOOR WIRE**

WARNING: Wear insulated gloves.

NOTE: Insulate the removed terminals with insulating tape.

a. Disconnect the 2 connectors.

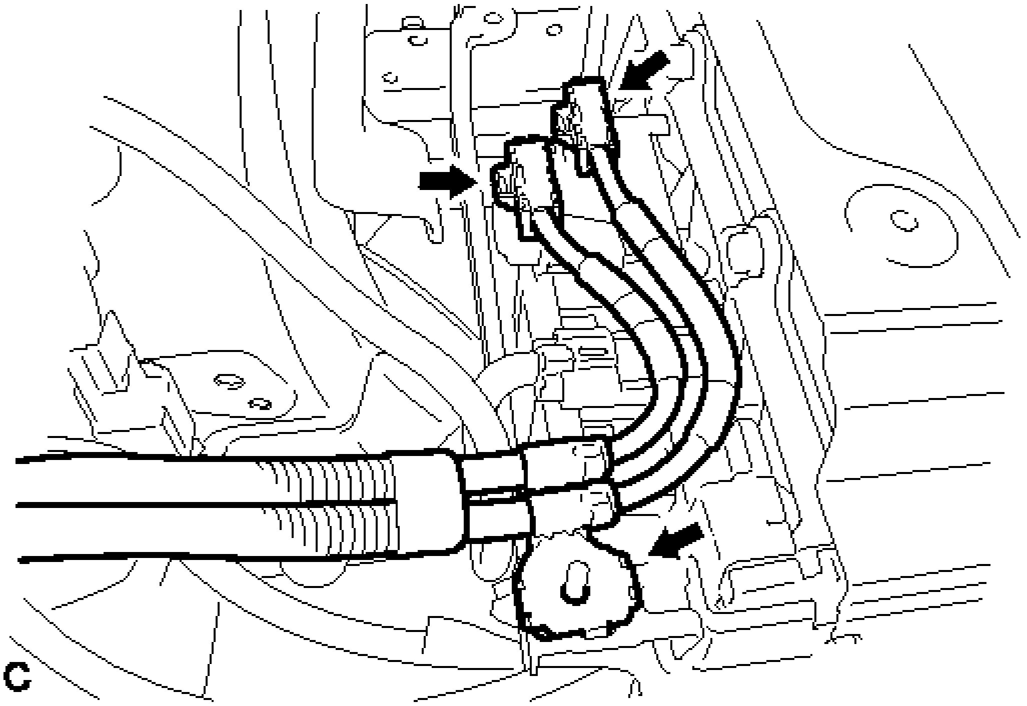

Fig. 159: Identifying No. 4 Floor Wire Connectors And Shielded Wire Ground
Courtesy of TOYOTA MOTOR SALES, U.S.A., INC.

b. Disconnect the shielded wire ground.
c. Disconnect the wire harness clamp and connector.

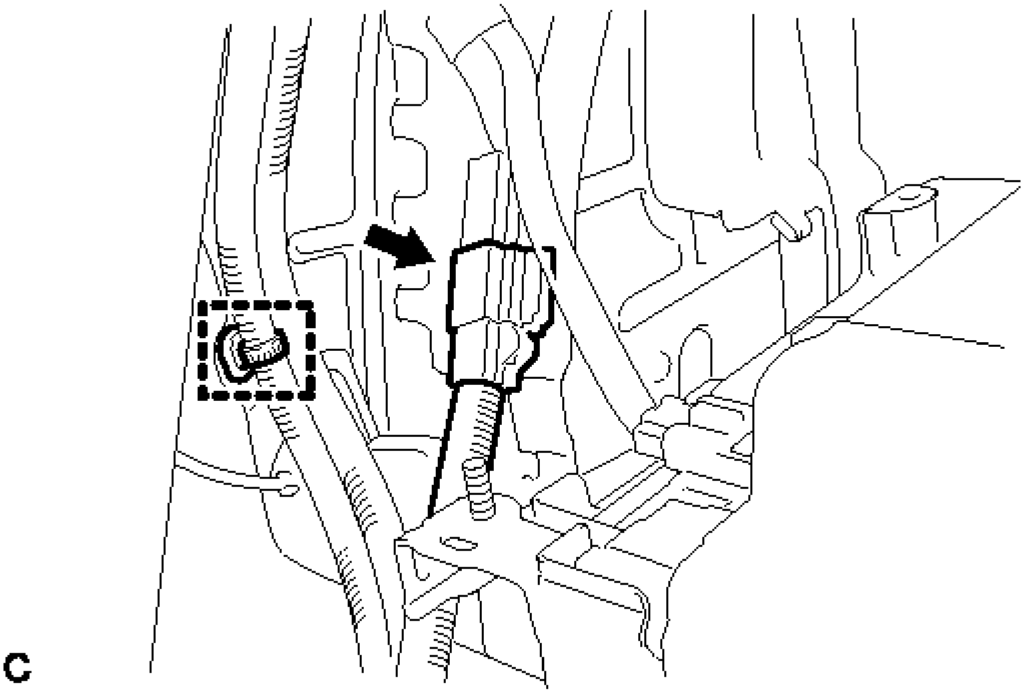

Fig. 160: Identifying Wire Harness Clamp And Connector
Courtesy of TOYOTA MOTOR SALES, U.S.A., INC.

d. Disengage the 3 claws and push the frame wire out from the floor panel.

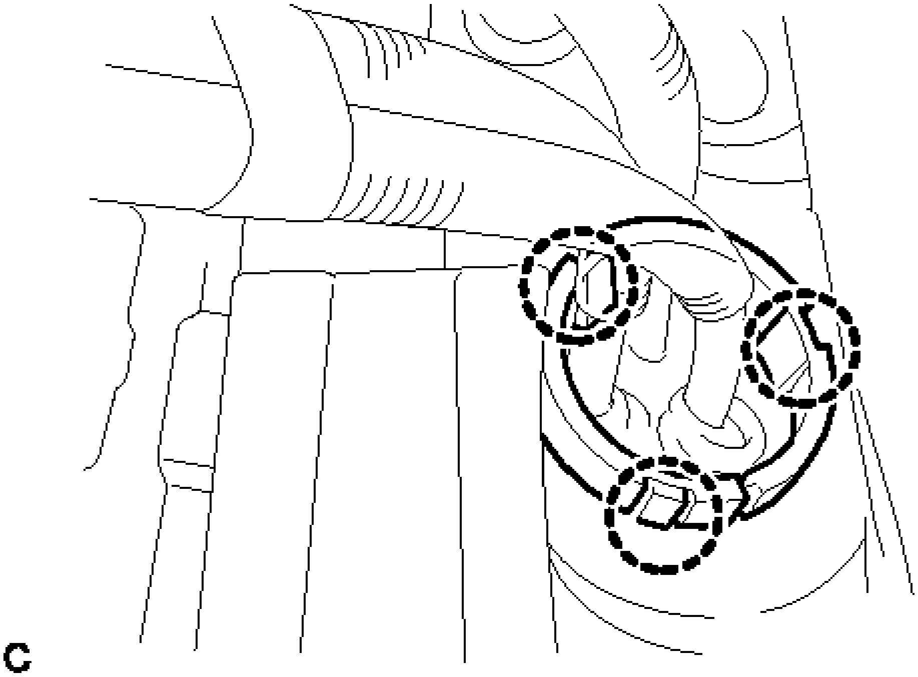

Fig. 161: Identifying Frame Wire Claws
Courtesy of TOYOTA MOTOR SALES, U.S.A., INC.

e. Disconnect the 2 wire harness clamps.

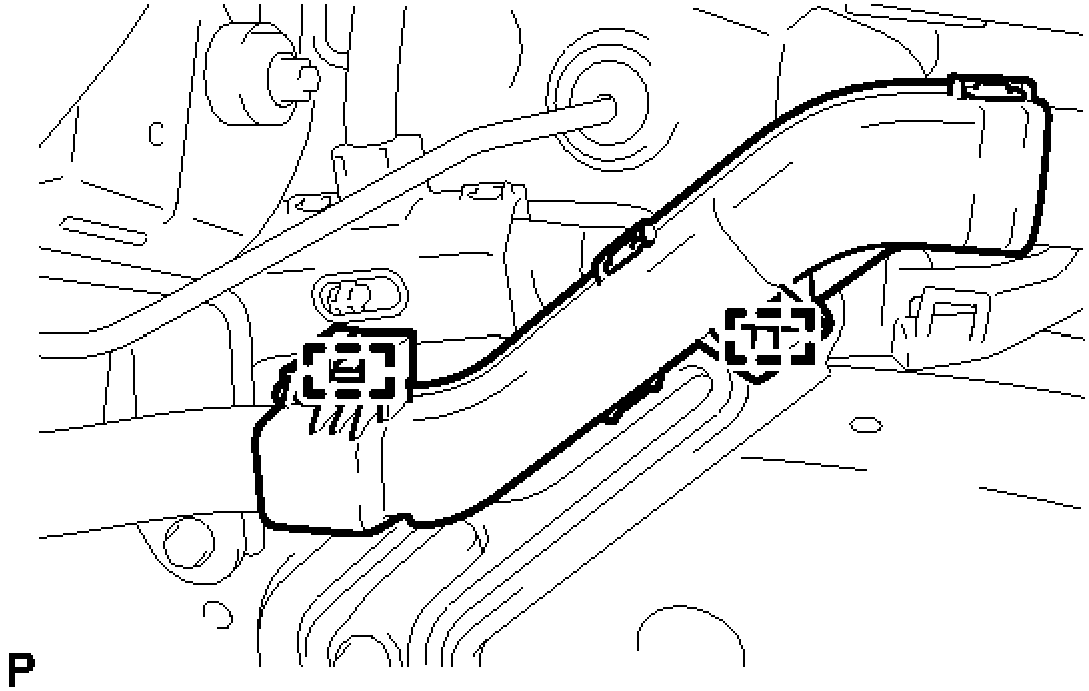

Fig. 162: Identifying Wire Harness Clamps
Courtesy of TOYOTA MOTOR SALES, U.S.A., INC.

f. Disconnect the 2 wire harness clamps and connector.

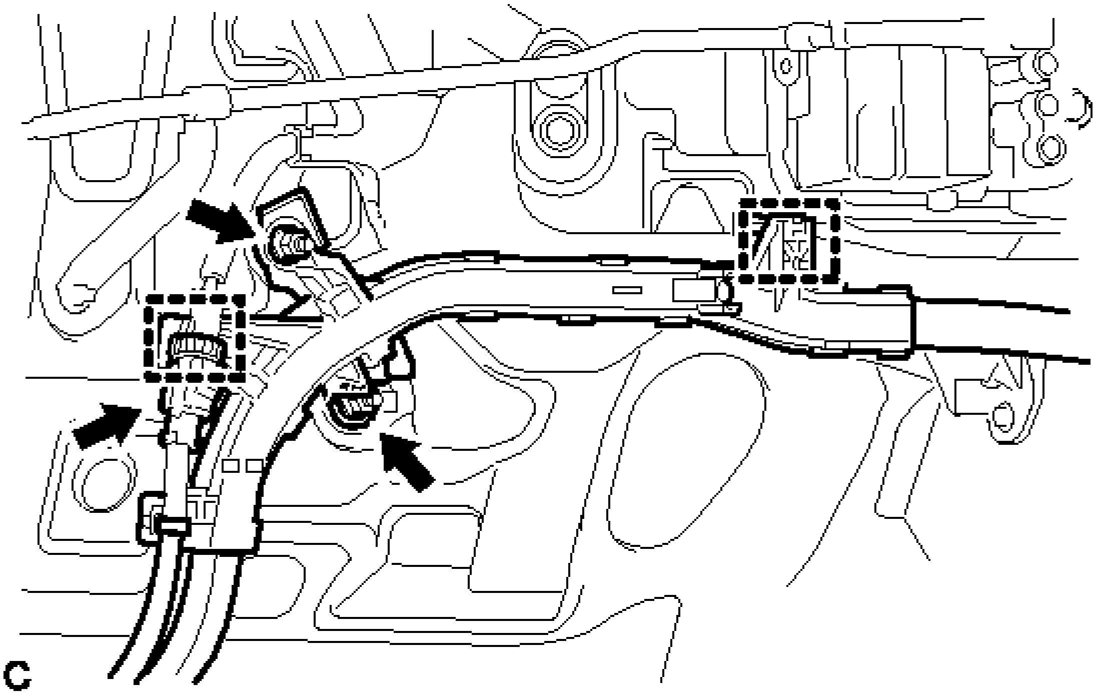

Fig. 163: Identifying Wire Harness Clamps And Connector
Courtesy of TOYOTA MOTOR SALES, U.S.A., INC.

g. Remove the 2 nuts.

h. Remove the 2 bolts.

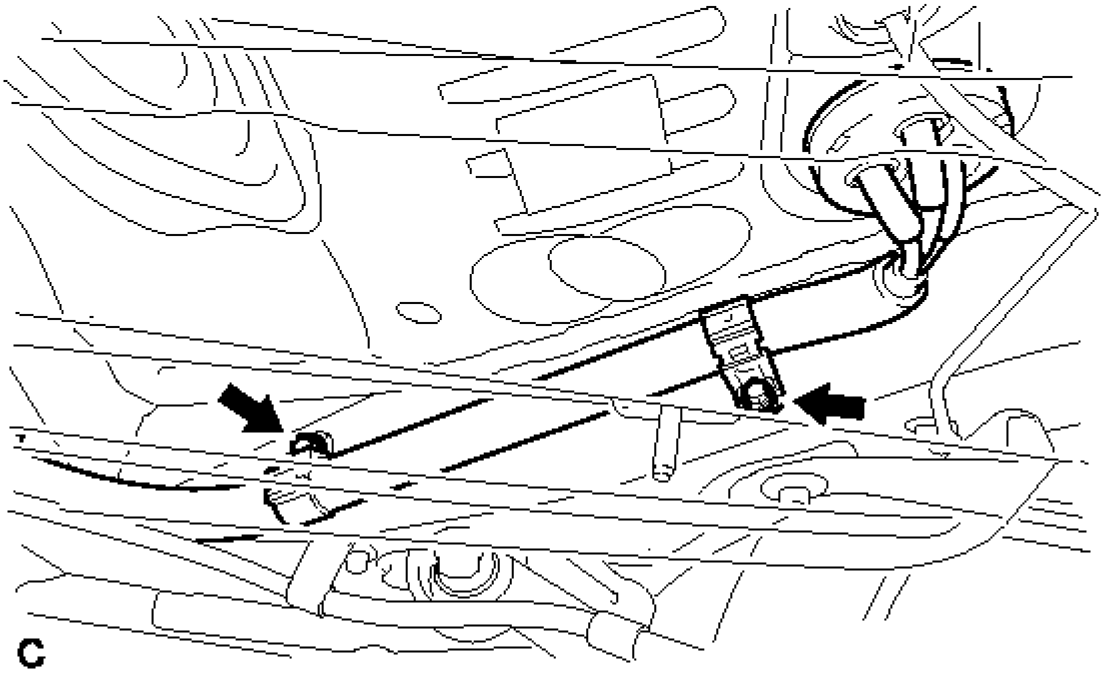

Fig. 164: Identifying Wire Harness Nuts And Bolts
Courtesy of TOYOTA MOTOR SALES, U.S.A., INC.

i. Remove the 2 bolts and 4 nuts.

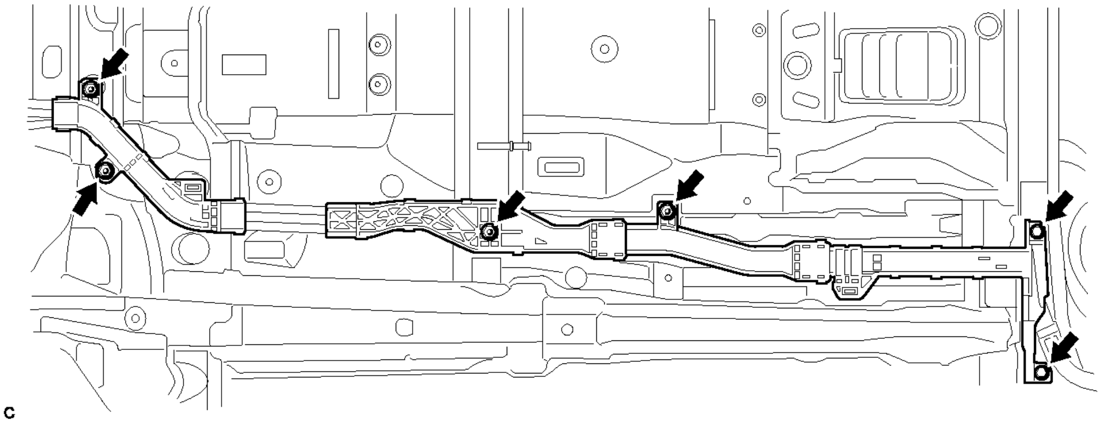

Fig. 165: Identifying Wire Harness Nuts And Bolts
Courtesy of TOYOTA MOTOR SALES, U.S.A., INC.

j. Disconnect the 2 clamps and remove the No. 4 floor wire.

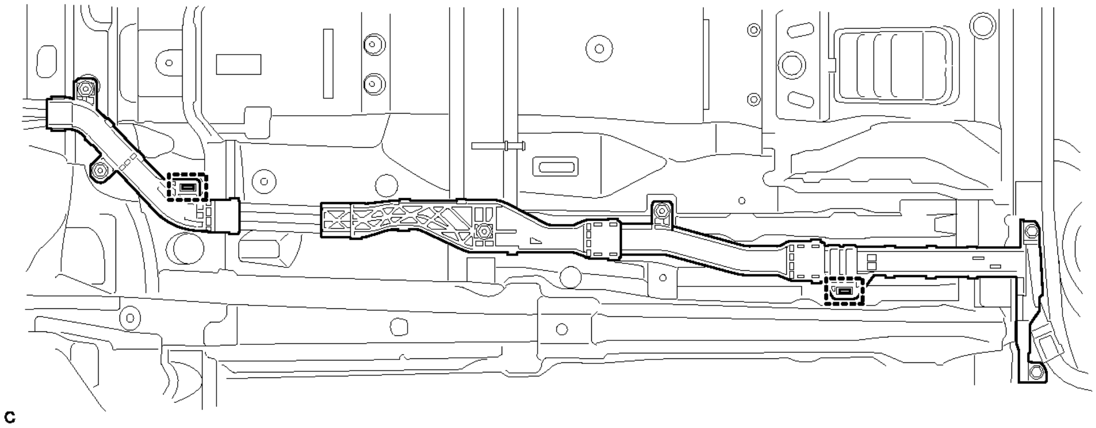

Fig. 166: Identifying No. 4 Floor Wire Clamps
Courtesy of TOYOTA MOTOR SALES, U.S.A., INC.

HINT:

When removing the clamp, break the claw on the clamp. The clamp cannot be reused.

INSTALLATION

INSTALLATION

1. **INSTALL NO. 4 FLOOR WIRE**

   WARNING: Wear insulated gloves.

   a. Install the No. 4 floor wire with 2 new clamps shown in the illustration.

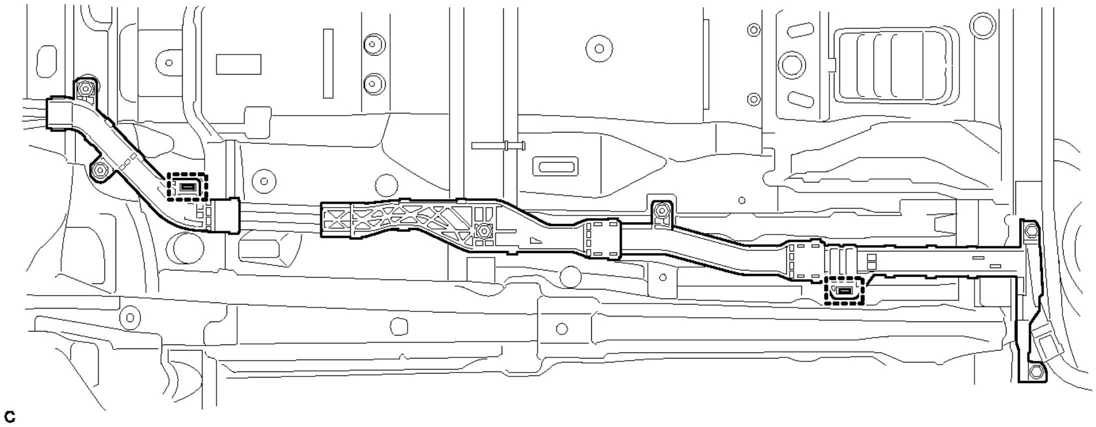

Fig. 167: Identifying No. 4 Floor Wire Clamps
Courtesy of TOYOTA MOTOR SALES, U.S.A., INC.

   b. Install the 4 nuts and 2 bolts shown in the illustration.

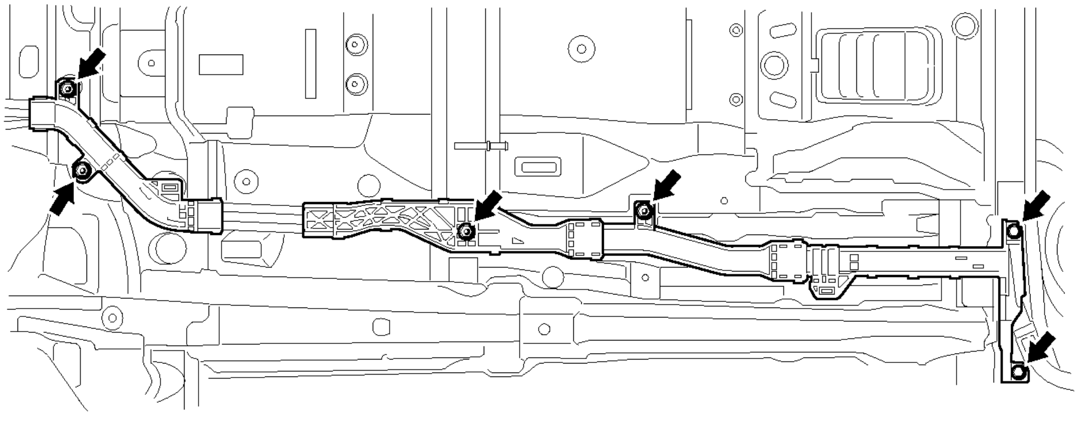

Fig. 168: Identifying Wire Harness Nuts And Bolts
Courtesy of TOYOTA MOTOR SALES, U.S.A., INC.

Torque: 8.0 N*m (82 kgf*cm, 71 in.*lbf)

c. Install the 2 bolts shown in the illustration.

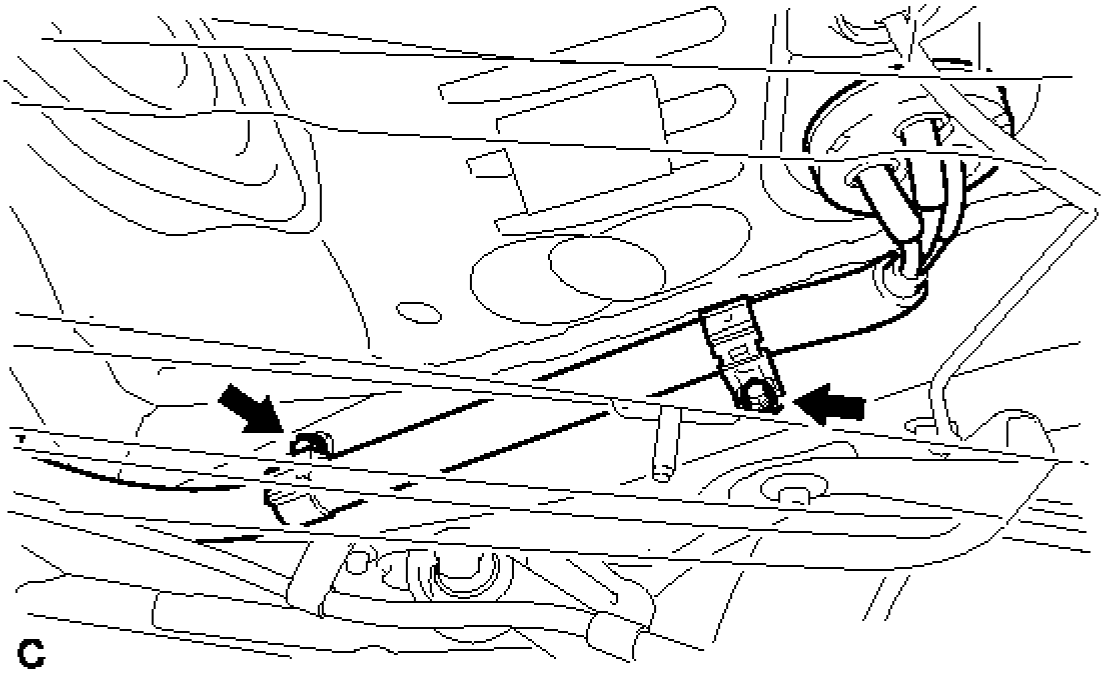

Fig. 169: Identifying Wire Harness Nuts And Bolts
Courtesy of TOYOTA MOTOR SALES, U.S.A., INC.

Torque: 8.0 N*m (82 kgf*cm, 71 in.*lbf)

d. Install the 2 nuts shown in the illustration.

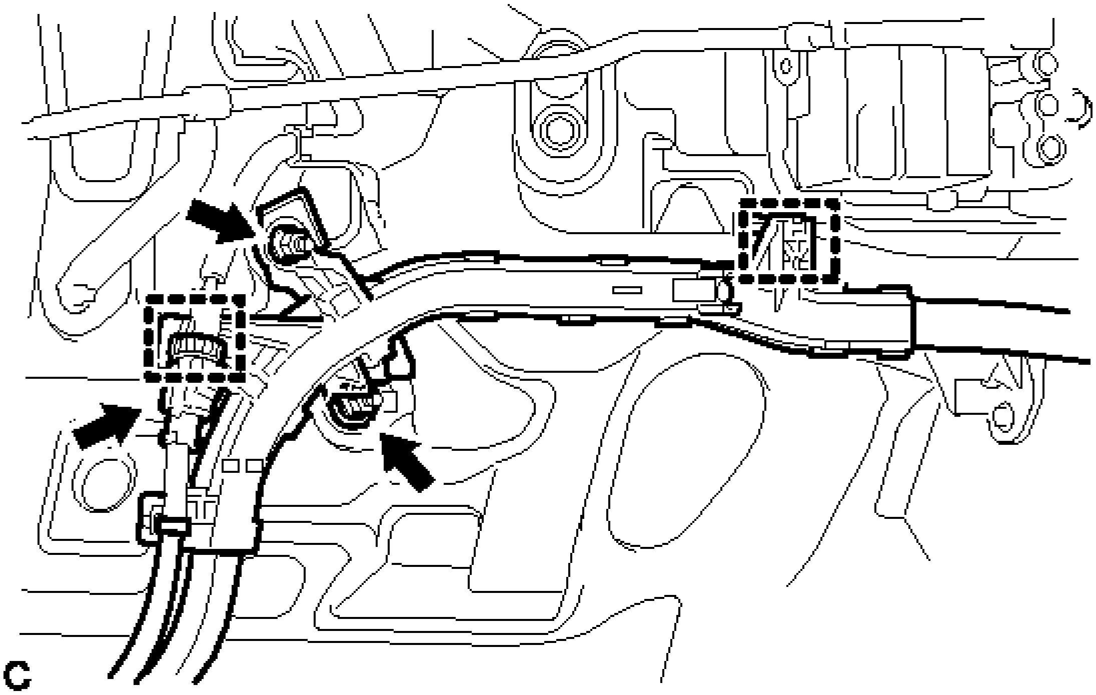

Fig. 170: Identifying Wire Harness Clamps And Connector
Courtesy of TOYOTA MOTOR SALES, U.S.A., INC.

Torque: 8.0 N*m (82 kgf*cm, 71 in.*lbf)

e. Connect the connector and 2 wire harness clamps.
f. Connect the 2 wire harness clamps shown in the illustration.

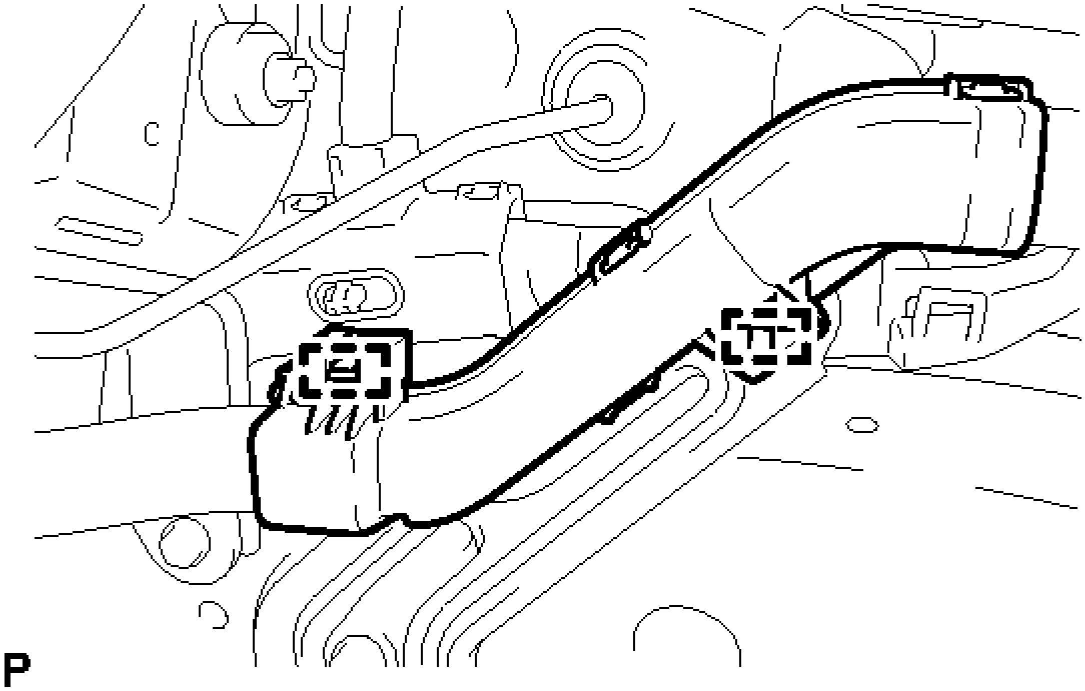

Fig. 171: Identifying Wire Harness Clamps
Courtesy of TOYOTA MOTOR SALES, U.S.A., INC.

g. Insert the No. 4 floor wire into the floor panel hole.
h. Connect the connector and wire harness clamp.

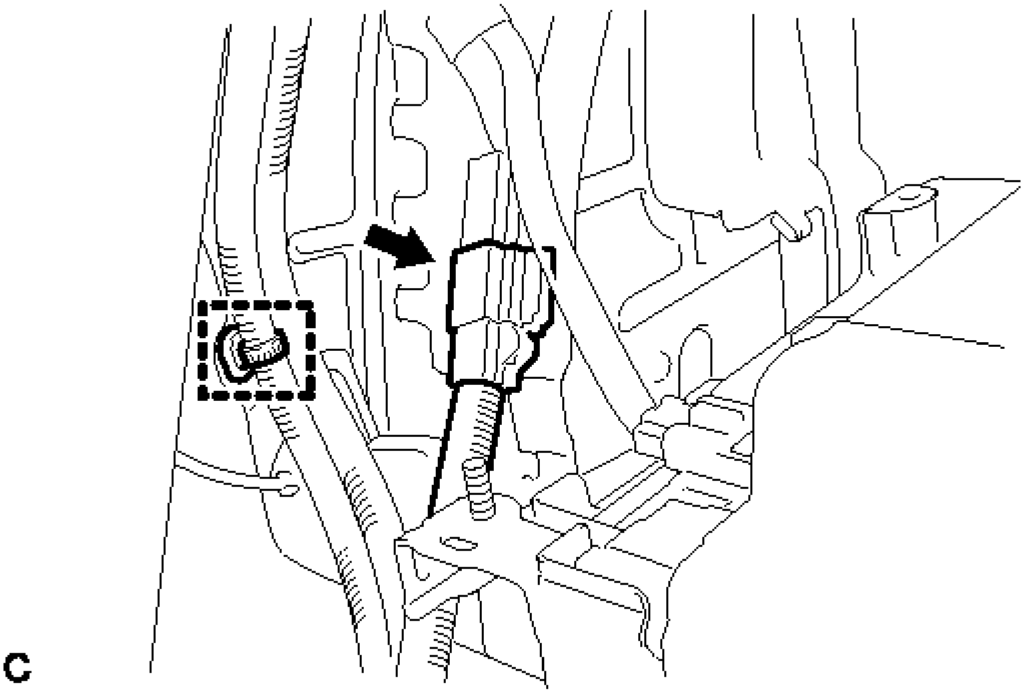

Fig. 172: Identifying Wire Harness Clamp And Connector

Courtesy of TOYOTA MOTOR SALES, U.S.A., INC.

i. Connect the 2 connectors.

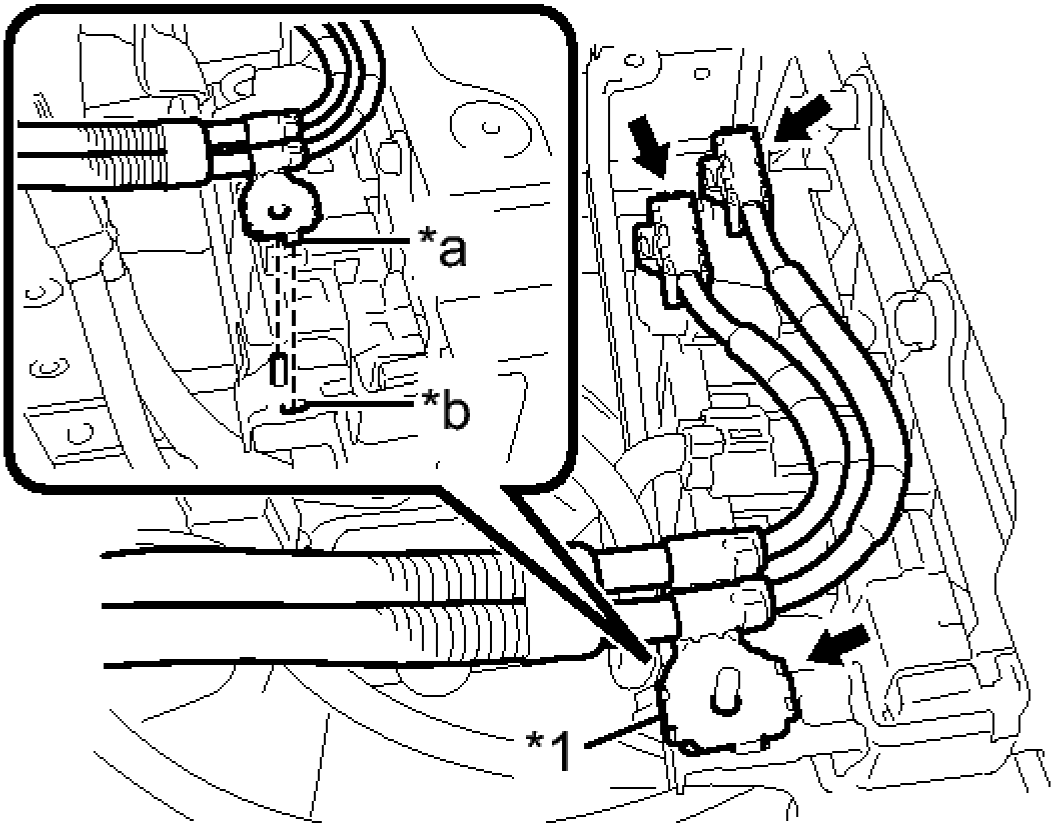

C

Fig. 173: Identifying No. 4 Floor Wire Connectors And Shielded Wire Ground
Courtesy of TOYOTA MOTOR SALES, U.S.A., INC.

TEXT IN ILLUSTRATION

*1	Shielded Wire Ground
*a	Claw
*b	Hole

j. Connect the shielded wire ground.

NOTE:

- **Make sure that the ends of the No. 4 floor wire do not cross over**

each other.

- **The connector should be connected securely.**
- **Be sure to align the claw of the shielded wire ground with the hole.**
- **Be sure to install the shielded wire ground in the correct direction.**

2. **INSTALL NO. 4 HYBRID BATTERY SHIELD PANEL** See step 4
3. **INSTALL NO. 1 FLOOR UNDER COVER** . Refer to **INSTALLATION - Step 11**
4. **INSTALL FRONT CENTER FLOOR COVER RH**
    a. Install the front center floor cover RH with the 6 clips.
5. **INSTALL NO. 2 PARKING BRAKE CABLE ASSEMBLY**
    a. Install the No. 2 parking brake cable assembly with the nut.

    Torque: 6.0 N*m (61 kgf*cm, 53 in.*lbf)

6. **INSTALL NO. 1 ROOM PARTITION BOARD** . Refer to **INSTALLATION - Step 3**
7. **INSTALL PACKAGE TRAY TRIM PANEL ASSEMBLY** . Refer to **INSTALLATION - Step 3**
8. **INSTALL REAR SEAT SHOULDER BELT COVER** . Refer to **INSTALLATION - Step 4**
9. **INSTALL CHILD RESTRAINT SEAT TETHER ANCHOR COVER** . Refer to **INSTALLATION - Step 5**
10. **INSTALL CENTER STOP LIGHT SET** . Refer to **INSTALLATION - Step 1**
11. **INSTALL ROOF SIDE INNER GARNISH LH** . Refer to **INSTALLATION - Step 21**
12. **INSTALL ROOF SIDE INNER GARNISH RH** . Refer to **INSTALLATION - Step 28**
13. **CONNECT REAR SEAT INNER WITH CENTER BELT ASSEMBLY LH** . Refer to **INSTALLATION - Step 2**
14. **INSTALL CHILD RESTRAINT SEAT ANCHOR BRACKET SUB-ASSEMBLY LH** . Refer to **INSTALLATION - Step 1**
15. **CONNECT REAR SEAT OUTER BELT ASSEMBLY (for LH Side)** . Refer to **INSTALLATION - Step 9**
16. **CONNECT REAR SEAT OUTER BELT ASSEMBLY (for RH Side)** . Refer to **INSTALLATION - Step 10**
17. **INSTALL REAR DOOR OPENING TRIM WEATHERSTRIP LH** . Refer to **INSTALLATION - Step 26**
18. **INSTALL REAR DOOR OPENING TRIM WEATHERSTRIP RH** . Refer to **INSTALLATION - Step 33**
19. **INSTALL REAR SIDE SEATBACK ASSEMBLY LH** . Refer to **INSTALLATION - Step 1**
20. **INSTALL REAR SIDE SEATBACK ASSEMBLY RH** . Refer to **INSTALLATION - Step 2**
21. **INSTALL REAR SEATBACK ASSEMBLY LH** . Refer to **INSTALLATION - Step 3**
22. **INSTALL NO. 2 ROOM PARTITION COVER** . Refer to **INSTALLATION - Step 4**
23. **INSTALL REAR SEATBACK ASSEMBLY RH** . Refer to **INSTALLATION - Step 5**

24. **INSTALL REAR SEAT CUSHION LOCK HOOK** . Refer to **INSTALLATION - Step 6**
25. **INSTALL REAR SEAT CUSHION ASSEMBLY** . Refer to **INSTALLATION - Step 7**
26. **INSTALL ENGINE ASSEMBLY WITH TRANSAXLE**

    Refer to **INSTALLATION**

ACCELERATOR PEDAL SENSOR

COMPONENTS

ILLUSTRATION

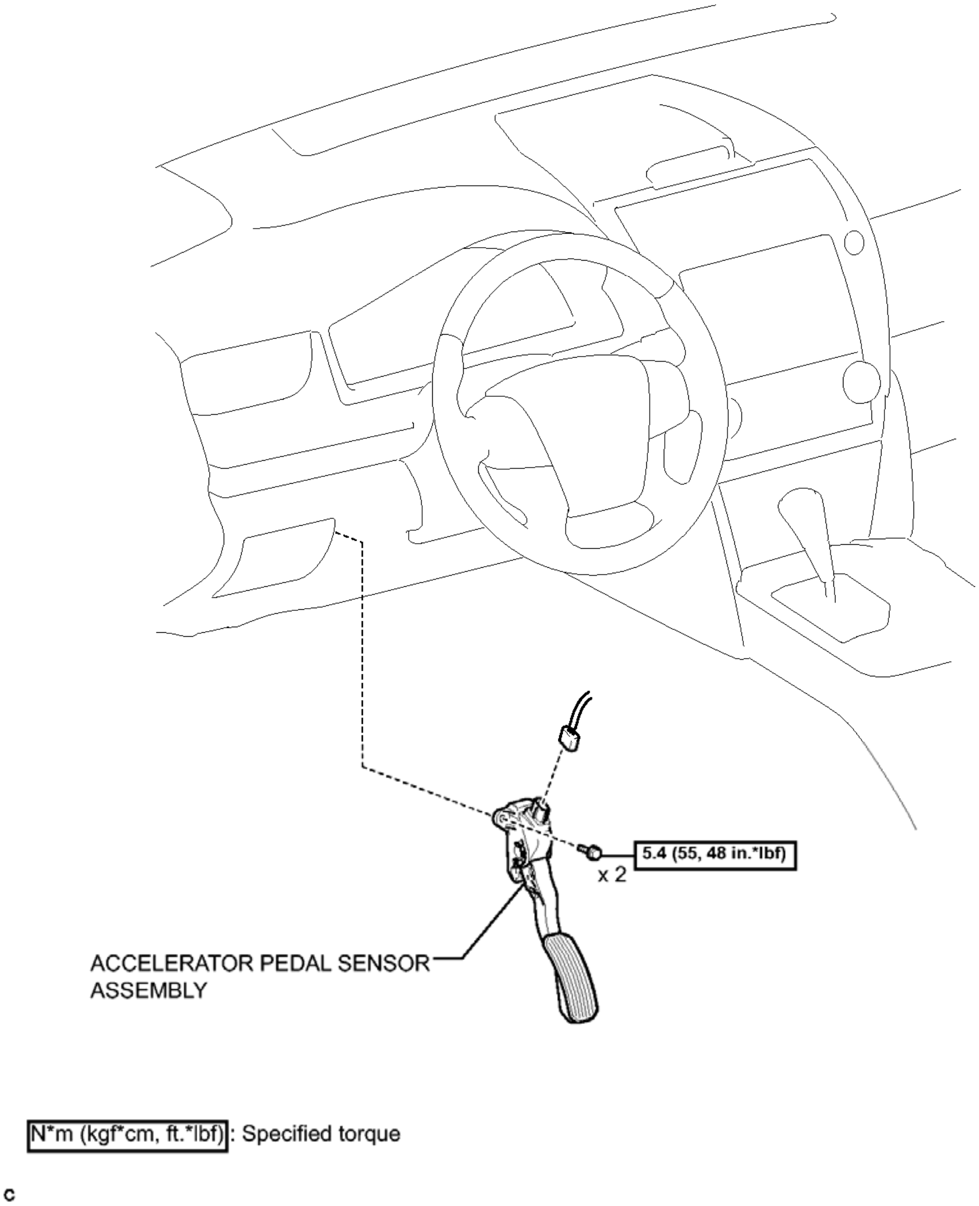
5.4 (55, 48 in.*lbf)
x 2
ACCELERATOR PEDAL SENSOR ASSEMBLY
N*m (kgf*cm, ft.*lbf): Specified torque
c

Fig. 174: Identifying Accelerator Pedal Sensor Replacement Components With Torque Specifications
Courtesy of TOYOTA MOTOR SALES, U.S.A., INC.

ON-VEHICLE INSPECTION

ON-VEHICLE INSPECTION

1. **INSPECT ACCELERATOR PEDAL SENSOR ASSEMBLY**

a. Connect the Techstream to the DLC3.
b. Turn the power switch on (IG).
c. Enter the following menus: Powertrain / Hybrid Control / Data List / Accel Pedal Pos #1, Accel Pedal Pos #2.
d. Read the Data List.

Result

Tester Display	Accelerator Pedal Condition	Specified Condition
Accel Pedal Pos #1	Not depressed	8 to 28%
	Fully depressed	62 to 92%
	Not depressed --> Fully depressed --> Not depressed (Accelerator pedal should be operated slowly)	Value changes progressively
Accel Pedal Pos #2	Not depressed	20 to 44%
	Fully depressed	78 to 100%
	Not depressed --> Fully depressed --> Not depressed (Accelerator pedal should be operated slowly)	Value changes progressively

REMOVAL

REMOVAL

1. **REMOVE ACCELERATOR PEDAL SENSOR ASSEMBLY**

NOTE:

- **Avoid physical shock to the accelerator pedal sensor assembly.**
- **Do not disassemble the accelerator pedal sensor assembly.**

a. Disconnect the connector.

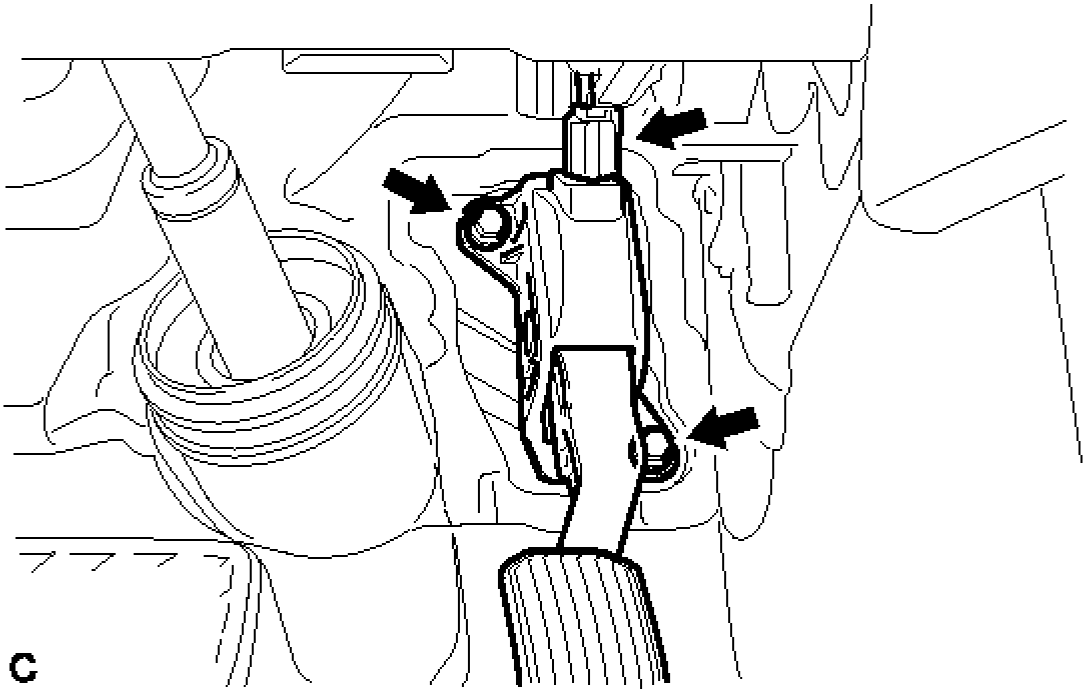

Fig. 175: Identifying Accelerator Pedal Sensor Bolts And Connector
Courtesy of TOYOTA MOTOR SALES, U.S.A., INC.

b. Remove the 2 bolts and accelerator pedal sensor assembly.

INSTALLATION

INSTALLATION

1. **INSTALL ACCELERATOR PEDAL SENSOR ASSEMBLY**

NOTE:

- **Avoid physical shock to the accelerator pedal sensor assembly.**
- **Do not disassemble the accelerator pedal sensor assembly.**

a. Temporarily install the accelerator pedal sensor assembly with the 2 bolts.

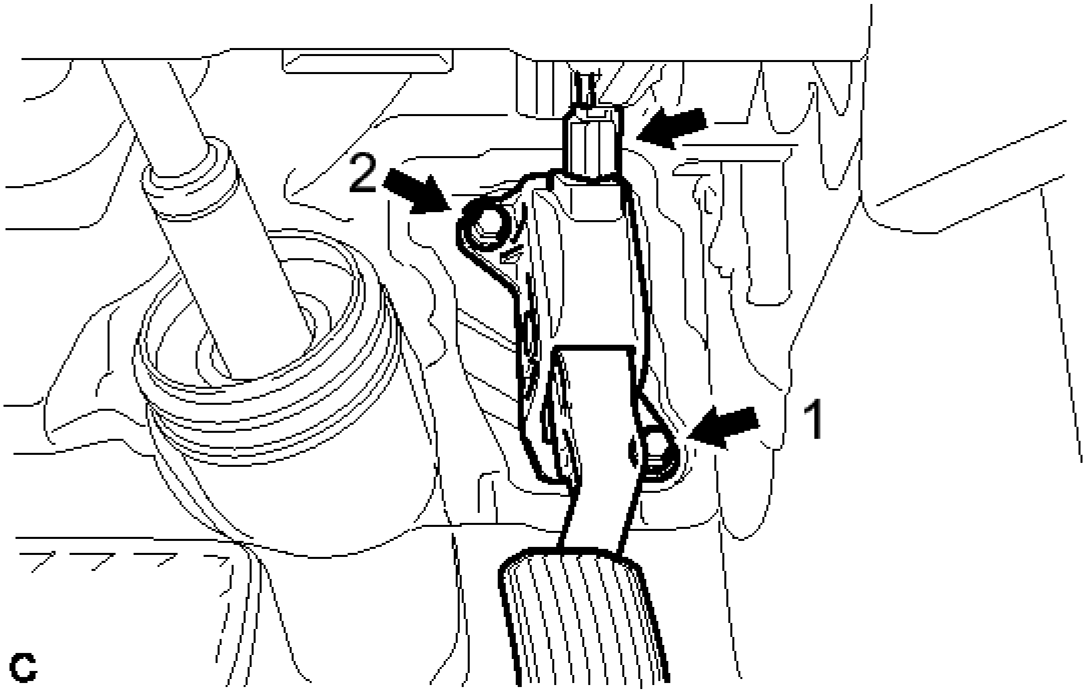

Fig. 176: Identifying Accelerator Pedal Sensor Bolts And Connector
Courtesy of TOYOTA MOTOR SALES, U.S.A., INC.

b. Tighten the 2 bolts in the order shown in the illustration.

   Torque: 5.4 N*m (55 kgf*cm, 48 in.*lbf)

c. Connect the connector.

RELAY

ON-VEHICLE INSPECTION

ON-VEHICLE INSPECTION

1. **INSPECT IGNITION CONTROL RELAY (IGCT)**
   a. Measure the resistance according to the value(s) in the table below.

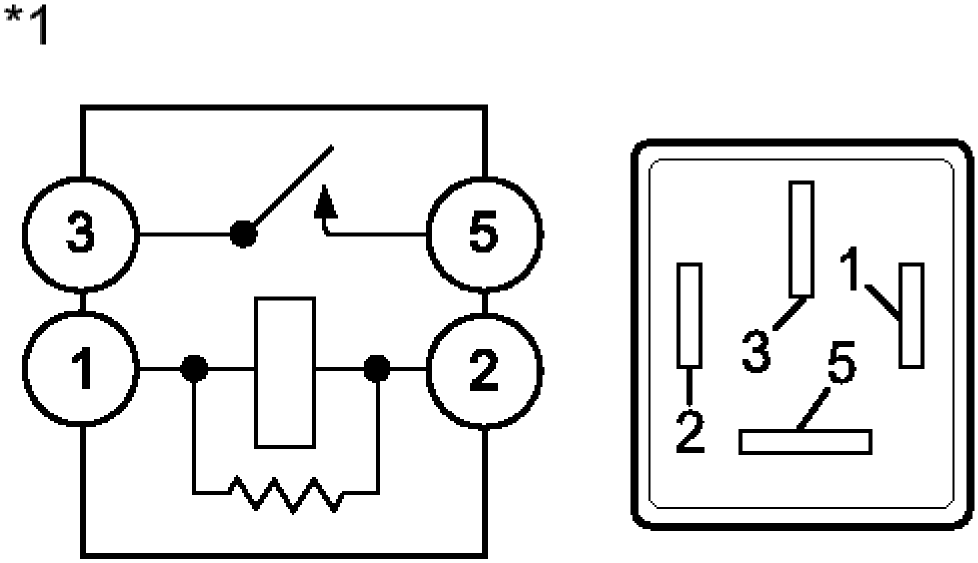

Fig. 177: Inspecting Relay (IGCT)
Courtesy of TOYOTA MOTOR SALES, U.S.A., INC.

Standard Resistance

Tester Connection	Condition	Specified Condition
3 - 5	Auxiliary battery voltage is not applied between terminals 1 and 2	10 kohms or higher
3 - 5	Auxiliary battery voltage is applied between terminals 1 and 2	Below 1 ohms

TEXT IN ILLUSTRATION

*1	Ignition Control Relay

If the result is not as specified, replace the relay.

2. **INSPECT HYBRID WATER PUMP RELAY (INV W/PMP)**
    a. Measure the resistance according to the value(s) in the table below.

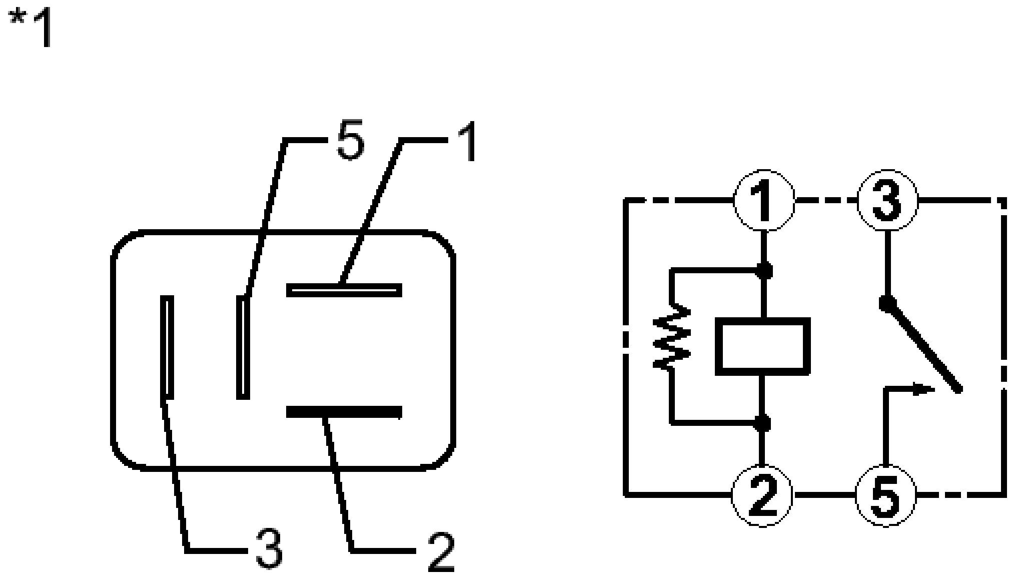

Fig. 178: Identifying Hybrid Water Pump Relay
Courtesy of TOYOTA MOTOR SALES, U.S.A., INC.

Standard Resistance

Tester Connection	Condition	Specified Condition
3 - 5	Auxiliary battery voltage is not applied between terminals 1 and 2	10 kohms or higher
3 - 5	Auxiliary battery voltage is applied between terminals 1 and 2	Below 1 ohms

TEXT IN ILLUSTRATION

*1	Hybrid Water Pump Relay

If the result is not as specified, replace the relay.

HV RELAY ASSEMBLY

COMPONENTS

ILLUSTRATION

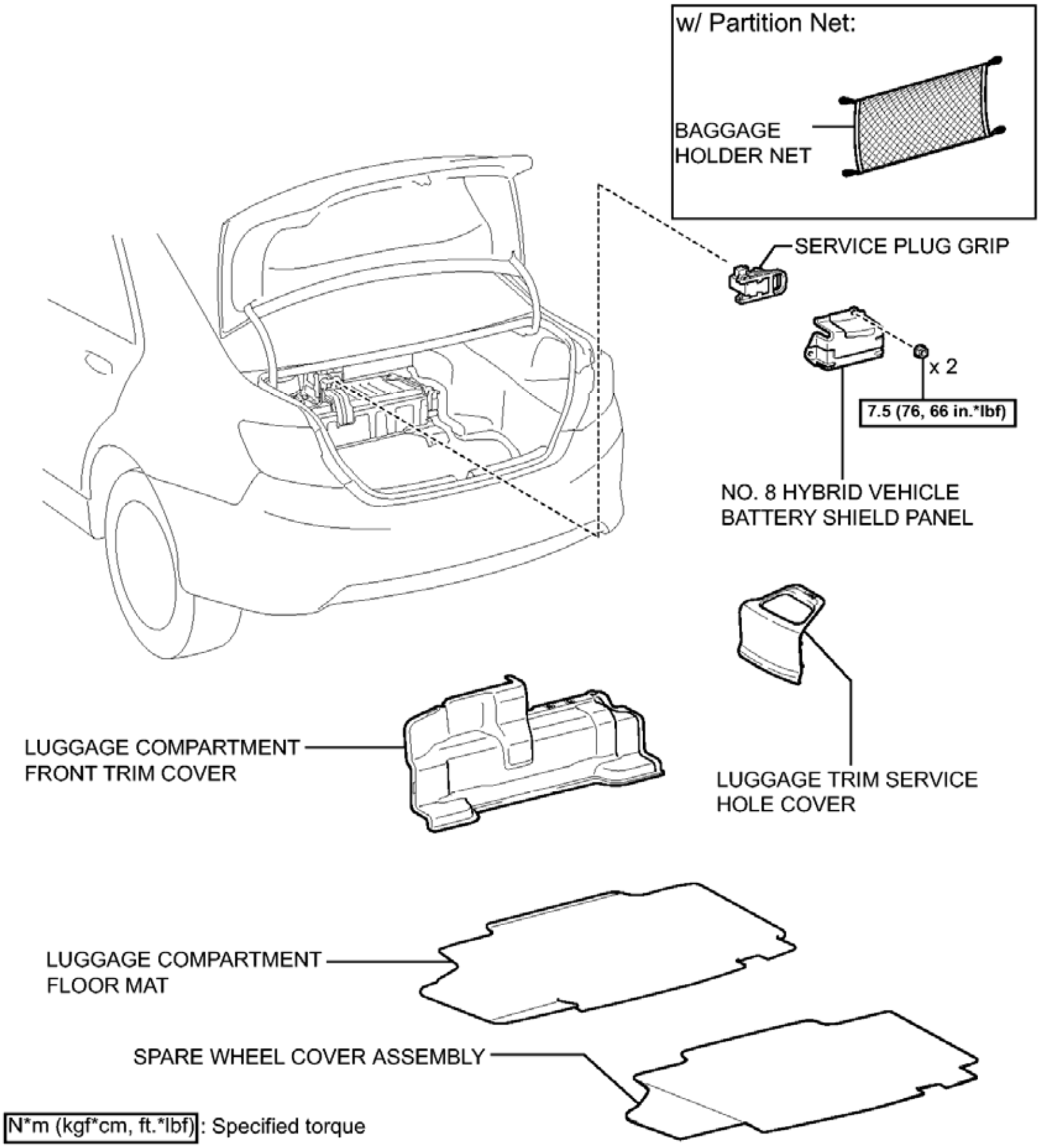
w/ Partition Net:
BAGGAGE HOLDER NET
SERVICE PLUG GRIP
x 2
7.5 (76, 66 in.*lbf)
NO. 8 HYBRID VEHICLE BATTERY SHIELD PANEL
LUGGAGE COMPARTMENT FRONT TRIM COVER
LUGGAGE TRIM SERVICE HOLE COVER
LUGGAGE COMPARTMENT FLOOR MAT
SPARE WHEEL COVER ASSEMBLY
N*m (kgf*cm, ft.*lbf) : Specified torque
C

Fig. 179: Identifying HV Relay Assembly Replacement Components With Torque Specifications (1 Of 5)
Courtesy of TOYOTA MOTOR SALES, U.S.A., INC.

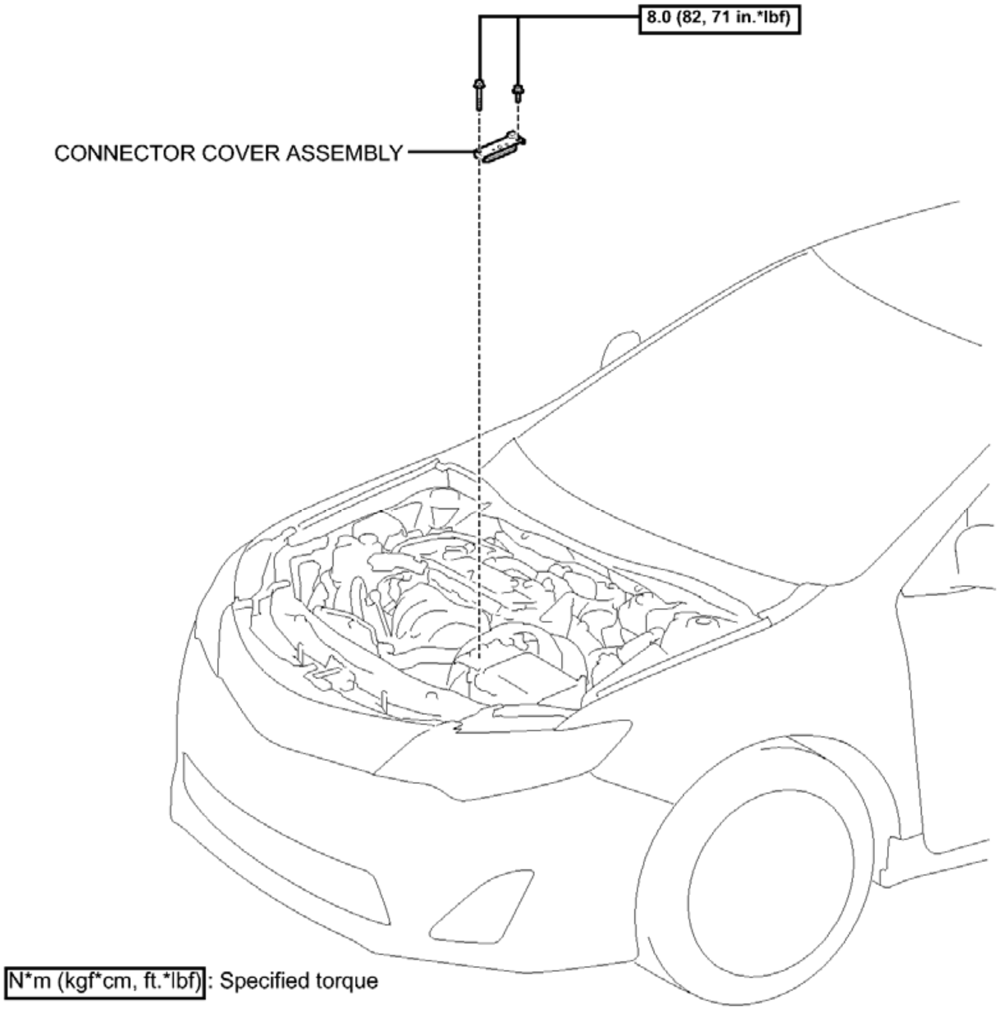
8.0 (82, 71 in.*lbf)
CONNECTOR COVER ASSEMBLY
N*m (kgf*cm, ft.*lbf): Specified torque

c

Fig. 180: Identifying HV Relay Assembly Replacement Components With Torque Specifications (2 Of 5)
Courtesy of TOYOTA MOTOR SALES, U.S.A., INC.

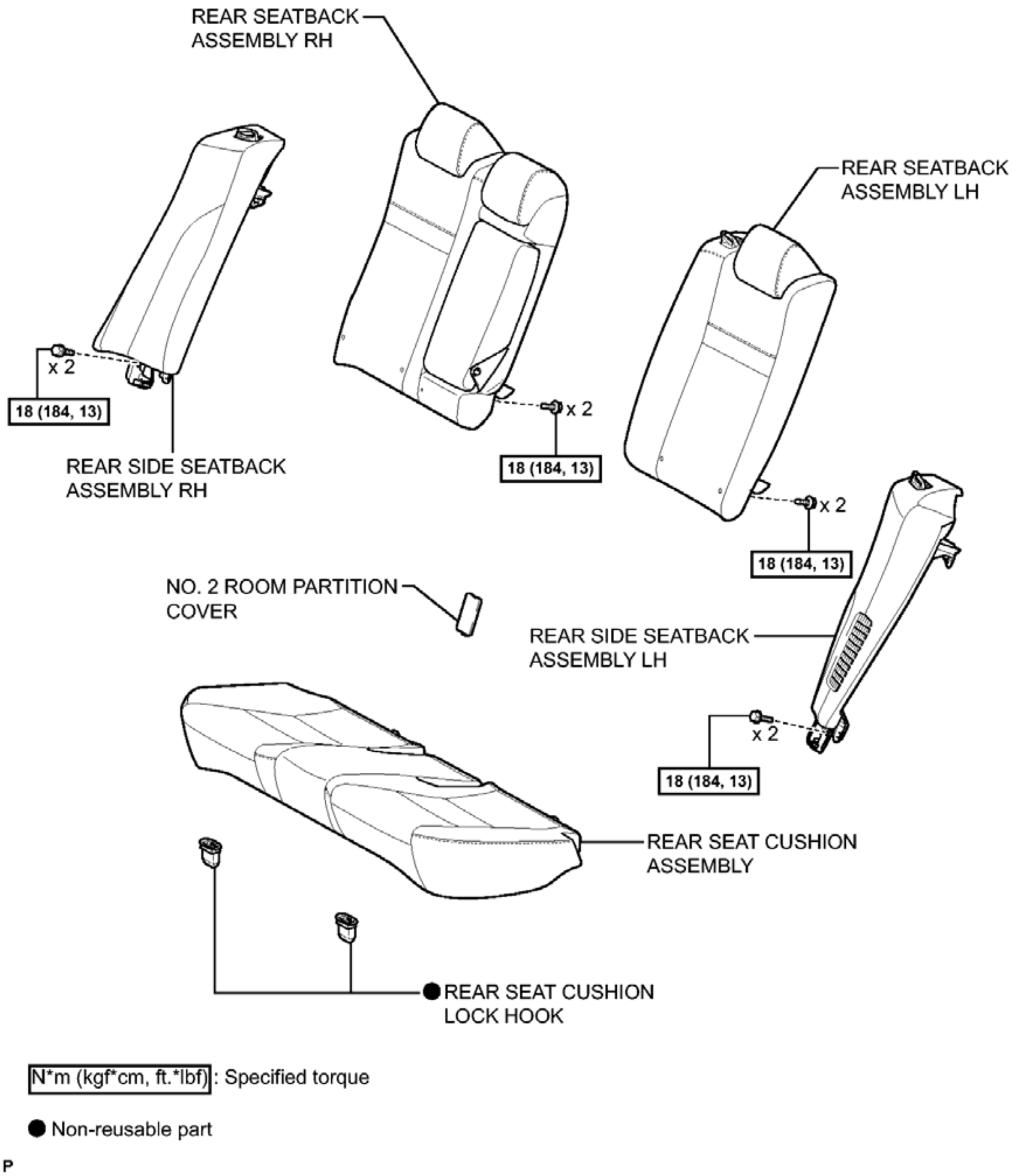
REAR SEATBACK ASSEMBLY RH
REAR SEATBACK ASSEMBLY LH
x 2
18 (184, 13)
REAR SIDE SEATBACK ASSEMBLY RH
x 2
18 (184, 13)
x 2
18 (184, 13)
NO. 2 ROOM PARTITION COVER
REAR SIDE SEATBACK ASSEMBLY LH
x 2
18 (184, 13)
REAR SEAT CUSHION ASSEMBLY
● REAR SEAT CUSHION LOCK HOOK
N*m (kgf*cm, ft.*lbf) : Specified torque
● Non-reusable part
P

Fig. 181: Identifying HV Relay Assembly Replacement Components With Torque Specifications (3 Of 5)
Courtesy of TOYOTA MOTOR SALES, U.S.A., INC.

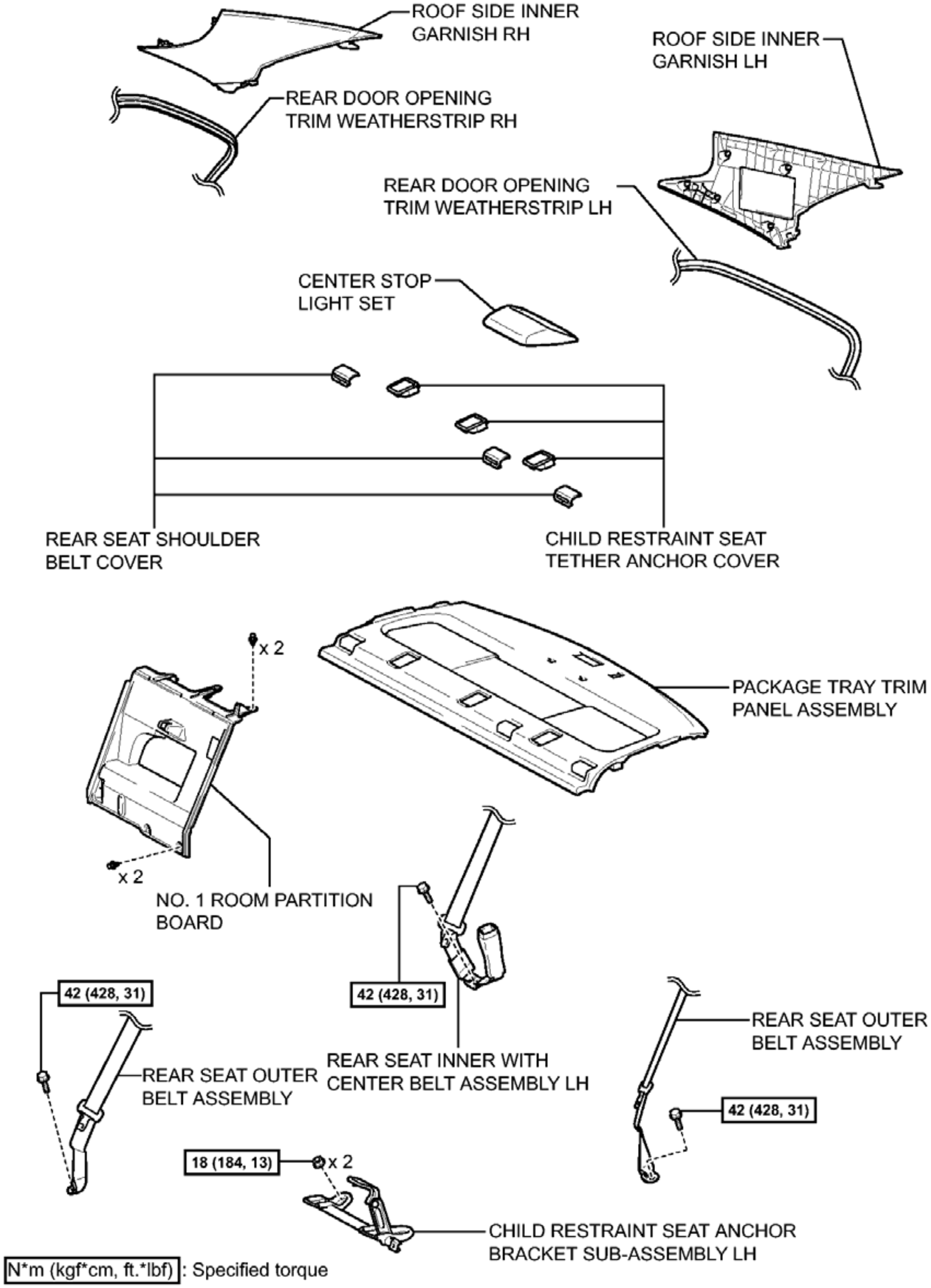
ROOF SIDE INNER GARNISH RH
ROOF SIDE INNER GARNISH LH
REAR DOOR OPENING TRIM WEATHERSTRIP RH
REAR DOOR OPENING TRIM WEATHERSTRIP LH
CENTER STOP LIGHT SET
REAR SEAT SHOULDER BELT COVER
CHILD RESTRAINT SEAT TETHER ANCHOR COVER
x 2
PACKAGE TRAY TRIM PANEL ASSEMBLY
x 2
NO. 1 ROOM PARTITION BOARD
42 (428, 31)
42 (428, 31)
REAR SEAT OUTER BELT ASSEMBLY
REAR SEAT OUTER BELT ASSEMBLY
REAR SEAT INNER WITH CENTER BELT ASSEMBLY LH
42 (428, 31)
18 (184, 13)
x 2
CHILD RESTRAINT SEAT ANCHOR BRACKET SUB-ASSEMBLY LH
N*m (kgf*cm, ft.*lbf) : Specified torque

Fig. 182: Identifying HV Relay Assembly Replacement Components With Torque Specifications (4 Of 5)
Courtesy of TOYOTA MOTOR SALES, U.S.A., INC.

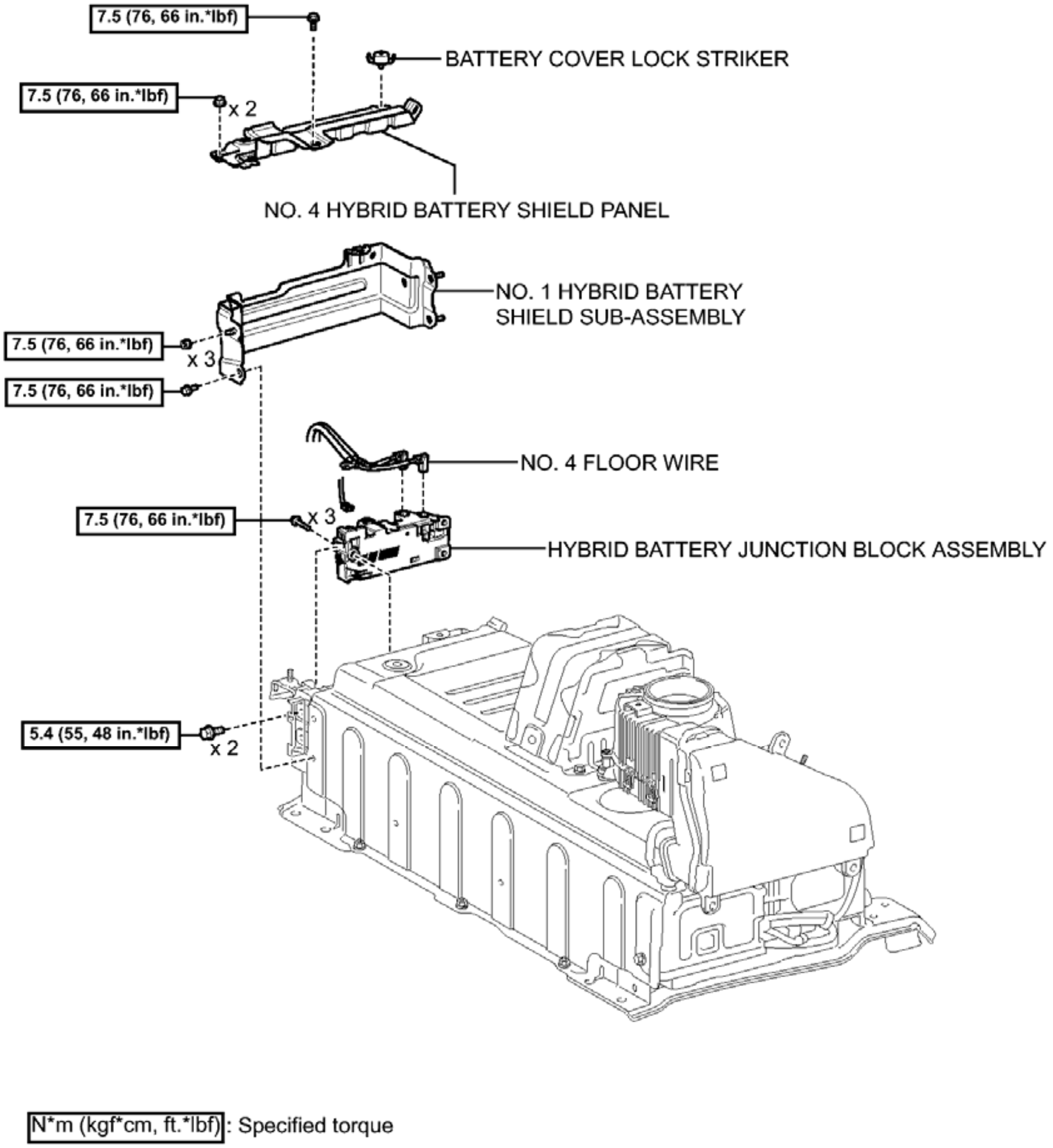
7.5 (76, 66 in.*lbf)
BATTERY COVER LOCK STRIKER
7.5 (76, 66 in.*lbf)
x 2
NO. 4 HYBRID BATTERY SHIELD PANEL
NO. 1 HYBRID BATTERY SHIELD SUB-ASSEMBLY
7.5 (76, 66 in.*lbf)
x 3
7.5 (76, 66 in.*lbf)
NO. 4 FLOOR WIRE
7.5 (76, 66 in.*lbf)
x 3
HYBRID BATTERY JUNCTION BLOCK ASSEMBLY
5.4 (55, 48 in.*lbf)
x 2
N*m (kgf*cm, ft.*lbf): Specified torque

c

Fig. 183: Identifying HV Relay Assembly Replacement Components With Torque Specifications (5 Of 5)
Courtesy of TOYOTA MOTOR SALES, U.S.A., INC.

REMOVAL

REMOVAL

1. **PRECAUTION**

Refer to **PRECAUTION**

2. **REMOVE SERVICE PLUG GRIP**

   Refer to **REMOVAL**

3. **REMOVE CONNECTOR COVER ASSEMBLY** See step 4
4. **CHECK TERMINAL VOLTAGE** See step 5
5. **INSTALL CONNECTOR COVER ASSEMBLY** See step 19
6. **REMOVE REAR SEAT CUSHION ASSEMBLY** . Refer to **REMOVAL - Step 4**
7. **REMOVE REAR SEAT CUSHION LOCK HOOK** . Refer to **REMOVAL - Step 5**
8. **REMOVE REAR SEATBACK ASSEMBLY RH** . Refer to **REMOVAL - Step 6**
9. **REMOVE NO. 2 ROOM PARTITION COVER** . Refer to **REMOVAL - Step 7**
10. **REMOVE REAR SEATBACK ASSEMBLY LH** . Refer to **REMOVAL - Step 8**
11. **REMOVE REAR SIDE SEATBACK ASSEMBLY LH** . Refer to **REMOVAL - Step 9**
12. **REMOVE REAR SIDE SEATBACK ASSEMBLY RH** . Refer to **REMOVAL - Step 10**
13. **DISCONNECT REAR DOOR OPENING TRIM WEATHERSTRIP LH** . Refer to **REMOVAL - Step 13**
14. **DISCONNECT REAR DOOR OPENING TRIM WEATHERSTRIP RH** . Refer to **REMOVAL - Step 14**
15. **DISCONNECT REAR SEAT OUTER BELT ASSEMBLY (for LH Side)** . Refer to **REMOVAL - Step 14**
16. **DISCONNECT REAR SEAT OUTER BELT ASSEMBLY (for RH Side)** . Refer to **REMOVAL - Step 15**
17. **REMOVE CHILD RESTRAINT SEAT ANCHOR BRACKET SUB-ASSEMBLY LH** . Refer to **REMOVAL - Step 11**
18. **DISCONNECT REAR SEAT INNER WITH CENTER BELT ASSEMBLY LH** . Refer to **REMOVAL - Step 20**
19. **REMOVE ROOF SIDE INNER GARNISH LH** . Refer to **REMOVAL - Step 25**
20. **REMOVE ROOF SIDE INNER GARNISH RH** . Refer to **REMOVAL - Step 32**
21. **REMOVE CENTER STOP LIGHT SET** . Refer to **REMOVAL - Step 1**
22. **REMOVE CHILD RESTRAINT SEAT TETHER ANCHOR COVER** . Refer to **REMOVAL - Step 19**
23. **REMOVE REAR SEAT SHOULDER BELT COVER** . Refer to **REMOVAL - Step 20**
24. **REMOVE PACKAGE TRAY TRIM PANEL ASSEMBLY** . Refer to **REMOVAL - Step 21**
25. **REMOVE NO. 1 ROOM PARTITION BOARD** . Refer to **REMOVAL - Step 23**
26. **REMOVE NO. 4 HYBRID BATTERY SHIELD PANEL**

    WARNING: **Wear insulated gloves.**

a. Using the service plug grip, remove the battery cover lock striker.

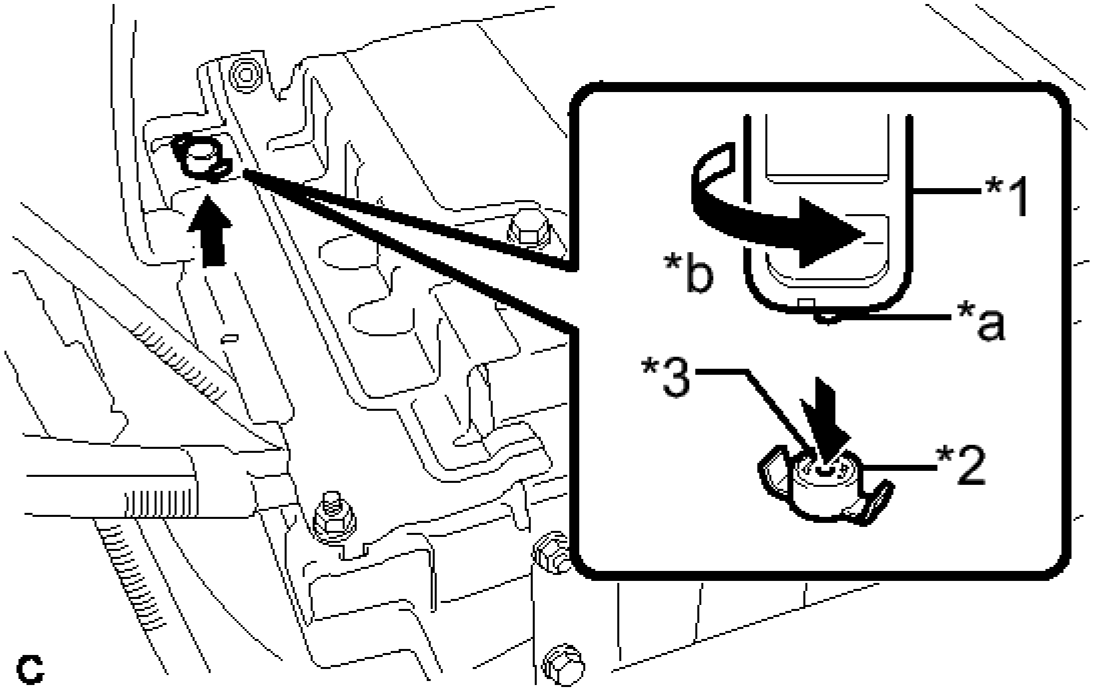

Fig. 184: Removing Battery Cover Lock Striker
Courtesy of TOYOTA MOTOR SALES, U.S.A., INC.

TEXT IN ILLUSTRATION

*1	Service Plug Grip
*2	Battery Cover Lock Striker
*3	Button
*a	Projection
*b	Turn

HINT:

Insert the projecting part of the service plug grip, and turn the button of the battery cover lock striker counterclockwise to release the lock.

b. Remove the bolt, 2 nuts and No. 4 hybrid battery shield panel.

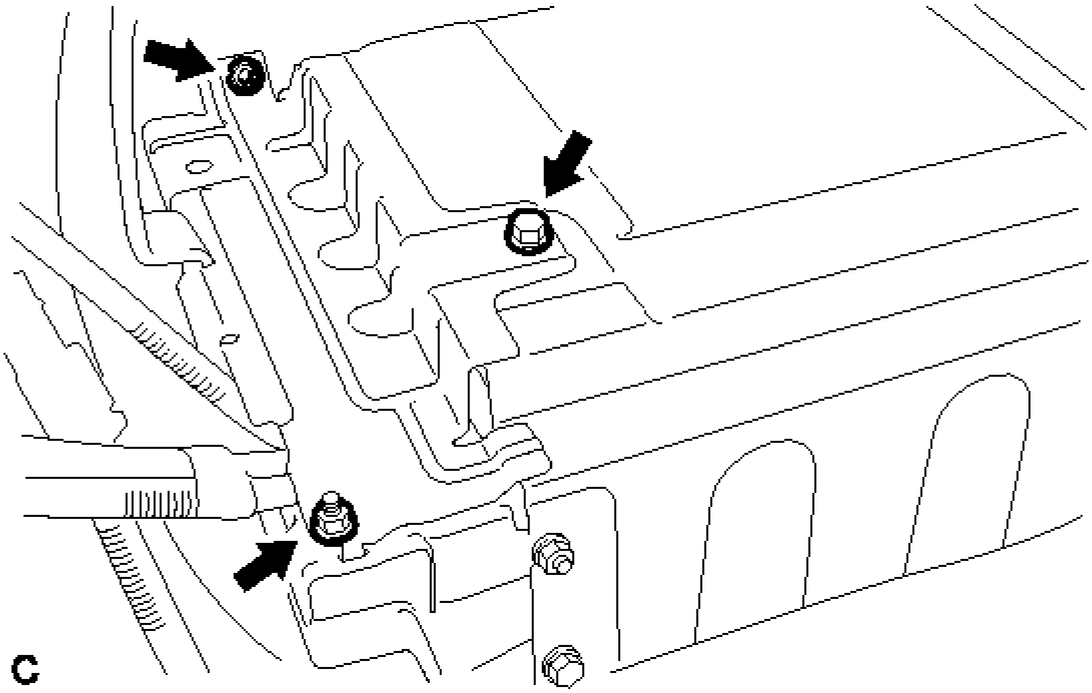

Fig. 185: Identifying No. 4 Hybrid Battery Shield Panel Nuts And Bolt
Courtesy of TOYOTA MOTOR SALES, U.S.A., INC.

27. **DISCONNECT NO. 4 FLOOR WIRE**

WARNING: Wear insulated gloves.

NOTE: Insulate the disconnected connectors with insulating tape.

a. Disconnect the 2 connectors shown in the illustration.

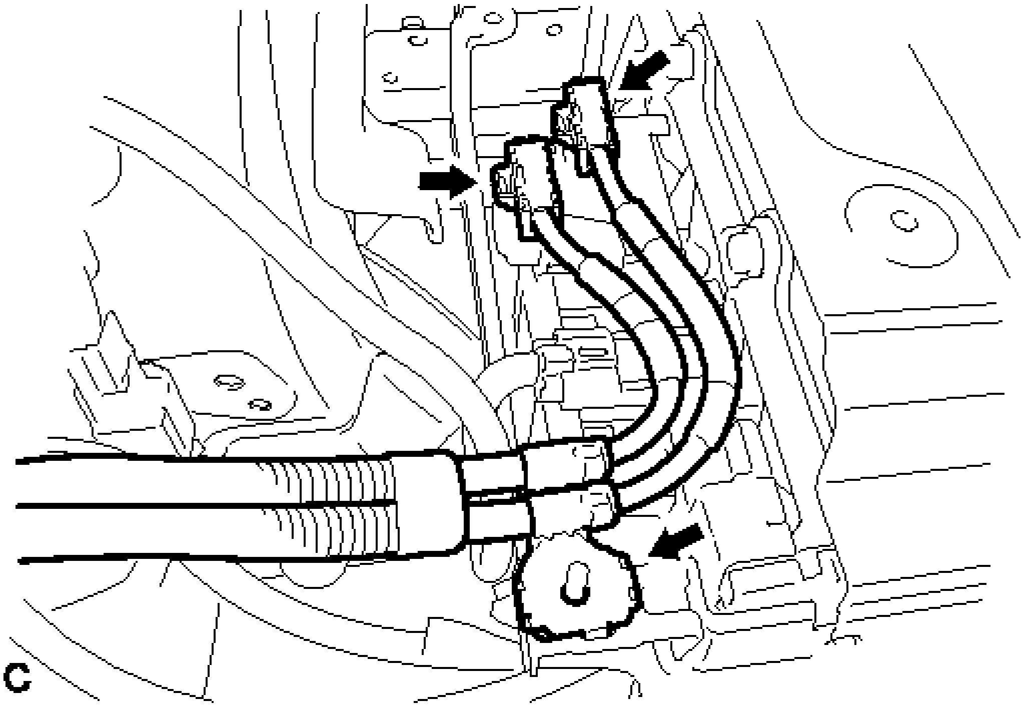

Fig. 186: Identifying No. 4 Floor Wire Connectors And Shielded Wire Ground
Courtesy of TOYOTA MOTOR SALES, U.S.A., INC.

b. Disconnect the shielded wire ground and No. 4 floor wire.

28. REMOVE NO. 1 HYBRID BATTERY SHIELD SUB-ASSEMBLY

WARNING: Wear insulated gloves.

a. Disconnect the connector and wire harness clamp.

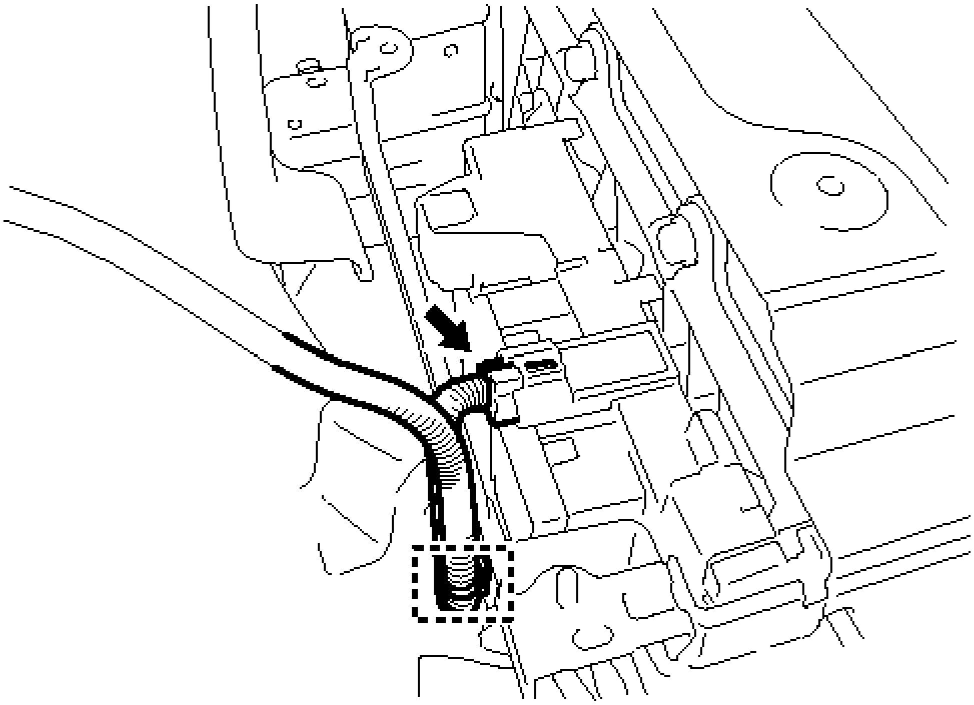

Fig. 187: Identifying No. 1 Hybrid Battery Connector And Wire Harness Clamp
Courtesy of TOYOTA MOTOR SALES, U.S.A., INC.

b. Remove the bolt, 3 nuts and No. 1 hybrid battery shield sub-assembly.

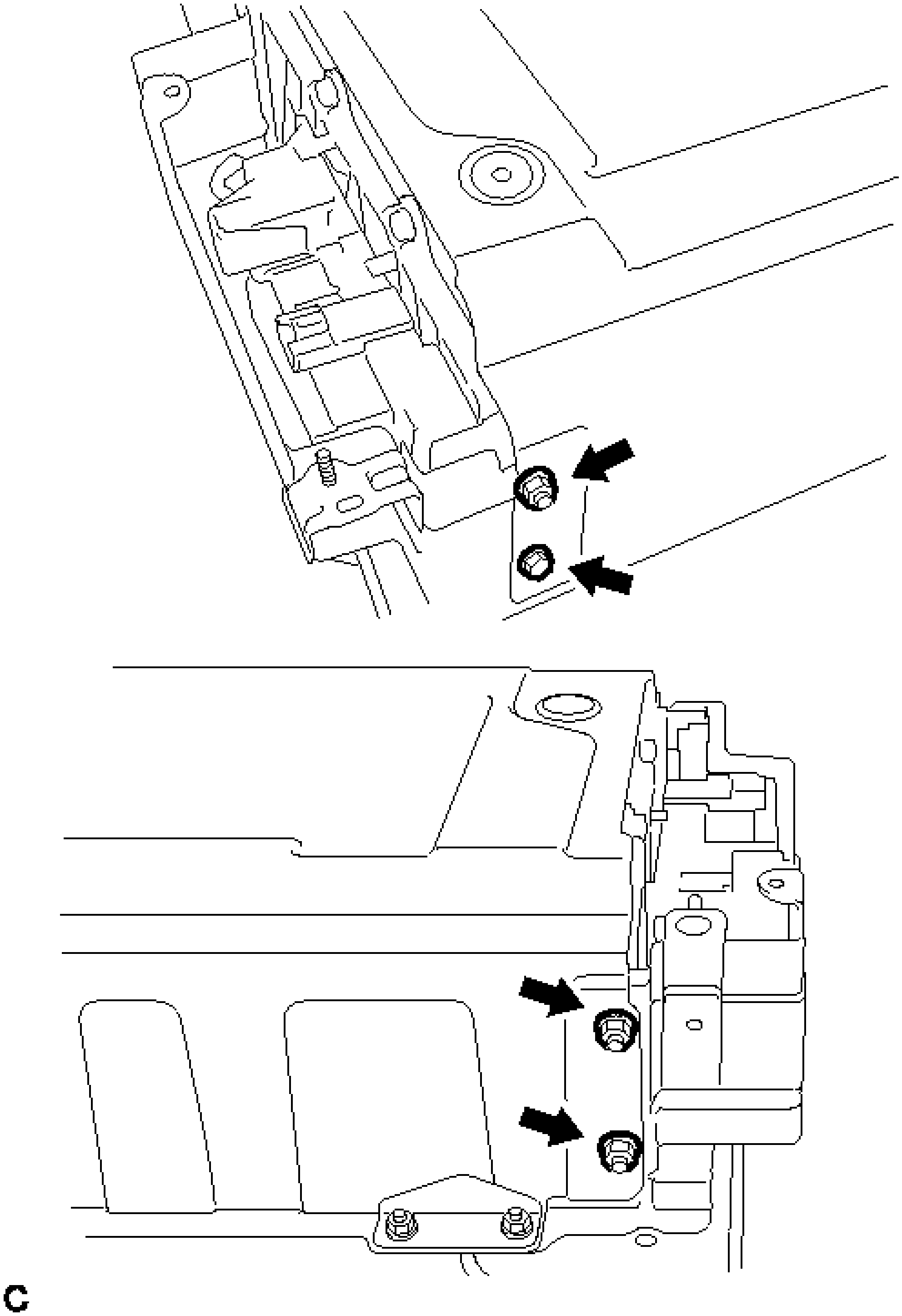

Fig. 188: Identifying No. 1 Hybrid Battery Shield Nuts And Bolt
Courtesy of TOYOTA MOTOR SALES, U.S.A., INC.

29. **REMOVE HYBRID BATTERY JUNCTION BLOCK ASSEMBLY**

WARNING: **Wear insulated gloves.**

NOTE: **Insulate the disconnected terminals with insulating tape.**

a. Disengage the claw and disconnect the terminal cover.

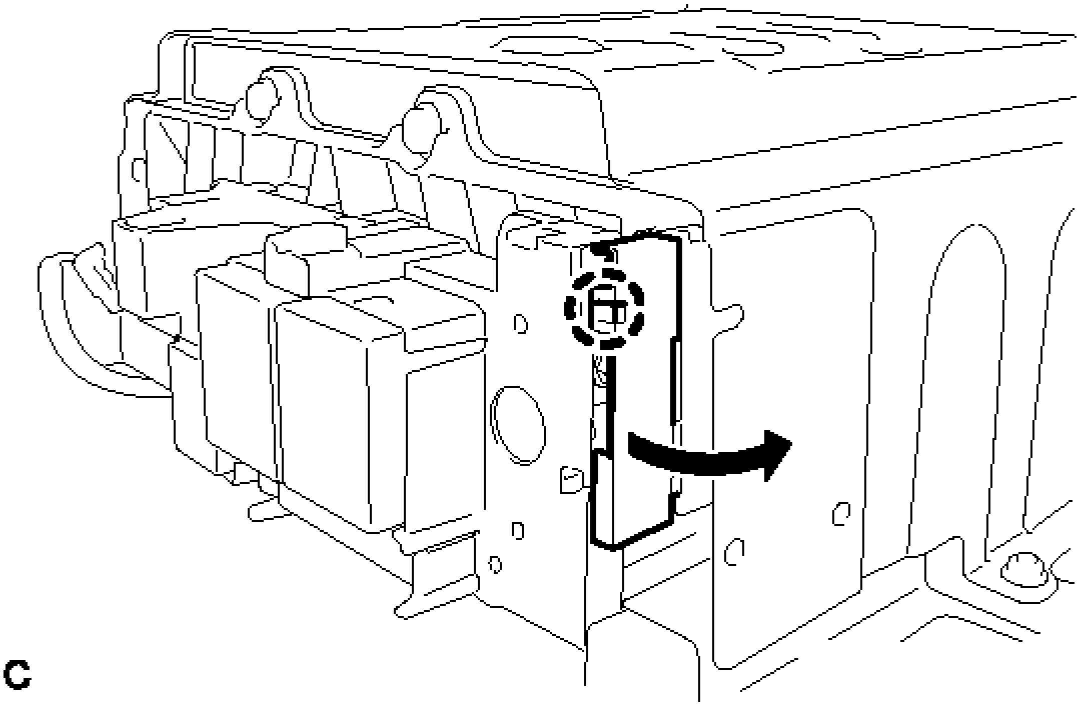

Fig. 189: Identifying Terminal Cover Claw
Courtesy of TOYOTA MOTOR SALES, U.S.A., INC.

b. Using an insulated tool, remove the 2 bolts.

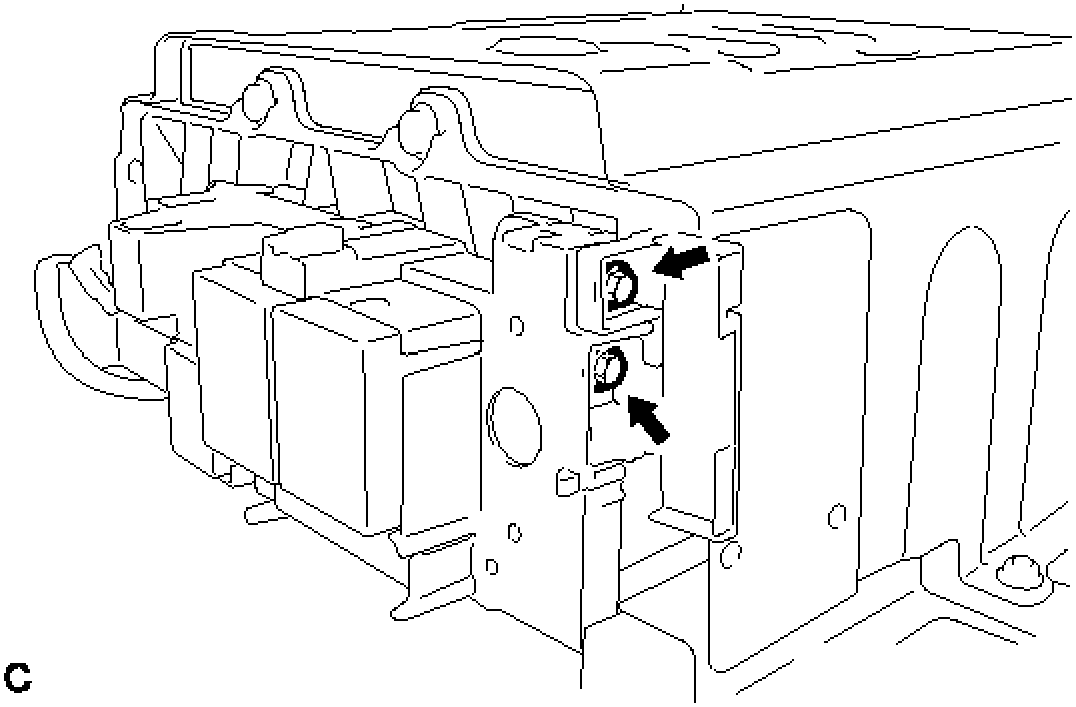

Fig. 190: Identifying Hybrid Battery Junction Block Bolts
Courtesy of TOYOTA MOTOR SALES, U.S.A., INC.

c. Disconnect the connector shown in the illustration.

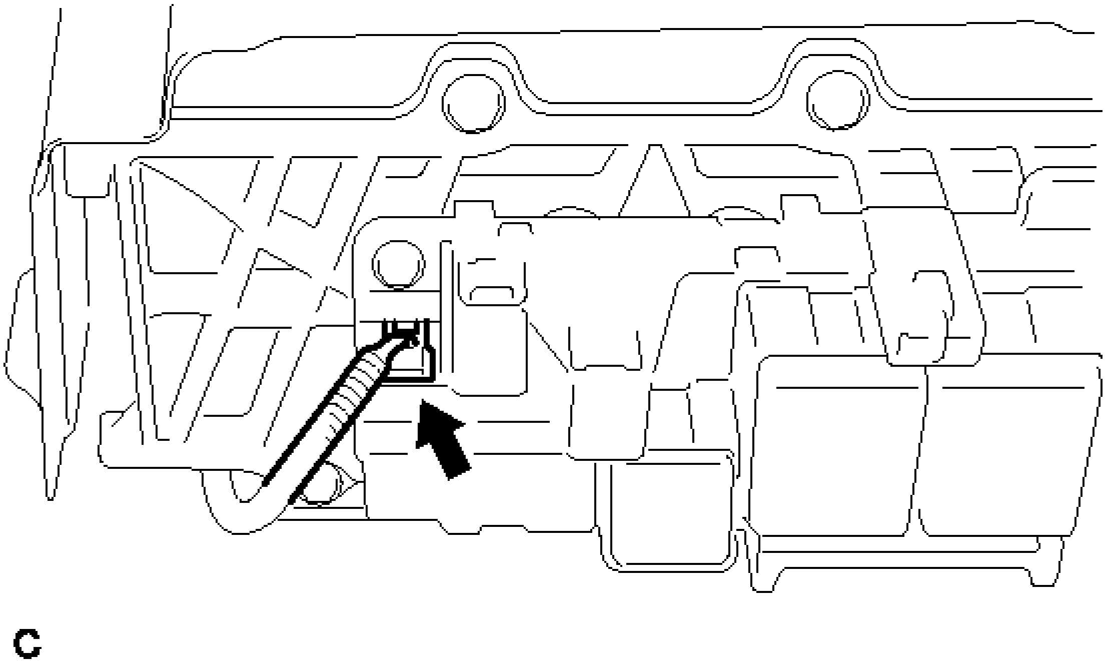

Fig. 191: Identifying Hybrid Battery Junction Block Connector
Courtesy of TOYOTA MOTOR SALES, U.S.A., INC.

d. Remove the 3 bolts and hybrid battery junction block assembly.

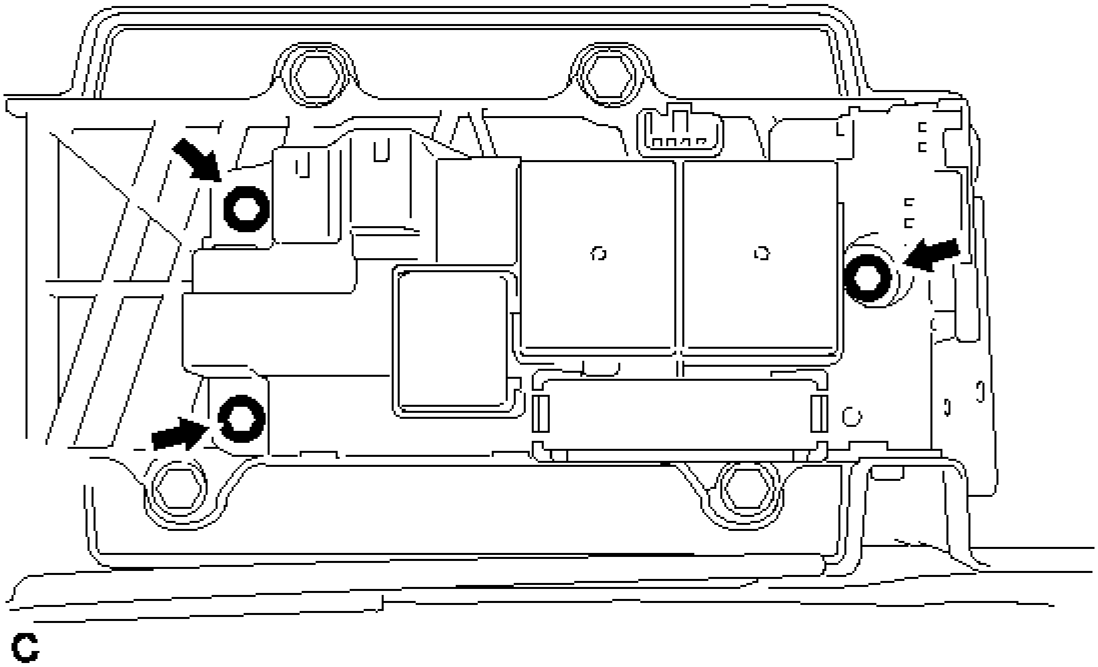

Fig. 192: Identifying Hybrid Battery Junction Block Bolts
Courtesy of TOYOTA MOTOR SALES, U.S.A., INC.

INSPECTION

INSPECTION

1. **INSPECT HYBRID BATTERY JUNCTION BLOCK ASSEMBLY**
    a. Inspect SMRB.
        1. Measure the resistance according to the value(s) in the table below.

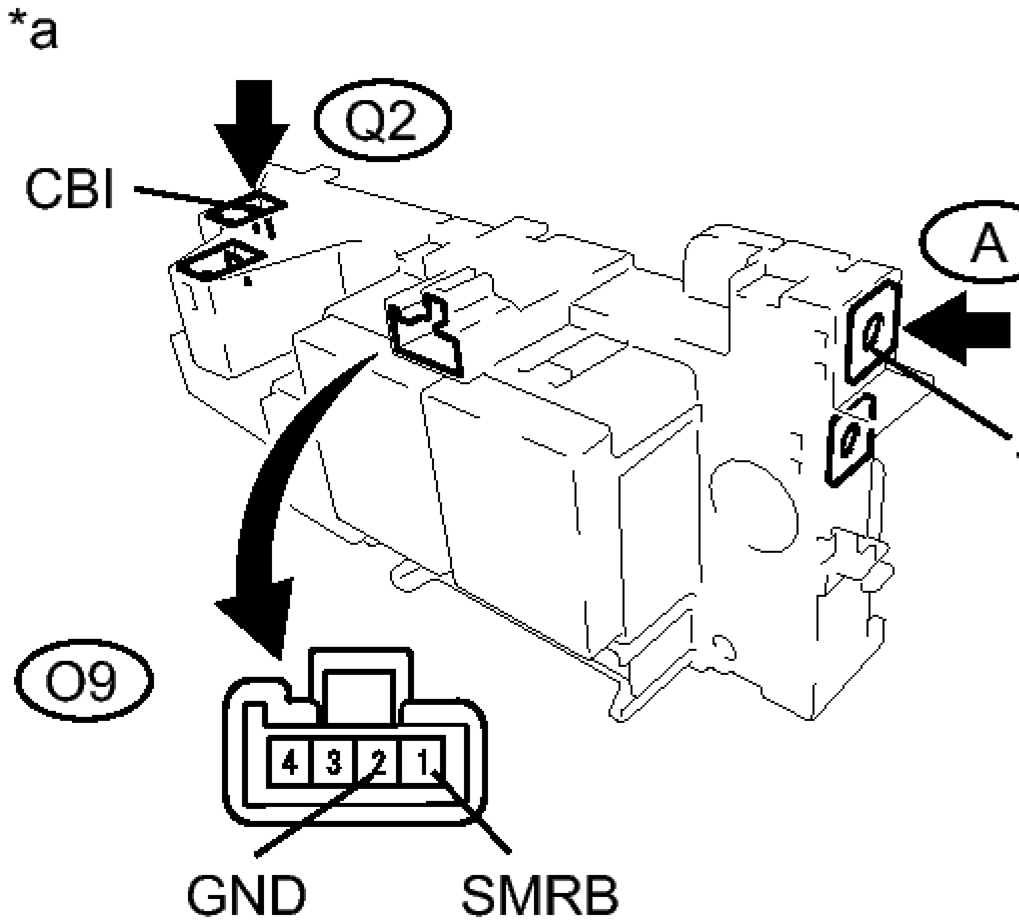

Fig. 193: Identifying Hybrid Battery Junction Block Connector Terminals
Courtesy of TOYOTA MOTOR SALES, U.S.A., INC.

Standard Resistance

Tester Connection	**Condition**	**Specified Condition**
A-1 (+) - Q2-1 (CBI)	Auxiliary battery voltage is not applied between terminals O9-1 (SMRB) and O9-2 (GND)	10 kohms or higher
A-1 (+) - Q2-1 (CBI)	Auxiliary battery voltage is applied between terminals O9-1 (SMRB) and O9-2 (GND)	Below 1 ohms

TEXT IN ILLUSTRATION

*a	Component without harness connected (Hybrid Battery Junction Block Assembly)

2. Measure the resistance according to the value(s) in the table below.

   Standard Resistance

Tester Connection	Condition	Specified Condition
O9-1 (SMRB) - O9-2 (GND)	-40 to 80°C (-40 to 176°F)	25.0 to 59.0 ohms

   If the result is not as specified, replace the hybrid battery junction block assembly or electric vehicle fuse.

b. Inspect SMRG.
   1. Measure the resistance according to the value(s) in the table below.

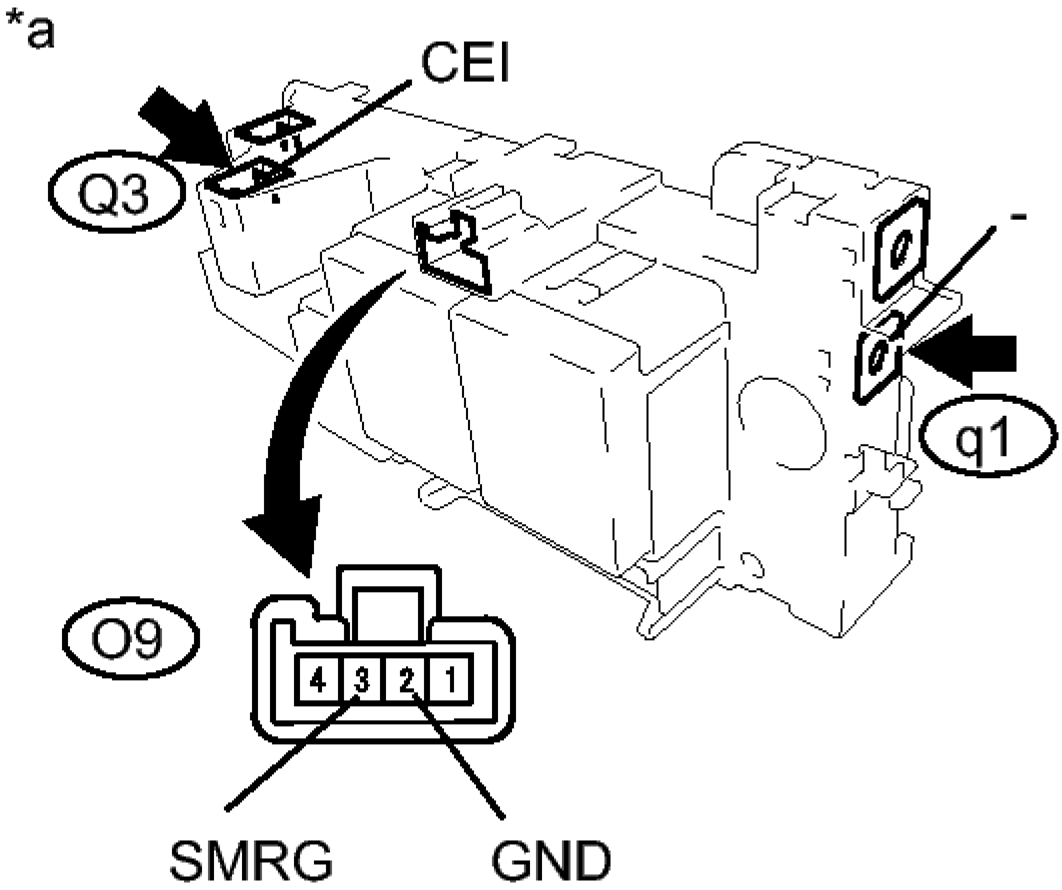

Fig. 194: Identifying Hybrid Battery Junction Block Connector Terminals
Courtesy of TOYOTA MOTOR SALES, U.S.A., INC.

Standard Resistance

Tester Connection	Condition	Specified Condition
q1-1 (-) - Q3- 1 (CEI)	Auxiliary battery voltage is not applied between terminals O9-3 (SMRG) and O9-2 (GND)	10 kohms or higher
q1-1(-) - Q3- 1 (CEI)	Auxiliary battery voltage is applied between terminals O9-3 (SMRG) and O9-2 (GND)	Below 1 ohms

TEXT IN ILLUSTRATION

*a	Component without harness connected (Hybrid Battery Junction Block Assembly)

2. Measure the resistance according to the value(s) in the table below.

   Standard Resistance

Tester Connection	Condition	Specified Condition
O9-3 (SMRG) - O9-2 (GND)	-40 to 80°C (-40 to 176°F)	25.0 to 59.0 ohms

   If the result is not as specified, replace the hybrid battery junction block assembly.

c. Inspect SMRP.

   1. Measure the resistance according to the value(s) in the table below.

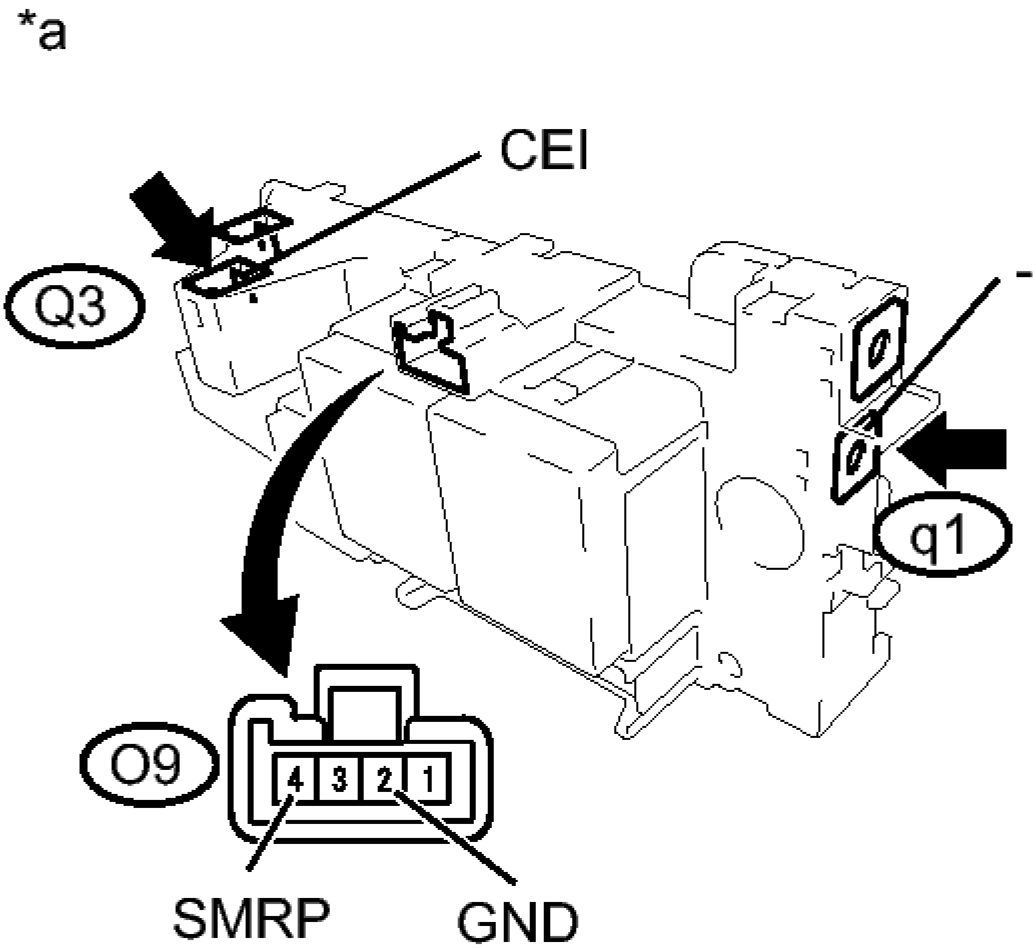

Fig. 195: Identifying Hybrid Battery Junction Block Connector Terminals
Courtesy of TOYOTA MOTOR SALES, U.S.A., INC.

Standard Resistance

Tester Connection	Condition	Specified Condition
q1-1 (-) - Q3- 1 (CEI)	Auxiliary battery voltage is not applied between terminals O9-4 (SMRP) and O9-2 (GND)	10 kohms or higher
q1-1(-) - Q3- 1(CEI)	Auxiliary battery voltage is applied between terminals O9-4 (SMRP) and O9-2 (GND)	28.5 to 31.5 ohms

TEXT IN ILLUSTRATION

*a	Component without harness connected (Hybrid Battery Junction Block Assembly)

2. Measure the resistance according to the value(s) in the table below.

Standard Resistance

Tester Connection	Condition	Specified Condition
O9-4 (SMRP) and O9-2 (GND)	-40 to 80°C (-40 to 176°F)	112 to 274 ohms

If the result is not as specified, replace the hybrid battery junction block assembly.

INSTALLATION

INSTALLATION

1. **INSTALL HYBRID BATTERY JUNCTION BLOCK ASSEMBLY**

WARNING: Wear insulated gloves.

a. Install the hybrid battery junction block assembly with the 3 bolts.

Torque: 7.5 N*m (76 kgf*cm, 66 in.*lbf)

b. Connect the connector to the hybrid battery junction block assembly.

NOTE: The connector should be connected securely.

c. Using an insulated tool, install the 2 bolts.

Torque: 5.4 N*m (55 kgf*cm, 48 in.*lbf)

NOTE: **Be sure to use a torque wrench to tighten the bolts.**

d. Connect the terminal cover.

NOTE: **The terminal cover should be connected securely.**

2. INSTALL NO. 1 HYBRID BATTERY SHIELD SUB-ASSEMBLY

WARNING: **Wear insulated gloves.**

a. Install the No. 1 hybrid battery shield sub-assembly with the bolt and 3 nuts.

Torque: 7.5 N*m (76 kgf*cm, 66 in.*lbf)

b. Connect the connector.

NOTE: **The connector should be connected securely.**

3. CONNECT NO. 4 FLOOR WIRE

WARNING: **Wear insulated gloves.**

a. Connect the 2 connectors.

NOTE:

- **Make sure that the ends of the No. 4 floor wire do not cross over each other.**
- **The connector should be connected securely.**

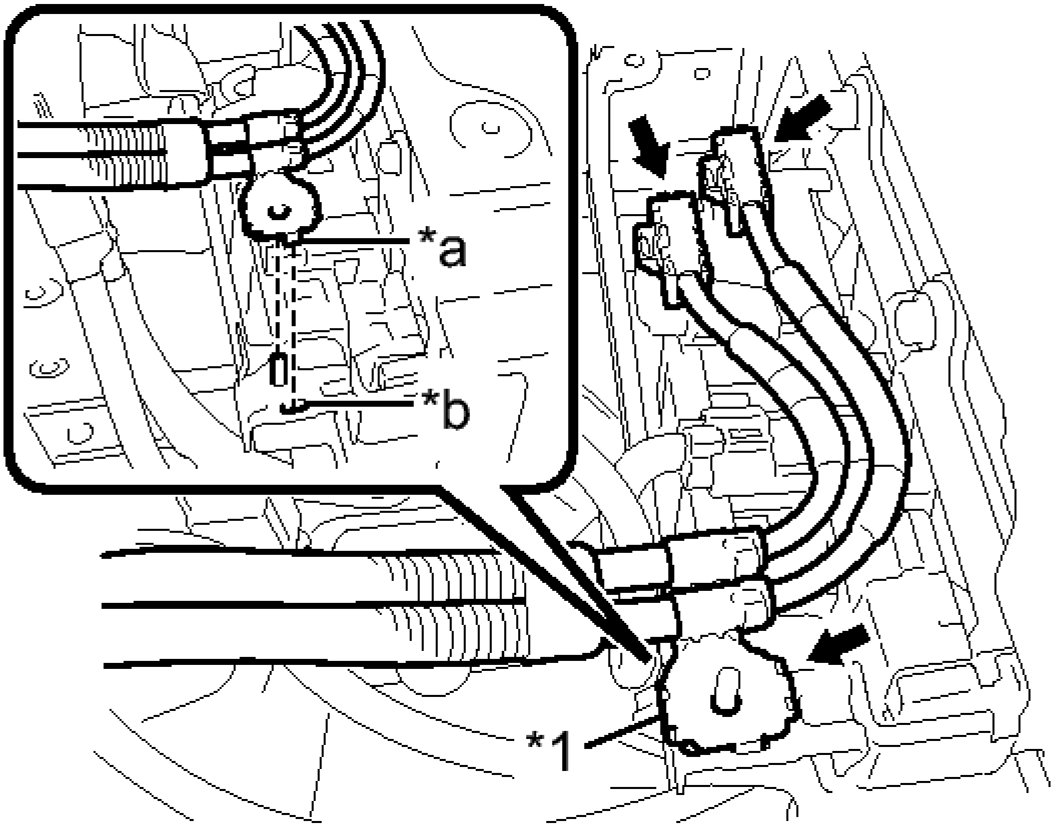

Fig. 196: Identifying No. 4 Floor Wire Connectors And Shielded Wire Ground
Courtesy of TOYOTA MOTOR SALES, U.S.A., INC.

TEXT IN ILLUSTRATION

*1	Shielded Wire Ground
*a	Claw
*b	Hole

b. Connect the shielded wire ground.

NOTE:	- **Be sure to align the claw of the shielded wire ground with the hole.** - **Be sure to install the shielded wire ground in the correct direction.**

4. **INSTALL NO. 4 HYBRID BATTERY SHIELD PANEL**

WARNING: Wear insulated gloves.

a. Install the No. 4 hybrid battery shield panel with the bolt and 2 nuts.

Torque: 7.5 N*m (76 kgf*cm, 66 in.*lbf)

b. Install the battery cover lock striker, then push the button to lock it.

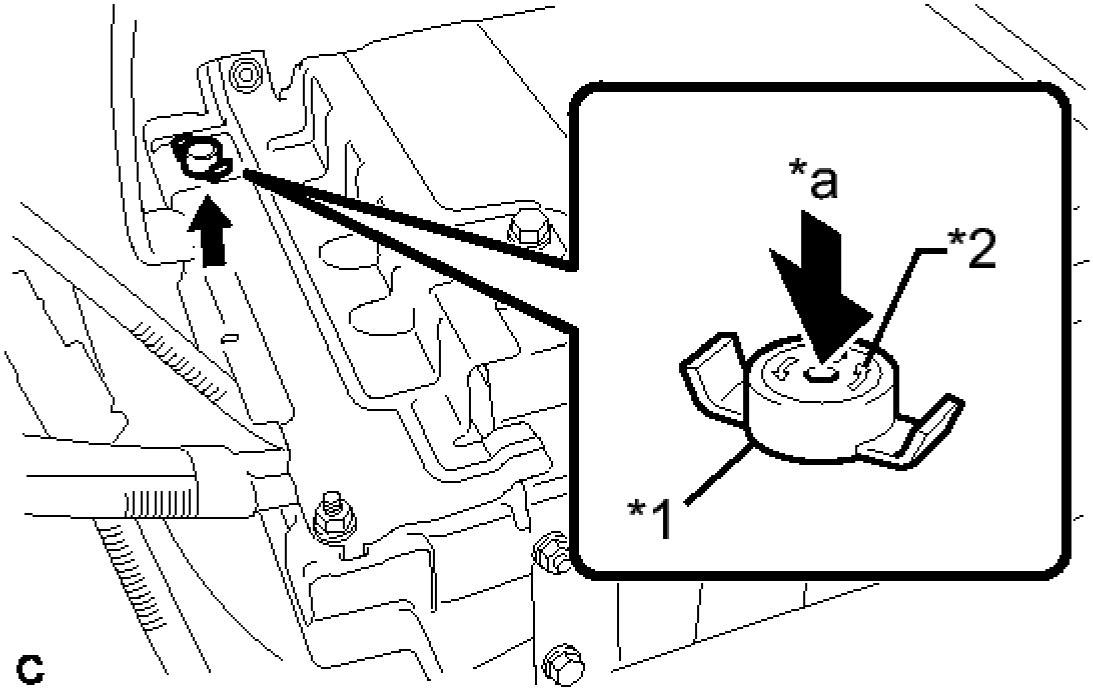

Fig. 197: Installing Battery Cover Lock Striker
Courtesy of TOYOTA MOTOR SALES, U.S.A., INC.

TEXT IN ILLUSTRATION

*1	Battery Cover Lock Striker
*2	Button
*a	Push

5. **INSTALL NO. 1 ROOM PARTITION BOARD** . Refer to **INSTALLATION - Step 3**
6. **INSTALL PACKAGE TRAY TRIM PANEL ASSEMBLY** . Refer to **INSTALLATION - Step 3**
7. **INSTALL REAR SEAT SHOULDER BELT COVER** . Refer to **INSTALLATION - Step 4**
8. **INSTALL CHILD RESTRAINT SEAT TETHER ANCHOR COVER** . Refer to **INSTALLATION - Step 5**
9. **INSTALL CENTER STOP LIGHT SET** . Refer to **INSTALLATION - Step 1**

10. **INSTALL ROOF SIDE INNER GARNISH LH** . Refer to **INSTALLATION - Step 21**
11. **INSTALL ROOF SIDE INNER GARNISH RH** . Refer to **INSTALLATION - Step 28**
12. **CONNECT REAR SEAT INNER WITH CENTER BELT ASSEMBLY LH** . Refer to **INSTALLATION - Step 2**
13. **INSTALL CHILD RESTRAINT SEAT ANCHOR BRACKET SUB-ASSEMBLY LH** . Refer to **INSTALLATION - Step 1**
14. **CONNECT REAR SEAT OUTER BELT ASSEMBLY (for LH Side)** . Refer to **INSTALLATION - Step 9**
15. **CONNECT REAR SEAT OUTER BELT ASSEMBLY (for RH Side)** . Refer to **INSTALLATION - Step 10**
16. **INSTALL REAR DOOR OPENING TRIM WEATHERSTRIP LH** . Refer to **INSTALLATION - Step 26**
17. **INSTALL REAR DOOR OPENING TRIM WEATHERSTRIP RH** . Refer to **INSTALLATION - Step 33**
18. **INSTALL REAR SIDE SEATBACK ASSEMBLY LH** . Refer to **INSTALLATION - Step 1**
19. **INSTALL REAR SIDE SEATBACK ASSEMBLY RH** . Refer to **INSTALLATION - Step 2**
20. **INSTALL REAR SEATBACK ASSEMBLY LH** . Refer to **INSTALLATION - Step 3**
21. **INSTALL NO. 2 ROOM PARTITION COVER** . Refer to **INSTALLATION - Step 4**
22. **INSTALL REAR SEATBACK ASSEMBLY RH** . Refer to **INSTALLATION - Step 5**
23. **INSTALL REAR SEAT CUSHION LOCK HOOK** . Refer to **INSTALLATION - Step 6**
24. **INSTALL REAR SEAT CUSHION ASSEMBLY** . Refer to **INSTALLATION - Step 7**
25. **INSTALL SERVICE PLUG GRIP**

    Refer to **INSTALLATION**

COMBINATION SWITCH

COMPONENTS

ILLUSTRATION

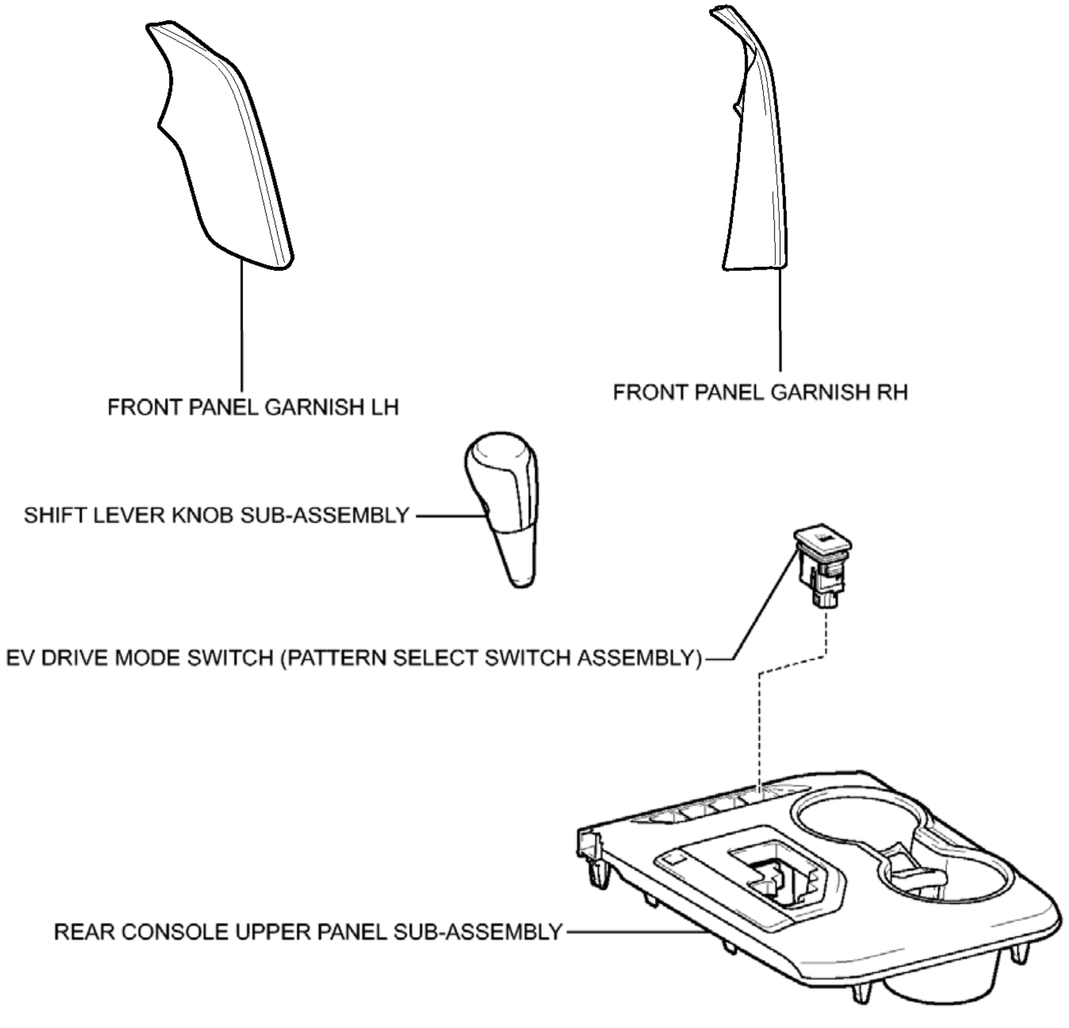
FRONT PANEL GARNISH LH
FRONT PANEL GARNISH RH
SHIFT LEVER KNOB SUB-ASSEMBLY
EV DRIVE MODE SWITCH (PATTERN SELECT SWITCH ASSEMBLY)
REAR CONSOLE UPPER PANEL SUB-ASSEMBLY
C

Fig. 198: Identifying Combination Switch Replacement Components
Courtesy of TOYOTA MOTOR SALES, U.S.A., INC.

REMOVAL

REMOVAL

1. **REMOVE FRONT PANEL GARNISH LH** . Refer to **REMOVAL - Step 12**
2. **REMOVE FRONT PANEL GARNISH RH** . Refer to **REMOVAL - Step 15**
3. **REMOVE SHIFT LEVER KNOB SUB-ASSEMBLY** . Refer to **REMOVAL - Step 16**
4. **REMOVE REAR CONSOLE UPPER PANEL SUB-ASSEMBLY** . Refer to **REMOVAL - Step 17**
5. **REMOVE EV DRIVE MODE SWITCH (PATTERN SELECT SWITCH ASSEMBLY)**

a. Disengage the 2 claws and remove the EV drive mode switch (pattern select switch assembly).

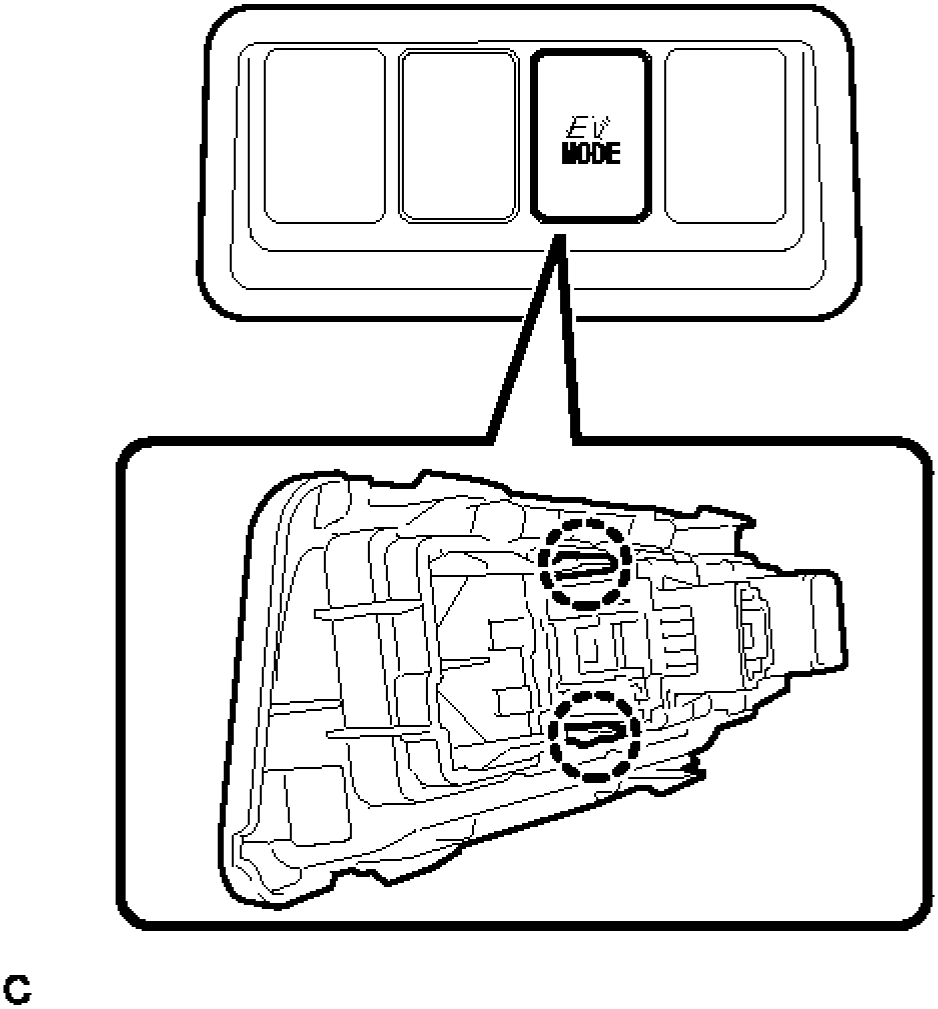

Fig. 199: Identifying EV Drive Mode Switch Claws
Courtesy of TOYOTA MOTOR SALES, U.S.A., INC.

INSPECTION

INSPECTION

1. **INSPECT EV DRIVE MODE SWITCH (PATTERN SELECT SWITCH ASSEMBLY)**
   a. Measure the resistance according to the value(s) in the table below.

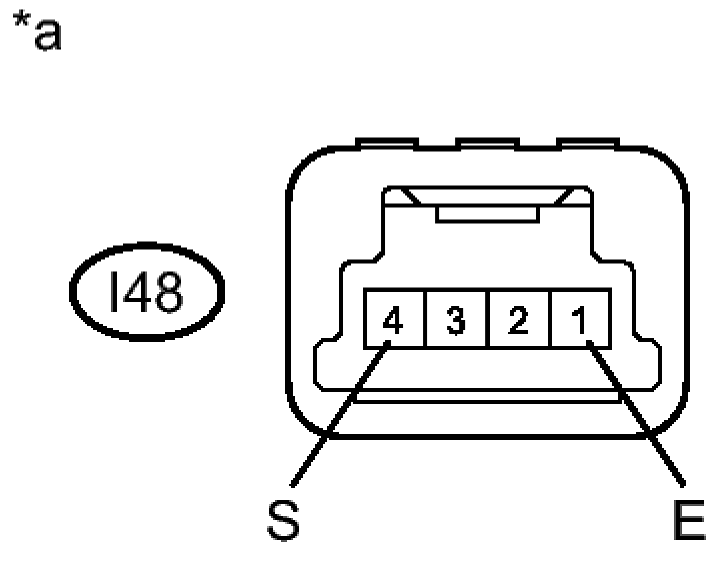

Fig. 200: Identifying EV Drive Mode Switch Connector Terminals
Courtesy of TOYOTA MOTOR SALES, U.S.A., INC.

Standard Resistance

Tester Connection	Condition	Specified Condition
I48-4 (S) - I48-1 (E)	EV drive mode switch (pattern select switch assembly) being pushed and held	Below 1 ohms
I48-4 (S) - I48-1 (E)	EV drive mode switch (pattern select switch assembly) not pushed	10 kohms or higher

TEXT IN ILLUSTRATION

*a	Component without harness connected (EV Drive Mode Switch (Pattern Select Switch Assembly))

If the result is not as specified, replace the EV drive mode switch (pattern select switch assembly).

b. Apply Auxiliary battery voltage between the terminals of the switch, and check the illumination condition of the pattern select switch assembly.

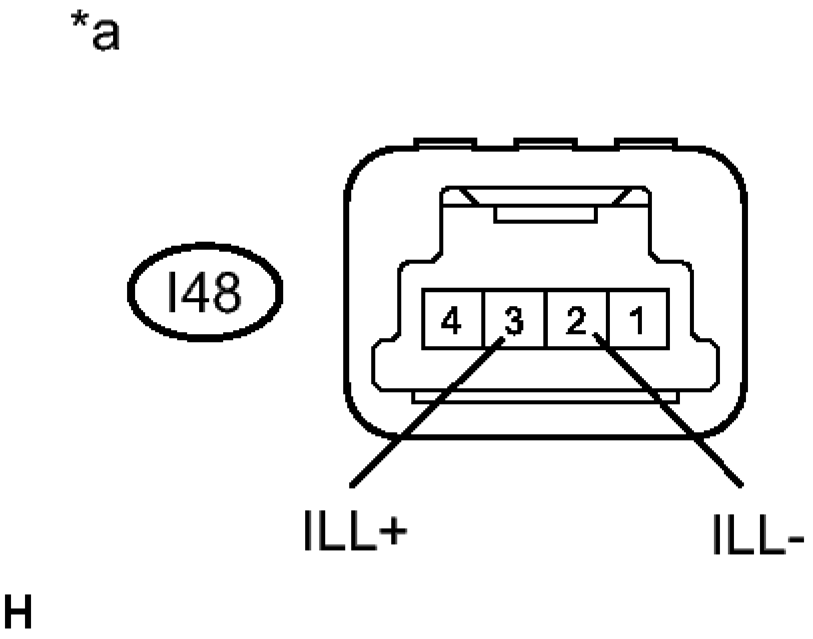

Fig. 201: Identifying EV Drive Mode Switch Connector Terminals
Courtesy of TOYOTA MOTOR SALES, U.S.A., INC.

Standard Resistance

Measurement Condition	**Specified Condition**
Auxiliary battery positive (+) --> I48-3 (ILL+) Auxiliary battery negative (-) -->I48-2 (ILL-)	Illuminates

TEXT IN ILLUSTRATION

*a	Component without harness connected (EV Drive Mode Switch (Pattern Select Switch Assembly))

If the result is not as specified, replace the EV drive mode switch (pattern select switch assembly).

INSTALLATION

INSTALLATION

1. **INSTALL EV DRIVE MODE SWITCH (PATTERN SELECT SWITCH ASSEMBLY)**
   a. Engage the 2 claws to install the EV drive mode switch (pattern select switch assembly).
2. **INSTALL REAR CONSOLE UPPER PANEL SUB-ASSEMBLY** . Refer to **INSTALLATION - Step 35**
3. **INSTALL SHIFT LEVER KNOB SUB-ASSEMBLY** . Refer to **INSTALLATION - Step 36**
4. **INSTALL FRONT PANEL GARNISH LH** . Refer to **INSTALLATION - Step 40**

5. **INSTALL FRONT PANEL GARNISH RH** . Refer to **INSTALLATION - Step 37**

SERVICE PLUG GRIP

COMPONENTS

ILLUSTRATION

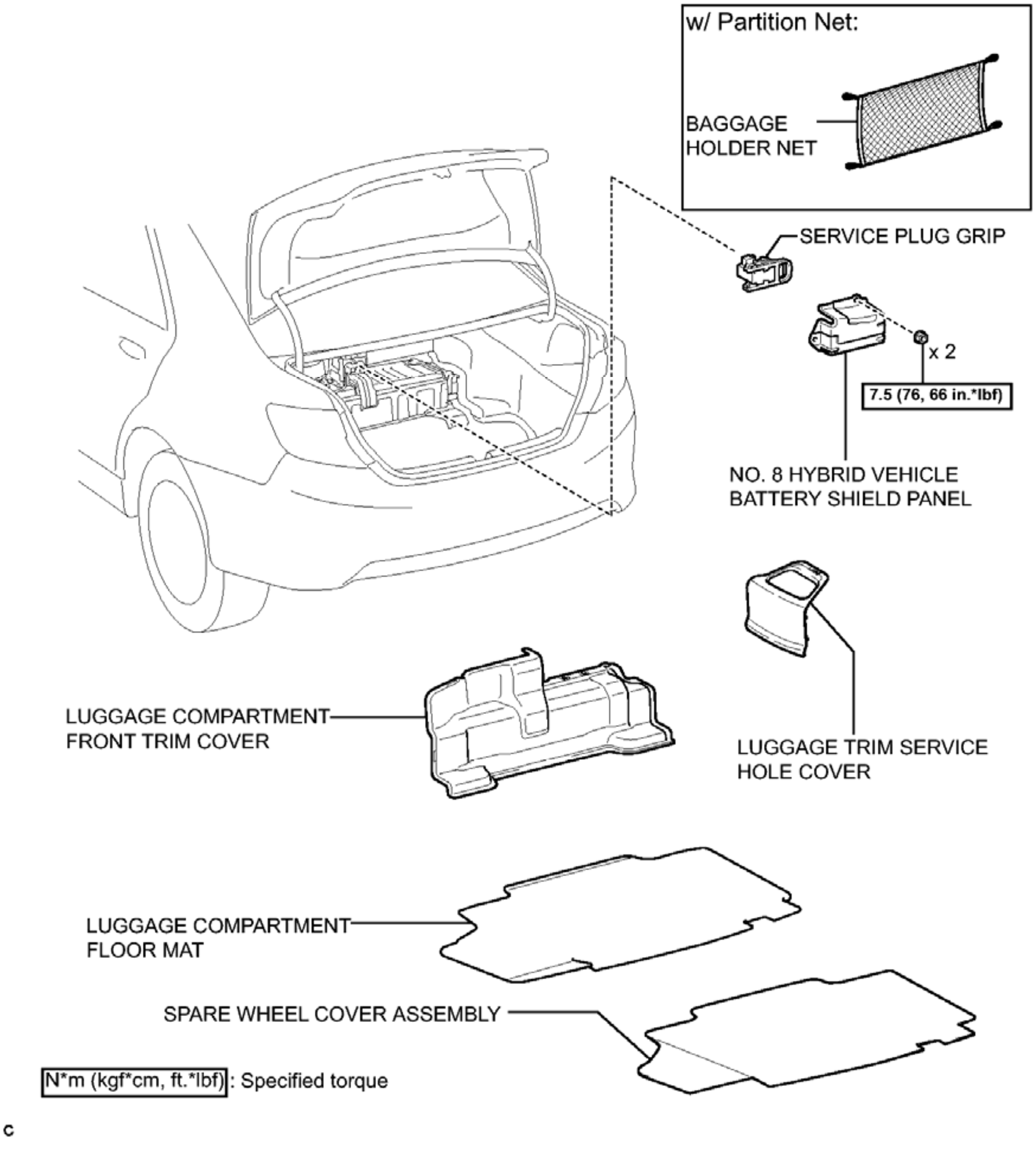
w/ Partition Net:
BAGGAGE HOLDER NET
SERVICE PLUG GRIP
x 2
7.5 (76, 66 in.*lbf)
NO. 8 HYBRID VEHICLE BATTERY SHIELD PANEL
LUGGAGE COMPARTMENT FRONT TRIM COVER
LUGGAGE TRIM SERVICE HOLE COVER
LUGGAGE COMPARTMENT FLOOR MAT
SPARE WHEEL COVER ASSEMBLY
N*m (kgf*cm, ft.*lbf) : Specified torque
c

Fig. 202: Identifying Service Plug Grip Replacement Components With Torque Specifications
Courtesy of TOYOTA MOTOR SALES, U.S.A., INC.

REMOVAL

REMOVAL

1. **PRECAUTION**

WARNING:

- **Before inspecting the high voltage system or disconnecting the low voltage connector of the inverter with converter assembly, take safety precautions such as wearing insulated gloves and removing the service plug grip to prevent electrical shocks. After removing the service plug grip, put it in your pocket to prevent other technicians from accidentally reconnecting it while you are working on the high voltage system.**
- **After removing the service plug grip, wait for at least 10 minutes before touching any of the high voltage connectors or terminals. After waiting for 10 minutes, check the voltage at the terminals in the inspection point in the inverter with converter assembly. The voltage should be 0 V before beginning work. Refer to PRECAUTION .**

NOTE: **After turning the power switch off, waiting time may be required before disconnecting the cable from the negative (-) auxiliary battery terminal. Therefore, make sure to read the disconnecting the cable from the negative (-) auxiliary battery terminal notices before proceeding with work. Refer to PRECAUTION .**

HINT:

Waiting for at least 10 minutes is required to discharge the high-voltage capacitor inside the inverter with converter assembly.

2. **REMOVE LUGGAGE TRIM SERVICE HOLE COVER** . Refer to **REMOVAL - Step 2**
3. **DISCONNECT CABLE FROM NEGATIVE AUXILIARY BATTERY TERMINAL**

NOTE: **When disconnecting the cable, some systems need to be initialized after the cable is reconnected. Refer to INITIALIZATION .**

4. **REMOVE LUGGAGE COMPARTMENT FLOOR MAT** . Refer to **REMOVAL - Step 1**
5. **REMOVE SPARE WHEEL COVER ASSEMBLY** . Refer to **REMOVAL - Step 2**
6. **REMOVE BAGGAGE HOLDER NET (w/ Partition Net)** . Refer to **REMOVAL - Step 3**
7. **REMOVE LUGGAGE COMPARTMENT FRONT TRIM COVER** . Refer to **REMOVAL - Step 6**
8. **REMOVE NO. 8 HYBRID VEHICLE BATTERY SHIELD PANEL**
    a. Remove the 2 nuts and No. 8 hybrid vehicle battery shield panel.

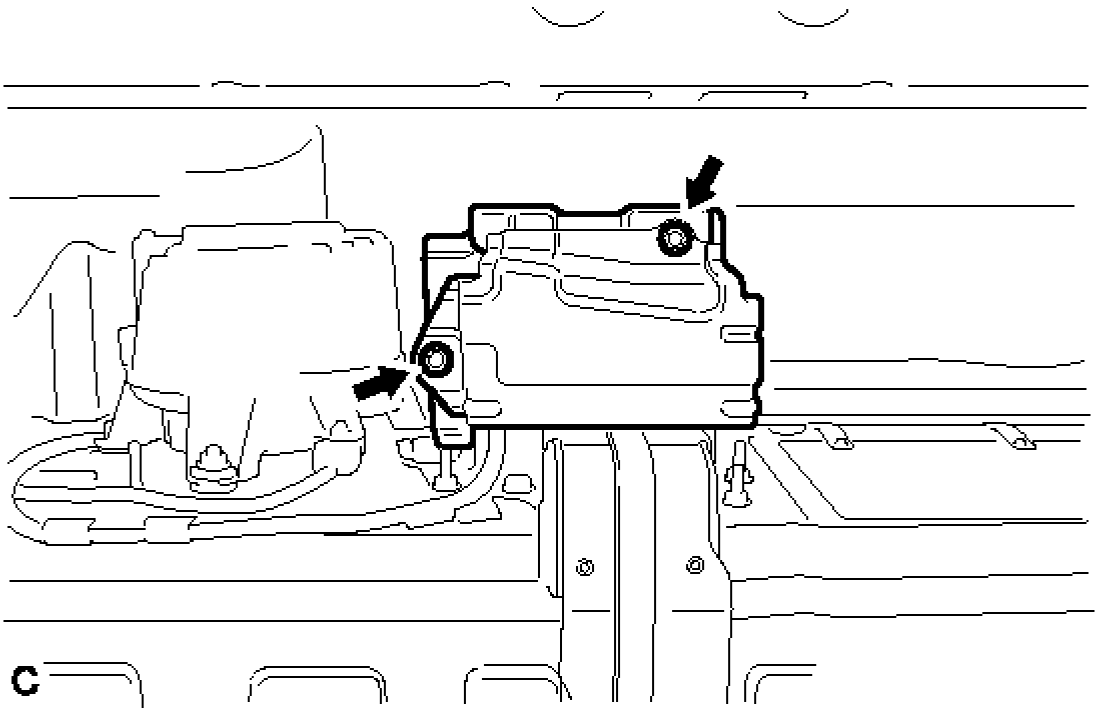

Fig. 203: Identifying No. 8 Hybrid Vehicle Battery Shield Panel Nuts
Courtesy of TOYOTA MOTOR SALES, U.S.A., INC.

9. **REMOVE SERVICE PLUG GRIP**

WARNING:

- **Wear insulating gloves.**
- **Remove the service plug grip to interrupt the high voltage circuit at the time of inspection or repair.**
- **Keep the removed service plug grip in your pocket to prevent other technicians from accidentally reconnecting it while you are servicing the vehicle.**
- **All the high voltage wiring connectors are orange.**

a. Wear insulating gloves and remove the service plug grip after sliding up the lever of the service plug grip as shown in the illustration.

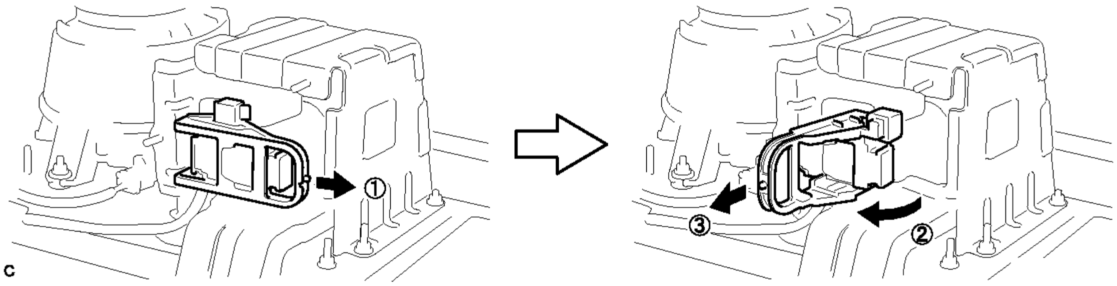

Fig. 204: Removing Service Grip Plug
Courtesy of TOYOTA MOTOR SALES, U.S.A., INC.

WARNING:

- **Keep the removed service plug grip in your pocket to prevent other technicians from accidentally reconnecting it while you are servicing the vehicle.**
- **After removing the service plug grip, do not touch the high voltage connectors or terminals for 10 minutes.**

HINT:

Waiting for at least 10 minutes is required to discharge the high voltage capacitor inside the inverter with converter assembly.

INSPECTION

INSPECTION

1. **INSPECT SERVICE PLUG GRIP**
   a. Measure the resistance according to the value(s) in the table below.

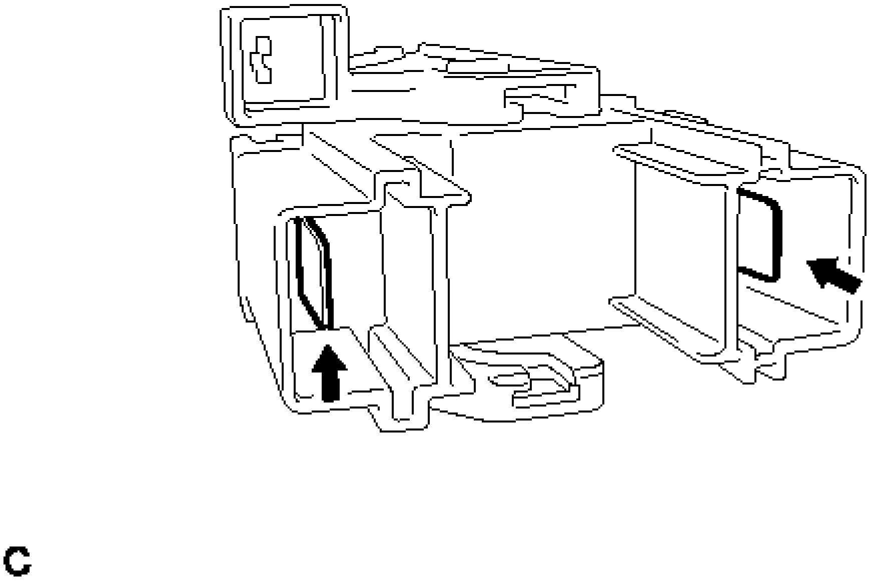

Fig. 205: Inspect Service Plug Grip
Courtesy of TOYOTA MOTOR SALES, U.S.A., INC.

Standard Resistance

Tester Connection	Condition	Specified Condition
Service plug grip	Always	Below 1 ohms

If the result is not as specified, replace the service plug grip.

INSTALLATION

INSTALLATION

1. **INSTALL SERVICE PLUG GRIP**

   WARNING: Wear insulating gloves.

   NOTE: Before connecting the service plug, check that no parts and tools remain and that the high voltage terminals and connectors are connected securely.

   a. Wear insulated gloves and install the service plug grip in the order shown in the illustration.

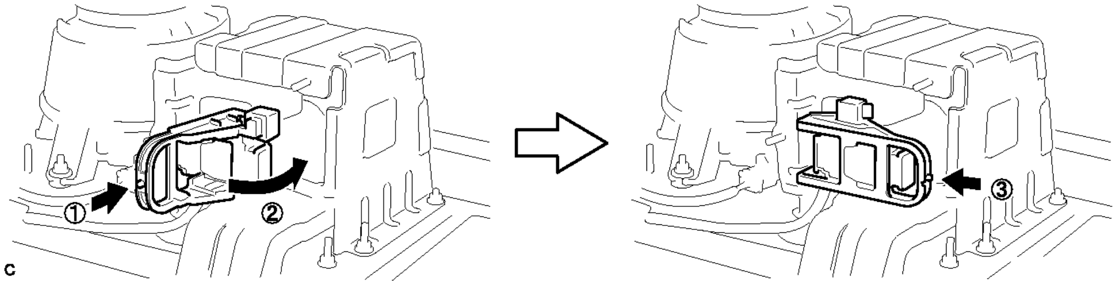

Fig. 206: Rotating The Handle Of The Service Plug Grip
Courtesy of TOYOTA MOTOR SALES, U.S.A., INC.

   b. Rotate the handle of the service plug grip 90° toward the battery and slide it in the direction shown by the arrow until a click sound is heard.

2. **INSTALL NO. 8 HYBRID VEHICLE BATTERY SHIELD PANEL**

   a. Install the No. 8 hybrid vehicle battery shield panel with the 2 nuts.

   Torque: 7.5 N*m (76 kgf*cm, 66 in.*lbf)

3. **INSTALL LUGGAGE COMPARTMENT FRONT TRIM COVER** . Refer to **INSTALLATION - Step 9**
4. **INSTALL BAGGAGE HOLDER NET (w/ Partition Net)** . Refer to **INSTALLATION - Step 11**
5. **INSTALL SPARE WHEEL COVER ASSEMBLY** . Refer to **INSTALLATION - Step 12**
6. **INSTALL LUGGAGE COMPARTMENT FLOOR MAT** . Refer to **INSTALLATION - Step 13**
7. **CONNECT CABLE TO NEGATIVE AUXILIARY BATTERY TERMINAL**

   NOTE: When disconnecting the cable, some systems need to be initialized after the cable is reconnected. Refer to INITIALIZATION .

8. **INSTALL LUGGAGE TRIM SERVICE HOLE COVER** . Refer to **INSTALLATION - Step 3**

BATTERY BLOWER

COMPONENTS

ILLUSTRATION

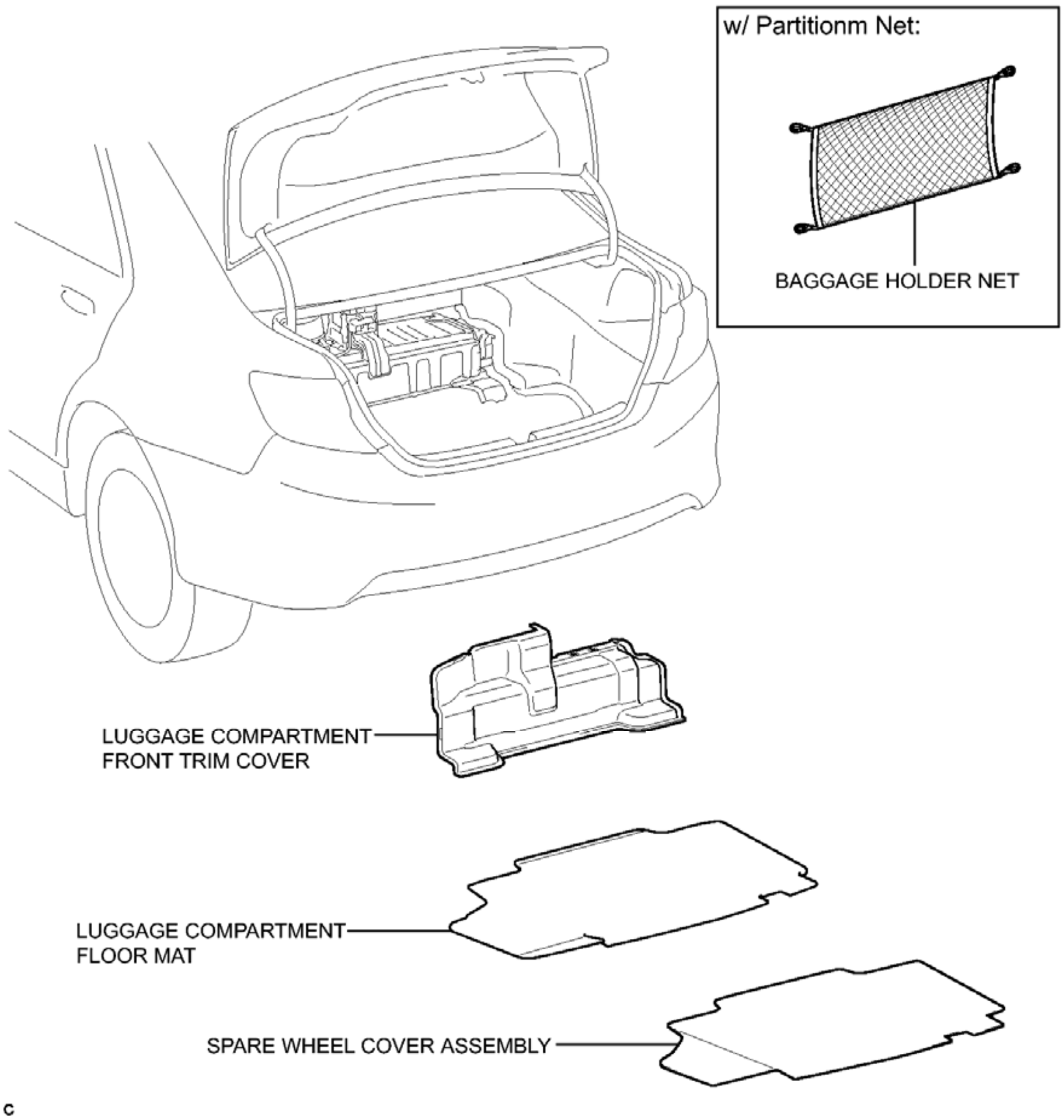
w/ Partitionm Net:
BAGGAGE HOLDER NET
LUGGAGE COMPARTMENT FRONT TRIM COVER
LUGGAGE COMPARTMENT FLOOR MAT
SPARE WHEEL COVER ASSEMBLY
C

Fig. 207: Identifying Battery Blower Replacement Components (1 Of 3)
Courtesy of TOYOTA MOTOR SALES, U.S.A., INC.

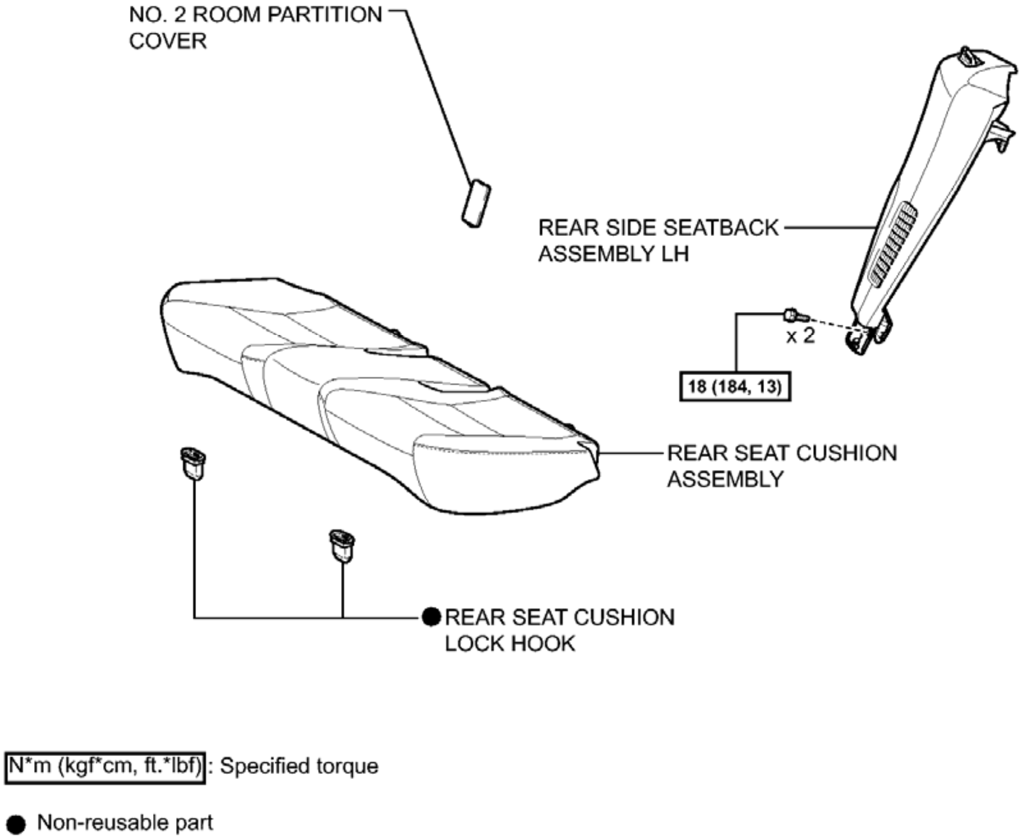
NO. 2 ROOM PARTITION COVER
REAR SIDE SEATBACK ASSEMBLY LH
x 2
18 (184, 13)
REAR SEAT CUSHION ASSEMBLY
● REAR SEAT CUSHION LOCK HOOK
N*m (kgf*cm, ft.*lbf) : Specified torque
● Non-reusable part

Fig. 208: Identifying Battery Blower Replacement Components With Torque Specifications (2 Of 3)
Courtesy of TOYOTA MOTOR SALES, U.S.A., INC.

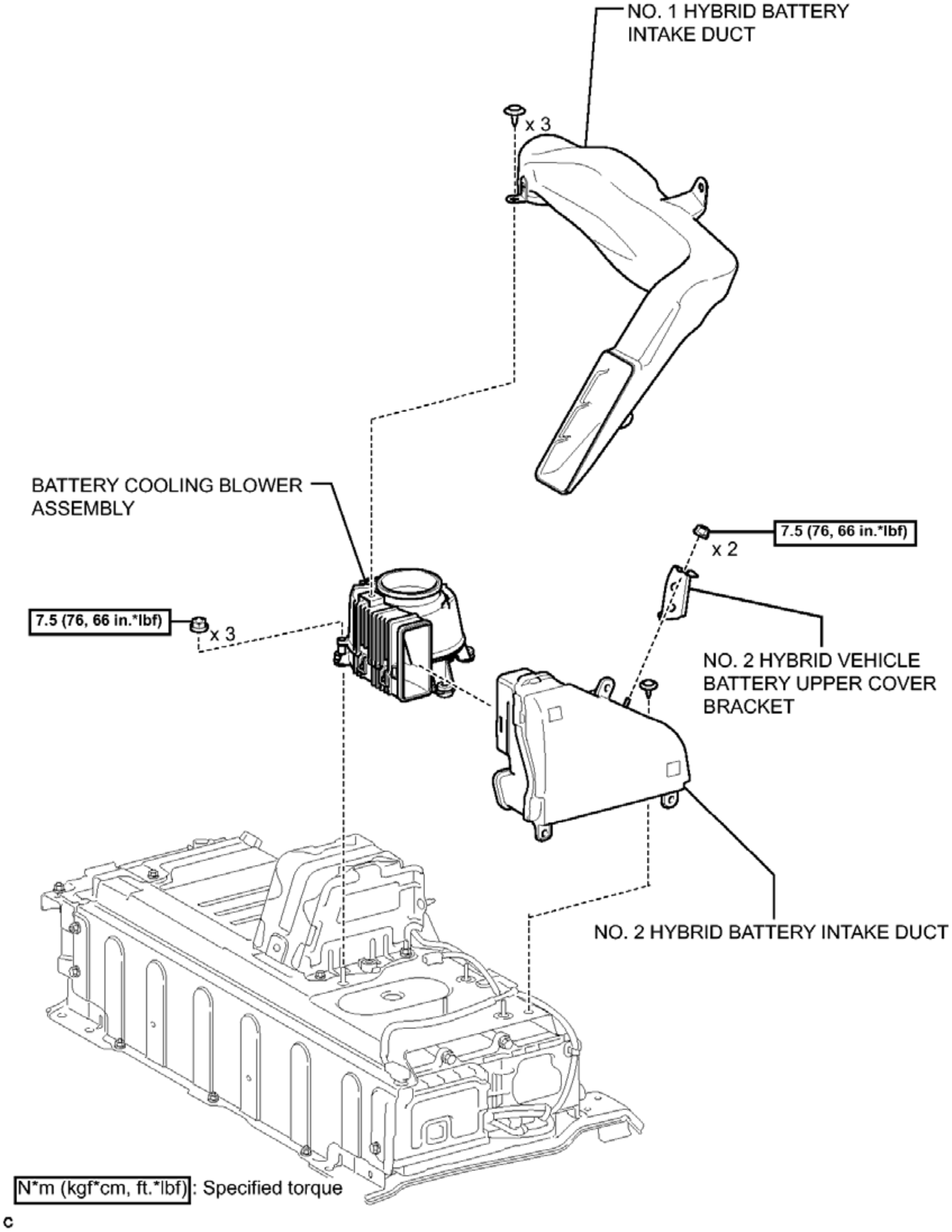
NO. 1 HYBRID BATTERY INTAKE DUCT
x 3
BATTERY COOLING BLOWER ASSEMBLY
7.5 (76, 66 in.*lbf)
x 2
7.5 (76, 66 in.*lbf)
x 3
NO. 2 HYBRID VEHICLE BATTERY UPPER COVER BRACKET
NO. 2 HYBRID BATTERY INTAKE DUCT
N*m (kgf*cm, ft.*lbf): Specified torque
c

Fig. 209: Identifying Battery Blower Replacement Components With Torque Specifications (3 Of 3)
Courtesy of TOYOTA MOTOR SALES, U.S.A., INC.

REMOVAL

REMOVAL

1. **REMOVE LUGGAGE COMPARTMENT FLOOR MAT** . Refer to **REMOVAL - Step 1**

2. **REMOVE SPARE WHEEL COVER ASSEMBLY** . Refer to **REMOVAL - Step 2**
3. **REMOVE BAGGAGE HOLDER NET (w/ Partition Net)** . Refer to **REMOVAL - Step 3**
4. **REMOVE LUGGAGE COMPARTMENT FRONT TRIM COVER** . Refer to **REMOVAL - Step 6**
5. **REMOVE REAR SEAT CUSHION ASSEMBLY** . Refer to **REMOVAL - Step 4**
6. **REMOVE REAR SEAT CUSHION LOCK HOOK** . Refer to **REMOVAL - Step 5**
7. **SEPARATE REAR SEATBACK ASSEMBLY** See step 8
8. **REMOVE REAR SIDE SEATBACK ASSEMBLY LH** . Refer to **REMOVAL - Step 9**
9. **REMOVE NO. 1 HYBRID BATTERY INTAKE DUCT**
    a. Remove the 3 clips and No. 1 hybrid battery intake duct.

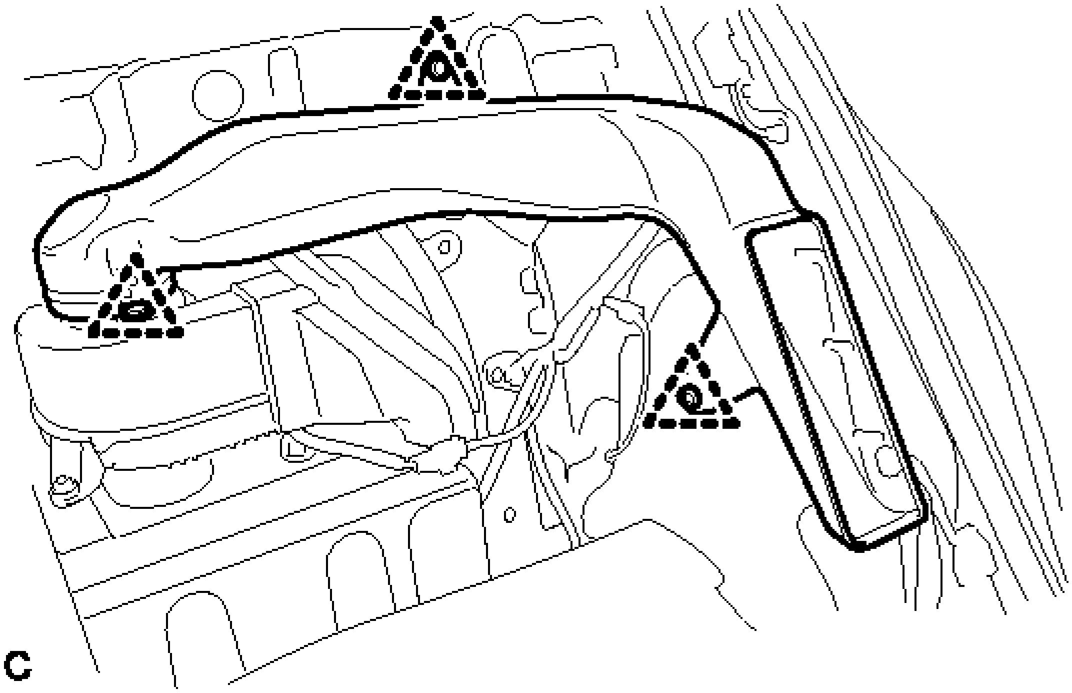

Fig. 210: Identifying No. 1 Hybrid Battery Intake Duct Clips
Courtesy of TOYOTA MOTOR SALES, U.S.A., INC.

10. **REMOVE NO. 2 HYBRID VEHICLE BATTERY UPPER COVER BRACKET**
    a. Remove the 2 nuts and No. 2 hybrid vehicle battery upper cover bracket.

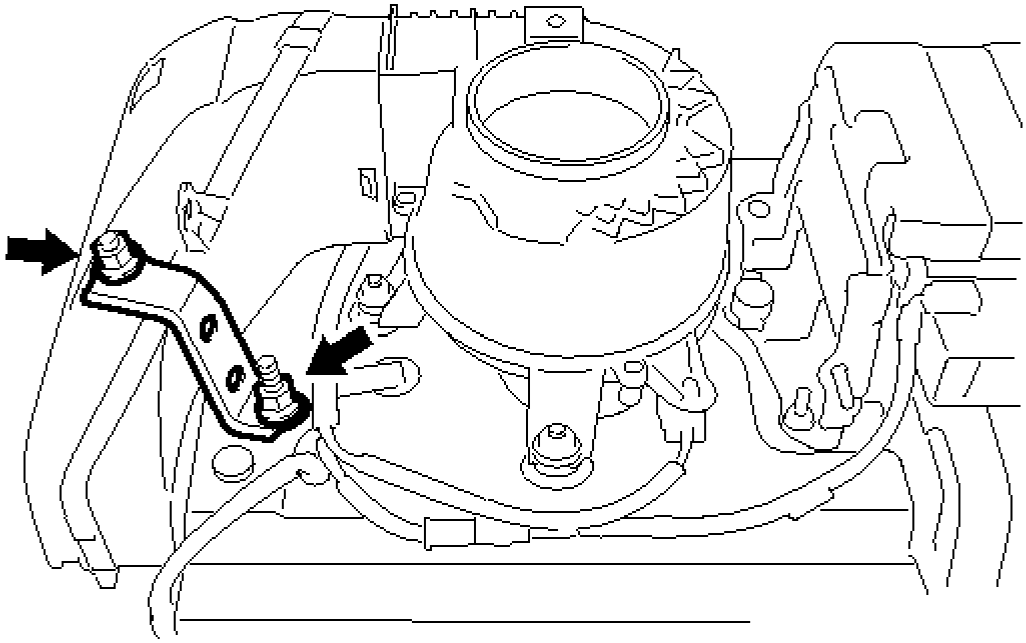

Fig. 211: Identifying No. 2 Hybrid Vehicle Battery Upper Cover Bracket And Nuts
Courtesy of TOYOTA MOTOR SALES, U.S.A., INC.

11. **SEPARATE NO. 2 HYBRID BATTERY INTAKE DUCT**
    a. Remove the clip.

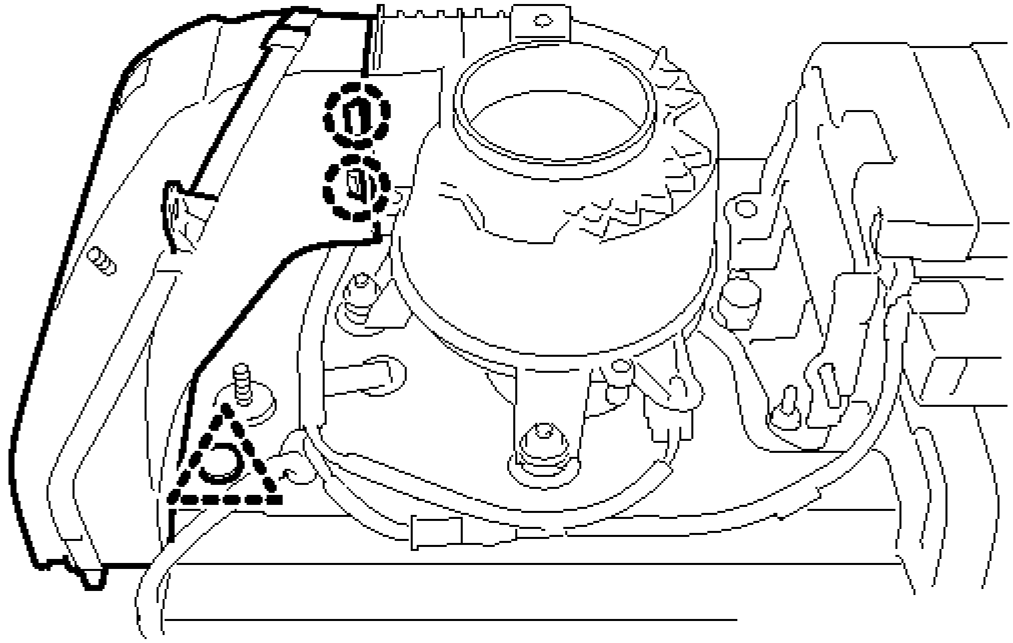

Fig. 212: Identifying Battery Upper Cover Clip And Claws

Courtesy of TOYOTA MOTOR SALES, U.S.A., INC.

b. Disengage the 2 claws and separate the No. 2 hybrid battery intake duct.

12. **REMOVE BATTERY COOLING BLOWER ASSEMBLY**

NOTE:

- **Be sure not to touch the fan part of the battery cooling blower assembly.**
- **Do not lift the battery cooling blower assembly using the wire harness.**

a. Disconnect the connector from the battery cooling blower assembly.

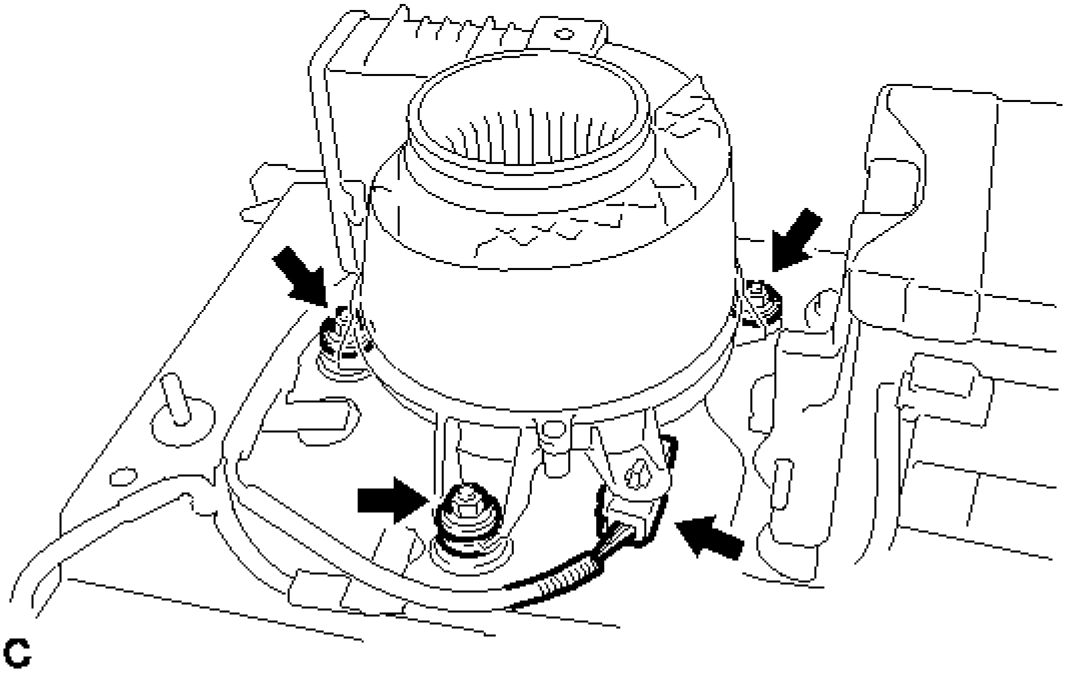

Fig. 213: Identifying Battery Cooling Blower Assembly Nuts And Connector
Courtesy of TOYOTA MOTOR SALES, U.S.A., INC.

b. Remove the 3 nuts and battery cooling blower assembly.

INSTALLATION

INSTALLATION

1. **INSTALL BATTERY COOLING BLOWER ASSEMBLY**

NOTE:

- **Be sure not to touch the fan part of the battery cooling blower assembly.**

- **Do not lift the battery cooling blower assembly using the wire harness.**

   a. Install the battery cooling blower assembly with the 3 nuts.

      Torque: 7.5 N*m (76 kgf*cm, 66 in.*lbf)

   b. Connect the connector.

2. **INSTALL NO. 2 HYBRID BATTERY INTAKE DUCT**
   a. Engage the 2 claws to install the No. 2 hybrid battery intake duct.
   b. Install the clip.

   NOTE: **Ensure that the duct is installed securely.**

3. **INSTALL NO. 2 HYBRID VEHICLE BATTERY UPPER COVER BRACKET**
   a. Install the No. 2 hybrid vehicle battery upper cover bracket with the 2 nuts.

      Torque: 7.5 N*m (76 kgf*cm, 66 in.*lbf)

4. **INSTALL NO. 1 HYBRID BATTERY INTAKE DUCT**
   a. Install the No. 1 hybrid battery intake duct with the 3 clips.

   NOTE: **Ensure that the duct is installed securely.**

5. **INSTALL REAR SIDE SEATBACK ASSEMBLY LH** . Refer to **INSTALLATION - Step 1**
6. **INSTALL REAR SEATBACK ASSEMBLY** See step 7
7. **INSTALL REAR SEAT CUSHION LOCK HOOK** . Refer to **INSTALLATION - Step 6**
8. **INSTALL REAR SEAT CUSHION ASSEMBLY** . Refer to **INSTALLATION - Step 7**
9. **INSTALL LUGGAGE COMPARTMENT FRONT TRIM COVER** . Refer to **INSTALLATION - Step 9**
10. **INSTALL BAGGAGE HOLDER NET (w/ Partition Net)** . Refer to **INSTALLATION - Step 11**
11. **INSTALL SPARE WHEEL COVER ASSEMBLY** . Refer to **INSTALLATION - Step 12**
12. **INSTALL LUGGAGE COMPARTMENT FLOOR MAT** . Refer to **INSTALLATION - Step 13**

HYBRID SERVICE DISABLE PROCEDURES

Toyota - Camry HV - 2012-2017-13

SAFETY PRECAUTIONS

WARNING: **The vehicle has a hybrid system that operates at voltages up to 650V. The hybrid system uses an HV battery that contains an electrolyte which is a strong alkali solution that includes potassium hydroxide. Be sure to follow the instructions in this manual to handle the system correctly. Failure to do so may result in serious injury or electrocution.**

PRECAUTIONS FOR INSPECTING HYBRID CONTROL SYSTEM

Before inspecting the high-voltage system or disconnecting the low voltage connector of the inverter with converter assembly, take safety precautions such as wearing insulated gloves and removing the service plug grip to prevent electrical shocks. After removing the service plug grip, put it in your pocket to prevent other technicians from accidentally reconnecting it while you are working on the high-voltage system

NOTE: **After removing the service plug grip, turning the power switch on (READY) may cause a malfunction. Do not turn the power switch on (READY) unless instructed by the repair manual.**

After disconnecting the service plug grip, wait for at least 10 minutes before touching any of the high-voltage connectors or terminals. Waiting for at least 10 minutes is required to discharge the high-voltage capacitor inside the inverter with converter assembly.

Ensure the HV battery has 0 voltage. Check the voltage at the terminals in the inspection point in the inverter with converter assembly.

NOTE: **Make sure to pull the converter connector cover assembly straight up, as a connector is connected to the bottom of the cover. Cover the opening with non-residue tape to prevent entry of foreign matter or liquid after removing the connector cover**

When turning the power switch on (IG) during inspections, do not press the power switch with the brake pedal depressed.

WARNING: **Pressing the power switch with the brake pedal depressed causes the system to enter the READY-on state. This is very dangerous because high voltage may be applied to the inspection area.**

Turn the power switch off, wear insulated gloves, and disconnect the cable from the negative (-) terminal of the 12V auxiliary battery before touching any of the orange-colored wires of the high-voltage system.

NOTE: **After the power switch is turned off, the navigation receiver assembly (for Navigation Receiver type) records various types of memory and settings. As a result, after turning the power switch off, make sure to wait at least 60 seconds before disconnecting the cable from the negative (-) auxiliary battery terminal.**

Turn the power switch off before performing any resistance checks. Turn the power switch off before disconnecting or reconnecting any connectors.

When performing work involving high-voltage wires, use either a tool wrapping with vinyl insulation tape or a insulated tool.

When high-voltage connectors are removed, wrap the connectors with insulation tape to prevent them from contacting foreign matter.

NOTICE FOR HYBRID CONTROL SYSTEM ACTIVATION

When the warning light is illuminated, or the auxiliary battery has been disconnected and reconnected, attempting to turn the power switch on (READY) may not start the system (the system may not enter the READY-on state) on the first attempt. If so, turn the power switch off and reattempt to start the hybrid system.

PRECAUTIONS FOR DISCONNECTING AMD TERMINAL

NOTE: **The AMD terminal is connected to the positive terminal of the auxiliary battery. To prevent damage when the AMD terminal is being disconnected, use the following procedure. See Fig. 1.**

Be sure to disconnect the cable from the negative (-) terminal of the auxiliary battery before disconnecting the AMD terminal from the engine room relay block and junction block assembly.

NOTE: **After the power switch is turned off, the navigation receiver assembly (for Navigation Receiver type) records various types of memory and settings. As a result, after turning the power switch off, make sure to wait at least 60 seconds before disconnecting the cable from the negative (-) auxiliary battery terminal.**

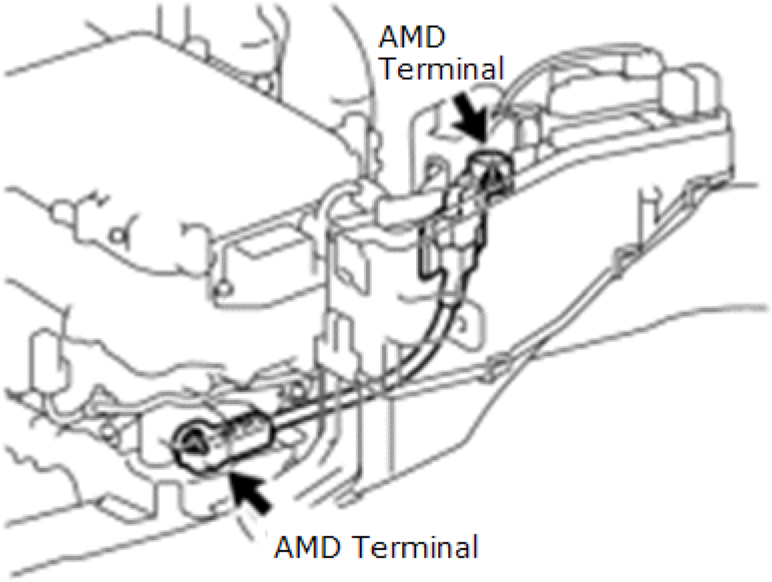

Fig. 1: Identifying AMD Cable & Terminals
Courtesy of TOYOTA MOTOR SALES, U.S.A., INC.

After disconnecting the AMD terminal, wrap the terminal with insulation tape.

Be sure to reconnect the AMD terminal to the engine room junction block assembly before reconnecting the cable of the negative (-) terminal of the auxiliary battery.

CAUTION: A short circuit to ground may occur if the AMD terminal is disconnected before the cable is disconnected from the negative (-) terminal of the auxiliary battery. If a short circuit to ground occurs, it can result in an open circuit in a fusible link or fuse.

DISPOSING OF HV BATTERY

When disposing of an HV battery, make sure to return it through an authorized collection agent who is capable of handling it safely. If the HV battery is returned via the manufacturer specified route, it will be returned properly and in a safe manner by an authorized collection agent.

WARNING: Accidents such as electric shock may result if the HV battery is disposed of improperly or abandoned. Therefore, make sure to return all HV batteries through an authorized collection agent.

WARNING: After removing the HV battery, keep it away from water. Exposure to water may cause the HV battery to produce heat, resulting in a fire.

DISCONNECTING AND RECONNECTING 12V AUXILIARY BATTERY CABLE

NOTE: After the power switch is turned off, the navigation receiver assembly (for Navigation Receiver type) records various types of memory and settings. As a result, after turning the power switch off, make sure to wait at least 60 seconds before disconnecting the cable from the negative (-) auxiliary battery terminal.

Before performing work on electronic components, disconnect the cable from the negative (-) auxiliary battery terminal to prevent damage to the electrical system or electrical components.

Before disconnecting and reconnecting the auxiliary battery cable, turn the power switch off and the headlight switch off. Then loosen the terminal nut completely. Do not damage the cable or terminal.

When the auxiliary battery cable is disconnected, the clock and radio settings and stored DTCs are cleared. Therefore, before disconnecting the auxiliary battery cable, make a note of them.

SPECIAL TOOLS

NOTE: No special tools are required for this procedure.

HIGH-VOLTAGE DISABLE

CAUTION: Be sure to read the SAFETY PRECAUTIONS thoroughly before servicing.

WARNING: Before inspecting the high-voltage system or disconnecting the low voltage connector of the inverter with converter assembly, take safety precautions, such as wearing insulated gloves and removing the service plug grip to prevent electrical shocks. After removing the service plug grip, put it in your pocket to prevent other technicians from accidentally reconnecting it while you are working on the high-voltage system.

CAUTION: After removing the service plug grip, do not turn the power switch on (READY), unless instructed by the repair manual because this may cause a malfunction.

DISCONNECT

1. Turn the power switch off, and uncover the 12V battery. See **Fig. 2**.
2. Disconnect the negative terminal of the auxiliary (12-volt) battery. See **Fig. 2**.

NOTE: After the power switch is turned off, the navigation receiver assembly (for Navigation Receiver type) records various types of memory and settings. As a result, after turning the power switch off, make sure to wait at least 60 seconds before disconnecting the cable from the negative (-) auxiliary battery terminal.

NOTE: **When the warning light is illuminated, or the auxiliary (12-volt) battery has been disconnected and reconnected, attempting to turn the power switch on (READY) may not start the system (the system may not enter the READY-on state) on the first attempt. If so, turn the power switch off and reattempt to turn the power switch on (READY).**

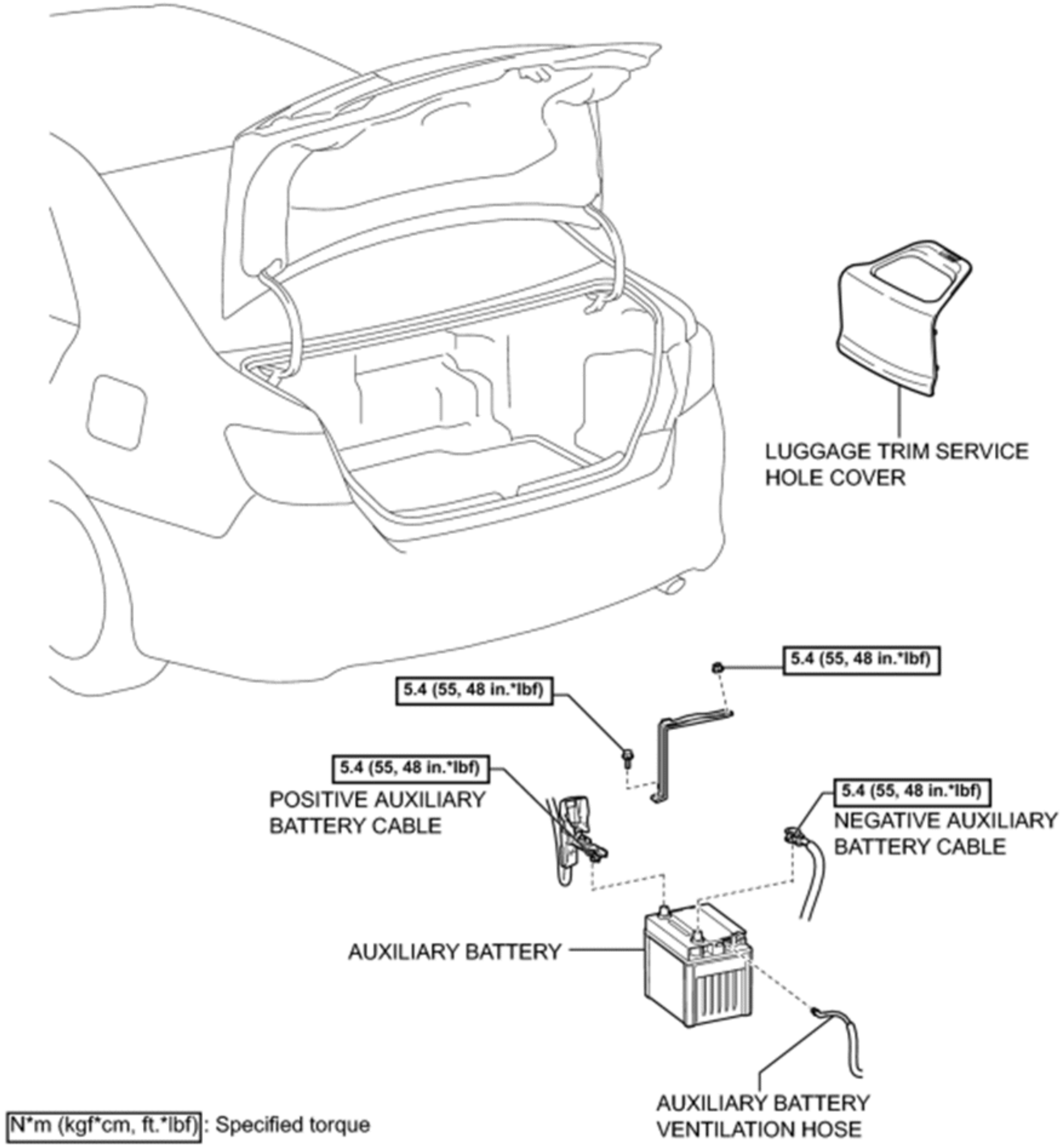
LUGGAGE TRIM SERVICE HOLE COVER
5.4 (55, 48 in.*lbf)
5.4 (55, 48 in.*lbf)
5.4 (55, 48 in.*lbf)
POSITIVE AUXILIARY BATTERY CABLE
5.4 (55, 48 in.*lbf)
NEGATIVE AUXILIARY BATTERY CABLE
AUXILIARY BATTERY
AUXILIARY BATTERY VENTILATION HOSE
N*m (kgf*cm, ft.*lbf): Specified torque

Fig. 2: Locating 12V Battery
Courtesy of TOYOTA MOTOR SALES, U.S.A., INC.

3. Uncover the service plug grip, and remove. See **Fig. 3** and **Fig. 4** .
    a. Remove the 2 nuts and hybrid vehicle battery shield panel from the HV battery.
    b. Slide the lever (1) and release the lock.
    c. Raise the lever (2) and pull the service plug grip (3) to remove it.

CAUTION: After removing the service plug grip, put it in your pocket to prevent other technicians from accidentally reconnecting it while you are working on the high-voltage system.

CAUTION: Turning the power switch on (READY) with the service plug grip removed could cause a malfunction. Do not turn the power switch on (READY) unless instructed by the repair manual.

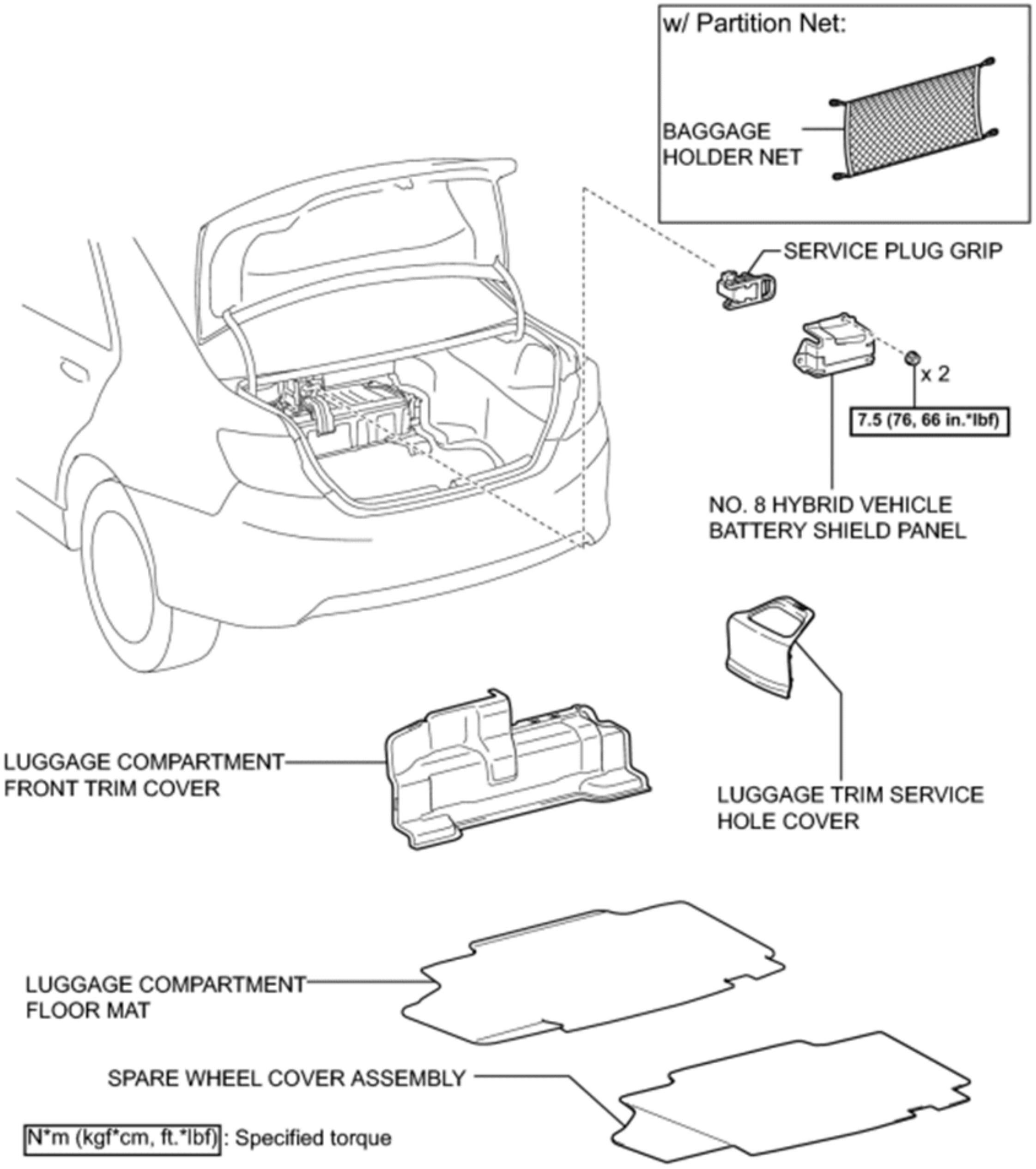
w/ Partition Net:
BAGGAGE HOLDER NET
SERVICE PLUG GRIP
x 2
7.5 (76, 66 in.*lbf)
NO. 8 HYBRID VEHICLE BATTERY SHIELD PANEL
LUGGAGE COMPARTMENT FRONT TRIM COVER
LUGGAGE TRIM SERVICE HOLE COVER
LUGGAGE COMPARTMENT FLOOR MAT
SPARE WHEEL COVER ASSEMBLY
N*m (kgf*cm, ft.*lbf) : Specified torque

Fig. 3: Locating Battery Shield Panel & Service Plug Grip
Courtesy of TOYOTA MOTOR SALES, U.S.A., INC.

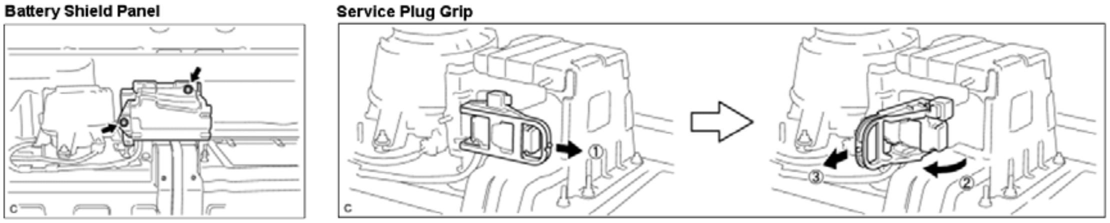

Fig. 4: Removing Battery Shield Panel & Service Plug Grip
Courtesy of TOYOTA MOTOR SALES, U.S.A., INC.

4. After disconnecting the service plug grip, wait for at least 10 minutes before touching any of the high-voltage connectors or terminals. Waiting for at least 10 minutes is required to discharge the high-voltage capacitor inside the inverter with converter assembly.
5. After waiting, check the voltage at the inspection point in the inverter with converter assembly. See **Isolation Check**.

ISOLATION CHECK

1. Remove the 2 bolts and connector cover assembly from the inverter with converter assembly in engine compartment. See **Fig. 5**.

NOTE: Make sure to pull the connector cover assembly straight up, as a connector is connected to the bottom of the cover. Cover the opening with non-residue tape to prevent entry of foreign matter or liquid after removing the connector cover

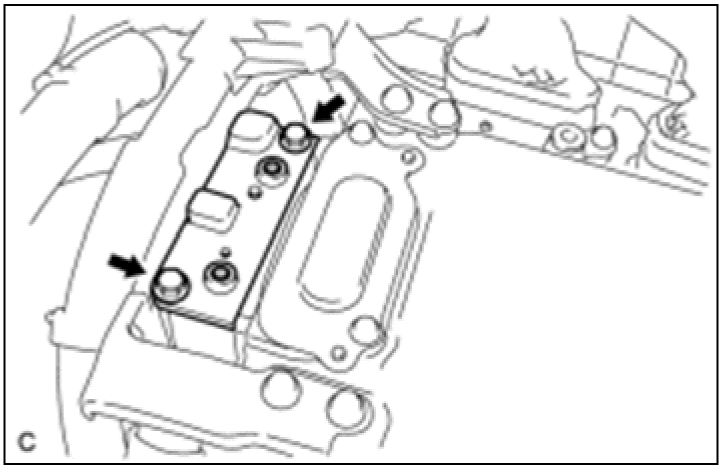

Fig. 5: Identifying Inverter Cover
Courtesy of TOYOTA MOTOR SALES, U.S.A., INC.

2. Check the voltage at the terminals in the inspection point in the inverter with converter assembly.

   Using the voltmeter, measure the voltage between the terminals of the 2-phase connectors (N-P).

   Standard voltage: 0 V

CAUTION: Wear insulating gloves.

HINT:

Use measuring range of DC 750 V or more on the voltmeter.

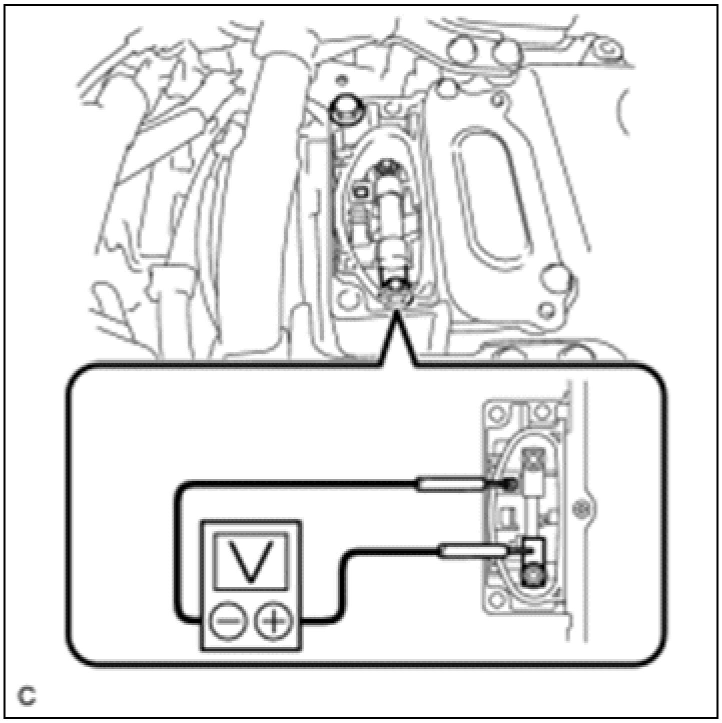

Fig. 6: Measuring Voltage Between Terminals Of 2-Phase Connectors
Courtesy of TOYOTA MOTOR SALES, U.S.A., INC.

3. Re-install inverter connector cover assembly.

CONNECT

CAUTION: Wear insulated gloves.

NOTE: Before connecting the service plug grip, make sure that no parts or tools remain in the luggage compartment.

1. Install service plug grip.
    a. Wear insulated gloves and insert the service plug grip in the order as shown in the illustration.
    b. Tilt the service plug grip 90° and slide it to the left until a click sound is heard.
    c. Install the battery shield panel to the HV battery with the 2 nuts.

2. Connect cable to negative 12-volt battery terminal.
3. Install luggage compartment components.

2012-2017 DRIVELINE/AXLES

Hybrid Transaxle (Service Information) (Hybrid)

HYBRID VEHICLE TRANSAXLE

COMPONENTS

ILLUSTRATION

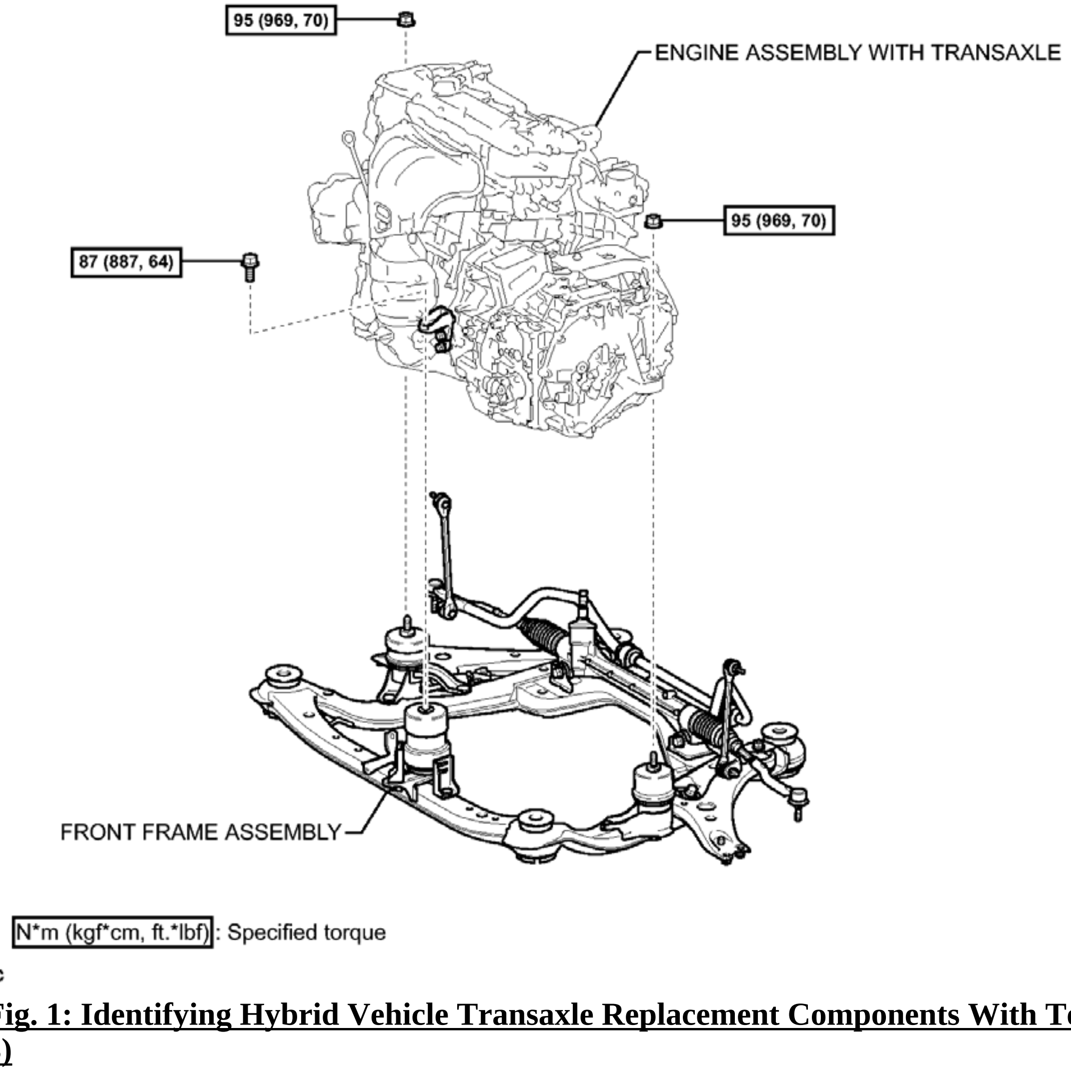
95 (969, 70)
ENGINE ASSEMBLY WITH TRANSAXLE
95 (969, 70)
87 (887, 64)
FRONT FRAME ASSEMBLY
N*m (kgf*cm, ft.*lbf): Specified torque
C

Fig. 1: Identifying Hybrid Vehicle Transaxle Replacement Components With Torque Specifications (1 Of 3)
Courtesy of TOYOTA MOTOR SALES, U.S.A., INC.

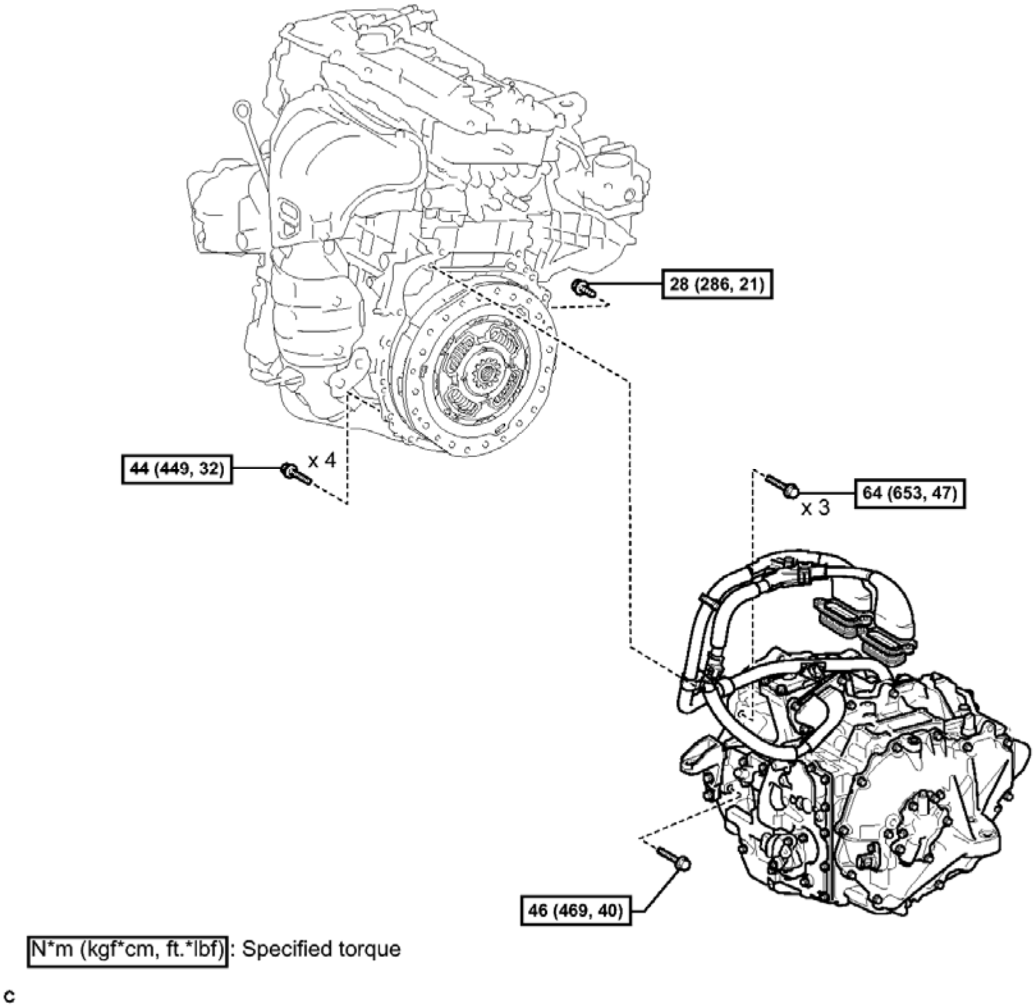
28 (286, 21)
44 (449, 32)
x 4
64 (653, 47)
x 3
46 (469, 40)
N*m (kgf*cm, ft.*lbf): Specified torque
c

Fig. 2: Identifying Hybrid Vehicle Transaxle Replacement Components With Torque Specifications (2 Of 3)

Courtesy of TOYOTA MOTOR SALES, U.S.A., INC.

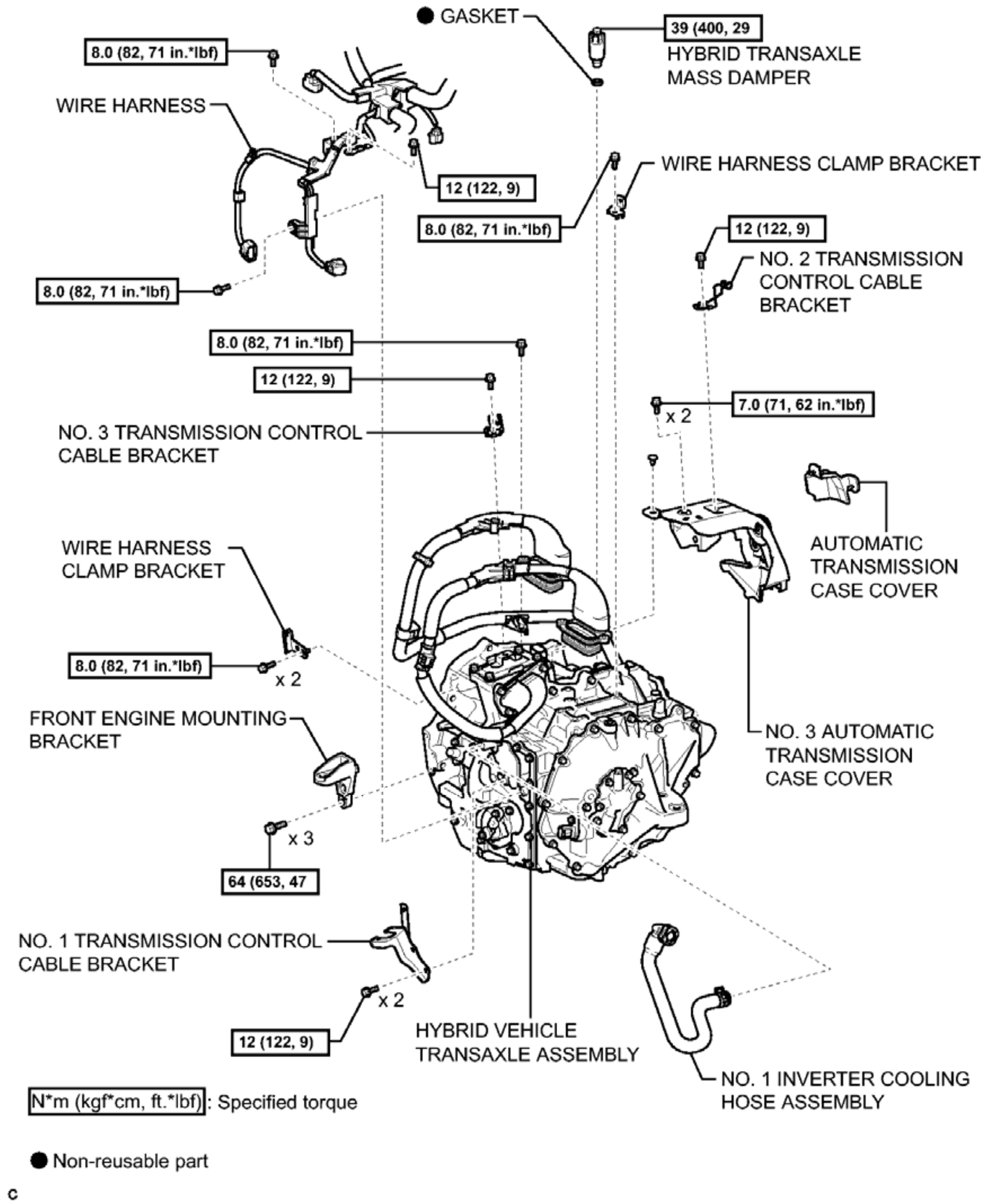
● GASKET
39 (400, 29
HYBRID TRANSAXLE MASS DAMPER
8.0 (82, 71 in.*lbf)
WIRE HARNESS
12 (122, 9)
WIRE HARNESS CLAMP BRACKET
8.0 (82, 71 in.*lbf)
12 (122, 9)
NO. 2 TRANSMISSION CONTROL CABLE BRACKET
8.0 (82, 71 in.*lbf)
8.0 (82, 71 in.*lbf)
12 (122, 9)
7.0 (71, 62 in.*lbf)
x 2
NO. 3 TRANSMISSION CONTROL CABLE BRACKET
AUTOMATIC TRANSMISSION CASE COVER
WIRE HARNESS CLAMP BRACKET
8.0 (82, 71 in.*lbf)
x 2
FRONT ENGINE MOUNTING BRACKET
NO. 3 AUTOMATIC TRANSMISSION CASE COVER
x 3
64 (653, 47
NO. 1 TRANSMISSION CONTROL CABLE BRACKET
x 2
12 (122, 9)
HYBRID VEHICLE TRANSAXLE ASSEMBLY
NO. 1 INVERTER COOLING HOSE ASSEMBLY
N*m (kgf*cm, ft.*lbf): Specified torque
● Non-reusable part
c

Fig. 3: Identifying Hybrid Vehicle Transaxle Replacement Components With Torque Specifications (3 Of 3)
Courtesy of TOYOTA MOTOR SALES, U.S.A., INC.

REMOVAL

REMOVAL

WARNING: **The engine assembly with transmission is very heavy. Be sure to follow the procedure described in the service information, or the engine lifter may suddenly drop.**

1. **REMOVE ENGINE ASSEMBLY WITH TRANSAXLE**

   Refer to **REMOVAL**

2. **SEPARATE WIRE HARNESS**
   a. Remove the 3 bolts and disconnect the 4 connectors, 3 clamps and wire harness from the hybrid vehicle transaxle assembly.

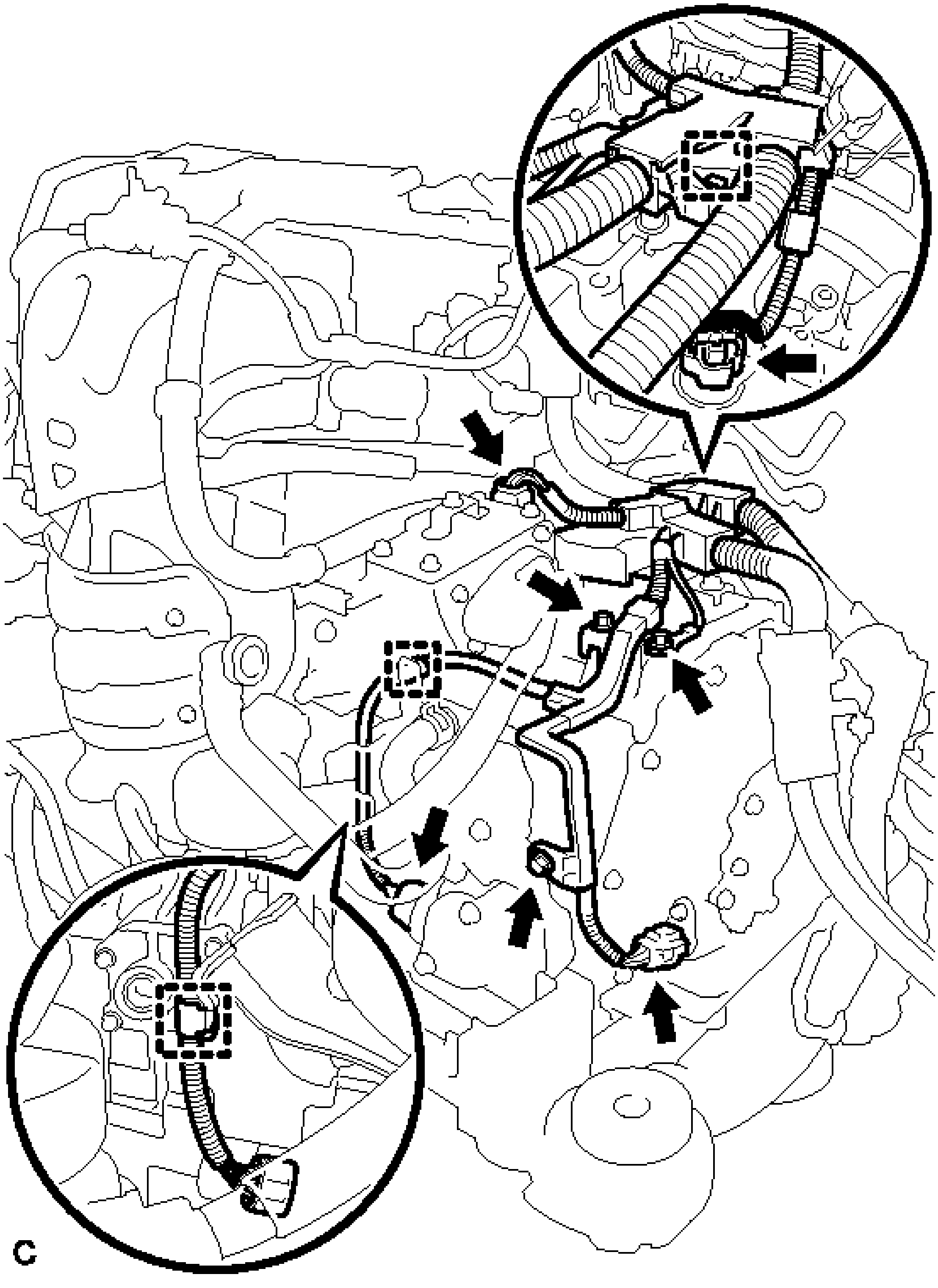

Fig. 4: Identifying Wire Harness Connectors, Clamps, And Bolts
Courtesy of TOYOTA MOTOR SALES, U.S.A., INC.

b. Remove the bolt and disconnect the 3 clamps and motor cable from the hybrid vehicle transaxle assembly.

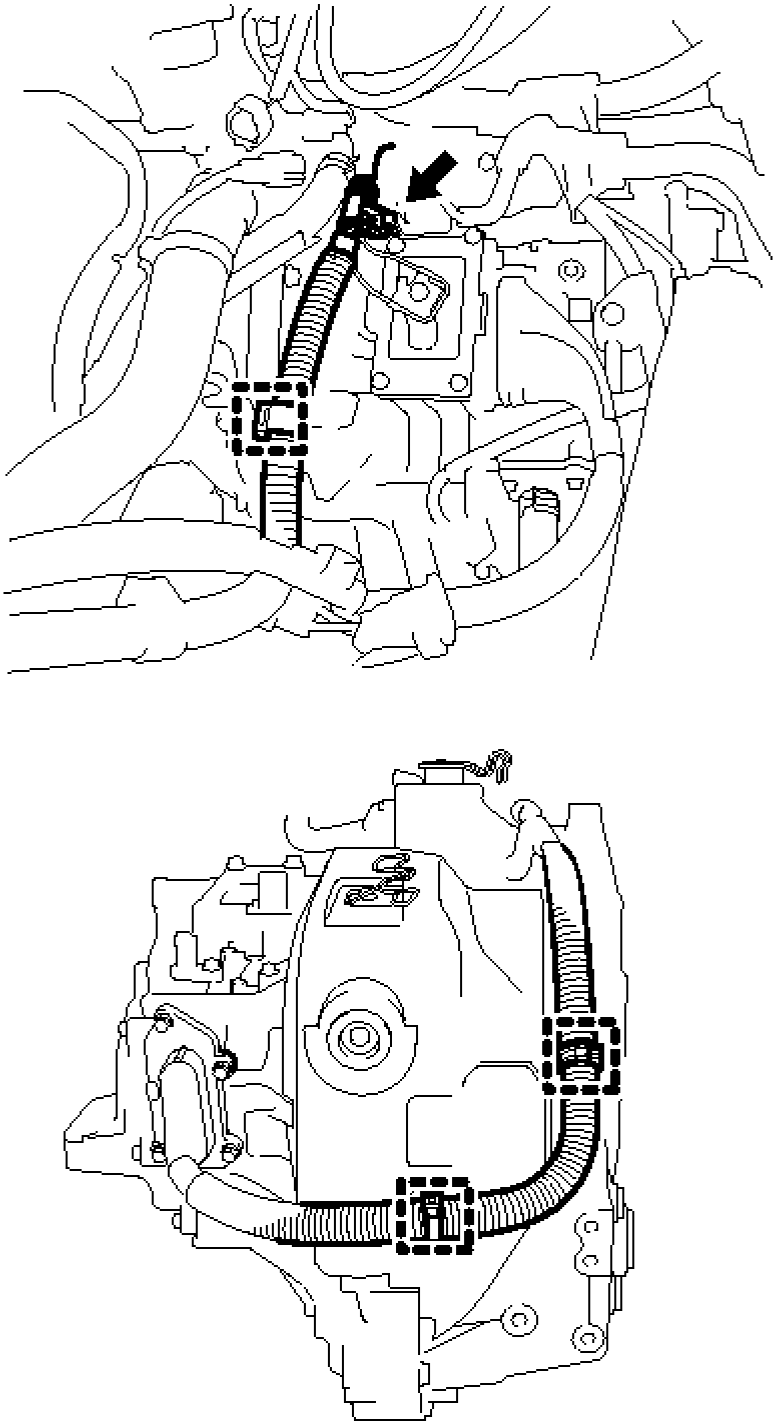

Fig. 5: Identifying Motor Cable Bolt And Clamps
Courtesy of TOYOTA MOTOR SALES, U.S.A., INC.

3. **REMOVE FRONT FRAME ASSEMBLY** . Refer to **REMOVAL - Step 85**
4. **REMOVE HYBRID VEHICLE TRANSAXLE ASSEMBLY**

a. Using the transmission jack attachment, set the hybrid vehicle transaxle assembly on a transmission jack.

NOTE:

- **Secure the hybrid vehicle transaxle assembly to the transmission jack using a suitable adapter, such as a rope or attachment.**
- **To prevent the motor water jacket cover assembly from deforming, do not place any attachments onto the motor water jacket cover assembly of the hybrid vehicle transaxle assembly.**
- **Hold the engine assembly with a suitable adapter, such as a rope, during the operation.**

b. Remove the 9 bolts and hybrid vehicle transaxle assembly.

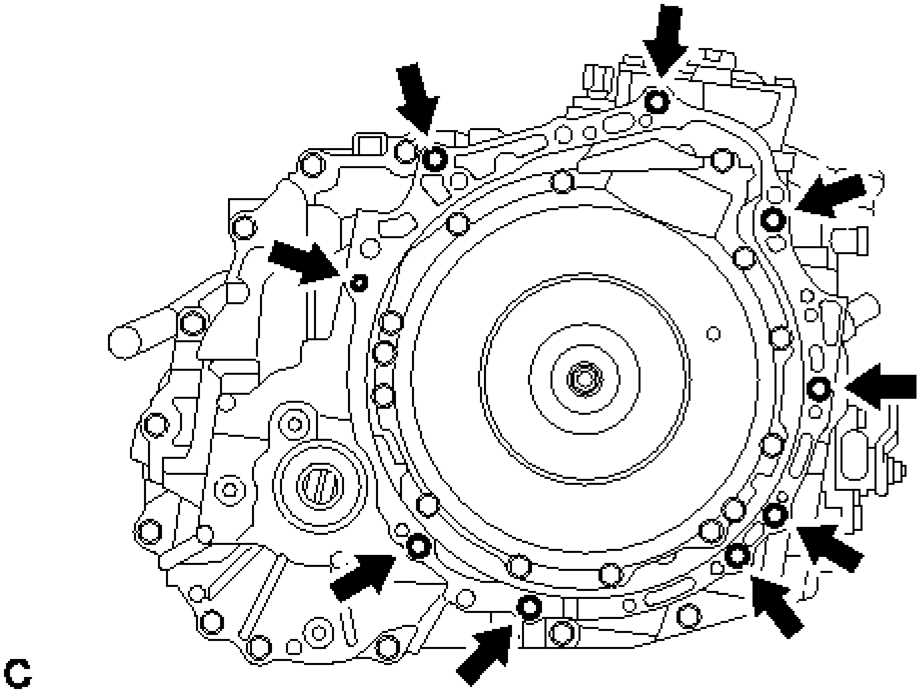

Fig. 6: Identifying Hybrid Vehicle Transaxle Assembly Bolts
Courtesy of TOYOTA MOTOR SALES, U.S.A., INC.

NOTE:

- **To avoid damage to the knock pins, do not pry between the hybrid vehicle transaxle assembly and the engine.**
- **To prevent the splines of the damper from becoming misaligned, do not allow the transaxle to hit the damper during transaxle removal and installation.**

5. **REMOVE FRONT ENGINE MOUNTING BRACKET**

a. Remove the 3 bolts and front engine mounting bracket from the hybrid vehicle transaxle assembly.

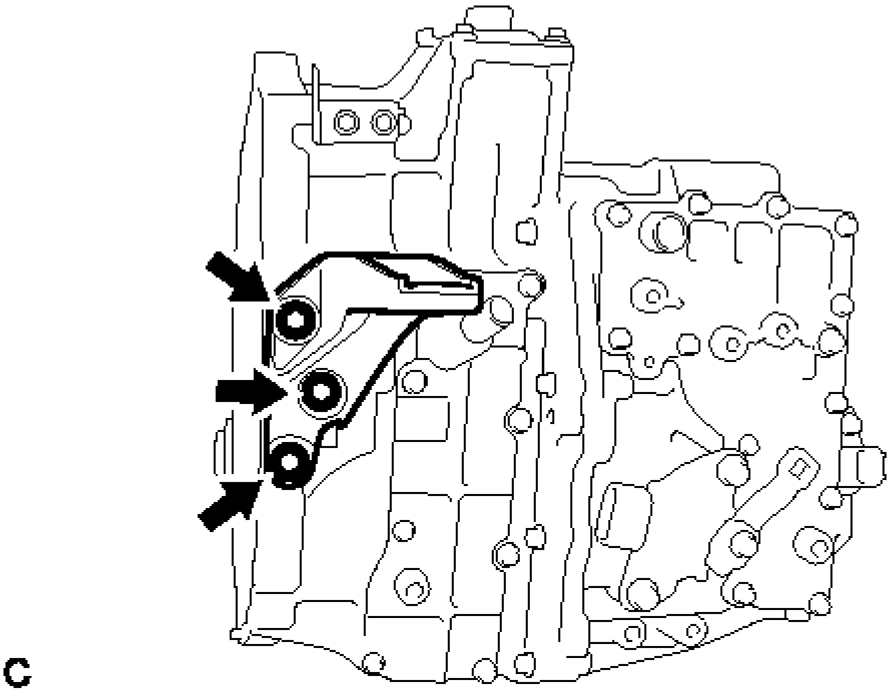

Fig. 7: Identifying Front Engine Mounting Bracket Bolts
Courtesy of TOYOTA MOTOR SALES, U.S.A., INC.

6. **REMOVE NO. 1 TRANSMISSION CONTROL CABLE BRACKET**
   a. Remove the 2 bolts and No. 1 transmission control cable bracket from the hybrid vehicle transaxle assembly.

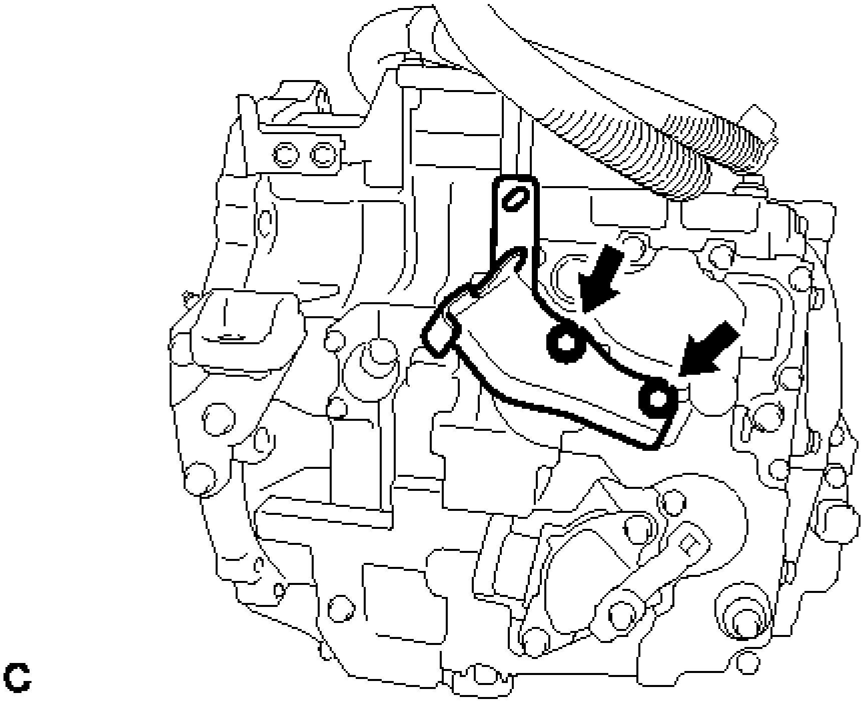

Fig. 8: Identifying No. 1 Transmission Control Cable Bracket Bolts
Courtesy of TOYOTA MOTOR SALES, U.S.A., INC.

7. **REMOVE NO. 2 TRANSMISSION CONTROL CABLE BRACKET**
    a. Remove the bolt and No. 2 transmission control cable bracket from the hybrid vehicle transaxle assembly.

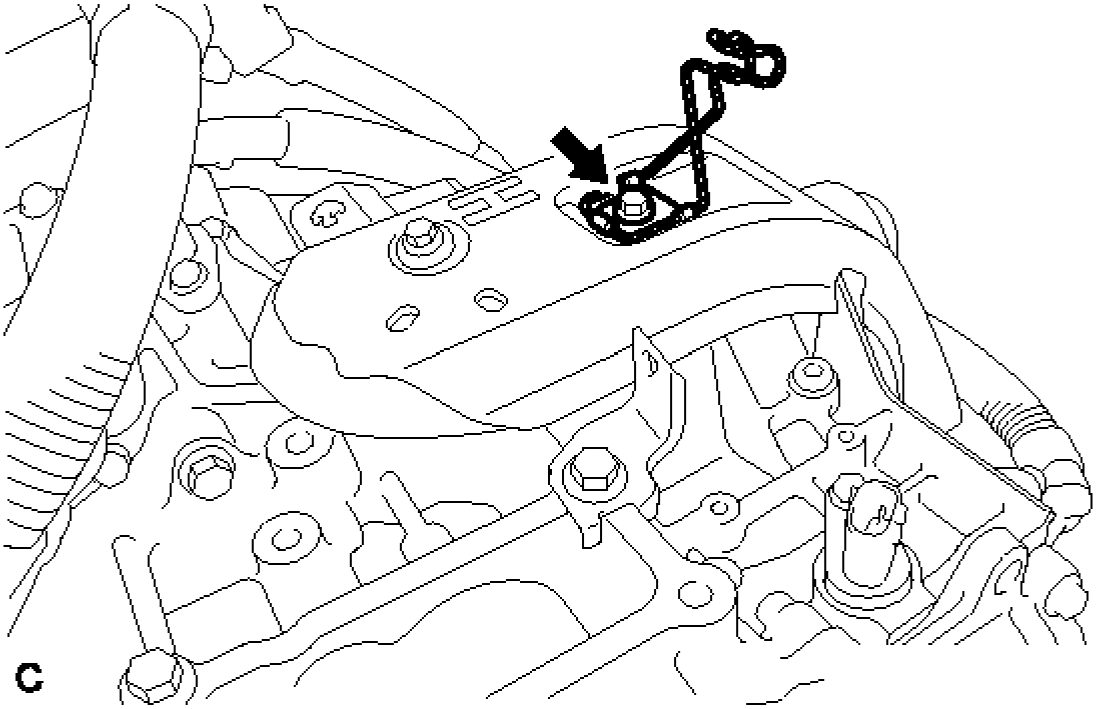

Fig. 9: Identifying No. 2 Transmission Control Cable Bracket Bolts
Courtesy of TOYOTA MOTOR SALES, U.S.A., INC.

8. **REMOVE NO. 3 TRANSMISSION CONTROL CABLE BRACKET**
    a. Remove the bolt and No. 3 transmission control cable bracket from the hybrid vehicle transaxle assembly.

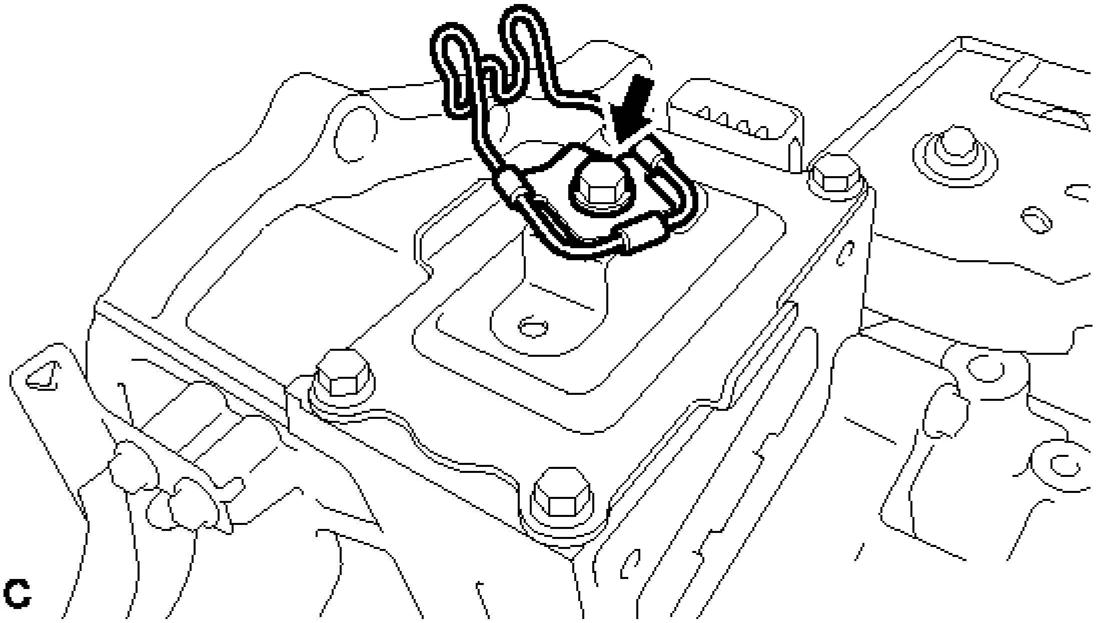

Fig. 10: Identifying No. 3 Transmission Control Cable Bracket Bolts
Courtesy of TOYOTA MOTOR SALES, U.S.A., INC.

9. **REMOVE AUTOMATIC TRANSMISSION CASE COVER**
    a. Disengage the 2 guides and remove the automatic transmission case cover.

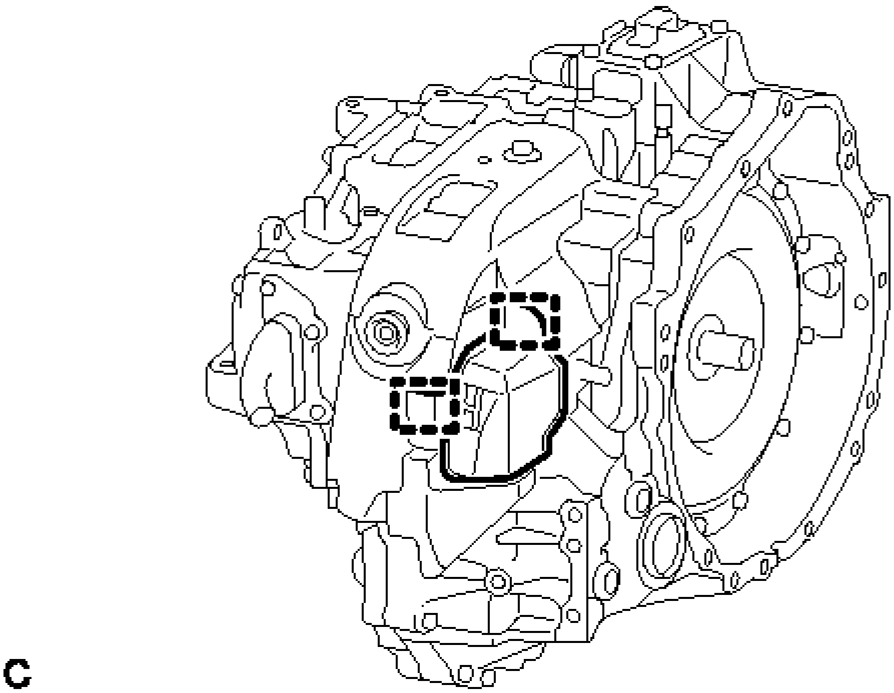

Fig. 11: Identifying Automatic Transmission Case Cover Guides

Courtesy of TOYOTA MOTOR SALES, U.S.A., INC.

10. **REMOVE NO. 3 AUTOMATIC TRANSMISSION CASE COVER**
    a. Remove the 2 bolts, clip and No. 3 automatic transmission case cover from the hybrid vehicle transaxle assembly.

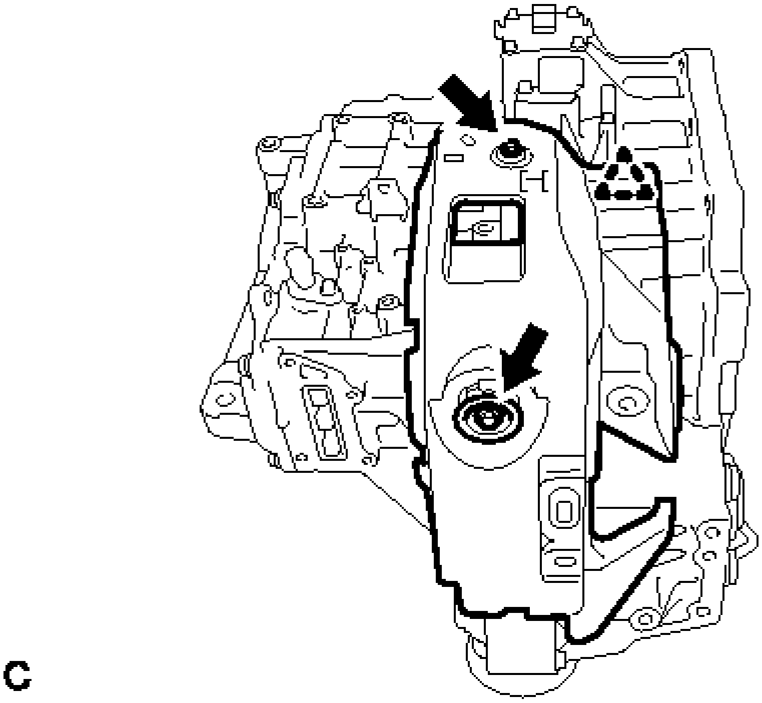

Fig. 12: Identifying No. 3 Automatic Transmission Case Cover Clip And Bolts
Courtesy of TOYOTA MOTOR SALES, U.S.A., INC.

11. **REMOVE HYBRID TRANSAXLE MASS DAMPER**
    a. Remove the hybrid transaxle mass damper and gasket from the hybrid vehicle transaxle assembly.

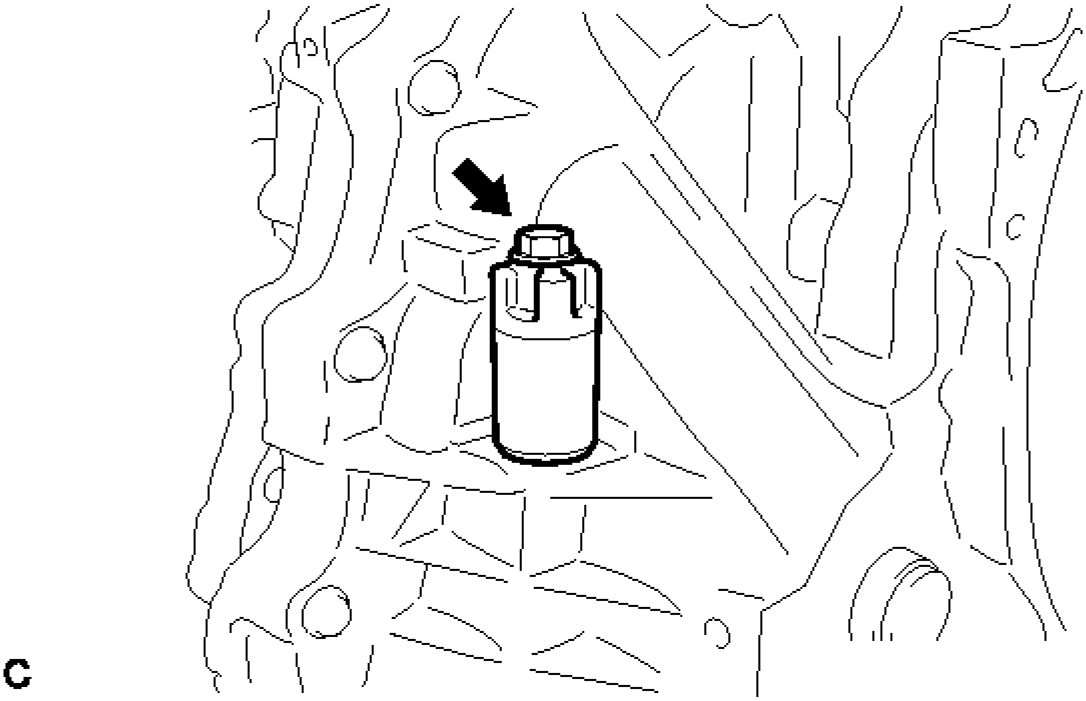

Fig. 13: Identifying Hybrid Transaxle Mass Damper
Courtesy of TOYOTA MOTOR SALES, U.S.A., INC.

12. **REMOVE WIRE HARNESS CLAMP BRACKET**
    a. Remove the 3 bolts and 2 wire harness clamp brackets from the hybrid vehicle transaxle assembly.

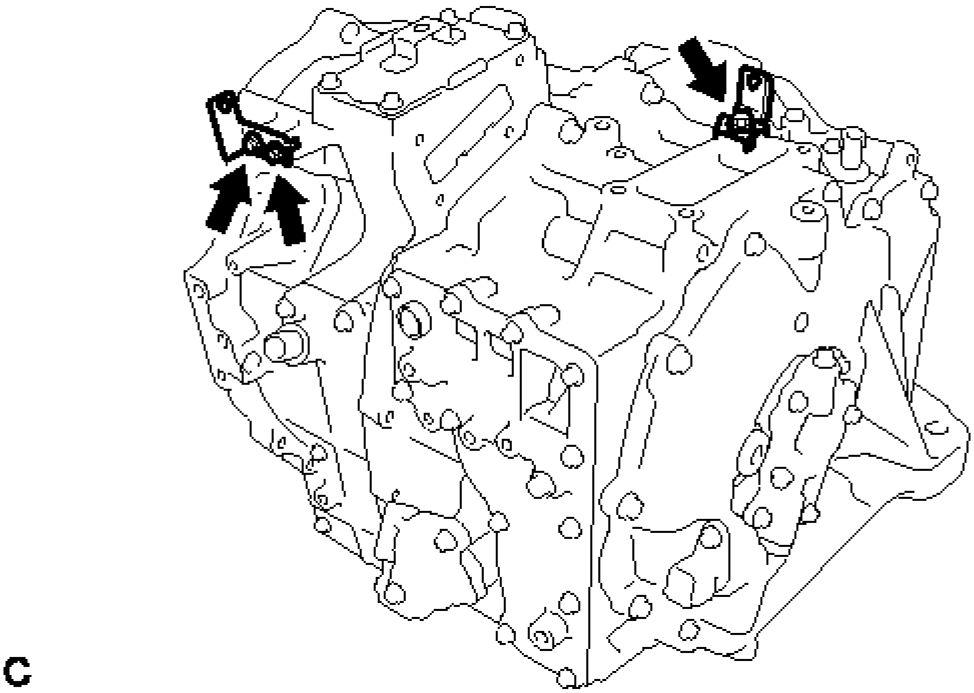

Fig. 14: Identifying Wire Harness Clamp Bracket Bolts

Courtesy of TOYOTA MOTOR SALES, U.S.A., INC.

13. **REMOVE NO. 1 INVERTER COOLING HOSE ASSEMBLY**
    - a. Remove the No. 1 inverter cooling hose assembly from the hybrid vehicle transaxle assembly.

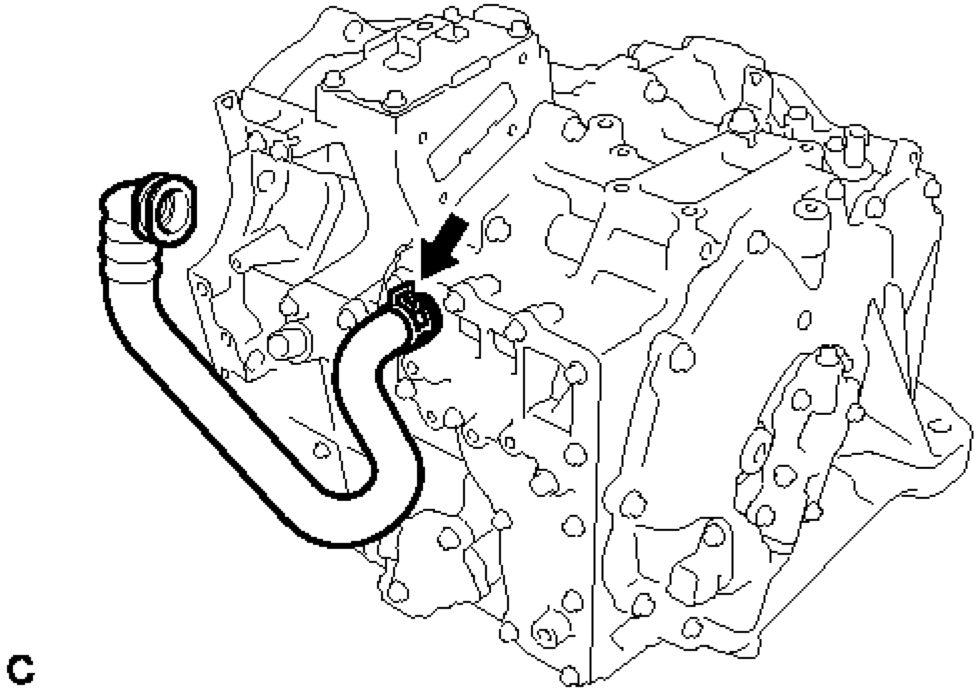

Fig. 15: Identifying No. 1 Inverter Cooling Hose Clamp
Courtesy of TOYOTA MOTOR SALES, U.S.A., INC.

INSTALLATION

INSTALLATION

1. **INSTALL NO. 1 INVERTER COOLING HOSE ASSEMBLY**
    - a. Install the No. 1 inverter cooling hose assembly to the hybrid vehicle transaxle assembly.
2. **INSTALL WIRE HARNESS CLAMP BRACKET**
    - a. Install the 2 wire harness clamp brackets to the hybrid vehicle transaxle assembly with the 3 bolts.

      Torque: 8.0 N*m (82 kgf*cm, 71 in.*lbf)
3. **INSTALL HYBRID TRANSAXLE MASS DAMPER**
    - a. Install a new gasket and the hybrid transaxle mass damper.

      Torque: 39 N*m (400 kgf*cm, 29 ft.*lbf)
4. **INSTALL NO. 3 AUTOMATIC TRANSMISSION CASE COVER**
    - a. Install the No. 3 automatic transmission case cover to the hybrid vehicle transaxle assembly with

the 2 bolts and clip.

Torque: 7.0 N*m (71 kgf*cm, 62 in.*lbf)

5. **INSTALL AUTOMATIC TRANSMISSION CASE COVER**
    a. Engage the 2 guides and install the automatic transmission case cover.
6. **INSTALL NO. 3 TRANSMISSION CONTROL CABLE BRACKET**
    a. Install the No. 3 transmission control cable bracket to the hybrid vehicle transaxle assembly with the bolt.

        Torque: 12 N*m (122 kgf*cm, 9 ft.*lbf)

7. **INSTALL NO. 2 TRANSMISSION CONTROL CABLE BRACKET**
    a. Install the No. 2 transmission control cable bracket to the hybrid vehicle transaxle assembly with the bolt.

        Torque: 12 N*m (122 kgf*cm, 9 ft.*lbf)

8. **INSTALL NO. 1 TRANSMISSION CONTROL CABLE BRACKET**
    a. Install the No. 1 transmission control cable bracket to the hybrid vehicle transaxle assembly with the 2 bolts.

        Torque: 12 N*m (122 kgf*cm, 9 ft.*lbf)

9. **INSTALL FRONT ENGINE MOUNTING BRACKET**
    a. Install the front engine mounting bracket to the hybrid vehicle transaxle assembly with the 3 bolts.

        Torque: 64 N*m (653 kgf*cm, 47 ft.*lbf)

10. **INSTALL HYBRID VEHICLE TRANSAXLE ASSEMBLY**
    a. Make sure that the knock pins are installed to the engine.

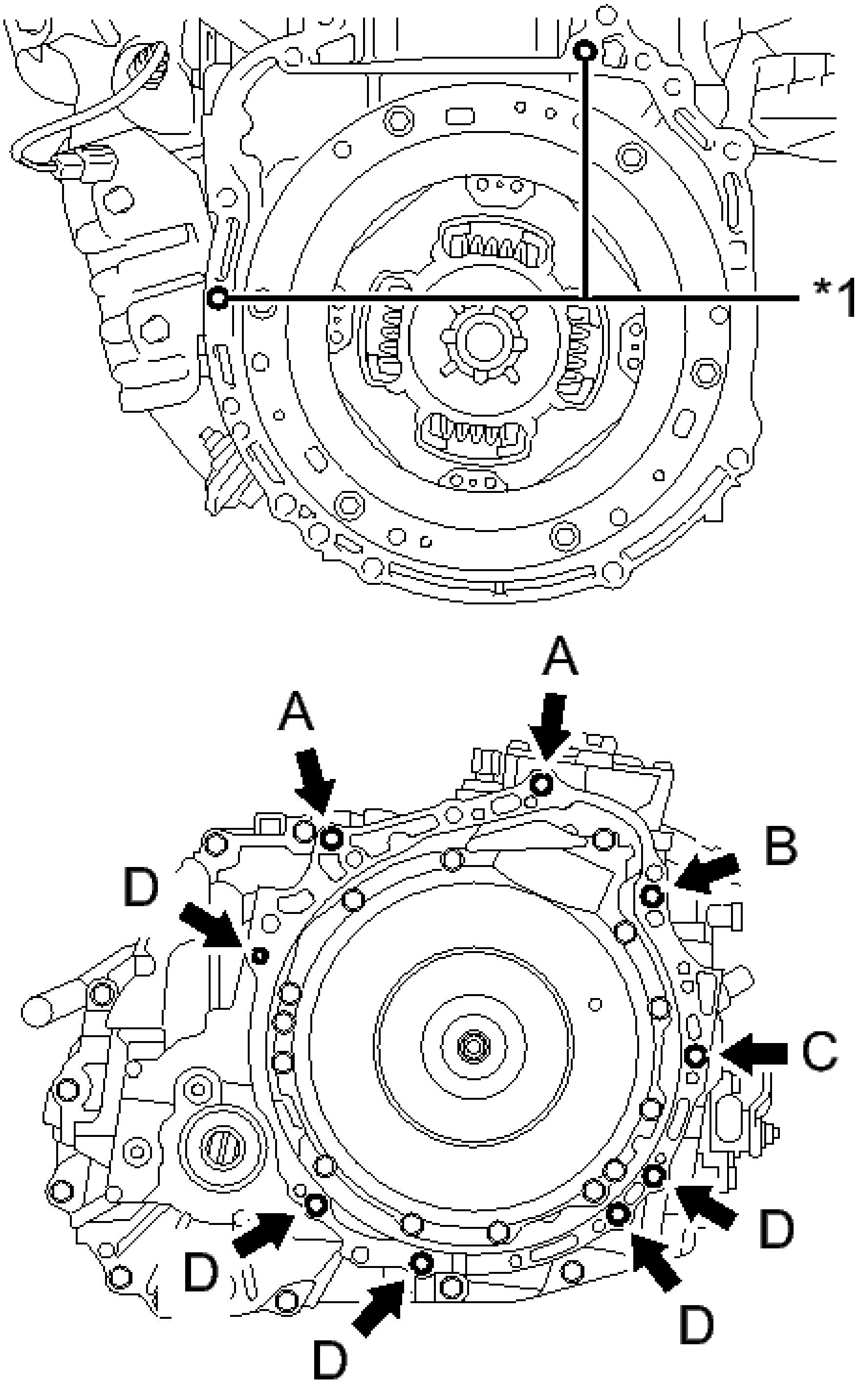
*1
A
A
B
D
C
D
D
D
D

Fig. 16: Identifying Knock Pins
Courtesy of TOYOTA MOTOR SALES, U.S.A., INC.

TEXT IN ILLUSTRATION

	Knock

*1	Pin

b. Install the hybrid vehicle transaxle assembly to the engine with the 9 bolts.

Bolt	Bolt Length	Torque
A, B	55 mm (2.17 in.)	64 N*m (653 kgf*cm, 47 ft.*lbf)
C	65 mm (2.56 in.)	46 N*m (469 kgf*cm, 34 ft.*lbf)
D	32 mm (1.26 in.)	44 N*m (449 kgf*cm, 32 ft.*lbf)
E	38 mm (1.50 in.)	28 N*m (286 kgf*cm, 21 ft.*lbf)

NOTE:

- **Do not apply grease either to the spline or to the input shaft.**
- **Make sure that the wire harness or similar items are not pinched between the contact surfaces.**
- **Do not forcibly pry on the hybrid vehicle transaxle.**
- **Make sure to align the hybrid vehicle transaxle so that the input shaft of the hybrid vehicle transaxle will be inserted straight into the inner splines of the transmission input damper.**
- **When inserting the input shaft of the hybrid vehicle transaxle into the inner splines of the transmission input damper, do not shake the hybrid vehicle transaxle excessively.**
- **When mounting the hybrid vehicle transaxle to the engine, make sure to securely fit the knock pins into the knock holes.**

HINT:

Temporarily tighten bolt B first.

11. **INSTALL FRONT FRAME ASSEMBLY** . Refer to **INSTALLATION - Step 11**
12. **CONNECT WIRE HARNESS**
    a. Connect the 3 clamps and install the motor cable to the hybrid vehicle transaxle assembly with the bolt.

       Torque: 8.0 N*m (82 kgf*cm, 71 in.*lbf)

    b. Connect the 3 clamps, 4 connectors and install the wire harness to the hybrid vehicle transaxle assembly with the 3 bolts.

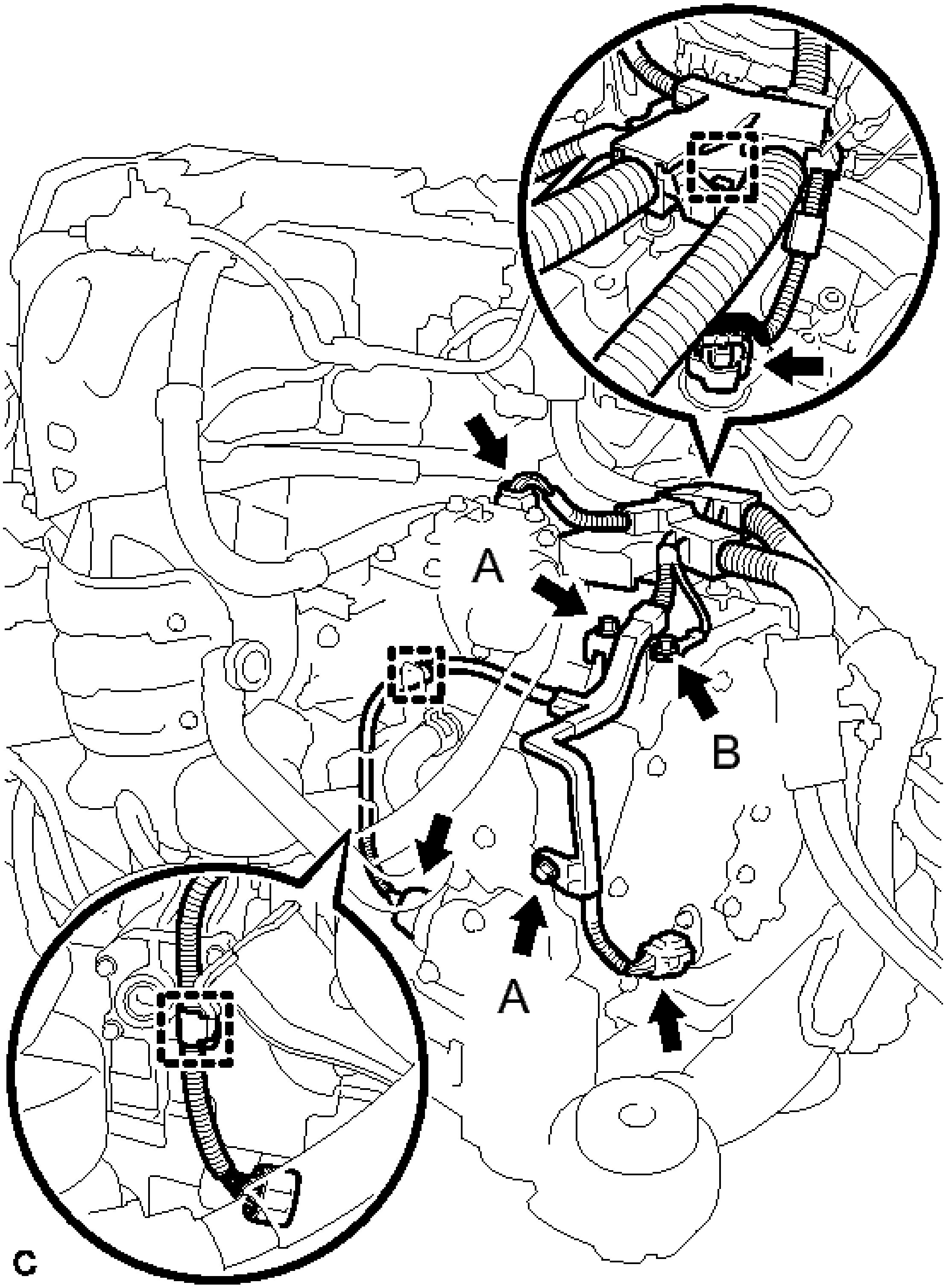

Fig. 17: Identifying Wire Harness Connectors, Clamps, And Bolts
Courtesy of TOYOTA MOTOR SALES, U.S.A., INC.

Bolt A

Torque: 8.0 N*m (82 kgf*cm, 71 in.*lbf)

Bolt B

Torque: 12 N*m (122 kgf*cm, 9 ft.*lbf)

13. **INSTALL ENGINE ASSEMBLY WITH TRANSAXLE**

    Refer to **INSTALLATION**

GENERATOR CABLE

COMPONENTS

ILLUSTRATION

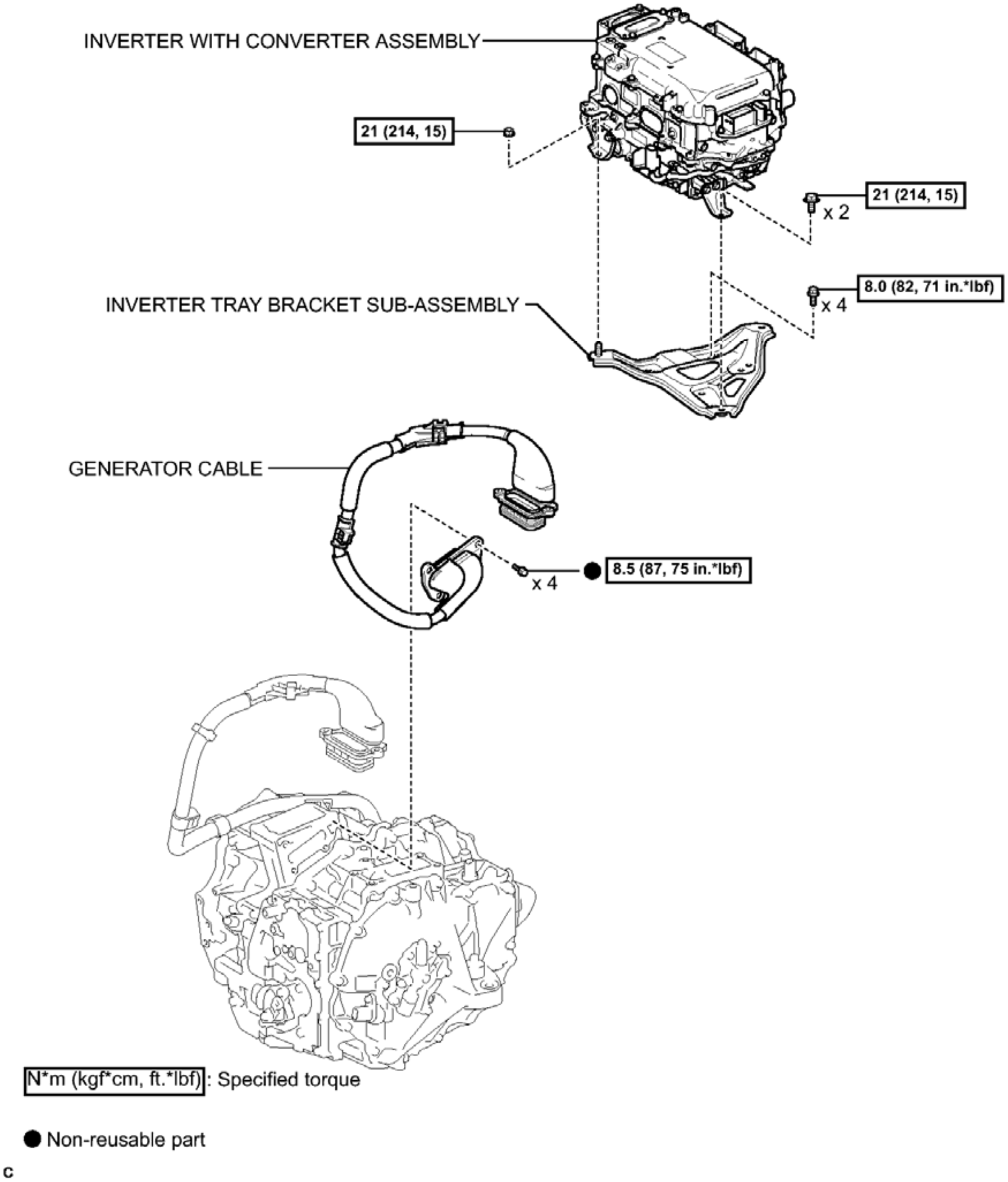
INVERTER WITH CONVERTER ASSEMBLY
21 (214, 15)
21 (214, 15)
x 2
INVERTER TRAY BRACKET SUB-ASSEMBLY
8.0 (82, 71 in.*lbf)
x 4
GENERATOR CABLE
x 4
● 8.5 (87, 75 in.*lbf)
N*m (kgf*cm, ft.*lbf): Specified torque
● Non-reusable part
c

Fig. 18: Identifying Generator Cable Replacement Components With Torque Specifications
Courtesy of TOYOTA MOTOR SALES, U.S.A., INC.

REMOVAL

REMOVAL

1. **REMOVE INVERTER WITH CONVERTER ASSEMBLY**

Refer to **REMOVAL**

2. **REMOVE INVERTER TRAY BRACKET SUB-ASSEMBLY**
    a. Remove the 4 bolts and inverter tray bracket sub-assembly from the body.

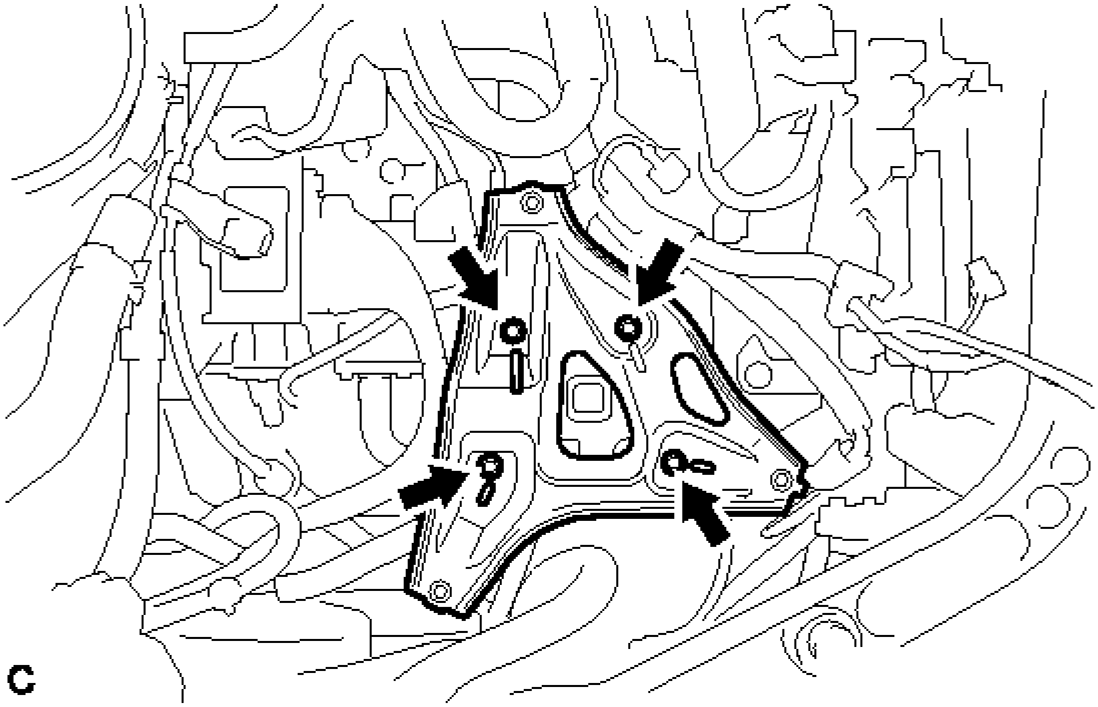

Fig. 19: Identifying Inverter Tray Bracket Bolts
Courtesy of TOYOTA MOTOR SALES, U.S.A., INC.

3. **REMOVE GENERATOR CABLE**
    a. Remove the 4 bolts and generator cable from the hybrid vehicle transaxle assembly.

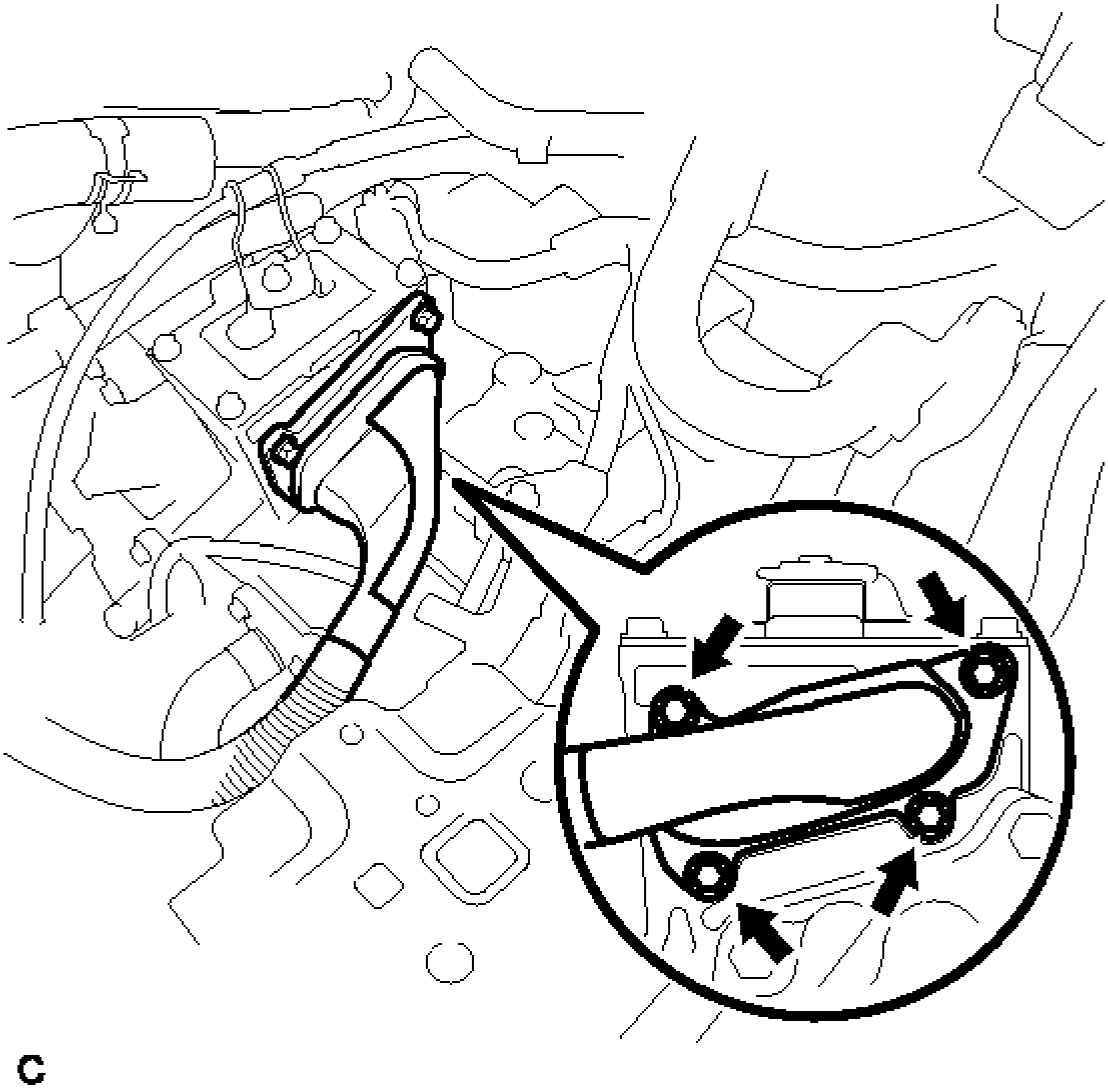

Fig. 20: Identifying Generator Cable Bolts
Courtesy of TOYOTA MOTOR SALES, U.S.A., INC.

INSTALLATION

INSTALLATION

1. **INSTALL GENERATOR CABLE**
   a. Install the generator cable to the hybrid vehicle transaxle assembly with 4 new bolts.

      Torque: 8.5 N*m (87 kgf*cm, 75 in.*lbf)

2. **INSTALL INVERTER TRAY BRACKET SUB-ASSEMBLY**
   a. Temporarily install the inverter tray bracket sub-assembly to the body with the 4 bolts.

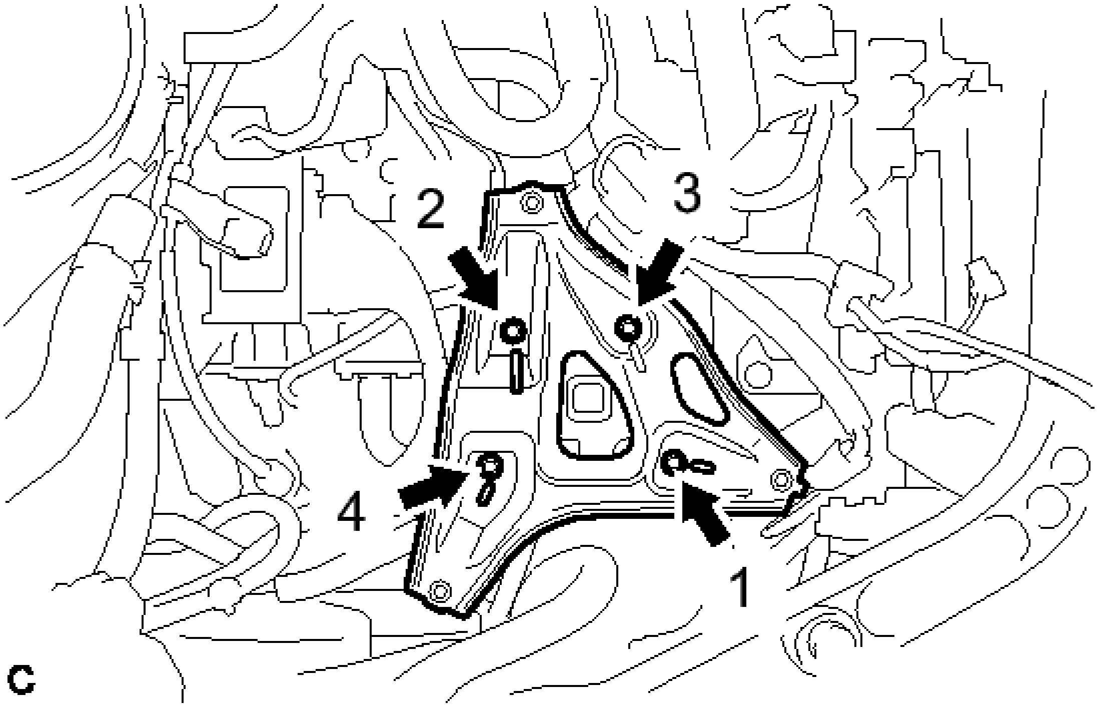

Fig. 21: Identifying Inverter Tray Bracket Bolts
Courtesy of TOYOTA MOTOR SALES, U.S.A., INC.

HINT:

Temporarily tighten bolt 1.

b. Install the 4 bolts in the order shown in the illustration.

Torque: 8.0 N*m (82 kgf*cm, 71 in.*lbf)

3. **INSTALL INVERTER WITH CONVERTER ASSEMBLY**

Refer to **INSTALLATION**

MOTOR CABLE

COMPONENTS

ILLUSTRATION

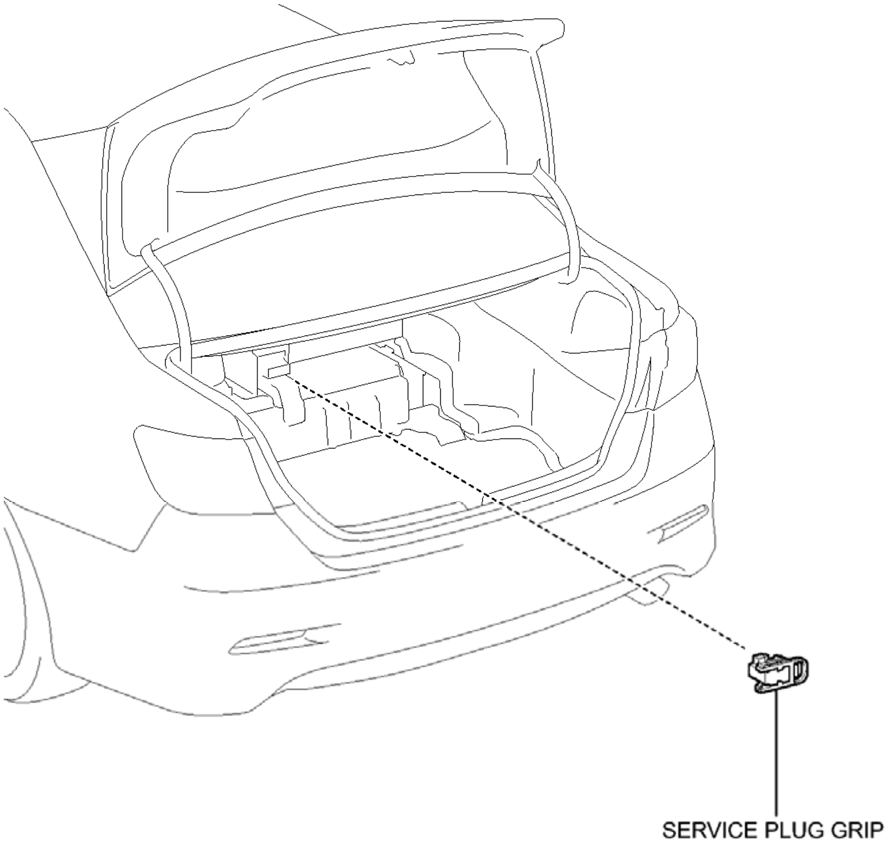
SERVICE PLUG GRIP

Fig. 22: Identifying Motor Cable Replacement Components (1 Of 2)
Courtesy of TOYOTA MOTOR SALES, U.S.A., INC.

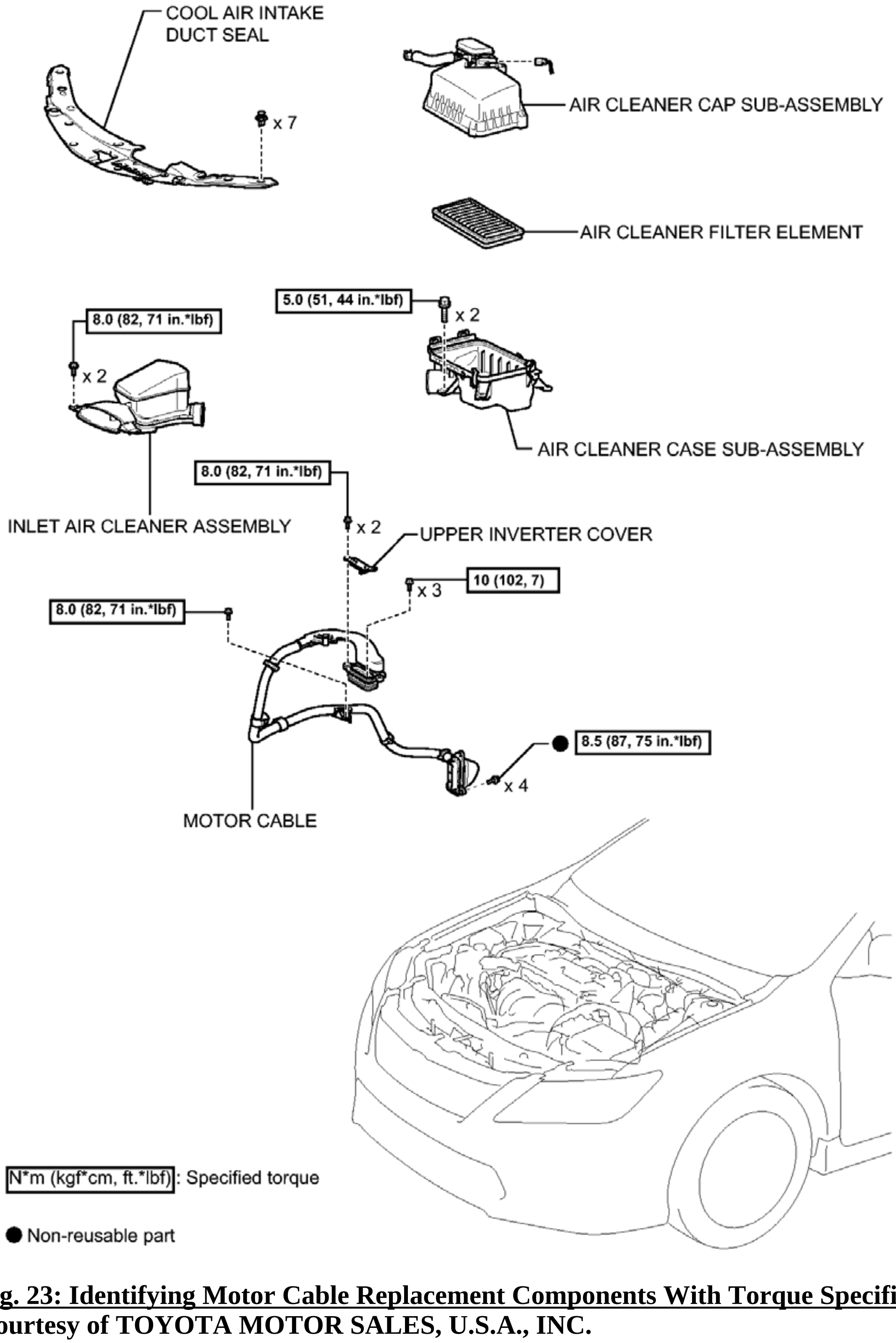
COOL AIR INTAKE DUCT SEAL
x 7
AIR CLEANER CAP SUB-ASSEMBLY
AIR CLEANER FILTER ELEMENT
5.0 (51, 44 in.*lbf)
x 2
8.0 (82, 71 in.*lbf)
x 2
AIR CLEANER CASE SUB-ASSEMBLY
8.0 (82, 71 in.*lbf)
INLET AIR CLEANER ASSEMBLY
x 2
UPPER INVERTER COVER
10 (102, 7)
x 3
8.0 (82, 71 in.*lbf)
● 8.5 (87, 75 in.*lbf)
x 4
MOTOR CABLE
N*m (kgf*cm, ft.*lbf) : Specified torque
● Non-reusable part

Fig. 23: Identifying Motor Cable Replacement Components With Torque Specifications (2 Of 2)
Courtesy of TOYOTA MOTOR SALES, U.S.A., INC.

REMOVAL

REMOVAL

1. **REMOVE SERVICE PLUG GRIP**

   Refer to **REMOVAL**

2. **REMOVE COOL AIR INTAKE DUCT SEAL** . Refer to **REMOVAL - Step 1**
3. **REMOVE INLET AIR CLEANER ASSEMBLY** . Refer to **REMOVAL - Step 30**
4. **REMOVE AIR CLEANER CAP SUB-ASSEMBLY** . Refer to **REMOVAL - Step 3**
5. **REMOVE AIR CLEANER FILTER ELEMENT**
6. **REMOVE AIR CLEANER CASE SUB-ASSEMBLY** . Refer to **REMOVAL - Step 33**
7. **REMOVE UPPER INVERTER COVER** . Refer to **REMOVAL - Step 14**
8. **REMOVE MOTOR CABLE**

   WARNING: **Wear insulated gloves.**

   a. Using an insulated tool, remove the 3 bolts.

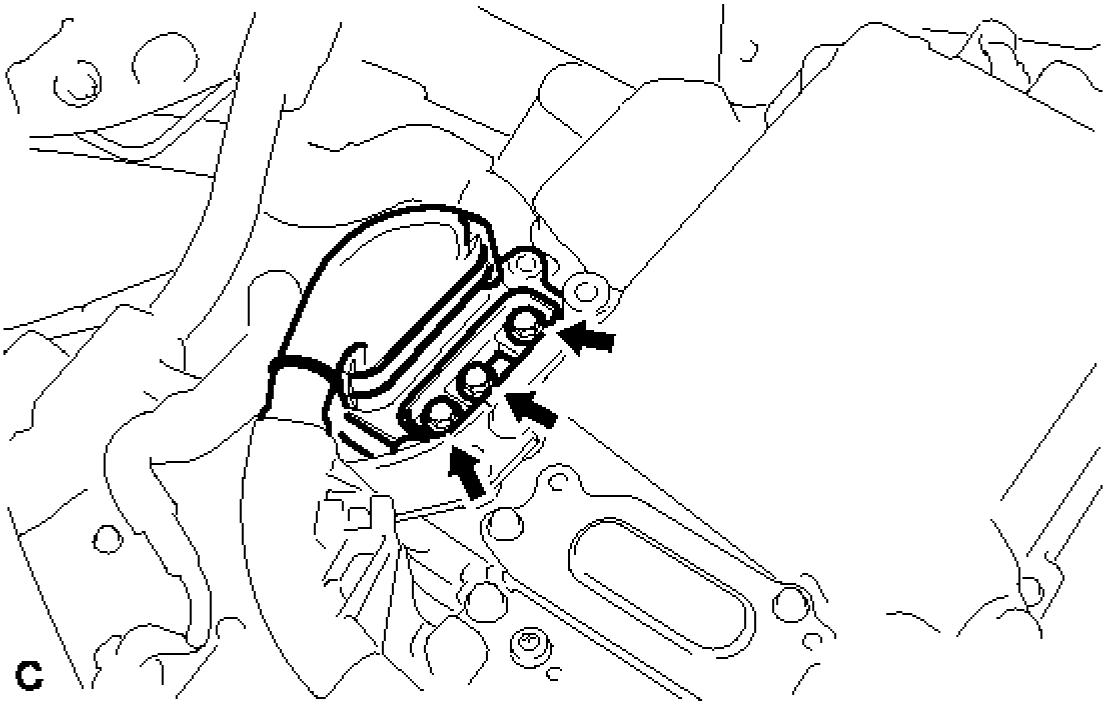

Fig. 24: Identifying Motor Cable Bolts
Courtesy of TOYOTA MOTOR SALES, U.S.A., INC.

   b. Disconnect the 3 wire harness clamps and separate the motor cable.

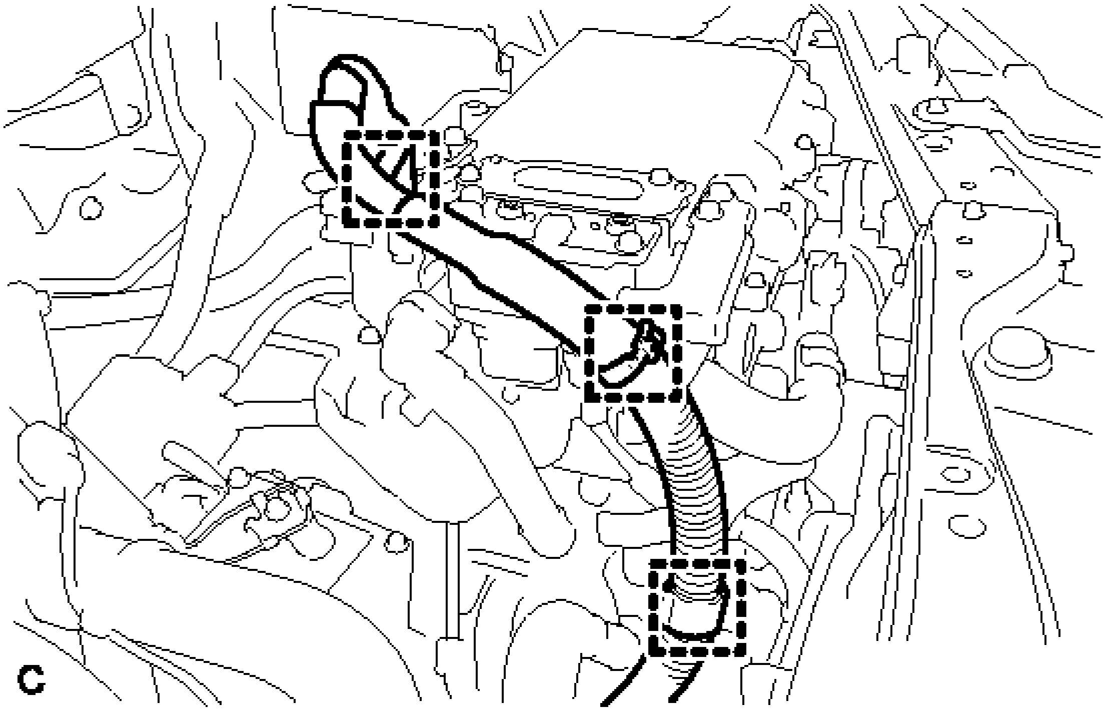

Fig. 25: Identifying Motor Cable Wire Harness Clamps
Courtesy of TOYOTA MOTOR SALES, U.S.A., INC.

NOTE:

- **Do not damage the terminals, connector housings or inverter with converter assembly when disconnecting them.**
- **Do not touch the connector waterproofing rubber or terminals.**
- **Insulate the removed terminals with insulating tape.**
- **Do not allow any foreign objects or water to enter the inverter with converter assembly.**

c. Disconnect the clamp.

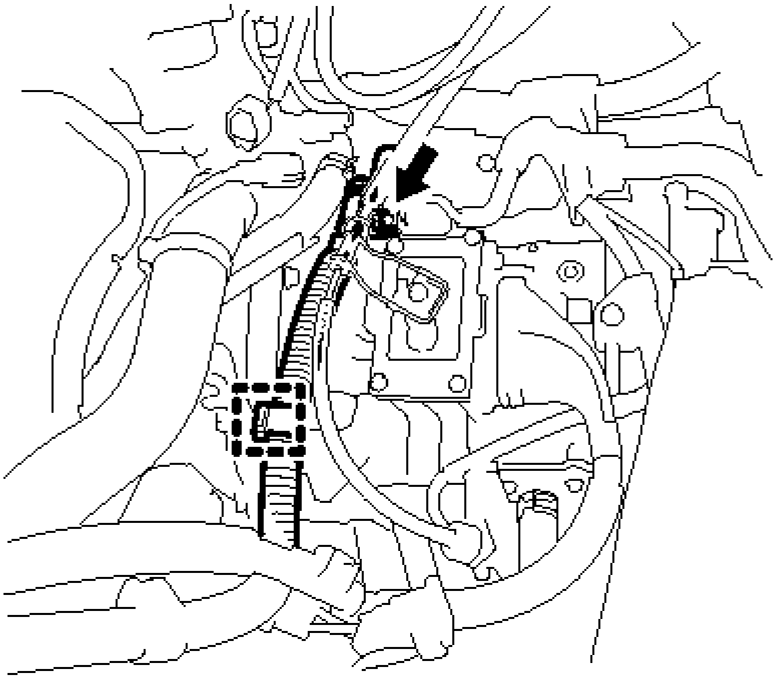

Fig. 26: Identifying Motor Cable Clamp
Courtesy of TOYOTA MOTOR SALES, U.S.A., INC.

d. Remove the bolt and disconnect the motor cable from the hybrid vehicle transaxle assembly.
e. Disconnect the 2 clamps.

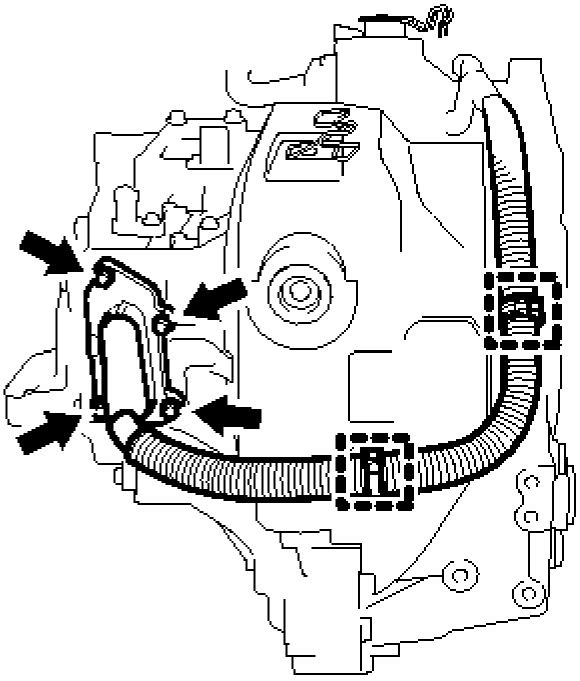

C

Fig. 27: Identifying Motor Cable Bolts And Clamps

Courtesy of TOYOTA MOTOR SALES, U.S.A., INC.

f. Remove the 4 bolts and motor cable from the hybrid vehicle transaxle assembly.

INSTALLATION

INSTALLATION

1. **INSTALL MOTOR CABLE**

WARNING: **Wear insulated gloves.**

NOTE:

- **Do not damage the terminals, connector housings or inverter with converter assembly when connecting them.**
- **Do not touch the connector waterproofing rubber or terminals.**
- **Do not allow any foreign objects or water to enter the inverter with converter assembly.**

a. Install the motor cable to the hybrid vehicle transaxle assembly with 4 new bolts.

Torque: 8.5 N*m (87 kgf*cm, 75 in.*lbf)

b. Connect the 2 clamps in the order shown in the illustration.

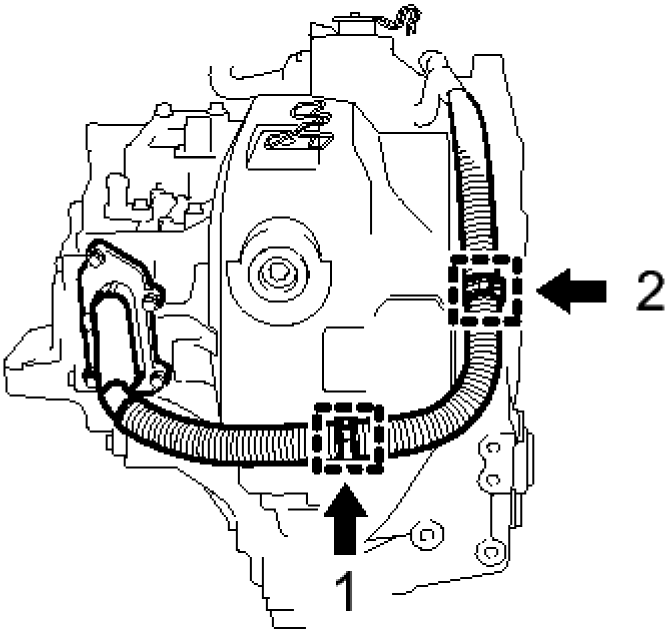

C

Fig. 28: Identifying Motor Cable Clamps
Courtesy of TOYOTA MOTOR SALES, U.S.A., INC.

c. Install the motor cable to the hybrid vehicle transaxle assembly with the bolt.

Torque: 8.0 N*m (82 kgf*cm, 71 in.*lbf)

d. Connect the clamp.
e. Connect the motor cable to the inverter with converter assembly.
f. Connect the 3 wire harness clamps.
g. Using an insulated tool, install the motor cable to the inverter with converter assembly with the 3 bolts.

Torque: 10 N*m (102 kgf*cm, 7 ft.*lbf)

NOTE:

- **The connector should be connected securely.**
- **The bolts should be fastened securely.**

2. **INSTALL UPPER INVERTER COVER** . Refer to **INSTALLATION - Step 22**
3. **INSTALL AIR CLEANER CASE SUB-ASSEMBLY** . Refer to **INSTALLATION - Step 60**
4. **INSTALL AIR CLEANER FILTER ELEMENT**
5. **INSTALL AIR CLEANER CAP SUB-ASSEMBLY** . Refer to **INSTALLATION - Step 2**
6. **INSTALL INLET AIR CLEANER ASSEMBLY** . Refer to **INSTALLATION - Step 63**
7. **INSTALL COOL AIR INTAKE DUCT SEAL** . Refer to **INSTALLATION - Step 4**
8. **INSTALL SERVICE PLUG GRIP**

   Refer to **INSTALLATION**

HYBRID TRANSAXLE FLUID

ON-VEHICLE INSPECTION

ON-VEHICLE INSPECTION

1. **INSPECT HYBRID TRANSAXLE FLUID**
   a. Using a 10 mm hexagon socket wrench, remove the filler plug and gasket.

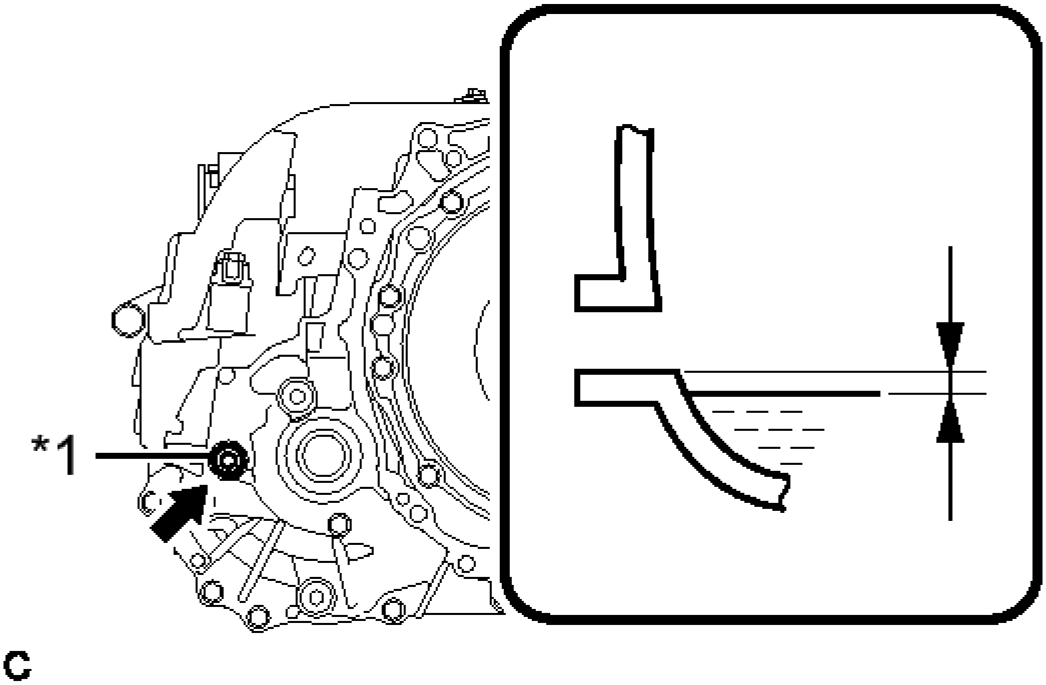

Fig. 29: Identifying Hybrid Transaxle Filler Plug
Courtesy of TOYOTA MOTOR SALES, U.S.A., INC.

TEXT IN ILLUSTRATION

*1	Filler Plug

b. Check that the fluid level is between 0 to 5 mm (0 to 0.197 in.) from the bottom lip of the filler plug opening. (If the fluid level is too low, return to the Add Hybrid Transaxle Fluid procedure.)

NOTE:

- **Stop the vehicle on a level surface.**
- **Be sure to directly check that the transaxle fluid level is within the specified range.**
- **Insufficient or excessive amounts of transaxle fluid may damage the hybrid transaxle.**
- **If the fluid was replaced or fluid was added, make sure to recheck the fluid level after driving the vehicle.**

c. Check for leaks if the quantity of transaxle fluid is low. (If there are no fluid leaks but the amount of the fluid is insufficient, add fluid See step 2.)

d. Using a 10 mm hexagon socket wrench, install the filler plug with a new gasket.

Torque: 39 N*m (400 kgf*cm, 29 ft.*lbf)

REPLACEMENT

REPLACEMENT

1. **REPLACE HYBRID TRANSAXLE FLUID**
    a. Be sure that the vehicle remains level and lift the vehicle. [*1]
    b. Using a 10 mm hexagon socket wrench, remove the filler plug and gasket. [*2]

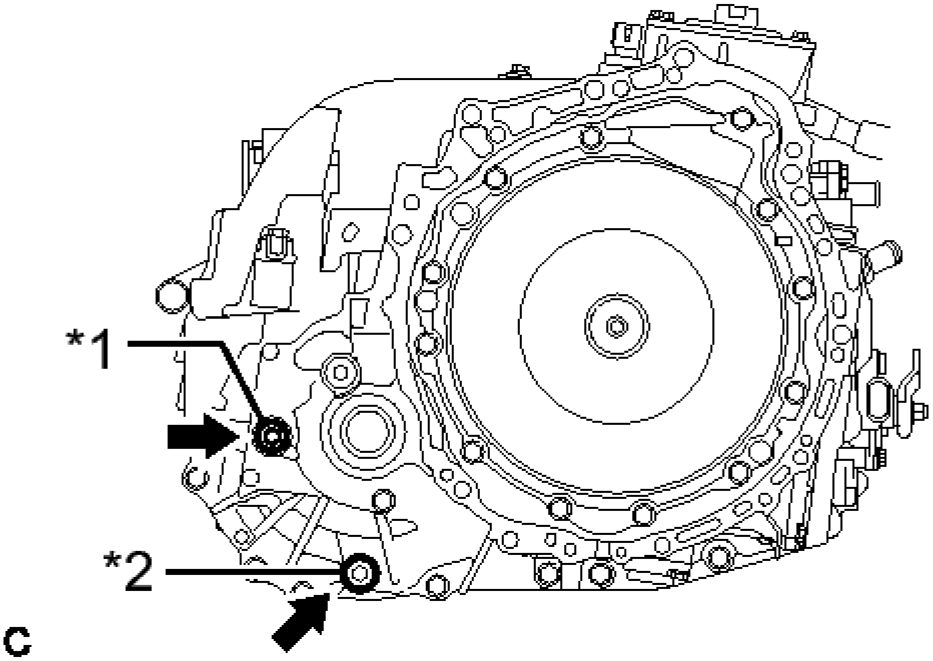

Fig. 30: Identifying Hybrid Transaxle Filler And Drain Plugs
Courtesy of TOYOTA MOTOR SALES, U.S.A., INC.

TEXT IN ILLUSTRATION

*1	Filler Plug
*2	Drain Plug

c. Using a 10 mm hexagon socket wrench, remove the drain plug and gasket to drain the hybrid transaxle fluid. [*3]
d. Using a 10 mm hexagon socket wrench, temporarily install the drain plug and gasket. [*4]

HINT:

Because the drain plug will be removed again, the gasket can be reused at this time.

e. Add transaxle fluid until the fluid level is between 0 to 5 mm (0 to 0.197 in.) from the bottom lip of the filler plug opening. [*5]

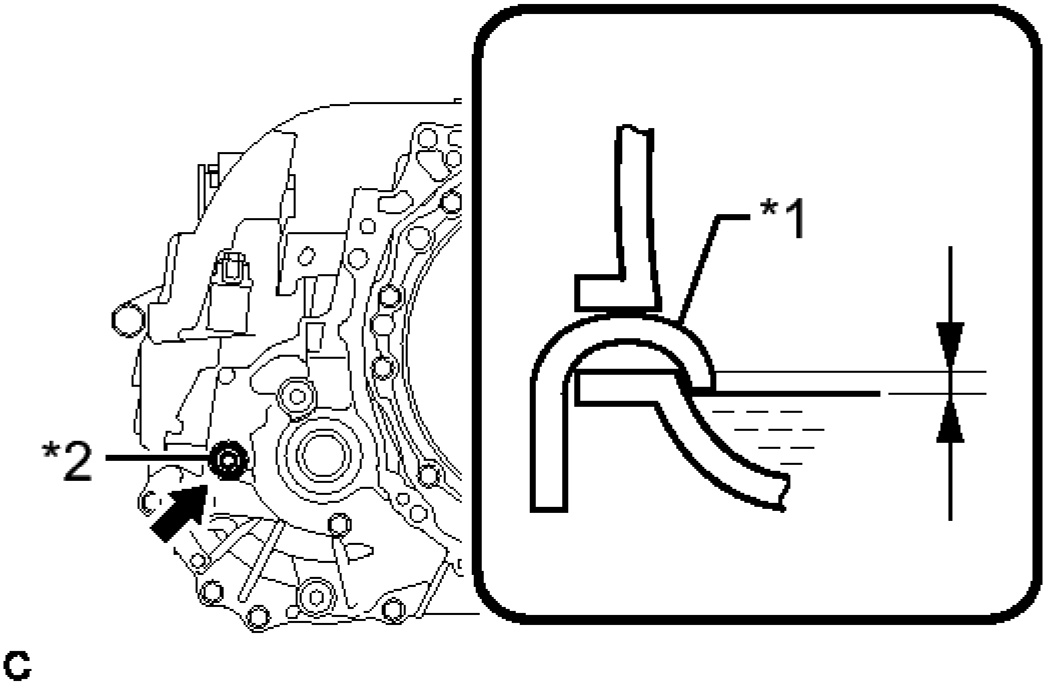

Fig. 31: Identifying Hybrid Transaxle Filler Plug And Filler Nozzle
Courtesy of TOYOTA MOTOR SALES, U.S.A., INC.

TEXT IN ILLUSTRATION

*1	Filler Nozzle
*2	Filler Plug

NOTE:

- **Use Toyota Genuine ATF WS.**
- **Be sure to fully insert the filler nozzle into the filler plug opening.**
- **Be sure to add fluid slowly. If fluid is added quickly, the fluid may hit internal parts and bounce back, resulting in fluid coming out of the filler plug opening.**
- **Be sure to directly check that the transaxle fluid level is within the specified range.**
- **Insufficient or excessive amounts of transaxle fluid may damage the hybrid transaxle.**

f. Using a 10 mm hexagon socket wrench, temporarily install the filler plug and gasket. [*6]

HINT:

Because the filler plug will be removed again, the gasket can be reused at this time.

  g. Lower the vehicle. [*7]
  h. Connect the Techstream to the DLC3 and turn the power switch on (IG). [*8]
  i. Put the engine in inspection mode. Refer to **INSPECTION MODE PROCEDURE** . [*9]
  j. Idle the engine for 30 seconds with the power switch on (READY). [*10]
  k. Turn the power switch off. [*11]
  l. Repeat steps [*1] to [*11].
  m. Repeat steps [*1] to [*3].
  n. Using a 10 mm hexagon socket wrench, install the drain plug and a new gasket.

  Torque: 39 N*m (400 kgf*cm, 29 ft.*lbf)

2. **ADD HYBRID TRANSAXLE FLUID** See step 2
3. **INSPECT HYBRID TRANSAXLE FLUID** See step 3

ADJUSTMENT

ADJUSTMENT

1. **DRAIN HYBRID TRANSAXLE FLUID**
   a. Using a 10 mm hexagon socket wrench, remove the filler plug and gasket.

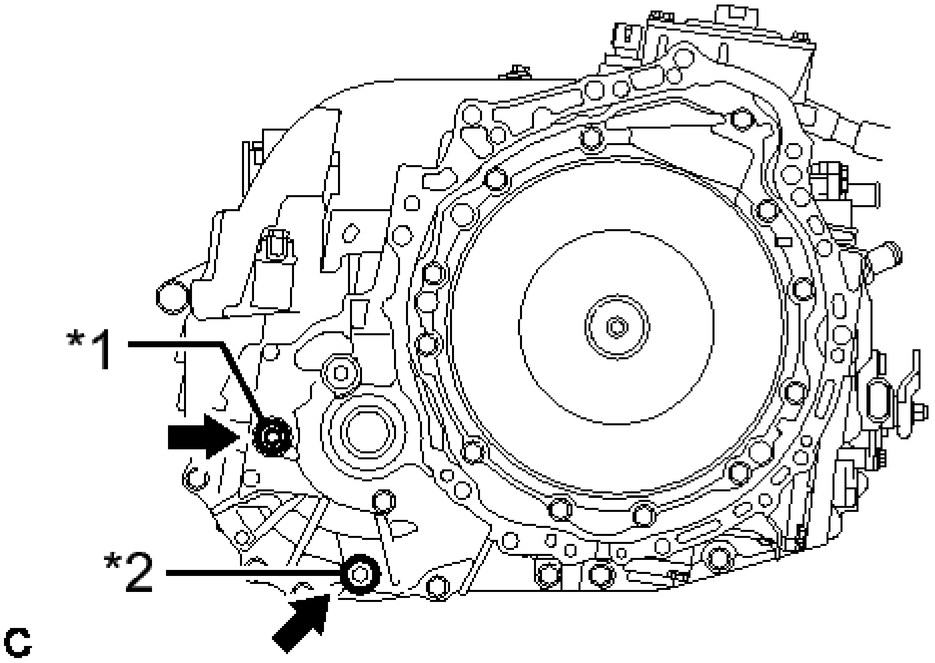

Fig. 32: Identifying Hybrid Transaxle Filler And Drain Plugs
Courtesy of TOYOTA MOTOR SALES, U.S.A., INC.

TEXT IN ILLUSTRATION

*1	Filler Plug
*2	Drain Plug

b. Using a 10 mm hexagon socket wrench, remove the drain plug and gasket to drain the hybrid transaxle fluid.
c. Using a 10 mm hexagon socket wrench, install the drain plug and a new gasket.

Torque: 39 N*m (400 kgf*cm, 29 ft.*lbf)

2. **ADD HYBRID TRANSAXLE FLUID**
   a. Add transaxle fluid until the fluid level is between 0 to 5 mm (0 to 0.197 in.) from the bottom lip of the filler plug opening.

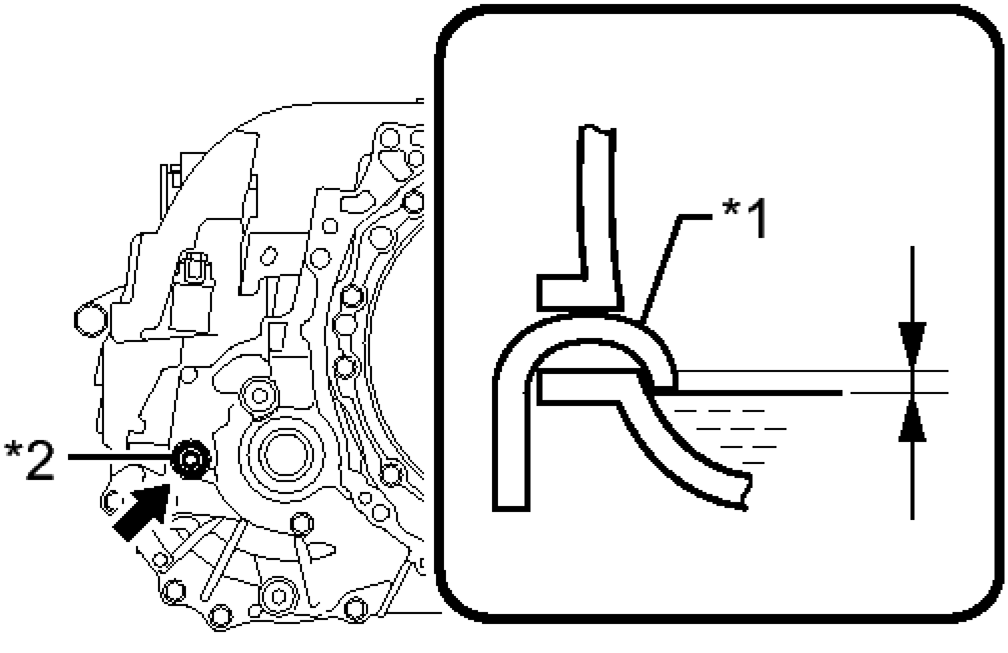

Fig. 33: Identifying Hybrid Transaxle Filler Plug And Filler Nozzle
Courtesy of TOYOTA MOTOR SALES, U.S.A., INC.

TEXT IN ILLUSTRATION

*1	Filler Nozzle
*2	Filler Plug

NOTE:

- **Stop the vehicle on a level surface.**

- **Use Toyota Genuine ATF WS.**
- **Be sure to fully insert the filler nozzle into the filler plug opening.**
- **Be sure to add fluid slowly. If fluid is added quickly, the fluid may hit internal parts and bounce back, resulting in fluid coming out of the filler plug opening.**
- **Be sure to directly check that the transaxle fluid level is within the specified range.**
- **Insufficient or excessive amounts of transaxle fluid may damage the hybrid transaxle.**

Reference

3.7 liters (3.9 US qts, 3.2 Imp. qts)

b. After adding fluid, leave it for 30 seconds so that the fluid surface can become still again, and then check that the fluid level is between 0 to 5 mm (0 to 0.197 in.) from the bottom lip of the filler plug opening. (If the fluid level is too low, return to the Add Hybrid Transaxle Fluid procedure.)

NOTE: **After adding fluid, make sure to check the fluid level.**

3. **INSPECT HYBRID TRANSAXLE FLUID**

a. Using a 10 mm hexagon socket wrench, remove the filler plug and gasket.

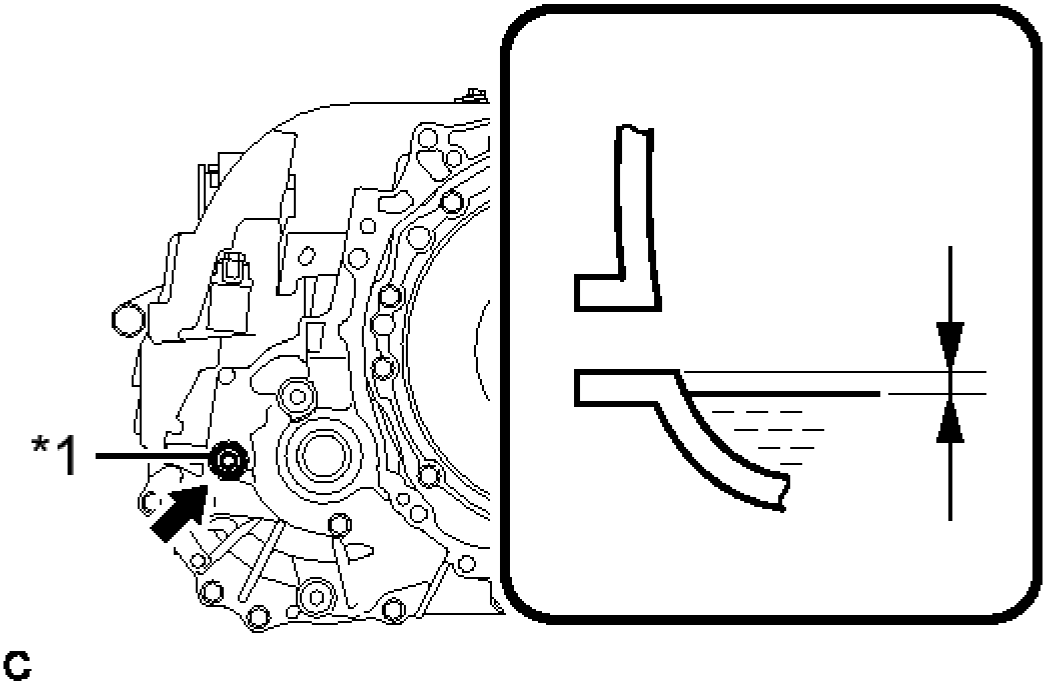

Fig. 34: Identifying Hybrid Transaxle Filler Plug

Courtesy of TOYOTA MOTOR SALES, U.S.A., INC.

TEXT IN ILLUSTRATION

*1	Filler Plug

b. Check that the fluid level is between 0 to 5 mm (0 to 0.197 in.) from the bottom lip of the filler plug opening. (If the fluid level is too low, return to the Add Hybrid Transaxle Fluid procedure.)

NOTE:

- **Stop the vehicle on a level surface.**
- **Be sure to directly check that the transaxle fluid level is within the specified range.**
- **Insufficient or excessive amounts of transaxle fluid may damage the hybrid transaxle.**
- **If the fluid was replaced or fluid was added, make sure to recheck the fluid level after driving the vehicle.**

c. Check for leaks if the quantity of transaxle fluid is low.

d. Using a 10 mm hexagon socket wrench, install the filler plug with a new gasket.

Torque: 39 N*m (400 kgf*cm, 29 ft.*lbf)

TRANSMISSION CONTROL CABLE

COMPONENTS

ILLUSTRATION

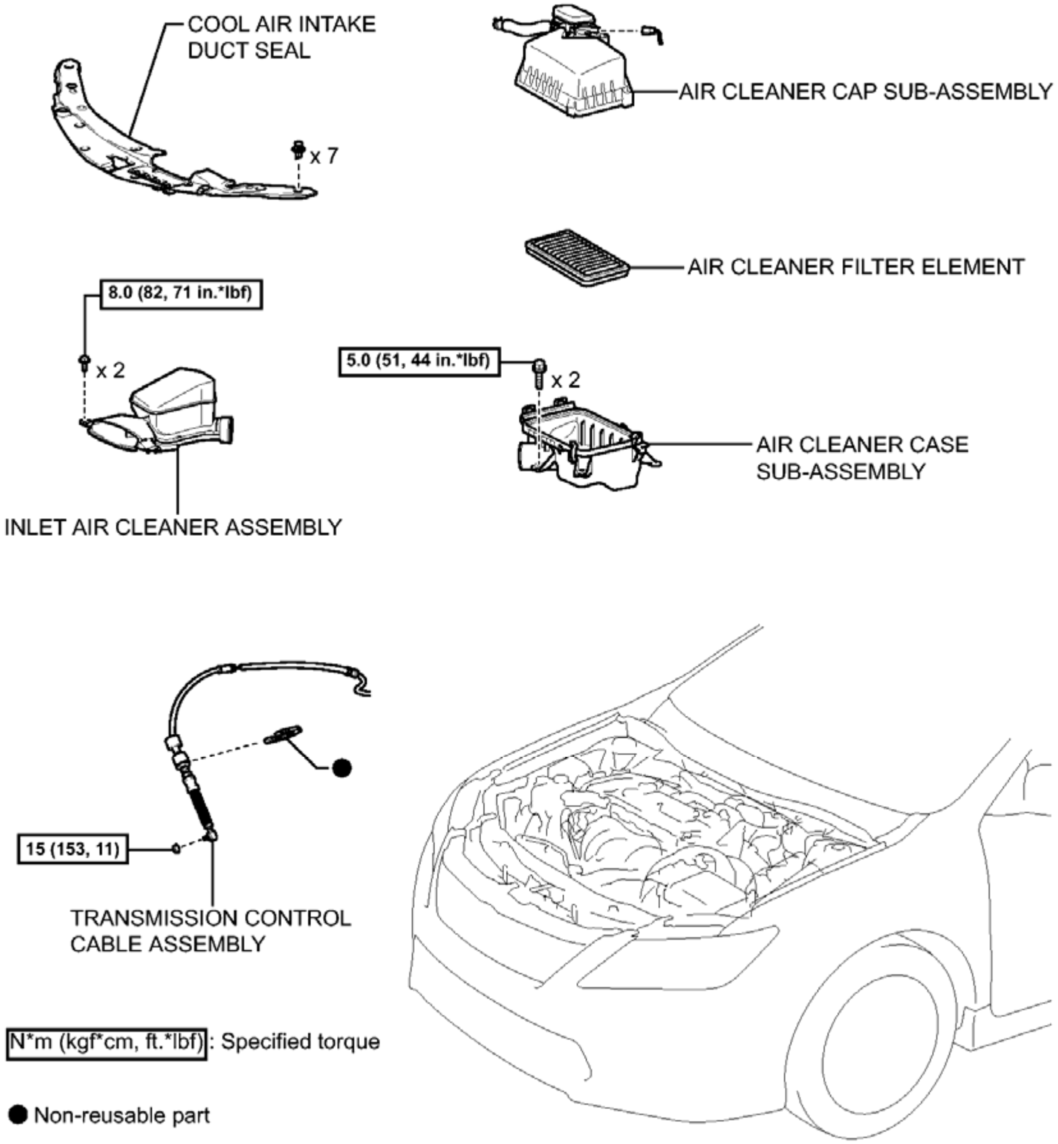
COOL AIR INTAKE DUCT SEAL
x 7
AIR CLEANER CAP SUB-ASSEMBLY
AIR CLEANER FILTER ELEMENT
8.0 (82, 71 in.*lbf)
x 2
5.0 (51, 44 in.*lbf)
x 2
AIR CLEANER CASE SUB-ASSEMBLY
INLET AIR CLEANER ASSEMBLY
15 (153, 11)
TRANSMISSION CONTROL CABLE ASSEMBLY
N*m (kgf*cm, ft.*lbf) : Specified torque
● Non-reusable part

Fig. 35: Identifying Transmission Control Cable Replacement Components With Torque Specifications (1 Of 2)

Courtesy of TOYOTA MOTOR SALES, U.S.A., INC.

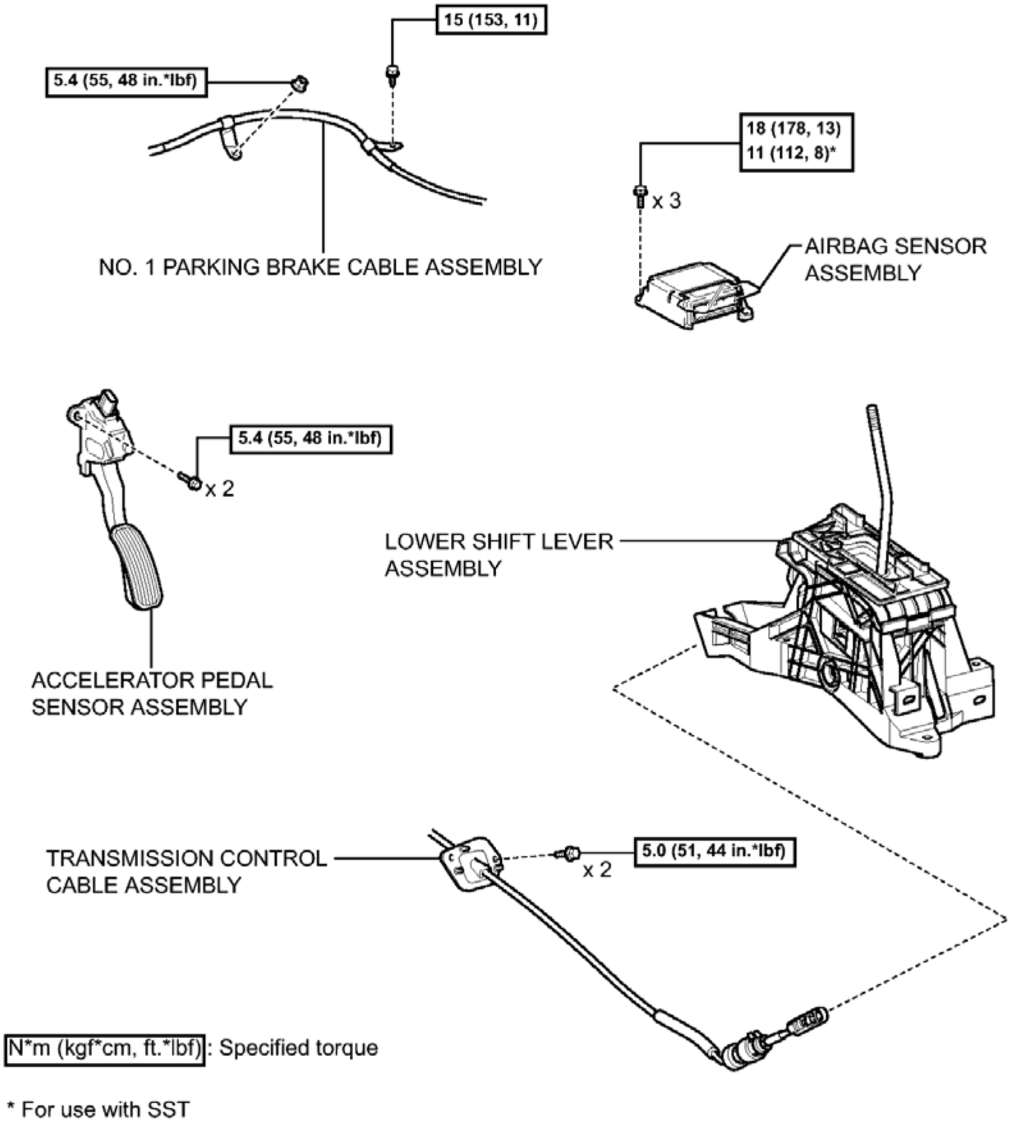
15 (153, 11)
5.4 (55, 48 in.*lbf)
18 (178, 13)
11 (112, 8)*
x 3
NO. 1 PARKING BRAKE CABLE ASSEMBLY
AIRBAG SENSOR ASSEMBLY
5.4 (55, 48 in.*lbf)
x 2
LOWER SHIFT LEVER ASSEMBLY
ACCELERATOR PEDAL SENSOR ASSEMBLY
TRANSMISSION CONTROL CABLE ASSEMBLY
5.0 (51, 44 in.*lbf)
x 2
N*m (kgf*cm, ft.*lbf): Specified torque
* For use with SST

Fig. 36: Identifying Transmission Control Cable Replacement Components With Torque Specifications (2 Of 2)
Courtesy of TOYOTA MOTOR SALES, U.S.A., INC.

REMOVAL

REMOVAL

1. **REMOVE COOL AIR INTAKE DUCT SEAL** . Refer to **REMOVAL - Step 1**
2. **REMOVE INLET AIR CLEANER ASSEMBLY** . Refer to **REMOVAL - Step 30**
3. **REMOVE AIR CLEANER CAP SUB-ASSEMBLY** . Refer to **REMOVAL - Step 3**
4. **REMOVE AIR CLEANER FILTER ELEMENT**

5. **REMOVE AIR CLEANER CASE SUB-ASSEMBLY** . Refer to **REMOVAL - Step 33**
6. **REMOVE AIRBAG SENSOR ASSEMBLY**

   Refer to **REMOVAL - Step 17**

7. **REMOVE ACCELERATOR PEDAL SENSOR ASSEMBLY** . Refer to **REMOVAL - Step 1**
8. **DISCONNECT NO. 1 PARKING BRAKE CABLE ASSEMBLY**
   a. Turn back the floor carpet.
   b. Remove the bolt and nut, and disconnect the No. 1 parking brake cable assembly.

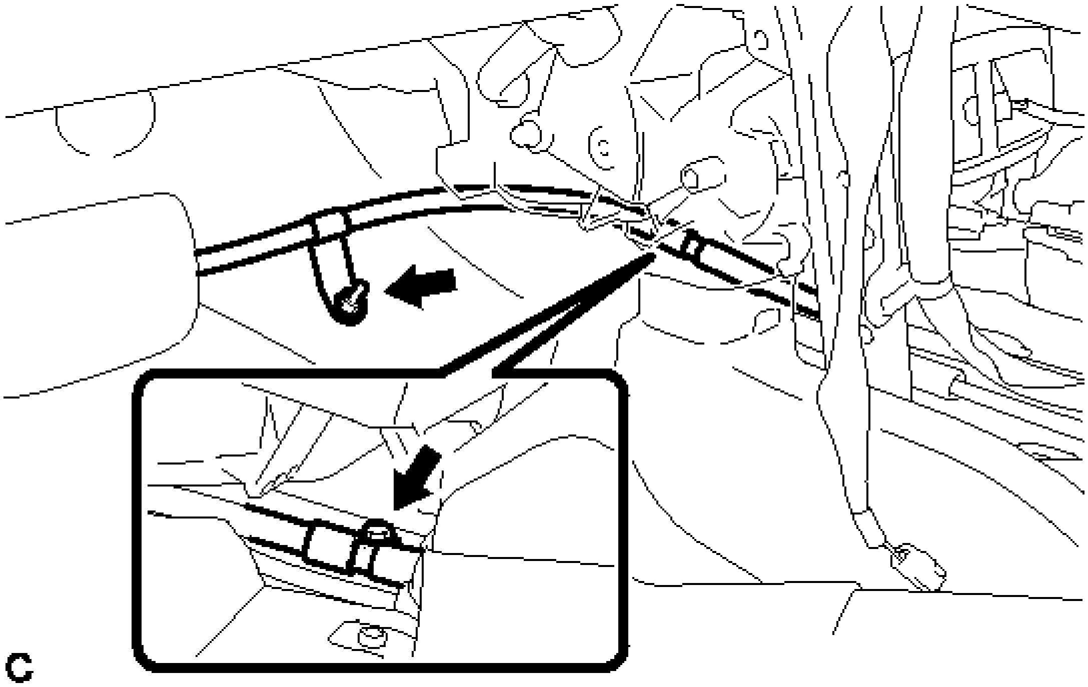

Fig. 37: Identifying No. 1 Parking Brake Cable Bolt And Nut
Courtesy of TOYOTA MOTOR SALES, U.S.A., INC.

9. **REMOVE TRANSMISSION CONTROL CABLE ASSEMBLY**
   a. Move the shift lever to N.
   b. Disconnect the end of the transmission control cable from the lower shift lever assembly.

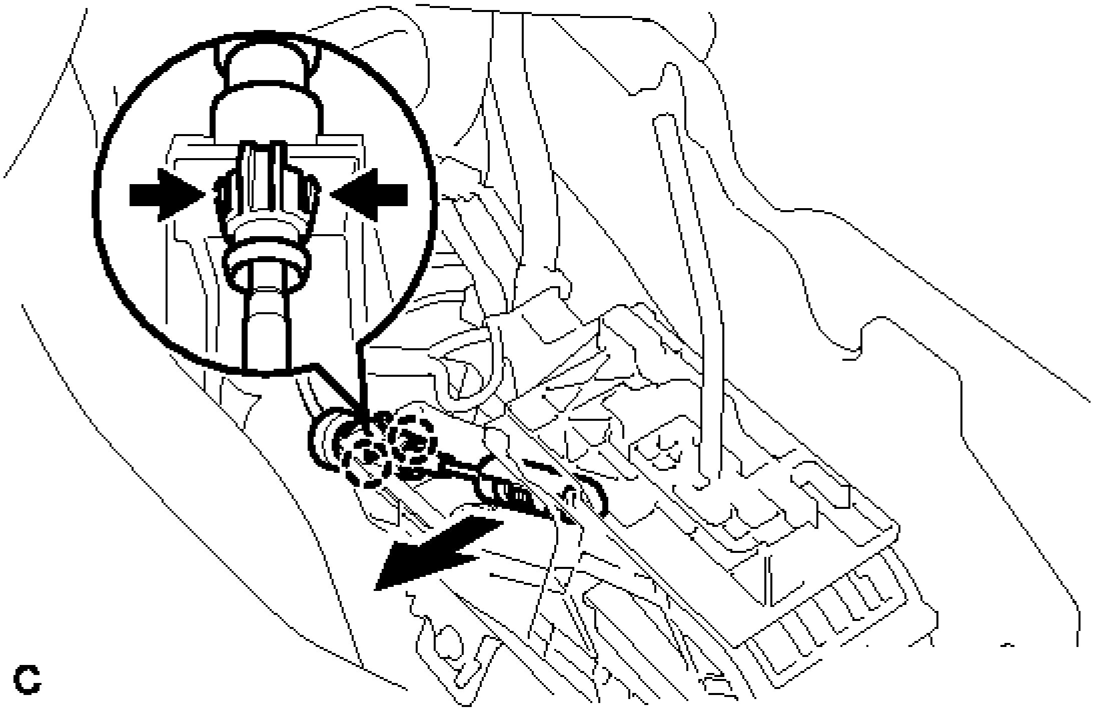

Fig. 38: Identifying Transmission Control Cable Assembly End
Courtesy of TOYOTA MOTOR SALES, U.S.A., INC.

c. Disengage the 2 claws and disconnect the transmission control cable assembly from the lower shift lever assembly.
d. Remove the nut and disconnect the transmission control cable assembly from the control shaft lever.

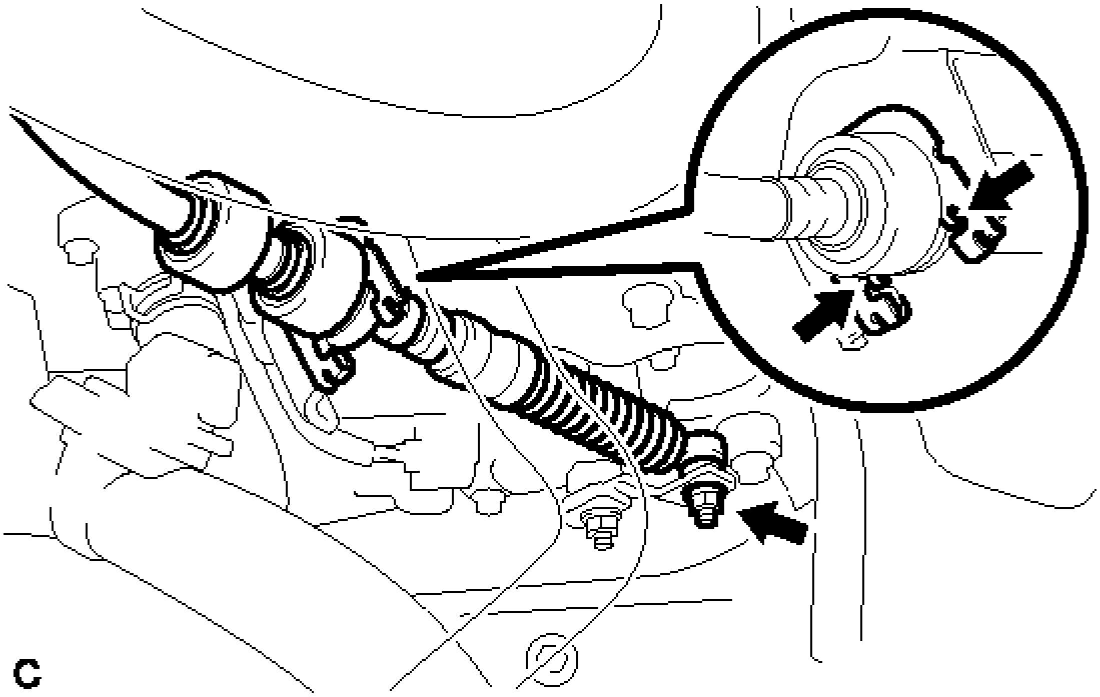

Fig. 39: Identifying Transmission Control Cable Assembly Nut
Courtesy of TOYOTA MOTOR SALES, U.S.A., INC.

e. Using a screwdriver, disengage the 4 claws and disconnect the transmission control cable assembly with clip from the No. 1 transmission control cable bracket.
f. Remove the clip from the transmission control cable assembly.
g. Disconnect the transmission control cable assembly from the 2 transmission control brackets.

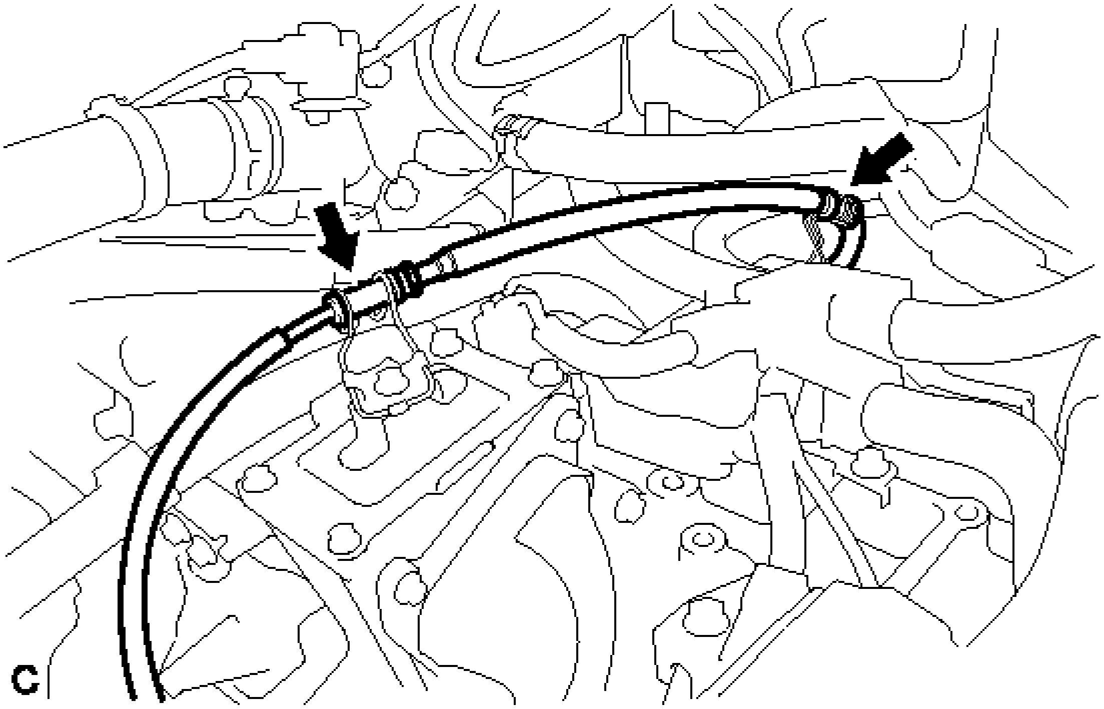

Fig. 40: Identifying Transmission Control Cable Assembly Control Brackets
Courtesy of TOYOTA MOTOR SALES, U.S.A., INC.

h. Remove the bolt and disconnect the No. 1 parking brake cable assembly from the body.

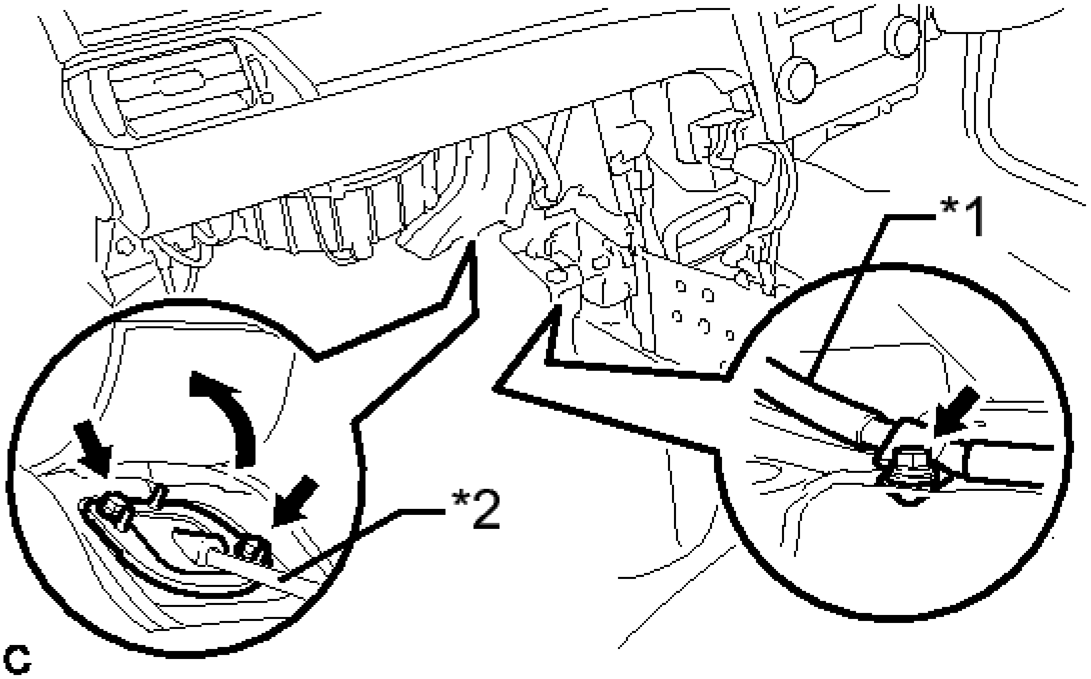

Fig. 41: Identifying No. 1 Parking Brake Cable Bolt
Courtesy of TOYOTA MOTOR SALES, U.S.A., INC.

TEXT IN ILLUSTRATION

*1	No. 1 parking brake cable assembly
*2	Transmission control cable assembly

i. Turn back the dash panel insulator.
j. Remove the 2 bolts and pull out the transmission control cable assembly from the body.

ADJUSTMENT

ADJUSTMENT

1. **INSPECT SHIFT LEVER POSITION**
    a. While moving the shift lever from the N position to each position, check that the lever moves smoothly and that the shift position indicator comes on properly according to the shift lever position.
    b. Put the vehicle into the READY-on state and check the following:
        1. When the shift lever is moved to the D position, the vehicle moves forward.
        2. When the shift lever is moved to the R position, the vehicle moves in reverse.

NOTE: **The vehicle should not move when the shift position indicator is off.**

2. **ADJUST SHIFT LEVER POSITION**
    a. Move the shift lever to N.
    b. Remove the console box. Refer to **REMOVAL** .
    c. Disconnect the end of the transmission control cable assembly from the lower shift lever assembly.

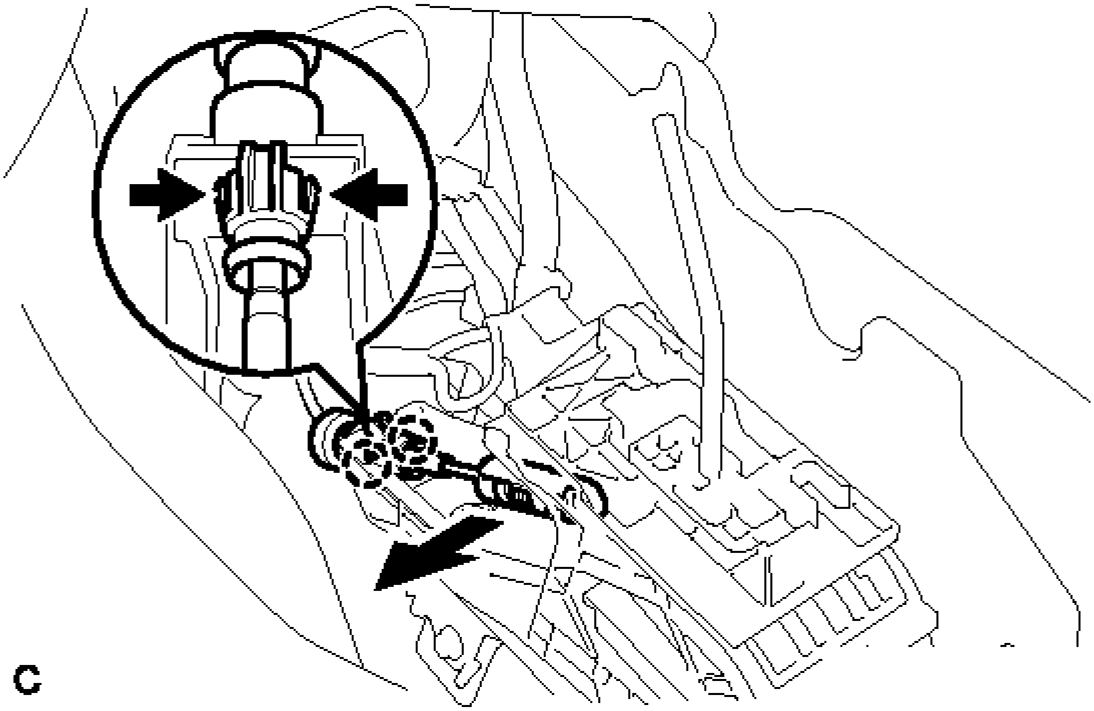

Fig. 42: Identifying Transmission Control Cable Assembly End
Courtesy of TOYOTA MOTOR SALES, U.S.A., INC.

d. Slide the slider of the transmission control cable assembly in the direction indicated by the arrow and pull the lock piece outward.

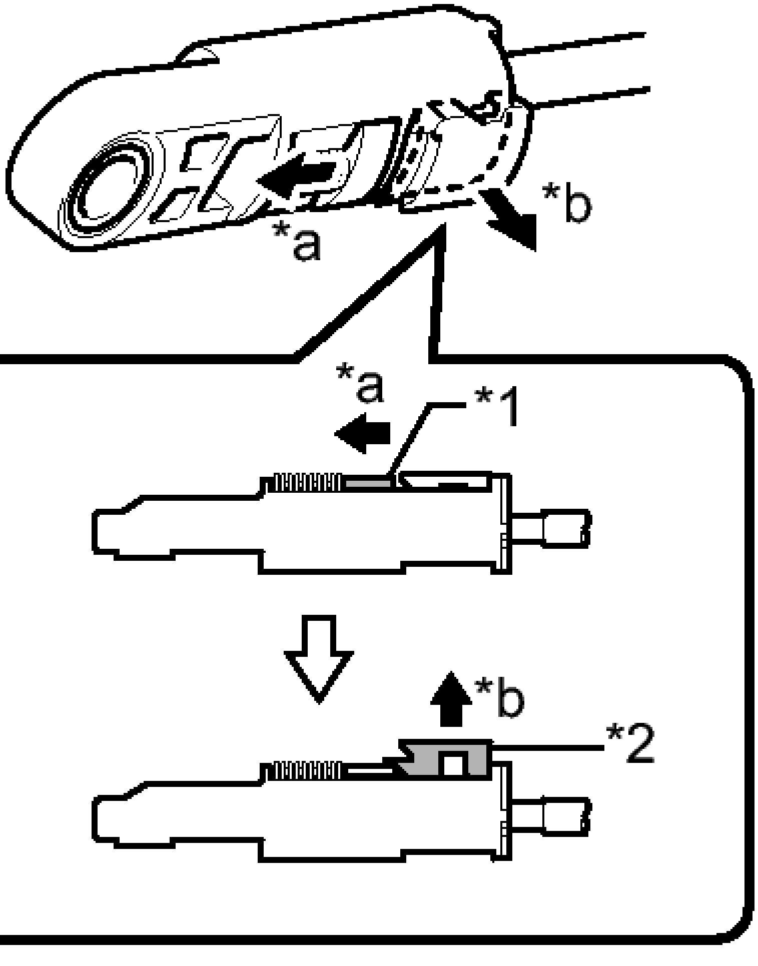

Fig. 43: Identifying Transmission Control Cable Assembly Slider
Courtesy of TOYOTA MOTOR SALES, U.S.A., INC.

TEXT IN ILLUSTRATION

*1	Slider
*2	Lock Piece
*a	Slide
*b	Pull

e. Install the end of the transmission control cable assembly to the lower shift lever assembly.

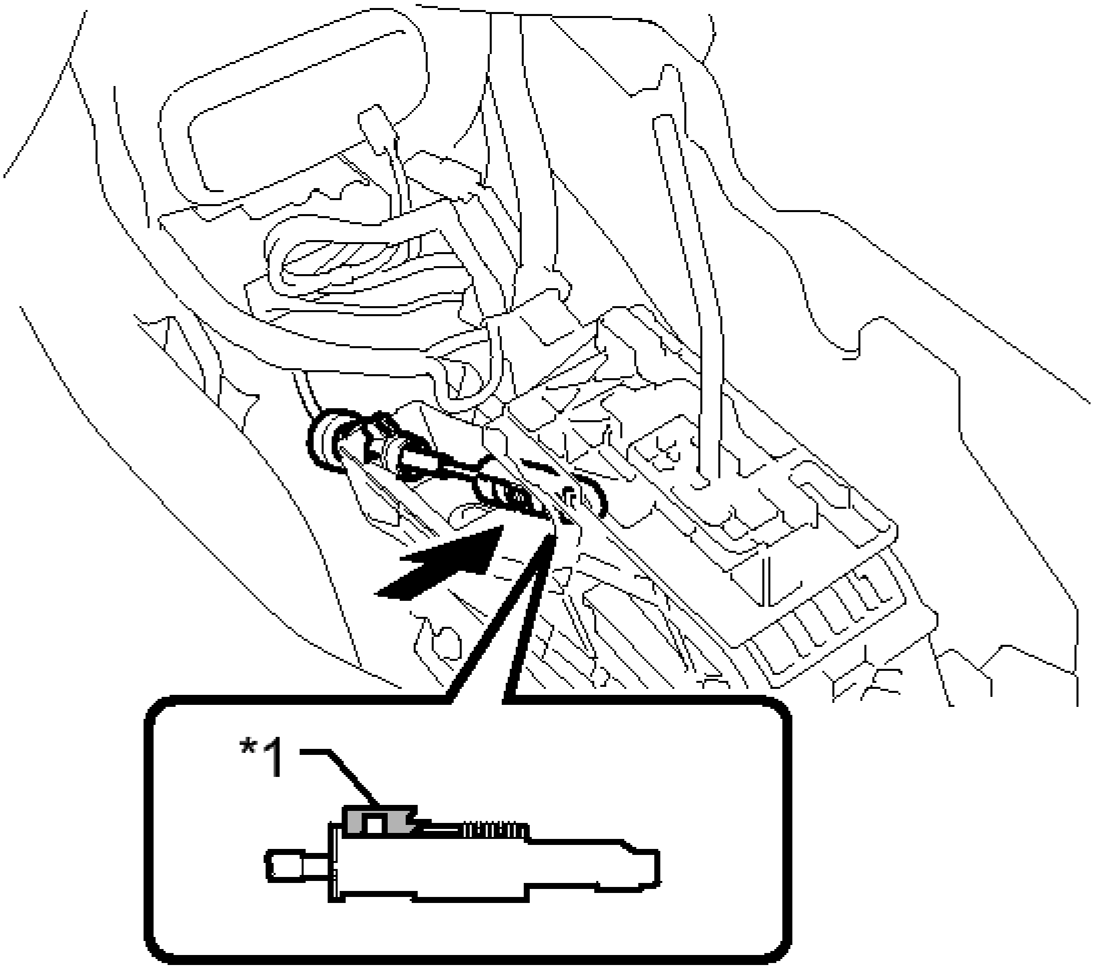

Fig. 44: Installing End Of Transmission Control Cable Assembly
Courtesy of TOYOTA MOTOR SALES, U.S.A., INC.

TEXT IN ILLUSTRATION

*1	Lock Piece

NOTE:

- **Check that the lock piece is pulled up.**
- **Install the cable end all the way to the base of the pin.**

f. Push the lock piece into the adjuster case.

NOTE:

- **Check that the park/neutral position switch and the shift lever are in neutral.**

- **Securely push in the lock piece until the slider lock is engaged.**

g. After adjusting the shift lever position, check the operation and function of the shift lever. If there is a problem, adjust the position again.
h. Install the console box. Refer to **INSTALLATION** .

INSTALLATION

INSTALLATION

1. **INSTALL TRANSMISSION CONTROL CABLE ASSEMBLY**

NOTE: **Before installing the transmission control cable assembly, check that the shift lever position sensor and the shift lever are in neutral.**

a. Pass the transmission control cable assembly from the cabin to the engine compartment.
b. Install the transmission control cable assembly with the 2 bolts.

Torque: 5.0 N*m (51 kgf*cm, 44 in.*lbf)

c. Install the dash panel insulator to the original position.
d. Connect the transmission control cable assembly to the 2 transmission control cable brackets.
e. Install a new clip to the No. 1 transmission control cable bracket.
f. Install the transmission control cable assembly to the No. 1 transmission control cable bracket

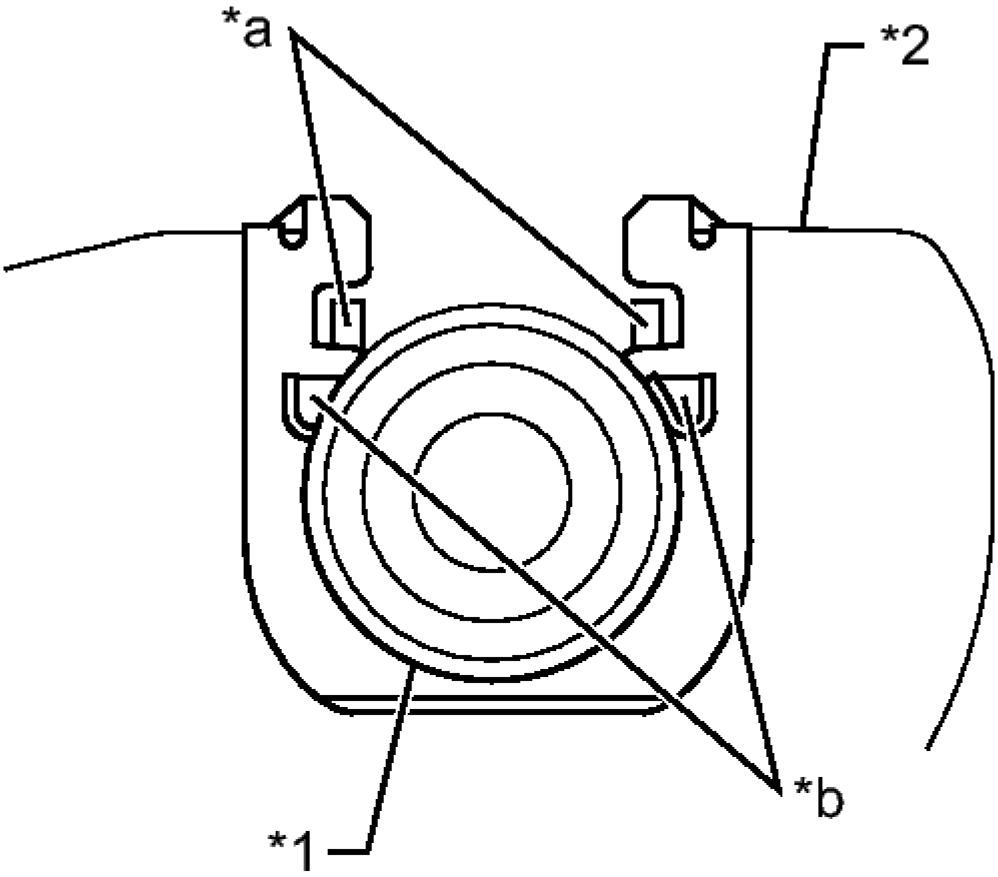

Fig. 45: Identifying Transmission Control Cable Assembly And Bracket
Courtesy of TOYOTA MOTOR SALES, U.S.A., INC.

TEXT IN ILLUSTRATION

*1	No. 1 Transmission control cable assembly
*2	No. 1 transmission control cable bracket
*a	Claw A
*b	Claw B

NOTE:

- **Make sure that the claws A on the clip are securely fit into the bracket holes.**
- **Make sure that the cable is securely installed inside of the claws B of the clip.**

g. Connect the transmission control cable assembly to the control shaft lever with the nut.

Torque: 15 N*m (153 kgf*cm, 11 ft.*lbf)

h. Engage the 2 claws to connect the transmission control cable assembly.

i. Slide the slider of the transmission control cable in the direction indicated by the arrow and pull the lock piece outward.

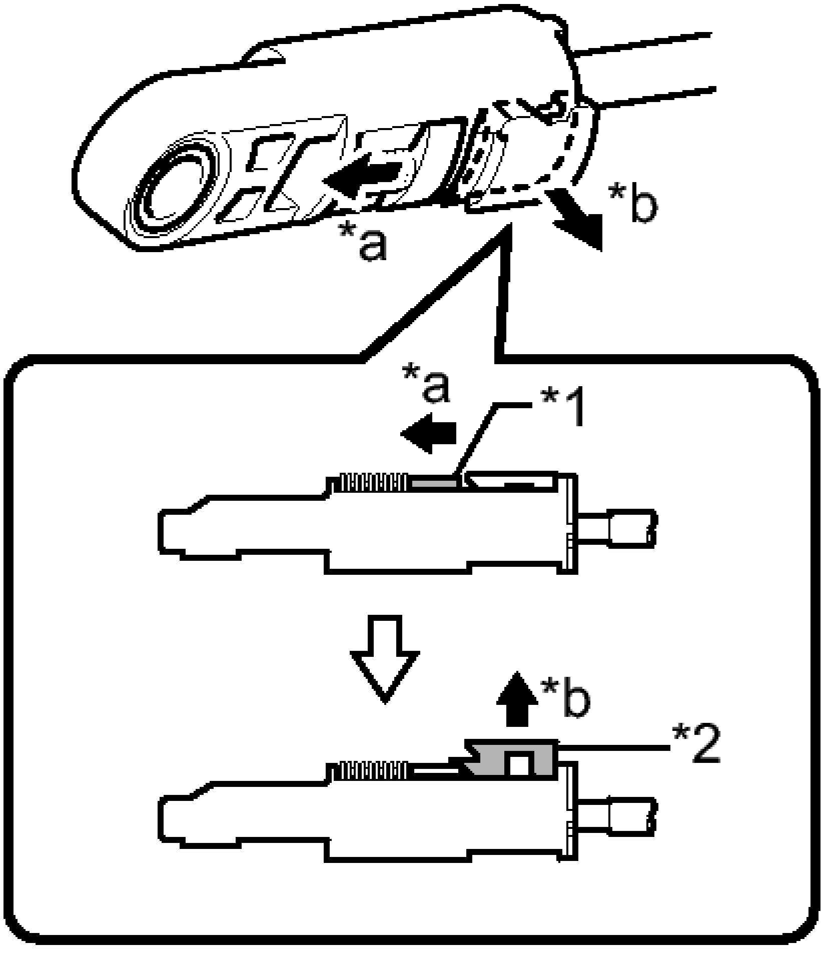

Fig. 46: Identifying Transmission Control Cable Assembly Slider
Courtesy of TOYOTA MOTOR SALES, U.S.A., INC.

TEXT IN ILLUSTRATION

*1	Slider
*2	Lock Piece
*a	Slide
*b	Pull

j. Install the end of transmission control cable assembly to the lower shift lever assembly.

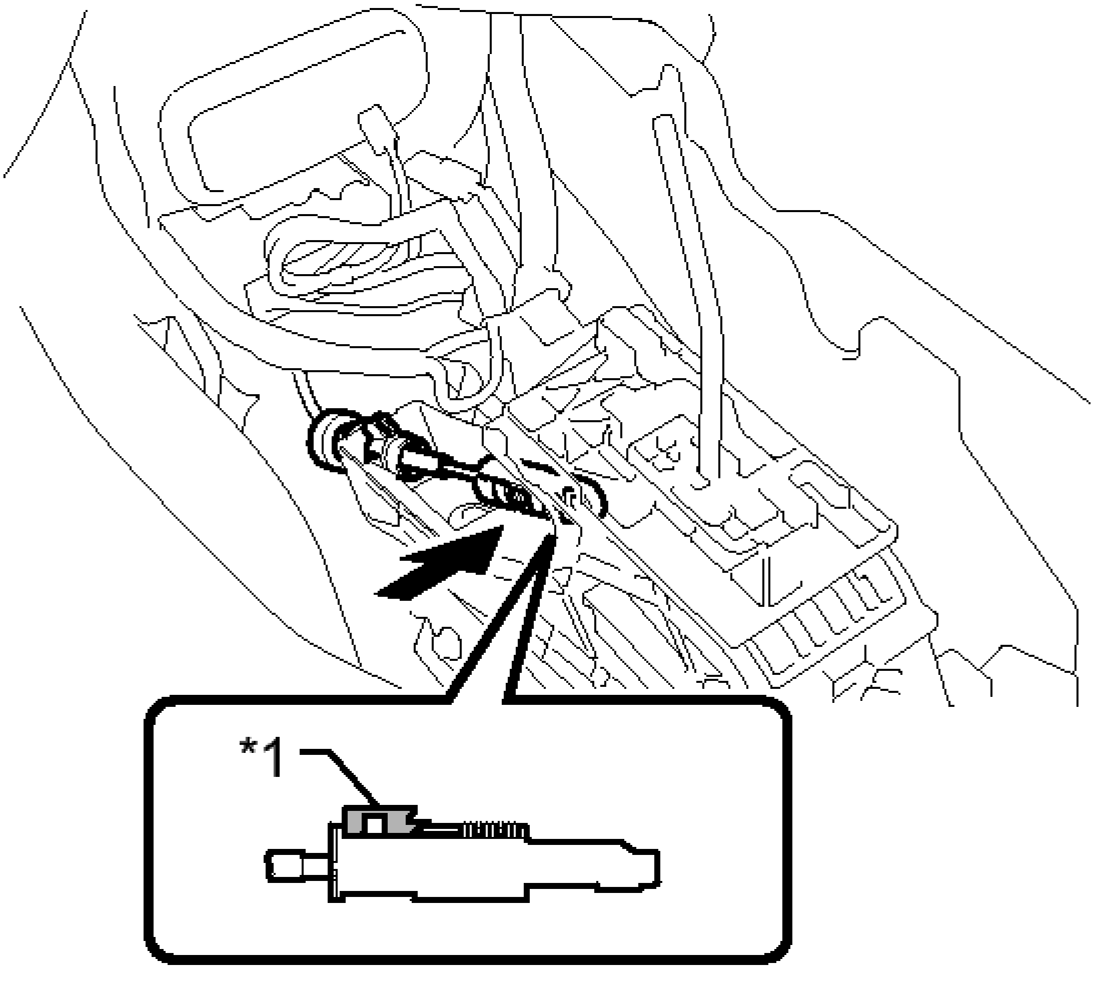

Fig. 47: Installing End Of Transmission Control Cable Assembly
Courtesy of TOYOTA MOTOR SALES, U.S.A., INC.

TEXT IN ILLUSTRATION

*1	Lock Piece

NOTE:

- **Check that the lock piece is pulled up.**
- **Install the cable end all the way to the base of the pin.**

k. Push the lock piece into the adjuster case.

NOTE:

- **Check that the shift lever position sensor and the shift lever are in neutral.**
- **Securely push in the lock piece until the slider lock is engaged.**

2. **CONNECT NO. 1 PARKING BRAKE CABLE ASSEMBLY**
   a. Install the No. 1 parking brake cable assembly with the bolt and nut.

   Bolt

   Torque: 15 N*m (153 kgf*cm, 11 ft.*lbf)

   Nut

   Torque: 5.4 N*m (55 kgf*cm, 48 in.*lbf)

   b. Install the floor carpet to the original position.
3. **INSTALL ACCELERATOR PEDAL SENSOR ASSEMBLY** . Refer to **INSTALLATION - Step 1**
4. **INSTALL AIRBAG SENSOR ASSEMBLY**

   Refer to **INSTALLATION - Step 1**

5. **INSTALL AIR CLEANER CASE SUB-ASSEMBLY** . Refer to **INSTALLATION - Step 60**
6. **INSTALL AIR CLEANER FILTER ELEMENT**
7. **INSTALL AIR CLEANER CAP SUB-ASSEMBLY** . Refer to **REMOVAL - Step 3**
8. **INSTALL INLET AIR CLEANER ASSEMBLY** . Refer to **INSTALLATION - Step 63**
9. **INSTALL COOL AIR INTAKE DUCT SEAL** . Refer to **INSTALLATION - Step 4**
10. **INSPECT SHIFT LEVER POSITION** See step 1
11. **ADJUST SHIFT LEVER POSITION** See step 2

HYBRID TRANSAXLE OIL SEAL

COMPONENTS

ILLUSTRATION

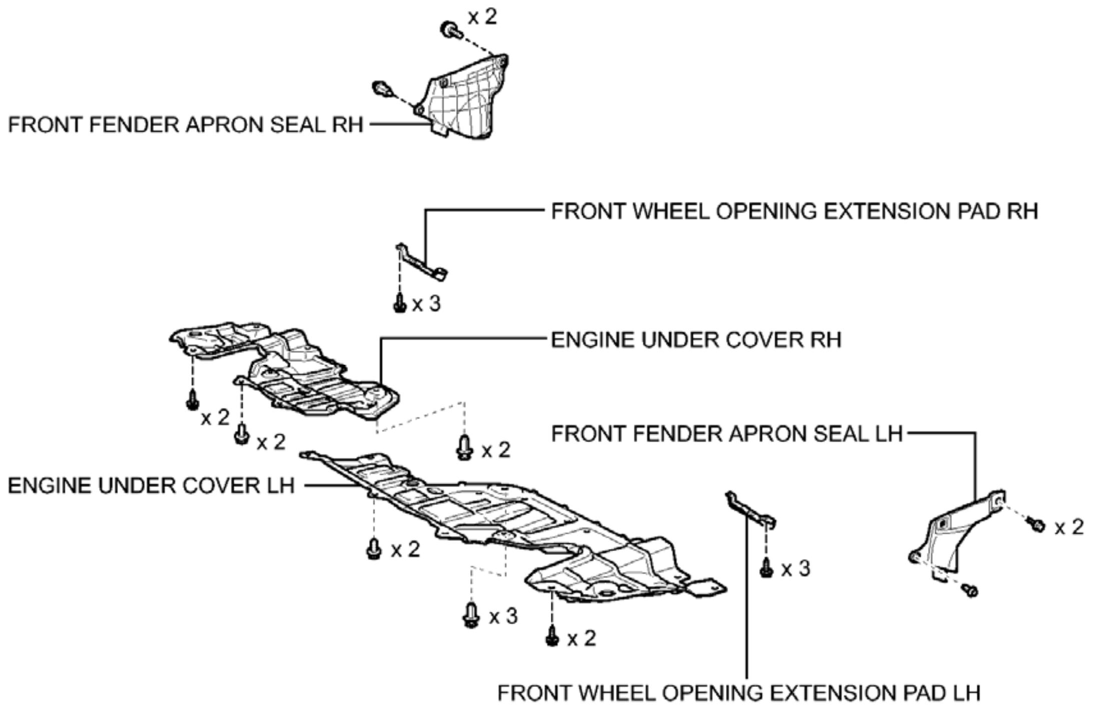
x 2
FRONT FENDER APRON SEAL RH
FRONT WHEEL OPENING EXTENSION PAD RH
x 3
ENGINE UNDER COVER RH
x 2
x 2
x 2
FRONT FENDER APRON SEAL LH
ENGINE UNDER COVER LH
x 2
x 2
x 3
x 3
x 2
FRONT WHEEL OPENING EXTENSION PAD LH

c

Fig. 48: Identifying Hybrid Transaxle Oil Seal Replacement Components (1 Of 3)
Courtesy of TOYOTA MOTOR SALES, U.S.A., INC.

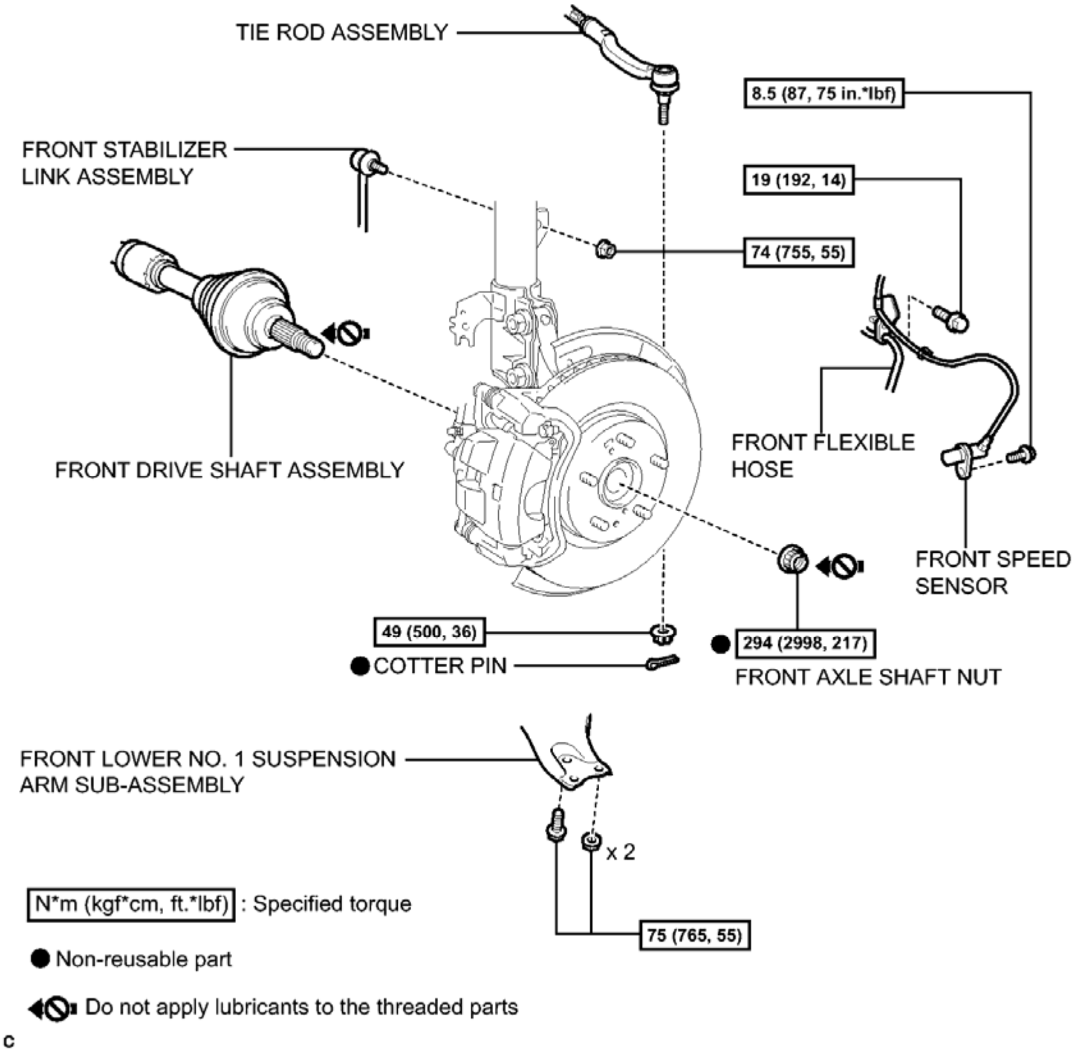
TIE ROD ASSEMBLY
8.5 (87, 75 in.*lbf)
FRONT STABILIZER LINK ASSEMBLY
19 (192, 14)
74 (755, 55)
FRONT DRIVE SHAFT ASSEMBLY
FRONT FLEXIBLE HOSE
FRONT SPEED SENSOR
49 (500, 36)
● COTTER PIN
● 294 (2998, 217)
FRONT AXLE SHAFT NUT
FRONT LOWER NO. 1 SUSPENSION ARM SUB-ASSEMBLY
x 2
75 (765, 55)
N*m (kgf*cm, ft.*lbf) : Specified torque
● Non-reusable part
Do not apply lubricants to the threaded parts
c

Fig. 49: Identifying Hybrid Transaxle Oil Seal Replacement Components With Torque Specifications (2 Of 3)

Courtesy of TOYOTA MOTOR SALES, U.S.A., INC.

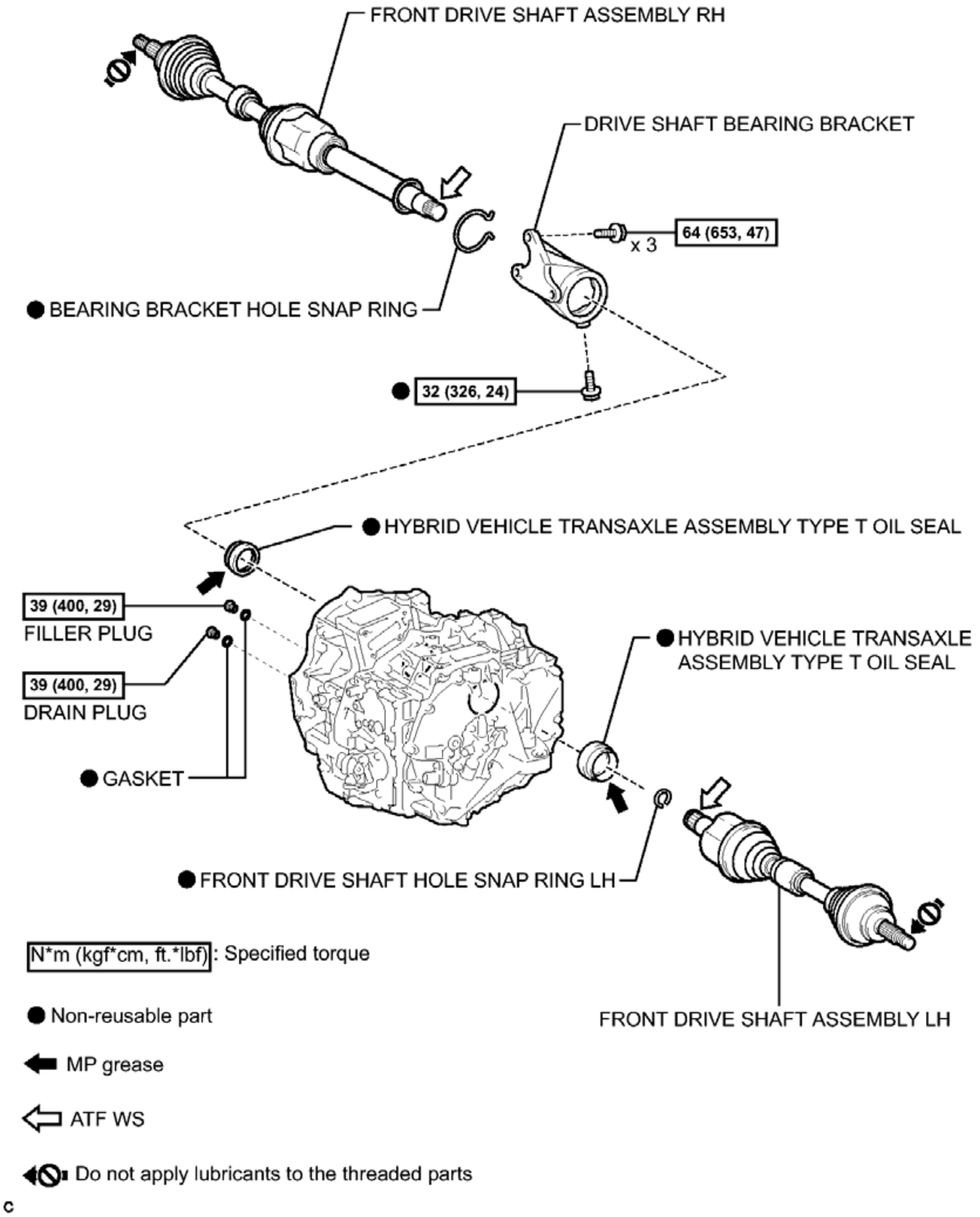
FRONT DRIVE SHAFT ASSEMBLY RH
DRIVE SHAFT BEARING BRACKET
64 (653, 47)
x 3
● BEARING BRACKET HOLE SNAP RING
● 32 (326, 24)
● HYBRID VEHICLE TRANSAXLE ASSEMBLY TYPE T OIL SEAL
39 (400, 29)
FILLER PLUG
39 (400, 29)
DRAIN PLUG
● HYBRID VEHICLE TRANSAXLE ASSEMBLY TYPE T OIL SEAL
● GASKET
● FRONT DRIVE SHAFT HOLE SNAP RING LH
FRONT DRIVE SHAFT ASSEMBLY LH
N*m (kgf*cm, ft.*lbf): Specified torque
● Non-reusable part
MP grease
ATF WS
Do not apply lubricants to the threaded parts
C

Fig. 50: Identifying Hybrid Transaxle Oil Seal Replacement Components With Torque Specifications (3 Of 3)
Courtesy of TOYOTA MOTOR SALES, U.S.A., INC.

REPLACEMENT

REPLACEMENT

HINT:

- Use the same procedure for the RH side and LH side.
- The procedure listed below is for the LH side.

1. **REMOVE FRONT WHEELS**
2. **REMOVE FRONT WHEEL OPENING EXTENSION PAD LH**
3. **REMOVE ENGINE UNDER COVER LH**
4. **REMOVE FRONT WHEEL OPENING EXTENSION PAD RH**
5. **REMOVE ENGINE UNDER COVER RH**
6. **REMOVE FRONT FENDER APRON SEAL LH**
7. **REMOVE FRONT FENDER APRON SEAL RH**
8. **DRAIN HYBRID TRANSAXLE FLUID** See step 1
9. **REMOVE FRONT AXLE SHAFT NUT** . Refer to **REMOVAL - Step 9**
10. **SEPARATE FRONT STABILIZER LINK ASSEMBLY** . Refer to **REMOVAL - Step 4**
11. **SEPARATE FRONT SPEED SENSOR** . Refer to **REMOVAL - Step 3**
12. **SEPARATE TIE ROD ASSEMBLY** . Refer to **REMOVAL - Step 5**
13. **SEPARATE FRONT LOWER NO. 1 SUSPENSION ARM SUB-ASSEMBLY** . Refer to **REMOVAL - Step 10**
14. **SEPARATE FRONT DRIVE SHAFT ASSEMBLY** . Refer to **REMOVAL - Step 9**
15. **REMOVE FRONT DRIVE SHAFT ASSEMBLY LH** . Refer to **REMOVAL - Step 15**
16. **REMOVE FRONT DRIVE SHAFT ASSEMBLY RH** . Refer to **REMOVAL - Step 16**
17. **REMOVE FRONT DRIVE SHAFT HOLE SNAP RING LH** . Refer to **REMOVAL - Step 17**
18. **REMOVE DRIVE SHAFT BEARING BRACKET** . Refer to **REMOVAL - Step 90**
19. **REMOVE HYBRID VEHICLE TRANSAXLE ASSEMBLY TYPE T OIL SEAL**
    a. Remove the left side oil seal.
        1. Using SST, remove the hybrid vehicle transaxle assembly type T oil seal from the hybrid vehicle transaxle assembly.

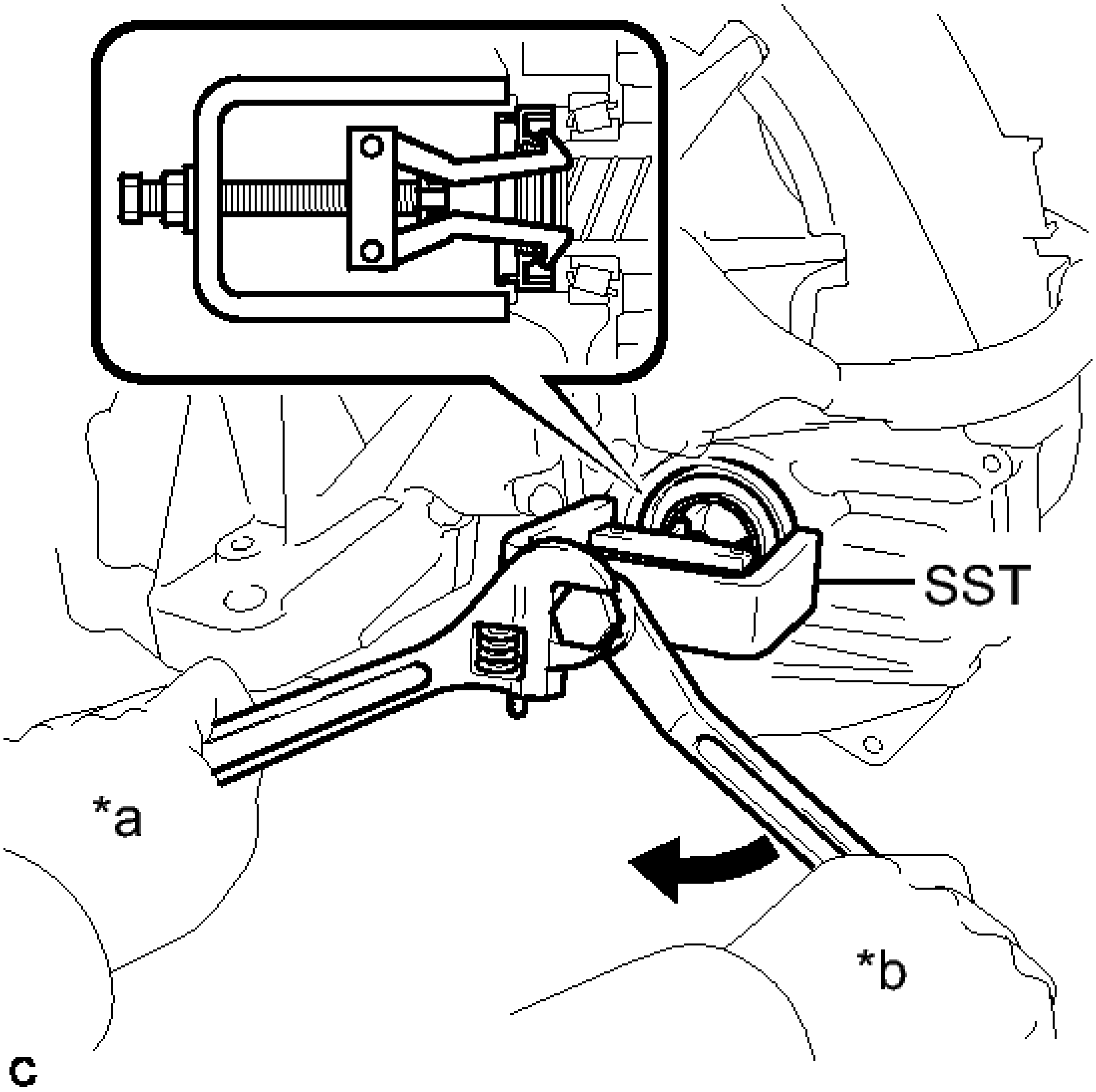

Fig. 51: Removing Hybrid Vehicle Transaxle Type T Oil Seal
Courtesy of TOYOTA MOTOR SALES, U.S.A., INC.

- **SST: 09514-35011**

TEXT IN ILLUSTRATION

*a	Hold
*b	Turn

b. Remove the right side oil seal.
   1. Using SST, remove the hybrid vehicle transaxle assembly type T oil seal from the hybrid vehicle transaxle assembly.

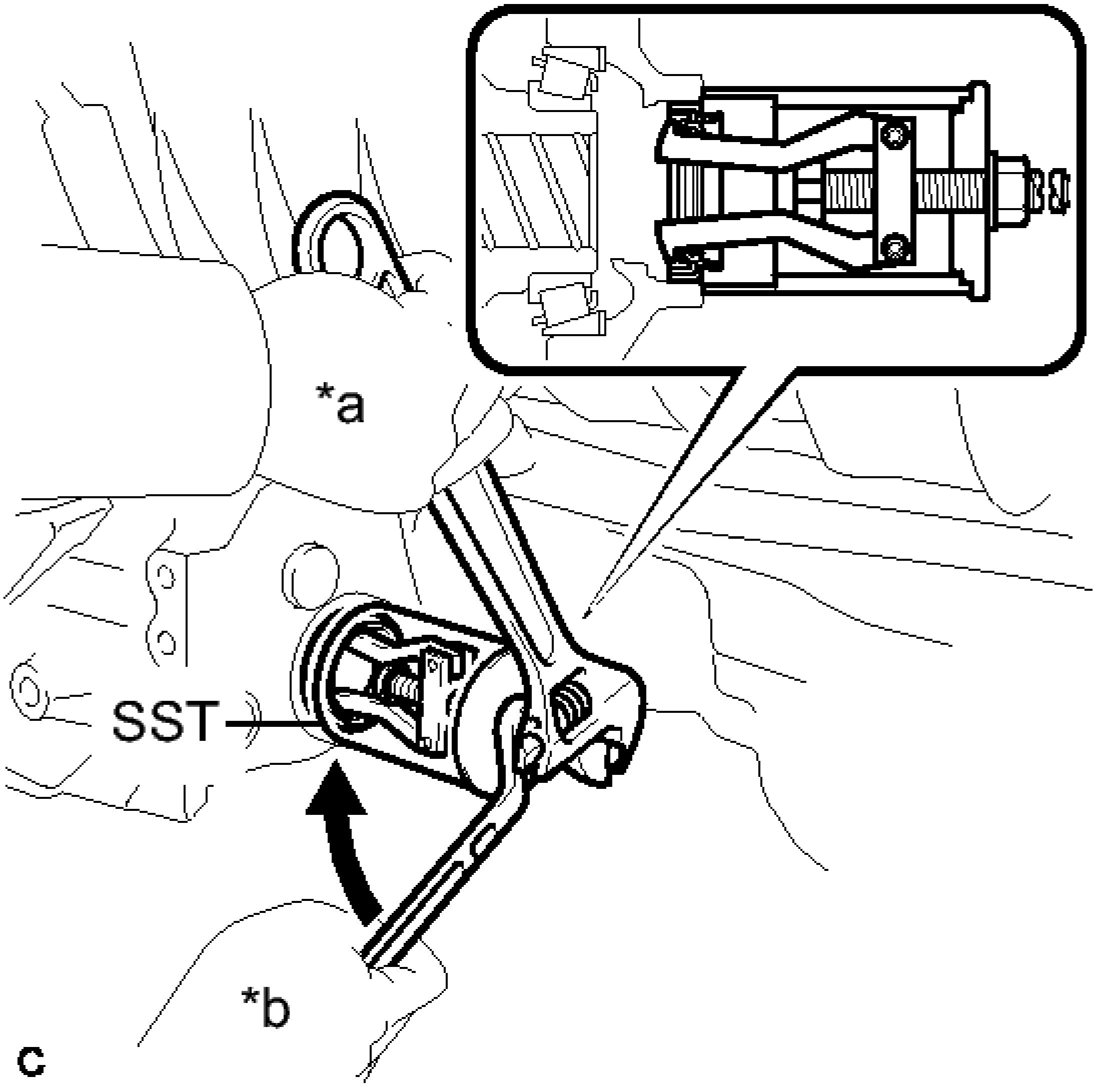

Fig. 52: Removing Hybrid Vehicle Transaxle Type T Oil Seal
Courtesy of TOYOTA MOTOR SALES, U.S.A., INC.

- **SST: 09612-30012**

TEXT IN ILLUSTRATION

*a	Hold
*b	Turn

20. **INSTALL HYBRID VEHICLE TRANSAXLE ASSEMBLY TYPE T OIL SEAL**
    a. Install a new left side oil seal.
        1. Using SST and a hammer, tap in a new hybrid vehicle transaxle assembly type T oil seal.

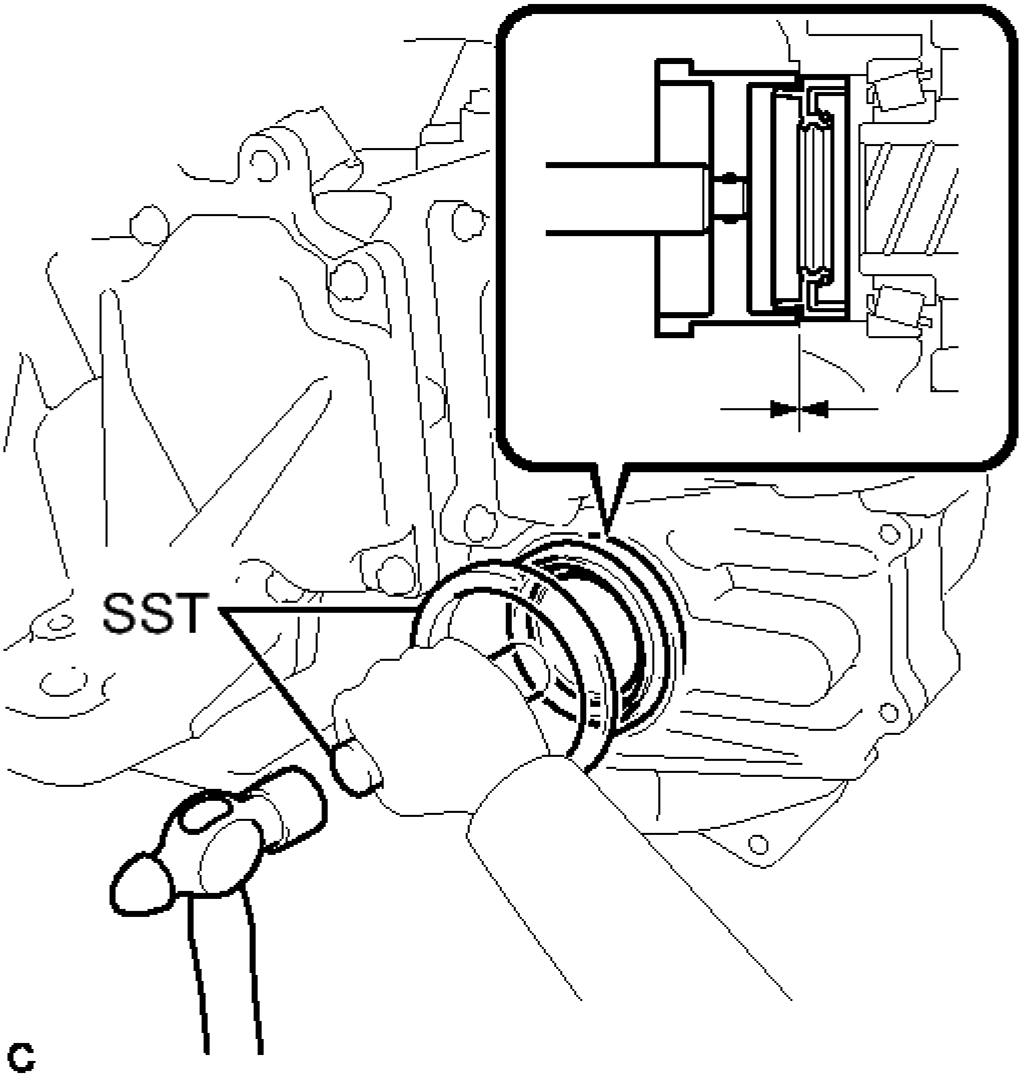

Fig. 53: Installing Hybrid Vehicle Transaxle Type T Oil Seal
Courtesy of TOYOTA MOTOR SALES, U.S.A., INC.

- **SST: 09223-15020**
- **SST: 09950-70010**
  09951-07150

Oil seal installation depth

-0.5 to 0.5 mm (-0.0197 to 0.0197 in.)

2. Coat the lip of the hybrid vehicle transaxle assembly type T oil seal with MP grease.

b. Install a new RH side oil seal.

1. Using SST and a hammer, tap in a new hybrid vehicle transaxle assembly type T oil seal.

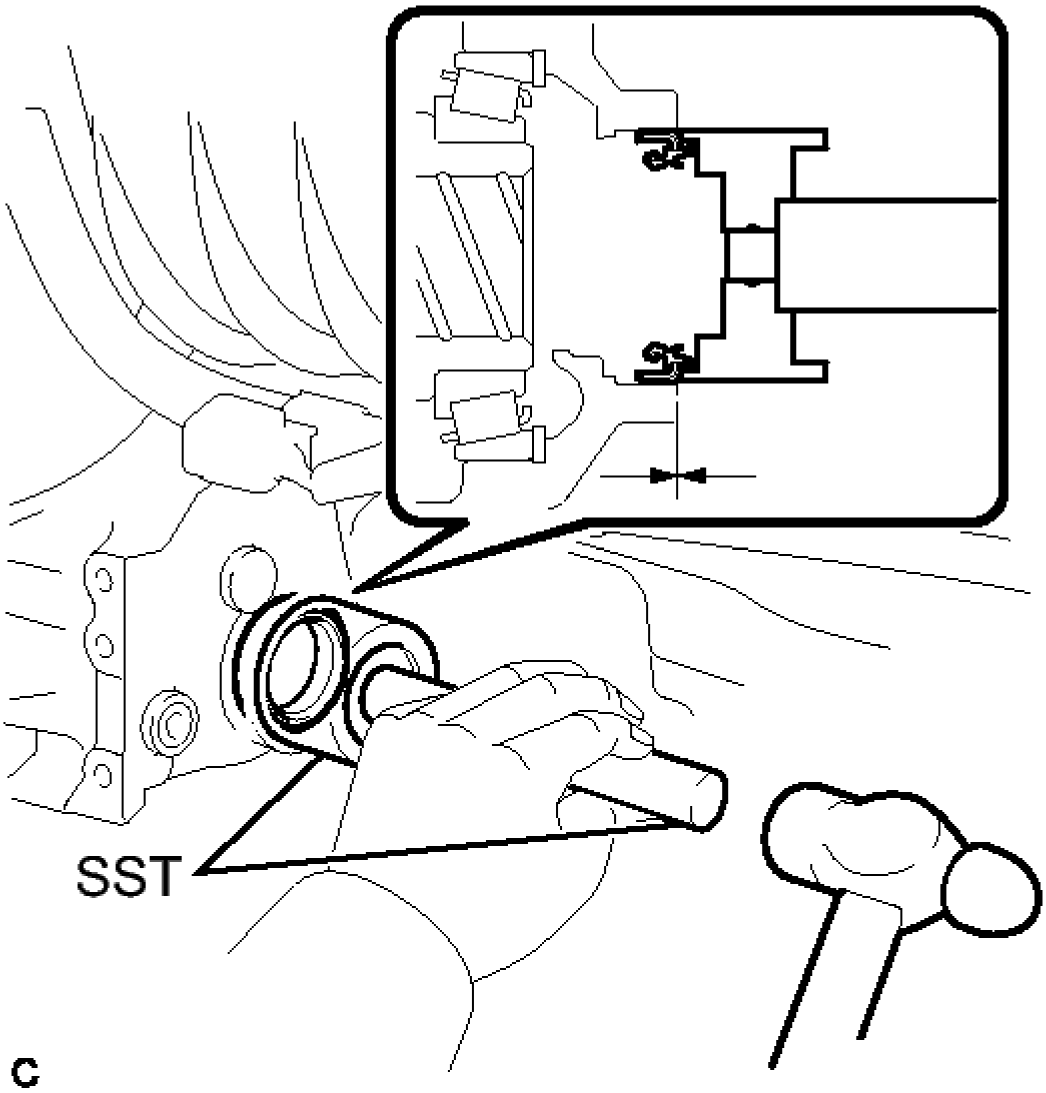

Fig. 54: Installing Hybrid Vehicle Transaxle Type T Oil Seal
Courtesy of TOYOTA MOTOR SALES, U.S.A., INC.

- **SST: 09710-30050**
- **SST: 09950-70010**
  09951-07150

Oil seal installation depth

-0.5 to 0.5 mm (-0.0197 to 0.0197 in.)

2. Coat the lip of the hybrid vehicle transaxle assembly type T oil seal with MP grease.

21. **INSTALL DRIVE SHAFT BEARING BRACKET** . Refer to **INSTALLATION - Step 7**
22. **INSTALL FRONT DRIVE SHAFT HOLE SNAP RING LH** . Refer to **REASSEMBLY - Step 13**
23. **INSTALL FRONT DRIVE SHAFT ASSEMBLY LH** . Refer to **INSTALLATION - Step 1**

24. **INSTALL FRONT DRIVE SHAFT ASSEMBLY RH** . Refer to **INSTALLATION - Step 2**
25. **CONNECT FRONT LOWER NO. 1 SUSPENSION ARM SUB-ASSEMBLY** . Refer to **INSTALLATION - Step 8**
26. **CONNECT TIE ROD ASSEMBLY** . Refer to **INSTALLATION - Step 8**
27. **INSTALL FRONT SPEED SENSOR** . Refer to **INSTALLATION - Step 11**
28. **INSTALL FRONT STABILIZER LINK ASSEMBLY** . Refer to **INSTALLATION - Step 10**
29. **INSTALL FRONT AXLE SHAFT NUT** . Refer to **INSTALLATION - Step 7**
30. **ADD HYBRID TRANSAXLE FLUID** See step 2
31. **INSPECT HYBRID TRANSAXLE FLUID** See step 3
32. **INSPECT FOR TRANSAXLE FLUID LEAK**
33. **INSTALL FRONT WHEELS** . Refer to **INSTALLATION - Step 8**
34. **ADJUST FRONT WHEEL ALIGNMENT**

    Refer to **ADJUSTMENT**

35. **INSTALL FRONT FENDER APRON SEAL LH**
36. **INSTALL FRONT FENDER APRON SEAL RH**
37. **INSTALL ENGINE UNDER COVER LH**
38. **INSTALL FRONT WHEEL OPENING EXTENSION PAD LH**
39. **INSTALL ENGINE UNDER COVER RH**
40. **INSTALL FRONT WHEEL OPENING EXTENSION PAD RH**
41. **CHECK FOR SPEED SENSOR SIGNAL**

    Refer to **TEST MODE PROCEDURE**

INPUT SHAFT OIL SEAL

COMPONENTS

ILLUSTRATION

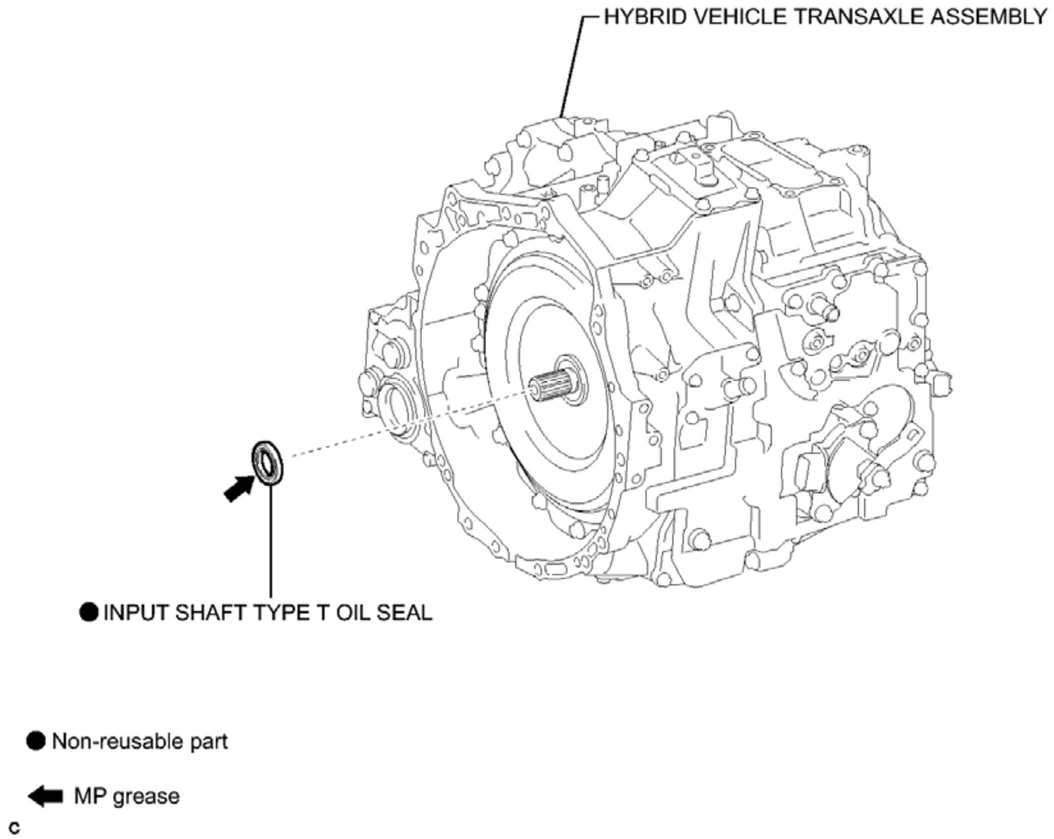
HYBRID VEHICLE TRANSAXLE ASSEMBLY
● INPUT SHAFT TYPE T OIL SEAL
● Non-reusable part
MP grease
c

Fig. 55: Identifying Input Shaft Oil Seal Replacement Components
Courtesy of TOYOTA MOTOR SALES, U.S.A., INC.

REPLACEMENT

REPLACEMENT

1. **REMOVE HYBRID VEHICLE TRANSAXLE ASSEMBLY**

   Refer to **REMOVAL**

2. **REMOVE INPUT SHAFT TYPE T OIL SEAL**
   1. Using a screwdriver with its tip taped, remove the input shaft type T oil seal.

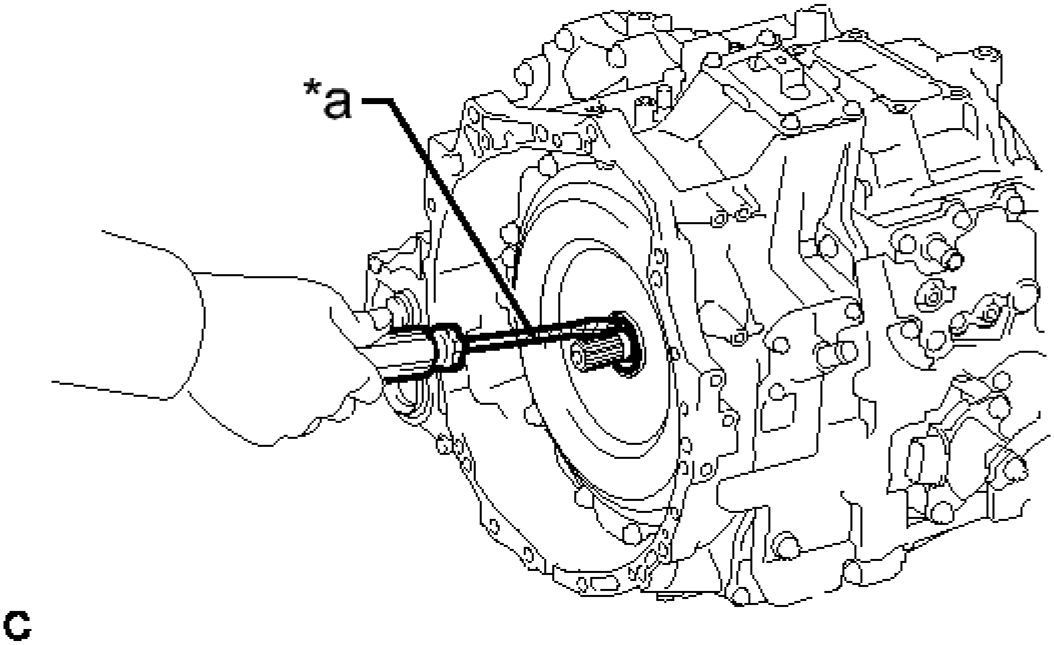

Fig. 56: Removing Input Shaft Type T Oil Seal
Courtesy of TOYOTA MOTOR SALES, U.S.A., INC.

TEXT IN ILLUSTRATION

*a	Vinyl Tape

NOTE: **When removing the input shaft type T oil seal, make sure not to damage the input shaft or hybrid vehicle transaxle housing.**

3. **INSTALL INPUT SHAFT TYPE T OIL SEAL**
    a. Coat the lip of a new input shaft type T oil seal with MP grease.

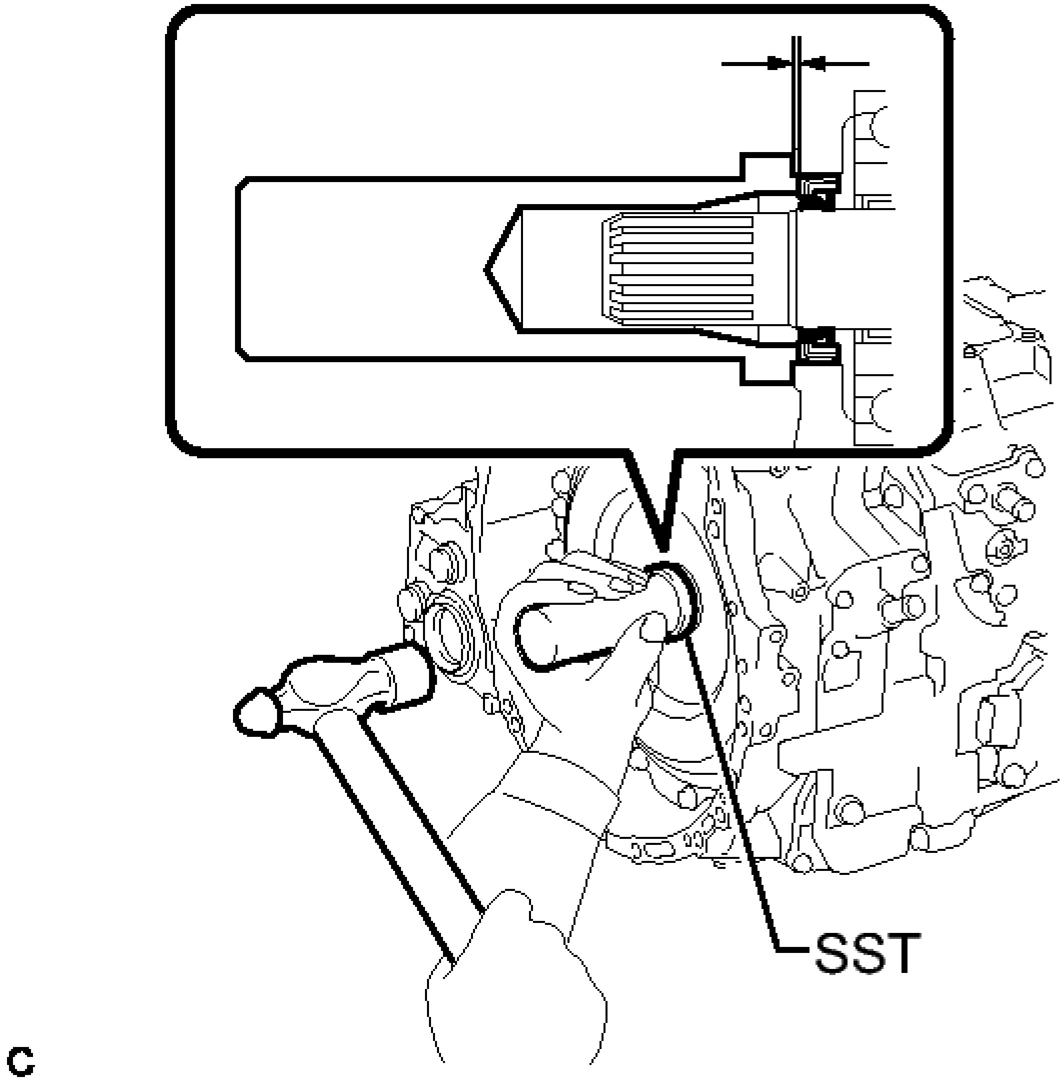

Fig. 57: Installing Input Shaft Type T Oil Seal
Courtesy of TOYOTA MOTOR SALES, U.S.A., INC.

b. Using SST and a hammer, tap in the input shaft type T oil seal.

  - **SST: 09388-40010**

  Oil seal installation depth

  1.0 to 1.8 mm (0.0394 to 0.0709 in.)

NOTE:

- **Ensure that no foreign matter adheres to the input shaft type T oil seal lip.**
- **Ensure that the input shaft type T oil seal is not at an angle.**

4. **INSTALL HYBRID VEHICLE TRANSAXLE ASSEMBLY**

Refer to **INSTALLATION**

MOTOR WATER JACKET COVER ASSEMBLY

COMPONENTS

ILLUSTRATION

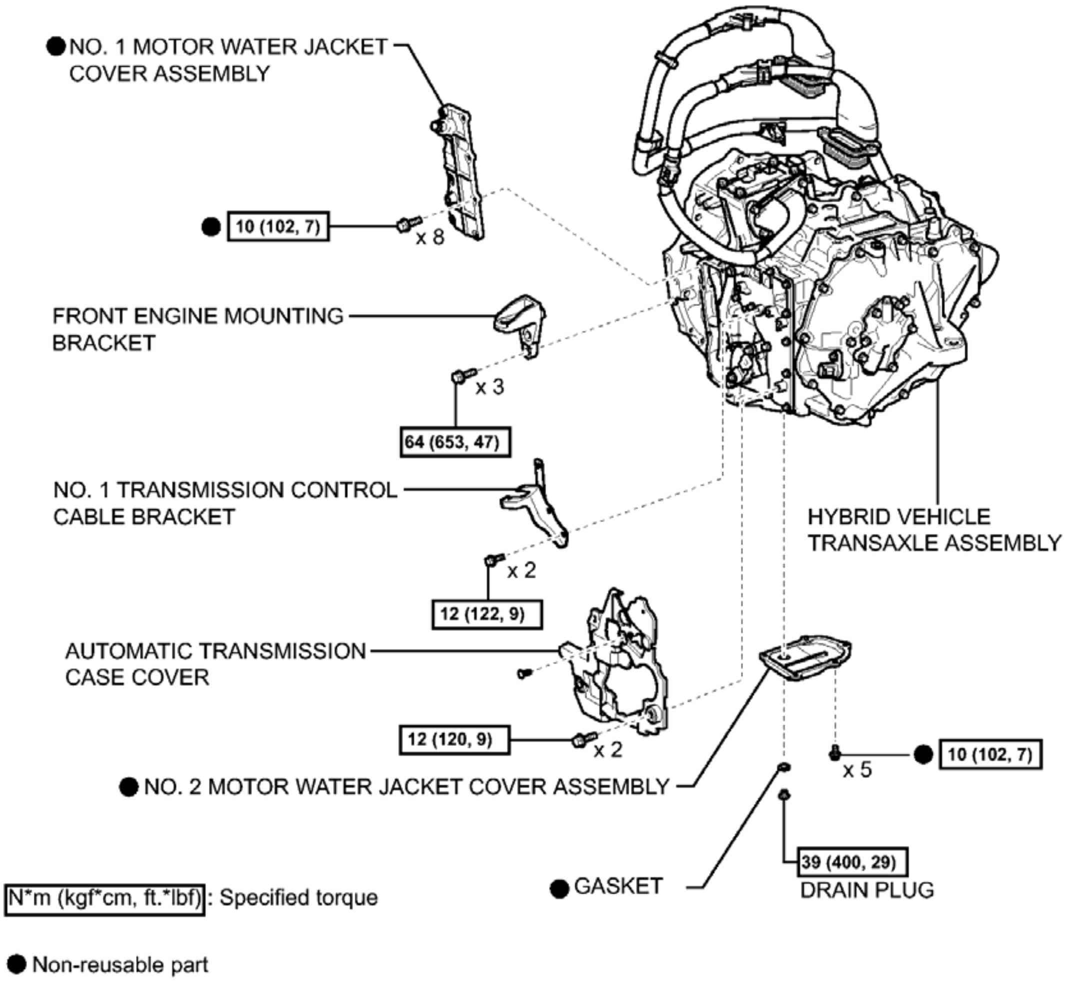
● NO. 1 MOTOR WATER JACKET COVER ASSEMBLY
● 10 (102, 7)
x 8
FRONT ENGINE MOUNTING BRACKET
x 3
64 (653, 47)
NO. 1 TRANSMISSION CONTROL CABLE BRACKET
x 2
12 (122, 9)
HYBRID VEHICLE TRANSAXLE ASSEMBLY
AUTOMATIC TRANSMISSION CASE COVER
12 (120, 9)
x 2
● NO. 2 MOTOR WATER JACKET COVER ASSEMBLY
x 5
● 10 (102, 7)
● GASKET
39 (400, 29)
DRAIN PLUG
N*m (kgf*cm, ft.*lbf): Specified torque
● Non-reusable part

Fig. 58: Identifying Motor Water Jacket Cover Assembly Replacement Components With Torque Specifications
Courtesy of TOYOTA MOTOR SALES, U.S.A., INC.

REMOVAL

REMOVAL

1. **DRAIN COOLANT (for Inverter)** . Refer to **REPLACEMENT - Step 1**

2. **REMOVE NO. 2 MOTOR WATER JACKET COVER ASSEMBLY**
   a. Remove the 5 bolts.

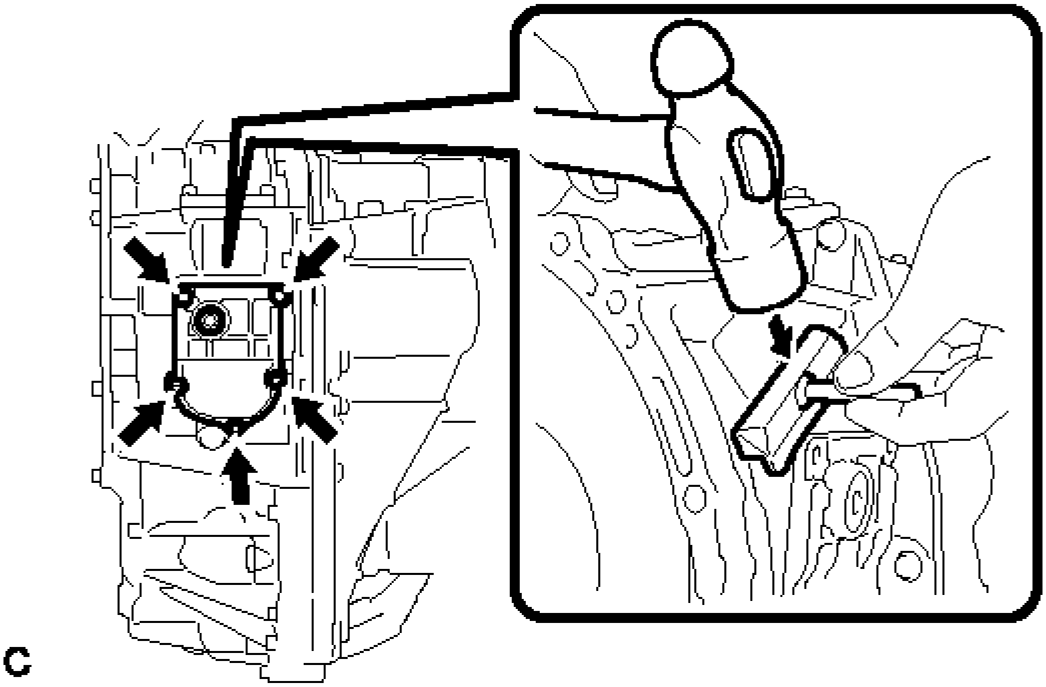

Fig. 59: Identifying No. 2 Motor Water Jacket Cover Bolts
Courtesy of TOYOTA MOTOR SALES, U.S.A., INC.

   b. Insert the blade of an oil pan seal cutter between the transaxle housing. Cut through the applied sealer and remove the No. 2 motor water jacket cover assembly.

NOTE: **Be careful not to damage the contact surfaces of the transaxle housing where the motor water jacket cover is installed.**

3. **REMOVE HYBRID VEHICLE TRANSAXLE ASSEMBLY**

   Refer to **REMOVAL**

4. **REMOVE FRONT ENGINE MOUNTING BRACKET** See step 5
5. **REMOVE NO. 1 TRANSMISSION CONTROL CABLE BRACKET** See step 6
6. **REMOVE AUTOMATIC TRANSMISSION CASE COVER**
   a. Remove the 2 bolts, clip and automatic transmission case cover from the hybrid vehicle transaxle assembly.

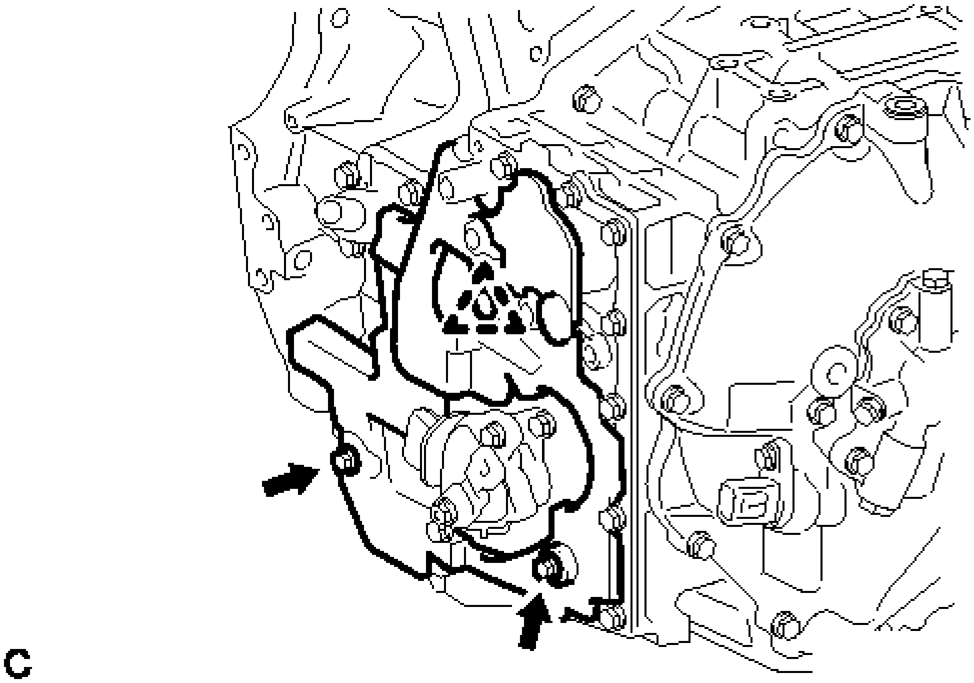

Fig. 60: Identifying Automatic Transmission Case Cover Clip And Bolts
Courtesy of TOYOTA MOTOR SALES, U.S.A., INC.

7. **REMOVE NO. 1 MOTOR WATER JACKET COVER ASSEMBLY**
    a. Remove the 8 bolts.

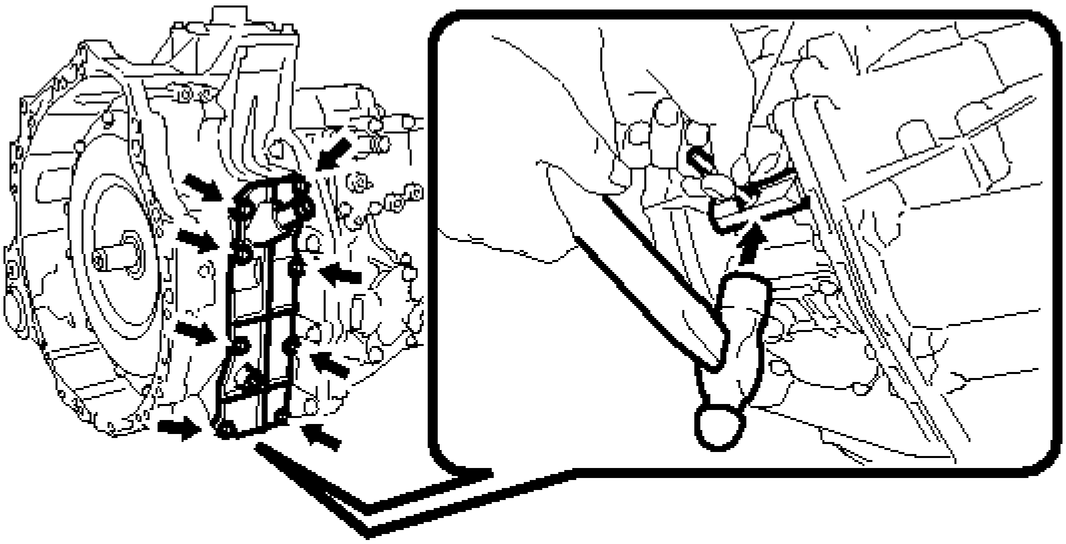

Fig. 61: Identifying No. 1 Motor Water Jacket Cover Bolts

Courtesy of TOYOTA MOTOR SALES, U.S.A., INC.

b. Insert the blade of an oil pan seal cutter between the transaxle housing. Cut through the applied sealer and remove the No. 1 motor water jacket cover assembly.

NOTE: **Be careful not to damage the contact surfaces of the transaxle housing where the motor water jacket cover is installed.**

INSTALLATION

INSTALLATION

1. **INSTALL NO. 1 MOTOR WATER JACKET COVER ASSEMBLY**
    a. Remove any remaining seal packing from the transaxle housing installation surface and bolt holes.

NOTE:

- **Clean and degrease the installation surface and bolt holes.**
- **Do not allow any remaining seal packing to enter the coolant path when cleaning.**

b. Apply seal packing in a continuous line as shown in the illustration.

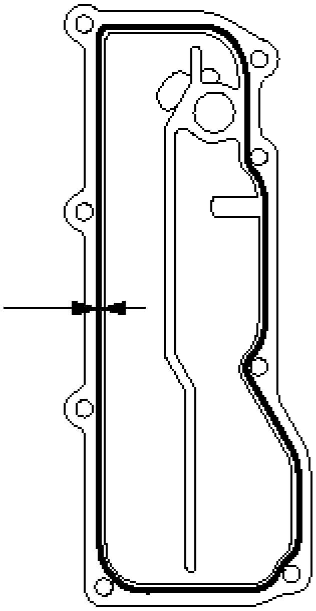

Fig. 62: Applying Seal Packing
Courtesy of TOYOTA MOTOR SALES, U.S.A., INC.

Seal packing

Toyota Genuine Seal Packing 1282B, Three Bond 1282B or equivalent

Standard seal diameter

1.5 mm (0.059 in.) or more.

NOTE: **Remove any oil from the contact surface.**

c. Install a new No. 1 motor water jacket cover assembly to the hybrid vehicle transaxle with 8 new bolts.

Torque: 10 N*m (102 kgf*cm, 7 ft.*lbf)

NOTE:

- **Install the motor water jacket cover assembly within 3 minutes and tighten the bolts within 10 minutes after applying seal packing.**
- **Do not add coolant within 2 hours after installing the motor water jacket cover assembly.**
- **Do not start the engine for at least 2 hours after installing the motor water jacket cover assembly.**

2. **INSTALL AUTOMATIC TRANSMISSION CASE COVER**
   a. Install the automatic transmission case cover to the hybrid vehicle transaxle with the 2 bolts and clip.

   Torque: 12 N*m (120 kgf*cm, 9 ft.*lbf)

3. **INSTALL NO. 1 TRANSMISSION CONTROL CABLE BRACKET**
4. **INSTALL FRONT ENGINE MOUNTING BRACKET**
5. **INSTALL NO. 2 MOTOR WATER JACKET COVER ASSEMBLY**
   a. Remove any remaining seal packing from the transaxle housing installation surface and bolt holes.

   NOTE:

   - **Clean and degrease the installation surface and bolt holes.**
   - **Do not allow any remaining seal packing to enter the coolant path when cleaning.**

   b. Apply seal packing in a continuous line as shown in the illustration.

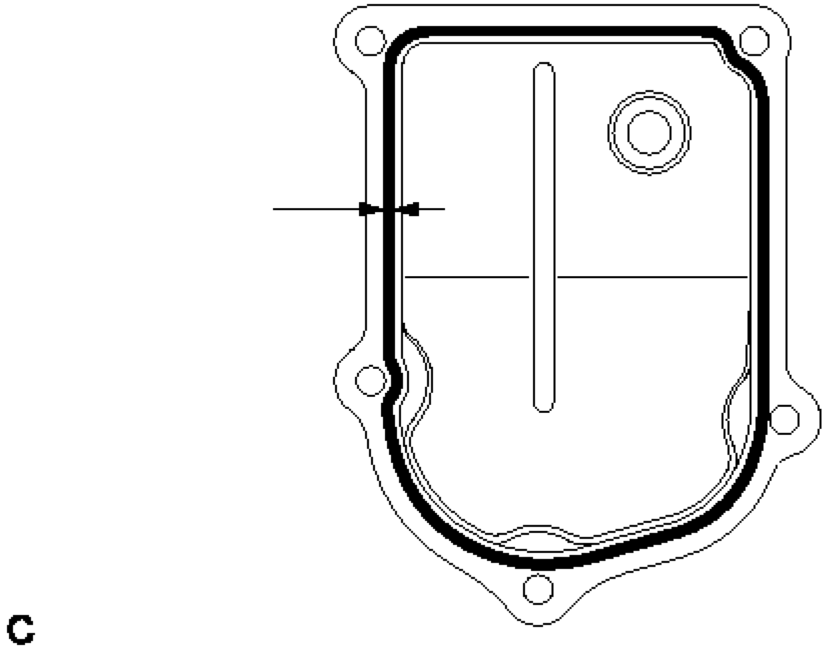

Fig. 63: Applying Seal Packing
Courtesy of TOYOTA MOTOR SALES, U.S.A., INC.

Seal packing

Toyota Genuine Seal Packing 1282B, Three Bond 1282B or equivalent

Standard seal diameter

1.5 mm (0.059 in.) or more.

NOTE: **Remove any oil from the contact surface.**

c. Install a new No. 2 motor water jacket cover assembly to the hybrid vehicle transaxle with 5 new bolts.

Torque: 10 N*m (102 kgf*cm, 7 ft.*lbf)

NOTE:

- **Install the motor water jacket cover assembly within 3 minutes and tighten the bolts within 10 minutes after applying seal packing.**
- **Do not add coolant within 2 hours after installing the motor water jacket cover assembly.**
- **Do not start the engine for at least 2 hours after installing the motor water jacket cover assembly.**

6. **INSTALL HYBRID VEHICLE TRANSAXLE ASSEMBLY**

   Refer to **INSTALLATION**

SHIFT LEVER

COMPONENTS

ILLUSTRATION

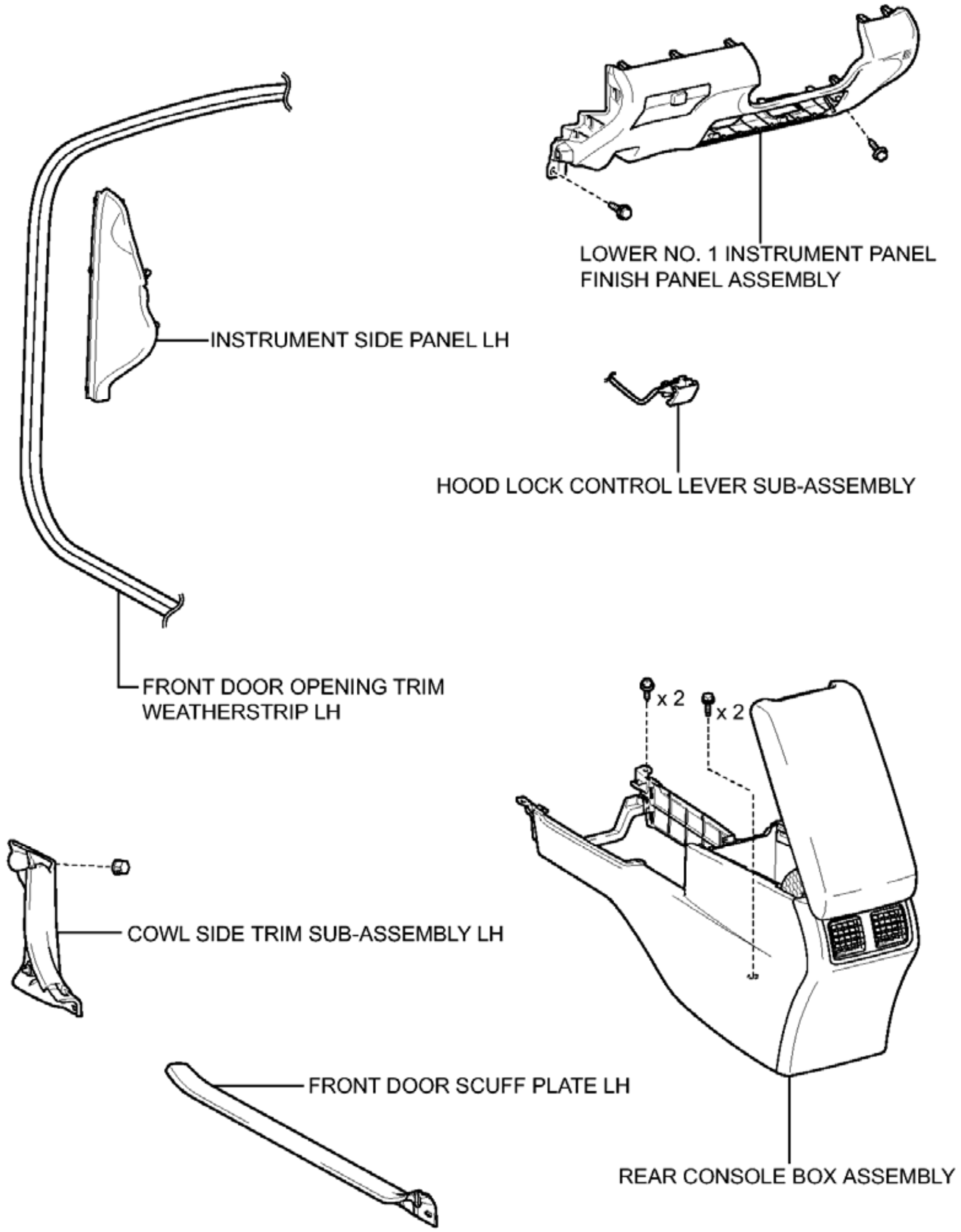
LOWER NO. 1 INSTRUMENT PANEL FINISH PANEL ASSEMBLY
INSTRUMENT SIDE PANEL LH
HOOD LOCK CONTROL LEVER SUB-ASSEMBLY
FRONT DOOR OPENING TRIM WEATHERSTRIP LH
x 2
x 2
COWL SIDE TRIM SUB-ASSEMBLY LH
FRONT DOOR SCUFF PLATE LH
REAR CONSOLE BOX ASSEMBLY

Fig. 64: Identifying Shift Lever Replacement Components (1 Of 4)
Courtesy of TOYOTA MOTOR SALES, U.S.A., INC.

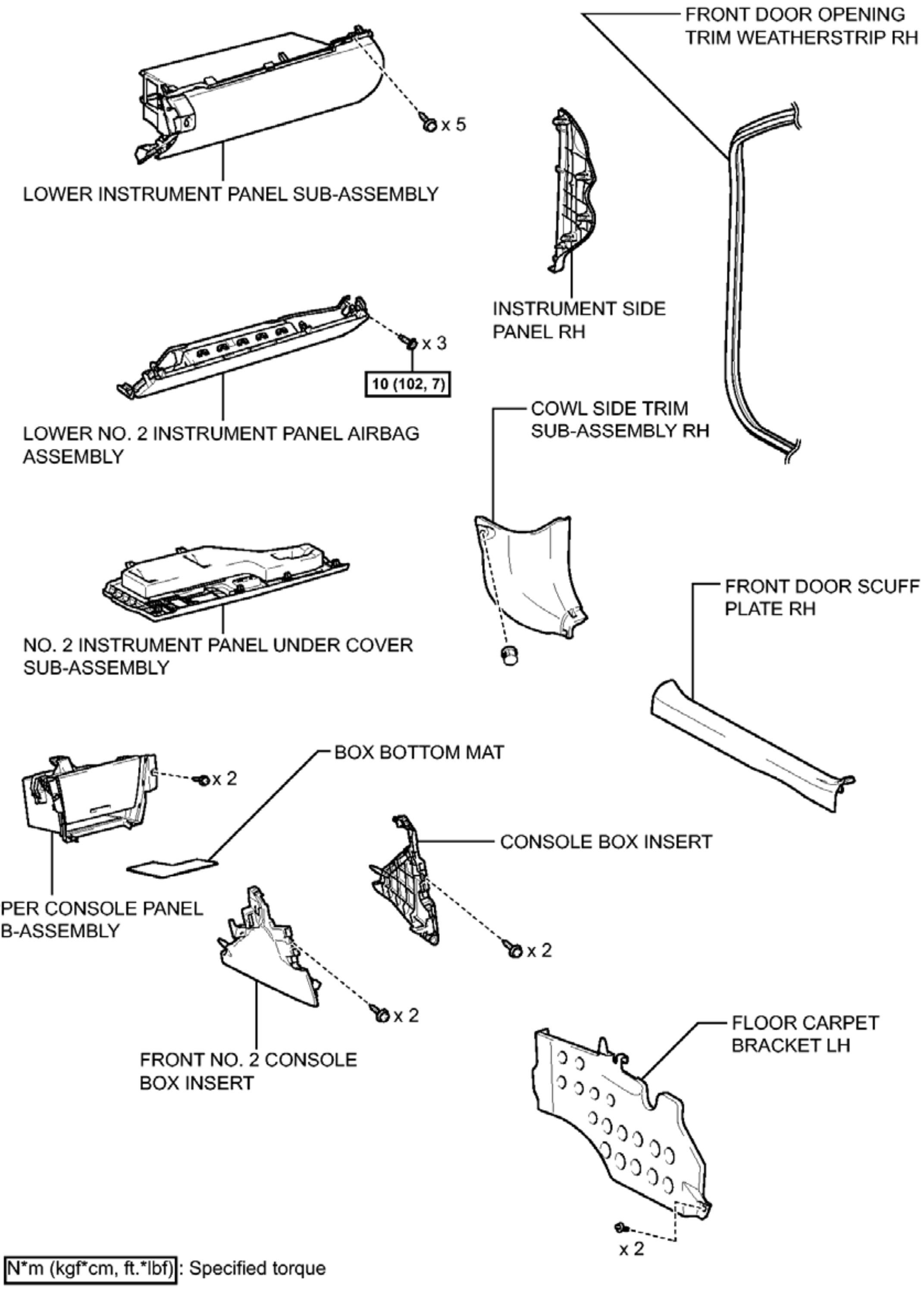
FRONT DOOR OPENING TRIM WEATHERSTRIP RH
x 5
LOWER INSTRUMENT PANEL SUB-ASSEMBLY
INSTRUMENT SIDE PANEL RH
x 3
10 (102, 7)
LOWER NO. 2 INSTRUMENT PANEL AIRBAG ASSEMBLY
COWL SIDE TRIM SUB-ASSEMBLY RH
NO. 2 INSTRUMENT PANEL UNDER COVER SUB-ASSEMBLY
FRONT DOOR SCUFF PLATE RH
BOX BOTTOM MAT
x 2
CONSOLE BOX INSERT
UPPER CONSOLE PANEL SUB-ASSEMBLY
x 2
x 2
FRONT NO. 2 CONSOLE BOX INSERT
FLOOR CARPET BRACKET LH
x 2
N*m (kgf*cm, ft.*lbf): Specified torque

Fig. 65: Identifying Shift Lever Replacement Components With Torque Specifications (2 Of 4)
Courtesy of TOYOTA MOTOR SALES, U.S.A., INC.

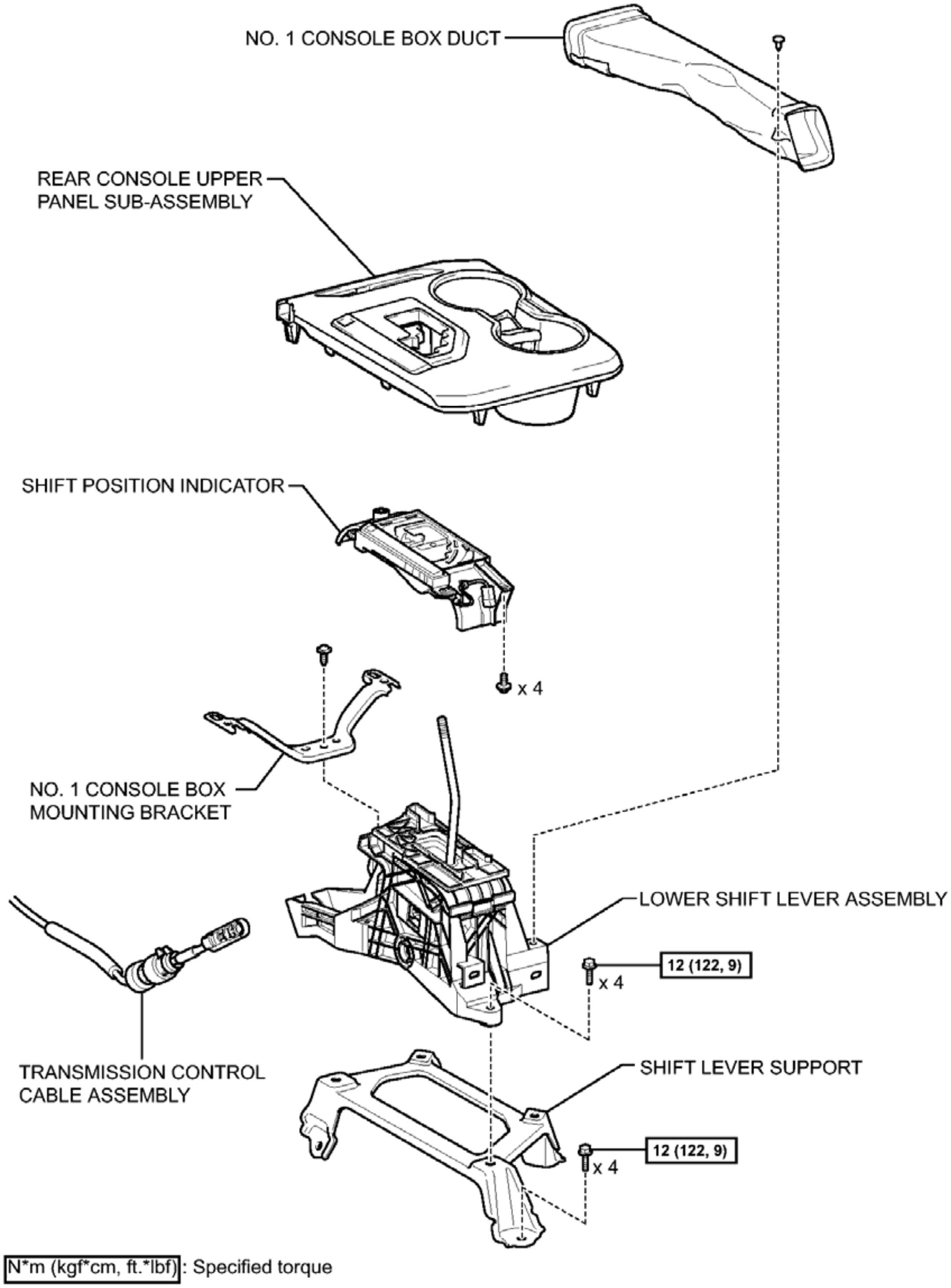
NO. 1 CONSOLE BOX DUCT
REAR CONSOLE UPPER PANEL SUB-ASSEMBLY
SHIFT POSITION INDICATOR
x 4
NO. 1 CONSOLE BOX MOUNTING BRACKET
LOWER SHIFT LEVER ASSEMBLY
12 (122, 9)
x 4
TRANSMISSION CONTROL CABLE ASSEMBLY
SHIFT LEVER SUPPORT
12 (122, 9)
x 4
N*m (kgf*cm, ft.*lbf): Specified torque

Fig. 66: Identifying Shift Lever Replacement Components With Torque Specifications (3 Of 4)
Courtesy of TOYOTA MOTOR SALES, U.S.A., INC.

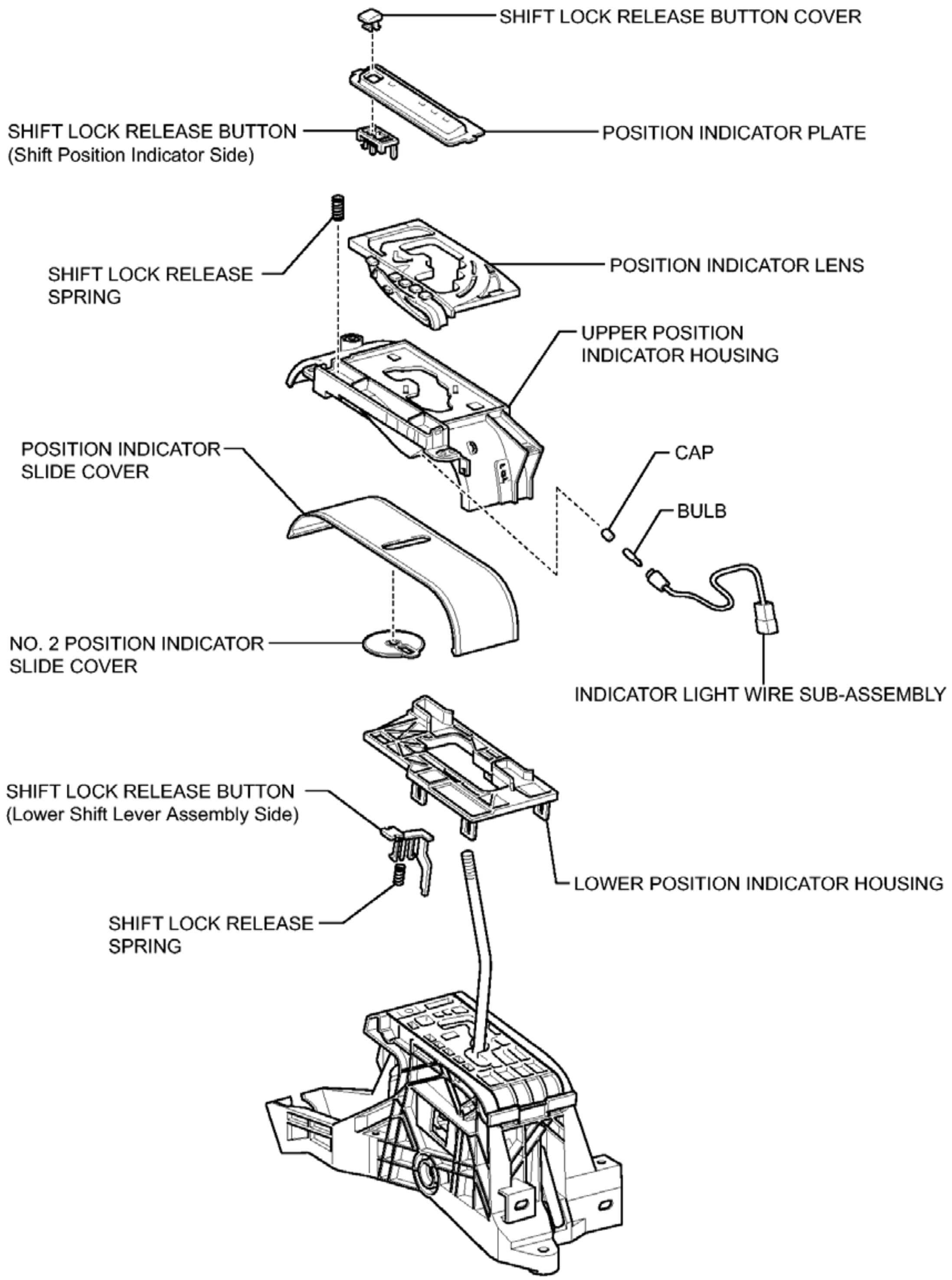
SHIFT LOCK RELEASE BUTTON COVER
SHIFT LOCK RELEASE BUTTON
(Shift Position Indicator Side)
POSITION INDICATOR PLATE
SHIFT LOCK RELEASE
SPRING
POSITION INDICATOR LENS
UPPER POSITION
INDICATOR HOUSING
POSITION INDICATOR
SLIDE COVER
CAP
BULB
NO. 2 POSITION INDICATOR
SLIDE COVER
INDICATOR LIGHT WIRE SUB-ASSEMBLY
SHIFT LOCK RELEASE BUTTON
(Lower Shift Lever Assembly Side)
LOWER POSITION INDICATOR HOUSING
SHIFT LOCK RELEASE
SPRING
C

Fig. 67: Identifying Shift Lever Replacement Components (4 Of 4)
Courtesy of TOYOTA MOTOR SALES, U.S.A., INC.

ON-VEHICLE INSPECTION

ON-VEHICLE INSPECTION

1. **INSPECT LOWER SHIFT LEVER ASSEMBLY**
    a. Inspect shift lock operation.
        1. Move the shift lever to P.
        2. Turn the power switch off.
        3. Check that the shift lever cannot be moved from P to any other position.
        4. Turn the power switch on (READY), depress the brake pedal, and check that the shift lever can be moved from P to any other position.

            If the operation cannot be done as specified, inspect the lower shift lever assembly.

    b. Inspect shift lock release button operation.
        1. Move the shift lever to P.
        2. Turn the power switch off.
        3. When moving the shift lever with the shift lock release button pressed, check that the shift lever can be moved from P to any other position.

            If the operation cannot be done as specified, inspect the shift lock control unit.

REMOVAL

REMOVAL

1. **REMOVE REAR CONSOLE BOX ASSEMBLY**

    Refer to **REMOVAL - Step 10**

2. **REMOVE FRONT DOOR SCUFF PLATE LH** . Refer to **REMOVAL - Step 4**
3. **REMOVE COWL SIDE TRIM SUB-ASSEMBLY LH** . Refer to **REMOVAL - Step 5**
4. **DISCONNECT FRONT DOOR OPENING TRIM WEATHERSTRIP LH** . Refer to **REMOVAL - Step 6**
5. **REMOVE INSTRUMENT SIDE PANEL LH** . Refer to **REMOVAL - Step 7**
6. **DISCONNECT HOOD LOCK CONTROL LEVER SUB-ASSEMBLY** . Refer to **REMOVAL - Step 13**
7. **REMOVE LOWER NO. 1 INSTRUMENT PANEL FINISH PANEL ASSEMBLY** . Refer to **REMOVAL - Step 14**
8. **REMOVE FRONT DOOR SCUFF PLATE RH** . Refer to **REMOVAL - Step 8**
9. **REMOVE COWL SIDE TRIM SUB-ASSEMBLY RH** . Refer to **REMOVAL - Step 9**
10. **DISCONNECT FRONT DOOR OPENING TRIM WEATHERSTRIP RH** . Refer to **REMOVAL - Step 33**
11. **REMOVE INSTRUMENT SIDE PANEL RH** . Refer to **REMOVAL - Step 34**
12. **REMOVE NO. 2 INSTRUMENT PANEL UNDER COVER SUB-ASSEMBLY** . Refer to

REMOVAL - Step 35

13. **REMOVE LOWER NO. 2 INSTRUMENT PANEL AIRBAG ASSEMBLY** . Refer to **REMOVAL - Step 9**
14. **REMOVE LOWER INSTRUMENT PANEL SUB-ASSEMBLY** . Refer to **REMOVAL - Step 37**
15. **REMOVE BOX BOTTOM MAT** . Refer to **REMOVAL - Step 24**
16. **REMOVE UPPER CONSOLE PANEL SUB-ASSEMBLY** . Refer to **REMOVAL - Step 25**
17. **REMOVE FRONT NO. 2 CONSOLE BOX INSERT** . Refer to **REMOVAL - Step 47**
18. **REMOVE CONSOLE BOX INSERT** . Refer to **REMOVAL - Step 48**
19. **REMOVE FLOOR CARPET BRACKET LH** . Refer to **REMOVAL - Step 26**
20. **REMOVE NO. 1 CONSOLE BOX MOUNTING BRACKET**
    a. Remove the screw and No. 1 console box mounting bracket from the lower shift lever assembly.

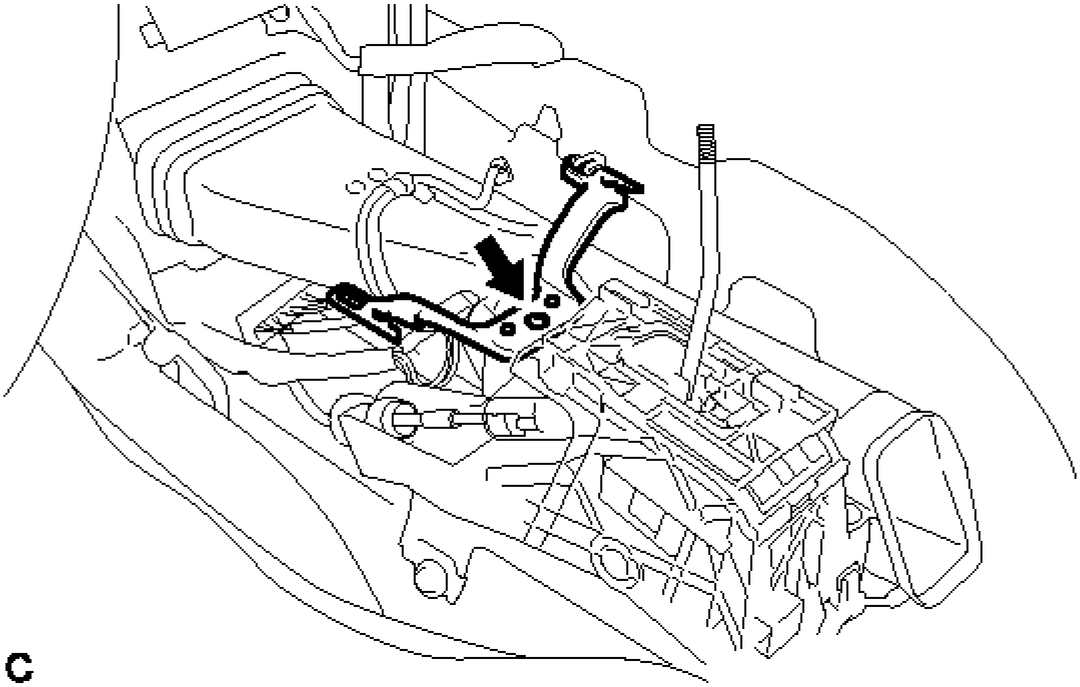

Fig. 68: Identifying No. 1 Console Box Mounting Bracket Screw
Courtesy of TOYOTA MOTOR SALES, U.S.A., INC.

21. **REMOVE NO. 1 CONSOLE BOX DUCT**
    a. Remove the clip and No. 1 console box duct.

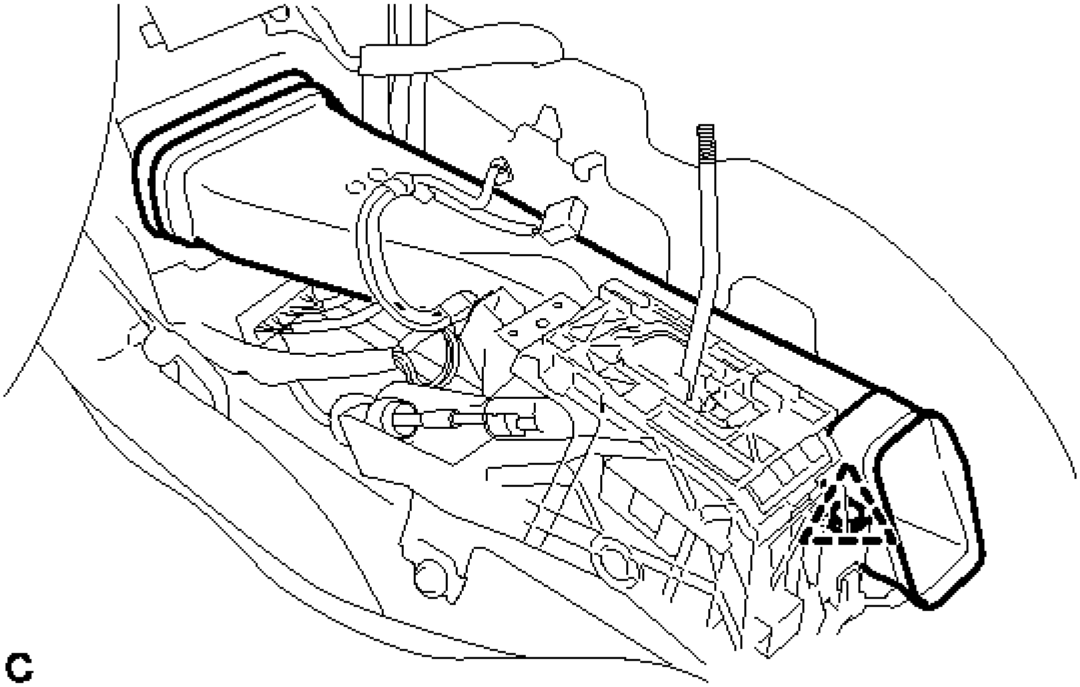

Fig. 69: Identifying No. 1 Console Box Duct Clip
Courtesy of TOYOTA MOTOR SALES, U.S.A., INC.

22. **REMOVE LOWER SHIFT LEVER ASSEMBLY**
    a. Disconnect the end of transmission control cable assembly from the lower shift lever assembly.

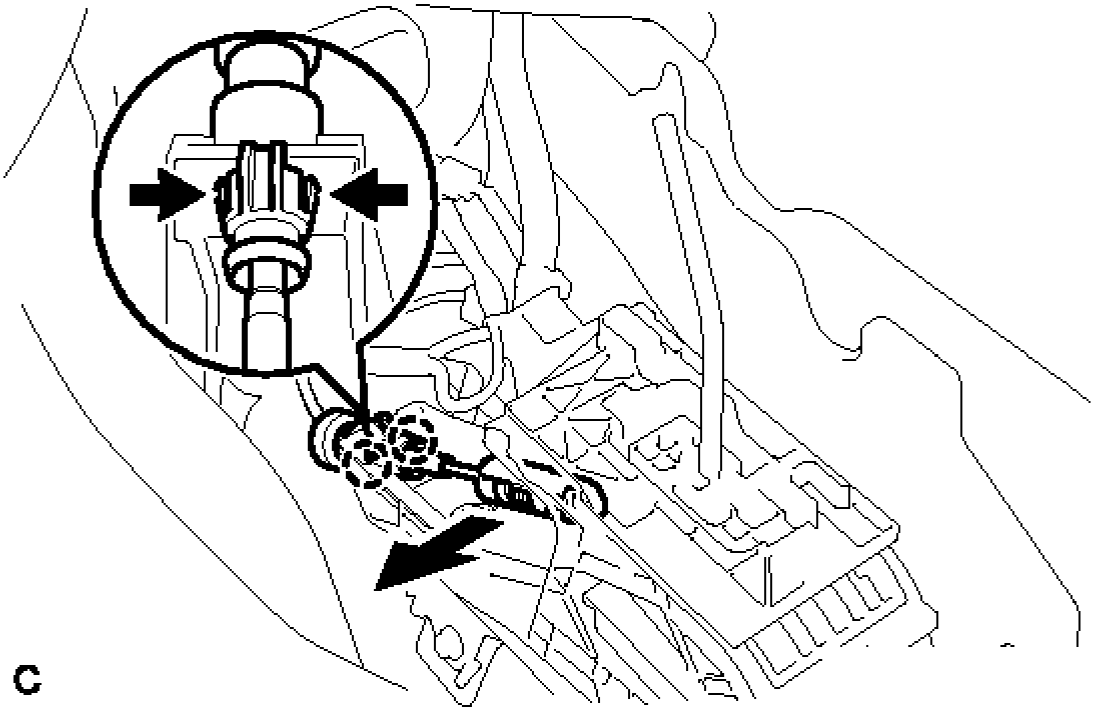

Fig. 70: Identifying Transmission Control Cable Assembly End

Courtesy of TOYOTA MOTOR SALES, U.S.A., INC.

b. Disengage the 2 claws and disconnect the transmission control cable assembly from the lower shift lever assembly.
c. Disconnect the 3 clamps and connector.

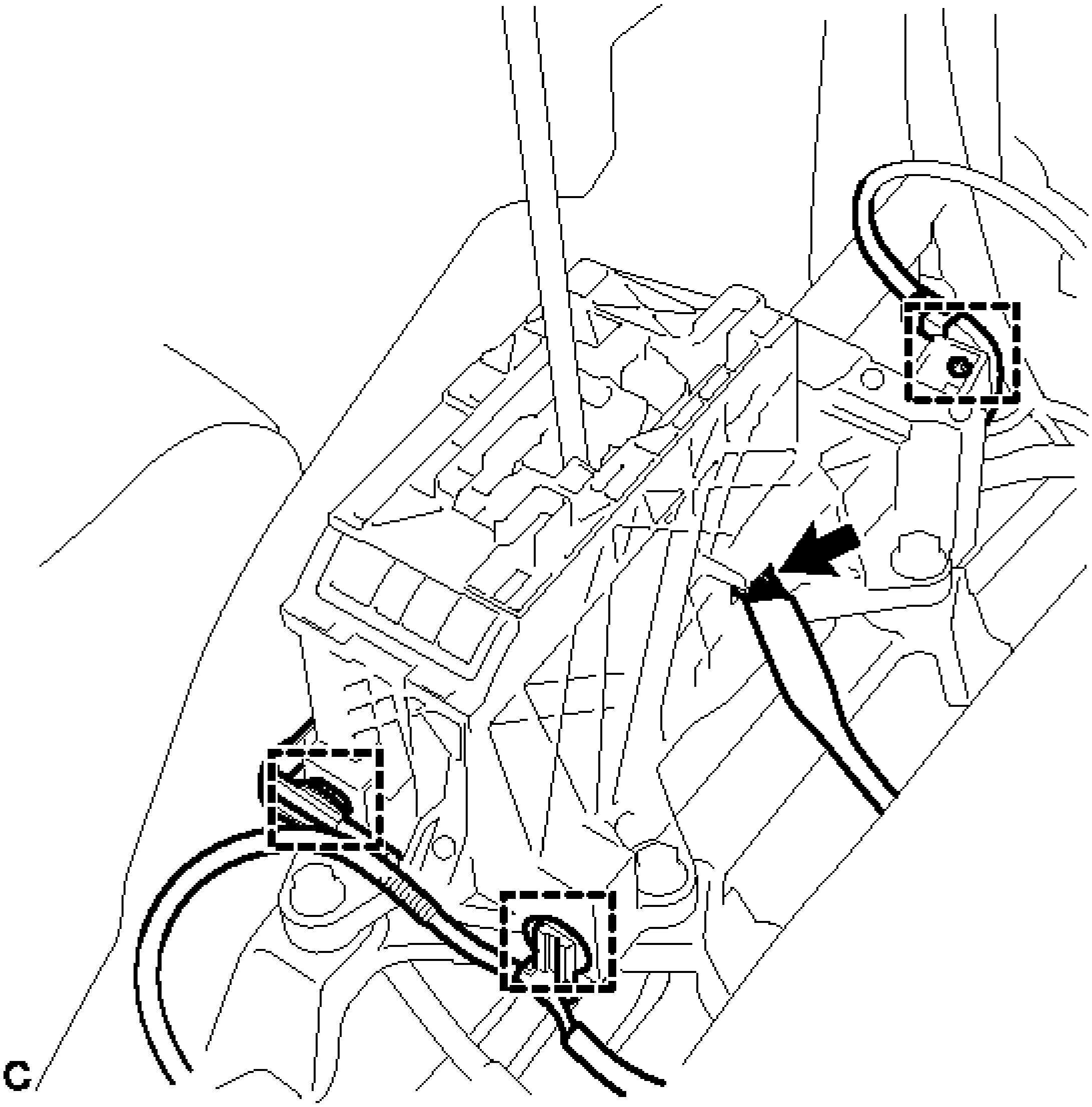

Fig. 71: Identifying Transmission Control Cable Assembly Claws And Connector
Courtesy of TOYOTA MOTOR SALES, U.S.A., INC.

d. Remove the 4 bolts and lower shift lever assembly.

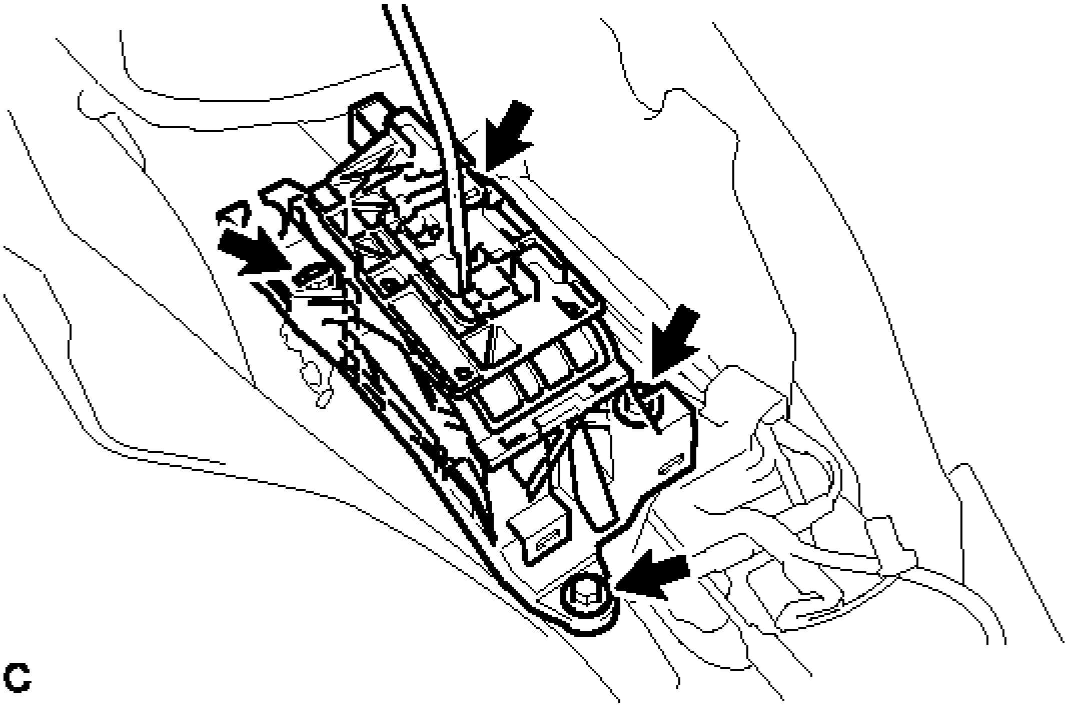

Fig. 72: Identifying Lower Shift Lever Assembly Bolts
Courtesy of TOYOTA MOTOR SALES, U.S.A., INC.

23. **REMOVE SHIFT LEVER SUPPORT**
    a. Remove the 4 bolts and shift lever support.

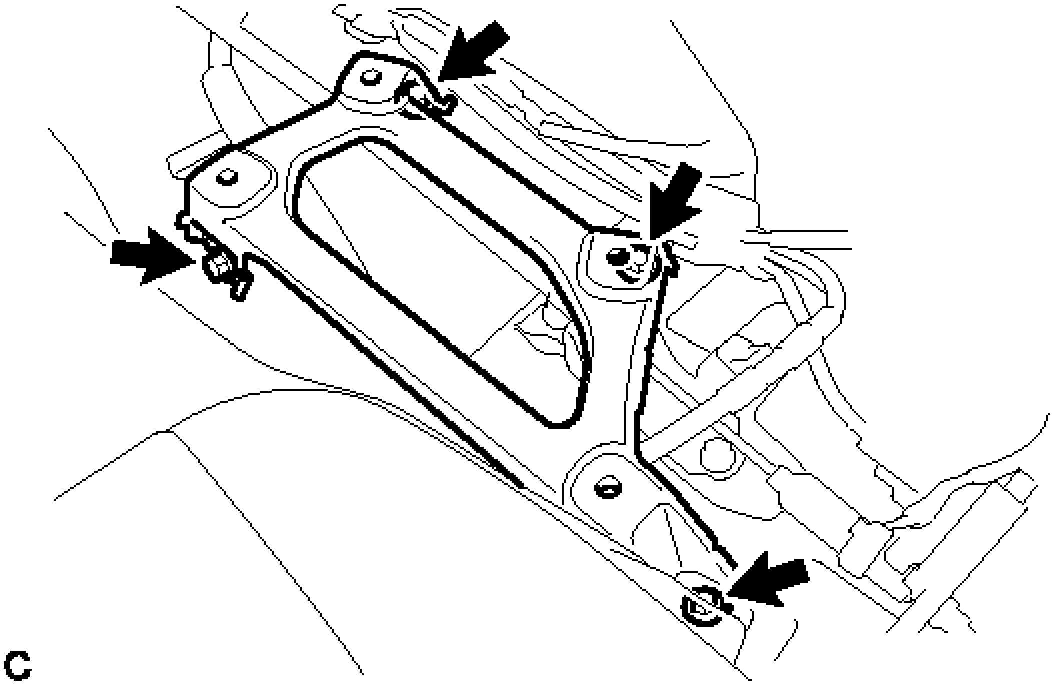

Fig. 73: Identifying Shift Lever Support Bolts

Courtesy of TOYOTA MOTOR SALES, U.S.A., INC.

DISASSEMBLY

DISASSEMBLY

1. **REMOVE LOWER POSITION INDICATOR HOUSING**
   a. Disengage the 5 claws to remove the lower position indicator housing.

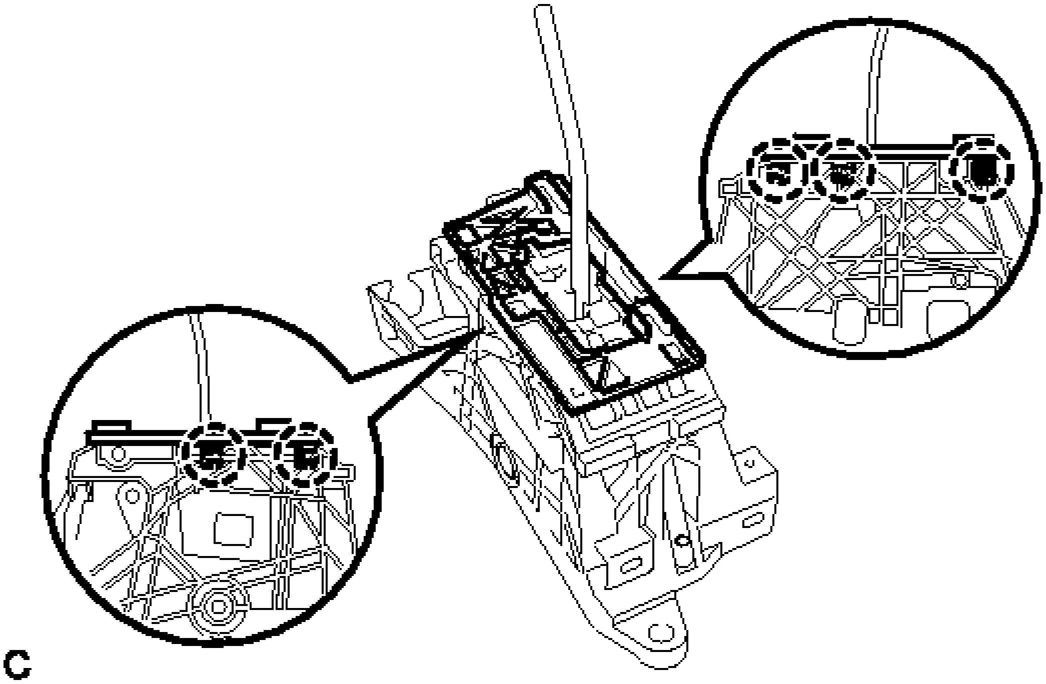

Fig. 74: Identifying Lower Position Indicator Housing Claws
Courtesy of TOYOTA MOTOR SALES, U.S.A., INC.

2. **REMOVE SHIFT LOCK RELEASE BUTTON (Lower Shift Lever Assembly Side)**
   a. Disengage the 2 claws to remove the shift lock release button and shift lock release spring.

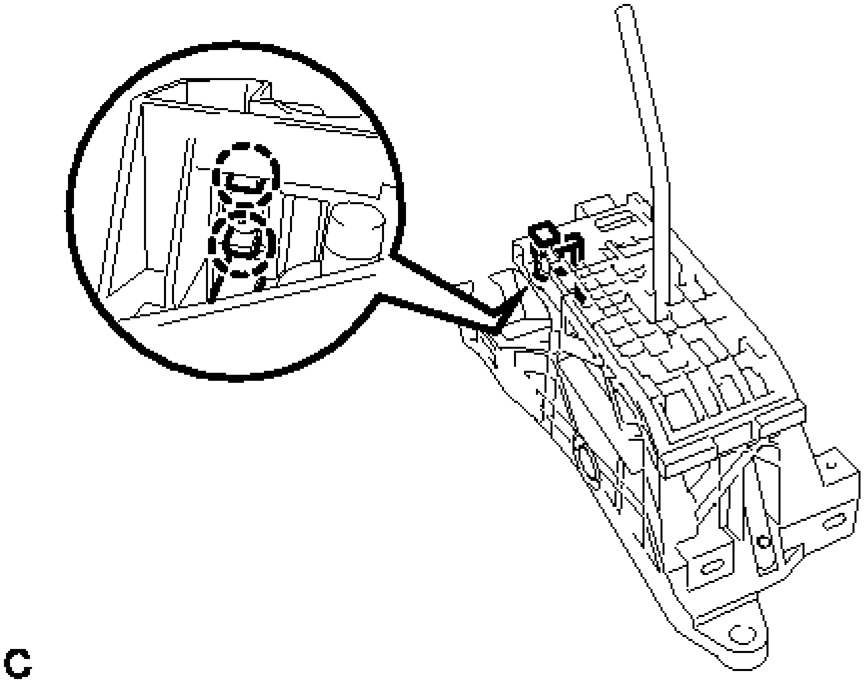

Fig. 75: Identifying Shift Lock Release Button Claws And Shift Lock Release Spring Claws
Courtesy of TOYOTA MOTOR SALES, U.S.A., INC.

3. **REMOVE SHIFT POSITION INDICATOR**
   a. Remove the 4 screws and shift position indicator.

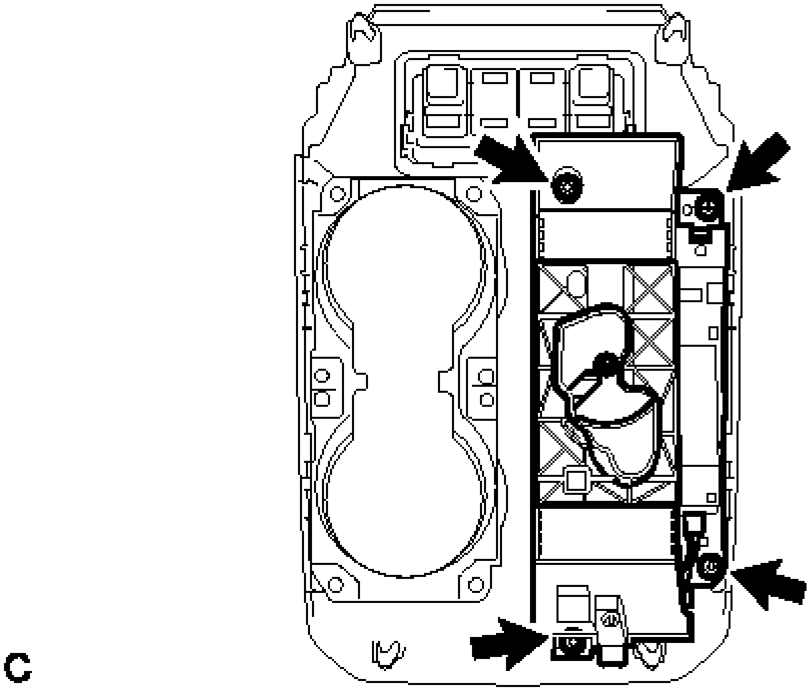

Fig. 76: Identifying Shift Position Indicator Screws

Courtesy of TOYOTA MOTOR SALES, U.S.A., INC.

4. **REMOVE SHIFT LOCK RELEASE BUTTON COVER**
    a. Disengage the 2 claws to remove the shift lock release button cover.

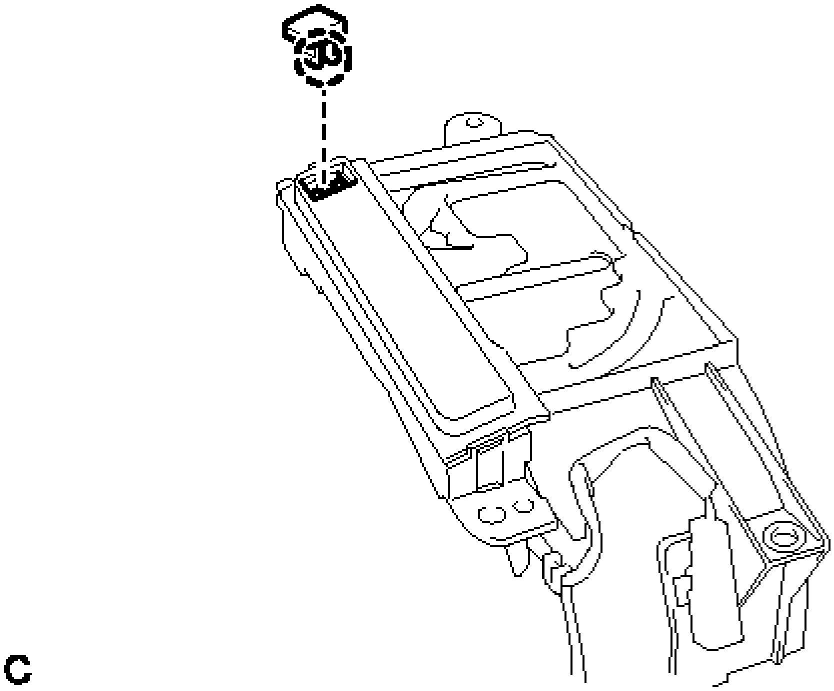

Fig. 77: Identifying Shift Lock Release Button Cover
Courtesy of TOYOTA MOTOR SALES, U.S.A., INC.

5. **REMOVE SHIFT LOCK RELEASE BUTTON (Shift Position Indicator Side)**
    a. Disengage the 2 claws to remove the position indicator plate.

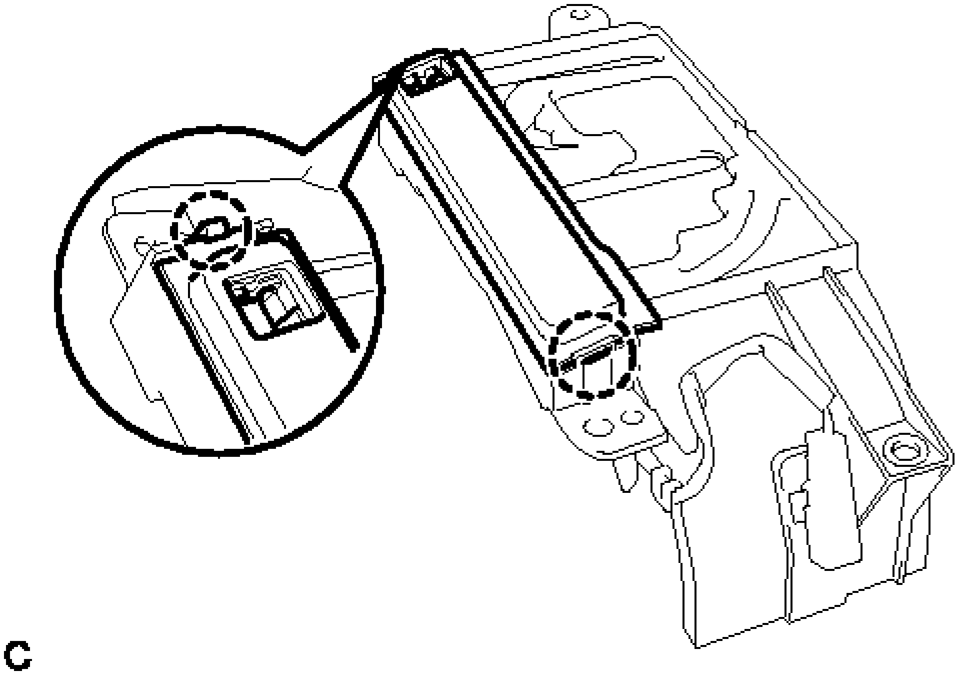

Fig. 78: Identifying Position Indicator Plate Claws
Courtesy of TOYOTA MOTOR SALES, U.S.A., INC.

b. Disengage the claw to remove the shift lock release button and shift lock release spring.

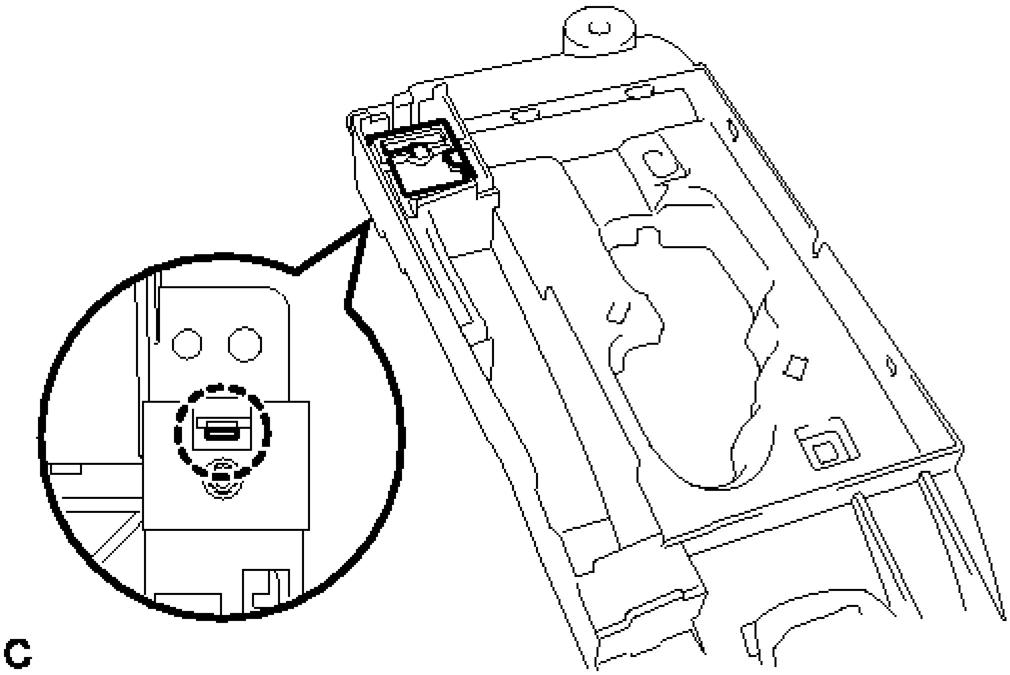

Fig. 79: Identifying Shift Lock Release Button Claw And Shift Lock Release Spring Claw
Courtesy of TOYOTA MOTOR SALES, U.S.A., INC.

6. **REMOVE INDICATOR LIGHT WIRE SUB-ASSEMBLY**
    a. Separate the bulb socket, 2 guides and clamp, and remove the indicator light wire sub-assembly from the upper position indicator housing.

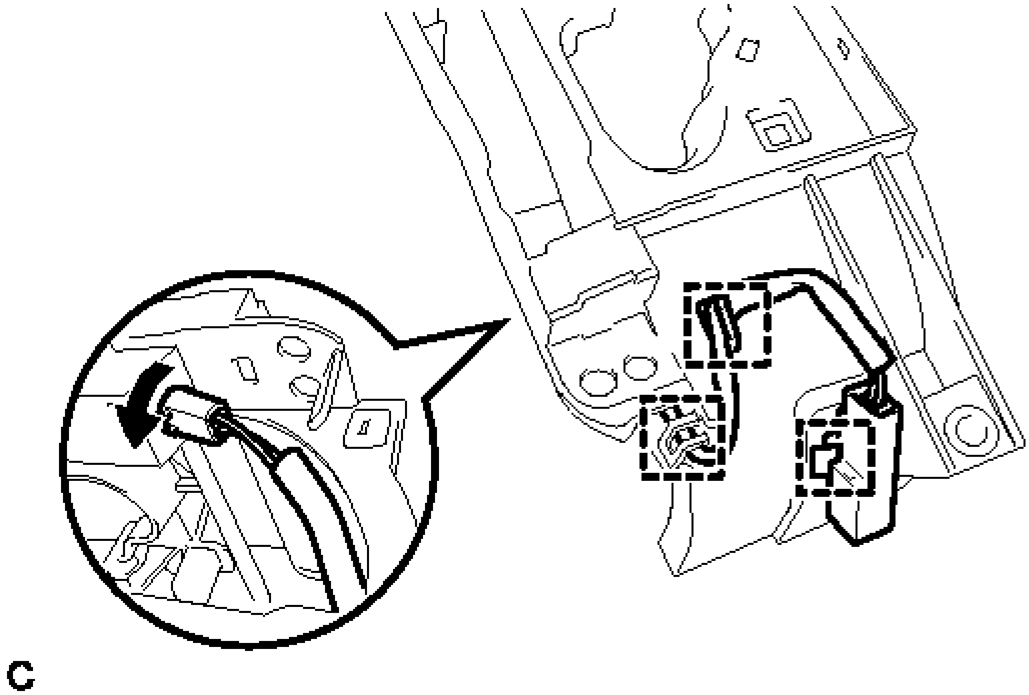

Fig. 80: Removing Indicator Light Wire Sub-Assembly
Courtesy of TOYOTA MOTOR SALES, U.S.A., INC.

    b. Remove the bulb from the indicator light wire sub-assembly.
    c. Remove the cap from the bulb.

7. **REMOVE POSITION INDICATOR SLIDE COVER**
    a. Remove the position indicator slide cover from the upper position indicator housing.

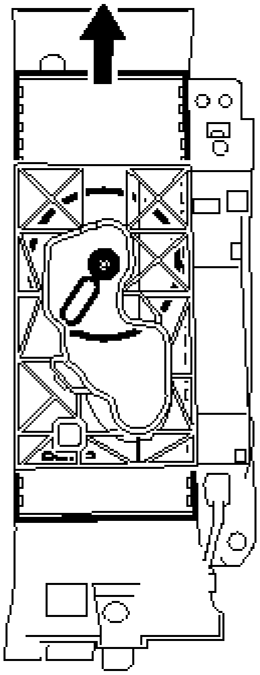

Fig. 81: Removing Position Indicator Slide Cover
Courtesy of TOYOTA MOTOR SALES, U.S.A., INC.

8. **REMOVE NO. 2 POSITION INDICATOR SLIDE COVER**
    a. Remove the No. 2 position indicator slide cover from the position indicator slide cover.

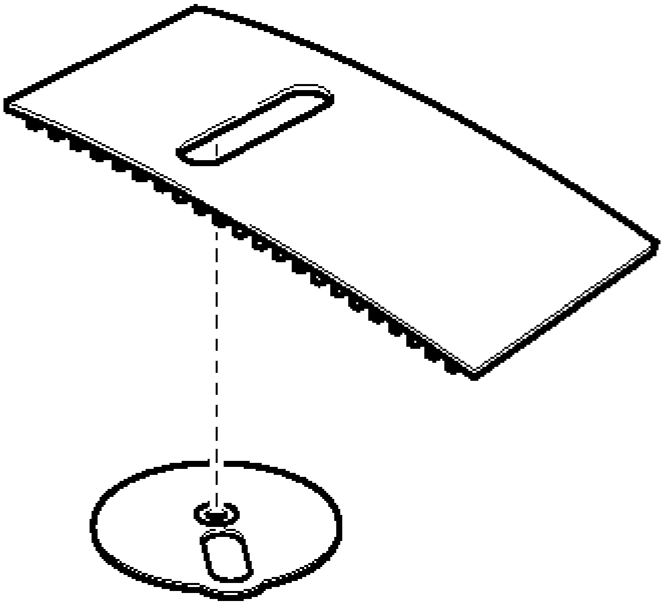

Fig. 82: Identifying No. 2 Position Indicator Slide Cover

Courtesy of TOYOTA MOTOR SALES, U.S.A., INC.

9. **REMOVE UPPER POSITION INDICATOR HOUSING**
    a. Disengage the 4 claws to remove the position indicator lens.

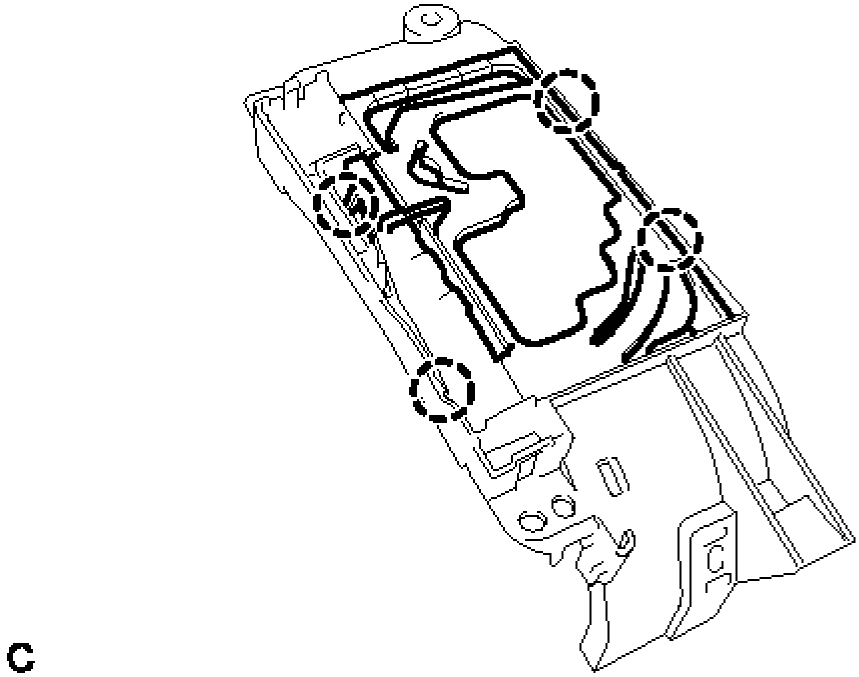

Fig. 83: Identifying Position Indicator Lens Claws
Courtesy of TOYOTA MOTOR SALES, U.S.A., INC.

INSPECTION

INSPECTION

1. **INSPECT LOWER SHIFT LEVER ASSEMBLY**
    a. Measure the voltage according to the value(s) in the table below.

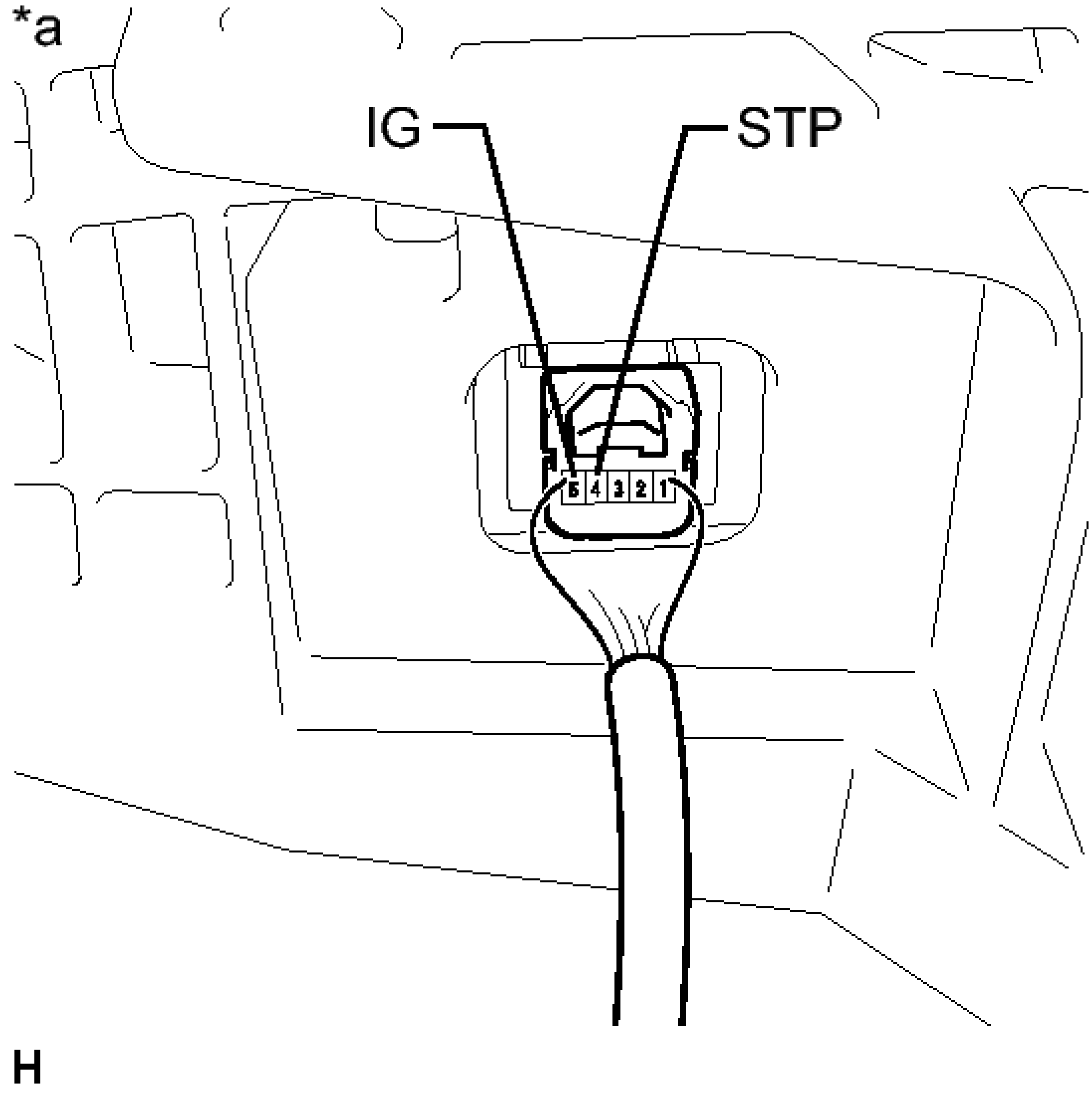

Fig. 84: Identifying Shift Lock Control ECU Connector Terminals
Courtesy of TOYOTA MOTOR SALES, U.S.A., INC.

Standard Voltage

Tester Connection	Condition	Specified Condition
5 (IG) - Body ground	Power switch on (IG)	11 to 14 V
	Power switch off	Below 1 V
4 (STP) - Body	Brake pedal depressed	11 to 14 V

ground	Brake pedal released	Below 1 V

TEXT IN ILLUSTRATION

*a	Component with harness connected (Shift Lock Control ECU)

HINT:

Do not disconnect the shift lock control unit assembly connector.

b. Measure the resistance according to the value(s) in the table below.

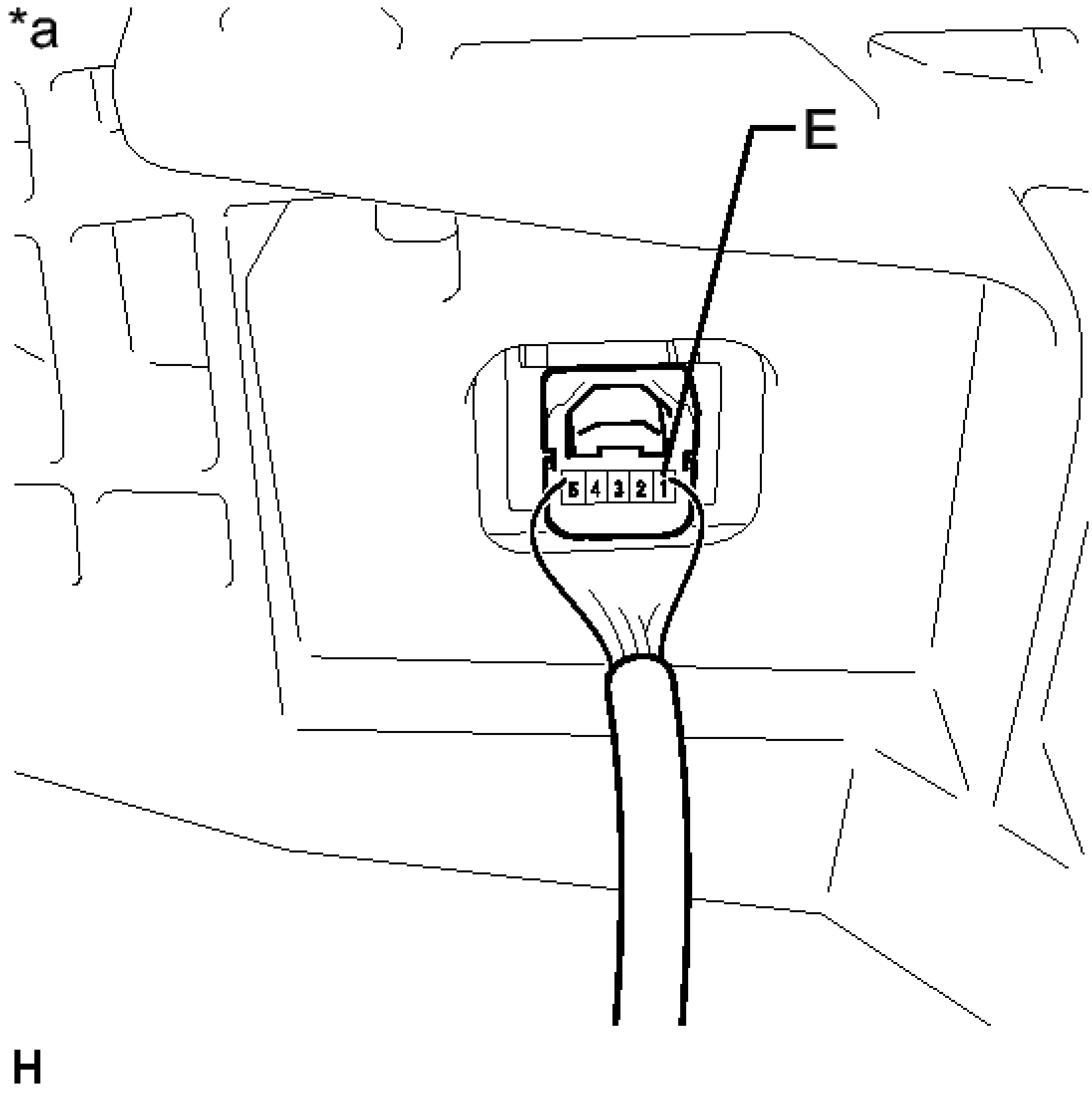

Fig. 85: Identifying Shift Lock Control ECU Connector Terminals
Courtesy of TOYOTA MOTOR SALES, U.S.A., INC.

Standard Resistance

Tester Connection	Condition	Specified Condition
1 (E) - Body ground	Always	Below 1 ohms

TEXT IN ILLUSTRATION

*a	Component with harness connected

	(Shift Lock Control ECU)

HINT:

Do not disconnect the shift lock control unit assembly connector.

c. Inspect shift lock solenoid
   1. Disconnect the shift lock solenoid connector.

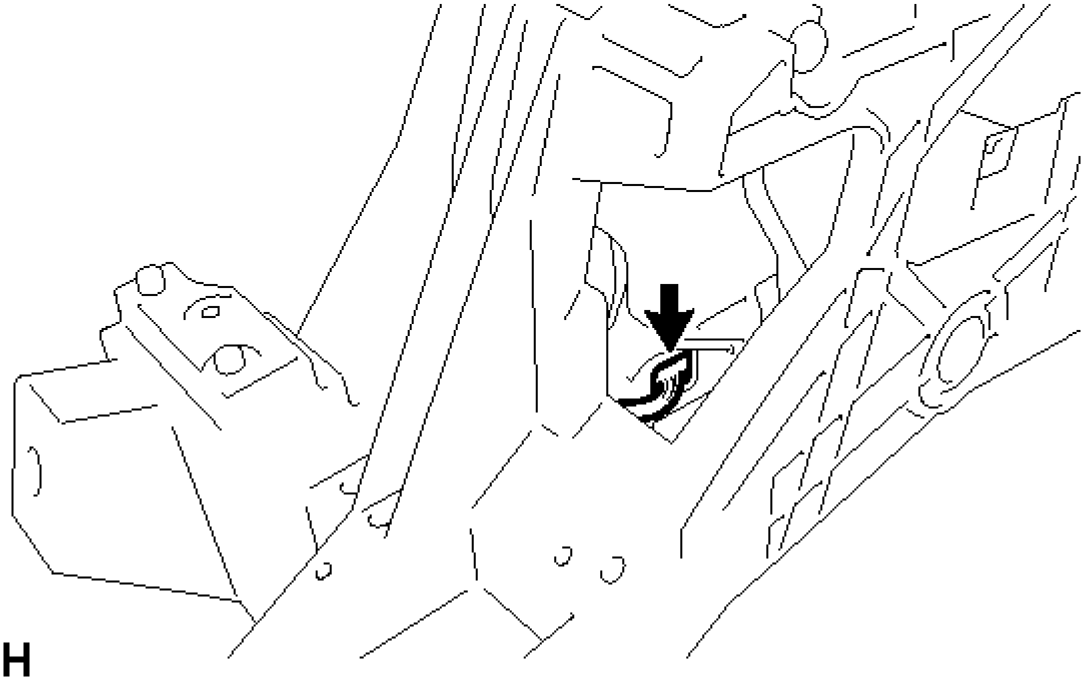

Fig. 86: Identifying Shift Lock Solenoid Connector
Courtesy of TOYOTA MOTOR SALES, U.S.A., INC.

   2. Measure the resistance according to the value(s) in the table below when the shift lever is moved to each position.

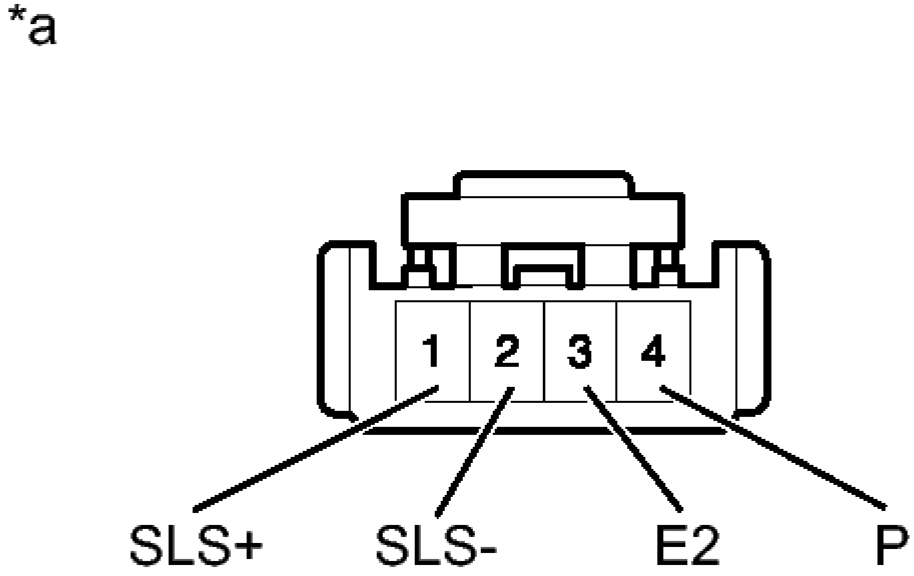

Fig. 87: Measure The Resistance
Courtesy of TOYOTA MOTOR SALES, U.S.A., INC.

Standard Resistance

Tester Connection	Shift Lever Position	Specified Condition
4 (P) - 3 (E2)	P	10 kohms or higher
4 (P) - 3 (E2)	Other than P	Below 1 ohms

TEXT IN ILLUSTRATION

*a	Front view of wire harness connector (to Shift Lock Solenoid)

- If the result is not as specified, replace the shift lock control unit assembly.
- If the shift lock does not operate when the power source of the shift lock control unit assembly is normal and the resistance between the body ground and the shift lock

solenoid is as specified, replace the shift lock control unit assembly.

3. Measure the resistance according to the value(s) in the table below.

   Standard Resistance

Tester Connection	Condition	Specified Condition
1 (SLS+) - 2 (SLS-)	Always	112 ohms

- If the result is not as specified, replace the shift lock control unit assembly.
- If the shift lock does not operate when the power source of the shift lock control unit assembly is normal and the resistance between the body ground and the shift lock solenoid is as specified, replace the shift lock control unit assembly.

REASSEMBLY

REASSEMBLY

1. **INSTALL UPPER POSITION INDICATOR HOUSING**
   a. Engage the 4 claws to install the position indicator lens.

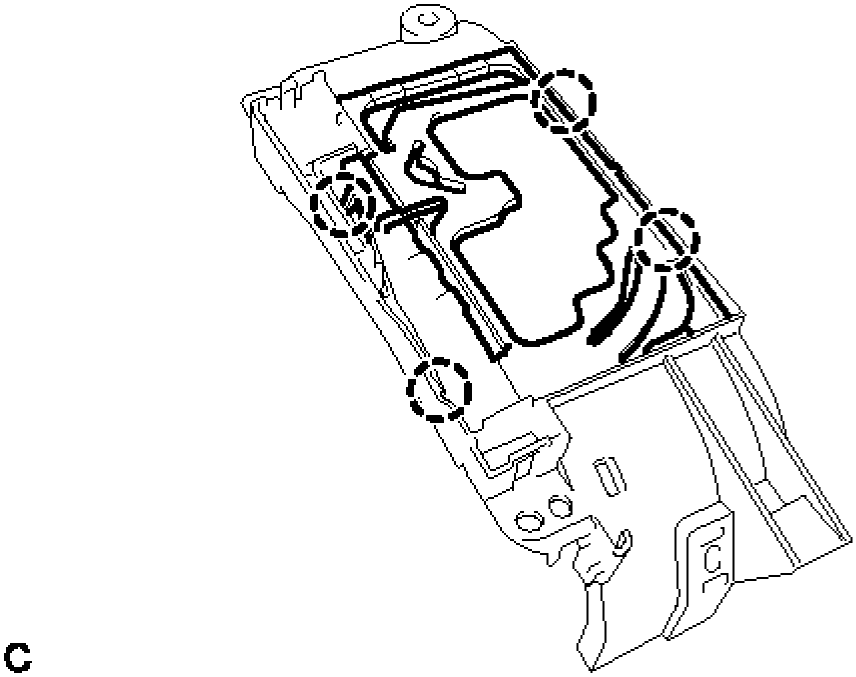

Fig. 88: Identifying Position Indicator Lens Claws
Courtesy of TOYOTA MOTOR SALES, U.S.A., INC.

2. **INSTALL NO. 2 POSITION INDICATOR SLIDE COVER**

a. Install the No. 2 position indicator slide cover to the position indicator slide cover.

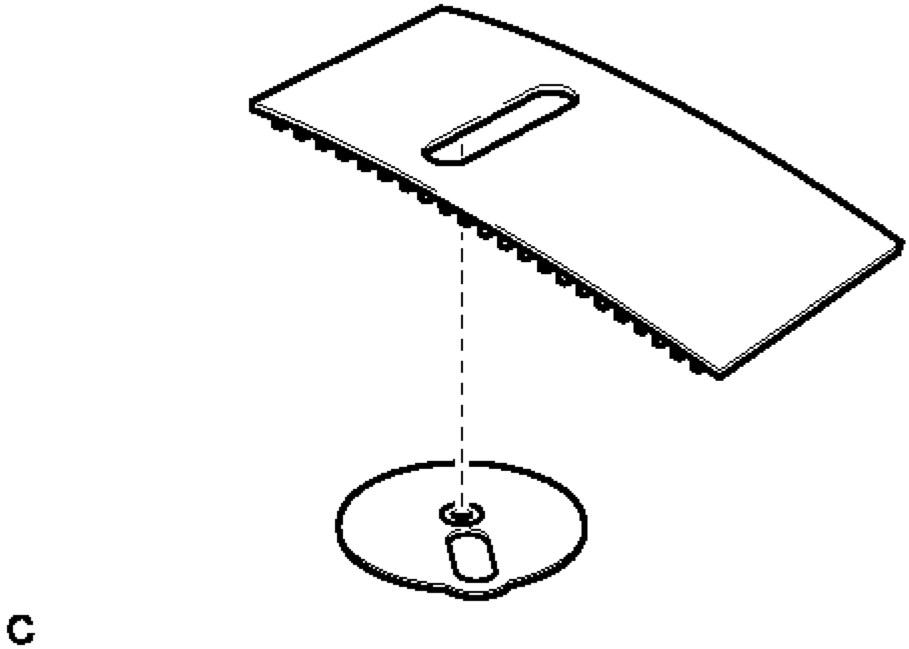

Fig. 89: Identifying No. 2 Position Indicator Slide Cover
Courtesy of TOYOTA MOTOR SALES, U.S.A., INC.

3. **INSTALL POSITION INDICATOR SLIDE COVER**
   a. Install the position indicator slide cover to the upper position indicator housing.

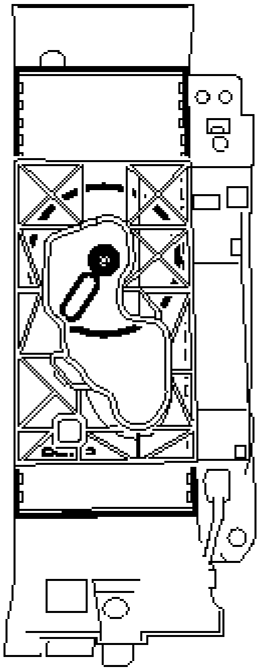

Fig. 90: Installing Position Indicator Slide Cover
Courtesy of TOYOTA MOTOR SALES, U.S.A., INC.

4. **INSTALL INDICATOR LIGHT WIRE SUB-ASSEMBLY**
   a. Install the cap to the bulb.
   b. Install the bulb to the indicator light wire sub-assembly.
   c. Connect the 2 guides, clamp and bulb socket to install the indicator light wire sub-assembly to the upper position indicator housing.

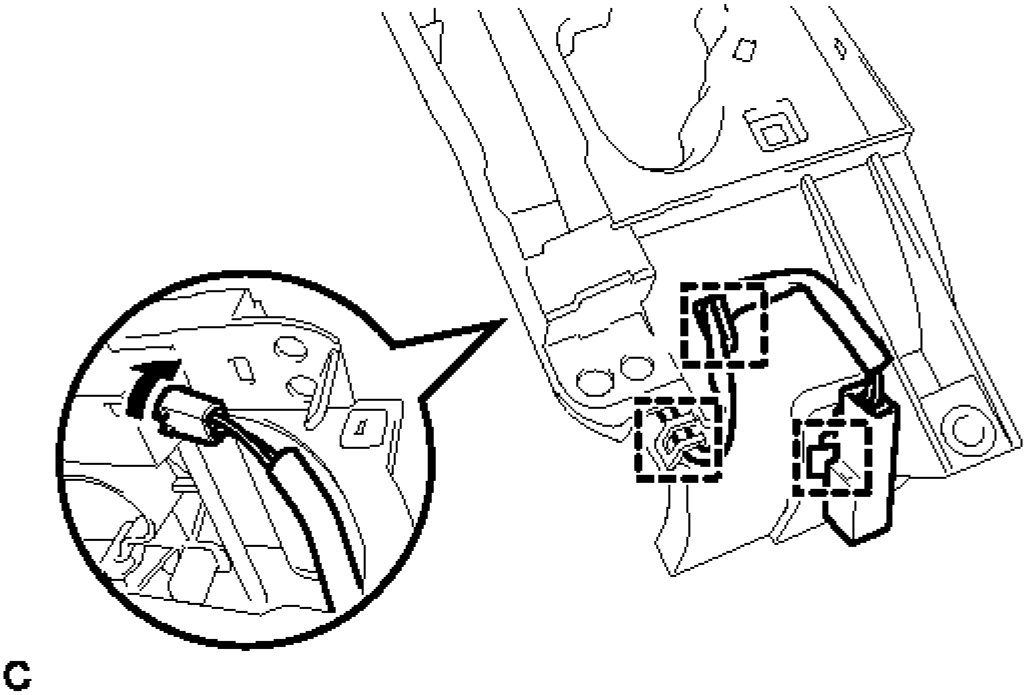

Fig. 91: Installing Indicator Light Wire Sub-Assembly
Courtesy of TOYOTA MOTOR SALES, U.S.A., INC.

5. **INSTALL SHIFT LOCK RELEASE BUTTON (Shift Position Indicator Side)**
   a. Engage the claw to install the shift lock release button with the shift lock release spring.

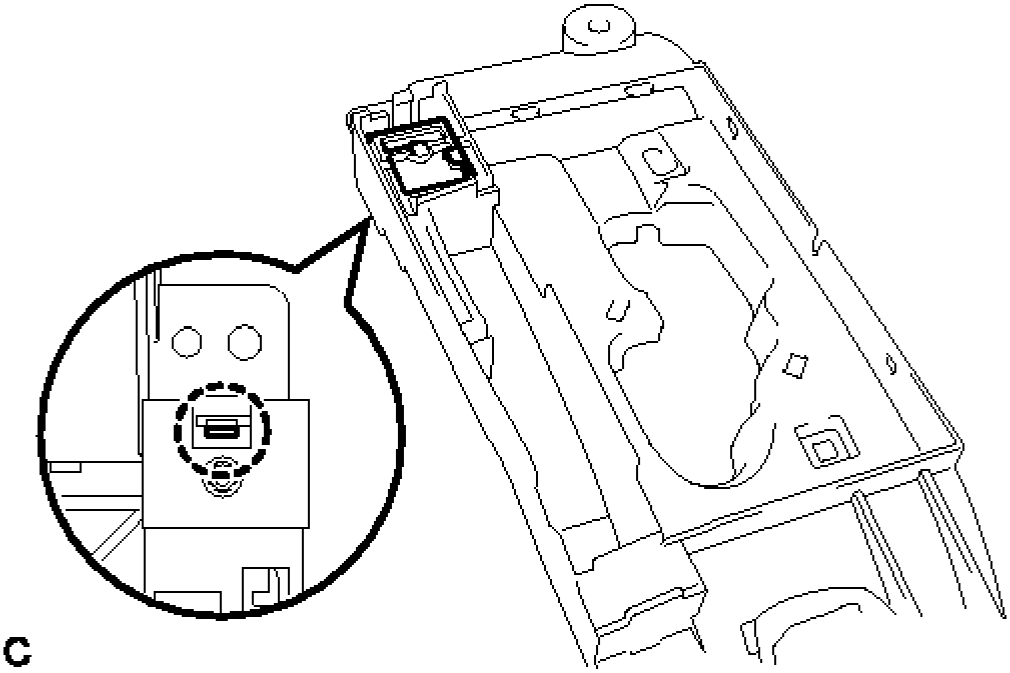

Fig. 92: Identifying Shift Lock Release Button Claw And Shift Lock Release Spring Claw

Courtesy of TOYOTA MOTOR SALES, U.S.A., INC.

b. Engage the 2 claws to install the position indicator plate.

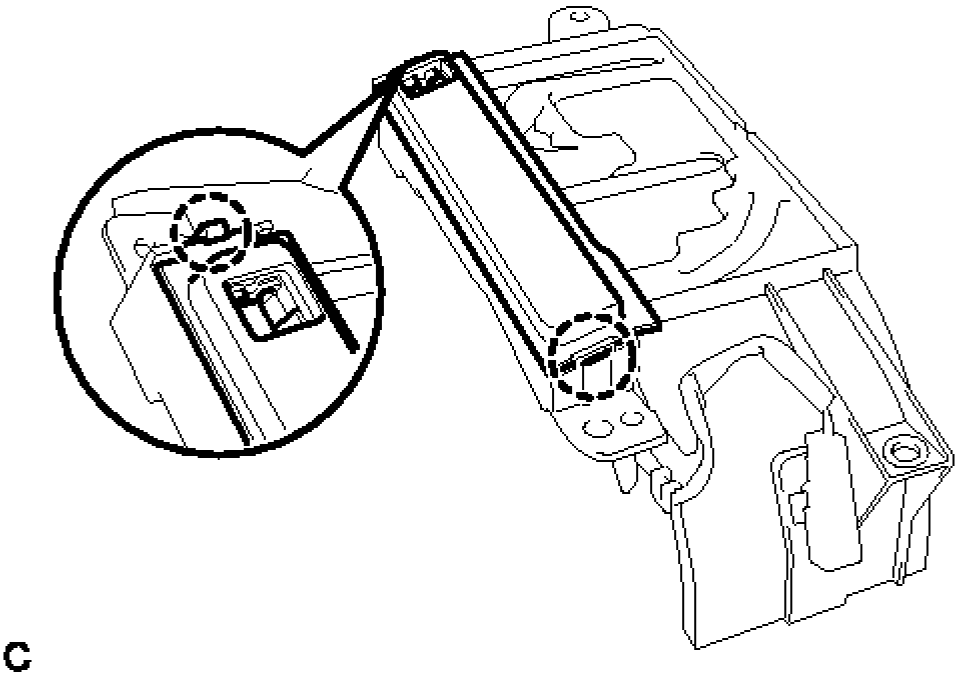

Fig. 93: Identifying Position Indicator Plate Claws
Courtesy of TOYOTA MOTOR SALES, U.S.A., INC.

6. **INSTALL SHIFT LOCK RELEASE BUTTON COVER**
    a. Engage the 2 claws to install the shift lock release button cover.

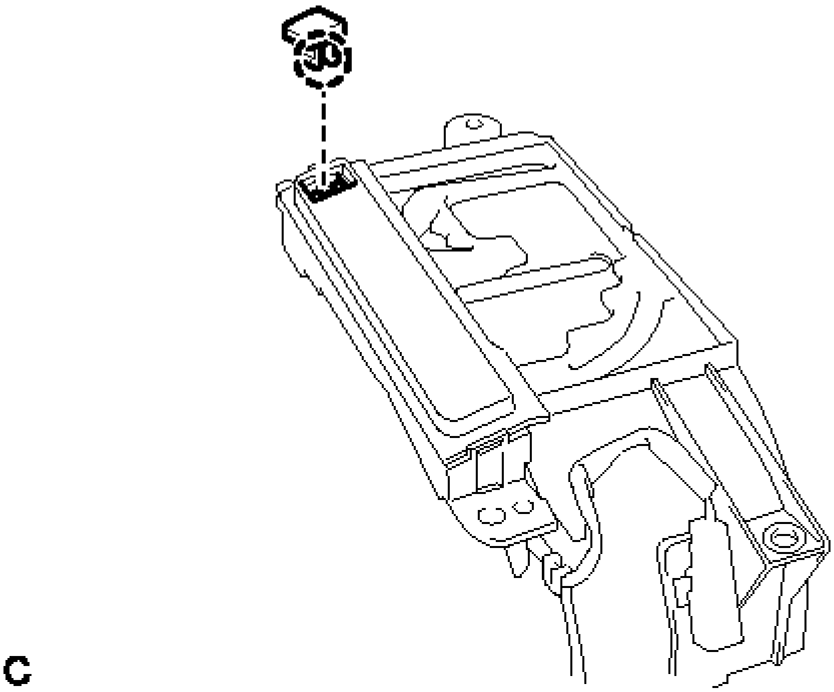

Fig. 94: Identifying Shift Lock Release Button Cover
Courtesy of TOYOTA MOTOR SALES, U.S.A., INC.

7. **INSTALL SHIFT POSITION INDICATOR**
   a. Install the shift position indicator with the 4 screws in the sequence shown in the illustration.

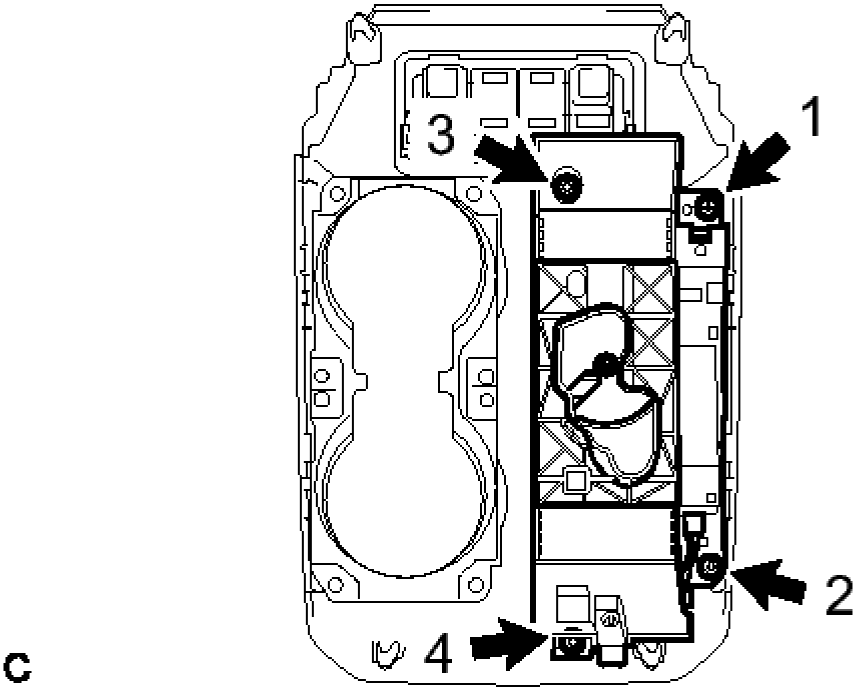

Fig. 95: Identifying Shift Position Indicator Screws

Courtesy of TOYOTA MOTOR SALES, U.S.A., INC.

8. **INSTALL SHIFT LOCK RELEASE BUTTON (Lower Shift Lever Assembly Side)**
    a. Engage the 2 claws to install the shift lock release button with the shift lock release spring.

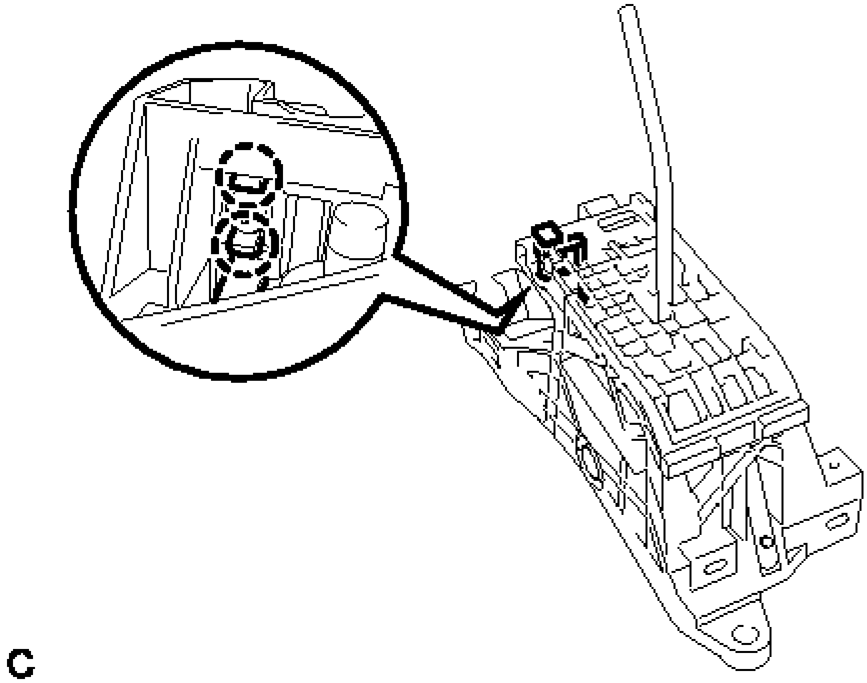

Fig. 96: Identifying Shift Lock Release Button Claws And Shift Lock Release Spring Claws
Courtesy of TOYOTA MOTOR SALES, U.S.A., INC.

9. **INSTALL LOWER POSITION INDICATOR HOUSING**
    a. Engage the 5 claws to install the lower position indicator housing.

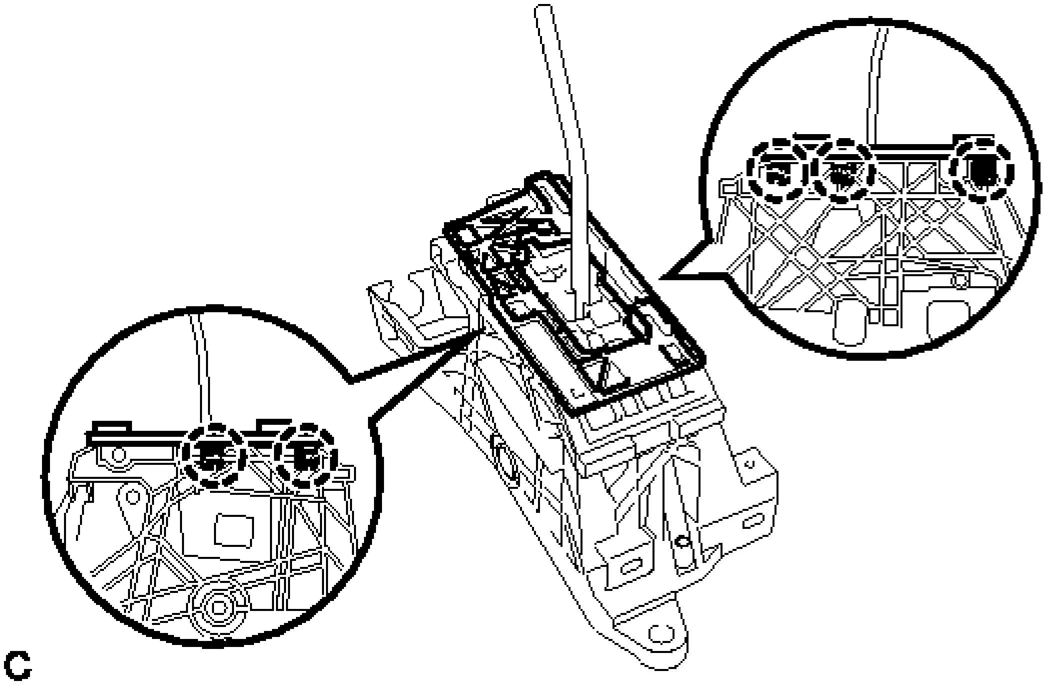

Fig. 97: Identifying Lower Position Indicator Housing Claws
Courtesy of TOYOTA MOTOR SALES, U.S.A., INC.

INSTALLATION

INSTALLATION

1. **INSTALL SHIFT LEVER SUPPORT**
    a. Install the shift lever support with the 4 bolts in the sequence shown in the illustration.

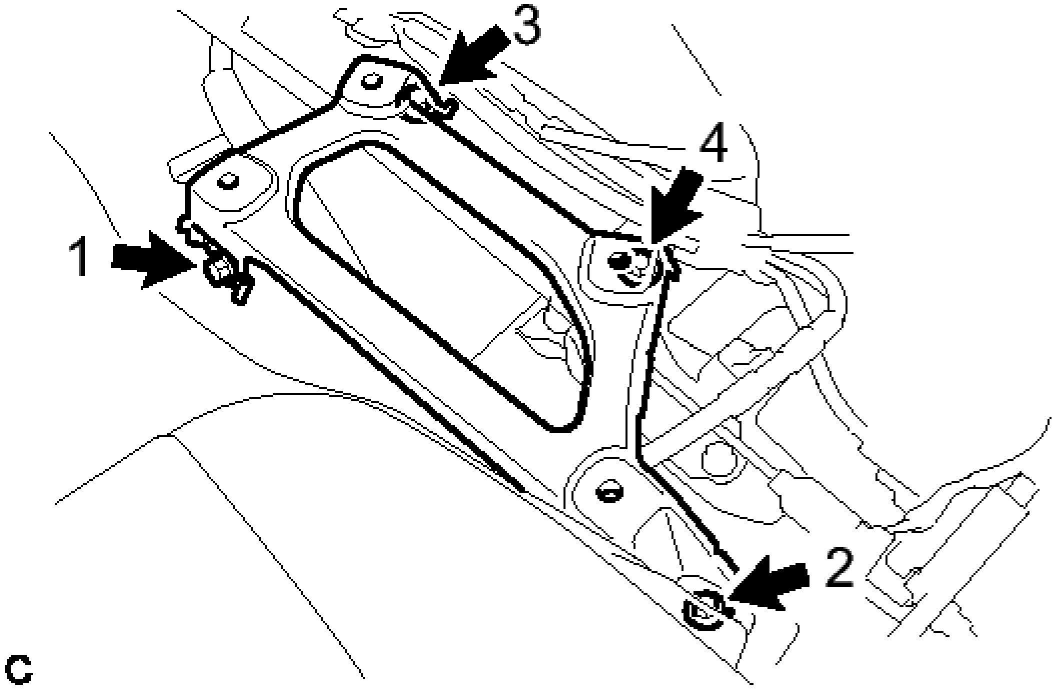

Fig. 98: Identifying Shift Lever Support Bolts
Courtesy of TOYOTA MOTOR SALES, U.S.A., INC.

Torque: 12 N*m (122 kgf*cm, 9 ft.*lbf)

2. **INSTALL LOWER SHIFT LEVER ASSEMBLY**

NOTE: Check that the park/neutral position switch and the shift lever are in neutral.

a. Install the lower shift lever assembly with the 4 bolts in the sequence shown in the illustration.

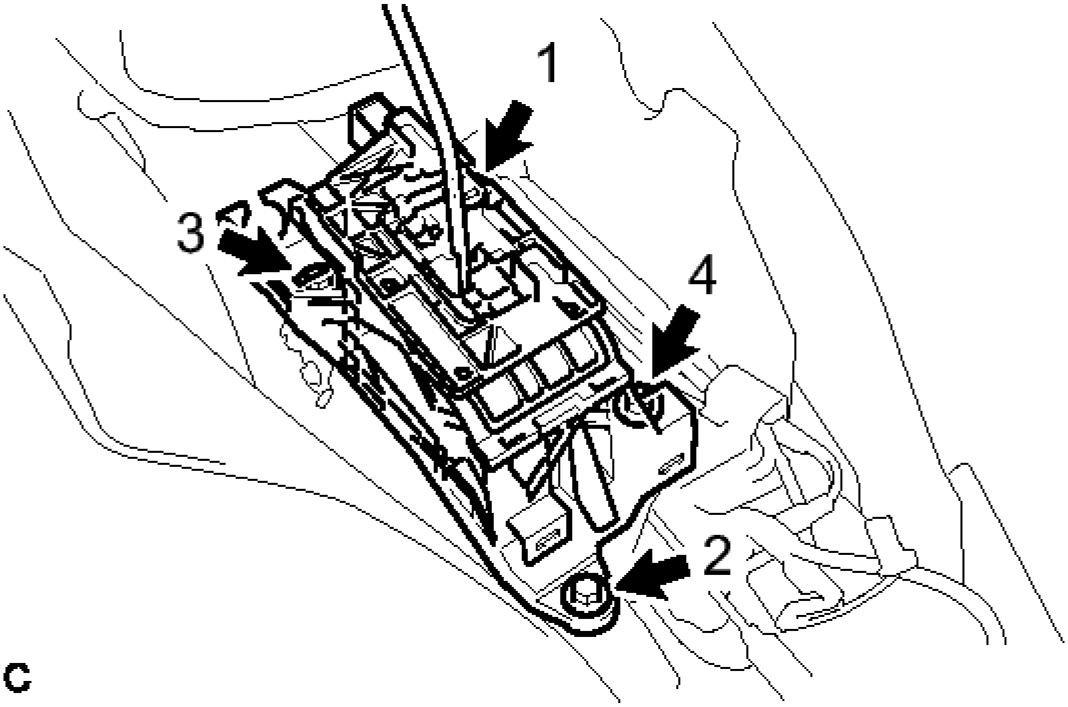

Fig. 99: Identifying Lower Shift Lever Assembly Bolts
Courtesy of TOYOTA MOTOR SALES, U.S.A., INC.

Torque: 12 N*m (122 kgf*cm, 9 ft.*lbf)

b. Connect the 3 clamps and connector.
c. Slide the slider of the transmission control cable in the direction indicated by the arrow and pull the lock piece outward.

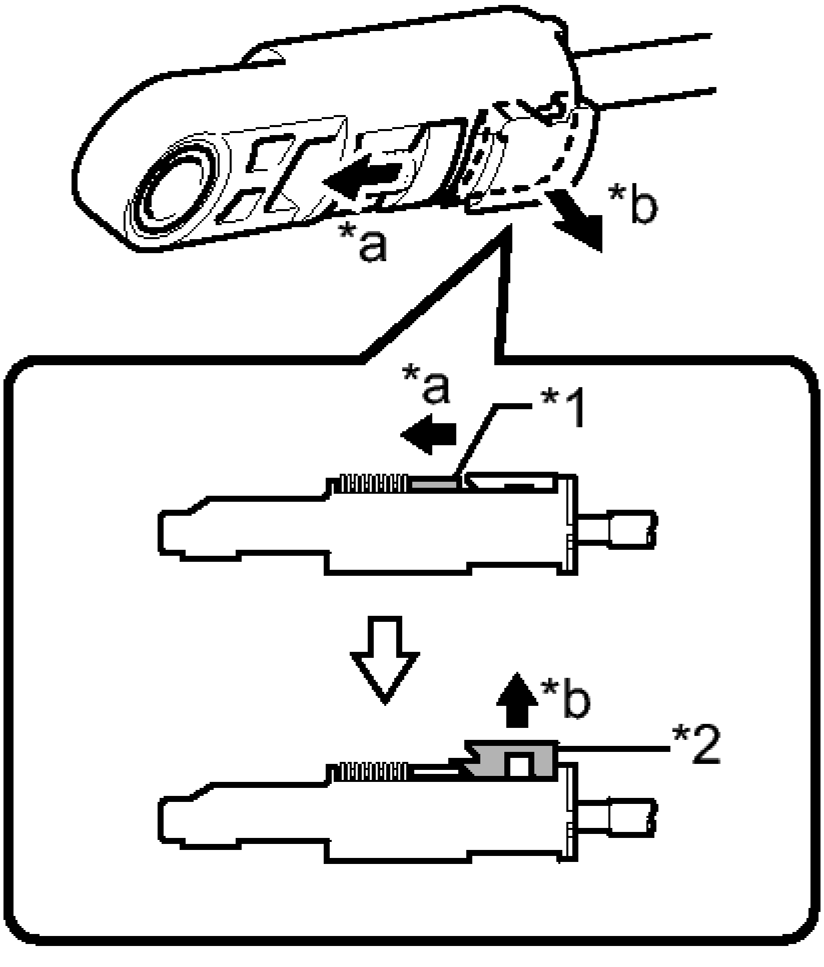

Fig. 100: Identifying Transmission Control Cable Assembly Slider
Courtesy of TOYOTA MOTOR SALES, U.S.A., INC.

TEXT IN ILLUSTRATION

*1	Slider
*2	Lock Piece
*a	Slide
*b	Pull

d. Install the end of the transmission control cable to the shift lever assembly.

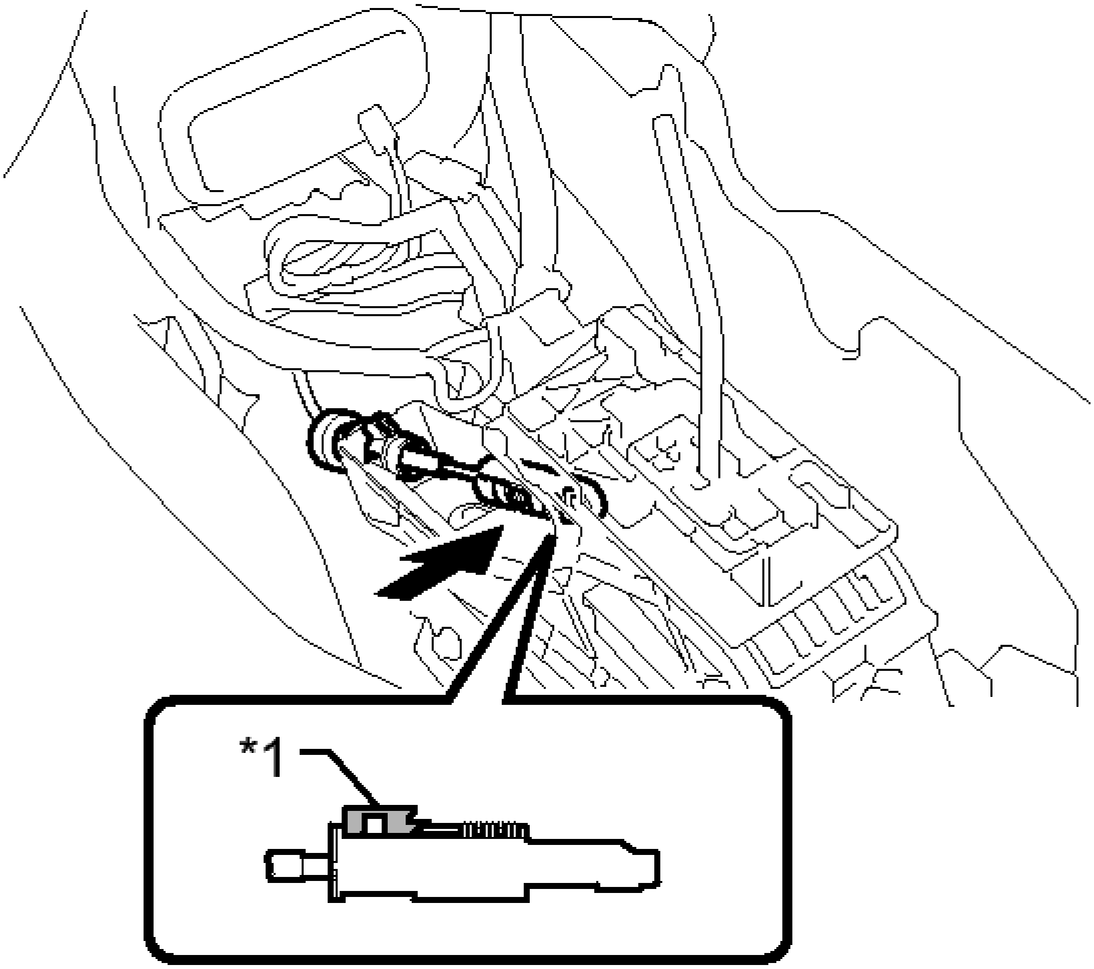

Fig. 101: Installing End Of Transmission Control Cable Assembly
Courtesy of TOYOTA MOTOR SALES, U.S.A., INC.

TEXT IN ILLUSTRATION

*1	Lock Piece

NOTE:

- **Check that the lock piece is pulled up.**
- **Install the cable end all the way to the base of the pin.**

e. Push the lock piece into the adjuster case.

NOTE:

- **Check that the park/neutral position switch and the shift lever are in neutral.**

- **Securely push in the lock piece until the slider lock is engaged.**

3. **INSTALL NO. 1 CONSOLE BOX DUCT**
    a. Install the No. 1 console box duct to the lower shift lever assembly with the clip.
4. **INSTALL NO. 1 CONSOLE BOX MOUNTING BRACKET**
    a. Install the No. 1 console box mounting bracket to the lower shift lever assembly with the screw.
5. **INSTALL FLOOR CARPET BRACKET LH** . Refer to **INSTALLATION - Step 10**
6. **INSTALL CONSOLE BOX INSERT** . Refer to **INSTALLATION - Step 4**
7. **INSTALL FRONT NO. 2 CONSOLE BOX INSERT** . Refer to **INSTALLATION - Step 5**
8. **INSTALL UPPER CONSOLE PANEL SUB-ASSEMBLY** . Refer to **INSTALLATION - Step 27**
9. **INSTALL BOX BOTTOM MAT** . Refer to **INSTALLATION - Step 28**
10. **INSTALL LOWER INSTRUMENT PANEL SUB-ASSEMBLY** . Refer to **INSTALLATION - Step 15**
11. **INSTALL LOWER NO. 2 INSTRUMENT PANEL AIRBAG ASSEMBLY** . Refer to **INSTALLATION - Step 1**
12. **INSTALL NO. 2 INSTRUMENT PANEL UNDER COVER SUB-ASSEMBLY** . Refer to **INSTALLATION - Step 17**
13. **INSTALL INSTRUMENT SIDE PANEL RH** . Refer to **INSTALLATION - Step 18**
14. **INSTALL FRONT DOOR OPENING TRIM WEATHERSTRIP RH** . Refer to **INSTALLATION - Step 47**
15. **INSTALL COWL SIDE TRIM SUB-ASSEMBLY RH** . Refer to **INSTALLATION - Step 48**
16. **INSTALL FRONT DOOR SCUFF PLATE RH** . Refer to **INSTALLATION - Step 49**
17. **INSTALL LOWER NO. 1 INSTRUMENT PANEL FINISH PANEL ASSEMBLY** . Refer to **INSTALLATION - Step 38**
18. **CONNECT HOOD LOCK CONTROL LEVER SUB-ASSEMBLY** . Refer to **INSTALLATION - Step 39**
19. **INSTALL INSTRUMENT SIDE PANEL LH** . Refer to **INSTALLATION - Step 45**
20. **INSTALL FRONT DOOR OPENING TRIM WEATHERSTRIP LH** . Refer to **INSTALLATION - Step 43**
21. **INSTALL COWL SIDE TRIM SUB-ASSEMBLY LH** . Refer to **INSTALLATION - Step 44**
22. **INSTALL FRONT DOOR SCUFF PLATE LH** . Refer to **INSTALLATION - Step 45**
23. **INSTALL REAR CONSOLE BOX ASSEMBLY**

    Refer to **INSTALLATION - Step 1**

24. **INSPECT SHIFT LEVER POSITION** See step 1

SHIFT LEVER POSITION SENSOR

COMPONENTS

ILLUSTRATION

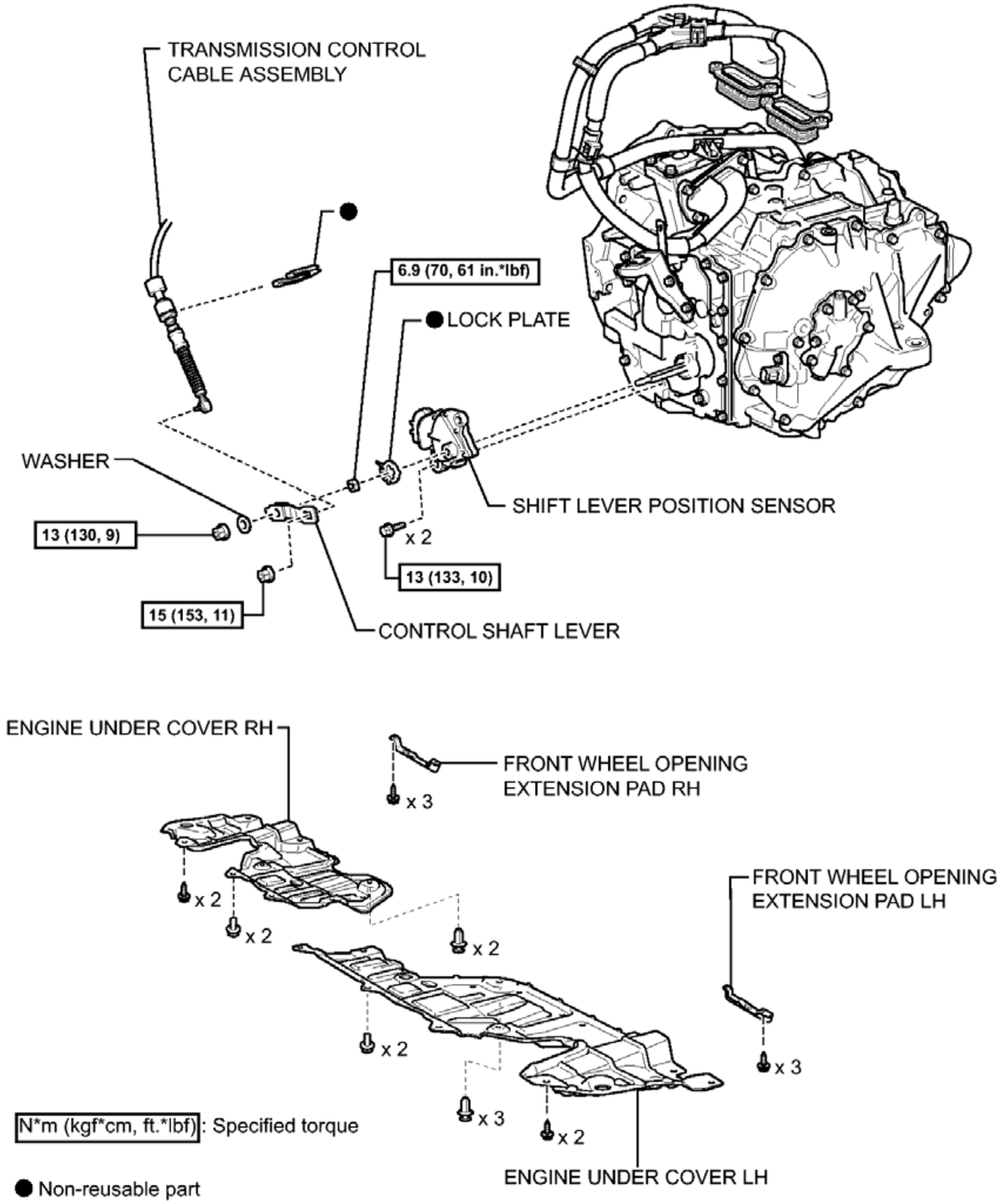
TRANSMISSION CONTROL CABLE ASSEMBLY
●
6.9 (70, 61 in.*lbf)
● LOCK PLATE
WASHER
13 (130, 9)
SHIFT LEVER POSITION SENSOR
x 2
13 (133, 10)
15 (153, 11)
CONTROL SHAFT LEVER
ENGINE UNDER COVER RH
FRONT WHEEL OPENING EXTENSION PAD RH
x 3
x 2
x 2
x 2
FRONT WHEEL OPENING EXTENSION PAD LH
x 2
x 3
x 3
x 2
ENGINE UNDER COVER LH
N*m (kgf*cm, ft.*lbf): Specified torque
● Non-reusable part

Fig. 102: Identifying Shift Lever Position Sensor Replacement Components With Torque Specifications
Courtesy of TOYOTA MOTOR SALES, U.S.A., INC.

REMOVAL

REMOVAL

1. **REMOVE FRONT WHEEL OPENING EXTENSION PAD LH**
2. **REMOVE ENGINE UNDER COVER LH**
3. **REMOVE FRONT WHEEL OPENING EXTENSION PAD RH**
4. **REMOVE ENGINE UNDER COVER RH**
5. **SEPARATE TRANSMISSION CONTROL CABLE ASSEMBLY**
    a. Remove the nut and disconnect the transmission control cable assembly from the control shaft lever.

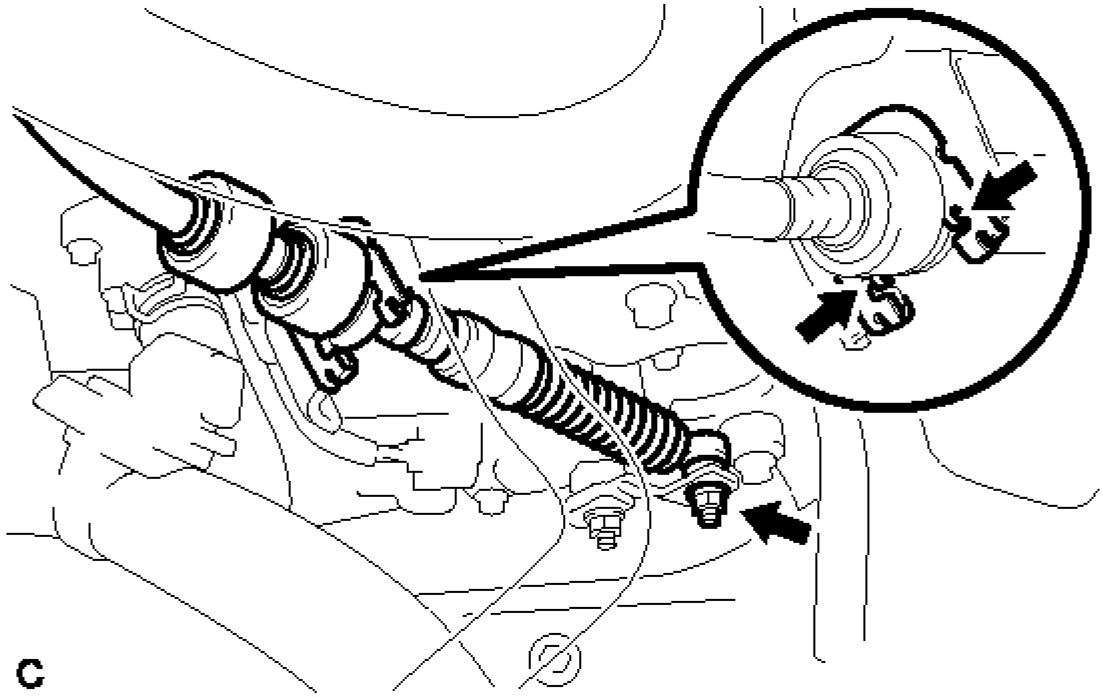

Fig. 103: Identifying Transmission Control Cable Assembly Nut
Courtesy of TOYOTA MOTOR SALES, U.S.A., INC.

    b. Using a screwdriver, disengage the 4 claws and disconnect the transmission control cable assembly with clip from the No. 1 transmission control cable bracket.
    c. Remove the clip from the transmission control cable assembly.
6. **REMOVE SHIFT LEVER POSITION SENSOR**
    a. Disconnect the connector from the shift lever position sensor.

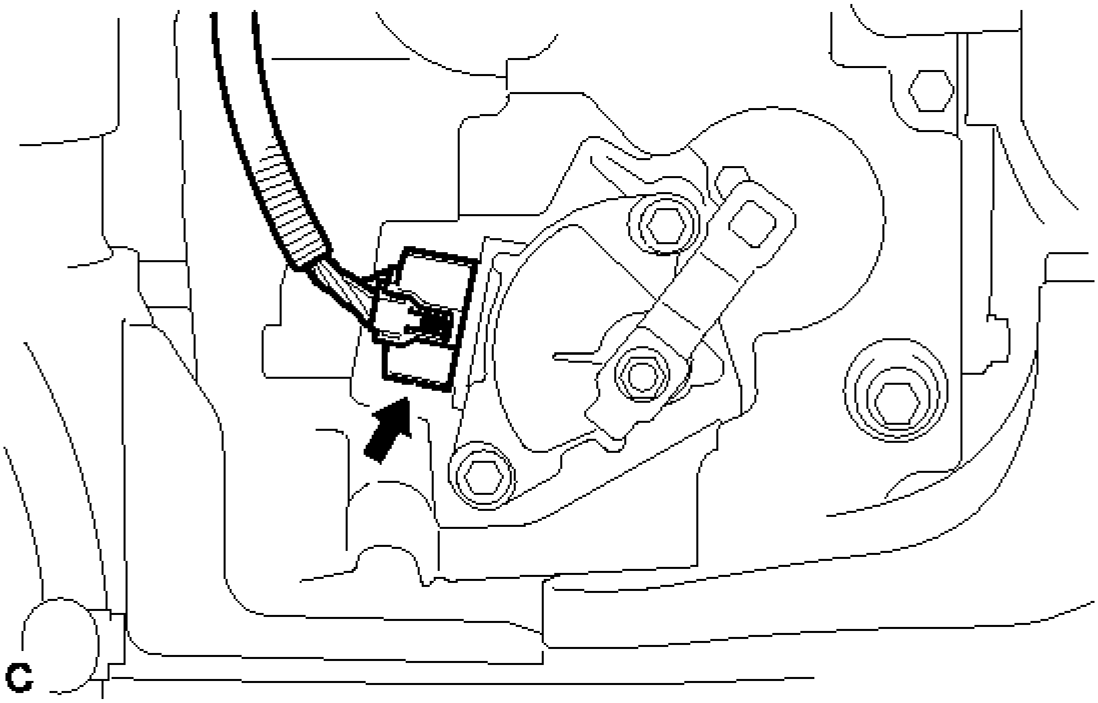

Fig. 104: Identifying Shift Lever Position Sensor Connector
Courtesy of TOYOTA MOTOR SALES, U.S.A., INC.

b. Remove the nut, washer, and control shaft lever from the manual valve shaft.

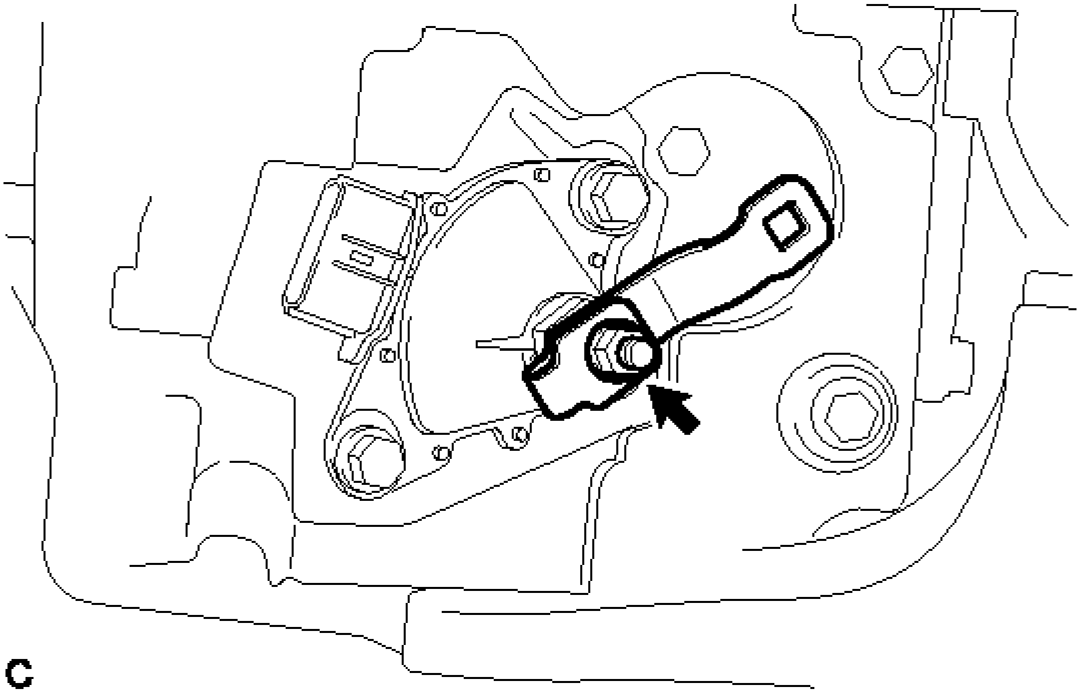

Fig. 105: Identifying Control Shaft Lever Washer And Nut
Courtesy of TOYOTA MOTOR SALES, U.S.A., INC.

c. Using a screwdriver, pry the tabs of the lock plate.

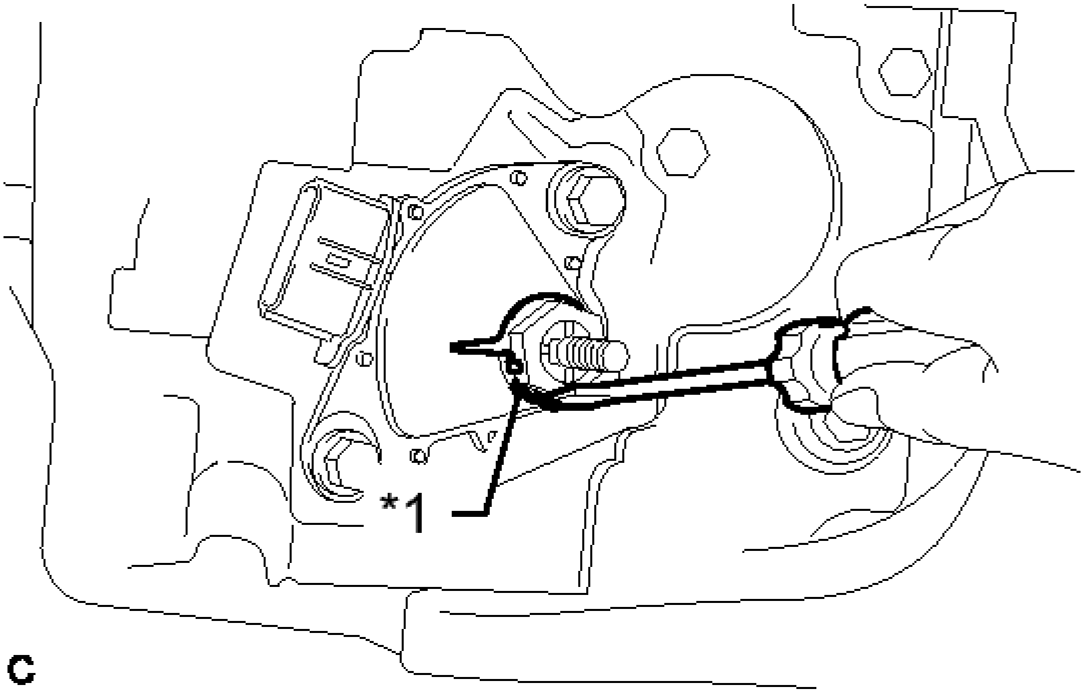

Fig. 106: Identifying Lock Plate Tabs
Courtesy of TOYOTA MOTOR SALES, U.S.A., INC.

TEXT IN ILLUSTRATION

*1	Lock Plate

d. Remove the lock nut and lock plate from the manual valve shaft.

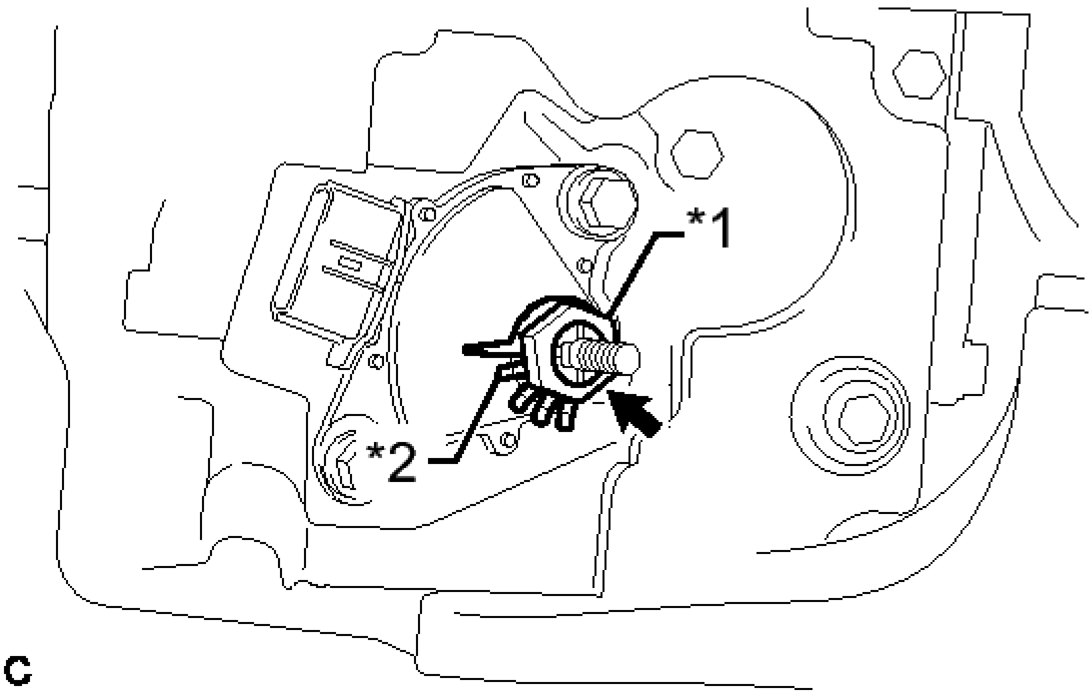

Fig. 107: Identifying Lock Nut And Lock Plate
Courtesy of TOYOTA MOTOR SALES, U.S.A., INC.

TEXT IN ILLUSTRATION

*1	Lock Nut
*2	Lock Plate

e. Remove the 2 bolts and pull out the shift lever position sensor from the manual valve shaft.

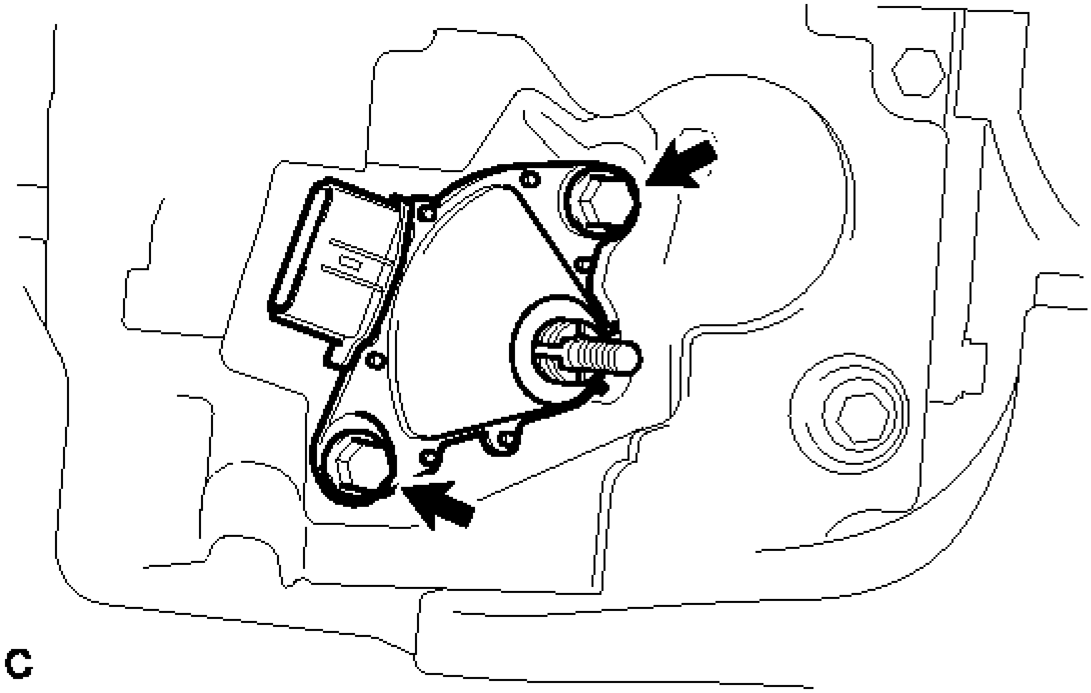

Fig. 108: Identifying Shift Lever Position Sensor Bolts
Courtesy of TOYOTA MOTOR SALES, U.S.A., INC.

INSPECTION

INSPECTION

1. **INSPECT SHIFT LEVER POSITION SENSOR**
    a. Measure the resistance according to the value(s) in the table below.

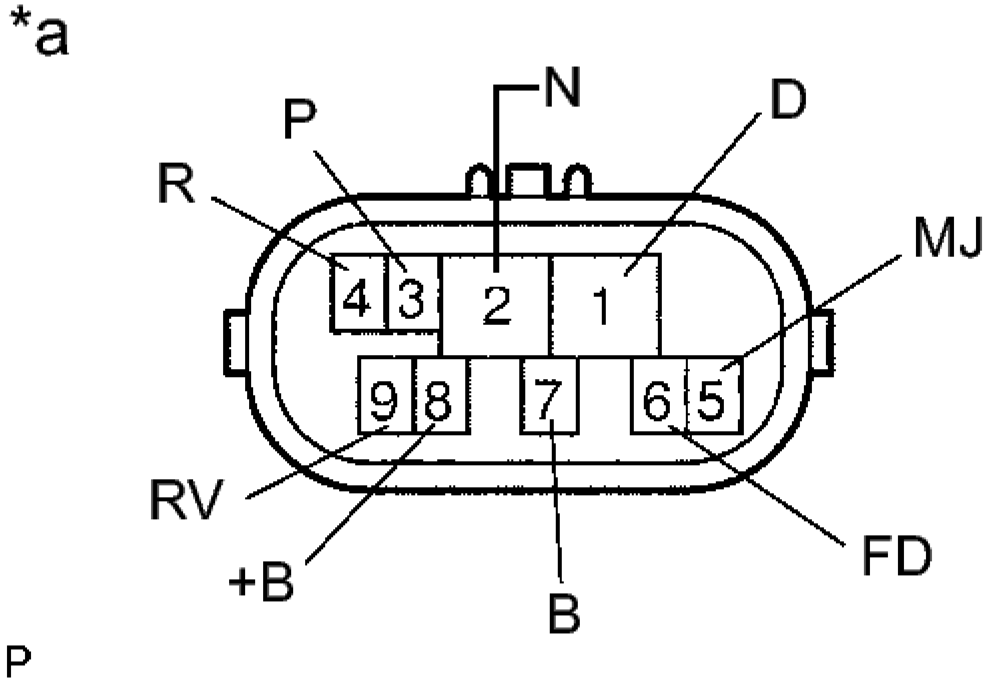

Fig. 109: Shift Lever Position Sensor Connector
Courtesy of TOYOTA MOTOR SALES, U.S.A., INC.

Standard Resistance

Tester Connection	Shift Lever Position	Specified Condition
8 (+B) - 1 (D)	D	Below 1 ohms
	Except D	10 kohms or higher
8 (+B) - 2 (N)	N	Below 1 ohms
	Except N	4.2 to 5.2 kohms
8 (+B) - 3 (P)	P	Below 1 ohms
	Except P	10 kohms or higher
8 (+B) - 4 (R)	R	Below 1 ohms
	Except R	10 kohms or higher
8 (+B) - 5 (MJ)	ALL	Below 1 ohms

8 (+B) - 6 (FD)	D or B	Below 1 ohms
	Except D and B	10 kohms or higher
8 (+B) - 7 (B)	B	Below 1 ohms
	Except B	10 kohms or higher
8 (+B) - 9 (RV)	R	Below 1 ohms
	Except R	10 kohms or higher

TEXT IN ILLUSTRATION

*a	Component without harness connected (Shift Lever Position Sensor)

If the result is not as specified, replace the shift lever position sensor.

ADJUSTMENT

ADJUSTMENT

1. **INSPECT SHIFT LEVER POSITION SENSOR POSITION**
    a. Apply the parking brake.
    b. Lock the wheels with chocks to secure the vehicle.
    c. Turn the power switch on (READY).
    d. Move the shift lever to D and release the brake.

    NOTE: **Be sure to apply the parking brake and lock the wheels with chocks to secure the vehicle.**

    e. Slowly move the shift lever to N and measure moving distance (A) of the shift lever from the original point to the gear activation point.

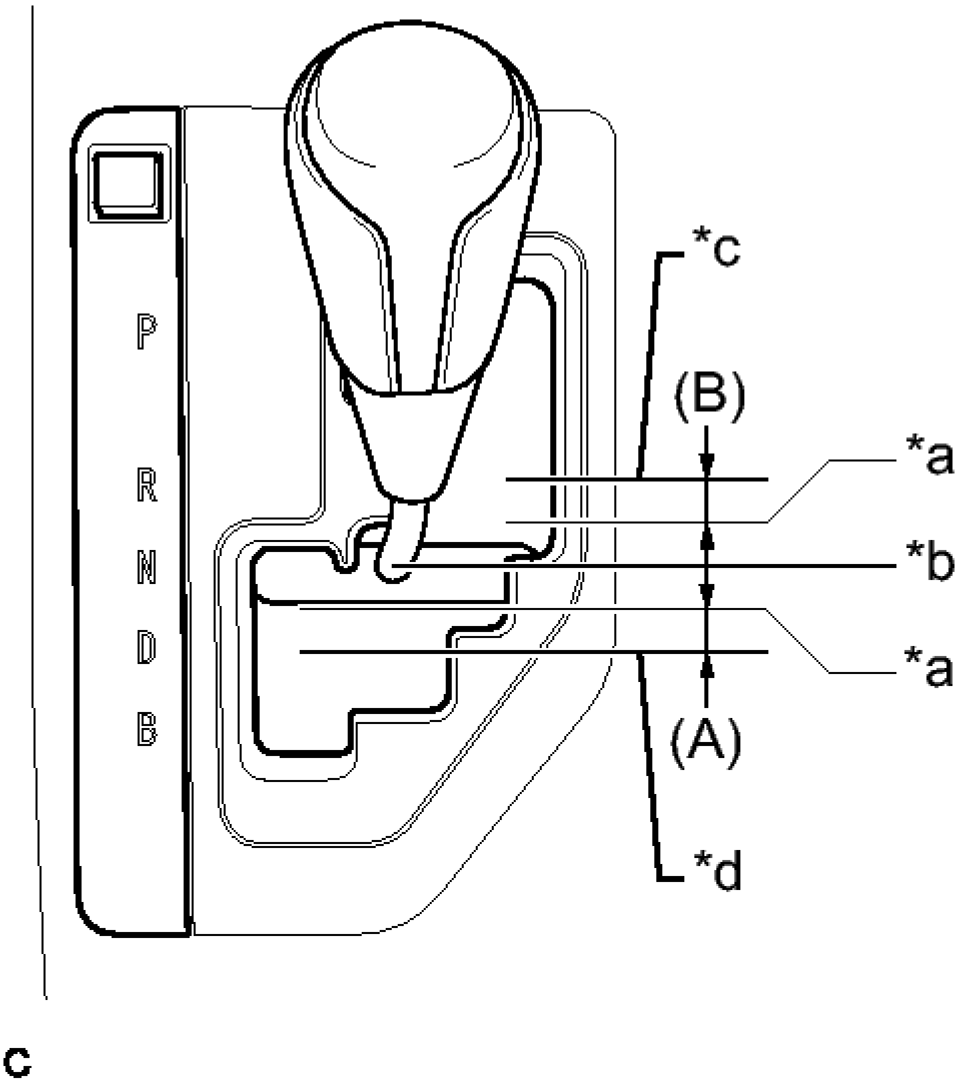

Fig. 110: Measure Moving Distance To The Gear Activation Point
Courtesy of TOYOTA MOTOR SALES, U.S.A., INC.

TEXT IN ILLUSTRATION

*a	Gear Activation Point
*b	N Position
*c	R Position
*d	D Position

NOTE: Be sure to move the shift lever slowly.

f. Move the shift lever to R and release the brake.

NOTE: Be sure to apply the parking brake and lock the wheels with chocks to secure the vehicle.

g. Slowly move the shift lever to N and measure moving distance (B) of the shift lever from the original point to the vehicle activation point.

NOTE: Be sure to move the shift lever slowly.

h. Check that moving distances (A) and (B) shown in the illustration are almost the same.

HINT:

- If moving distances (A) and (B) are almost the same, adjustment of the shift lever position is not necessary.
- If moving distance (A) is shorter than (B), perform adjustment of the shift lever position [*1].
- If moving distance (B) is shorter than (A), perform adjustment of the shift lever position [*2].

2. **ADJUST SHIFT LEVER POSITION SENSOR POSITION**
   a. If moving distance (A) is shorter than (B).[*1]
      1. Move the shift lever to N.
      2. Loosen the 2 bolts.

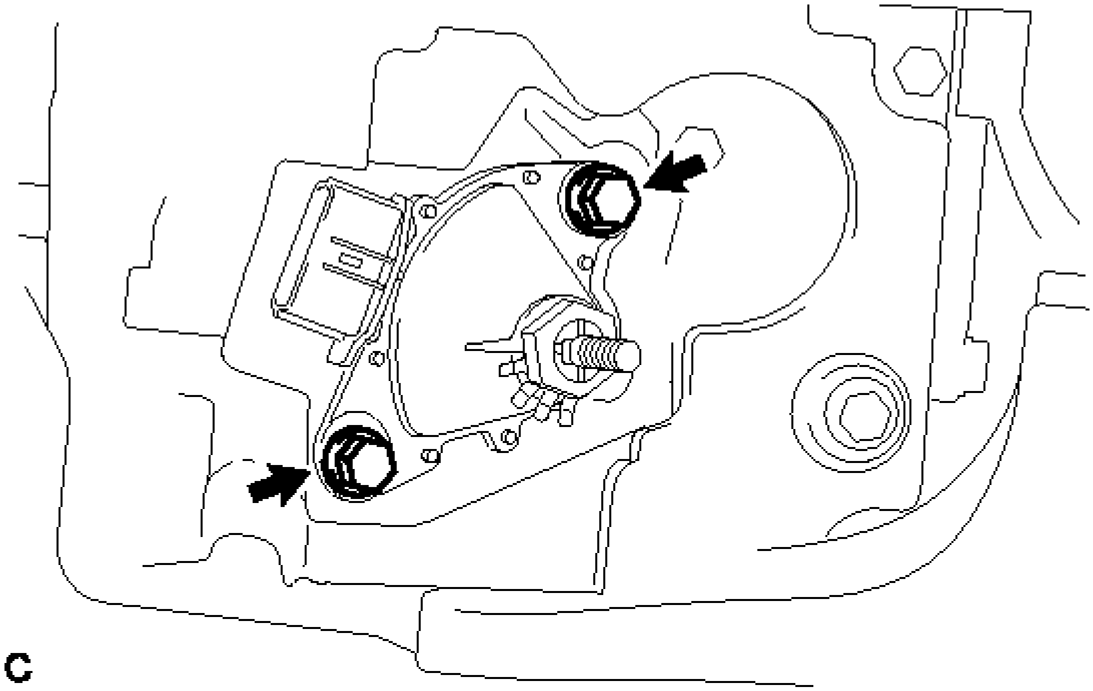

Fig. 111: Identifying Shift Lever Position Sensor Bolts
Courtesy of TOYOTA MOTOR SALES, U.S.A., INC.

3. Slightly turn the shift lever position sensor counterclockwise.

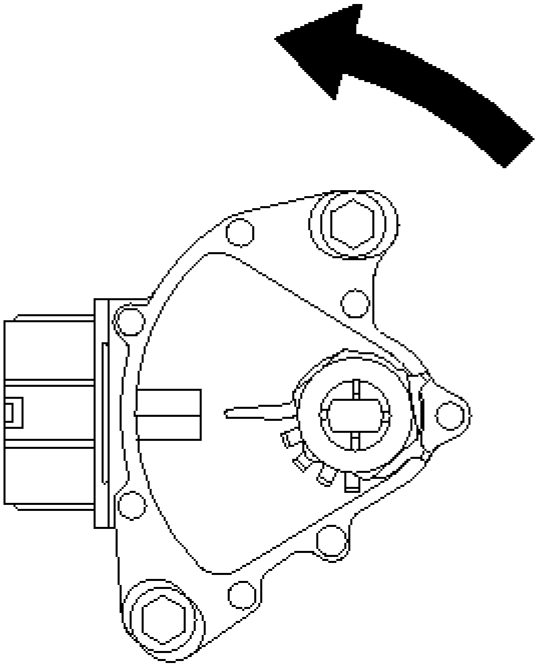

Fig. 112: Identifying Shift Lever Position Sensor Counterclockwise
Courtesy of TOYOTA MOTOR SALES, U.S.A., INC.

HINT:

If the shift lever is moved from R to N, the moving distance of the shift lever from the original point to the gear activation point becomes longer.

4. Tighten the 2 bolts in the order shown in the illustration.

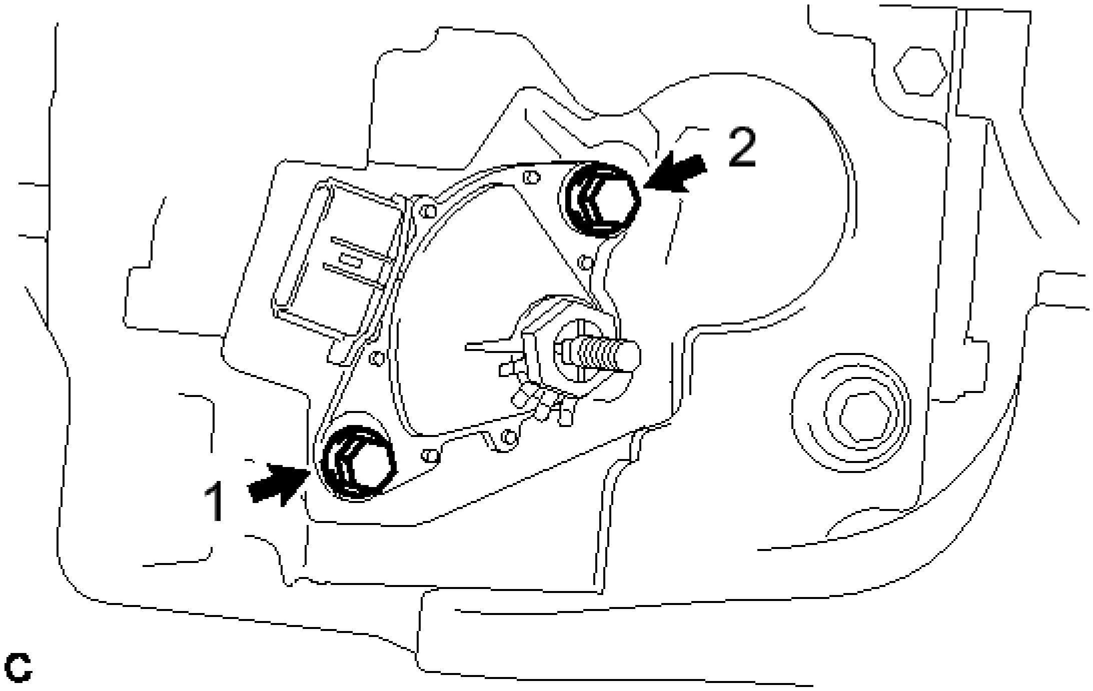

Fig. 113: Identifying Shift Lever Position Sensor Bolts
Courtesy of TOYOTA MOTOR SALES, U.S.A., INC.

Torque: 13 N*m (133 kgf*cm, 10 ft.*lbf)

5. Recheck the shift lever position sensor.

b. If moving distance (B) is shorter than (A) [*2]
    1. Move the shift lever to N.
    2. Loosen the 2 bolts.

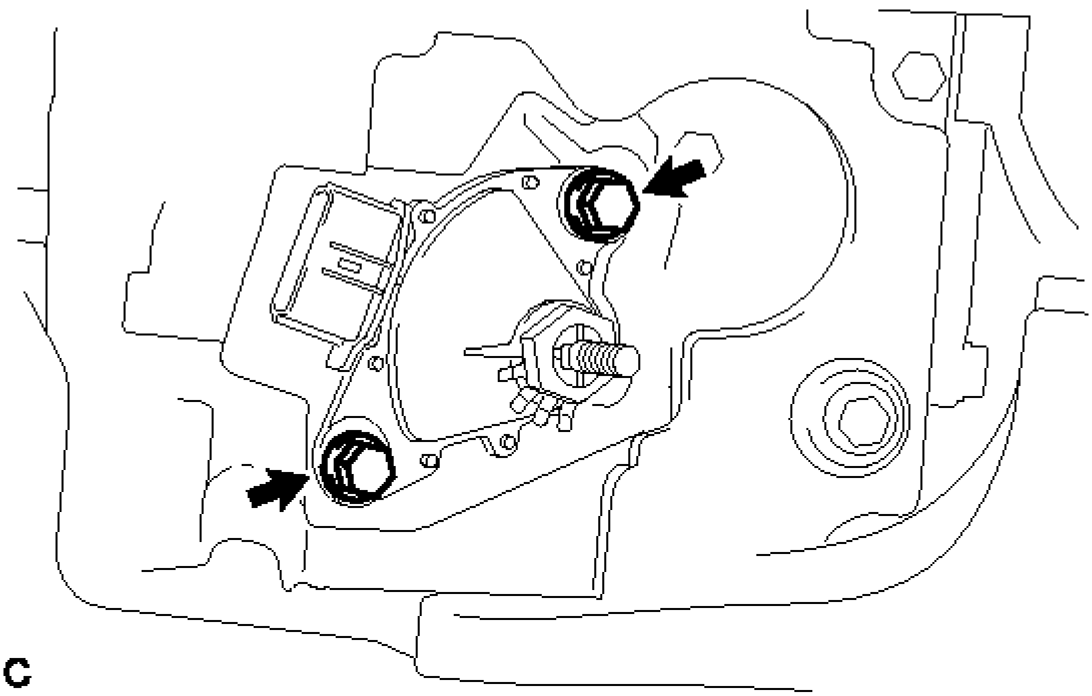

Fig. 114: Identifying Shift Lever Position Sensor Bolts
Courtesy of TOYOTA MOTOR SALES, U.S.A., INC.

3. Slightly turn the shift lever position sensor clockwise.

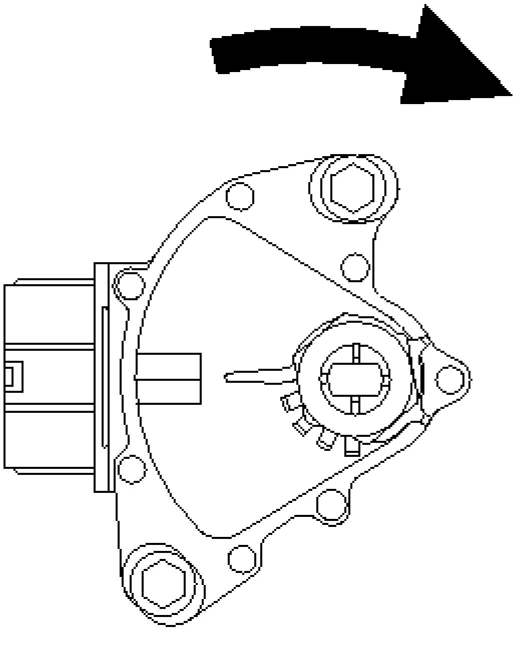

Fig. 115: Identifying Shift Lever Position Sensor Clockwise
Courtesy of TOYOTA MOTOR SALES, U.S.A., INC.

HINT:

If the shift lever is moved from D to N, the moving distance of the shift lever from the original point to the gear activation point becomes longer.

4. Tighten the 2 bolts in the order shown in the illustration.

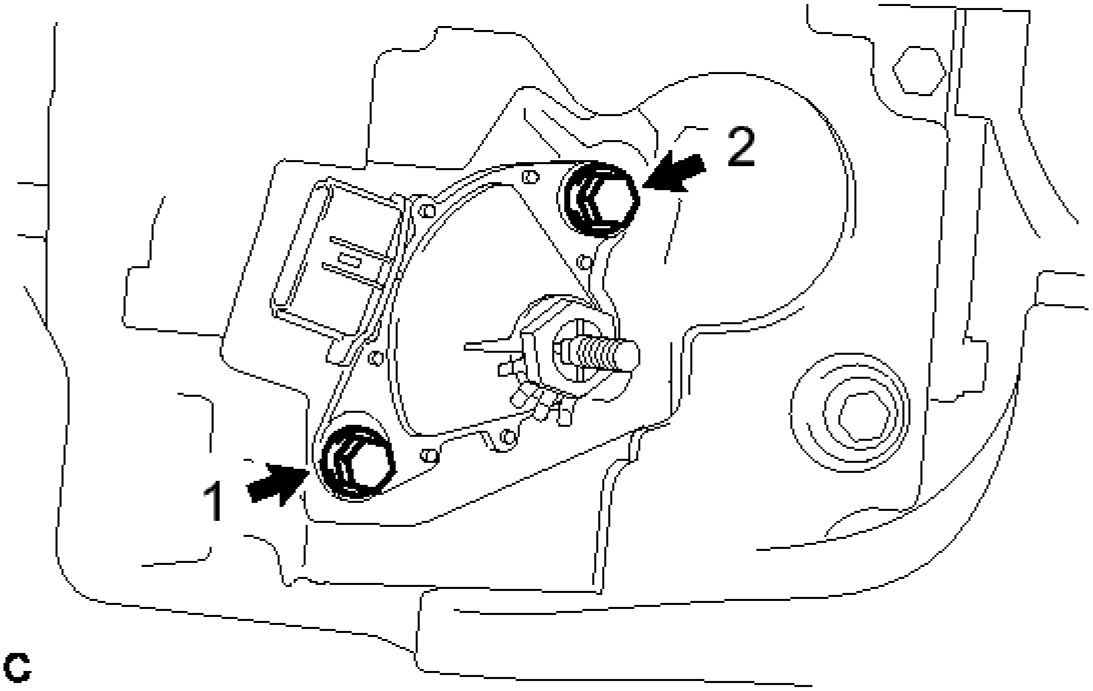

Fig. 116: Identifying Shift Lever Position Sensor Bolts
Courtesy of TOYOTA MOTOR SALES, U.S.A., INC.

Torque: 13 N*m (133 kgf*cm, 10 ft.*lbf)

5. Recheck the shift lever position sensor.

INSTALLATION

INSTALLATION

1. **INSTALL SHIFT LEVER POSITION SENSOR**
   a. Install the shift lever position sensor to the manual valve shaft.
   b. Temporarily install the 2 bolts.
   c. Install a new lock plate and tighten the nut.

   Torque: 6.9 N*m (70 kgf*cm, 61 in.*lbf)

   d. Temporarily install the control shaft lever to the manual valve shaft.

e. Turn the lever clockwise until it stops, then turn it counterclockwise 2 notches.

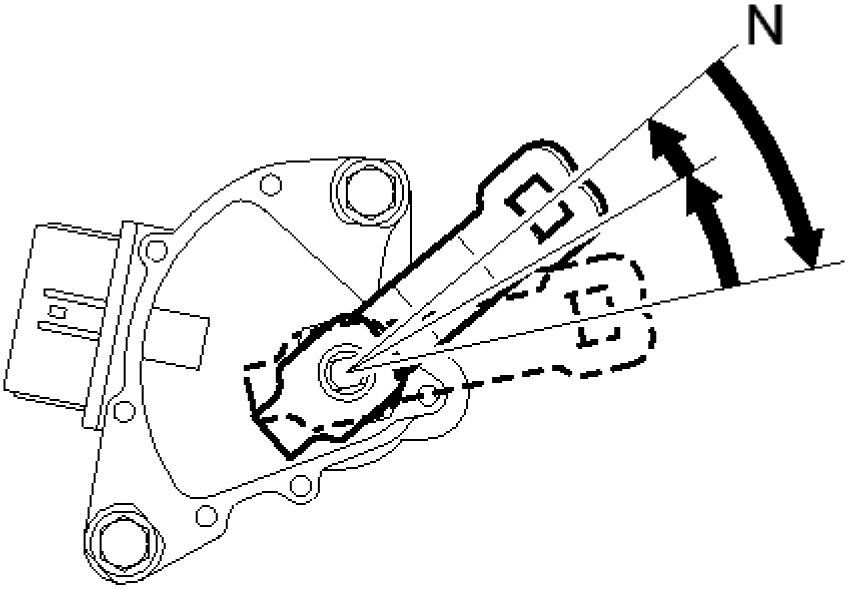

Fig. 117: Turning Control Shaft Lever
Courtesy of TOYOTA MOTOR SALES, U.S.A., INC.

f. Remove the control shaft lever from the manual valve shaft.

g. Align the protruding part with the neutral basic line.

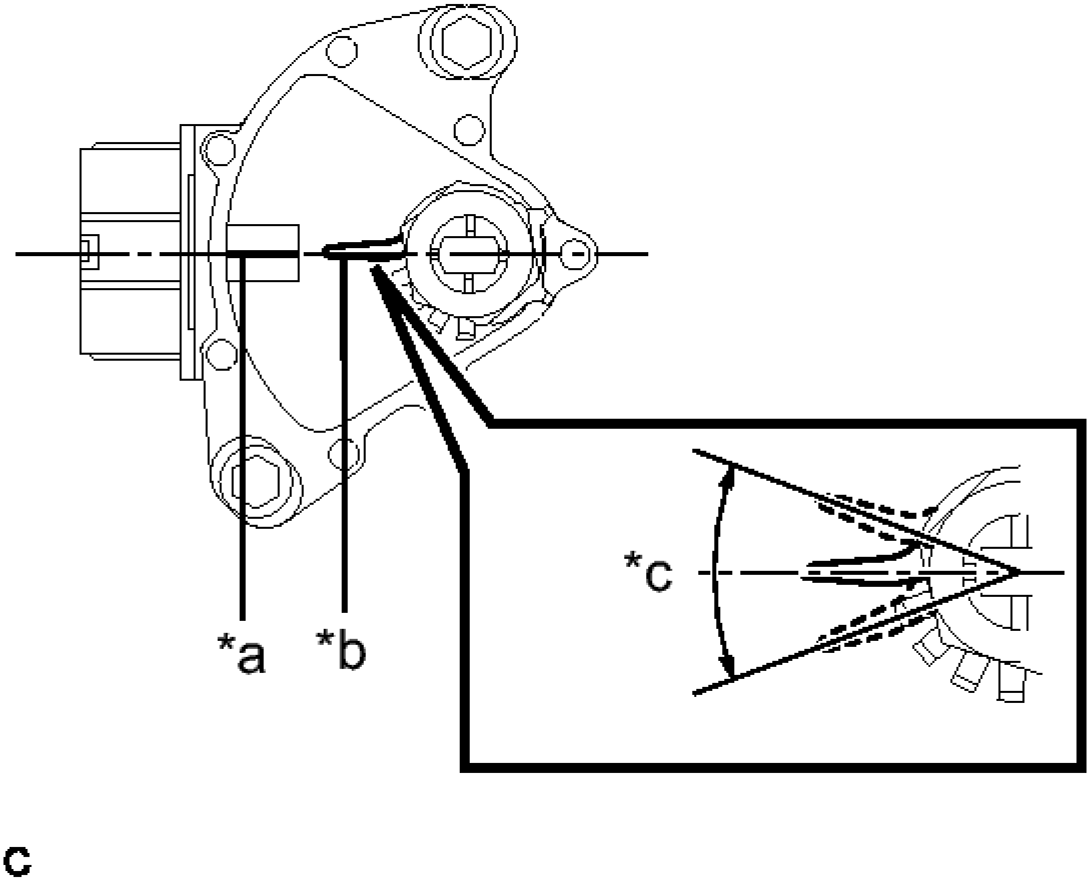

Fig. 118: Aligning Protruding Part With Neutral Basic Line
Courtesy of TOYOTA MOTOR SALES, U.S.A., INC.

TEXT IN ILLUSTRATION

*a	Neutral Basic Line
*b	Protruding
*c	Range of Play

NOTE: **There is play on the nut stopper side (protruding part). Align the center point of the range of the play with the neutral basic line.**

h. Tighten the 2 bolts in the order shown in the illustration.

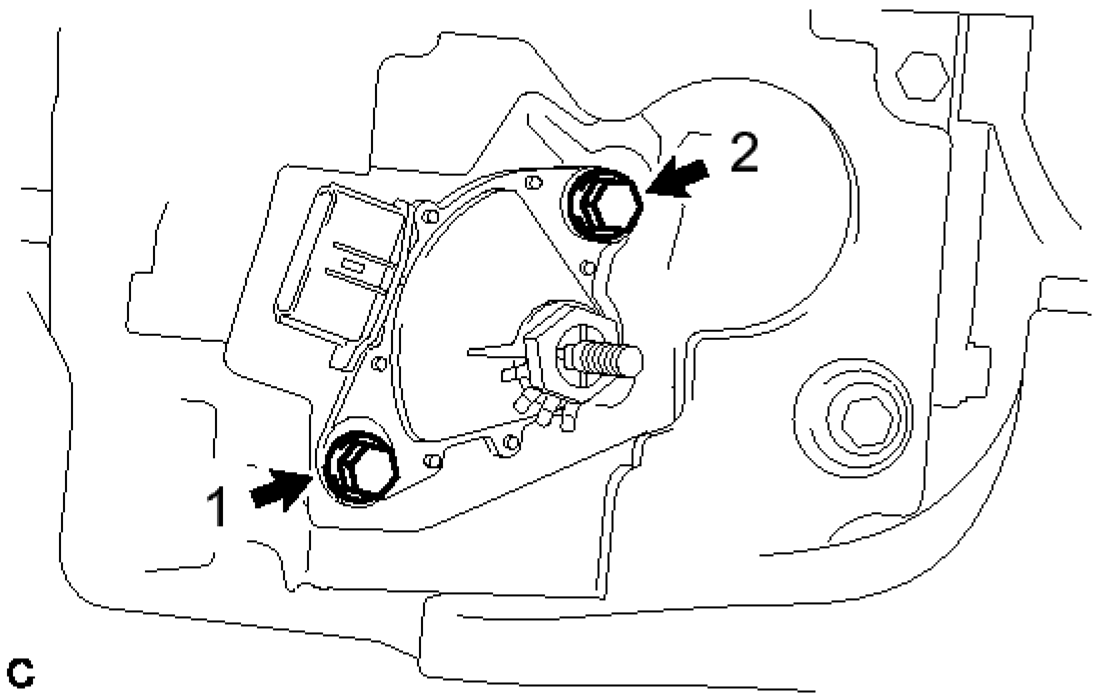

Fig. 119: Identifying Shift Lever Position Sensor Bolts
Courtesy of TOYOTA MOTOR SALES, U.S.A., INC.

Torque: 13 N*m (133 kgf*cm, 10 ft.*lbf)

- i. Using a screwdriver, secure the nut with the lock plate.
- j. Install the control shaft lever, washer, and nut to the manual valve shaft.

Torque: 13 N*m (130 kgf*cm, 9 ft.*lbf)

- k. Connect the connector to the shift lever position sensor.

2. **CONNECT TRANSMISSION CONTROL CABLE ASSEMBLY**
    - a. Move the shift lever to the N position.
    - b. Install a new clip to the control bracket.
    - c. Install the transmission control cable assembly to the control bracket.

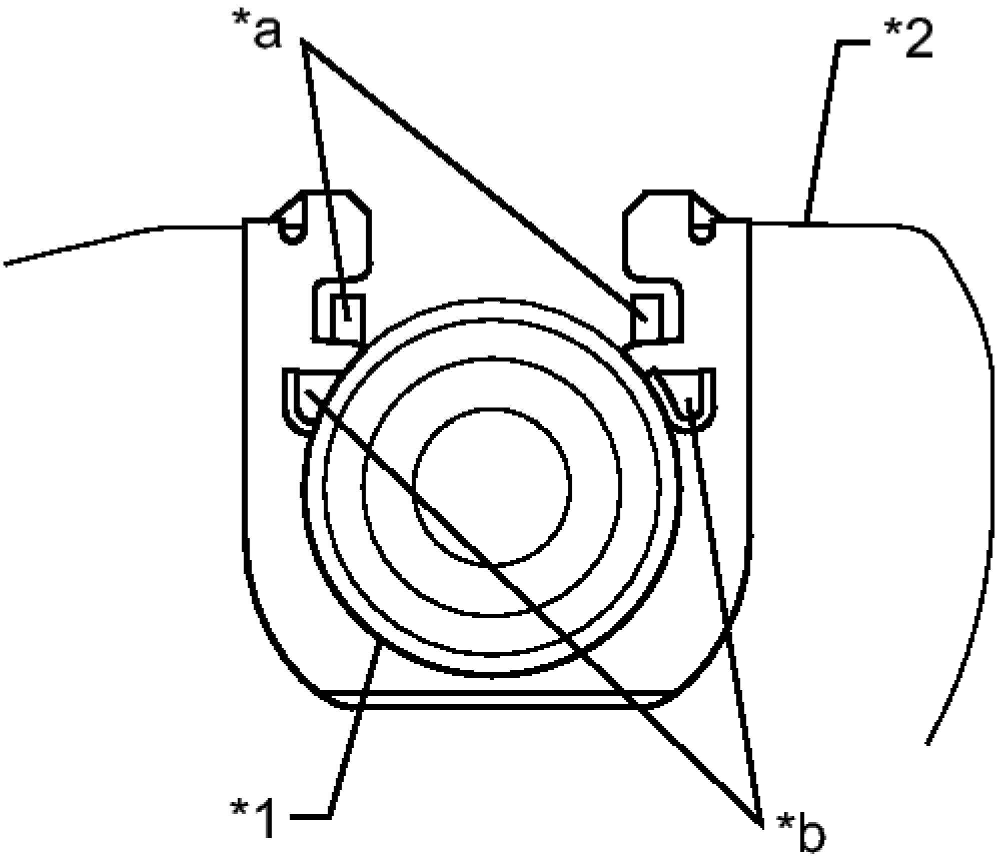

Fig. 120: Installing Transmission Control Cable Assembly To Control Bracket
Courtesy of TOYOTA MOTOR SALES, U.S.A., INC.

TEXT IN ILLUSTRATION

*1	Transmission Control Cable Assembly
*2	No. 1 Transmission Control Cable Bracket
*a	Claw A
*b	Claw B

NOTE:

- **Make sure that the A claws on the clip are securely fit into the bracket holes.**
- **Make sure that the cable is securely installed inside the B claws of the clip.**

d. Install the transmission control cable assembly to the control shaft lever with the nut.

Torque: 15 N*m (153 kgf*cm, 11 ft.*lbf)

3. **INSPECT SHIFT LEVER POSITION SENSOR POSITION** See step 1
4. **ADJUST SHIFT LEVER POSITION SENSOR POSITION** See step 2
5. **INSPECT SHIFT LEVER POSITION** See step 1
6. **ADJUST SHIFT LEVER POSITION** See step 2
7. **INSTALL ENGINE UNDER COVER RH**
8. **INSTALL FRONT WHEEL OPENING EXTENSION PAD RH**
9. **INSTALL ENGINE UNDER COVER LH**
10. **INSTALL FRONT WHEEL OPENING EXTENSION PAD LH**

2012-2017 ENGINE

Ignition System (Inspection) - Camry (2AR-FE)

IGNITION SYSTEM

PARTS LOCATION

ILLUSTRATION

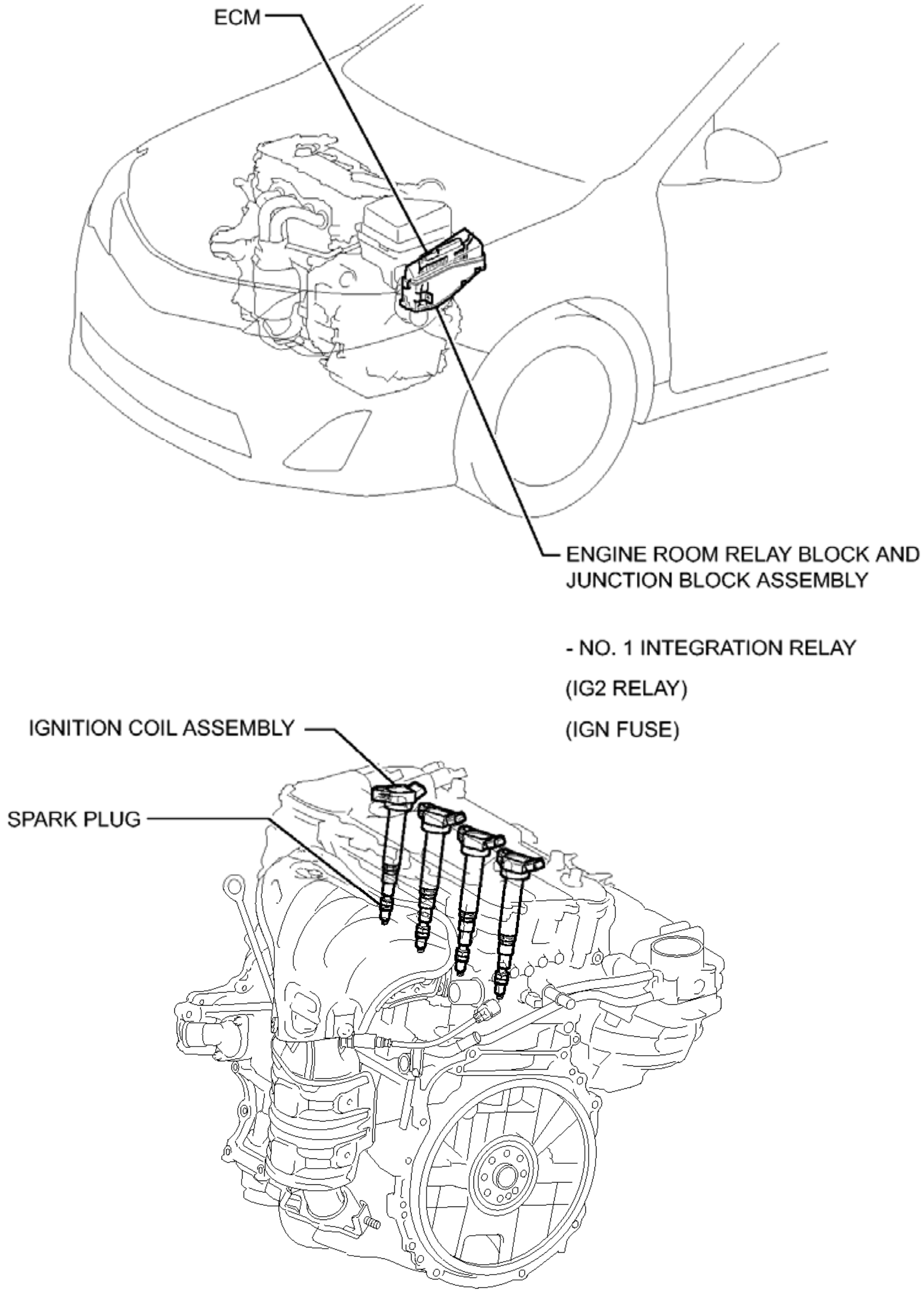
ECM
ENGINE ROOM RELAY BLOCK AND JUNCTION BLOCK ASSEMBLY
- NO. 1 INTEGRATION RELAY
(IG2 RELAY)
(IGN FUSE)
IGNITION COIL ASSEMBLY
SPARK PLUG
C

Fig. 1: Identifying Ignition System Components Location
Courtesy of TOYOTA MOTOR SALES, U.S.A., INC.

SYSTEM DIAGRAM

SYSTEM DIAGRAM

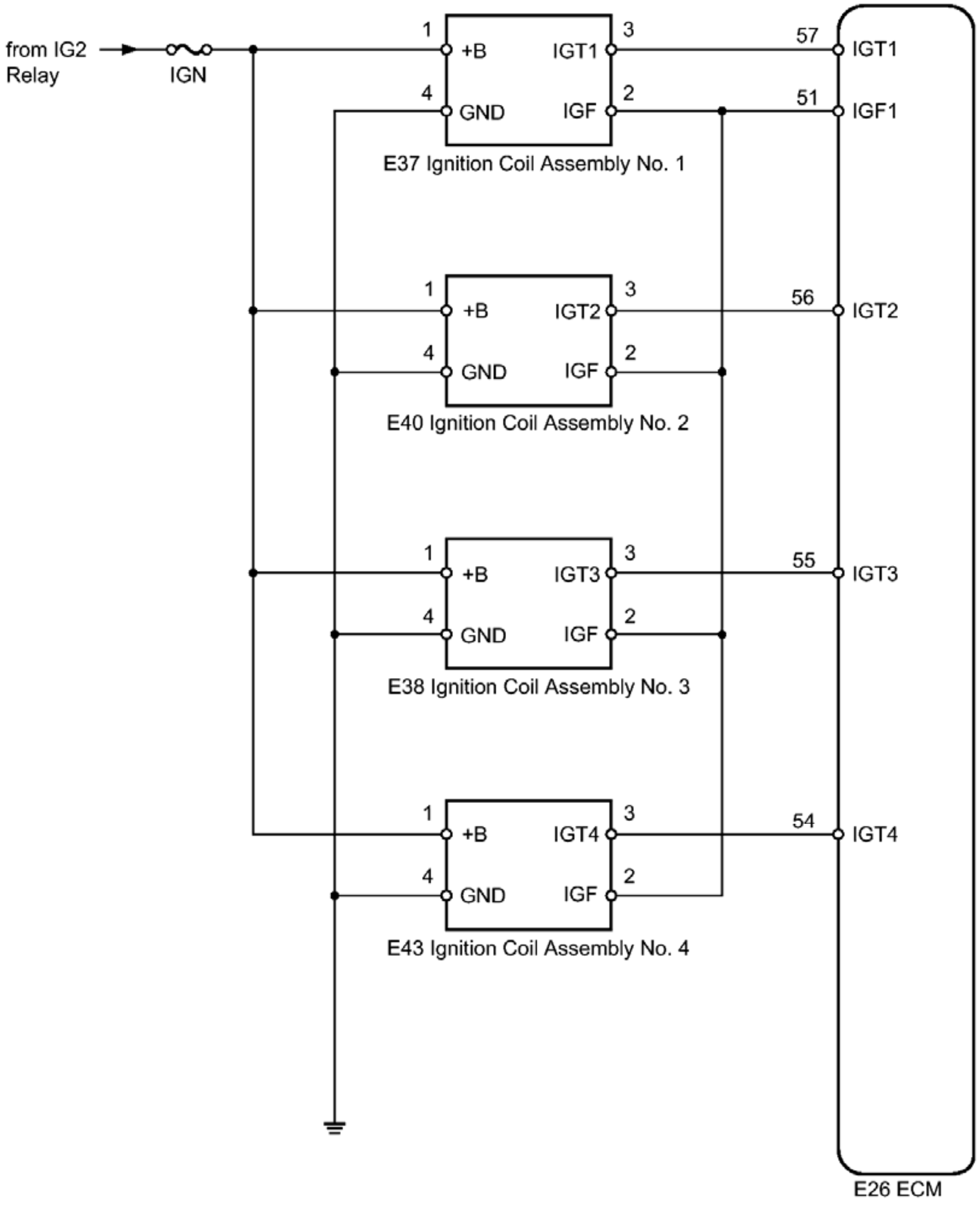
from IG2
Relay
IGN
1
+B
IGT1
3
4
GND
IGF
2
57
IGT1
51
IGF1
E37 Ignition Coil Assembly No. 1
1
+B
IGT2
3
56
IGT2
4
GND
IGF
2
E40 Ignition Coil Assembly No. 2
1
+B
IGT3
3
55
IGT3
4
GND
IGF
2
E38 Ignition Coil Assembly No. 3
1
+B
IGT4
3
54
IGT4
4
GND
IGF
2
E43 Ignition Coil Assembly No. 4
E26 ECM

Fig. 2: Identifying Ignition System Diagram
Courtesy of TOYOTA MOTOR SALES, U.S.A., INC.

ON-VEHICLE INSPECTION

ON-VEHICLE INSPECTION

1. **PERFORM SPARK TEST**

a. Check for DTCs. Refer to **DTC CHECK / CLEAR** .

NOTE: If any DTC is output, perform troubleshooting procedures for that DTC.

b. Remove the ignition coil assemblies and spark plugs. Refer to **REMOVAL** .

c. Disconnect the 4 injector connectors.

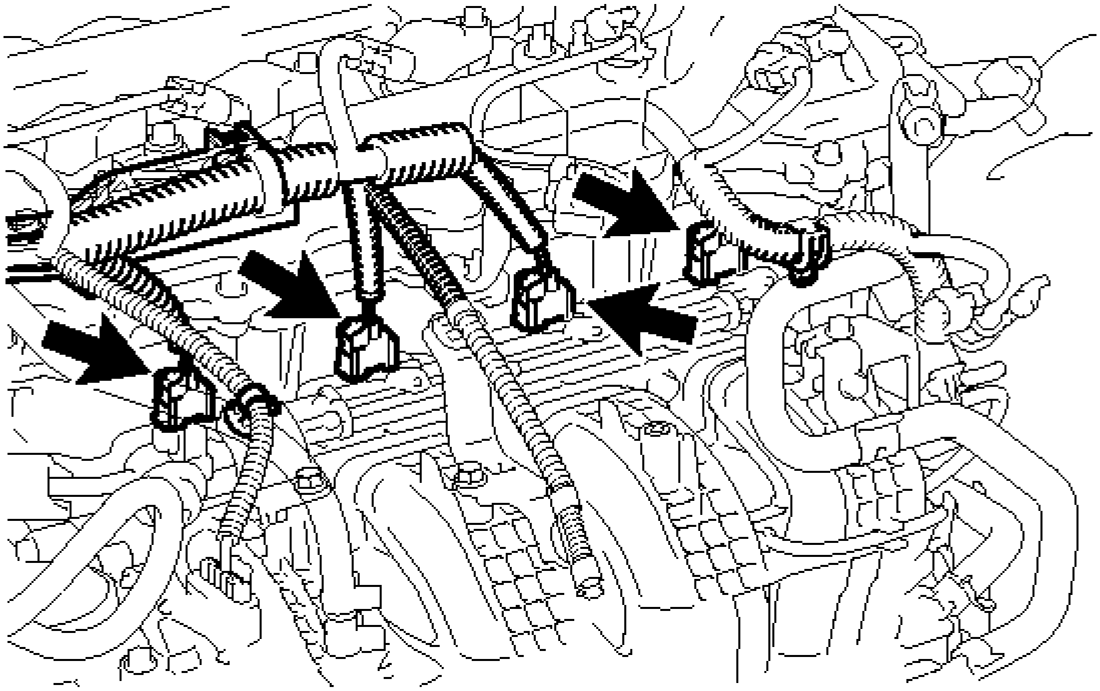

Fig. 3: Identifying Injector Connectors
Courtesy of TOYOTA MOTOR SALES, U.S.A., INC.

d. Install the spark plug into the ignition coil assembly, and then connect the ignition coil connector.

e. Ground the spark plug.

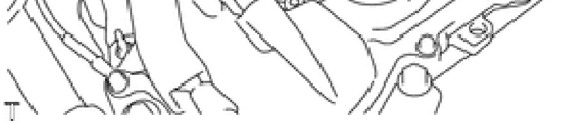

Fig. 4: Checking Spark Occurs At Each Spark Plug While Engine Is Being Cranked
Courtesy of TOYOTA MOTOR SALES, U.S.A., INC.

f. Check that spark occurs at each spark plug while the engine is being cranked.

NOTE:

- **Be sure to ground the spark plugs when checking them.**
- **Do not crank the engine for more than 2 seconds.**

  Cranking will stop if the engine switch is pushed again for models with cranking holding function.
- **If a spark plug has been struck or dropped, replace it.**
- **If an ignition coil assembly has been struck or dropped, replace it.**

HINT:

If spark does not occur for any cylinder, perform the following Inspect Ignition Coil and Spark Test procedure.

g. Connect the 4 fuel injector connectors.
h. Install the spark plugs and ignition coil assemblies. Refer to **INSTALLATION** .
i. Check for DTCs. Refer to **DTC CHECK / CLEAR** .
j. Clear the DTCs. Refer to **DTC CHECK / CLEAR** .

2. **INSPECT IGNITION COIL AND SPARK TEST**

HINT:

Perform "Inspection After Repair" after replacing the spark plug and ignition coil assembly. Refer to **INITIALIZATION** .

a. Check that the wire harness side connector of the ignition coil assembly is securely connected.

RESULT

Result	Action
NG	Connect securely
OK	Go to next step

b. Perform a spark test on each ignition coil assembly.
    1. Replace the ignition coil assembly with a known good one.
    2. Perform the spark test again.

RESULT

Result	Action
NG	Go to next step
OK	Replace ignition coil assembly

c. Perform a spark test on each spark plug.
   1. Replace the spark plug with a known good one.
   2. Perform the spark test again.

RESULT

Result	Action
NG	Inspect the ignition system. Refer to **DTC P0351: Ignition Coil "A" Primary / Secondary Circuit; DTC P0352: Ignition Coil "B" Primary / Secondary Circuit; DTC P0353: Ignition Coil "C" Primary / Secondary Circuit; DTC P0354: Ignition Coil "D" Primary / Secondary**

	Circuit .
OK	Replace spark plug

3. **CHECK SPARK PLUG**

NOTE:

- **Do not use a wire brush for cleaning.**
- **Do not adjust the electrode gap of a used spark plug.**

HINT:

Perform "Inspection After Repair" after replacing the spark plug. Refer to **INITIALIZATION** .

a. Check the electrode using a megohmmeter:

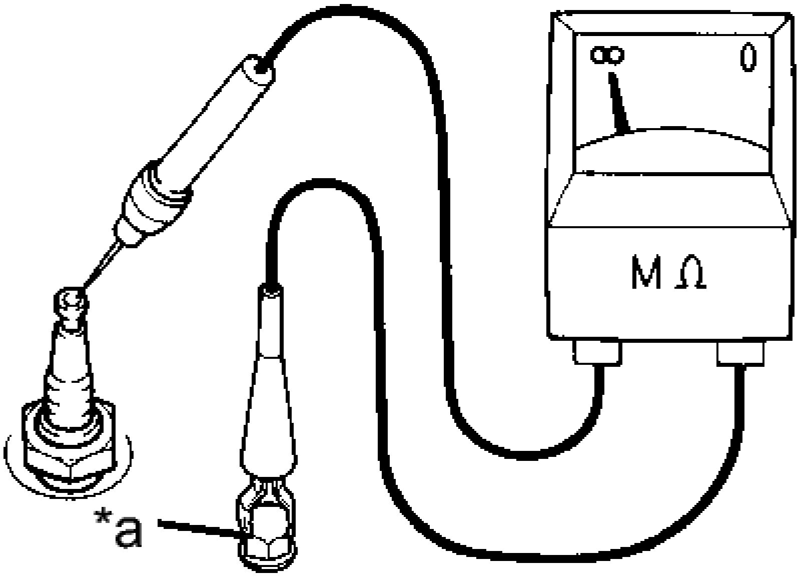

Fig. 5: Electrode Using A Megohmmeter
Courtesy of TOYOTA MOTOR SALES, U.S.A., INC.

TEXT IN ILLUSTRATION

*a	Ground

1. Using a megohmmeter, measure the insulation resistance.

   Standard Insulation Resistance

Tester		Specified

Connection	Condition	Condition
Spark plug (terminal part) - Body ground	Always	10 Mohms or higher

HINT:

- If the result is not as specified, clean the spark plug with a spark plug cleaner and measure the resistance again.
- If a megohmmeter is not available, perform the following simple inspection instead.

b. Alternative inspection method:

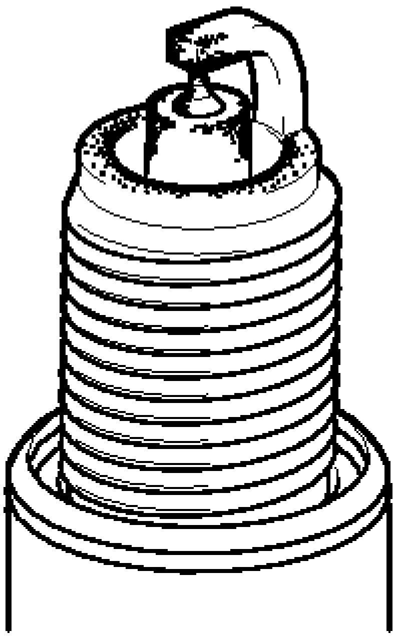

Fig. 6: Identifying Spark Plug Condition
Courtesy of TOYOTA MOTOR SALES, U.S.A., INC.

1. Quickly accelerate the engine to 4000 rpm 5 times.
2. Remove the spark plug. Refer to **REMOVAL** .
3. Visually check the spark plug.

   If the electrode is dry, the spark plug is functioning properly. If the electrode is damp, proceed to the next step.

4. Install the spark plug. Refer to **INSTALLATION** .

c. Check the spark plug for any damage to its thread and insulator.

If there is any damage, replace the spark plug.

Recommended Spark Plug

Manufacturer	Spark Plug Type
DENSO	SK16HR11

d. Reference:
   1. Check the spark plug electrode gap.

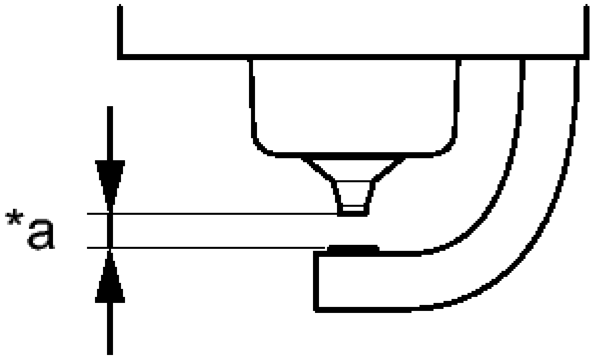

P

Fig. 7: Checking Spark Plug Electrode Gap
Courtesy of TOYOTA MOTOR SALES, U.S.A., INC.

Maximum electrode gap for a used spark plug

1.3 mm (0.0512 in.)

If the gap is more than the maximum, replace the spark plug.

NOTE: Never attempt to adjust the gap of a used plug.

Electrode gap for a new spark plug

1.0 to 1.1 mm (0.0394 to 0.0433 in.)

TEXT IN ILLUSTRATION

*a	Spark plug electrode gap

e. Clean the spark plugs.

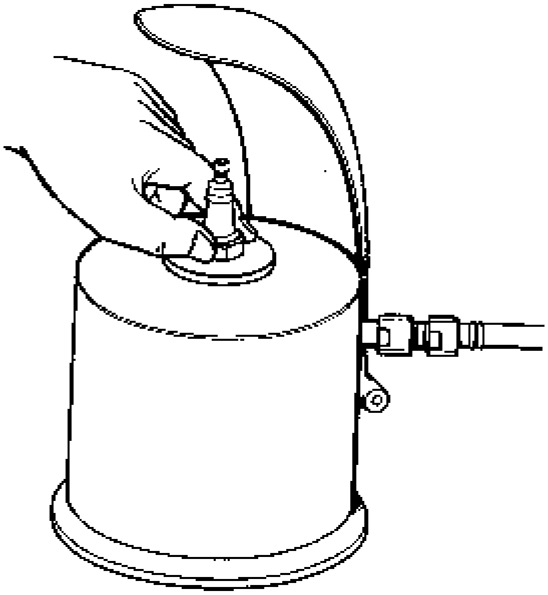

Fig. 8: Cleaning Electrode With Spark Plug Cleaner
Courtesy of TOYOTA MOTOR SALES, U.S.A., INC.

If the electrode has traces of wet carbon, clean the electrode with a spark plug cleaner and then dry it.

Standard air pressure

588 kPa (6.0 kgf/cm^2 , 85 psi)

Standard duration

20 seconds or less

HINT:

Only use a spark plug cleaner when the electrode is free of oil. If the electrode has traces of oil, use gasoline to clean off the oil before using the spark plug cleaner.

IGNITION SYSTEM

PARTS LOCATION

ILLUSTRATION

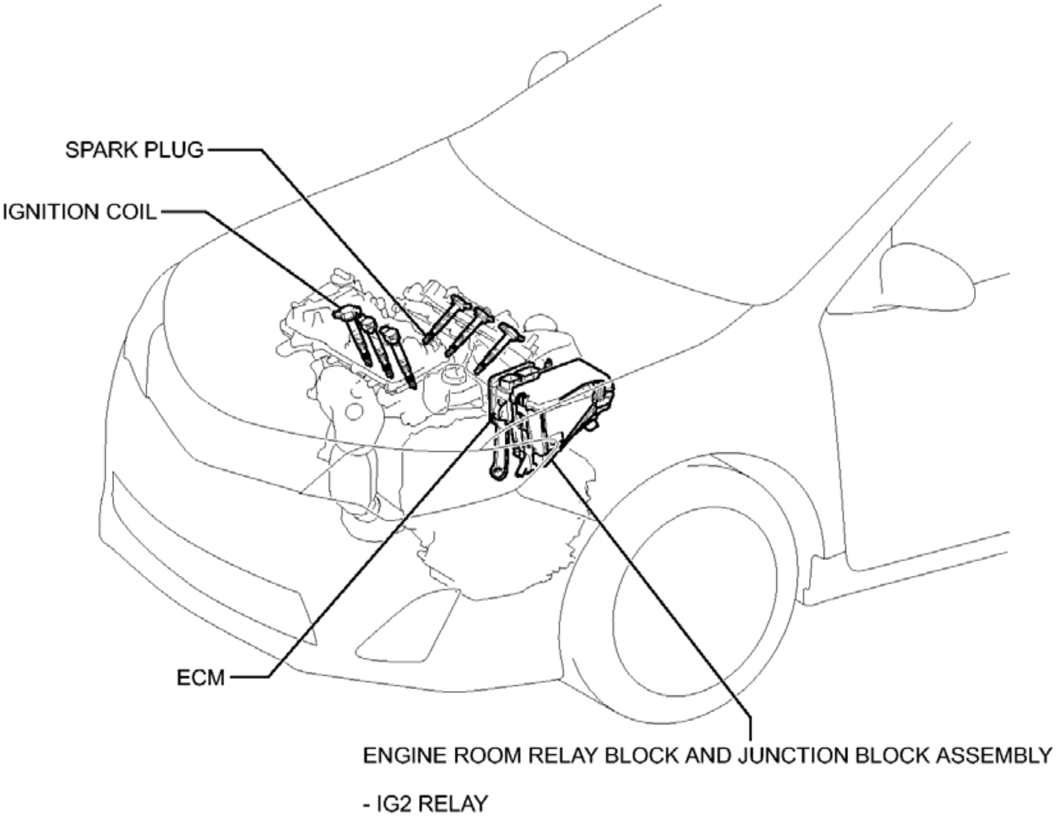
SPARK PLUG
IGNITION COIL
ECM
ENGINE ROOM RELAY BLOCK AND JUNCTION BLOCK ASSEMBLY
- IG2 RELAY

c

Fig. 1: Identifying Ignition System Components Location
Courtesy of TOYOTA MOTOR SALES, U.S.A., INC.

SYSTEM DIAGRAM

SYSTEM DIAGRAM

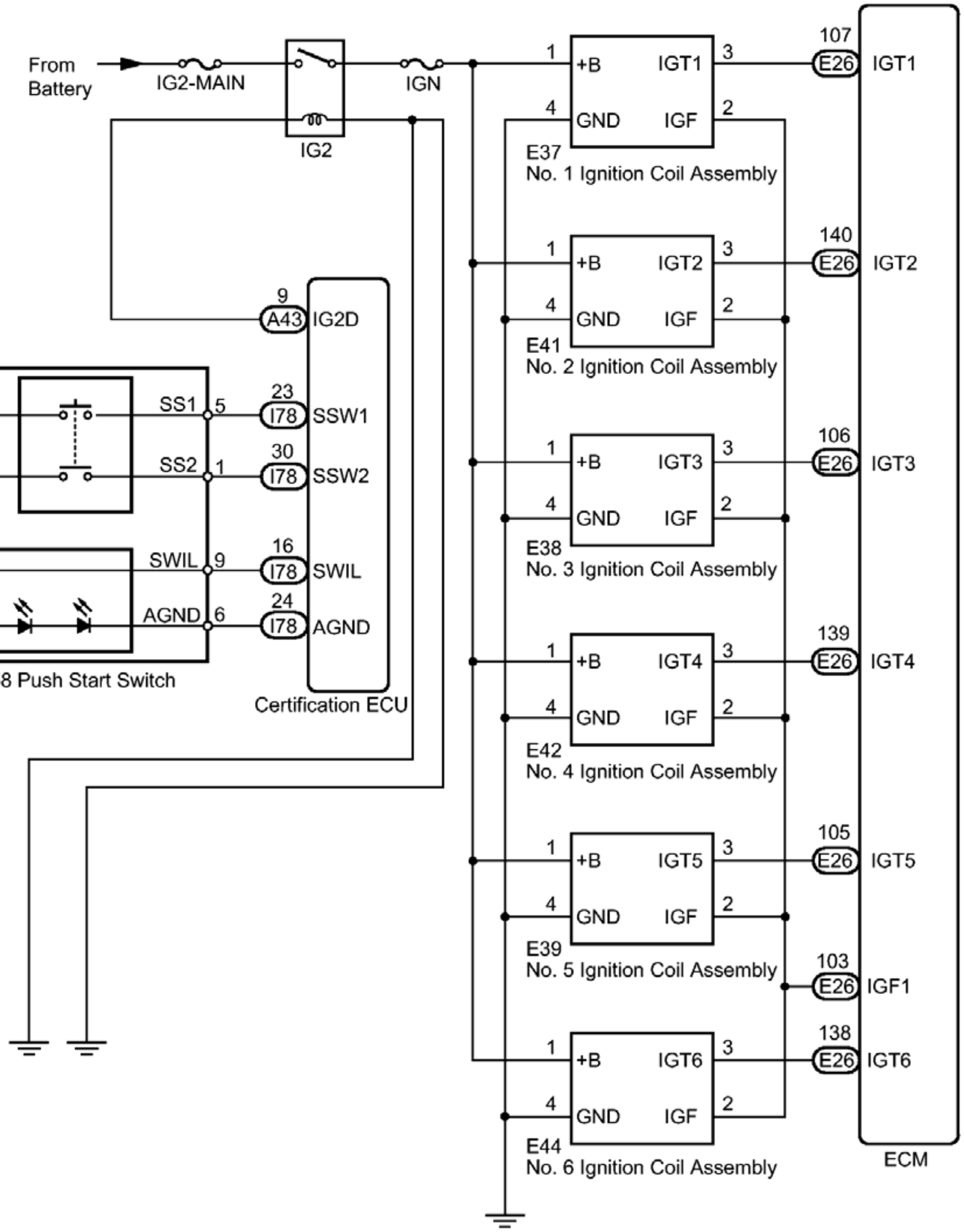
From Battery
IG2-MAIN
IG2
IGN
9
A43
IG2D
SS1
5
23
I78
SSW1
SS2
1
30
I78
SSW2
SWIL
9
16
I78
SWIL
AGND
6
24
I78
AGND
I58 Push Start Switch
Certification ECU
1
+B
IGT1
3
4
GND
IGF
2
E37
No. 1 Ignition Coil Assembly
107
E26
IGT1
1
+B
IGT2
3
4
GND
IGF
2
E41
No. 2 Ignition Coil Assembly
140
E26
IGT2
1
+B
IGT3
3
4
GND
IGF
2
E38
No. 3 Ignition Coil Assembly
106
E26
IGT3
1
+B
IGT4
3
4
GND
IGF
2
E42
No. 4 Ignition Coil Assembly
139
E26
IGT4
1
+B
IGT5
3
4
GND
IGF
2
E39
No. 5 Ignition Coil Assembly
105
E26
IGT5
103
E26
IGF1
1
+B
IGT6
3
4
GND
IGF
2
E44
No. 6 Ignition Coil Assembly
138
E26
IGT6
ECM

Fig. 2: Identifying Ignition System Wiring Diagram
Courtesy of TOYOTA MOTOR SALES, U.S.A., INC.

ON-VEHICLE INSPECTION

ON-VEHICLE INSPECTION

1. **PERFORM SPARK TEST**

a. Check for DTCs. Refer to **DTC CHECK / CLEAR** .

NOTE: If any DTC is present, perform troubleshooting in accordance with the procedure for that DTC.

b. Remove the ignition coils and spark plugs. Refer to **REMOVAL** .

c. Disconnect the 6 fuel injector connectors.

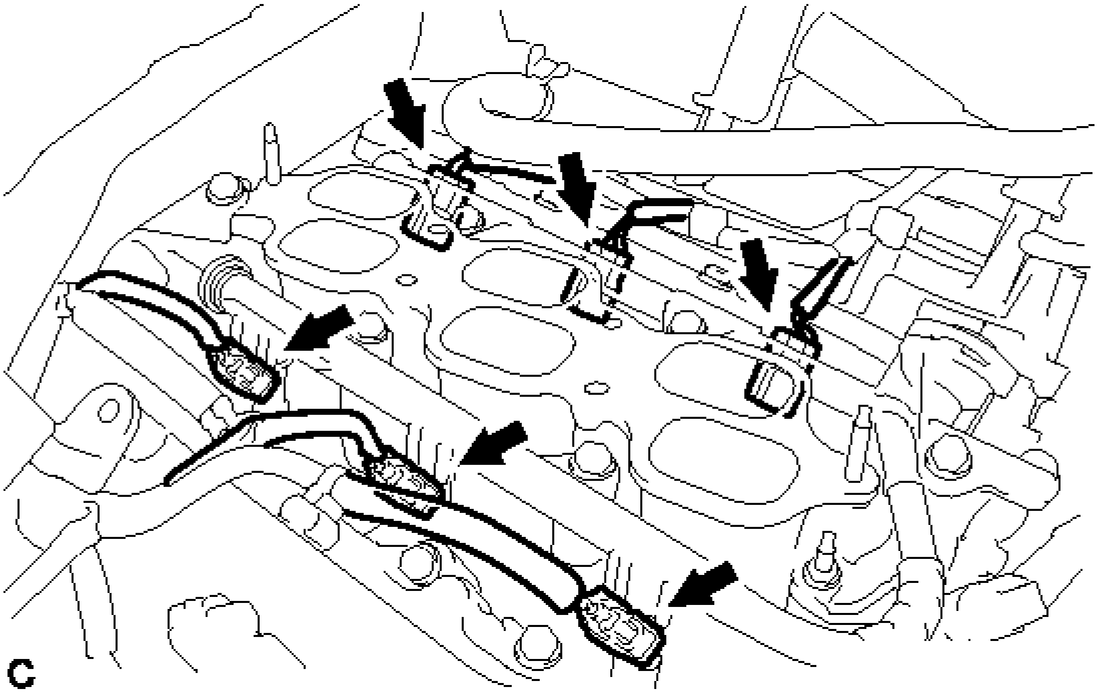

Fig. 3: Identifying Fuel Injector Connectors
Courtesy of TOYOTA MOTOR SALES, U.S.A., INC.

d. Install the spark plug into the ignition coil, and then connect the ignition coil connector.

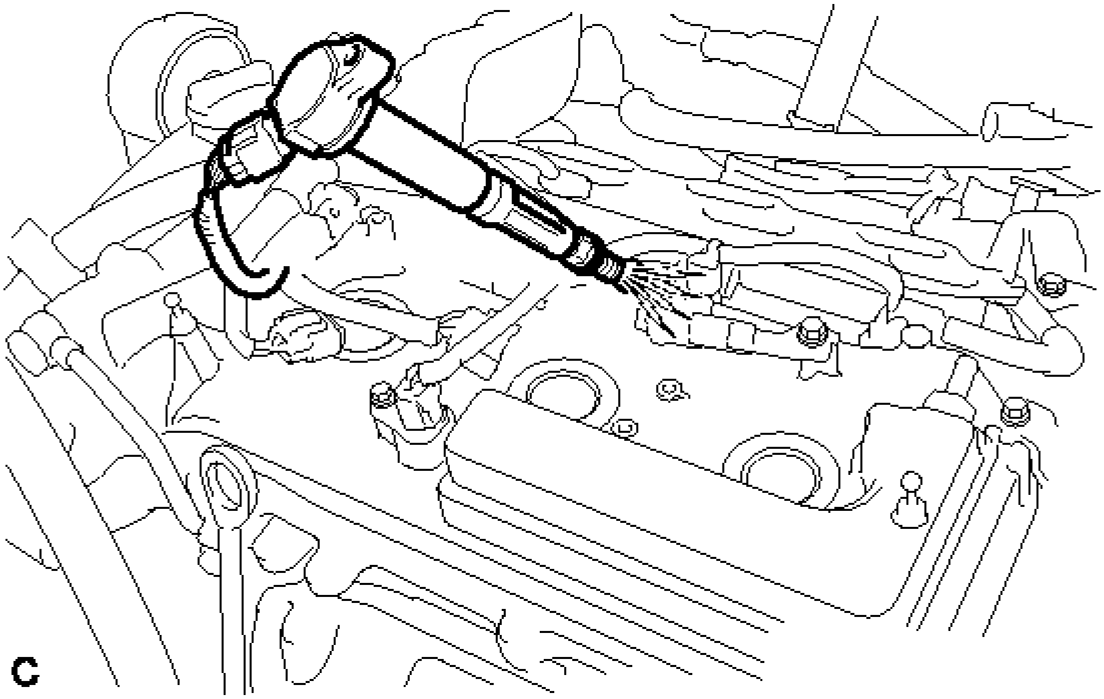

Fig. 4: Checking Ground Spark Plugs
Courtesy of TOYOTA MOTOR SALES, U.S.A., INC.

e. Ground the spark plug.
f. Check that spark occurs at each spark plug while the engine is being cranked.

NOTE:

- **Be sure to ground the spark plugs when checking them.**
- **Do not crank the engine for more than 2 seconds.**

  Cranking will stop if the engine switch is pushed again for models with cranking holding function.

- **If a spark plug has been struck or dropped, replace it.**
- **If an ignition coil has been struck or dropped, replace it.**

HINT:

If spark does not occur for any cylinder, perform the following inspect Ignition Coil and Spark Test procedure.

g. Connect the 6 fuel injector connectors.
h. Install the spark plugs and ignition coils. Refer to **INSTALLATION** .
i. Clear the DTCs. Refer to **DTC CHECK / CLEAR** .

2. **INSPECT IGNITION COIL AND SPARK TEST**

HINT:

Perform "Inspection After Repair" after replacing the spark plug. Refer to **INITIALIZATION** .

a. Check that the wire harness side connector of the ignition coil is securely connected.

   Result

Result	Action
NG	Connect securely
OK	Go to next step

b. Perform a spark test on each ignition coil.
   1. Replace the ignition coil with a known good one.
   2. Perform the spark test again.

      Result

Result	Action
NG	Go to next step
OK	Replace ignition coil

c. Perform a spark test on each spark plug.
   1. Replace the spark plug with a known good one.
   2. Perform the spark test again.

      Result

Result	Proceed to
	Inspect the ignition system. Refer to **DTC P0351: Ignition Coil "A"**

NG	**Primary / Secondary Circuit; DTC P0352: Ignition Coil "B" Primary / Secondary Circuit; DTC P0353: Ignition Coil "C" Primary / Secondary Circuit; DTC P0354: Ignition Coil "D" Primary / Secondary Circuit; DTC P0355: Ignition Coil "E" Primary / Secondary Circuit; DTC P0356: Ignition Coil "F" Primary / Secondary Circuit** .
OK	Replace spark plug

3. **CHECK SPARK PLUG**

NOTE:

- **Do not use a wire brush for cleaning.**
- **Do not adjust the electrode gap of a spark plug.**

HINT:

Perform "Inspection After Repair" after replacing the spark plug. Refer to **INITIALIZATION** .

a. Check the electrode using a megohmmeter.

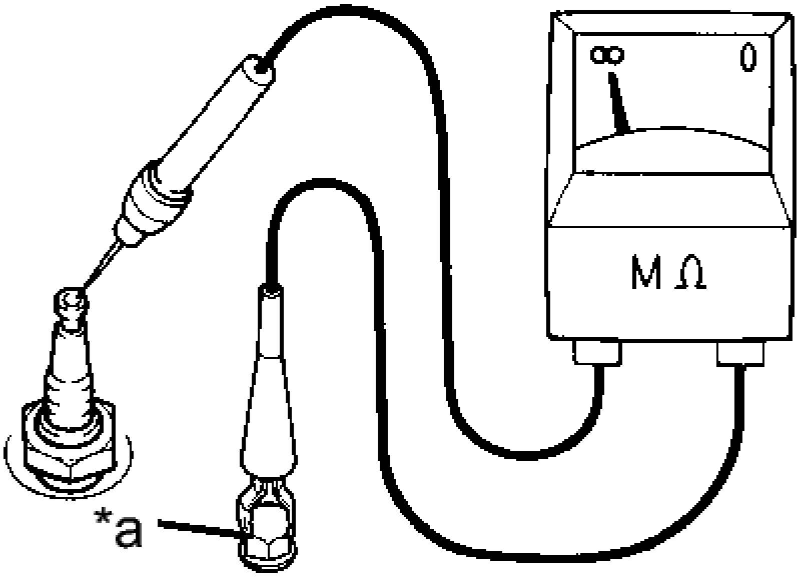

Fig. 5: Checking Electrode Using Megohmmeter
Courtesy of TOYOTA MOTOR SALES, U.S.A., INC.

TEXT IN ILLUSTRATION

*1	Ground

1. Using a megohmmeter, measure the insulation resistance.

   Standard Insulation Resistance

Tester Connection	Condition	Specified Condition
Spark plug (terminal part) - Body ground	Always	10 Mohms or more

   HINT:

   - If the result is not as specified, clean the spark plug with a spark plug cleaner and measure the resistance again.
   - If a megohmmeter is not available, perform the following simple inspection instead.

b. Alternative inspection method.

1. Quickly accelerate the engine to 4000 rpm 5 times.
2. Remove the spark plug. Refer to **REMOVAL** .
3. Visually check the spark plug.

   If the electrode is dry, the spark plug is functioning properly. If the electrode is damp, proceed to the next step.

4. Install the spark plug. Refer to **INSTALLATION** .

c. Check the spark plug for any damage to its threads and insulator.

   If there is any damage, replace the spark plug.

   Recommended Spark Plug

Manufacturer	Spark Plug Type
DENSO	FK20HR11

d. Reference.

1. Check the spark plug electrode gap.

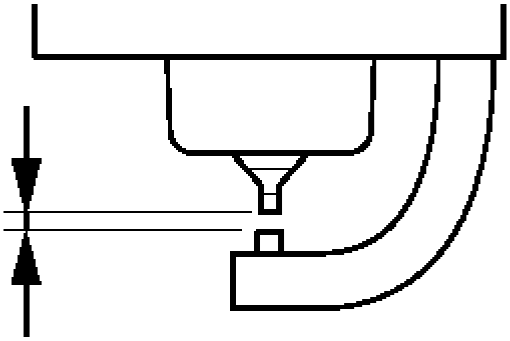

Fig. 6: Checking Spark Plug Electrode Gap
Courtesy of TOYOTA MOTOR SALES, U.S.A., INC.

Maximum Electrode Gap for Used Spark Plug

1.4 mm (0.0551 in.)

If the gap is greater than the maximum, replace the spark plug.

NOTE: Never attempt to adjust the gap of a used

Electrode Gap for New Spark Plug

1.0 to 1.1 mm (0.0394 to 0.0433 in.)

e. Clean the spark plugs.

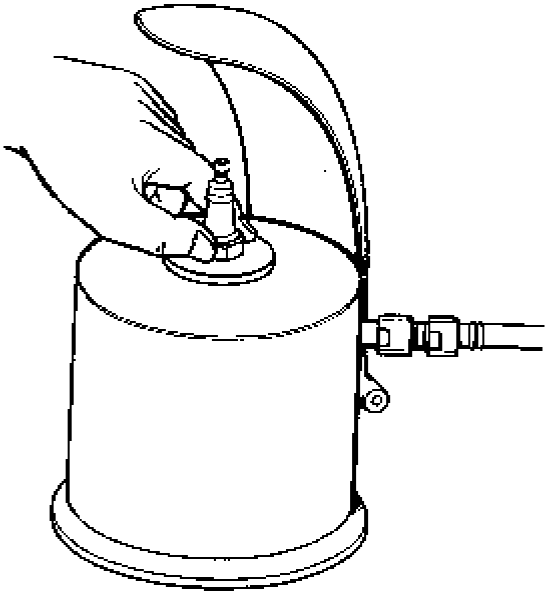

Fig. 7: Cleaning Electrode With Spark Plug Cleaner
Courtesy of TOYOTA MOTOR SALES, U.S.A., INC.

If the electrode has traces of wet carbon, clean the electrode with a spark plug cleaner and then dry it.

Standard Air Pressure

588 kPa (6.0 kgf/cm^2 , 85 psi)

Standard Duration

20 seconds or less

HINT:

Only use the spark plug cleaner when the electrode is free of oil. If the electrode has traces of oil, use gasoline to clean off the oil before using the spark plug cleaner.

2012-2017 ENGINE

Ignition System (Inspection) (Hybrid)

IGNITION SYSTEM

PARTS LOCATION

ILLUSTRATION

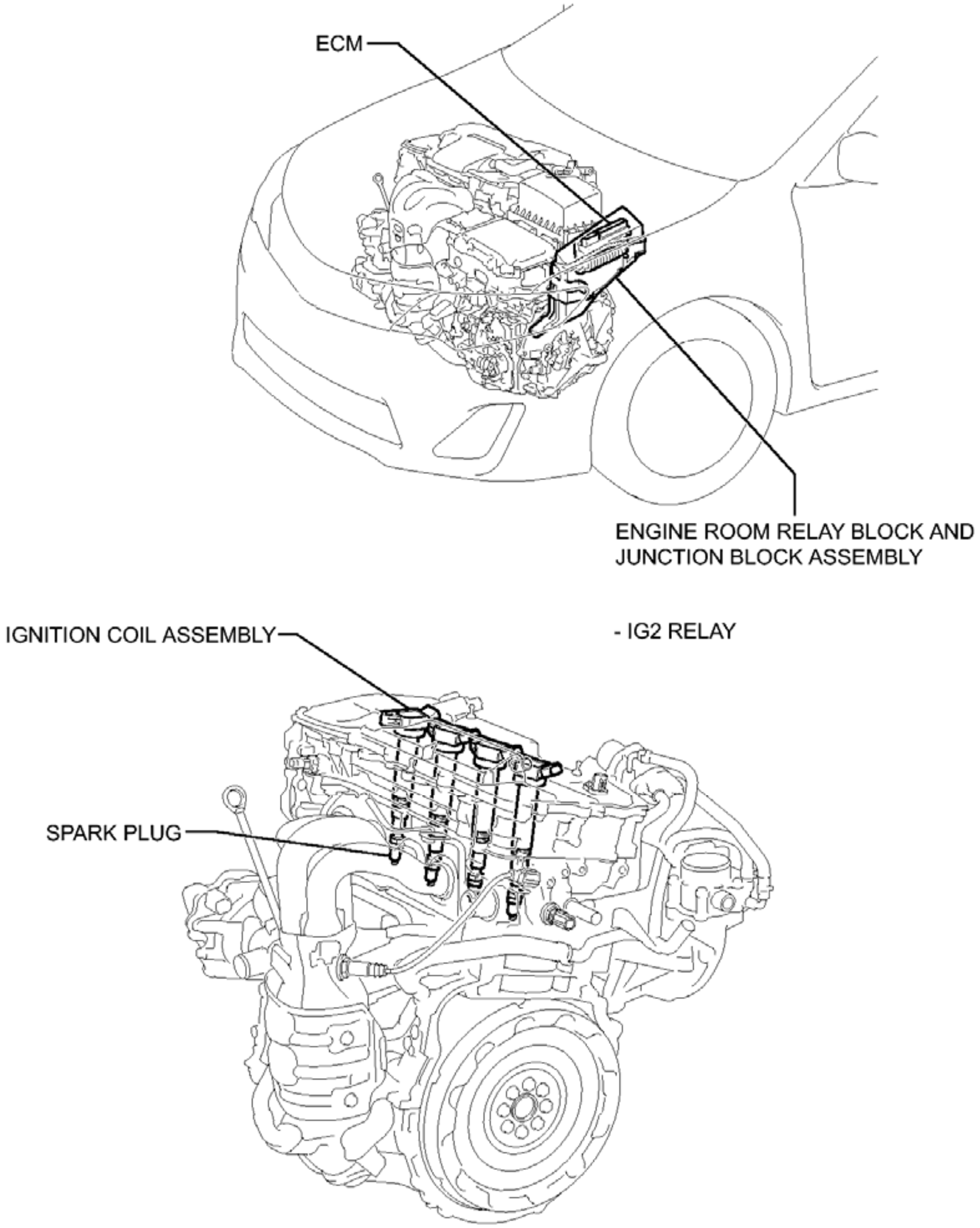
ECM
ENGINE ROOM RELAY BLOCK AND JUNCTION BLOCK ASSEMBLY
- IG2 RELAY
IGNITION COIL ASSEMBLY
SPARK PLUG

Fig. 1: Identifying Ignition System Components Location
Courtesy of TOYOTA MOTOR SALES, U.S.A., INC.

SYSTEM DIAGRAM

SYSTEM DIAGRAM

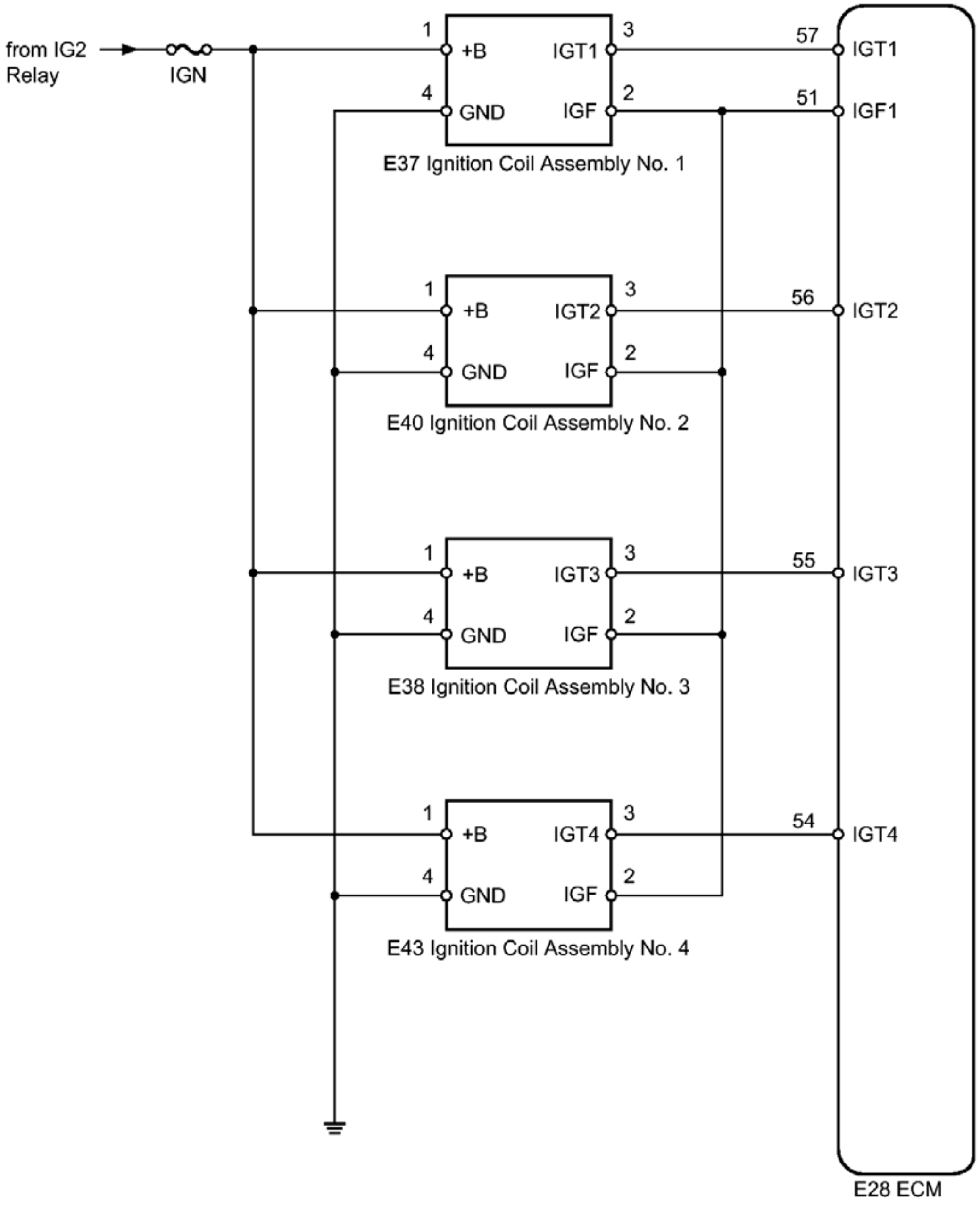
from IG2
Relay
IGN
1
+B
IGT1
3
57
IGT1
4
GND
IGF
2
51
IGF1
E37 Ignition Coil Assembly No. 1
1
+B
IGT2
3
56
IGT2
4
GND
IGF
2
E40 Ignition Coil Assembly No. 2
1
+B
IGT3
3
55
IGT3
4
GND
IGF
2
E38 Ignition Coil Assembly No. 3
1
+B
IGT4
3
54
IGT4
4
GND
IGF
2
E43 Ignition Coil Assembly No. 4
E28 ECM

Fig. 2: Ignition System Diagram
Courtesy of TOYOTA MOTOR SALES, U.S.A., INC.

ON-VEHICLE INSPECTION

ON-VEHICLE INSPECTION

1. **PERFORM SPARK TEST**

a. Check for DTCs. Refer to **DTC CHECK / CLEAR** .

NOTE: **If any DTC is output, perform troubleshooting procedures for that DTC.**

b. Remove the ignition coil assemblies and spark plugs. Refer to **REMOVAL** .
c. Disconnect the 4 injector connectors.

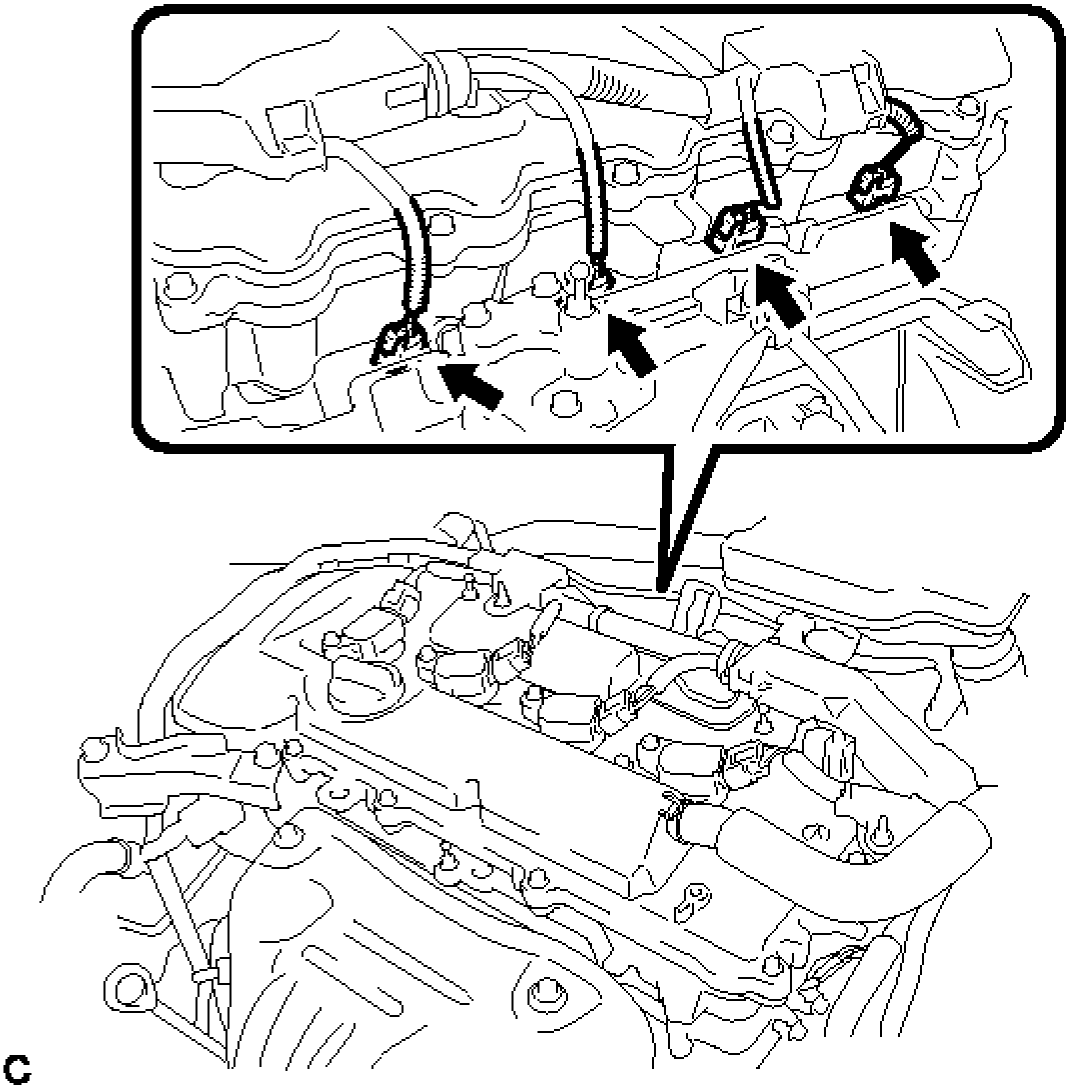

Fig. 3: Identifying Injector Connectors
Courtesy of TOYOTA MOTOR SALES, U.S.A., INC.

d. Install the spark plug into the ignition coil assembly, and then connect the ignition coil connector.
e. Ground the spark plug.

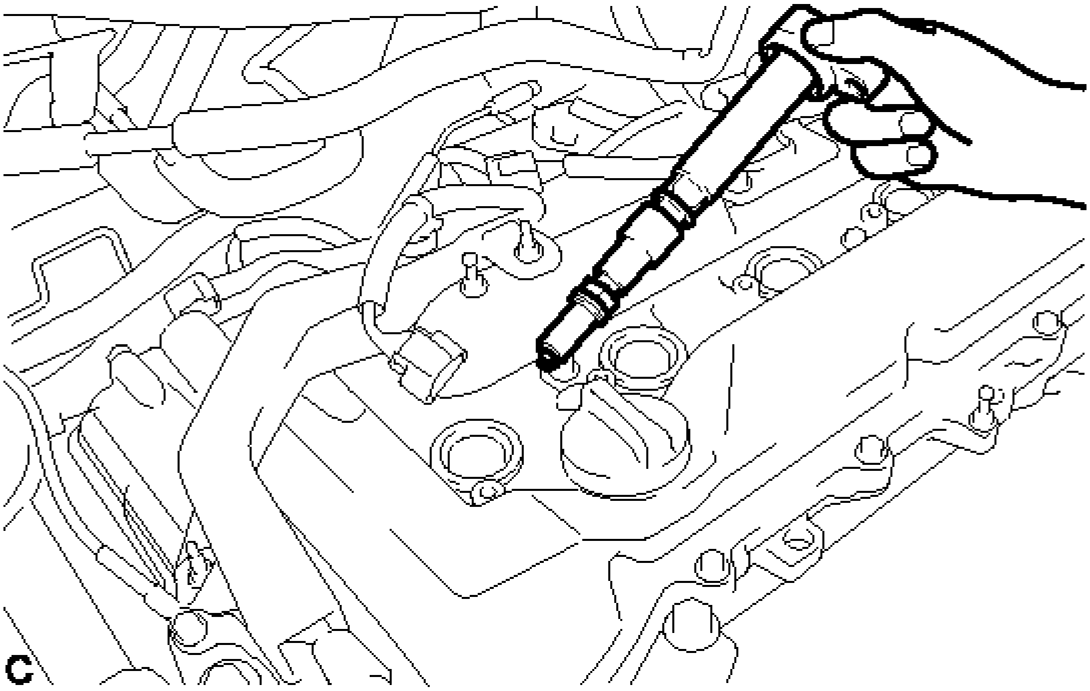

Fig. 4: Identifying Spark Plug In Ignition Coil
Courtesy of TOYOTA MOTOR SALES, U.S.A., INC.

f. Check that spark occurs at each spark plug while the engine is being cranked.

NOTE:

- **Be sure to ground the spark plugs when checking them.**
- **Do not crank the engine for more than 2 seconds.**

  Cranking will stop if the power switch is pushed again for models with cranking holding function.
- **If a spark plug has been struck or dropped, replace it.**
- **If an ignition coil assembly has been struck or dropped, replace it.**

HINT:

If spark does not occur for any cylinder, perform the following Inspect Ignition Coil and Spark Test procedure.

g. Connect the 4 fuel injector connectors.

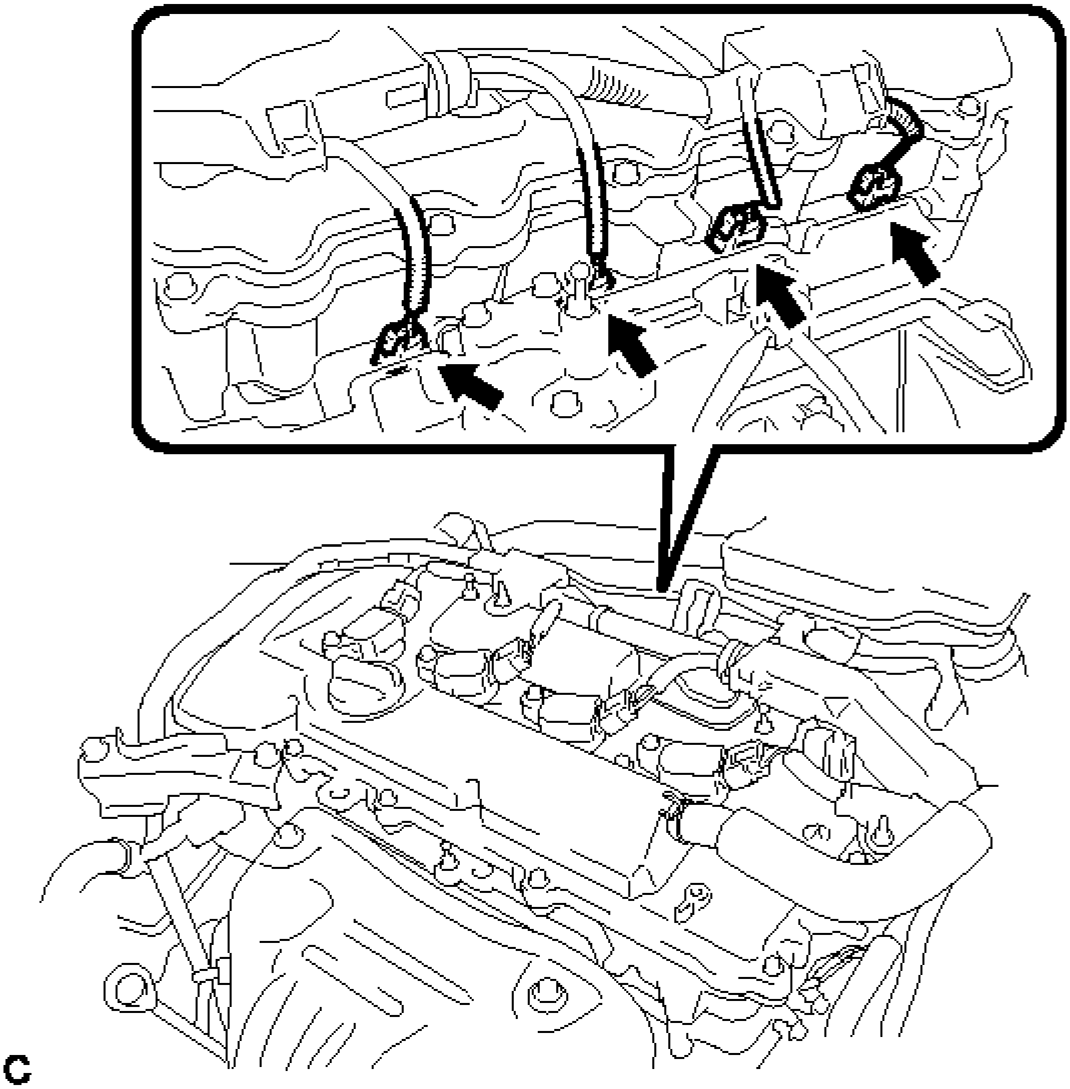

Fig. 5: Identifying Injector Connectors
Courtesy of TOYOTA MOTOR SALES, U.S.A., INC.

h. Install the spark plugs and ignition coil assemblies. Refer to **INSTALLATION** .
i. Check for DTCs. Refer to **DTC CHECK / CLEAR** .
j. Clear the DTCs. Refer to **DTC CHECK / CLEAR** .

2. **INSPECT IGNITION COIL AND SPARK TEST**

HINT:

Perform "Inspection After Repair" after replacing the spark plug and ignition coil assembly. Refer to **INITIALIZATION** .

a. Check that the wire harness side connector of the ignition coil assembly is securely connected.

RESULT

Result	Action
NG	Connect securely
OK	Go to next step

b. Perform a spark test on each ignition coil assembly.

1. Replace the ignition coil assembly with a known good one.
2. Perform the spark test again.

RESULT

Result	Action
NG	Go to next step
OK	Replace ignition coil assembly

c. Perform a spark test on each spark plug.

1. Replace the spark plug with a known good one.
2. Perform the spark test again.

RESULT

Result	Action
NG	Inspect the ignition system. Refer to **DTC P0351: Ignition Coil "A" Primary / Secondary Circuit; DTC P0352: Ignition Coil "B" Primary / Secondary Circuit;**

	DTC P0353: Ignition Coil "C" Primary / Secondary Circuit; DTC P0354: Ignition Coil "D" Primary / Secondary Circuit .
OK	Replace spark plug

3. **CHECK SPARK PLUG**

NOTE:

- **Do not use a wire brush for cleaning.**
- **Do not adjust the electrode gap of a used spark plug.**

HINT:

Perform "Inspection After Repair" after replacing the spark plug. Refer to **INITIALIZATION** .

a. Check the electrode using a megohmmeter:

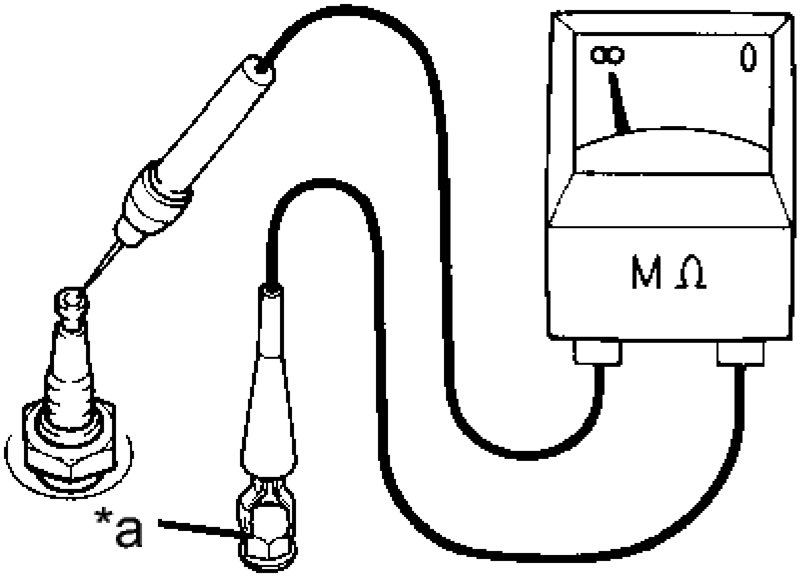

Fig. 6: Electrode Using A Megohmmeter
Courtesy of TOYOTA MOTOR SALES, U.S.A., INC.

TEXT IN ILLUSTRATION

*a	Ground

1. Using a megohmmeter, measure the insulation resistance.

   Standard Insulation Resistance

Tester Connection	Condition	Specified Condition
Spark plug (terminal part) - Body ground	Always	10 Mohms or higher

   HINT:

   - If the result is not as specified, clean the spark plug with a spark plug cleaner and measure the resistance again.
   - If a megohmmeter is not available, perform the following simple inspection instead.

b. Alternative inspection method:

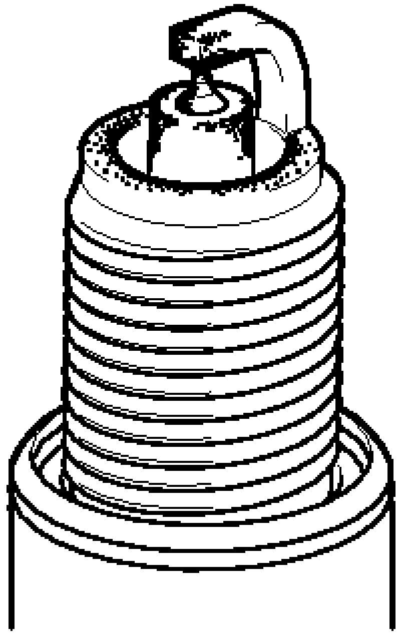

Fig. 7: Identifying Spark Plug Condition
Courtesy of TOYOTA MOTOR SALES, U.S.A., INC.

1. Quickly accelerate the engine to 4000 RPM 5 times.
2. Remove the spark plug. Refer to **REMOVAL** .
3. Visually check the spark plug.

   If the electrode is dry, the spark plug is functioning properly. If the electrode is damp, proceed to the next step.

c. Check the spark plug for any damage to its thread and insulator.

If there is any damage, replace the spark plug.

Recommended Spark Plug

Manufacturer	Spark Plug Type
DENSO	FK16HR-A8

d. Reference:

1. Check the spark plug electrode gap.

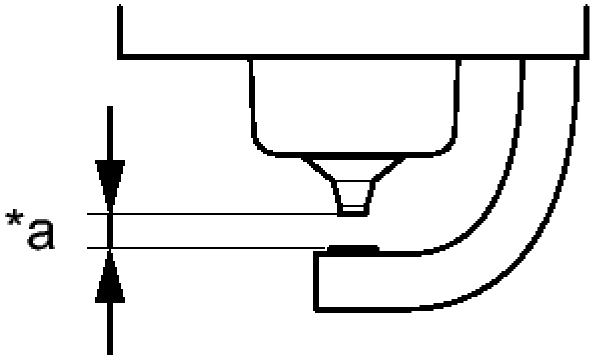

P

Fig. 8: Checking Spark Plug Electrode Gap
Courtesy of TOYOTA MOTOR SALES, U.S.A., INC.

Maximum electrode gap for a used spark plug

1.1 mm (0.0433 in.)

If the gap is more than the maximum, replace the spark plug.

NOTE: **Never attempt to adjust the gap of a used plug.**

Electrode gap for a new spark plug

0.7 to 0.8 mm (0.0276 to 0.0315 in.)

TEXT IN ILLUSTRATION

*a	Spark plug electrode gap

e. Clean the spark plugs.

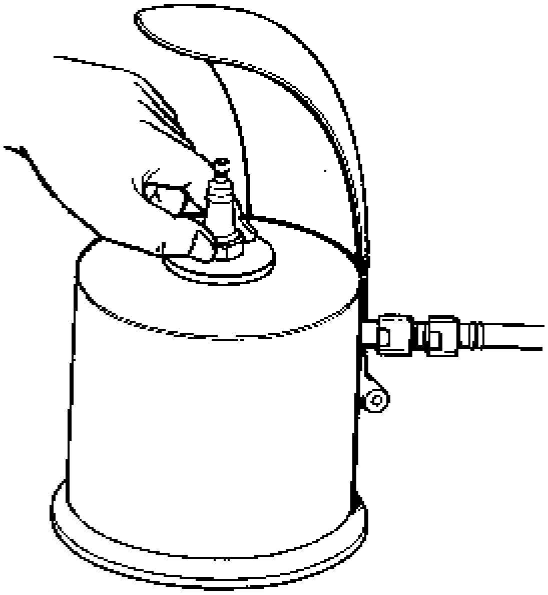

Fig. 9: Cleaning Electrode With Spark Plug Cleaner
Courtesy of TOYOTA MOTOR SALES, U.S.A., INC.

If the electrode has traces of wet carbon, clean the electrode with a spark plug cleaner and then dry it.

Standard air pressure

588 kPa (6.0 kgf/cm^2 , 85 psi)

Standard duration

20 seconds or less

HINT:

Only use a spark plug cleaner when the electrode is free of oil. If the electrode has traces of oil, use gasoline to clean off the oil before using the spark plug cleaner.

f. Install the spark plug. Refer to **INSTALLATION** .

2012-2017 ACCESSORIES & EQUIPMENT

Interior Trim (Service Information) (Hybrid) - Camry

INSTRUMENT PANEL SAFETY PAD

PRECAUTION

PRECAUTION

1. **PRECAUTION FOR VEHICLE WITH SRS AIRBAG AND SEAT BELT PRETENSIONER**
   a. Some operations in this service information may affect the SRS airbags. Prior to performing the corresponding operations, read the precautions regarding the SRS airbags.
      - for Separate Type Yaw Rate Sensor: Refer to **PRECAUTION**
      - for Built-in Type Yaw Rate Sensor: Refer to **PRECAUTION**
2. **TABLE OF BOLT, SCREW AND NUT**

   HINT:

   All bolts, screws and nuts relevant to installing and removing the instrument panel are shown along with their alphabet codes in the table below.

Code	Shape	Size	Code	Shape	Size
<A>		= 8 mm (0.315 in.) Length = 20 mm (0.787 in.)	<B>		= 8 mm (0.315 in.) Length = 15 mm (0.591 in.)
<C>		= 6 mm (0.236 in.) Length = 20 mm (0.787 in.)	<D>		= 5 mm (0.197 in.) Length = 15 mm (0.591 in.)
<E>		= 5 mm (0.197 in.) Length = 16 mm (0.630 in.)	<F>		= 3 mm (0.118 in.) Length = 12 mm (0.472 in.)
<G>		= 6 mm (0.236 in.)	<H>		= 6 mm (0.236 in.)

COMPONENTS

ILLUSTRATION

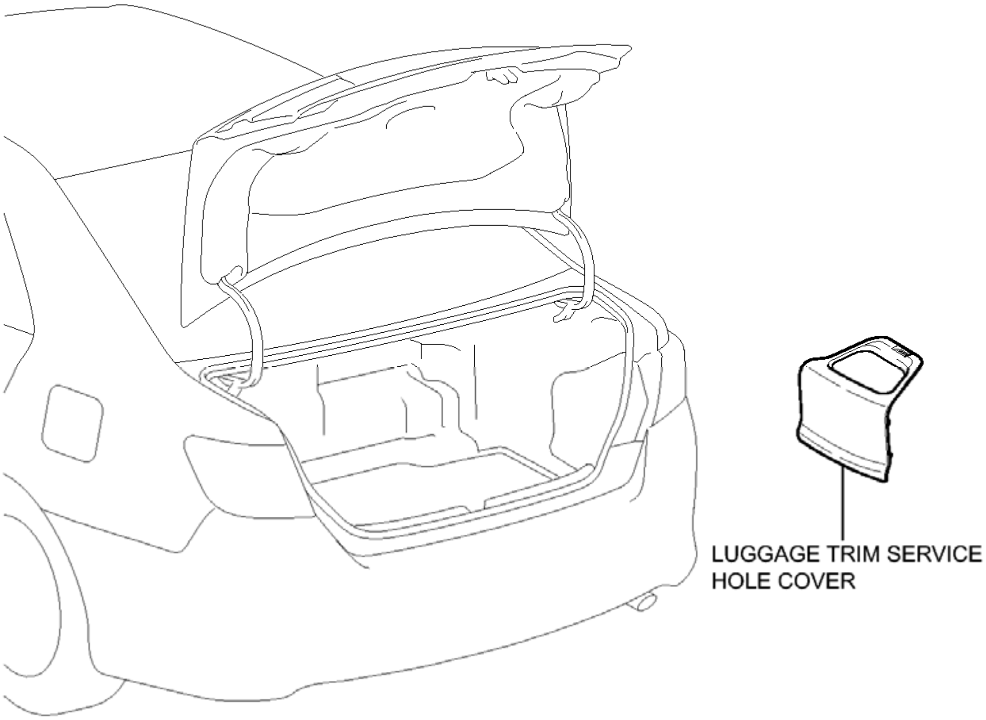
LUGGAGE TRIM SERVICE HOLE COVER

P

Fig. 1: Identifying Instrument Panel Safety Pad Replacement Components (1 Of 7)
Courtesy of TOYOTA MOTOR SALES, U.S.A., INC.

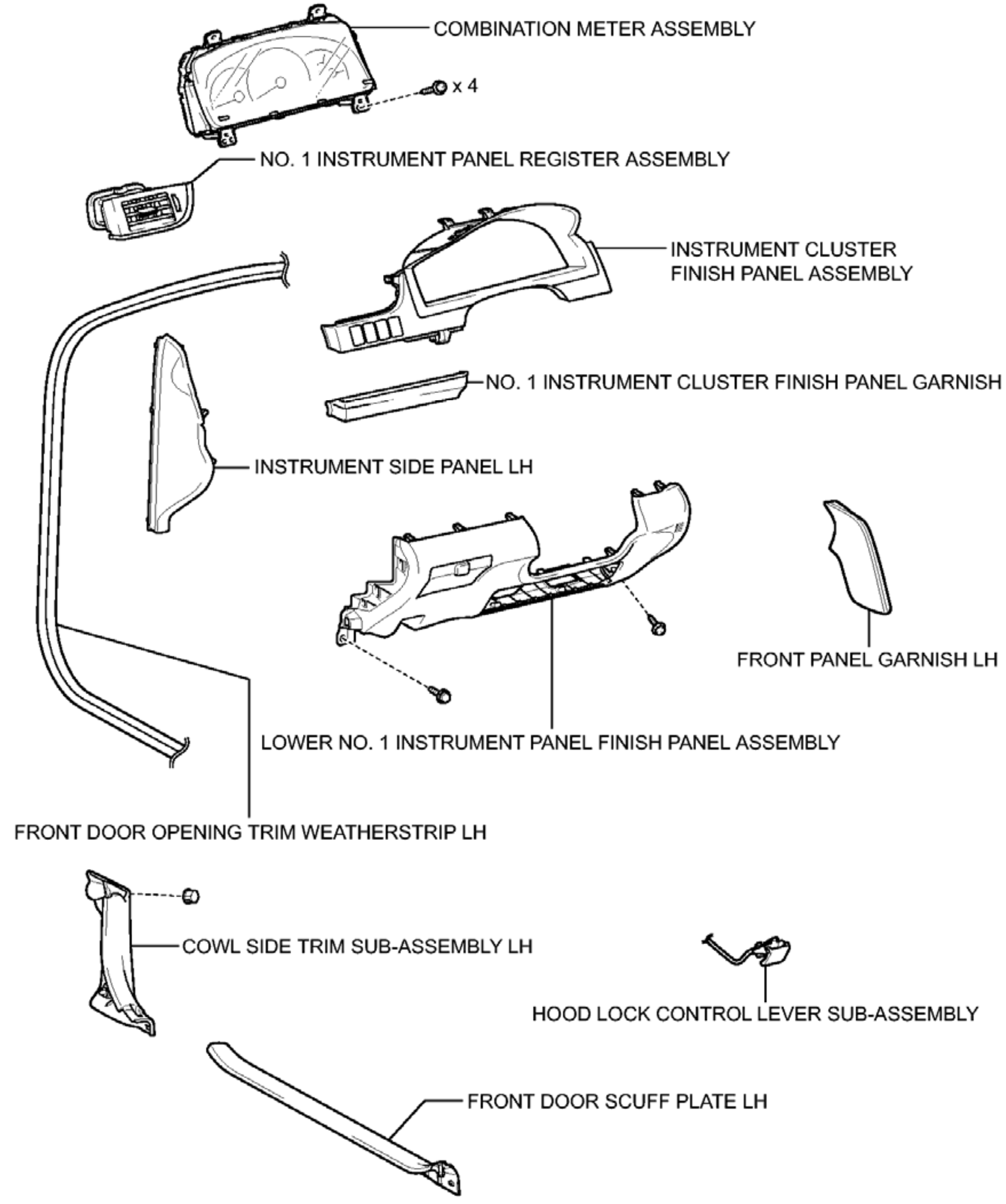
COMBINATION METER ASSEMBLY
x 4
NO. 1 INSTRUMENT PANEL REGISTER ASSEMBLY
INSTRUMENT CLUSTER FINISH PANEL ASSEMBLY
NO. 1 INSTRUMENT CLUSTER FINISH PANEL GARNISH
INSTRUMENT SIDE PANEL LH
FRONT PANEL GARNISH LH
LOWER NO. 1 INSTRUMENT PANEL FINISH PANEL ASSEMBLY
FRONT DOOR OPENING TRIM WEATHERSTRIP LH
COWL SIDE TRIM SUB-ASSEMBLY LH
HOOD LOCK CONTROL LEVER SUB-ASSEMBLY
FRONT DOOR SCUFF PLATE LH
P

Fig. 2: Identifying Instrument Panel Safety Pad Replacement Components (2 Of 7)
Courtesy of TOYOTA MOTOR SALES, U.S.A., INC.

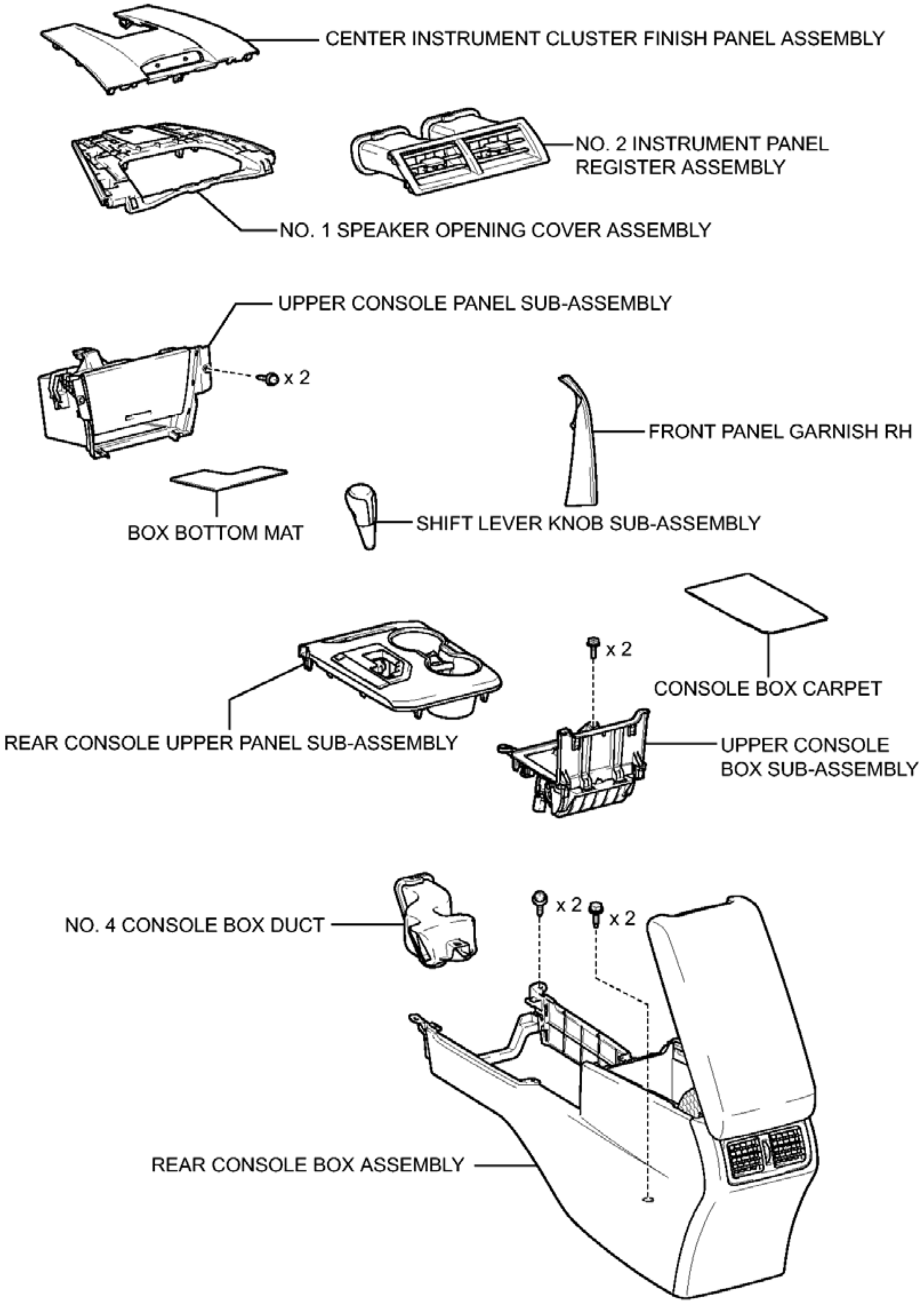
CENTER INSTRUMENT CLUSTER FINISH PANEL ASSEMBLY
NO. 2 INSTRUMENT PANEL REGISTER ASSEMBLY
NO. 1 SPEAKER OPENING COVER ASSEMBLY
UPPER CONSOLE PANEL SUB-ASSEMBLY
x 2
FRONT PANEL GARNISH RH
BOX BOTTOM MAT
SHIFT LEVER KNOB SUB-ASSEMBLY
x 2
CONSOLE BOX CARPET
REAR CONSOLE UPPER PANEL SUB-ASSEMBLY
UPPER CONSOLE BOX SUB-ASSEMBLY
NO. 4 CONSOLE BOX DUCT
x 2
x 2
REAR CONSOLE BOX ASSEMBLY

P

Fig. 3: Identifying Instrument Panel Safety Pad Replacement Components (3 Of 7)
Courtesy of TOYOTA MOTOR SALES, U.S.A., INC.

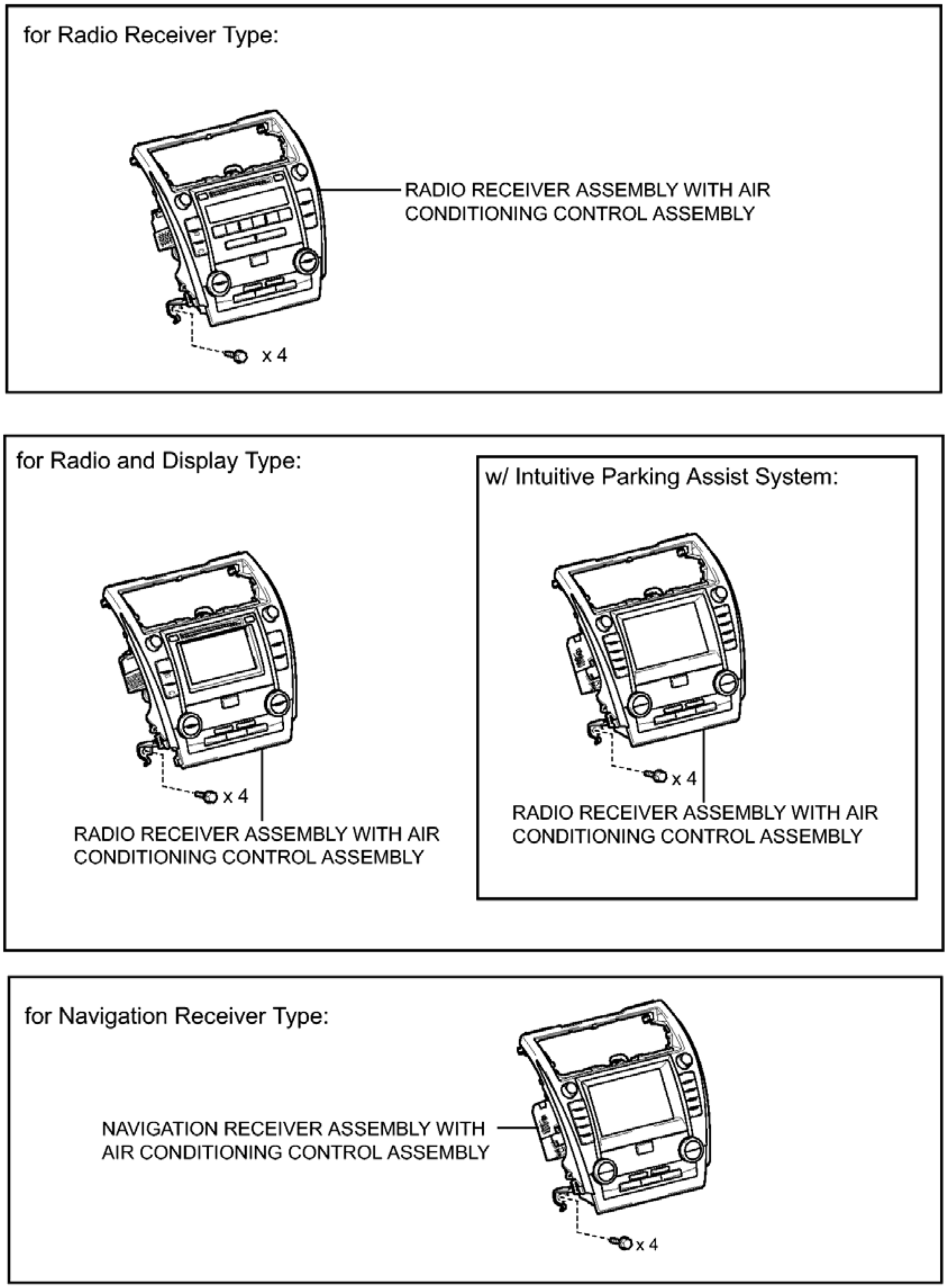
for Radio Receiver Type:
RADIO RECEIVER ASSEMBLY WITH AIR CONDITIONING CONTROL ASSEMBLY
x 4
for Radio and Display Type:
x 4
RADIO RECEIVER ASSEMBLY WITH AIR CONDITIONING CONTROL ASSEMBLY
w/ Intuitive Parking Assist System:
x 4
RADIO RECEIVER ASSEMBLY WITH AIR CONDITIONING CONTROL ASSEMBLY
for Navigation Receiver Type:
NAVIGATION RECEIVER ASSEMBLY WITH AIR CONDITIONING CONTROL ASSEMBLY
x 4

P

Fig. 4: Identifying Instrument Panel Safety Pad Replacement Components (4 Of 7)

Courtesy of TOYOTA MOTOR SALES, U.S.A., INC.

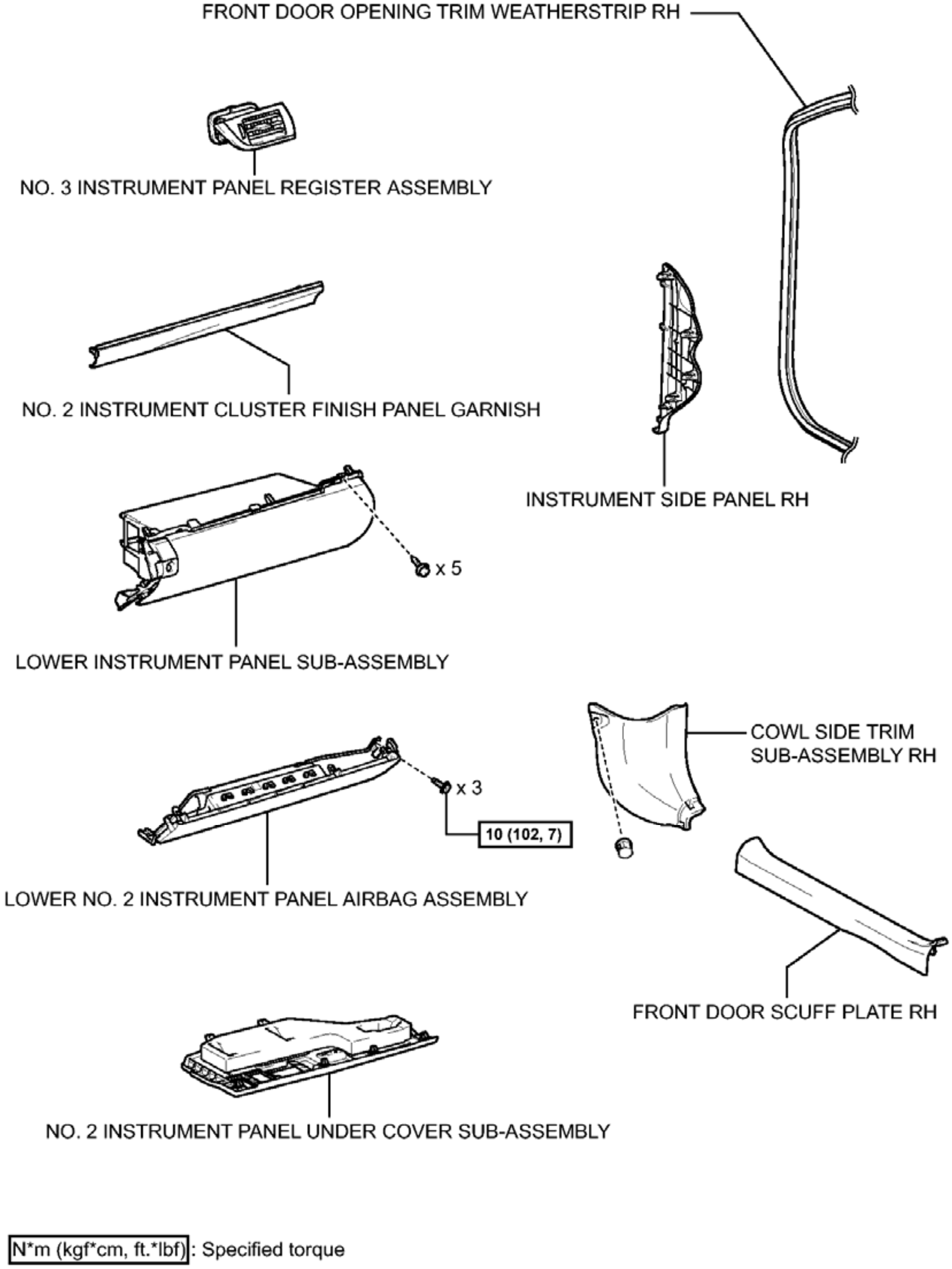
FRONT DOOR OPENING TRIM WEATHERSTRIP RH
NO. 3 INSTRUMENT PANEL REGISTER ASSEMBLY
NO. 2 INSTRUMENT CLUSTER FINISH PANEL GARNISH
INSTRUMENT SIDE PANEL RH
x 5
LOWER INSTRUMENT PANEL SUB-ASSEMBLY
COWL SIDE TRIM
SUB-ASSEMBLY RH
x 3
10 (102, 7)
LOWER NO. 2 INSTRUMENT PANEL AIRBAG ASSEMBLY
FRONT DOOR SCUFF PLATE RH
NO. 2 INSTRUMENT PANEL UNDER COVER SUB-ASSEMBLY
N*m (kgf*cm, ft.*lbf) : Specified torque
P

Fig. 5: Identifying Instrument Panel Safety Pad Replacement Components With Torque Specifications (5 Of 7)
Courtesy of TOYOTA MOTOR SALES, U.S.A., INC.

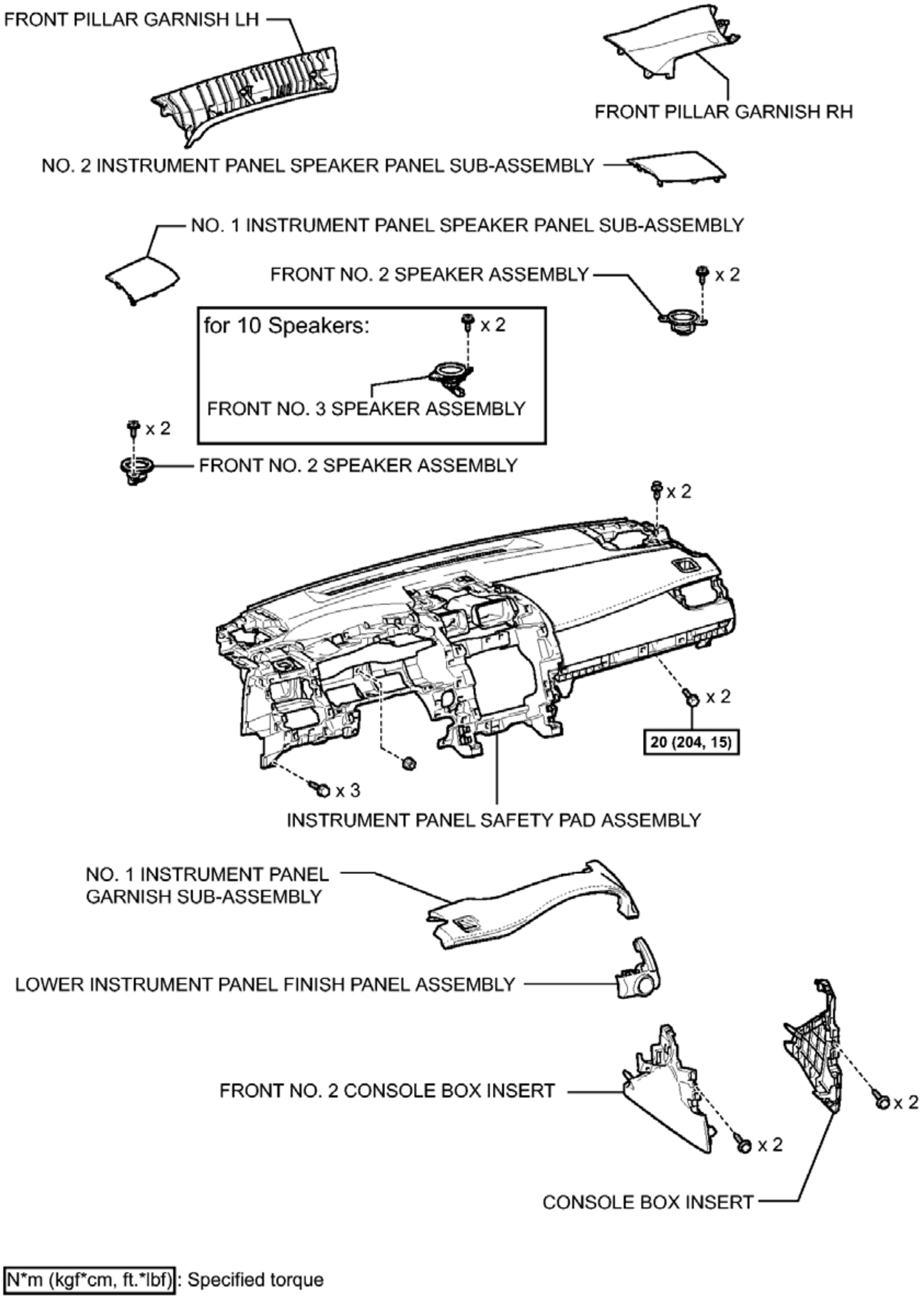
FRONT PILLAR GARNISH LH
FRONT PILLAR GARNISH RH
NO. 2 INSTRUMENT PANEL SPEAKER PANEL SUB-ASSEMBLY
NO. 1 INSTRUMENT PANEL SPEAKER PANEL SUB-ASSEMBLY
FRONT NO. 2 SPEAKER ASSEMBLY
x 2
for 10 Speakers:
x 2
FRONT NO. 3 SPEAKER ASSEMBLY
x 2
FRONT NO. 2 SPEAKER ASSEMBLY
x 2
x 2
20 (204, 15)
x 3
INSTRUMENT PANEL SAFETY PAD ASSEMBLY
NO. 1 INSTRUMENT PANEL
GARNISH SUB-ASSEMBLY
LOWER INSTRUMENT PANEL FINISH PANEL ASSEMBLY
FRONT NO. 2 CONSOLE BOX INSERT
x 2
x 2
CONSOLE BOX INSERT
N*m (kgf*cm, ft.*lbf) : Specified torque

P

Fig. 6: Identifying Instrument Panel Safety Pad Replacement Components With Torque Specifications (6 Of 7)

Courtesy of TOYOTA MOTOR SALES, U.S.A., INC.

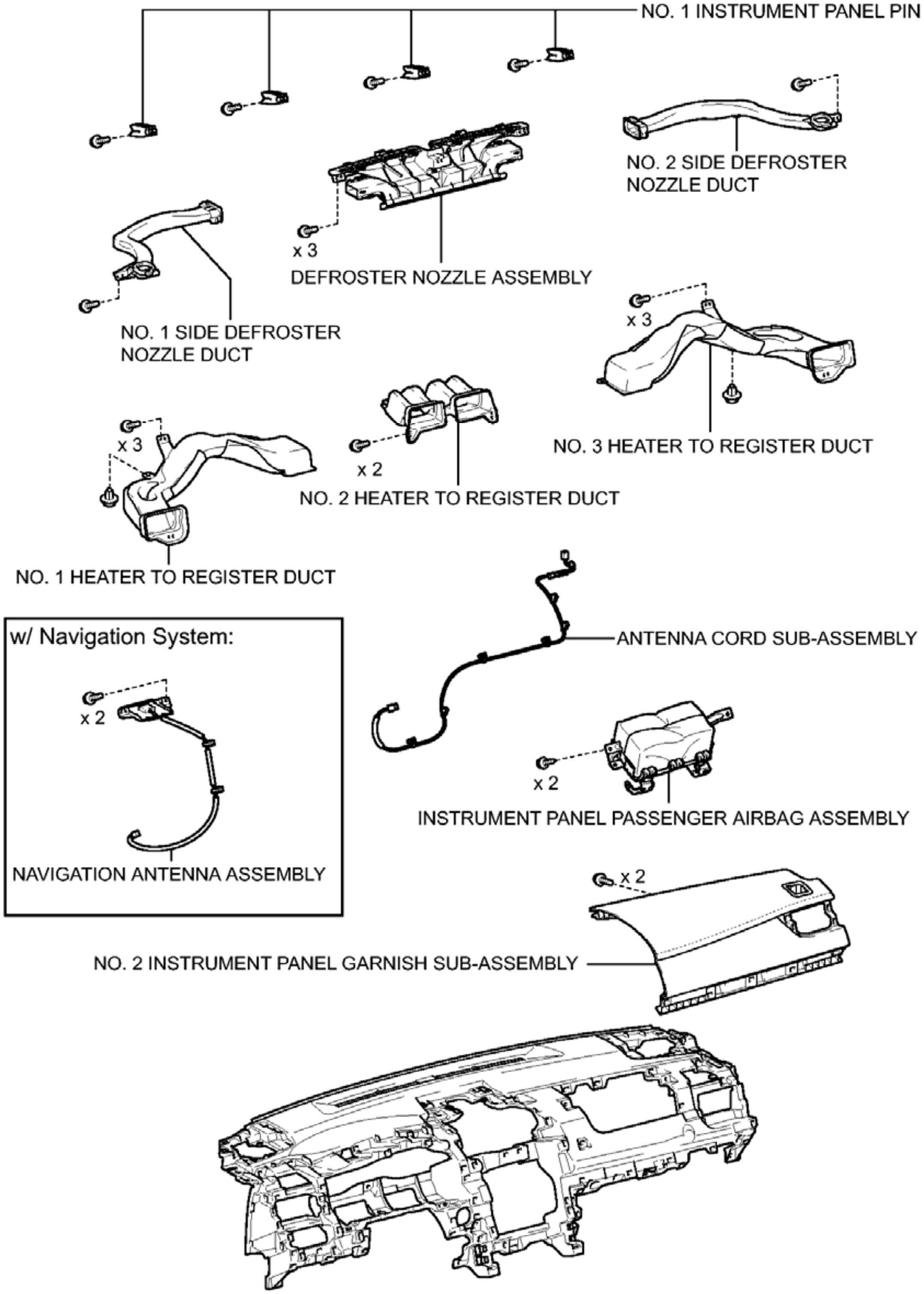
NO. 1 INSTRUMENT PANEL PIN
NO. 2 SIDE DEFROSTER NOZZLE DUCT
x 3
DEFROSTER NOZZLE ASSEMBLY
NO. 1 SIDE DEFROSTER NOZZLE DUCT
x 3
NO. 3 HEATER TO REGISTER DUCT
x 3
x 2
NO. 2 HEATER TO REGISTER DUCT
NO. 1 HEATER TO REGISTER DUCT
w/ Navigation System:
x 2
NAVIGATION ANTENNA ASSEMBLY
ANTENNA CORD SUB-ASSEMBLY
x 2
INSTRUMENT PANEL PASSENGER AIRBAG ASSEMBLY
x 2
NO. 2 INSTRUMENT PANEL GARNISH SUB-ASSEMBLY
P

Fig. 7: Identifying Instrument Panel Safety Pad Replacement Components (7 Of 7)
Courtesy of TOYOTA MOTOR SALES, U.S.A., INC.

REMOVAL

REMOVAL

1. **PRECAUTION**

   Refer to **PRECAUTION**

   NOTE: **After turning the power switch off, waiting time may be required before disconnecting the cable from the auxiliary battery negative (-) terminal. Therefore, make sure to read the disconnecting the cable from the auxiliary battery negative (-) terminal notices before proceeding with work. Refer to PRECAUTION .**

2. **REMOVE LUGGAGE TRIM SERVICE HOLE COVER** . Refer to **REMOVAL - Step 2**
3. **DISCONNECT CABLE FROM AUXILIARY BATTERY NEGATIVE TERMINAL**

   WARNING: **Wait at least 90 seconds after disconnecting the cable from the negative (-) auxiliary battery terminal to disable the SRS system.**

   NOTE: **When disconnecting the cable, some systems need to be initialized after the cable is reconnected. Refer to INITIALIZATION .**

4. **REMOVE FRONT DOOR SCUFF PLATE LH** See step 4
5. **REMOVE COWL SIDE TRIM SUB-ASSEMBLY LH** See step 5
6. **DISCONNECT FRONT DOOR OPENING TRIM WEATHERSTRIP LH**
   1. Disconnect the front door opening trim weatherstrip LH.

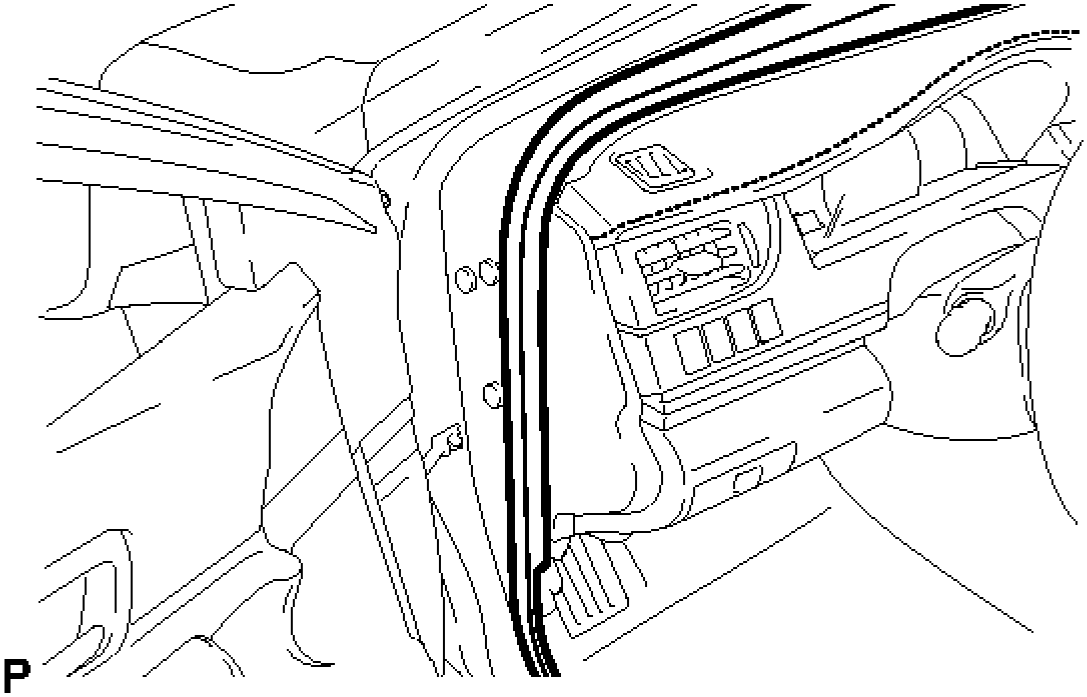

Fig. 8: Identifying Front Door Opening Trim Weatherstrip LH
Courtesy of TOYOTA MOTOR SALES, U.S.A., INC.

7. **REMOVE INSTRUMENT SIDE PANEL LH**
   a. Using a molding remover, disengage the 4 claws as shown in the illustration.

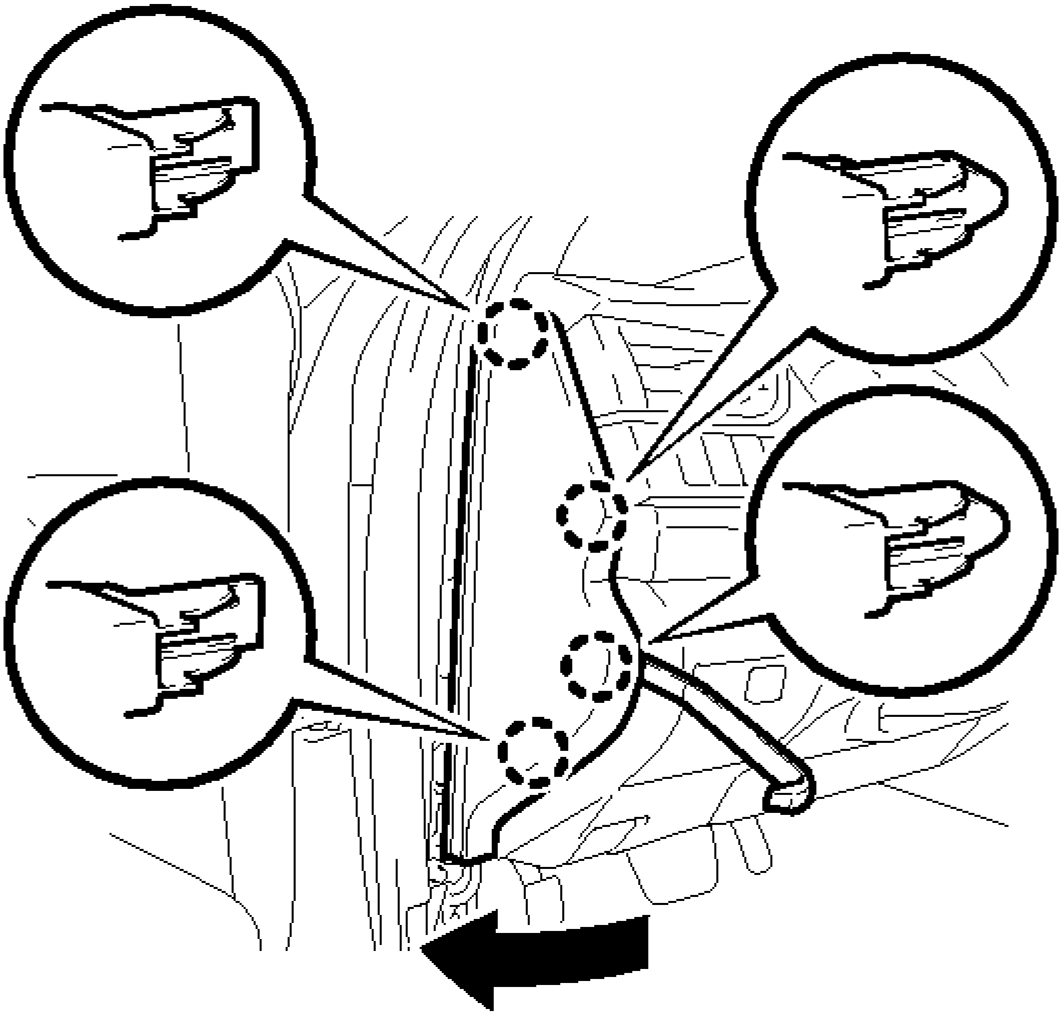

Fig. 9: Disengaging Instrument Side Panel LH Claws
Courtesy of TOYOTA MOTOR SALES, U.S.A., INC.

b. Disengage the 3 guides and remove the instrument side panel LH as shown in the illustration.

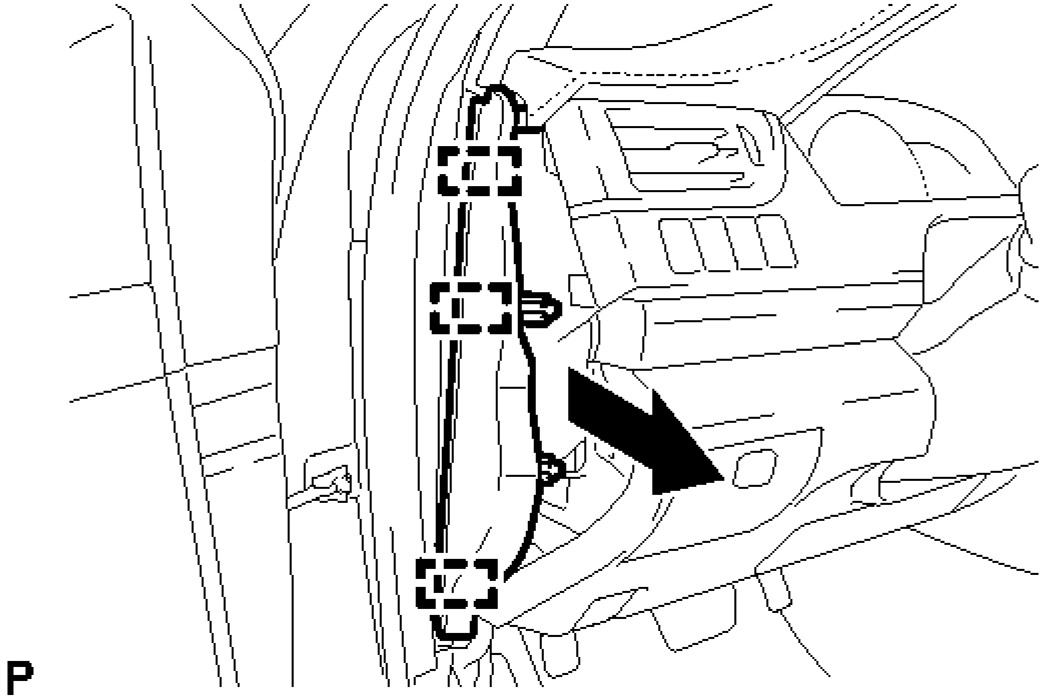

Fig. 10: Disengaging Instrument Side Panel LH Guides
Courtesy of TOYOTA MOTOR SALES, U.S.A., INC.

8. **REMOVE NO. 1 INSTRUMENT CLUSTER FINISH PANEL GARNISH**
    a. Disengage the 3 clips to remove the No. 1 instrument cluster finish panel garnish as shown in the illustration.

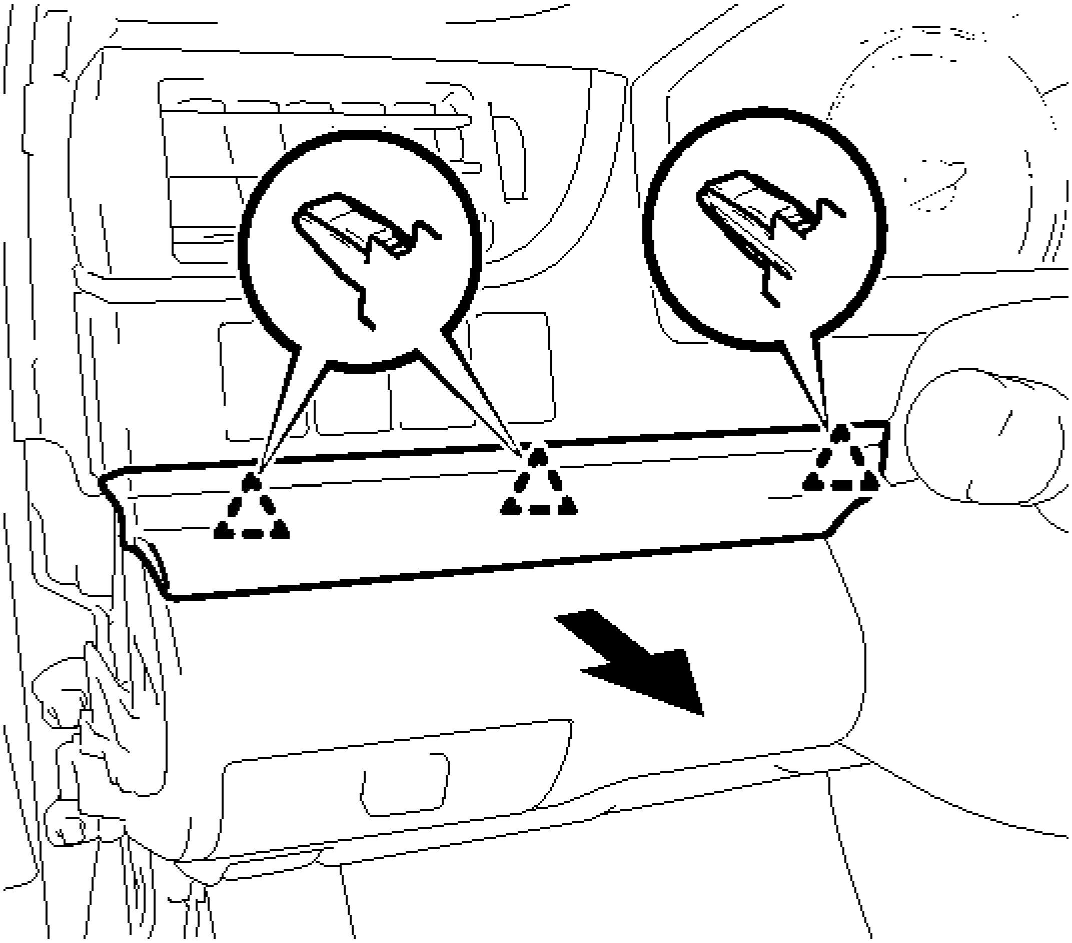

Fig. 11: Removing No. 1 Instrument Cluster Finish Panel Garnish
Courtesy of TOYOTA MOTOR SALES, U.S.A., INC.

9. **REMOVE NO. 1 INSTRUMENT PANEL REGISTER ASSEMBLY**
   a. Apply protective tape to the area shown in the illustration.

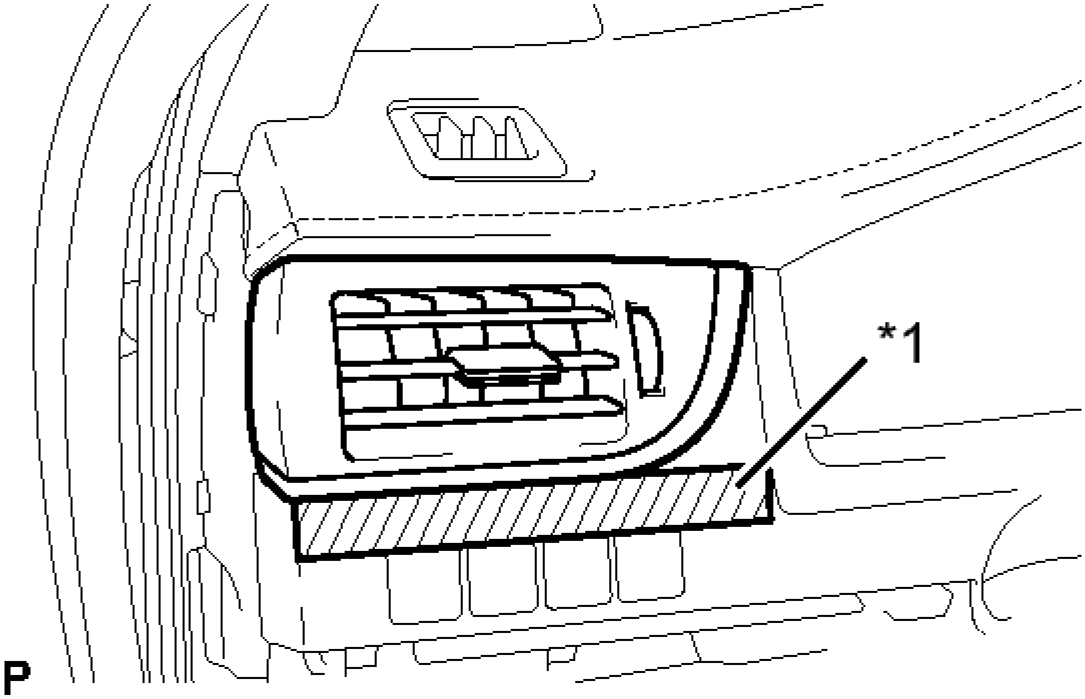

Fig. 12: Identifying Protective Tape Around No. 1 Instrument Panel Register Assembly
Courtesy of TOYOTA MOTOR SALES, U.S.A., INC.

TEXT IN ILLUSTRATION

*1	Protective Tape

b. Disengage the 2 clips as shown in the illustration.

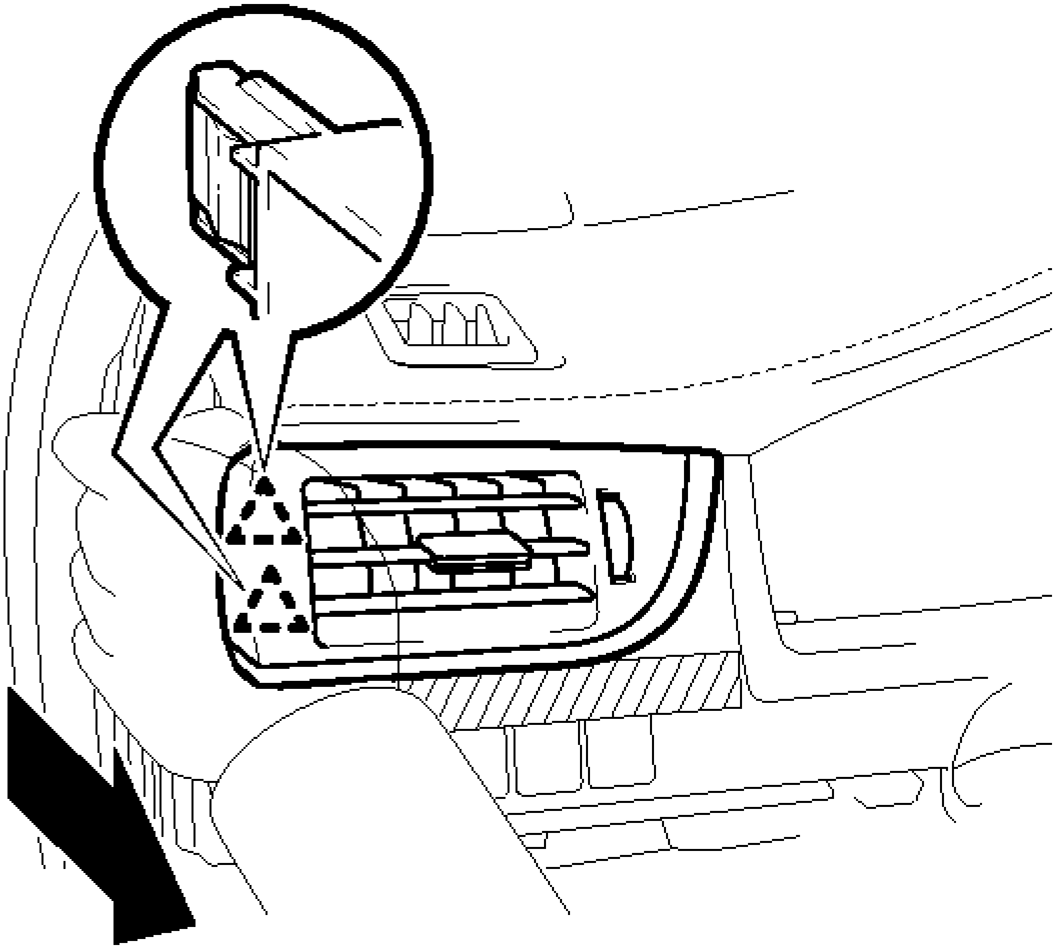

P

Fig. 13: Removing No. 1 Instrument Panel Register Assembly
Courtesy of TOYOTA MOTOR SALES, U.S.A., INC.

c. Using a molding remover, disengage the 2 clips to remove the No. 1 instrument panel register assembly.

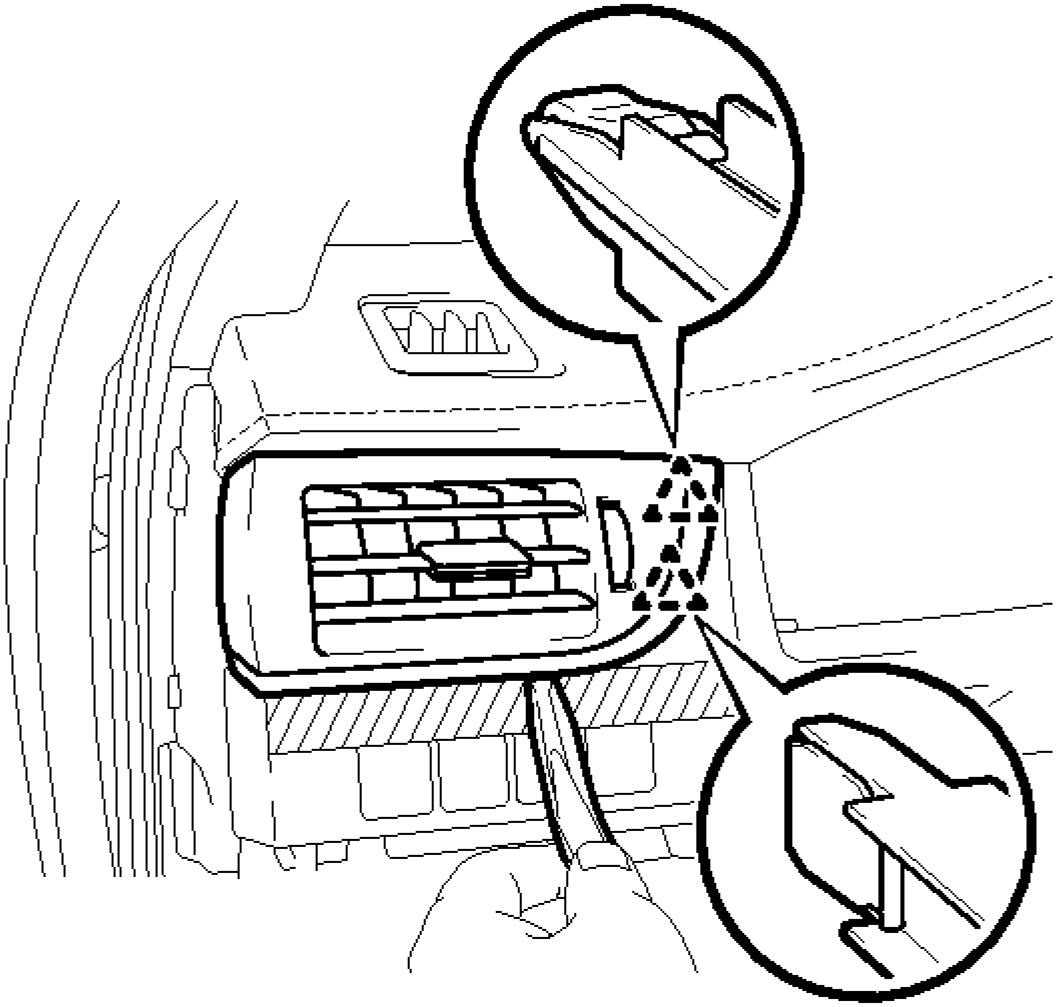

P

Fig. 14: Identifying No. 1 Instrument Panel Register Assembly
Courtesy of TOYOTA MOTOR SALES, U.S.A., INC.

10. **REMOVE INSTRUMENT CLUSTER FINISH PANEL ASSEMBLY**
    a. Operate the tilt and telescopic lever to fully extend and lower the steering column assembly.
    b. Using a molding remover, disengage the 2 claws, 4 clips and 2 guides.

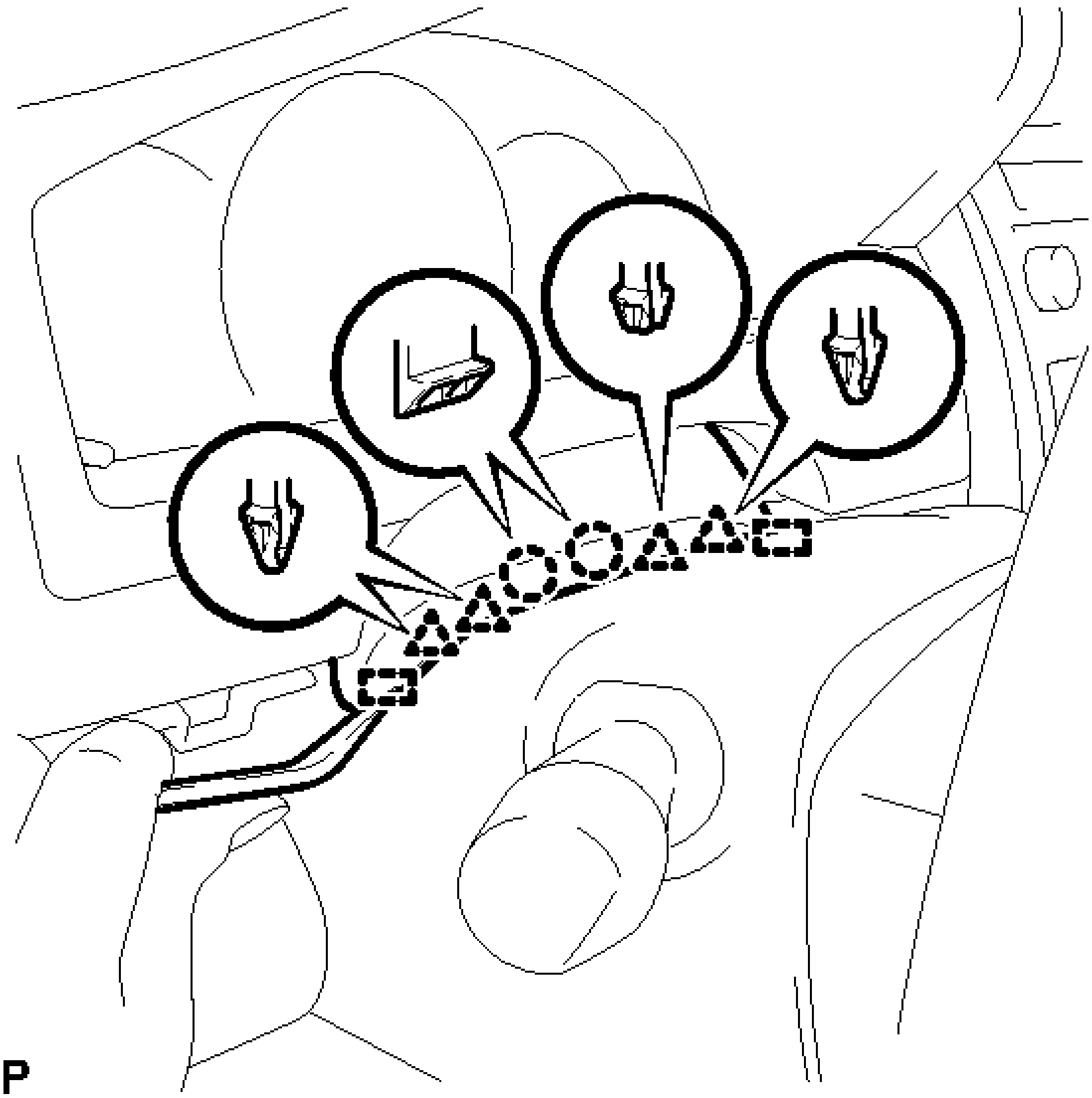

Fig. 15: Disengaging Instrument Cluster Finish Panel Assembly Fasteners
Courtesy of TOYOTA MOTOR SALES, U.S.A., INC.

c. Disengage the 5 claws, 5 clips and 2 guides.

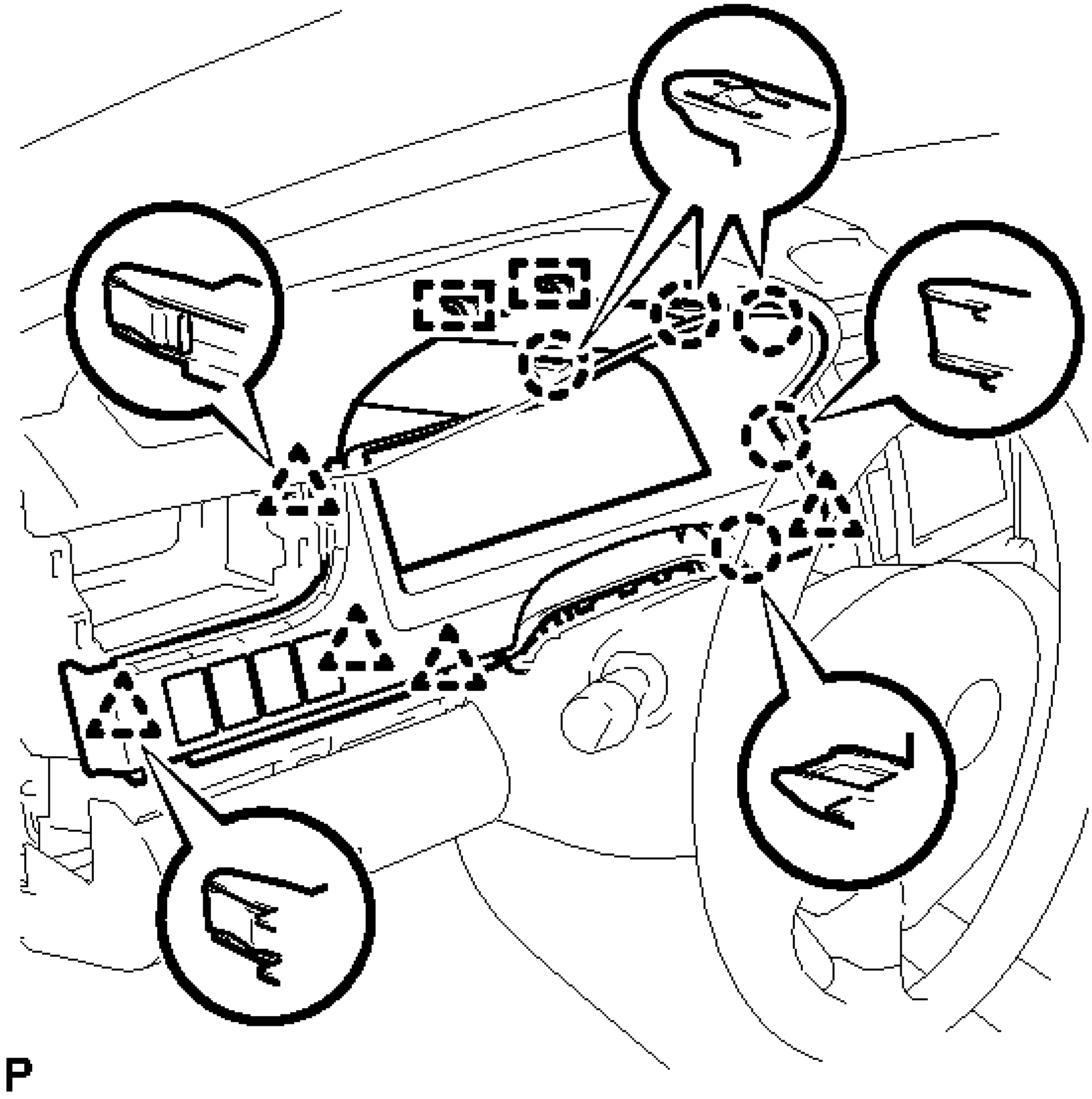

Fig. 16: Identifying Instrument Cluster Finish Panel Assembly Fasteners
Courtesy of TOYOTA MOTOR SALES, U.S.A., INC.

d. Disconnect each connector.

e. Remove the instrument cluster finish panel assembly as shown in the illustration.

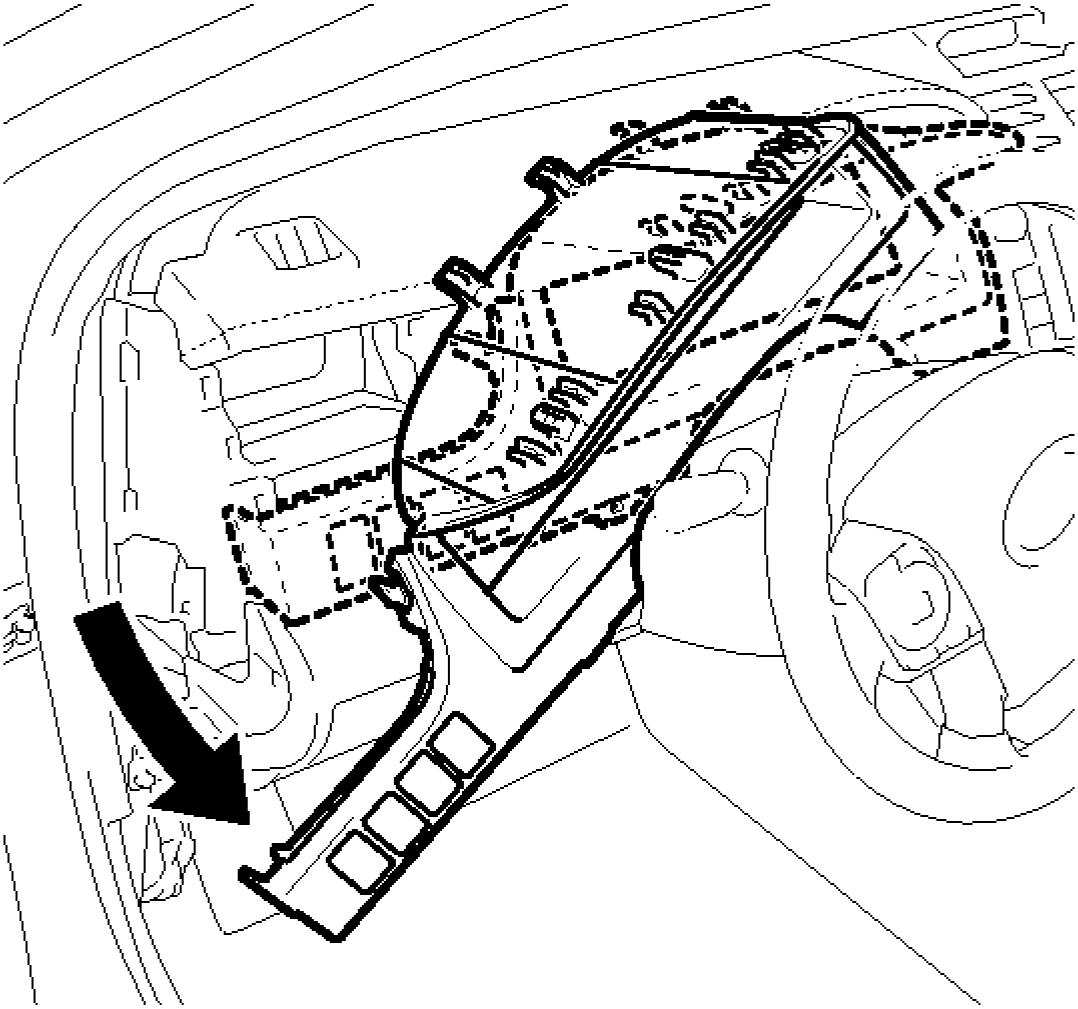

P

Fig. 17: Removing Instrument Cluster Finish Panel Assembly
Courtesy of TOYOTA MOTOR SALES, U.S.A., INC.

11. **REMOVE COMBINATION METER ASSEMBLY** . Refer to **REMOVAL - Step 9**
12. **REMOVE FRONT PANEL GARNISH LH**
    a. Disengage the 3 claws, 2 clips and 8 guides to remove the front panel garnish LH.

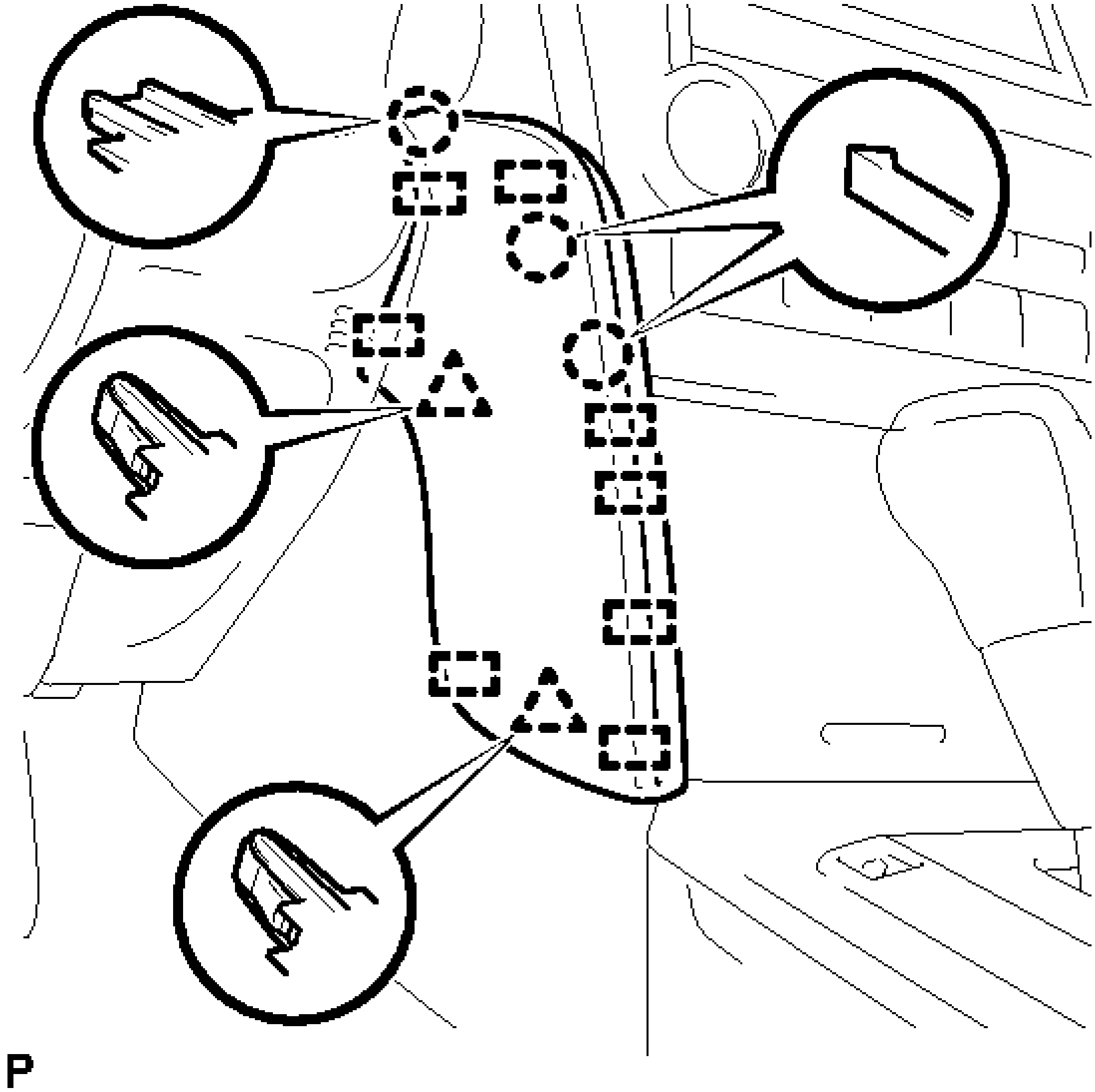

Fig. 18: Identifying Front Panel Garnish LH Fasteners
Courtesy of TOYOTA MOTOR SALES, U.S.A., INC.

13. **DISCONNECT HOOD LOCK CONTROL LEVER SUB-ASSEMBLY**
    a. Disengage the claw and 2 guides to disconnect the hood lock control lever sub-assembly.

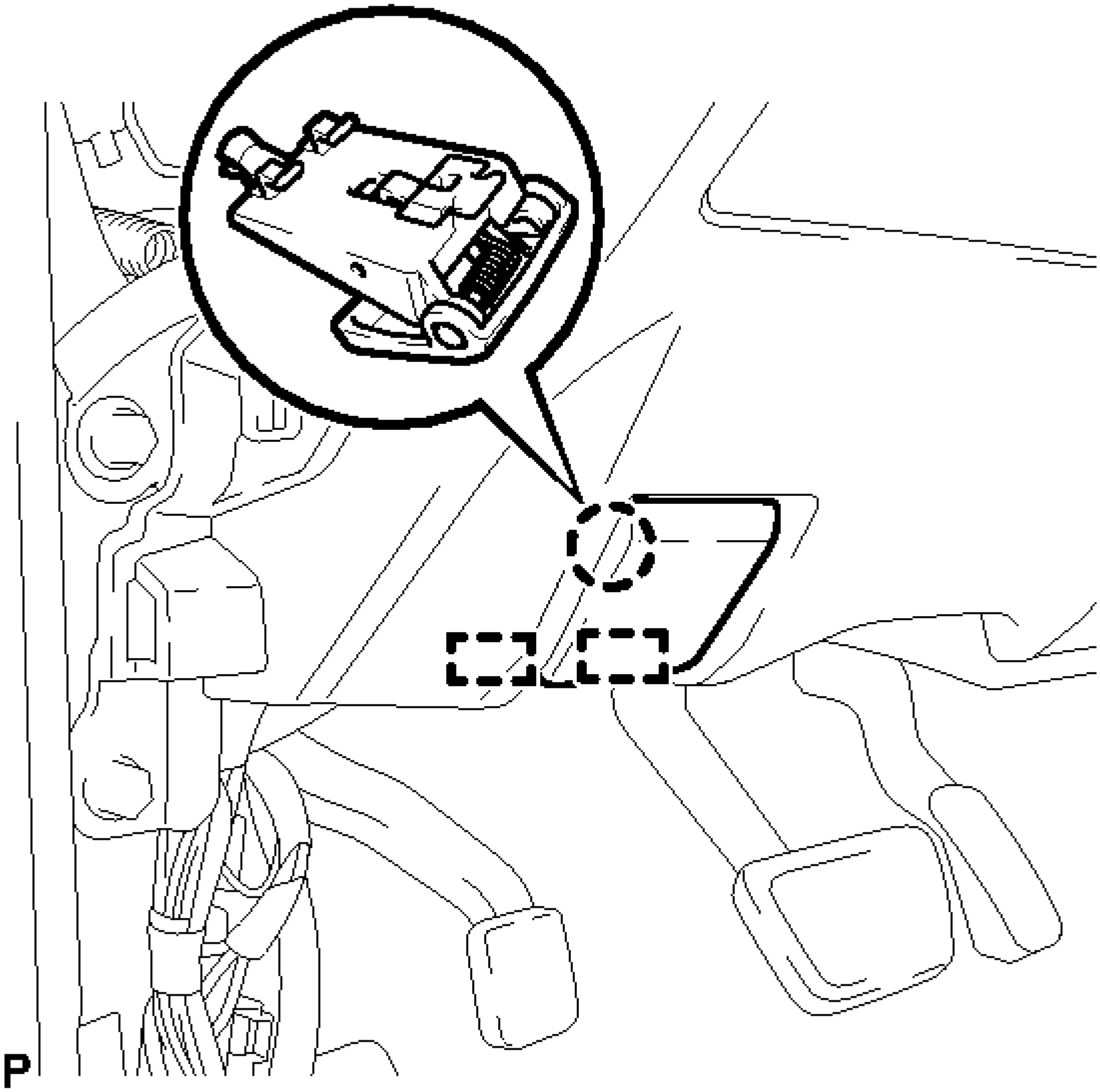

Fig. 19: Identifying Hood Lock Control Lever Sub-Assembly
Courtesy of TOYOTA MOTOR SALES, U.S.A., INC.

14. **REMOVE LOWER NO. 1 INSTRUMENT PANEL FINISH PANEL ASSEMBLY**
    a. Remove the bolt <C> and screw <D> or <E>.

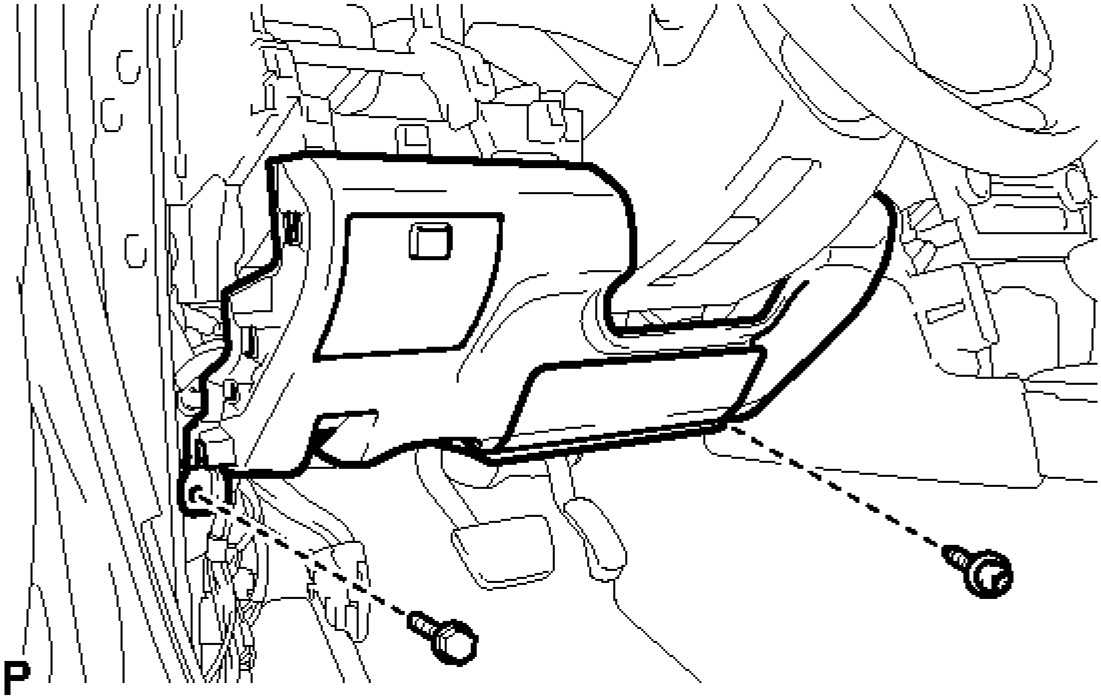

Fig. 20: Identifying Lower No. 1 Instrument Panel Finish Panel Assembly Fasteners
Courtesy of TOYOTA MOTOR SALES, U.S.A., INC.

b. Disengage the 4 claws, 9 clips and 3 guides to remove the lower No. 1 instrument panel finish panel assembly.

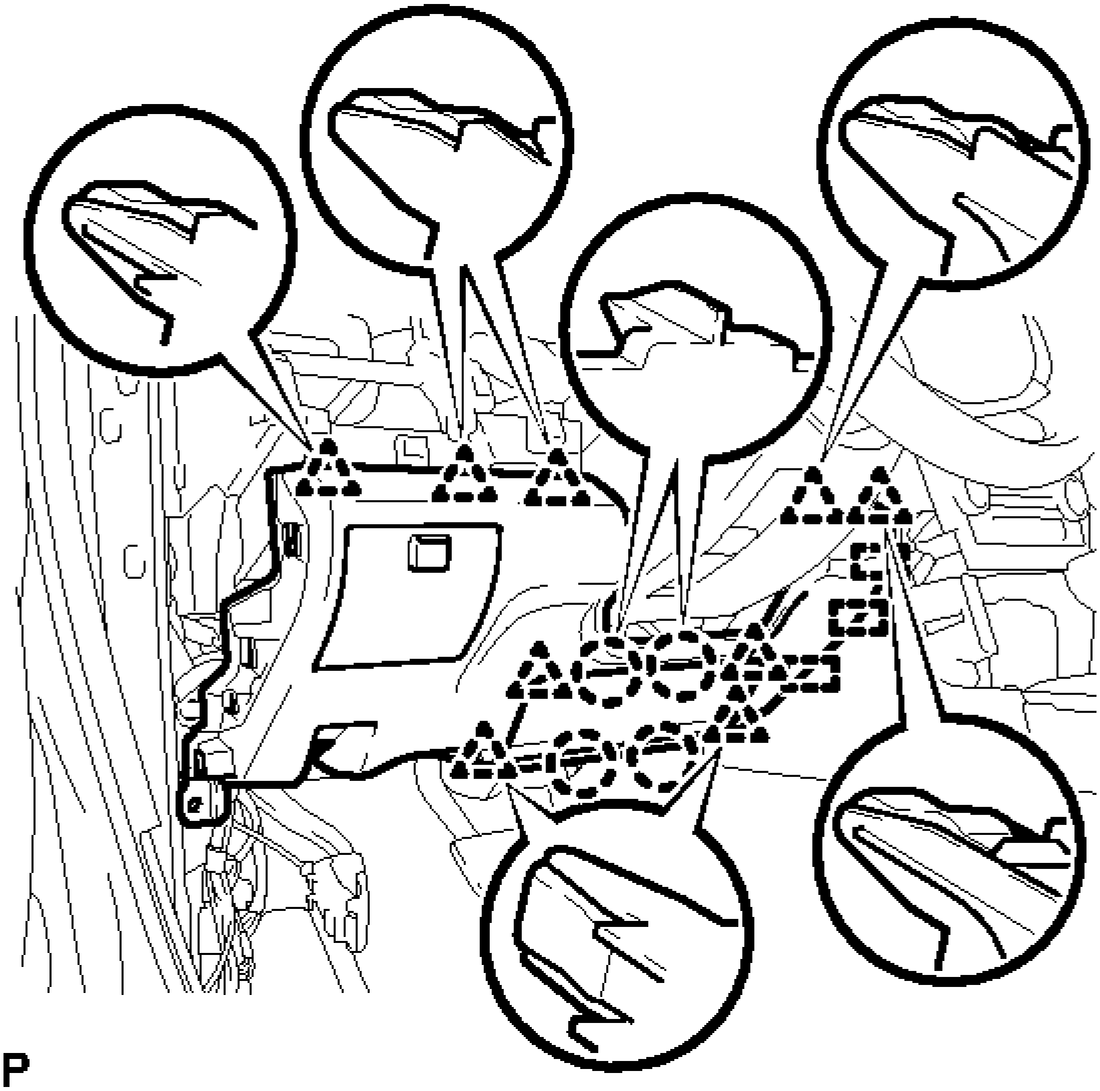

Fig. 21: Identifying Lower No. 1 Instrument Panel Finish Panel Assembly Claws, Clips And Guides
Courtesy of TOYOTA MOTOR SALES, U.S.A., INC.

15. **REMOVE FRONT PANEL GARNISH RH**
    a. Disengage the 3 claws, 2 clips and 8 guides to remove the front panel garnish RH.

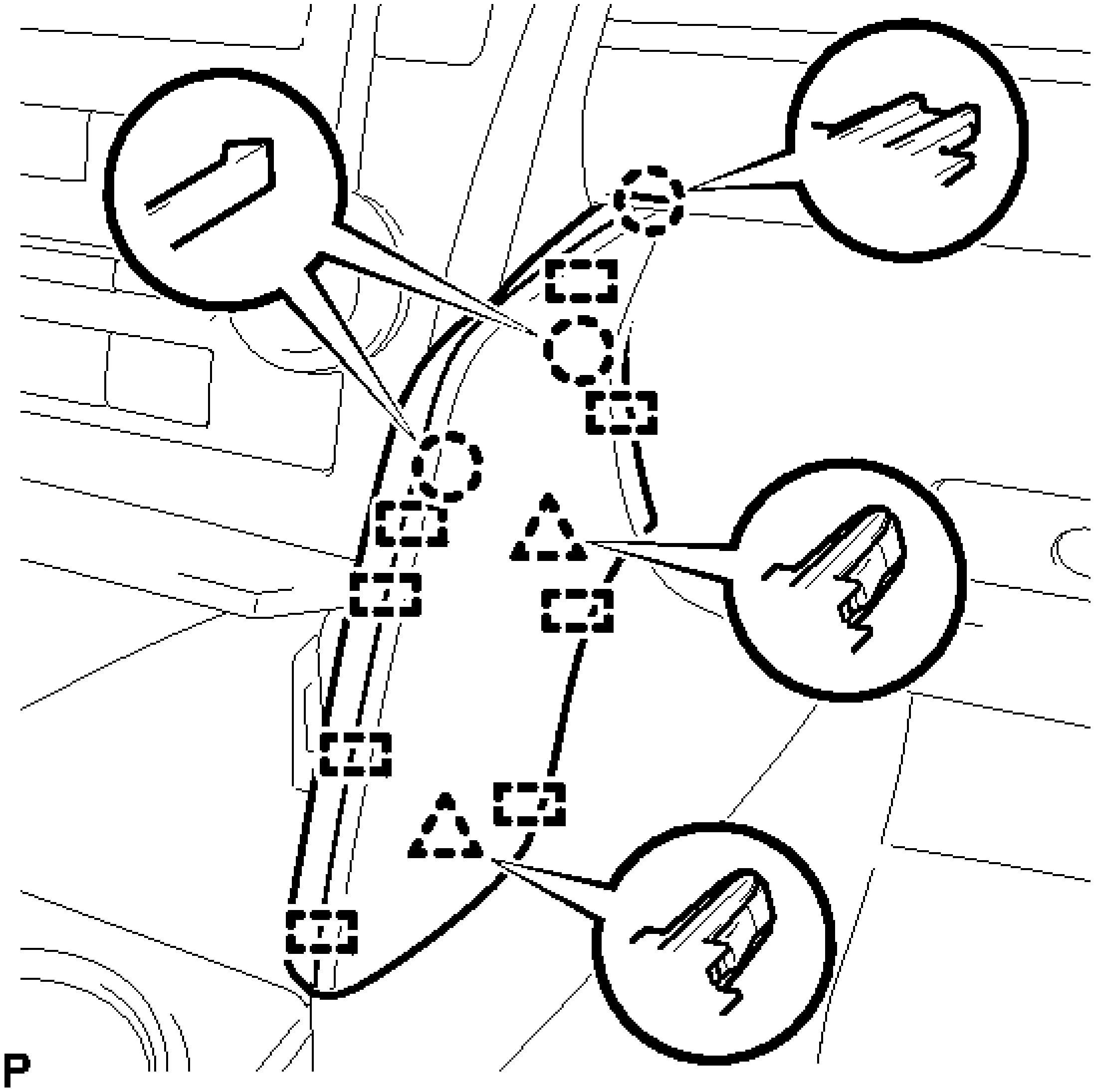

Fig. 22: Identifying Front Panel Garnish RH
Courtesy of TOYOTA MOTOR SALES, U.S.A., INC.

16. **REMOVE SHIFT LEVER KNOB SUB-ASSEMBLY**
    a. Turn the shift lever knob sub-assembly counterclockwise and remove the shift lever knob sub-assembly.

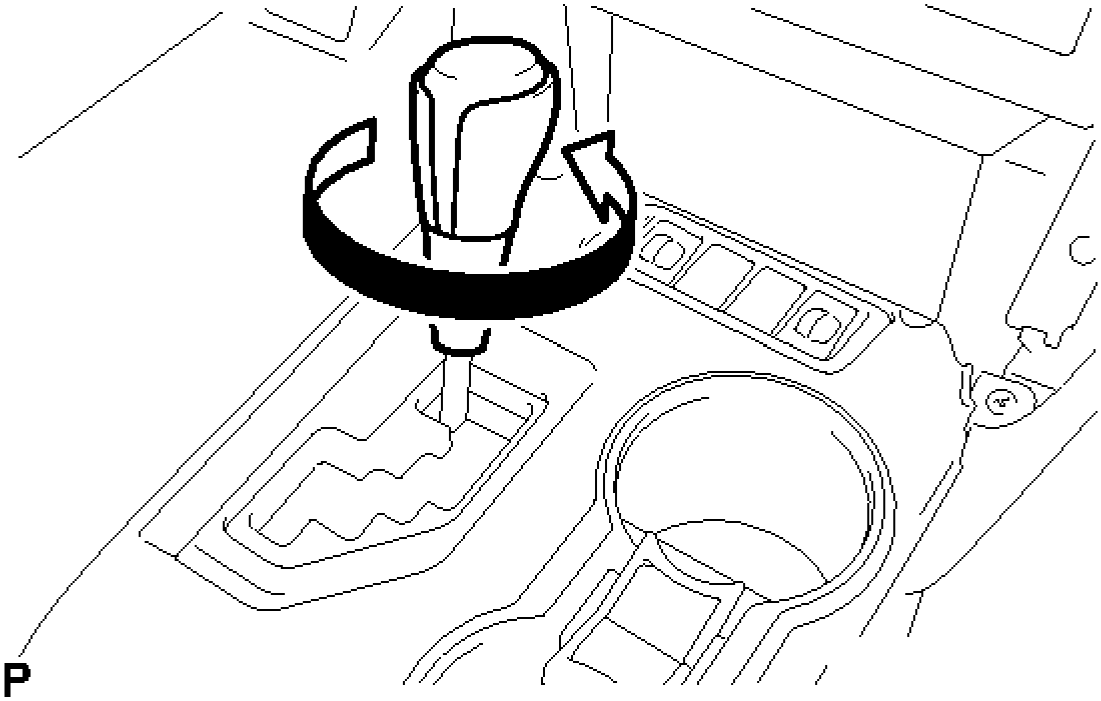

Fig. 23: Removing Shift Lever Knob
Courtesy of TOYOTA MOTOR SALES, U.S.A., INC.

17. **REMOVE REAR CONSOLE UPPER PANEL SUB-ASSEMBLY**
    1. Open the upper console panel sub-assembly door.
    2. Move the shift lever to N.
    3. Disengage the 4 clips.

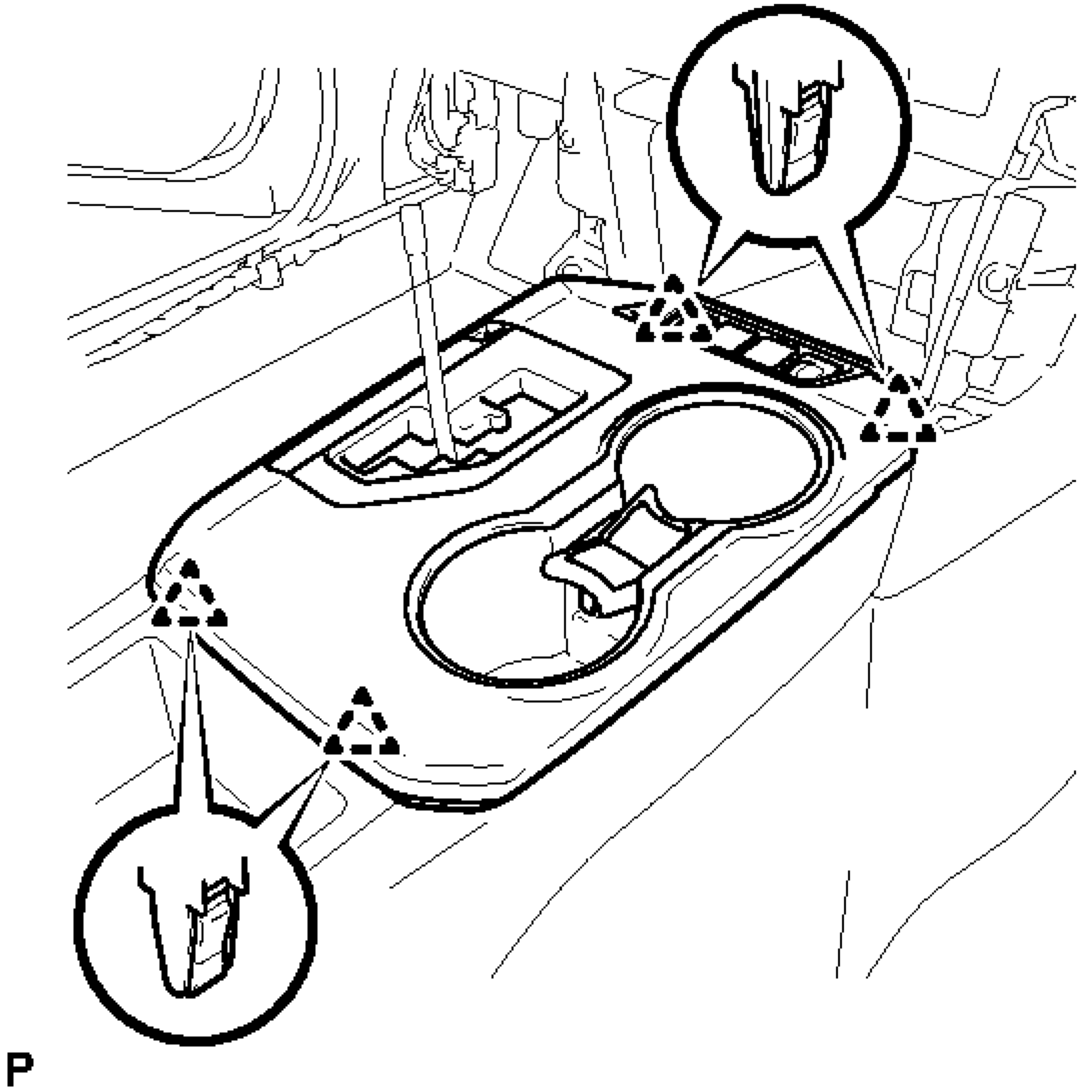

Fig. 24: Identifying Rear Console Upper Panel Clips
Courtesy of TOYOTA MOTOR SALES, U.S.A., INC.

   d. Disconnect each connector and remove the rear console upper panel sub-assembly.

18. **REMOVE UPPER CONSOLE BOX SUB-ASSEMBLY** See step 7
19. **REMOVE NO. 4 CONSOLE BOX DUCT** See step 8
20. **REMOVE CONSOLE BOX CARPET** See step 9
21. **REMOVE REAR CONSOLE BOX ASSEMBLY** See step 10
22. **REMOVE CENTER INSTRUMENT CLUSTER FINISH PANEL ASSEMBLY**
    a. Using a molding remover, disengage the 2 claws and 2 clips as shown in the illustration.

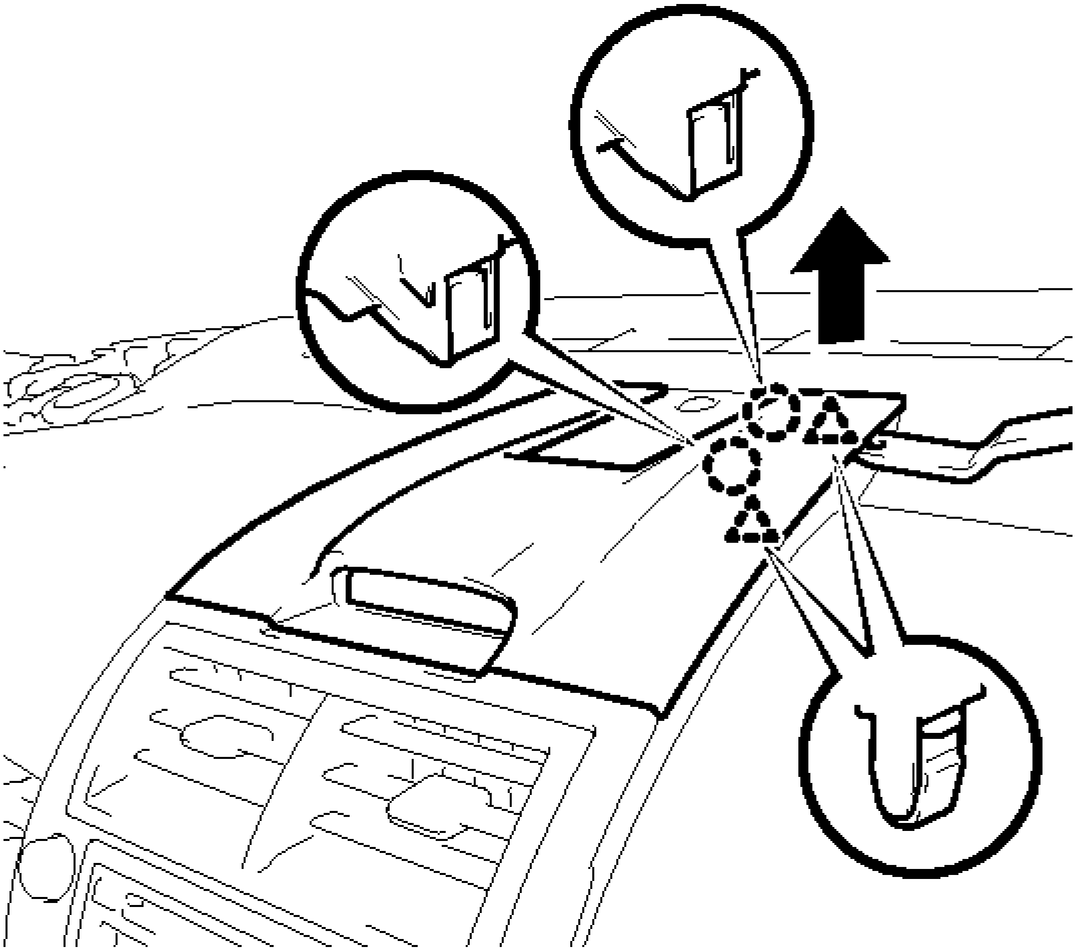

P

Fig. 25: Removing Center Instrument Cluster Finish Panel Assembly
Courtesy of TOYOTA MOTOR SALES, U.S.A., INC.

b. Using a molding remover, disengage the 2 claws and 2 clips as shown in the illustration.

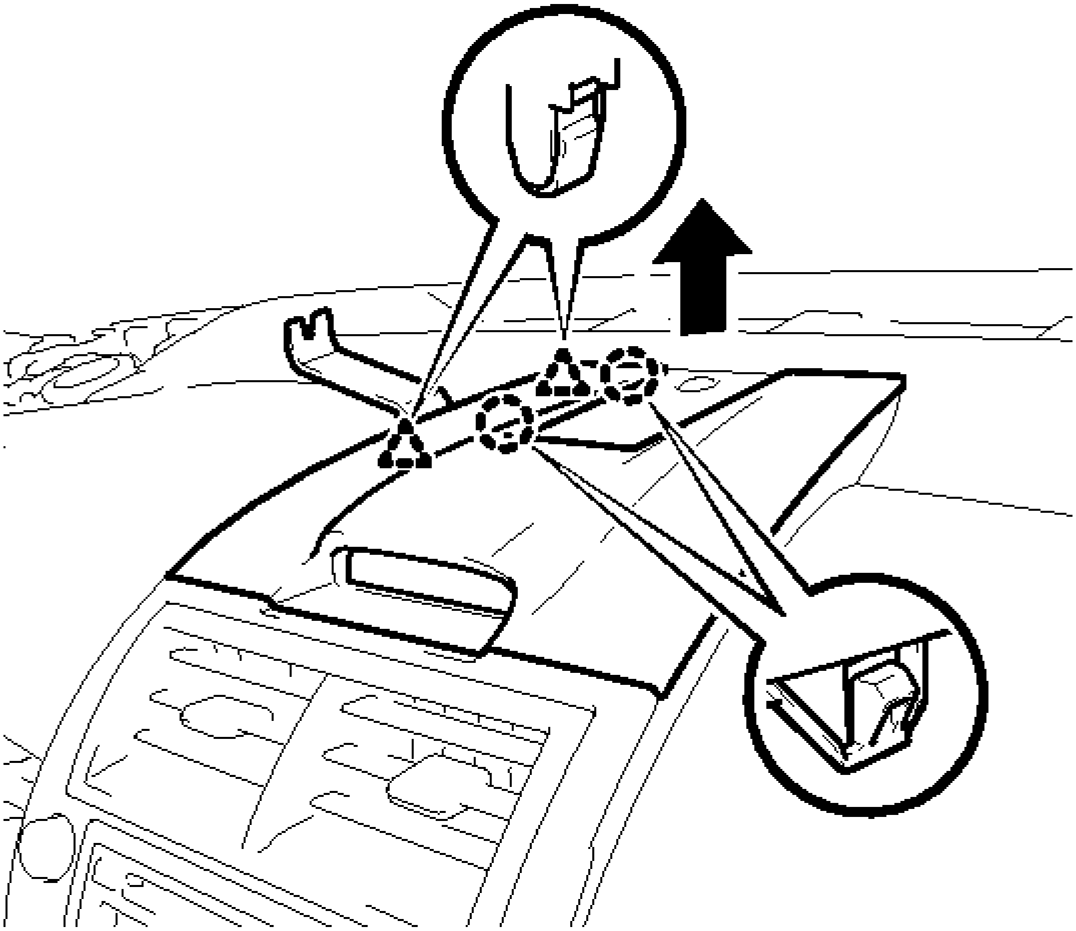

P

Fig. 26: Removing Center Instrument Cluster Finish Panel Assembly
Courtesy of TOYOTA MOTOR SALES, U.S.A., INC.

c. Disengage the 3 claws and 2 clips as shown in the illustration.

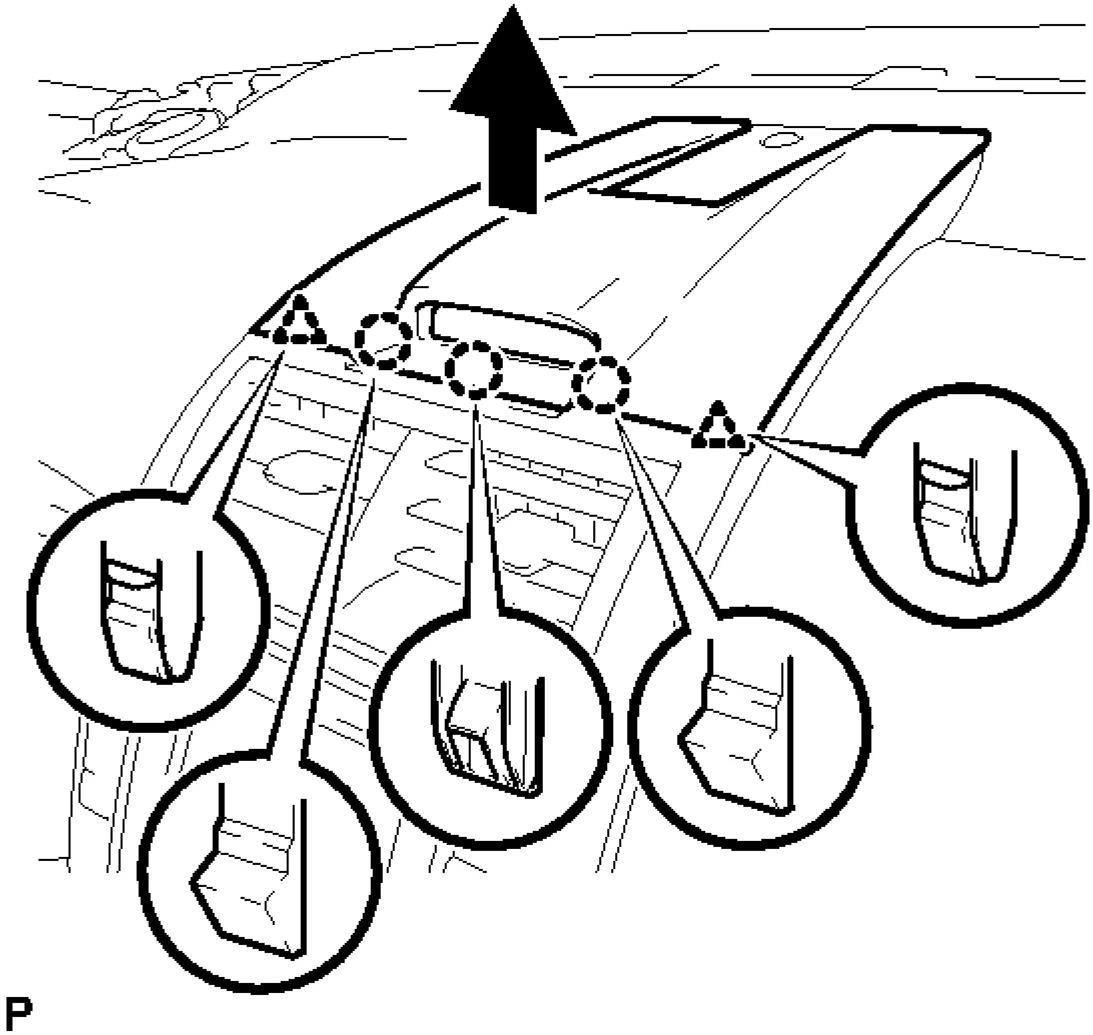

Fig. 27: Removing Center Instrument Cluster Finish Panel Assembly
Courtesy of TOYOTA MOTOR SALES, U.S.A., INC.

d. Disengage the clamp.

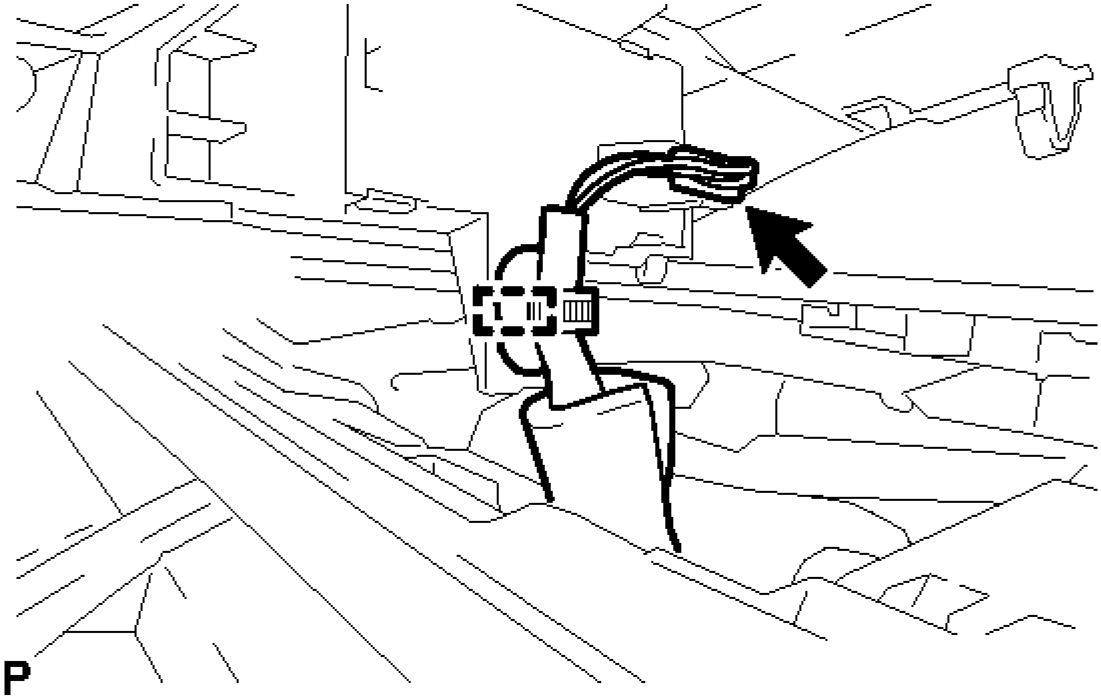

Fig. 28: Locating Center Instrument Cluster Finish Panel Assembly Connector
Courtesy of TOYOTA MOTOR SALES, U.S.A., INC.

e. Disconnect the connector to remove the center instrument cluster finish panel assembly.

23. **REMOVE NO. 2 INSTRUMENT PANEL REGISTER ASSEMBLY**

a. Pull the No. 2 instrument panel register assembly in the direction indicated by the arrow to disengage the 6 clips to remove the No. 2 instrument panel register assembly.

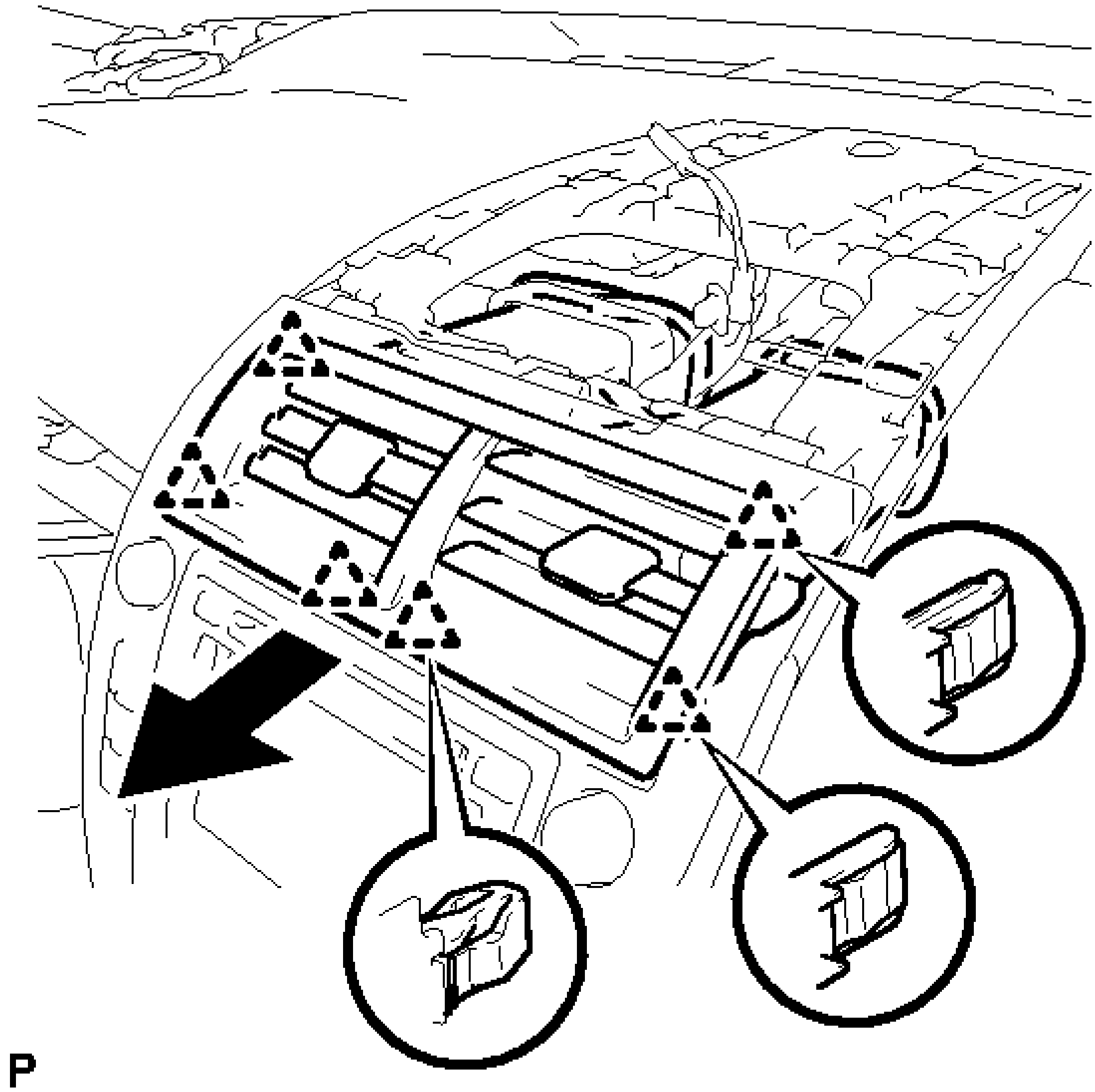

Fig. 29: Removing No. 2 Instrument Panel Register Assembly
Courtesy of TOYOTA MOTOR SALES, U.S.A., INC.

24. **REMOVE BOX BOTTOM MAT**
    a. Remove the box bottom mat.

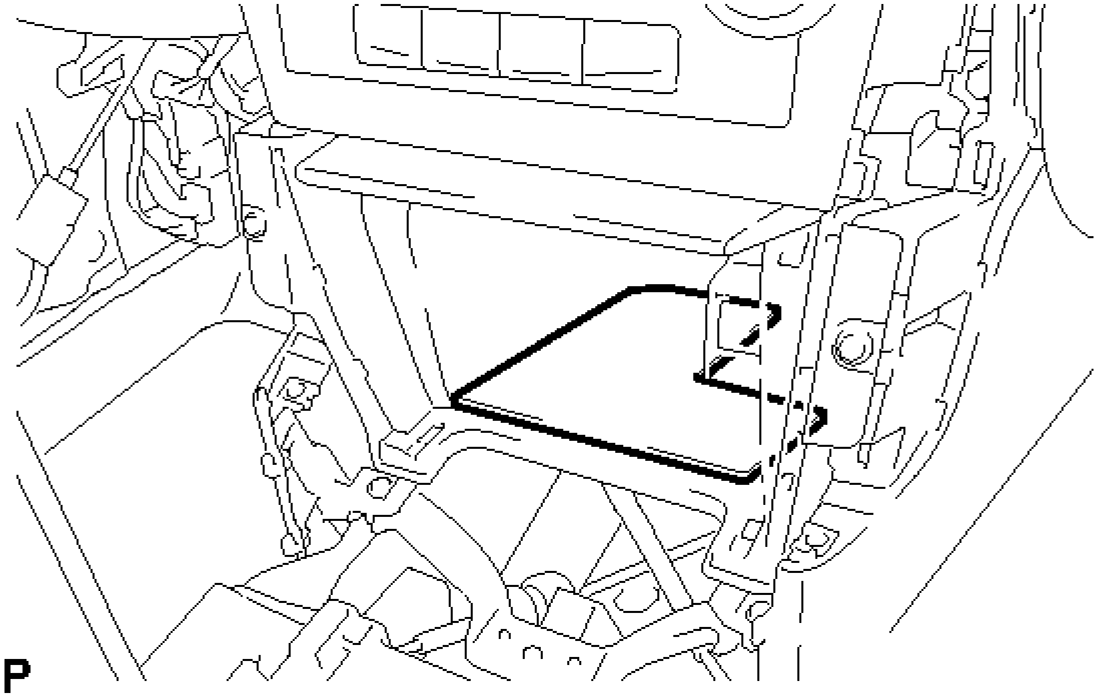

Fig. 30: Identifying Box Bottom Mat
Courtesy of TOYOTA MOTOR SALES, U.S.A., INC.

25. **REMOVE UPPER CONSOLE PANEL SUB-ASSEMBLY**
    a. Remove the 2 screws <D> or <E>.

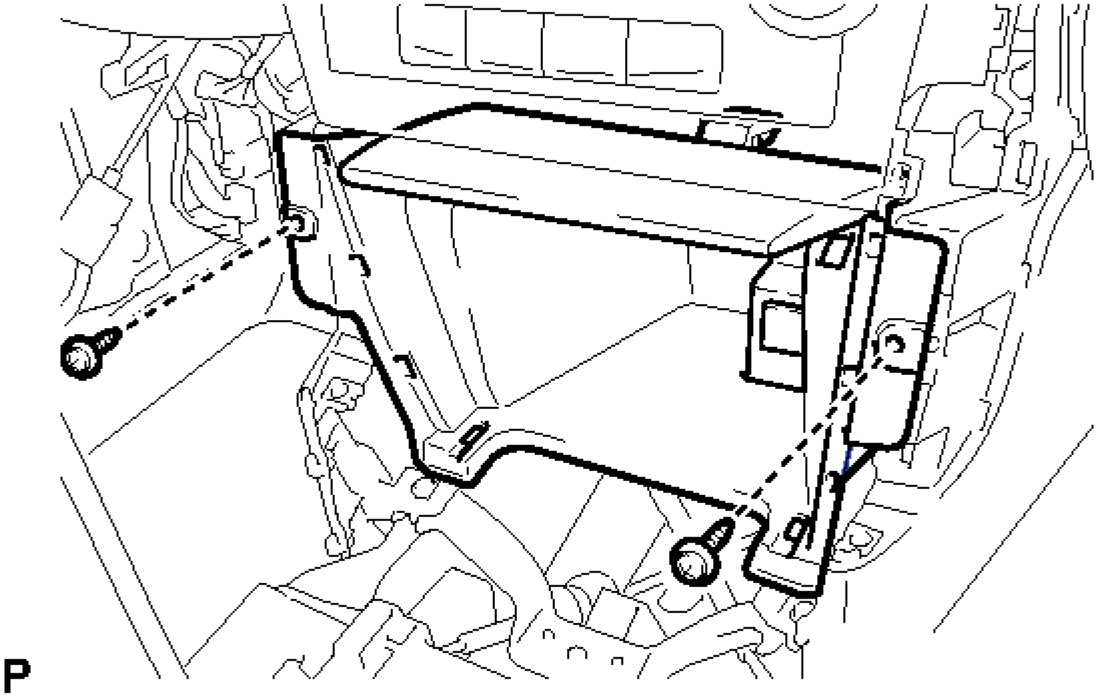

Fig. 31: Locating Upper Console Panel Sub-Assembly Fasteners

Courtesy of TOYOTA MOTOR SALES, U.S.A., INC.

b. Disengage the 4 clips and guide as shown in the illustration.

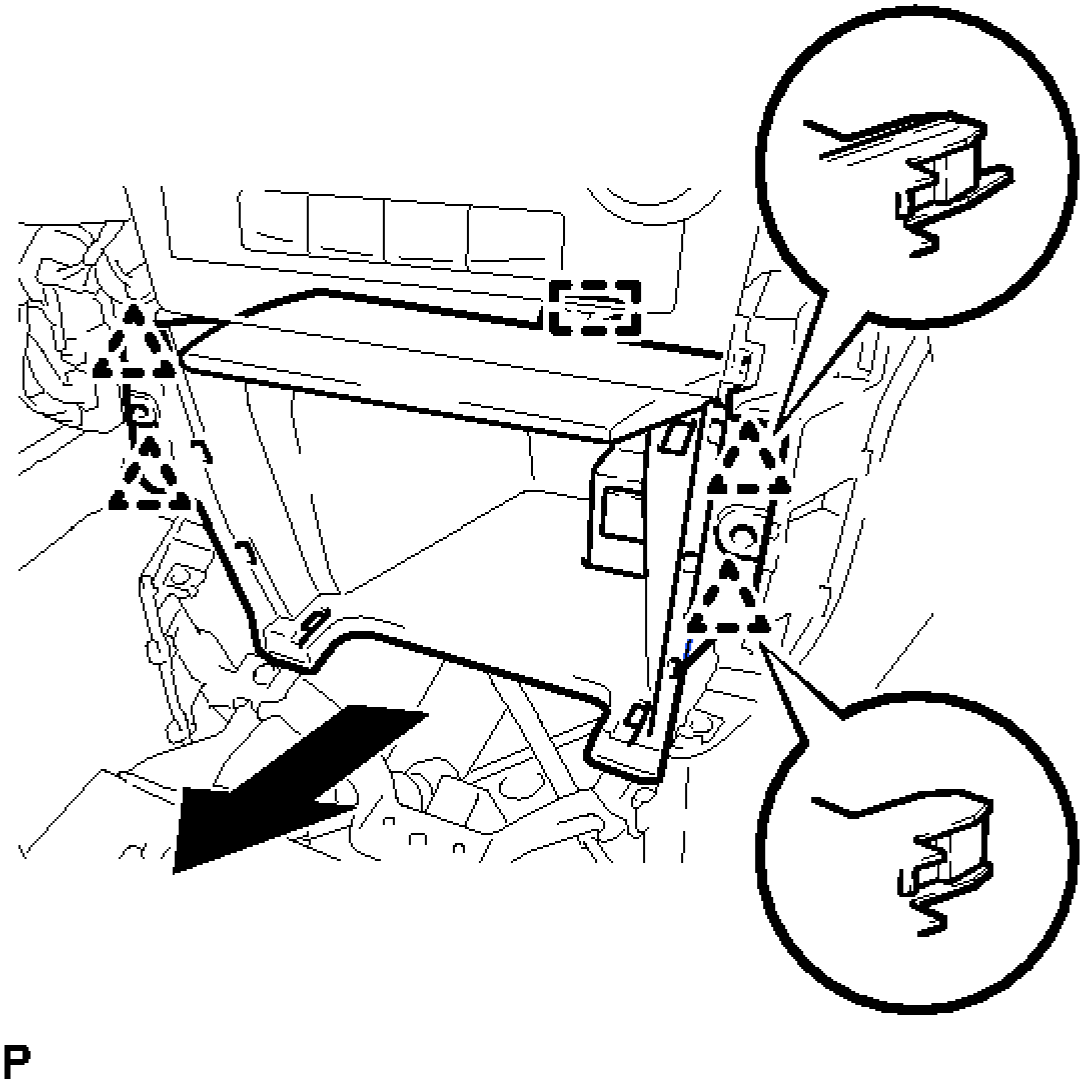

Fig. 32: Removing Upper Console Panel Sub-Assembly
Courtesy of TOYOTA MOTOR SALES, U.S.A., INC.

c. Disconnect each connector to remove the upper console panel sub-assembly.

26. **REMOVE RADIO RECEIVER ASSEMBLY WITH AIR CONDITIONING CONTROL ASSEMBLY (for Radio Receiver Type)** . Refer to **REMOVAL - Step 9**
27. **REMOVE RADIO RECEIVER ASSEMBLY WITH AIR CONDITIONING CONTROL ASSEMBLY (for Radio and Display Type)** . Refer to **REMOVAL - Step 10**
28. **REMOVE NAVIGATION RECEIVER ASSEMBLY WITH AIR CONDITIONING CONTROL ASSEMBLY (for Navigation Receiver Type)** . Refer to **REMOVAL - Step 9**
29. **REMOVE NO. 1 SPEAKER OPENING COVER ASSEMBLY**

a. Disengage the 8 clips as shown in the illustration.

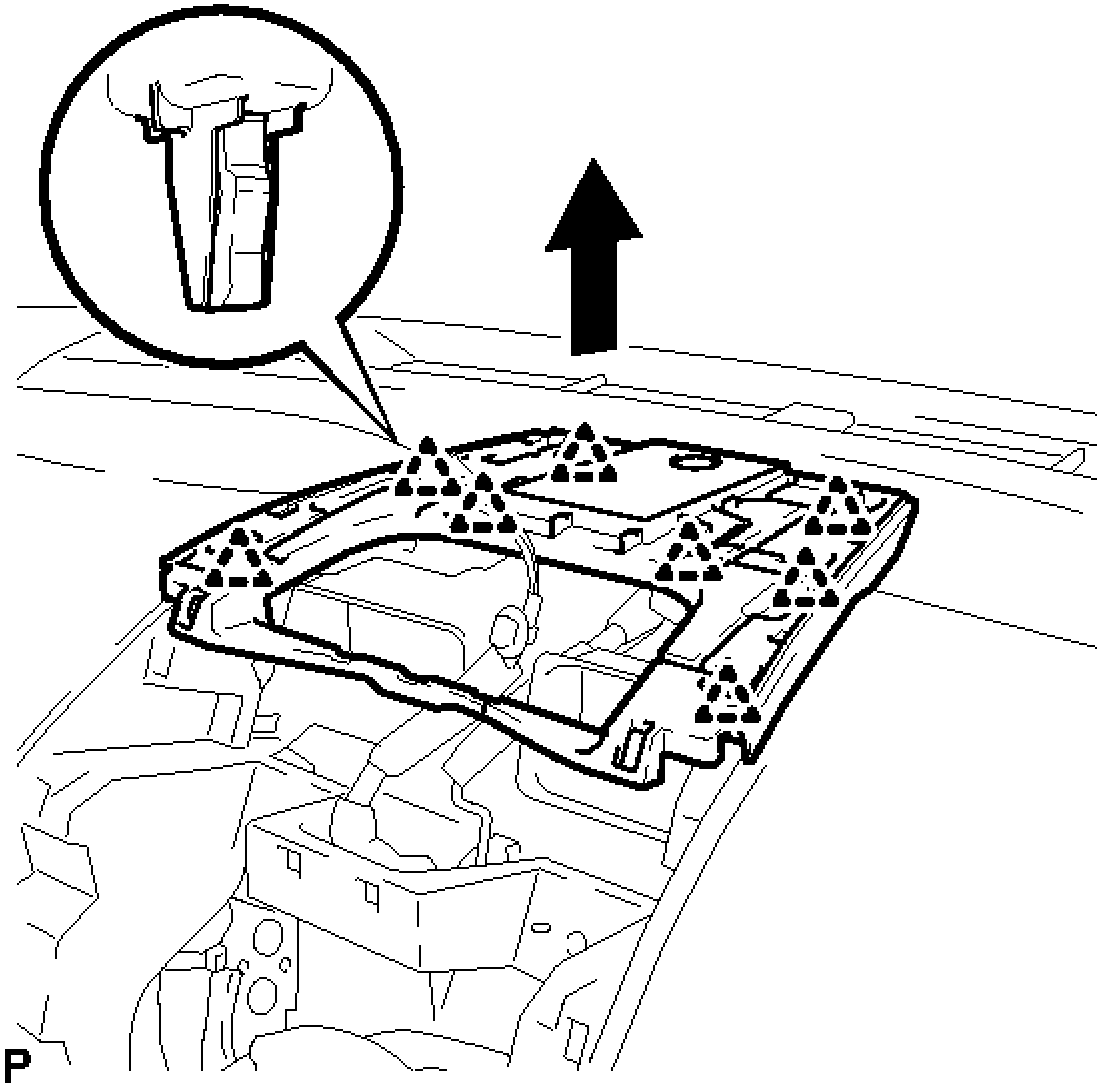

Fig. 33: Removing No. 1 Speaker Opening Cover Assembly
Courtesy of TOYOTA MOTOR SALES, U.S.A., INC.

b. Disconnect the connector to remove the No. 1 speaker opening cover assembly.

30. **REMOVE FRONT NO. 3 SPEAKER ASSEMBLY (for 10 Speakers)** . Refer to **REMOVAL - Step 16**
31. **REMOVE FRONT DOOR SCUFF PLATE RH**

    HINT:

    Use the same procedure as for the LH side See step 4.

32. **REMOVE COWL SIDE TRIM SUB-ASSEMBLY RH**

HINT:

Use the same procedure as for the LH side See step 5.

33. **DISCONNECT FRONT DOOR OPENING TRIM WEATHERSTRIP RH**
    a. Disconnect the front door opening trim weatherstrip RH.

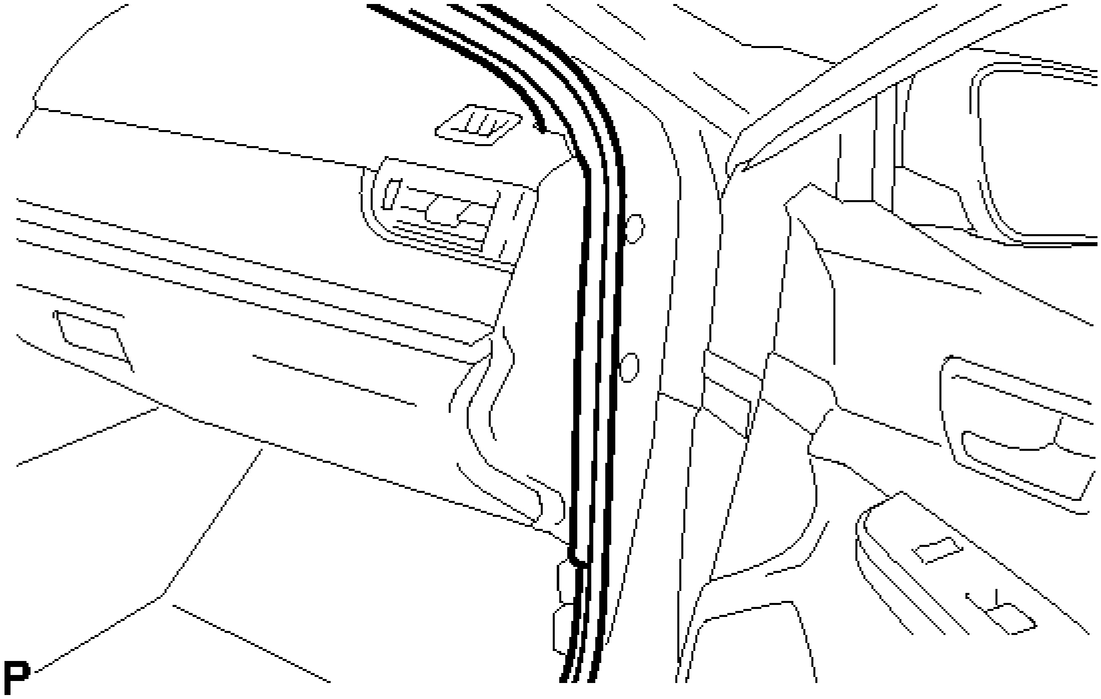

Fig. 34: Identifying Front Door Opening Trim Weatherstrip RH
Courtesy of TOYOTA MOTOR SALES, U.S.A., INC.

34. **REMOVE INSTRUMENT SIDE PANEL RH**
    a. Using a molding remover, disengage the 4 claws as shown in the illustration.

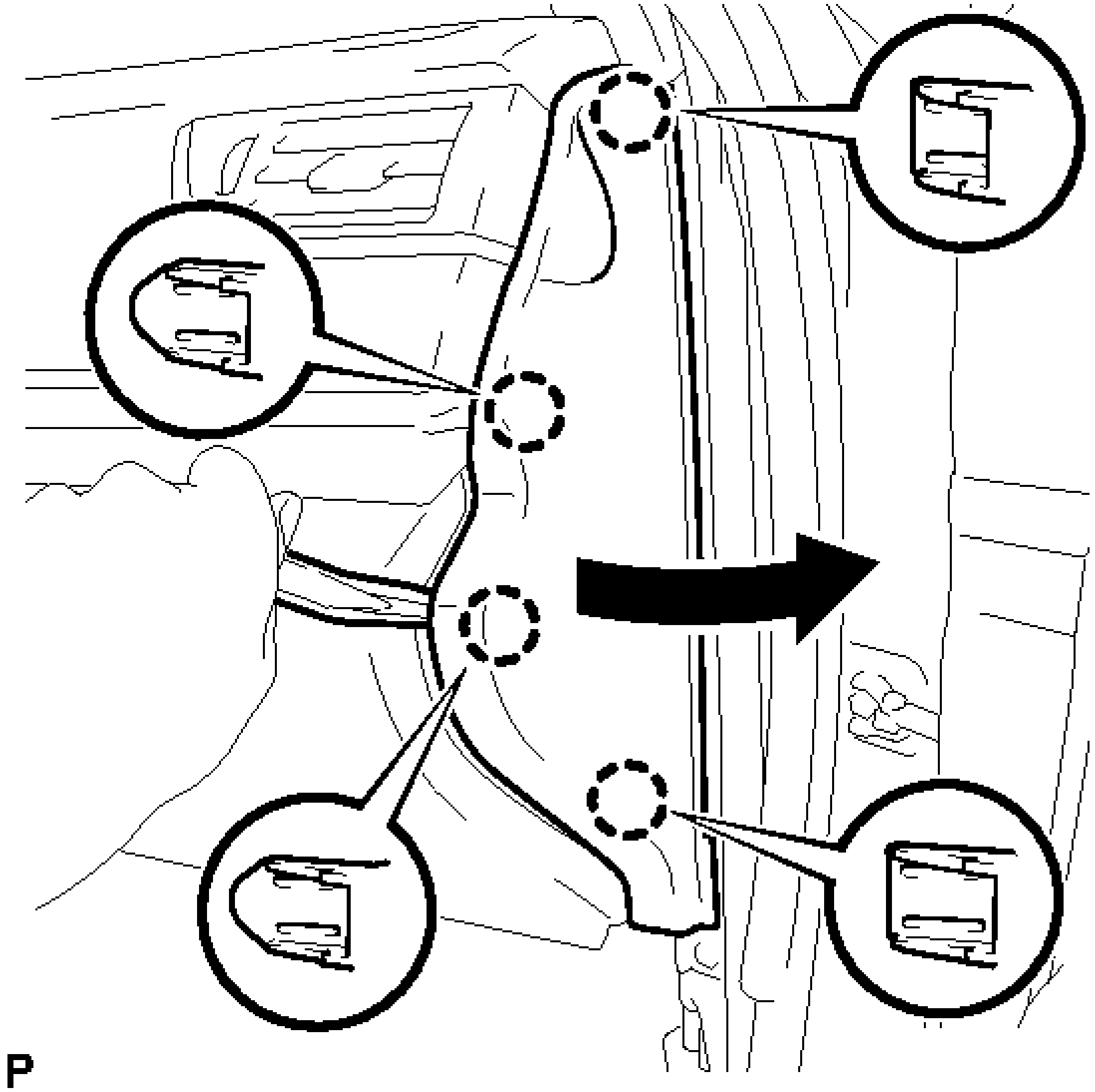

Fig. 35: Disengaging Instrument Side Panel RH Claws
Courtesy of TOYOTA MOTOR SALES, U.S.A., INC.

b. Disengage the 3 guides to remove the instrument side panel RH as shown in the illustration.

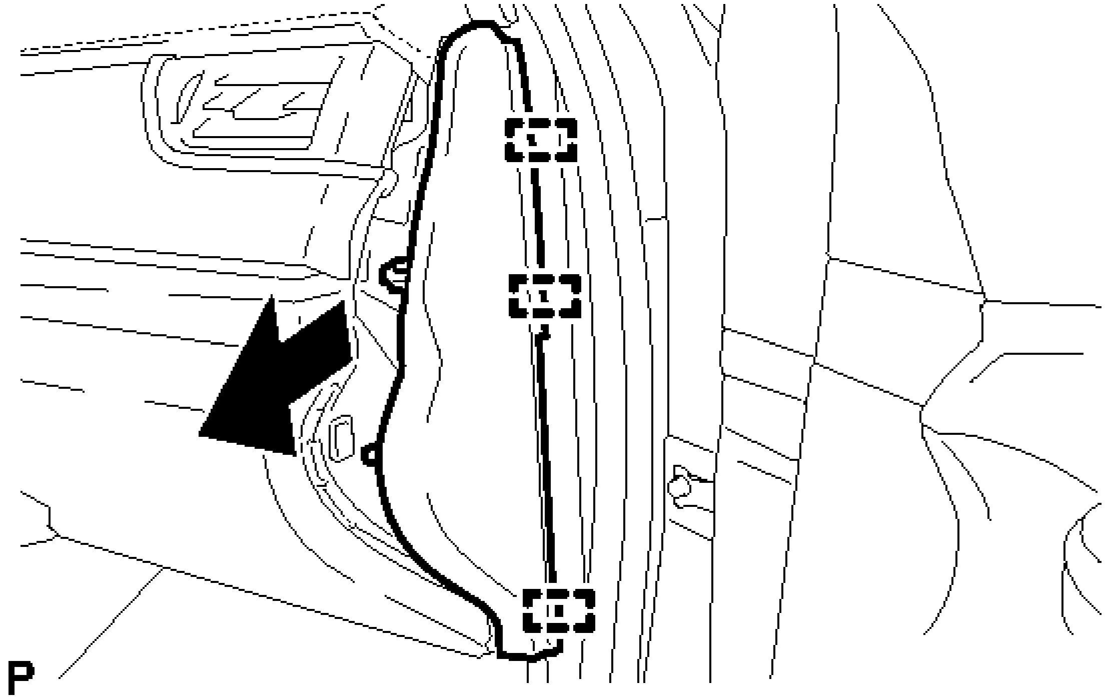

Fig. 36: Disengaging Instrument Side Panel RH Guides
Courtesy of TOYOTA MOTOR SALES, U.S.A., INC.

35. **REMOVE NO. 2 INSTRUMENT PANEL UNDER COVER SUB-ASSEMBLY**
    a. Disengage the 4 claws and 2 guides.

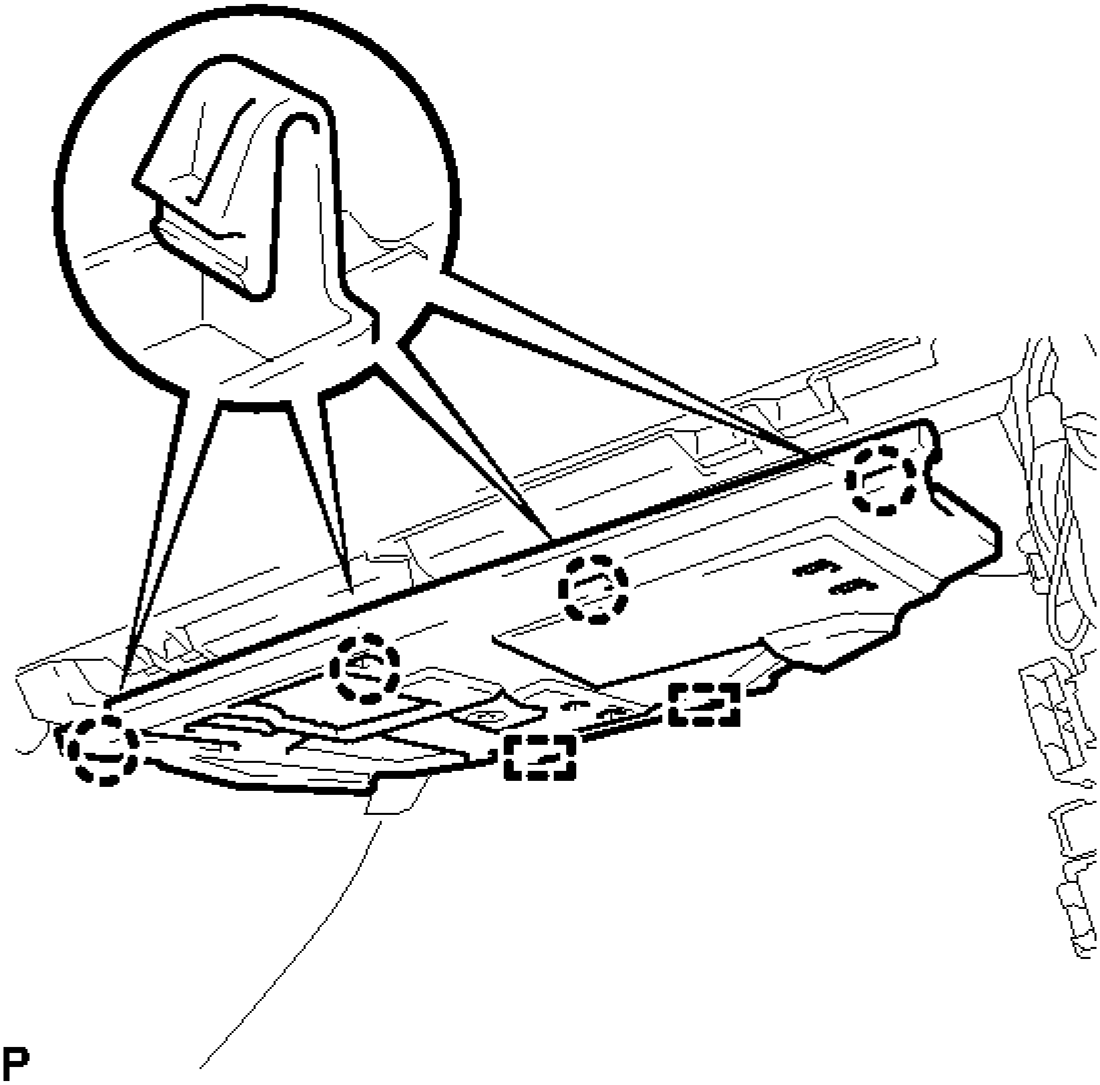

Fig. 37: Identifying No. 2 Instrument Panel Under Cover Sub-Assembly
Courtesy of TOYOTA MOTOR SALES, U.S.A., INC.

b. Disconnect the connector and remove the No. 2 instrument panel under cover sub-assembly.

36. **REMOVE LOWER NO. 2 INSTRUMENT PANEL AIRBAG ASSEMBLY** . Refer to **REMOVAL - Step 9**
37. **REMOVE LOWER INSTRUMENT PANEL SUB-ASSEMBLY**
    a. Remove the 2 screws <D> or <E>.

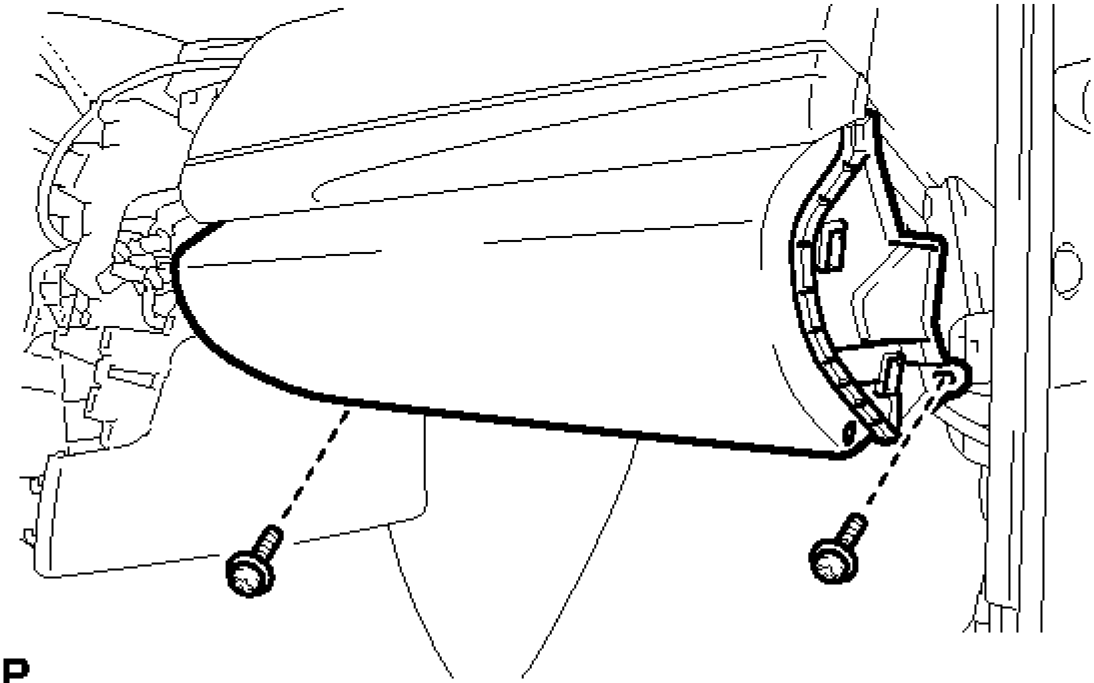

Fig. 38: Locating Lower Instrument Panel Sub-Assembly Lower Fasteners
Courtesy of TOYOTA MOTOR SALES, U.S.A., INC.

b. Open the lower instrument panel door.
c. Remove the 3 screws <D> or <E>.

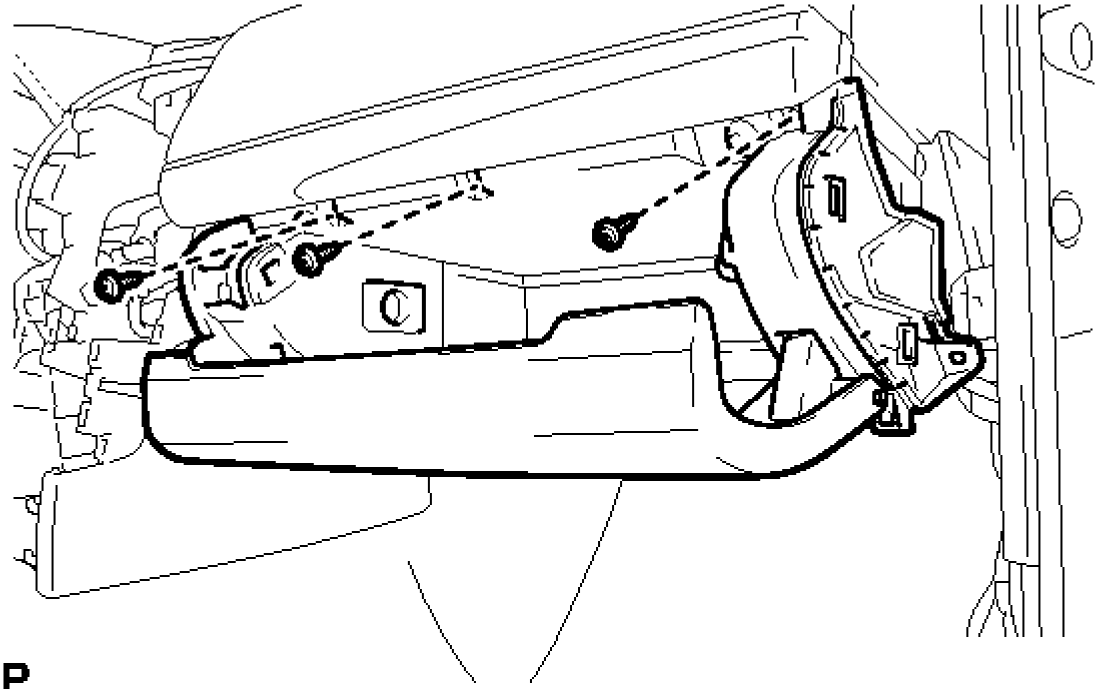

Fig. 39: Locating Lower Instrument Panel Sub-Assembly Upper Fasteners

Courtesy of TOYOTA MOTOR SALES, U.S.A., INC.

d. Disengage the 2 clips and 3 guides.

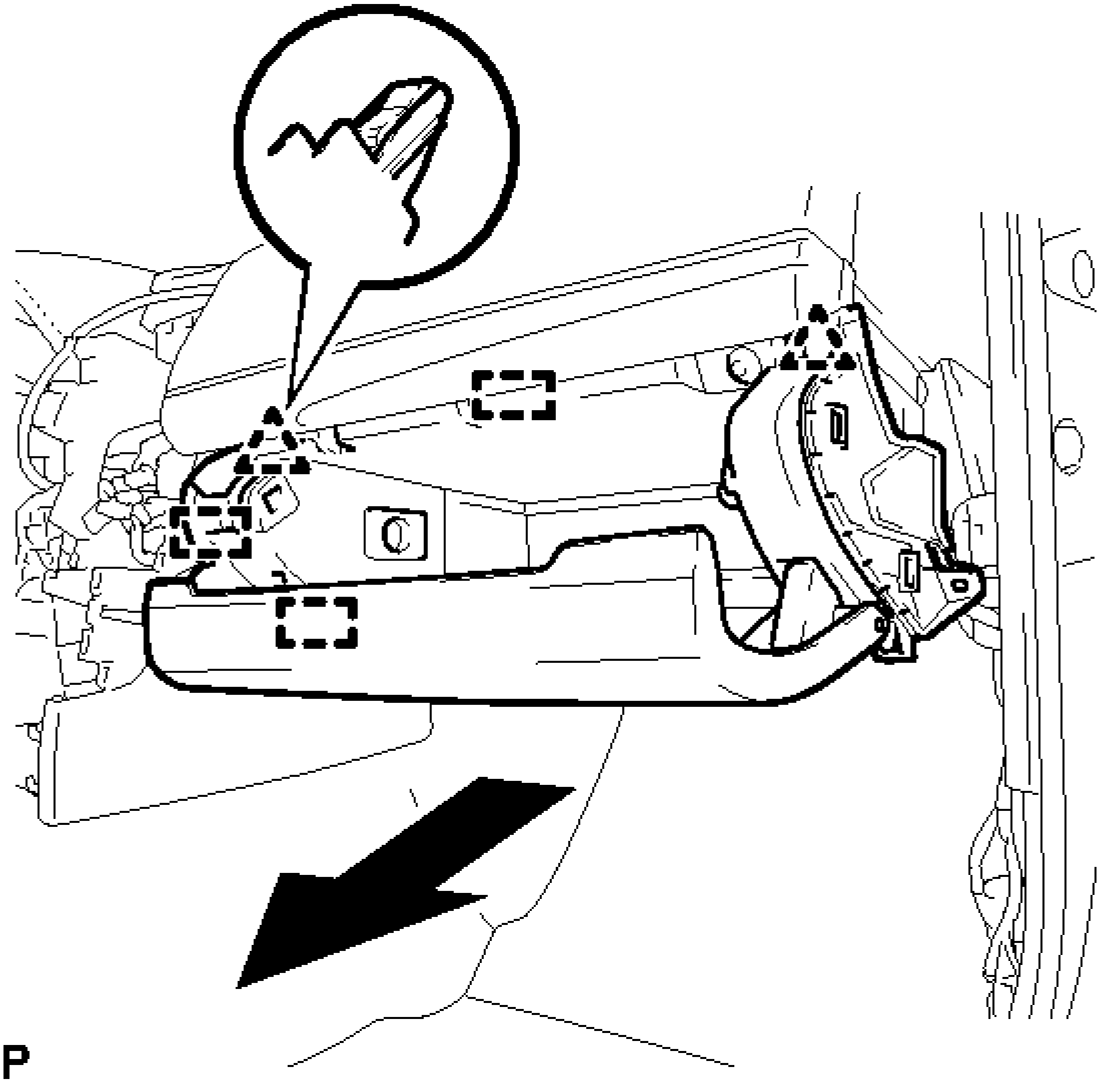

Fig. 40: Identifying Lower Instrument Panel Door Clips And Guides
Courtesy of TOYOTA MOTOR SALES, U.S.A., INC.

e. Disengage the glove compartment light as shown in the illustration.

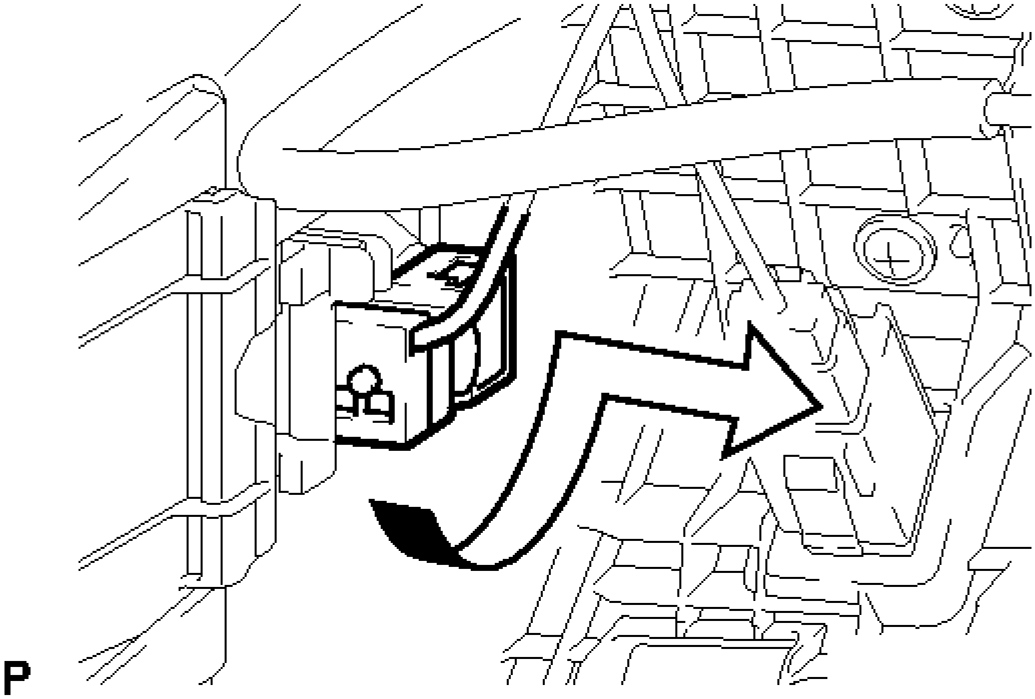

Fig. 41: Removing Glove Compartment Light
Courtesy of TOYOTA MOTOR SALES, U.S.A., INC.

f. Disconnect each connector and remove the lower instrument panel sub-assembly.

38. **REMOVE NO. 2 INSTRUMENT CLUSTER FINISH PANEL GARNISH**

a. Disengage the 5 clips to remove the No. 2 instrument cluster finish panel garnish as shown in the illustration.

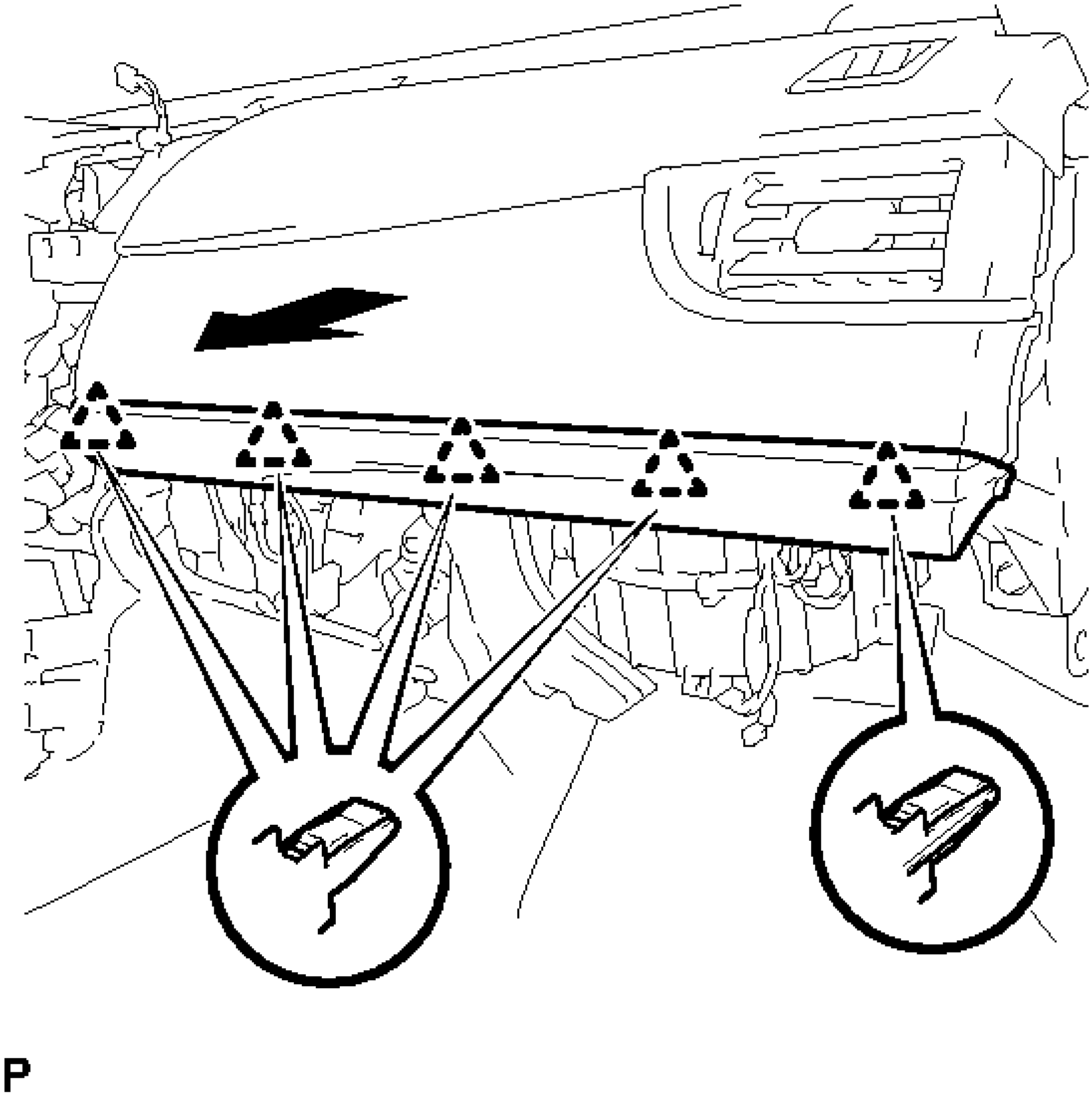

Fig. 42: Removing No. 2 Instrument Cluster Finish Panel Garnish
Courtesy of TOYOTA MOTOR SALES, U.S.A., INC.

39. **REMOVE NO. 3 INSTRUMENT PANEL REGISTER ASSEMBLY**
    a. Apply protective tape to the area shown in the illustration.

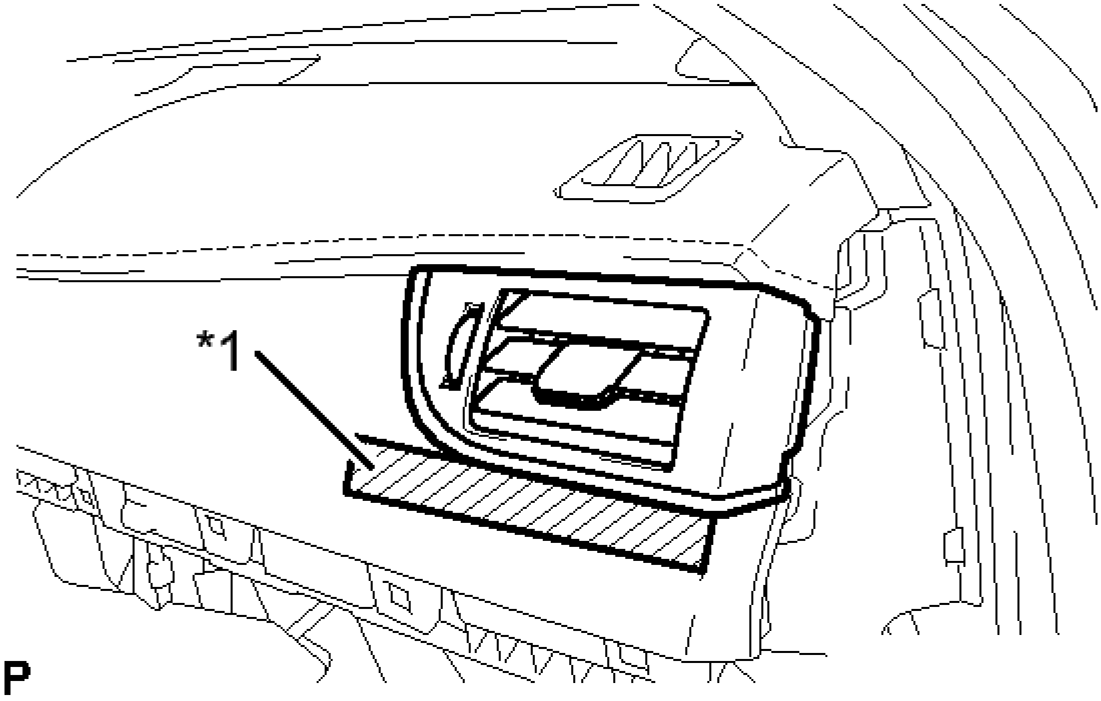

Fig. 43: Identifying Protective Tape Around No. 3 Instrument Panel Register Assembly
Courtesy of TOYOTA MOTOR SALES, U.S.A., INC.

TEXT IN ILLUSTRATION

*1	Protective Tape

b. Disengage the 2 clips as shown in the illustration.

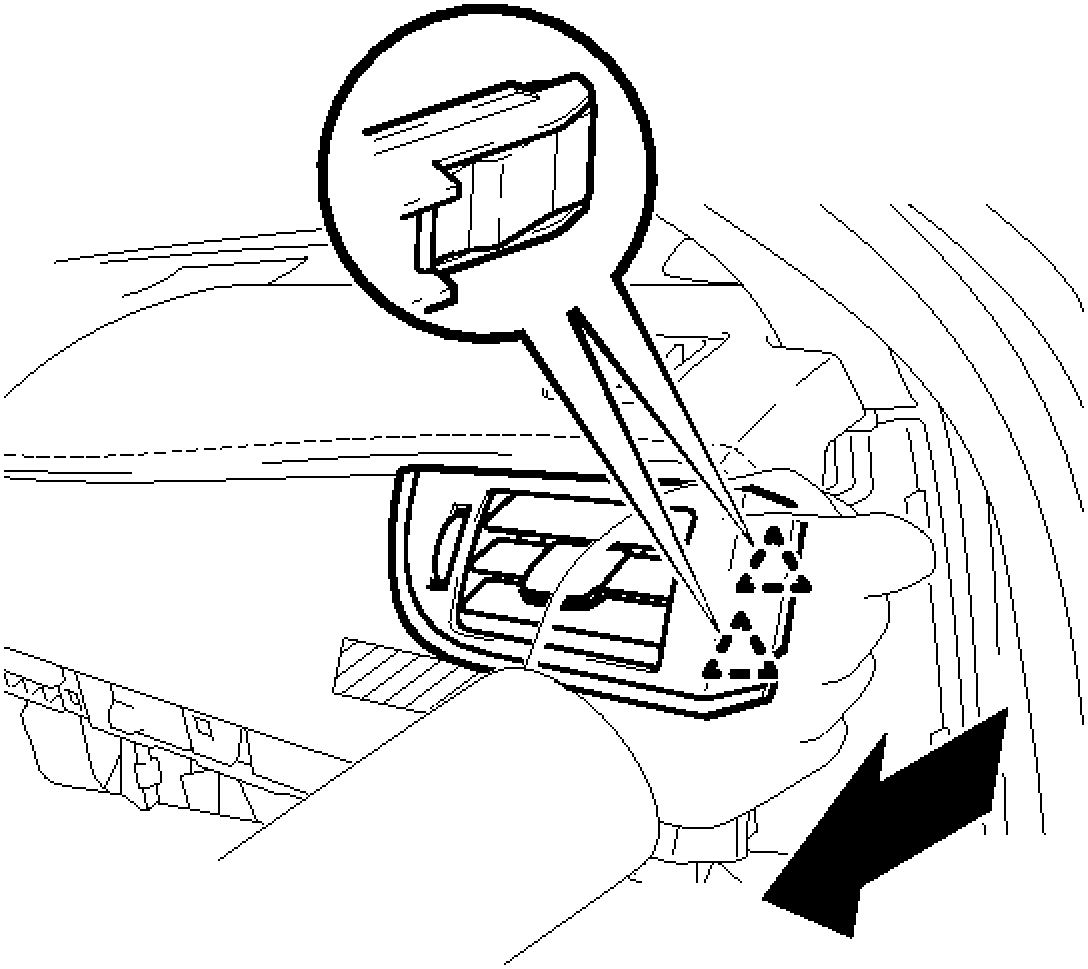

P

Fig. 44: Removing No. 3 Instrument Panel Register Assembly
Courtesy of TOYOTA MOTOR SALES, U.S.A., INC.

c. Using a molding remover, disengage the 2 clips to remove the No. 3 instrument panel register assembly.

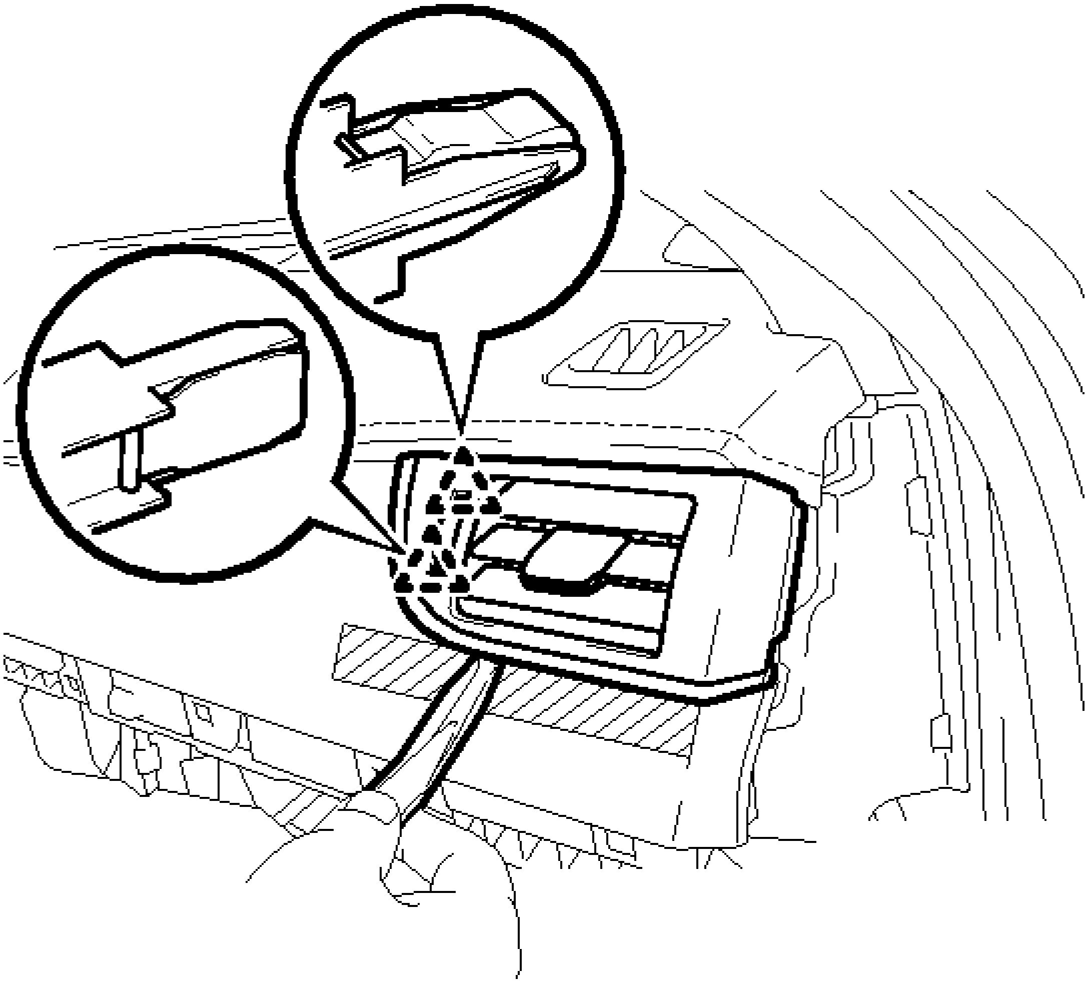

Fig. 45: Removing No. 3 Instrument Panel Register Assembly Clips
Courtesy of TOYOTA MOTOR SALES, U.S.A., INC.

40. **REMOVE FRONT PILLAR GARNISH LH** See step 7
41. **REMOVE NO. 1 INSTRUMENT PANEL SPEAKER PANEL SUB-ASSEMBLY**
    a. Apply protective tape to the area shown in the illustration.

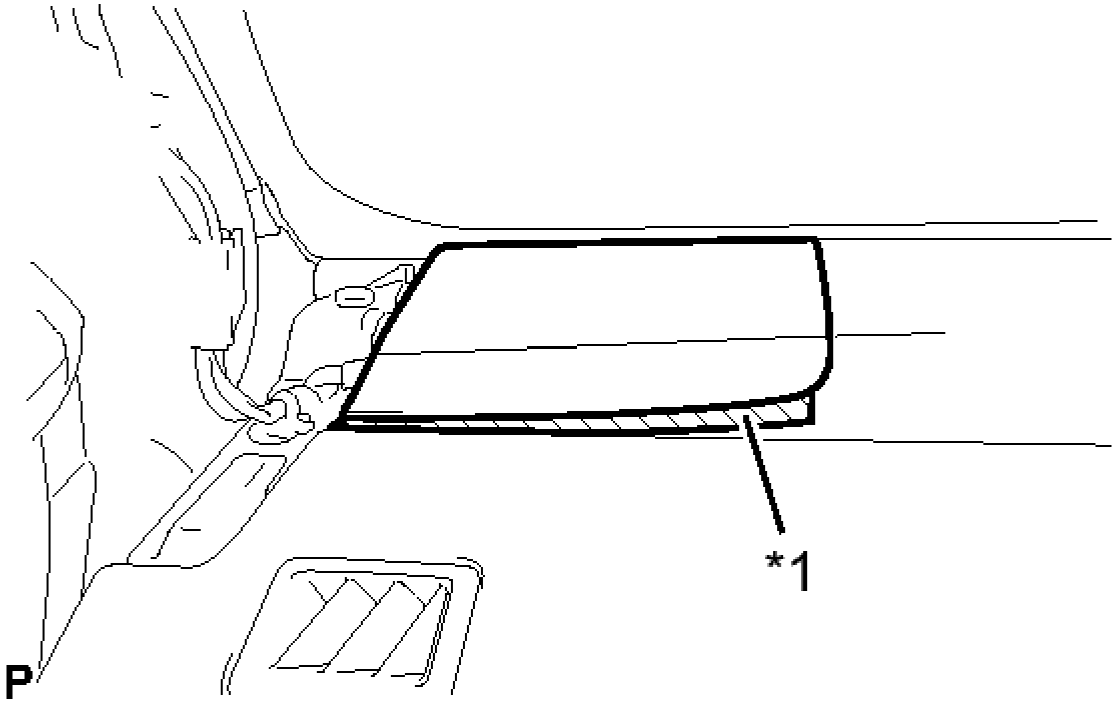

Fig. 46: Identifying Protective Tape Around No. 1 Instrument Panel Speaker Panel Sub-Assembly
Courtesy of TOYOTA MOTOR SALES, U.S.A., INC.

TEXT IN ILLUSTRATION

*1	Protective Tape

b. Using a molding remover, disengage the 2 clips and 3 claws.

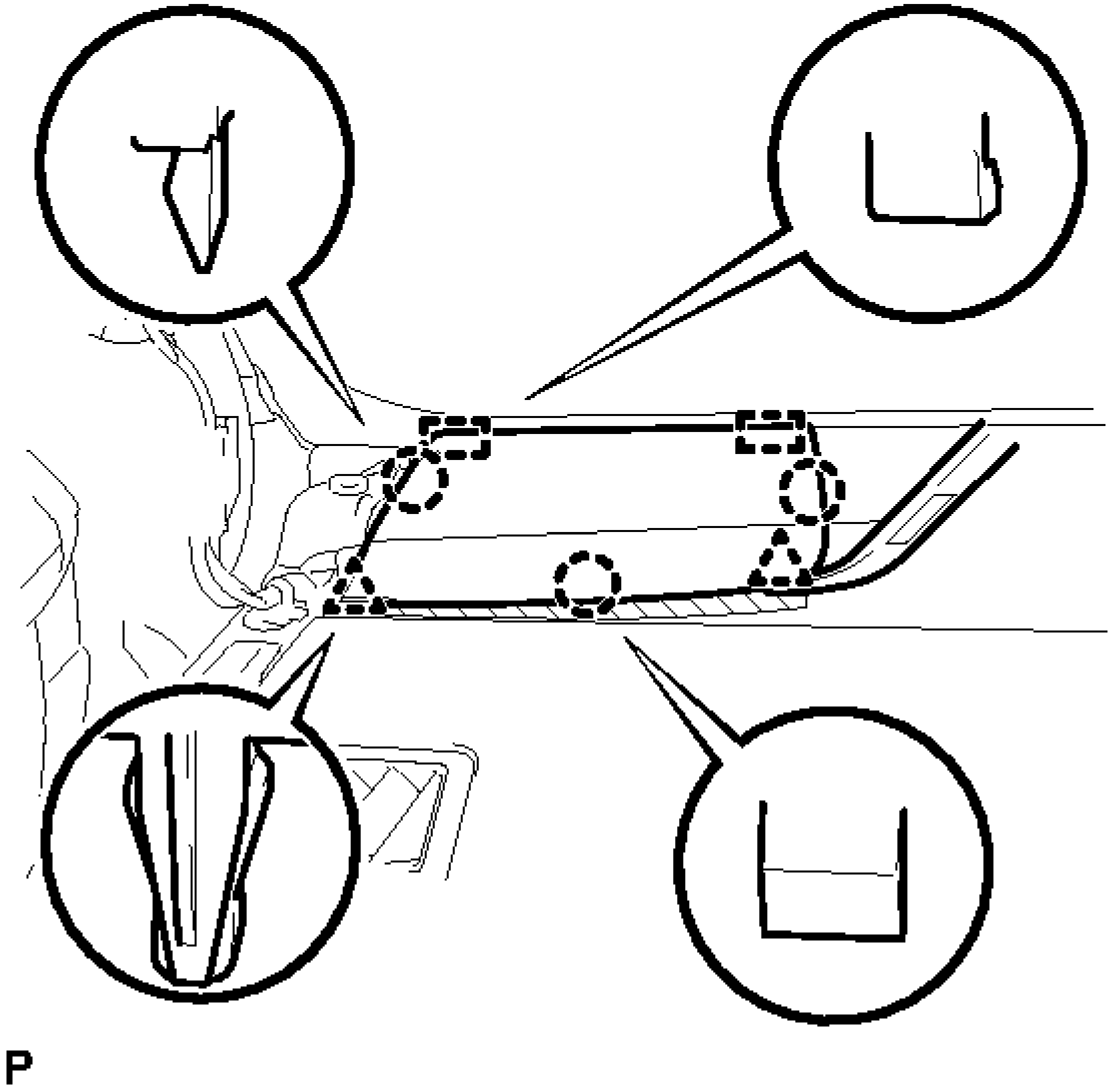

Fig. 47: Identifying No. 1 Instrument Panel Speaker Panel Sub-Assembly
Courtesy of TOYOTA MOTOR SALES, U.S.A., INC.

c. Disengage the 2 guides to remove the No. 1 instrument panel speaker panel sub-assembly.

42. **REMOVE FRONT NO. 2 SPEAKER ASSEMBLY (for LH Side)** . Refer to **REMOVAL - Step 5**
43. **REMOVE FRONT PILLAR GARNISH RH**

    HINT:

    Use the same procedure as for the LH side See step 7.

44. **REMOVE NO. 2 INSTRUMENT PANEL SPEAKER PANEL SUB-ASSEMBLY**
    a. Apply protective tape to the area shown in the illustration.

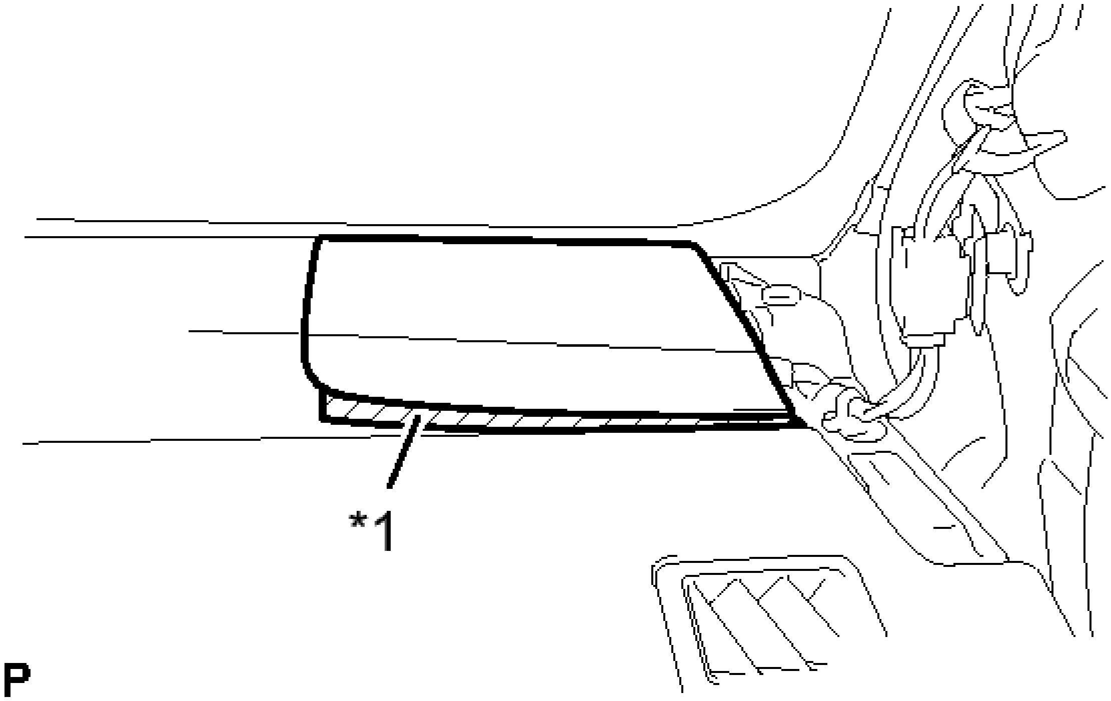

Fig. 48: Identifying Protective Tape Around No. 2 Instrument Panel Speaker Panel Sub-Assembly
Courtesy of TOYOTA MOTOR SALES, U.S.A., INC.

TEXT IN ILLUSTRATION

*1	Protective Tape

b. Using a molding remover, disengage the 2 clips and 3 claws.

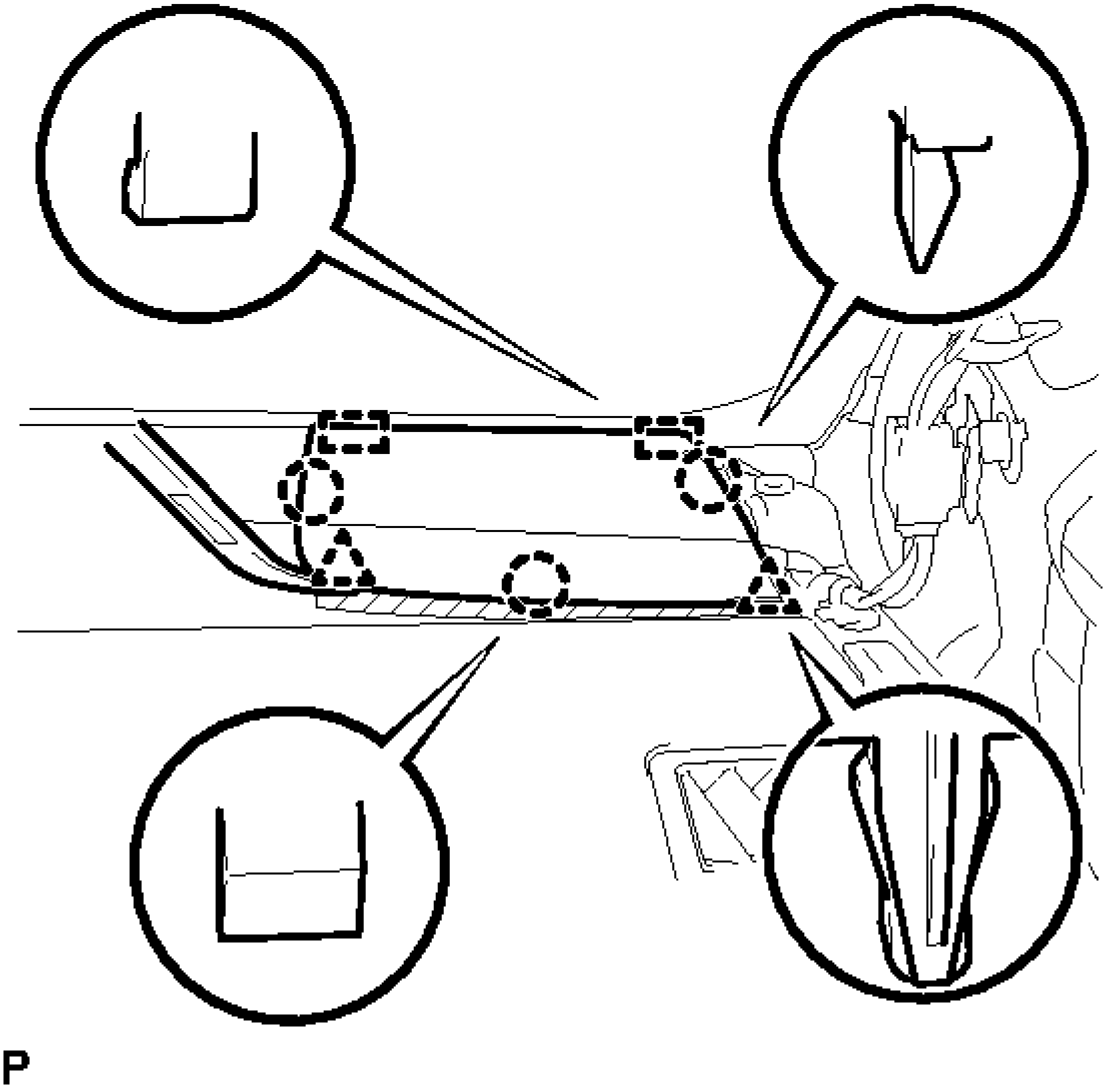

Fig. 49: Identifying No. 2 Instrument Panel Speaker Panel Sub-Assembly
Courtesy of TOYOTA MOTOR SALES, U.S.A., INC.

c. Disengage the 2 guides to remove the No. 2 instrument panel speaker panel sub-assembly.

45. **REMOVE FRONT NO. 2 SPEAKER ASSEMBLY (for RH Side)**

    HINT:

    Use the same procedure as for the LH side. Refer to **REMOVAL - Step 5** .

46. **REMOVE LOWER INSTRUMENT PANEL FINISH PANEL ASSEMBLY**
    a. Disengage the 4 clips and guide.

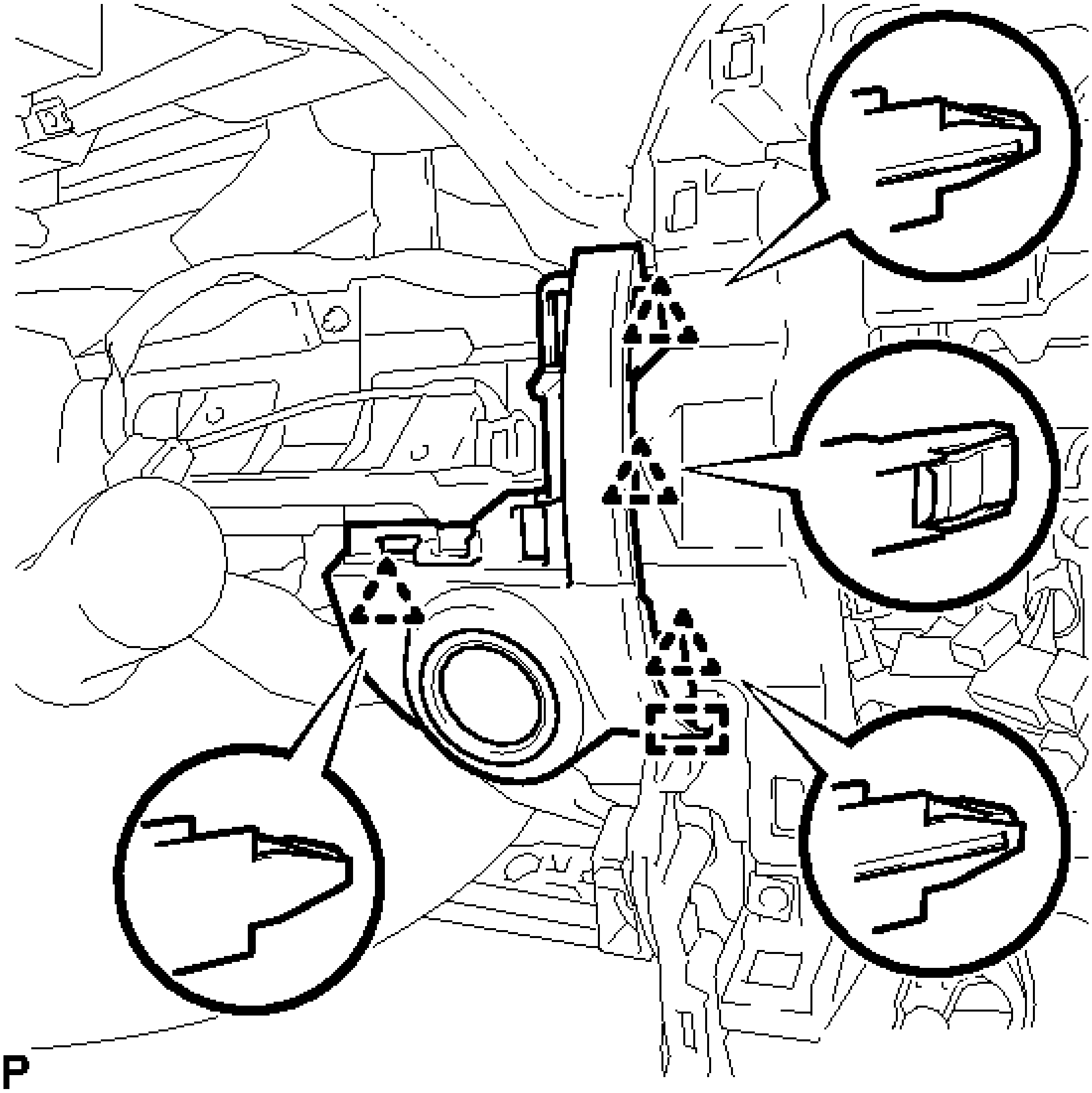

Fig. 50: Identifying Lower Instrument Panel Finish Panel Clips And Guide
Courtesy of TOYOTA MOTOR SALES, U.S.A., INC.

b. Disconnect the connector and remove the lower instrument panel finish panel assembly.

47. **REMOVE FRONT NO. 2 CONSOLE BOX INSERT**

a. Disengage the 2 claws to disconnect the room temperature sensor from the front No. 2 console box insert.

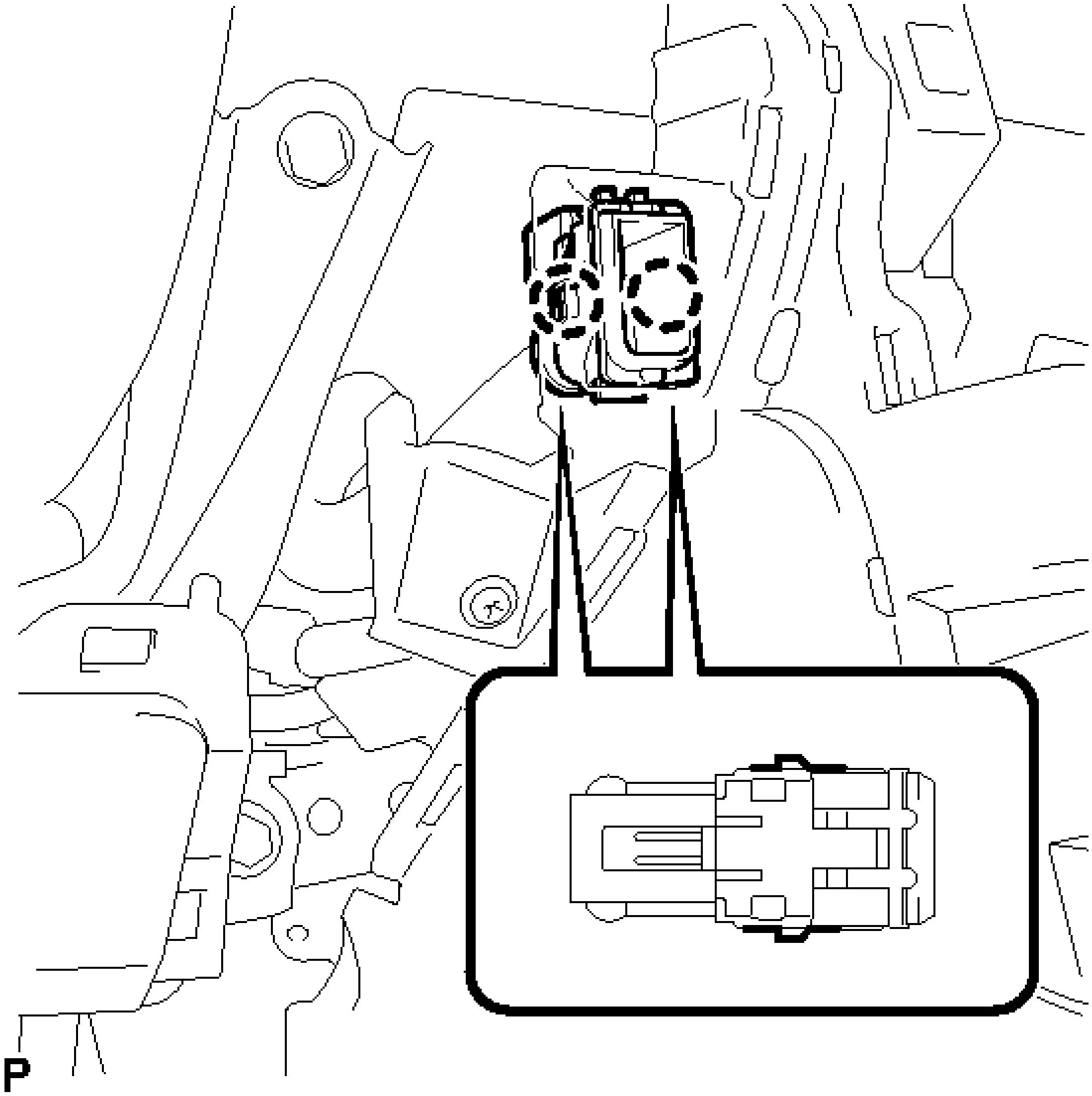

Fig. 51: Locating Room Temperature Sensor Claws
Courtesy of TOYOTA MOTOR SALES, U.S.A., INC.

b. Remove the 2 screws <D> or <E>.

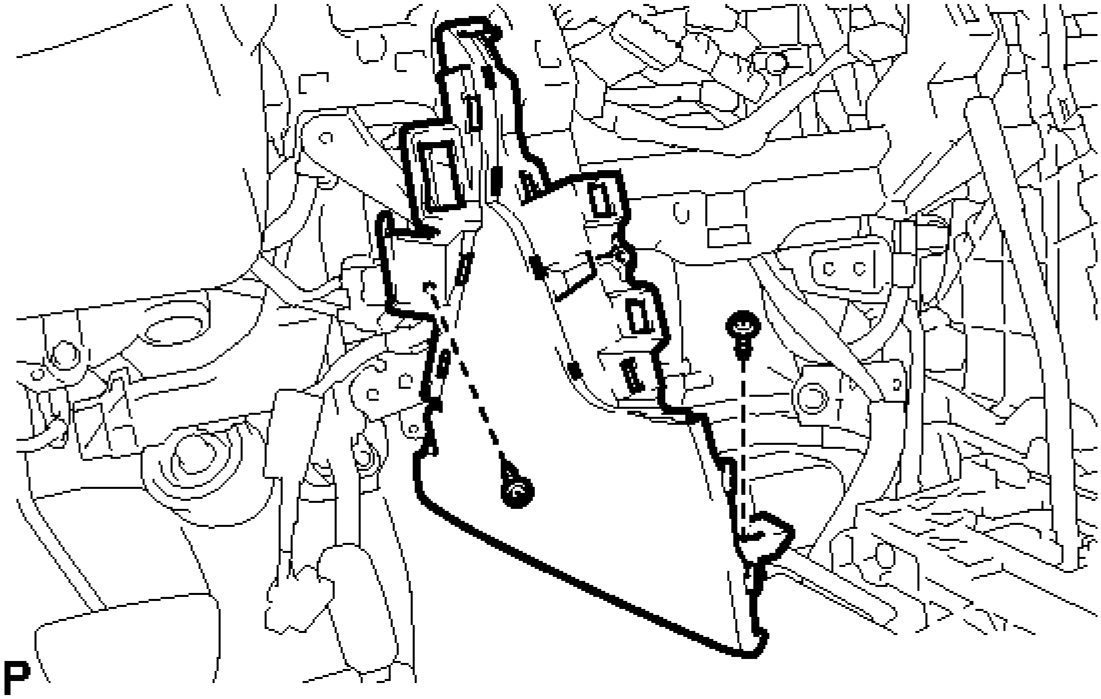

Fig. 52: Identifying Front No. 2 Console Box Insert Fasteners
Courtesy of TOYOTA MOTOR SALES, U.S.A., INC.

c. Disengage the clip and 3 guides to remove the front No. 2 console box insert as shown in the illustration.

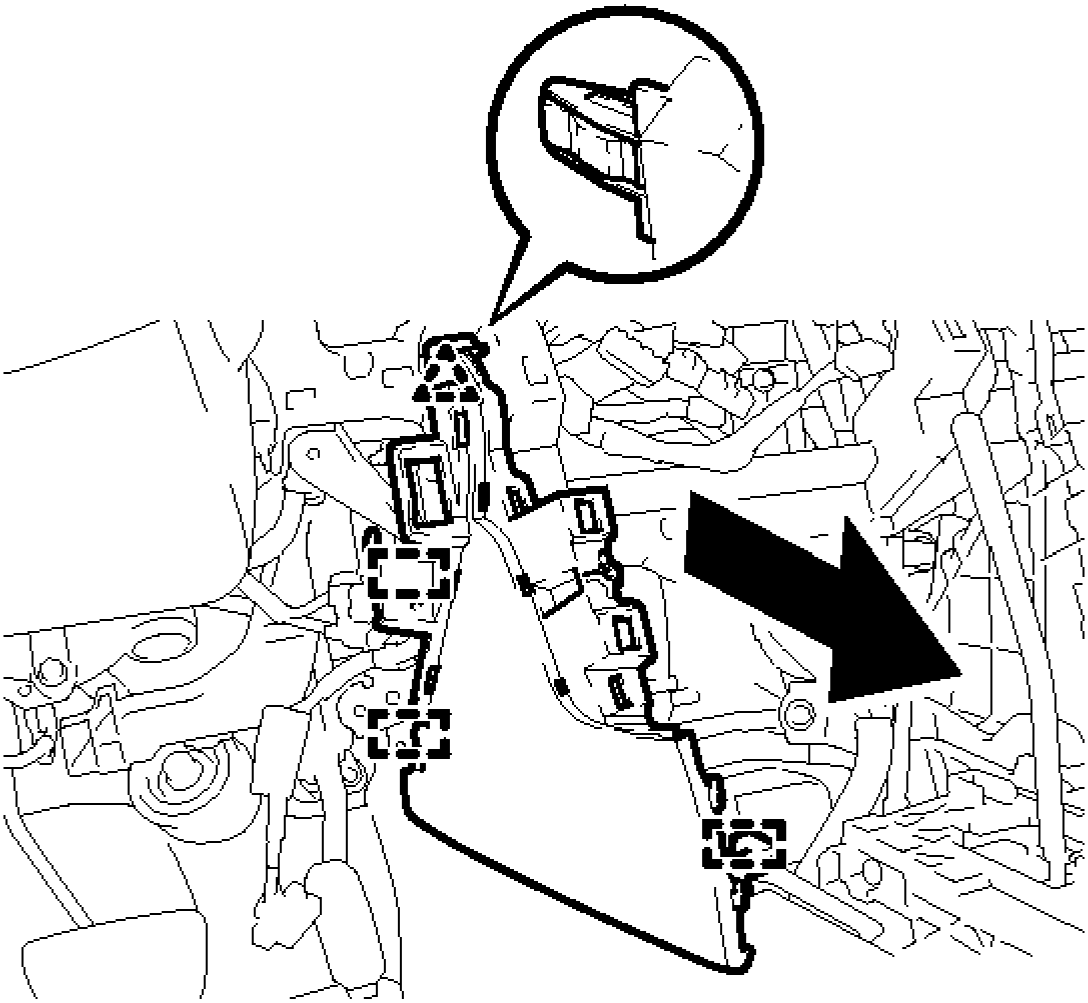

P

Fig. 53: Removing Front No. 2 Console Box Insert
Courtesy of TOYOTA MOTOR SALES, U.S.A., INC.

48. **REMOVE CONSOLE BOX INSERT**
    a. Remove the 2 screws <D> or <E>.

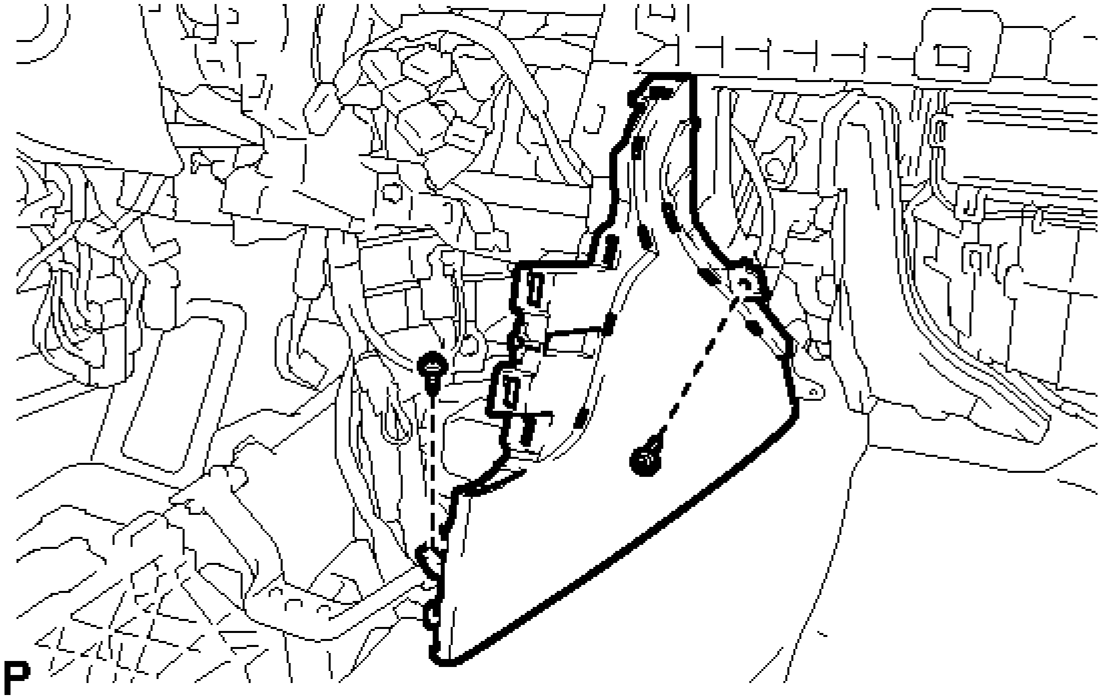

Fig. 54: Identifying Console Box Insert Fasteners
Courtesy of TOYOTA MOTOR SALES, U.S.A., INC.

b. Disengage the clip and 3 guides to remove the console box insert as shown in the illustration.

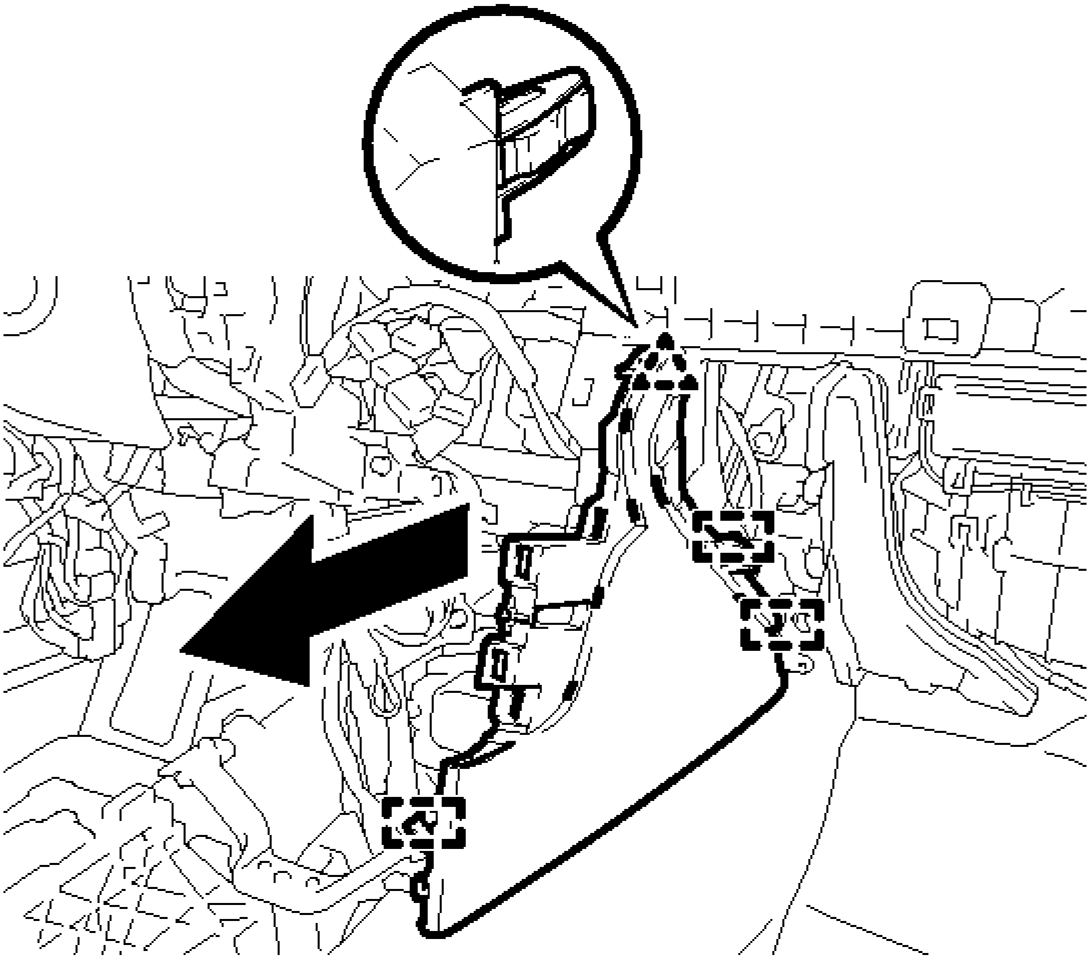

P

Fig. 55: Removing Console Box Insert
Courtesy of TOYOTA MOTOR SALES, U.S.A., INC.

49. REMOVE NO. 1 INSTRUMENT PANEL GARNISH SUB-ASSEMBLY

a. Disengage the 10 clips to remove the No. 1 instrument panel garnish sub-assembly as shown in the illustration.

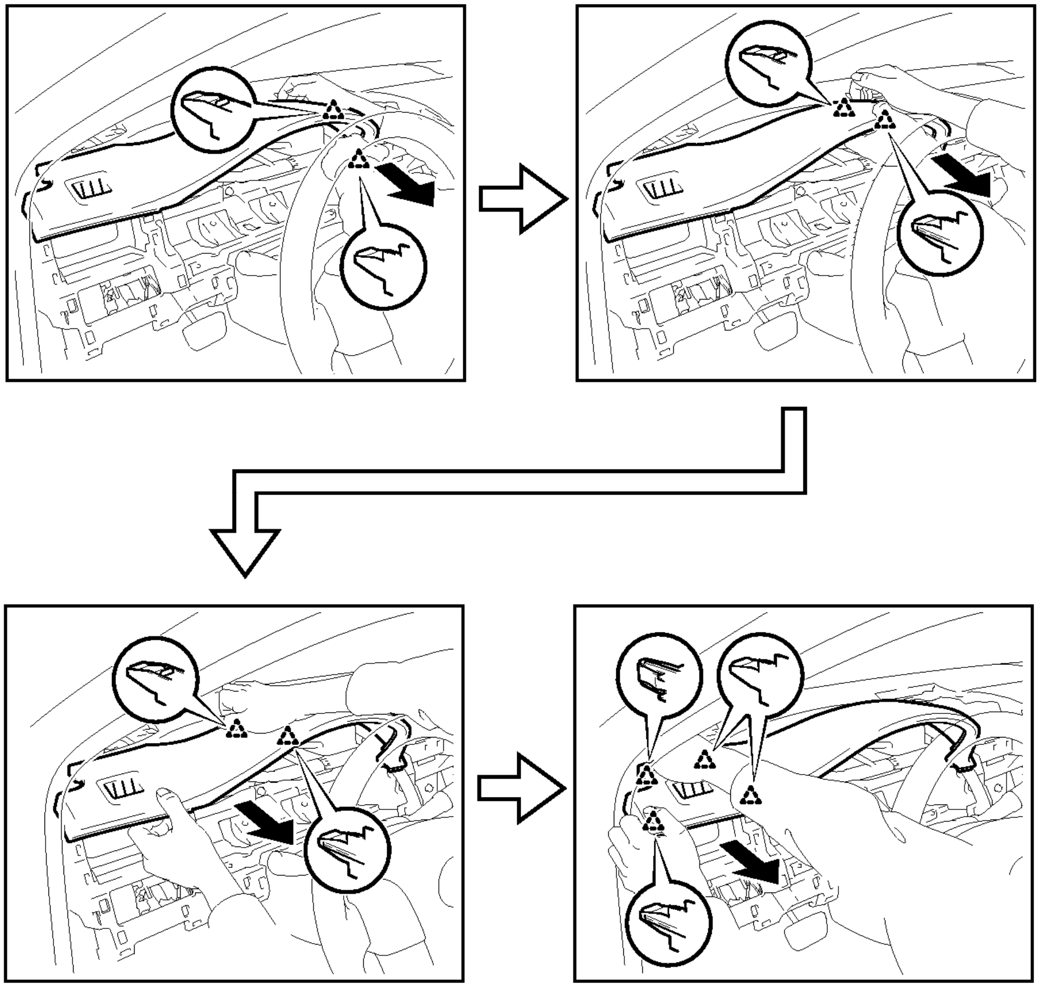

Fig. 56: Removing No. 1 Instrument Panel Garnish Sub-Assembly
Courtesy of TOYOTA MOTOR SALES, U.S.A., INC.

50. **DISCONNECT NO. 2 INSTRUMENT PANEL WIRE** . Refer to **REMOVAL - Step 3**
51. **REMOVE INSTRUMENT PANEL SAFETY PAD ASSEMBLY**
    a. Disconnect each connector.

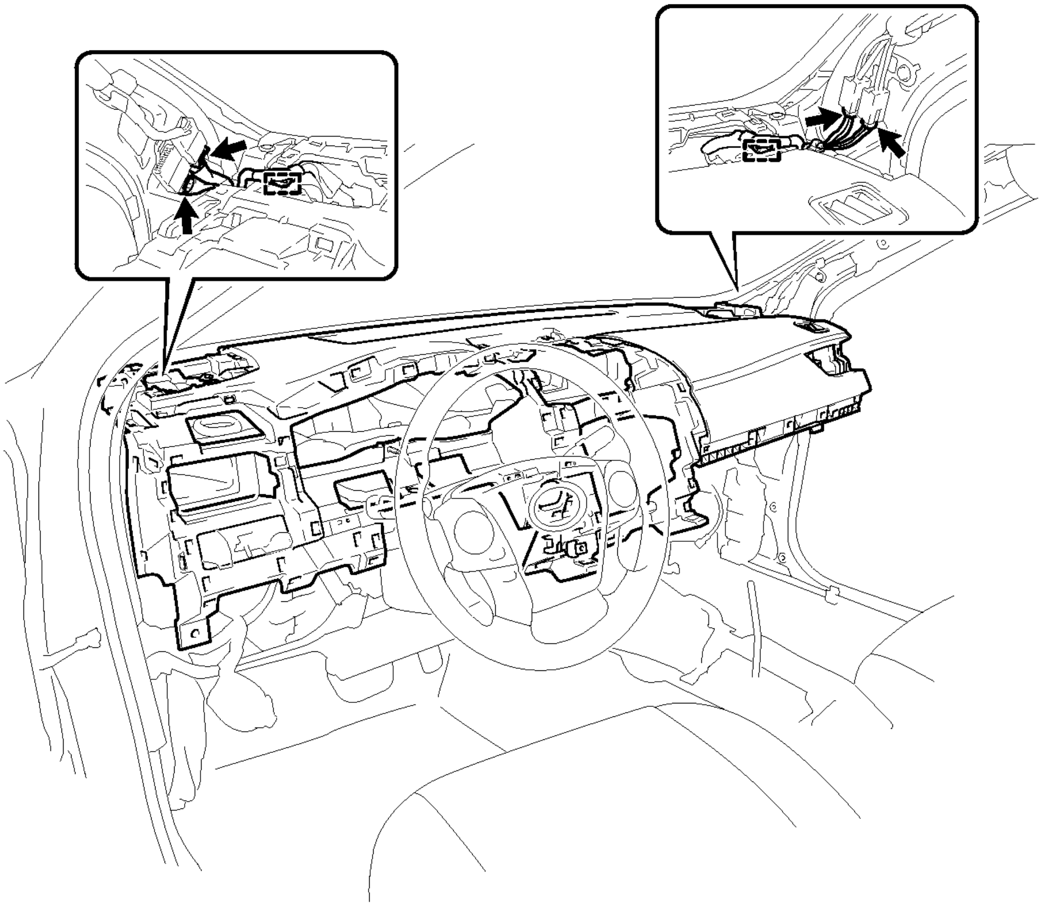

Fig. 57: Locating Instrument Panel Safety Pad Assembly Connectors
Courtesy of TOYOTA MOTOR SALES, U.S.A., INC.

b. Disengage each clamp.
c. Remove the 2 passenger airbag bolts <A> or <B>.

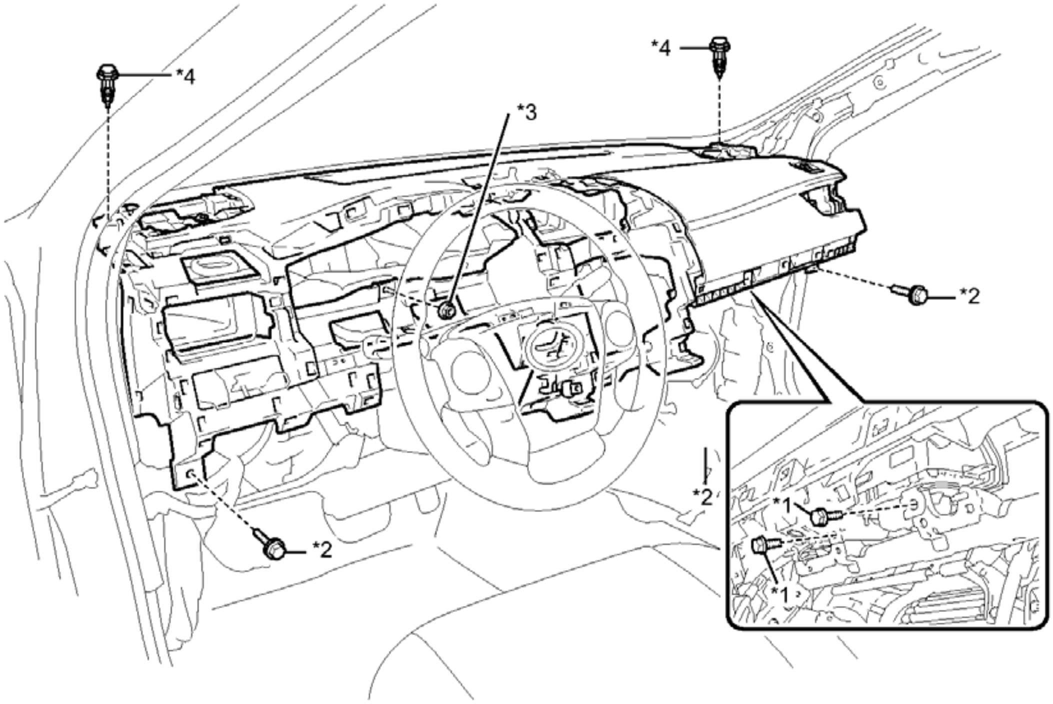

Fig. 58: Locating Instrument Panel Safety Pad Assembly Fasteners
Courtesy of TOYOTA MOTOR SALES, U.S.A., INC.

TEXT IN ILLUSTRATION

*1	Passenger Airbag Bolt <A> or <B>	*2	Bolt <C>
*3	Nut <G> or <H>	*4	Clip

d. Remove the 3 bolts <C> and nut <G> or <H>.
e. Remove the 2 clips.
f. Disengage the 5 guides and remove the instrument panel safety pad assembly as shown in the illustration.

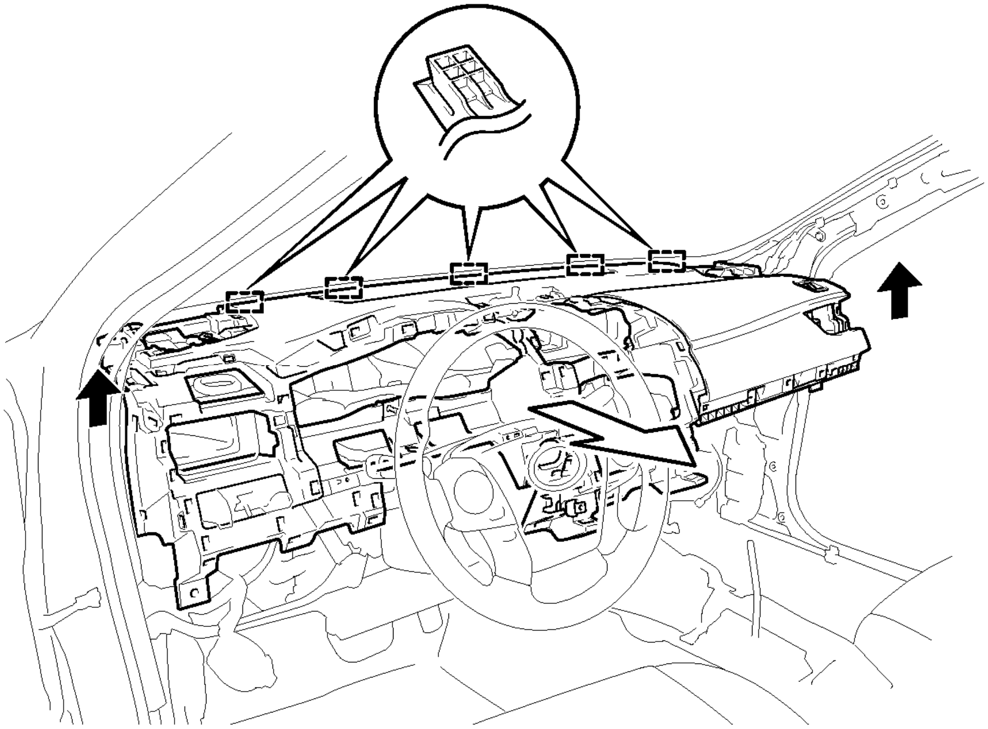

Fig. 59: Removing Instrument Panel Safety Pad Assembly
Courtesy of TOYOTA MOTOR SALES, U.S.A., INC.

NOTE:

- **Do not damage the instrument panel safety pad assembly.**
- **Do not allow the wire harnesses to interfere with the surrounding parts.**

DISASSEMBLY

DISASSEMBLY

1. **REMOVE NO. 1 INSTRUMENT PANEL PIN**
    a. Remove the 4 screws <D> or <E> and 4 No. 1 instrument panel pins.

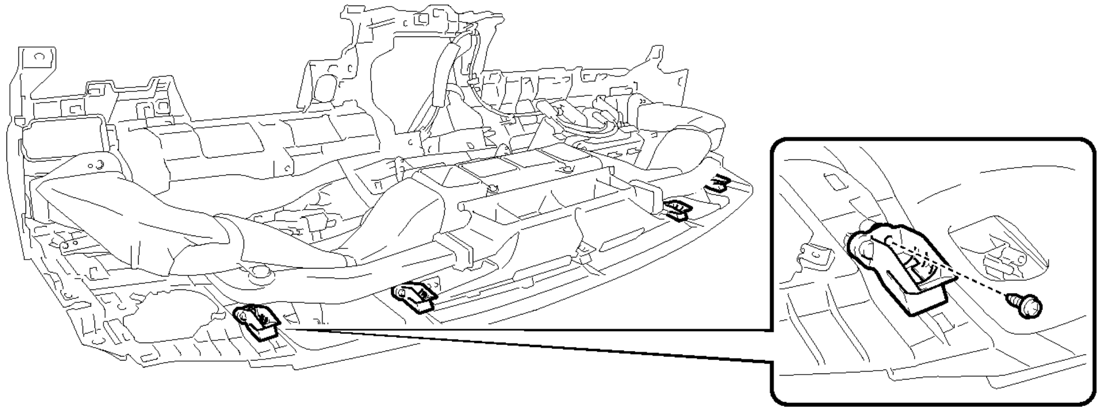

Fig. 60: Locating No. 1 Instrument Panel Pin Fasteners
Courtesy of TOYOTA MOTOR SALES, U.S.A., INC.

2. **REMOVE INSTRUMENT PANEL PASSENGER AIRBAG ASSEMBLY** . Refer to **REMOVAL - Step 5**
3. **REMOVE NO. 1 HEATER TO REGISTER DUCT**
   a. Remove the clip.

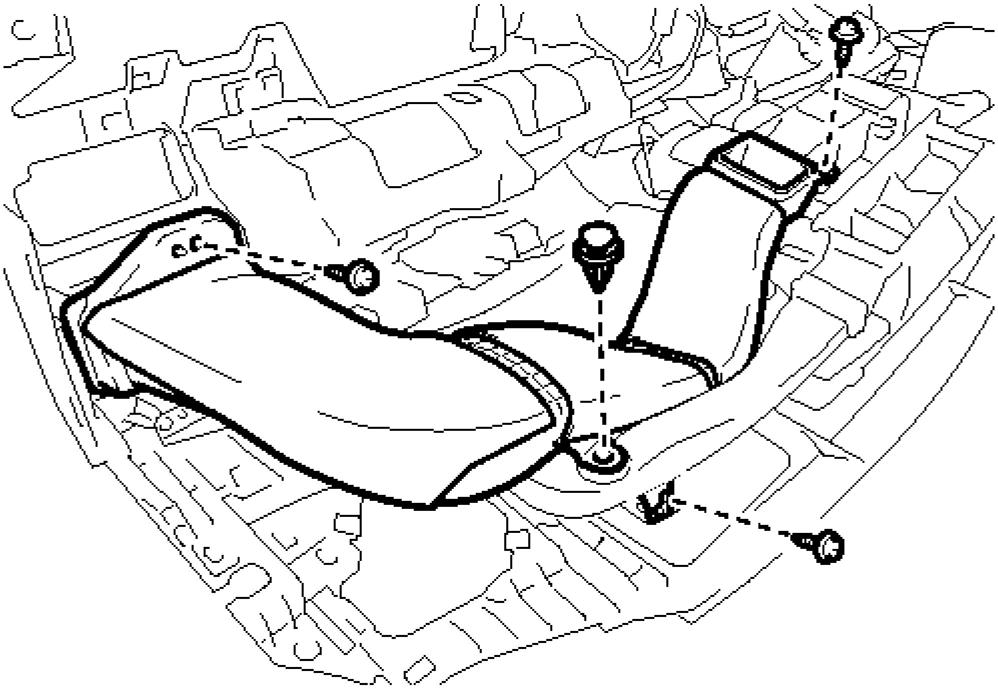

Fig. 61: Locating No. 1 Heater To Register Duct Fasteners
Courtesy of TOYOTA MOTOR SALES, U.S.A., INC.

   b. Remove the 3 screws <D> or <E> and No. 1 heater to register duct.
4. **REMOVE NO. 1 SIDE DEFROSTER NOZZLE DUCT**
   a. Remove the screw <D> or <E>.

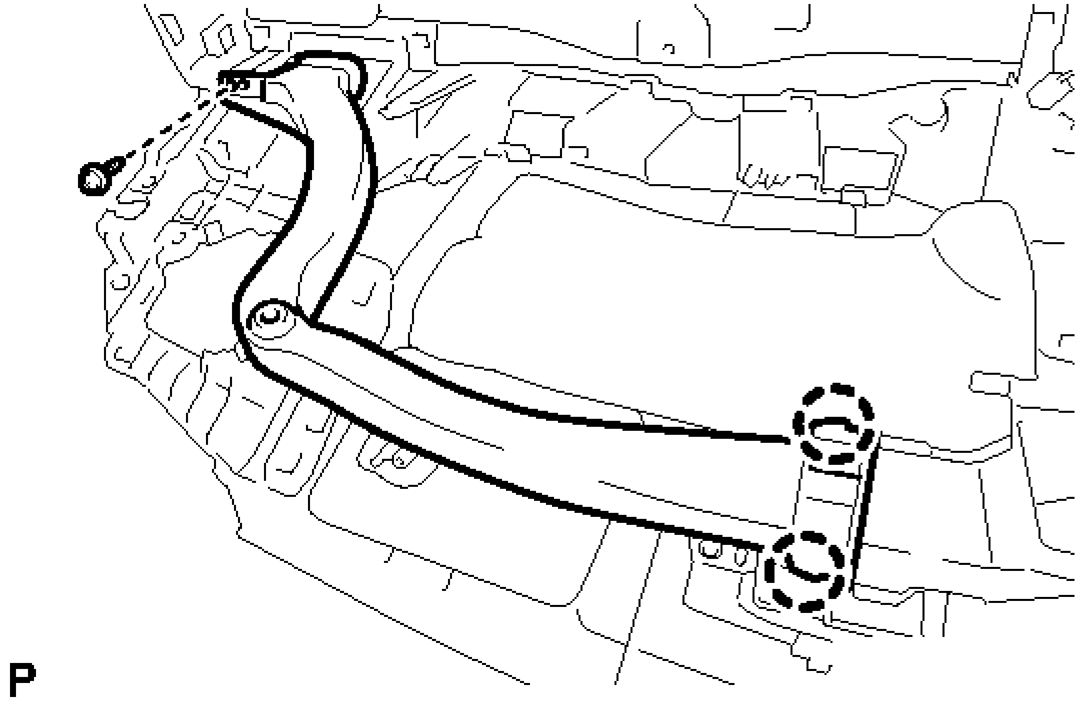

Fig. 62: Locating No. 1 Side Defroster Nozzle Duct Fasteners
Courtesy of TOYOTA MOTOR SALES, U.S.A., INC.

b. Disengage the 2 claws to remove the No. 1 side defroster nozzle duct.

5. **REMOVE NO. 3 HEATER TO REGISTER DUCT**

a. Remove the clip.

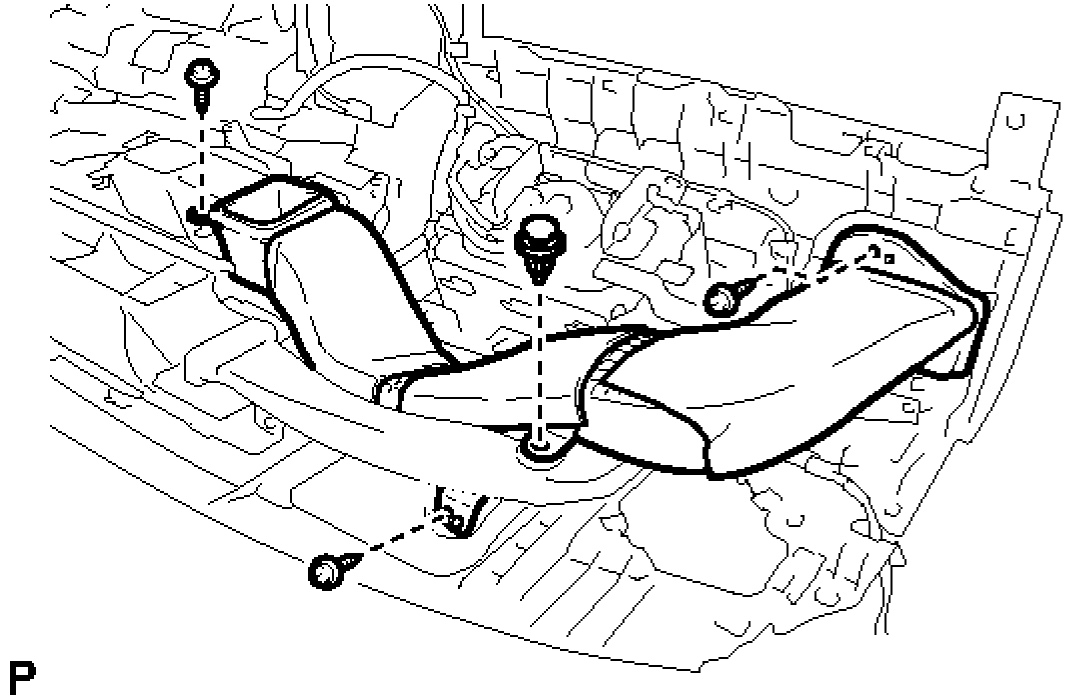

Fig. 63: Locating No. 3 Heater To Register Duct Fasteners
Courtesy of TOYOTA MOTOR SALES, U.S.A., INC.

b. Remove the 3 screws <D> or <E> and No. 3 heater to register duct.

6. **REMOVE NO. 2 SIDE DEFROSTER NOZZLE DUCT**
    a. Remove the screw <D> or <E>.

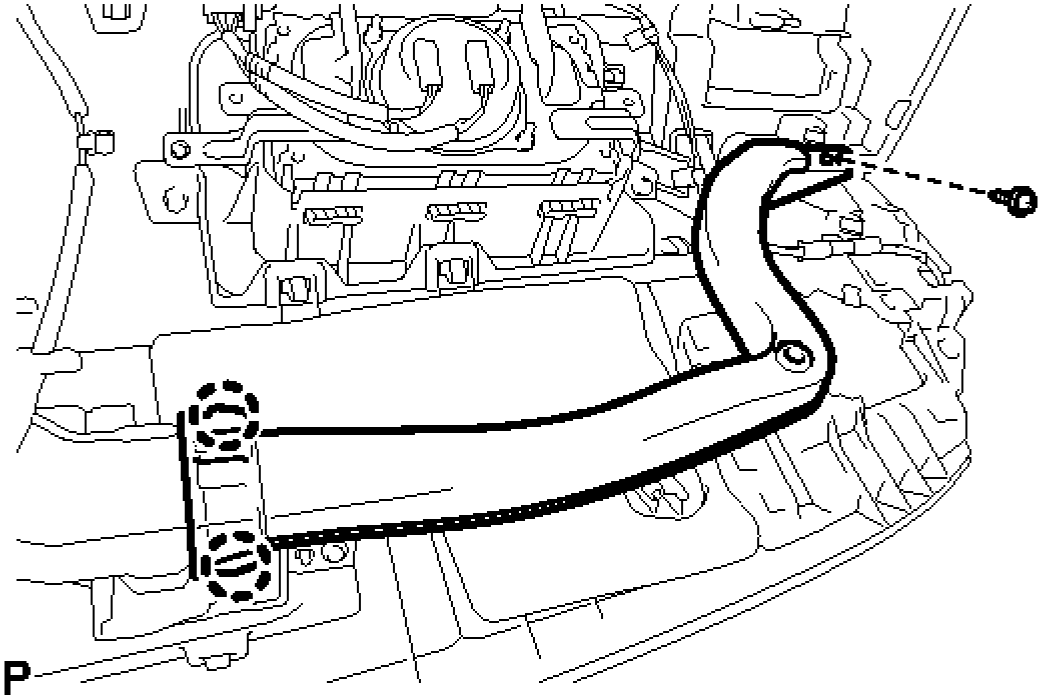

Fig. 64: Locating No. 2 Side Defroster Nozzle Duct Fasteners
Courtesy of TOYOTA MOTOR SALES, U.S.A., INC.

b. Disengage the 2 claws to remove the No. 2 side defroster nozzle duct.

7. **REMOVE ANTENNA CORD SUB-ASSEMBLY** . Refer to **REMOVAL - Step 4**
8. **REMOVE DEFROSTER NOZZLE ASSEMBLY**
    a. Remove the 3 screws <D> or <E>.

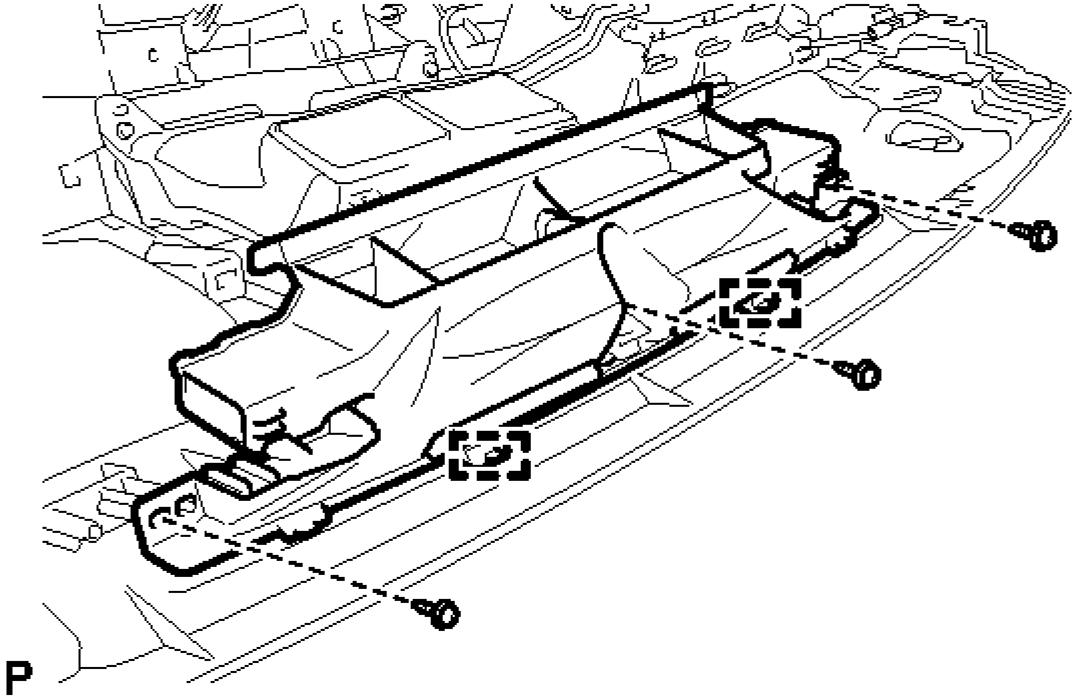

Fig. 65: Locating Defroster Nozzle Assembly Fasteners
Courtesy of TOYOTA MOTOR SALES, U.S.A., INC.

b. Disengage the 2 guides to remove the defroster nozzle assembly.

9. **REMOVE NAVIGATION ANTENNA ASSEMBLY (w/ Navigation System)** . Refer to **REMOVAL - Step 7**
10. **REMOVE NO. 2 HEATER TO REGISTER DUCT**
    a. Remove the 2 screws <D> or <E> and No. 2 heater to register duct.

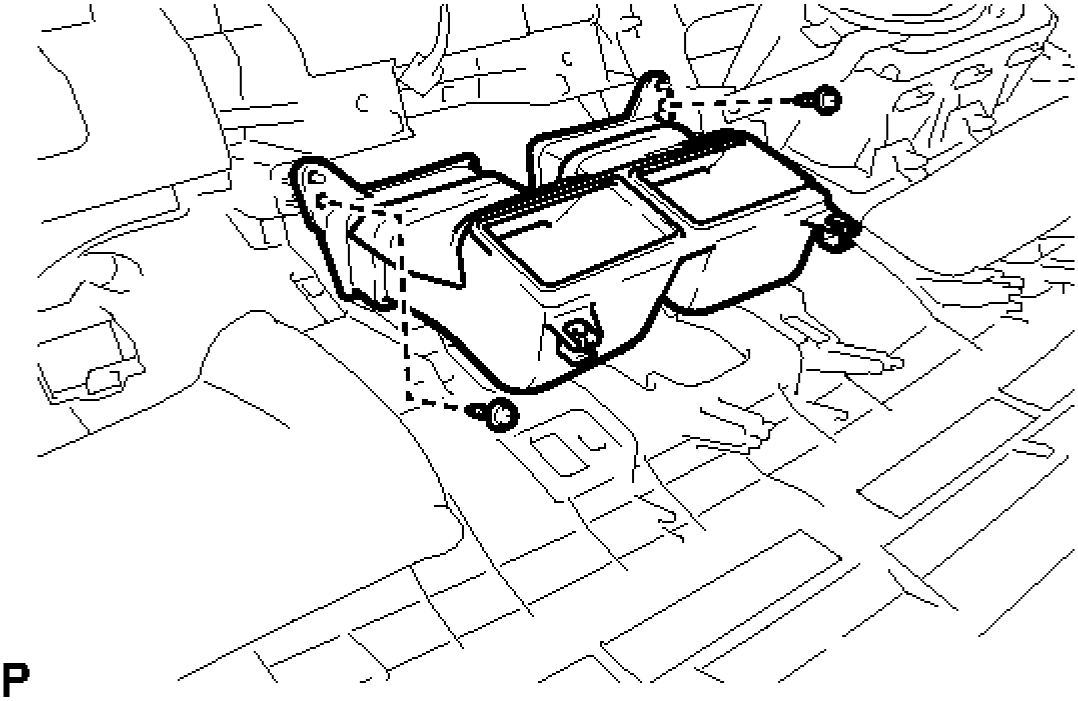

Fig. 66: Locating No. 2 Heater To Register Duct Fasteners
Courtesy of TOYOTA MOTOR SALES, U.S.A., INC.

11. **REMOVE NO. 2 INSTRUMENT PANEL GARNISH SUB-ASSEMBLY**
    a. Remove the 2 screws <D> or <E>.

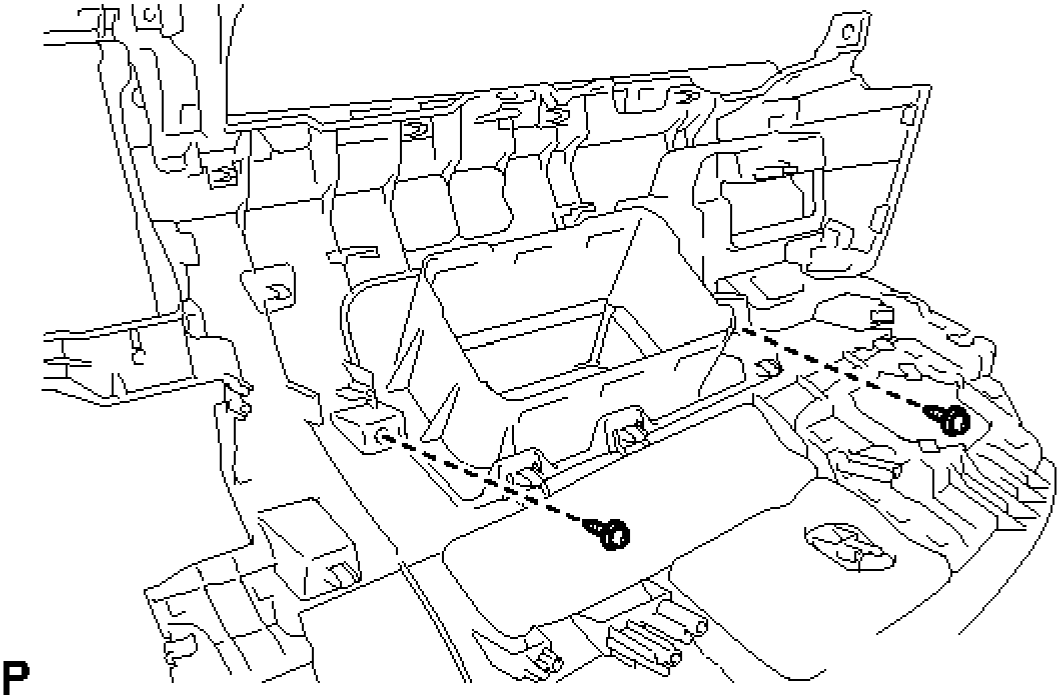

Fig. 67: Locating No. 2 Instrument Panel Garnish Sub-Assembly Fasteners

Courtesy of TOYOTA MOTOR SALES, U.S.A., INC.

b. Apply protective tape to the areas shown in the illustration.

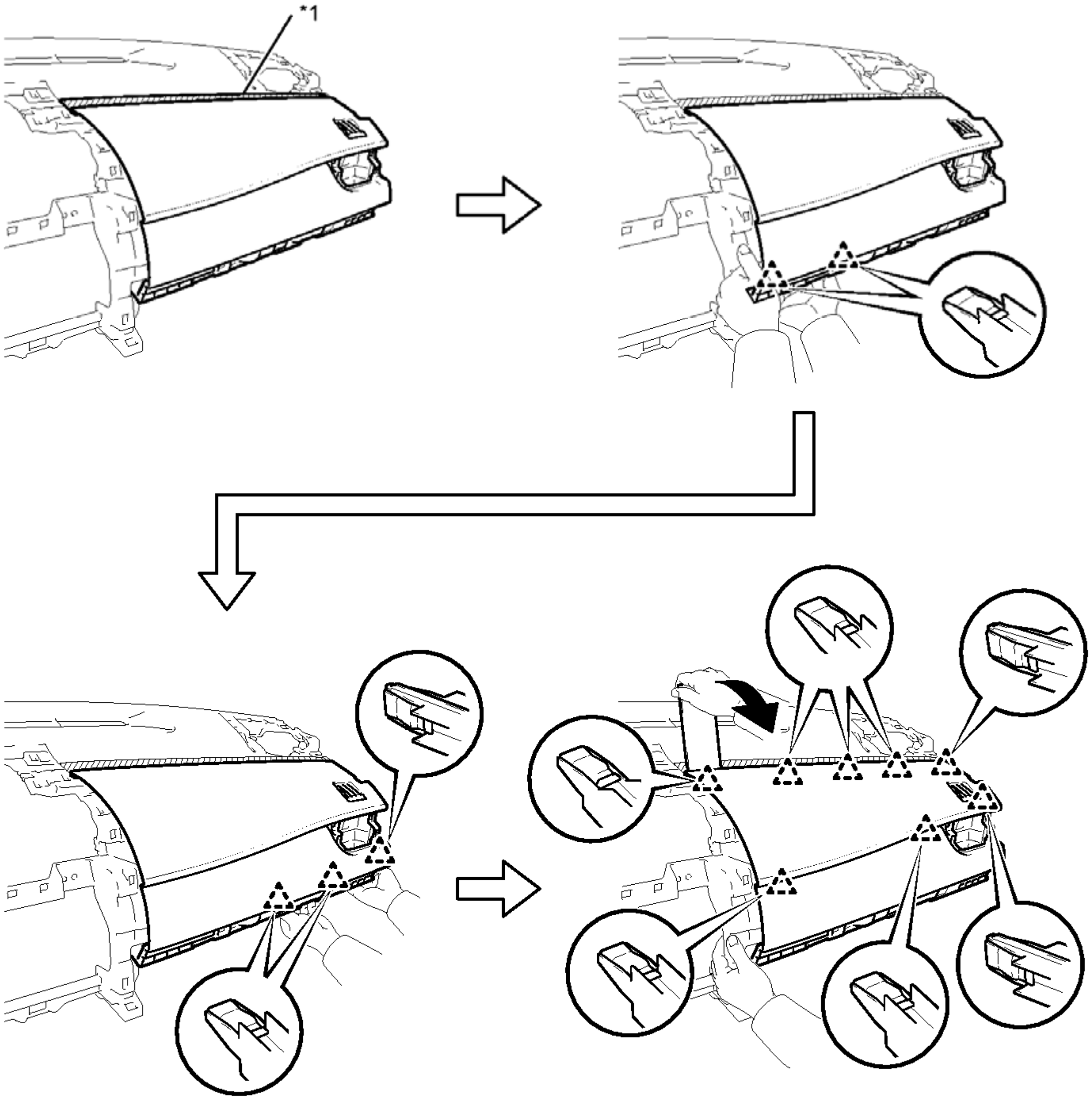

P

Fig. 68: Identifying Protective Tape Around No. 2 Instrument Panel Garnish Sub-Assembly
Courtesy of TOYOTA MOTOR SALES, U.S.A., INC.

TEXT IN ILLUSTRATION

*1	Protective Tape	-	-

c. Disengage the 5 clips as shown in the illustration.

d. Using a molding remover, disengage the 8 clips to remove the No. 2 instrument panel garnish sub-assembly as shown in the illustration.

REASSEMBLY

REASSEMBLY

1. **INSTALL NO. 2 INSTRUMENT PANEL GARNISH SUB-ASSEMBLY**
    a. Engage the 13 clips.

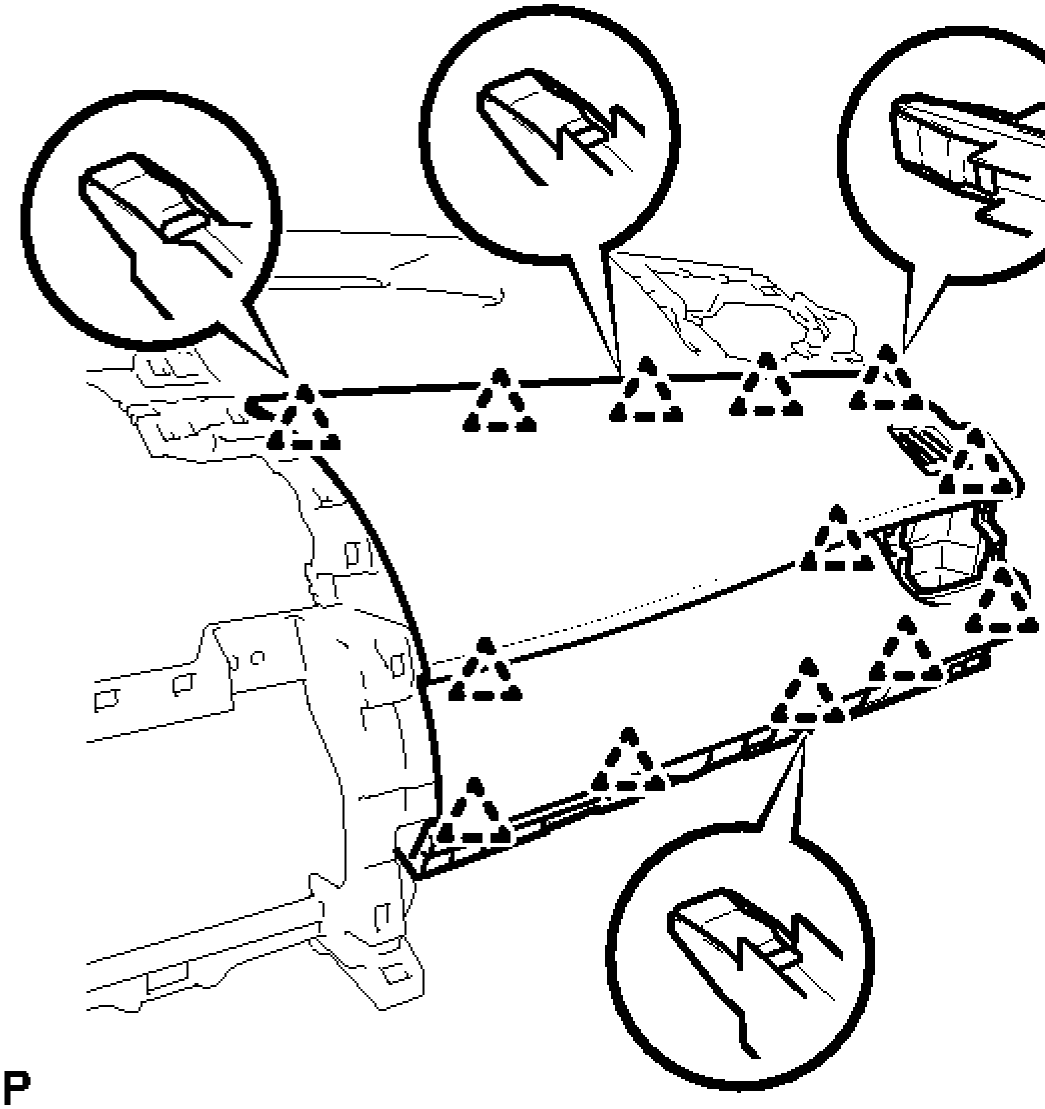

Fig. 69: Identifying No. 2 Instrument Panel Garnish Sub-Assembly
Courtesy of TOYOTA MOTOR SALES, U.S.A., INC.

b. Install the No. 2 instrument panel garnish sub-assembly with the 2 screws <D> or <E>.

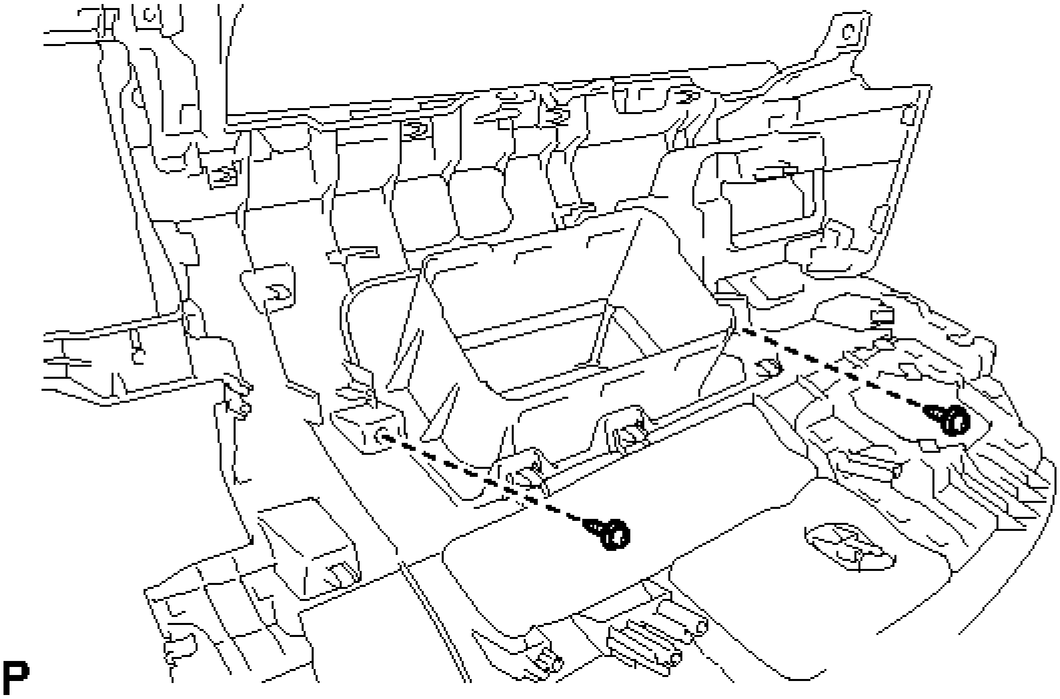

Fig. 70: Locating No. 2 Instrument Panel Garnish Sub-Assembly Fasteners
Courtesy of TOYOTA MOTOR SALES, U.S.A., INC.

2. **INSTALL NO. 2 HEATER TO REGISTER DUCT**
   a. Install the No. 2 heater to register duct with the 2 screws <D> or <E>.

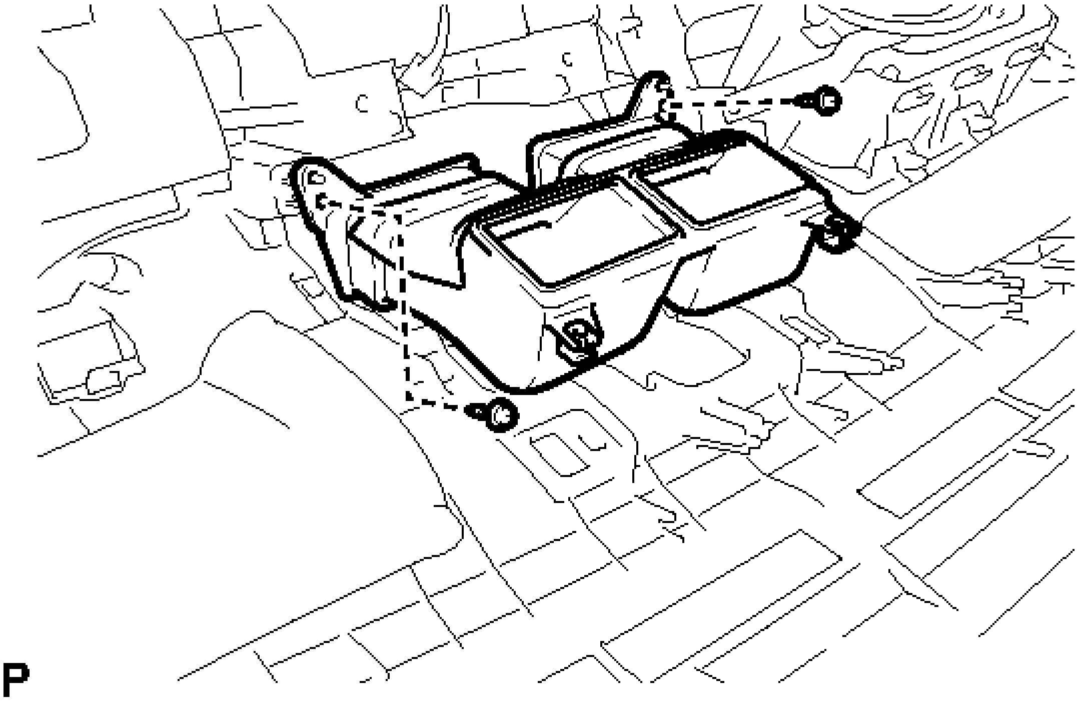

Fig. 71: Locating No. 2 Heater To Register Duct Fasteners

Courtesy of TOYOTA MOTOR SALES, U.S.A., INC.

3. **INSTALL NAVIGATION ANTENNA ASSEMBLY (w/ Navigation System)** . Refer to **INSTALLATION - Step 1**
4. **INSTALL DEFROSTER NOZZLE ASSEMBLY**
    a. Engage the 2 guides.

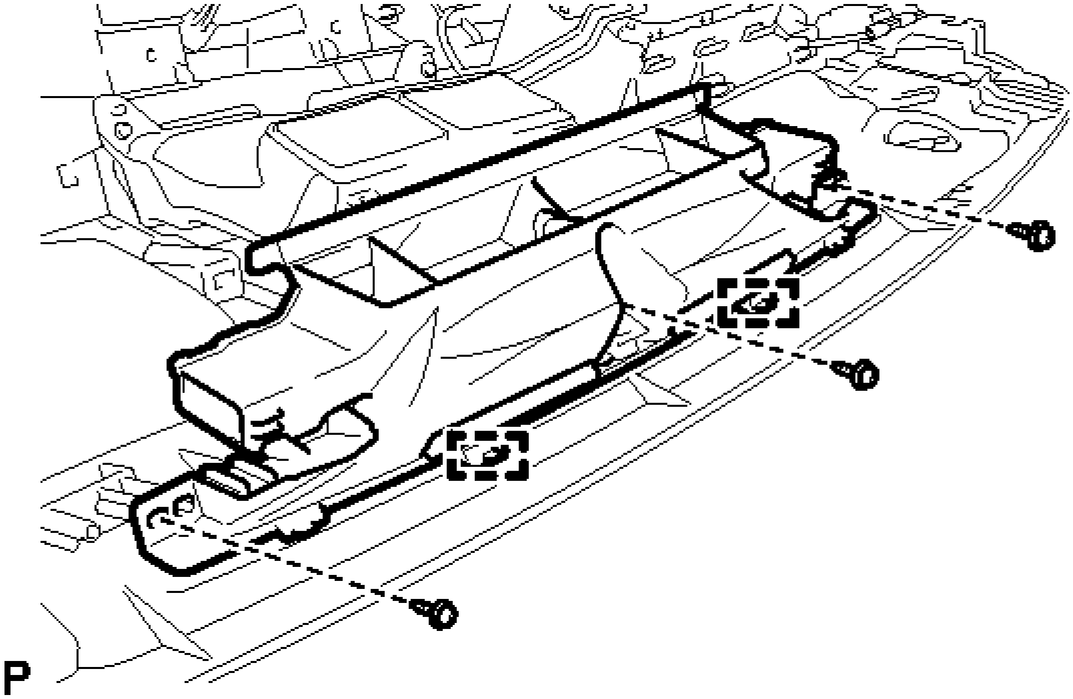

Fig. 72: Locating Defroster Nozzle Assembly Fasteners
Courtesy of TOYOTA MOTOR SALES, U.S.A., INC.

    b. Install the defroster nozzle assembly with the 3 screws <D> or <E>.
5. **INSTALL ANTENNA CORD SUB-ASSEMBLY** . Refer to **INSTALLATION - Step 3**
6. **INSTALL NO. 2 SIDE DEFROSTER NOZZLE DUCT**
    a. Engage the 2 claws.

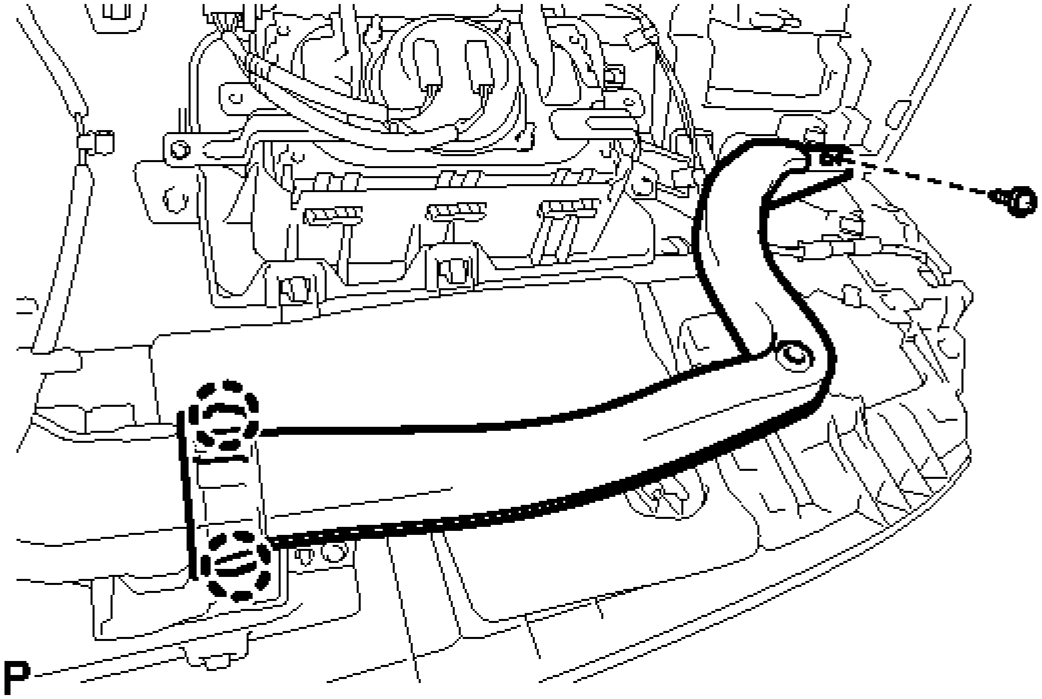

Fig. 73: Locating No. 2 Side Defroster Nozzle Duct Fasteners
Courtesy of TOYOTA MOTOR SALES, U.S.A., INC.

b. Install the No. 2 side defroster nozzle duct with the screw <D> or <E>.

7. **INSTALL NO. 3 HEATER TO REGISTER DUCT**
   a. Install the No. 3 heater to register duct with the 3 screws <D> or <E>.

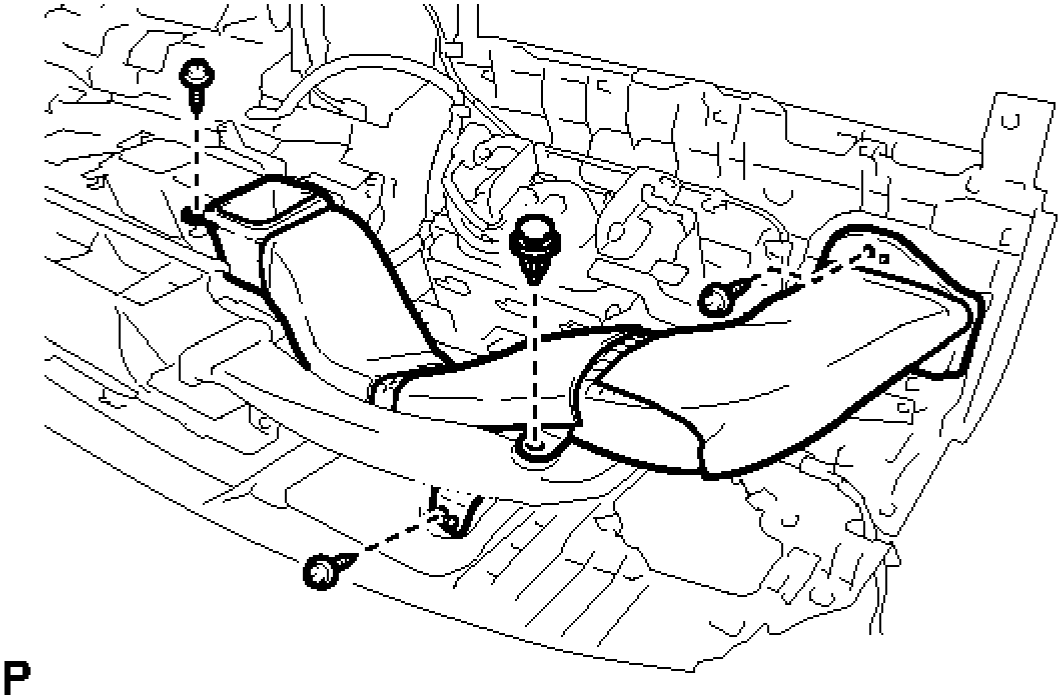

Fig. 74: Locating No. 3 Heater To Register Duct Fasteners
Courtesy of TOYOTA MOTOR SALES, U.S.A., INC.

b. Install the clip.

8. **INSTALL NO. 1 SIDE DEFROSTER NOZZLE DUCT**
   a. Engage the 2 claws.

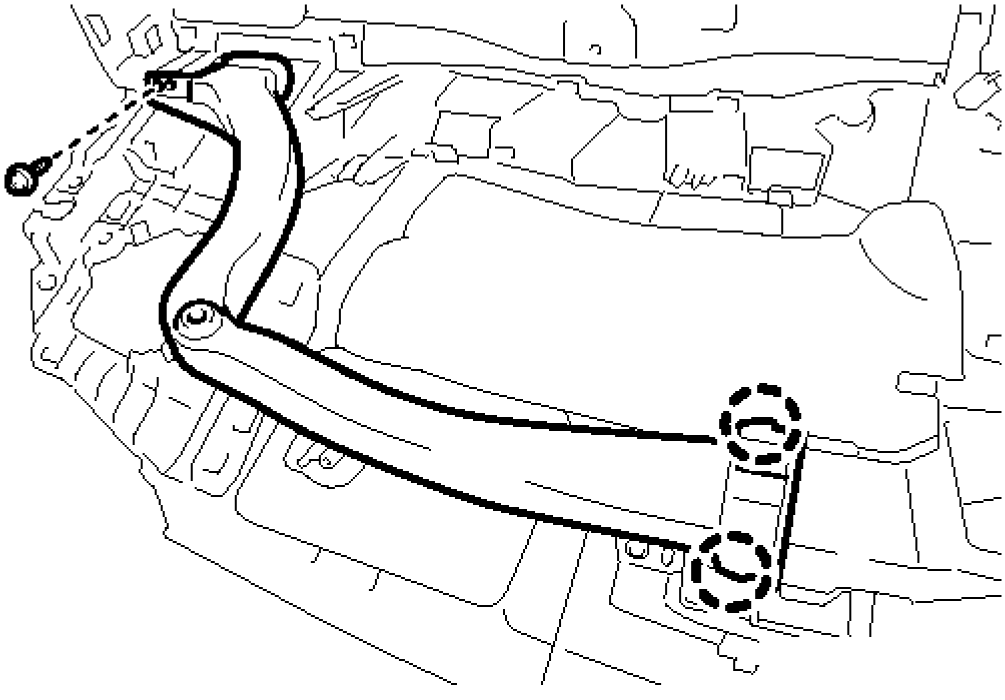

Fig. 75: Locating No. 1 Side Defroster Nozzle Duct Fasteners
Courtesy of TOYOTA MOTOR SALES, U.S.A., INC.

   b. Install the No. 1 side defroster nozzle duct with the screw <D> or <E>.

9. **INSTALL NO. 1 HEATER TO REGISTER DUCT**
   a. Install the No. 1 heater to register duct with the 3 screws <D> or <E>.

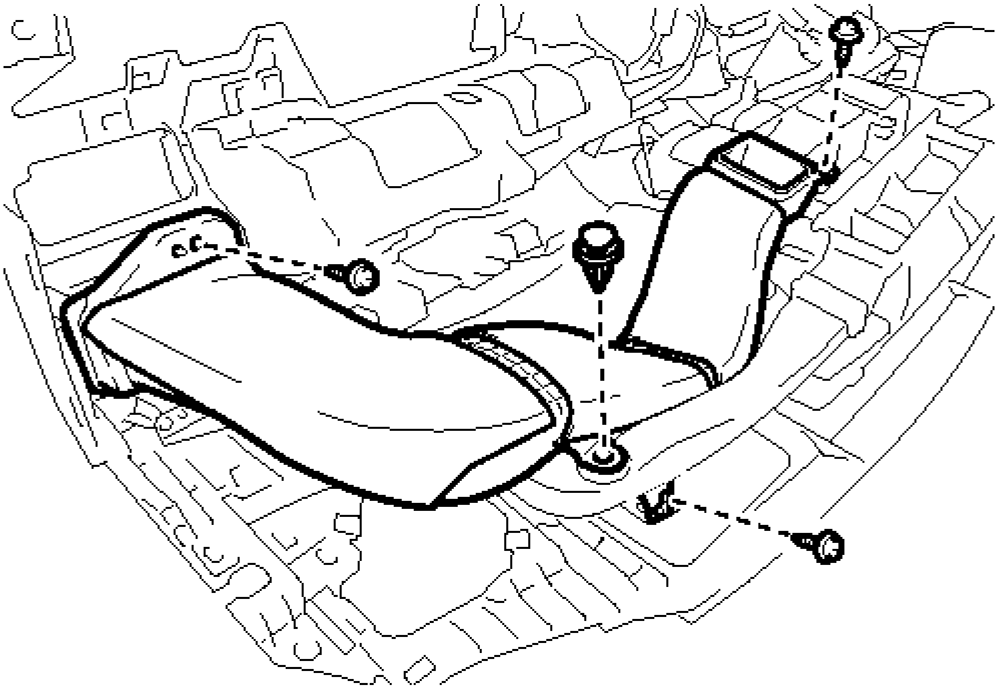

Fig. 76: Locating No. 1 Heater To Register Duct Fasteners
Courtesy of TOYOTA MOTOR SALES, U.S.A., INC.

b. Install the clip.

10. **INSTALL INSTRUMENT PANEL PASSENGER AIRBAG ASSEMBLY** . Refer to **INSTALLATION - Step 2**
11. **INSTALL NO. 1 INSTRUMENT PANEL PIN**
    a. Install the 4 No. 1 instrument panel pins with the 4 screws <D> or <E>.

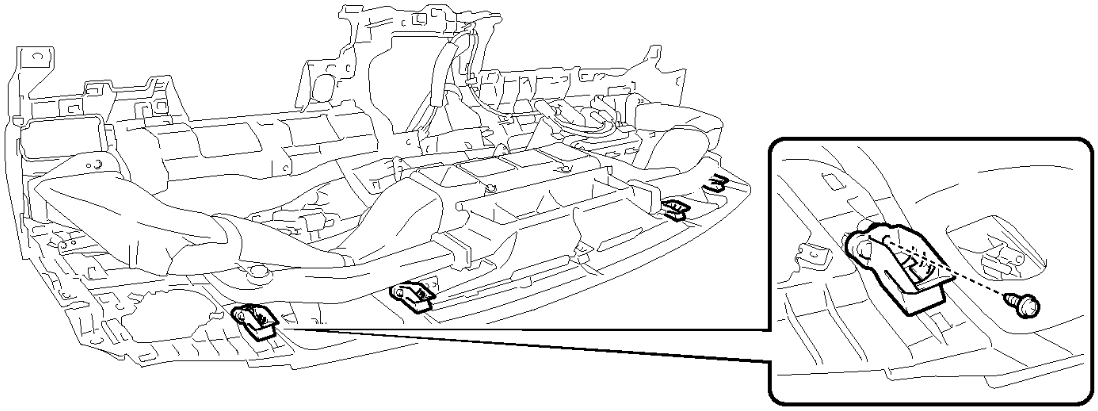

Fig. 77: Locating No. 1 Instrument Panel Pin Fasteners
Courtesy of TOYOTA MOTOR SALES, U.S.A., INC.

INSTALLATION

INSTALLATION

1. **INSTALL INSTRUMENT PANEL SAFETY PAD ASSEMBLY**
    a. Engage the 5 guides and temporarily install the instrument panel safety pad assembly as shown in the illustration.

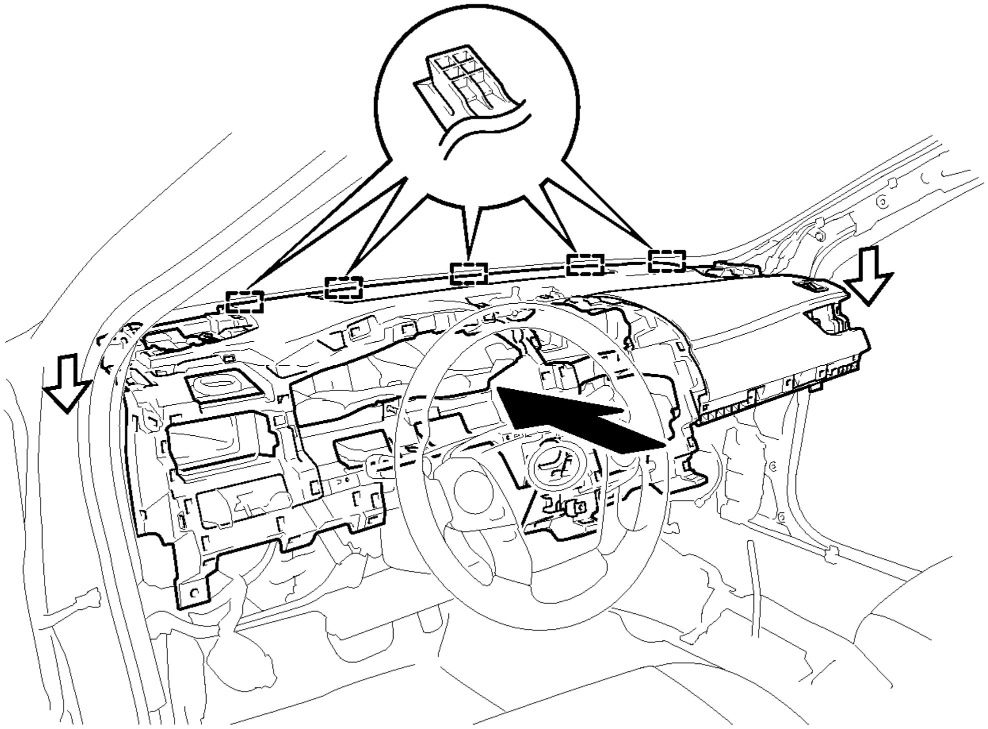

Fig. 78: Installing Instrument Panel Safety Pad Assembly
Courtesy of TOYOTA MOTOR SALES, U.S.A., INC.

NOTE:

- **Do not damage the instrument panel safety pad assembly.**
- **Do not allow the wire harnesses to interfere with the surrounding parts.**

    b. Install the 2 clips.
    c. Install the 3 bolts <C> and nut <G> or <H>.
    d. Install the 2 passenger airbag bolts <A> or <B>.

Torque: 20 N*m (204 kgf*cm, 15 ft.*lbf)

    e. Engage each clamp.
    f. Connect each connector.
2. **CONNECT NO. 2 INSTRUMENT PANEL WIRE** . Refer to **INSTALLATION - Step 4**
3. **INSTALL NO. 1 INSTRUMENT PANEL GARNISH SUB-ASSEMBLY**
    a. Engage the 10 clips to install the No. 1 instrument panel garnish sub-assembly.

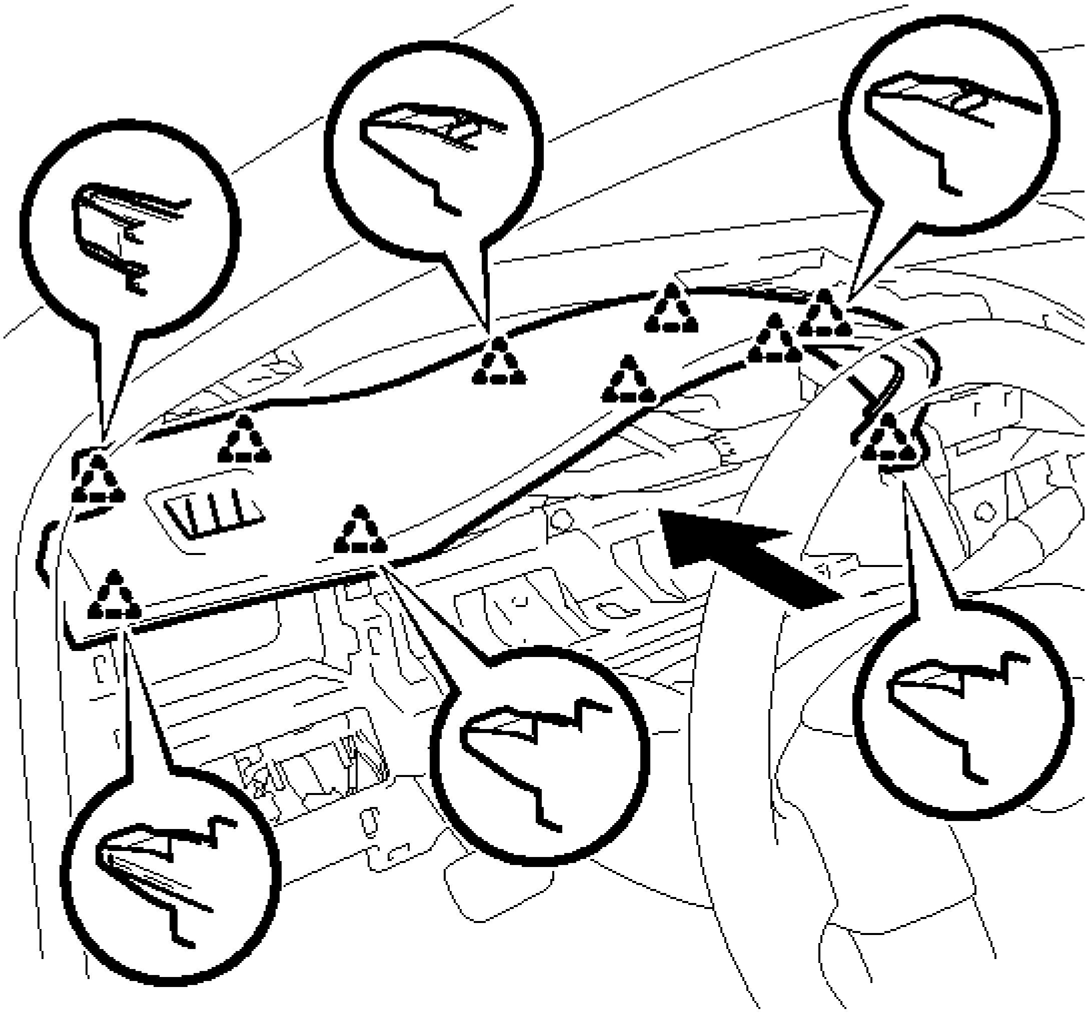

Fig. 79: Installing No. 1 Instrument Panel Garnish Sub-Assembly
Courtesy of TOYOTA MOTOR SALES, U.S.A., INC.

4. **INSTALL CONSOLE BOX INSERT**
   a. Engage the clip and 3 guides.

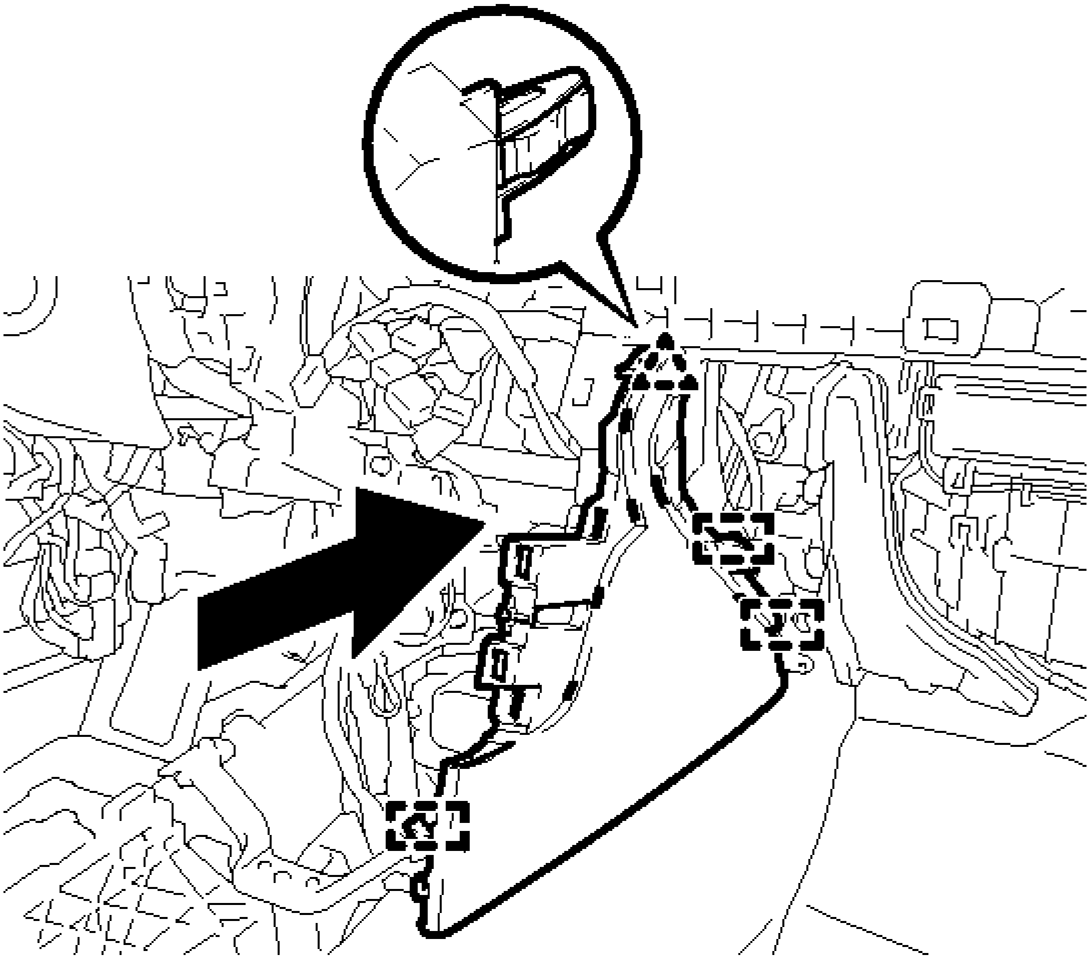

P

Fig. 80: Installing Console Box Insert
Courtesy of TOYOTA MOTOR SALES, U.S.A., INC.

- b. Install the console box insert with the 2 screws <D> or <E>.

5. **INSTALL FRONT NO. 2 CONSOLE BOX INSERT**
   - a. Engage the 2 claws to connect the room temperature sensor.
   - b. Engage the clip and 3 guides.

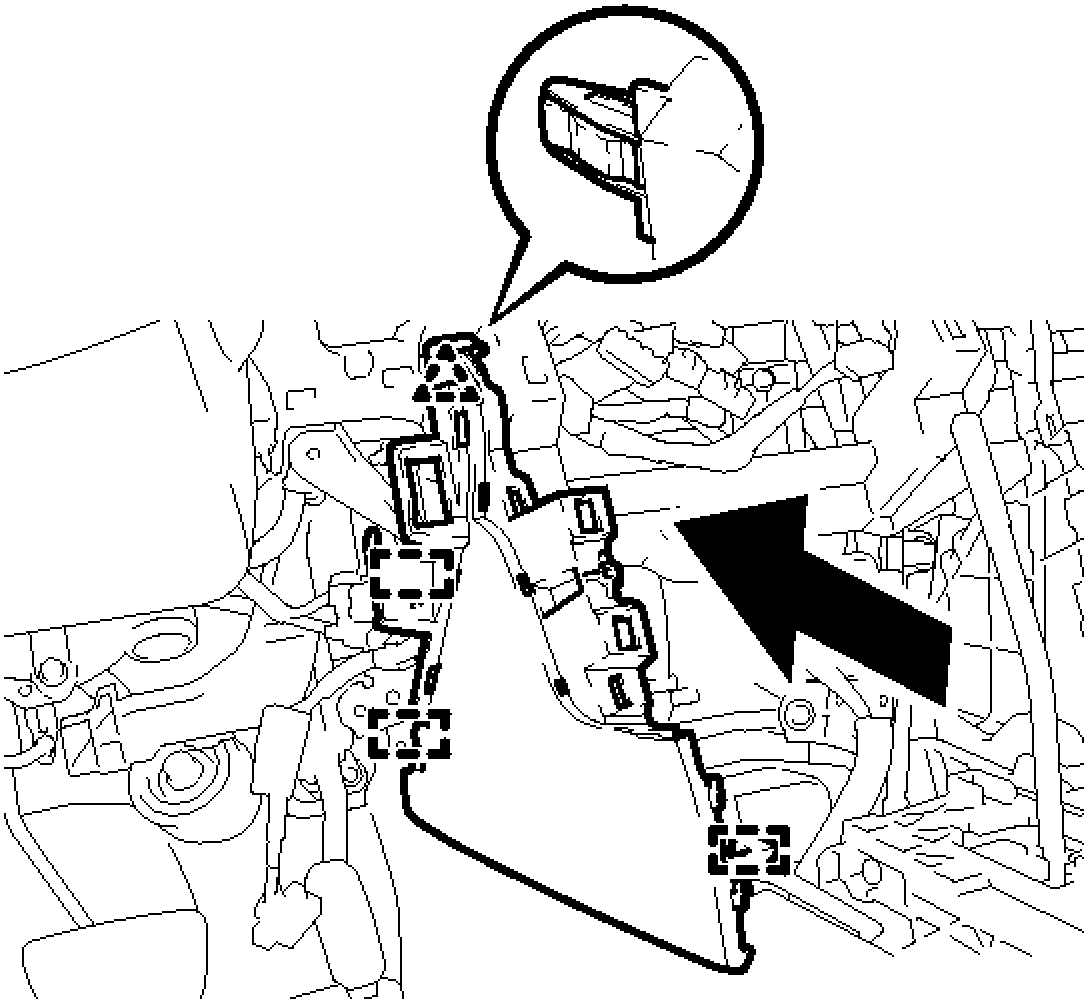

Fig. 81: Installing Front No. 2 Console Box Insert
Courtesy of TOYOTA MOTOR SALES, U.S.A., INC.

c. Install the front No. 2 console box insert with the 2 screws <D> or <E>.

6. **INSTALL LOWER INSTRUMENT PANEL FINISH PANEL ASSEMBLY**
    a. Connect the connector.
    b. Engage the 4 clips and guide to install the lower instrument panel finish panel assembly.
7. **INSTALL FRONT NO. 2 SPEAKER ASSEMBLY (for LH Side)** . Refer to **INSTALLATION - Step 1**
8. **INSTALL NO. 1 INSTRUMENT PANEL SPEAKER PANEL SUB-ASSEMBLY**
    a. Engage the 2 guides.

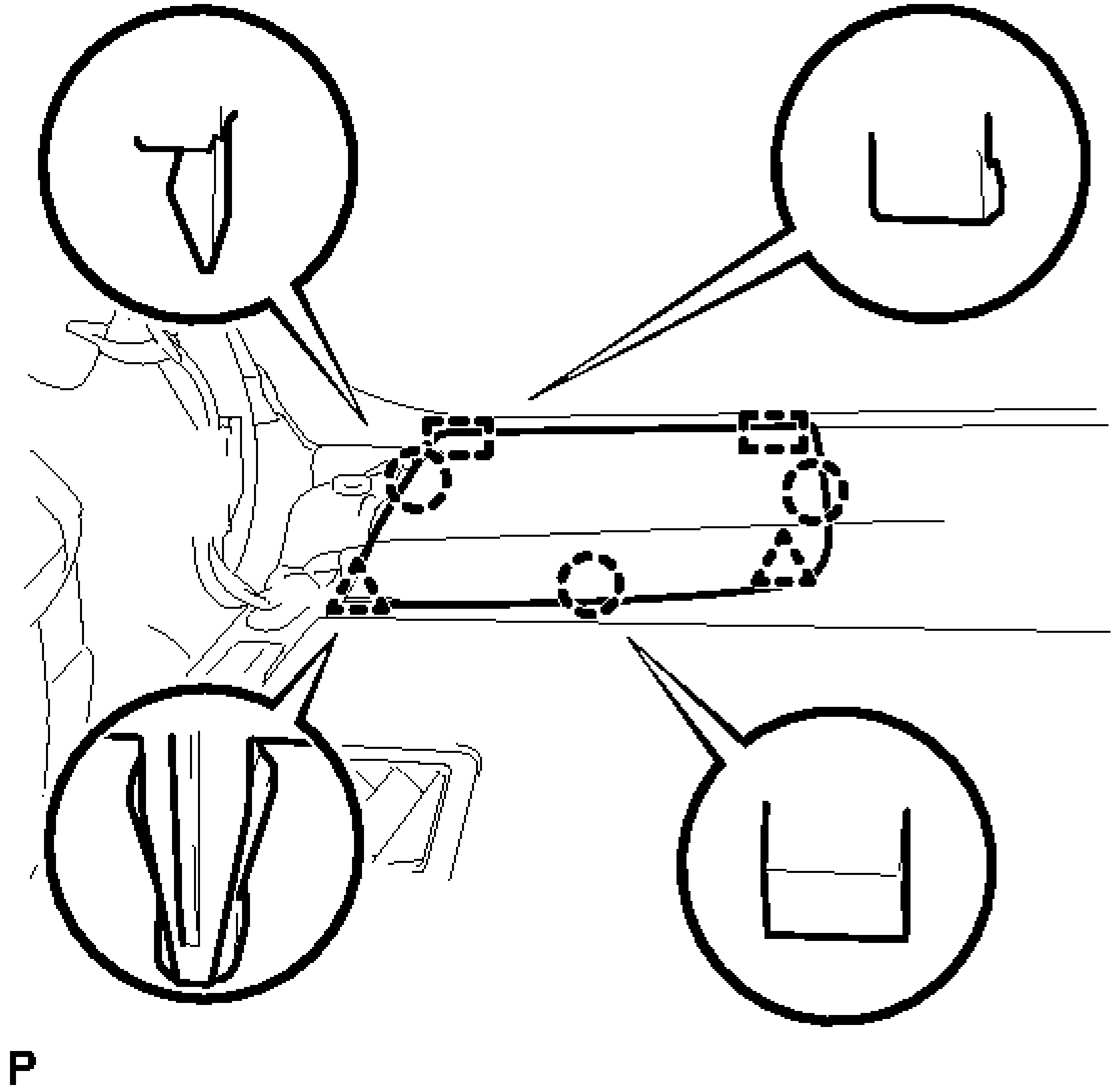

Fig. 82: Identifying No. 1 Instrument Panel Speaker Panel Sub-Assembly
Courtesy of TOYOTA MOTOR SALES, U.S.A., INC.

   b. Engage the 3 claws and 2 clips to install the No. 1 instrument panel speaker panel sub-assembly.

9. **INSTALL FRONT PILLAR GARNISH LH** See step 42
10. **INSTALL FRONT NO. 2 SPEAKER ASSEMBLY (for RH Side)**

    HINT:

    Use the same procedure as for the LH side. Refer to **INSTALLATION - Step 1** .

11. **INSTALL NO. 2 INSTRUMENT PANEL SPEAKER PANEL SUB-ASSEMBLY**
    a. Engage the 2 guides.

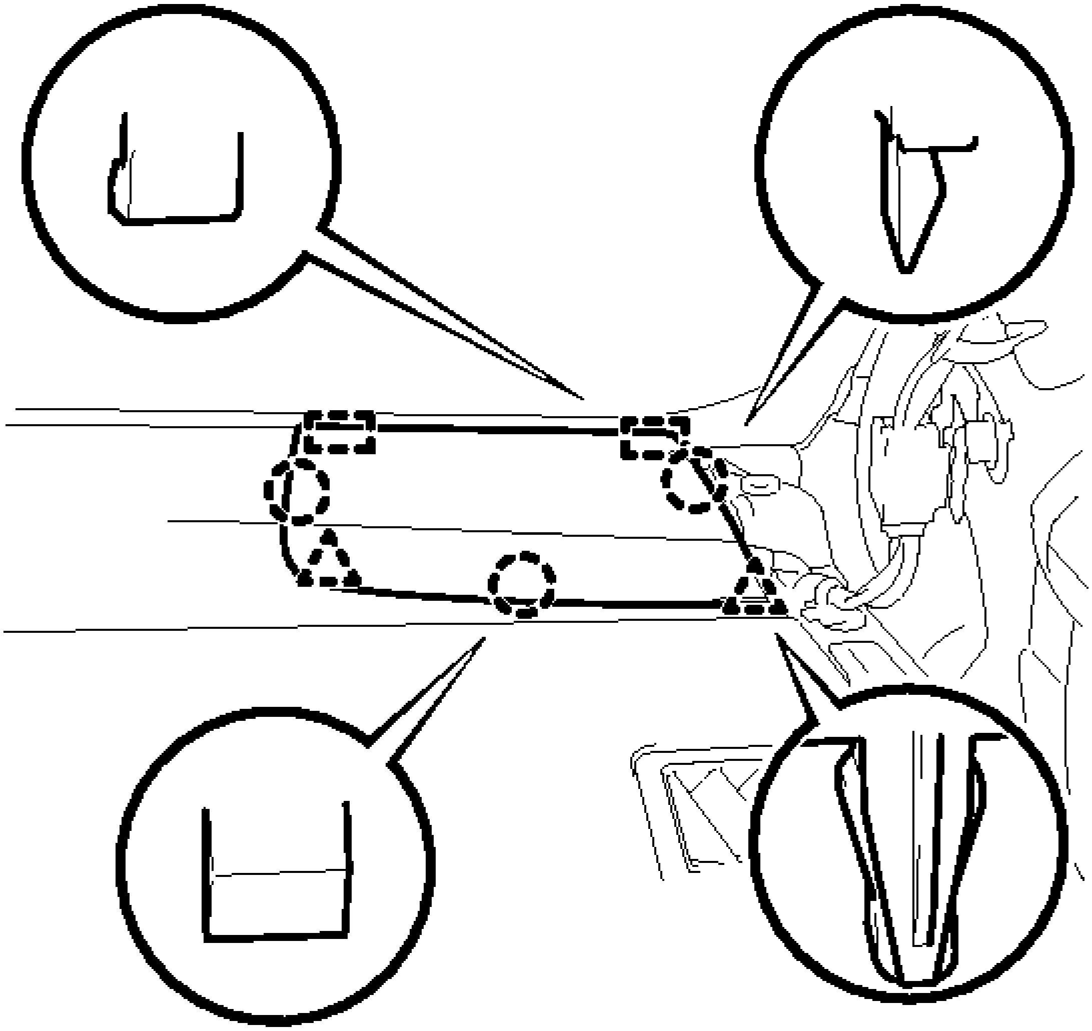

Fig. 83: Identifying No. 2 Instrument Panel Speaker Panel Sub-Assembly
Courtesy of TOYOTA MOTOR SALES, U.S.A., INC.

b. Engage the 3 claws and 2 clips to install the No. 2 instrument panel speaker panel sub-assembly.

12. **INSTALL FRONT PILLAR GARNISH RH**

HINT:

Use the same procedure as for the LH side See step 42.

13. **INSTALL NO. 3 INSTRUMENT PANEL REGISTER ASSEMBLY**

a. Engage the 4 clips to install the No. 3 instrument panel register assembly.

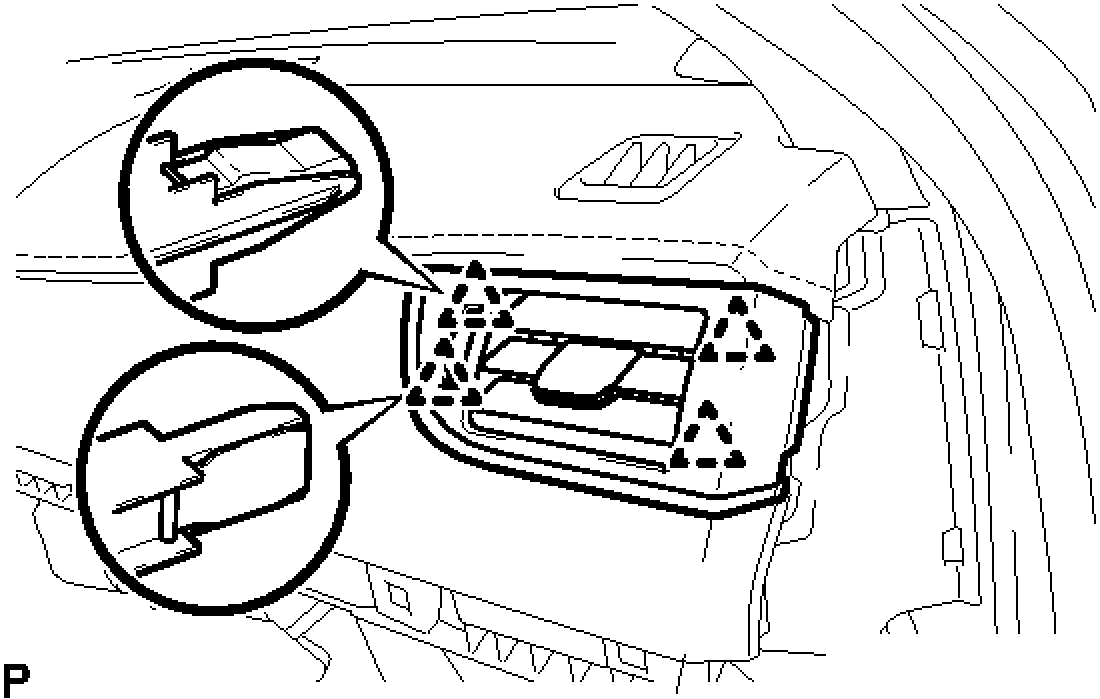

Fig. 84: Identifying No. 3 Instrument Panel Register Assembly
Courtesy of TOYOTA MOTOR SALES, U.S.A., INC.

14. **INSTALL NO. 2 INSTRUMENT CLUSTER FINISH PANEL GARNISH**
    a. Engage the 5 clips to install the No. 2 instrument cluster finish panel garnish.

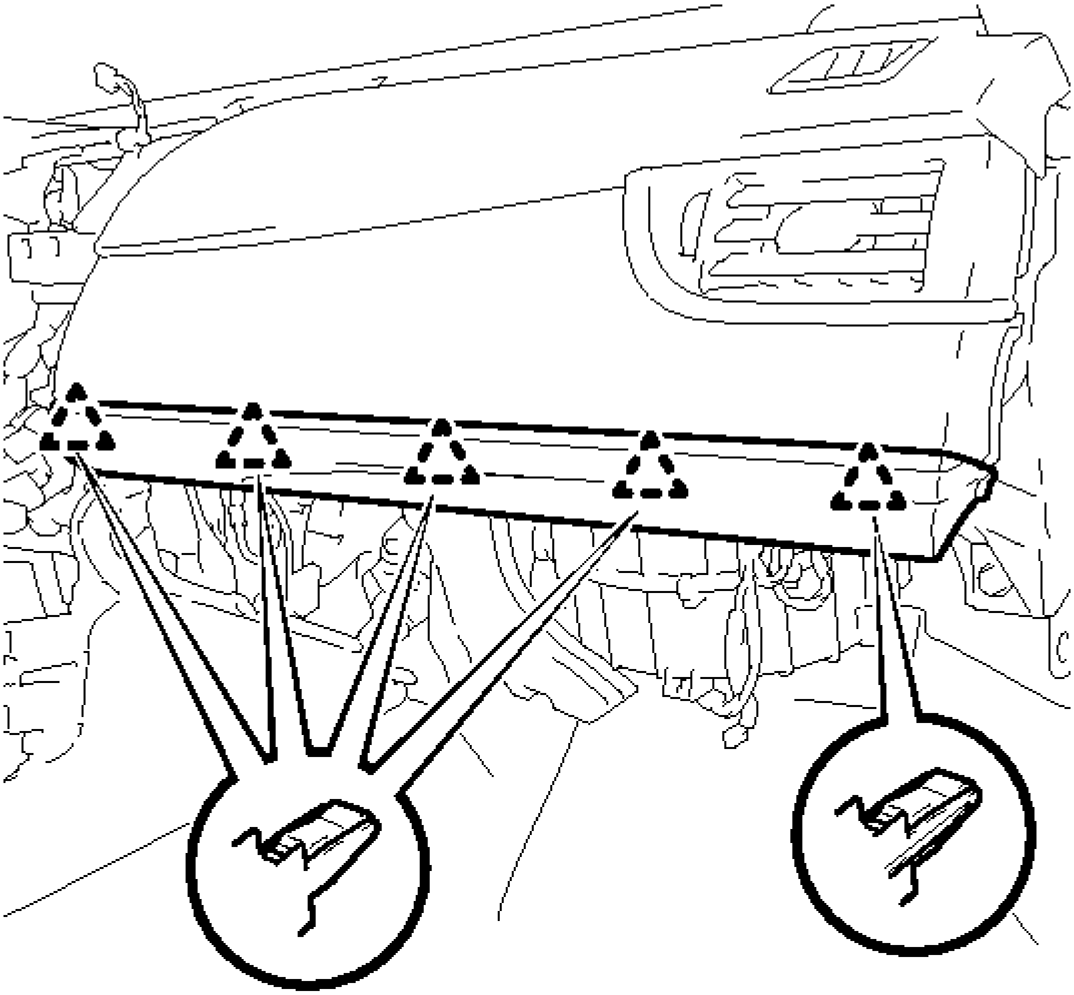

Fig. 85: Identifying No. 2 Instrument Cluster Finish Panel Garnish
Courtesy of TOYOTA MOTOR SALES, U.S.A., INC.

15. **INSTALL LOWER INSTRUMENT PANEL SUB-ASSEMBLY**
    a. Connect each connector.
    b. Engage the glove compartment light as shown in the illustration.

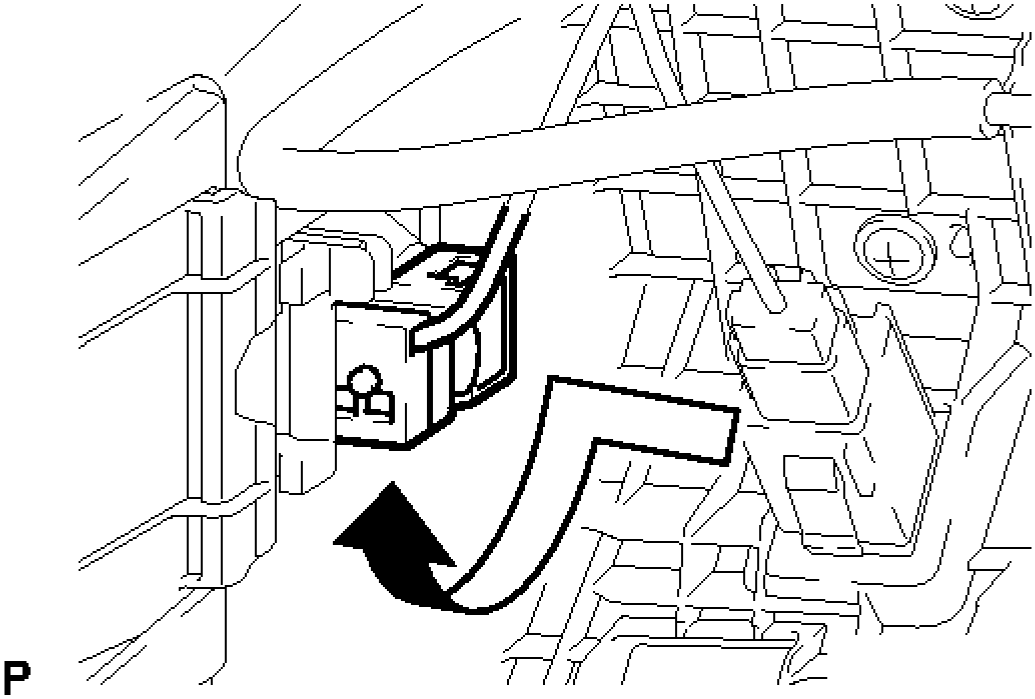

Fig. 86: Installing Glove Compartment Light
Courtesy of TOYOTA MOTOR SALES, U.S.A., INC.

c. Engage the 3 guides and 2 clips.

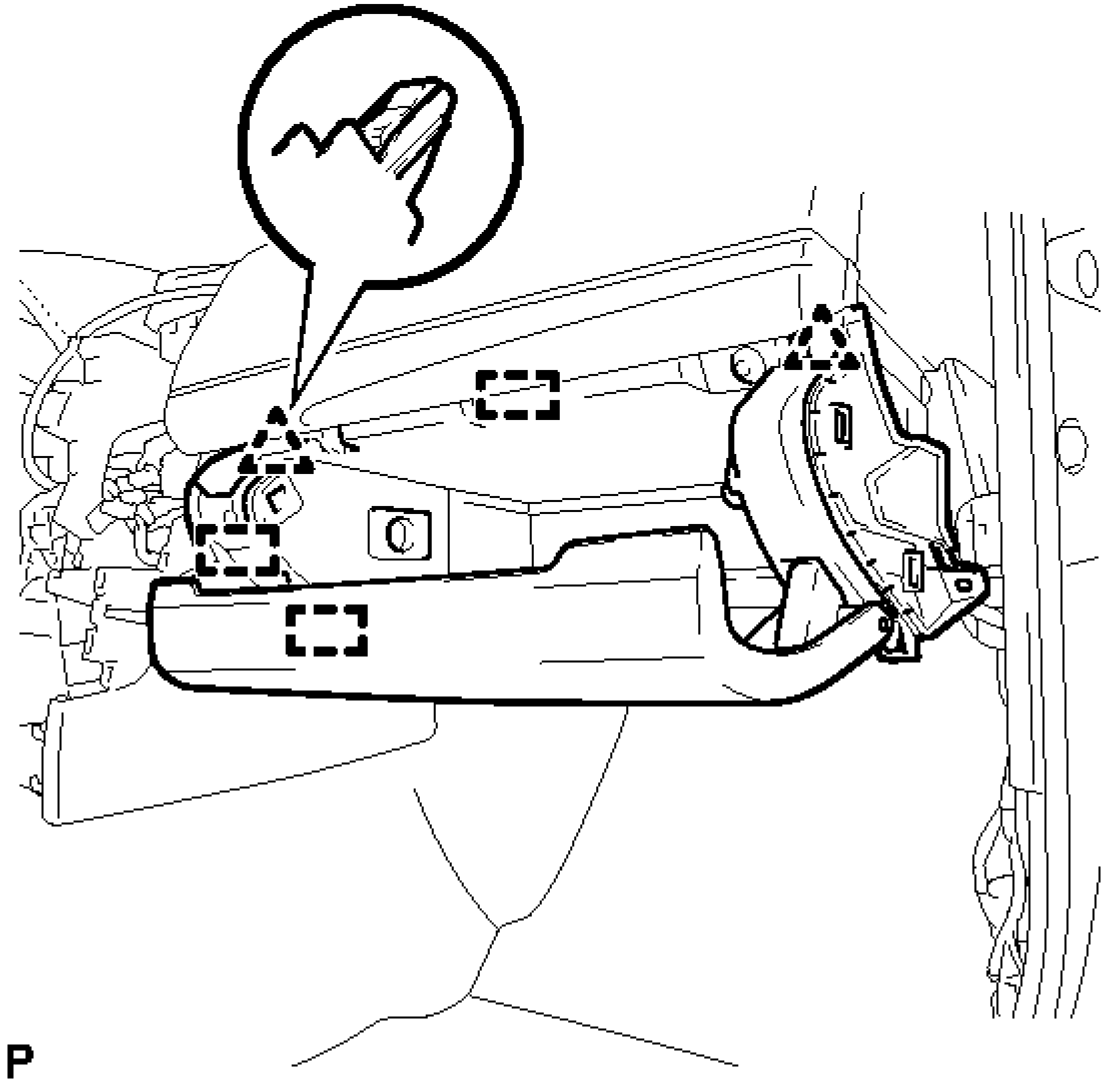

Fig. 87: Identifying Glove Compartment Guides And Clips
Courtesy of TOYOTA MOTOR SALES, U.S.A., INC.

d. Install the lower instrument panel sub-assembly with the 5 screws <D> or <E>.

16. **INSTALL LOWER NO. 2 INSTRUMENT PANEL AIRBAG ASSEMBLY** . Refer to **INSTALLATION - Step 1**
17. **INSTALL NO. 2 INSTRUMENT PANEL UNDER COVER SUB-ASSEMBLY**
    a. Connect the connector.
    b. Engage the 2 guides and 4 claws to install the No. 2 instrument panel under cover sub-assembly.
18. **INSTALL INSTRUMENT SIDE PANEL RH**
    a. Engage the 3 guides.
    b. Engage the 4 claws to install the instrument side panel RH as shown in the illustration.

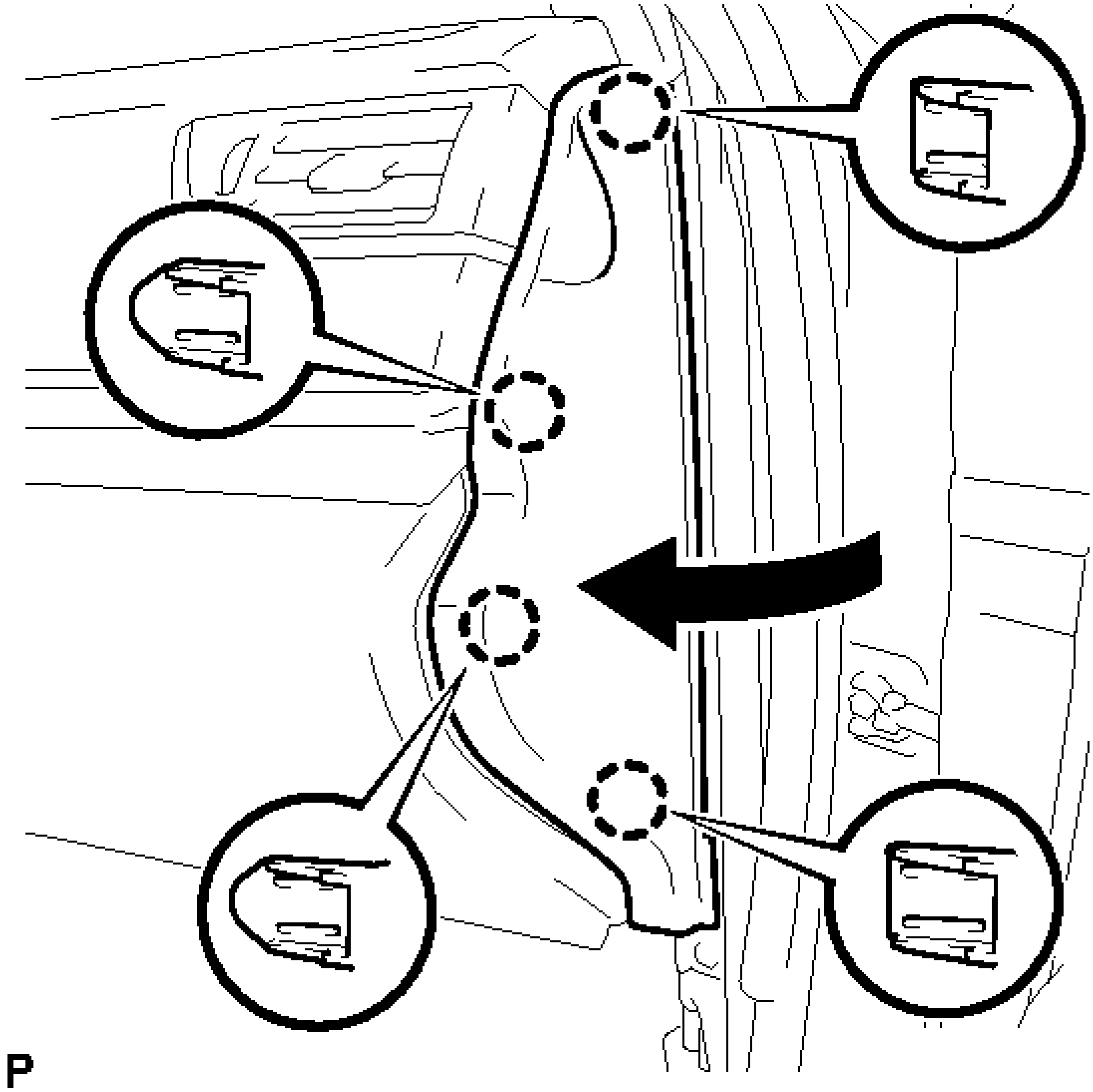

Fig. 88: Engaging Instrument Side Panel RH Claws
Courtesy of TOYOTA MOTOR SALES, U.S.A., INC.

19. **INSTALL FRONT DOOR OPENING TRIM WEATHERSTRIP RH** See step 47
20. **INSTALL COWL SIDE TRIM SUB-ASSEMBLY RH**

    HINT:

    Use the same procedure as for the LH side See step 44.

21. **INSTALL FRONT DOOR SCUFF PLATE RH**

    HINT:

    Use the same procedure as for the LH side See step 45.

22. **INSTALL FRONT NO. 3 SPEAKER ASSEMBLY (for 10 Speakers)** . Refer to **INSTALLATION - Step 5**
23. **INSTALL NO. 1 SPEAKER OPENING COVER ASSEMBLY**
    a. Connect the connector.
    b. Engage the 8 clips to install the No. 1 speaker opening cover assembly.

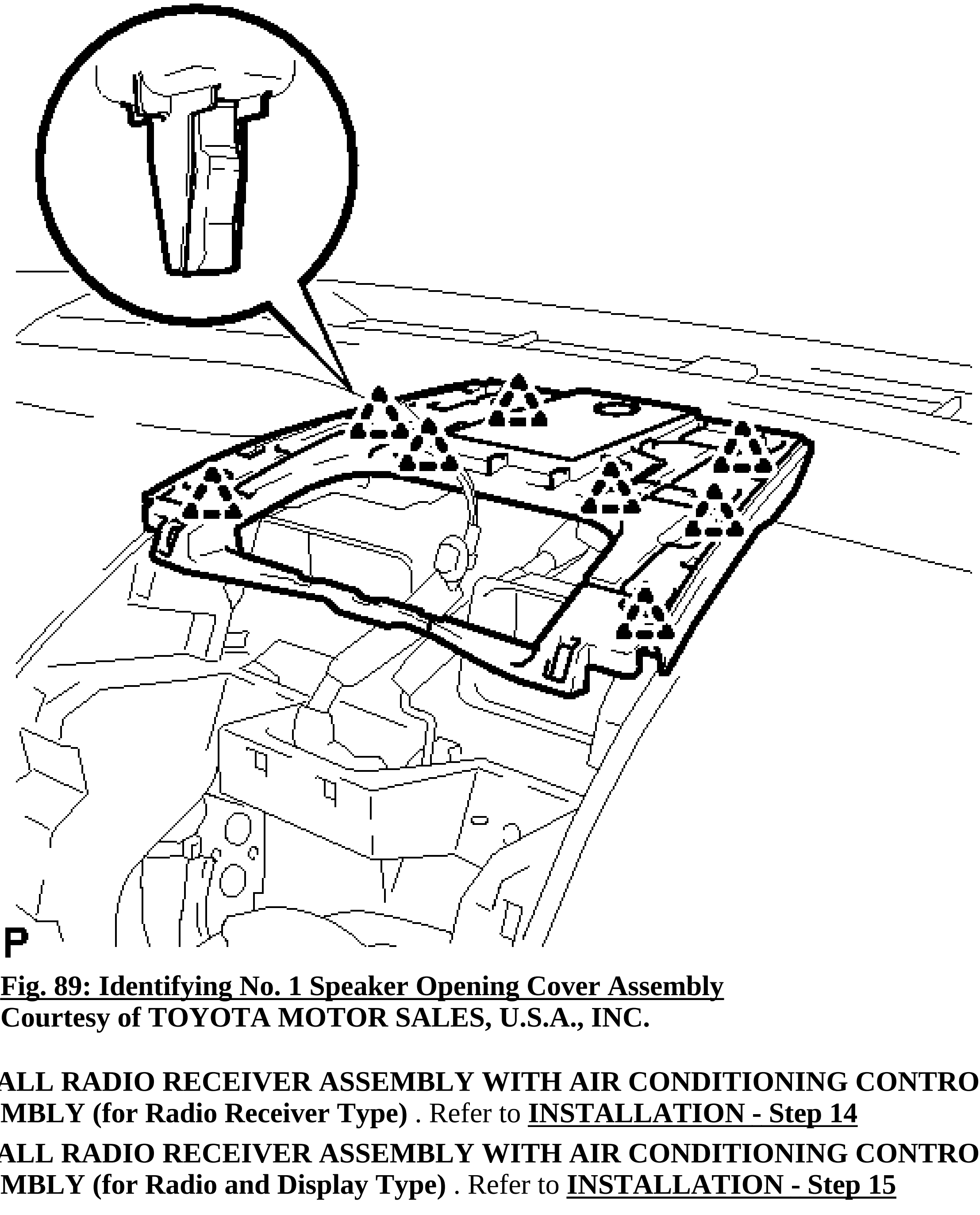

Fig. 89: Identifying No. 1 Speaker Opening Cover Assembly
Courtesy of TOYOTA MOTOR SALES, U.S.A., INC.

24. **INSTALL RADIO RECEIVER ASSEMBLY WITH AIR CONDITIONING CONTROL ASSEMBLY (for Radio Receiver Type)** . Refer to **INSTALLATION - Step 14**
25. **INSTALL RADIO RECEIVER ASSEMBLY WITH AIR CONDITIONING CONTROL ASSEMBLY (for Radio and Display Type)** . Refer to **INSTALLATION - Step 15**
26. **INSTALL NAVIGATION RECEIVER ASSEMBLY WITH AIR CONDITIONING CONTROL ASSEMBLY (for Navigation Receiver Type)** . Refer to **INSTALLATION - Step 7**

27. **INSTALL UPPER CONSOLE PANEL SUB-ASSEMBLY**
    a. Connect each connector.
    b. Engage the 4 clips and guide.
    c. Install the upper console panel sub-assembly with the 2 screws <D> or <E>.
28. **INSTALL BOX BOTTOM MAT**
    a. Install the box bottom mat.
29. **INSTALL NO. 2 INSTRUMENT PANEL REGISTER ASSEMBLY**
    a. Engage the 6 clips to install the No. 2 instrument panel register assembly.

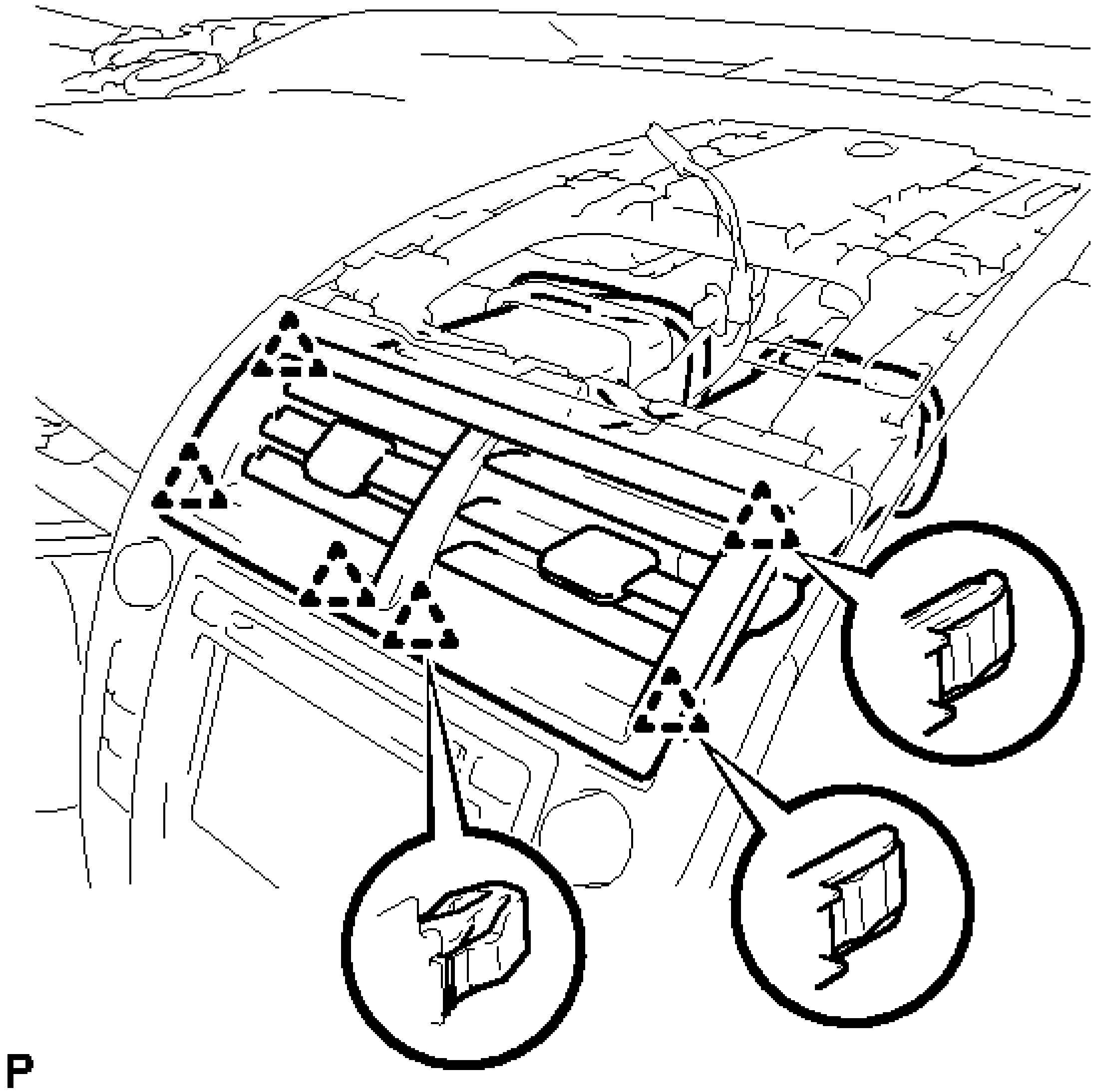

Fig. 90: Identifying No. 2 Instrument Panel Register Assembly
Courtesy of TOYOTA MOTOR SALES, U.S.A., INC.

NOTE: **When installing the No. 2 instrument panel register assembly, check that the wire harness is not caught between the No. 2 instrument**

panel register assembly and duct.

30. **INSTALL CENTER INSTRUMENT CLUSTER FINISH PANEL ASSEMBLY**
    a. Connect the connector.
    b. Engage the clamp.
    c. Engage the 6 clips and 7 claws to install the center instrument cluster finish panel assembly.

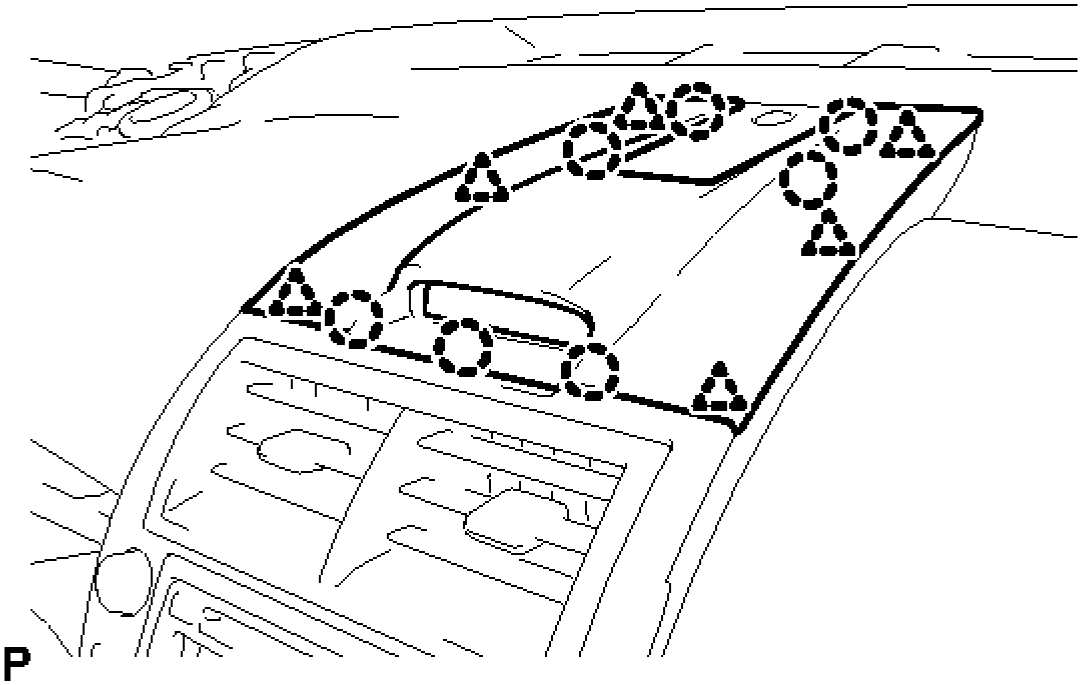

Fig. 91: Identifying Center Instrument Cluster Finish Panel Assembly
Courtesy of TOYOTA MOTOR SALES, U.S.A., INC.

31. **INSTALL REAR CONSOLE BOX ASSEMBLY** See step 1
32. **INSTALL CONSOLE BOX CARPET** See step 2
33. **INSTALL NO. 4 CONSOLE BOX DUCT** See step 3
34. **INSTALL UPPER CONSOLE BOX SUB-ASSEMBLY** See step 4
35. **INSTALL REAR CONSOLE UPPER PANEL SUB-ASSEMBLY**
    a. Connect each connector.
    b. Engage the 4 clips and install the rear console upper panel sub-assembly.
    c. Move the shift lever to P.
36. **INSTALL SHIFT LEVER KNOB SUB-ASSEMBLY**
    a. Turn the shift lever knob sub-assembly clockwise to install the shift lever knob sub-assembly.

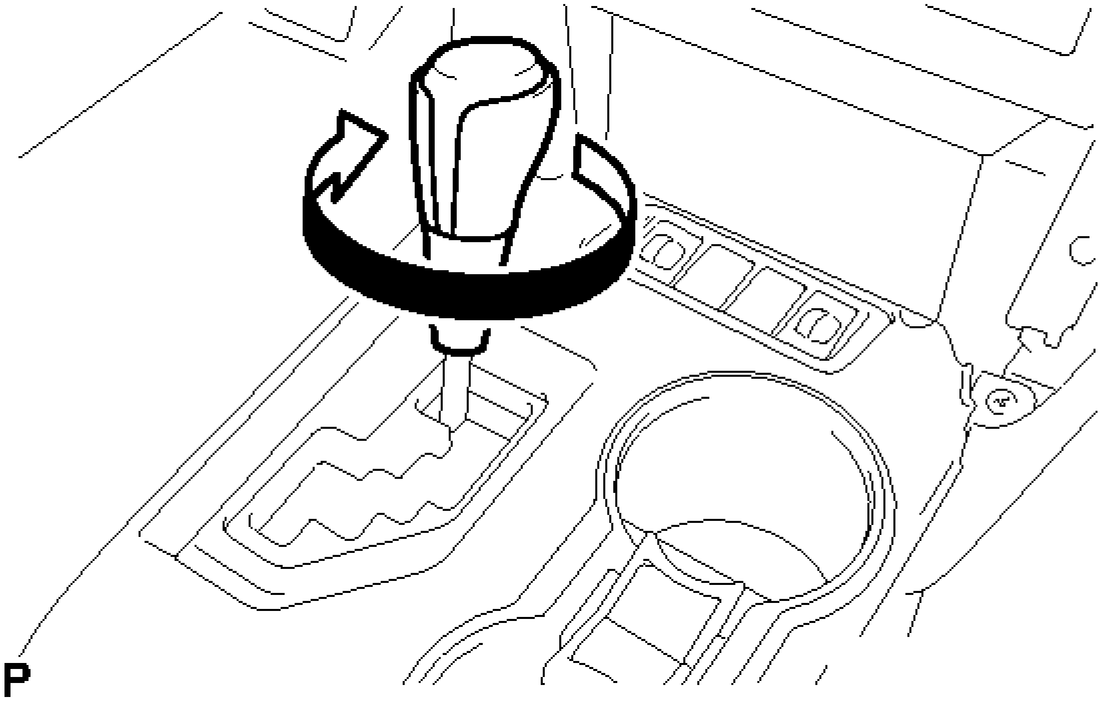

Fig. 92: Installing Shift Lever Knob
Courtesy of TOYOTA MOTOR SALES, U.S.A., INC.

37. **INSTALL FRONT PANEL GARNISH RH**
    a. Engage the 3 claws, 2 clips and 8 guides to install the front panel garnish RH.
38. **INSTALL LOWER NO. 1 INSTRUMENT PANEL FINISH PANEL ASSEMBLY**
    a. Engage the 4 claws, 9 clips and 3 guides.
    b. Install the lower No. 1 instrument panel finish panel assembly with the bolt <C> and screw <D> or <E>.
39. **CONNECT HOOD LOCK CONTROL LEVER SUB-ASSEMBLY**
    a. Engage the claw and 2 guides to connect the hood lock control lever sub-assembly.
40. **INSTALL FRONT PANEL GARNISH LH**
    a. Engage the 3 claws, 2 clips and 8 guides to install the front panel garnish LH.
41. **INSTALL COMBINATION METER ASSEMBLY** . Refer to **INSTALLATION - Step 1**
42. **INSTALL INSTRUMENT CLUSTER FINISH PANEL ASSEMBLY**
    a. Temporarily install the instrument cluster finish panel assembly as shown in the illustration.

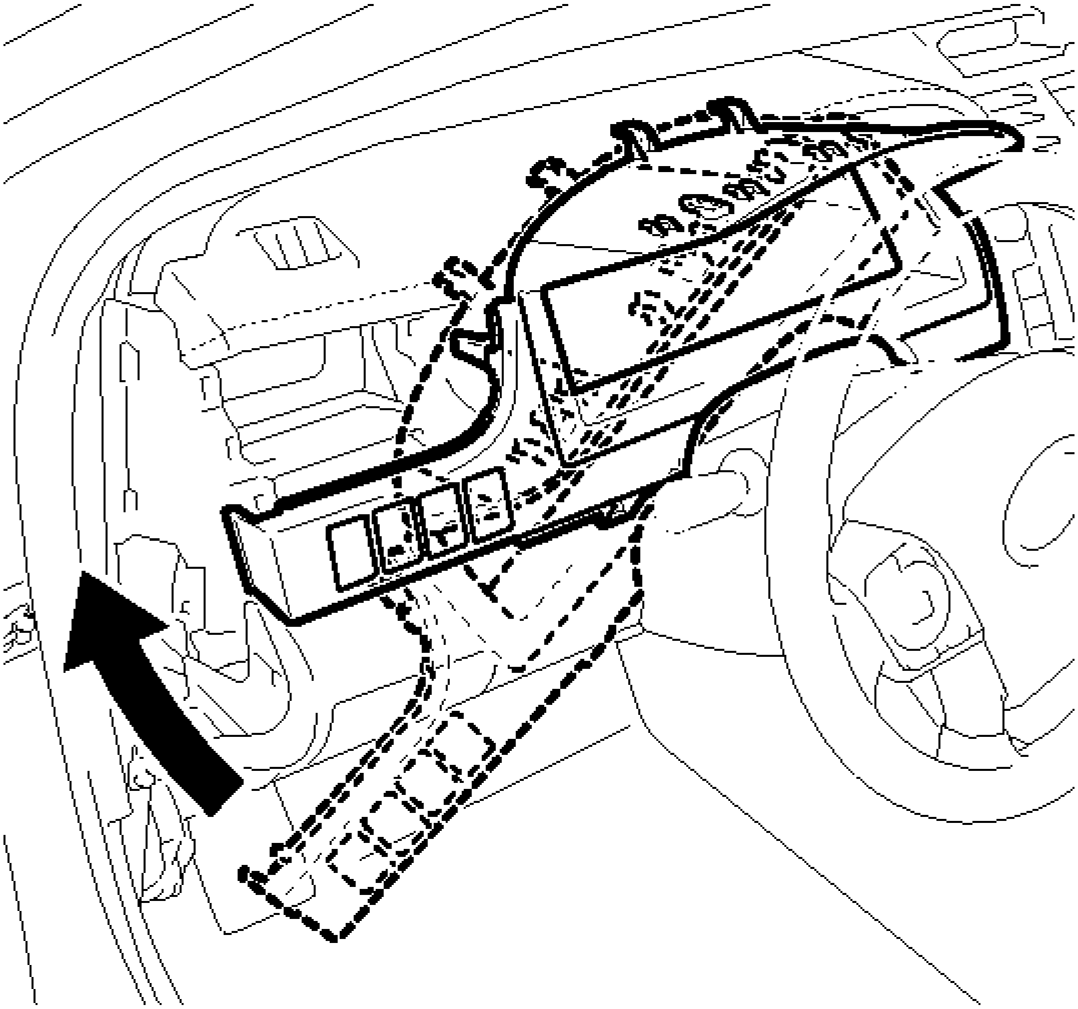

Fig. 93: Installing Instrument Cluster Finish Panel Assembly
Courtesy of TOYOTA MOTOR SALES, U.S.A., INC.

b. Connect each connector.
c. Engage the 5 claws, 5 clips and 2 guides, and install the instrument cluster finish panel assembly.
d. Engage the 2 claws, 4 clips and 2 guides.

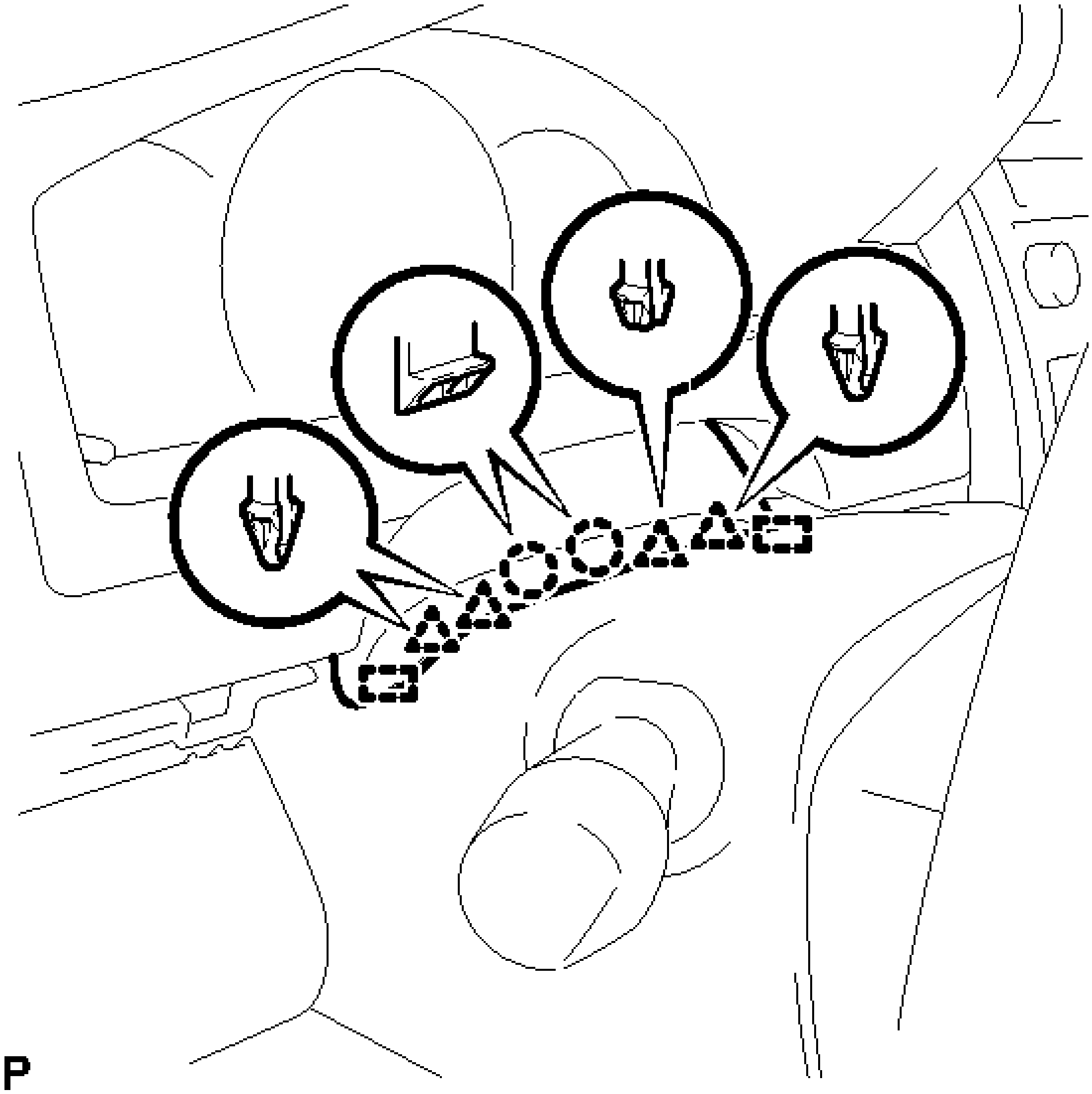

Fig. 94: Engaging Instrument Cluster Finish Panel Assembly Fasteners
Courtesy of TOYOTA MOTOR SALES, U.S.A., INC.

43. **INSTALL NO. 1 INSTRUMENT PANEL REGISTER ASSEMBLY**
    a. Engage the 4 clips to install the No. 1 instrument panel register assembly.

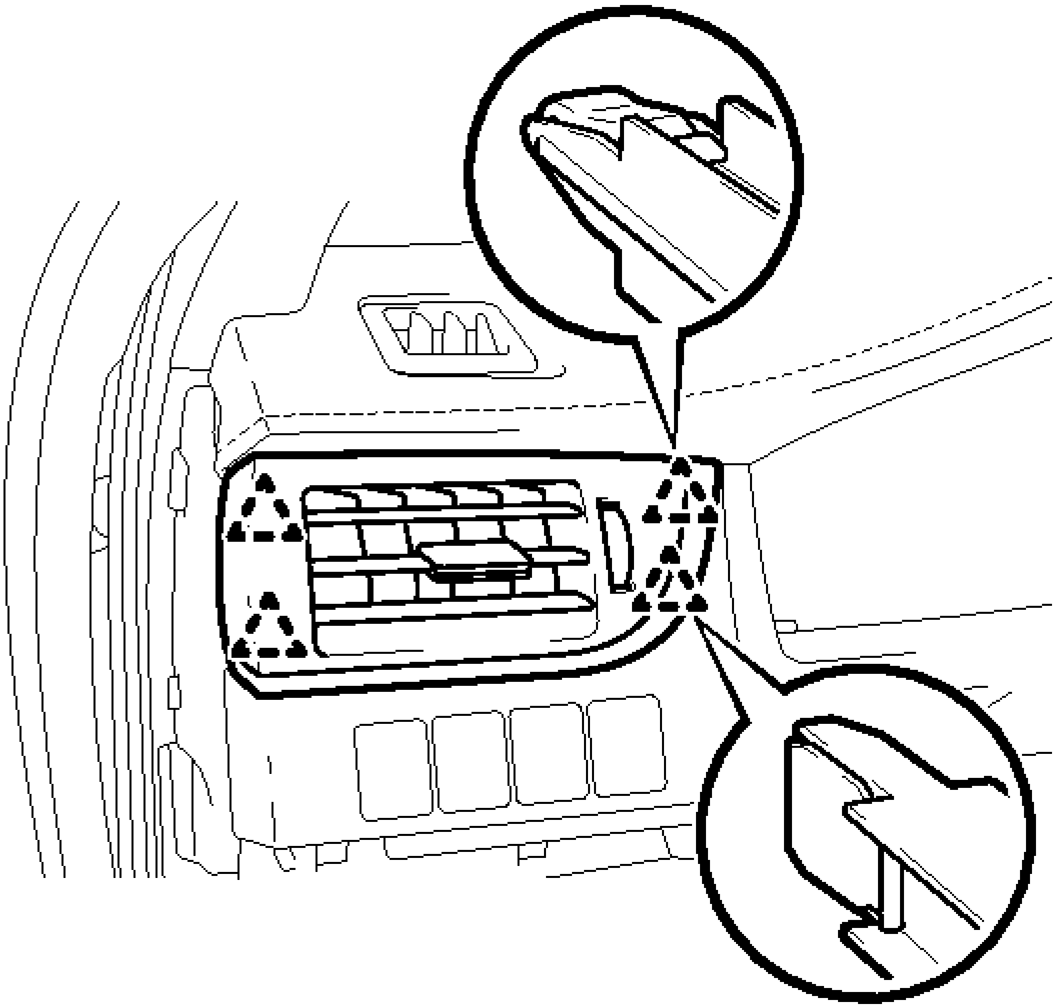

Fig. 95: Identifying No. 1 Instrument Panel Register Assembly
Courtesy of TOYOTA MOTOR SALES, U.S.A., INC.

44. **INSTALL NO. 1 INSTRUMENT CLUSTER FINISH PANEL GARNISH**
    a. Engage the 3 clips to install the No. 1 instrument cluster finish panel garnish.

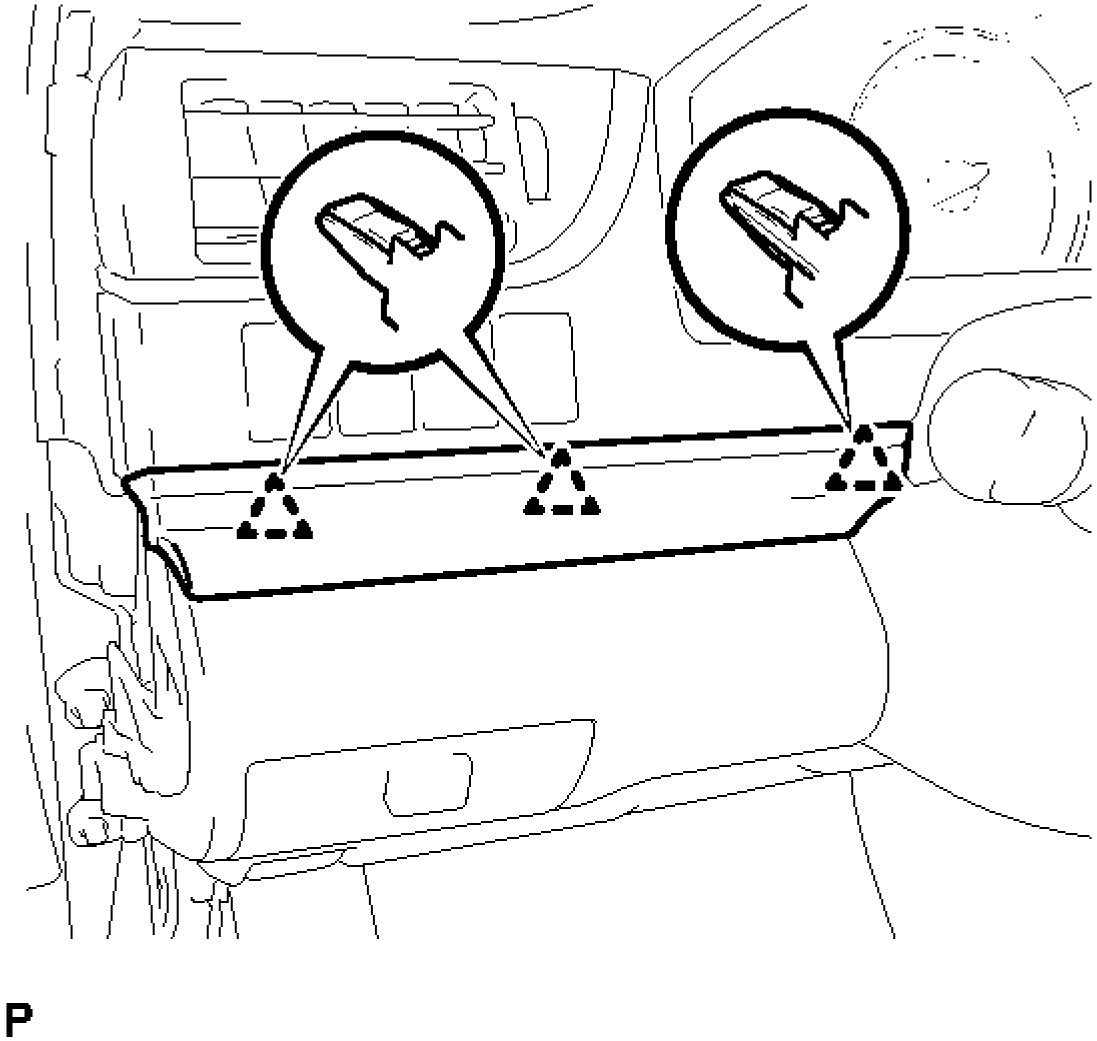

Fig. 96: Identifying No. 1 Instrument Cluster Finish Panel Garnish
Courtesy of TOYOTA MOTOR SALES, U.S.A., INC.

45. **INSTALL INSTRUMENT SIDE PANEL LH**
    a. Engage the 3 guides.
    b. Engage the 4 claws to install the instrument side panel LH as shown in the illustration.

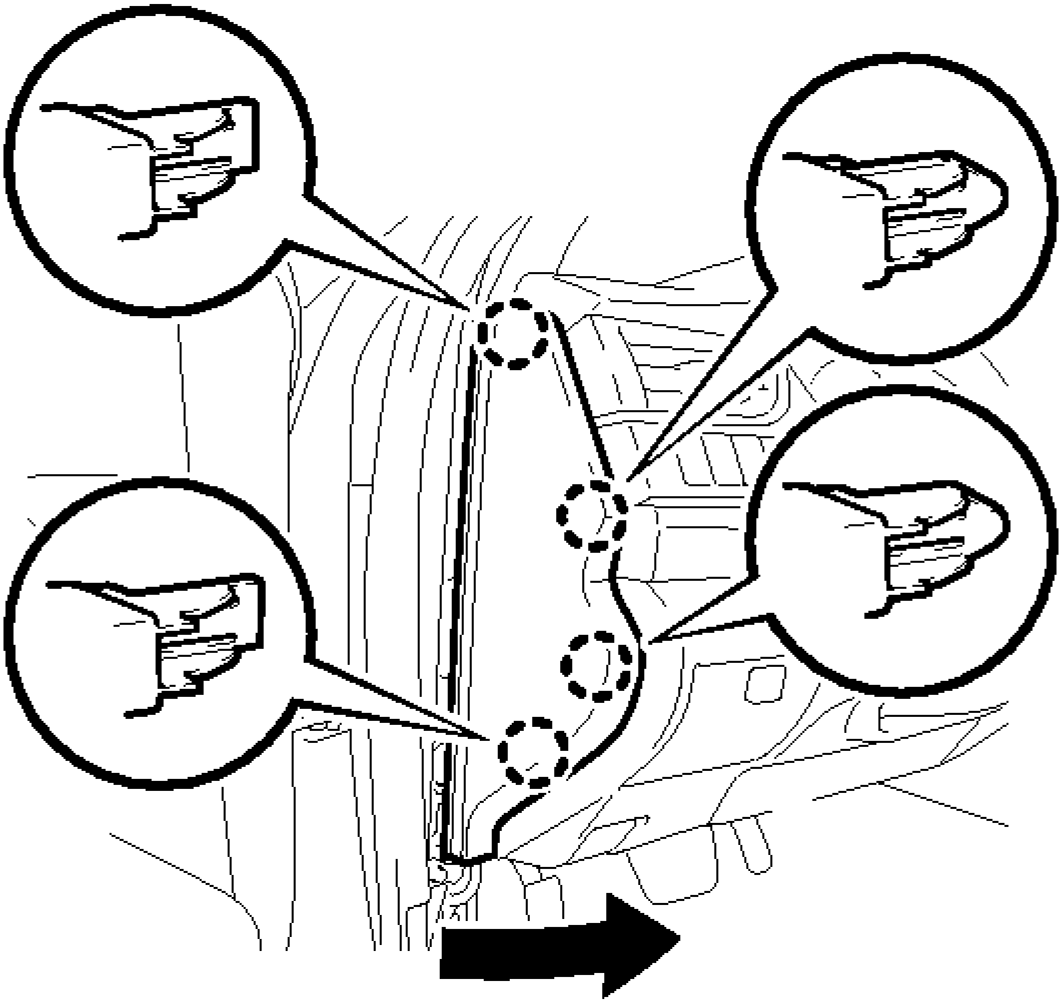

Fig. 97: Engaging Instrument Side Panel LH Claws
Courtesy of TOYOTA MOTOR SALES, U.S.A., INC.

46. **INSTALL FRONT DOOR OPENING TRIM WEATHERSTRIP LH** See step 43
47. **INSTALL COWL SIDE TRIM SUB-ASSEMBLY LH** See step 44
48. **INSTALL FRONT DOOR SCUFF PLATE LH** See step 45
49. **CONNECT CABLE TO AUXILIARY BATTERY NEGATIVE TERMINAL**

NOTE: **When disconnecting the cable, some systems need to be initialized after the cable is reconnected. Refer to INITIALIZATION .**

50. **INSTALL LUGGAGE TRIM SERVICE HOLE COVER** . Refer to **INSTALLATION - Step 3**
51. **INSPECT SRS WARNING LIGHT**

for Separate Type Yaw Rate Sensor: Refer to **DIAGNOSIS SYSTEM**

for Built-in Type Yaw Rate Sensor: Refer to **DIAGNOSIS SYSTEM**

FRONT CONSOLE BOX

COMPONENTS

ILLUSTRATION

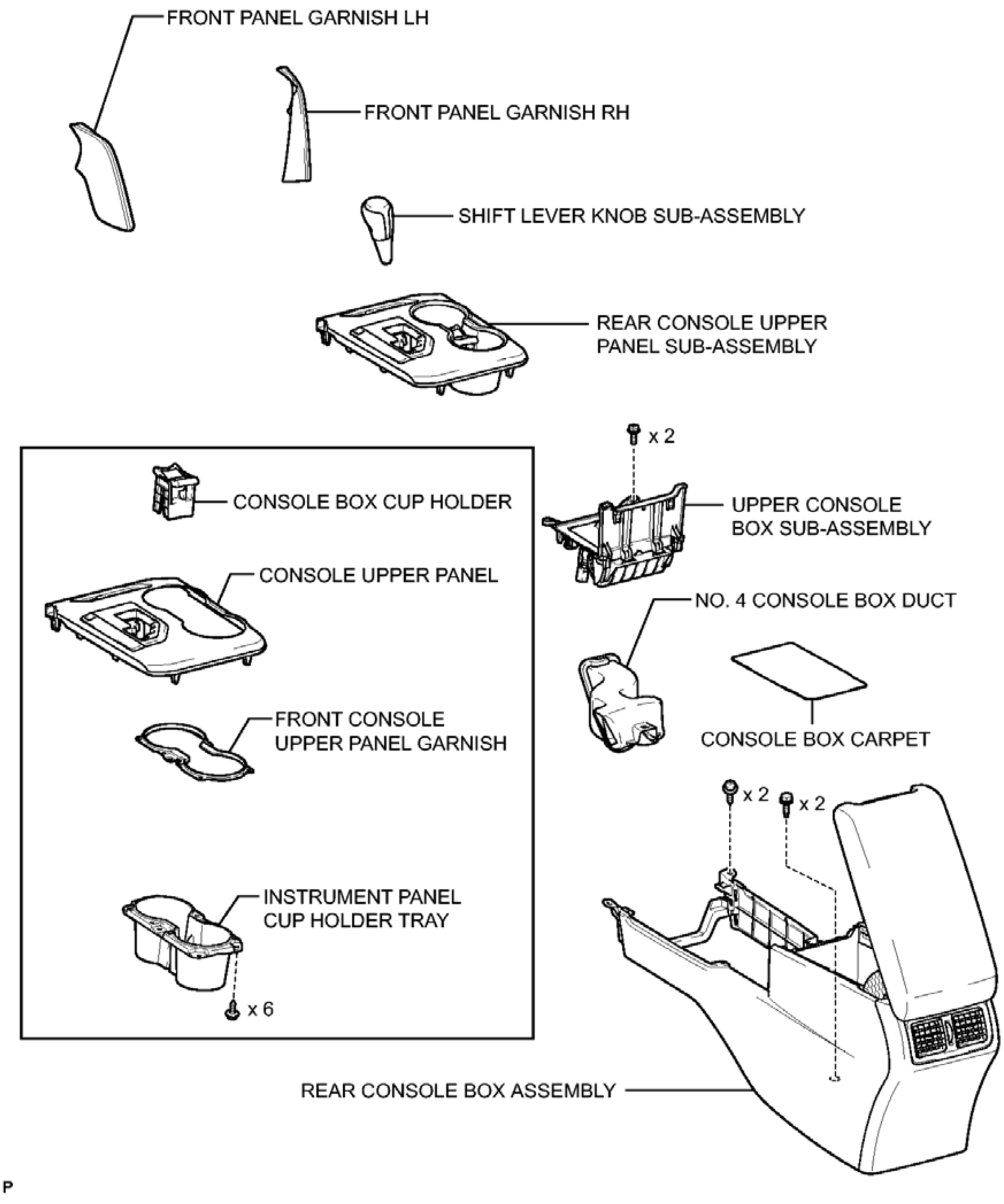
FRONT PANEL GARNISH LH
FRONT PANEL GARNISH RH
SHIFT LEVER KNOB SUB-ASSEMBLY
REAR CONSOLE UPPER PANEL SUB-ASSEMBLY
x 2
CONSOLE BOX CUP HOLDER
UPPER CONSOLE BOX SUB-ASSEMBLY
CONSOLE UPPER PANEL
NO. 4 CONSOLE BOX DUCT
FRONT CONSOLE UPPER PANEL GARNISH
CONSOLE BOX CARPET
x 2
x 2
INSTRUMENT PANEL CUP HOLDER TRAY
x 6
REAR CONSOLE BOX ASSEMBLY
P

Fig. 98: Identifying Front Console Box Replacement Components (1 Of 2)
Courtesy of TOYOTA MOTOR SALES, U.S.A., INC.

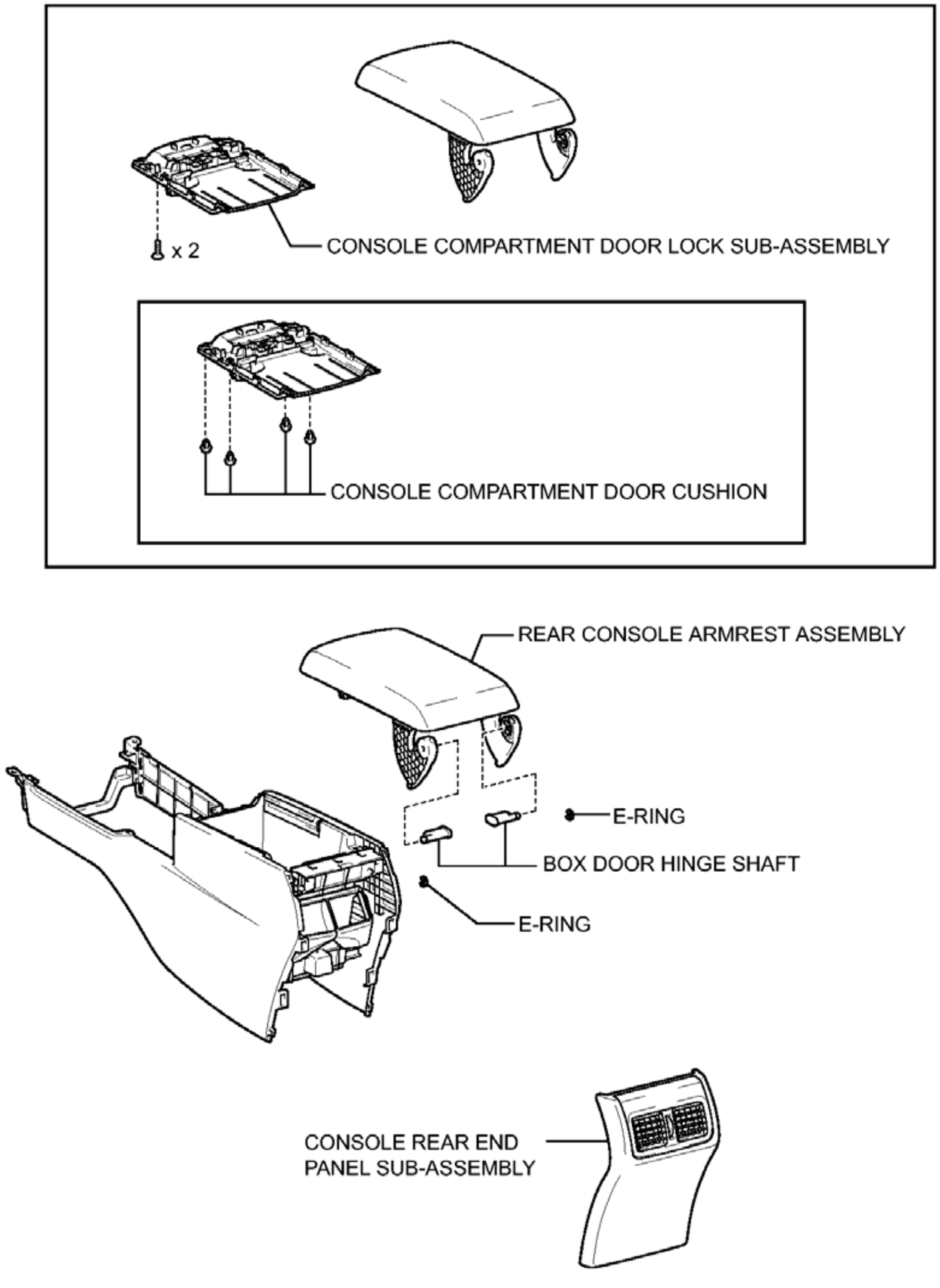
x 2
CONSOLE COMPARTMENT DOOR LOCK SUB-ASSEMBLY
CONSOLE COMPARTMENT DOOR CUSHION
REAR CONSOLE ARMREST ASSEMBLY
E-RING
BOX DOOR HINGE SHAFT
E-RING
CONSOLE REAR END PANEL SUB-ASSEMBLY
P

Fig. 99: Identifying Front Console Box Replacement Components (2 Of 2)
Courtesy of TOYOTA MOTOR SALES, U.S.A., INC.

REMOVAL

REMOVAL

1. **REMOVE FRONT PANEL GARNISH LH** See step 12
2. **REMOVE FRONT PANEL GARNISH RH** See step 15
3. **REMOVE SHIFT LEVER KNOB SUB-ASSEMBLY** See step 16
4. **REMOVE REAR CONSOLE UPPER PANEL SUB-ASSEMBLY** See step 17
5. **REMOVE CONSOLE BOX CUP HOLDER**
    a. Remove the console box cup holder from the rear console upper panel sub-assembly.

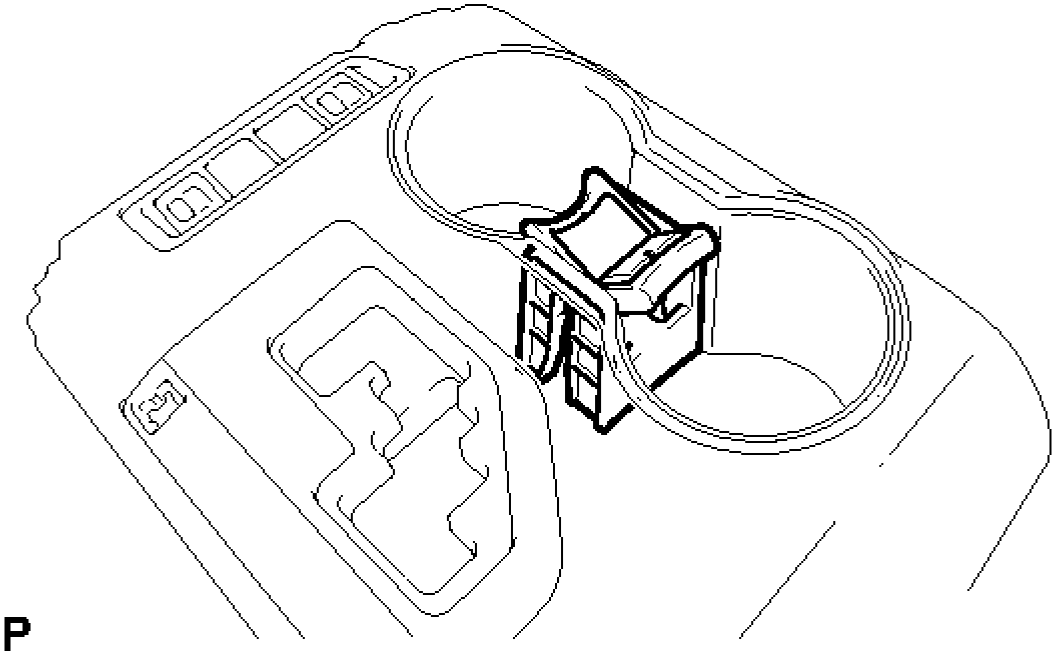

Fig. 100: Identifying Console Box Cup Holder
Courtesy of TOYOTA MOTOR SALES, U.S.A., INC.

6. **REMOVE INSTRUMENT PANEL CUP HOLDER TRAY**
    a. Remove the 6 screws and instrument panel cup holder tray.

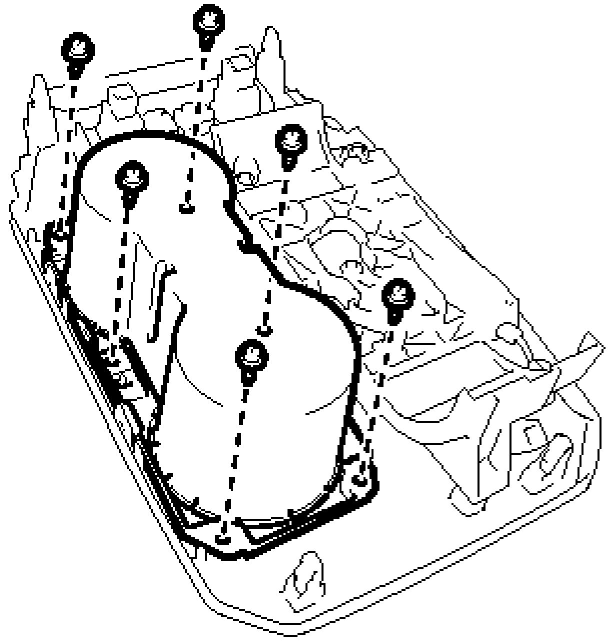

P

Fig. 101: Locating Instrument Panel Cup Holder Tray Fasteners
Courtesy of TOYOTA MOTOR SALES, U.S.A., INC.

b. Remove the front console upper panel garnish.

7. **REMOVE UPPER CONSOLE BOX SUB-ASSEMBLY**
    a. Remove the 2 screws.

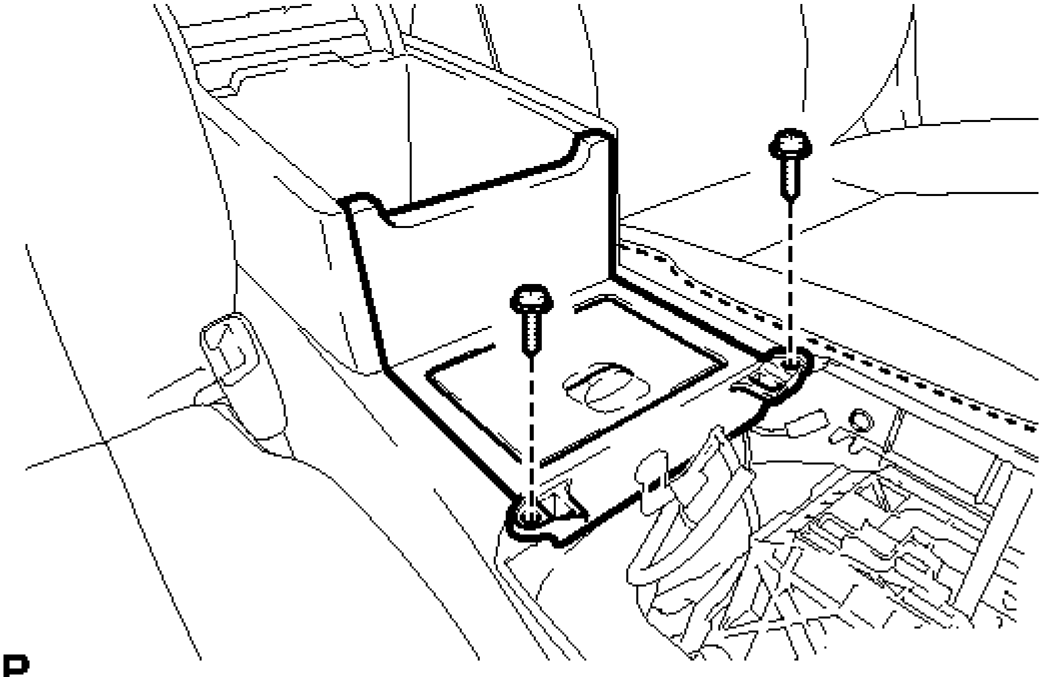

P

Fig. 102: Identifying Upper Console Box Screws
Courtesy of TOYOTA MOTOR SALES, U.S.A., INC.

b. Disengage the 4 clips and 2 guides remove the upper console box sub-assembly as shown in the illustration.

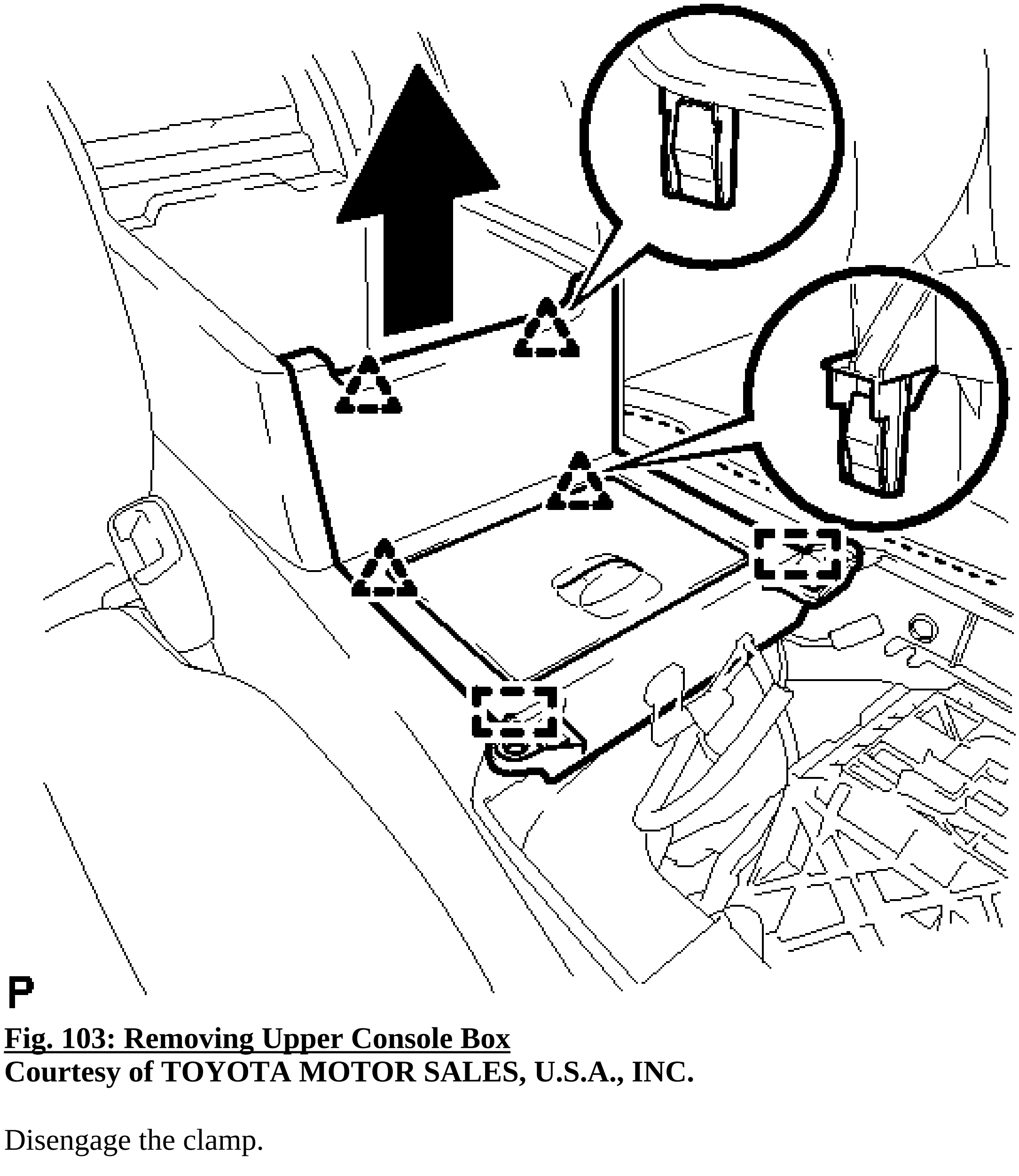

Fig. 103: Removing Upper Console Box
Courtesy of TOYOTA MOTOR SALES, U.S.A., INC.

c. Disengage the clamp.

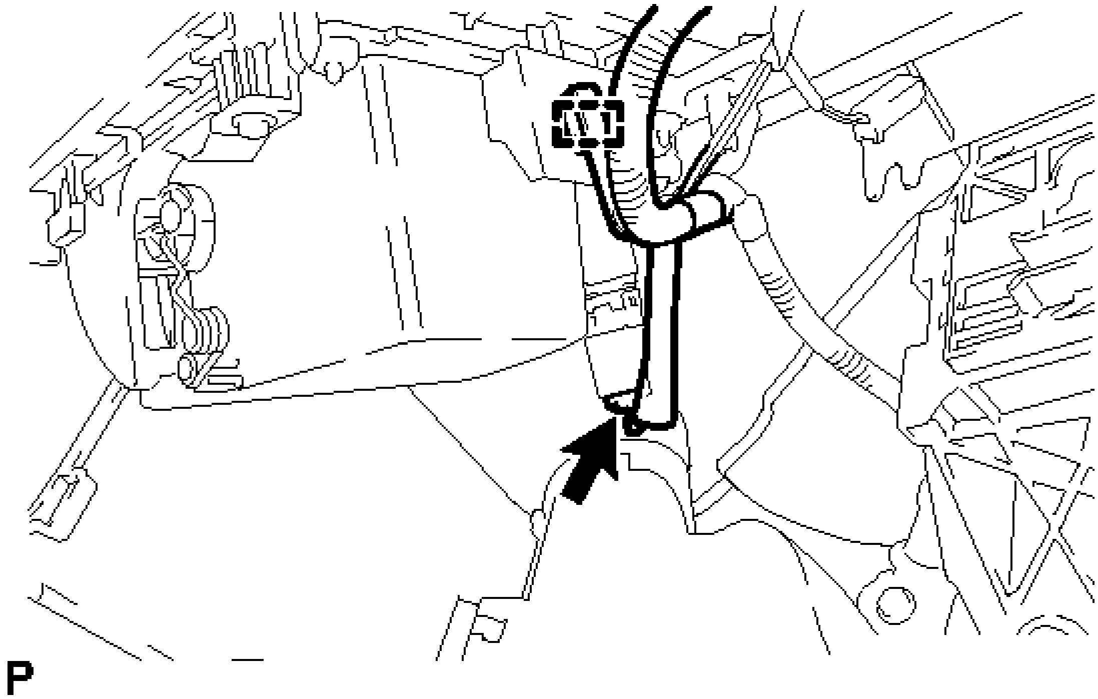

Fig. 104: Locating Upper Console Box Sub-Assembly Connector
Courtesy of TOYOTA MOTOR SALES, U.S.A., INC.

d. Disconnect the connector to remove the upper console box sub-assembly.

8. **REMOVE NO. 4 CONSOLE BOX DUCT**
   a. Disengage the claw and remove the No. 4 console box duct.

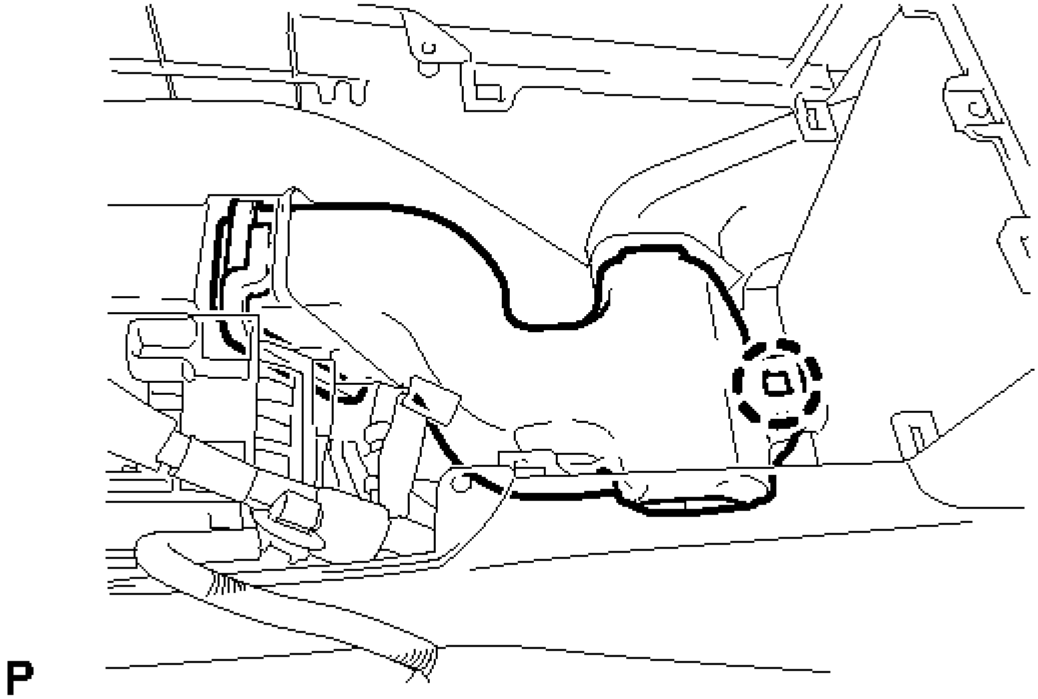

Fig. 105: Locating No. 4 Console Box Duct (w/ Rear Register Duct) Claw
Courtesy of TOYOTA MOTOR SALES, U.S.A., INC.

9. **REMOVE CONSOLE BOX CARPET**
    a. Remove the console box carpet.

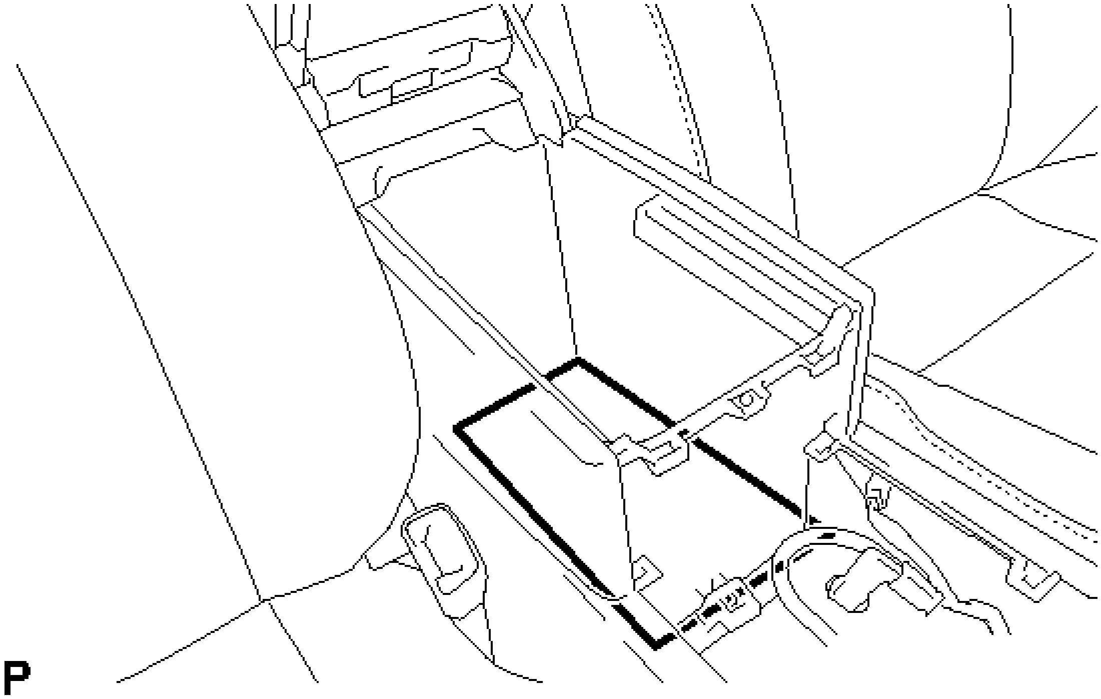

Fig. 106: Identifying Console Box Carpet
Courtesy of TOYOTA MOTOR SALES, U.S.A., INC.

10. **REMOVE REAR CONSOLE BOX ASSEMBLY**
    a. Remove the 2 bolts and 2 screws.

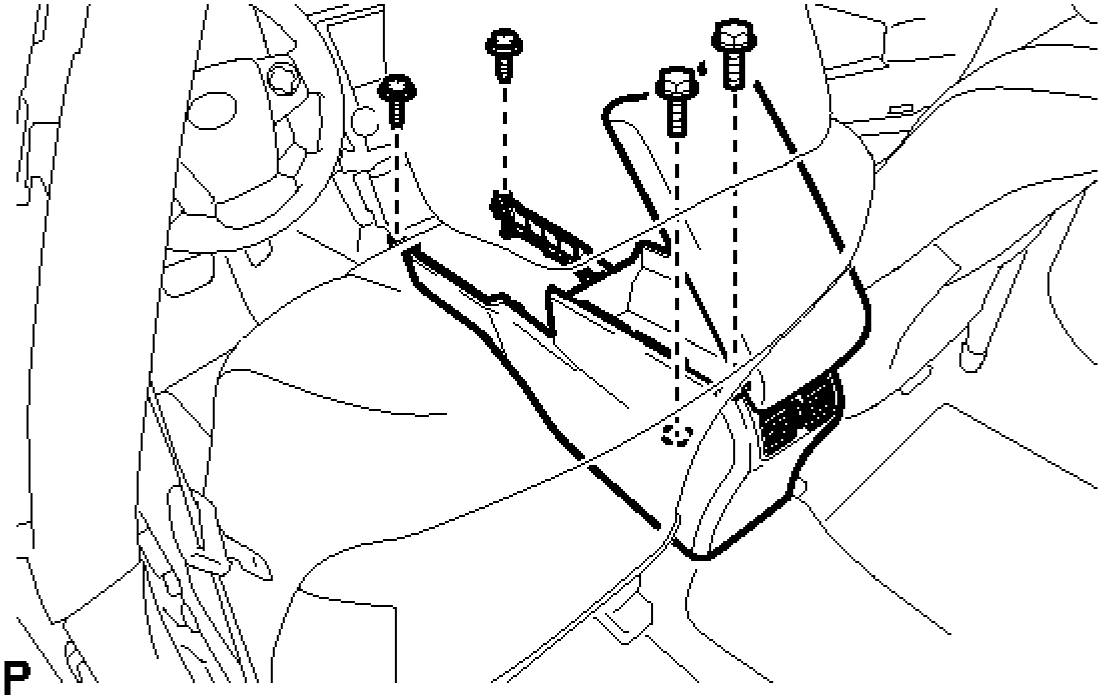

Fig. 107: Identifying Rear Console Box Bolts And Screws
Courtesy of TOYOTA MOTOR SALES, U.S.A., INC.

b. Pull the rear console box assembly in the direction indicated by the arrow to disengage the 4 guides and remove the rear console box assembly.

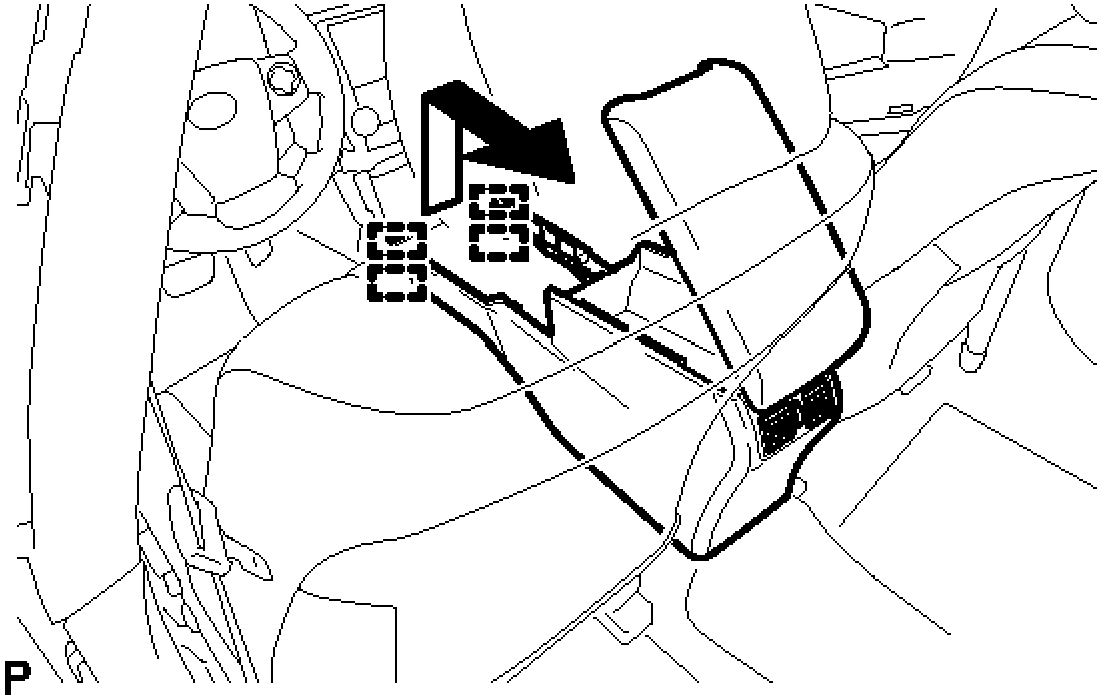

Fig. 108: Removing The Rear Console Box Assembly

Courtesy of TOYOTA MOTOR SALES, U.S.A., INC.

DISASSEMBLY

DISASSEMBLY

1. **REMOVE CONSOLE REAR END PANEL SUB-ASSEMBLY**
    a. Disengage the 4 claws and 4 clips to remove the console rear end panel sub-assembly.

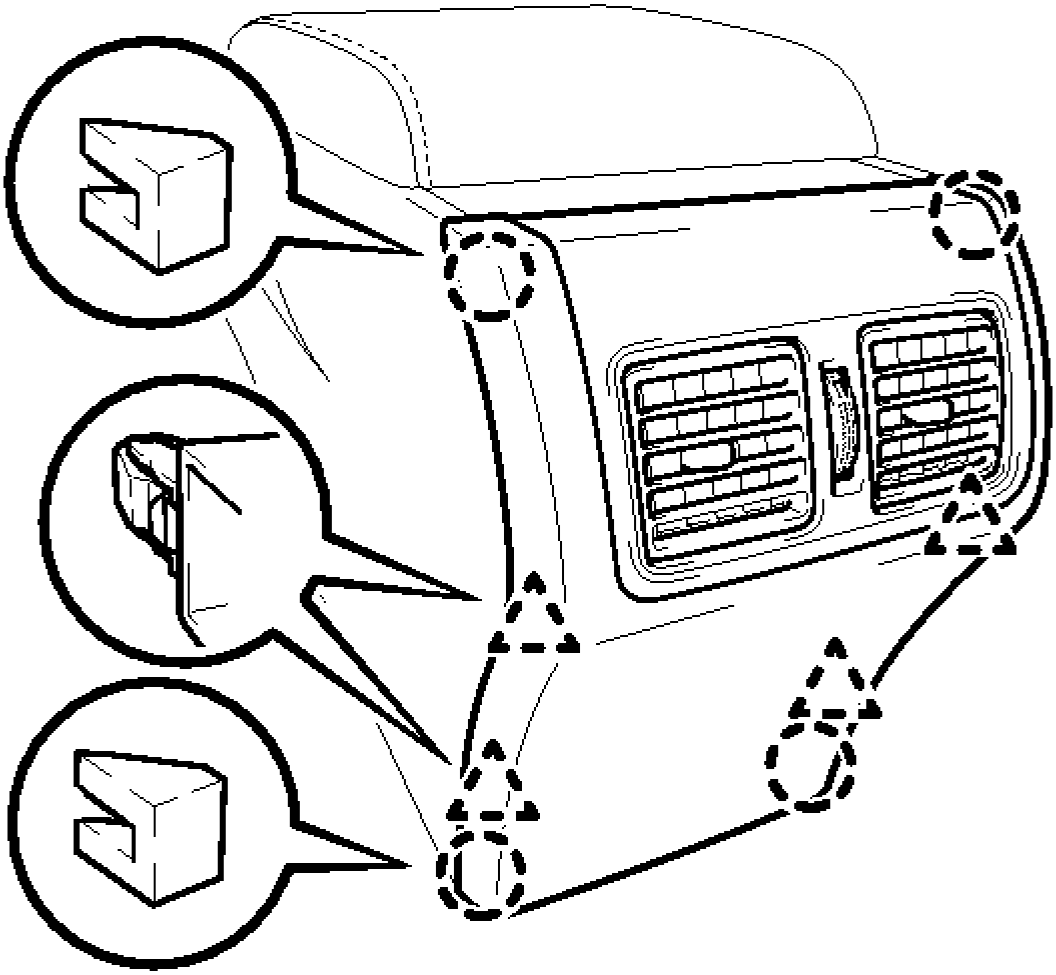

Fig. 109: Identifying Console Rear End Panel Claws And Clips
Courtesy of TOYOTA MOTOR SALES, U.S.A., INC.

2. **REMOVE REAR CONSOLE ARMREST ASSEMBLY**
    a. Using a screwdriver, remove the 2 E-rings.

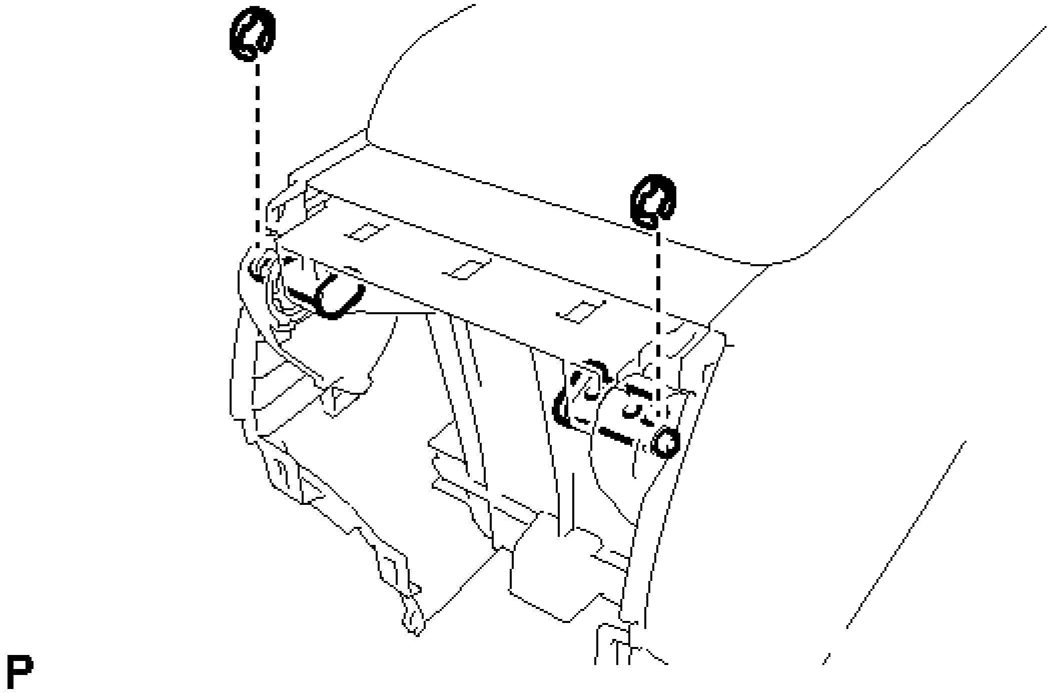

Fig. 110: Locating Rear Console Armrest Assembly E-Rings
Courtesy of TOYOTA MOTOR SALES, U.S.A., INC.

NOTE: **Be careful not to allow the E-rings to pop out when removing them.**

b. Using a screwdriver, pull out the 2 box door hinge shafts.

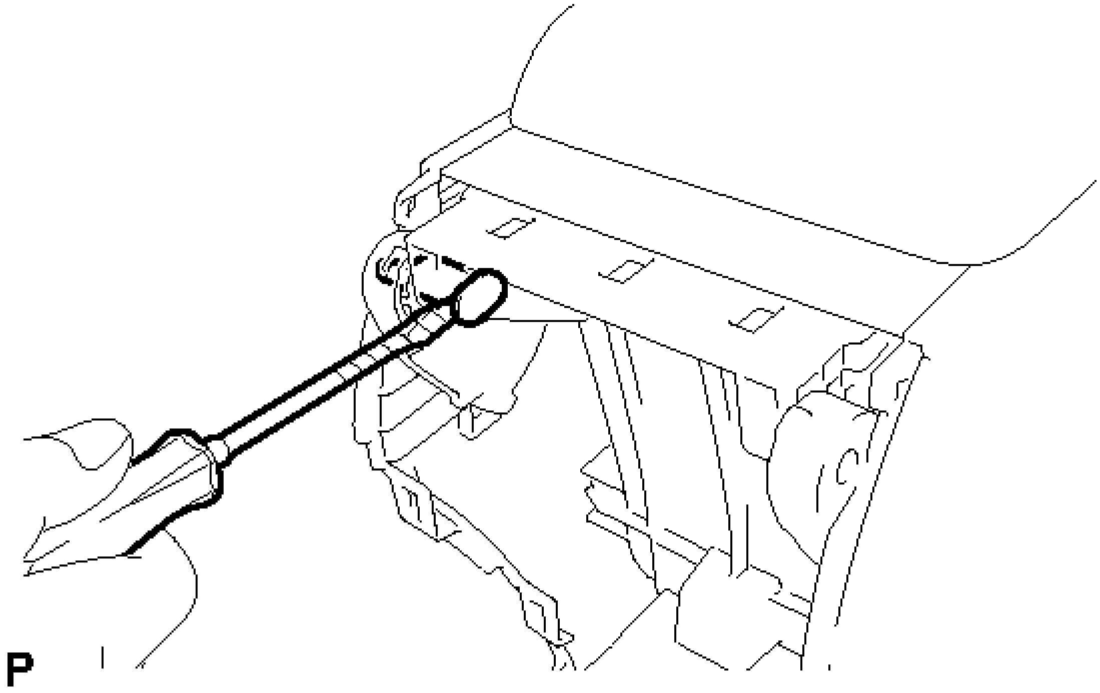

Fig. 111: Removing Rear Console Armrest Assembly Hinge Shafts
Courtesy of TOYOTA MOTOR SALES, U.S.A., INC.

HINT:

- Tape the screwdriver tip before use.
- The illustration is for the LH side.
- Use the same procedure for the RH side and LH side.

c. Remove the rear console armrest assembly.

3. **REMOVE CONSOLE COMPARTMENT DOOR LOCK SUB-ASSEMBLY**

a. Remove the 2 screws.

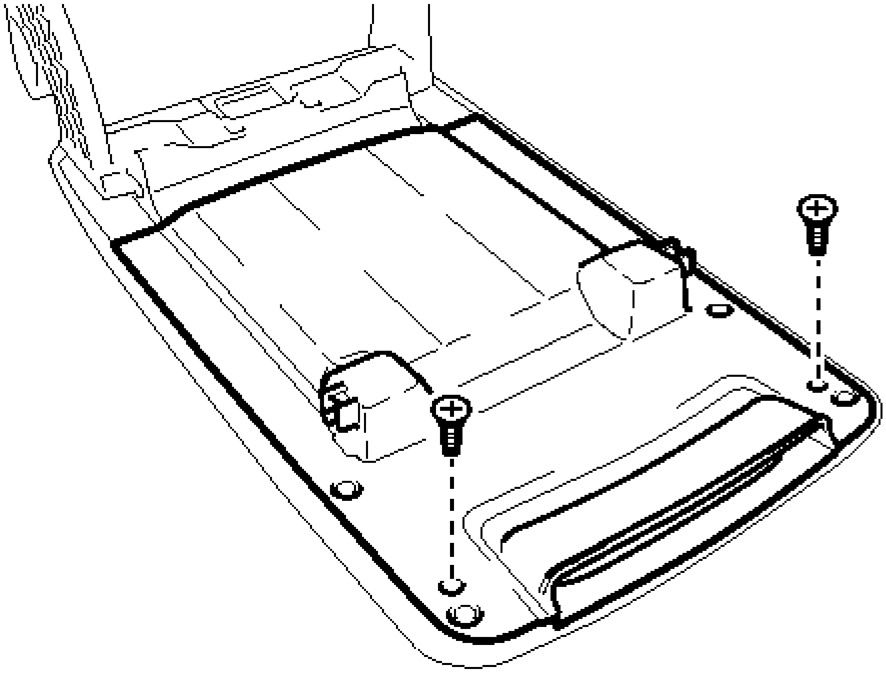

Fig. 112: Locating Console Compartment Door Lock Sub-Assembly Fasteners
Courtesy of TOYOTA MOTOR SALES, U.S.A., INC.

b. Using a screwdriver, disengage the 8 claws.

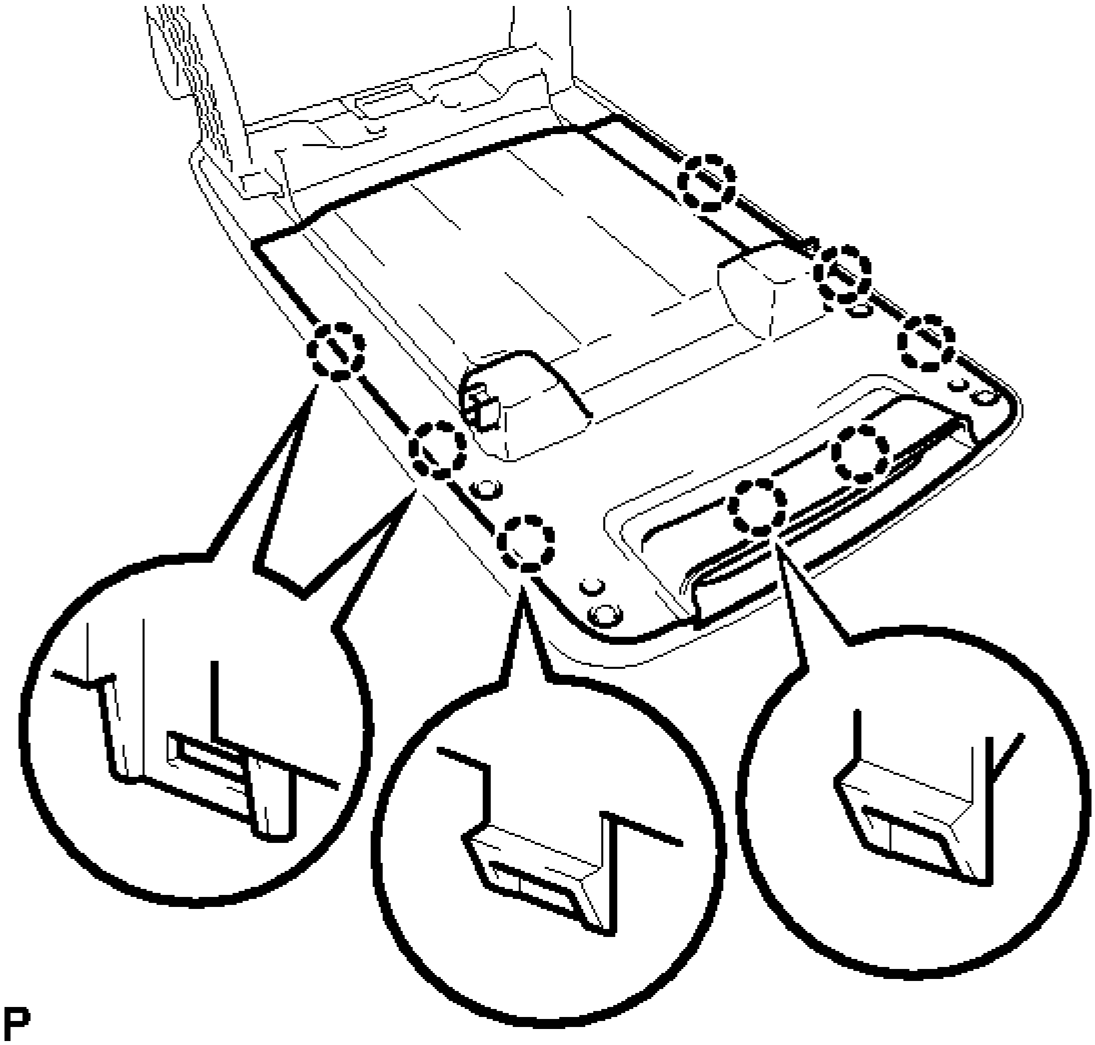

Fig. 113: Locating Console Compartment Door Lock Sub-Assembly Claws
Courtesy of TOYOTA MOTOR SALES, U.S.A., INC.

HINT:

Tape the screwdriver tip before use.

c. Disengage the 2 guides to remove the console compartment door lock sub-assembly as shown in the illustration.

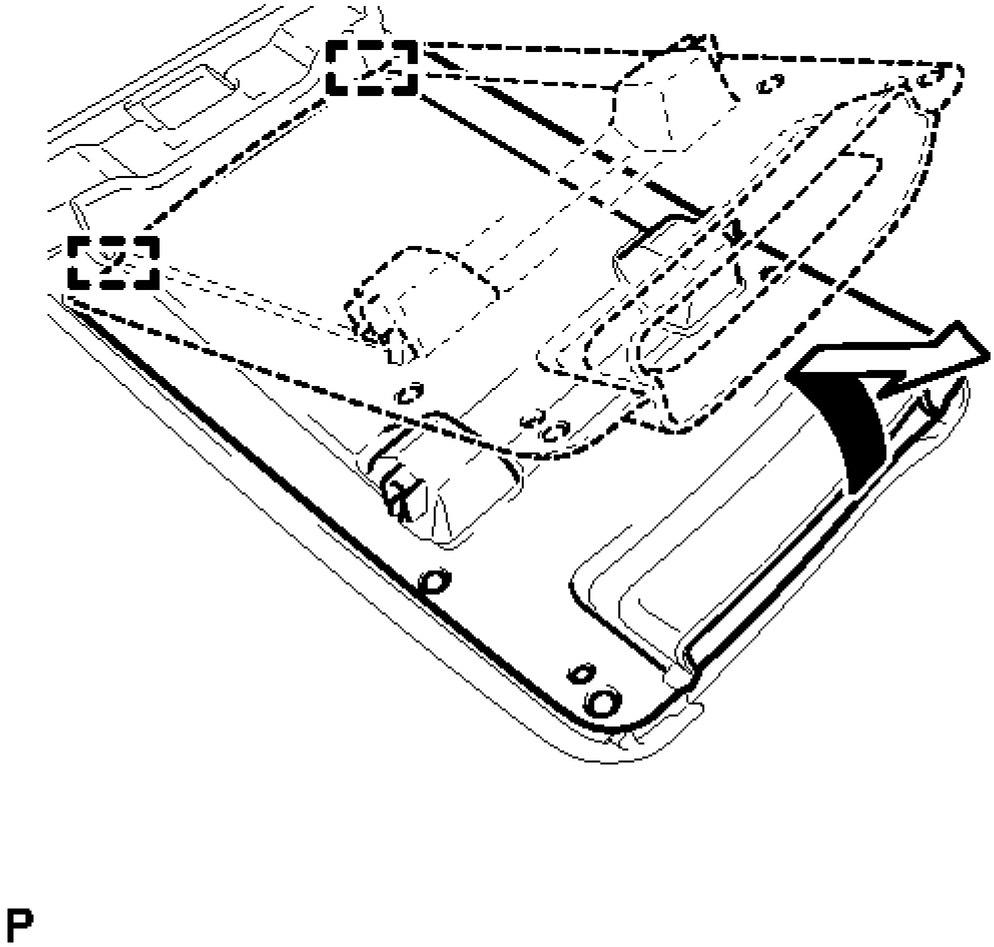

Fig. 114: Removing Console Compartment Door Lock Sub-Assembly
Courtesy of TOYOTA MOTOR SALES, U.S.A., INC.

4. **REMOVE CONSOLE COMPARTMENT DOOR CUSHION**
    a. Remove the 4 console compartment door cushions from the console compartment door lock sub-assembly.

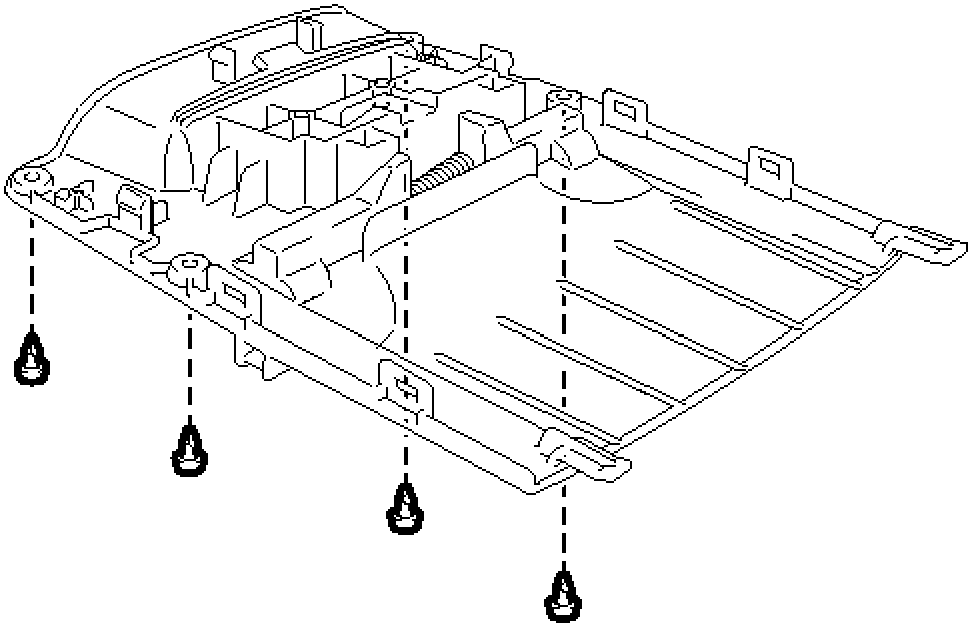

Fig. 115: Locating Console Compartment Door Cushion Fasteners
Courtesy of TOYOTA MOTOR SALES, U.S.A., INC.

REASSEMBLY

REASSEMBLY

1. **INSTALL CONSOLE COMPARTMENT DOOR CUSHION**
    a. Install the 4 console compartment door cushions to the console compartment door lock sub-assembly.

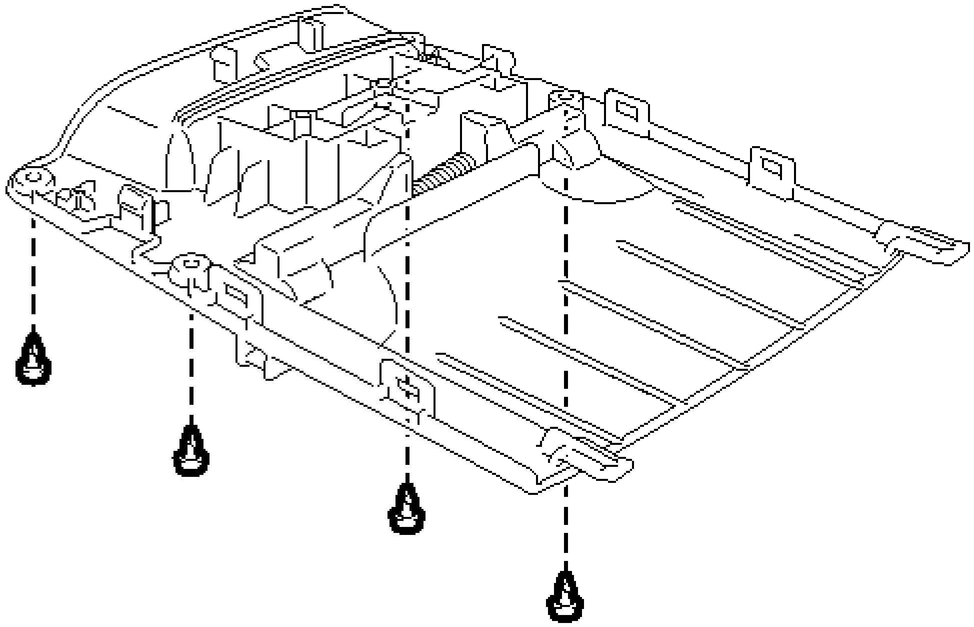

P

Fig. 116: Locating Console Compartment Door Cushion Fasteners
Courtesy of TOYOTA MOTOR SALES, U.S.A., INC.

2. **INSTALL CONSOLE COMPARTMENT DOOR LOCK SUB-ASSEMBLY**
    a. Engage the 2 guides and temporarily install the console compartment door lock sub-assembly as shown in the illustration.

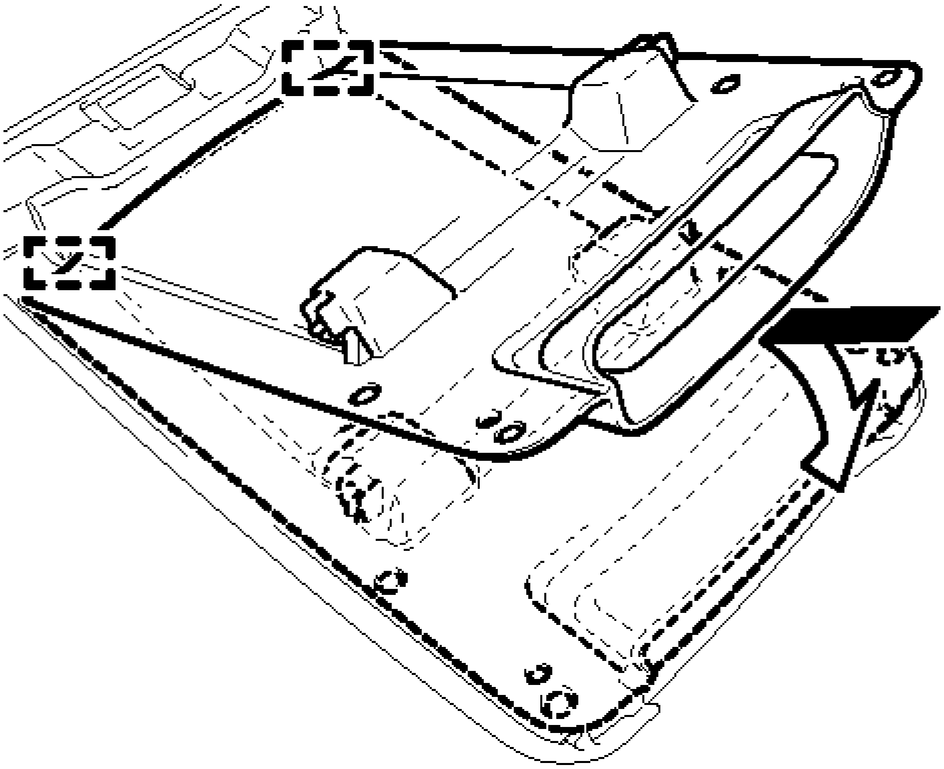

P

Fig. 117: Installing Console Compartment Door Lock Sub-Assembly
Courtesy of TOYOTA MOTOR SALES, U.S.A., INC.

b. Engage the 8 claws.

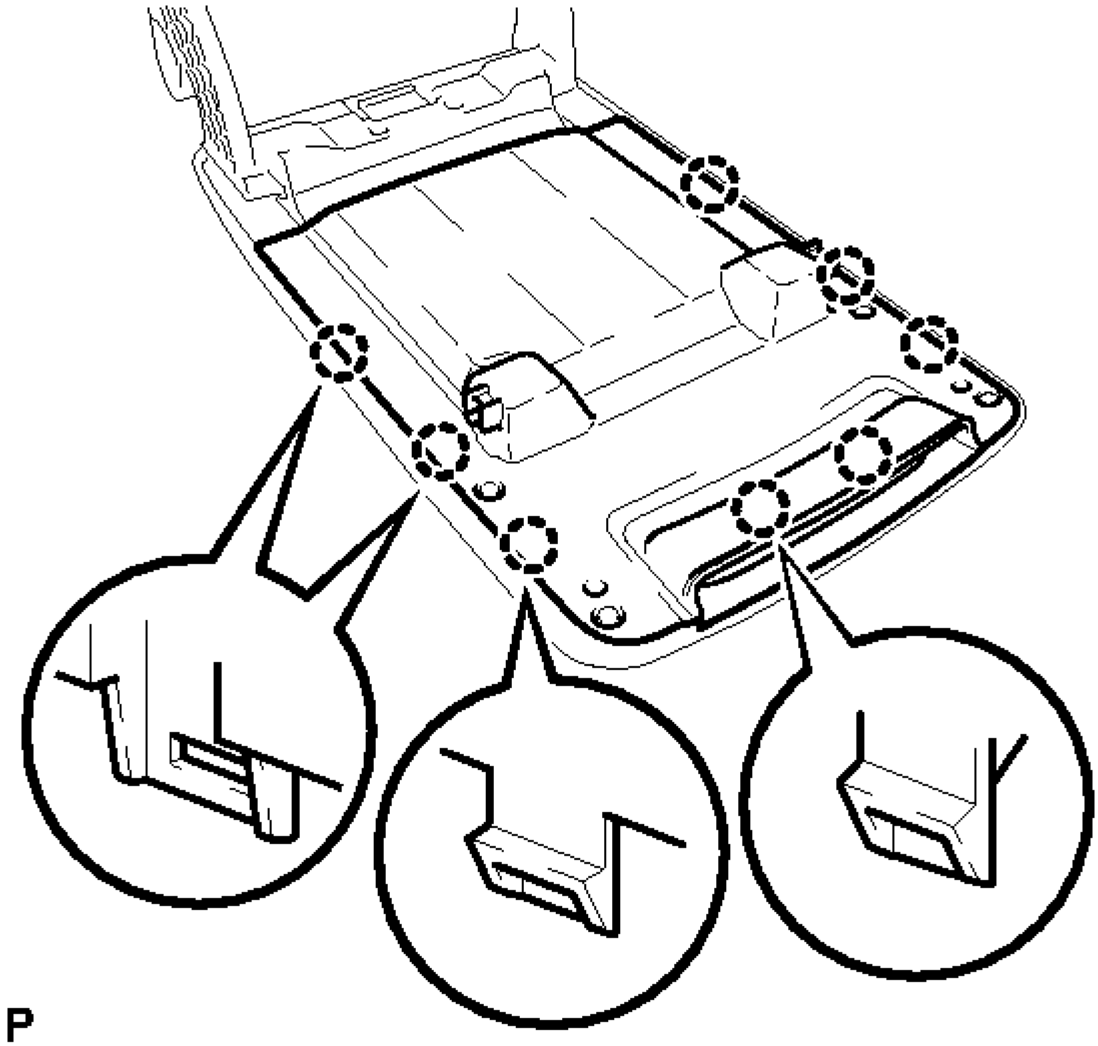

Fig. 118: Locating Console Compartment Door Lock Sub-Assembly Claws
Courtesy of TOYOTA MOTOR SALES, U.S.A., INC.

c. Install the console compartment door lock sub-assembly with the 2 screws.

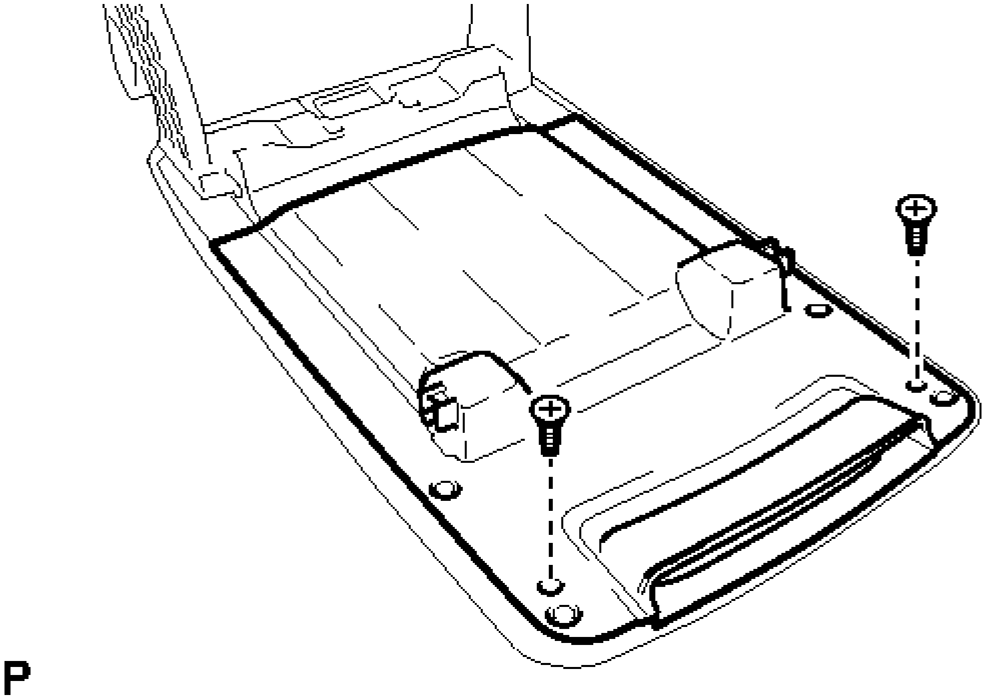

Fig. 119: Locating Console Compartment Door Lock Sub-Assembly Fasteners
Courtesy of TOYOTA MOTOR SALES, U.S.A., INC.

3. **INSTALL REAR CONSOLE ARMREST ASSEMBLY**
   1. Temporarily install the rear console armrest assembly.
   2. Push in the 2 box door hinge shafts by hand as far as possible.

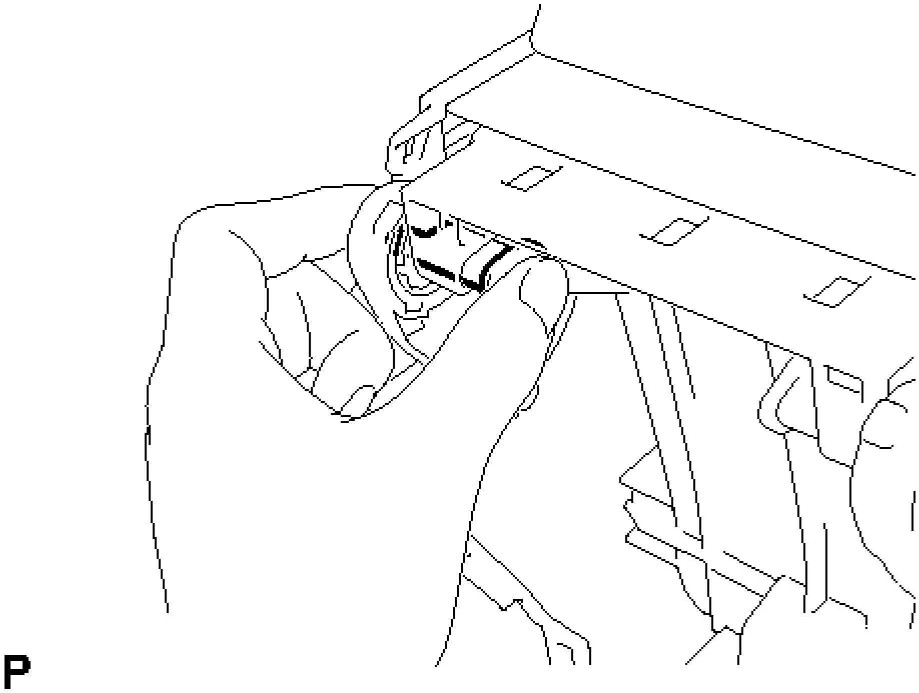

Fig. 120: Installing Rear Console Armrest Assembly Hinge Shafts
Courtesy of TOYOTA MOTOR SALES, U.S.A., INC.

HINT:

- The illustration is for the LH side.
- Use the same procedure for the RH side and LH side.

c. Using pliers, push in the 2 box door hinge shafts completely.

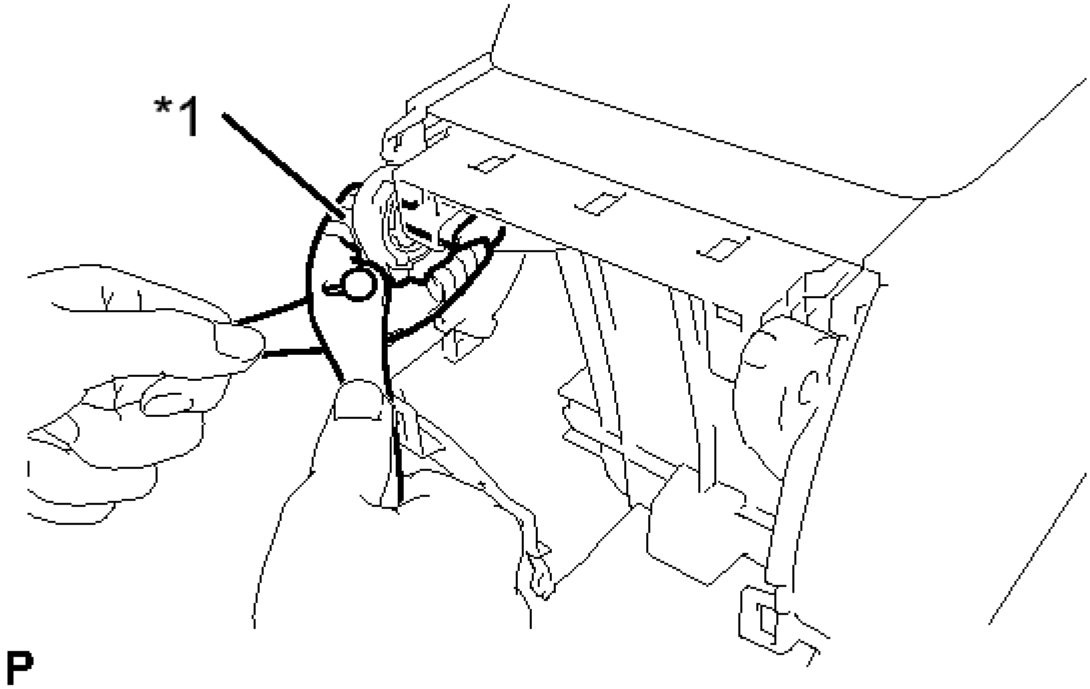

Fig. 121: Installing Rear Console Armrest Assembly Hinge Shafts Using Pliers
Courtesy of TOYOTA MOTOR SALES, U.S.A., INC.

TEXT IN ILLUSTRATION

*1	Protective Tape

HINT:

- Tape the tips of the pliers before use.
- The illustration is for the LH side.
- Use the same procedure for the RH side and LH side.

d. Install the rear console armrest assembly with the 2 E-rings.

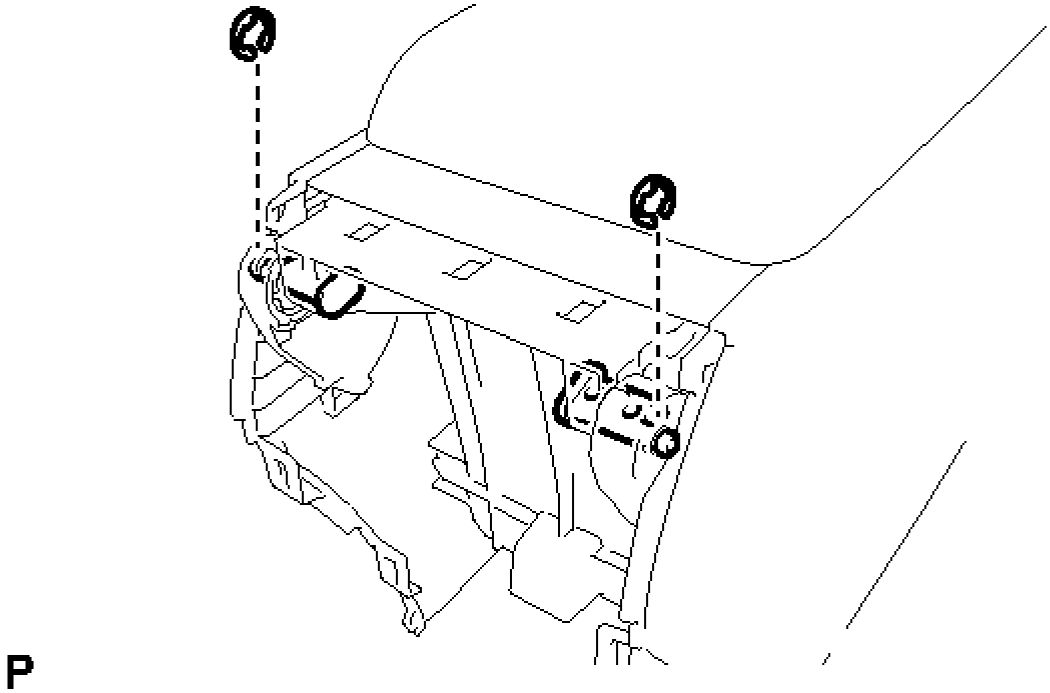

Fig. 122: Locating Rear Console Armrest Assembly E-Rings
Courtesy of TOYOTA MOTOR SALES, U.S.A., INC.

4. **INSTALL CONSOLE REAR END PANEL SUB-ASSEMBLY**
    a. Engage the 4 claws and 4 clips to install the console rear end panel sub-assembly.

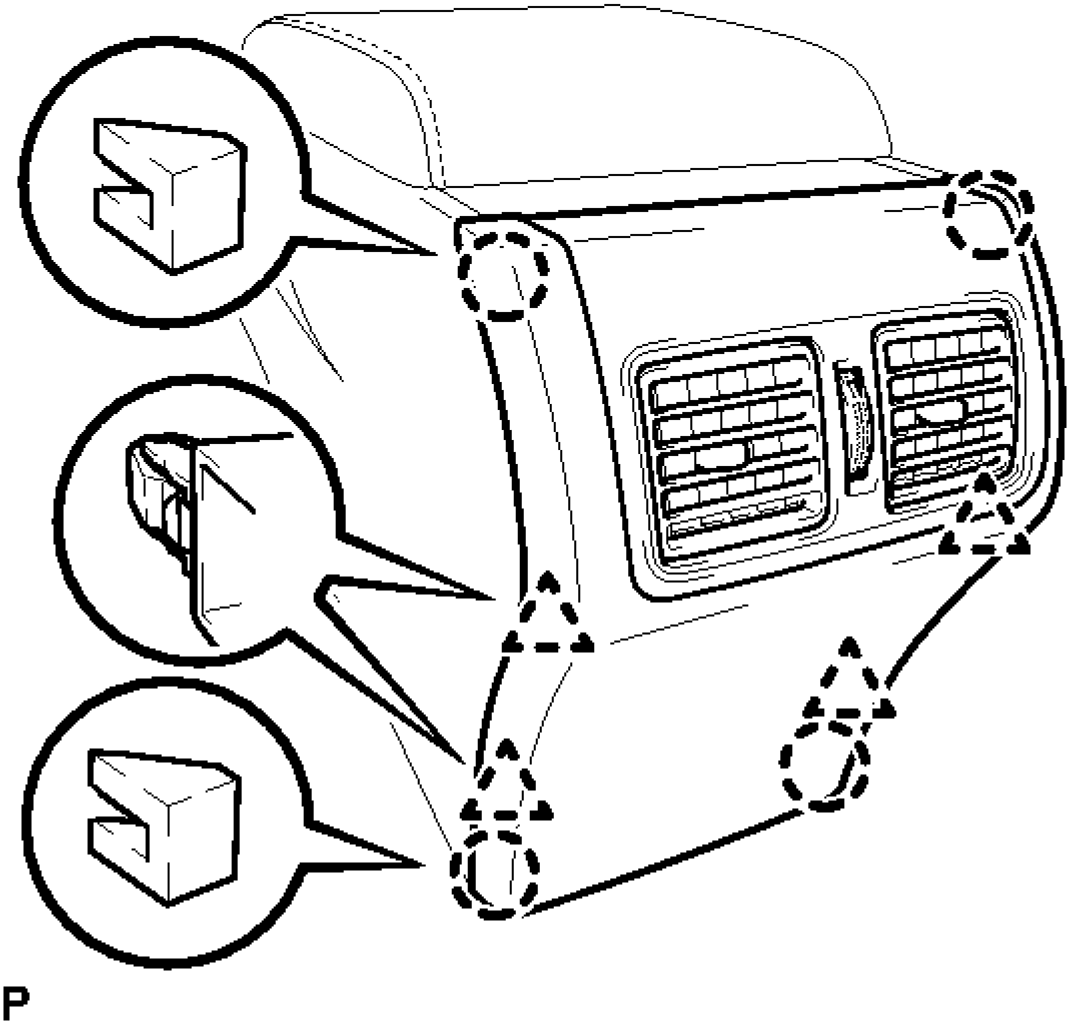

Fig. 123: Identifying Console Rear End Panel Claws And Clips
Courtesy of TOYOTA MOTOR SALES, U.S.A., INC.

INSTALLATION

INSTALLATION

1. **INSTALL REAR CONSOLE BOX ASSEMBLY**
    a. Engage the 4 guides as shown in the illustration.

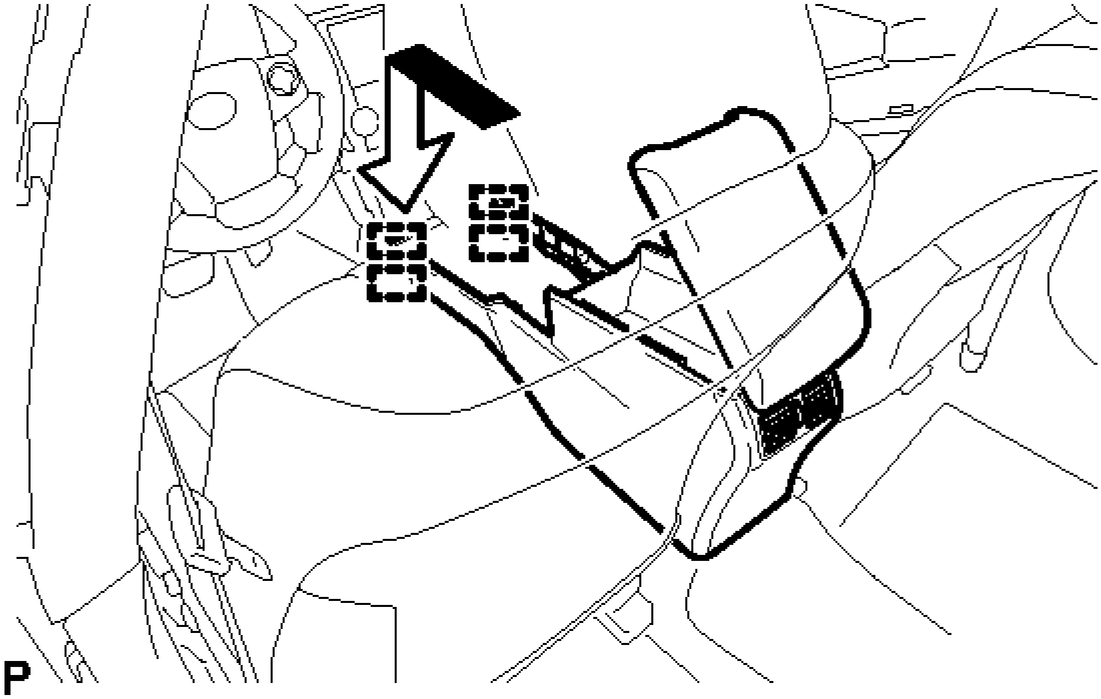

Fig. 124: Installing The Rear Console Box Assembly
Courtesy of TOYOTA MOTOR SALES, U.S.A., INC.

- b. Install the rear console box assembly with the 2 bolts and 2 screws.

2. **INSTALL CONSOLE BOX CARPET**
    - a. Install the console box carpet.
3. **INSTALL NO. 4 CONSOLE BOX DUCT**
    - a. Engage the claw to install the No. 4 console box duct.
4. **INSTALL UPPER CONSOLE BOX SUB-ASSEMBLY**
    - a. Connect the connector and engage the clamp.
    - b. Engage the 2 guides and 4 clips as shown in the illustration.

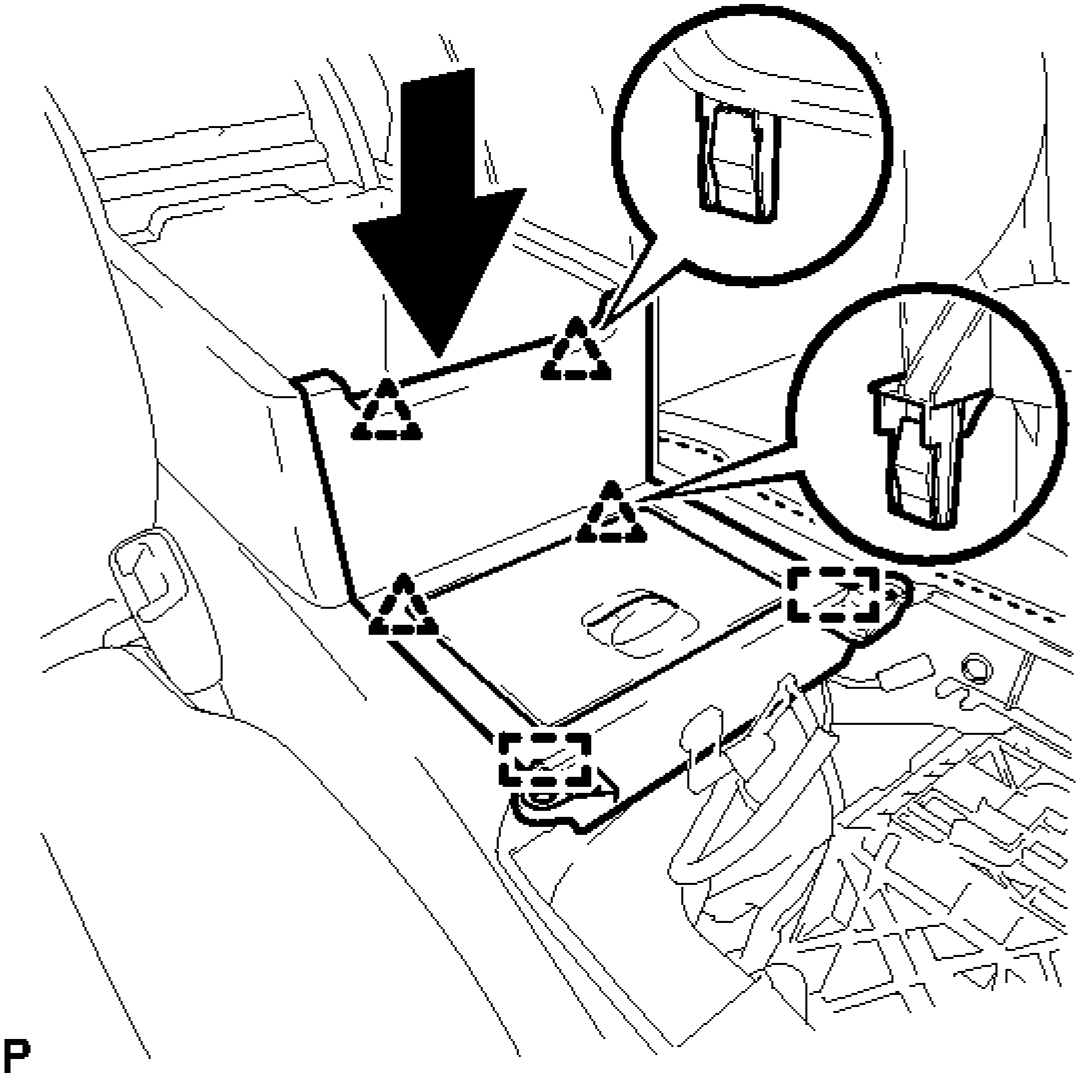

Fig. 125: Installing Upper Console Box
Courtesy of TOYOTA MOTOR SALES, U.S.A., INC.

  c. Install the upper console box sub-assembly with the 2 screws.

5. **INSTALL INSTRUMENT PANEL CUP HOLDER TRAY**
    a. Install the front console upper panel garnish.
    b. Install the instrument panel cup holder tray with the 6 screws.
6. **INSTALL CONSOLE BOX CUP HOLDER**
    a. Install the console box cup holder to the rear console upper panel sub-assembly.
7. **INSTALL REAR CONSOLE UPPER PANEL SUB-ASSEMBLY** See step 35
8. **INSTALL SHIFT LEVER KNOB SUB-ASSEMBLY** See step 36
9. **INSTALL FRONT PANEL GARNISH RH** See step 37
10. **INSTALL FRONT PANEL GARNISH LH** See step 40

ROOF HEADLINING

COMPONENTS

ILLUSTRATION

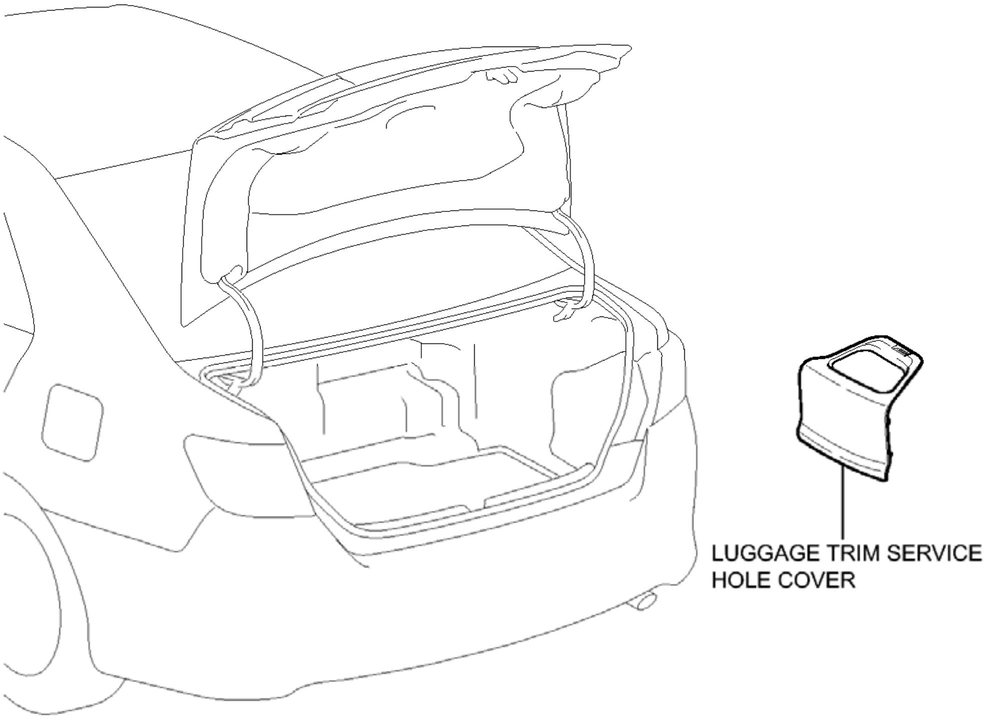
LUGGAGE TRIM SERVICE HOLE COVER
P

Fig. 126: Identifying Roof Headlining Replacement Components (1 Of 13)
Courtesy of TOYOTA MOTOR SALES, U.S.A., INC.

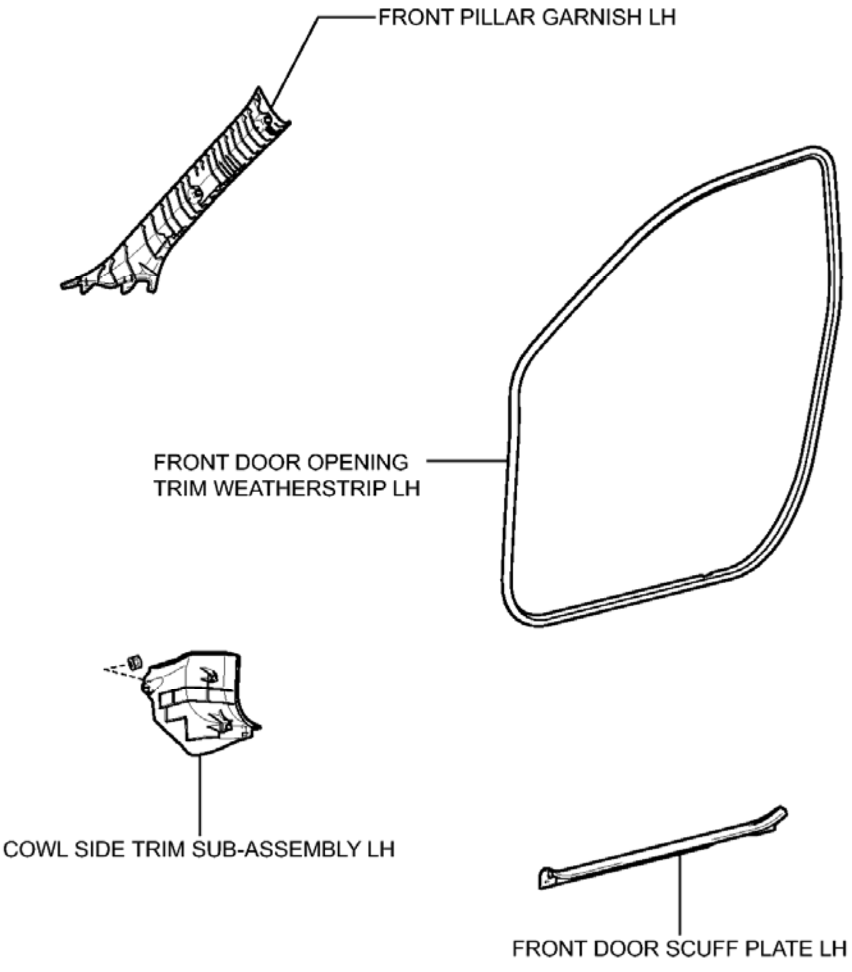
FRONT PILLAR GARNISH LH
FRONT DOOR OPENING TRIM WEATHERSTRIP LH
COWL SIDE TRIM SUB-ASSEMBLY LH
FRONT DOOR SCUFF PLATE LH

P

Fig. 127: Identifying Roof Headlining Replacement Components (2 Of 13)
Courtesy of TOYOTA MOTOR SALES, U.S.A., INC.

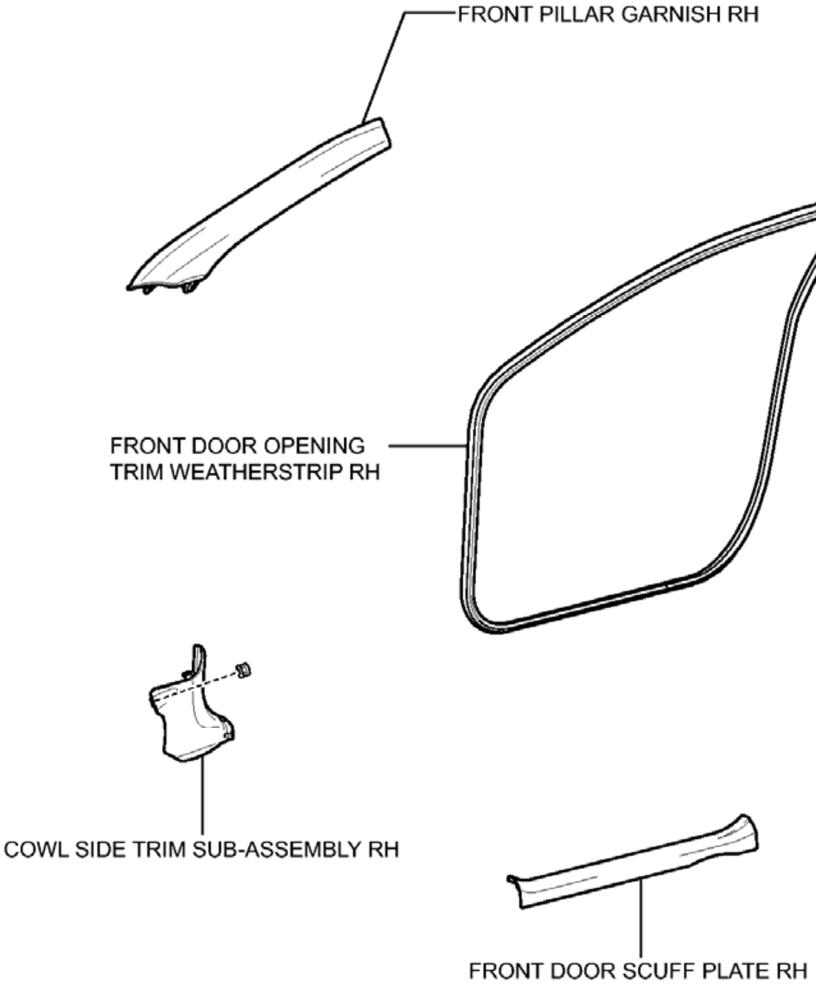
FRONT PILLAR GARNISH RH
FRONT DOOR OPENING TRIM WEATHERSTRIP RH
COWL SIDE TRIM SUB-ASSEMBLY RH
FRONT DOOR SCUFF PLATE RH

P

Fig. 128: Identifying Roof Headlining Replacement Components (3 Of 13)
Courtesy of TOYOTA MOTOR SALES, U.S.A., INC.

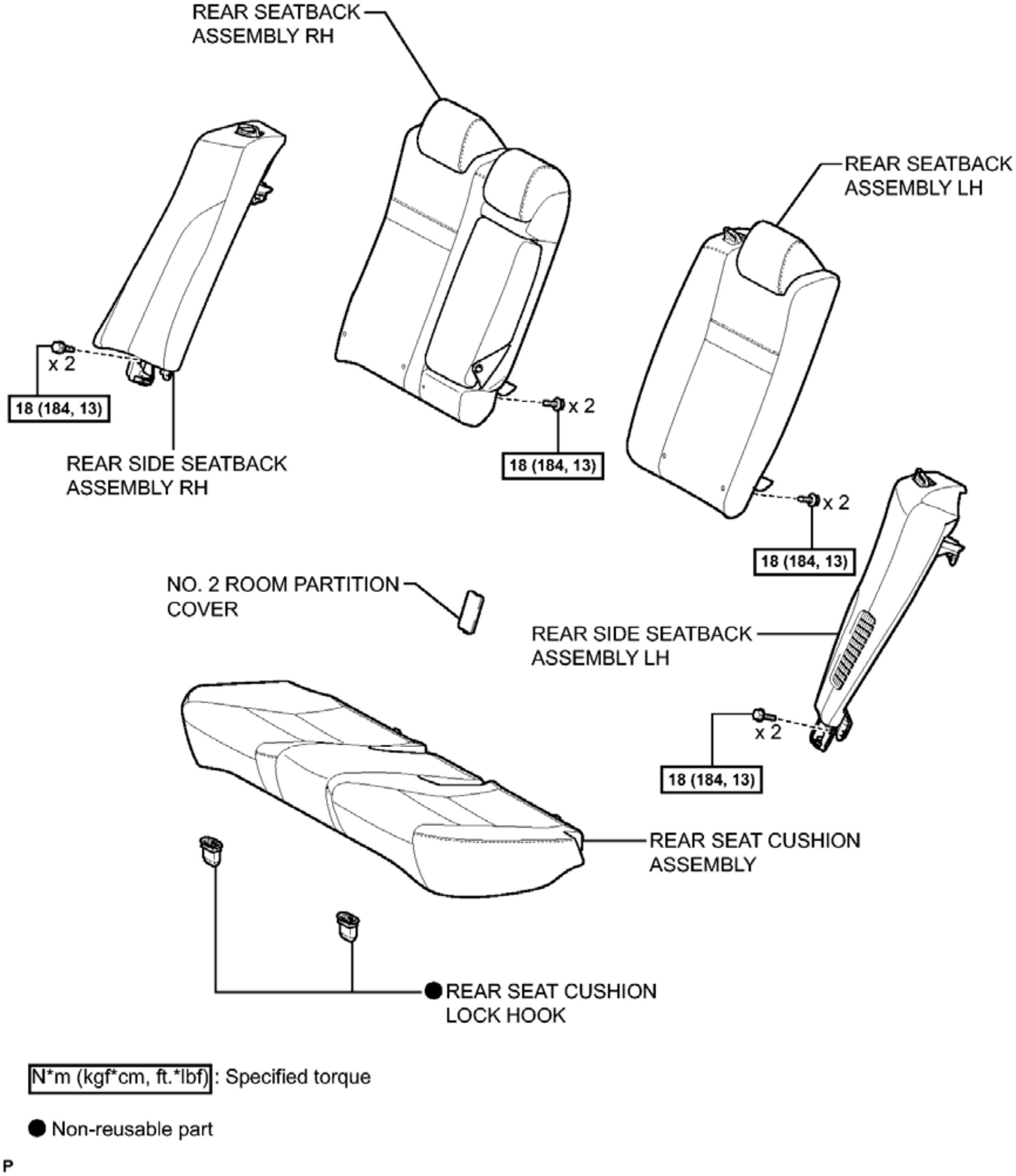
REAR SEATBACK ASSEMBLY RH
REAR SEATBACK ASSEMBLY LH
x 2
18 (184, 13)
x 2
18 (184, 13)
REAR SIDE SEATBACK ASSEMBLY RH
x 2
18 (184, 13)
NO. 2 ROOM PARTITION COVER
REAR SIDE SEATBACK ASSEMBLY LH
x 2
18 (184, 13)
REAR SEAT CUSHION ASSEMBLY
● REAR SEAT CUSHION LOCK HOOK
N*m (kgf*cm, ft.*lbf) : Specified torque
● Non-reusable part
P

Fig. 129: Identifying Roof Headlining Replacement Components With Torque Specifications (4 Of 13)
Courtesy of TOYOTA MOTOR SALES, U.S.A., INC.

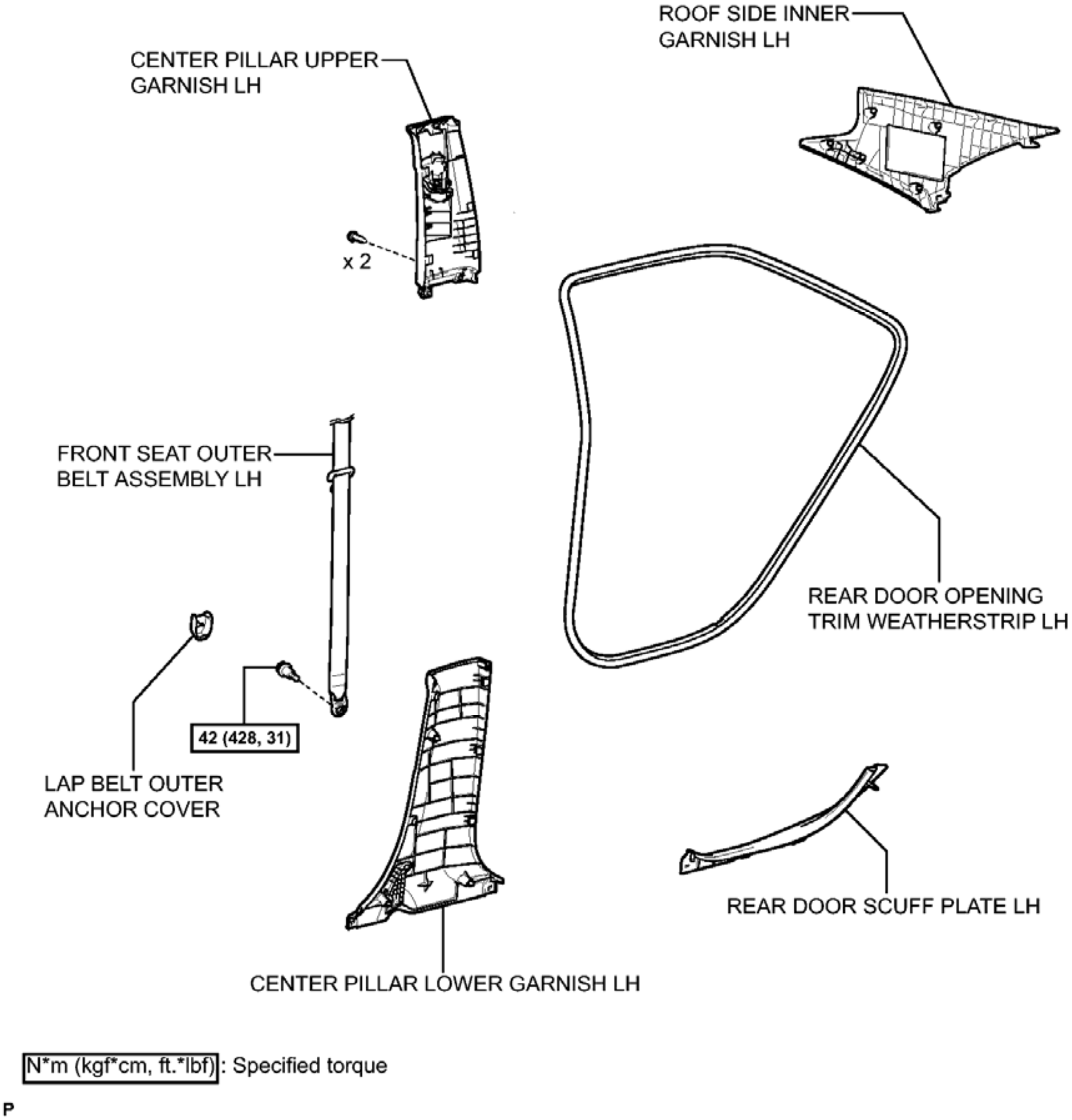
ROOF SIDE INNER GARNISH LH
CENTER PILLAR UPPER GARNISH LH
x 2
FRONT SEAT OUTER BELT ASSEMBLY LH
REAR DOOR OPENING TRIM WEATHERSTRIP LH
42 (428, 31)
LAP BELT OUTER ANCHOR COVER
REAR DOOR SCUFF PLATE LH
CENTER PILLAR LOWER GARNISH LH
N*m (kgf*cm, ft.*lbf): Specified torque
P

Fig. 130: Identifying Roof Headlining Replacement Components With Torque Specifications (5 Of 13)
Courtesy of TOYOTA MOTOR SALES, U.S.A., INC.

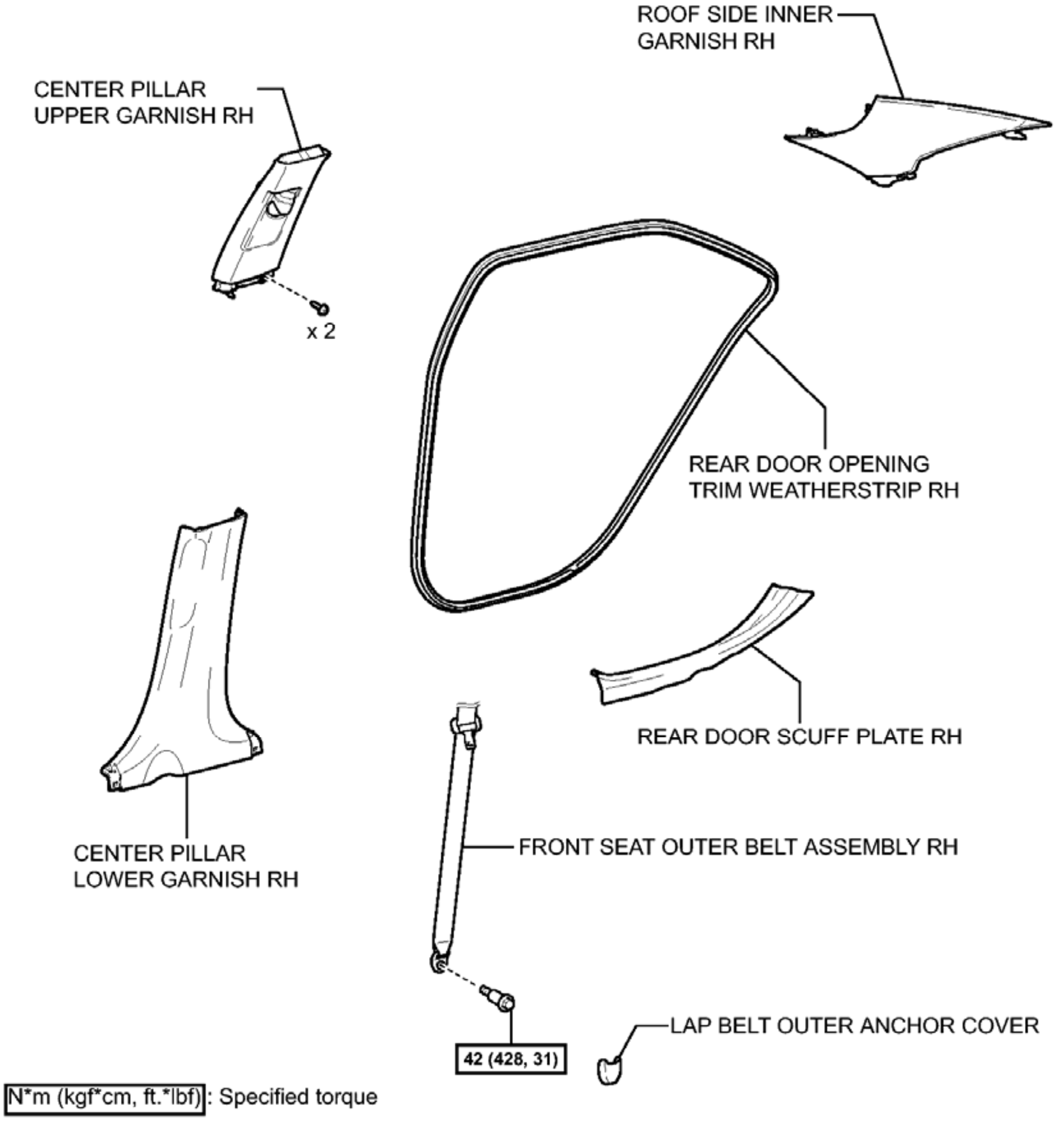
ROOF SIDE INNER GARNISH RH
CENTER PILLAR UPPER GARNISH RH
x 2
REAR DOOR OPENING TRIM WEATHERSTRIP RH
REAR DOOR SCUFF PLATE RH
FRONT SEAT OUTER BELT ASSEMBLY RH
CENTER PILLAR LOWER GARNISH RH
LAP BELT OUTER ANCHOR COVER
42 (428, 31)
N*m (kgf*cm, ft.*lbf): Specified torque
P

Fig. 131: Identifying Roof Headlining Replacement Components With Torque Specifications (6 Of 13)
Courtesy of TOYOTA MOTOR SALES, U.S.A., INC.

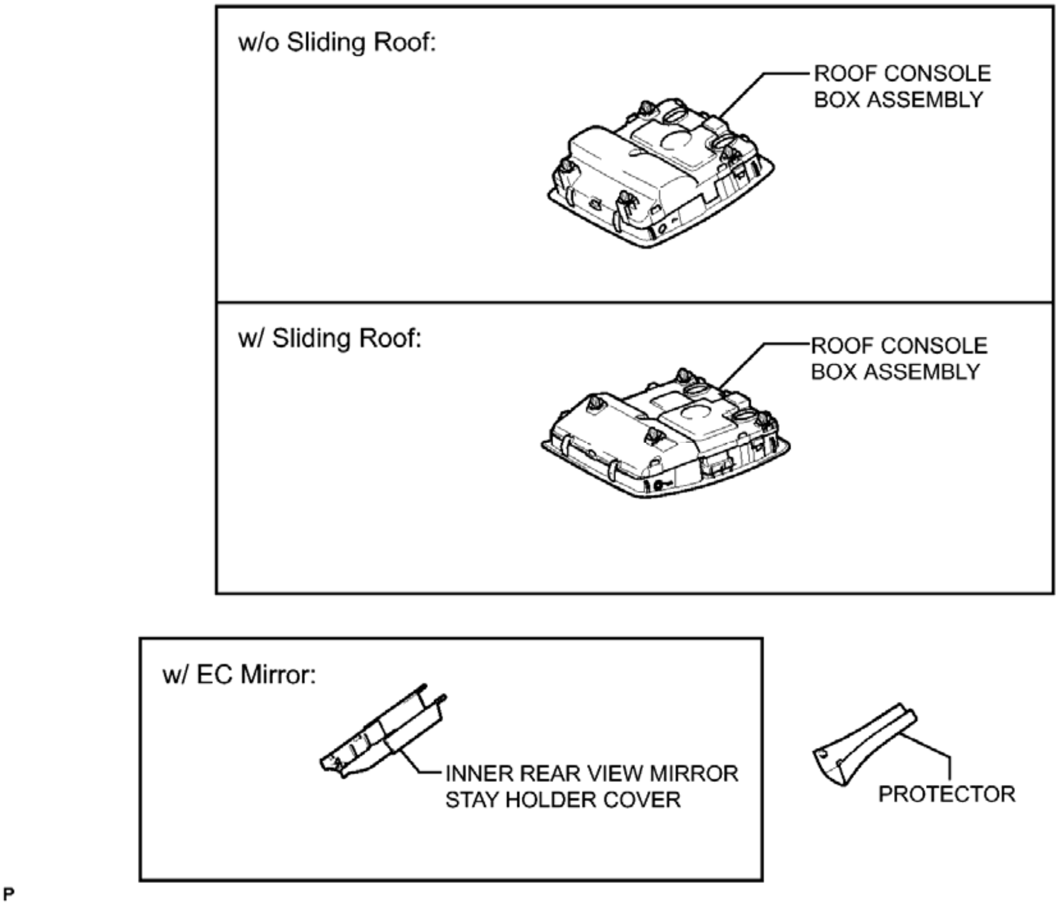
w/o Sliding Roof:
ROOF CONSOLE BOX ASSEMBLY
w/ Sliding Roof:
ROOF CONSOLE BOX ASSEMBLY
w/ EC Mirror:
INNER REAR VIEW MIRROR STAY HOLDER COVER
PROTECTOR
P

Fig. 132: Identifying Roof Headlining Replacement Components (7 Of 13)
Courtesy of TOYOTA MOTOR SALES, U.S.A., INC.

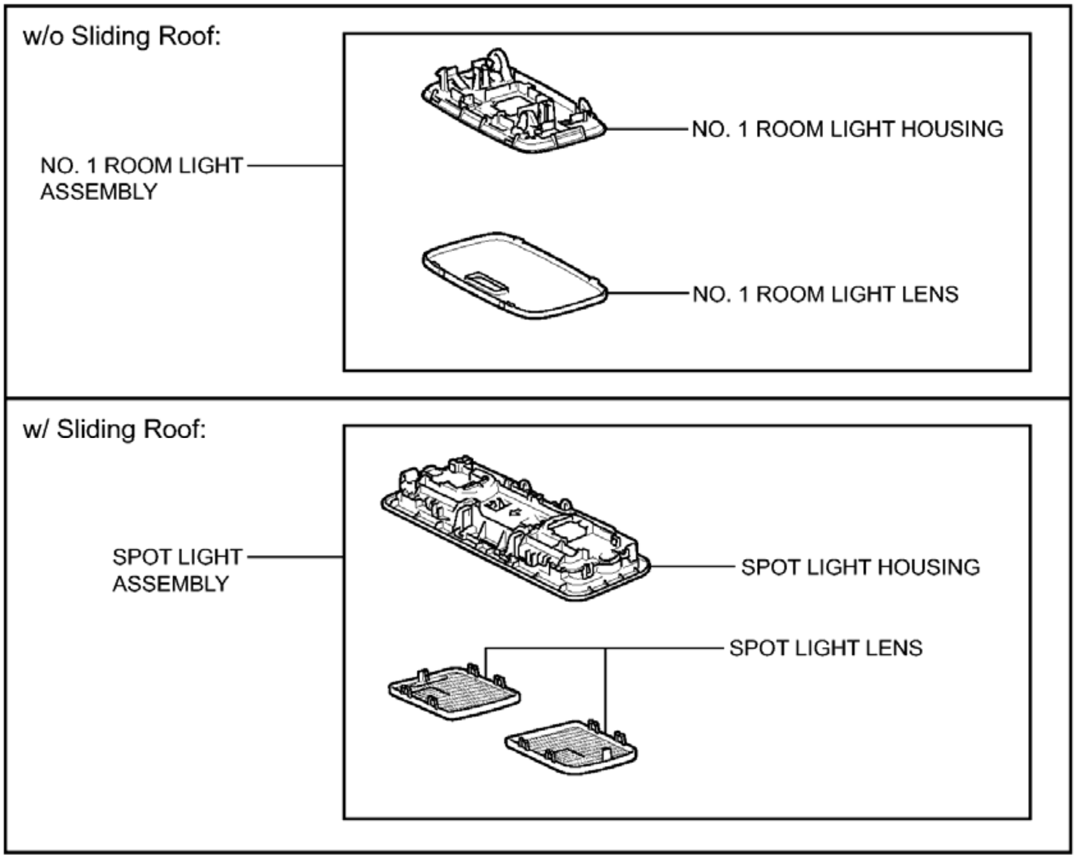
w/o Sliding Roof:
NO. 1 ROOM LIGHT HOUSING
NO. 1 ROOM LIGHT ASSEMBLY
NO. 1 ROOM LIGHT LENS
w/ Sliding Roof:
SPOT LIGHT ASSEMBLY
SPOT LIGHT HOUSING
SPOT LIGHT LENS
P

Fig. 133: Identifying Roof Headlining Replacement Components (8 Of 13)
Courtesy of TOYOTA MOTOR SALES, U.S.A., INC.

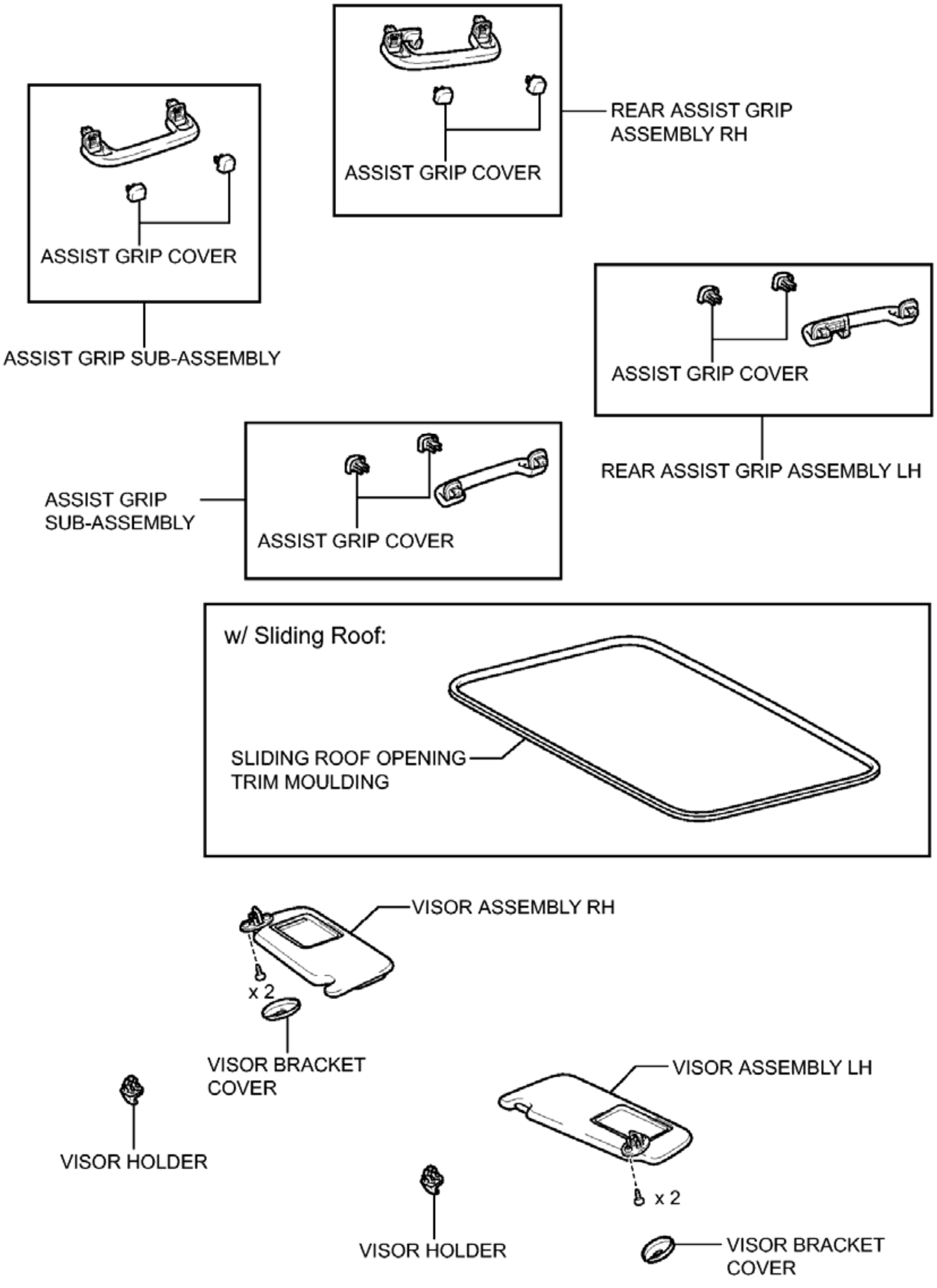
REAR ASSIST GRIP ASSEMBLY RH
ASSIST GRIP COVER
ASSIST GRIP COVER
ASSIST GRIP SUB-ASSEMBLY
ASSIST GRIP COVER
REAR ASSIST GRIP ASSEMBLY LH
ASSIST GRIP SUB-ASSEMBLY
ASSIST GRIP COVER
w/ Sliding Roof:
SLIDING ROOF OPENING TRIM MOULDING
VISOR ASSEMBLY RH
x 2
VISOR BRACKET COVER
VISOR HOLDER
VISOR ASSEMBLY LH
x 2
VISOR HOLDER
VISOR BRACKET COVER
P

Fig. 134: Identifying Roof Headlining Replacement Components (9 Of 13)
Courtesy of TOYOTA MOTOR SALES, U.S.A., INC.

w/o Sliding Roof:

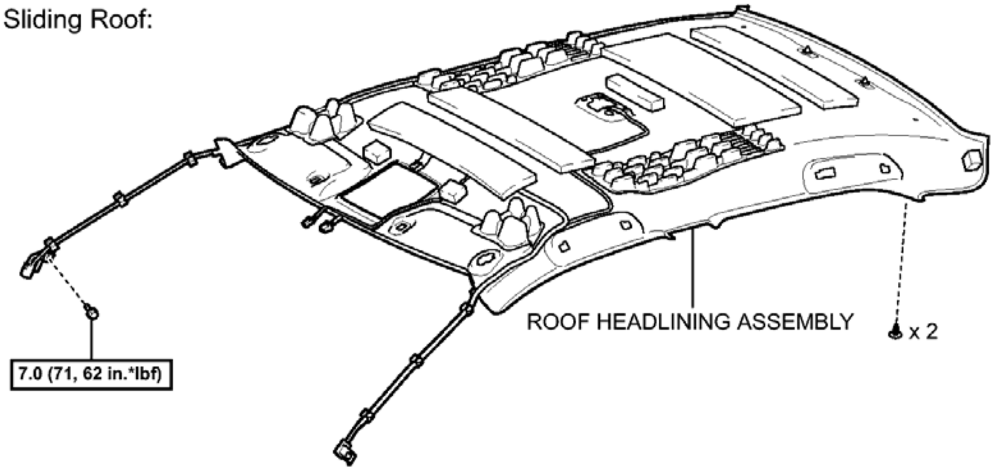
ROOF HEADLINING ASSEMBLY
x 2
7.0 (71, 62 in.*lbf)

w/ Sliding Roof:

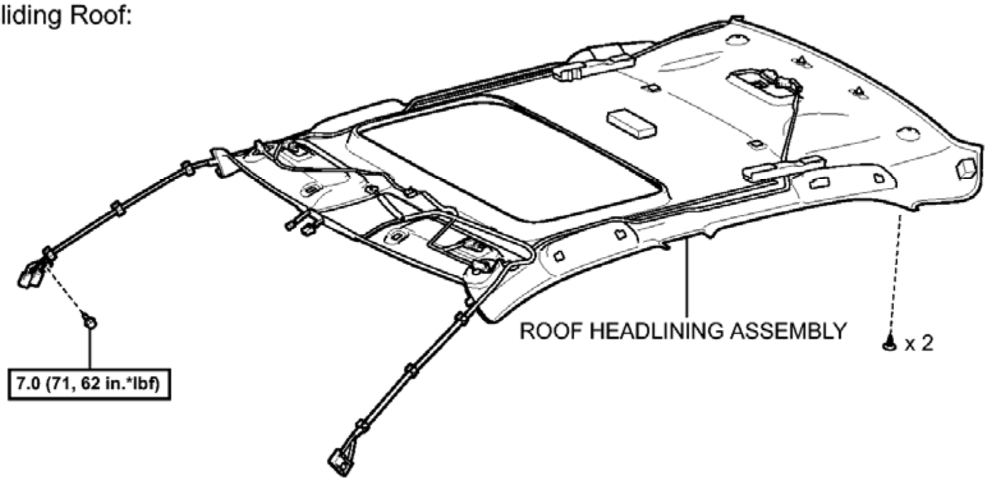
ROOF HEADLINING ASSEMBLY
x 2
7.0 (71, 62 in.*lbf)

N*m (kgf*cm, ft.*lbf): Specified torque

P

Fig. 135: Identifying Roof Headlining Replacement Components With Torque Specifications (10 Of 13)
Courtesy of TOYOTA MOTOR SALES, U.S.A., INC.

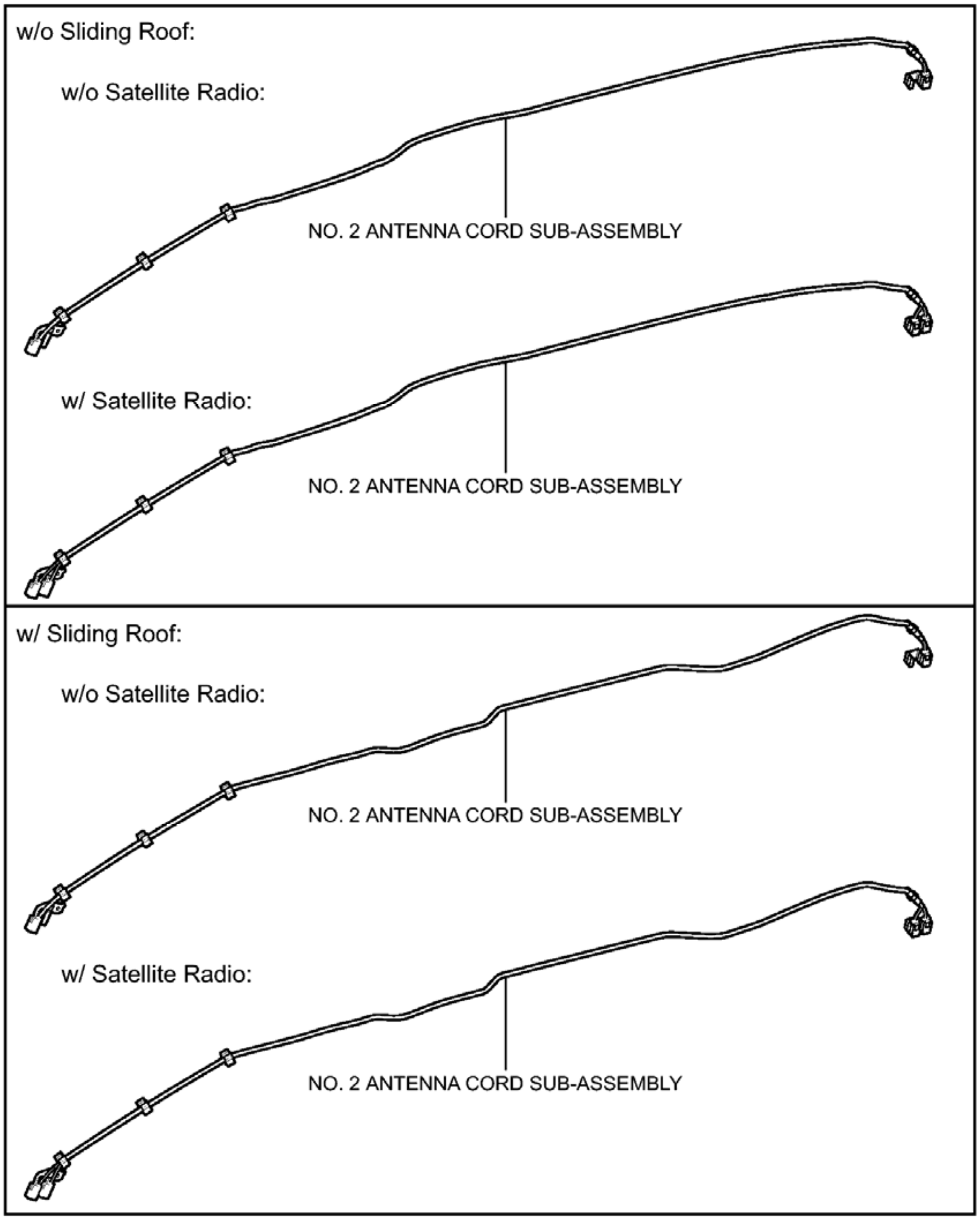
w/o Sliding Roof:
w/o Satellite Radio:
NO. 2 ANTENNA CORD SUB-ASSEMBLY
w/ Satellite Radio:
NO. 2 ANTENNA CORD SUB-ASSEMBLY
w/ Sliding Roof:
w/o Satellite Radio:
NO. 2 ANTENNA CORD SUB-ASSEMBLY
w/ Satellite Radio:
NO. 2 ANTENNA CORD SUB-ASSEMBLY
P

Fig. 136: Identifying Roof Headlining Replacement Components (11 Of 13)
Courtesy of TOYOTA MOTOR SALES, U.S.A., INC.

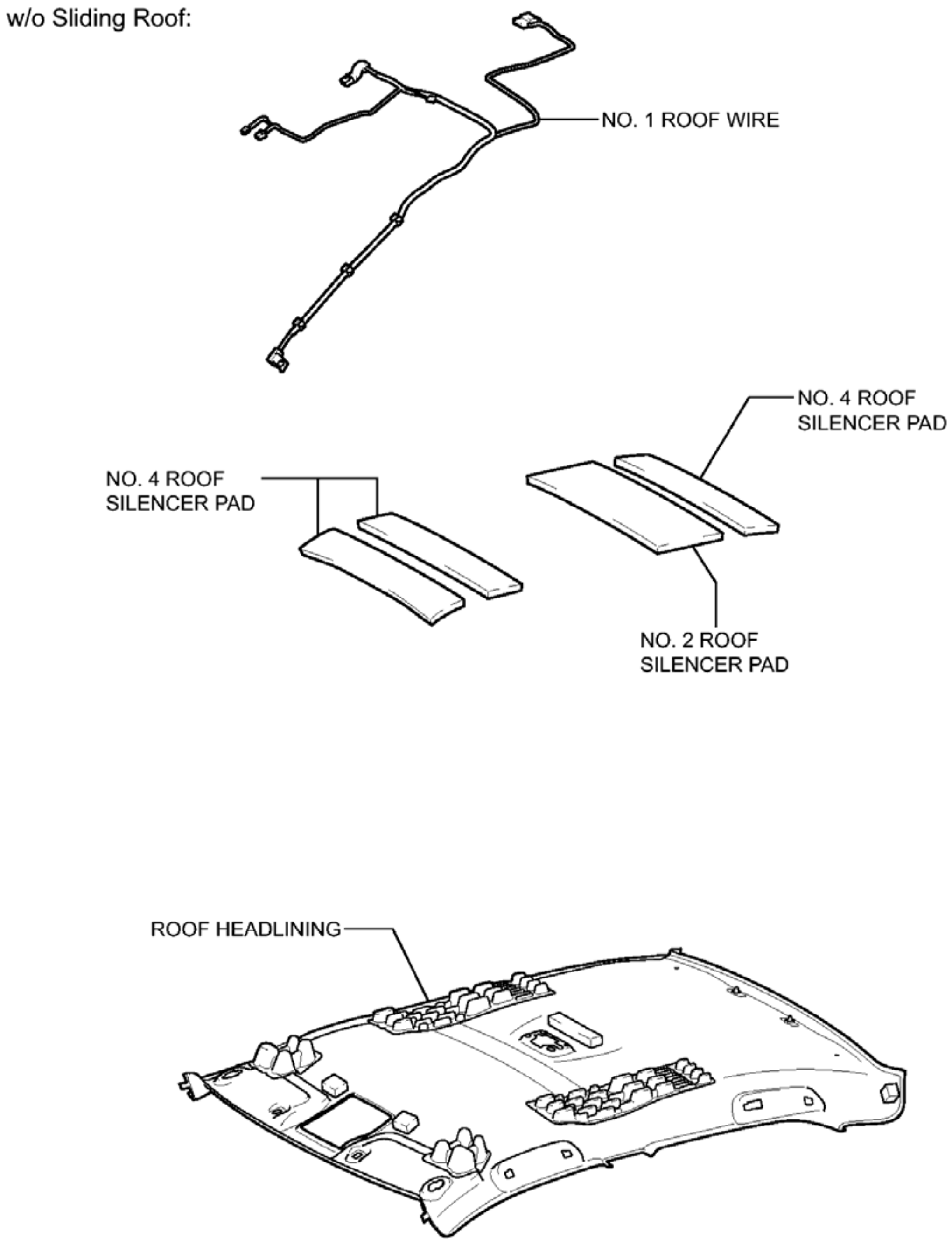
w/o Sliding Roof:
NO. 1 ROOF WIRE
NO. 4 ROOF SILENCER PAD
NO. 4 ROOF SILENCER PAD
NO. 2 ROOF SILENCER PAD
ROOF HEADLINING
P

Fig. 137: Identifying Roof Headlining Replacement Components (12 Of 13)
Courtesy of TOYOTA MOTOR SALES, U.S.A., INC.

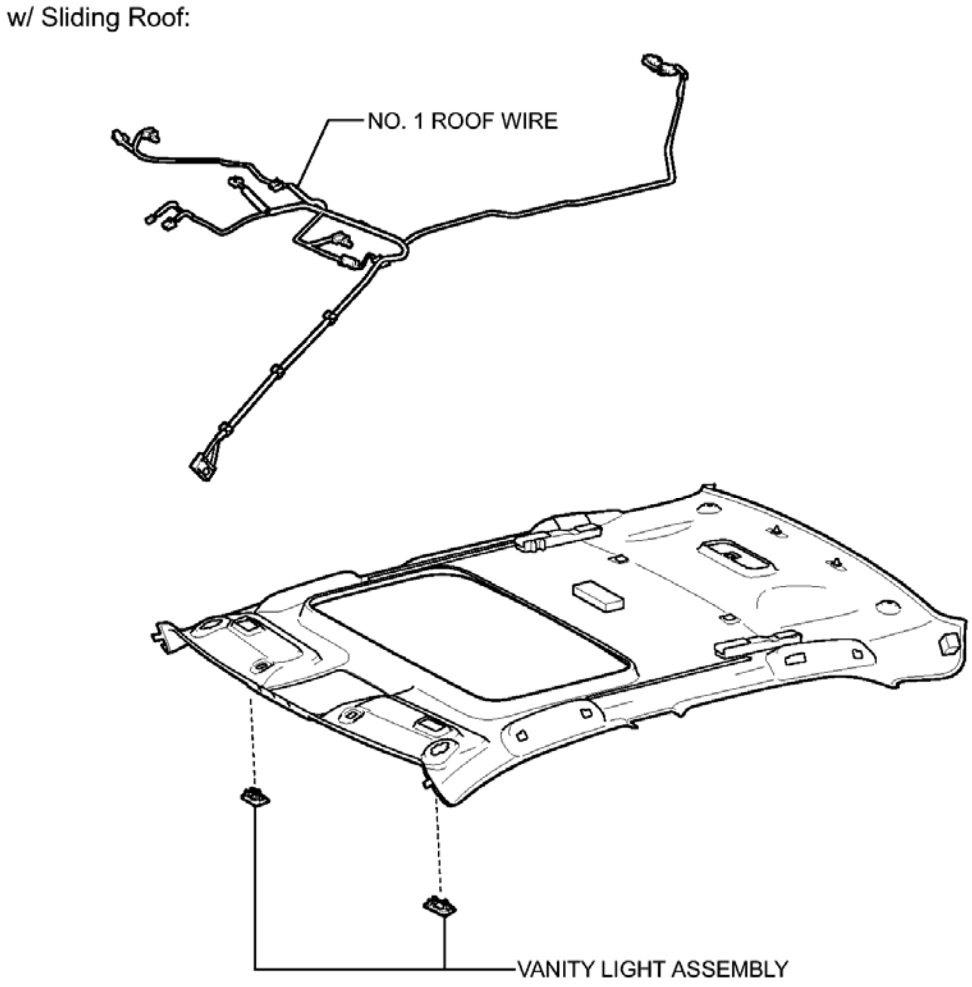

P

Fig. 138: Identifying Roof Headlining Replacement Components (13 Of 13)
Courtesy of TOYOTA MOTOR SALES, U.S.A., INC.

REMOVAL

REMOVAL

1. **PRECAUTION**

WARNING: **Be sure to read Precaution thoroughly before servicing.**

for Separate Type Yaw Rate Sensor: Refer to PRECAUTION

for Built-in Type Yaw Rate Sensor: Refer to PRECAUTION

NOTE: **After turning the power switch off, waiting time may be required before disconnecting the cable from the negative (-) auxiliary battery terminal.**

Therefore, make sure to read the disconnecting the cable from the negative (-) auxiliary battery terminal notices before proceeding with work. Refer to PRECAUTION .

2. **REMOVE LUGGAGE TRIM SERVICE HOLE COVER** . Refer to **REMOVAL - Step 2**
3. **DISCONNECT CABLE FROM AUXILIARY BATTERY NEGATIVE TERMINAL**

WARNING: **Wait at least 90 seconds after disconnecting the cable from the negative (-) auxiliary battery terminal to disable the SRS system.**

NOTE: **When disconnecting the cable, some systems need to be initialized after the cable is reconnected. Refer to INITIALIZATION .**

4. **REMOVE FRONT DOOR SCUFF PLATE LH**
   a. Disengage the 10 claws and remove the front door scuff plate LH.

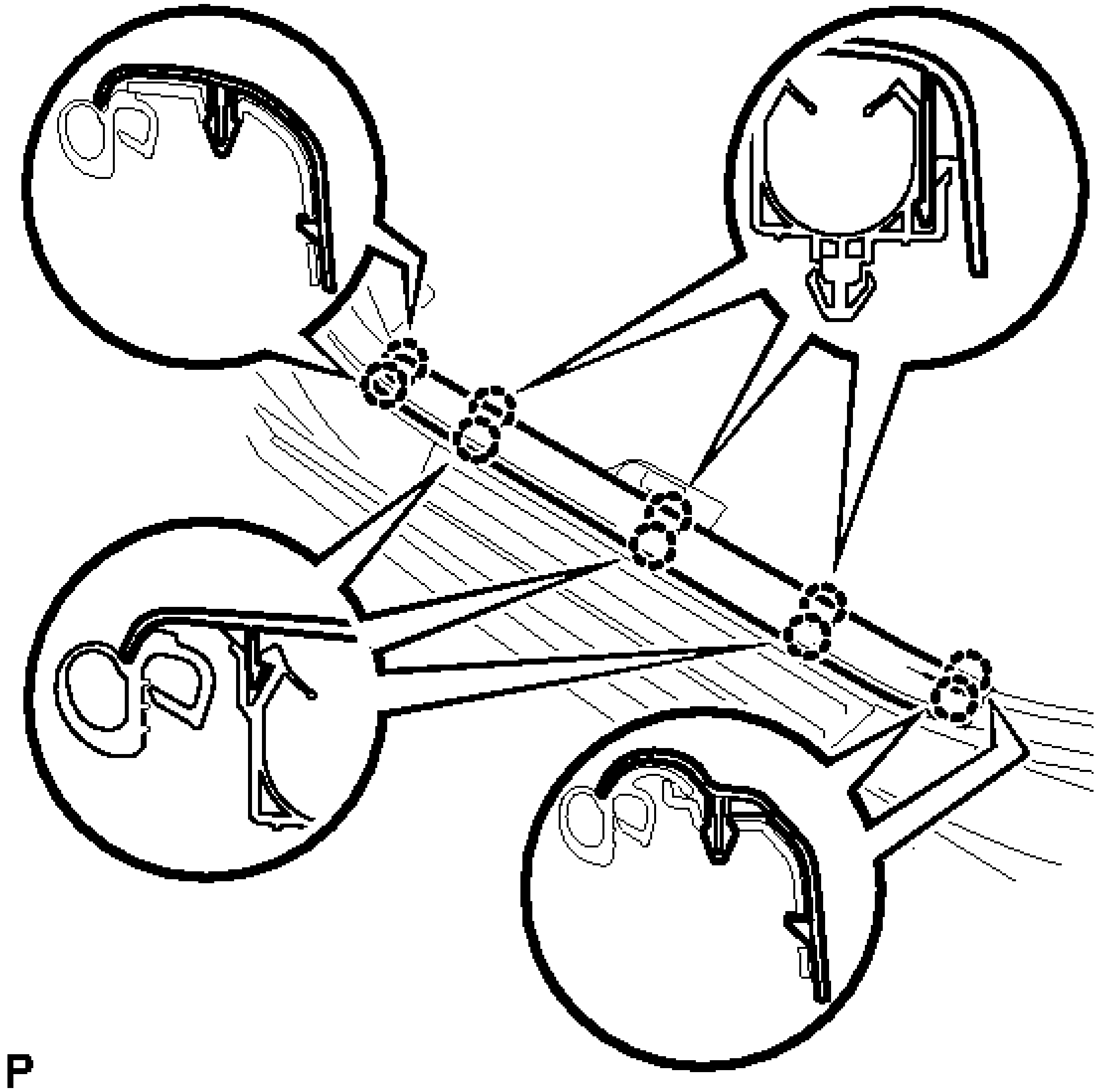

Fig. 139: Identifying Front Door Scuff Plate LH Claws
Courtesy of TOYOTA MOTOR SALES, U.S.A., INC.

5. **REMOVE COWL SIDE TRIM SUB-ASSEMBLY LH**
    a. Remove the clip.

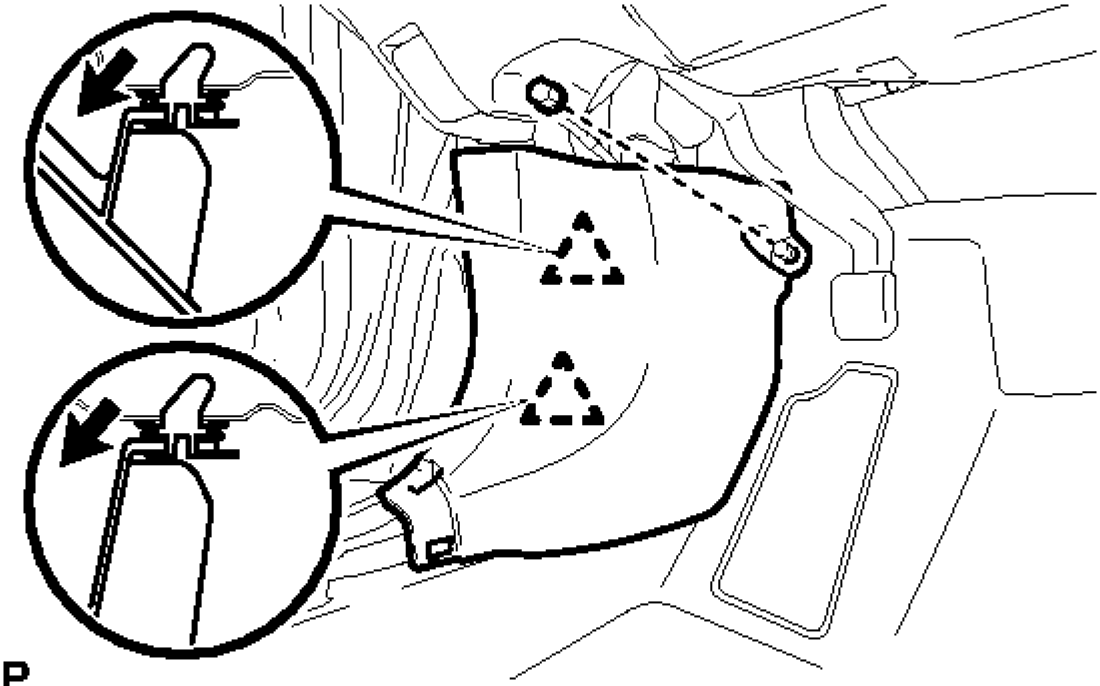

Fig. 140: Removing Cowl Side Trim Sub-Assembly LH
Courtesy of TOYOTA MOTOR SALES, U.S.A., INC.

- b. Pull the cowl side trim sub-assembly LH in the direction indicated by the arrow shown in the illustration to disengage the 2 clips and remove the cowl side trim sub-assembly LH.

6. **REMOVE FRONT DOOR OPENING TRIM WEATHERSTRIP LH**
    - a. Remove the front door opening trim weatherstrip LH.
7. **REMOVE FRONT PILLAR GARNISH LH**
    - a. Pull the upper part of the garnish toward the inside of the cabin and disengage the garnish from the base of the 2 clips.

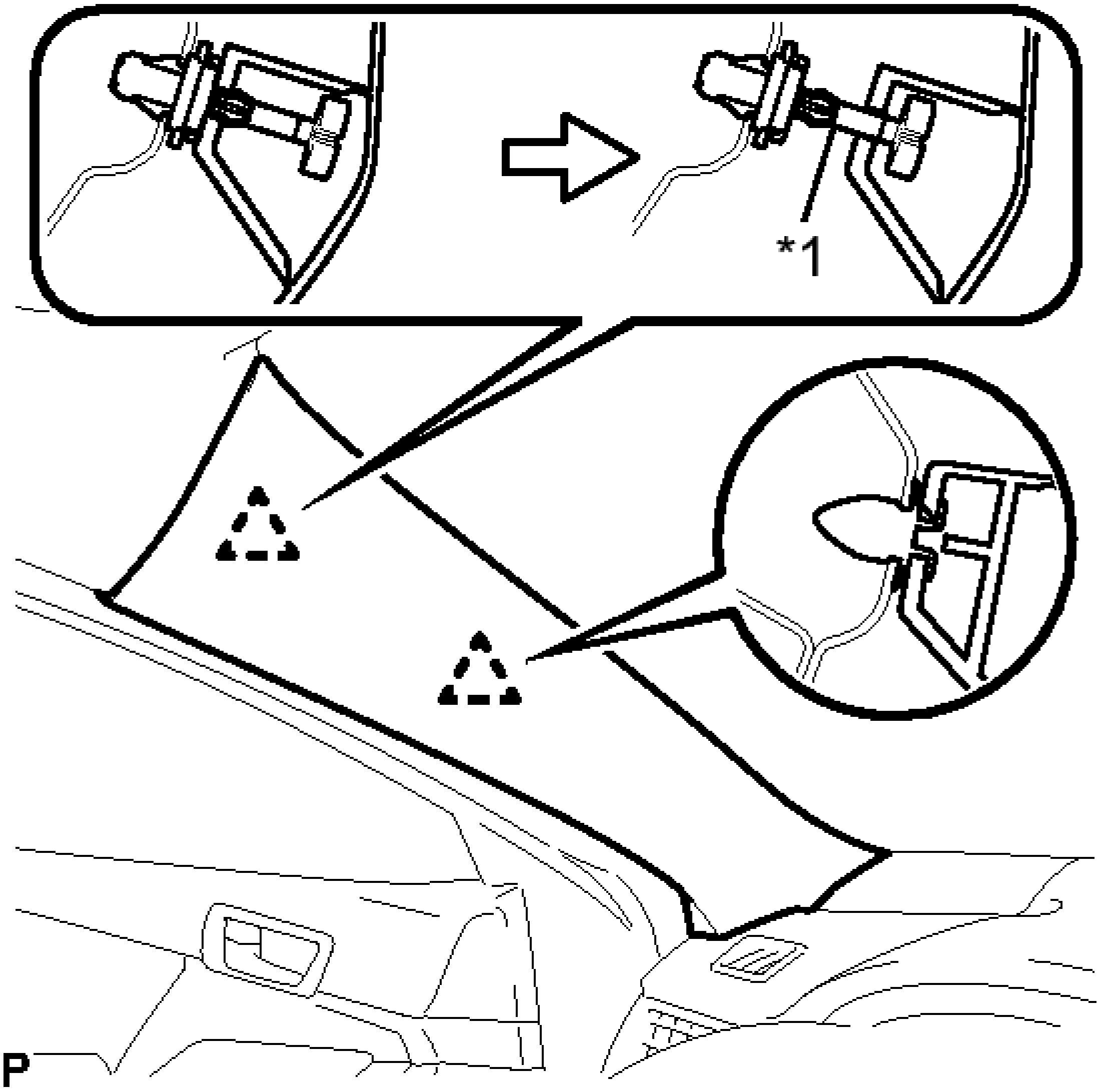

Fig. 141: Identifying Front Pillar Garnish LH Fasteners
Courtesy of TOYOTA MOTOR SALES, U.S.A., INC.

TEXT IN ILLUSTRATION

*1	Front Pillar Garnish Clip

HINT:

Make the front pillar garnish LH hang down from the front pillar garnish clip.

b. While pushing the tabs on the front pillar garnish clip in the direction indicated by the arrow (1) shown in the illustration, disengage the front pillar garnish clip.

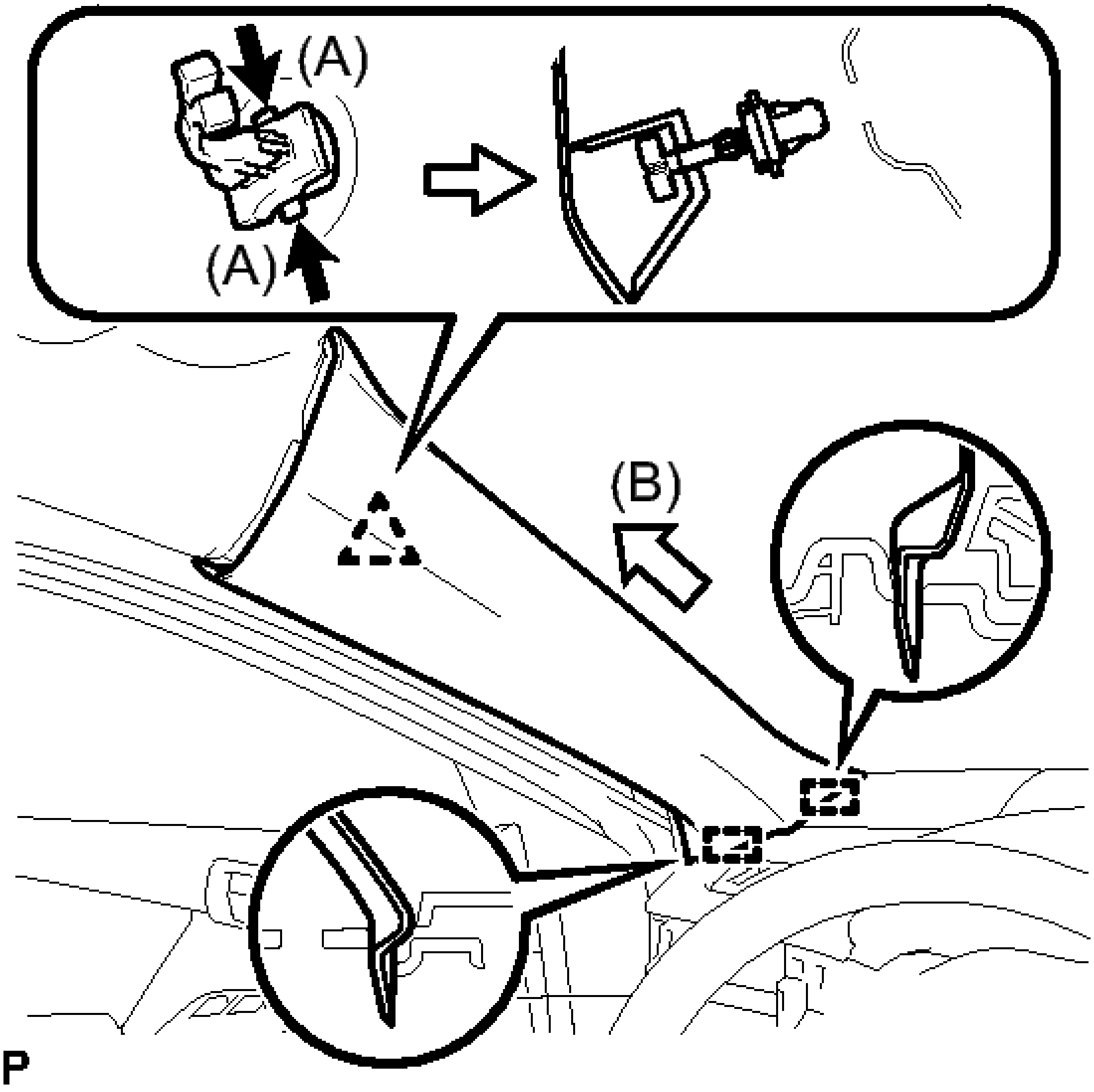

Fig. 142: Removing Front Pillar Garnish LH
Courtesy of TOYOTA MOTOR SALES, U.S.A., INC.

c. Pull the garnish in the direction indicated by the arrow (2) shown in the illustration to disengage the 2 guides and remove the front pillar garnish LH.
d. Protect the curtain shield airbag assembly.

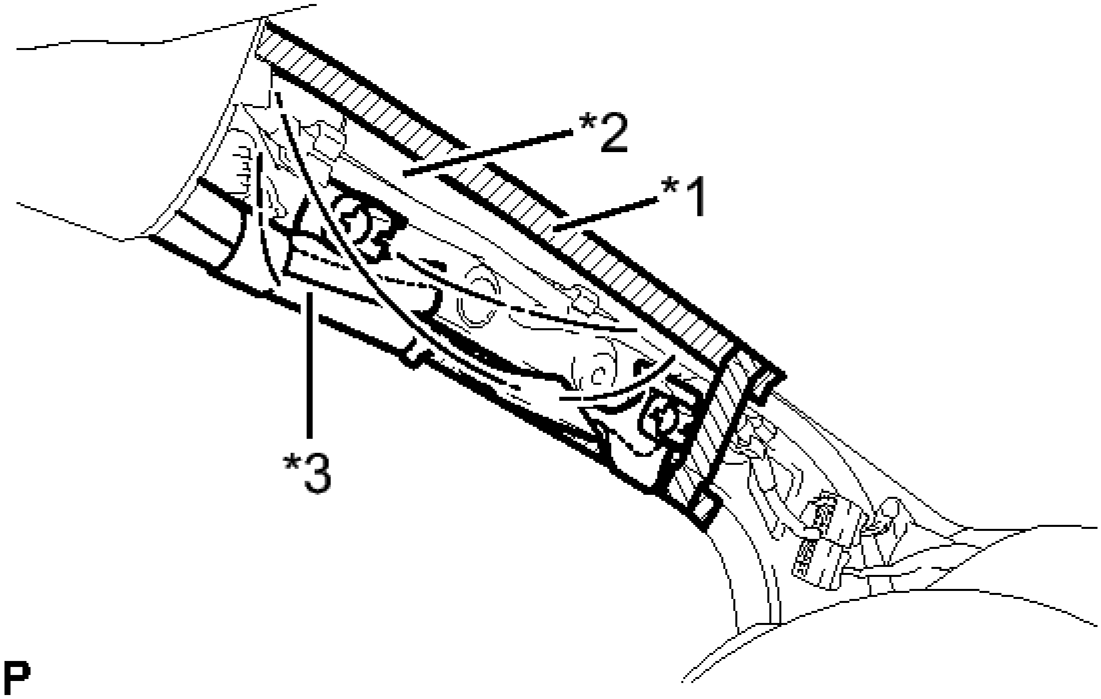

Fig. 143: Identifying Curtain Shield Airbag Assembly With Protective Cover And Tape
Courtesy of TOYOTA MOTOR SALES, U.S.A., INC.

TEXT IN ILLUSTRATION

*1	Adhesive Tape
*2	Protective Cover
*3	Curtain Shield Airbag Assembly

1. Cover the airbag with a piece of cloth or nylon and secure the edges of the cover with tape as shown in the illustration.

NOTE: **Cover the curtain shield airbag with a protective cover as soon as the front pillar garnish is removed.**

8. **REMOVE FRONT DOOR SCUFF PLATE RH**

HINT:

Use the same procedure as for the LH side.

9. **REMOVE COWL SIDE TRIM SUB-ASSEMBLY RH**

HINT:

Use the same procedure as for the LH side.

10. **REMOVE FRONT DOOR OPENING TRIM WEATHERSTRIP RH**

    HINT:

    Use the same procedure as for the LH side.

11. **REMOVE FRONT PILLAR GARNISH RH**

    HINT:

    Use the same procedure as for the LH side.

12. **REMOVE REAR SEAT CUSHION ASSEMBLY** . Refer to **REMOVAL - Step 4**
13. **REMOVE REAR SEAT CUSHION LOCK HOOK** . Refer to **REMOVAL - Step 5**
14. **REMOVE REAR SEATBACK ASSEMBLY RH** . Refer to **REMOVAL - Step 6**
15. **REMOVE NO. 2 ROOM PARTITION COVER** . Refer to **REMOVAL - Step 7**
16. **REMOVE REAR SEATBACK ASSEMBLY LH** . Refer to **REMOVAL - Step 8**
17. **REMOVE REAR SIDE SEATBACK ASSEMBLY LH** . Refer to **REMOVAL - Step 9**
18. **REMOVE REAR SIDE SEATBACK ASSEMBLY RH** . Refer to **REMOVAL - Step 10**
19. **REMOVE REAR DOOR SCUFF PLATE LH**
    a. Disengage the 6 claws and remove the rear door scuff plate LH.

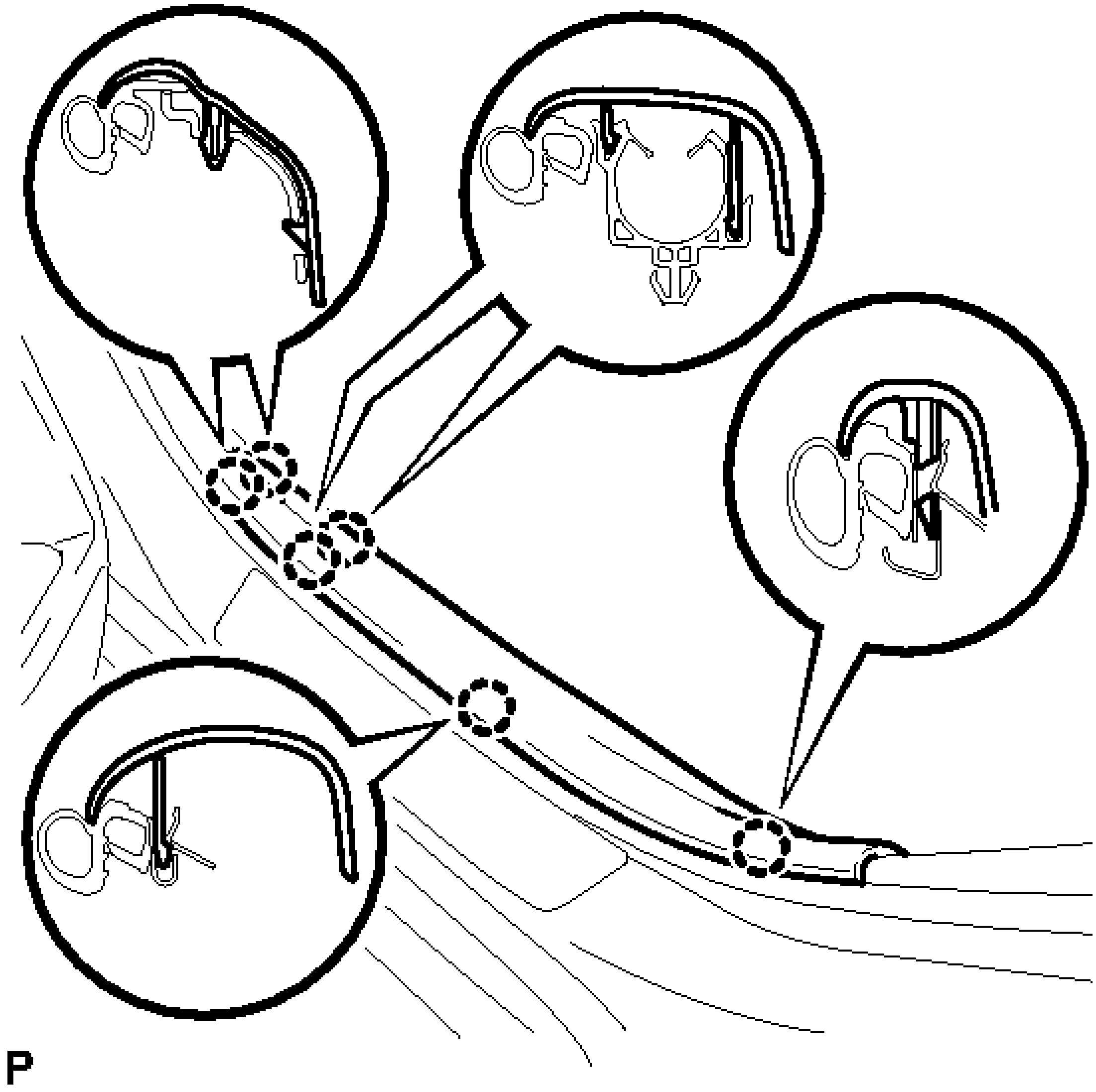

Fig. 144: Identifying Rear Door Scuff Plate LH Claws
Courtesy of TOYOTA MOTOR SALES, U.S.A., INC.

HINT:

Disengage the claws from the rear side of the scuff plate.

20. **REMOVE REAR DOOR OPENING TRIM WEATHERSTRIP LH**
    a. Remove the rear door opening trim weatherstrip LH.
21. **REMOVE LAP BELT OUTER ANCHOR COVER (for LH Side)** . Refer to **REMOVAL - Step 8**
22. **DISCONNECT FRONT SEAT OUTER BELT ASSEMBLY LH** . Refer to **REMOVAL - Step 9**
23. **REMOVE CENTER PILLAR LOWER GARNISH LH**
    a. Disengage the 2 claws and 3 clips, and remove the center pillar lower garnish LH.

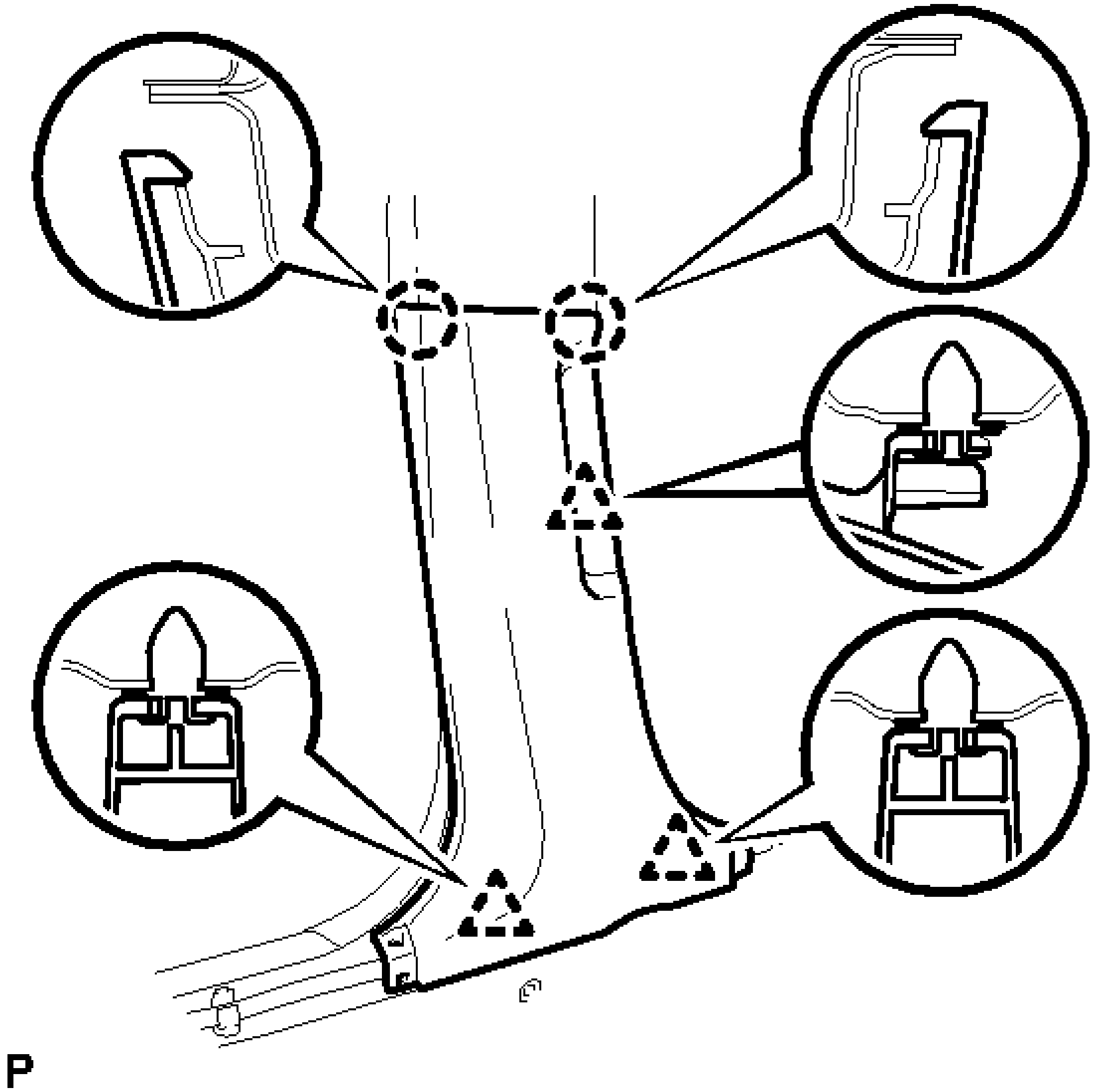

Fig. 145: Identifying Center Pillar Lower Garnish LH Fasteners
Courtesy of TOYOTA MOTOR SALES, U.S.A., INC.

24. **REMOVE CENTER PILLAR UPPER GARNISH LH**
    a. Remove the 2 screws.

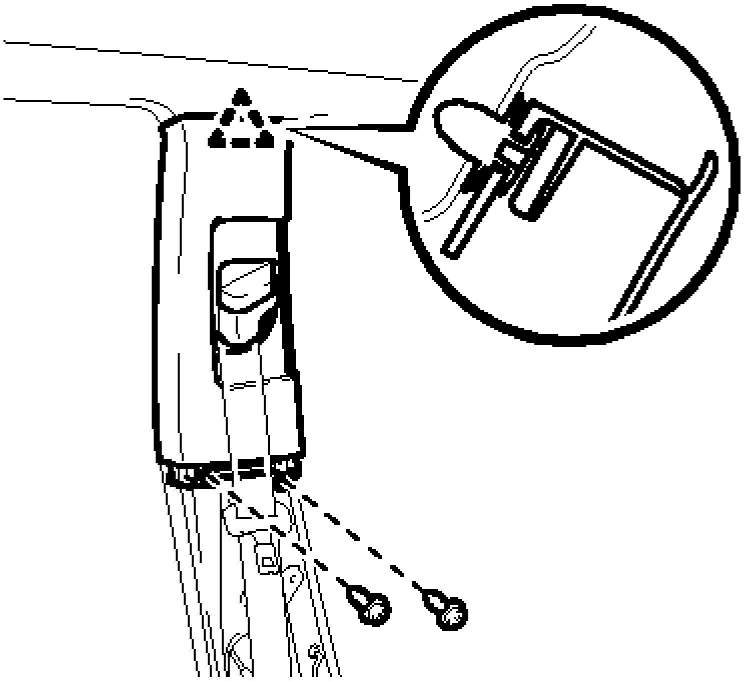

Fig. 146: Locating Center Pillar Upper Garnish LH Fasteners
Courtesy of TOYOTA MOTOR SALES, U.S.A., INC.

b. Disengage the clip.
c. Pass the floor anchor of the front seat outer seat belt assembly LH through the center pillar upper garnish LH and remove the center pillar upper garnish LH.

25. **REMOVE ROOF SIDE INNER GARNISH LH**

a. Disengage the 5 clips.

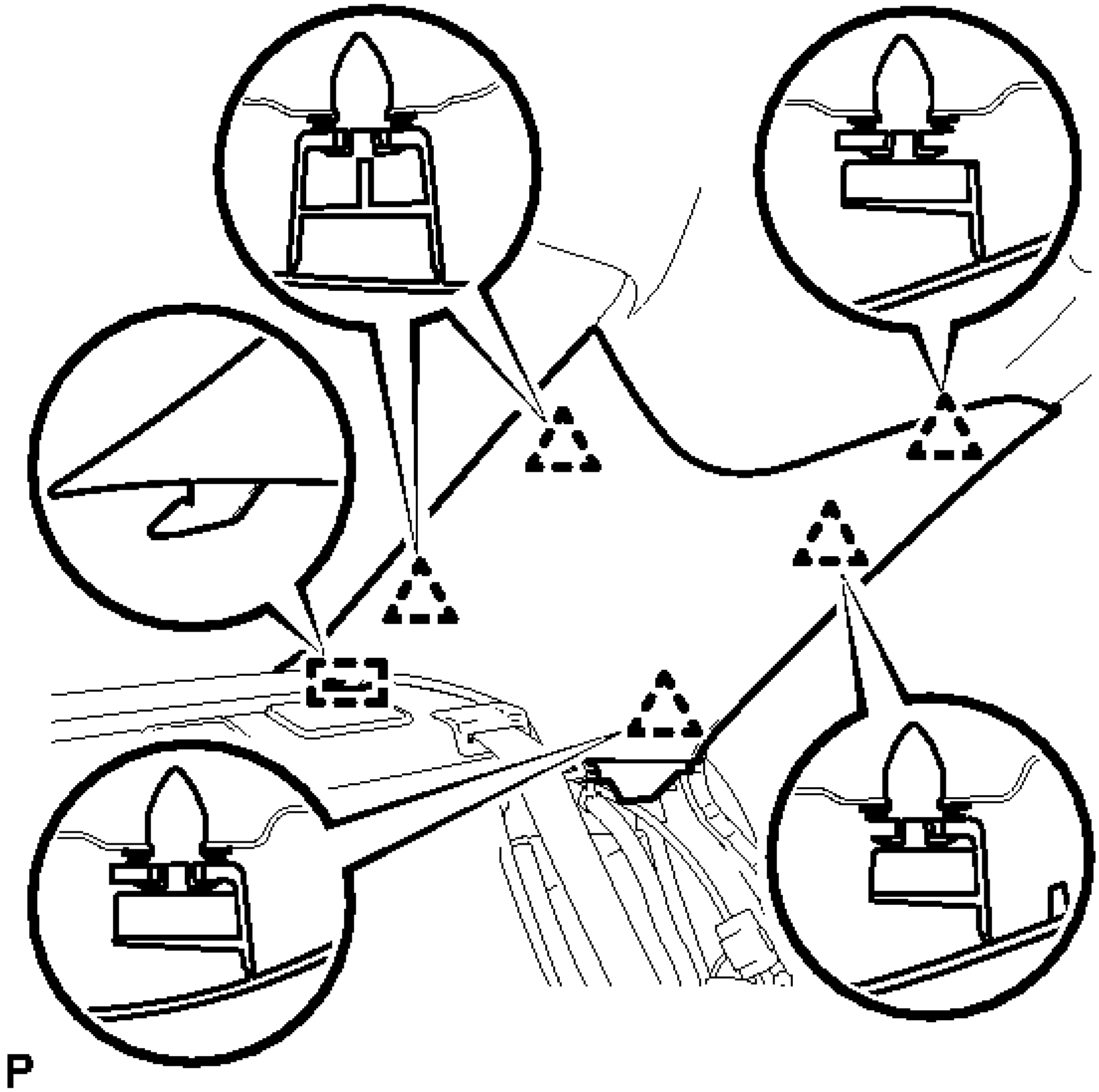

Fig. 147: Identifying Roof Side Inner Garnish LH Clips
Courtesy of TOYOTA MOTOR SALES, U.S.A., INC.

b. Disengage the guide and remove the roof side inner garnish LH.

26. **REMOVE REAR DOOR SCUFF PLATE RH**

    HINT:

    Use the same procedure as for the LH side.

27. **REMOVE REAR DOOR OPENING TRIM WEATHERSTRIP RH**

    HINT:

    Use the same procedure as for the LH side.

28. **REMOVE LAP BELT OUTER ANCHOR COVER (for RH Side)**

HINT:

Use the same procedure as for the LH side.

29. **DISCONNECT FRONT SEAT OUTER BELT ASSEMBLY RH**

HINT:

Use the same procedure as for the LH side.

30. **REMOVE CENTER PILLAR LOWER GARNISH RH**

HINT:

Use the same procedure as for the LH side.

31. **REMOVE CENTER PILLAR UPPER GARNISH RH**

HINT:

Use the same procedure as for the LH side.

32. **REMOVE ROOF SIDE INNER GARNISH RH**

HINT:

Use the same procedure as for the LH side.

33. **REMOVE FRONT SEAT ASSEMBLY LH**

for Manual Seat. Refer to **REMOVAL**

for Power Seat. Refer to **REMOVAL**

34. **REMOVE FRONT SEAT ASSEMBLY RH**

HINT:

Use the same procedure as for the LH side.

35. **REMOVE INSTRUMENT PANEL SAFETY PAD ASSEMBLY**

Refer to **REMOVAL**

36. **REMOVE INNER REAR VIEW MIRROR STAY HOLDER COVER (w/ EC Mirror)** . Refer to

REMOVAL - Step 2

37. **REMOVE PROTECTOR** . Refer to **REMOVAL - Step 1**
38. **REMOVE ROOF CONSOLE BOX ASSEMBLY (w/o Sliding Roof)** . Refer to **REMOVAL - Step 1**
39. **REMOVE ROOF CONSOLE BOX ASSEMBLY (w/ Sliding Roof)** . Refer to **REMOVAL - Step 2**
40. **REMOVE NO. 1 ROOM LIGHT ASSEMBLY (w/o Sliding Roof)** . Refer to **REMOVAL - Step 1**
41. **REMOVE SPOT LIGHT ASSEMBLY (w/ Sliding Roof)** . Refer to **REMOVAL - Step 2**
42. **REMOVE ASSIST GRIP SUB-ASSEMBLY**
    a. Using a screwdriver, disengage the 4 claws and remove the 2 assist grip covers.

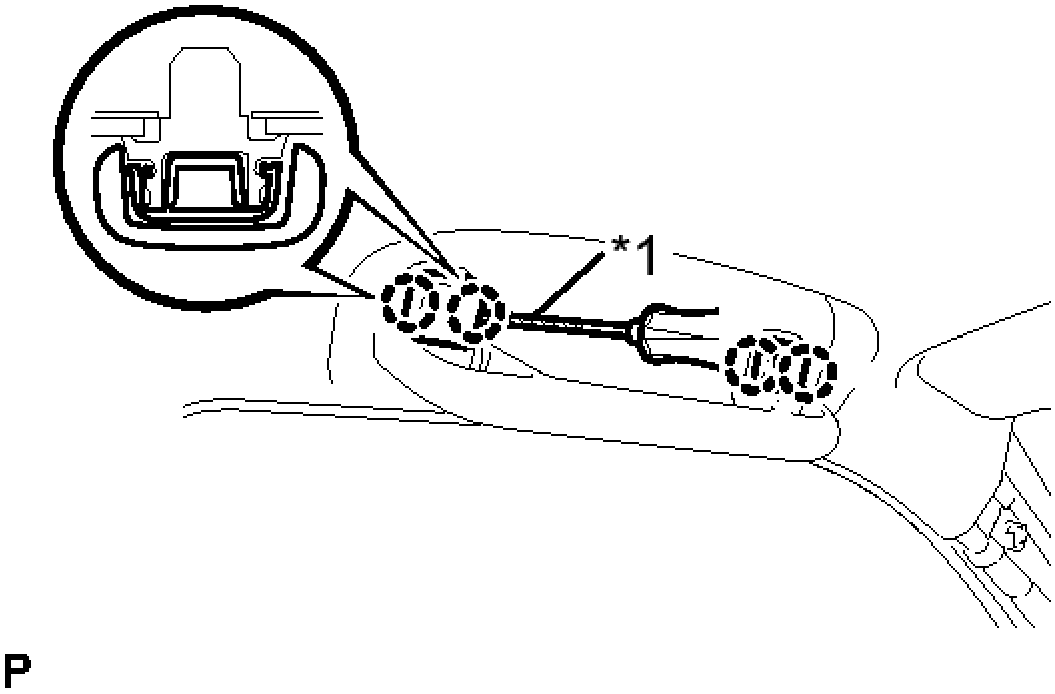

Fig. 148: Identifying Assist Grip Sub-Assembly
Courtesy of TOYOTA MOTOR SALES, U.S.A., INC.

TEXT IN ILLUSTRATION

*1	Protective Tape

NOTE: **Do not forcibly pry the assist grip covers to prevent them from being deformed.**

HINT:

Tape the screwdriver tip before use.

b. Disengage the 2 clips and remove the assist grip sub-assembly.

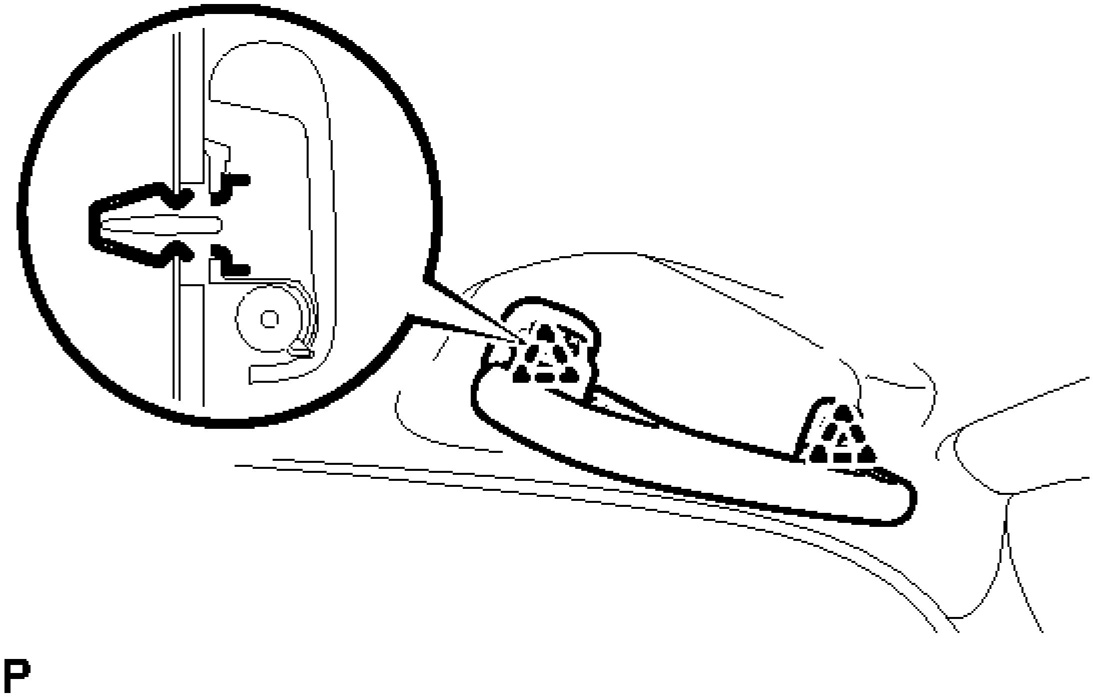

Fig. 149: Identifying Assist Grip Sub-Assembly Clips
Courtesy of TOYOTA MOTOR SALES, U.S.A., INC.

c. Remove the 2 clips from the vehicle body.

   HINT:

   Use the same procedure for the RH side.

43. **REMOVE REAR ASSIST GRIP ASSEMBLY LH**
    a. Using a screwdriver, disengage the 4 claws and remove the 2 assist grip covers.

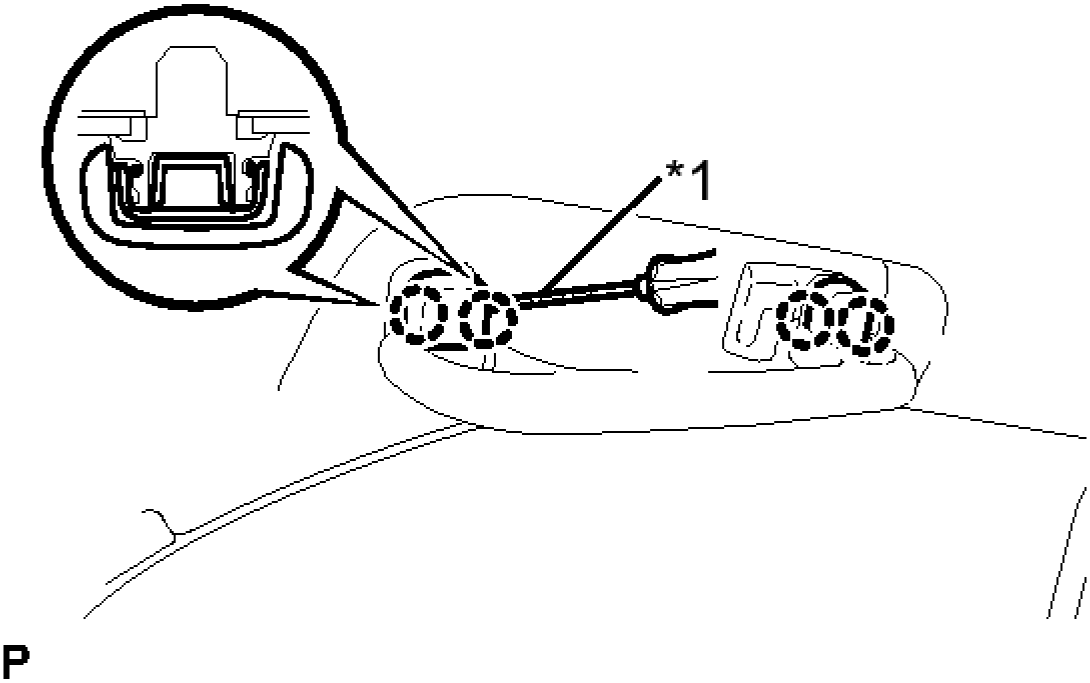

Fig. 150: Removing Rear Assist Grip Assembly LH
Courtesy of TOYOTA MOTOR SALES, U.S.A., INC.

TEXT IN ILLUSTRATION

*1	Protective Tape

NOTE: **Do not forcibly pry the assist grip covers to prevent them from being deformed.**

HINT:

Tape the screwdriver tip before use.

b. Disengage the 2 clips and remove the rear assist grip assembly LH.

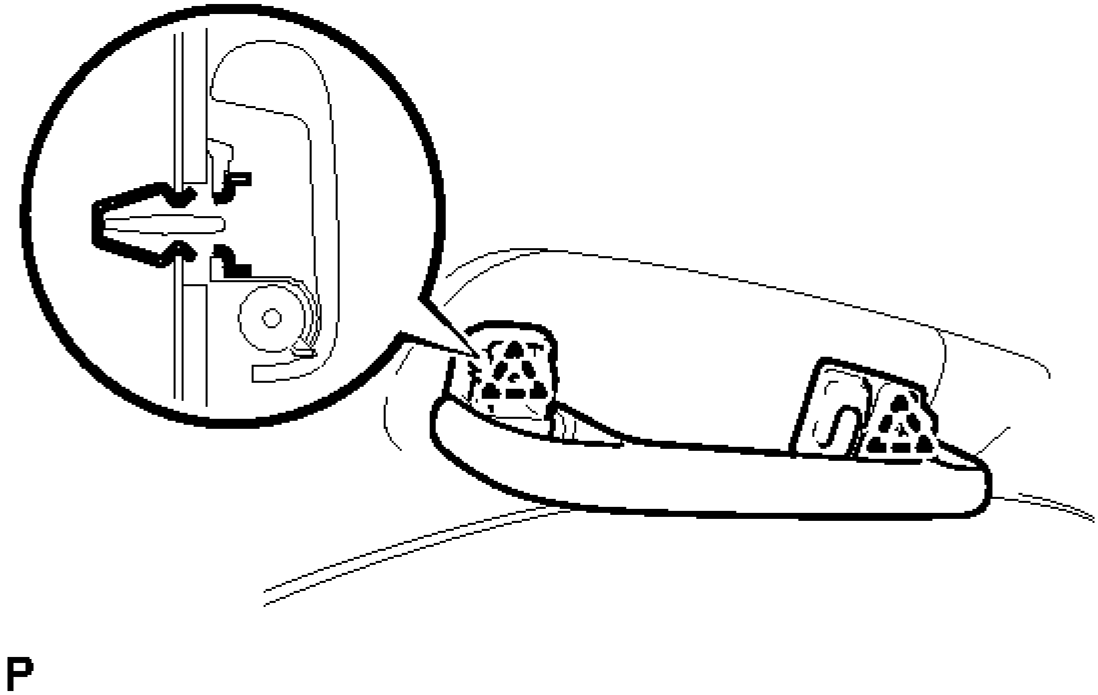

Fig. 151: Identifying Rear Assist Grip Assembly LH Clips
Courtesy of TOYOTA MOTOR SALES, U.S.A., INC.

c. Remove the 2 clips from the vehicle body.

44. **REMOVE REAR ASSIST GRIP ASSEMBLY RH**

    HINT:

    Use the same procedure as for the LH side.

45. **REMOVE SLIDING ROOF OPENING TRIM MOLDING (w/ Sliding Roof)**
    a. Remove the sliding roof opening trim molding.
46. **REMOVE VISOR BRACKET COVER (for LH Side)**
    a. Using a molding remover, disengage the 4 claws and remove the visor bracket cover.

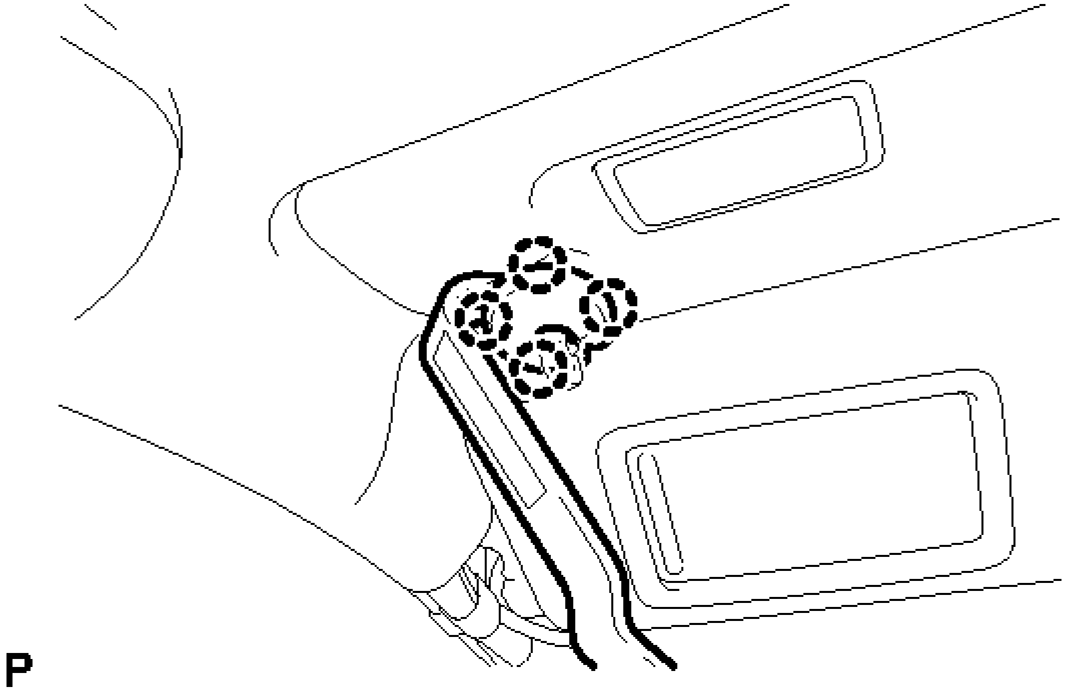

Fig. 152: Removing Visor Bracket Cover (For LH Side)
Courtesy of TOYOTA MOTOR SALES, U.S.A., INC.

47. **REMOVE VISOR ASSEMBLY LH**
    a. Remove the 2 screws and visor assembly LH.

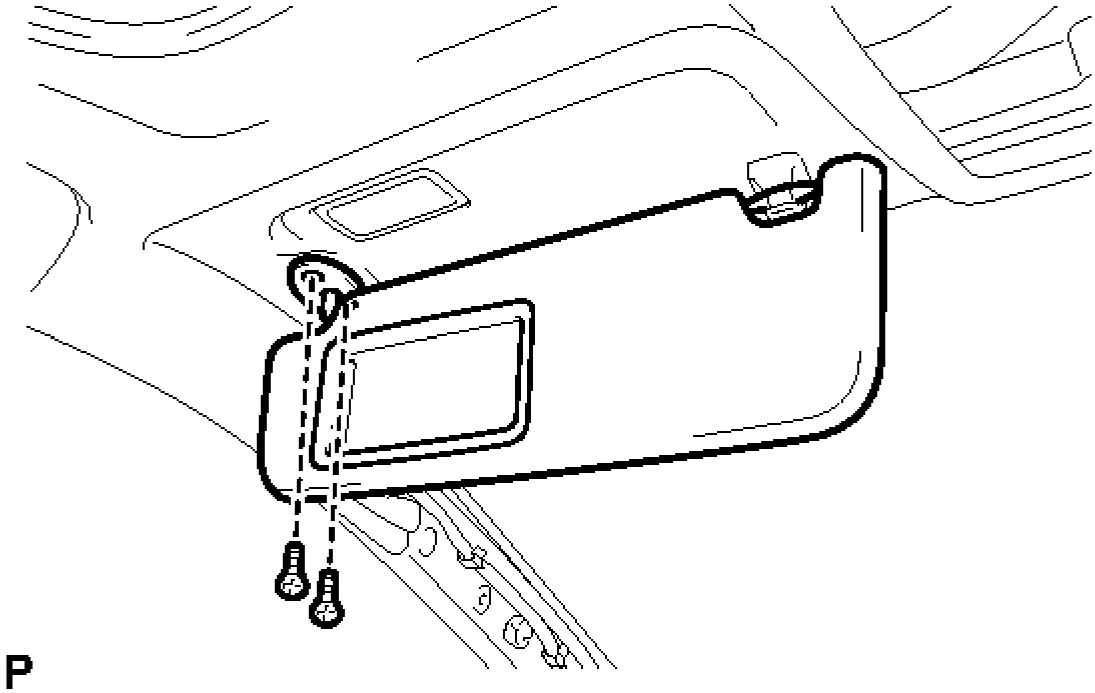

Fig. 153: Identifying Visor Assembly LH Fasteners

Courtesy of TOYOTA MOTOR SALES, U.S.A., INC.

48. **REMOVE VISOR BRACKET COVER (for RH Side)**

HINT:

Use the same procedure as for the LH side.

49. **REMOVE VISOR ASSEMBLY RH**

HINT:

Use the same procedure as for the LH side.

50. **REMOVE VISOR HOLDER**
    a. Turn the visor holder approximately 45° and pull it out as shown in the illustration.

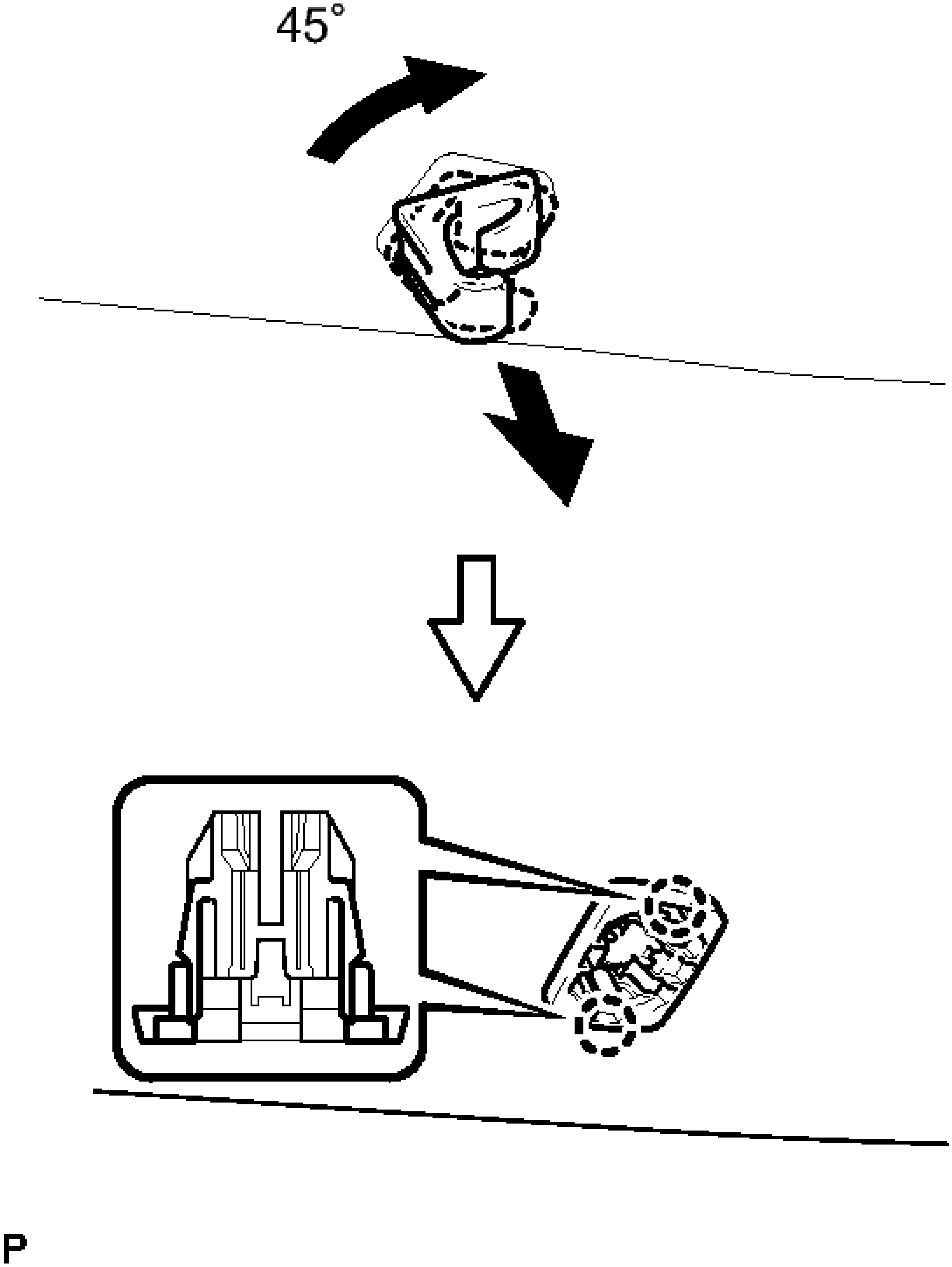

Fig. 154: Removing Visor Holder
Courtesy of TOYOTA MOTOR SALES, U.S.A., INC.

b. Disengage the 2 claws and remove the visor holder.

HINT:

Use the same procedure for the other visor holder.

51. **REMOVE ROOF HEADLINING ASSEMBLY (w/o Sliding Roof)**
    a. w/ EC Mirror
        1. Disconnect the connector from the inner rear view mirror assembly.
    b. Disconnect the connector from the air conditioning thermistor assembly.
    c. Remove the bolt and disconnect the bracket from the front pillar RH.

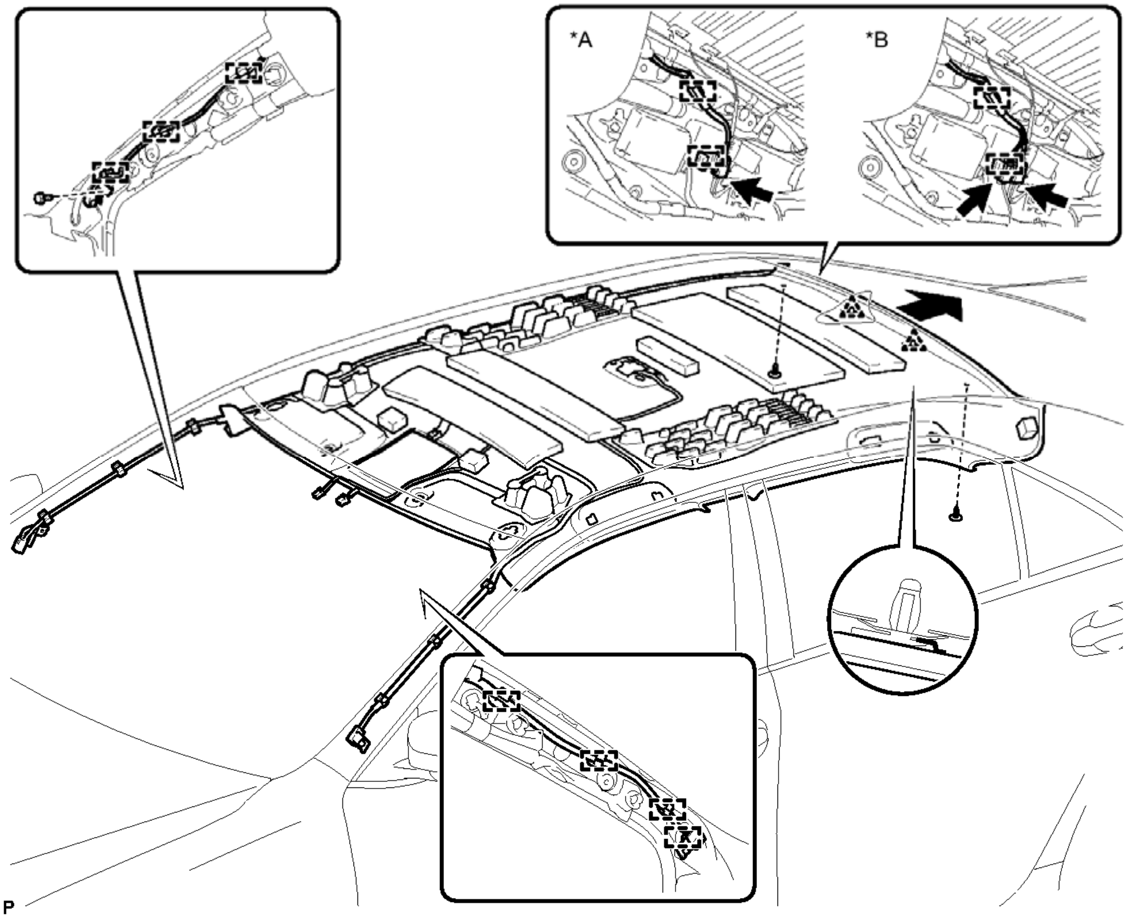

Fig. 155: Removing Roof Headlining Assembly (W/O Sliding Roof)
Courtesy of TOYOTA MOTOR SALES, U.S.A., INC.

TEXT IN ILLUSTRATION

*A	w/o Satellite Radio	*B	w/ Satellite Radio

d. Disengage the 3 clamps from the front pillar RH.
e. Disengage the 4 clamps from the front pillar LH.

f. w/o Satellite Radio:
    1. Disengage the 2 clamps and disconnect the connector from the rear pillar RH.

g. w/ Satellite Radio:
    1. Disengage the 2 clamps and disconnect the 2 connectors from the rear pillar RH.

h. Remove the 2 clips.

i. Slide the roof headlining assembly to disengage the 2 clips as shown in the illustration.

HINT:

Leave the 2 clips in the vehicle.

j. Remove the roof headlining assembly from the vehicle through the front door RH.

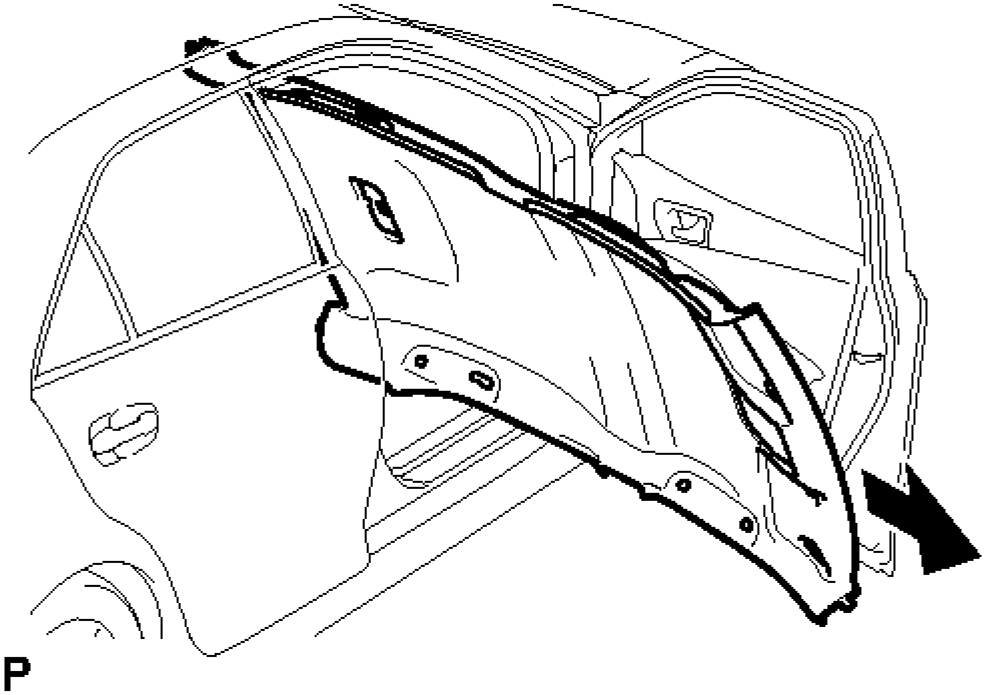

Fig. 156: Removing Roof Headlining Assembly From Vehicle (w/o Sliding Roof)
Courtesy of TOYOTA MOTOR SALES, U.S.A., INC.

NOTE: **Do not damage the roof headlining assembly or body interior.**

k. Remove the 2 clips from the vehicle body as shown in the illustration.

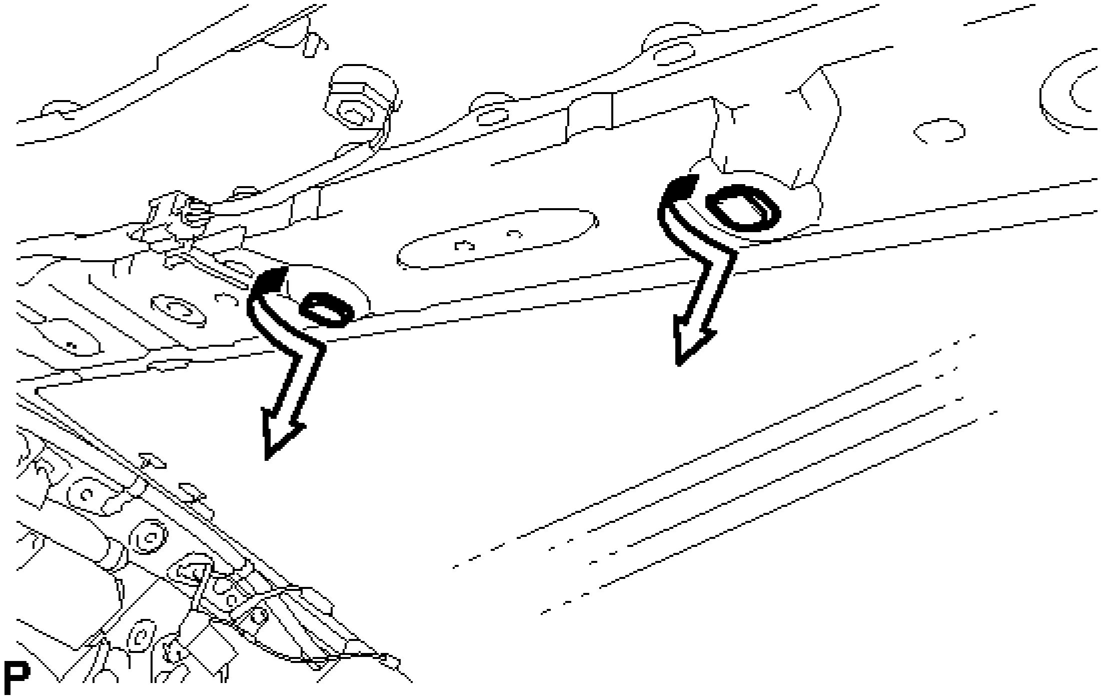

Fig. 157: Removing Roof Headlining Assembly Clips
Courtesy of TOYOTA MOTOR SALES, U.S.A., INC.

52. **REMOVE ROOF HEADLINING ASSEMBLY (w/ Sliding Roof)**
    a. w/ EC Mirror
        1. Disconnect the connector from the inner rear view mirror assembly.
    b. Disconnect the connector from the air conditioning thermistor assembly.
    c. Disconnect the connector from the sliding roof drive gear assembly.

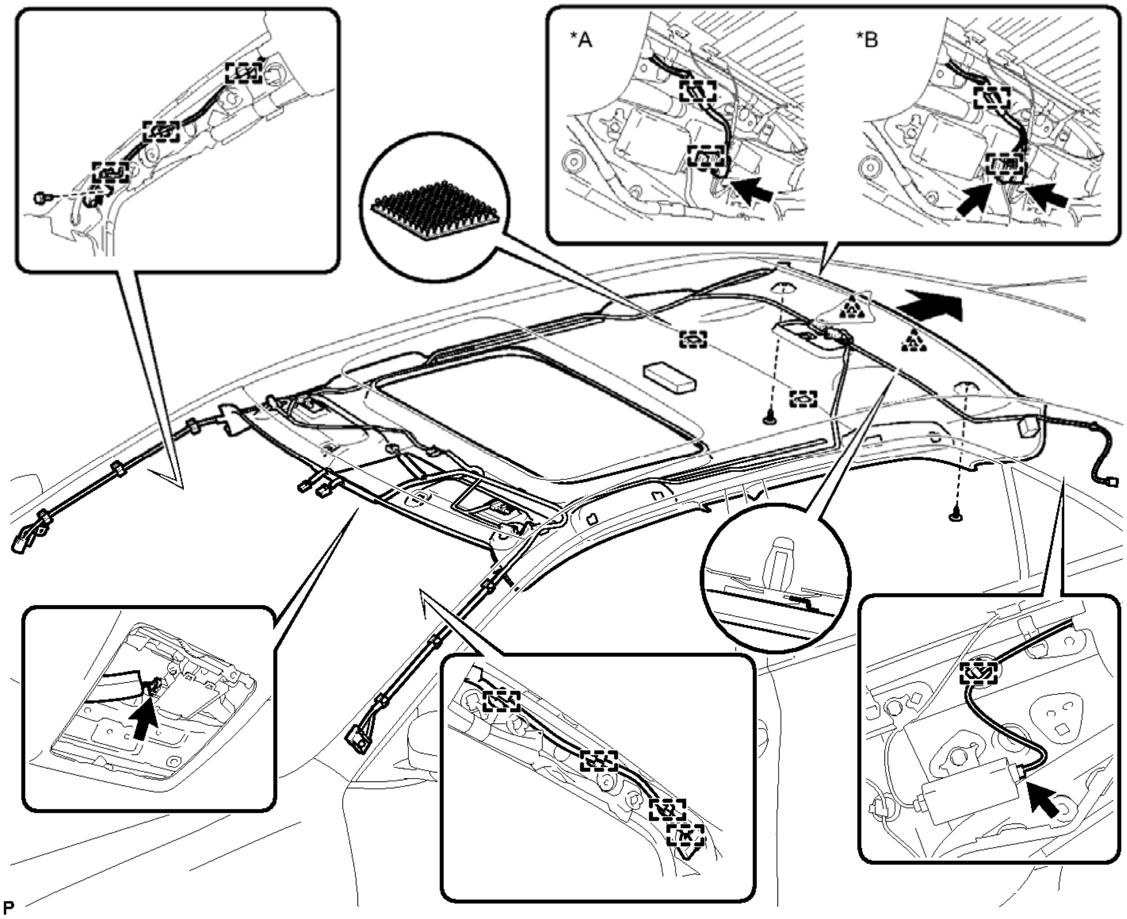

Fig. 158: Removing Roof Headlining Assembly (W/ Sliding Roof)
Courtesy of TOYOTA MOTOR SALES, U.S.A., INC.

TEXT IN ILLUSTRATION

*A	w/o Satellite Radio	*B	w/ Satellite Radio

d. Remove the bolt and disconnect the bracket from the front pillar RH.
e. Disengage the 3 clamps from the front pillar RH.
f. Disengage the 4 clamps from the front pillar LH.
g. w/o Satellite Radio:
    1. Disengage the 2 clamps and disconnect the connector from the rear pillar RH.
h. w/ Satellite Radio:
    1. Disengage the 2 clamps and disconnect the 2 connectors from the rear pillar RH.
i. Remove the 2 clips.
j. Disengage the 2 fasteners.
k. Slide the roof headlining assembly to disengage the 2 clips as shown in the illustration.

HINT:

Leave the 2 clips in the vehicle.

l. Remove the roof headlining assembly from the vehicle through the front door RH.

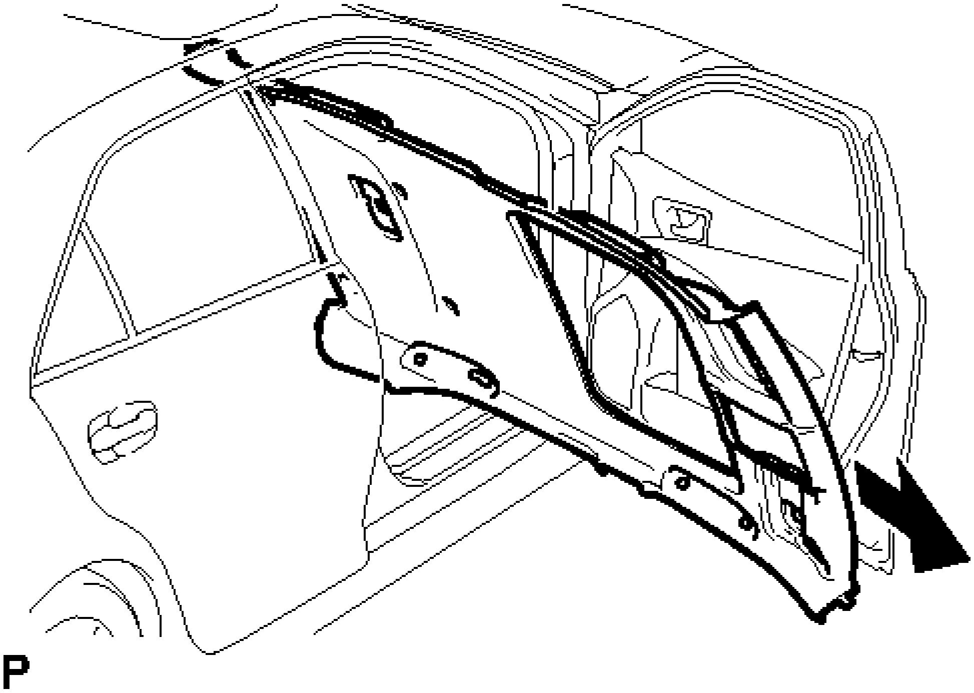

Fig. 159: Removing Roof Headlining Assembly From Vehicle (w/ Sliding Roof)
Courtesy of TOYOTA MOTOR SALES, U.S.A., INC.

NOTE: **Do not damage the roof headlining assembly or body interior.**

m. Remove the 2 clips from the vehicle body as shown in the illustration.

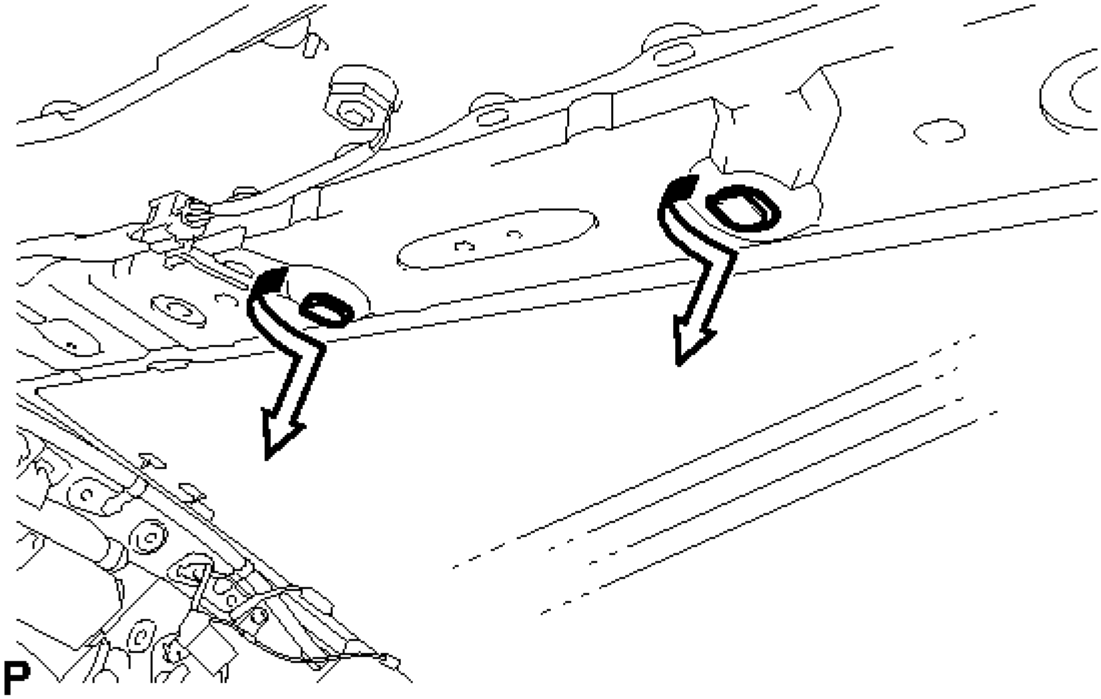

Fig. 160: Removing Roof Headlining Assembly Clips
Courtesy of TOYOTA MOTOR SALES, U.S.A., INC.

DISASSEMBLY

DISASSEMBLY

1. **REMOVE VANITY LIGHT ASSEMBLY (w/ Sliding Roof)**
    a. Remove the vanity light assembly. Refer to **REMOVAL - Step 2** .

    HINT:

    Use the same procedure for the other vanity light.
2. **REMOVE NO. 2 ANTENNA CORD SUB-ASSEMBLY** . Refer to **REMOVAL - Step 6**
3. **REMOVE NO. 4 ROOF SILENCER PAD (w/o Sliding Roof)**
    a. Remove the 3 No. 4 roof silencer pads.

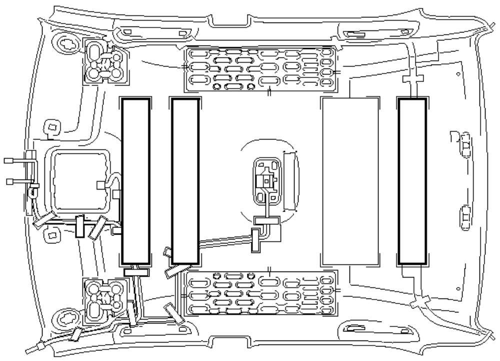

P

Fig. 161: Identifying No. 4 Roof Silencer Pads
Courtesy of TOYOTA MOTOR SALES, U.S.A., INC.

4. **REMOVE NO. 1 ROOF WIRE**
    a. Remove the adhesive tape from the roof headlining assembly.

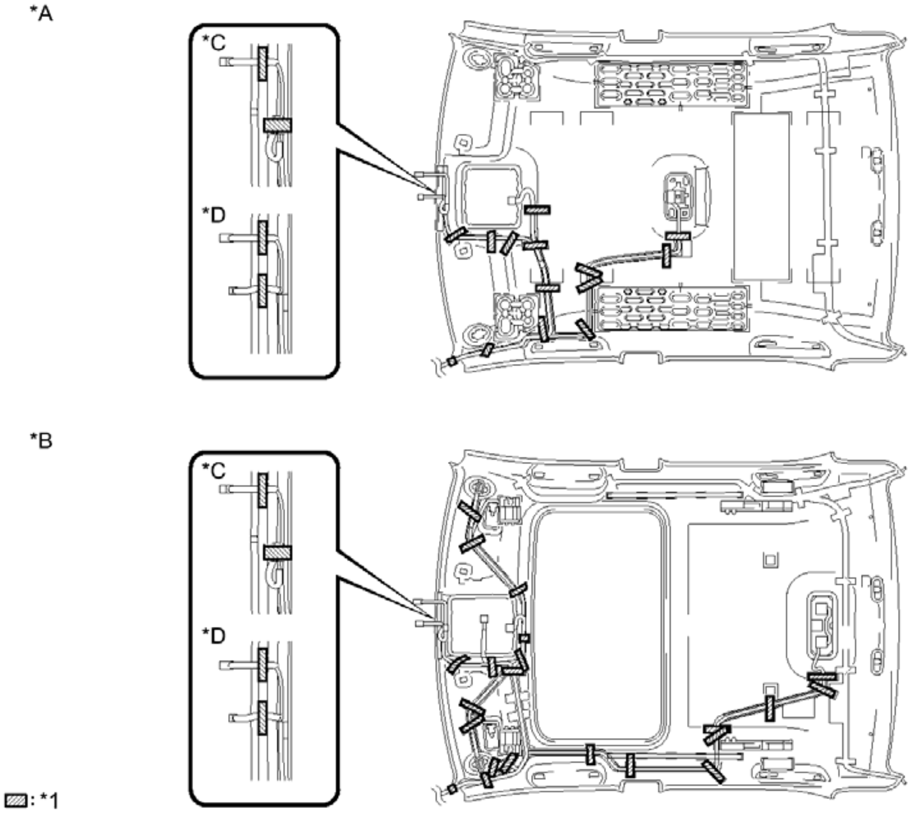

P

Fig. 162: Identifying Roof Headlining Tape
Courtesy of TOYOTA MOTOR SALES, U.S.A., INC.

TEXT IN ILLUSTRATION

*A	w/o Sliding Roof	*B	w/ Sliding Roof
*C	w/o EC Mirror	*D	w/ EC Mirror
*1	Adhesive Tape	-	-

b. w/ Sliding Roof:
   1. Turn the visor connectors counterclockwise approximately 45° and separate the connectors from the roof headlining assembly.

c. Remove the No. 1 roof wire from the roof headlining assembly.

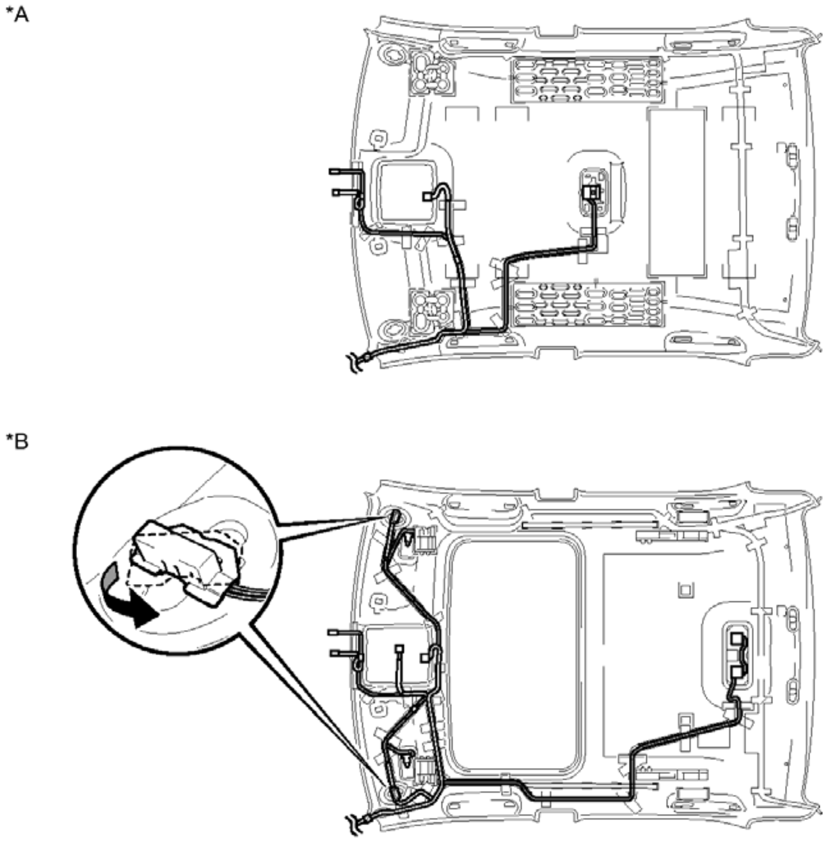

Fig. 163: Identifying No. 1 Roof Wire
Courtesy of TOYOTA MOTOR SALES, U.S.A., INC.

TEXT IN ILLUSTRATION

*A	w/o Sliding	*B	w/ Sliding

	Roof		Roof

5. **REMOVE NO. 2 ROOF SILENCER PAD (w/o Sliding Roof)**
   1. Remove the No. 2 roof silencer pad.

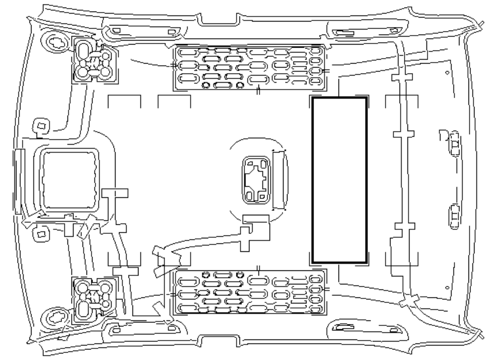

P

Fig. 164: Identifying No. 2 Roof Silencer Pad (w/o Sliding Roof)
Courtesy of TOYOTA MOTOR SALES, U.S.A., INC.

REASSEMBLY

REASSEMBLY

1. **INSTALL NO. 2 ROOF SILENCER PAD (w/o Sliding Roof)**
   1. Align the markings on the roof headlining assembly with the No. 2 roof silencer pad and install a new pad using hot-melt glue as shown in the illustration.

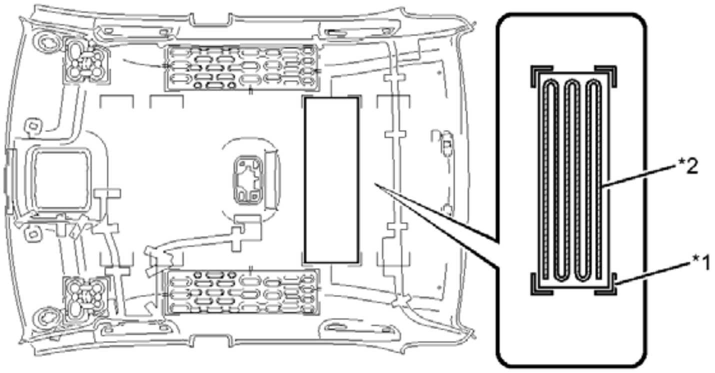

P

Fig. 165: Identifying No. 2 Roof Silencer Pad (w/o Sliding Roof)
Courtesy of TOYOTA MOTOR SALES, U.S.A., INC.

TEXT IN ILLUSTRATION

			Hot-

*1	Marking	*2	melt Glue

2. **INSTALL NO. 1 ROOF WIRE**
    a. Apply double-sided tape as shown in the illustration.

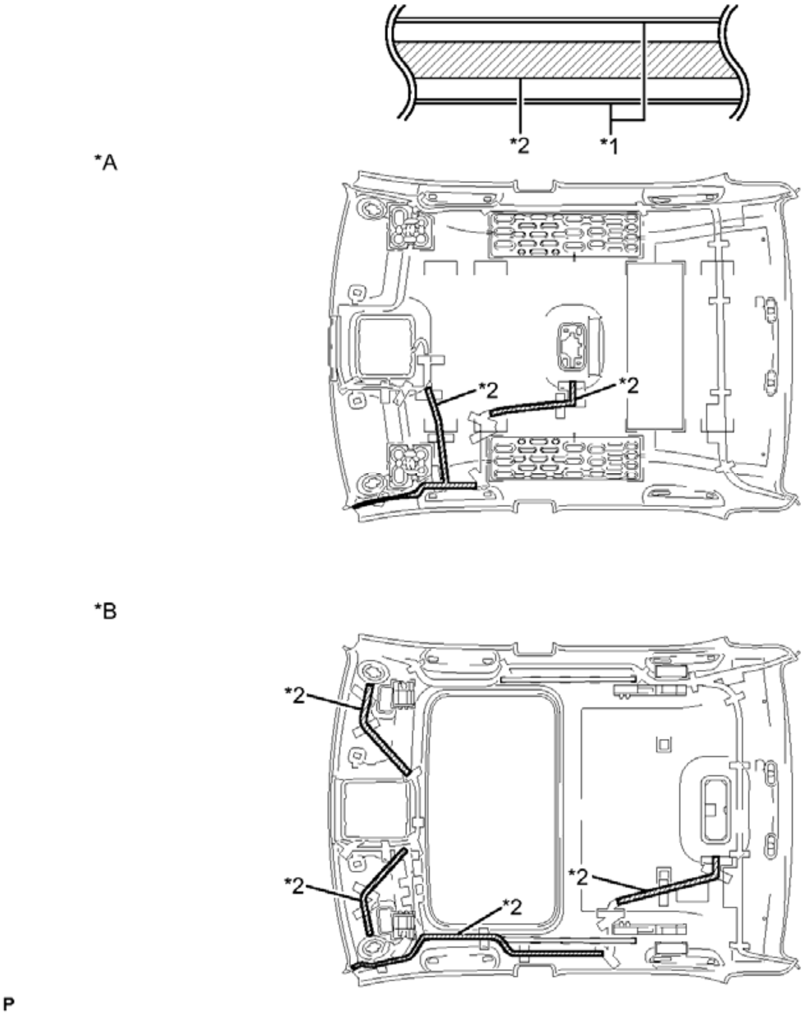

Fig. 166: Identifying Double-Sided Tape
Courtesy of TOYOTA MOTOR SALES, U.S.A., INC.

TEXT IN ILLUSTRATION

*A	w/o Sliding Roof	*B	w/ Sliding Roof
*1	Marking	*2	Double-sided Tape

b. Peel off the release paper from the double-sided tape.

c. Attach the No. 1 roof wire along the double-sided tape so that the marking surface of the wire harness faces downward.

d. Align the pink marking tape (A) on the No. 1 roof wire with the vehicle front side tab on the roof headlining.

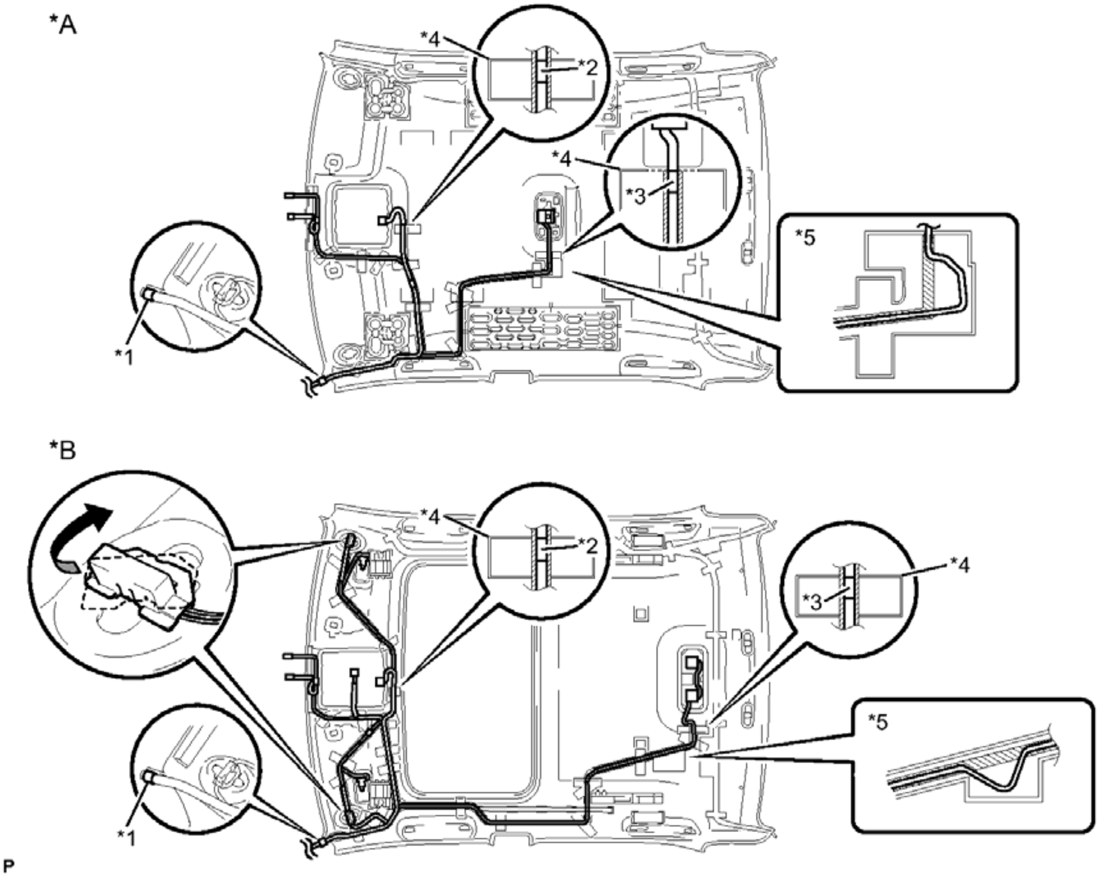

Fig. 167: Aligning The Pink Marking Tape
Courtesy of TOYOTA MOTOR SALES, U.S.A., INC.

TEXT IN ILLUSTRATION

*A	w/o Sliding Roof	*B	w/ Sliding Roof
*1	Pink Marking Tape (A)	*2	Pink Marking Tape (B)
*3	Pink Marking Tape (C)	*4	Marking

*5	Adjustment Area	-	-

e. w/ Sliding Roof:

  1. Turn the visor connector LH clockwise approximately 45° to install it to the roof headlining assembly.

f. Align the edge of the pink marking tape (A) on the No. 1 roof wire with the markings on the roof headlining.

g. Attach the No. 1 roof wire, starting from the pink marking tape (B) to the pink marking tape (A) while aligning it with the double-sided tape.

NOTE:

- **Securely attach the No. 1 roof wire before the hot-melt glue cools.**
- **If any of the No. 1 roof wire is left loose, this will cause abnormal noise. Make sure to attach the No. 1 roof wire without leaving any of it loose.**

h. w/ Sliding Roof:

  1. Turn the visor connector RH clockwise approximately 45° to install it to the roof headlining assembly.
  2. Attach the No. 1 roof wire, starting from the visor connector RH to the pink marking tape (B) while aligning it with the double-sided tape.

  NOTE:

  - **Securely attach the No. 1 roof wire.**
  - **If any of the No. 1 roof wire is left loose, this will cause abnormal noise. Make sure to attach the No. 1 roof wire without leaving any of it loose.**

i. Align the edge of the pink marking tape (C) on the No. 1 roof wire with the markings on the roof headlining.

j. Attach the No. 1 roof wire, starting from the pink marking tape (A) to the pink marking tape (C) while aligning it with the double-sided tape.

NOTE:

- **Securely attach the No. 1 roof wire.**
- **If any of the No. 1 roof wire is left loose, this will cause abnormal noise. Make sure to attach the No. 1 roof wire without leaving any of it loose.**

HINT:

Secure the extra length of the No. 1 roof wire in the adjustment area.

k. Apply adhesive tape by aligning it with the markings on the roof headlining as shown in the

illustration.

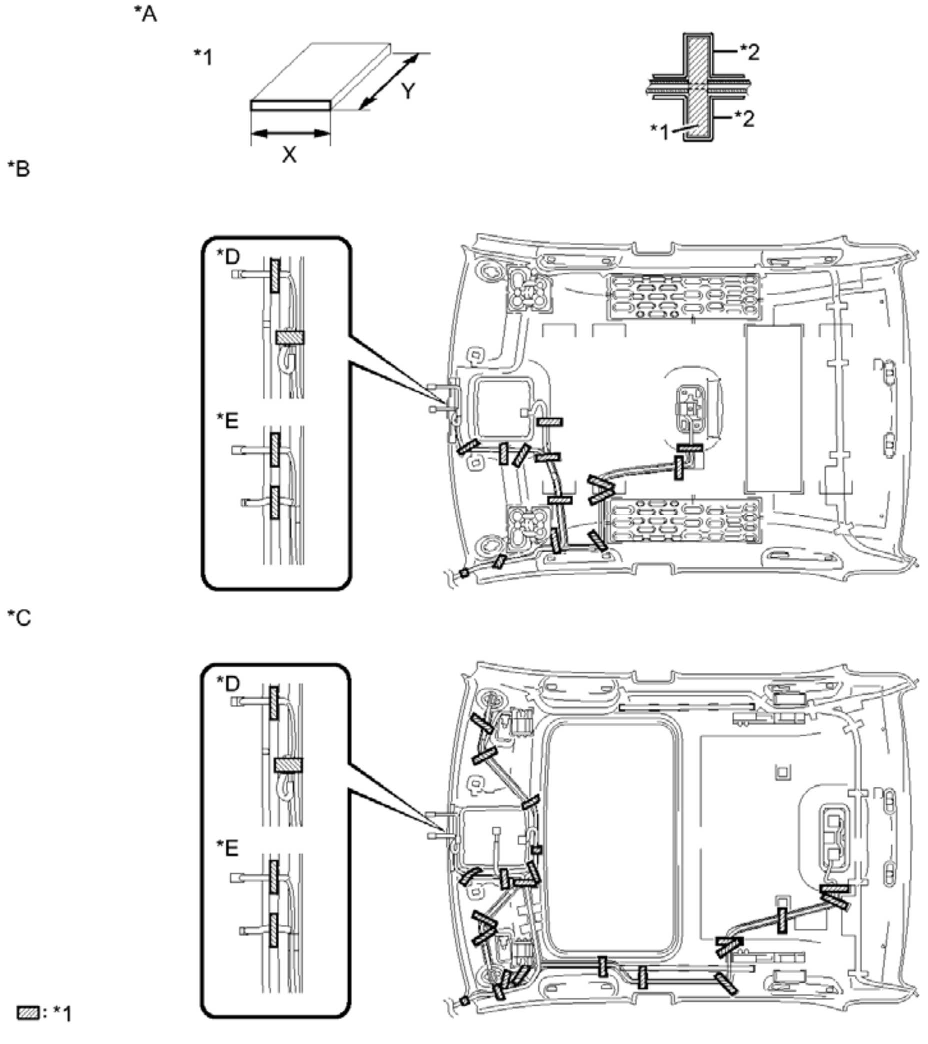

Fig. 168: Identifying Adhesive Tape
Courtesy of TOYOTA MOTOR SALES, U.S.A., INC.

TEXT IN ILLUSTRATION

*A	Tape Attachment Location (Reference)	*B	w/o Sliding Roof
*C	w/ Sliding Roof	*D	w/o EC Mirror
*E	w/ EC Mirror	-	-
*1	Adhesive Tape	*2	Marking

Adhesive Tape Size

X

20 mm (0.787 in.)

Y

80 mm (3.15 in.)

3. **INSTALL NO. 4 ROOF SILENCER PAD (w/o Sliding Roof)**
    a. Align the markings on the roof headlining assembly with the 3 No. 4 roof silencer pads and install 3 new pads using hot-melt glue as shown in the illustration.

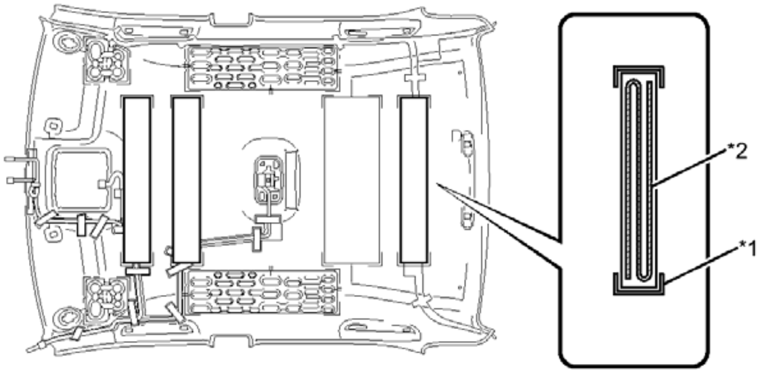

P

Fig. 169: Identifying No. 4 Roof Silencer Pads
Courtesy of TOYOTA MOTOR SALES, U.S.A., INC.

TEXT IN ILLUSTRATION

*1	Marking	*2	Hot-melt Glue

4. **INSTALL NO. 2 ANTENNA CORD SUB-ASSEMBLY** . Refer to **INSTALLATION - Step 1**
5. **INSTALL VANITY LIGHT ASSEMBLY (w/ Sliding Roof)**
    a. Install the vanity light assembly. Refer to **INSTALLATION - Step 1** .

    HINT:

    Use the same procedure for the other vanity light.

INSTALLATION

INSTALLATION

1. **INSTALL ROOF HEADLINING ASSEMBLY (w/o Sliding Roof)**
    a. Install the 2 clips to the roof headlining assembly.

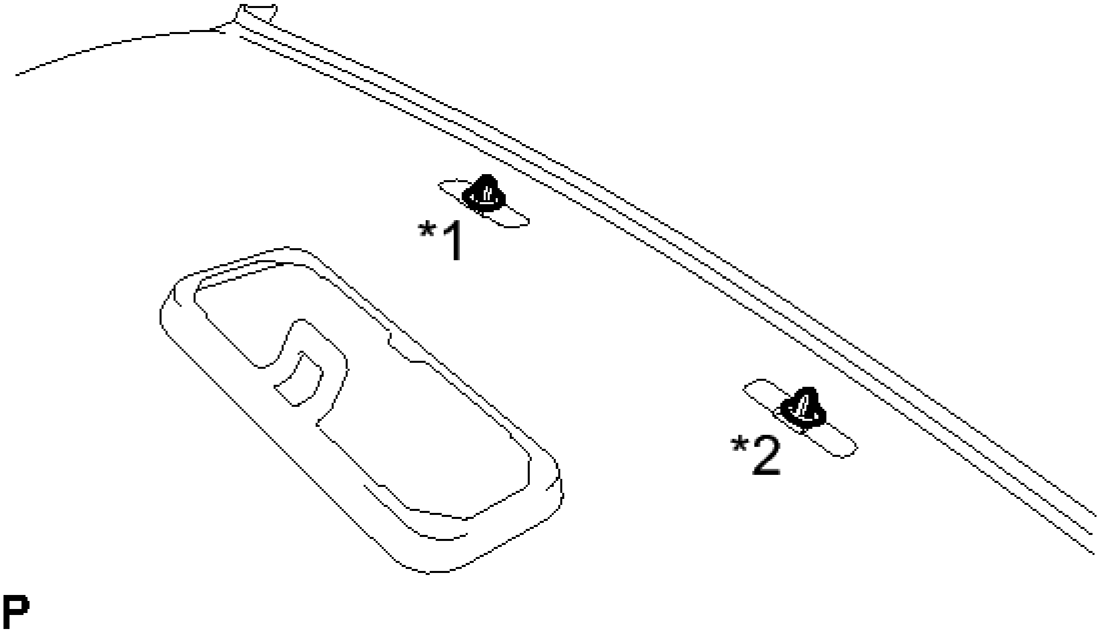

Fig. 170: Identifying Roof Headlining Assembly Clips
Courtesy of TOYOTA MOTOR SALES, U.S.A., INC.

TEXT IN ILLUSTRATION

*1	Clip (Black)
*2	Clip (White)

    b. Put the roof headlining assembly into the vehicle through the front door RH.

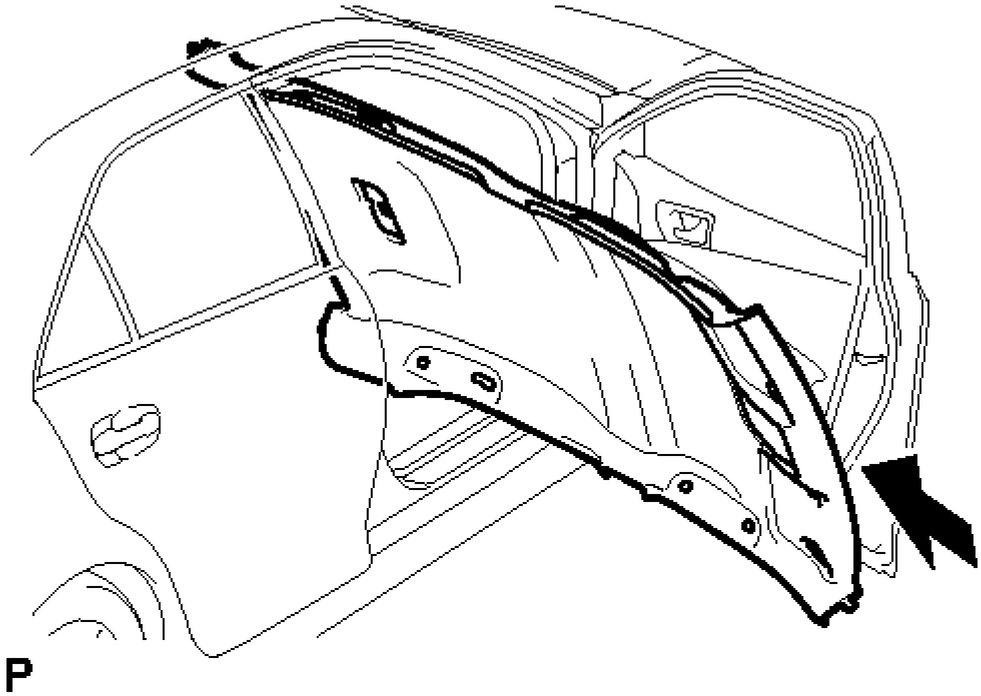

Fig. 171: Installing Roof Headlining Assembly From Vehicle (w/o Sliding Roof)
Courtesy of TOYOTA MOTOR SALES, U.S.A., INC.

NOTE: **Do not damage the roof headlining assembly or body interior.**

c. Engage the 2 clips.

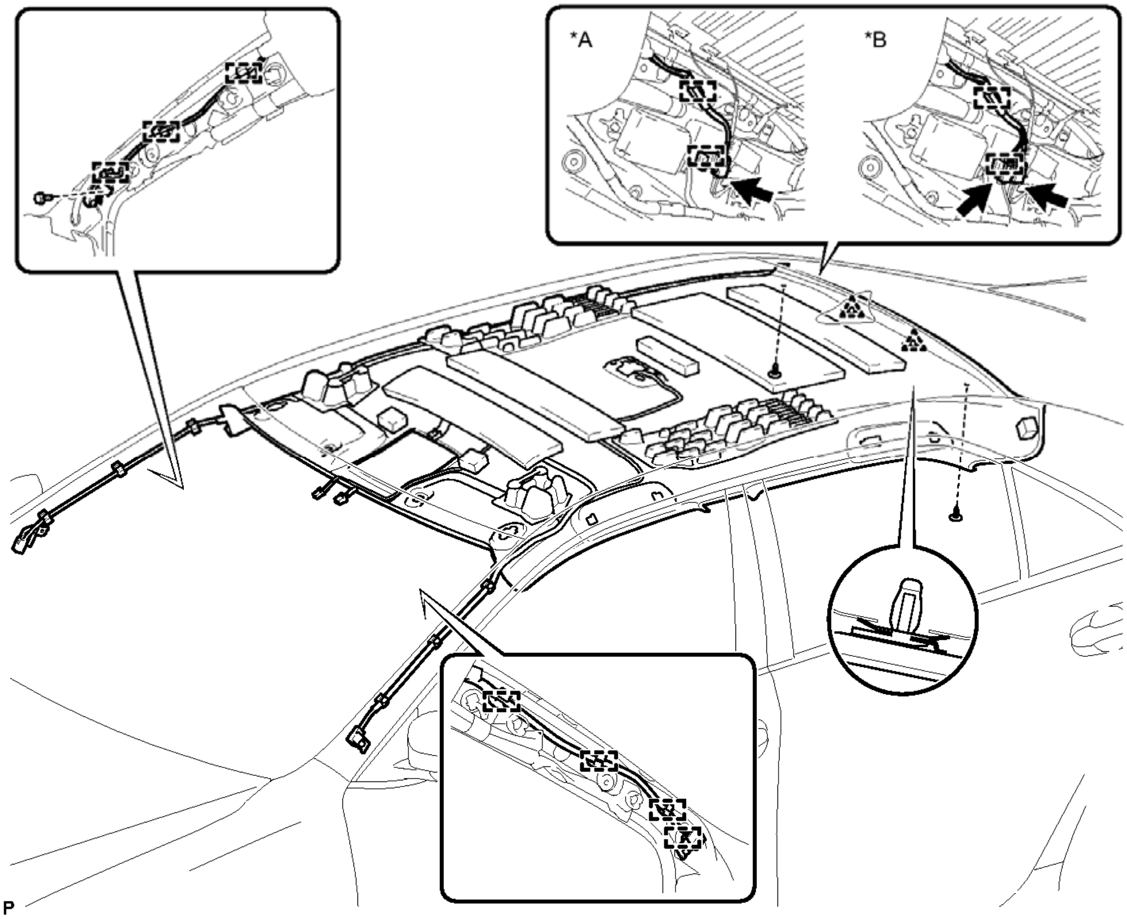

Fig. 172: Identifying Roof Headlining Assembly Clips
Courtesy of TOYOTA MOTOR SALES, U.S.A., INC.

TEXT IN ILLUSTRATION

*A	w/o Satellite Radio	*B	w/ Satellite Radio

d. Install the roof headlining assembly with the 2 clips.
e. Engage the 4 clamps to the front pillar LH.
f. Engage the 3 clamps to the front pillar RH.
g. Connect the bracket with the bolt to the front pillar RH.

Torque: 7.0 N*m (71 kgf*cm, 62 in.*lbf)

h. w/o Satellite Radio:
    1. Engage the 2 clamps and connect the connector to the rear pillar RH.
i. w/ Satellite Radio:
    1. Engage the 2 clamps and connect the 2 connectors to the rear pillar RH.
j. Connect the connector to the air conditioning thermistor assembly.

k. w/ EC Mirror
    1. Connect the connector to the inner rear view mirror assembly.

2. **INSTALL ROOF HEADLINING ASSEMBLY (w/ Sliding Roof)**
    a. Install the 2 clips to the roof headlining assembly.

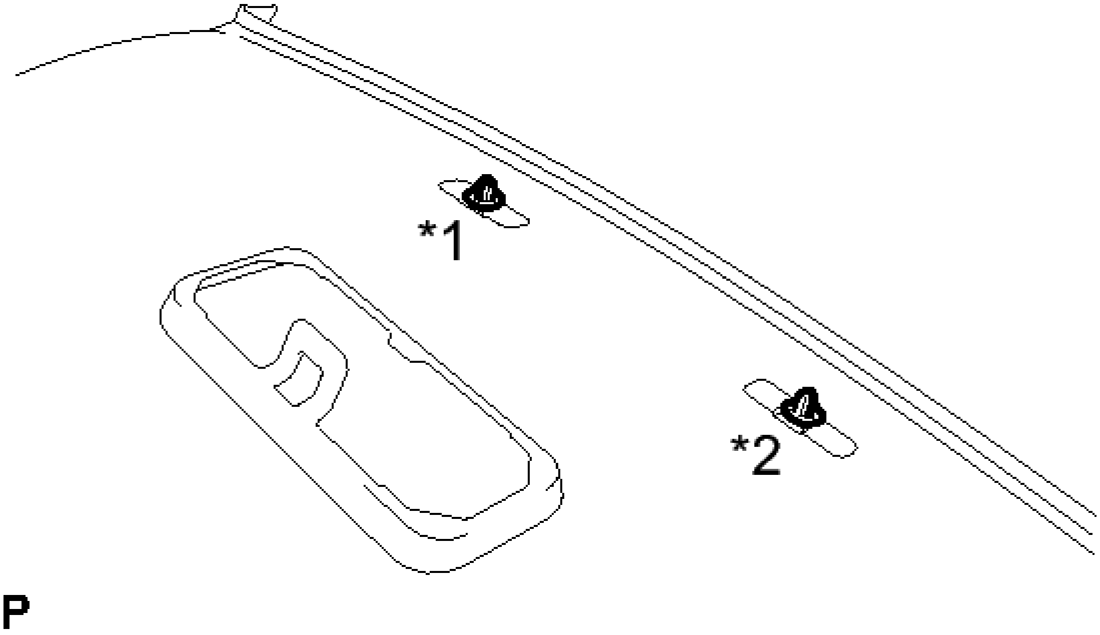

Fig. 173: Identifying Roof Headlining Assembly Clips
Courtesy of TOYOTA MOTOR SALES, U.S.A., INC.

TEXT IN ILLUSTRATION

*1	Clip (Black)
*2	Clip (White)

    b. Put the roof headlining assembly into the vehicle through the front door RH.

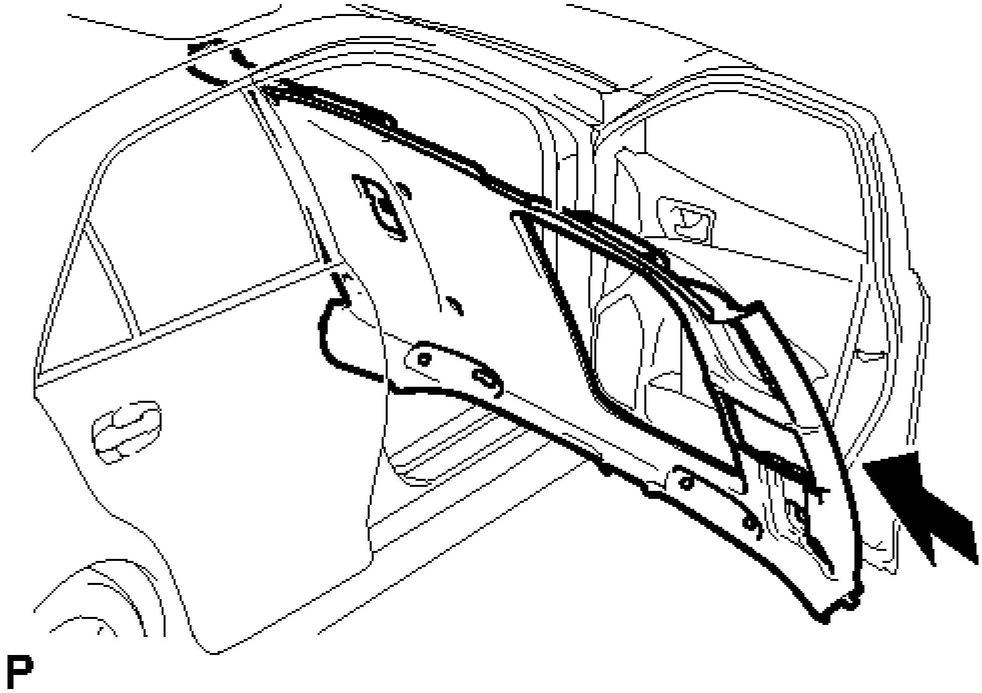

Fig. 174: Installing Roof Headlining Assembly From Vehicle (w/ Sliding Roof)
Courtesy of TOYOTA MOTOR SALES, U.S.A., INC.

NOTE: **Do not damage the roof headlining assembly or body interior.**

c. Engage the 2 clips and 2 fasteners.

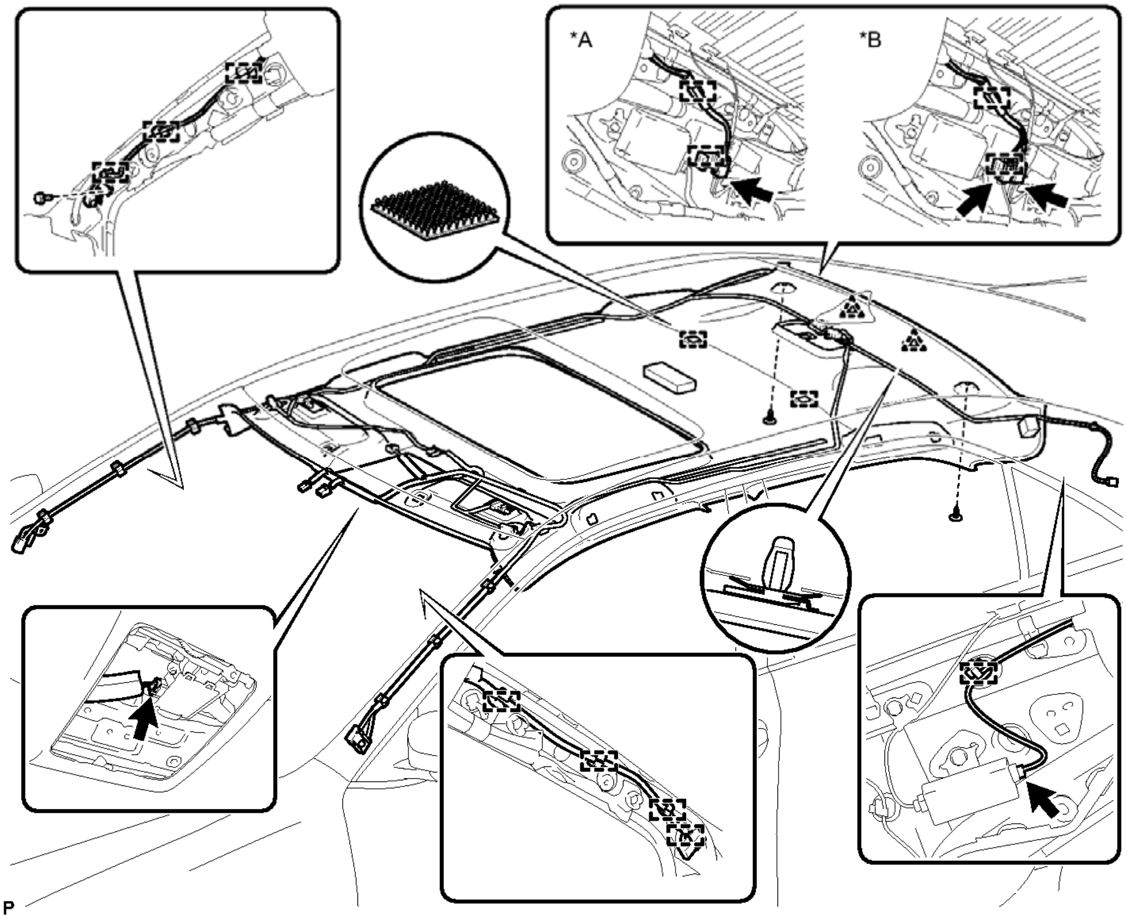

Fig. 175: Identifying Roof Headlining Assembly Clips And Fasteners
Courtesy of TOYOTA MOTOR SALES, U.S.A., INC.

TEXT IN ILLUSTRATION

*A	w/o Satellite Radio	*B	w/ Satellite Radio

d. Install the roof headlining assembly with the 2 clips.
e. Engage the 4 clamps to the front pillar LH.
f. Engage the 3 clamps to the front pillar RH.
g. Connect the bracket with the bolt to the front pillar RH.

Torque: 7.0 N*m (71 kgf*cm, 62 in.*lbf)

h. w/o Satellite Radio:
    1. Engage the 2 clamps and connect the connector to the rear pillar RH.
i. w/ Satellite Radio:
    1. Engage the 2 clamps and connect the 2 connectors to the rear pillar RH.
j. Connect the connector to the sliding roof drive gear assembly.

   k. Connect the connector to the air conditioning thermistor assembly.
   l. w/ EC Mirror
      1. Connect the connector to the inner rear view mirror.

3. **INSTALL VISOR HOLDER**
   a. Engage the 2 claws.

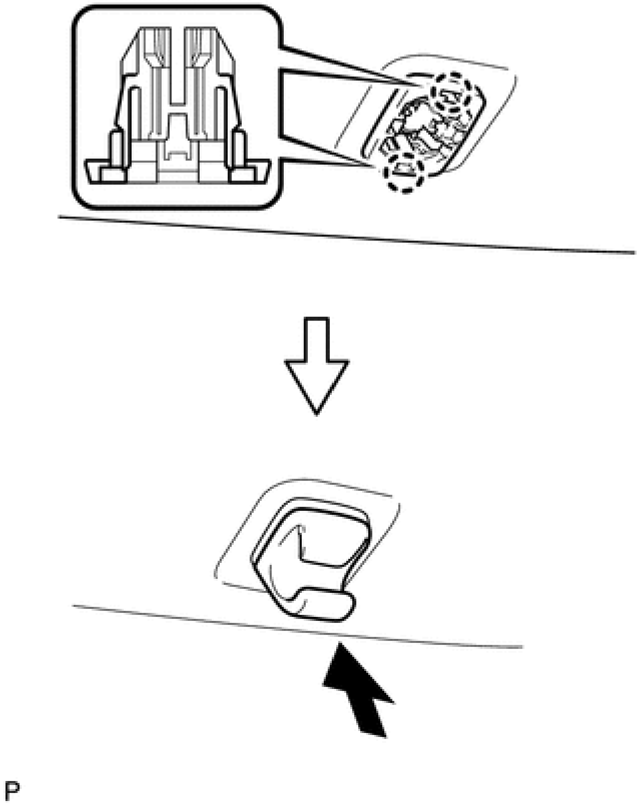

Fig. 176: Installing Visor Holder
Courtesy of TOYOTA MOTOR SALES, U.S.A., INC.

   b. Push in the visor holder as shown in the illustration.

   HINT:

   Use the same procedure for the other visor holder.

4. **INSTALL VISOR ASSEMBLY LH**
   a. Install the visor assembly LH with the 2 screws.
5. **INSTALL VISOR BRACKET COVER (for LH Side)**
   a. Engage the 4 claws to install the visor bracket cover.

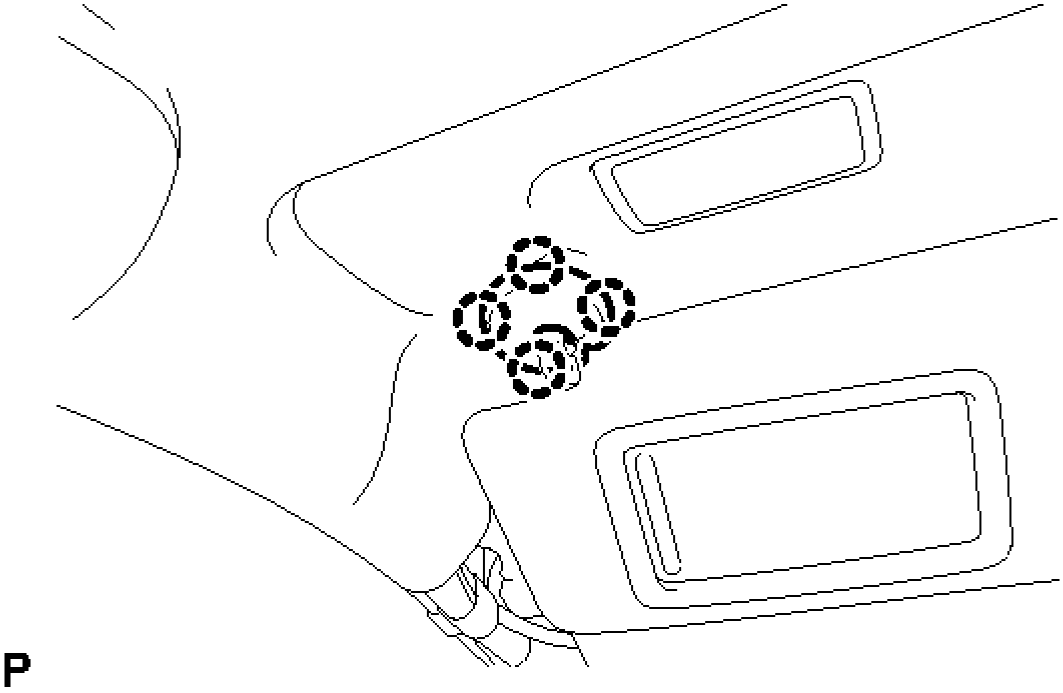

Fig. 177: Identifying Visor Bracket Cover (For LH Side) Claws
Courtesy of TOYOTA MOTOR SALES, U.S.A., INC.

6. **INSTALL VISOR ASSEMBLY RH**

   HINT:

   Use the same procedure as for the LH side.

7. **INSTALL VISOR BRACKET COVER (for RH Side)**

   HINT:

   Use the same procedure as for the LH side.

8. **INSTALL SLIDING ROOF OPENING TRIM MOLDING (w/ Sliding Roof)**
   a. Align the alignment mark on the molding with the notch of the roof headlining to install the sliding roof opening trim molding.

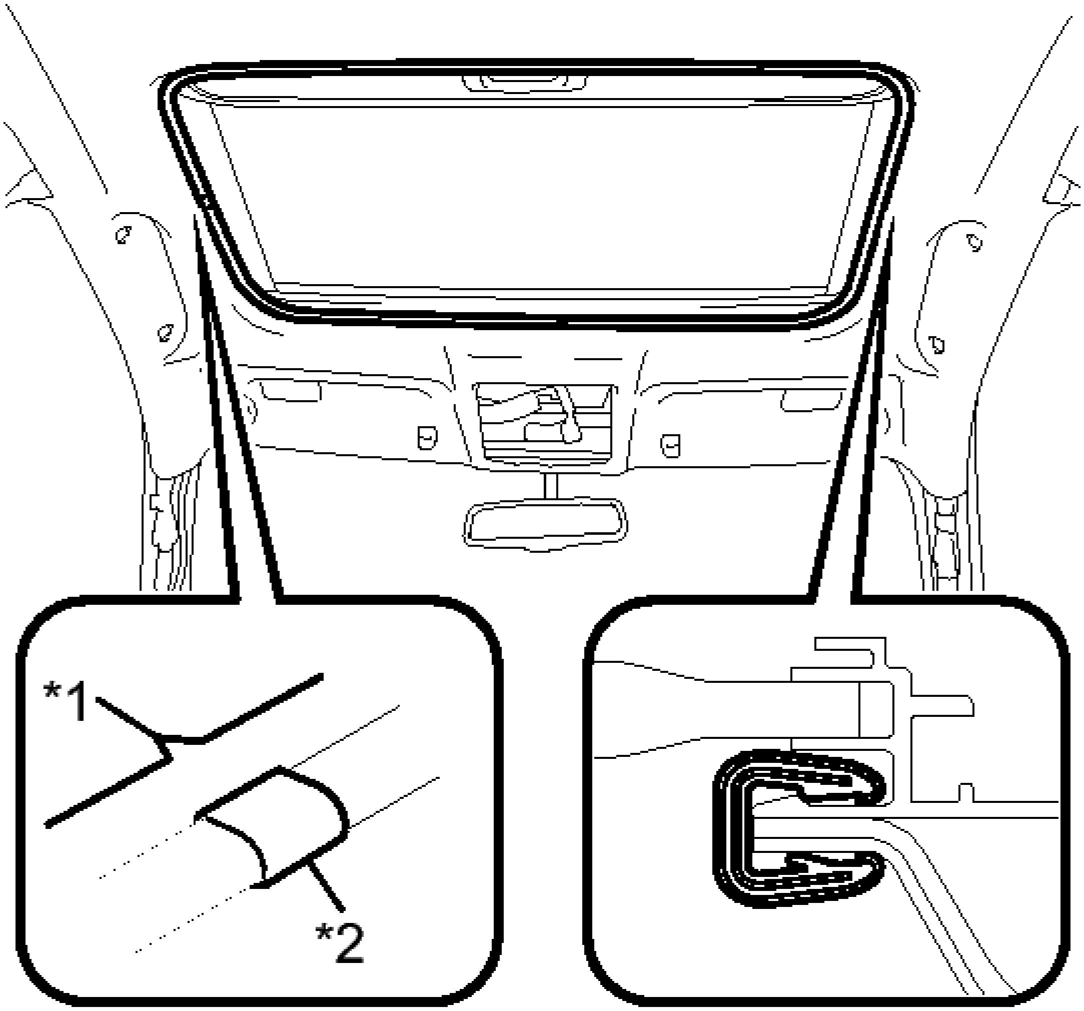

Fig. 178: Identifying Sliding Roof Opening Trim Molding (w/ Sliding Roof)
Courtesy of TOYOTA MOTOR SALES, U.S.A., INC.

TEXT IN ILLUSTRATION

*1	Notch
*2	Alignment Mark

NOTE: **After installation, check that the corners fit correctly.**

9. **INSTALL ASSIST GRIP SUB-ASSEMBLY**
   a. Put a assist grip sub-assembly together as shown in the illustration.

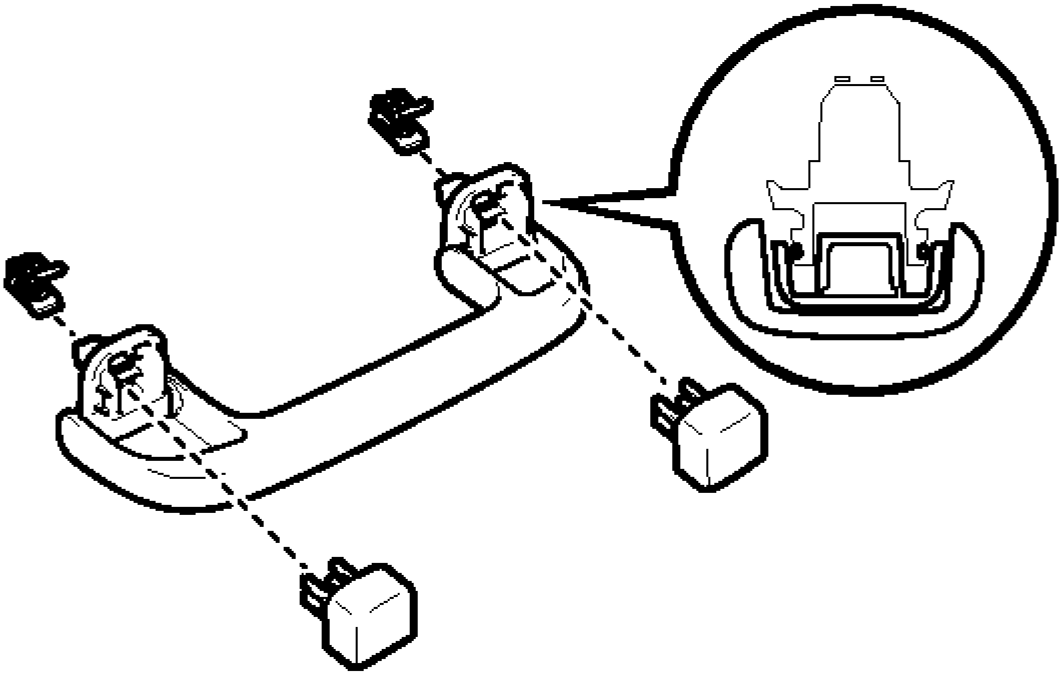

Fig. 179: Identifying Assist Grip Sub-Assembly
Courtesy of TOYOTA MOTOR SALES, U.S.A., INC.

b. Engage the 2 clips to install the assist grip sub-assembly.

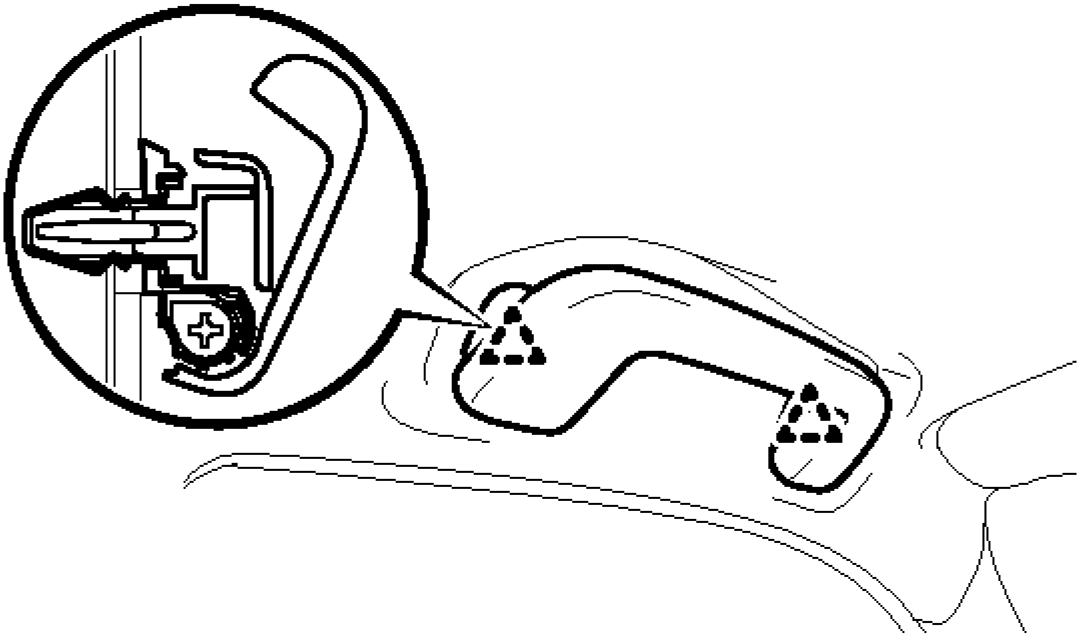

Fig. 180: Identifying Assist Grip Sub-Assembly Clips
Courtesy of TOYOTA MOTOR SALES, U.S.A., INC.

c. Engage the 4 claws to install the 2 assist grip covers

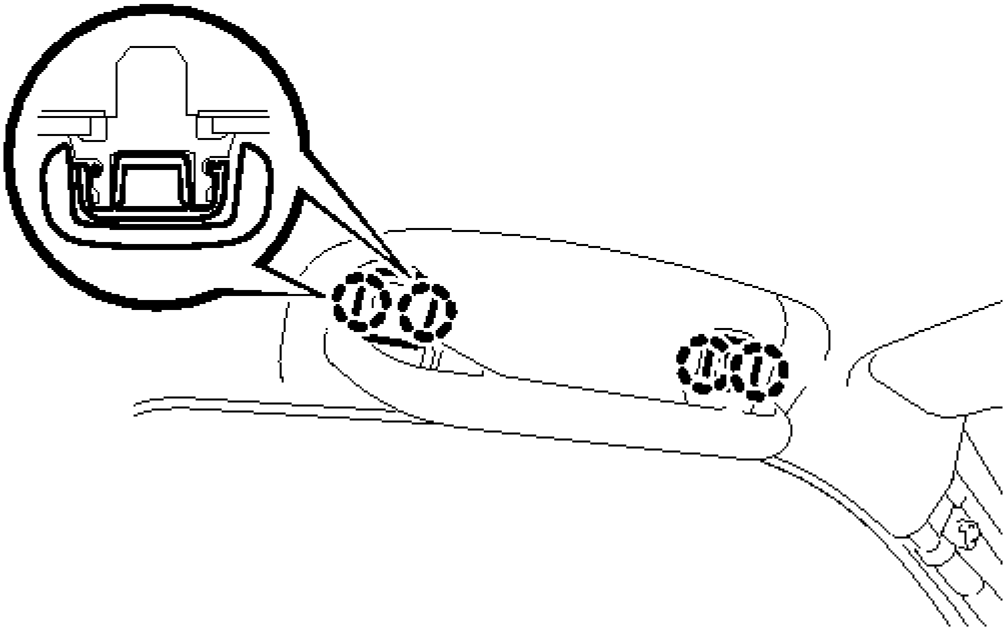

P

Fig. 181: Identifying Assist Grip Sub-Assembly Claws
Courtesy of TOYOTA MOTOR SALES, U.S.A., INC.

HINT:

Use the same procedure for the RH side.

10. **INSTALL REAR ASSIST GRIP ASSEMBLY LH**
    a. Put a rear assist grip assembly LH together as shown in the illustration.

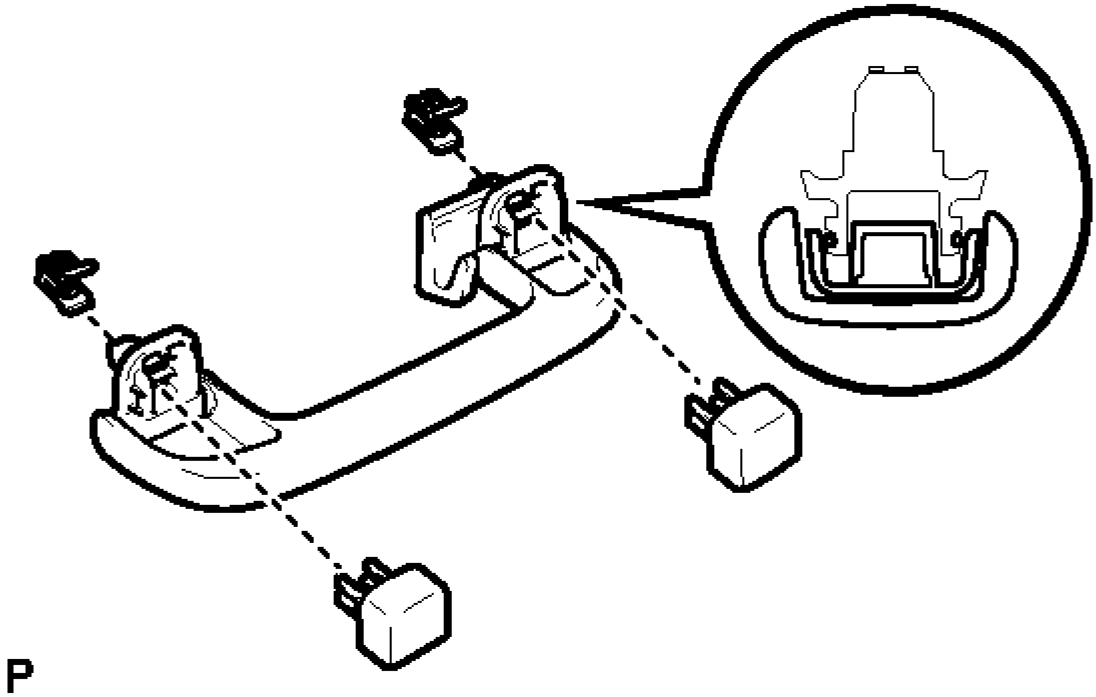

Fig. 182: Identifying Rear Assist Grip Assembly LH
Courtesy of TOYOTA MOTOR SALES, U.S.A., INC.

b. Engage the 2 clips to install the rear assist grip assembly LH.

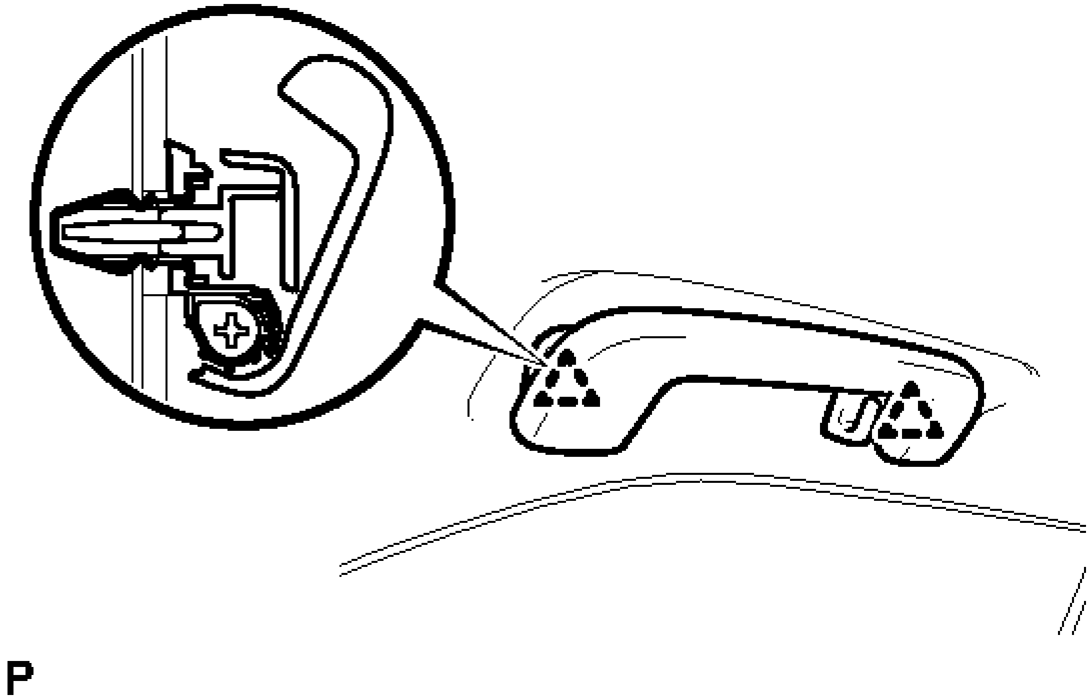

Fig. 183: Identifying Rear Assist Grip Assembly LH Clips
Courtesy of TOYOTA MOTOR SALES, U.S.A., INC.

c. Engage the 4 claws to install the 2 assist grip covers

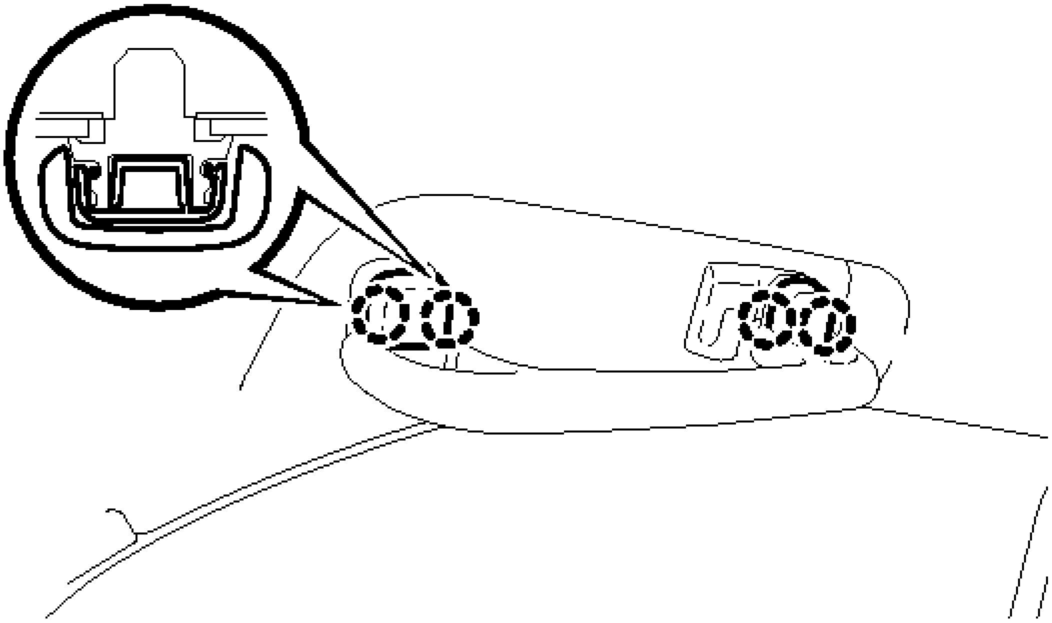

Fig. 184: Identifying Rear Assist Grip Assembly LH Claws
Courtesy of TOYOTA MOTOR SALES, U.S.A., INC.

11. **INSTALL REAR ASSIST GRIP ASSEMBLY RH**

    HINT:

    Use the same procedure as for the LH side.

12. **INSTALL NO. 1 ROOM LIGHT ASSEMBLY (w/o Sliding Roof)** . Refer to **INSTALLATION - Step 1**
13. **INSTALL SPOT LIGHT ASSEMBLY (w/ Sliding Roof)** . Refer to **INSTALLATION - Step 2**
14. **INSTALL ROOF CONSOLE BOX ASSEMBLY (w/o Sliding Roof)** . Refer to **INSTALLATION - Step 2**
15. **INSTALL ROOF CONSOLE BOX ASSEMBLY (w/ Sliding Roof)** . Refer to **INSTALLATION - Step 3**
16. **INSTALL PROTECTOR** . Refer to **INSTALLATION - Step 2**
17. **INSTALL INNER REAR VIEW MIRROR STAY HOLDER COVER (w/ EC Mirror)** . Refer to **INSTALLATION - Step 3**
18. **INSTALL INSTRUMENT PANEL SAFETY PAD ASSEMBLY**

    Refer to **INSTALLATION**

19. **INSTALL FRONT SEAT ASSEMBLY LH**

for Manual Seat. Refer to **INSTALLATION**

for Power Seat. Refer to **INSTALLATION**

20. **INSTALL FRONT SEAT ASSEMBLY RH**

    HINT:

    Use the same procedure as for the LH side.

21. **INSTALL ROOF SIDE INNER GARNISH LH**
    1. Engage the guide.
    2. Engage the 5 clips to install the roof side inner garnish LH.
22. **INSTALL CENTER PILLAR UPPER GARNISH LH**
    1. Pass the floor anchor of the front seat outer seat belt assembly LH through the center pillar upper garnish LH.
    2. Engage the clip.
    3. Install the center pillar upper garnish LH with the 2 screws.
23. **INSTALL CENTER PILLAR LOWER GARNISH LH**
    1. Engage the 2 claws and 3 clips to install the center pillar lower garnish LH.
24. **CONNECT FRONT SEAT OUTER BELT ASSEMBLY LH** . Refer to **INSTALLATION - Step 6**
25. **INSTALL LAP BELT OUTER ANCHOR COVER (for LH Side)** . Refer to **INSTALLATION - Step 7**
26. **INSTALL REAR DOOR OPENING TRIM WEATHERSTRIP LH**
    1. Align the alignment mark (Pink) on the weatherstrip with the protruding portion on the body indicated by the arrow in the illustration, and install the rear door opening trim weatherstrip LH.

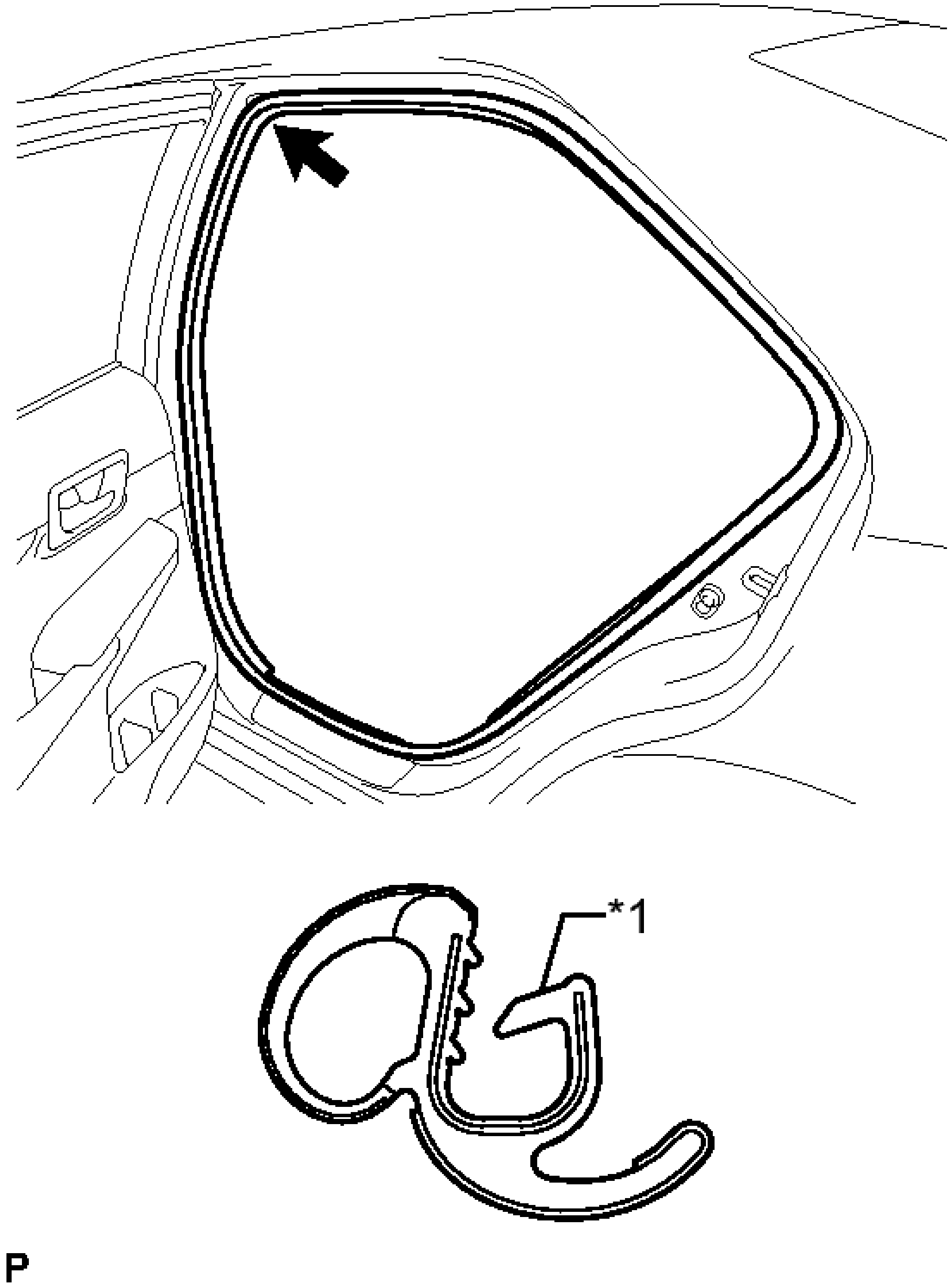

Fig. 185: Identifying Rear Door Opening Trim Weatherstrip LH
Courtesy of TOYOTA MOTOR SALES, U.S.A., INC.

TEXT IN ILLUSTRATION

	Alignment

*1	Mark (Pink)

NOTE: **After installation, check that the corners fit correctly.**

27. **INSTALL REAR DOOR SCUFF PLATE LH**
    a. Engage the 6 claws to install the rear door scuff plate LH.

    HINT:

    Engage the claws from the rear side of the scuff plate.

28. **INSTALL ROOF SIDE INNER GARNISH RH**

    HINT:

    Use the same procedure as for the LH side.

29. **INSTALL CENTER PILLAR UPPER GARNISH RH**

    HINT:

    Use the same procedure as for the LH side.

30. **INSTALL CENTER PILLAR LOWER GARNISH RH**

    HINT:

    Use the same procedure as for the LH side.

31. **CONNECT FRONT SEAT OUTER BELT ASSEMBLY RH**

    HINT:

    Use the same procedure as for the LH side.

32. **INSTALL LAP BELT OUTER ANCHOR COVER (for RH Side)**

    HINT:

    Use the same procedure as for the LH side.

33. **INSTALL REAR DOOR OPENING TRIM WEATHERSTRIP RH**
    a. Align the alignment mark (Blue) on the weatherstrip with the protruding portion on the body indicated by the arrow in the illustration, and install the rear door opening trim weatherstrip RH.

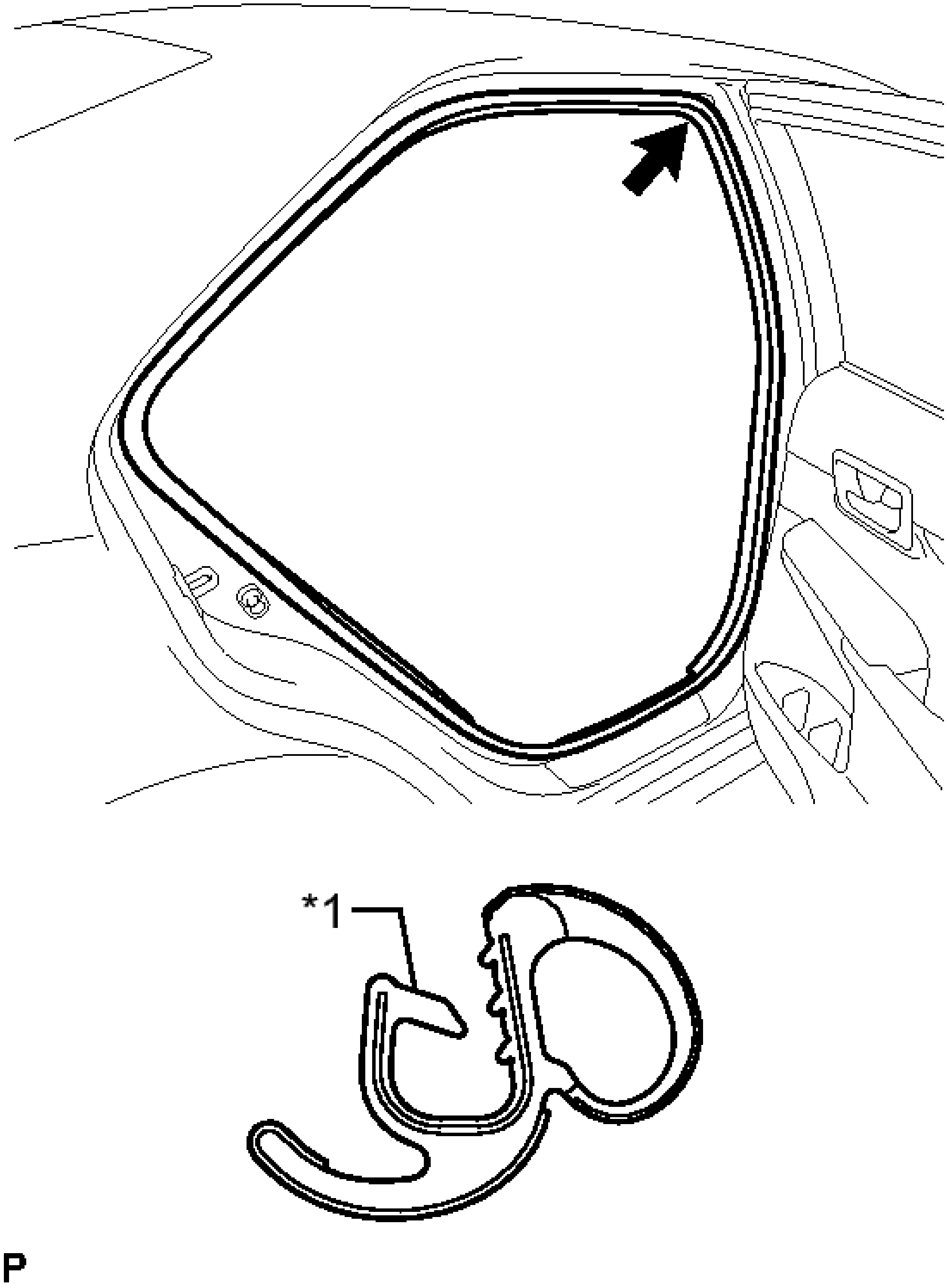

Fig. 186: Identifying Rear Door Opening Trim Weatherstrip RH
Courtesy of TOYOTA MOTOR SALES, U.S.A., INC.

TEXT IN ILLUSTRATION

	Alignment

*1	Mark (Blue)

NOTE: **After installation, check that the corners fit correctly.**

34. **INSTALL REAR DOOR SCUFF PLATE RH**

    HINT:

    Use the same procedure as for the LH side.

35. **INSTALL REAR SIDE SEATBACK ASSEMBLY RH** . Refer to **INSTALLATION - Step 2**
36. **INSTALL REAR SIDE SEATBACK ASSEMBLY LH** . Refer to **INSTALLATION - Step 1**
37. **INSTALL REAR SEATBACK ASSEMBLY LH** . Refer to **INSTALLATION - Step 3**
38. **INSTALL NO. 2 ROOM PARTITION COVER** . Refer to **INSTALLATION - Step 4**
39. **INSTALL REAR SEATBACK ASSEMBLY RH** . Refer to **INSTALLATION - Step 5**
40. **INSTALL REAR SEAT CUSHION LOCK HOOK** . Refer to **INSTALLATION - Step 6**
41. **INSTALL REAR SEAT CUSHION ASSEMBLY** . Refer to **INSTALLATION - Step 7**
42. **INSTALL FRONT PILLAR GARNISH LH**
    a. Remove the protective cover.
    b. Make sure that the front pillar garnish clip is not damaged.

    NOTE: **If there is any damage, replace the garnish clip with a new one.**

    c. Install the front pillar garnish clip to front pillar garnish LH.

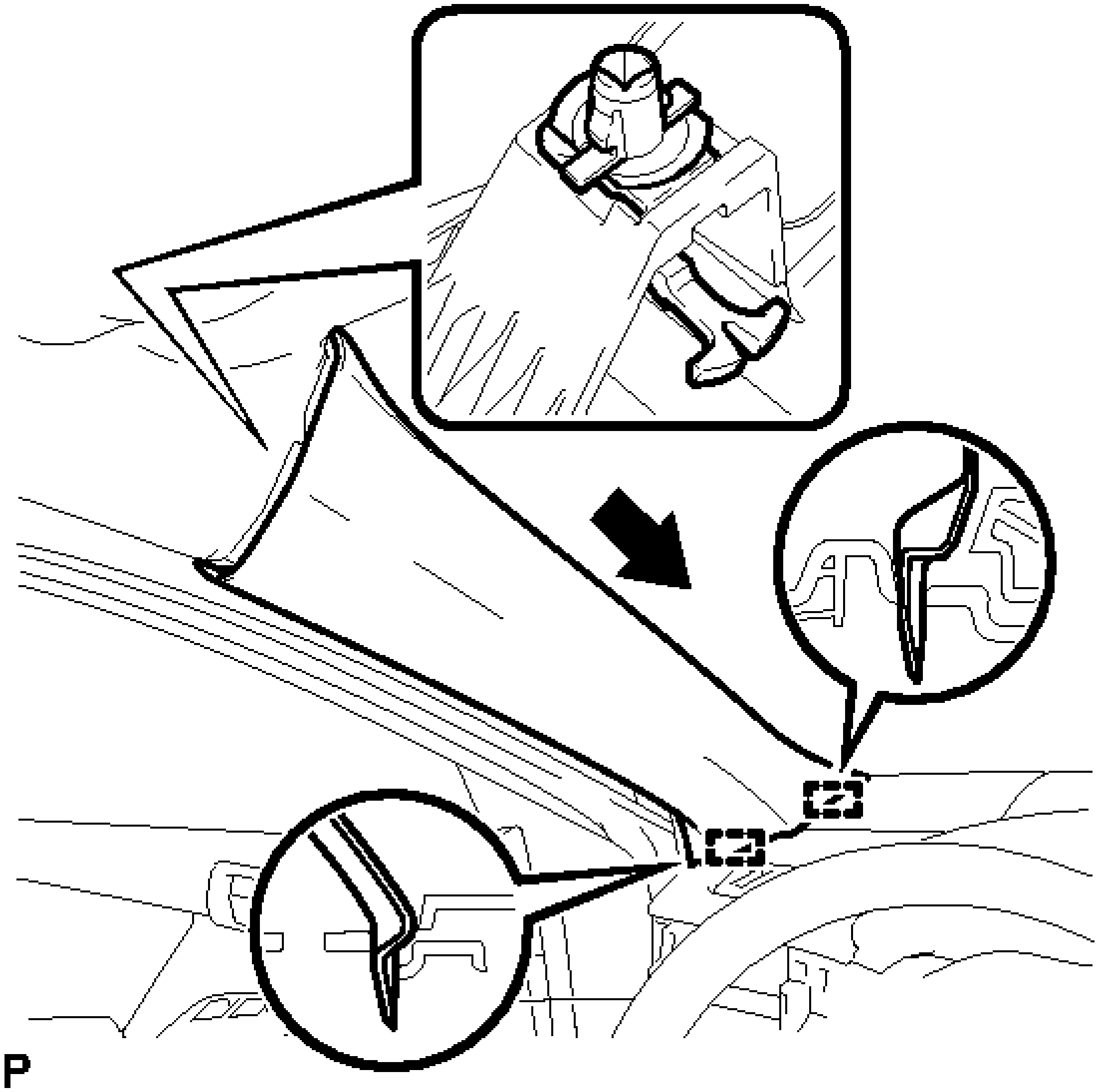

Fig. 187: Installing Front Pillar Garnish LH
Courtesy of TOYOTA MOTOR SALES, U.S.A., INC.

HINT:

Install the front pillar garnish clip so that it faces as shown in the illustration.

d. Engage the 2 guides as shown in the illustration.
e. Engage the 2 clips to install the front pillar garnish LH.

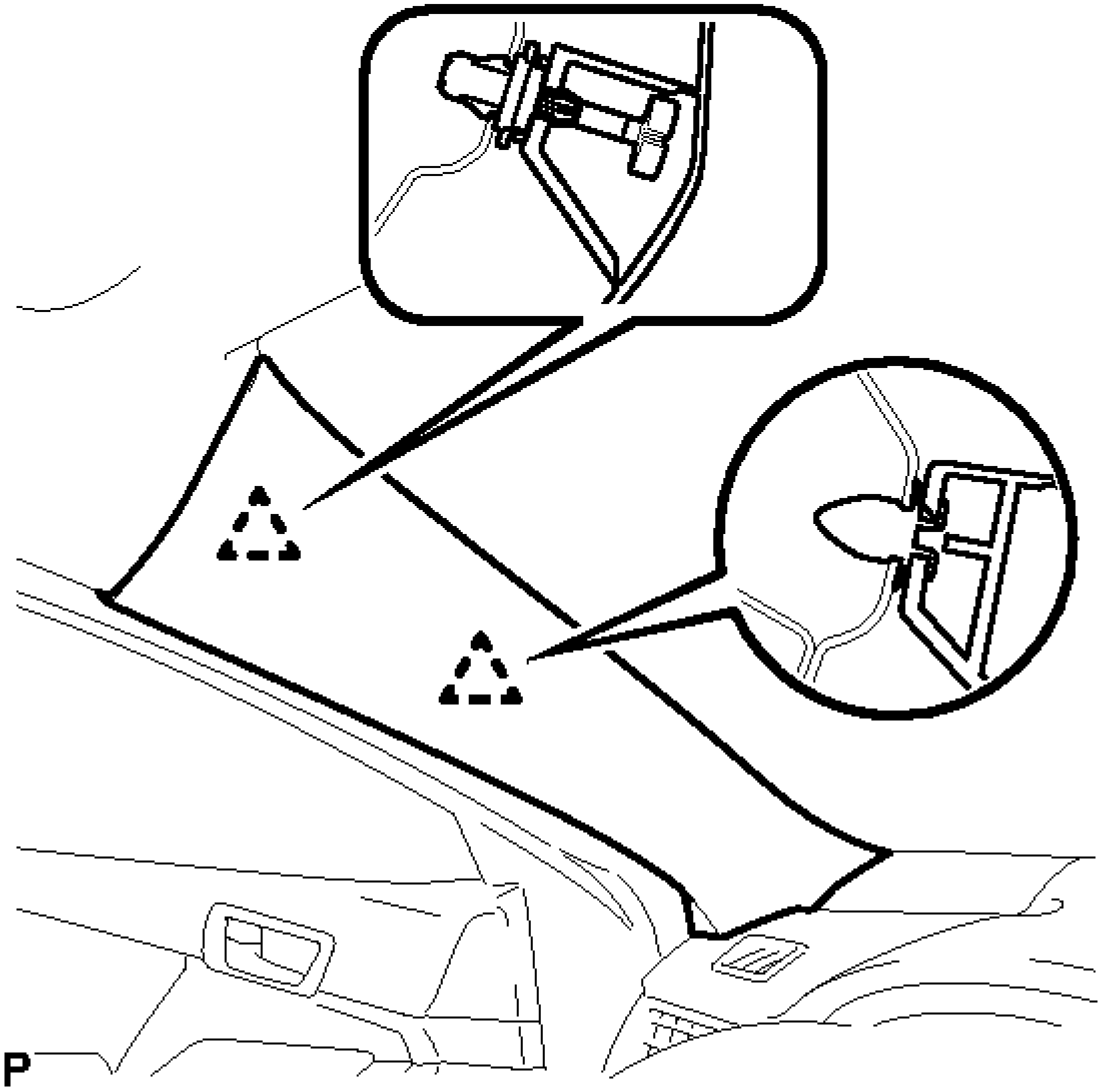

Fig. 188: Identifying Front Pillar Garnish LH Fasteners
Courtesy of TOYOTA MOTOR SALES, U.S.A., INC.

43. **INSTALL FRONT DOOR OPENING TRIM WEATHERSTRIP LH**
    a. Align the alignment mark (Yellow) on the weatherstrip with the protruding portion on the body indicated by the arrow in the illustration, and install the front door opening trim weatherstrip LH.

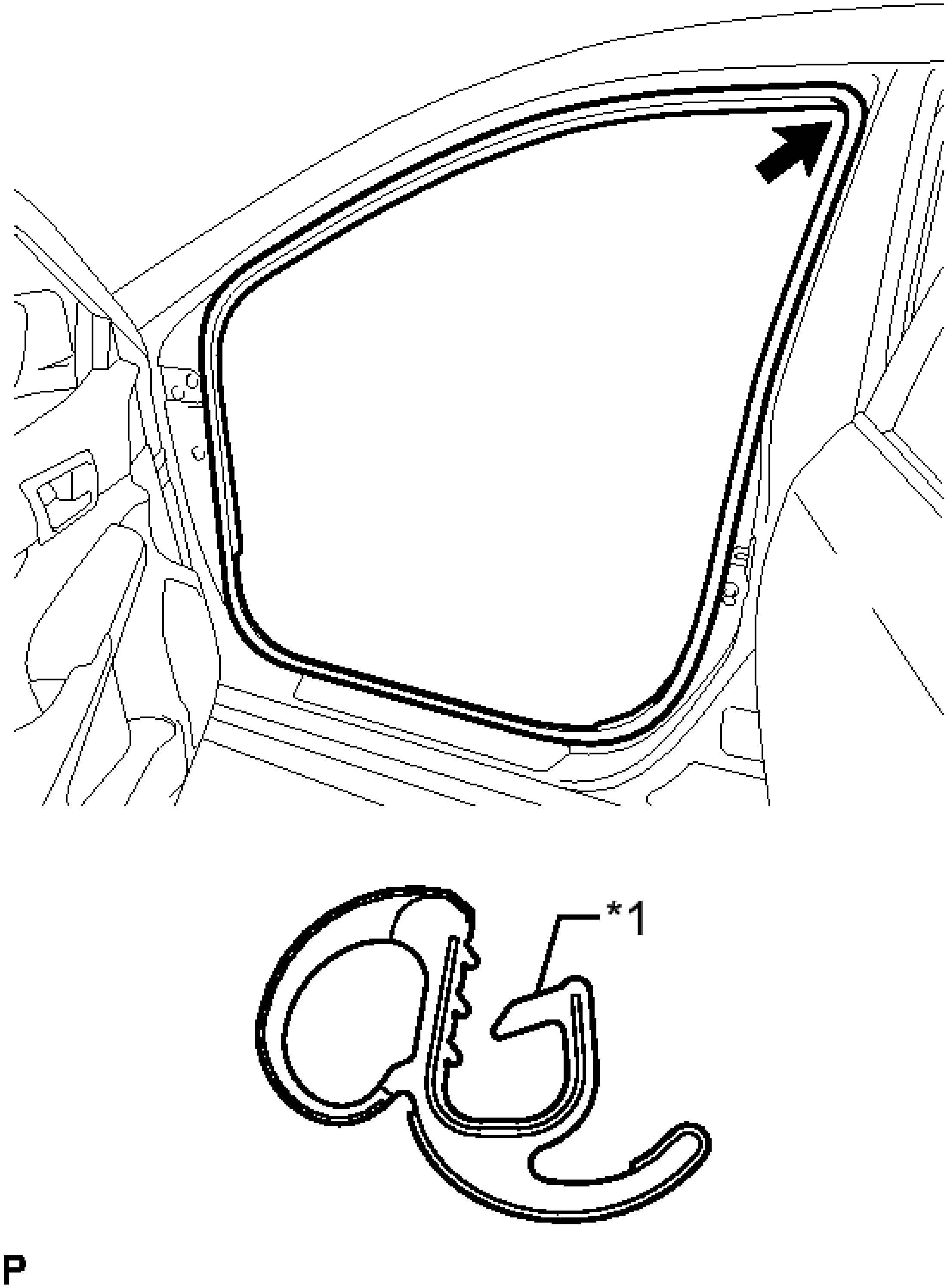

Fig. 189: Identifying Front Door Opening Trim Weatherstrip LH
Courtesy of TOYOTA MOTOR SALES, U.S.A., INC.

TEXT IN ILLUSTRATION

	Alignment

*1	Mark (Yellow)

NOTE: **After installation, check that the corners fit correctly.**

44. **INSTALL COWL SIDE TRIM SUB-ASSEMBLY LH**
    a. Insert the 2 clips in the direction indicated by the arrows shown in the illustration to engage them.

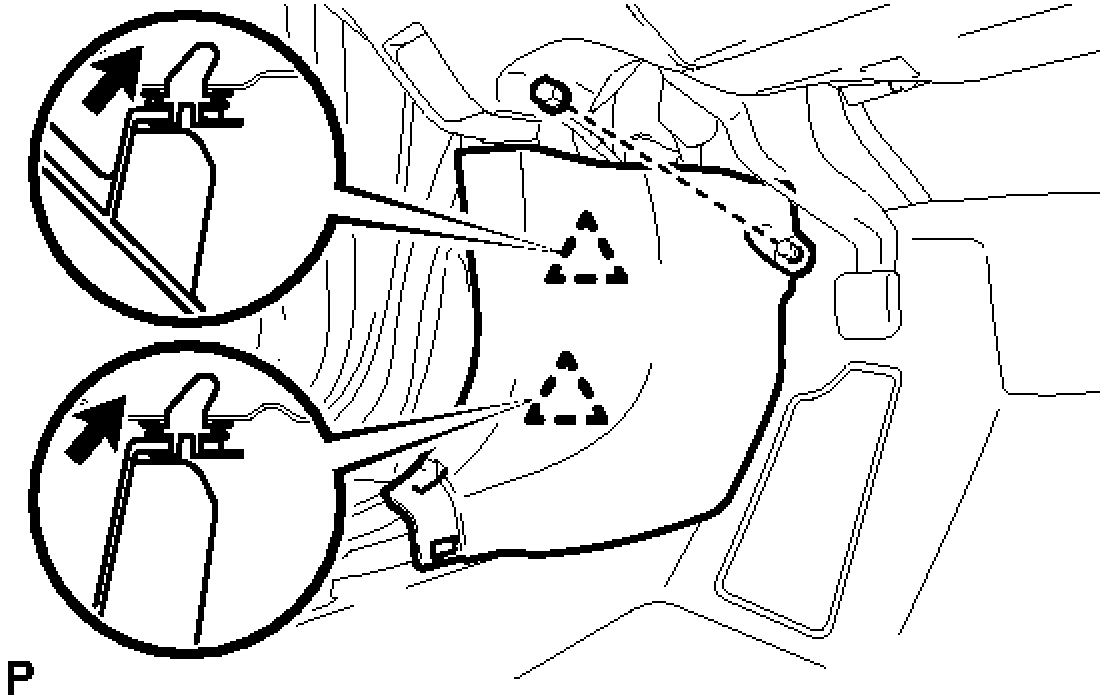

Fig. 190: Identifying Cowl Side Trim Sub-Assembly LH Clips
Courtesy of TOYOTA MOTOR SALES, U.S.A., INC.

    b. Install the cowl side trim sub-assembly LH with the clip.

45. **INSTALL FRONT DOOR SCUFF PLATE LH**
    a. Engage the 10 claws to install the front door scuff plate LH.
46. **INSTALL FRONT PILLAR GARNISH RH**

    HINT:

    Use the same procedure as for the LH side.

47. **INSTALL FRONT DOOR OPENING TRIM WEATHERSTRIP RH**
    a. Align the alignment mark (White) on the weatherstrip with the protruding portion on the body indicated by the arrow in the illustration, and install the front door opening trim weatherstrip RH.

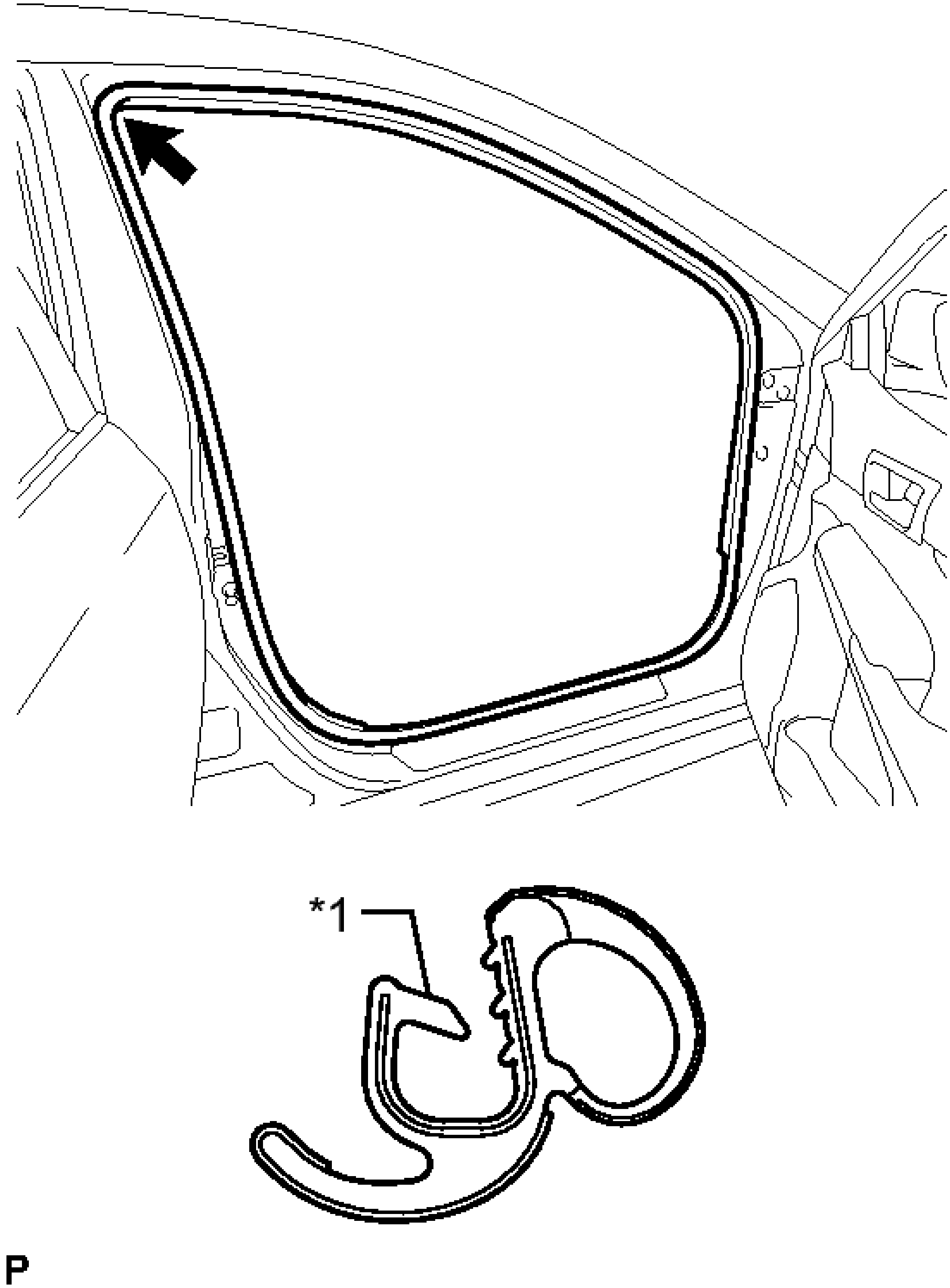

Fig. 191: Identifying Front Door Opening Trim Weatherstrip RH
Courtesy of TOYOTA MOTOR SALES, U.S.A., INC.

TEXT IN ILLUSTRATION

	Alignment

*1	Mark (White)

NOTE: **After installation, check that the corners fit correctly.**

48. **INSTALL COWL SIDE TRIM SUB-ASSEMBLY RH**

    HINT:

    Use the same procedure as for the LH side.

49. **INSTALL FRONT DOOR SCUFF PLATE RH**

    HINT:

    Use the same procedure as for the LH side.

50. **CONNECT CABLE TO AUXILIARY BATTERY NEGATIVE TERMINAL**

    NOTE: **When disconnecting the cable, some systems need to be initialized after the cable is reconnected. Refer to INITIALIZATION .**

51. **INSTALL LUGGAGE TRIM SERVICE HOLE COVER** . Refer to **INSTALLATION - Step 3**
52. **INSPECT SRS WARNING LIGHT**

    for Separate Type Yaw Rate Sensor: Refer to **DIAGNOSIS SYSTEM**

    for Built-in Type Yaw Rate Sensor: Refer to **DIAGNOSIS SYSTEM**

2012-2017 ACCESSORIES & EQUIPMENT

Interior Trim (Service Information) (Except Hybrid) - Camry

INSTRUMENT PANEL SAFETY PAD

PRECAUTION

PRECAUTION

1. **PRECAUTION FOR VEHICLE WITH SRS AIRBAG AND SEAT BELT PRETENSIONER**
    a. Some operations in this information may affect the SRS airbags. Prior to performing the corresponding operations, read the precautions regarding the SRS airbags.
        - For Separate Type Yaw Rate Sensor. Refer to **PRECAUTION** .
        - For Built-in Type Yaw Rate Sensor. Refer to **PRECAUTION** .
2. **TABLE OF BOLT, SCREW AND NUT**

    HINT:

    All bolts, screws and nuts relevant to installing and removing the instrument panel are shown along with their alphabet codes in the table below.

Code	Shape	Size	Code	Shape	Size
<A>		= 8 mm (0.315 in.) Length = 15 mm (0.591 in.)	<B>		= 6 mm (0.236 in.) Length = 20 mm (0.787 in.)
<C>		= 5 mm (0.197 in.) Length = 15 mm (0.591 in.)	<D>		= 5 mm (0.197 in.) Length = 16 mm (0.630 in.)
<E>		= 3 mm (0.118 in.) Length = 12 mm (0.472 in.)	<F>		= 6 mm (0.236 in.)
<G>		= 6 mm (0.236 in.)			

COMPONENTS

ILLUSTRATION

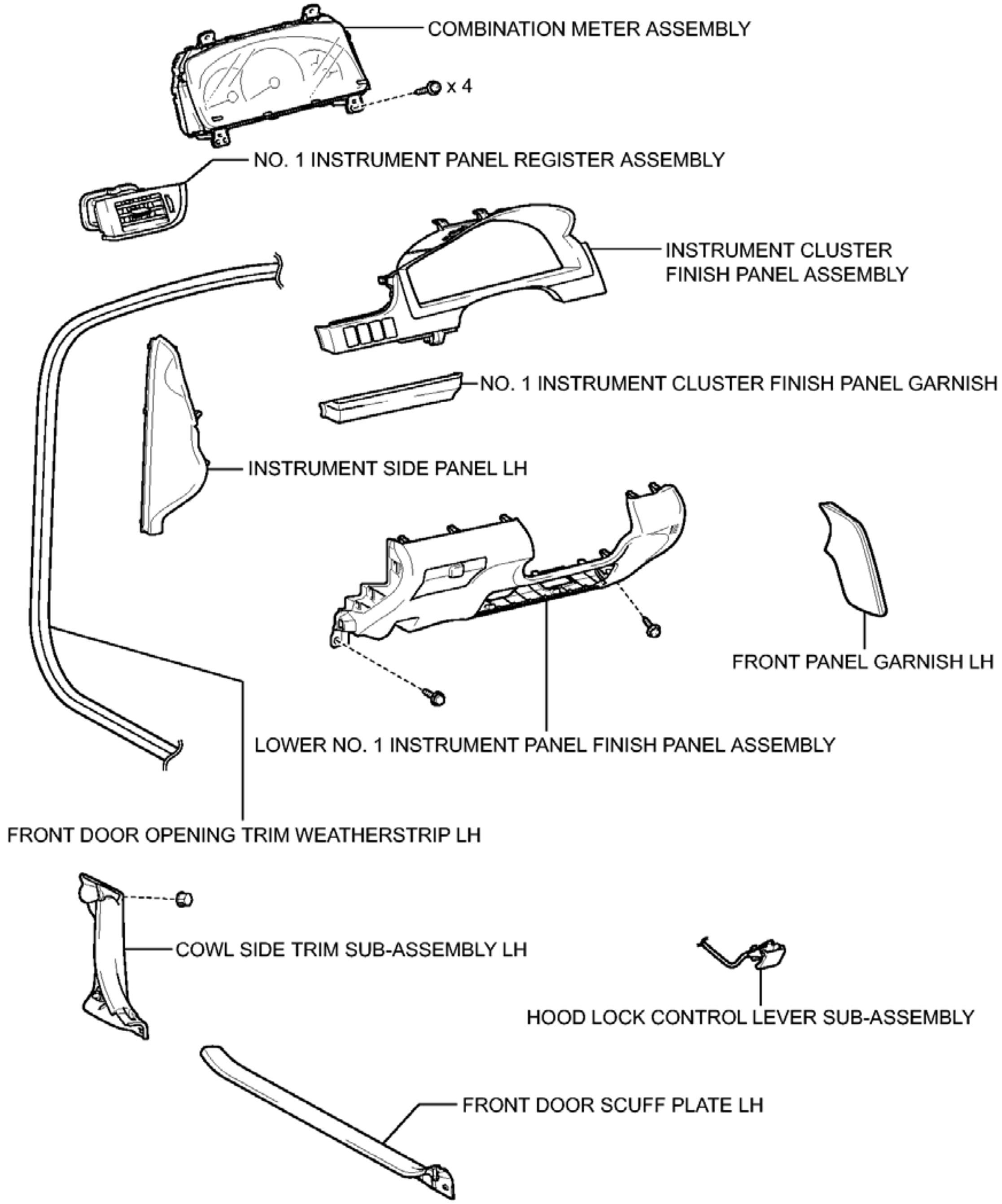
COMBINATION METER ASSEMBLY
x 4
NO. 1 INSTRUMENT PANEL REGISTER ASSEMBLY
INSTRUMENT CLUSTER FINISH PANEL ASSEMBLY
NO. 1 INSTRUMENT CLUSTER FINISH PANEL GARNISH
INSTRUMENT SIDE PANEL LH
FRONT PANEL GARNISH LH
LOWER NO. 1 INSTRUMENT PANEL FINISH PANEL ASSEMBLY
FRONT DOOR OPENING TRIM WEATHERSTRIP LH
COWL SIDE TRIM SUB-ASSEMBLY LH
HOOD LOCK CONTROL LEVER SUB-ASSEMBLY
FRONT DOOR SCUFF PLATE LH
P

Fig. 1: Identifying Instrument Panel Safety Pad Replacement Components (1 Of 7)
Courtesy of TOYOTA MOTOR SALES, U.S.A., INC.

ILLUSTRATION

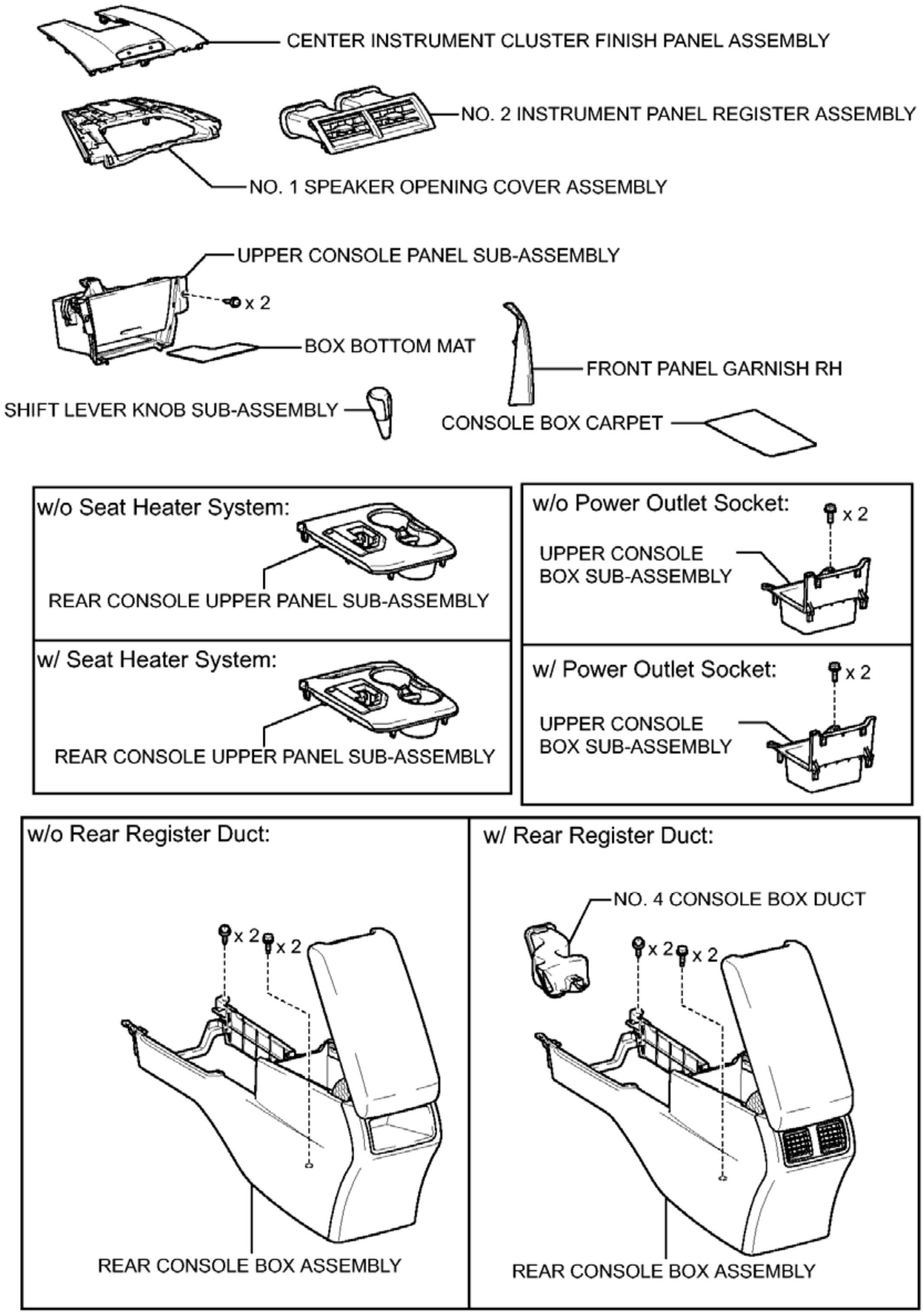
CENTER INSTRUMENT CLUSTER FINISH PANEL ASSEMBLY
NO. 2 INSTRUMENT PANEL REGISTER ASSEMBLY
NO. 1 SPEAKER OPENING COVER ASSEMBLY
UPPER CONSOLE PANEL SUB-ASSEMBLY
x 2
BOX BOTTOM MAT
FRONT PANEL GARNISH RH
SHIFT LEVER KNOB SUB-ASSEMBLY
CONSOLE BOX CARPET
w/o Seat Heater System:
REAR CONSOLE UPPER PANEL SUB-ASSEMBLY
w/ Seat Heater System:
REAR CONSOLE UPPER PANEL SUB-ASSEMBLY
w/o Power Outlet Socket:
x 2
UPPER CONSOLE BOX SUB-ASSEMBLY
w/ Power Outlet Socket:
x 2
UPPER CONSOLE BOX SUB-ASSEMBLY
w/o Rear Register Duct:
x 2
x 2
REAR CONSOLE BOX ASSEMBLY
w/ Rear Register Duct:
NO. 4 CONSOLE BOX DUCT
x 2
x 2
REAR CONSOLE BOX ASSEMBLY
P

Fig. 2: Identifying Instrument Panel Safety Pad Replacement Components (2 Of 7)
Courtesy of TOYOTA MOTOR SALES, U.S.A., INC.

ILLUSTRATION

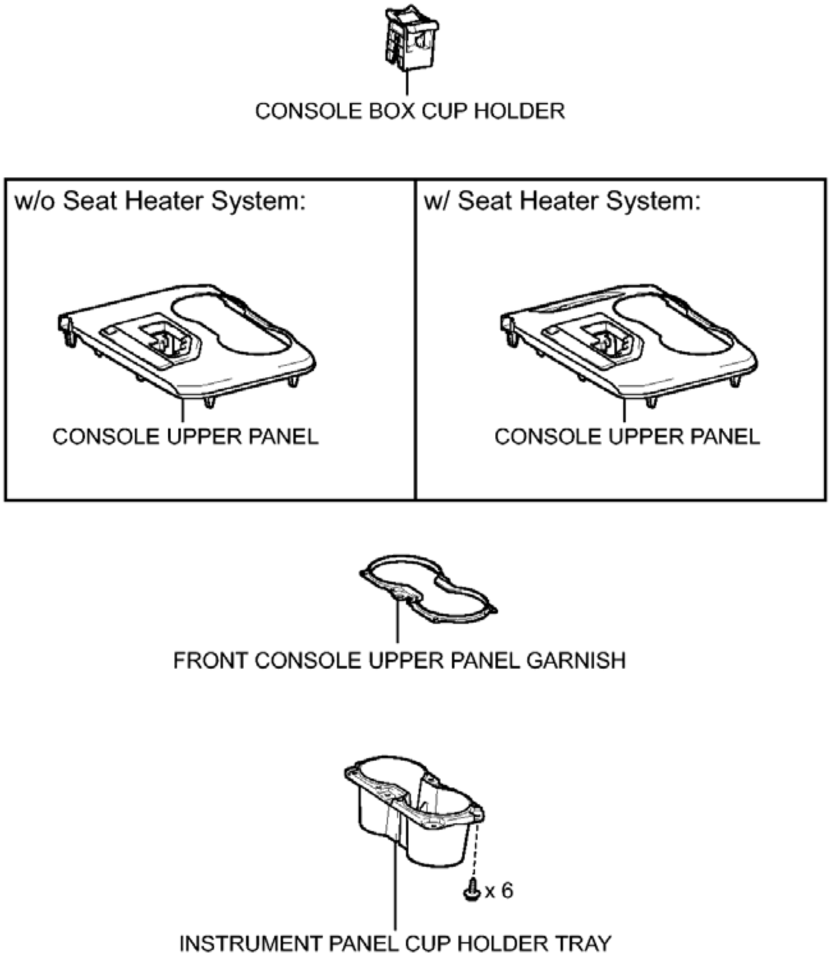
CONSOLE BOX CUP HOLDER
w/o Seat Heater System:
w/ Seat Heater System:
CONSOLE UPPER PANEL
CONSOLE UPPER PANEL
FRONT CONSOLE UPPER PANEL GARNISH
x 6
INSTRUMENT PANEL CUP HOLDER TRAY

P

Fig. 3: Identifying Instrument Panel Safety Pad Replacement Components (3 Of 7)
Courtesy of TOYOTA MOTOR SALES, U.S.A., INC.

ILLUSTRATION

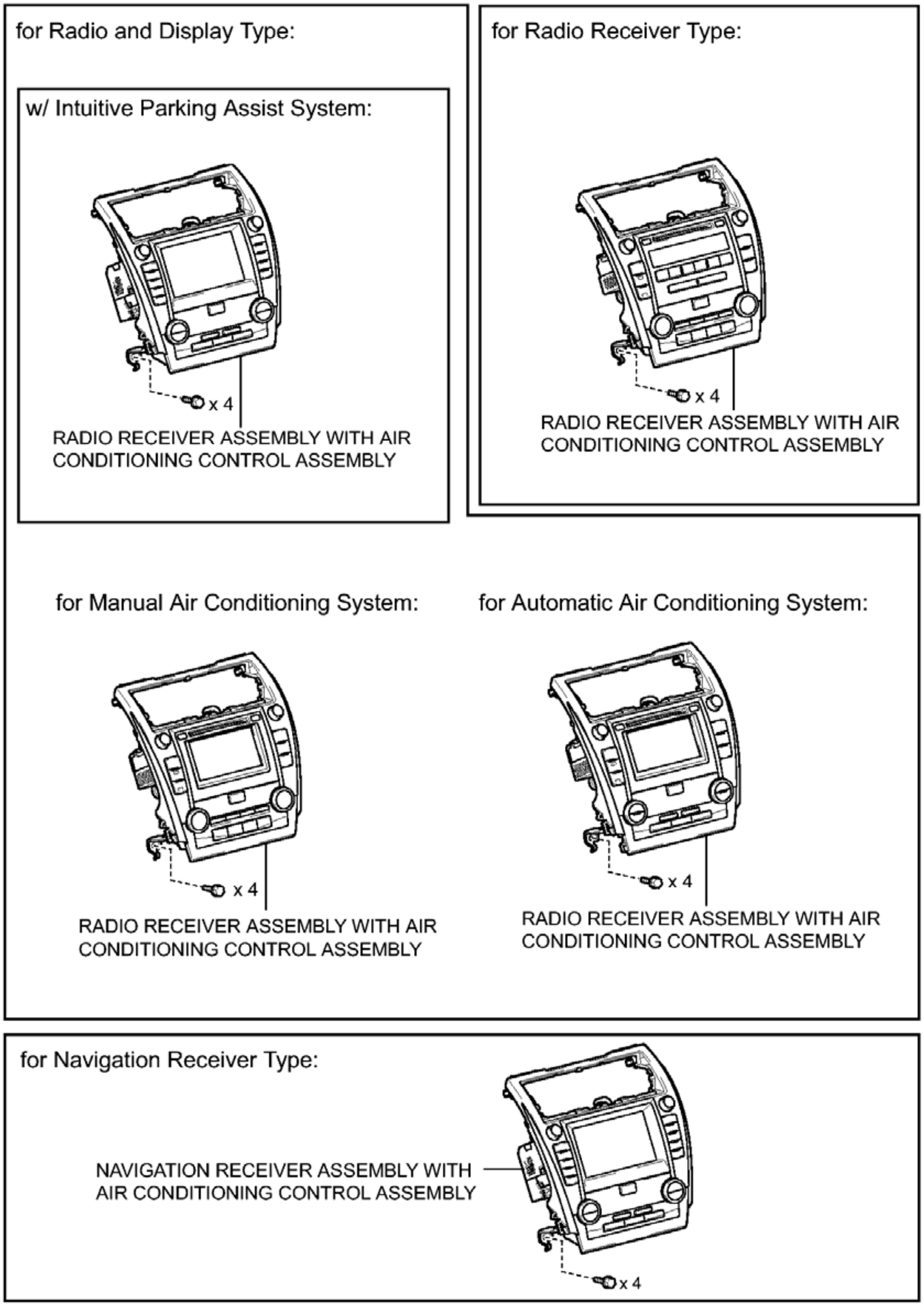
for Radio and Display Type:
w/ Intuitive Parking Assist System:
x 4
RADIO RECEIVER ASSEMBLY WITH AIR CONDITIONING CONTROL ASSEMBLY
for Radio Receiver Type:
x 4
RADIO RECEIVER ASSEMBLY WITH AIR CONDITIONING CONTROL ASSEMBLY
for Manual Air Conditioning System:
x 4
RADIO RECEIVER ASSEMBLY WITH AIR CONDITIONING CONTROL ASSEMBLY
for Automatic Air Conditioning System:
x 4
RADIO RECEIVER ASSEMBLY WITH AIR CONDITIONING CONTROL ASSEMBLY
for Navigation Receiver Type:
NAVIGATION RECEIVER ASSEMBLY WITH AIR CONDITIONING CONTROL ASSEMBLY
x 4

P

Fig. 4: Identifying Instrument Panel Safety Pad Replacement Components (4 Of 7)
Courtesy of TOYOTA MOTOR SALES, U.S.A., INC.

ILLUSTRATION

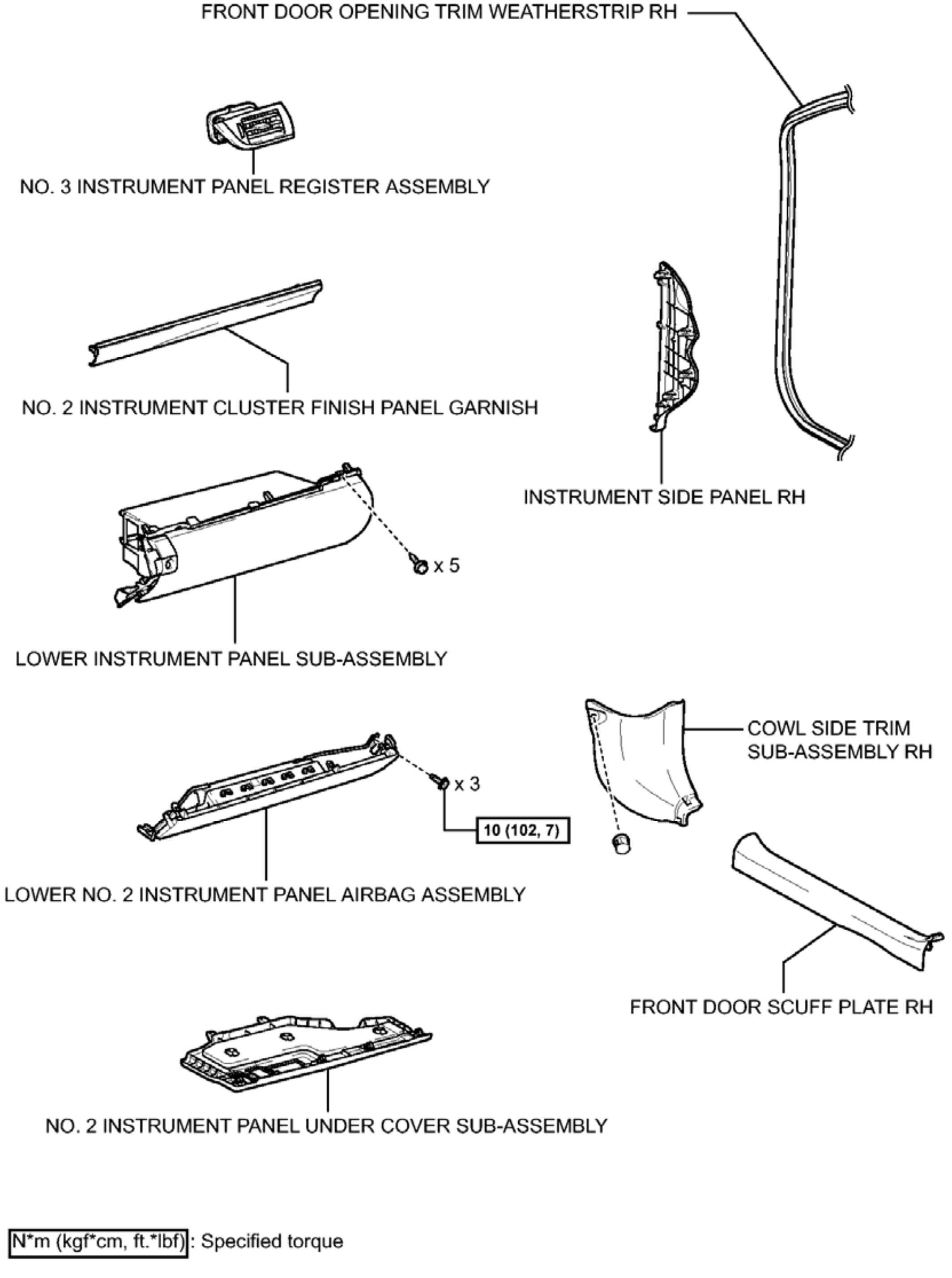
FRONT DOOR OPENING TRIM WEATHERSTRIP RH
NO. 3 INSTRUMENT PANEL REGISTER ASSEMBLY
NO. 2 INSTRUMENT CLUSTER FINISH PANEL GARNISH
INSTRUMENT SIDE PANEL RH
x 5
LOWER INSTRUMENT PANEL SUB-ASSEMBLY
COWL SIDE TRIM
SUB-ASSEMBLY RH
x 3
10 (102, 7)
LOWER NO. 2 INSTRUMENT PANEL AIRBAG ASSEMBLY
FRONT DOOR SCUFF PLATE RH
NO. 2 INSTRUMENT PANEL UNDER COVER SUB-ASSEMBLY
N*m (kgf*cm, ft.*lbf): Specified torque
P

Fig. 5: Identifying Instrument Panel Safety Pad Replacement Components With Torque Specifications (5 Of 7)

Courtesy of TOYOTA MOTOR SALES, U.S.A., INC.

ILLUSTRATION

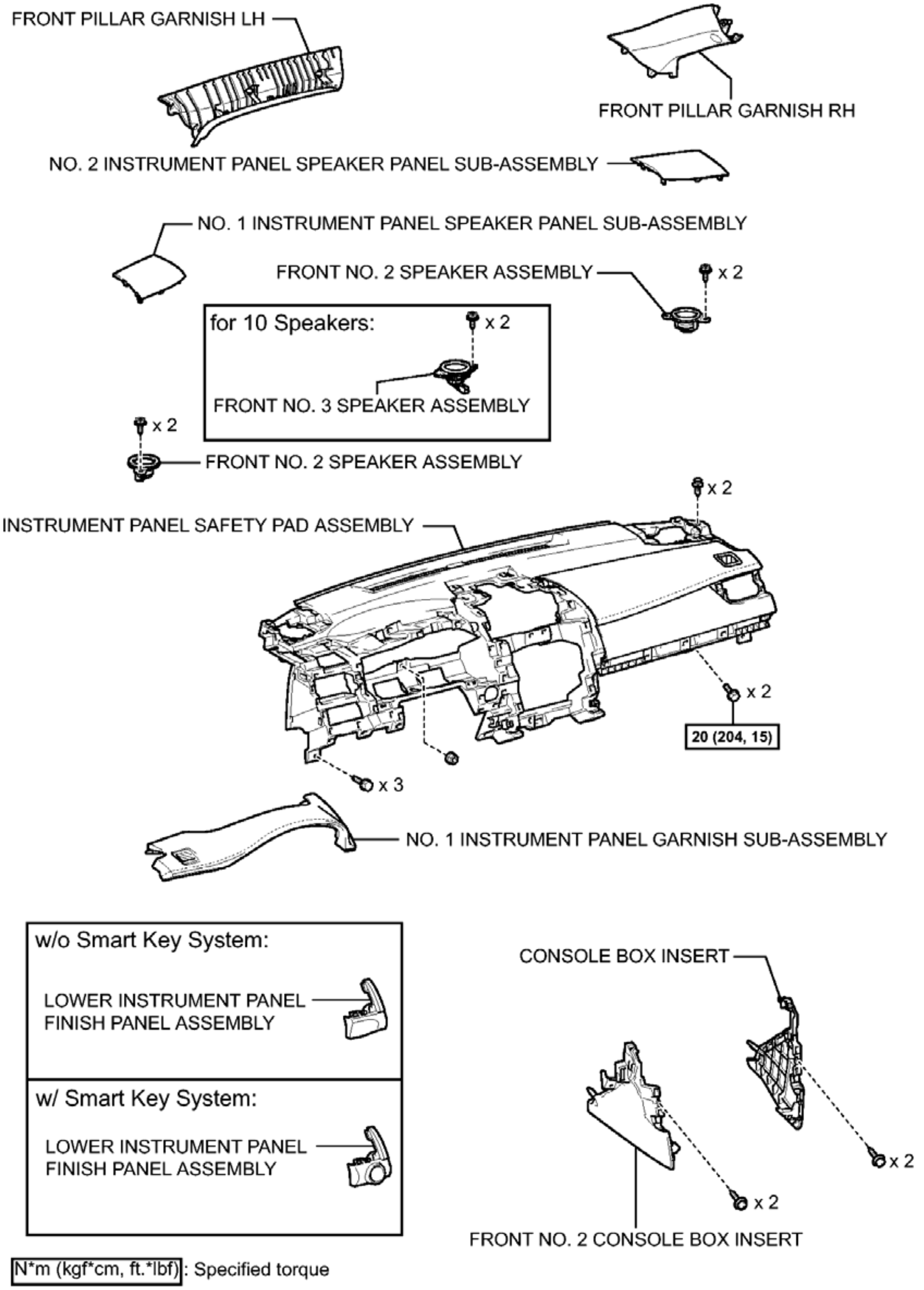
FRONT PILLAR GARNISH LH
FRONT PILLAR GARNISH RH
NO. 2 INSTRUMENT PANEL SPEAKER PANEL SUB-ASSEMBLY
NO. 1 INSTRUMENT PANEL SPEAKER PANEL SUB-ASSEMBLY
FRONT NO. 2 SPEAKER ASSEMBLY
x 2
for 10 Speakers:
x 2
FRONT NO. 3 SPEAKER ASSEMBLY
x 2
FRONT NO. 2 SPEAKER ASSEMBLY
x 2
INSTRUMENT PANEL SAFETY PAD ASSEMBLY
x 2
20 (204, 15)
x 3
NO. 1 INSTRUMENT PANEL GARNISH SUB-ASSEMBLY
w/o Smart Key System:
LOWER INSTRUMENT PANEL FINISH PANEL ASSEMBLY
w/ Smart Key System:
LOWER INSTRUMENT PANEL FINISH PANEL ASSEMBLY
CONSOLE BOX INSERT
x 2
x 2
FRONT NO. 2 CONSOLE BOX INSERT
N*m (kgf*cm, ft.*lbf) : Specified torque
P

Fig. 6: Identifying Instrument Panel Safety Pad Replacement Components With Torque Specifications (6 Of 7)

Courtesy of TOYOTA MOTOR SALES, U.S.A., INC.

ILLUSTRATION

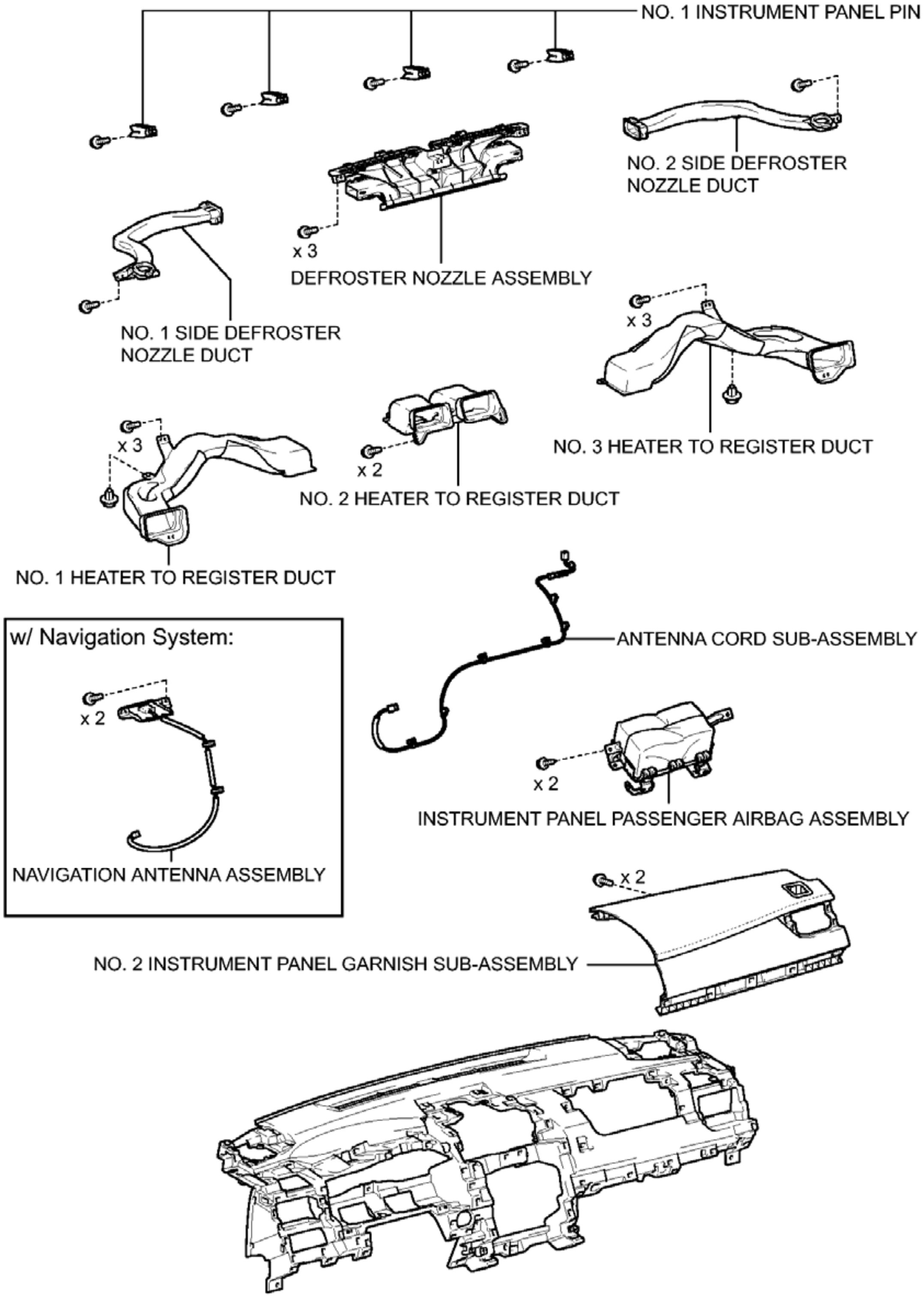
NO. 1 INSTRUMENT PANEL PIN
NO. 2 SIDE DEFROSTER NOZZLE DUCT
x 3
DEFROSTER NOZZLE ASSEMBLY
NO. 1 SIDE DEFROSTER NOZZLE DUCT
x 3
NO. 3 HEATER TO REGISTER DUCT
x 3
x 2
NO. 2 HEATER TO REGISTER DUCT
NO. 1 HEATER TO REGISTER DUCT
w/ Navigation System:
x 2
NAVIGATION ANTENNA ASSEMBLY
ANTENNA CORD SUB-ASSEMBLY
x 2
INSTRUMENT PANEL PASSENGER AIRBAG ASSEMBLY
x 2
NO. 2 INSTRUMENT PANEL GARNISH SUB-ASSEMBLY

P

Fig. 7: Identifying Instrument Panel Safety Pad Replacement Components (7 Of 7)
Courtesy of TOYOTA MOTOR SALES, U.S.A., INC.

REMOVAL

REMOVAL

1. **PRECAUTION**

   Refer to **PRECAUTION**.

   NOTE: **After turning the ignition switch off, waiting time may be required before disconnecting the cable from the negative (-) battery terminal. Therefore, make sure to read the disconnecting the cable from the negative (-) battery terminal notices before proceeding with work. Refer to PRECAUTION .**

2. **DISCONNECT CABLE FROM NEGATIVE BATTERY TERMINAL**

   WARNING: **Wait at least 90 seconds after disconnecting the cable from the negative (-) battery terminal to disable the SRS system.**

   NOTE: **When disconnecting the cable, some systems need to be initialized after the cable is reconnected. Refer to INITIALIZATION .**

3. **REMOVE FRONT DOOR SCUFF PLATE LH** . See step 3.
4. **REMOVE COWL SIDE TRIM SUB-ASSEMBLY LH** . See step 4.
5. **DISCONNECT FRONT DOOR OPENING TRIM WEATHERSTRIP LH**
   1. Disconnect the front door opening trim weatherstrip LH.

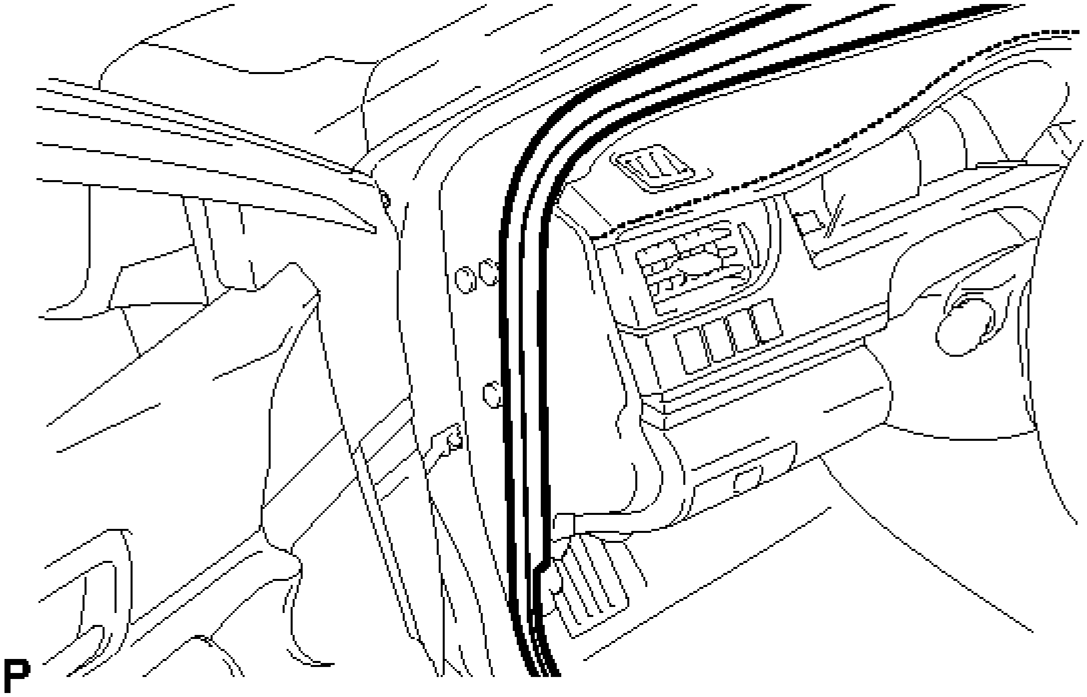

Fig. 8: Identifying Front Door Opening Trim Weatherstrip LH
Courtesy of TOYOTA MOTOR SALES, U.S.A., INC.

6. **REMOVE INSTRUMENT SIDE PANEL LH**
   a. Using a moulding remover, disengage the 4 claws as shown in the illustration.

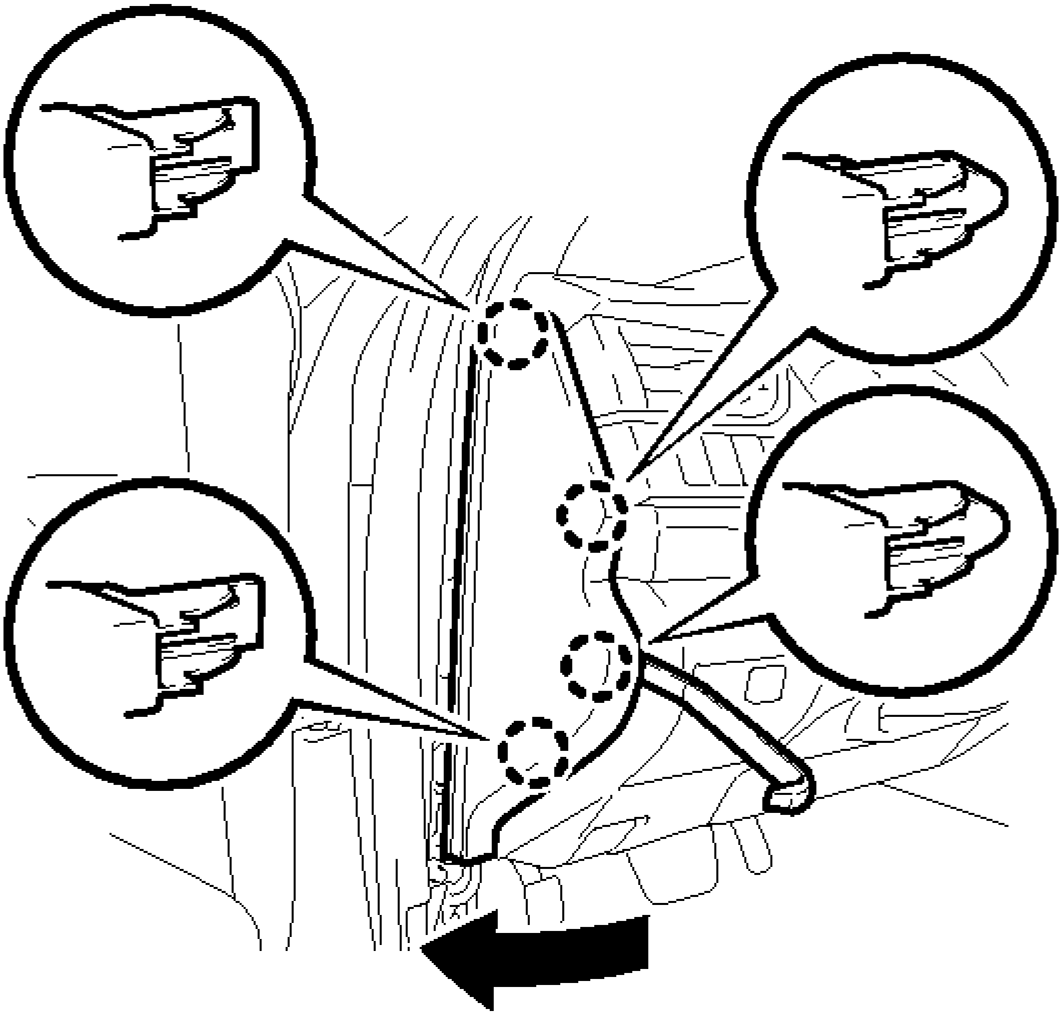

Fig. 9: Disengaging Instrument Side Panel LH Claws
Courtesy of TOYOTA MOTOR SALES, U.S.A., INC.

b. Disengage the 3 guides and remove the instrument side panel LH as shown in the illustration.

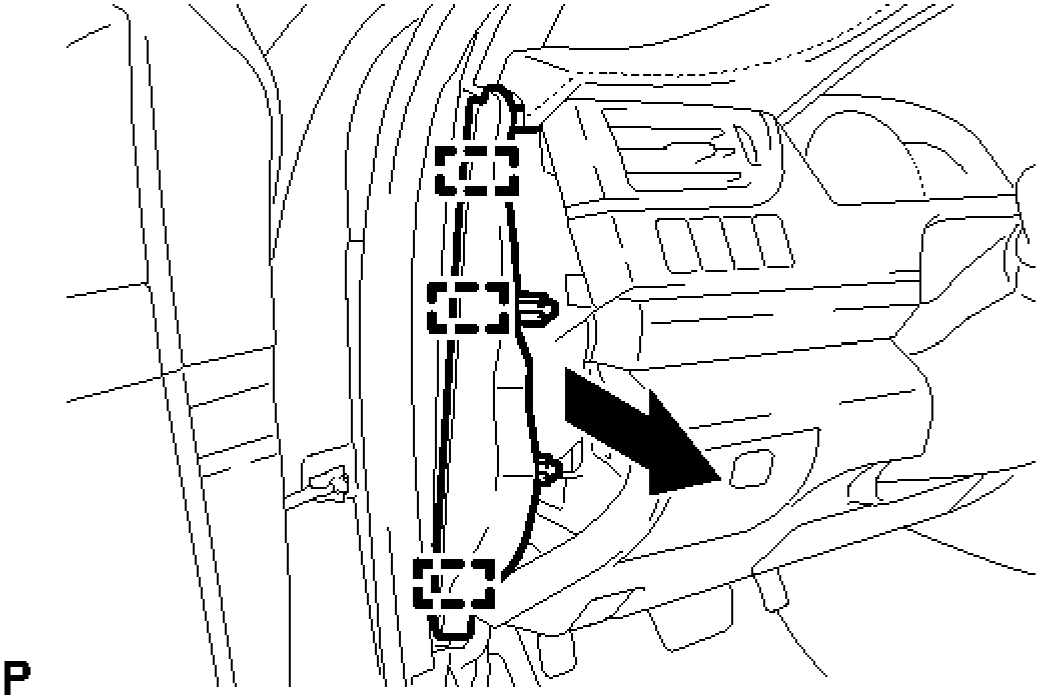

Fig. 10: Disengaging Instrument Side Panel LH Guides
Courtesy of TOYOTA MOTOR SALES, U.S.A., INC.

7. **REMOVE NO. 1 INSTRUMENT CLUSTER FINISH PANEL GARNISH**
    a. Disengage the 3 clips to remove the No. 1 instrument cluster finish panel garnish as shown in the illustration.

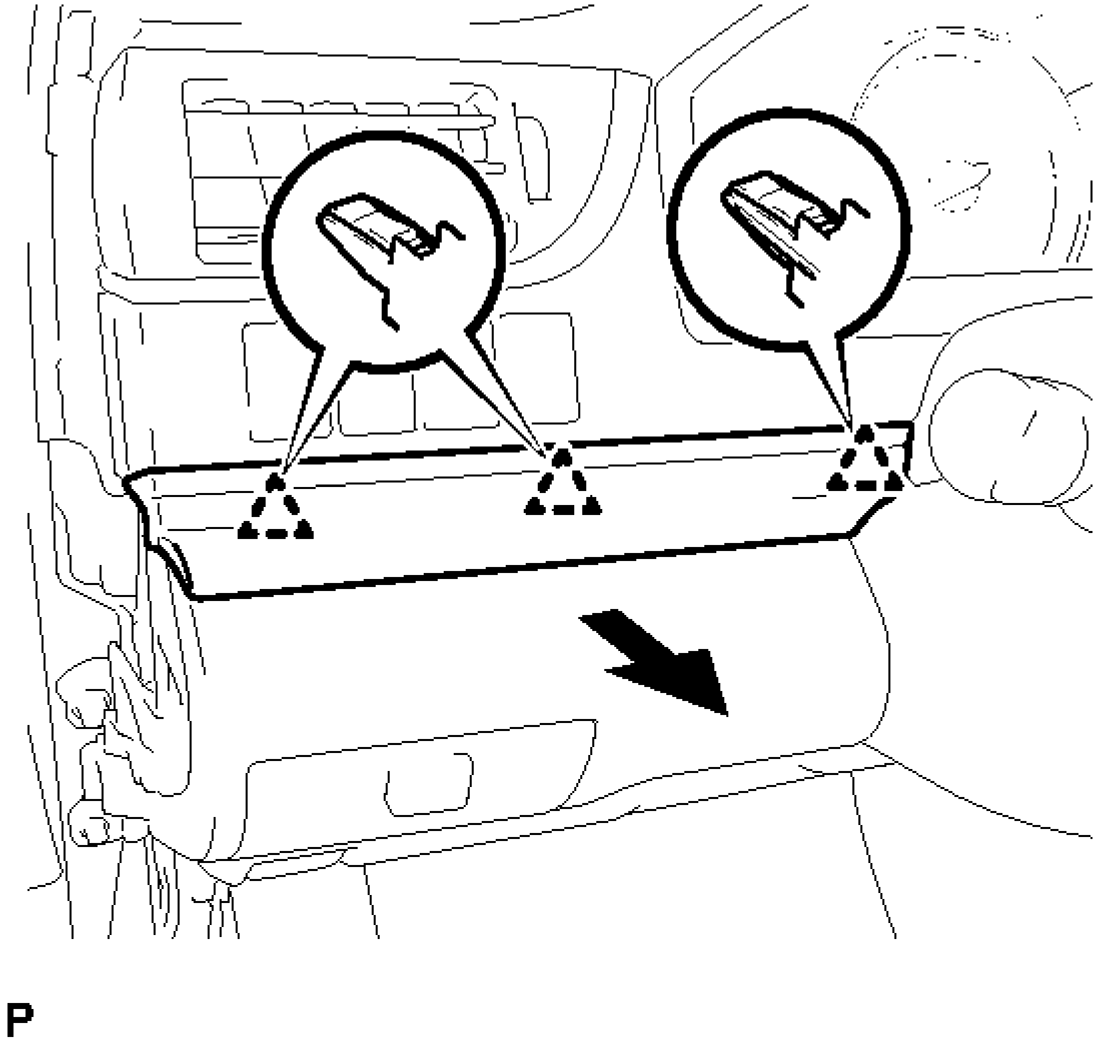

Fig. 11: Removing No. 1 Instrument Cluster Finish Panel Garnish
Courtesy of TOYOTA MOTOR SALES, U.S.A., INC.

8. **REMOVE NO. 1 INSTRUMENT PANEL REGISTER ASSEMBLY**
    a. Apply protective tape to the area shown in the illustration.

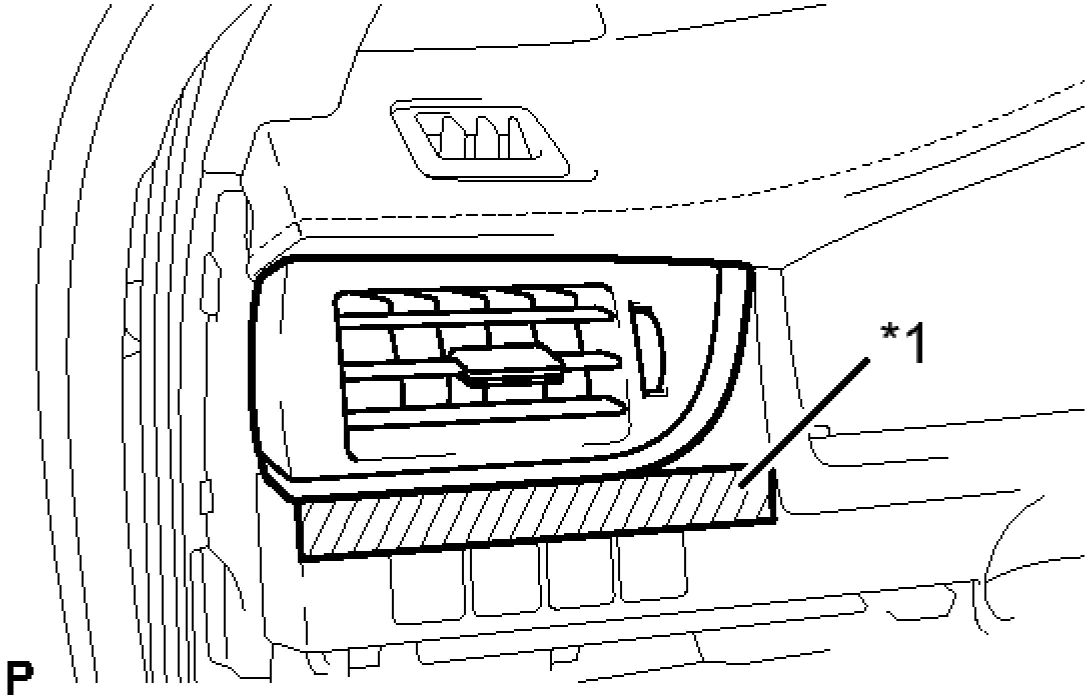

Fig. 12: Identifying Protective Tape Around No. 1 Instrument Panel Register Assembly
Courtesy of TOYOTA MOTOR SALES, U.S.A., INC.

TEXT IN ILLUSTRATION

*1	Protective Tape

b. Disengage the 2 clips as shown in the illustration.

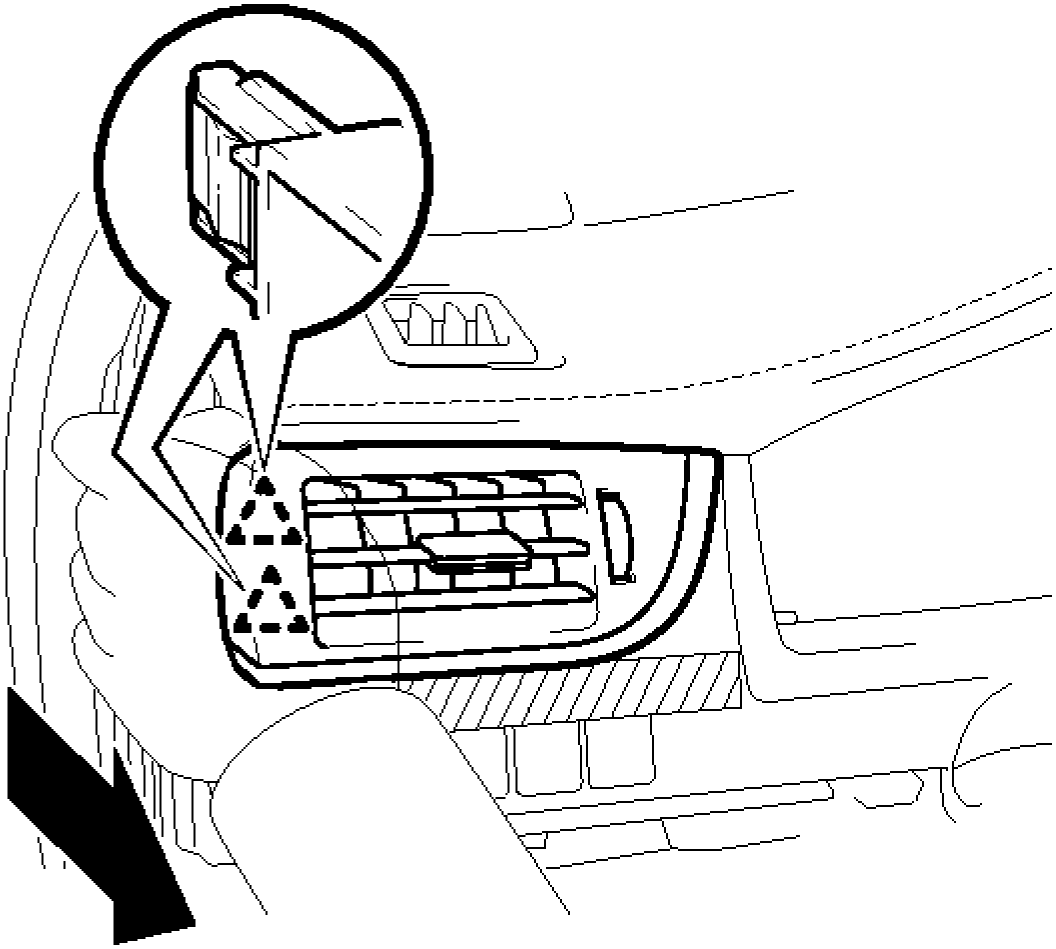

Fig. 13: Removing No. 1 Instrument Panel Register Assembly
Courtesy of TOYOTA MOTOR SALES, U.S.A., INC.

c. Using a moulding remover, disengage the 2 clips to remove the No. 1 instrument panel register assembly.

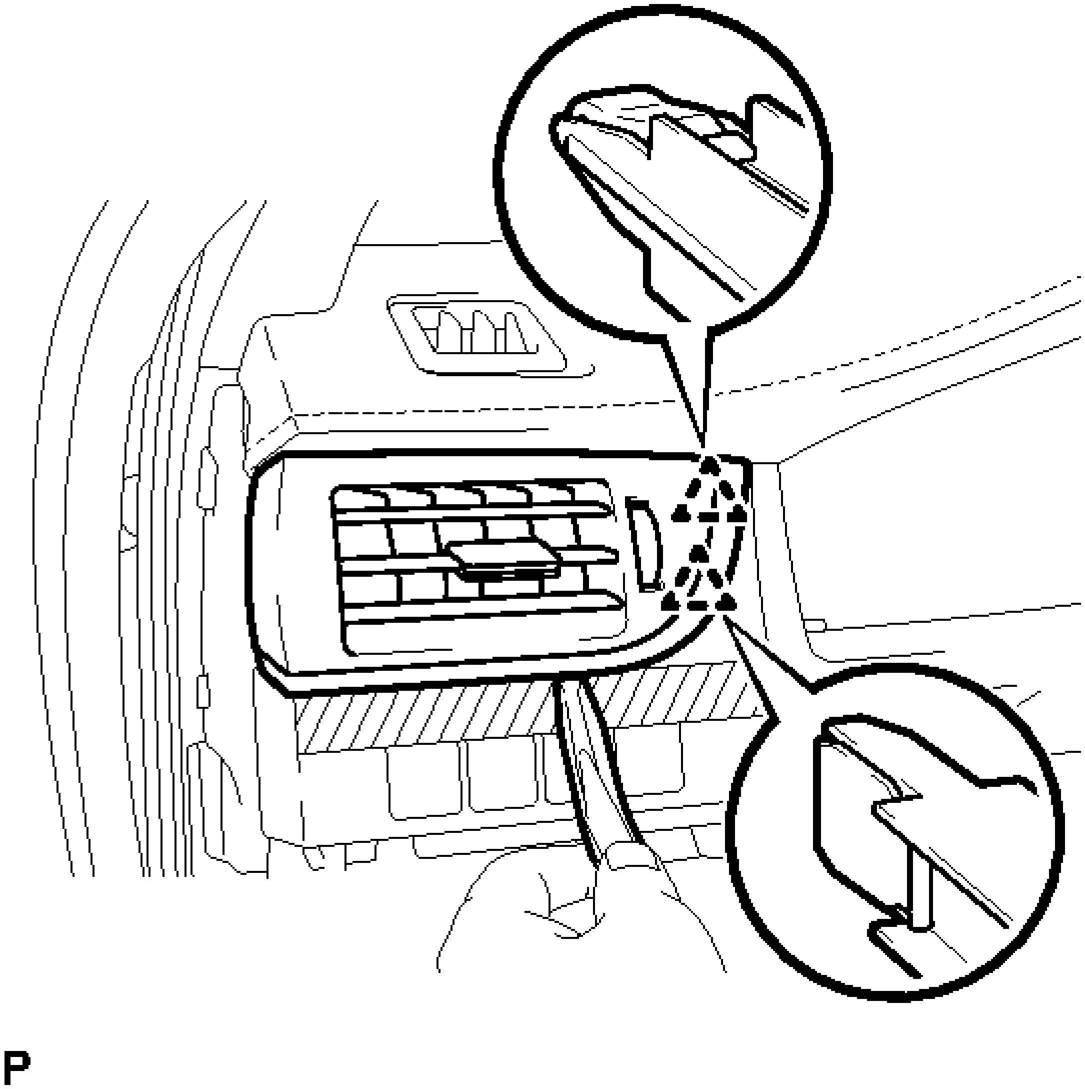

Fig. 14: Identifying No. 1 Instrument Panel Register Assembly
Courtesy of TOYOTA MOTOR SALES, U.S.A., INC.

9. **REMOVE INSTRUMENT CLUSTER FINISH PANEL ASSEMBLY**
    a. Operate the tilt and telescopic lever to fully extend and lower the steering column assembly.
    b. Using a moulding remover, disengage the 2 claws, 4 clips and 2 guides.

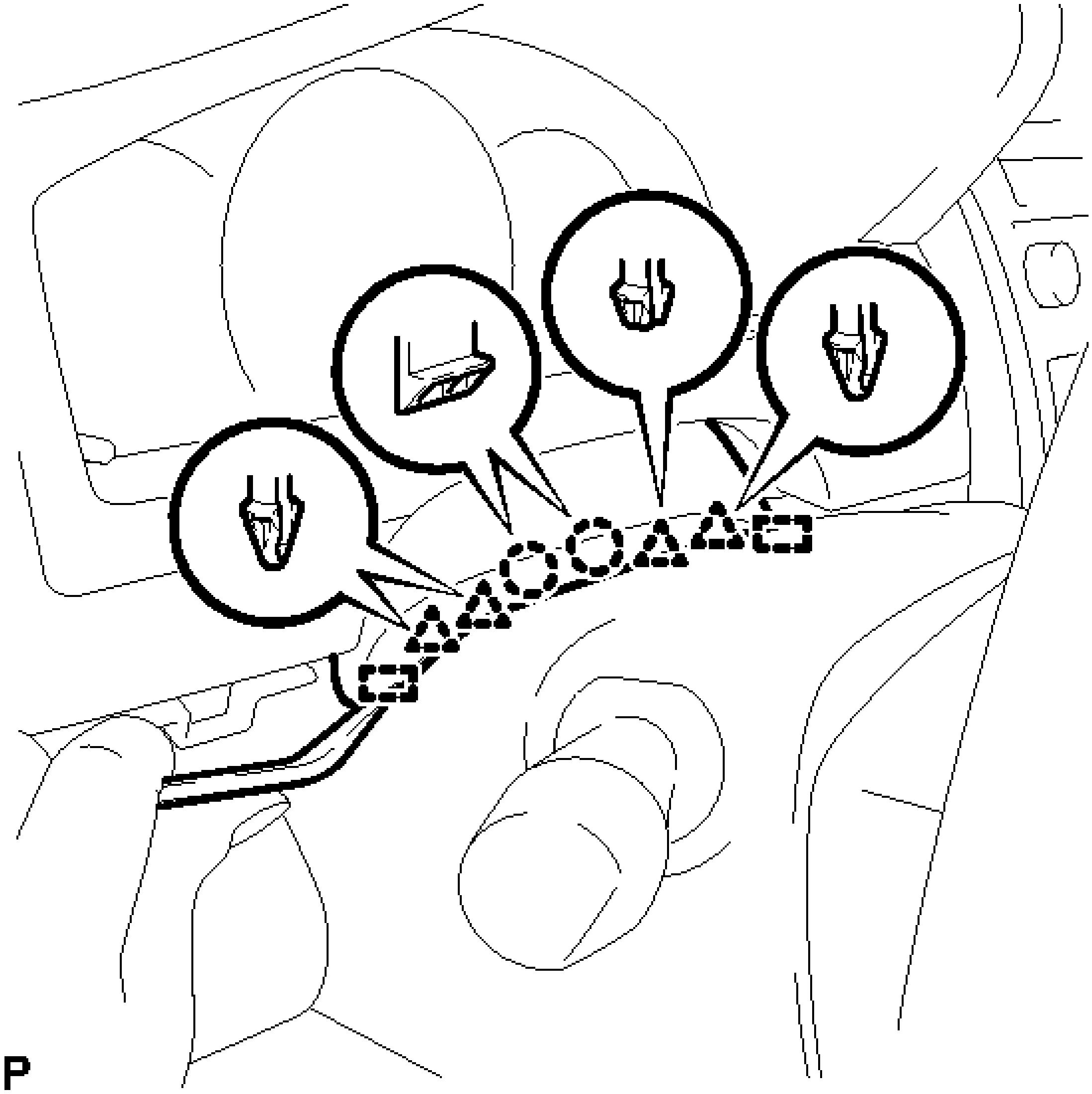

Fig. 15: Disengaging Instrument Cluster Finish Panel Assembly Fasteners
Courtesy of TOYOTA MOTOR SALES, U.S.A., INC.

c. Disengage the 5 claws, 5 clips and 2 guides.

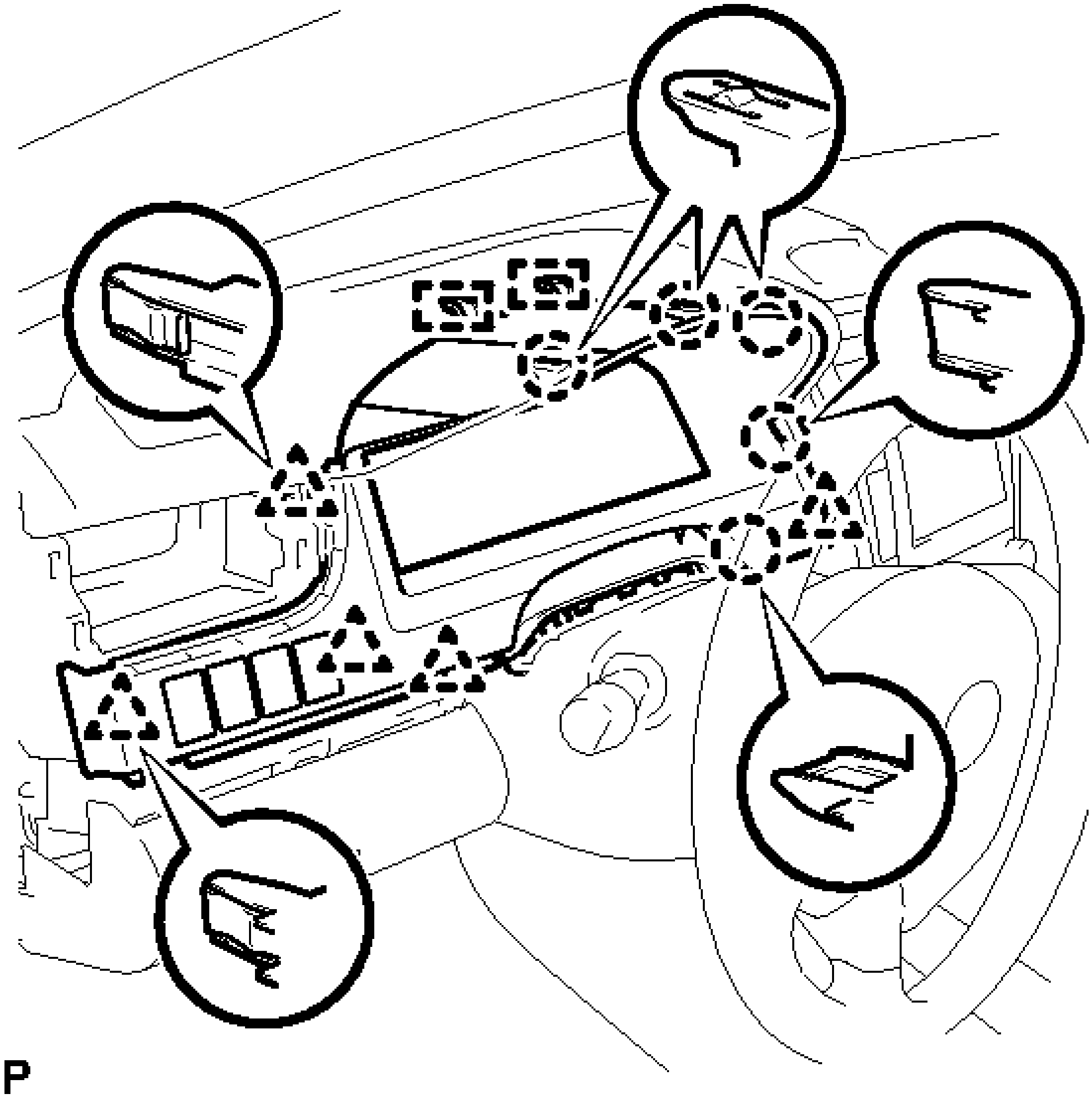

Fig. 16: Identifying Instrument Cluster Finish Panel Assembly Fasteners
Courtesy of TOYOTA MOTOR SALES, U.S.A., INC.

d. Disconnect each connector.
e. Remove the instrument cluster finish panel assembly as shown in the illustration.

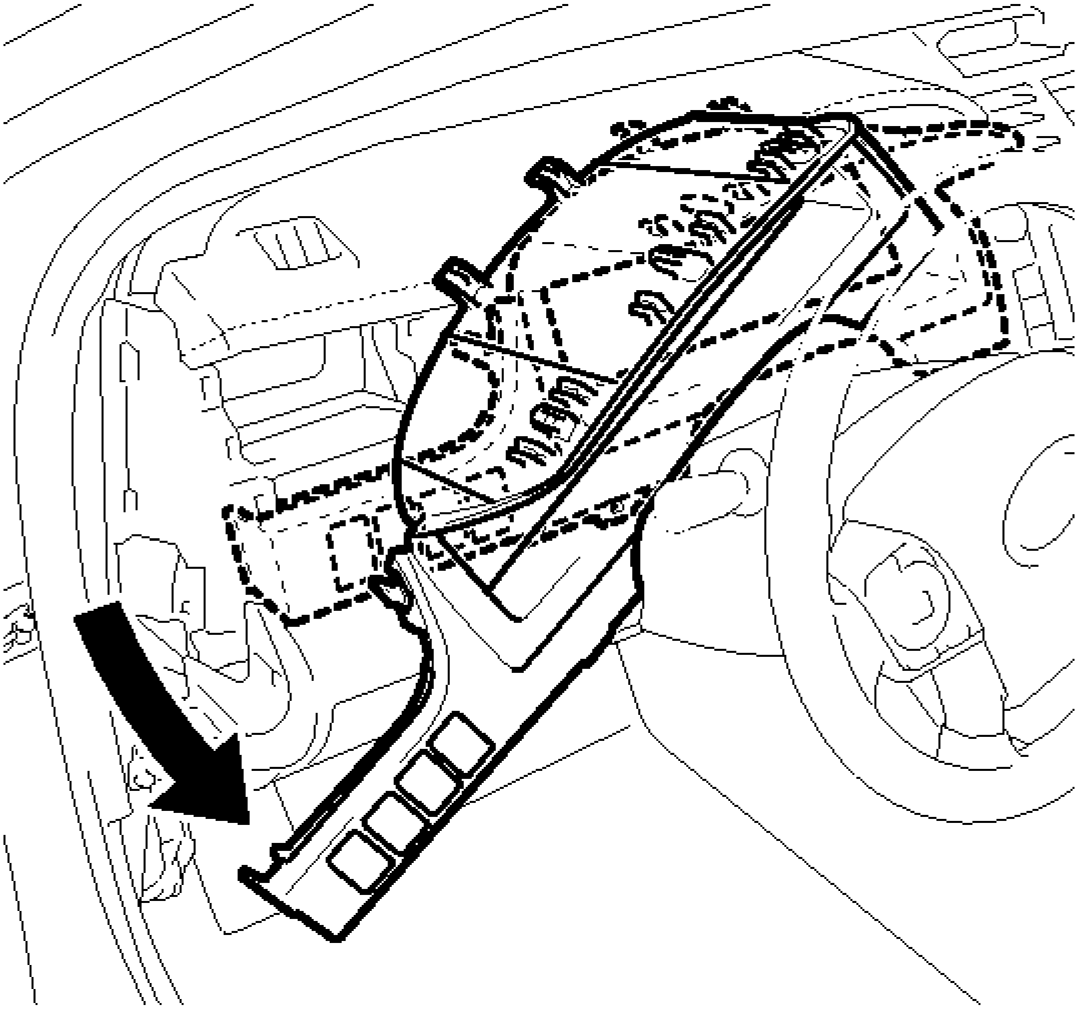

Fig. 17: Removing Instrument Cluster Finish Panel Assembly
Courtesy of TOYOTA MOTOR SALES, U.S.A., INC.

10. **REMOVE COMBINATION METER ASSEMBLY** . Refer to **REMOVAL - Step 8** .
11. **REMOVE FRONT PANEL GARNISH LH**
    a. Disengage the 3 claws, 2 clips and 8 guides to remove the front panel garnish LH.

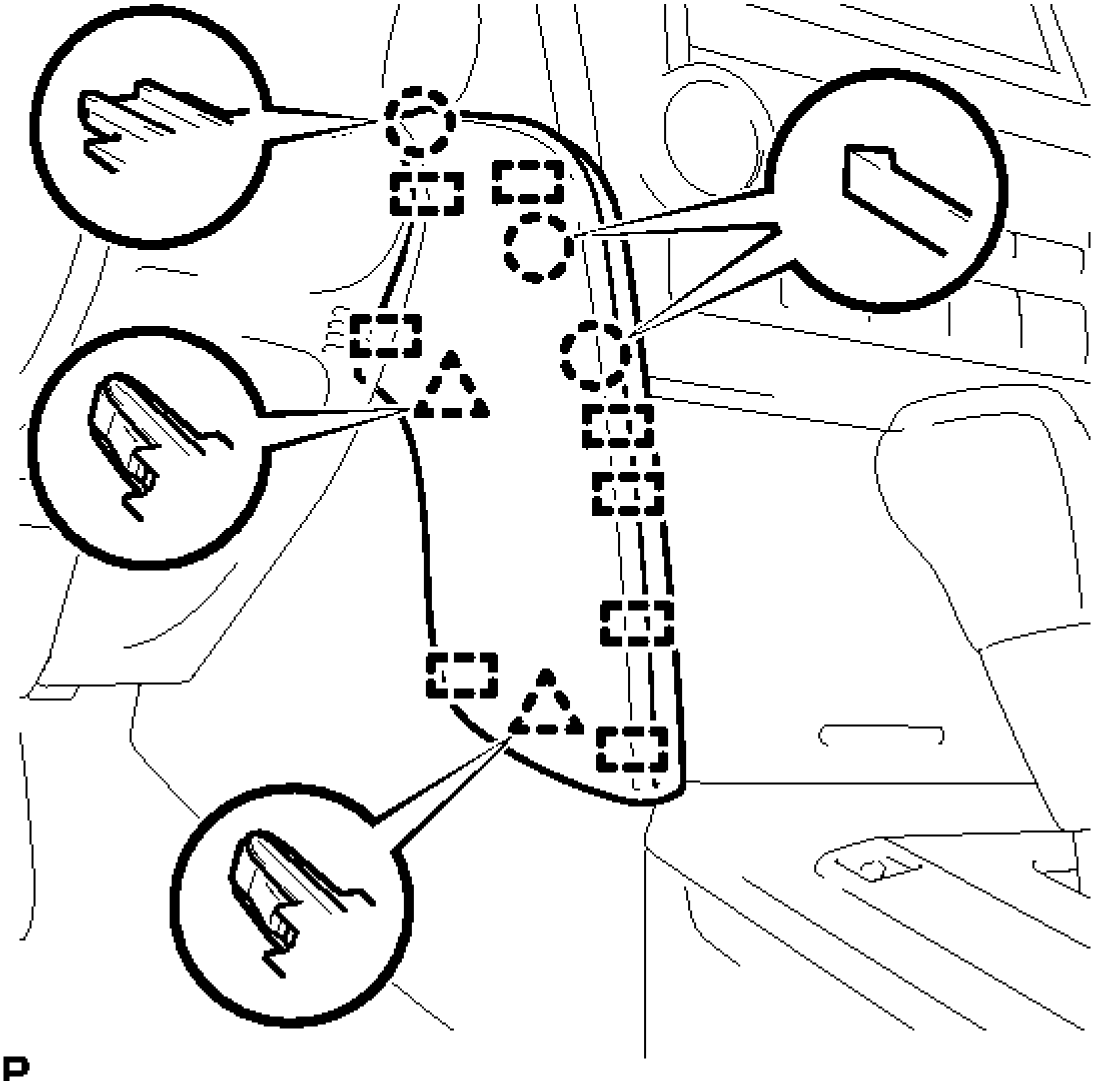

Fig. 18: Identifying Front Panel Garnish LH Fasteners
Courtesy of TOYOTA MOTOR SALES, U.S.A., INC.

12. **DISCONNECT HOOD LOCK CONTROL LEVER SUB-ASSEMBLY**
    a. Disengage the claw and 2 guides to disconnect the hood lock control lever sub-assembly.

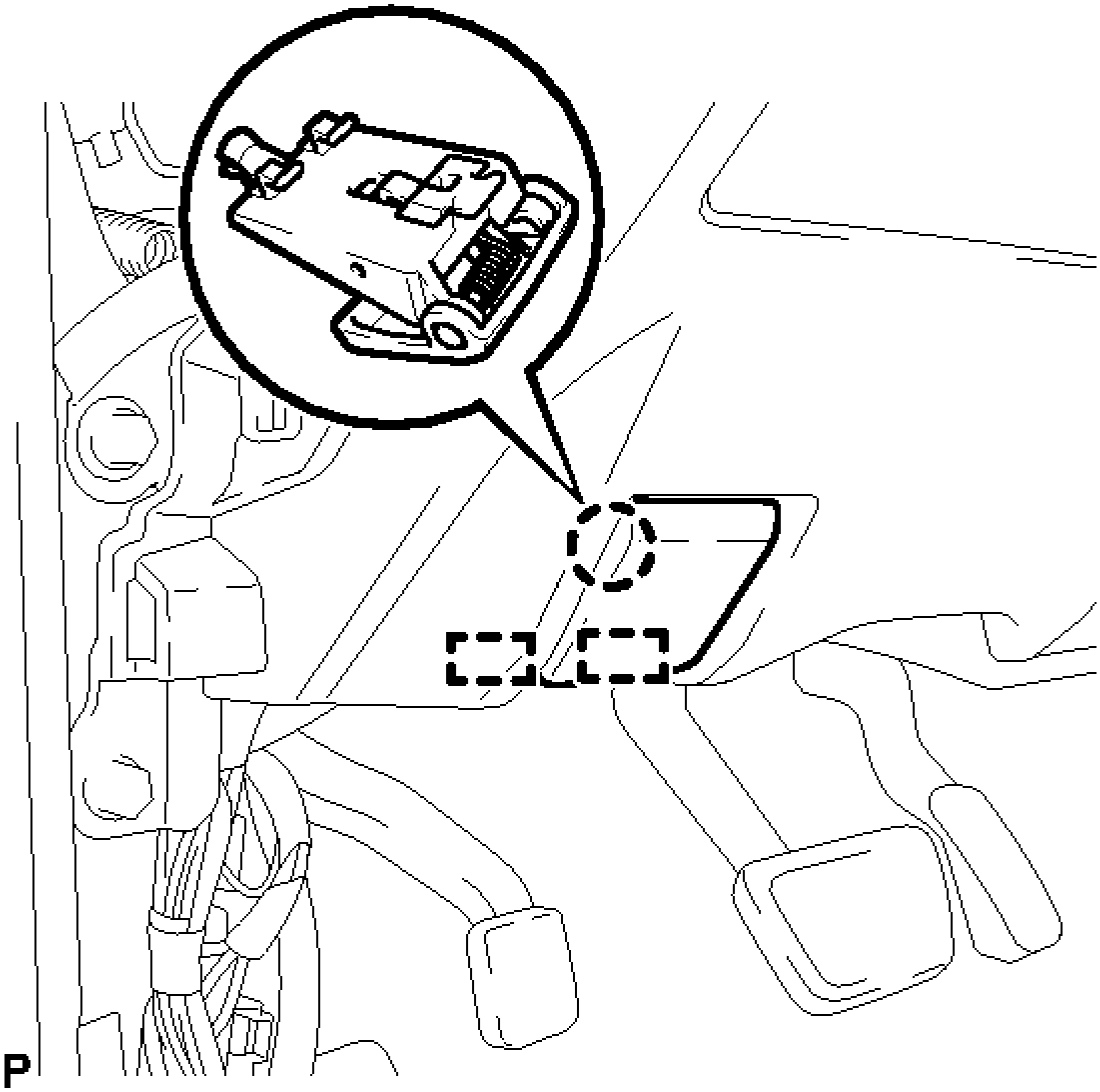

Fig. 19: Identifying Hood Lock Control Lever Sub-Assembly
Courtesy of TOYOTA MOTOR SALES, U.S.A., INC.

13. **REMOVE LOWER NO. 1 INSTRUMENT PANEL FINISH PANEL ASSEMBLY**
    a. Remove the bolt <B> and screw <C> or <D>.

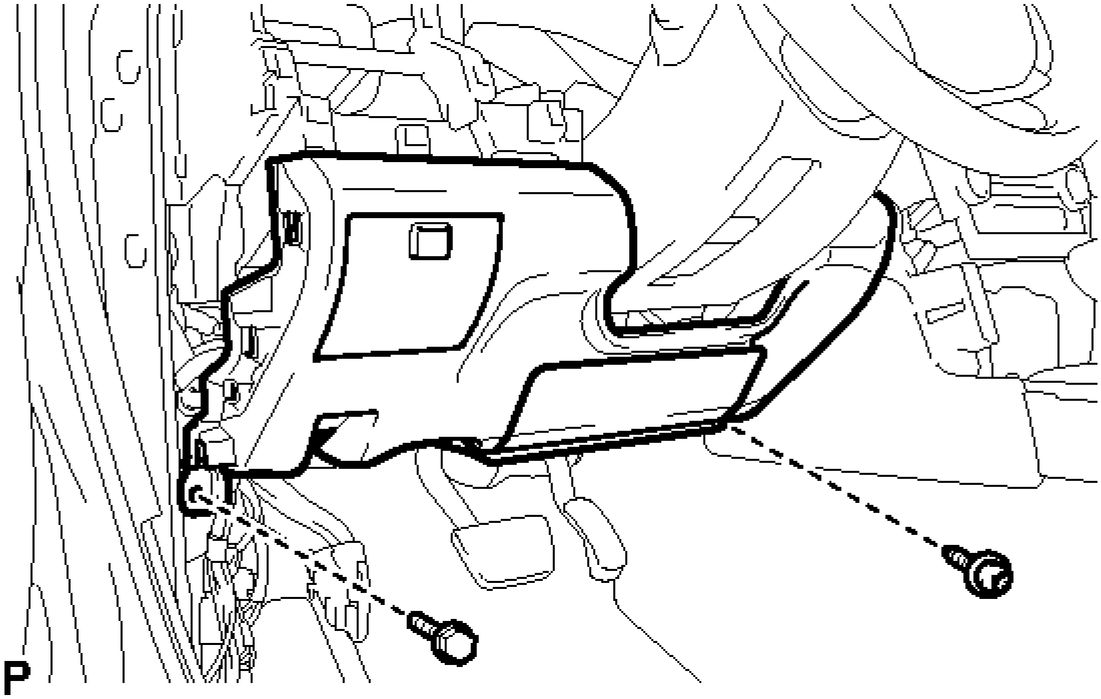

Fig. 20: Identifying Lower No. 1 Instrument Panel Finish Panel Assembly Fasteners
Courtesy of TOYOTA MOTOR SALES, U.S.A., INC.

b. Disengage the 4 claws, 9 clips and 3 guides to remove the lower No. 1 instrument panel finish panel assembly.

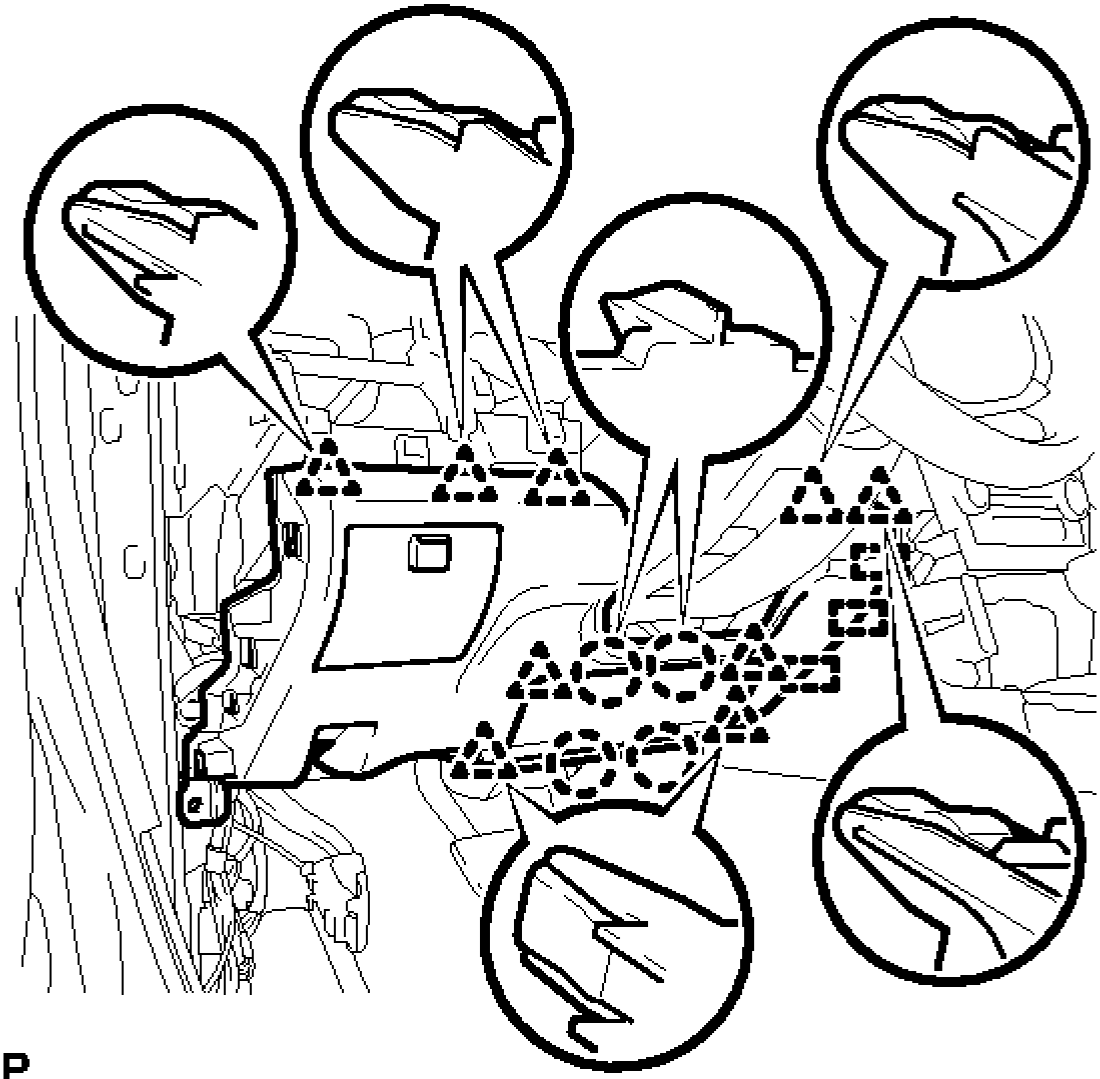

Fig. 21: Identifying Lower No. 1 Instrument Panel Finish Panel Assembly Claws, Clips And Guides
Courtesy of TOYOTA MOTOR SALES, U.S.A., INC.

14. **REMOVE FRONT PANEL GARNISH RH**
    a. Disengage the 3 claws, 2 clips and 8 guides to remove the front panel garnish RH.

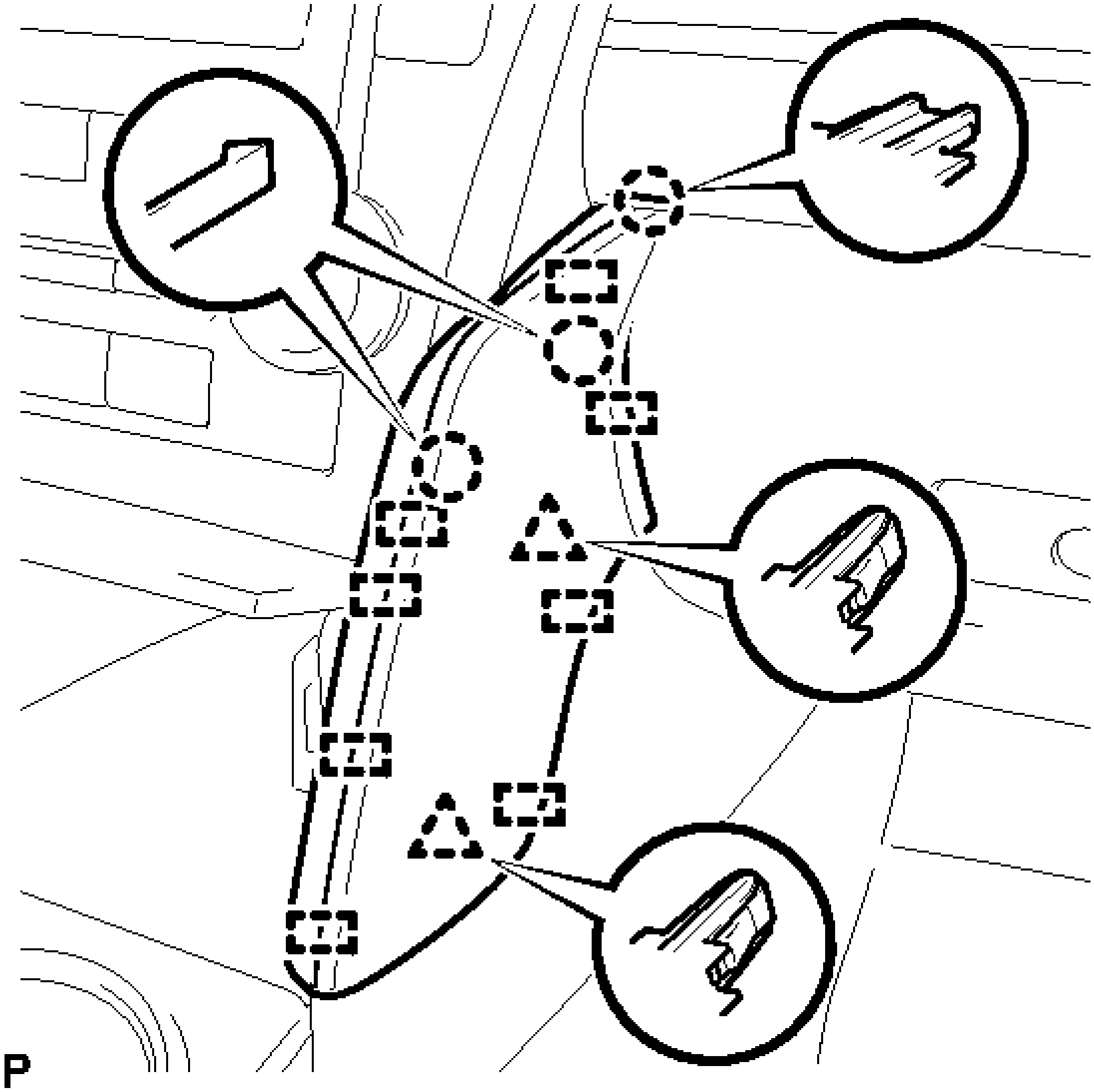

Fig. 22: Identifying Front Panel Garnish RH
Courtesy of TOYOTA MOTOR SALES, U.S.A., INC.

15. **REMOVE SHIFT LEVER KNOB SUB-ASSEMBLY**
    a. Turn the shift lever knob sub-assembly counterclockwise and remove the shift lever knob sub-assembly.

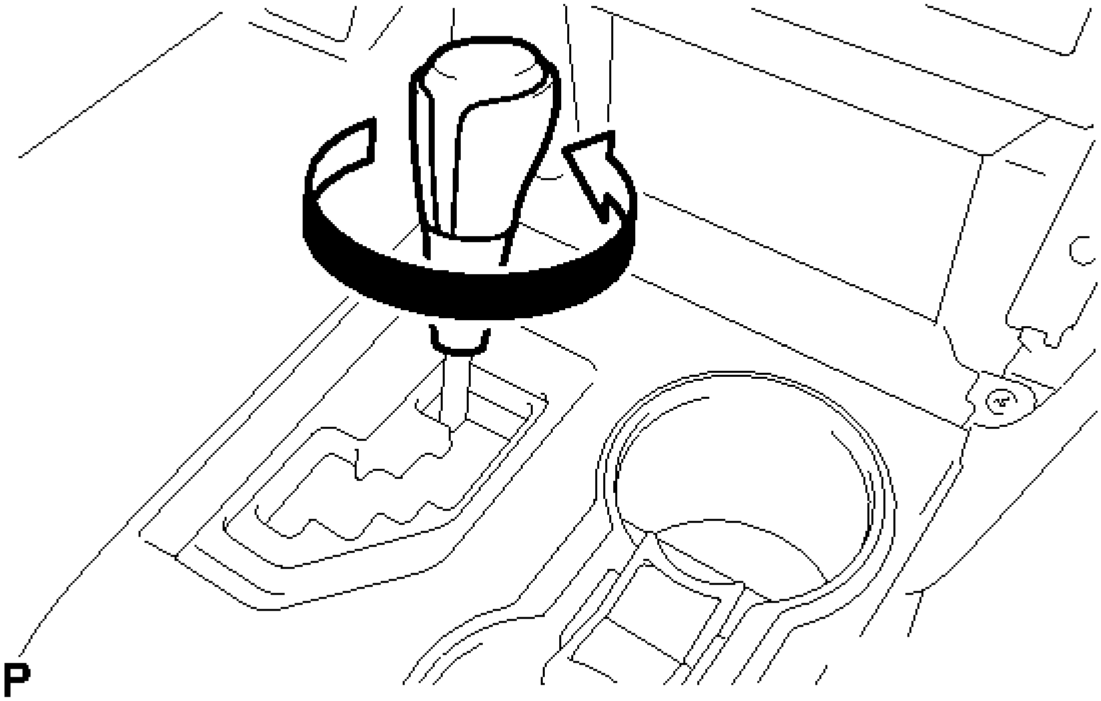

Fig. 23: Removing Shift Lever Knob Sub-Assembly
Courtesy of TOYOTA MOTOR SALES, U.S.A., INC.

16. **REMOVE REAR CONSOLE UPPER PANEL SUB-ASSEMBLY**
    a. Move the shift lever to N.
    b. Disengage the 4 clips.

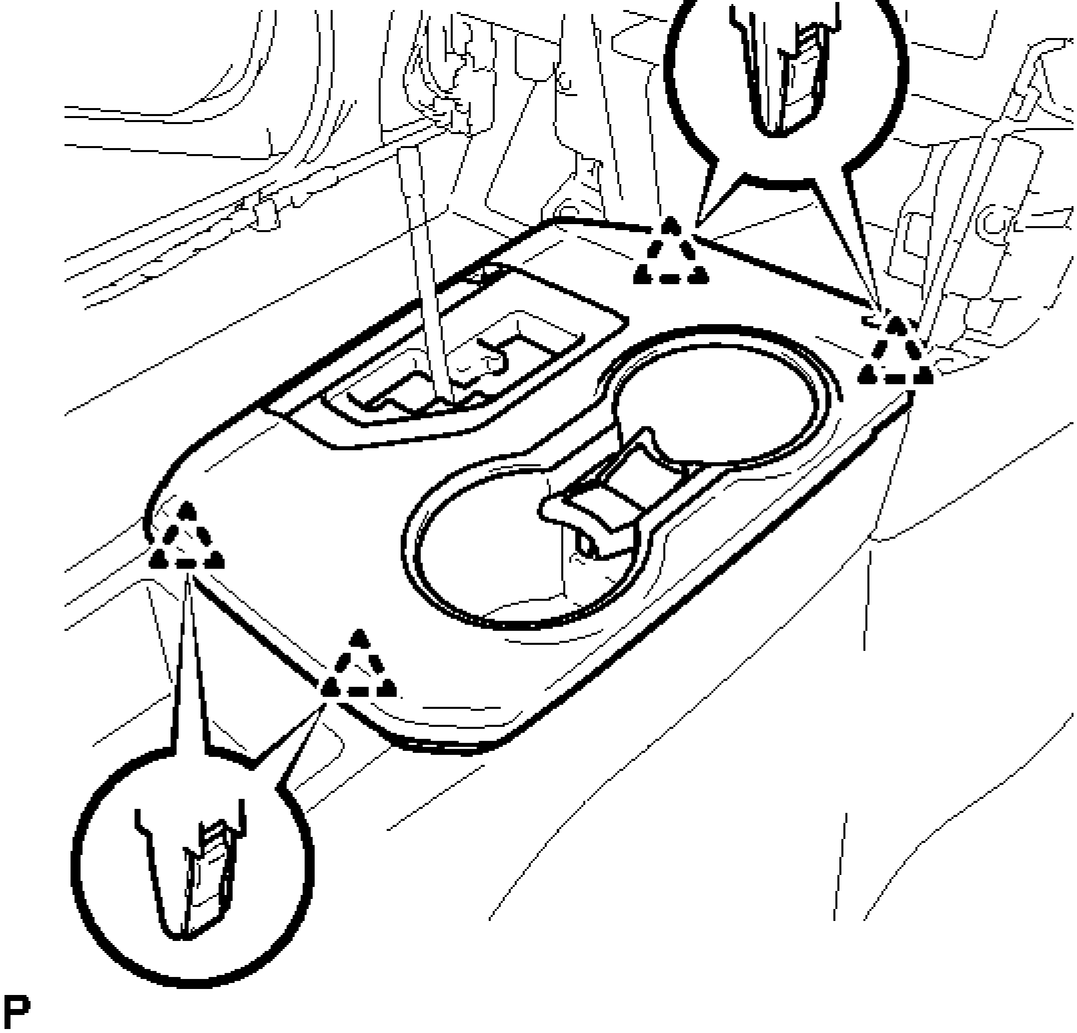

Fig. 24: Identifying Rear Console Upper Panel Sub-Assembly Clips
Courtesy of TOYOTA MOTOR SALES, U.S.A., INC.

c. w/ Seat heater System:
    1. Disconnect the 2 connectors.

d. Disconnect the connector and remove the rear console upper panel sub-assembly.

17. **REMOVE CONSOLE BOX CUP HOLDER**
    a. Remove the console box cup holder from the rear console upper panel sub-assembly.

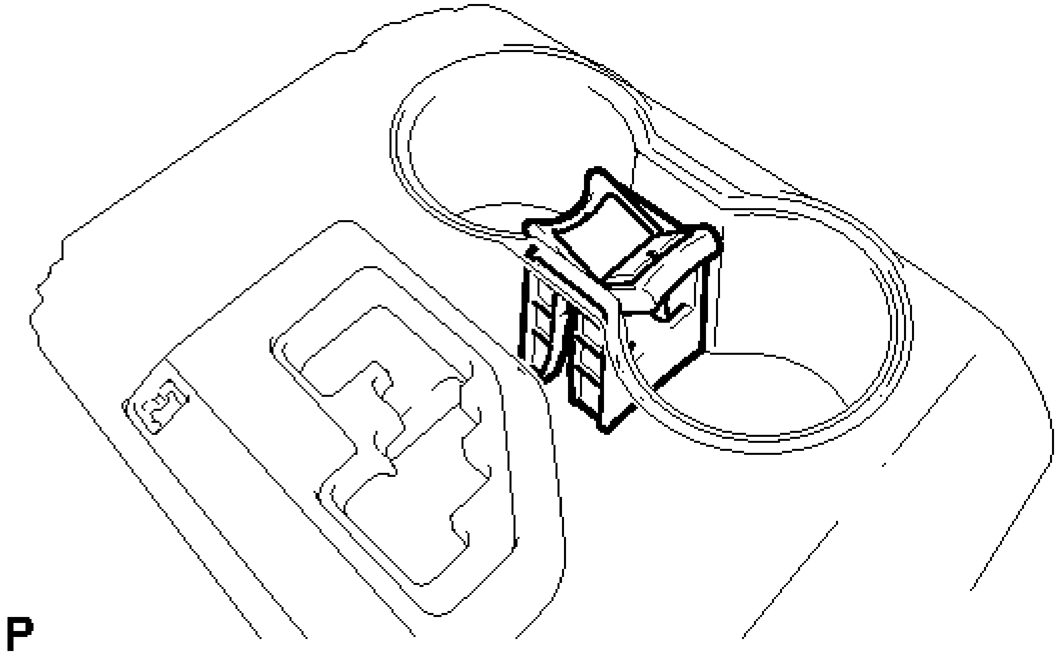

Fig. 25: Identifying Console Box Cup Holder
Courtesy of TOYOTA MOTOR SALES, U.S.A., INC.

18. **REMOVE INSTRUMENT PANEL CUP HOLDER TRAY**
    a. Remove the 6 screws <E> and instrument panel cup holder tray.

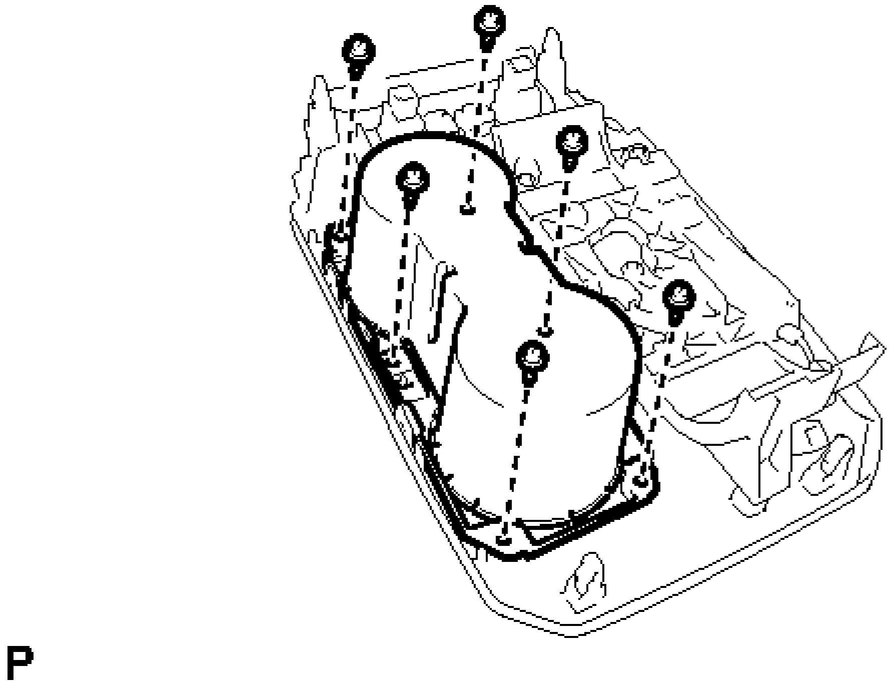

Fig. 26: Locating Instrument Panel Cup Holder Tray Fasteners

Courtesy of TOYOTA MOTOR SALES, U.S.A., INC.

b. Remove the front console upper panel garnish.

19. **REMOVE UPPER CONSOLE BOX SUB-ASSEMBLY** . See step 5.
20. **REMOVE NO. 4 CONSOLE BOX DUCT (w/ Rear Register Duct)** . See step 6.
21. **REMOVE CONSOLE BOX CARPET** . See step 7.
22. **REMOVE REAR CONSOLE BOX ASSEMBLY** . See step 8.
23. **REMOVE CENTER INSTRUMENT CLUSTER FINISH PANEL ASSEMBLY**
    a. Using a moulding remover, disengage the 2 claws and 2 clips as shown in the illustration.

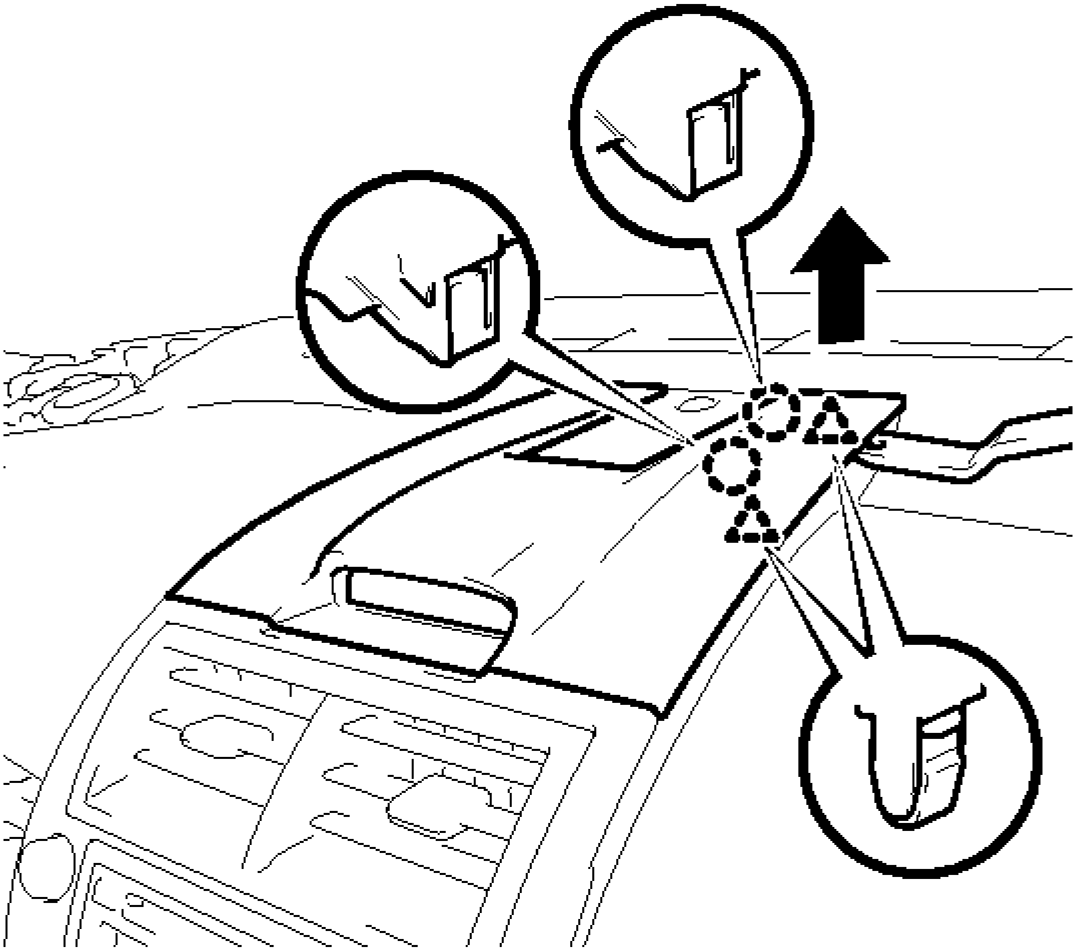

Fig. 27: Removing Center Instrument Cluster Finish Panel Assembly
Courtesy of TOYOTA MOTOR SALES, U.S.A., INC.

b. Using a moulding remover, disengage the 2 claws and 2 clips as shown in the illustration.

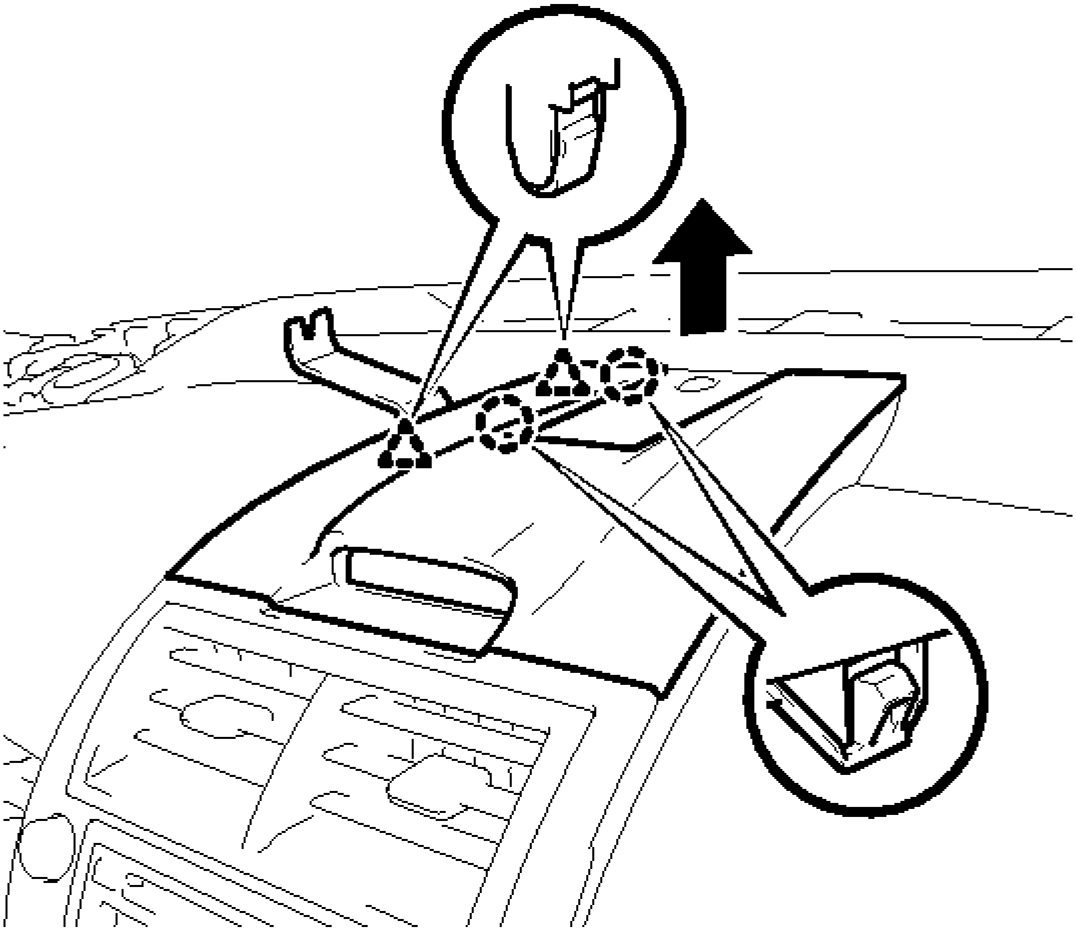

P

Fig. 28: Removing Center Instrument Cluster Finish Panel Assembly
Courtesy of TOYOTA MOTOR SALES, U.S.A., INC.

c. Disengage the 3 claws and 2 clips as shown in the illustration.

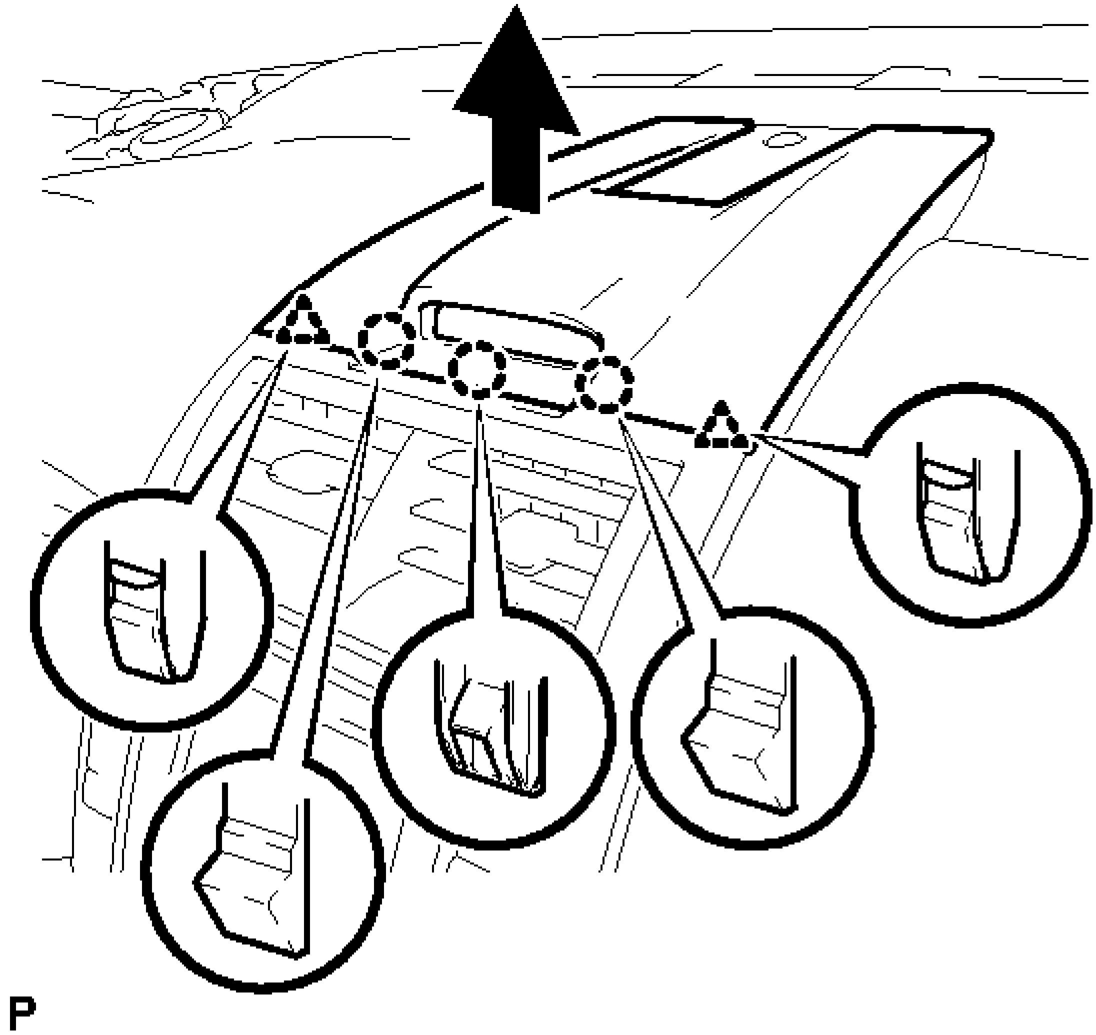

Fig. 29: Removing Center Instrument Cluster Finish Panel Assembly
Courtesy of TOYOTA MOTOR SALES, U.S.A., INC.

d. Disengage the clamp.

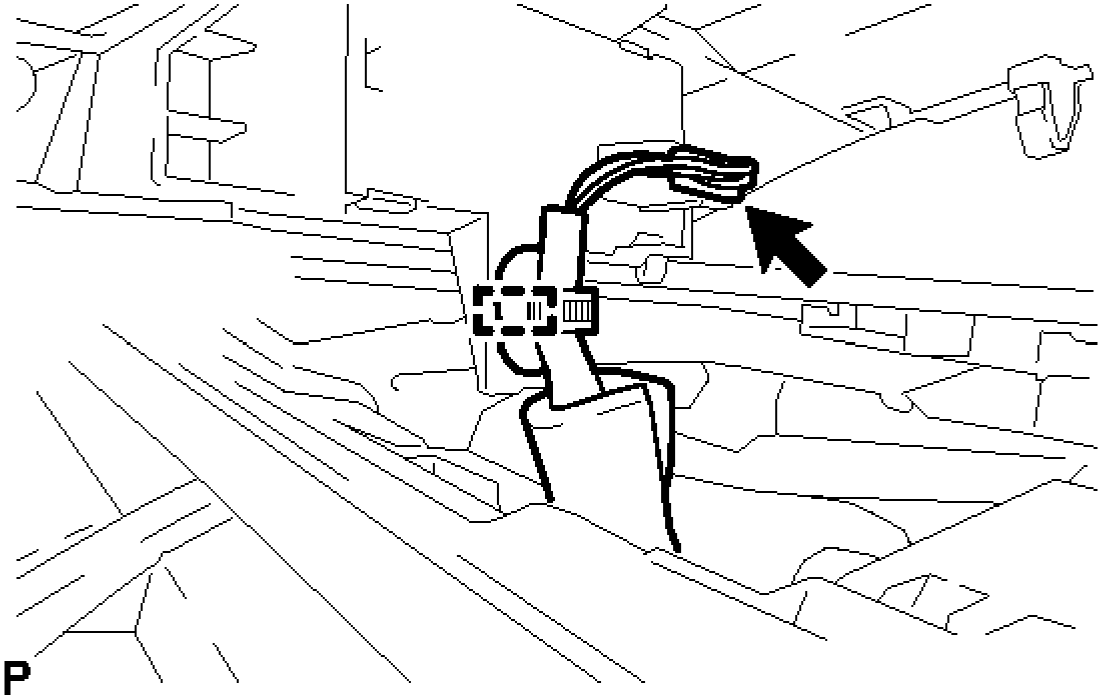

Fig. 30: Locating Center Instrument Cluster Finish Panel Assembly Connector
Courtesy of TOYOTA MOTOR SALES, U.S.A., INC.

e. Disconnect the connector to remove the center instrument cluster finish panel assembly.

24. **REMOVE NO. 2 INSTRUMENT PANEL REGISTER ASSEMBLY**

    a. Pull the No. 2 instrument panel register assembly in the direction indicated by the arrow to disengage the 6 clips to remove the No. 2 instrument panel register assembly.

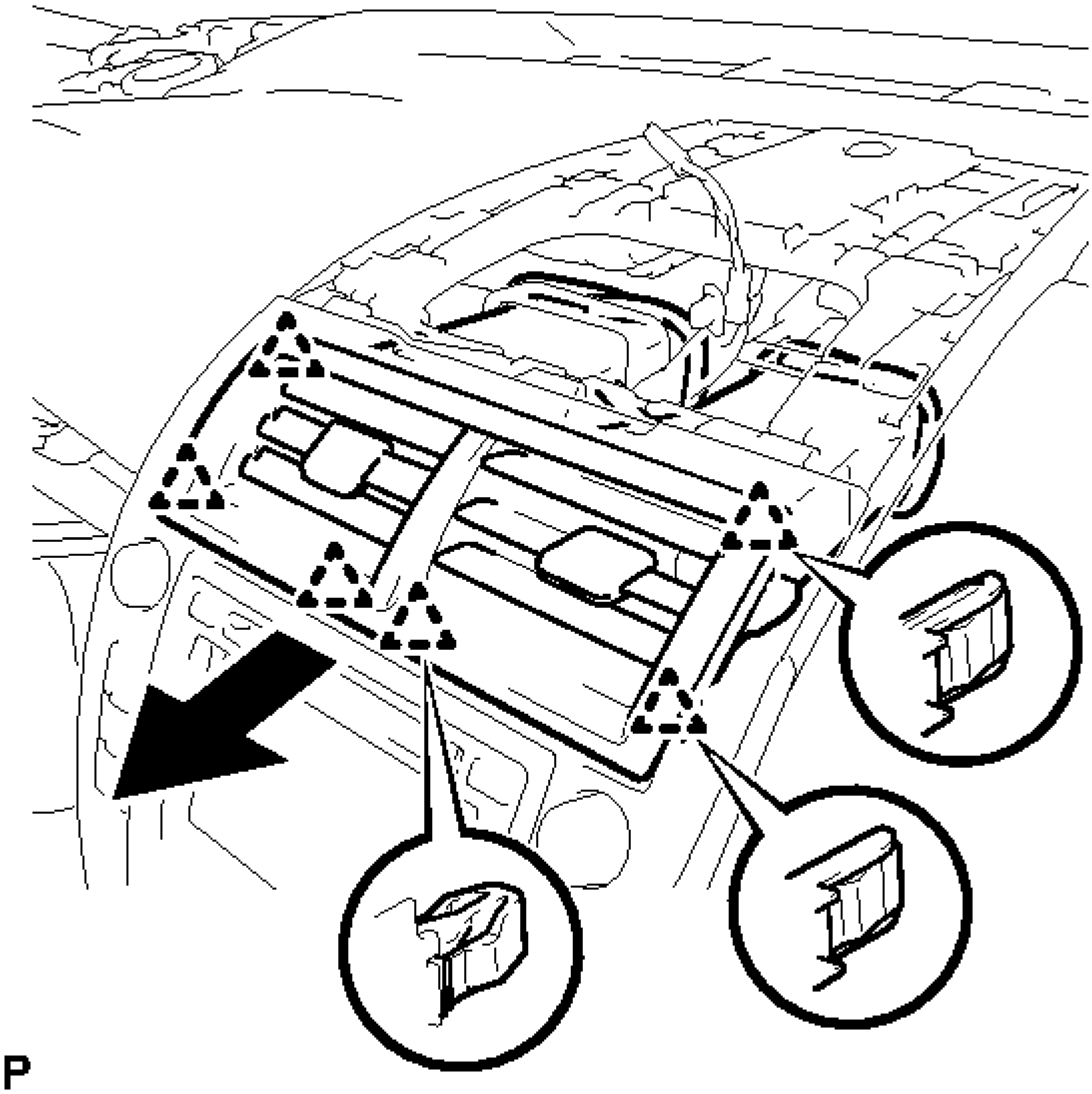

Fig. 31: Removing No. 2 Instrument Panel Register Assembly
Courtesy of TOYOTA MOTOR SALES, U.S.A., INC.

25. **REMOVE BOX BOTTOM MAT**
    a. Remove the box bottom mat.

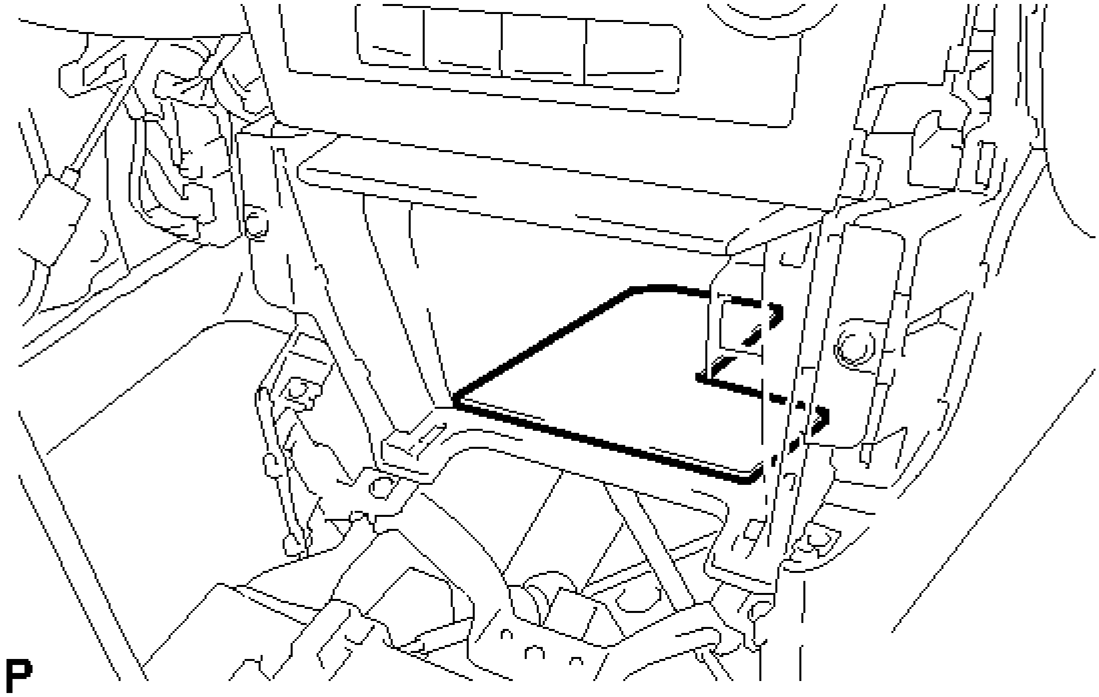

Fig. 32: Identifying Box Bottom Mat
Courtesy of TOYOTA MOTOR SALES, U.S.A., INC.

26. **REMOVE UPPER CONSOLE PANEL SUB-ASSEMBLY**
    a. Remove the 2 screws <C> or <D>.

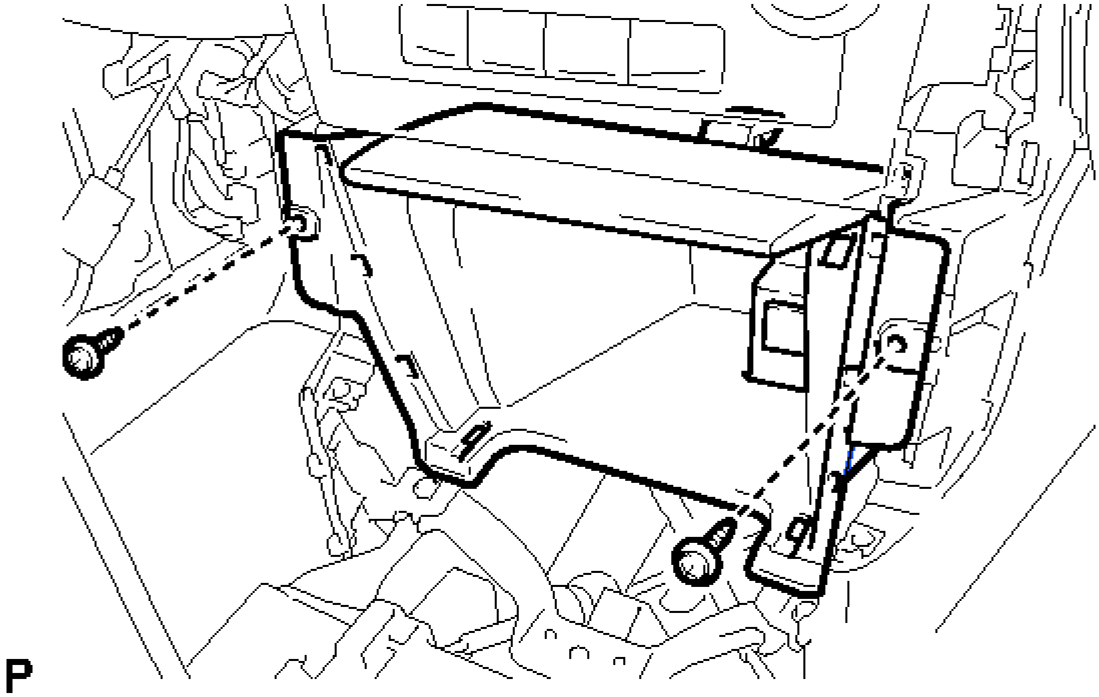

Fig. 33: Locating Upper Console Panel Sub-Assembly Fasteners

Courtesy of TOYOTA MOTOR SALES, U.S.A., INC.

b. Disengage the 4 clips and guide as shown in the illustration.

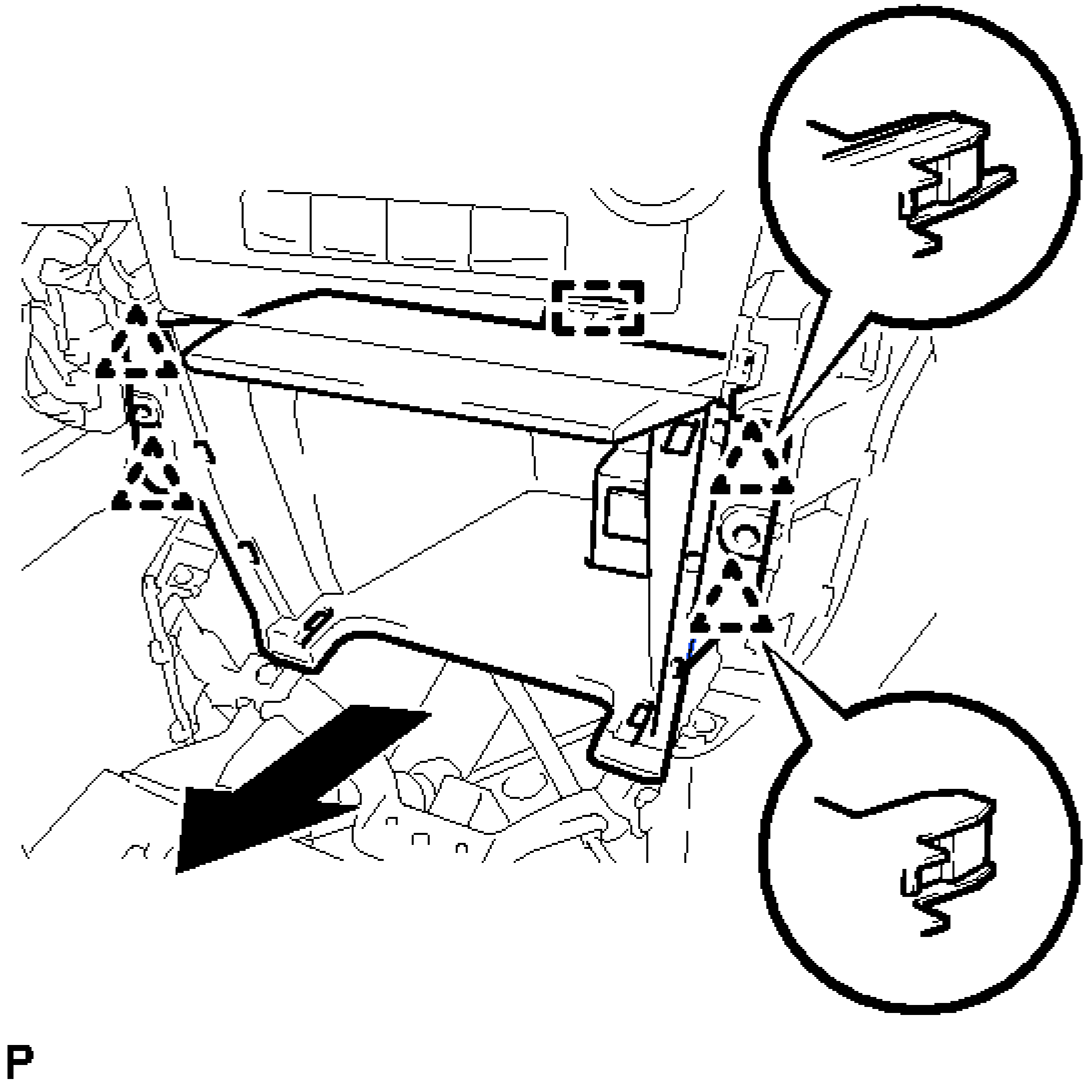

Fig. 34: Removing Upper Console Panel Sub-Assembly
Courtesy of TOYOTA MOTOR SALES, U.S.A., INC.

c. Disconnect each connector to remove the upper console panel sub-assembly.

27. **REMOVE RADIO RECEIVER ASSEMBLY WITH AIR CONDITIONING CONTROL ASSEMBLY (for Radio Receiver Type)** . Refer to **REMOVAL - Step 8** .
28. **REMOVE RADIO RECEIVER ASSEMBLY WITH AIR CONDITIONING CONTROL ASSEMBLY (for Radio and Display Type)** . Refer to **REMOVAL - Step 9** .
29. **REMOVE NAVIGATION RECEIVER ASSEMBLY WITH AIR CONDITIONING CONTROL ASSEMBLY (for Navigation Receiver Type)** . Refer to **REMOVAL - Step 8** .
30. **REMOVE NO. 1 SPEAKER OPENING COVER ASSEMBLY**

a. Disengage the 8 clips as shown in the illustration.

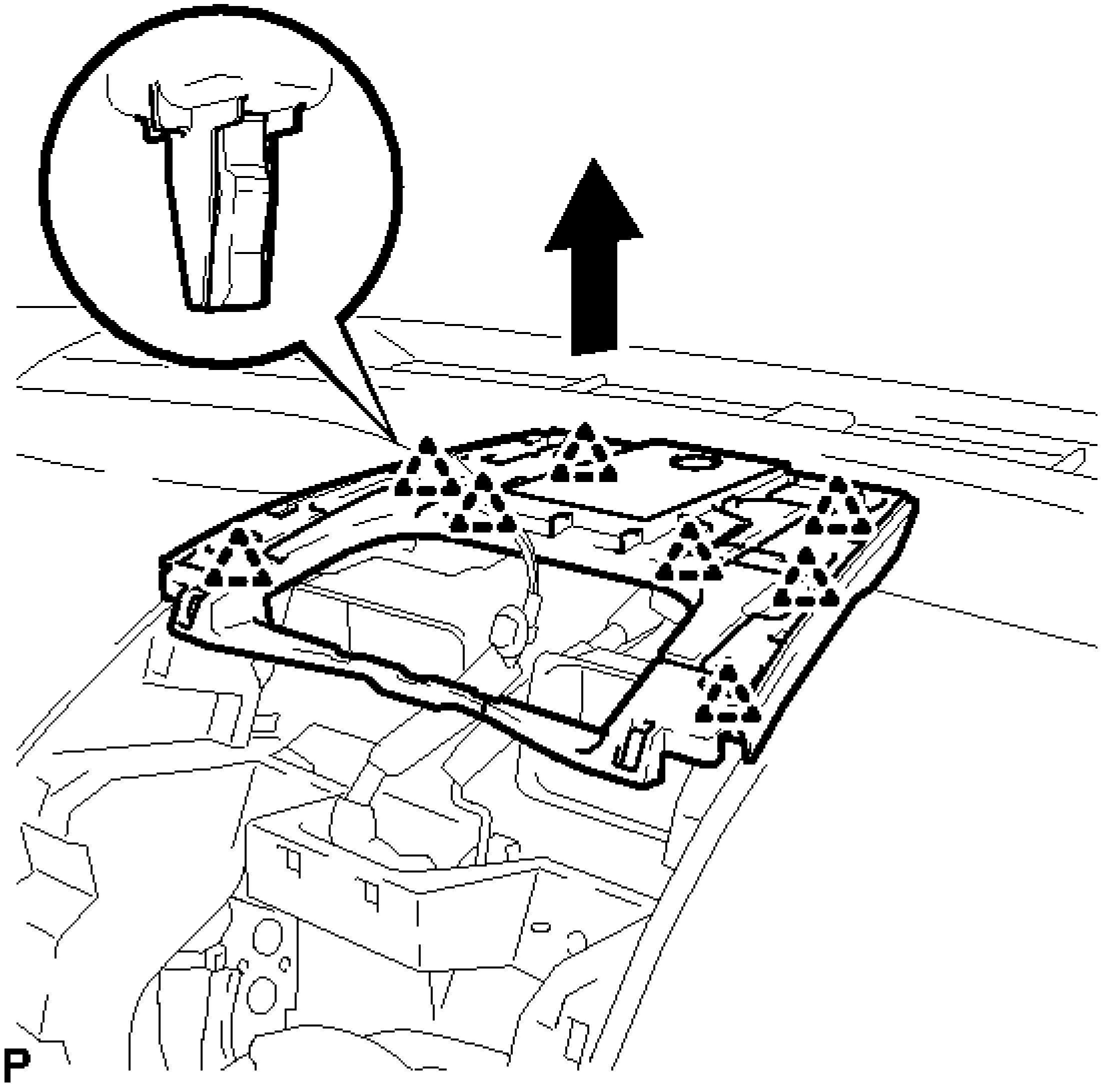

Fig. 35: Removing No. 1 Speaker Opening Cover Assembly
Courtesy of TOYOTA MOTOR SALES, U.S.A., INC.

b. Disconnect the connector to remove the No. 1 speaker opening cover assembly.

31. **REMOVE FRONT NO. 3 SPEAKER ASSEMBLY (for 10 Speakers)** . Refer to **REMOVAL - Step 15** .
32. **REMOVE FRONT DOOR SCUFF PLATE RH**

    HINT:

    Use the same procedure as for the LH side. See step 3.

33. **REMOVE COWL SIDE TRIM SUB-ASSEMBLY RH**

HINT:

Use the same procedure as for the LH side. See step 4.

34. **DISCONNECT FRONT DOOR OPENING TRIM WEATHERSTRIP RH**
    a. Disconnect the front door opening trim weatherstrip RH.

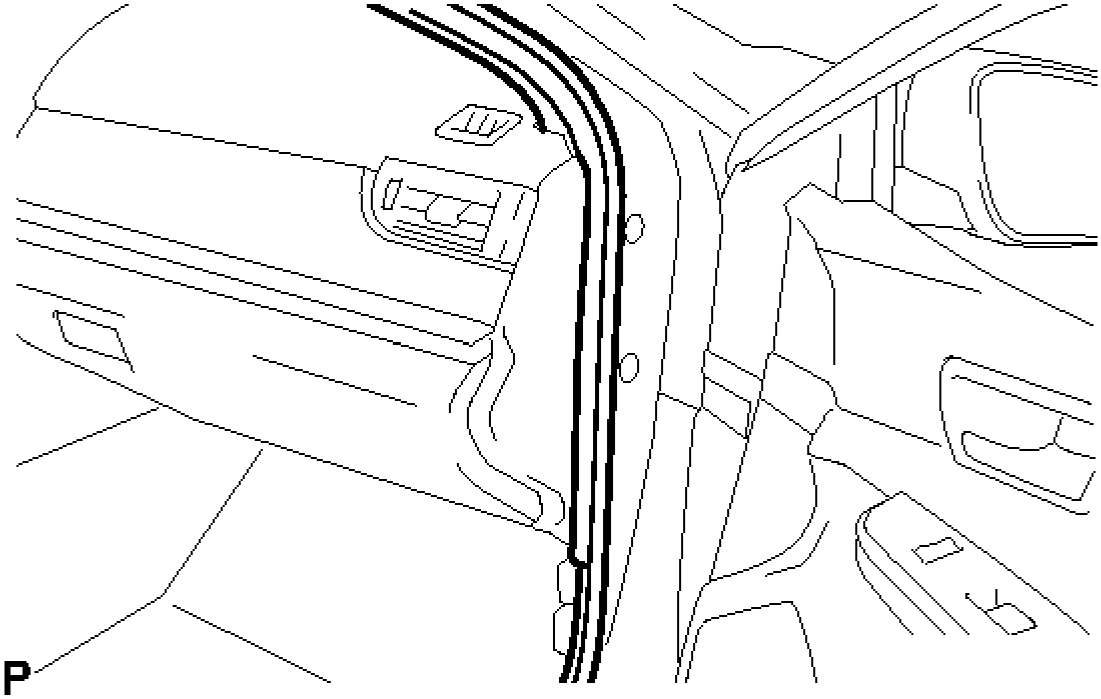

Fig. 36: Identifying Front Door Opening Trim Weatherstrip RH
Courtesy of TOYOTA MOTOR SALES, U.S.A., INC.

35. **REMOVE INSTRUMENT SIDE PANEL RH**
    a. Using a moulding remover, disengage the 4 claws as shown in the illustration.

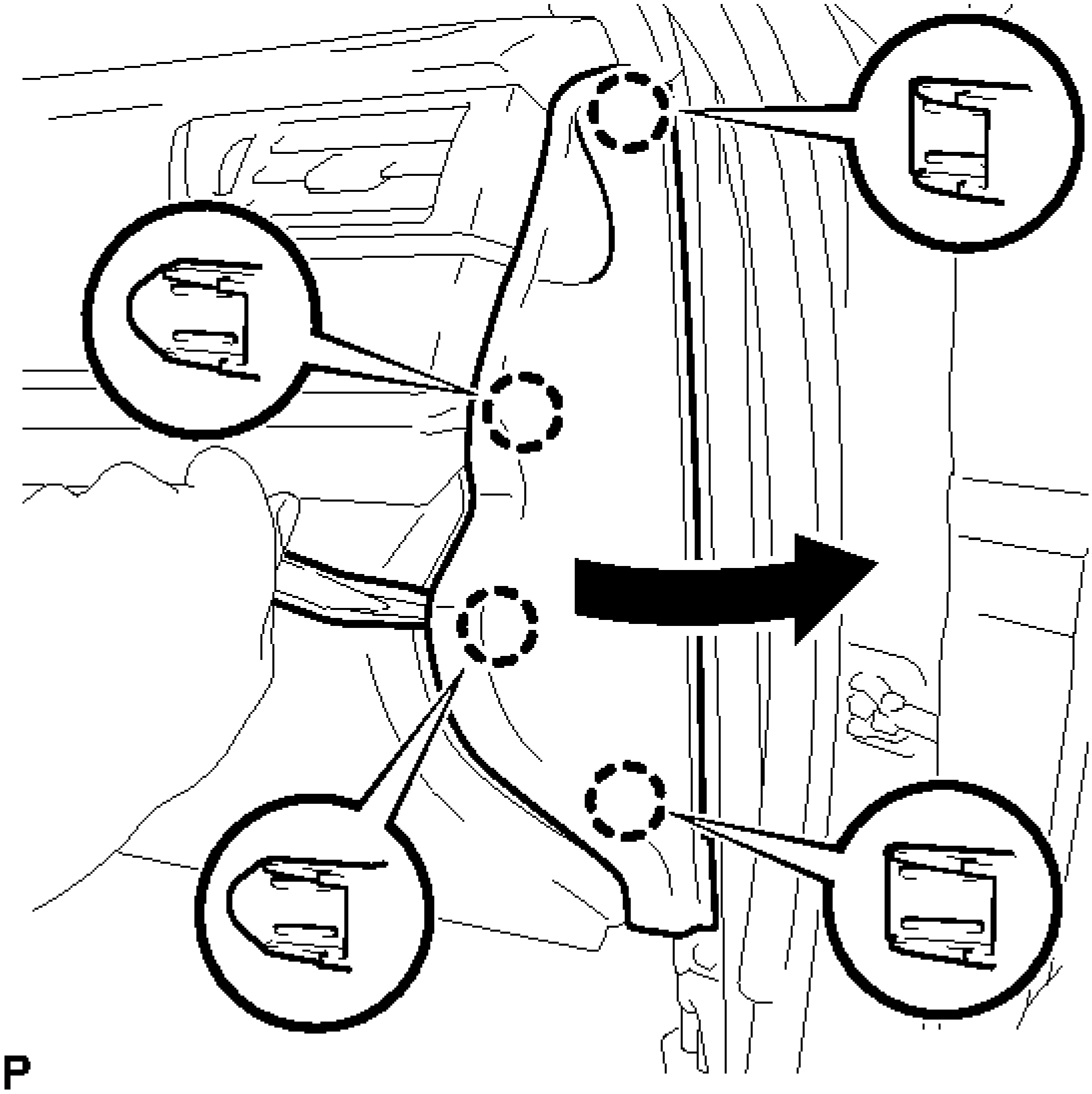

Fig. 37: Disengaging Instrument Side Panel RH Claws
Courtesy of TOYOTA MOTOR SALES, U.S.A., INC.

b. Disengage the 3 guides to remove the instrument side panel RH as shown in the illustration.

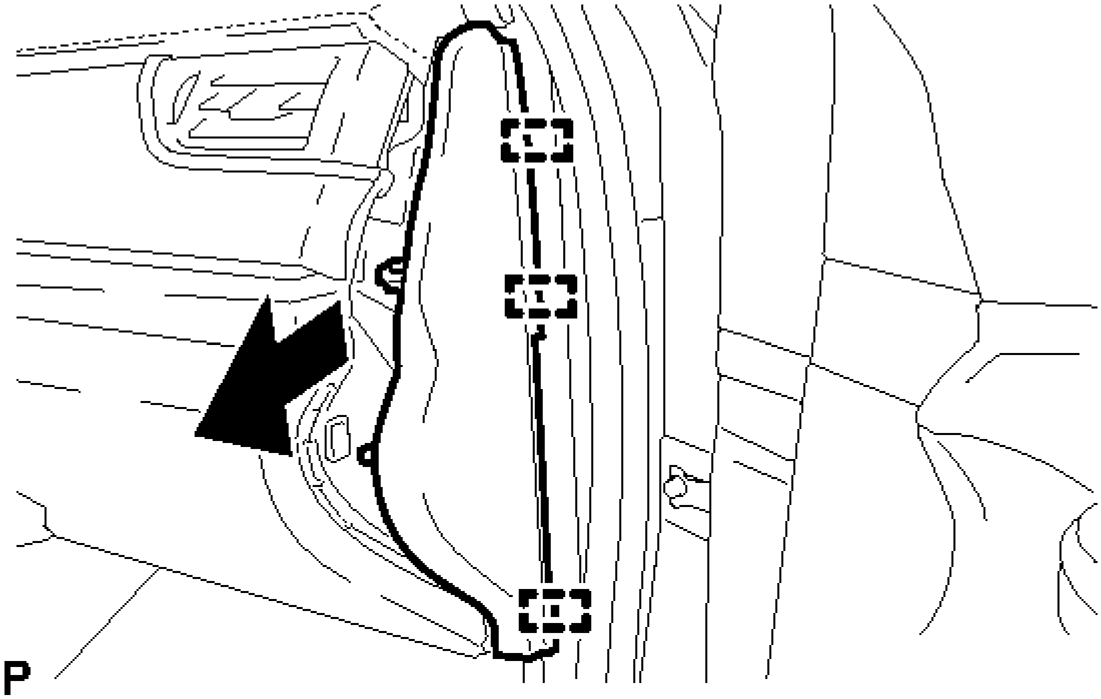

Fig. 38: Disengaging Instrument Side Panel RH Guides
Courtesy of TOYOTA MOTOR SALES, U.S.A., INC.

36. REMOVE NO. 2 INSTRUMENT PANEL UNDER COVER SUB-ASSEMBLY

a. Disengage the 4 claws.

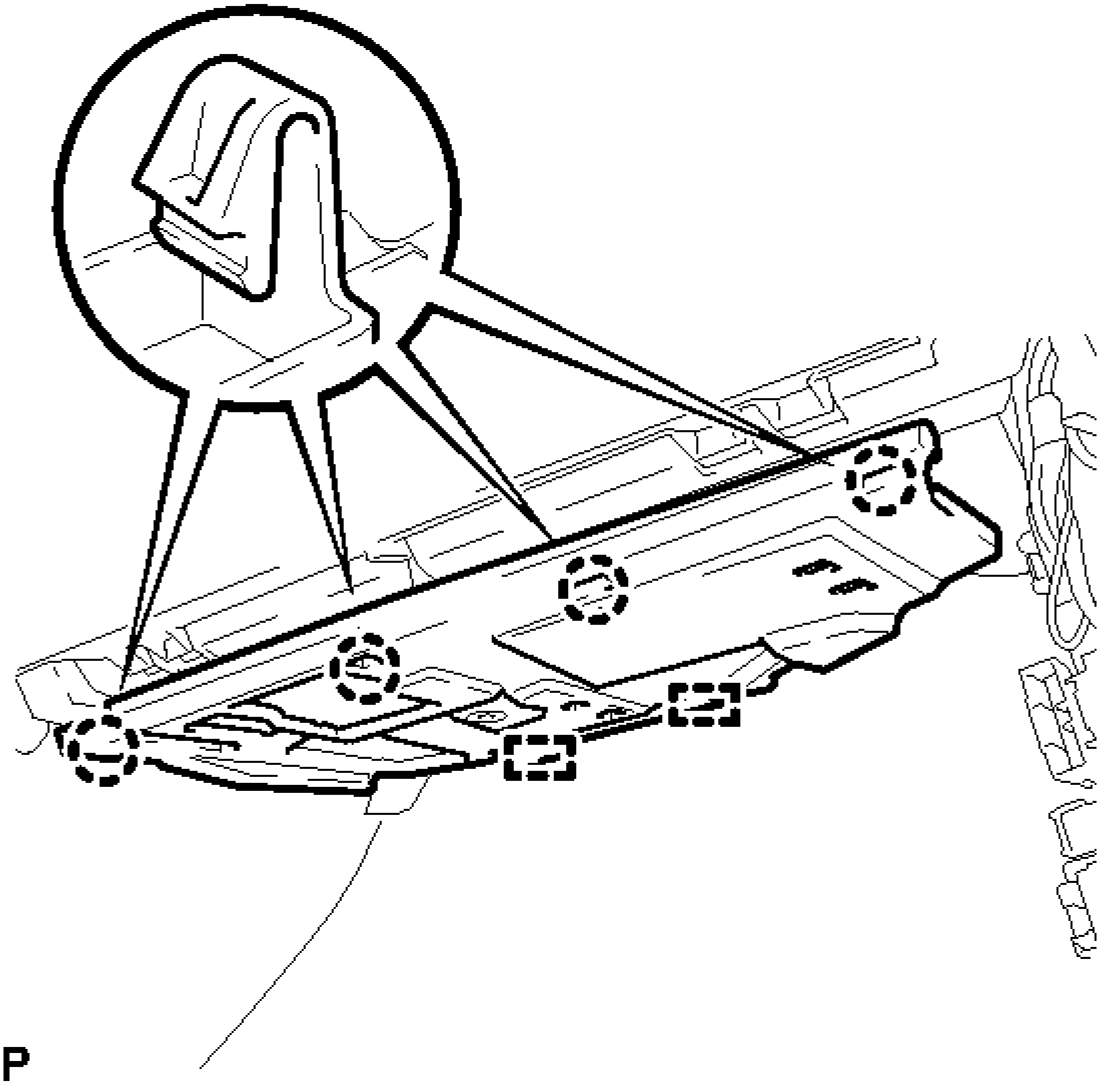

Fig. 39: Identifying No. 2 Instrument Panel Under Cover Sub-Assembly
Courtesy of TOYOTA MOTOR SALES, U.S.A., INC.

b. Disengage the 2 guides to remove the No. 2 instrument panel under cover sub-assembly.

37. **REMOVE LOWER NO. 2 INSTRUMENT PANEL AIRBAG ASSEMBLY** . Refer to **REMOVAL - Step 8** .
38. **REMOVE LOWER INSTRUMENT PANEL SUB-ASSEMBLY**

a. Remove the 2 screws <C> or <D>.

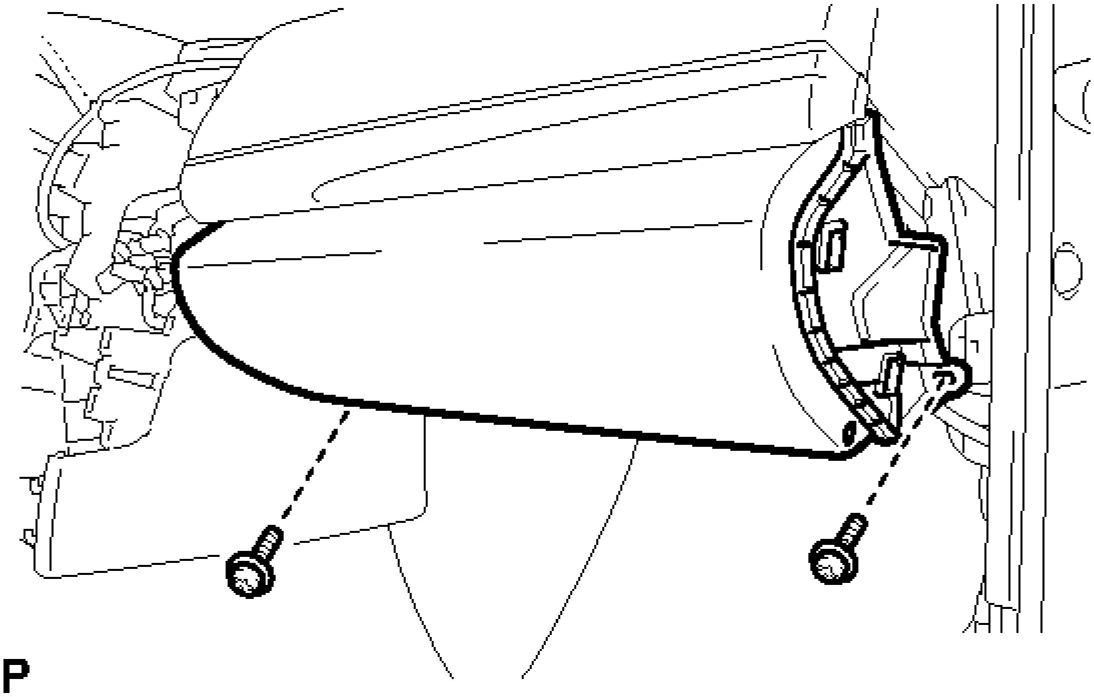

Fig. 40: Locating Lower Instrument Panel Sub-Assembly Lower Fasteners
Courtesy of TOYOTA MOTOR SALES, U.S.A., INC.

b. Open the lower instrument panel door.
c. Remove the 3 screws <C> or <D>.

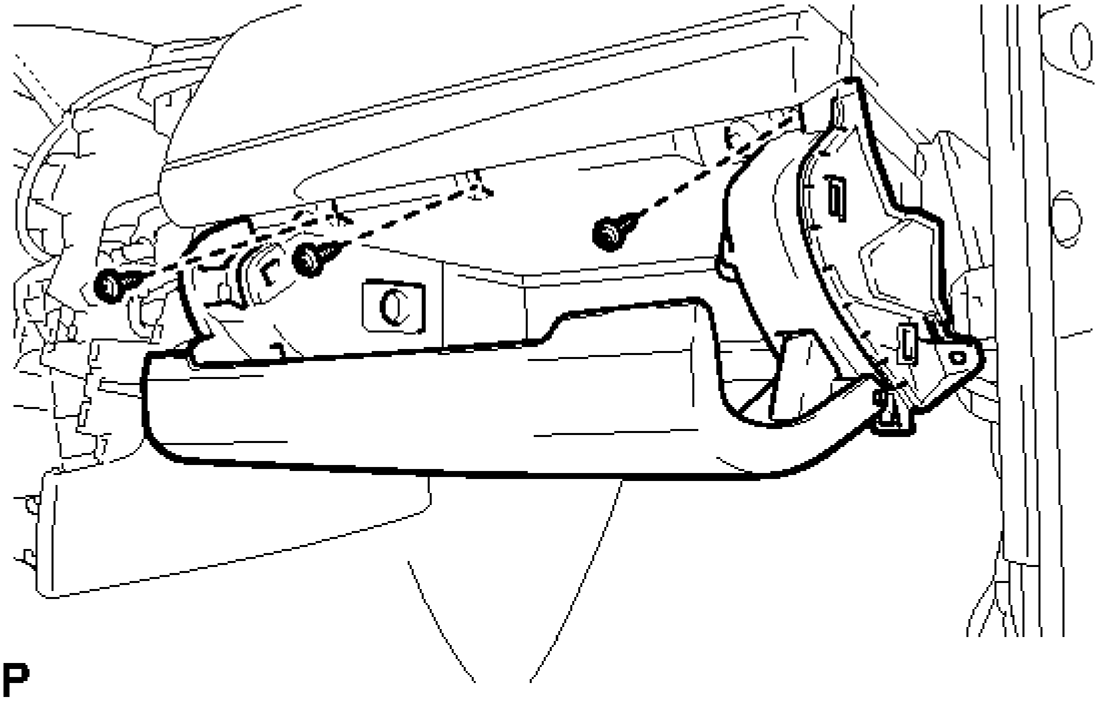

Fig. 41: Locating Lower Instrument Panel Sub-Assembly Upper Fasteners

Courtesy of TOYOTA MOTOR SALES, U.S.A., INC.

d. Disengage the 2 clips and guide.

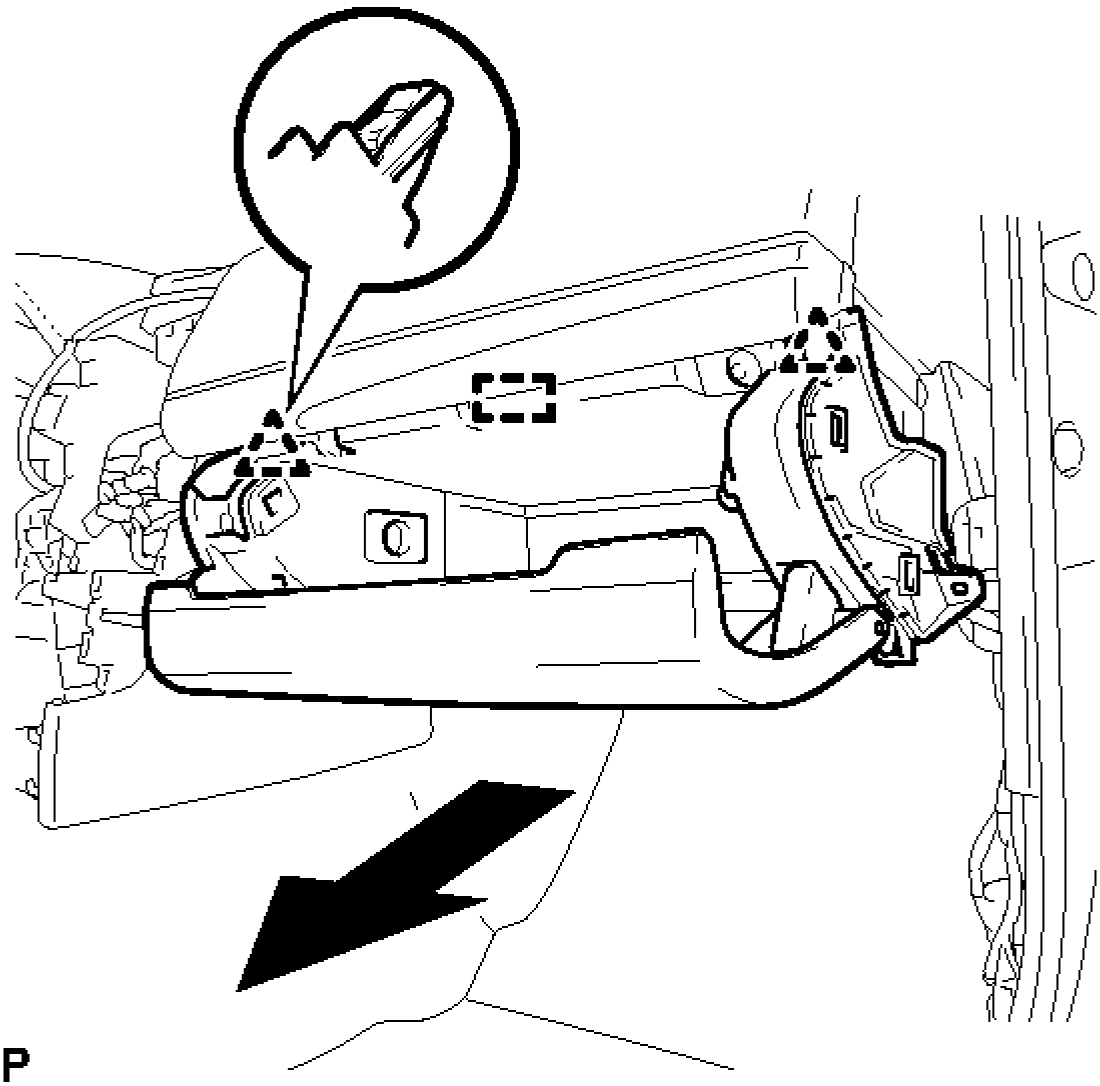

Fig. 42: Removing Lower Instrument Panel Sub-Assembly
Courtesy of TOYOTA MOTOR SALES, U.S.A., INC.

e. Disengage the glove compartment light as shown in the illustration.

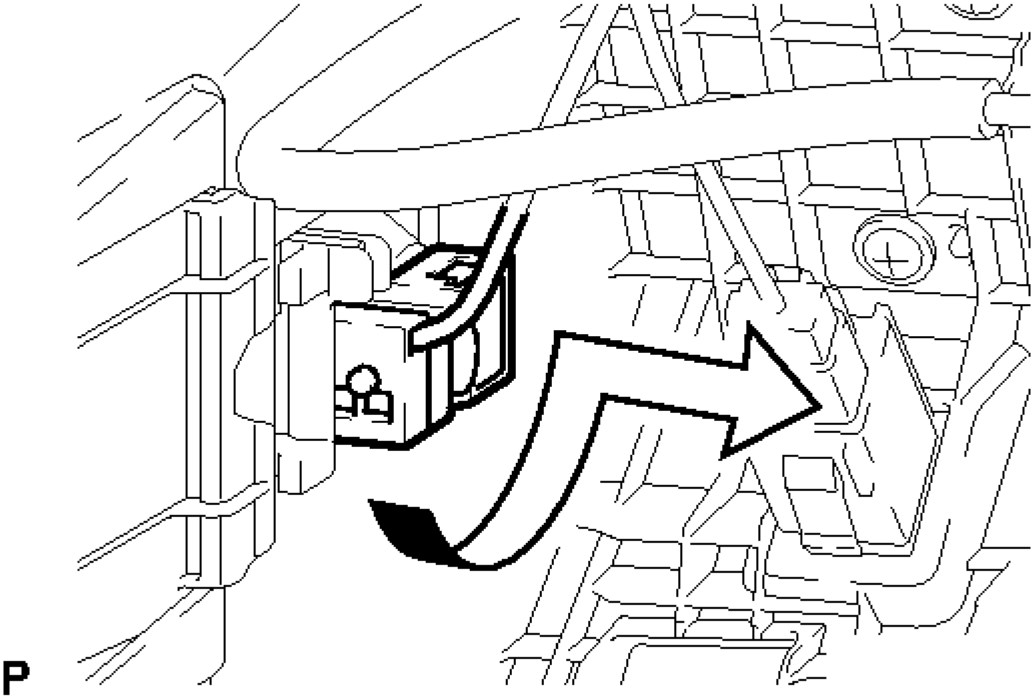

Fig. 43: Removing Glove Compartment Light
Courtesy of TOYOTA MOTOR SALES, U.S.A., INC.

f. Disconnect each connector and remove the lower instrument panel sub-assembly.

39. **REMOVE NO. 2 INSTRUMENT CLUSTER FINISH PANEL GARNISH**

    a. Disengage the 5 clips to remove the No. 2 instrument cluster finish panel garnish as shown in the illustration.

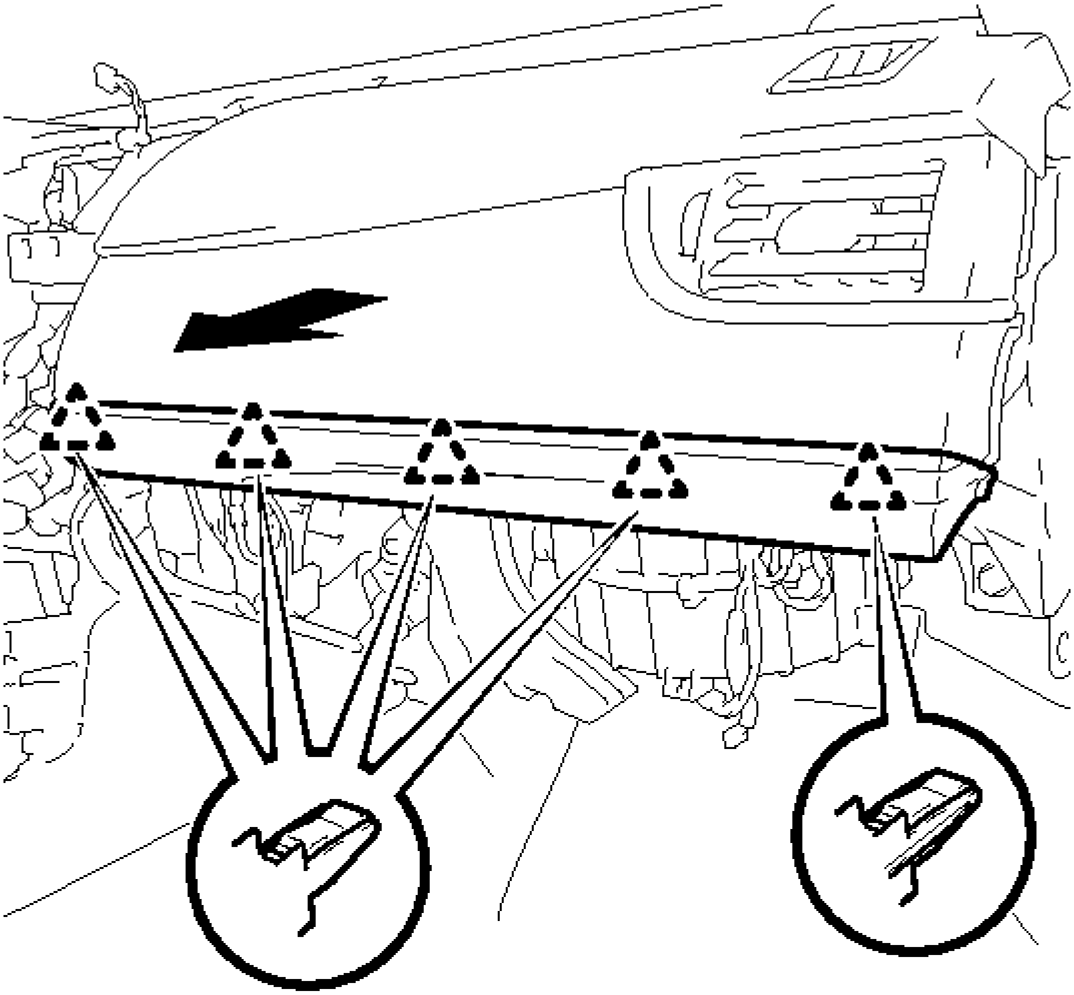

P

Fig. 44: Removing No. 2 Instrument Cluster Finish Panel Garnish
Courtesy of TOYOTA MOTOR SALES, U.S.A., INC.

40. **REMOVE NO. 3 INSTRUMENT PANEL REGISTER ASSEMBLY**
    a. Apply protective tape to the area shown in the illustration.

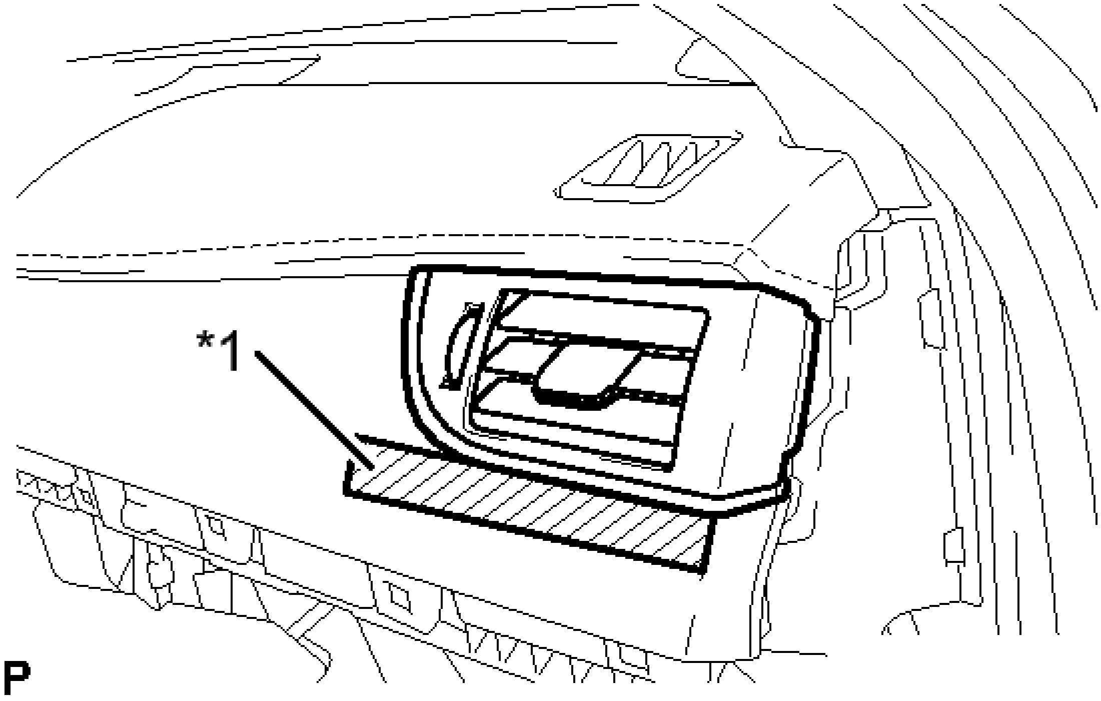

Fig. 45: Identifying Protective Tape Around No. 3 Instrument Panel Register Assembly
Courtesy of TOYOTA MOTOR SALES, U.S.A., INC.

TEXT IN ILLUSTRATION

*1	Protective Tape

b. Disengage the 2 clips as shown in the illustration.

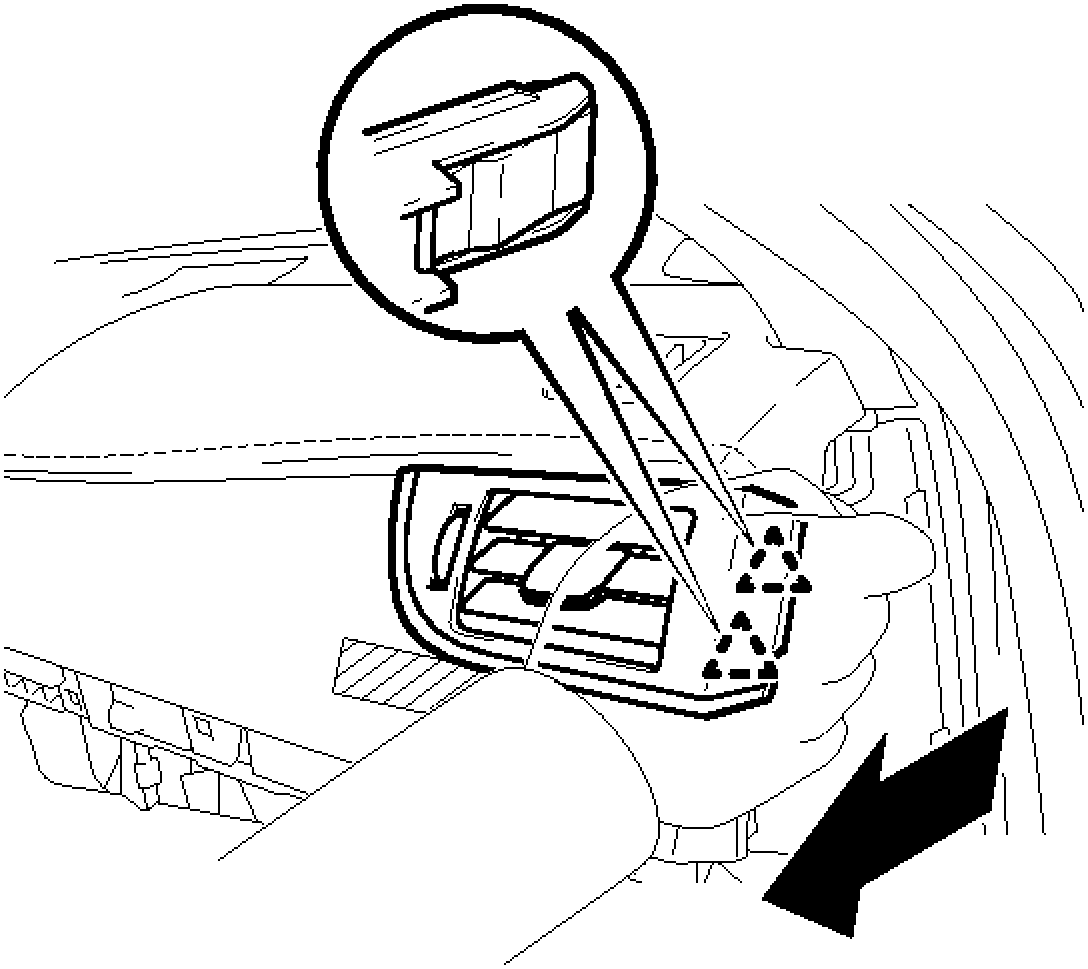

Fig. 46: Removing No. 3 Instrument Panel Register Assembly
Courtesy of TOYOTA MOTOR SALES, U.S.A., INC.

c. Using a moulding remover, disengage the 2 clips to remove the No. 3 instrument panel register assembly.

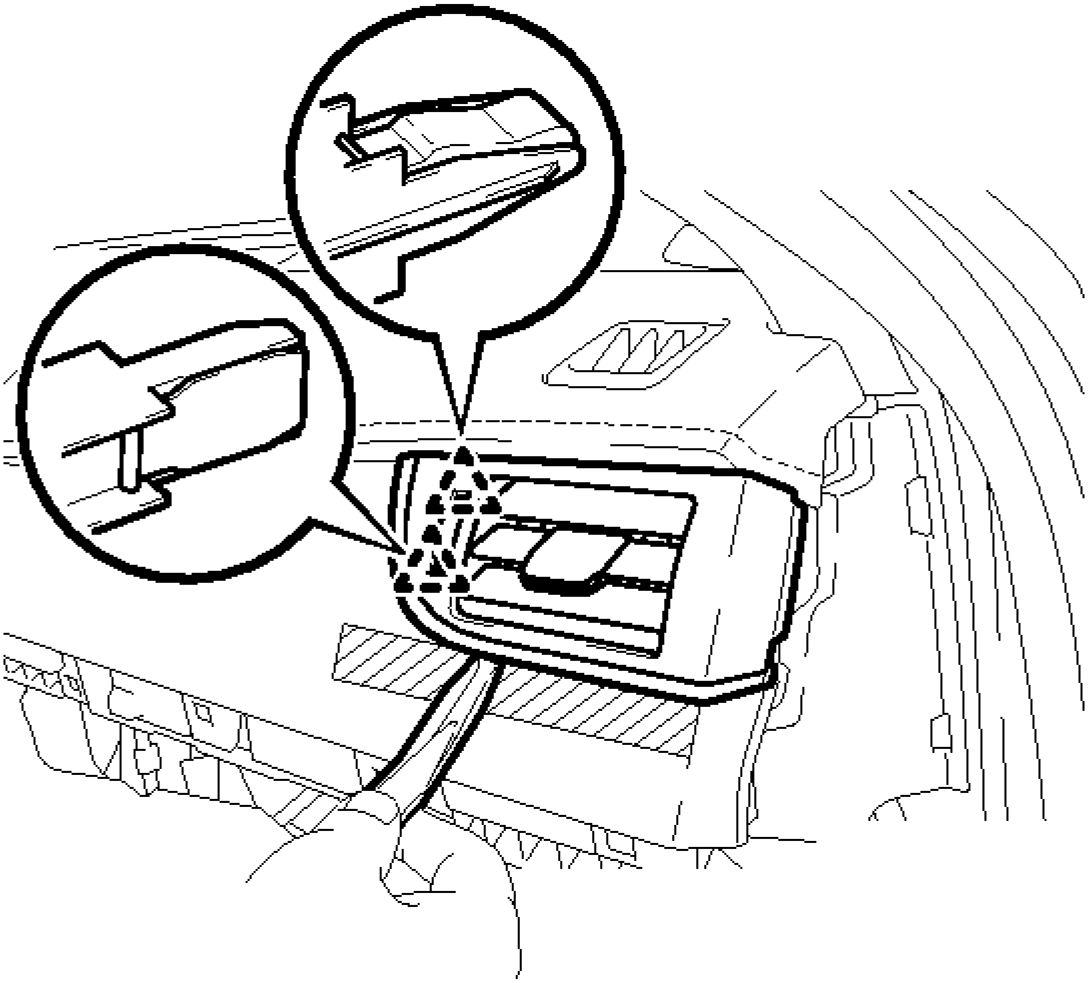

Fig. 47: Removing No. 3 Instrument Panel Register Assembly Clips
Courtesy of TOYOTA MOTOR SALES, U.S.A., INC.

41. **REMOVE FRONT PILLAR GARNISH LH** . See step 6.
42. **REMOVE NO. 1 INSTRUMENT PANEL SPEAKER PANEL SUB-ASSEMBLY**
    a. Apply protective tape to the area shown in the illustration.

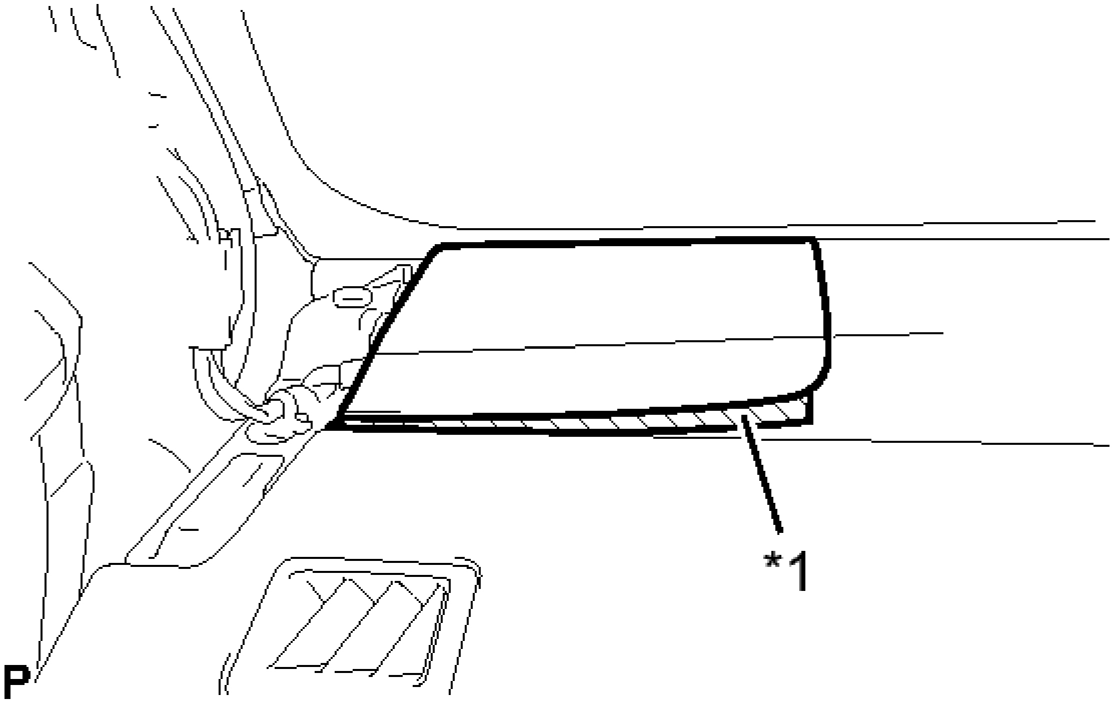

Fig. 48: Identifying Protective Tape Around No. 1 Instrument Panel Speaker Panel Sub-Assembly
Courtesy of TOYOTA MOTOR SALES, U.S.A., INC.

TEXT IN ILLUSTRATION

*1	Protective Tape

b. Using a moulding remover, disengage the 2 clips and 3 claws.

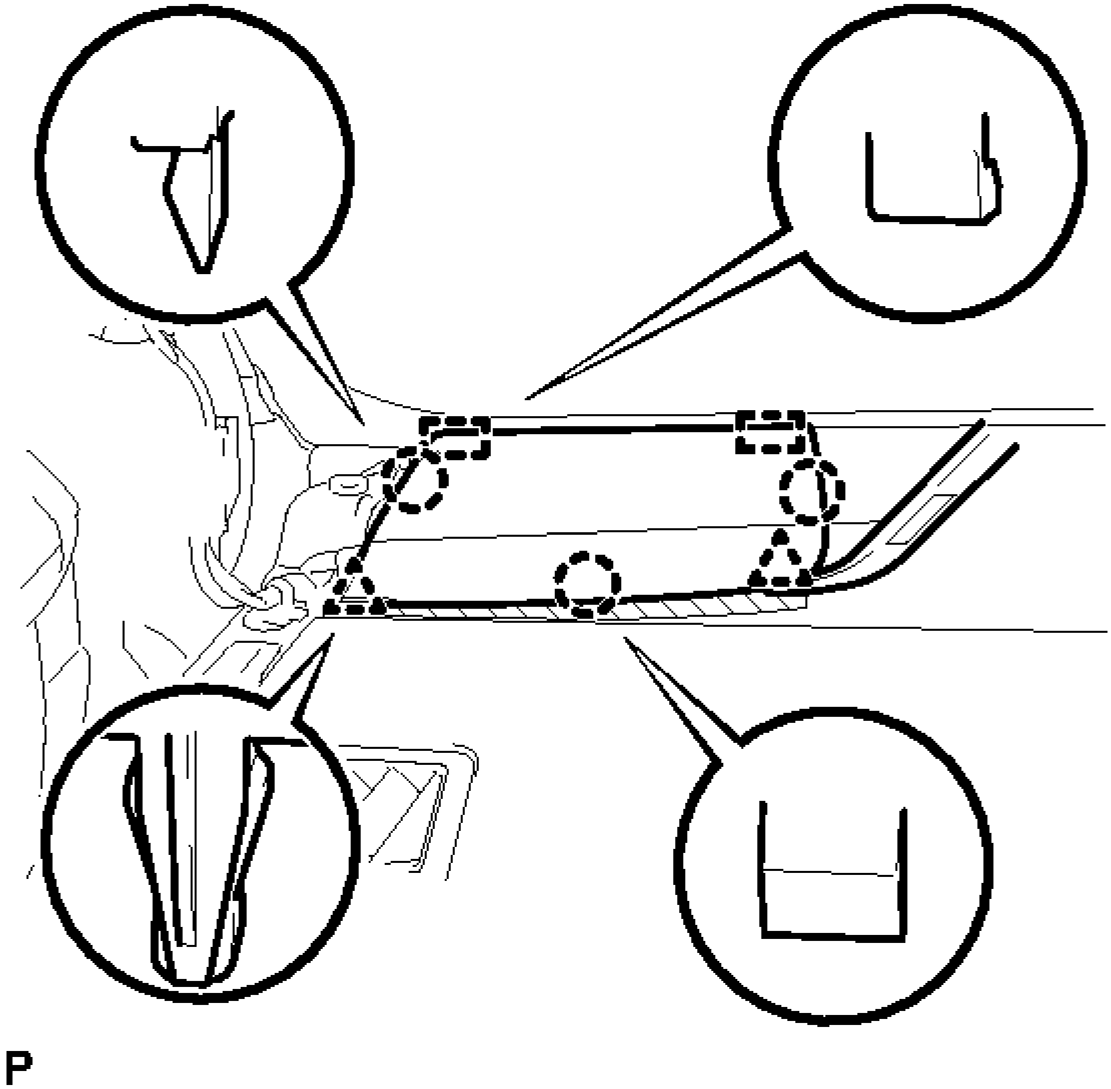

Fig. 49: Identifying No. 1 Instrument Panel Speaker Panel Sub-Assembly
Courtesy of TOYOTA MOTOR SALES, U.S.A., INC.

c. Disengage the 2 guides to remove the No. 1 instrument panel speaker panel sub-assembly.

43. **REMOVE FRONT NO. 2 SPEAKER ASSEMBLY (for LH Side)** . Refer to **REMOVAL - Step 5** .
44. **REMOVE FRONT PILLAR GARNISH RH**

    HINT:

    Use the same procedure as for the LH side. See step 6.

45. **REMOVE NO. 2 INSTRUMENT PANEL SPEAKER PANEL SUB-ASSEMBLY**

    a. Apply protective tape to the area shown in the illustration.

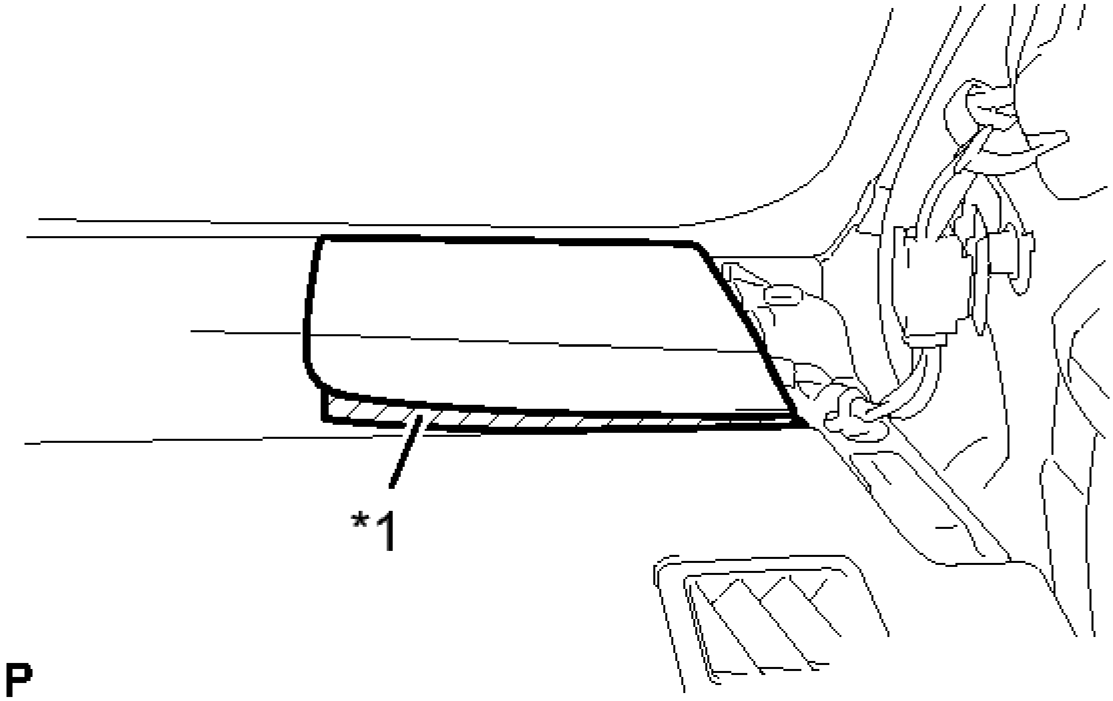

Fig. 50: Identifying Protective Tape Around No. 2 Instrument Panel Speaker Panel Sub-Assembly
Courtesy of TOYOTA MOTOR SALES, U.S.A., INC.

TEXT IN ILLUSTRATION

*1	Protective Tape

b. Using a moulding remover, disengage the 2 clips and 3 claws.

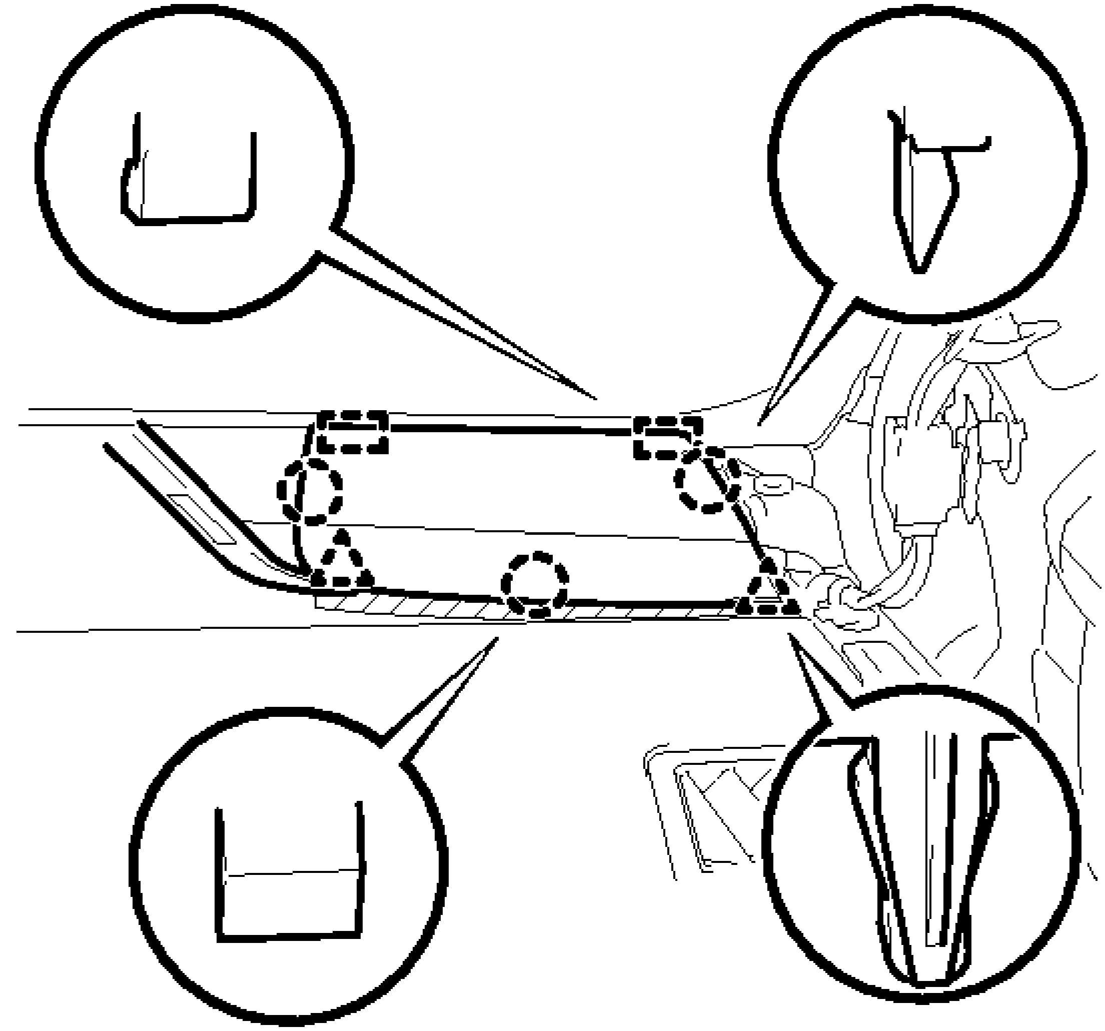

Fig. 51: Identifying No. 2 Instrument Panel Speaker Panel Sub-Assembly
Courtesy of TOYOTA MOTOR SALES, U.S.A., INC.

c. Disengage the 2 guides to remove the No. 2 instrument panel speaker panel sub-assembly.

46. **REMOVE FRONT NO. 2 SPEAKER ASSEMBLY (for RH Side)**

    HINT:

    Use the same procedure as for the LH side. Refer to **REMOVAL - Step 5** .

47. **REMOVE LOWER INSTRUMENT PANEL FINISH PANEL ASSEMBLY**
    a. Disengage the 4 clips to remove the lower instrument panel finish panel assembly.

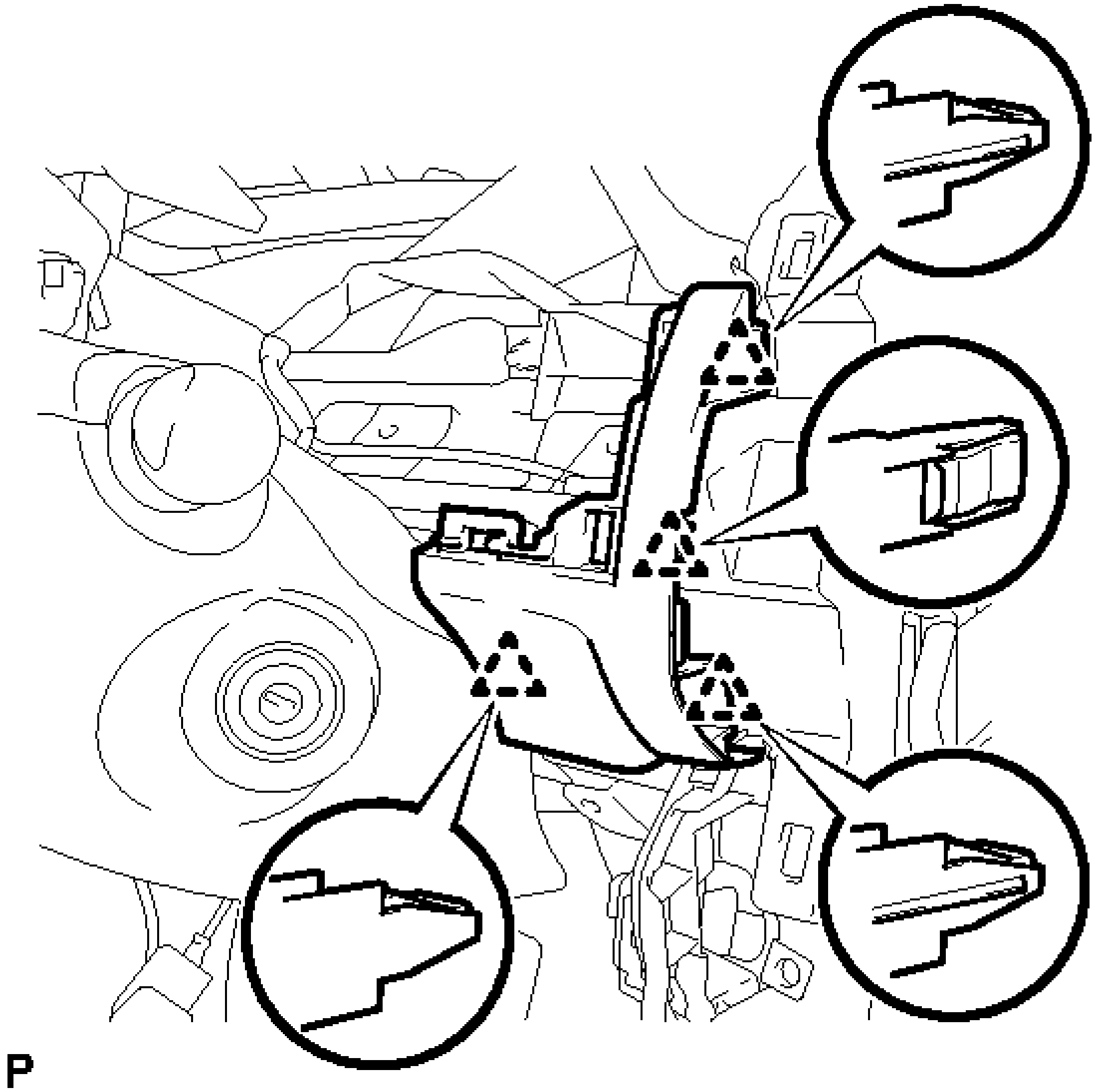

Fig. 52: Identifying Lower Instrument Panel Finish Panel Assembly
Courtesy of TOYOTA MOTOR SALES, U.S.A., INC.

b. w/ Smart Key System:
    1. Disconnect the connector.

48. **REMOVE FRONT NO. 2 CONSOLE BOX INSERT**

    a. Disengage the 2 claws to disconnect the room temperature sensor from the front No. 2 console box insert.

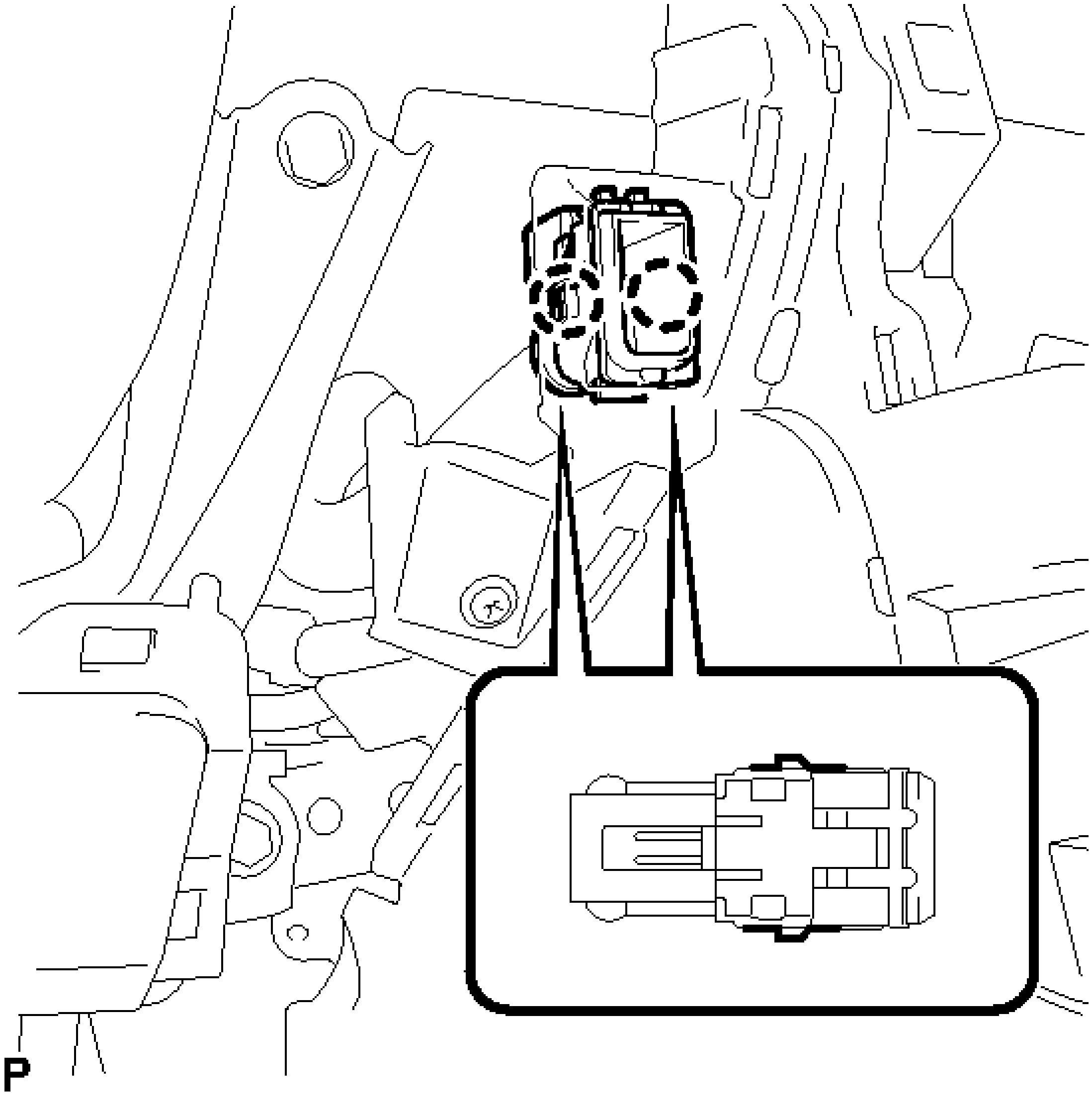

Fig. 53: Locating Room Temperature Sensor Claws
Courtesy of TOYOTA MOTOR SALES, U.S.A., INC.

b. Remove the 2 screws <C> or <D>.

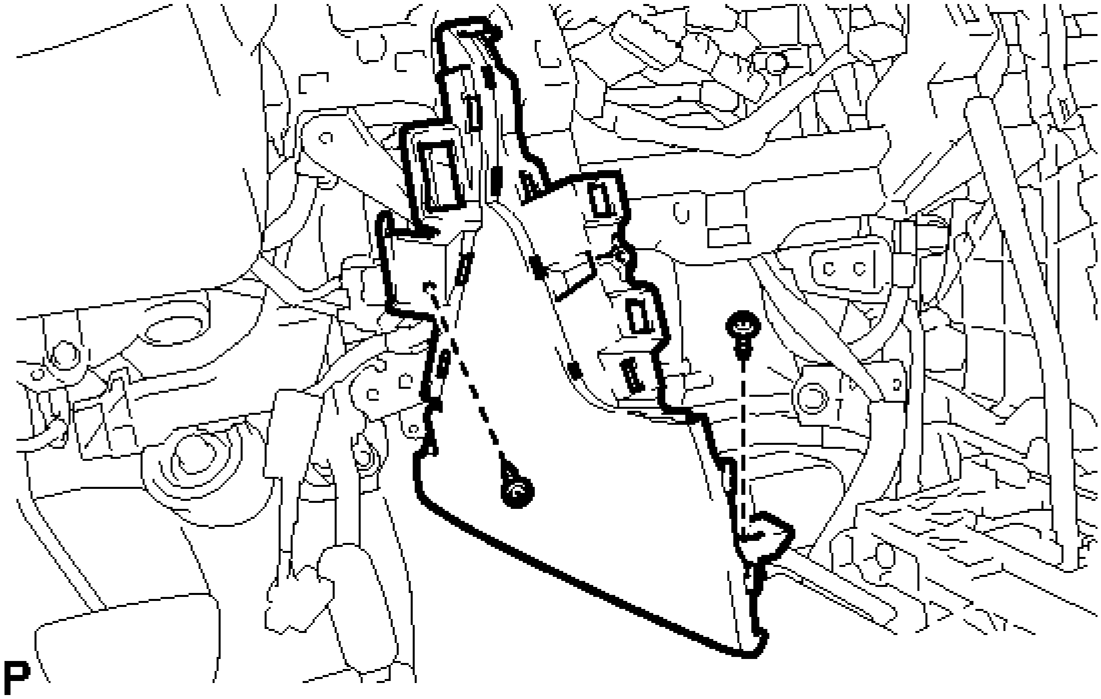

Fig. 54: Identifying Front No. 2 Console Box Insert Fasteners
Courtesy of TOYOTA MOTOR SALES, U.S.A., INC.

c. Disengage the clip and 3 guides to remove the front No. 2 console box insert as shown in the illustration.

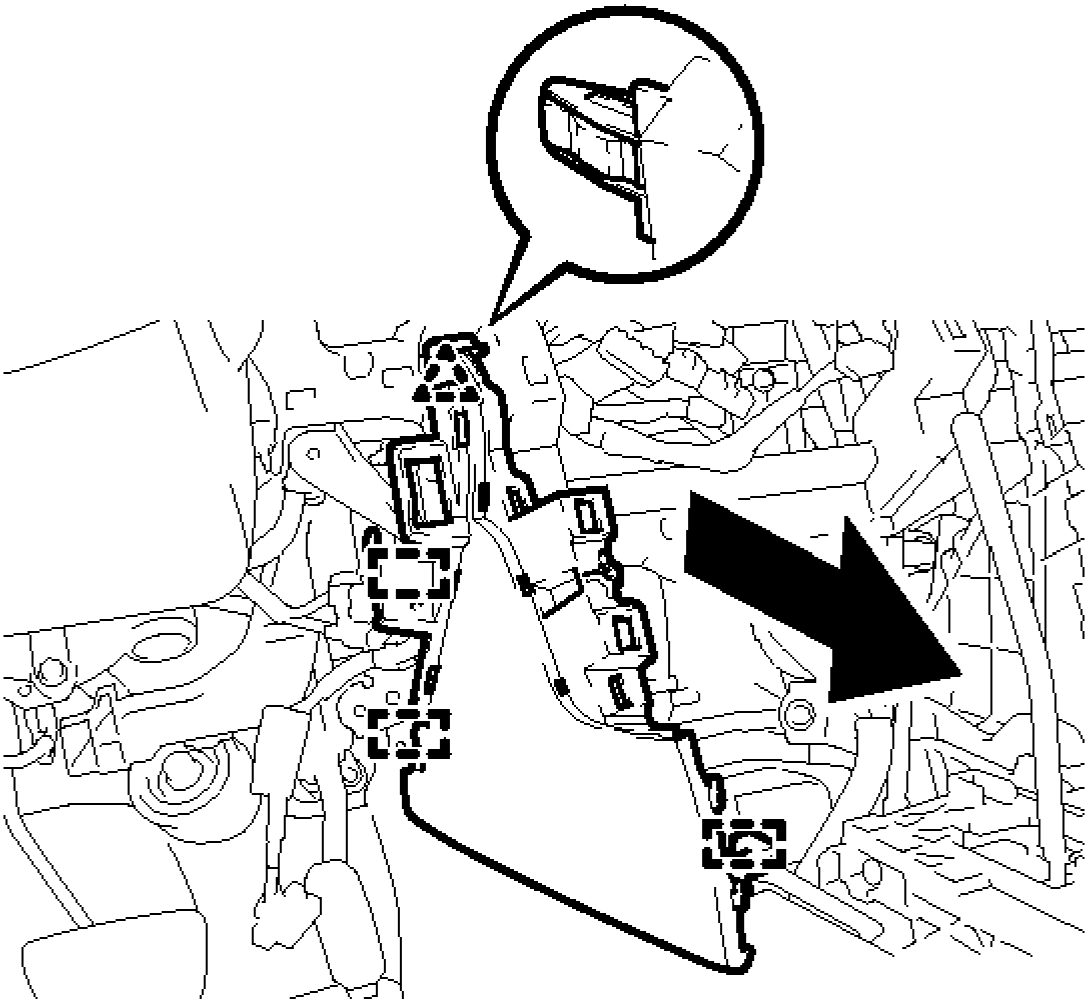

Fig. 55: Removing Front No. 2 Console Box Insert
Courtesy of TOYOTA MOTOR SALES, U.S.A., INC.

49. **REMOVE CONSOLE BOX INSERT**
    a. Remove the 2 screws <C> or <D>.

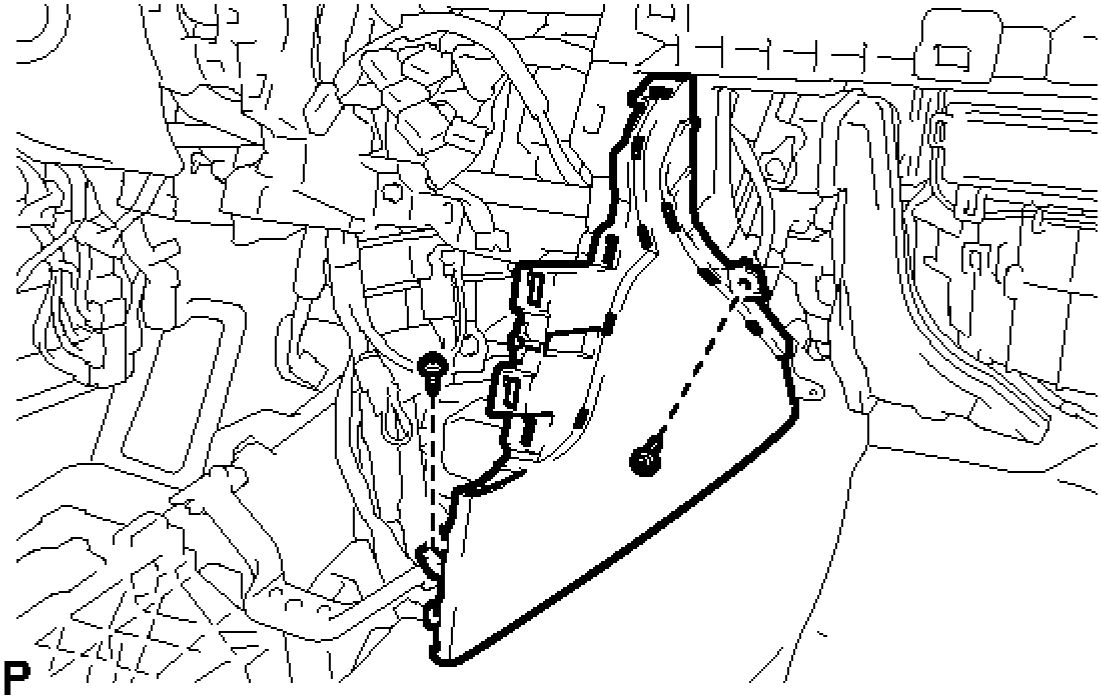

Fig. 56: Identifying Console Box Insert Fasteners
Courtesy of TOYOTA MOTOR SALES, U.S.A., INC.

b. Disengage the clip and 3 guides to remove the console box insert as shown in the illustration.

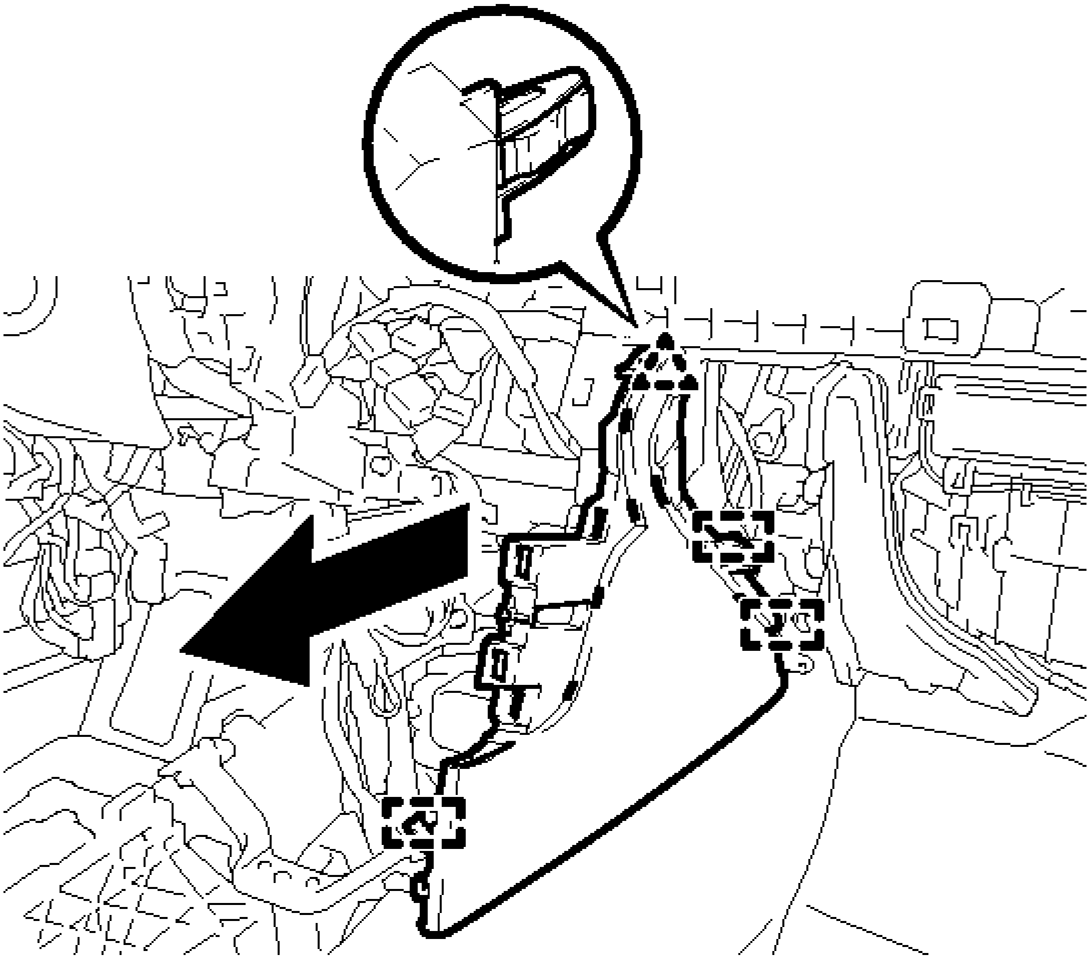

P

Fig. 57: Removing Console Box Insert
Courtesy of TOYOTA MOTOR SALES, U.S.A., INC.

50. **REMOVE NO. 1 INSTRUMENT PANEL GARNISH SUB-ASSEMBLY**
    a. Disengage the 10 clips to remove the No. 1 instrument panel garnish sub-assembly as shown in the illustration.

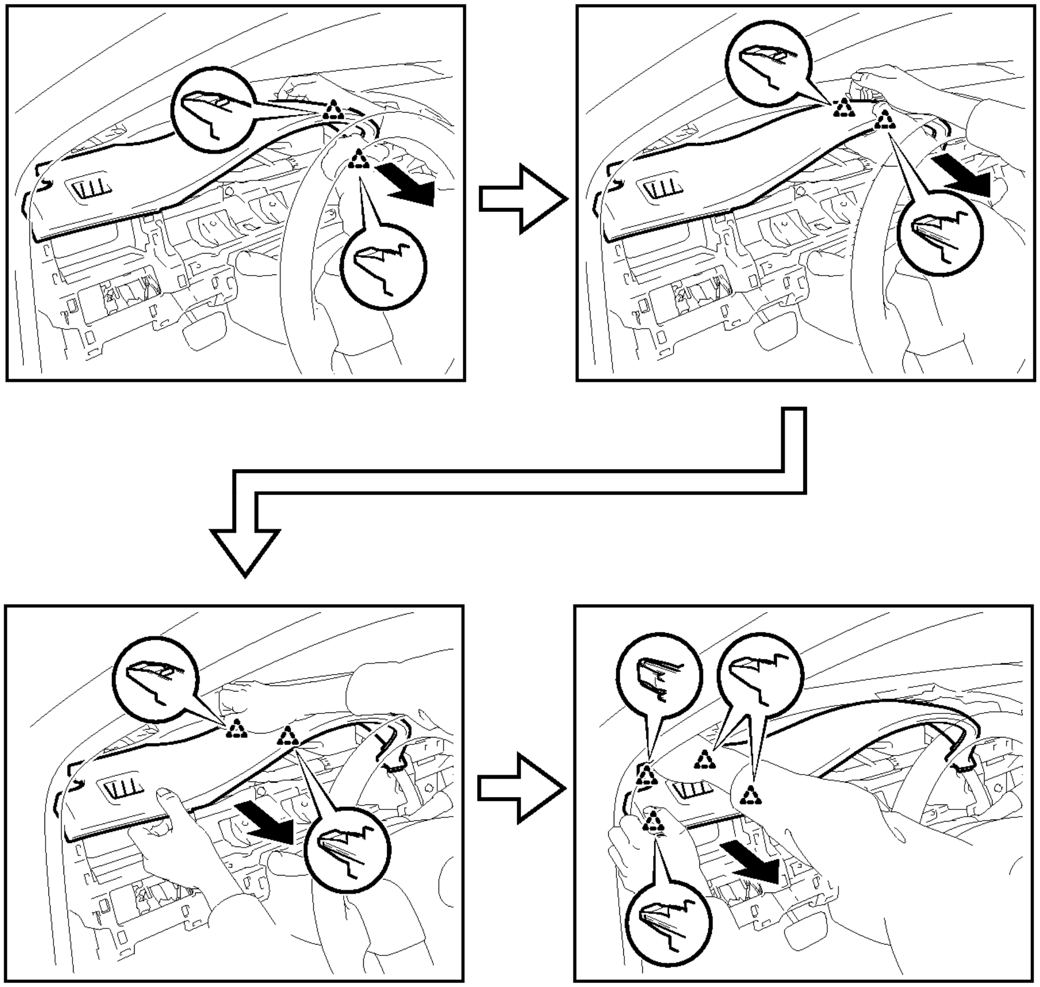

Fig. 58: Removing No. 1 Instrument Panel Garnish Sub-Assembly
Courtesy of TOYOTA MOTOR SALES, U.S.A., INC.

51. **DISCONNECT NO. 2 INSTRUMENT PANEL WIRE** . Refer to **REMOVAL - Step 3** .
52. **REMOVE INSTRUMENT PANEL SAFETY PAD ASSEMBLY**
    a. Disconnect each connector.

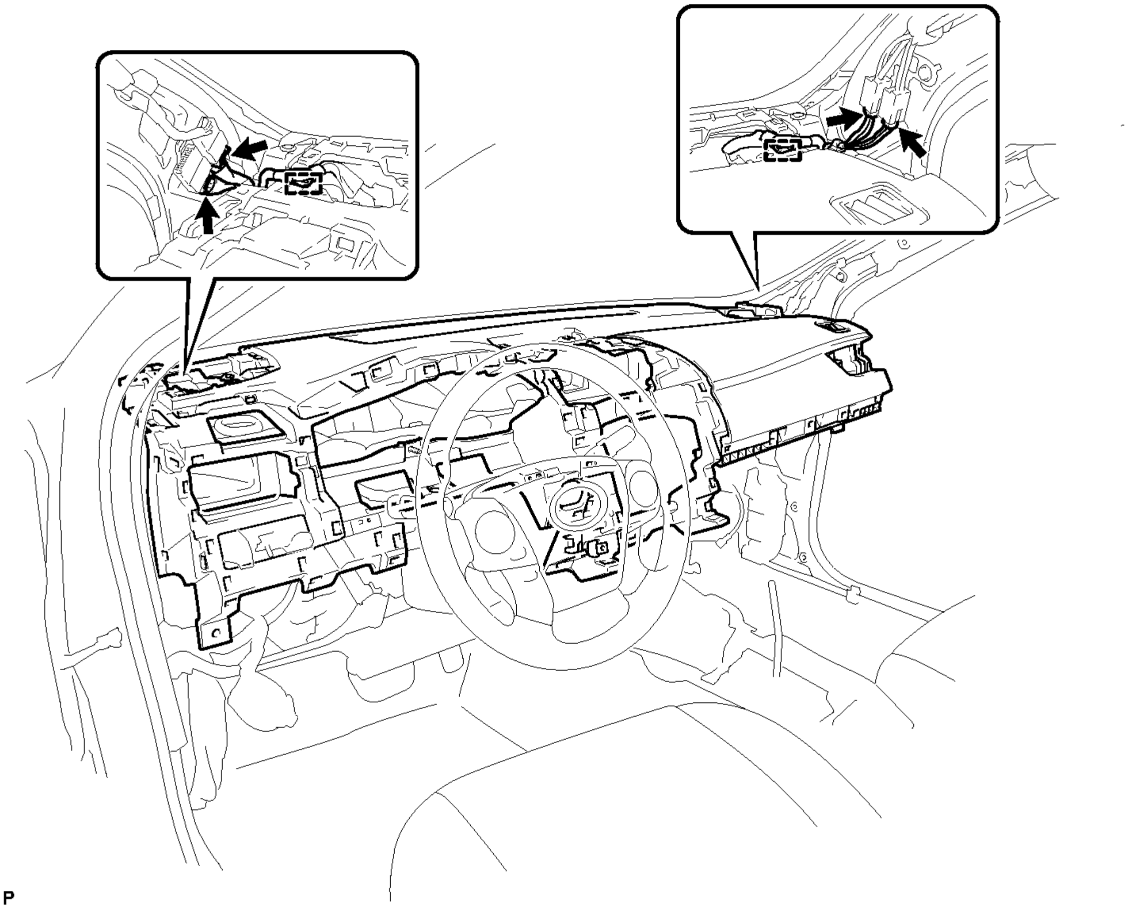

Fig. 59: Locating Instrument Panel Safety Pad Assembly Connectors
Courtesy of TOYOTA MOTOR SALES, U.S.A., INC.

b. Disengage each clamp.
c. Remove the 2 passenger airbag bolts <A>.

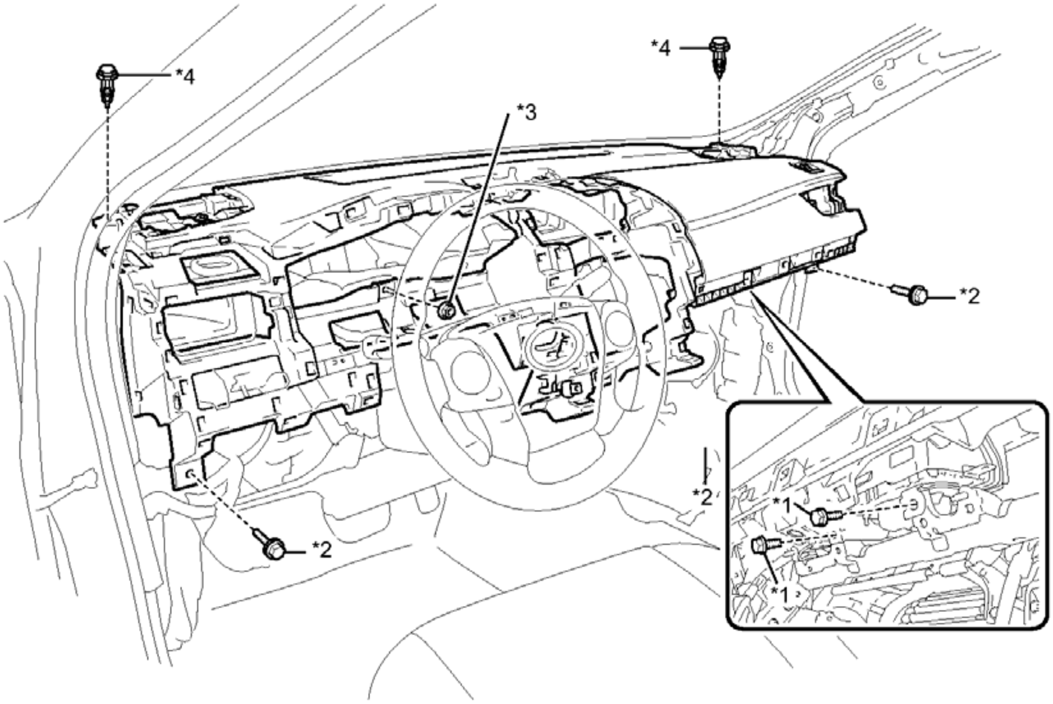

Fig. 60: Locating Instrument Panel Safety Pad Assembly Fasteners
Courtesy of TOYOTA MOTOR SALES, U.S.A., INC.

TEXT IN ILLUSTRATION

*1	Passenger Airbag Bolt <A>	*2	Bolt <B>
*3	Nut <F> or <G>	*4	Clip

d. Remove the 3 bolts <B> and nut <F> or <G>.
e. Remove the 2 clips.
f. Disengage the 5 guides and remove the instrument panel safety pad assembly as shown in the illustration.

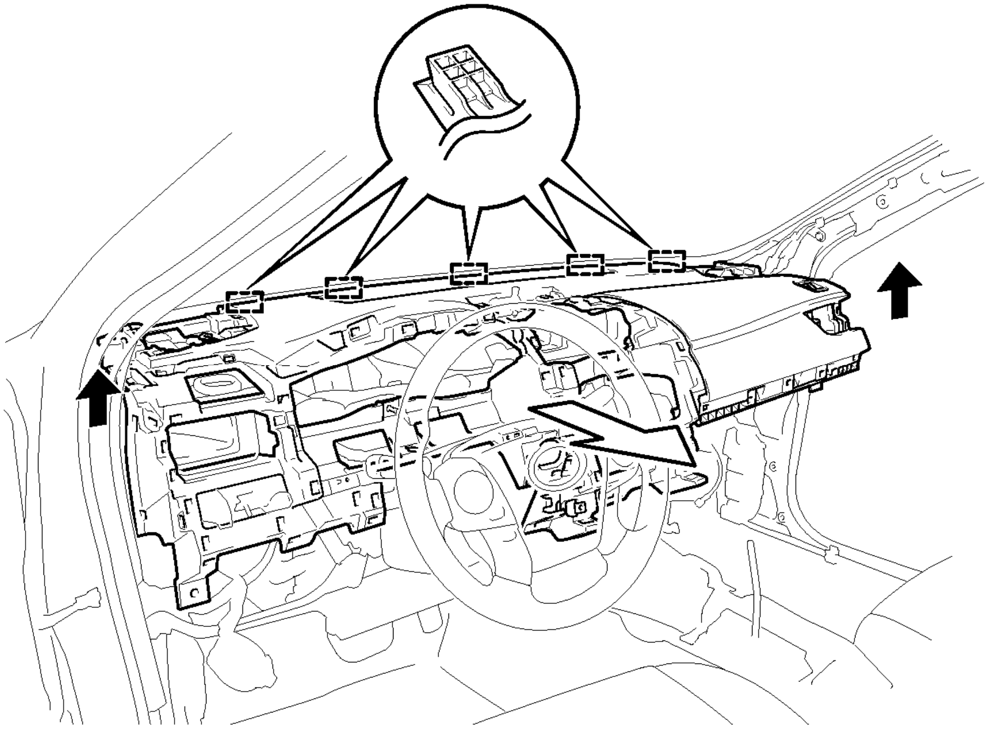

P

Fig. 61: Removing Instrument Panel Safety Pad Assembly
Courtesy of TOYOTA MOTOR SALES, U.S.A., INC.

NOTE:

- **Do not damage the instrument panel safety pad assembly.**
- **Do not allow the wire harnesses to interfere with the surrounding parts.**

DISASSEMBLY

DISASSEMBLY

1. **REMOVE NO. 1 INSTRUMENT PANEL PIN**
    a. Remove the 4 screws <C> or <D> and 4 No. 1 instrument panel pins.

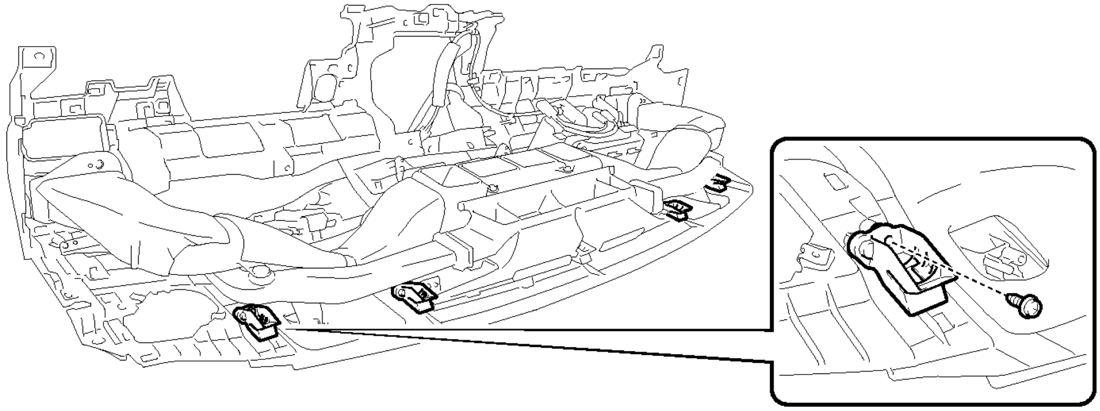

Fig. 62: Locating No. 1 Instrument Panel Pin Fasteners
Courtesy of TOYOTA MOTOR SALES, U.S.A., INC.

2. **REMOVE INSTRUMENT PANEL PASSENGER AIRBAG ASSEMBLY** . Refer to **REMOVAL - Step 5** .
3. **REMOVE NO. 1 HEATER TO REGISTER DUCT**
    a. Remove the clip.

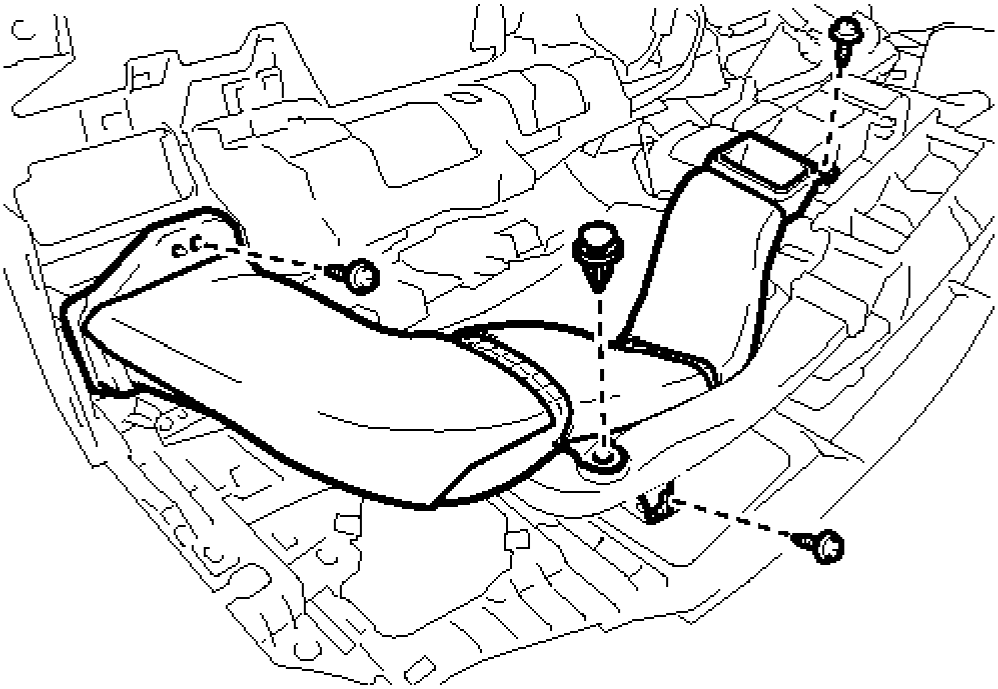

Fig. 63: Locating No. 1 Heater To Register Duct Fasteners
Courtesy of TOYOTA MOTOR SALES, U.S.A., INC.

    b. Remove the 3 screws <C> or <D> and No. 1 heater to register duct.
4. **REMOVE NO. 1 SIDE DEFROSTER NOZZLE DUCT**
    a. Remove the screw <C> or <D>.

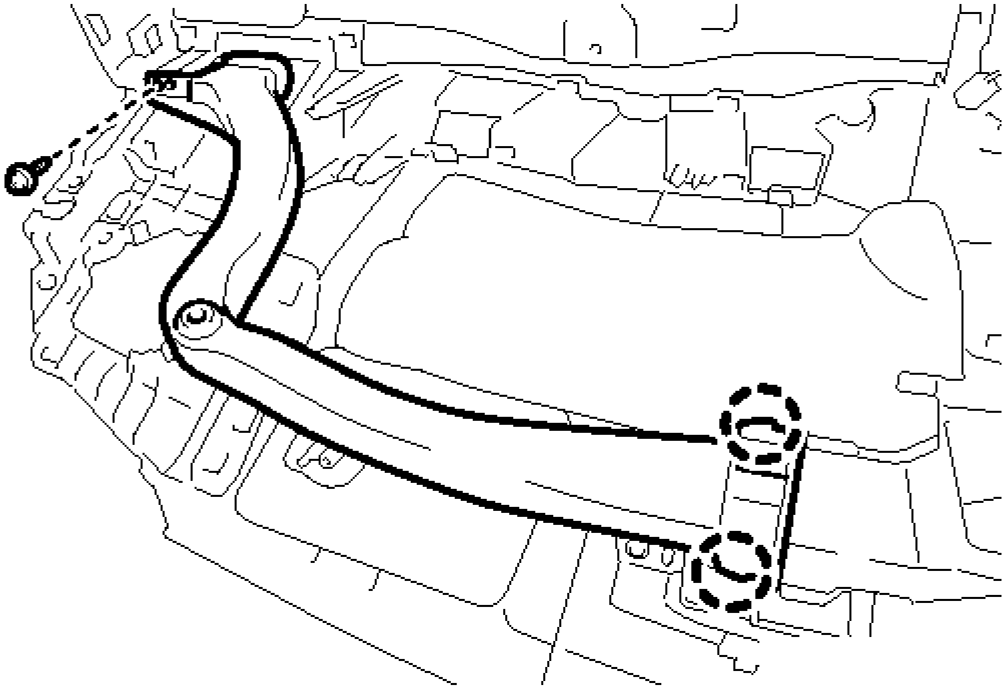

Fig. 64: Locating No. 1 Side Defroster Nozzle Duct Fasteners
Courtesy of TOYOTA MOTOR SALES, U.S.A., INC.

b. Disengage the 2 claws to remove the No. 1 side defroster nozzle duct.

5. **REMOVE NO. 3 HEATER TO REGISTER DUCT**
   a. Remove the clip.

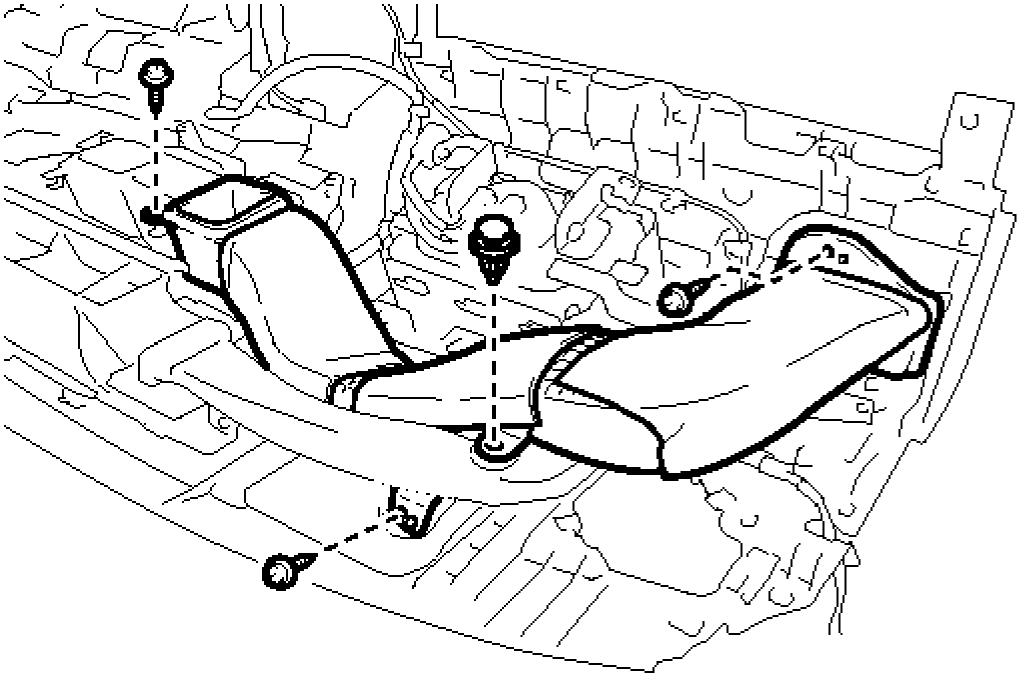

Fig. 65: Locating No. 3 Heater To Register Duct Fasteners
Courtesy of TOYOTA MOTOR SALES, U.S.A., INC.

b. Remove the 3 screws <C> or <D> and No. 3 heater to register duct.

6. **REMOVE NO. 2 SIDE DEFROSTER NOZZLE DUCT**
   a. Remove the screw <C> or <D>.

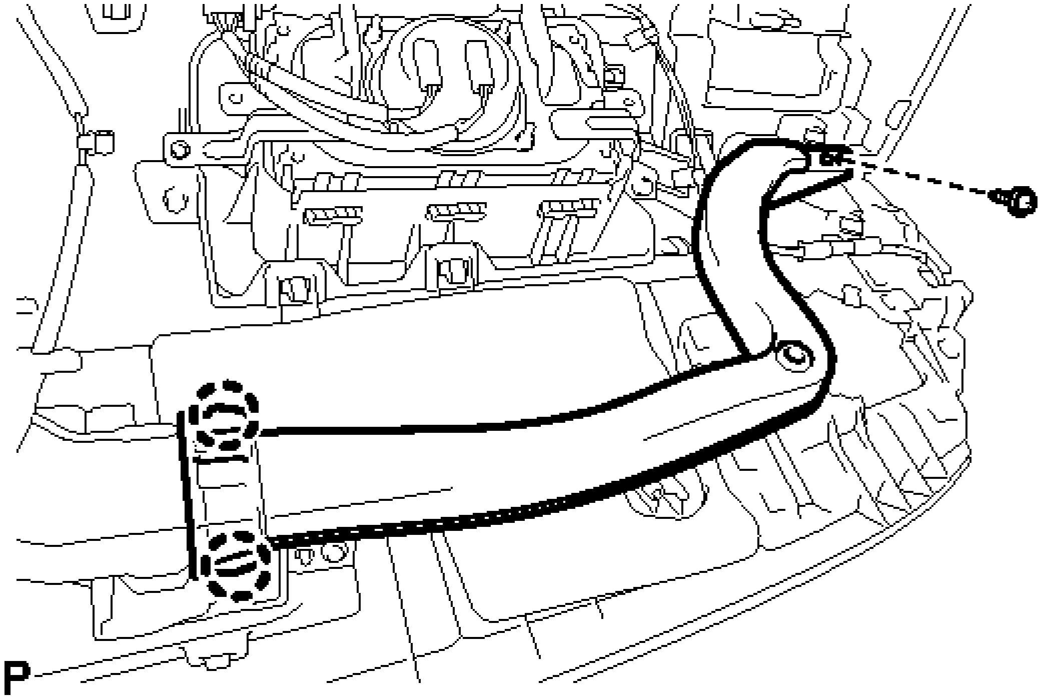

Fig. 66: Locating No. 2 Side Defroster Nozzle Duct Fasteners
Courtesy of TOYOTA MOTOR SALES, U.S.A., INC.

   b. Disengage the 2 claws to remove the No. 2 side defroster nozzle duct.

7. **REMOVE ANTENNA CORD SUB-ASSEMBLY** . Refer to **REMOVAL - Step 4** .
8. **REMOVE DEFROSTER NOZZLE ASSEMBLY**
   a. Remove the 3 screws <C> or <D>.

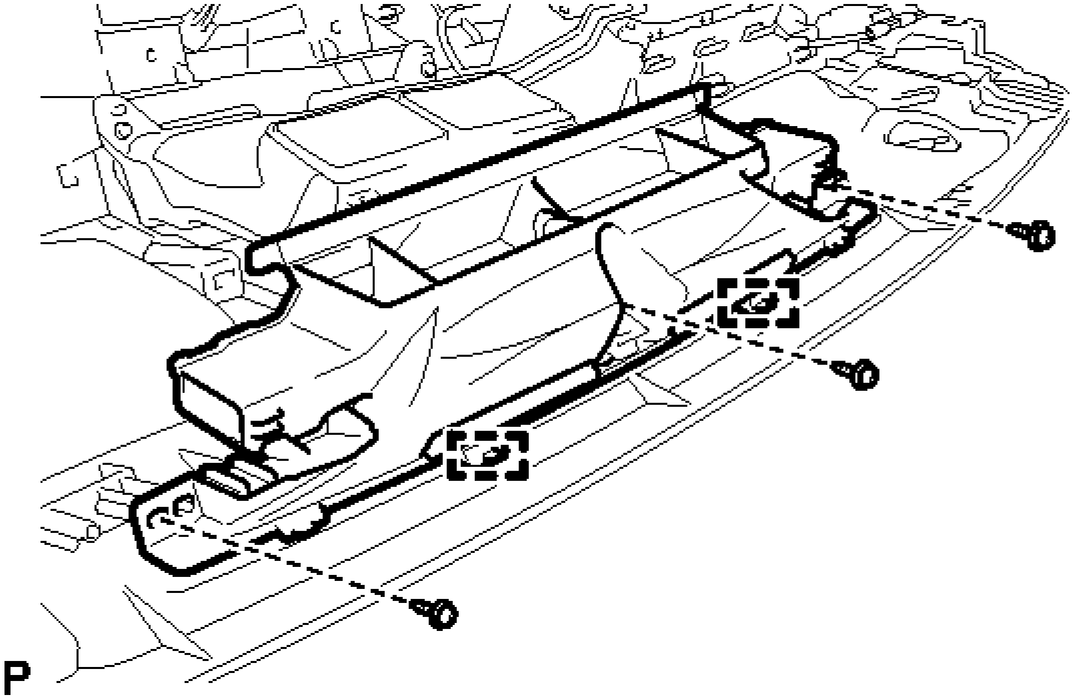

Fig. 67: Locating Defroster Nozzle Assembly Fasteners
Courtesy of TOYOTA MOTOR SALES, U.S.A., INC.

   b. Disengage the 2 guides to remove the defroster nozzle assembly.

9. **REMOVE NAVIGATION ANTENNA ASSEMBLY (w/ Navigation System)** . Refer to **REMOVAL - Step 7** .
10. **REMOVE NO. 2 HEATER TO REGISTER DUCT**
    a. Remove the 2 screws <C> or <D> and No. 2 heater to register duct.

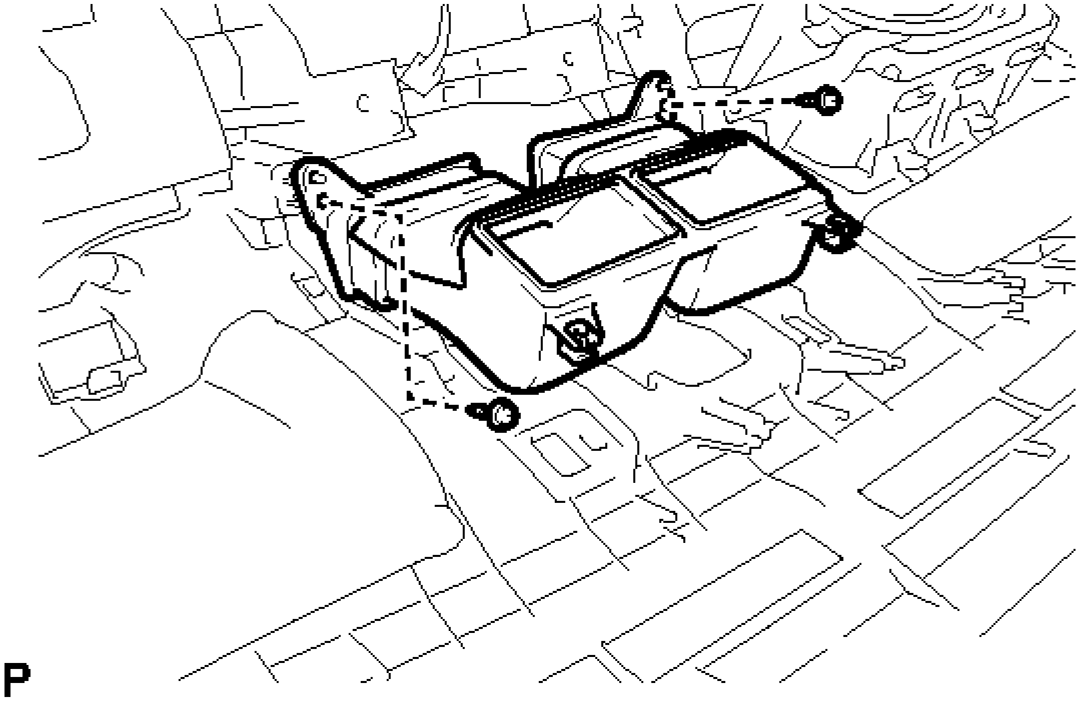

Fig. 68: Locating No. 2 Heater To Register Duct Fasteners
Courtesy of TOYOTA MOTOR SALES, U.S.A., INC.

11. REMOVE NO. 2 INSTRUMENT PANEL GARNISH SUB-ASSEMBLY

a. Remove the 2 screws <C> or <D>.

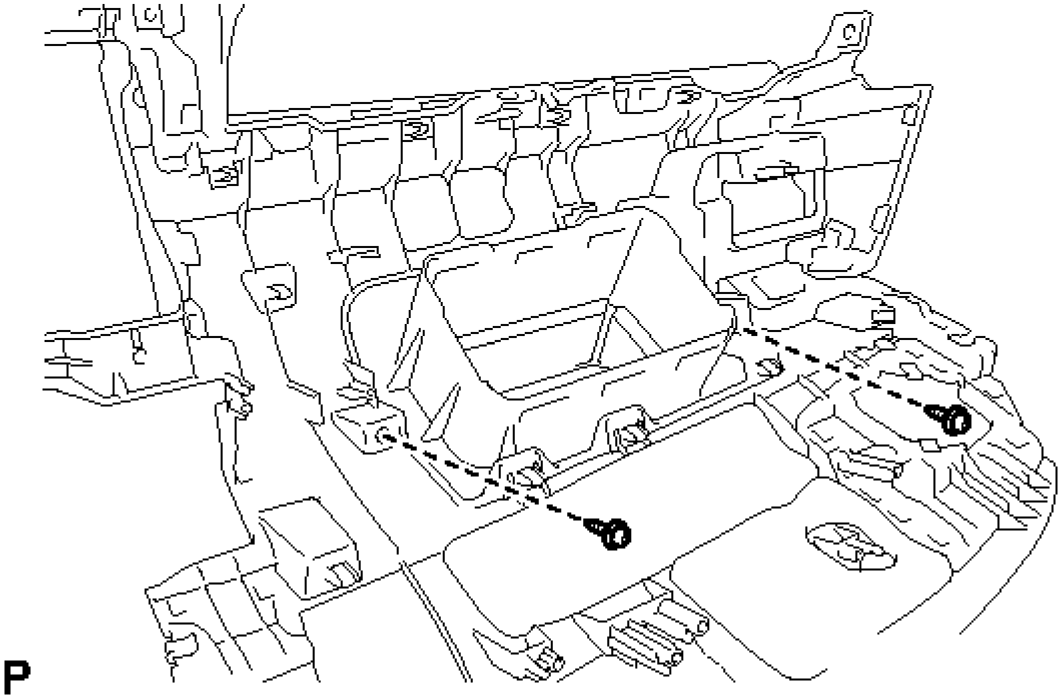

Fig. 69: Locating No. 2 Instrument Panel Garnish Sub-Assembly Fasteners

Courtesy of TOYOTA MOTOR SALES, U.S.A., INC.

b. Apply protective tape to the areas shown in the illustration.

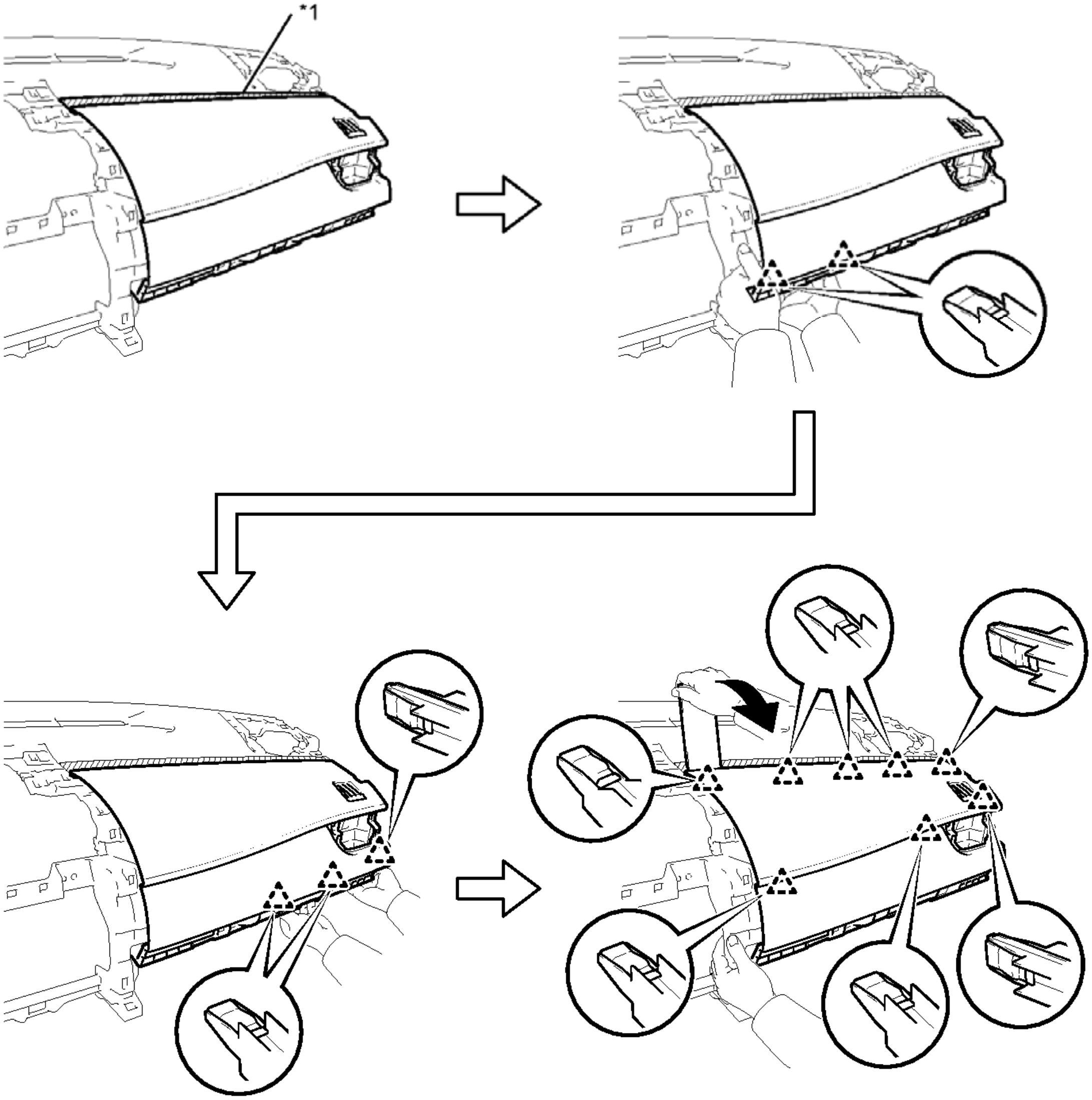

P

Fig. 70: Identifying Protective Tape Around No. 2 Instrument Panel Garnish Sub-Assembly
Courtesy of TOYOTA MOTOR SALES, U.S.A., INC.

TEXT IN ILLUSTRATION

*1	Protective Tape	-	-

c. Disengage the 5 clips as shown in the illustration.

d. Using a moulding remover, disengage the 8 clips to remove the No. 2 instrument panel garnish sub-assembly as shown in the illustration.

REASSEMBLY

REASSEMBLY

1. **INSTALL NO. 2 INSTRUMENT PANEL GARNISH SUB-ASSEMBLY**
   a. Engage the 13 clips.

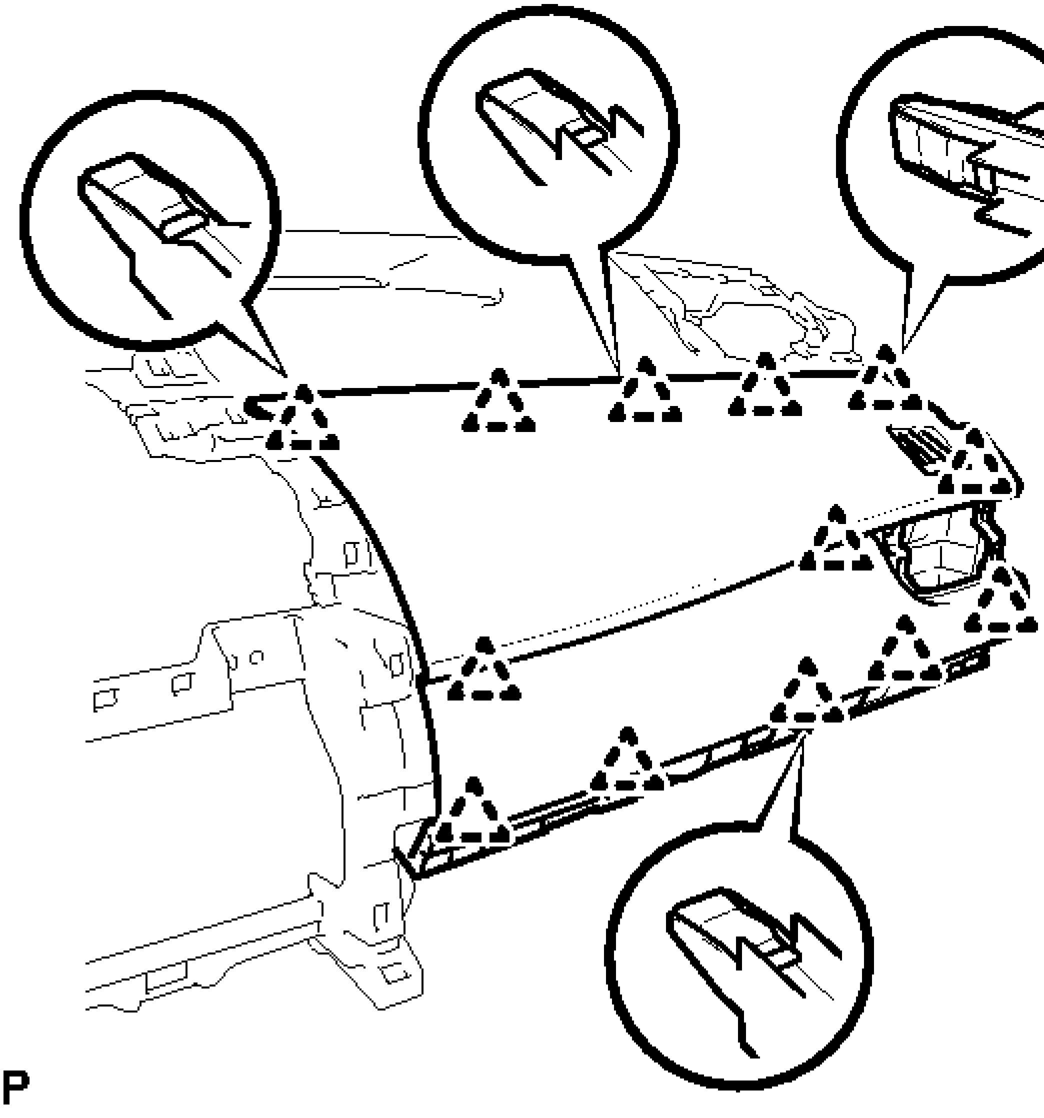

Fig. 71: Identifying No. 2 Instrument Panel Garnish Sub-Assembly
Courtesy of TOYOTA MOTOR SALES, U.S.A., INC.

b. Install the No. 2 instrument panel garnish sub-assembly with the 2 screws <C> or <D>.

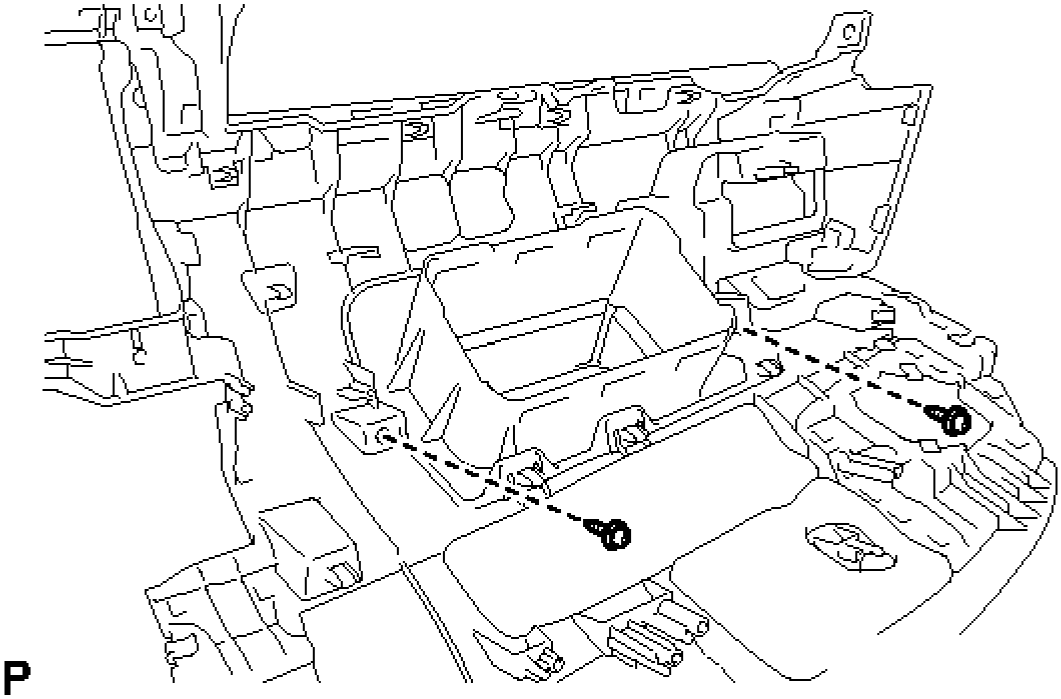

Fig. 72: Locating No. 2 Instrument Panel Garnish Sub-Assembly Fasteners
Courtesy of TOYOTA MOTOR SALES, U.S.A., INC.

2. **INSTALL NO. 2 HEATER TO REGISTER DUCT**
   a. Install the No. 2 heater to register duct with the 2 screws <C> or <D>.

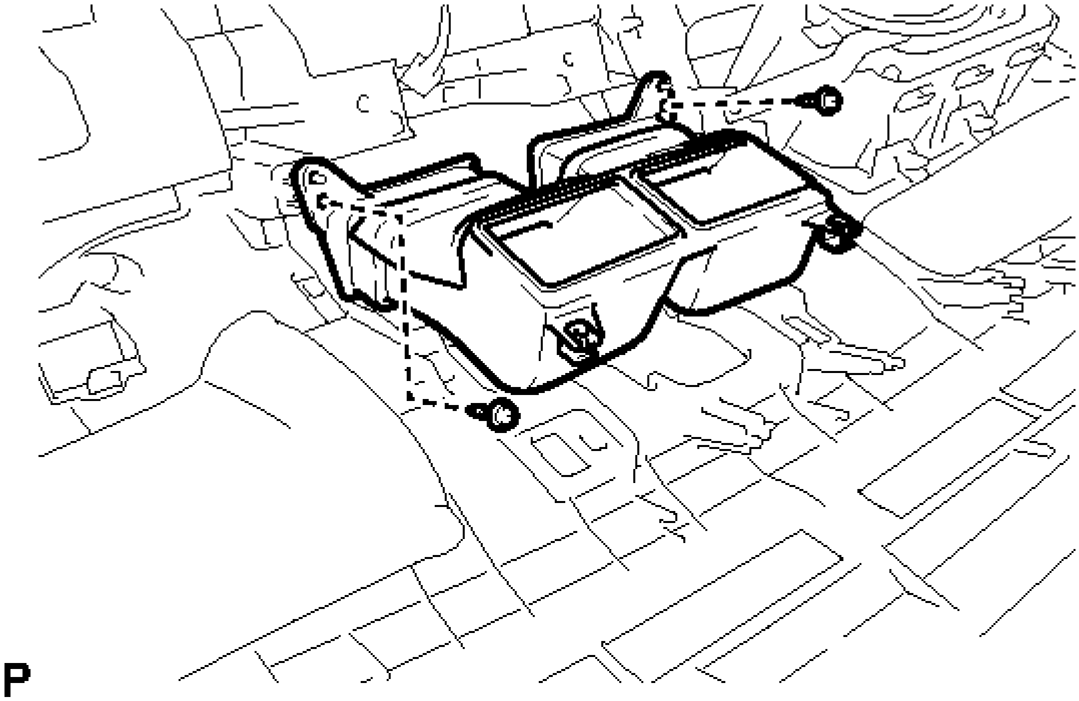

Fig. 73: Locating No. 2 Heater To Register Duct Fasteners

Courtesy of TOYOTA MOTOR SALES, U.S.A., INC.

3. **INSTALL NAVIGATION ANTENNA ASSEMBLY (w/ Navigation System)** . Refer to **INSTALLATION - Step 1** .
4. **INSTALL DEFROSTER NOZZLE ASSEMBLY**
    a. Engage the 2 guides.

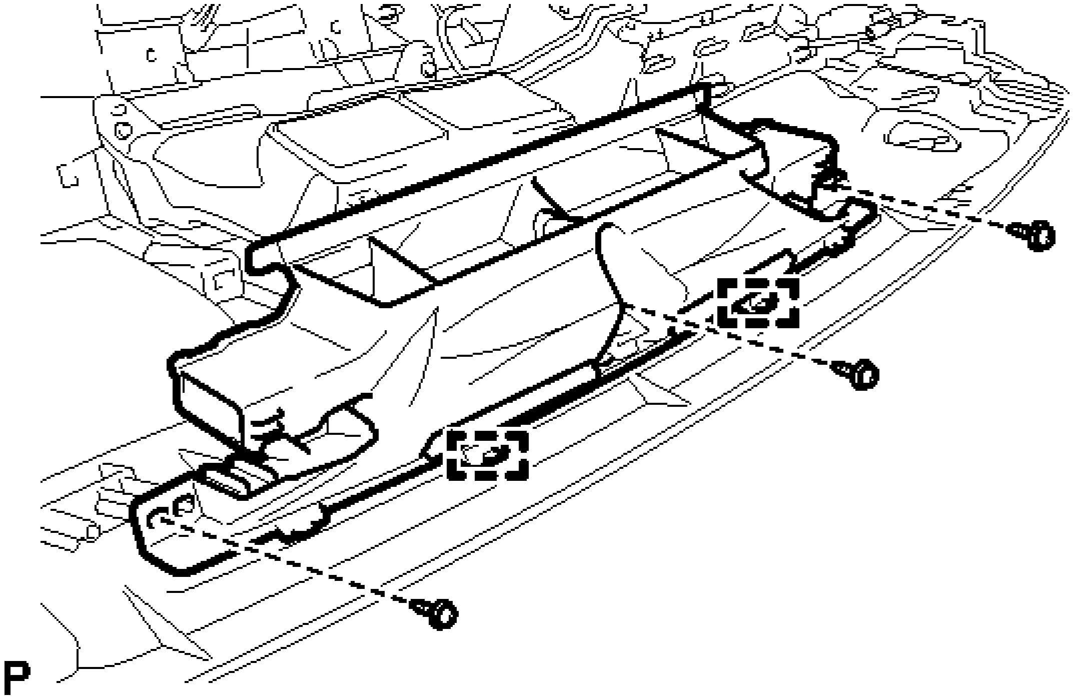

Fig. 74: Locating Defroster Nozzle Assembly Fasteners
Courtesy of TOYOTA MOTOR SALES, U.S.A., INC.

    b. Install the defroster nozzle assembly with the 3 screws <C> or <D>.
5. **INSTALL ANTENNA CORD SUB-ASSEMBLY** . Refer to **INSTALLATION - Step 3** .
6. **INSTALL NO. 2 SIDE DEFROSTER NOZZLE DUCT**
    a. Engage the 2 claws.

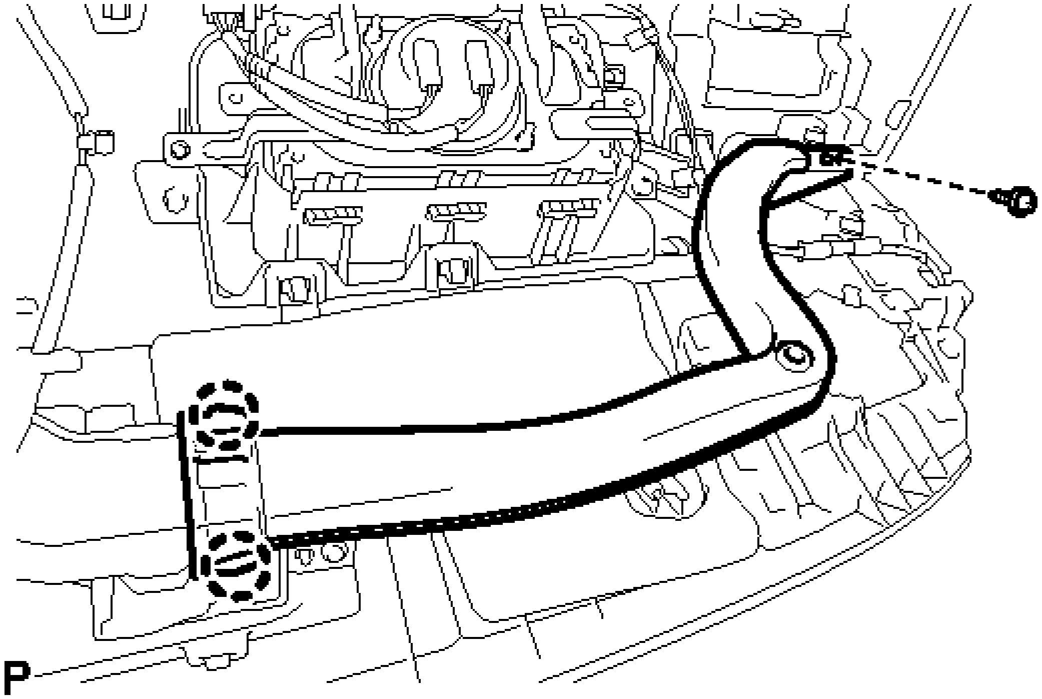

Fig. 75: Locating No. 2 Side Defroster Nozzle Duct Fasteners
Courtesy of TOYOTA MOTOR SALES, U.S.A., INC.

b. Install the No. 2 side defroster nozzle duct with the screw <C> or <D>.

7. **INSTALL NO. 3 HEATER TO REGISTER DUCT**
    a. Install the No. 3 heater to register duct with the 3 screws <C> or <D>.

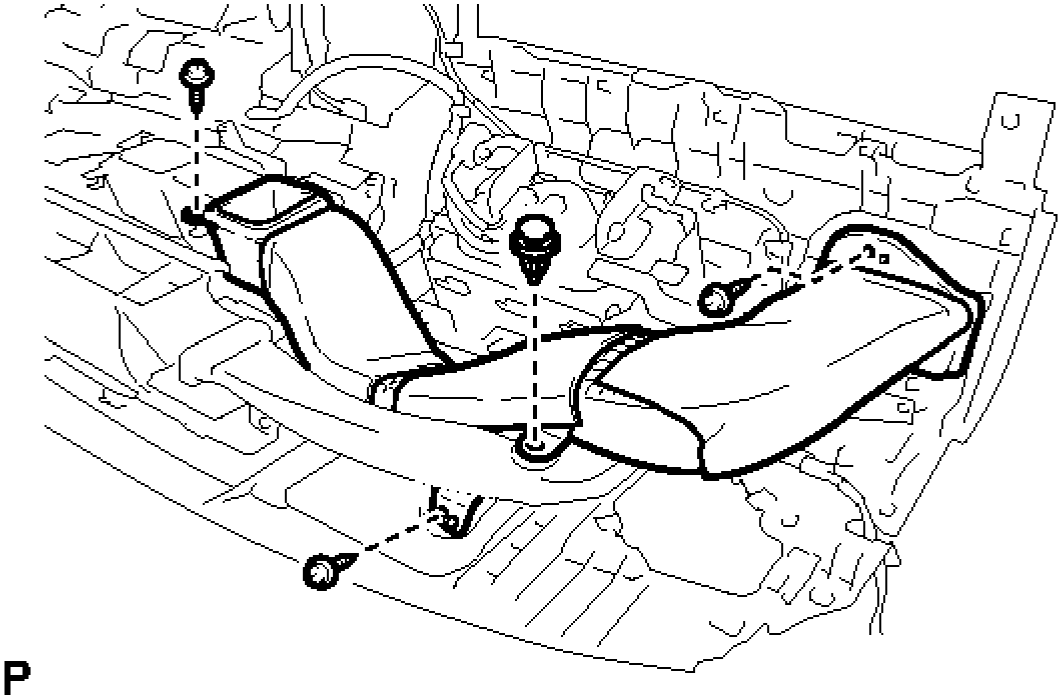

Fig. 76: Locating No. 3 Heater To Register Duct Fasteners
Courtesy of TOYOTA MOTOR SALES, U.S.A., INC.

b. Install the clip.

8. **INSTALL NO. 1 SIDE DEFROSTER NOZZLE DUCT**

a. Engage the 2 claws.

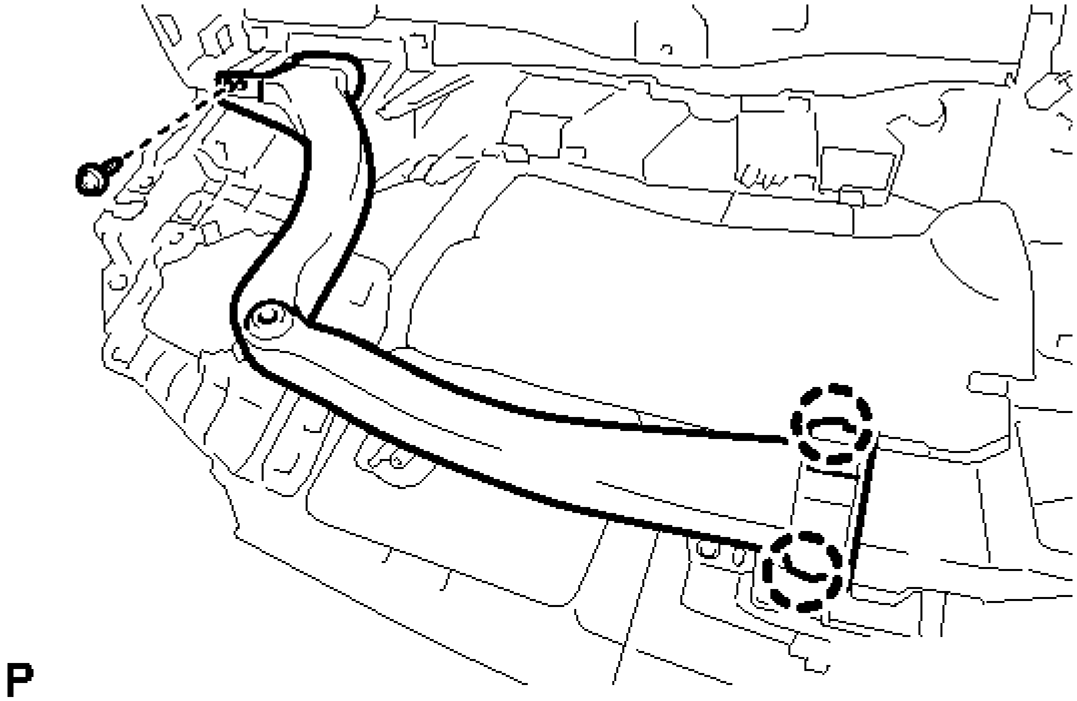

Fig. 77: Locating No. 1 Side Defroster Nozzle Duct Fasteners
Courtesy of TOYOTA MOTOR SALES, U.S.A., INC.

b. Install the No. 1 side defroster nozzle duct with the screw <C> or <D>.

9. **INSTALL NO. 1 HEATER TO REGISTER DUCT**

a. Install the No. 1 heater to register duct with the 3 screws <C> or <D>.

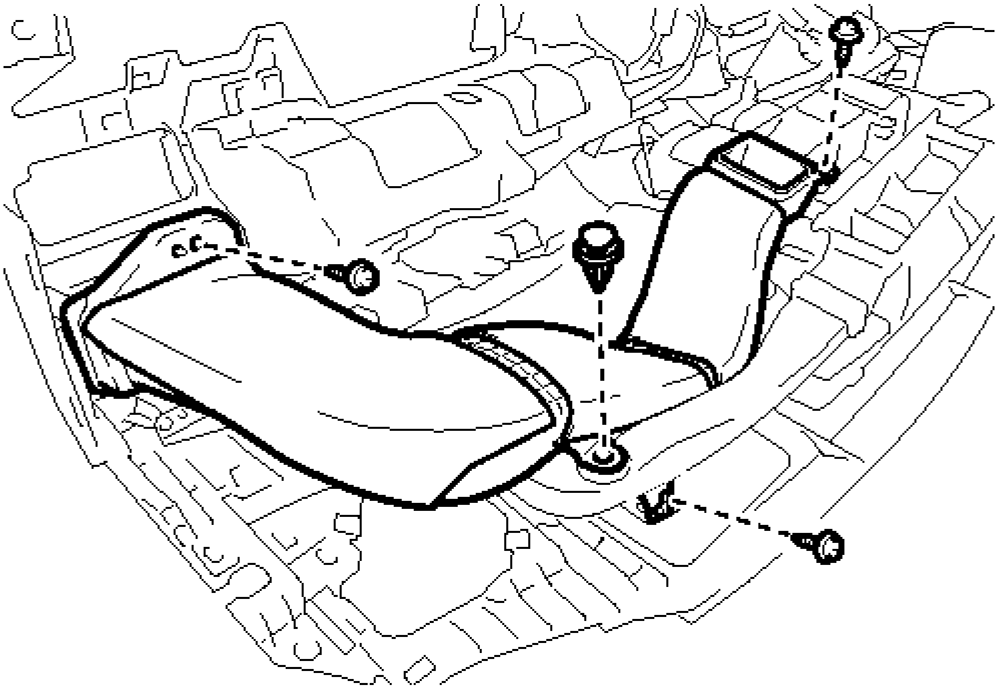

Fig. 78: Locating No. 1 Heater To Register Duct Fasteners
Courtesy of TOYOTA MOTOR SALES, U.S.A., INC.

   b. Install the clip.

10. **INSTALL INSTRUMENT PANEL PASSENGER AIRBAG ASSEMBLY** . Refer to **INSTALLATION - Step 2** .
11. **INSTALL NO. 1 INSTRUMENT PANEL PIN**
    a. Install the 4 No. 1 instrument panel pins with the 4 screws <C> or <D>.

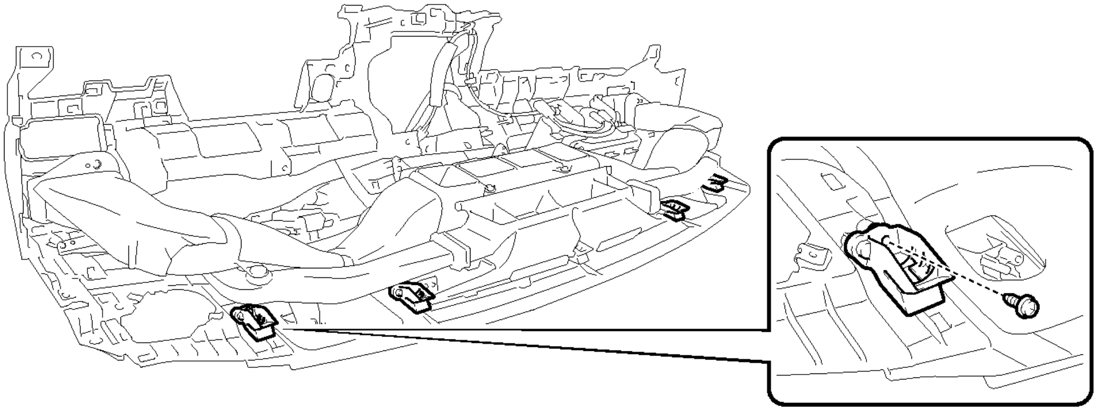

Fig. 79: Locating No. 1 Instrument Panel Pin Fasteners
Courtesy of TOYOTA MOTOR SALES, U.S.A., INC.

INSTALLATION

INSTALLATION

1. **INSTALL INSTRUMENT PANEL SAFETY PAD ASSEMBLY**
    a. Engage the 5 guides and temporarily install the instrument panel safety pad assembly as shown in the illustration.

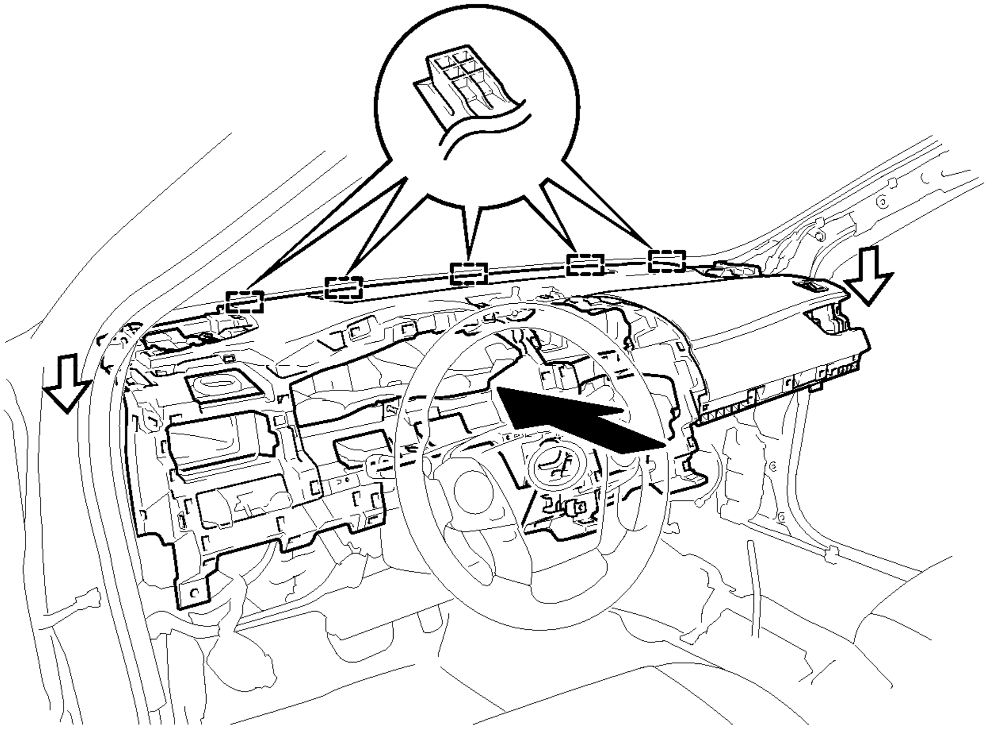

Fig. 80: Installing Instrument Panel Safety Pad Assembly
Courtesy of TOYOTA MOTOR SALES, U.S.A., INC.

NOTE:

- **Do not damage the instrument panel safety pad assembly.**
- **Do not allow the wire harnesses to interfere with the surrounding parts.**

    b. Install the 2 clips.
    c. Install the 3 bolts <B> and nut <F> or <G>.
    d. Install the 2 passenger airbag bolts <A>.

Torque: 20 N*m (204 kgf*cm, 15 ft.*lbf)

    e. Engage each clamp.
    f. Connect each connector.

2. **CONNECT NO. 2 INSTRUMENT PANEL WIRE** . Refer to **INSTALLATION - Step 4** .
3. **INSTALL NO. 1 INSTRUMENT PANEL GARNISH SUB-ASSEMBLY**
    a. Engage the 10 clips to install the No. 1 instrument panel garnish sub-assembly.

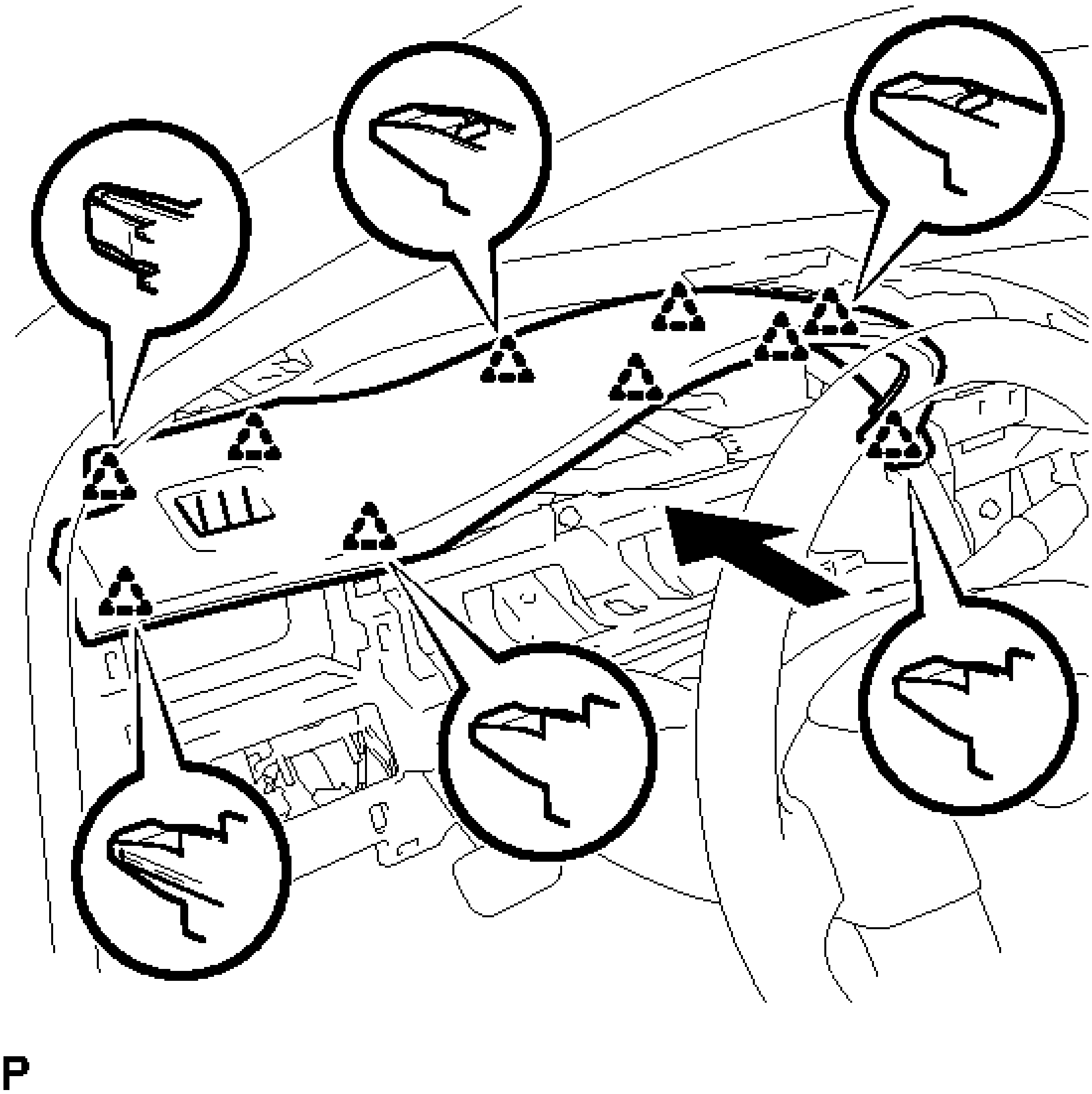

Fig. 81: Installing No. 1 Instrument Panel Garnish Sub-Assembly
Courtesy of TOYOTA MOTOR SALES, U.S.A., INC.

4. **INSTALL CONSOLE BOX INSERT**
   a. Engage the clip and 3 guides.

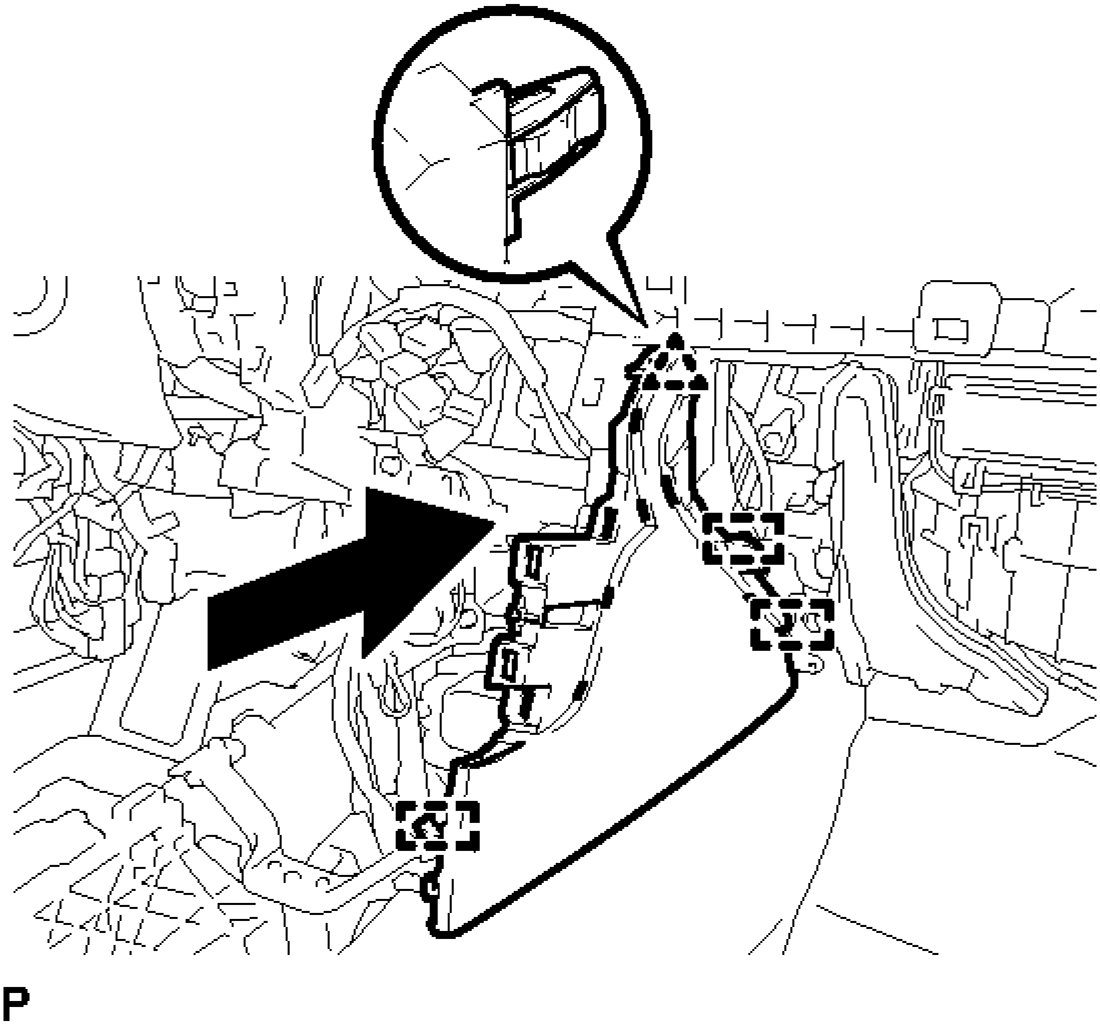

Fig. 82: Installing Console Box Insert
Courtesy of TOYOTA MOTOR SALES, U.S.A., INC.

b. Install the console box insert with the 2 screws <C> or <D>.

5. **INSTALL FRONT NO. 2 CONSOLE BOX INSERT**

   a. Engage the clip and 3 guides.

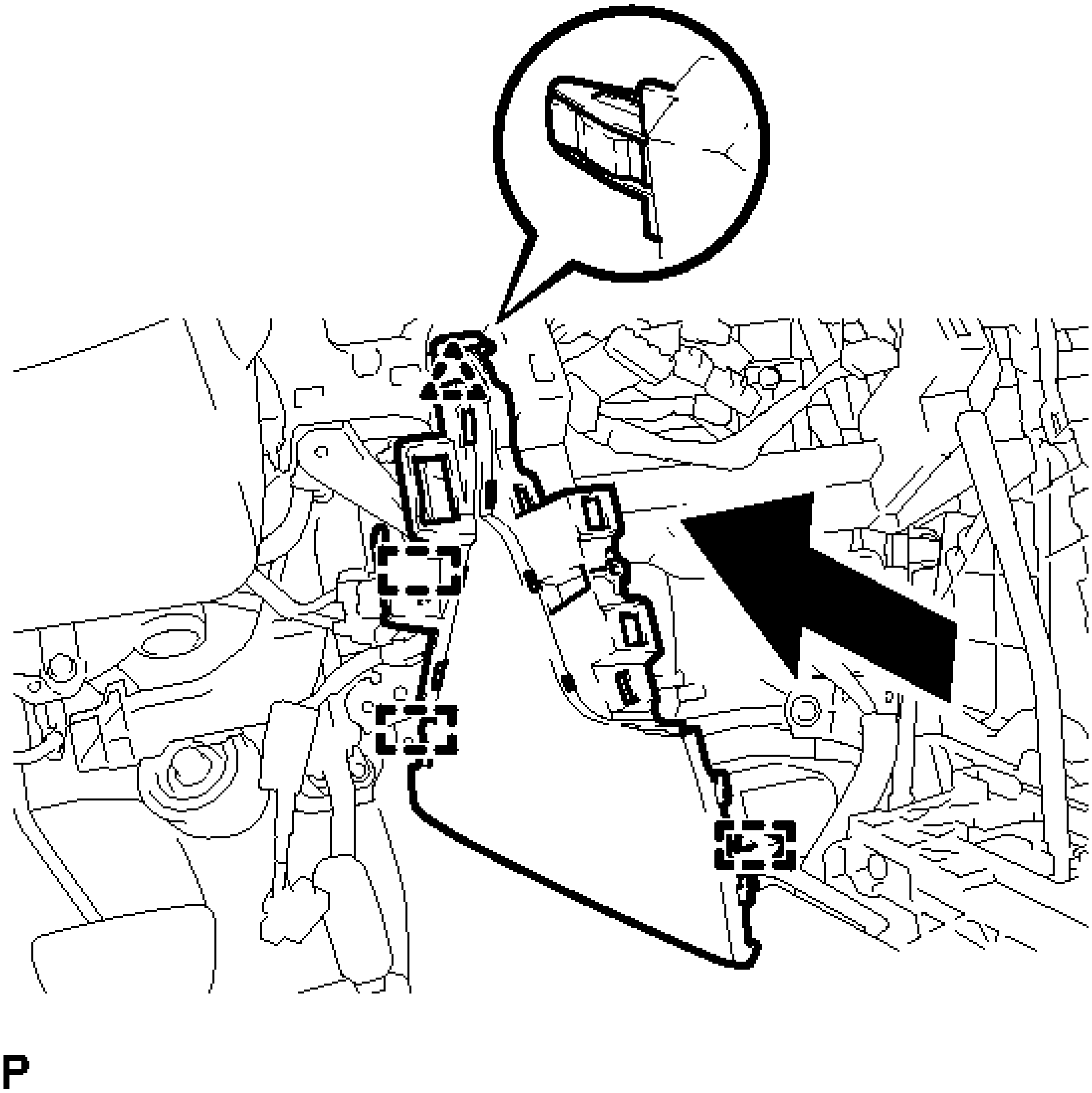

Fig. 83: Installing Front No. 2 Console Box Insert
Courtesy of TOYOTA MOTOR SALES, U.S.A., INC.

b. Install the front No. 2 console box insert with the 2 screws <C> or <D>.

c. Engage the 2 claws to connect the room temperature sensor.

6. **INSTALL LOWER INSTRUMENT PANEL FINISH PANEL ASSEMBLY**

   a. w/ Smart Key System:

      1. Connect the connector.

   b. Engage the 4 clips to install the lower instrument panel finish panel assembly.

7. **INSTALL FRONT NO. 2 SPEAKER ASSEMBLY (for LH Side)** . Refer to **INSTALLATION - Step 1** .

8. **INSTALL NO. 1 INSTRUMENT PANEL SPEAKER PANEL SUB-ASSEMBLY**

   a. Engage the 2 guides.

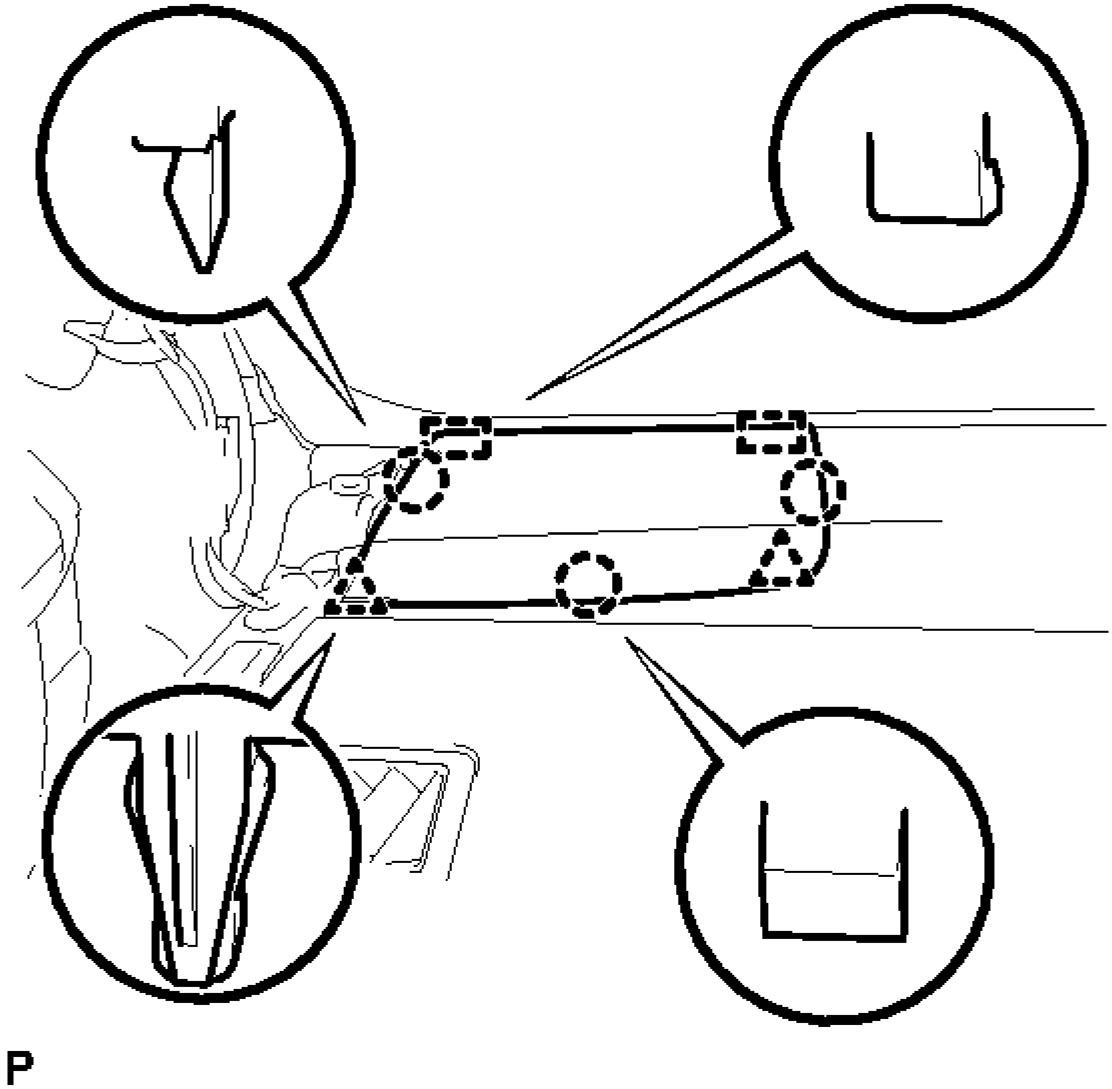

Fig. 84: Identifying No. 1 Instrument Panel Speaker Panel Sub-Assembly
Courtesy of TOYOTA MOTOR SALES, U.S.A., INC.

  b. Engage the 3 claws and 2 clips to install the No. 1 instrument panel speaker panel sub-assembly.

9. **INSTALL FRONT PILLAR GARNISH LH** . See step 41.
10. **INSTALL FRONT NO. 2 SPEAKER ASSEMBLY (for RH Side)**

    HINT:

    Use the same procedure as for the LH side. Refer to **INSTALLATION - Step 1** .

11. **INSTALL NO. 2 INSTRUMENT PANEL SPEAKER PANEL SUB-ASSEMBLY**
    a. Engage the 2 guides.

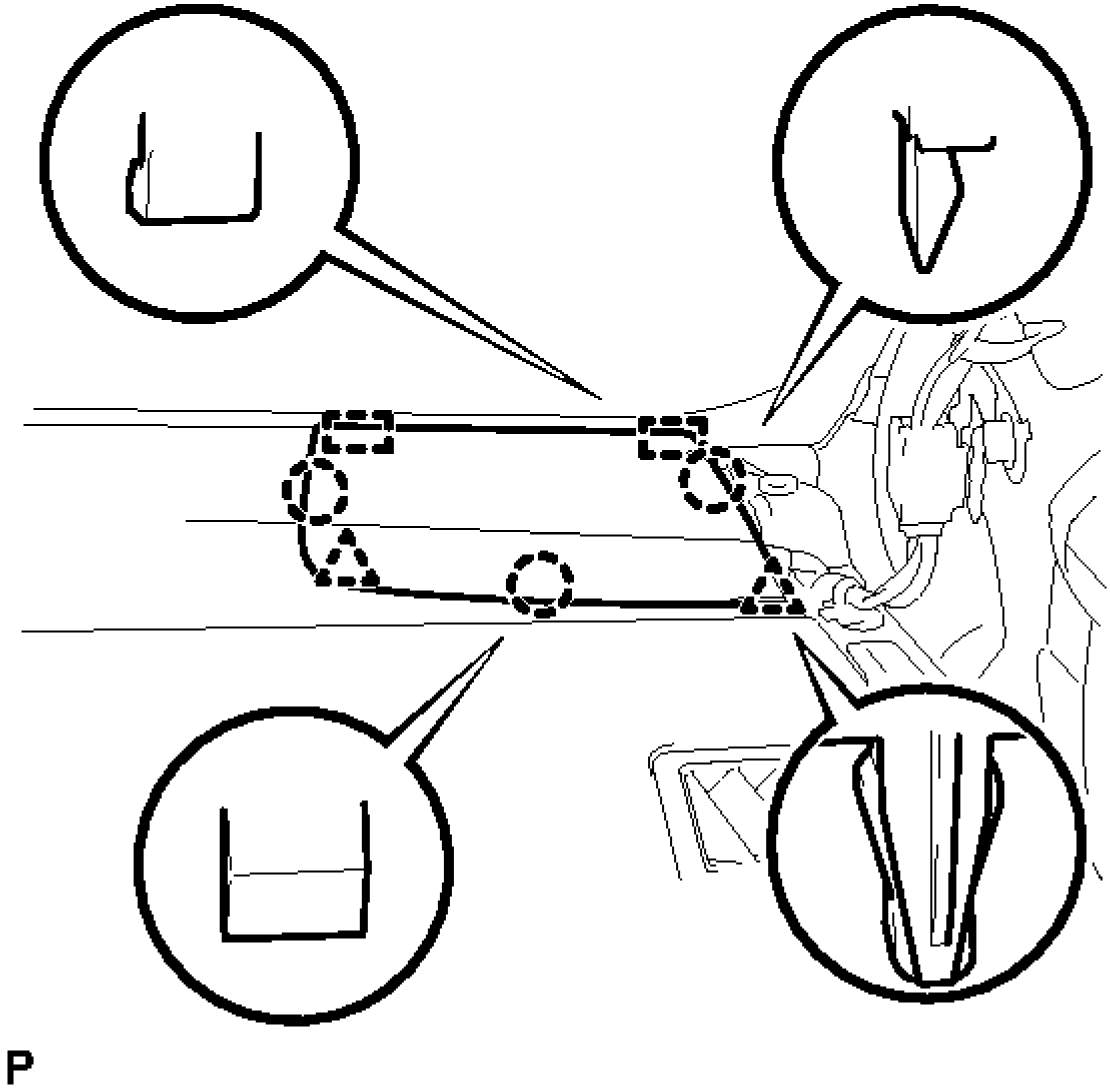

Fig. 85: Identifying No. 2 Instrument Panel Speaker Panel Sub-Assembly
Courtesy of TOYOTA MOTOR SALES, U.S.A., INC.

b. Engage the 3 claws and 2 clips to install the No. 2 instrument panel speaker panel sub-assembly.

12. **INSTALL FRONT PILLAR GARNISH RH**

    HINT:

    Use the same procedure as for the LH side. See step 41.

13. **INSTALL NO. 3 INSTRUMENT PANEL REGISTER ASSEMBLY**

    a. Engage the 4 clips to install the No. 3 instrument panel register assembly.

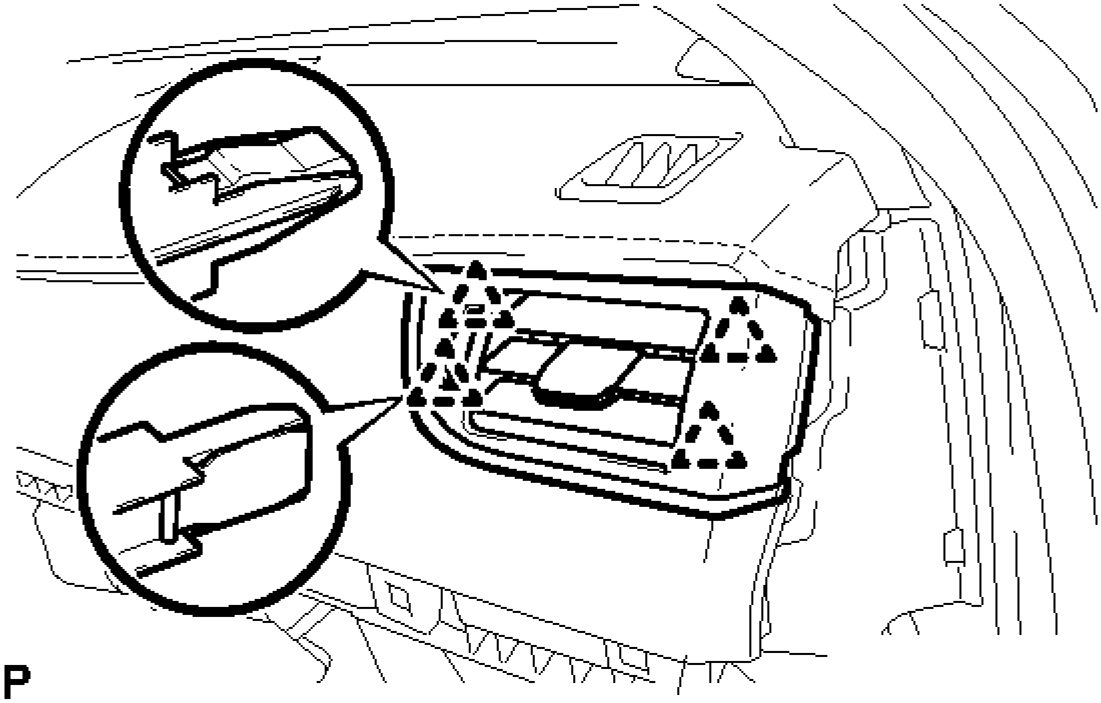

Fig. 86: Identifying No. 3 Instrument Panel Register Assembly
Courtesy of TOYOTA MOTOR SALES, U.S.A., INC.

14. **INSTALL NO. 2 INSTRUMENT CLUSTER FINISH PANEL GARNISH**
    1. Engage the 5 clips to install the No. 2 instrument cluster finish panel garnish.

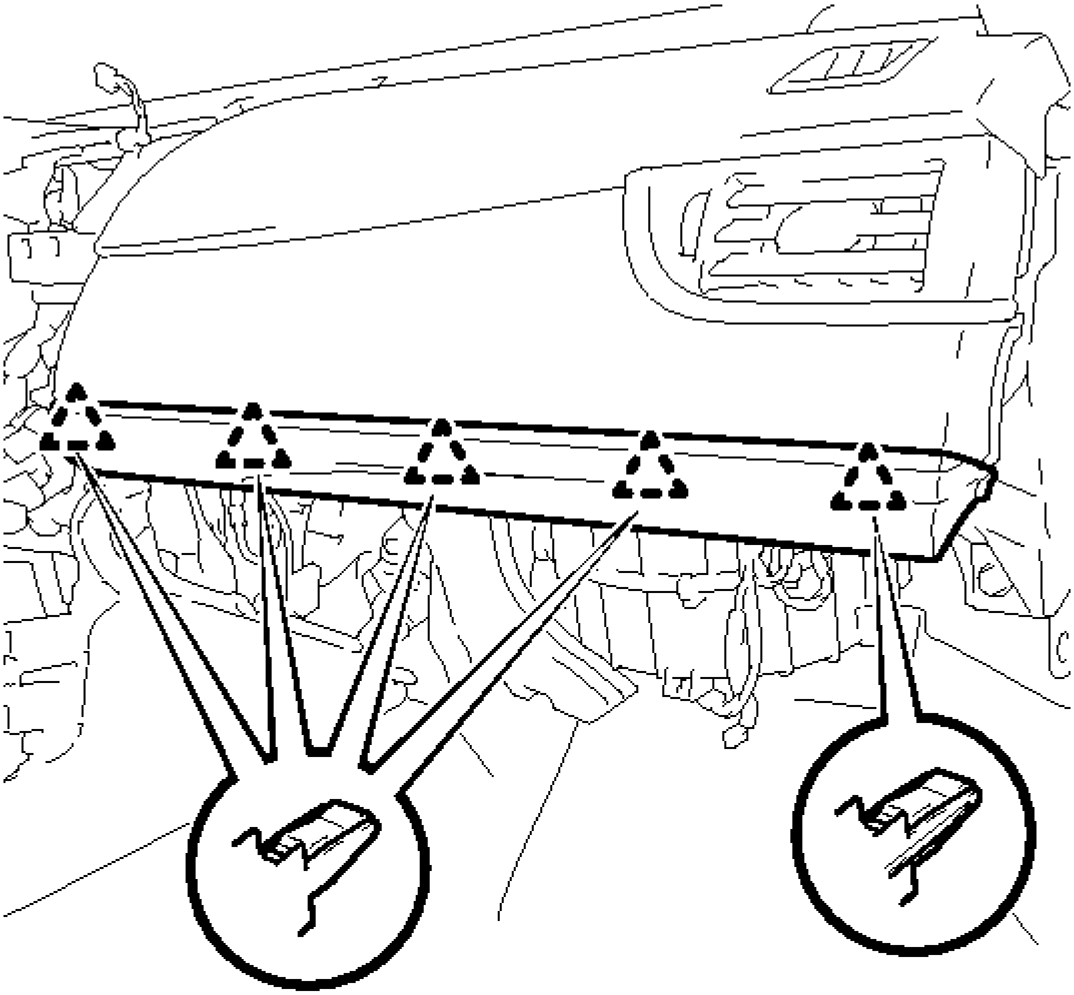

Fig. 87: Identifying No. 2 Instrument Cluster Finish Panel Garnish
Courtesy of TOYOTA MOTOR SALES, U.S.A., INC.

15. **INSTALL LOWER INSTRUMENT PANEL SUB-ASSEMBLY**
    a. Connect each connector.
    b. Engage the glove compartment light as shown in the illustration.

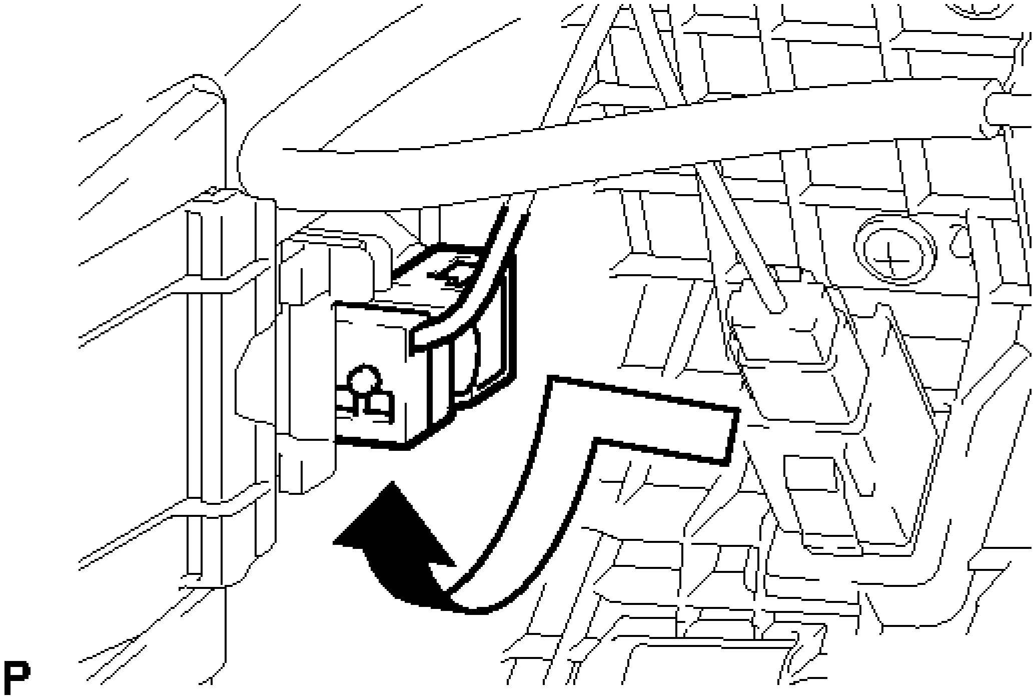

Fig. 88: Installing Glove Compartment Light
Courtesy of TOYOTA MOTOR SALES, U.S.A., INC.

c. Engage the guide and 2 clips.

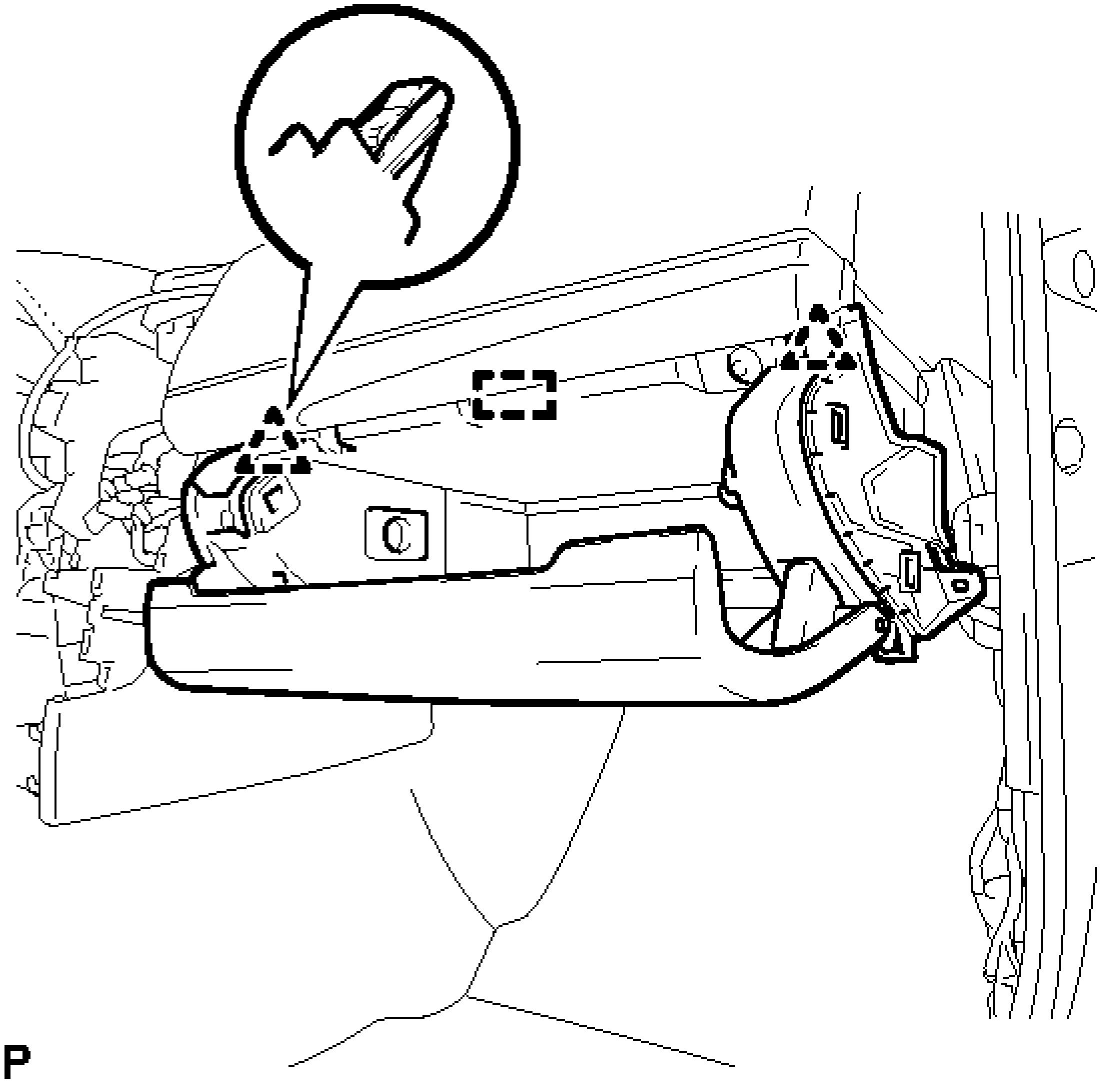

Fig. 89: Identifying Lower Instrument Panel Sub-Assembly
Courtesy of TOYOTA MOTOR SALES, U.S.A., INC.

   d. Install the lower instrument panel sub-assembly with the 5 screws <C> or <D>.

16. **INSTALL LOWER NO. 2 INSTRUMENT PANEL AIRBAG ASSEMBLY** . Refer to **INSTALLATION - Step 1** .
17. **INSTALL NO. 2 INSTRUMENT PANEL UNDER COVER SUB-ASSEMBLY**
    a. Engage the 2 guides and 4 claws to install the No. 2 instrument panel under cover sub-assembly.
18. **INSTALL INSTRUMENT SIDE PANEL RH**
    a. Engage the 3 guides.
    b. Engage the 4 claws to install the instrument side panel RH as shown in the illustration.

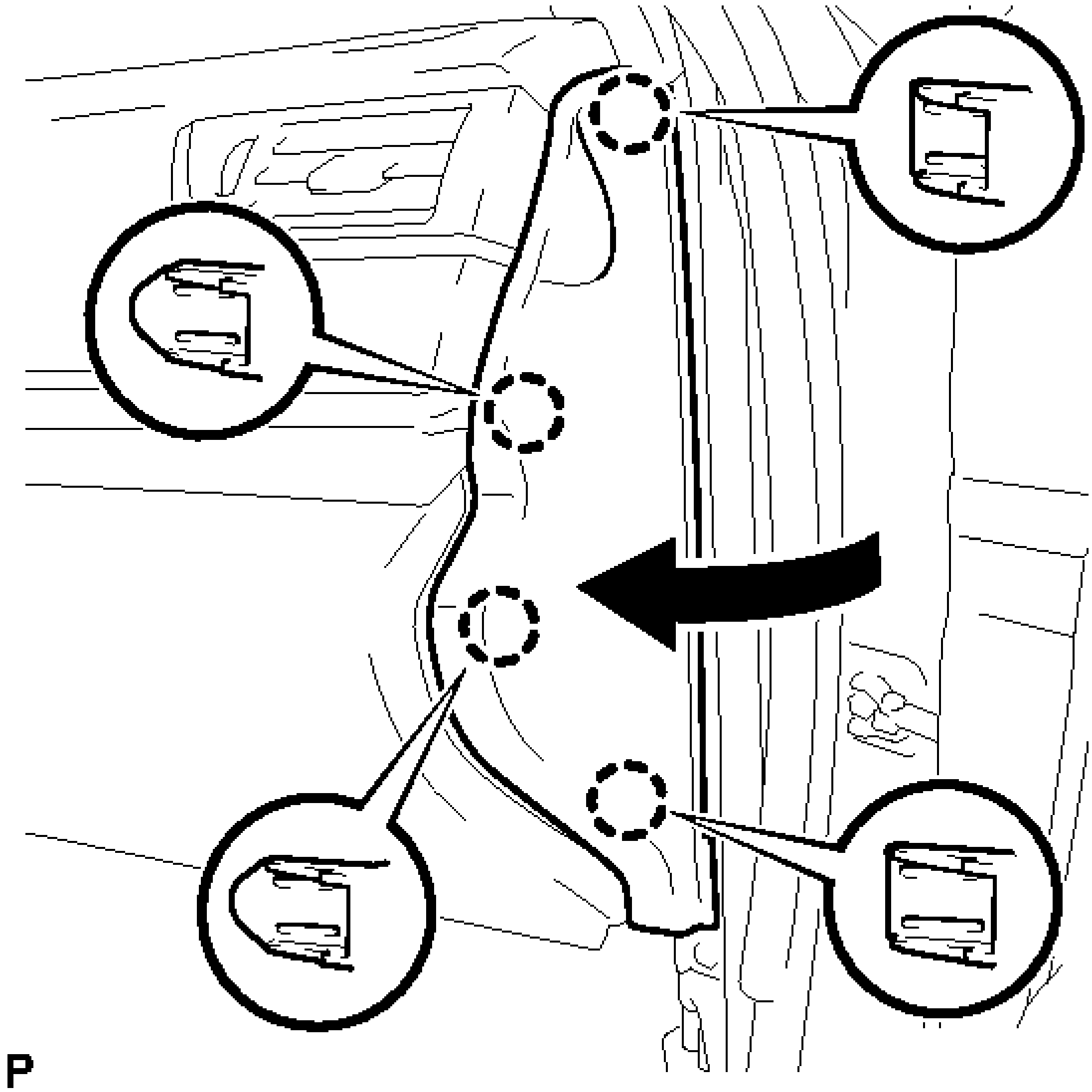

Fig. 90: Engaging Instrument Side Panel RH Claws
Courtesy of TOYOTA MOTOR SALES, U.S.A., INC.

19. **INSTALL FRONT DOOR OPENING TRIM WEATHERSTRIP RH** . See step 46.
20. **INSTALL COWL SIDE TRIM SUB-ASSEMBLY RH**

    HINT:

    Use the same procedure as for the LH side. See step 43.

21. **INSTALL FRONT DOOR SCUFF PLATE RH**

    HINT:

    Use the same procedure as for the LH side. See step 44.

22. **INSTALL FRONT NO. 3 SPEAKER ASSEMBLY (for 10 Speakers)** . Refer to **INSTALLATION - Step 5** .
23. **INSTALL NO. 1 SPEAKER OPENING COVER ASSEMBLY**
    1. Connect the connector.
    2. Engage the 8 clips to install the No. 1 speaker opening cover assembly.

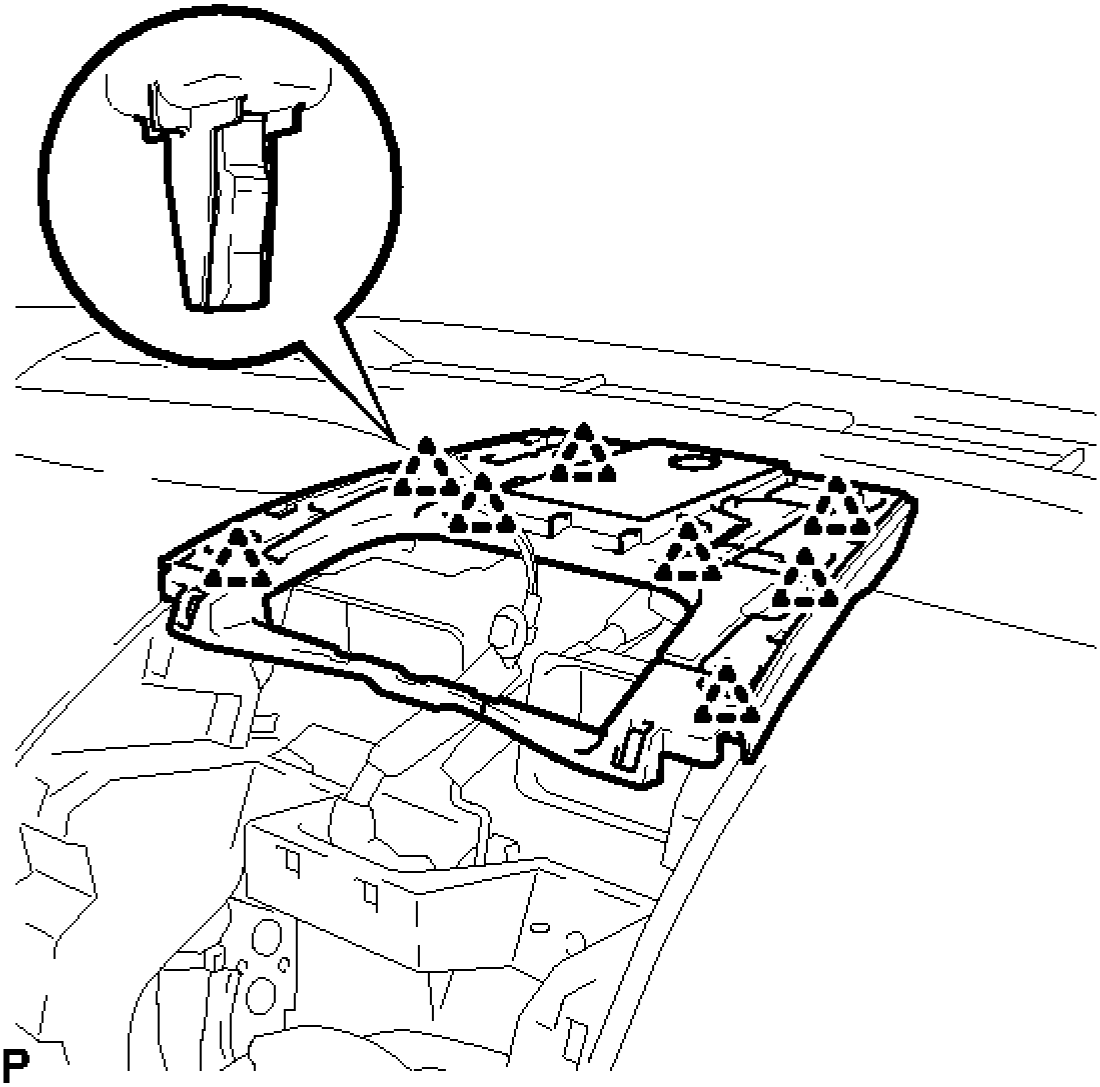

Fig. 91: Identifying No. 1 Speaker Opening Cover Assembly
Courtesy of TOYOTA MOTOR SALES, U.S.A., INC.

24. **INSTALL RADIO RECEIVER ASSEMBLY WITH AIR CONDITIONING CONTROL ASSEMBLY (for Radio Receiver Type)** . Refer to **INSTALLATION - Step 14** .
25. **INSTALL RADIO RECEIVER ASSEMBLY WITH AIR CONDITIONING CONTROL ASSEMBLY (for Radio and Display Type)** . Refer to **INSTALLATION - Step 15** .
26. **INSTALL NAVIGATION RECEIVER ASSEMBLY WITH AIR CONDITIONING CONTROL ASSEMBLY (for Navigation Receiver Type)** . Refer to **INSTALLATION - Step 7** .

27. **INSTALL UPPER CONSOLE PANEL SUB-ASSEMBLY**
    a. Connect each connector.
    b. Engage the 4 clips and guide.
    c. Install the upper console panel sub-assembly with the 2 screws <C> or <D>.

28. **INSTALL BOX BOTTOM MAT**
    a. Install the box bottom mat.

29. **INSTALL NO. 2 INSTRUMENT PANEL REGISTER ASSEMBLY**
    a. Engage the 6 clips to install the No. 2 instrument panel register assembly.

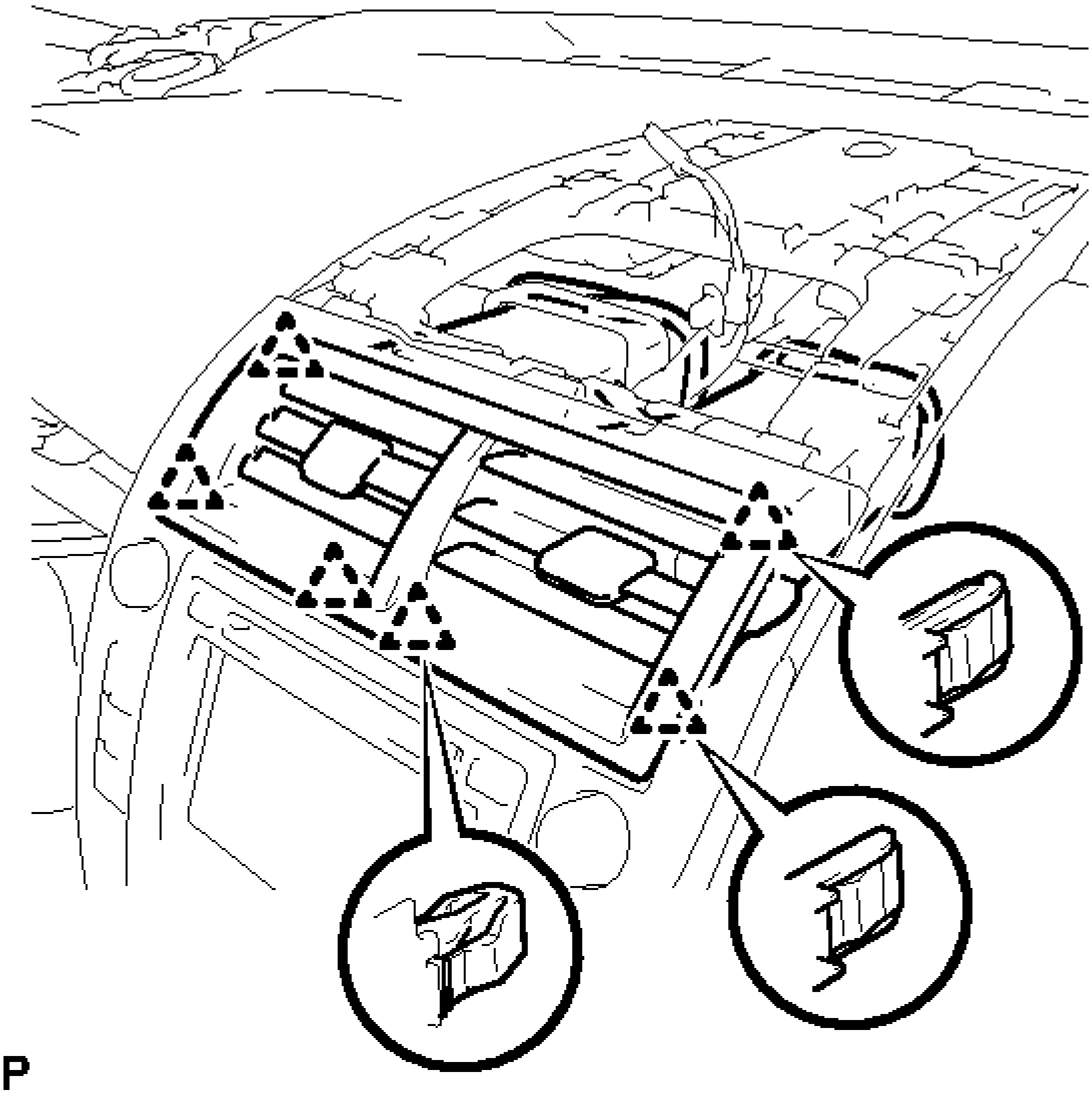

Fig. 92: Identifying No. 2 Instrument Panel Register Assembly
Courtesy of TOYOTA MOTOR SALES, U.S.A., INC.

NOTE: **When installing the No. 2 instrument panel register assembly, check that the wire harness is not caught between the No. 2 instrument**

panel register assembly and duct.

30. **INSTALL CENTER INSTRUMENT CLUSTER FINISH PANEL ASSEMBLY**
    a. Connect the connector.
    b. Engage the clamp.
    c. Engage the 6 clips and 7 claws to install the center instrument cluster finish panel assembly.

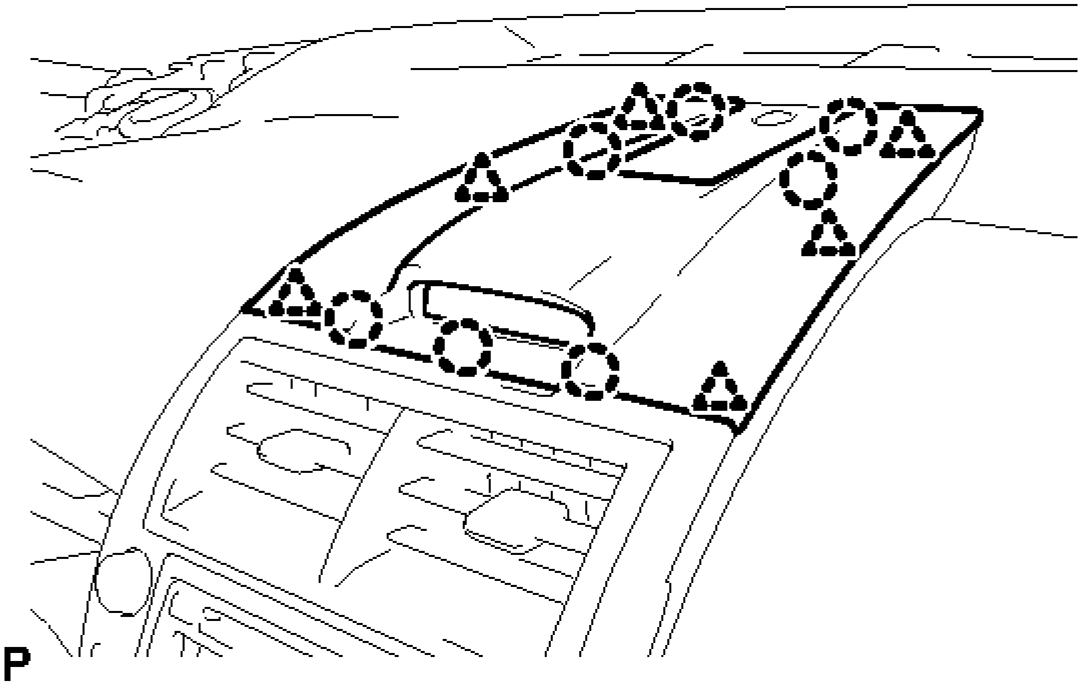

Fig. 93: Identifying Center Instrument Cluster Finish Panel Assembly
Courtesy of TOYOTA MOTOR SALES, U.S.A., INC.

31. **INSTALL REAR CONSOLE BOX ASSEMBLY** . See step 1.
32. **INSTALL CONSOLE BOX CARPET** . See step 2.
33. **INSTALL NO. 4 CONSOLE BOX DUCT (w/ Rear Register Duct)** . See step 3.
34. **INSTALL UPPER CONSOLE BOX SUB-ASSEMBLY** . See step 4.
35. **INSTALL CONSOLE BOX CUP HOLDER**
    a. Install the console box cup holder to the instrument panel cup holder tray.
36. **INSTALL INSTRUMENT PANEL CUP HOLDER TRAY**
    a. Install the front console upper panel garnish.
    b. Install the instrument panel cup holder tray and front console upper panel garnish with the 6 screws <C> or <D>.
37. **INSTALL REAR CONSOLE UPPER PANEL SUB-ASSEMBLY**
    a. Connect the connector.
    b. w/ Seat Heater System:

        1. Connect the 2 connectors.
    c. Engage the 4 clips and install the rear console upper panel sub-assembly.
    d. Move the shift lever to P.

38. **INSTALL SHIFT LEVER KNOB SUB-ASSEMBLY**
    a. Turn the shift lever knob sub-assembly clockwise to install the shift lever knob sub-assembly.

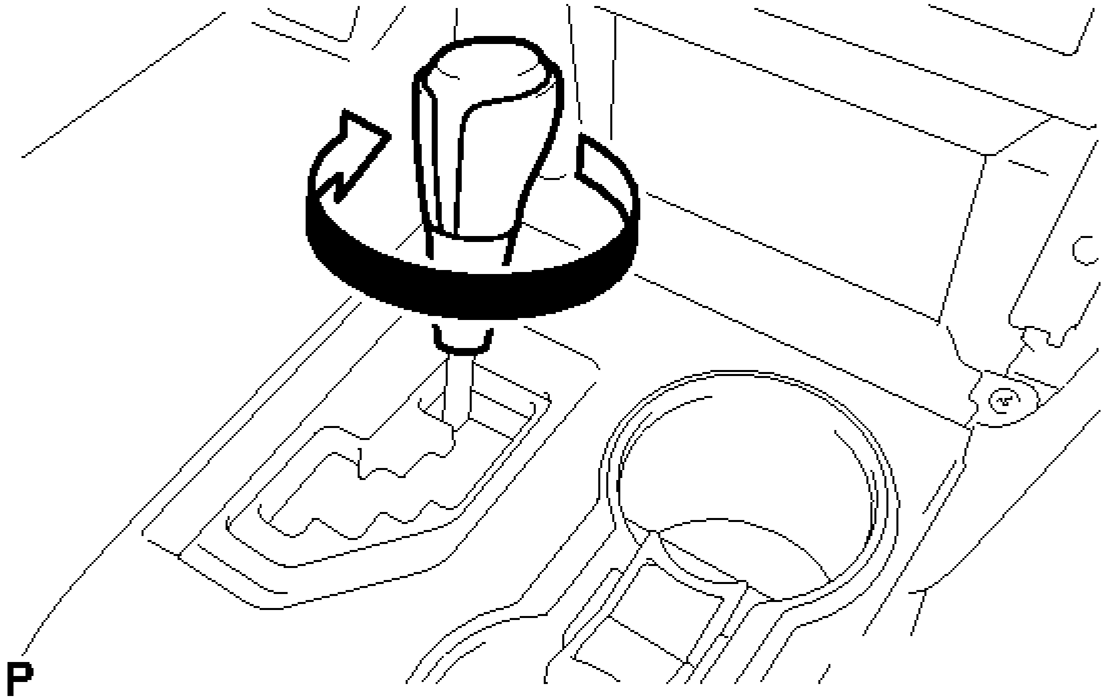

Fig. 94: Installing Shift Lever Knob Sub-Assembly
Courtesy of TOYOTA MOTOR SALES, U.S.A., INC.

39. **INSTALL FRONT PANEL GARNISH RH**
    a. Engage the 3 claws, 2 clips and 8 guides to install the front panel garnish RH.
40. **INSTALL LOWER NO. 1 INSTRUMENT PANEL FINISH PANEL ASSEMBLY**
    a. Engage the 4 claws, 9 clips and 3 guides.
    b. Install the lower No. 1 instrument panel finish panel assembly with the bolt <B> and screw <C> or <D>.
41. **CONNECT HOOD LOCK CONTROL LEVER SUB-ASSEMBLY**
    a. Engage the claw and 2 guides to connect the hood lock control lever sub-assembly.
42. **INSTALL FRONT PANEL GARNISH LH**
    a. Engage the 3 claws, 2 clips and 8 guides to install the front panel garnish LH.
43. **INSTALL COMBINATION METER ASSEMBLY** . Refer to **INSTALLATION - Step 1** .
44. **INSTALL INSTRUMENT CLUSTER FINISH PANEL ASSEMBLY**
    a. Temporarily install the instrument cluster finish panel assembly as shown in the illustration.

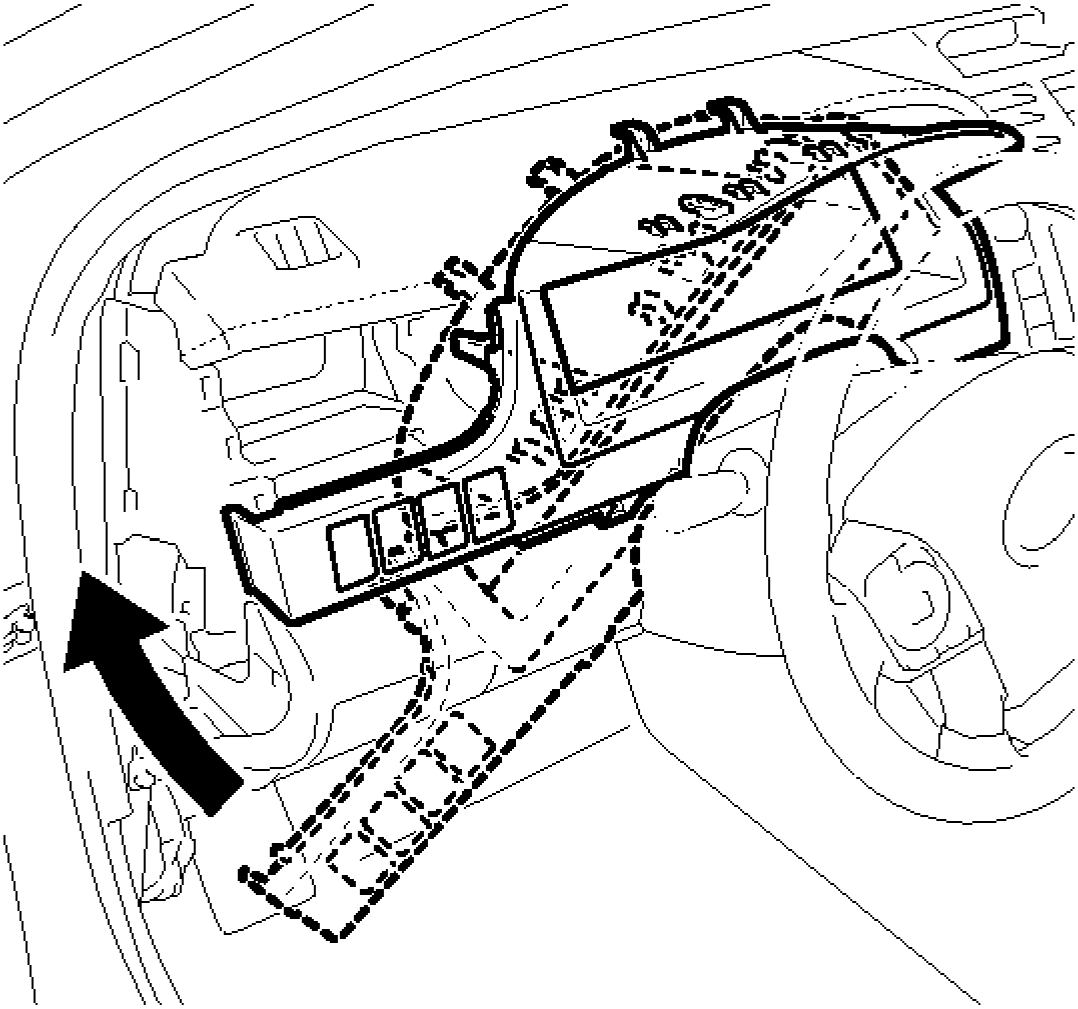

Fig. 95: Installing Instrument Cluster Finish Panel Assembly
Courtesy of TOYOTA MOTOR SALES, U.S.A., INC.

b. Connect each connector.
c. Engage the 5 claws, 5 clips and 2 guides, and install the instrument cluster finish panel assembly.
d. Engage the 2 claws, 4 clips and 2 guides.

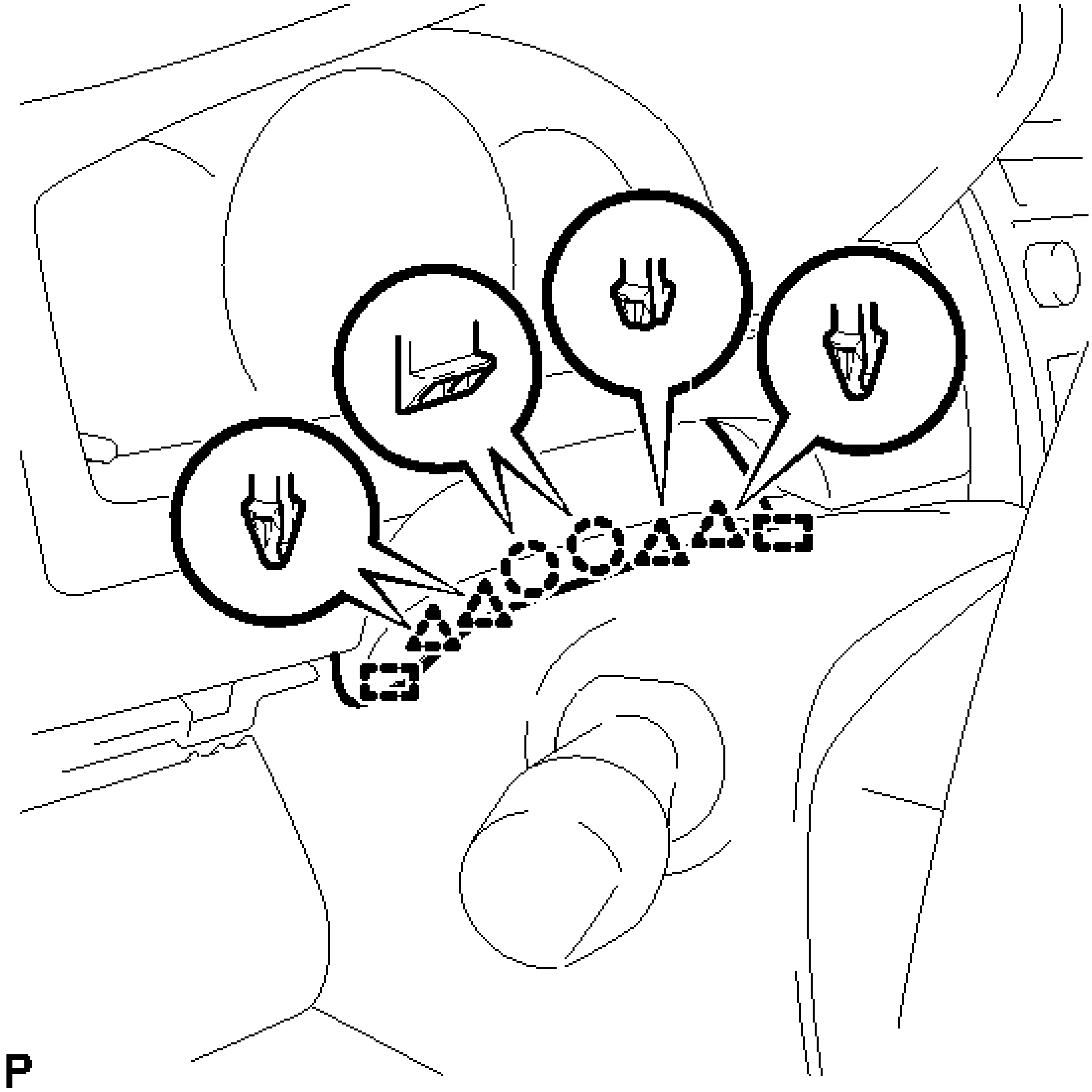

Fig. 96: Engaging Instrument Cluster Finish Panel Assembly Fasteners
Courtesy of TOYOTA MOTOR SALES, U.S.A., INC.

45. **INSTALL NO. 1 INSTRUMENT PANEL REGISTER ASSEMBLY**
    a. Engage the 4 clips to install the No. 1 instrument panel register assembly.

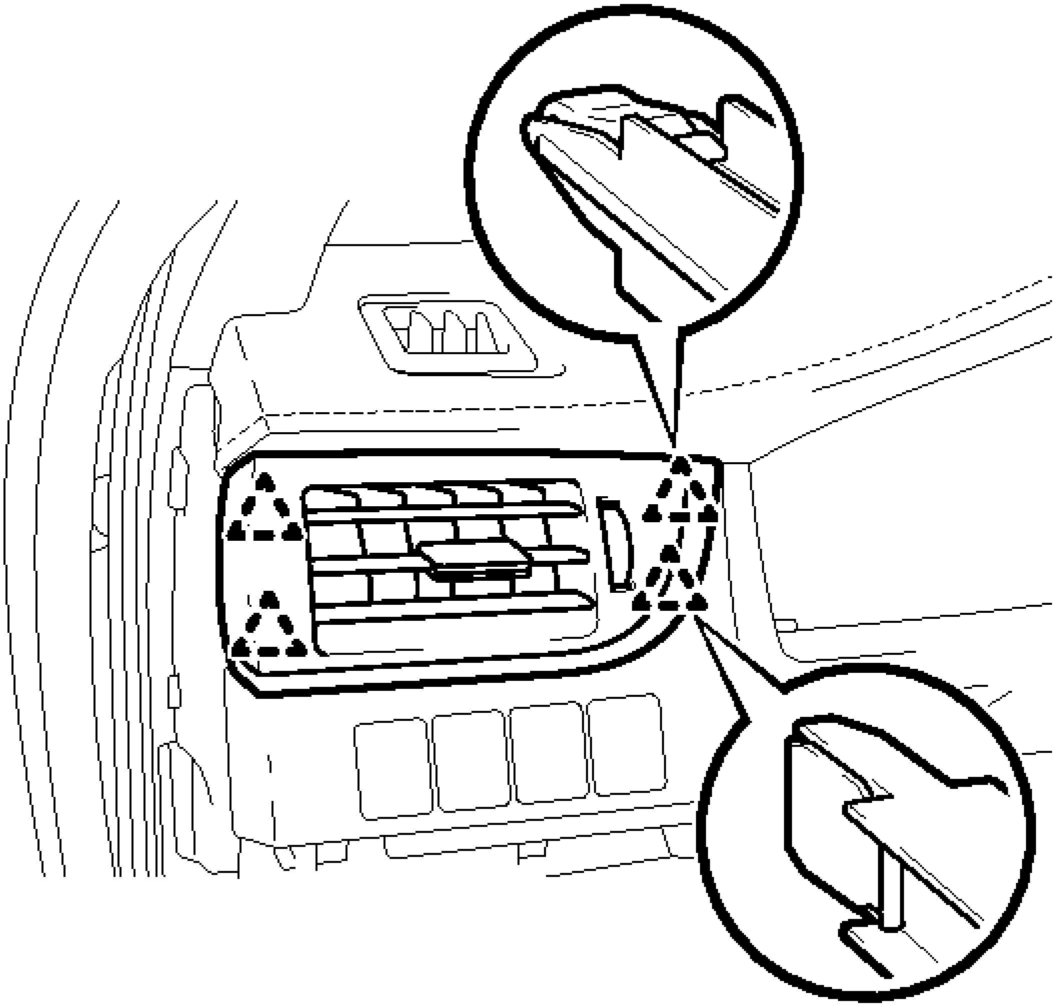

Fig. 97: Identifying No. 1 Instrument Panel Register Assembly
Courtesy of TOYOTA MOTOR SALES, U.S.A., INC.

46. **INSTALL NO. 1 INSTRUMENT CLUSTER FINISH PANEL GARNISH**
    a. Engage the 3 clips to install the No. 1 instrument cluster finish panel garnish.

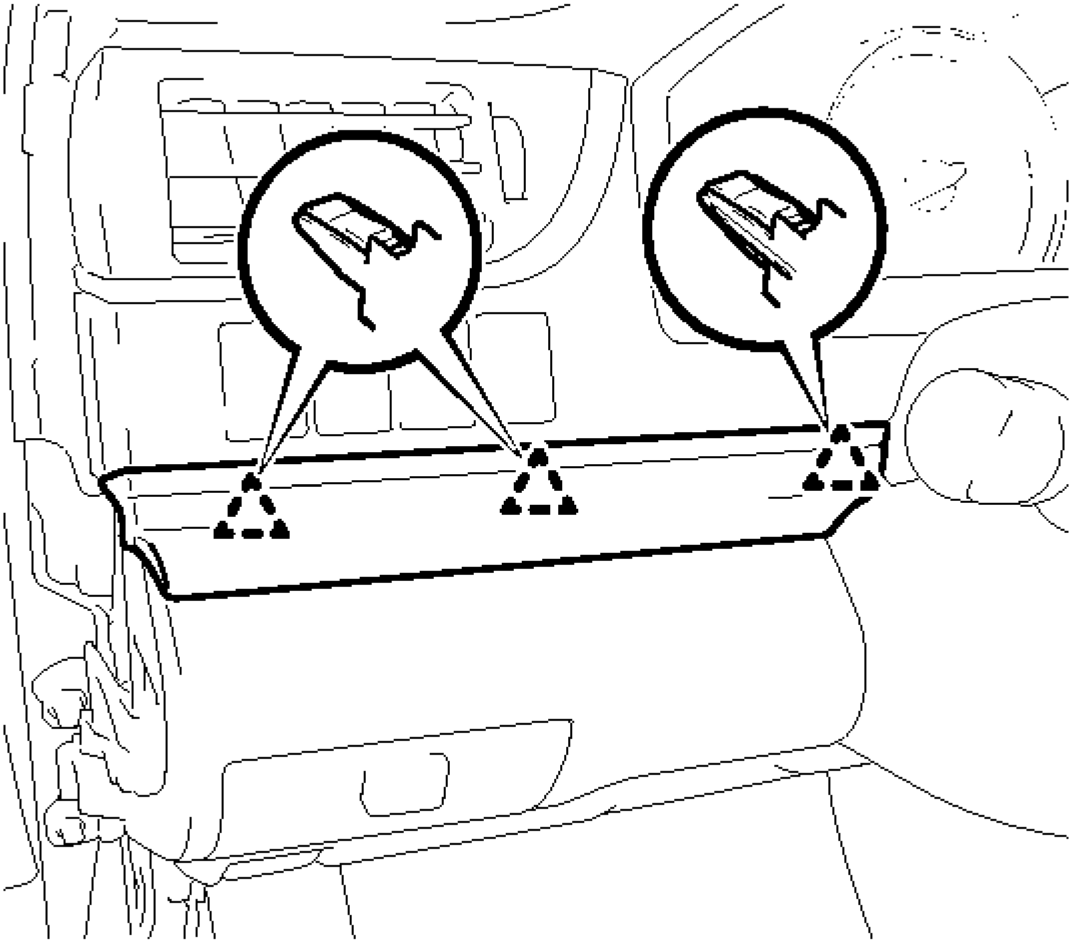

Fig. 98: Identifying No. 1 Instrument Cluster Finish Panel Garnish
Courtesy of TOYOTA MOTOR SALES, U.S.A., INC.

47. **INSTALL INSTRUMENT SIDE PANEL LH**
    a. Engage the 3 guides.
    b. Engage the 4 claws to install the instrument side panel LH as shown in the illustration.

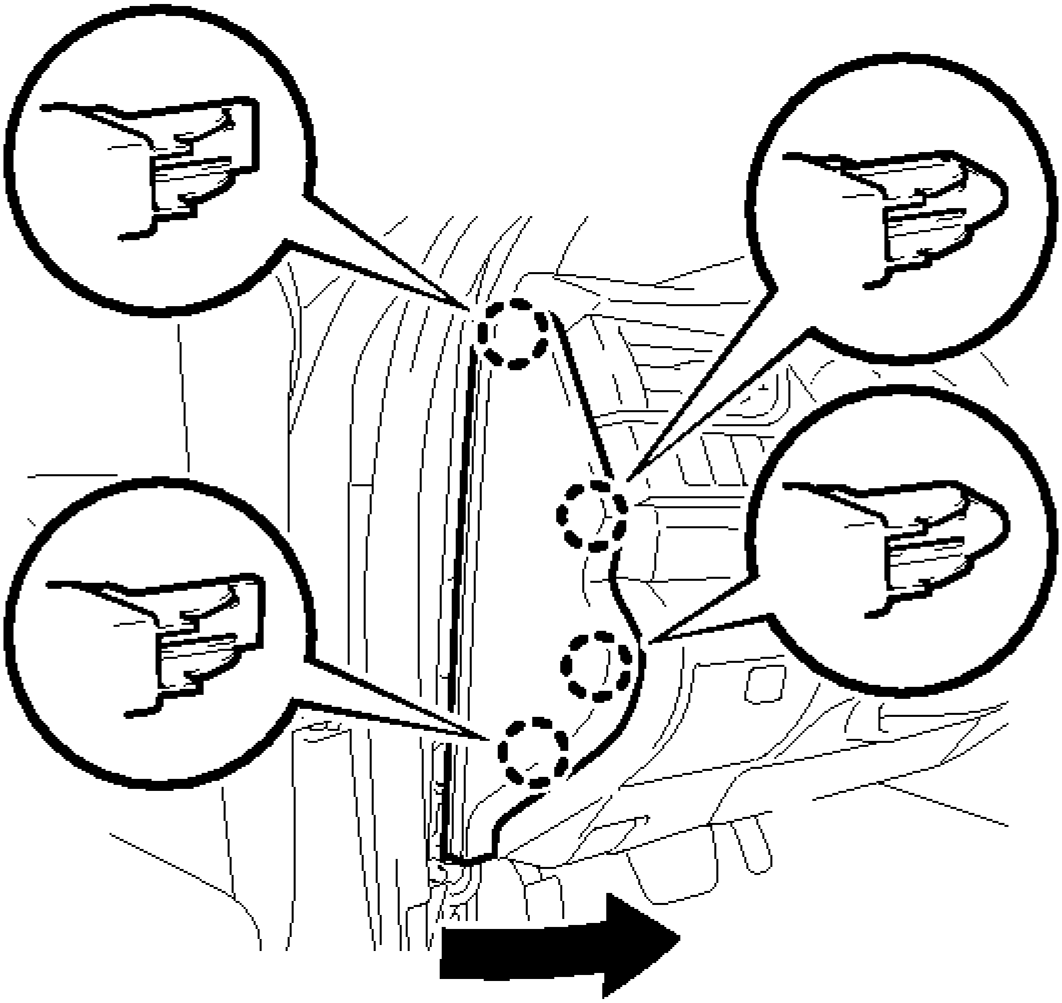

Fig. 99: Engaging Instrument Side Panel LH Claws
Courtesy of TOYOTA MOTOR SALES, U.S.A., INC.

48. **INSTALL FRONT DOOR OPENING TRIM WEATHERSTRIP LH** . See step 42.
49. **INSTALL COWL SIDE TRIM SUB-ASSEMBLY LH** . See step 43.
50. **INSTALL FRONT DOOR SCUFF PLATE LH** . See step 44.
51. **CONNECT CABLE TO NEGATIVE BATTERY TERMINAL**

NOTE: **When disconnecting the cable, some systems need to be initialized after the cable is reconnected. Refer to INITIALIZATION .**

52. **INSPECT SRS WARNING LIGHT**
    - For Separate Type Yaw Rate Sensor. Refer to **DIAGNOSIS SYSTEM** .
    - For Built-in Type Yaw Rate Sensor. Refer to **DIAGNOSIS SYSTEM** .

FRONT CONSOLE BOX

COMPONENTS

ILLUSTRATION

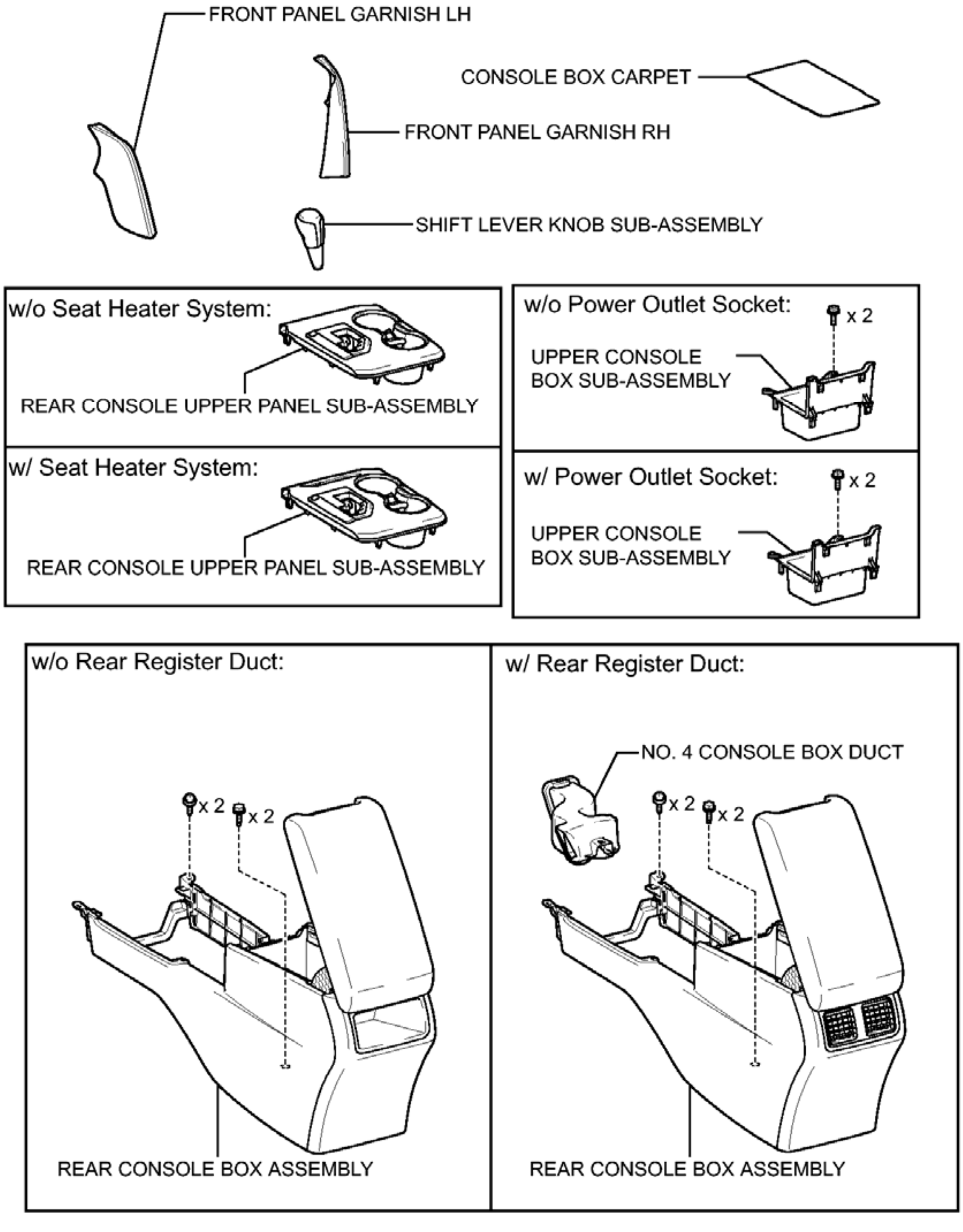
FRONT PANEL GARNISH LH
CONSOLE BOX CARPET
FRONT PANEL GARNISH RH
SHIFT LEVER KNOB SUB-ASSEMBLY
w/o Seat Heater System:
REAR CONSOLE UPPER PANEL SUB-ASSEMBLY
w/ Seat Heater System:
REAR CONSOLE UPPER PANEL SUB-ASSEMBLY
w/o Power Outlet Socket:
x 2
UPPER CONSOLE BOX SUB-ASSEMBLY
w/ Power Outlet Socket:
x 2
UPPER CONSOLE BOX SUB-ASSEMBLY
w/o Rear Register Duct:
x 2
x 2
REAR CONSOLE BOX ASSEMBLY
w/ Rear Register Duct:
NO. 4 CONSOLE BOX DUCT
x 2
x 2
REAR CONSOLE BOX ASSEMBLY
P

Fig. 100: Identifying Front Console Box Replacement Components (1 Of 2)
Courtesy of TOYOTA MOTOR SALES, U.S.A., INC.

ILLUSTRATION

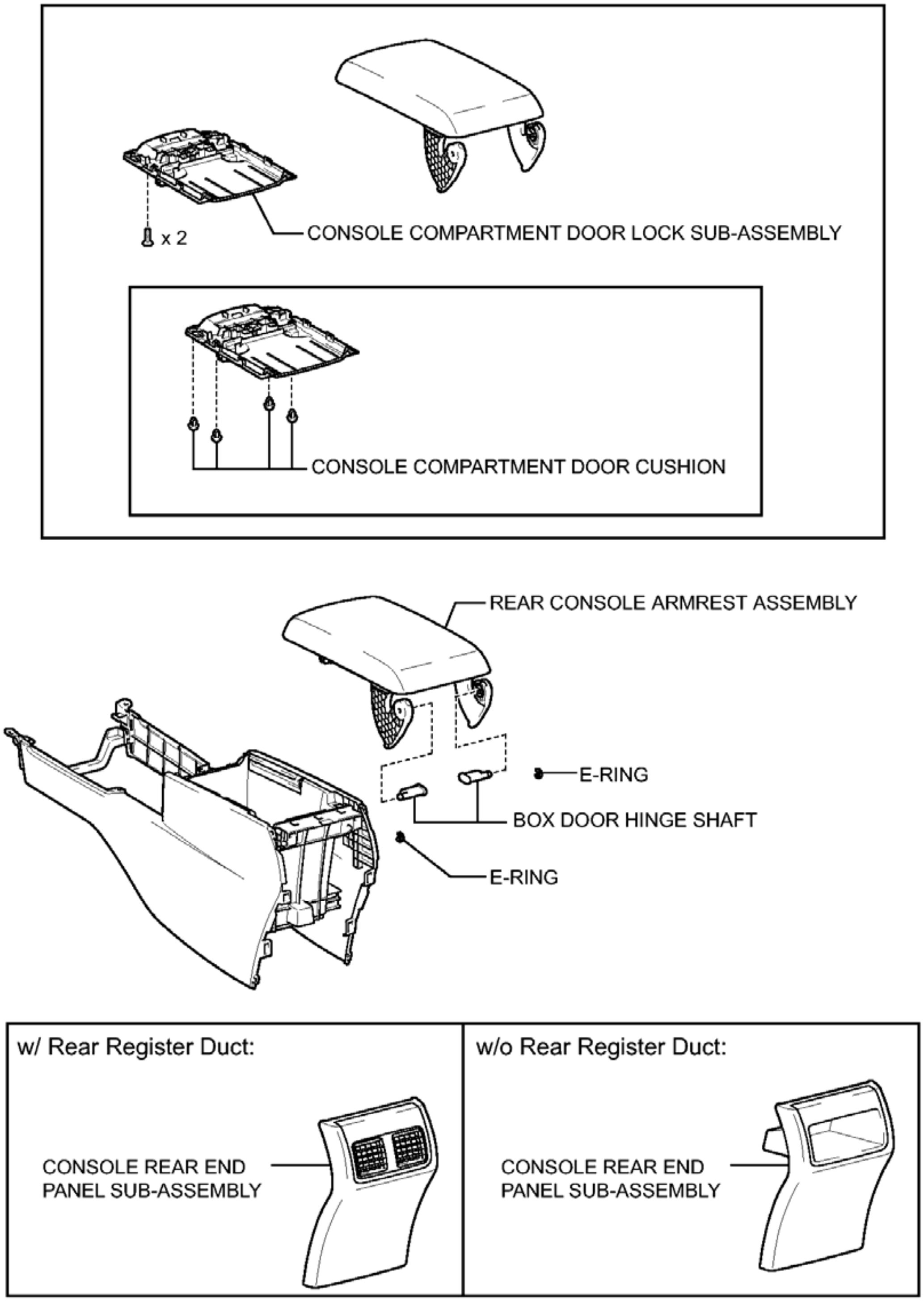
x 2
CONSOLE COMPARTMENT DOOR LOCK SUB-ASSEMBLY
CONSOLE COMPARTMENT DOOR CUSHION
REAR CONSOLE ARMREST ASSEMBLY
E-RING
BOX DOOR HINGE SHAFT
E-RING
w/ Rear Register Duct:
CONSOLE REAR END PANEL SUB-ASSEMBLY
w/o Rear Register Duct:
CONSOLE REAR END PANEL SUB-ASSEMBLY

P

Fig. 101: Identifying Front Console Box Replacement Components (2 Of 2)
Courtesy of TOYOTA MOTOR SALES, U.S.A., INC.

REMOVAL

REMOVAL

1. **REMOVE FRONT PANEL GARNISH LH** . See step 11.
2. **REMOVE FRONT PANEL GARNISH RH** . See step 14.
3. **REMOVE SHIFT LEVER KNOB SUB-ASSEMBLY** . See step 15.
4. **REMOVE REAR CONSOLE UPPER PANEL SUB-ASSEMBLY** . See step 16.
5. **REMOVE UPPER CONSOLE BOX SUB-ASSEMBLY**
    a. Remove the 2 screws.

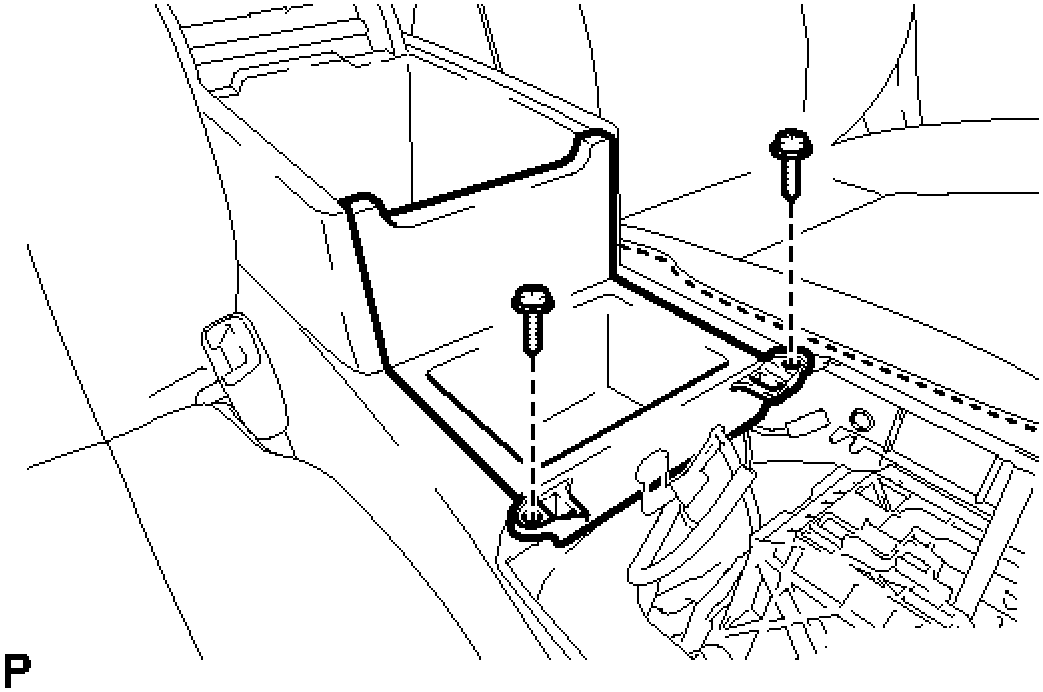

Fig. 102: Locating Upper Console Box Sub-Assembly Fasteners
Courtesy of TOYOTA MOTOR SALES, U.S.A., INC.

b. Disengage the 4 clips and remove the upper console box sub-assembly as shown in the illustration.

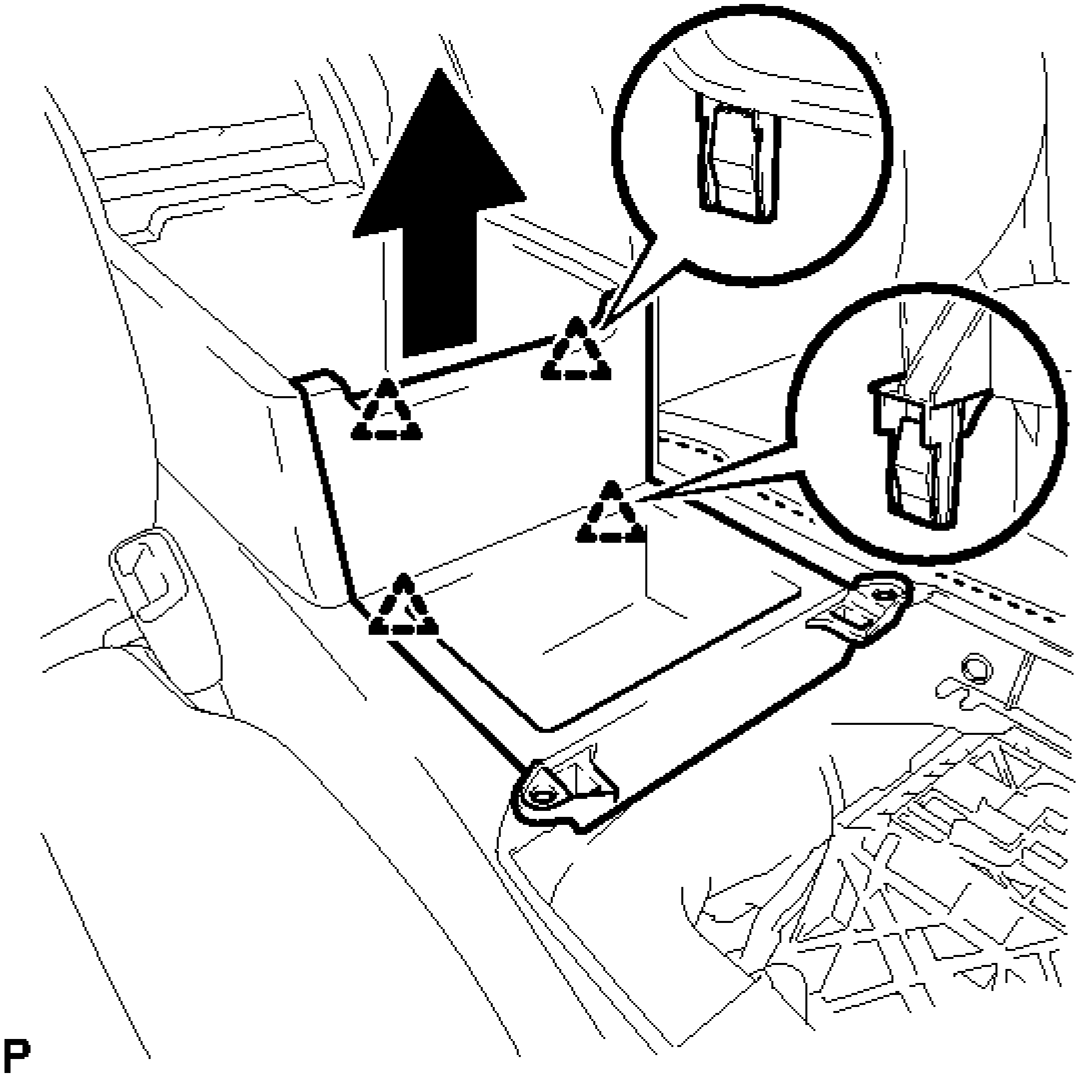

Fig. 103: Removing Upper Console Box Sub-Assembly
Courtesy of TOYOTA MOTOR SALES, U.S.A., INC.

c. w/ Power Outlet Socket:
    1. Disengage the clamp.

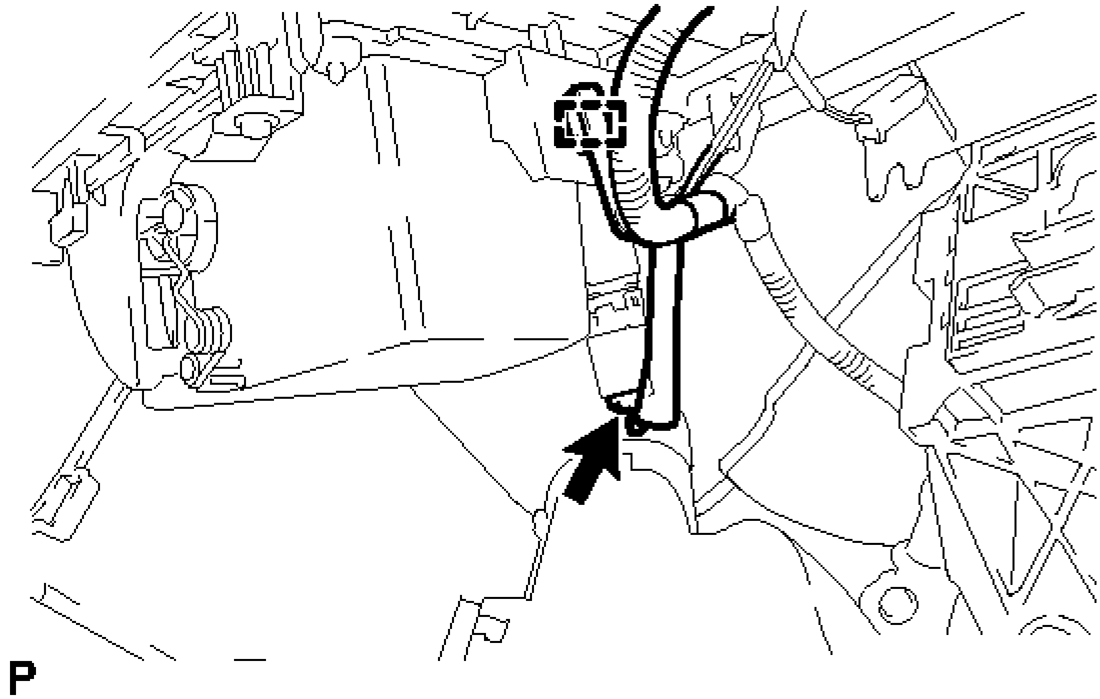

Fig. 104: Locating Upper Console Box Sub-Assembly Connector
Courtesy of TOYOTA MOTOR SALES, U.S.A., INC.

2. Disconnect the connector to remove the upper console box sub-assembly.

6. **REMOVE NO. 4 CONSOLE BOX DUCT (w/ Rear Register Duct)**

   a. Disengage the claw and remove the No. 4 console box duct.

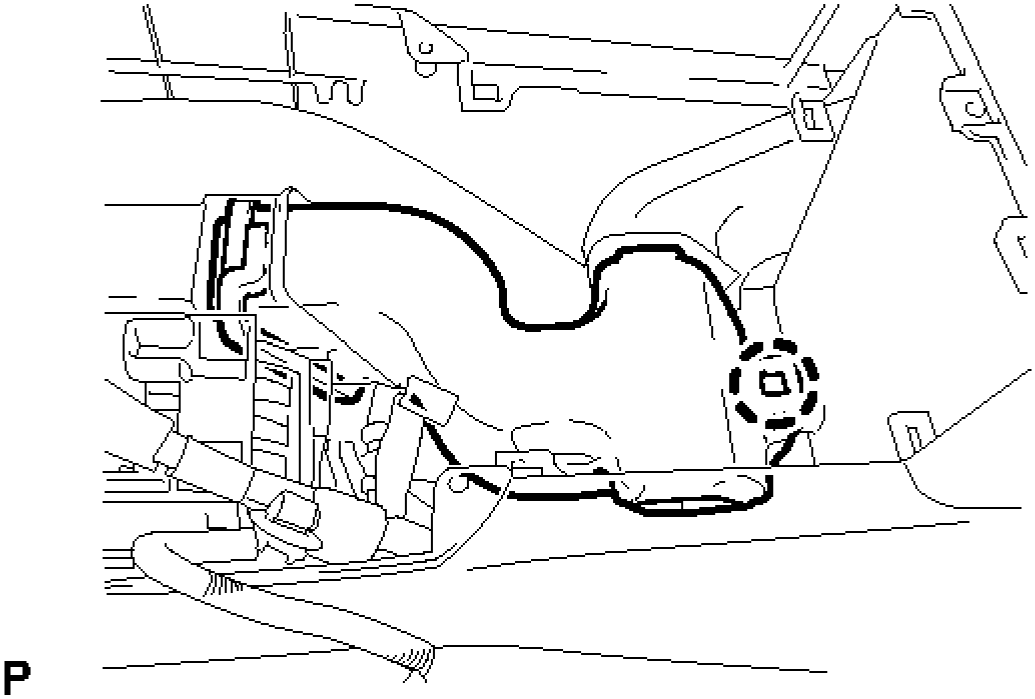

Fig. 105: Locating No. 4 Console Box Duct (w/ Rear Register Duct) Claw
Courtesy of TOYOTA MOTOR SALES, U.S.A., INC.

7. **REMOVE CONSOLE BOX CARPET**
    a. Remove the console box carpet.

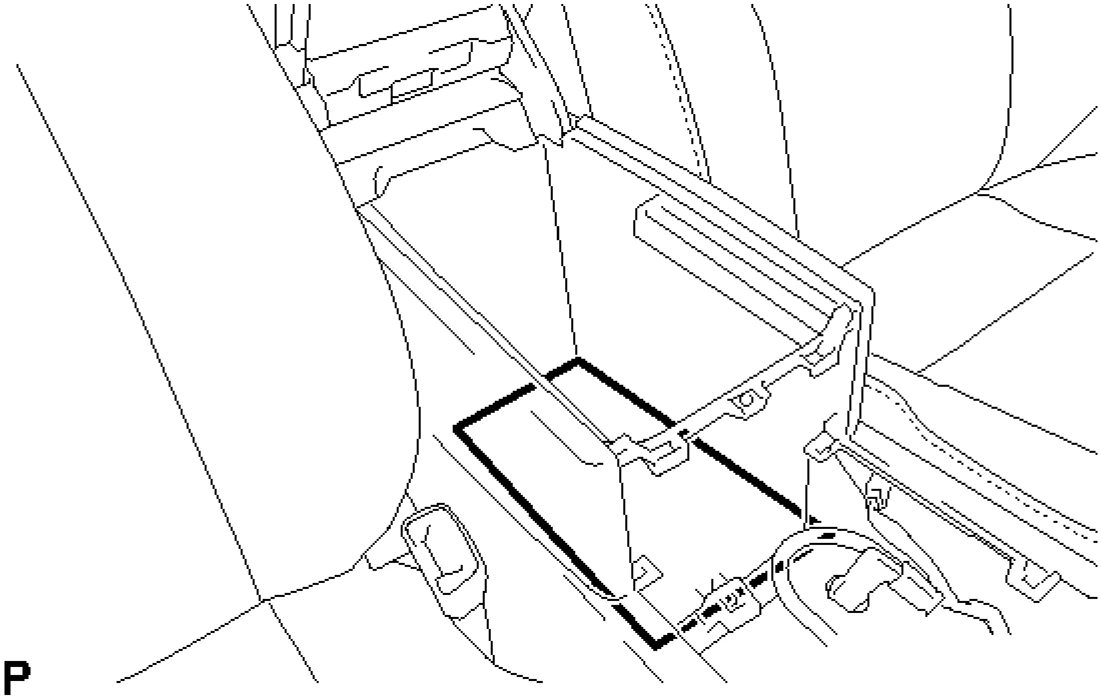

Fig. 106: Identifying Console Box Carpet
Courtesy of TOYOTA MOTOR SALES, U.S.A., INC.

8. **REMOVE REAR CONSOLE BOX ASSEMBLY**
    a. Remove the 2 bolts and 2 screws.

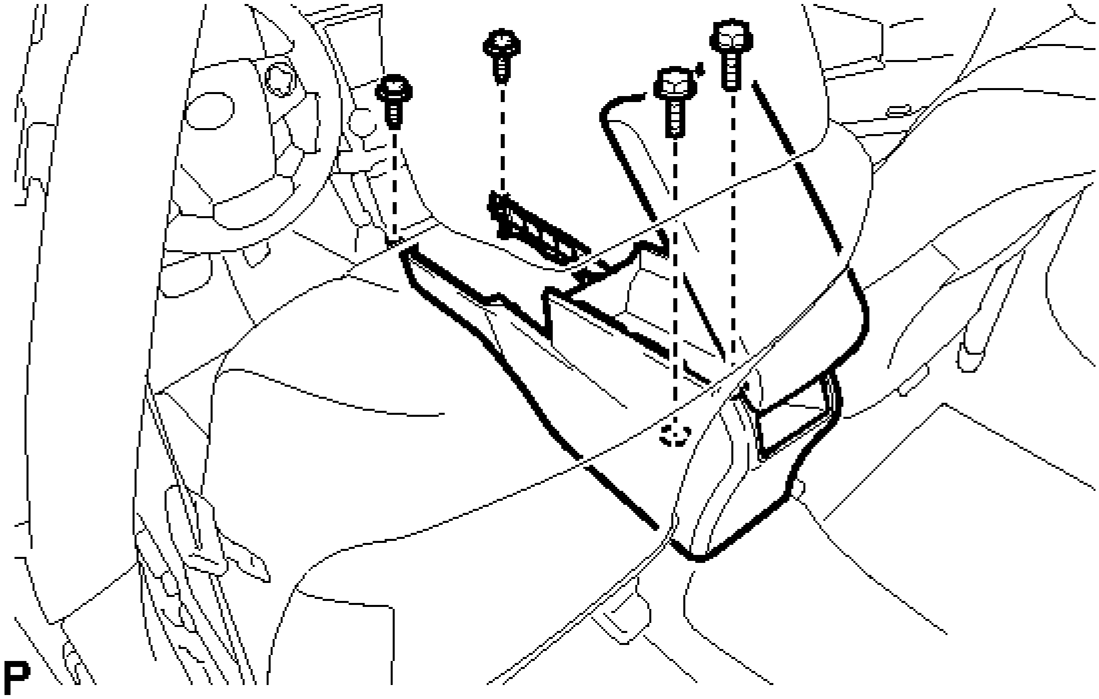

Fig. 107: Locating Rear Console Box Assembly Fasteners
Courtesy of TOYOTA MOTOR SALES, U.S.A., INC.

b. Pull the rear console box assembly in the direction indicated by the arrow to disengage the 4 guides and remove the rear console box assembly.

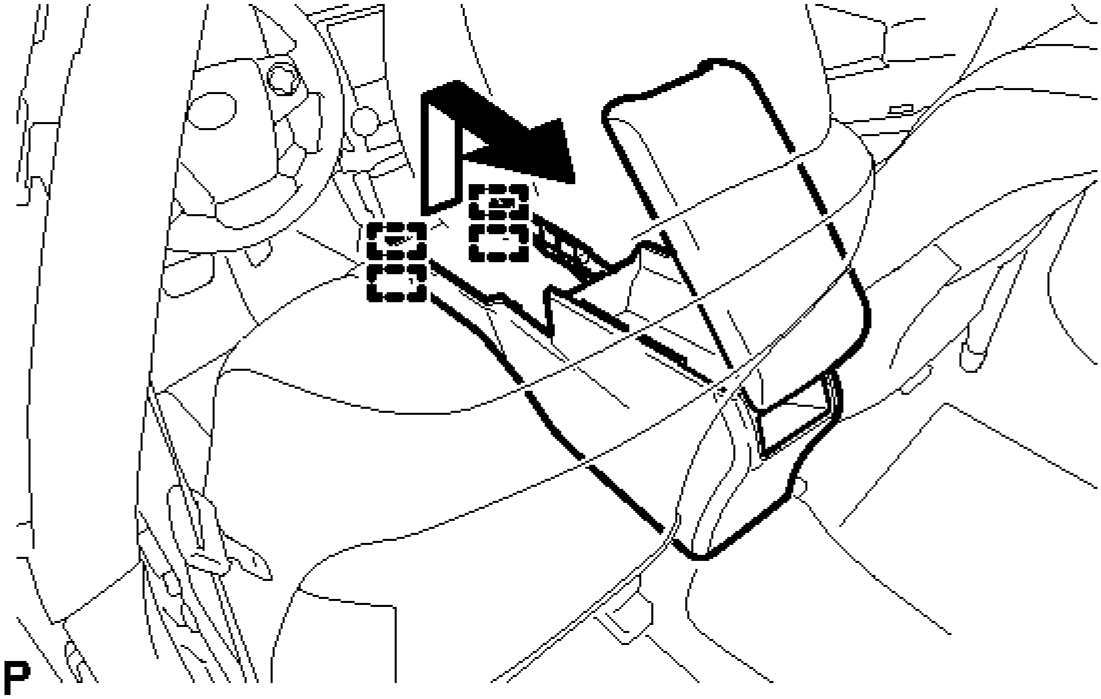

Fig. 108: Removing Rear Console Box Assembly

Courtesy of TOYOTA MOTOR SALES, U.S.A., INC.

DISASSEMBLY

DISASSEMBLY

1. **REMOVE CONSOLE REAR END PANEL SUB-ASSEMBLY**
    a. Disengage the 4 claws and 4 clips to remove the console rear end panel sub-assembly.

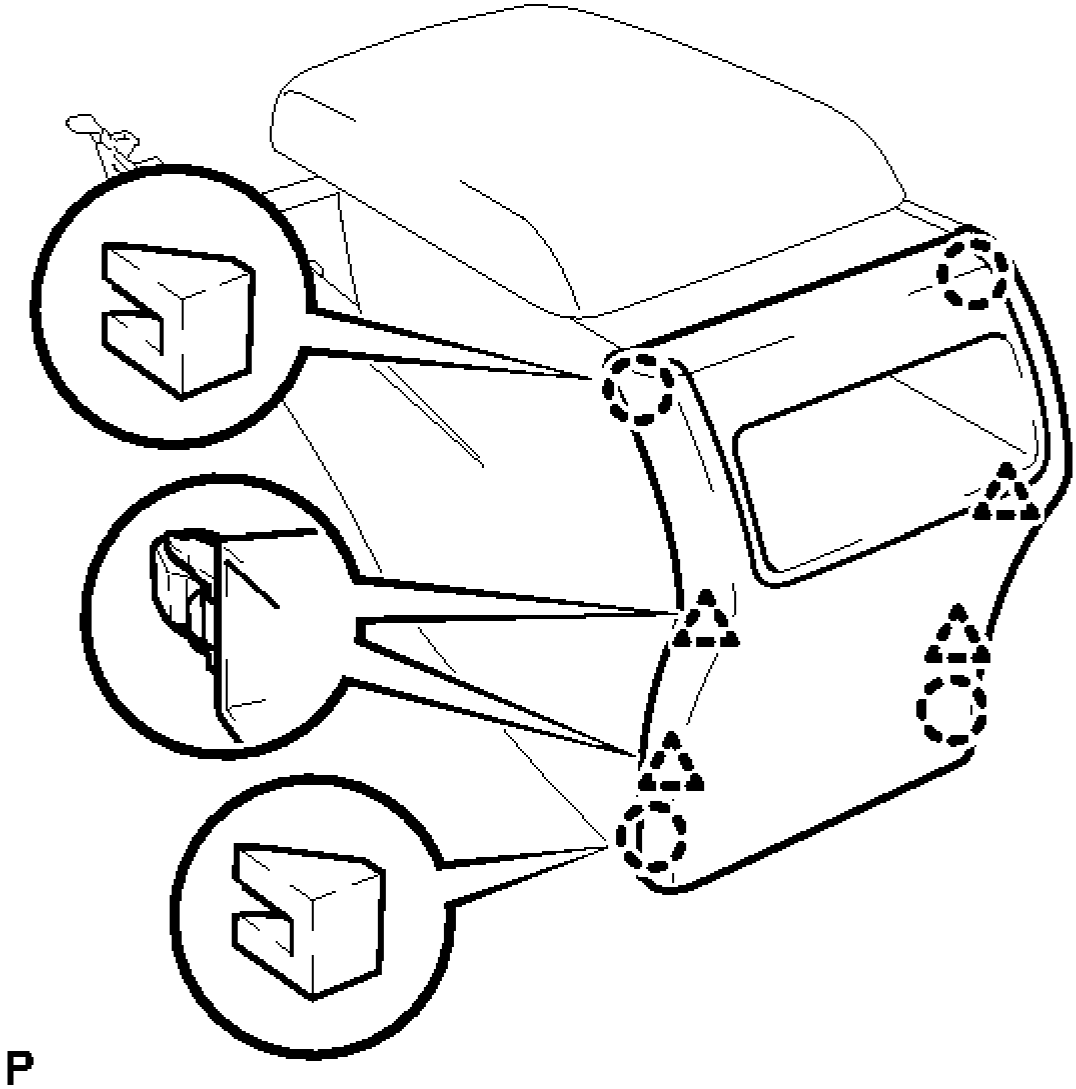

Fig. 109: Identifying Console Rear End Panel Sub-Assembly
Courtesy of TOYOTA MOTOR SALES, U.S.A., INC.

2. **REMOVE REAR CONSOLE ARMREST ASSEMBLY**
    a. Using a screwdriver, remove the 2 E-rings.

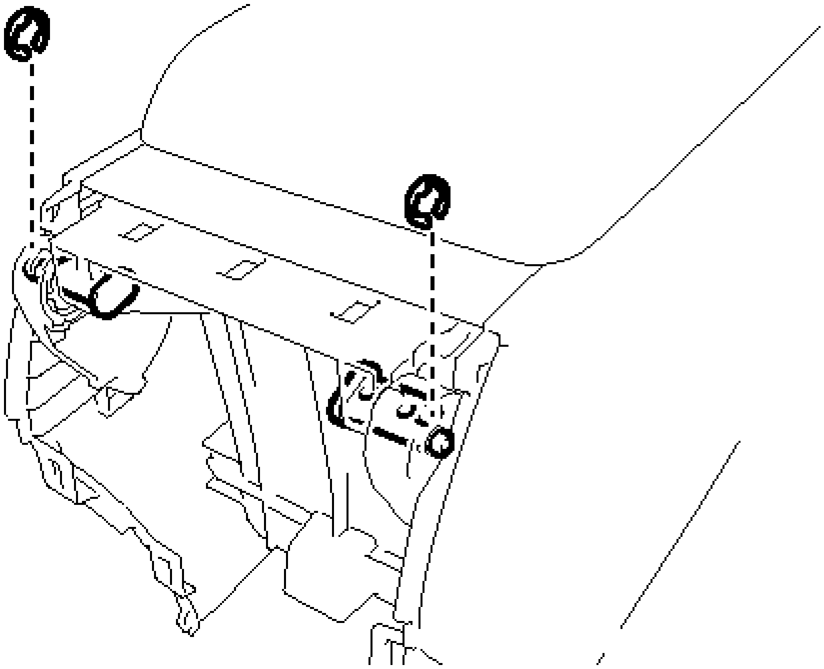

Fig. 110: Locating Rear Console Armrest Assembly E-Rings
Courtesy of TOYOTA MOTOR SALES, U.S.A., INC.

NOTE: **Be careful not to allow the E-rings to pop out when removing them.**

b. Using a screwdriver, pull out the 2 box door hinge shafts.

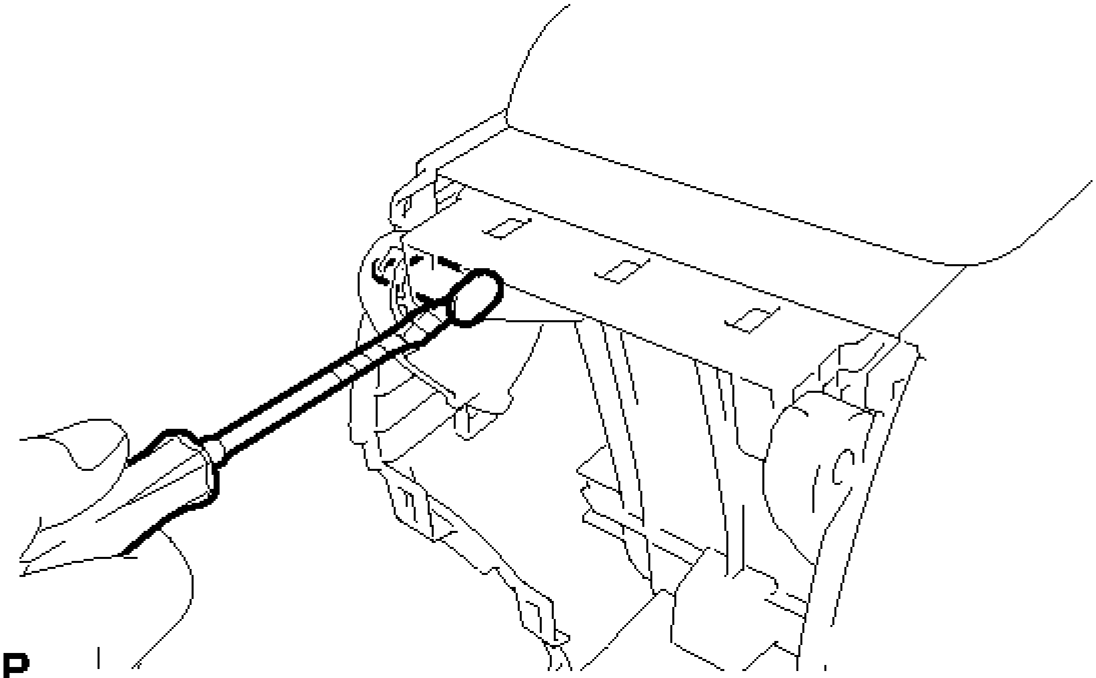

Fig. 111: Removing Rear Console Armrest Assembly Hinge Shafts
Courtesy of TOYOTA MOTOR SALES, U.S.A., INC.

HINT:

- Tape the screwdriver tip before use.
- The illustration is for the LH side.
- Use the same procedure for the RH side and LH side.

c. Remove the rear console armrest assembly.

3. **REMOVE CONSOLE COMPARTMENT DOOR LOCK SUB-ASSEMBLY**

a. Remove the 2 screws.

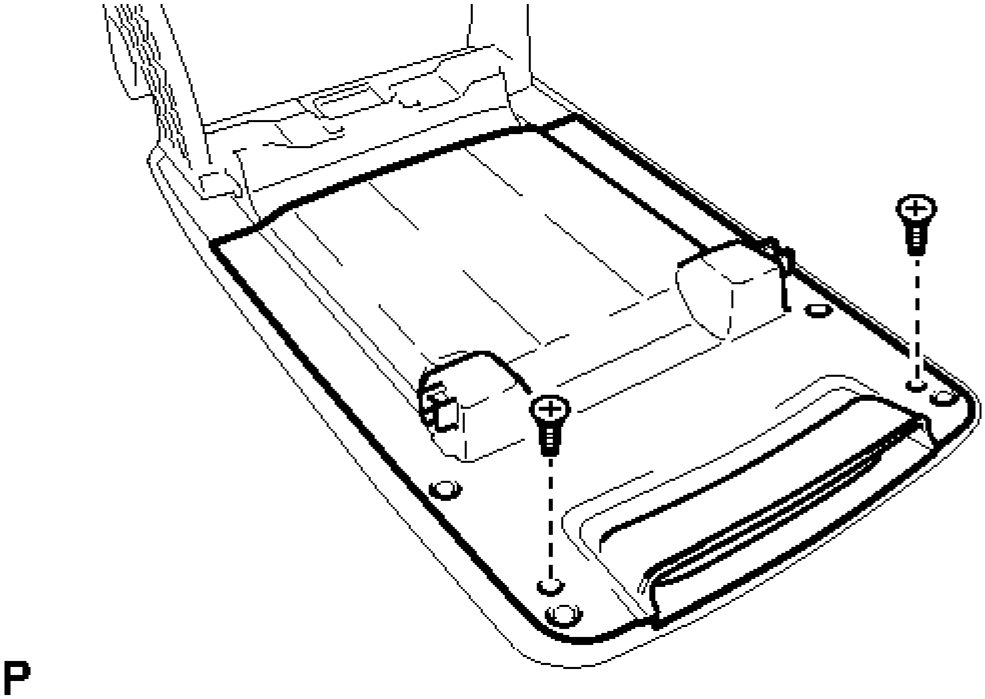

Fig. 112: Locating Console Compartment Door Lock Sub-Assembly Fasteners
Courtesy of TOYOTA MOTOR SALES, U.S.A., INC.

b. Using a screwdriver, disengage the 8 claws.

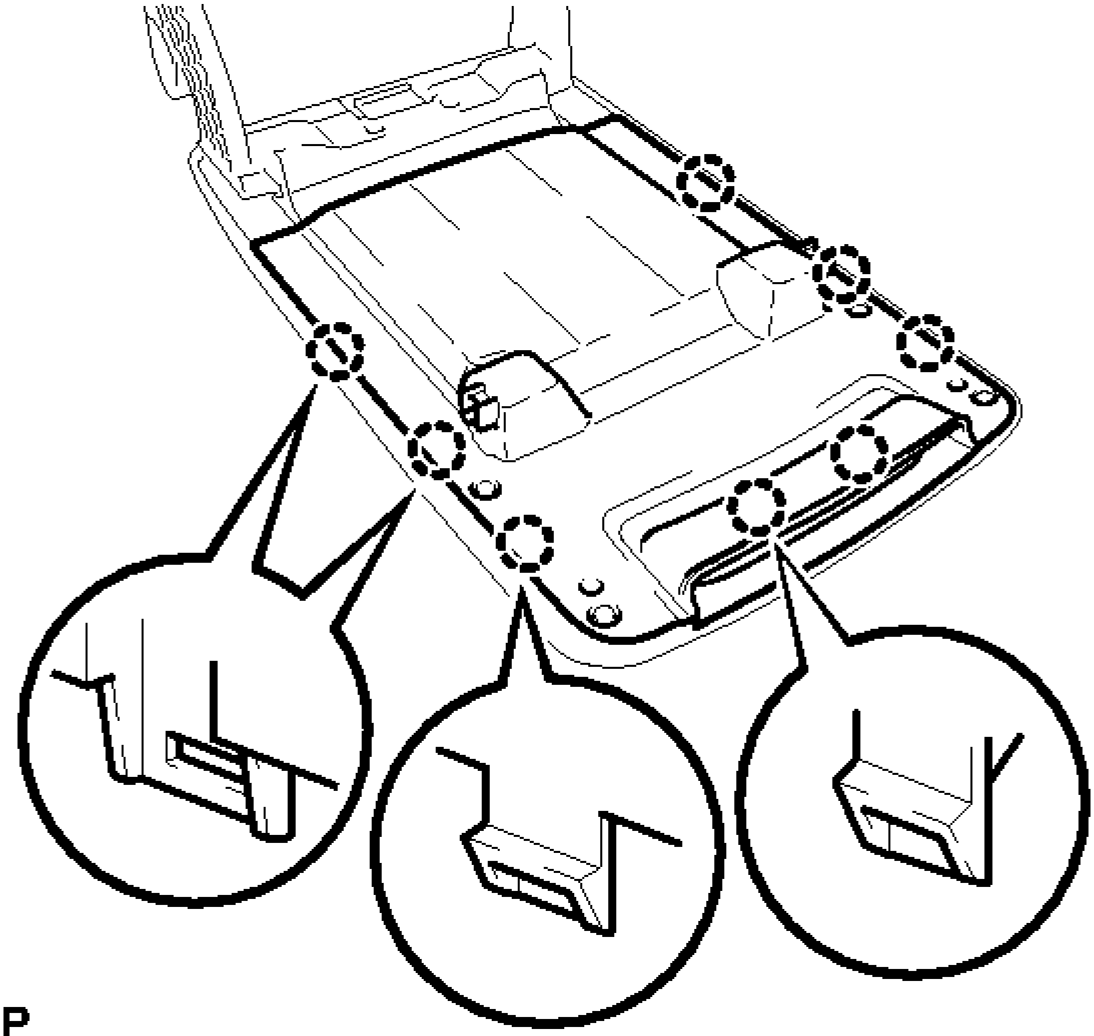

Fig. 113: Locating Console Compartment Door Lock Sub-Assembly Claws
Courtesy of TOYOTA MOTOR SALES, U.S.A., INC.

HINT:

Tape the screwdriver tip before use.

c. Disengage the 2 guides to remove the console compartment door lock sub-assembly as shown in the illustration.

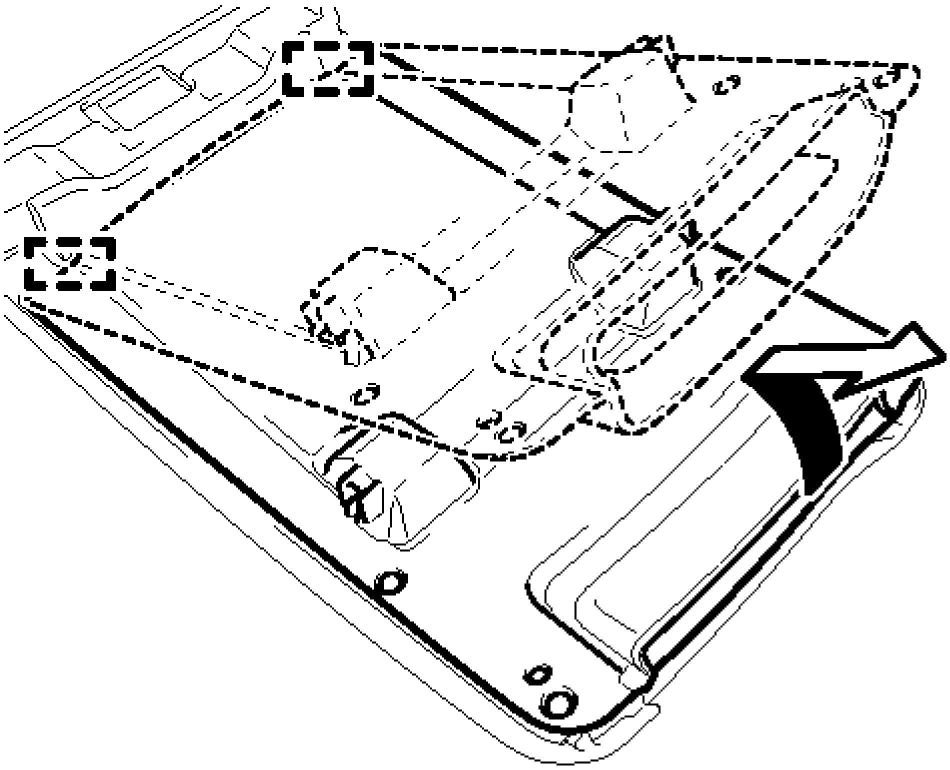

Fig. 114: Removing Console Compartment Door Lock Sub-Assembly
Courtesy of TOYOTA MOTOR SALES, U.S.A., INC.

4. **REMOVE CONSOLE COMPARTMENT DOOR CUSHION**
    a. Remove the 4 console compartment door cushions from the console compartment door lock sub-assembly.

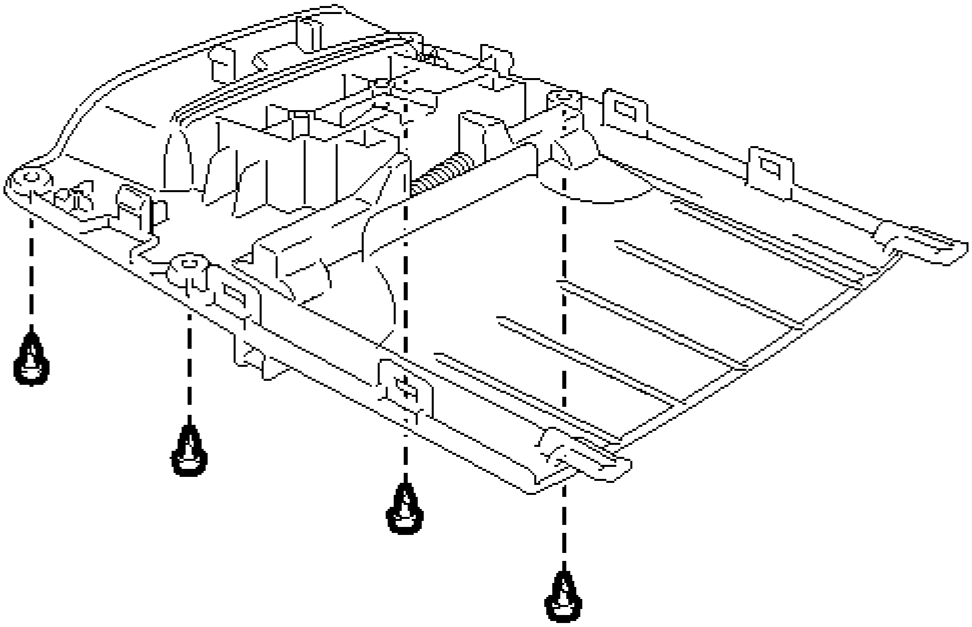

Fig. 115: Locating Console Compartment Door Cushion Fasteners
Courtesy of TOYOTA MOTOR SALES, U.S.A., INC.

REASSEMBLY

REASSEMBLY

1. **INSTALL CONSOLE COMPARTMENT DOOR CUSHION**
    a. Install the 4 console compartment door cushions to the console compartment door lock sub-assembly.

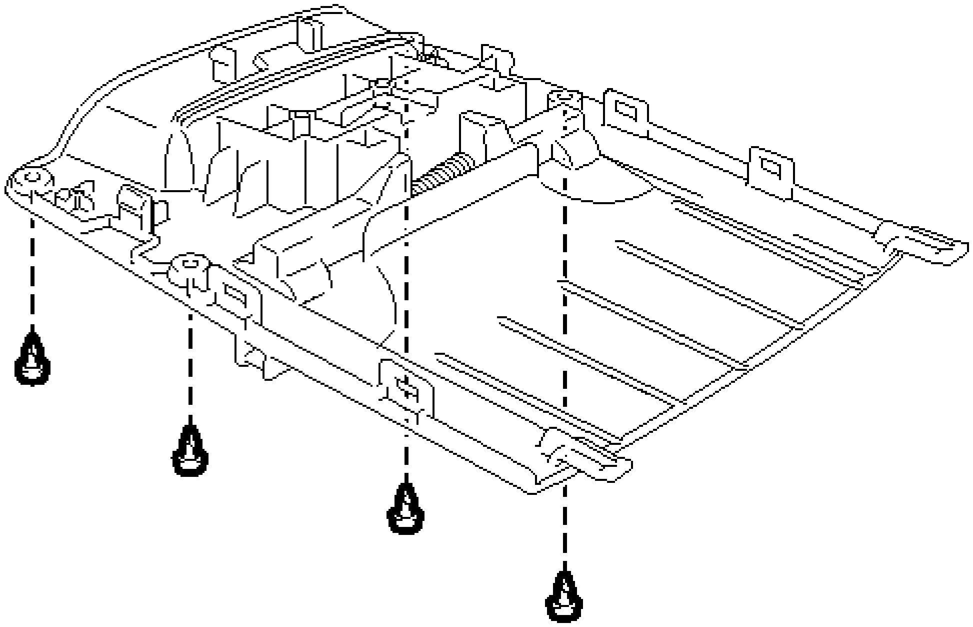

Fig. 116: Locating Console Compartment Door Cushion Fasteners
Courtesy of TOYOTA MOTOR SALES, U.S.A., INC.

2. **INSTALL CONSOLE COMPARTMENT DOOR LOCK SUB-ASSEMBLY**
    a. Engage the 2 guides and temporarily install the console compartment door lock sub-assembly as shown in the illustration.

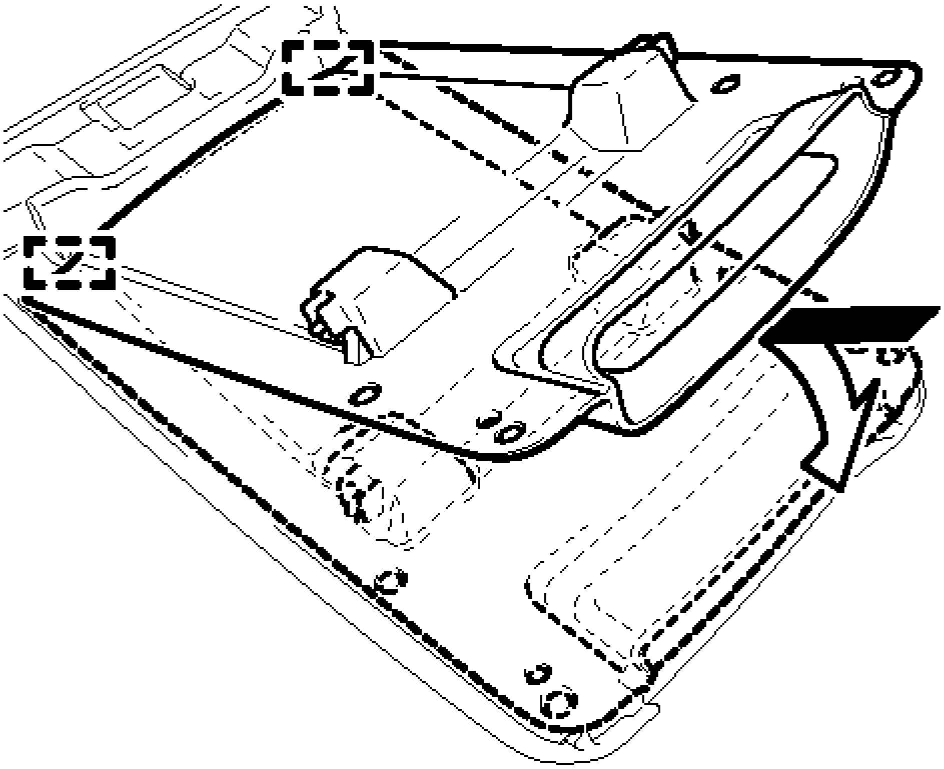

P

Fig. 117: Installing Console Compartment Door Lock Sub-Assembly
Courtesy of TOYOTA MOTOR SALES, U.S.A., INC.

b. Engage the 8 claws.

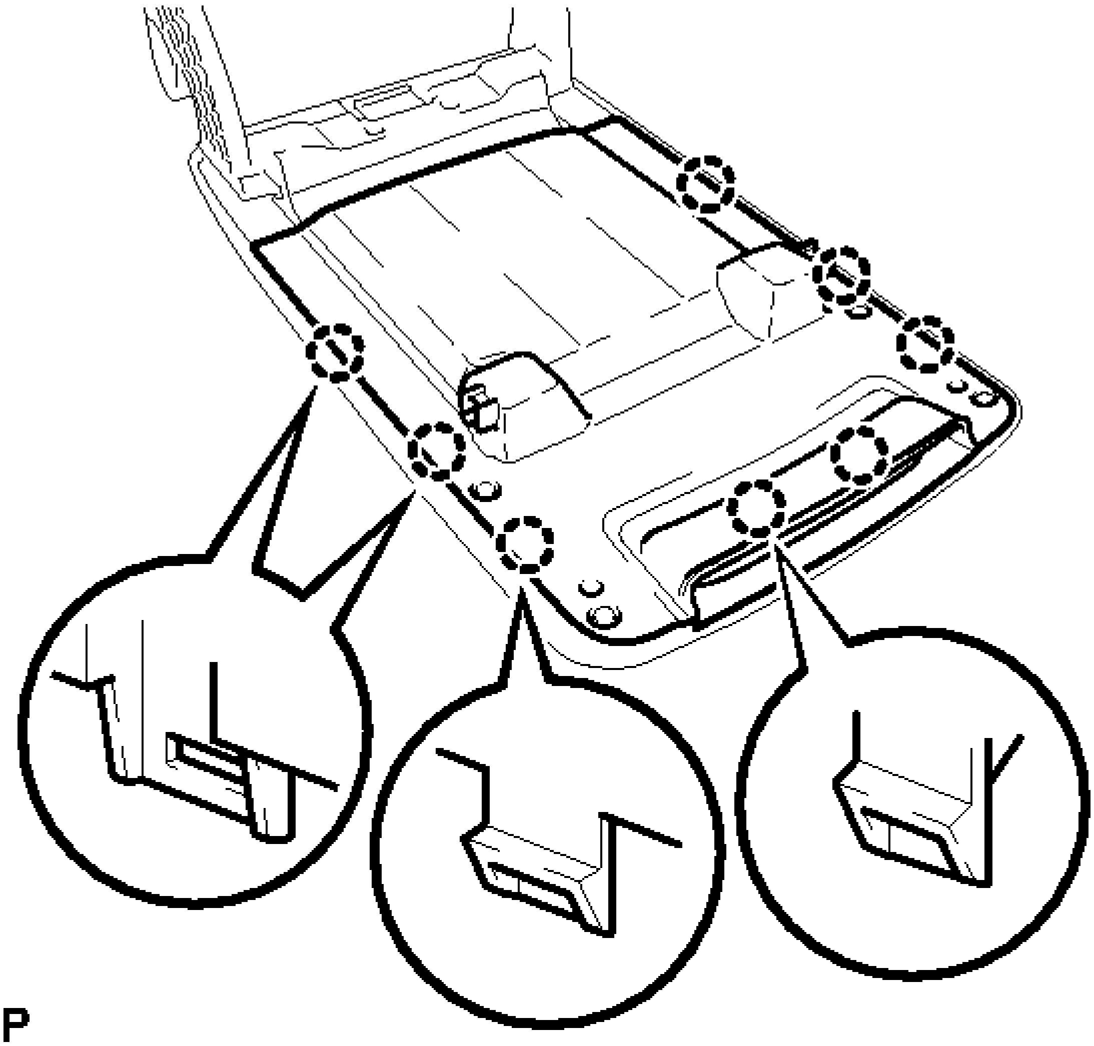

Fig. 118: Locating Console Compartment Door Lock Sub-Assembly Claws
Courtesy of TOYOTA MOTOR SALES, U.S.A., INC.

c. Install the console compartment door lock sub-assembly with the 2 screws.

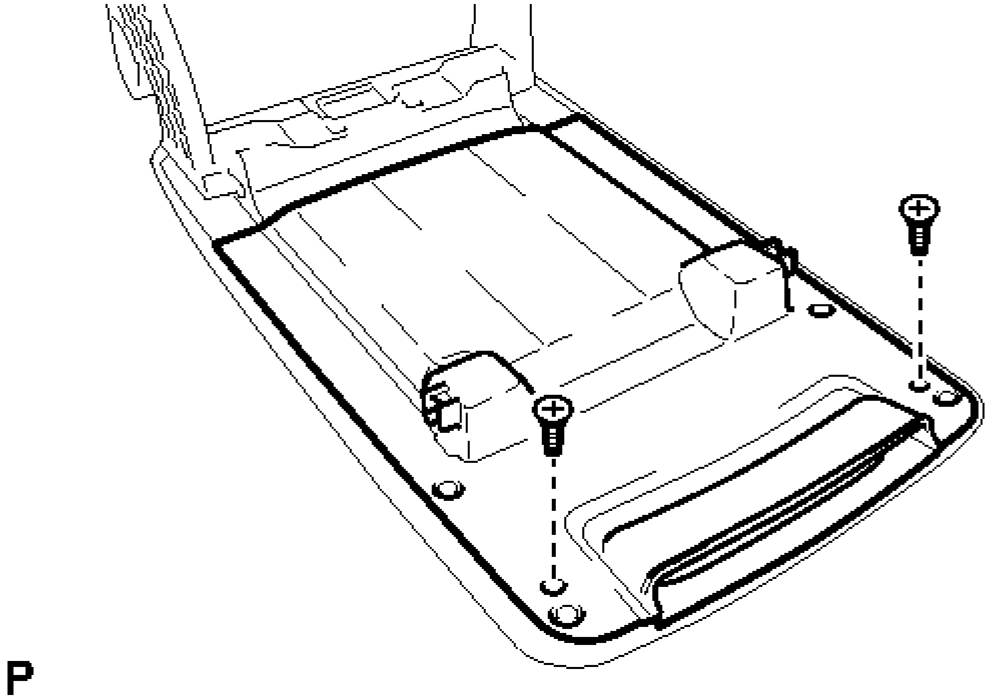

Fig. 119: Locating Console Compartment Door Lock Sub-Assembly Fasteners
Courtesy of TOYOTA MOTOR SALES, U.S.A., INC.

3. **INSTALL REAR CONSOLE ARMREST ASSEMBLY**
   a. Temporarily install the rear console armrest assembly.
   b. Push in the 2 box door hinge shafts by hand as far as possible.

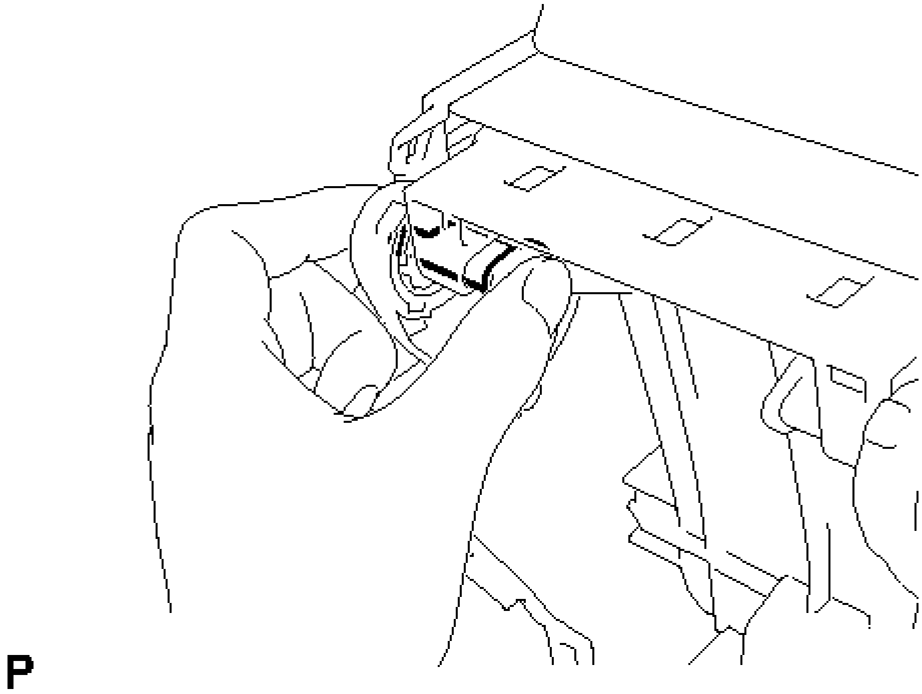

Fig. 120: Installing Rear Console Armrest Assembly Hinge Shafts
Courtesy of TOYOTA MOTOR SALES, U.S.A., INC.

HINT:

- The illustration is for the LH side.
- Use the same procedure for the RH side and LH side.

c. Using pliers, push in the 2 box door hinge shafts completely.

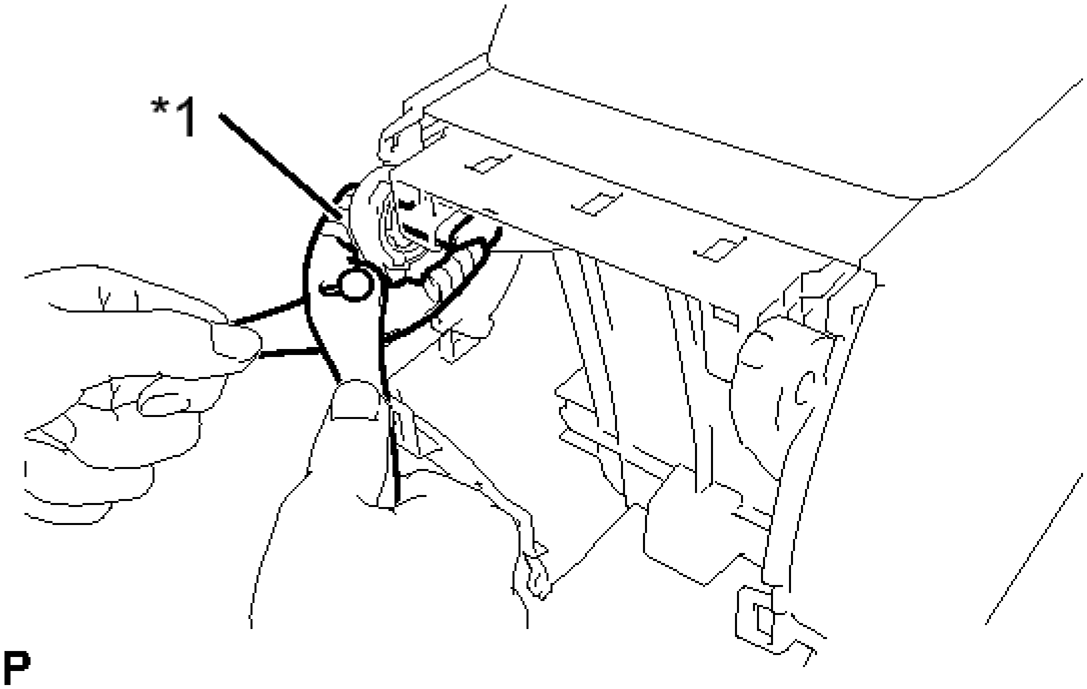

Fig. 121: Installing Rear Console Armrest Assembly Hinge Shafts Using Pliers
Courtesy of TOYOTA MOTOR SALES, U.S.A., INC.

TEXT IN ILLUSTRATION

*1	Protective Tape

HINT:

- Tape the tips of the pliers before use.
- The illustration is for the LH side.
- Use the same procedure for the RH side and LH side.

d. Install the rear console armrest assembly with the 2 E-rings.

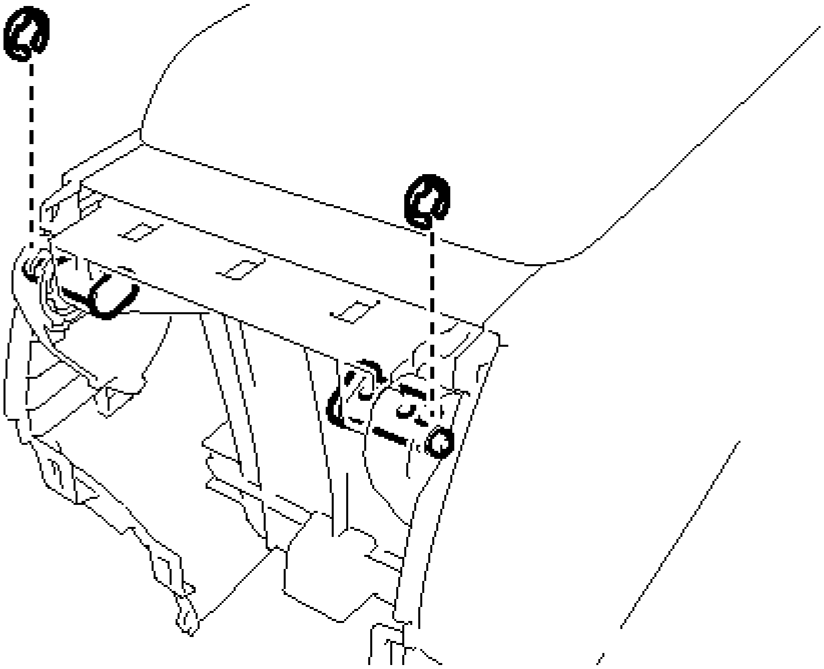

P

Fig. 122: Locating Rear Console Armrest Assembly E-Rings
Courtesy of TOYOTA MOTOR SALES, U.S.A., INC.

4. **INSTALL CONSOLE REAR END PANEL SUB-ASSEMBLY**
    a. Engage the 4 claws and 4 clips to install the console rear end panel sub-assembly.

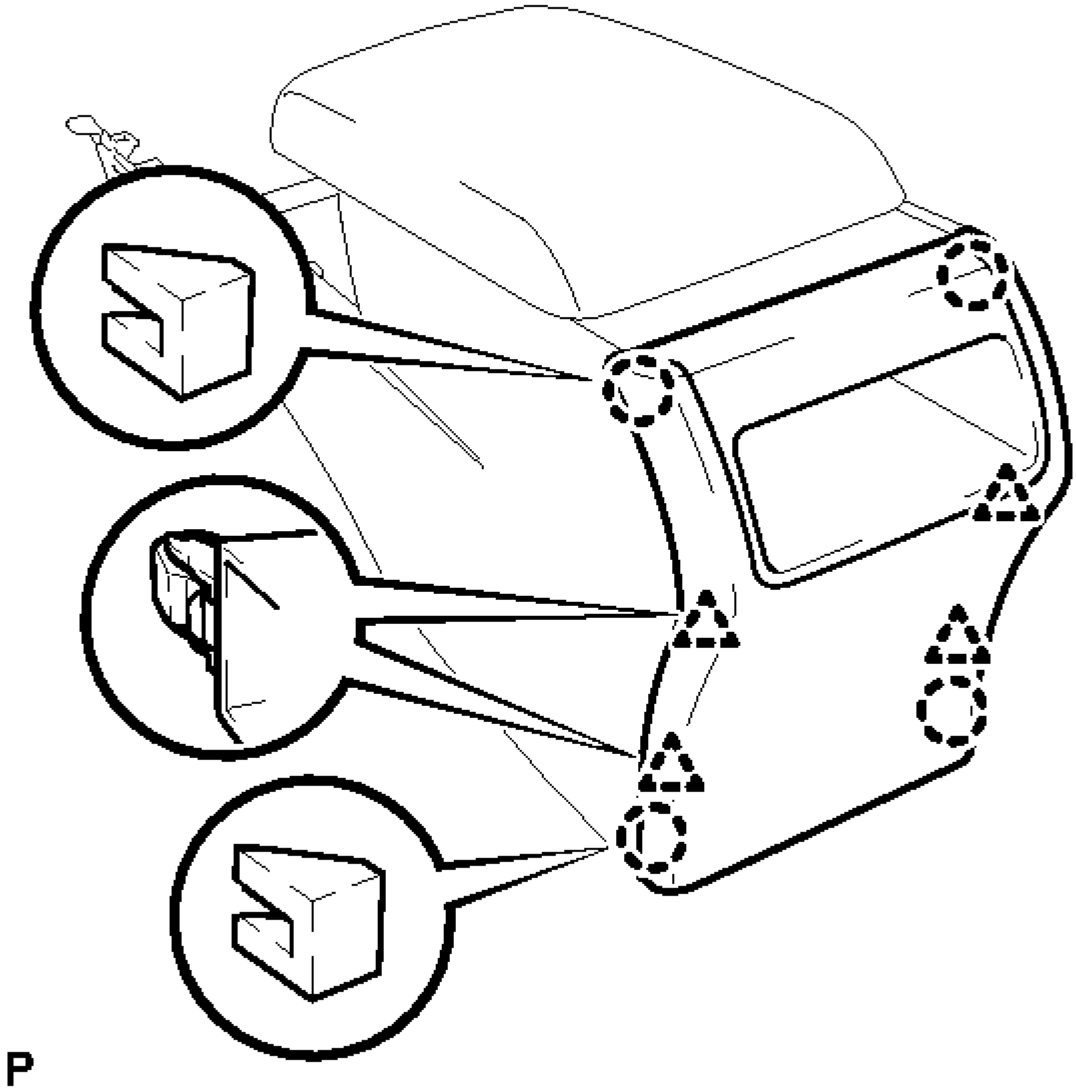

Fig. 123: Identifying Console Rear End Panel Sub-Assembly
Courtesy of TOYOTA MOTOR SALES, U.S.A., INC.

INSTALLATION

INSTALLATION

1. **INSTALL REAR CONSOLE BOX ASSEMBLY**
    a. Engage the 4 guides as shown in the illustration.

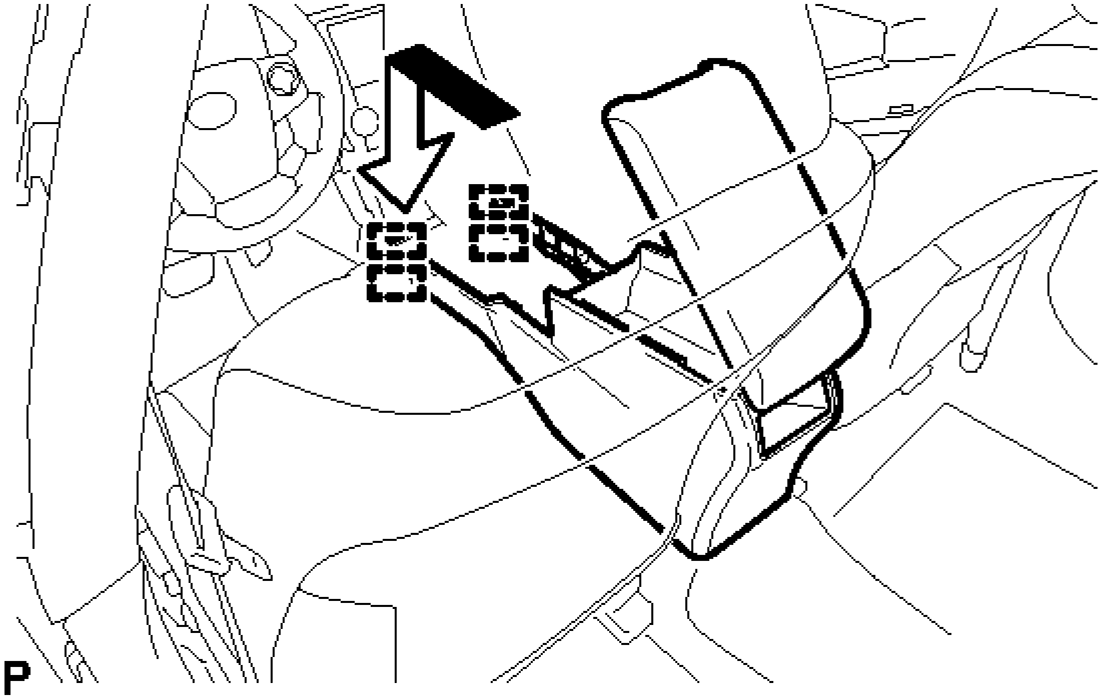

Fig. 124: Installing Rear Console Box Assembly
Courtesy of TOYOTA MOTOR SALES, U.S.A., INC.

- b. Install the rear console box assembly with the 2 bolts and 2 screws.

2. **INSTALL CONSOLE BOX CARPET**
    - a. Install the console box carpet.
3. **INSTALL NO. 4 CONSOLE BOX DUCT (w/ Rear Register Duct)**
    - a. Engage the claw to install the No. 4 console box duct.
4. **INSTALL UPPER CONSOLE BOX SUB-ASSEMBLY**
    - a. w/ Power Outlet Socket:
        1. Connect the connector.
        2. Engage the clamp.
    - b. Engage the 4 clips as shown in the illustration.

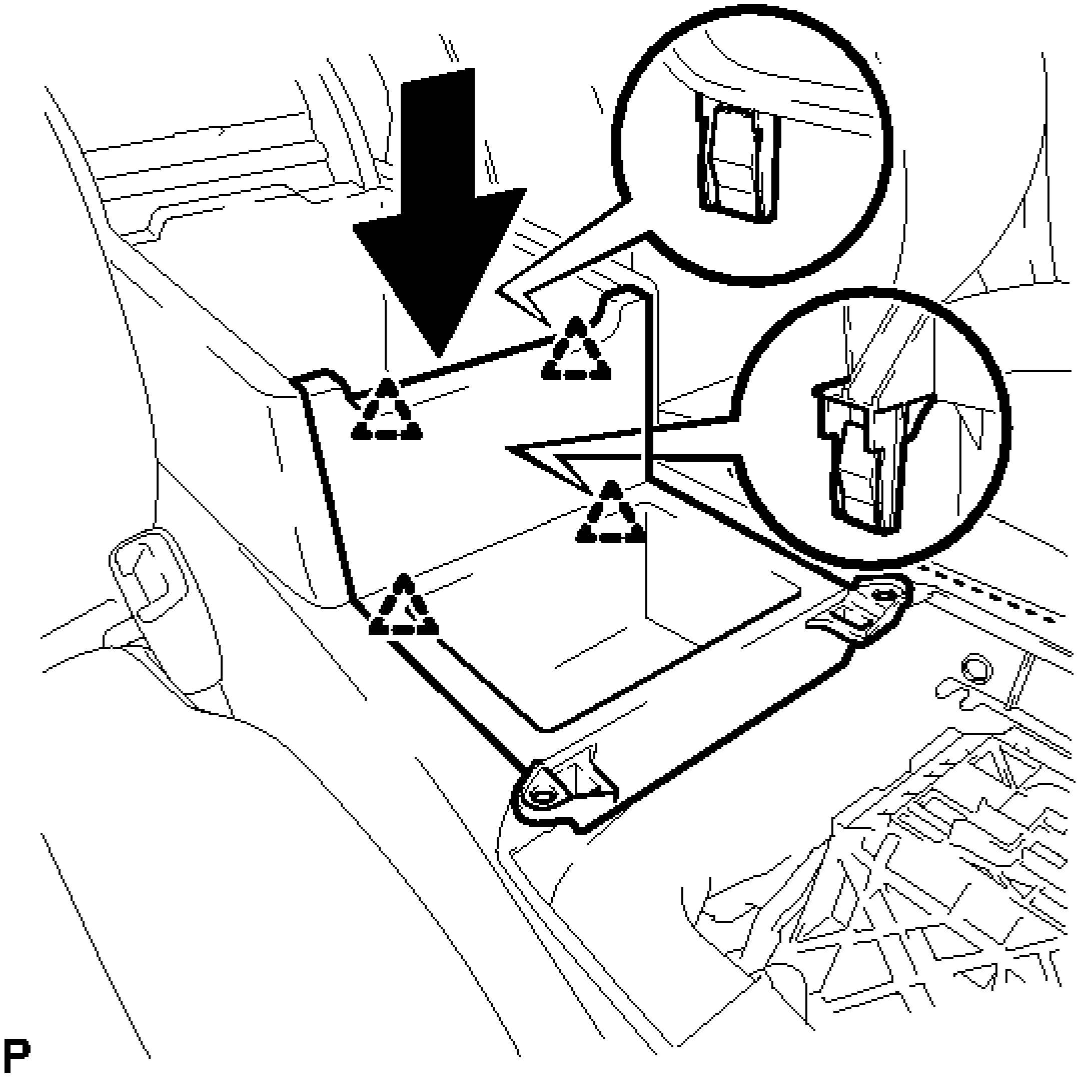

Fig. 125: Installing Upper Console Box Sub-Assembly
Courtesy of TOYOTA MOTOR SALES, U.S.A., INC.

c. Install the upper console box sub-assembly with the 2 screws.

5. **INSTALL REAR CONSOLE UPPER PANEL SUB-ASSEMBLY** . See step 37.
6. **INSTALL SHIFT LEVER KNOB SUB-ASSEMBLY** . See step 38.
7. **INSTALL FRONT PANEL GARNISH RH** . See step 39.
8. **INSTALL FRONT PANEL GARNISH LH** . See step 42.

ROOF HEADLINING

COMPONENTS

ILLUSTRATION

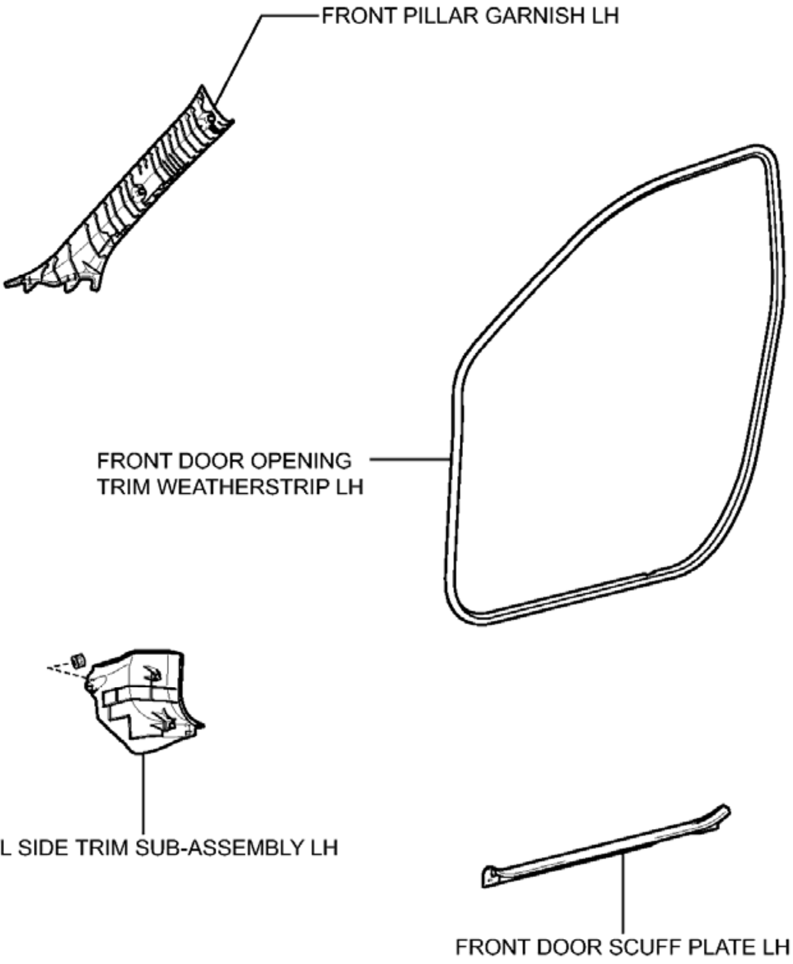
FRONT PILLAR GARNISH LH
FRONT DOOR OPENING TRIM WEATHERSTRIP LH
COWL SIDE TRIM SUB-ASSEMBLY LH
FRONT DOOR SCUFF PLATE LH

P

Fig. 126: Identifying Roof Headlining Replacement Components (1 Of 12)
Courtesy of TOYOTA MOTOR SALES, U.S.A., INC.

ILLUSTRATION

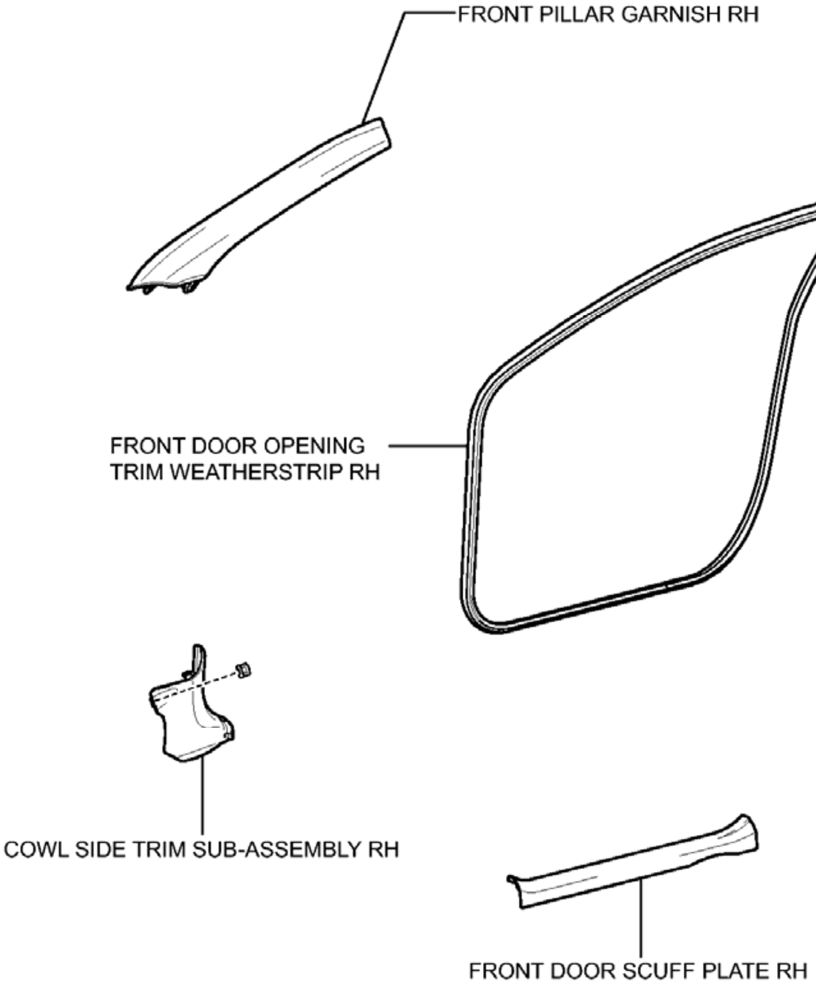
FRONT PILLAR GARNISH RH
FRONT DOOR OPENING TRIM WEATHERSTRIP RH
COWL SIDE TRIM SUB-ASSEMBLY RH
FRONT DOOR SCUFF PLATE RH
P

Fig. 127: Identifying Roof Headlining Replacement Components (2 Of 12)
Courtesy of TOYOTA MOTOR SALES, U.S.A., INC.

ILLUSTRATION

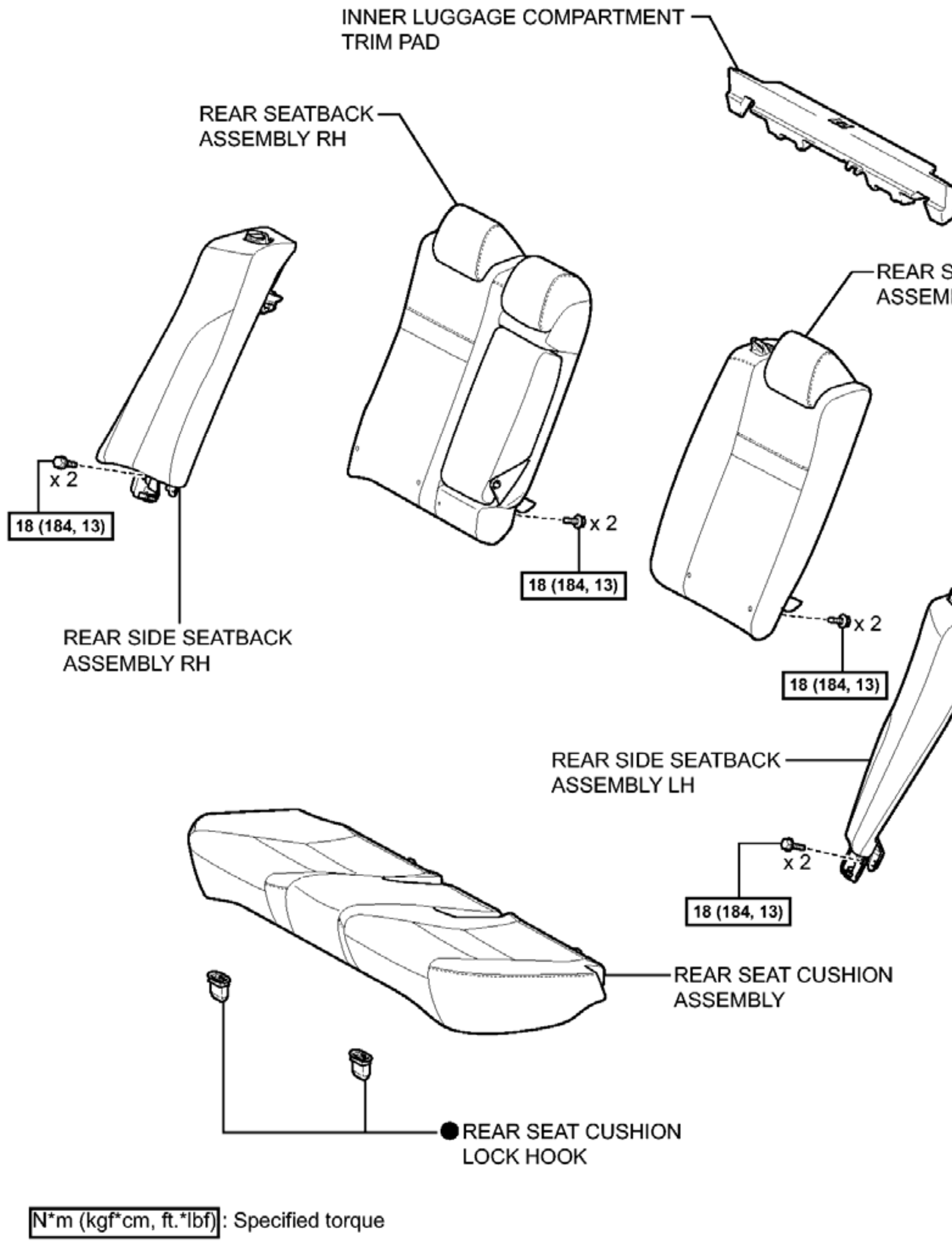
INNER LUGGAGE COMPARTMENT TRIM PAD
REAR SEATBACK ASSEMBLY RH
REAR SEATBACK ASSEMBLY LH
x 2
18 (184, 13)
x 2
18 (184, 13)
x 2
18 (184, 13)
REAR SIDE SEATBACK ASSEMBLY RH
REAR SIDE SEATBACK ASSEMBLY LH
x 2
18 (184, 13)
REAR SEAT CUSHION ASSEMBLY
● REAR SEAT CUSHION LOCK HOOK
N*m (kgf*cm, ft.*lbf) : Specified torque
● Non-reusable part
P

Fig. 128: Identifying Roof Headlining Replacement Components With Torque Specifications (3 Of 12)
Courtesy of TOYOTA MOTOR SALES, U.S.A., INC.

ILLUSTRATION

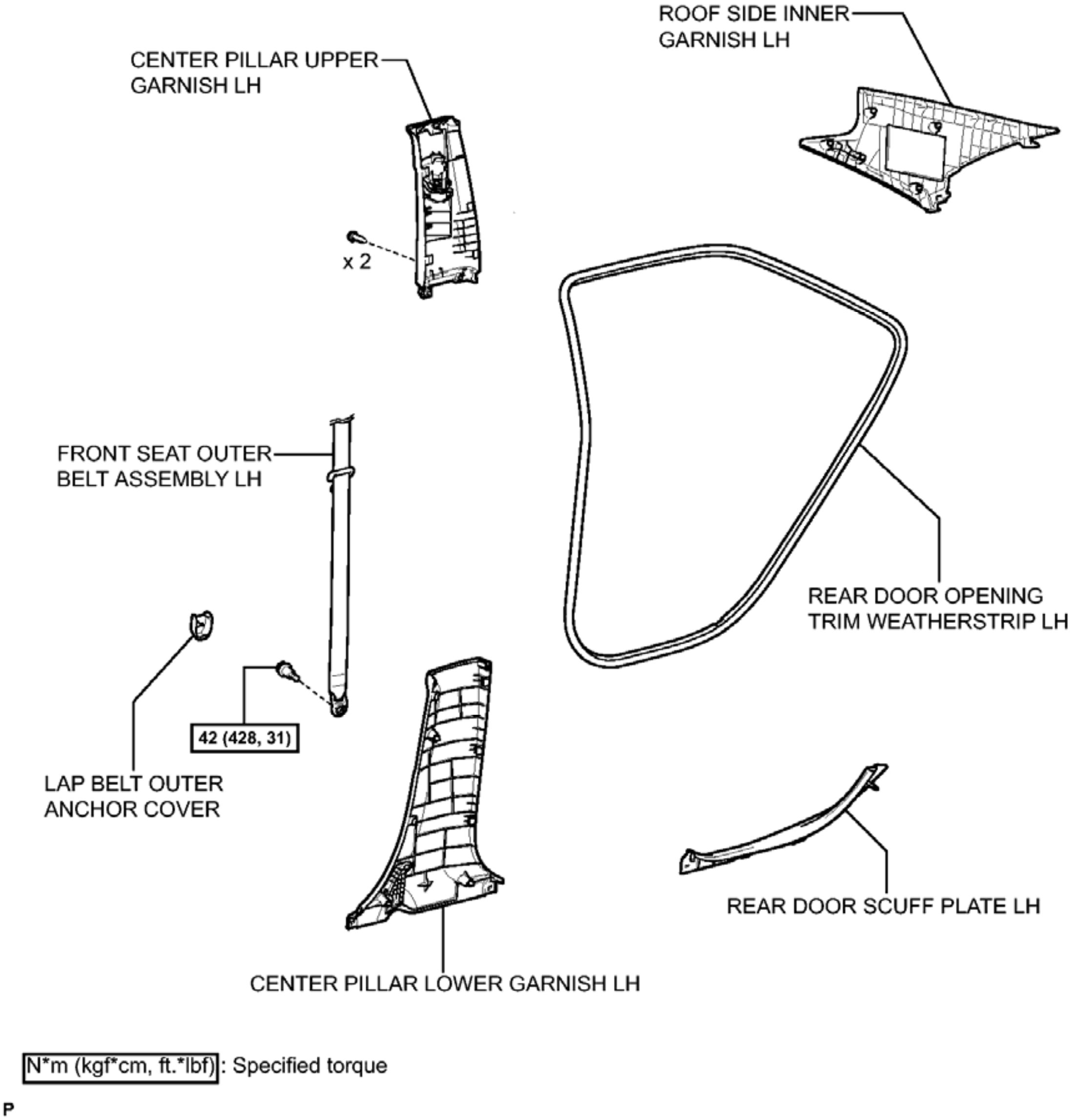
ROOF SIDE INNER GARNISH LH
CENTER PILLAR UPPER GARNISH LH
x 2
FRONT SEAT OUTER BELT ASSEMBLY LH
REAR DOOR OPENING TRIM WEATHERSTRIP LH
42 (428, 31)
LAP BELT OUTER ANCHOR COVER
REAR DOOR SCUFF PLATE LH
CENTER PILLAR LOWER GARNISH LH
N*m (kgf*cm, ft.*lbf) : Specified torque
P

Fig. 129: Identifying Roof Headlining Replacement Components With Torque Specifications (4 Of 12)
Courtesy of TOYOTA MOTOR SALES, U.S.A., INC.

ILLUSTRATION

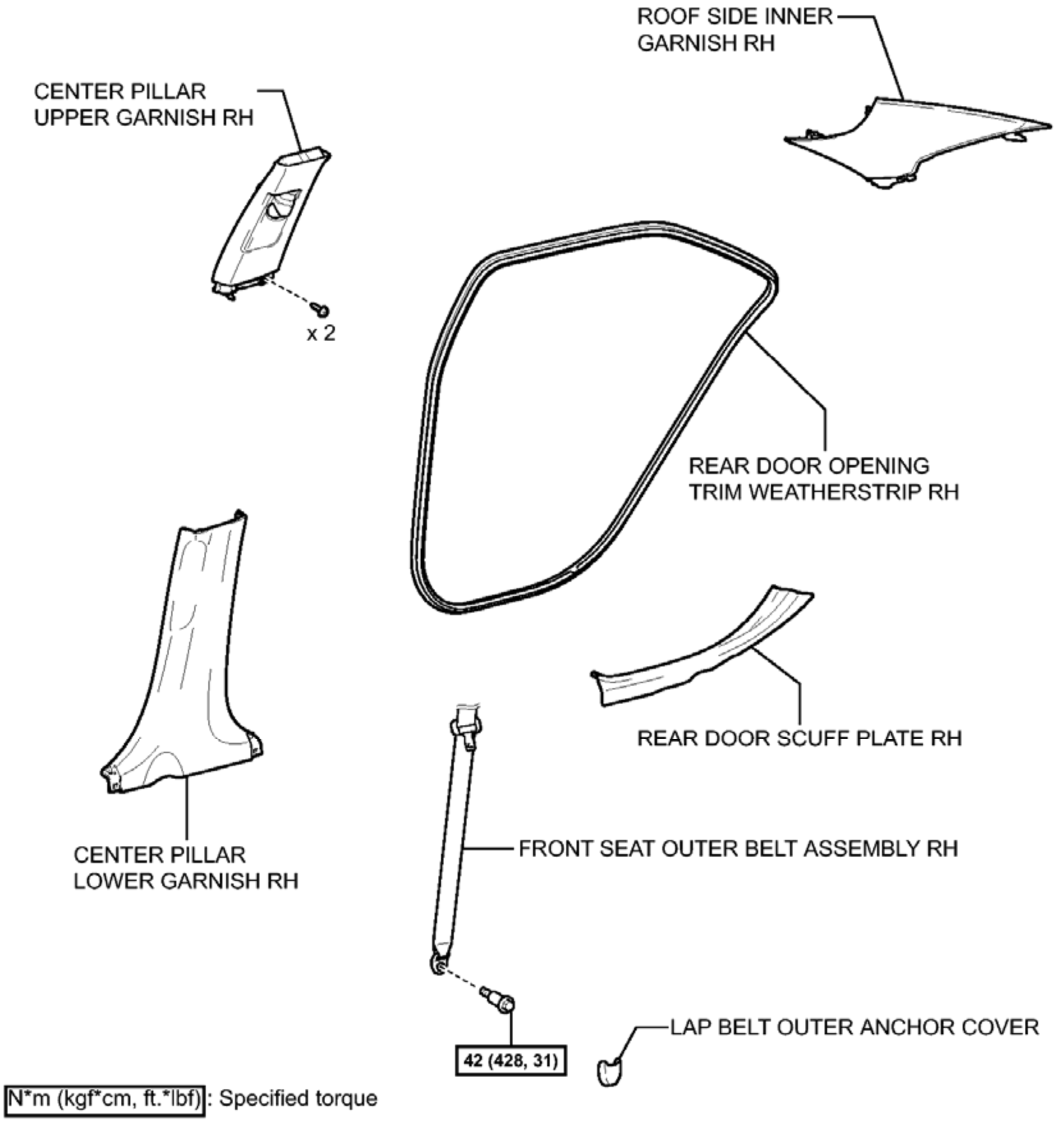
ROOF SIDE INNER GARNISH RH
CENTER PILLAR UPPER GARNISH RH
x 2
REAR DOOR OPENING TRIM WEATHERSTRIP RH
REAR DOOR SCUFF PLATE RH
FRONT SEAT OUTER BELT ASSEMBLY RH
CENTER PILLAR LOWER GARNISH RH
LAP BELT OUTER ANCHOR COVER
42 (428, 31)
N*m (kgf*cm, ft.*lbf): Specified torque
P

Fig. 130: Identifying Roof Headlining Replacement Components With Torque Specifications (5 Of 12)
Courtesy of TOYOTA MOTOR SALES, U.S.A., INC.

ILLUSTRATION

w/o Sliding Roof:

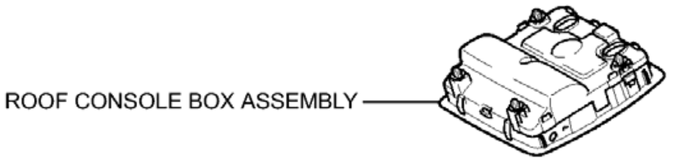
ROOF CONSOLE BOX ASSEMBLY

w/ Sliding Roof:

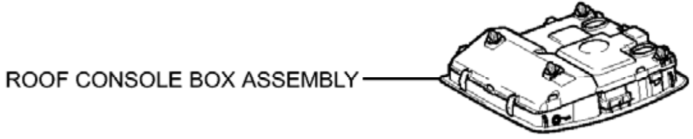
ROOF CONSOLE BOX ASSEMBLY

w/ EC Mirror:

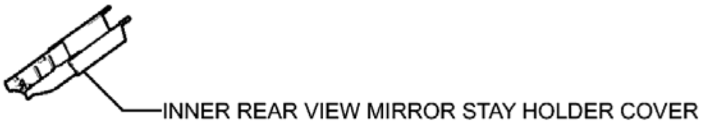
INNER REAR VIEW MIRROR STAY HOLDER COVER

P

Fig. 131: Identifying Roof Headlining Replacement Components (6 Of 12)
Courtesy of TOYOTA MOTOR SALES, U.S.A., INC.

ILLUSTRATION

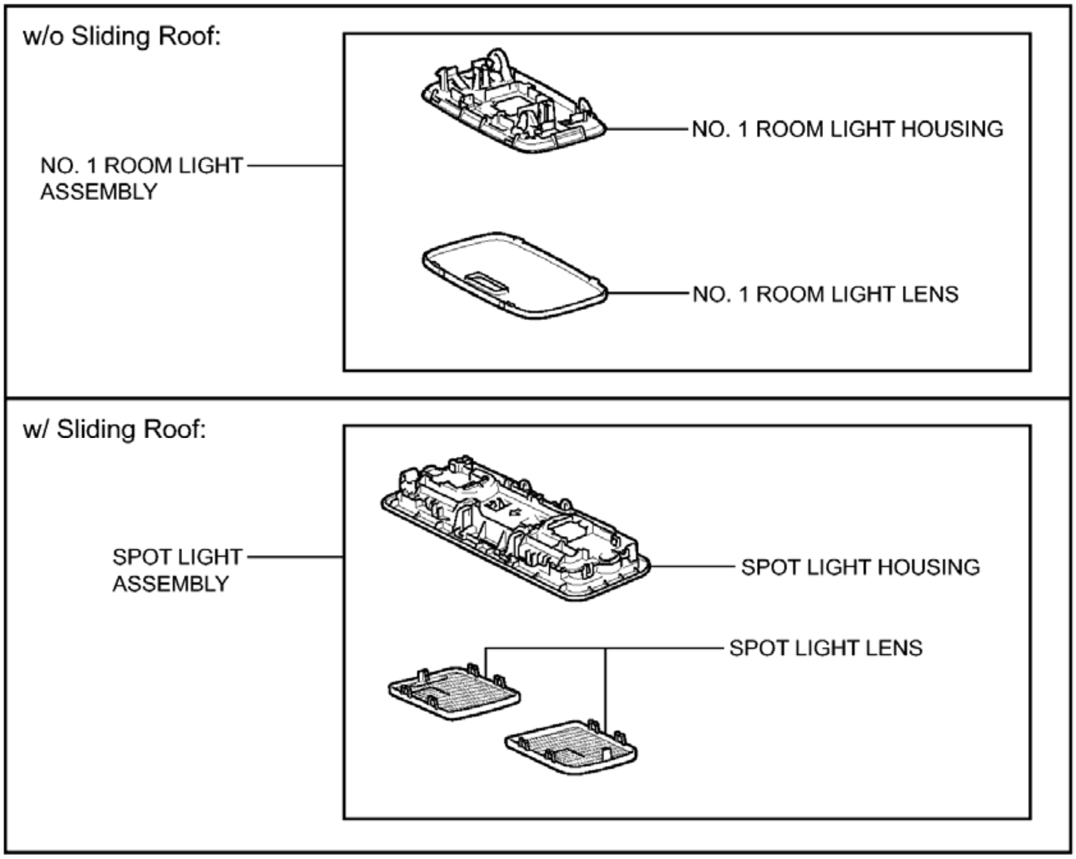
w/o Sliding Roof:
NO. 1 ROOM LIGHT ASSEMBLY
NO. 1 ROOM LIGHT HOUSING
NO. 1 ROOM LIGHT LENS
w/ Sliding Roof:
SPOT LIGHT ASSEMBLY
SPOT LIGHT HOUSING
SPOT LIGHT LENS
P

Fig. 132: Identifying Roof Headlining Replacement Components (7 Of 12)
Courtesy of TOYOTA MOTOR SALES, U.S.A., INC.

ILLUSTRATION

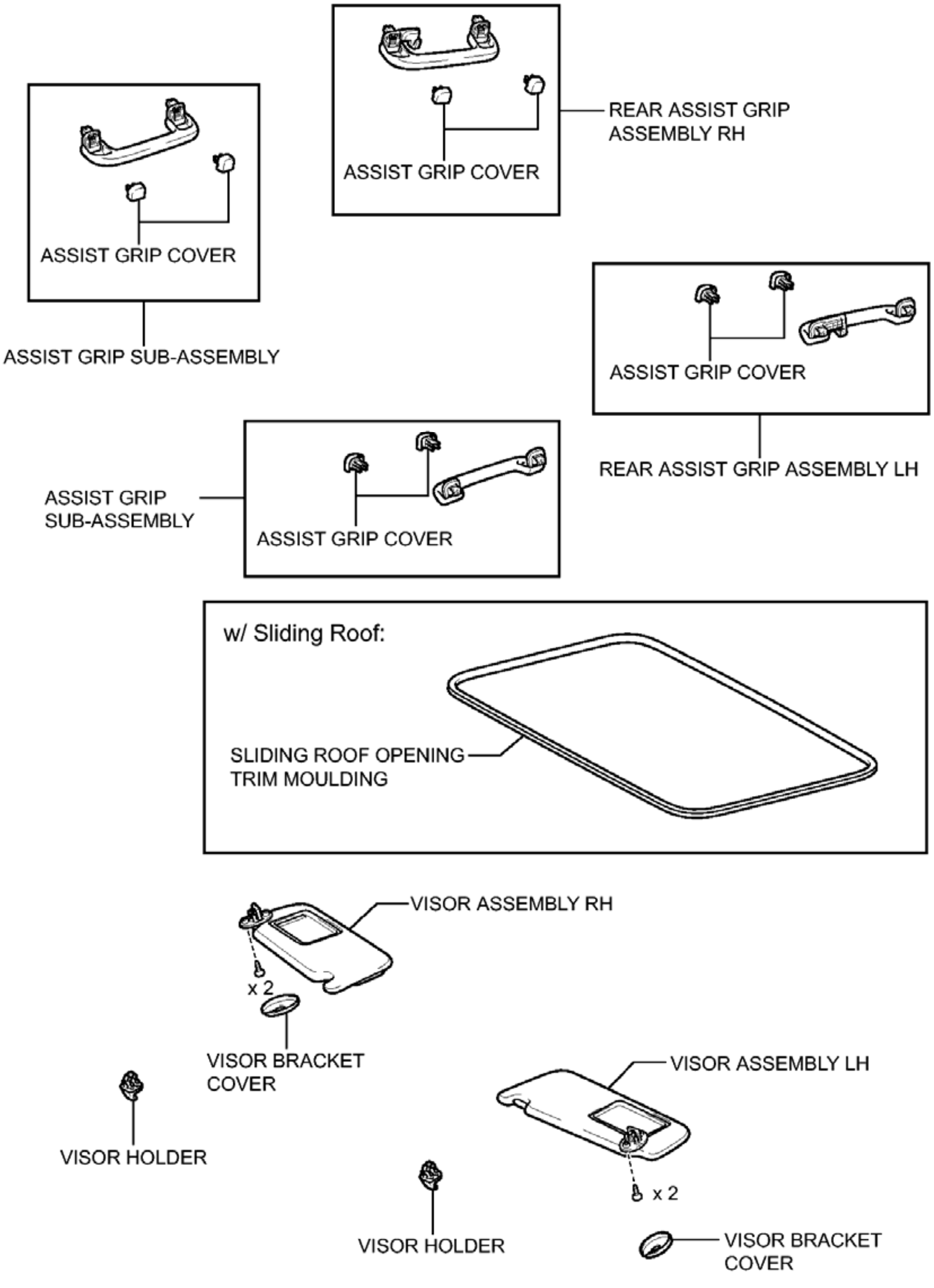
REAR ASSIST GRIP ASSEMBLY RH
ASSIST GRIP COVER
ASSIST GRIP COVER
ASSIST GRIP SUB-ASSEMBLY
ASSIST GRIP COVER
REAR ASSIST GRIP ASSEMBLY LH
ASSIST GRIP SUB-ASSEMBLY
ASSIST GRIP COVER
w/ Sliding Roof:
SLIDING ROOF OPENING TRIM MOULDING
VISOR ASSEMBLY RH
x 2
VISOR BRACKET COVER
VISOR HOLDER
VISOR ASSEMBLY LH
x 2
VISOR HOLDER
VISOR BRACKET COVER

P

Fig. 133: Identifying Roof Headlining Replacement Components (8 Of 12)
Courtesy of TOYOTA MOTOR SALES, U.S.A., INC.

ILLUSTRATION

w/o Sliding Roof:

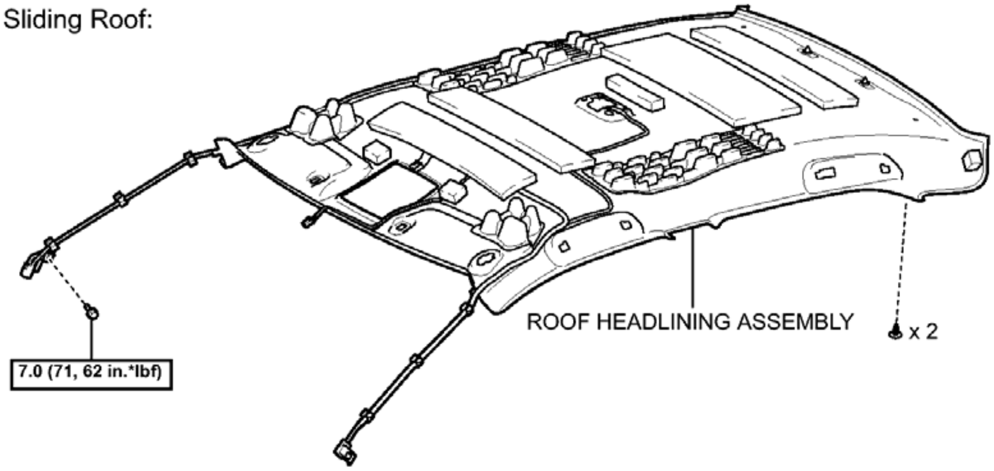
ROOF HEADLINING ASSEMBLY
x 2
7.0 (71, 62 in.*lbf)

w/ Sliding Roof:

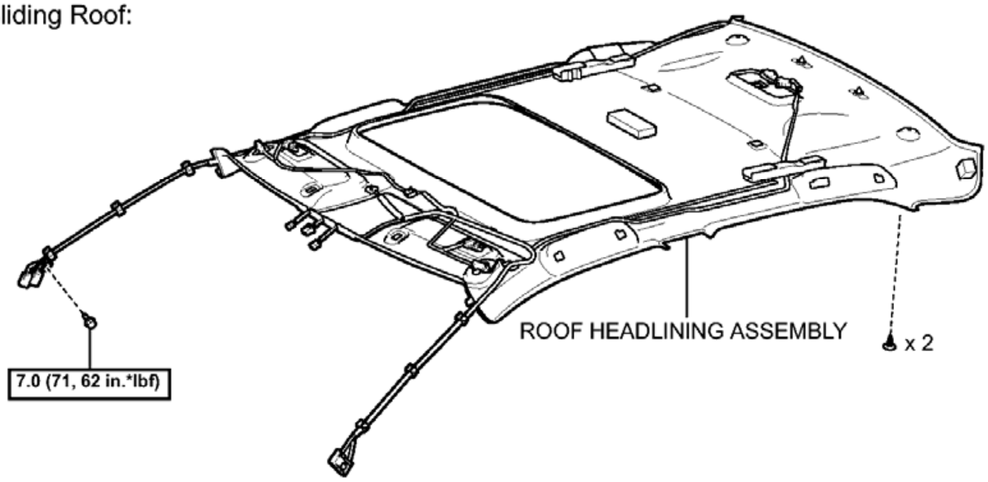
ROOF HEADLINING ASSEMBLY
x 2
7.0 (71, 62 in.*lbf)

N*m (kgf*cm, ft.*lbf): Specified torque

P

Fig. 134: Identifying Roof Headlining Replacement Components With Torque Specifications (9 Of 12)
Courtesy of TOYOTA MOTOR SALES, U.S.A., INC.

ILLUSTRATION

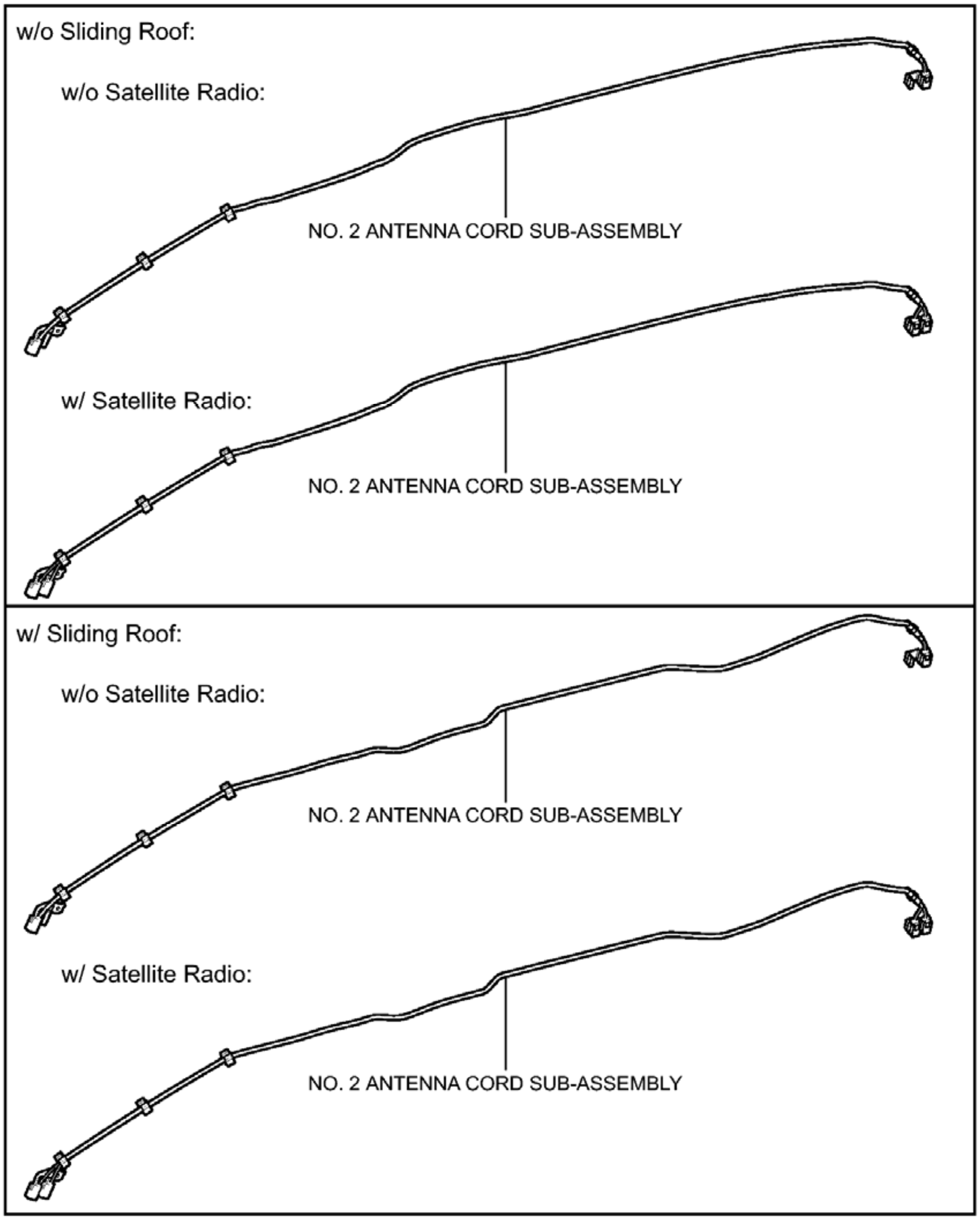
w/o Sliding Roof:
w/o Satellite Radio:
NO. 2 ANTENNA CORD SUB-ASSEMBLY
w/ Satellite Radio:
NO. 2 ANTENNA CORD SUB-ASSEMBLY
w/ Sliding Roof:
w/o Satellite Radio:
NO. 2 ANTENNA CORD SUB-ASSEMBLY
w/ Satellite Radio:
NO. 2 ANTENNA CORD SUB-ASSEMBLY
P

Fig. 135: Identifying Roof Headlining Replacement Components (10 Of 12)
Courtesy of TOYOTA MOTOR SALES, U.S.A., INC.

ILLUSTRATION

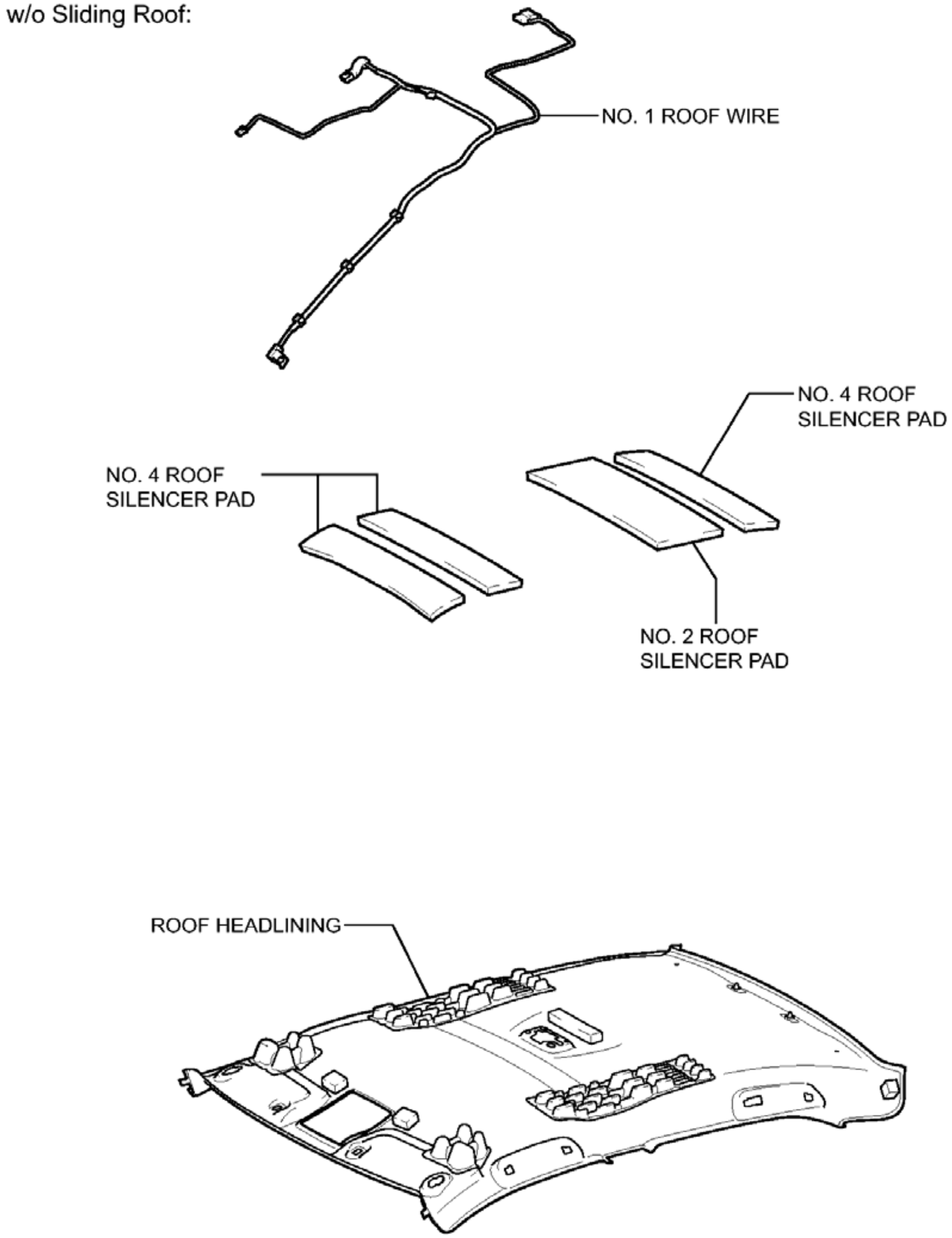
w/o Sliding Roof:
NO. 1 ROOF WIRE
NO. 4 ROOF SILENCER PAD
NO. 4 ROOF SILENCER PAD
NO. 2 ROOF SILENCER PAD
ROOF HEADLINING

P

Fig. 136: Identifying Roof Headlining Replacement Components (11 Of 12)
Courtesy of TOYOTA MOTOR SALES, U.S.A., INC.

ILLUSTRATION

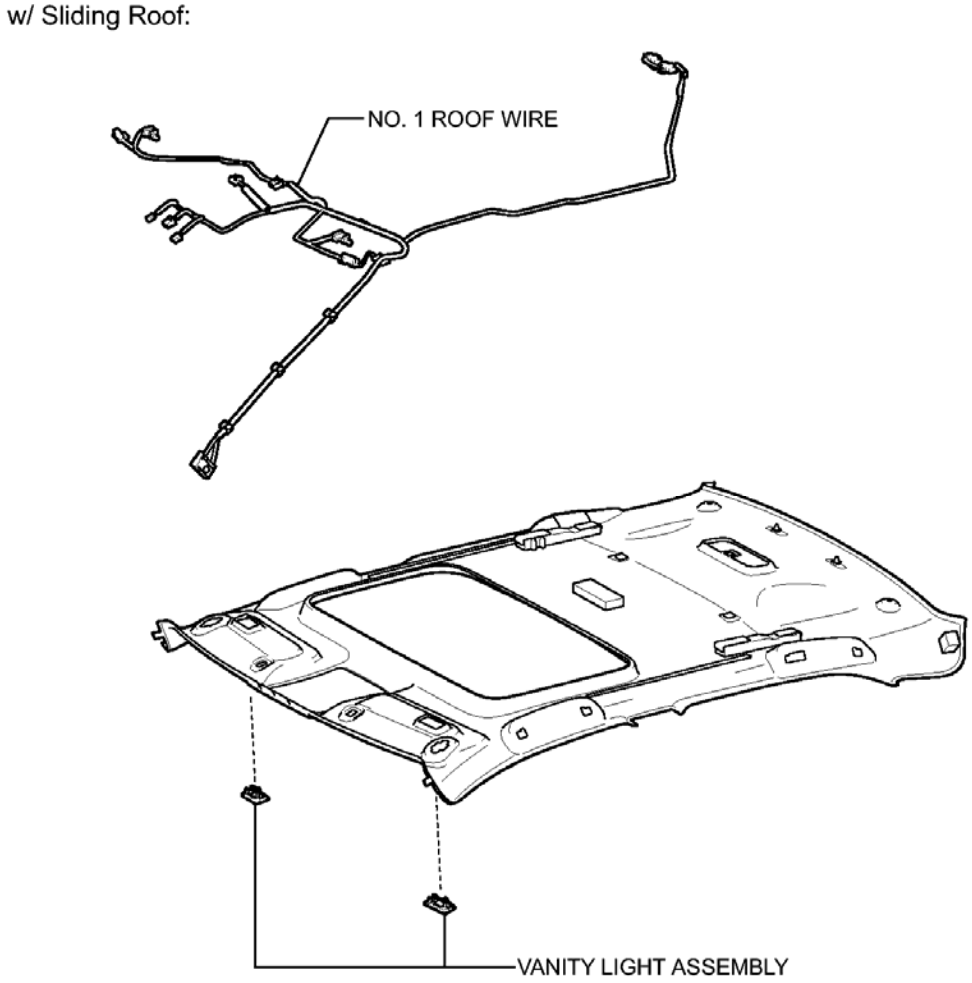

P

Fig. 137: Identifying Roof Headlining Replacement Components (12 Of 12)
Courtesy of TOYOTA MOTOR SALES, U.S.A., INC.

REMOVAL

REMOVAL

1. **PRECAUTION**

WARNING: Be sure to read Precaution thoroughly before servicing.

For Separate Type Yaw Rate Sensor: Refer to PRECAUTION .

For Built-in Type Yaw Rate Sensor: Refer to PRECAUTION .

NOTE: After turning the ignition switch off, waiting time may be required before disconnecting the cable from the negative (-) battery terminal. Therefore,

make sure to read the disconnecting the cable from the negative (-) battery terminal notices before proceeding with work. Refer to PRECAUTION .

2. **DISCONNECT CABLE FROM NEGATIVE BATTERY TERMINAL**

WARNING: **Wait at least 90 seconds after disconnecting the cable from the negative (-) battery terminal to disable the SRS system.**

NOTE: **When disconnecting the cable, some systems need to be initialized after the cable is reconnected. Refer to INITIALIZATION .**

3. **REMOVE FRONT DOOR SCUFF PLATE LH**
   a. Disengage the 10 claws and remove the front door scuff plate LH.

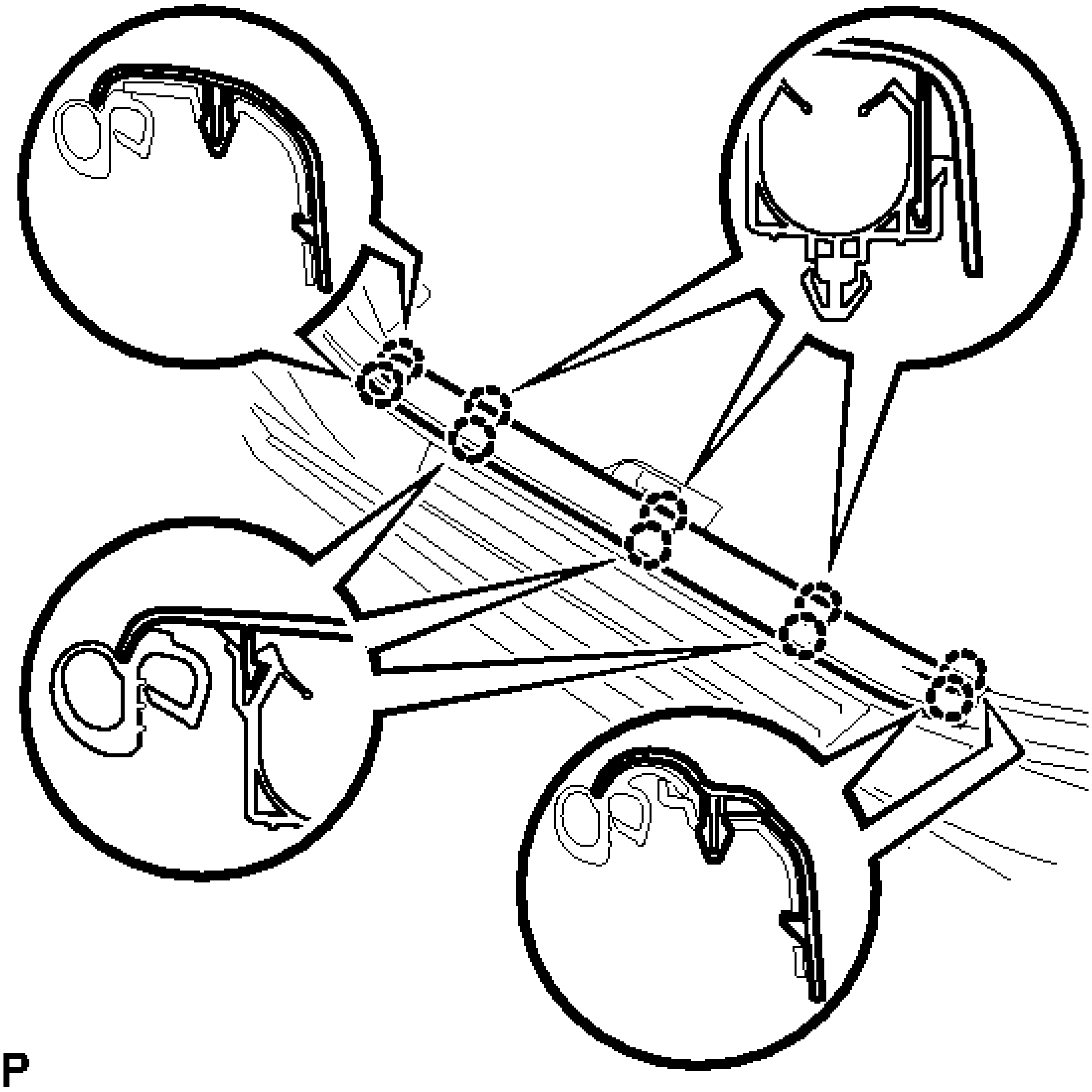

P

Fig. 138: Identifying Front Door Scuff Plate LH Claws

Courtesy of TOYOTA MOTOR SALES, U.S.A., INC.

4. **REMOVE COWL SIDE TRIM SUB-ASSEMBLY LH**
   a. Remove the clip.

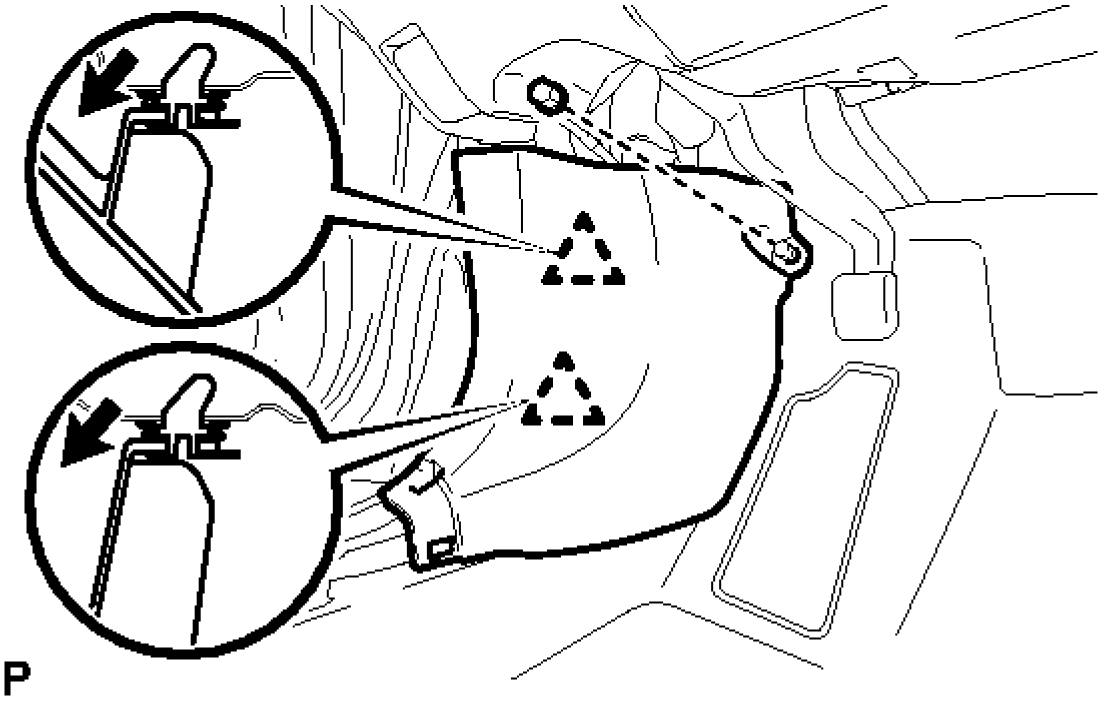

Fig. 139: Removing Cowl Side Trim Sub-Assembly LH
Courtesy of TOYOTA MOTOR SALES, U.S.A., INC.

   b. Disengage the 2 clips and remove the cowl side trim sub-assembly LH.

5. **REMOVE FRONT DOOR OPENING TRIM WEATHERSTRIP LH**
   a. Remove the front door opening trim weatherstrip LH.

6. **REMOVE FRONT PILLAR GARNISH LH**
   a. Pull the upper part of the garnish toward the inside of the cabin and disengage the garnish from the base of the 2 clips.

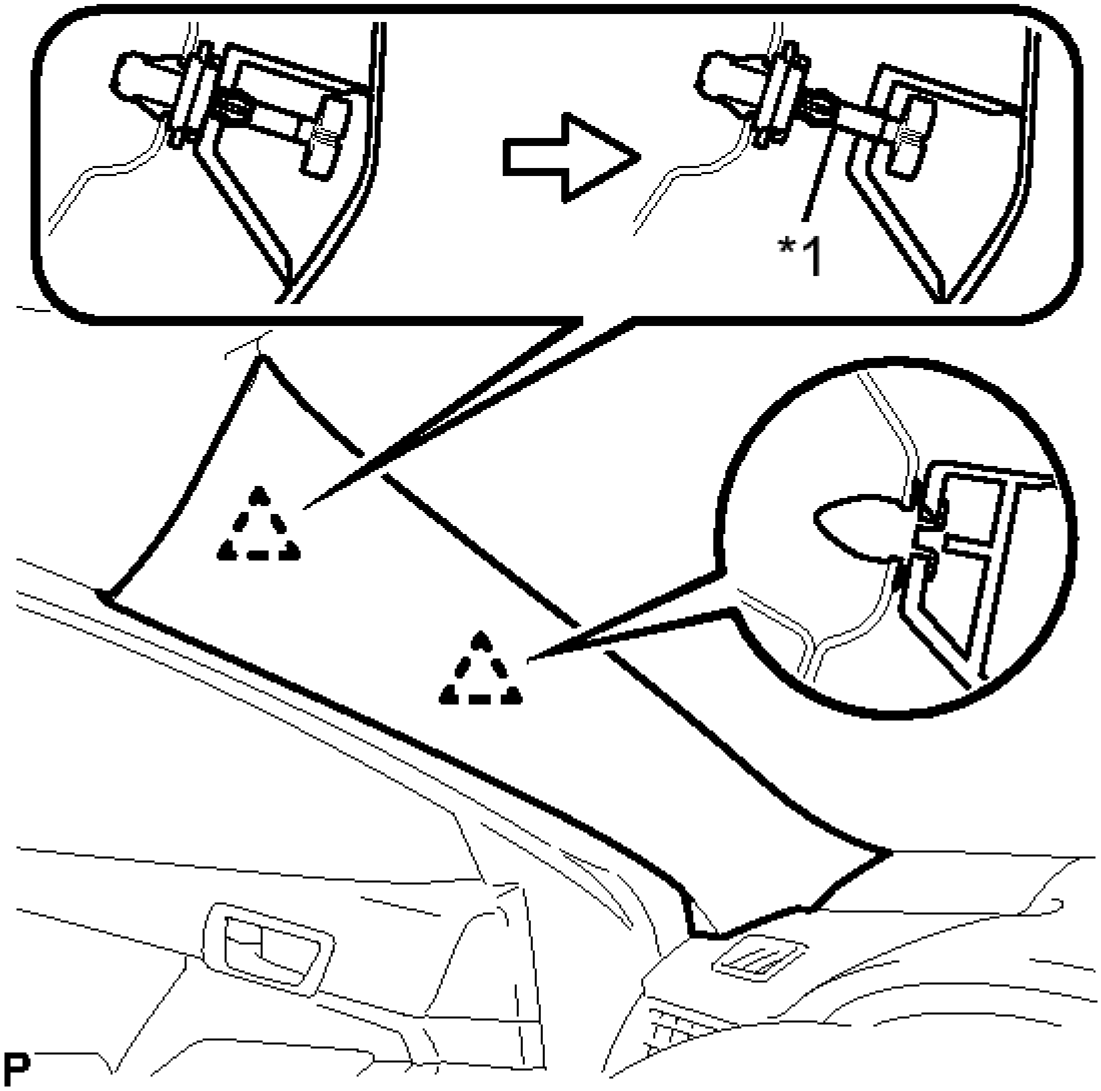

Fig. 140: Identifying Front Pillar Garnish LH Fasteners
Courtesy of TOYOTA MOTOR SALES, U.S.A., INC.

TEXT IN ILLUSTRATION

*1	Front Pillar Garnish Clip

HINT:

Make the front pillar garnish LH hang down from the front pillar garnish clip.

b. While pushing the tabs on the front pillar garnish clip in the direction indicated by the arrow (A) shown in the illustration, disengage the front pillar garnish clip.

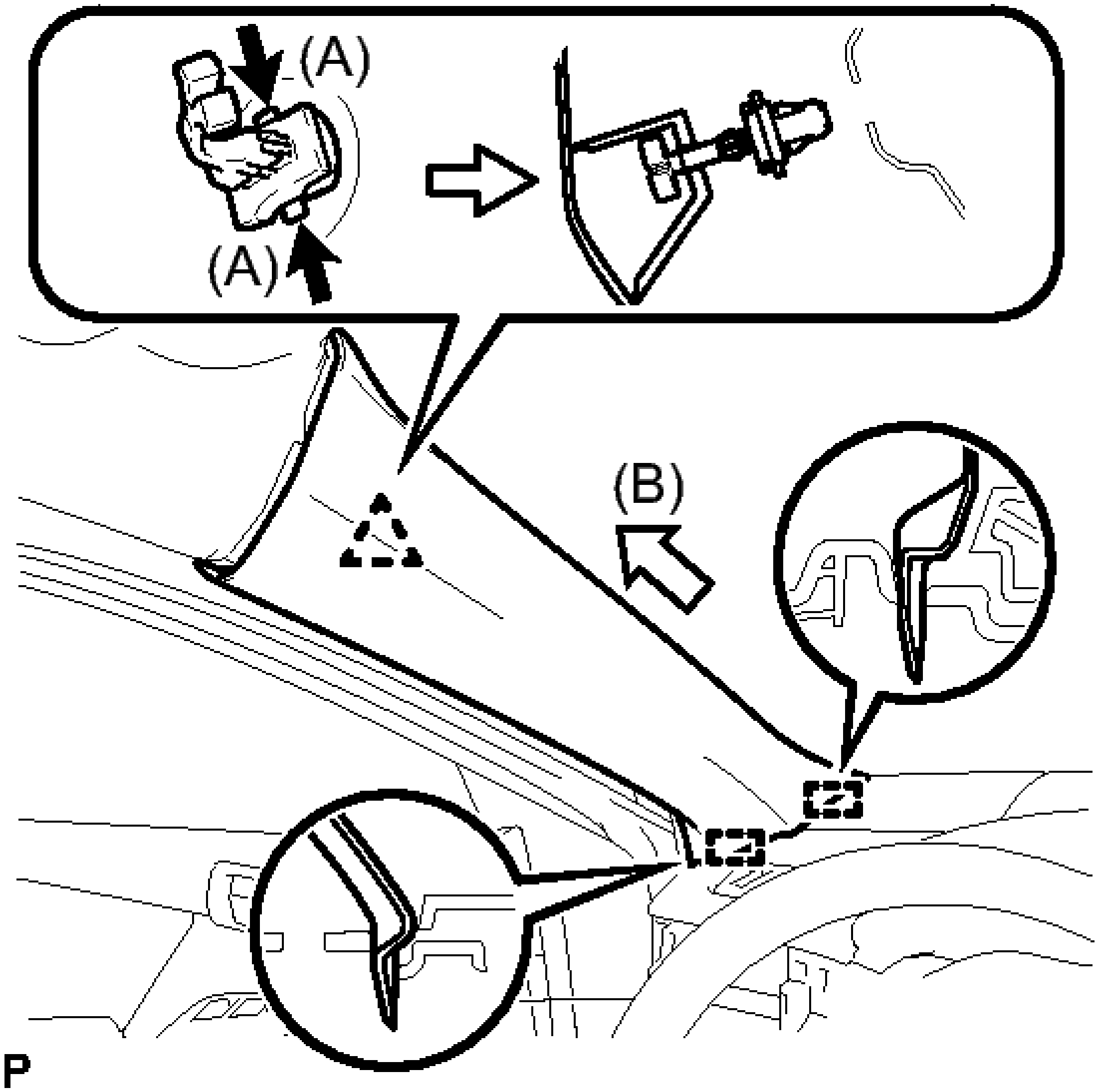

Fig. 141: Removing Front Pillar Garnish LH
Courtesy of TOYOTA MOTOR SALES, U.S.A., INC.

c. Pull the garnish in the direction indicated by the arrow (B) shown in the illustration to disengage the 2 guides and remove the front pillar garnish LH.
d. Protect the curtain shield airbag assembly.

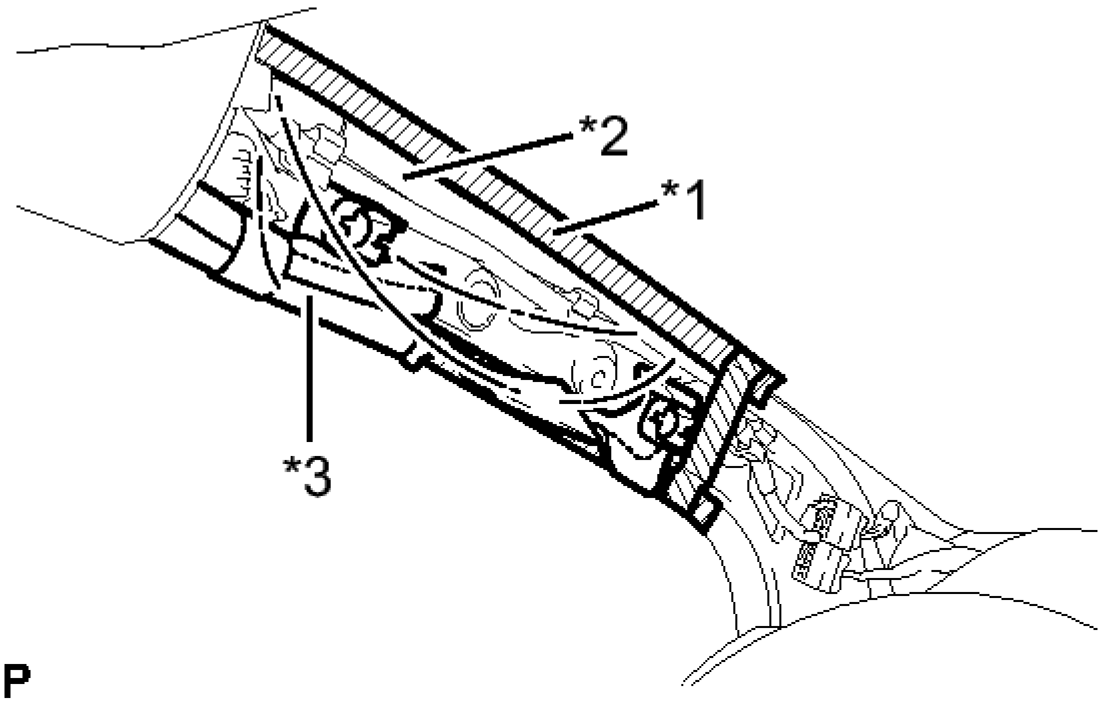

Fig. 142: Identifying Curtain Shield Airbag Assembly With Protective Cover And Tape
Courtesy of TOYOTA MOTOR SALES, U.S.A., INC.

TEXT IN ILLUSTRATION

*1	Adhesive Tape
*2	Protective Cover
*3	Curtain Shield Airbag Assembly

1. Cover the airbag with a piece of cloth or nylon and secure the edges of the cover with tape as shown in the illustration.

NOTE: **Cover the curtain shield airbag with a protective cover as soon as the front pillar garnish is removed.**

7. **REMOVE FRONT DOOR SCUFF PLATE RH**

HINT:

Use the same procedure as for the LH side.

8. **REMOVE COWL SIDE TRIM SUB-ASSEMBLY RH**

HINT:

Use the same procedure as for the LH side.

9. **REMOVE FRONT DOOR OPENING TRIM WEATHERSTRIP RH**

   HINT:

   Use the same procedure as for the LH side.

10. **REMOVE FRONT PILLAR GARNISH RH**

    HINT:

    Use the same procedure as for the LH side.

11. **REMOVE REAR SEAT CUSHION ASSEMBLY** . Refer to **REMOVAL - Step 3** .
12. **REMOVE REAR SEAT CUSHION LOCK HOOK** . Refer to **REMOVAL - Step 4** .
13. **REMOVE INNER LUGGAGE COMPARTMENT TRIM PAD** . Refer to **REMOVAL - Step 5** .
14. **REMOVE REAR SEATBACK ASSEMBLY RH** . Refer to **REMOVAL - Step 7** .
15. **REMOVE REAR SEATBACK ASSEMBLY LH** . Refer to **REMOVAL - Step 6** .
16. **REMOVE REAR SIDE SEATBACK ASSEMBLY RH** . Refer to **REMOVAL - Step 9** .
17. **REMOVE REAR SIDE SEATBACK ASSEMBLY LH** . Refer to **REMOVAL - Step 6** .
18. **REMOVE REAR DOOR SCUFF PLATE LH**
    a. Disengage the 6 claws and remove the rear door scuff plate LH.

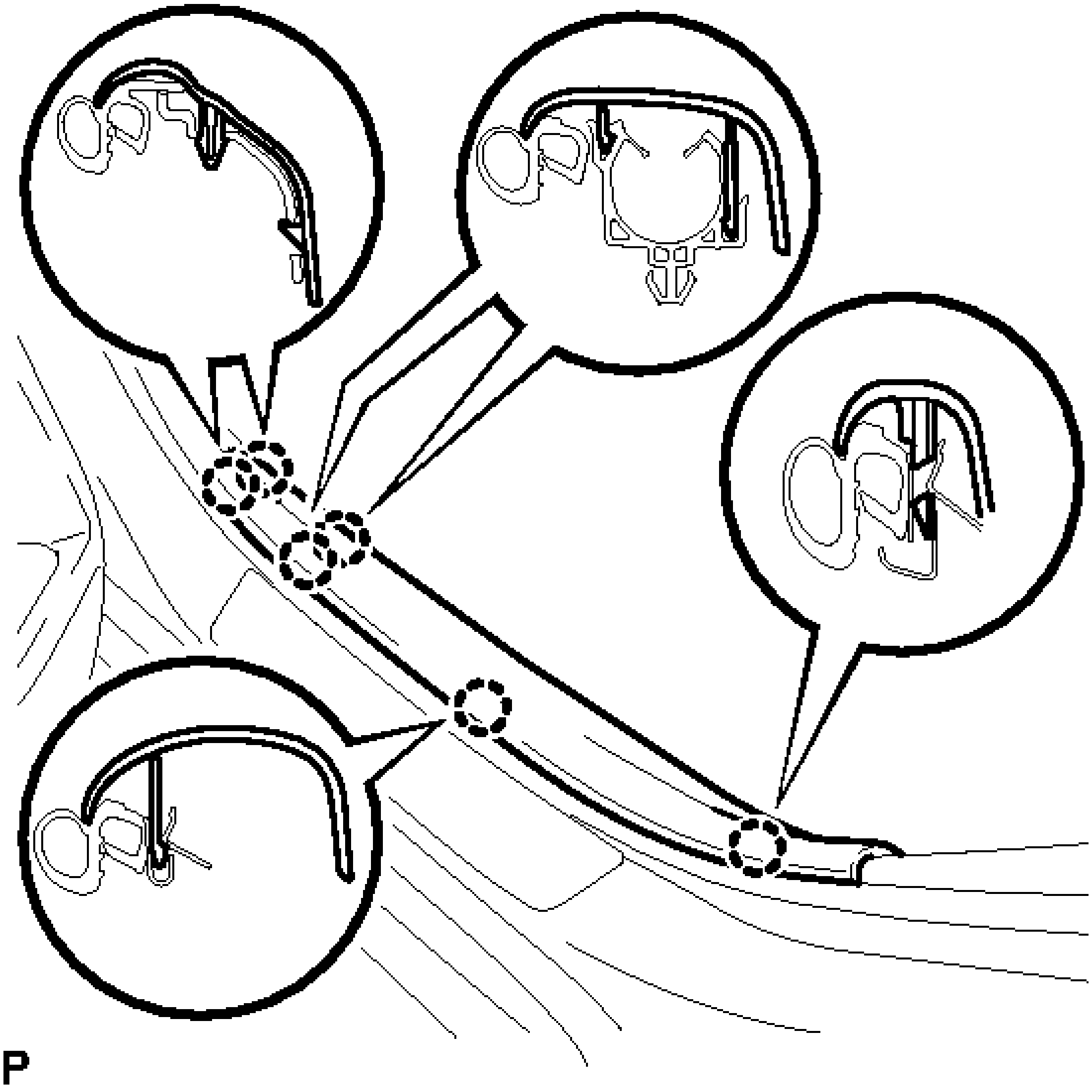

Fig. 143: Identifying Rear Door Scuff Plate LH Claws
Courtesy of TOYOTA MOTOR SALES, U.S.A., INC.

HINT:

Disengage the claws from the rear side of the scuff plate.

19. **REMOVE REAR DOOR OPENING TRIM WEATHERSTRIP LH**
    a. Remove the rear door opening trim weatherstrip LH.
20. **REMOVE LAP BELT OUTER ANCHOR COVER (for LH Side)** . Refer to **REMOVAL - Step 7** .
21. **DISCONNECT FRONT SEAT OUTER BELT ASSEMBLY LH** . Refer to **REMOVAL - Step 8** .
22. **REMOVE CENTER PILLAR LOWER GARNISH LH**
    a. Disengage the 2 claws and 3 clips, and remove the center pillar lower garnish LH.

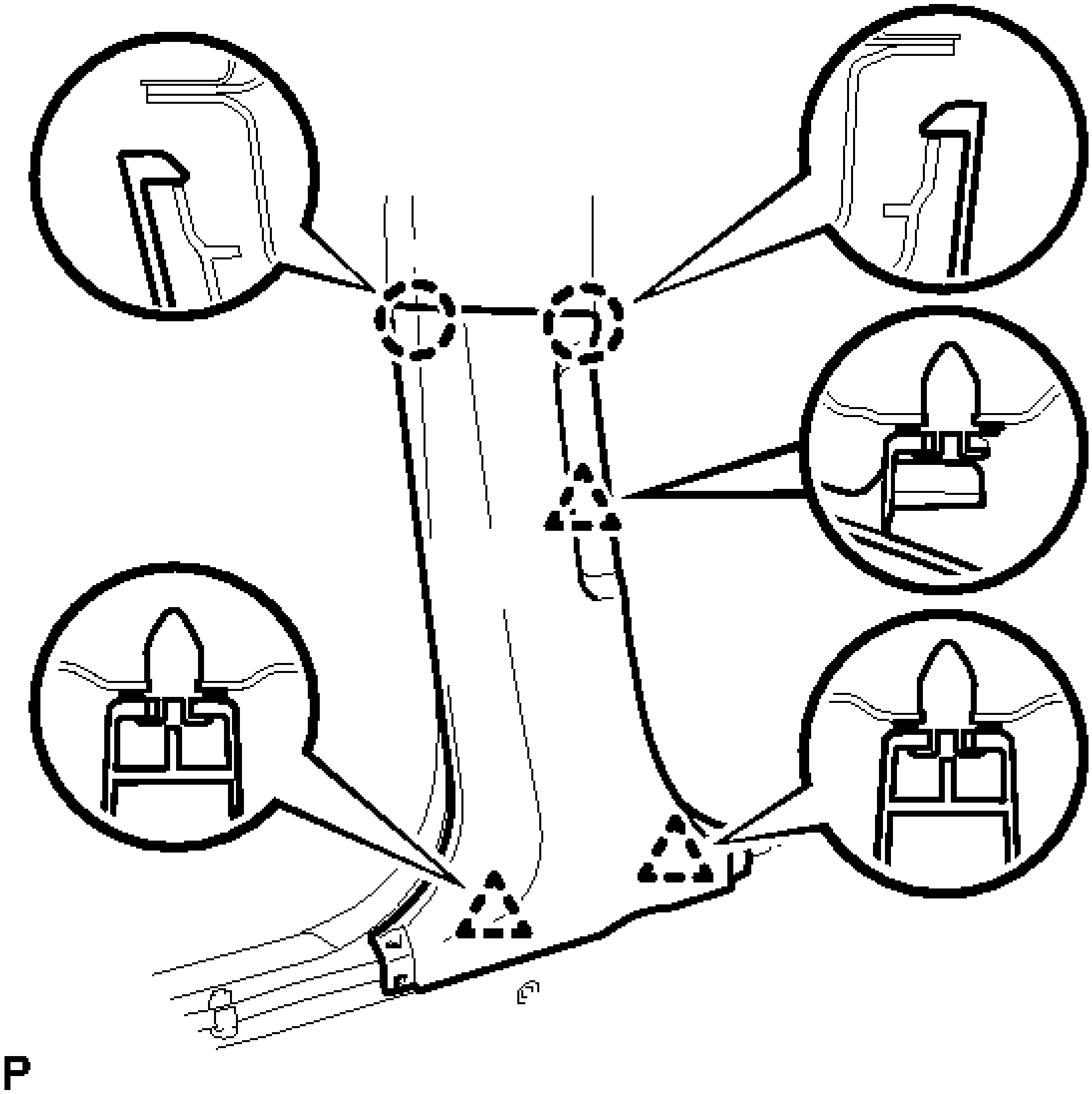

Fig. 144: Identifying Center Pillar Lower Garnish LH Fasteners
Courtesy of TOYOTA MOTOR SALES, U.S.A., INC.

23. **REMOVE CENTER PILLAR UPPER GARNISH LH**
    a. Remove the 2 screws.

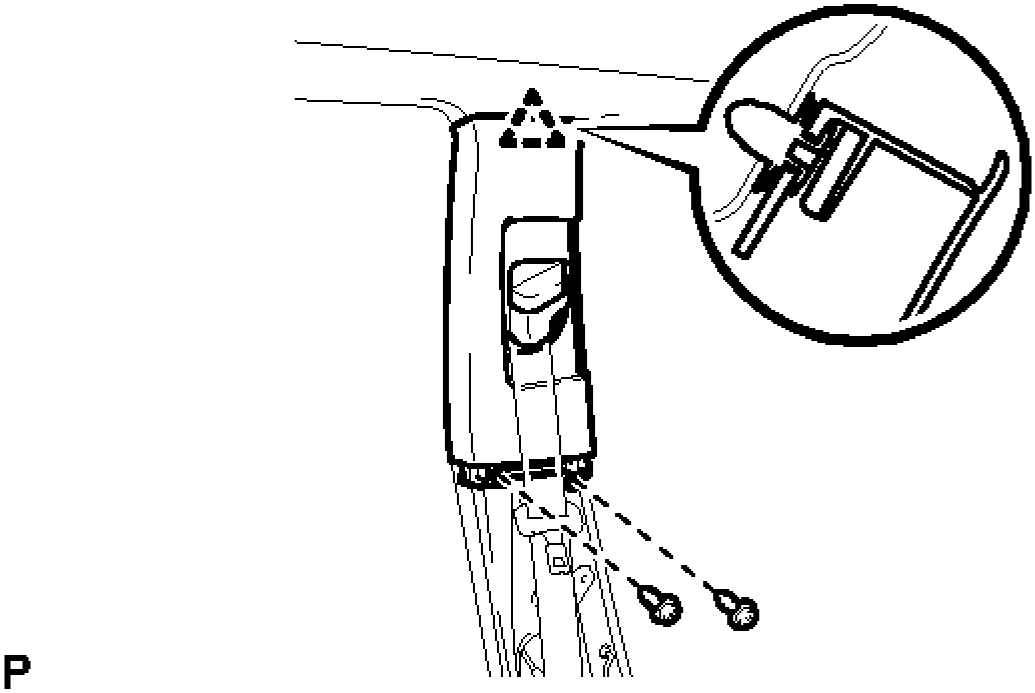

Fig. 145: Locating Center Pillar Upper Garnish LH Fasteners
Courtesy of TOYOTA MOTOR SALES, U.S.A., INC.

b. Disengage the clip.
c. Pass the floor anchor of the front seat outer seat belt assembly LH through the center pillar upper garnish LH and remove the center pillar upper garnish LH.

24. **REMOVE ROOF SIDE INNER GARNISH LH**

a. Disengage the 5 clips.

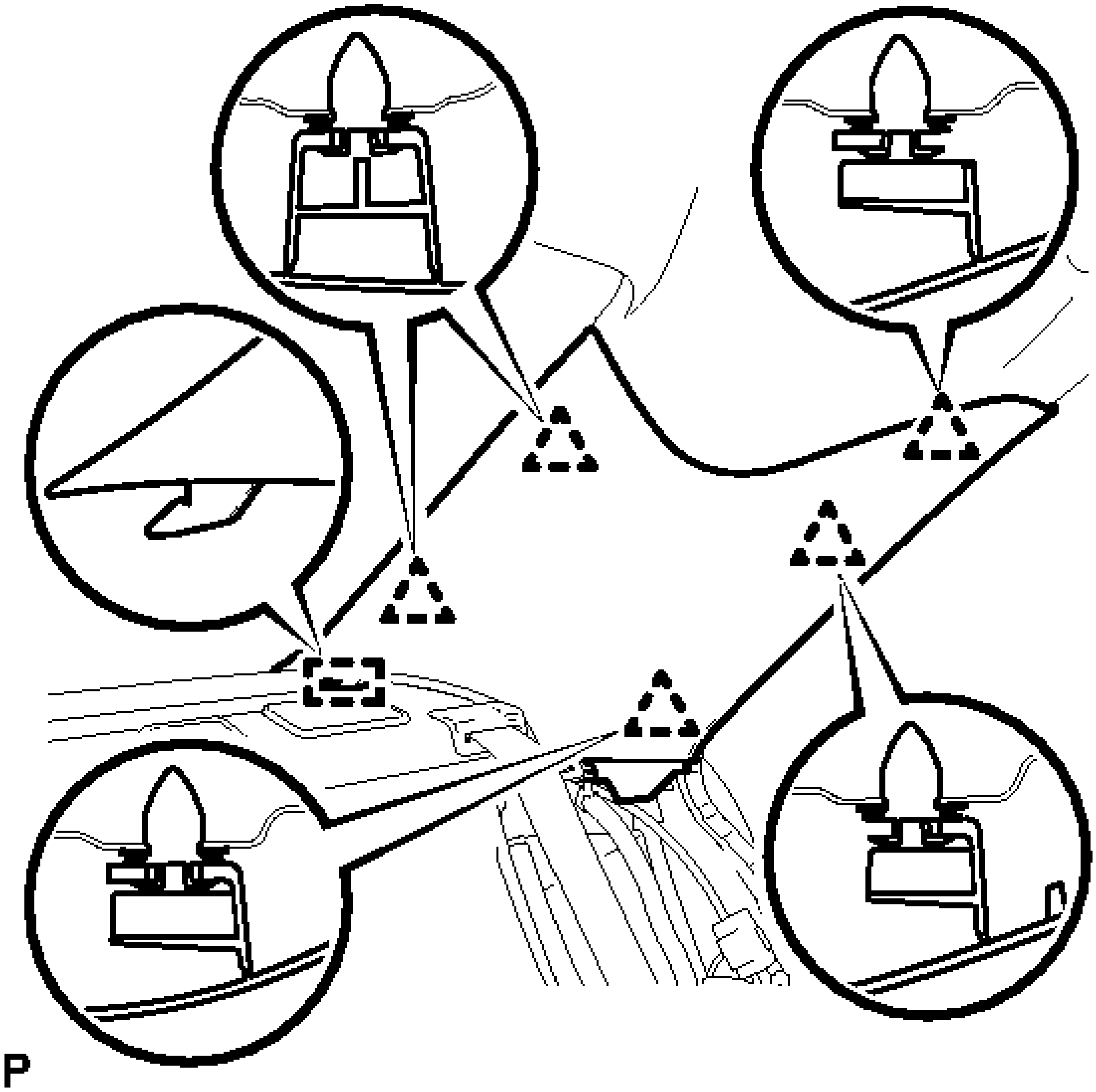

Fig. 146: Identifying Roof Side Inner Garnish LH Clips
Courtesy of TOYOTA MOTOR SALES, U.S.A., INC.

b. Disengage the guide and remove the roof side inner garnish LH.

25. **REMOVE REAR DOOR SCUFF PLATE RH**

    HINT:

    Use the same procedure as for the LH side.

26. **REMOVE REAR DOOR OPENING TRIM WEATHERSTRIP RH**

    HINT:

    Use the same procedure as for the LH side.

27. **REMOVE LAP BELT OUTER ANCHOR COVER (for RH Side)**

HINT:

Use the same procedure as for the LH side.

28. **DISCONNECT FRONT SEAT OUTER BELT ASSEMBLY RH**

HINT:

Use the same procedure as for the LH side.

29. **REMOVE CENTER PILLAR LOWER GARNISH RH**

HINT:

Use the same procedure as for the LH side.

30. **REMOVE CENTER PILLAR UPPER GARNISH RH**

HINT:

Use the same procedure as for the LH side.

31. **REMOVE ROOF SIDE INNER GARNISH RH**

HINT:

Use the same procedure as for the LH side.

32. **REMOVE FRONT SEAT ASSEMBLY LH**

For TMMK Made Manual Seat. Refer to **REMOVAL** .

For TMMK Made Power Seat. Refer to **REMOVAL** .

For SIA Made Manual Seat. Refer to **REMOVAL** .

For SIA Made Power Seat. Refer to **REMOVAL** .

33. **REMOVE FRONT SEAT ASSEMBLY RH**

HINT:

Use the same procedure as for the LH side.

34. **REMOVE INSTRUMENT PANEL ASSEMBLY**

Refer to **REMOVAL**.

35. **REMOVE INNER REAR VIEW MIRROR STAY HOLDER COVER (w/ EC Mirror)** . Refer to **REMOVAL - Step 2** .
36. **REMOVE ROOF CONSOLE BOX ASSEMBLY (w/o Sliding Roof)** . Refer to **REMOVAL - Step 1** .
37. **REMOVE ROOF CONSOLE BOX ASSEMBLY (w/ Sliding Roof)** . Refer to **REMOVAL - Step 2** .
38. **REMOVE NO. 1 ROOM LIGHT ASSEMBLY (w/o Sliding Roof)** . Refer to **REMOVAL - Step 1** .
39. **REMOVE SPOT LIGHT ASSEMBLY (w/ Sliding Roof)** . Refer to **REMOVAL - Step 2** .
40. **REMOVE ASSIST GRIP SUB-ASSEMBLY**
    a. Using a screwdriver, disengage the 4 claws and remove the 2 assist grip covers.

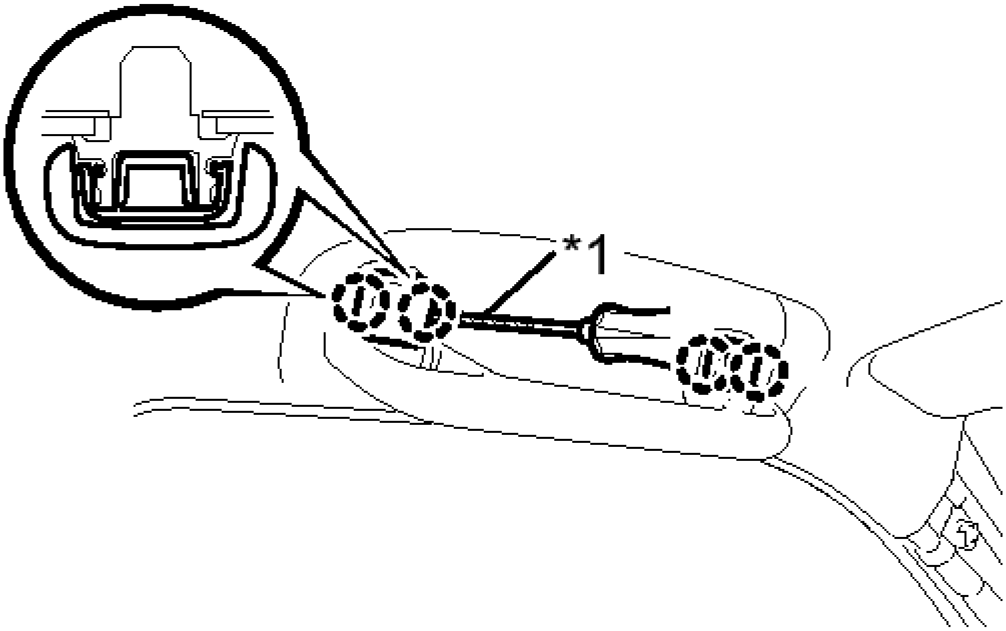

P

Fig. 147: Identifying Assist Grip Sub-Assembly
Courtesy of TOYOTA MOTOR SALES, U.S.A., INC.

TEXT IN ILLUSTRATION

*1	Protective Tape

NOTE: **Do not forcibly pry the assist grip covers to prevent them from being deformed.**

HINT:

Tape the screwdriver tip before use.

b. Disengage the 2 clips and remove the assist grip sub-assembly.

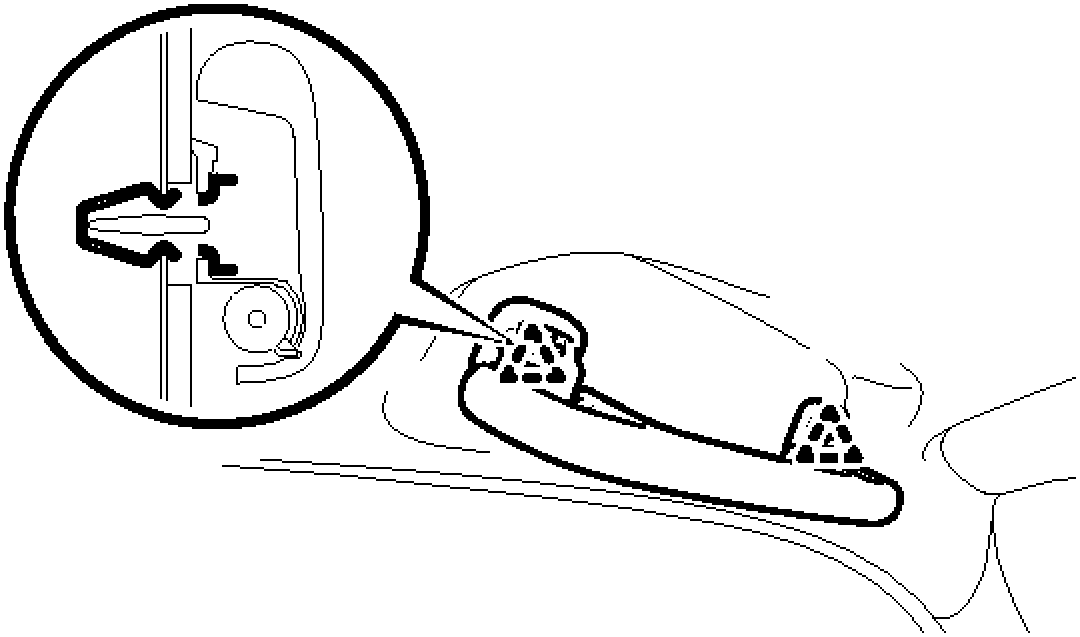

Fig. 148: Identifying Assist Grip Sub-Assembly Clips
Courtesy of TOYOTA MOTOR SALES, U.S.A., INC.

c. Remove the 2 clips from the vehicle body.

HINT:

Use the same procedure for the RH side.

41. **REMOVE REAR ASSIST GRIP ASSEMBLY LH**

a. Using a screwdriver, disengage the 4 claws and remove the 2 assist grip covers.

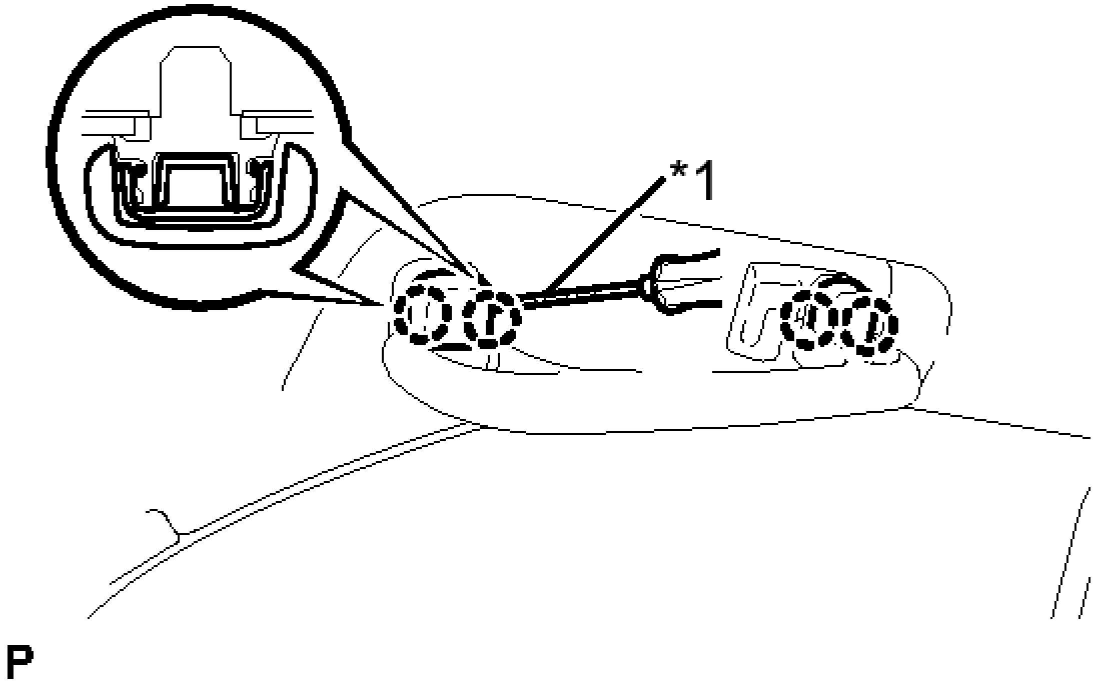

Fig. 149: Removing Rear Assist Grip Assembly LH
Courtesy of TOYOTA MOTOR SALES, U.S.A., INC.

TEXT IN ILLUSTRATION

*1	Protective Tape

NOTE: **Do not forcibly pry the assist grip covers to prevent them from being deformed.**

HINT:

Tape the screwdriver tip before use.

b. Disengage the 2 clips and remove the rear assist grip assembly LH.

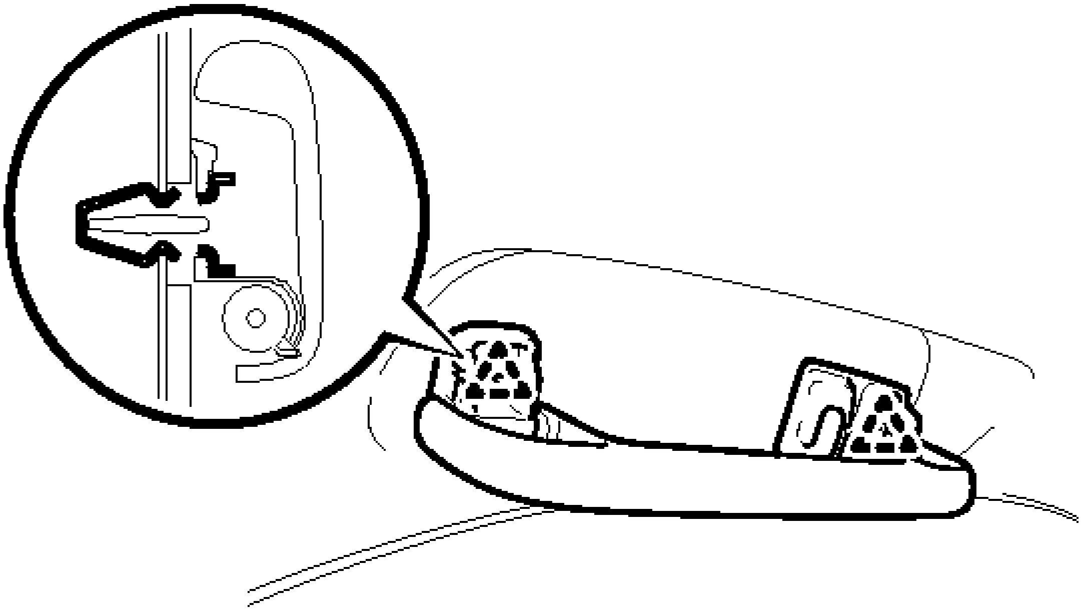

Fig. 150: Identifying Rear Assist Grip Assembly LH Clips
Courtesy of TOYOTA MOTOR SALES, U.S.A., INC.

c. Remove the 2 clips from the vehicle body.

42. **REMOVE REAR ASSIST GRIP ASSEMBLY RH**

HINT:

Use the same procedure as for the LH side.

43. **REMOVE SLIDING ROOF OPENING TRIM MOULDING (w/ Sliding Roof)**

a. Remove the sliding roof opening trim moulding.

44. **REMOVE VISOR BRACKET COVER (for LH Side)**

a. Using a moulding remover, disengage the 4 claws and remove the visor bracket cover.

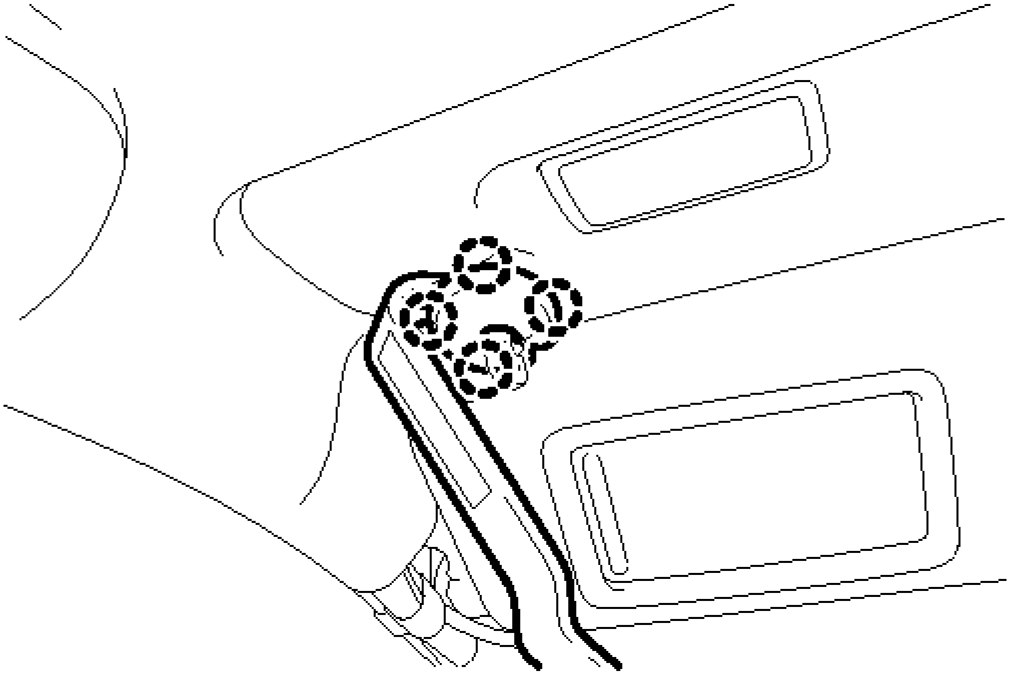

Fig. 151: Removing Visor Bracket Cover (For LH Side)
Courtesy of TOYOTA MOTOR SALES, U.S.A., INC.

45. **REMOVE VISOR ASSEMBLY LH**
    a. Remove the 2 screws and visor assembly LH.

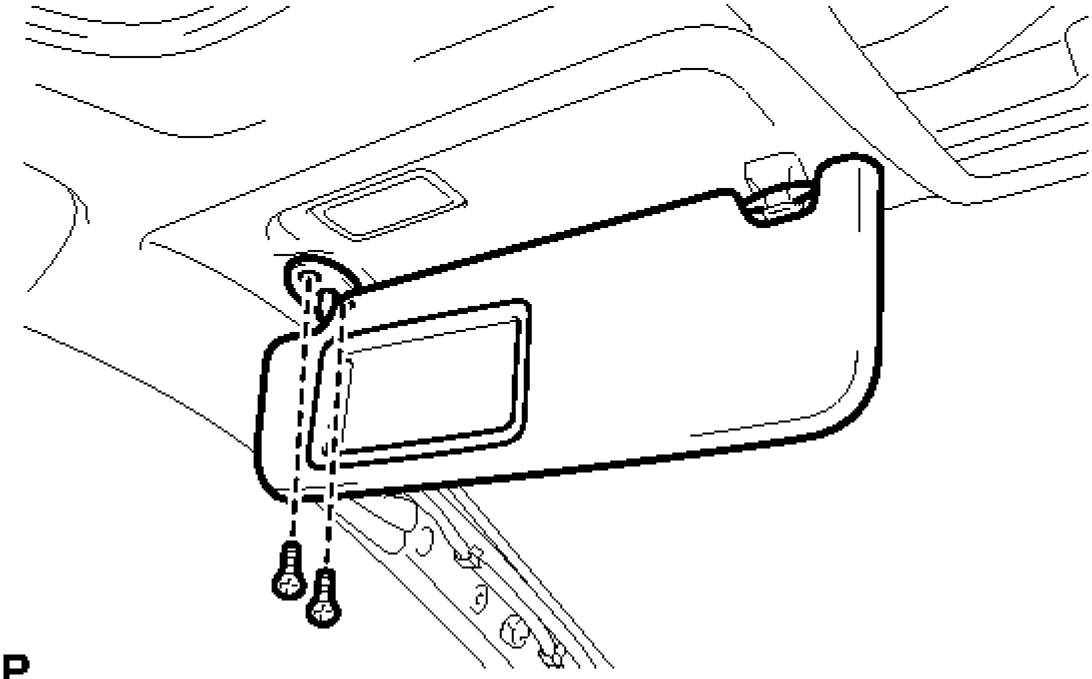

Fig. 152: Identifying Visor Assembly LH Fasteners

Courtesy of TOYOTA MOTOR SALES, U.S.A., INC.

46. **REMOVE VISOR BRACKET COVER (for RH Side)**

    HINT:

    Use the same procedure as for the LH side.

47. **REMOVE VISOR ASSEMBLY RH**

    HINT:

    Use the same procedure as for the LH side.

48. **REMOVE VISOR HOLDER**
    a. Turn the visor holder approximately 45° and pull it out as shown in the illustration.

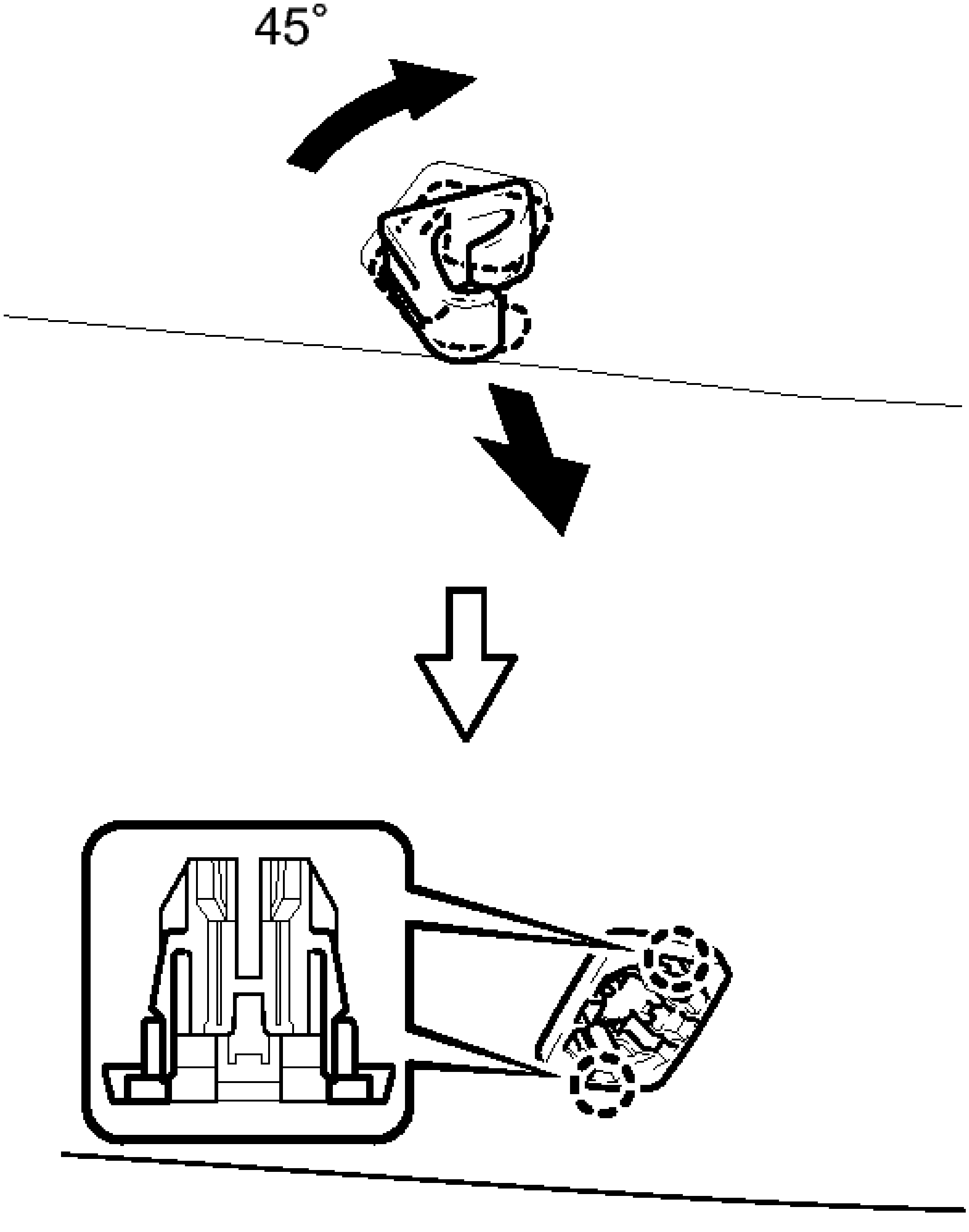

Fig. 153: Removing Visor Holder
Courtesy of TOYOTA MOTOR SALES, U.S.A., INC.

b. Disengage the 2 claws and remove the visor holder.

HINT:

Use the same procedure for the other visor holder.

49. **REMOVE ROOF HEADLINING ASSEMBLY (w/o Sliding Roof)**
    a. w/ EC Mirror
        1. Disconnect the connector from the inner rear view mirror.
    b. Remove the bolt and disconnect the bracket from the front pillar RH.

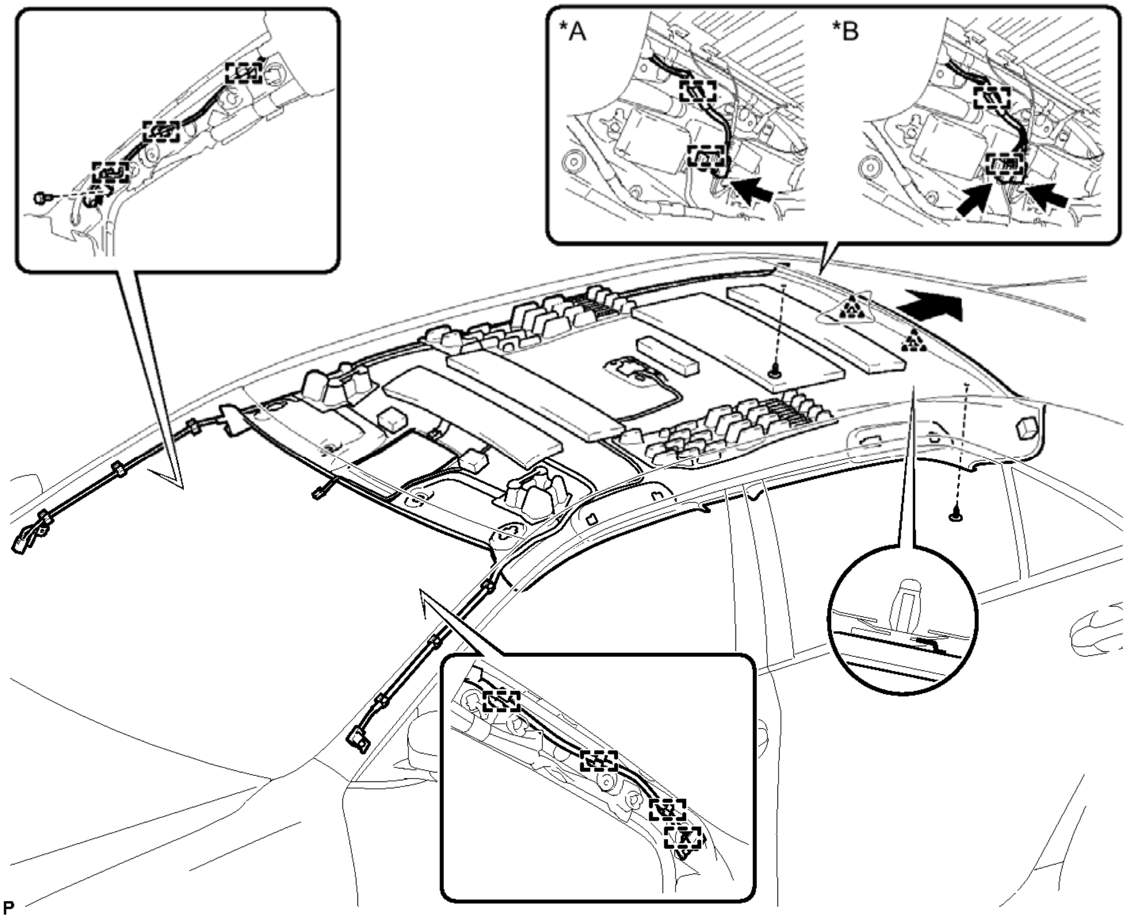

Fig. 154: Removing Roof Headlining Assembly (w/o Sliding Roof)
Courtesy of TOYOTA MOTOR SALES, U.S.A., INC.

TEXT IN ILLUSTRATION

*A	w/o Satellite Radio	*B	w/ Satellite Radio

    c. Disengage the 3 clamps from the front pillar RH.
    d. Disengage the 4 clamps from the front pillar LH.
    e. w/o Satellite Radio:

    1. Disengage the 2 clamps and disconnect the connector from the rear pillar RH.

f. w/ Satellite Radio:
    1. Disengage the 2 clamps and disconnect the 2 connectors from the rear pillar RH.

g. Remove the 2 clips.

h. Slide the roof headlining assembly to disengage the 2 clips as shown in the illustration.

HINT:

Leave the 2 clips in the vehicle.

i. Remove the roof headlining assembly from the vehicle through the front door RH.

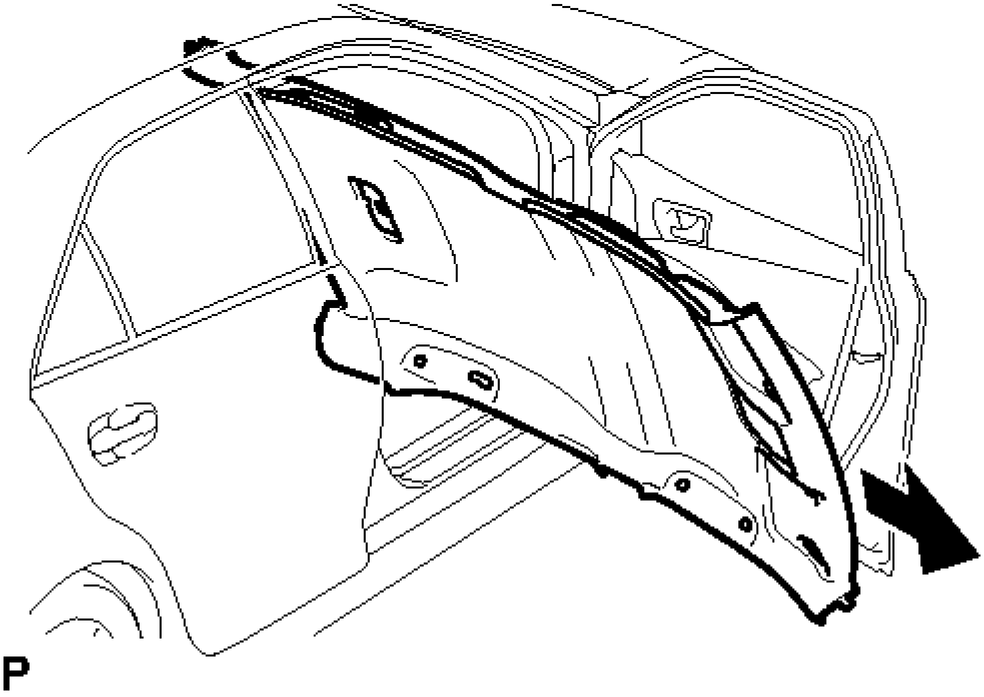

Fig. 155: Removing Roof Headlining Assembly From Vehicle (w/o Sliding Roof)
Courtesy of TOYOTA MOTOR SALES, U.S.A., INC.

NOTE: **Do not damage the roof headlining assembly or body interior.**

j. Remove the 2 clips from the vehicle body as shown in the illustration.

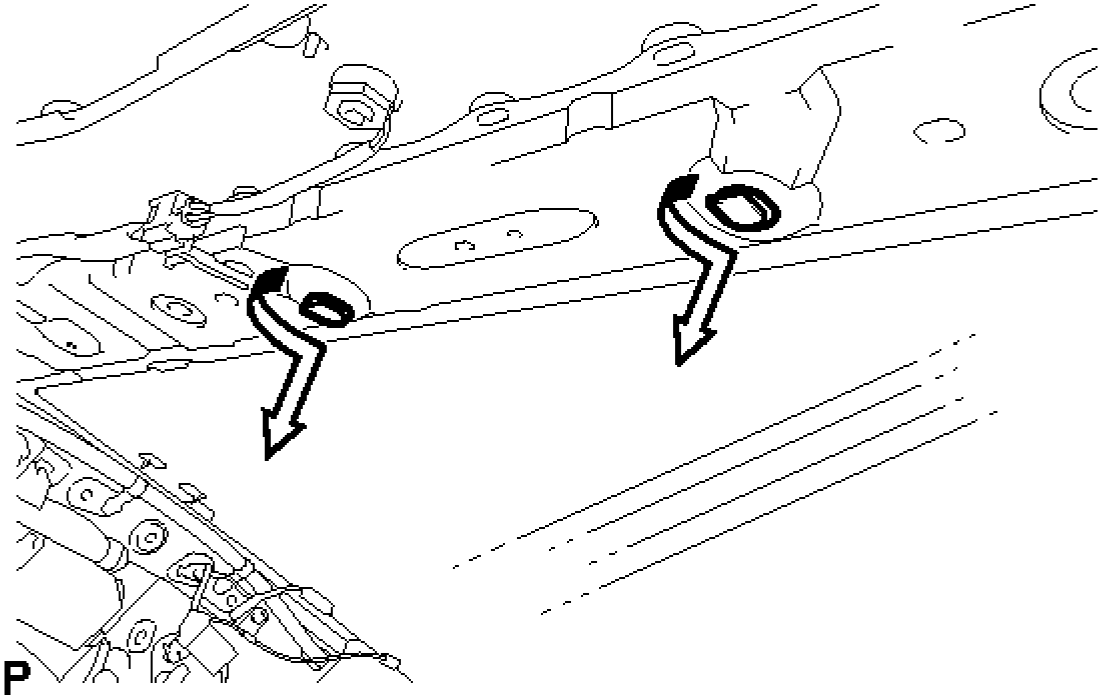

Fig. 156: Removing Roof Headlining Assembly Clips
Courtesy of TOYOTA MOTOR SALES, U.S.A., INC.

50. **REMOVE ROOF HEADLINING ASSEMBLY (w/ Sliding Roof)**
    - a. w/ EC Mirror
        1. Disconnect the connector from the inner rear view mirror.
    - b. Disconnect the connector from the sliding roof drive gear assembly.

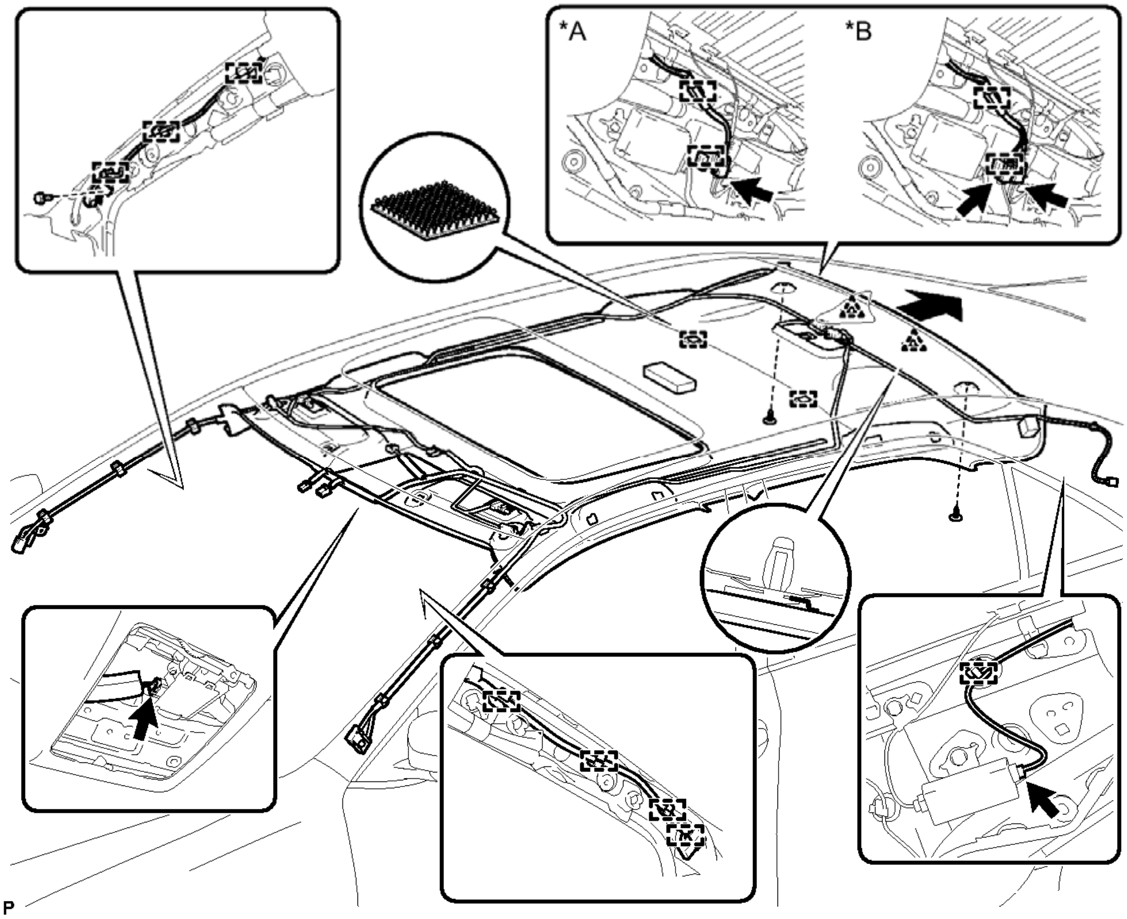

Fig. 157: Removing Roof Headlining Assembly (w/ Sliding Roof)
Courtesy of TOYOTA MOTOR SALES, U.S.A., INC.

TEXT IN ILLUSTRATION

*A	w/o Satellite Radio	*B	w/ Satellite Radio

c. Remove the bolt and disconnect the bracket from the front pillar RH.
d. Disengage the 3 clamps from the front pillar RH.
e. Disengage the 4 clamps from the front pillar LH.
f. w/o Satellite Radio:
    1. Disengage the 2 clamps and disconnect the connector from the rear pillar RH.
g. w/ Satellite Radio:
    1. Disengage the 2 clamps and disconnect the 2 connectors from the rear pillar RH.
h. Remove the 2 clips.
i. Disengage the 2 fasteners.
j. Slide the roof headlining assembly to disengage the 2 clips as shown in the illustration.

HINT:

Leave the 2 clips in the vehicle.

k. Remove the roof headlining assembly from the vehicle through the front door RH.

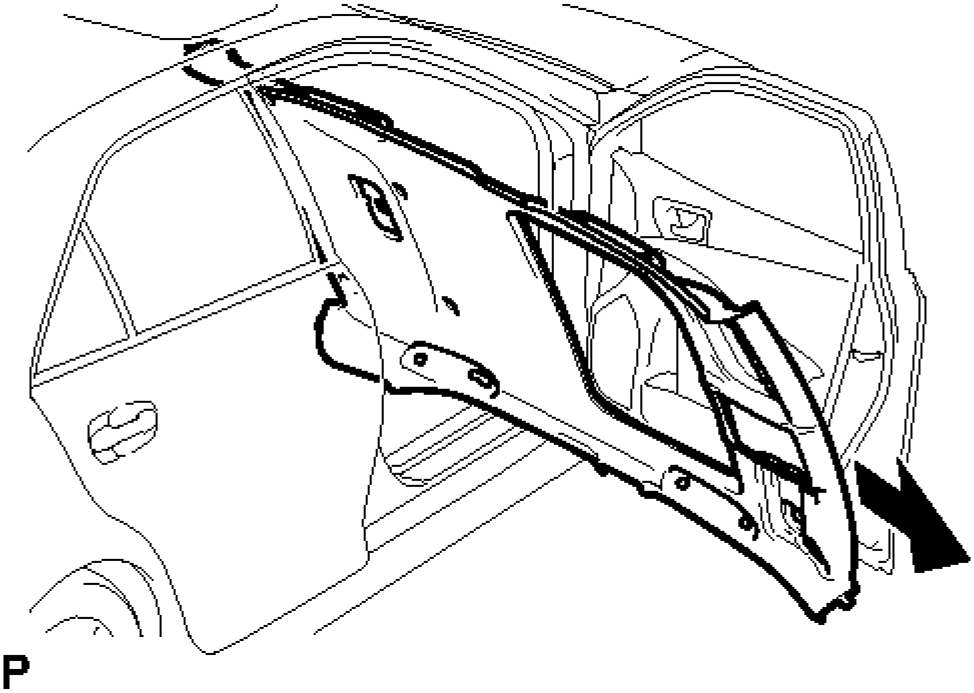

Fig. 158: Removing Roof Headlining Assembly From Vehicle (w/ Sliding Roof)
Courtesy of TOYOTA MOTOR SALES, U.S.A., INC.

NOTE: **Do not damage the roof headlining assembly or body interior.**

l. Remove the 2 clips from the vehicle body as shown in the illustration.

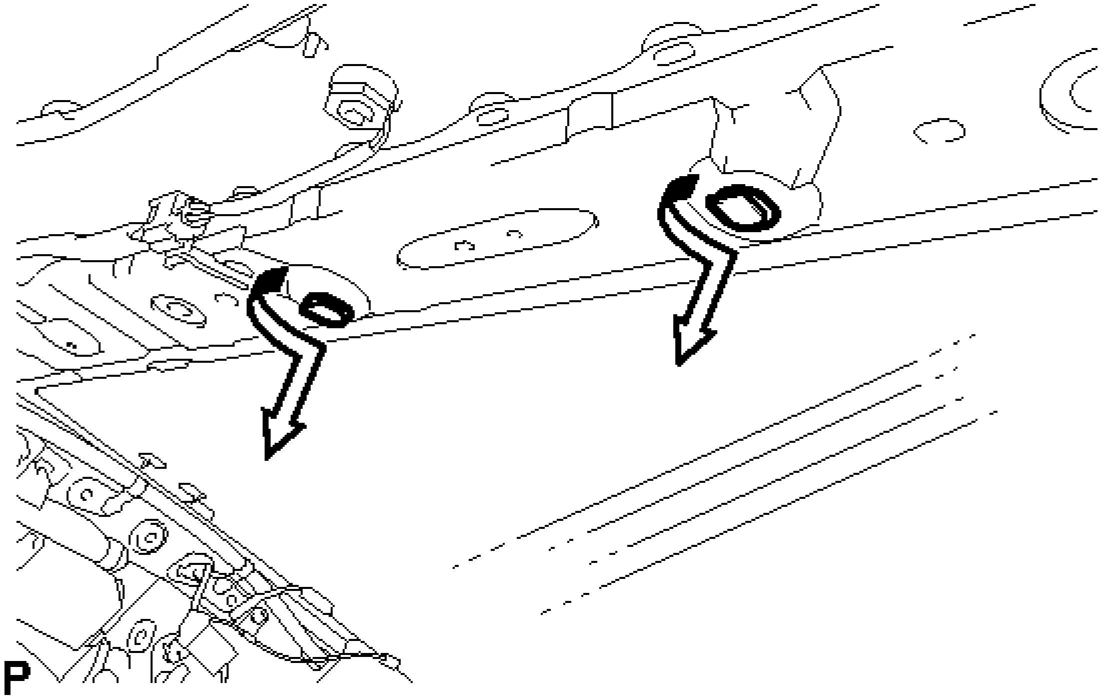

Fig. 159: Removing Roof Headlining Assembly Clips
Courtesy of TOYOTA MOTOR SALES, U.S.A., INC.

DISASSEMBLY

DISASSEMBLY

1. **REMOVE VANITY LIGHT ASSEMBLY (w/ Sliding Roof)**
    a. Remove the vanity light assembly. Refer to **REMOVAL - Step 2** .

    HINT:

    Use the same procedure for the other vanity light.

2. **REMOVE NO. 4 ROOF SILENCER PAD (w/o Sliding Roof)**
    a. Remove the 3 No. 4 roof silencer pads.

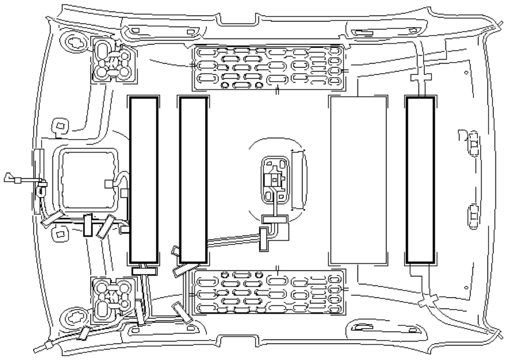

P

Fig. 160: Identifying No. 4 Roof Silencer Pad (w/o Sliding Roof)
Courtesy of TOYOTA MOTOR SALES, U.S.A., INC.

3. **REMOVE NO. 2 ANTENNA CORD SUB-ASSEMBLY** . Refer to **REMOVAL - Step 6** .
4. **REMOVE NO. 1 ROOF WIRE**
    a. Remove the adhesive tape from the roof headlining assembly.

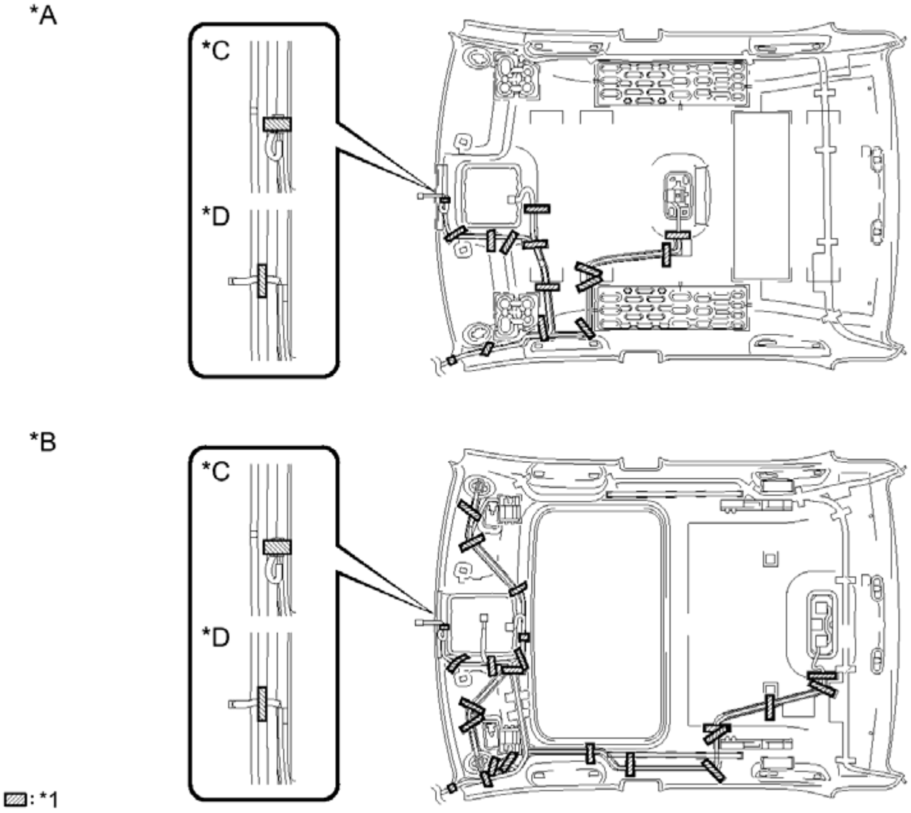

P

Fig. 161: Identifying No. 1 Roof Wire Adhesive Tape
Courtesy of TOYOTA MOTOR SALES, U.S.A., INC.

TEXT IN ILLUSTRATION

*A	w/o Sliding Roof	*B	w/ Sliding Roof
*C	w/o EC Mirror	*D	w/ EC Mirror
*1	Adhesive Tape	-	-

b. w/ Sliding Roof:

   1. Turn the visor connectors counterclockwise approximately 45° and separate the connectors from the roof headlining assembly.

c. Remove the No. 1 roof wire from the roof headlining assembly.

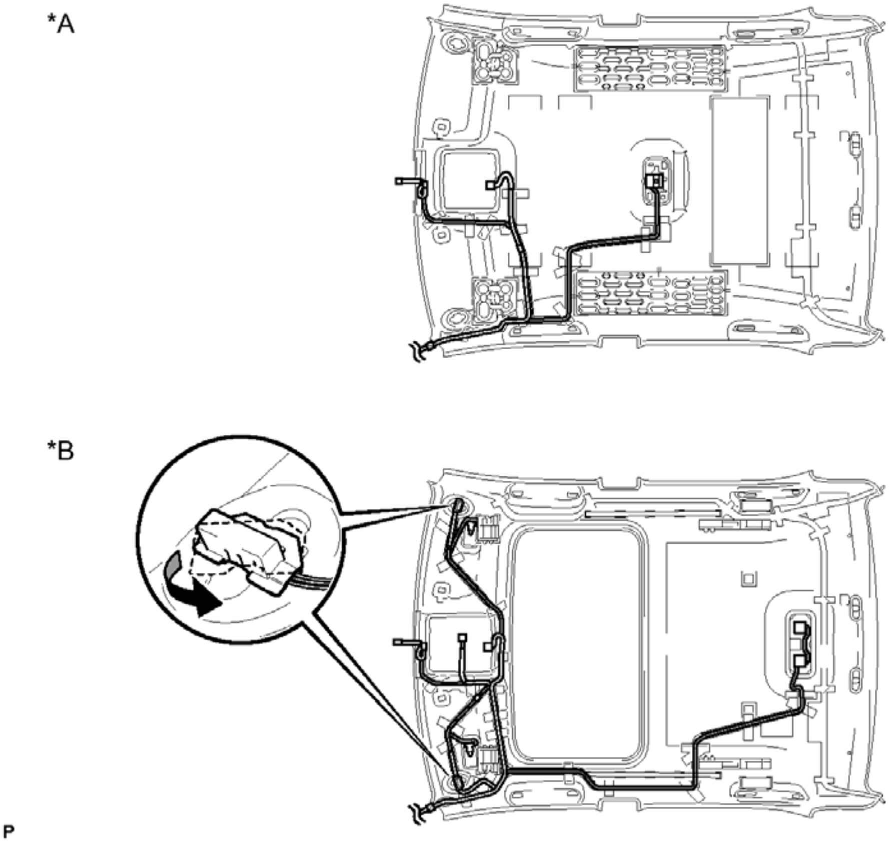

Fig. 162: Identifying No. 1 Roof Wire
Courtesy of TOYOTA MOTOR SALES, U.S.A., INC.

TEXT IN ILLUSTRATION

*A	w/o Sliding	*B	w/ Sliding

	Roof		Roof

5. **REMOVE NO. 2 ROOF SILENCER PAD (w/o Sliding Roof)**
   a. Remove the No. 2 roof silencer pad.

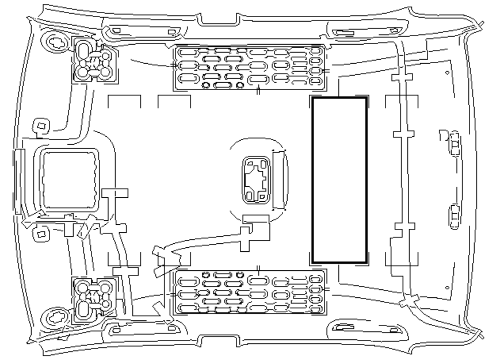

P

Fig. 163: Identifying No. 2 Roof Silencer Pad (w/o Sliding Roof)
Courtesy of TOYOTA MOTOR SALES, U.S.A., INC.

REASSEMBLY

REASSEMBLY

1. **INSTALL NO. 2 ROOF SILENCER PAD (w/o Sliding Roof)**
   a. Align the markings on the roof headlining assembly with the No. 2 roof silencer pad and install the pad using hot-melt glue as shown in the illustration.

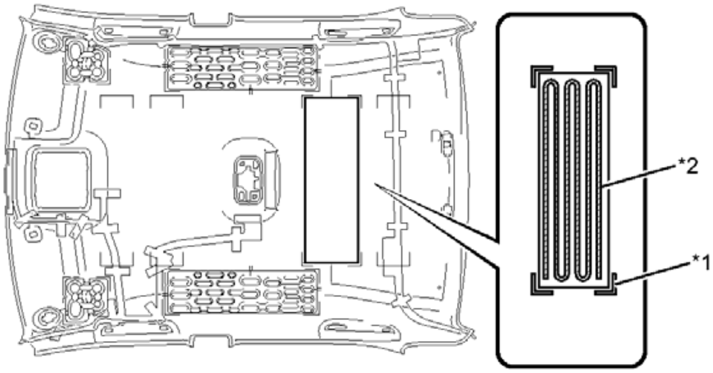

P

Fig. 164: Identifying No. 2 Roof Silencer Pad (w/o Sliding Roof)
Courtesy of TOYOTA MOTOR SALES, U.S.A., INC.

TEXT IN ILLUSTRATION

			Hot-

*1	Marking	*2	melt Glue

2. **INSTALL NO. 1 ROOF WIRE**
    a. Apply double-sided tape as shown in the illustration.

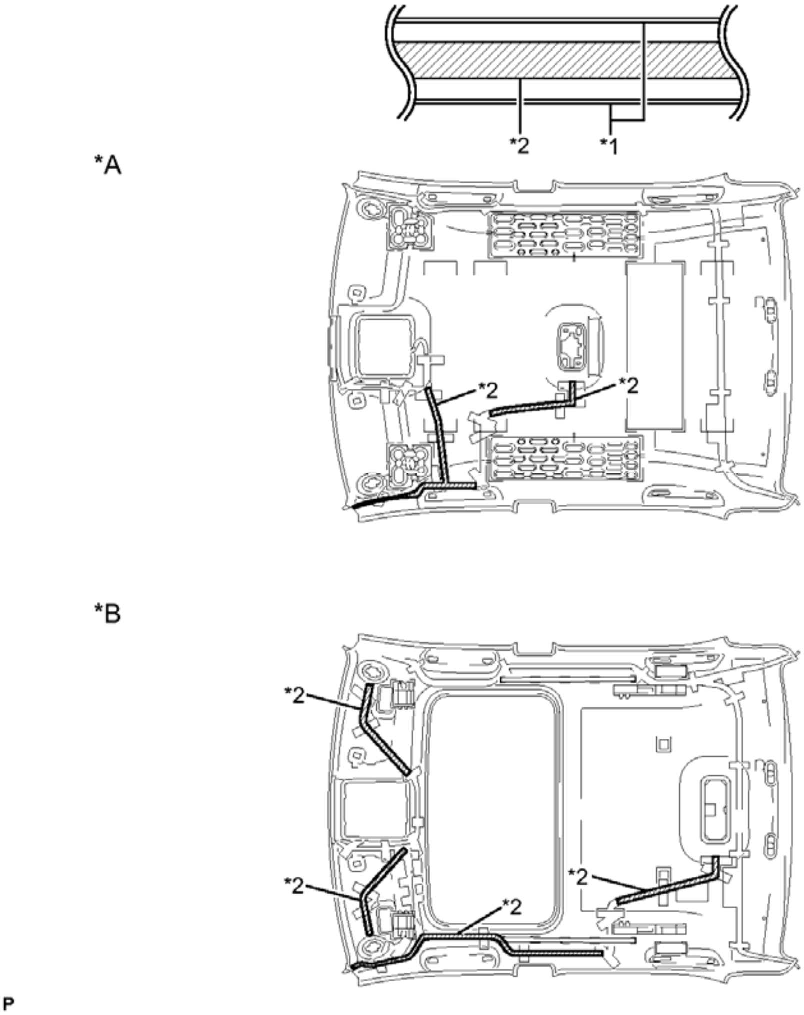

Fig. 165: Identifying No. 1 Roof Wire Double-Sided Tape
Courtesy of TOYOTA MOTOR SALES, U.S.A., INC.

TEXT IN ILLUSTRATION

*A	w/o Sliding Roof	*B	w/ Sliding Roof
*1	Marking	*2	Hot-melt Glue

b. Peel off the release paper from the double-sided tape.
c. Attach the No. 1 roof wire along the double-sided tape so that the marking surface of the wire harness faces downward.
d. Align the pink marking tape (A) on the No. 1 roof wire with the vehicle front side tab on the roof headlining.

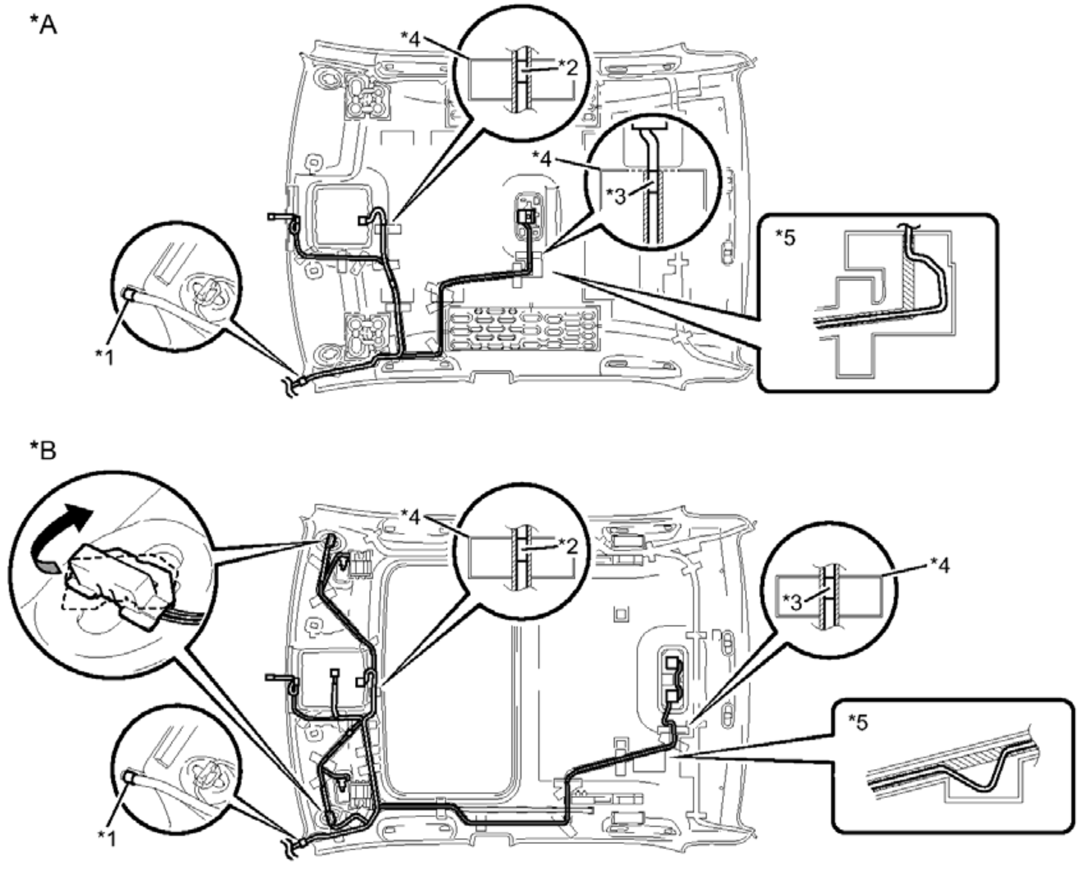

Fig. 166: Identifying No. 1 Roof Wire
Courtesy of TOYOTA MOTOR SALES, U.S.A., INC.

TEXT IN ILLUSTRATION

*A	w/o Sliding Roof	*B	w/ Sliding Roof
*1	Pink Marking Tape (A)	*2	Pink Marking Tape (B)
*3	Pink Marking Tape (C)	*4	Marking

*5	Adjustment Area	-	-

e. w/ Sliding Roof:
    1. Turn the visor connector LH clockwise approximately 45° to install it to the roof headlining assembly.

f. Align the edge of the pink marking tape (A) on the No. 1 roof wire with the markings on the roof headlining.

g. Attach the No. 1 roof wire, starting from the pink marking tape (B) to the pink marking tape (A) while aligning it with the double-sided tape.

NOTE:

- **Securely attach the No. 1 roof wire before the hot-melt glue cools.**
- **If any of the No. 1 roof wire is left loose, this will cause abnormal noise. Make sure to attach the No. 1 roof wire without leaving any of it loose.**

h. w/ Sliding Roof:
    1. Turn the visor connector RH clockwise approximately 45° to install it to the roof headlining assembly.
    2. Attach the No. 1 roof wire, starting from the visor connector RH to the pink marking tape (B) while aligning it with the double-sided tape.

    NOTE:

    - **Securely attach the No. 1 roof wire.**
    - **If any of the No. 1 roof wire is left loose, this will cause abnormal noise. Make sure to attach the No. 1 roof wire without leaving any of it loose.**

i. Align the edge of the pink marking tape (C) on the No. 1 roof wire with the markings on the roof headlining.

j. Attach the No. 1 roof wire, starting from the pink marking tape (A) to the pink marking tape (C) while aligning it with the double-sided tape.

NOTE:

- **Securely attach the No. 1 roof wire.**
- **If any of the No. 1 roof wire is left loose, this will cause abnormal noise. Make sure to attach the No. 1 roof wire without leaving any of it loose.**

HINT:

Secure the extra length of the No. 1 roof wire in the adjustment area.

k. Apply adhesive tape by aligning it with the markings on the roof headlining as shown in the

illustration.

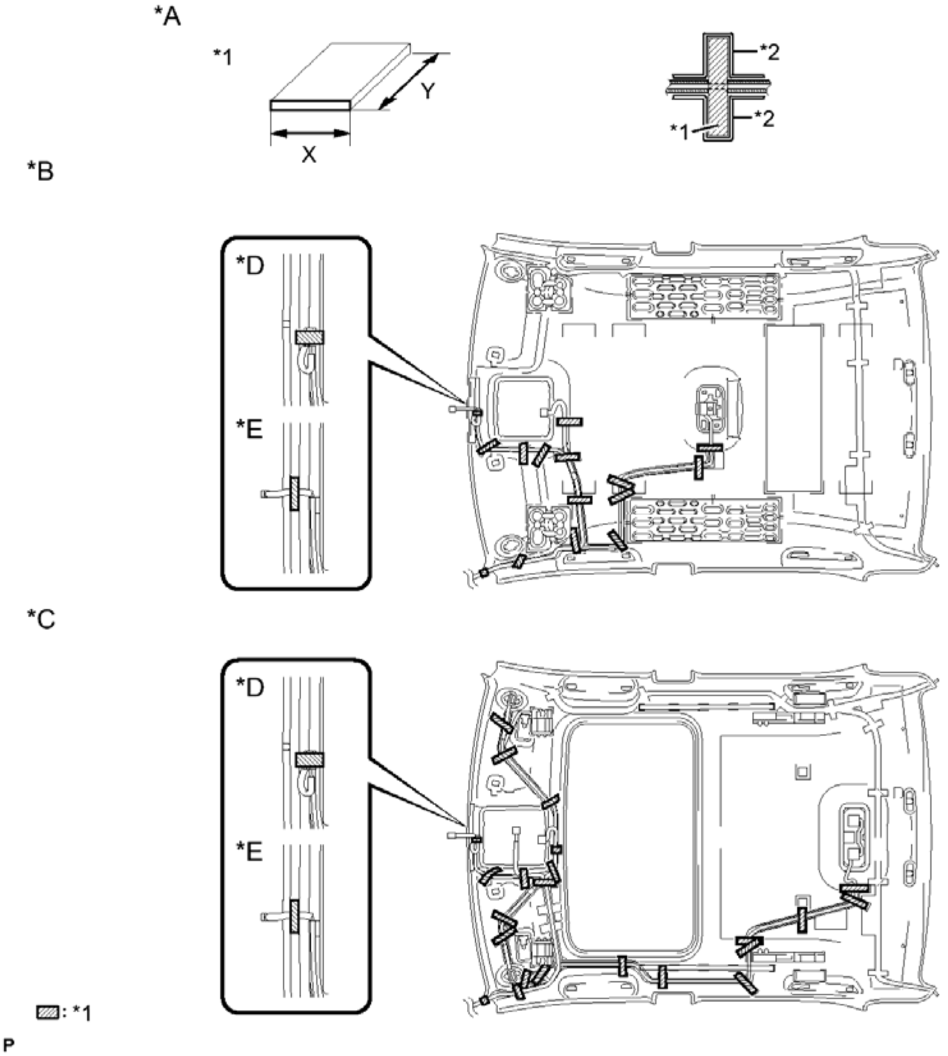

Fig. 167: Identifying No. 1 Roof Wire Double-Sided Tape
Courtesy of TOYOTA MOTOR SALES, U.S.A., INC.

TEXT IN ILLUSTRATION

*A	Tape Attachment Location (Reference)	*B	w/o Sliding Roof
*C	w/ Sliding Roof	*D	w/o EC Mirror
*E	w/ EC Mirror	-	-
*1	Adhesive Tape	*2	Marking

Adhesive Tape Size

X

20 mm (0.787 in.)

Y

80 mm (3.15 in.)

3. **INSTALL NO. 2 ANTENNA CORD SUB-ASSEMBLY** . Refer to **INSTALLATION - Step 1** .
4. **INSTALL NO. 4 ROOF SILENCER PAD (w/o Sliding Roof)**
   a. Align the markings on the roof headlining assembly with the 3 No. 4 roof silencer pads and install the pads using hot-melt glue as shown in the illustration.

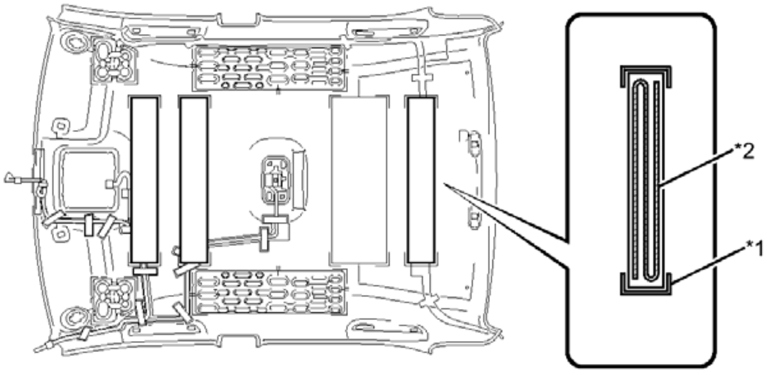

Fig. 168: Identifying No. 4 Roof Silencer Pad (w/o Sliding Roof)
Courtesy of TOYOTA MOTOR SALES, U.S.A., INC.

TEXT IN ILLUSTRATION

*1	Marking	*2	Hot-melt Glue

5. **INSTALL VANITY LIGHT ASSEMBLY (w/ Sliding Roof)**
   a. Install the vanity light assembly. Refer to **INSTALLATION - Step 1** .

   HINT:

   Use the same procedure for the other vanity light.

INSTALLATION

INSTALLATION

1. **INSTALL ROOF HEADLINING ASSEMBLY (w/o Sliding Roof)**
    a. Install the 2 clips to the roof headlining assembly.

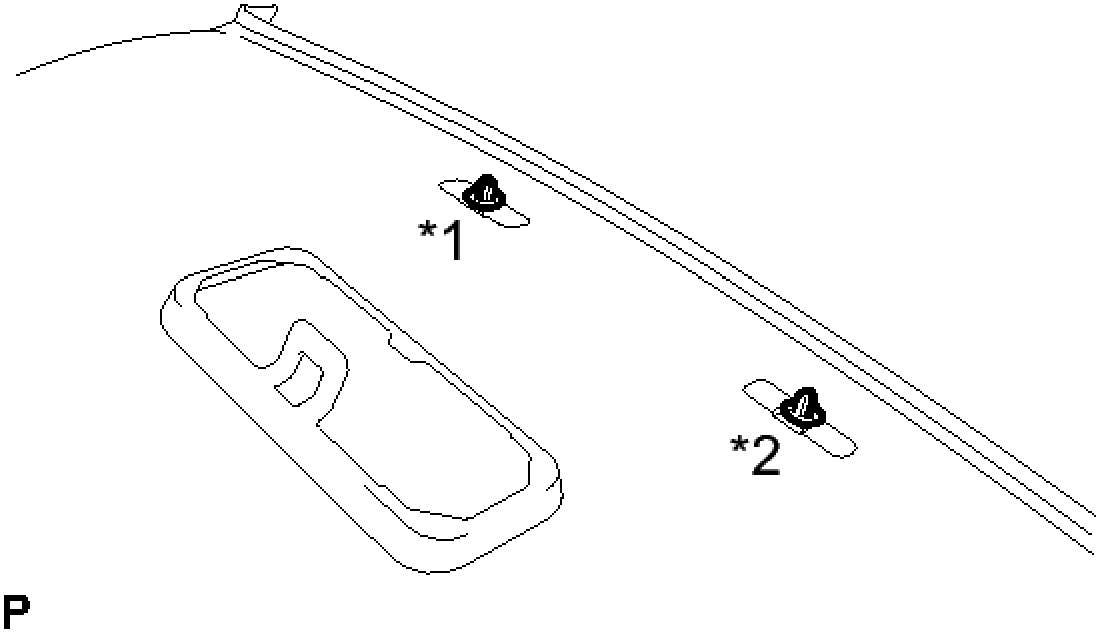

Fig. 169: Identifying Roof Headlining Assembly Clips
Courtesy of TOYOTA MOTOR SALES, U.S.A., INC.

TEXT IN ILLUSTRATION

*1	Clip (Black)
*2	Clip (White)

    b. Put the roof headlining assembly into the vehicle through the front door RH.

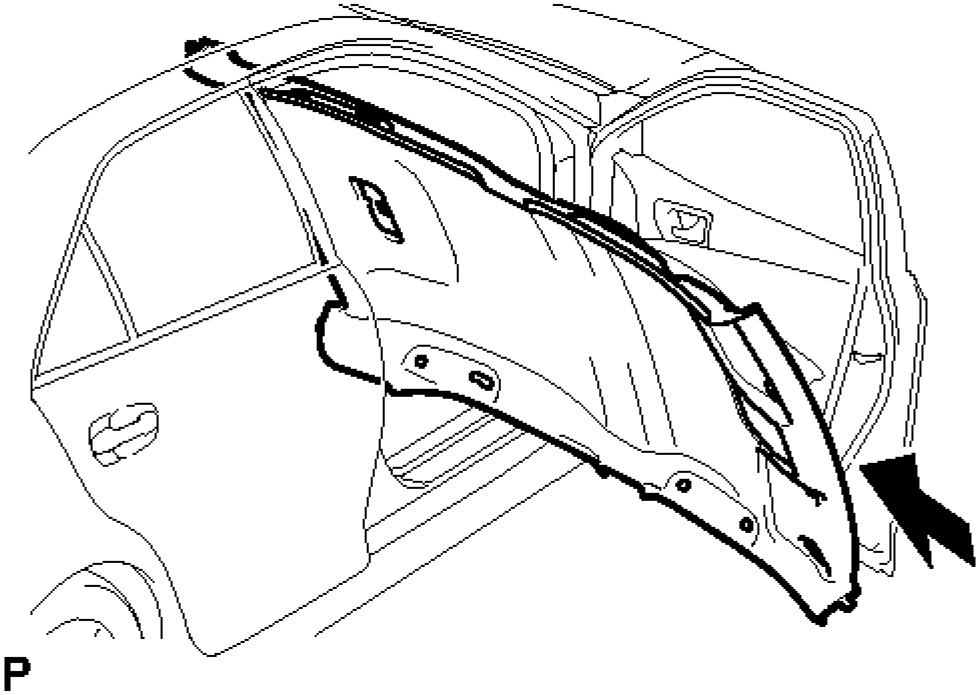

Fig. 170: Installing Roof Headlining Assembly From Vehicle (w/o Sliding Roof)
Courtesy of TOYOTA MOTOR SALES, U.S.A., INC.

NOTE: Do not damage the roof headlining assembly or body interior.

c. Engage the 2 clips.

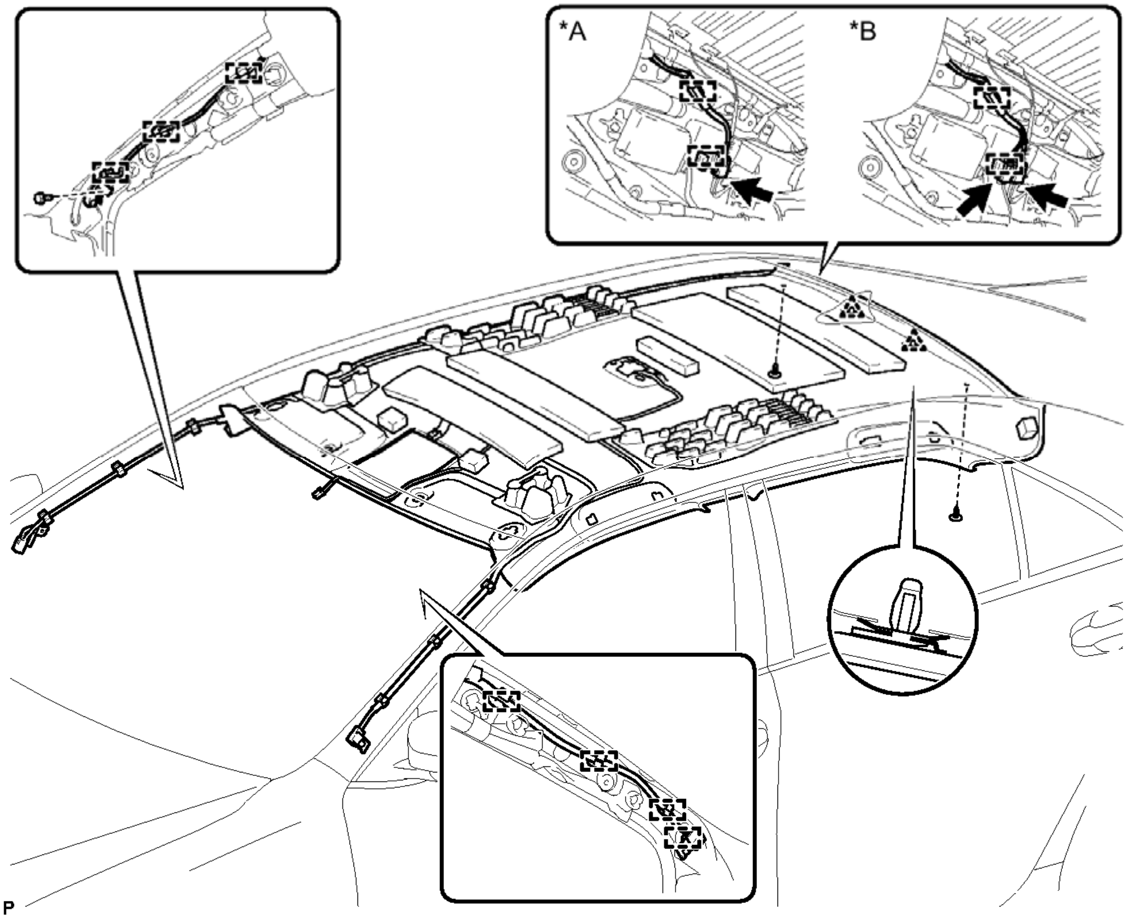

Fig. 171: Identifying Roof Headlining Assembly (w/o Sliding Roof)
Courtesy of TOYOTA MOTOR SALES, U.S.A., INC.

TEXT IN ILLUSTRATION

*A	w/o Satellite Radio	*B	w/ Satellite Radio

d. Install the roof headlining assembly with the 2 clips.
e. Engage the 4 clamps to the front pillar LH.
f. Engage the 3 clamps to the front pillar RH.
g. Connect the bracket with the bolt to the front pillar RH.

Torque: 7.0 N*m (71 kgf*cm, 62 in.*lbf)

h. w/o Satellite Radio:
    1. Engage the 2 clamps and connect the connector to the rear pillar RH.
i. w/ Satellite Radio:
    1. Engage the 2 clamps and connect the 2 connectors to the rear pillar RH.
j. w/ EC Mirror

1. Connect the connector to the inner rear view mirror.

2. **INSTALL ROOF HEADLINING ASSEMBLY (w/ Sliding Roof)**
   a. Install the 2 clips to the roof headlining assembly.

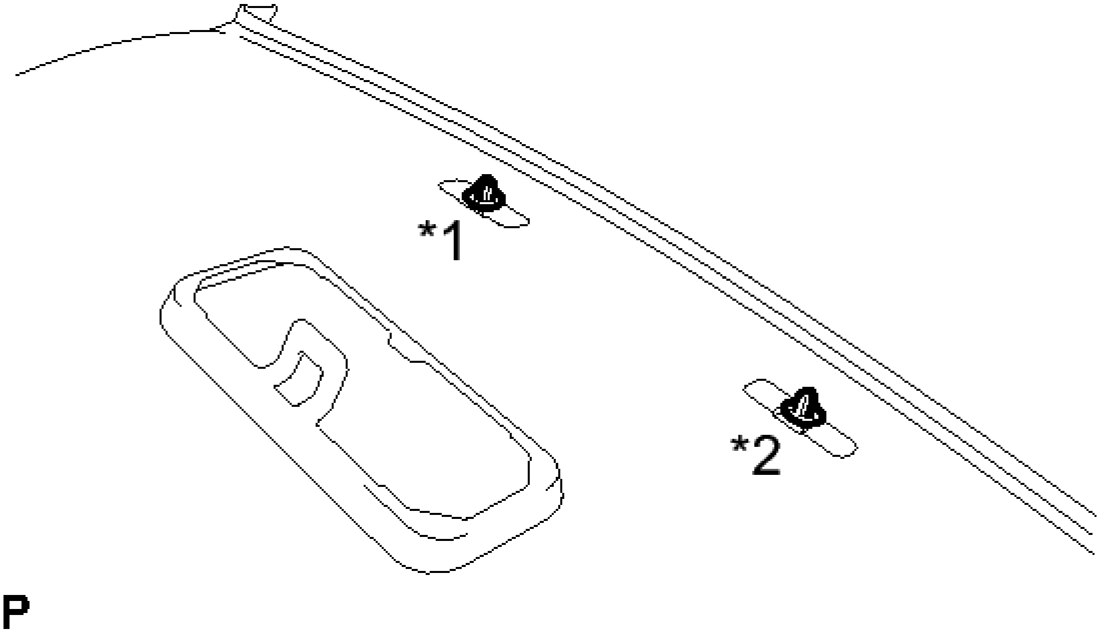

Fig. 172: Identifying Roof Headlining Assembly Clips
Courtesy of TOYOTA MOTOR SALES, U.S.A., INC.

TEXT IN ILLUSTRATION

*1	Clip (Black)
*2	Clip (White)

   b. Put the roof headlining assembly into the vehicle through the front door RH.

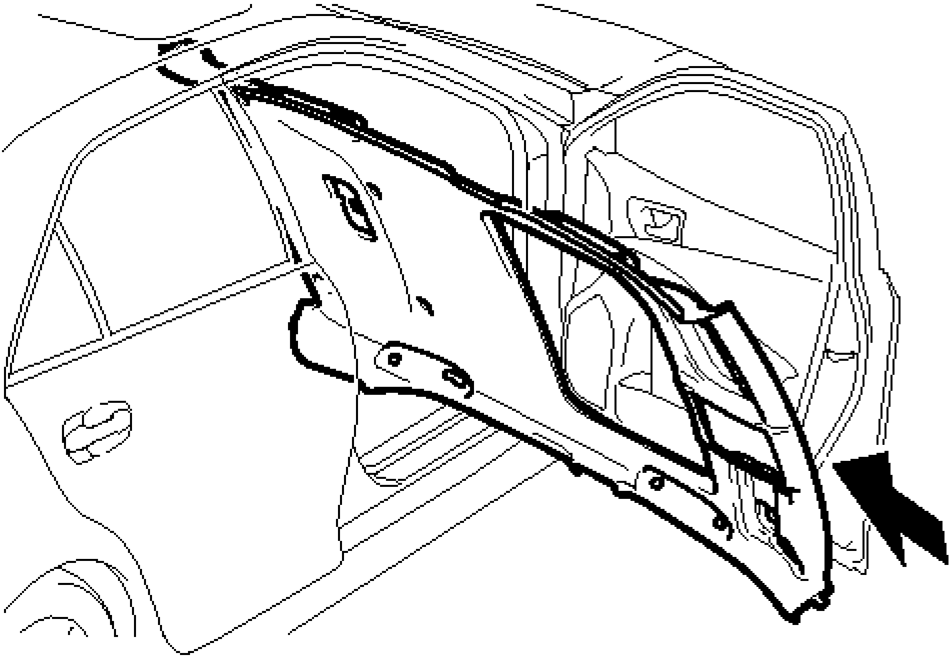

Fig. 173: Installing Roof Headlining Assembly From Vehicle (w/ Sliding Roof)
Courtesy of TOYOTA MOTOR SALES, U.S.A., INC.

NOTE: **Do not damage the roof headlining assembly or body interior.**

c. Engage the 2 clips and 2 fasteners.

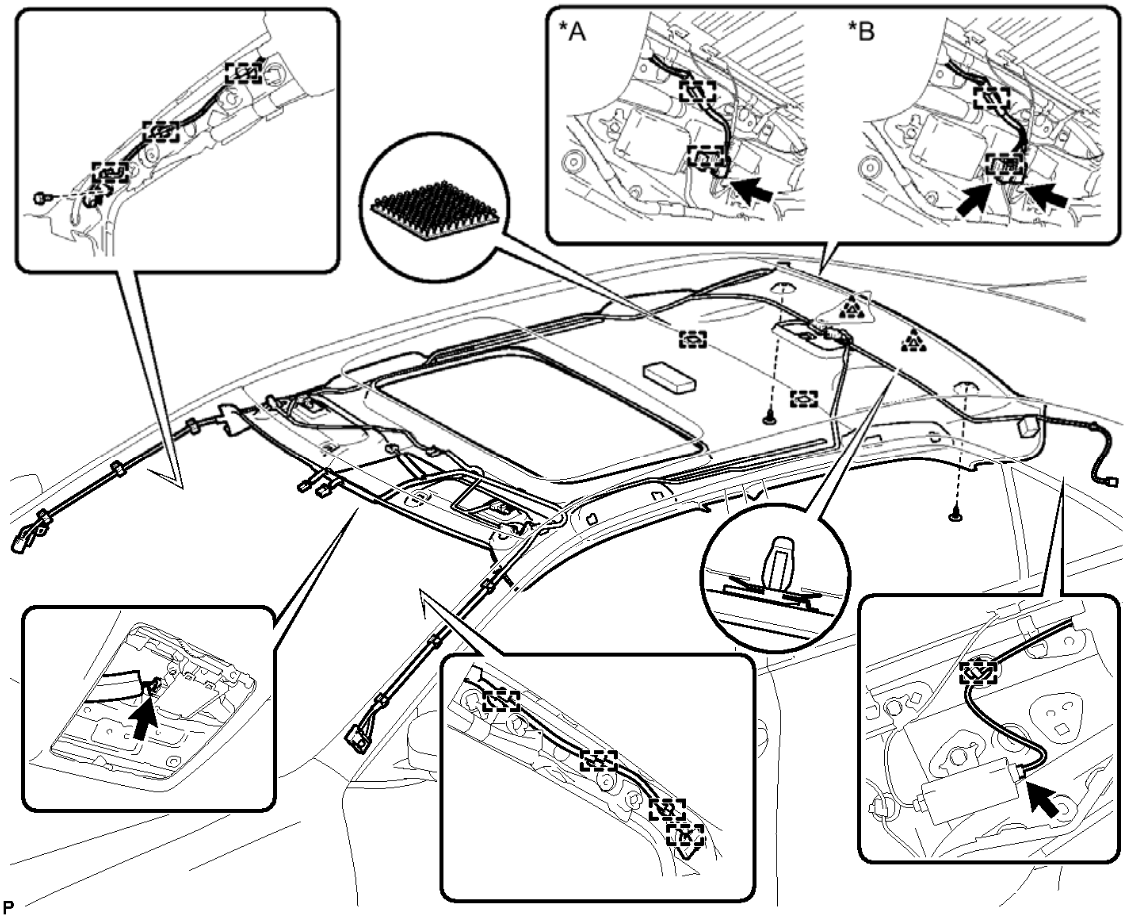

Fig. 174: Identifying Roof Headlining Assembly (w/ Sliding Roof)
Courtesy of TOYOTA MOTOR SALES, U.S.A., INC.

TEXT IN ILLUSTRATION

*A	w/o Satellite Radio	*B	w/ Satellite Radio

d. Install the roof headlining assembly with the 2 clips.
e. Engage the 4 clamps to the front pillar LH.
f. Engage the 3 clamps to the front pillar RH.
g. Connect the bracket with the bolt to the front pillar RH.

Torque: 7.0 N*m (71 kgf*cm, 62 in.*lbf)

h. w/o Satellite Radio:
    1. Engage the 2 clamps and connect the connector to the rear pillar RH.
i. w/ Satellite Radio:
    1. Engage the 2 clamps and connect the 2 connectors to the rear pillar RH.
j. Connect the connector to the sliding roof drive gear assembly.

k. w/ EC Mirror
    1. Connect the connector to the inner rear view mirror.

3. **INSTALL VISOR HOLDER**
    a. Engage the 2 claws.

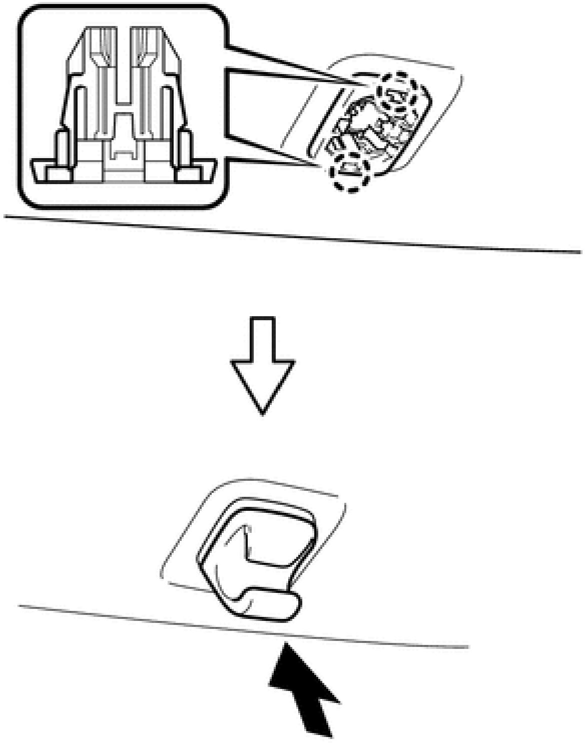

Fig. 175: Installing Visor Holder
Courtesy of TOYOTA MOTOR SALES, U.S.A., INC.

    b. Push in the visor holder as shown in the illustration.

HINT:

Use the same procedure for the other visor holder.

4. **INSTALL VISOR ASSEMBLY LH**
    a. Install the visor assembly LH with the 2 screws.
5. **INSTALL VISOR BRACKET COVER (for LH Side)**
    a. Engage the 4 claws to install the visor bracket cover.

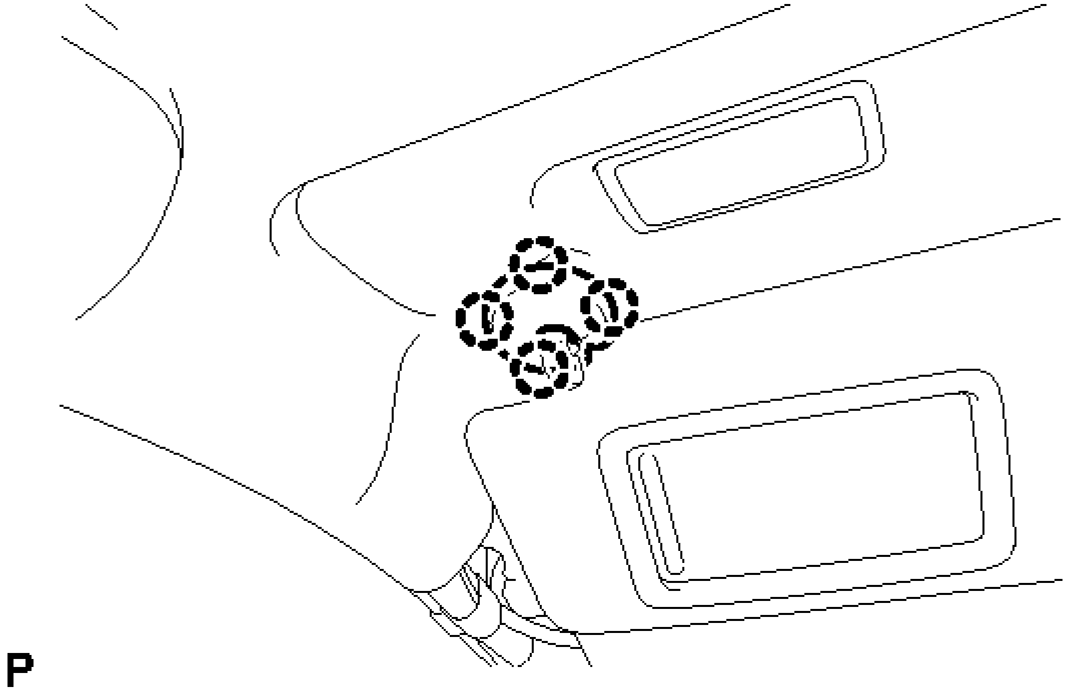

Fig. 176: Identifying Visor Bracket Cover (For LH Side) Claws
Courtesy of TOYOTA MOTOR SALES, U.S.A., INC.

6. **INSTALL VISOR ASSEMBLY RH**

   HINT:

   Use the same procedure as for the LH side.

7. **INSTALL VISOR BRACKET COVER (for RH Side)**

   HINT:

   Use the same procedure as for the LH side.

8. **INSTALL SLIDING ROOF OPENING TRIM MOULDING (w/ Sliding Roof)**
   a. Align the alignment mark on the moulding with the notch of the roof headlining to install the sliding roof opening trim moulding.

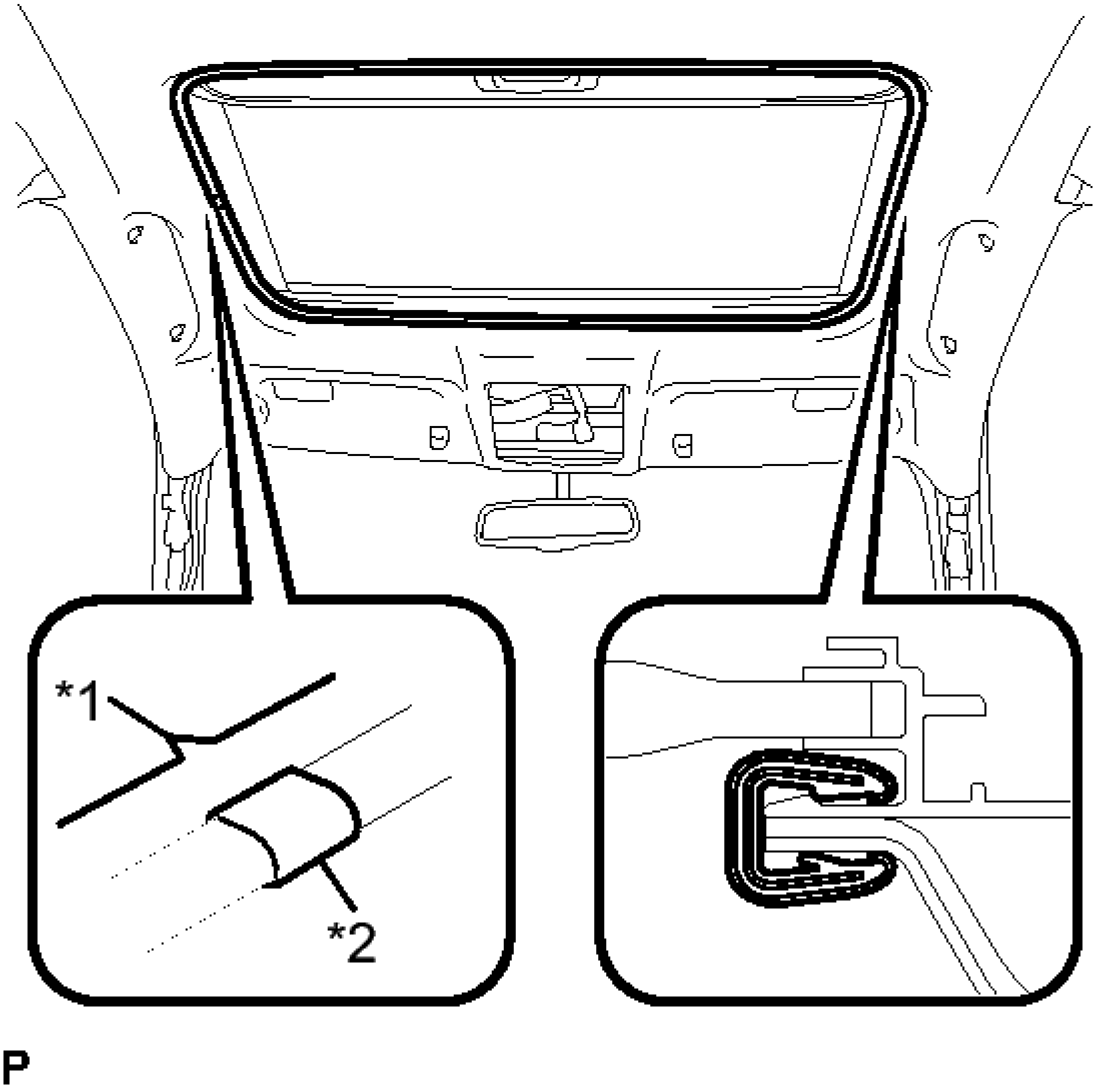

Fig. 177: Identifying Sliding Roof Opening Trim Moulding (w/ Sliding Roof)
Courtesy of TOYOTA MOTOR SALES, U.S.A., INC.

TEXT IN ILLUSTRATION

*1	Notch
*2	Alignment Mark

NOTE: **After installation, check that the corners fit correctly.**

9. **INSTALL ASSIST GRIP SUB-ASSEMBLY**
    a. Put a assist grip sub-assembly together as shown in the illustration.

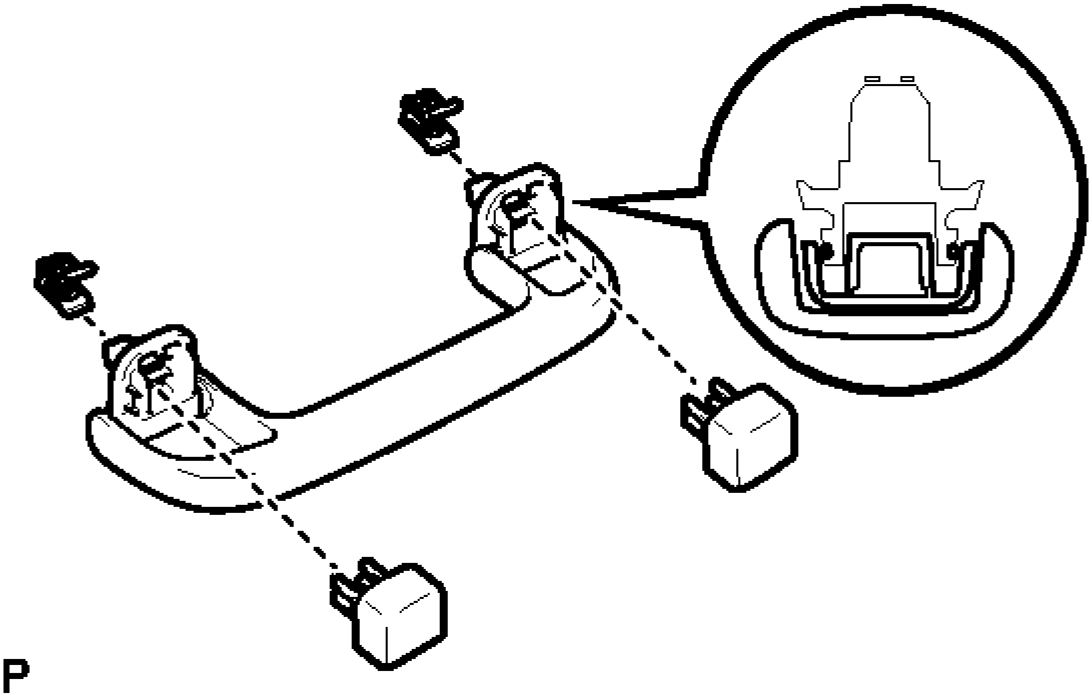

Fig. 178: Identifying Assist Grip Sub-Assembly
Courtesy of TOYOTA MOTOR SALES, U.S.A., INC.

b. Engage the 2 clips to install the assist grip sub-assembly.

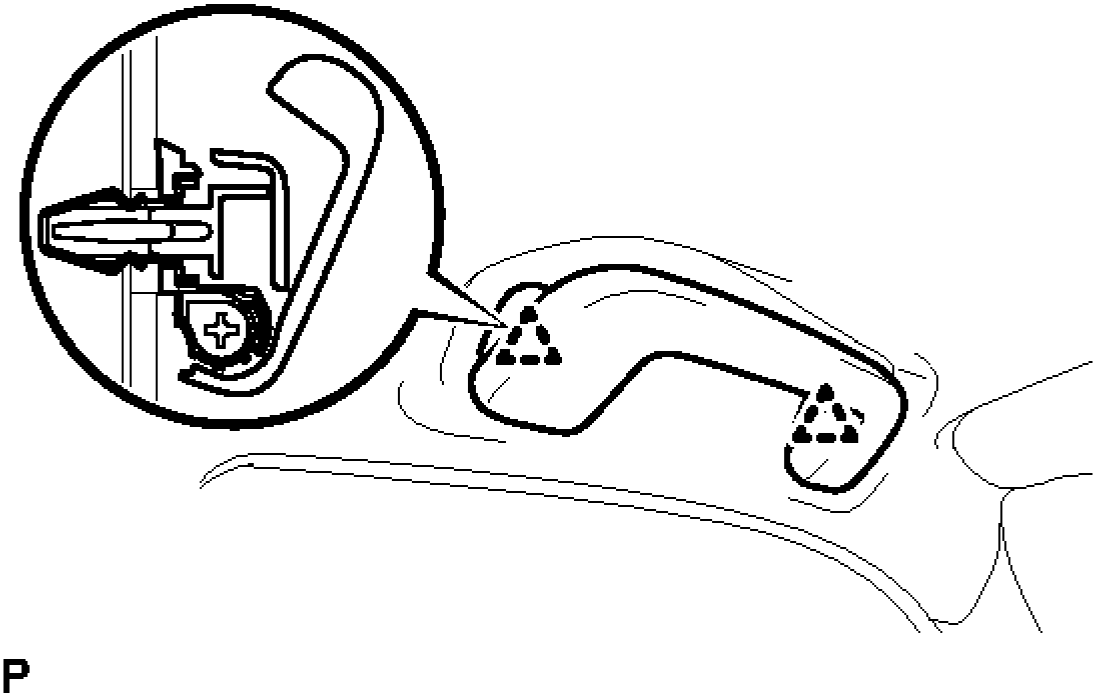

Fig. 179: Identifying Assist Grip Sub-Assembly Clips
Courtesy of TOYOTA MOTOR SALES, U.S.A., INC.

c. Engage the 4 claws to install the 2 assist grip covers

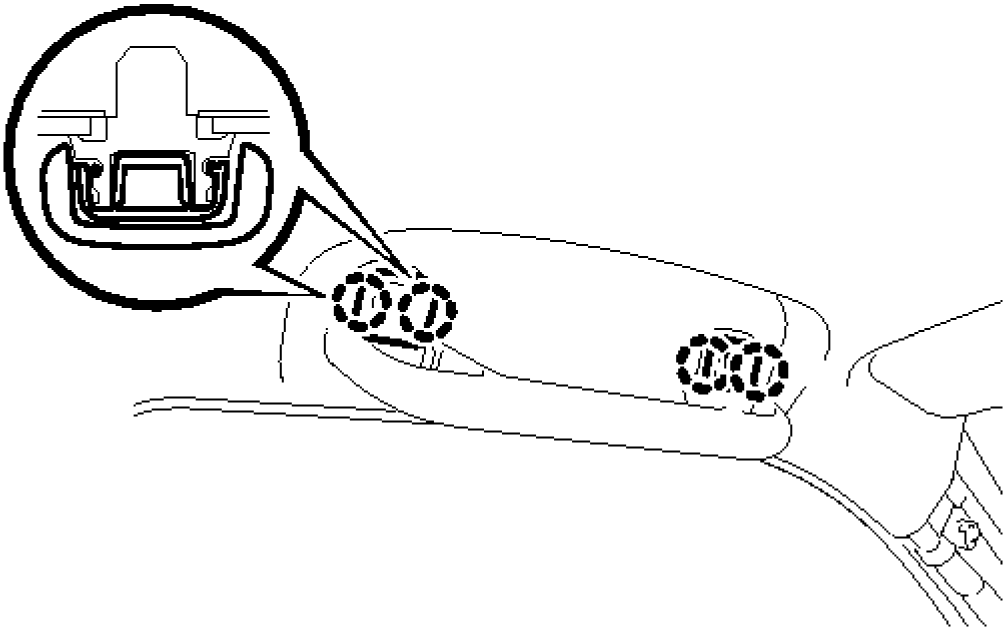

P

Fig. 180: Identifying Assist Grip Sub-Assembly Claws
Courtesy of TOYOTA MOTOR SALES, U.S.A., INC.

HINT:

Use the same procedure for the RH side.

10. **INSTALL REAR ASSIST GRIP ASSEMBLY LH**
    a. Put a rear assist grip assembly LH together as shown in the illustration.

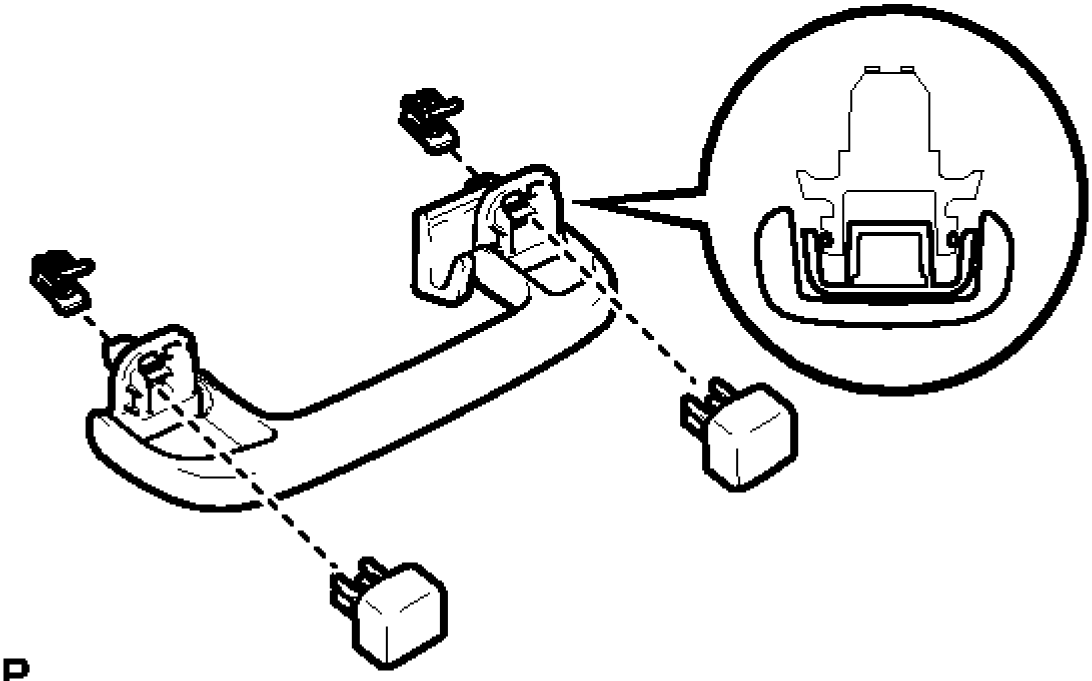

P

Fig. 181: Identifying Rear Assist Grip Assembly LH
Courtesy of TOYOTA MOTOR SALES, U.S.A., INC.

b. Engage the 2 clips to install the rear assist grip assembly LH.

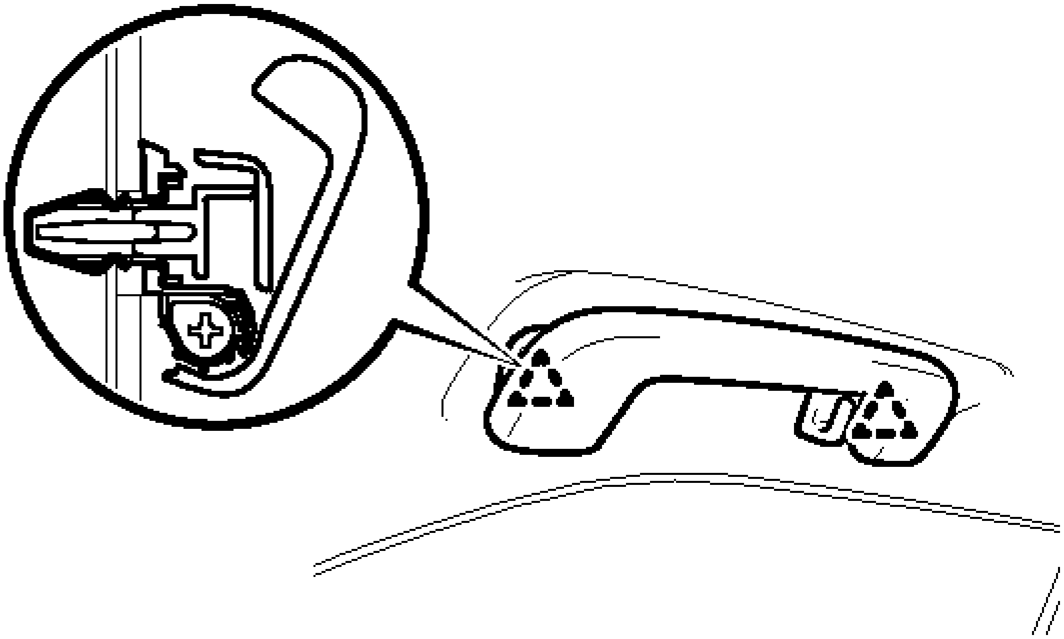

P

Fig. 182: Identifying Rear Assist Grip Assembly LH Clips
Courtesy of TOYOTA MOTOR SALES, U.S.A., INC.

c. Engage the 4 claws to install the 2 assist grip covers

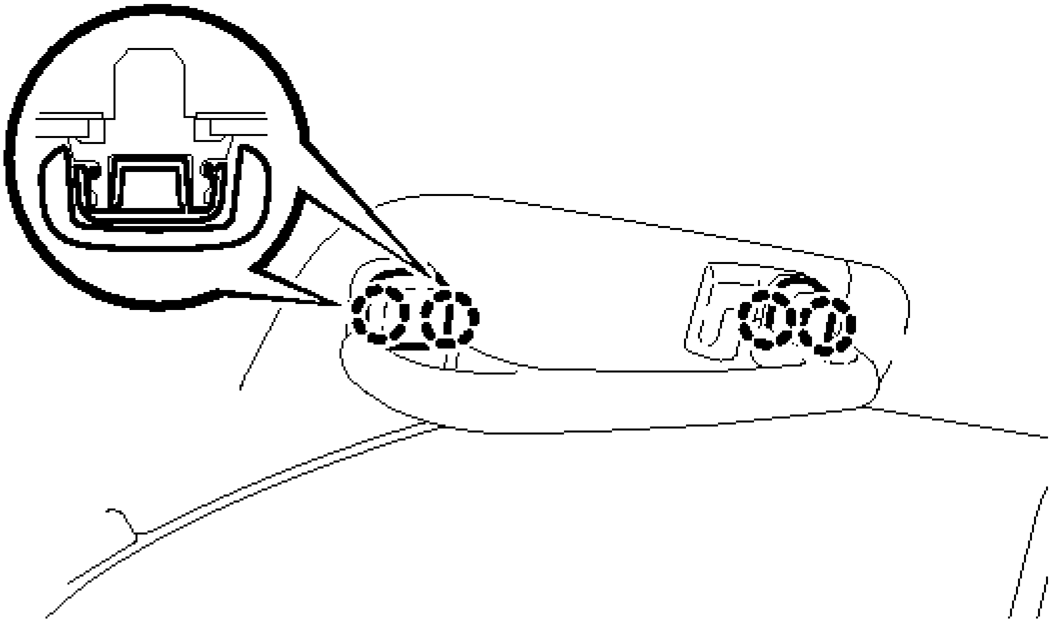

Fig. 183: Identifying Rear Assist Grip Assembly LH Claws
Courtesy of TOYOTA MOTOR SALES, U.S.A., INC.

11. **INSTALL REAR ASSIST GRIP ASSEMBLY RH**

    HINT:

    Use the same procedure as for the LH side.

12. **INSTALL NO. 1 ROOM LIGHT ASSEMBLY (w/o Sliding Roof)** . Refer to **INSTALLATION - Step 1** .
13. **INSTALL SPOT LIGHT ASSEMBLY (w/ Sliding Roof)** . Refer to **INSTALLATION - Step 2** .
14. **INSTALL ROOF CONSOLE BOX ASSEMBLY (w/o Sliding Roof)** . Refer to **INSTALLATION - Step 2** .
15. **INSTALL ROOF CONSOLE BOX ASSEMBLY (w/ Sliding Roof)** . Refer to **INSTALLATION - Step 3** .
16. **INSTALL INNER REAR VIEW MIRROR STAY HOLDER COVER (w/ EC Mirror)** . Refer to **INSTALLATION - Step 3** .
17. **INSTALL INSTRUMENT PANEL ASSEMBLY**

    Refer to **INSTALLATION**.

18. **INSTALL FRONT SEAT ASSEMBLY LH**

For TMMK Made Manual Seat. Refer to **INSTALLATION** .

For TMMK Made Power Seat. Refer to **INSTALLATION** .

For SIA Made Manual Seat. Refer to **INSTALLATION** .

For SIA Made Power Seat. Refer to **INSTALLATION** .

19. **INSTALL FRONT SEAT ASSEMBLY RH**

    HINT:

    Use the same procedure as for the LH side.

20. **INSTALL ROOF SIDE INNER GARNISH LH**
    a. Engage the guide.
    b. Engage the 5 clips to install the roof side inner garnish LH.
21. **INSTALL CENTER PILLAR UPPER GARNISH LH**
    a. Pass the floor anchor of the front seat outer seat belt assembly LH through the center pillar upper garnish LH.
    b. Engage the clip.
    c. Install the center pillar upper garnish LH with the 2 screws.
22. **INSTALL CENTER PILLAR LOWER GARNISH LH**
    a. Engage the 2 claws and 3 clips to install the center pillar lower garnish LH.
23. **CONNECT FRONT SEAT OUTER BELT ASSEMBLY LH** . Refer to **INSTALLATION - Step 6** .
24. **INSTALL LAP BELT OUTER ANCHOR COVER (for LH Side)** . Refer to **INSTALLATION - Step 7** .
25. **INSTALL REAR DOOR OPENING TRIM WEATHERSTRIP LH**
    a. Align the alignment mark (Pink) on the weatherstrip with the protruding portion on the body indicated by the arrow in the illustration, and install the rear door opening trim weatherstrip LH.

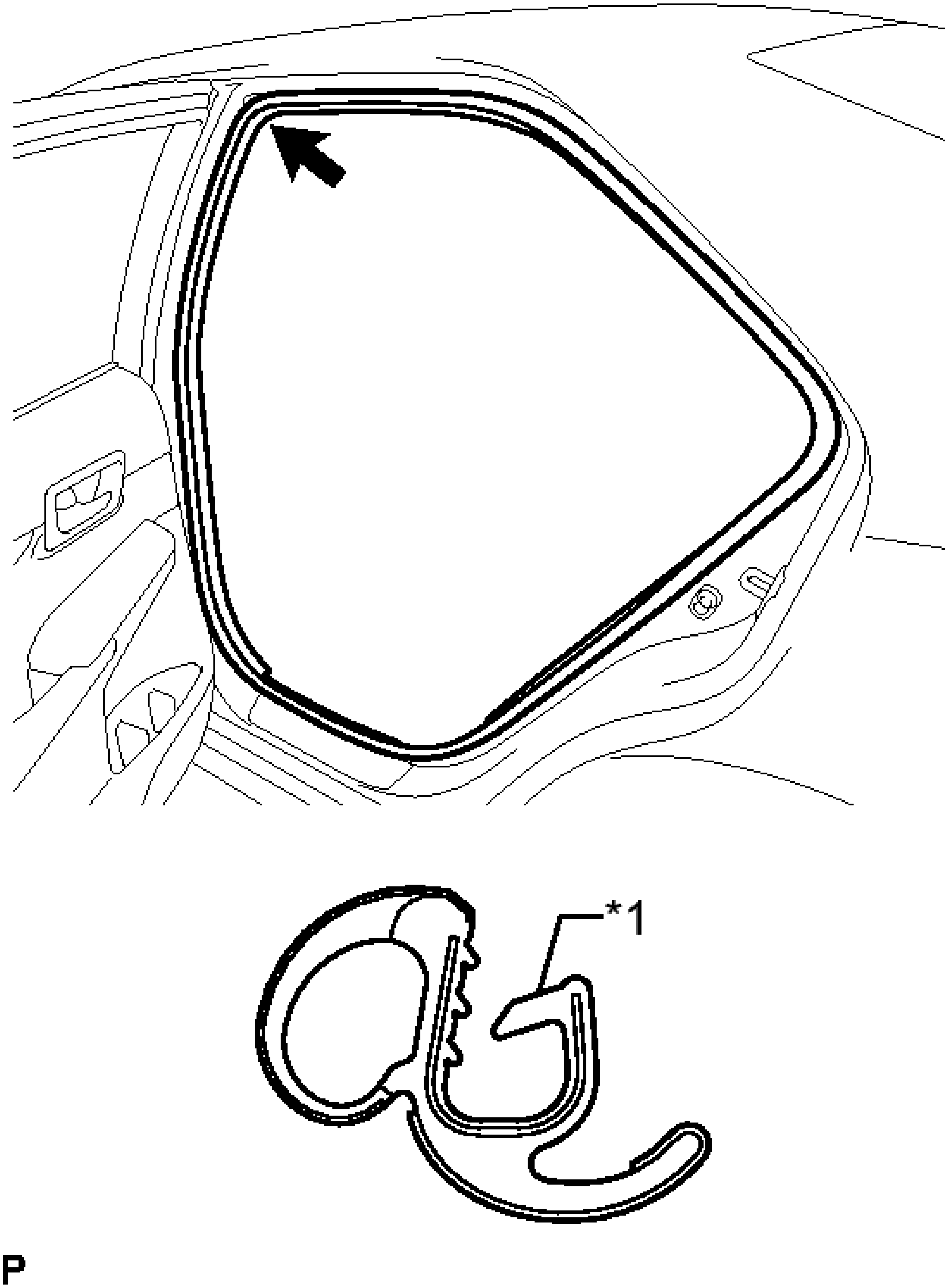

Fig. 184: Identifying Rear Door Opening Trim Weatherstrip LH
Courtesy of TOYOTA MOTOR SALES, U.S.A., INC.

TEXT IN ILLUSTRATION

	Alignment

*1	Mark (Pink)

NOTE: **After installation, check that the corners fit correctly.**

26. **INSTALL REAR DOOR SCUFF PLATE LH**
    a. Engage the 6 claws to install the rear door scuff plate LH.

    HINT:

    Engage the claws from the rear side of the scuff plate.

27. **INSTALL ROOF SIDE INNER GARNISH RH**

    HINT:

    Use the same procedure as for the LH side.

28. **INSTALL CENTER PILLAR UPPER GARNISH RH**

    HINT:

    Use the same procedure as for the LH side.

29. **INSTALL CENTER PILLAR LOWER GARNISH RH**

    HINT:

    Use the same procedure as for the LH side.

30. **CONNECT FRONT SEAT OUTER BELT ASSEMBLY RH**

    HINT:

    Use the same procedure as for the LH side.

31. **INSTALL LAP BELT OUTER ANCHOR COVER (for RH Side)**

    HINT:

    Use the same procedure as for the LH side.

32. **INSTALL REAR DOOR OPENING TRIM WEATHERSTRIP RH**
    a. Align the alignment mark (Blue) on the weatherstrip with the protruding portion on the body indicated by the arrow in the illustration, and install the rear door opening trim weatherstrip RH.

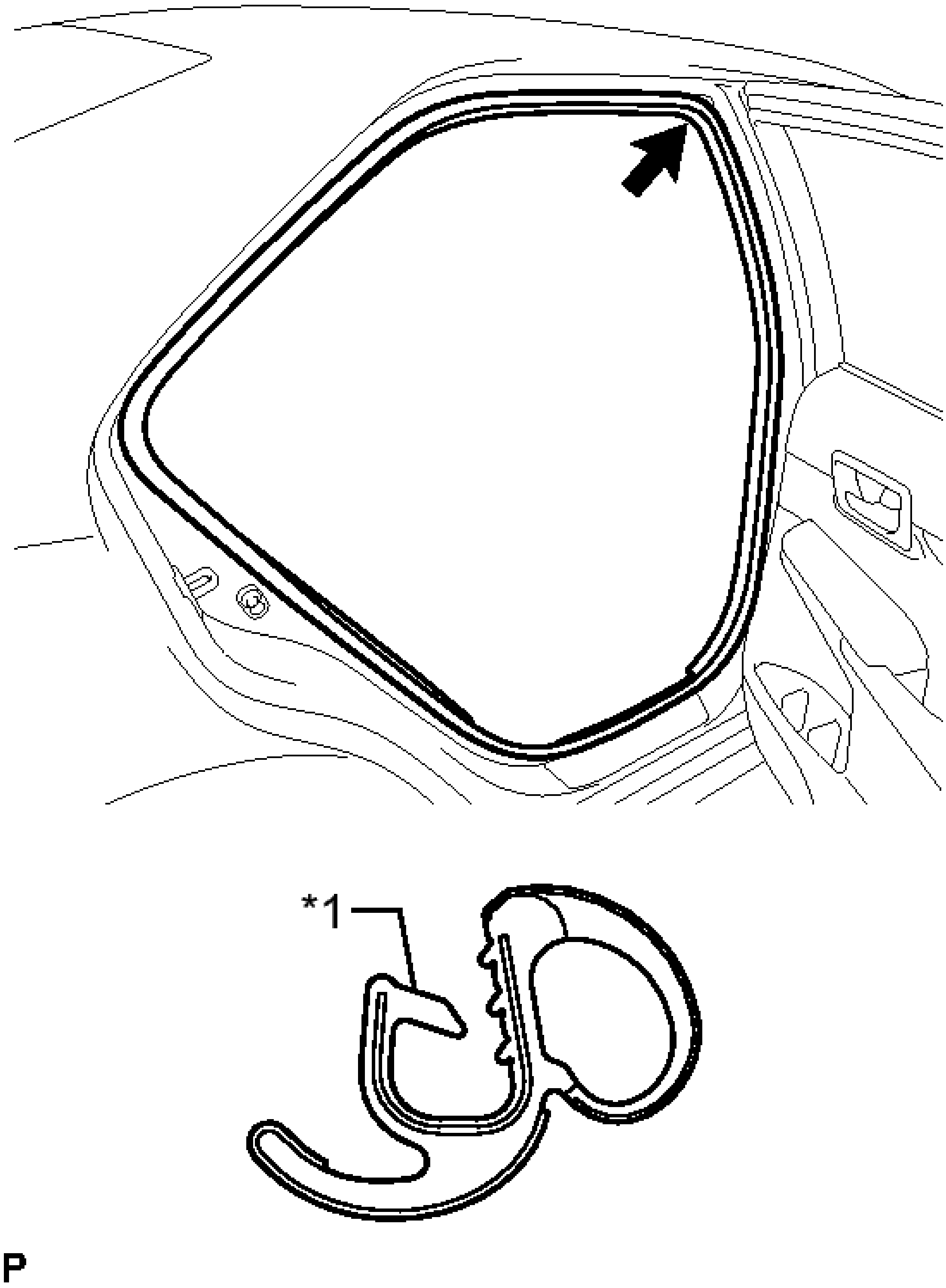

Fig. 185: Identifying Rear Door Opening Trim Weatherstrip RH
Courtesy of TOYOTA MOTOR SALES, U.S.A., INC.

TEXT IN ILLUSTRATION

	Alignment

*1	Mark (Blue)

NOTE: After installation, check that the corners fit correctly.

33. **INSTALL REAR DOOR SCUFF PLATE RH**

    HINT:

    Use the same procedure as for the LH side.

34. **INSTALL REAR SIDE SEATBACK ASSEMBLY RH** . Refer to **INSTALLATION - Step 1** .
35. **INSTALL REAR SIDE SEATBACK ASSEMBLY LH** . Refer to **INSTALLATION - Step 2** .
36. **INSTALL REAR SEATBACK ASSEMBLY RH** . Refer to **INSTALLATION - Step 3** .
37. **INSTALL REAR SEATBACK ASSEMBLY LH** . Refer to **INSTALLATION - Step 4** .
38. **INSTALL INNER LUGGAGE COMPARTMENT TRIM PAD** . Refer to **INSTALLATION - Step 5** .
39. **INSTALL REAR SEAT CUSHION LOCK HOOK** . Refer to **INSTALLATION - Step 6** .
40. **INSTALL REAR SEAT CUSHION ASSEMBLY** . Refer to **INSTALLATION - Step 7** .
41. **INSTALL FRONT PILLAR GARNISH LH**
    a. Remove the protective cover.
    b. Make sure that the front pillar garnish clip is not damaged.

    NOTE: If there is any damage, replace the garnish clip with a new one.

    c. Install the front pillar garnish clip to front pillar garnish LH.

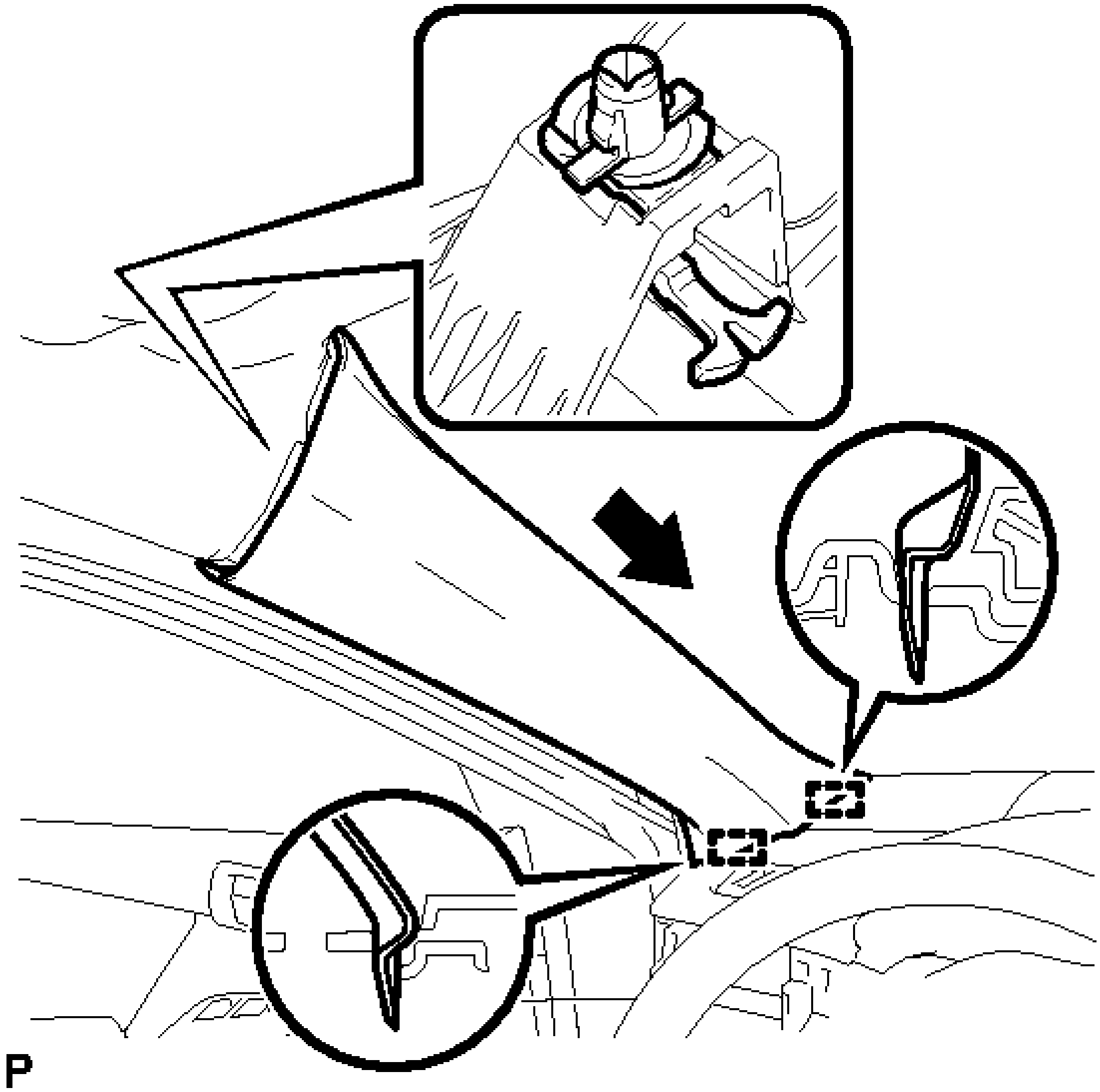

Fig. 186: Installing Front Pillar Garnish LH
Courtesy of TOYOTA MOTOR SALES, U.S.A., INC.

HINT:

Install the front pillar garnish clip so that it faces as shown in the illustration.

d. Engage the 2 guides as shown in the illustration.
e. Engage the 2 clips to install the front pillar garnish LH.

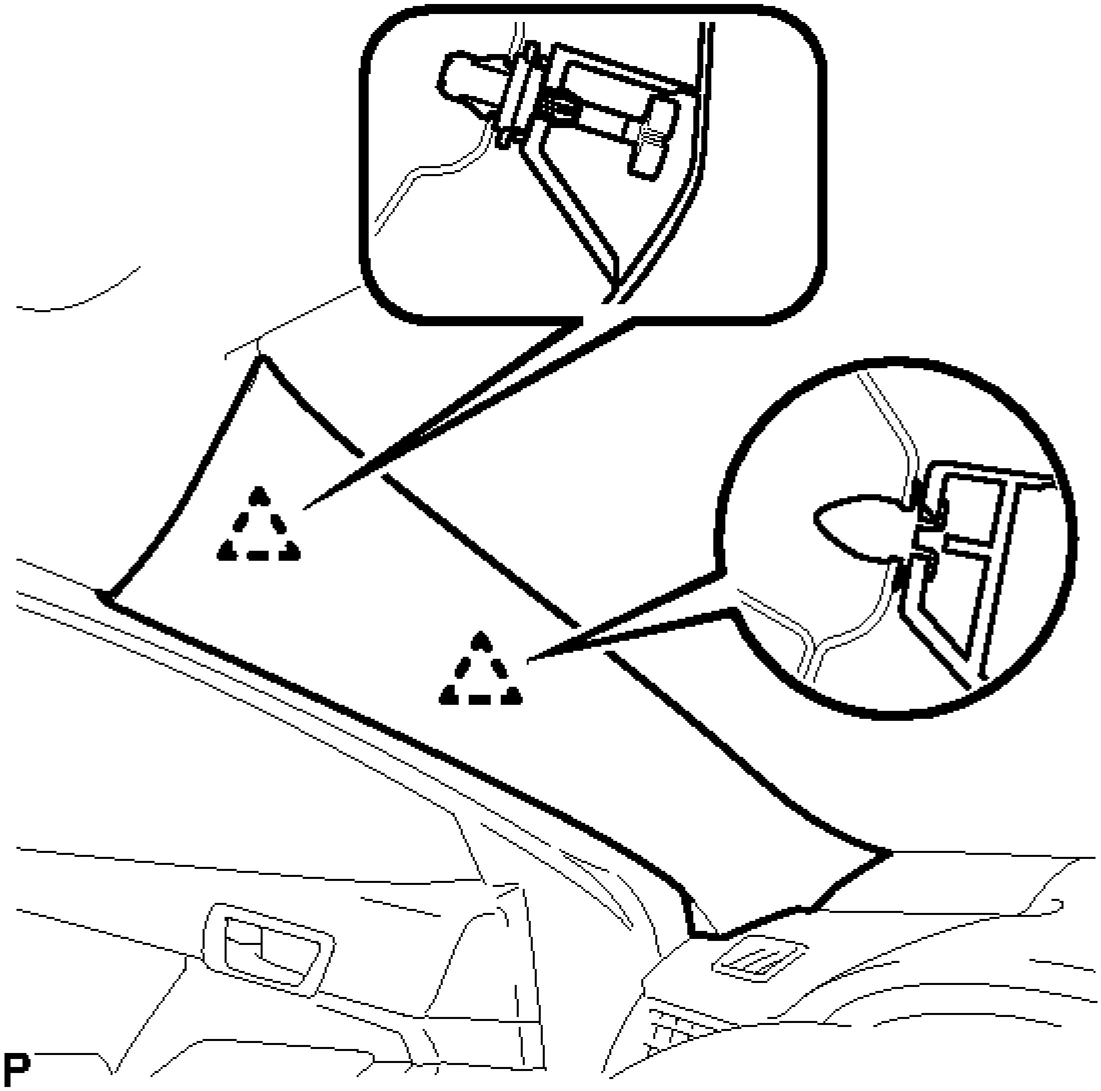

Fig. 187: Identifying Front Pillar Garnish LH Fasteners
Courtesy of TOYOTA MOTOR SALES, U.S.A., INC.

42. **INSTALL FRONT DOOR OPENING TRIM WEATHERSTRIP LH**
    a. Align the alignment mark (Yellow) on the weatherstrip with the protruding portion on the body indicated by the arrow in the illustration, and install the front door opening trim weatherstrip LH.

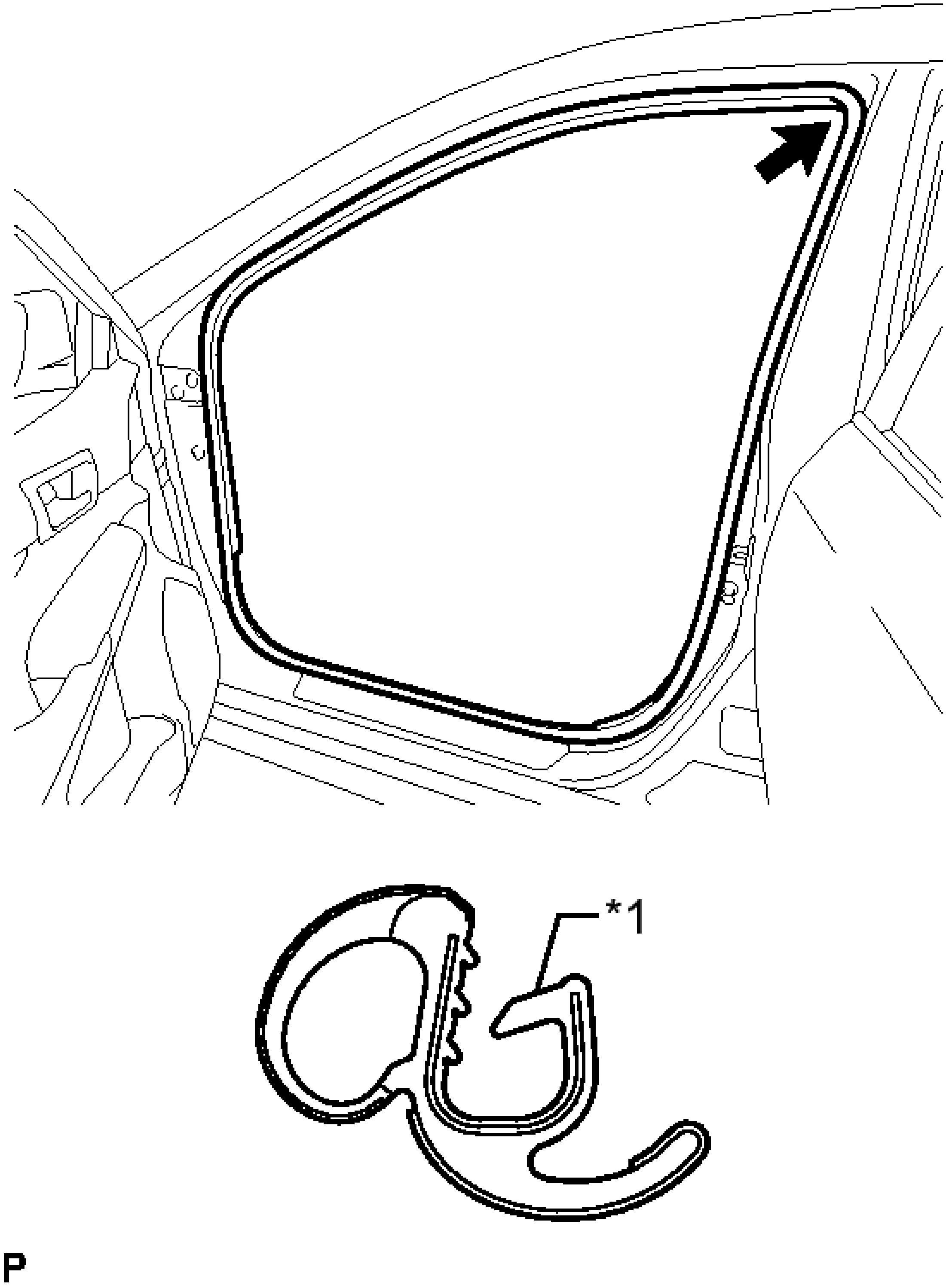

Fig. 188: Identifying Front Door Opening Trim Weatherstrip LH
Courtesy of TOYOTA MOTOR SALES, U.S.A., INC.

TEXT IN ILLUSTRATION

	Alignment

*1	Mark (Yellow)

NOTE: **After installation, check that the corners fit correctly.**

43. **INSTALL COWL SIDE TRIM SUB-ASSEMBLY LH**
    1. Engage the 2 clips.
    2. Install the cowl side trim sub-assembly LH with the clip.
44. **INSTALL FRONT DOOR SCUFF PLATE LH**
    1. Engage the 10 claws to install the front door scuff plate LH.
45. **INSTALL FRONT PILLAR GARNISH RH**

HINT:

Use the same procedure as for the LH side.

46. **INSTALL FRONT DOOR OPENING TRIM WEATHERSTRIP RH**
    1. Align the alignment mark (White) on the weatherstrip with the protruding portion on the body indicated by the arrow in the illustration, and install the front door opening trim weatherstrip RH.

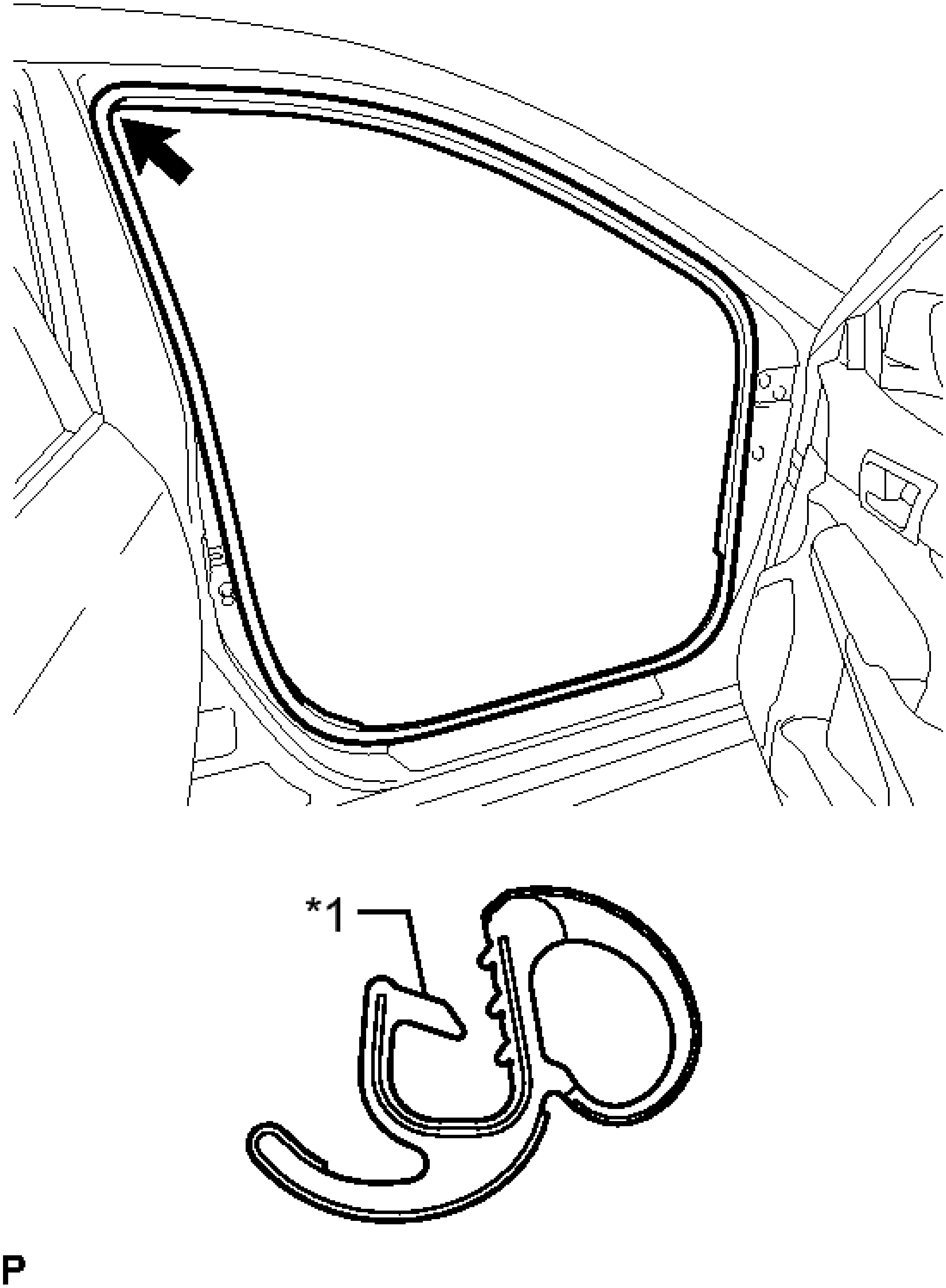

Fig. 189: Identifying Front Door Opening Trim Weatherstrip RH
Courtesy of TOYOTA MOTOR SALES, U.S.A., INC.

TEXT IN ILLUSTRATION

	Alignment

*1	Mark (White)

NOTE: **After installation, check that the corners fit correctly.**

47. INSTALL COWL SIDE TRIM SUB-ASSEMBLY RH

HINT:

Use the same procedure as for the LH side.

48. INSTALL FRONT DOOR SCUFF PLATE RH

HINT:

Use the same procedure as for the LH side.

49. CONNECT CABLE TO NEGATIVE BATTERY TERMINAL

NOTE: **When disconnecting the cable, some systems need to be initialized after the cable is reconnected. Refer to INITIALIZATION .**

50. INSPECT SRS WARNING LIGHT

For Separate Type Yaw Rate Sensor: Refer to **DIAGNOSIS SYSTEM** .

For Built-in Type Yaw Rate Sensor: Refer to **DIAGNOSIS SYSTEM** .

HOW TO USE THIS SERVICE INFORMATION

GENERAL INFORMATION

GENERAL INFORMATION

1. **GENERAL DESCRIPTION**
    a. This service information is written in accordance with SAE J2008.
    b. Repair operations can be separated mainly into the following 3 processes:
        1. Diagnosis
        2. Removing/Installing, Replacing, Disassembling/Reassembling, Checking and Adjusting
        3. Final Inspection
    c. The following procedure is omitted from this service information. However, this procedure must be performed.
        1. Use a jack or lift to perform operations.
        2. Clean all removed parts.
        3. Perform a visual check before and after performing any work.
2. **PREPARATION**
    a. Use of Special Service Tools (SST) and Special Service Materials (SSM) may be required, depending on the repair procedure. Be sure to use SST and SSM when they are required and follow the work procedure properly. A list of SST and SSM is in the appropriate "PREPARATION" articles of this service information.
3. **REPAIR PROCEDURES**
    a. A component illustration is placed under the title where necessary.
    b. Non-reusable parts, grease application areas, precoated parts and torque specifications are noted in the component illustrations.

        The following illustration is an example.

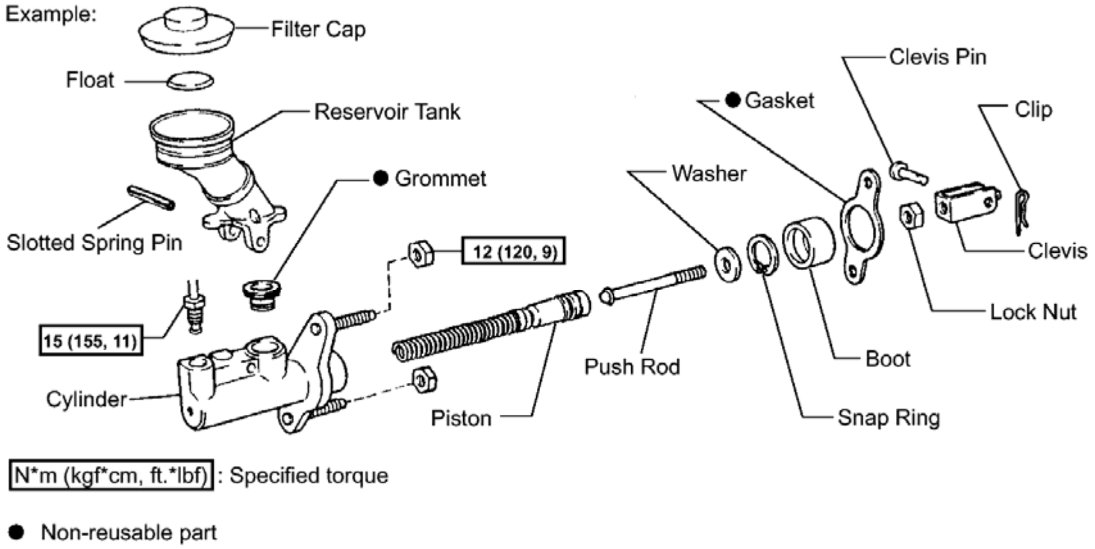
Example:
Filter Cap
Float
Reservoir Tank
● Grommet
Slotted Spring Pin
15 (155, 11)
Cylinder
12 (120, 9)
Piston
Push Rod
Washer
● Gasket
Clevis Pin
Clip
Clevis
Lock Nut
Boot
Snap Ring
N*m (kgf*cm, ft.*lbf) : Specified torque
● Non-reusable part

Fig. 1: Identifying Replacement Components With Torque Specifications (Example)
Courtesy of TOYOTA MOTOR SALES, U.S.A., INC.

c. Torque specifications, grease application areas and non-reusable parts are emphasized in the procedures.

HINT:

There are cases where such information can only be explained by using an illustration. In these cases, torque, oil and other information are described in the illustration.

d. Only items with key points are described in the text. What to do and other details are explained using illustrations next to the text. Both the text and illustrations are accompanied by standard values and notices.

Illustration	What to do and where to do it
Task heading	What work will be performed
Explanation text	• How to perform the task • Information such as specifications and warnings, which are written in boldface text

   e. Illustrations of similar vehicle models are sometimes used. In these cases, minor details may be different from the actual vehicle.
   f. Procedures are presented in a step-by-step format.
4. **SERVICE SPECIFICATIONS**
   a. Specifications are presented in boldface text throughout the service information. The specifications are also found in the appropriate "SERVICE SPECIFICATIONS" article for reference.
5. **TERM DEFINITIONS**

CAUTION	Possibility of injury to you or other people.
NOTICE	Possibility of damage to components being repaired.
HINT	Provides additional information to help you perform repairs.

6. **INTERNATIONAL SYSTEM OF UNITS**
   a. The units used in this service information comply with the International System of Units (SI UNIT) standard. Other units from the metric system and the English systems are also provided.

      Example:

      Torque: 30 N*m (310 kgf*cm, 22 ft.*lbf)

IDENTIFICATION INFORMATION

VEHICLE IDENTIFICATION AND SERIAL NUMBERS

VEHICLE IDENTIFICATION AND SERIAL NUMBERS

1. **VEHICLE IDENTIFICATION NUMBER**
   a. The vehicle identification number is stamped on the vehicle body and on the certification label as shown in the illustration.

      A

Vehicle Identification Number

B

Certification Label

C

Vehicle Identification Number*

*: w/ Outer rear view mirror type side turn signal light

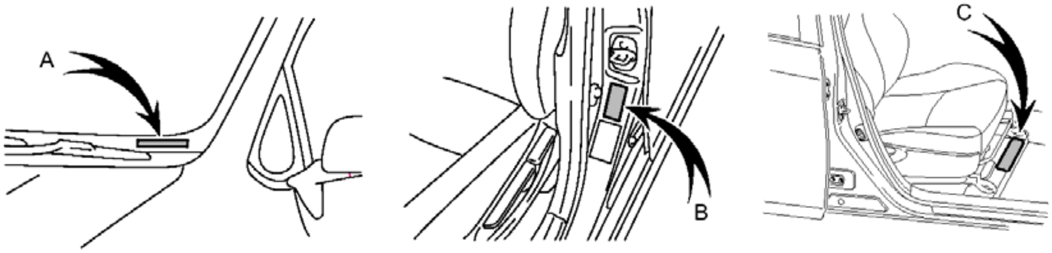

Fig. 2: Identifying Vehicle Identification Number
Courtesy of TOYOTA MOTOR SALES, U.S.A., INC.

2. **ENGINE SERIAL NUMBER AND TRANSAXLE SERIAL NUMBER**
   a. The engine serial number is stamped on the cylinder block of the engine as shown in the illustration.

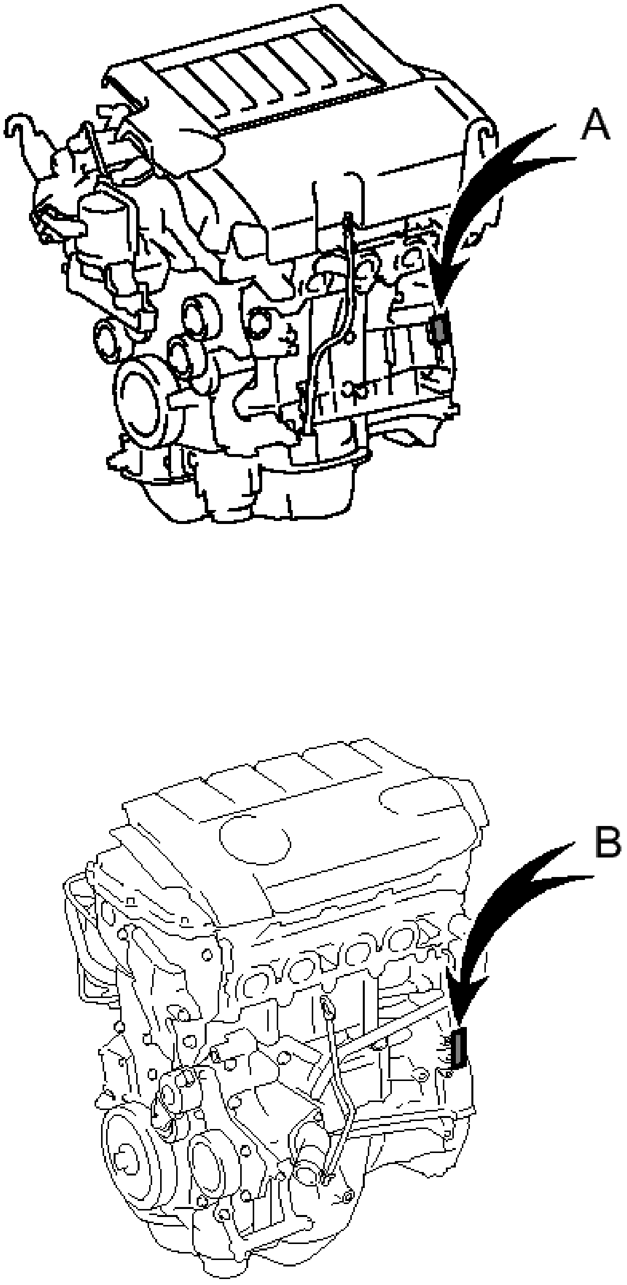

T

Fig. 3: Identifying Engine Identification Number
Courtesy of TOYOTA MOTOR SALES, U.S.A., INC.

A

2GR-FE Engine Serial Number

B

2AR-FE Engine Serial Number

b. The transaxle serial number is stamped on the case as shown in the illustration.

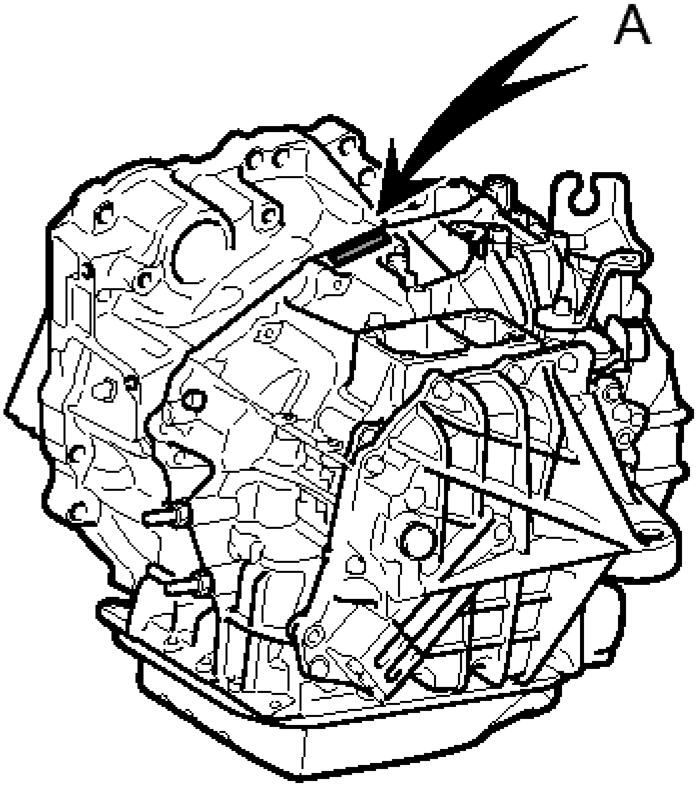

Fig. 4: Identifying Transaxle Serial Number
Courtesy of TOYOTA MOTOR SALES, U.S.A., INC.

A

U660E and U760E Transaxle Serial Number

REPAIR INSTRUCTION

PRECAUTION

PRECAUTION

1. **BASIC REPAIR HINT**
    a. HINTS ON OPERATIONS

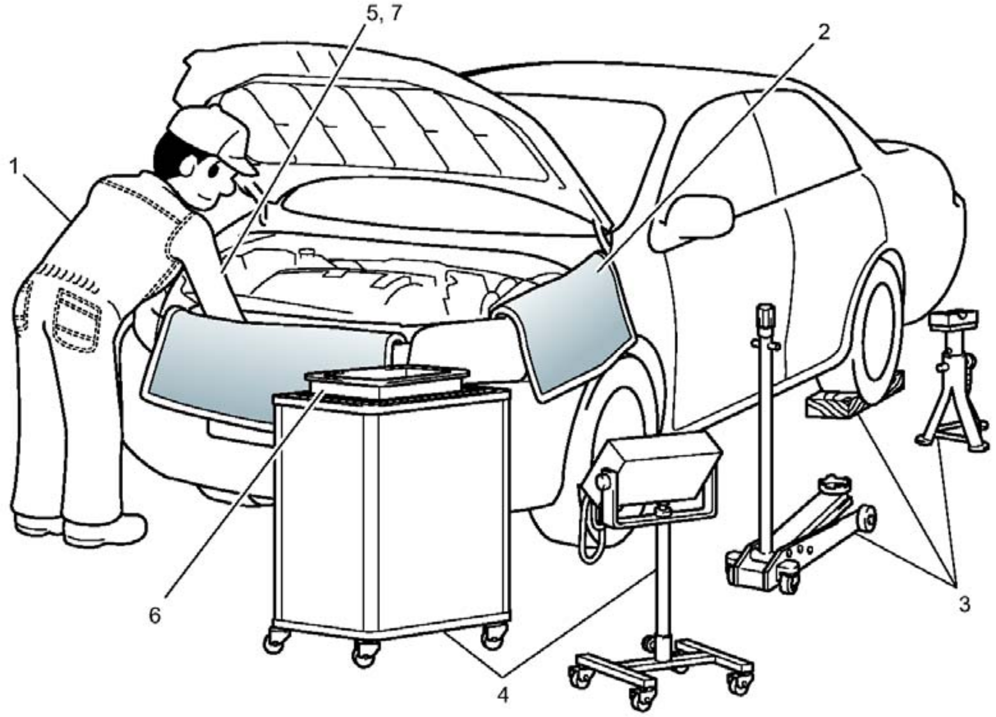

Fig. 5: Identifying Basic Repair Hints & Precautions
Courtesy of TOYOTA MOTOR SALES, U.S.A., INC.

1	Attire	• Always wear a clean uniform. • A hat and safety shoes must be worn.
2	Vehicle protection	Prepare a grille cover, fender cover, seat cover and floor mat before starting work.
		• When working with 2 or more persons, be sure to check the safety of one another.

3	Safety procedures	• When working with the engine running, make sure to provide ventilation for exhaust fumes in the workshop. • If working on high temperature, high pressure, rotating, moving or vibrating parts, wear appropriate safety equipment and take extra care not to injure yourself or others. • When jacking up the vehicle, be sure to support the specified locations with safety stands. • When lifting up the vehicle, use appropriate safety equipment.
4	Preparation of tools and measuring equipment	Before starting work, prepare a tool stand, SST, measuring equipment, oil, and any replacement parts required.
		• Diagnose with a thorough understanding of proper procedures and of the reported problem. • Before removing any parts, check the general condition of the assembly and for deformation and damage. • If the procedure is

5	Removal and installation, disassembly and assembly operations	complicated, take notes. For example, note the total number of electrical connections, bolts or hoses removed. Add matchmarks to ensure reassembly of components in the original positions. Temporarily mark hoses and their fittings if needed. • Clean and wash the removed parts if necessary and assemble them after a thorough check.
6	Removed parts	• Place the removed parts in a separate box to avoid mixing them up with new parts or contaminating the new parts. • For non-reusable parts such as gaskets, O-rings and self-locking nuts, replace them with new ones as instructed in this service information. • Retain the removed parts for customer inspection, if requested.
		• Make sure that removed and installed parts (oil filler cap, level

7*	Checks to perform after work is finished	dipstick, floor mat, etc.) are properly installed/tightened. • Make sure that none of the cloths or tools that were used have been left in the engine compartment or within the vehicle. • Check that there are no oil leaks.

WARNING: *: Be sure to perform these checks properly, Notperforming these checks properly after finishing work can lead to serious accident or injury.

b. JACKING UP AND SUPPORTING THE VEHICLE

  1. Care must be taken when jacking up and supporting the vehicle. Be sure to lift and support the vehicle at the proper locations.

c. PRECOATED PARTS

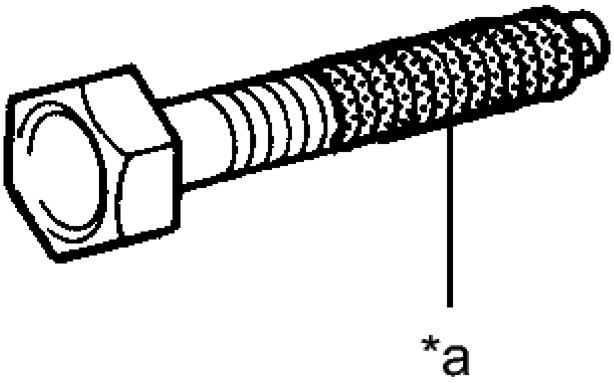

Fig. 6: Identifying Precoated Parts With Seal Lock Adhesive
Courtesy of TOYOTA MOTOR SALES, U.S.A., INC.

TEXT IN ILLUSTRATION

*a	Seal Lock Adhesive

1. Precoated parts are bolts and nuts that are coated with seal lock adhesive at the factory.
2. If a precoated part is retightened, loosened or moved in any way, it must be recoated with the specified adhesive.
3. When reusing a precoated part, clean off the old adhesive and dry the part with compressed air. Then apply new seal lock adhesive appropriately to that part.
4. Some seal lock agents harden slowly. You may have to wait for the seal lock adhesive to harden.

d. GASKETS
    1. When necessary, use a sealer on gaskets to prevent leaks.

e. BOLTS, NUTS AND SCREWS
    1. Carefully follow all the specifications for tightening torque. Always use a torque wrench.

f. FUSES

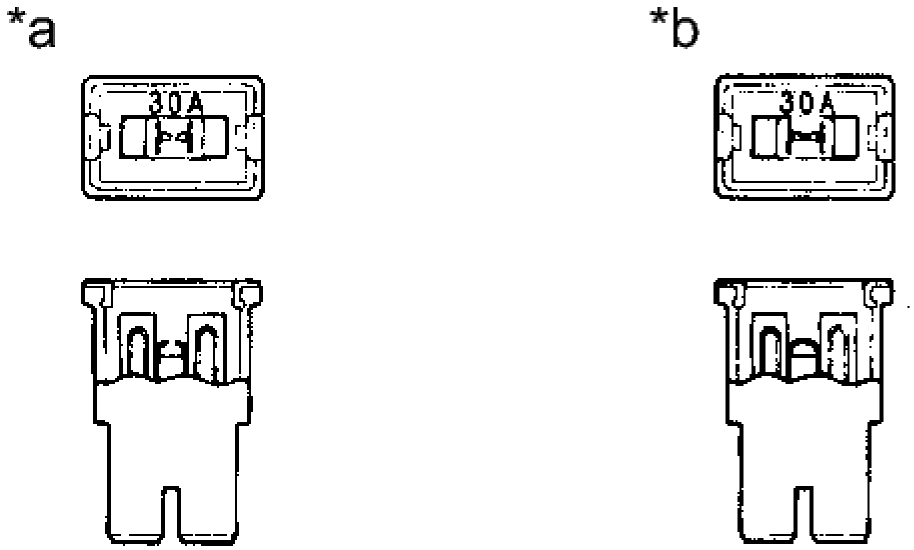

Fig. 7: Identifying Incorrect/Correct Fuse Wires
Courtesy of TOYOTA MOTOR SALES, U.S.A., INC.

TEXT IN ILLUSTRATION

*a	INCORRECT
*b	CORRECT

1. When inspecting a fuse, check that the wire of the fuse is not broken.

2. If the wire of a fuse is broken, confirm that there are no shorts in its circuit.
3. When a fuse is replaced, a fuse with the same amperage rating must be used.

Illustration	Symbol	Part Name	Abbreviation
		FUSE	FUSE
		MEDIUM CURRENT FUSE	M-FUSE
		HIGH CURRENT FUSE	H-FUSE
		FUSIBLE LINK	FL
		CIRCUIT BREAKER	CB

g. CLIPS

1. The removal and installation methods of typical clips used for vehicle body parts are shown in the table below.

   HINT:

   If clips are damaged during a procedure, always replace the damaged clips with new ones.

Shape (Example)	Removal/Installation
	Remove the clips with a clip remover or pliers.
	Remove the clips with a clip remover or screwdriver.
	Remove the clips with a wide scraper to prevent panel damage.
	Remove the clips by pushing the center pin through and prying out the shell.
	Remove the clips by unscrewing the center pin and prying out the shell.

	Remove the clips by prying out the pin and then prying out the shell.

h. CLAWS

1. The removal and installation methods of typical claws used for vehicle body parts are shown in the table below.

   HINT:

   If claws are damaged during a procedure, always replace the cap or cover that has damaged claws with a new one.

Shape (Example)	**Illustration**	**Procedure**
		Using a screwdriver, disengage the claws and remove the cap or cover.
		Using a screwdriver, disengage the claws and remove the cap or cover.
		Using a screwdriver, disengage the claws and remove the cap or cover.

i. HINGES, GUIDES, CLAMPS, PINS, ETC.

1. The removal and installation methods of typical hinges, guides, clamps and pins used for vehicle body parts are shown in the table below.

   HINT:

   If clamps are damaged during a procedure, always replace the cap or cover that has damaged clamps with a new one.

Shape (Example)	Removal/Installation

j. REMOVAL AND INSTALLATION OF VACUUM HOSES

1. To disconnect a vacuum hose, pull and twist it from the end of the hose. Do not pull it from the middle of the hose as this may damage the hose.

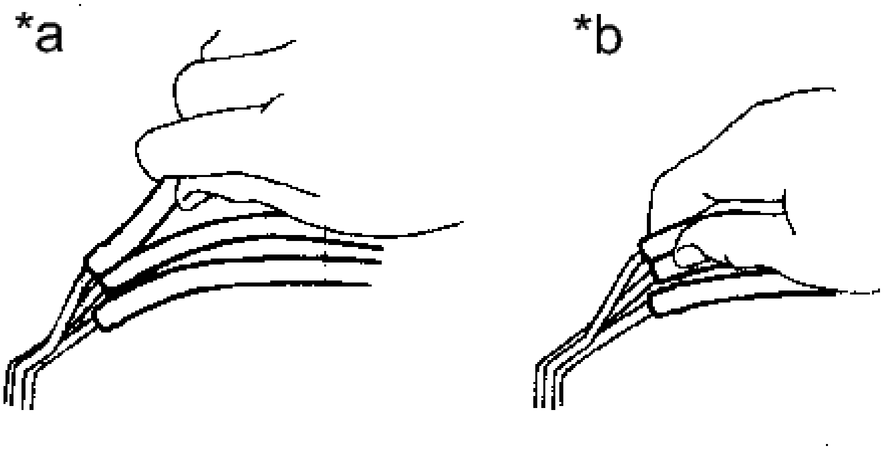

Fig. 8: Precaution For Removal/Installation Of Vacuum Hoses
Courtesy of TOYOTA MOTOR SALES, U.S.A., INC.

TEXT IN ILLUSTRATION

*a	INCORRECT
*b	CORRECT

2. When disconnecting vacuum hoses, use tags to identify where they should be reconnected.

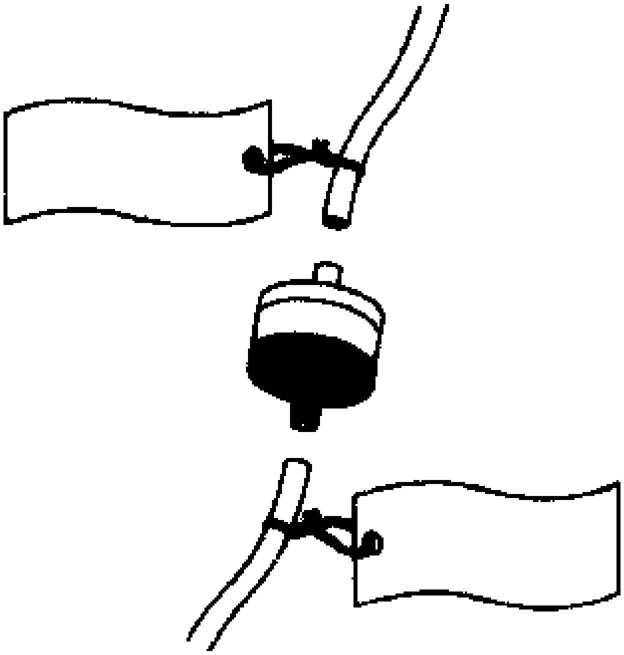

Fig. 9: Identifying Tag On Vacuum Hoses
Courtesy of TOYOTA MOTOR SALES, U.S.A., INC.

3. After completing any hose related repairs, double-check that the vacuum hoses are properly connected. The label under the hood shows the proper layout.
4. When using a vacuum gauge, never force the hose onto a connector that is too large. If a hose has been stretched, air may leak. Use a step-down adapter if necessary.

k. TORQUE WHEN USING TORQUE WRENCH WITH EXTENSION TOOL

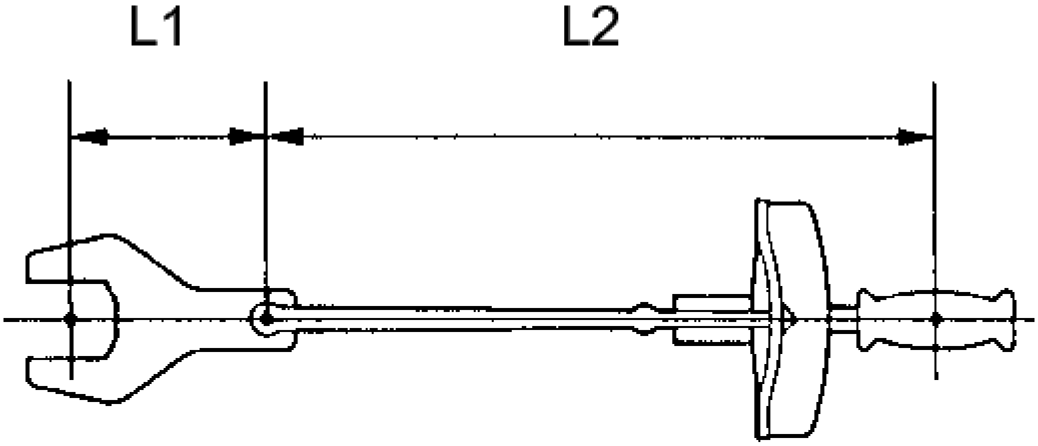

Fig. 10: Identifying Length Of Extension Tool & Torque Wrench (1 Of 2)
Courtesy of TOYOTA MOTOR SALES, U.S.A., INC.

1. Use the formula below to calculate special torque values for situations where SST or an extension tool is combined with a torque wrench.

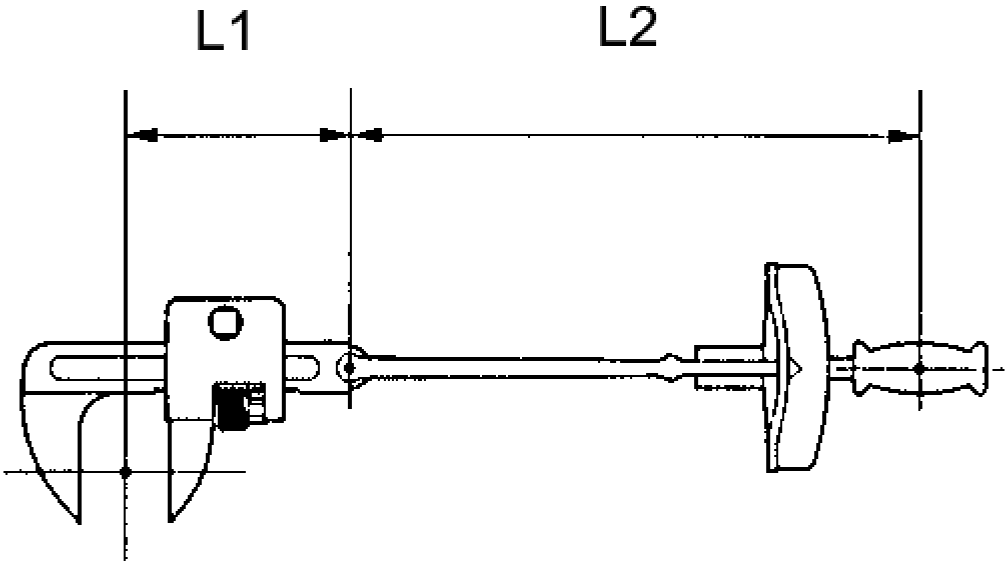

Fig. 11: Identifying Length Of Extension Tool & Torque Wrench (2 Of 2)
Courtesy of TOYOTA MOTOR SALES, U.S.A., INC.

Formula

$T' = (L2/(L1 + L2))*T$

T'	Reading of torque wrench {N*m (kgf*cm, ft.*lbf)}
T	Torque {N*m (kgf*cm, ft.*lbf)}
L1	Length of SST or extension tool {cm (in.)}
L2	Length of torque wrench {cm (in.)}

NOTE: **If an extension tool or SST is combined with a torque wrench and used to tighten to a torque specification in this service information, the actual torque will be excessive and parts will be damaged.**

2. **FOR VEHICLES EQUIPPED WITH SRS AIRBAG AND SEAT BELT PRETENSIONER**

This vehicle is equipped with a Supplemental Restraint System (SRS).

WARNING:

- **Before performing pre-disposal deployment of any SRS component, review and closely follow all applicable environmental and hazardous material regulations. Pre-disposal deployment may be considered hazardous material treatment.**
- **Failure to carry out the service operations in the correct sequence could cause the SRS to unexpectedly deploy during servicing and lead to serious injury. Furthermore, if a mistake is made when servicing the SRS, it is possible that the SRS may fail to operate properly. Before servicing (including**

removal or installation of parts, inspection or replacement), be sure to read the following information carefully.

a. GENERAL NOTICE

1. As malfunctions of the SRS are difficult to confirm, the Diagnostic Trouble Codes (DTCs) become the most important source of information when troubleshooting. When troubleshooting the SRS, always check for DTCs before disconnecting the battery.
2. Work must be started at least 90 seconds after the ignition switch is turned off and after the cable is disconnected from the negative (-) battery terminal.

   The SRS is equipped with a back-up power source. If work is started within 90 seconds after turning the ignition switch off and disconnecting the cable from the negative (-) battery terminal, the SRS may deploy.

   When the cable is disconnected from the negative (-) battery terminal, the clock and audio system memory will be cleared. Before starting work, make a note of the settings of each memory system. When work is finished, reset the clock and audio system as before.

   WARNING: **Never use a back-up power source (battery or other) to avoid clearing the system memory. The back-up power source may inadvertently power the SRS and cause it to deploy.**

3. If the vehicle has been involved in a minor collision where the SRS does not deploy, the steering pad, front passenger airbag assembly, knee airbag assembly, seat side airbag assembly, curtain shield airbag assembly and front seat outer belt assembly should be inspected before further use of the vehicle.
4. Never use SRS parts from another vehicle. When replacing parts, use new ones.
5. Before repairs, remove the airbag sensor assemblies if impacts are likely to be applied to the sensor during repairs.
6. Never disassemble and attempt to repair any airbag sensor assemblies or airbag assemblies.
   a. Steering pad
   b. Front passenger airbag assembly
   c. Knee airbag assembly
   d. Seat side airbag assembly
   e. Curtain shield airbag assembly
   f. Front seat outer belt assembly
7. Replace the airbag sensor assemblies and the airbag assemblies if: 1) damage has occurred from being dropped, or 2) cracks, dents or other defects in the case, bracket or connector are present.
8. Do not directly expose the airbag sensor assemblies or airbag assemblies to hot air or flames.
9. Use a voltmeter/ohmmeter with high impedance (minimum = 10 kohms) for troubleshooting electrical circuits.

10. Information labels are attached to the SRS components. Follow the instructions on the labels.
11. After work on the SRS is completed, check the SRS warning light.

b. SPIRAL CABLE
   1. The steering wheel must be fitted correctly to the steering column with the spiral cable at the neutral position. Otherwise, cable damage and other problems may occur. Refer to the information about correct installation of the steering wheel. Refer to **INSTALLATION** .

c. STEERING PAD
   1. Always place a removed or new steering pad with the surface facing upward as shown in the illustration. Placing the steering pad with the pad surface facing downward could cause a serious accident if the airbag deploys. Also, do not place anything on top of the steering pad.
   2. Never measure the resistance of the airbag squib. This may cause the airbag to deploy, which could cause serious injury.
   3. Grease or detergents of any kind should not be applied to the steering pad.
   4. Store the steering pad in an area where the ambient temperature is below 93°C (199°F), the humidity is not high and there is no electrical noise.
   5. Before using an electric welder anywhere on the vehicle, disconnect the center airbag sensor assembly connectors. These connectors contain shorting springs. This feature reduces the possibility of the airbag deploying due to current entering the squib wiring.
   6. When disposing of the vehicle or the steering pad by itself, the airbag should be deployed using SST before disposal. Refer to **DISPOSAL** . Deploy the airbag in a safe place away from electrical noise.

d. FRONT PASSENGER AIRBAG ASSEMBLY
   1. Always place a removed or new front passenger airbag assembly with the pad surface facing upward as shown in the illustration. Placing the airbag assembly with the airbag deployment direction facing downward could cause a serious accident if the airbag deploys.
   2. Never measure the resistance of the airbag squib. This may cause the airbag to deploy, which could cause serious injury.
   3. Grease or detergents of any kind should not be applied to the front passenger airbag assembly.
   4. Store the airbag assembly in an area where the ambient temperature is below 93°C (199°F), the humidity is not high and there is no electrical noise.
   5. Before using an electric welder anywhere on the vehicle, disconnect the center airbag sensor assembly connectors. These connectors contain shorting springs. This feature reduces the possibility of the airbag deploying due to current entering the squib wiring.
   6. When disposing of the vehicle or the airbag assembly unit by itself, the airbag should be deployed using SST before disposal. Refer to **DISPOSAL** . Deploy the airbag in a safe place away from electrical noise.

e. KNEE AIRBAG ASSEMBLY
   1. Always place a removed or new knee airbag assembly with the airbag deployment direction facing upward as shown in the illustration. Placing the airbag assembly with the airbag deployment direction facing downward could cause a serious accident if the airbag deploys.
   2. Never measure the resistance of the airbag squib. This may cause the airbag to deploy, which

could cause serious injury.

3. Grease or detergents of any kind should not be applied to the knee airbag assembly.
4. Store the knee airbag assembly in an area where the ambient temperature is below 93°C (199°F), the humidity is not high and there is no electrical noise.
5. Before using an electric welder anywhere on the vehicle, disconnect the center airbag sensor assembly connectors. These connectors contain shorting springs. This feature reduces the possibility of the airbag deploying due to current entering the squib wiring.
6. When disposing of a vehicle or knee airbag assembly unit by itself, the airbag should be deployed using SST before disposal. Refer to **DISPOSAL** (for driver side). Refer to **DISPOSAL** (for front passenger side)). Deploy the airbag in a safe place away from electrical noise.

f. SEAT SIDE AIRBAG ASSEMBLY

1. Always place a removed or new seat side airbag assembly with the airbag deployment direction facing upward.
2. Never measure the resistance of the airbag squib. This may cause the airbag to deploy, which could cause serious injury.
3. Grease or detergents of any kind should not be applied to the seat side airbag assembly.
4. Store the airbag assembly in an area where the ambient temperature is below 93°C (199°F), the humidity is not high and there is no electrical noise.
5. Before using an electric welder anywhere on the vehicle, disconnect the center airbag sensor assembly connectors. These connectors contain shorting springs. This feature reduces the possibility of the airbag deploying due to current entering the squib wiring.
6. When disposing of a vehicle or the airbag assembly unit by itself, the airbag should be deployed using SST before disposal. Refer to **DISPOSAL** (for front side). Refer to **DISPOSAL** (for rear side)). Deploy the airbag in a safe place away from electrical noise.

g. CURTAIN SHIELD AIRBAG ASSEMBLY

1. Always place a removed or new curtain shield airbag assembly in a clear plastic bag, and keep it in a safe place.

WARNING: **The plastic bag should be disposed of after use.**

NOTE: Never disassemble the curtain shield airbag assembly.

2. Never measure the resistance of the airbag squib. This may cause the airbag to deploy, which could cause serious injury.
3. Grease or detergents of any kind should not be applied to the curtain shield airbag assembly.
4. Store the airbag assembly in an area where the ambient temperature is below 93°C (199°F), the humidity is not high and there is no electrical noise.
5. Before using an electric welder anywhere on the vehicle, disconnect the center airbag sensor assembly connectors. These connectors contain shorting springs. This feature reduces the possibility of the airbag deploying due to current entering the squib wiring.

        6. When disposing of a vehicle or the airbag assembly unit by itself, the airbag should be deployed using SST before disposal. Refer to **DISPOSAL** . Deploy the airbag in a safe place away from electrical noise.

    h. FRONT SEAT OUTER BELT ASSEMBLY (SEAT BELT PRETENSIONER)

        1. Never measure the resistance of the front seat outer belt assembly. This may cause the pretensioner of the front seat outer belt assembly to activate, which could cause serious injury.
        2. Never disassemble the front seat outer belt assembly.
        3. Never install the front seat outer belt assembly on another vehicle.
        4. Store the seat outer belt assembly in an area where the ambient temperature is below 80°C (176°F), the humidity is not high and there is no electrical noise.
        5. Before using an electric welder anywhere on the vehicle, disconnect the center airbag sensor assembly connectors. These connectors contain shorting springs. This feature reduces the possibility of the airbag deploying due to current entering the squib wiring.
        6. When disposing of a vehicle or the front seat outer belt assembly unit by itself, the front seat outer belt assembly should be activated before disposal. Refer to **DISPOSAL** . Activate the front seat outer belt assembly in a safe place away from electrical noise.
        7. As the front seat outer belt assembly is hot after being activated, allow some time for it to cool down sufficiently before disposal. Never apply water to cool down the front seat outer belt assembly.
        8. Grease, detergents, oil or water should not be applied to the front seat outer belt assembly.

    i. CENTER AIRBAG SENSOR ASSEMBLY

        1. Never reuse a center airbag sensor assembly that has been involved in a collision where the SRS has deployed.
        2. The connectors to the center airbag sensor assembly should be connected or disconnected with the sensor installed to the vehicle. If the connectors are connected or disconnected while the center airbag sensor assembly is not installed, the SRS may activate.
        3. Work must be started at least 90 seconds after the ignition switch is turned off and the cable is disconnected from the negative (-) battery terminal, even if only loosening the bolts of the center airbag sensor assembly.

    j. WIRE HARNESS AND CONNECTOR

        1. All the connectors in the system are a standard yellow color. If an SRS wire harness has an open circuit or a connector is broken, replace it.

3. **ELECTRONIC CONTROL**

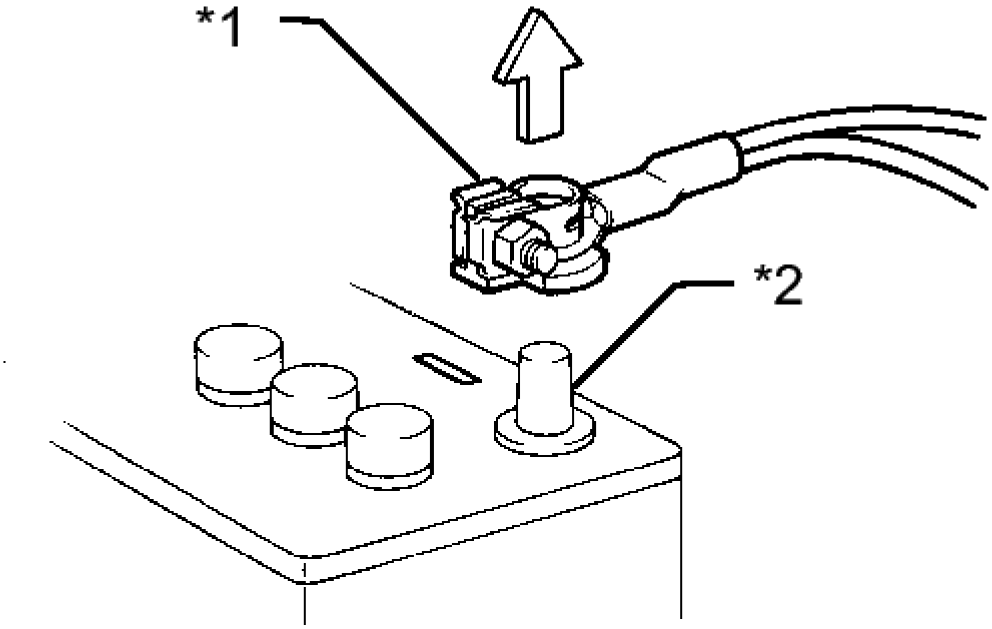

Fig. 12: Identifying Battery Terminal And Cable
Courtesy of TOYOTA MOTOR SALES, U.S.A., INC.

TEXT IN ILLUSTRATION

*1	Cable
*2	Negative (-) Battery Terminal

NOTE:

- **Certain systems need to be initialized after disconnecting and reconnecting the cable from the negative (-) battery terminal.**
- **After the ignition switch is turned off, the navigation receiver assembly (for Navigation Receiver Type) or radio and display receiver assembly (for Radio and Display Type with Intuitive Parking Assist System) records various types of memory and settings. As a result, after turning the ignition switch off, make sure to wait at least 60 seconds before disconnecting the cable from the negative (-) battery terminal.**

a. DISCONNECTING AND RECONNECTING NEGATIVE BATTERY CABLE
    1. Before performing work on electronic components, disconnect the cable from the negative (-) battery terminal to prevent damage to the electrical system or components.
    2. When disconnecting the cable, turn the ignition switch and headlight switch off and loosen the cable nut completely. Perform these operations without twisting or prying the cable. Then disconnect the cable.

3. Clock settings, radio settings, audio system memory, DTCs and other data will be cleared when the cable is disconnected from the negative (-) battery terminal. Write down any necessary data before disconnecting the cable.

b. HANDLING OF ELECTRONIC PARTS

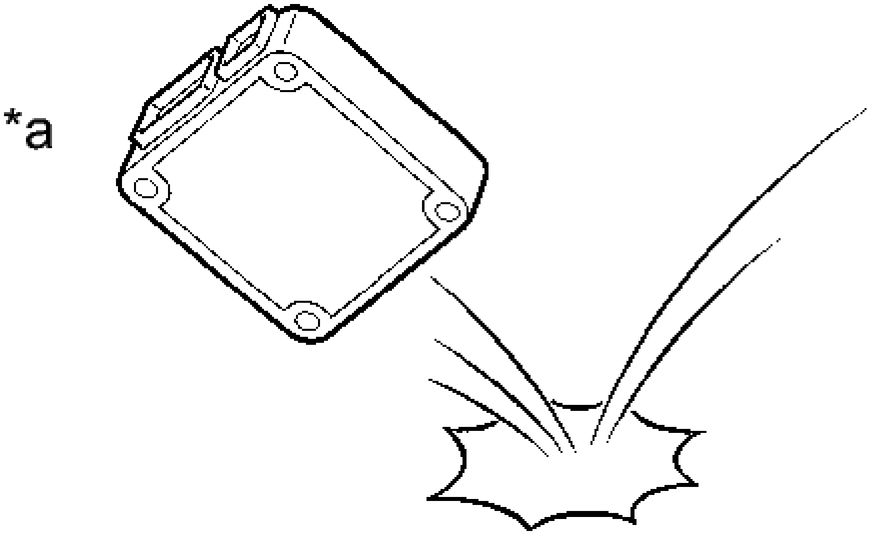

Fig. 13: Precaution For Handling Electronic Parts
Courtesy of TOYOTA MOTOR SALES, U.S.A., INC.

TEXT IN ILLUSTRATION

*a	INCORRECT

1. Do not open the cover or case of the ECU unless absolutely necessary. If the IC terminals are touched, the IC may be rendered inoperative by static electricity.
2. Do not pull on the wires when disconnecting electronic connectors. Pull on the connector itself.
3. Do not drop electronic components, such as sensors or relays. If they are dropped on a hard surface, they should be replaced.
4. When cleaning the engine components with steam, protect the electronic components, air filter and emission-related components from water.
5. Never use an impact wrench to remove or install temperature switches or temperature sensors.
6. When measuring the resistance between terminals of a wire connector, insert the tester probe carefully to prevent the terminals from bending.

4. **REMOVAL AND INSTALLATION OF FUEL CONTROL PARTS**

a. PLACE FOR REMOVING AND INSTALLING FUEL SYSTEM PARTS

1. Work in a location with good air ventilation that does not have welders, grinders, drills, electric motors, stoves, or any other ignition sources nearby.
2. Never work in a pit or near a pit as fuel vapors will collect there.

b. REMOVING AND INSTALLING FUEL SYSTEM PARTS

1. Prepare a fire extinguisher before starting work.
2. To prevent static electricity, install a ground wire between the fuel changer and vehicle, and do not spray the surrounding area with water. Be careful when performing work in this area, as the floor surface will become slippery. Do not clean up gasoline spills with water, as this may cause the gasoline to spread, and possibly create a fire hazard.
3. Avoid using electric motors, work lights and other electric equipment that can cause sparks or high temperatures.
4. Avoid using iron hammers as they may create sparks.
5. Dispose of fuel-contaminated cloth separately using a fire resistant container.

5. **REMOVAL AND INSTALLATION OF ENGINE INTAKE PARTS**

a. If any metal particles enter intake system parts, this may damage the engine.

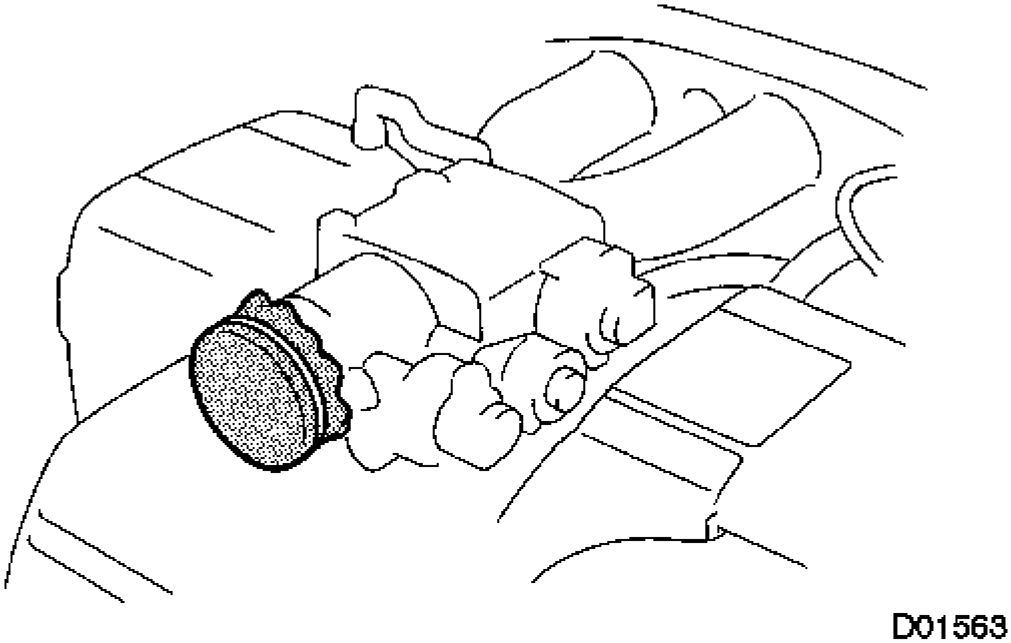

Fig. 14: Identifying Cover Of Openings Of Removed Parts And Engine Openings
Courtesy of TOYOTA MOTOR SALES, U.S.A., INC.

b. When removing and installing intake system parts, cover the openings of the removed parts and engine openings. Use adhesive tape or other suitable materials.

c. When installing intake system parts, check that no metal particles have entered the engine or installed parts.

6. **HANDLING OF HOSE CLAMPS**

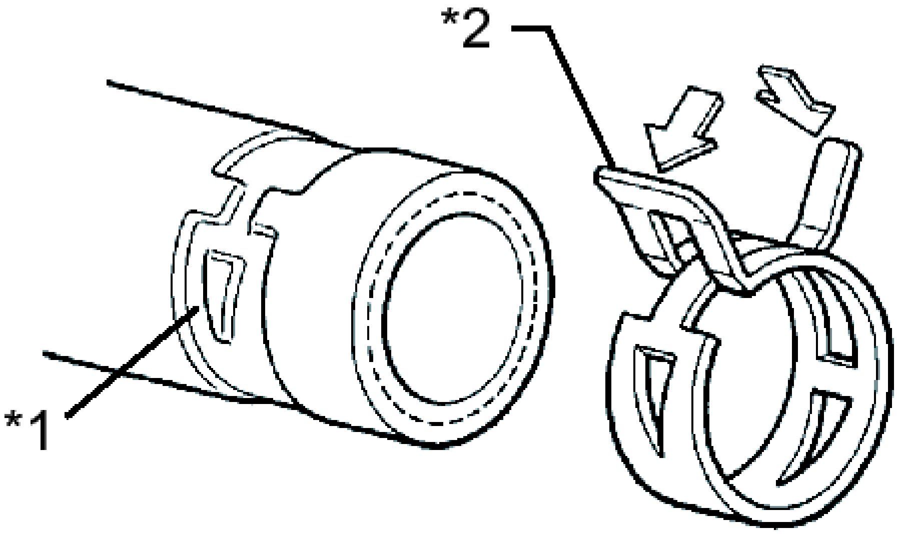

Fig. 15: Identifying Clamp Track And Spring Type Clamp
Courtesy of TOYOTA MOTOR SALES, U.S.A., INC.

TEXT IN ILLUSTRATION

*1	Clamp Track
*2	Spring Type Clamp

a. Before removing a hose, check the clamp position so that it can be reinstalled in the same position.
b. Replace any deformed or dented clamps with new ones.
c. When reusing a hose, attach the clamp on the clamp track portion of the hose.
d. For a spring type clamp, it may be necessary to spread the tabs slightly after installation by pushing them in the direction of the arrows as shown in the illustration.

7. **FOR VEHICLES EQUIPPED WITH MOBILE COMMUNICATION SYSTEMS**

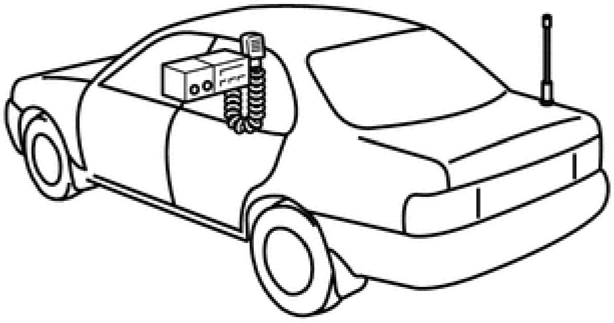

Fig. 16: Identifying Antenna For Vehicles Equipped With Mobile Communication Systems
Courtesy of TOYOTA MOTOR SALES, U.S.A., INC.

a. Install the antenna as far away from the ECU and sensors of the vehicle electronic systems as possible.
b. Install the antenna and feeder at least 20 cm (7.87 in.) away from the ECU and sensors of the vehicle electronic systems. For details about ECU and sensor locations, refer to the article on the applicable components.
c. Keep the antenna and feeder separate from other wiring as much as possible. This will prevent signals sent from the communication equipment from affecting vehicle equipment and vice versa.
d. Check that the antenna and feeder are correctly adjusted.
e. Do not install a high-powered mobile communication system.

8. **HEADLIGHT INSPECTION OR MAINTENANCE**

a. When the headlight dimmer switch assembly is set to head, do not touch the discharge headlight high-voltage socket area.

NOTE: When performing inspection or maintenance, the discharge headlight precautions must be followed.

b. When the headlights are illuminated, do not cover the headlights for 3 minutes or more.

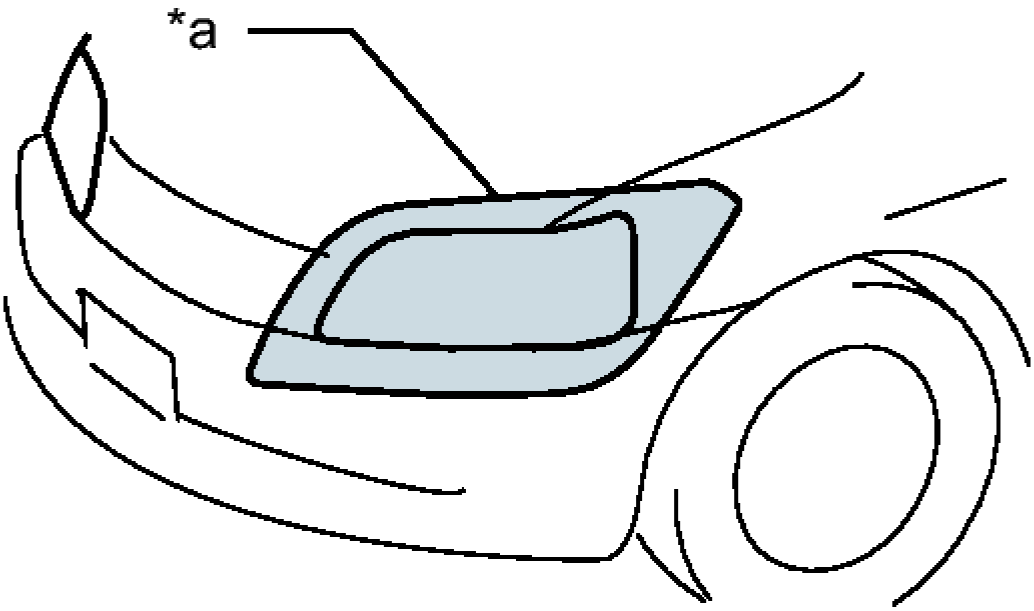

Fig. 17: Identifying Headlight Inspection
Courtesy of TOYOTA MOTOR SALES, U.S.A., INC.

TEXT IN ILLUSTRATION

*a	Illumination for 3 minutes or more prohibited if covered

NOTE: **As the headlight's outer lens is made of resin, the resulting heat created when covering the headlight for an extended period of time may deform the headlight.**

9. **FOR VEHICLES EQUIPPED WITH TRACTION CONTROL (TR(A)C) AND VEHICLE STABILITY CONTROL (VSC) SYSTEMS**

   When testing with a 2-wheel drum tester such as a speedometer tester, a combination speedometer and brake tester, or a chassis dynamometer, or when jacking up the front wheels and turning the wheels, perform the following procedure to enter inspection mode and disable the TR(A)C and VSC systems. Refer to **PRECAUTION** .

   HINT:

   - The vehicle may slip unexpectedly out of the dynamometer because of TR(A)C and VSC operation.

- Pressing the VSC OFF switch (for vehicles with a VSC OFF switch) does not disable TR(A)C and VSC operation completely.

NOTE:

- **Make sure that the VSC warning light is blinking.**
- **Secure the vehicle with chains for safety.**

10. **PRECAUTIONS FOR TOWING FRONT WHEEL DRIVE VEHICLES**
    a. Use one of the following methods to tow the vehicle.
    b. If the vehicle has trouble with the chassis or drivetrain, use method 1 (flatbed truck).

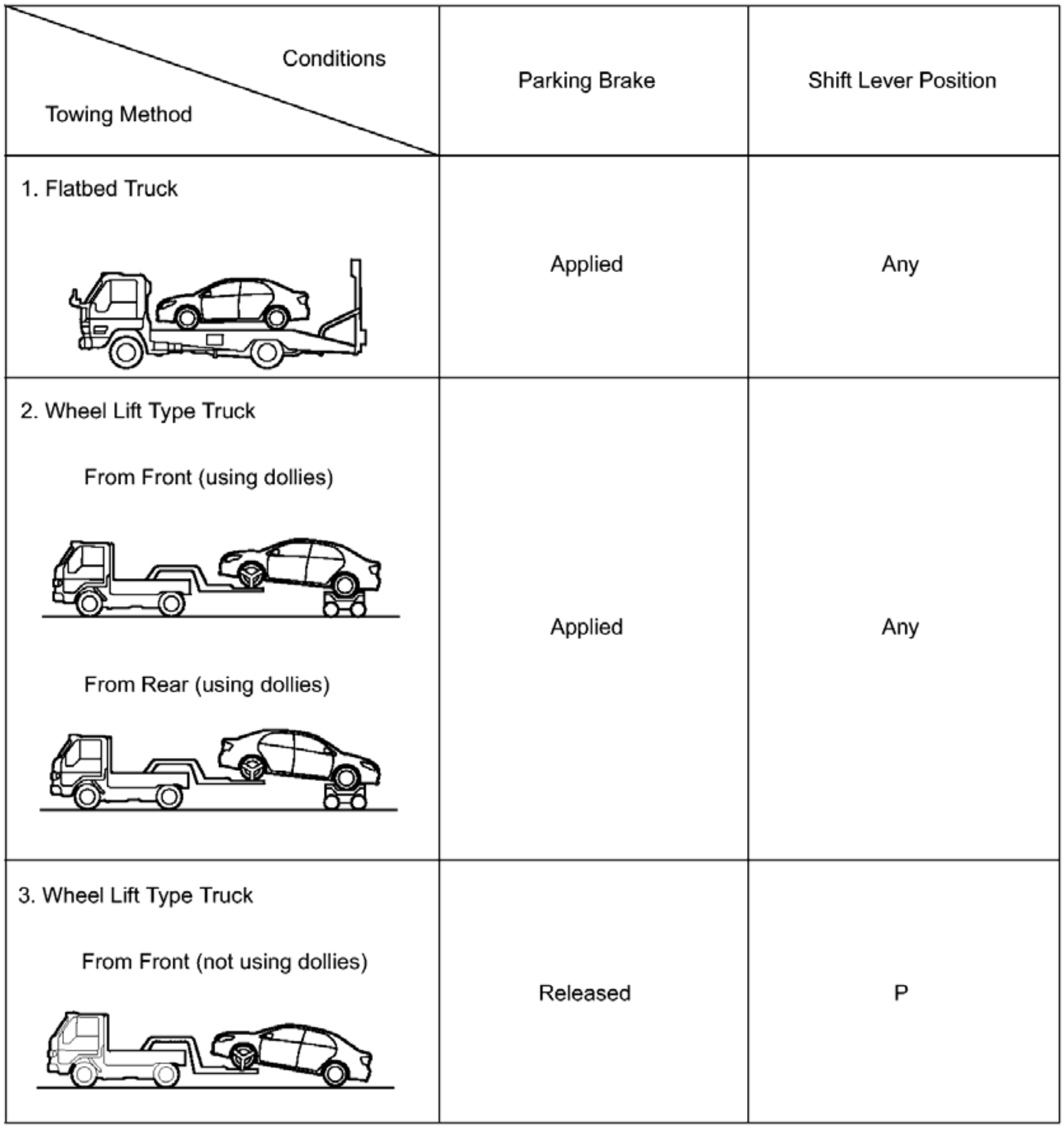

Conditions Towing Method	Parking Brake	Shift Lever Position
1. Flatbed Truck	Applied	Any
2. Wheel Lift Type Truck From Front (using dollies) From Rear (using dollies)	Applied	Any
3. Wheel Lift Type Truck From Front (not using dollies)	Released	P

Fig. 18: Identifying Precautions For Towing Front Wheel Drive Vehicles

Courtesy of TOYOTA MOTOR SALES, U.S.A., INC.

NOTE: **Do not use any towing method other than those shown above.**

c. If a tow truck is not available, in an emergency the vehicle may be temporarily towed using a cable or chain secured to the emergency towing eyelet(s). This should only be attempted on hard surfaced roads for distances of less than 80 km, and at speeds below 30 km/h (19 mph).

A driver must be in the vehicle to steer and operate the brakes. The vehicle's wheels, drivetrain, axles, steering and brakes must be in good condition.

NOTE: **If the towing speed or distance exceeds the above limits, or the vehicle is towed in a backward direction with the front wheels on the ground, the transaxle may be damaged.**

1. Emergency towing procedure
    a. Turn the ignition switch ON.
    b. Depress the brake pedal and move the shift lever to N.
    c. Release the parking brake.
    d. Release the brake pedal slowly.

NOTE:

- **Use extreme caution when towing the vehicle. Avoid sudden starts or erratic driving maneuvers which place excessive stress on the emergency towing eyelet and the cables or chains.**
- **Do not turn off the ignition switch. Turning off the ignition switch may result in engagement of the steering lock, resulting in a hazardous situation or accident.**

d. The towing methods shown below are dangerous and can damage the vehicle, so do not use them.

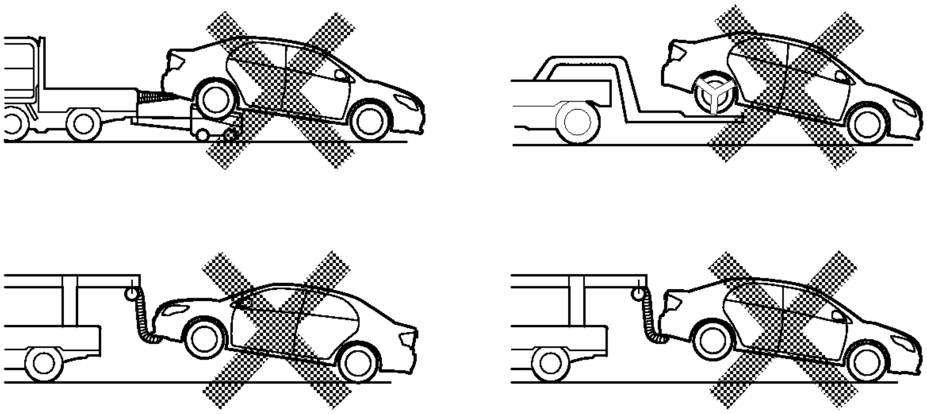

Fig. 19: Illustrations Of How NOT TO Tow Front Wheel Drive Vehicles

Courtesy of TOYOTA MOTOR SALES, U.S.A., INC.

1. Do not tow the vehicle facing rearward with the front wheels on the ground.

NOTE:

- **If the vehicle is towed facing rearward with the front wheels on the ground, the drivetrain may overheat and be damaged.**
- **In addition, if the vehicle is equipped with the VSC system, the system may apply the brakes to the rotating wheels.**

2. Do not use a sling-type towing method either from the front or rear.

NOTE: **If a sling-type tow truck is used, damage may occur to the vehicle body.**

11. FOR VEHICLES EQUIPPED WITH CATALYTIC CONVERTER

WARNING: **If a large amount of unburned gasoline or gasoline vapors flow into the converter, it may cause converter overheating and create a fire hazard. To prevent this, observe the following precautions:**

a. Use only unleaded gasoline.
b. Avoid performing unnecessary spark tests.
    1. Perform a spark test only when absolutely necessary. Perform this test as rapidly as possible.
    2. While testing, never race the engine unless instructed.
c. Avoid a prolonged engine compression measurement. Engine compression measurements must be performed as rapidly as possible.
d. Do not run the engine when the fuel tank is nearly empty. This may cause the engine to misfire and create an extra load on the converter.

12. EXPRESSIONS OF IGNITION SWITCH

a. The type of ignition switch used on this model differs according to the specifications of the vehicle.

The expressions listed in the table below are used in this service information.

Expression	Ignition Switch (position)	Engine Switch (condition)
Ignition switch off	LOCK	Off
Ignition switch to ACC	ACC	On (ACC)
Ignition		

switch to ON	ON	On (IG)
Engine start	START	Start

VEHICLE LIFT AND SUPPORT LOCATIONS

VEHICLE LIFT AND SUPPORT LOCATIONS

1. **NOTICE ABOUT VEHICLE CONDITION WHEN RAISING VEHICLE**
    a. The vehicle must be unloaded before jacking up or raising the vehicle. Never jack up or raise a heavily loaded vehicle.
    b. When removing any heavy components like the engine or transaxle, the vehicle center of gravity will shift. To stabilize the vehicle, place a balance weight in a location that will prevent the vehicle from rolling or shifting, or place a transmission jack under the appropriate jack position at the opposite end of the vehicle.
2. **NOTICE FOR USING 4 POST LIFT**
    a. Follow the safety procedures outlined in the lift's instruction manual.
    b. Do not damage the tires or wheels while driving onto the lift.
    c. Use wheel chocks to secure the vehicle.
3. **NOTICE FOR USING JACK AND SAFETY STANDS**
    a. Work on a level surface. Use wheel chocks at all times.
    b. Use safety stands with rubber attachments as shown in the illustration.

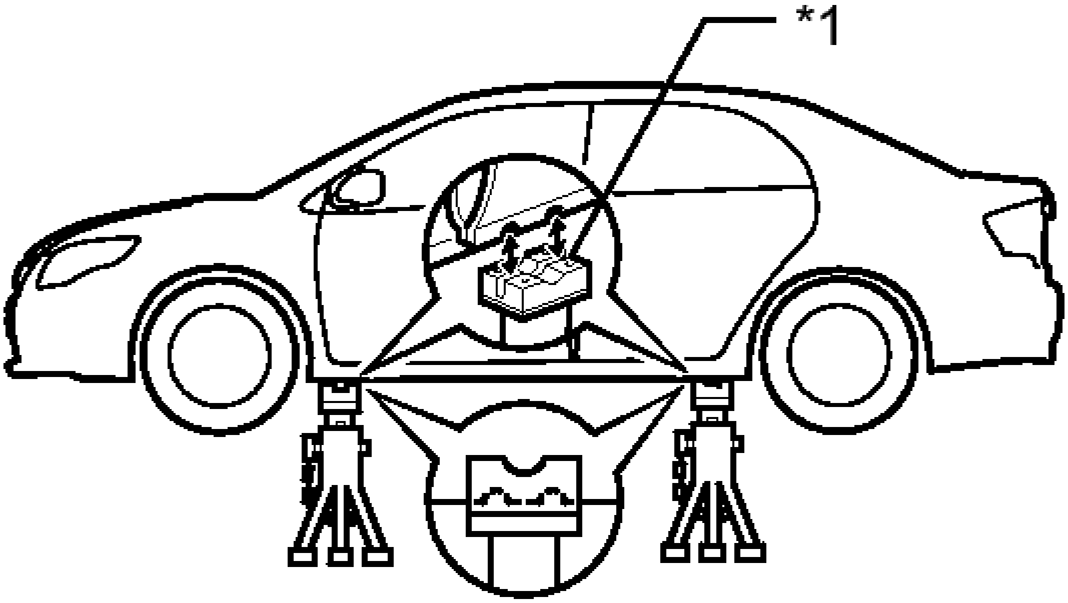

Fig. 20: Notice For Using Jack And Safety Stands

Courtesy of TOYOTA MOTOR SALES, U.S.A., INC.

TEXT IN ILLUSTRATION

*1	Rubber Attachment

c. Set the jack and safety stands exactly under the specified locations on the vehicle.

d. Do not work on or leave the vehicle supported only by a jack. Be sure to support the vehicle with safety stands.

e. When jacking up the vehicle, first release the parking brake and move the shift lever to N.

f. When jacking up the entire vehicle:

    1. When jacking up the front wheels first, make sure wheel chocks are behind the rear wheels.
    2. When jacking up the rear wheels first, make sure wheel chocks are in front of the front wheels.

g. When jacking up only the front or rear wheels of the vehicle:

    1. Before jacking up the front wheels, place wheel chocks on both sides of the rear wheels.
    2. Before jacking up the rear wheels, place wheel chocks on both sides of the front wheels.

h. When lowering a vehicle that only has its front or rear wheels jacked up.

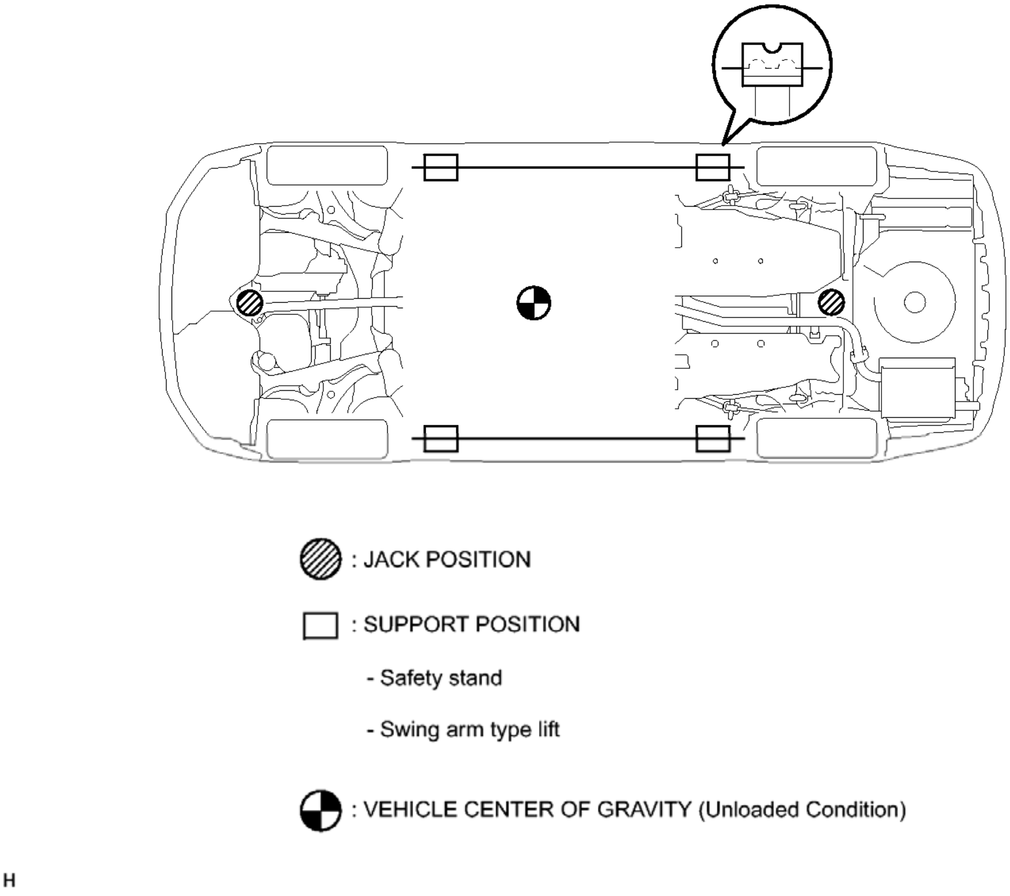
▨ : JACK POSITION
☐ : SUPPORT POSITION
- Safety stand
- Swing arm type lift
◐ : VEHICLE CENTER OF GRAVITY (Unloaded Condition)
H

Fig. 21: Identifying Vehicle Support Locations & Center Of Gravity
Courtesy of TOYOTA MOTOR SALES, U.S.A., INC.

    1. Before lowering the front wheels, make sure wheel chocks are in front of the rear wheels.
    2. Before lowering the rear wheels, make sure wheel chocks are behind the front wheels.

4. **NOTICE FOR USING A SWING ARM TYPE LIFT**
    a. Follow the safety procedures outlined in the lift's instruction manual.
    b. Use swing arms equipped with rubber attachments as shown in the illustration.
    c. Position the vehicle so that its center of gravity is centered on the lift (length of "L" in the illustration should be as short as possible).
    d. Ensure that the rubber cushions or swing arms do not contact the body cladding or lower mouldings.
    e. Be sure to lock the swing arms before raising the vehicle (if equipped with arm locks).
    f. Use the lift to raise the vehicle until the tires are off the ground, then stop the lift and shake the front and rear of the vehicle to make sure that it is stable.

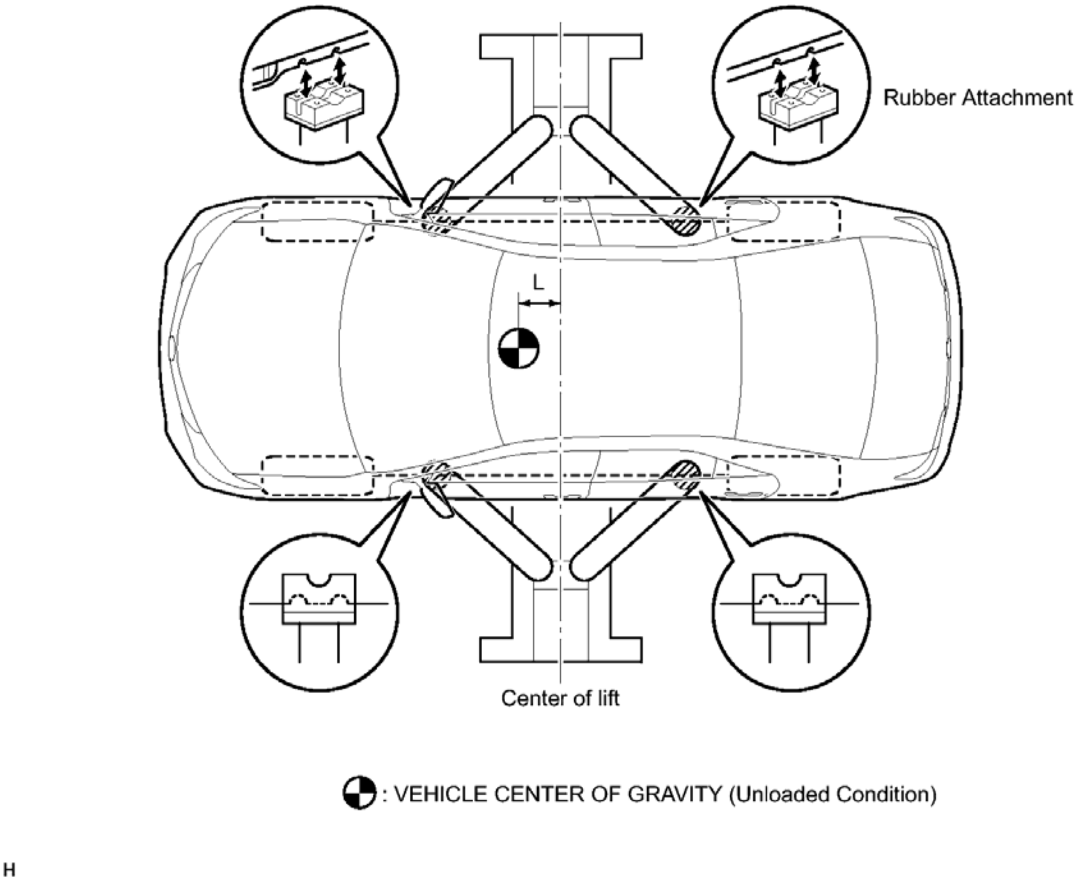

Fig. 22: Identifying Vehicle Support Locations & Center Of Gravity
Courtesy of TOYOTA MOTOR SALES, U.S.A., INC.

5. **NOTICE FOR USING PLATE TYPE LIFT**

a. Follow the safety procedures outlined in the lift's instruction manual.
b. Use plate lift attachments (rubber lifting blocks) on top of the plates.
c. Be sure to set the vehicle to the specified position described in the following chart and shown in the following illustration.

Right and left set position	• Center the vehicle on the lift.
Front and rear set position	• Align the plate cushion ends with the lower ends of the attachments (A). • Be sure to set the attachment to position (B) as shown in the illustration.

d. Ensure that the plate lift or rubber lifting blocks do not contact the body cladding or lower mouldings.
e. Use the lift to raise the vehicle until the tires are off the ground, then stop the lift and shake the front and rear of the vehicle to make sure that it is stable.

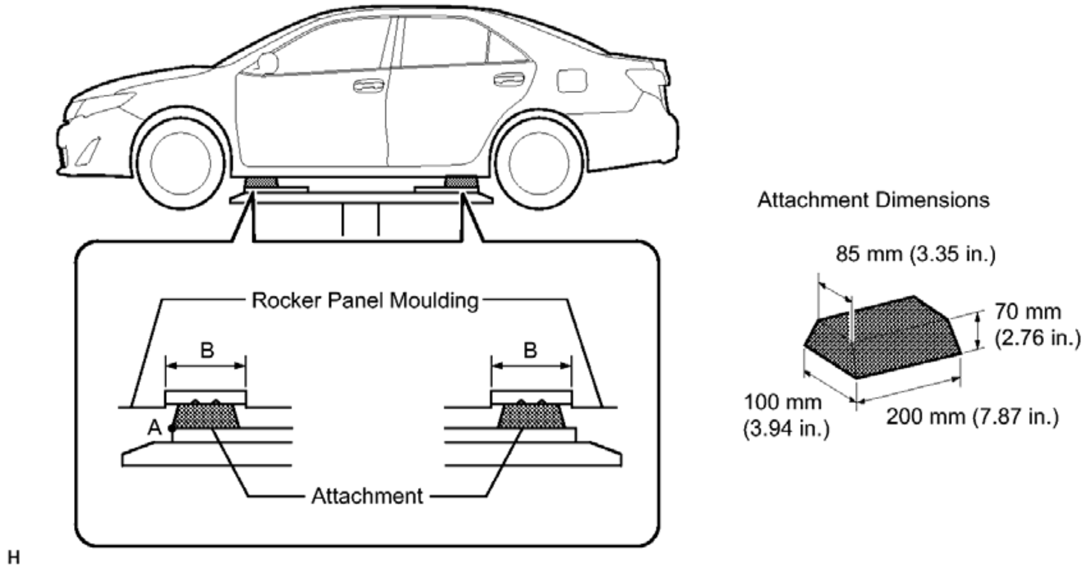

Fig. 23: Identifying Plate Type Lift Attachments
Courtesy of TOYOTA MOTOR SALES, U.S.A., INC.

CUSTOMIZE PARAMETERS

CUSTOMIZE PARAMETERS

1. **CUSTOMIZE INTUITIVE PARKING ASSIST SYSTEM** . Refer to **CUSTOMIZE PARAMETERS - Step 1**
2. **CUSTOMIZE POWER DOOR LOCK CONTROL SYSTEM** . Refer to **CUSTOMIZE PARAMETERS - Step 1**
3. **CUSTOMIZE WIRELESS DOOR LOCK CONTROL SYSTEM (w/ Smart Key System)** . Refer to **CUSTOMIZE PARAMETERS - Step 1**
4. **CUSTOMIZE WIRELESS DOOR LOCK CONTROL SYSTEM (w/o Smart Key System)** . Refer to **CUSTOMIZE PARAMETERS - Step 1**
5. **CUSTOMIZE SMART KEY SYSTEM (for Entry Function)** . Refer to **CUSTOMIZE PARAMETERS - Step 1**
6. **CUSTOMIZE SMART KEY SYSTEM (for Start Function)** . Refer to **CUSTOMIZE PARAMETERS - Step 1**
7. **CUSTOMIZE THEFT DETERRENT SYSTEM** . Refer to **CUSTOMIZE PARAMETERS - Step 1**
8. **CUSTOMIZE REMOTE ENGINE STARTER SYSTEM** . Refer to **CUSTOMIZE PARAMETERS - Step 1**
9. **CUSTOMIZE LIGHTING SYSTEM (INT)** . Refer to **CUSTOMIZE PARAMETERS - Step 1**
10. **CUSTOMIZE METER / GAUGE SYSTEM** . Refer to **CUSTOMIZE PARAMETERS - Step 1**
11. **CUSTOMIZE SEAT BELT WARNING SYSTEM** . Refer to **CUSTOMIZE PARAMETERS - Step 1**
12. **CUSTOMIZE AIR CONDITIONING SYSTEM (for Automatic Air Conditioning System)** . Refer to **CUSTOMIZE PARAMETERS - Step 1**

13. **CUSTOMIZE AIR CONDITIONING SYSTEM (for Manual Air Conditioning System)** . Refer to **CUSTOMIZE PARAMETERS - Step 1**
14. **CUSTOMIZE POWER WINDOW CONTROL SYSTEM** . Refer to **CUSTOMIZE PARAMETERS - Step 1**
15. **CUSTOMIZE SLIDING ROOF SYSTEM** . Refer to **CUSTOMIZE PARAMETERS - Step 1**
16. **CUSTOMIZE LIGHTING SYSTEM (EXT)** . Refer to **CUSTOMIZE PARAMETERS - Step 1**

INITIALIZATION

INITIALIZATION

1. **PROCEDURES NECESSARY WHEN BATTERY TERMINAL IS DISCONNECTED/RECONNECTED**

Necessary Procedures	Effect/Inoperative Function When Necessary Procedures are not Performed	See
Correct the steering angle neutral point	Parking assist monitor system	Refer to **INITIALIZATION**

NOTE: **After the ignition switch is turned off, the navigation receiver assembly (for Navigation Receiver Type) or radio and display receiver assembly (for Radio and Display Type with Intuitive Parking Assist System) records various types of memory and settings. As a result, after turning the ignition switch off, make sure to wait at least 60 seconds before disconnecting the cable from the negative (-) battery terminal.**

2. **PROCEDURES NECESSARY WHEN ECU OR OTHER PARTS ARE REPLACED**

Replacement Part	Necessary Procedure	Effect/Inoperative Function when Necessary Procedures are not Performed	See
ECM	Vehicle Identification Number (VIN) registration	MIL comes on	Refer to **REGISTRATION** for 2AR-FE Refer to **REGISTRATION** for 2GR-FE

	ECU communication ID registration (Engine immobiliser system)	Engine start	Refer to **REGISTRATION** *1 Refer to **REGISTRATION** *2
- Throttle with motor body assembly - Cleaning the deposits from the throttle with motor body assembly - Engine assembly - Cylinder head sub-assembly - Camshaft (for intake or exhaust camshaft) - Camshaft timing gear assembly - Camshaft timing exhaust gear assembly - Piston or piston ring - Mass air flow meter sub-assembly - Fuel injector assembly - Fuel pump - Air fuel ratio sensor - Engine coolant temperature sensor - Spark plug - Ignition coil assembly - Air leaks from intake system	Inspection after repair	Poor idle, engine starting, etc	Refer to **INITIALIZATION** for 2AR-FE Refer to **INITIALIZATION** for 2GR-FE

• Gas leaks from exhaust system • Knock control sensor				
Automatic transaxle assembly		a. Reset memory b. Input transaxle compensation code into TCM c. Perform road test to allow TCM to learn	• Large shift shock • Deterioration of fuel efficiency	Refer to **INITIALIZATION** for U660E Initialization Refer to **REGISTRATION** for U660E Registration
• Valve body assembly • Shift solenoid valve SL3 and/or SL4		a. Reset memory b. Reset transaxle compensation code c. Perform road test to allow TCM to learn	• Large shift shock • Deterioration of fuel efficiency	
Shift solenoid valve SL1 and/or SL2		Perform road test to allow TCM to learn	• Large shift shock • Deterioration of fuel efficiency	
TCM (If possible, read the transaxle compensation code from the previous TCM)	Possible	a. Reset memory b. Transfer transaxle compensation code c. Perform road test to allow TCM to learn	• Large shift shock • Deterioration of fuel efficiency	
	Impossible	a. Reset memory b. Reset transaxle compensation code c. Perform road test to allow TCM to learn	• Large shift shock • Deterioration of fuel efficiency	
Automatic transaxle		a. Reset memory b. Input transaxle compensation code into ECM	• Large shift shock • Deterioration	

assembly		c. Perform road test to allow ECM to learn	of fuel efficiency	Refer to **INITIALIZATION** for U760E Initialization Refer to **REGISTRATION** for U760E Registration
• Valve body assembly • Shift solenoid valve SL3 and/or SL4		a. Reset memory b. Reset transaxle compensation code c. Perform road test to allow ECM to learn	• Large shift shock • Deterioration of fuel efficiency	
Shift solenoid valve SL1 and/or SL2		Perform road test to allow ECM to learn	• Large shift shock • Deterioration of fuel efficiency	
ECM (If possible, read the transaxle compensation code from the previous ECM)	Possible	a. Reset memory b. Transfer transaxle compensation code c. Perform road test to allow ECM to learn	• Large shift shock • Deterioration of fuel efficiency	
	Impossible	a. Reset memory b. Reset transaxle compensation code c. Perform road test to allow ECM to learn	• Large shift shock • Deterioration of fuel efficiency	
Door control and tire pressure monitoring system receiver assembly		• Transmitter ID registration • Initialization	• When DTC detection conditions of "transmitter ID not received" DTC are met, TPWS indicator blinks for 1 minute, and then illuminates. • Tire pressure	Refer to **INITIALIZATION** for Initialization Refer to **REGISTRATION** for Registration

		warning function	
	Code registration (Wireless door lock system)	Wireless door lock control system	Refer to **REGISTRATION**
- Tire pressure monitor receiver assembly - Tire pressure warning valve and transmitter	- Transmitter ID registration - Initialization	- When DTC detection conditions of "transmitter ID not received" DTC are met, TPWS indicator blinks for 1 minute, and then illuminates. - Tire pressure warning function	Refer to **INITIALIZATION** for Initialization Refer to **REGISTRATION** for Registration
Skid control ECU (Brake actuator assembly)	Perform system variant learning	- Slip indicator light illumination - VSC disabled or malfunctioning	Refer to **CALIBRATION**
Power steering ECU assembly	- Torque sensor zero point calibration*3*4 - Assist map writing	- P/S warning light comes on - EPS control	Refer to **CALIBRATION** *3 Refer to **CALIBRATION** *4 Refer to **CALIBRATION** *5
Electric power steering column sub-assembly (containing the torque sensor)*3*4	Torque sensor zero point calibration	Steering effort is different between turning steering wheel to left and right	
- Spiral cable with sensor assembly - Spiral cable sub-assembly - Steering sensor	- Correct steering angle neutral point - Steering angle setting	Parking assist monitor system	Refer to **CALIBRATION**
Radio and display receiver assembly	Radio and display receiver assembly initialization	Parking assist monitor system	

Rear television camera assembly	Back camera position setting	Parking assist monitor system	
- Roof console box assembly*6 - Garage door opener transmitter*6	Re-registration of codes in the garage door opener system - Register transmitter code - Rolling code systems	Garage door opener system	Refer to **REGISTRATION**
DCM (Telematics Transceiver)	DCM activation	Safety connect system	Refer to **DCM ACTIVATION**
- Certification ECU (smart key ECU assembly)*1 - Steering lock ECU (steering lock actuator assembly) *1 - Electrical key transmitter sub-assembly*1	Code registration (Engine immobiliser system)	- Wireless door lock control system - Smart key system - Engine start - Steering lock system	Refer to **REGISTRATION**
- Transponder key ECU assembly*2 - Door control transmitter assembly*2 - Key*3	Code registration (Engine immobiliser system)	Engine start	Refer to **REGISTRATION**
- Door control transmitter assembly*2 - Door control receiver	Code registration (Wireless door lock system)	Wireless door lock control system	Refer to **REGISTRATION**
- Remote engine starter ECU*7 - Certification ECU (smart key ECU assembly)*7	Registration of remote engine starter ID (Remote engine starter system)	Remote engine start	Refer to **REGISTRATION**
		- Occupant classification system - Passenger	

- Occupant classification ECU - Front passenger seat	Zero point calibration and sensitivity check. (Occupant classification system)	airbag ON/OFF indicator - Airbag system (Front passenger side) - Seat belt warning system (Front passenger)	Refer to **INITIALIZATION**
- No. 1 air conditioning radiator damper servo sub-assembly*8*9 - No. 2 air conditioning radiator damper servo sub-assembly*8 - No. 1 blower damper servo sub-assembly*8*9	Initialization servo motor (Air conditioning system)	DTCs are output	Refer to **INITIALIZATION** *8 Refer to **INITIALIZATION** *9
- Power window regulator motor assembly - Door window regulator sub-assembly - Door glass - Door glass run	Initialize power window control system	- Auto up/down function - Jam protection function - Operation function after ignition switch is turned off - Key-linked function - Wireless transmitter-linked function	Refer to **INITIALIZATION**
- Sliding roof ECU (sliding roof drive		- Automatic slide open/close and tilt up/down function of sliding roof - Jam protection	

gear sub-assembly) • Sliding roof glass sub-assembly • Sliding roof drive cable sub-assembly	Initialize sliding roof ECU (pulse sensor initial position setting)	function • Operation function after ignition switch is turned off • Key-linked function • Wireless transmitter-linked function • Sliding roof open warning	Refer to **INITIALIZATION**
Headlight leveling ECU assembly	Perform headlight leveling ECU assembly initialization	Headlight leveling function	Refer to **INITIALIZATION**
Rear height control sensor sub-assembly	Perform headlight leveling ECU assembly initialization	Headlight leveling function	

*1: w/ Smart Key System

*2: w/o Smart Key System

*3: for 2AR-FE without Wireless Door Lock

*4: for 2AR-FE with Wireless Door Lock

*5: for 2GR-FE

*6: w/ Garage Door Opener System

*7: w/ Remote Engine Starter System

*8: for Automatic Air Conditioning System

*9: for Manual Air Conditioning System

HOW TO TROUBLESHOOT ECU CONTROLLED SYSTEMS

GENERAL INFORMATION

GENERAL INFORMATION

A large number of ECU controlled systems are used in this vehicle. In general, ECU controlled systems are considered to be very intricate, requiring a high level of technical knowledge to troubleshoot. However, most problem checking procedures only involve inspecting the ECU controlled system circuits one by one. An adequate understanding of the system and a basic knowledge of electricity is enough to perform effective troubleshooting, accurate diagnosis and necessary repairs.

(For using the Techstream*)

HINT:

*: The Techstream is the name for the diagnostic tester in North America.

- Before using the Techstream, read the operator's manual thoroughly.
- If the Techstream cannot communicate with the ECU controlled systems when connected to the DLC3 with the ignition switch ON and the Techstream turned on, there is a problem on the vehicle side or the Techstream side.
    1. If communication is possible when the Techstream is connected to another vehicle, inspect the diagnosis data link line (bus (+) line), CANH and CANL lines, and the power circuits for the vehicle ECUs.
    2. If communication is still not possible when the Techstream is connected to another vehicle, the problem is probably in the Techstream itself. Perform the Self Test procedure outlined in the Techstream operator's manual.

1. **TROUBLESHOOTING PROCEDURES**
    - The troubleshooting procedures consist of diagnosis procedures for when a DTC is stored and diagnosis procedures for when no DTC is stored. The basic idea is explained in the following table.

Procedure Type	Details	Troubleshooting Method
DTC Based Diagnosis	The diagnosis procedure is based on the DTC that is stored.	The malfunctioning part is identified based on the DTC detection conditions using a process of elimination. The possible trouble areas are eliminated one-by-one by use of the Techstream and inspection of related parts.
		The malfunctioning part is identified

Symptom Based Diagnosis (No DTCs stored)	The diagnosis procedure is based on problem symptoms.	based on the problem symptoms using a process of elimination. The possible trouble areas are eliminated one-by-one by use of the Techstream and inspection of related parts.

- Vehicle systems are complex and use many ECUs that are difficult to inspect independently. Therefore, a process of elimination is used, where components that can be inspected individually are inspected, and if no problems are found in these components, the related ECU is identified as the problem and replaced.
- It is extremely important to ask the customer about the environment and the conditions present when the problem occurred (Customer Problem Analysis). This makes it possible to simulate the conditions and confirm the symptom. If the symptom cannot be confirmed or the DTC does not recur, the malfunctioning part may not be identified using the troubleshooting procedure, and the ECU for the related system may be replaced even though it is not defective. If this happens, the original problem will not be solved.
- In order to prevent endless expansion of troubleshooting procedures, the troubleshooting procedures are written with the assumption that multiple malfunctions do not occur simultaneously for a single problem symptom.
- To identify the malfunctioning part, troubleshooting procedures narrow down the target by separating components, ECUs and wire harnesses during the inspection. If the wire harness is identified as the cause of the problem, it is necessary to inspect not only the connections to components and ECUs but also all of the wire harness connectors between the component and the ECU.

2. **DESCRIPTION**
   a. The data of each system and Diagnostic Trouble Codes (DTCs) can be read from the Data Link Connector 3 (DLC3) of the vehicle. When the system seems to be malfunctioning, use the Techstream to check for malfunctions and perform repairs.
3. **CHECK DLC3**
   a. The vehicle ECUs use ISO 15765-4 communication protocol. The terminal arrangement of the DLC3 complies with SAE J1962 and matches the ISO 15765-4 format.

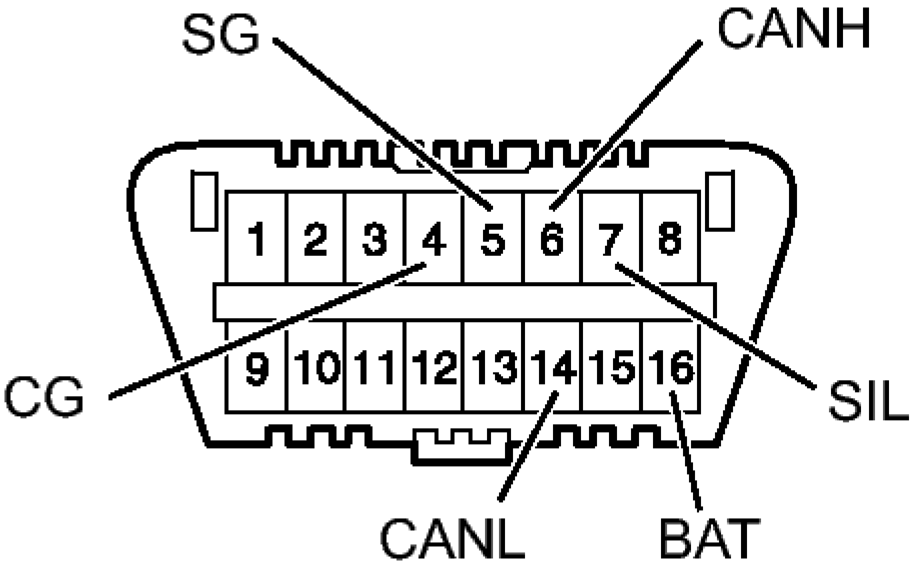

Fig. 24: Identifying DLC3 Connector Terminals
Courtesy of TOYOTA MOTOR SALES, U.S.A., INC.

Symbol	Terminal No.	Name	Reference Terminal	Result	Condition
SIL	7	Bus "+" line	5 - Signal ground	Pulse generation	During transmission
CG	4	Chassis ground	Body ground	1 ohms or less	Always
SG	5	Signal ground	Body ground	1 ohms or less	Always
BAT	16	Battery positive	Body ground	11 to 14 V	Always
CANH	6	CAN "High" line	14 - CANL	54 to 69 ohms	Ignition switch off*
			Battery positive	6 kohms or higher	Ignition switch off*
			4 - CG	200 ohms or higher	Ignition switch off*
CANL	14	CAN "Low" line	Battery positive	6 kohms or higher	Ignition switch off*
			4 - CG	200 ohms or higher	Ignition switch off*

NOTE: ***: Before measuring the resistance, leave the vehicle as is for at least 1 minute and do not operate the ignition switch, any other switches**

or the doors.

If the result is not as specified, the DLC3 may have a malfunction. Repair or replace the harness or connector.

ELECTRONIC CIRCUIT INSPECTION PROCEDURE

ELECTRONIC CIRCUIT INSPECTION PROCEDURE

1. **BASIC INSPECTION**
    a. WHEN MEASURING RESISTANCE OF ELECTRONIC PARTS
        1. Unless otherwise stated, all resistance measurements are standard values measured at an ambient temperature of 20°C (68°F). Resistance measurements may be inaccurate if measured at high temperatures, i.e. immediately after the vehicle has been running. Measurements should be made after the engine has cooled down.
    b. HANDLING CONNECTORS

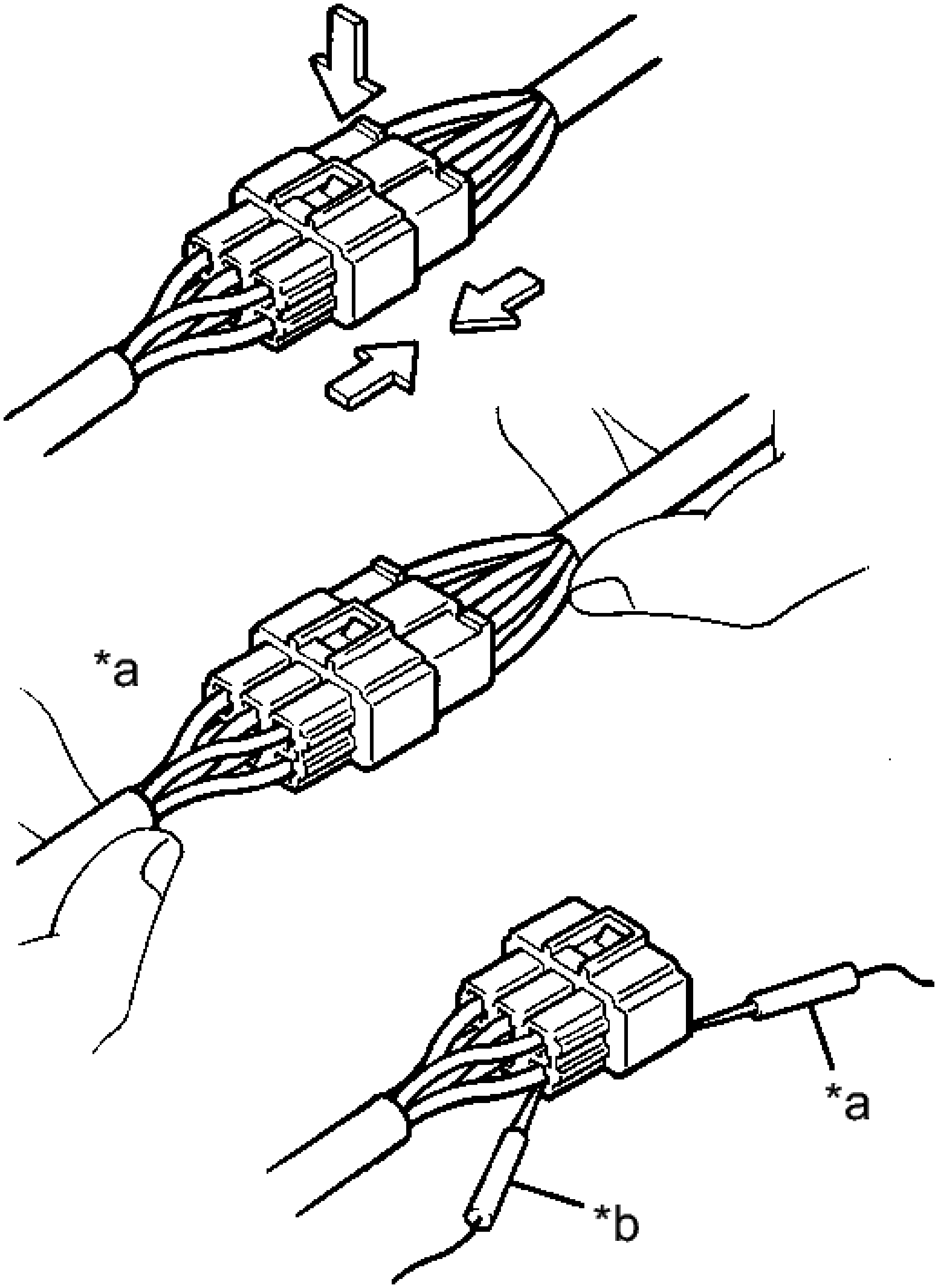

Fig. 25: Identifying Correct/Incorrect Way To Handle Connectors
Courtesy of TOYOTA MOTOR SALES, U.S.A., INC.

TEXT IN ILLUSTRATION

*a	INCORRECT

*b	CORRECT

1. When disconnecting a connector, first squeeze the mating connector housing halves tightly together to release the lock, and then press the lock claw and separate the connector.
2. When disconnecting a connector, do not pull on the harnesses. Grasp the connector directly and separate it.
3. Before connecting a connector, check that there are no deformations, damage, looseness or missing terminals.
4. When connecting a connector, press firmly until it locks with a "click" sound.
5. If checking a connector with a TOYOTA electrical tester, check the connector from the backside (harness side) using a mini test lead.

NOTE:

- **As a waterproof connector cannot be checked from the backside, check it by connecting a sub-harness.**
- **Do not damage the terminals by moving the inserted tester needle.**

c. CHECKING CONNECTORS

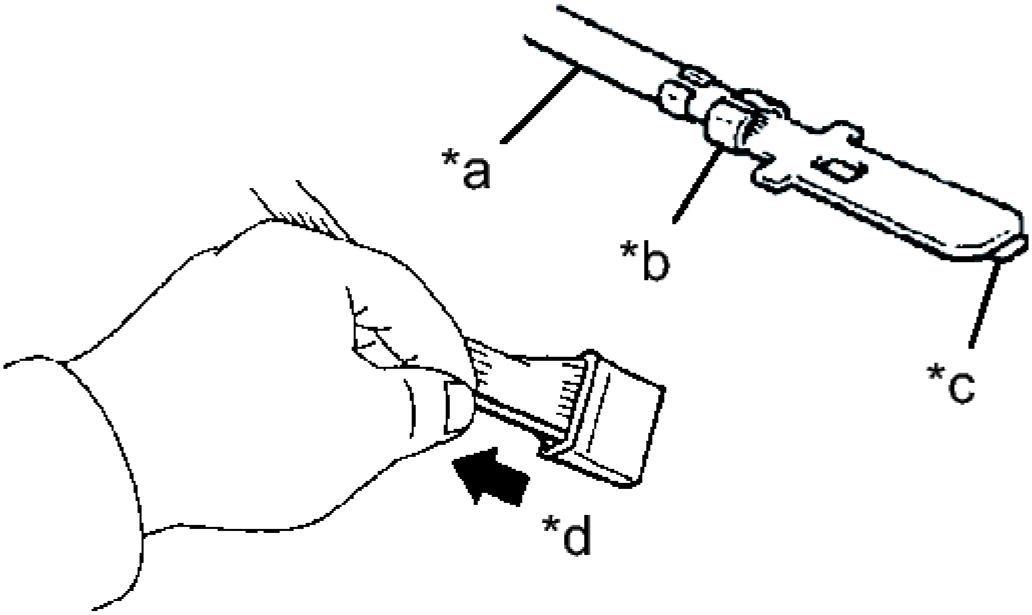

Fig. 26: Identifying Core Wire, Looseness of Crimping & Terminal Deformation
Courtesy of TOYOTA MOTOR SALES, U.S.A., INC.

TEXT IN ILLUSTRATION

*a	Core Wire
	Looseness

*b	of Crimping
*c	Terminal Deformation
*d	Pull Lightly

1. Checking when a connector is connected: Squeeze the connectors together to confirm that they are fully connected and locked.
2. Checking when a connector is disconnected: Check by pulling the wire harness lightly from the backside of the connector. Look for unlatched terminals, missing terminals, loose crimps or broken conductor wires. Visually check for corrosion, metallic or foreign matter and water, and bent, rusted, overheated, contaminated or deformed terminals.
3. Checking the contact pressure of the terminal: Prepare a spare male terminal. Insert it into a female terminal, and check for ample tension when inserting and after full engagement.

NOTE: When testing a gold-plated female terminal, always use a gold-plated male terminal.

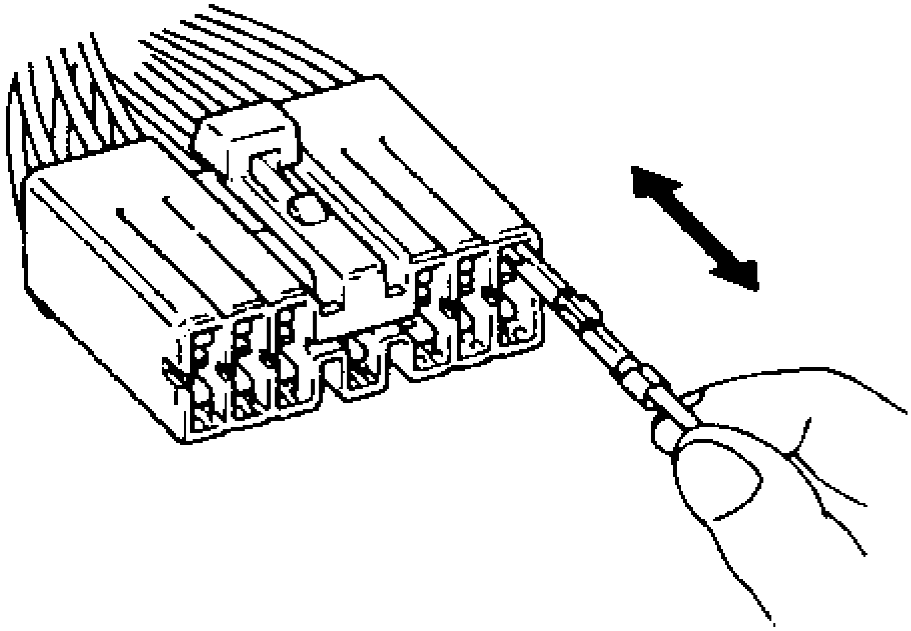

Fig. 27: Checking Contact Pressure Of Terminal
Courtesy of TOYOTA MOTOR SALES, U.S.A., INC.

d. CONNECTOR TERMINAL REPAIR METHOD

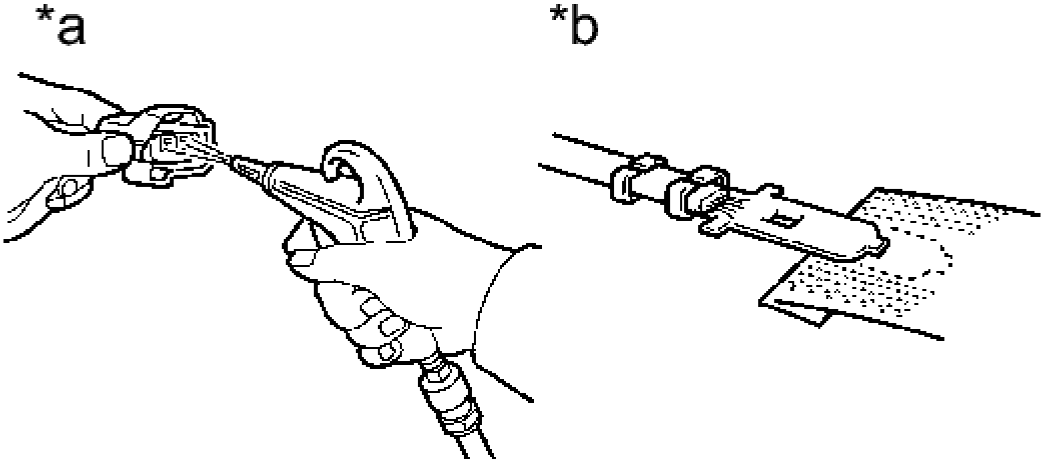

Fig. 28: Identifying Correct/Incorrect Connector Terminal Repair Method
Courtesy of TOYOTA MOTOR SALES, U.S.A., INC.

TEXT IN ILLUSTRATION

*a	CORRECT
*b	INCORRECT

1. If there is any foreign matter on the terminal, clean the contact point with compressed air or a cloth. Never rub the contact point using sandpaper as the plating may come off.
2. If there is abnormal contact pressure, replace the female terminal. If the male terminal is gold-plated (gold color), use a gold-plated female terminal; if it is silver-plated (silver color), use a silver-plated female terminal.
3. Damaged, deformed or corroded terminals should be replaced. If the terminal does not lock into the housing, the housing may have to be replaced.

e. WIRE HARNESS HANDLING

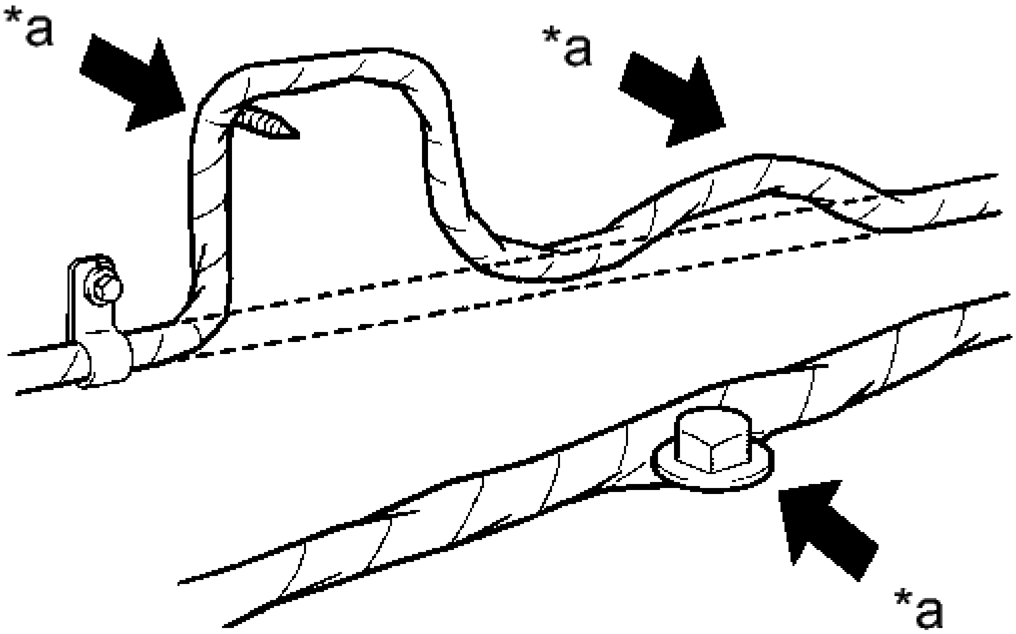

Fig. 29: Identifying Incorrect Wire Harness Handling
Courtesy of TOYOTA MOTOR SALES, U.S.A., INC.

TEXT IN ILLUSTRATION

*a	INCORRECT

1. If removing a wire harness, check the wiring and clamps before proceeding so that it can be restored in the same way.
2. Never twist, pull or slacken the wire harness more than necessary.
3. The wire harness should never come into contact with any high temperature part, rotating, moving, vibrating or sharp-edged parts. Avoid contact with panel edges, screw tips and other sharp items.
4. When installing parts, never pinch the wire harness.
5. Never cut or break the cover of the wire harness. If it is cut or broken, repair it with insulating tape or replace the wire harness.

2. **CHECK FOR OPEN CIRCUIT**

   a. For an open circuit in the wire harness in Fig. 1, measure the resistance and voltage as follows:

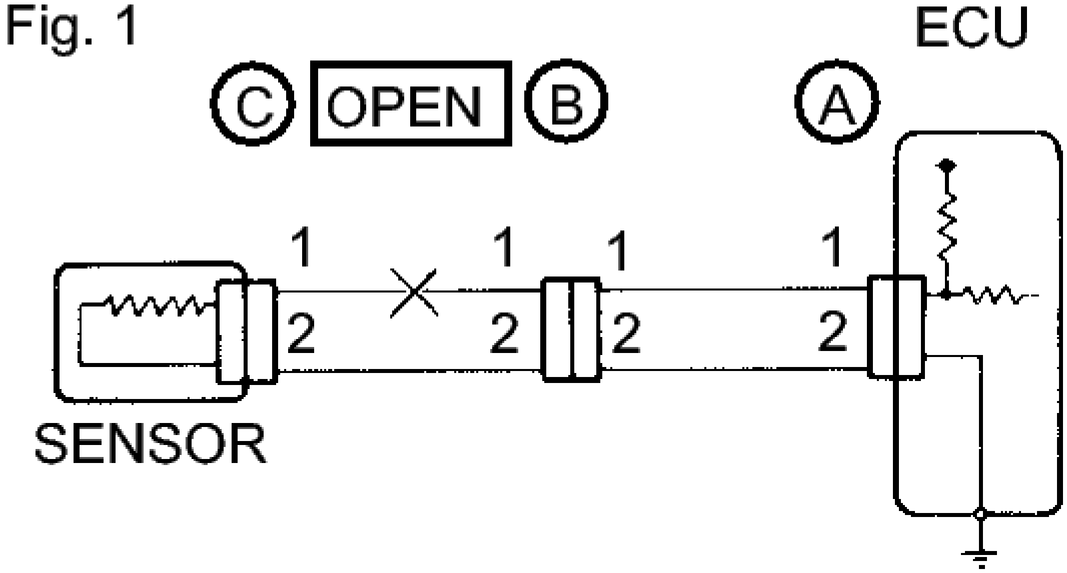
Fig. 1
ECU
C
OPEN
B
A
1
1
1
1
2
2
2
2
SENSOR

Fig. 30: Checking For Open Circuit
Courtesy of TOYOTA MOTOR SALES, U.S.A., INC.

   b. Check the resistance.

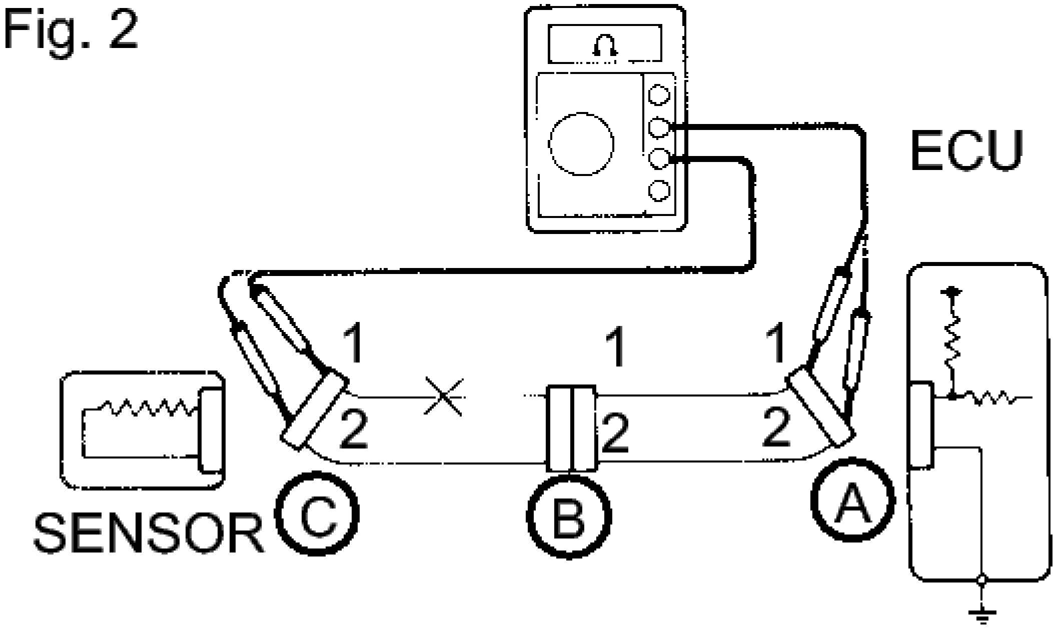
Fig. 2
Ω
ECU
1
1
1
2
2
2
SENSOR
C
B
A

Fig. 31: Measuring Resistance Between Terminals Of Connectors
Courtesy of TOYOTA MOTOR SALES, U.S.A., INC.

1. Disconnect connectors A and C and measure the resistance between the terminals of the connectors.

   Standard Resistance (Fig. 2)

Tester Connection	Specified Condition
Connector A terminal 1 - Connector C terminal 1	10 kohms or higher
Connector A terminal 2 - Connector C terminal 2	Below 1 ohms

   HINT:

   Measure the resistance while lightly shaking the wire harness vertically and horizontally.

   If the results match the values specified above, an open circuit exists between terminal 1 of connector A and terminal 1 of connector C.
2. Disconnect connector B and measure the resistance between the terminals of the connectors.

Fig. 3

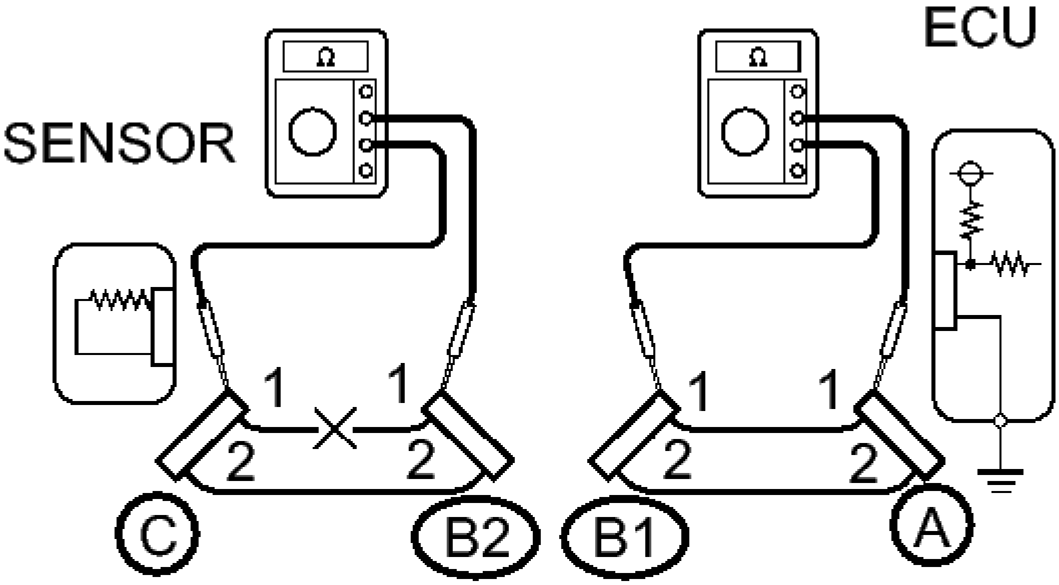

Fig. 32: Measuring Resistance Between Terminals Of Connectors
Courtesy of TOYOTA MOTOR SALES, U.S.A., INC.

Standard Resistance (Fig. 3)

Tester Connection	Specified Condition
Connector A terminal 1 - Connector B1 terminal 1	Below 1 ohms
Connector B2 terminal 1 - Connector C terminal 1	10 kohms or higher

If the results match the values specified above, an open circuit exists between terminal 1 of connector B2 and terminal 1 of connector C.

c. Check the voltage.

Fig. 4

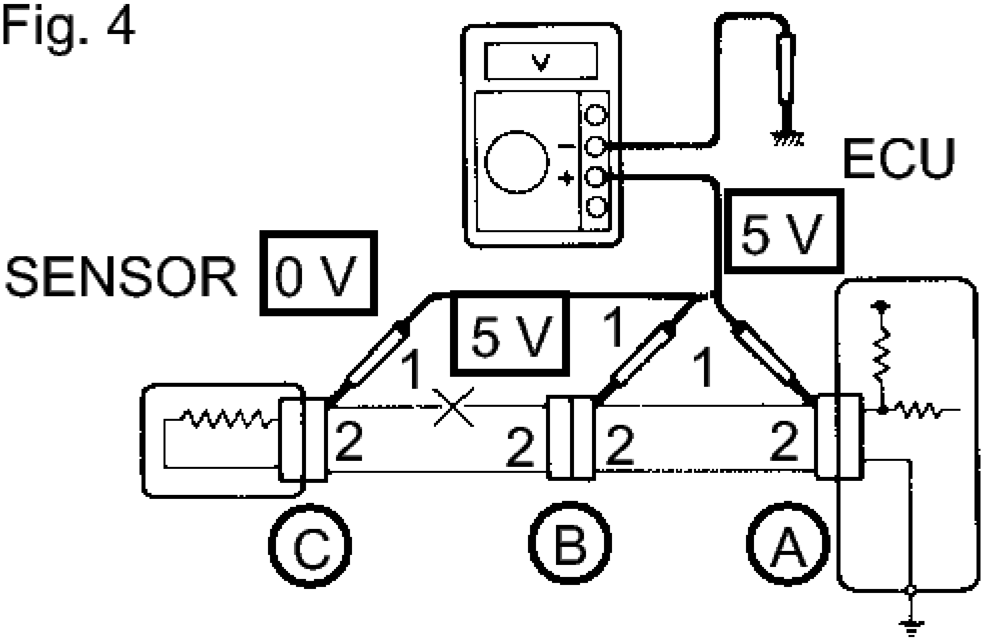

Fig. 33: Measuring Voltage Between Body Ground And Terminals
Courtesy of TOYOTA MOTOR SALES, U.S.A., INC.

1. In a circuit in which voltage is applied to the ECU connector terminal, an open circuit can be checked by conducting a voltage check.

   With each connector still connected, measure the voltage between body ground and the following terminals (in this order): 1) terminal 1 of connector A, 2) terminal 1 of connector B, and 3) terminal 1 of connector C.

   Standard Voltage (Fig. 4)

Tester Connection	Specified Condition
Connector A terminal 1 - Body ground	5 V
Connector B terminal 1 - Body ground	5 V
Connector C terminal 1 - Body ground	Below 1 V

If the results match the values specified above, an open circuit exists in the wire harness between terminal 1 of connector B and terminal 1 of connector C.

3. **CHECK FOR SHORT CIRCUIT**
   a. If a wire in the harness is shorted to ground (Fig. 5), locate the shorted section by measuring the resistance as follows:

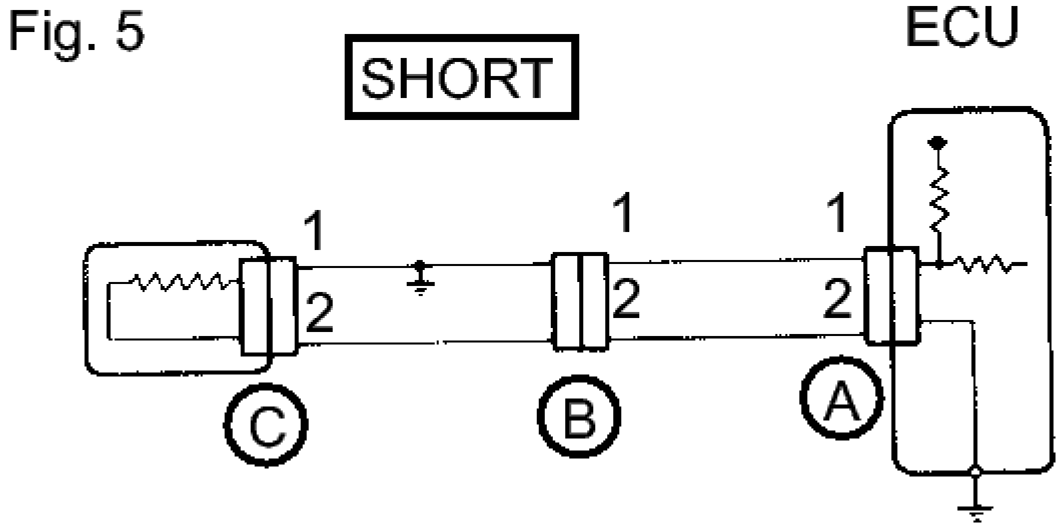

Fig. 34: Checking For Short Circuit
Courtesy of TOYOTA MOTOR SALES, U.S.A., INC.

   b. Check the resistance to body ground.

Fig. 6

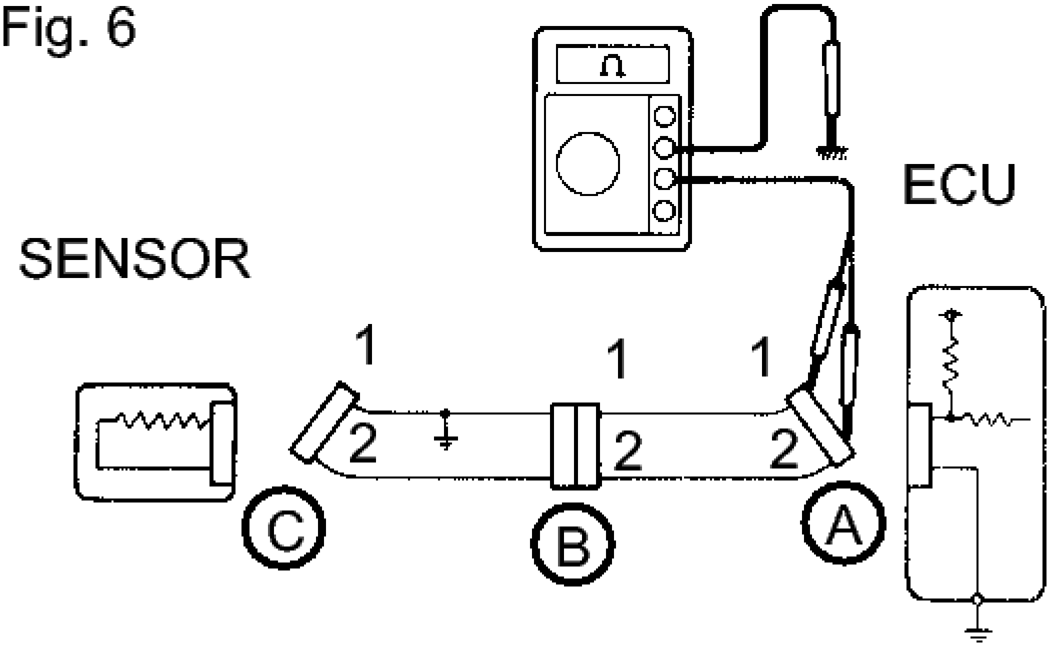

Fig. 35: Measuring Resistance Between Connectors A And C
Courtesy of TOYOTA MOTOR SALES, U.S.A., INC.

1. Disconnect connectors A and C and measure the resistance.

   Standard Resistance (Fig. 6)

Tester Connection	Specified Condition
Connector A terminal 1 - Body ground	Below 1 ohms
Connector A terminal 2 - Body ground	10 kohms or higher

   HINT:

   Measure the resistance while lightly shaking the wire harness vertically and horizontally.

   If the results match the values specified above, a short circuit exists between terminal 1 of connector A and terminal 1 of connector C.

2. Disconnect connector B and measure the resistance.

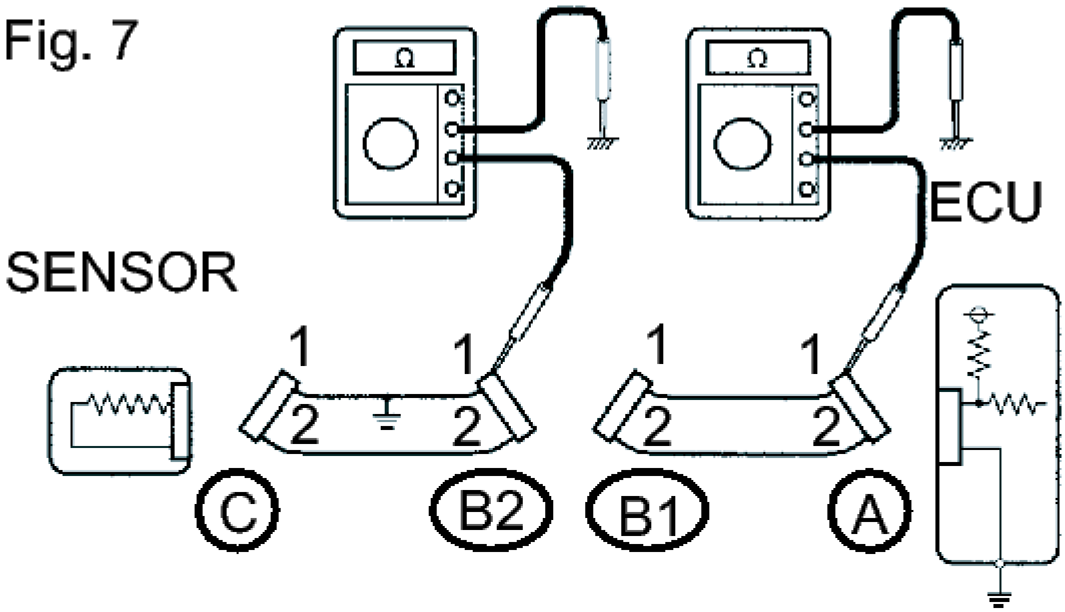

Fig. 36: Measuring Connector Resistance
Courtesy of TOYOTA MOTOR SALES, U.S.A., INC.

Standard Resistance (Fig. 7)

Tester Connection	Specified Condition
Connector A terminal 1 - Body ground	10 kohms or higher
Connector B2 terminal 1 - Body ground	Below 1 ohms

If the results match the values specified above, a short circuit exists between terminal 1 of connector B2 and terminal 1 of connector C.

4. **CHECK AND REPLACE ECU**

NOTE:

- **The connector should not be disconnected from the ECU. Perform the inspection from the backside of the connector on the wire harness side.**
- **When no measuring condition is specified, perform the inspection with the engine stopped and the ignition switch ON.**

- **Check that the connectors are fully seated. Check for loose, corroded or broken wires.**

a. First, check the ECU ground circuit. If it is faulty, repair it. If it is normal, the ECU could be faulty. Temporarily replace the ECU with a normally functioning one and check if the symptoms occur. If the trouble symptoms disappear, replace the original ECU.
   1. Measure the resistance between the ECU ground terminal and body ground.

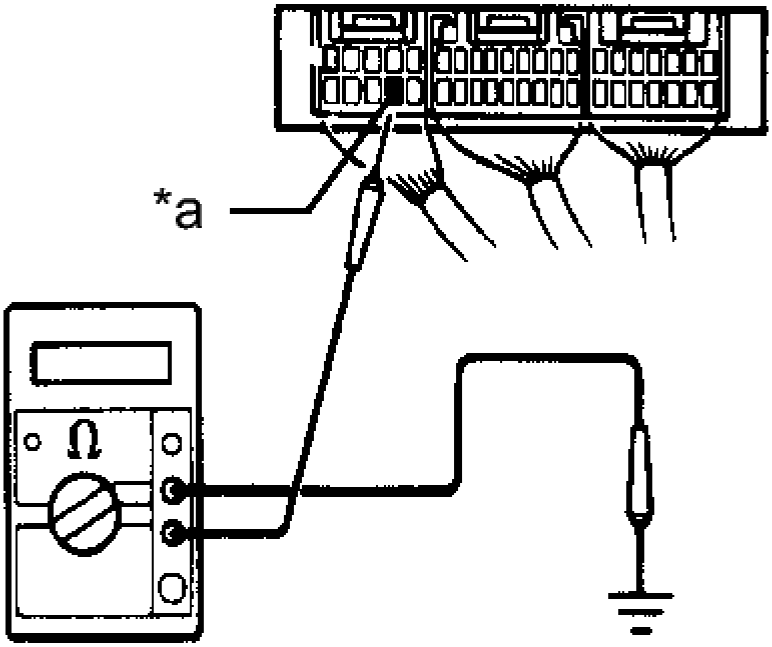

Fig. 37: Identifying ECU Ground Terminal & Body Ground
Courtesy of TOYOTA MOTOR SALES, U.S.A., INC.

TEXT IN ILLUSTRATION

*a	Ground

Standard resistance

Below 1 ohms

   2. Disconnect the ECU connector. Check the ground terminals on the ECU side and wire harness side for bent terminals, corrosion or foreign matter. Lastly, check the contact pressure of the female terminals.

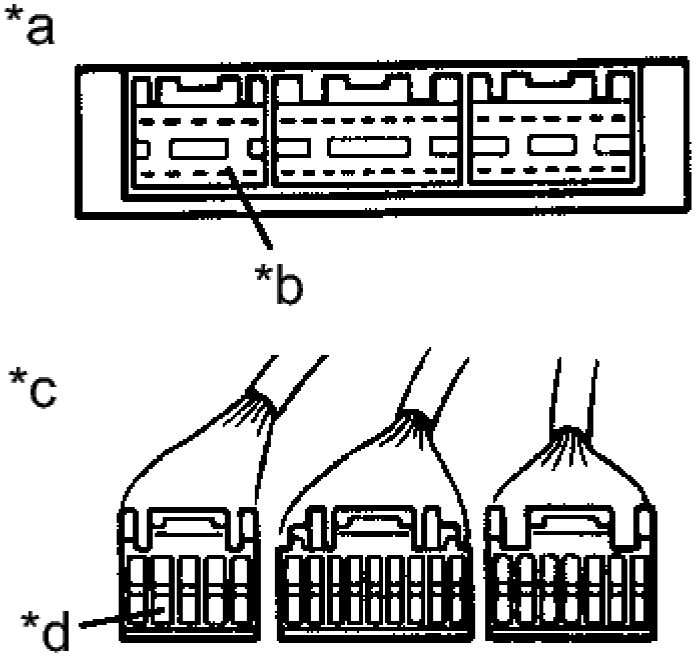

Fig. 38: Checking The Contact Pressure Of The Female Terminals
Courtesy of TOYOTA MOTOR SALES, U.S.A., INC.

TEXT IN ILLUSTRATION

*a	Component without harness connected (ECU)
*b	Ground
*c	Front view of wire harness connector (to ECU)
*d	Ground

HOW TO PROCEED WITH TROUBLESHOOTING

HOW TO PROCEED WITH TROUBLESHOOTING

1. **OPERATION FLOW**

   HINT:

   Perform troubleshooting in accordance with the procedure below. The following is an outline of basic troubleshooting procedure. Confirm the troubleshooting procedure for the circuit you are working on before beginning troubleshooting.

a. **VEHICLE BROUGHT TO WORKSHOP**

   NEXT: Go to next step

b. **CUSTOMER PROBLEM ANALYSIS**
   1. Ask the customer about the conditions and environment when the problem occurred.

      NEXT: Go to next step

c. **INSPECT BATTERY VOLTAGE**

   Standard voltage

   11 to 14 V

   If the voltage is below 11 V, recharge or replace the battery before proceeding to the next step.

   NEXT: Go to next step

d. **SYMPTOM CONFIRMATION AND DTC (AND FREEZE FRAME DATA) CHECK**
   1. Visually check the wire harnesses, connectors and fuses for open and short circuits.
   2. Warm up the engine to the normal operating temperature.
   3. Confirm the problem symptoms and conditions, and check for DTCs.

      Result

Result	Proceed to
DTC is output	A
DTC is not output	B

      B --> GO TO STEP f

      A: Go to next step

e. **DTC CHART**
   1. Find the output DTC in the DTC chart. Look at the Trouble Area column for a list of potentially malfunctioning circuits and/or parts.

NEXT --> GO TO STEP g

f. **PROBLEM SYMPTOMS CHART**

   1. Find the problem symptoms in the problem symptoms table. Look at the Suspected Area column for a list of potentially malfunctioning circuits and/or parts.

      NEXT: Go to next step

g. **CIRCUIT INSPECTION OR PARTS INSPECTION**

   1. Identify the malfunctioning circuit or part.

      NEXT: Go to next step

h. **ADJUST, REPAIR OR REPLACE**

   1. Adjust, repair or replace the malfunctioning circuit or parts.

      NEXT: Go to next step

i. **CONFIRMATION TEST**

   1. After the adjustment, repairs or replacement of components, confirm that the malfunction no longer exists. If the malfunction does not recur, perform a confirmation test under the same conditions and in the same environment as when the malfunction first occurred.

      NEXT --> END

2. **CUSTOMER PROBLEM ANALYSIS**

   HINT:

   - When troubleshooting, confirm that the problem symptoms have been accurately identified. Preconceptions should be discarded in order to make an accurate judgment. To clearly understand what the problem symptoms are, it is extremely important to ask the customer about the problem and the conditions at the time the malfunction occurred.
   - Gather as much information as possible for reference. Past problems that seem unrelated may also help in some cases.
   - The following 5 items are important points for problem analysis:

What	Vehicle model, system name
When	Date, time, occurrence frequency
Where	Road

	conditions
Under what conditions?	Driving conditions, weather conditions
How did it happen?	Problem symptoms

3. **SYMPTOM CONFIRMATION AND DIAGNOSTIC TROUBLE CODE**

HINT:

The diagnostic system in this vehicle has various functions.

- The first function is the Diagnostic Trouble Code (DTC) check. A DTC is a code stored in the ECU memory whenever a malfunction in the signal circuits to the ECU occurs. In a DTC check, a previous malfunction's DTC can be checked by a technician during troubleshooting.
- Another function is the Input Signal Check, which checks if the signals from various switches are sent to the ECU correctly.

  By using these functions, the problem areas can be narrowed down and troubleshooting can be more effective. Diagnostic functions are incorporated in the following systems of this vehicle.

System	**Symptom Confirmation and Diagnostic Trouble Code**				
	DTC Check (Normal Mode)	**DTC Check (Check Mode)**	**Sensor Check/Test Mode (Input Signal Check)**	**Data List**	**Active Test**
SFI System (2AR-FE)	o	o	-	o	o
Ignition System (2AR-FE)	-	-	-	-	-
SFI System (2GR-FE)	o	o	-	o	o
Ignition System (2GR-FE)	-	-	-	-	-
Fuel System (2AR-FE)	-	-	-	-	-
Fuel System (2GR-FE)	-	-	-	-	-
Emission Control System	-	-	-	-	-

(2AR-FE)					
Emission Control System (2GR-FE)	-	-	-	-	-
Intake System (2AR-FE)	-	-	-	-	-
Intake System (2GR-FE)	-	-	-	-	-
Cooling Fan System (2AR-FE)	-	-	-	-	-
Cooling Fan System (2GR-FE)	-	-	-	-	-
Starting System (2AR-FE)	-	-	-	-	-
Starting System (2GR-FE)	-	-	-	-	-
Cruise Control System	o	-	-	o	o
Automatic Transaxle System (U660E)	o	o	-	o	o
Automatic Transaxle System (U760E)	o	o	-	o	o
Tire Pressure Warning System	o	-	o	o	o
Vehicle Stability Control System	o	-	o	o	o
Power Steering System (for 2AR-FE without Wireless Door Lock)	o	-	-	o	-
Power Steering System (for 2AR-FE with Wireless Door Lock)	o	-	-	o	-

Power Steering System (for 2GR-FE)	o	-	-	o	-
Steering Lock System	o	-	-	o	-
Audio and Visual System (for Radio Receiver Type)	-	-	-	-	-
Audio and Visual System (for Radio and Display Type with intuitive Parking Assist System)	o	-	-	o	-
Audio and Visual System (for Radio and Display Type without intuitive Parking Assist System)	o	-	-	o	-
Navigation System (for Radio and Display Type)	o	-	-	o	-
Navigation System (for Navigation Receiver Type)	o	-	-	o	-
Intuitive Parking Assist System	o	-	-	o	o
Parking Assist Monitor System	o	-	-	o	-
Rear View Monitor System	-	-	-	-	-
Blind Spot Monitor System	o	-	o	o	-
Garage Door Opener System	-	-	-	-	-

Safety Connect System	o	-	-	o	-
Charging System (2AR-FE)	-	-	-	-	-
Charging System (2GR-FE)	-	-	-	-	-
LIN Communication System	o	-	-	o	-
CAN Communication System	o	-	-	-	-
Power Door Lock Control System	-	-	-	o	o
Wireless Door Lock Control System (w/ Smart Key System)	o	-	-	o	o
Wireless Door Lock Control System (w/o Smart Key System)	o	-	-	o	o
Key Reminder Warning System	-	-	-	o	-
Smart Key System (for Entry Function)	o	-	-	o	o
Smart Key System (for Start Function)	o	-	-	o	o
Engine Immobiliser System (w/ Smart Key System)	o	-	-	o	o
Engine Immobiliser System (w/o Smart Key System)	o	-	-	o	o

Theft Deterrent System	-	-	-	o	o
Remote Engine Starter System	o	-	-	o	-
Lighting System (INT)	-	-	-	o	o
Meter / Gauge System	o	-	-	o	o
Clock System	-	-	-	-	-
Airbag System (for Separate Type Yaw Rate Sensor)	o	o	-	o	-
Airbag System (for Built-in Type Yaw Rate Sensor)	o	o	-	o	-
Occupant Classification System	o	-	-	o	-
Front Power Seat Control System	-	-	-	-	-
Seat Heater System	-	-	-	-	-
Seat Belt Warning System	-	-	-	o	o
Air Conditioning System (for Automatic Air Conditioning System)	o	-	-	o	o
Air Conditioning System (for Manual Air Conditioning System)	o	-	-	o	o
Power Window Control System	o	-	-	o	o
Window Defogger System	-	-	-	-	o

Sliding Roof System	o	-	-	o	o
Power Mirror Control System	-	-	-	-	o
Wiper and Washer System	-	-	-	-	-
Lighting System (EXT)	o	-	-	o	o
Automatic Headlight Beam Level Control System	o	-	-	o	o
Manual Headlight Beam Level Control System	-	-	-	-	-
Horn System	-	-	-	-	-

- In the DTC check, it is very important to determine whether the problem indicated by the DTC either: 1) still occurs, or 2) occurred in the past but has returned to normal. In addition, the DTC should be compared to the problem symptom to see if they are related. For this reason, DTCs should be checked before and after confirmation of symptoms (i.e., whether or not problem symptoms exist) to determine current system conditions, as shown in the flowchart below.
- Never skip the DTC check. Failing to check for DTCs, depending on the case, may result in unnecessary troubleshooting for systems operating normally or lead to repairs not related to the problem. Follow the procedure listed in the flowchart in the correct order.
- The following flowchart shows how to proceed with troubleshooting using the DTC check. Directions from the flowchart will indicate how to proceed either to DTC troubleshooting or to the troubleshooting of each problem symptom.

a. **DTC CHECK**

   NEXT: Go to next step

b. **MAKE A NOTE OF DTC DISPLAYED AND THEN CLEAR DTCs**

   NEXT: Go to next step

c. **SYMPTOM CONFIRMATION**

   Result

Result	Proceed to
No symptoms	A

exist	
Symptoms exist	B

B --> GO TO STEP e

A: Go to next step

d. **SIMULATION TEST USING SYMPTOM SIMULATION METHODS**

NEXT: Go to next step

e. **DTC CHECK**

Result

Result	Proceed to
DTC is not output	A
DTC is output	B

B --> TROUBLESHOOT FOR PROBLEM INDICATED BY DTC

A: Go to next step

f. **SYMPTOM CONFIRMATION**

Result

Result	Proceed to
Symptoms exist	A
No symptoms exist	B

If a DTC was displayed in the initial DTC check, the problem may have occurred in a wire harness or connector in that circuit in the past. Check the wire harness and connectors.

B --> END

A --> TROUBLESHOOT FOR EACH PROBLEM SYMPTOM

If problem symptoms are present, but no DTCs were stored again after they were cleared, then the problem causing the symptom may be occurring for something that does not store DTCs (the DTC that was displayed in the initial DTC check may have been from a past problem or a secondary problem).

4. **SYMPTOM SIMULATION**

HINT:

The most difficult case in troubleshooting is when no problem symptoms occur. In such a case, a thorough problem analysis must be carried out. A simulation of the same or similar conditions and environment in which the problem occurred in the customer's vehicle should be carried out. No matter how much skill or experience a technician has, troubleshooting without confirming the problem symptoms will lead to important repairs being overlooked and mistakes or delays.

For example

With a problem that only occurs when the engine is cold or as a result of vibration caused by the road during driving, the problem can never be determined if the symptoms are being checked on a stationary vehicle or a vehicle with a warmed-up engine. Vibration, heat or water penetration (moisture) is difficult to reproduce. The following symptom simulation tests are effective substitutes for the conditions and can be applied to a stationary vehicle. Important points in the symptom simulation test:

In the symptom simulation test, the problem symptoms as well as the problem area or parts must be confirmed. First, narrow down the possible problem circuits according to the symptoms. Then, connect the tester and carry out the symptom simulation test, judging whether the circuit being tested is defective or normal. Also, confirm the problem symptoms at the same time. Refer to Problem Symptoms Table for each system to narrow down the possible causes.

To reproduce DTCs, it is necessary to satisfy the respective DTC detection conditions.

a. VIBRATION METHOD: When a malfunction seems to occur as a result of vibration.

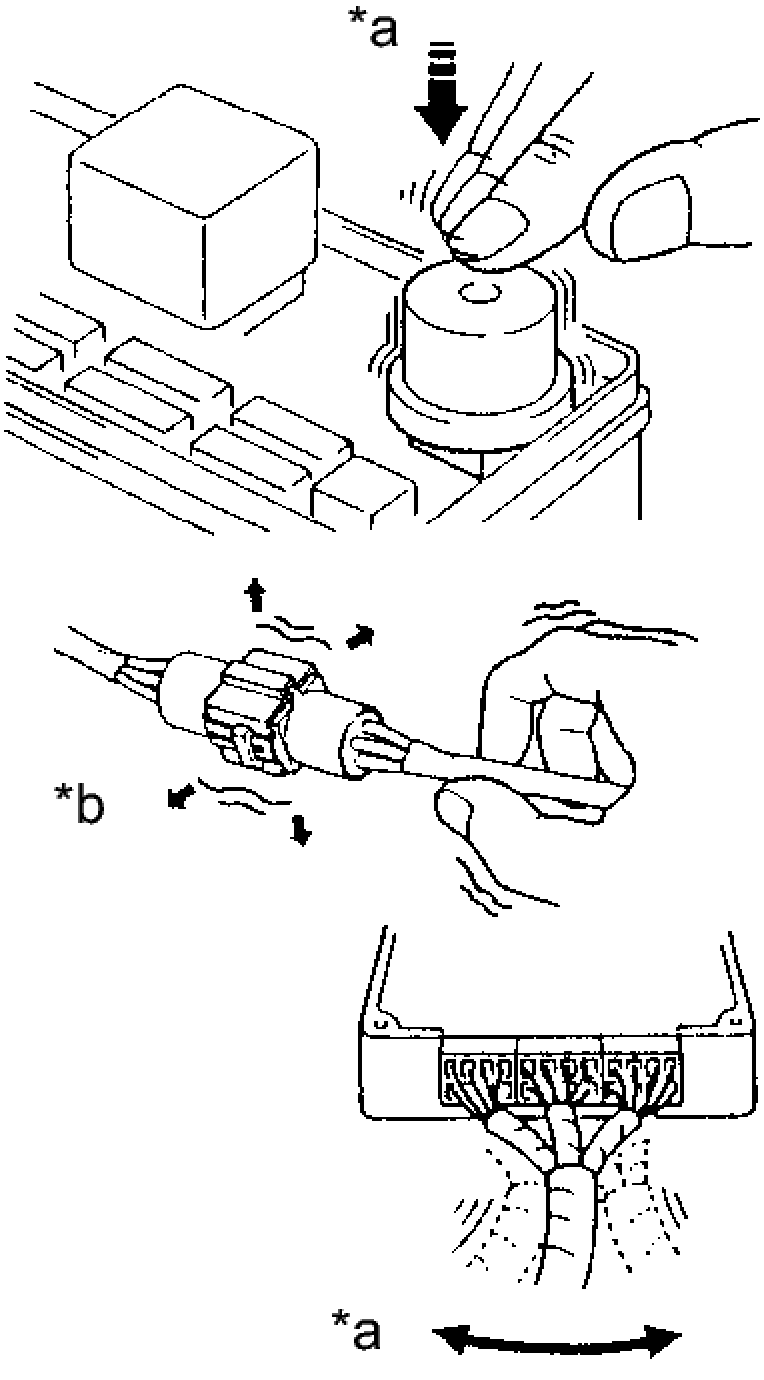

Fig. 39: Identifying Vibration Method
Courtesy of TOYOTA MOTOR SALES, U.S.A., INC.

TEXT IN ILLUSTRATION

*a	Vibrate

	Slightly
*b	Shake Slightly

1. PARTS OR SENSORS

   Apply slight vibration with a finger to the part or sensor suspected to be the cause of the problem, and check whether the malfunction occurs.

   NOTE: **Applying strong vibration to relays may open the relays.**

2. CONNECTORS

   Slightly shake the connector vertically and horizontally.

3. WIRE HARNESS

   Slightly shake the wire harness vertically and horizontally.

   HINT:

   The connector joint and fulcrum of the vibration are the major areas that should be checked thoroughly.

b. HEAT METHOD: When a malfunction seems to occur when the area in question is heated.

   1. Heat the component that is the possible cause of the malfunction with a hair dryer or similar device. Check if the malfunction occurs.

      NOTE:

      - **Do not heat components to more than 60°C (140°F). Exceeding this temperature may damage the components.**
      - **Do not apply heat directly to parts in an ECU.**

c. WATER SPRINKLING METHOD: When a malfunction seems to occur on a rainy day or in high-humidity.

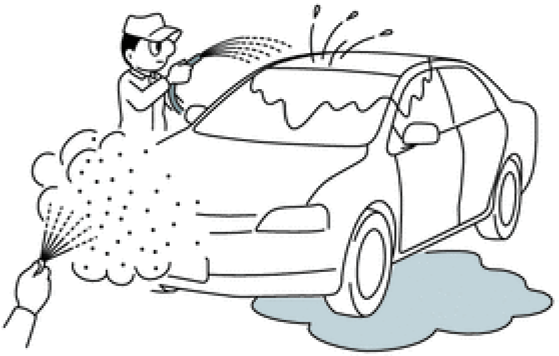

Fig. 40: Identifying Water Sprinkling Method
Courtesy of TOYOTA MOTOR SALES, U.S.A., INC.

1. Sprinkle water onto the vehicle and check if the malfunction occurs.

NOTE:

- **Never sprinkle water directly into the engine compartment. Indirectly change the temperature and humidity by spraying water onto the front of the radiator.**
- **Never apply water directly onto the electronic components.**

HINT:

If the vehicle has or had a water leak problem, the leak may have damaged the ECU or connections. Look for evidence of corrosion or short circuits. Proceed with caution during water tests.

d. HIGH ELECTRICAL LOAD METHOD: When a malfunction seems to occur when the electrical load is high.

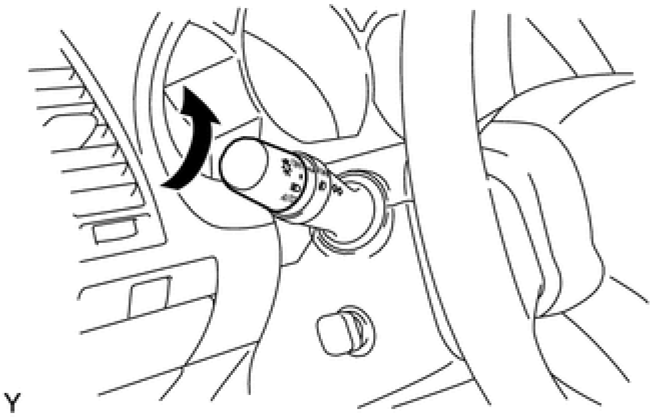

Fig. 41: Turning On Heater Blower, Headlight, Rear Window Defogger And All Other Electrical Loads
Courtesy of TOYOTA MOTOR SALES, U.S.A., INC.

1. Turn on the heater blower, headlights, rear window defogger and all other electrical loads. Check if the malfunction recurs.

5. **DIAGNOSTIC TROUBLE CODE CHART**

Look for output Diagnostic Trouble Codes (DTCs) (from the DTC checks) in the appropriate article's Diagnostic Trouble Code chart. Use the chart to determine the trouble area and the proper inspection procedure. A description of each of the chart's columns is shown in the table below.

Item	Description
DTC No.	Indicates the diagnostic trouble code.
Detection Item	Indicates the system or details of the problem.
Trouble Area	Indicates the suspected areas of the problem.
See	Indicates the article where the inspection procedure for each circuit is to be found, or gives instruction for checking and repairs.

6. **PROBLEM SYMPTOMS TABLE**

When no DTC is output but the problem still occurs, use the Problem Symptoms Table. The suspected areas (circuits or parts) for each problem symptom are shown in the table. The suspected areas are listed in order of probability. A description of each of the table columns is shown in the following table.

HINT:

In some cases, the problem is not detected by the diagnostic system even though a problem symptom occurs. It is possible that the problem occurs outside the detection range of the diagnostic system, or that the problem occurs in a completely different system.

Item	Description
Symptom	-
Suspected Area	Indicates the circuit or part which needs to be checked.
See	Indicates the article where the inspection procedure is located.

7. **INSPECTION**

A description of the main points for inspection of suspected areas is shown in the following table.

Item	Description
Description	The major role and operation of the circuit or system and its component parts are explained.
DTC No., DTC Detection Condition and Trouble Area	Indicates the diagnostic trouble codes, DTC detection conditions and suspected areas for a problem.
	This is a wiring diagram for

Wiring Diagram	the circuit or system. This diagram can be used together with the Electrical Wiring Diagram to thoroughly understand the circuit. Wire colors are indicated by alphabetical codes. B = Black, L = Blue, R = Red, BR = Brown, LG = Light Green, V = Violet, G = Green, O = Orange, W = White, GR = Gray, P = Pink, Y = Yellow, SB = Sky Blue The first letter indicates the basic wire color and the second letter indicates the color of the stripe.
Inspection Procedure	This shows the procedure not only to determine whether the circuit is normal or abnormal, but also to determine

	whether the problem is located in the sensors, actuators, wire harness or ECU.
Illustration of the ECU connector during the check	The illustration shows whether the connector being checked is connected or disconnected. The connections for an electrical tester are indicated by (+) or (-) after the terminal name. For inspections between a connector and body ground, information about the ground is not shown in the illustration.

TERMS

ABBREVIATIONS USED IN THIS SERVICE INFORMATION

ABBREVIATIONS USED IN THIS SERVICE INFORMATION

Abbreviation	Meaning
ABS	Anti-Lock Brake System
A/C	Air Conditioner

AC	Alternating Current
ACC	Accessory
ACIS	Acoustic Control Induction System
ACM	Active Control Engine Mount
ACSD	Automatic Cold Start Device
ACT	Actuator
A.D.D	Automatic Disconnecting Differential
ADM	P.T. Astra Daihatsu Motor
A/F	Air-Fuel Ratio
AFS	Adaptive Front-Lighting System
AHC	Active Height Control Suspension
AID	Air Injection Control Driver
ALR	Automatic Locking Retractor
ALT	Alternator
AMP	Amplifier
ANT	Antenna
ASG	Automated Sequential Gearbox
ASL	Automatic Sound Levelizer
ASSB	Assembly Services Sdn. Bhd.
A/T, ATM	Automatic Transmission (Transaxle)
A-TRAC, A-TRC	Active Traction Control
ATDC	After Top Dead Center
ATF	Automatic Transmission Fluid
AUTO	Automatic
AUX	Auxiliary
AVG	Average
AVS	Adaptive Variable Suspension
AWD	All Wheel Drive
B+, +B	Battery Voltage
BA	Brake Assist
BACS	Boost Altitude Compensation System
BATT	Battery
BDC	Bottom Dead Center
B/L	Bi-Level
B/S	Bore-Stroke Ratio
BTDC	Before Top Dead Center
BVSV	Bimetallic Vacuum Switching Valve
Calif.	California
CAN	Controller Area Network
CB	Circuit Breaker
CCM	Carbon Ceramic Material

	Catalytic Converter for Oxidation
CCV	Canister Closed Valve
CD	Compact Disc
CF	Cornering Force
CG	Center of Gravity
CH	Channel
CKD	Complete Knock Down
COMB.	Combination
CPS	Combustion Pressure Sensor
CPU	Central Processing Unit
CRAWL	Crawl Control
CRS	Child Restraint System
CTR	Center
C/V	Check Valve
CV	Control Valve
CVT	Continuously Variable Transmission (Transaxle)
CW	Curb Weight
DC	Direct Current
DEF	Defogger
DFL	Deflector
DIFF.	Differential
DIFF. LOCK	Differential Lock
D/INJ	Direct Injection
DLC	Data Link Connector
DLI	Distributorless Ignition
DOHC	Double Overhead Camshaft
DP	Dash Pot
DS	Dead Soak
DSP	Digital Signal Processor
DTC	Diagnostic Trouble Code
DVD	Digital Versatile Disc
EBD	Electric Brake Force Distribution
EC	Electrochromic
ECAM	Engine Control And Measurement System
ECD	Electronically Controlled Diesel
ECDY	Eddy Current Dynamometer
ECT	Electronic Controlled Automatic Transmission
ECU	Electronic Control Unit
ED	Electro-Deposited
EDU	Electronic Driving Unit
EDIC	Electric Diesel Injection Control

	Electronic Fuel Injection
E/G	Engine
EGR	Exhaust Gas Recirculation
ELR	Emergency Locking Retractor
EMPS	Electric Motor Power Steering
EPS	Electric Power Steering
ENG	Engine
ES	Easy & Smooth
ESA	Electronic Spark Advance
EVAP	Evaporative Emission Control
E-VRV	Electric Vacuum Regulating Valve
EX	Exhaust
FE	Fuel Economy
FF	Front-Engine-Front-Wheel-Drive
F/G	Fuel Gauge
FIPG	Formed In Place Gasket
FL	Fusible Link
	Front Left
F/P	Fuel Pump
FR	Front
	Front Right
F/W	Flywheel
FW/D	Flywheel Damper
FWD	Front Wheel Drive
GAS	Gasoline
GND	Ground
GPS	Global Positioning System
GSA	Gear Shift Actuator
GTMC	Gac Toyota Motor Co., Ltd.
H/B	Hatchback
H-FUSE	High Current Fuse
HID	High Intensity Discharge (Headlight)
HPU	Hydraulic Power Unit
HSG	Housing
HT	Hard Top
HV	Hybrid Vehicle
HWS	Heated Windshield System
IC	Integrated Circuit
IDI	Indirect Diesel Injection
IFS	Independent Front Suspension
IG	Ignition

IIA	Integrated Ignition Assembly
IMC	INDUS Motor Company Ltd.
IN	Intake (Manifold, Valve)
INT	Intermittent
I/P	Instrument Panel
IRS	Independent Rear Suspension
ISC	Idle Speed Control
ISCV	Idle Speed Control Valve
KD	Kick-Down
KDSS	Kinetic Dynamic Suspension System
LAN	Local Area Network
LCD	Liquid Crystal Display
LED	Light Emitting Diode
LEV	Low Emission Vehicle
LH	Left-Hand
LHD	Left-Hand Drive
LIN	Local Interconnect Network
L/H/W	Length, Height, Width
LLC	Long-Life Coolant
LNG	Liquefied Natural Gas
LPG	Liquefied Petroleum Gas
LSD	Limited Slip Differential
LSP & BV	Load Sensing Proportioning and Bypass Valve
LSPV	Load Sensing Proportioning Valve
MAP	Manifold Absolute Pressure
MAX.	Maximum
MIC	Microphone
MIL	Malfunction Indicator Lamp
MIN.	Minimum
MG1	Motor Generator No. 1
MG2	Motor Generator No. 2
MMT	Multi-mode Manual Transmission
MP	Multipurpose
MPI	Multipoint Electronic Injection
MPX	Multiplex Communication System
M/T	Manual Transmission (Transaxle)
MT	Mount
MTG	Mounting
N	Neutral
NA	Natural Aspiration
NO.	Number

	Oxygen Sensor
OC	Oxidation Catalyst
OCV	Oil Control Valve
O/D	Overdrive
OEM	Original Equipment Manufacturing
OPT	Option
ORVR	On-board Refilling Vapor Recovery
O/S	Oversize
P & BV	Proportioning and Bypass Valve
PBD	Power Back Door
PCS	Power Control System
	Pre-crash Safety System/Pre-collision System
PCV	Positive Crankcase Ventilation
PKB	Parking Brake
PPS	Progressive Power Steering
PROM	Programmable Read Only Memory
PS	Power Steering
PSD	Power Slide Door
PTC	Positive Temperature Coefficient
PTO	Power Take-Off
PZEV	Partial Zero Emission Vehicle
P/W	Power Window
R & P	Rack and Pinion
RAM	Random Access Memory
RBS	Recirculating Ball Type Steering
REAS	Relative Absorber System
R/F	Reinforcement
RFS	Rigid Front Suspension
RH	Right-Hand
RHD	Right-Hand Drive
RL	Rear Left
ROM	Read Only Memory
RR	Rear
	Rear Right
RRS	Rigid Rear Suspension
RSE	Rear Seat Entertainment
RWD	Rear Wheel Drive
SC	Supercharger
SCV	Swirl Control Valve (for gasoline engine)
	Suction Control Valve (for diesel engine)
SFTM	Sichuan Faw Toyota Motor Co., Ltd.

SIA	Subaru of Indiana Automotive, Inc.
SICS	Starting Injection Control System
SLLC	Super Long Life Coolant
SOC	State Of Charge
SOHC	Single Overhead Camshaft
SPEC	Specification
SPI	Single Point Injection
SPV	Spill Control Valve
SRS	Supplemental Restraint System
SSM	Special Service Materials
SST	Special Service Tools
STD	Standard
STJ	Cold-Start Fuel Injection
SULEV	Super Ultra Low Emission Vehicle
T/A	Transaxle
TACH	Tachometer
TASA	Toyota Argentina S.A.
TCAP	Toyota Caetano Portugal, S.A.
TCM	Transmission Control Module
TCV	Timing Control Valve (for diesel engine)
	Tumble Control Valve (for gasoline engine)
TDB	Toyota do Brasil Ltda.
TDC	Top Dead Center
TDV	Toyota de Venezuela, C.A.
TEMP.	Temperature
TFT	TOYOTA Free-Tronic
TFTM	Tianjin Faw Toyota Motor Co., Ltd.
THS ll	TOYOTA Hybrid System ll
TIS	Total Information System for Vehicle Development
T/M	Transmission
TMC	Toyota Motor Corporation
TMCA	Toyota Motor Corporation Australia Ltd.
TMMBC	Toyota Motor Manufacturing de Baja California, S. de R.L. de C.V.
TMMC	Toyota Motor Manufacturing Canada Inc.
TMMF	Toyota Motor Manufacturing France S.A.S.
TMMI	Toyota Motor Manufacturing, Indiana, Inc.
TMMIN	P.T. Toyota Motor Manufacturing Indonesia
TMMK	TOYOTA Motor Manufacturing Kentucky, Inc.
TMMR	Toyota Motor Manufacturing Russia
TMMT	Toyota Motor Manufacturing Turkey Inc.

TMMTX	Toyota Motor Manufacturing, Texas, Inc.
TMUK	Toyota Motor Manufacturing (UK) Ltd.
TMP	Toyota Motor Philippines Corp.
TMT	Toyota Motor Thailand Co. Ltd.
TMV	Toyota Motor Vietnam Co., Ltd.
TPCA	Toyota Peugeot Citroen Automobiles Czech, s.r.o.
TRAC/TRC	Traction Control System
TSAM	Toyota South Africa Motors (Pty) Ltd.
TVIP	TOYOTA Vehicle Intrusion Protection
TWC	Three-Way Catalyst
U/D	Underdrive
U/S	Undersize
VCV	Vacuum Control Valve
VDIM	Vehicle Dynamics Integrated Management
VENT	Ventilator
VGRS	Variable Gear Ratio Steering
VIM	Vehicle Interface Module
VIN	Vehicle Identification Number
VLC	Valve Lift Control
VPS	Variable Power Steering
VSC	Vehicle Stability Control
VSV	Vacuum Switching Valve
VTV	Vacuum Transmitting Valve
VVT-i	Variable Valve Timing-intelligent
W/, w/	With
WGN	Wagon
W/H	Wire Harness
W/O, w/o	Without
X-REAS	X-Relative Absorber System
1ST, 1st	First
2ND, 2nd	Second
2WD	Two Wheel Drive Vehicle (4 x 2)
3RD, 3rd	Third
4TH, 4th	Fourth
4WD	Four Wheel Drive Vehicle (4 x 4)
4WS	Four Wheel Steering System
5TH, 5th	Fifth
6TH, 6th	Sixth
7TH, 7th	Seventh
8TH, 8th	Eighth

GLOSSARY OF SAE AND TOYOTA TERMS

GLOSSARY OF SAE AND TOYOTA TERMS

This glossary lists all SAE-J1930 terms and abbreviations used in this service information in compliance with SAE recommendations, as well as their TOYOTA equivalents.

SAE Abbreviation	SAE Term	TOYOTA Term ()-Abbreviation
A/C	Air Conditioning	Air Conditioner
ACL	Air Cleaner	Air Cleaner, A/CL
AIR	Secondary Air Injection	Air Injection (AI)
AP	Accelerator Pedal	-
B+	Battery Positive Voltage	+B, Battery Voltage
BARO	Barometric Pressure	HAC
CAC	Charge Air Cooler	Intercooler
CARB	Carburetor	Carburetor
CFI	Continuous Fuel Injection	-
CKP	Crankshaft Position	Crank Angle
CL	Closed Loop	Closed Loop
CMP	Camshaft Position	Cam Angle
CPP	Clutch Pedal Position	-
CTOX	Continuous Trap Oxidizer	-
CTP	Closed Throttle Position	LL ON, Idle ON
DFI	Direct Fuel Injection	Direct Injection (DI./INJ)
DI	Distributor Ignition	-
DLC3	Data Link Connector 3	OBD II Diagnostic Connector
DTC	Diagnostic Trouble Code	Diagnostic Trouble Code
DTM	Diagnostic Test Mode	-
ECL	Engine Coolant Level	-
ECM	Engine Control Module	Engine Electronic Control Unit (ECU)
ECT	Engine Coolant Temperature	Coolant Temperature, Water Temperature (THW)
EEPROM	Electrically Erasable Programmable Read Only Memory	Electrically Erasable Programmable Read Only Memory (EEPROM)
EFE	Early Fuel Evaporation	Cold Mixture Heater (CMH), Heat Control Valve (HCV)
EGR	Exhaust Gas Recirculation	Exhaust Gas Recirculation (EGR)
EI	Electronic Ignition	Distributorless Ignition (DLI)
EM	Engine Modification	Engine Modification (EM)
	Erasable Programmable Read Only	Programmable Read Only Memory

EPROM	Memory	(PROM)
EVAP	Evaporative Emission	Evaporative Emission Control (EVAP)
FC	Fan Control	-
FEEPROM	Flash Electrically Erasable Programmable Read Only Memory	-
FEPROM	Flash Erasable Programmable Read Only Memory	-
FF	Flexible Fuel	-
FP	Fuel Pump	Fuel Pump
GEN	Generator	Alternator
GND	Ground	Ground (GND)
HO2S	Heated Oxygen Sensor	Heated Oxygen Sensor (HO_2 S)
IAC	Idle Air Control	Idle Speed Control (ISC)
IAT	Intake Air Temperature	Intake or Inlet Air Temperature
ICM	Ignition Control Module	-
IFI	Indirect Fuel Injection	Indirect Injection (IDL)
IFS	Inertia Fuel-Shutoff	-
ISC	Idle Speed Control	-
KS	Knock Sensor	Knock Sensor
MAF	Mass Airflow	Air Flow Meter
MAP	Manifold Absolute Pressure	Manifold Pressure Intake Vacuum
MC	Mixture Control	Electric Bleed Air Control Valve (EBCV) Mixture Control Valve (MCV) Electric Air Control Valve (EACV)
MDP	Manifold Differential Pressure	-
MFI	Multiport Fuel Injection	Electronic Fuel Injection (EFI)
MIL	Malfunction Indicator Lamp	Check Engine Light
MST	Manifold Surface Temperature	-
MVZ	Manifold Vacuum Zone	-
NVRAM	Non-Volatile Random Access Memory	-
O2S	Oxygen Sensor	Oxygen Sensor, O_2 Sensor (O_2 S)
OBD	On-Board Diagnostic	On-Board Diagnostic System (OBD)
OC	Oxidation Catalytic Converter	Oxidation Catalytic Convert (OC), CCo
OL	Open Loop	Open Loop
PAIR	Pulsed Secondary Air Injection	Air Suction (AS)
PCM	Powertrain Control Module	-

PNP	Park/Neutral Position	-
PROM	Programmable Read Only Memory	-
PSP	Power Steering Pressure	-
PTOX	Periodic Trap Oxidizer	Diesel Particulate Filter (DPF) Diesel Particulate Trap (DPT)
RAM	Random Access Memory	Random Access Memory (RAM)
RM	Relay Module	-
ROM	Read Only Memory	Read Only Memory (ROM)
RPM	Engine Speed	Engine Speed
SC	Supercharger	Supercharger
SCB	Supercharger Bypass	E-ABV
SFI	Sequential Multiport Fuel Injection	Electronic Fuel Injection (EFI), Sequential Injection
SPL	Smoke Puff Limiter	-
SRI	Service Reminder Indicator	-
SRT	System Readiness Test	-
ST	Scan Tool	-
TB	Throttle Body	Throttle Body
TBI	Throttle Body Fuel Injection	Single Point Injection Central Fuel Injection (Ci)
TC	Turbocharger	Turbocharger
TCC	Torque Converter Clutch	Torque Converter
TCM	Transmission Control Module	Transmission ECU, ECT ECU
TP	Throttle Position	Throttle Position
TR	Transmission Range	-
TVV	Thermal Vacuum Valve	Bimetallic Vacuum Switching Valve (BVSV) Thermostatic Vacuum Switching Valve (TVSV)
TWC	Three-Way Catalytic Converter	Three-Way Catalytic (TWC) Manifold Converter CC_{RO}
TWC+OC	Three-Way + Oxidation Catalytic Converter	CC_R + CCo
VAF	Volume Airflow	Air Flow Meter
VR	Voltage Regulator	Voltage Regulator
VSS	Vehicle Speed Sensor	Vehicle Speed Sensor
WOT	Wide Open Throttle	Full Throttle
WU-OC	Warm Up Oxidation Catalytic Converter	-
WU-TWC	Warm Up Three-Way Catalytic Converter	-

3GR	Third Gear	-
4GR	Fourth Gear	-

2012-2017 ACCESSORIES & EQUIPMENT

Lighting System (Exterior) (Service Information) (Except Hybrid) - Camry

HEADLIGHT ASSEMBLY

COMPONENTS

ILLUSTRATION

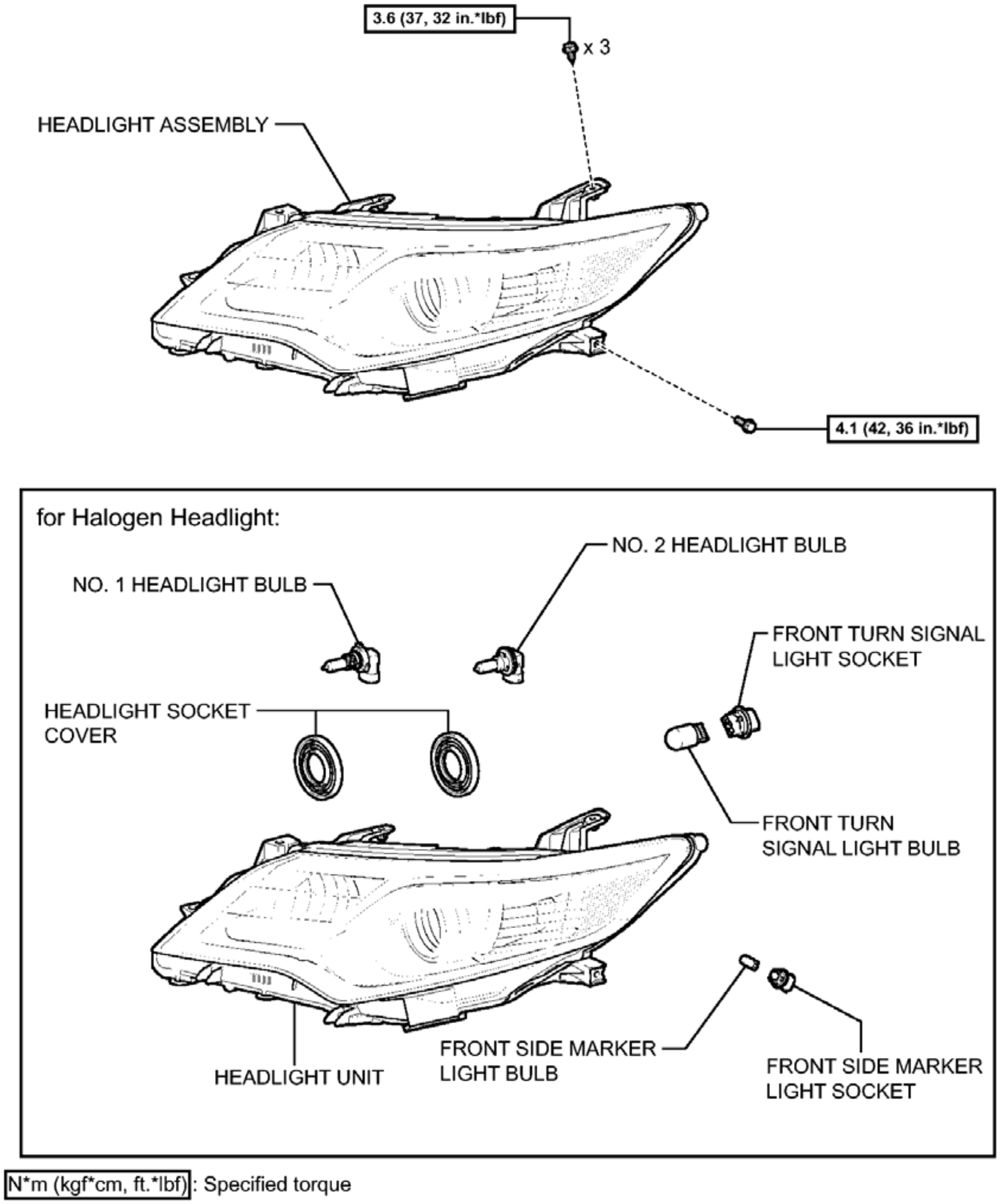
3.6 (37, 32 in.*lbf)
x 3
HEADLIGHT ASSEMBLY
4.1 (42, 36 in.*lbf)
for Halogen Headlight:
NO. 2 HEADLIGHT BULB
NO. 1 HEADLIGHT BULB
FRONT TURN SIGNAL LIGHT SOCKET
HEADLIGHT SOCKET COVER
FRONT TURN SIGNAL LIGHT BULB
FRONT SIDE MARKER LIGHT BULB
FRONT SIDE MARKER LIGHT SOCKET
HEADLIGHT UNIT
N*m (kgf*cm, ft.*lbf): Specified torque

P

Fig. 1: Identifying Headlight Assembly Replacement Components With Torque Specifications (1 Of 2)
Courtesy of TOYOTA MOTOR SALES, U.S.A., INC.

ILLUSTRATION

for HID Headlight:

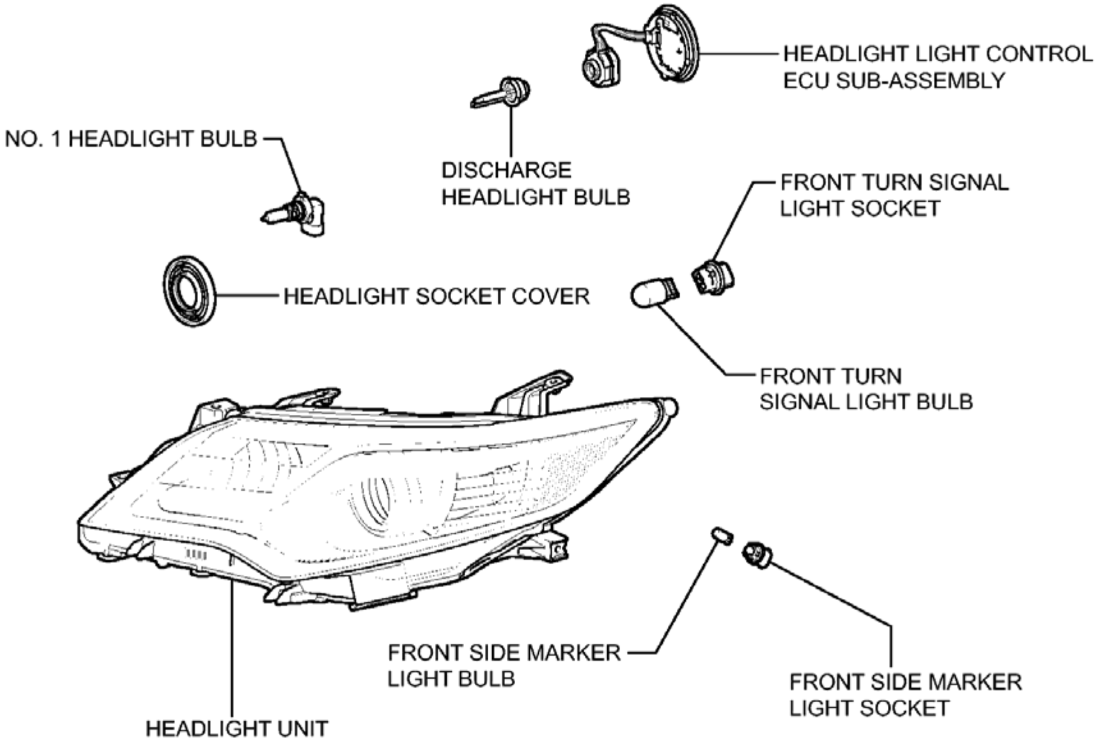
HEADLIGHT LIGHT CONTROL
ECU SUB-ASSEMBLY
NO. 1 HEADLIGHT BULB
DISCHARGE
HEADLIGHT BULB
FRONT TURN SIGNAL
LIGHT SOCKET
HEADLIGHT SOCKET COVER
FRONT TURN
SIGNAL LIGHT BULB
FRONT SIDE MARKER
LIGHT BULB
FRONT SIDE MARKER
LIGHT SOCKET
HEADLIGHT UNIT

P

Fig. 2: Identifying Headlight Assembly Replacement Components (2 Of 2)
Courtesy of TOYOTA MOTOR SALES, U.S.A., INC.

REMOVAL

REMOVAL

HINT:

- Use the same procedure for the RH and LH sides.
- The procedure described below is for the LH side.

1. **PRECAUTION (for HID Headlight)**

   Refer to **PRECAUTION** .

   NOTE: After turning the ignition switch off, waiting time may be required before

disconnecting the cable from the negative (-) battery terminal. Therefore, make sure to read the disconnecting the cable from the negative (-) battery terminal notices before proceeding with work. Refer to PRECAUTION .

2. **DISCONNECT CABLE FROM NEGATIVE BATTERY TERMINAL (for HID Headlight)**

NOTE: **When disconnecting the cable, some systems need to be initialized after the cable is reconnected. Refer to INITIALIZATION .**

3. **REMOVE FRONT BUMPER ASSEMBLY**

Refer to **REMOVAL** .

4. **REMOVE HEADLIGHT ASSEMBLY**
    a. Remove the 3 screws and bolt.

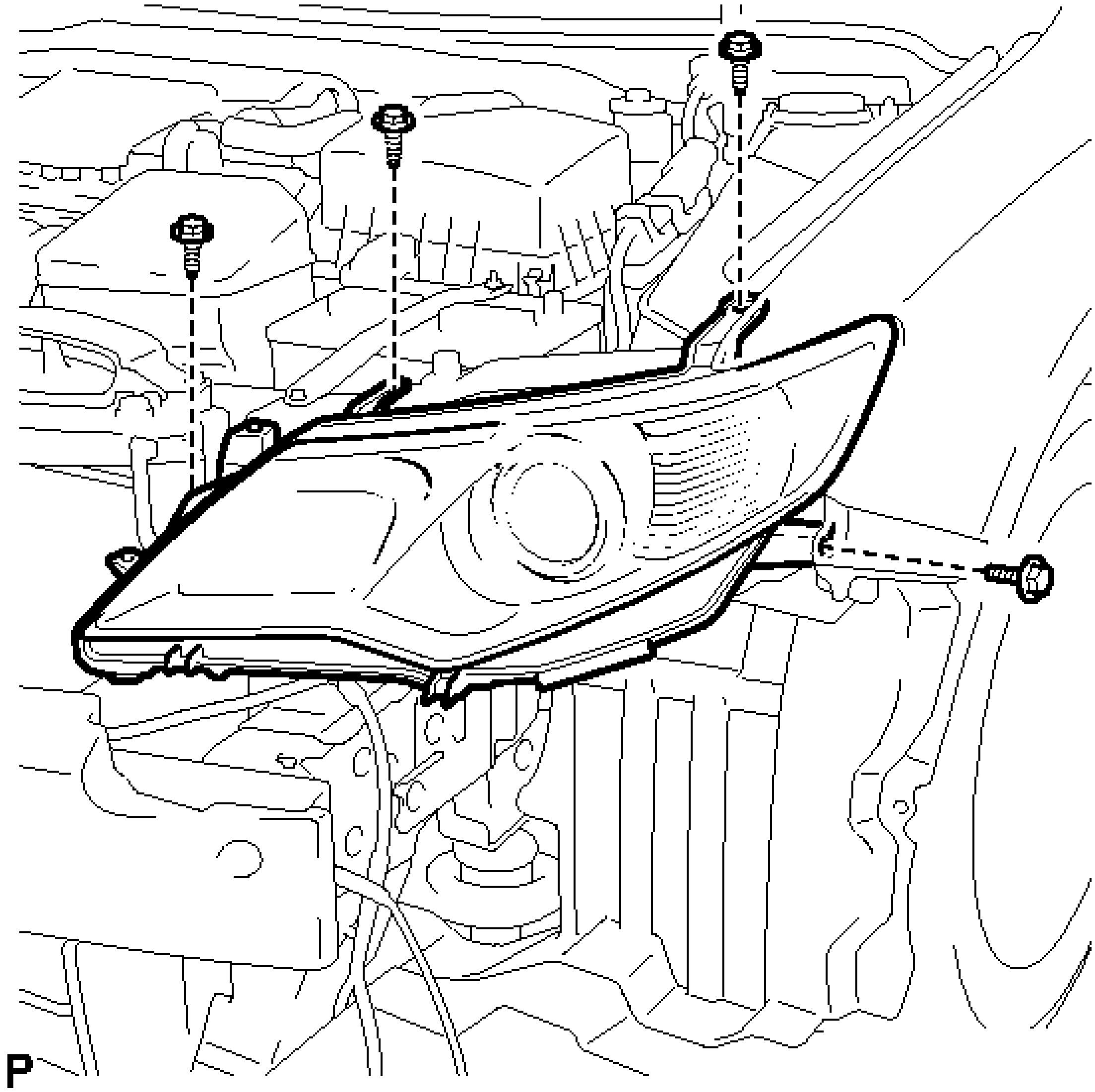

Fig. 3: Identifying Headlight Assembly Fasteners
Courtesy of TOYOTA MOTOR SALES, U.S.A., INC.

b. Disengage the clamp.

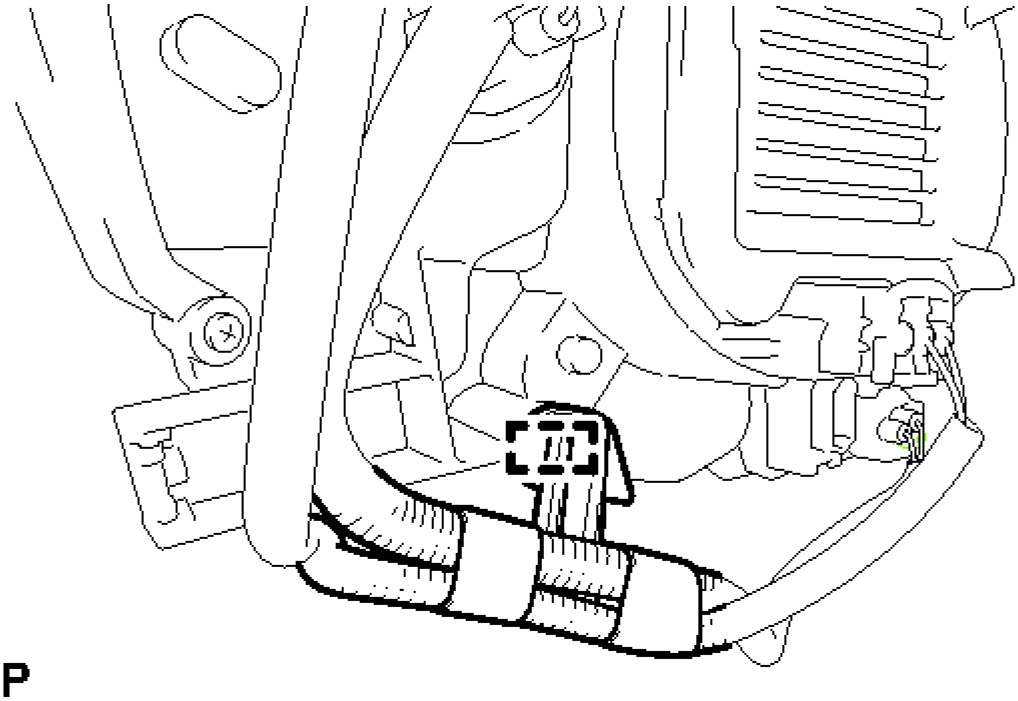

Fig. 4: Identifying Headlight Assembly Clamp
Courtesy of TOYOTA MOTOR SALES, U.S.A., INC.

c. Disconnect each connector and remove the headlight assembly.

DISASSEMBLY

DISASSEMBLY

1. **REMOVE NO. 1 HEADLIGHT BULB**
    a. Turn the No. 1 headlight bulb in the direction indicated by the arrow shown in the illustration, and remove it.

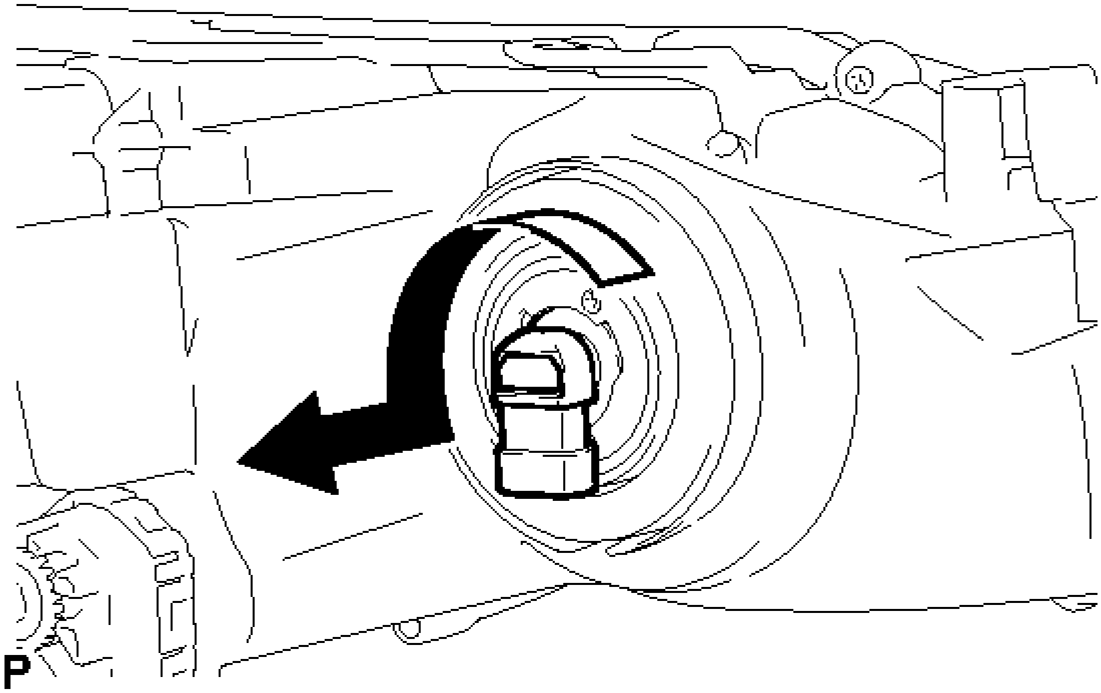

Fig. 5: Removing No. 1 Headlight Bulb
Courtesy of TOYOTA MOTOR SALES, U.S.A., INC.

NOTE: Do not touch the bulb glass.

2. **REMOVE NO. 2 HEADLIGHT BULB (for Halogen Headlight)**
   a. Turn the No. 2 headlight bulb in the direction indicated by the arrow shown in the illustration, and remove it.

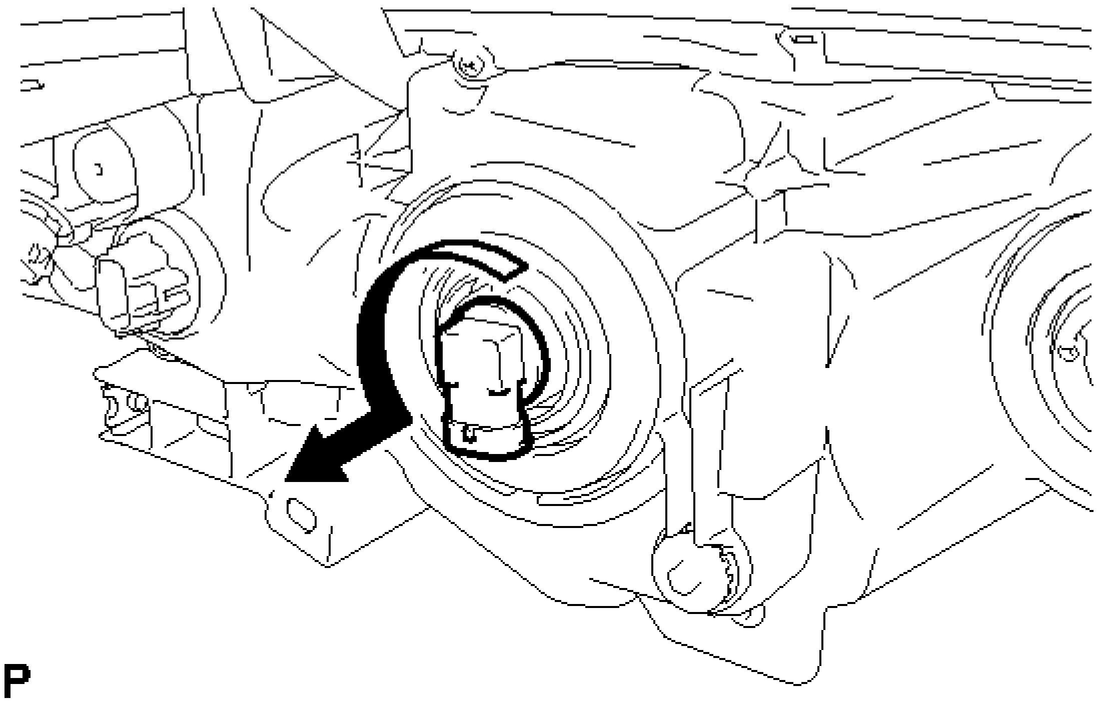

Fig. 6: Removing No. 2 Headlight Bulb (For Halogen Headlight)
Courtesy of TOYOTA MOTOR SALES, U.S.A., INC.

NOTE: **Do not touch the bulb glass.**

3. **REMOVE HEADLIGHT LIGHT CONTROL ECU SUB-ASSEMBLY (for HID Headlight)**
    a. for LH Side:
        1. Turn the headlight light control ECU sub-assembly in the direction indicated by the arrow shown in the illustration, and disconnect it.

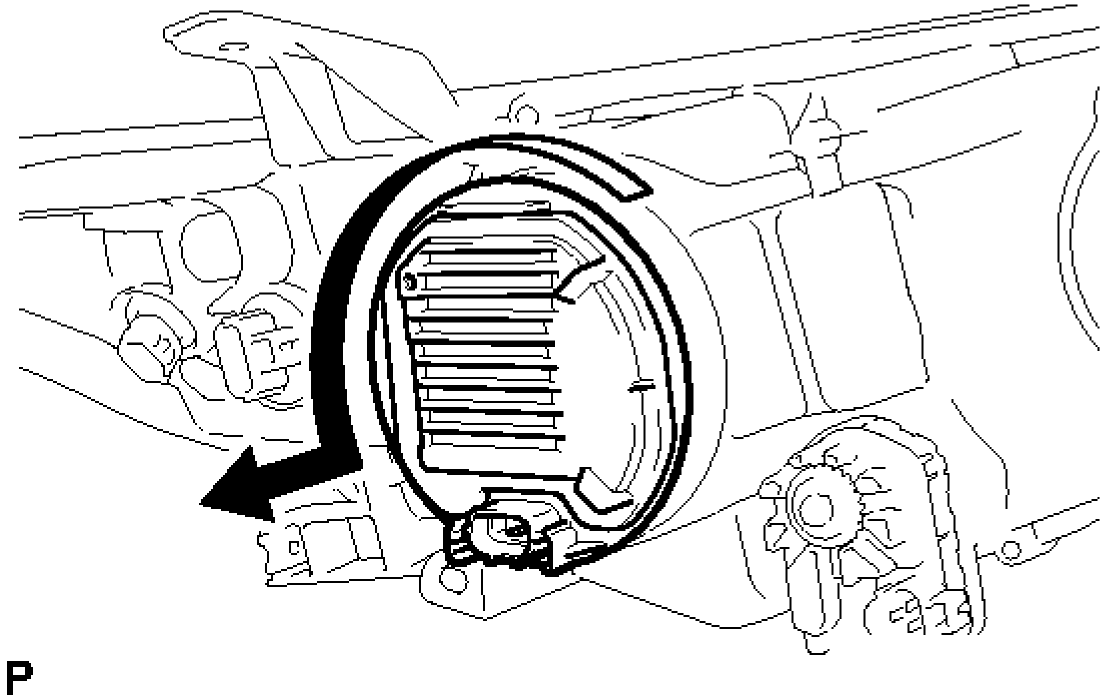

Fig. 7: Removing Headlight Light Control ECU Sub-Assembly (For HID Headlight) (For LH Side)
Courtesy of TOYOTA MOTOR SALES, U.S.A., INC.

NOTE:

- **Do not apply excessive force using a tool.**
- **Do not damage the O-ring or allow it to become contaminated with foreign matter. If the O-ring is damaged or contaminated, water may get into the headlight assembly, resulting in a malfunction of the headlight light control ECU sub-assembly.**

b. for RH Side:

1. Turn the headlight light control ECU sub-assembly in the direction indicated by the arrow shown in the illustration, and disconnect it.

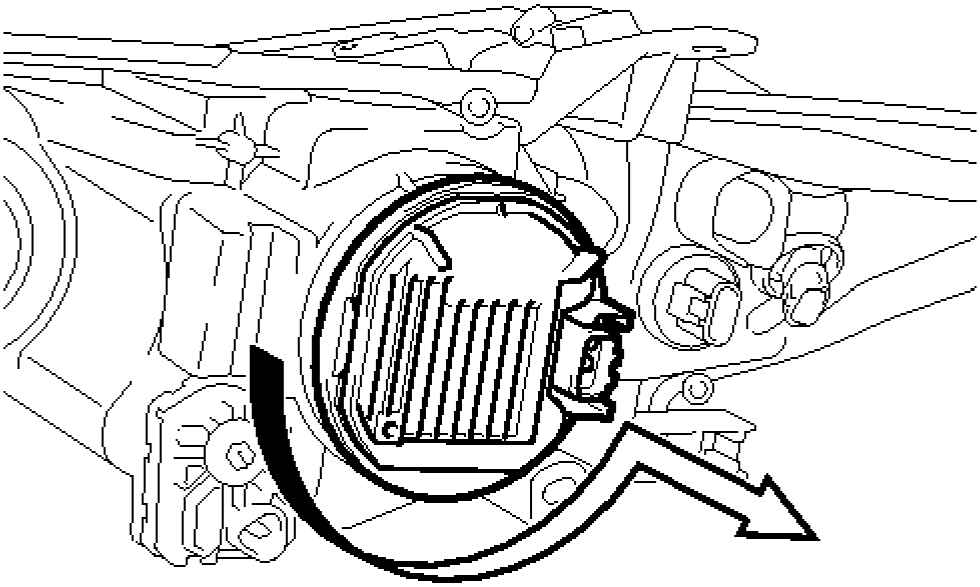

P

Fig. 8: Removing Headlight Light Control ECU Sub-Assembly (For HID Headlight) (For RH Side)
Courtesy of TOYOTA MOTOR SALES, U.S.A., INC.

NOTE:

- **Do not apply excessive force using a tool.**
- **Do not damage the O-ring or allow it to become contaminated with foreign matter. If the O-ring is damaged or contaminated, water may get into the headlight assembly, resulting in a malfunction of the headlight light control ECU sub-assembly.**

c. Disengage the clamp.

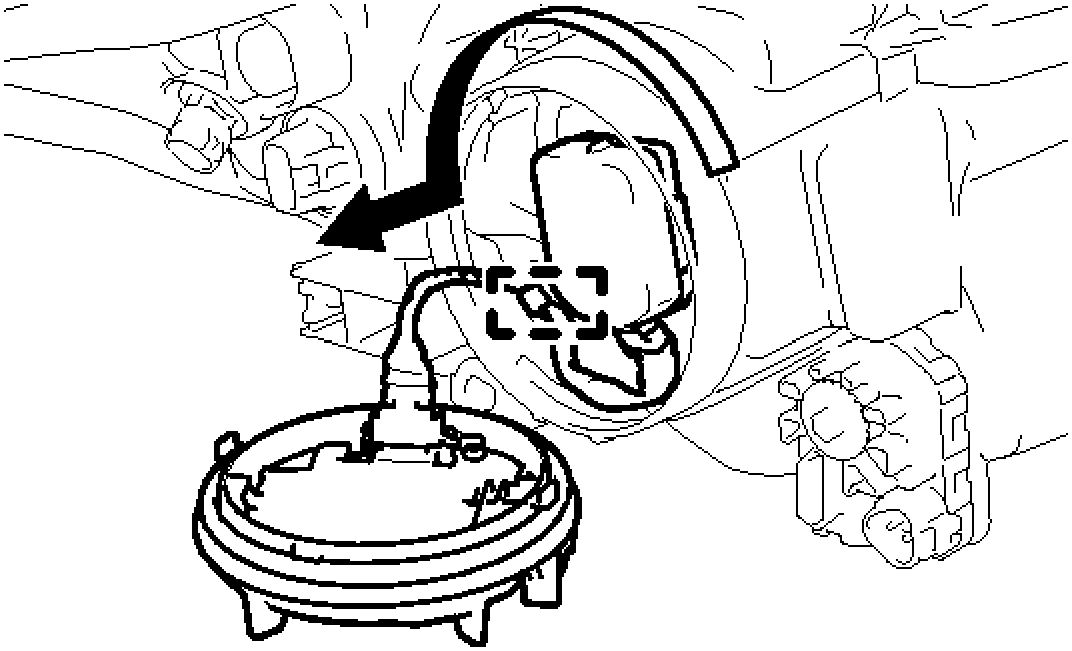

Fig. 9: Removing Headlight Light Control ECU Sub-Assembly Clamp (For HID Headlight)
Courtesy of TOYOTA MOTOR SALES, U.S.A., INC.

d. Turn the socket of the headlight light control ECU sub-assembly in the direction indicated by the arrow shown in the illustration, and remove it.

NOTE: Do not pull the headlight light control ECU sub-assembly with the socket connected.

4. **REMOVE DISCHARGE HEADLIGHT BULB (for HID Headlight)**
    a. Release the set spring as shown in the illustration and remove the discharge headlight bulb.

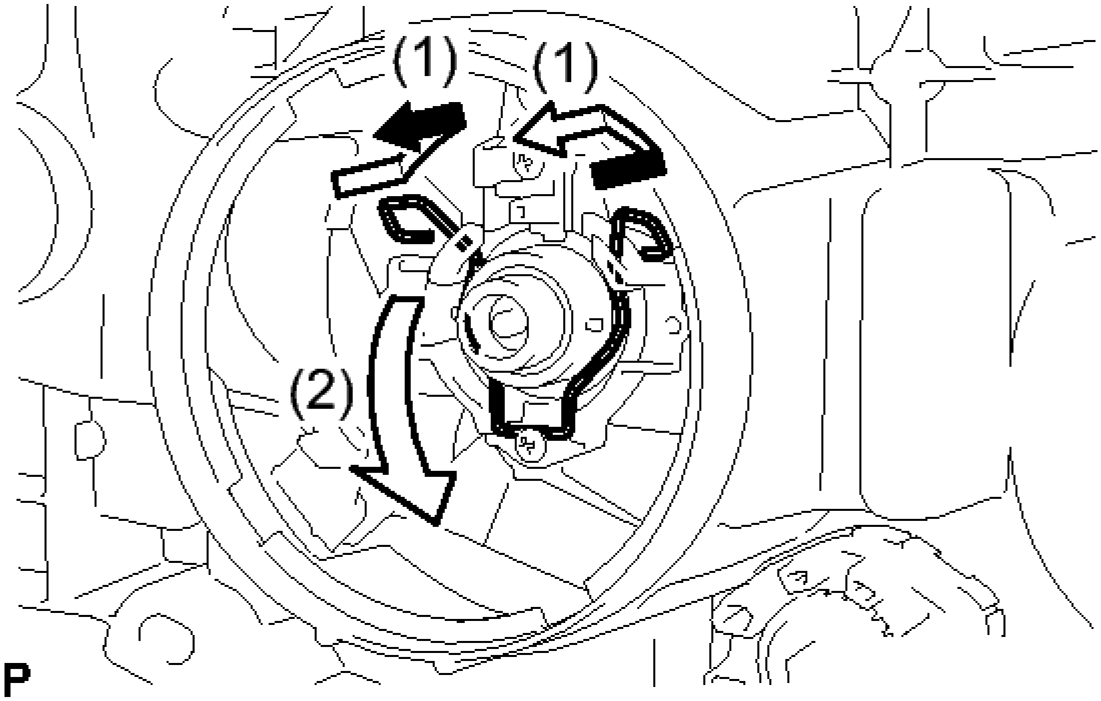

Fig. 10: Removing Discharge Headlight Bulb (For HID Headlight)
Courtesy of TOYOTA MOTOR SALES, U.S.A., INC.

NOTE: **Do not touch the bulb glass.**

5. **REMOVE HEADLIGHT SOCKET COVER**
    a. for Halogen Headlight:
        1. Remove the 2 headlight socket covers from the headlight unit.
    b. for HID Headlight:
        1. Remove the headlight socket cover from the headlight unit.
6. **REMOVE FRONT TURN SIGNAL LIGHT BULB**
    a. Turn the front turn signal light socket with the front turn signal light bulb in the direction indicated by the arrow shown in the illustration, and remove them as a unit.

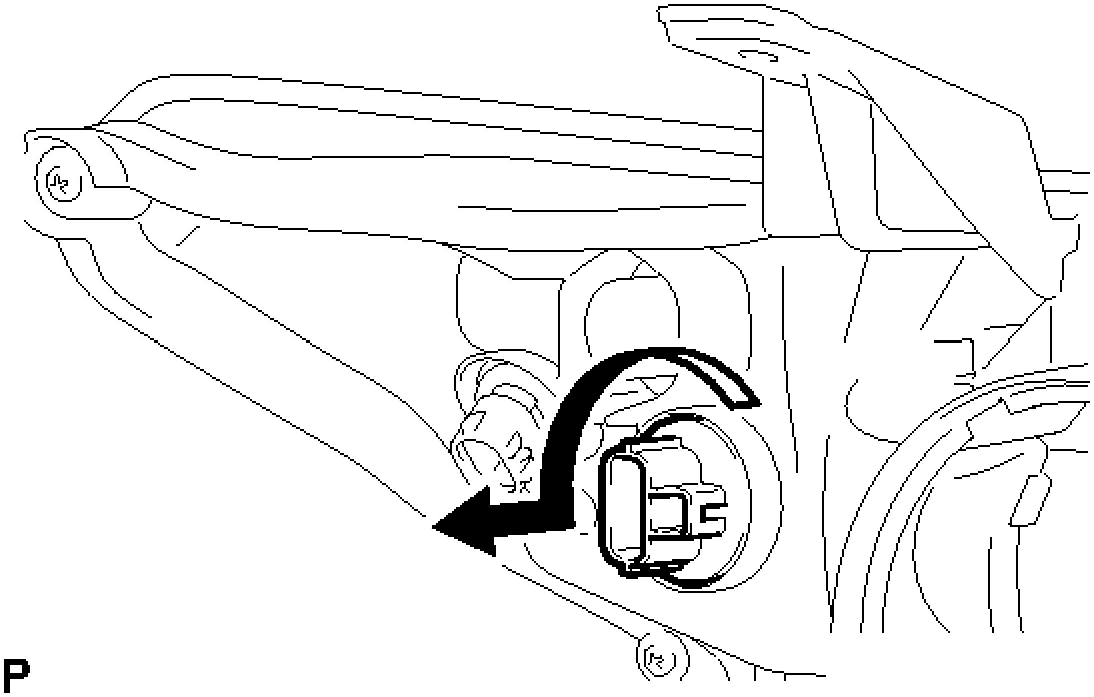

Fig. 11: Removing Front Turn Signal Light Bulb
Courtesy of TOYOTA MOTOR SALES, U.S.A., INC.

b. Remove the front turn signal light bulb from the front turn signal light socket.

7. **REMOVE FRONT SIDE MARKER LIGHT BULB**
   a. Turn the front side marker light socket with the front side marker light bulb in the direction indicated by the arrow shown in the illustration, and remove them as a unit.

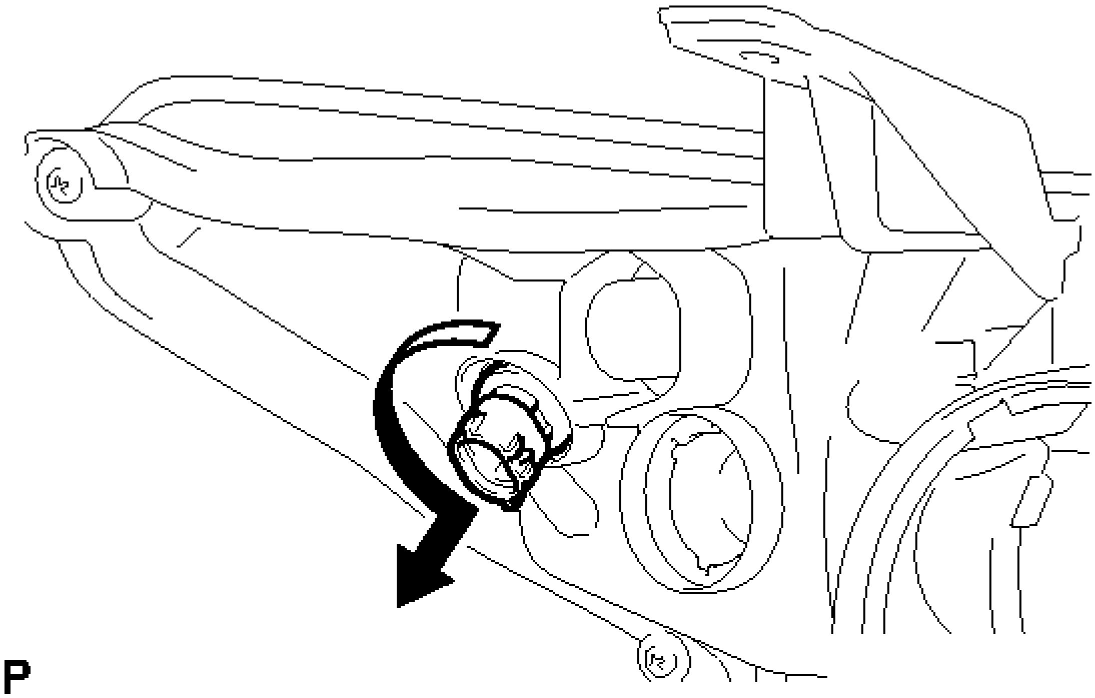

Fig. 12: Removing Front Side Marker Light Bulb
Courtesy of TOYOTA MOTOR SALES, U.S.A., INC.

b. Remove the front side marker light bulb from the front side marker light socket.

ADJUSTMENT

ADJUSTMENT

HINT:

It is possible that a bulb is incorrectly installed, affecting headlight aim. Bulb installation should be considered prior to performing the adjustment procedure.

1. **PREPARE VEHICLE FOR HEADLIGHT AIM ADJUSTMENT**
   a. Prepare the vehicle:
      - Ensure that there is no damage or deformation to the body around the headlights.
      - Fill the fuel tank.
      - Make sure that the oil is filled to the specified level.
      - Make sure that the engine coolant is filled to the specified level.
      - Inflate the tires to the appropriate pressure.
      - Unload the trunk and vehicle, ensuring that the spare tire, tools and jack are in their original positions.
      - Sit a person of average weight (68 kg, 150 lb) in the driver's seat.
      - Vehicles with manual headlight beam level control system should be adjusted to "0".

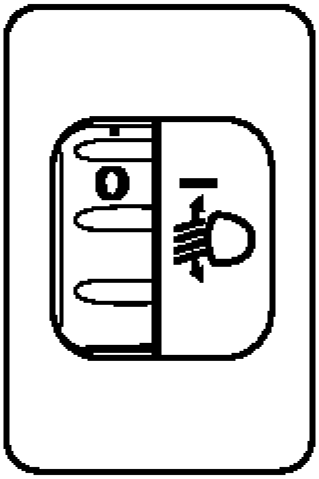

Fig. 13: Adjusting Halogen Headlight To "0" For Headlight Aim Adjustment
Courtesy of TOYOTA MOTOR SALES, U.S.A., INC.

2. **PREPARE FOR HEADLIGHT AIMING (Using a headlight aim test machine)**
    a. Adjust the headlight aim in accordance with the headlight aim test machine instructions.
3. **PREPARE FOR HEADLIGHT AIMING (Using a Screen)**
    a. Prepare the vehicle:

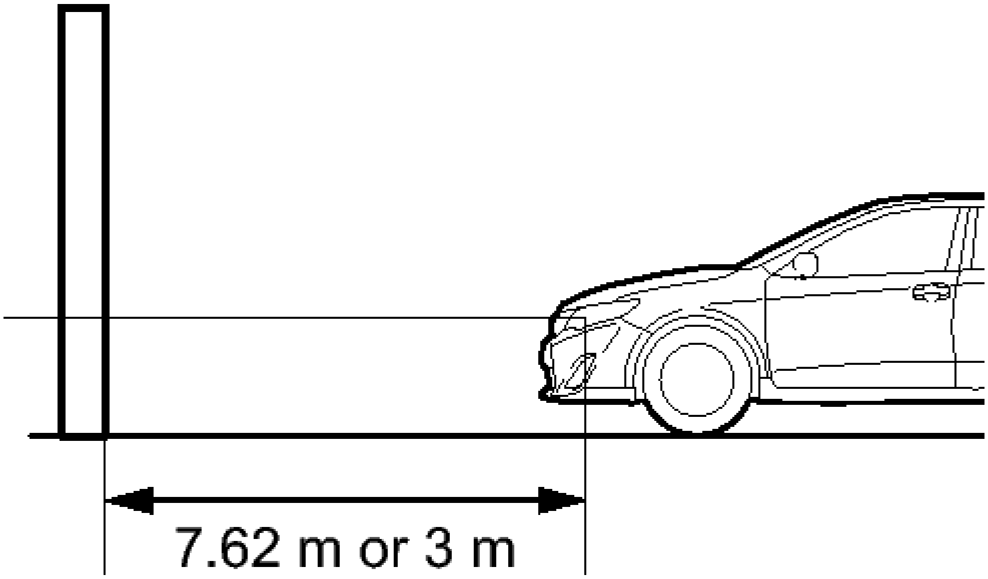

P

Fig. 14: Identifying Headlight Aiming Distance (Using A Screen)
Courtesy of TOYOTA MOTOR SALES, U.S.A., INC.

- Place the vehicle in a location that is dark enough to clearly observe the cutoff line. The cutoff line is a distinct line, below which light from the headlights can be observed and above which it cannot.
- Place the vehicle at a 90° angle to the wall.
- Create a 7.62 m (25 ft.) distance between the vehicle (headlight bulb center) and the wall.
- Make sure that the vehicle is on a level surface.
- Position the front wheels straight ahead.
- Bounce the vehicle up and down several times to settle the suspension.

NOTE: **A distance of 7.62 m (25 ft.) between the vehicle (headlight bulb center) and the wall is necessary for proper aim adjustment. If sufficient space is not available, secure a distance of exactly 3 m (9.84 ft.) to allow for checking and adjustment of headlight aim. (The size of the target zone will change with the distance, so follow the instructions in the illustration.)**

b. Prepare a piece of thick white paper (approximately 2 m (6.56 ft.) (height) x 4 m (13.1 ft.) (width)) to use as a screen.
c. Draw a vertical line down the center of the screen (V line).
d. Set the screen as shown in the illustration.

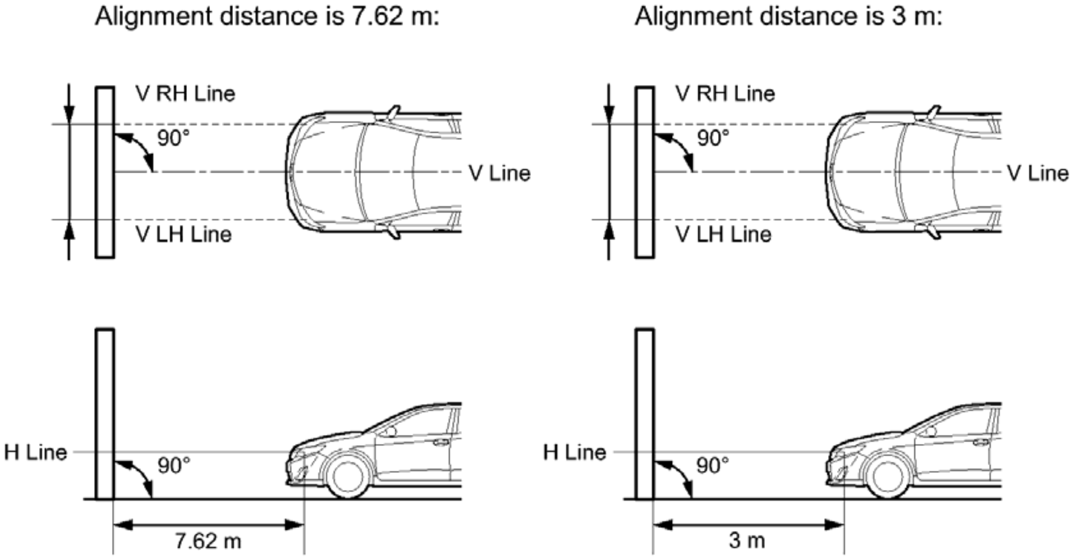
Alignment distance is 7.62 m:
Alignment distance is 3 m:
V RH Line
90°
V Line
V LH Line
H Line
90°
7.62 m
3 m
P

Fig. 15: Identifying Headlight Aiming Distance (Using A Screen)
Courtesy of TOYOTA MOTOR SALES, U.S.A., INC.

HINT:

- Stand the screen perpendicular to the ground.
- Align the V line on the screen with the center of the vehicle.

e. Draw base lines (H, V LH and V RH lines) on the screen as shown in the illustration.

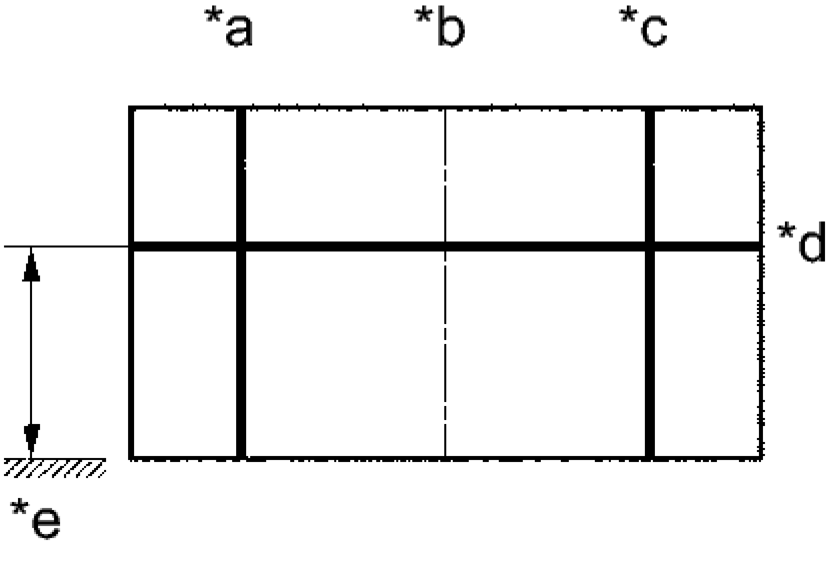

Fig. 16: Identifying V LH Line, V RH Line Graph

Courtesy of TOYOTA MOTOR SALES, U.S.A., INC.

TEXT IN ILLUSTRATION

*a	V LH Line
*b	V Line
*c	V RH Line
*d	H Line
*e	Ground

HINT:

- The base lines differ for "low beam inspection" and "high beam inspection".
- Mark the headlight bulb center marks on the screen. If the center mark cannot be observed on the headlight, use the center of the headlight bulb as the center mark.

1. H Line (Headlight height):

   Draw a horizontal line across the screen so that it passes through the center marks. The H line should be at the same height as the headlight bulb center marks of the low beam headlights.

2. V LH Line, V RH Line (Center mark position of left-hand (LH) and right-hand (RH) headlights):

   Draw two vertical lines so that they intersect the H line at each center mark (aligned with the center of the low beam headlight bulbs).

4. **INSPECT HEADLIGHT AIMING**
   a. Cover the headlight or disconnect the connector of the headlight/ECU on the opposite side to prevent light from the headlight that is not being inspected from affecting the headlight aiming inspection.

WARNING: **Do not disconnect the HID high voltage connector for the bulb when performing this aiming inspection.**

NOTE: **Do not keep the headlight covered for more than 3 minutes. The headlight lens is made of synthetic resin, which may melt or be damaged due to excessive heat.**

HINT:

When checking the aim of the high beam, cover the low beam or disconnect the connector.

   b. Start the engine.

c. Turn on the headlights and check the aiming of each beam.

HINT:

- Preferred position for the low beam: Matches preferred cutoff line shown in the illustration.
- Preferred position for the high beam: Matches center of intensity shown in the illustration.

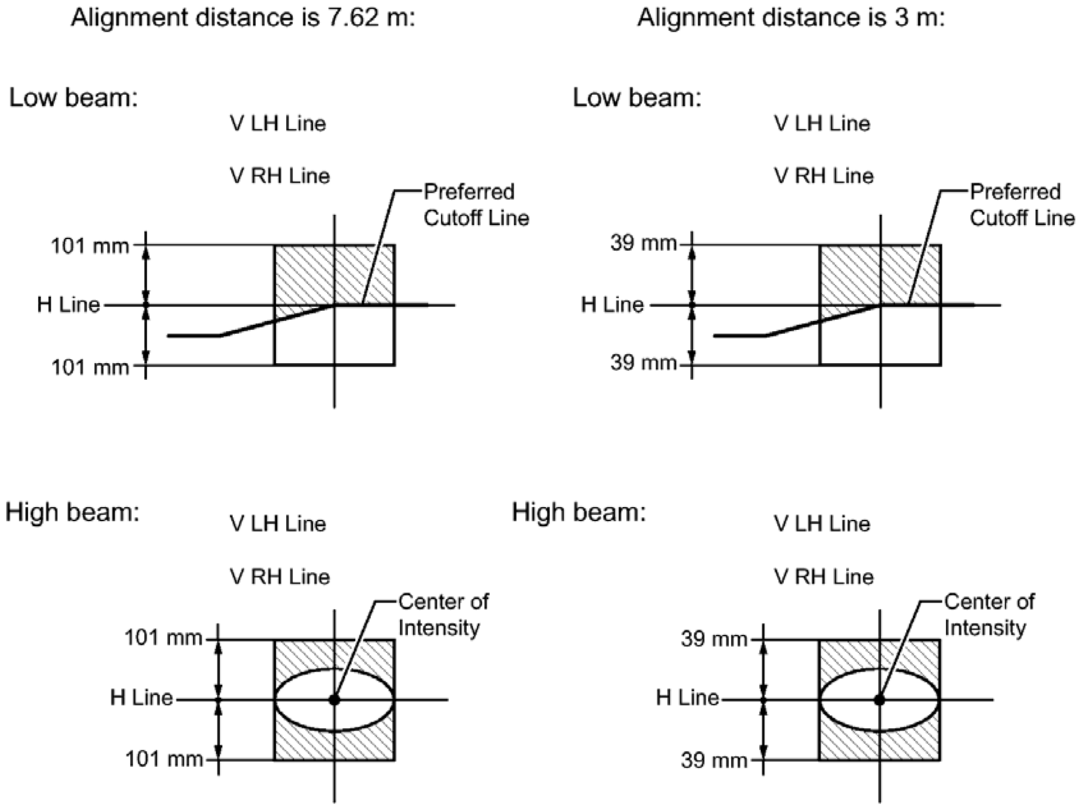
Alignment distance is 7.62 m:
Alignment distance is 3 m:
Low beam:
V LH Line
V RH Line
Preferred Cutoff Line
101 mm
H Line
101 mm
Low beam:
V LH Line
V RH Line
Preferred Cutoff Line
39 mm
H Line
39 mm
High beam:
V LH Line
V RH Line
Center of Intensity
101 mm
H Line
101 mm
High beam:
V LH Line
V RH Line
Center of Intensity
39 mm
H Line
39 mm

P

Fig. 17: Identifying Preferred Beam Positions
Courtesy of TOYOTA MOTOR SALES, U.S.A., INC.

HINT:

- Since the low beam light and the high beam light are a unit, if the aim on the low beam is correct, the high beam should also be correct. However, check both beams just to make sure.
- If the alignment distance is 7.62 m (25 ft.):

  The low beam cutoff line should be within 101 mm (3.97 in.) above or below the H line as well as 101 mm (3.97 in.) left or right of the V line (SAE J599).

- If the alignment distance is 3 m (9.84 ft.):

The low beam cutoff line should be within 39 mm (1.56 in.) above or below the H line as well as 39 mm (1.56 in.) left or right of the V line (SAE J599).

- If the alignment distance is 7.62 m (25 ft.):

  The high beam center of intensity should be within 101 mm (3.97 in.) above or below the H line as well as left and right of the V line (SAE J599).

- If the alignment distance is 3 m (9.84 ft.):

  The high beam center of intensity should be within 39 mm (1.56 in.) above or below the H line as well as 39 mm (1.56 in.) left or right of the V line (SAE J599).

5. **ADJUST HEADLIGHT AIMING**
   a. Adjust the aim vertically:

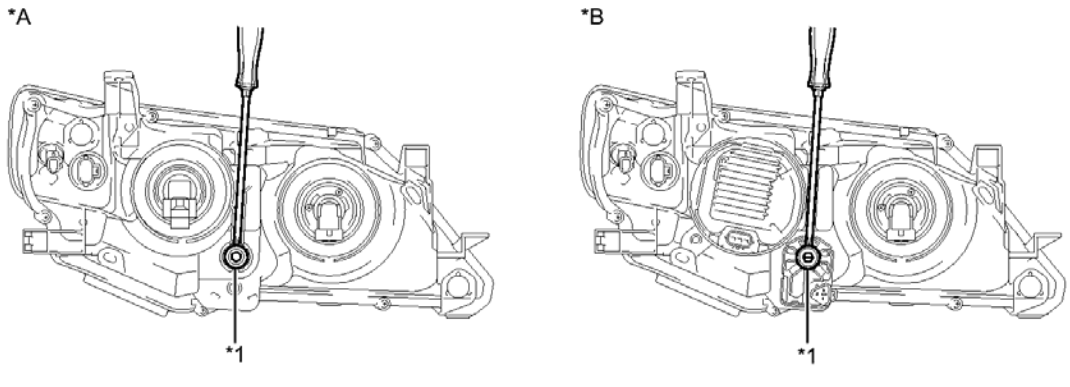

Fig. 18: Adjusting Headlight Aim
Courtesy of TOYOTA MOTOR SALES, U.S.A., INC.

TEXT IN ILLUSTRATION

*A	for Halogen Headlight	*B	for HID Headlight
*1	Aiming Screw	-	-

Adjust the aim of each headlight to the specified range by turning aiming screw with a screwdriver.

NOTE: **The final turn of the aiming screw should be made in the clockwise direction. If the screw is tightened excessively, loosen it and then retighten it, so that the final turn of the screw is in the clockwise direction.**

HINT:

- The low beam light and the high beam light are a unit. Adjusting the aim on the low beam to the correct position should also result in the high beam adjustment being correct.
- If it is not possible to correctly adjust the headlight aim, check the bulbs, headlight unit and headlight unit reflector installation.
- The headlight aim moves up when turning the aiming screw counterclockwise, and moves down when turning the aiming screw clockwise.

REASSEMBLY

REASSEMBLY

1. **INSTALL FRONT SIDE MARKER LIGHT BULB**
   a. Install the front side marker light bulb to the front side marker light socket.
   b. Turn the front side marker light socket with the front side marker light bulb in the direction indicated by the arrow shown in the illustration and install them as a unit.

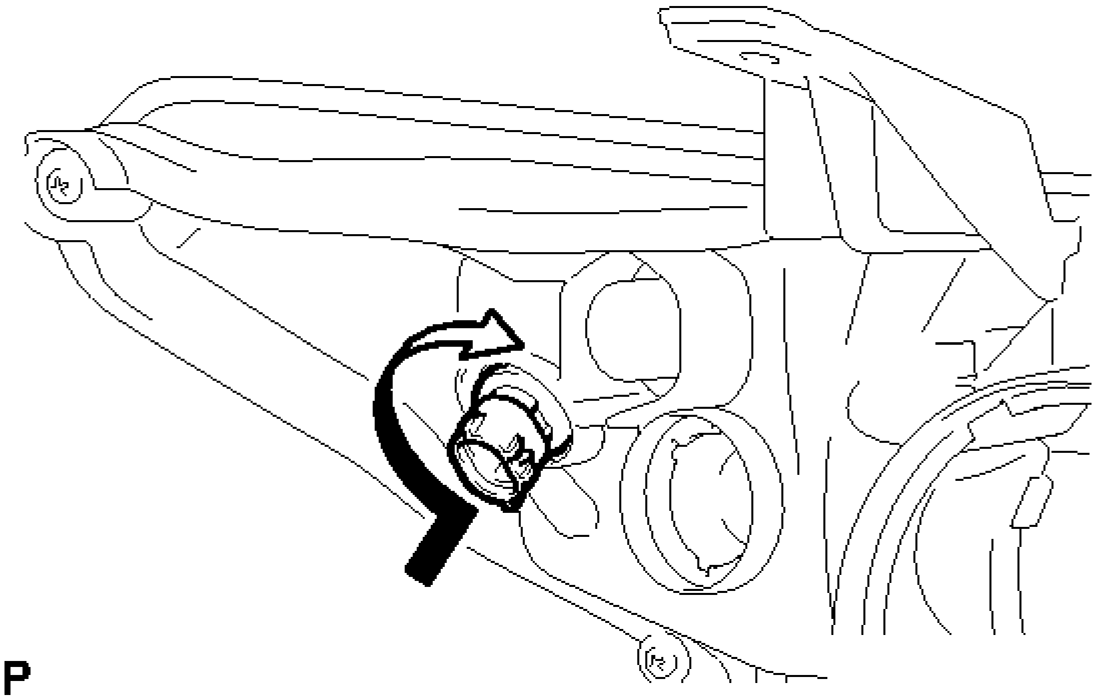

Fig. 19: Installing Front Side Marker Light Bulb
Courtesy of TOYOTA MOTOR SALES, U.S.A., INC.

2. **INSTALL FRONT TURN SIGNAL LIGHT BULB**
   a. Install the front turn signal light bulb to the front turn signal light socket.
   b. Turn the front turn signal light socket with the front turn signal light bulb in the direction indicated by the arrow shown in the illustration and install them as a unit.

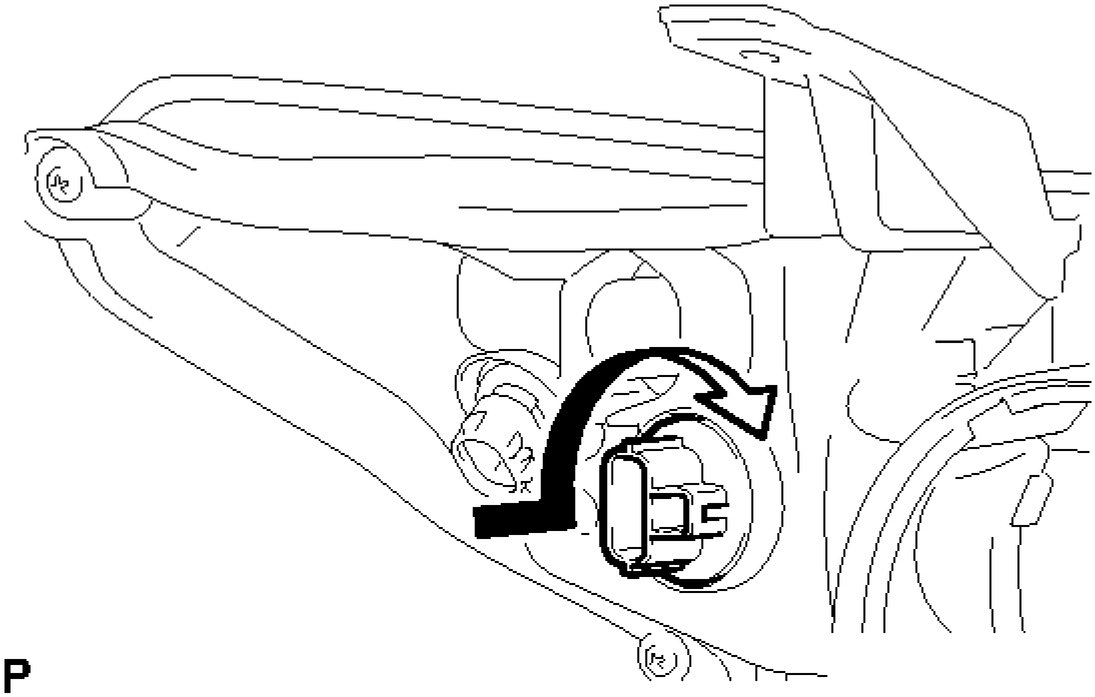

Fig. 20: Installing Front Turn Signal Light Bulb
Courtesy of TOYOTA MOTOR SALES, U.S.A., INC.

3. **INSTALL HEADLIGHT SOCKET COVER**
    a. for Halogen Headlight:
        1. Install the 2 headlight socket covers to the headlight unit.
    b. for HID Headlight:
        1. Install the headlight socket cover to the headlight unit.
4. **INSTALL NO. 2 HEADLIGHT BULB (for Halogen Headlight)**
    a. Turn the No. 2 headlight bulb in the direction indicated by the arrow shown in the illustration to install it.

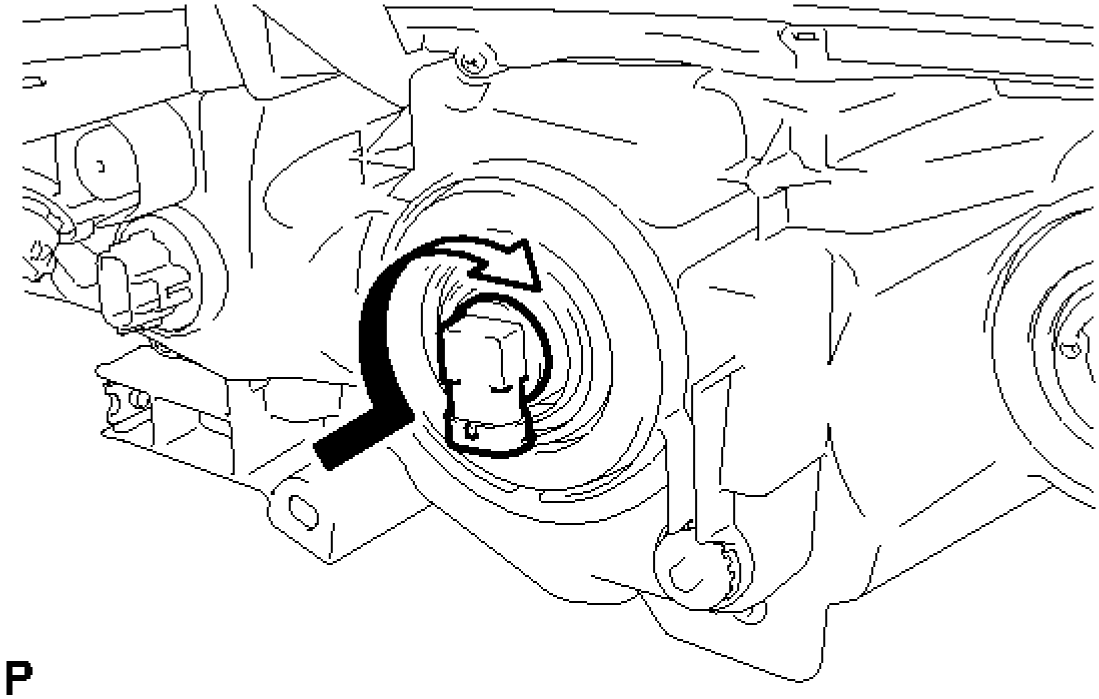

Fig. 21: Installing No. 2 Headlight Bulb (For Halogen Headlight)
Courtesy of TOYOTA MOTOR SALES, U.S.A., INC.

NOTE: Do not touch the bulb glass.

5. **INSTALL DISCHARGE HEADLIGHT BULB (for HID Headlight)**
    a. Set the discharge headlight bulb to the headlight unit.

    NOTE: Do not touch the bulb glass.

    b. Lock the set spring to install the discharge headlight bulb as shown in the illustration.

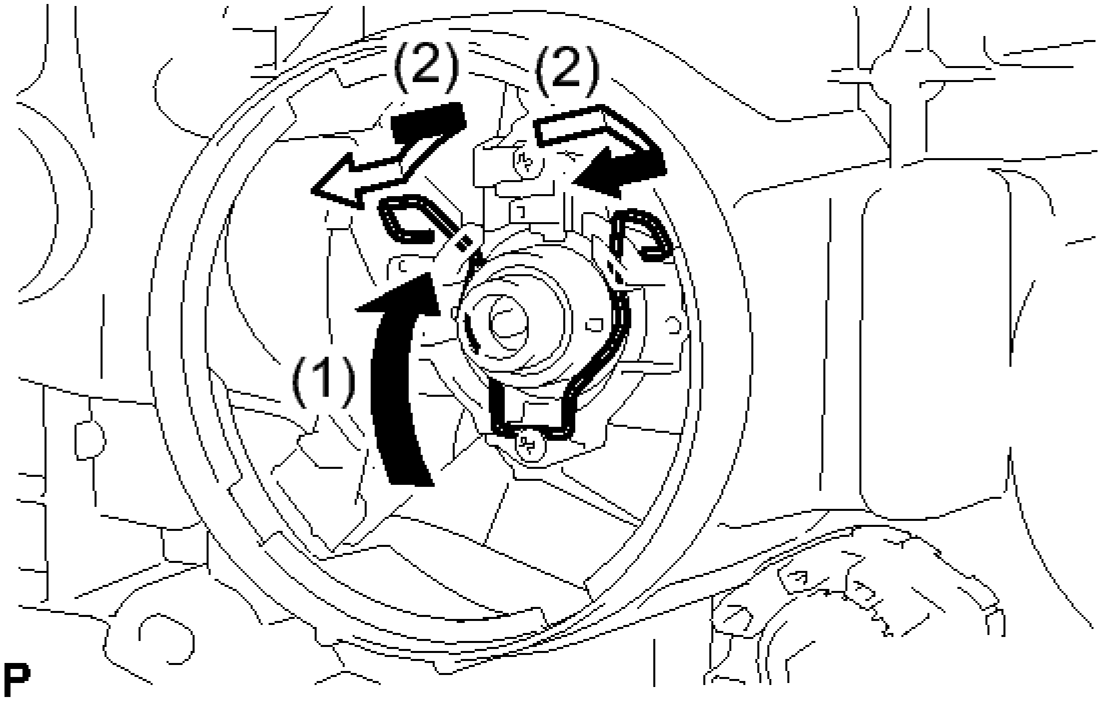

Fig. 22: Installing Discharge Headlight Bulb (For HID Headlight)
Courtesy of TOYOTA MOTOR SALES, U.S.A., INC.

6. **INSTALL HEADLIGHT LIGHT CONTROL ECU SUB-ASSEMBLY (for HID Headlight)**
    a. Turn the socket of the headlight light control ECU sub-assembly in the direction indicated by the arrow shown in the illustration to connect it.

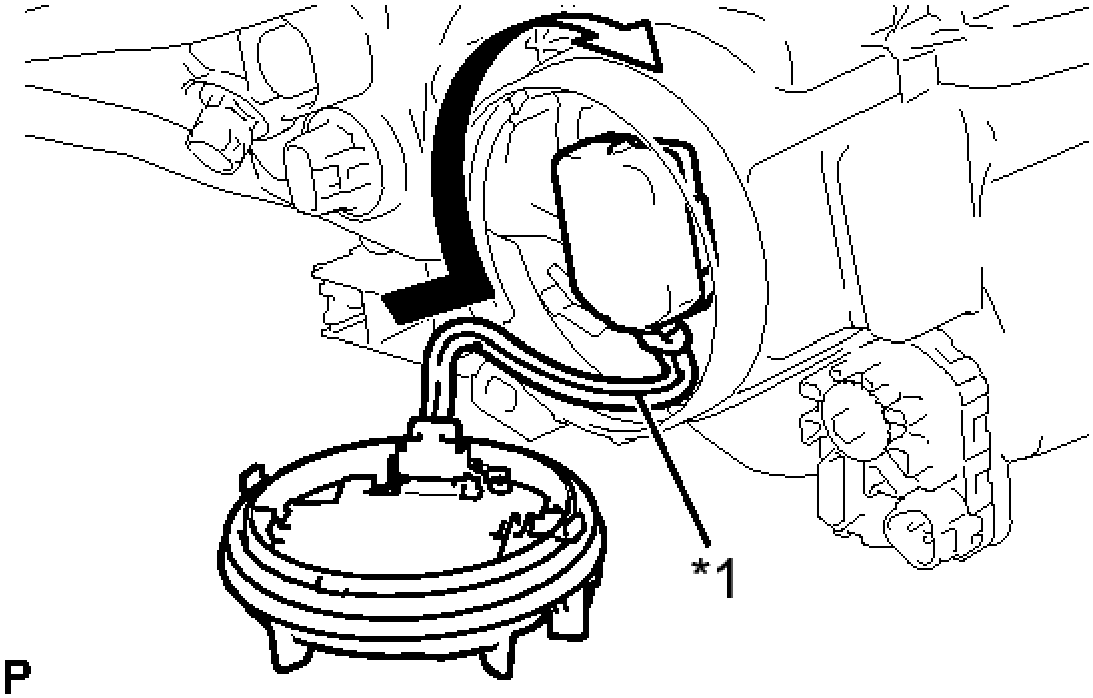

Fig. 23: Installing Headlight Light Control ECU Sub-Assembly (For HID Headlight)
Courtesy of TOYOTA MOTOR SALES, U.S.A., INC.

NOTE:	- **Check that the O-ring is installed on the headlight light control ECU sub-assembly.** - **Check that the O-ring is not damaged or contaminated with foreign matter. If there is any damage, replace the O-ring with a new one.** - **Do not pull the headlight light control ECU sub-assembly with the socket connected.**

b. Check that the red line on the output harness is not twisted and store the harness in the headlight assembly securely so that the output harness is not pinched.

TEXT IN ILLUSTRATION

*1	Red Line

c. Engage the clamp.

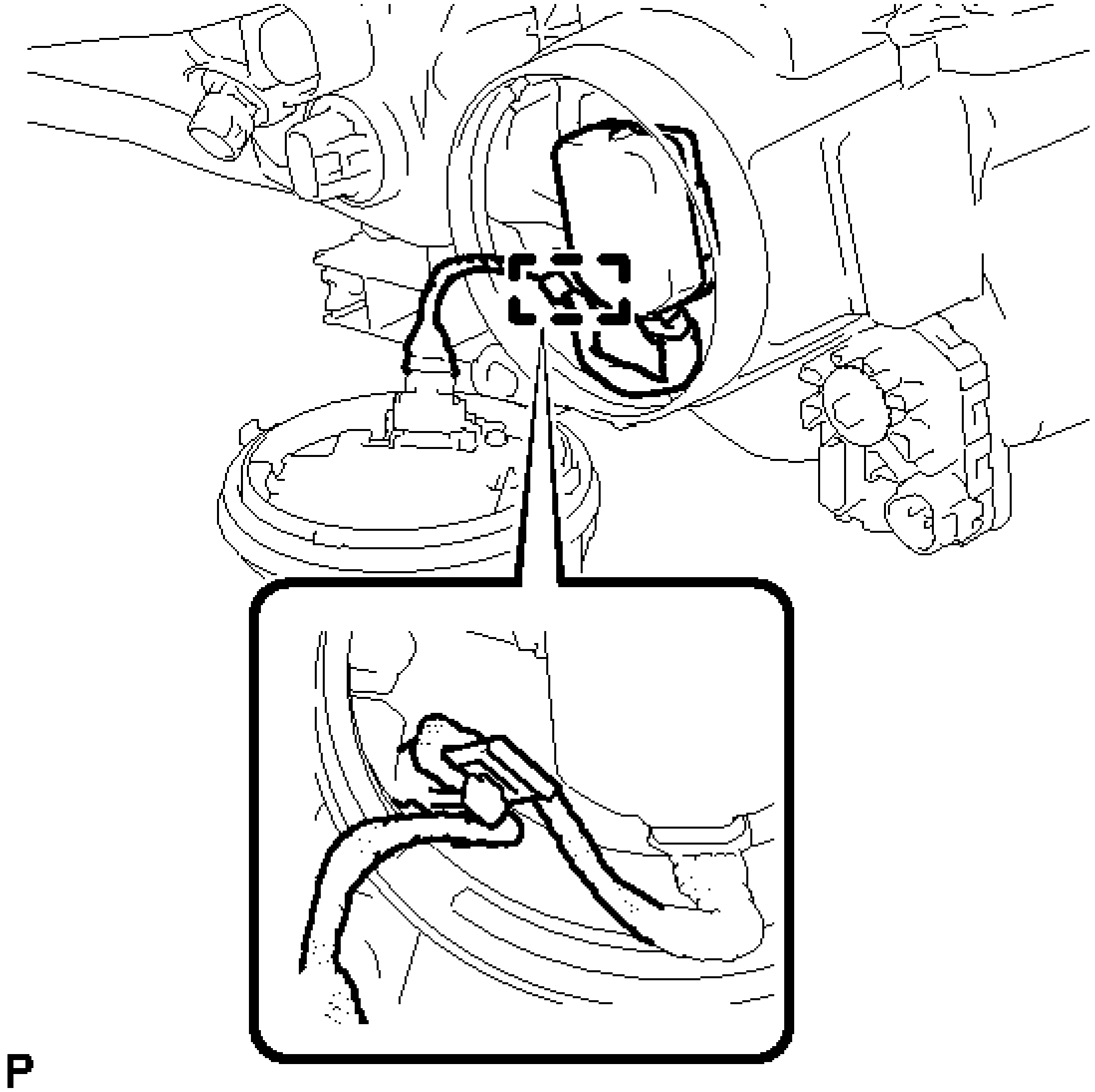

Fig. 24: Installing Headlight Light Control ECU Sub-Assembly Clamp (For HID Headlight)
Courtesy of TOYOTA MOTOR SALES, U.S.A., INC.

d. for LH Side:
    1. Turn the headlight light control ECU sub-assembly in the direction indicated by the arrow shown in the illustration until the lock marks are aligned to install it.

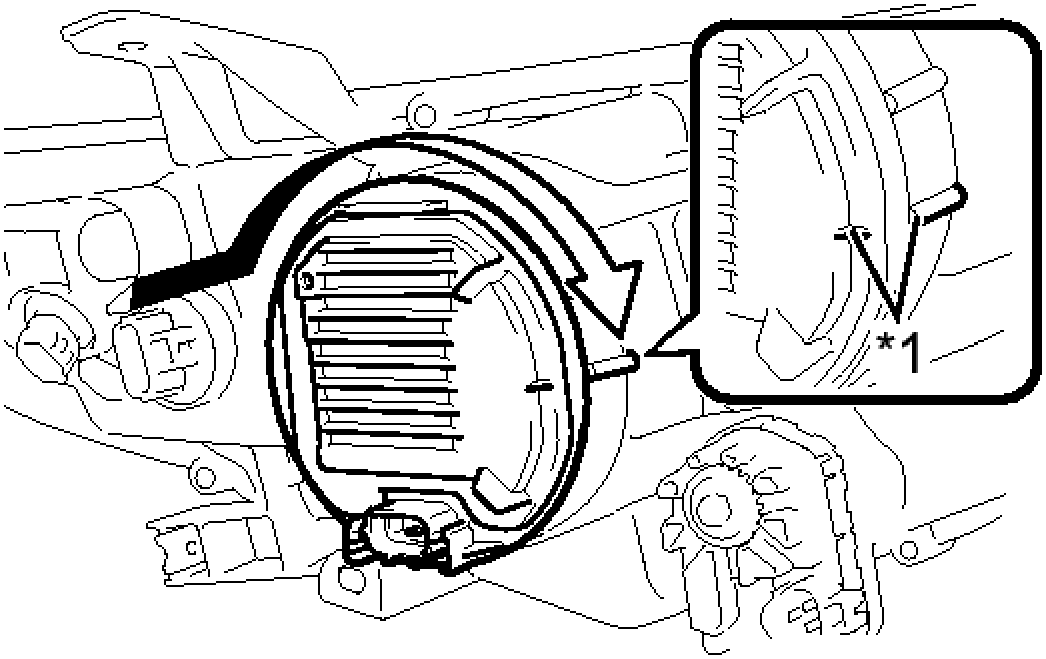

P

Fig. 25: Installing Headlight Light Control ECU Sub-Assembly (For HID Headlight) (For LH Side)
Courtesy of TOYOTA MOTOR SALES, U.S.A., INC.

TEXT IN ILLUSTRATION

*1	Lock Mark

NOTE:	- **To prevent incomplete installation, make sure to fully push in and turn the headlight light control ECU sub-assembly until the lock marks are aligned.** - **Do not apply excessive force using a tool.**

e. for RH Side:
   1. Turn the headlight light control ECU sub-assembly in the direction indicated by the arrow shown in the illustration until the lock marks are aligned to install it.

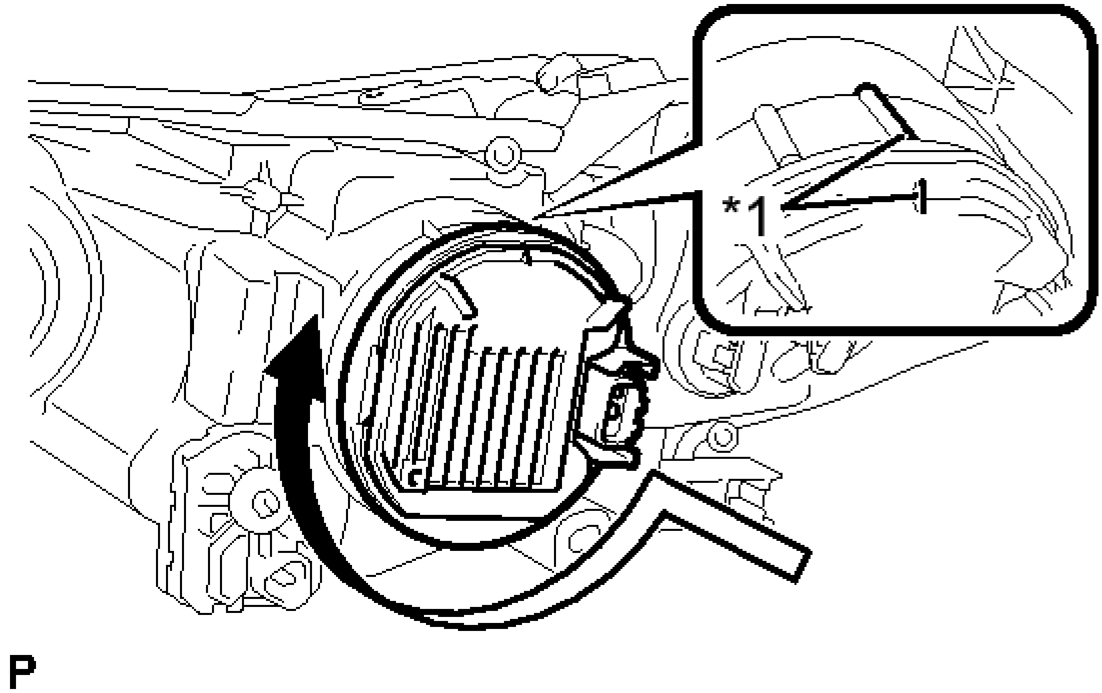

Fig. 26: Installing Headlight Light Control ECU Sub-Assembly (For HID Headlight) (For RH Side)
Courtesy of TOYOTA MOTOR SALES, U.S.A., INC.

TEXT IN ILLUSTRATION

*1	Lock Mark

NOTE:

- **To prevent incomplete installation, make sure to fully push in and turn the headlight light control ECU sub-assembly until the lock marks are aligned.**
- **Do not apply excessive force using a tool.**

7. **INSTALL NO. 1 HEADLIGHT BULB**
    a. Turn the No. 1 headlight bulb in the direction indicated by the arrow shown in the illustration to install it.

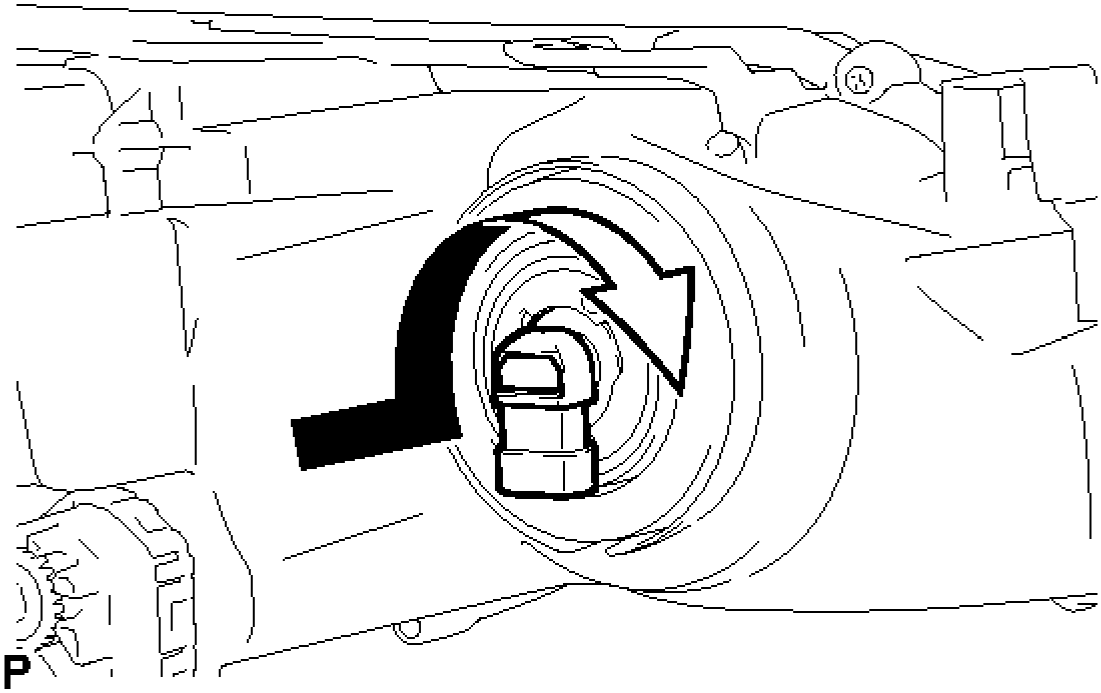

Fig. 27: Installing No. 1 Headlight Bulb
Courtesy of TOYOTA MOTOR SALES, U.S.A., INC.

NOTE: **Do not touch the bulb glass.**

INSTALLATION

INSTALLATION

HINT:

- Use the same procedure for the RH and LH sides.
- The procedure described below is for the LH side.

1. **INSTALL HEADLIGHT ASSEMBLY**
    a. Connect each connector.
    b. Engage the clamp.
    c. Install the headlight assembly with the 3 screws and bolt.

    Screw

    Torque: 3.6 N*m (37 kgf*cm, 32 in.*lbf)

    Bolt

    Torque: 4.1 N*m (42 kgf*cm, 36 in.*lbf)

2. **INSTALL FRONT BUMPER ASSEMBLY**

   Refer to **INSTALLATION** .

3. **CONNECT CABLE TO NEGATIVE BATTERY TERMINAL (for HID Headlight)**

   NOTE: **When disconnecting the cable, some systems need to be initialized after the cable is reconnected. Refer to INITIALIZATION .**

4. **ADJUST HEADLIGHT AIMING**

   Refer to **ADJUSTMENT**.

5. **ADJUST FOG LIGHT AIMING (w/ Fog Light)**

   Refer to **ADJUSTMENT**.

HIGH INTENSITY DISCHARGE HEADLIGHT BULB

COMPONENTS

ILLUSTRATION

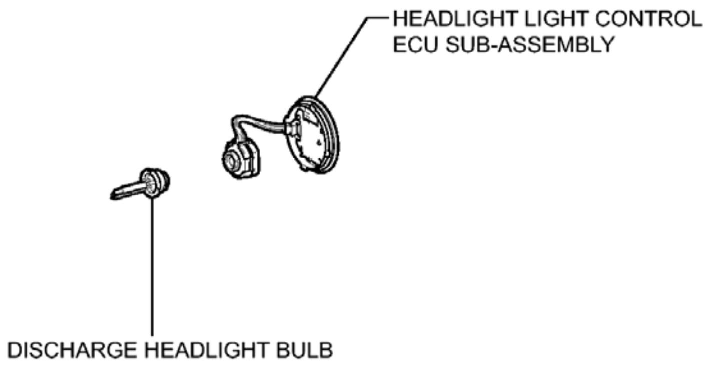
HEADLIGHT LIGHT CONTROL ECU SUB-ASSEMBLY
DISCHARGE HEADLIGHT BULB
P

Fig. 28: Identifying High Intensity Discharge Headlight Bulb Replacement Components
Courtesy of TOYOTA MOTOR SALES, U.S.A., INC.

ON-VEHICLE INSPECTION

ON-VEHICLE INSPECTION

1. **INSPECT DISCHARGE HEADLIGHT BULB**

NOTE: **Confirm the following items before replacing a discharge headlight bulb. If a malfunction is discovered and repaired, perform the inspection again to confirm the repair.**

- **Make sure that the high voltage socket of the light control ECU and discharge headlight bulb are connected normally.**
- **Make sure that there is no damage to the high voltage socket of the light control ECU or discharge headlight bulb connector.**

HINT:

Even if a bulb seems to turn on normally, it may not be normal. Perform all the following steps in order because an abnormal condition might otherwise not be easy to duplicate.

a. Prepare the vehicle:

Before performing the following inspection procedure, turn off the discharge headlight bulbs for more than 10 minutes to allow them to cool down sufficiently.

HINT:

Since it is necessary to find the cause of a malfunction that causes a discharge headlight bulb not to turn on, the discharge headlight bulbs should be inspected starting from a cooled off state.

1. Turn on the discharge headlights for more than 25 minutes, and check that the bulbs illuminate normally when they are turned on.

   HINT:

   - Leave the headlights on for more than 25 minutes to stabilize the discharge headlight bulb arc tube voltage.
   - A discharge headlight bulb that has almost reached the end of its life may turn off due to a headlight control ECU fail-safe function because the arc tube voltage is high.
2. Repeatedly turn the discharge headlights off for 15 seconds and on for 15 seconds (5 times for each). Check that the bulbs illuminate normally.

   HINT:

   This inspection confirms the ability of the bulbs to start when hot.

3. Turn off the discharge headlights for 3 minutes, and then turn on the discharge headlights for 3 minutes. Check that the bulbs illuminate normally when they are turned on.

   HINT:

- A characteristic of discharge headlight bulbs is that their starting voltage is highest when 3 minutes have elapsed after being turned off. This is the most difficult situation for discharge bulbs to start in.
- This inspection is further confirmation of the ability of the bulbs to start when hot.

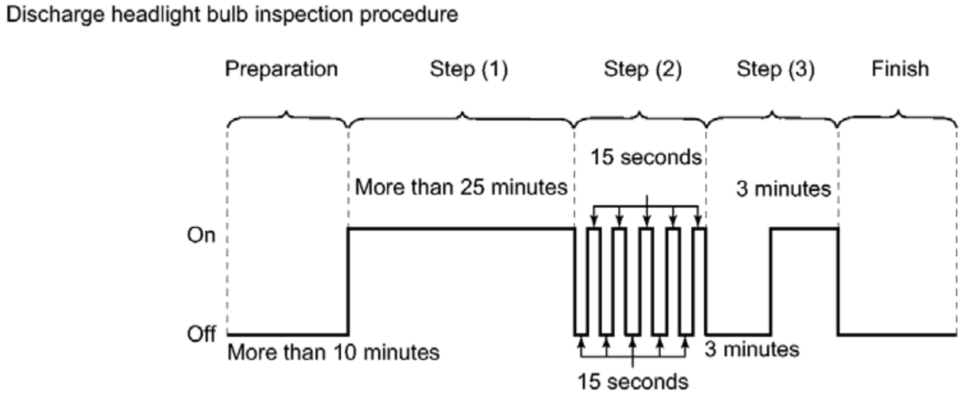

Fig. 29: Identifying Discharge Headlight Bulb Inspection Procedure
Courtesy of TOYOTA MOTOR SALES, U.S.A., INC.

Standard

The discharge headlight bulbs illuminate normally in all steps.

4. Remove the discharge headlight bulb and perform a visual inspection of the arc tube.

   Standard

   The inside of the arc tube is not bulging or deformed and is not clouded. However, a dull brown coloration inside the arc tube is normal.

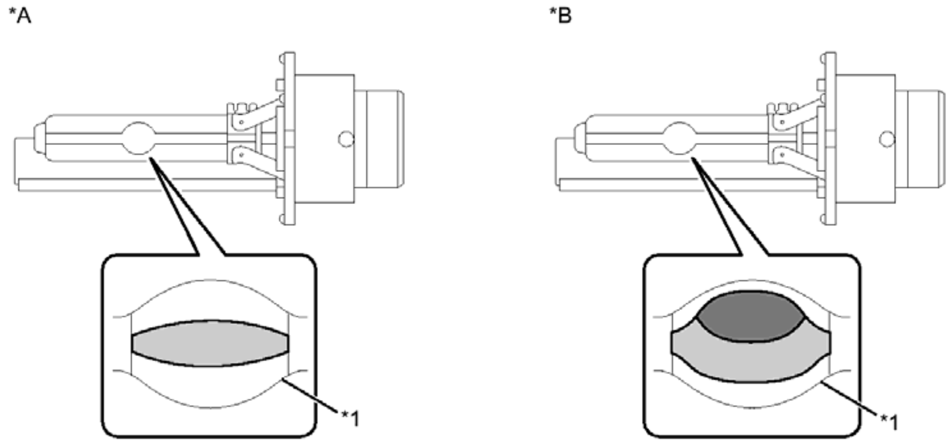

Fig. 30: Identifying Arc Tube Coloration
Courtesy of TOYOTA MOTOR SALES, U.S.A., INC.

TEXT IN ILLUSTRATION

*A	Discharge Headlight Bulb is Normal	*B	Discharge Headlight Bulb at End of Usable Life
*1	Arc Tube	-	-
	Inside of Arc Tube		Distortion / Clouded Area

REMOVAL

REMOVAL

HINT:

- Use the same procedure for the RH and LH sides.
- The procedure described below is for the LH side.

1. **PRECAUTION**

   Refer to **PRECAUTION** .

   NOTE: **After turning the ignition switch off, waiting time may be required before**

disconnecting the cable from the negative (-) battery terminal. Therefore, make sure to read the disconnecting the cable from the negative (-) battery terminal notices before proceeding with work. Refer to PRECAUTION .

2. **DISCONNECT CABLE FROM NEGATIVE BATTERY TERMINAL**

NOTE: **When disconnecting the cable, some systems need to be initialized after the cable is reconnected. Refer to INITIALIZATION .**

3. **REMOVE HEADLIGHT LIGHT CONTROL ECU SUB-ASSEMBLY**

WARNING: **The headlight light control ECU sub-assembly may be hot when the light control switch is in the HEAD position or right after it is turned off. Check that the headlight light control ECU sub-assembly is not hot before starting work.**

   a. Disconnect the connector.
   b. for LH Side:
      1. Turn the headlight light control ECU sub-assembly in the direction indicated by the arrow shown in the illustration, and disconnect it.

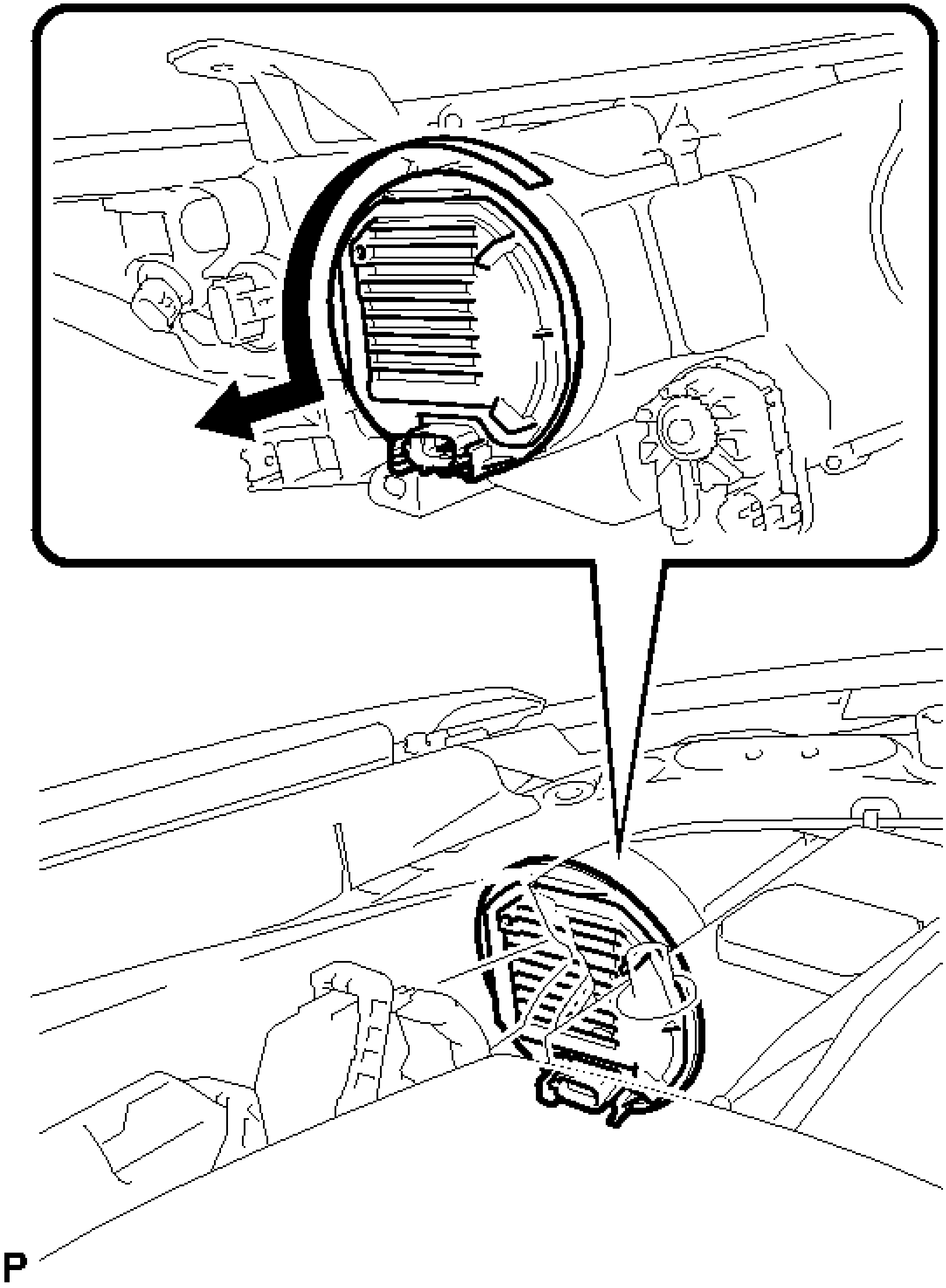

Fig. 31: Removing Headlight Light Control ECU Sub-Assembly (For LH Side)
Courtesy of TOYOTA MOTOR SALES, U.S.A., INC.

NOTE:

- **Do not apply excessive force using a tool.**

- **Do not damage the O-ring or allow it to become contaminated with foreign matter. If the O-ring is damaged or contaminated, water may get into the headlight assembly, resulting in a malfunction of the headlight light control ECU sub-assembly.**

c. for RH Side:

  1. Turn the headlight light control ECU sub-assembly in the direction indicated by the arrow shown in the illustration, and disconnect it.

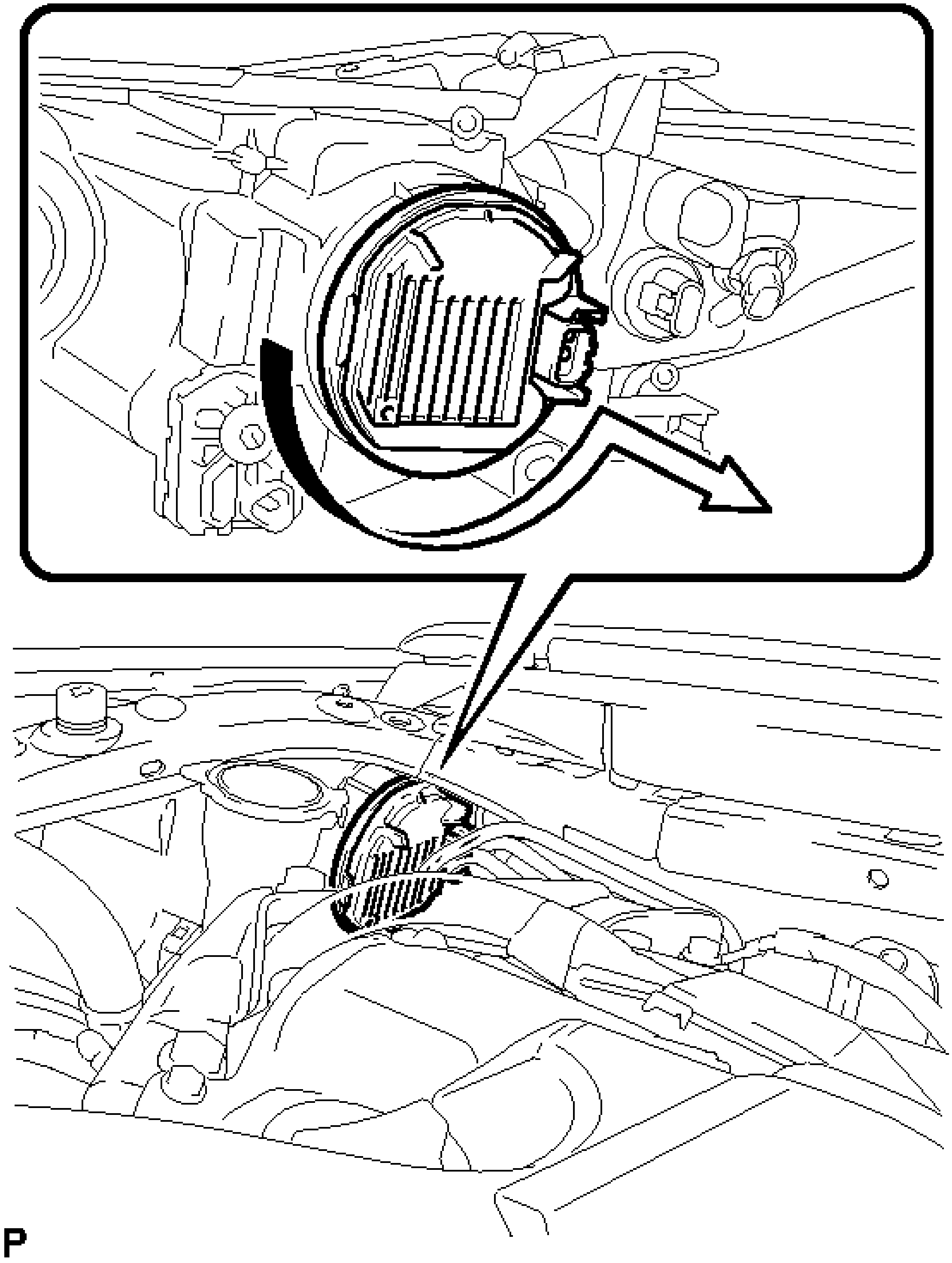

Fig. 32: Removing Headlight Light Control ECU Sub-Assembly (For RH Side)
Courtesy of TOYOTA MOTOR SALES, U.S.A., INC.

NOTE:

- **Do not apply excessive force using a tool.**

- **Do not damage the O-ring or allow it to become contaminated with foreign matter. If the O-ring is damaged or contaminated, water may get into the headlight assembly, resulting in a malfunction of the headlight light control ECU sub-assembly.**

d. Disengage the clamp.

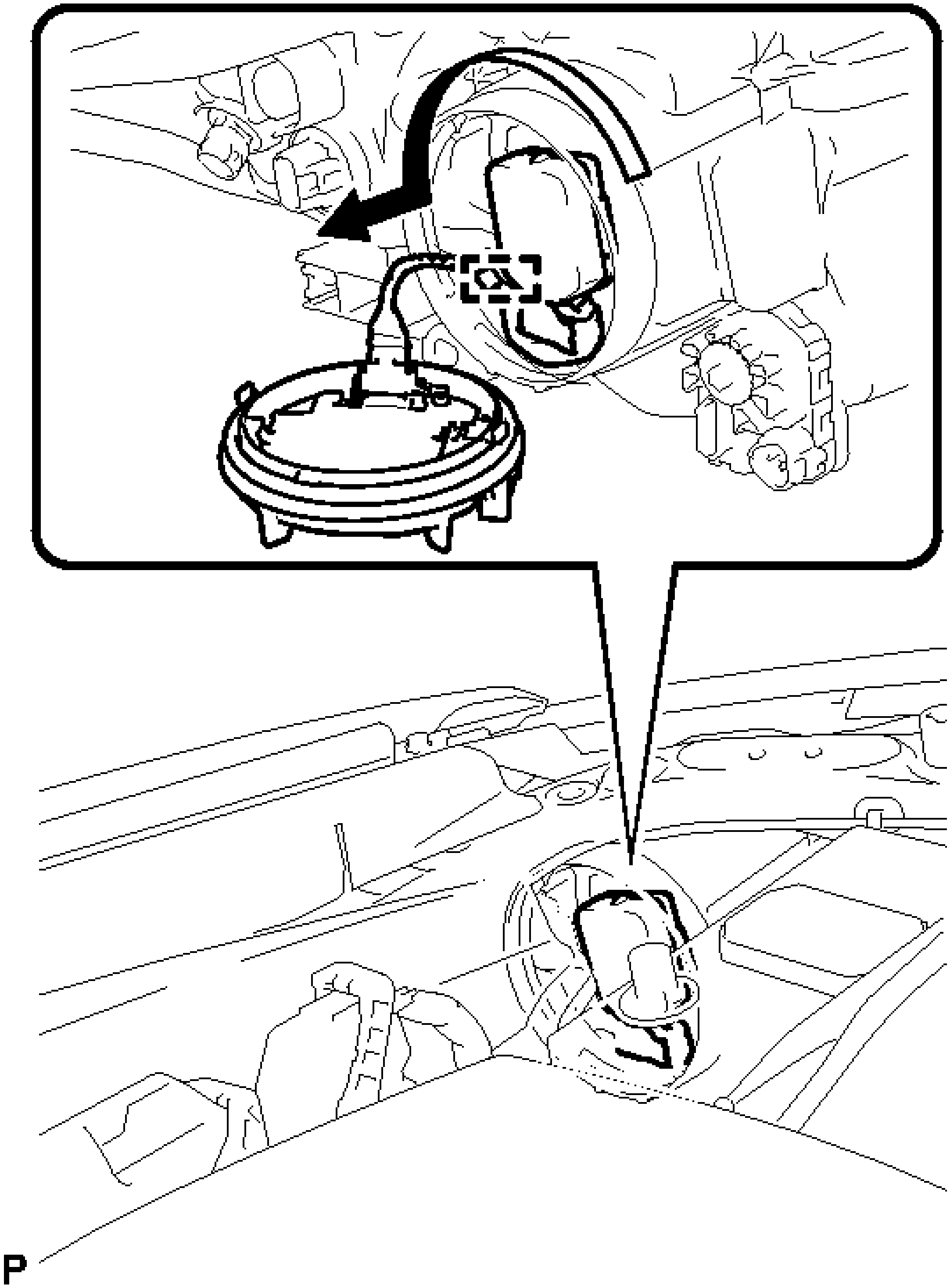

Fig. 33: Removing Headlight Light Control ECU Sub-Assembly Clamp
Courtesy of TOYOTA MOTOR SALES, U.S.A., INC.

e. Turn the socket of the headlight light control ECU sub-assembly in the direction indicated by the arrow shown in the illustration, and remove it.

NOTE: **Do not pull the headlight light control ECU sub-assembly with the socket connected.**

4. **REMOVE DISCHARGE HEADLIGHT BULB**
    a. Release the set spring as shown in the illustration and remove the discharge headlight bulb.

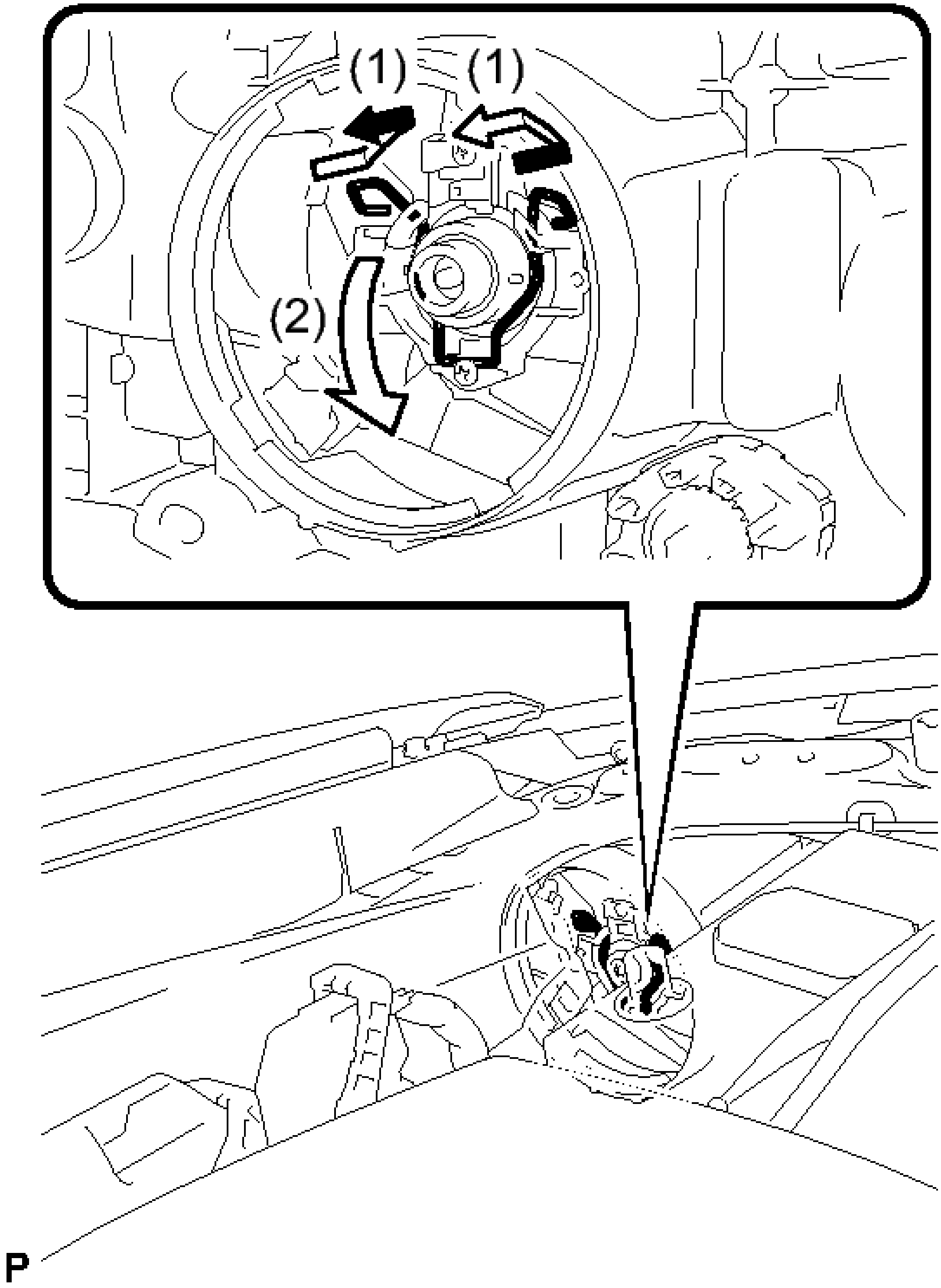

Fig. 34: Removing Discharge Headlight Bulb
Courtesy of TOYOTA MOTOR SALES, U.S.A., INC.

NOTE: **Do not touch the bulb glass.**

INSTALLATION

INSTALLATION

HINT:

- Use the same procedure for the RH and LH sides.
- The procedure described below is for the LH side.

1. **INSTALL DISCHARGE HEADLIGHT BULB**
    a. Set the discharge headlight bulb to the headlight unit.

    NOTE: **Do not touch the bulb glass.**

    b. Lock the set spring to install the discharge headlight bulb as shown in the illustration.

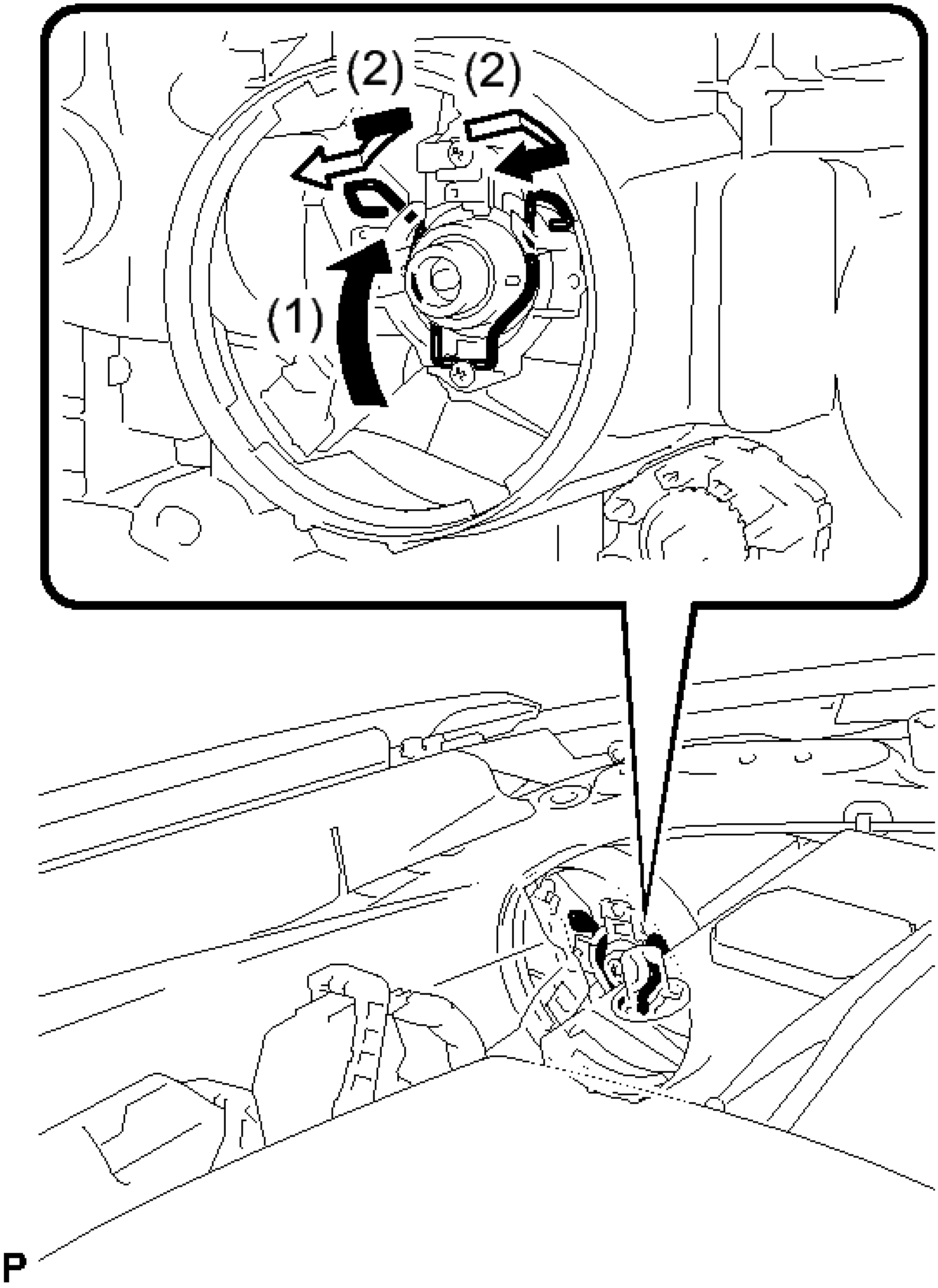

Fig. 35: Installing Discharge Headlight Bulb
Courtesy of TOYOTA MOTOR SALES, U.S.A., INC.

2. **INSTALL HEADLIGHT LIGHT CONTROL ECU SUB-ASSEMBLY**
    a. Turn the socket of the headlight light control ECU sub-assembly in the direction indicated by the

arrow shown in the illustration to connect it.

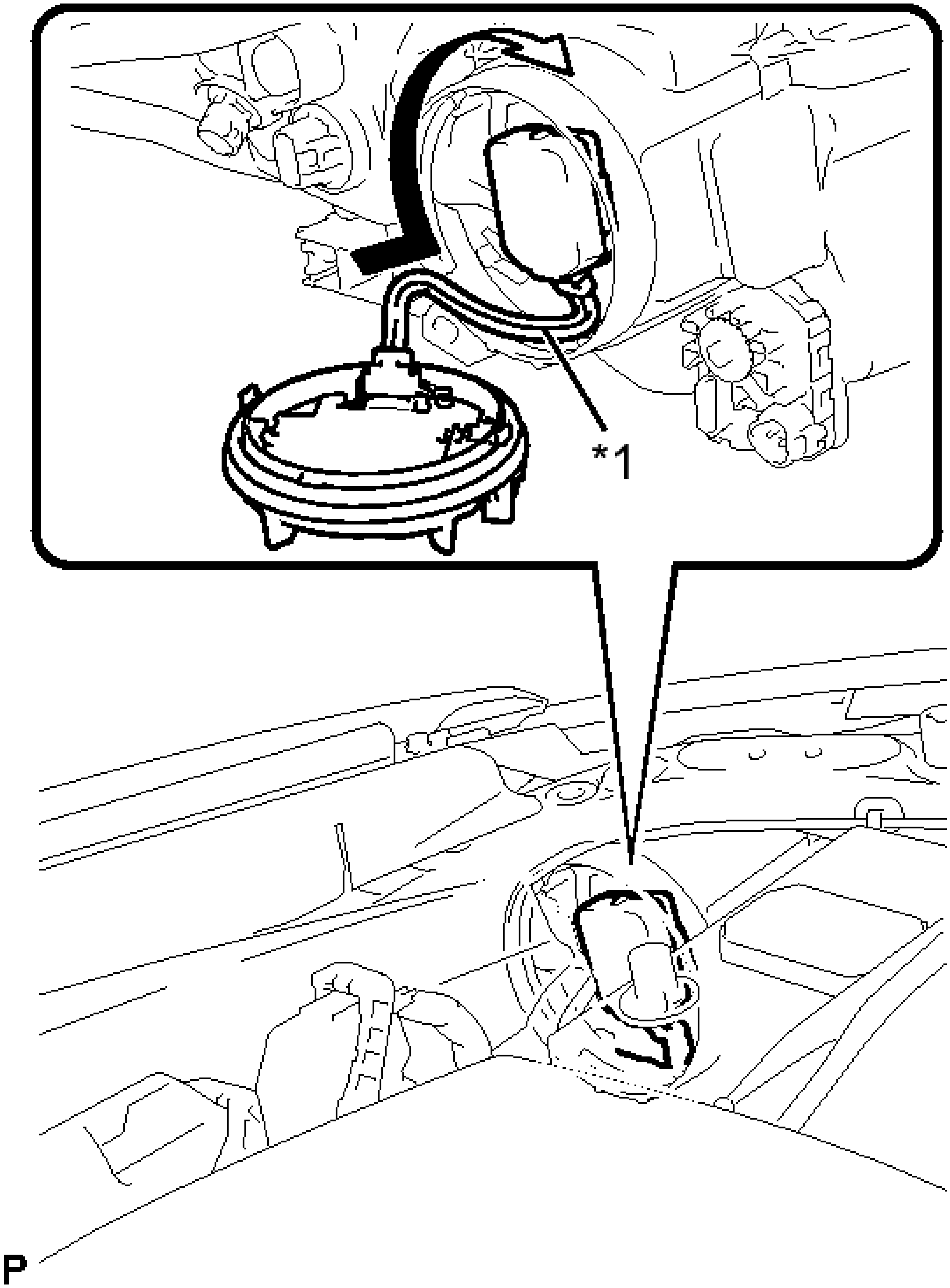

Fig. 36: Installing Headlight Light Control ECU Sub-Assembly
Courtesy of TOYOTA MOTOR SALES, U.S.A., INC.

NOTE:

- **Check that the O-ring is installed on the headlight light control ECU sub-assembly.**
- **Check that the O-ring is not damaged or contaminated with foreign matter. If there is any damage, replace the O-ring with a new one.**
- **Do not pull the headlight light control ECU sub-assembly with the socket connected.**

b. Check that the red line on the output harness is not twisted and store the harness in the headlight assembly securely so that the output harness is not pinched.

TEXT IN ILLUSTRATION

*1	Red Line

c. Engage the clamp.

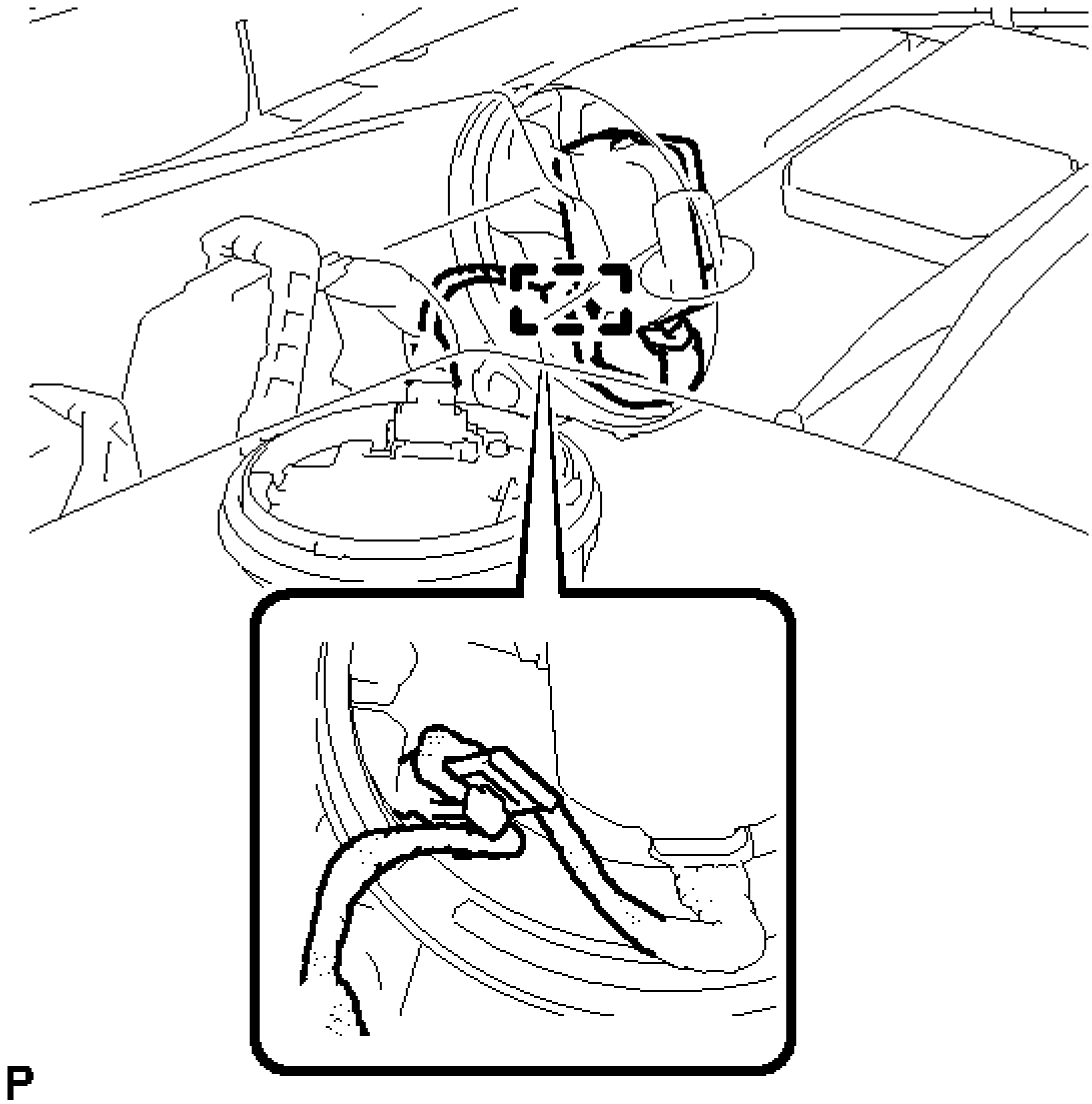

Fig. 37: Installing Headlight Light Control ECU Sub-Assembly Clamp
Courtesy of TOYOTA MOTOR SALES, U.S.A., INC.

d. for LH Side:
    1. Turn the headlight light control ECU sub-assembly in the direction indicated by the arrow shown in the illustration until the lock marks are aligned to install it.

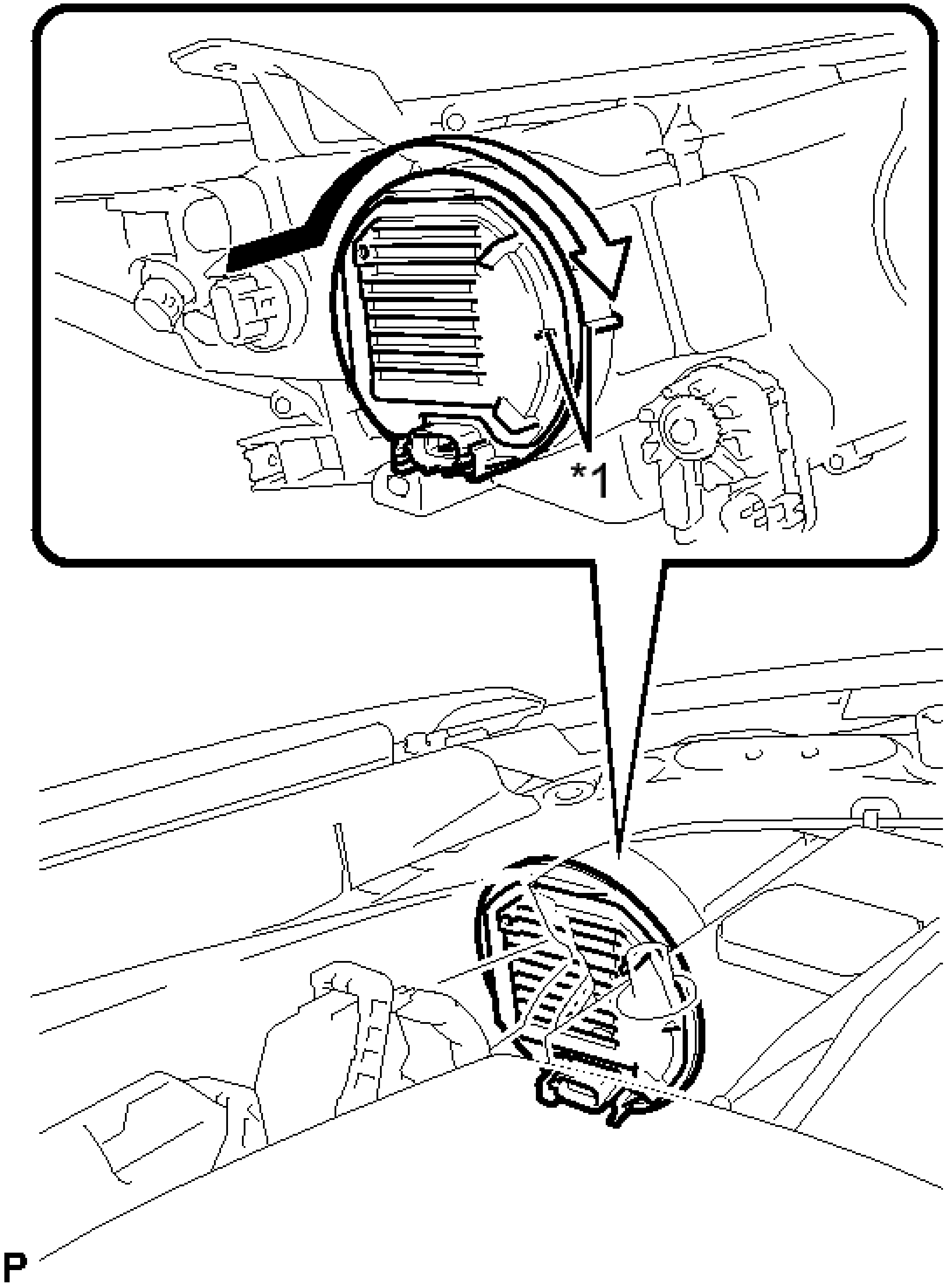

Fig. 38: Installing Headlight Light Control ECU Sub-Assembly (For LH Side)
Courtesy of TOYOTA MOTOR SALES, U.S.A., INC.

TEXT IN ILLUSTRATION

	Lock

*1	Mark

NOTE:

- **To prevent incomplete installation, make sure to fully push in and turn the headlight light control ECU sub-assembly until the lock marks are aligned.**
- **Do not apply excessive force using a tool.**

e. for RH Side:

  1. Turn the headlight light control ECU sub-assembly in the direction indicated by the arrow shown in the illustration until the lock marks are aligned to install it.

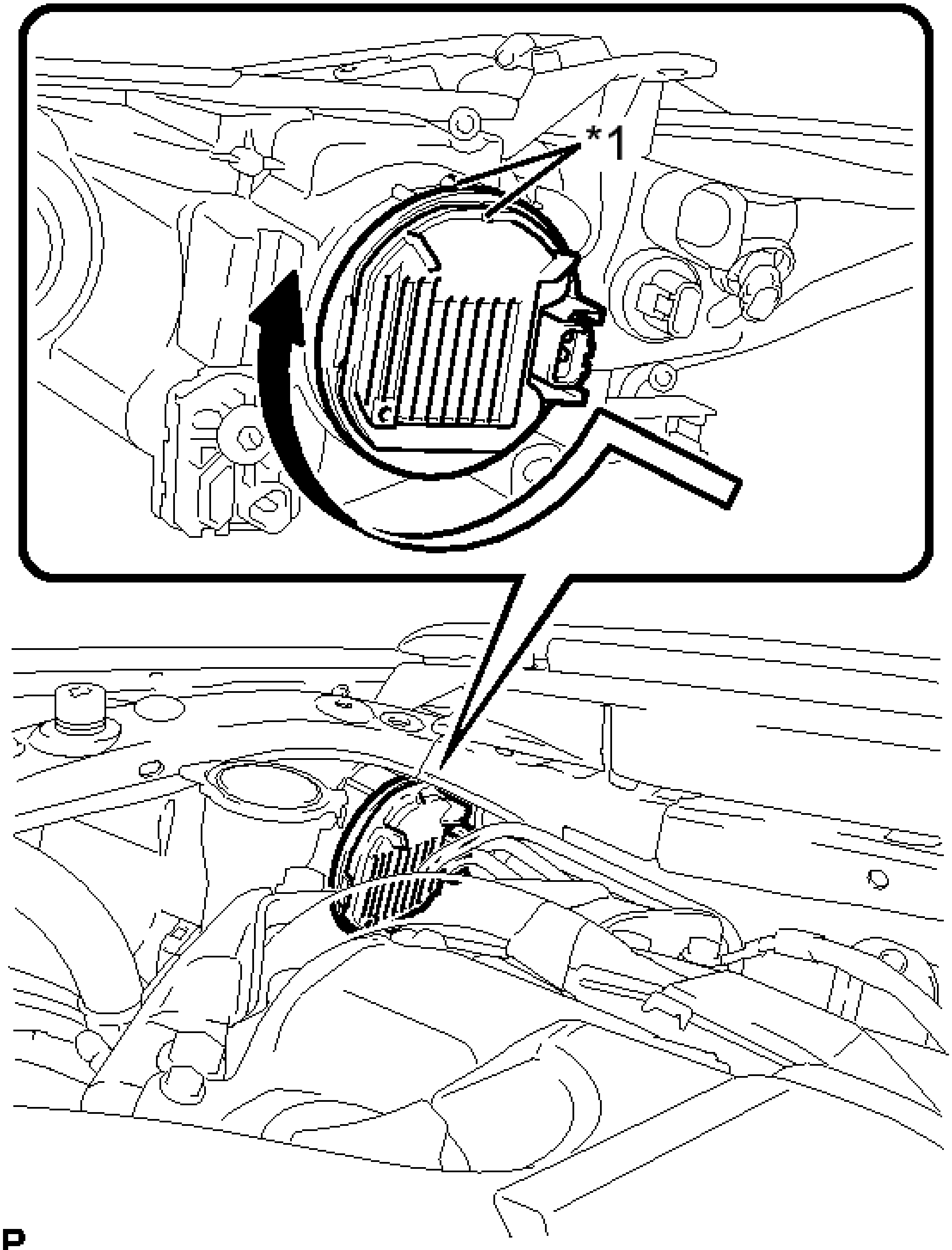

P

Fig. 39: Installing Headlight Light Control ECU Sub-Assembly (For RH Side)
Courtesy of TOYOTA MOTOR SALES, U.S.A., INC.

TEXT IN ILLUSTRATION

	Lock

*1	Mark

NOTE:

- **To prevent incomplete installation, make sure to fully push in and turn the headlight light control ECU sub-assembly until the lock marks are aligned.**
- **Do not apply excessive force using a tool.**

f. Connect the connector.

3. **CONNECT CABLE TO NEGATIVE BATTERY TERMINAL**

NOTE: **When disconnecting the cable, some systems need to be initialized after the cable is reconnected. Refer to INITIALIZATION .**

FOG LIGHT ASSEMBLY

COMPONENTS

ILLUSTRATION

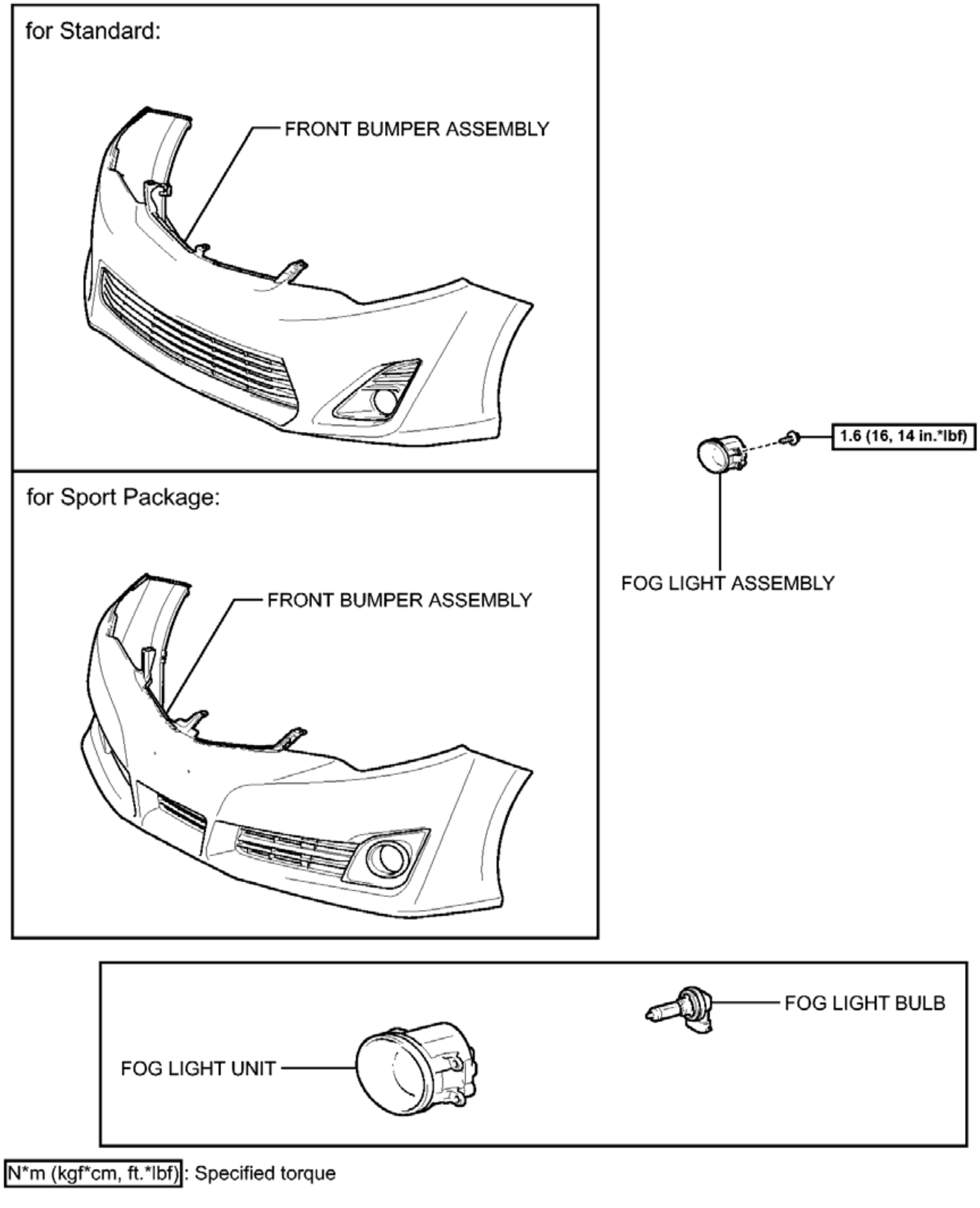
for Standard:
FRONT BUMPER ASSEMBLY
for Sport Package:
FRONT BUMPER ASSEMBLY
1.6 (16, 14 in.*lbf)
FOG LIGHT ASSEMBLY
FOG LIGHT BULB
FOG LIGHT UNIT
N*m (kgf*cm, ft.*lbf) : Specified torque
P

Fig. 40: Identifying Fog Light Assembly Replacement Components With Torque Specifications
Courtesy of TOYOTA MOTOR SALES, U.S.A., INC.

REMOVAL

REMOVAL

HINT:

- Use the same procedure for the RH and LH sides.
- The procedure described below is for the LH side.

1. **REMOVE FRONT BUMPER ASSEMBLY**

   Refer to **REMOVAL** .

2. **REMOVE FOG LIGHT ASSEMBLY**
   a. Remove the screw.

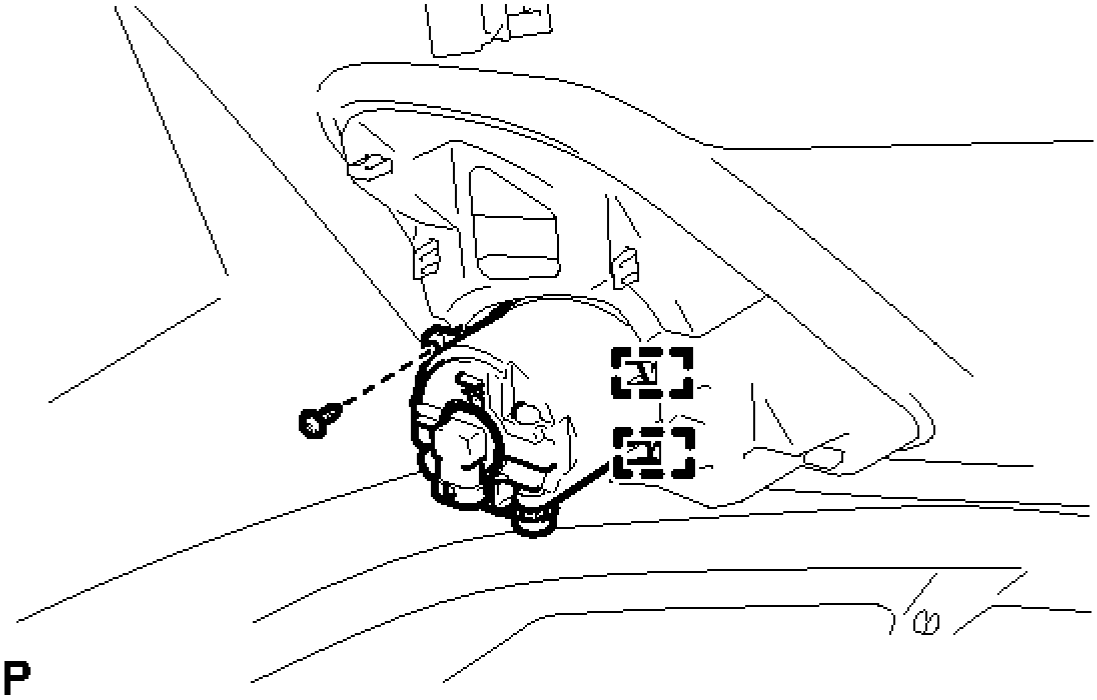

Fig. 41: Identifying Fog Light Assembly
Courtesy of TOYOTA MOTOR SALES, U.S.A., INC.

   b. Disengage the 2 guides and remove the fog light assembly.

DISASSEMBLY

DISASSEMBLY

1. **REMOVE FOG LIGHT BULB**
   a. Turn the fog light bulb in the direction indicated by the arrow shown in the illustration and remove it.

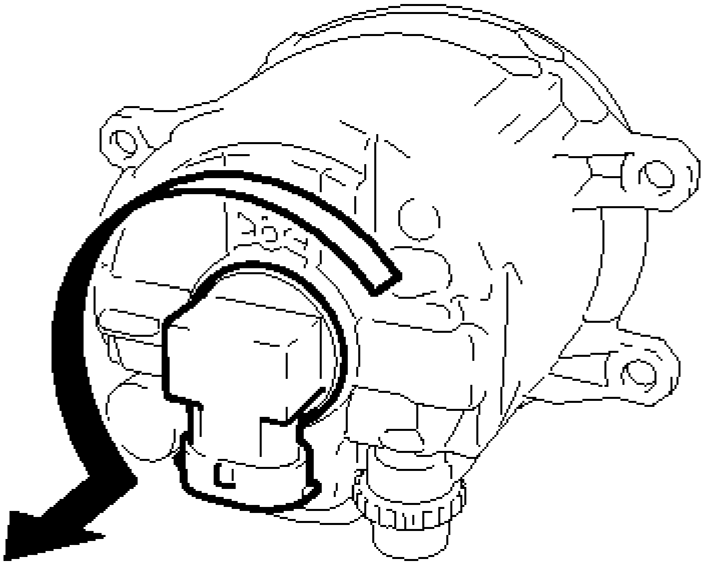

P

Fig. 42: Removing Fog Light Bulb
Courtesy of TOYOTA MOTOR SALES, U.S.A., INC.

NOTE: **Do not touch the bulb glass.**

ADJUSTMENT

ADJUSTMENT

HINT:

It is possible that a bulb is incorrectly installed, affecting fog light aim. Bulb installation should be considered prior to performing the adjustment procedure.

1. **PREPARE VEHICLE FOR FOG LIGHT AIM ADJUSTMENT**
   a. Prepare the vehicle:
      - Ensure there is no damage or deformation to the body around the fog lights.
      - Fill the fuel tank.
      - Make sure that the oil is filled to the specified level.
      - Make sure that the coolant is filled to the specified level.
      - Inflate the tires to the appropriate pressure.
      - Unload the trunk and vehicle, ensuring that the spare tire, tools and jack are in their original positions.
      - Sit a person of average weight (68 kg, 150 lb) in the driver's seat.
2. **PREPARE FOR FOG LIGHT AIMING**

a. Prepare the vehicle:

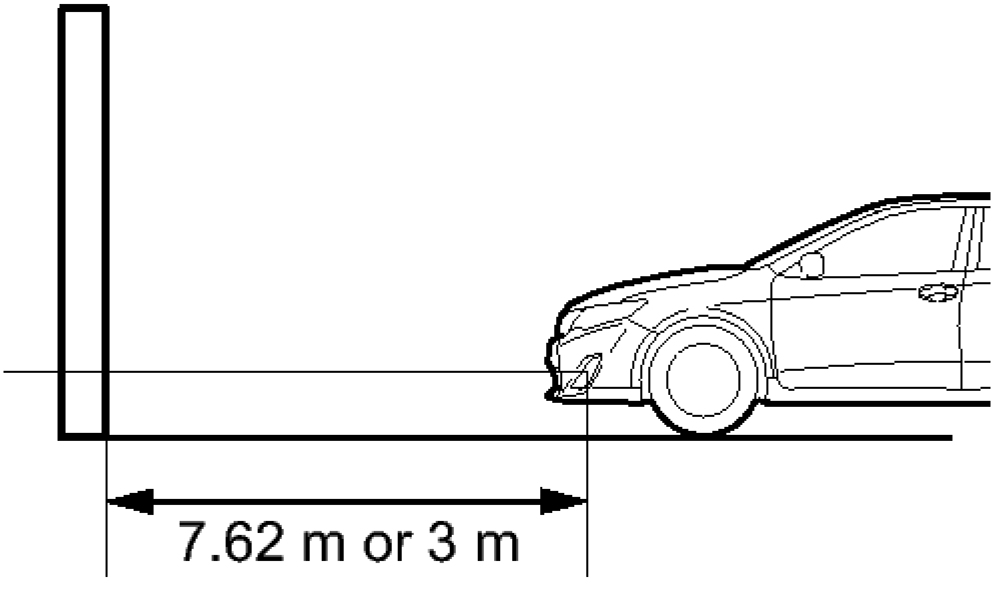

Fig. 43: Identifying Fog Light Aiming Distance (Using A Screen)
Courtesy of TOYOTA MOTOR SALES, U.S.A., INC.

- Place the vehicle in a location that is dark enough to clearly observe the cutoff line. The cutoff line is a distinct line, below which light from the fog lights can be observed and above which it cannot.
- Place the vehicle at a 90° angle to the wall.
- Create a 7.62 m (25 ft.) distance between the vehicle (fog light bulb center) and the wall.
- Make sure that the vehicle is on a level surface.
- Position the front wheels straight ahead.
- Bounce the vehicle up and down to settle the suspension.

NOTE: **A distance of 7.62 m (25 ft.) between the vehicle (fog light bulb center) and the wall is necessary for proper aim adjustment. If sufficient space is not available, secure a distance of exactly 3 m (9.84 ft.) to allow for checking and adjustment of fog light aim. (The size of the target zone will change with the distance, so follow the instructions in the illustration.)**

b. Prepare a piece of thick white paper (approximately 2 m (6.56 ft.) (height) x 4 m (13.1 ft.) (width)) to use as a screen.

c. Draw a vertical line down the center of the screen (V line).

d. Set the screen as shown in the illustration.

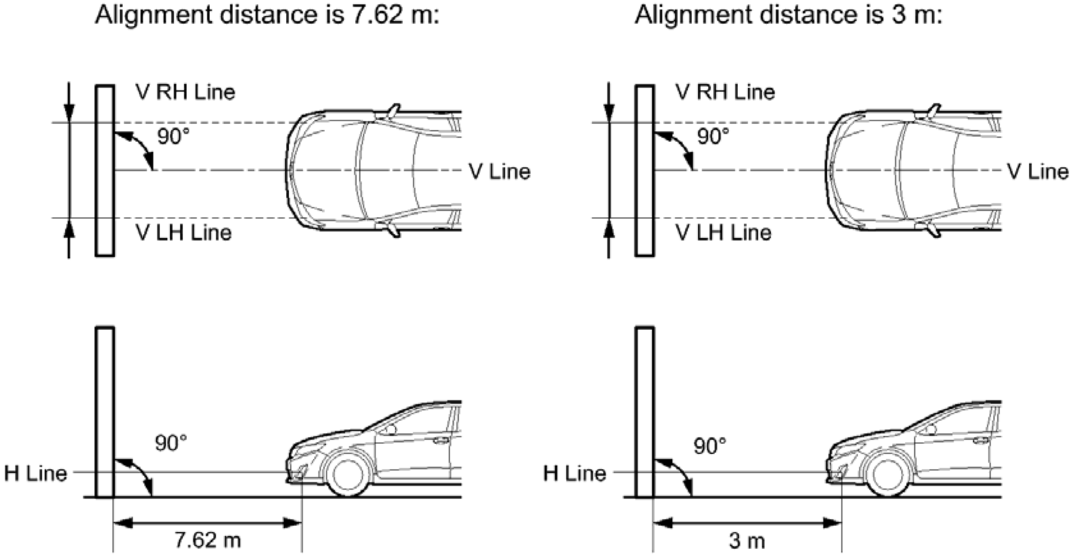
Alignment distance is 7.62 m:
Alignment distance is 3 m:
V RH Line
90°
V Line
V LH Line
V RH Line
90°
V Line
V LH Line
H Line
90°
7.62 m
H Line
90°
3 m
P

Fig. 44: Identifying Fog Light Aiming Distance (Using A Screen)
Courtesy of TOYOTA MOTOR SALES, U.S.A., INC.

HINT:

- Stand the screen perpendicular to the ground.
- Align the V line on the screen with the center of the vehicle.

e. Draw base lines (H, V LH, and V RH lines) on the screen as shown in the illustration.

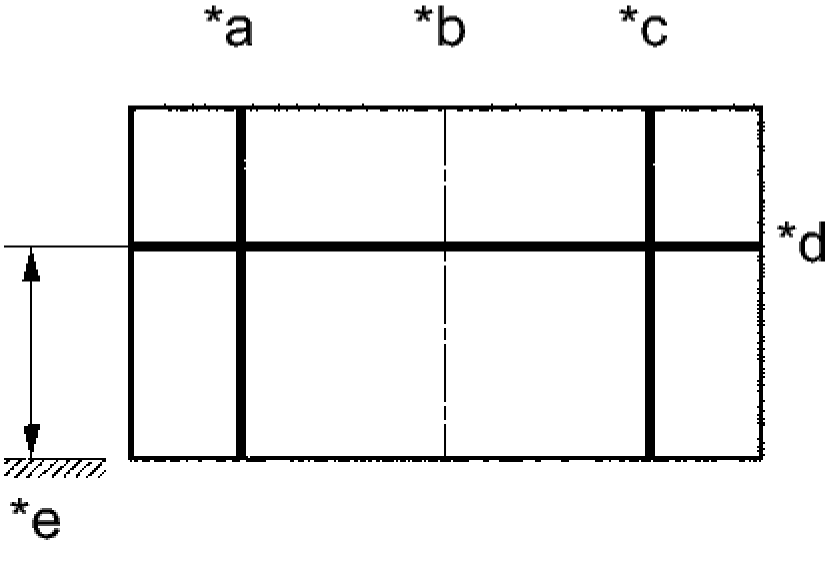

Fig. 45: Identifying V LH Line, V RH Line Graph

Courtesy of TOYOTA MOTOR SALES, U.S.A., INC.

TEXT IN ILLUSTRATION

*a	V LH Line
*b	V Line
*c	V RH Line
*d	H Line
*e	Ground

HINT:

Mark the fog light bulb center marks on the screen. If the center mark cannot be observed on the fog light, use the center of the fog light bulb.

1. H Line (Fog light height):

   Draw a horizontal line across the screen so that it passes through the center marks. The H line should be at the same height as the fog light bulb center marks of the fog lights.

2. V LH Line, V RH Line (Center mark position of left-hand (LH) and right-hand (RH) fog lights):

   Draw two vertical lines so that they intersect the H line at each center mark (aligned with the center of the fog light bulbs).

3. **INSPECT FOG LIGHT AIMING**
   - a. Cover the fog light or disconnect the connector of the fog light on the opposite side to prevent light from the fog light that is not being inspected from affecting the fog light aiming inspection.
   - b. Start the engine.
   - c. Turn on the fog lights and check if the upper edge of the hot zone for each fog light matches the upper edge as shown in the illustration.

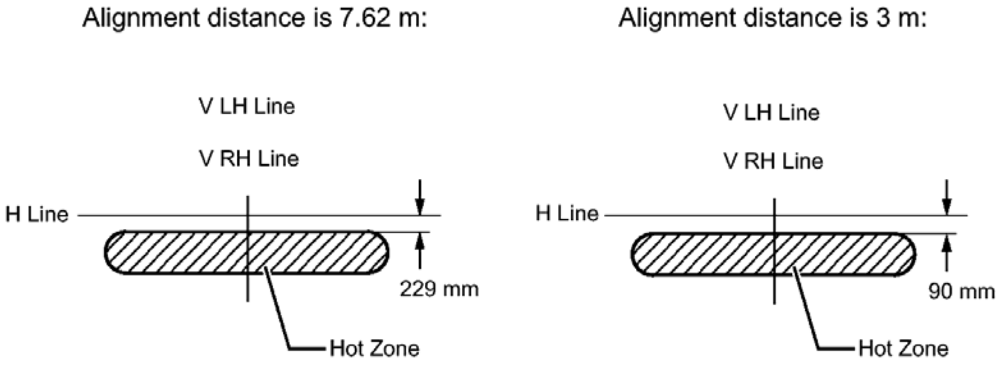
Alignment distance is 7.62 m:
V LH Line
V RH Line
H Line
229 mm
Hot Zone
Alignment distance is 3 m:
V LH Line
V RH Line
H Line
90 mm
Hot Zone

P

Fig. 46: Inspecting Fog Light Aiming
Courtesy of TOYOTA MOTOR SALES, U.S.A., INC.

HINT:

- If the alignment distance is 7.62 m (25 ft.):

  The upper edge of the hot zone for the fog light should be 229 mm (9.02 in.) below the H line.

- If the alignment distance is 3 m (9.84 ft.):

  The upper edge of the hot zone for the fog light should be 90 mm (3.54 in.) below the H line.

4. **ADJUST FOG LIGHT AIMING**
   a. Adjust the aim vertically:

      Adjust the aim of each fog light to the specified range by turning each aiming screw with a screwdriver.

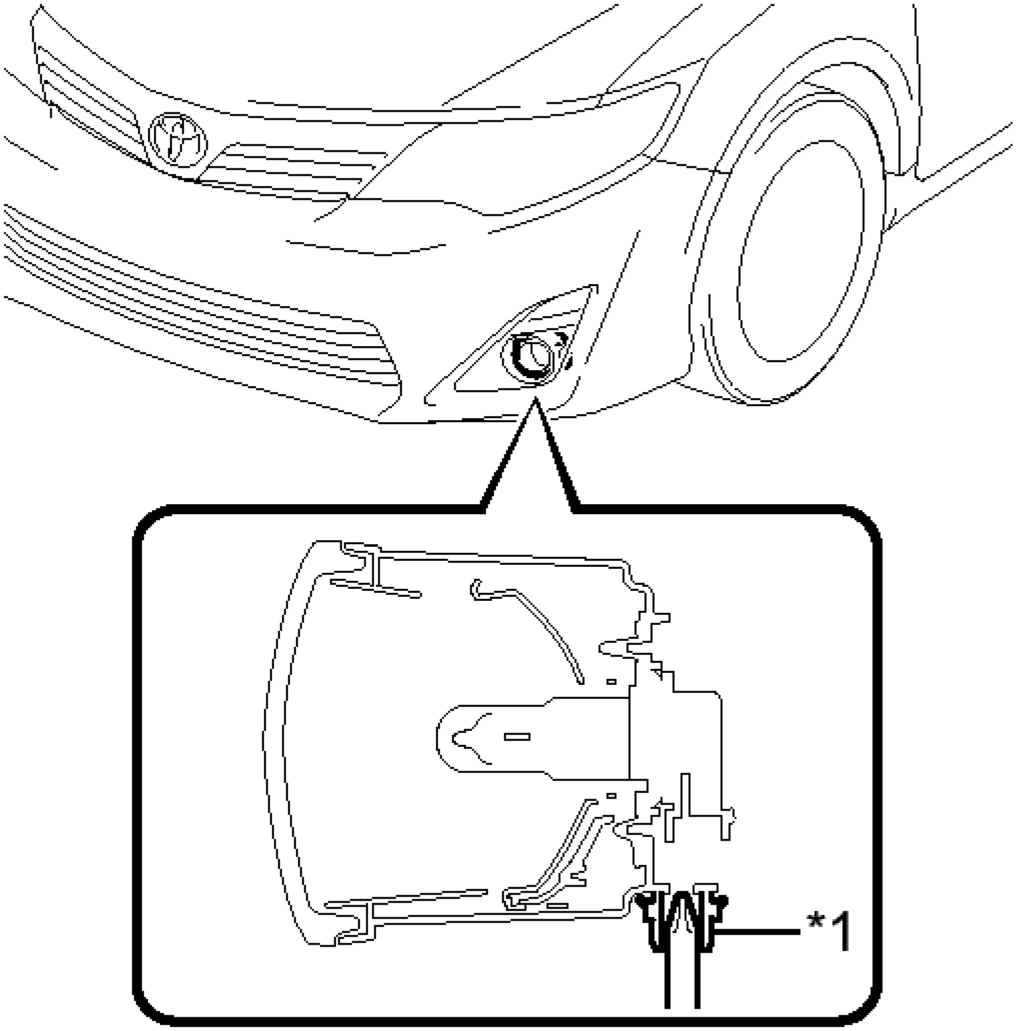

P

Fig. 47: Adjusting Fog Light Aim
Courtesy of TOYOTA MOTOR SALES, U.S.A., INC.

TEXT IN ILLUSTRATION

*1	Aiming Screw

NOTE: **The final turn of the aiming screw should be made in the clockwise direction. If the screw is tightened excessively, loosen it and then retighten it, so that the final turn of the screw is in the clockwise direction.**

HINT:

If it is not possible to correctly adjust fog light aim, check bulb, fog light unit and fog light unit reflector installation.

REASSEMBLY

REASSEMBLY

1. **INSTALL FOG LIGHT BULB**
    a. Turn the fog light bulb in the direction indicated by the arrow shown in the illustration to install it.

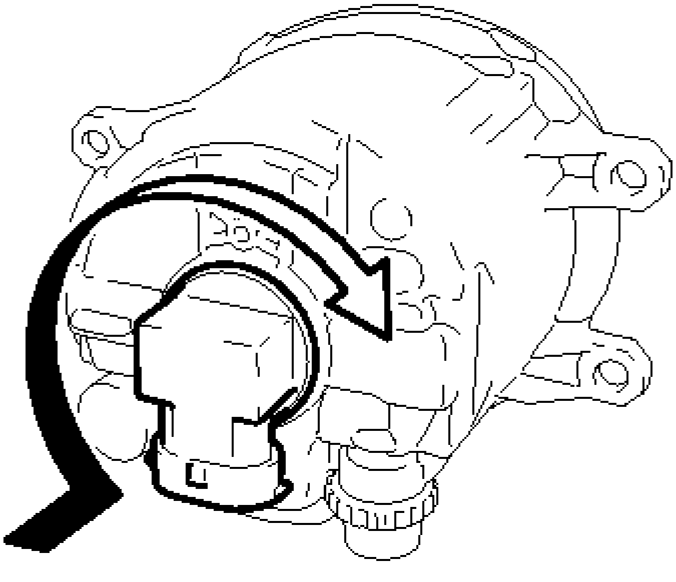

Fig. 48: Installing Fog Light Bulb
Courtesy of TOYOTA MOTOR SALES, U.S.A., INC.

NOTE: **Do not touch the bulb glass.**

INSTALLATION

INSTALLATION

HINT:

- Use the same procedure for the RH and LH sides.
- The procedure described below is for the LH side.

1. **INSTALL FOG LIGHT ASSEMBLY**
    a. Engage the 2 guides.
    b. Install the fog light assembly with the screw.

    Torque: 1.6 N*m (16 kgf*cm, 14 in.*lbf)

2. **INSTALL FRONT BUMPER ASSEMBLY**

   Refer to **INSTALLATION** .

SIDE TURN SIGNAL LIGHT ASSEMBLY

COMPONENTS

ILLUSTRATION

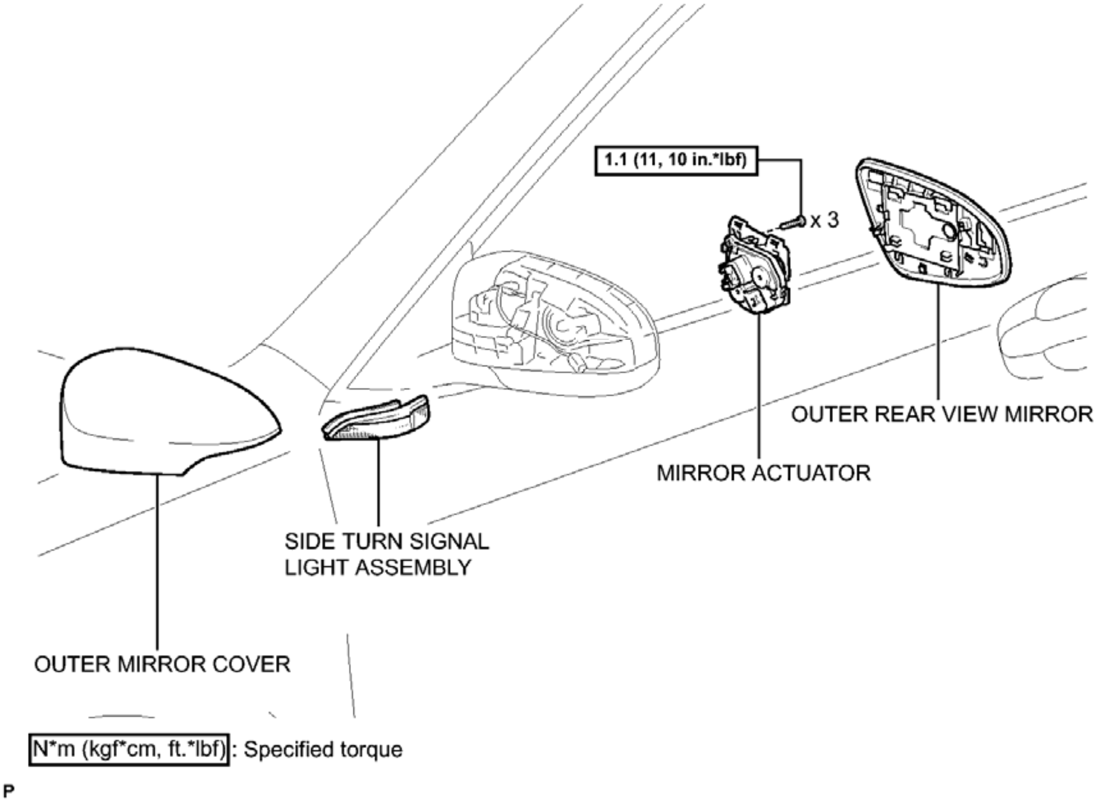
1.1 (11, 10 in.*lbf)
x 3
OUTER REAR VIEW MIRROR
MIRROR ACTUATOR
SIDE TURN SIGNAL LIGHT ASSEMBLY
OUTER MIRROR COVER
N*m (kgf*cm, ft.*lbf): Specified torque
P

Fig. 49: Identifying Side Turn Signal Light Assembly Replacement Components With Torque Specifications
Courtesy of TOYOTA MOTOR SALES, U.S.A., INC.

REMOVAL

REMOVAL

HINT:

- Use the same procedure for the RH and LH sides.

- The procedure described below is for the LH side.

1. **REMOVE OUTER REAR VIEW MIRROR** . Refer to **REMOVAL - Step 2** .
2. **REMOVE OUTER MIRROR COVER** . Refer to **REMOVAL - Step 4** .
3. **REMOVE SIDE TURN SIGNAL LIGHT ASSEMBLY**
    a. Disengage the 2 claws.

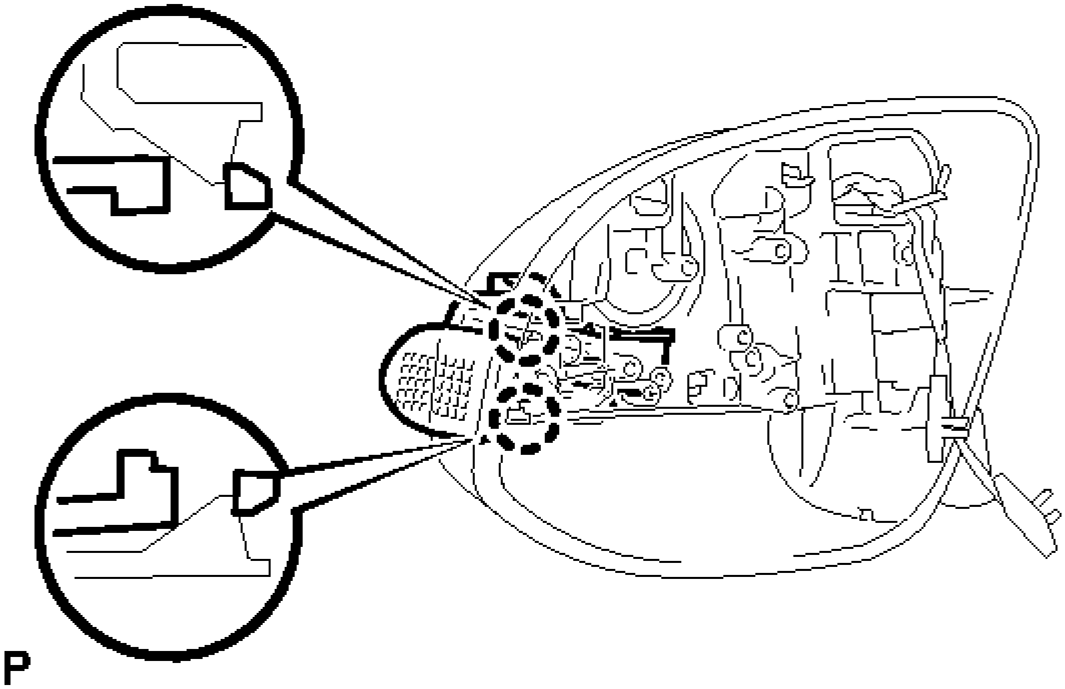

Fig. 50: Identifying Side Turn Signal Light Assembly
Courtesy of TOYOTA MOTOR SALES, U.S.A., INC.

    b. Disconnect the connector and remove the side turn signal light assembly.

INSPECTION

INSPECTION

1. **INSPECT SIDE TURN SIGNAL LIGHT ASSEMBLY LH**
    a. Connect a positive (+) lead from the battery to terminal 1 and a negative (-) lead to terminal 2.

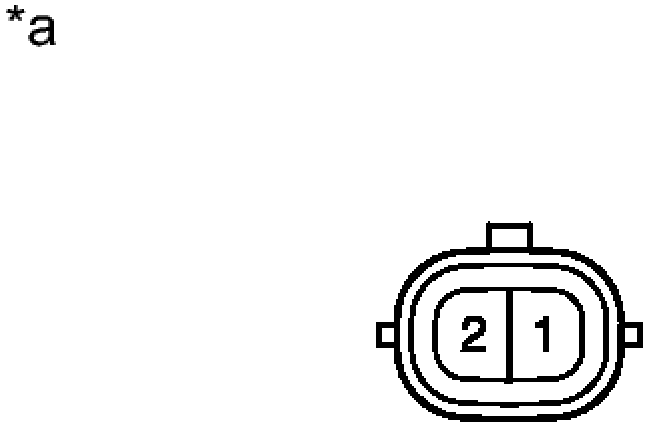

Fig. 51: Identifying Turn Signal Light Assembly Connector
Courtesy of TOYOTA MOTOR SALES, U.S.A., INC.

b. Check that the side turn signal light comes on.

OK

The light comes on.

TEXT IN ILLUSTRATION

*a	Component without harness connected (Side Turn Signal Light Assembly LH)

If the result is not as specified, replace the side turn signal light assembly LH.

2. **INSPECT SIDE TURN SIGNAL LIGHT ASSEMBLY RH**
    a. Connect a positive (+) lead from the battery to terminal 1 and a negative (-) lead to terminal 2.

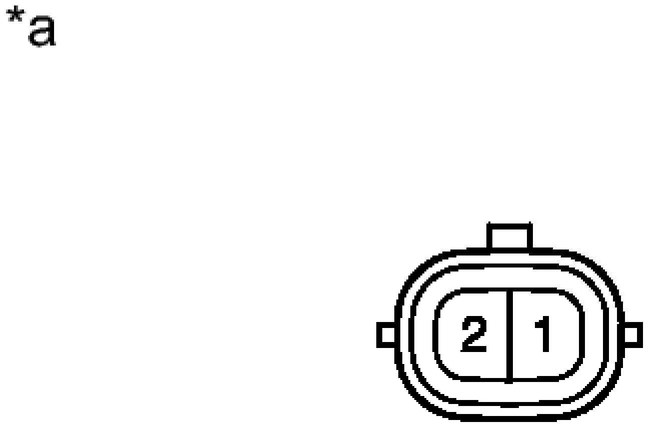

Fig. 52: Identifying Turn Signal Light Assembly Connector
Courtesy of TOYOTA MOTOR SALES, U.S.A., INC.

b. Check that the side turn signal light comes on.

OK

The light comes on.

TEXT IN ILLUSTRATION

*a	Component without harness connected (Side Turn Signal Light Assembly RH)

If the result is not as specified, replace the side turn signal light assembly RH.

INSTALLATION

INSTALLATION

HINT:

- Use the same procedure for the RH and LH sides.
- The procedure described below is for the LH side.

1. **INSTALL SIDE TURN SIGNAL LIGHT ASSEMBLY**
    a. Connect the connector.
    b. Engage the 2 claws to install the side turn signal light assembly.
2. **INSTALL OUTER MIRROR COVER** . Refer to **INSTALLATION - Step 2** .
3. **INSTALL OUTER REAR VIEW MIRROR** . Refer to **INSTALLATION - Step 2** .

REAR COMBINATION LIGHT ASSEMBLY

COMPONENTS

ILLUSTRATION

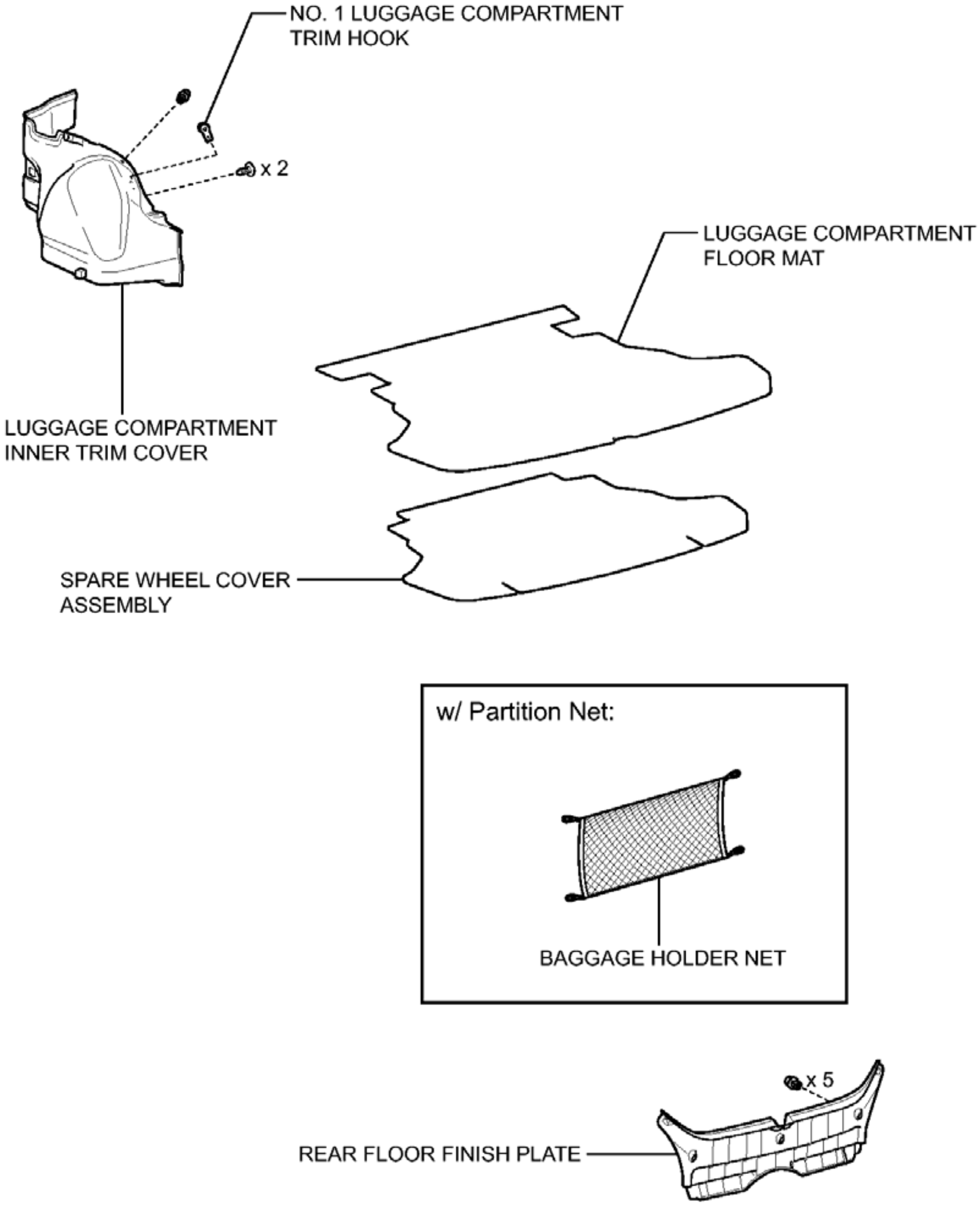
NO. 1 LUGGAGE COMPARTMENT TRIM HOOK
x 2
LUGGAGE COMPARTMENT FLOOR MAT
LUGGAGE COMPARTMENT INNER TRIM COVER
SPARE WHEEL COVER ASSEMBLY
w/ Partition Net:
BAGGAGE HOLDER NET
x 5
REAR FLOOR FINISH PLATE

P

Fig. 53: Identifying Rear Combination Light Assembly Replacement Components (1 Of 2)
Courtesy of TOYOTA MOTOR SALES, U.S.A., INC.

ILLUSTRATION

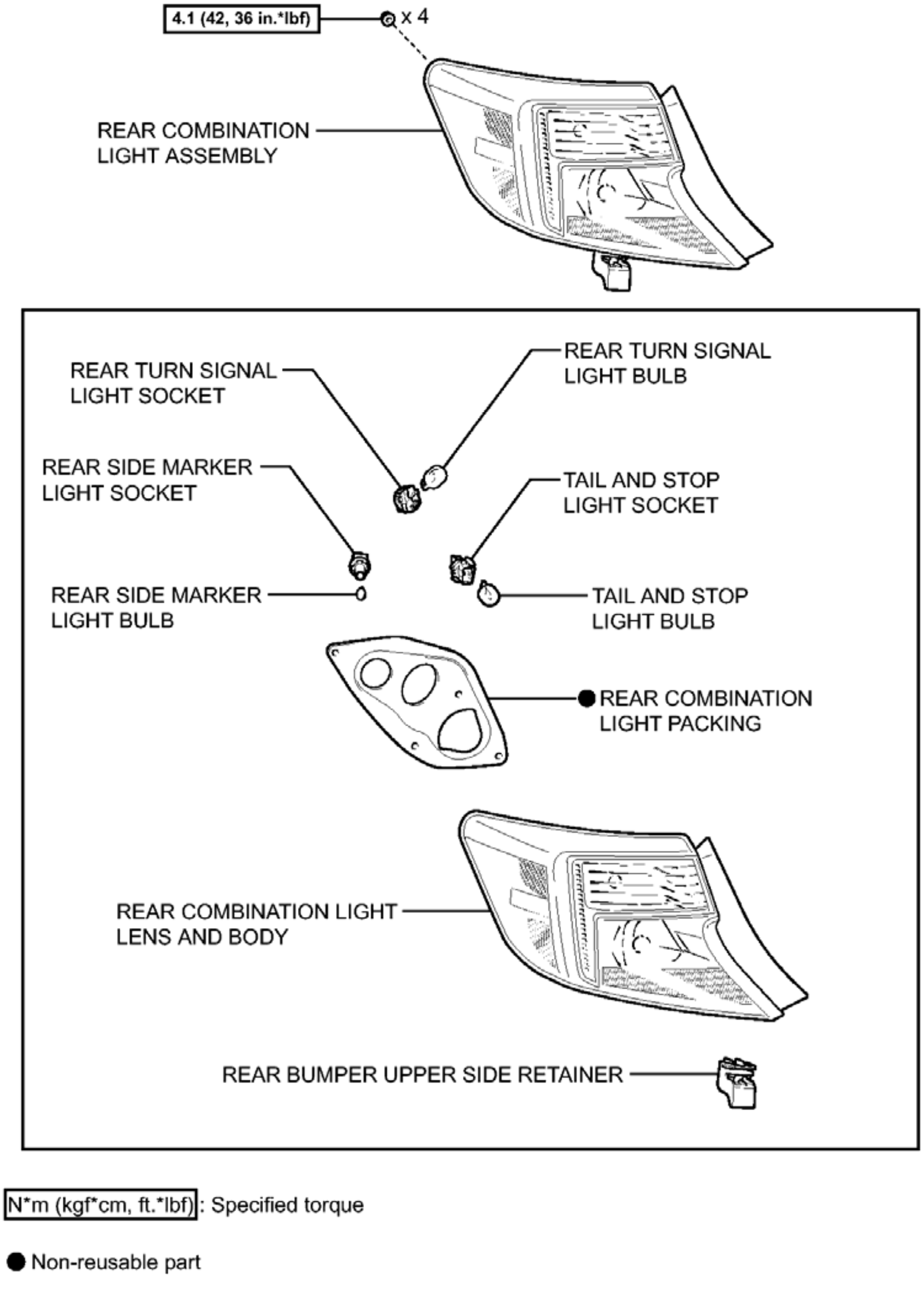
4.1 (42, 36 in.*lbf)
x 4
REAR COMBINATION LIGHT ASSEMBLY
REAR TURN SIGNAL LIGHT SOCKET
REAR TURN SIGNAL LIGHT BULB
REAR SIDE MARKER LIGHT SOCKET
TAIL AND STOP LIGHT SOCKET
REAR SIDE MARKER LIGHT BULB
TAIL AND STOP LIGHT BULB
● REAR COMBINATION LIGHT PACKING
REAR COMBINATION LIGHT LENS AND BODY
REAR BUMPER UPPER SIDE RETAINER
N*m (kgf*cm, ft.*lbf): Specified torque
● Non-reusable part
P

Fig. 54: Identifying Rear Combination Light Assembly Replacement Components With Torque Specifications (2 Of 2)
Courtesy of TOYOTA MOTOR SALES, U.S.A., INC.

ON-VEHICLE INSPECTION

ON-VEHICLE INSPECTION

1. **INSPECT REAR COMBINATION LIGHT ASSEMBLY LH**

a. Disconnect the connector from the rear combination light assembly LH.

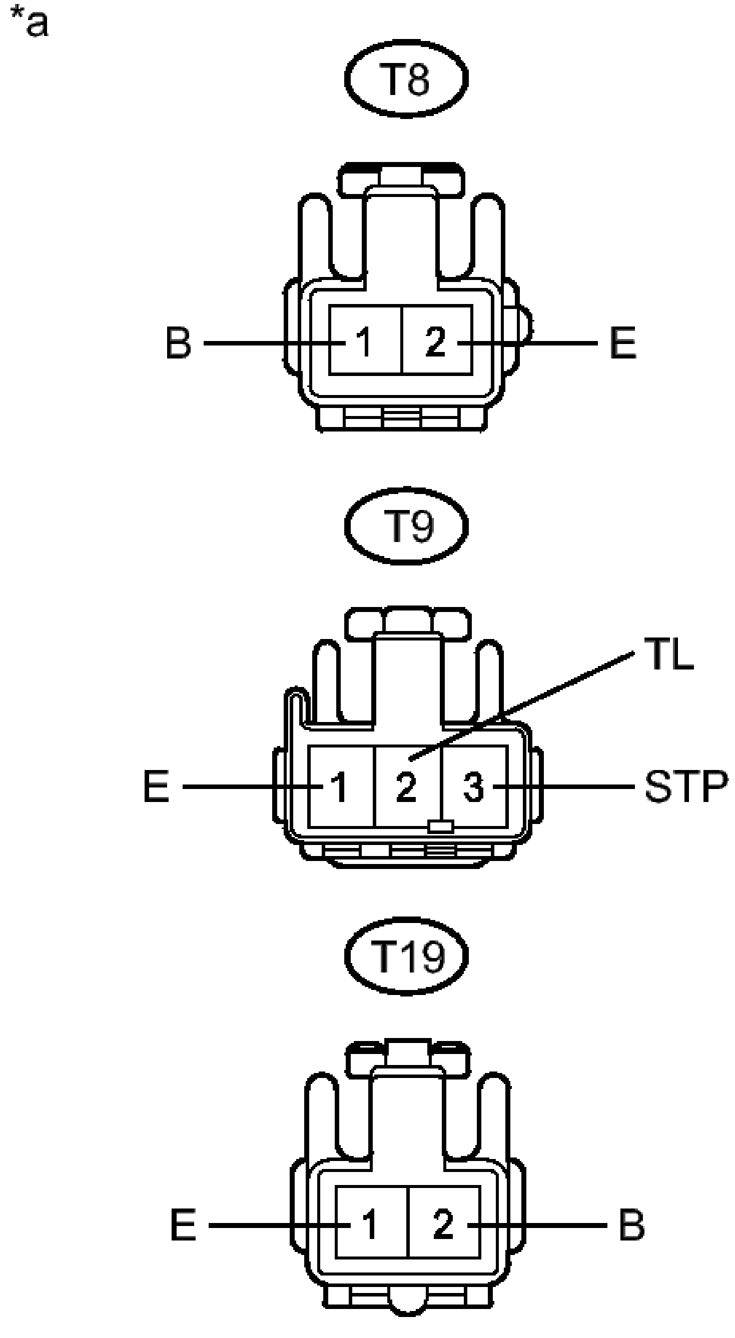
*a
T8
B
1
2
E
T9
TL
E
1
2
3
STP
T19
E
1
2
B

H

Fig. 55: Inspecting Rear Combination Light Assembly LH Connectors
Courtesy of TOYOTA MOTOR SALES, U.S.A., INC.

b. Measure the voltage according to the value(s) in the table below.

Standard Voltage

Tester Connection	Switch Condition	Specified Condition
T8-1 (B)-T8-2 (E)	Turn signal switch in neutral position	Below 1 V
	Turn signal switch in left turn position	11 to 14 V (60 to 120 times per minute)
T9-2 (TL) - T9-1 (E)	Light control switch off	Below 1 V
	Light control switch in tail position	11 to 14 V
T9-3 (STP) - T9-1 (E)	Brake pedal released	Below 1 V
	Brake pedal depressed	11 to 14 V
T19-2 (B) - T19-1 (E)	Light control switch off	Below 1 V
	Light control switch in tail position	11 to 14 V

TEXT IN ILLUSTRATION

*a	Front view of wire harness connector (to Rear Combination

	Light Assembly LH)

If the result is not as specified, repair or replace the wire harness or connector.

2. **INSPECT REAR COMBINATION LIGHT ASSEMBLY RH**
    a. Disconnect the connector from the rear combination light assembly RH.

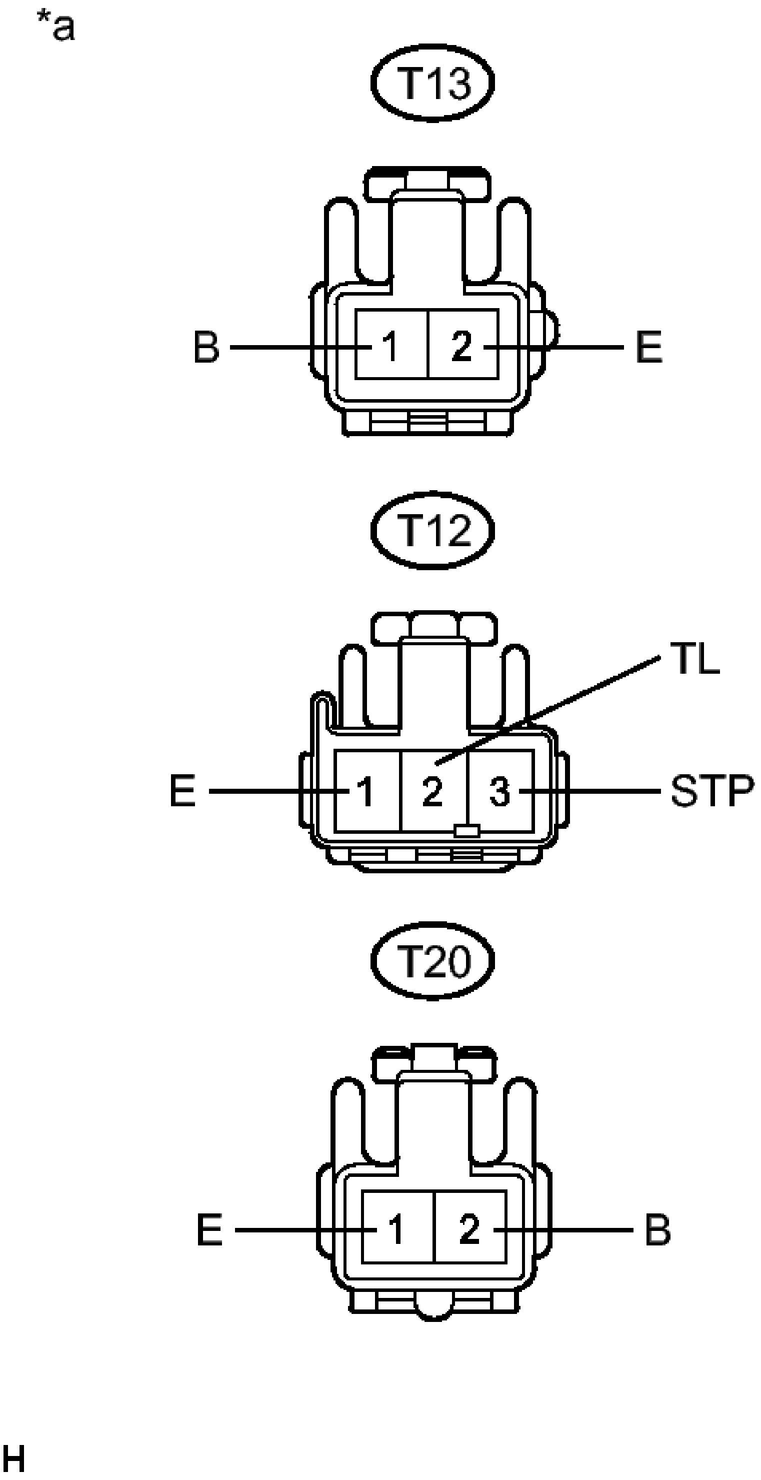
*a
T13
B
1
2
E
T12
TL
E
1
2
3
STP
T20
E
1
2
B
H

Fig. 56: Inspecting Rear Combination Light Assembly RH Connectors
Courtesy of TOYOTA MOTOR SALES, U.S.A., INC.

b. Measure the voltage according to the value(s) in the table below.

Standard Voltage

Tester Connection	Switch Condition	Specified Condition
T13-1 (B) - T13-2 (E)	Turn signal switch in neutral position	Below 1 V
	Turn signal switch in right turn position	11 to 14 V (60 to 120 times per minute)
T12-2 (TL) - T12-1 (E)	Light control switch off	Below 1 V
	Light control switch in tail position	11 to 14 V
T12-3 (STP) - T12-1 (E)	Brake pedal released	Below 1 V
	Brake pedal depressed	11 to 14 V
T20-2 (B) - T20-1 (E)	Light control switch off	Below 1 V
	Light control switch in tail position	11 to 14 V

TEXT IN ILLUSTRATION

*a	Front view of wire harness connector (to Rear Combination Light Assembly

	RH)

If the result is not as specified, repair or replace the wire harness or connector.

REMOVAL

REMOVAL

HINT:

- Use the same procedure for the RH and LH sides.
- The procedure described below is for the LH side.

1. **REMOVE REAR BUMPER ASSEMBLY**

   Refer to **REMOVAL** .

2. **REMOVE LUGGAGE COMPARTMENT FLOOR MAT** . Refer to **REMOVAL - Step 1** .
3. **REMOVE SPARE WHEEL COVER ASSEMBLY** . Refer to **REMOVAL - Step 2** .
4. **REMOVE BAGGAGE HOLDER NET (w/ Partition Net)** . Refer to **REMOVAL - Step 3** .
5. **REMOVE REAR FLOOR FINISH PLATE** . Refer to **REMOVAL - Step 4** .
6. **REMOVE NO. 1 LUGGAGE COMPARTMENT TRIM HOOK** . Refer to **REMOVAL - Step 22** .
7. **REMOVE LUGGAGE COMPARTMENT INNER TRIM COVER** . Refer to **REMOVAL - Step 6** .
8. **REMOVE REAR COMBINATION LIGHT ASSEMBLY**
   a. Disconnect each connector.

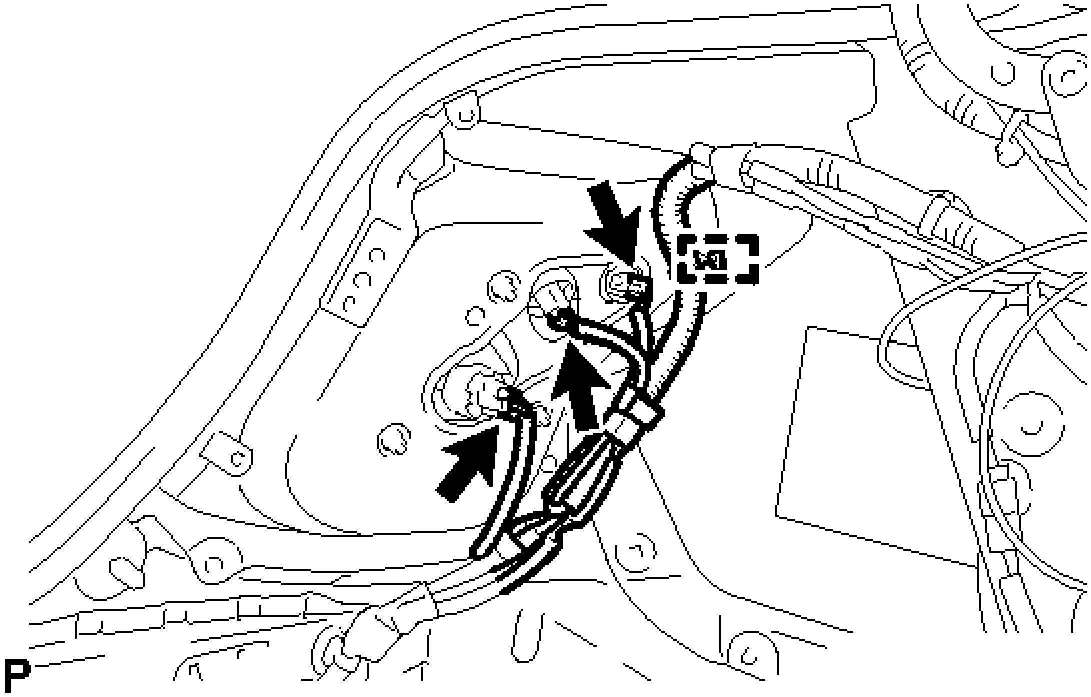

Fig. 57: Identifying Rear Combination Light Assembly Connectors And Clamp
Courtesy of TOYOTA MOTOR SALES, U.S.A., INC.

b. Disengage the clamp.
c. Remove the 4 nuts and rear combination light assembly.

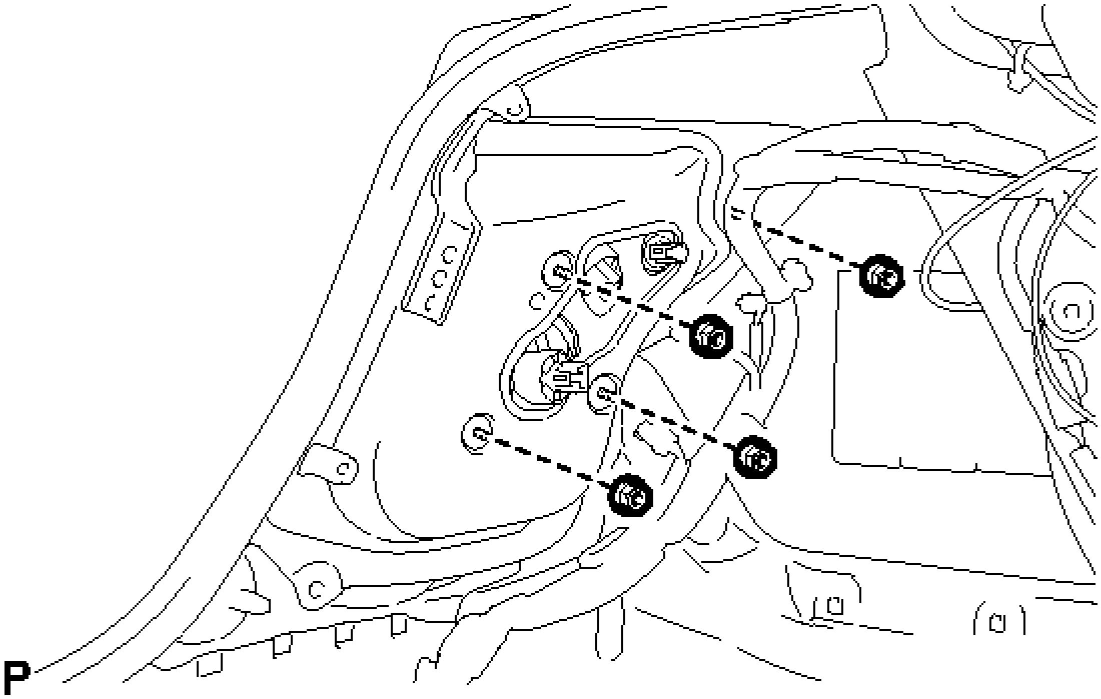

Fig. 58: Identifying Rear Combination Light Assembly Fasteners

Courtesy of TOYOTA MOTOR SALES, U.S.A., INC.

DISASSEMBLY

DISASSEMBLY

1. **REMOVE REAR COMBINATION LIGHT PACKING**
    a. Remove the rear combination light packing.

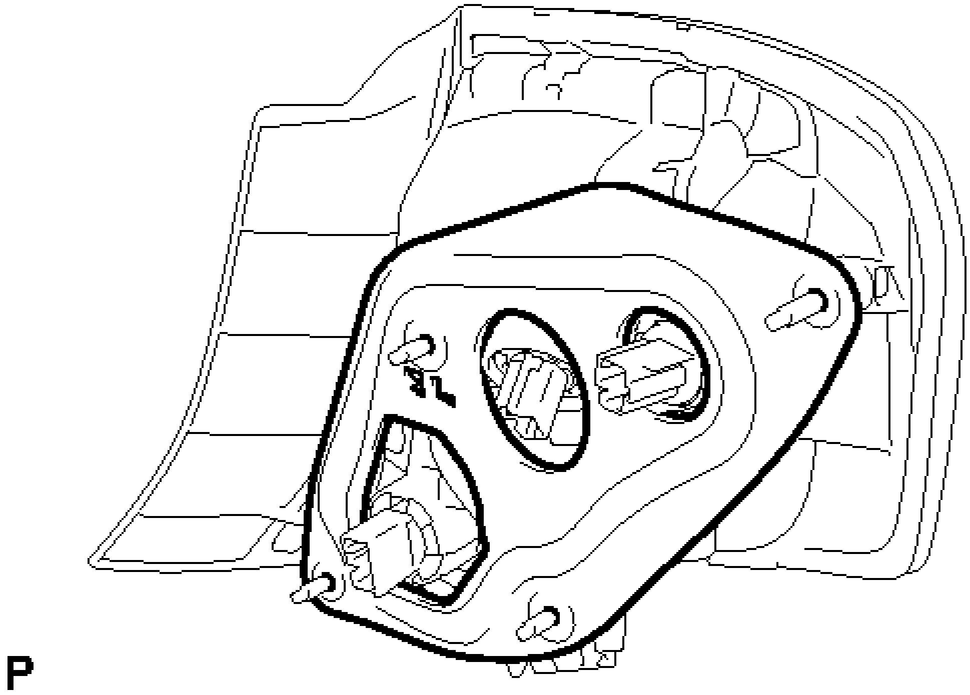

Fig. 59: Identifying Rear Combination Light Packing
Courtesy of TOYOTA MOTOR SALES, U.S.A., INC.

NOTE:

- **Be sure to remove all the traces of the old packing from the body.**
- **Do not reuse the removed packing. Be sure to install a new rear combination light packing to prevent water ingress.**

2. **REMOVE REAR SIDE MARKER LIGHT BULB**
    a. Turn the rear side marker light socket with the rear side marker light bulb in the direction indicated by the arrow shown in the illustration, and remove them as a unit.

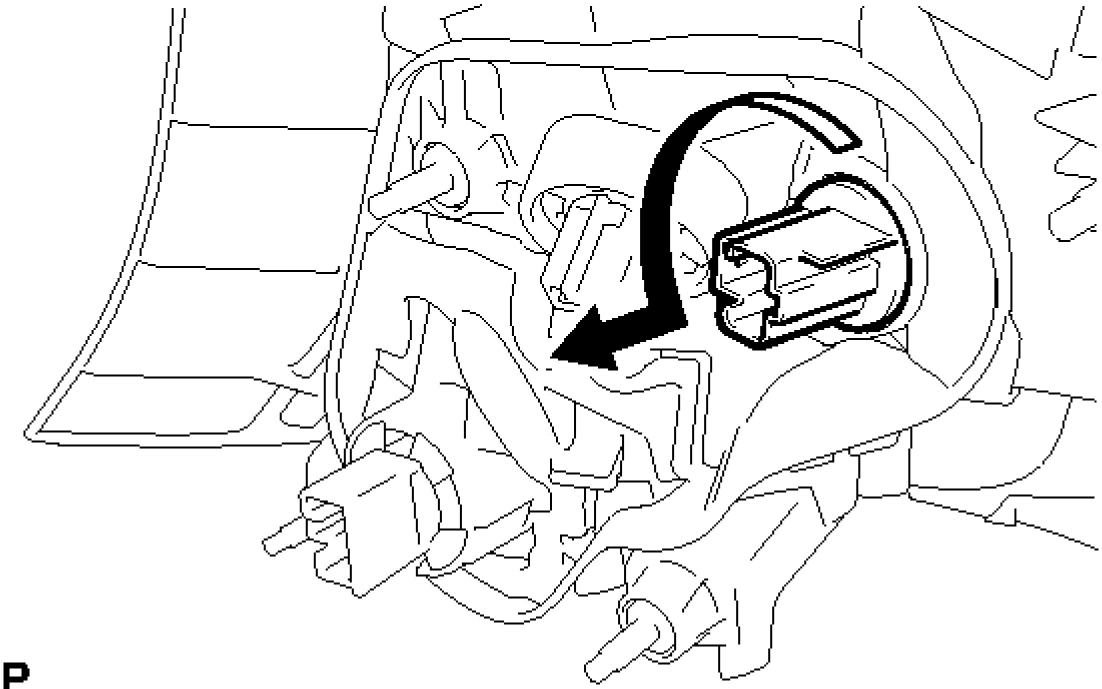

Fig. 60: Removing Rear Side Marker Light Bulb
Courtesy of TOYOTA MOTOR SALES, U.S.A., INC.

b. Remove the rear side marker light bulb from the rear side marker light socket.

3. **REMOVE REAR TURN SIGNAL LIGHT BULB**
   a. Turn the rear turn signal light socket with the rear turn signal light bulb in the direction indicated by the arrow shown in the illustration, and remove them as a unit.

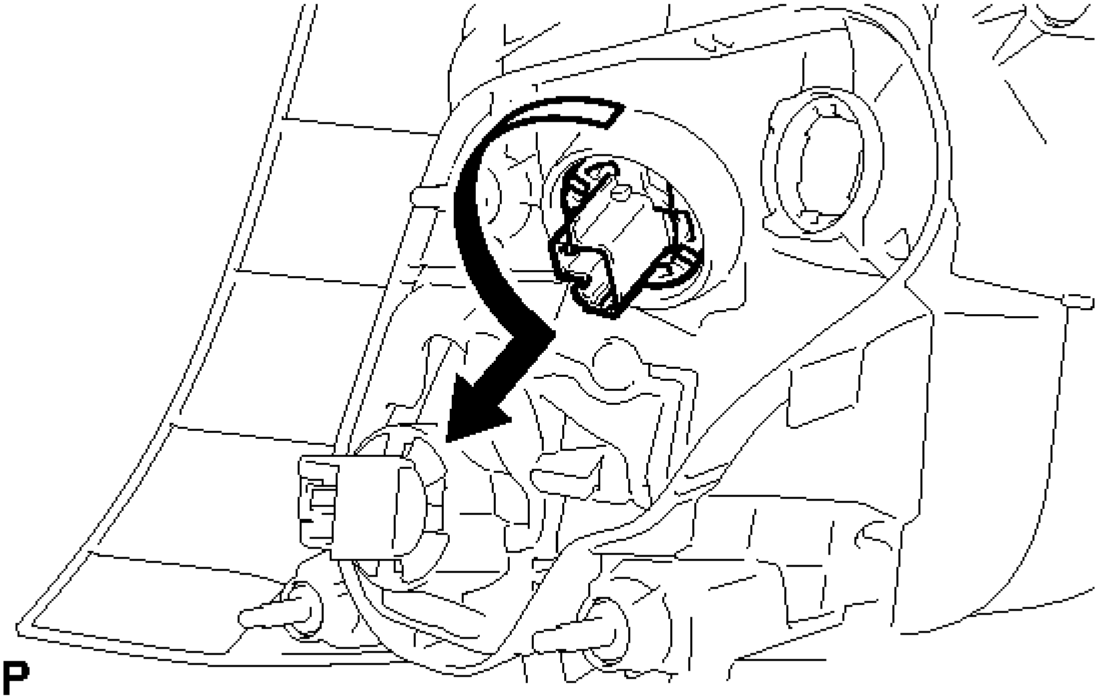

Fig. 61: Removing Rear Turn Signal Light Bulb
Courtesy of TOYOTA MOTOR SALES, U.S.A., INC.

b. Remove the rear turn signal light bulb from the rear turn signal light socket.

4. **REMOVE TAIL AND STOP LIGHT BULB**

   a. Turn the tail and stop light socket with the tail and stop light bulb in the direction indicated by the arrow shown in the illustration, and remove them as a unit.

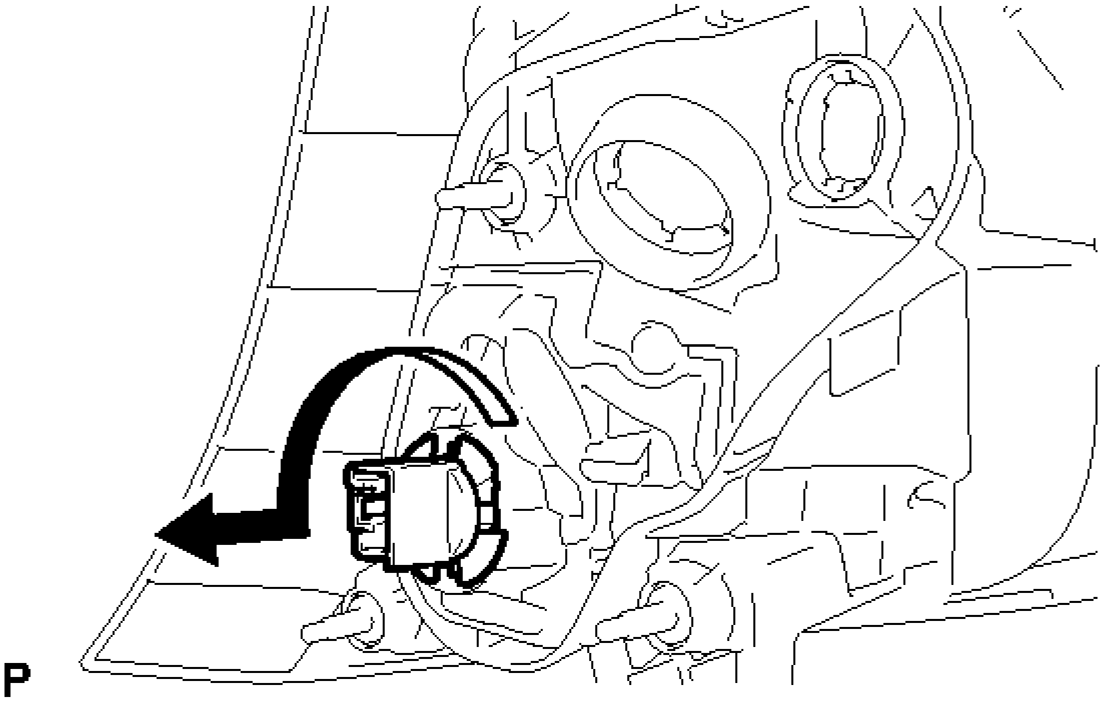

Fig. 62: Removing Tail And Stop Light Bulb
Courtesy of TOYOTA MOTOR SALES, U.S.A., INC.

b. Remove the tail and stop light bulb from the tail and stop light socket.

5. **REMOVE REAR BUMPER UPPER SIDE RETAINER**

   a. Using a screwdriver, disengage the claw and remove the rear bumper upper side retainer as shown in the illustration.

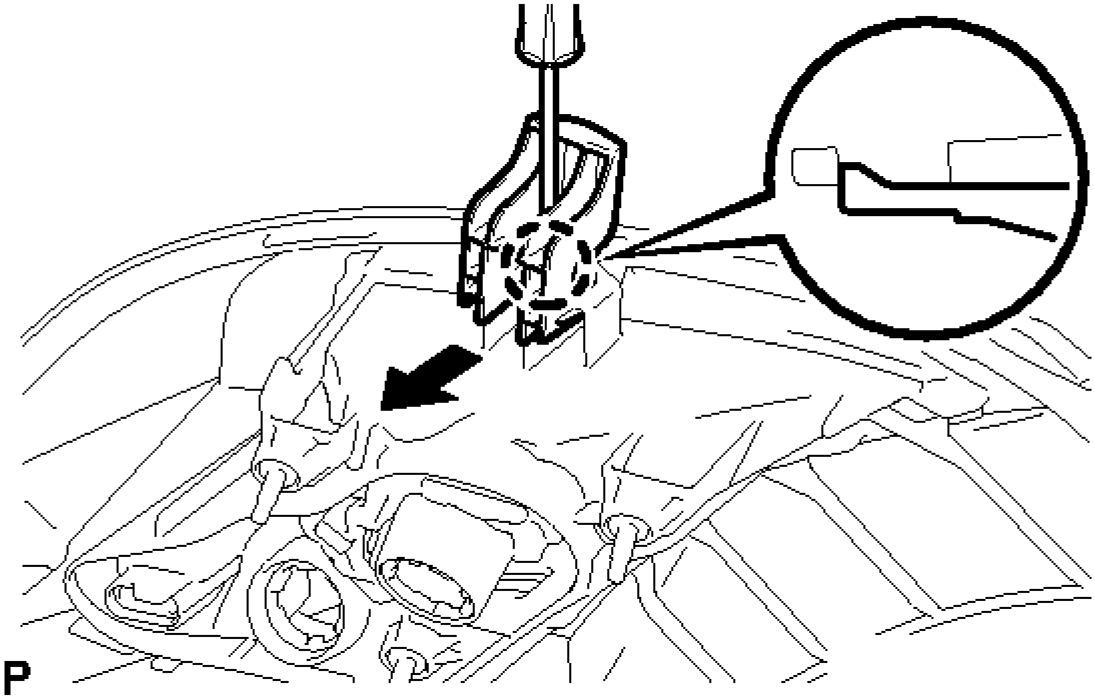

Fig. 63: Removing Rear Bumper Upper Side Retainer
Courtesy of TOYOTA MOTOR SALES, U.S.A., INC.

REASSEMBLY

REASSEMBLY

1. **INSTALL REAR BUMPER UPPER SIDE RETAINER**
    a. Engage the claw to install the rear bumper upper side retainer as shown in the illustration.

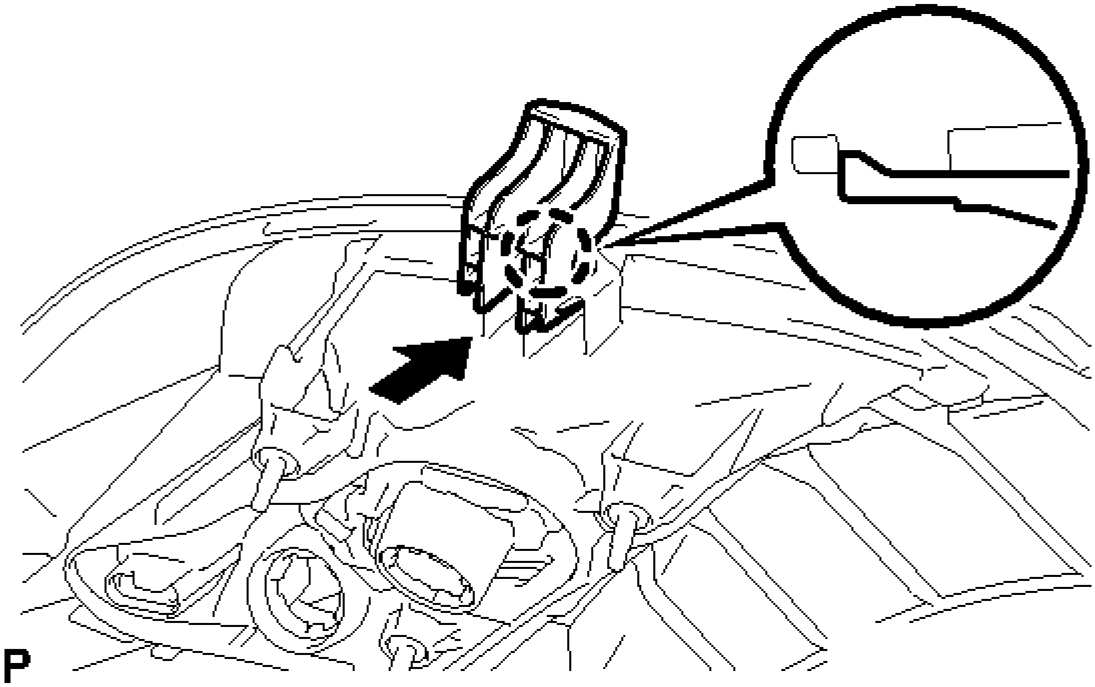

Fig. 64: Installing Rear Bumper Upper Side Retainer
Courtesy of TOYOTA MOTOR SALES, U.S.A., INC.

2. **INSTALL TAIL AND STOP LIGHT BULB**
    a. Install the tail and stop light bulb to the tail and stop light socket.
    b. Turn the tail and stop light socket with the tail and stop light bulb in the direction indicated by the arrow shown in the illustration to install them as a unit.

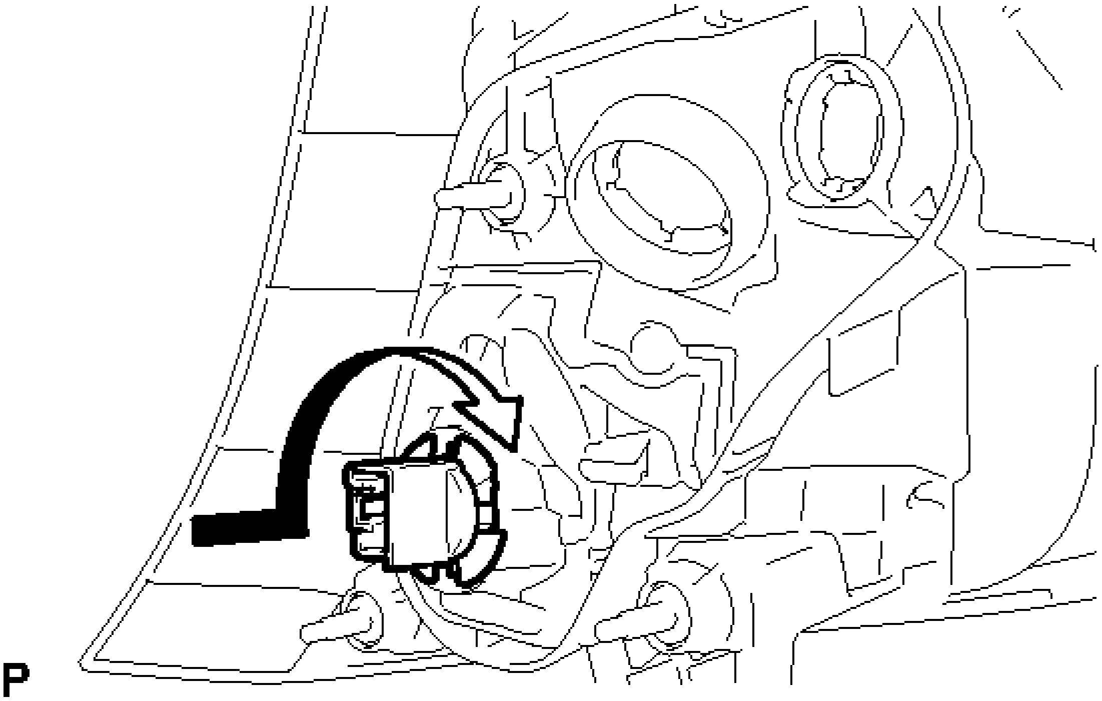

Fig. 65: Installing Tail And Stop Light Bulb
Courtesy of TOYOTA MOTOR SALES, U.S.A., INC.

3. **INSTALL REAR TURN SIGNAL LIGHT BULB**
    1. Install the rear turn signal light bulb to the rear turn signal light socket.
    2. Turn the rear turn signal light socket with the rear turn signal light bulb in the direction indicated by the arrow shown in the illustration to install them as a unit.

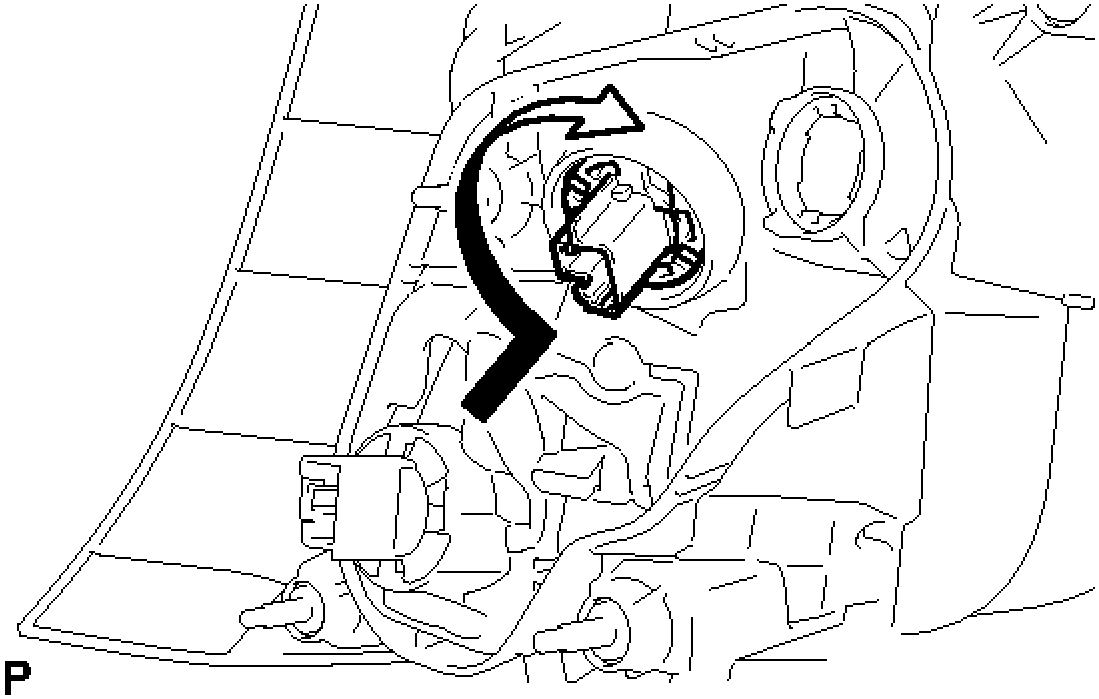

Fig. 66: Installing Rear Turn Signal Light Bulb
Courtesy of TOYOTA MOTOR SALES, U.S.A., INC.

4. **INSTALL REAR SIDE MARKER LIGHT BULB**
    a. Install the rear side marker light bulb to the rear side marker light socket.
    b. Turn the rear side marker light socket with the rear side marker light bulb in the direction indicated by the arrow shown in the illustration to install them as a unit.

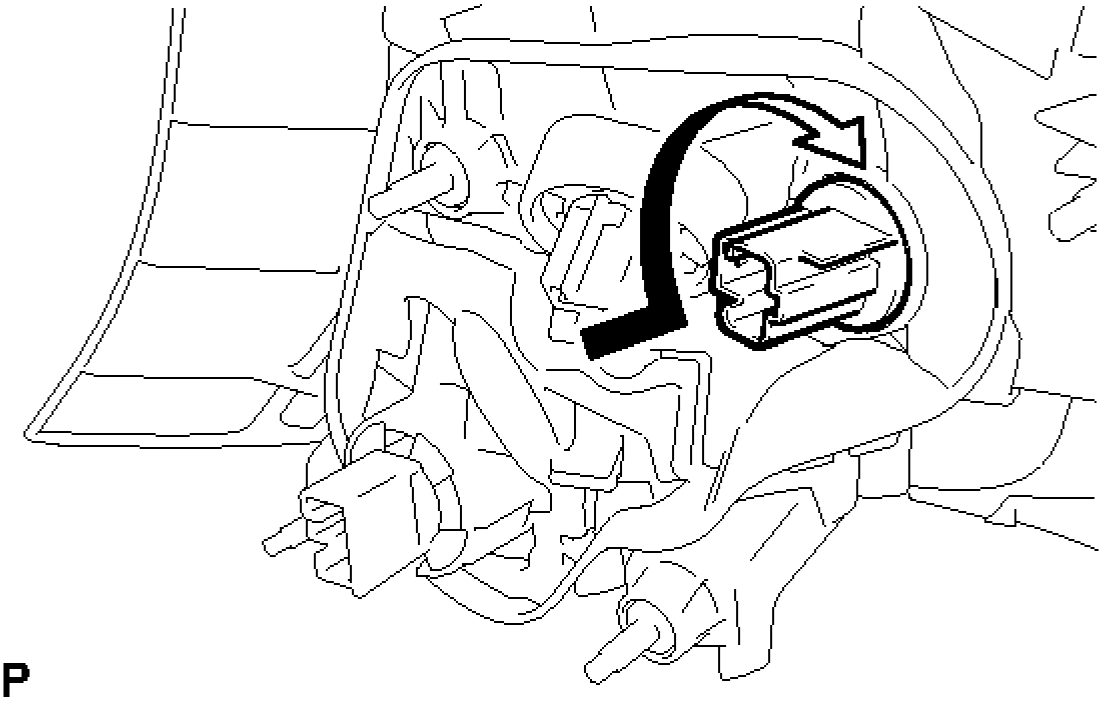

Fig. 67: Installing Rear Side Marker Light Bulb
Courtesy of TOYOTA MOTOR SALES, U.S.A., INC.

5. **INSTALL REAR COMBINATION LIGHT PACKING**
    a. Install a new rear combination light packing.

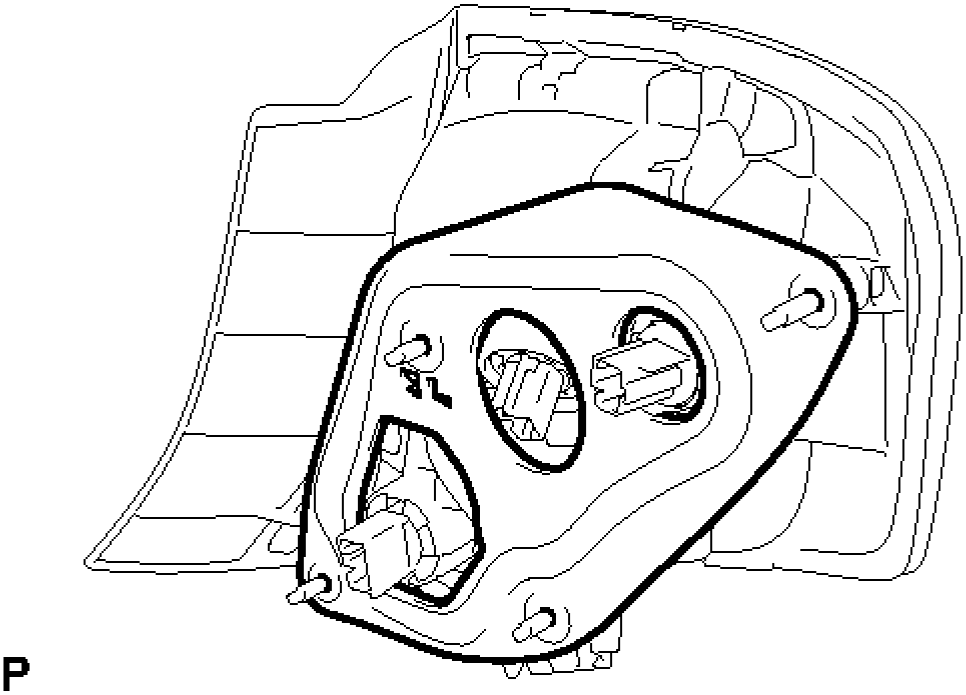

Fig. 68: Identifying Rear Combination Light Packing

INSTALLATION

INSTALLATION

HINT:

- Use the same procedure for the RH and LH sides.
- The procedure described below is for the LH side.

1. **INSTALL REAR COMBINATION LIGHT ASSEMBLY**
    1. Install the rear combination light assembly with the 4 nuts.

       Torque: 4.1 N*m (42 kgf*cm, 36 in.*lbf)

    2. Engage the clamp.
    3. Connect each connector.
2. **INSTALL LUGGAGE COMPARTMENT INNER TRIM COVER** . Refer to **INSTALLATION - Step 6** .
3. **INSTALL NO. 1 LUGGAGE COMPARTMENT TRIM HOOK** . Refer to **INSTALLATION - Step 4** .
4. **INSTALL REAR FLOOR FINISH PLATE** . Refer to **INSTALLATION - Step 9** .
5. **INSTALL BAGGAGE HOLDER NET (w/ Partition Net)** . Refer to **INSTALLATION - Step 10** .
6. **INSTALL SPARE WHEEL COVER ASSEMBLY** . Refer to **INSTALLATION - Step 11** .
7. **INSTALL LUGGAGE COMPARTMENT FLOOR MAT** . Refer to **INSTALLATION - Step 12** .
8. **INSTALL REAR BUMPER ASSEMBLY**

   Refer to **INSTALLATION** .

REAR LIGHT ASSEMBLY

COMPONENTS

ILLUSTRATION

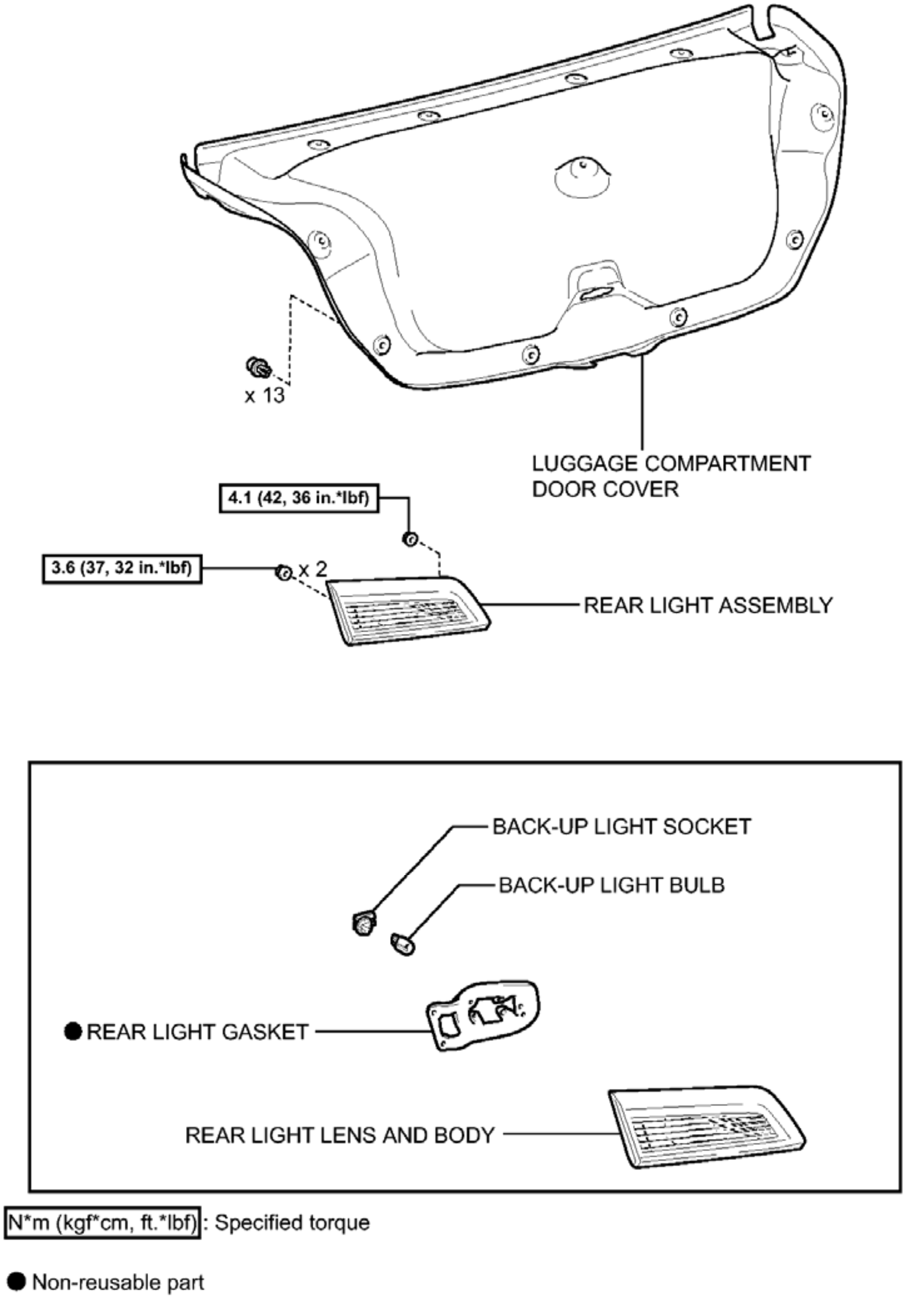
x 13
LUGGAGE COMPARTMENT DOOR COVER
4.1 (42, 36 in.*lbf)
3.6 (37, 32 in.*lbf)
x 2
REAR LIGHT ASSEMBLY
BACK-UP LIGHT SOCKET
BACK-UP LIGHT BULB
● REAR LIGHT GASKET
REAR LIGHT LENS AND BODY
N*m (kgf*cm, ft.*lbf): Specified torque
● Non-reusable part
P

Fig. 69: Identifying Rear Light Assembly Replacement Components With Torque Specifications
Courtesy of TOYOTA MOTOR SALES, U.S.A., INC.

ON-VEHICLE INSPECTION

ON-VEHICLE INSPECTION

1. **INSPECT REAR LIGHT ASSEMBLY LH**

a. Disconnect the connector from the rear light assembly LH.

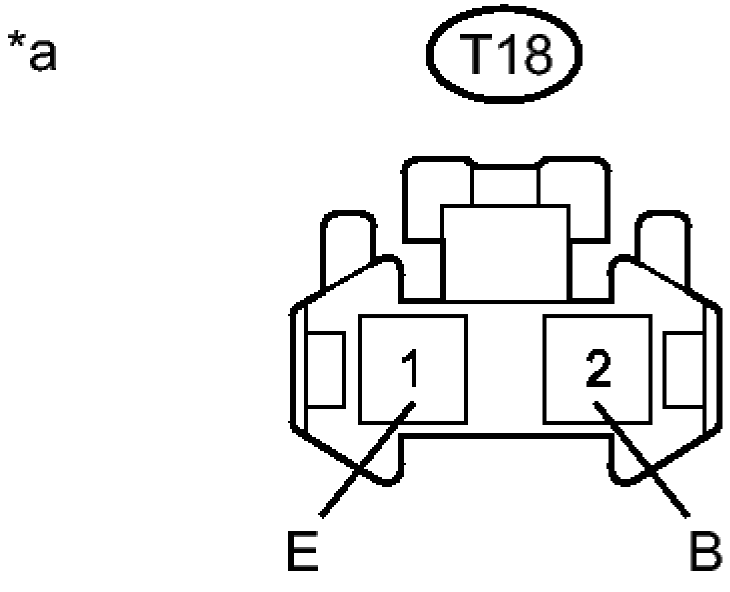

Fig. 70: Inspecting Rear Light Assembly LH Connector
Courtesy of TOYOTA MOTOR SALES, U.S.A., INC.

b. Measure the voltage according to the value(s) in the table below.

Standard Voltage

Tester Connection	Condition	Specified Condition
T18-2 (B/U) - T18-1 (E)	Engine started and the shift lever not in R	Below 1 V
	Engine started and the shift lever in R	11 to 14 V

TEXT IN ILLUSTRATION

	Front view of wire

*a	harness connector (to Rear Light Assembly LH)

If the result is not as specified, repair or replace the wire harness or connector.

2. **INSPECT REAR LIGHT ASSEMBLY RH**
   a. Disconnect the connector from the rear light assembly RH.

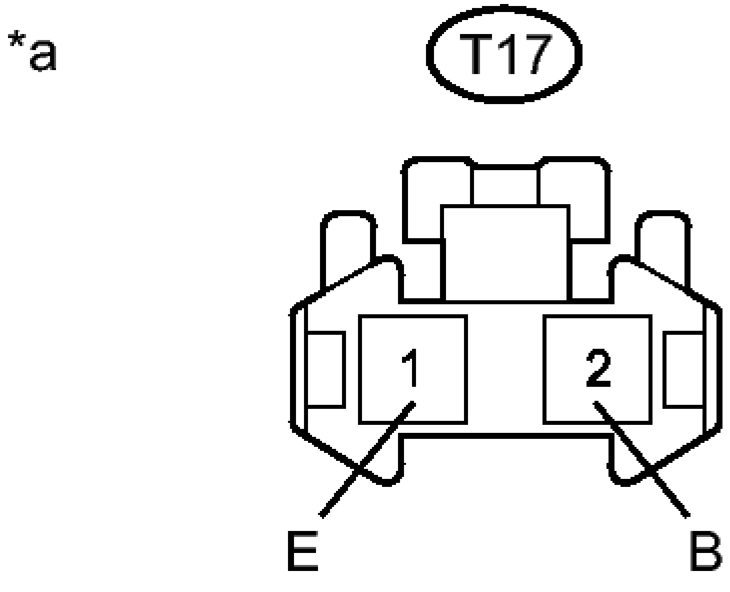

Fig. 71: Inspecting Rear Light Assembly RH Connector
Courtesy of TOYOTA MOTOR SALES, U.S.A., INC.

   b. Measure the voltage according to the value(s) in the table below.

Standard Voltage

Tester Connection	Condition	Specified Condition
T17-2 (B/U) -	Engine started and the shift lever not in R	Below 1 V

T17-1 (E)	Engine started and the shift lever in R	11 to 14 V

TEXT IN ILLUSTRATION

*a	Front view of wire harness connector (to Rear Light Assembly RH)

If the result is not as specified, repair or replace the wire harness or connector.

REMOVAL

REMOVAL

HINT:

- Use the same procedure for the RH and LH sides.
- The procedure described below is for the LH side.

1. **REMOVE LUGGAGE COMPARTMENT DOOR COVER** . Refer to **DISASSEMBLY - Step 1** .
2. **REMOVE REAR LIGHT ASSEMBLY**
    a. Disconnect the connector.

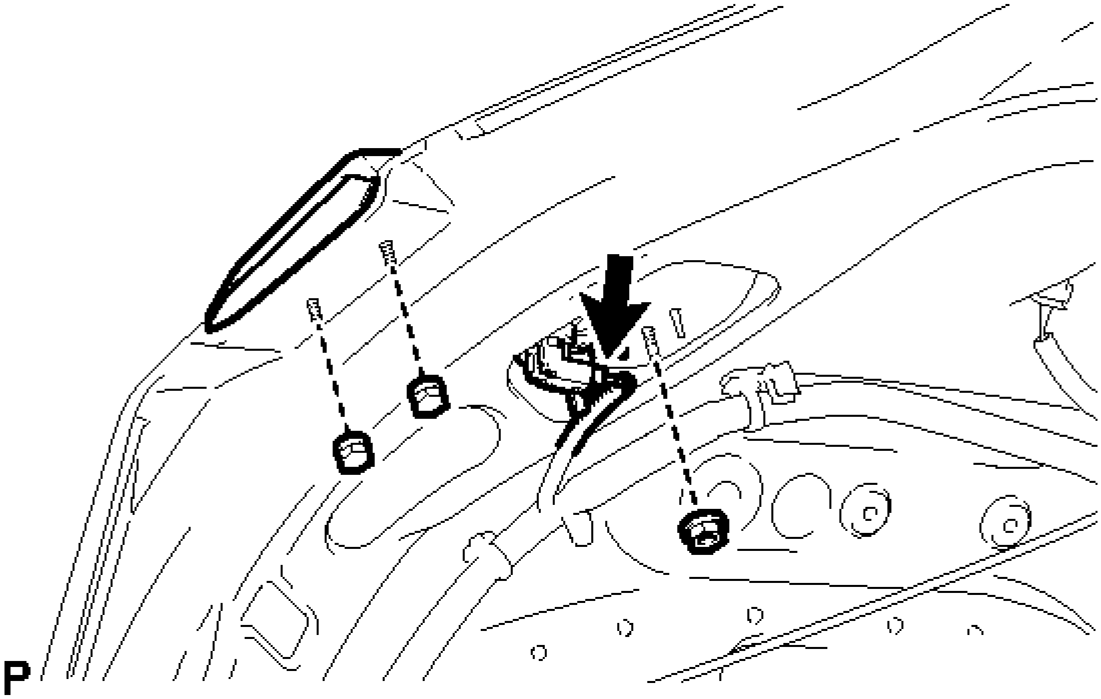

Fig. 72: Identifying Rear Light Assembly Connector And Fasteners
Courtesy of TOYOTA MOTOR SALES, U.S.A., INC.

b. Remove the 3 nuts and rear light assembly.

DISASSEMBLY

DISASSEMBLY

1. **REMOVE REAR LIGHT GASKET**
   a. Remove the rear light gasket.

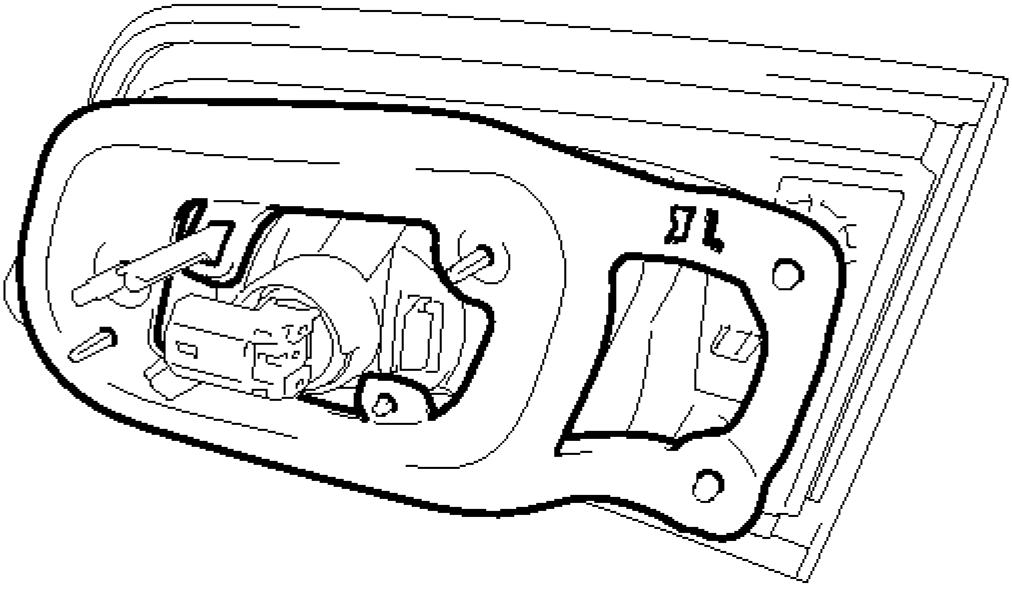

Fig. 73: Identifying Rear Light Gasket
Courtesy of TOYOTA MOTOR SALES, U.S.A., INC.

NOTE:

- **Be sure to remove all the traces of the old gasket from the body.**
- **Do not reuse the removed gasket. Be sure to install a new rear light gasket to prevent water ingress.**

2. **REMOVE BACK-UP LIGHT BULB**
    a. Turn the back-up light socket with the back-up light bulb in the direction indicated by the arrow shown in the illustration and remove them as a unit.

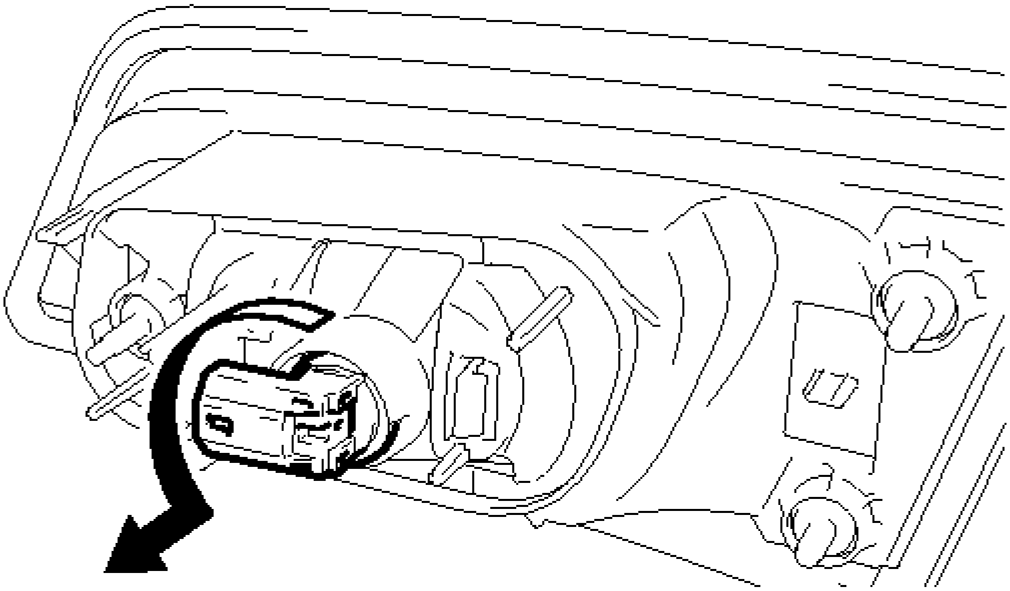

Fig. 74: Removing Back-Up Light Bulb
Courtesy of TOYOTA MOTOR SALES, U.S.A., INC.

b. Remove the back-up light bulb from the back-up light socket.

REASSEMBLY

REASSEMBLY

1. **INSTALL BACK-UP LIGHT BULB**
    a. Install the back-up light bulb to the back-up light socket.
    b. Turn the back-up light socket with the back-up light bulb in the direction indicated by the arrow shown in the illustration to install them as a unit.

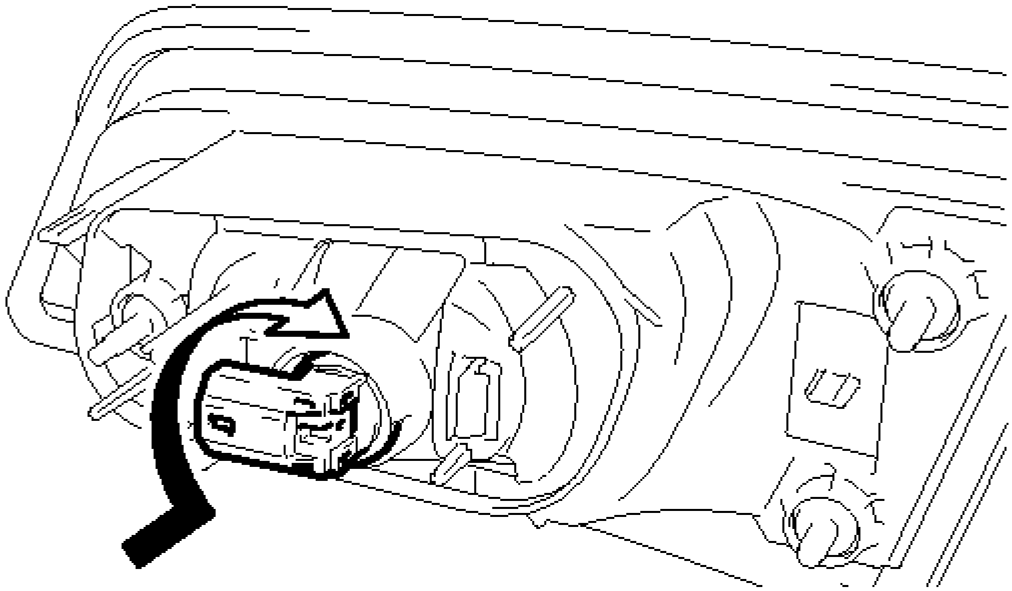

P

Fig. 75: Installing Back-Up Light Bulb
Courtesy of TOYOTA MOTOR SALES, U.S.A., INC.

2. **INSTALL REAR LIGHT GASKET**
   a. Install a new rear light gasket.

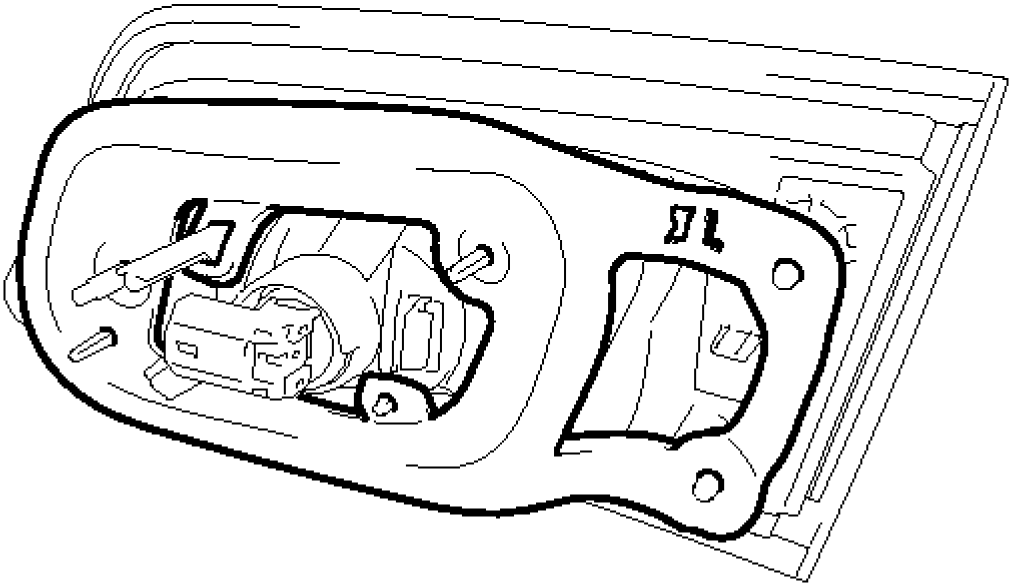

P

Fig. 76: Identifying Rear Light Gasket

Courtesy of TOYOTA MOTOR SALES, U.S.A., INC.

INSTALLATION

INSTALLATION

HINT:

- Use the same procedure for the RH and LH sides.
- The procedure described below is for the LH side.

1. **INSTALL REAR LIGHT ASSEMBLY**
    a. Install the rear light assembly with the 3 nuts.

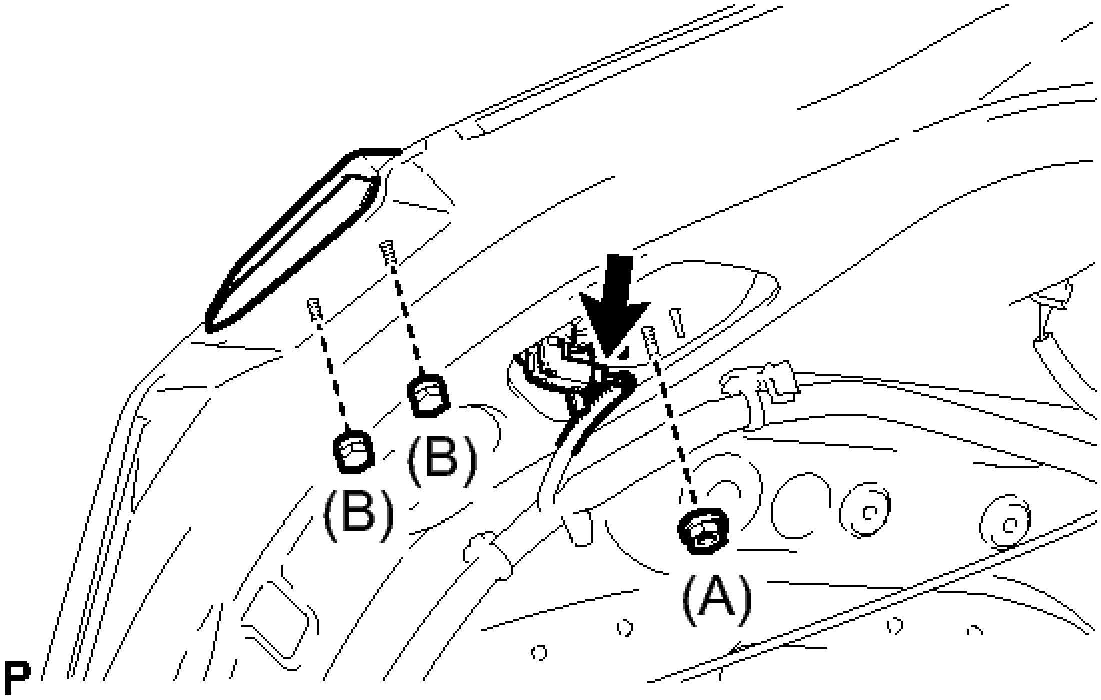

Fig. 77: Identifying Rear Light Assembly Connector And Fasteners
Courtesy of TOYOTA MOTOR SALES, U.S.A., INC.

Nut (A)

Torque: 4.1 N*m (42 kgf*cm, 36 in.*lbf)

Nut (B)

Torque: 3.6 N*m (37 kgf*cm, 32 in.*lbf)

    b. Connect the connector.
2. **INSTALL LUGGAGE COMPARTMENT DOOR COVER** . Refer to **REASSEMBLY - Step 12** .

LICENSE PLATE LIGHT ASSEMBLY

COMPONENTS

ILLUSTRATION

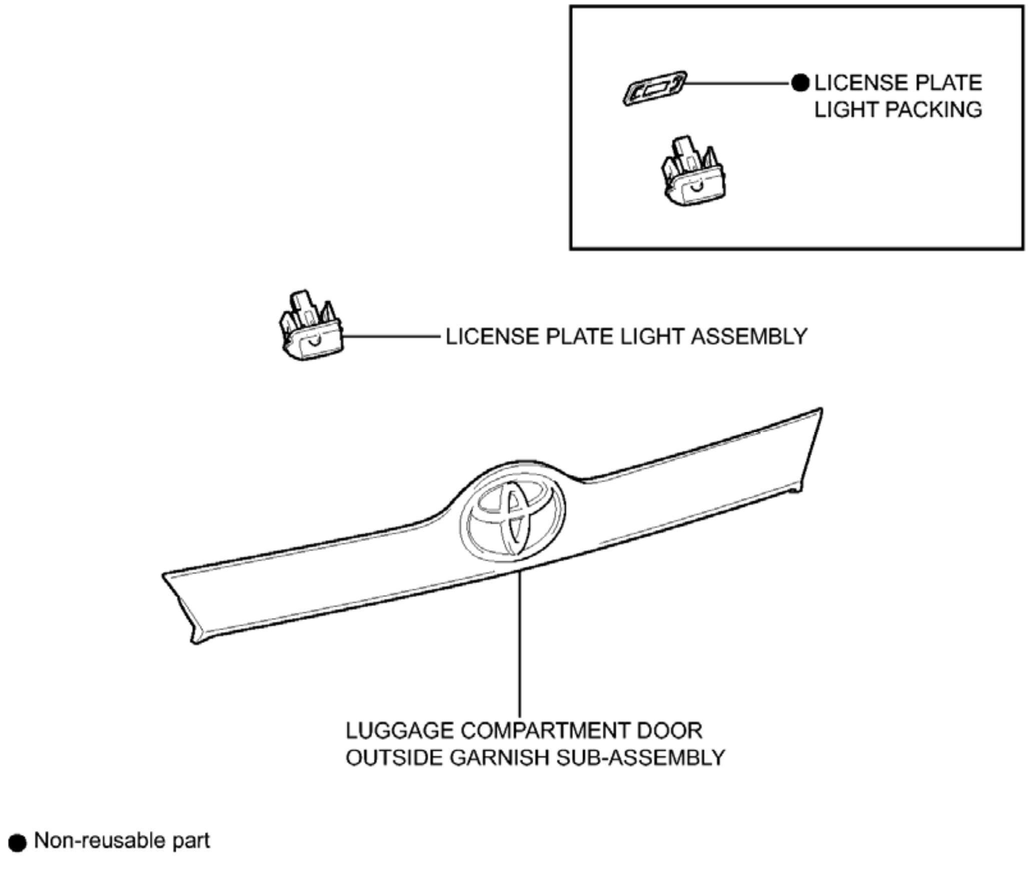
LICENSE PLATE LIGHT PACKING
LICENSE PLATE LIGHT ASSEMBLY
LUGGAGE COMPARTMENT DOOR OUTSIDE GARNISH SUB-ASSEMBLY
● Non-reusable part
P

Fig. 78: Identifying License Plate Light Assembly Replacement Components
Courtesy of TOYOTA MOTOR SALES, U.S.A., INC.

REMOVAL

REMOVAL

HINT:

- Use the same procedure for the RH and LH sides.
- The procedure described below is for the LH side.

1. **REMOVE LUGGAGE COMPARTMENT DOOR OUTSIDE GARNISH SUB-ASSEMBLY**

   Refer to **REMOVAL** .

2. **REMOVE LICENSE PLATE LIGHT ASSEMBLY**
    a. Disconnect the connector.

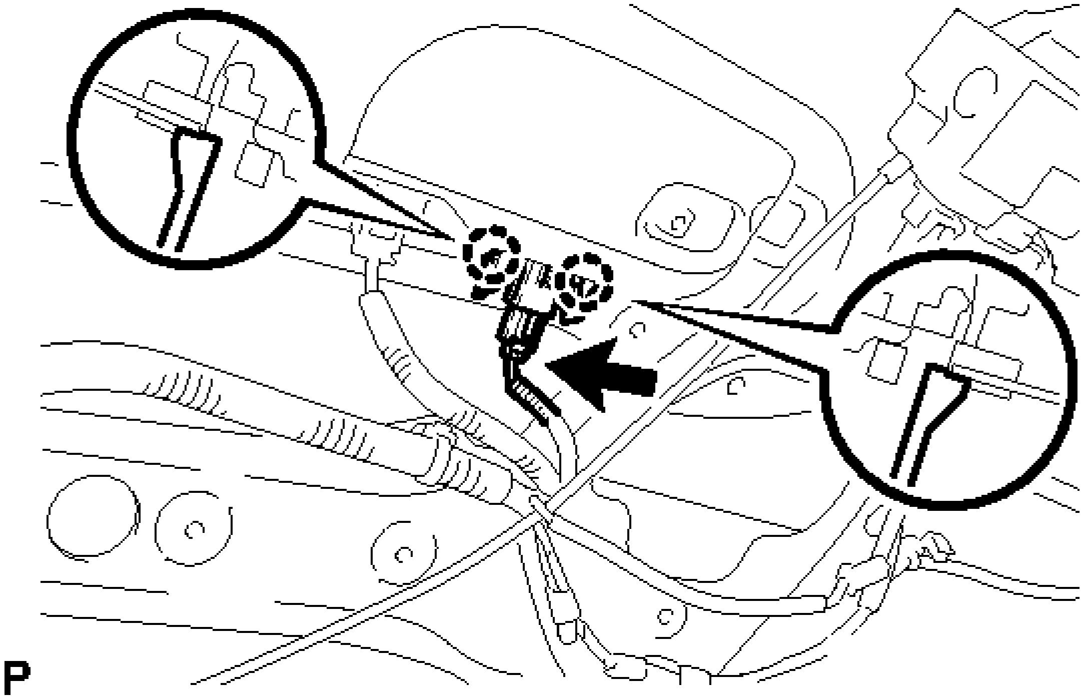

Fig. 79: Locating License Plate Light Assembly Connector And Claws
Courtesy of TOYOTA MOTOR SALES, U.S.A., INC.

    b. Disengage the 2 claws and remove the license plate light assembly.

3. **REMOVE LICENSE PLATE LIGHT PACKING**
    a. Remove the license plate light packing.

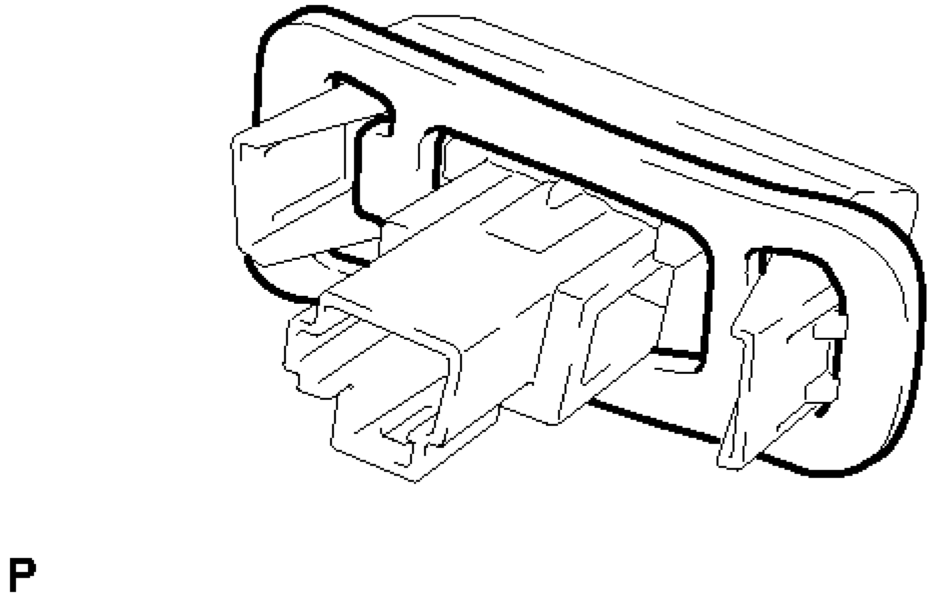

Fig. 80: Identifying License Plate Light Packing
Courtesy of TOYOTA MOTOR SALES, U.S.A., INC.

NOTE: **Do not reuse the removed packing. Be sure to install a new license plate light packing to prevent water ingress.**

INSPECTION

INSPECTION

1. **INSPECT LICENSE PLATE LIGHT ASSEMBLY**
    a. Connect a positive (+) lead from the battery to terminal 1 and a negative (-) lead to terminal 2.

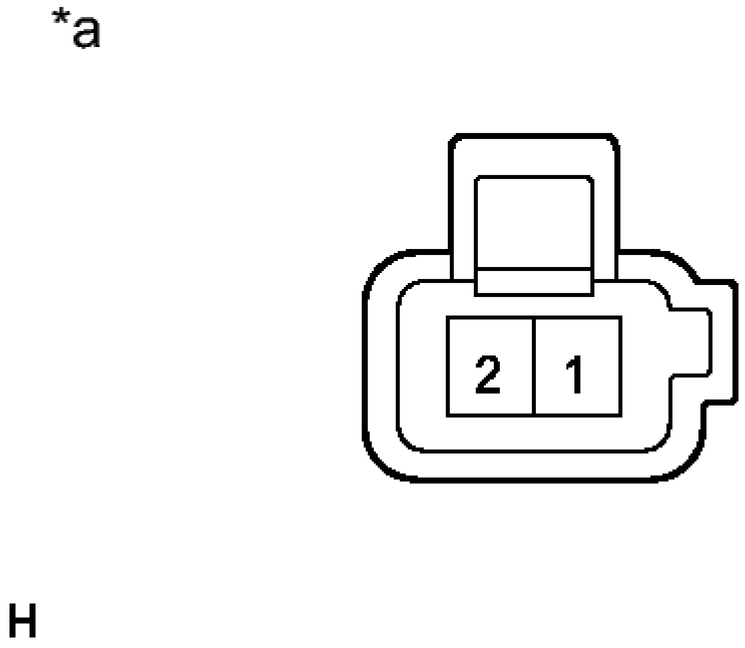

Fig. 81: Identifying License Plate Light Assembly Connector
Courtesy of TOYOTA MOTOR SALES, U.S.A., INC.

b. Check that the license plate light comes on.

OK

The light comes on.

TEXT IN ILLUSTRATION

*a	Component without harness connected (License Plate Light Assembly)

If the result is not as specified, replace the bulb or license plate light socket and wire.

INSTALLATION

INSTALLATION

HINT:

- Use the same procedure for the RH and LH sides.

- The procedure described below is for the LH side.

1. **INSTALL LICENSE PLATE LIGHT PACKING**
   a. Install a new license plate light packing.
2. **INSTALL LICENSE PLATE LIGHT ASSEMBLY**
   a. Engage the 2 claws to install the license plate light assembly.
   b. Connect the connector.
3. **INSTALL LUGGAGE COMPARTMENT DOOR OUTSIDE GARNISH SUB-ASSEMBLY**

   Refer to **INSTALLATION** .

HIGH MOUNTED STOP LIGHT ASSEMBLY

COMPONENTS

ILLUSTRATION

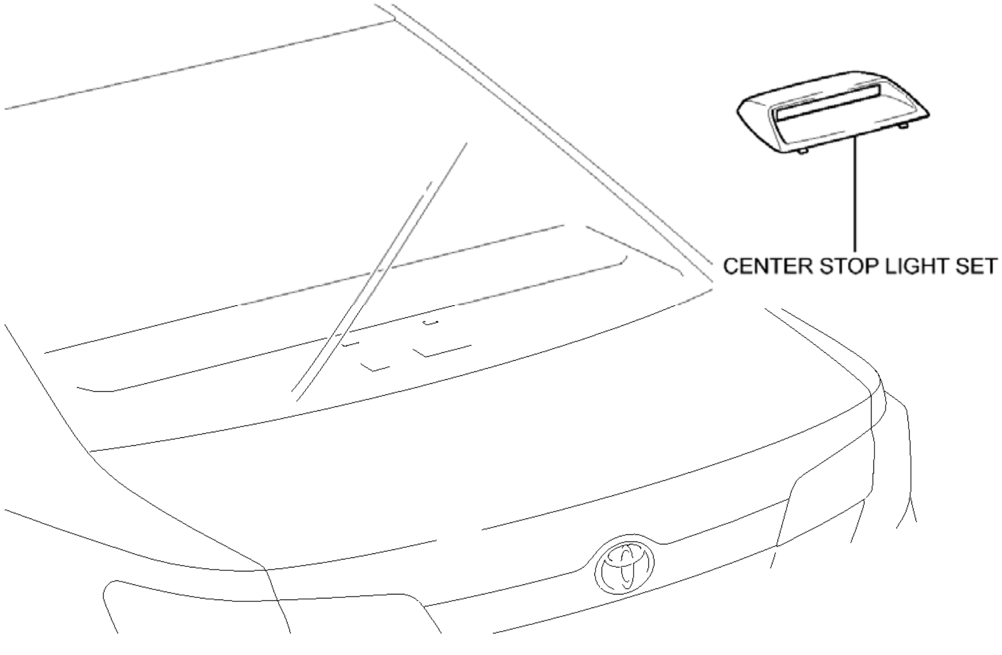

Fig. 82: Identifying High Mounted Stop Light Assembly Replacement Components
Courtesy of TOYOTA MOTOR SALES, U.S.A., INC.

REMOVAL

REMOVAL

1. **REMOVE CENTER STOP LIGHT SET**
    a. Slide the center stop light set in the order and directions shown by the arrows in the illustration while pushing it towards the rear of the vehicle to disengage the 4 claws.

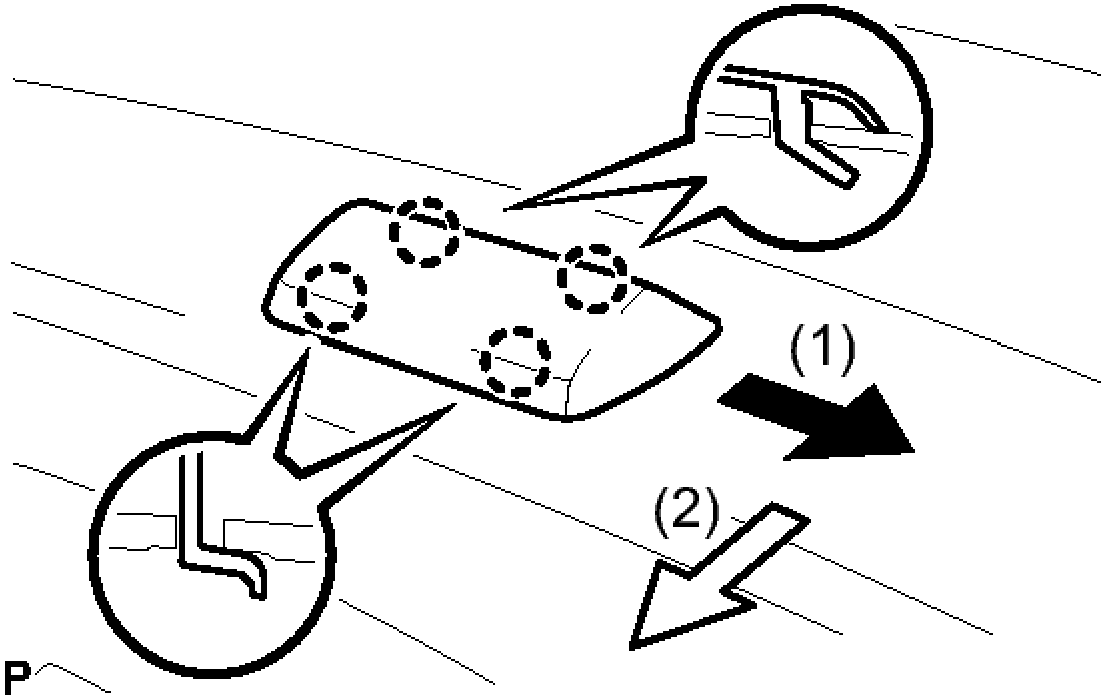

Fig. 83: Removing Center Stop Light Set
Courtesy of TOYOTA MOTOR SALES, U.S.A., INC.

    b. Turn the center stop light set 180 degrees as shown by the arrow in the illustration.

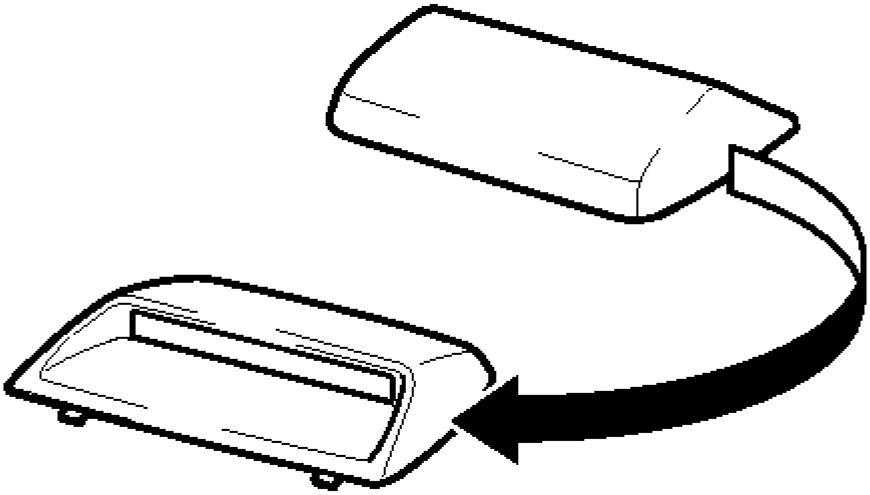

Fig. 84: Turning Center Stop Light Set
Courtesy of TOYOTA MOTOR SALES, U.S.A., INC.

HINT:

This makes it easier to disconnect the connector.

c. Disconnect the connector and remove the center stop light set.

INSPECTION

INSPECTION

1. **INSPECT CENTER STOP LIGHT SET**
   a. Connect a positive (+) lead from the battery to terminal 1 and a negative (-) lead to terminal 2.

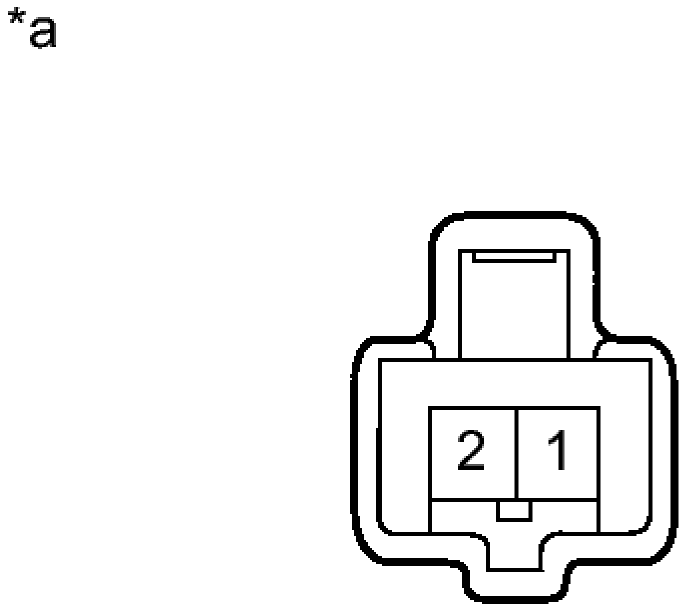

Fig. 85: Identifying Center Stop Light Set Connector
Courtesy of TOYOTA MOTOR SALES, U.S.A., INC.

b. Check that the center stop light comes on.

OK

The light comes on.

TEXT IN ILLUSTRATION

*a	Component without harness connected (Center Stop Light Set)

If the result is not as specified, replace the center stop light set.

INSTALLATION

INSTALLATION

1. **INSTALL CENTER STOP LIGHT SET**
   a. Connect the connector.
   b. Temporarily install the center stop light set.

c. Slide the center stop light set in the order and directions shown by the arrows in the illustration while pushing it towards the rear of the vehicle to engage the 4 claws.

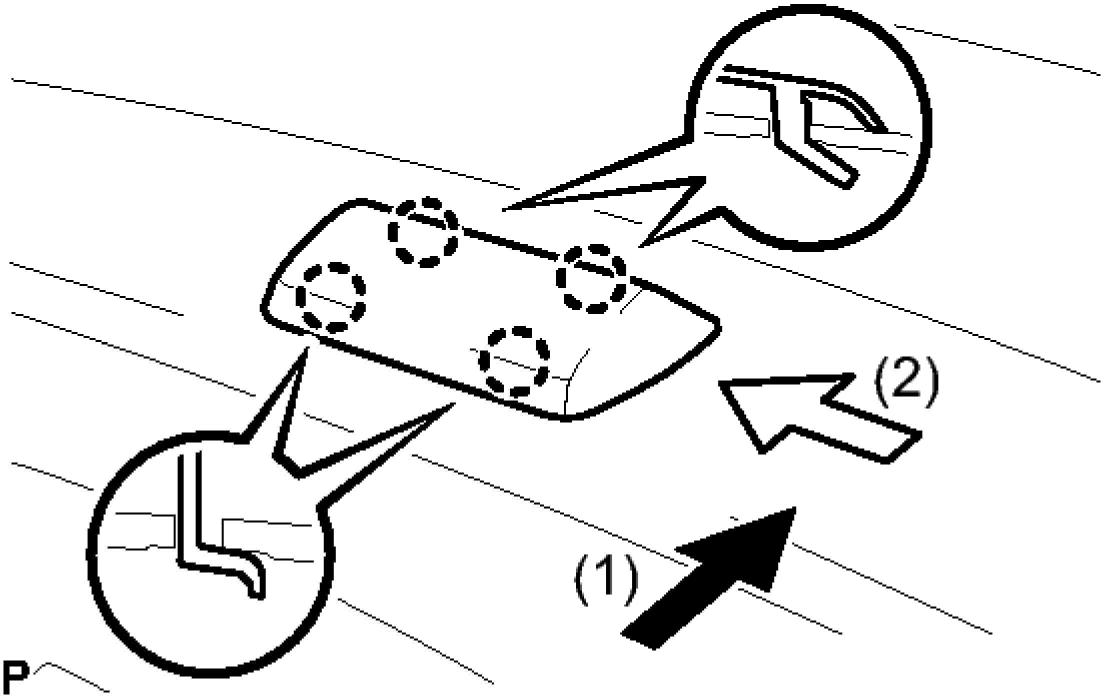

Fig. 86: Installing Center Stop Light Set
Courtesy of TOYOTA MOTOR SALES, U.S.A., INC.

HEADLIGHT DIMMER SWITCH

COMPONENTS

ILLUSTRATION

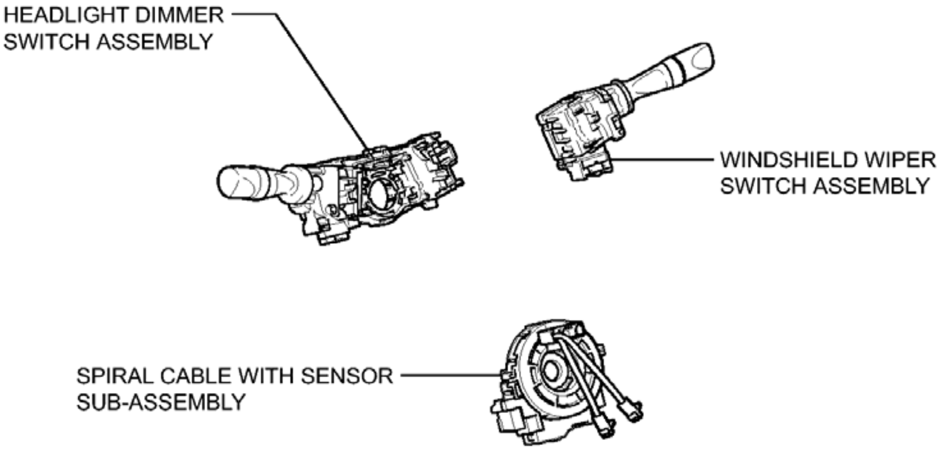
HEADLIGHT DIMMER SWITCH ASSEMBLY
WINDSHIELD WIPER SWITCH ASSEMBLY
SPIRAL CABLE WITH SENSOR SUB-ASSEMBLY

P

Fig. 87: Identifying Headlight Dimmer Switch Replacement Components
Courtesy of TOYOTA MOTOR SALES, U.S.A., INC.

REMOVAL

REMOVAL

1. **REMOVE SPIRAL CABLE WITH SENSOR SUB-ASSEMBLY**

   Refer to **REMOVAL** .

2. **REMOVE WINDSHIELD WIPER SWITCH ASSEMBLY** . Refer to **REMOVAL - Step 3** .
3. **REMOVE HEADLIGHT DIMMER SWITCH ASSEMBLY**
   a. Disconnect the connector.

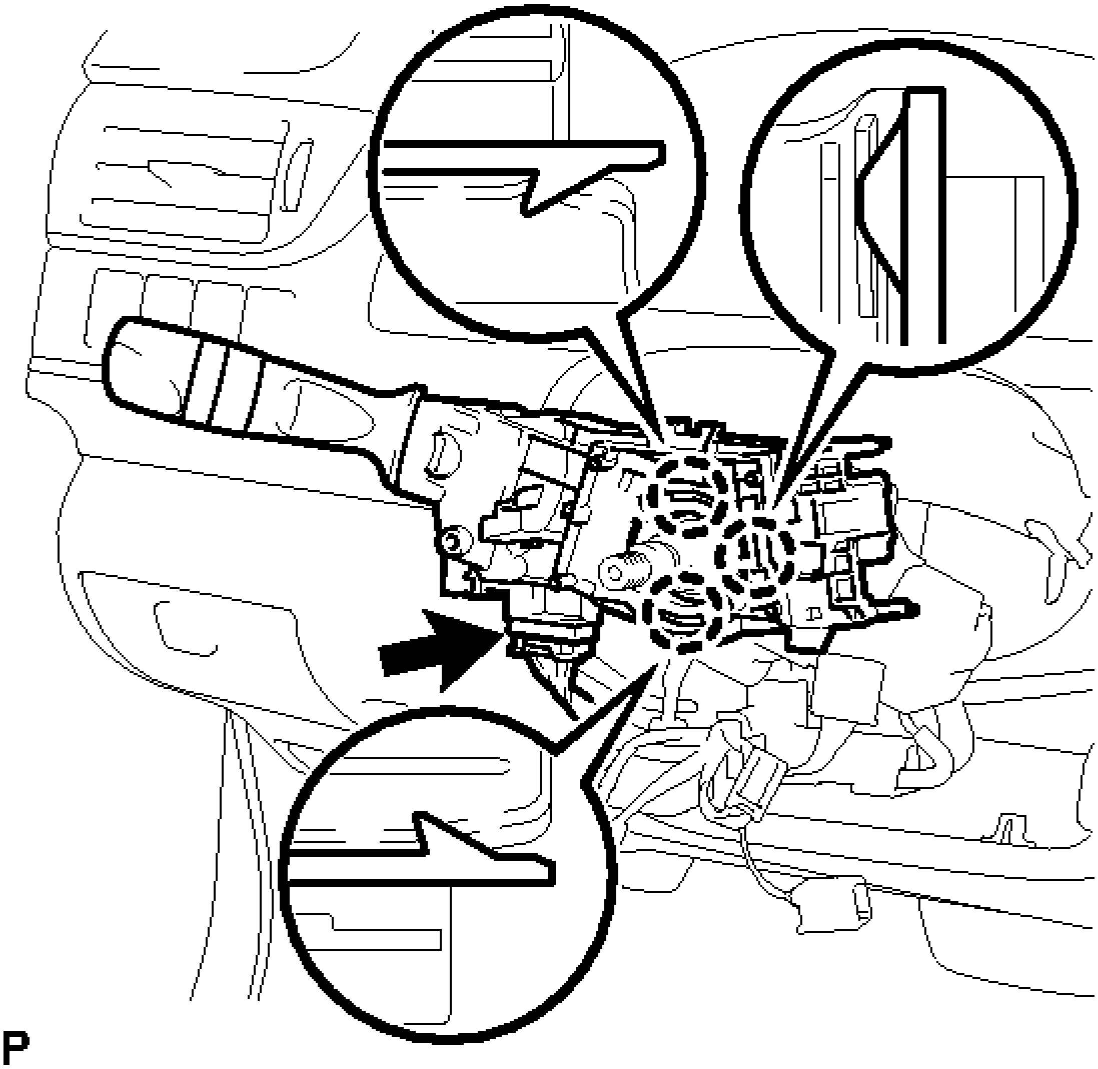

Fig. 88: Identifying Headlight Dimmer Switch Assembly
Courtesy of TOYOTA MOTOR SALES, U.S.A., INC.

b. Using a screwdriver, disengage the 3 claws and remove the headlight dimmer switch assembly.

INSPECTION

INSPECTION

1. **INSPECT HEADLIGHT DIMMER SWITCH ASSEMBLY**
    a. Measure the resistance according to the value(s) in the table below.

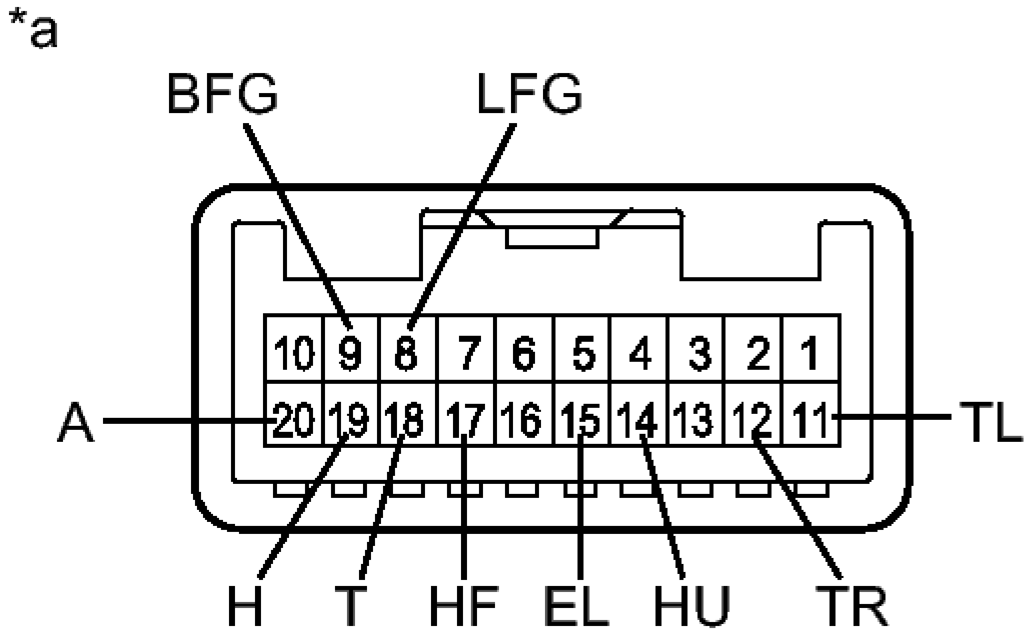
*a
BFG
LFG
10
9
8
7
6
5
4
3
2
1
A
20
19
18
17
16
15
14
13
12
11
TL
H
T
HF
EL
HU
TR

Fig. 89: Inspecting Headlight Dimmer Switch Assembly Connector Terminals
Courtesy of TOYOTA MOTOR SALES, U.S.A., INC.

Standard Resistance

LIGHT CONTROL SWITCH (W/ DRL OFF FUNCTION)

Tester Connection	Switch Condition	Specified Condition
18 (T) - 15 (EL)	Light control switch off (DRL OFF position)	10 kohms or higher
19 (H) - 15 (EL)		10 kohms or higher
20 (A) - 15 (EL)		10 kohms or higher
20 (A) - 15 (EL)	Light control switch in AUTO position	Below 1 ohms
18 (T) - 15 (EL)	Light control switch in tail position	Below 1 ohms
18 (T) - 15 (EL)	Light control	Below 1 ohms

19 (H) - 15 (EL)	switch in head position	Below 1 ohms

LIGHT CONTROL SWITCH (W/O DRL OFF FUNCTION)

Tester Connection	Switch Condition	Specified Condition
18 (T) - 15 (EL)	Light control switch off	10 kohms or higher
19 (H) - 15 (EL)		10 kohms or higher
20 (A) - 15 (EL)		10 kohms or higher
18 (T) - 15 (EL)	Light control switch in tail position	Below 1 ohms
18 (T) - 15 (EL)	Light control switch in head position	Below 1 ohms
19 (H) - 15 (EL)		Below 1 ohms
20 (A) - 15 (EL)	Light control switch in AUTO position	Below 1 ohms

DIMMER SWITCH

Tester Connection	Switch Condition	Specified Condition
14 (HU) - 15 (EL)	Dimmer switch in high position	Below 1 ohms
14 (HU) - 15 (EL)	Dimmer switch in high flasher position	Below 1 ohms
17 (HF) - 15 (EL)		Below 1 ohms

TURN SIGNAL SWITCH

Tester Connection	Switch Condition	Specified Condition

12 (TR) - 15 (EL)	Neutral	10 kohms or higher
11 (TL) - 15 (EL)		10 kohms or higher
12 (TR) - 15 (EL)	Right turn	Below 1 ohms
11 (TL) - 15 (EL)	Left turn	Below 1 ohms

FRONT FOG LIGHT SWITCH*1

Tester Connection	Switch Condition	Specified Condition
8 (LFG) - 9 (BFG)	Front fog light switch off	10 kohms or higher
8 (LFG) - 9 (BFG)	Front fog light switch on	Below 1 ohms

*1: w/ Front Fog Light

TEXT IN ILLUSTRATION

*a	Component without harness connected (Headlight Dimmer Switch Assembly)

If the result is not as specified, replace the headlight dimmer switch assembly.

INSTALLATION

INSTALLATION

1. **INSTALL HEADLIGHT DIMMER SWITCH ASSEMBLY**
   a. Engage the 3 claws to install the headlight dimmer switch assembly.
   b. Connect the connector.
2. **INSTALL WINDSHIELD WIPER SWITCH ASSEMBLY** . Refer to **INSTALLATION - Step 1** .
3. **INSTALL SPIRAL CABLE WITH SENSOR SUB-ASSEMBLY**

   Refer to **INSTALLATION** .

HAZARD WARNING SWITCH

COMPONENTS

ILLUSTRATION

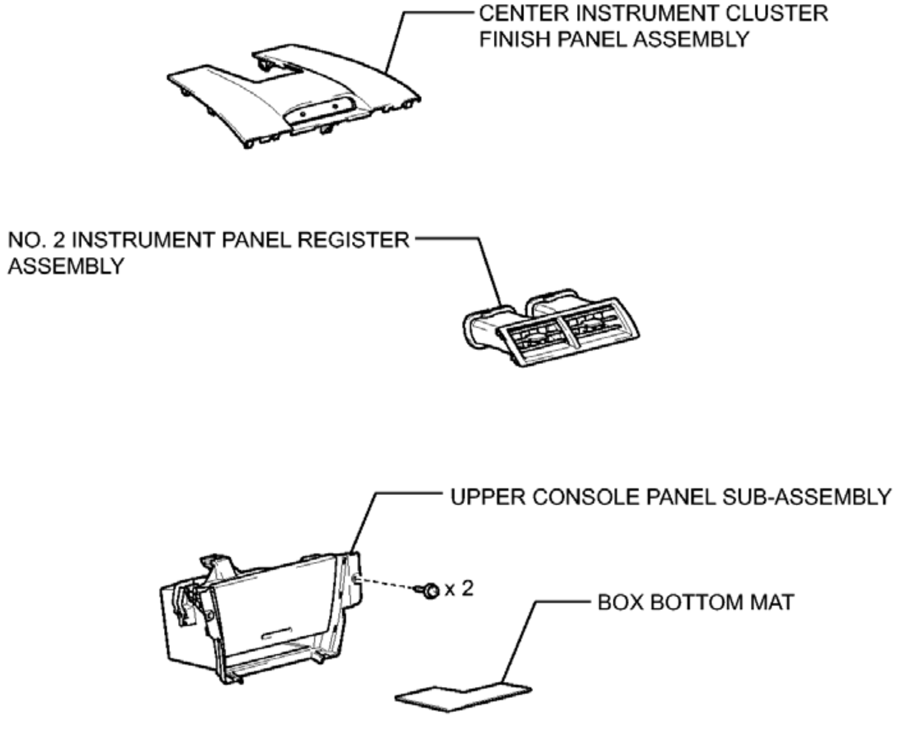
CENTER INSTRUMENT CLUSTER FINISH PANEL ASSEMBLY
NO. 2 INSTRUMENT PANEL REGISTER ASSEMBLY
UPPER CONSOLE PANEL SUB-ASSEMBLY
x 2
BOX BOTTOM MAT
P

Fig. 90: Identifying Hazard Warning Switch Replacement Components (1 Of 5)
Courtesy of TOYOTA MOTOR SALES, U.S.A., INC.

ILLUSTRATION

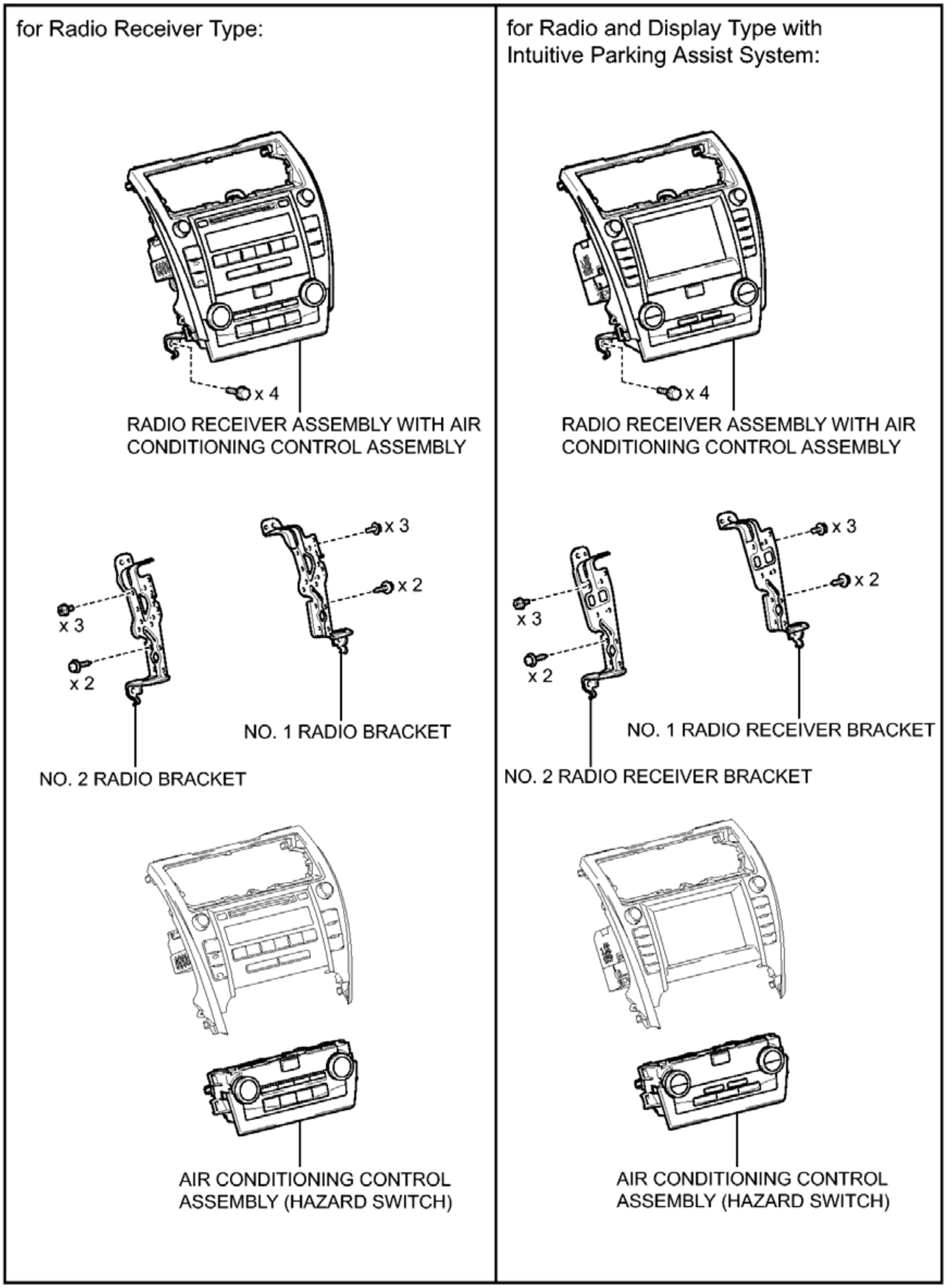
for Radio Receiver Type:
for Radio and Display Type with Intuitive Parking Assist System:
x 4
RADIO RECEIVER ASSEMBLY WITH AIR CONDITIONING CONTROL ASSEMBLY
x 4
RADIO RECEIVER ASSEMBLY WITH AIR CONDITIONING CONTROL ASSEMBLY
x 3
x 2
x 3
x 2
NO. 1 RADIO BRACKET
NO. 2 RADIO BRACKET
x 3
x 2
x 3
x 2
NO. 1 RADIO RECEIVER BRACKET
NO. 2 RADIO RECEIVER BRACKET
AIR CONDITIONING CONTROL ASSEMBLY (HAZARD SWITCH)
AIR CONDITIONING CONTROL ASSEMBLY (HAZARD SWITCH)
P

Fig. 91: Identifying Hazard Warning Switch Replacement Components (2 Of 5)
Courtesy of TOYOTA MOTOR SALES, U.S.A., INC.

ILLUSTRATION

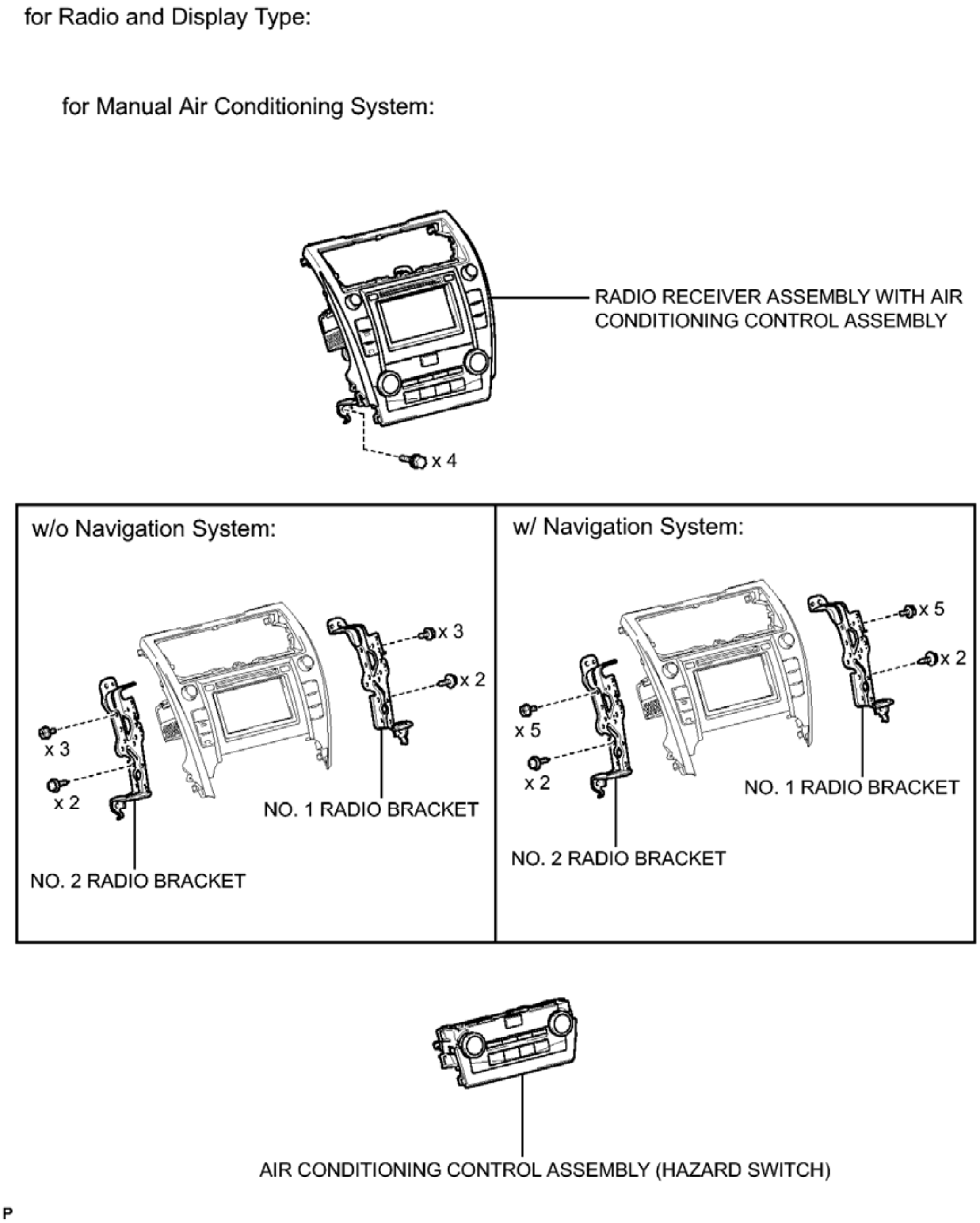
for Radio and Display Type:
for Manual Air Conditioning System:
RADIO RECEIVER ASSEMBLY WITH AIR CONDITIONING CONTROL ASSEMBLY
x 4
w/o Navigation System:
x 3
x 2
x 3
x 2
NO. 1 RADIO BRACKET
NO. 2 RADIO BRACKET
w/ Navigation System:
x 5
x 2
x 5
x 2
NO. 1 RADIO BRACKET
NO. 2 RADIO BRACKET
AIR CONDITIONING CONTROL ASSEMBLY (HAZARD SWITCH)
P

Fig. 92: Identifying Hazard Warning Switch Replacement Components (3 Of 5)
Courtesy of TOYOTA MOTOR SALES, U.S.A., INC.

ILLUSTRATION

for Radio and Display Type:

for Automatic Air Conditioning System:

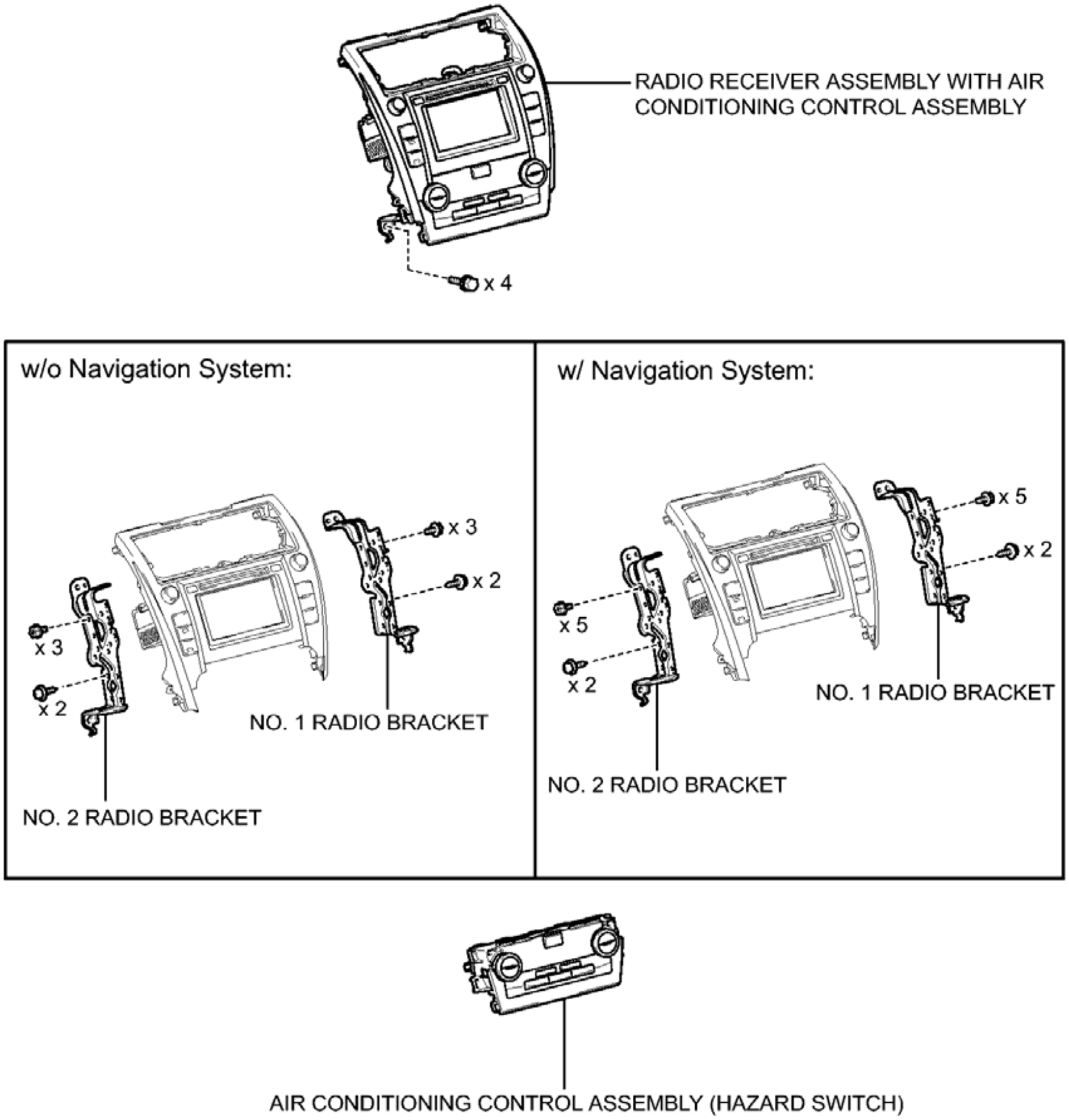
RADIO RECEIVER ASSEMBLY WITH AIR CONDITIONING CONTROL ASSEMBLY
x 4
w/o Navigation System:
x 3
x 2
x 3
x 2
NO. 1 RADIO BRACKET
NO. 2 RADIO BRACKET
w/ Navigation System:
x 5
x 2
x 5
x 2
NO. 1 RADIO BRACKET
NO. 2 RADIO BRACKET
AIR CONDITIONING CONTROL ASSEMBLY (HAZARD SWITCH)

P

Fig. 93: Identifying Hazard Warning Switch Replacement Components (4 Of 5)
Courtesy of TOYOTA MOTOR SALES, U.S.A., INC.

ILLUSTRATION

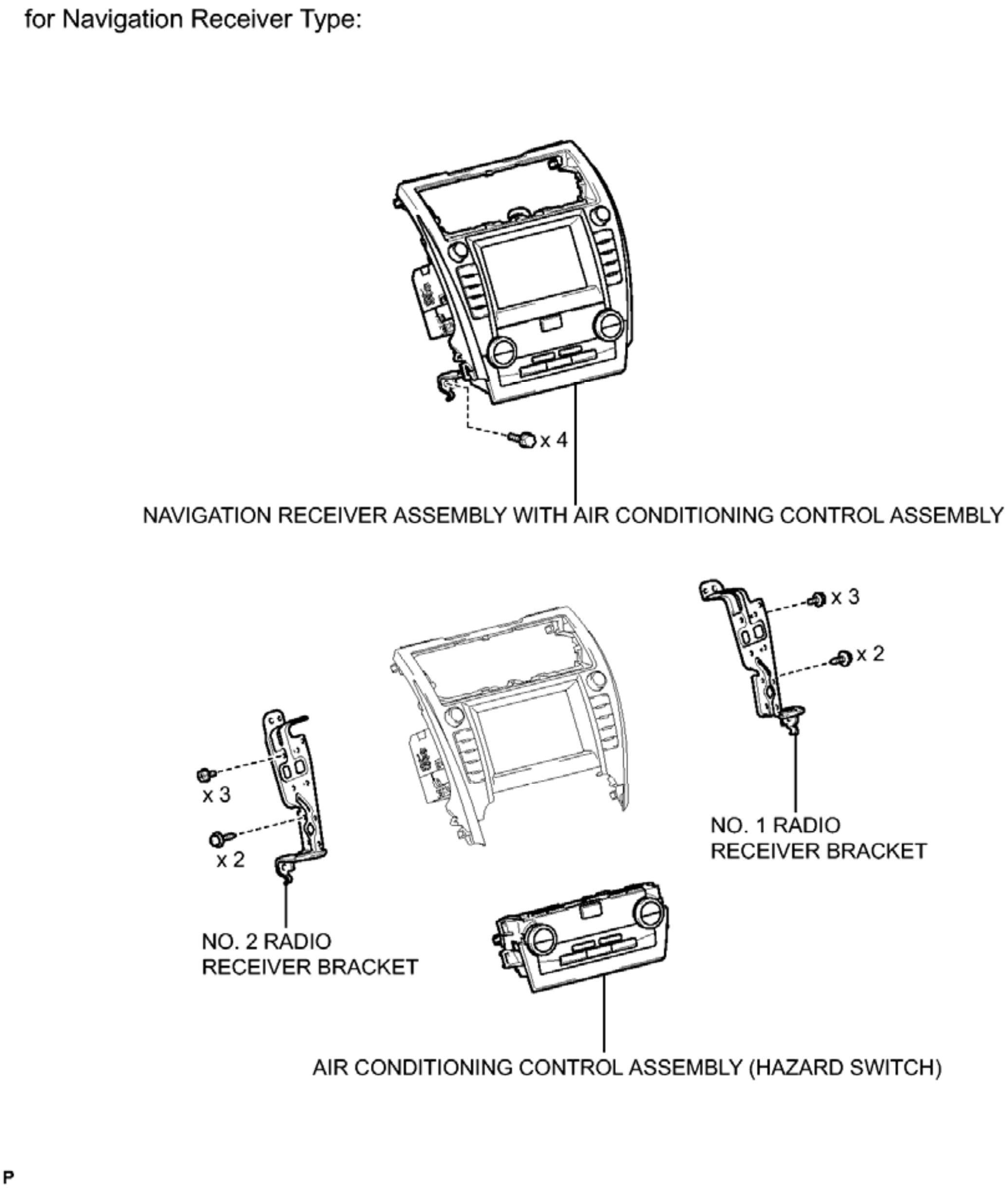
for Navigation Receiver Type:
x 4
NAVIGATION RECEIVER ASSEMBLY WITH AIR CONDITIONING CONTROL ASSEMBLY
x 3
x 2
x 3
x 2
NO. 1 RADIO RECEIVER BRACKET
NO. 2 RADIO RECEIVER BRACKET
AIR CONDITIONING CONTROL ASSEMBLY (HAZARD SWITCH)
P

Fig. 94: Identifying Hazard Warning Switch Replacement Components (5 Of 5)
Courtesy of TOYOTA MOTOR SALES, U.S.A., INC.

REMOVAL

REMOVAL

1. **PRECAUTION**

NOTE: **After turning the ignition switch off, waiting time may be required before disconnecting the cable from the negative (-) battery terminal. Therefore, make sure to read the disconnecting the cable from the negative (-) battery terminal notices before proceeding with work. Refer to PRECAUTION .**

2. **DISCONNECT CABLE FROM NEGATIVE BATTERY TERMINAL (for Radio and Display Type with Intuitive Parking Assist System)**

   NOTE: When disconnecting the cable, some systems need to be initialized after the cable is reconnected. Refer to INITIALIZATION .

3. **DISCONNECT CABLE FROM NEGATIVE BATTERY TERMINAL (for Navigation Receiver Type)**

   NOTE: When disconnecting the cable, some systems need to be initialized after the cable is reconnected. Refer to INITIALIZATION .

4. **REMOVE REAR CONSOLE BOX ASSEMBLY**

   Refer to **REMOVAL** .

5. **REMOVE BOX BOTTOM MAT** . Refer to **REMOVAL - Step 25** .
6. **REMOVE UPPER CONSOLE PANEL SUB-ASSEMBLY** . Refer to **REMOVAL - Step 26** .
7. **REMOVE CENTER INSTRUMENT CLUSTER FINISH PANEL ASSEMBLY** . Refer to **REMOVAL - Step 23** .
8. **REMOVE NO. 2 INSTRUMENT PANEL REGISTER ASSEMBLY** . Refer to **REMOVAL - Step 24** .
9. **REMOVE RADIO RECEIVER ASSEMBLY WITH AIR CONDITIONING CONTROL ASSEMBLY (for Radio Receiver Type)** . Refer to **REMOVAL - Step 8** .
10. **REMOVE RADIO RECEIVER ASSEMBLY WITH AIR CONDITIONING CONTROL ASSEMBLY (for Radio and Display Type)** . Refer to **REMOVAL - Step 9** .
11. **REMOVE NAVIGATION RECEIVER ASSEMBLY WITH AIR CONDITIONING CONTROL ASSEMBLY (for Navigation Receiver Type)** . Refer to **REMOVAL - Step 8** .
12. **REMOVE NO. 1 RADIO BRACKET (for Radio Receiver Type)** . Refer to **REMOVAL - Step 10** .
13. **REMOVE NO. 2 RADIO BRACKET (for Radio Receiver Type)** . Refer to **REMOVAL - Step 11** .
14. **REMOVE NO. 1 RADIO BRACKET (for Radio and Display Type)** . Refer to **REMOVAL - Step 12** .
15. **REMOVE NO. 2 RADIO BRACKET (for Radio and Display Type)** . Refer to **REMOVAL - Step 13** .
16. **REMOVE NO. 1 RADIO RECEIVER BRACKET (for Radio and Display Type with Intuitive Parking Assist System)** . Refer to **REMOVAL - Step 14** .
17. **REMOVE NO. 2 RADIO RECEIVER BRACKET (for Radio and Display Type with Intuitive Parking Assist System)** . Refer to **REMOVAL - Step 15** .
18. **REMOVE NO. 1 RADIO RECEIVER BRACKET (for Navigation Receiver Type)** . Refer to **REMOVAL - Step 9** .
19. **REMOVE NO. 2 RADIO RECEIVER BRACKET (for Navigation Receiver Type)** . Refer to **REMOVAL - Step 10** .
20. **REMOVE AIR CONDITIONING CONTROL ASSEMBLY (HAZARD SWITCH)** . Refer to

REMOVAL - Step 20 .

INSPECTION

INSPECTION

1. **INSPECT AIR CONDITIONING CONTROL ASSEMBLY (HAZARD SWITCH)**
    a. Measure the resistance according to the value(s) in the table below.

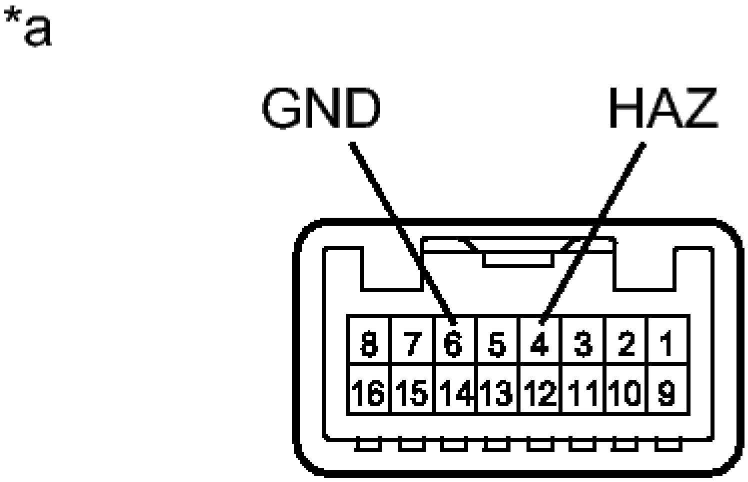

Fig. 95: Inspecting Air Conditioning Control Assembly (Hazard Switch) Connector Terminals
Courtesy of TOYOTA MOTOR SALES, U.S.A., INC.

Standard Resistance

Tester Connection	Switch Condition	Specified Condition
4 (HAZ) - 6 (GND)	Hazard switch off	10 kohms or higher
	Hazard switch on	Below 1 ohms

TEXT IN ILLUSTRATION

	Component without harness

*a	connected (Air Conditioning Control Assembly (Hazard Switch))

If the result is not as specified, replace the air conditioning control assembly.

INSTALLATION

INSTALLATION

1. **INSTALL AIR CONDITIONING CONTROL ASSEMBLY (HAZARD SWITCH)** . Refer to **INSTALLATION - Step 1** .
2. **INSTALL NO. 1 RADIO BRACKET (for Radio Receiver Type)** . Refer to **INSTALLATION - Step 8** .
3. **INSTALL NO. 2 RADIO BRACKET (for Radio Receiver Type)** . Refer to **INSTALLATION - Step 9** .
4. **INSTALL NO. 1 RADIO BRACKET (for Radio and Display Type)** . Refer to **INSTALLATION - Step 10** .
5. **INSTALL NO. 2 RADIO BRACKET (for Radio and Display Type)** . Refer to **INSTALLATION - Step 11** .
6. **INSTALL NO. 1 RADIO RECEIVER BRACKET (for Radio and Display Type with Intuitive Parking Assist System)** . Refer to **INSTALLATION - Step 12** .
7. **INSTALL NO. 2 RADIO RECEIVER BRACKET (for Radio and Display Type with Intuitive Parking Assist System)** . Refer to **INSTALLATION - Step 13** .
8. **INSTALL NO. 1 RADIO RECEIVER BRACKET (for Navigation Receiver Type)** . Refer to **INSTALLATION - Step 5** .
9. **INSTALL NO. 2 RADIO RECEIVER BRACKET (for Navigation Receiver Type)** . Refer to **INSTALLATION - Step 6** .
10. **INSTALL RADIO RECEIVER ASSEMBLY WITH AIR CONDITIONING CONTROL ASSEMBLY (for Radio Receiver Type)** . Refer to **INSTALLATION - Step 14** .
11. **INSTALL RADIO RECEIVER ASSEMBLY WITH AIR CONDITIONING CONTROL ASSEMBLY (for Radio and Display Type)** . Refer to **INSTALLATION - Step 15** .
12. **INSTALL NAVIGATION RECEIVER ASSEMBLY WITH AIR CONDITIONING CONTROL ASSEMBLY (for Navigation Receiver Type)** . Refer to **INSTALLATION - Step 7** .
13. **INSTALL NO. 2 INSTRUMENT PANEL REGISTER ASSEMBLY** . Refer to **INSTALLATION - Step 29** .
14. **INSTALL CENTER INSTRUMENT CLUSTER FINISH PANEL ASSEMBLY** . Refer to **INSTALLATION - Step 30** .
15. **INSTALL UPPER CONSOLE PANEL SUB-ASSEMBLY** . Refer to **INSTALLATION - Step 27** .
16. **INSTALL BOX BOTTOM MAT** . Refer to **INSTALLATION - Step 28** .

17. **INSTALL REAR CONSOLE BOX ASSEMBLY**

    Refer to **INSTALLATION** .

18. **CONNECT CABLE TO NEGATIVE BATTERY TERMINAL (for Radio and Display Type with Intuitive Parking Assist System)**

    NOTE: **When disconnecting the cable, some systems need to be initialized after the cable is reconnected. Refer to INITIALIZATION .**

19. **CONNECT CABLE TO NEGATIVE BATTERY TERMINAL (for Navigation Receiver Type)**

    NOTE: **When disconnecting the cable, some systems need to be initialized after the cable is reconnected. Refer to INITIALIZATION .**

HEADLIGHT LEVELING SWITCH

COMPONENTS

ILLUSTRATION

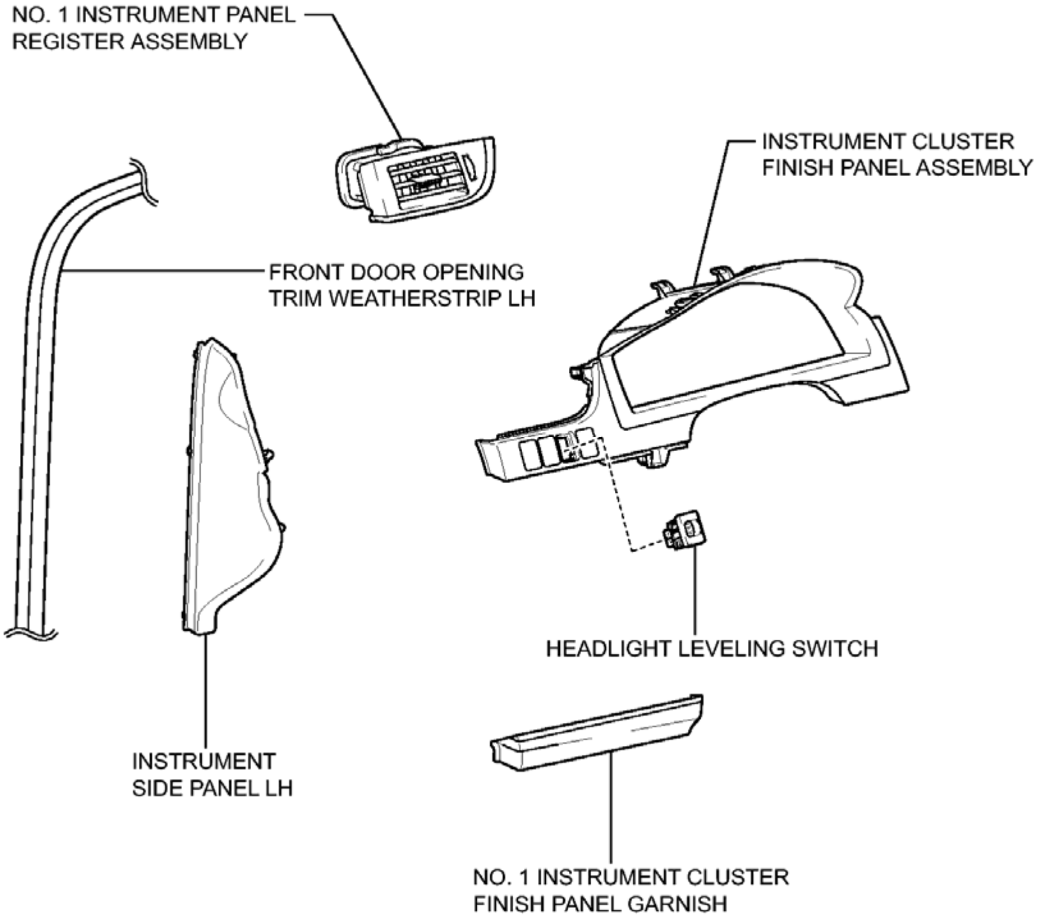
NO. 1 INSTRUMENT PANEL REGISTER ASSEMBLY
INSTRUMENT CLUSTER FINISH PANEL ASSEMBLY
FRONT DOOR OPENING TRIM WEATHERSTRIP LH
HEADLIGHT LEVELING SWITCH
INSTRUMENT SIDE PANEL LH
NO. 1 INSTRUMENT CLUSTER FINISH PANEL GARNISH
P

Fig. 96: Identifying Headlight Leveling Switch Replacement Components
Courtesy of TOYOTA MOTOR SALES, U.S.A., INC.

REMOVAL

REMOVAL

1. **DISCONNECT FRONT DOOR OPENING TRIM WEATHERSTRIP LH** . Refer to **REMOVAL - Step 5** .
2. **REMOVE INSTRUMENT SIDE PANEL LH** . Refer to **REMOVAL - Step 6** .
3. **REMOVE NO. 1 INSTRUMENT CLUSTER FINISH PANEL GARNISH** . Refer to **REMOVAL - Step 7** .
4. **REMOVE NO. 1 INSTRUMENT PANEL REGISTER ASSEMBLY** . Refer to **REMOVAL - Step 8** .
5. **REMOVE INSTRUMENT CLUSTER FINISH PANEL ASSEMBLY** . Refer to **REMOVAL - Step 9** .

6. **REMOVE HEADLIGHT LEVELING SWITCH**
    a. Disengage the 2 claws and remove the headlight leveling switch.

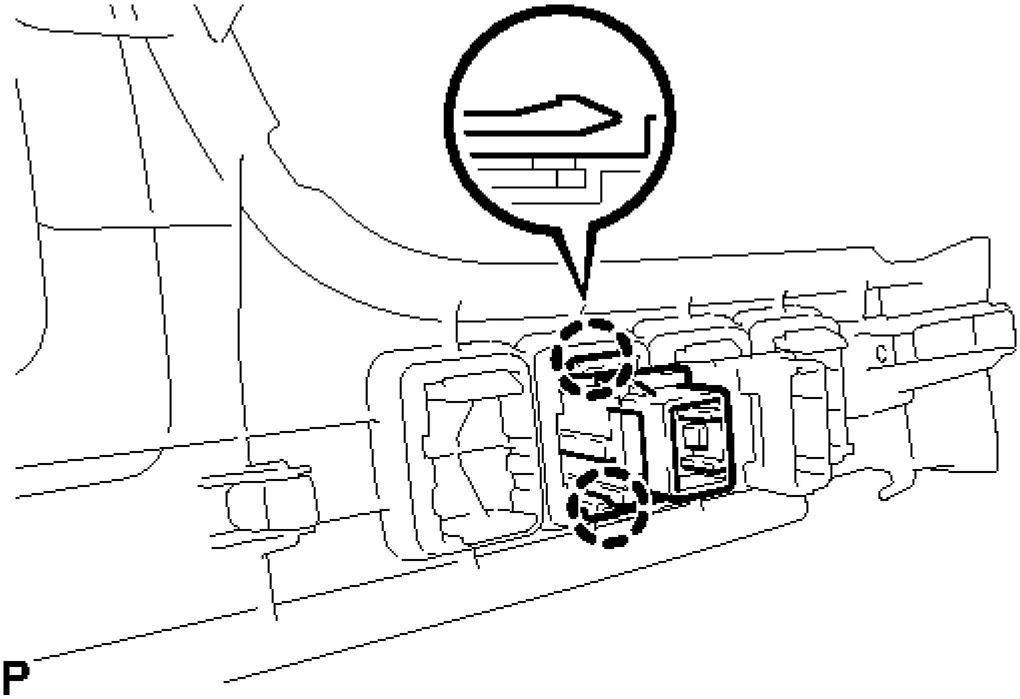

Fig. 97: Identifying Headlight Leveling Switch Claws
Courtesy of TOYOTA MOTOR SALES, U.S.A., INC.

INSPECTION

INSPECTION

1. **INSPECT HEADLIGHT LEVELING SWITCH**
    a. Voltage Check
        1. Connect a positive (+) lead from the battery to terminal 1 (B) and a negative (-) lead to terminal 5 (E).

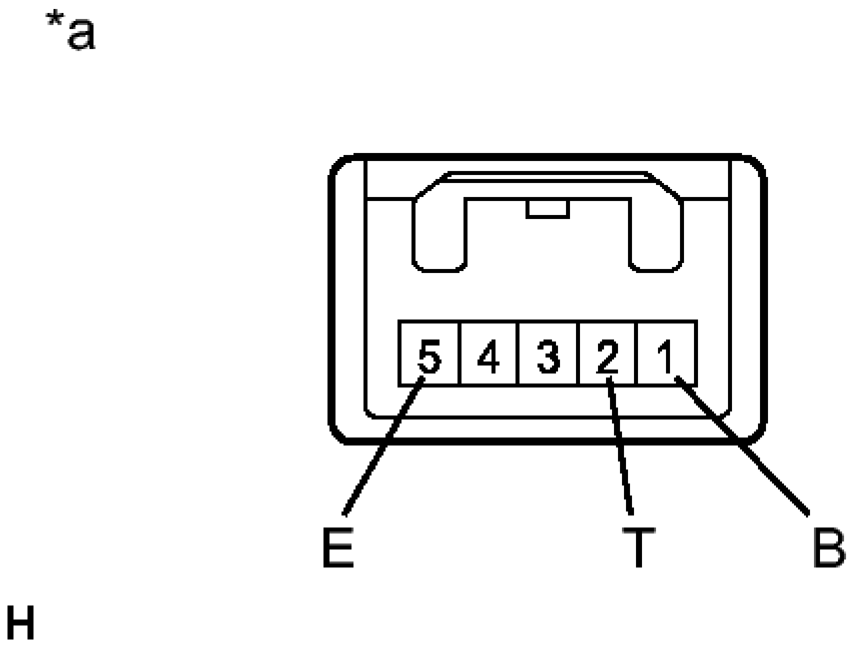

Fig. 98: Inspecting Headlight Leveling Switch Connector Terminals
Courtesy of TOYOTA MOTOR SALES, U.S.A., INC.

2. Measure the voltage according to the value(s) in the table below.

   Standard Voltage

Tester Condition	**Switch Position**	**Specified Condition (Battery voltage is 12 V)**
2 (T) - 5 (E)	0	10.44 to 11.16 V
	1	9.16 to 9.88 V
	2	7.88 to 8.60 V
	3	6.6 to 7.32 V
	4	5.32 to 6.04 V
	5	4.04 to 4.76 V

TEXT IN ILLUSTRATION

*a	Component without harness connected (Headlight Leveling Switch)

If the result is not as specified, replace the headlight leveling switch.

b. LED Illumination Inspection

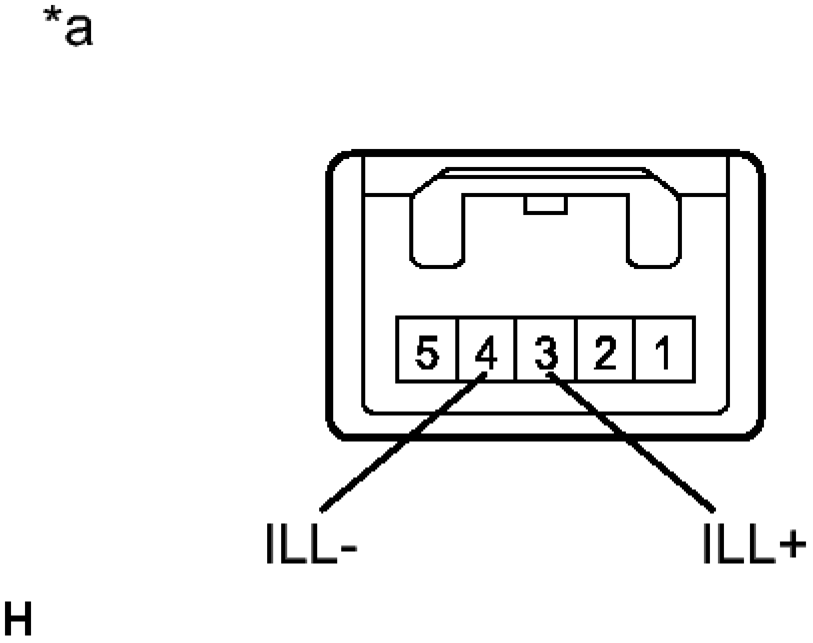

Fig. 99: Inspecting Headlight Leveling Switch Connector Terminals
Courtesy of TOYOTA MOTOR SALES, U.S.A., INC.

1. Apply battery voltage to the headlight leveling switch and check that the switch illuminates.

   OK

Tester Connection	Specified Condition
Battery positive (+) --> Terminal 3 (ILL+) Battery	Illuminates

negative (-) --> Terminal 4 (ILL-)	

TEXT IN ILLUSTRATION

*a	Component without harness connected (Headlight Leveling Switch)

If the result is not as specified, replace the headlight leveling switch.

INSTALLATION

INSTALLATION

1. **INSTALL HEADLIGHT LEVELING SWITCH**
    a. Engage the 2 claws to install the headlight leveling switch.
2. **INSTALL INSTRUMENT CLUSTER FINISH PANEL ASSEMBLY** . Refer to **INSTALLATION - Step 44** .
3. **INSTALL NO. 1 INSTRUMENT PANEL REGISTER ASSEMBLY** . Refer to **INSTALLATION - Step 45** .
4. **INSTALL NO. 1 INSTRUMENT CLUSTER FINISH PANEL GARNISH** . Refer to **INSTALLATION - Step 46** .
5. **INSTALL INSTRUMENT SIDE PANEL LH** . Refer to **INSTALLATION - Step 47** .
6. **INSTALL FRONT DOOR OPENING TRIM WEATHERSTRIP LH** . Refer to **INSTALLATION - Step 42** .

STOP LIGHT SWITCH

COMPONENTS

ILLUSTRATION

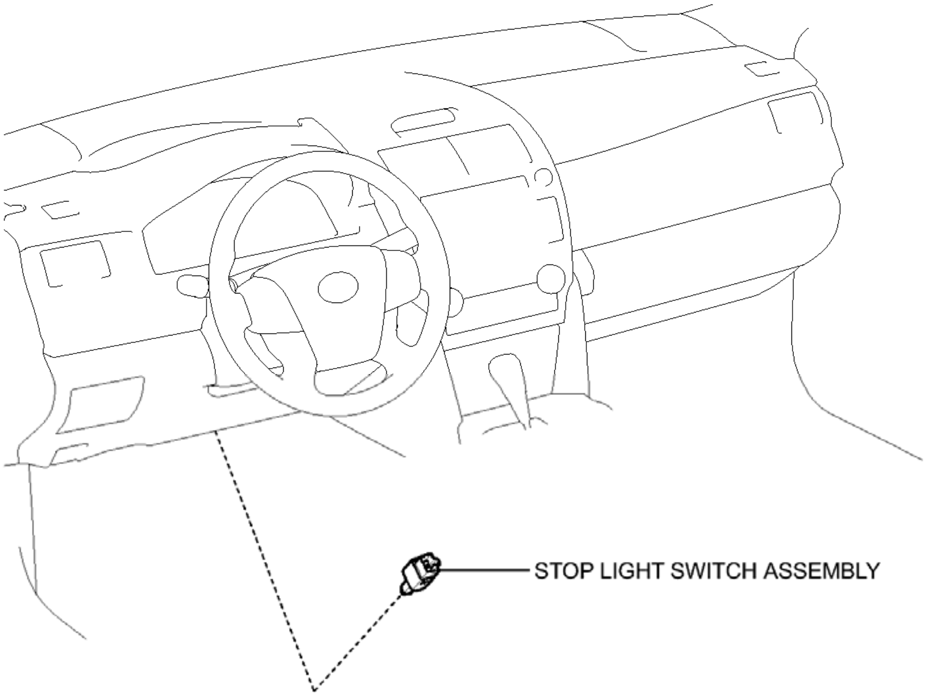
STOP LIGHT SWITCH ASSEMBLY

P

Fig. 100: Identifying Stop Light Switch Replacement Components
Courtesy of TOYOTA MOTOR SALES, U.S.A., INC.

REMOVAL

REMOVAL

1. **REMOVE STOP LIGHT SWITCH ASSEMBLY**
   a. Disconnect the connector.

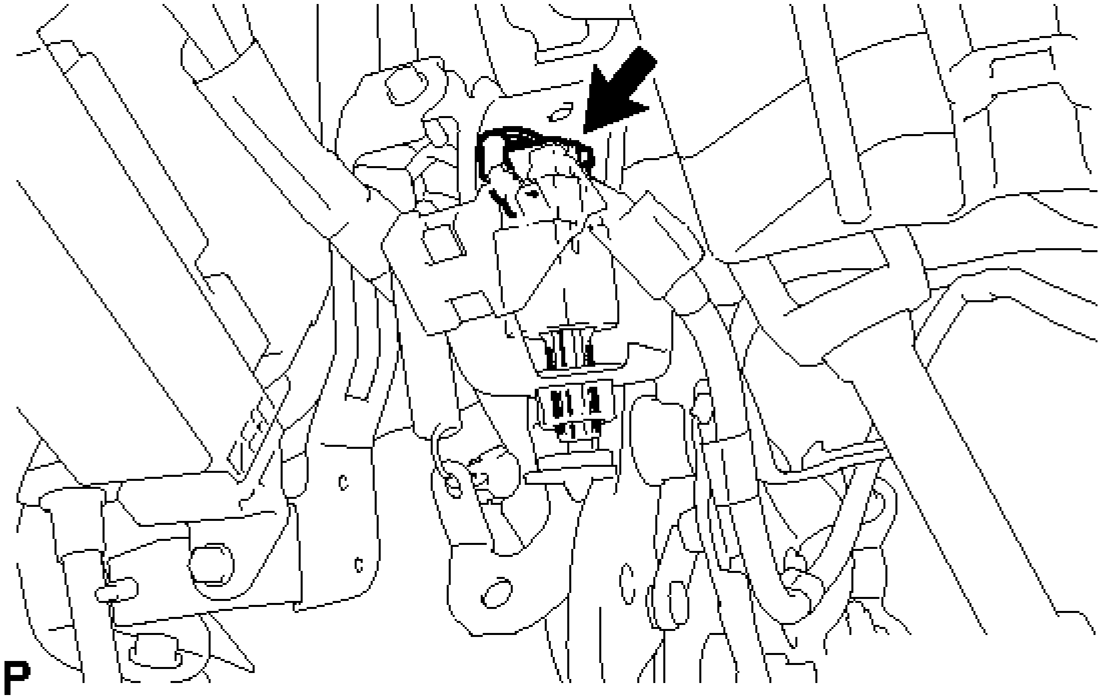

Fig. 101: Locating Stop Light Switch Assembly Connector
Courtesy of TOYOTA MOTOR SALES, U.S.A., INC.

b. Turn the stop light switch assembly counterclockwise and remove it.

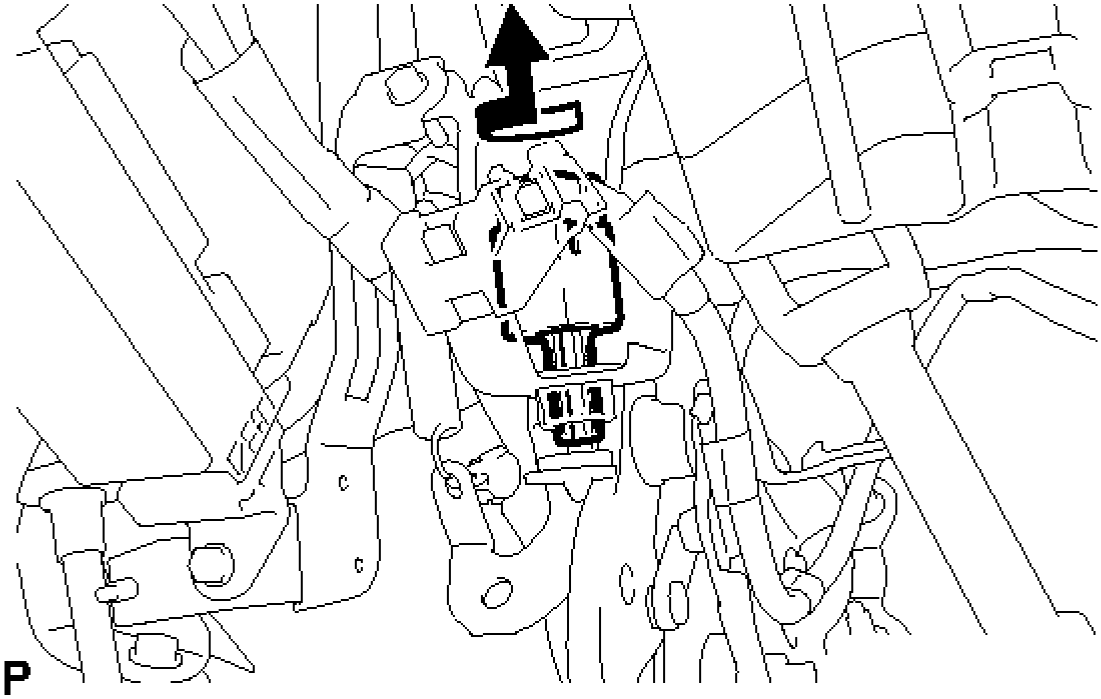

Fig. 102: Removing Stop Light Switch Assembly
Courtesy of TOYOTA MOTOR SALES, U.S.A., INC.

INSPECTION

INSPECTION

1. **INSPECT STOP LIGHT SWITCH ASSEMBLY**
   a. Measure the resistance according to the value(s) in the table below.

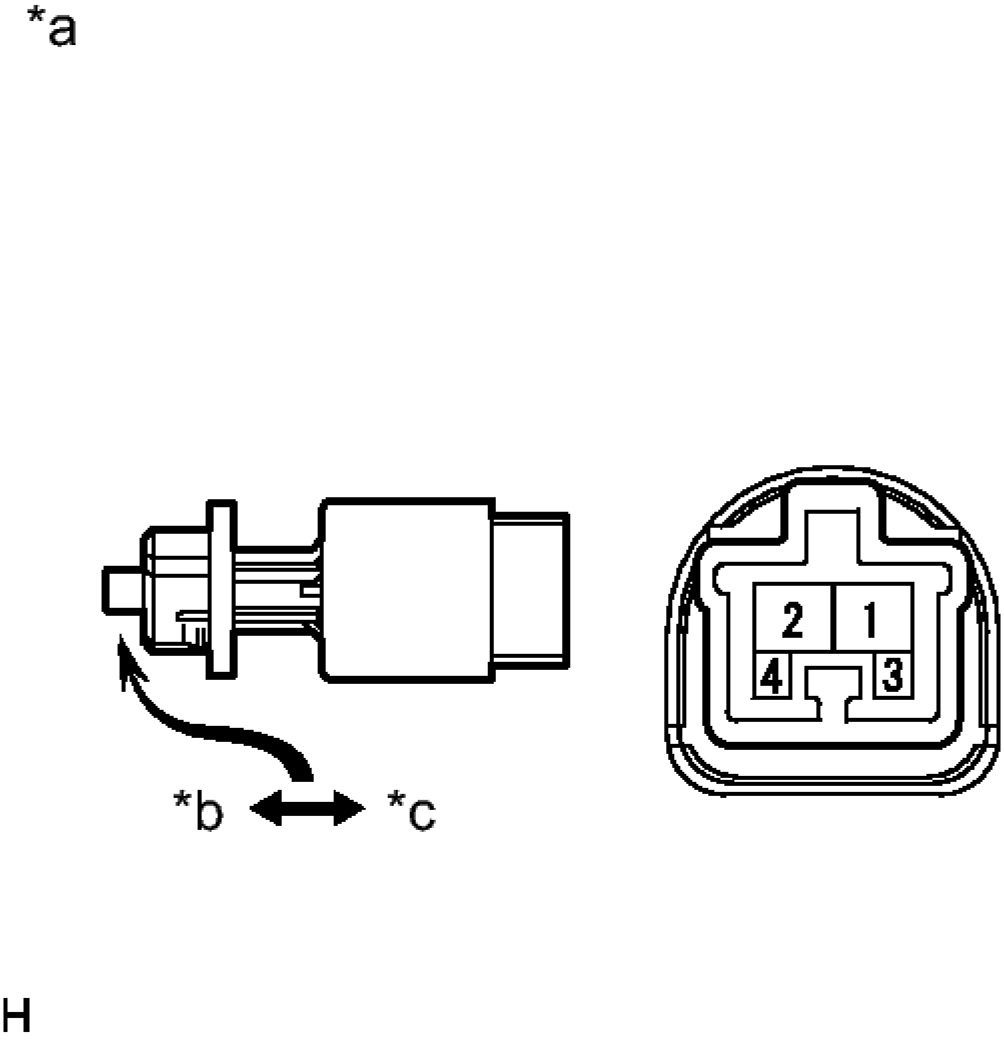

Fig. 103: Inspecting Stop Light Switch Assembly Connector
Courtesy of TOYOTA MOTOR SALES, U.S.A., INC.

Standard Resistance

Tester Connection	Switch Condition	Specified Condition
	Pushed	10 kohms or higher

1 - 2	Not pushed	Below 0.1 ohms
3 - 4	Pushed	Below 200 ohms
	Not pushed	10 kohms or higher

TEXT IN ILLUSTRATION

*a	Component without harness connected (Stop Light Switch Assembly)
*b	Not Pushed
*c	Pushed

If the result is not as specified, replace the stop light switch assembly.

INSTALLATION

INSTALLATION

1. **INSTALL STOP LIGHT SWITCH ASSEMBLY**
    a. Insert the stop light switch assembly until the threaded sleeve hits the pedal.

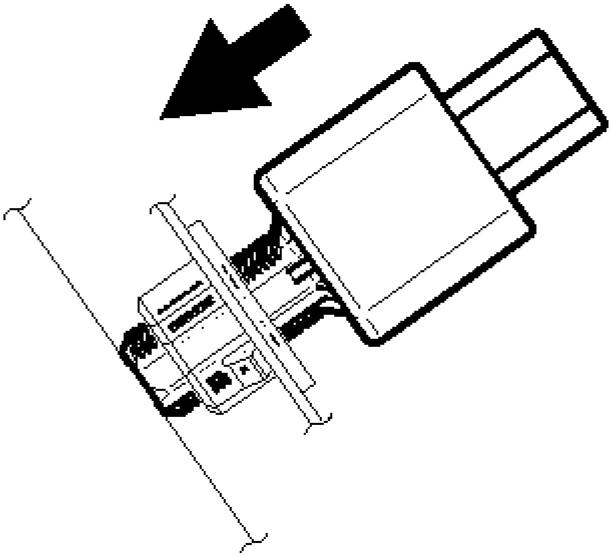

P

Fig. 104: Inserting Stop Light Switch Assembly Until Rod Hits Pedal
Courtesy of TOYOTA MOTOR SALES, U.S.A., INC.

NOTE: **When inserting the stop light switch assembly, support the pedal from behind so that the pedal is not pushed in.**

b. Make a quarter turn clockwise to install the stop light switch assembly.

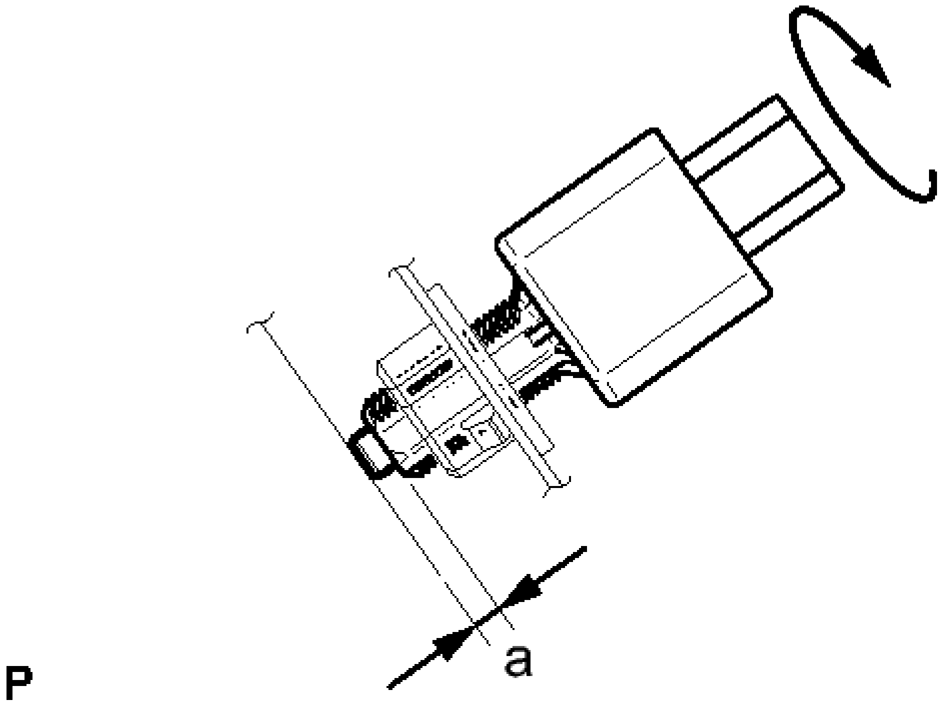

Fig. 105: Turning Stop Light Switch Assembly
Courtesy of TOYOTA MOTOR SALES, U.S.A., INC.

Torque: 1.5 N*m (15 kgf*cm, 13 in.*lbf)

or less

NOTE: When inserting the stop light switch assembly, support the pedal from behind so that the pedal is not pushed in.

c. Connect the connector.
d. Check the protrusion of the plunger.

PROTRUSION OF THE PLUNGER

Area	Measurement
a	1.5 to 2.5 mm (0.0591 to 0.0984 in.)

If the protrusion is not as specified, recheck switch installation and inspect brake pedal adjustment if necessary. Refer to **ADJUSTMENT** .

NOTE: Do not depress or support the brake pedal.

AUTOMATIC LIGHT CONTROL SENSOR

COMPONENTS

ILLUSTRATION

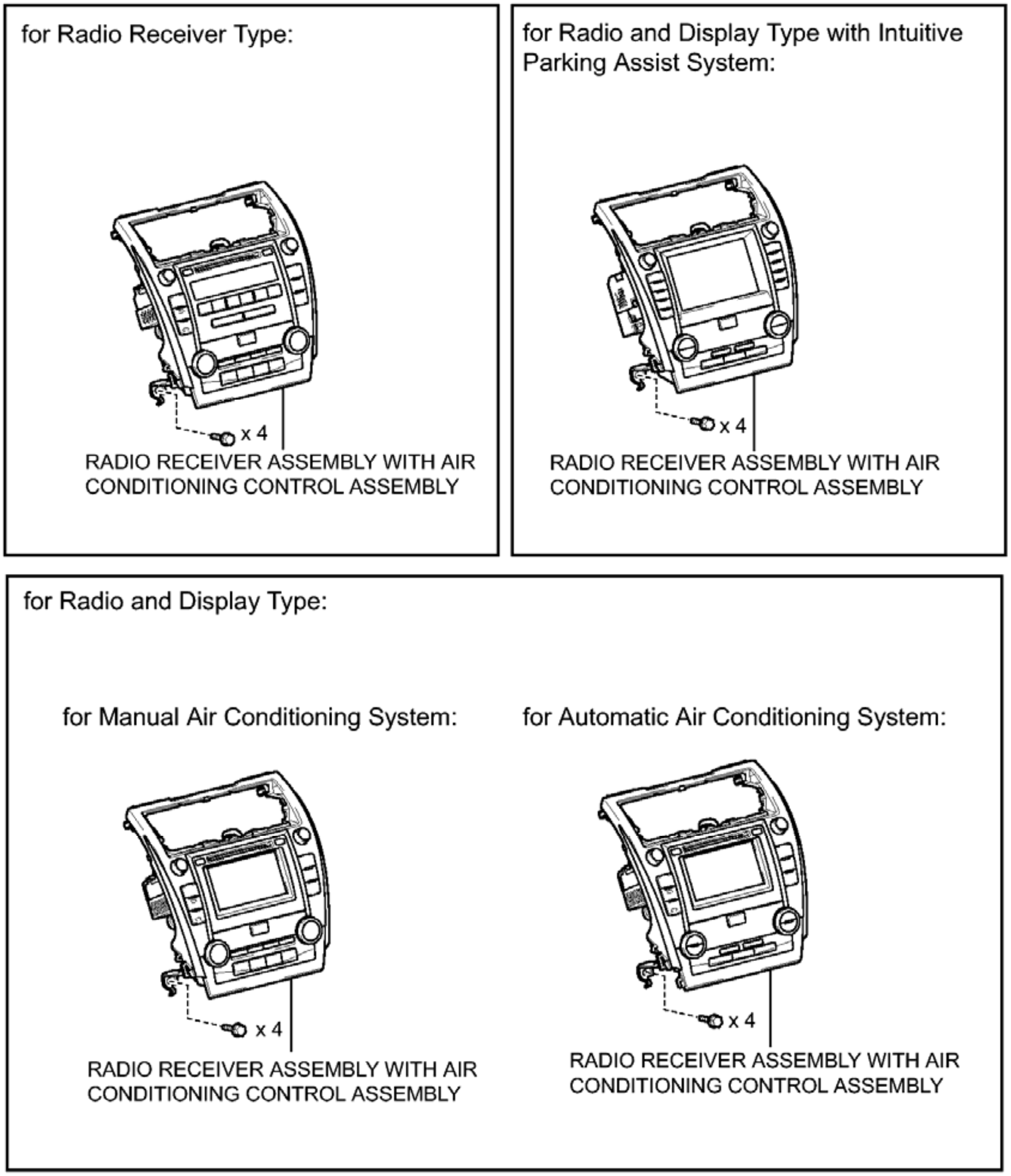
for Radio Receiver Type:
x 4
RADIO RECEIVER ASSEMBLY WITH AIR CONDITIONING CONTROL ASSEMBLY
for Radio and Display Type with Intuitive Parking Assist System:
x 4
RADIO RECEIVER ASSEMBLY WITH AIR CONDITIONING CONTROL ASSEMBLY
for Radio and Display Type:
for Manual Air Conditioning System:
x 4
RADIO RECEIVER ASSEMBLY WITH AIR CONDITIONING CONTROL ASSEMBLY
for Automatic Air Conditioning System:
x 4
RADIO RECEIVER ASSEMBLY WITH AIR CONDITIONING CONTROL ASSEMBLY

P

Fig. 106: Identifying Automatic Light Control Sensor Replacement Components (1 Of 2)
Courtesy of TOYOTA MOTOR SALES, U.S.A., INC.

ILLUSTRATION

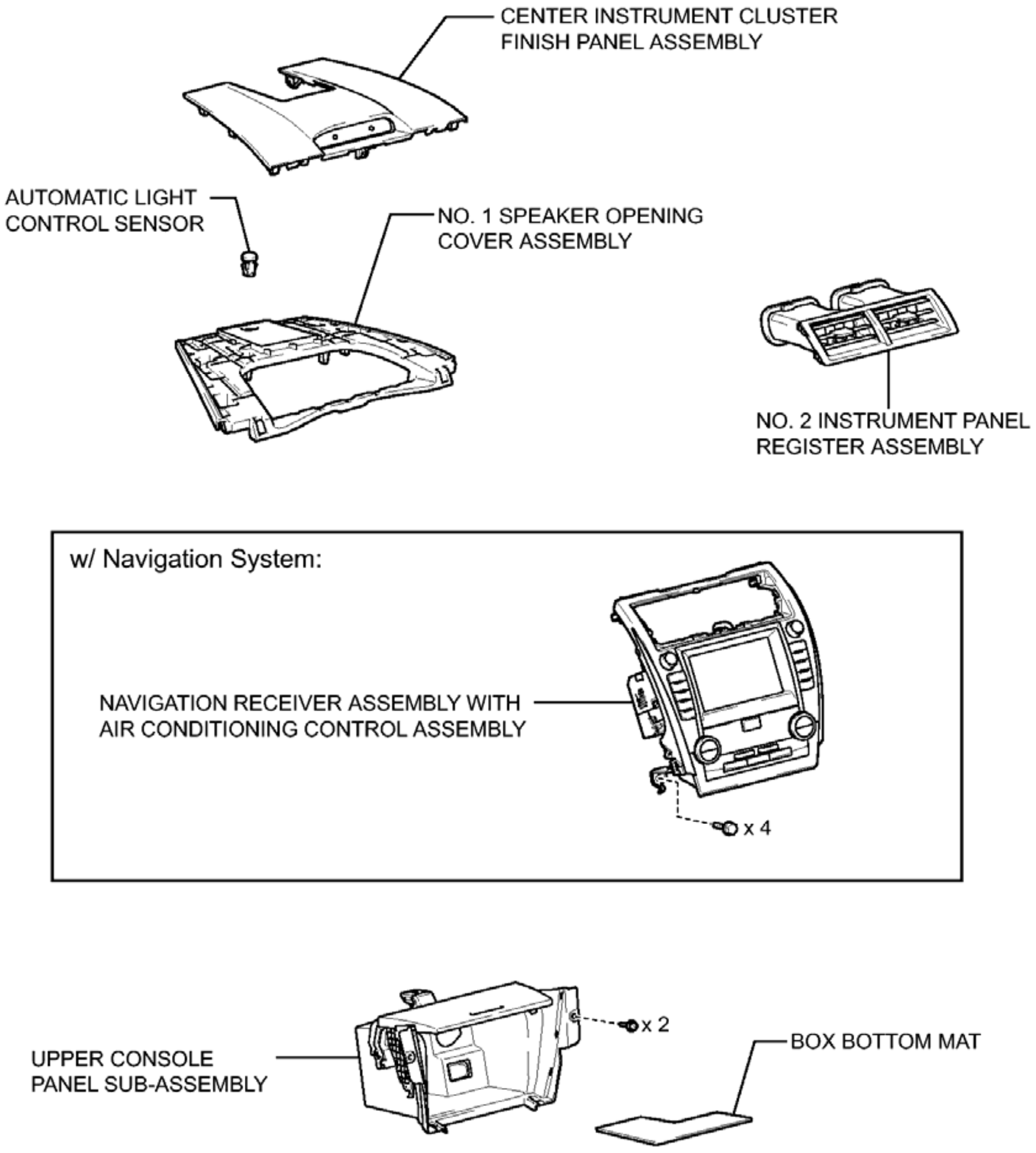
CENTER INSTRUMENT CLUSTER FINISH PANEL ASSEMBLY
AUTOMATIC LIGHT CONTROL SENSOR
NO. 1 SPEAKER OPENING COVER ASSEMBLY
NO. 2 INSTRUMENT PANEL REGISTER ASSEMBLY
w/ Navigation System:
NAVIGATION RECEIVER ASSEMBLY WITH AIR CONDITIONING CONTROL ASSEMBLY
x 4
UPPER CONSOLE PANEL SUB-ASSEMBLY
x 2
BOX BOTTOM MAT

P

Fig. 107: Identifying Automatic Light Control Sensor Replacement Components (2 Of 2)
Courtesy of TOYOTA MOTOR SALES, U.S.A., INC.

REMOVAL

REMOVAL

1. **PRECAUTION**

NOTE: **After turning the ignition switch off, waiting time may be required before disconnecting the cable from the negative (-) battery terminal. Therefore, make sure to read the disconnecting the cable from the negative (-) battery terminal notices before proceeding with work. Refer to PRECAUTION .**

2. **DISCONNECT CABLE FROM NEGATIVE BATTERY TERMINAL (for Radio and Display Type with Intuitive Parking Assist System)**

   NOTE: **When disconnecting the cable, some systems need to be initialized after the cable is reconnected. Refer to INITIALIZATION .**

3. **DISCONNECT CABLE FROM NEGATIVE BATTERY TERMINAL (for Navigation Receiver Type)**

   NOTE: **When disconnecting the cable, some systems need to be initialized after the cable is reconnected. Refer to INITIALIZATION .**

4. **REMOVE REAR CONSOLE BOX ASSEMBLY**

   Refer to **REMOVAL** .

5. **REMOVE BOX BOTTOM MAT** . Refer to **REMOVAL - Step 25** .
6. **REMOVE UPPER CONSOLE PANEL SUB-ASSEMBLY** . Refer to **REMOVAL - Step 26** .
7. **REMOVE CENTER INSTRUMENT CLUSTER FINISH PANEL ASSEMBLY** . Refer to **REMOVAL - Step 23** .
8. **REMOVE NO. 2 INSTRUMENT PANEL REGISTER ASSEMBLY** . Refer to **REMOVAL - Step 24** .
9. **REMOVE RADIO RECEIVER ASSEMBLY WITH AIR CONDITIONING CONTROL ASSEMBLY (for Radio Receiver Type)** . Refer to **REMOVAL - Step 8** .
10. **REMOVE RADIO RECEIVER ASSEMBLY WITH AIR CONDITIONING CONTROL ASSEMBLY (for Radio and Display Type)** . Refer to **REMOVAL - Step 9** .
11. **REMOVE NAVIGATION RECEIVER ASSEMBLY WITH AIR CONDITIONING CONTROL ASSEMBLY (for Navigation Receiver Type)** . Refer to **REMOVAL - Step 8** .
12. **REMOVE NO. 1 SPEAKER OPENING COVER ASSEMBLY** . Refer to **REMOVAL - Step 30** .
13. **REMOVE AUTOMATIC LIGHT CONTROL SENSOR**
    a. Disengage the 2 claws and remove the automatic light control sensor.

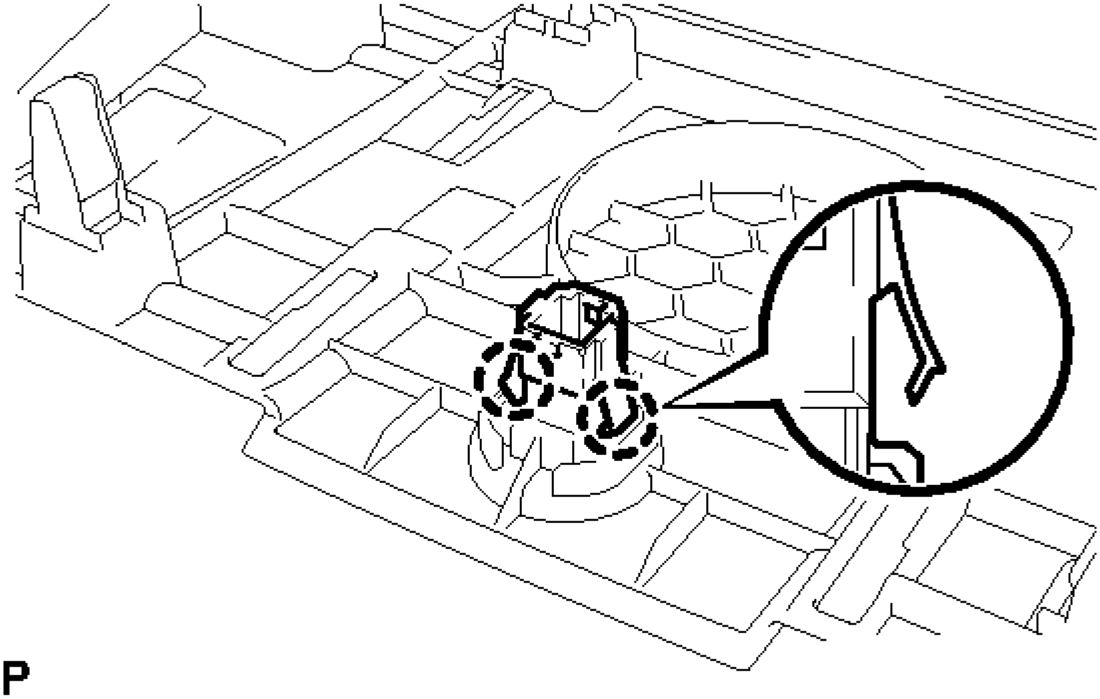

Fig. 108: Identifying Automatic Light Control Sensor Claws
Courtesy of TOYOTA MOTOR SALES, U.S.A., INC.

INSPECTION

INSPECTION

1. **INSPECT AUTOMATIC LIGHT CONTROL SENSOR (for Automatic Air Conditioning System)**
    a. Disconnect the I61 automatic light control sensor connector.

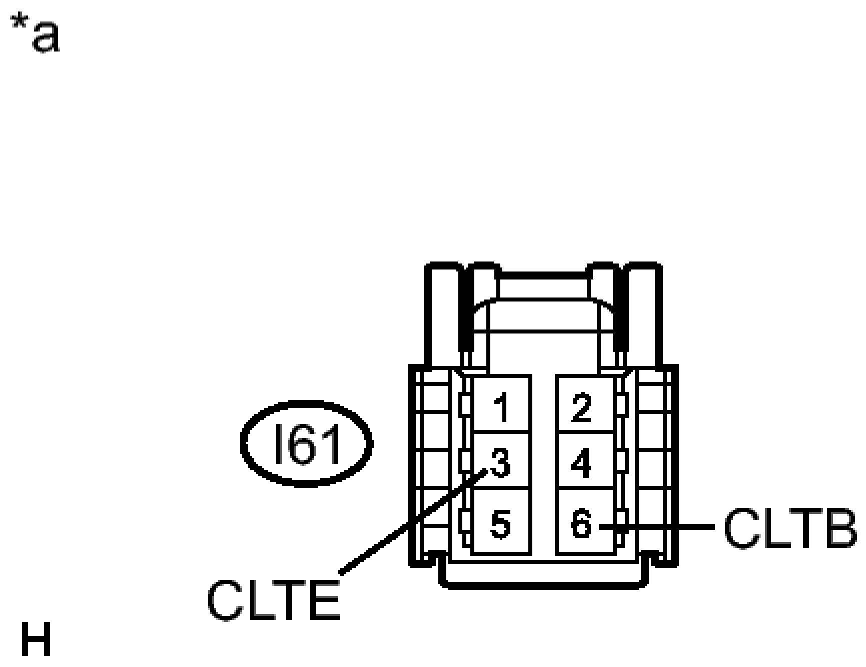

Fig. 109: Inspecting I61 Automatic Light Control Sensor Connector Terminals
Courtesy of TOYOTA MOTOR SALES, U.S.A., INC.

b. Measure the voltage and resistance according to the value(s) in the table below.

Standard Voltage

Tester Connection	Switch Condition	Specified Condition
I61-6 (CLTB) - I61-3 (CLTE)	Ignition switch off	Below 1 V
	Ignition switch ON	11 to 14 V

Standard Resistance

Tester Connection	Condition	Specified Condition
I61-3 (CLTE) - Body ground	Always	Below 1 ohms

TEXT IN ILLUSTRATION

	Front

*a	view of wire harness connector (to Automatic Light Control Sensor)

If the result is not as specified, there may be a malfunction on the wire harness side.

c. Reconnect the I61 automatic light control sensor connector.

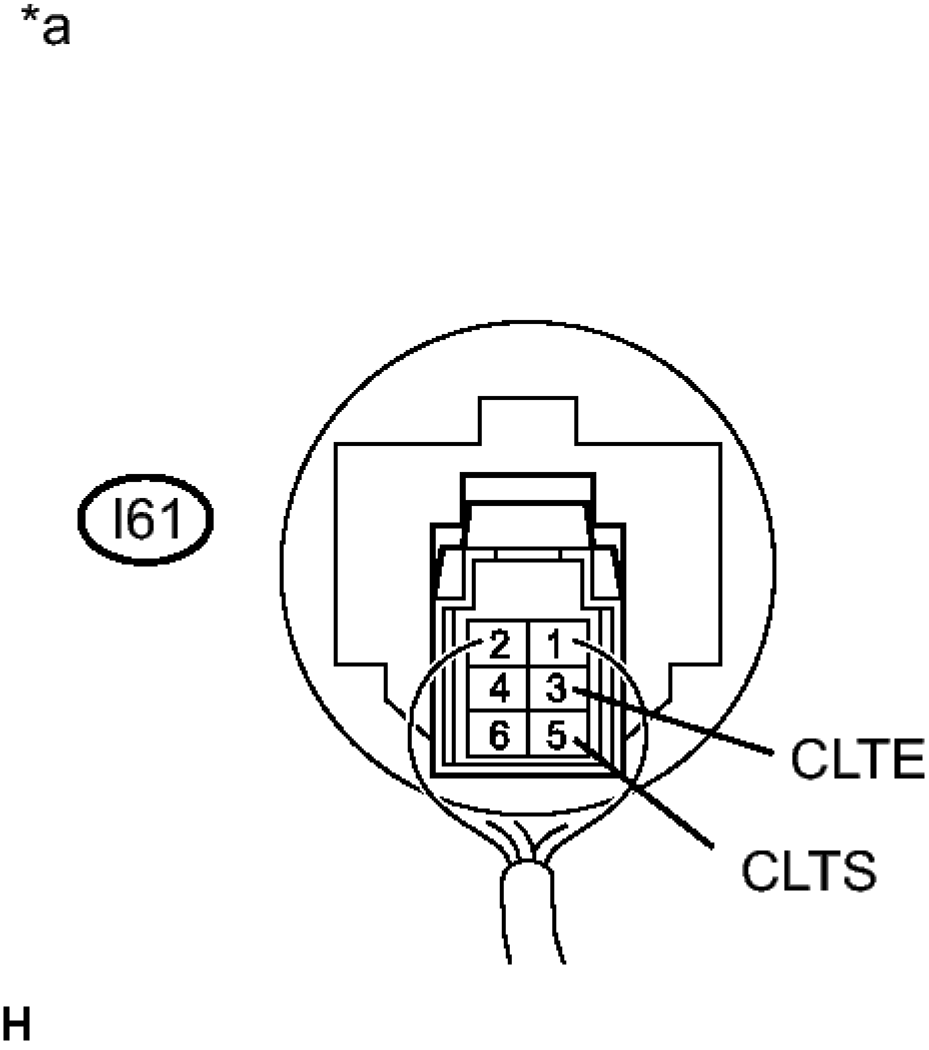

Fig. 110: Inspecting I61 Automatic Light Control Sensor Connector Terminals
Courtesy of TOYOTA MOTOR SALES, U.S.A., INC.

d. Connect an oscilloscope to the automatic light control sensor connector.

TEXT IN ILLUSTRATION

*a	Component with harness connected (Automatic Light Control Sensor)

e. Check the waveform.

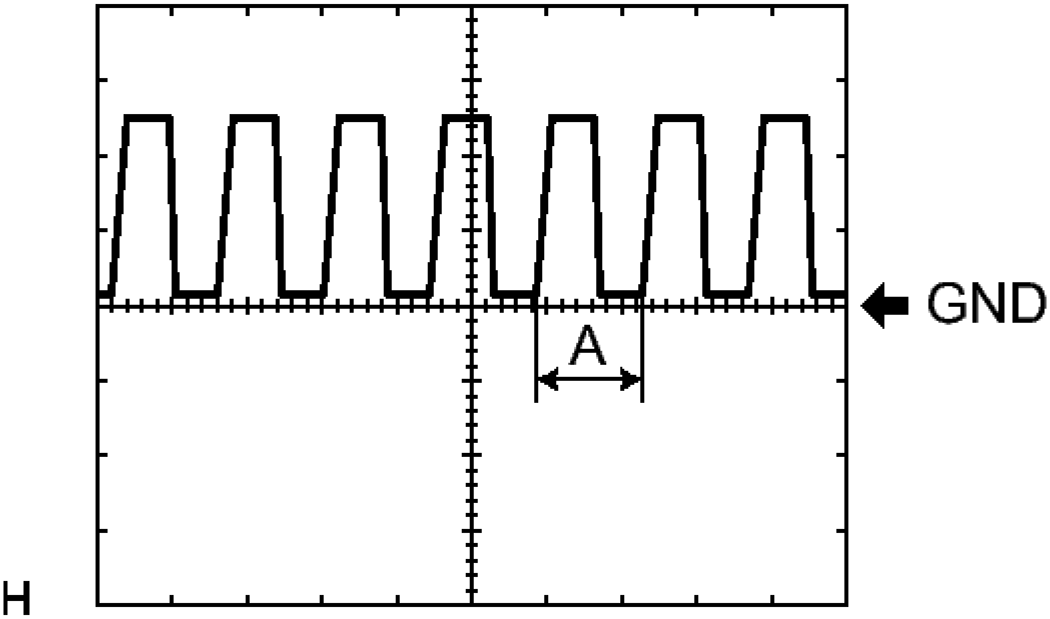

Fig. 111: Identifying Waveform Graph
Courtesy of TOYOTA MOTOR SALES, U.S.A., INC.

OK

Tester Connection	Tool Setting	Switch Condition	Specified Condition
I61-3 (CLTE) - I61-5 (CLTS)	5 V/DIV., 5 ms./DIV	Ignition switch ON, light control switch in	Correct waveform is as shown

		AUTO position	above

HINT:

If the ambient light becomes brighter, width A becomes narrower.

If the result is not as specified, the automatic light control sensor may have a malfunction.

2. **INSPECT AUTOMATIC LIGHT CONTROL SENSOR (for Manual Air Conditioning System)**
   a. Disconnect the I132 automatic light control sensor connector.

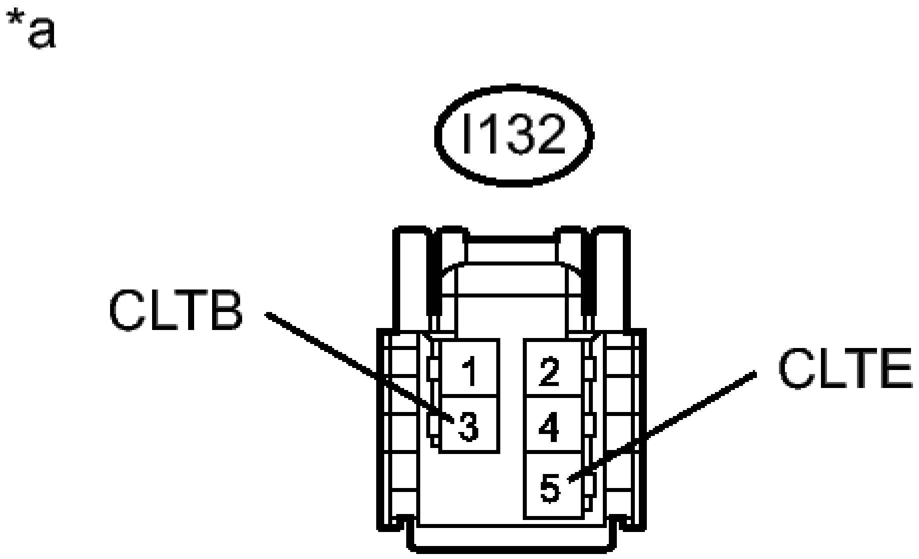

Fig. 112: Inspecting I132 Automatic Light Control Sensor Connector Terminals
Courtesy of TOYOTA MOTOR SALES, U.S.A., INC.

   b. Measure the voltage and resistance according to the value(s) in the table below.

Standard Voltage

Tester Connection	Switch Condition	Specified Condition
I132-3 (CLTB) - I132-5 (CLTE)	Ignition switch off	Below 1 V
	Ignition switch ON	11 to 14 V

Standard Resistance

Tester Connection	Condition	Specified Condition
I132-5 (CLTE) - Body ground	Always	Below 1 ohms

TEXT IN ILLUSTRATION

*a	Front view of wire harness connector (to Automatic Light Control Sensor)

If the result is not as specified, there may be a malfunction on the wire harness side.

c. Reconnect the I132 automatic light control sensor connector.

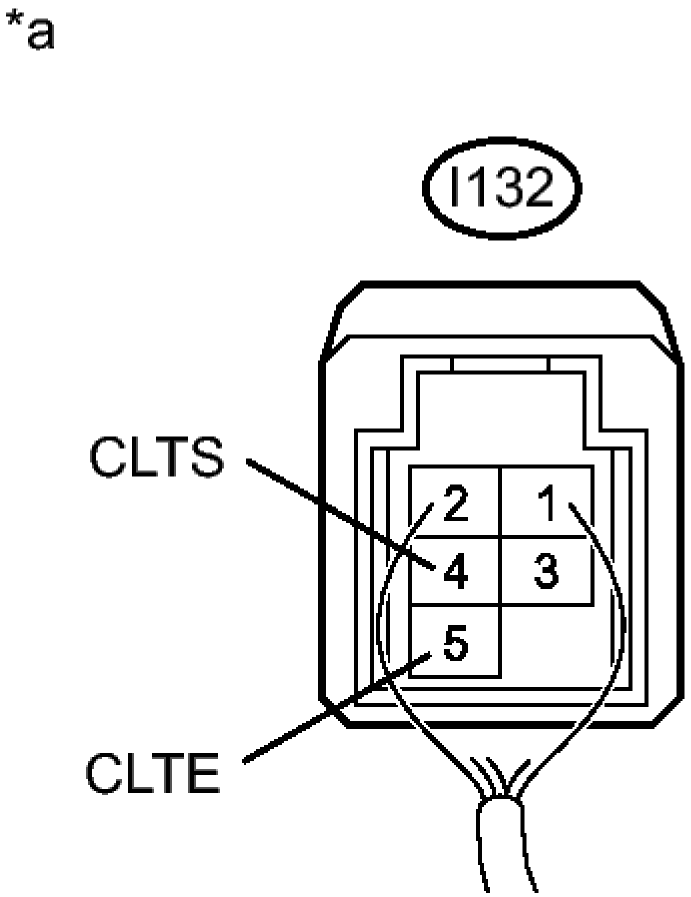

Fig. 113: Inspecting I132 Automatic Light Control Sensor Connector Terminals
Courtesy of TOYOTA MOTOR SALES, U.S.A., INC.

d. Connect an oscilloscope to the automatic light control sensor connector.

TEXT IN ILLUSTRATION

*a	Component with harness connected (Automatic Light Control Sensor)

e. Check the waveform.

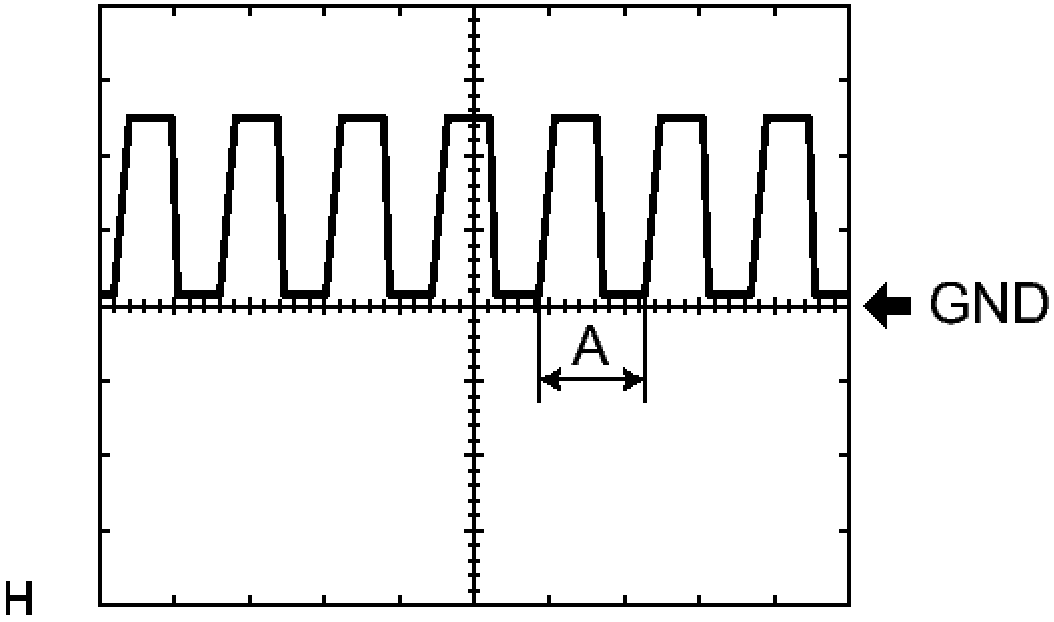

Fig. 114: Identifying Waveform Graph
Courtesy of TOYOTA MOTOR SALES, U.S.A., INC.

OK

Tester Connection	Tool Setting	Switch Condition	Specified Condition
I132-5 (CLTE) - I132-4 (CLTS)	5 V/DIV., 5 ms./DIV	Ignition switch ON, light control switch in AUTO position	Correct waveform is as shown above

HINT:

If the ambient light becomes brighter, width A becomes narrower.

If the result is not as specified, the automatic light control sensor may have a malfunction.

INSTALLATION

INSTALLATION

1. **INSTALL AUTOMATIC LIGHT CONTROL SENSOR**
    a. Engage the 2 claws to install the automatic light control sensor.

2. **INSTALL NO. 1 SPEAKER OPENING COVER ASSEMBLY** . Refer to **INSTALLATION - Step 23** .
3. **INSTALL RADIO RECEIVER ASSEMBLY WITH AIR CONDITIONING CONTROL ASSEMBLY (for Radio Receiver Type)** . Refer to **INSTALLATION - Step 14** .
4. **INSTALL RADIO RECEIVER ASSEMBLY WITH AIR CONDITIONING CONTROL ASSEMBLY (for Radio and Display Type)** . Refer to **INSTALLATION - Step 15** .
5. **INSTALL NAVIGATION RECEIVER ASSEMBLY WITH AIR CONDITIONING CONTROL ASSEMBLY (for Navigation Receiver Type)** . Refer to **INSTALLATION - Step 7** .
6. **INSTALL NO. 2 INSTRUMENT PANEL REGISTER ASSEMBLY** . Refer to **INSTALLATION - Step 29** .
7. **INSTALL CENTER INSTRUMENT CLUSTER FINISH PANEL ASSEMBLY** . Refer to **INSTALLATION - Step 30** .
8. **INSTALL UPPER CONSOLE PANEL SUB-ASSEMBLY** . Refer to **INSTALLATION - Step 27** .
9. **INSTALL BOX BOTTOM MAT** . Refer to **INSTALLATION - Step 28** .
10. **INSTALL REAR CONSOLE BOX ASSEMBLY**

    Refer to **INSTALLATION** .

11. **CONNECT CABLE TO NEGATIVE BATTERY TERMINAL (for Radio and Display Type with Intuitive Parking Assist System)**

    NOTE: **When disconnecting the cable, some systems need to be initialized after the cable is reconnected. Refer to INITIALIZATION .**

12. **CONNECT CABLE TO NEGATIVE BATTERY TERMINAL (for Navigation Receiver Type)**

    NOTE: **When disconnecting the cable, some systems need to be initialized after the cable is reconnected. Refer to INITIALIZATION .**

HEIGHT CONTROL SENSOR

COMPONENTS

ILLUSTRATION

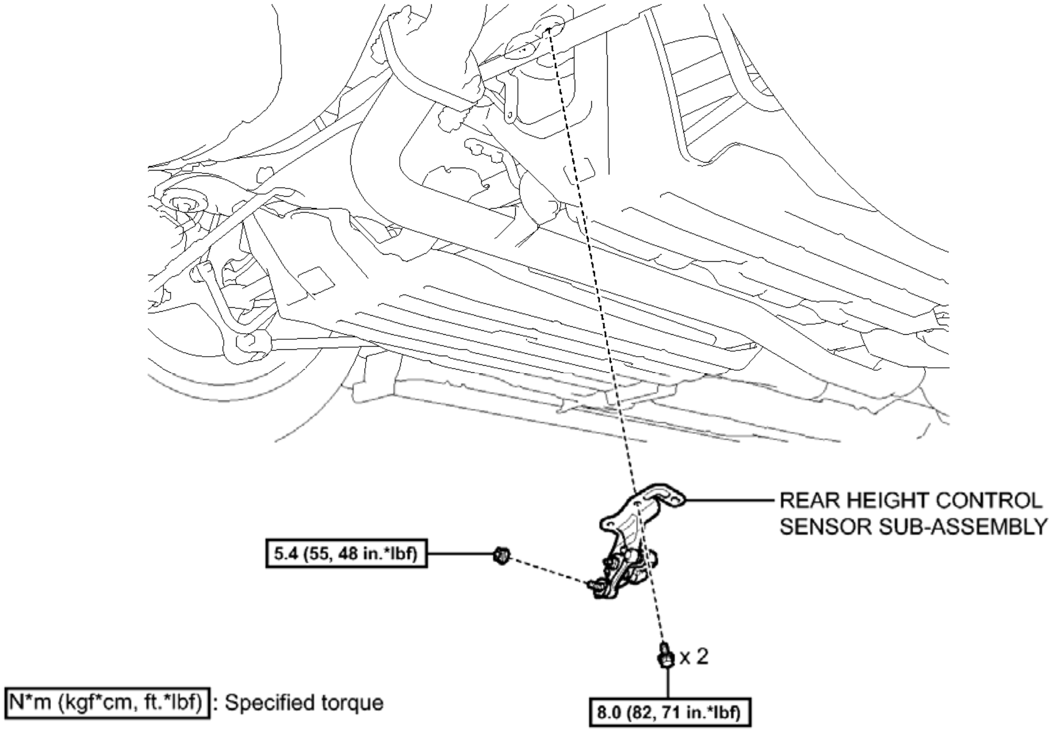
REAR HEIGHT CONTROL SENSOR SUB-ASSEMBLY
5.4 (55, 48 in.*lbf)
x 2
8.0 (82, 71 in.*lbf)
N*m (kgf*cm, ft.*lbf) : Specified torque
P

Fig. 115: Identifying Height Control Sensor Replacement Components With Torque Specifications
Courtesy of TOYOTA MOTOR SALES, U.S.A., INC.

REMOVAL

REMOVAL

1. **PRECAUTION**

   NOTE: **After turning the ignition switch off, waiting time may be required before disconnecting the cable from the negative (-) battery terminal. Therefore, make sure to read the disconnecting the cable from the negative (-) battery terminal notices before proceeding with work. Refer to PRECAUTION .**

2. **DISCONNECT CABLE FROM NEGATIVE BATTERY TERMINAL**

   NOTE: **When disconnecting the cable, some systems need to be initialized after the cable is reconnected. Refer to INITIALIZATION .**

3. **REMOVE REAR HEIGHT CONTROL SENSOR SUB-ASSEMBLY**
   a. Disconnect the connector.

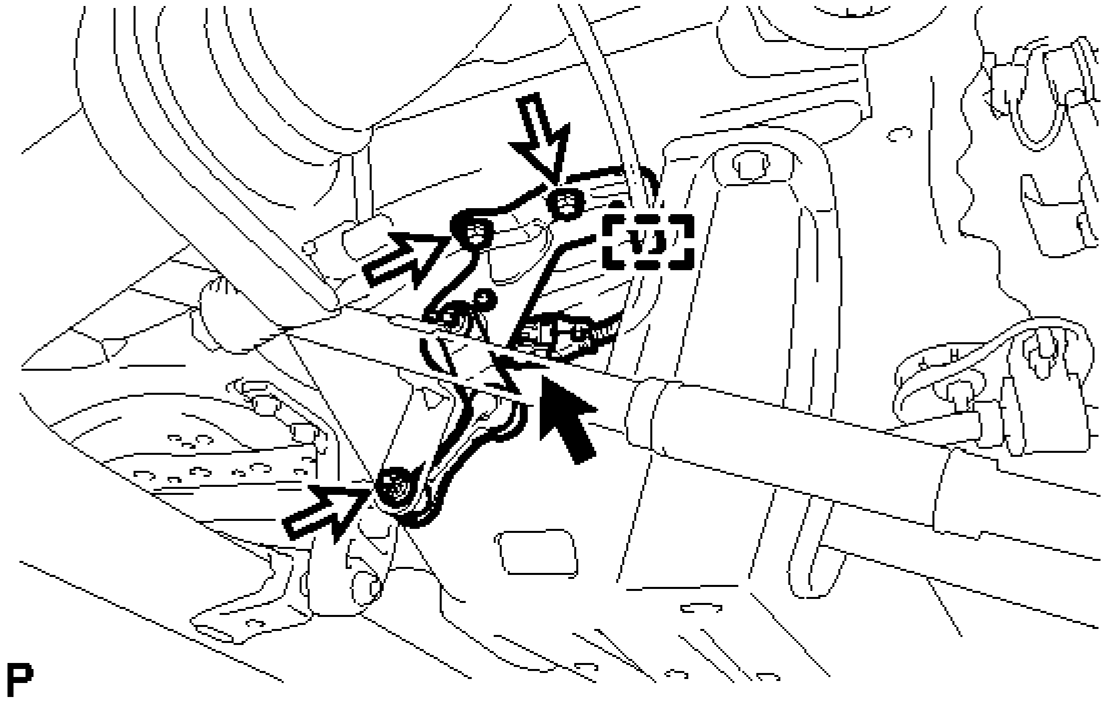

Fig. 116: Locating Rear Height Control Sensor Sub-Assembly Connector And Fasteners
Courtesy of TOYOTA MOTOR SALES, U.S.A., INC.

b. Remove the nut and 2 bolts.
c. Disengage the clamp and remove the rear height control sensor sub-assembly.

NOTE: **Do not drop the rear height control sensor sub-assembly. If it is dropped, replace it with a new one.**

INSPECTION

INSPECTION

1. **INSPECT REAR HEIGHT CONTROL SENSOR SUB-ASSEMBLY**
    a. Connect 3 dry cell batteries (1.5 V) in series.

NOTE: **Do not use rechargeable batteries as they may not output a voltage of 1.5 V.**

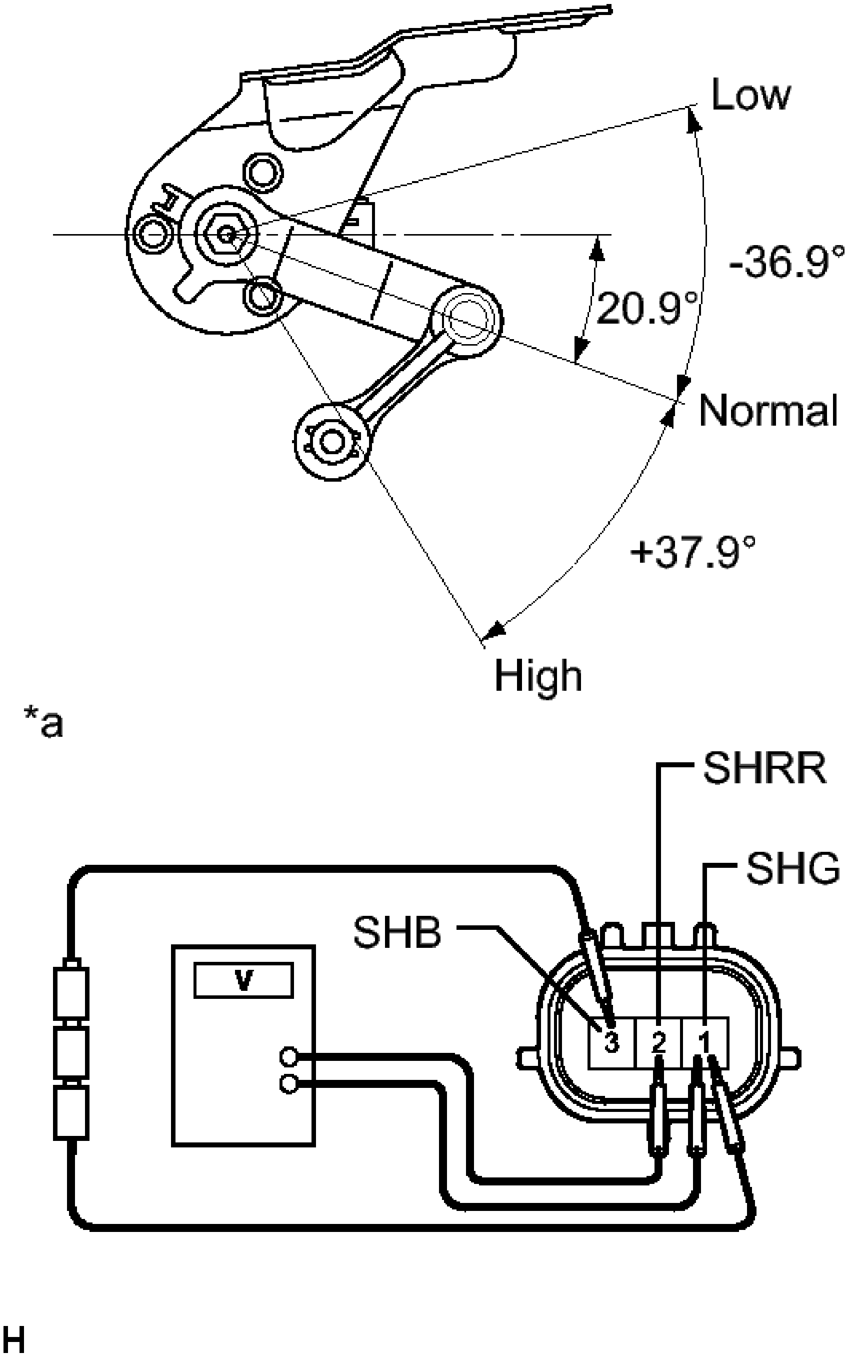
Low
-36.9°
20.9°
Normal
+37.9°
High
*a
SHRR
SHG
SHB
V
3
2
1
H

Fig. 117: Inspecting Rear Height Control Sensor Sub-Assembly
Courtesy of TOYOTA MOTOR SALES, U.S.A., INC.

b. Connect the positive (+) lead from the batteries to terminal 3 (SHB) and the negative (-) lead from the batteries to terminal 1 (SHG).

c. Measure the voltage between terminals 2 (SHRR) and 1 (SHG) while slowly moving the link up and down.

Standard Voltage

Tester Connection	Condition	Specified Condition
2 (SHRR) - 1 (SHG)	+37.9° (High)	3.77 V
2 (SHRR) - 1 (SHG)	0° (Normal)	2.25 V
2 (SHRR) - 1 (SHG)	-36.9° (Low)	0.77 V

TEXT IN ILLUSTRATION

*a	Component without harness connected (Rear Height Control Sensor Sub-assembly)

If the result is not as specified, replace the rear height control sensor sub-assembly.

INSTALLATION

INSTALLATION

1. **INSTALL REAR HEIGHT CONTROL SENSOR SUB-ASSEMBLY**
   a. Engage the clamp.
   b. Install the rear height control sensor sub-assembly with the 2 bolts.

      Torque: 8.0 N*m (82 kgf*cm, 71 in.*lbf)

   c. Install the nut.

      Torque: 5.4 N*m (55 kgf*cm, 48 in.*lbf)

   d. Connect the connector.
2. **CONNECT CABLE TO NEGATIVE BATTERY TERMINAL**

NOTE: **When disconnecting the cable, some systems need to be initialized after the cable is reconnected. Refer to INITIALIZATION .**

3. **INITIALIZE HEIGHT CONTROL SENSOR SIGNAL**

   Refer to **INITIALIZATION** .

4. **ADJUST HEADLIGHT AIMING**

   Refer to **ADJUSTMENT**.

HEADLIGHT LEVELING ECU

COMPONENTS

ILLUSTRATION

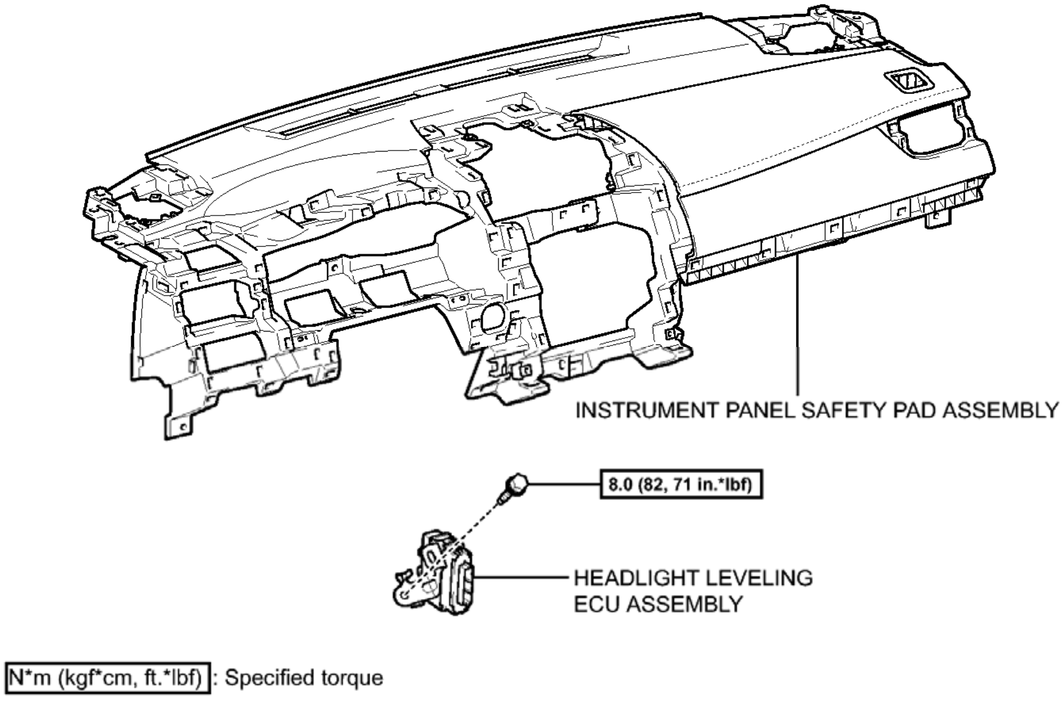
INSTRUMENT PANEL SAFETY PAD ASSEMBLY
8.0 (82, 71 in.*lbf)
HEADLIGHT LEVELING ECU ASSEMBLY
N*m (kgf*cm, ft.*lbf) : Specified torque
P

Fig. 118: Identifying Headlight Leveling ECU Replacement Components With Torque Specifications
Courtesy of TOYOTA MOTOR SALES, U.S.A., INC.

REMOVAL

REMOVAL

1. **REMOVE INSTRUMENT PANEL SAFETY PAD ASSEMBLY**

Refer to **REMOVAL** .

2. **REMOVE HEADLIGHT LEVELING ECU ASSEMBLY**
    a. Disconnect the connector.

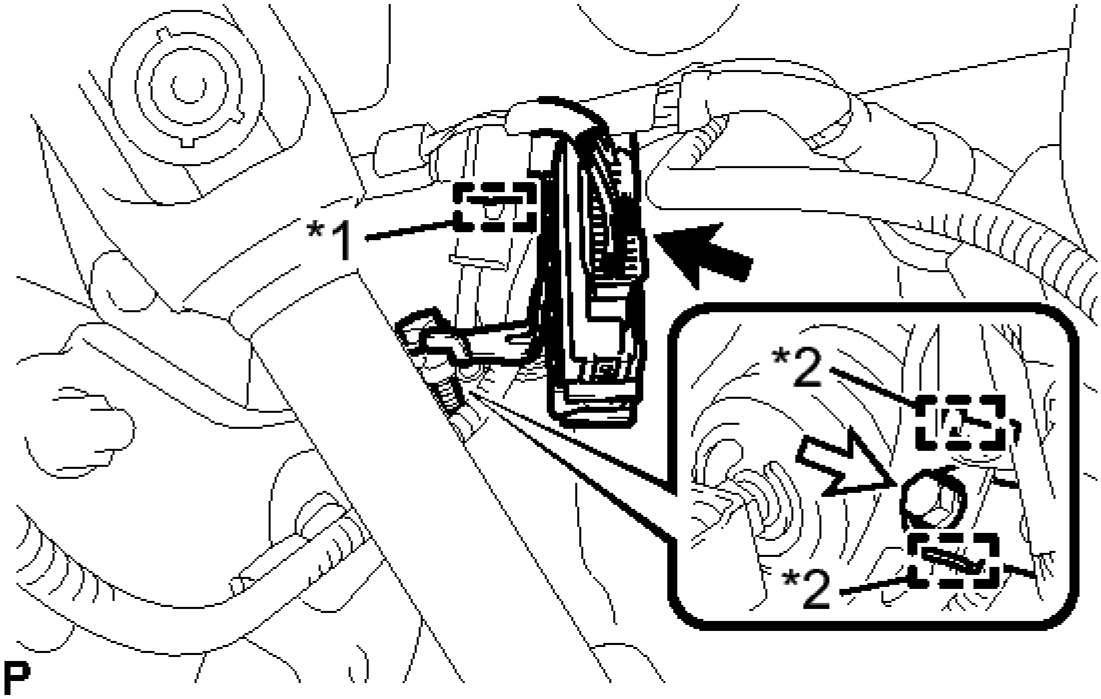

Fig. 119: Locating Headlight Leveling ECU Assembly Connector And Guide
Courtesy of TOYOTA MOTOR SALES, U.S.A., INC.

    b. Disengage the clamp.

TEXT IN ILLUSTRATION

*1	Clamp
*2	Guide

    c. Remove the bolt.
    d. Disengage the 2 guides and remove the headlight leveling ECU assembly.

INSTALLATION

INSTALLATION

1. **INSTALL HEADLIGHT LEVELING ECU ASSEMBLY**
    a. Engage the 2 guides.
    b. Install the headlight leveling ECU assembly with the bolt.

Torque: 8.0 N*m (82 kgf*cm, 71 in.*lbf)

   c. Engage the clamp.
   d. Connect the connector.
2. **INSTALL INSTRUMENT PANEL SAFETY PAD ASSEMBLY**

   Refer to **INSTALLATION** .

3. **INITIALIZE HEIGHT CONTROL SENSOR SIGNAL**

   Refer to **INITIALIZATION** .

4. **ADJUST HEADLIGHT AIMING**

   Refer to **ADJUSTMENT**.

RELAY

ON-VEHICLE INSPECTION

ON-VEHICLE INSPECTION

1. **INSPECT H-LP RELAY**
   a. Measure the resistance according to the value(s) in the table below.

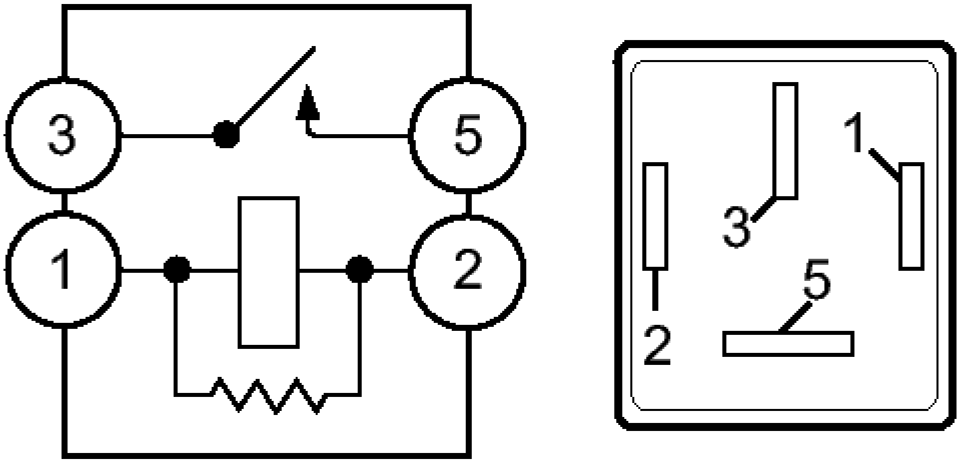

Fig. 120: Identifying H-LP Relay
Courtesy of TOYOTA MOTOR SALES, U.S.A., INC.

Standard Resistance

Tester Connection	Condition	Specified Condition
3 - 5	Voltage is not applied between terminals 1 and 2	10 kohms or higher
3 - 5	Voltage is applied between terminals 1 and 2	Below 1 ohms

If the result is not as specified, replace the H-LP relay.

2012-2017 ACCESSORIES & EQUIPMENT

Lighting System (Interior) (Service Information) (Hybrid)

VANITY LIGHT

COMPONENTS

ILLUSTRATION

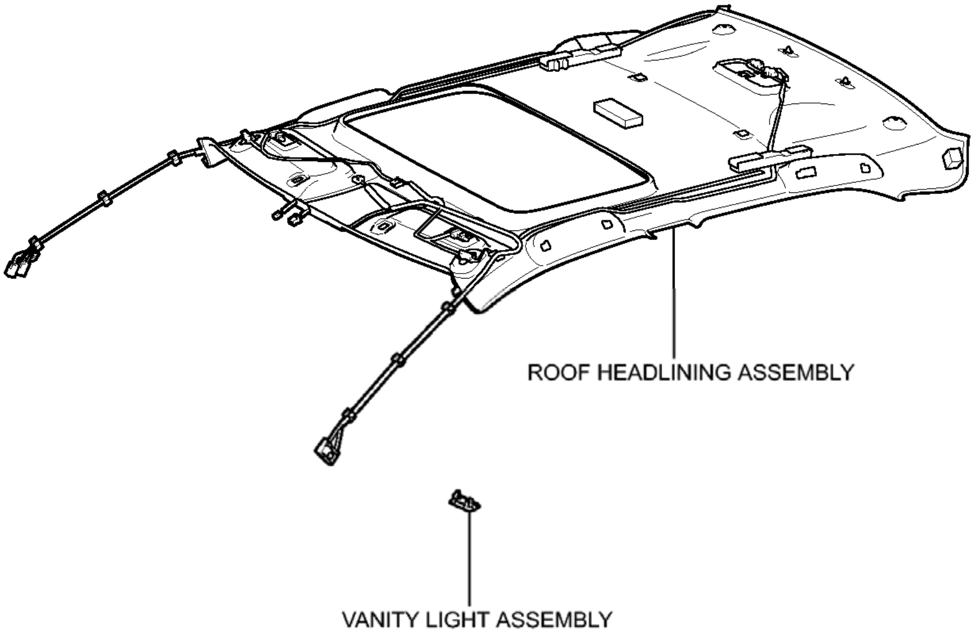
ROOF HEADLINING ASSEMBLY
VANITY LIGHT ASSEMBLY

P

Fig. 1: Identifying Vanity Light Replacement Components
Courtesy of TOYOTA MOTOR SALES, U.S.A., INC.

REMOVAL

REMOVAL

HINT:

- Use the same procedure for the RH and LH sides.
- The procedure described below is for the LH side.

1. **REMOVE ROOF HEADLINING ASSEMBLY**

   Refer to **REMOVAL**

2. **REMOVE VANITY LIGHT ASSEMBLY**
   1. Tilt the tab to disengage the 2 claws <A> and separate the bulb holder from the vanity light as shown in the illustration.

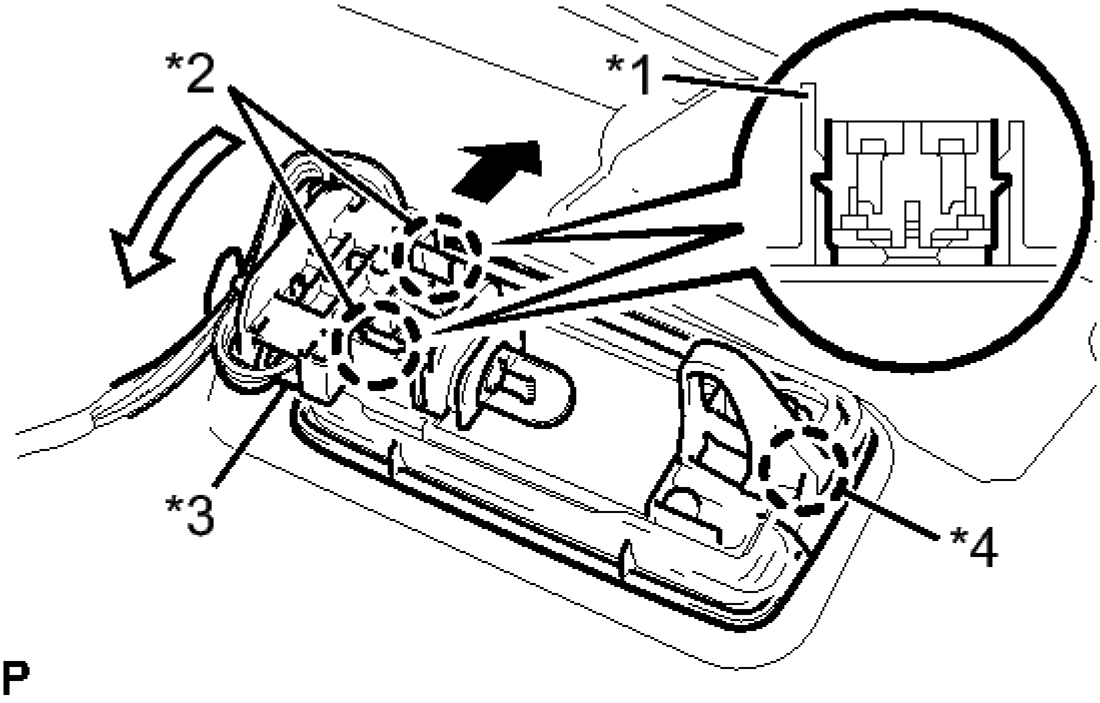

Fig. 2: Removing Vanity Light Assembly
Courtesy of TOYOTA MOTOR SALES, U.S.A., INC.

TEXT IN ILLUSTRATION

*1	Tab
*2	Claw <A>
*3	Bulb Holder
*4	Claw <B>

   2. Disengage the claw <B> and remove the vanity light assembly.

INSTALLATION

INSTALLATION

HINT:

- Use the same procedure for the RH and LH sides.
- The procedure described below is for the LH side.

1. **INSTALL VANITY LIGHT ASSEMBLY**
    a. Engage the claw <B> to install the vanity light assembly.

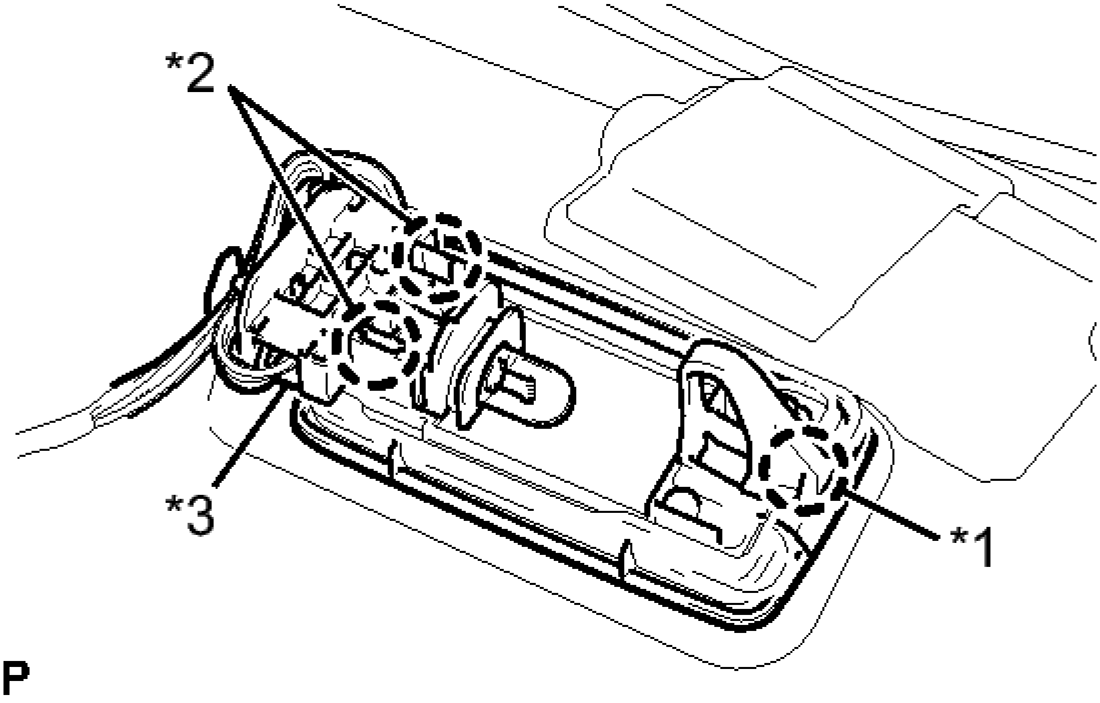

Fig. 3: Installing Vanity Light Assembly
Courtesy of TOYOTA MOTOR SALES, U.S.A., INC.

TEXT IN ILLUSTRATION

*1	Claw <B>
*2	Claw <A>
*3	Bulb Holder

    b. Engage the 2 claws <A> to install the bulb holder to the vanity light assembly.

2. **INSTALL ROOF HEADLINING ASSEMBLY**

    Refer to **INSTALLATION**

PERSONAL LIGHT

COMPONENTS

ILLUSTRATION

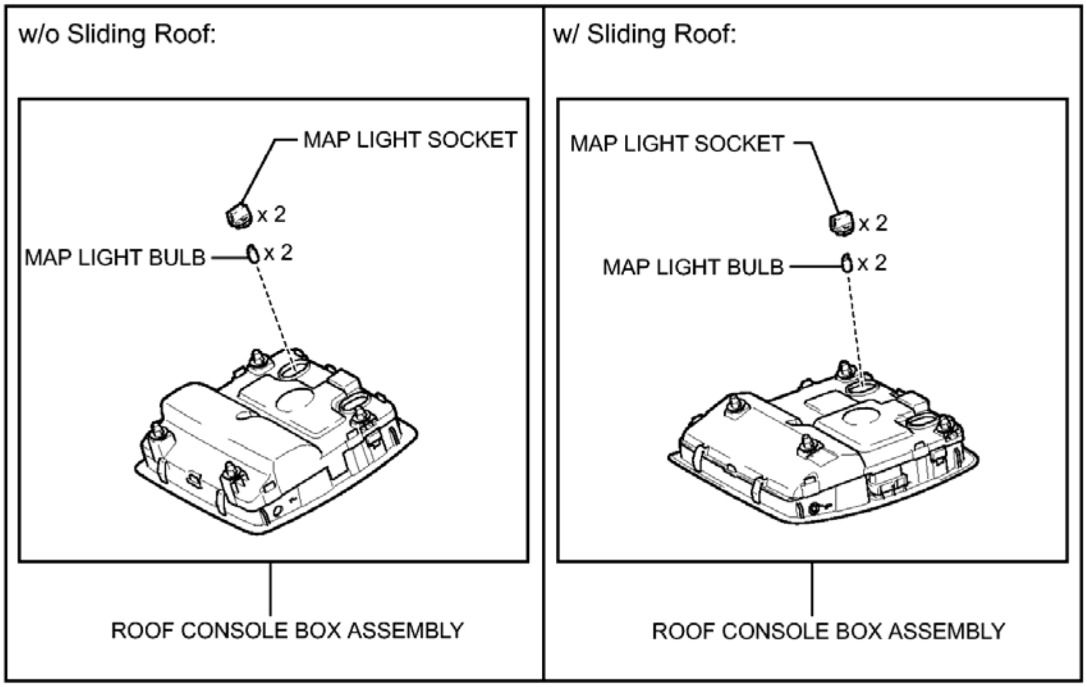
w/o Sliding Roof:
MAP LIGHT SOCKET
x 2
MAP LIGHT BULB
x 2
ROOF CONSOLE BOX ASSEMBLY
w/ Sliding Roof:
MAP LIGHT SOCKET
x 2
MAP LIGHT BULB
x 2
ROOF CONSOLE BOX ASSEMBLY

P

Fig. 4: Identifying Personal Light Replacement Components
Courtesy of TOYOTA MOTOR SALES, U.S.A., INC.

REMOVAL

REMOVAL

1. **REMOVE ROOF CONSOLE BOX ASSEMBLY (w/o Sliding Roof)**
    a. Using a molding remover, disengage the 4 clips.

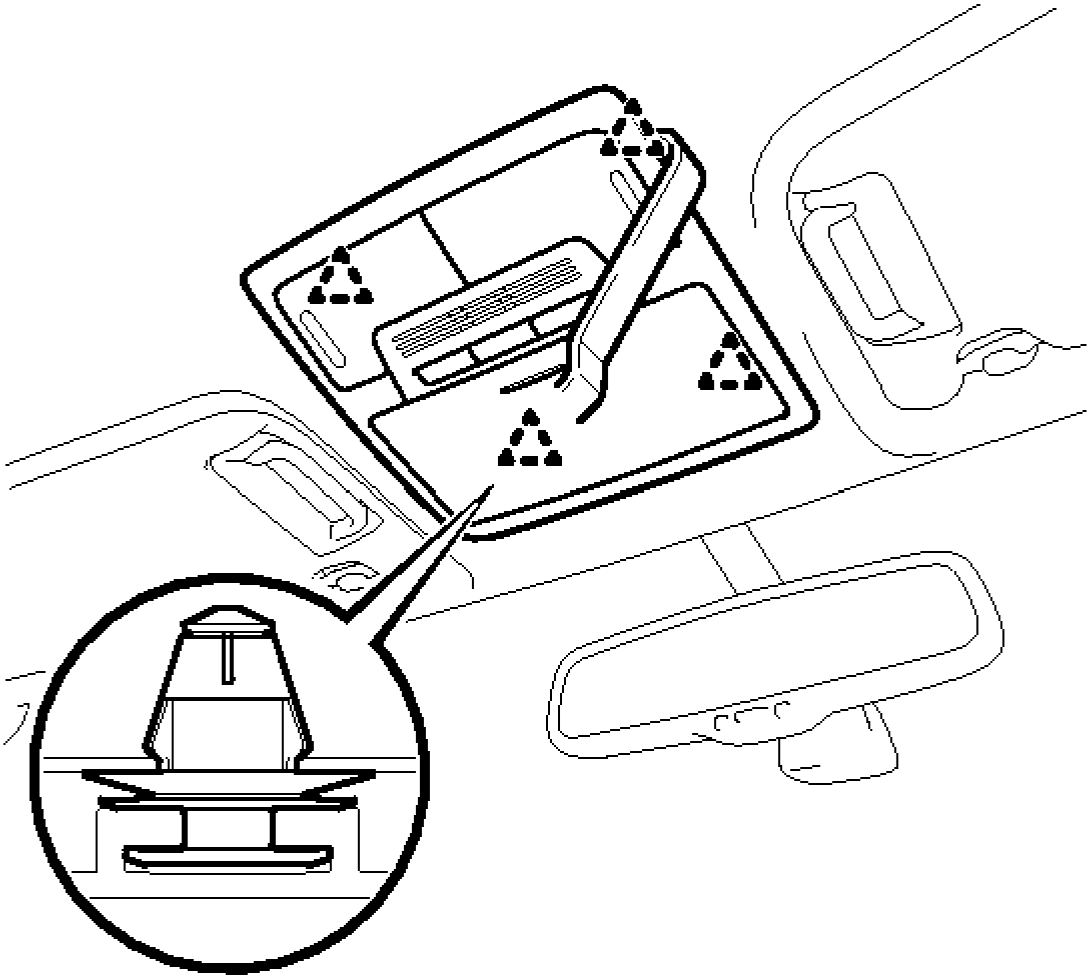

Fig. 5: Identifying Roof Console Box Assembly Clips
Courtesy of TOYOTA MOTOR SALES, U.S.A., INC.

b. Disconnect the connector and remove the roof console box assembly.

2. **REMOVE ROOF CONSOLE BOX ASSEMBLY (w/ Sliding Roof)**
   a. Using a molding remover, disengage the 4 clips.

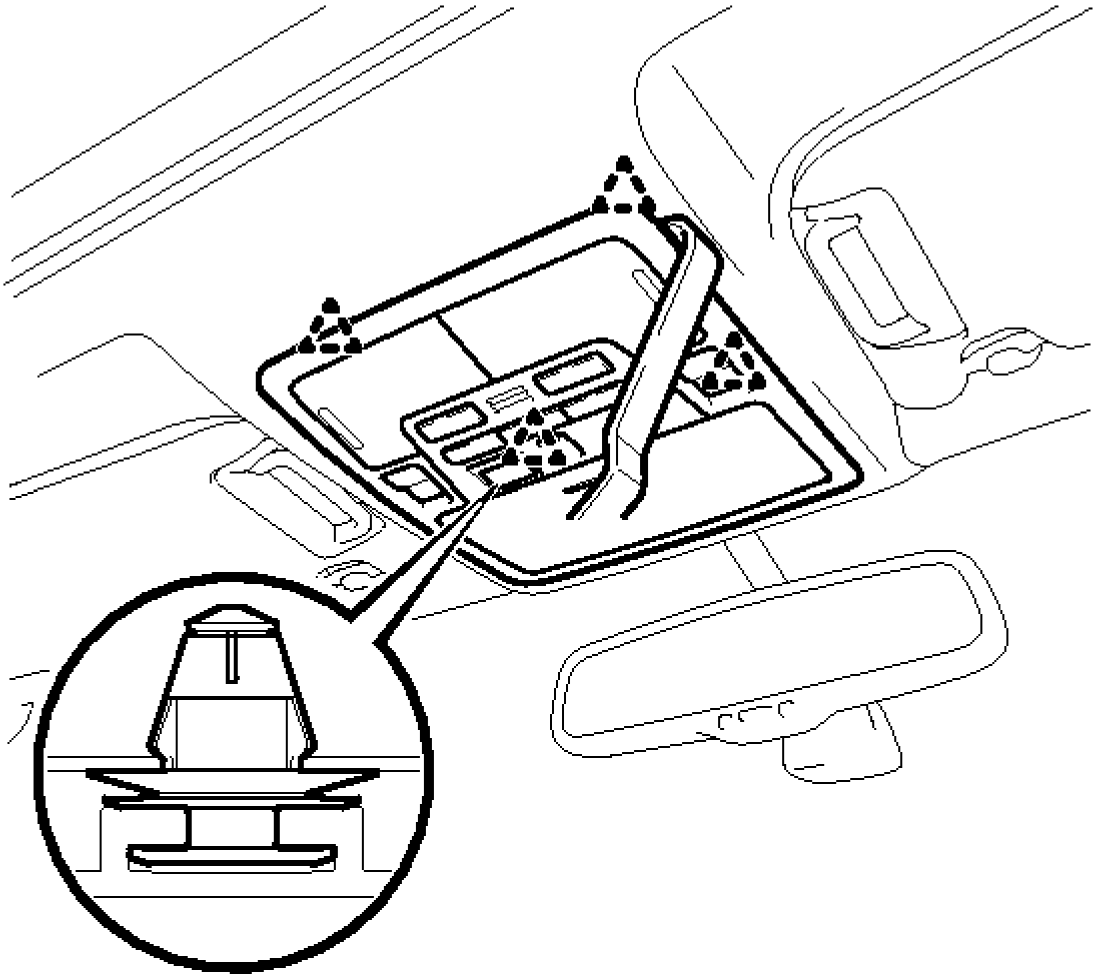

P

Fig. 6: Identifying Roof Console Box Assembly Clips
Courtesy of TOYOTA MOTOR SALES, U.S.A., INC.

b. Disconnect the connector and remove the roof console box assembly.

3. **REMOVE MAP LIGHT BULB**

   a. Turn the 2 map light sockets with the 2 map light bulbs in the direction indicated by the arrows in the illustration and remove them as a unit.

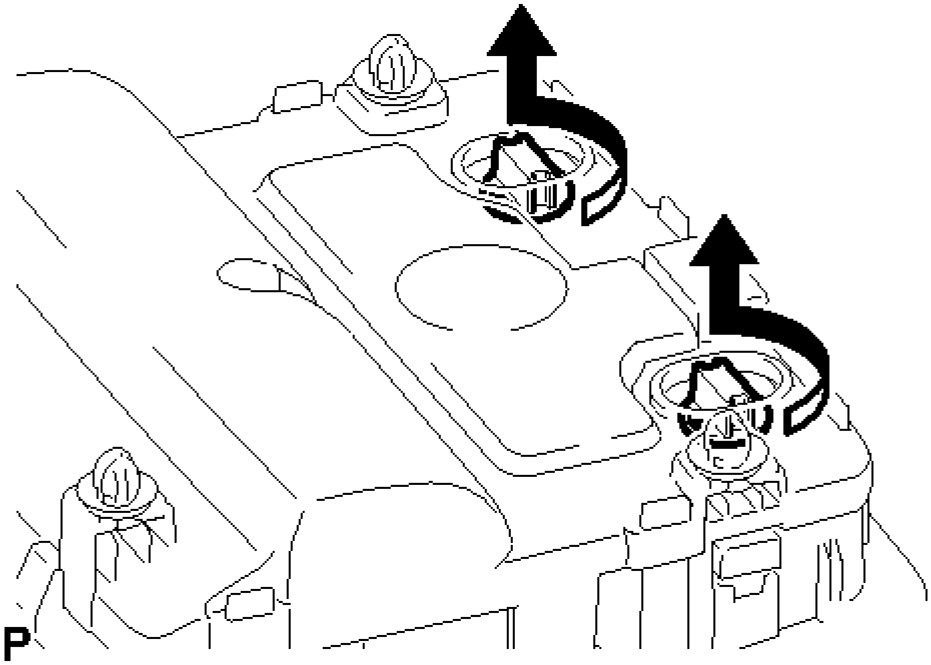

Fig. 7: Removing Map Light Bulbs
Courtesy of TOYOTA MOTOR SALES, U.S.A., INC.

b. Remove the 2 map light bulbs from the 2 map light sockets.

INSPECTION

INSPECTION

1. **INSPECT ROOF CONSOLE BOX ASSEMBLY (w/o Sliding Roof)**
    a. Inspect the personal lights.

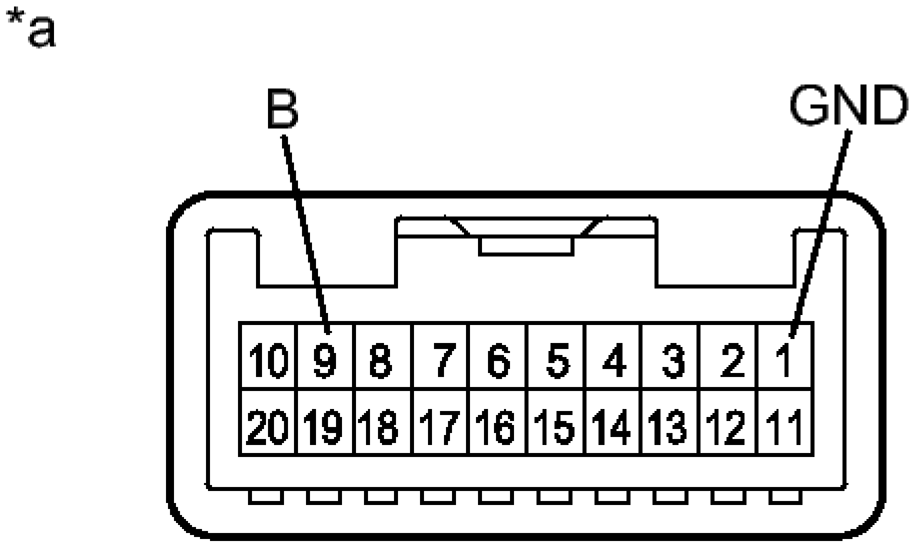

Fig. 8: Identifying Roof Console Box Assembly Connector Terminals
Courtesy of TOYOTA MOTOR SALES, U.S.A., INC.

1. Connect a positive (+) lead from the auxiliary battery to terminal 9 (B) and a negative (-) lead to terminal 1 (GND).

   Result

Tester Connection	Condition	Specified Condition
9 (B) - 1 (GND)	Personal light switches off	Personal light LH and RH do not come on
	Personal light switch LH on	Personal light LH comes on
	Personal light switch RH on	Personal light RH comes on

TEXT IN ILLUSTRATION

	Component

*a	without harness connected (Roof Console Box Assembly)

If the result is not as specified, replace the bulb or roof console box assembly.

2. **INSPECT ROOF CONSOLE BOX ASSEMBLY (w/ Sliding Roof)**
   a. Inspect the personal lights.

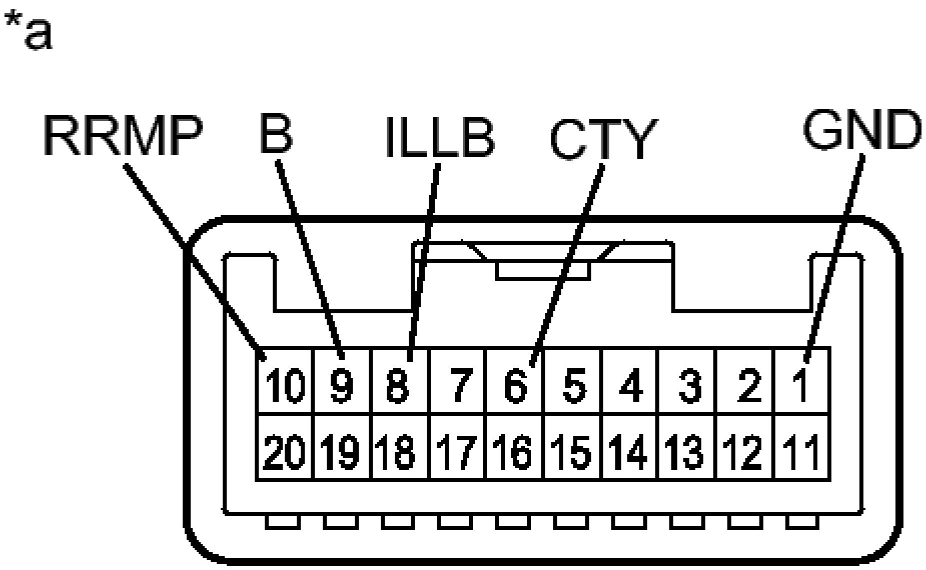

Fig. 9: Identifying Roof Console Box Assembly Connector Terminals
Courtesy of TOYOTA MOTOR SALES, U.S.A., INC.

1. Connect a positive (+) lead from the auxiliary battery to terminal 9 (B) and a negative (-) lead to terminal 1 (GND) or 6 (CTY).

   Result

Tester Connection	Condition	Specified Condition
	Interior light on/off	Personal

9 (B) - 1 (GND)	switch off and personal light switches off	light LH and RH do not come on
	Interior light on/off switch off and personal light switch LH on	Personal light LH comes on
	Interior light on/off switch off and personal light switch RH on	Personal light RH comes on
	Interior light on/off switch on and personal light switches off	Personal light LH and RH comes on
9 (B) - 6 (CTY)	Interior light door switch off and personal light switches off	Personal light LH and RH do not come on
	Interior light door switch off and personal light	Personal light LH and RH do not come on

	switches on	
	Interior light door switch on and personal light switches off	Personal light LH and RH comes on

TEXT IN ILLUSTRATION

*a	Component without harness connected (Roof Console Box Assembly)

If the result is not as specified, replace the bulb or roof console box assembly.

b. Inspect the center console spot light.

   1. Connect a positive (+) lead from the auxiliary battery to terminal 8 (ILLB) and a negative (-) lead to terminal 1 (GND).

      Result

Tester Connection	Condition	Specified Condition
1 (GND) - 8 (ILLB)	Auxiliary battery positive (+) --> Terminal 8 (ILLB) Auxiliary battery negative (-) --> Terminal 1 (GND)	Center console spot light comes on

If the result is not as specified, replace the roof console box assembly.

c. Measure the resistance according to the value(s) in the table below.

Standard Resistance

Tester Connection	Condition	Specified Condition
1 (GND) - 10 (RRMP)	Personal light switches off and interior light on/off switch off	10 kohms or higher
	Personal light switches off and interior light on/off switch on	Below 1 ohms
6 (CTY) - 10 (RRMP)	Interior light door switch off	10 kohms or higher
	Interior light door switch on	Below 1 ohms

If the result is not as specified, replace the roof console box assembly.

INSTALLATION

INSTALLATION

1. **INSTALL MAP LIGHT BULB**
   a. Install the 2 map light bulbs to the 2 map light sockets.
   b. Turn the 2 map light sockets with the 2 map light bulbs in the direction indicated by the arrows in the illustration and install them as a unit.

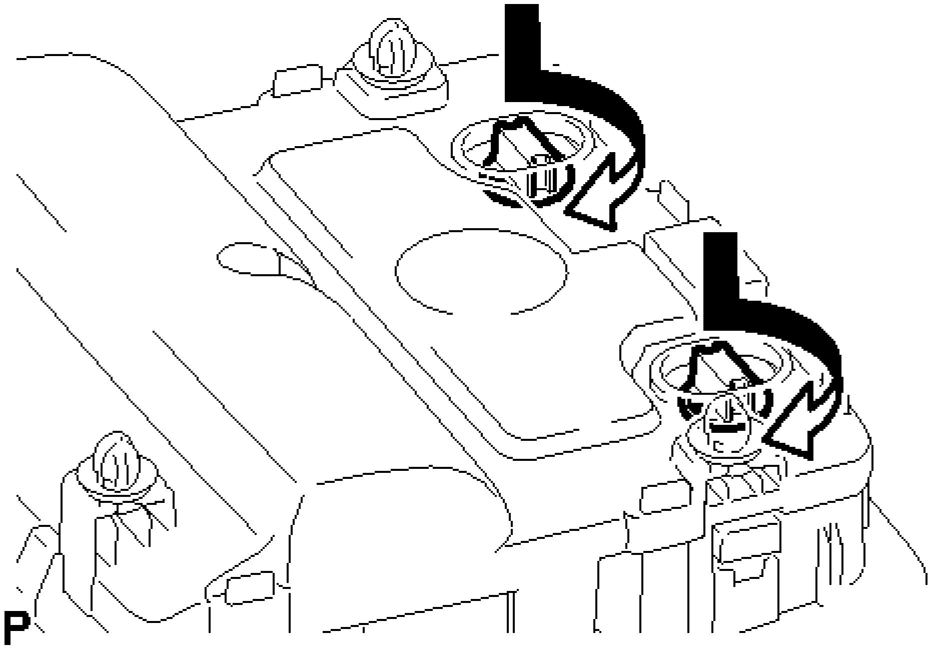

Fig. 10: Installing Map Light Bulbs
Courtesy of TOYOTA MOTOR SALES, U.S.A., INC.

2. **INSTALL ROOF CONSOLE BOX ASSEMBLY (w/o Sliding Roof)**
   1. Connect the connector.
   2. Engage the 4 clips to install the roof console box assembly.

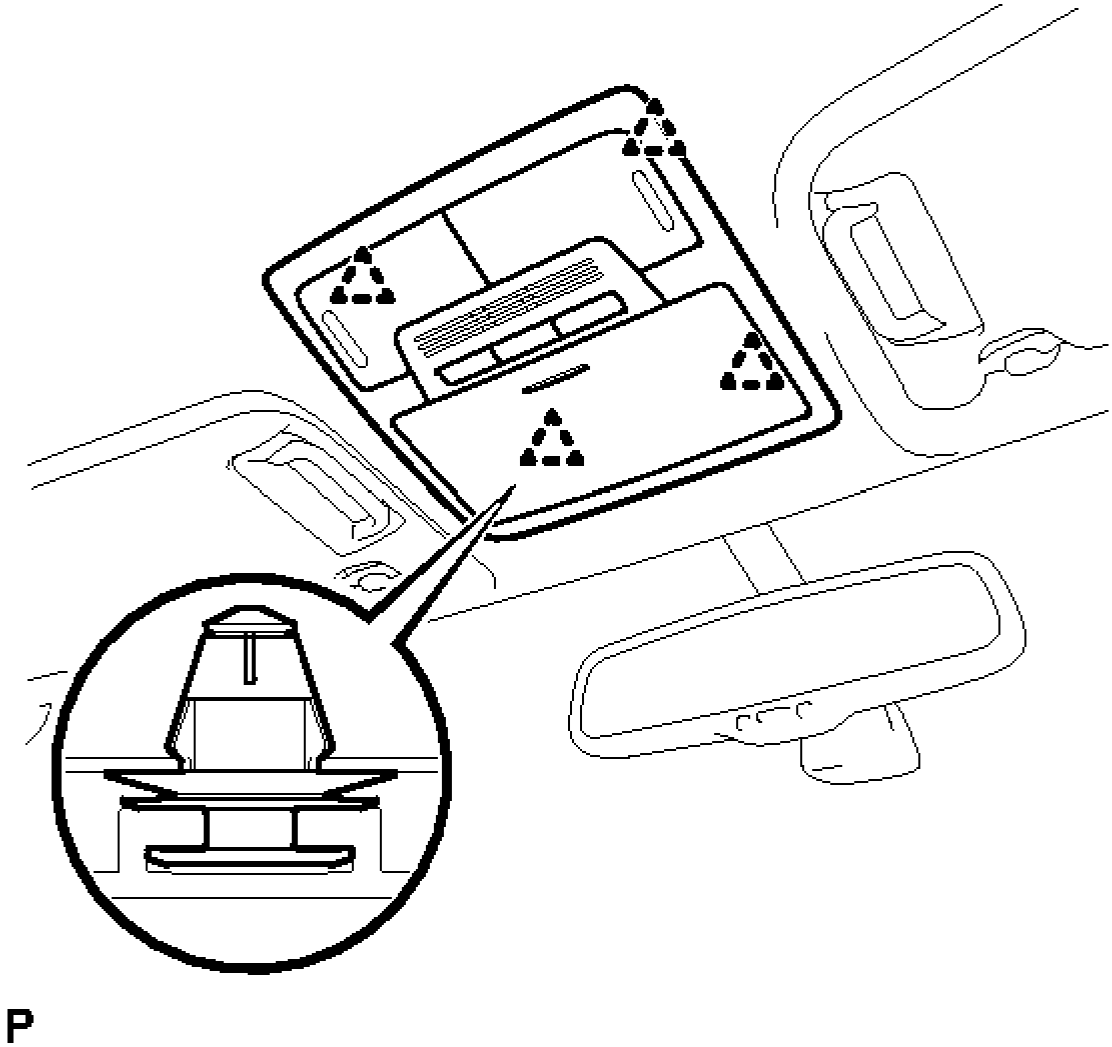

Fig. 11: Identifying Roof Console Box Assembly Clips
Courtesy of TOYOTA MOTOR SALES, U.S.A., INC.

3. **INSTALL ROOF CONSOLE BOX ASSEMBLY (w/ Sliding Roof)**
   a. Connect the connector.
   b. Engage the 4 clips to install the roof console box assembly.

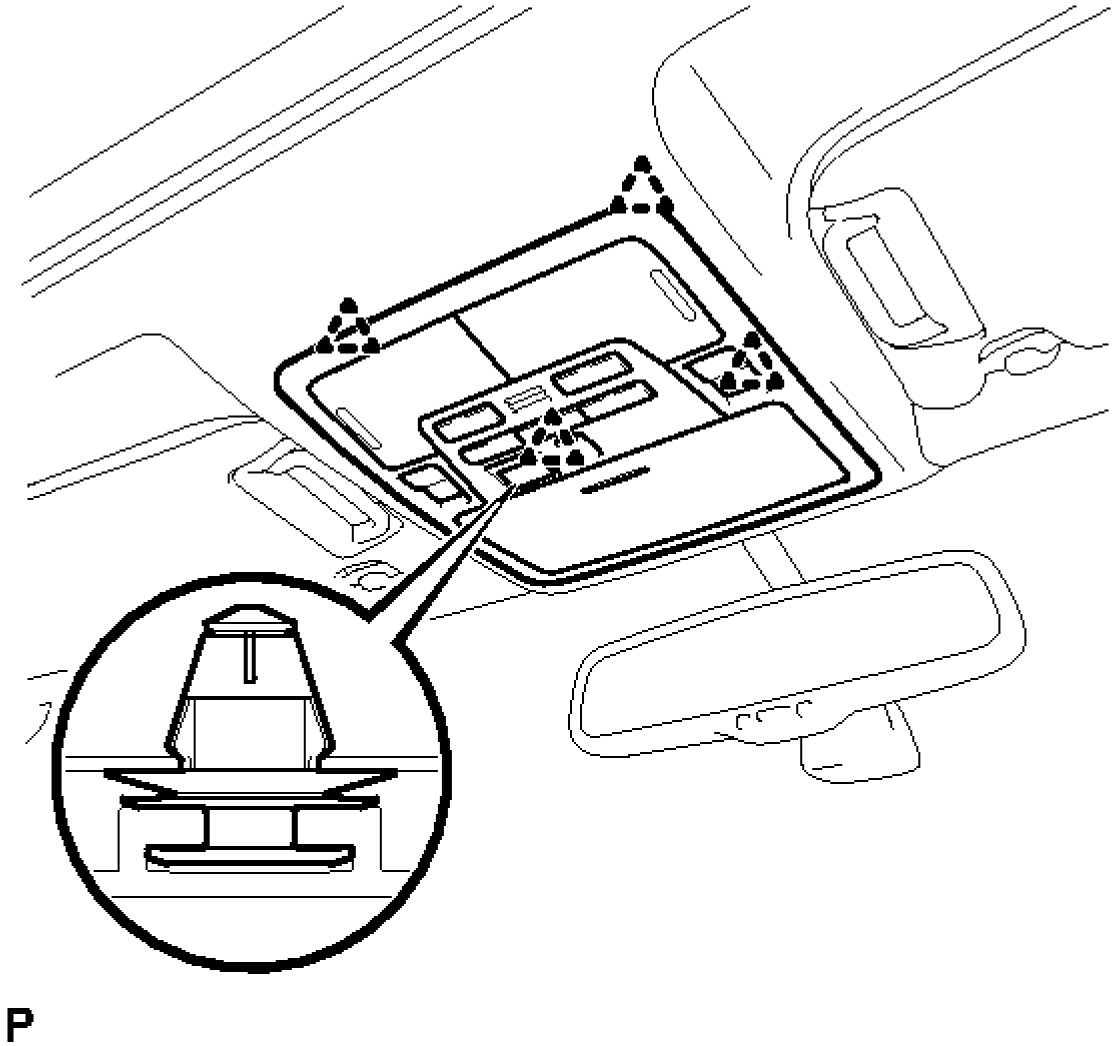

Fig. 12: Identifying Roof Console Box Assembly Clips
Courtesy of TOYOTA MOTOR SALES, U.S.A., INC.

ROOM LIGHT

COMPONENTS

ILLUSTRATION

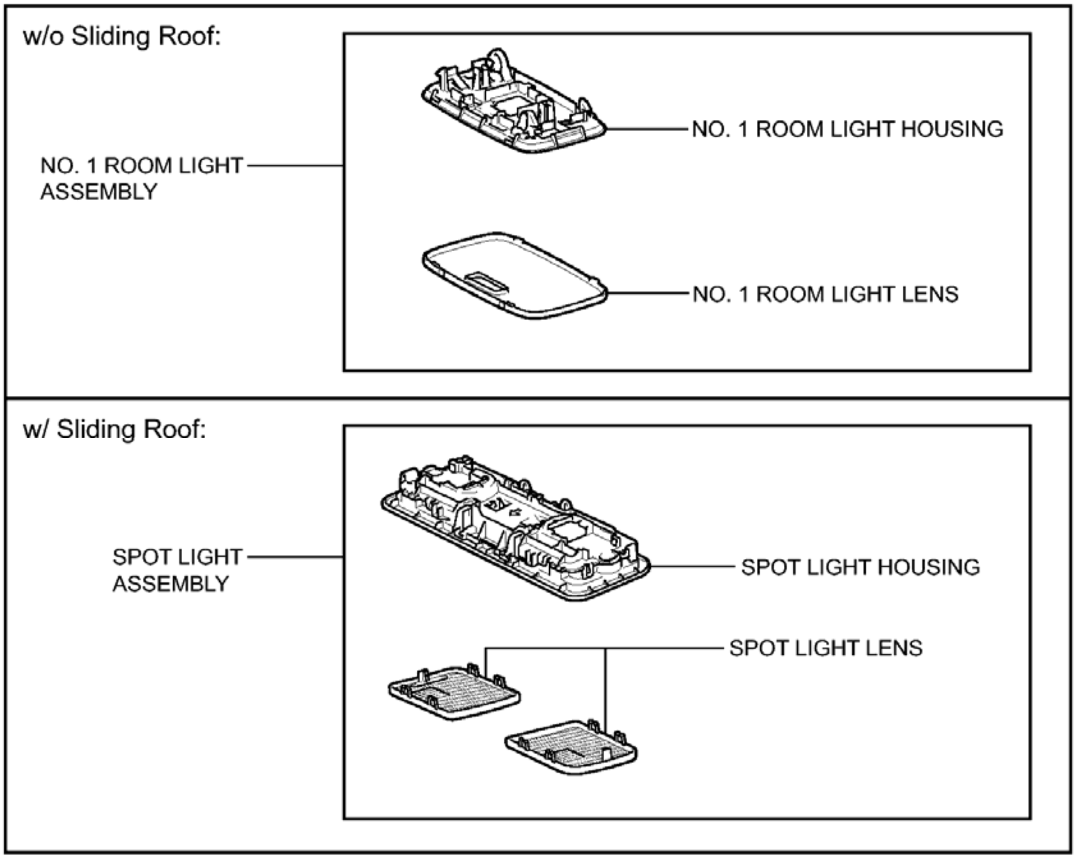
w/o Sliding Roof:
NO. 1 ROOM LIGHT HOUSING
NO. 1 ROOM LIGHT ASSEMBLY
NO. 1 ROOM LIGHT LENS
w/ Sliding Roof:
SPOT LIGHT ASSEMBLY
SPOT LIGHT HOUSING
SPOT LIGHT LENS
P

Fig. 13: Identifying Room Light Replacement Components
Courtesy of TOYOTA MOTOR SALES, U.S.A., INC.

REMOVAL

REMOVAL

1. **REMOVE NO. 1 ROOM LIGHT ASSEMBLY (w/o Sliding Roof)**
    a. Using a screwdriver with its tip wrapped with protective tape, disengage the 4 claws and remove the No. 1 room light lens.

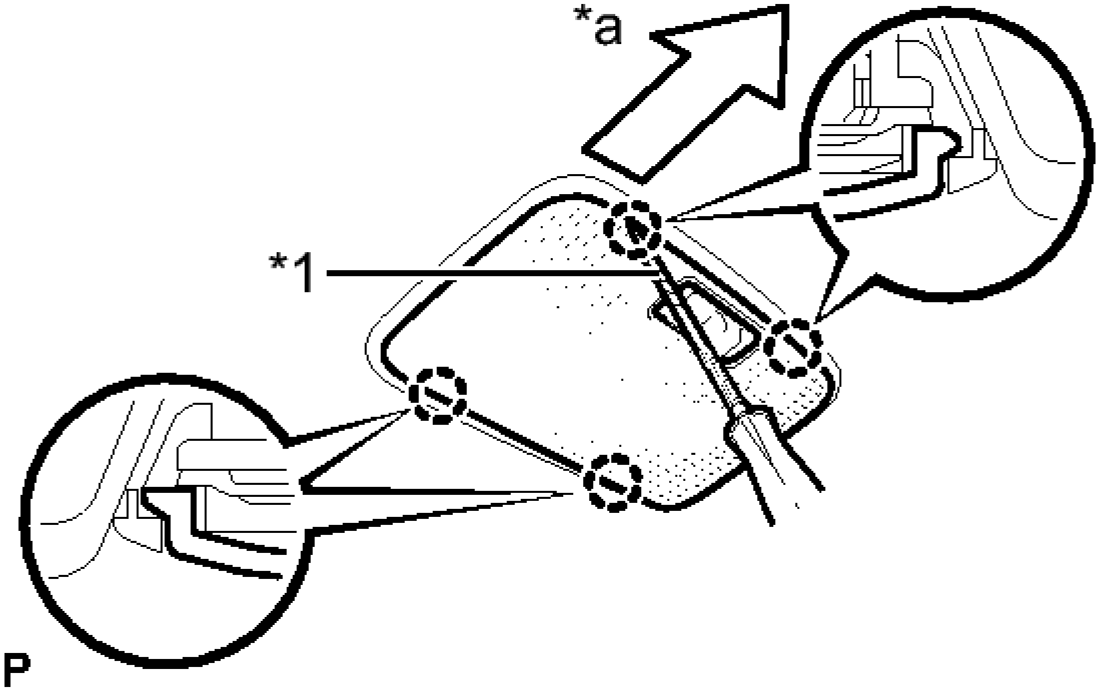

Fig. 14: Removing No. 1 Room Light Assembly
Courtesy of TOYOTA MOTOR SALES, U.S.A., INC.

TEXT IN ILLUSTRATION

*1	Protective Tape
*a	Front

b. Using a screwdriver with its tip wrapped with protective tape, disengage the 4 claws as shown in the illustration and remove the No. 1 room light housing.

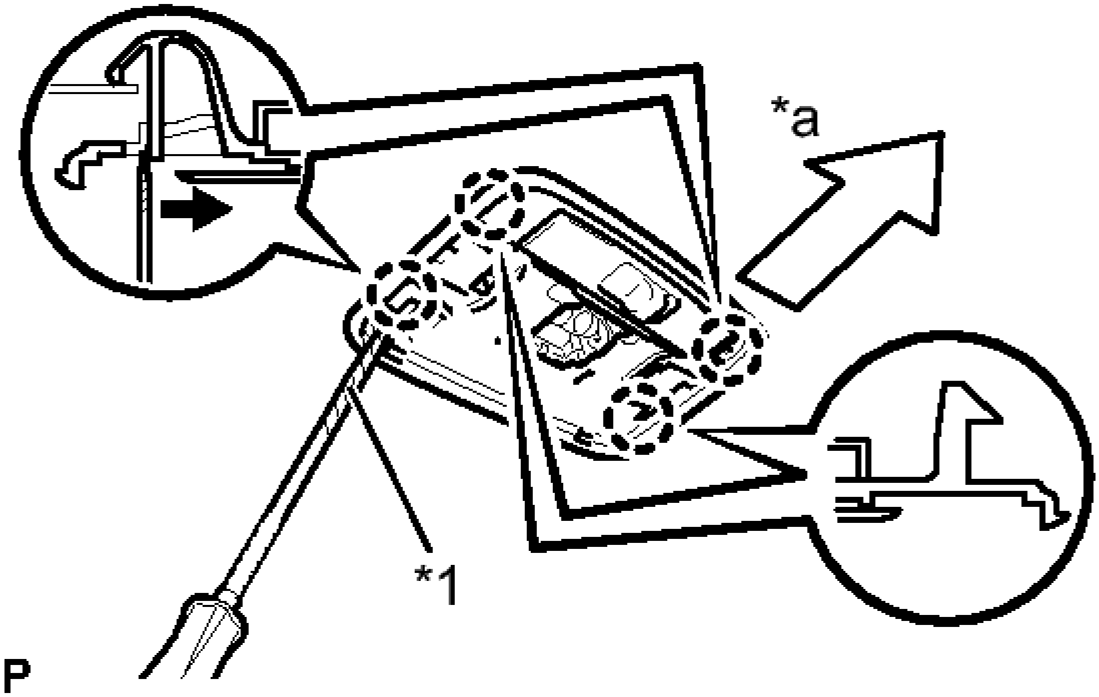

Fig. 15: Removing No. 1 Room Light Housing
Courtesy of TOYOTA MOTOR SALES, U.S.A., INC.

TEXT IN ILLUSTRATION

*1	Protective Tape
*a	Front

c. Using a screwdriver, disengage the 4 claws and disconnect the room light switch base from the No. 1 room light housing.

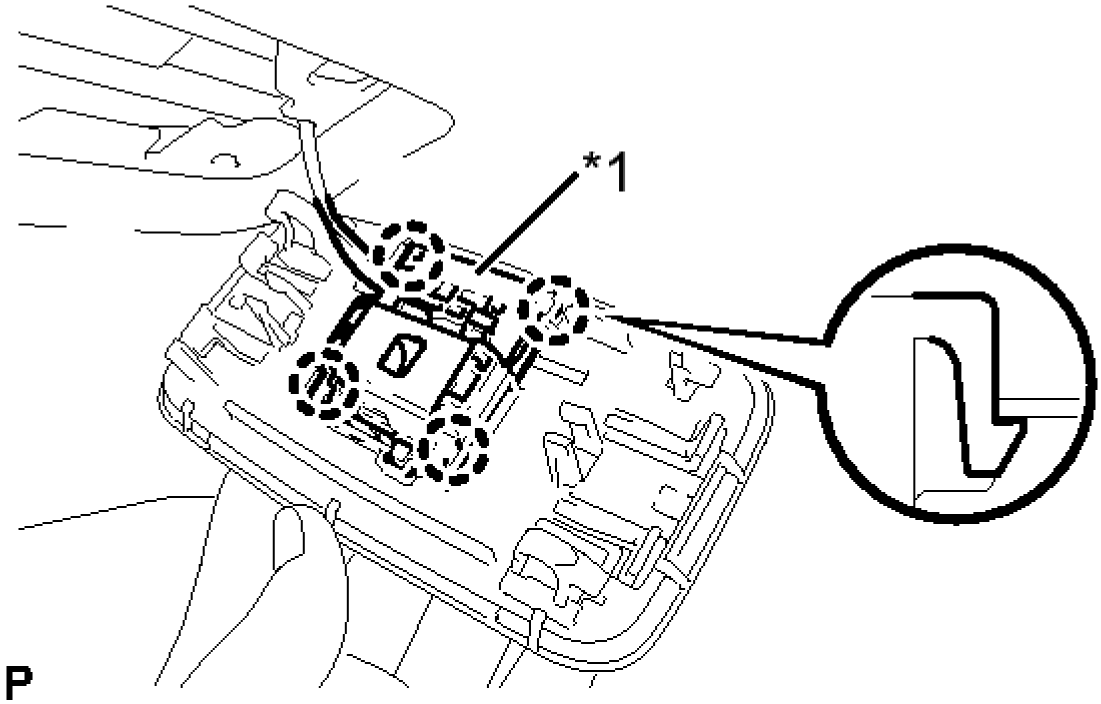

Fig. 16: Identifying Claws & Connector
Courtesy of TOYOTA MOTOR SALES, U.S.A., INC.

TEXT IN ILLUSTRATION

*1	Room Light Switch Base

2. **REMOVE SPOT LIGHT ASSEMBLY (w/ Sliding Roof)**
    a. Using a screwdriver with its tip wrapped with protective tape, disengage the 8 claws and remove the 2 spot light lenses.

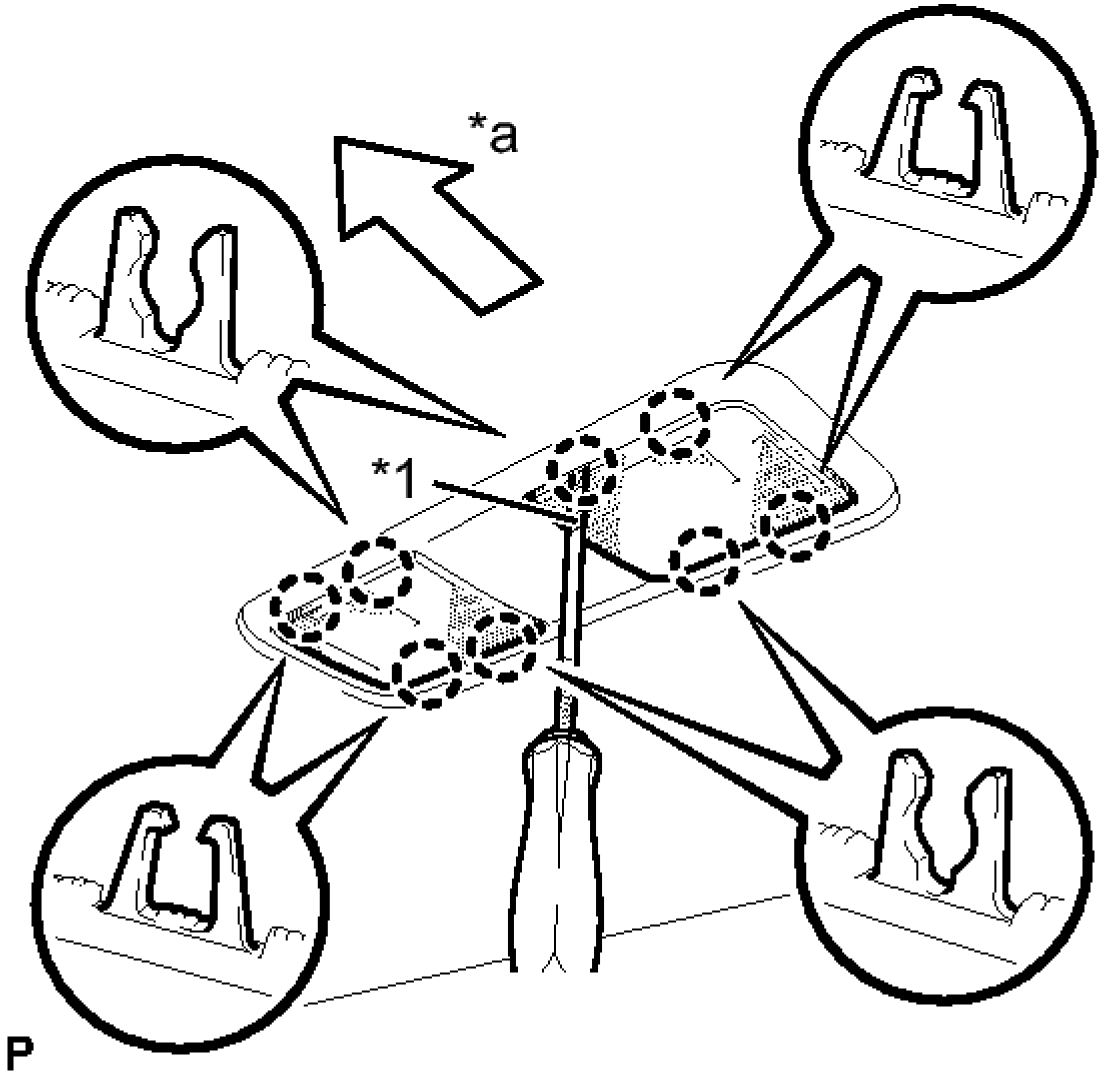

Fig. 17: Removing The Spot Light Lenses
Courtesy of TOYOTA MOTOR SALES, U.S.A., INC.

TEXT IN ILLUSTRATION

*1	Protective Tape
*a	Front

b. Using a screwdriver with its tip wrapped with protective tape and molding remover, disengage the 2 claws <A>.

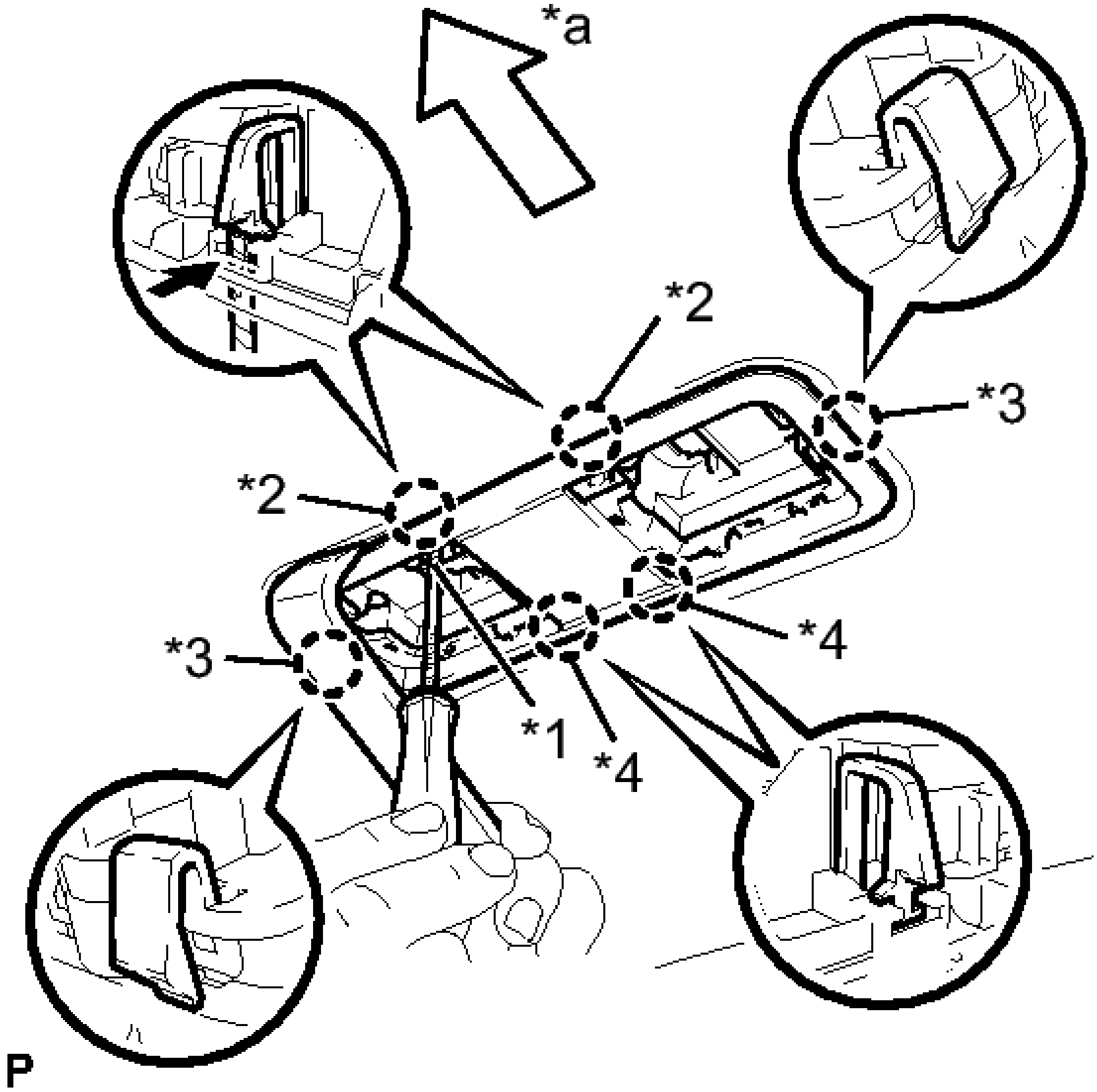

Fig. 18: Disconnecting The Spot Light Housing
Courtesy of TOYOTA MOTOR SALES, U.S.A., INC.

TEXT IN ILLUSTRATION

*1	Protective Tape
*2	Claw <A>
*3	Claw <B>
*4	Claw <C>
*a	Front

c. Disengage the 2 claws <B> and 2 claws <C>, and disconnect the spot light housing.

d. Using a screwdriver, disengage the 8 claws and disconnect the 2 map light sub-assemblies from the spot light housing.

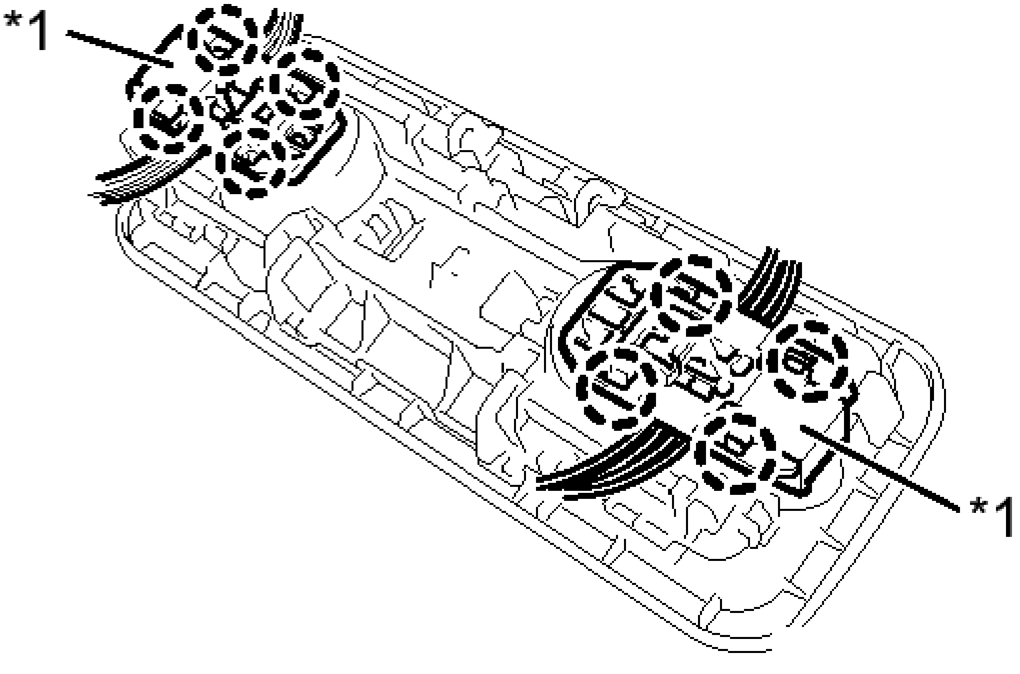

Fig. 19: Disconnecting The Map Light Sub-Assemblies
Courtesy of TOYOTA MOTOR SALES, U.S.A., INC.

TEXT IN ILLUSTRATION

*1	Map Light Sub-assembly

INSTALLATION

INSTALLATION

1. **INSTALL NO. 1 ROOM LIGHT ASSEMBLY (w/o Sliding Roof)**
   a. Align the switch parts shown in the illustration and engage the 4 claws to install the room light switch base to the No. 1 room light housing.

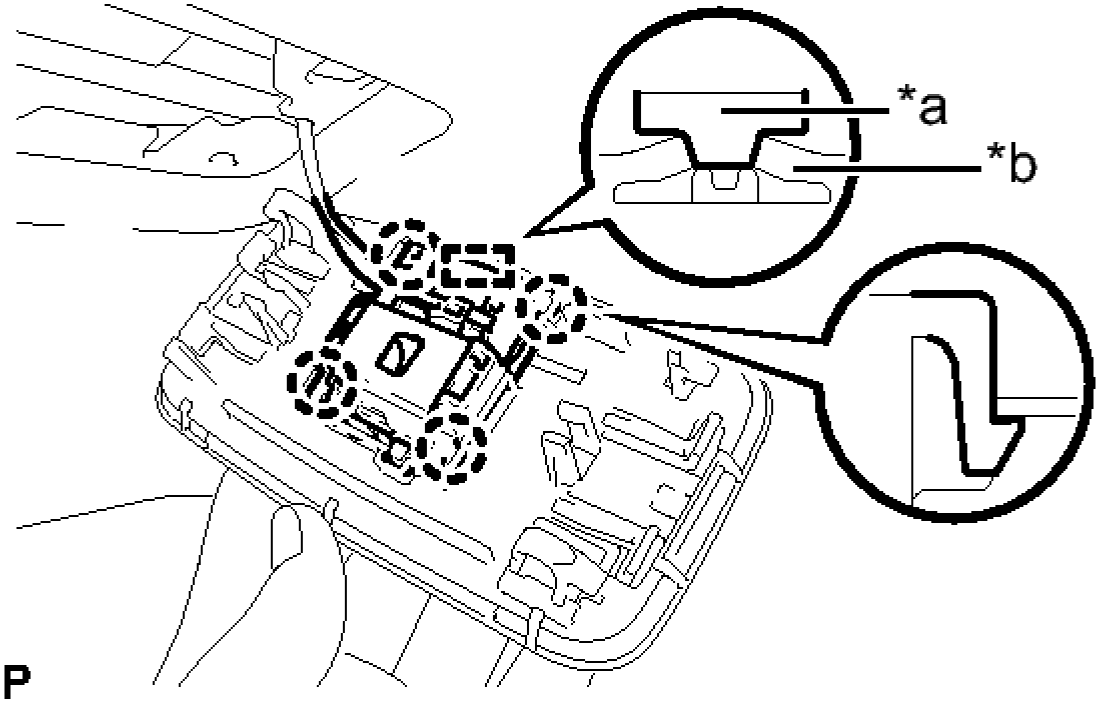

Fig. 20: Installing No. 1 Room Light Assembly
Courtesy of TOYOTA MOTOR SALES, U.S.A., INC.

TEXT IN ILLUSTRATION

*a	Switch Part of Room Light Switch Base
*b	Switch Part of No. 1 Room Light Housing

b. Engage the 4 claws to install the No. 1 room light housing.

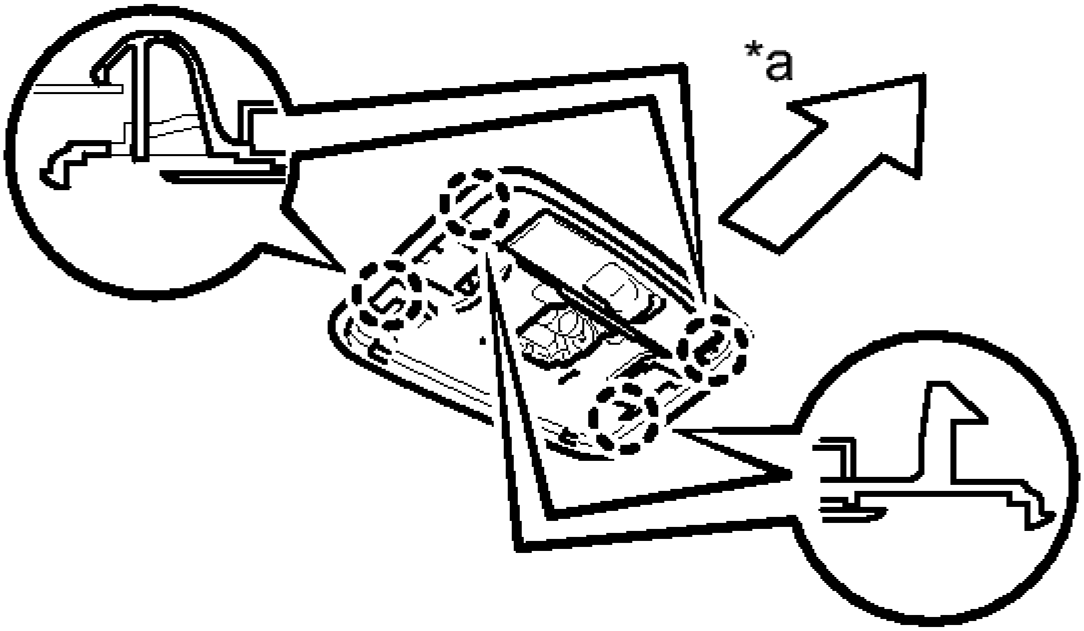

P

Fig. 21: Installing No. 1 Room Light Housing
Courtesy of TOYOTA MOTOR SALES, U.S.A., INC.

TEXT IN ILLUSTRATION

*a	Front

c. Engage the 4 claws to install the No. 1 room light lens.

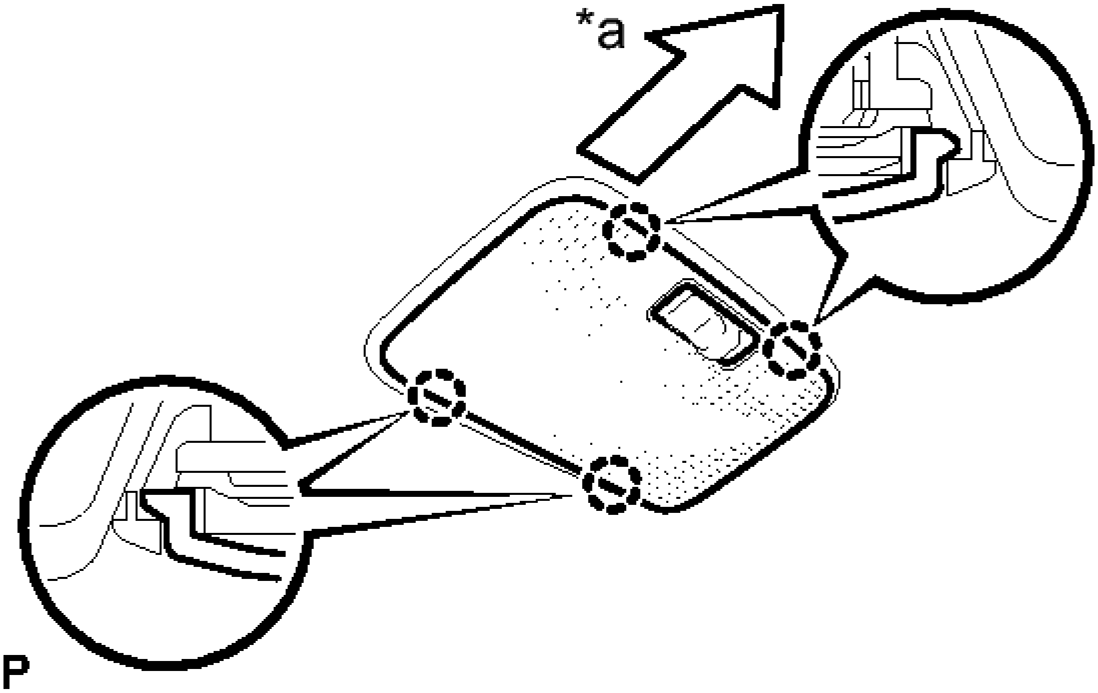

Fig. 22: Installing No. 1 Room Light Lens
Courtesy of TOYOTA MOTOR SALES, U.S.A., INC.

TEXT IN ILLUSTRATION

*a	Front

2. **INSTALL SPOT LIGHT ASSEMBLY (w/ Sliding Roof)**
    a. Engage the 8 claws to install the 2 map light sub-assemblies to the spot light housing as shown in the illustration.

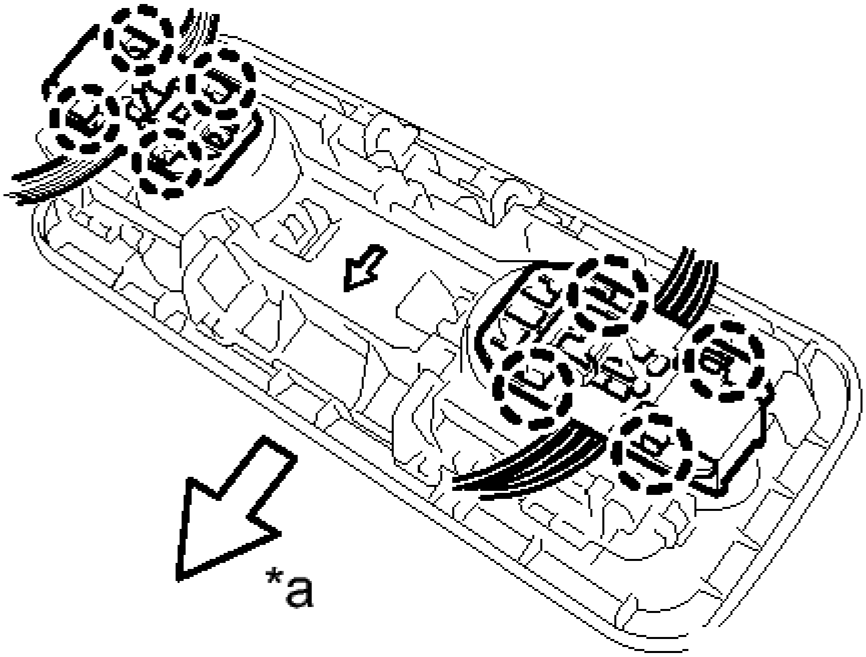

Fig. 23: Installing The Map Light Sub-Assemblies
Courtesy of TOYOTA MOTOR SALES, U.S.A., INC.

TEXT IN ILLUSTRATION

*a	Front

b. Engage the 6 claws to install the spot light housing.

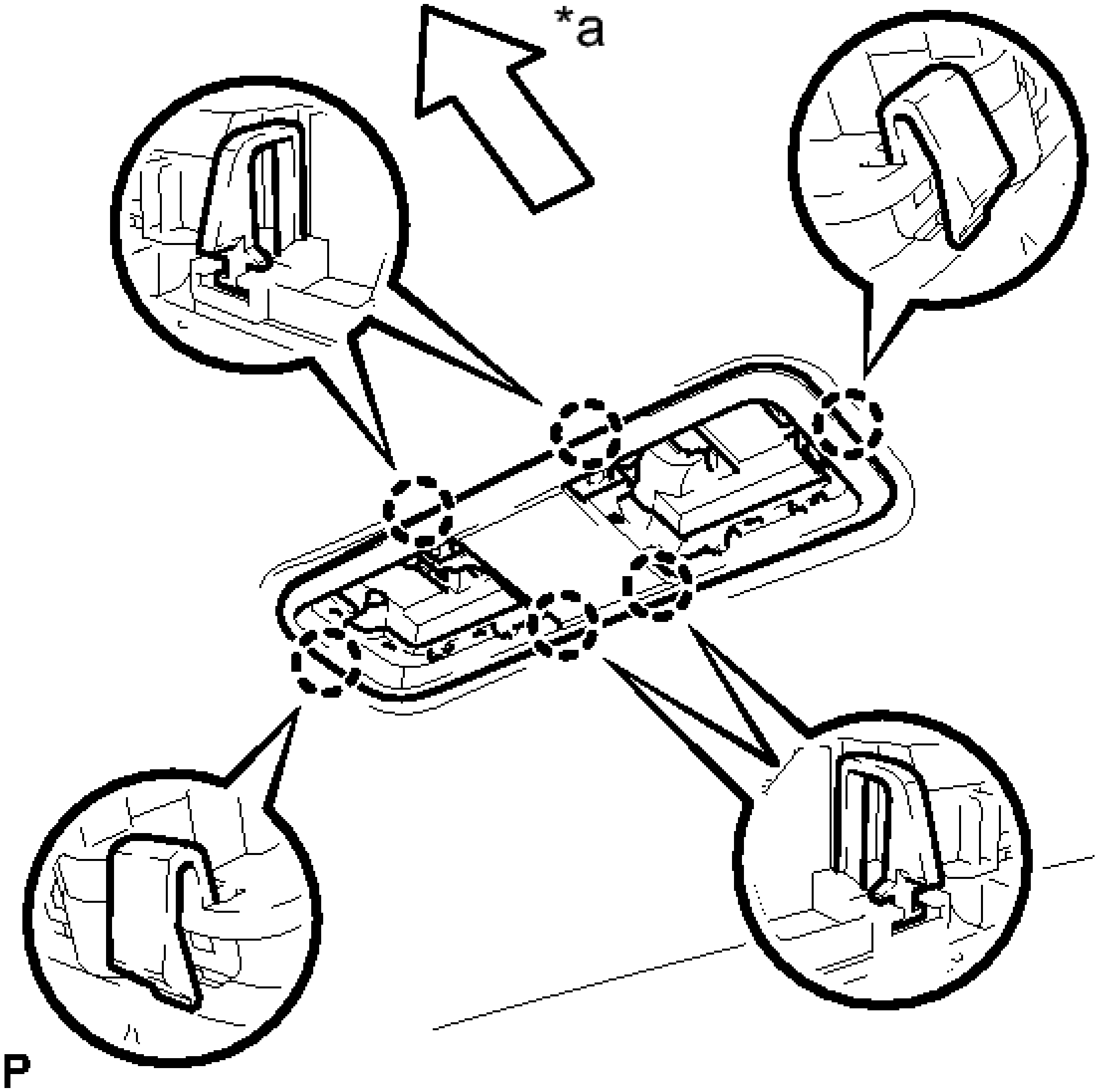

Fig. 24: Installing Spot Light Housing
Courtesy of TOYOTA MOTOR SALES, U.S.A., INC.

TEXT IN ILLUSTRATION

*a	Front

c. Engage the 8 claws to install the 2 spot light lenses.

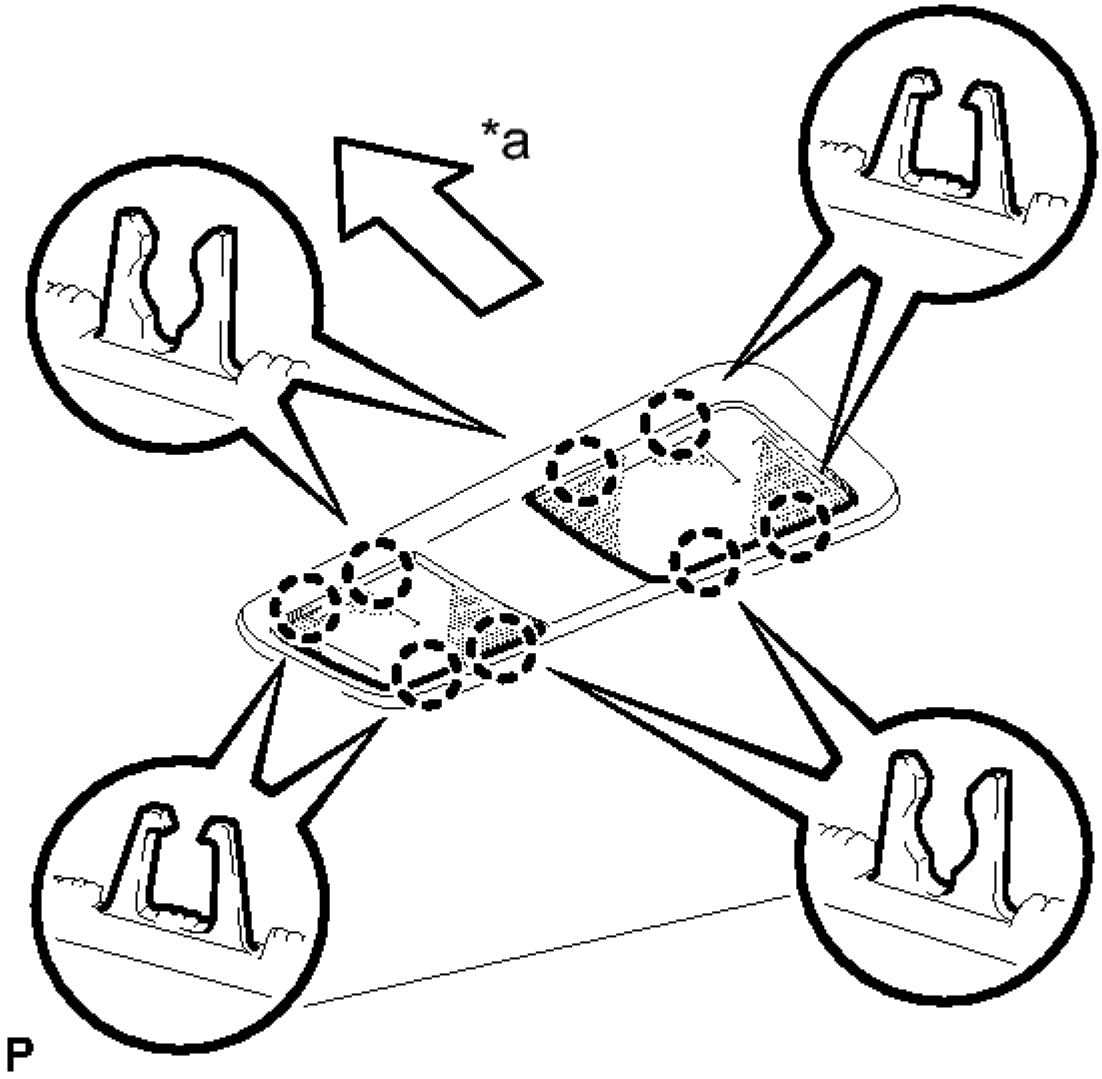

Fig. 25: Installing Spot Light Lenses
Courtesy of TOYOTA MOTOR SALES, U.S.A., INC.

TEXT IN ILLUSTRATION

*a	Front

LUGGAGE COMPARTMENT ROOM LIGHT

COMPONENTS

ILLUSTRATION

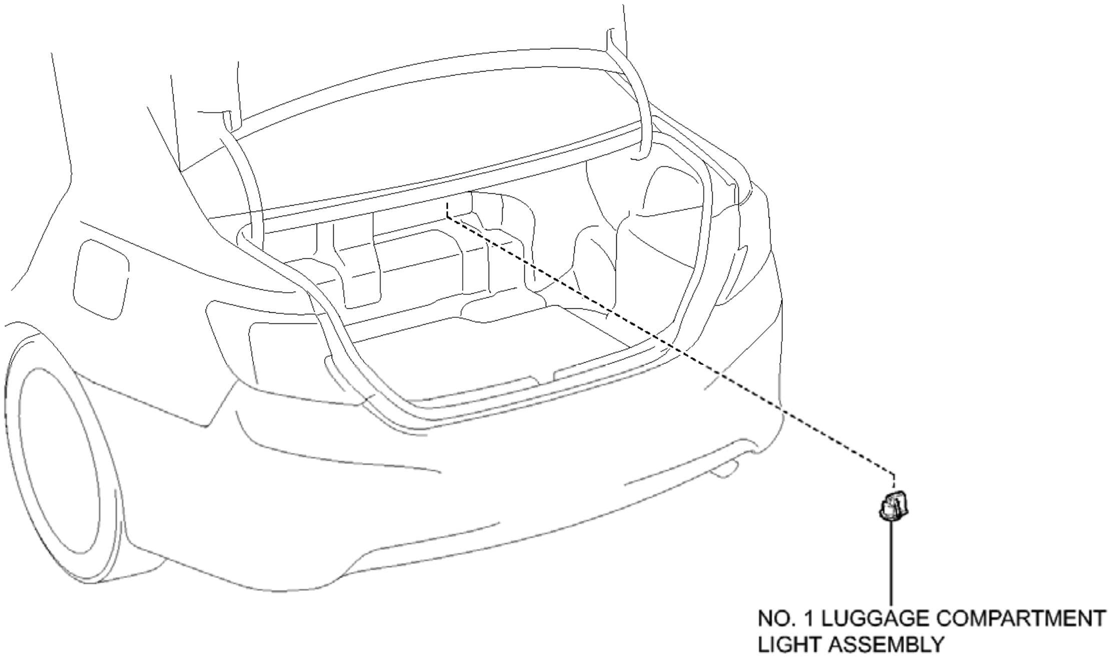
NO. 1 LUGGAGE COMPARTMENT
LIGHT ASSEMBLY

P

Fig. 26: Identifying Luggage Compartment Room Light Replacement Components
Courtesy of TOYOTA MOTOR SALES, U.S.A., INC.

REMOVAL

REMOVAL

1. **REMOVE NO. 1 LUGGAGE COMPARTMENT LIGHT ASSEMBLY**
    a. Disengage the 2 claws.

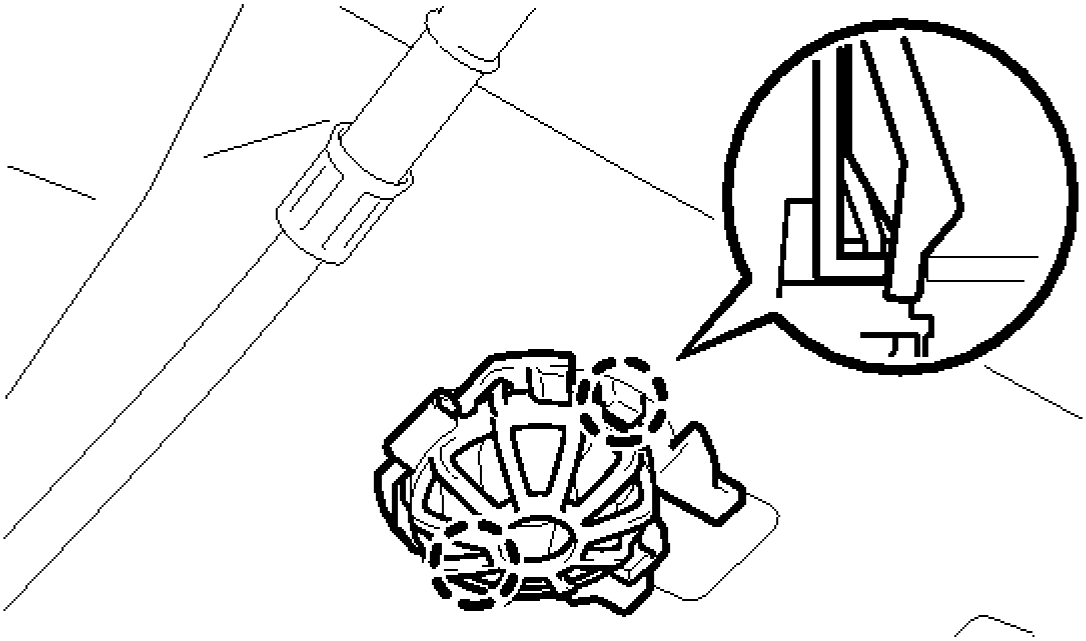

Fig. 27: Identifying No. 1 Luggage Compartment Light Assembly Claws
Courtesy of TOYOTA MOTOR SALES, U.S.A., INC.

b. Disconnect the connector and remove the No. 1 luggage compartment light assembly.

INSPECTION

INSPECTION

1. **INSPECT NO. 1 LUGGAGE COMPARTMENT LIGHT ASSEMBLY**
    a. Connect a positive (+) lead from the auxiliary battery to terminal 2 and a negative (-) lead to terminal 1.

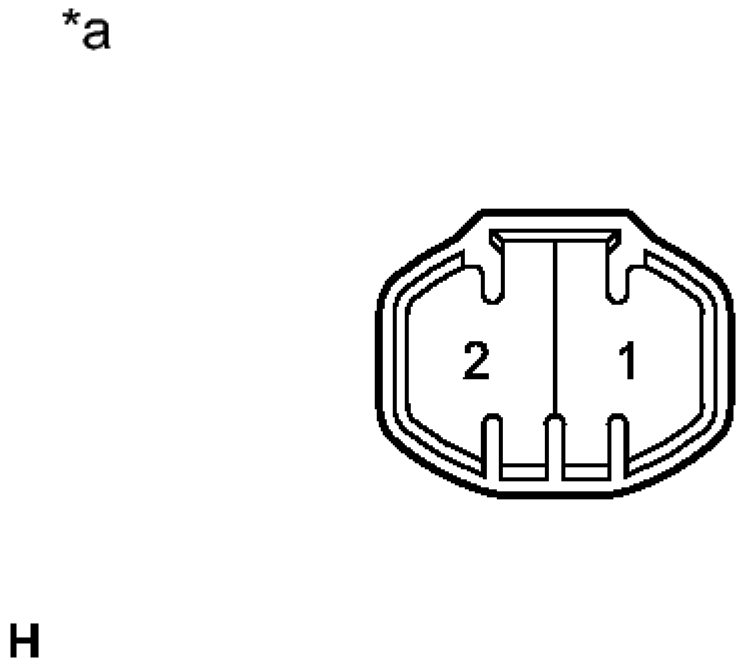

Fig. 28: No. 1 Luggage Compartment Light Assembly Connector End View
Courtesy of TOYOTA MOTOR SALES, U.S.A., INC.

b. Check that the No. 1 luggage compartment light comes on.

OK

No. 1 luggage compartment light comes on.

TEXT IN ILLUSTRATION

*a	Component without harness connected (No. 1 Luggage Compartment Light Assembly)

If the result is not as specified, replace the bulb or No. 1 luggage compartment light assembly.

INSTALLATION

INSTALLATION

1. **INSTALL NO. 1 LUGGAGE COMPARTMENT LIGHT ASSEMBLY**

a. Connect the connector.
b. Engage the 2 claws to install the No. 1 luggage compartment light assembly.

DOOR COURTESY LIGHT

COMPONENTS

ILLUSTRATION

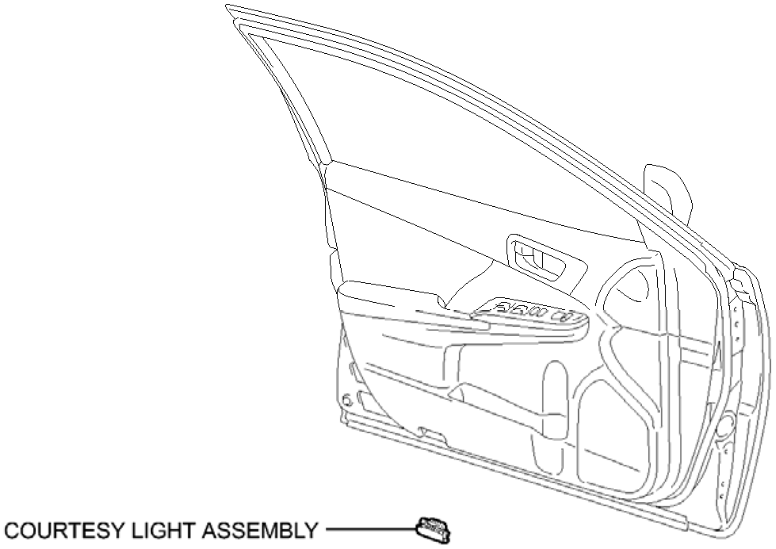

P

Fig. 29: Identifying Door Courtesy Light Replacement Components
Courtesy of TOYOTA MOTOR SALES, U.S.A., INC.

REMOVAL

REMOVAL

1. **REMOVE COURTESY LIGHT ASSEMBLY**
    a. Using a screwdriver with its tip wrapped with protective tape, disengage the claw.

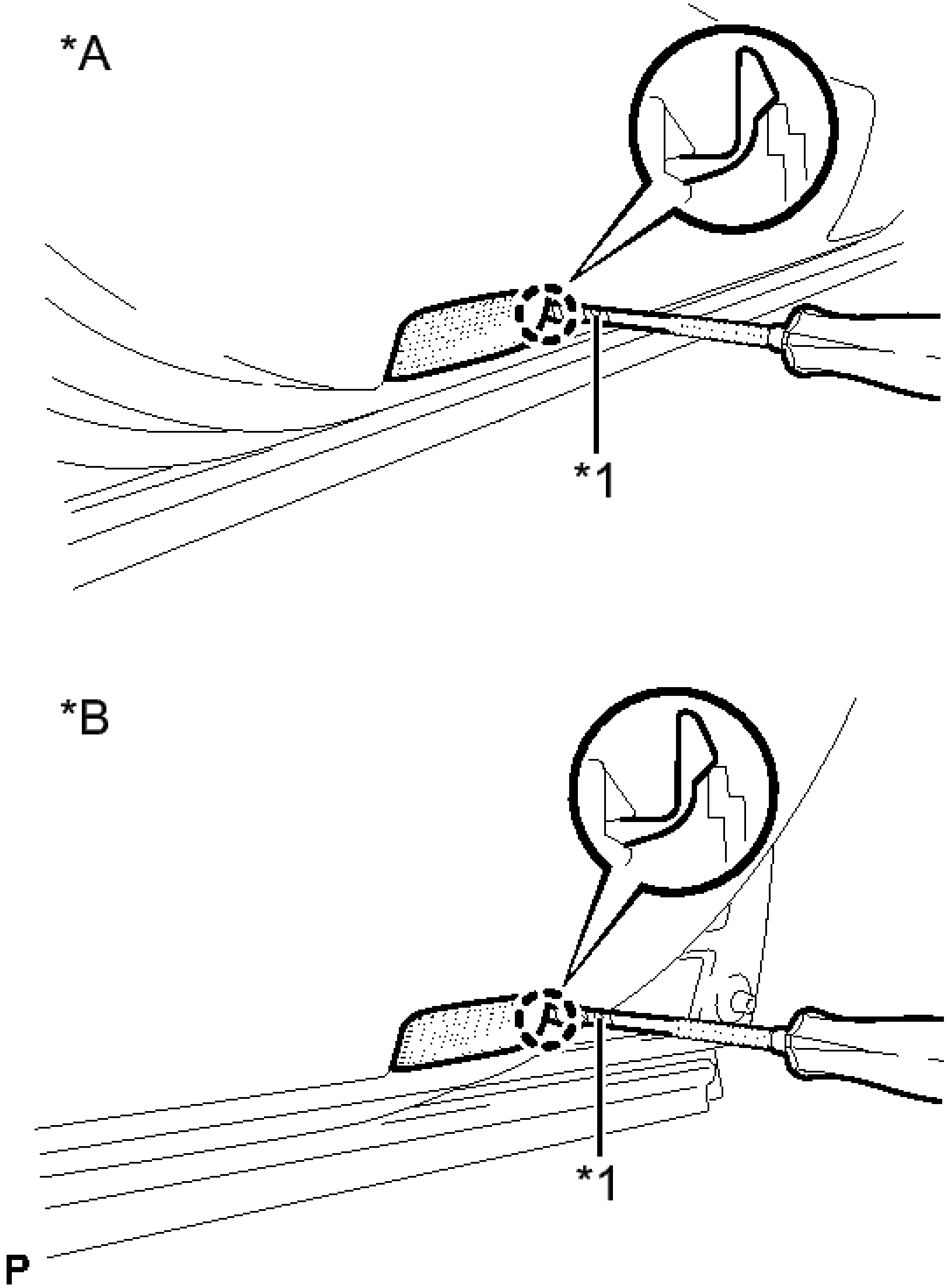

Fig. 30: Removing The Courtesy Light Assembly
Courtesy of TOYOTA MOTOR SALES, U.S.A., INC.

TEXT IN ILLUSTRATION

	for LH

*A	Side
*B	for RH Side
*1	Protective Tape

b. Disconnect the connector and remove the courtesy light assembly.

INSPECTION

INSPECTION

1. **INSPECT COURTESY LIGHT ASSEMBLY LH**
    a. Connect a positive (+) lead from the auxiliary battery to terminal 1 and a negative (-) lead to terminal 2.

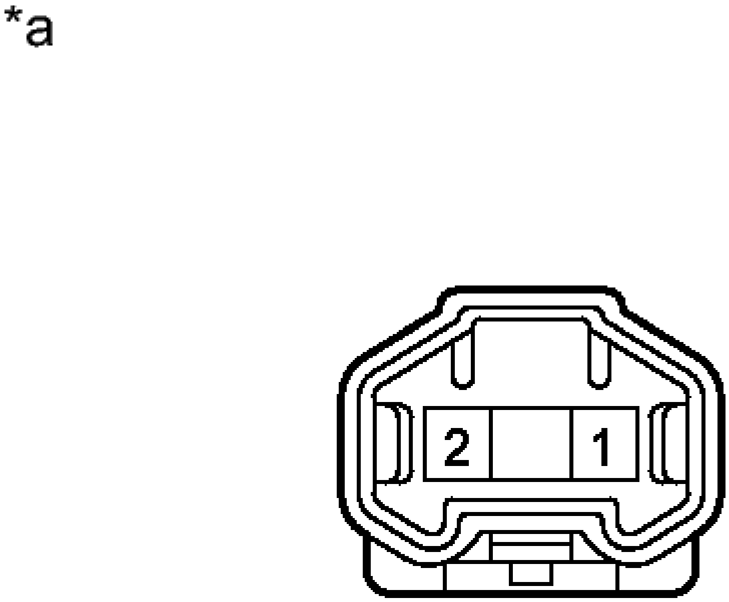

Fig. 31: Identifying Courtesy Light Assembly LH Connector Terminals
Courtesy of TOYOTA MOTOR SALES, U.S.A., INC.

b. Check that the courtesy light comes on.

OK

Courtesy light comes on.

TEXT IN ILLUSTRATION

*a	Component without harness connected (Courtesy Light Assembly LH)

If the result is not as specified, replace the bulb or courtesy light assembly LH.

2. **INSPECT COURTESY LIGHT ASSEMBLY RH**
    a. Connect a positive (+) lead from the auxiliary battery to terminal 1 and a negative (-) lead to terminal 2.

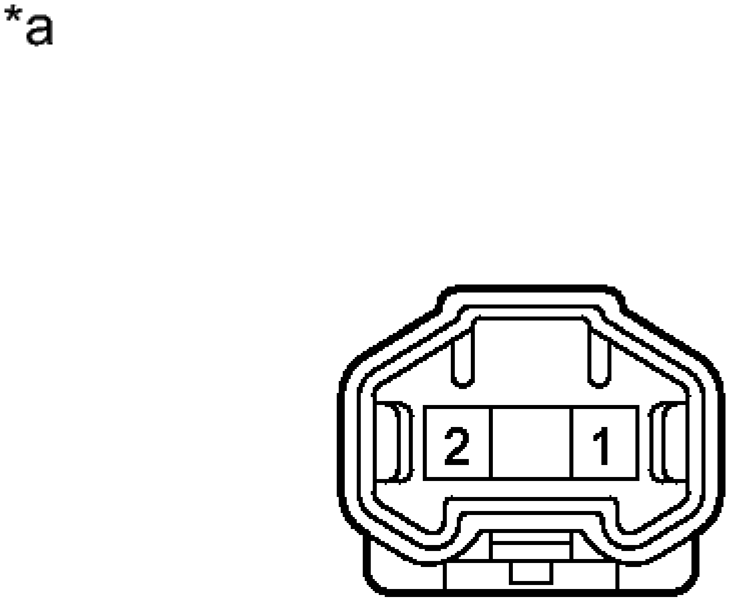

Fig. 32: Identifying Courtesy Light Assembly RH Connector Terminals
Courtesy of TOYOTA MOTOR SALES, U.S.A., INC.

    b. Check that the courtesy light comes on.

OK

Courtesy light comes on.

TEXT IN ILLUSTRATION

	Component without

*a	harness connected (Courtesy Light Assembly RH)

If the result is not as specified, replace the bulb or courtesy light assembly RH.

INSTALLATION

INSTALLATION

1. **INSTALL COURTESY LIGHT ASSEMBLY**
    a. Connect the connector.
    b. Engage the claw to install the courtesy light assembly.

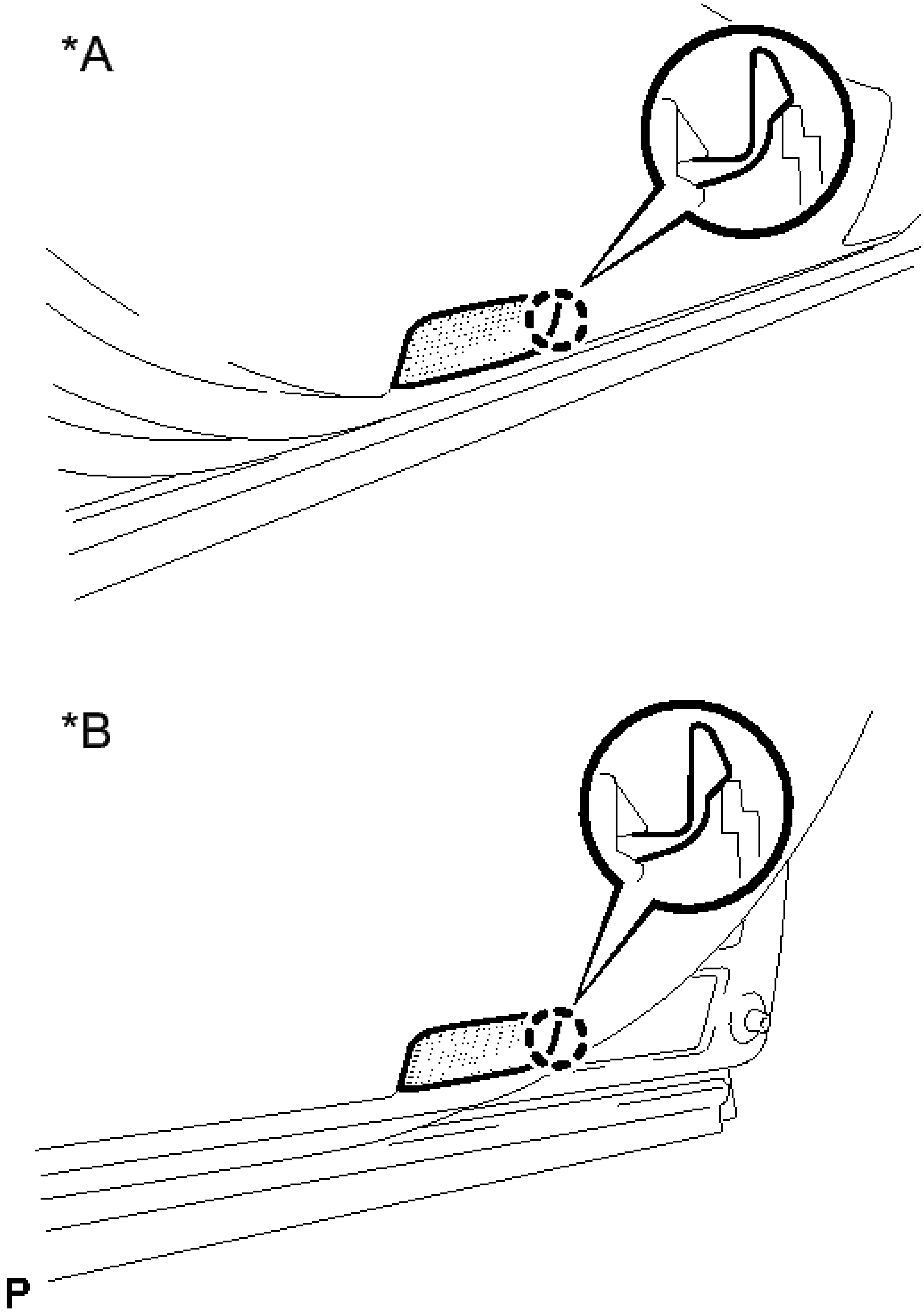

Fig. 33: Installing Courtesy Light Assembly
Courtesy of TOYOTA MOTOR SALES, U.S.A., INC.

TEXT IN ILLUSTRATION

	for

*A	LH Side
*B	for RH Side

VANITY LIGHT SWITCH

COMPONENTS

ILLUSTRATION

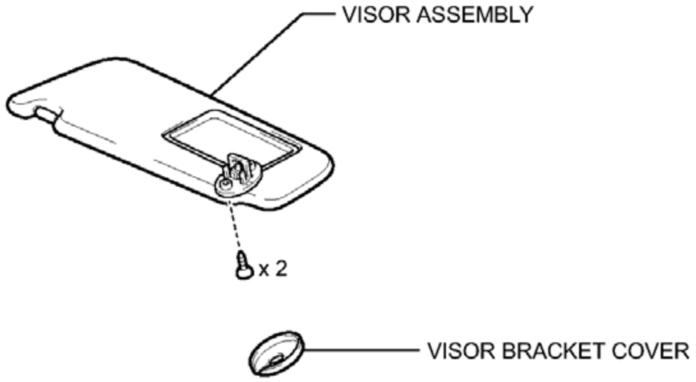

P

Fig. 34: Identifying Vanity Light Switch Replacement Components
Courtesy of TOYOTA MOTOR SALES, U.S.A., INC.

REMOVAL

REMOVAL

HINT:

- Use the same procedure for the RH and LH sides.
- The procedure described below is for the LH side.

1. **REMOVE VISOR BRACKET COVER** . Refer to **REMOVAL - Step 46**
2. **REMOVE VISOR ASSEMBLY** . Refer to **REMOVAL - Step 47**

INSPECTION

INSPECTION

1. **INSPECT VISOR ASSEMBLY LH**
   1. Inspect the vanity light switch.
      1. Measure the resistance according to the value(s) in the table below.

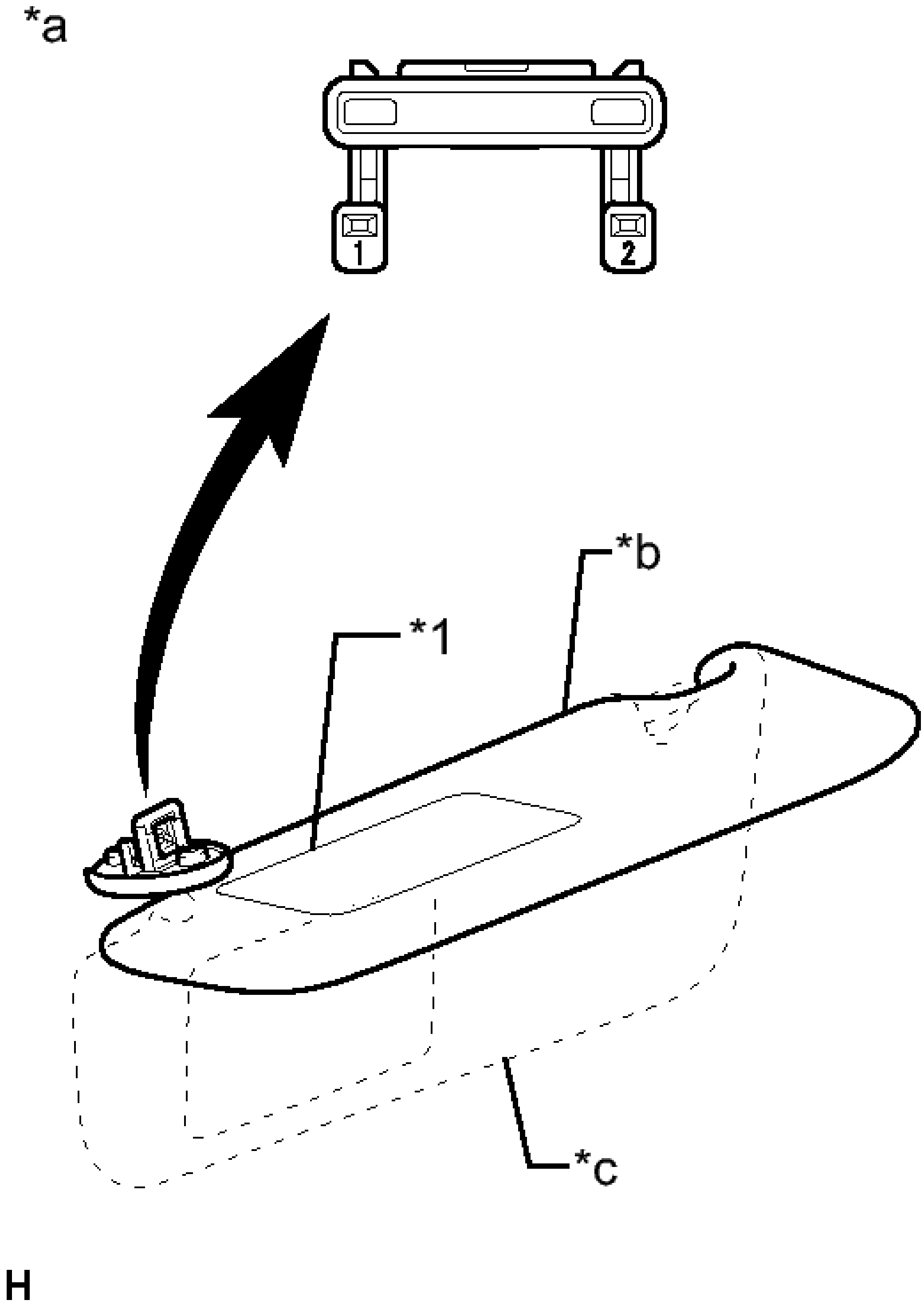

Fig. 35: Inspecting Visor Assembly LH
Courtesy of TOYOTA MOTOR SALES, U.S.A., INC.

Standard Resistance

Tester Connection	Condition	Specified Condition
1 - 2	Visor up	10 kohms or higher
1 - 2	Mirror cover fully closed with visor down	10 kohms or higher
1 - 2	Mirror cover fully open with visor down	Below 1 ohms

TEXT IN ILLUSTRATION

*a	Component without harness connected (Visor Assembly LH)
*b	Visor up
*c	Visor down
*1	Mirror Cover

If the result is not as specified, replace the visor assembly LH.

2. **INSPECT VISOR ASSEMBLY RH**
    a. Inspect the vanity light switch.
        1. Measure the resistance according to the value(s) in the table below.

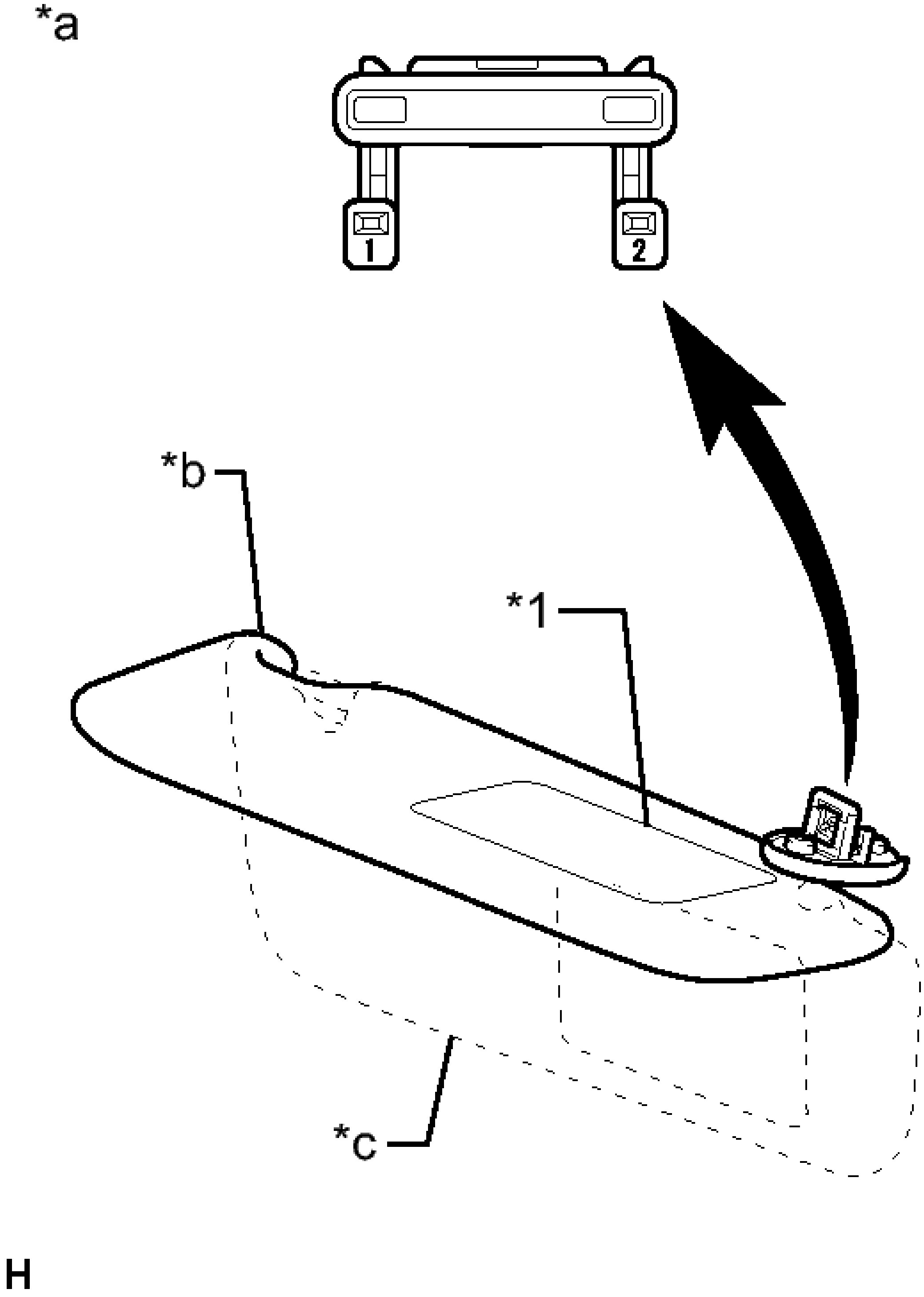

Fig. 36: Inspecting Visor Assembly RH
Courtesy of TOYOTA MOTOR SALES, U.S.A., INC.

Standard Resistance

Tester Connection	**Condition**	**Specified Condition**
1 - 2	Visor up	10 kohms or higher
1 - 2	Mirror cover fully closed with visor down	10 kohms or higher
1 - 2	Mirror cover fully open with visor down	Below 1 ohms

TEXT IN ILLUSTRATION

*a	Component without harness connected (Visor Assembly RH)
*b	Visor up
*c	Visor down
*1	Mirror Cover

If the result is not as specified, replace the visor assembly RH.

INSTALLATION

INSTALLATION

HINT:

- Use the same procedure for the RH and LH sides.
- The procedure described below is for the LH side.

1. **INSTALL VISOR ASSEMBLY** . Refer to **INSTALLATION - Step 4**
2. **INSTALL VISOR BRACKET COVER** . Refer to **INSTALLATION - Step 5**

FRONT DOOR COURTESY SWITCH

COMPONENTS

ILLUSTRATION

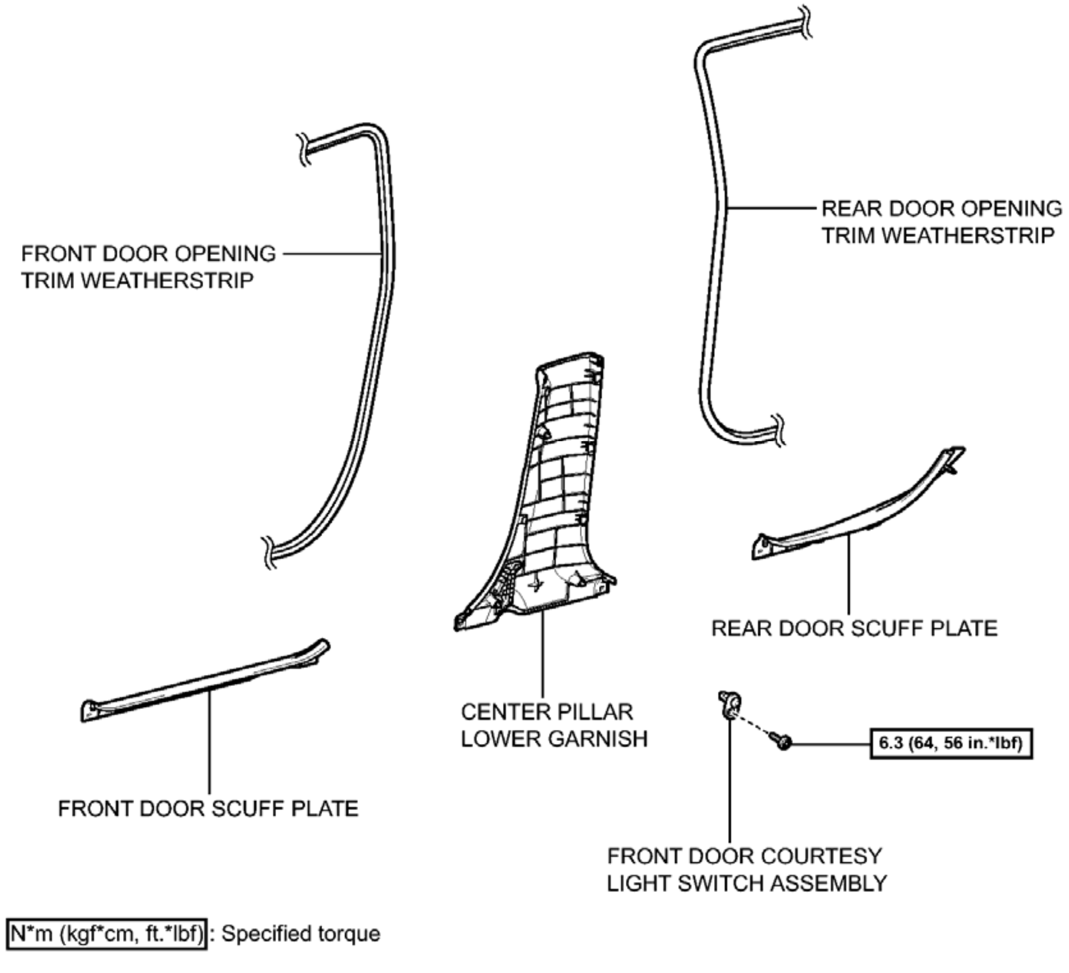
FRONT DOOR OPENING TRIM WEATHERSTRIP
REAR DOOR OPENING TRIM WEATHERSTRIP
REAR DOOR SCUFF PLATE
CENTER PILLAR LOWER GARNISH
FRONT DOOR SCUFF PLATE
6.3 (64, 56 in.*lbf)
FRONT DOOR COURTESY LIGHT SWITCH ASSEMBLY
N*m (kgf*cm, ft.*lbf): Specified torque
P

Fig. 37: Identifying Front Door Courtesy Switch Replacement Components With Torque Specifications
Courtesy of TOYOTA MOTOR SALES, U.S.A., INC.

REMOVAL

REMOVAL

HINT:

- Use the same procedure for the RH and LH sides.
- The procedure described below is for the LH side.

1. **REMOVE FRONT DOOR SCUFF PLATE** . Refer to **REMOVAL - Step 4**

2. **DISCONNECT FRONT DOOR OPENING TRIM WEATHERSTRIP** . Refer to **REMOVAL - Step 5**
3. **REMOVE REAR DOOR SCUFF PLATE** . Refer to **REMOVAL - Step 19**
4. **DISCONNECT REAR DOOR OPENING TRIM WEATHERSTRIP** . Refer to **REMOVAL - Step 7**
5. **REMOVE CENTER PILLAR LOWER GARNISH** . Refer to **REMOVAL - Step 23**
6. **REMOVE FRONT DOOR COURTESY LIGHT SWITCH ASSEMBLY**
   1. Disconnect the connector.
   2. Using a T30 "TORX" socket wrench, remove the screw and front door courtesy light switch assembly.

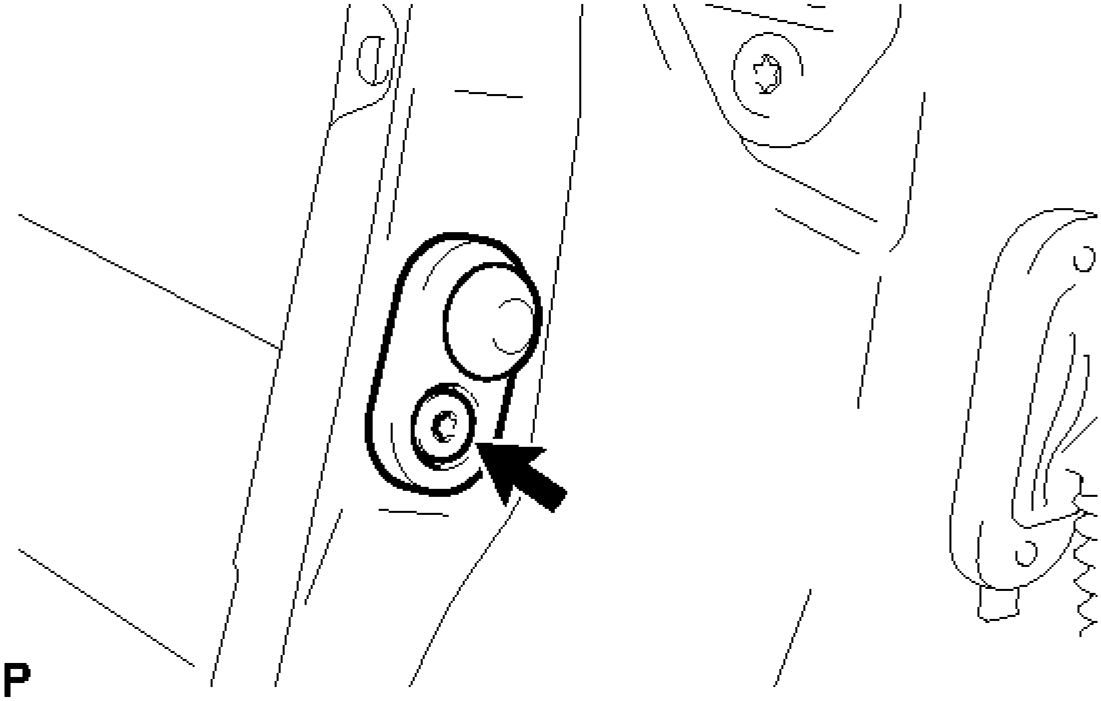

Fig. 38: Identifying Front Door Courtesy Light Switch Screw
Courtesy of TOYOTA MOTOR SALES, U.S.A., INC.

INSPECTION

INSPECTION

1. **INSPECT FRONT DOOR COURTESY LIGHT SWITCH ASSEMBLY**
   1. Measure the resistance according to the value(s) in the table below.

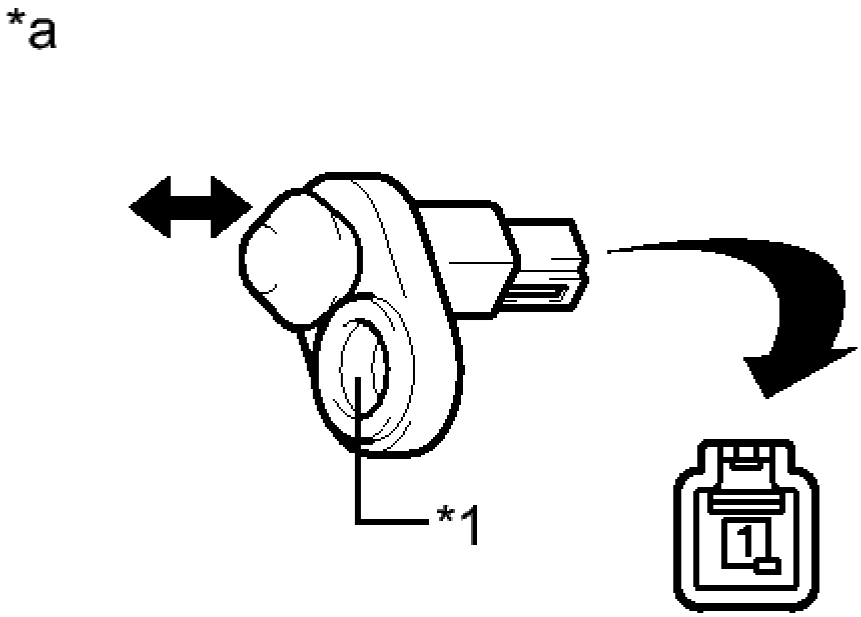

Fig. 39: Identifying Front Door Courtesy Light Switch Connector Terminal
Courtesy of TOYOTA MOTOR SALES, U.S.A., INC.

Standard Resistance

Tester Connection	Switch Condition	Specified Condition
1 - Switch body	Not pushed (ON)	Below 1 ohms
	Pushed (OFF)	10 kohms or higher

TEXT IN ILLUSTRATION

*a	Component without harness connected (Front Door Courtesy Light Switch Assembly)
*1	Switch Body

If the result is not as specified, replace the front door courtesy light switch assembly.

INSTALLATION

INSTALLATION

HINT:

- Use the same procedure for the RH and LH sides.
- The procedure described below is for the LH side.

1. **INSTALL FRONT DOOR COURTESY LIGHT SWITCH ASSEMBLY**
    a. Using a T30 "TORX" socket wrench, install the front door courtesy light switch assembly with the screw.

    Torque: 6.3 N*m (64 kgf*cm, 56 in.*lbf)

    HINT:

    There are 2 diameters for the "TORX" screws: 6 mm (0.236 in.) and 7 mm (0.276 in.). The diameter of a supplied "TORX" screw is 7 mm (0.276 in.).

    b. Connect the connector.
2. **INSTALL CENTER PILLAR LOWER GARNISH** . Refer to **INSTALLATION - Step 23**
3. **INSTALL REAR DOOR OPENING TRIM WEATHERSTRIP**

    for LH Side: Refer to **INSTALLATION - Step 26**

    for RH Side: Refer to **INSTALLATION - Step 33**

4. **INSTALL REAR DOOR SCUFF PLATE** . Refer to **INSTALLATION - Step 27**
5. **INSTALL FRONT DOOR OPENING TRIM WEATHERSTRIP**

    for LH Side: Refer to **INSTALLATION - Step 43**

    for RH Side: Refer to **INSTALLATION - Step 47**

6. **INSTALL FRONT DOOR SCUFF PLATE** . Refer to **INSTALLATION - Step 45**

REAR DOOR COURTESY SWITCH

COMPONENTS

ILLUSTRATION

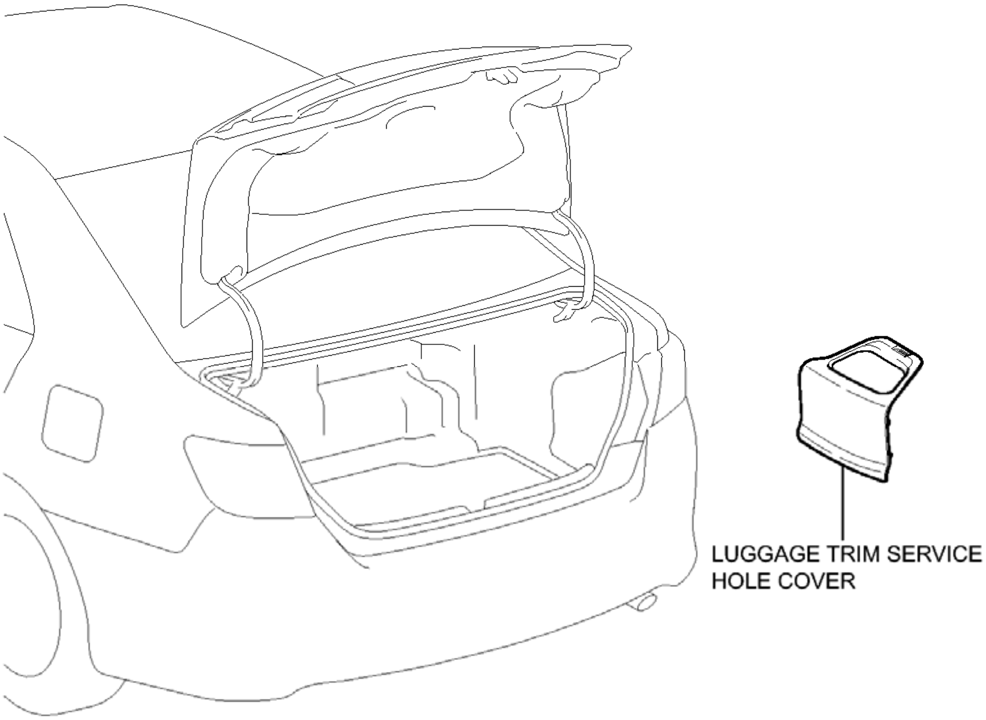
LUGGAGE TRIM SERVICE HOLE COVER
P

Fig. 40: Identifying Rear Door Courtesy Switch Replacement Components (1 Of 2)
Courtesy of TOYOTA MOTOR SALES, U.S.A., INC.

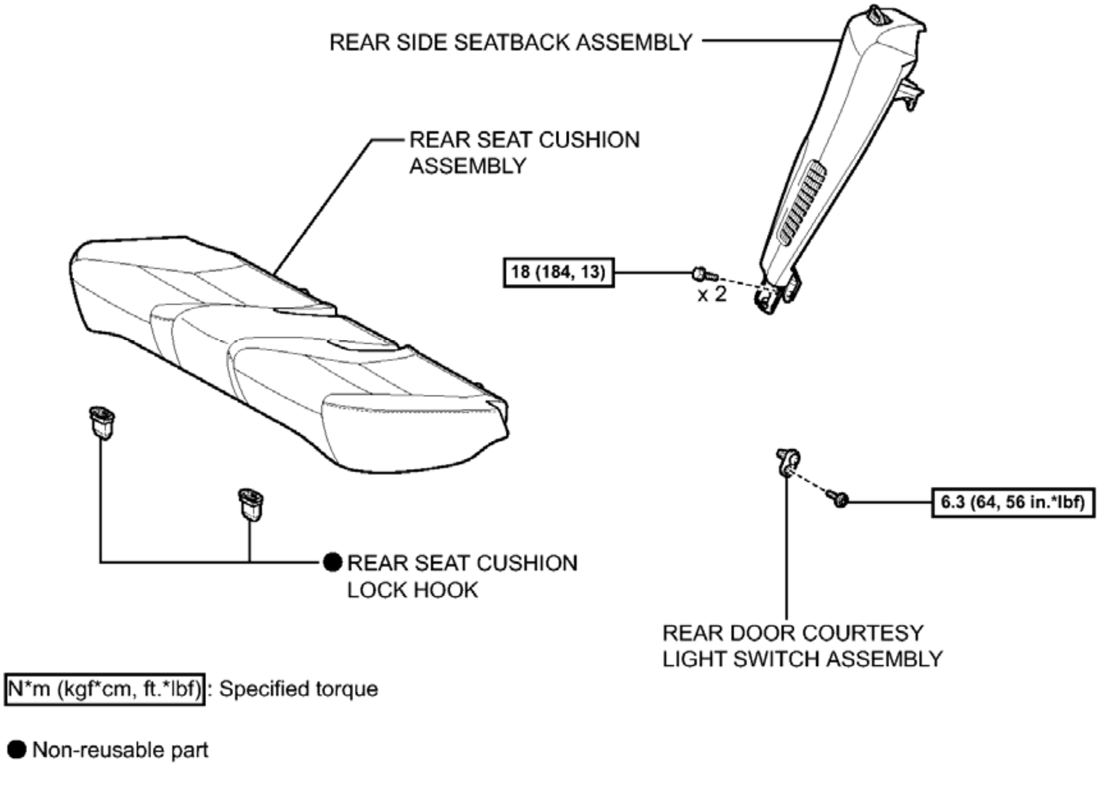
REAR SIDE SEATBACK ASSEMBLY
REAR SEAT CUSHION ASSEMBLY
18 (184, 13)
x 2
6.3 (64, 56 in.*lbf)
● REAR SEAT CUSHION LOCK HOOK
REAR DOOR COURTESY LIGHT SWITCH ASSEMBLY
N*m (kgf*cm, ft.*lbf) : Specified torque
● Non-reusable part
P

Fig. 41: Identifying Rear Door Courtesy Switch Replacement Components With Torque Specifications (2 Of 2)
Courtesy of TOYOTA MOTOR SALES, U.S.A., INC.

REMOVAL

REMOVAL

HINT:

- Use the same procedure for the RH and LH sides.
- The procedure described below is for the LH side.

1. **PRECAUTION**

WARNING: **Be sure to read Precaution thoroughly before servicing. Refer to PRECAUTION .**

NOTE: **After turning the power switch off, waiting time may be required before disconnecting the cable from the negative (-) auxiliary battery terminal.**

Therefore, make sure to read the disconnecting the cable from the negative (-) auxiliary battery terminal notices before proceeding with work. Refer to PRECAUTION .

2. **REMOVE LUGGAGE TRIM SERVICE HOLE COVER** . Refer to **REMOVAL - Step 2**
3. **DISCONNECT CABLE FROM AUXILIARY BATTERY NEGATIVE TERMINAL**

WARNING: **Wait at least 90 seconds after disconnecting the cable from the negative (-) battery terminal to disable the SRS system.**

NOTE: **When disconnecting the cable, some systems need to be initialized after the cable is reconnected. Refer to INITIALIZATION .**

4. **REMOVE REAR SEAT CUSHION ASSEMBLY** . Refer to **REMOVAL - Step 4**
5. **REMOVE REAR SEAT CUSHION LOCK HOOK** . Refer to **REMOVAL - Step 5**
6. **REMOVE REAR SIDE SEATBACK ASSEMBLY** . Refer to **REMOVAL - Step 9**
7. **REMOVE REAR DOOR COURTESY LIGHT SWITCH ASSEMBLY**
   a. Disconnect the connector.
   b. Using a T30 "TORX" socket wrench, remove the screw and rear door courtesy light switch assembly.

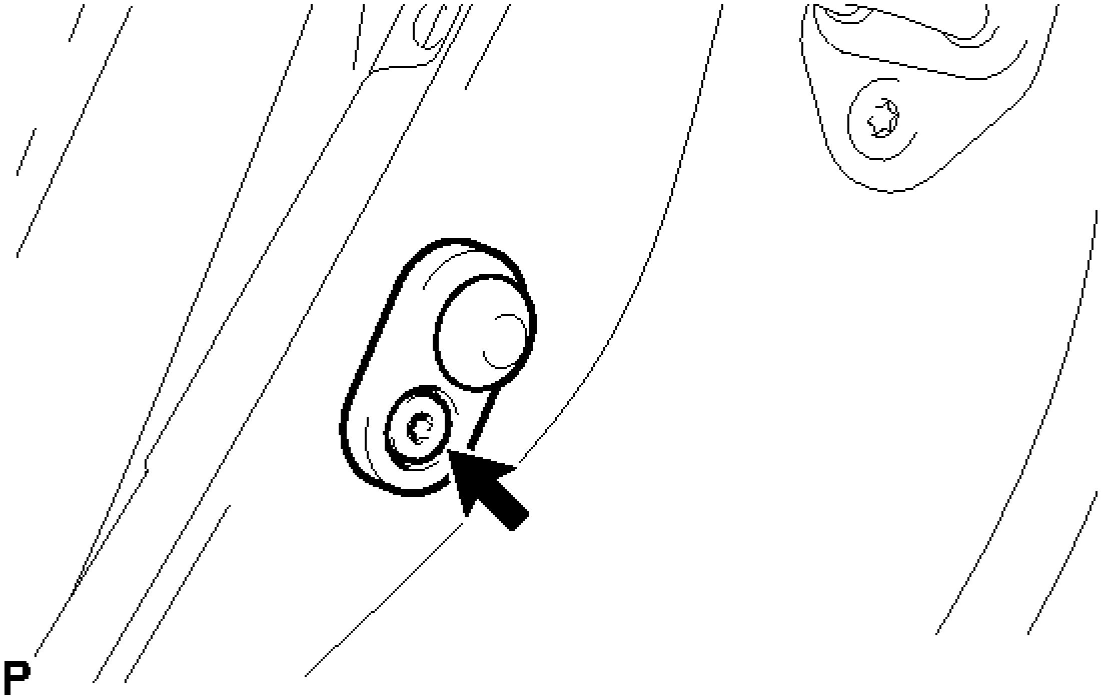

Fig. 42: Identifying Rear Door Courtesy Light Switch Screw
Courtesy of TOYOTA MOTOR SALES, U.S.A., INC.

INSPECTION

INSPECTION

1. **INSPECT REAR DOOR COURTESY LIGHT SWITCH ASSEMBLY**
    a. Measure the resistance according to the value(s) in the table below.

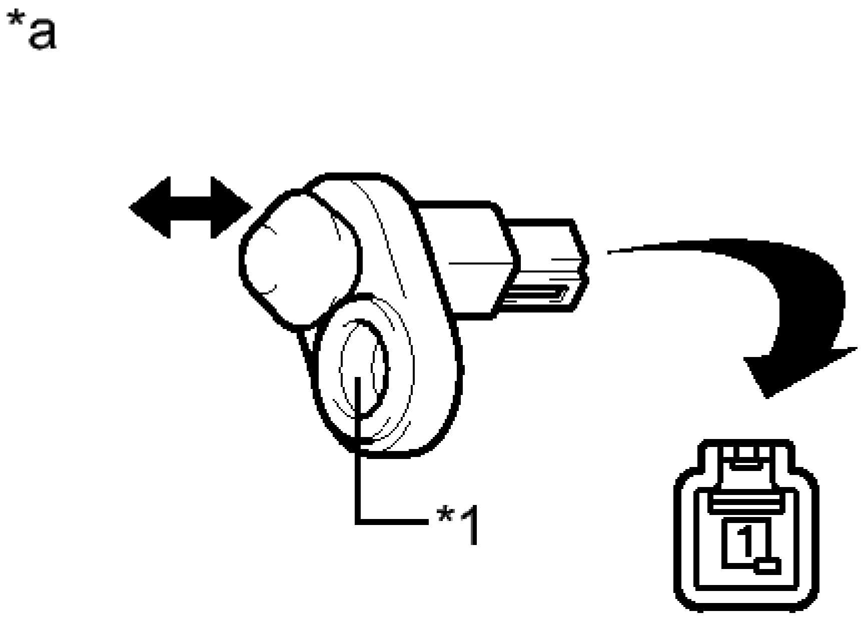

Fig. 43: Identifying Rear Door Courtesy Light Switch Connector Terminal
Courtesy of TOYOTA MOTOR SALES, U.S.A., INC.

Standard Resistance

Tester Connection	Switch Condition	Specified Condition
1 - Switch body	Not pushed (ON)	Below 1 ohms
	Pushed (OFF)	10 kohms or higher

TEXT IN ILLUSTRATION

*a	Component without harness connected (Rear Door

	Courtesy Light Switch Assembly)
*1	Switch Body

If the result is not as specified, replace the rear door courtesy light switch assembly.

INSTALLATION

INSTALLATION

HINT:

- Use the same procedure for the RH and LH sides.
- The procedure described below is for the LH side.

1. **INSTALL REAR DOOR COURTESY LIGHT SWITCH ASSEMBLY**
    a. Using a T30 "TORX" socket wrench, install the rear door courtesy light switch assembly with the screw.

       Torque: 6.3 N*m (64 kgf*cm, 56 in.*lbf)

       HINT:

       There are 2 diameters for the "TORX" screws: 6 mm (0.236 in.) and 7 mm (0.276 in.). The diameter of a supplied "TORX" screw is 7 mm (0.276 in.).

    b. Connect the connector.
2. **INSTALL REAR SIDE SEATBACK ASSEMBLY** . Refer to **INSTALLATION - Step 1**
3. **INSTALL REAR SEAT CUSHION LOCK HOOK** . Refer to **INSTALLATION - Step 6**
4. **INSTALL REAR SEAT CUSHION ASSEMBLY** . Refer to **INSTALLATION - Step 7**
5. **CONNECT CABLE TO AUXILIARY BATTERY NEGATIVE TERMINAL**

   NOTE: **When disconnecting the cable, some systems need to be initialized after the cable is reconnected. Refer to INITIALIZATION .**

6. **INSTALL LUGGAGE TRIM SERVICE HOLE COVER** . Refer to **INSTALLATION - Step 3**
7. **INSPECT SRS WARNING LIGHT**

   for Separate Type Yaw Rate Sensor: Refer to **DIAGNOSIS SYSTEM**

   for Built-in Type Yaw Rate Sensor: Refer to **DIAGNOSIS SYSTEM**

BACK DOOR COURTESY SWITCH

COMPONENTS

ILLUSTRATION

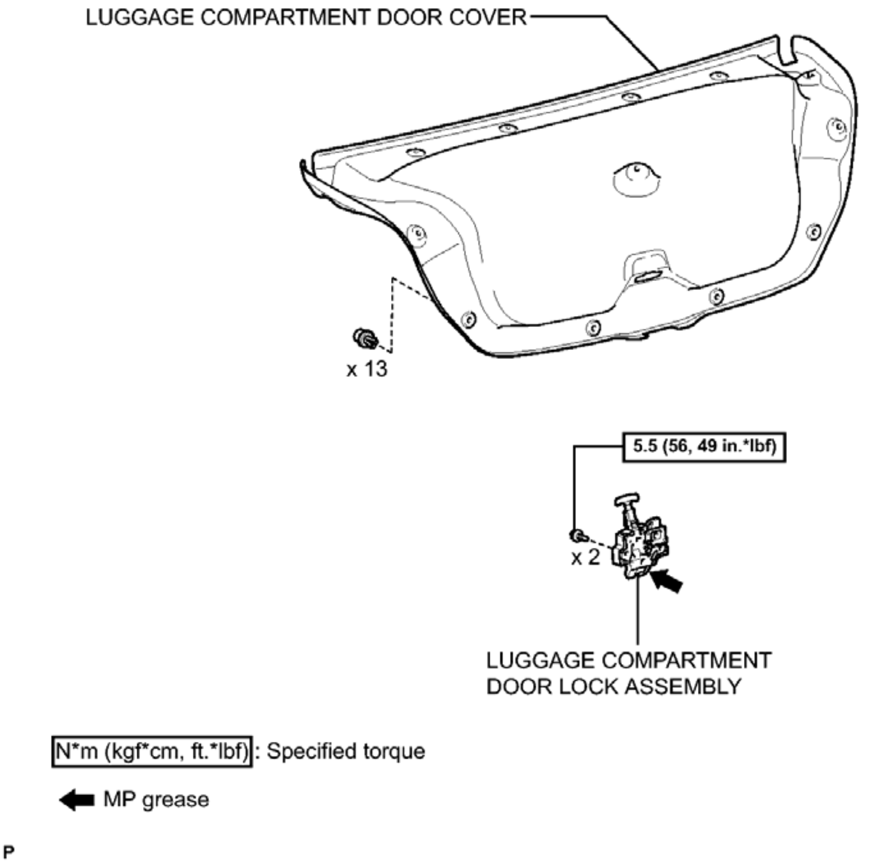
LUGGAGE COMPARTMENT DOOR COVER
x 13
5.5 (56, 49 in.*lbf)
x 2
LUGGAGE COMPARTMENT DOOR LOCK ASSEMBLY
N*m (kgf*cm, ft.*lbf): Specified torque
MP grease
P

Fig. 44: Identifying Back Door Courtesy Switch Replacement Components With Torque Specifications
Courtesy of TOYOTA MOTOR SALES, U.S.A., INC.

REMOVAL

REMOVAL

1. **REMOVE LUGGAGE COMPARTMENT DOOR COVER** . Refer to **DISASSEMBLY - Step 1**
2. **REMOVE LUGGAGE COMPARTMENT DOOR LOCK ASSEMBLY** . Refer to **REMOVAL - Step 2**

INSPECTION

INSPECTION

1. **INSPECT LUGGAGE COMPARTMENT DOOR LOCK ASSEMBLY**
    1. Check the operation of the door lock motor.
        1. Move the door lock to the close (lock) position.

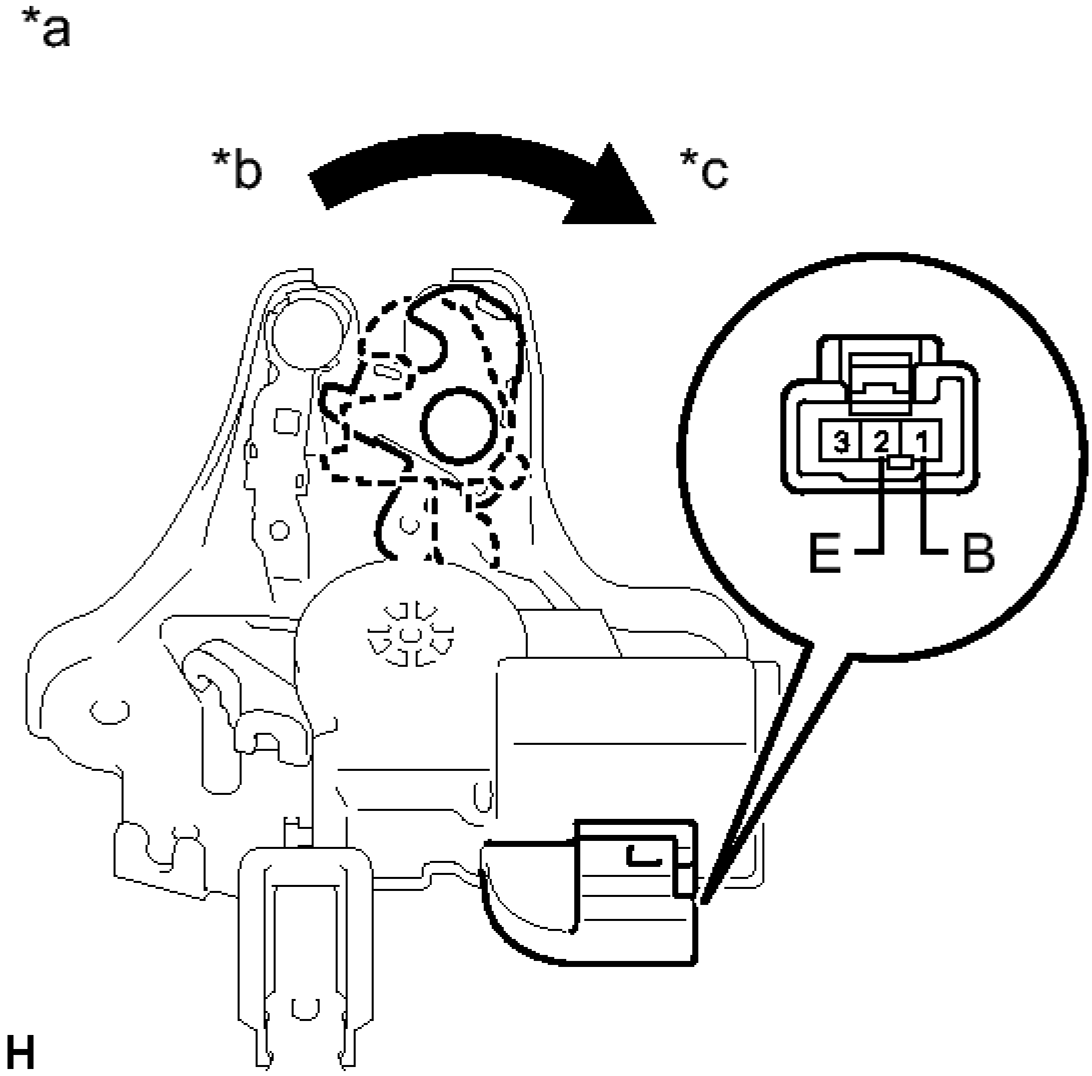

Fig. 45: Checking Operation Of The Door Lock Motor
Courtesy of TOYOTA MOTOR SALES, U.S.A., INC.

2. Apply auxiliary battery voltage to the door lock motor and check operation of the door lock motor.

OK

Measurement Condition	Specified Condition
Auxiliary	

battery positive (+) --> 1 (B) Auxiliary battery negative (-) --> 2 (E)	Luggage compartment door lock motor open (unlock) operation

TEXT IN ILLUSTRATION

*a	Component without harness connected: (Luggage Compartment Door Lock Assembly)
*b	Close (Lock)
*c	Open (Unlock)

If the result is not as specified, replace the luggage compartment door lock assembly.

b. Check the operation of the door courtesy switch.
    1. Measure the resistance according to the value(s) in the table below.

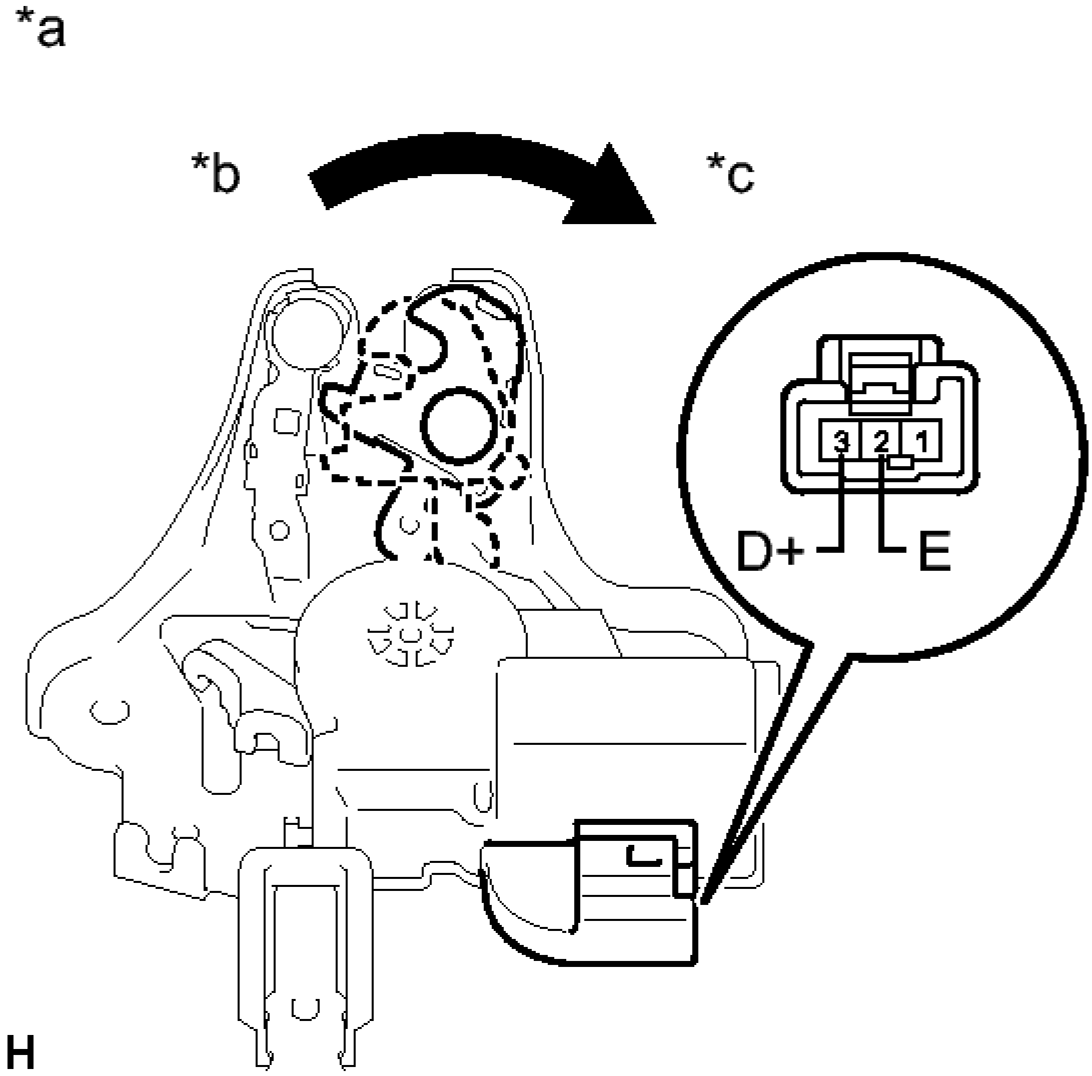

Fig. 46: Inspecting Luggage Compartment Door Lock Assembly
Courtesy of TOYOTA MOTOR SALES, U.S.A., INC.

Standard Resistance

Measurement Condition	Door Lock Condition	Specified Condition
2 (E) - 3 (D+)	Close (Lock)	10 kohms or higher
2 (E) - 3 (D+)	Open (Unlock)	Below 1 ohms

TEXT IN ILLUSTRATION

	Component

*a	without harness connected: (Luggage Compartment Door Lock Assembly)
*b	Close (Lock)
*c	Open (Unlock)

If the result is not as specified, replace the luggage compartment door lock assembly.

INSTALLATION

INSTALLATION

1. **INSTALL LUGGAGE COMPARTMENT DOOR LOCK ASSEMBLY** . Refer to **INSTALLATION - Step 1**
2. **INSTALL LUGGAGE COMPARTMENT DOOR COVER** . Refer to **REASSEMBLY - Step 10**

RELAY

ON-VEHICLE INSPECTION

ON-VEHICLE INSPECTION

1. **INSPECT LIGHT CUT RELAY**
    a. Measure the resistance according to the value(s) in the table below.

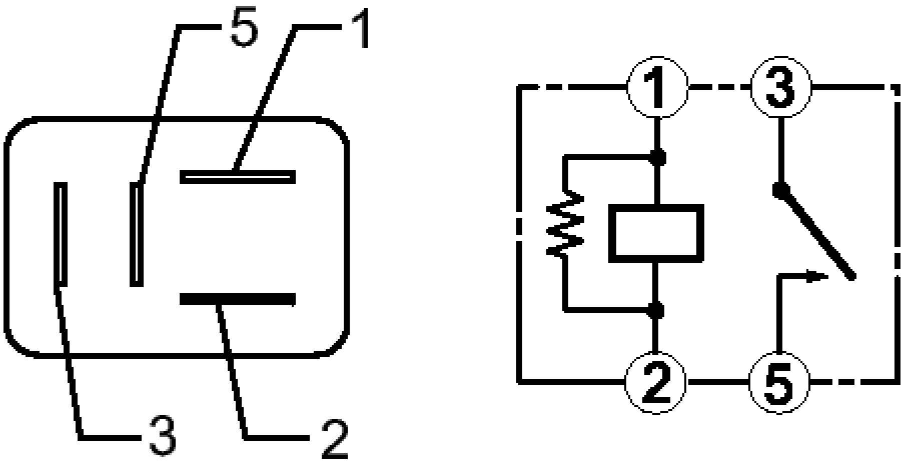

Fig. 47: Inspecting Light Cut Relay
Courtesy of TOYOTA MOTOR SALES, U.S.A., INC.

Standard Resistance

Tester Connection	Condition	Specified Condition
3 - 5	Voltage is not applied between terminals 1 and 2	10 kohms or higher
3 - 5	Voltage is applied between terminals 1 and 2	Below 1 ohms

If the result is not as specified, replace the light cut relay.

VANITY LIGHT

COMPONENTS

ILLUSTRATION

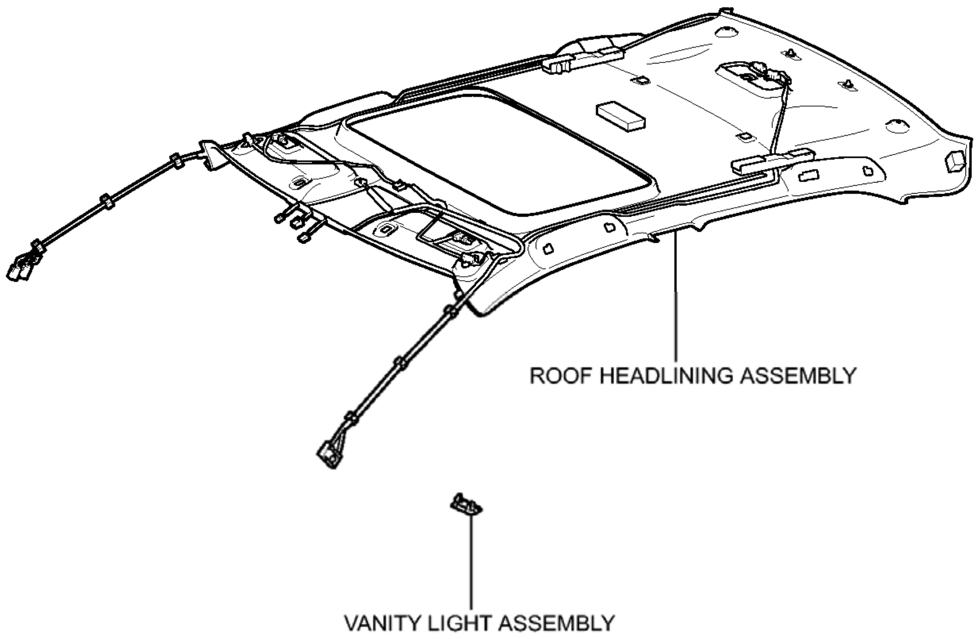
ROOF HEADLINING ASSEMBLY
VANITY LIGHT ASSEMBLY

P

Fig. 1: Identifying Light Replacement Components
Courtesy of TOYOTA MOTOR SALES, U.S.A., INC.

REMOVAL

REMOVAL

HINT:

- Use the same procedure for the RH and LH sides.
- The procedure described below is for the LH side.

1. **REMOVE ROOF HEADLINING ASSEMBLY**

   Refer to **REMOVAL**

2. **REMOVE VANITY LIGHT ASSEMBLY**
   a. Tilt the tab to disengage the 2 claws <A> and separate the bulb holder from the vanity light as shown in the illustration.

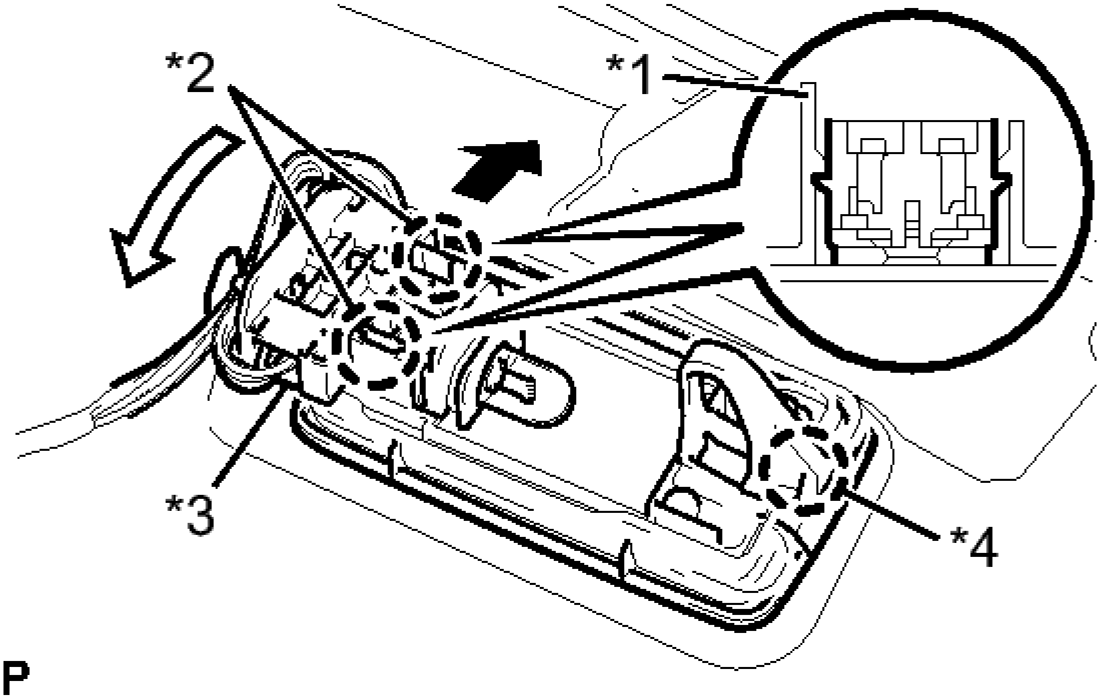

Fig. 2: Identifying Vanity Light Assembly Claws
Courtesy of TOYOTA MOTOR SALES, U.S.A., INC.

TEXT IN ILLUSTRATION

*1	Tab
*2	Claw <A>
*3	Bulb Holder
*4	Claw <B>

   b. Disengage the claw <B> and remove the vanity light assembly.

INSTALLATION

INSTALLATION

HINT:

- Use the same procedure for the RH and LH sides.
- The procedure described below is for the LH side.

1. **INSTALL VANITY LIGHT ASSEMBLY**
    a. Engage the claw <B> to install the vanity light assembly.

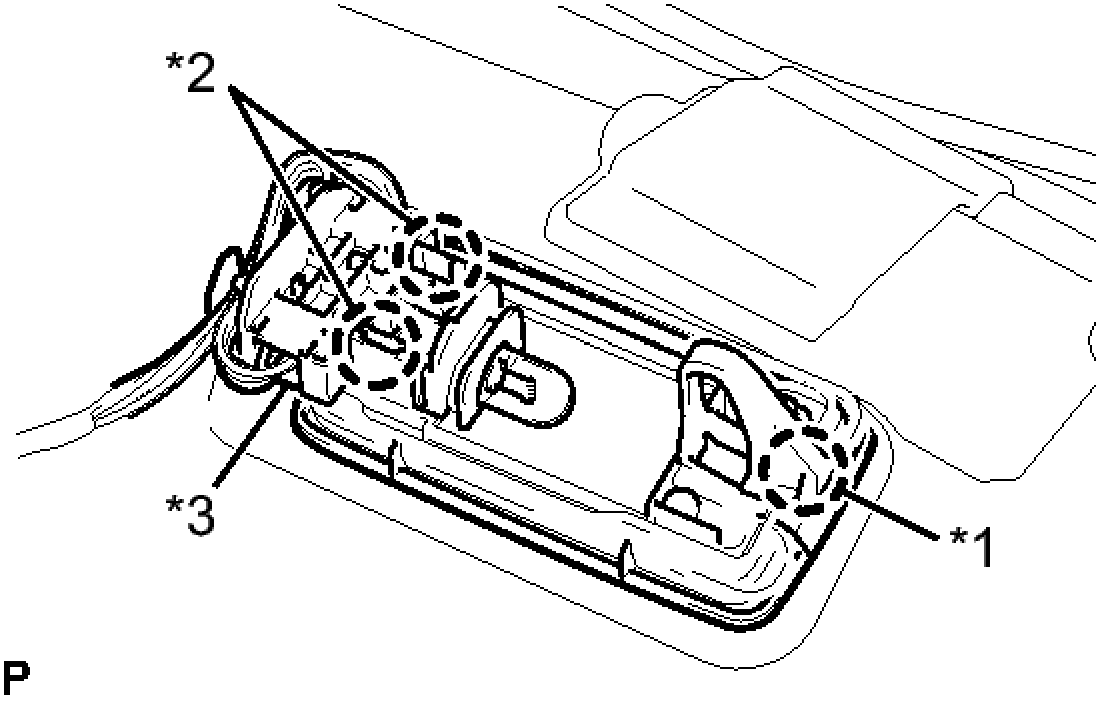

Fig. 3: Identifying Vanity Light Assembly Claw
Courtesy of TOYOTA MOTOR SALES, U.S.A., INC.

TEXT IN ILLUSTRATION

*1	Claw <B>
*2	Claw <A>
*3	Bulb Holder

    b. Engage the 2 claws <A> to install the bulb holder to the vanity light assembly.

2. **INSTALL ROOF HEADLINING ASSEMBLY**

    Refer to **INSTALLATION**

PERSONAL LIGHT

COMPONENTS

ILLUSTRATION

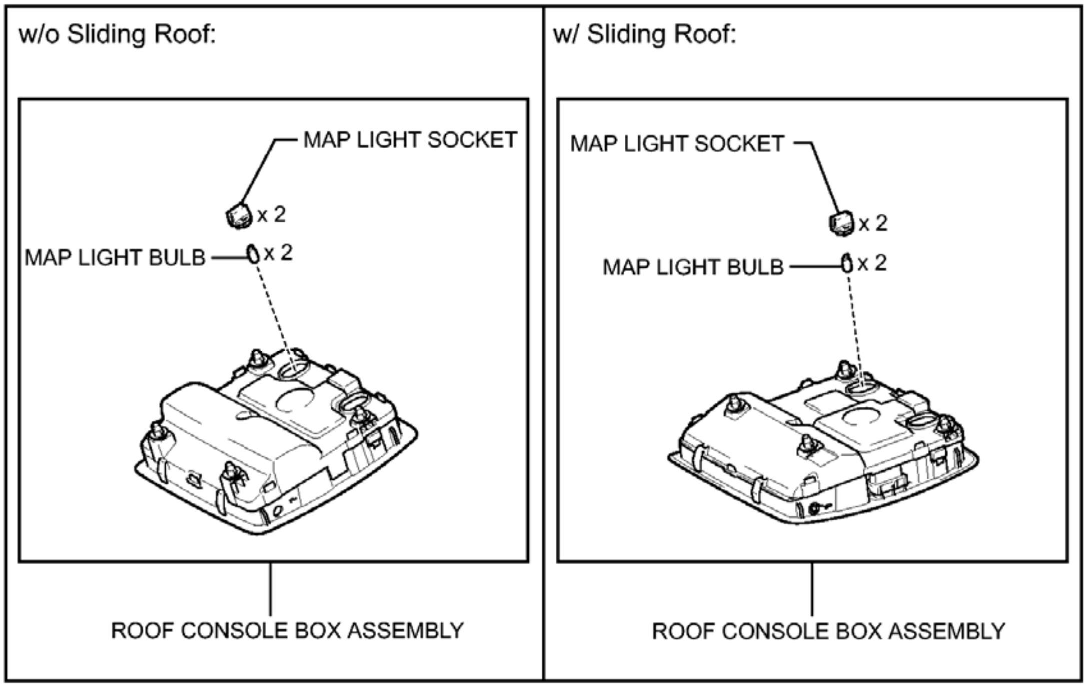
w/o Sliding Roof:
MAP LIGHT SOCKET
x 2
MAP LIGHT BULB
x 2
ROOF CONSOLE BOX ASSEMBLY
w/ Sliding Roof:
MAP LIGHT SOCKET
x 2
MAP LIGHT BULB
x 2
ROOF CONSOLE BOX ASSEMBLY

P

Fig. 4: Identifying Personal Light Replacement Components
Courtesy of TOYOTA MOTOR SALES, U.S.A., INC.

REMOVAL

REMOVAL

1. **REMOVE ROOF CONSOLE BOX ASSEMBLY (w/o Sliding Roof)**
    a. Using a moulding remover, disengage the 4 clips.

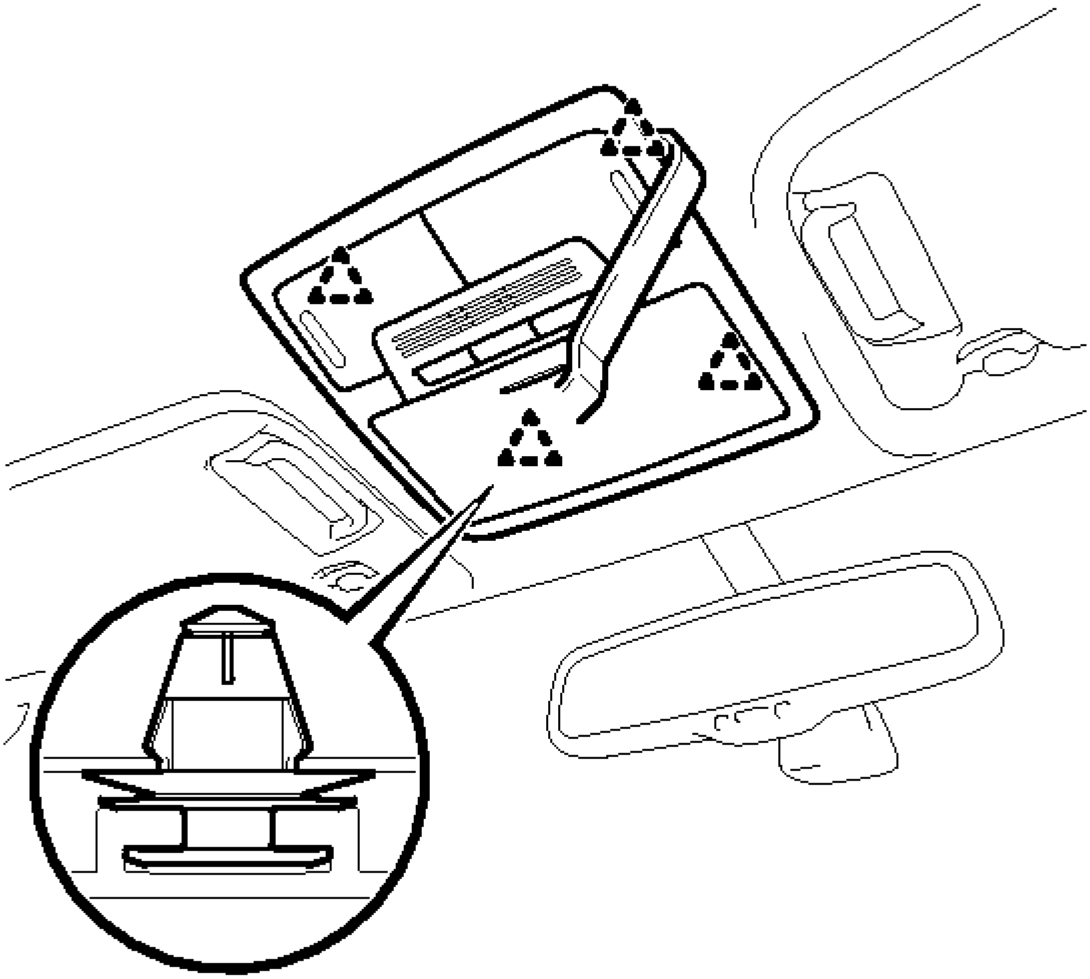

Fig. 5: Identifying Roof Console Box Assembly Clips
Courtesy of TOYOTA MOTOR SALES, U.S.A., INC.

b. Disconnect the connector and remove the roof console box assembly.

2. **REMOVE ROOF CONSOLE BOX ASSEMBLY (w/ Sliding Roof)**
   a. Using a moulding remover, disengage the 4 clips.

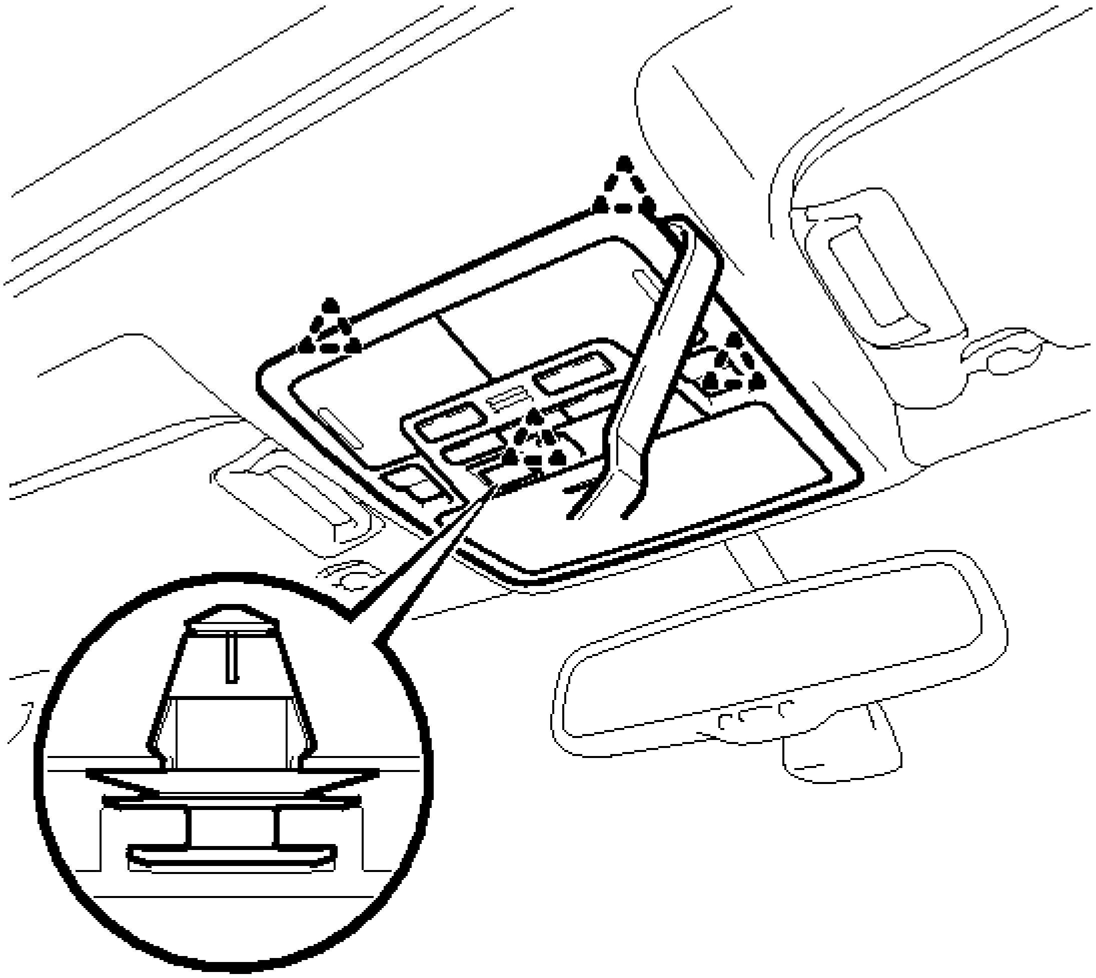

P

Fig. 6: Identifying Roof Console Box Assembly Clips
Courtesy of TOYOTA MOTOR SALES, U.S.A., INC.

b. Disconnect the connector and remove the roof console box assembly.

3. **REMOVE MAP LIGHT BULB**

   a. Turn the 2 map light sockets with the 2 map light bulbs in the direction indicated by the arrows in the illustration and remove them as a unit.

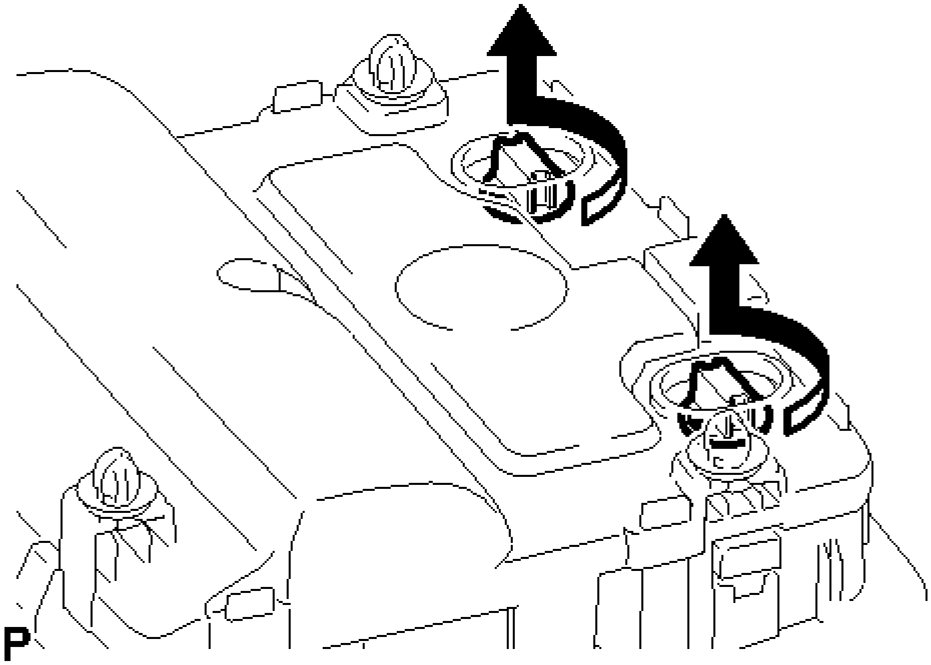

Fig. 7: Removing Map Light Bulbs
Courtesy of TOYOTA MOTOR SALES, U.S.A., INC.

b. Remove the 2 map light bulbs from the 2 map light sockets.

INSPECTION

INSPECTION

1. **INSPECT ROOF CONSOLE BOX ASSEMBLY (w/o Sliding Roof)**
    a. Inspect the personal lights.

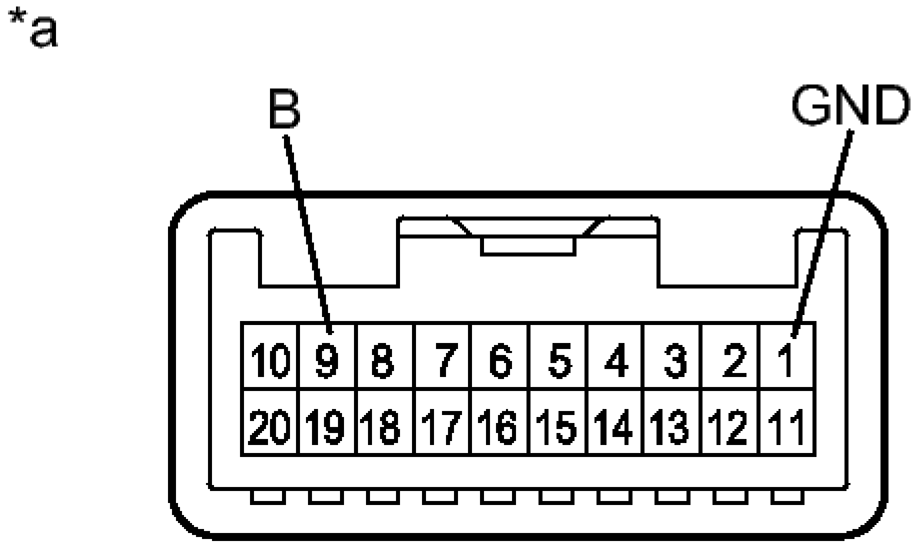

Fig. 8: Roof Console Box Assembly Connector Terminal Identification
Courtesy of TOYOTA MOTOR SALES, U.S.A., INC.

1. Connect a positive (+) lead from the battery to terminal 9 (B) and a negative (-) lead to terminal 1 (GND).

   Result

Tester Connection	Condition	Specified Condition
9 (B) - 1 (GND)	Personal light switches off	Personal light LH and RH do not come on
	Personal light switch LH on	Personal light LH comes on
	Personal light switch RH on	Personal light RH comes on

TEXT IN ILLUSTRATION

	Component

*a	without harness connected (Roof Console Box Assembly)

If the result is not as specified, replace the bulb or roof console box assembly.

2. **INSPECT ROOF CONSOLE BOX ASSEMBLY (w/ Sliding Roof)**
   a. Inspect the personal lights.

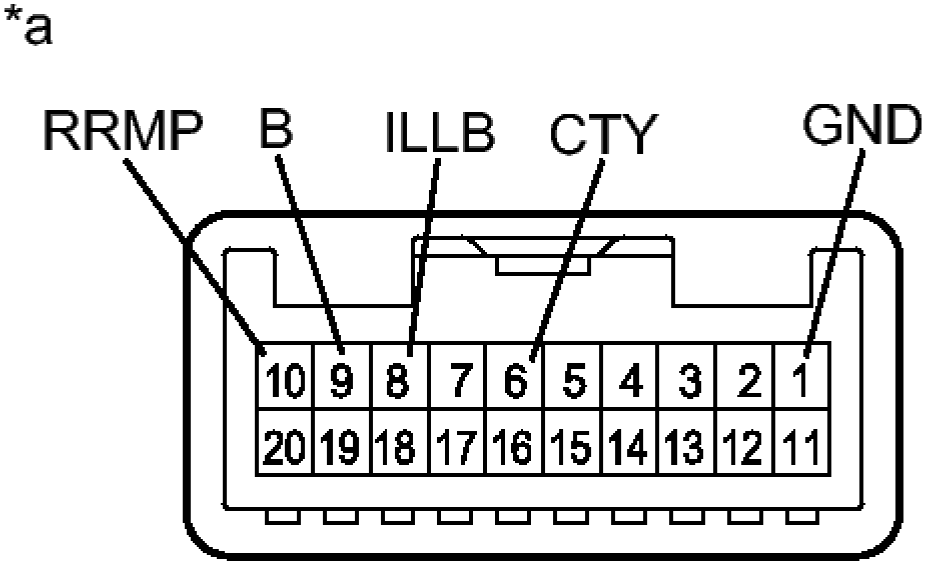

Fig. 9: Roof Console Box Assembly Connector Terminal Identification (W/Sliding Roof)
Courtesy of TOYOTA MOTOR SALES, U.S.A., INC.

1. Connect a positive (+) lead from the battery to terminal 9 (B) and a negative (-) lead to terminal 1 (GND) or 6 (CTY).

   Result

Tester Connection	Condition	Specified Condition
	Interior light on/off	Personal

	switch off and personal light switches off	light LH and RH do not come on
9 (B) - 1 (GND)	Interior light on/off switch off and personal light switch LH on	Personal light LH comes on
	Interior light on/off switch off and personal light switch RH on	Personal light RH comes on
	Interior light on/off switch on and personal light switches off	Personal light LH and RH comes on
9 (B) - 6 (CTY)	Interior light door switch off and personal light switches off	Personal light LH and RH do not come on
	Interior light door switch off and personal light	Personal light LH and RH do not come on

	switches on	
	Interior light door switch on and personal light switches off	Personal light LH and RH comes on

TEXT IN ILLUSTRATION

*a	Component without harness connected (Roof Console Box Assembly)

If the result is not as specified, replace the bulb or roof console box assembly.

b. Inspect the center console spot light.

  1. Connect a positive (+) lead from the battery to terminal 8 (ILLB) and a negative (-) lead to terminal 1 (GND).

     Result

Tester Connection	Condition	Specified Condition
1 (GND) - 8 (ILLB)	Battery positive (+) --> Terminal 8 (ILLB) Battery positive (-) --> Terminal 1 (GND)	Center console spot light comes on

If the result is not as specified, replace the roof console box assembly.

c. Measure the resistance according to the value(s) in the table below.

Standard Resistance

Tester Connection	Condition	Specified Condition
1 (GND) - 10 (RRMP)	Personal light switches off and interior light on/off switch off	10 kohms or higher
	Personal light switches off and interior light on/off switch on	Below 1 ohms
6 (CTY) - 10 (RRMP)	Interior light door switch off	10 kohms or higher
	Interior light door switch on	Below 1 ohms

If the result is not as specified, replace the roof console box assembly.

INSTALLATION

INSTALLATION

1. **INSTALL MAP LIGHT BULB**
    a. Install the 2 map light bulbs to the 2 map light sockets.
    b. Turn the 2 map light sockets with the 2 map light bulbs in the direction indicated by the arrows in the illustration and install them as a unit.

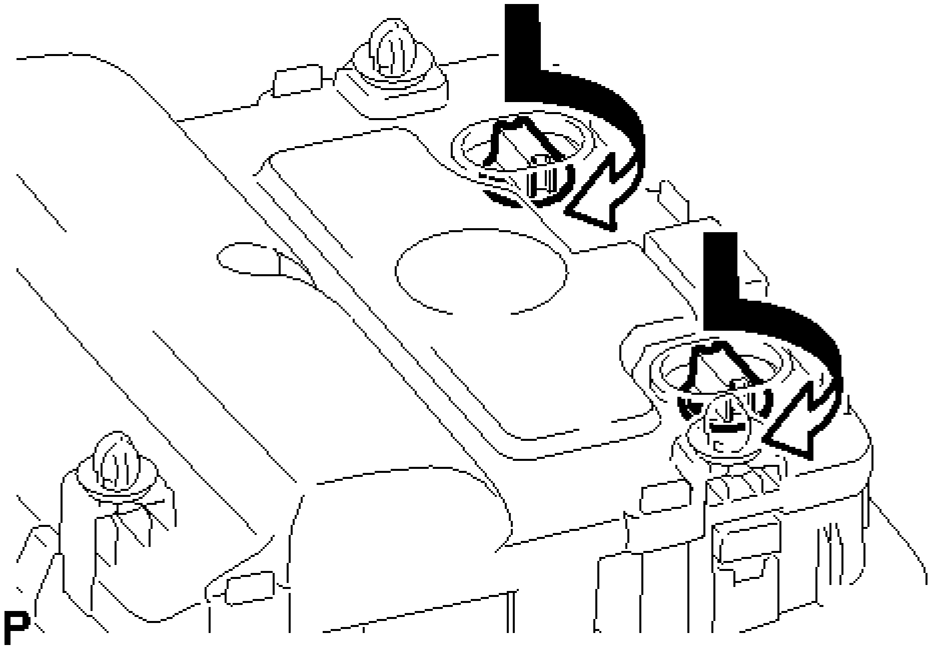

Fig. 10: Installing Map Light Bulbs
Courtesy of TOYOTA MOTOR SALES, U.S.A., INC.

2. **INSTALL ROOF CONSOLE BOX ASSEMBLY (w/o Sliding Roof)**
    a. Connect the connector.
    b. Engage the 4 clips to install the roof console box assembly.

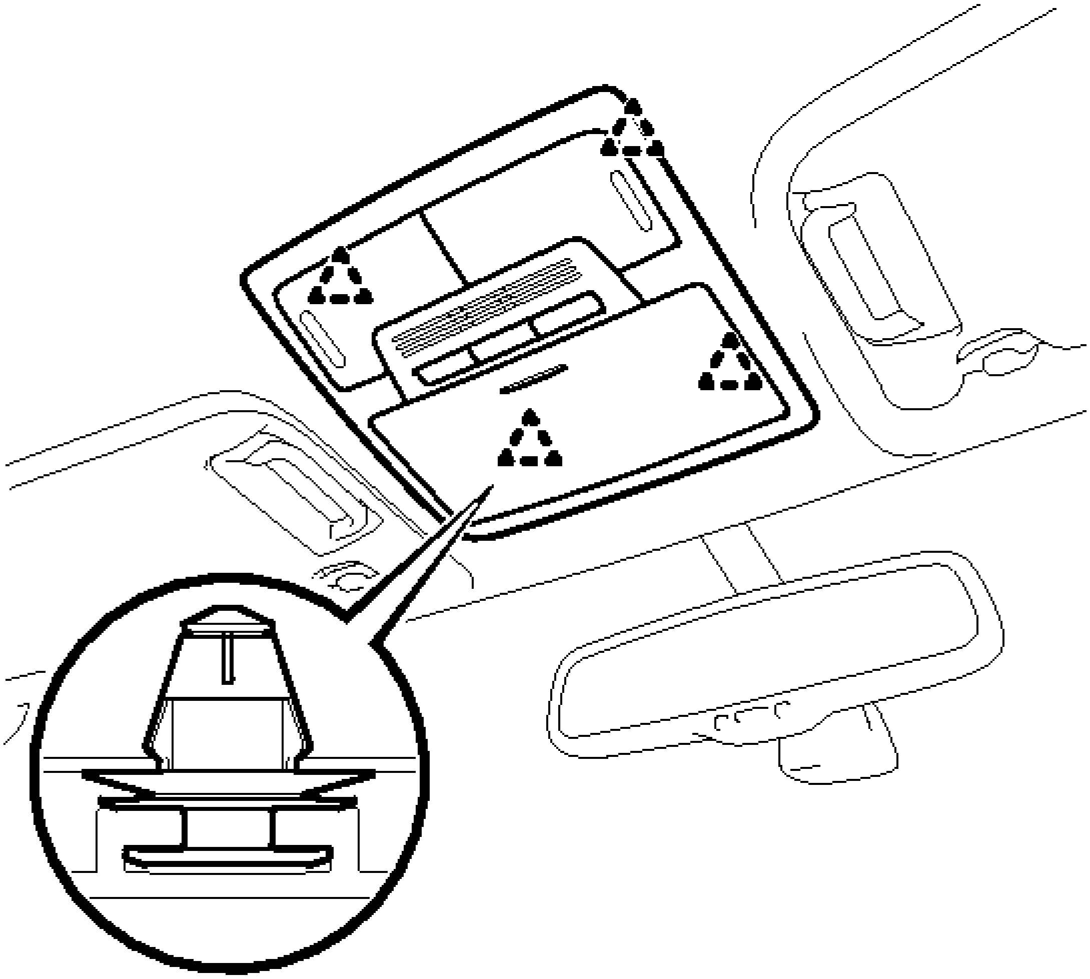

P

Fig. 11: Identifying Roof Console Box Assembly Clips
Courtesy of TOYOTA MOTOR SALES, U.S.A., INC.

3. **INSTALL ROOF CONSOLE BOX ASSEMBLY (w/ Sliding Roof)**
   a. Connect the connector.
   b. Engage the 4 clips to install the roof console box assembly.

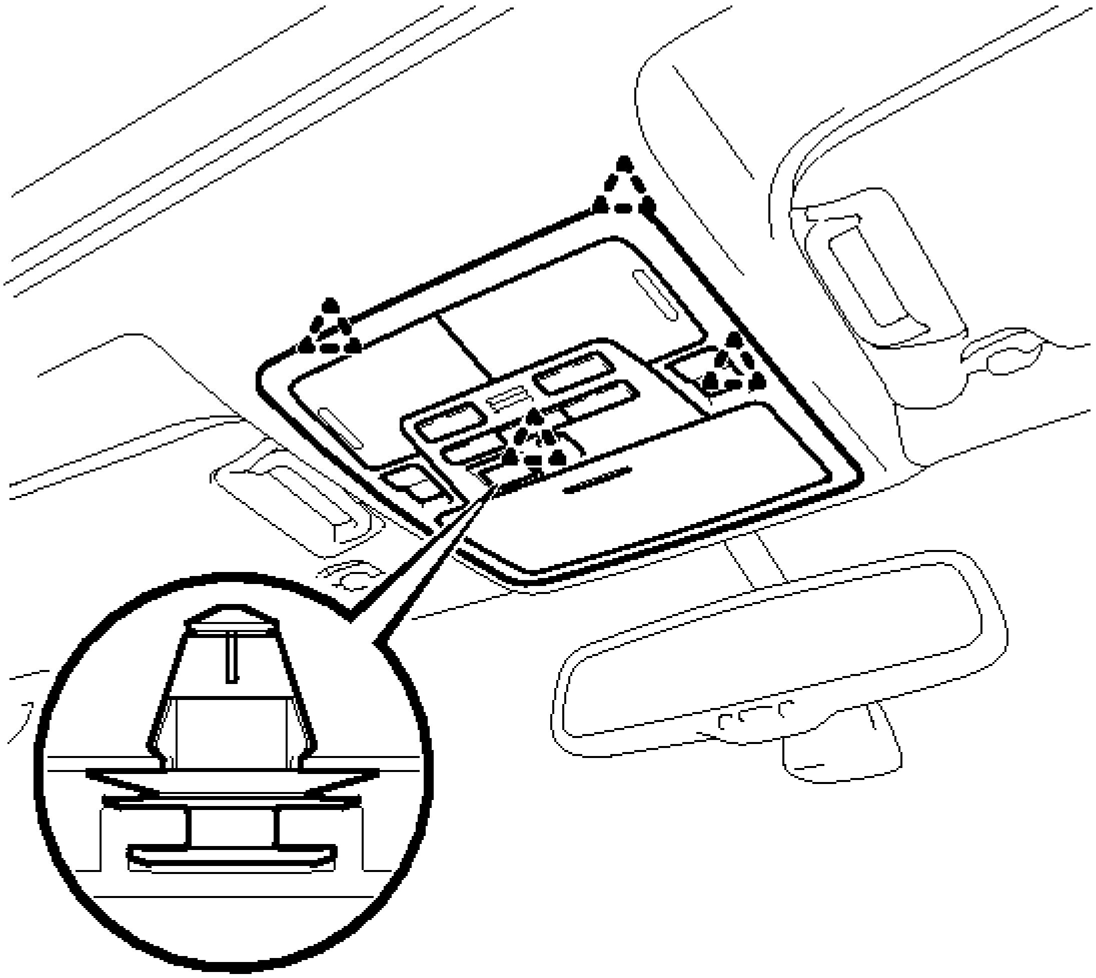

Fig. 12: Identifying Roof Console Box Assembly Clips
Courtesy of TOYOTA MOTOR SALES, U.S.A., INC.

ROOM LIGHT

COMPONENTS

ILLUSTRATION

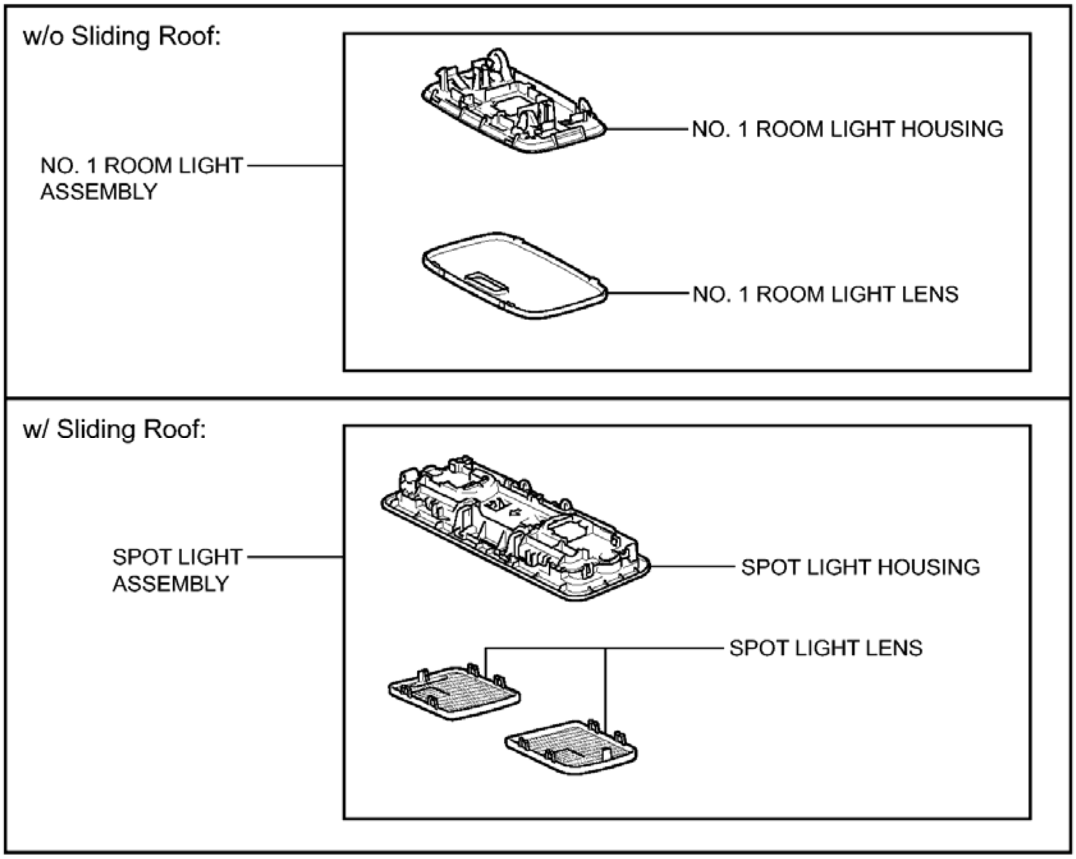
w/o Sliding Roof:
NO. 1 ROOM LIGHT HOUSING
NO. 1 ROOM LIGHT ASSEMBLY
NO. 1 ROOM LIGHT LENS
w/ Sliding Roof:
SPOT LIGHT ASSEMBLY
SPOT LIGHT HOUSING
SPOT LIGHT LENS
P

Fig. 13: Identifying Room Light Replacement Components
Courtesy of TOYOTA MOTOR SALES, U.S.A., INC.

REMOVAL

REMOVAL

1. **REMOVE NO. 1 ROOM LIGHT ASSEMBLY (w/o Sliding Roof)**
    a. Using a screwdriver with its tip wrapped with protective tape, disengage the 4 claws and remove the No. 1 room light lens.

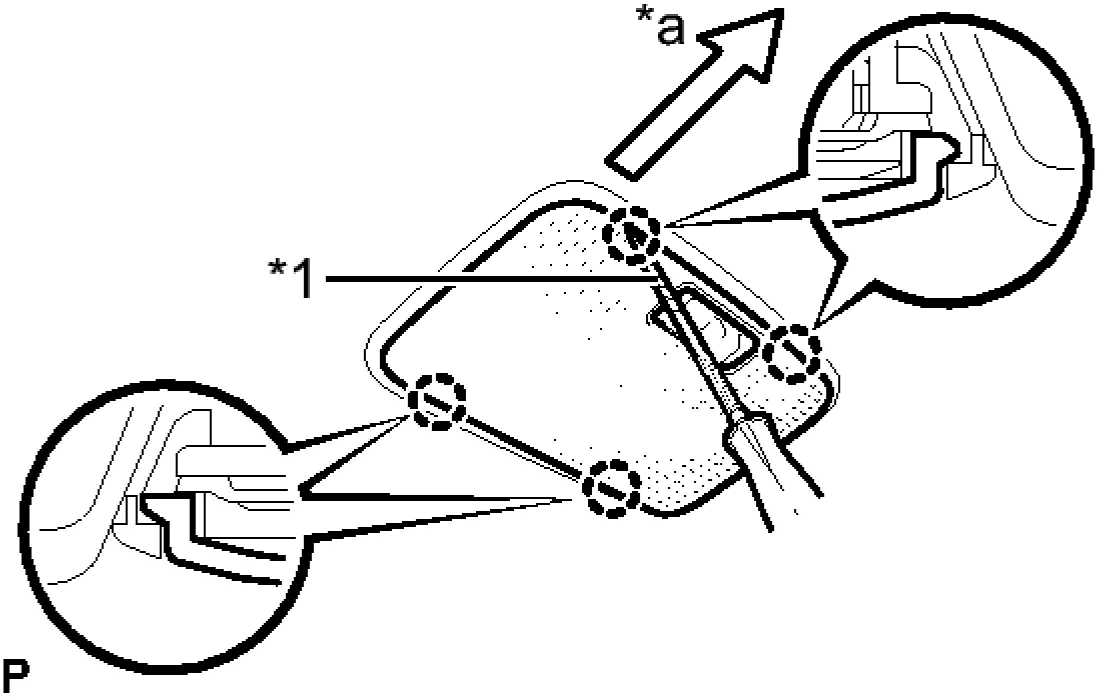

Fig. 14: Identifying No. 1 Room Light Lens Claws
Courtesy of TOYOTA MOTOR SALES, U.S.A., INC.

TEXT IN ILLUSTRATION

*1	Protective Tape
*a	Front

b. Using a screwdriver with its tip wrapped with protective tape, disengage the 4 claws as shown in the illustration and remove the No. 1 room light housing.

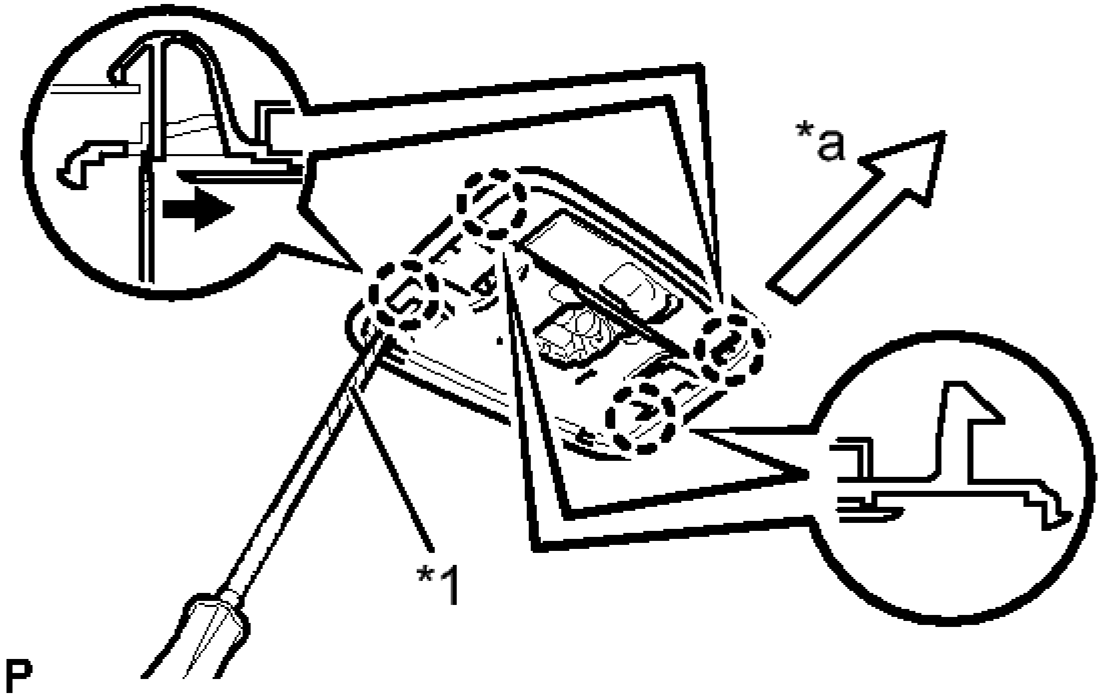

Fig. 15: Identifying Claws
Courtesy of TOYOTA MOTOR SALES, U.S.A., INC.

TEXT IN ILLUSTRATION

*1	Protective Tape
*a	Front

c. Using a screwdriver, disengage the 4 claws and disconnect the room light switch base from the No. 1 room light housing.

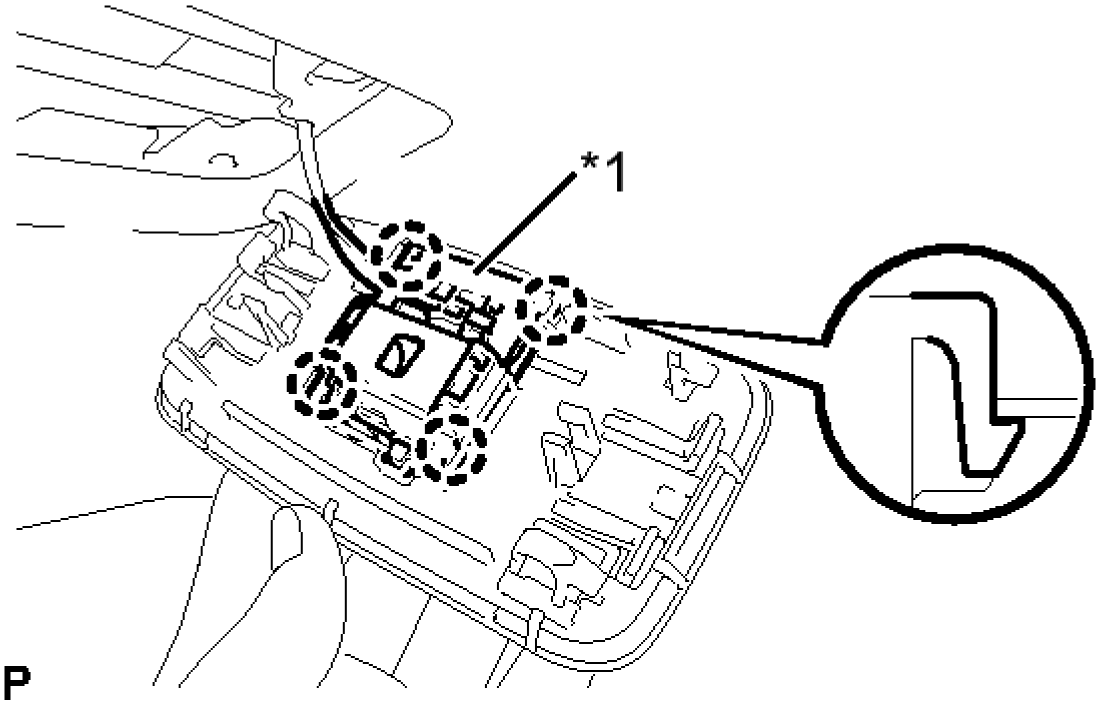

Fig. 16: Identifying Claws & Connector
Courtesy of TOYOTA MOTOR SALES, U.S.A., INC.

TEXT IN ILLUSTRATION

*1	Room Light Switch Base

2. **REMOVE SPOT LIGHT ASSEMBLY (w/ Sliding Roof)**
    a. Using a screwdriver with its tip wrapped with protective tape, disengage the 8 claws and remove the 2 spot light lenses.

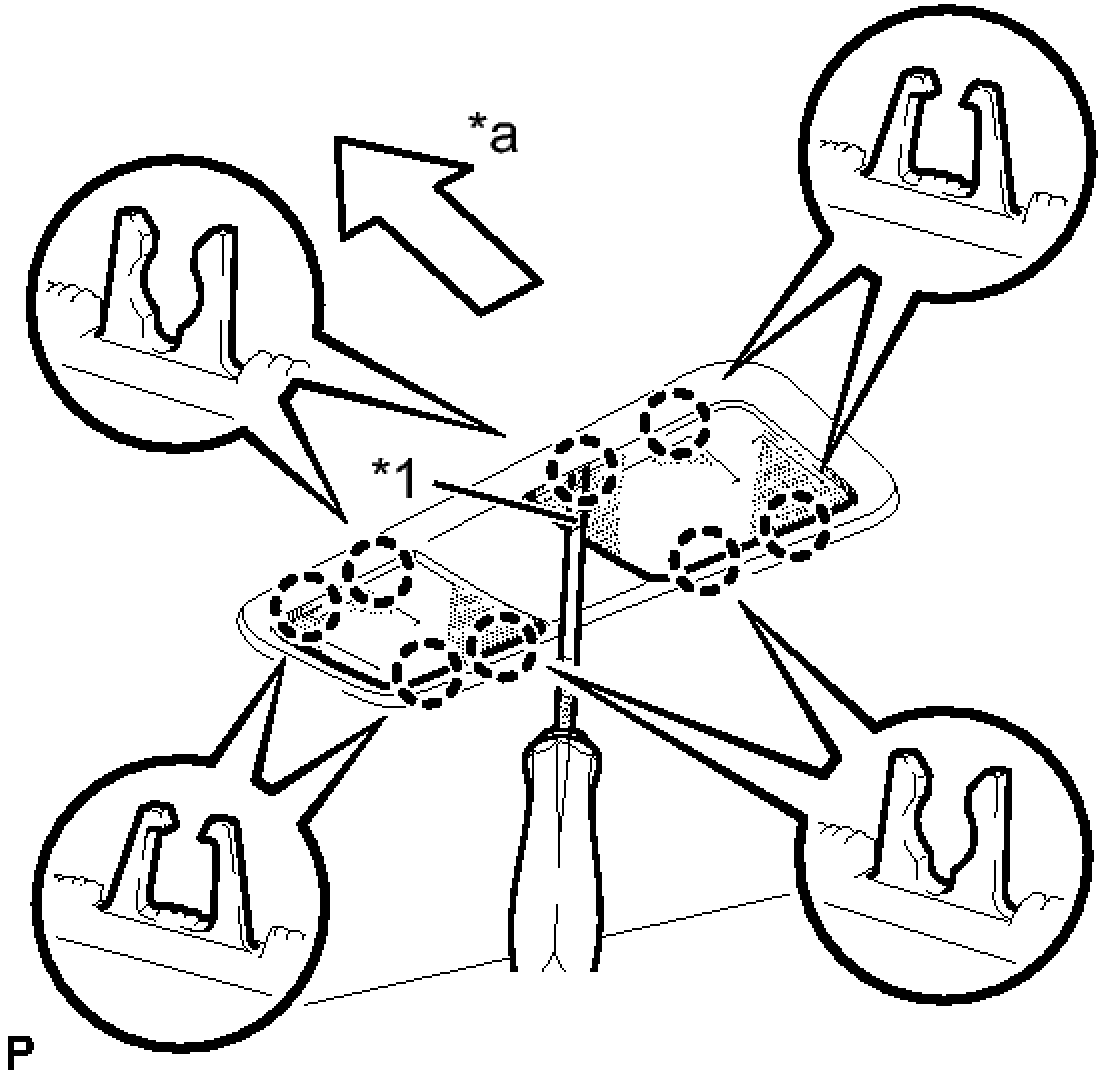

Fig. 17: Identifying Spot Light Lenses Claws
Courtesy of TOYOTA MOTOR SALES, U.S.A., INC.

TEXT IN ILLUSTRATION

*1	Protective Tape
*a	Front

b. Using a screwdriver with its tip wrapped with protective tape and moulding remover, disengage the 2 claws <A>.

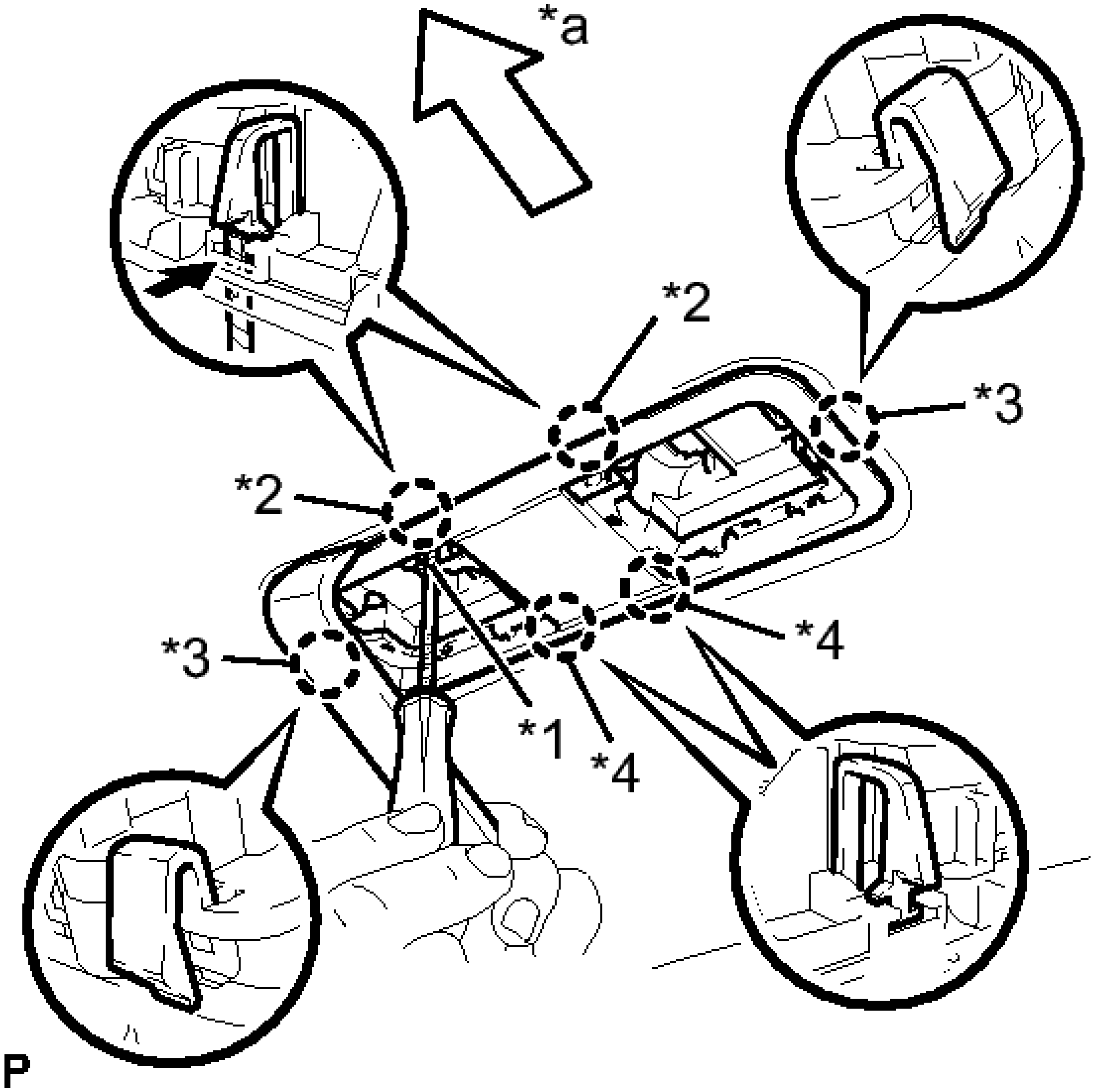

Fig. 18: Disconnecting Spot Light Housing
Courtesy of TOYOTA MOTOR SALES, U.S.A., INC.

TEXT IN ILLUSTRATION

*1	Protective Tape
*2	Claw <A>
*3	Claw <B>
*4	Claw <C>
*a	Front

c. Disengage the 2 claws <B> and 2 claws <C>, and disconnect the spot light housing.

d. Using a screwdriver, disengage the 8 claws and disconnect the 2 map light sub-assemblies from the spot light housing.

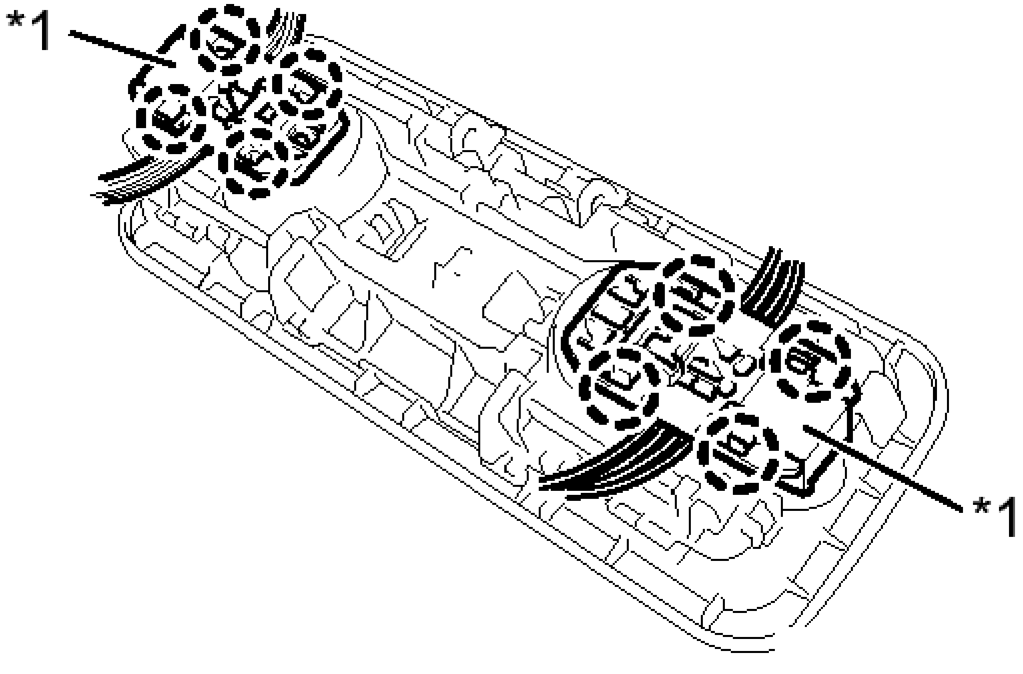

Fig. 19: Identifying Map Light Sub-Assemblies Claws
Courtesy of TOYOTA MOTOR SALES, U.S.A., INC.

TEXT IN ILLUSTRATION

*1	Map Light Sub-assembly

INSTALLATION

INSTALLATION

1. **INSTALL NO. 1 ROOM LIGHT ASSEMBLY (w/o Sliding Roof)**
    a. Align the switch parts shown in the illustration and engage the 4 claws to install the room light switch base to the No. 1 room light housing.

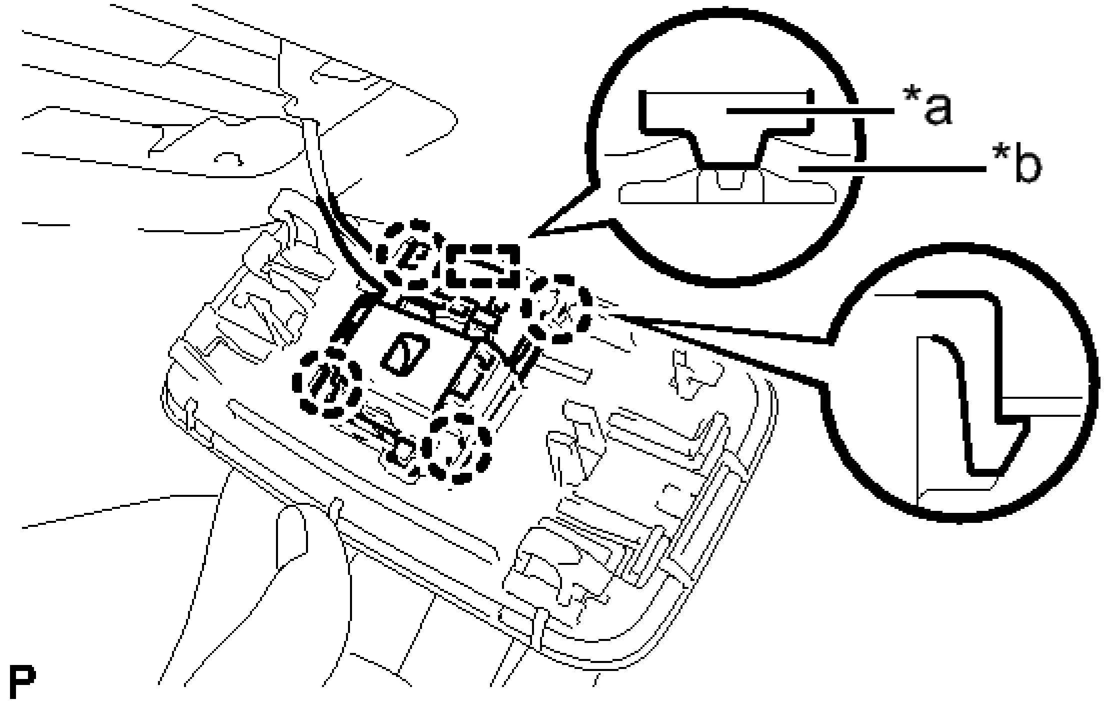

Fig. 20: Installing No. 1 Room Light Assembly
Courtesy of TOYOTA MOTOR SALES, U.S.A., INC.

TEXT IN ILLUSTRATION

*a	Switch Part of Room Light Switch Base
*b	Switch Part of No. 1 Room Light Housing

b. Engage the 4 claws to install the No. 1 room light housing.

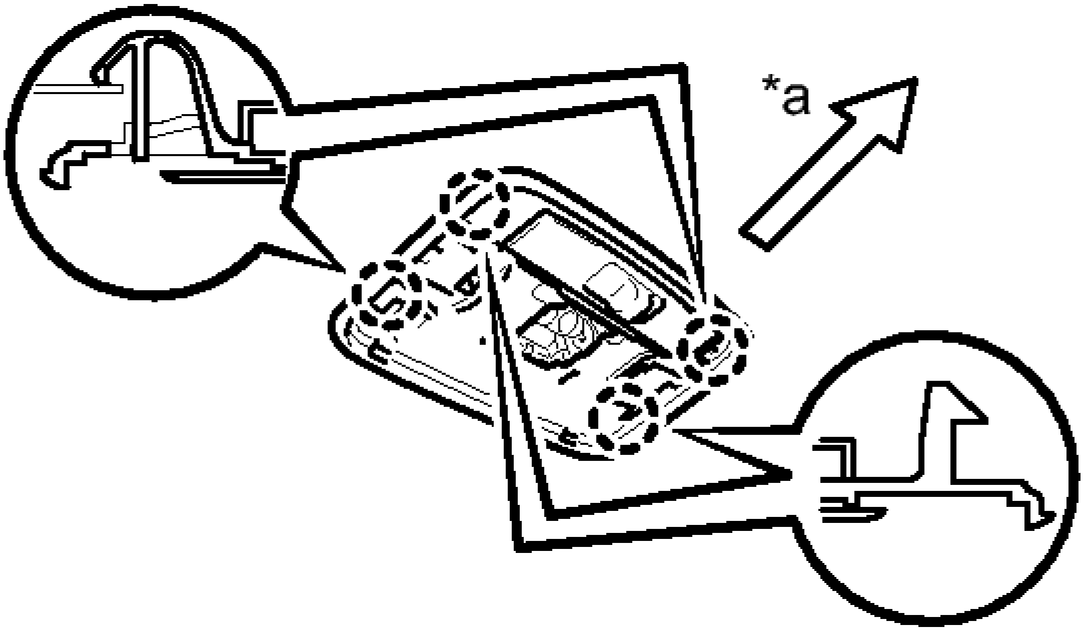

Fig. 21: Identifying Claws
Courtesy of TOYOTA MOTOR SALES, U.S.A., INC.

TEXT IN ILLUSTRATION

*a	Front

c. Engage the 4 claws to install the No. 1 room light lens.

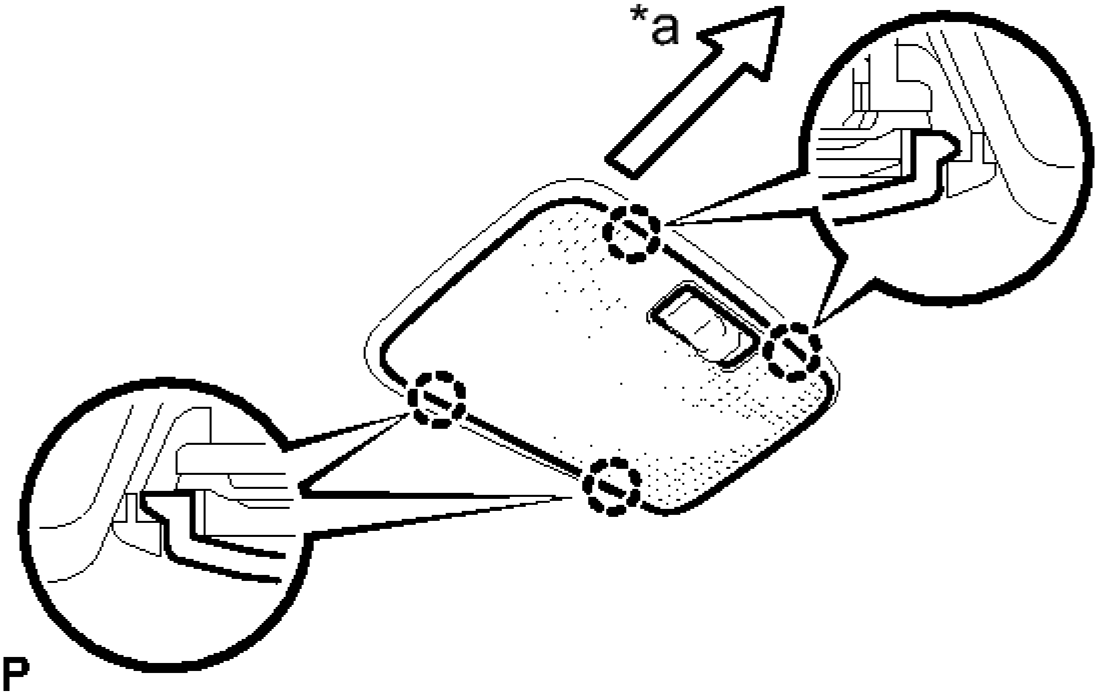

Fig. 22: Identifying Claws
Courtesy of TOYOTA MOTOR SALES, U.S.A., INC.

TEXT IN ILLUSTRATION

*a	Front

2. **INSTALL SPOT LIGHT ASSEMBLY (w/ Sliding Roof)**
   a. Engage the 8 claws to install the map light sub-assembly to the spot light housing as shown in the illustration.

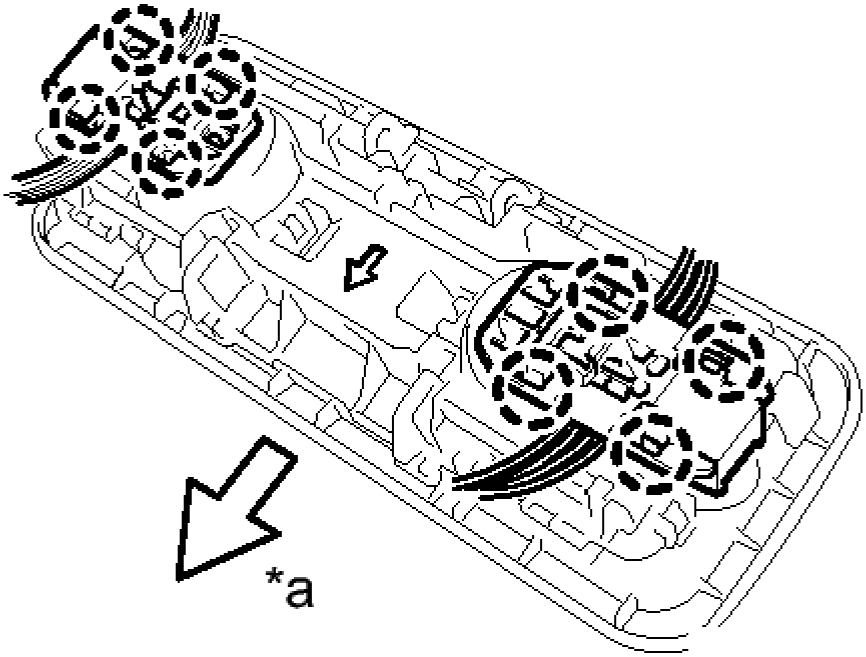

P

Fig. 23: Identifying Map Light Sub-Assembly Claws
Courtesy of TOYOTA MOTOR SALES, U.S.A., INC.

TEXT IN ILLUSTRATION

*a	Front

b. Engage the 6 claws to install the spot light housing.

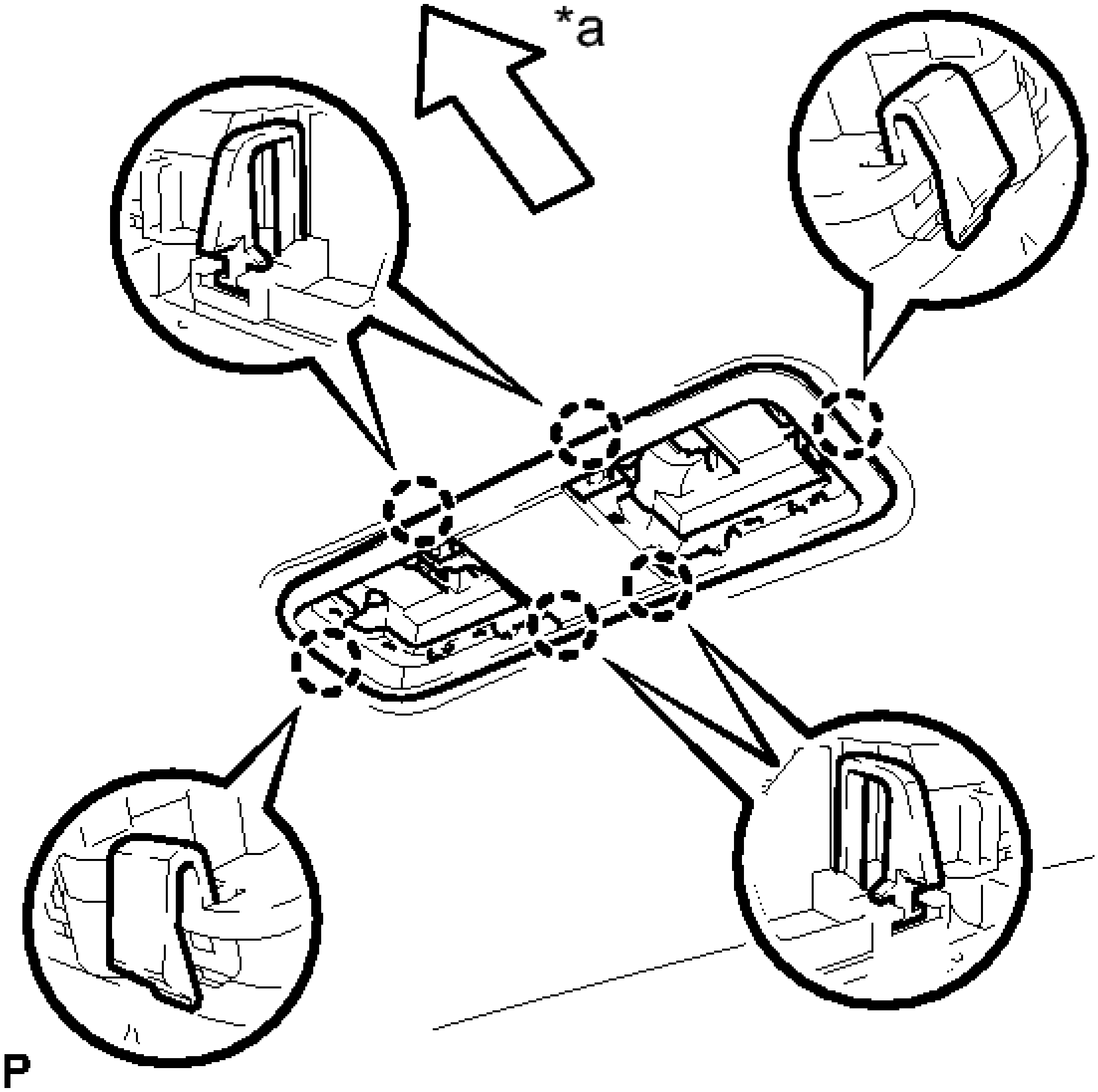

Fig. 24: Identifying Spot Light Housing Claws
Courtesy of TOYOTA MOTOR SALES, U.S.A., INC.

TEXT IN ILLUSTRATION

*a	Front

c. Engage the 8 claws to install the 2 spot light lenses.

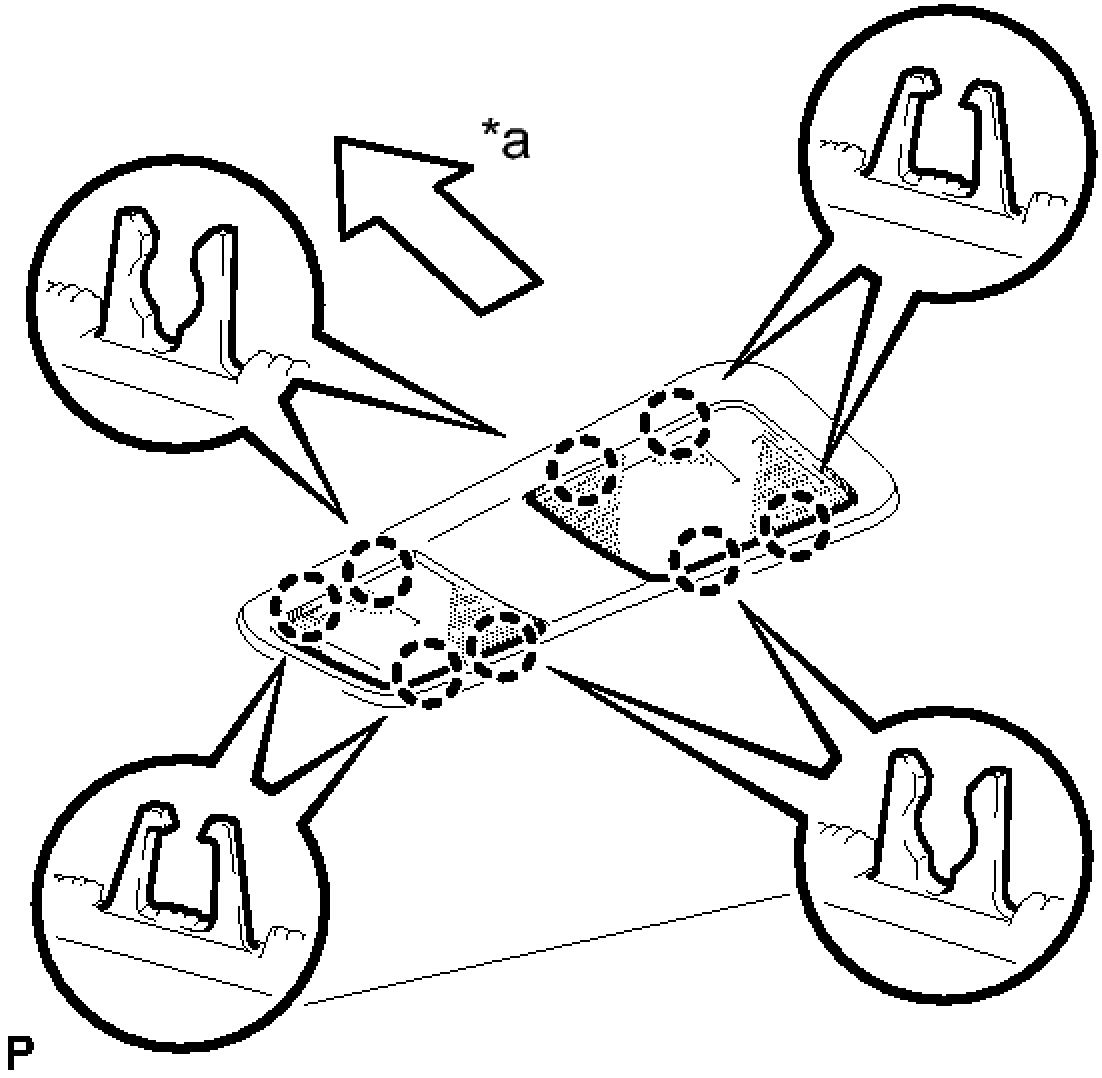

Fig. 25: Identifying Spot Light Lenses Claws
Courtesy of TOYOTA MOTOR SALES, U.S.A., INC.

TEXT IN ILLUSTRATION

*a	Front

LUGGAGE COMPARTMENT ROOM LIGHT

COMPONENTS

ILLUSTRATION

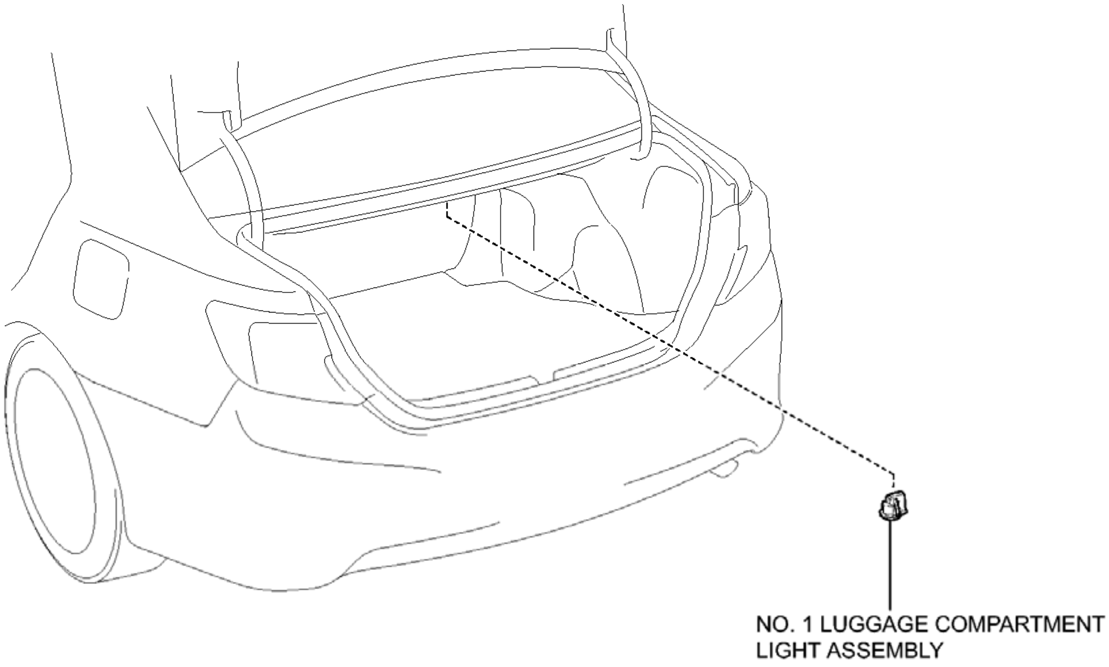
NO. 1 LUGGAGE COMPARTMENT LIGHT ASSEMBLY
P

Fig. 26: Identifying Luggage Compartment Room Light Replacement Components
Courtesy of TOYOTA MOTOR SALES, U.S.A., INC.

REMOVAL

REMOVAL

1. **REMOVE NO. 1 LUGGAGE COMPARTMENT LIGHT ASSEMBLY**
   a. Disengage the 2 claws.

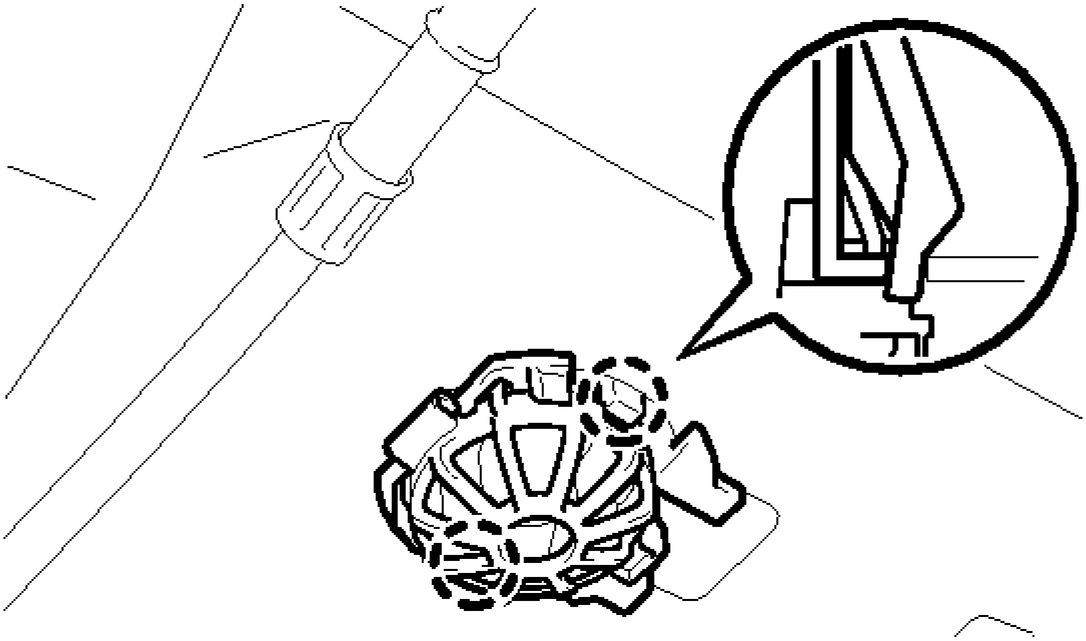

Fig. 27: Identifying No. 1 Luggage Compartment Light Assembly Claws
Courtesy of TOYOTA MOTOR SALES, U.S.A., INC.

b. Disconnect the connector and remove the No. 1 luggage compartment light assembly.

INSPECTION

INSPECTION

1. **INSPECT NO. 1 LUGGAGE COMPARTMENT LIGHT ASSEMBLY**
    a. Connect a positive (+) lead from the battery to terminal 2 and a negative (-) lead to terminal 1.

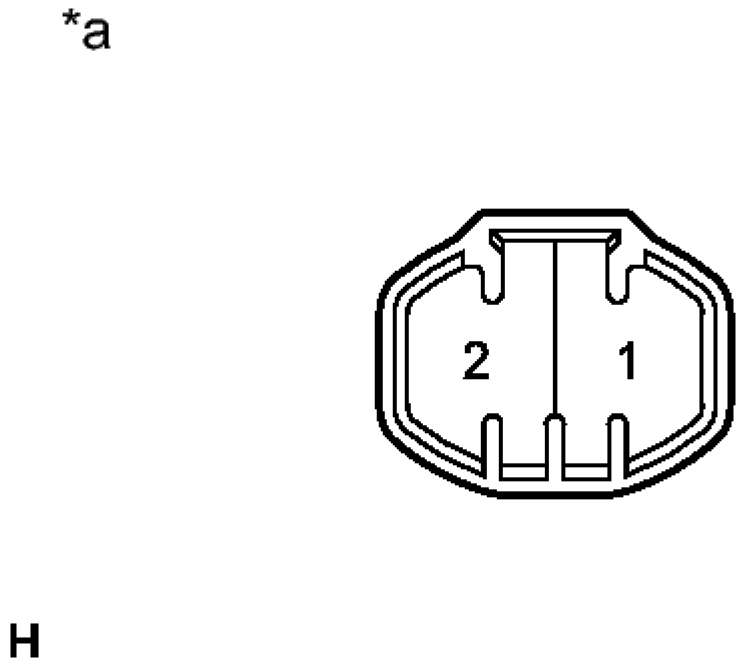

Fig. 28: No. 1 Luggage Compartment Light Assembly Connector End View
Courtesy of TOYOTA MOTOR SALES, U.S.A., INC.

b. Check that the No. 1 luggage compartment light comes on.

OK

No. 1 luggage compartment light comes on.

TEXT IN ILLUSTRATION

*a	Component without harness connected (No. 1 Luggage Compartment Light Assembly)

If the result is not as specified, replace the bulb or No. 1 luggage compartment light assembly.

INSTALLATION

INSTALLATION

1. **INSTALL NO. 1 LUGGAGE COMPARTMENT LIGHT ASSEMBLY**

a. Connect the connector.
b. Engage the 2 claws to install the No. 1 luggage compartment light assembly.

DOOR COURTESY LIGHT

COMPONENTS

ILLUSTRATION

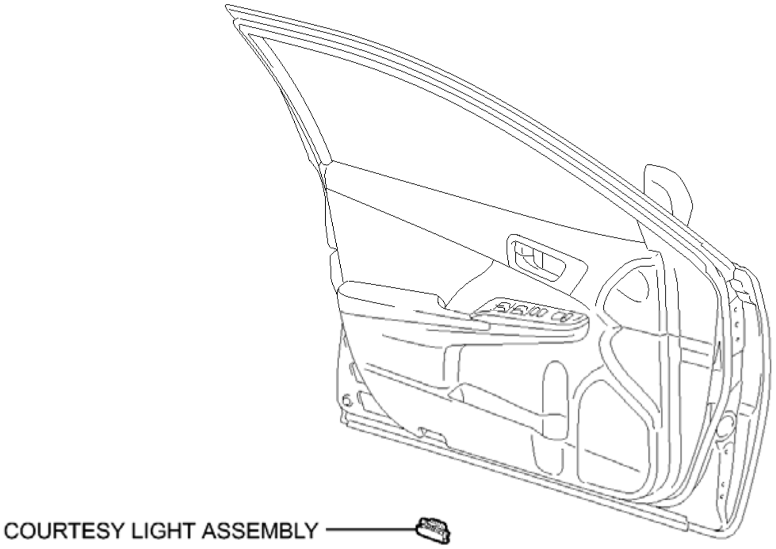

P

Fig. 29: Identifying Door Courtesy Light Replacement Components
Courtesy of TOYOTA MOTOR SALES, U.S.A., INC.

REMOVAL

REMOVAL

1. **REMOVE COURTESY LIGHT ASSEMBLY**
    a. Using a screwdriver with its tip wrapped with protective tape, disengage the claw.

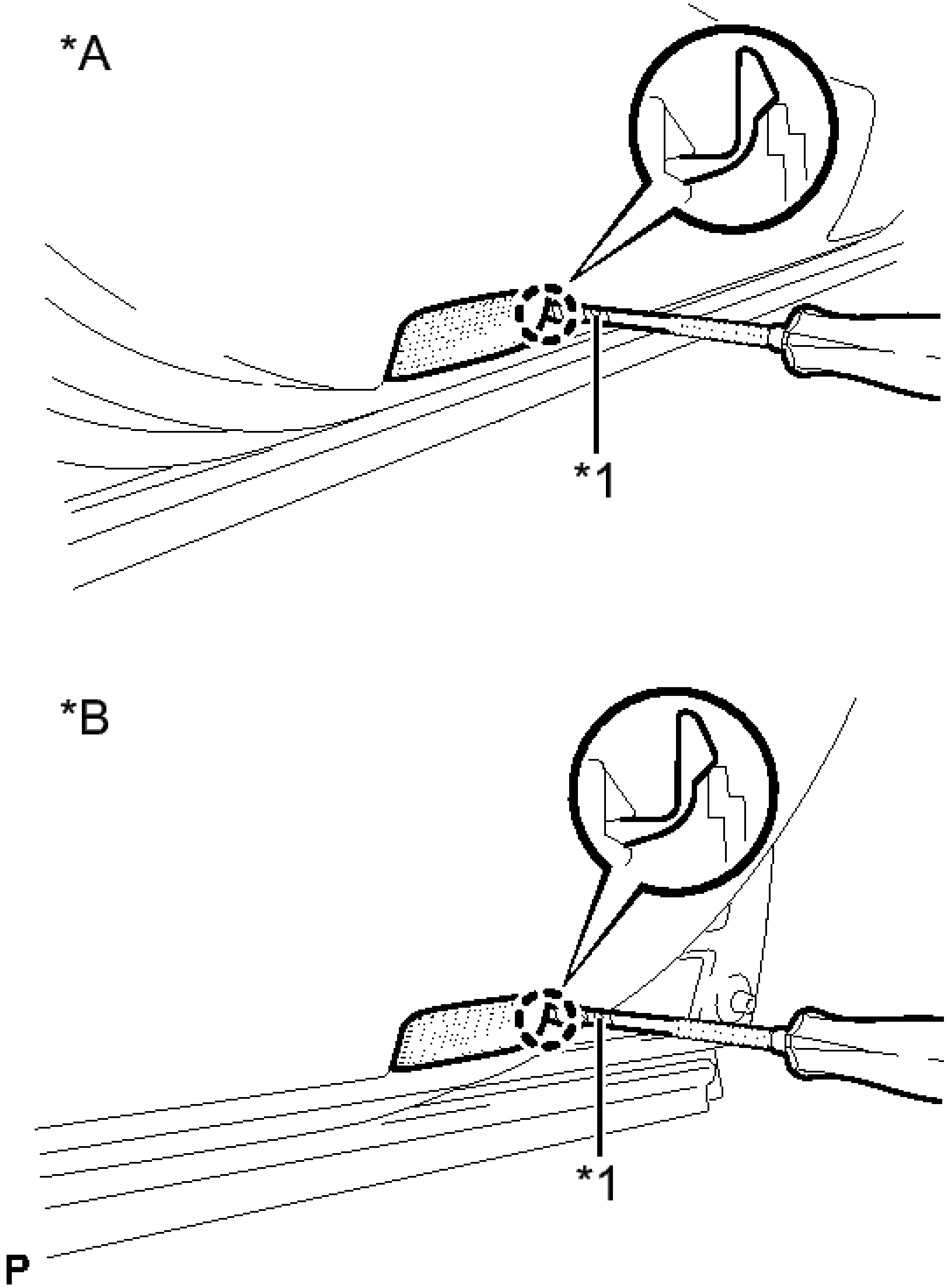

Fig. 30: Identifying Courtesy Light Assembly Claw
Courtesy of TOYOTA MOTOR SALES, U.S.A., INC.

TEXT IN ILLUSTRATION

	for LH

*A	Side
*B	for RH Side
*1	Protective Tape

b. Disconnect the connector and remove the courtesy light assembly.

INSPECTION

INSPECTION

1. **INSPECT COURTESY LIGHT ASSEMBLY LH**
   a. Connect a positive (+) lead from the battery to terminal 1 and a negative (-) lead to terminal 2.

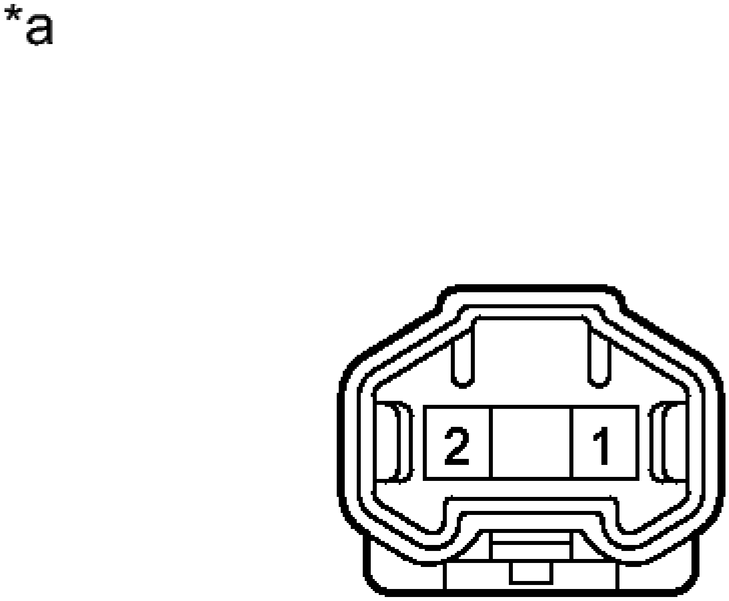

Fig. 31: Courtesy Light Assembly RH Connector Terminal Identification
Courtesy of TOYOTA MOTOR SALES, U.S.A., INC.

b. Check that the courtesy light comes on.

OK

Courtesy light comes on.

TEXT IN ILLUSTRATION

	Component

*a	without harness connected (Courtesy Light Assembly LH)

If the result is not as specified, replace the bulb or courtesy light assembly LH.

2. **INSPECT COURTESY LIGHT ASSEMBLY RH**
   a. Connect a positive (+) lead from the battery to terminal 1 and a negative (-) lead to terminal 2.

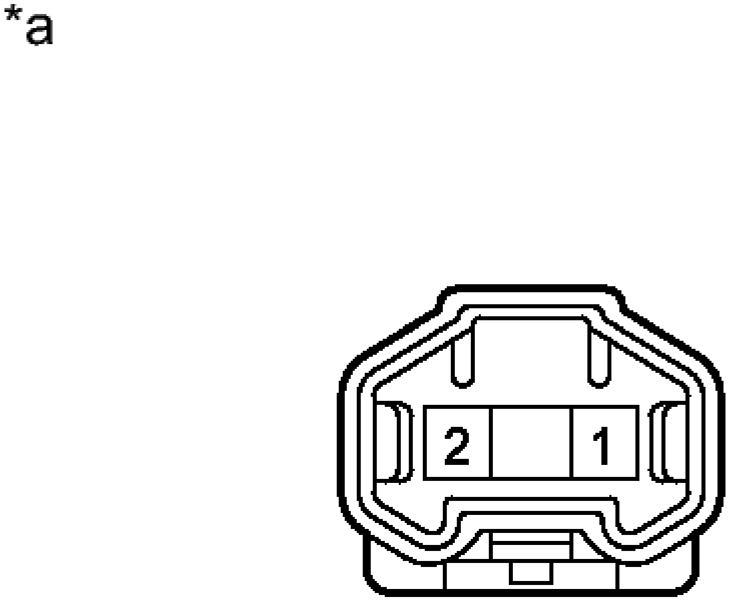

Fig. 32: Courtesy Light Assembly Connector Terminal Identification RH
Courtesy of TOYOTA MOTOR SALES, U.S.A., INC.

   b. Check that the courtesy light comes on.

OK

Courtesy light comes on.

TEXT IN ILLUSTRATION

	Component without harness connected

*a	(Courtesy Light Assembly RH)

If the result is not as specified, replace the bulb or courtesy light assembly RH.

INSTALLATION

INSTALLATION

1. **INSTALL COURTESY LIGHT ASSEMBLY**
    a. Connect the connector.
    b. Engage the claw to install the courtesy light assembly.

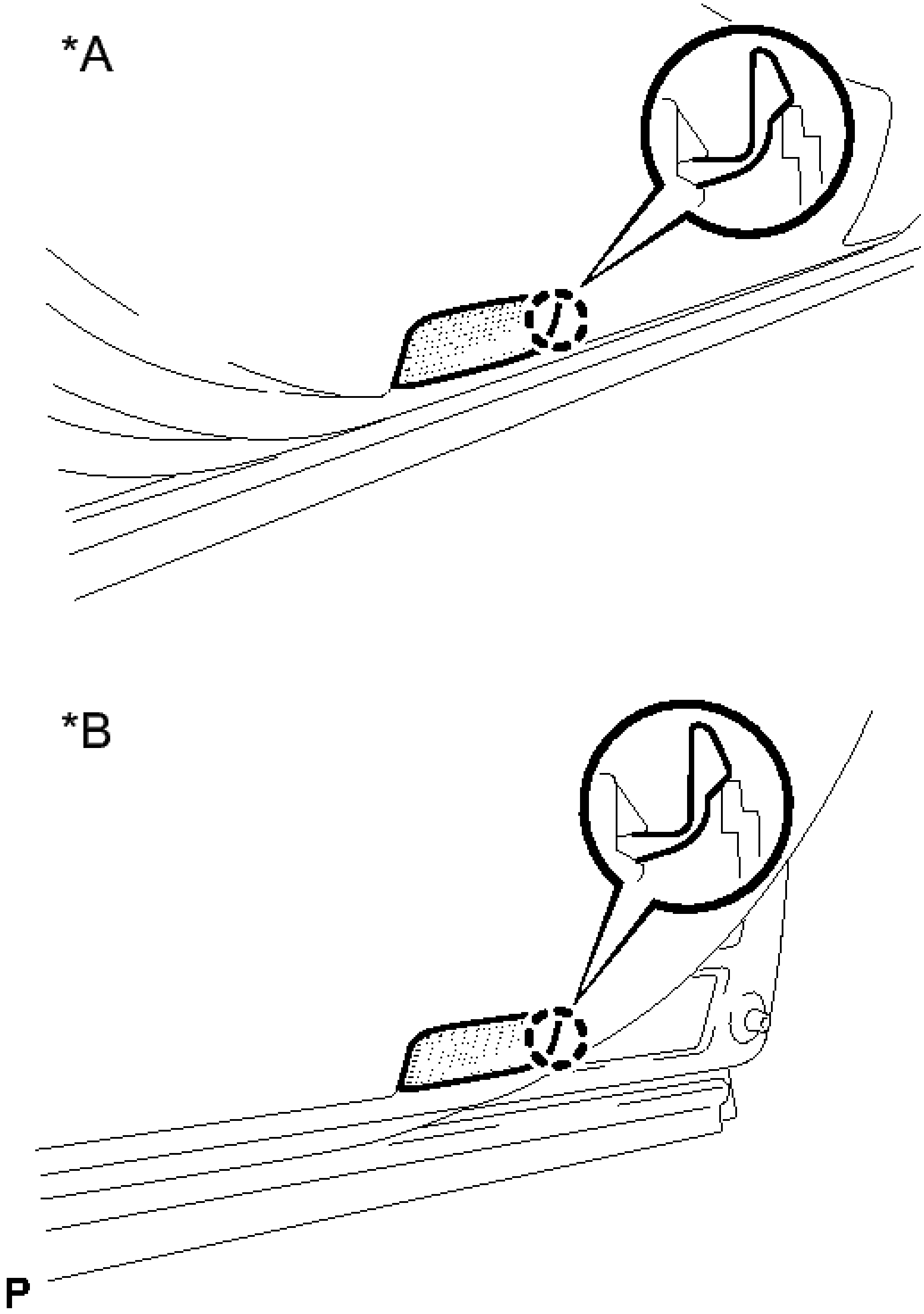

Fig. 33: Identifying Courtesy Light Assembly Claw
Courtesy of TOYOTA MOTOR SALES, U.S.A., INC.

TEXT IN ILLUSTRATION

	for

*A	LH Side
*B	for RH Side

IGNITION KEY CYLINDER LIGHT

COMPONENTS

ILLUSTRATION

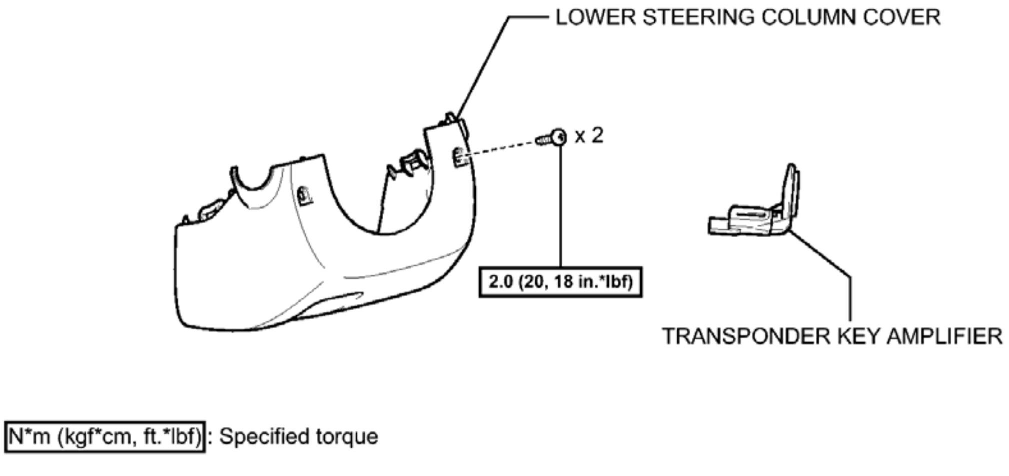
LOWER STEERING COLUMN COVER
x 2
2.0 (20, 18 in.*lbf)
TRANSPONDER KEY AMPLIFIER
N*m (kgf*cm, ft.*lbf): Specified torque
P

Fig. 34: Identifying Transponder Key Amplifier Replacement Components With Torque Specifications
Courtesy of TOYOTA MOTOR SALES, U.S.A., INC.

REMOVAL

REMOVAL

1. **REMOVE LOWER STEERING COLUMN COVER** . Refer to **REMOVAL - Step 1**
2. **REMOVE TRANSPONDER KEY AMPLIFIER** . Refer to **REMOVAL - Step 2**

INSPECTION

INSPECTION

1. **INSPECT TRANSPONDER KEY AMPLIFIER**
    a. Connect a positive (+) lead from the battery to terminal 2 (ILL+) and a negative (-) lead to terminal 6 (ILL-).

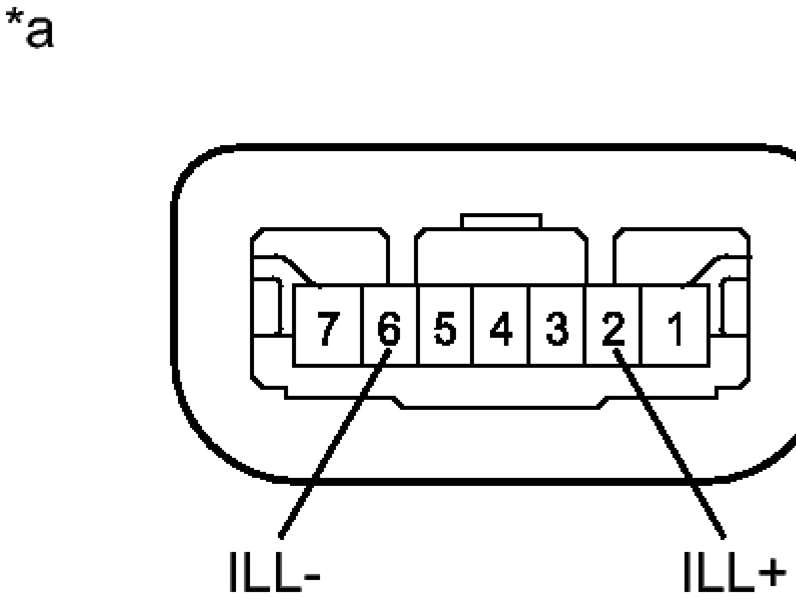

Fig. 35: Transponder Key Amplifier Connector Terminal Identification
Courtesy of TOYOTA MOTOR SALES, U.S.A., INC.

b. Check that the ignition key cylinder light comes on.

OK

The light comes on.

TEXT IN ILLUSTRATION

*a	Component without harness connected (Transponder Key Amplifier)

If the result is not as specified, replace the transponder key amplifier.

INSTALLATION

INSTALLATION

1. **INSTALL TRANSPONDER KEY AMPLIFIER** . Refer to **INSTALLATION - Step 1**
2. **INSTALL LOWER STEERING COLUMN COVER** . Refer to **INSTALLATION - Step 3**

VANITY LIGHT SWITCH

COMPONENTS

ILLUSTRATION

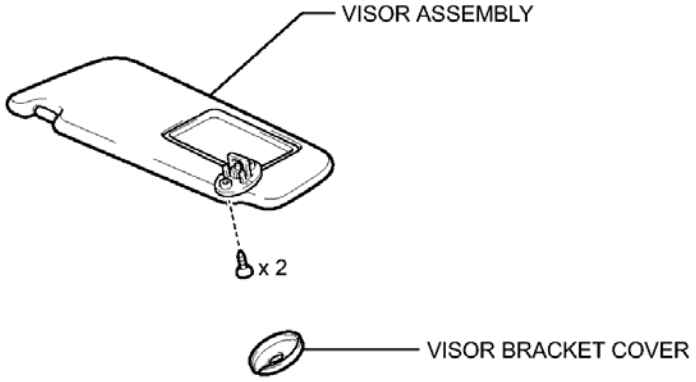

P

Fig. 36: Identifying Vanity Light Switch Replacement Components
Courtesy of TOYOTA MOTOR SALES, U.S.A., INC.

REMOVAL

REMOVAL

HINT:

- Use the same procedure for the RH and LH sides.
- The procedure described below is for the LH side.

1. **REMOVE VISOR BRACKET COVER** . Refer to **REMOVAL - Step 44**
2. **REMOVE VISOR ASSEMBLY** . Refer to **REMOVAL - Step 45**

INSPECTION

INSPECTION

1. **INSPECT VISOR ASSEMBLY LH**
    a. Inspect the vanity light switch.
        1. Measure the resistance according to the value(s) in the table below.

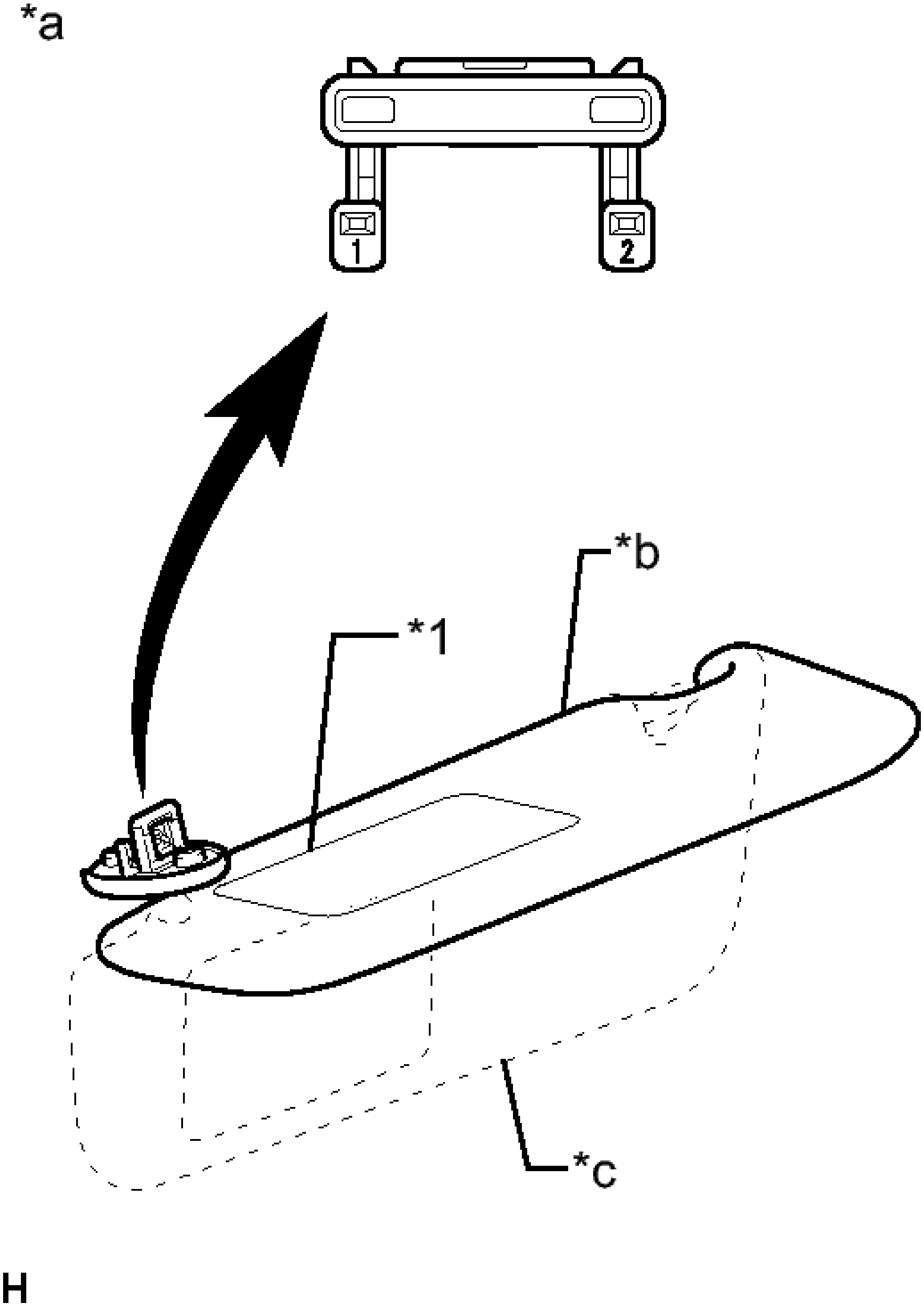

Fig. 37: Inspecting Visor Assembly LH
Courtesy of TOYOTA MOTOR SALES, U.S.A., INC.

Standard Resistance

Tester Connection	Switch Condition	Specified Condition
1 - 2	Visor up	10 kohms or higher
1 - 2	Mirror cover fully closed with visor down	10 kohms or higher
1 - 2	Mirror cover fully open with visor down	Below 1 ohms

TEXT IN ILLUSTRATION

*a	Component without harness connected (Visor Assembly LH)
*b	Visor up
*c	Visor down
*1	Mirror Cover

If the result is not as specified, replace the visor assembly LH.

2. **INSPECT VISOR ASSEMBLY RH**
    a. Inspect the vanity light switch.
        1. Measure the resistance according to the value(s) in the table below.

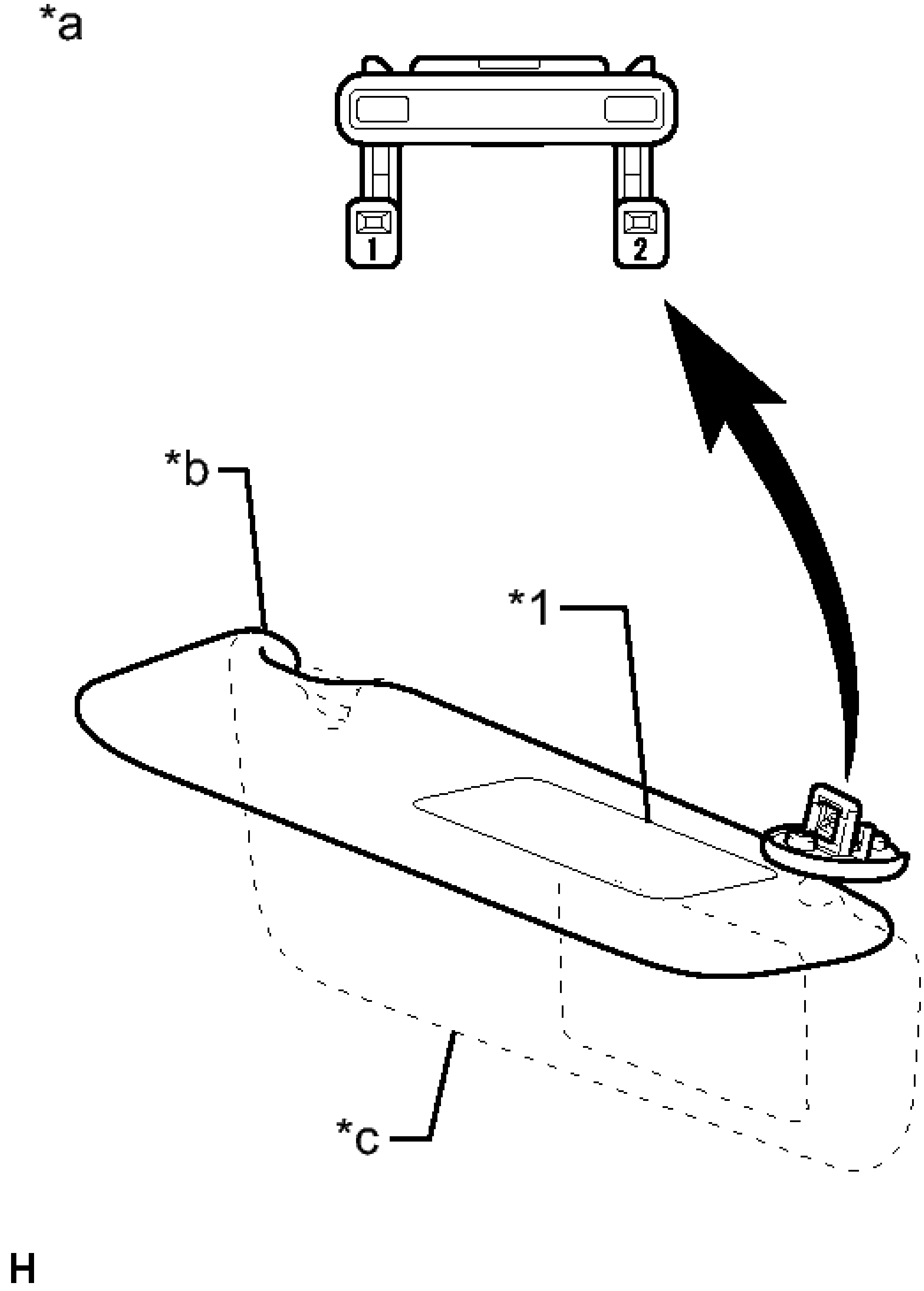

Fig. 38: Inspecting Visor Assembly RH
Courtesy of TOYOTA MOTOR SALES, U.S.A., INC.

Standard Resistance

Tester Connection	Switch Condition	Specified Condition
1 - 2	Visor up	10 kohms or higher
1 - 2	Mirror cover fully closed with visor down	10 kohms or higher
1 - 2	Mirror cover fully open with visor down	Below 1 ohms

TEXT IN ILLUSTRATION

*a	Component without harness connected (Visor Assembly RH)
*b	Visor up
*c	Visor down
*1	Mirror Cover

If the result is not as specified, replace the visor assembly RH.

INSTALLATION

INSTALLATION

HINT:

- Use the same procedure for the RH and LH sides.
- The procedure described below is for the LH side.

1. **INSTALL VISOR ASSEMBLY** . Refer to **INSTALLATION - Step 4**
2. **INSTALL VISOR BRACKET COVER** . Refer to **INSTALLATION - Step 5**

FRONT DOOR COURTESY SWITCH

COMPONENTS

ILLUSTRATION

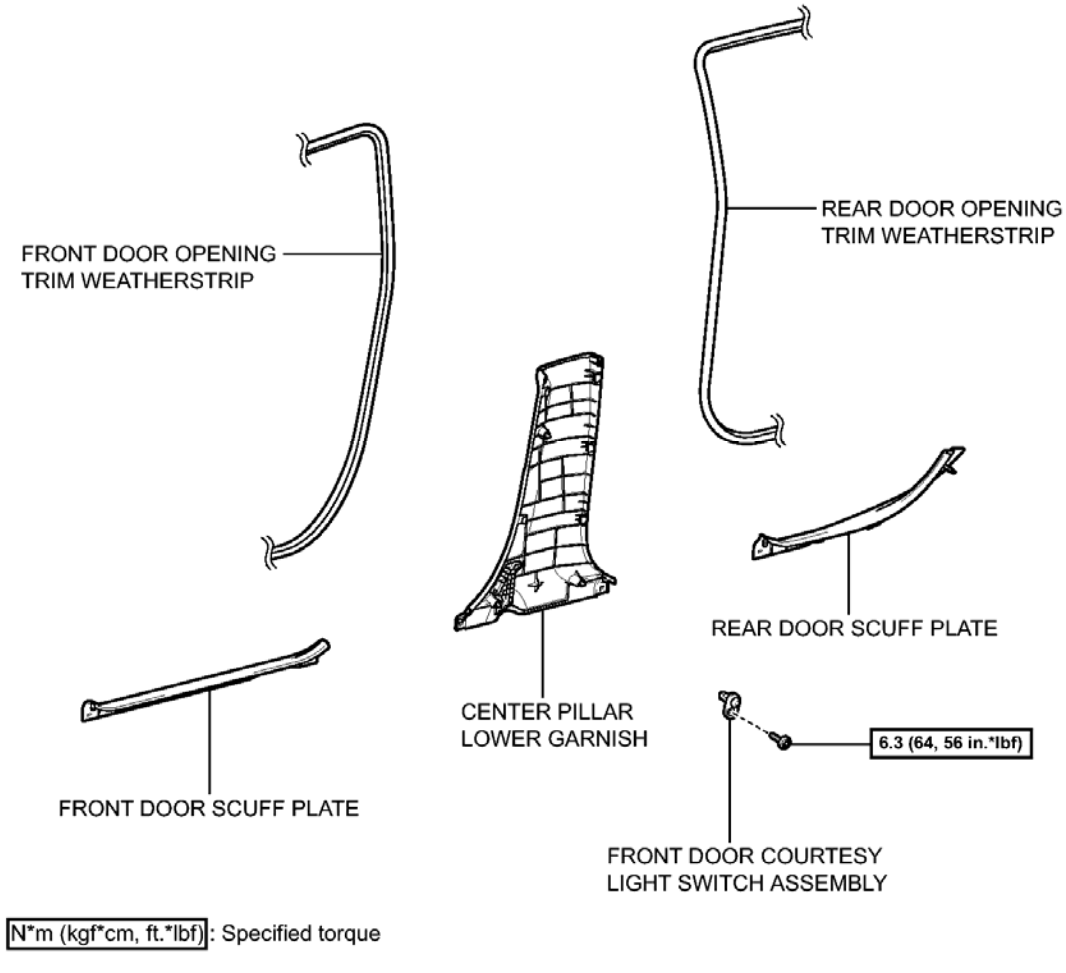
REAR DOOR OPENING
TRIM WEATHERSTRIP
FRONT DOOR OPENING
TRIM WEATHERSTRIP
REAR DOOR SCUFF PLATE
CENTER PILLAR
LOWER GARNISH
6.3 (64, 56 in.*lbf)
FRONT DOOR SCUFF PLATE
FRONT DOOR COURTESY
LIGHT SWITCH ASSEMBLY
N*m (kgf*cm, ft.*lbf): Specified torque
P

Fig. 39: Identifying Front Door Courtesy Switch Replacement Components With Torque Specifications
Courtesy of TOYOTA MOTOR SALES, U.S.A., INC.

REMOVAL

REMOVAL

HINT:

- Use the same procedure for the RH and LH sides.
- The procedure described below is for the LH side.

1. **REMOVE FRONT DOOR SCUFF PLATE** . Refer to **REMOVAL - Step 3**

2. **DISCONNECT FRONT DOOR OPENING TRIM WEATHERSTRIP** . Refer to **REMOVAL - Step 4**
3. **REMOVE REAR DOOR SCUFF PLATE** . Refer to **REMOVAL - Step 18**
4. **DISCONNECT REAR DOOR OPENING TRIM WEATHERSTRIP** . Refer to **REMOVAL - Step 6**
5. **REMOVE CENTER PILLAR LOWER GARNISH** . Refer to **REMOVAL - Step 22**
6. **REMOVE FRONT DOOR COURTESY LIGHT SWITCH ASSEMBLY**
    a. Disconnect the connector.
    b. Using a T30 "TORX" socket wrench, remove the screw and front door courtesy light switch assembly.

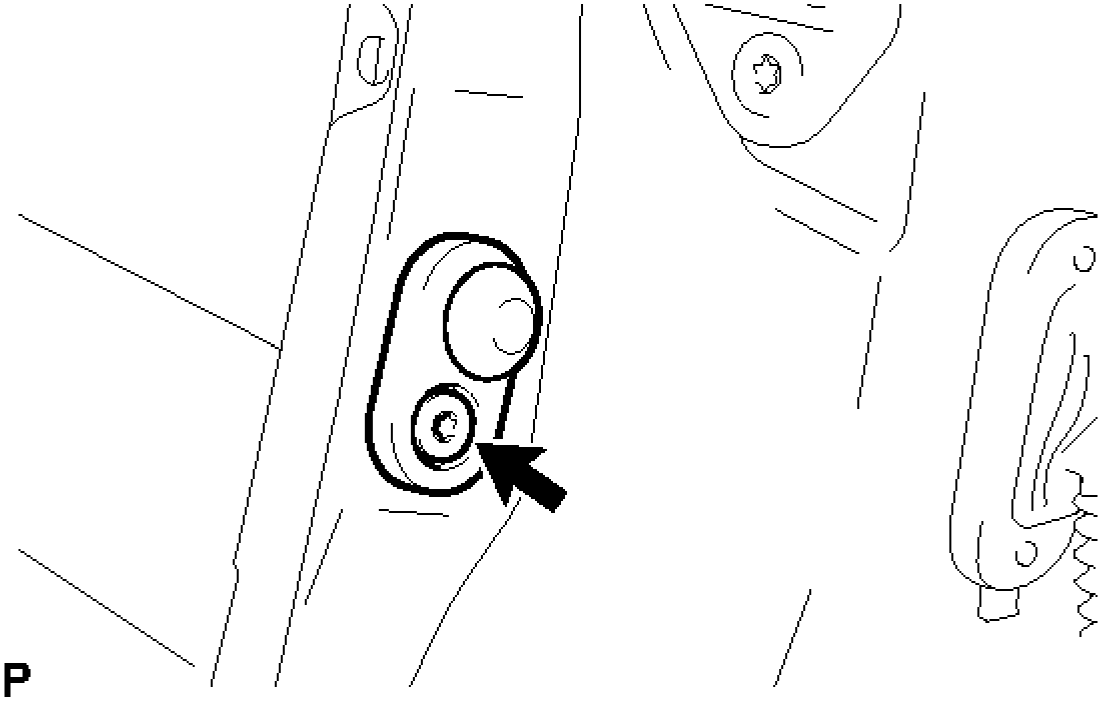

Fig. 40: Identifying Front Door Courtesy Light Switch Screw
Courtesy of TOYOTA MOTOR SALES, U.S.A., INC.

INSPECTION

INSPECTION

1. **INSPECT FRONT DOOR COURTESY LIGHT SWITCH ASSEMBLY**
    a. Measure the resistance according to the value(s) in the table below.

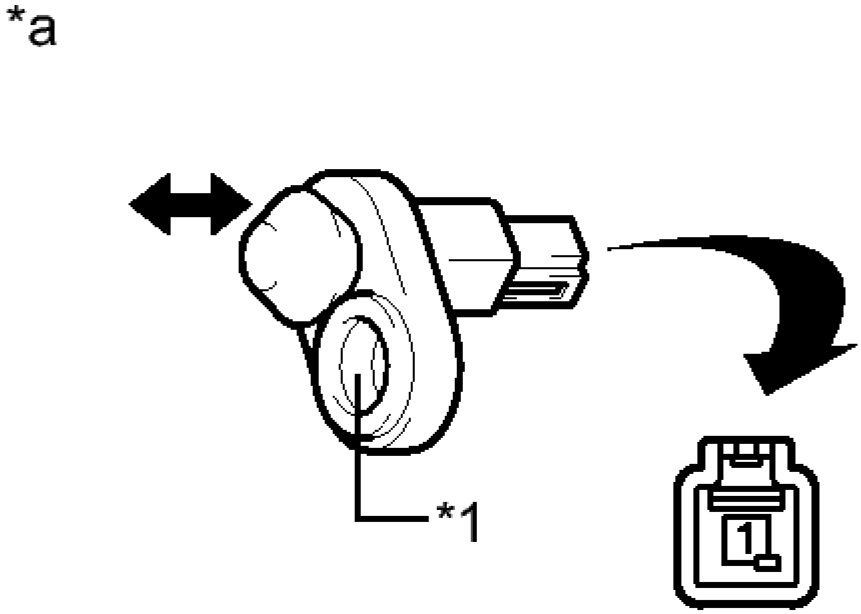

Fig. 41: Rear Door Courtesy Light Switch Connector Terminal Identification
Courtesy of TOYOTA MOTOR SALES, U.S.A., INC.

Standard Resistance

Tester Connection	Switch Condition	Specified Condition
1 - Switch body	Not pushed (ON)	Below 1 ohms
	Pushed (OFF)	10 kohms or higher

TEXT IN ILLUSTRATION

*a	Component without harness connected (Front Door Courtesy Light Switch Assembly)
*1	Switch Body

If the result is not as specified, replace the front door courtesy light switch assembly.

INSTALLATION

INSTALLATION

HINT:

- Use the same procedure for the RH and LH sides.
- The procedure described below is for the LH side.

1. **INSTALL FRONT DOOR COURTESY LIGHT SWITCH ASSEMBLY**
    a. Using a T30 "TORX" socket wrench, install the front door courtesy light switch assembly with the screw.

       Torque: 6.3 N*m (64 kgf*cm, 56 in.*lbf)

       HINT:

       There are 2 diameters for the "TORX" screws: 6 mm (0.236 in.) and 7 mm (0.276 in.). The diameter of a supplied "TORX" screw is 7 mm (0.276 in.).

    b. Connect the connector.
2. **INSTALL CENTER PILLAR LOWER GARNISH** . Refer to **INSTALLATION - Step 22**
3. **INSTALL REAR DOOR OPENING TRIM WEATHERSTRIP**

   for LH Side: Refer to **INSTALLATION - Step 25**

   for RH Side: Refer to **INSTALLATION - Step 32**

4. **INSTALL REAR DOOR SCUFF PLATE** . Refer to **INSTALLATION - Step 26**
5. **INSTALL FRONT DOOR OPENING TRIM WEATHERSTRIP**

   for LH Side: Refer to **INSTALLATION - Step 42**

   for RH Side: Refer to **INSTALLATION - Step 46**

6. **INSTALL FRONT DOOR SCUFF PLATE** . Refer to **INSTALLATION - Step 44**

REAR DOOR COURTESY SWITCH

COMPONENTS

ILLUSTRATION

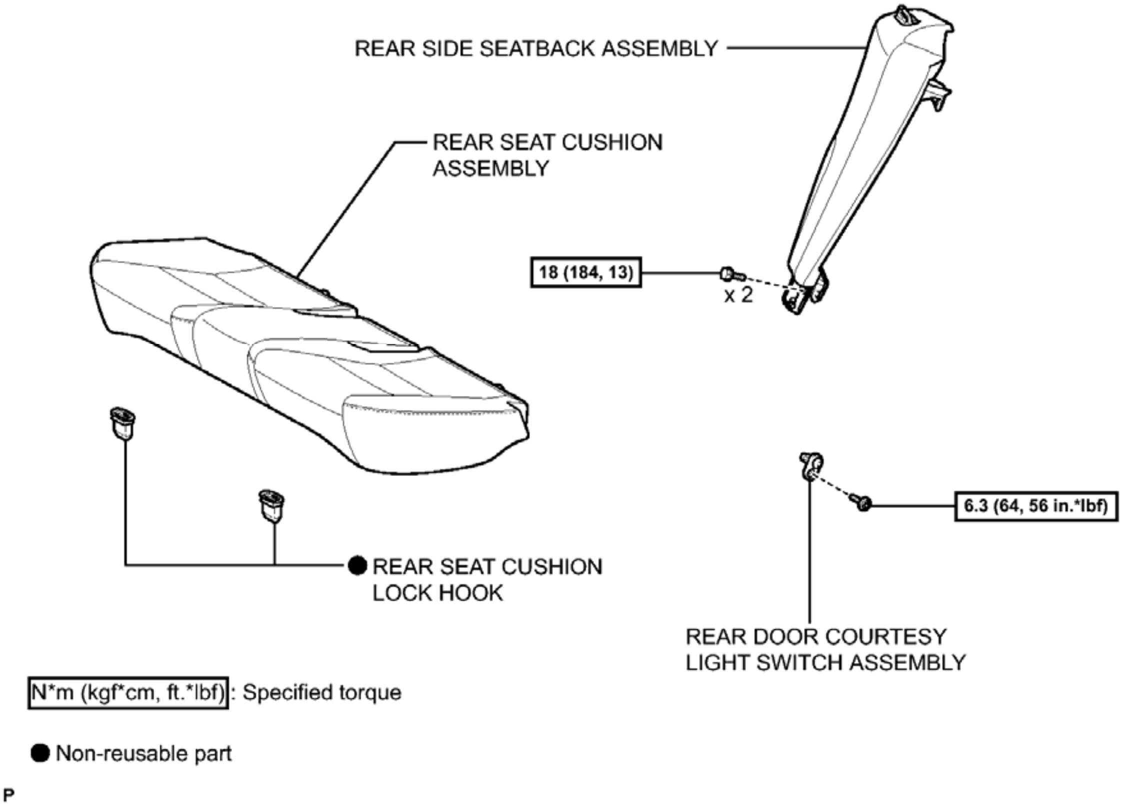
REAR SIDE SEATBACK ASSEMBLY
REAR SEAT CUSHION ASSEMBLY
18 (184, 13)
x 2
REAR SEAT CUSHION LOCK HOOK
6.3 (64, 56 in.*lbf)
REAR DOOR COURTESY LIGHT SWITCH ASSEMBLY
N*m (kgf*cm, ft.*lbf): Specified torque
● Non-reusable part
P

Fig. 42: Identifying Rear Door Courtesy Switch Replacement Components With Torque Specifications
Courtesy of TOYOTA MOTOR SALES, U.S.A., INC.

REMOVAL

REMOVAL

HINT:

- Use the same procedure for the RH and LH sides.
- The procedure described below is for the LH side.

1. **PRECAUTION**

WARNING: **Be sure to read Precaution thoroughly before servicing. Refer to PRECAUTION .**

NOTE: **After turning the ignition switch off, waiting time may be required before disconnecting the cable from the negative (-) battery terminal. Therefore, make sure to read the disconnecting the cable from the negative (-) battery**

terminal notices before proceeding with work. Refer to PRECAUTION .

2. **DISCONNECT CABLE FROM NEGATIVE BATTERY TERMINAL**

WARNING: **Wait at least 90 seconds after disconnecting the cable from the negative (-) battery terminal to disable the SRS system.**

NOTE: When disconnecting the cable, some systems need to be initialized after the cable is reconnected. Refer to INITIALIZATION .

3. **REMOVE REAR SEAT CUSHION ASSEMBLY** . Refer to **REMOVAL - Step 3**
4. **REMOVE REAR SEAT CUSHION LOCK HOOK** . Refer to **REMOVAL - Step 4**
5. **REMOVE REAR SIDE SEATBACK ASSEMBLY** . Refer to **REMOVAL - Step 8**
6. **REMOVE REAR DOOR COURTESY LIGHT SWITCH ASSEMBLY**
   a. Disconnect the connector.
   b. Using a T30 "TORX" socket wrench, remove the screw and rear door courtesy light switch assembly.

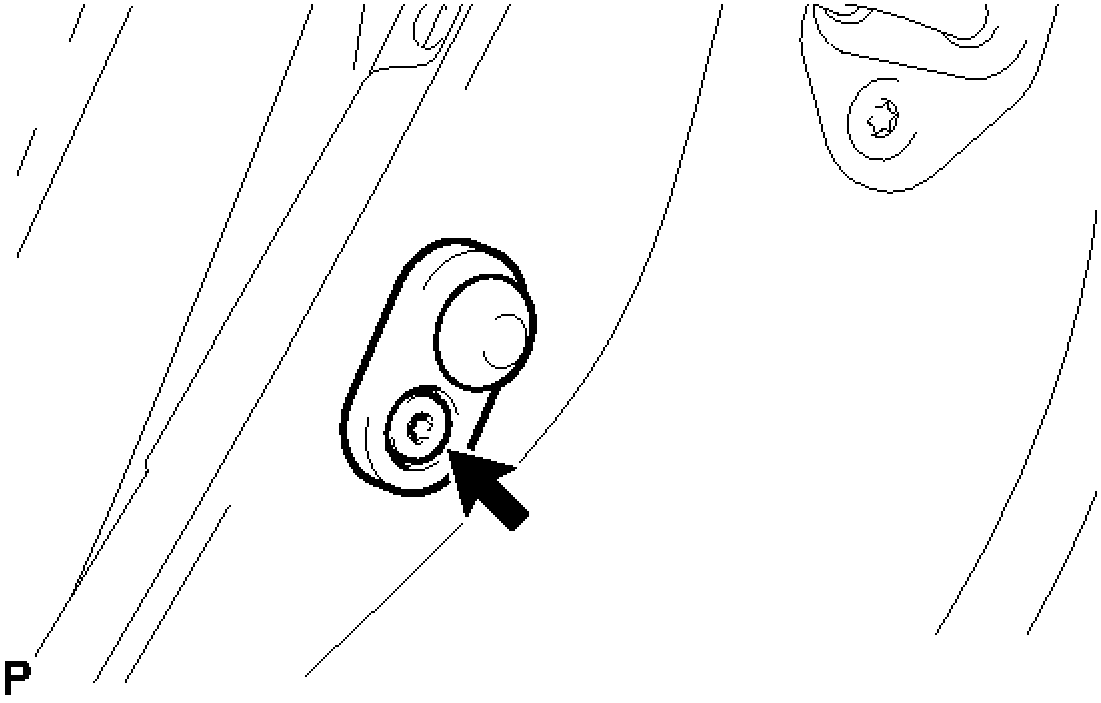

Fig. 43: Identifying Rear Door Courtesy Light Switch Screw
Courtesy of TOYOTA MOTOR SALES, U.S.A., INC.

INSPECTION

INSPECTION

1. **INSPECT REAR DOOR COURTESY LIGHT SWITCH ASSEMBLY**
    a. Measure the resistance according to the value(s) in the table below.

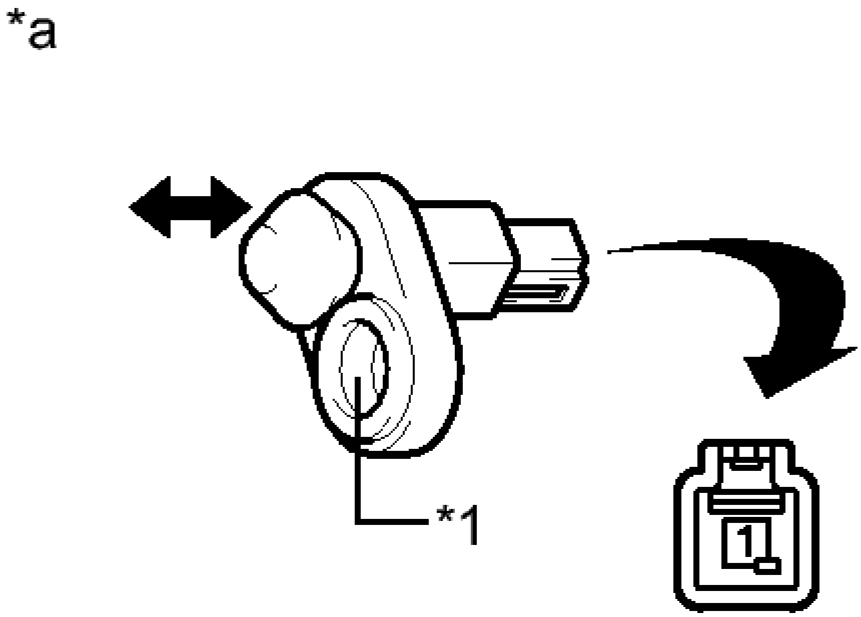

Fig. 44: Rear Door Courtesy Light Switch Connector Terminal Identification
Courtesy of TOYOTA MOTOR SALES, U.S.A., INC.

Standard Resistance

Tester Connection	Switch Condition	Specified Condition
1 - Switch body	Not pushed (ON)	Below 1 ohms
	Pushed (OFF)	10 kohms or higher

TEXT IN ILLUSTRATION

*a	Component without harness connected (Rear Door Courtesy Light Switch Assembly)

*1	Switch Body

If the result is not as specified, replace the rear door courtesy light switch assembly.

INSTALLATION

INSTALLATION

HINT:

- Use the same procedure for the RH and LH sides.
- The procedure described below is for the LH side.

1. **INSTALL REAR DOOR COURTESY LIGHT SWITCH ASSEMBLY**
    a. Using a T30 "TORX" socket wrench, install the rear door courtesy light switch assembly with the screw.

       Torque: 6.3 N*m (64 kgf*cm, 56 in.*lbf)

       HINT:

       There are 2 diameters for the "TORX" screws: 6 mm (0.236 in.) and 7 mm (0.276 in.). The diameter of a supplied "TORX" screw is 7 mm (0.276 in.).

    b. Connect the connector.
2. **INSTALL REAR SIDE SEATBACK ASSEMBLY** . Refer to **INSTALLATION - Step 2**
3. **INSTALL REAR SEAT CUSHION LOCK HOOK** . Refer to **INSTALLATION - Step 6**
4. **INSTALL REAR SEAT CUSHION ASSEMBLY** . Refer to **INSTALLATION - Step 7**
5. **CONNECT CABLE TO NEGATIVE BATTERY TERMINAL**

   NOTE: When disconnecting the cable, some systems need to be initialized after the cable is reconnected. Refer to INITIALIZATION .

6. **INSPECT SRS WARNING LIGHT**

   for Separate Type Yaw Rate Sensor: Refer to **DIAGNOSIS SYSTEM**

   for Built-in Type Yaw Rate Sensor: Refer to **DIAGNOSIS SYSTEM**

BACK DOOR COURTESY SWITCH

COMPONENTS

ILLUSTRATION

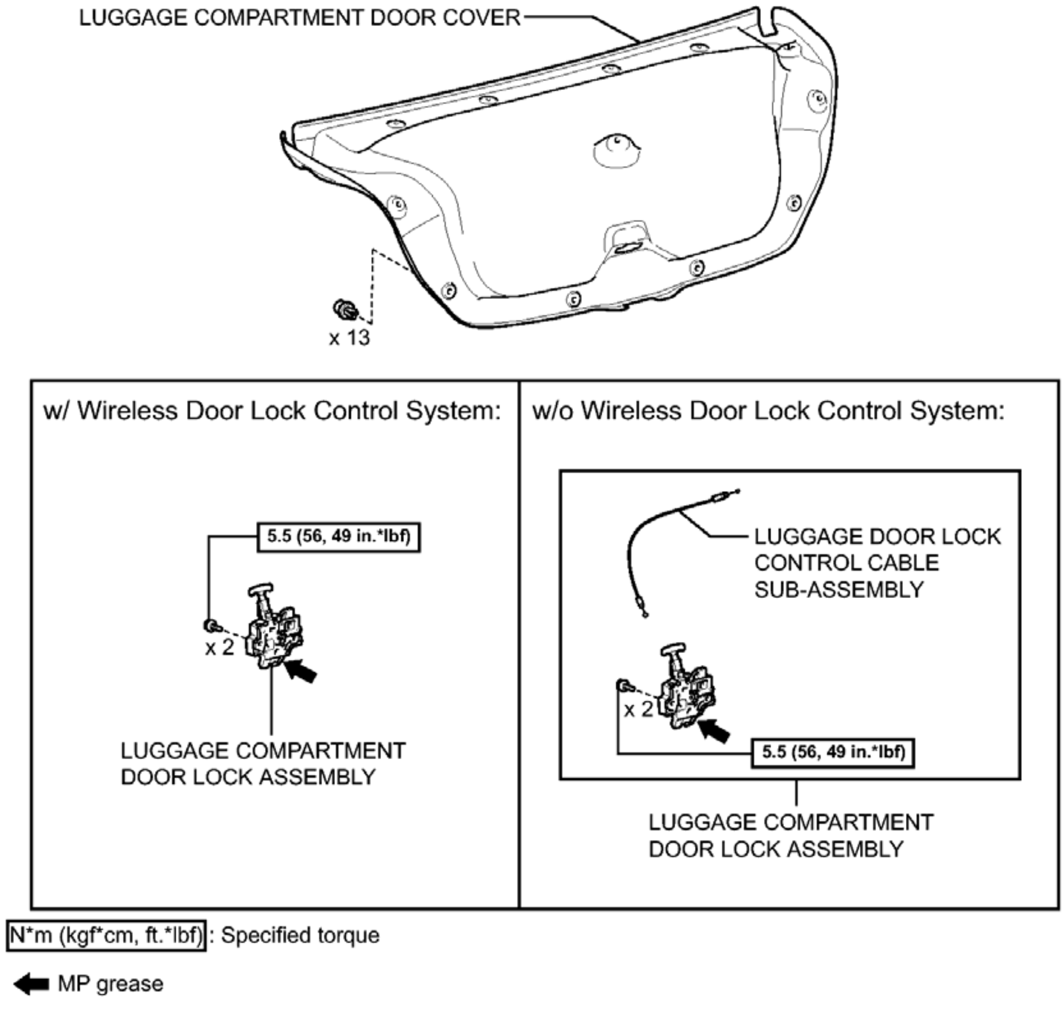
LUGGAGE COMPARTMENT DOOR COVER
x 13
w/ Wireless Door Lock Control System:
5.5 (56, 49 in.*lbf)
x 2
LUGGAGE COMPARTMENT DOOR LOCK ASSEMBLY
w/o Wireless Door Lock Control System:
LUGGAGE DOOR LOCK CONTROL CABLE SUB-ASSEMBLY
x 2
5.5 (56, 49 in.*lbf)
LUGGAGE COMPARTMENT DOOR LOCK ASSEMBLY
N*m (kgf*cm, ft.*lbf) : Specified torque
MP grease
P

Fig. 45: Identifying Luggage Compartment Door Lock Replacement Components With Torque Specifications
Courtesy of TOYOTA MOTOR SALES, U.S.A., INC.

REMOVAL

REMOVAL

1. **REMOVE LUGGAGE COMPARTMENT DOOR COVER** . Refer to **DISASSEMBLY - Step 1**
2. **REMOVE LUGGAGE COMPARTMENT DOOR LOCK ASSEMBLY (w/ Wireless Door Lock Control System)** . Refer to **REMOVAL - Step 2**
3. **REMOVE LUGGAGE COMPARTMENT DOOR LOCK ASSEMBLY (w/o Wireless Door Lock Control System)** . Refer to **REMOVAL - Step 3**
4. **REMOVE LUGGAGE DOOR LOCK CONTROL CABLE SUB-ASSEMBLY (w/o Wireless Door Lock Control System)** . Refer to **REMOVAL - Step 4**

INSPECTION

INSPECTION

1. **INSPECT LUGGAGE COMPARTMENT DOOR LOCK ASSEMBLY**
    a. Check the operation of the door lock motor.
        1. Move the door lock to the close (lock) position.

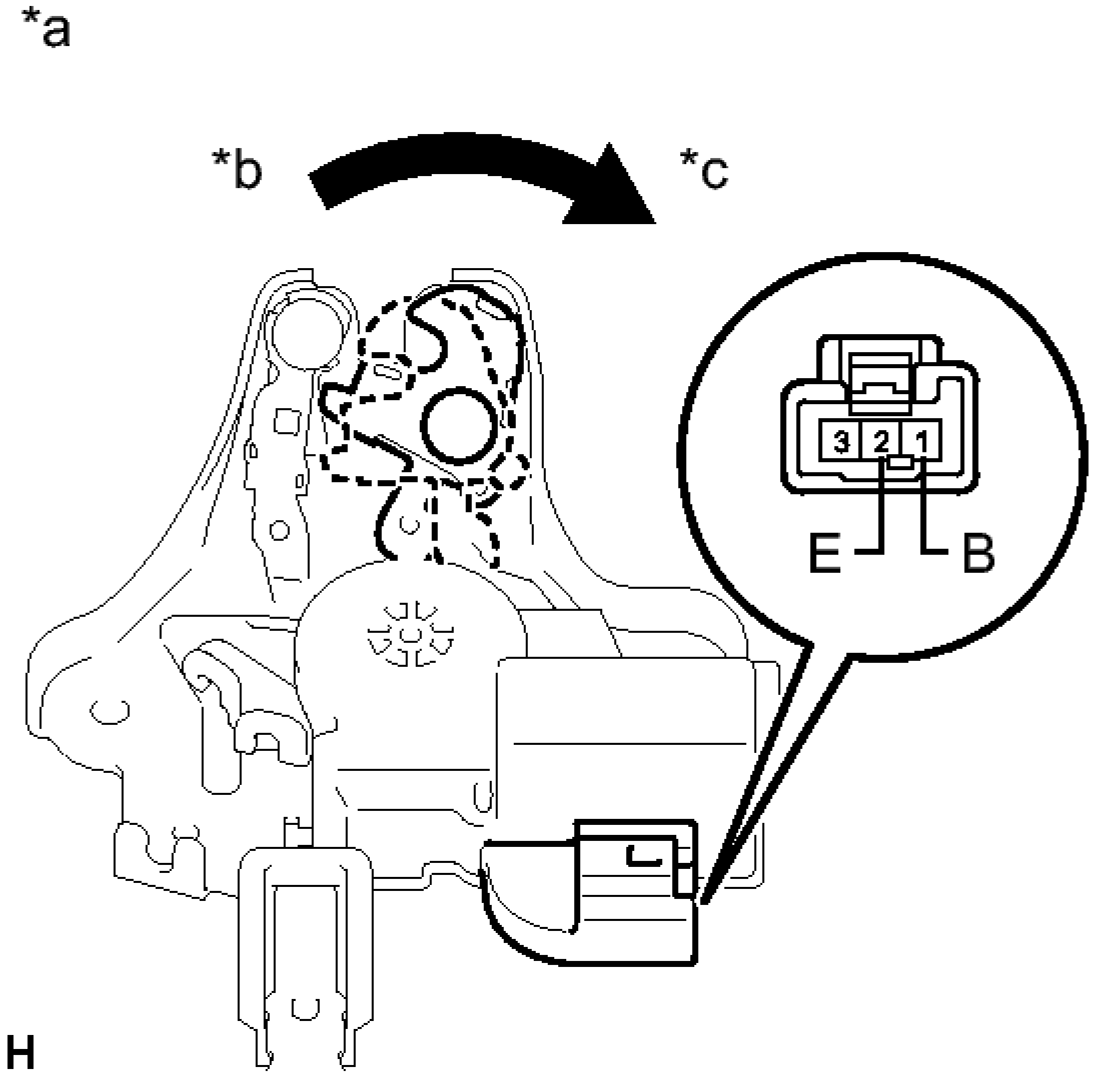

Fig. 46: Checking Operation Of Door Lock Motor
Courtesy of TOYOTA MOTOR SALES, U.S.A., INC.

2. Apply battery voltage to the door lock motor and check operation of the door lock motor.

OK

Measurement Condition	Specified Condition

Battery positive (+) --> 1 (B) Battery negative (-) --> 2 (E)	Luggage compartment door lock motor open (unlock) operation

TEXT IN ILLUSTRATION

*a	Component without harness connected: (Luggage Compartment Door Lock Assembly)
*b	Close (Lock)
*c	Open (Unlock)

If the result is not as specified, replace the luggage compartment door lock assembly.

b. Check the operation of the door courtesy switch.

   1. Measure the resistance according to the value(s) in the table below.

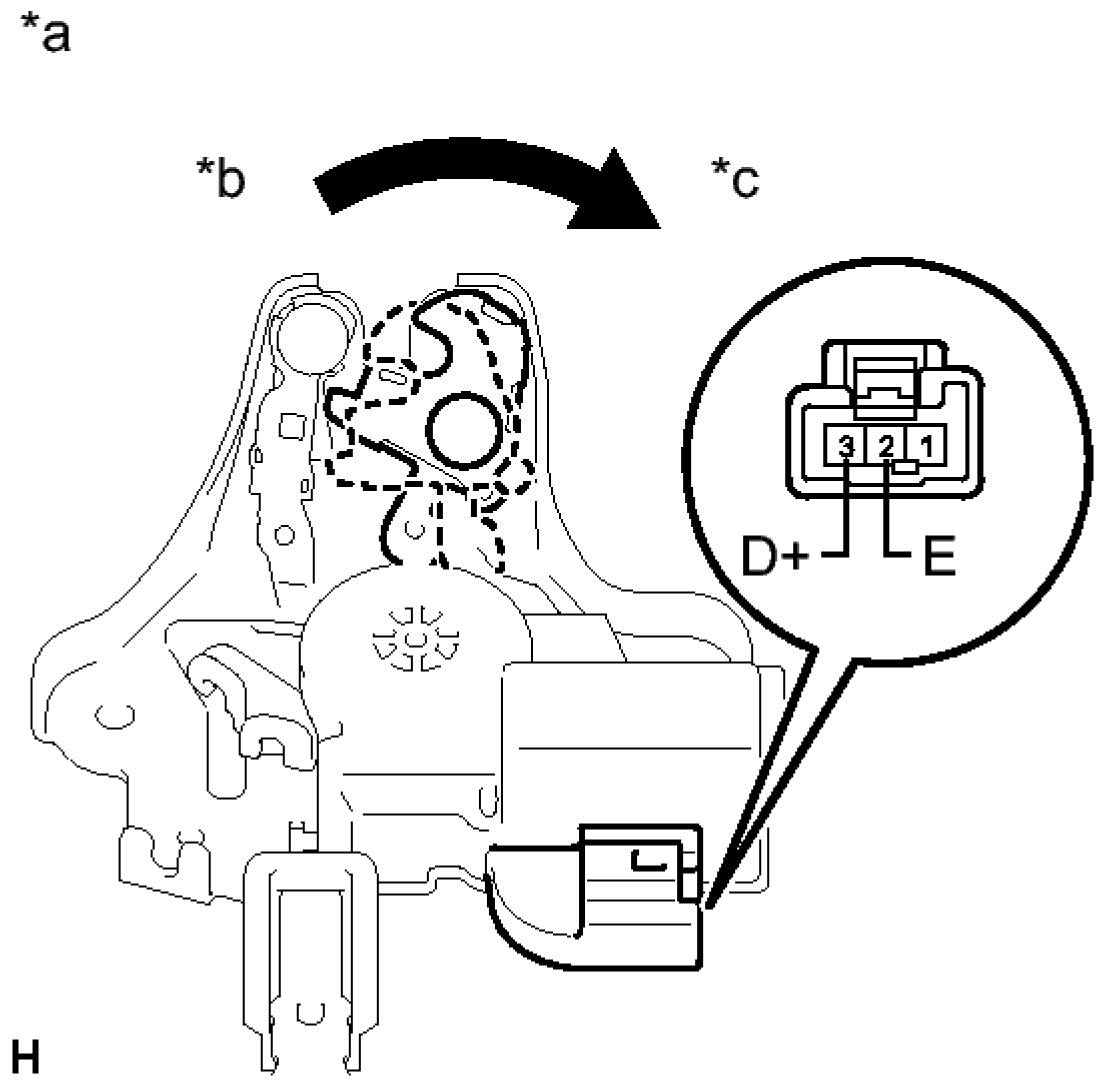

Fig. 47: Inspecting Luggage Compartment Door Lock Assembly
Courtesy of TOYOTA MOTOR SALES, U.S.A., INC.

Standard resistance

Measurement Condition	Door Lock Condition	Specified Condition
2 (E) - 3 (D+)	Close (Lock)	10 kohms or higher
2 (E) - 3 (D+)	Open (Unlock)	Below 1 ohms

TEXT IN ILLUSTRATION

	Component

*a	without harness connected: (Luggage Compartment Door Lock Assembly)
*b	Close (Lock)
*c	Open (Unlock)

If the result is not as specified, replace the luggage compartment door lock assembly.

INSTALLATION

INSTALLATION

1. **INSTALL LUGGAGE COMPARTMENT DOOR LOCK ASSEMBLY (w/ Wireless Door Lock Control System)** . Refer to **INSTALLATION - Step 1**
2. **INSTALL LUGGAGE DOOR LOCK CONTROL CABLE SUB-ASSEMBLY (w/o Wireless Door Lock Control System)** . Refer to **INSTALLATION - Step 2**
3. **INSTALL LUGGAGE COMPARTMENT DOOR LOCK ASSEMBLY (w/o Wireless Door Lock Control System)** . Refer to **INSTALLATION - Step 3**
4. **INSTALL LUGGAGE COMPARTMENT DOOR COVER** . Refer to **REASSEMBLY - Step 12**

RELAY

ON-VEHICLE INSPECTION

ON-VEHICLE INSPECTION

1. **INSPECT LIGHT CUT RELAY**
    a. Measure the resistance according to the value(s) in the table below.

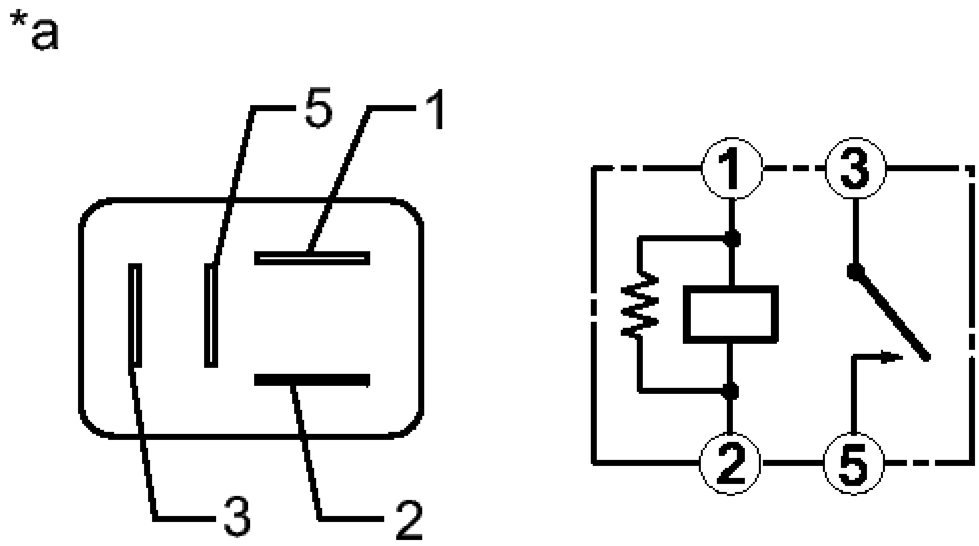

Fig. 48: Light Cut Relay
Courtesy of TOYOTA MOTOR SALES, U.S.A., INC.

Standard Resistance

Tester Connection	Condition	Specified Condition
3 - 5	Voltage is not applied between terminals 1 and 2	10 kohms or higher
3 - 5	Voltage is applied between terminals 1 and 2	Below 1 ohms

TEXT IN ILLUSTRATION

*a	Component without harness connected (Light Cut Relay)

If the result is not as specified, replace the light cut relay.

HEADLIGHT ASSEMBLY

COMPONENTS

ILLUSTRATION

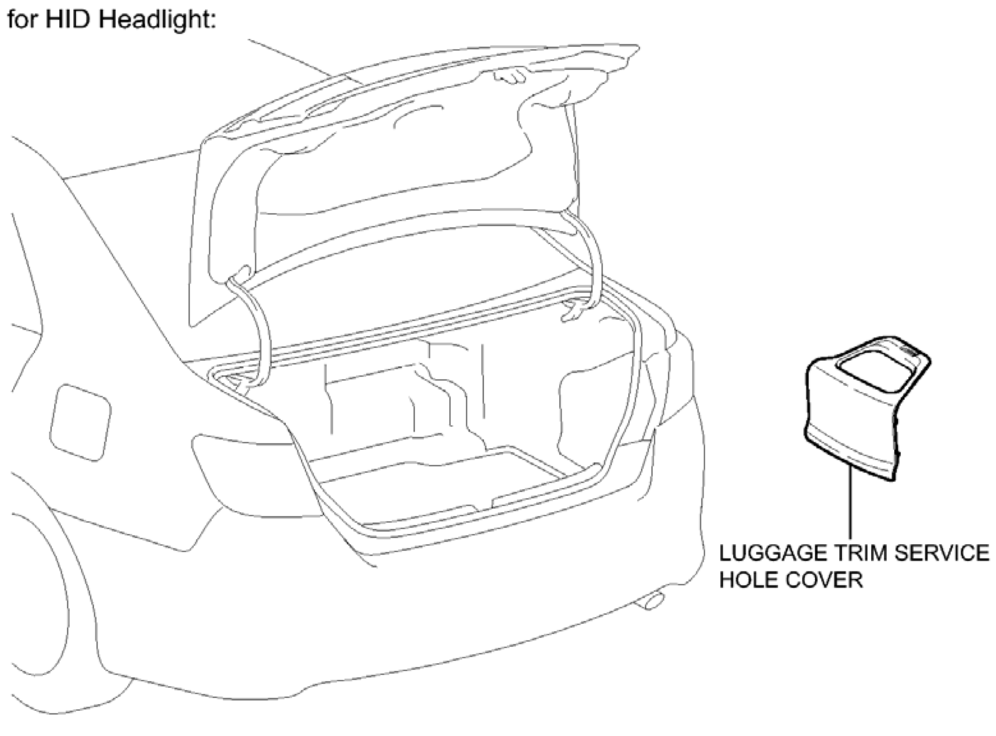
for HID Headlight:
LUGGAGE TRIM SERVICE HOLE COVER
P

Fig. 1: Identifying Headlight Assembly Replacement Components (1 Of 3)
Courtesy of TOYOTA MOTOR SALES, U.S.A., INC.

Fig. 2: Identifying Headlight Assembly Replacement Components With Torque Specifications (2 Of 3)
Courtesy of TOYOTA MOTOR SALES, U.S.A., INC.

Fig. 3: Identifying Headlight Assembly Replacement Components (3 Of 3)
Courtesy of TOYOTA MOTOR SALES, U.S.A., INC.

REMOVAL

REMOVAL

HINT:

- Use the same procedure for the RH and LH sides.
- The procedure described below is for the LH side.

1. **PRECAUTION (for HID Headlight)**

   Refer to **PRECAUTION**

   NOTE: After turning the power switch off, waiting time may be required before

disconnecting the cable from the negative (-) auxiliary battery terminal. Therefore, make sure to read the disconnecting the cable from the negative (-) auxiliary battery terminal notices before proceeding with work. Refer to PRECAUTION .

2. **REMOVE LUGGAGE TRIM SERVICE HOLE COVER (for HID Headlight)** . Refer to **REMOVAL - Step 2**
3. **DISCONNECT CABLE FROM AUXILIARY BATTERY NEGATIVE TERMINAL (for HID Headlight)**

   NOTE: **When disconnecting the cable, some systems need to be initialized after the cable is reconnected. Refer to INITIALIZATION .**

4. **REMOVE FRONT BUMPER ASSEMBLY**

   Refer to **REMOVAL**

5. **REMOVE HEADLIGHT ASSEMBLY**
   a. Remove the 3 screws and bolt.

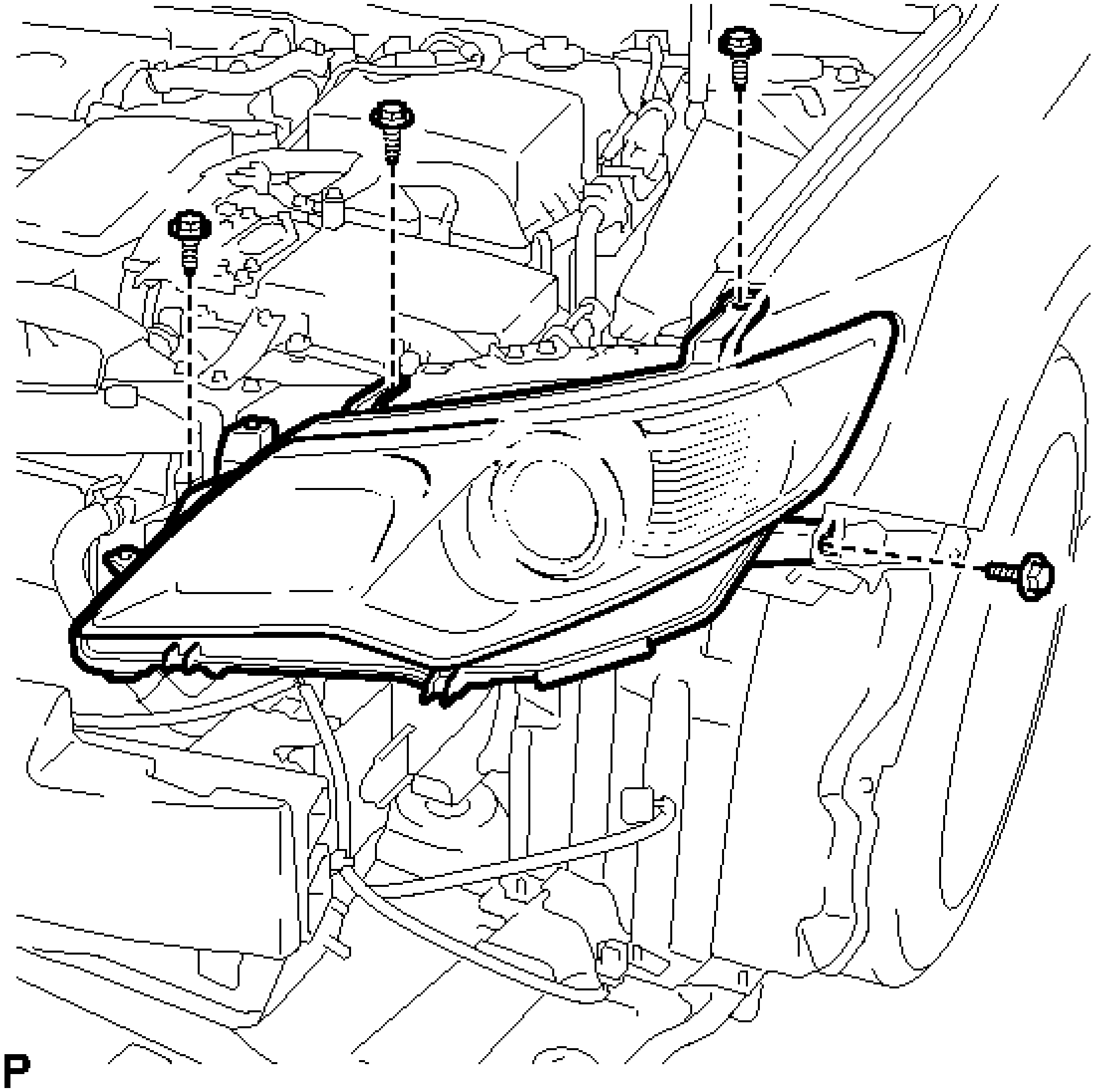

Fig. 4: Identifying Headlight Assembly Screws And Bolt
Courtesy of TOYOTA MOTOR SALES, U.S.A., INC.

b. Disengage the clamp.

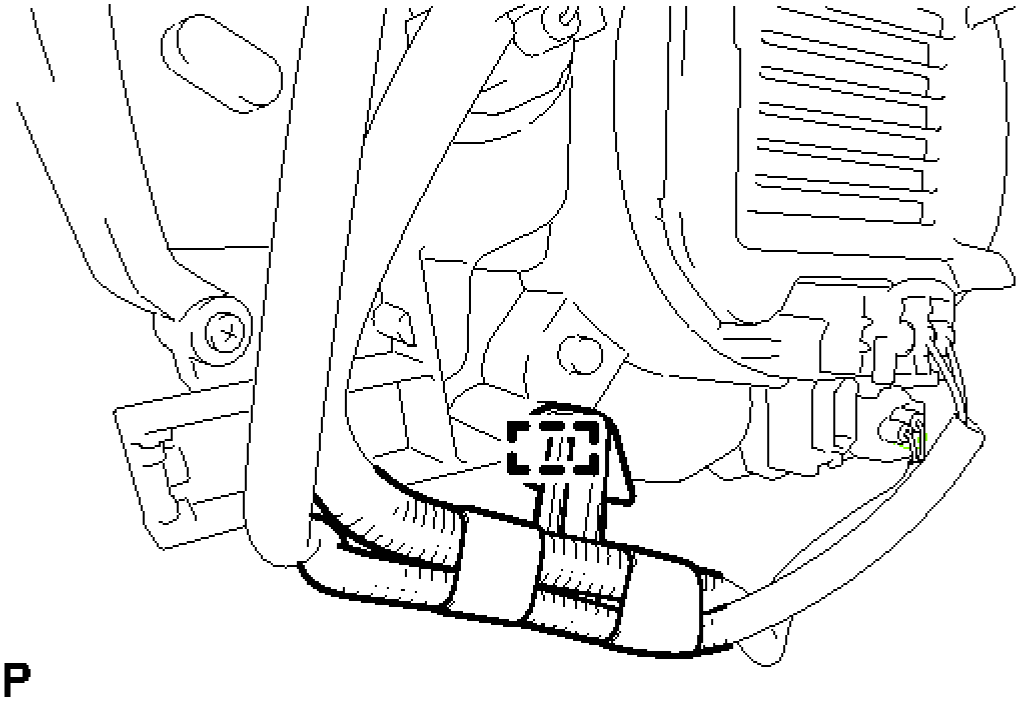

Fig. 5: Identifying Headlight Assembly Clamp
Courtesy of TOYOTA MOTOR SALES, U.S.A., INC.

c. Disconnect each connector and remove the headlight assembly.

DISASSEMBLY

DISASSEMBLY

1. **REMOVE NO. 1 HEADLIGHT BULB**
    a. Turn the No. 1 headlight bulb in the direction indicated by the arrow shown in the illustration, and remove it.

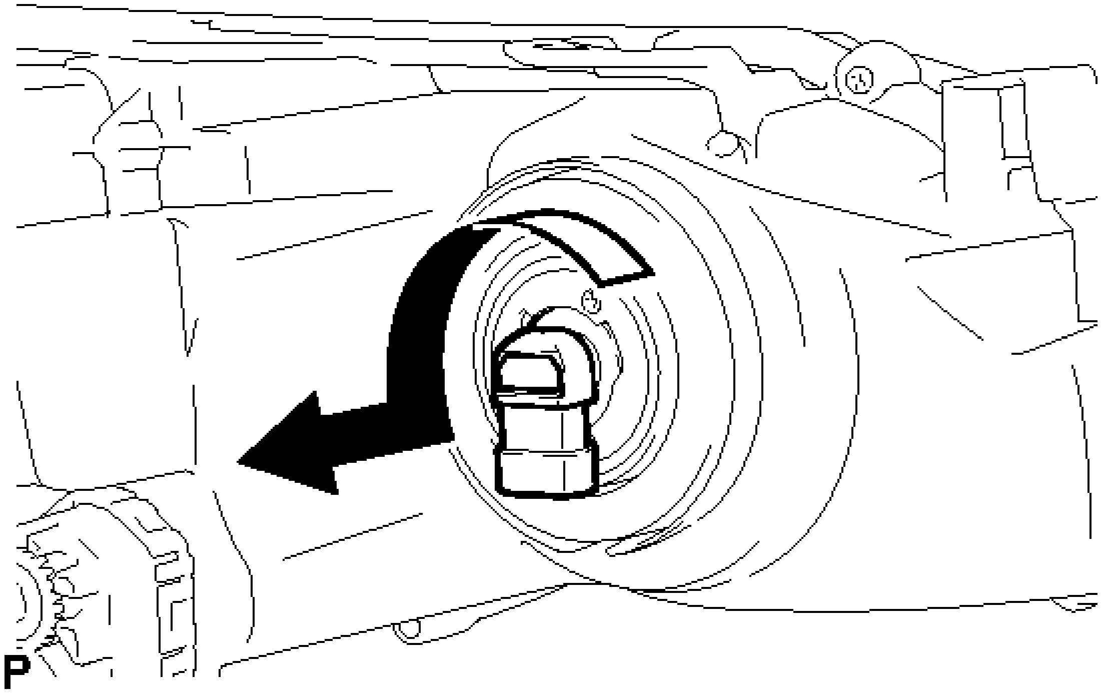

Fig. 6: Removing No. 1 Headlight Bulb
Courtesy of TOYOTA MOTOR SALES, U.S.A., INC.

NOTE: **Do not touch the bulb glass.**

2. **REMOVE NO. 2 HEADLIGHT BULB (for Halogen Headlight)**
    a. Turn the No. 2 headlight bulb in the direction indicated by the arrow shown in the illustration, and remove it.

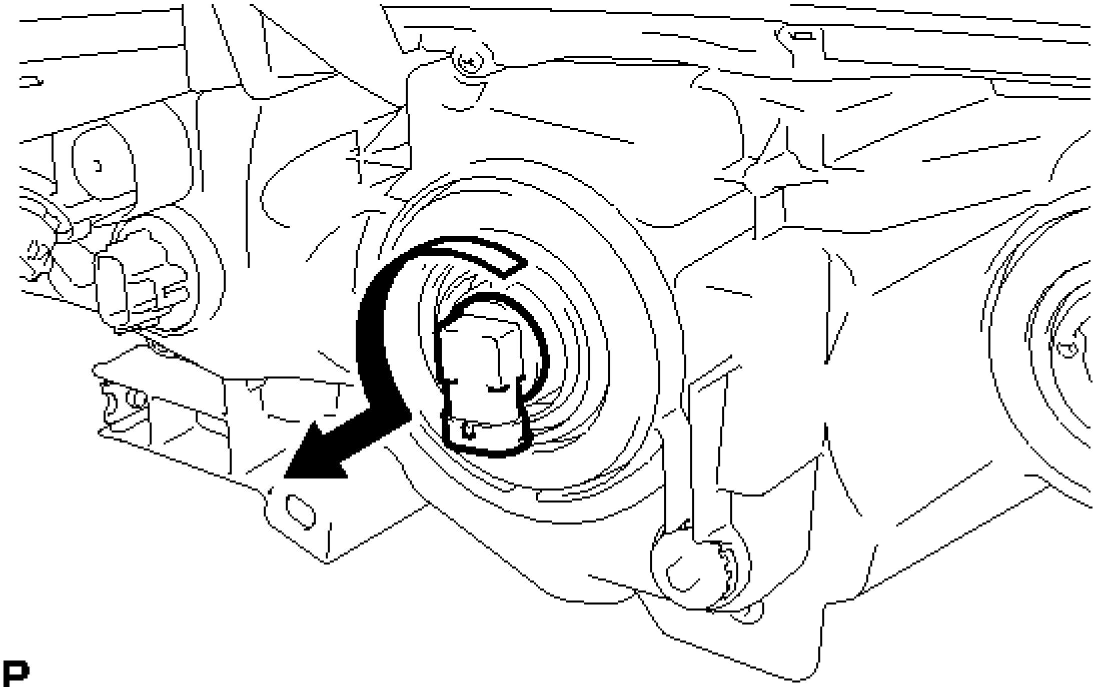

Fig. 7: Removing No. 2 Headlight Bulb (For Halogen Headlight)
Courtesy of TOYOTA MOTOR SALES, U.S.A., INC.

NOTE: **Do not touch the bulb glass.**

3. **REMOVE HEADLIGHT LIGHT CONTROL ECU SUB-ASSEMBLY (for HID Headlight)**
    a. for LH Side:
        1. Turn the headlight light control ECU sub-assembly in the direction indicated by the arrow shown in the illustration, and disconnect it.

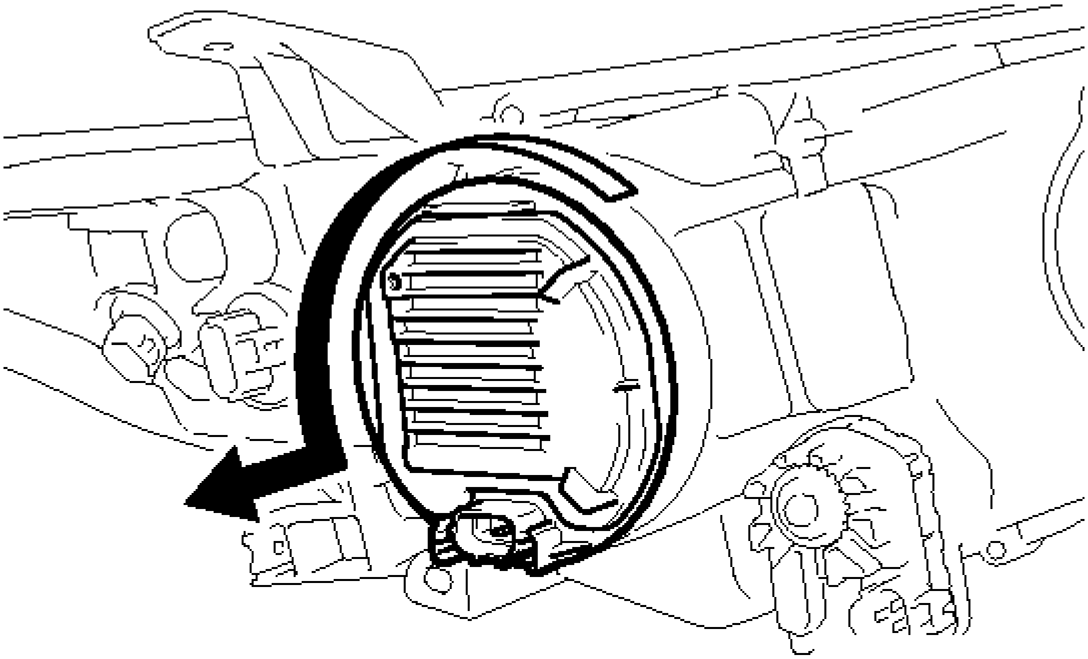

Fig. 8: Removing Headlight Light Control ECU Sub-Assembly (For HID Headlight) (For LH Side)
Courtesy of TOYOTA MOTOR SALES, U.S.A., INC.

NOTE:

- **Do not apply excessive force using a tool.**
- **Do not damage the O-ring or allow it to become contaminated with foreign matter. If the O-ring is damaged or contaminated, water may get into the headlight assembly, resulting in a malfunction of the headlight light control ECU sub-assembly.**

b. for RH Side:

1. Turn the headlight light control ECU sub-assembly in the direction indicated by the arrow shown in the illustration, and disconnect it.

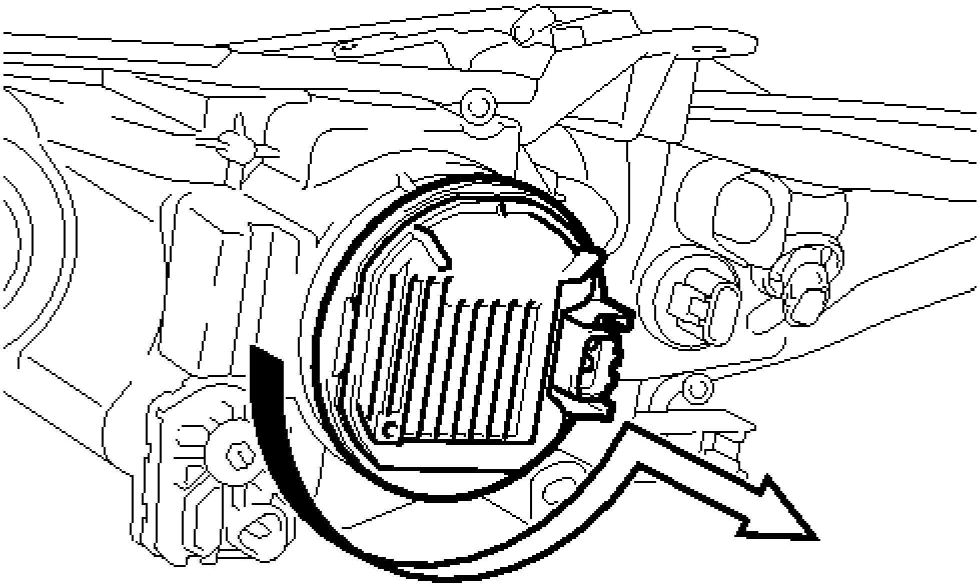

P

Fig. 9: Removing Headlight Light Control ECU Sub-Assembly (For HID Headlight) (For RH Side)
Courtesy of TOYOTA MOTOR SALES, U.S.A., INC.

NOTE:	- **Do not apply excessive force using a tool.** - **Do not damage the O-ring or allow it to become contaminated with foreign matter. If the O-ring is damaged or contaminated, water may get into the headlight assembly, resulting in a malfunction of the headlight light control ECU sub-assembly.**

c. Disengage the clamp.

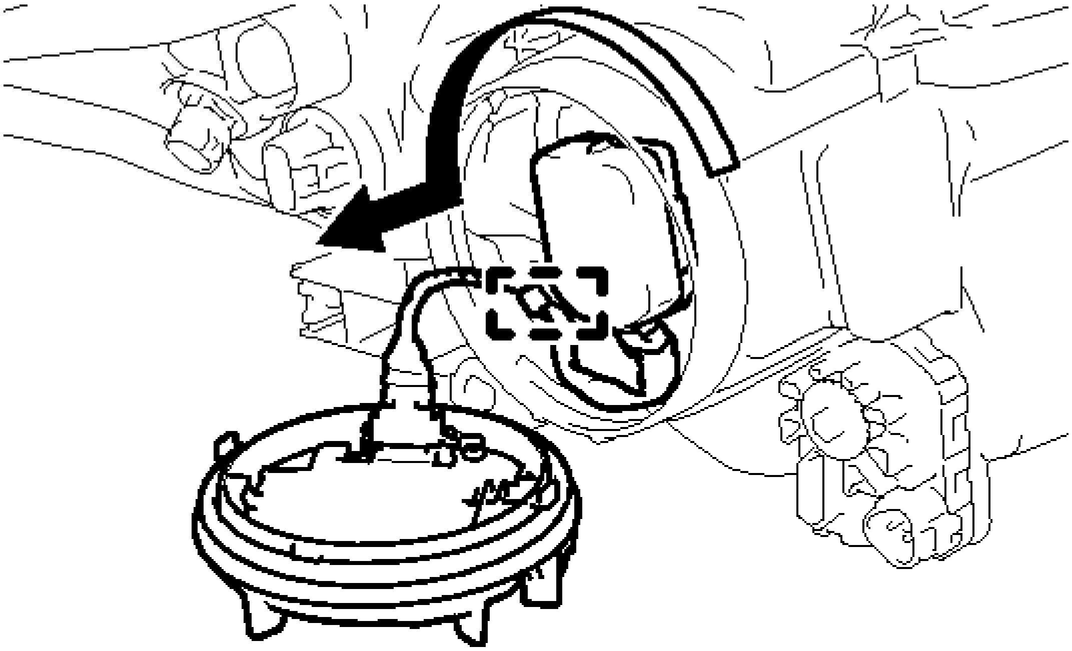

Fig. 10: Removing Headlight Light Control ECU Sub-Assembly Clamp (For HID Headlight)
Courtesy of TOYOTA MOTOR SALES, U.S.A., INC.

d. Turn the socket of the headlight light control ECU sub-assembly in the direction indicated by the arrow shown in the illustration, and remove it.

NOTE: **Do not pull the headlight light control ECU sub-assembly with the socket connected.**

4. **REMOVE DISCHARGE HEADLIGHT BULB (for HID Headlight)**
   a. Release the set spring as shown in the illustration and remove the discharge headlight bulb.

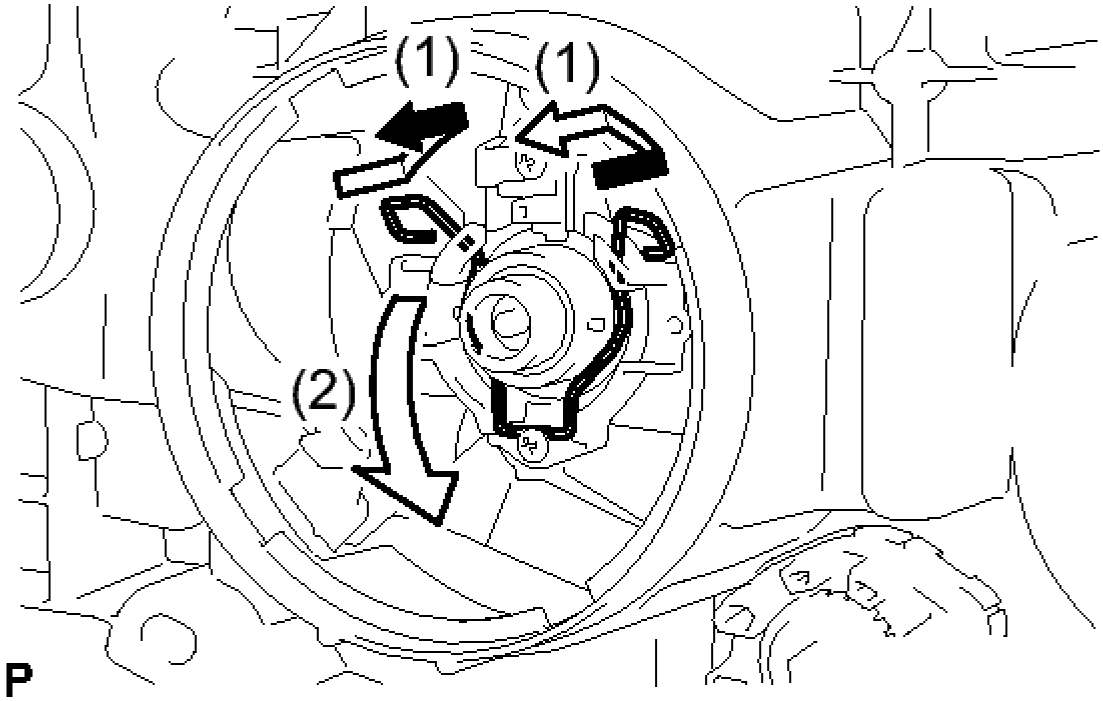

Fig. 11: Removing Discharge Headlight Bulb (For HID Headlight)
Courtesy of TOYOTA MOTOR SALES, U.S.A., INC.

NOTE: **Do not touch the bulb glass.**

5. **REMOVE HEADLIGHT SOCKET COVER**
    a. for Halogen Headlight:
        1. Remove the 2 headlight socket covers from the headlight unit.
    b. for HID Headlight:
        1. Remove the headlight socket cover from the headlight unit.
6. **REMOVE FRONT TURN SIGNAL LIGHT BULB**
    a. Turn the front turn signal light socket with the front turn signal light bulb in the direction indicated by the arrow shown in the illustration, and remove them as a unit.

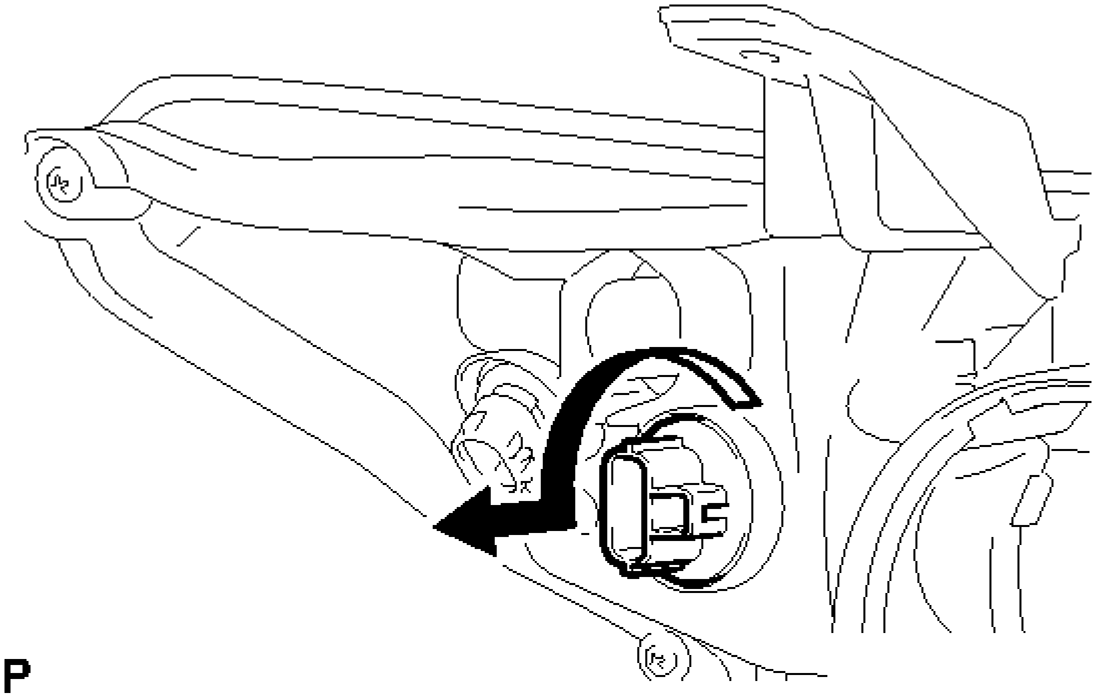

Fig. 12: Removing Front Turn Signal Light Bulb
Courtesy of TOYOTA MOTOR SALES, U.S.A., INC.

b. Remove the front turn signal light bulb from the front turn signal light socket.

7. **REMOVE FRONT SIDE MARKER LIGHT BULB**
    a. Turn the front side marker light socket with the front side marker light bulb in the direction indicated by the arrow shown in the illustration, and remove them as a unit.

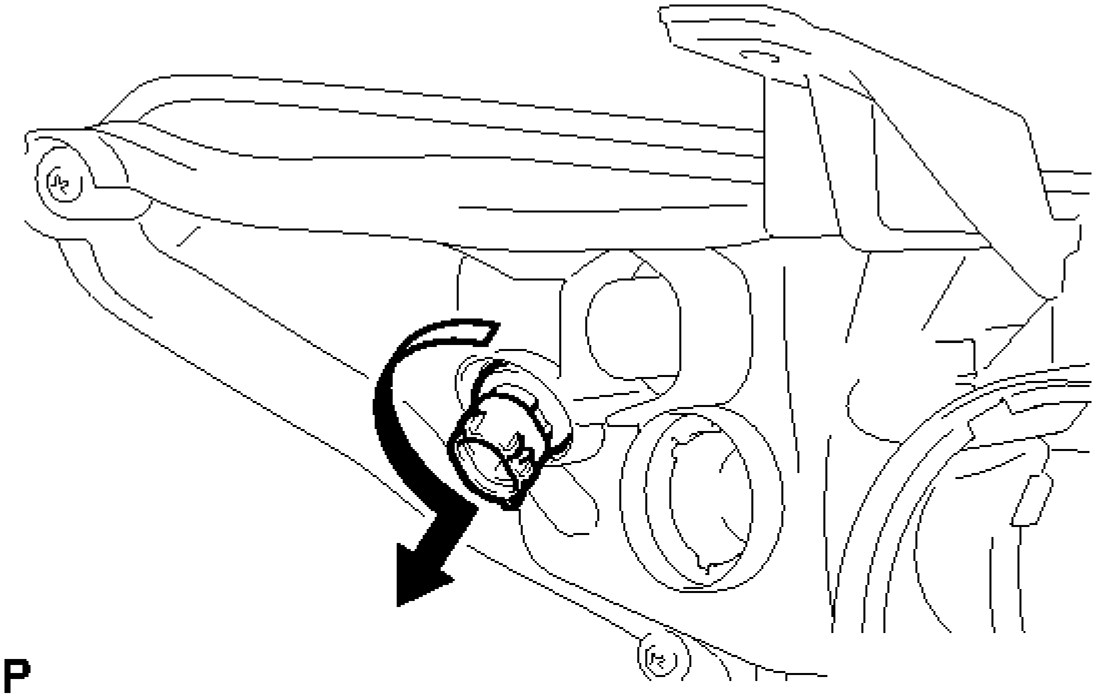

Fig. 13: Removing Front Side Marker Light Bulb
Courtesy of TOYOTA MOTOR SALES, U.S.A., INC.

b. Remove the front side marker light bulb from the front side marker light socket.

ADJUSTMENT

ADJUSTMENT

HINT:

It is possible that a bulb is incorrectly installed, affecting headlight aim. Bulb installation should be considered prior to performing the adjustment procedure.

1. **PREPARE VEHICLE FOR HEADLIGHT AIM ADJUSTMENT**
    a. Prepare the vehicle:
        - Ensure that there is no damage or deformation to the body around the headlights.
        - Fill the fuel tank.
        - Make sure that the oil is filled to the specified level.
        - Make sure that the engine coolant is filled to the specified level.
        - Inflate the tires to the appropriate pressure.
        - Unload the trunk and vehicle, ensuring that the spare tire, tools and jack are in their original positions.
        - Sit a person of average weight (68 kg, 150 lb) in the driver's seat.
        - Vehicles with manual headlight beam level control system should be adjusted to "0".

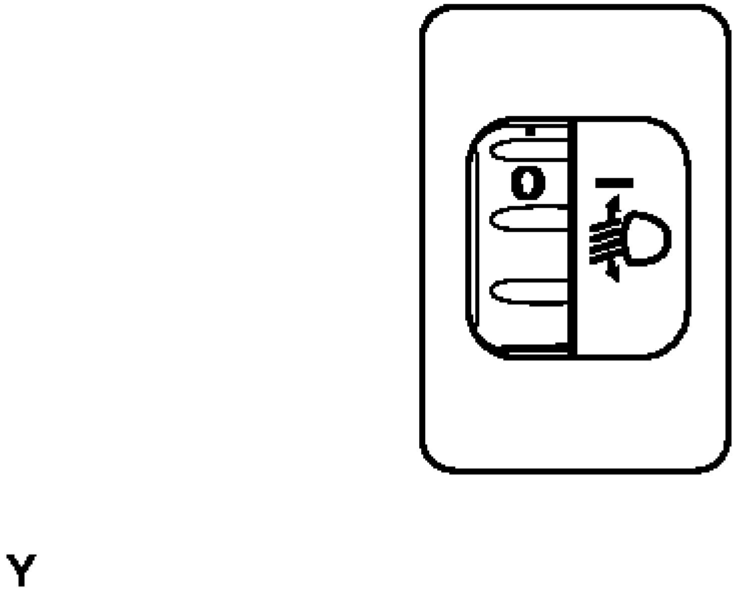

Fig. 14: Adjusting Halogen Headlight To "0" For Headlight Aim Adjustment
Courtesy of TOYOTA MOTOR SALES, U.S.A., INC.

2. **PREPARE FOR HEADLIGHT AIMING (Using a headlight aim test machine)**
    a. Adjust the headlight aim in accordance with the headlight aim test machine instructions.
3. **PREPARE FOR HEADLIGHT AIMING (Using a Screen)**
    a. Prepare the vehicle:

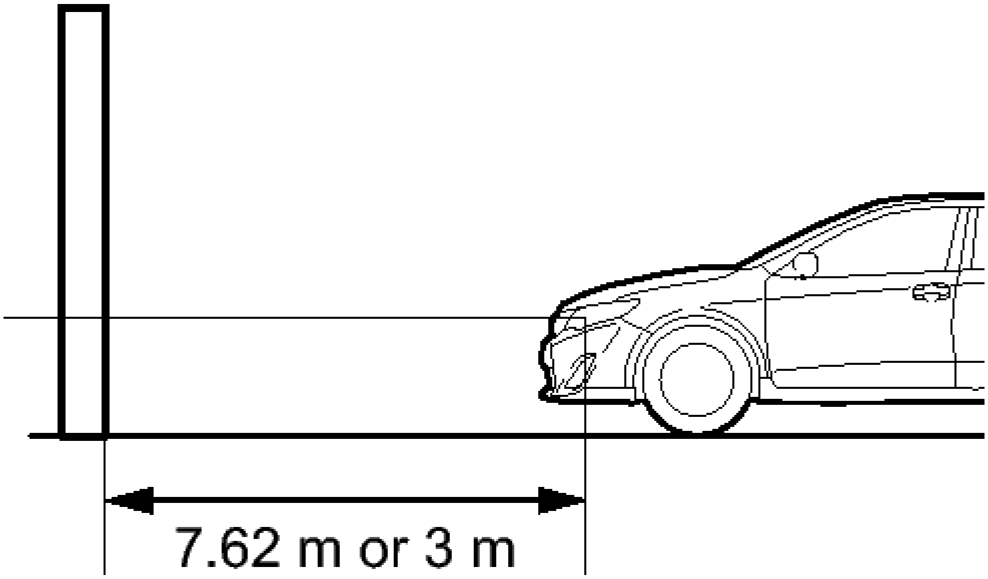

P

Fig. 15: Identifying Headlight Aiming Distance (Using A Screen)
Courtesy of TOYOTA MOTOR SALES, U.S.A., INC.

- Place the vehicle in a location that is dark enough to clearly observe the cutoff line. The cutoff line is a distinct line, below which light from the headlights can be observed and above which it cannot.
- Place the vehicle at a 90° angle to the wall.
- Create a 7.62 m (25 ft.) distance between the vehicle (headlight bulb center) and the wall.
- Make sure that the vehicle is on a level surface.
- Position the front wheels straight ahead.
- Bounce the vehicle up and down several times to settle the suspension.

NOTE: **A distance of 7.62 m (25 ft.) between the vehicle (headlight bulb center) and the wall is necessary for proper aim adjustment. If sufficient space is not available, secure a distance of exactly 3 m (9.84 ft.) to allow for checking and adjustment of headlight aim. (The size of the target zone will change with the distance, so follow the instructions in the illustration.)**

b. Prepare a piece of thick white paper (approximately 2 m (6.56 ft.) (height) x 4 m (13.1 ft.) (width)) to use as a screen.
c. Draw a vertical line down the center of the screen (V line).
d. Set the screen as shown in the illustration.

Fig. 16: Identifying Headlight Aiming Distance (Using A Screen)
Courtesy of TOYOTA MOTOR SALES, U.S.A., INC.

HINT:

- Stand the screen perpendicular to the ground.
- Align the V line on the screen with the center of the vehicle.

e. Draw base lines (H, V LH and V RH lines) on the screen as shown in the illustration.

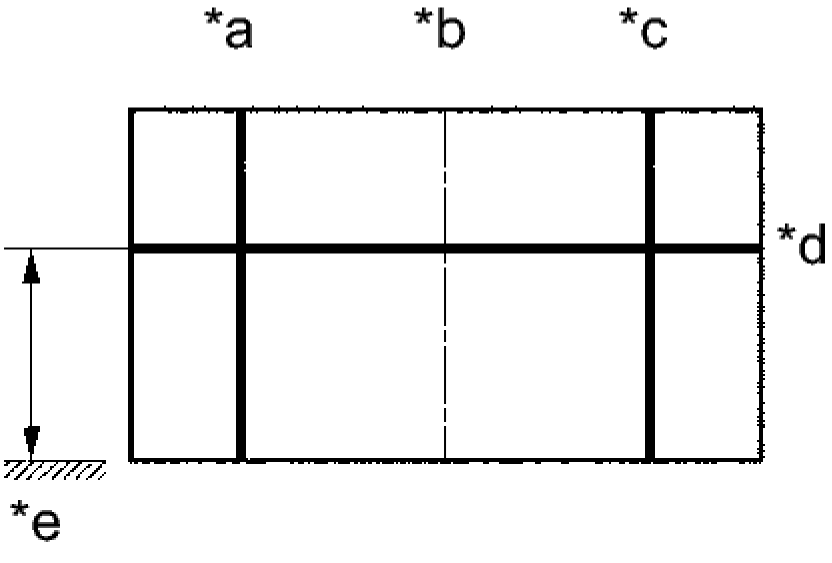

Fig. 17: Identifying V LH Line, V RH Line Graph

Courtesy of TOYOTA MOTOR SALES, U.S.A., INC.

TEXT IN ILLUSTRATION

*a	V LH Line
*b	V Line
*c	V RH Line
*d	H Line
*e	Ground

HINT:

- The base lines differ for "low beam inspection" and "high beam inspection".
- Mark the headlight bulb center marks on the screen. If the center mark cannot be observed on the headlight, use the center of the headlight bulb as the center mark.

1. H Line (Headlight height):

   Draw a horizontal line across the screen so that it passes through the center marks. The H line should be at the same height as the headlight bulb center marks of the low beam headlights.

2. V LH Line, V RH Line (Center mark position of left-hand (LH) and right-hand (RH) headlights):

   Draw two vertical lines so that they intersect the H line at each center mark (aligned with the center of the low beam headlight bulbs).

4. **INSPECT HEADLIGHT AIMING**
   a. Cover the headlight or disconnect the connector of the headlight/ECU on the opposite side to prevent light from the headlight that is not being inspected from affecting the headlight aiming inspection.

   WARNING: **Do not disconnect the HID high voltage connector for the bulb when performing this aiming inspection.**

   NOTE: **Do not keep the headlight covered for more than 3 minutes. The headlight lens is made of synthetic resin, which may melt or be damaged due to excessive heat.**

   HINT:

   When checking the aim of the high beam, cover the low beam or disconnect the connector.

   b. Start the engine.

c. Turn on the headlights and check the aiming of each beam.

HINT:

- Preferred position for the low beam: Matches preferred cutoff line shown in the illustration.
- Preferred position for the high beam: Matches center of intensity shown in the illustration.

Fig. 18: Alignment Distance Diagram
Courtesy of TOYOTA MOTOR SALES, U.S.A., INC.

HINT:

- Since the low beam light and the high beam light are a unit, if the aim on the low beam is correct, the high beam should also be correct. However, check both beams just to make sure.
- If the alignment distance is 7.62 m (25 ft.):

  The low beam cutoff line should be within 53 mm (2.09 in.) above the H line.

- If the alignment distance is 3 m (9.84 ft.):

  The low beam cutoff line should be within 20 mm (0.82 in.) above the H line.

- If the alignment distance is 7.62 m (25 ft.):

  The high beam center of intensity should be within 101 mm (3.97 in.) above or below the H line as well as left and right of the V line (SAE J599).

- If the alignment distance is 3 m (9.84 ft.):

  The high beam center of intensity should be within 39 mm (1.56 in.) above or below the H line as well as 39 mm (1.56 in.) left or right of the V line (SAE J599).

- If the alignment distance is 7.62 m (25 ft.):

  The right half of the low beam cutoff line should be on the H line (preferred cutoff line target).

- If the alignment distance is 3 m (9.84 ft.):

  The right half of the low beam cutoff line should be on the H line (preferred cutoff line target).

- If the alignment distance is 7.62 m (25 ft.):

  The high beam center of intensity should be on the H line (preferred center of intensity).

- If the alignment distance is 3 m (9.84 ft.):

  The high beam center of intensity should be on the H line (preferred center of intensity).

5. **ADJUST HEADLIGHT AIMING**
   a. Adjust the aim vertically:

Fig. 19: Adjusting Headlight Aim
Courtesy of TOYOTA MOTOR SALES, U.S.A., INC.

TEXT IN ILLUSTRATION

*A	for Halogen Headlight	*B	for HID Headlight
*1	Aiming Screw	-	-

Adjust the aim of each headlight to the specified range by turning aiming screw with a screwdriver.

NOTE: **The final turn of the aiming screw should be made in the clockwise direction. If the screw is tightened excessively, loosen it and then retighten it, so that the final turn of the screw is in the clockwise direction.**

HINT:

- The low beam light and the high beam light are a unit. Adjusting the aim on the low beam to the correct position should also result in the high beam adjustment being correct.
- If it is not possible to correctly adjust the headlight aim, check the bulbs, headlight unit and headlight unit reflector installation.
- The headlight aim moves up when turning the aiming screw counterclockwise, and moves down when turning the aiming screw clockwise.

REASSEMBLY

REASSEMBLY

1. **INSTALL FRONT SIDE MARKER LIGHT BULB**
    a. Install the front side marker light bulb to the front side marker light socket.
    b. Turn the front side marker light socket with the front side marker light bulb in the direction indicated by the arrow shown in the illustration and install them as a unit.

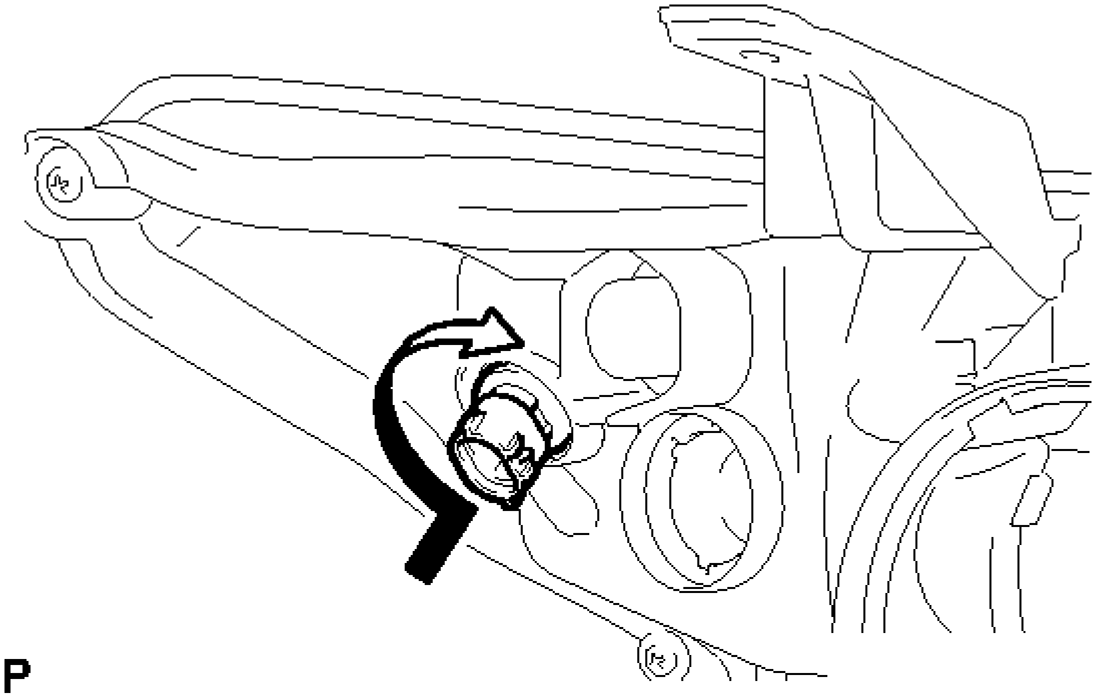

Fig. 20: Installing Front Side Marker Light Bulb
Courtesy of TOYOTA MOTOR SALES, U.S.A., INC.

2. **INSTALL FRONT TURN SIGNAL LIGHT BULB**
    a. Install the front turn signal light bulb to the front turn signal light socket.
    b. Turn the front turn signal light socket with the front turn signal light bulb in the direction indicated by the arrow shown in the illustration and install them as a unit.

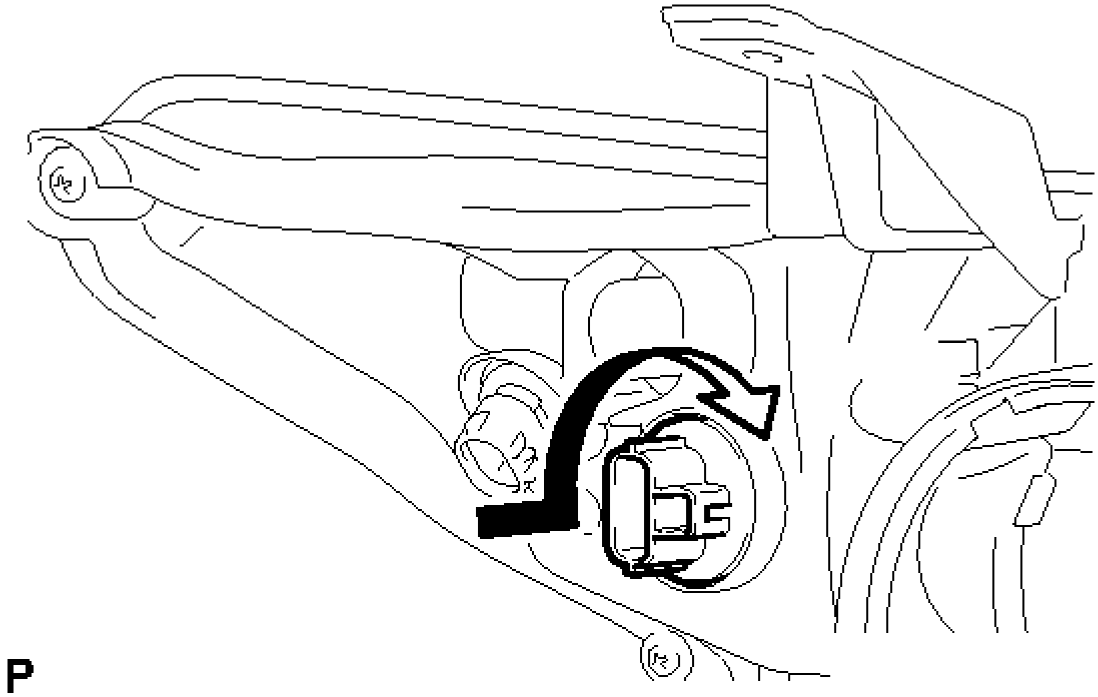

Fig. 21: Installing Front Turn Signal Light Bulb
Courtesy of TOYOTA MOTOR SALES, U.S.A., INC.

3. **INSTALL HEADLIGHT SOCKET COVER**
    a. for Halogen Headlight:
        1. Install the 2 headlight socket covers to the headlight unit.
    b. for HID Headlight:
        1. Install the headlight socket cover to the headlight unit.
4. **INSTALL NO. 2 HEADLIGHT BULB (for Halogen Headlight)**
    a. Turn the No. 2 headlight bulb in the direction indicated by the arrow shown in the illustration to install it.

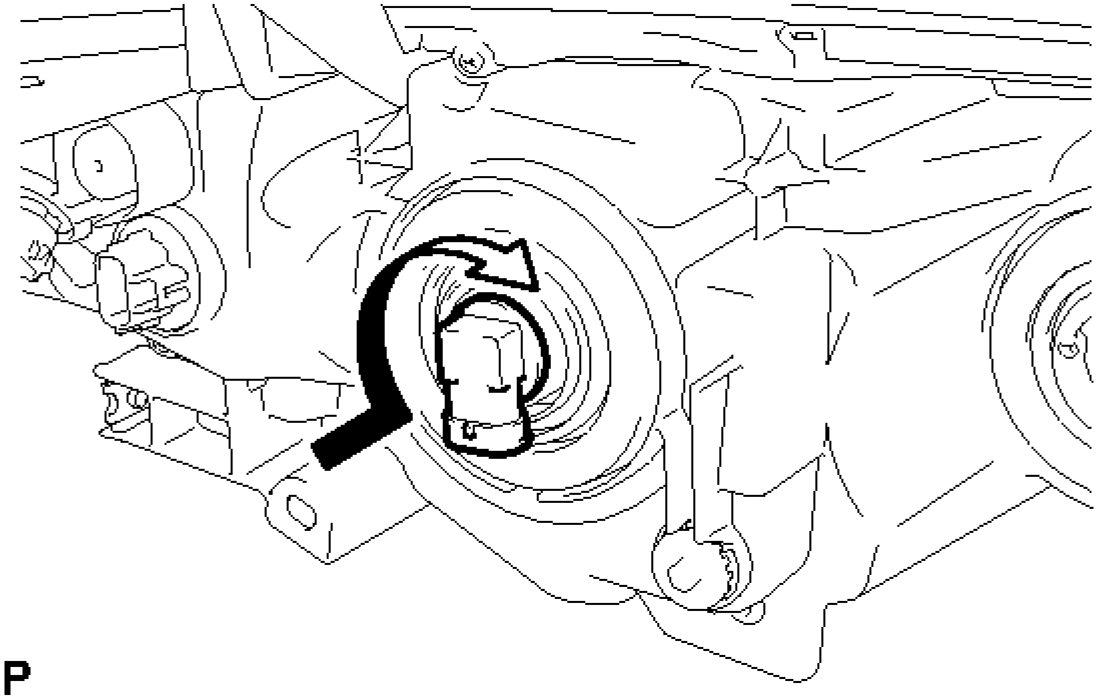

Fig. 22: Installing No. 2 Headlight Bulb (For Halogen Headlight)
Courtesy of TOYOTA MOTOR SALES, U.S.A., INC.

NOTE: Do not touch the bulb glass.

5. **INSTALL DISCHARGE HEADLIGHT BULB (for HID Headlight)**
   a. Set the discharge headlight bulb to the headlight unit.

   NOTE: Do not touch the bulb glass.

   b. Lock the set spring to install the discharge headlight bulb as shown in the illustration.

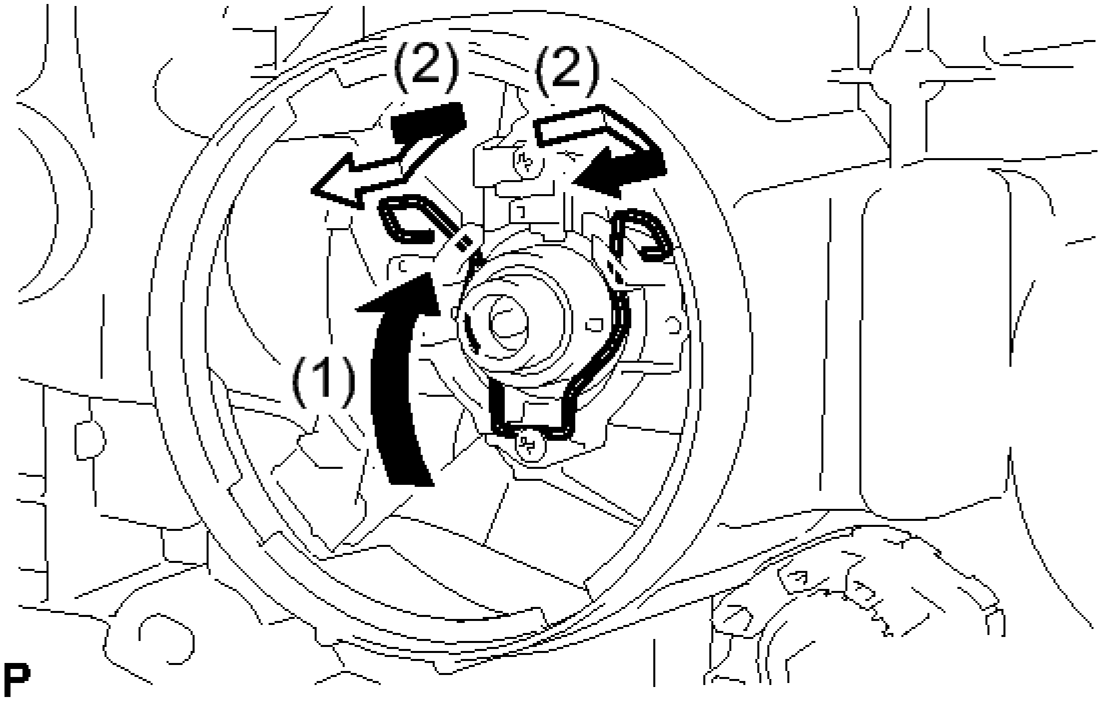

Fig. 23: Installing Discharge Headlight Bulb (For HID Headlight)
Courtesy of TOYOTA MOTOR SALES, U.S.A., INC.

6. **INSTALL HEADLIGHT LIGHT CONTROL ECU SUB-ASSEMBLY (for HID Headlight)**
   a. Turn the socket of the headlight light control ECU sub-assembly in the direction indicated by the arrow shown in the illustration to connect it.

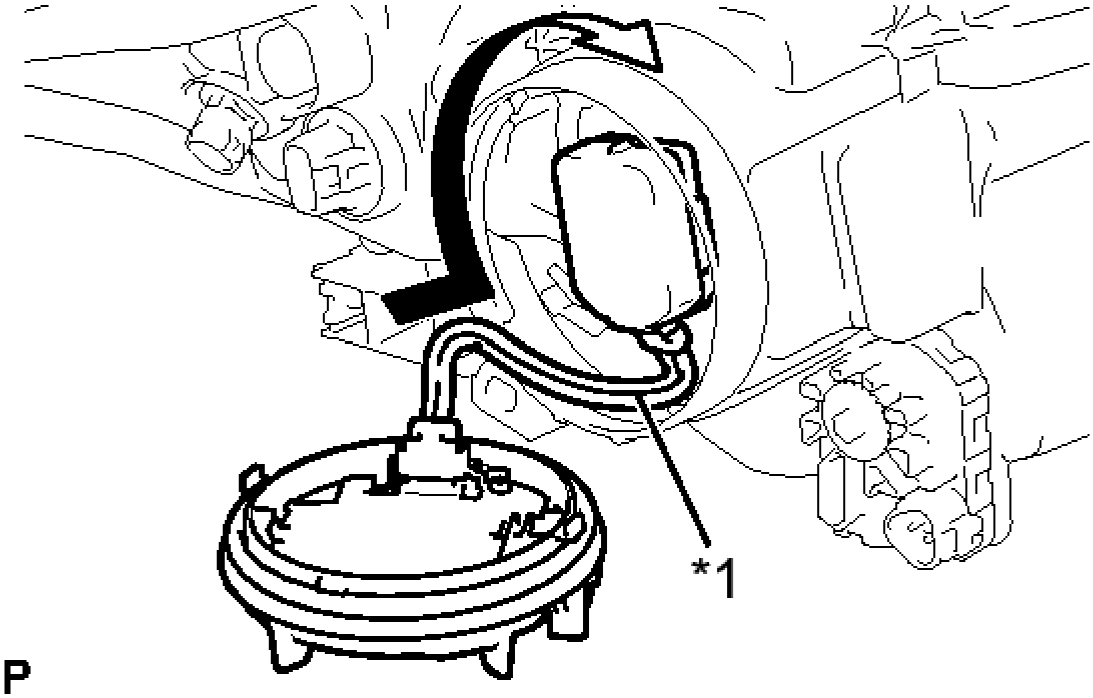

Fig. 24: Installing Headlight Light Control ECU Sub-Assembly (For HID Headlight)
Courtesy of TOYOTA MOTOR SALES, U.S.A., INC.

NOTE:	**Check that the O-ring is installed on the headlight light control ECU sub-assembly.** **Check that the O-ring is not damaged or contaminated with foreign matter. If there is any damage, replace the O-ring with a new one.** **Do not pull the headlight light control ECU sub-assembly with the socket connected.**

b. Check that the red line on the output harness is not twisted and store the harness in the headlight assembly securely so that the output harness is not pinched.

TEXT IN ILLUSTRATION

*1	Red Line

c. Engage the clamp.

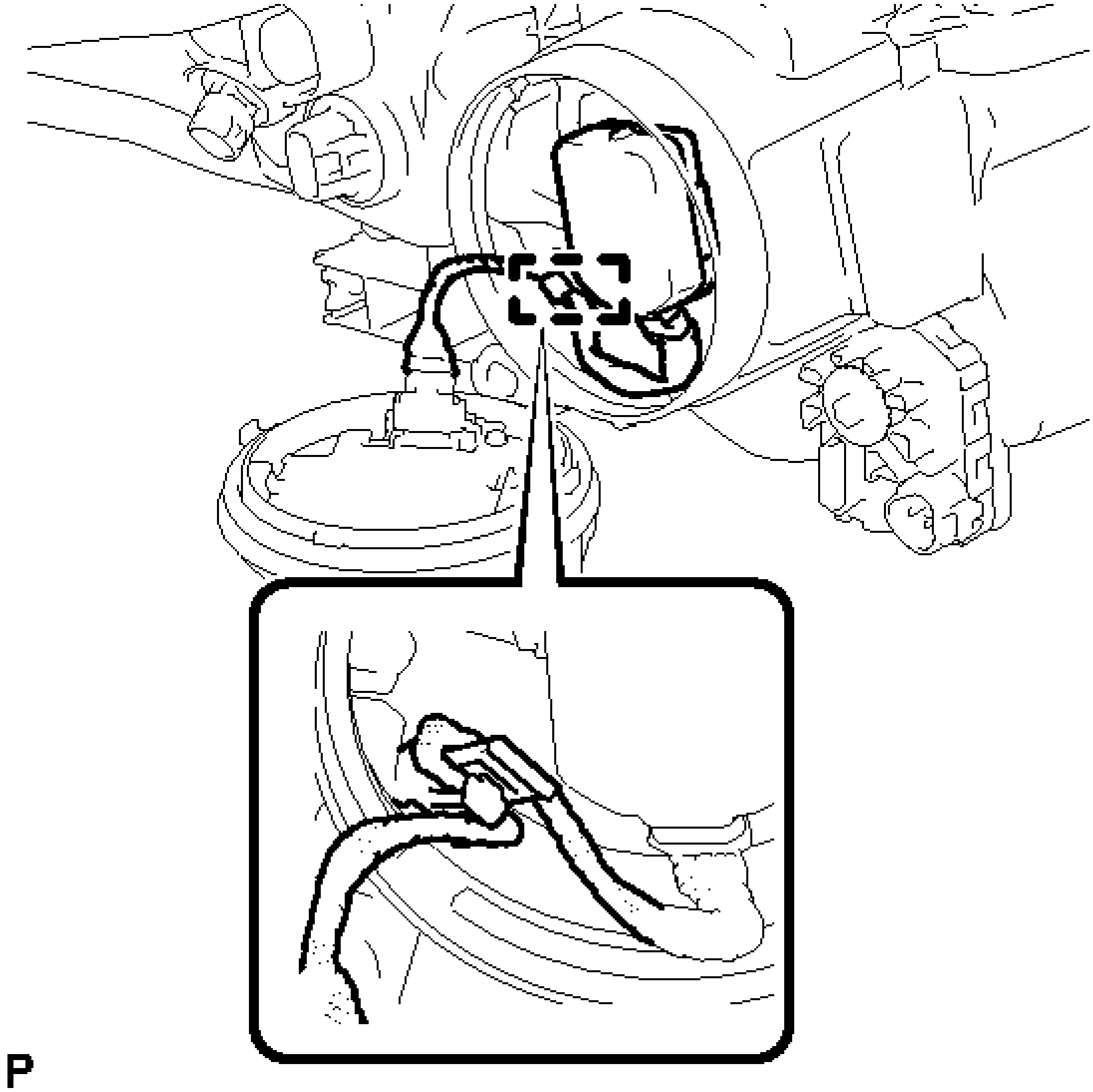

Fig. 25: Installing Headlight Light Control ECU Sub-Assembly Clamp (For HID Headlight)
Courtesy of TOYOTA MOTOR SALES, U.S.A., INC.

d. for LH Side:
   1. Turn the headlight light control ECU sub-assembly in the direction indicated by the arrow shown in the illustration until the lock marks are aligned to install it.

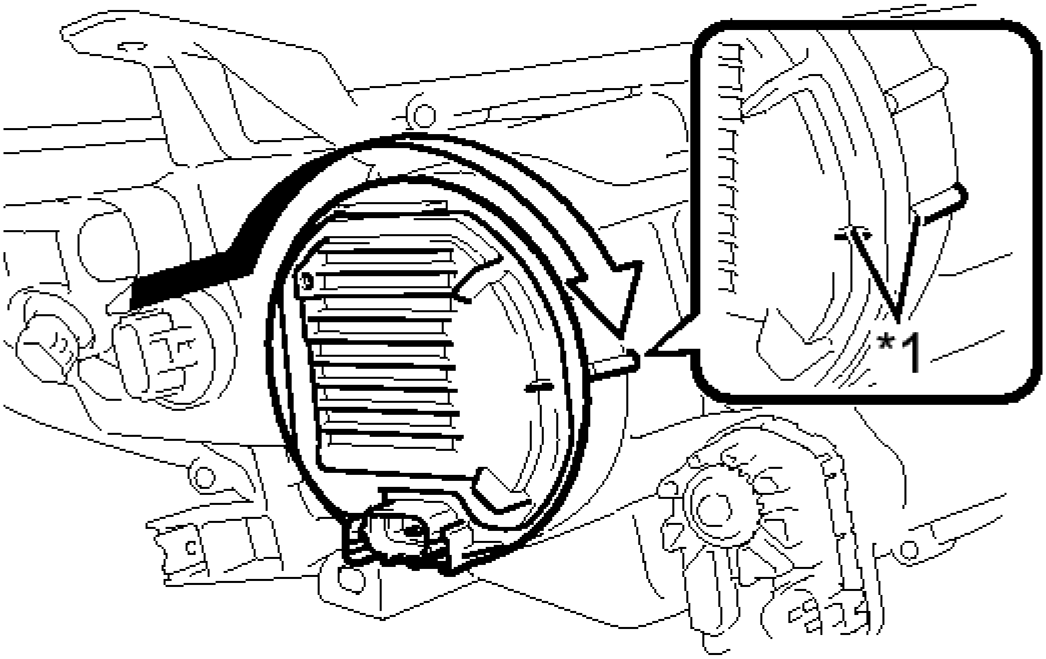

P

Fig. 26: Installing Headlight Light Control ECU Sub-Assembly (For HID Headlight) (For LH Side)
Courtesy of TOYOTA MOTOR SALES, U.S.A., INC.

TEXT IN ILLUSTRATION

*1	Lock Mark

NOTE:	- **To prevent incomplete installation, make sure to fully push in and turn the headlight light control ECU sub-assembly until the lock marks are aligned.** - **Do not apply excessive force using a tool.**

e. for RH Side:

1. Turn the headlight light control ECU sub-assembly in the direction indicated by the arrow shown in the illustration until the lock marks are aligned to install it.

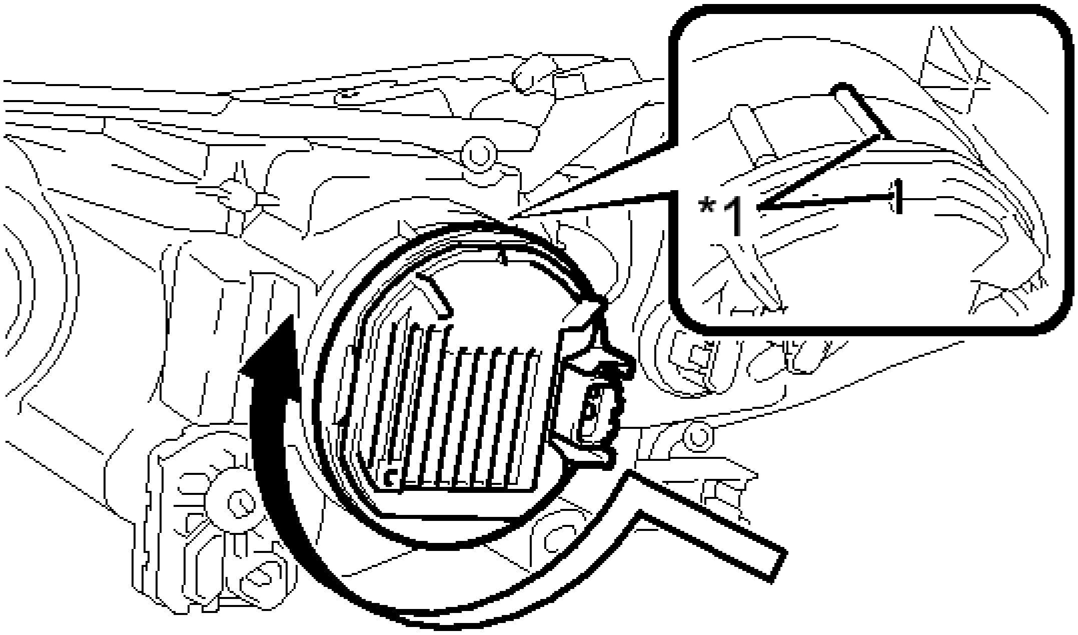

P

Fig. 27: Installing Headlight Light Control ECU Sub-Assembly (For HID Headlight) (For RH Side)
Courtesy of TOYOTA MOTOR SALES, U.S.A., INC.

TEXT IN ILLUSTRATION

*1	Lock Mark

NOTE:

- **To prevent incomplete installation, make sure to fully push in and turn the headlight light control ECU sub-assembly until the lock marks are aligned.**
- **Do not apply excessive force using a tool.**

7. **INSTALL NO. 1 HEADLIGHT BULB**
    a. Turn the No. 1 headlight bulb in the direction indicated by the arrow shown in the illustration to install it.

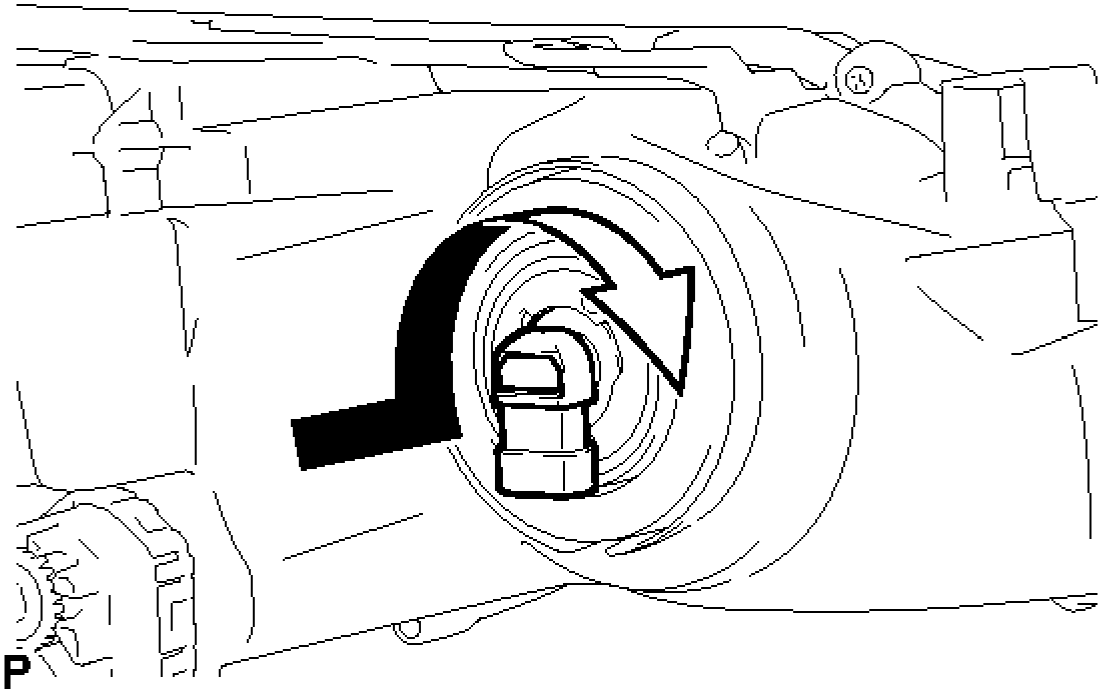

Fig. 28: Installing No. 1 Headlight Bulb
Courtesy of TOYOTA MOTOR SALES, U.S.A., INC.

NOTE: **Do not touch the bulb glass.**

INSTALLATION

INSTALLATION

HINT:

- Use the same procedure for the RH and LH sides.
- The procedure described below is for the LH side.

1. **INSTALL HEADLIGHT ASSEMBLY**
    a. Connect each connector.
    b. Engage the clamp.
    c. Install the headlight assembly with the 3 screws and bolt.

    Screw

    Torque: 3.6 N*m (37 kgf*cm, 32 in.*lbf)

    Bolt

    Torque: 4.1 N*m (42 kgf*cm, 36 in.*lbf)

2. **INSTALL FRONT BUMPER ASSEMBLY**

   Refer to **INSTALLATION**

3. **CONNECT CABLE TO AUXILIARY BATTERY NEGATIVE TERMINAL (for HID Headlight)**

   NOTE: **When disconnecting the cable, some systems need to be initialized after the cable is reconnected. Refer to INITIALIZATION .**

4. **INSTALL LUGGAGE TRIM SERVICE HOLE COVER (for HID Headlight)** . Refer to **INSTALLATION - Step 3**
5. **ADJUST HEADLIGHT AIMING**

   Refer to **ADJUSTMENT**

6. **ADJUST FOG LIGHT AIMING (w/ Fog Light)**

   Refer to **ADJUSTMENT**

HIGH INTENSITY DISCHARGE HEADLIGHT BULB

COMPONENTS

ILLUSTRATION

Fig. 29: Identifying High Intensity Discharge Headlight Bulb Replacement Components (1 Of 2)
Courtesy of TOYOTA MOTOR SALES, U.S.A., INC.

Fig. 30: Identifying High Intensity Discharge Headlight Bulb Replacement Components (2 Of 2)
Courtesy of TOYOTA MOTOR SALES, U.S.A., INC.

ON-VEHICLE INSPECTION

ON-VEHICLE INSPECTION

1. **INSPECT DISCHARGE HEADLIGHT BULB**

   NOTE: Confirm the following items before replacing a discharge headlight bulb. If a malfunction is discovered and repaired, perform the inspection again to confirm the repair.

   - **Make sure that the high voltage socket of the light control ECU and discharge headlight bulb are connected normally.**
   - **Make sure that there is no damage to the high voltage socket of the light control ECU or discharge headlight bulb connector.**

   HINT:

   Even if a bulb seems to turn on normally, it may not be normal. Perform all the following steps in order because an abnormal condition might otherwise not be easy to duplicate.

   a. Prepare the vehicle:

      Before performing the following inspection procedure, turn off the discharge headlight bulbs for more than 10 minutes to allow them to cool down sufficiently.

HINT:

Since it is necessary to find the cause of a malfunction that causes a discharge headlight bulb not to turn on, the discharge headlight bulbs should be inspected starting from a cooled off state.

1. Turn on the discharge headlights for more than 25 minutes, and check that the bulbs illuminate normally when they are turned on.

   HINT:

   - Leave the headlights on for more than 25 minutes to stabilize the discharge headlight bulb arc tube voltage.
   - A discharge headlight bulb that has almost reached the end of its life may turn off due to a headlight control ECU fail-safe function because the arc tube voltage is high.
2. Repeatedly turn the discharge headlights off for 15 seconds and on for 15 seconds (5 times for each). Check that the bulbs illuminate normally.

   HINT:

   This inspection confirms the ability of the bulbs to start when hot.

3. Turn off the discharge headlights for 3 minutes, and then turn on the discharge headlights for 3 minutes. Check that the bulbs illuminate normally when they are turned on.

   HINT:

   - A characteristic of discharge headlight bulbs is that their starting voltage is highest when 3 minutes have elapsed after being turned off. This is the most difficult situation for discharge bulbs to start in.
   - This inspection is further confirmation of the ability of the bulbs to start when hot.

Fig. 31: Identifying Discharge Headlight Bulb Inspection Procedure
Courtesy of TOYOTA MOTOR SALES, U.S.A., INC.

Standard

The discharge headlight bulbs illuminate normally in all steps.

4. Remove the discharge headlight bulb and perform a visual inspection of the arc tube.

Standard

The inside of the arc tube is not bulging or deformed and is not clouded. However, a dull brown coloration inside the arc tube is normal.

Fig. 32: Identifying Arc Tube Coloration
Courtesy of TOYOTA MOTOR SALES, U.S.A., INC.

TEXT IN ILLUSTRATION

*A	Discharge Headlight Bulb is Normal	*B	Discharge Headlight Bulb at End of Usable Life
*1	Arc Tube	-	-
	Inside of Arc Tube		Distortion / Clouded Area

REMOVAL

REMOVAL

HINT:

- Use the same procedure for the RH and LH sides.
- The procedure described below is for the LH side.

1. **PRECAUTION**

   Refer to **PRECAUTION**

   NOTE: **After turning the power switch off, waiting time may be required before disconnecting the cable from the negative (-) auxiliary battery terminal. Therefore, make sure to read the disconnecting the cable from the negative (-) auxiliary battery terminal notices before proceeding with work. Refer to PRECAUTION .**

2. **REMOVE LUGGAGE TRIM SERVICE HOLE COVER** . Refer to **REMOVAL - Step 2**
3. **DISCONNECT CABLE FROM AUXILIARY BATTERY NEGATIVE TERMINAL**

   NOTE: **When disconnecting the cable, some systems need to be initialized after the cable is reconnected. Refer to INITIALIZATION .**

4. **REMOVE HEADLIGHT LIGHT CONTROL ECU SUB-ASSEMBLY**

   WARNING: **The headlight light control ECU sub-assembly may be hot when the light control switch is in the HEAD position or right after it is turned off. Check that the headlight light control ECU sub-assembly is not hot before starting work.**

   a. Disconnect the connector.
   b. for LH Side:
      1. Using a screwdriver, disengage the claw and disconnect the wire harness.

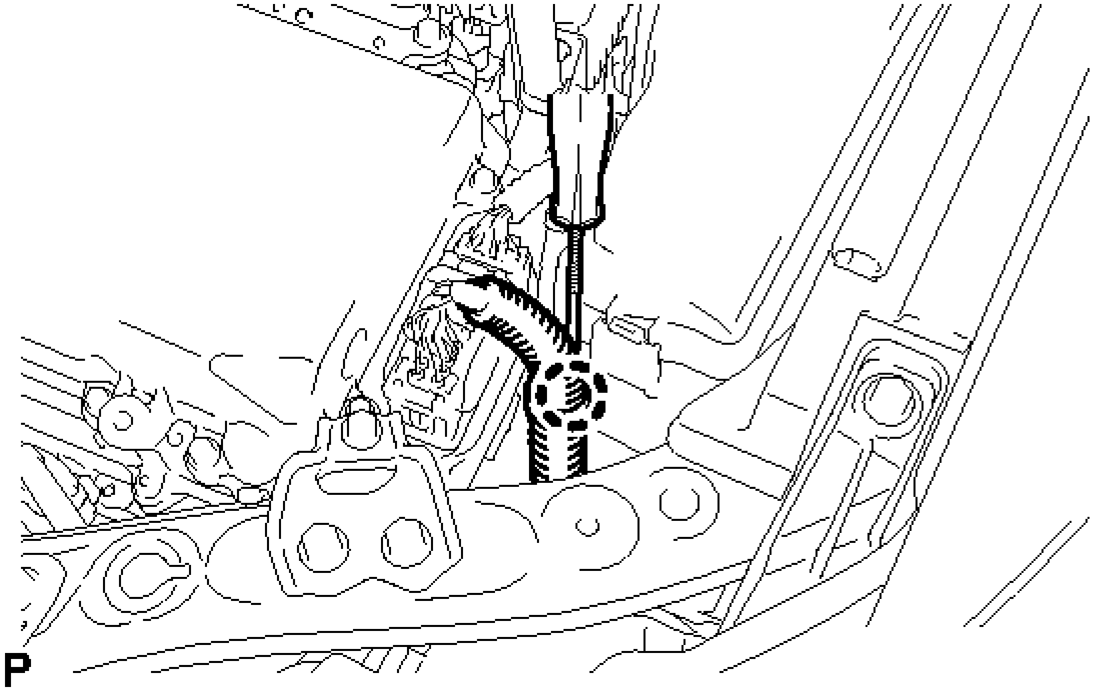

Fig. 33: Identifying Wire Harness Claw
Courtesy of TOYOTA MOTOR SALES, U.S.A., INC.

2. Move the wire harness as shown in the illustration.

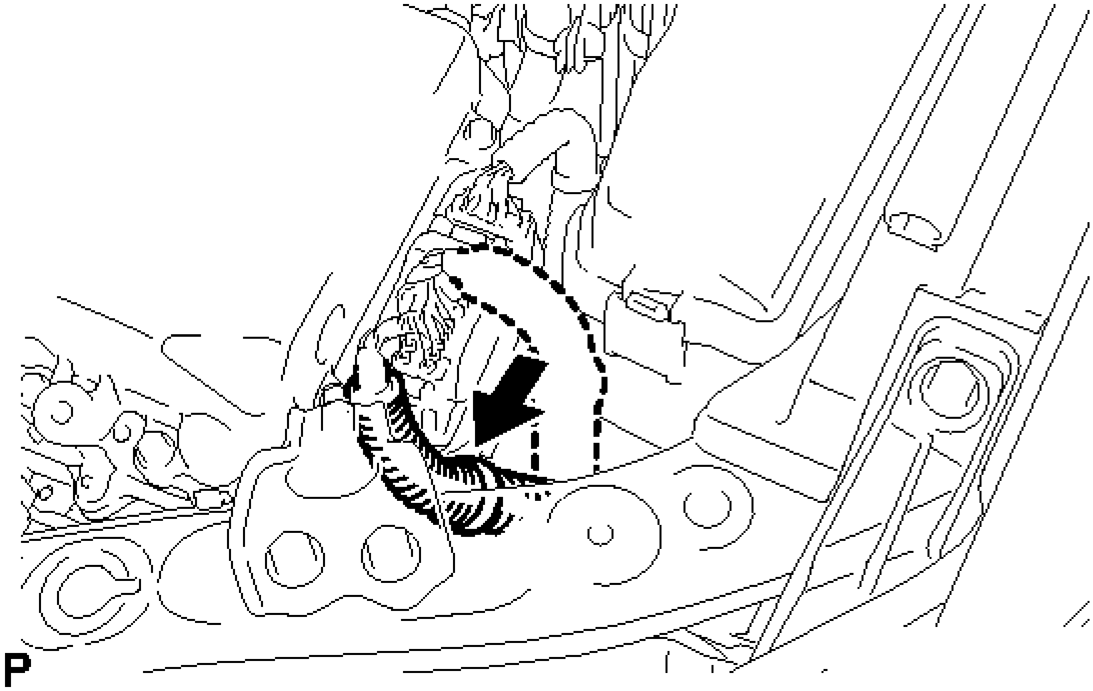

Fig. 34: Moving The Wire Harness
Courtesy of TOYOTA MOTOR SALES, U.S.A., INC.

3. Turn the headlight light control ECU sub-assembly in the direction indicated by the arrow shown in the illustration, and disconnect it.

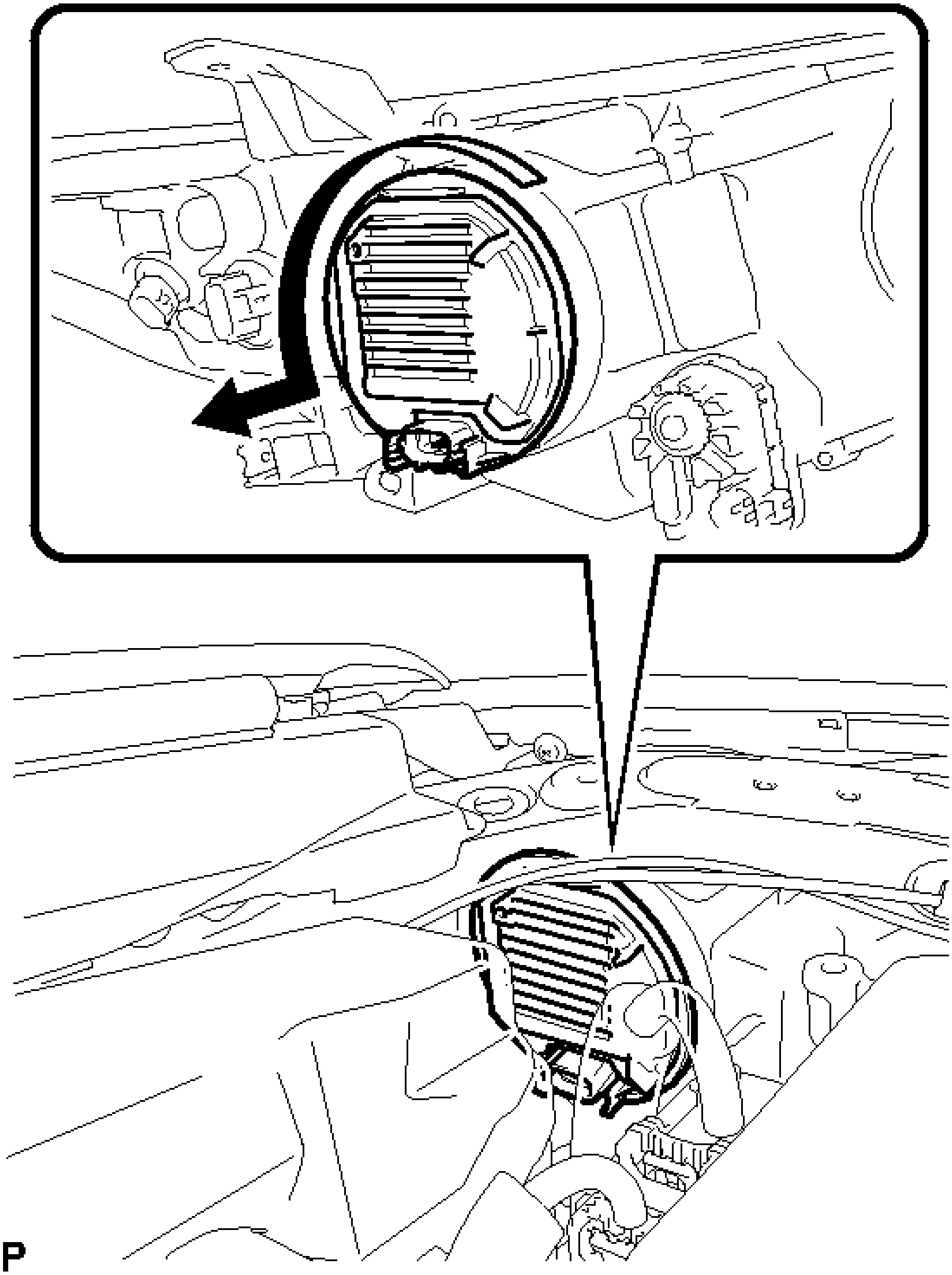

Fig. 35: Turning The Headlight Light Control ECU Sub-Assembly
Courtesy of TOYOTA MOTOR SALES, U.S.A., INC.

NOTE:

- **Do not apply excessive force using a tool.**
- **Do not damage the O-ring or allow it to become contaminated with foreign matter. If the O-ring is damaged or contaminated, water may get into the headlight assembly, resulting in a malfunction of the headlight light control ECU sub-assembly.**

c. for RH Side:

1. Turn the headlight light control ECU sub-assembly in the direction indicated by the arrow shown in the illustration, and disconnect it.

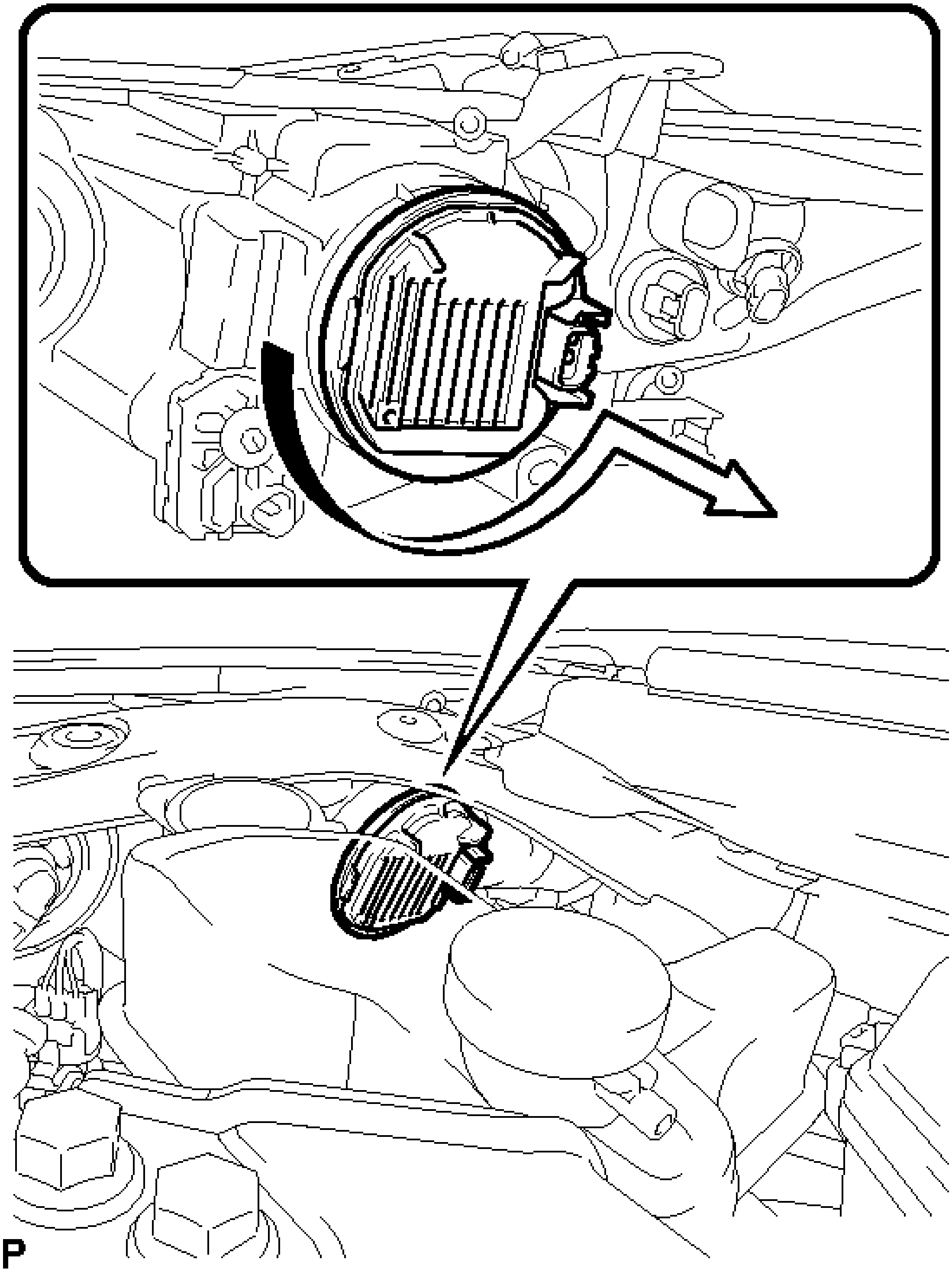

Fig. 36: Turning The Headlight Light Control ECU Sub-Assembly
Courtesy of TOYOTA MOTOR SALES, U.S.A., INC.

NOTE:

- **Do not apply excessive force using a tool.**

- **Do not damage the O-ring or allow it to become contaminated with foreign matter. If the O-ring is damaged or contaminated, water may get into the headlight assembly, resulting in a malfunction of the headlight light control ECU sub-assembly.**

d. Disengage the clamp.

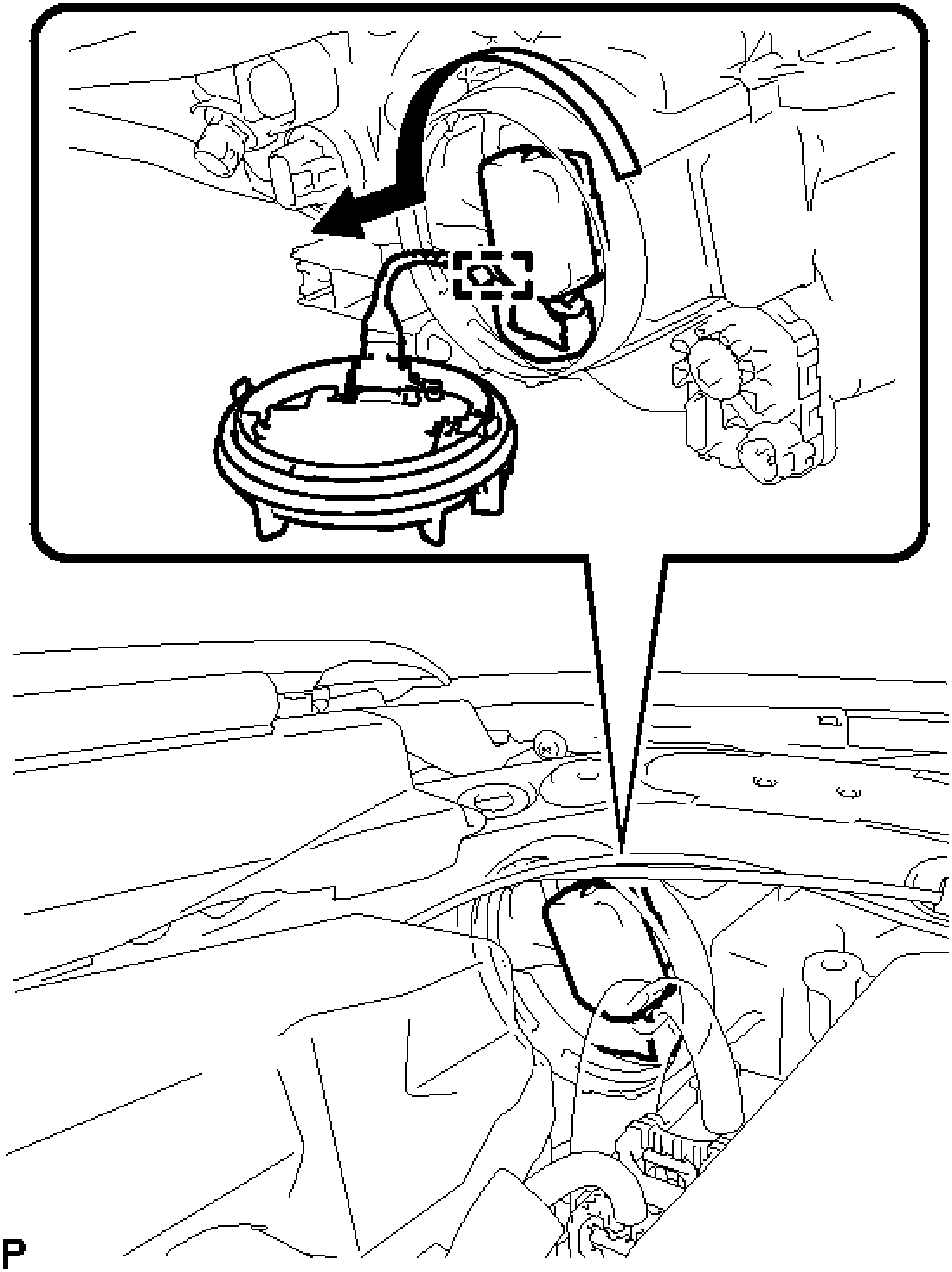

Fig. 37: Turning The Socket Of Headlight Light Control ECU Sub-Assembly
Courtesy of TOYOTA MOTOR SALES, U.S.A., INC.

e. Turn the socket of the headlight light control ECU sub-assembly in the direction indicated by the arrow shown in the illustration, and remove it.

NOTE: **Do not pull the headlight light control ECU sub-assembly with the socket connected.**

5. **REMOVE DISCHARGE HEADLIGHT BULB**
   a. Release the set spring as shown in the illustration and remove the discharge headlight bulb.

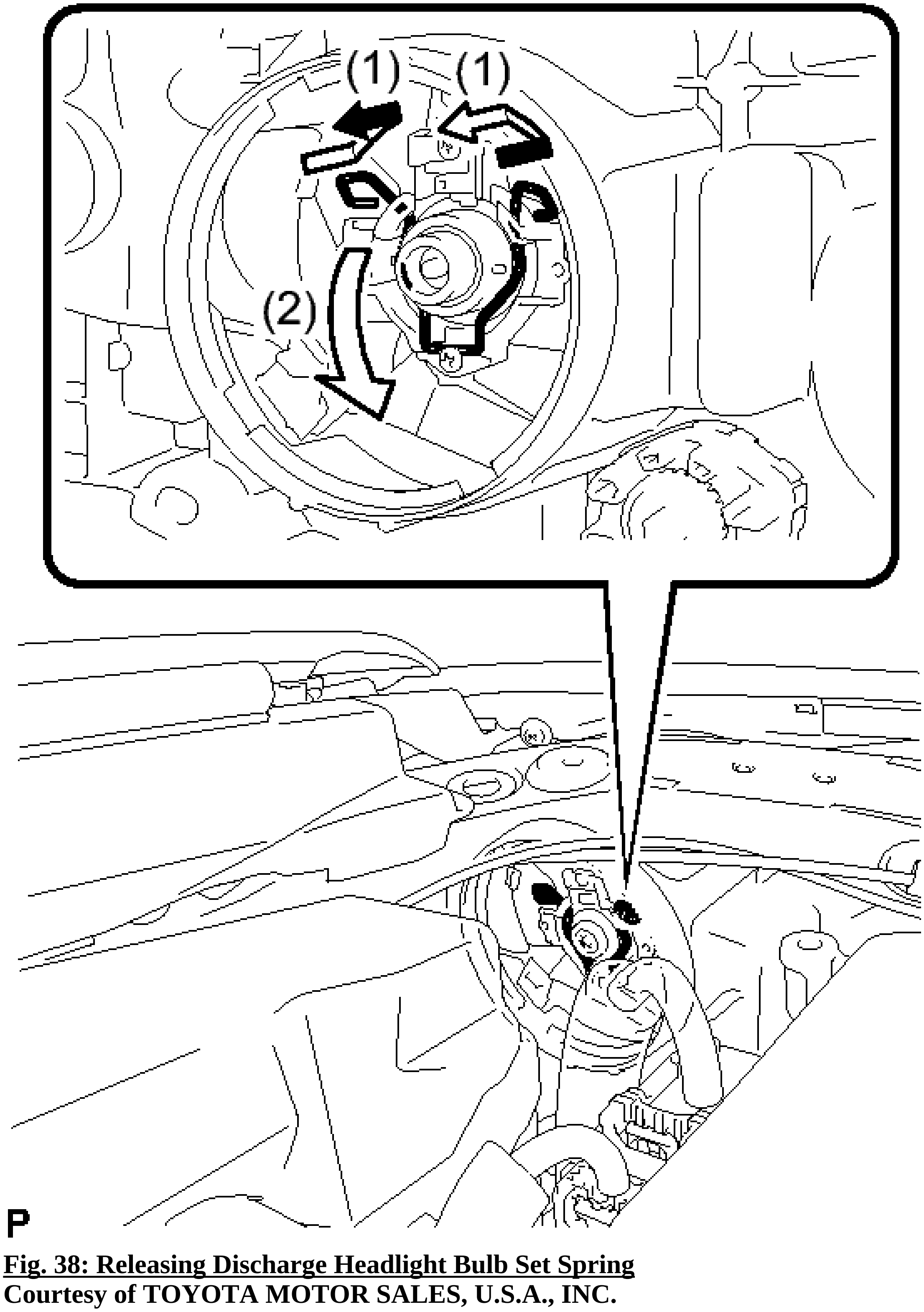

Fig. 38: Releasing Discharge Headlight Bulb Set Spring
Courtesy of TOYOTA MOTOR SALES, U.S.A., INC.

NOTE: Do not touch the bulb glass.

INSTALLATION

INSTALLATION

HINT:

- Use the same procedure for the RH and LH sides.
- The procedure described below is for the LH side.

1. **INSTALL DISCHARGE HEADLIGHT BULB**
    a. Set the discharge headlight bulb to the headlight unit.

    NOTE: **Do not touch the bulb glass.**

    b. Lock the set spring to install the discharge headlight bulb as shown in the illustration.

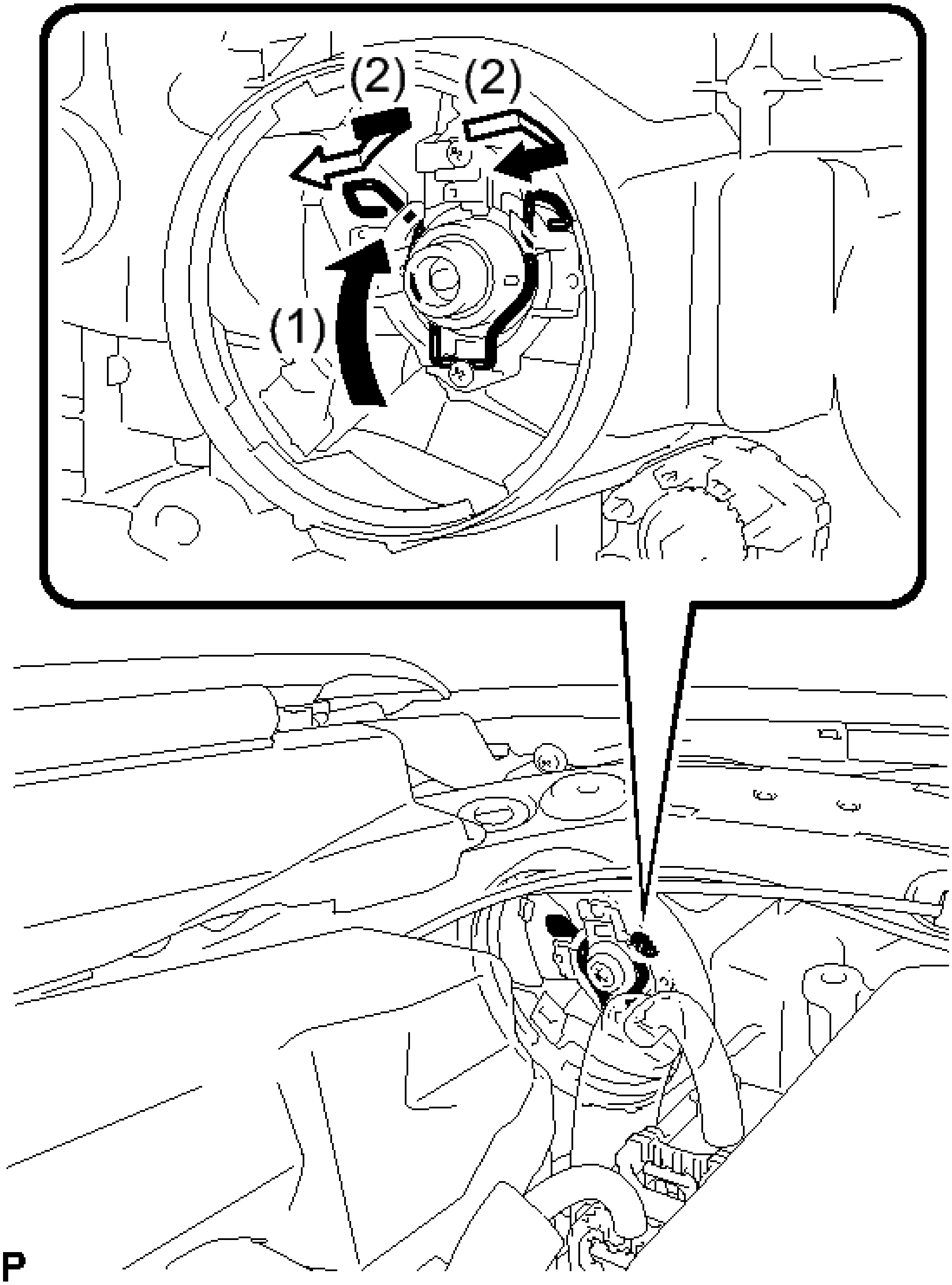

Fig. 39: Locking Discharge Headlight Bulb Set Spring
Courtesy of TOYOTA MOTOR SALES, U.S.A., INC.

2. **INSTALL HEADLIGHT LIGHT CONTROL ECU SUB-ASSEMBLY**
    a. Turn the socket of the headlight light control ECU sub-assembly in the direction indicated by the

arrow shown in the illustration to connect it.

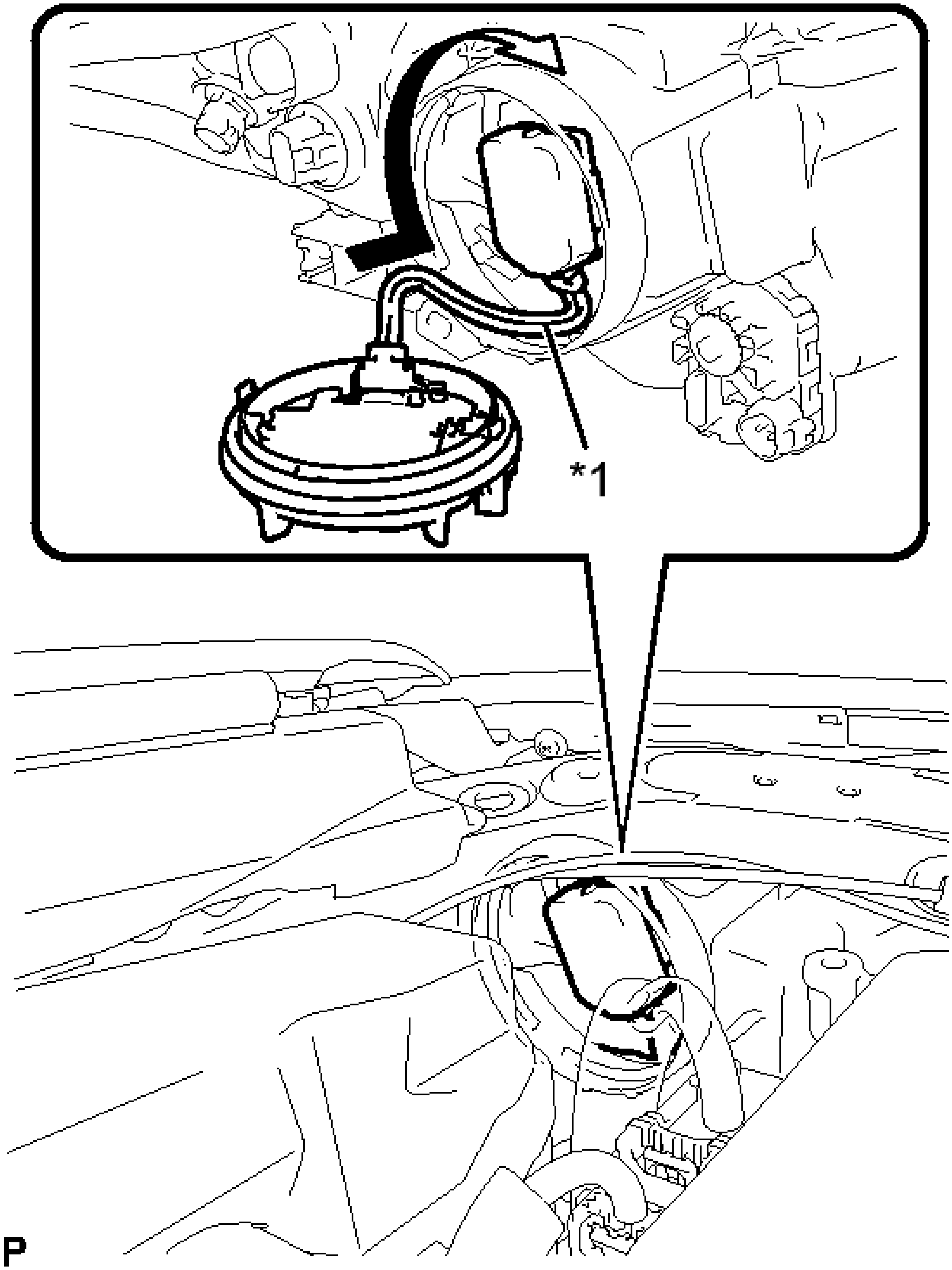

Fig. 40: Turning The Socket Of Headlight Light Control ECU Sub-Assembly
Courtesy of TOYOTA MOTOR SALES, U.S.A., INC.

NOTE:

- **Check that the O-ring is installed on the headlight light control ECU sub-assembly.**
- **Check that the O-ring is not damaged or contaminated with foreign matter. If there is any damage, replace the O-ring with a new one.**
- **Do not pull the headlight light control ECU sub-assembly with the socket connected.**

b. Check that the red line on the output harness is not twisted and store the harness in the headlight assembly securely so that the output harness is not pinched.

TEXT IN ILLUSTRATION

*1	Red Line

c. Engage the clamp.

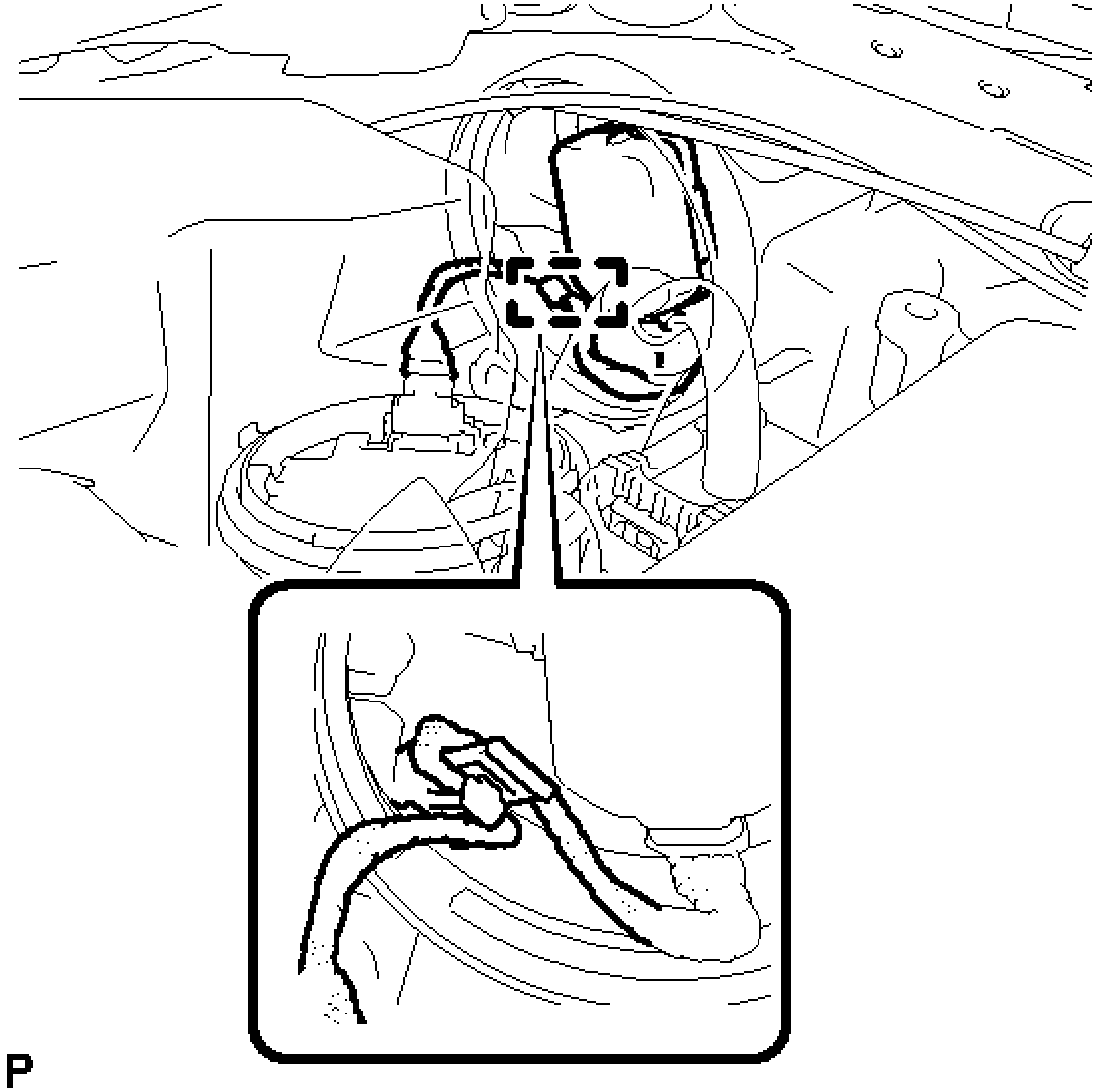

Fig. 41: Engaging The Clamp
Courtesy of TOYOTA MOTOR SALES, U.S.A., INC.

d. for LH Side:
    1. Turn the headlight light control ECU sub-assembly in the direction indicated by the arrow shown in the illustration until the lock marks are aligned to install it.

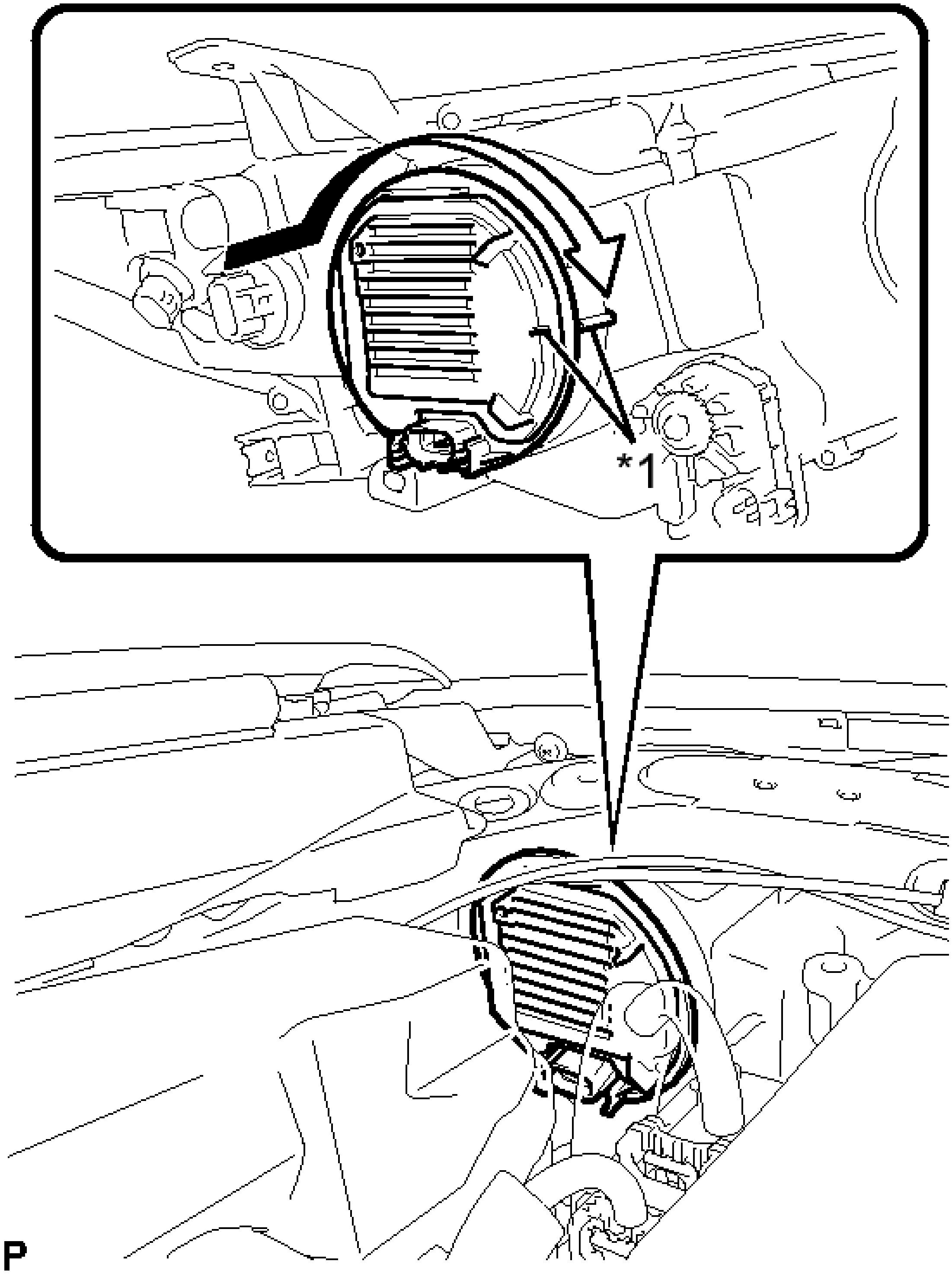

Fig. 42: Turning The Headlight Light Control ECU Sub-Assembly
Courtesy of TOYOTA MOTOR SALES, U.S.A., INC.

TEXT IN ILLUSTRATION

	Lock

*1	Mark

NOTE:

- **To prevent incomplete installation, make sure to fully push in and turn the headlight light control ECU sub-assembly until the lock marks are aligned.**
- **Do not apply excessive force using a tool.**

2. Engage the claw and connect the wire harness.

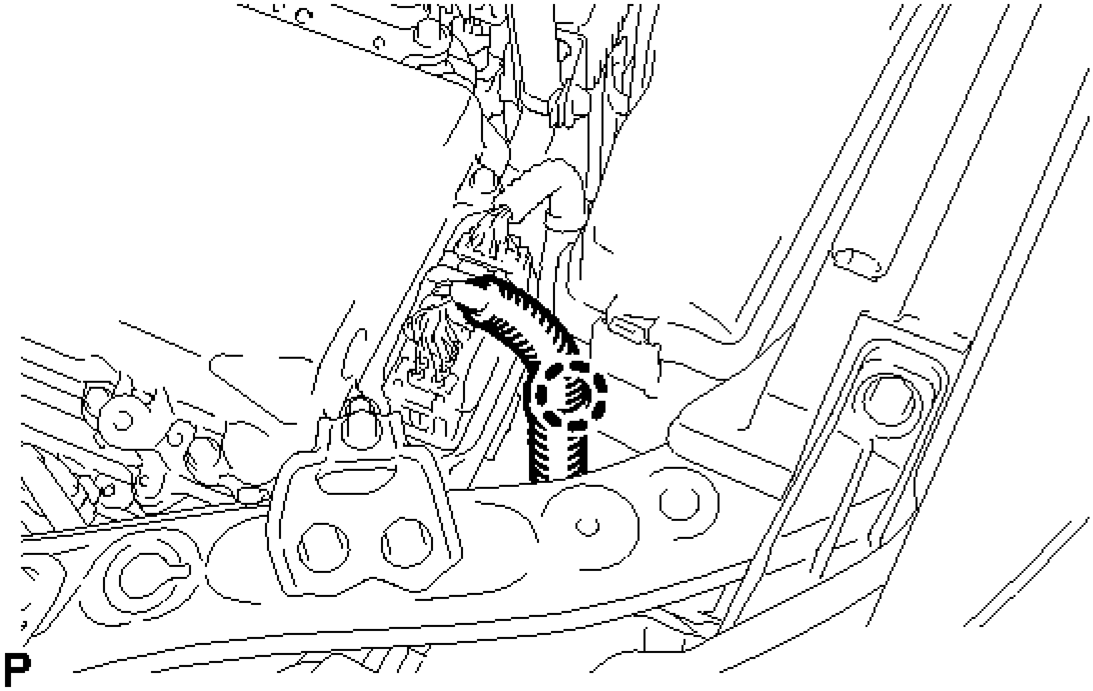

Fig. 43: Identifying Wire Harness Claw
Courtesy of TOYOTA MOTOR SALES, U.S.A., INC.

e. for RH Side:
    1. Turn the headlight light control ECU sub-assembly in the direction indicated by the arrow shown in the illustration until the lock marks are aligned to install it.

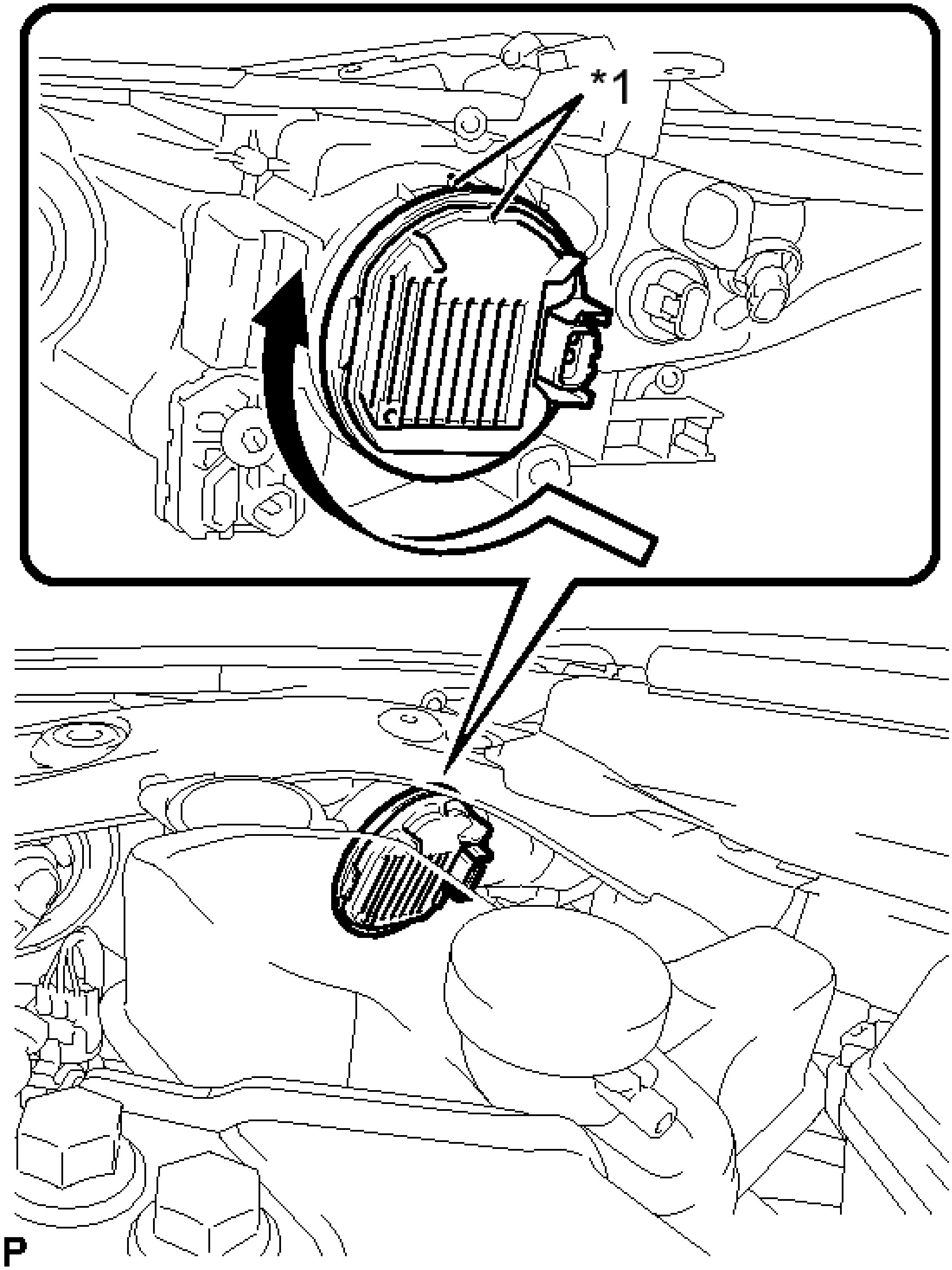

Fig. 44: Turning The Headlight Light Control ECU Sub-Assembly
Courtesy of TOYOTA MOTOR SALES, U.S.A., INC.

TEXT IN ILLUSTRATION

	Lock

*1	Mark

NOTE:

- **To prevent incomplete installation, make sure to fully push in and turn the headlight light control ECU sub-assembly until the lock marks are aligned.**
- **Do not apply excessive force using a tool.**

f. Connect the connector.

3. **CONNECT CABLE TO AUXILIARY BATTERY NEGATIVE TERMINAL**

NOTE: **When disconnecting the cable, some systems need to be initialized after the cable is reconnected. Refer to INITIALIZATION .**

4. **INSTALL LUGGAGE TRIM SERVICE HOLE COVER** . Refer to **INSTALLATION - Step 3**

FOG LIGHT ASSEMBLY

COMPONENTS

ILLUSTRATION

Fig. 45: Identifying Fog Light Assembly Replacement Components With Torque Specifications
Courtesy of TOYOTA MOTOR SALES, U.S.A., INC.

REMOVAL

REMOVAL

HINT:

- Use the same procedure for the RH and LH sides.
- The procedure described below is for the LH side.

1. **REMOVE FRONT BUMPER ASSEMBLY**

   Refer to **REMOVAL**

2. **REMOVE FOG LIGHT ASSEMBLY**
   a. Remove the screw.

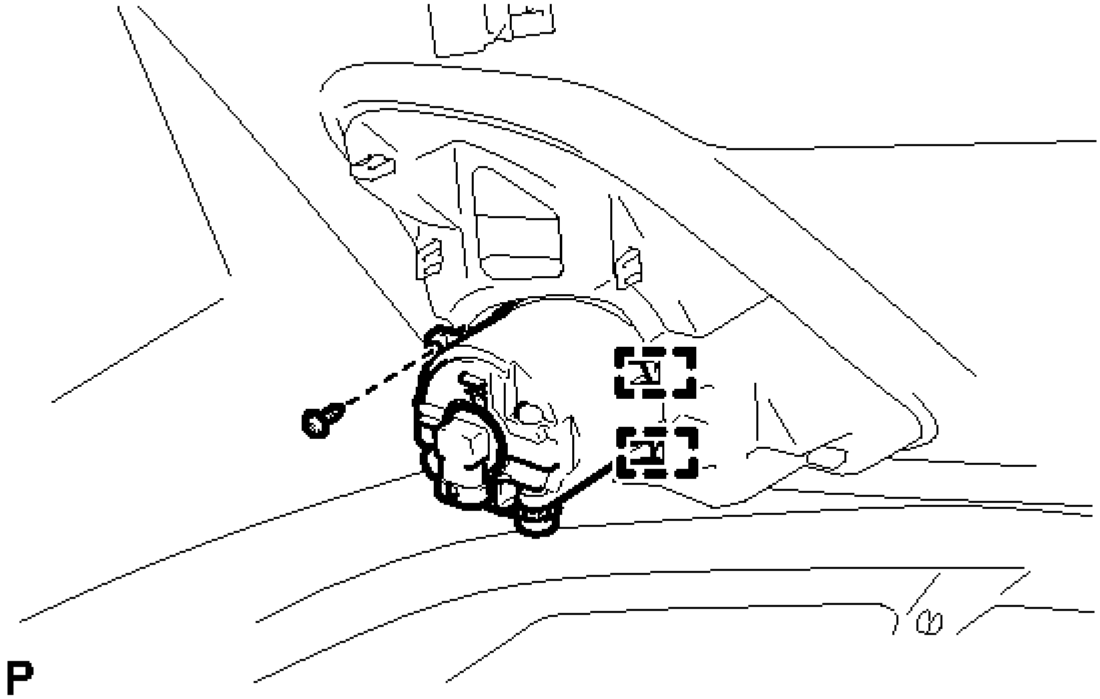

Fig. 46: Identifying Fog Light Assembly
Courtesy of TOYOTA MOTOR SALES, U.S.A., INC.

b. Disengage the 2 guides and remove the fog light assembly.

DISASSEMBLY

DISASSEMBLY

1. **REMOVE FOG LIGHT BULB**
    a. Turn the fog light bulb in the direction indicated by the arrow shown in the illustration and remove it.

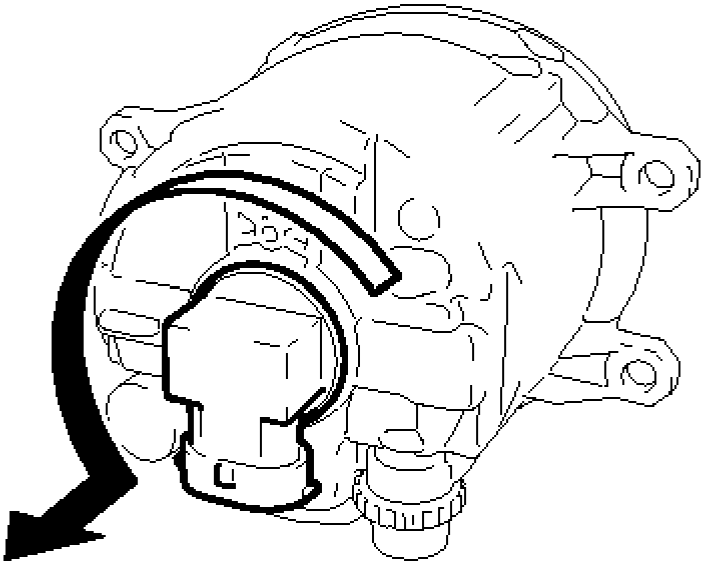

Fig. 47: Removing Fog Light Bulb
Courtesy of TOYOTA MOTOR SALES, U.S.A., INC.

NOTE: **Do not touch the bulb glass.**

ADJUSTMENT

ADJUSTMENT

HINT:

It is possible that a bulb is incorrectly installed, affecting fog light aim. Bulb installation should be considered prior to performing the adjustment procedure.

1. **PREPARE VEHICLE FOR FOG LIGHT AIM ADJUSTMENT**
    a. Prepare the vehicle:
        - Ensure there is no damage or deformation to the body around the fog lights.
        - Fill the fuel tank.
        - Make sure that the oil is filled to the specified level.
        - Make sure that the coolant is filled to the specified level.
        - Inflate the tires to the appropriate pressure.
        - Unload the trunk and vehicle, ensuring that the spare tire, tools and jack are in their original positions.
        - Sit a person of average weight (68 kg, 150 lb) in the driver's seat.
2. **PREPARE FOR FOG LIGHT AIMING**

a. Prepare the vehicle:

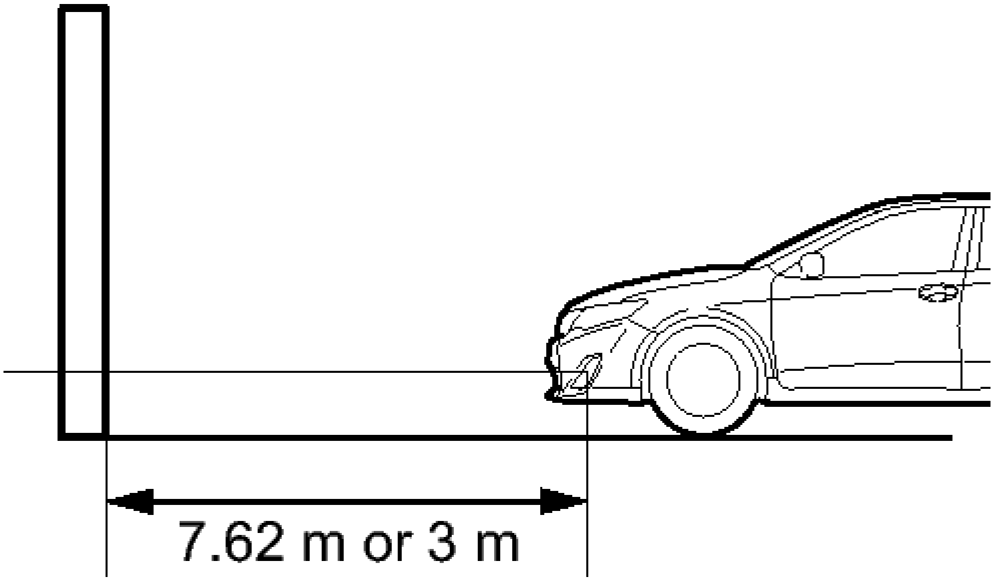

P

Fig. 48: Identifying Fog Light Aiming Distance (Using A Screen)
Courtesy of TOYOTA MOTOR SALES, U.S.A., INC.

- Place the vehicle in a location that is dark enough to clearly observe the cutoff line. The cutoff line is a distinct line, below which light from the fog lights can be observed and above which it cannot.
- Place the vehicle at a 90° angle to the wall.
- Create a 7.62 m (25 ft.) distance between the vehicle (fog light bulb center) and the wall.
- Make sure that the vehicle is on a level surface.
- Position the front wheels straight ahead.
- Bounce the vehicle up and down to settle the suspension.

NOTE: **A distance of 7.62 m (25 ft.) between the vehicle (fog light bulb center) and the wall is necessary for proper aim adjustment. If sufficient space is not available, secure a distance of exactly 3 m (9.84 ft.) to allow for checking and adjustment of fog light aim. (The size of the target zone will change with the distance, so follow the instructions in the illustration.)**

b. Prepare a piece of thick white paper (approximately 2 m (6.56 ft.) (height) x 4 m (13.1 ft.) (width)) to use as a screen.
c. Draw a vertical line down the center of the screen (V line).
d. Set the screen as shown in the illustration.

Fig. 49: Identifying Fog Light Aiming Distance (Using A Screen)
Courtesy of TOYOTA MOTOR SALES, U.S.A., INC.

HINT:

- Stand the screen perpendicular to the ground.
- Align the V line on the screen with the center of the vehicle.

e. Draw base lines (H, V LH, and V RH lines) on the screen as shown in the illustration.

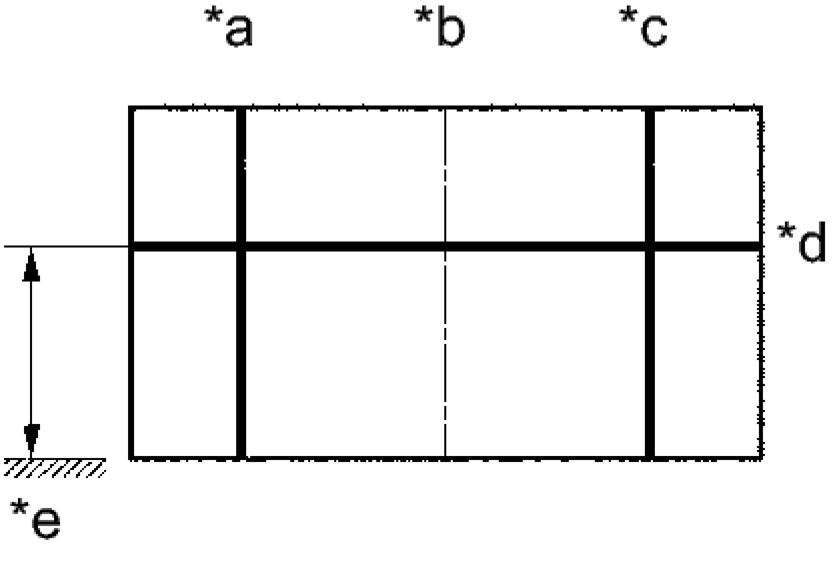

Fig. 50: Identifying V LH Line, V RH Line Graph

Courtesy of TOYOTA MOTOR SALES, U.S.A., INC.

TEXT IN ILLUSTRATION

*a	V LH Line
*b	V Line
*c	V RH Line
*d	H Line
*e	Ground

HINT:

Mark the fog light bulb center marks on the screen. If the center mark cannot be observed on the fog light, use the center of the fog light bulb.

1. H Line (Fog light height):

   Draw a horizontal line across the screen so that it passes through the center marks. The H line should be at the same height as the fog light bulb center marks of the fog lights.

2. V LH Line, V RH Line (Center mark position of left-hand (LH) and right-hand (RH) fog lights):

   Draw two vertical lines so that they intersect the H line at each center mark (aligned with the center of the fog light bulbs).

3. **INSPECT FOG LIGHT AIMING**
   a. Cover the fog light or disconnect the connector of the fog light on the opposite side to prevent light from the fog light that is not being inspected from affecting the fog light aiming inspection.
   b. Start the engine.
   c. Turn on the fog lights and check if the upper edge of the hot zone for each fog light matches the upper edge as shown in the illustration.

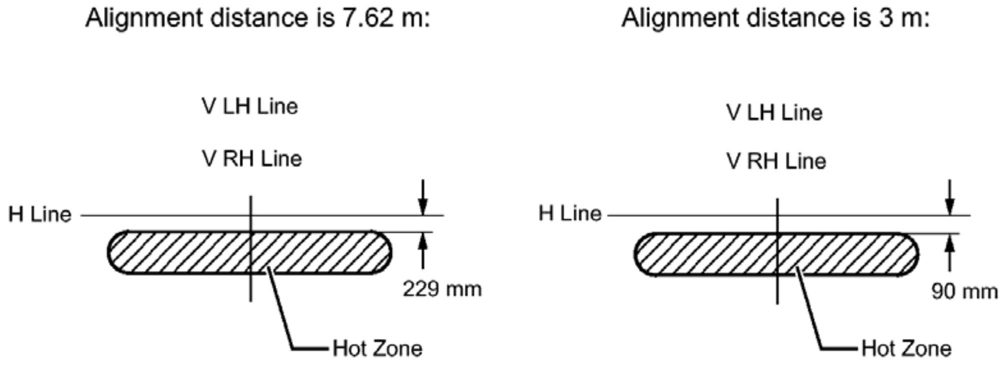
Alignment distance is 7.62 m:
V LH Line
V RH Line
H Line
229 mm
Hot Zone
Alignment distance is 3 m:
V LH Line
V RH Line
H Line
90 mm
Hot Zone

P

Fig. 51: Inspecting Fog Light Aiming
Courtesy of TOYOTA MOTOR SALES, U.S.A., INC.

HINT:

- If the alignment distance is 7.62 m (25 ft.):

  The upper edge of the hot zone for the fog light should be 229 mm (9.02 in.) below the H line.

- If the alignment distance is 3 m (9.84 ft.):

  The upper edge of the hot zone for the fog light should be 90 mm (3.54 in.) below the H line.

4. **ADJUST FOG LIGHT AIMING**
   a. Adjust the aim vertically:

      Adjust the aim of each fog light to the specified range by turning each aiming screw with a screwdriver.

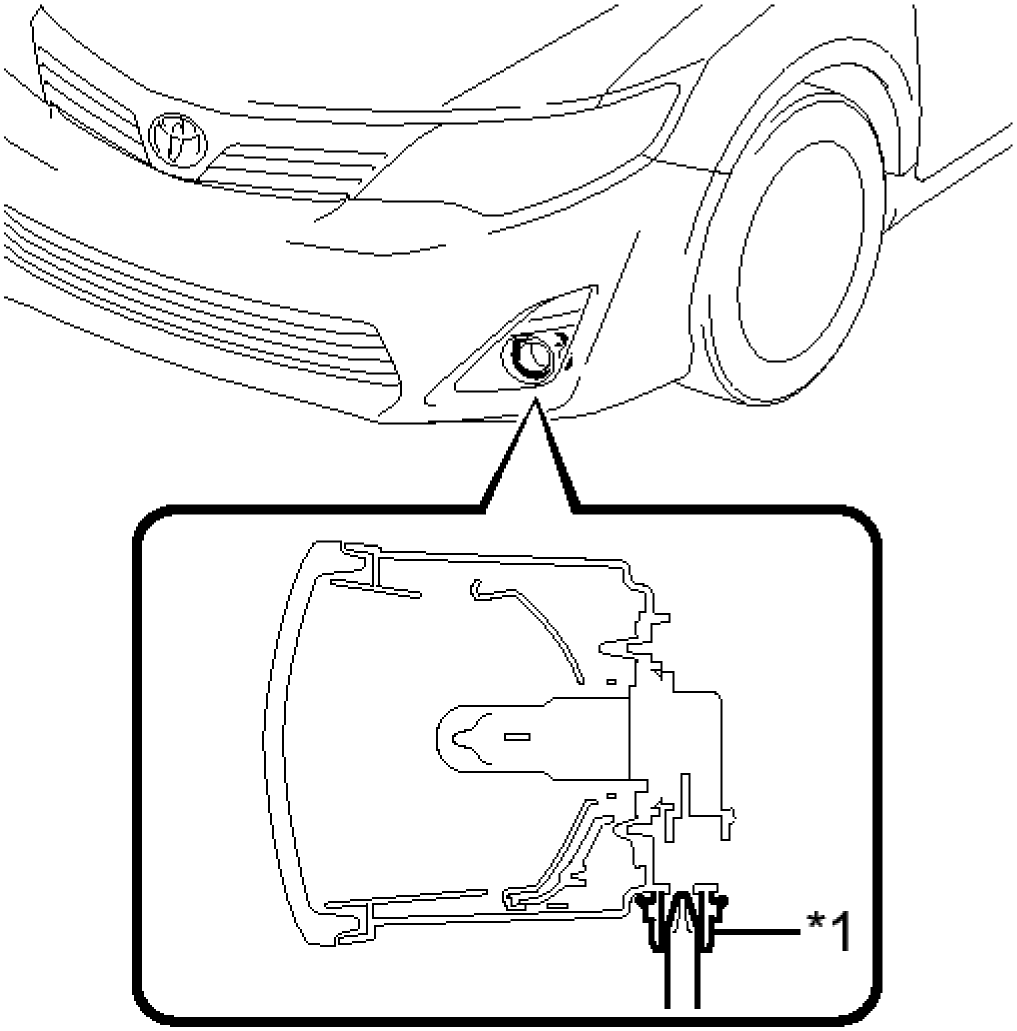

P

Fig. 52: Adjusting Fog Light Aim
Courtesy of TOYOTA MOTOR SALES, U.S.A., INC.

TEXT IN ILLUSTRATION

*1	Aiming Screw

NOTE: **The final turn of the aiming screw should be made in the clockwise direction. If the screw is tightened excessively, loosen it and then retighten it, so that the final turn of the screw is in the clockwise direction.**

HINT:

If it is not possible to correctly adjust fog light aim, check bulb, fog light unit and fog light unit reflector installation.

REASSEMBLY

REASSEMBLY

1. **INSTALL FOG LIGHT BULB**
    a. Turn the fog light bulb in the direction indicated by the arrow shown in the illustration to install it.

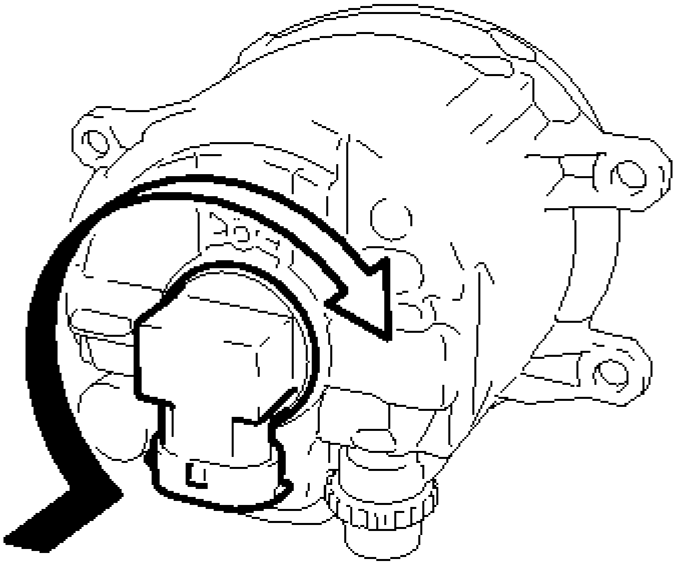

Fig. 53: Installing Fog Light Bulb
Courtesy of TOYOTA MOTOR SALES, U.S.A., INC.

NOTE: **Do not touch the bulb glass.**

INSTALLATION

INSTALLATION

HINT:

- Use the same procedure for the RH and LH sides.
- The procedure described below is for the LH side.

1. **INSTALL FOG LIGHT ASSEMBLY**
    a. Engage the 2 guides to temporarily install the fog light assembly.
    b. Install the fog light assembly with the screw.

Torque: 1.6 N*m (16 kgf*cm, 14 in.*lbf)

2. **INSTALL FRONT BUMPER ASSEMBLY**

   Refer to **INSTALLATION**

SIDE TURN SIGNAL LIGHT ASSEMBLY

COMPONENTS

ILLUSTRATION

Fig. 54: Identifying Side Turn Signal Light Assembly Replacement Components With Torque Specifications
Courtesy of TOYOTA MOTOR SALES, U.S.A., INC.

REMOVAL

REMOVAL

HINT:

- Use the same procedure for the RH and LH sides.

- The procedure described below is for the LH side.

1. **REMOVE OUTER REAR VIEW MIRROR** . Refer to **REMOVAL - Step 2**
2. **REMOVE OUTER MIRROR COVER** . Refer to **REMOVAL - Step 4**
3. **REMOVE SIDE TURN SIGNAL LIGHT ASSEMBLY**
    a. Disengage the 2 claws.

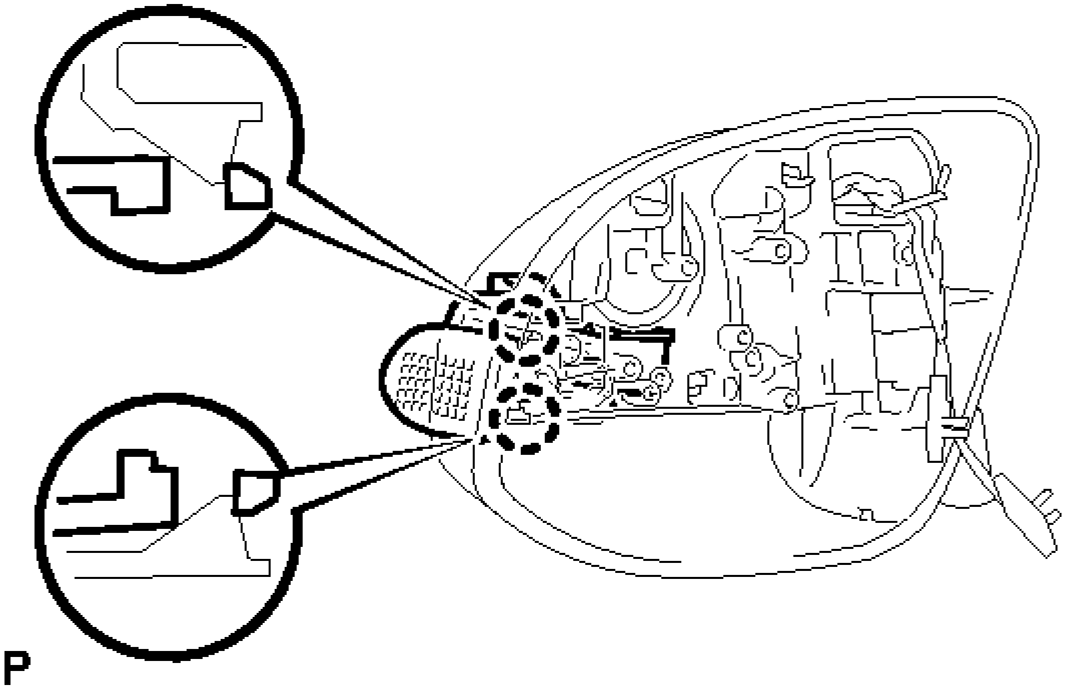

Fig. 55: Identifying Side Turn Signal Light Assembly
Courtesy of TOYOTA MOTOR SALES, U.S.A., INC.

    b. Disconnect the connector and remove the side turn signal light assembly.

INSPECTION

INSPECTION

1. **INSPECT SIDE TURN SIGNAL LIGHT ASSEMBLY LH**
    a. Connect a positive (+) lead from the auxiliary battery to terminal 1 and a negative (-) lead to terminal 2.

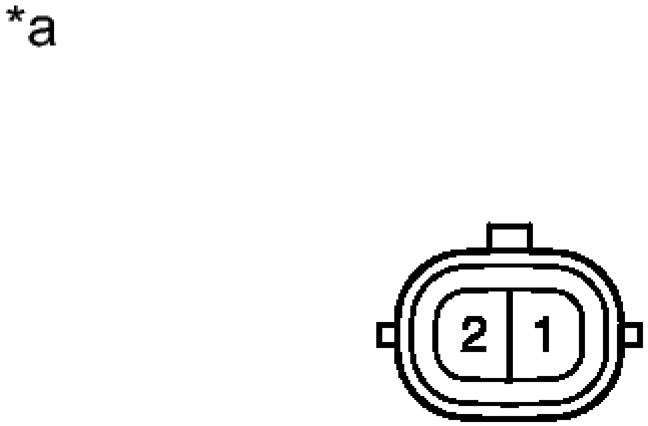

Fig. 56: Turn Signal Light Assembly LH
Courtesy of TOYOTA MOTOR SALES, U.S.A., INC.

b. Check that the side turn signal light comes on.

OK

The light comes on.

TEXT IN ILLUSTRATION

*a	Component without harness connected (Side Turn Signal Light Assembly LH)

If the result is not as specified, replace the side turn signal light assembly LH.

2. **INSPECT SIDE TURN SIGNAL LIGHT ASSEMBLY RH**
   a. Connect a positive (+) lead from the auxiliary battery to terminal 1 and a negative (-) lead to terminal 2.

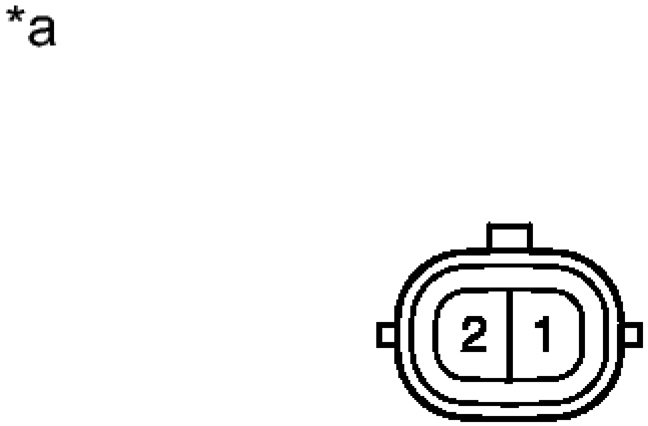

Fig. 57: Turn Signal Light Assembly LH
Courtesy of TOYOTA MOTOR SALES, U.S.A., INC.

b. Check that the side turn signal light comes on.

OK

The light comes on.

TEXT IN ILLUSTRATION

*a	Component without harness connected (Side Turn Signal Light Assembly RH)

If the result is not as specified, replace the side turn signal light assembly RH.

INSTALLATION

INSTALLATION

HINT:

- Use the same procedure for the RH and LH sides.
- The procedure described below is for the LH side.

1. **INSTALL SIDE TURN SIGNAL LIGHT ASSEMBLY**
    a. Connect the connector.
    b. Engage the 2 claws to install the side turn signal light assembly.
2. **INSTALL OUTER MIRROR COVER** . Refer to **INSTALLATION - Step 2**
3. **INSTALL OUTER REAR VIEW MIRROR** . Refer to **INSTALLATION - Step 2**

REAR COMBINATION LIGHT ASSEMBLY

COMPONENTS

ILLUSTRATION

Fig. 58: Identifying Rear Combination Light Assembly Replacement Components (1 Of 2)
Courtesy of TOYOTA MOTOR SALES, U.S.A., INC.

Fig. 59: Identifying Rear Combination Light Assembly Replacement Components With Torque Specifications (2 Of 2)
Courtesy of TOYOTA MOTOR SALES, U.S.A., INC.

ON-VEHICLE INSPECTION

ON-VEHICLE INSPECTION

1. **INSPECT REAR COMBINATION LIGHT ASSEMBLY LH**

a. Disconnect the connector from the rear combination light assembly LH.

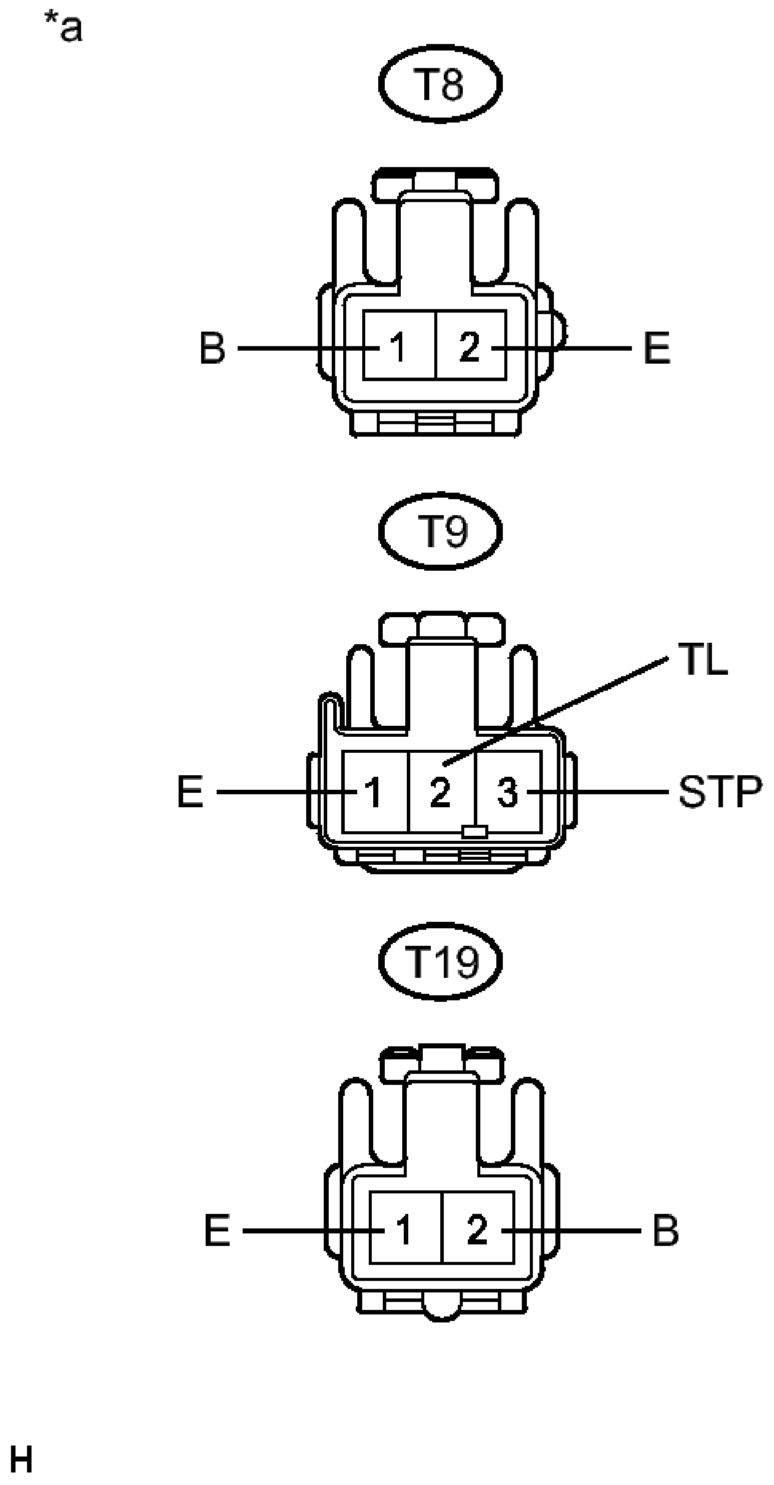
*a
T8
B
1
2
E
T9
TL
E
1
2
3
STP
T19
E
1
2
B
H

Fig. 60: Inspecting Rear Combination Light Assembly LH Connectors
Courtesy of TOYOTA MOTOR SALES, U.S.A., INC.

b. Measure the voltage according to the value(s) in the table below.

Standard Voltage

Tester Connection	Switch Condition	Specified Condition
T8-1 (B)-T8-2 (E)	Turn signal switch in neutral position	Below 1 V
	Turn signal switch in left turn position	11 to 14 V (60 to 120 times per minute)
T9-2 (TL) - T9-1 (E)	Light control switch off	Below 1 V
	Light control switch in tail position	11 to 14 V
T9-3 (STP) - T9-1 (E)	Brake pedal released	Below 1 V
	Brake pedal depressed	11 to 14 V
T19-2 (B) - T19-1 (E)	Light control switch off	Below 1 V
	Light control switch in tail position	11 to 14 V

TEXT IN ILLUSTRATION

*a	Front view of wire harness connector (to Rear Combination

	Light Assembly LH)

If the result is not as specified, repair or replace the wire harness or connector.

2. **INSPECT REAR COMBINATION LIGHT ASSEMBLY RH**
   a. Disconnect the connector from the rear combination light assembly RH.

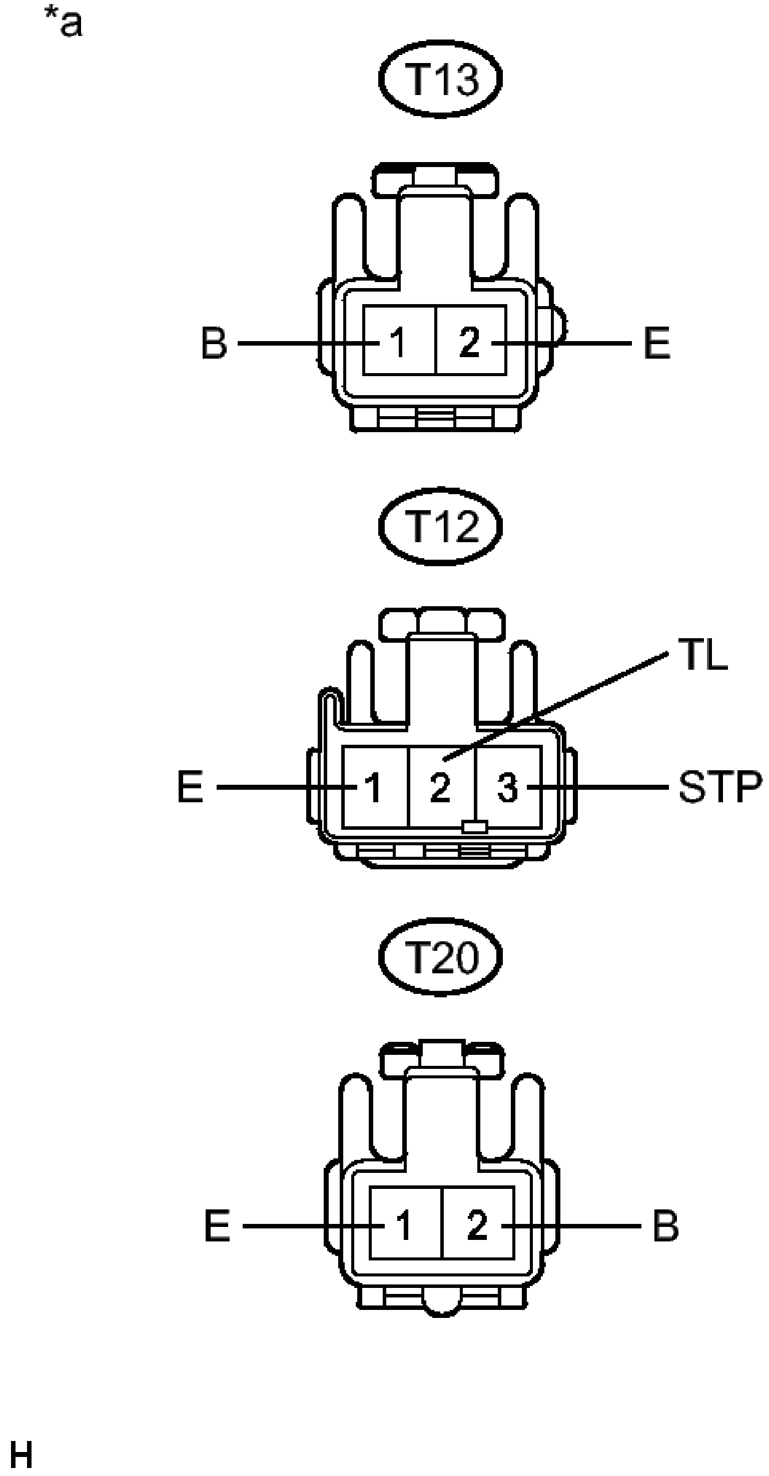
*a
T13
B
1
2
E
T12
TL
E
1
2
3
STP
T20
E
1
2
B
H

Fig. 61: Inspecting Rear Combination Light Assembly RH Connectors
Courtesy of TOYOTA MOTOR SALES, U.S.A., INC.

b. Measure the voltage according to the value(s) in the table below.

Standard Voltage

Tester Connection	Switch Condition	Specified Condition
T13-1 (B) - T13-2 (E)	Turn signal switch in neutral position	Below 1 V
	Turn signal switch in right turn position	11 to 14 V (60 to 120 times per minute)
T12-2 (TL) - T12-1 (E)	Light control switch off	Below 1 V
	Light control switch in tail position	11 to 14 V
T12-3 (STP) - T12-1 (E)	Brake pedal released	Below 1 V
	Brake pedal depressed	11 to 14 V
T20-2 (B) - T20-1 (E)	Light control switch off	Below 1 V
	Light control switch in tail position	11 to 14 V

TEXT IN ILLUSTRATION

*a	Front view of wire harness connector (to Rear Combination Light Assembly

	RH)

If the result is not as specified, repair or replace the wire harness or connector.

REMOVAL

REMOVAL

HINT:

- Use the same procedure for the RH and LH sides.
- The procedure described below is for the LH side.

1. **REMOVE REAR BUMPER ASSEMBLY**

   Refer to **REMOVAL**

2. **REMOVE LUGGAGE COMPARTMENT FLOOR MAT** . Refer to **REMOVAL - Step 1**
3. **REMOVE SPARE WHEEL COVER ASSEMBLY** . Refer to **REMOVAL - Step 2**
4. **REMOVE BAGGAGE HOLDER NET (w/ Partition Net)** . Refer to **REMOVAL - Step 3**
5. **REMOVE REAR FLOOR FINISH PLATE** . Refer to **REMOVAL - Step 4**
6. **REMOVE NO. 1 LUGGAGE COMPARTMENT TRIM HOOK** . Refer to **REMOVAL - Step 18**
7. **REMOVE LUGGAGE COMPARTMENT FRONT TRIM COVER** . Refer to **REMOVAL - Step 6**
8. **REMOVE LUGGAGE COMPARTMENT INNER TRIM COVER** . Refer to **REMOVAL - Step 7**
9. **REMOVE REAR COMBINATION LIGHT ASSEMBLY**
   1. Disconnect each connector.

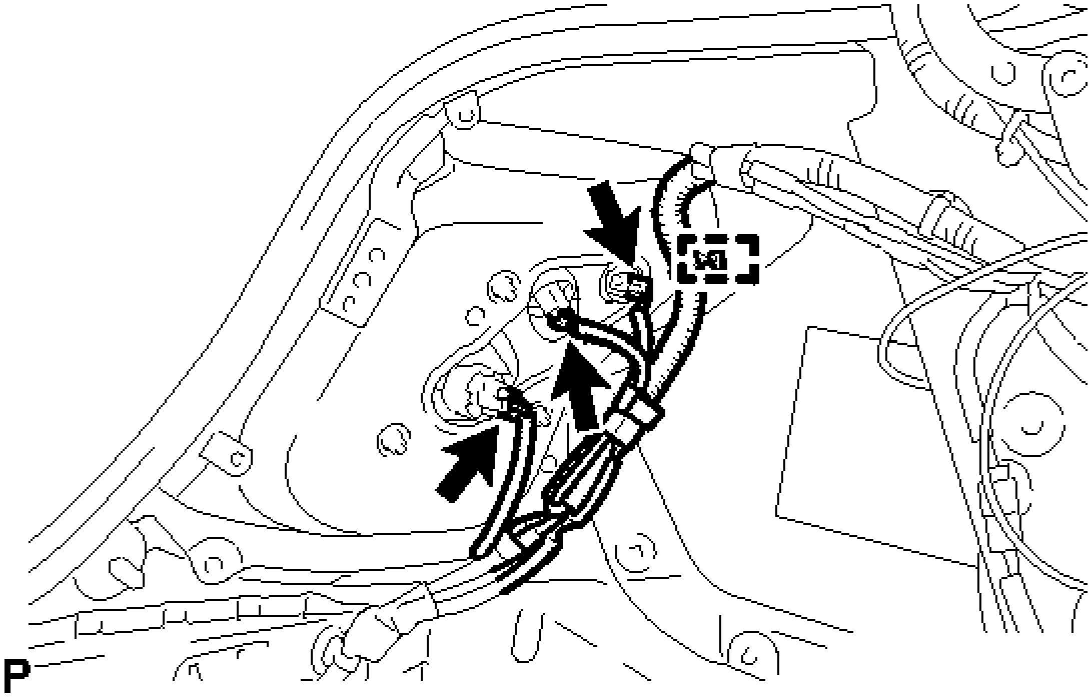

Fig. 62: Identifying Rear Combination Light Assembly Connectors And Clamp
Courtesy of TOYOTA MOTOR SALES, U.S.A., INC.

b. Disengage the clamp.
c. Remove the 4 nuts and rear combination light assembly.

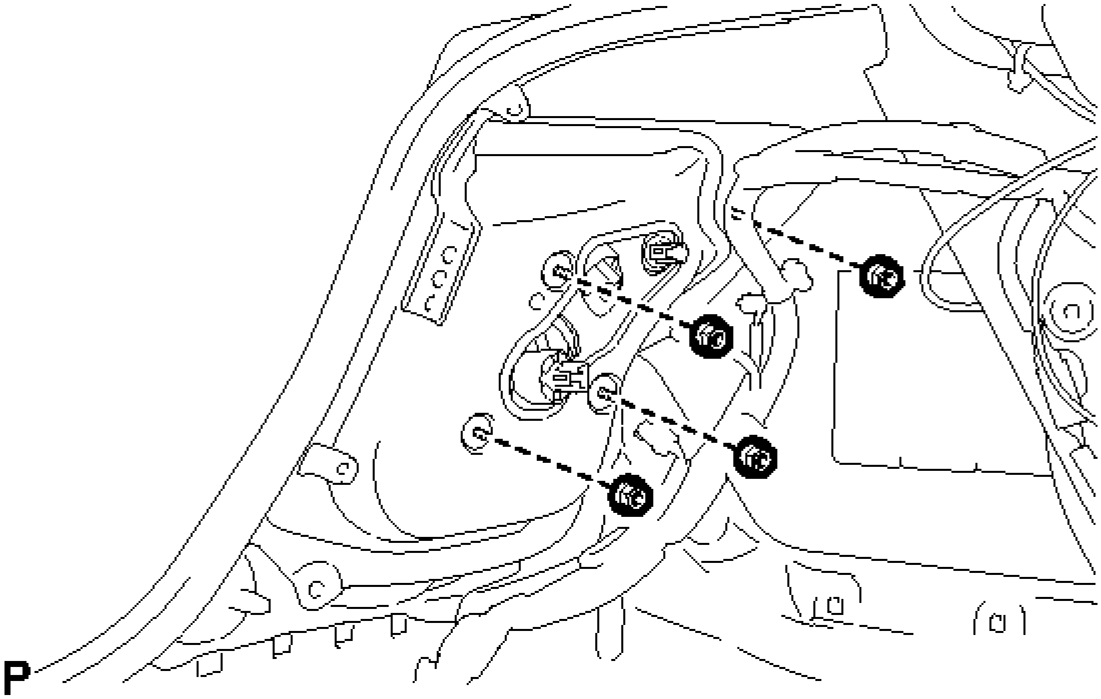

Fig. 63: Identifying Rear Combination Light Assembly Fasteners

Courtesy of TOYOTA MOTOR SALES, U.S.A., INC.

DISASSEMBLY

DISASSEMBLY

1. **REMOVE REAR COMBINATION LIGHT PACKING**
    a. Remove the rear combination light packing.

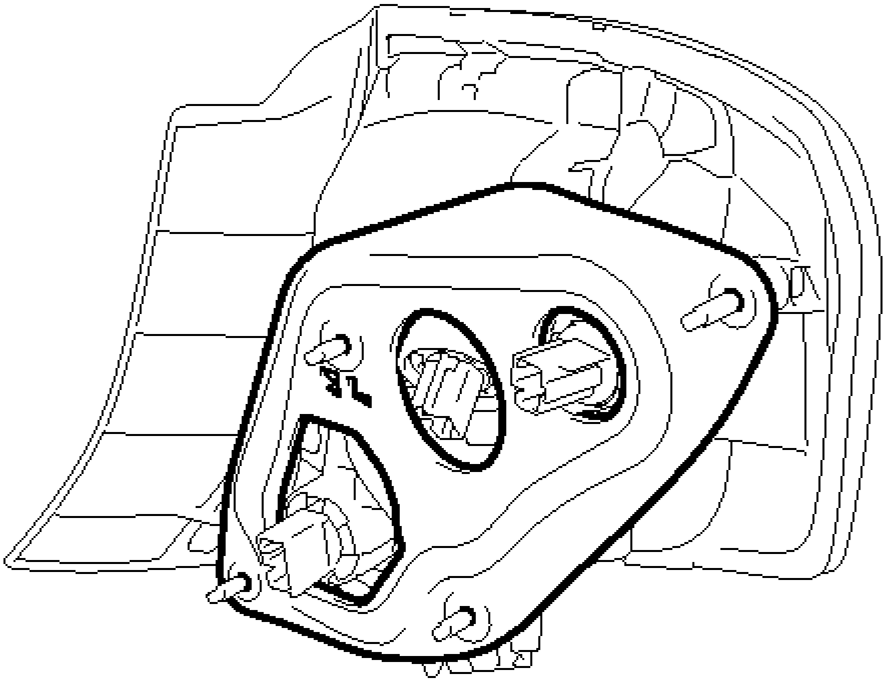

Fig. 64: Identifying Rear Combination Light Packing
Courtesy of TOYOTA MOTOR SALES, U.S.A., INC.

NOTE:

- **Be sure to remove all the traces of the old packing from the body.**
- **Do not reuse the removed packing. Be sure to install a new rear combination light packing to prevent water ingress.**

2. **REMOVE REAR SIDE MARKER LIGHT BULB**
    a. Turn the rear side marker light socket with the rear side marker light bulb in the direction indicated by the arrow shown in the illustration, and remove them as a unit.

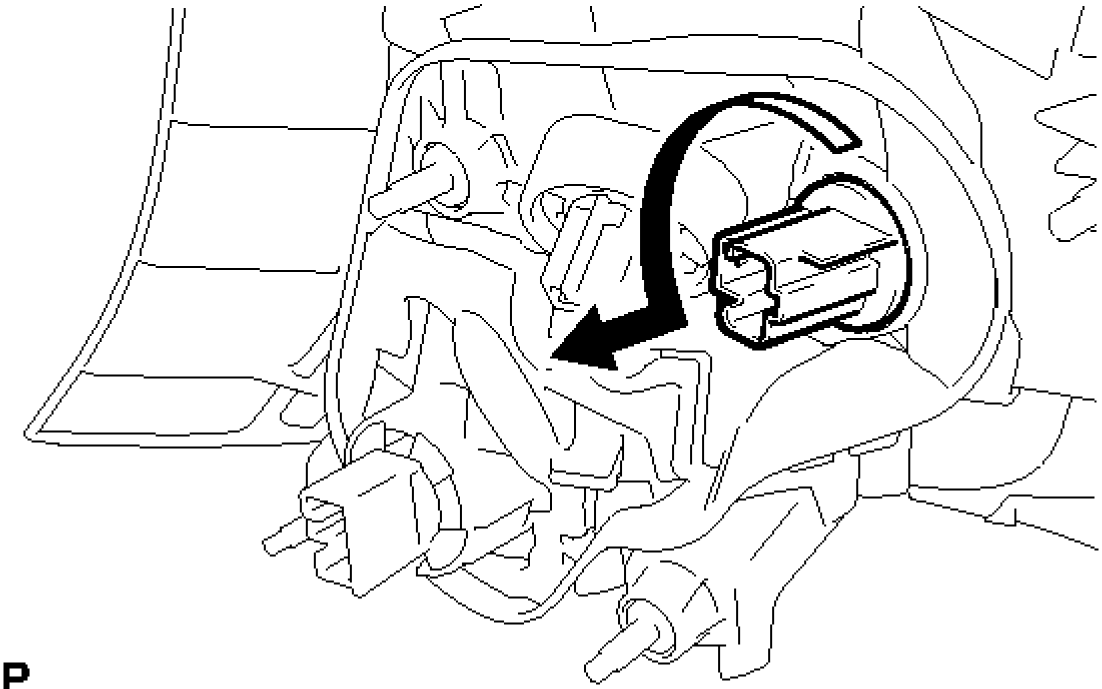

P

Fig. 65: Removing Rear Side Marker Light Bulb
Courtesy of TOYOTA MOTOR SALES, U.S.A., INC.

b. Remove the rear side marker light bulb from the rear side marker light socket.

3. **REMOVE REAR TURN SIGNAL LIGHT BULB**
    a. Turn the rear turn signal light socket with the rear turn signal light bulb in the direction indicated by the arrow shown in the illustration, and remove them as a unit.

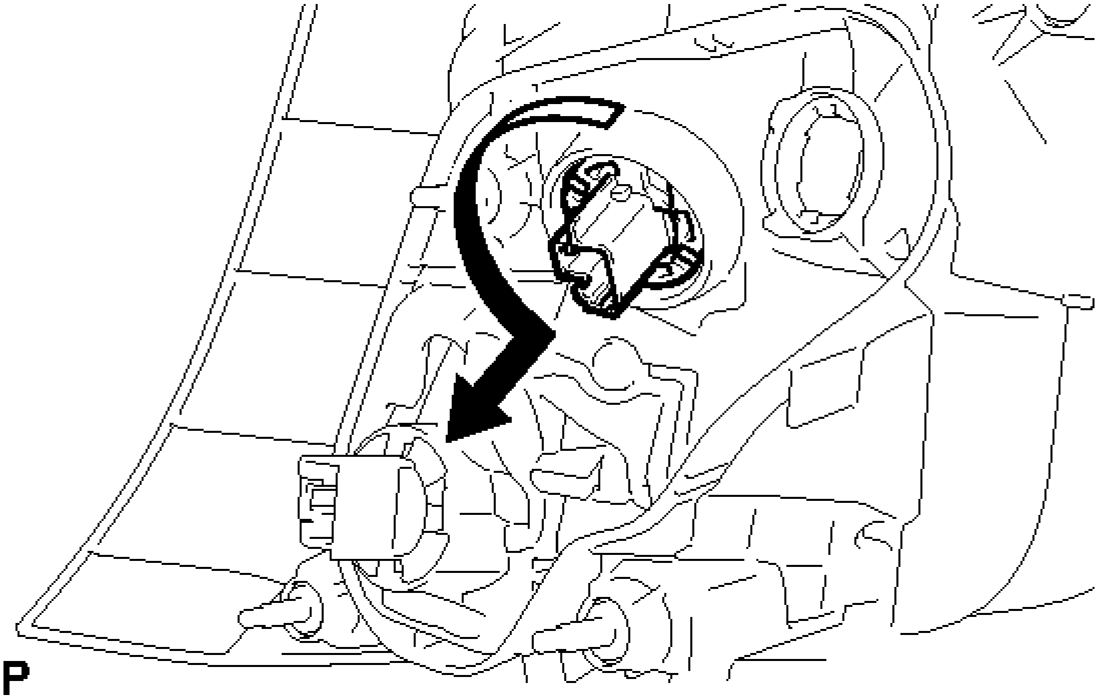

Fig. 66: Removing Rear Turn Signal Light Bulb
Courtesy of TOYOTA MOTOR SALES, U.S.A., INC.

b. Remove the rear turn signal light bulb from the rear turn signal light socket.

4. **REMOVE TAIL AND STOP LIGHT BULB**
   a. Turn the tail and stop light socket with the tail and stop light bulb in the direction indicated by the arrow shown in the illustration, and remove them as a unit.

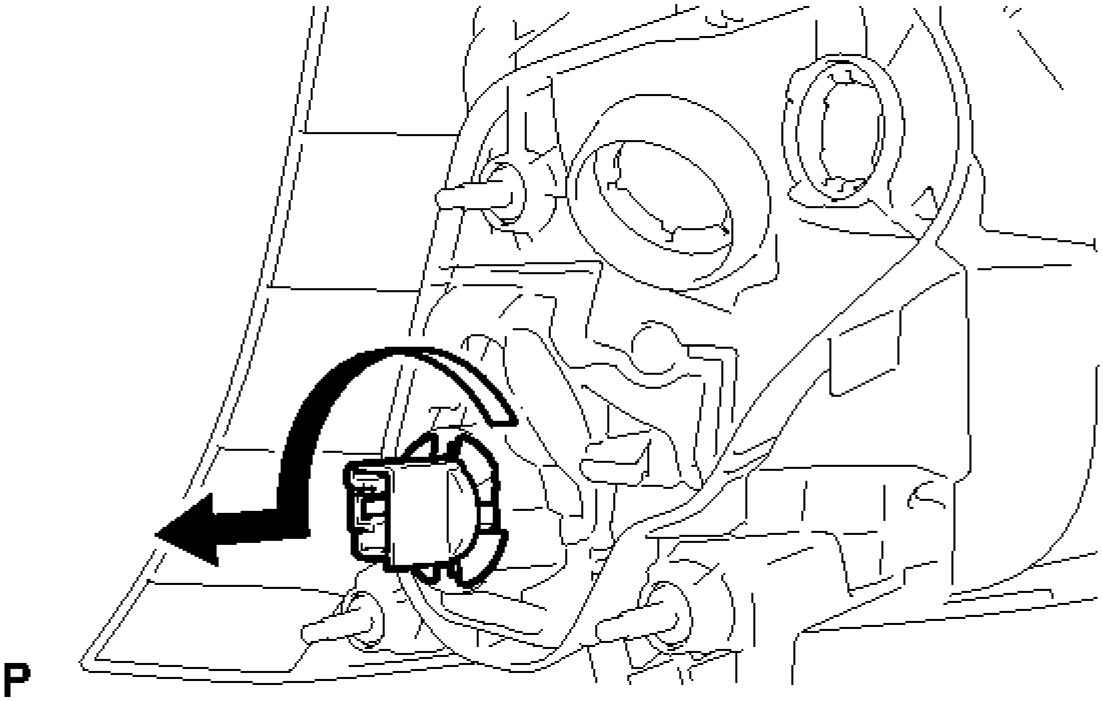

Fig. 67: Removing Tail And Stop Light Bulb
Courtesy of TOYOTA MOTOR SALES, U.S.A., INC.

b. Remove the tail and stop light bulb from the tail and stop light socket.

5. **REMOVE REAR BUMPER UPPER SIDE RETAINER**
    a. Using a screwdriver, disengage the claw and remove the rear bumper upper side retainer as shown in the illustration.

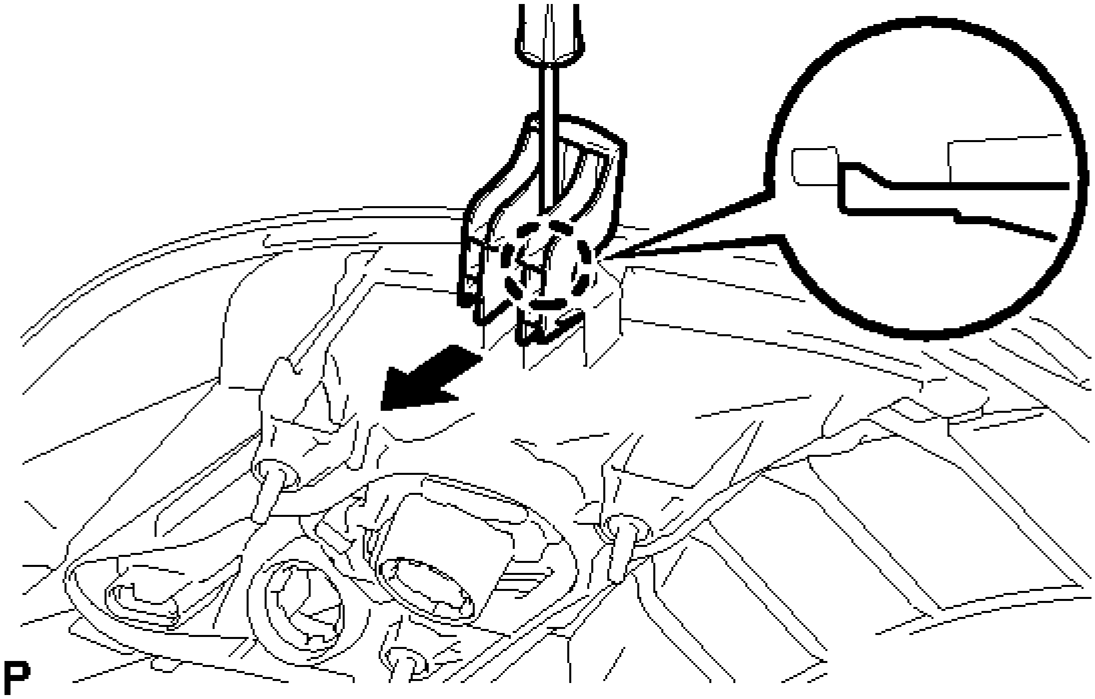

Fig. 68: Removing Rear Bumper Upper Side Retainer
Courtesy of TOYOTA MOTOR SALES, U.S.A., INC.

REASSEMBLY

REASSEMBLY

1. **INSTALL REAR BUMPER UPPER SIDE RETAINER**
    a. Engage the claw to install the rear bumper upper side retainer as shown in the illustration.

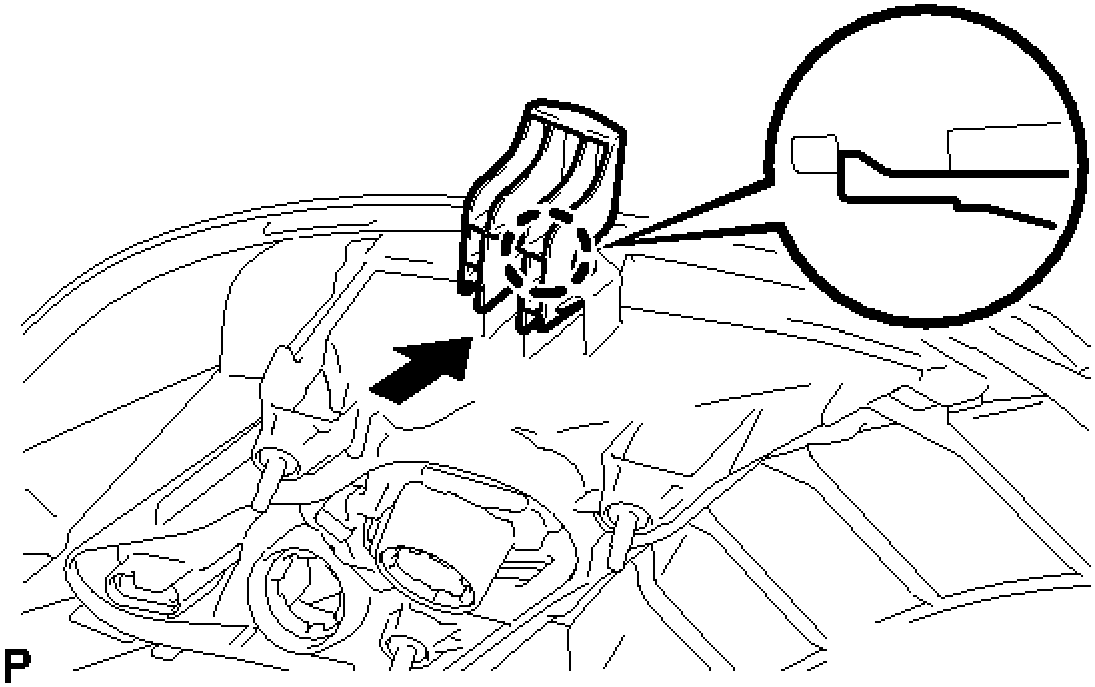

Fig. 69: Installing Rear Bumper Upper Side Retainer
Courtesy of TOYOTA MOTOR SALES, U.S.A., INC.

2. **INSTALL TAIL AND STOP LIGHT BULB**
   1. Install the tail and stop light bulb to the tail and stop light socket.
   2. Turn the tail and stop light socket with the tail and stop light bulb in the direction indicated by the arrow shown in the illustration to install them as a unit.

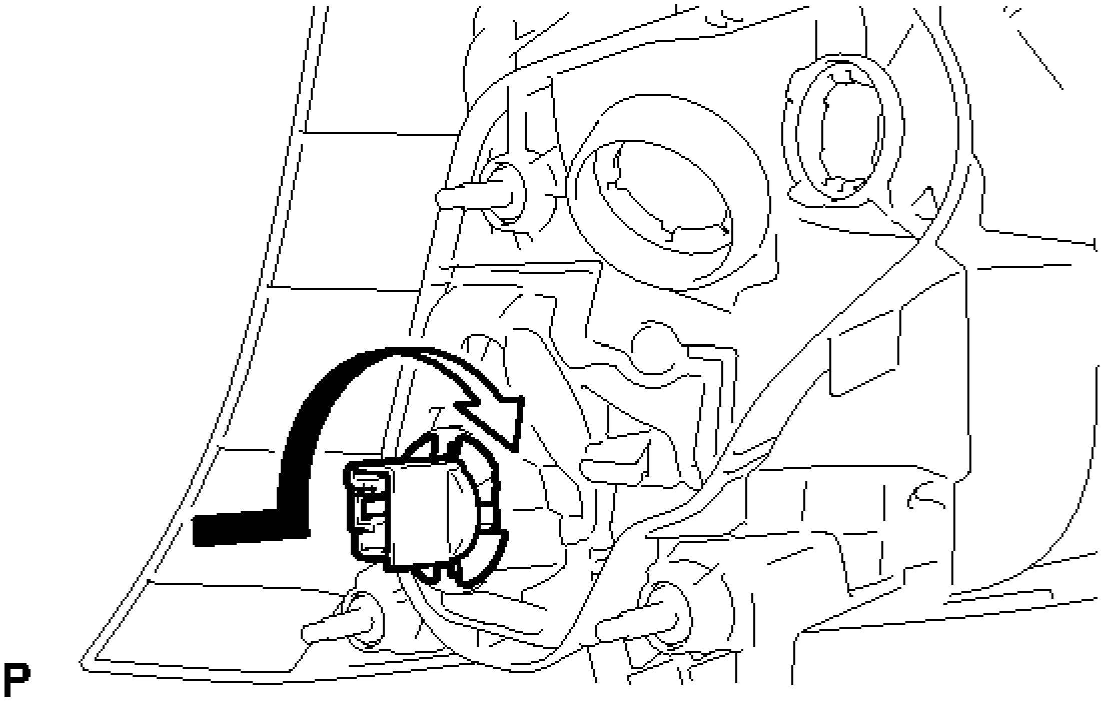

Fig. 70: Installing Tail And Stop Light Bulb
Courtesy of TOYOTA MOTOR SALES, U.S.A., INC.

3. **INSTALL REAR TURN SIGNAL LIGHT BULB**
   a. Install the rear turn signal light bulb to the rear turn signal light socket.
   b. Turn the rear turn signal light socket with the rear turn signal light bulb in the direction indicated by the arrow shown in the illustration to install them as a unit.

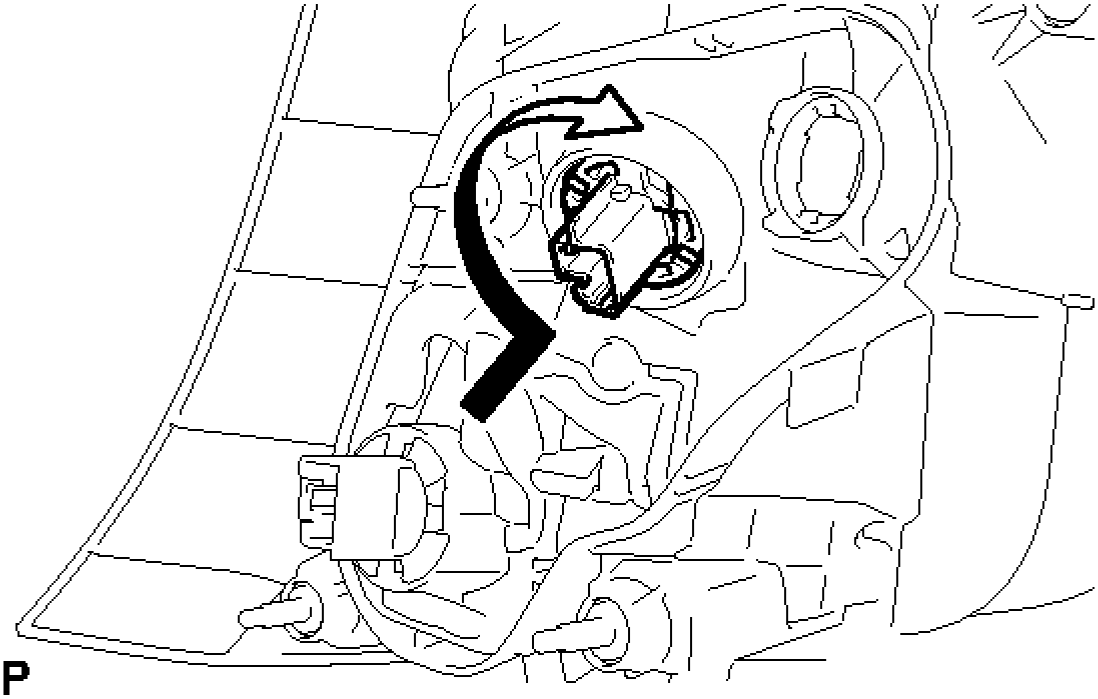

Fig. 71: Installing Rear Turn Signal Light Bulb
Courtesy of TOYOTA MOTOR SALES, U.S.A., INC.

4. **INSTALL REAR SIDE MARKER LIGHT BULB**
    1. Install the rear side marker light bulb to the rear side marker light socket.
    2. Turn the rear side marker light socket with the rear side marker light bulb in the direction indicated by the arrow shown in the illustration to install them as a unit.

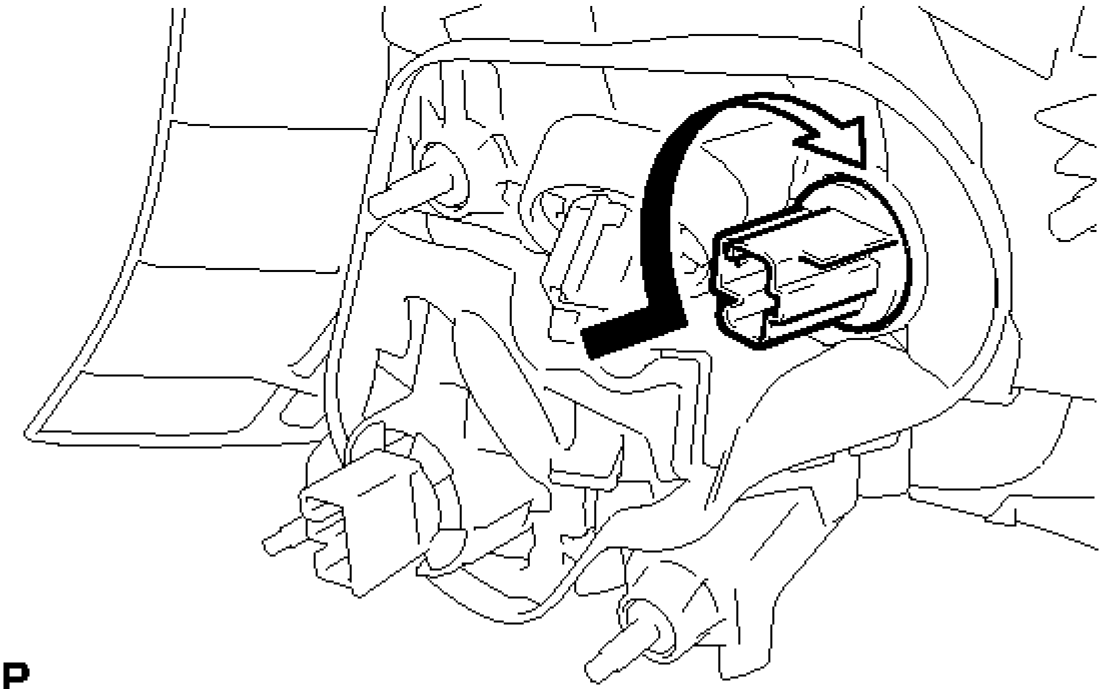

Fig. 72: Installing Rear Side Marker Light Bulb
Courtesy of TOYOTA MOTOR SALES, U.S.A., INC.

5. **INSTALL REAR COMBINATION LIGHT PACKING**
    a. Install a new rear combination light packing.

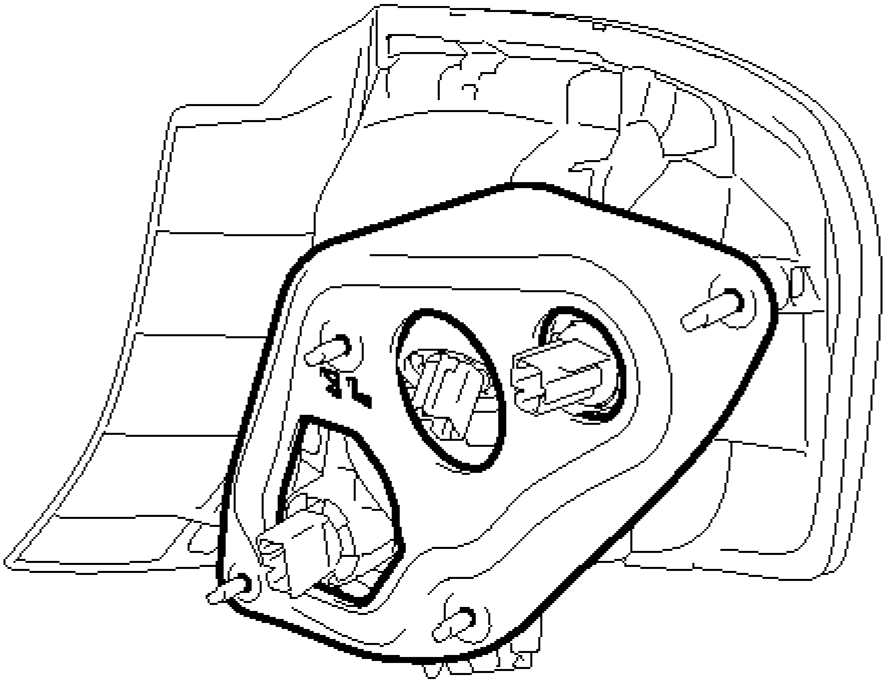

Fig. 73: Identifying Rear Combination Light Packing

INSTALLATION

INSTALLATION

HINT:

- Use the same procedure for the RH and LH sides.
- The procedure described below is for the LH side.

1. **INSTALL REAR COMBINATION LIGHT ASSEMBLY**
    a. Install the rear combination light assembly with the 4 nuts.

       Torque: 4.1 N*m (42 kgf*cm, 36 in.*lbf)

    b. Engage the clamp.
    c. Connect each connector.
2. **INSTALL LUGGAGE COMPARTMENT INNER TRIM COVER** . Refer to **INSTALLATION - Step 6**
3. **INSTALL NO. 1 LUGGAGE COMPARTMENT TRIM HOOK** . Refer to **INSTALLATION - Step 4**
4. **INSTALL LUGGAGE COMPARTMENT FRONT TRIM COVER** . Refer to **INSTALLATION - Step 9**
5. **INSTALL REAR FLOOR FINISH PLATE** . Refer to **INSTALLATION - Step 10**
6. **INSTALL BAGGAGE HOLDER NET (w/ Partition Net)** . Refer to **INSTALLATION - Step 11**
7. **INSTALL SPARE WHEEL COVER ASSEMBLY** . Refer to **INSTALLATION - Step 12**
8. **INSTALL LUGGAGE COMPARTMENT FLOOR MAT** . Refer to **INSTALLATION - Step 13**
9. **INSTALL REAR BUMPER ASSEMBLY**

   Refer to **INSTALLATION**

REAR LIGHT ASSEMBLY

COMPONENTS

ILLUSTRATION

Fig. 74: Identifying Rear Light Assembly Replacement Components With Torque Specifications
Courtesy of TOYOTA MOTOR SALES, U.S.A., INC.

ON-VEHICLE INSPECTION

ON-VEHICLE INSPECTION

1. **INSPECT REAR LIGHT ASSEMBLY LH**

a. Disconnect the connector from the rear light assembly LH.

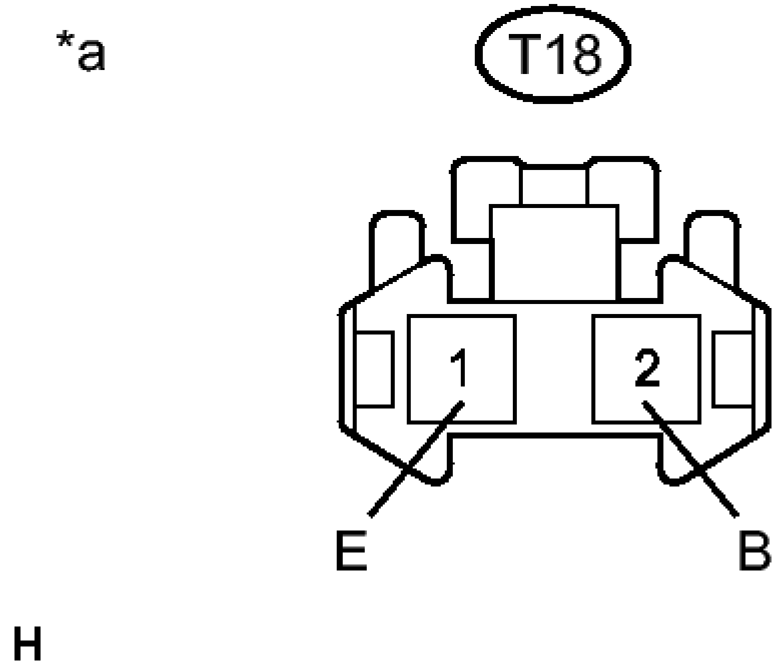

Fig. 75: Inspecting Rear Light Assembly LH Connector
Courtesy of TOYOTA MOTOR SALES, U.S.A., INC.

b. Measure the voltage according to the value(s) in the table below.

Standard Voltage

Tester Connection	Condition	Specified Condition
T18-2 (B)-T18-1 (E)	Power switch on (READY) and the shift lever not in R	Below 1 V
	Power switch on (READY) and the shift lever in R	11 to 16 V

TEXT IN ILLUSTRATION

	Front

*a	view of wire harness connector (to Rear Light Assembly LH)

If the result is not as specified, repair or replace the wire harness or connector.

2. **INSPECT REAR LIGHT ASSEMBLY RH**
   a. Disconnect the connector from the rear light assembly RH.

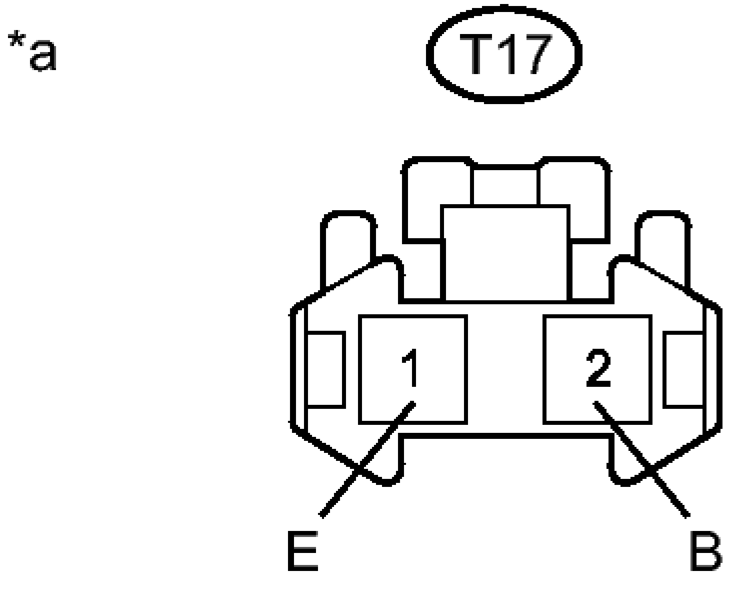

Fig. 76: Inspecting Rear Light Assembly RH Connector
Courtesy of TOYOTA MOTOR SALES, U.S.A., INC.

   b. Measure the voltage according to the value(s) in the table below.

Standard Voltage

Tester Connection	Condition	Specified Condition
	Power switch on (READY)	Below 1

T17-2 (B)-T17-1 (E)	and the shift lever not in R	V
	Power switch on (READY) and the shift lever in R	11 to 16 V

TEXT IN ILLUSTRATION

*a	Front view of wire harness connector (to Rear Light Assembly RH)

If the result is not as specified, repair or replace the wire harness or connector.

REMOVAL

REMOVAL

HINT:

- Use the same procedure for the RH and LH sides.
- The procedure described below is for the LH side.

1. **REMOVE LUGGAGE COMPARTMENT DOOR COVER** . Refer to **DISASSEMBLY - Step 1**
2. **REMOVE REAR LIGHT ASSEMBLY**
    a. Disconnect the connector.

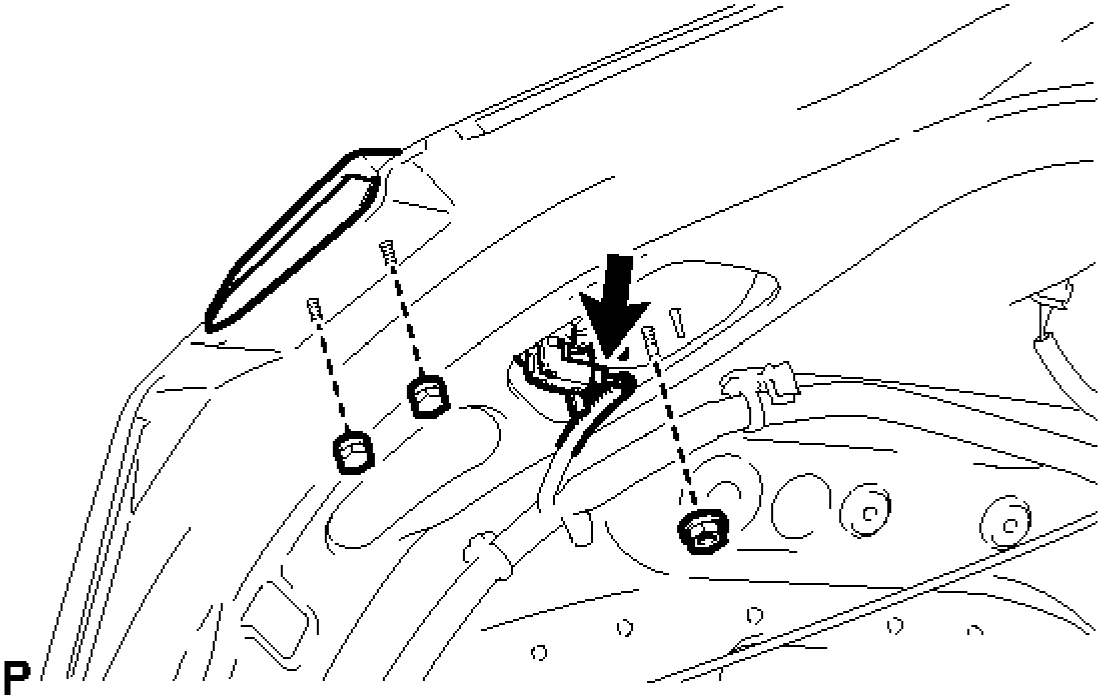

Fig. 77: Identifying Rear Light Assembly Connector And Fasteners
Courtesy of TOYOTA MOTOR SALES, U.S.A., INC.

b. Remove the 3 nuts and rear light assembly.

DISASSEMBLY

DISASSEMBLY

1. **REMOVE REAR LIGHT GASKET**
    a. Remove the rear light gasket.

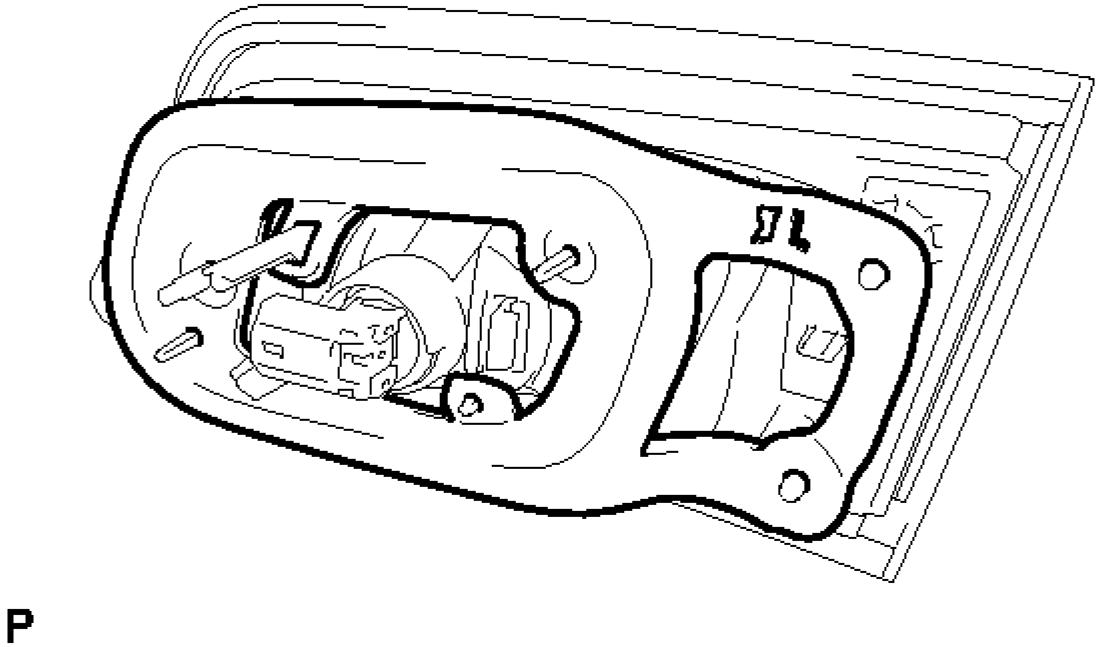

Fig. 78: Identifying Rear Light Gasket
Courtesy of TOYOTA MOTOR SALES, U.S.A., INC.

NOTE:

- **Be sure to remove all the traces of the old gasket from the body.**
- **Do not reuse the removed gasket. Be sure to install a new rear light gasket to prevent water ingress.**

2. **REMOVE BACK-UP LIGHT BULB**
   a. Turn the back-up light socket with the back-up light bulb in the direction indicated by the arrow shown in the illustration and remove them as a unit.

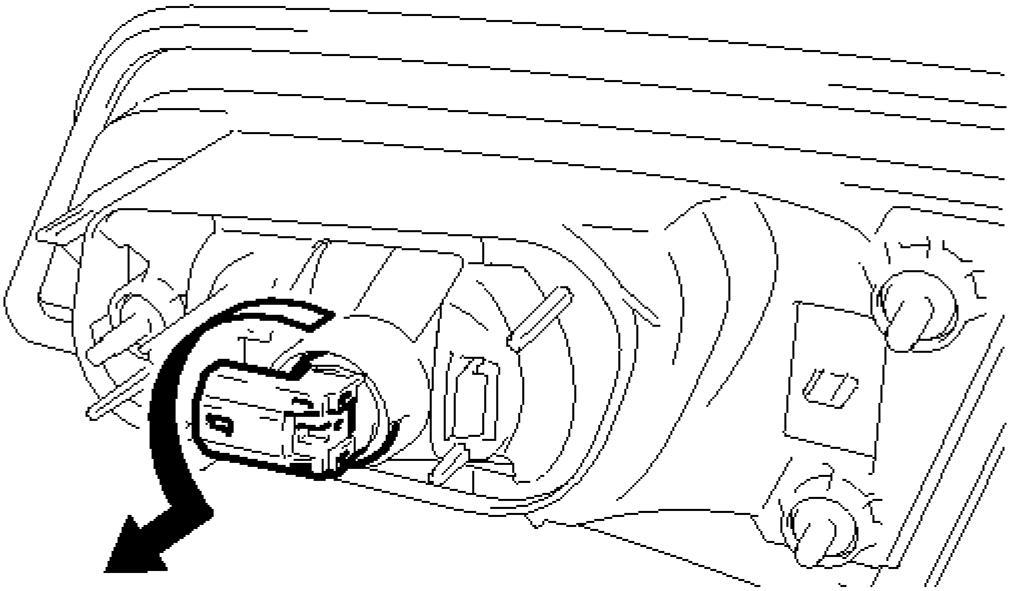

Fig. 79: Removing Back-Up Light Bulb
Courtesy of TOYOTA MOTOR SALES, U.S.A., INC.

b. Remove the back-up light bulb from the back-up light socket.

REASSEMBLY

REASSEMBLY

1. **INSTALL BACK-UP LIGHT BULB**
    a. Install the back-up light bulb to the back-up light socket.
    b. Turn the back-up light socket with the back-up light bulb in the direction indicated by the arrow shown in the illustration to install them as a unit.

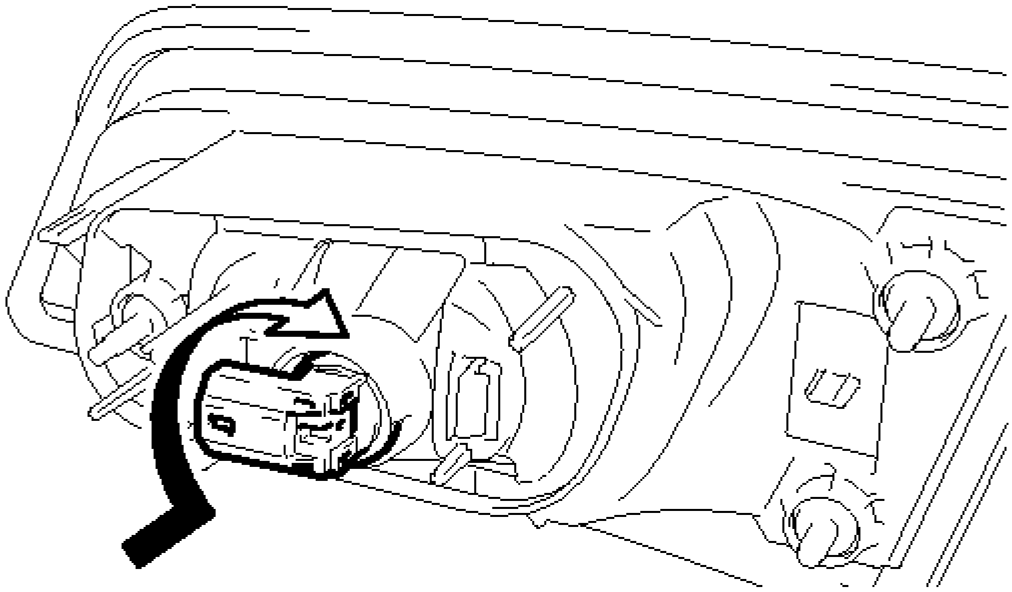

P

Fig. 80: Installing Back-Up Light Bulb
Courtesy of TOYOTA MOTOR SALES, U.S.A., INC.

2. **INSTALL REAR LIGHT GASKET**
    a. Install a new rear light gasket.

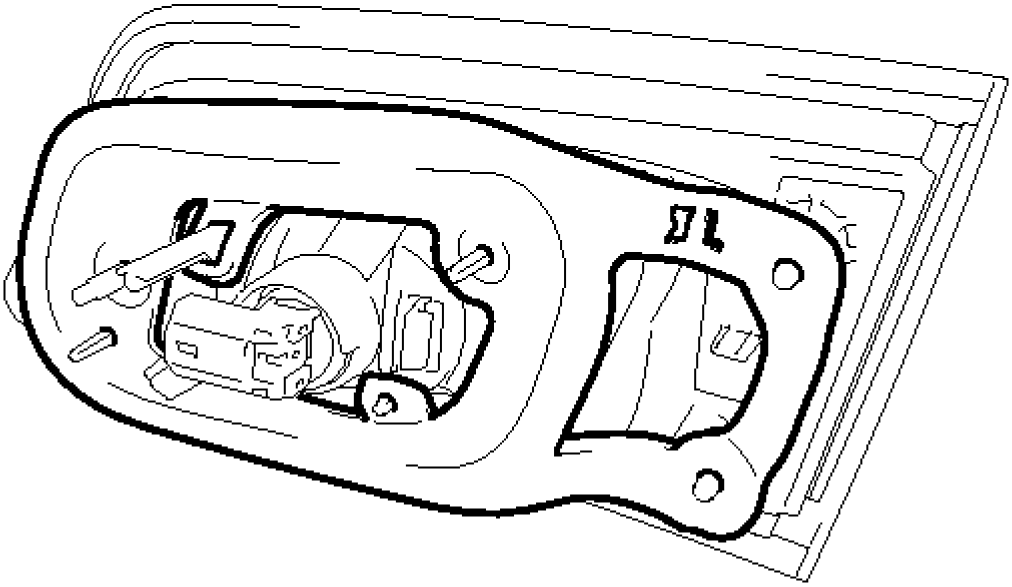

P

Fig. 81: Identifying Rear Light Gasket

Courtesy of TOYOTA MOTOR SALES, U.S.A., INC.

INSTALLATION

INSTALLATION

HINT:

- Use the same procedure for the RH and LH sides.
- The procedure described below is for the LH side.

1. **INSTALL REAR LIGHT ASSEMBLY**
    a. Install the rear light assembly with the 3 nuts.

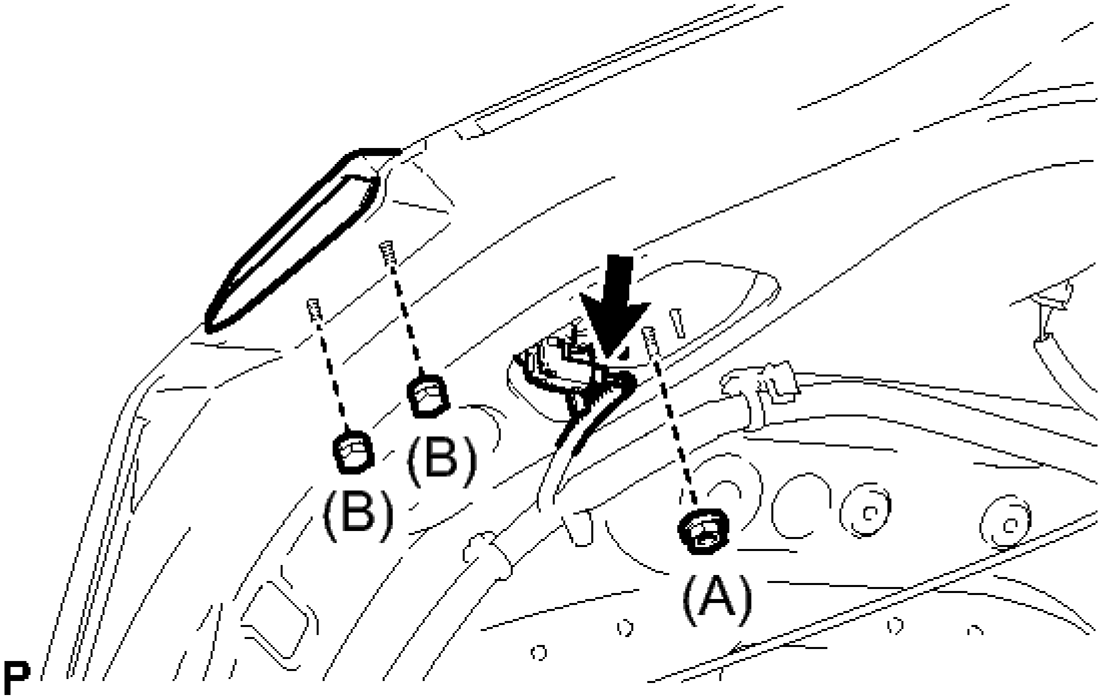

Fig. 82: Identifying Rear Light Assembly Connector And Fasteners
Courtesy of TOYOTA MOTOR SALES, U.S.A., INC.

Nut (A)

Torque: 4.1 N*m (42 kgf*cm, 36 in.*lbf)

Nut (B)

Torque: 3.6 N*m (37 kgf*cm, 32 in.*lbf)

    b. Connect the connector.

2. **INSTALL LUGGAGE COMPARTMENT DOOR COVER** . Refer to **REASSEMBLY - Step 10**

LICENSE PLATE LIGHT ASSEMBLY

COMPONENTS

ILLUSTRATION

Fig. 83: Identifying License Plate Light Assembly Replacement Components
Courtesy of TOYOTA MOTOR SALES, U.S.A., INC.

REMOVAL

REMOVAL

HINT:

- Use the same procedure for the RH and LH sides.
- The procedure described below is for the LH side.

1. **REMOVE LUGGAGE COMPARTMENT DOOR OUTSIDE GARNISH SUB-ASSEMBLY**

   Refer to **REMOVAL**

2. **REMOVE LICENSE PLATE LIGHT ASSEMBLY**
    a. Disconnect the connector.

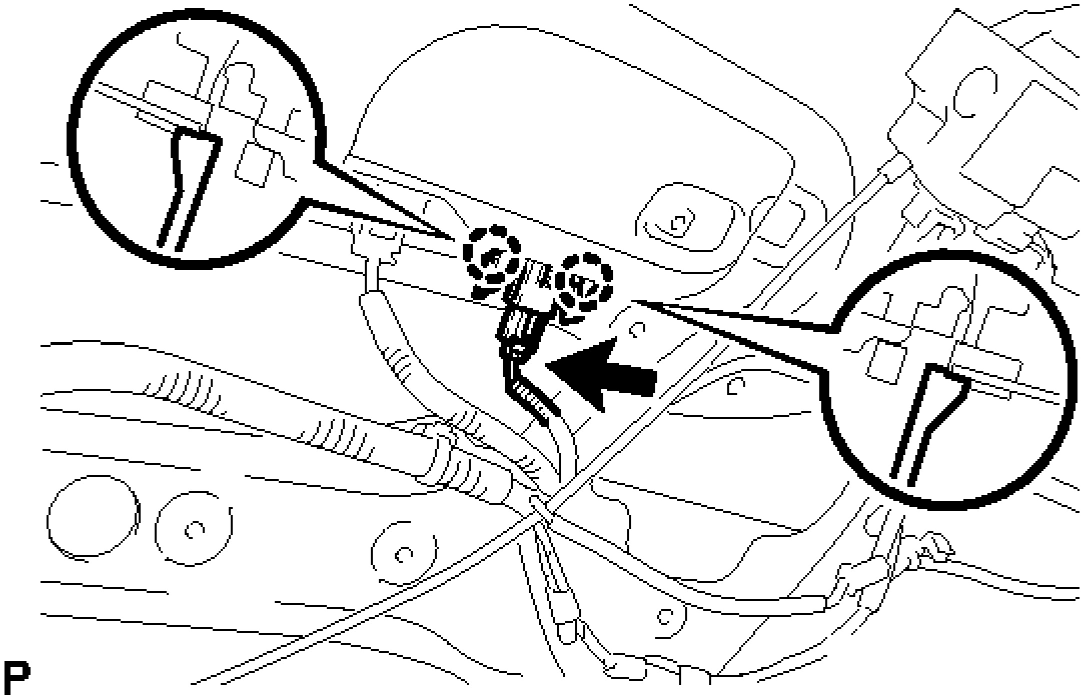

Fig. 84: Locating License Plate Light Assembly Connector And Claws
Courtesy of TOYOTA MOTOR SALES, U.S.A., INC.

    b. Disengage the 2 claws and remove the license plate light assembly.

3. **REMOVE LICENSE PLATE LIGHT PACKING**
    a. Remove the license plate light packing.

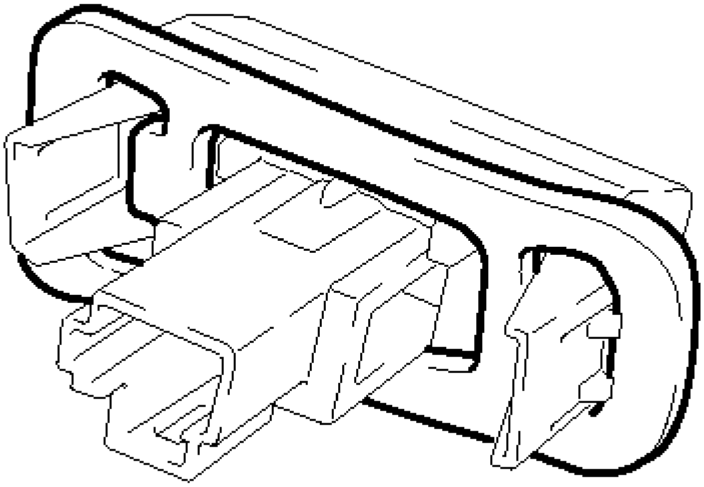

P

Fig. 85: Identifying License Plate Light Packing
Courtesy of TOYOTA MOTOR SALES, U.S.A., INC.

NOTE: **Do not reuse the removed packing. Be sure to install a new license plate light packing to prevent water ingress.**

INSPECTION

INSPECTION

1. **INSPECT LICENSE PLATE LIGHT ASSEMBLY**
    1. Connect a positive (+) lead from the auxiliary battery to terminal 1 and a negative (-) lead to terminal 2.

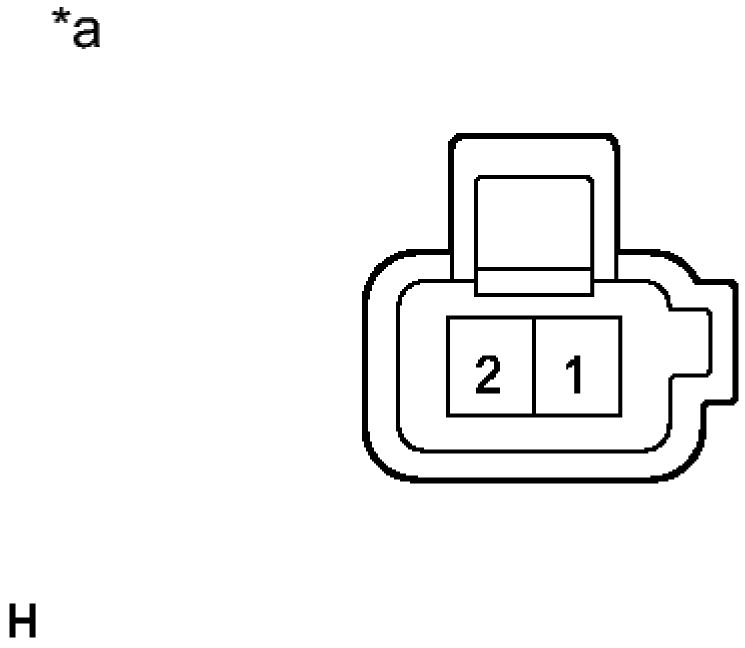

Fig. 86: License Plate Light Assembly Connector
Courtesy of TOYOTA MOTOR SALES, U.S.A., INC.

b. Check that the license plate light comes on.

OK

The light comes on.

TEXT IN ILLUSTRATION

*a	Component without harness connected (License Plate Light Assembly)

If the result is not as specified, replace the bulb or license plate light socket and wire.

INSTALLATION

INSTALLATION

HINT:

- Use the same procedure for the RH and LH sides.

- The procedure described below is for the LH side.

1. **INSTALL LICENSE PLATE LIGHT PACKING**
    a. Install a new license plate light packing.
2. **INSTALL LICENSE PLATE LIGHT ASSEMBLY**
    a. Engage the 2 claws to install the license plate light assembly.
    b. Connect the connector.
3. **INSTALL LUGGAGE COMPARTMENT DOOR OUTSIDE GARNISH SUB-ASSEMBLY**

    Refer to **INSTALLATION**

HIGH MOUNTED STOP LIGHT ASSEMBLY

COMPONENTS

ILLUSTRATION

Fig. 87: Identifying High Mounted Stop Light Assembly Replacement Components
Courtesy of TOYOTA MOTOR SALES, U.S.A., INC.

REMOVAL

REMOVAL

1. **REMOVE CENTER STOP LIGHT SET**
    1. Slide the center stop light set in the order and directions shown by the arrows in the illustration while pushing it towards the rear of the vehicle to disengage the 4 claws.

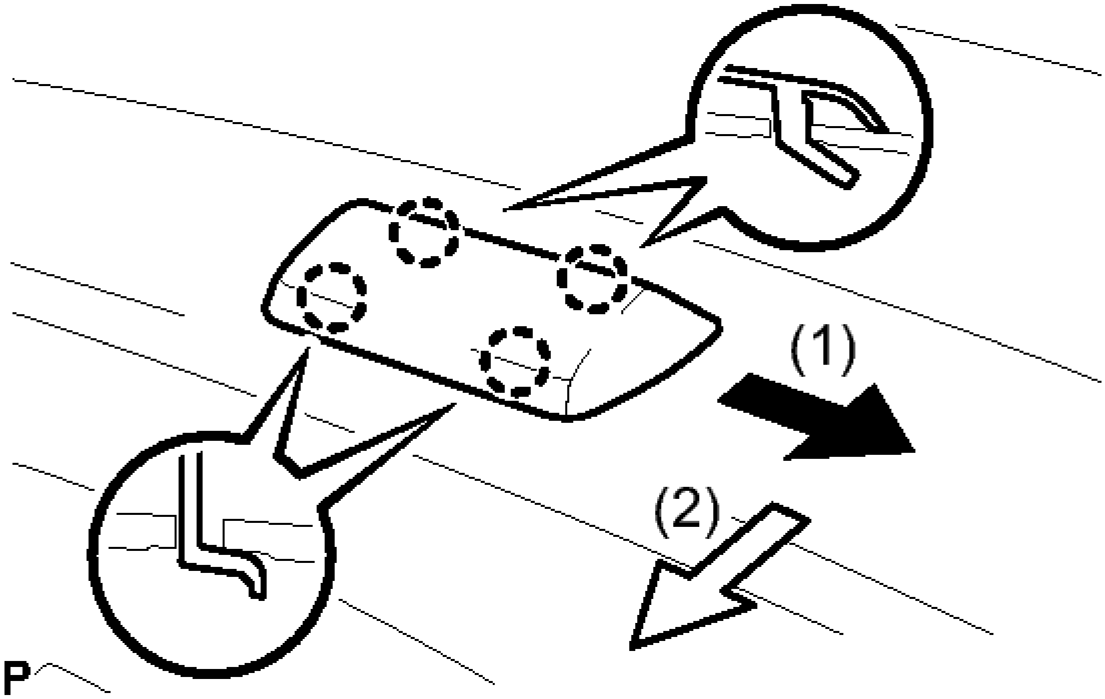

Fig. 88: Removing Center Stop Light Set
Courtesy of TOYOTA MOTOR SALES, U.S.A., INC.

    2. Turn the center stop light set 180 degrees as shown by the arrow in the illustration.

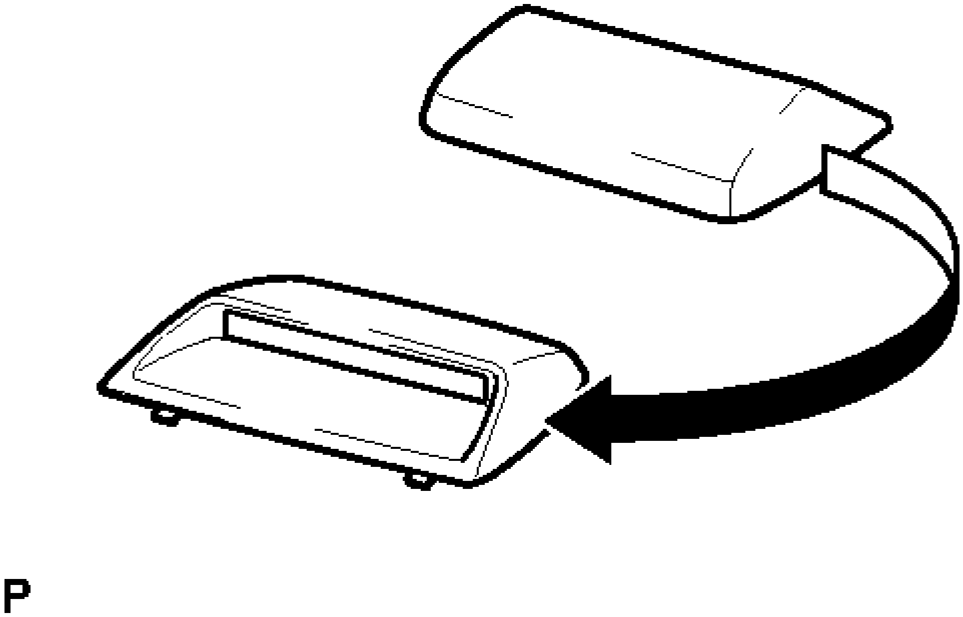

Fig. 89: Turning Center Stop Light Set
Courtesy of TOYOTA MOTOR SALES, U.S.A., INC.

HINT:

This makes it easier to disconnect the connector.

c. Disconnect the connector and remove the center stop light set.

INSPECTION

INSPECTION

1. **INSPECT CENTER STOP LIGHT SET**
    a. Connect a positive (+) lead from the auxiliary battery to terminal 1 and a negative (-) lead to terminal 2.

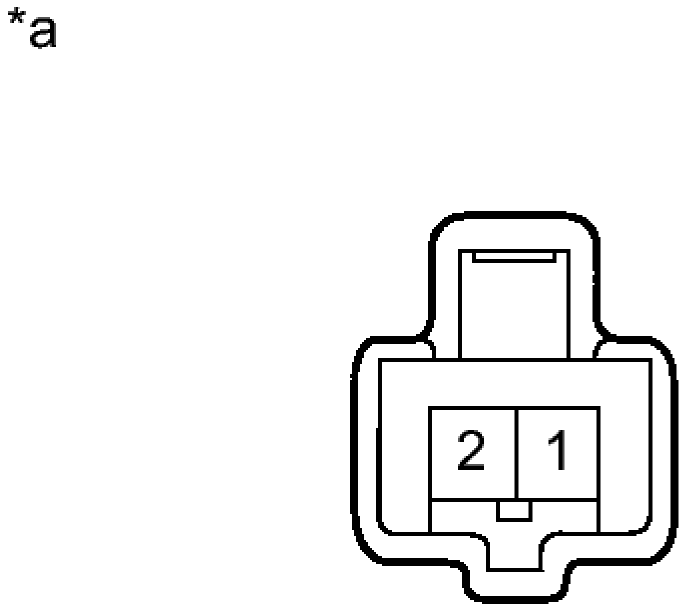

Fig. 90: Identifying Center Stop Light Set Connector
Courtesy of TOYOTA MOTOR SALES, U.S.A., INC.

b. Check that the center stop light comes on.

OK

The light comes on.

TEXT IN ILLUSTRATION

*a	Component without harness connected (Center Stop Light Set)

If the result is not as specified, replace the center stop light set.

INSTALLATION

INSTALLATION

1. **INSTALL CENTER STOP LIGHT SET**
    a. Connect the connector.
    b. Temporarily install the center stop light set.

c. Slide the center stop light set in the order and directions shown by the arrows in the illustration while pushing it towards the rear of the vehicle to engage the 4 claws.

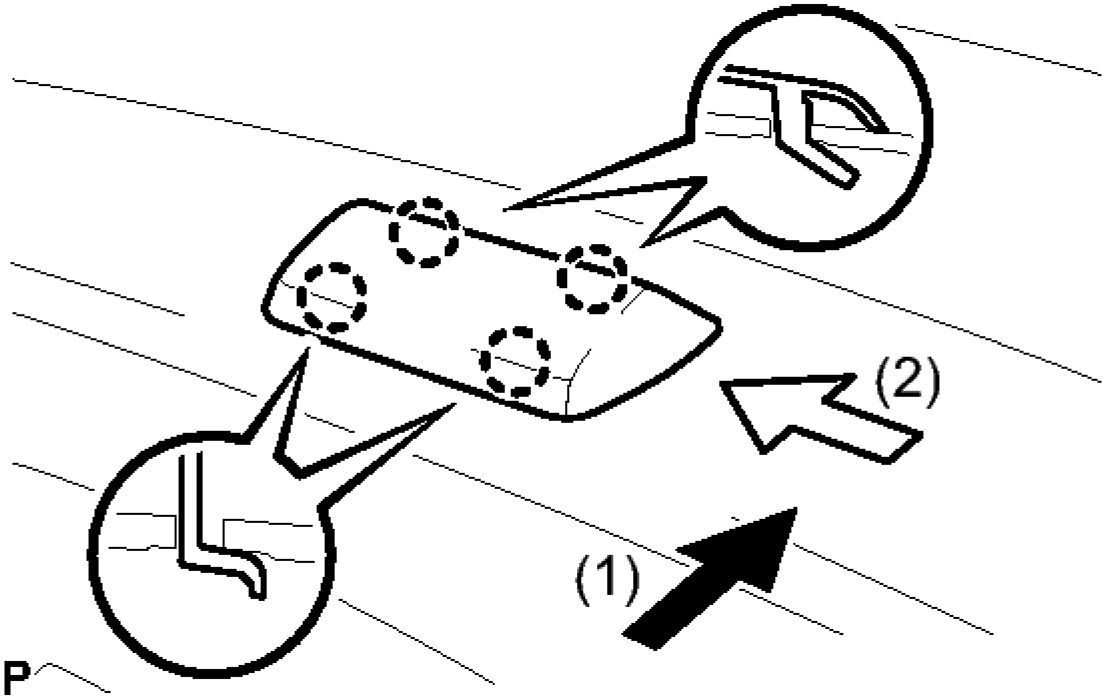

Fig. 91: Installing Center Stop Light Set
Courtesy of TOYOTA MOTOR SALES, U.S.A., INC.

HEADLIGHT DIMMER SWITCH

COMPONENTS

ILLUSTRATION

Fig. 92: Identifying Headlight Dimmer Switch Replacement Components
Courtesy of TOYOTA MOTOR SALES, U.S.A., INC.

REMOVAL

REMOVAL

1. **REMOVE SPIRAL CABLE WITH SENSOR SUB-ASSEMBLY**

   Refer to **REMOVAL**

2. **REMOVE WINDSHIELD WIPER SWITCH ASSEMBLY** . Refer to **REMOVAL - Step 3**
3. **REMOVE HEADLIGHT DIMMER SWITCH ASSEMBLY**
   a. Disconnect the connector.

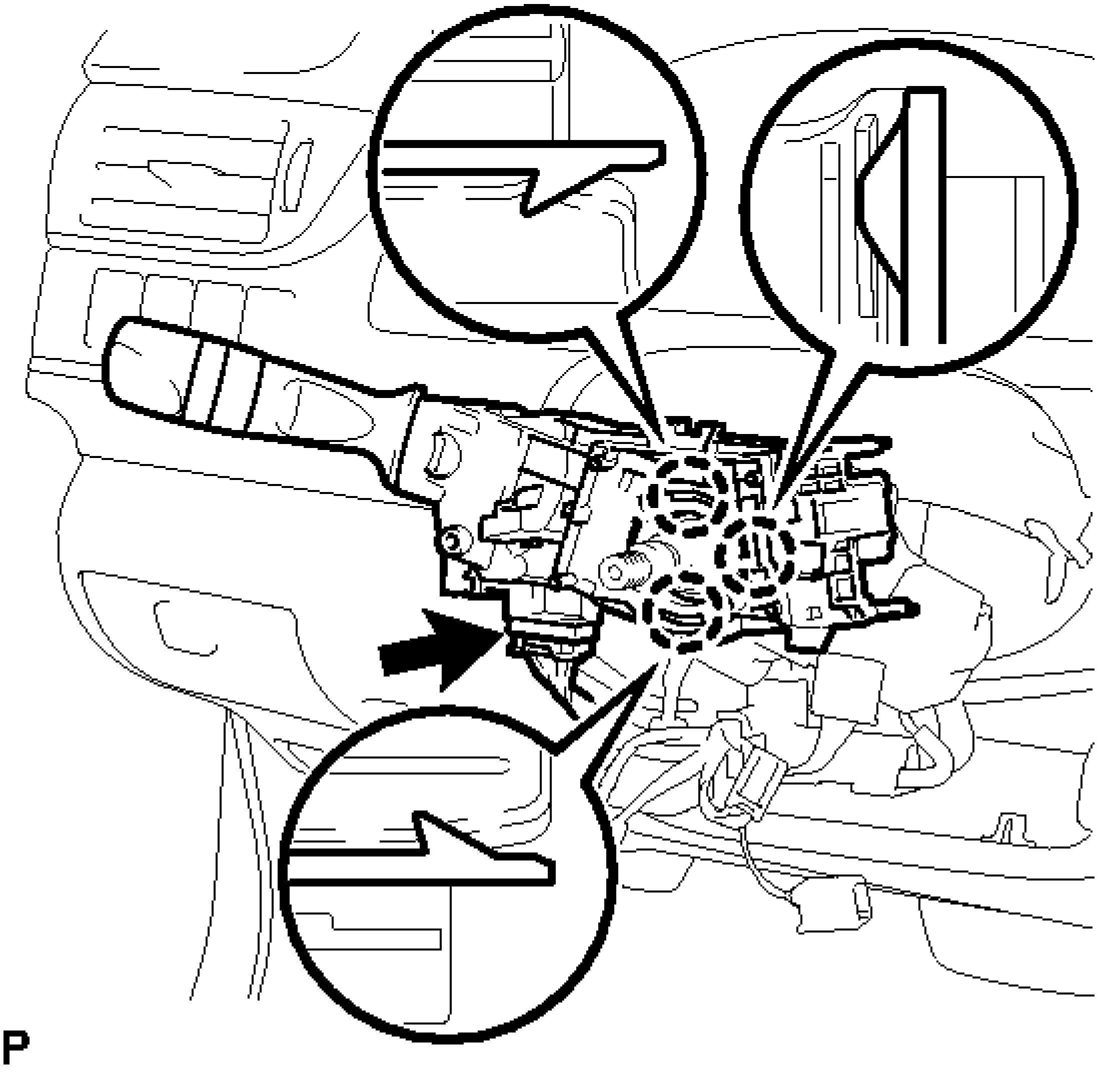

Fig. 93: Identifying Headlight Dimmer Switch Assembly
Courtesy of TOYOTA MOTOR SALES, U.S.A., INC.

b. Using a screwdriver, disengage the 3 claws and remove the headlight dimmer switch assembly.

INSPECTION

INSPECTION

1. **INSPECT HEADLIGHT DIMMER SWITCH ASSEMBLY**
    a. Measure the resistance according to the value(s) in the table below.

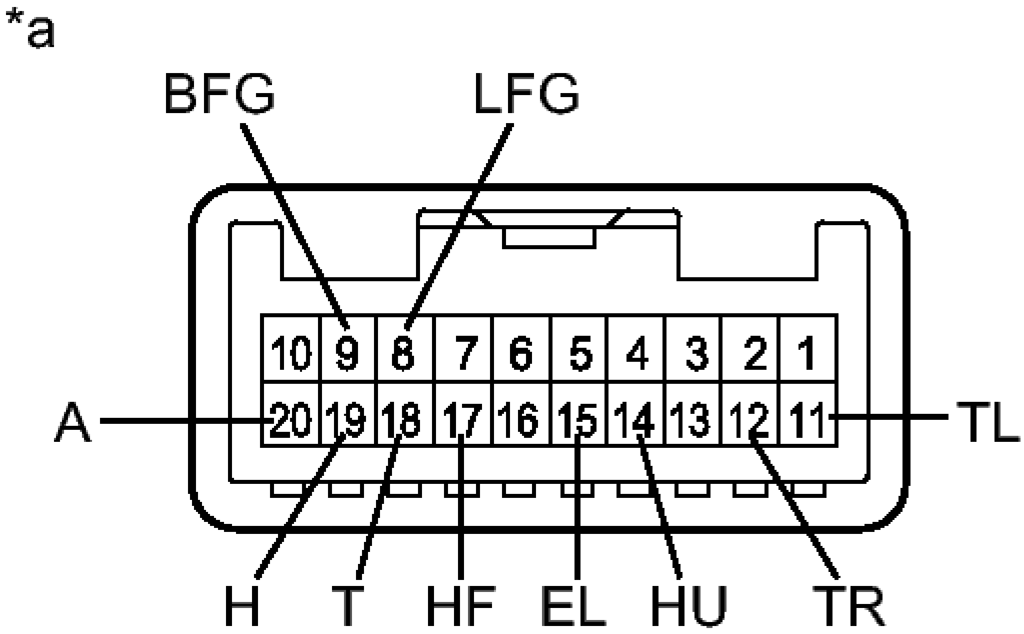
*a
BFG
LFG
10
9
8
7
6
5
4
3
2
1
A
20
19
18
17
16
15
14
13
12
11
TL
H
T
HF
EL
HU
TR

Fig. 94: Inspecting Headlight Dimmer Switch Assembly Connector Terminals
Courtesy of TOYOTA MOTOR SALES, U.S.A., INC.

Standard Resistance

LIGHT CONTROL SWITCH (W/ DRL OFF FUNCTION)

Tester Connection	Switch Condition	Specified Condition
18 (T) - 15 (EL)	Light control switch off (DRL OFF position)	10 kohms or higher
19 (H) - 15 (EL)		10 kohms or higher
20 (A) - 15 (EL)		10 kohms or higher
20 (A) - 15 (EL)	Light control switch in AUTO position	Below 1 ohms
18 (T) - 15 (EL)	Light control switch in tail position	Below 1 ohms
18 (T) - 15 (EL)	Light control	Below 1 ohms

19 (H) - 15 (EL)	switch in head position	Below 1 ohms

LIGHT CONTROL SWITCH (W/O DRL OFF FUNCTION)

Tester Connection	Switch Condition	Specified Condition
18 (T) - 15 (EL)	Light control switch off	10 kohms or higher
19 (H) - 15 (EL)		10 kohms or higher
20 (A) - 15 (EL)		10 kohms or higher
20 (A) - 15 (EL)	Light control switch in AUTO position	Below 1 ohms
18 (T) - 15 (EL)	Light control switch in tail position	Below 1 ohms
18 (T) - 15 (EL)	Light control switch in head position	Below 1 ohms
19 (H) - 15 (EL)		Below 1 ohms

DIMMER SWITCH

Tester Connection	Switch Condition	Specified Condition
14 (HU) - 15 (EL)	Dimmer switch in high position	Below 1 ohms
14 (HU) - 15 (EL)	Dimmer switch in high flasher position	Below 1 ohms
17 (HF) - 15 (EL)		Below 1 ohms

TURN SIGNAL SWITCH

Tester Connection	Switch Condition	Specified Condition

12 (TR) - 15 (EL)	Neutral	10 kohms or higher
11 (TL) - 15 (EL)		10 kohms or higher
12 (TR) - 15 (EL)	Right turn	Below 1 ohms
11 (TL) - 15 (EL)	Left turn	Below 1 ohms

FRONT FOG LIGHT SWITCH*1

Tester Connection	Switch Condition	Specified Condition
8 (LFG) - 9 (BFG)	Front fog light switch off	10 kohms or higher
8 (LFG) - 9 (BFG)	Front fog light switch on	Below 1 ohms

*1: w/ Front Fog Light

TEXT IN ILLUSTRATION

*a	Component without harness connected (Headlight Dimmer Switch Assembly)

If the result is not as specified, replace the headlight dimmer switch assembly.

INSTALLATION

INSTALLATION

1. **INSTALL HEADLIGHT DIMMER SWITCH ASSEMBLY**
    a. Engage the 3 claws to install the headlight dimmer switch assembly.
    b. Connect the connector.
2. **INSTALL WINDSHIELD WIPER SWITCH ASSEMBLY** . Refer to **INSTALLATION - Step 1**
3. **INSTALL SPIRAL CABLE WITH SENSOR SUB-ASSEMBLY**

    Refer to **INSTALLATION**

HAZARD WARNING SWITCH

COMPONENTS

ILLUSTRATION

Fig. 95: Identifying Hazard Warning Switch Replacement Components (1 Of 5)
Courtesy of TOYOTA MOTOR SALES, U.S.A., INC.

Fig. 96: Identifying Hazard Warning Switch Replacement Components (2 Of 5)
Courtesy of TOYOTA MOTOR SALES, U.S.A., INC.

Fig. 97: Identifying Hazard Warning Switch Replacement Components (3 Of 5)
Courtesy of TOYOTA MOTOR SALES, U.S.A., INC.

Fig. 98: Identifying Hazard Warning Switch Replacement Components (4 Of 5)
Courtesy of TOYOTA MOTOR SALES, U.S.A., INC.

Fig. 99: Identifying Hazard Warning Switch Replacement Components (4 Of 5)
Courtesy of TOYOTA MOTOR SALES, U.S.A., INC.

REMOVAL

REMOVAL

1. **PRECAUTION**

NOTE: **After turning the power switch off, waiting time may be required before disconnecting the cable from the negative (-) auxiliary battery terminal. Therefore, make sure to read the disconnecting the cable from the negative (-) auxiliary battery terminal notices before proceeding with work.**

Refer to PRECAUTION .

2. **REMOVE LUGGAGE TRIM SERVICE HOLE COVER**

   for Radio and Display Type with Intuitive Parking Assist System: Refer to **REMOVAL - Step 2**

   for Navigation Receiver Type: Refer to **REMOVAL - Step 2**

3. **DISCONNECT CABLE FROM AUXILIARY BATTERY NEGATIVE TERMINAL (for Radio and Display Type with Intuitive Parking Assist System)**

   NOTE: **When disconnecting the cable, some systems need to be initialized after the cable is reconnected. Refer to INITIALIZATION .**

4. **DISCONNECT CABLE FROM AUXILIARY BATTERY NEGATIVE TERMINAL (for Navigation Receiver Type)**

   NOTE: **When disconnecting the cable, some systems need to be initialized after the cable is reconnected. Refer to INITIALIZATION .**

5. **REMOVE REAR CONSOLE BOX ASSEMBLY**

   Refer to **REMOVAL**

6. **REMOVE BOX BOTTOM MAT** . Refer to **REMOVAL - Step 24**
7. **REMOVE UPPER CONSOLE PANEL SUB-ASSEMBLY** . Refer to **REMOVAL - Step 25**
8. **REMOVE CENTER INSTRUMENT CLUSTER FINISH PANEL ASSEMBLY** . Refer to **REMOVAL - Step 22**
9. **REMOVE NO. 2 INSTRUMENT PANEL REGISTER ASSEMBLY** . Refer to **REMOVAL - Step 23**
10. **REMOVE RADIO RECEIVER ASSEMBLY WITH AIR CONDITIONING CONTROL ASSEMBLY (for Radio Receiver Type)** . Refer to **REMOVAL - Step 9**
11. **REMOVE RADIO RECEIVER ASSEMBLY WITH AIR CONDITIONING CONTROL ASSEMBLY (for Radio and Display Type)** . Refer to **REMOVAL - Step 10**
12. **REMOVE NAVIGATION RECEIVER ASSEMBLY WITH AIR CONDITIONING CONTROL ASSEMBLY (for Navigation Receiver Type)** . Refer to **REMOVAL - Step 9**
13. **REMOVE NO. 1 RADIO BRACKET (for Radio Receiver Type)** . Refer to **REMOVAL - Step 11**
14. **REMOVE NO. 2 RADIO BRACKET (for Radio Receiver Type)** . Refer to **REMOVAL - Step 12**
15. **REMOVE NO. 1 RADIO BRACKET (for Radio and Display Type)** . Refer to **REMOVAL - Step 13**
16. **REMOVE NO. 2 RADIO BRACKET (for Radio and Display Type)** . Refer to **REMOVAL - Step 14**
17. **REMOVE NO. 1 RADIO RECEIVER BRACKET (for Radio and Display Type with Intuitive Parking Assist System)** . Refer to **REMOVAL - Step 15**
18. **REMOVE NO. 2 RADIO RECEIVER BRACKET (for Radio and Display Type with Intuitive**

Parking Assist System) . Refer to **REMOVAL - Step 16**

19. **REMOVE NO. 1 RADIO RECEIVER BRACKET (for Navigation Receiver Type)** . Refer to **REMOVAL - Step 10**
20. **REMOVE NO. 2 RADIO RECEIVER BRACKET (for Navigation Receiver Type)** . Refer to **REMOVAL - Step 11**
21. **REMOVE AIR CONDITIONING CONTROL ASSEMBLY (HAZARD SWITCH)** . Refer to **REMOVAL - Step 21**

INSPECTION

INSPECTION

1. **INSPECT AIR CONDITIONING CONTROL ASSEMBLY (HAZARD SWITCH)**
   a. Measure the resistance according to the value(s) in the table below.

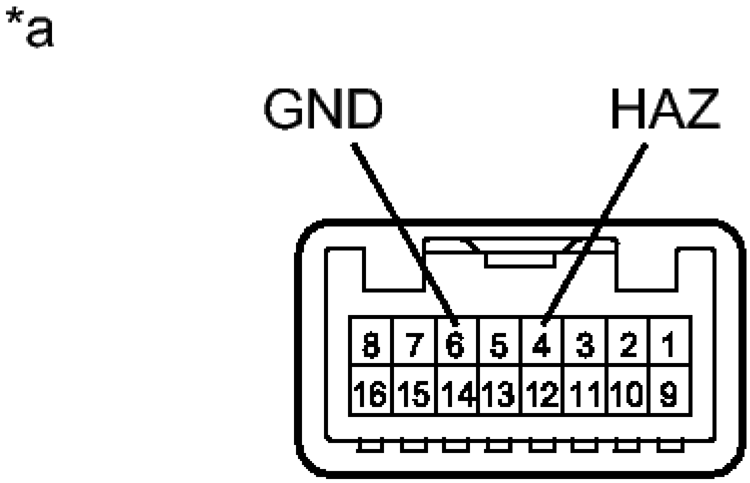

Fig. 100: Inspecting Air Conditioning Control Assembly (Hazard Switch) Connector Terminals
Courtesy of TOYOTA MOTOR SALES, U.S.A., INC.

Standard Resistance

Tester Connection	Switch Condition	Specified Condition
4 (HAZ) - 6 (GND)	Hazard switch off	10 kohms or higher
	Hazard	Below 1

	switch on	ohms

TEXT IN ILLUSTRATION

*a	Component without harness connected (Air Conditioning Control Assembly (Hazard Switch))

If the result is not as specified, replace the air conditioning control assembly.

INSTALLATION

INSTALLATION

1. **INSTALL AIR CONDITIONING CONTROL ASSEMBLY (HAZARD SWITCH)** . Refer to **INSTALLATION - Step 1**
2. **INSTALL NO. 1 RADIO BRACKET (for Radio Receiver Type)** . Refer to **INSTALLATION - Step 8**
3. **INSTALL NO. 2 RADIO BRACKET (for Radio Receiver Type)** . Refer to **INSTALLATION - Step 9**
4. **INSTALL NO. 1 RADIO BRACKET (for Radio and Display Type)** . Refer to **INSTALLATION - Step 10**
5. **INSTALL NO. 2 RADIO BRACKET (for Radio and Display Type)** . Refer to **INSTALLATION - Step 11**
6. **INSTALL NO. 1 RADIO RECEIVER BRACKET (for Radio and Display Type with Intuitive Parking Assist System)** . Refer to **INSTALLATION - Step 12**
7. **INSTALL NO. 2 RADIO RECEIVER BRACKET (for Radio and Display Type with Intuitive Parking Assist System)** . Refer to **INSTALLATION - Step 13**
8. **INSTALL NO. 1 RADIO RECEIVER BRACKET (for Navigation Receiver Type)** . Refer to **INSTALLATION - Step 5**
9. **INSTALL NO. 2 RADIO RECEIVER BRACKET (for Navigation Receiver Type)** . Refer to **INSTALLATION - Step 6**
10. **INSTALL RADIO RECEIVER ASSEMBLY WITH AIR CONDITIONING CONTROL ASSEMBLY (for Radio Receiver Type)** . Refer to **INSTALLATION - Step 14**
11. **INSTALL RADIO RECEIVER ASSEMBLY WITH AIR CONDITIONING CONTROL ASSEMBLY (for Radio and Display Type)** . Refer to **INSTALLATION - Step 15**
12. **INSTALL NAVIGATION RECEIVER ASSEMBLY WITH AIR CONDITIONING CONTROL ASSEMBLY (for Navigation Receiver Type)** . Refer to **INSTALLATION - Step 7**

13. **INSTALL NO. 2 INSTRUMENT PANEL REGISTER ASSEMBLY** . Refer to **INSTALLATION - Step 29**
14. **INSTALL CENTER INSTRUMENT CLUSTER FINISH PANEL ASSEMBLY** . Refer to **INSTALLATION - Step 30**
15. **INSTALL UPPER CONSOLE PANEL SUB-ASSEMBLY** . Refer to **INSTALLATION - Step 27**
16. **INSTALL BOX BOTTOM MAT** . Refer to **INSTALLATION - Step 28**
17. **INSTALL REAR CONSOLE BOX ASSEMBLY**

    Refer to **INSTALLATION**

18. **CONNECT CABLE TO AUXILIARY BATTERY NEGATIVE TERMINAL (for Radio and Display Type with Intuitive Parking Assist System)**

    NOTE: **When disconnecting the cable, some systems need to be initialized after the cable is reconnected. Refer to INITIALIZATION .**

19. **CONNECT CABLE TO AUXILIARY BATTERY NEGATIVE TERMINAL (for Navigation Receiver Type)**

    NOTE: **When disconnecting the cable, some systems need to be initialized after the cable is reconnected. Refer to INITIALIZATION .**

20. **INSTALL LUGGAGE TRIM SERVICE HOLE COVER**

    for Radio and Display Type with Intuitive Parking Assist System: Refer to **INSTALLATION - Step 3**

    for Navigation Receiver Type: Refer to **INSTALLATION - Step 3**

HEADLIGHT LEVELING SWITCH

COMPONENTS

ILLUSTRATION

Fig. 101: Identifying Headlight Leveling Switch Replacement Components
Courtesy of TOYOTA MOTOR SALES, U.S.A., INC.

REMOVAL

REMOVAL

1. **DISCONNECT FRONT DOOR OPENING TRIM WEATHERSTRIP LH** . Refer to **REMOVAL - Step 6**
2. **REMOVE INSTRUMENT SIDE PANEL LH** . Refer to **REMOVAL - Step 7**
3. **REMOVE NO. 1 INSTRUMENT CLUSTER FINISH PANEL GARNISH** . Refer to **REMOVAL - Step 8**
4. **REMOVE NO. 1 INSTRUMENT PANEL REGISTER ASSEMBLY** . Refer to **REMOVAL - Step 9**
5. **REMOVE INSTRUMENT CLUSTER FINISH PANEL ASSEMBLY** . Refer to **REMOVAL - Step 10**
6. **REMOVE HEADLIGHT LEVELING SWITCH**

a. Disengage the 2 claws and remove the headlight leveling switch from the instrument cluster finish panel assembly.

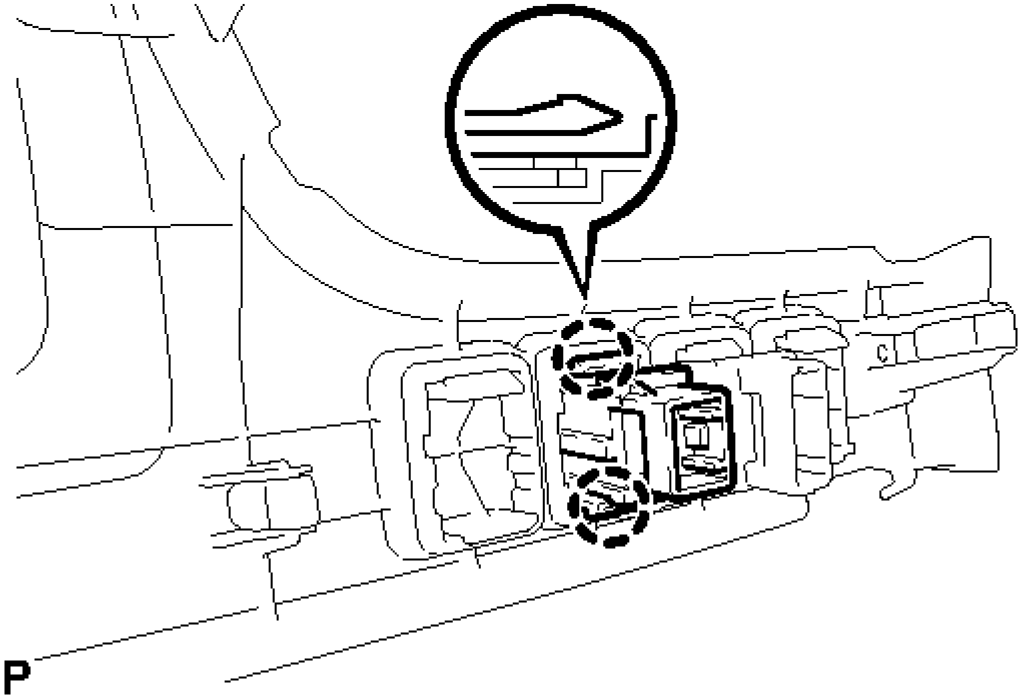

Fig. 102: Identifying Headlight Leveling Switch Claws
Courtesy of TOYOTA MOTOR SALES, U.S.A., INC.

INSPECTION

INSPECTION

1. **INSPECT HEADLIGHT LEVELING SWITCH**
    a. Voltage Check
        1. Connect a positive (+) lead from the auxiliary battery to terminal 1 (B) and a negative (-) lead to terminal 5 (E).

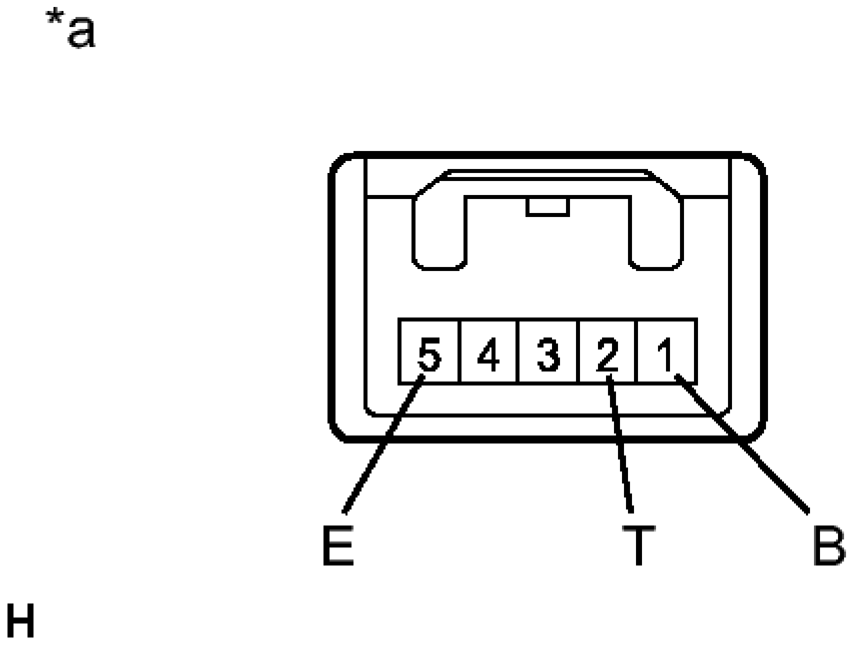

Fig. 103: Inspecting Headlight Leveling Switch Connector Terminals
Courtesy of TOYOTA MOTOR SALES, U.S.A., INC.

2. Measure the voltage according to the value(s) in the table below.

   Standard Voltage

Tester Condition	Switch Position	Specified Condition
2 (T) - 5 (E)	0	10.44 to 11.16 V
	1	9.16 to 9.88 V
	2	7.88 to 8.60 V
	3	6.6 to 7.32 V
	4	5.32 to 6.04 V
	5	4.04 to 4.76 V

HINT:

Auxiliary battery voltage is 12 V.

TEXT IN ILLUSTRATION

*a	Component without harness connected (Headlight Leveling Switch)

If the result is not as specified, replace the headlight leveling switch.

b. LED Illumination Inspection

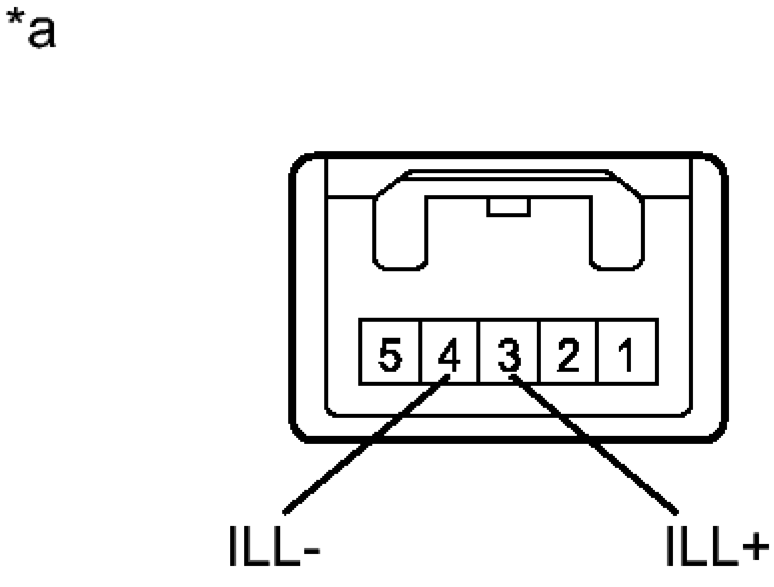

Fig. 104: Inspecting Headlight Leveling Switch Connector Terminals
Courtesy of TOYOTA MOTOR SALES, U.S.A., INC.

1. Apply auxiliary battery voltage to the headlight leveling switch and check that the switch illuminates.

   OK

Tester Connection	**Specified Condition**
Auxiliary battery positive (+) -->	

Terminal 3 (ILL+) Auxiliary battery negative (-) --> Terminal 4 (ILL-)	Illuminates

TEXT IN ILLUSTRATION

*a	Component without harness connected (Headlight Leveling Switch)

If the result is not as specified, replace the headlight leveling switch.

INSTALLATION

INSTALLATION

1. **INSTALL HEADLIGHT LEVELING SWITCH**
    a. Engage the 2 claws to install the headlight leveling switch to the instrument cluster finish panel assembly.
2. **INSTALL INSTRUMENT CLUSTER FINISH PANEL ASSEMBLY** . Refer to **INSTALLATION - Step 42**
3. **INSTALL NO. 1 INSTRUMENT PANEL REGISTER ASSEMBLY** . Refer to **INSTALLATION - Step 43**
4. **INSTALL NO. 1 INSTRUMENT CLUSTER FINISH PANEL GARNISH** . Refer to **INSTALLATION - Step 44**
5. **INSTALL INSTRUMENT SIDE PANEL LH** . Refer to **INSTALLATION - Step 45**
6. **INSTALL FRONT DOOR OPENING TRIM WEATHERSTRIP LH** . Refer to **INSTALLATION - Step 43**

STOP LIGHT SWITCH

COMPONENTS

ILLUSTRATION

Fig. 105: Identifying Stop Light Switch Replacement Components
Courtesy of TOYOTA MOTOR SALES, U.S.A., INC.

REMOVAL

REMOVAL

1. **REMOVE STOP LIGHT SWITCH ASSEMBLY**
    a. Disconnect the connector.

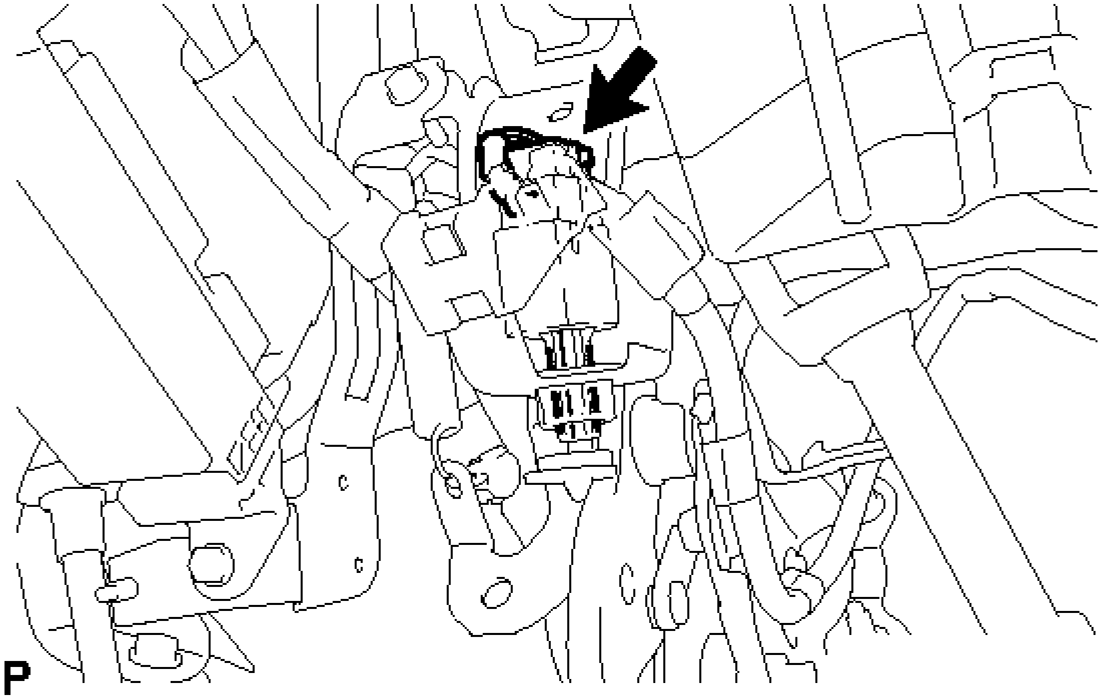

Fig. 106: Locating Stop Light Switch Assembly Connector
Courtesy of TOYOTA MOTOR SALES, U.S.A., INC.

b. Turn the stop light switch assembly counterclockwise and remove it.

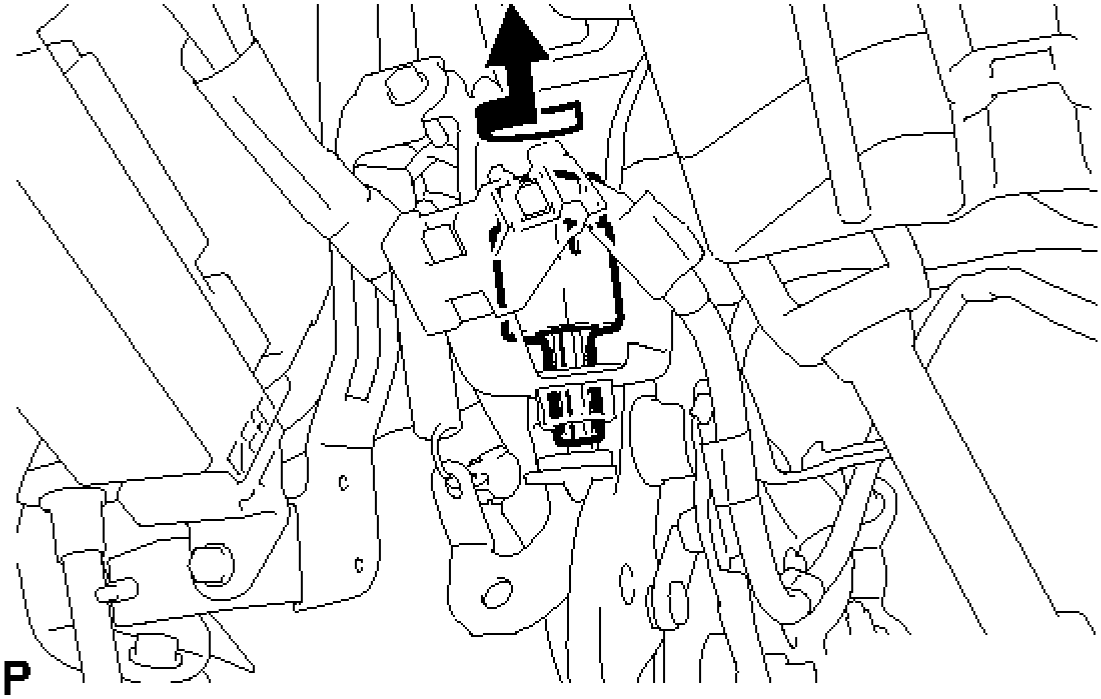

Fig. 107: Removing Stop Light Switch Assembly
Courtesy of TOYOTA MOTOR SALES, U.S.A., INC.

INSPECTION

INSPECTION

1. **INSPECT STOP LIGHT SWITCH ASSEMBLY**
    a. Measure the resistance according to the value(s) in the table below.

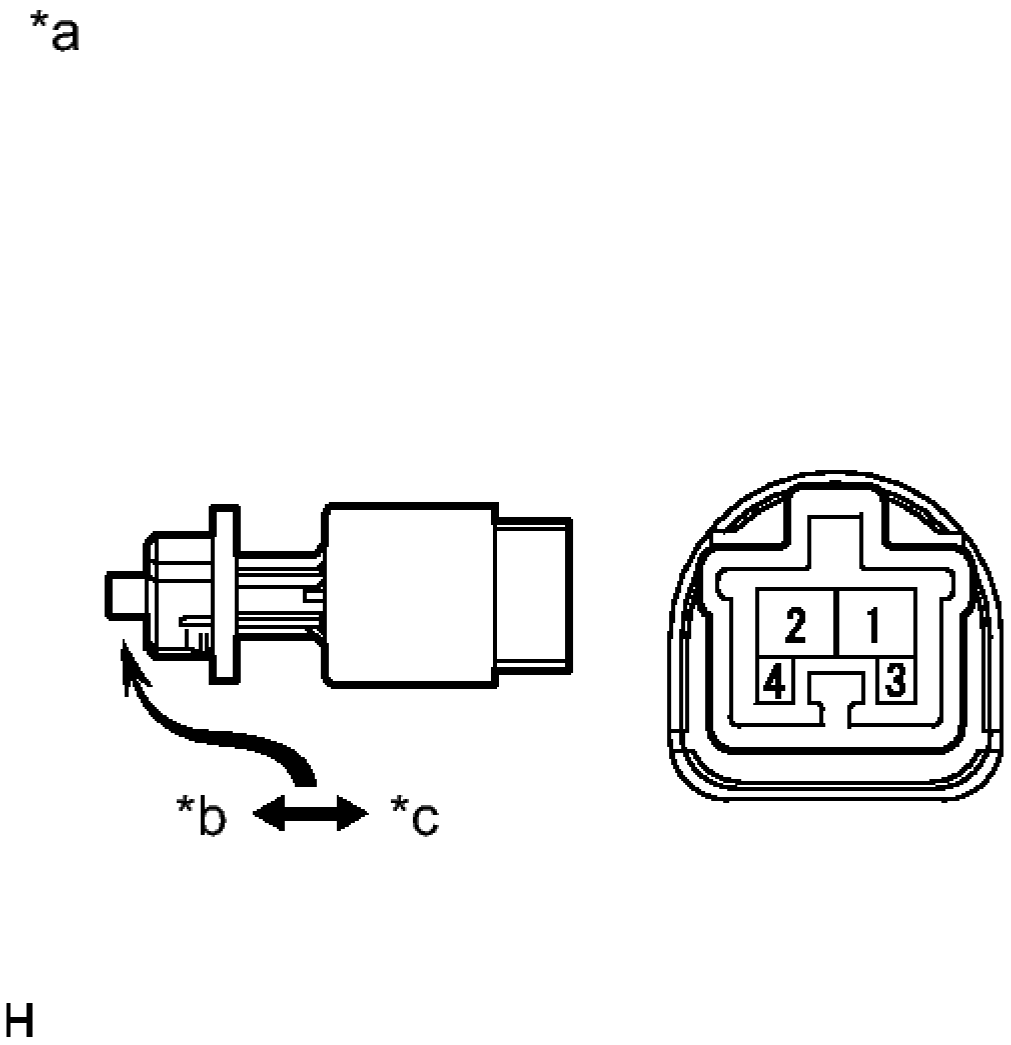

Fig. 108: Inspecting Stop Light Switch Assembly Connector
Courtesy of TOYOTA MOTOR SALES, U.S.A., INC.

Standard Resistance

Tester Connection	Switch Condition	Specified Condition
	Pushed	10 kohms or higher

1 - 2	Not pushed	Below 0.1 ohms
3 - 4	Pushed	Below 200 ohms
	Not pushed	10 kohms or higher

TEXT IN ILLUSTRATION

*a	Component without harness connected (Stop Light Switch Assembly)
*b	Not Pushed
*c	Pushed

If the result is not as specified, replace the stop light switch assembly.

INSTALLATION

INSTALLATION

1. **INSTALL STOP LIGHT SWITCH ASSEMBLY**
    a. Insert the stop light switch assembly until the threaded sleeve hits the pedal.

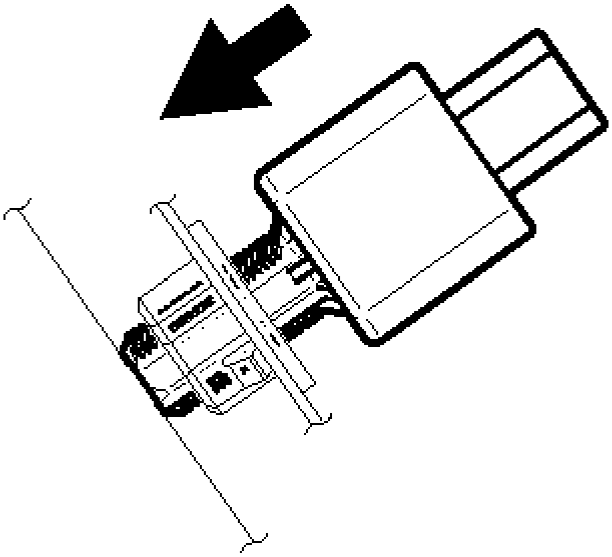

Fig. 109: Inserting Stop Light Switch Assembly Until Rod Hits Pedal
Courtesy of TOYOTA MOTOR SALES, U.S.A., INC.

NOTE: **When inserting the stop light switch assembly, support the pedal from behind so that the pedal is not pushed in.**

b. Make a quarter turn clockwise to install the stop light switch assembly.

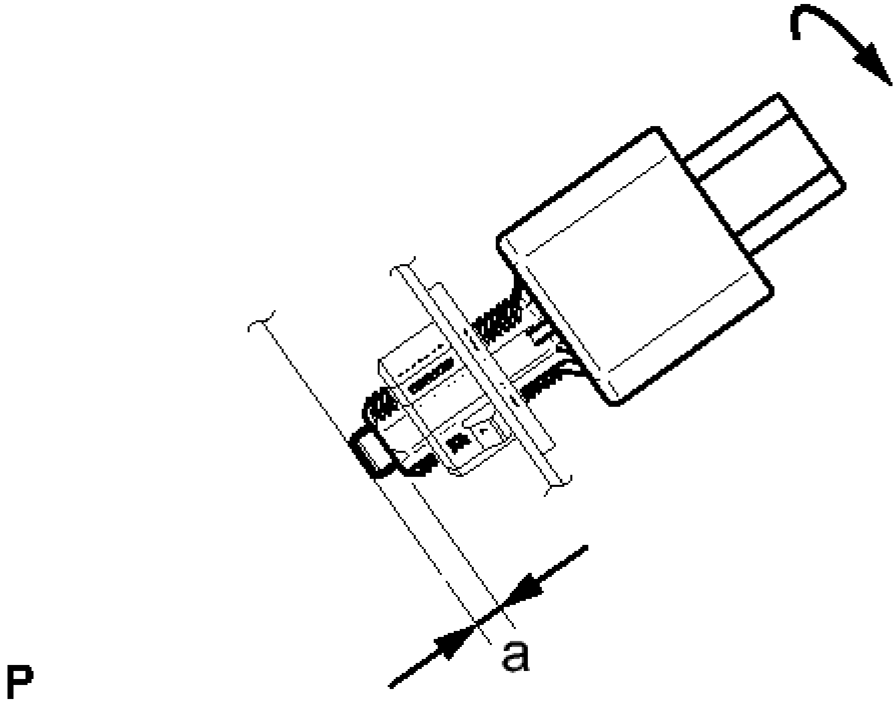

Fig. 110: Installing Stop Light Switch Assembly
Courtesy of TOYOTA MOTOR SALES, U.S.A., INC.

Torque: 1.5 N*m (15 kgf*cm, 13 in.*lbf)

or less

NOTE: When inserting the stop light switch assembly, support the pedal from behind so that the pedal is not pushed in.

c. Connect the connector.
d. Check the protrusion of the plunger.

PROTRUSION OF THE PLUNGER

Area	Measurement
a	1.5 to 2.5 mm (0.0591 to 0.0984 in.)

If the protrusion is not as specified, recheck switch installation and inspect brake pedal adjustment if necessary. Refer to **ADJUSTMENT** .

NOTE: Do not depress or support the brake pedal.

AUTOMATIC LIGHT CONTROL SENSOR

COMPONENTS

ILLUSTRATION

Fig. 111: Identifying Automatic Light Control Sensor Replacement Components (1 Of 3)
Courtesy of TOYOTA MOTOR SALES, U.S.A., INC.

Fig. 112: Identifying Automatic Light Control Sensor Replacement Components (2 Of 3)
Courtesy of TOYOTA MOTOR SALES, U.S.A., INC.

Fig. 113: Identifying Automatic Light Control Sensor Replacement Components (3 Of 3)
Courtesy of TOYOTA MOTOR SALES, U.S.A., INC.

REMOVAL

REMOVAL

1. **PRECAUTION**

NOTE: **After turning the power switch off, waiting time may be required before disconnecting the cable from the negative (-) auxiliary battery terminal. Therefore, make sure to read the disconnecting the cable from the negative (-) auxiliary battery terminal notices before proceeding with work. Refer to PRECAUTION .**

2. **REMOVE LUGGAGE TRIM SERVICE HOLE COVER**

   for Radio and Display Type with Intuitive Parking Assist System: Refer to **REMOVAL - Step 2**

   for Navigation Receiver Type: Refer to **REMOVAL - Step 2**

3. **DISCONNECT CABLE FROM AUXILIARY BATTERY NEGATIVE TERMINAL (for Radio and Display Type with Intuitive Parking Assist System)**

   NOTE: **When disconnecting the cable, some systems need to be initialized after the cable is reconnected. Refer to INITIALIZATION .**

4. **DISCONNECT CABLE FROM AUXILIARY BATTERY NEGATIVE TERMINAL (for Navigation Receiver Type)**

   NOTE: **When disconnecting the cable, some systems need to be initialized after the cable is reconnected. Refer to INITIALIZATION .**

5. **REMOVE REAR CONSOLE BOX ASSEMBLY**

   Refer to **REMOVAL**

6. **REMOVE BOX BOTTOM MAT** . Refer to **REMOVAL - Step 24**
7. **REMOVE UPPER CONSOLE PANEL SUB-ASSEMBLY** . Refer to **REMOVAL - Step 25**
8. **REMOVE CENTER INSTRUMENT CLUSTER FINISH PANEL ASSEMBLY** . Refer to **REMOVAL - Step 22**
9. **REMOVE NO. 2 INSTRUMENT PANEL REGISTER ASSEMBLY** . Refer to **REMOVAL - Step 23**
10. **REMOVE RADIO RECEIVER ASSEMBLY WITH AIR CONDITIONING CONTROL ASSEMBLY (for Radio Receiver Type)** . Refer to **REMOVAL - Step 9**
11. **REMOVE RADIO RECEIVER ASSEMBLY WITH AIR CONDITIONING CONTROL ASSEMBLY (for Radio and Display Type)** . Refer to **REMOVAL - Step 10**
12. **REMOVE NAVIGATION RECEIVER ASSEMBLY WITH AIR CONDITIONING CONTROL ASSEMBLY (for Navigation Receiver Type)** . Refer to **REMOVAL - Step 9**
13. **REMOVE NO. 1 SPEAKER OPENING COVER ASSEMBLY** . Refer to **REMOVAL - Step 29**
14. **REMOVE AUTOMATIC LIGHT CONTROL SENSOR**
    a. Disengage the 2 claws and remove the automatic light control sensor from the No. 1 speaker opening cover assembly.

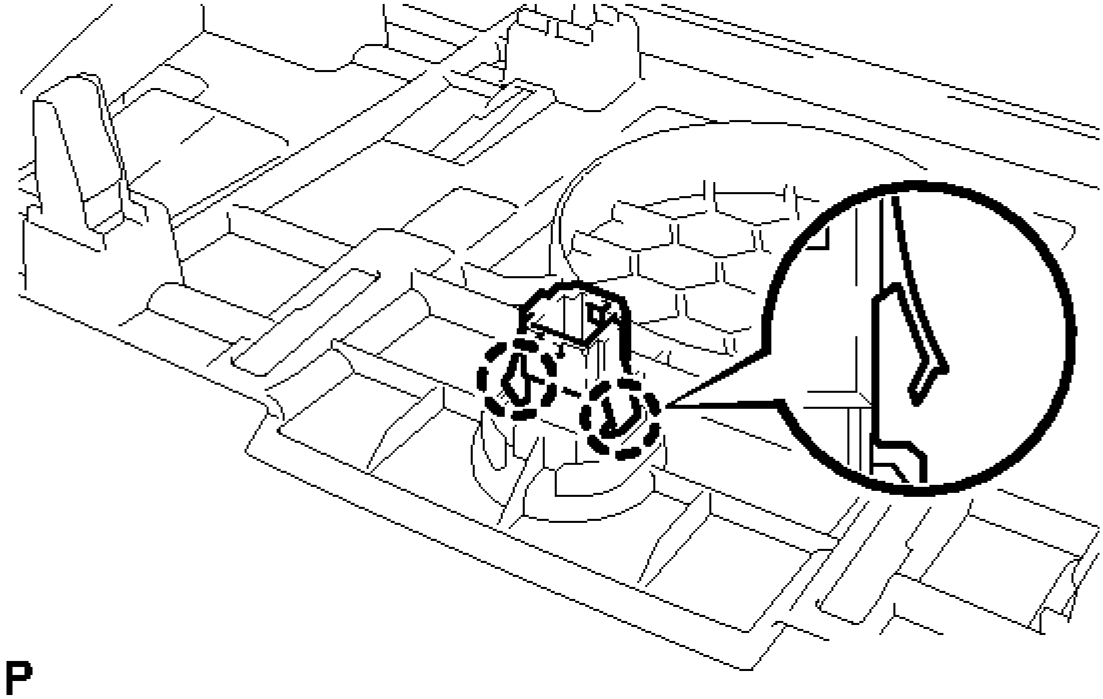

Fig. 114: Identifying Solar Sensor Claws
Courtesy of TOYOTA MOTOR SALES, U.S.A., INC.

INSPECTION

INSPECTION

1. **INSPECT AUTOMATIC LIGHT CONTROL SENSOR**
    a. Disconnect the I61 automatic light control sensor connector.

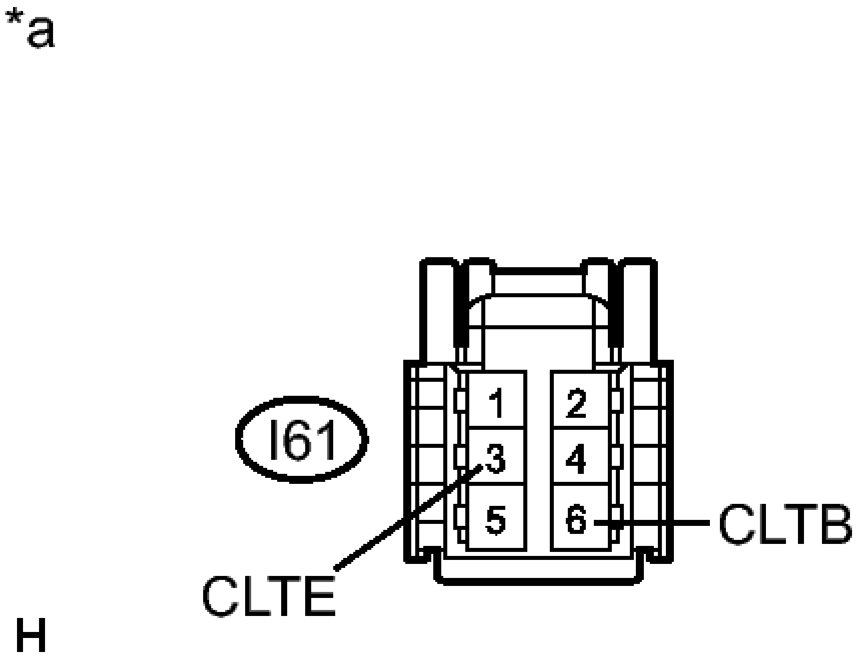

Fig. 115: Inspecting I61 Automatic Light Control Sensor Connector Terminals
Courtesy of TOYOTA MOTOR SALES, U.S.A., INC.

b. Measure the voltage and resistance according to the value(s) in the table below.

Standard Voltage

Tester Connection	**Switch Condition**	**Specified Condition**
I61-6 (CLTB) - I61-3 (CLTE)	Power switch off	Below 1 V
	Power switch on (IG)	11 to 14 V

Standard Resistance

Tester Connection	**Condition**	**Specified Condition**
I61-3 (CLTE) - Body ground	Always	Below 1 ohms

TEXT IN ILLUSTRATION

	Front

*a	view of wire harness connector (to Automatic Light Control Sensor)

If the result is not as specified, there may be a malfunction on the wire harness side.

c. Reconnect the I61 automatic light control sensor connector.

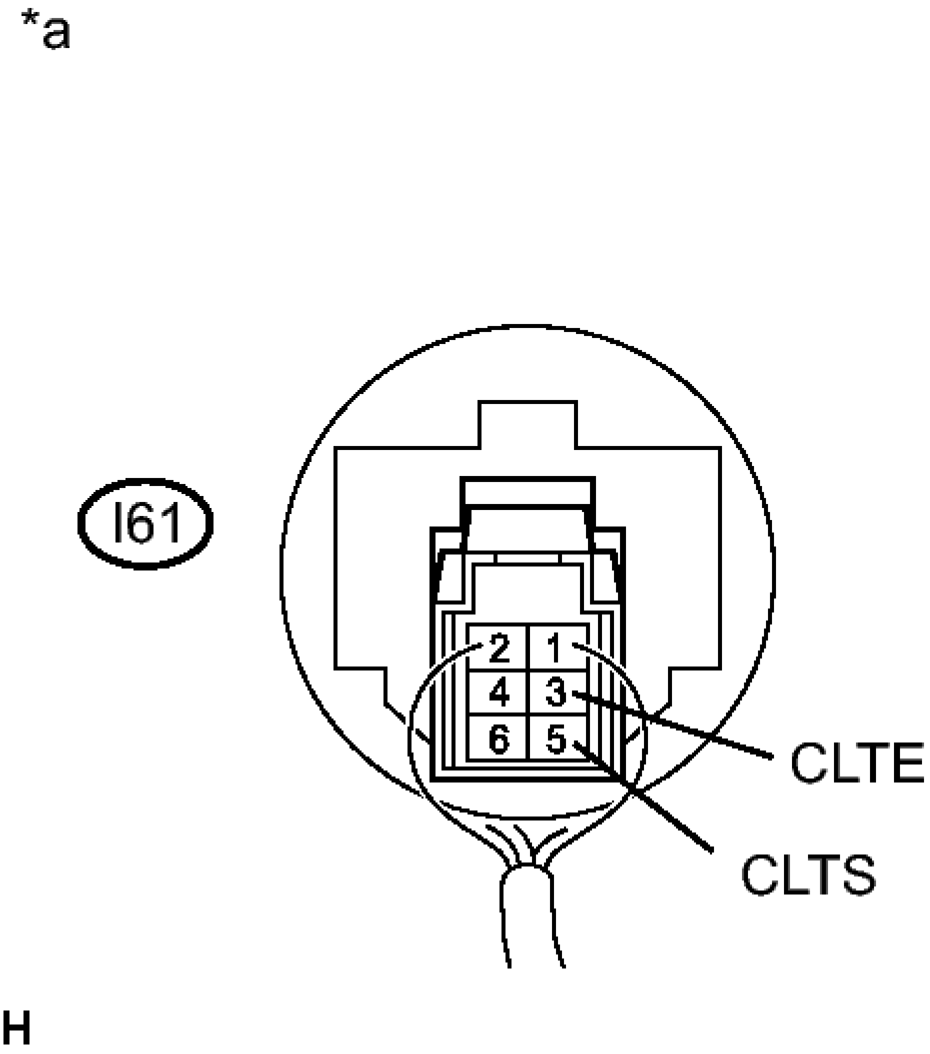

Fig. 116: Inspecting I61 Automatic Light Control Sensor Connector Terminals
Courtesy of TOYOTA MOTOR SALES, U.S.A., INC.

d. Connect an oscilloscope to the automatic light control sensor connector.

TEXT IN ILLUSTRATION

*a	Component with harness connected (Automatic Light Control Sensor)

e. Check the waveform.

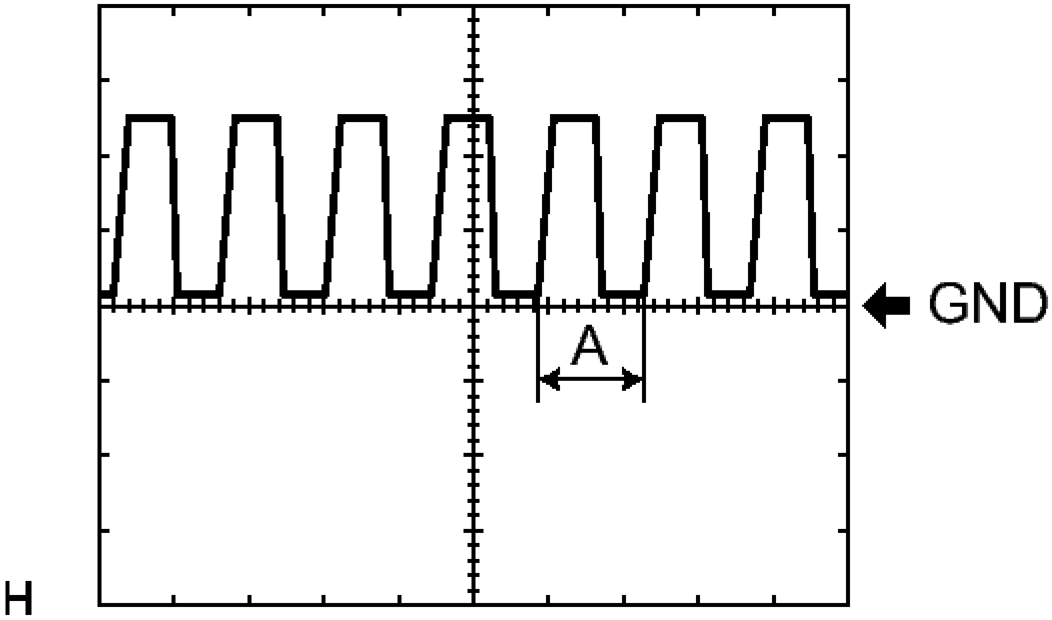

Fig. 117: Identifying Waveform Graph
Courtesy of TOYOTA MOTOR SALES, U.S.A., INC.

OK

Tester Connection	Tool Setting	Switch Condition	Specified Condition
I61-3 (CLTE) - I61-5 (CLTS)	5 V/DIV., 5 ms./DIV	Power switch on (IG), light control switch in	Correct waveform is as shown

		AUTO position	

HINT:

If the ambient light becomes brighter, width A becomes narrower.

If the result is not as specified, the automatic light control sensor may have a malfunction.

INSTALLATION

INSTALLATION

1. **INSTALL AUTOMATIC LIGHT CONTROL SENSOR**
    a. Engage the 2 claws to install the automatic light control sensor to the No. 1 speaker opening cover assembly.
2. **INSTALL NO. 1 SPEAKER OPENING COVER ASSEMBLY** . Refer to **INSTALLATION - Step 23**
3. **INSTALL RADIO RECEIVER ASSEMBLY WITH AIR CONDITIONING CONTROL ASSEMBLY (for Radio Receiver Type)** . Refer to **INSTALLATION - Step 14**
4. **INSTALL RADIO RECEIVER ASSEMBLY WITH AIR CONDITIONING CONTROL ASSEMBLY (for Radio and Display Type)** . Refer to **INSTALLATION - Step 15**
5. **INSTALL NAVIGATION RECEIVER ASSEMBLY WITH AIR CONDITIONING CONTROL ASSEMBLY (for Navigation Receiver Type)** . Refer to **INSTALLATION - Step 7**
6. **INSTALL NO. 2 INSTRUMENT PANEL REGISTER ASSEMBLY** . Refer to **INSTALLATION - Step 29**
7. **INSTALL CENTER INSTRUMENT CLUSTER FINISH PANEL ASSEMBLY** . Refer to **INSTALLATION - Step 30**
8. **INSTALL UPPER CONSOLE PANEL SUB-ASSEMBLY** . Refer to **INSTALLATION - Step 27**
9. **INSTALL BOX BOTTOM MAT** . Refer to **INSTALLATION - Step 28**
10. **INSTALL REAR CONSOLE BOX ASSEMBLY**

    Refer to **INSTALLATION**

11. **CONNECT CABLE TO AUXILIARY BATTERY NEGATIVE TERMINAL (for Radio and Display Type with Intuitive Parking Assist System)**

    NOTE: **When disconnecting the cable, some systems need to be initialized after the cable is reconnected. Refer to INITIALIZATION .**

12. **CONNECT CABLE TO AUXILIARY BATTERY NEGATIVE TERMINAL (for Navigation Receiver Type)**

    NOTE: **When disconnecting the cable, some systems need to be initialized after**

the cable is reconnected. Refer to INITIALIZATION .

13. **INSTALL LUGGAGE TRIM SERVICE HOLE COVER**

    for Radio and Display Type with Intuitive Parking Assist System: Refer to **INSTALLATION - Step 3**

    for Navigation Receiver Type: Refer to **INSTALLATION - Step 3**

HEIGHT CONTROL SENSOR

COMPONENTS

ILLUSTRATION

Fig. 118: Identifying Height Control Sensor Replacement Components (1 Of 2)
Courtesy of TOYOTA MOTOR SALES, U.S.A., INC.

Fig. 119: Identifying Height Control Sensor Replacement Components With Torque Specifications (2 Of 2)
Courtesy of TOYOTA MOTOR SALES, U.S.A., INC.

REMOVAL

REMOVAL

1. **PRECAUTION**

   NOTE: **After turning the power switch off, waiting time may be required before disconnecting the cable from the negative (-) auxiliary battery terminal. Therefore, make sure to read the disconnecting the cable from the negative (-) auxiliary battery terminal notices before proceeding with work. Refer to PRECAUTION .**

2. **REMOVE LUGGAGE TRIM SERVICE HOLE COVER** . Refer to **REMOVAL - Step 2**
3. **DISCONNECT CABLE FROM AUXILIARY BATTERY NEGATIVE TERMINAL**

   NOTE: **When disconnecting the cable, some systems need to be initialized after the cable is reconnected. Refer to INITIALIZATION .**

4. **REMOVE REAR HEIGHT CONTROL SENSOR SUB-ASSEMBLY**
   1. Disconnect the connector.

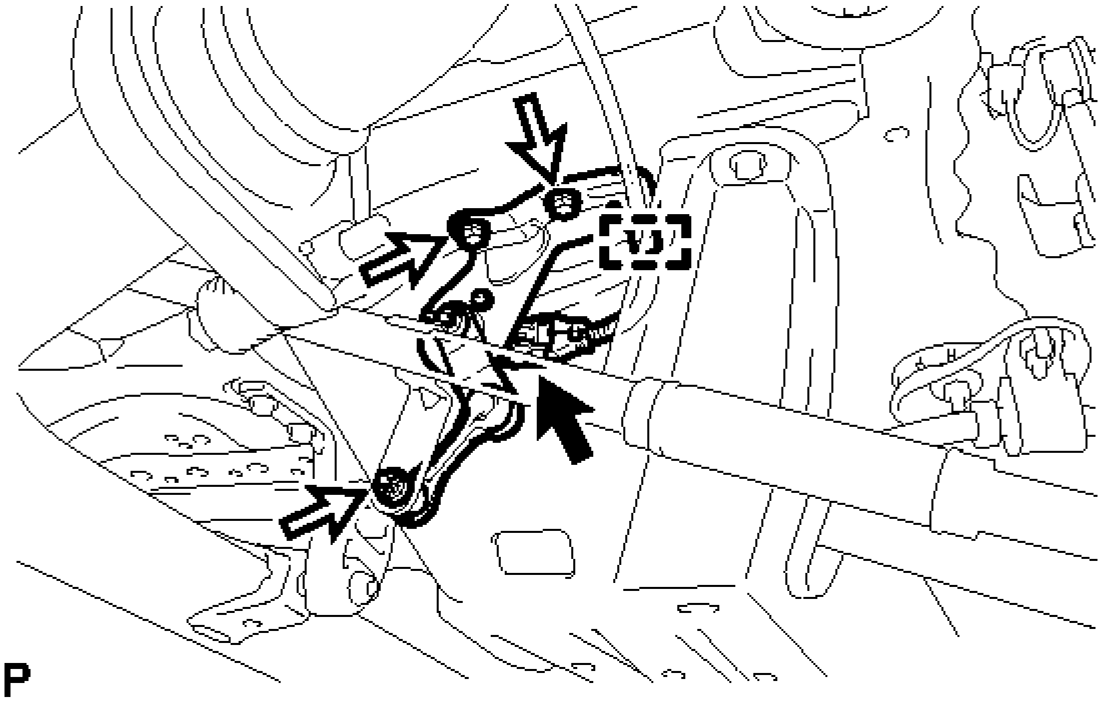

Fig. 120: Locating Rear Height Control Sensor Sub-Assembly Connector And Fasteners
Courtesy of TOYOTA MOTOR SALES, U.S.A., INC.

b. Remove the nut and 2 bolts.
c. Disengage the clamp and remove the rear height control sensor sub-assembly.

NOTE: **Do not drop the rear height control sensor sub-assembly. If it is dropped, replace it with a new one.**

INSPECTION

INSPECTION

1. **INSPECT REAR HEIGHT CONTROL SENSOR SUB-ASSEMBLY**
   a. Connect 3 dry cell batteries (1.5 V) in series.

NOTE: **Do not use rechargeable batteries as they may not output a voltage of 1.5 V.**

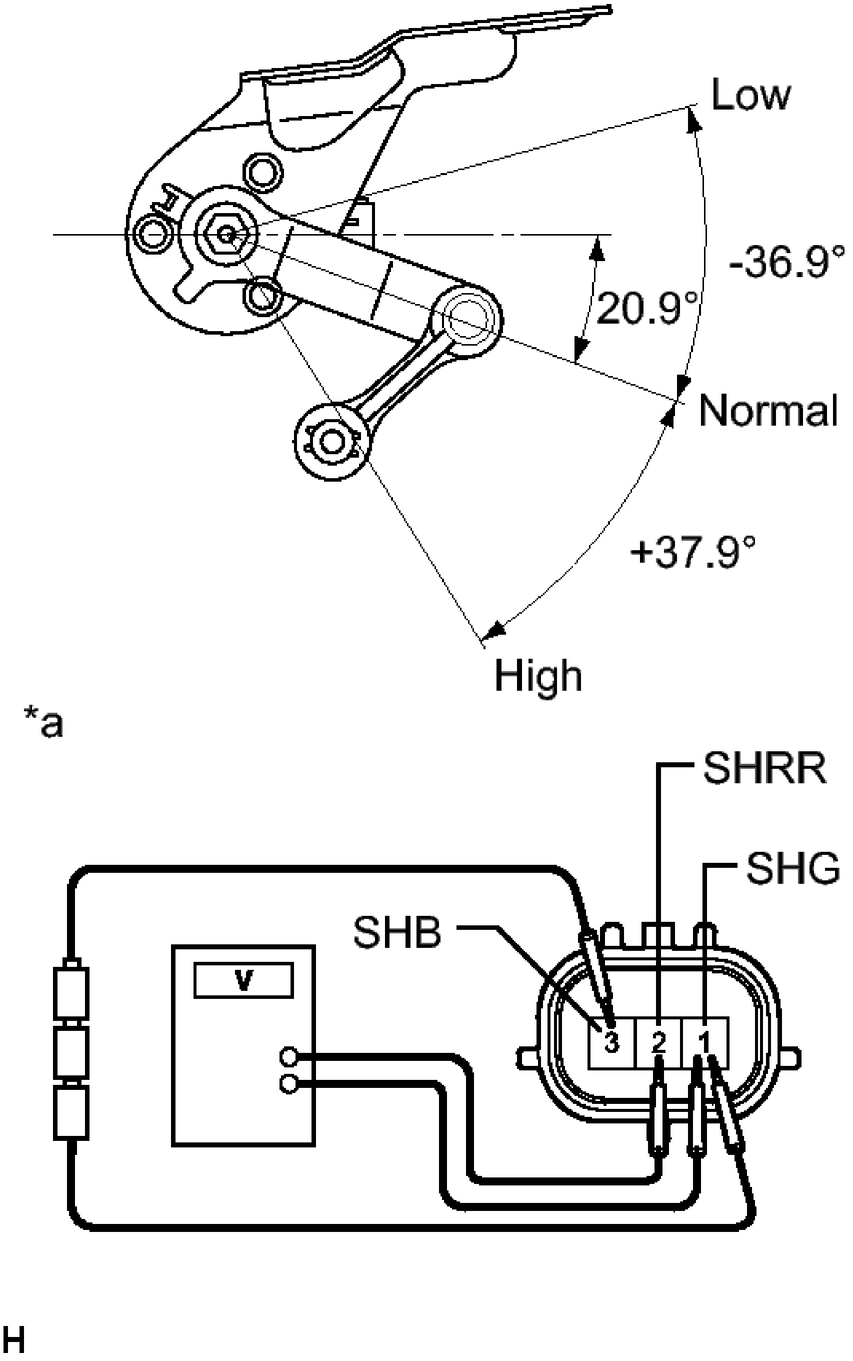
Low
-36.9°
20.9°
Normal
+37.9°
High
*a
SHRR
SHG
SHB
V
3
2
1
H

Fig. 121: Inspecting Rear Height Control Sensor Sub-Assembly
Courtesy of TOYOTA MOTOR SALES, U.S.A., INC.

b. Connect the positive (+) lead from the batteries to terminal 3 (SHB) and the negative (-) lead from the batteries to terminal 1 (SHG).

c. Measure the voltage between terminals 2 (SHRR) and 1 (SHG) while slowly moving the link up and down.

Standard Voltage

Tester Connection	**Condition**	**Specified Condition**
2 (SHRR) - 1 (SHG)	+37.9° (High)	3.77 V
2 (SHRR) - 1 (SHG)	0° (Normal)	2.25 V
2 (SHRR) - 1 (SHG)	-36.9° (Low)	0.77 V

TEXT IN ILLUSTRATION

*a	Component without harness connected (Rear Height Control Sensor Sub-assembly)

If the result is not as specified, replace the rear height control sensor sub-assembly.

INSTALLATION

INSTALLATION

1. **INSTALL REAR HEIGHT CONTROL SENSOR SUB-ASSEMBLY**
   a. Engage the clamp.
   b. Install the rear height control sensor sub-assembly with the 2 bolts.

   Torque: 8.0 N*m (82 kgf*cm, 71 in.*lbf)

   c. Install the nut.

   Torque: 5.4 N*m (55 kgf*cm, 48 in.*lbf)

   d. Connect the connector.
2. **CONNECT CABLE TO AUXILIARY BATTERY NEGATIVE TERMINAL**

NOTE: **When disconnecting the cable, some systems need to be initialized after the cable is reconnected. Refer to INITIALIZATION .**

3. **INSTALL LUGGAGE TRIM SERVICE HOLE COVER** . Refer to **INSTALLATION - Step 3**
4. **INITIALIZE HEIGHT CONTROL SENSOR SIGNAL**

   Refer to **INITIALIZATION**

5. **ADJUST HEADLIGHT AIMING**

   Refer to **ADJUSTMENT**

HEADLIGHT LEVELING ECU

COMPONENTS

ILLUSTRATION

Fig. 122: Identifying Headlight Leveling ECU Replacement Components With Torque Specifications
Courtesy of TOYOTA MOTOR SALES, U.S.A., INC.

REMOVAL

REMOVAL

1. **REMOVE INSTRUMENT PANEL SAFETY PAD ASSEMBLY**

   Refer to **REMOVAL**

2. **REMOVE HEADLIGHT LEVELING ECU ASSEMBLY**
   1. Disconnect the connector.

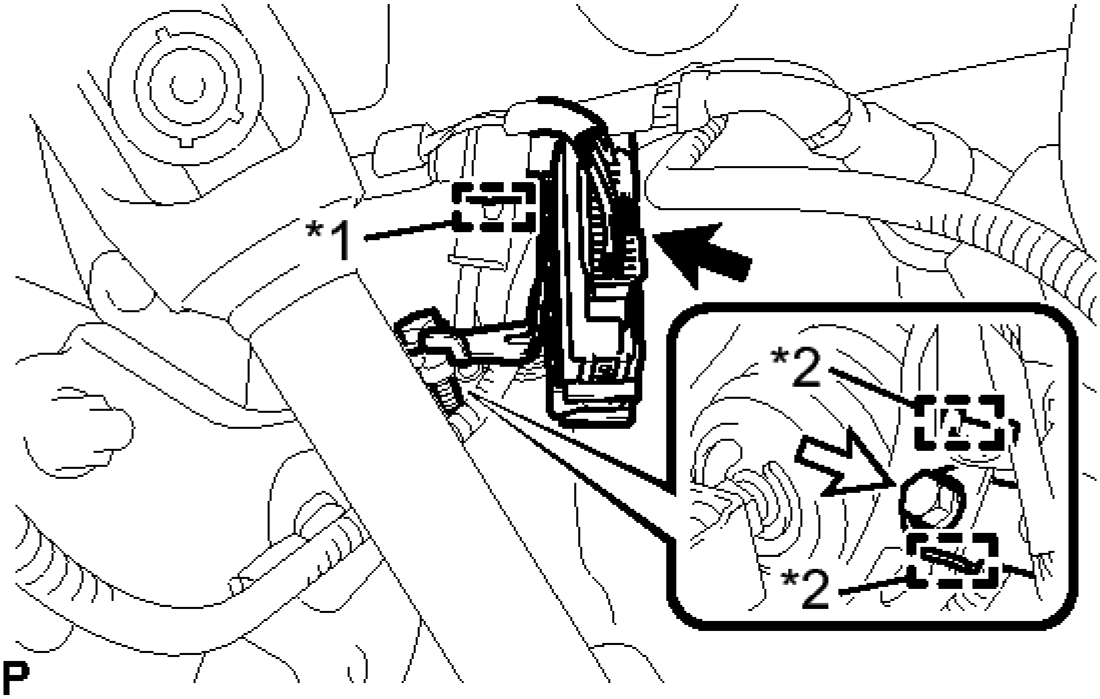

Fig. 123: Locating Headlight Leveling ECU Assembly Connector And Guide
Courtesy of TOYOTA MOTOR SALES, U.S.A., INC.

   2. Disengage the clamp.

TEXT IN ILLUSTRATION

*1	Clamp
*2	Guide

   3. Remove the bolt.
   4. Disengage the 2 guides and remove the headlight leveling ECU assembly.

INSTALLATION

INSTALLATION

1. **INSTALL HEADLIGHT LEVELING ECU ASSEMBLY**
   1. Engage the 2 guides.
   2. Install the headlight leveling ECU assembly with the bolt.

Torque: 8.0 N*m (82 kgf*cm, 71 in.*lbf)

   c. Engage the clamp.
   d. Connect the connector.

2. **INSTALL INSTRUMENT PANEL SAFETY PAD ASSEMBLY**

   Refer to **INSTALLATION**

3. **INITIALIZE HEIGHT CONTROL SENSOR SIGNAL**

   Refer to **INITIALIZATION**

4. **ADJUST HEADLIGHT AIMING**

   Refer to **ADJUSTMENT**

RELAY

ON-VEHICLE INSPECTION

ON-VEHICLE INSPECTION

1. **INSPECT H-LP RELAY**
   a. Measure the resistance according to the value(s) in the table below.

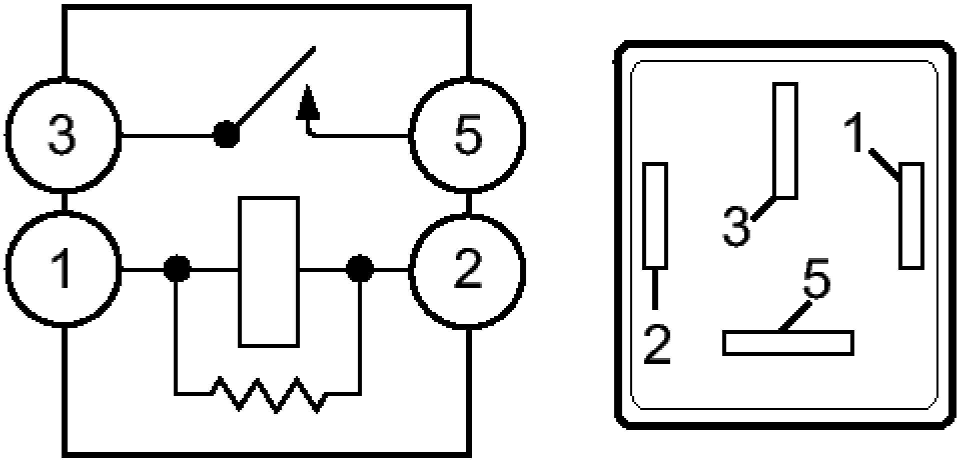

Fig. 124: H-LP Relay

Courtesy of TOYOTA MOTOR SALES, U.S.A., INC.

Standard Resistance

Tester Connection	Condition	Specified Condition
3 - 5	Voltage is not applied between terminals 1 and 2	10 kohms or higher
3 - 5	Voltage is applied between terminals 1 and 2	Below 1 ohms

If the result is not as specified, replace the H-LP relay.

2012-2017 ENGINE

Lubrication System (Service Information) - Camry (2AR-FE)

OIL AND OIL FILTER

COMPONENTS

ILLUSTRATION

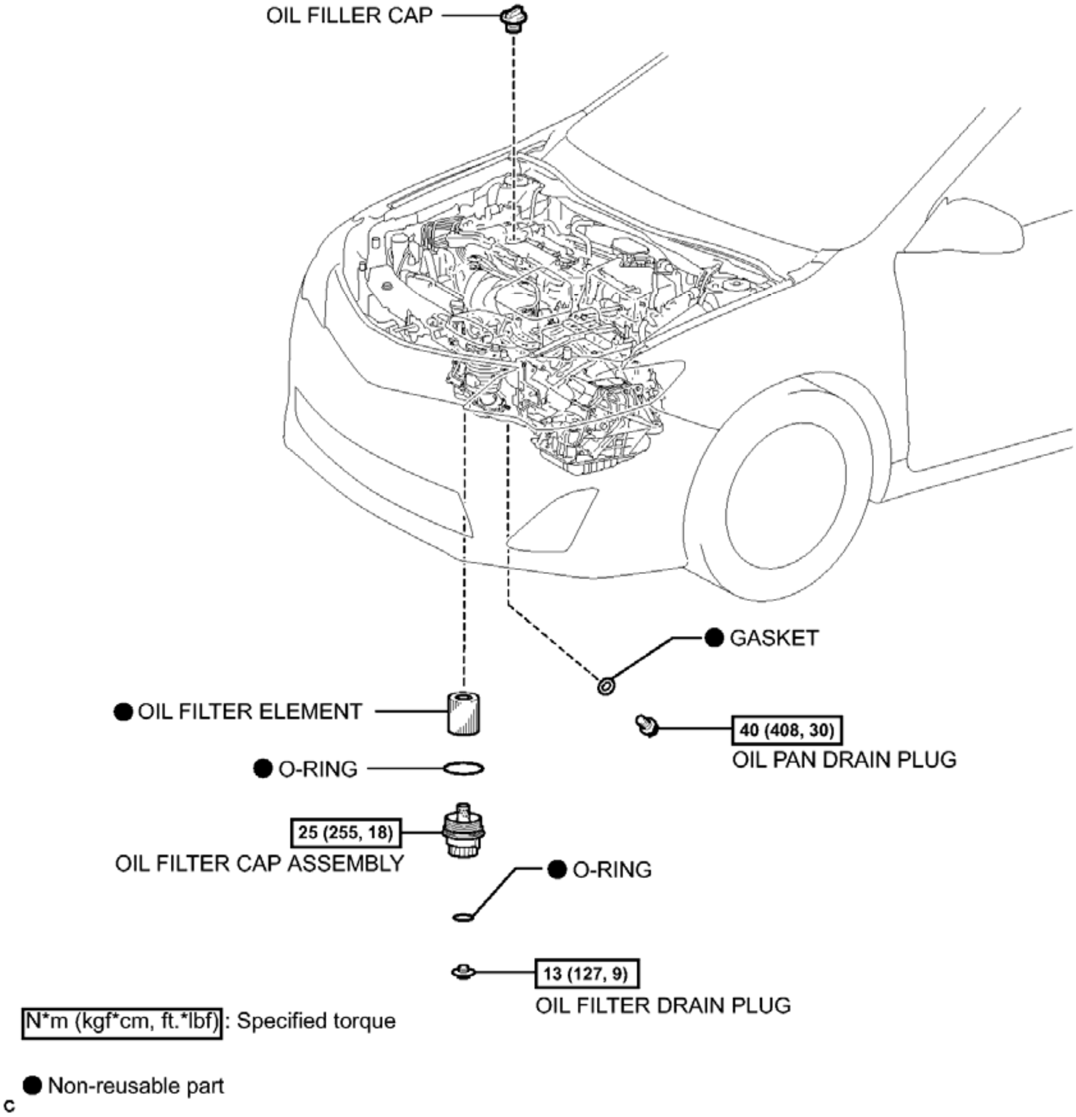
OIL FILLER CAP
● GASKET
● OIL FILTER ELEMENT
40 (408, 30)
OIL PAN DRAIN PLUG
● O-RING
25 (255, 18)
OIL FILTER CAP ASSEMBLY
● O-RING
13 (127, 9)
OIL FILTER DRAIN PLUG
N*m (kgf*cm, ft.*lbf): Specified torque
● Non-reusable part
C

Fig. 1: Identifying Oil And Oil Filter Replacement Components With Torque Specifications
Courtesy of TOYOTA MOTOR SALES, U.S.A., INC.

REPLACEMENT

REPLACEMENT

WARNING:

- **Prolonged and repeated contact with engine oil will result in the removal of natural oils from the skin, leading to dryness, irritation and dermatitis. In addition, used engine oil contains potentially harmful contaminants which may cause skin cancer.**
- **Wear protective clothing and gloves. Avoid contact with used oil. If contact occurs, wash your skin thoroughly with soap or waterless hand cleaner. Never use gasoline, thinners, or solvents to wash the skin.**
- **In order to protect the environment, dispose of used oil and used oil filters at designated disposal sites only.**

1. **DRAIN ENGINE OIL**
   a. Remove the oil filler cap.
   b. Remove the oil pan drain plug and gasket, and drain the engine oil into a container.
   c. Clean the oil pan drain plug and install a new gasket and the oil pan drain plug.

   Torque: 40 N*m (408 kgf*cm, 30 ft.*lbf)

2. **REMOVE OIL FILTER CAP ASSEMBLY**
   a. Connect a hose with an inside diameter of 15 mm (0.591 in.) to the pipe.

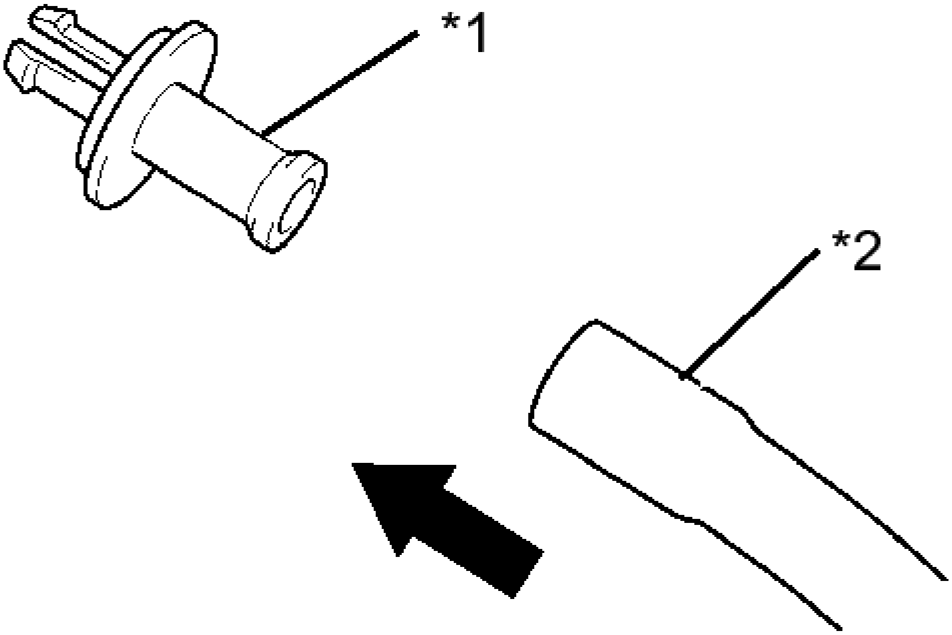

Fig. 2: Connecting Hose To Pipe
Courtesy of TOYOTA MOTOR SALES, U.S.A., INC.

TEXT IN ILLUSTRATION

*1	Pipe
*2	Hose

b. Remove the oil filter drain plug from the oil filter cap.

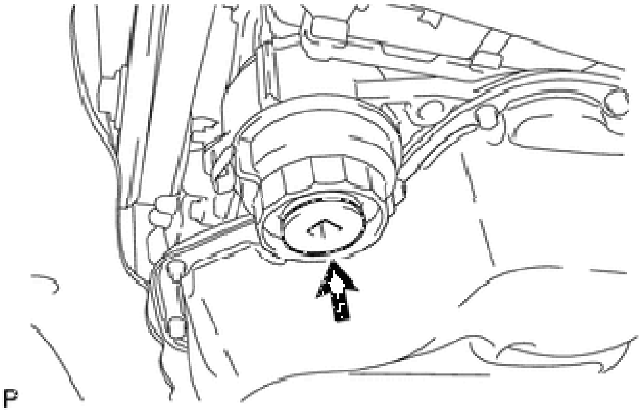

Fig. 3: Locating Oil Filter Drain Plug
Courtesy of TOYOTA MOTOR SALES, U.S.A., INC.

c. Install the pipe to the oil filter cap.

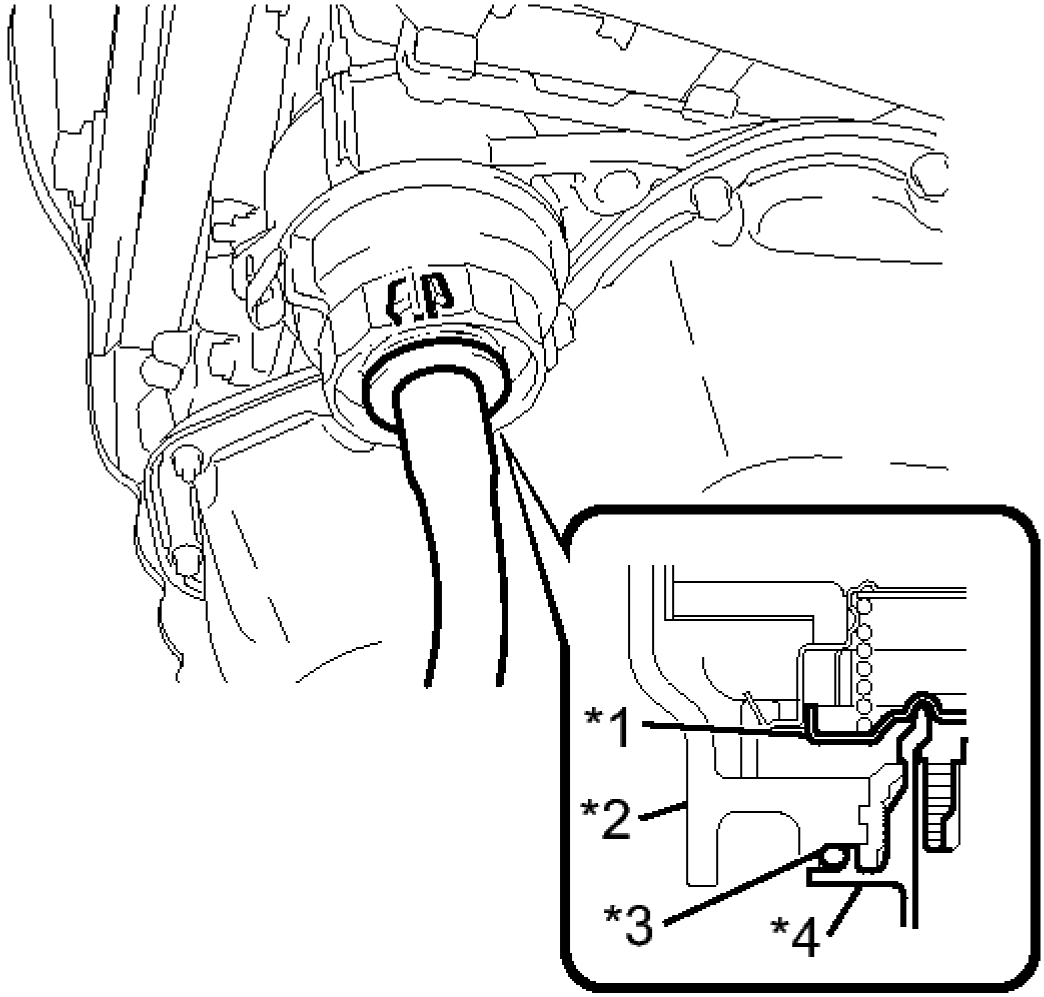

P

Fig. 4: Identifying Oil Filter Cap Assembly Valve, Cap, O-Ring & Pipe
Courtesy of TOYOTA MOTOR SALES, U.S.A., INC.

TEXT IN ILLUSTRATION

*1	Valve
*2	Cap
*3	O-ring
*4	Pipe

NOTE: **If the O-ring is removed with the drain plug, install the O-ring together with the pipe.**

HINT:

Use a container to catch the draining oil.

d. Check that the oil is drained from the oil filter. Then disconnect the pipe as shown in the illustration and remove the O-ring.

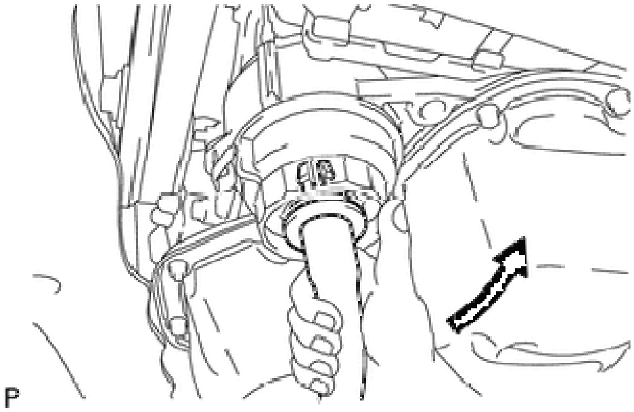

Fig. 5: Disconnecting Pipe
Courtesy of TOYOTA MOTOR SALES, U.S.A., INC.

e. Using SST, remove the oil filter cap.

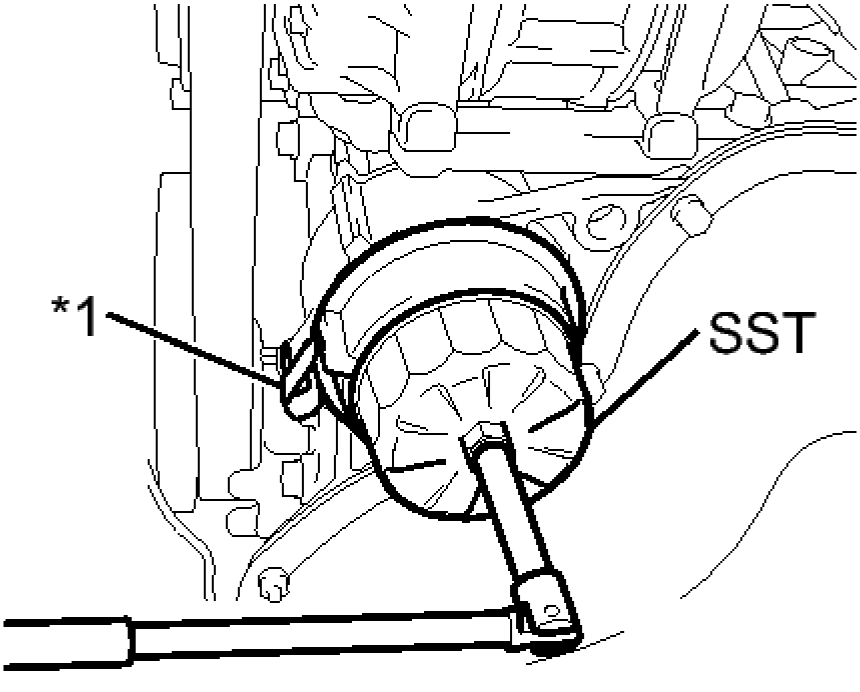

Fig. 6: Identifying Oil Filter Cap And SST
Courtesy of TOYOTA MOTOR SALES, U.S.A., INC.

TEXT IN ILLUSTRATION

	Oil

*1	Filter Bracket Clip

- **SST: 09228-06501**

NOTE: **Do not remove the oil filter bracket clip.**

f. Remove the oil filter element and O-ring from the oil filter cap.

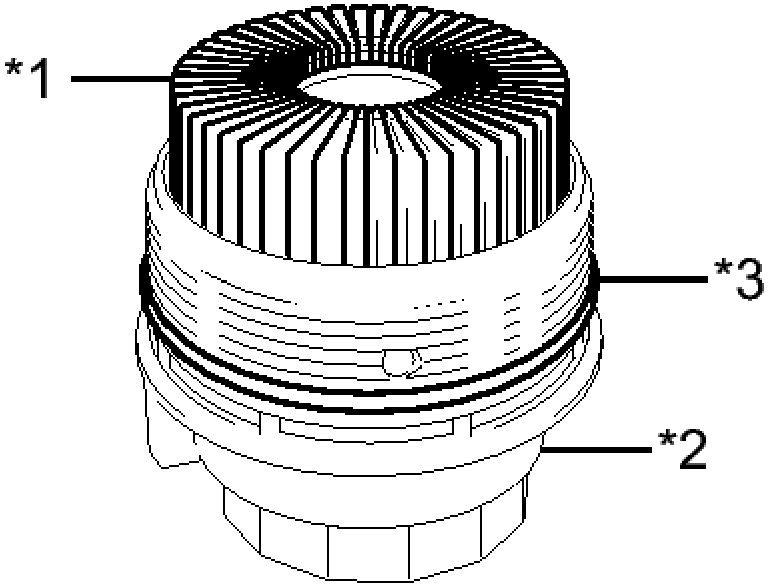

P

Fig. 7: Identifying Oil Filter, Oil Filter Cap And O-Ring
Courtesy of TOYOTA MOTOR SALES, U.S.A., INC.

TEXT IN ILLUSTRATION

*1	Oil Filter Element
*2	Oil Filter Cap
*3	O-ring

NOTE: **Be sure to remove the O-ring by hand, without using any tools, to prevent damage to the O-ring groove.**

3. **INSTALL OIL FILTER CAP ASSEMBLY**

a. Clean the inside of the oil filter cap, threads and O-ring groove.
b. Apply a small amount of engine oil to a new O-ring and install it to the oil filter cap.

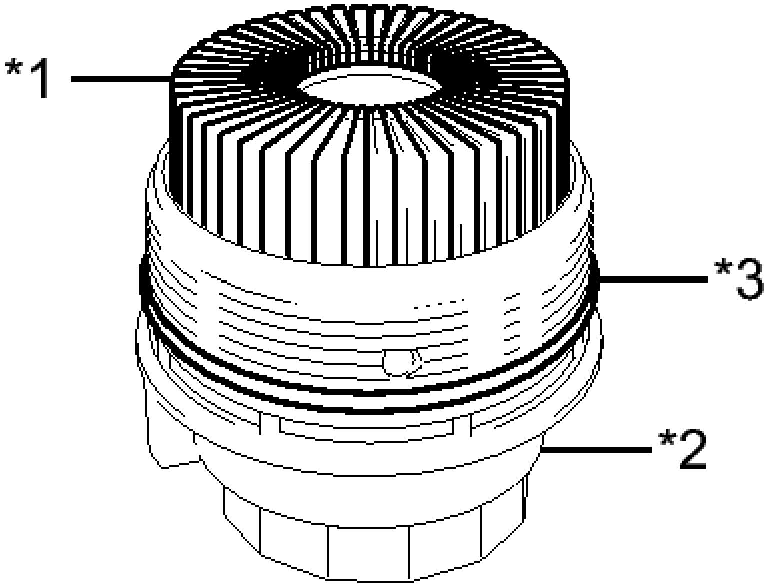

Fig. 8: Identifying Oil Filter Element, Oil Filter Cap And O-Ring
Courtesy of TOYOTA MOTOR SALES, U.S.A., INC.

TEXT IN ILLUSTRATION

*1	Oil Filter Element
*2	Oil Filter Cap
*3	O-ring

c. Set a new oil filter element into the oil filter cap.
d. Remove any dirt or foreign matter from the installation surface of the engine.
e. Apply a small amount of engine oil to the O-ring again and temporarily install the oil filter cap.

NOTE: Make sure that the O-ring does not get caught between the parts.

f. Using SST, tighten the oil filter cap.

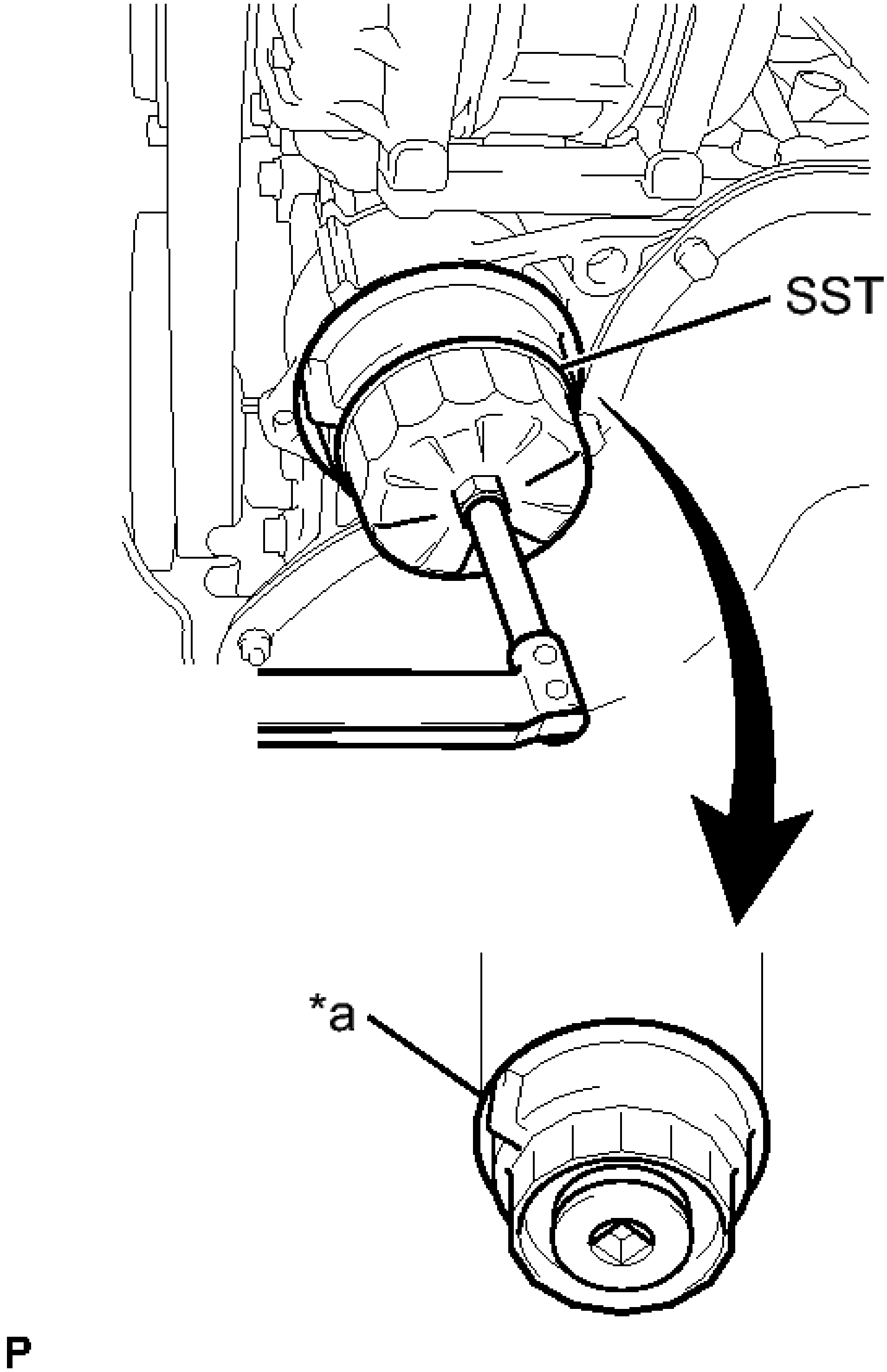

Fig. 9: Identifying Oil Filter Cap And SST

Courtesy of TOYOTA MOTOR SALES, U.S.A., INC.

TEXT IN ILLUSTRATION

	No

*a	Clearance

- **SST: 09228-06501**

Torque: 25 N*m (255 kgf*cm, 18 ft.*lbf)

NOTE:	**Make sure that the oil filter is installed securely as shown in the illustration.**

g. Apply a small amount of engine oil to a new O-ring, and install it to the oil filter cap.

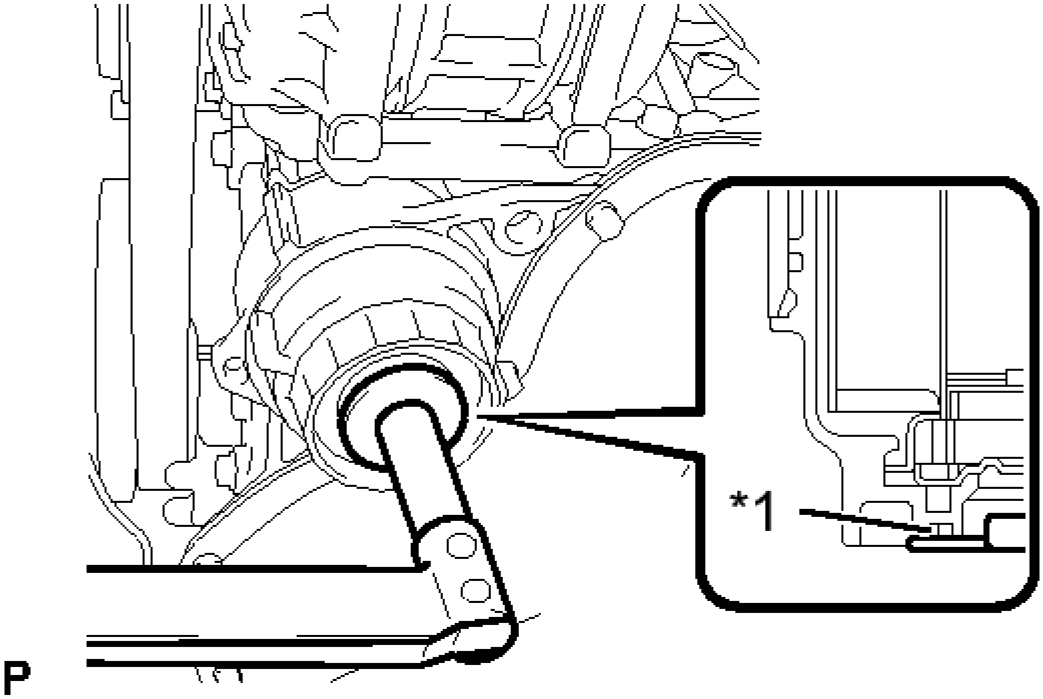

Fig. 10: Identifying Oil Filter Drain Plug "O" Ring
Courtesy of TOYOTA MOTOR SALES, U.S.A., INC.

TEXT IN ILLUSTRATION

*1	O-ring

NOTE:	**Before installing the O-ring, remove any dirt or foreign matter from the installation surface of the oil filter cap.**

h. Install the oil filter drain plug.

Torque: 13 N*m (127 kgf*cm, 9 ft.*lbf)

NOTE:	**Be careful that the O-ring does not get caught between any**

surrounding parts.

4. **ADD ENGINE OIL**
    a. Add new oil.

    Standard Oil Grade

Oil Grade	Oil Viscosity
ILSAC multigrade engine oil	0W-20

    Standard Capacity

Item	Specified Condition
Drain and refill (with oil filter change)	4.4 liters (4.6 US qts, 3.9 Imp. qts)
Drain and refill (without oil filter change)	4.0 liters (4.2 US qts, 3.5 Imp. qts)
Dry fill	5.3 liters (5.6 US qts, 4.7 Imp. qts)

    b. Install the oil filler cap.
5. **INSPECT FOR OIL LEAK**
6. **INSPECT ENGINE OIL LEVEL** . Refer to **ON-VEHICLE INSPECTION - Step 1**

OIL PRESSURE SWITCH

COMPONENTS

ILLUSTRATION

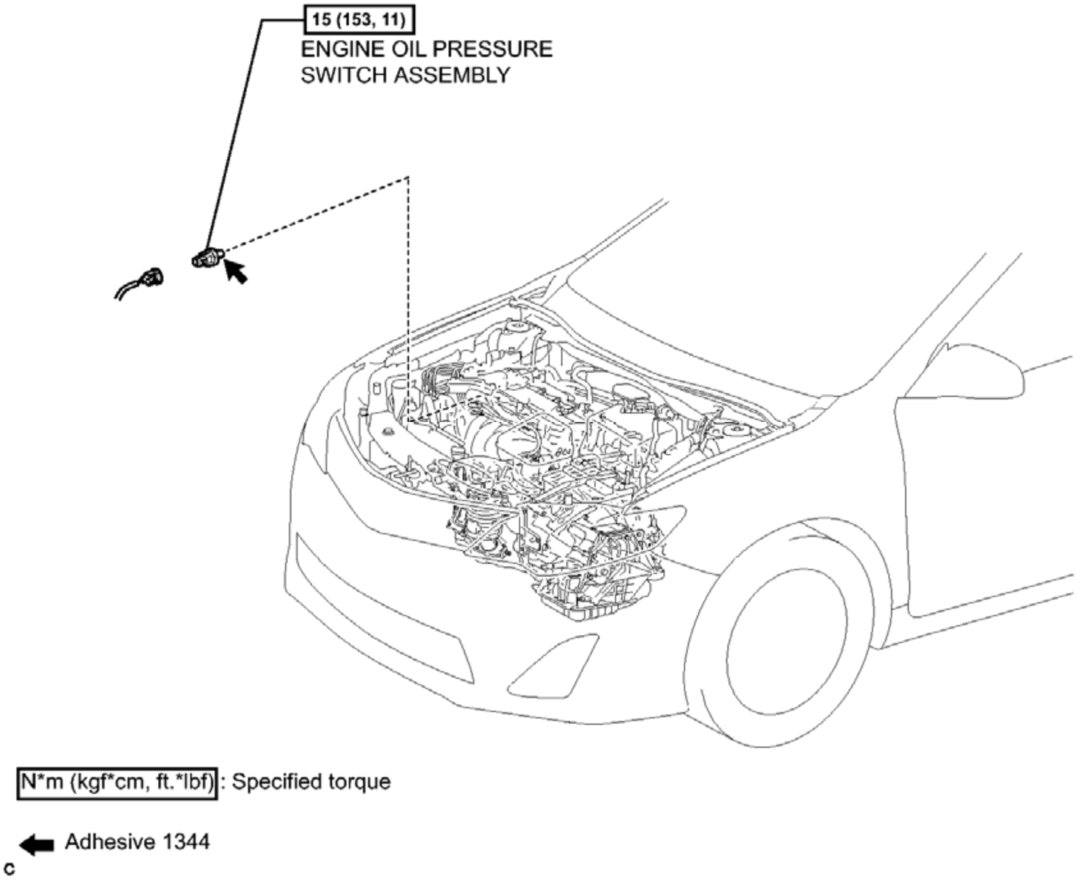
15 (153, 11)
ENGINE OIL PRESSURE SWITCH ASSEMBLY
N*m (kgf*cm, ft.*lbf) : Specified torque
Adhesive 1344
c

Fig. 11: Identifying Oil Pressure Switch Replacement Components With Torque Specifications
Courtesy of TOYOTA MOTOR SALES, U.S.A., INC.

REMOVAL

REMOVAL

1. **REMOVE ENGINE OIL PRESSURE SWITCH ASSEMBLY**
    a. Disconnect the connector.

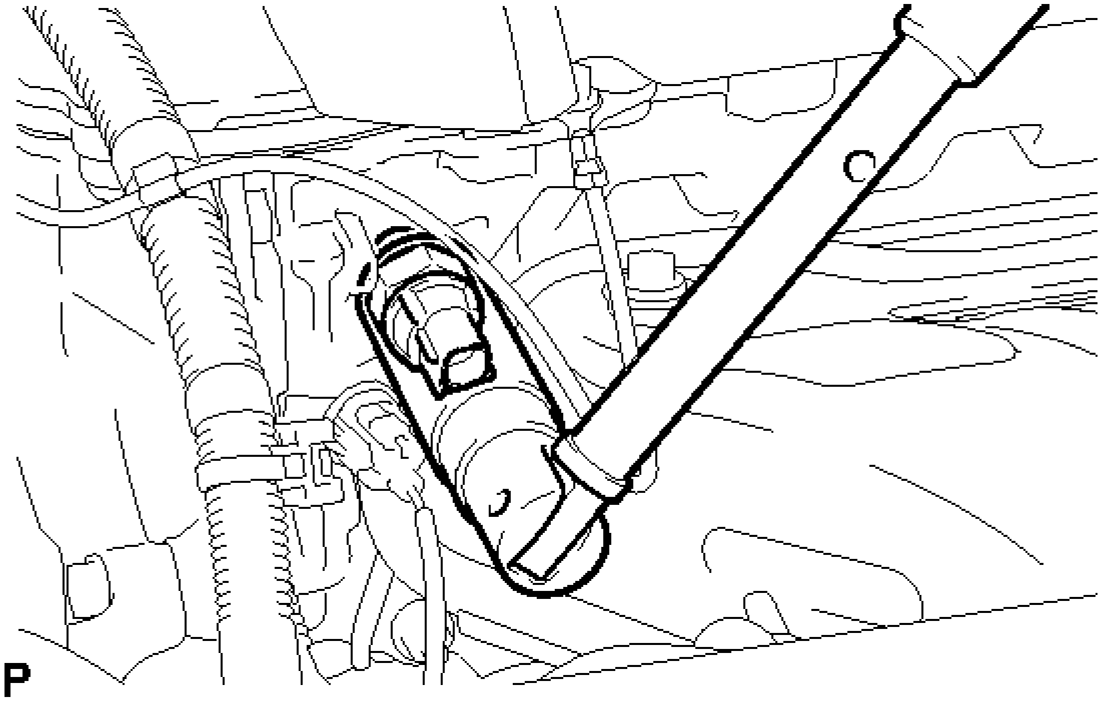

Fig. 12: Identifying Oil Pressure Switch Connector
Courtesy of TOYOTA MOTOR SALES, U.S.A., INC.

b. Using a 24 mm deep socket wrench, remove the oil pressure switch.

INSPECTION

INSPECTION

1. **INSPECT ENGINE OIL PRESSURE SWITCH ASSEMBLY**
    a. Disconnect the oil pressure switch connector.
    b. Start the engine.
    c. Measure the resistance according to the value(s) in the table below.

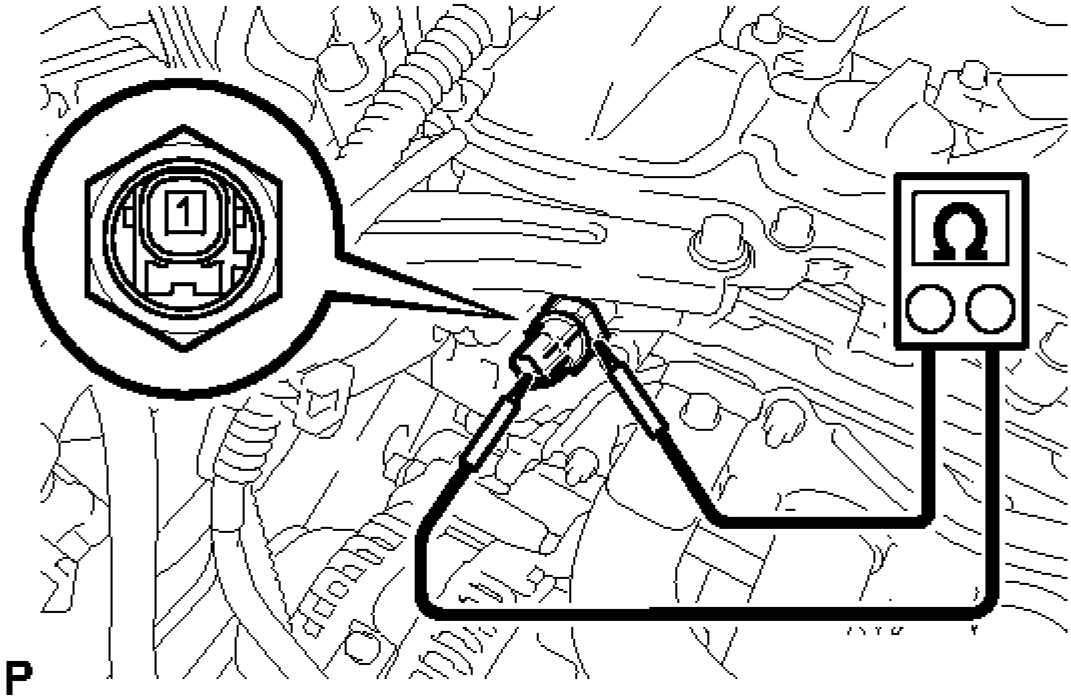

Fig. 13: Inspecting Engine Oil Pressure Switch Assembly
Courtesy of TOYOTA MOTOR SALES, U.S.A., INC.

Standard Resistance

Tester Connection	Condition	Specified Condition
1 - Body ground	Engine stopped	Below 1 ohms
	Engine idling	10 kohms or higher

If the result is not as specified, replace the oil pressure switch assembly.

INSTALLATION

INSTALLATION

1. **INSTALL ENGINE OIL PRESSURE SWITCH ASSEMBLY**
    a. Apply adhesive to 2 or 3 threads of the oil pressure switch.

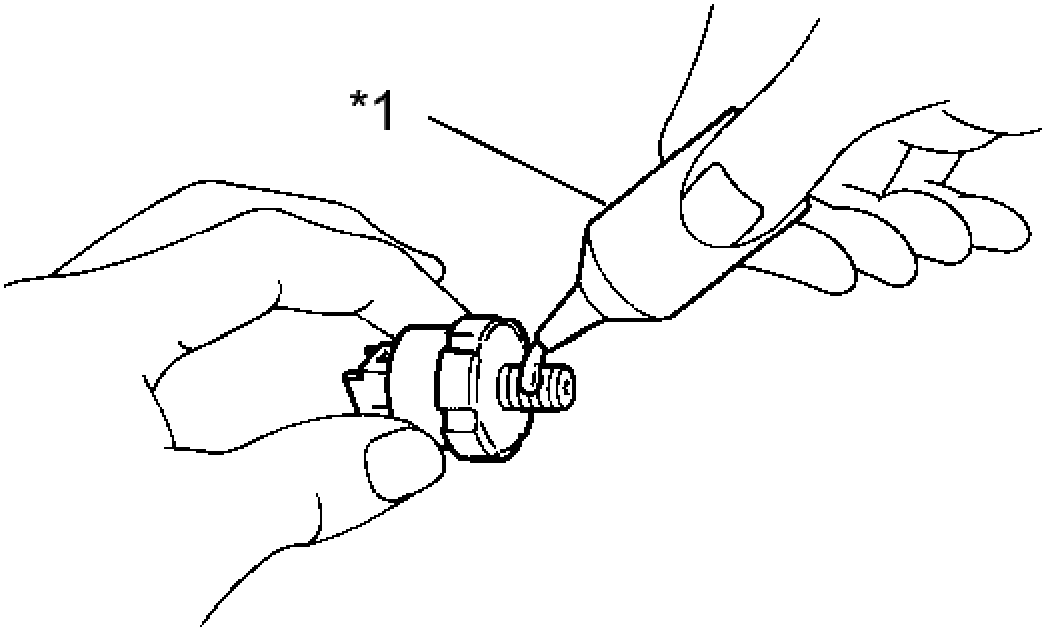

Fig. 14: Applying Adhesive To Threads
Courtesy of TOYOTA MOTOR SALES, U.S.A., INC.

TEXT IN ILLUSTRATION

*1	Adhesive

Adhesive

TOYOTA Genuine Adhesive 1344, Three Bond 1344 or equivalent.

NOTE: **Do not let adhesive adhere to the oil hole.**

b. Using a 24 mm deep socket wrench, install the oil pressure switch.

Torque: 15 N*m (153 kgf*cm, 11 ft.*lbf)

NOTE: **Do not start the engine within 1 hour of installation.**

c. Connect the connector.

2. **INSPECT FOR OIL LEAK**
3. **INSPECT ENGINE OIL LEVEL** . Refer to **ON-VEHICLE INSPECTION - Step 1**

OIL PUMP

COMPONENTS

ILLUSTRATION

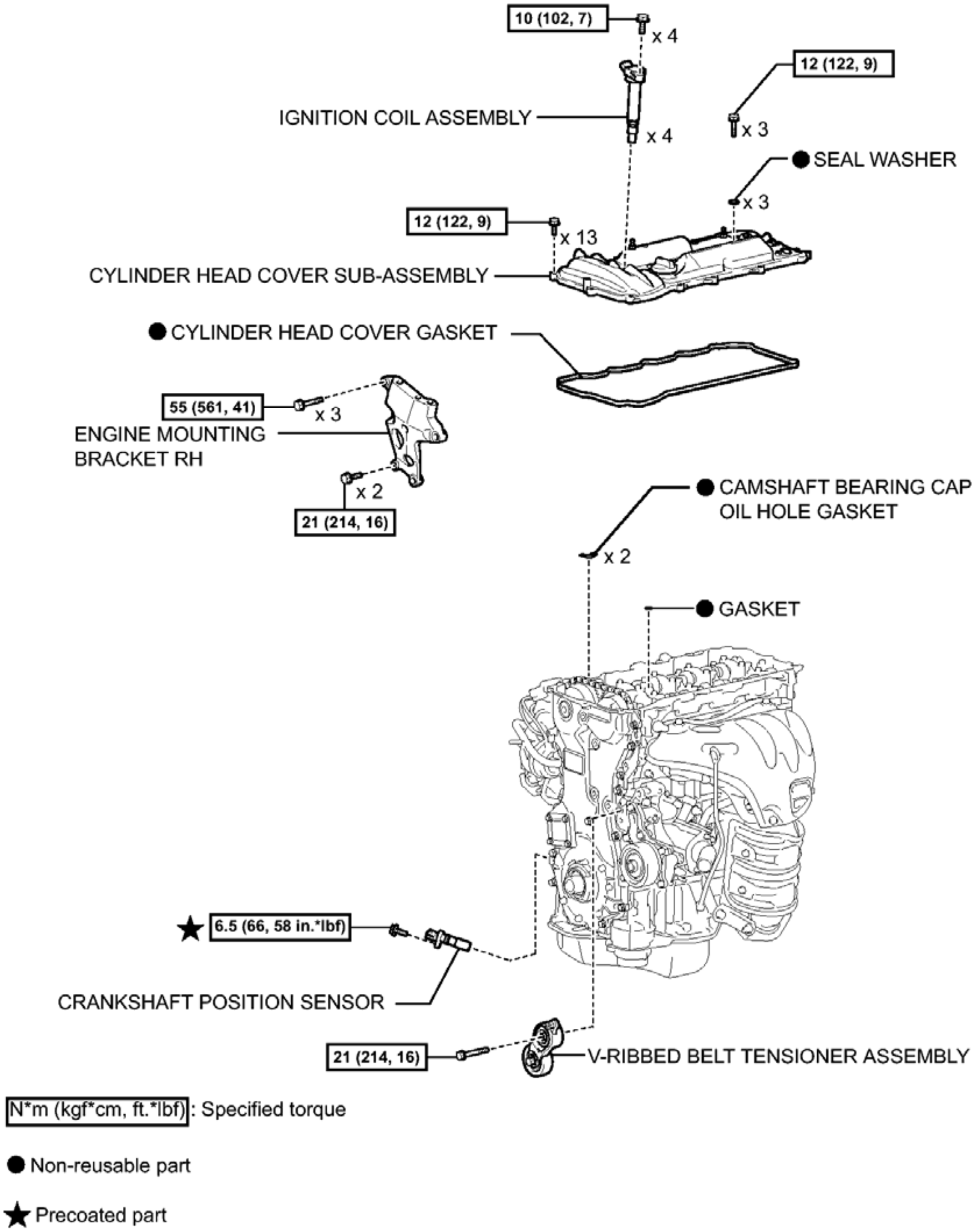
10 (102, 7)
x 4
12 (122, 9)
IGNITION COIL ASSEMBLY
x 4
x 3
SEAL WASHER
x 3
12 (122, 9)
x 13
CYLINDER HEAD COVER SUB-ASSEMBLY
CYLINDER HEAD COVER GASKET
55 (561, 41)
x 3
ENGINE MOUNTING
BRACKET RH
x 2
21 (214, 16)
CAMSHAFT BEARING CAP
OIL HOLE GASKET
x 2
GASKET
6.5 (66, 58 in.*lbf)
CRANKSHAFT POSITION SENSOR
21 (214, 16)
V-RIBBED BELT TENSIONER ASSEMBLY
N*m (kgf*cm, ft.*lbf) : Specified torque
● Non-reusable part
★ Precoated part

Fig. 15: Identifying Oil Pump Replacement Components With Torque Specifications (1 Of 2)
Courtesy of TOYOTA MOTOR SALES, U.S.A., INC.

ILLUSTRATION

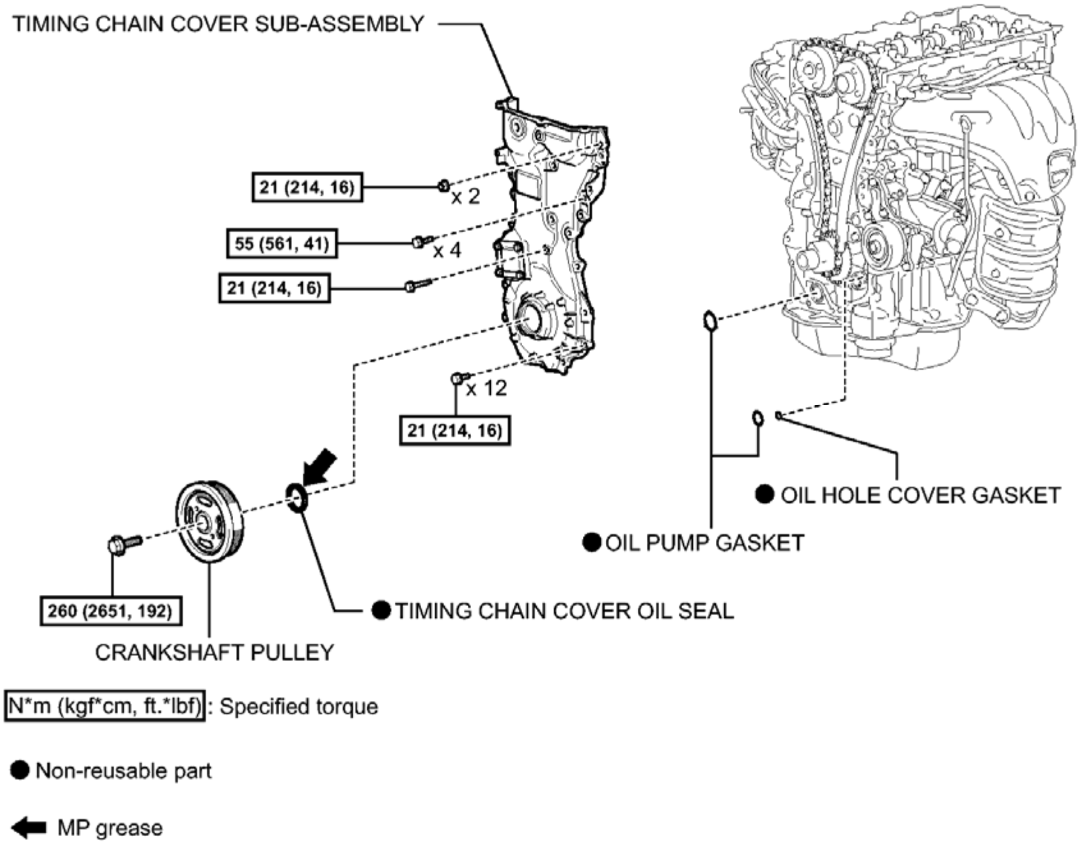
TIMING CHAIN COVER SUB-ASSEMBLY
21 (214, 16)
x 2
55 (561, 41)
x 4
21 (214, 16)
x 12
21 (214, 16)
260 (2651, 192)
CRANKSHAFT PULLEY
● TIMING CHAIN COVER OIL SEAL
● OIL HOLE COVER GASKET
● OIL PUMP GASKET
N*m (kgf*cm, ft.*lbf): Specified torque
● Non-reusable part
MP grease

Fig. 16: Identifying Oil Pump Replacement Components With Torque Specifications (2 Of 2)
Courtesy of TOYOTA MOTOR SALES, U.S.A., INC.

REMOVAL

REMOVAL

NOTE: **Do not remove the oil pump or oil pump relief valve from the timing chain cover sub-assembly.**

1. **REMOVE ENGINE AND TRANSAXLE**

   Refer to **REMOVAL**

2. **REMOVE ENGINE WIRE**
   1. Remove the engine wire.
3. **REMOVE IGNITION COIL ASSEMBLY** . Refer to **REMOVAL - Step 2**
4. **REMOVE CYLINDER HEAD COVER SUB-ASSEMBLY**
   1. Remove the 16 bolts, 3 seal washers, cylinder head cover and gasket.

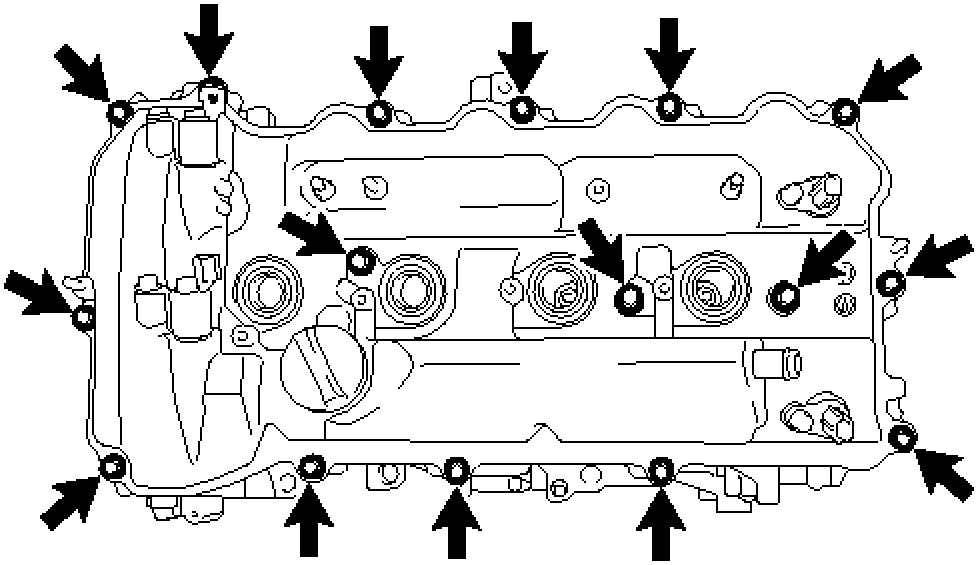

Fig. 17: Locating Cylinder Head Cover And Gasket Bolts And Seal Washers
Courtesy of TOYOTA MOTOR SALES, U.S.A., INC.

b. Remove the 3 gaskets from the camshaft bearing caps.

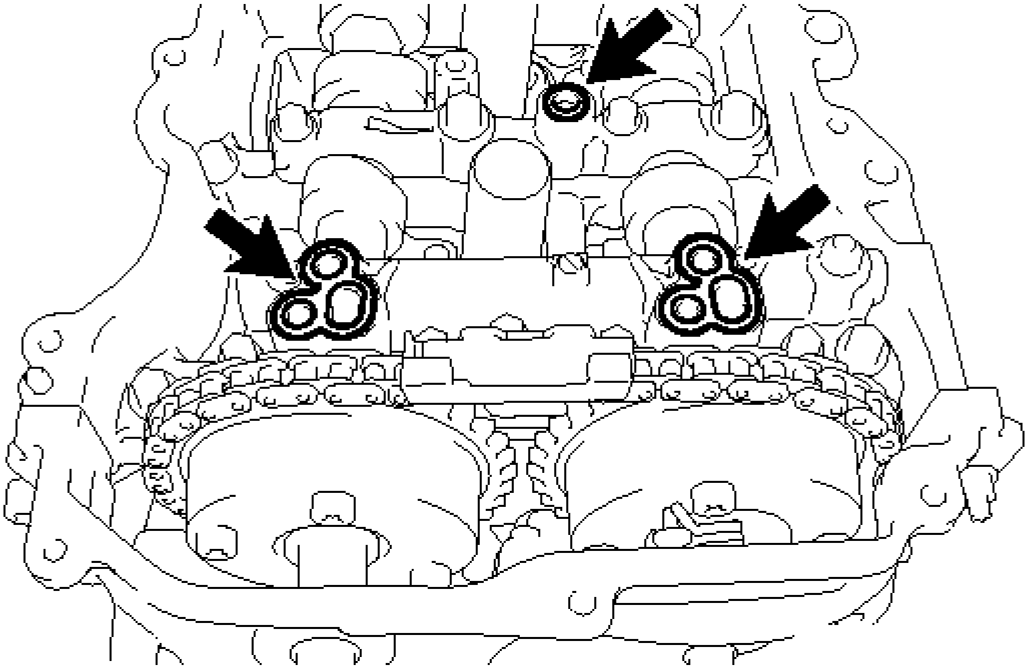

Fig. 18: Locating Camshaft Bearing Caps Gaskets
Courtesy of TOYOTA MOTOR SALES, U.S.A., INC.

5. **REMOVE CRANKSHAFT POSITION SENSOR** . Refer to **REMOVAL - Step 1**
6. **REMOVE CRANKSHAFT PULLEY** . Refer to **DISASSEMBLY - Step 16**
7. **REMOVE ENGINE MOUNTING BRACKET RH**
   a. Remove the 5 bolts and engine mounting bracket RH.

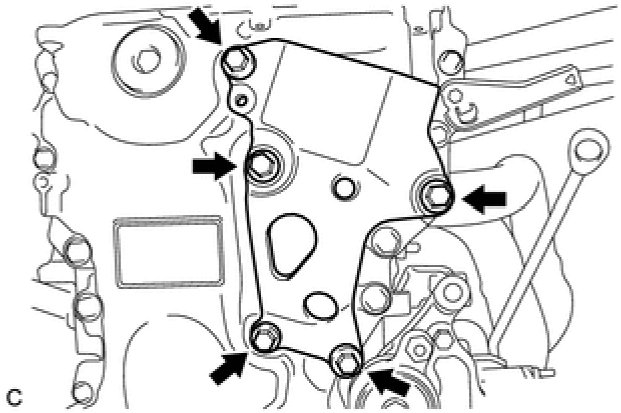

Fig. 19: Locating Engine Mounting Bracket Bolts
Courtesy of TOYOTA MOTOR SALES, U.S.A., INC.

8. **REMOVE V-RIBBED BELT TENSIONER ASSEMBLY** . Refer to **DISASSEMBLY - Step 13**
9. **REMOVE TIMING CHAIN COVER SUB-ASSEMBLY**
   a. Remove the 17 bolts and 2 nuts.

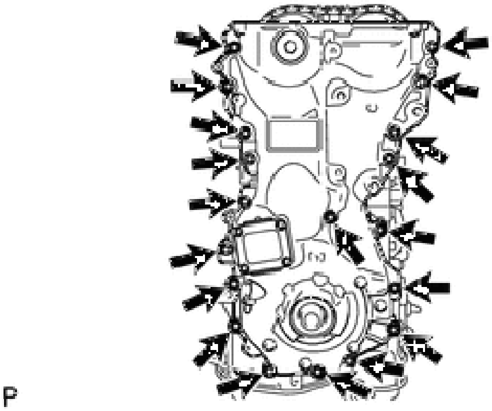

Fig. 20: Locating Timing Chain Cover Bolts And Nuts
Courtesy of TOYOTA MOTOR SALES, U.S.A., INC.

   b. Remove the timing chain cover by prying between the timing chain cover and cylinder head, camshaft housing, cylinder block and stiffening crankcase with a screwdriver as shown in the illustration.

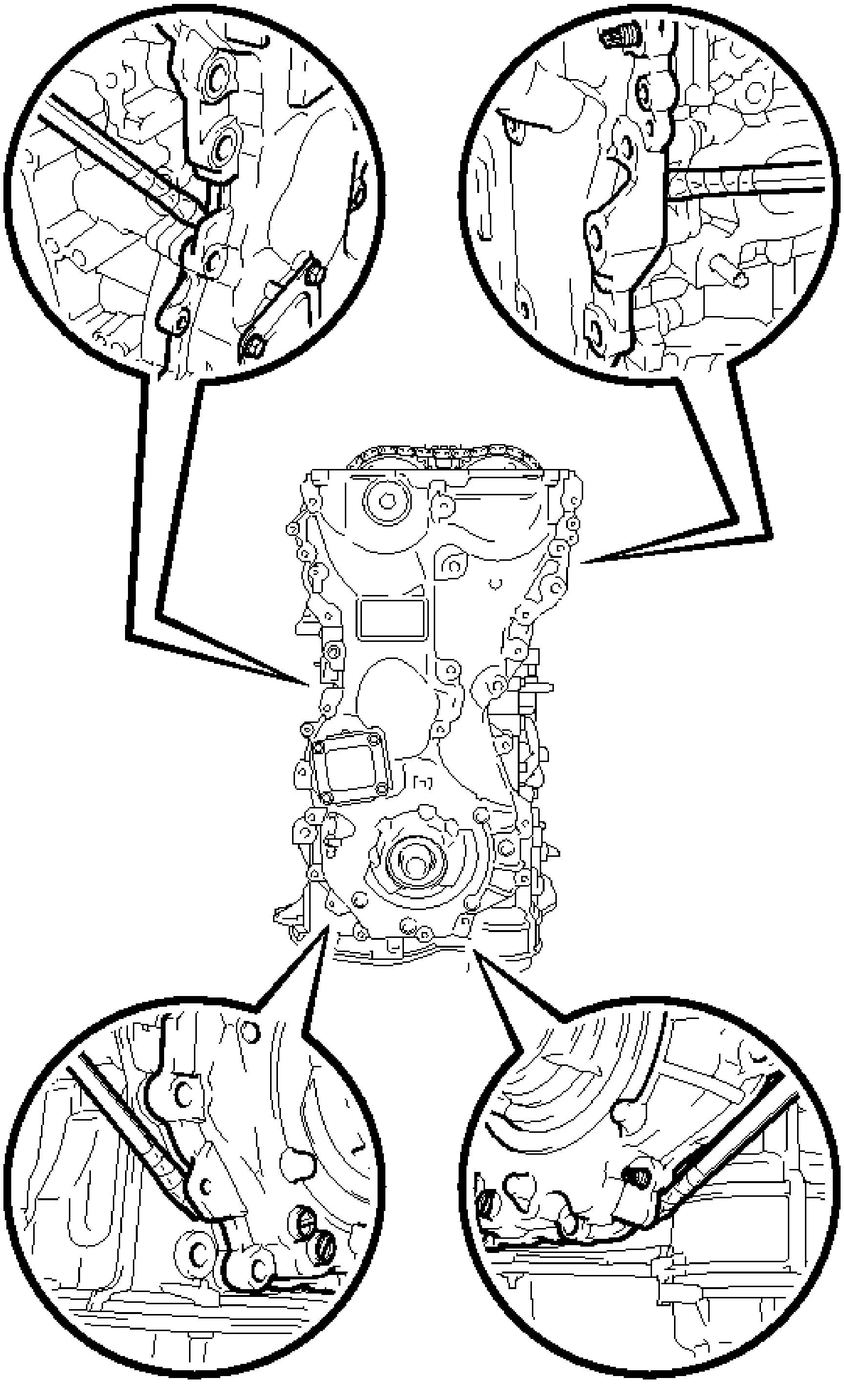

Fig. 21: Prying Between Timing Chain Cover And Cylinder Head
Courtesy of TOYOTA MOTOR SALES, U.S.A., INC.

NOTE: **Be careful not to damage the contact surfaces of the cylinder head,**

camshaft housing, cylinder block, stiffening crankcase or chain cover.

HINT:

Tape the screwdriver tip before use.

c. Remove the 3 gaskets from the stiffening crankcase.

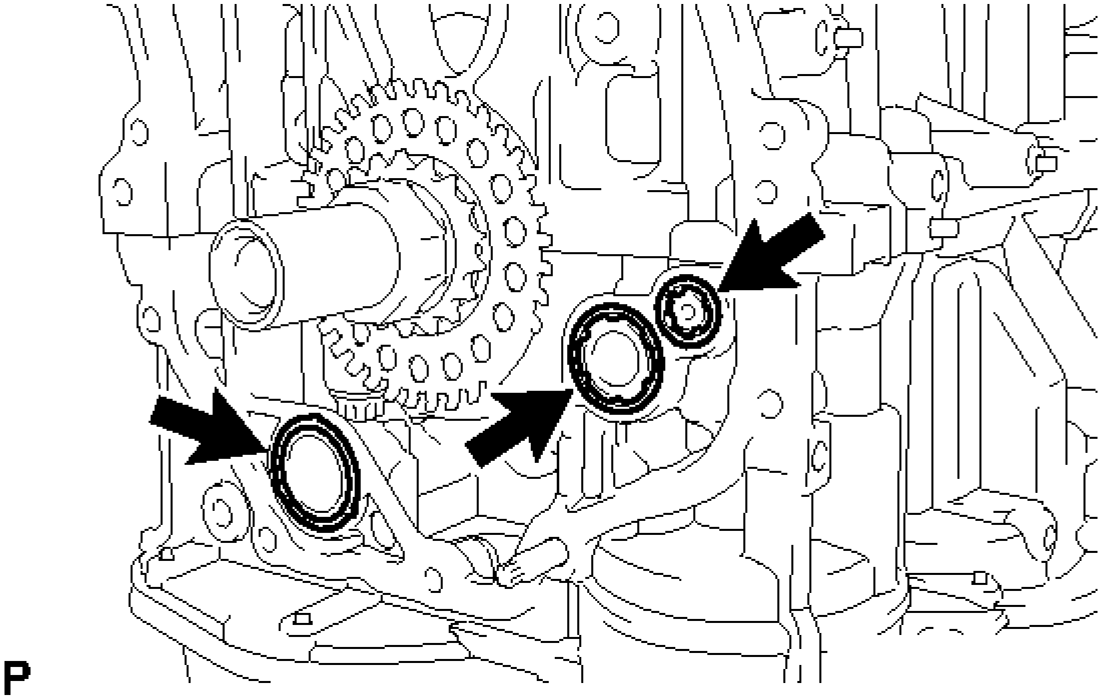

Fig. 22: Locating Gaskets
Courtesy of TOYOTA MOTOR SALES, U.S.A., INC.

10. **REMOVE TIMING CHAIN COVER OIL SEAL**
    a. Using a screwdriver and wooden block, pry out the oil seal.

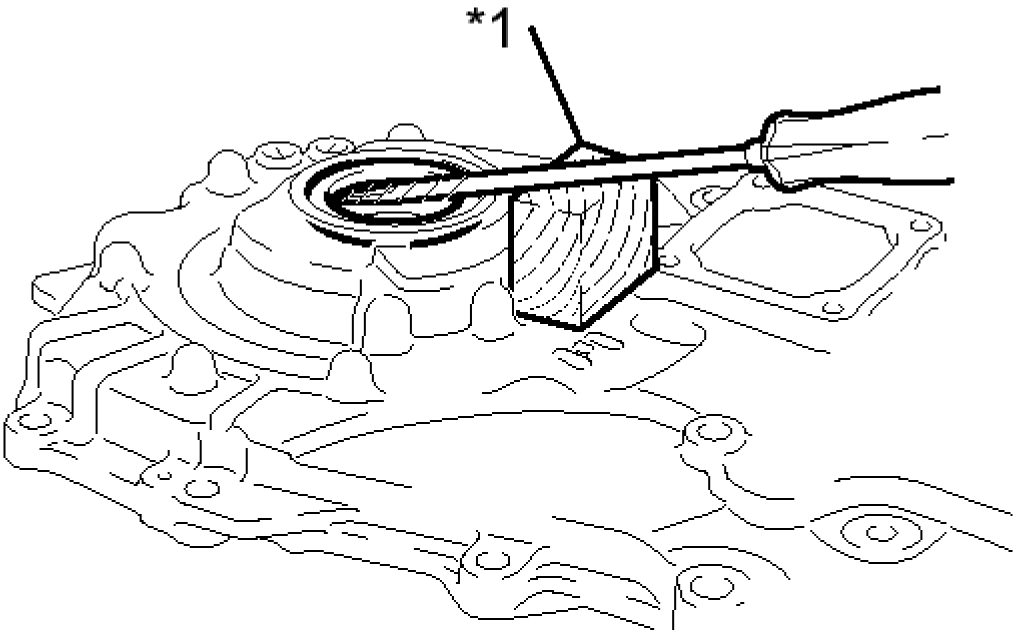

Fig. 23: Identifying Wooden Block
Courtesy of TOYOTA MOTOR SALES, U.S.A., INC.

TEXT IN ILLUSTRATION

*1	Wooden Block

NOTE: **Do not damage the surface of the oil seal press fit hole.**

HINT:

Tape the screwdriver tip before use.

INSTALLATION

INSTALLATION

1. **INSTALL TIMING CHAIN COVER SUB-ASSEMBLY**
    a. Apply a light coat of engine oil to 3 new gaskets.

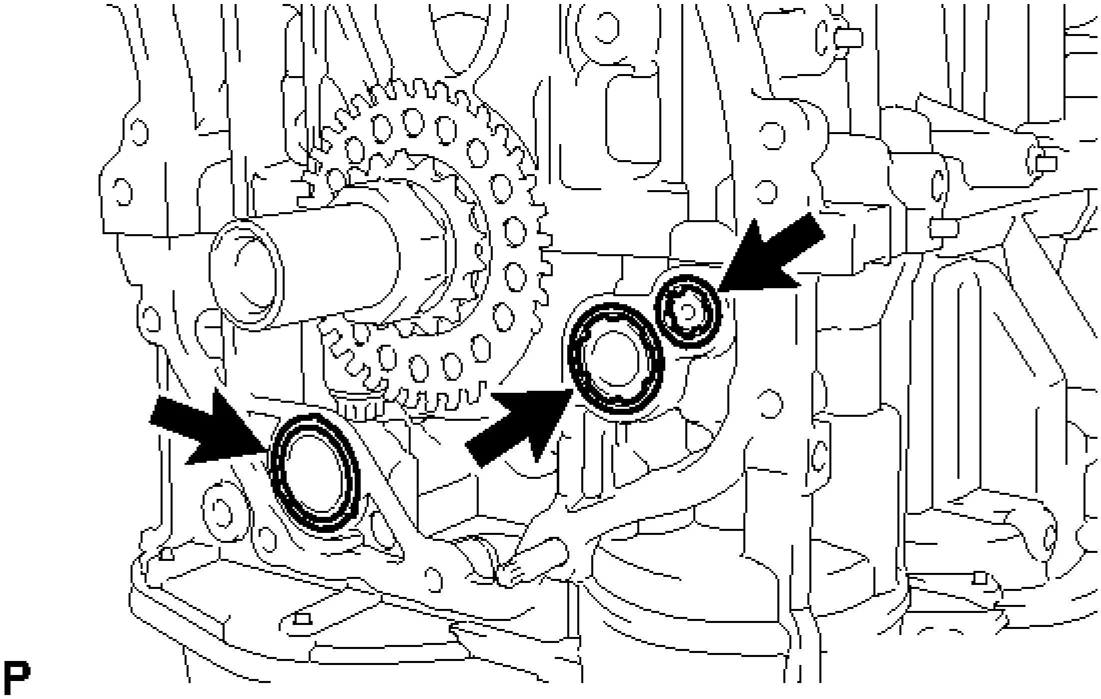

Fig. 24: Locating Gaskets
Courtesy of TOYOTA MOTOR SALES, U.S.A., INC.

b. Install the 3 gaskets to the stiffening crankcase.
c. Align the drive rotor spline and the crankshaft timing sprocket as shown in the illustration.

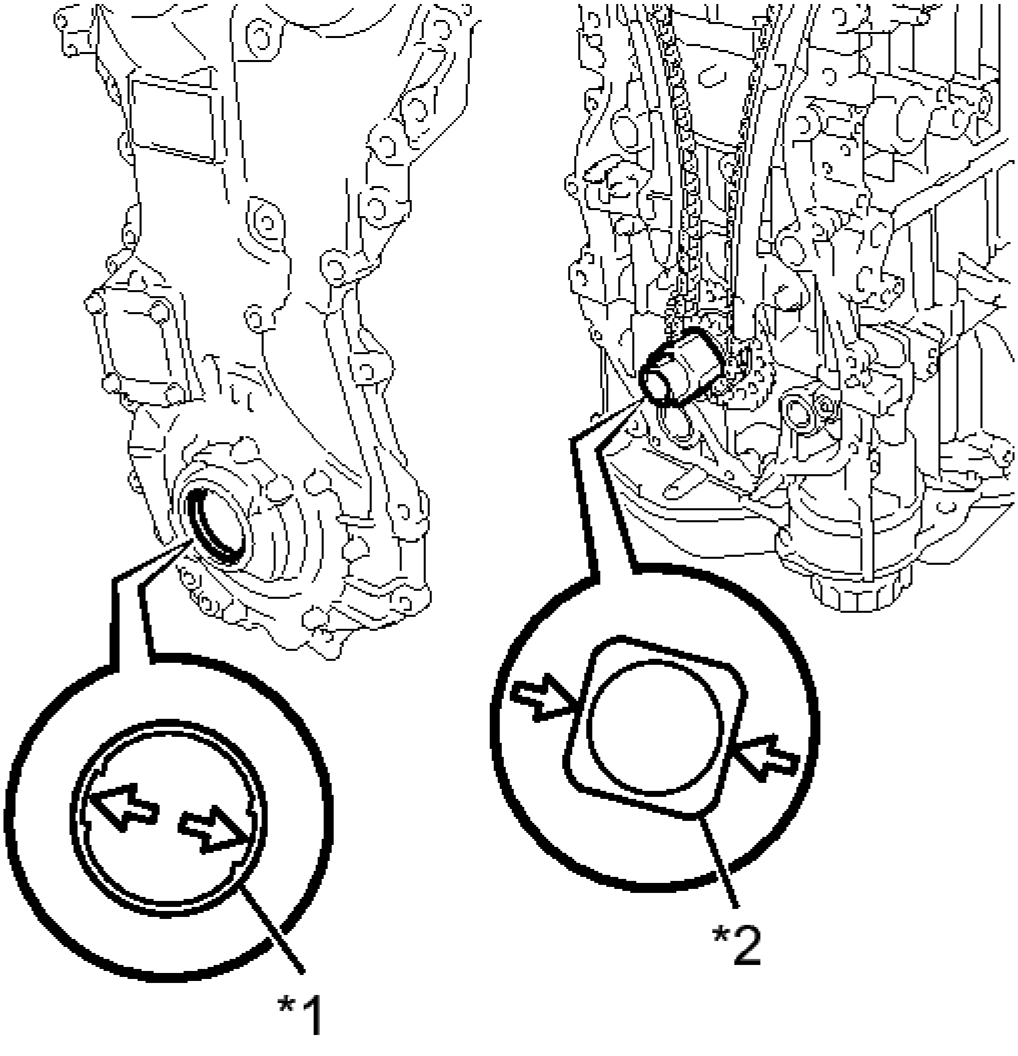

Fig. 25: Locating Drive Rotor Spline & Crankshaft Timing Sprocket
Courtesy of TOYOTA MOTOR SALES, U.S.A., INC.

TEXT IN ILLUSTRATION

*1	Drive Rotor Spline
*2	Crankshaft Timing Sprocket

d. Apply seal packing in a line to the timing chain cover as shown in the following illustration.

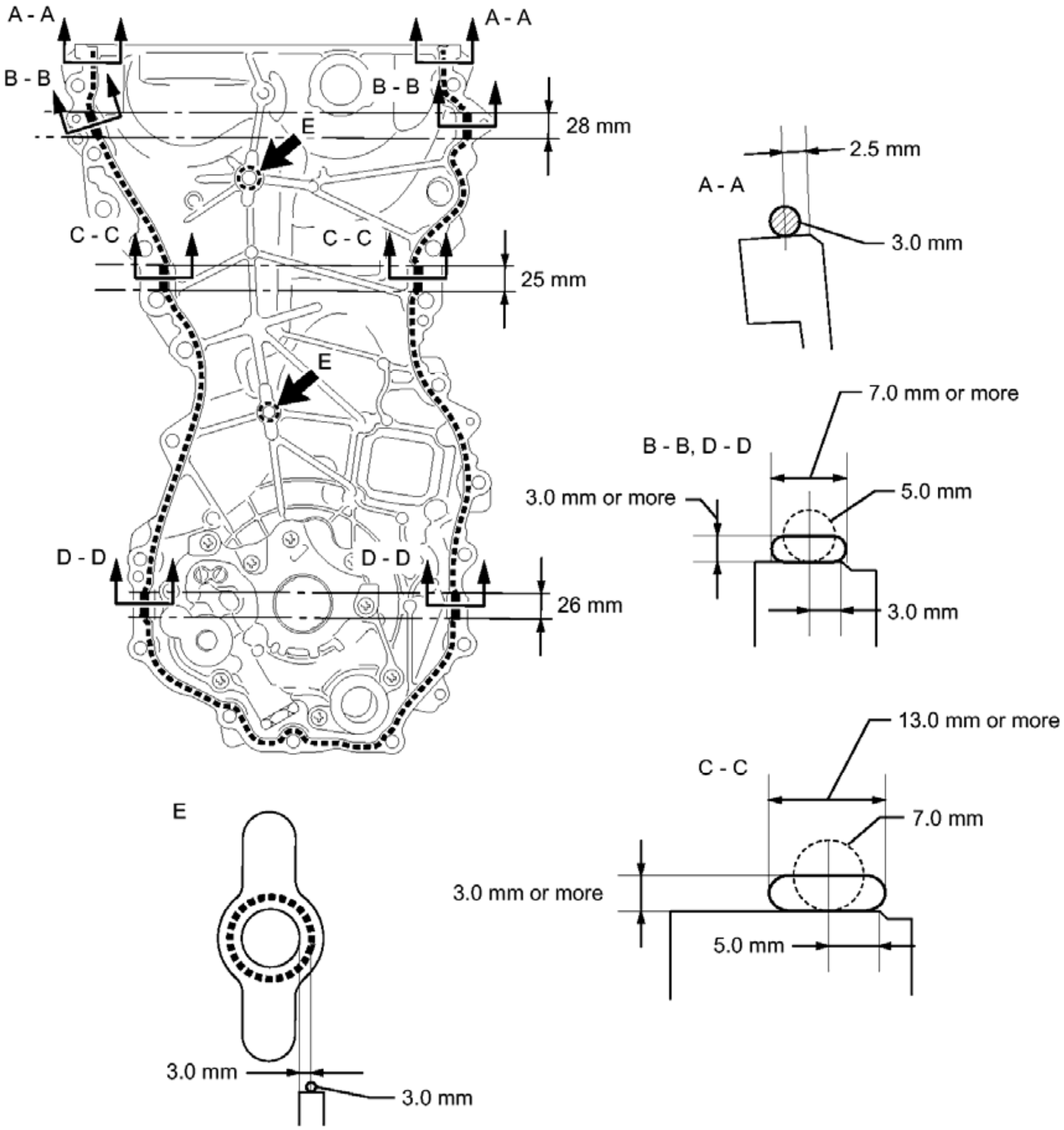
A - A
A - A
B - B
B - B
E
28 mm
C - C
C - C
25 mm
E
D - D
D - D
26 mm
2.5 mm
A - A
3.0 mm
7.0 mm or more
B - B, D - D
3.0 mm or more
5.0 mm
3.0 mm
13.0 mm or more
C - C
7.0 mm
3.0 mm or more
5.0 mm
E
3.0 mm
3.0 mm
P

Fig. 26: Applying Seal Packing Continuous Line To Timing Chain Cover
Courtesy of TOYOTA MOTOR SALES, U.S.A., INC.

Seal packing

Toyota Genuine Seal Packing Black, Three Bond 1207B or equivalent.

Apply Seal Packing as Follows

	Seal Packing Diameter (Round)	**Distance from Edge of**	**Seal**

Area	Seal Pacing Dimension (Flat)	Cover to Center of Seal Packing	Packing Application Length
Dashed Line	3.0 mm (0.118 in.)	2.5 mm (0.0984 in.)	-
	-		
A - A	3.0 mm (0.118 in.)	2.5 mm (0.0984 in.)	-
	-		
B - B	5.0 mm (0.197 in.)	3.0 mm (0.118 in.)	28 mm (1.10 in.)
	7.0 mm (0.276 in.) or more wide and 3.0 mm (0.118 in.) or more thick		
C - C	7.0 mm (0.276 in.)	5.0 mm (0.197 in.)	25 mm (0.984 in.)
	13.0 mm (0.512 in.) or more wide and 3.0 mm (0.118 in.) or more thick		
D - D	5.0 mm (0.197 in.)	3.0 mm (0.118 in.)	26 mm (1.02 in.)
	7.0 mm (0.276 in.) or more wide and 3.0 mm (0.118 in.) or more thick		
E	3.0 mm (0.118 in.)	3.0 mm (0.118 in.)	-
	-		

NOTE:

- **When the contact surfaces are wet, clean the surfaces with non-residue solvent before applying seal packing.**
- **Install the timing chain cover within 3 minutes and tighten the bolts within 10 minutes after applying seal packing.**
- **After applying seal packing to the timing chain cover, install the engine mounting bracket within 10 minutes.**
- **Do not apply oil for at least 4 hours after the installation.**
- **Do not start the engine for at least 4 hours after the installation.**

e. Temporarily install the timing chain cover with the 17 bolts and 2 nuts.

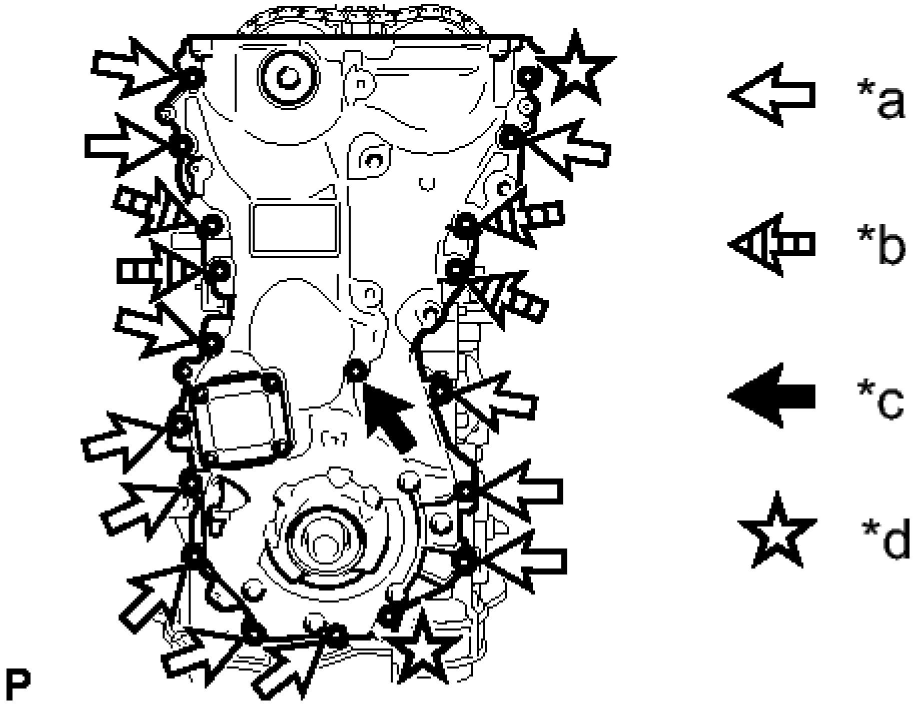

Fig. 27: Identifying Timing Chain Cover Bolts And Nuts
Courtesy of TOYOTA MOTOR SALES, U.S.A., INC.

TEXT IN ILLUSTRATION

*a	Bolt A
*b	Bolt B
*c	Bolt C
*d	Nut

Bolt Length

Item	Length	Thread Diameter
Bolt A	30 mm (1.18 in.)	8 mm (0.315 in.)
Bolt B	35 mm (1.38 in.)	10 mm (0.394 in.)
Bolt C	45 mm (1.77 in.)	8 mm (0.315 in.)

NOTE: Make sure there is no oil on the bolts. If oil is found on any bolt, clean it before installation.

f. Tighten the 17 bolts and 2 nuts in several steps, in the sequence shown in the illustration.

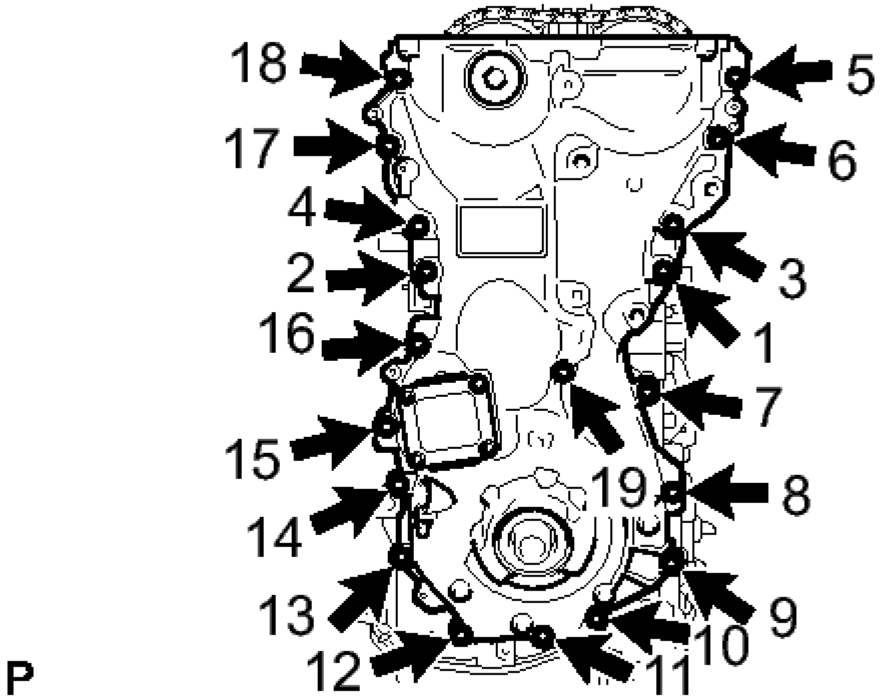

Fig. 28: Identifying Timing Chain Cover Bolts And Nuts Tightening Sequence
Courtesy of TOYOTA MOTOR SALES, U.S.A., INC.

for bolt 1, 2, 3 and 4

Torque: 55 N*m (561 kgf*cm, 41 ft.*lbf)

except bolt 1, 2, 3 and 4

Torque: 21 N*m (214 kgf*cm, 16 ft.*lbf)

2. **INSTALL ENGINE MOUNTING BRACKET RH**
   a. Install the engine mounting bracket RH with the 5 bolts in the order shown in the illustration.

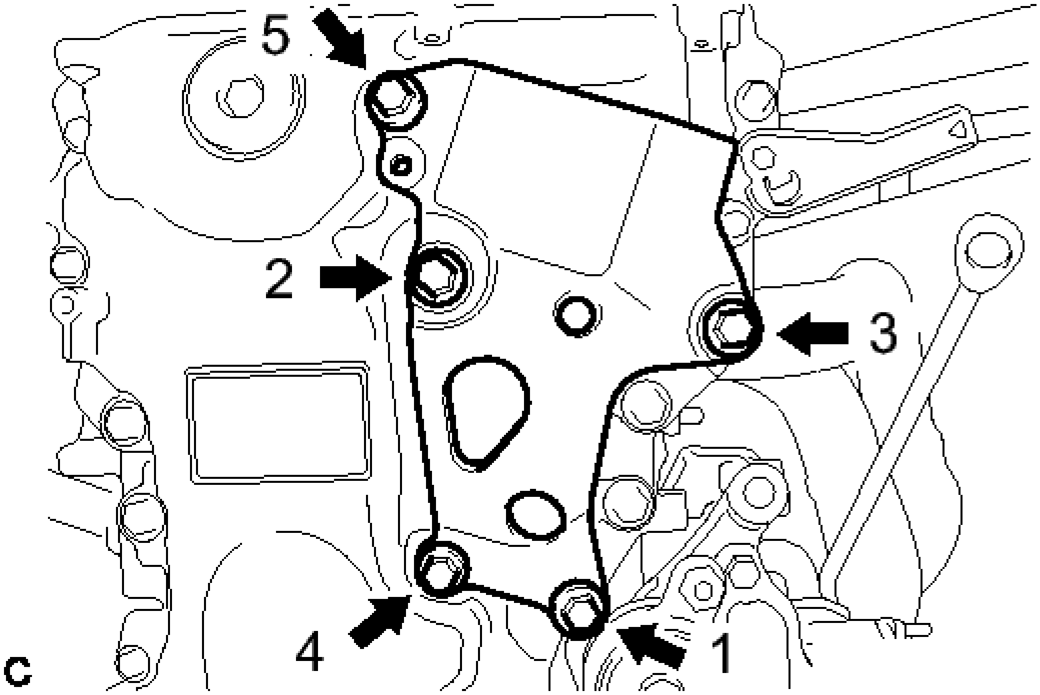

Fig. 29: Identifying Engine Mounting Bracket Bolts Tightening Sequence
Courtesy of TOYOTA MOTOR SALES, U.S.A., INC.

for bolt 1, 2 and 3

Torque: 55 N*m (561 kgf*cm, 41 ft.*lbf)

for bolt 4 and 5

Torque: 21 N*m (214 kgf*cm, 16 ft.*lbf)

NOTE: **After applying seal packing to the timing chain cover, install the engine mounting bracket within 10 minutes.**

3. **INSTALL TIMING CHAIN COVER OIL SEAL** . Refer to **INSTALLATION - Step 1**
4. **INSTALL CRANKSHAFT PULLEY** . Refer to **REASSEMBLY - Step 44**
5. **INSTALL CRANKSHAFT POSITION SENSOR** . Refer to **INSTALLATION - Step 1**
6. **INSTALL V-RIBBED BELT TENSIONER ASSEMBLY** . Refer to **REASSEMBLY - Step 48**
7. **INSTALL CYLINDER HEAD COVER SUB-ASSEMBLY**
   a. Apply a light coat of engine oil to 3 new gaskets.

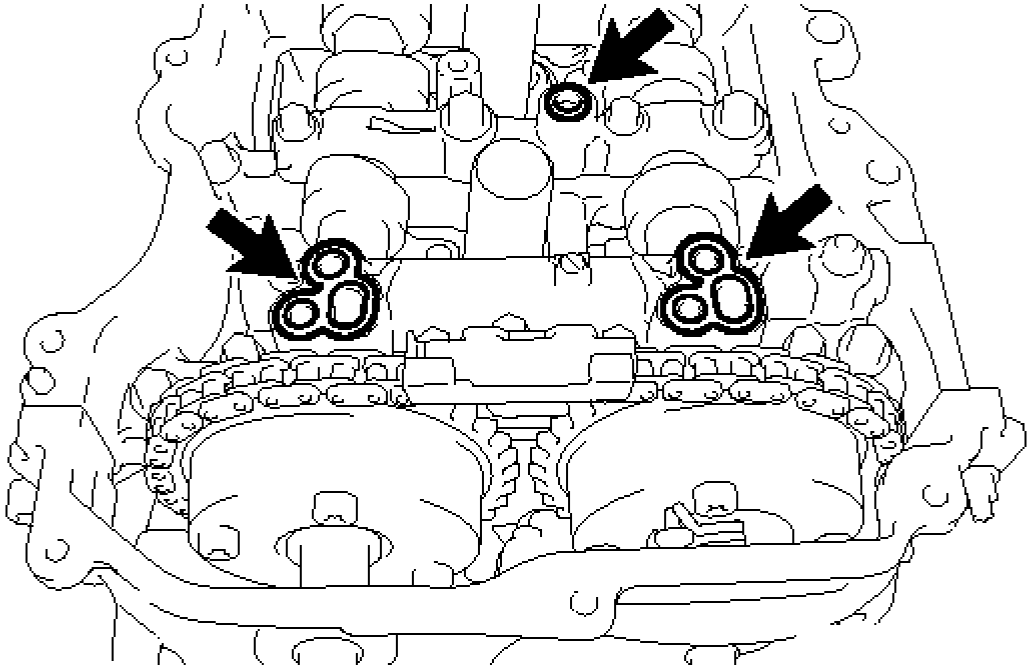

Fig. 30: Locating Camshaft Bearing Caps Gaskets
Courtesy of TOYOTA MOTOR SALES, U.S.A., INC.

b. Install the 3 gaskets to the camshaft bearing caps.
c. Visually check the spark plug tube gasket.

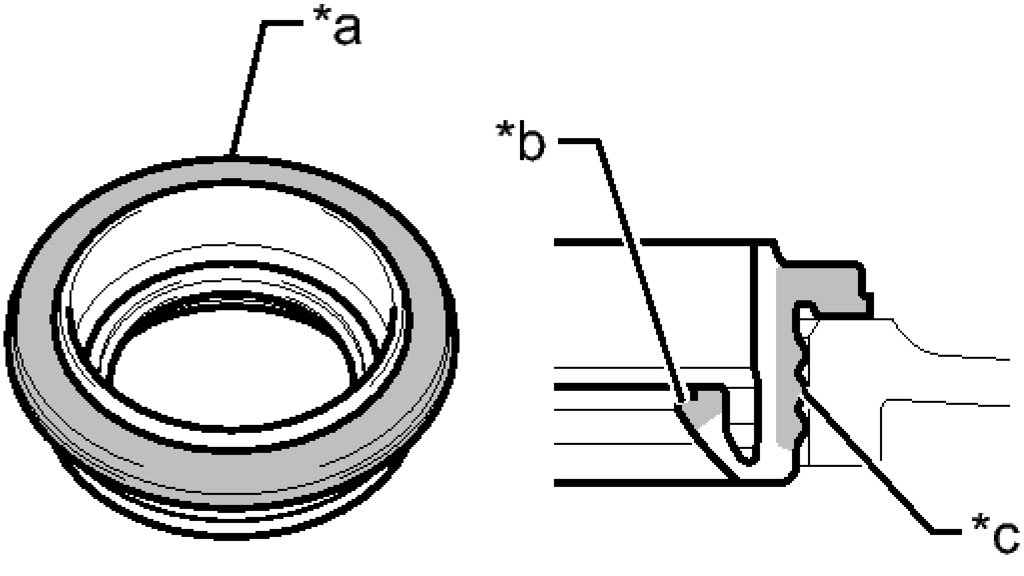

Fig. 31: Identifying No Scratches Or Deformation

Courtesy of TOYOTA MOTOR SALES, U.S.A., INC.

OK

Area	Specified Condition
Upper surface	No scratches or deformation
Outer lip	No scratches or deformation
Inner lip	No scratches

TEXT IN ILLUSTRATION

*a	Upper Surface
*b	Inner Lip
*c	Outer Lip

HINT:

If the result is not as specified, replace the spark plug tube gasket.

d. Install a new gasket to the cylinder head cover.

NOTE: **Remove any oil from the contact surface.**

e. Apply seal packing as shown in the illustration.

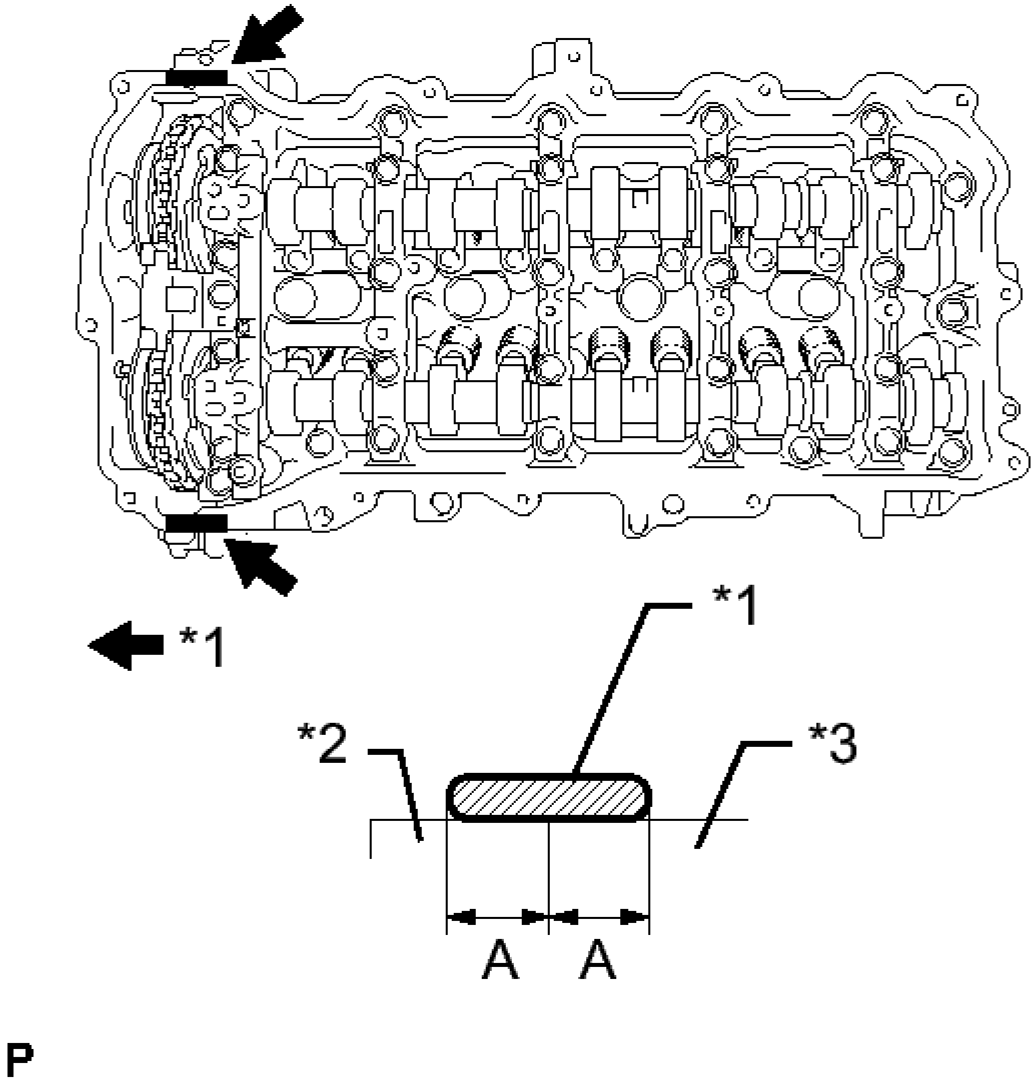

Fig. 32: Cylinder Head Cover Sub-Assembly
Courtesy of TOYOTA MOTOR SALES, U.S.A., INC.

Seal packing

Toyota Genuine Seal Packing Black, Three Bond 1207B or equivalent

Standard seal diameter

3.0 to 6.0 mm (0.118 to 0.236 in.)

Application width A

5.0 mm (0.197 in.)

TEXT IN ILLUSTRATION

*1	Seal packing
*2	Timing Chain Cover
*3	Camshaft Housing

NOTE:

- **Remove any oil from the contact surface.**
- **Install the cylinder head cover within 3 minutes and tighten the bolts within 15 minutes of applying seal packing.**

f. Align the cylinder head cover with pin A. Then align the cylinder head cover with pin B and install the cylinder head cover.

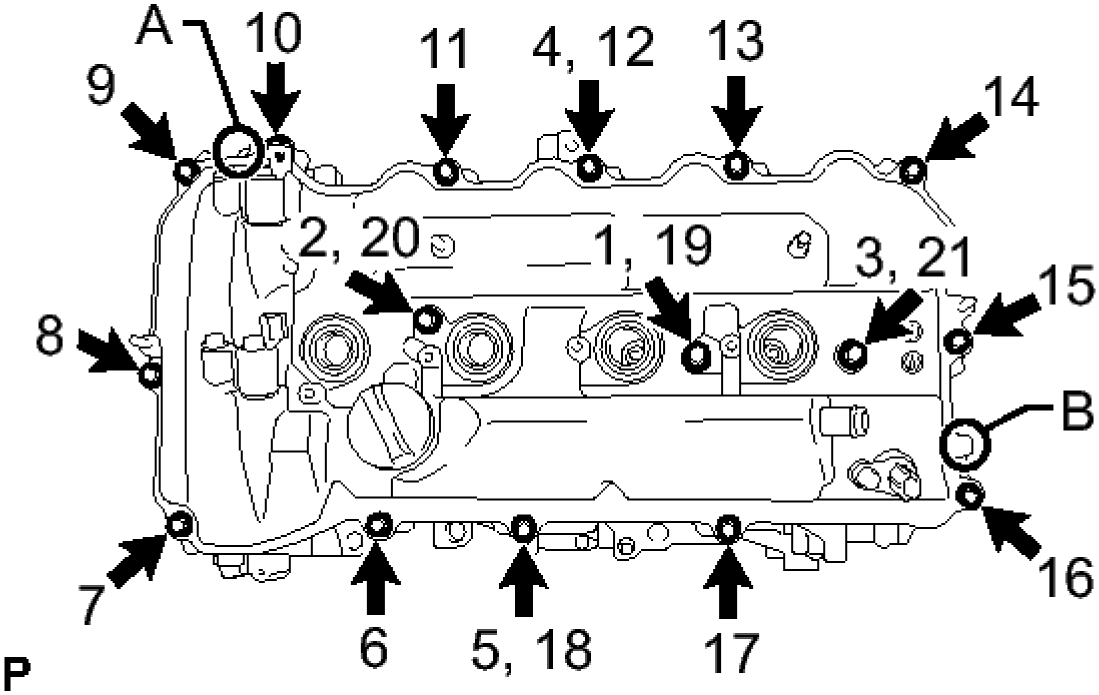

Fig. 33: Identifying Cylinder Head Cover Bolts Tightening Sequence
Courtesy of TOYOTA MOTOR SALES, U.S.A., INC.

g. Install 3 new seal washers and the 16 bolts, and then tighten the bolts in the order shown in the illustration.

Torque: 12 N*m (122 kgf*cm, 9 ft.*lbf)

NOTE:

- **Do not apply oil for at least 4 hours after the installation.**

8. **INSTALL IGNITION COIL ASSEMBLY** . Refer to **INSTALLATION - Step 2**
9. **INSTALL ENGINE WIRE**
    a. Install the engine wire to the engine with transaxle.
10. **INSTALL ENGINE AND TRANSAXLE**

    Refer to **INSTALLATION**

OIL AND OIL FILTER

COMPONENTS

ILLUSTRATION

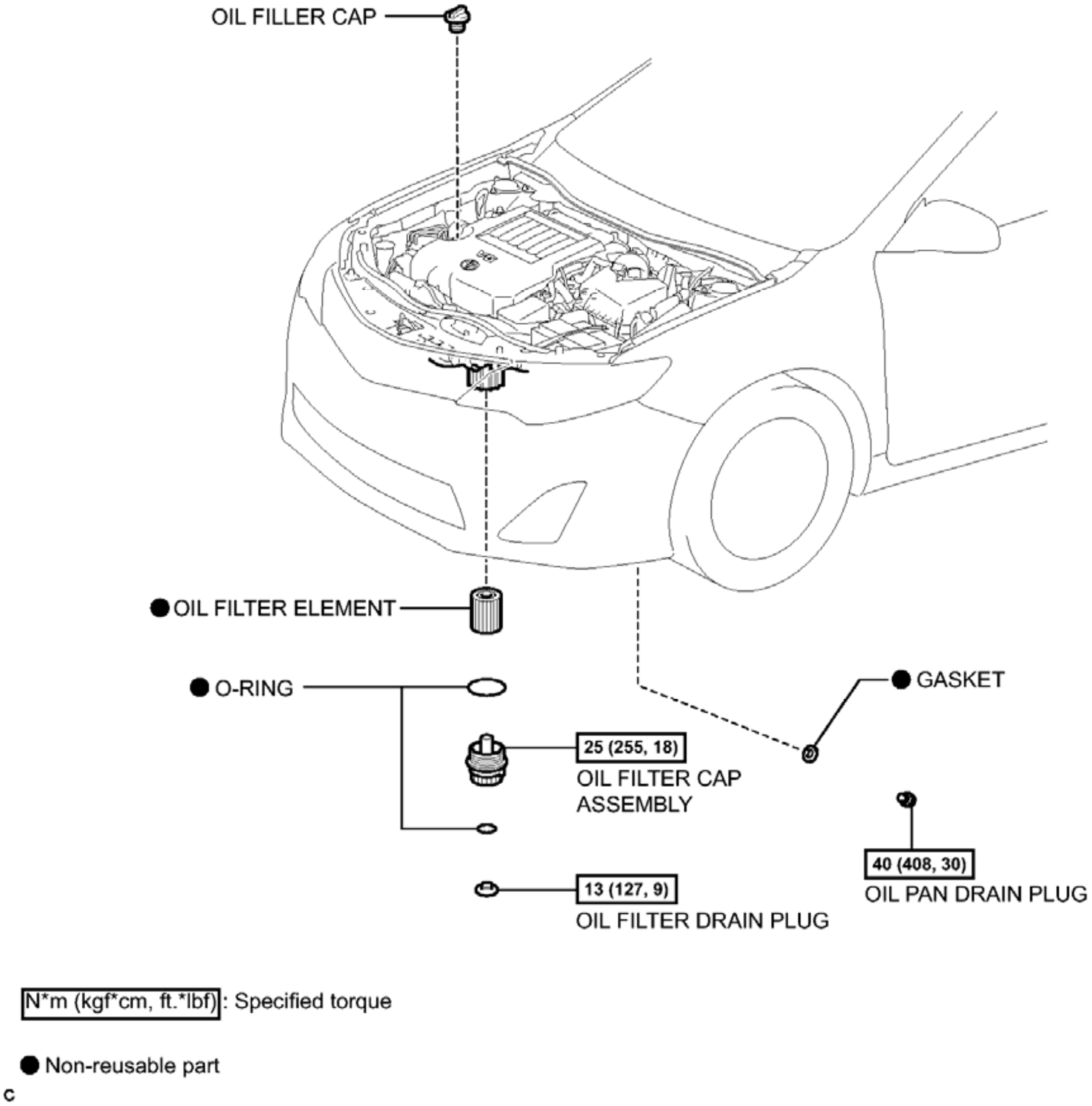
OIL FILLER CAP
● OIL FILTER ELEMENT
● O-RING
● GASKET
25 (255, 18)
OIL FILTER CAP ASSEMBLY
40 (408, 30)
OIL PAN DRAIN PLUG
13 (127, 9)
OIL FILTER DRAIN PLUG
N*m (kgf*cm, ft.*lbf): Specified torque
● Non-reusable part
c

Fig. 1: Identifying Oil And Filter Replacement Components With Torque Specifications
Courtesy of TOYOTA MOTOR SALES, U.S.A., INC.

REPLACEMENT

REPLACEMENT

WARNING:

- **Prolonged and repeated contact with engine oil will result in removal of natural oils from the skin, leading to dryness, irritation and dermatitis. In addition, used engine oil contains potentially harmful contaminants which may cause skin cancer.**
- **Precautions should be taken when replacing engine oil to minimize the risk of your skin making contact with used engine oil. Protective clothing and gloves that cannot be penetrated by oil should be worn. Skin should be washed with soap and water, or use waterless hand cleaner, to remove any used engine oil thoroughly. Do not use gasoline, thinners, or solvents.**
- **In order to preserve the environment, used oil and used oil filters must be disposed of at designated disposal sites.**

1. **DRAIN ENGINE OIL**
    a. Remove the oil filler cap.
    b. Remove the oil drain plug and drain the oil into a container.
    c. Clean the oil drain plug.
    d. Install the oil drain plug with a new gasket.

        Torque: 40 N*m (408 kgf*cm, 30 ft.*lbf)

2. **REMOVE OIL FILTER CAP ASSEMBLY**
    a. Connect the hose with an inside diameter of 15 mm (0.591 in.) to the pipe.

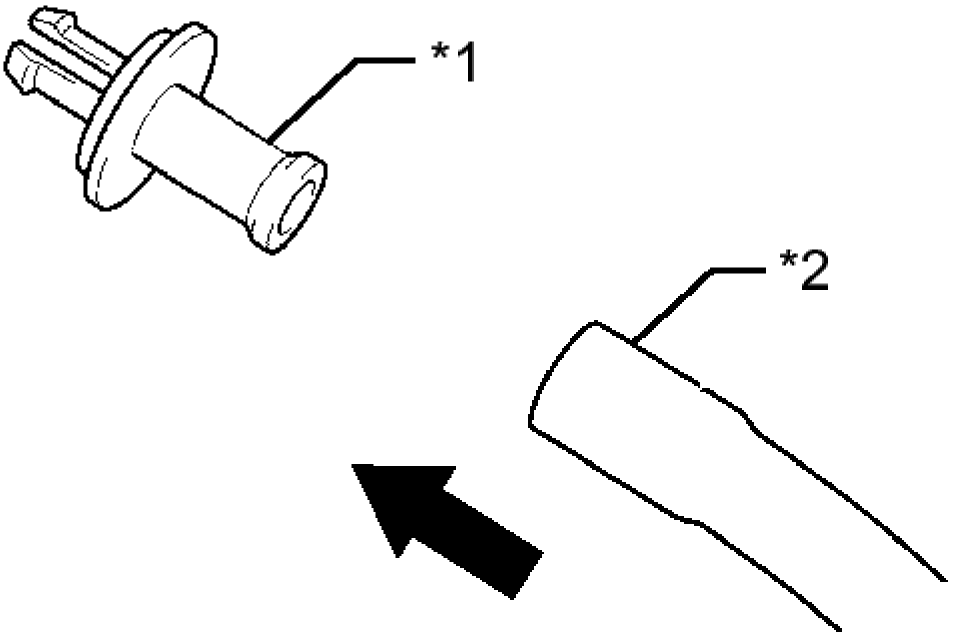

Fig. 2: Connecting Hose With An Inside Diameter Of 15 Mm (0.591 In.) To Pipe
Courtesy of TOYOTA MOTOR SALES, U.S.A., INC.

TEXT IN ILLUSTRATION

*1	Pipe
*2	Hose

b. Remove the oil filter drain plug from the oil filter cap.

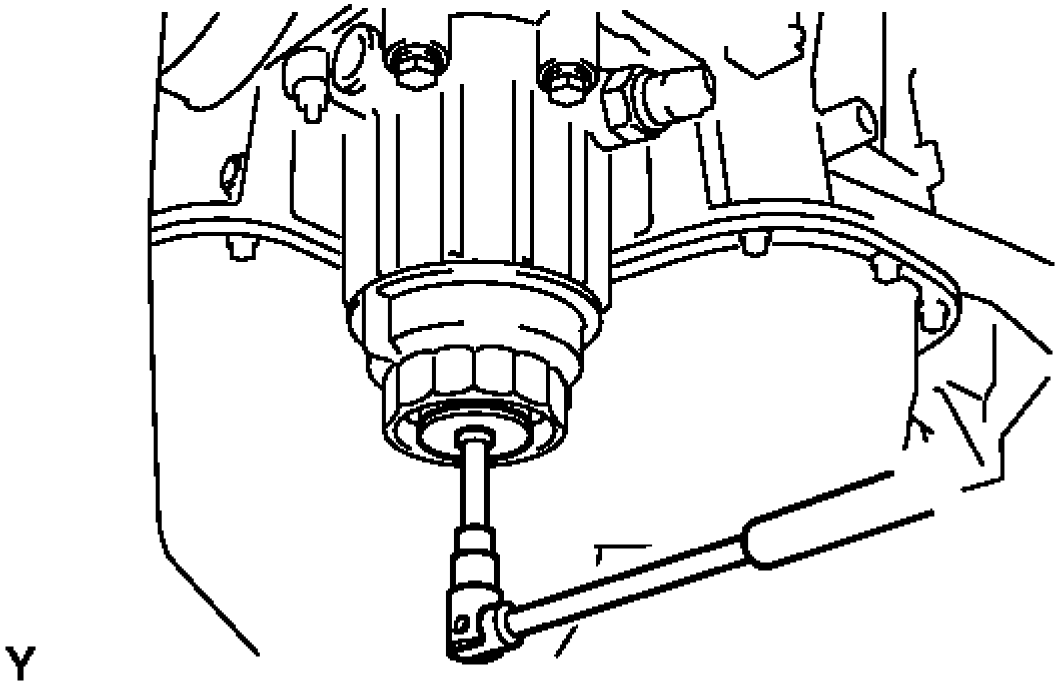

Fig. 3: Removing Oil Filter Drain Plug
Courtesy of TOYOTA MOTOR SALES, U.S.A., INC.

c. Insert the pipe with the hose into the oil filter cap.

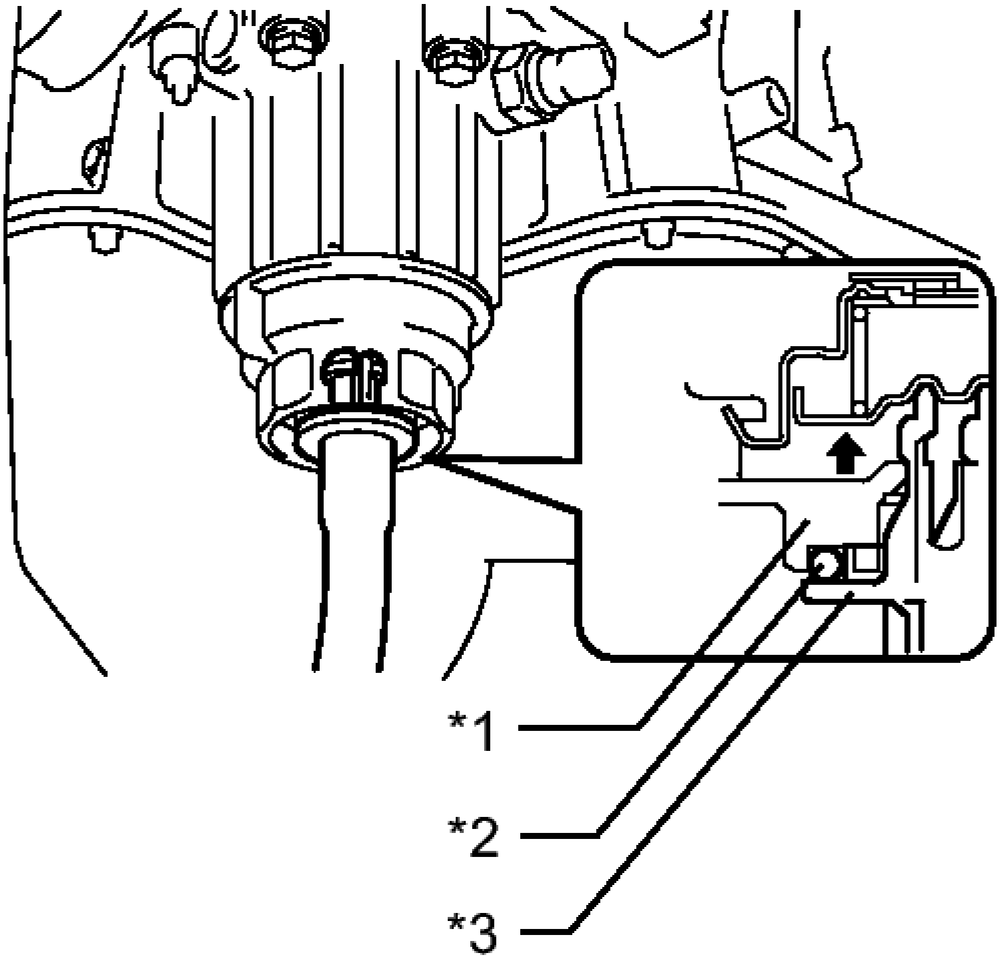

Fig. 4: Identifying Cap, O-Ring And Pipe

Courtesy of TOYOTA MOTOR SALES, U.S.A., INC.

TEXT IN ILLUSTRATION

*1	Cap
*2	O-ring
*3	Pipe

NOTE: **Be sure to insert the pipe with the O-ring installed on the oil filter cap.**

HINT:

Place the hose end into a container before draining oil from the hose.

d. Make sure that oil is completely drained, and remove the pipe and O-ring.

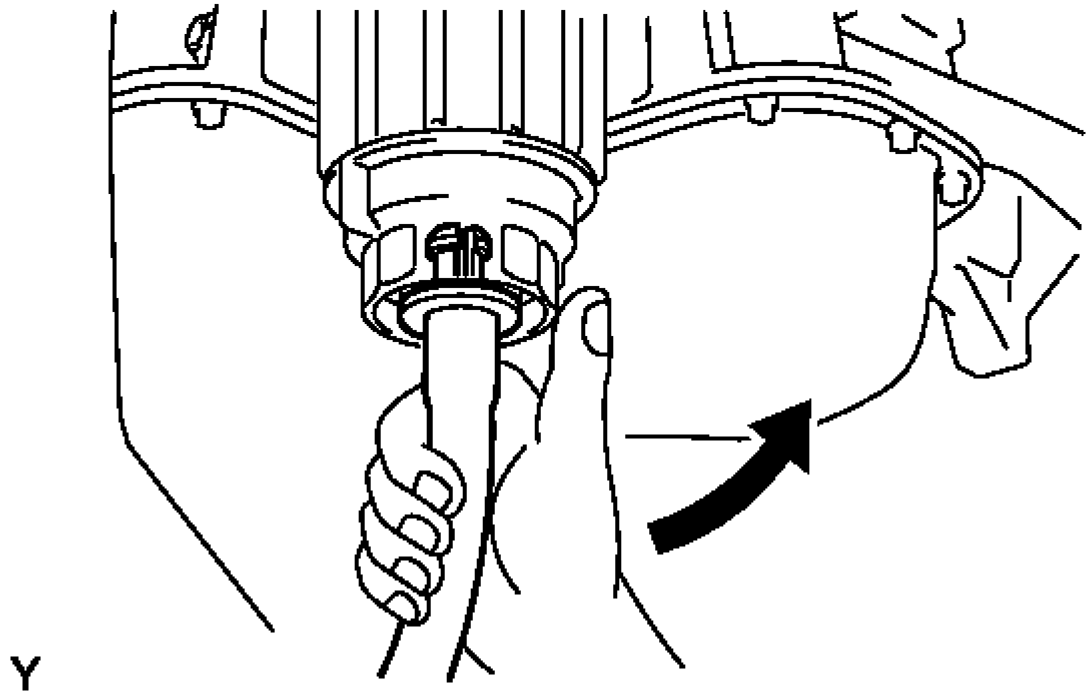

Fig. 5: Removing Pipe And O-Ring
Courtesy of TOYOTA MOTOR SALES, U.S.A., INC.

HINT:

Be sure to turn the pipe in the direction of the arrow to remove it.

e. Using SST, remove the oil filter cap.

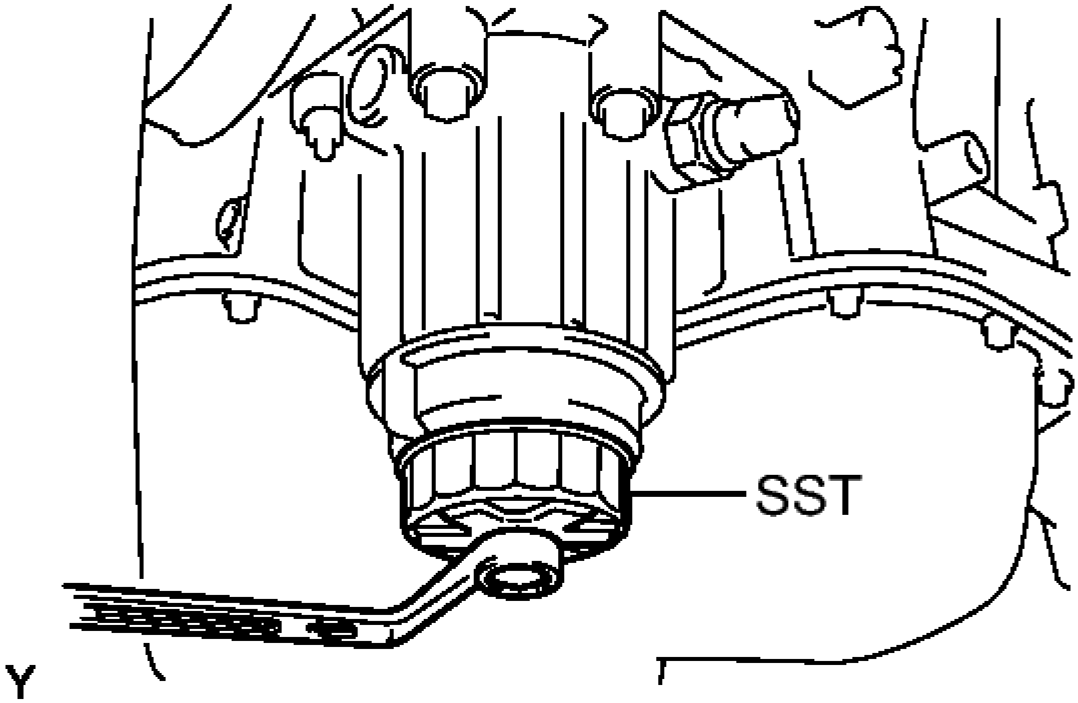

Fig. 6: Removing Oil Filter Cap
Courtesy of TOYOTA MOTOR SALES, U.S.A., INC.

- **SST: 09228-06501**

f. Remove the oil filter element and O-ring from the oil filter cap.

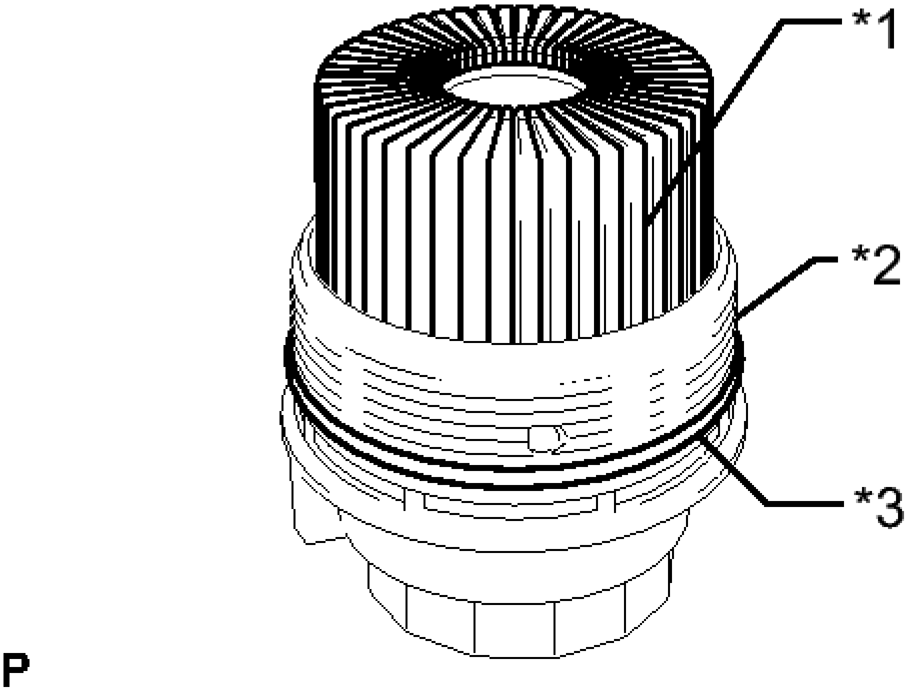

Fig. 7: Identifying Oil Filter Elements, Oil Filter Cap And O-ring

Courtesy of TOYOTA MOTOR SALES, U.S.A., INC.

TEXT IN ILLUSTRATION

*1	Oil Filter Element
*2	Oil Filter Cap
*3	O-ring

NOTE: **Do not use any tools to remove the O-ring in order to prevent the cap from being damaged. Be sure to remove it by hand.**

3. INSTALL OIL FILTER CAP ASSEMBLY

a. Clean the inside of the oil filter cap, threads and O-ring groove.

b. Apply a light coat of engine oil to a new O-ring and install it to the oil filter cap.

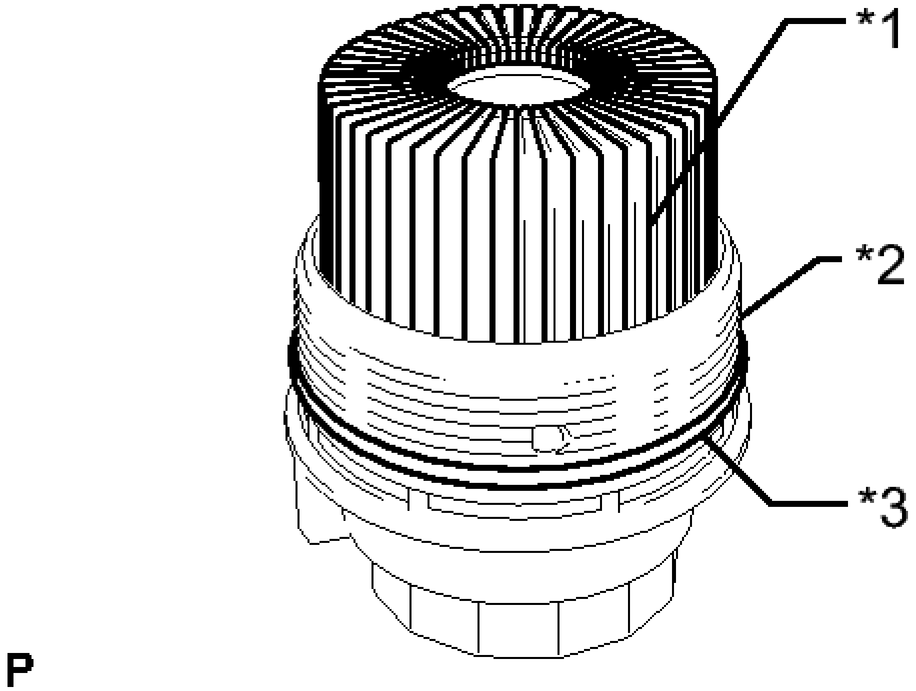

Fig. 8: Identifying Oil Filter Elements, Oil Filter Cap And O-ring
Courtesy of TOYOTA MOTOR SALES, U.S.A., INC.

TEXT IN ILLUSTRATION

*1	Oil Filter Element
	Oil

*2	Filter Cap
*3	O-ring

NOTE: Make sure that the O-ring does not get twisted on the groove.

c. Install a new oil filter element to the oil filter cap.
d. Remove all dirt and foreign matter from the installation surface and the inside of the cap on the engine side.
e. Apply a light coat of engine oil to the O-ring again and install the oil filter cap.

NOTE: Make sure that the O-ring does not get caught between the parts.

f. Using SST, install the oil filter cap.

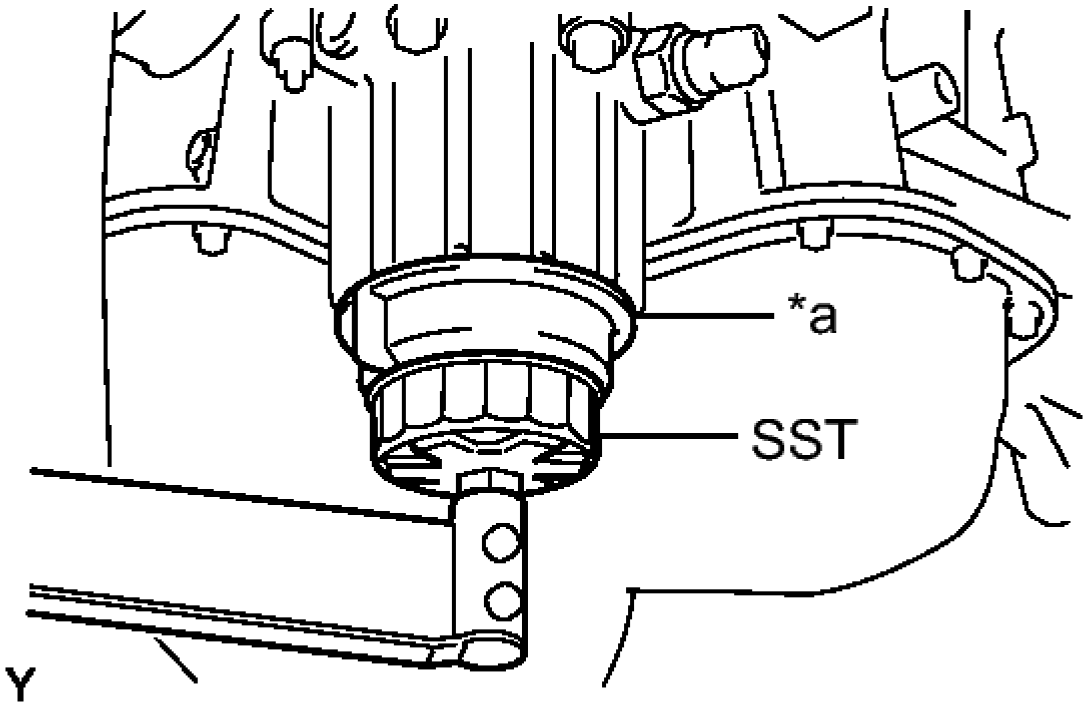

Fig. 9: Removing/Installing Oil Filter Cap
Courtesy of TOYOTA MOTOR SALES, U.S.A., INC.

TEXT IN ILLUSTRATION

*a	No Clearance

- **SST: 09228-06501**

Torque: 25 N*m (255 kgf*cm, 18 ft.*lbf)

NOTE: **Make sure that there is no clearance between the parts after tightening the oil filter cap.**

g. Apply a light coat of engine oil to a new O-ring and install it to the oil filter cap.

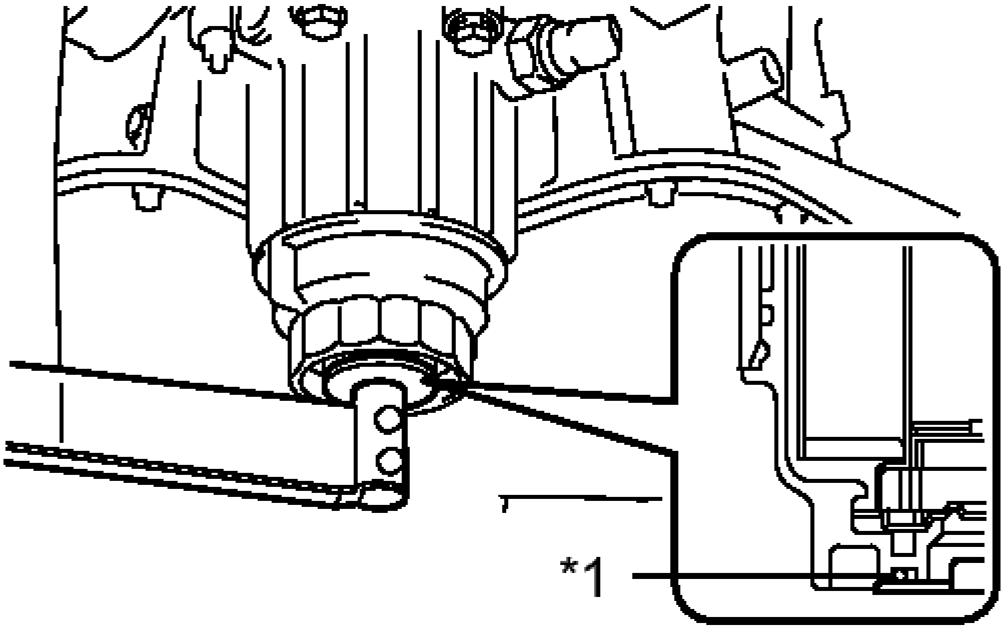

Fig. 10: Identifying O-ring Location
Courtesy of TOYOTA MOTOR SALES, U.S.A., INC.

TEXT IN ILLUSTRATION

*1	O-ring

NOTE: **Remove all dirt and foreign matter from the installation surface.**

h. Install the oil filter drain plug to the oil filter cap.

Torque: 13 N*m (127 kgf*cm, 9 ft.*lbf)

NOTE: **Make sure that the O-ring does not get caught between the parts.**

4. **ADD ENGINE OIL**
   a. Add clean engine oil and install the oil filter cap.

   Standard Oil Grade

Oil Grade	Oil Viscosity (SAE)
ILSAC multigrade engine oil	0W-20

Standard Capacity

Item	Standard Condition
Drain and refill with oil filter change	6.1 liters (6.4 US qts, 5.4 lmp. qts)
Drain and refill without oil filter change	5.7 liters (6.0 US qts, 5.0 lmp. qts)
Dry fill	6.8 liters (7.2 US qts, 6.0 lmp. qts)

5. **INSPECT FOR OIL LEAK**

OIL PRESSURE SWITCH

COMPONENTS

ILLUSTRATION

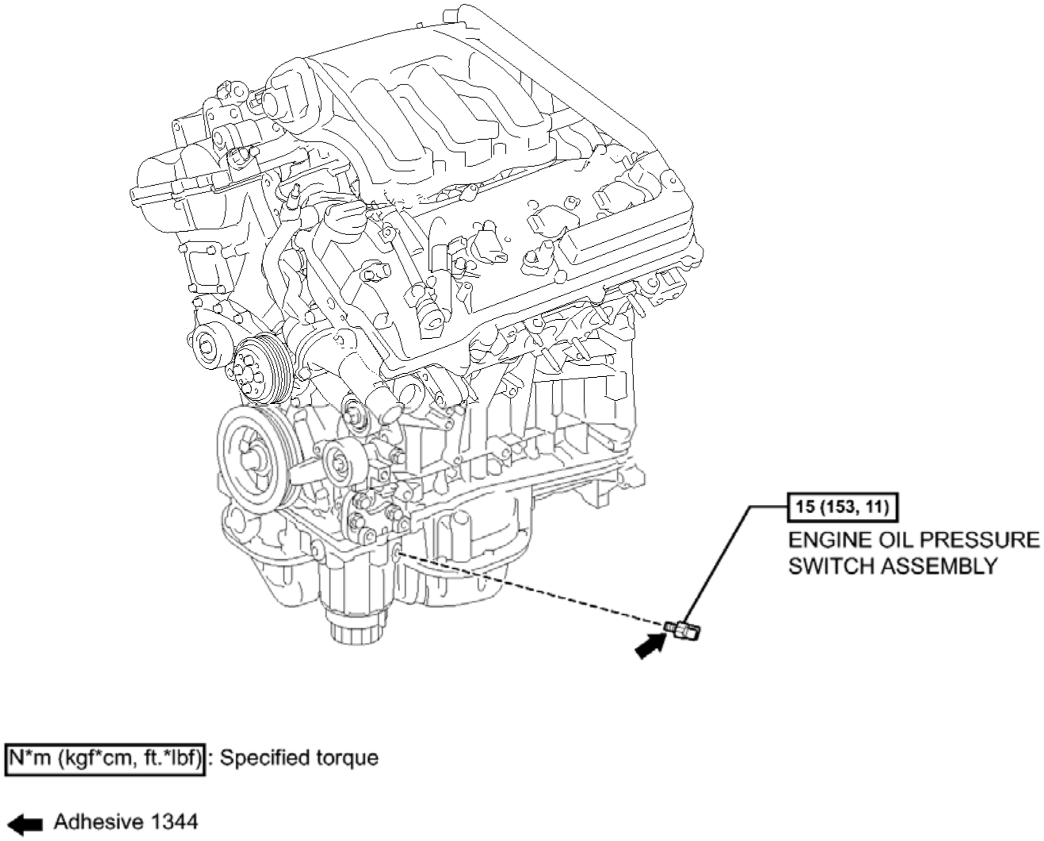
15 (153, 11)
ENGINE OIL PRESSURE SWITCH ASSEMBLY
N*m (kgf*cm, ft.*lbf): Specified torque
Adhesive 1344

Fig. 11: Identifying Oil Pressure Switch Replacement Components With Torque Specifications
Courtesy of TOYOTA MOTOR SALES, U.S.A., INC.

REMOVAL

REMOVAL

1. **REMOVE ENGINE OIL PRESSURE SWITCH ASSEMBLY**
   a. Disconnect the connector.
   b. Using a deep socket wrench, remove the oil pressure switch.

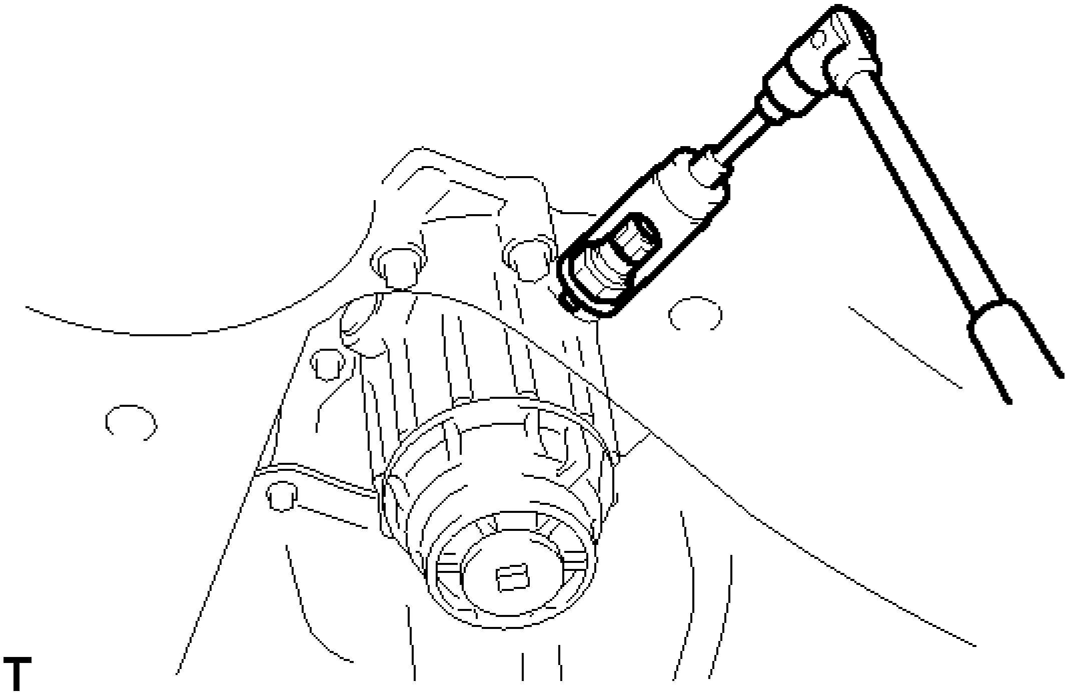

Fig. 12: Installing Oil Pressure Switch
Courtesy of TOYOTA MOTOR SALES, U.S.A., INC.

INSPECTION

INSPECTION

1. **INSPECT ENGINE OIL PRESSURE SWITCH ASSEMBLY**
    a. Disconnect the oil pressure switch assembly connector.
    b. Start the engine.
    c. Measure the resistance according to the value(s) in the table below.

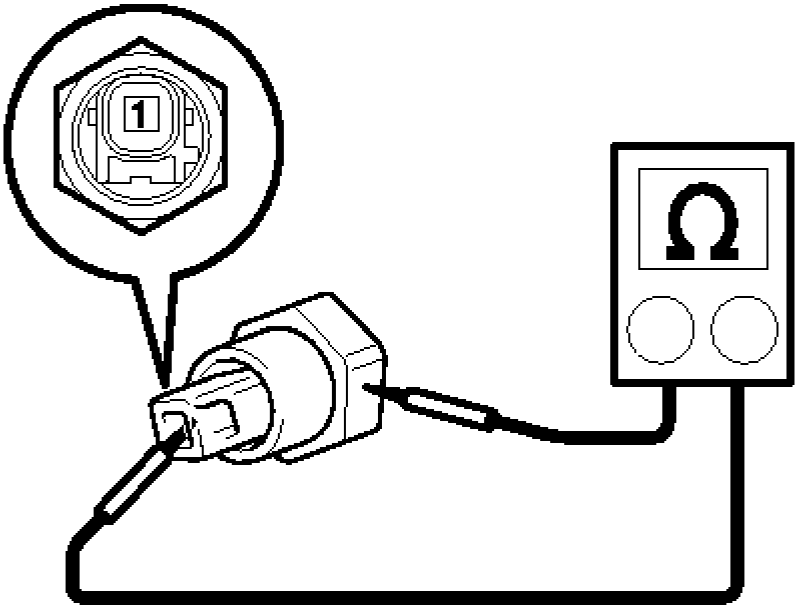

Fig. 13: Inspecting Engine Oil Pressure Switch Assembly
Courtesy of TOYOTA MOTOR SALES, U.S.A., INC.

Standard Resistance

Tester Connection	Condition	Specified Condition
1 - Switch body	Idling	10 kohms or higher
1 - Switch body	Engine stopped	Below 1 ohms

If the result is not as specified, replace the oil pressure switch assembly.

d. Reconnect the oil pressure switch assembly connector.

INSTALLATION

INSTALLATION

1. **INSTALL ENGINE OIL PRESSURE SWITCH ASSEMBLY**
   a. Apply adhesive to 2 or 3 threads of the oil pressure switch.

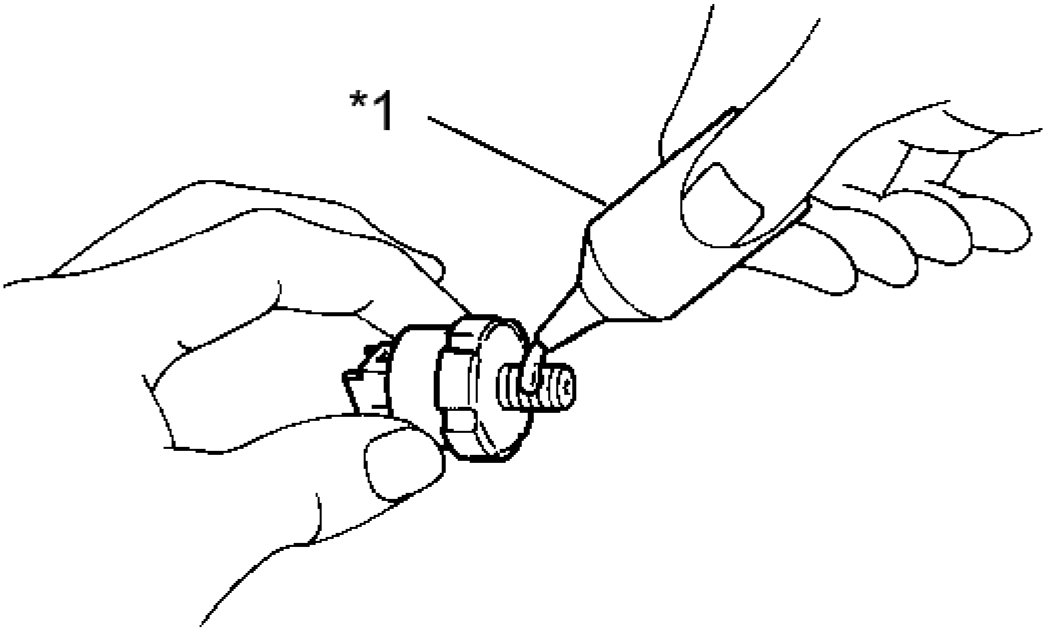

Fig. 14: Applying Adhesive To Threads
Courtesy of TOYOTA MOTOR SALES, U.S.A., INC.

TEXT IN ILLUSTRATION

*1	Adhesive

Adhesive

Toyota Genuine Adhesive 1344, Three Bond 1344 or equivalent

b. Using a deep socket wrench, install the oil pressure switch.

Torque: 15 N*m (153 kgf*cm, 11 ft.*lbf)

NOTE: Do not start the engine for at least 1 hour after installation.

c. Connect the connector.

2. **INSPECT FOR OIL LEAK**

OIL PUMP

COMPONENTS

ILLUSTRATION

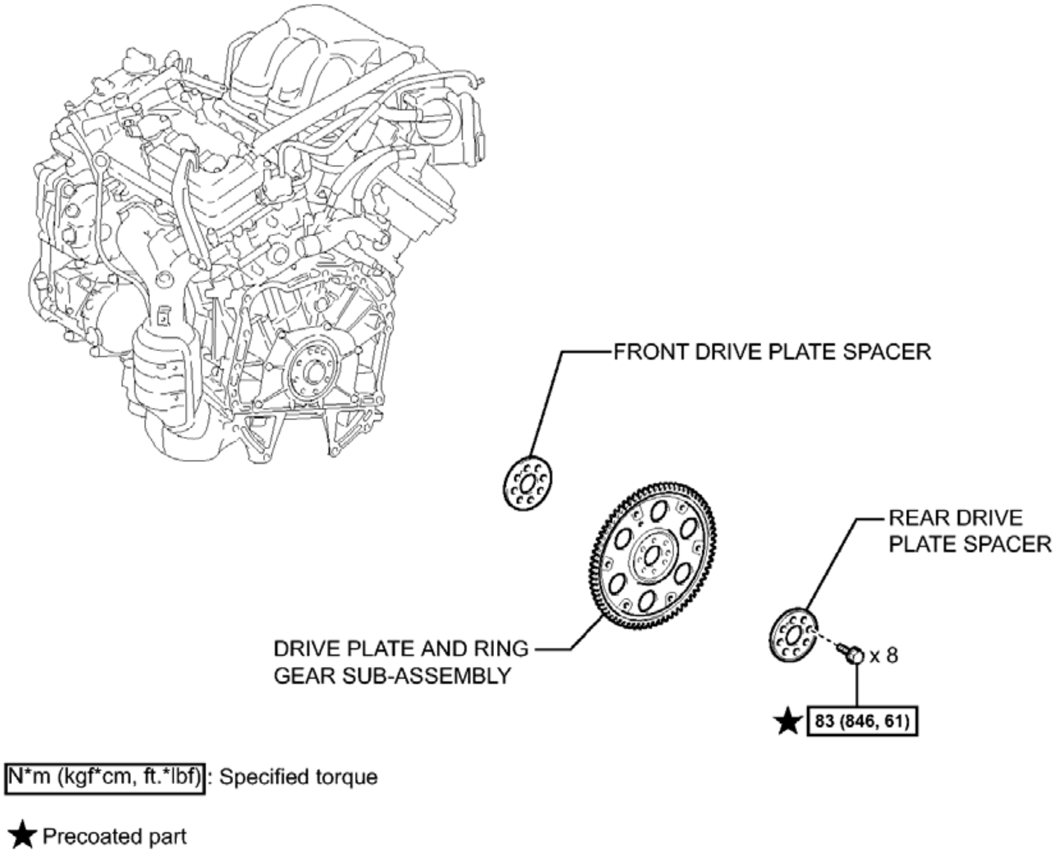
FRONT DRIVE PLATE SPACER
REAR DRIVE PLATE SPACER
DRIVE PLATE AND RING GEAR SUB-ASSEMBLY
x 8
★ 83 (846, 61)
N*m (kgf*cm, ft.*lbf) : Specified torque
★ Precoated part

Fig. 15: Identifying Oil Pump Replacement Components With Torque Specifications (1 Of 8)
Courtesy of TOYOTA MOTOR SALES, U.S.A., INC.

ILLUSTRATION

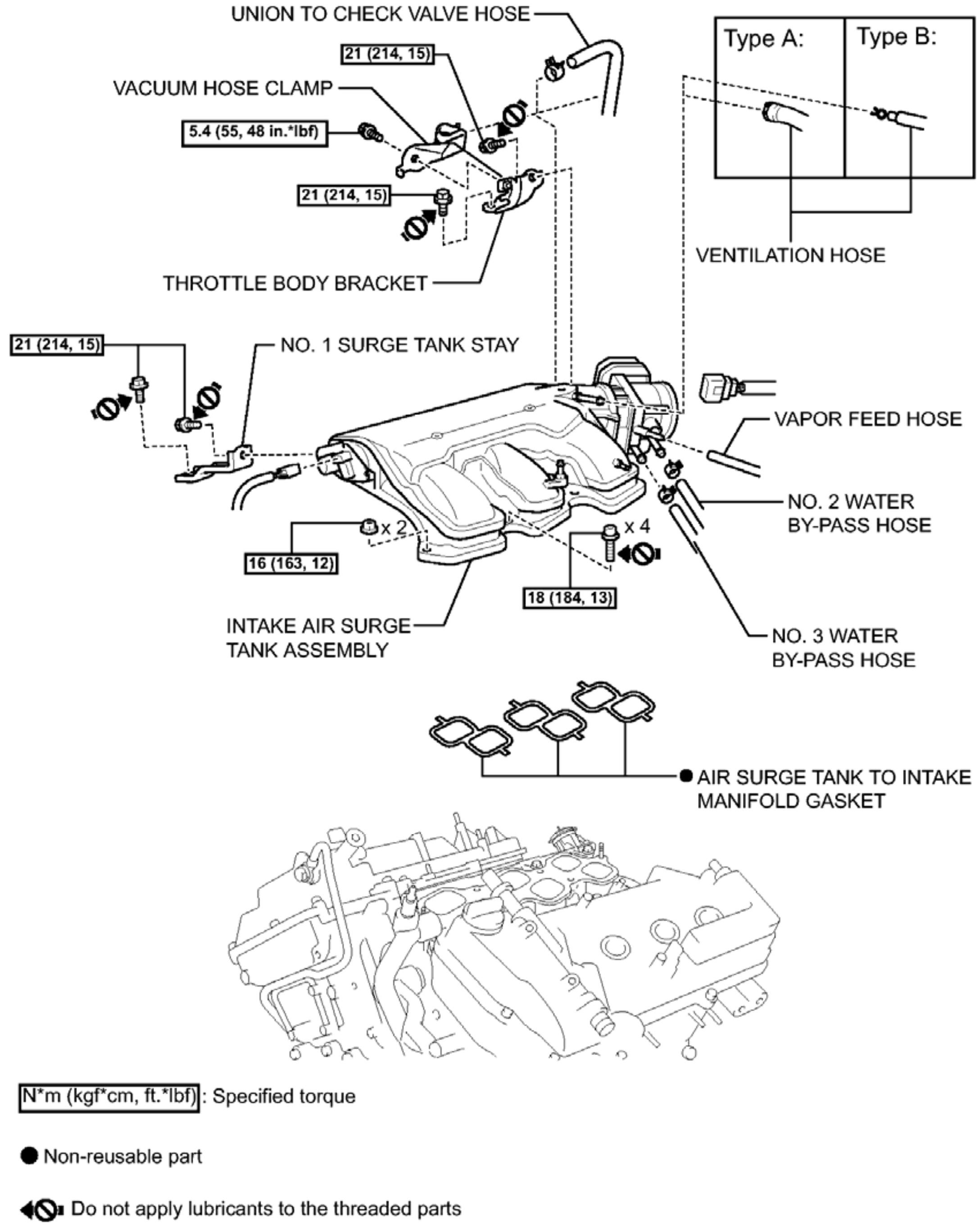
UNION TO CHECK VALVE HOSE
21 (214, 15)
VACUUM HOSE CLAMP
5.4 (55, 48 in.*lbf)
21 (214, 15)
THROTTLE BODY BRACKET
Type A:
Type B:
VENTILATION HOSE
21 (214, 15)
NO. 1 SURGE TANK STAY
VAPOR FEED HOSE
NO. 2 WATER BY-PASS HOSE
x 2
16 (163, 12)
x 4
18 (184, 13)
INTAKE AIR SURGE TANK ASSEMBLY
NO. 3 WATER BY-PASS HOSE
AIR SURGE TANK TO INTAKE MANIFOLD GASKET
N*m (kgf*cm, ft.*lbf) : Specified torque
● Non-reusable part
Do not apply lubricants to the threaded parts

Fig. 16: Identifying Oil Pump Replacement Components With Torque Specifications (2 Of 8)
Courtesy of TOYOTA MOTOR SALES, U.S.A., INC.

ILLUSTRATION

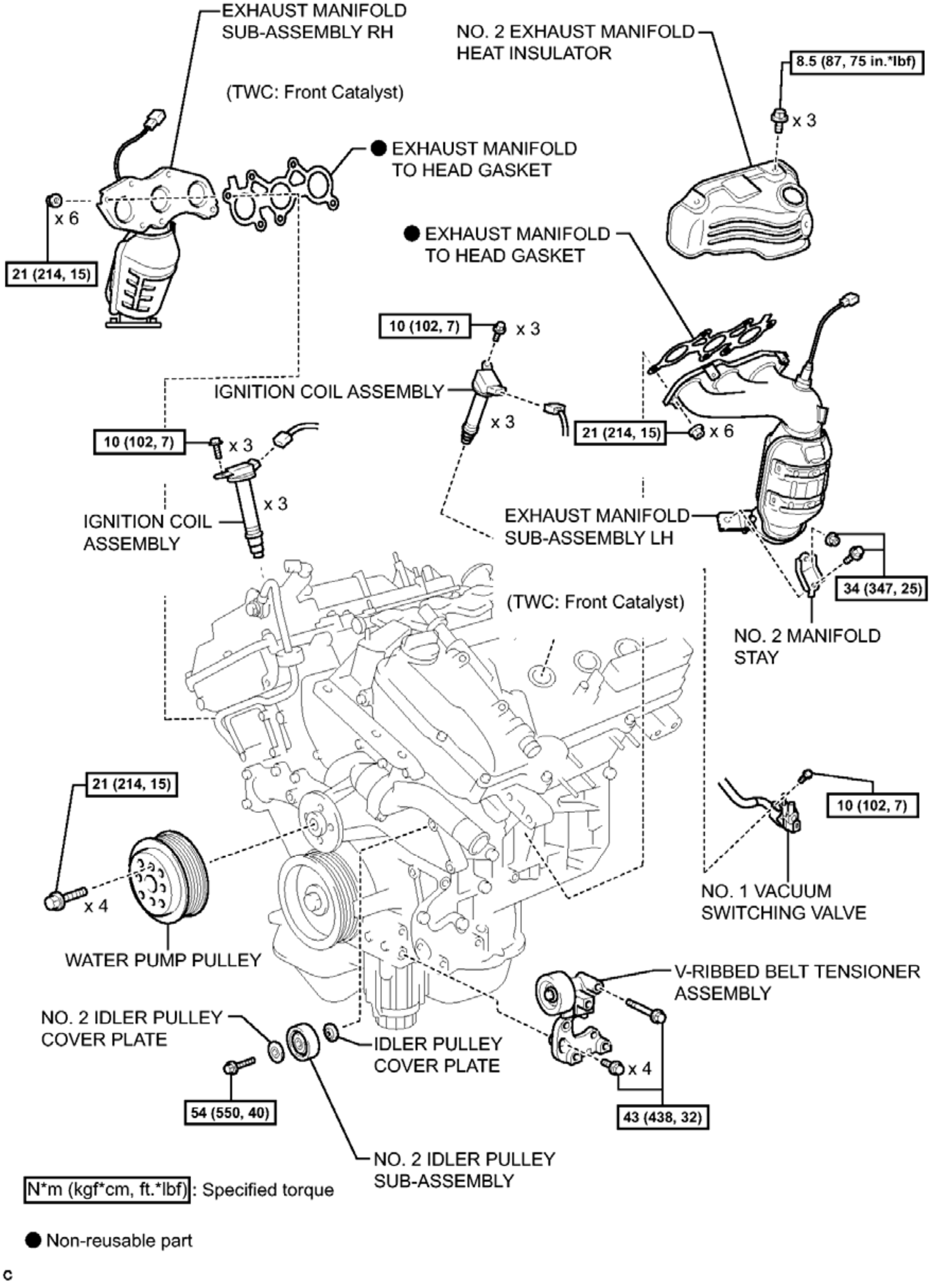
EXHAUST MANIFOLD SUB-ASSEMBLY RH
(TWC: Front Catalyst)
NO. 2 EXHAUST MANIFOLD HEAT INSULATOR
8.5 (87, 75 in.*lbf)
x 3
● EXHAUST MANIFOLD TO HEAD GASKET
x 6
21 (214, 15)
● EXHAUST MANIFOLD TO HEAD GASKET
10 (102, 7)
x 3
IGNITION COIL ASSEMBLY
x 3
21 (214, 15)
x 6
10 (102, 7)
x 3
x 3
IGNITION COIL ASSEMBLY
EXHAUST MANIFOLD SUB-ASSEMBLY LH
34 (347, 25)
(TWC: Front Catalyst)
NO. 2 MANIFOLD STAY
21 (214, 15)
10 (102, 7)
x 4
NO. 1 VACUUM SWITCHING VALVE
WATER PUMP PULLEY
V-RIBBED BELT TENSIONER ASSEMBLY
NO. 2 IDLER PULLEY COVER PLATE
IDLER PULLEY COVER PLATE
x 4
54 (550, 40)
43 (438, 32)
NO. 2 IDLER PULLEY SUB-ASSEMBLY
N*m (kgf*cm, ft.*lbf): Specified torque
● Non-reusable part
c

Fig. 17: Identifying Oil Pump Replacement Components With Torque Specifications (3 Of 8)
Courtesy of TOYOTA MOTOR SALES, U.S.A., INC.

ILLUSTRATION

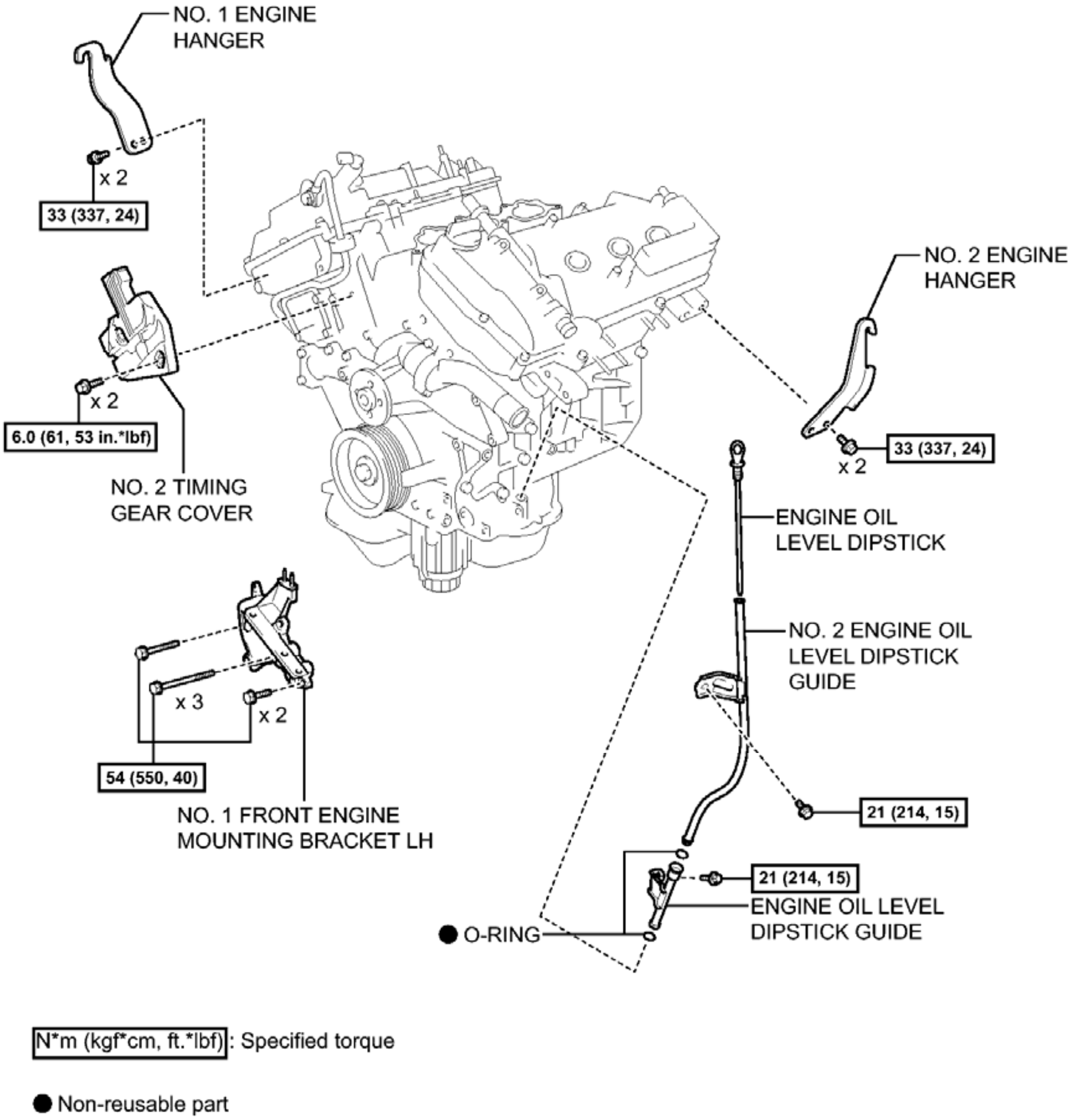
NO. 1 ENGINE HANGER
x 2
33 (337, 24)
NO. 2 ENGINE HANGER
x 2
33 (337, 24)
x 2
6.0 (61, 53 in.*lbf)
NO. 2 TIMING GEAR COVER
ENGINE OIL LEVEL DIPSTICK
NO. 2 ENGINE OIL LEVEL DIPSTICK GUIDE
x 3
x 2
54 (550, 40)
NO. 1 FRONT ENGINE MOUNTING BRACKET LH
21 (214, 15)
21 (214, 15)
ENGINE OIL LEVEL DIPSTICK GUIDE
● O-RING
N*m (kgf*cm, ft.*lbf): Specified torque
● Non-reusable part

Fig. 18: Identifying Oil Pump Replacement Components With Torque Specifications (4 Of 8)
Courtesy of TOYOTA MOTOR SALES, U.S.A., INC.

ILLUSTRATION

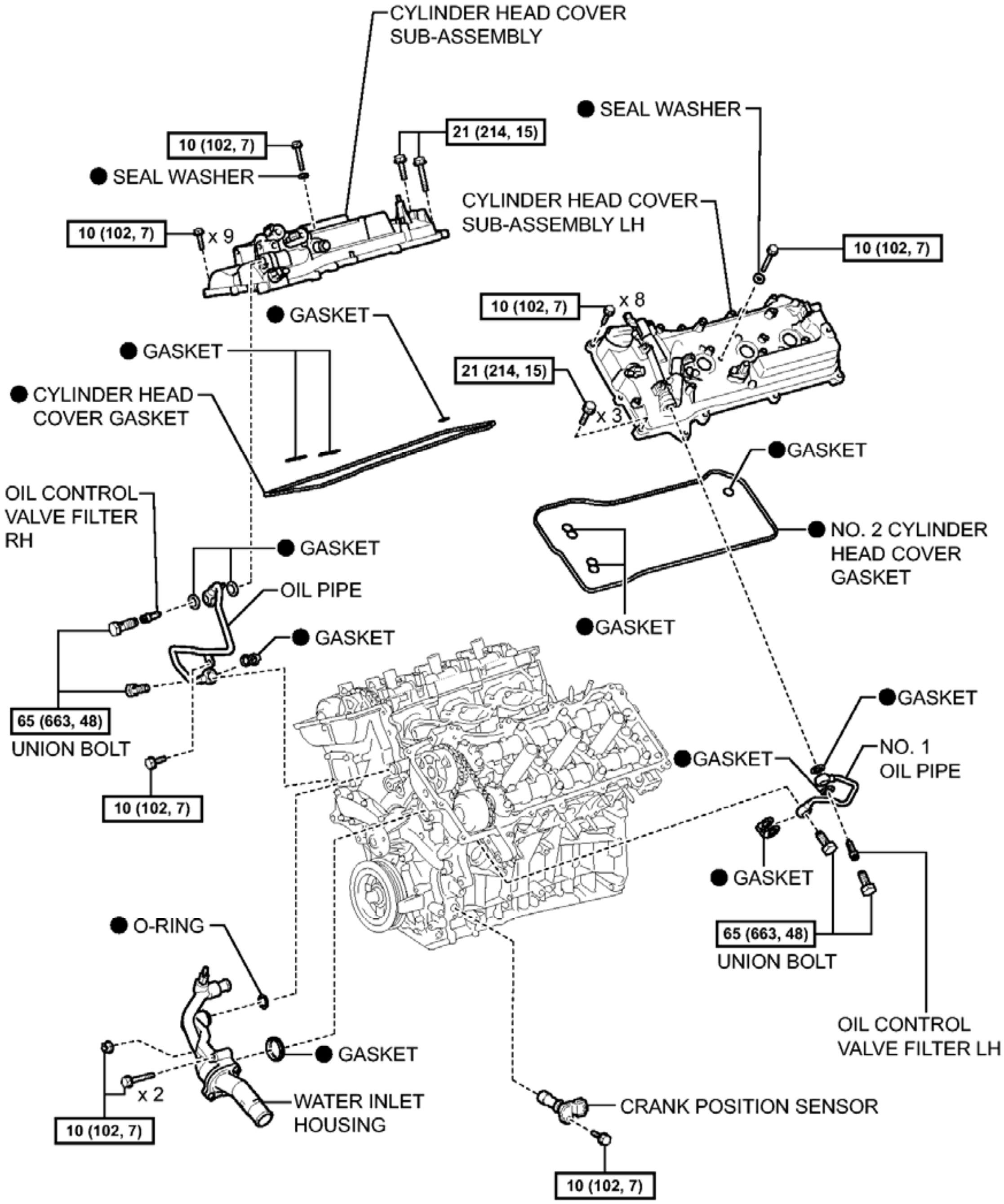
CYLINDER HEAD COVER SUB-ASSEMBLY
● SEAL WASHER
10 (102, 7)
21 (214, 15)
● SEAL WASHER
10 (102, 7)
x 9
CYLINDER HEAD COVER SUB-ASSEMBLY LH
10 (102, 7)
10 (102, 7)
x 8
● GASKET
● GASKET
21 (214, 15)
x 3
● CYLINDER HEAD COVER GASKET
●GASKET
● NO. 2 CYLINDER HEAD COVER GASKET
OIL CONTROL VALVE FILTER RH
● GASKET
OIL PIPE
●GASKET
● GASKET
65 (663, 48)
UNION BOLT
10 (102, 7)
●GASKET
●GASKET
NO. 1 OIL PIPE
● GASKET
65 (663, 48)
UNION BOLT
OIL CONTROL VALVE FILTER LH
● O-RING
● GASKET
x 2
10 (102, 7)
WATER INLET HOUSING
CRANK POSITION SENSOR
10 (102, 7)

N*m (kgf*cm, ft.*lbf): Specified torque

● Non-reusable part

Fig. 19: Identifying Oil Pump Replacement Components With Torque Specifications (5 Of 8)
Courtesy of TOYOTA MOTOR SALES, U.S.A., INC.

ILLUSTRATION

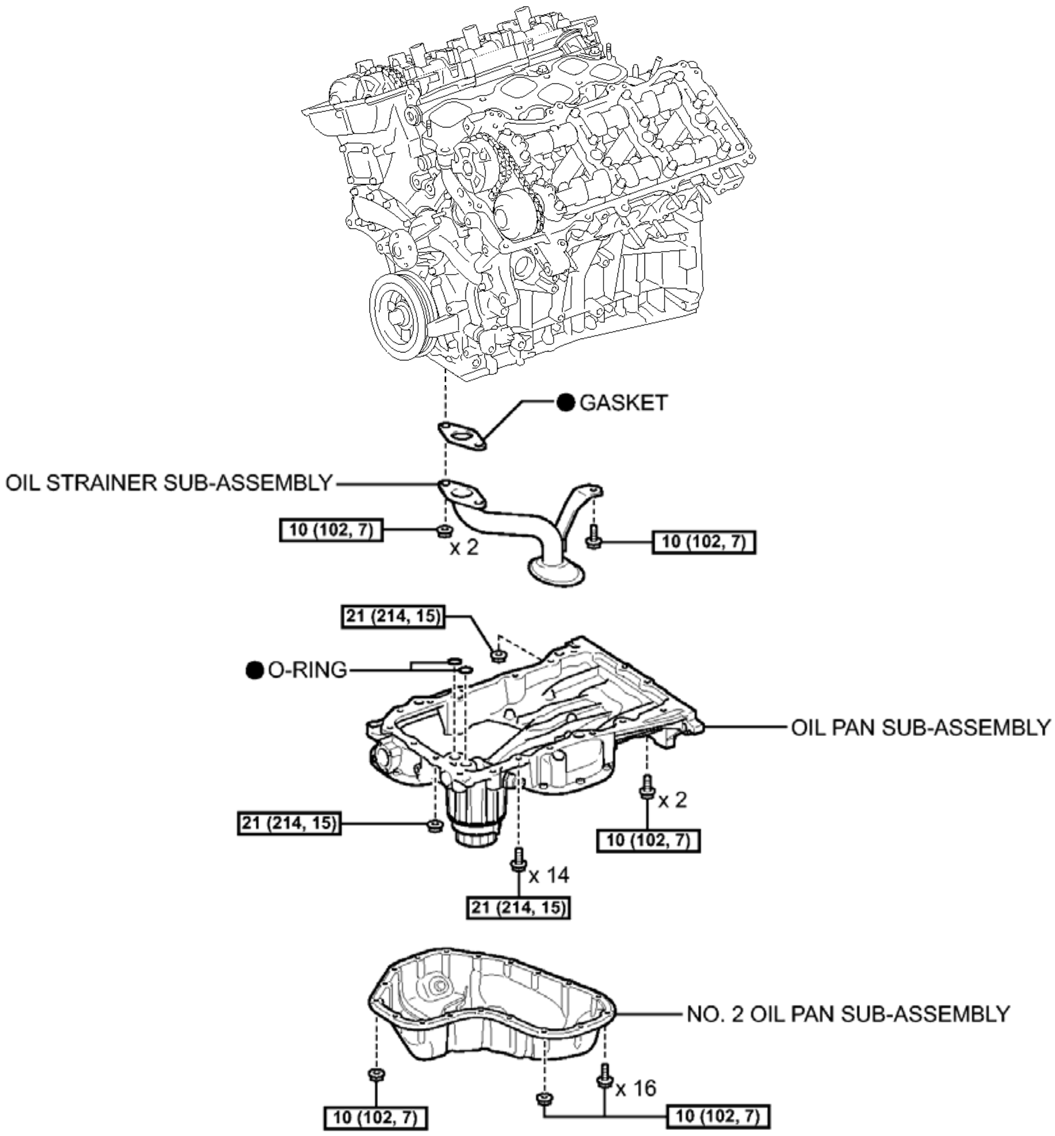
● GASKET
OIL STRAINER SUB-ASSEMBLY
10 (102, 7)
x 2
10 (102, 7)
21 (214, 15)
● O-RING
OIL PAN SUB-ASSEMBLY
x 2
10 (102, 7)
21 (214, 15)
x 14
21 (214, 15)
NO. 2 OIL PAN SUB-ASSEMBLY
x 16
10 (102, 7)
10 (102, 7)

N*m (kgf*cm, ft.*lbf) : Specified torque

● Non-reusable part

Fig. 20: Identifying Oil Pump Replacement Components With Torque Specifications (6 Of 8)
Courtesy of TOYOTA MOTOR SALES, U.S.A., INC.

ILLUSTRATION

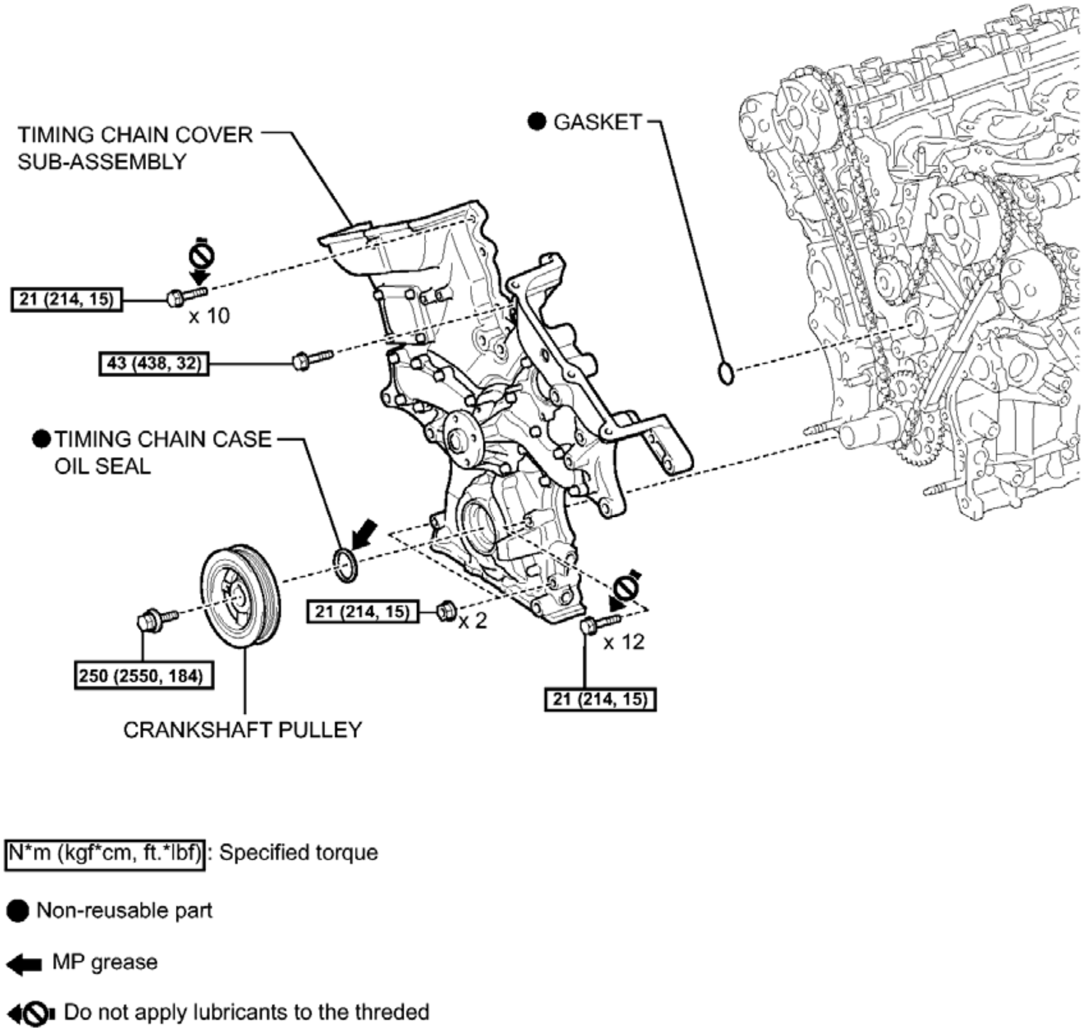
TIMING CHAIN COVER SUB-ASSEMBLY
● GASKET
21 (214, 15)
x 10
43 (438, 32)
● TIMING CHAIN CASE OIL SEAL
21 (214, 15)
x 2
x 12
21 (214, 15)
250 (2550, 184)
CRANKSHAFT PULLEY
N*m (kgf*cm, ft.*lbf): Specified torque
● Non-reusable part
⬅ MP grease
Do not apply lubricants to the threded

Fig. 21: Identifying Oil Pump Replacement Components With Torque Specifications (7 Of 8)
Courtesy of TOYOTA MOTOR SALES, U.S.A., INC.

ILLUSTRATION

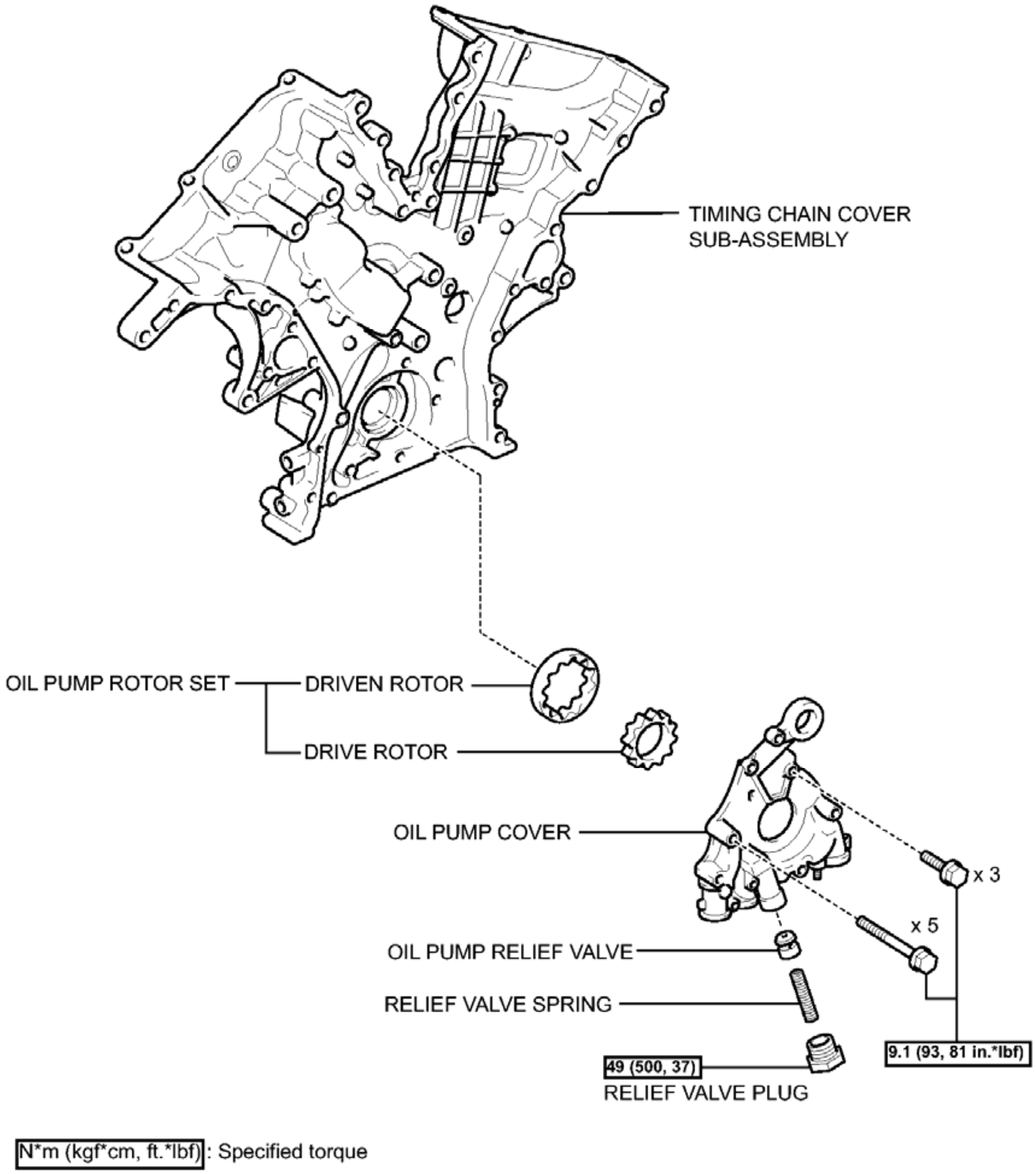
TIMING CHAIN COVER SUB-ASSEMBLY
OIL PUMP ROTOR SET
DRIVEN ROTOR
DRIVE ROTOR
OIL PUMP COVER
x 3
x 5
OIL PUMP RELIEF VALVE
RELIEF VALVE SPRING
9.1 (93, 81 in.*lbf)
49 (500, 37)
RELIEF VALVE PLUG
N*m (kgf*cm, ft.*lbf) : Specified torque

P

Fig. 22: Identifying Oil Pump Replacement Components With Torque Specifications (8 Of 8)
Courtesy of TOYOTA MOTOR SALES, U.S.A., INC.

REMOVAL

REMOVAL

1. **REMOVE AUTOMATIC TRANSAXLE ASSEMBLY**

Refer to **REMOVAL**

2. **REMOVE DRIVE PLATE AND RING GEAR SUB-ASSEMBLY** . Refer to **REMOVAL - Step 2**
3. **INSTALL ENGINE ON ENGINE STAND** . Refer to **REMOVAL - Step 78**
4. **REMOVE ENGINE HANGERS** . Refer to **REMOVAL - Step 1**
5. **REMOVE INTAKE AIR SURGE TANK ASSEMBLY** . Refer to **REMOVAL - Step 9**
6. **REMOVE NO. 1 SURGE TANK STAY** . Refer to **REMOVAL - Step 3**
7. **REMOVE THROTTLE BODY BRACKET** . Refer to **REMOVAL - Step 4**
8. **REMOVE IGNITION COIL ASSEMBLY** . Refer to **REMOVAL - Step 3**
9. **REMOVE EXHAUST MANIFOLD SUB-ASSEMBLY RH** . Refer to **REMOVAL - Step 8**
10. **REMOVE NO. 2 ENGINE OIL LEVEL DIPSTICK GUIDE** . Refer to **REMOVAL - Step 9**
11. **REMOVE NO. 2 MANIFOLD STAY** . Refer to **REMOVAL - Step 11**
12. **REMOVE NO. 2 EXHAUST MANIFOLD HEAT INSULATOR** . Refer to **REMOVAL - Step 10**
13. **REMOVE EXHAUST MANIFOLD SUB-ASSEMBLY LH** . Refer to **REMOVAL - Step 12**
14. **REMOVE V-RIBBED BELT TENSIONER ASSEMBLY** . Refer to **REMOVAL - Step 13**
15. **REMOVE ENGINE OIL LEVEL DIPSTICK GUIDE** . Refer to **DISASSEMBLY - Step 13**
16. **REMOVE NO. 2 TIMING GEAR COVER** . Refer to **REMOVAL - Step 14**
17. **REMOVE WATER PUMP PULLEY** . Refer to **REMOVAL - Step 15**
18. **REMOVE NO. 2 IDLER PULLEY SUB-ASSEMBLY** . Refer to **REMOVAL - Step 16**
19. **REMOVE NO. 1 VACUUM SWITCHING VALVE** . Refer to **REMOVAL - Step 17**
20. **REMOVE CRANK POSITION SENSOR** . Refer to **REMOVAL - Step 2**
21. **REMOVE NO. 1 OIL PIPE** . Refer to **DISASSEMBLY - Step 8**
22. **REMOVE OIL PIPE** . Refer to **DISASSEMBLY - Step 9**
23. **REMOVE CRANKSHAFT PULLEY** . Refer to **REMOVAL - Step 6**
24. **REMOVE NO. 1 FRONT ENGINE MOUNTING BRACKET LH** . Refer to **DISASSEMBLY - Step 14**
25. **REMOVE WATER INLET HOUSING** . Refer to **REMOVAL - Step 10**
26. **REMOVE CYLINDER HEAD COVER SUB-ASSEMBLY** . Refer to **DISASSEMBLY - Step 17**
27. **REMOVE CYLINDER HEAD COVER SUB-ASSEMBLY LH** . Refer to **DISASSEMBLY - Step 18**
28. **REMOVE NO. 2 OIL PAN SUB-ASSEMBLY** . Refer to **DISASSEMBLY - Step 19**
29. **REMOVE OIL STRAINER SUB-ASSEMBLY** . Refer to **DISASSEMBLY - Step 20**
30. **REMOVE OIL PAN SUB-ASSEMBLY** . Refer to **DISASSEMBLY - Step 21**
31. **REMOVE TIMING CHAIN COVER SUB-ASSEMBLY**
    a. Remove the 23 bolts and 2 nuts shown in the illustration.

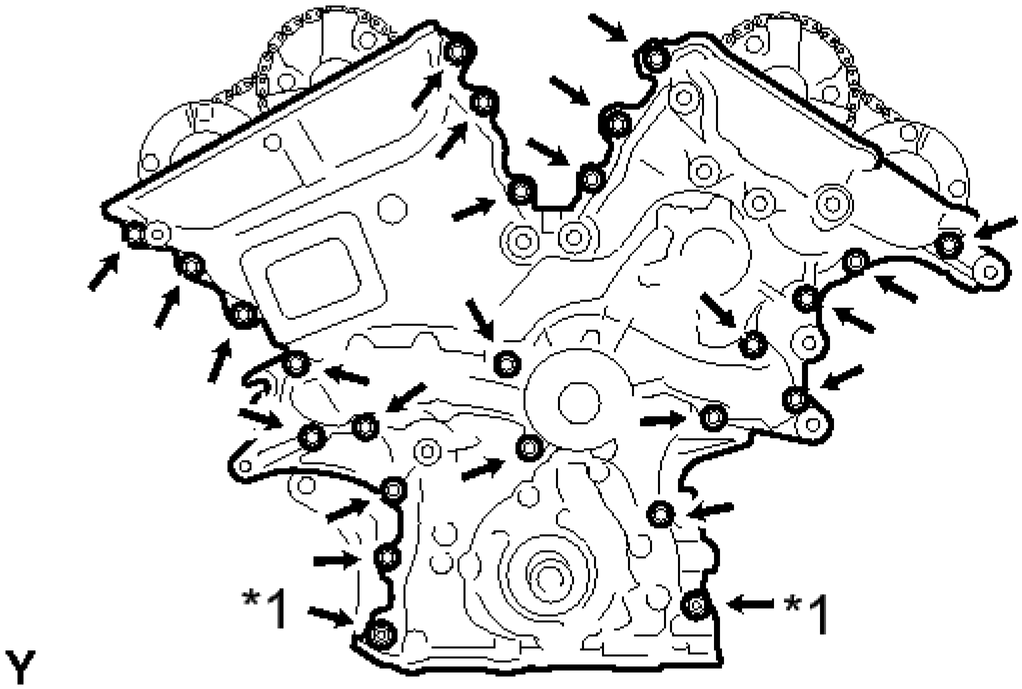

Fig. 23: Locating Timing Chain Cover Sub-Assembly Bolts & Nuts
Courtesy of TOYOTA MOTOR SALES, U.S.A., INC.

TEXT IN ILLUSTRATION

*1	Nut

b. Remove the timing chain cover by prying between the timing chain cover and cylinder head or cylinder block with a screwdriver.

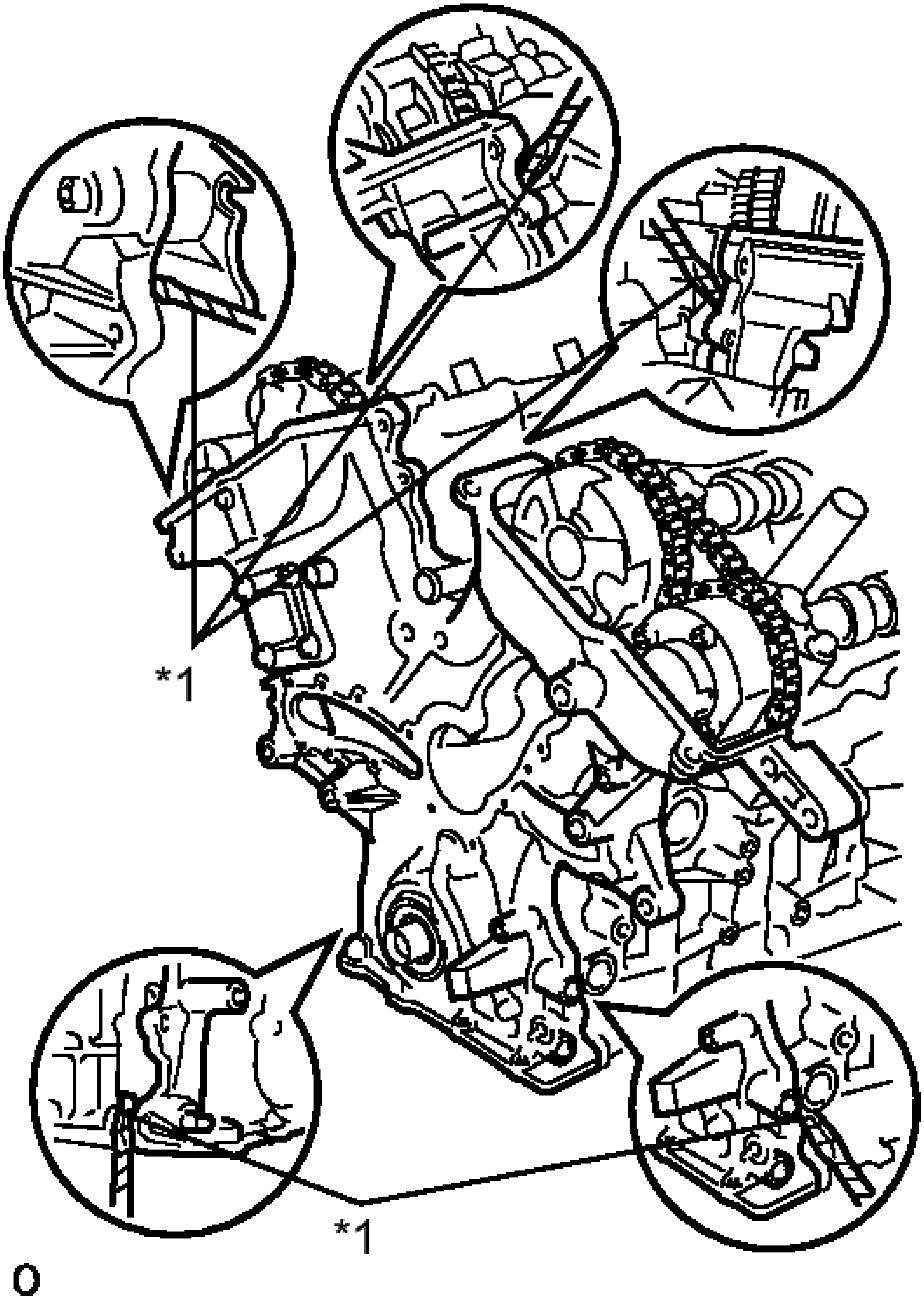

Fig. 24: Identifying Timing Chain Cover And Cylinder Head Or Cylinder Block
Courtesy of TOYOTA MOTOR SALES, U.S.A., INC.

TEXT IN ILLUSTRATION

	Protective

*1	Tape

NOTE: **Be careful not to damage the contact surfaces of the cylinder head, cylinder block and chain cover.**

HINT:

Tape the screwdriver tip before use.

c. Remove the gasket.

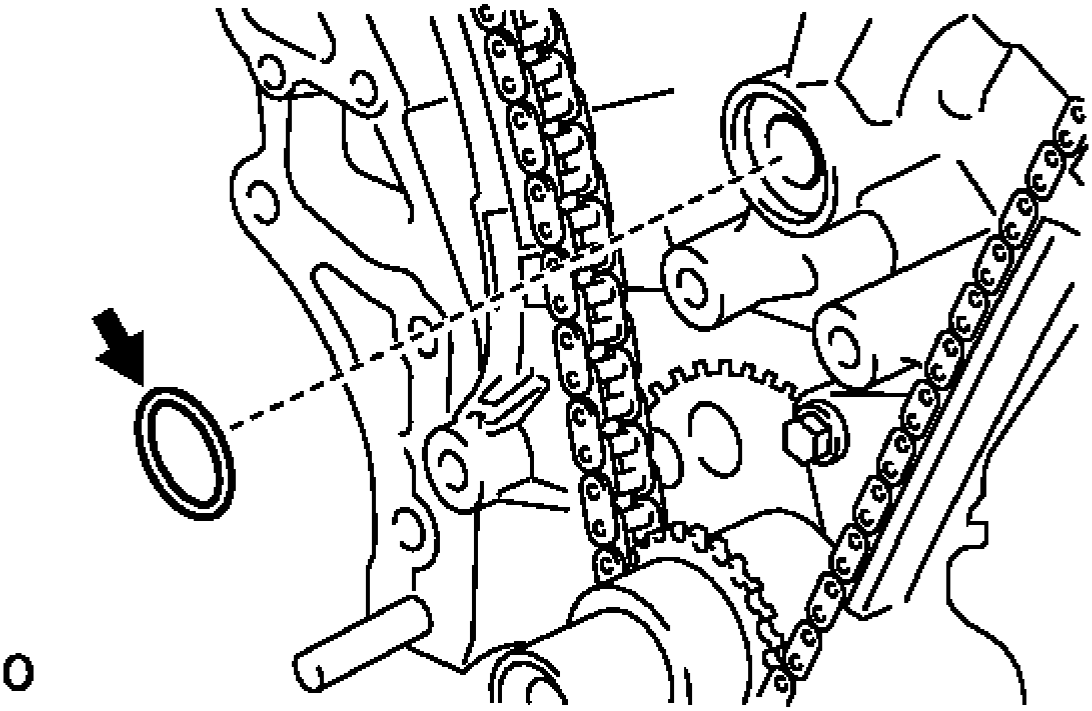

Fig. 25: Locating Gasket
Courtesy of TOYOTA MOTOR SALES, U.S.A., INC.

32. **REMOVE TIMING CHAIN CASE OIL SEAL**
    a. Using a screwdriver and wooden block, pry out the oil seal.

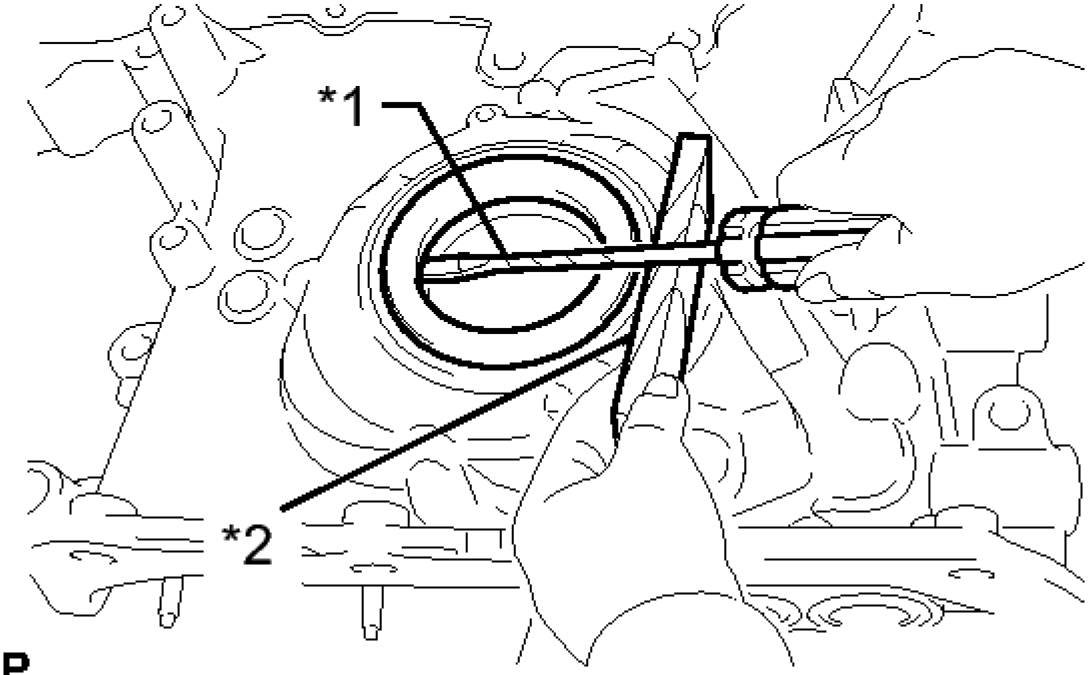

Fig. 26: Removing Timing Chain Case Oil Seal
Courtesy of TOYOTA MOTOR SALES, U.S.A., INC.

TEXT IN ILLUSTRATION

*1	Protective Tape
*2	Wooden Block

HINT:

Tape the screwdriver tip before use.

DISASSEMBLY

DISASSEMBLY

1. **REMOVE OIL PUMP RELIEF VALVE**
    a. Using a 27 mm socket wrench, remove the relief valve plug.

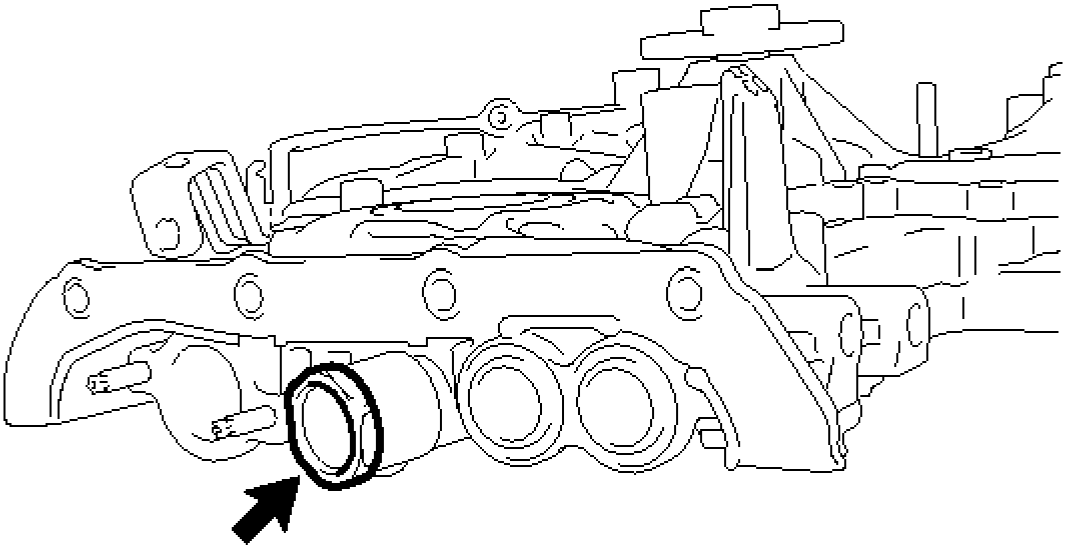

Fig. 27: Locating Oil Pump Relief Valve Plug
Courtesy of TOYOTA MOTOR SALES, U.S.A., INC.

b. Remove the relief valve spring and oil pump relief valve.

2. **REMOVE OIL PUMP COVER**
   a. Remove the 8 bolts, oil pump cover and oil pump rotor set.

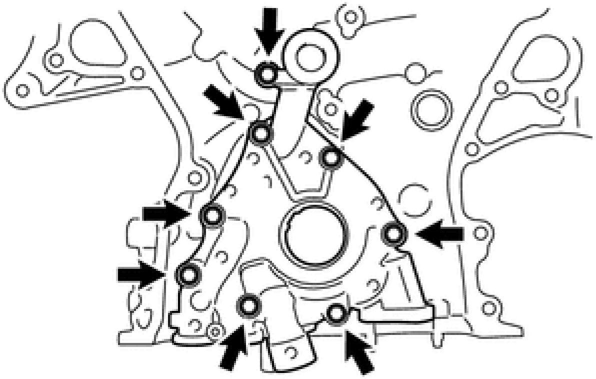

Fig. 28: Locating Oil Pump Cover Bolts
Courtesy of TOYOTA MOTOR SALES, U.S.A., INC.

INSPECTION

INSPECTION

1. **INSPECT OIL PUMP RELIEF VALVE**

a. Coat the relief valve with engine oil and check that it falls smoothly into the valve hole by its own weight.

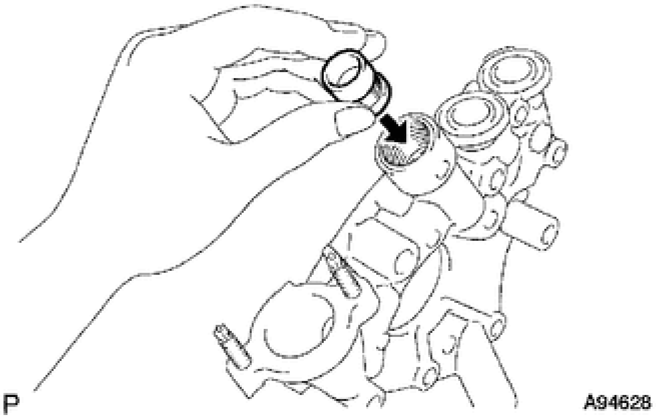

Fig. 29: Inspecting Oil Pump Relief Valve
Courtesy of TOYOTA MOTOR SALES, U.S.A., INC.

If the valve does not fall smoothly, replace the relief valve. If necessary, replace the oil pump assembly.

2. **INSPECT OIL PUMP ROTOR SET**
   a. Install the rotors to the timing chain cover with the rotor marks facing up. Check that the rotors rotate smoothly.

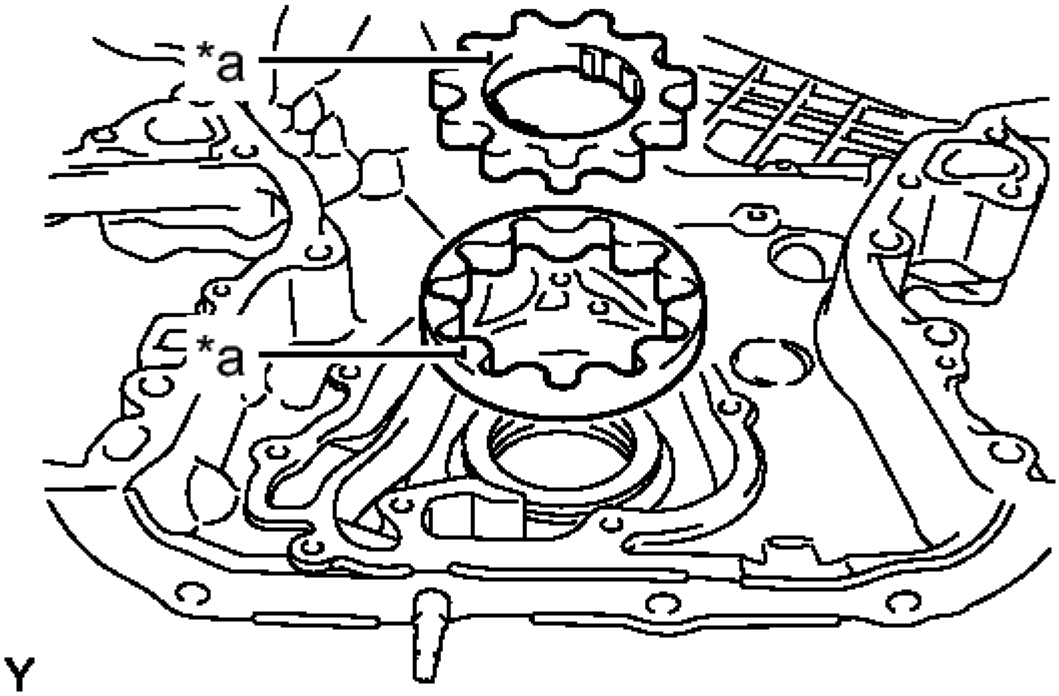

Fig. 30: Identifying Oil Pump Rotor Position
Courtesy of TOYOTA MOTOR SALES, U.S.A., INC.

TEXT IN ILLUSTRATION

*a	Mark

b. Check the tip clearance.

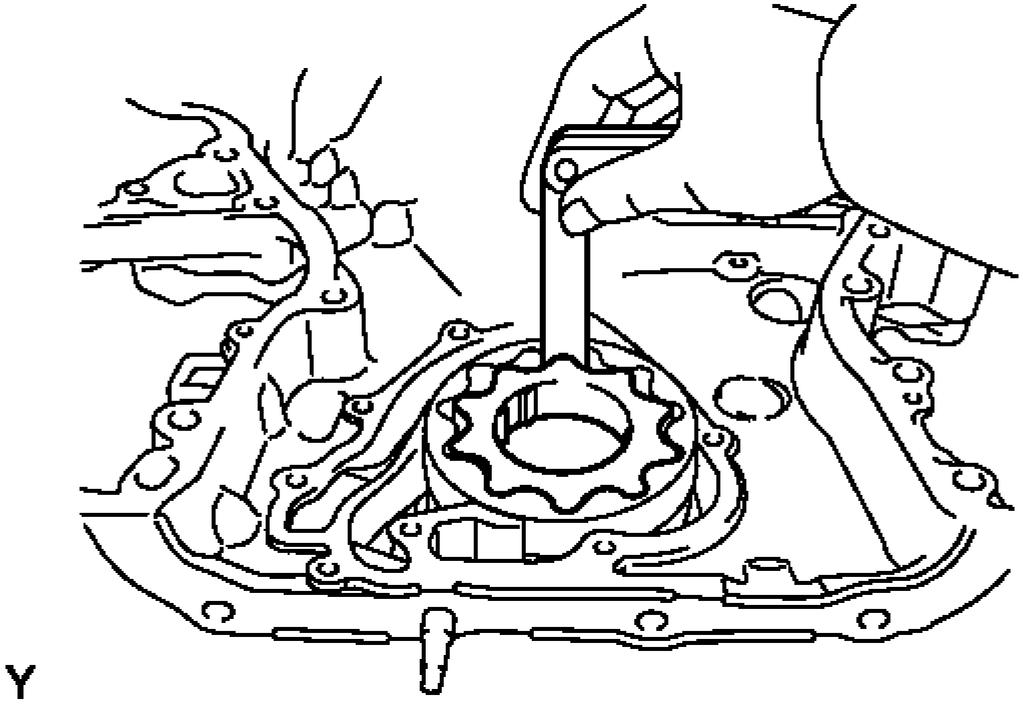

Fig. 31: Measuring Clearance Between Drive Rotor And Driven Rotor Tips
Courtesy of TOYOTA MOTOR SALES, U.S.A., INC.

1. Using a feeler gauge, measure the clearance between the drive and driven rotor tips as shown in the illustration.

   Tip Clearance

   Standard

   0.060 to 0.160 mm (0.00236 to 0.00630 in.)

   Maximum

   0.160 mm (0.00630 in.)

   If the tip clearance is greater than the maximum, replace the timing chain cover sub-assembly.

c. Check the side clearance.

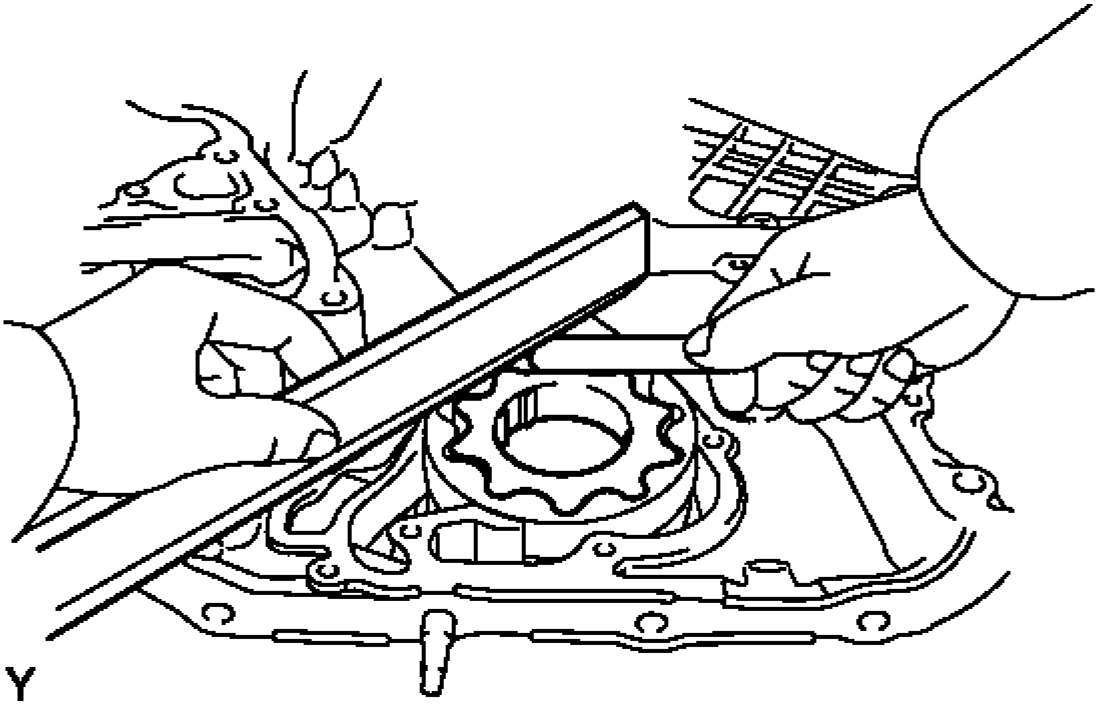

Fig. 32: Checking Side Clearance
Courtesy of TOYOTA MOTOR SALES, U.S.A., INC.

1. Using a feeler gauge and precision straightedge, measure the clearance between the rotors and precision straightedge as shown in the illustration.

   Side Clearance

   Standard

   0.030 to 0.090 mm (0.00118 to 0.00354 in.)

   Maximum

   0.090 mm (0.00354 in.)

   If the side clearance is greater than the maximum, replace the timing chain cover sub-assembly.

d. Check the body clearance.

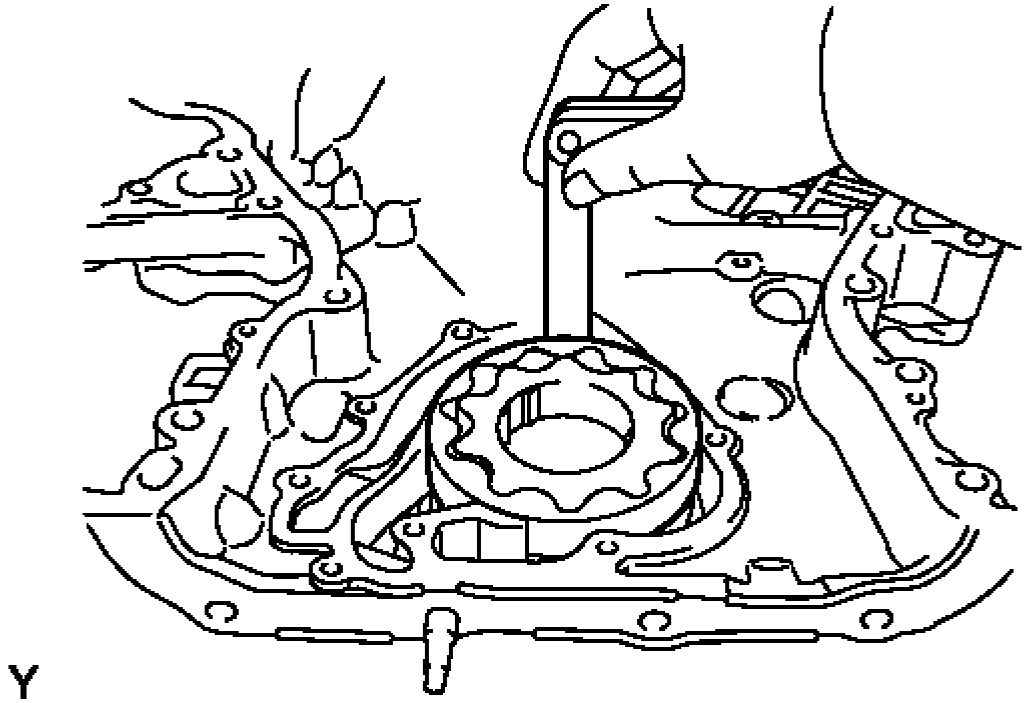

Fig. 33: Checking Body Clearance
Courtesy of TOYOTA MOTOR SALES, U.S.A., INC.

1. Using a feeler gauge, measure the clearance between the timing chain cover and driven rotor as shown in the illustration.

   Body Clearance

   Standard

   0.250 to 0.325 mm (0.00984 to 0.0128 in.)

   Maximum

   0.325 mm (0.0128 in.)

   If the body clearance is greater than the maximum, replace the timing chain cover sub-assembly.

REASSEMBLY

REASSEMBLY

1. **INSTALL OIL PUMP COVER**
   a. Coat the drive and driven rotors with engine oil and place them into the timing chain cover with the marks facing up (oil pump cover side). Check that the rotors rotate smoothly.

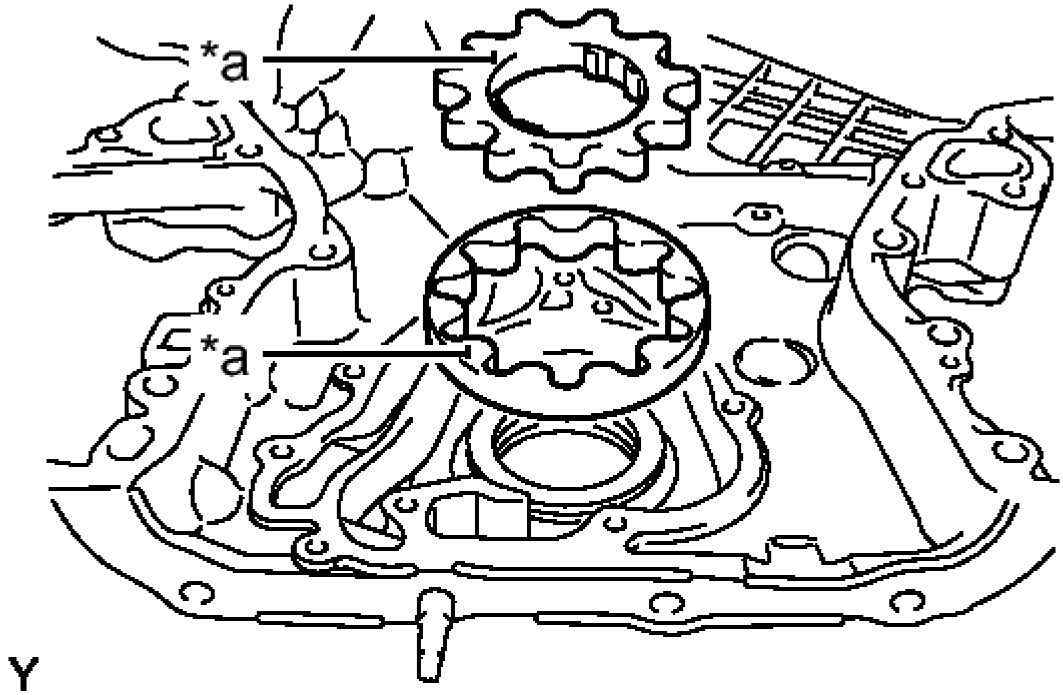

Fig. 34: Identifying Oil Pump Rotor Position
Courtesy of TOYOTA MOTOR SALES, U.S.A., INC.

TEXT IN ILLUSTRATION

*a	Mark

b. Install the oil pump cover with the 8 bolts.

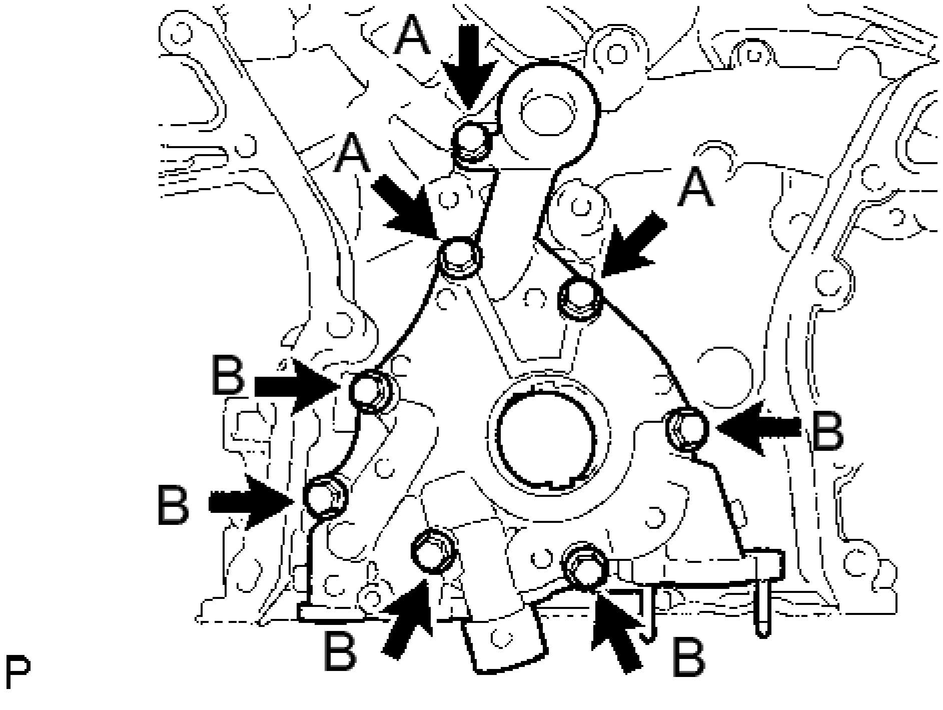

Fig. 35: Locating Oil Pump Cover With Bolts
Courtesy of TOYOTA MOTOR SALES, U.S.A., INC.

BOLT LENGTH

Item	Length
Bolt A	22 mm (0.866 in.)
Bolt B	40 mm (1.58 in.)

Torque: 9.1 N*m (93 kgf*cm, 81 in.*lbf)

2. **INSTALL OIL PUMP RELIEF VALVE**
    a. Coat the oil pump relief valve with engine oil.

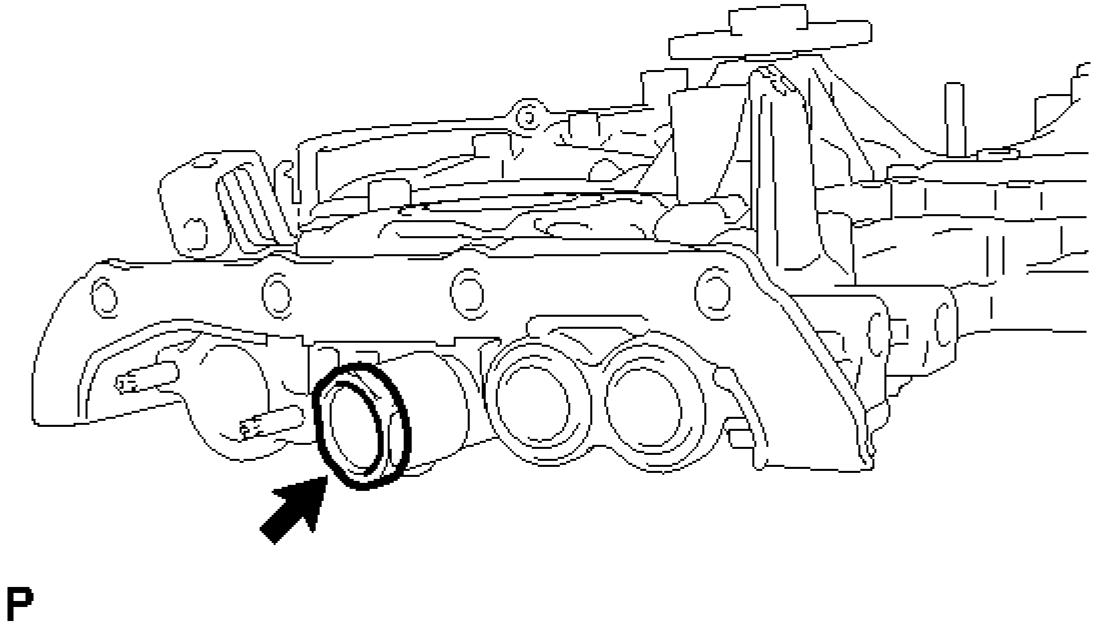

Fig. 36: Locating Oil Pump Relief Valve Plug
Courtesy of TOYOTA MOTOR SALES, U.S.A., INC.

    b. Insert the relief valve and relief valve spring into the oil pump cover hole.
    c. Using a 27 mm socket wrench, install the plug.

Torque: 49 N*m (500 kgf*cm, 37 ft.*lbf)

INSTALLATION

INSTALLATION

1. **INSTALL TIMING CHAIN CASE OIL SEAL**
    a. Using SST, tap in a new oil seal until its surface is flush with the timing chain case edge.

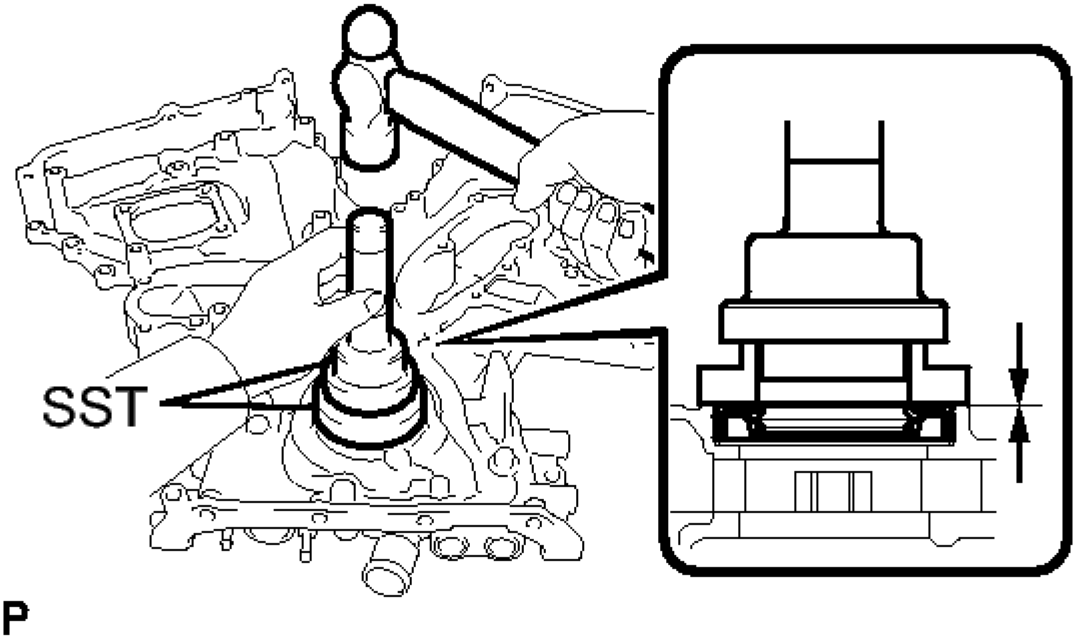

Fig. 37: Installing Timing Chain Case Oil Seal
Courtesy of TOYOTA MOTOR SALES, U.S.A., INC.

- **SST: 09223-22010**
- **SST: 09506-35010**

NOTE:

- **Keep the lip free from foreign matter.**
- **Do not tap on the oil seal at an angle.**
- **Make sure that the oil seal edge does not stick out of the timing chain case.**

HINT:

Tap in the oil seal so that it is positioned within 1.0 mm from the edge of the timing chain case.

    b. Apply a light coat of MP grease to the timing chain cover oil seal lip.

2. **INSTALL TIMING CHAIN COVER SUB-ASSEMBLY**
    a. Apply seal packing in a continuous line to the engine unit as shown in the following illustration.

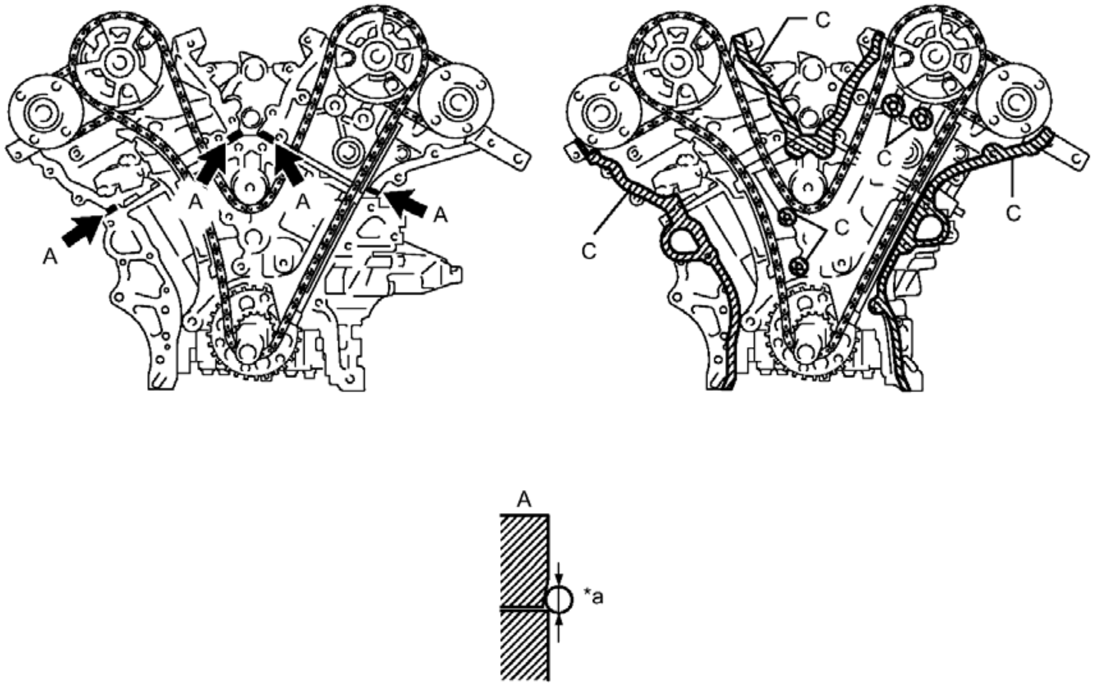

o

Fig. 38: Applying Seal Packing To Timing Chain Cover Sub-Assembly
Courtesy of TOYOTA MOTOR SALES, U.S.A., INC.

TEXT IN ILLUSTRATION

*a	Seal Diameter: 3.0 mm or more	Seal Packing

Seal packing

Toyota Genuine Seal Packing Black, Three Bond 1207B or equivalent

Seal diameter

3.0 mm (0.118 in.)

NOTE:

- **Be sure to clean and degrease the contact surfaces, especially the surfaces indicated by C in the illustration.**
- **If there is oil on the contact surfaces, wipe them with an oil-free cloth before applying seal packing.**
- **Install the chain cover within 3 minutes.**
- **Do not start the engine for at least 2 hours after installing.**

b. Apply seal packing in a continuous line to the timing chain cover as shown in the following illustration.

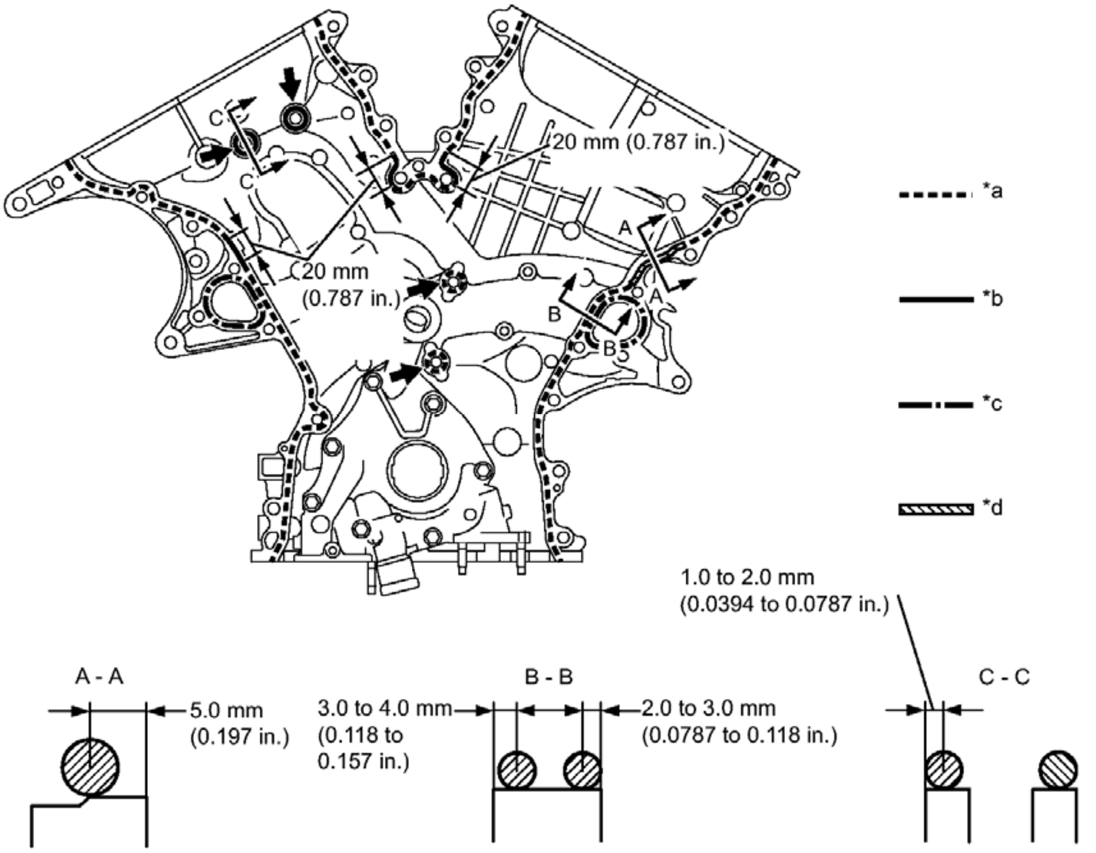
C
C
20 mm (0.787 in.)
20 mm
(0.787 in.)
A
A
B
B
*a
*b
*c
*d
1.0 to 2.0 mm
(0.0394 to 0.0787 in.)
A - A
5.0 mm
(0.197 in.)
3.0 to 4.0 mm
(0.118 to
0.157 in.)
B - B
2.0 to 3.0 mm
(0.0787 to 0.118 in.)
C - C

Fig. 39: Identifying Timing Chain Cover Seal Packing Applying Areas
Courtesy of TOYOTA MOTOR SALES, U.S.A., INC.

TEXT IN ILLUSTRATION

*a	Dashed line area (Seal packing: Toyota Genuine Seal Packing Black, Three Bond 1207B or equivalent)	*b	Continuous line area (Seal packing: Toyota Genuine Seal Packing Black, Three Bond 1207B or equivalent)
	Alternate		

*c	long and short dashed line area (Seal packing: Toyota Genuine Seal Packing 1282B, Three Bond 1282B or equivalent)	*d	Diagonal line area (Seal packing: Toyota Genuine Seal Packing Black, Three Bond 1207B or equivalent)
	Be sure to apply seal packing	-	-

Seal packing

Toyota Genuine Seal Packing Black, Three Bond 1207B or equivalent

Toyota Genuine Seal Packing 1282B, Three Bond 1282B or equivalent

NOTE:

- **If there is oil on the contact surfaces, wipe them with an oil-free cloth before applying seal packing.**
- **Install the chain cover within 3 minutes and tighten the bolts within 15 minutes after applying seal packing.**
- **Do not start the engine for at least 2 hours after installing.**

SEAL PACKING APPLICATION CHART

Area	Seal Packing Diameter	Application Position from Inside Seal Line
Continuous Line Area	4.5 mm or more (0.177 in.)	1.0 to 2.0 mm (0.0394 to 0.0787 in.)
Alternate Long and Short Dashed Line Area	3.5 mm or more (0.138 in.)	2.0 to 3.0 mm (0.0787 to 0.118 in.)

Dashed Line Area	3.5 mm or more (0.138 in.)	3.0 to 4.0 mm (0.118 to 0.158 in.)
Diagonal Line Area	6.0 mm or more (0.236 in.)	5.0 mm (0.197 in.)

c. Install a new gasket.

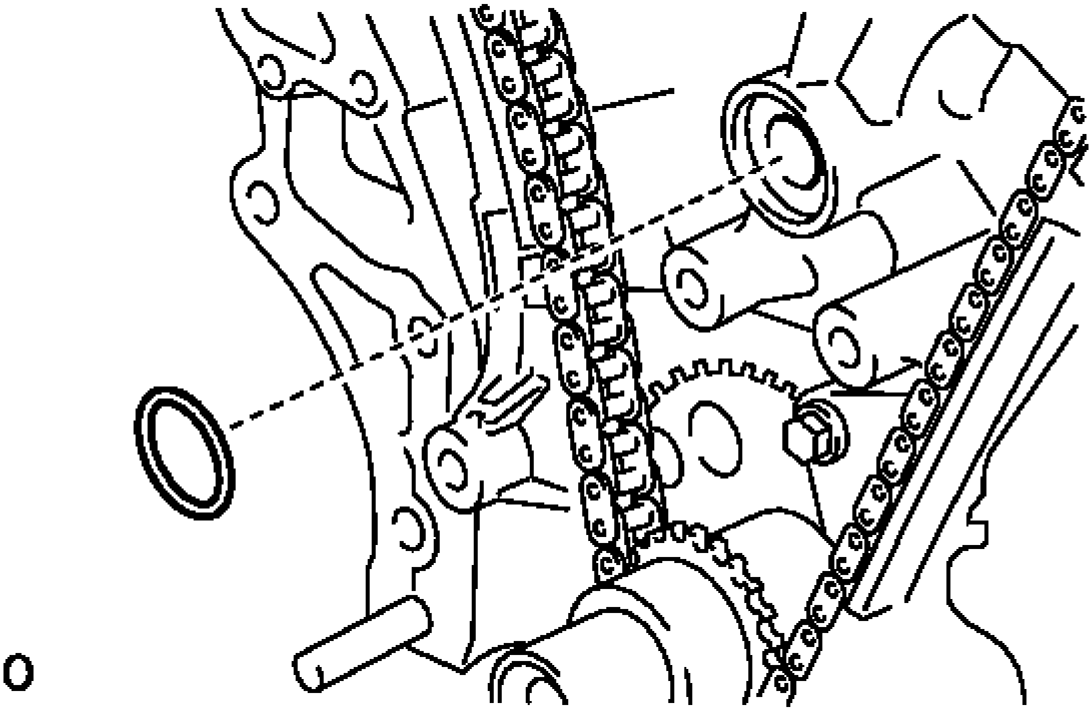

Fig. 40: Identifying Gasket
Courtesy of TOYOTA MOTOR SALES, U.S.A., INC.

d. Align the oil pump drive rotor spline and the crankshaft as shown in the illustration. Install the spline and chain cover to the crankshaft.

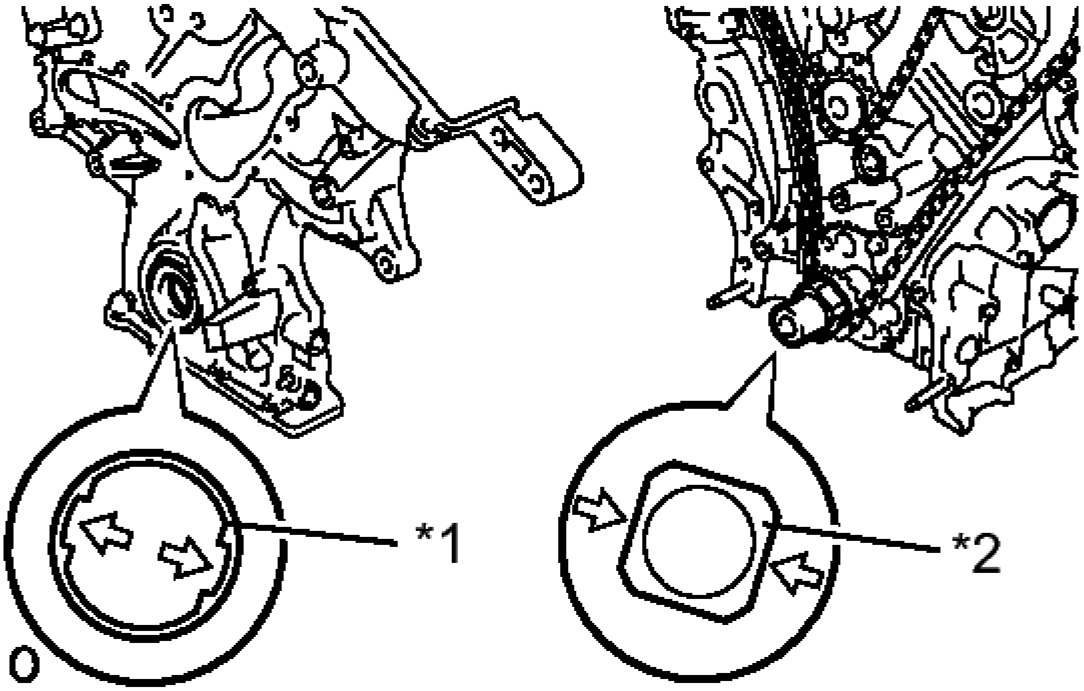

Fig. 41: Aligning Oil Pump Drive Rotor Spline & Crankshaft
Courtesy of TOYOTA MOTOR SALES, U.S.A., INC.

TEXT IN ILLUSTRATION

*1	Drive Rotor Spline
*2	Crankshaft

e. Temporarily tighten the timing chain cover with the 23 bolts and 2 nuts.

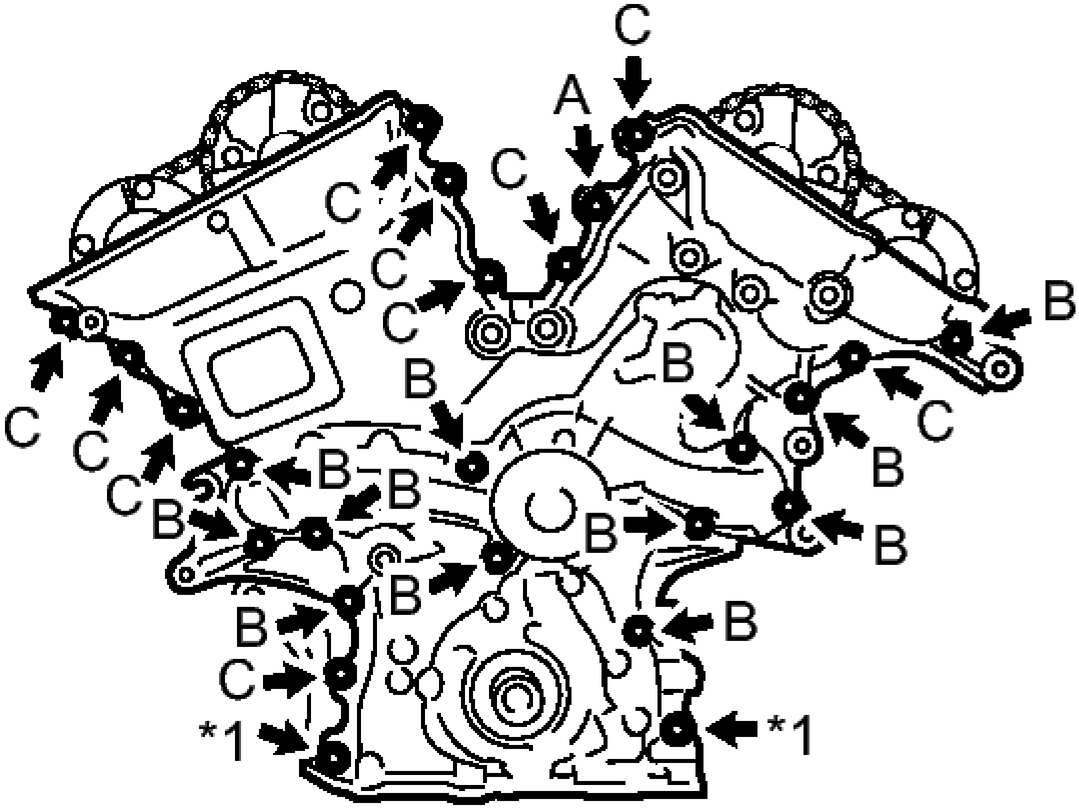
C
A
C
C
C
C
C
B
B
C
C
C
B
C
B
B
B
B
B
B
B
B
B
C
*1
*1

Fig. 42: Locating Timing Chain Cover Nuts & Bolts
Courtesy of TOYOTA MOTOR SALES, U.S.A., INC.

TEXT IN ILLUSTRATION

*1	Nut

BOLT LENGTH

Item	**Length**
Bolt A	40 mm (1.57 in.)
Bolt B	55 mm (2.17 in.)
Bolt	25 mm

C	(0.984 in.)

NOTE: Make sure that there is no oil on the threads of bolt B and C.

f. Fully tighten the bolts in this order: Area 1 and Area 2.

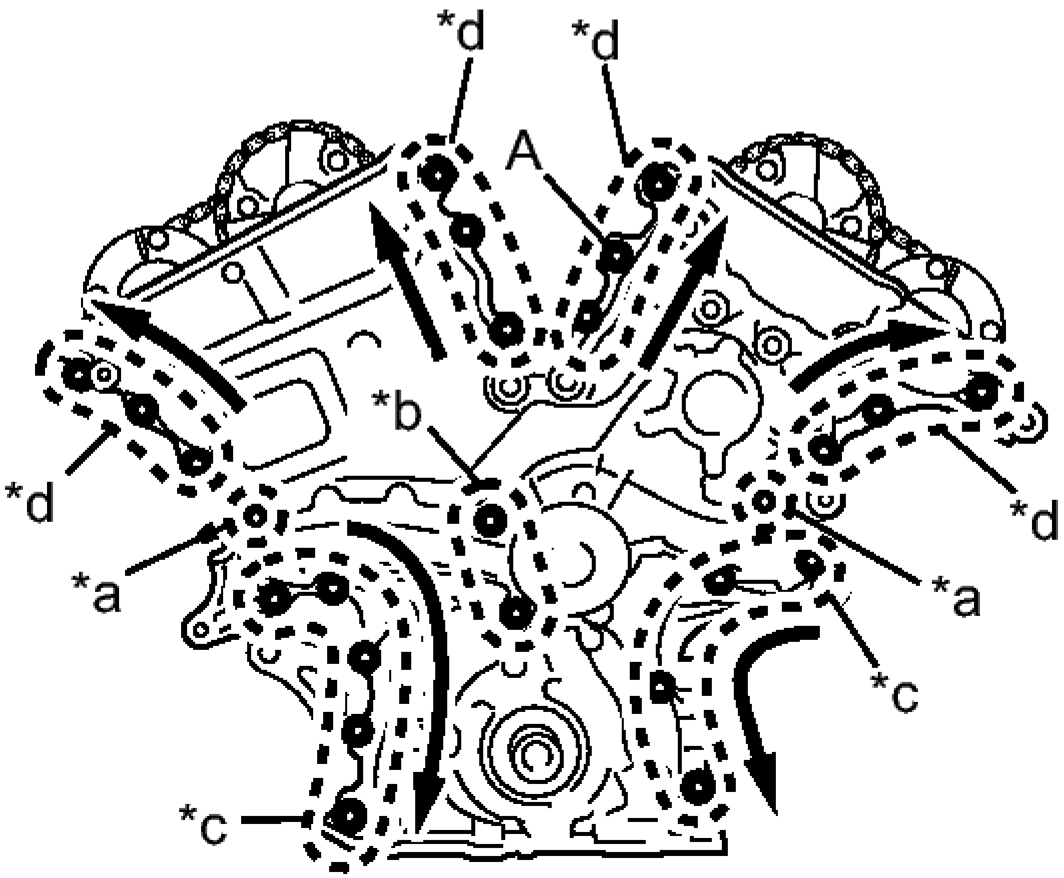

Fig. 43: Tightening Timing Chain Cover Nuts & Bolts Areas
Courtesy of TOYOTA MOTOR SALES, U.S.A., INC.

TEXT IN ILLUSTRATION

*a	Area 1
*b	Area 2

*c	Area 3
*d	Area 4

Torque: 21 N*m (214 kgf*cm, 15 ft.*lbf)

g. Fully tighten the bolts and nuts in Area 3.

   Torque: 21 N*m (214 kgf*cm, 15 ft.*lbf)

   HINT:

   Tighten the bolts and nuts from top to bottom as shown in the illustration.

h. Fully tighten the bolts in Area 4.

   Bolt A

   Torque: 43 N*m (438 kgf*cm, 32 ft.*lbf)

   Except bolt A

   Torque: 21 N*m (214 kgf*cm, 15 ft.*lbf)

   HINT:

   Tighten the bolts from bottom to top as shown in the illustration.

3. **INSTALL OIL PAN SUB-ASSEMBLY** . Refer to **REASSEMBLY - Step 37**
4. **INSTALL OIL STRAINER SUB-ASSEMBLY** . Refer to **REASSEMBLY - Step 38**
5. **INSTALL NO. 2 OIL PAN SUB-ASSEMBLY** . Refer to **REASSEMBLY - Step 39**
6. **INSTALL CYLINDER HEAD COVER SUB-ASSEMBLY** . Refer to **REASSEMBLY - Step 41**
7. **INSTALL CYLINDER HEAD COVER SUB-ASSEMBLY LH** . Refer to **REASSEMBLY - Step 42**
8. **INSTALL WATER INLET HOUSING** . Refer to **INSTALLATION - Step 3**
9. **INSTALL NO. 1 FRONT ENGINE MOUNTING BRACKET LH** . Refer to **REASSEMBLY - Step 35**
10. **INSTALL CRANKSHAFT PULLEY** . Refer to **INSTALLATION - Step 2**
11. **INSTALL NO. 1 OIL PIPE** . Refer to **REASSEMBLY - Step 48**
12. **INSTALL OIL PIPE** . Refer to **REASSEMBLY - Step 49**
13. **INSTALL CRANK POSITION SENSOR** . Refer to **INSTALLATION - Step 1**
14. **INSTALL NO. 1 VACUUM SWITCHING VALVE** . Refer to **INSTALLATION - Step 5**
15. **INSTALL WATER PUMP PULLEY** . Refer to **INSTALLATION - Step 6**

16. **INSTALL NO. 2 IDLER PULLEY SUB-ASSEMBLY** . Refer to **INSTALLATION - Step 7**
17. **INSTALL NO. 2 TIMING GEAR COVER** . Refer to **INSTALLATION - Step 8**
18. **INSTALL ENGINE OIL LEVEL DIPSTICK GUIDE** . Refer to **REASSEMBLY - Step 44**
19. **INSTALL V-RIBBED BELT TENSIONER ASSEMBLY** . Refer to **INSTALLATION - Step 9**
20. **INSTALL EXHAUST MANIFOLD SUB-ASSEMBLY LH** . Refer to **INSTALLATION - Step 10**
21. **INSTALL NO. 2 EXHAUST MANIFOLD HEAT INSULATOR** . Refer to **INSTALLATION - Step 3**
22. **INSTALL NO. 2 MANIFOLD STAY** . Refer to **INSTALLATION - Step 2**
23. **INSTALL NO. 2 ENGINE OIL LEVEL DIPSTICK GUIDE** . Refer to **INSTALLATION - Step 13**
24. **INSTALL EXHAUST MANIFOLD SUB-ASSEMBLY RH** . Refer to **INSTALLATION - Step 14**
25. **INSTALL IGNITION COIL ASSEMBLY** . Refer to **INSTALLATION - Step 2**
26. **INSTALL THROTTLE BODY BRACKET** . Refer to **INSTALLATION - Step 19**
27. **INSTALL NO. 1 SURGE TANK STAY** . Refer to **INSTALLATION - Step 18**
28. **INSTALL INTAKE AIR SURGE TANK ASSEMBLY** . Refer to **INSTALLATION - Step 6**
29. **INSTALL ENGINE HANGERS** . Refer to **REMOVAL - Step 1**
30. **REMOVE ENGINE STAND**
31. **INSTALL DRIVE PLATE AND RING GEAR SUB-ASSEMBLY** . Refer to **INSTALLATION - Step 2**
32. **INSTALL AUTOMATIC TRANSAXLE ASSEMBLY**

    Refer to **INSTALLATION**

OIL AND OIL FILTER

COMPONENTS

ILLUSTRATION

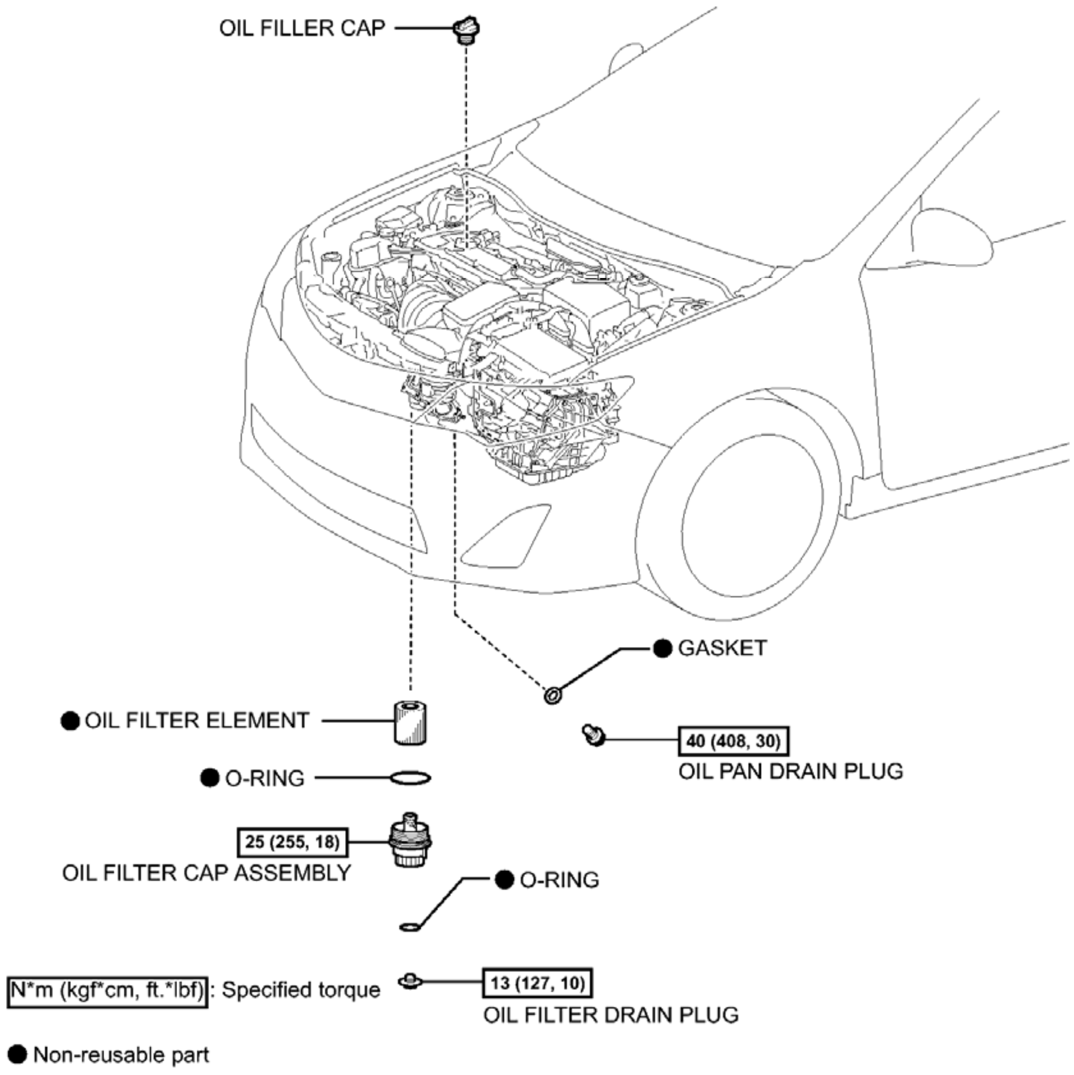
OIL FILLER CAP
● GASKET
● OIL FILTER ELEMENT
40 (408, 30)
OIL PAN DRAIN PLUG
● O-RING
25 (255, 18)
OIL FILTER CAP ASSEMBLY
● O-RING
N*m (kgf*cm, ft.*lbf): Specified torque
13 (127, 10)
OIL FILTER DRAIN PLUG
● Non-reusable part
C

Fig. 1: Identifying Oil And Oil Filter Replacement Components With Torque Specifications
Courtesy of TOYOTA MOTOR SALES, U.S.A., INC.

REPLACEMENT

REPLACEMENT

WARNING:

- **Prolonged and repeated contact with engine oil will result in the removal of natural oils from the skin, leading to dryness, irritation and dermatitis. In addition, used engine oil contains potentially harmful contaminants which may cause skin cancer.**
- **Wear protective clothing and gloves. Avoid contact with used oil. If contact occurs, wash your skin thoroughly with soap or waterless hand cleaner. Never use gasoline, thinners, or solvents to wash the skin.**
- **In order to protect the environment, dispose of used oil and used oil filters at designated disposal sites only.**

1. **DRAIN ENGINE OIL**
    a. Remove the oil filler cap.
    b. Remove the oil pan drain plug and gasket, and drain the engine oil into a container.
    c. Clean the oil pan drain plug and install a new gasket and the oil pan drain plug.

    Torque: 40 N*m (408 kgf*cm, 30 ft.*lbf)

2. **REMOVE OIL FILTER CAP ASSEMBLY**
    a. Connect a hose with an inside diameter of 15 mm (0.591 in.) to the pipe.

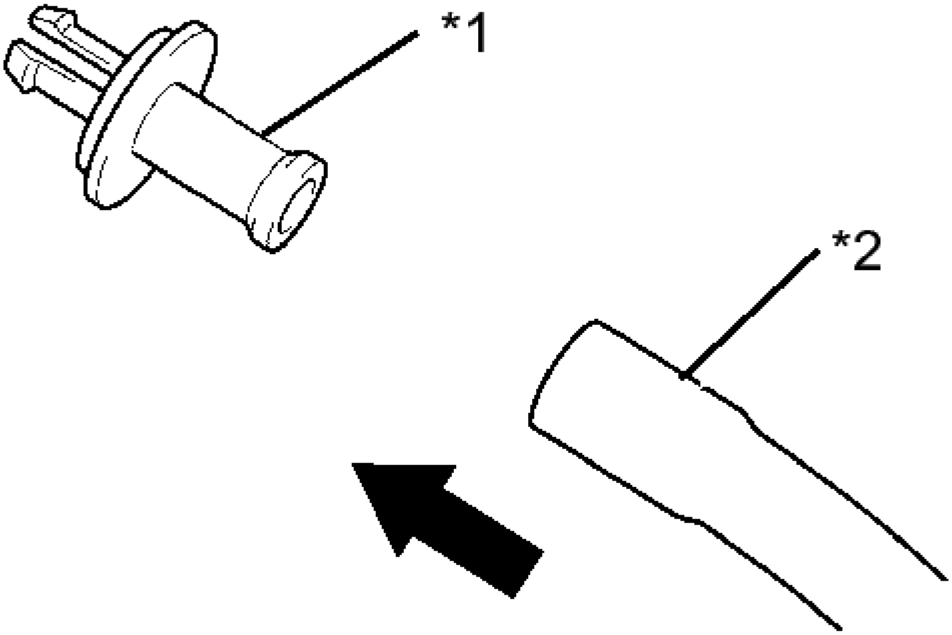

Fig. 2: Connecting Hose To Pipe
Courtesy of TOYOTA MOTOR SALES, U.S.A., INC.

TEXT IN ILLUSTRATION

*1	Pipe
*2	Hose

b. Remove the oil filter drain plug from the oil filter cap.

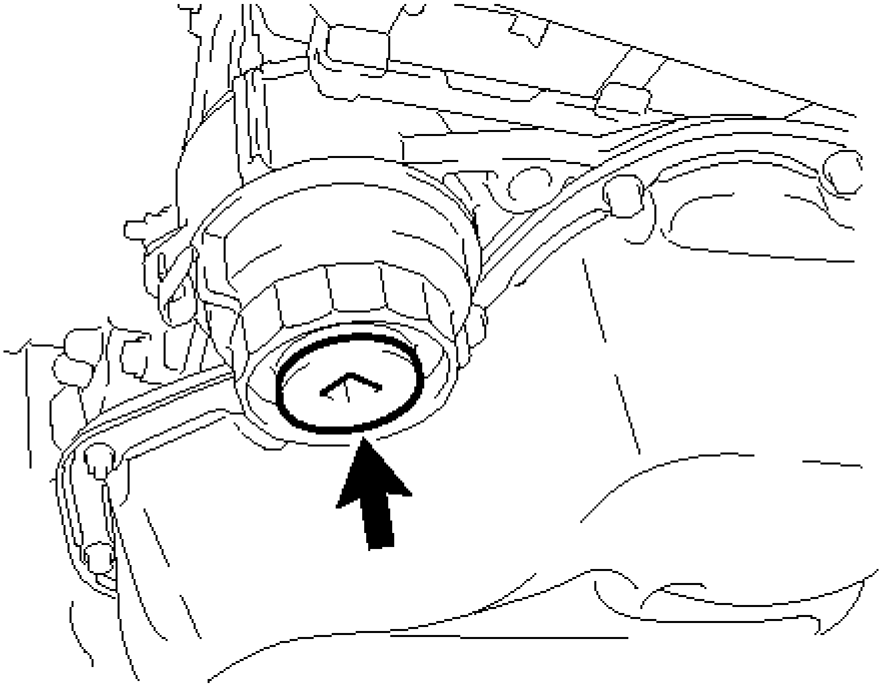

Fig. 3: Identifying Oil Filter Drain Plug
Courtesy of TOYOTA MOTOR SALES, U.S.A., INC.

c. Install the pipe to the oil filter cap.

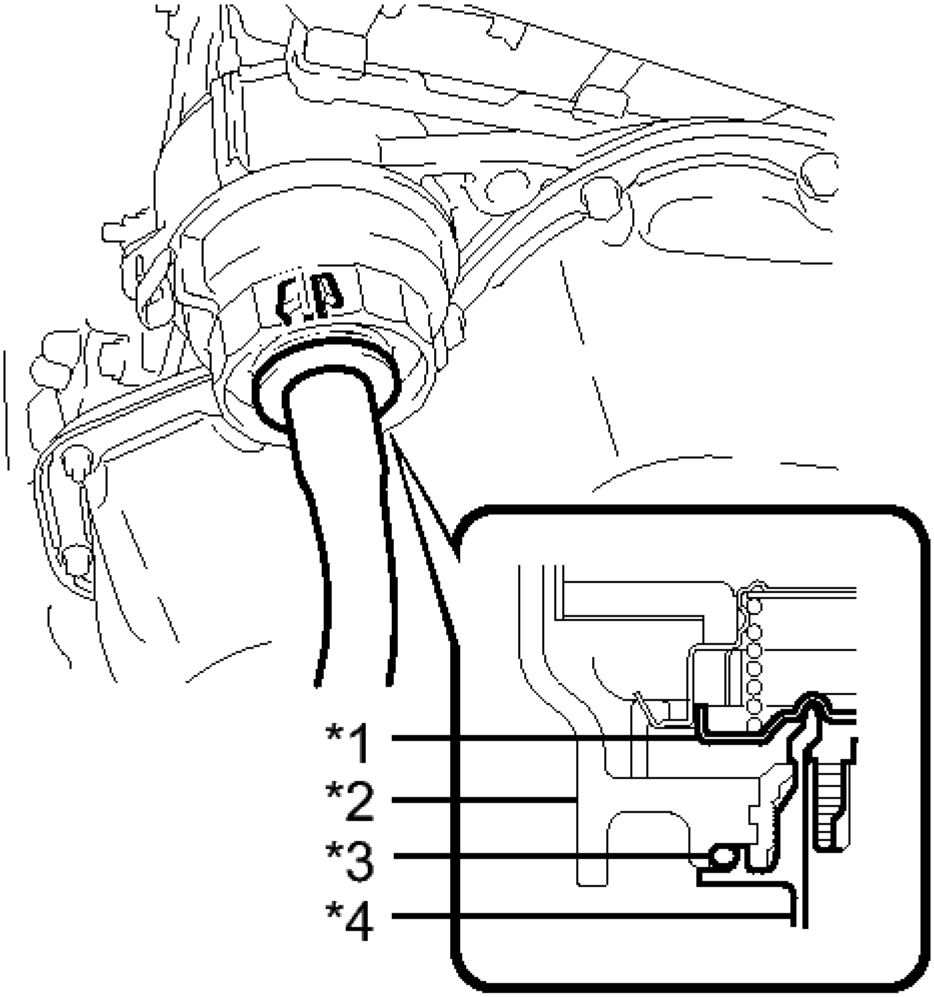

Fig. 4: Identifying Oil Filter Cap Pipe
Courtesy of TOYOTA MOTOR SALES, U.S.A., INC.

TEXT IN ILLUSTRATION

*1	Valve
*2	Cap
*3	O-ring
*4	Pipe

NOTE: If the O-ring is removed with the oil filter drain plug, install the O-ring together with the pipe.

HINT:

Use a container to catch the draining oil.

d. Check that the oil is drained from the oil filter. Then disconnect the pipe as shown in the illustration and remove the O-ring.

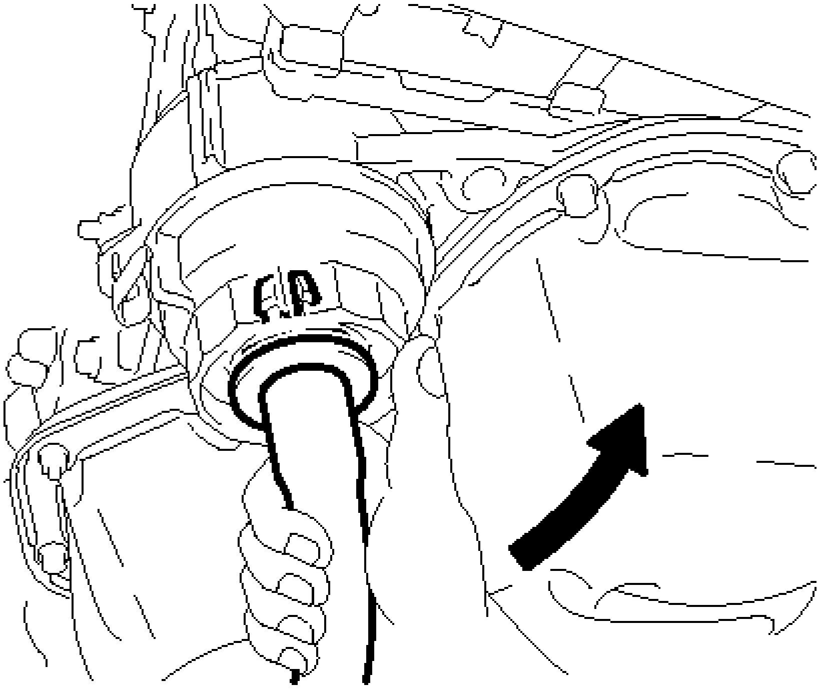

Fig. 5: Disconnecting Oil Filter Cap Pipe
Courtesy of TOYOTA MOTOR SALES, U.S.A., INC.

e. Using SST, remove the oil filter cap.

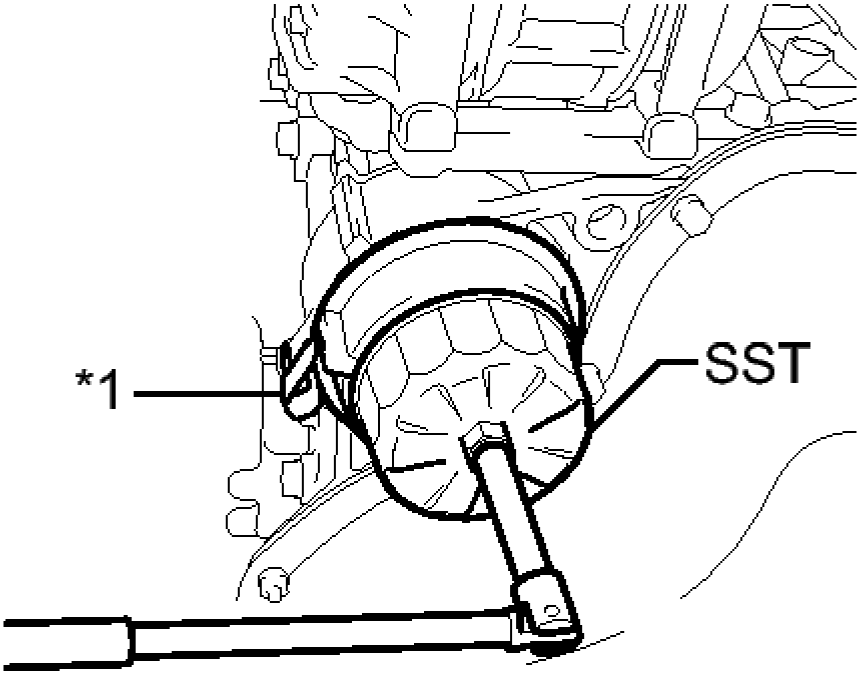

Fig. 6: Removing The Oil Filter Cap
Courtesy of TOYOTA MOTOR SALES, U.S.A., INC.

TEXT IN ILLUSTRATION

*1	Oil Filter Bracket Clip

- **SST: 09228-06501**

NOTE: **Do not remove the oil filter bracket clip.**

f. Remove the oil filter element and O-ring from the oil filter cap.

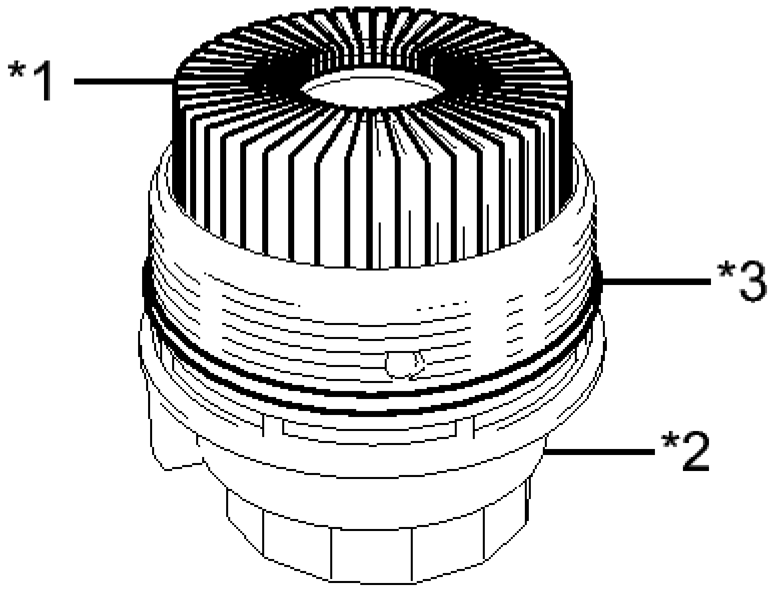

P

Fig. 7: Identifying Oil Filter Element, O-Ring And Oil Filter Cap
Courtesy of TOYOTA MOTOR SALES, U.S.A., INC.

TEXT IN ILLUSTRATION

*1	Oil Filter Element
*2	Oil Filter Cap
*3	O-ring

NOTE: **Be sure to remove the O-ring by hand, without using any tools, to prevent damage to the O-ring groove.**

3. **INSTALL OIL FILTER CAP ASSEMBLY**
   a. Clean the inside of the oil filter cap, threads and O-ring groove.
   b. Apply a small amount of engine oil to a new O-ring and install it to the oil filter cap.

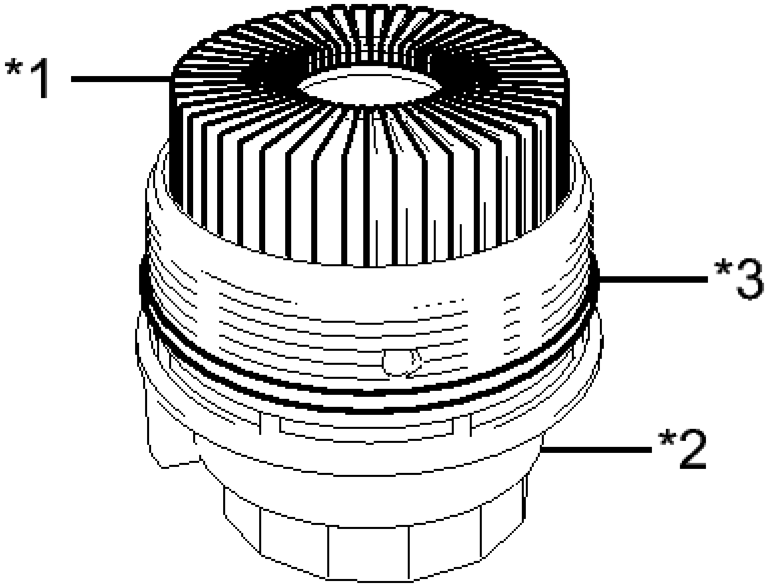

P

Fig. 8: Identifying Oil Filter Element, O-Ring And Oil Filter Cap
Courtesy of TOYOTA MOTOR SALES, U.S.A., INC.

TEXT IN ILLUSTRATION

*1	Oil Filter Element
*2	Oil Filter Cap
*3	O-ring

c. Set a new oil filter element into the oil filter cap.
d. Remove any dirt or foreign matter from the installation surface of the engine.
e. Apply a small amount of engine oil to the O-ring again and temporarily install the oil filter cap.

NOTE: **Make sure that the O-ring does not get caught between the parts.**

f. Using SST, tighten the oil filter cap.

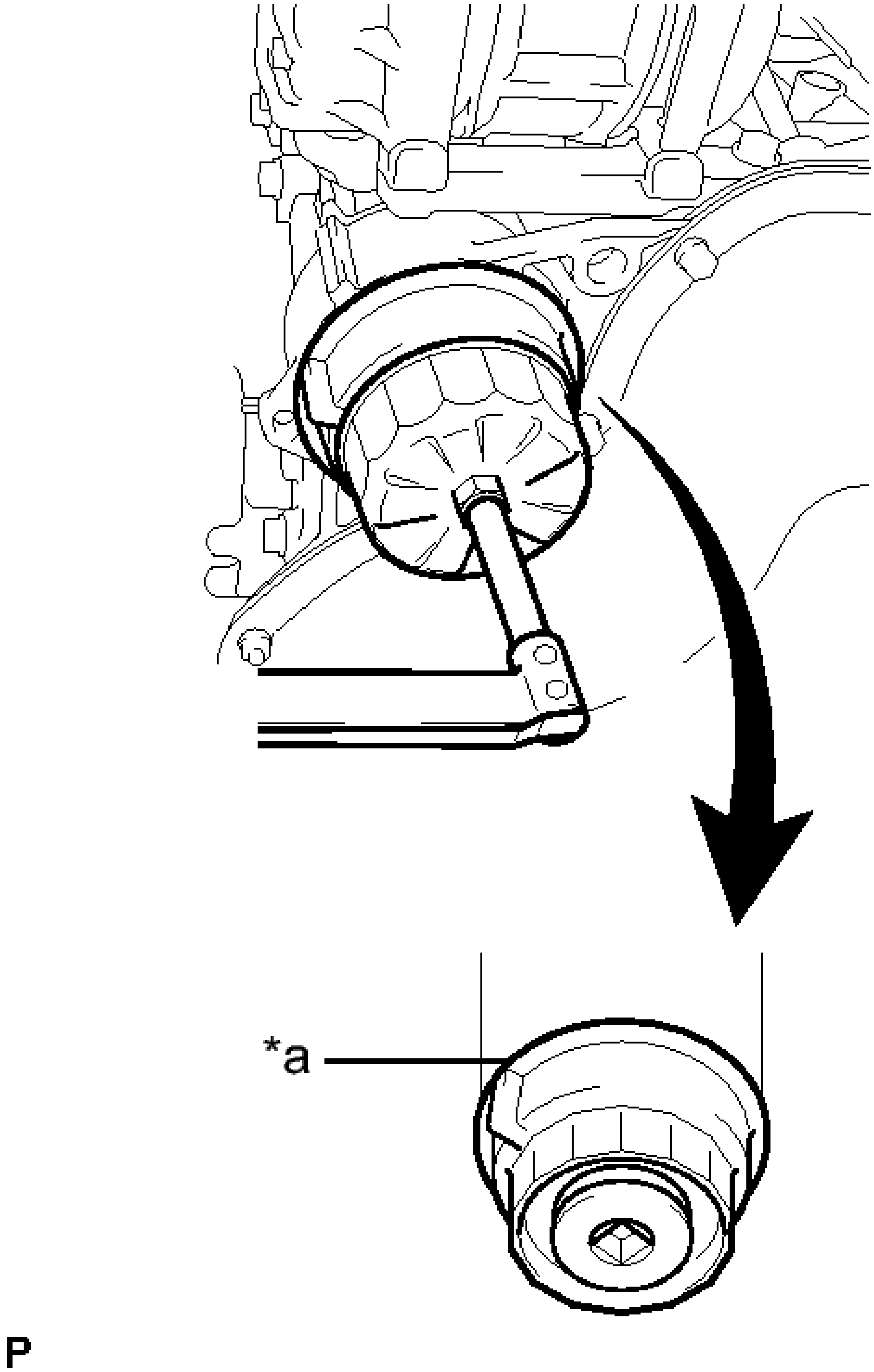

Fig. 9: Tightening The Oil Filter Cap
Courtesy of TOYOTA MOTOR SALES, U.S.A., INC.

TEXT IN ILLUSTRATION

	No

*a	Clearance

- **SST: 09228-06501**

Torque: 25 N*m (255 kgf*cm, 18 ft.*lbf)

NOTE:	**Make sure that the oil filter is installed securely as shown in the illustration.**

g. Apply a small amount of engine oil to a new O-ring, and install it to the oil filter cap.

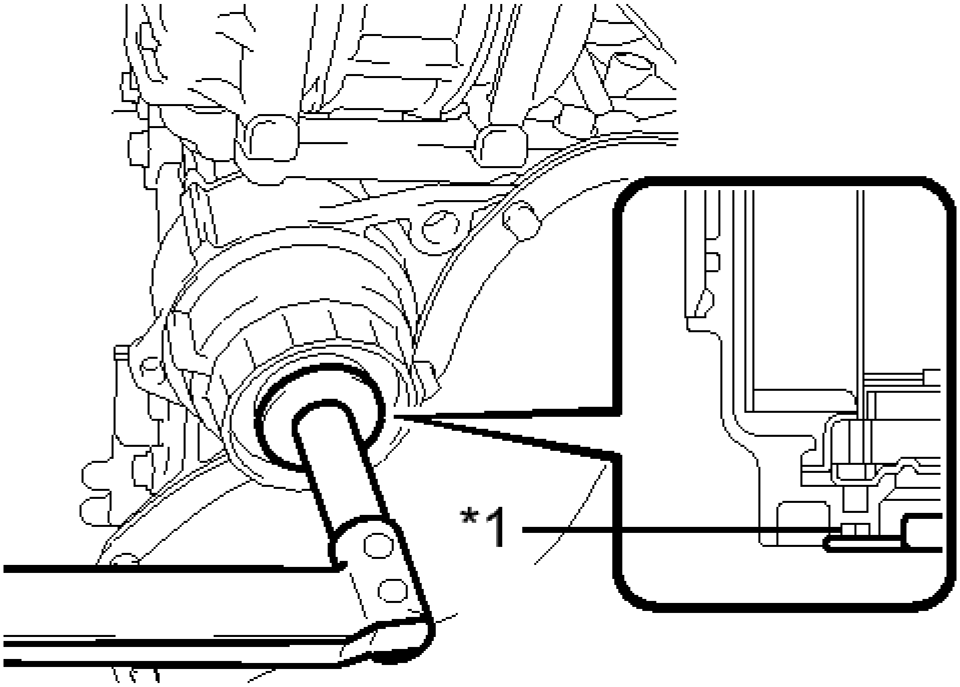

Fig. 10: Identifying Oil Filter Cap O-Ring
Courtesy of TOYOTA MOTOR SALES, U.S.A., INC.

TEXT IN ILLUSTRATION

*1	O-ring

NOTE:	**Before installing the O-ring, remove any dirt or foreign matter from the installation surface of the oil filter cap.**

h. Install the oil filter drain plug.

Torque: 13 N*m (127 kgf*cm, 10 ft.*lbf)

NOTE:	**Be careful that the O-ring does not get caught between any**

surrounding parts.

4. **ADD ENGINE OIL**
    a. Add new oil.

Standard Oil Grade

Oil Grade	Oil Viscosity
ILSAC multigrade engine oil	0W-20

Standard Oil Grade (Destination package for South Korea)

Oil Grade	Oil Viscosity (SAE)
API grade SL "energy-conserving", SM "energy-conserving", SN "resource-conserving" or ILSAC multigrade engine oil	• 0W-20 • 5W-20 • 5W-30 • 10W-30
API grade SL, SM or SN multigrade engine oil	• 15W-40 • 20W-50

Standard Capacity

Item	Specified Condition
Drain and refill (with oil filter	4.4 liters (4.6 US qts, 3.9 Imp. qts)

change)	
Drain and refill (without oil filter change)	4.0 liters (4.2 US qts, 3.5 Imp. qts)
Dry fill	5.3 liters (5.6 US qts, 4.7 Imp. qts)

  b. Install the oil filler cap.

5. **INSPECT FOR OIL LEAK**
6. **INSPECT ENGINE OIL LEVEL** . Refer to **ON-VEHICLE INSPECTION - Step 1**

OIL PRESSURE SWITCH

COMPONENTS

ILLUSTRATION

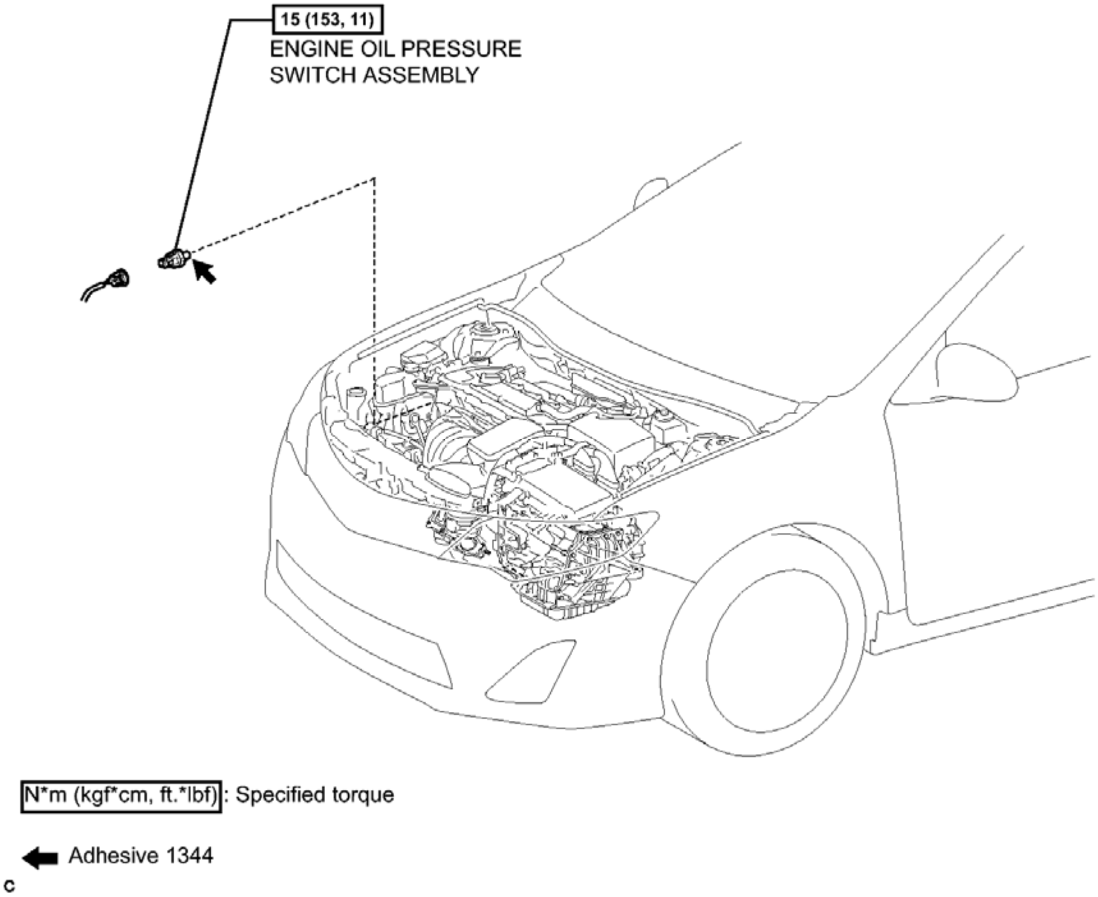
15 (153, 11)
ENGINE OIL PRESSURE
SWITCH ASSEMBLY
N*m (kgf*cm, ft.*lbf): Specified torque
Adhesive 1344
C

Fig. 11: Identifying Oil Pressure Switch Replacement Components With Torque Specifications
Courtesy of TOYOTA MOTOR SALES, U.S.A., INC.

REMOVAL

REMOVAL

1. **REMOVE ENGINE OIL PRESSURE SWITCH ASSEMBLY**
    a. Disconnect the connector.

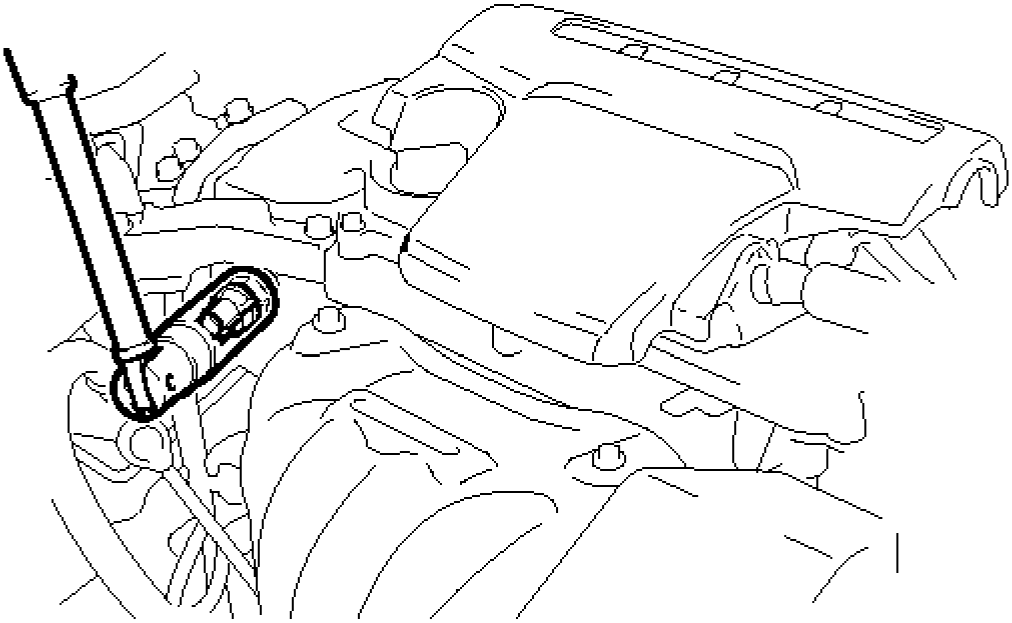

Fig. 12: Removing The Oil Pressure Switch
Courtesy of TOYOTA MOTOR SALES, U.S.A., INC.

b. Using a 24 mm deep socket wrench, remove the oil pressure switch.

INSPECTION

INSPECTION

1. **INSPECT ENGINE OIL PRESSURE SWITCH ASSEMBLY**
    a. Disconnect the oil pressure switch connector.
    b. Start the engine.
    c. Measure the resistance according to the value(s) in the table below.

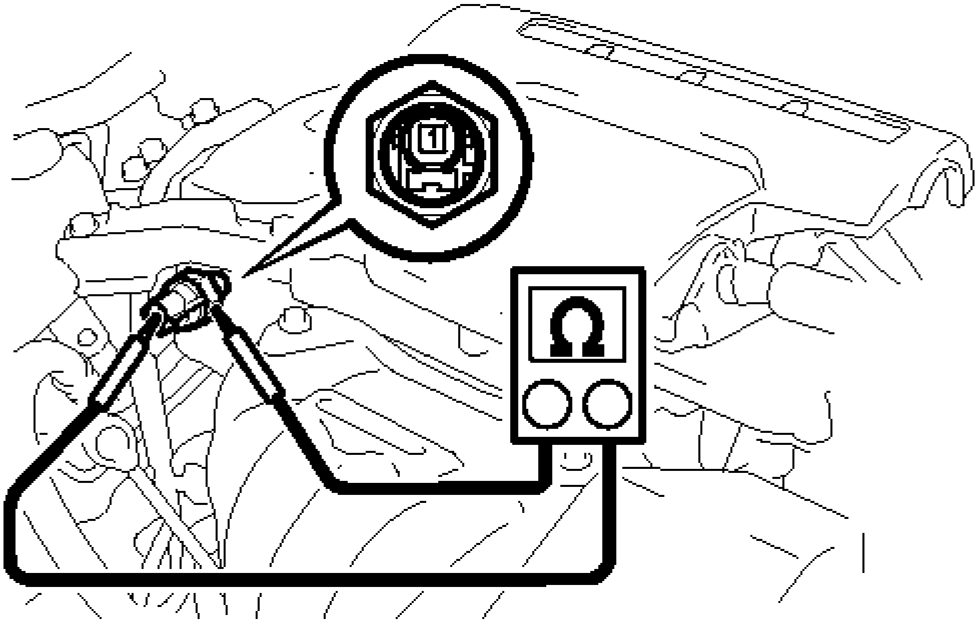

Fig. 13: Measuring The Resistance Of Oil Pressure Switch
Courtesy of TOYOTA MOTOR SALES, U.S.A., INC.

Standard Resistance

Tester Connection	Condition	Specified Condition
1 - Body ground	Engine stopped	Below 1 ohms
	Engine idling	10 kohms or higher

If the result is not as specified, replace the oil pressure switch assembly.

INSTALLATION

INSTALLATION

1. **INSTALL ENGINE OIL PRESSURE SWITCH ASSEMBLY**
    a. Apply adhesive to 2 or 3 threads of the oil pressure switch.

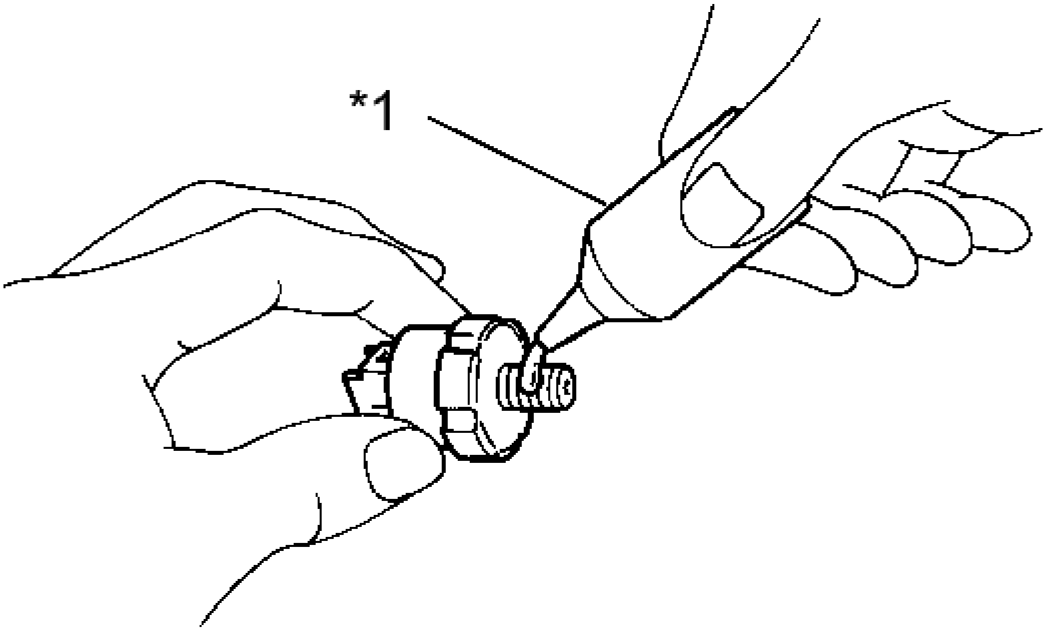

Fig. 14: Applying Adhesive To Oil Pressure Switch
Courtesy of TOYOTA MOTOR SALES, U.S.A., INC.

TEXT IN ILLUSTRATION

*1	Adhesive

Adhesive

TOYOTA Genuine Adhesive 1344, Three Bond 1344 or equivalent.

NOTE: **Do not let adhesive adhere to the oil hole.**

b. Using a 24 mm deep socket wrench, install the oil pressure switch.

Torque: 15 N*m (153 kgf*cm, 11 ft.*lbf)

NOTE: **Do not start the engine within 1 hour of installation.**

c. Connect the connector.

2. **INSPECT FOR OIL LEAK**
3. **INSPECT ENGINE OIL LEVEL** . Refer to **ON-VEHICLE INSPECTION - Step 1**

OIL PUMP

COMPONENTS

ILLUSTRATION

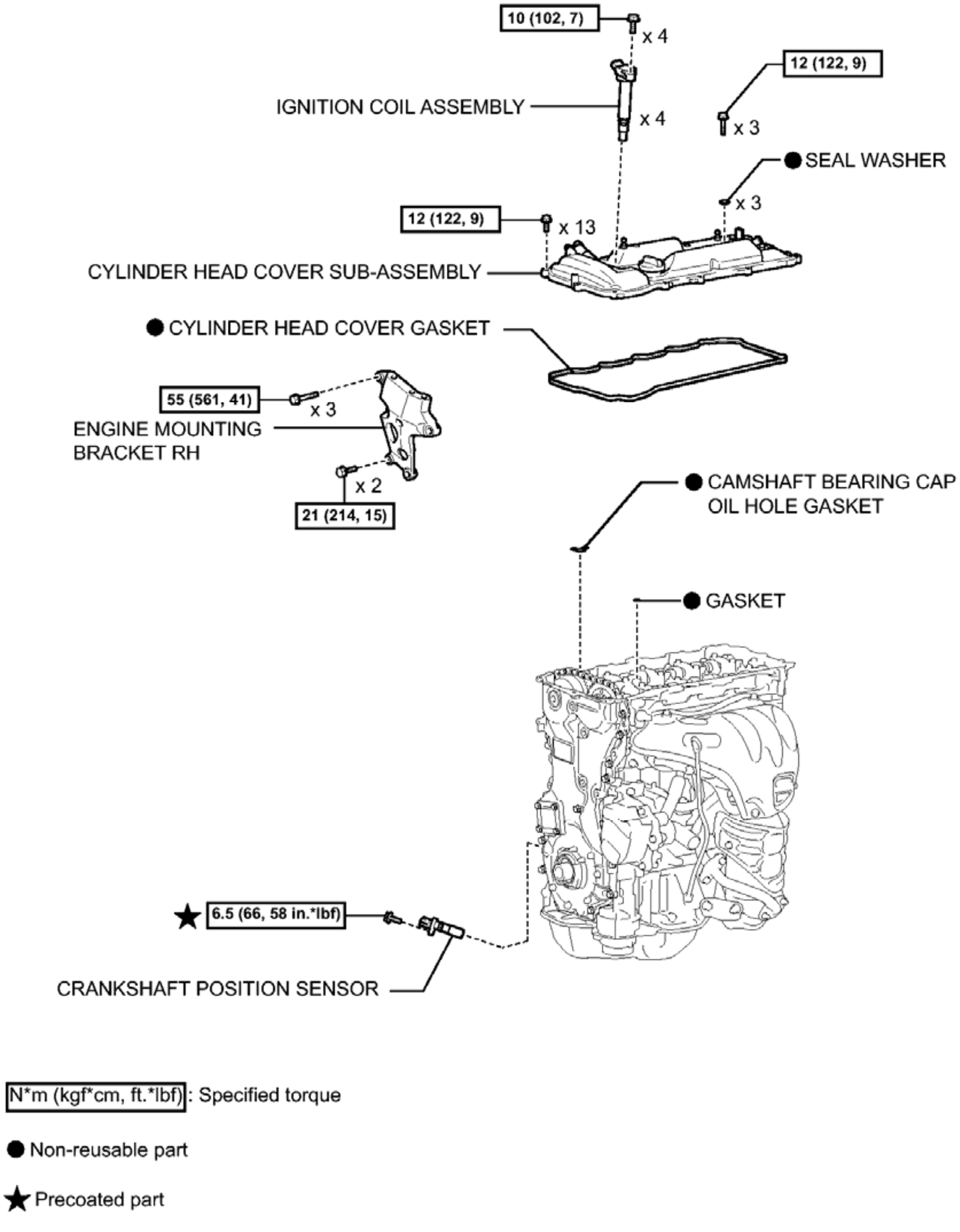
10 (102, 7)
x 4
12 (122, 9)
IGNITION COIL ASSEMBLY
x 4
x 3
● SEAL WASHER
x 3
12 (122, 9)
x 13
CYLINDER HEAD COVER SUB-ASSEMBLY
● CYLINDER HEAD COVER GASKET
55 (561, 41)
x 3
ENGINE MOUNTING
BRACKET RH
x 2
21 (214, 15)
● CAMSHAFT BEARING CAP
OIL HOLE GASKET
● GASKET
★ 6.5 (66, 58 in.*lbf)
CRANKSHAFT POSITION SENSOR
N*m (kgf*cm, ft.*lbf) : Specified torque
● Non-reusable part
★ Precoated part
P

Fig. 15: Identifying Oil Pump Replacement Components With Torque Specifications (1 Of 2)
Courtesy of TOYOTA MOTOR SALES, U.S.A., INC.

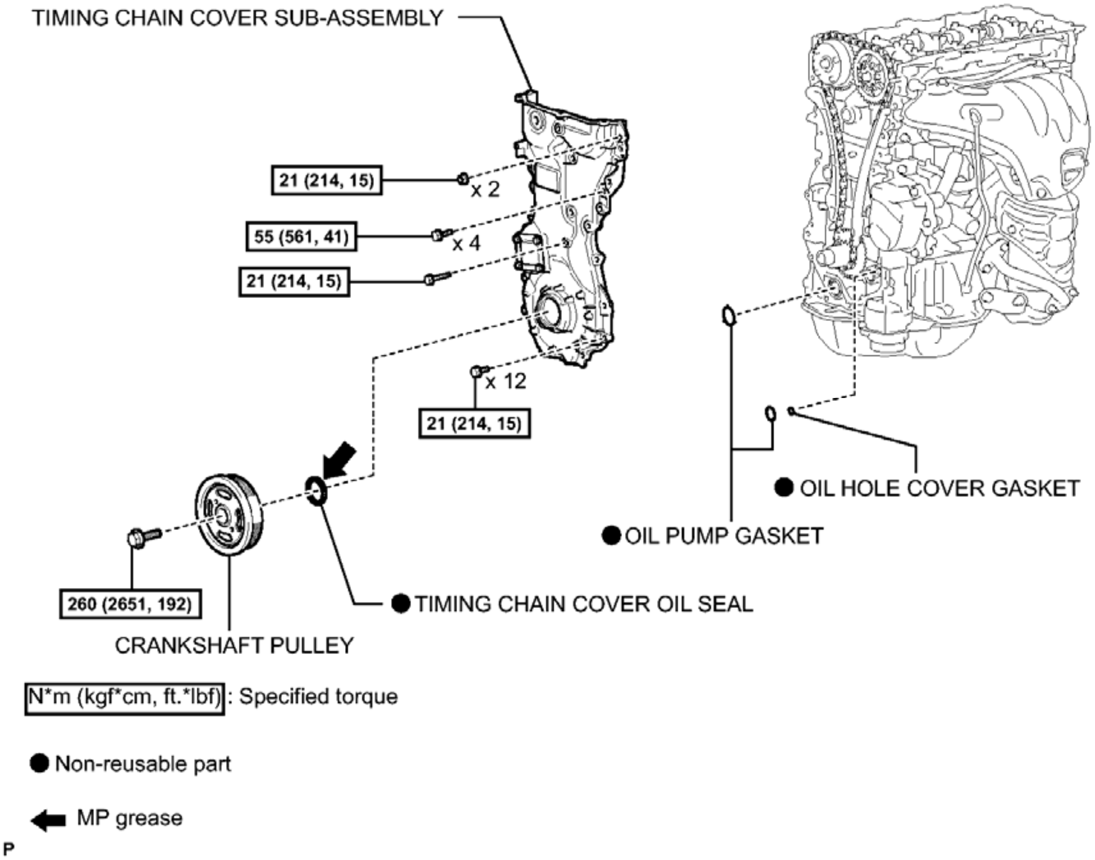
TIMING CHAIN COVER SUB-ASSEMBLY
21 (214, 15)
x 2
55 (561, 41)
x 4
21 (214, 15)
x 12
21 (214, 15)
OIL HOLE COVER GASKET
OIL PUMP GASKET
260 (2651, 192)
TIMING CHAIN COVER OIL SEAL
CRANKSHAFT PULLEY
N*m (kgf*cm, ft.*lbf): Specified torque
Non-reusable part
MP grease
P

Fig. 16: Identifying Oil Pump Replacement Components With Torque Specifications (2 Of 2)
Courtesy of TOYOTA MOTOR SALES, U.S.A., INC.

REMOVAL

REMOVAL

NOTE: **Do not remove the oil pump or oil pump relief valve from the timing chain cover sub-assembly.**

1. **REMOVE ENGINE AND TRANSAXLE**

   Refer to **REMOVAL**

2. **REMOVE ENGINE WIRE**
3. **REMOVE IGNITION COIL ASSEMBLY** . Refer to **REMOVAL - Step 2**
4. **REMOVE CYLINDER HEAD COVER SUB-ASSEMBLY**
   a. Remove the 16 bolts, 3 seal washers, cylinder head cover and cylinder head cover gasket.

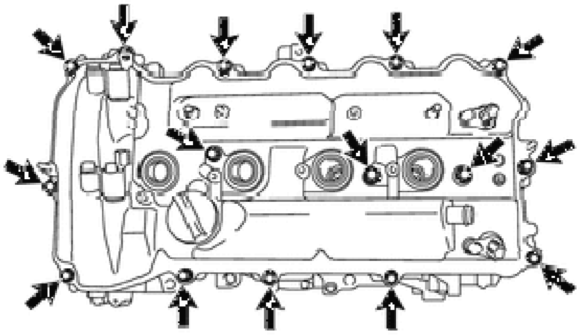

Fig. 17: Locating Cylinder Head Cover And Gasket Bolts And Seal Washers
Courtesy of TOYOTA MOTOR SALES, U.S.A., INC.

b. Remove the 2 gaskets from the camshaft bearing caps.

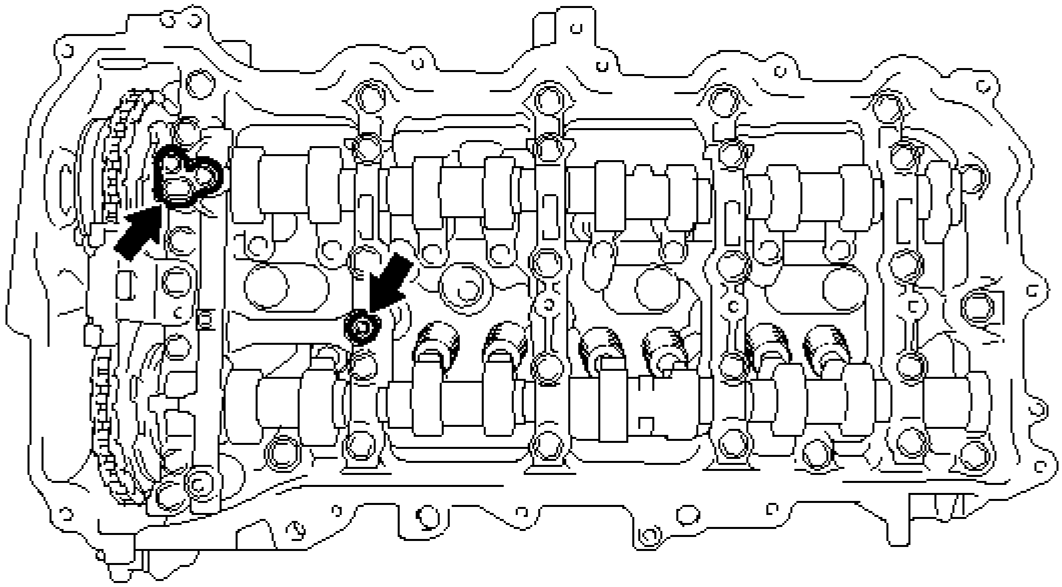

Fig. 18: Identifying Gaskets
Courtesy of TOYOTA MOTOR SALES, U.S.A., INC.

5. **REMOVE CRANKSHAFT POSITION SENSOR** . Refer to **REMOVAL - Step 1**
6. **REMOVE CRANKSHAFT PULLEY** . Refer to **DISASSEMBLY - Step 14**
7. **REMOVE ENGINE MOUNTING BRACKET RH**
    a. Remove the 5 bolts and engine mounting bracket RH.

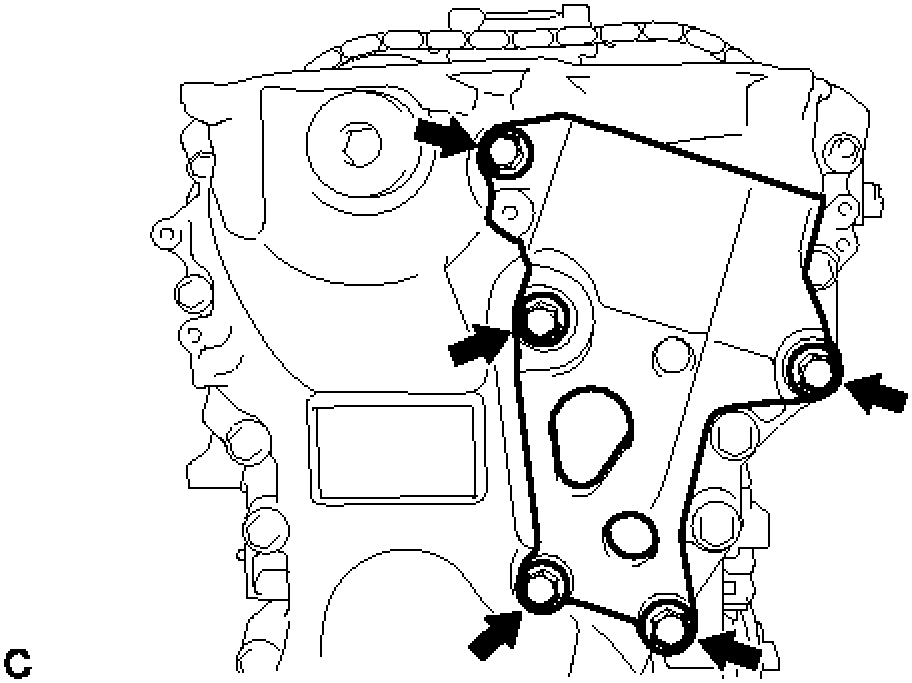

Fig. 19: Identifying Engine Mounting Bracket RH Bolts
Courtesy of TOYOTA MOTOR SALES, U.S.A., INC.

8. **REMOVE TIMING CHAIN COVER SUB-ASSEMBLY**
    a. Remove the 17 bolts and 2 nuts.

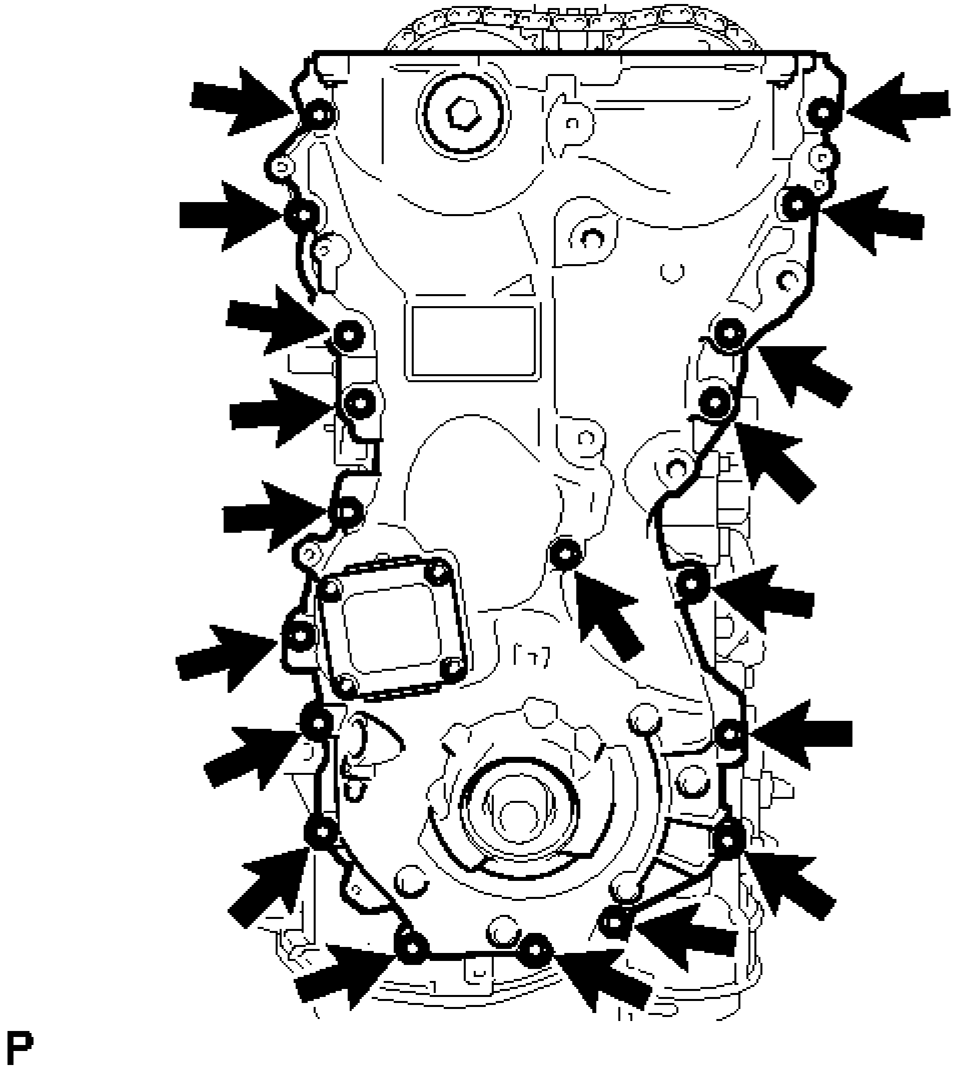

Fig. 20: Locating Timing Chain Cover Sub-Assembly Bolts & Nuts
Courtesy of TOYOTA MOTOR SALES, U.S.A., INC.

b. Remove the timing chain cover by prying between the timing chain cover and cylinder head, camshaft housing, cylinder block and stiffening crankcase with a screwdriver as shown in the illustration.

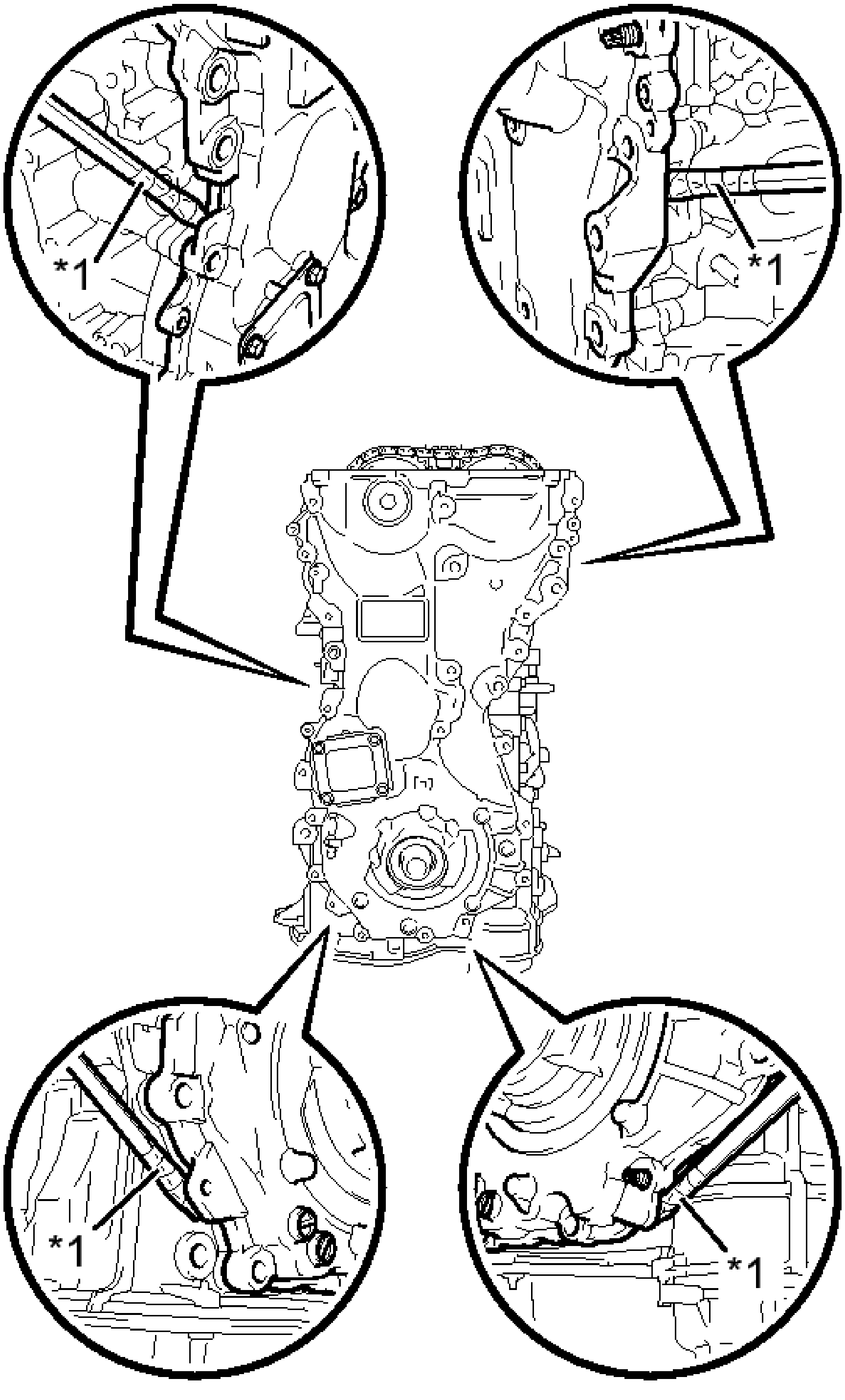

Fig. 21: Removing The Timing Chain Cover
Courtesy of TOYOTA MOTOR SALES, U.S.A., INC.

TEXT IN ILLUSTRATION

*1	Protective Tape

NOTE: **Be careful not to damage the contact surfaces of the cylinder head, camshaft housing, cylinder block, stiffening crankcase or chain cover.**

HINT:

Tape the screwdriver tip before use.

c. Remove the 3 gaskets from the stiffening crankcase.

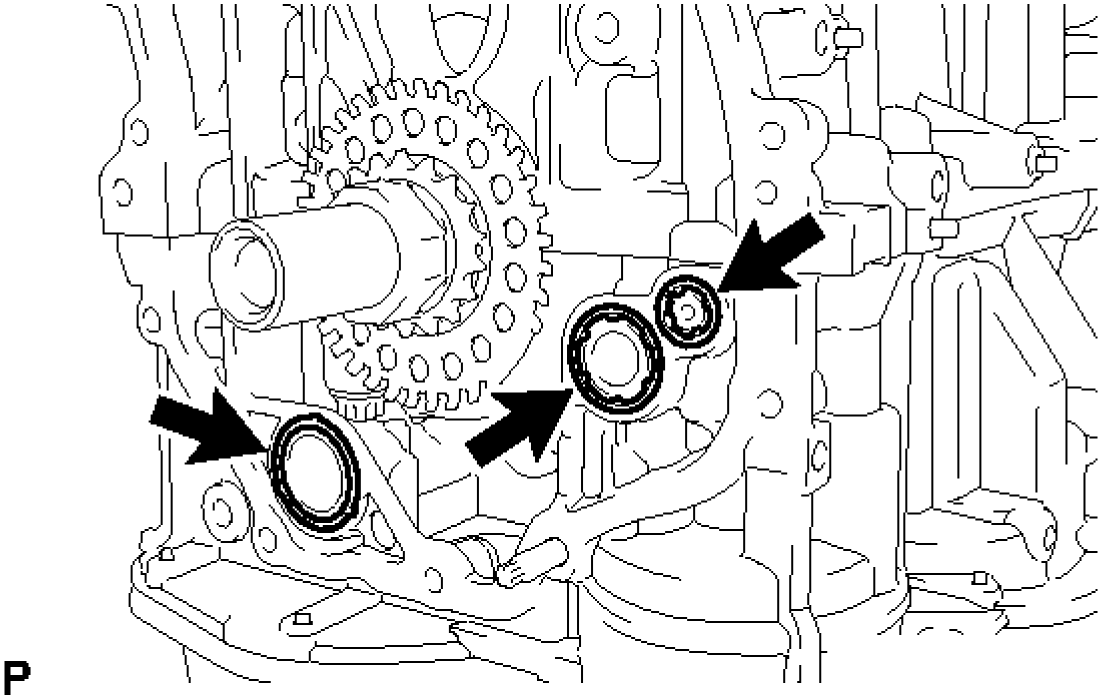

Fig. 22: Locating Gaskets
Courtesy of TOYOTA MOTOR SALES, U.S.A., INC.

9. **REMOVE TIMING CHAIN COVER OIL SEAL**
   a. Using a screwdriver and wooden block, pry out the oil seal.

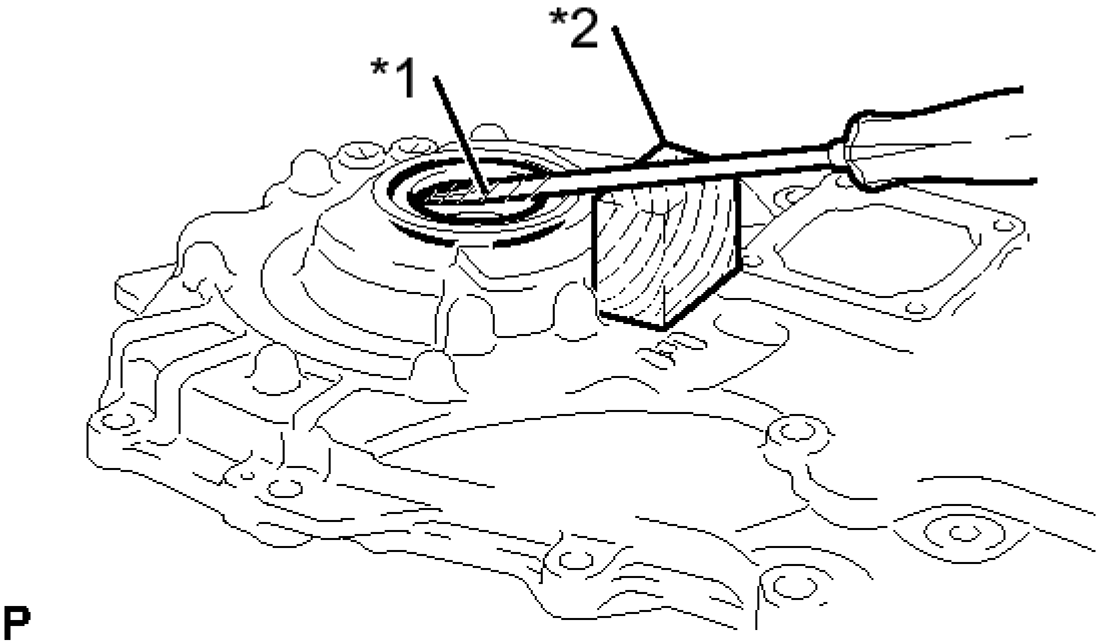

Fig. 23: Removing Timing Chain Cover Oil Seal Using Screwdriver & Wooden Block
Courtesy of TOYOTA MOTOR SALES, U.S.A., INC.

TEXT IN ILLUSTRATION

*1	Protective Tape
*2	Wooden Block

NOTE: **Do not damage the surface of the oil seal press fit hole.**

HINT:

Tape the screwdriver tip before use.

INSTALLATION

INSTALLATION

1. **INSTALL TIMING CHAIN COVER SUB-ASSEMBLY**
    a. Apply a light coat of engine oil to 3 new gaskets.

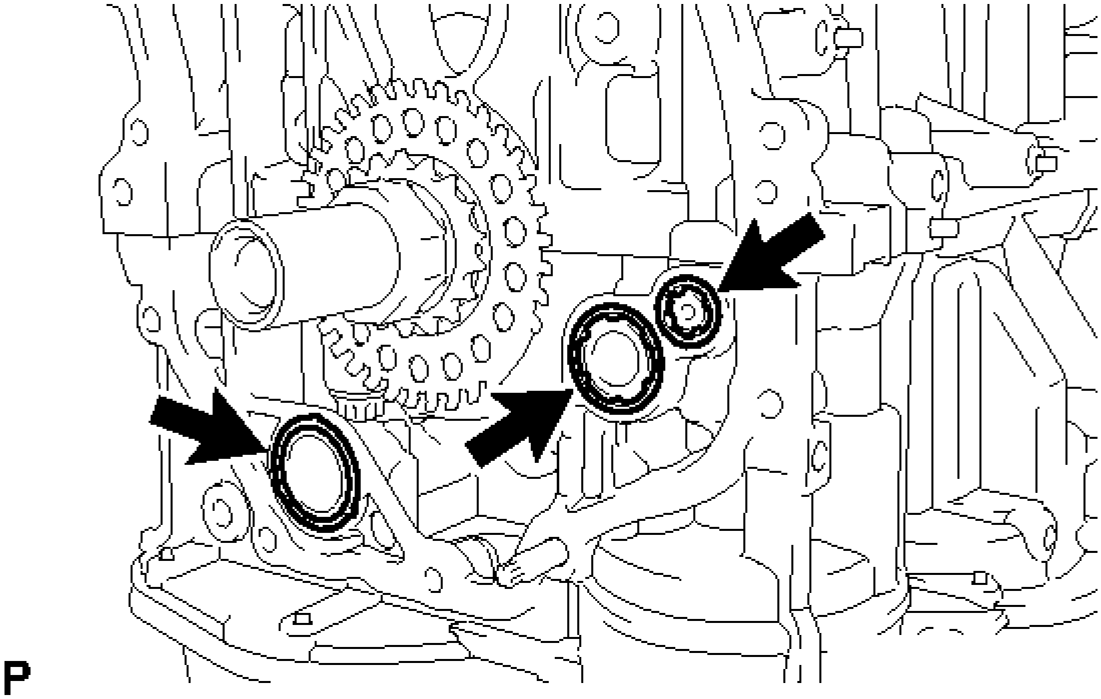

Fig. 24: Locating Gaskets
Courtesy of TOYOTA MOTOR SALES, U.S.A., INC.

b. Install the 3 gaskets to the stiffening crankcase.
c. Align the drive rotor spline and the crankshaft timing sprocket as shown in the illustration.

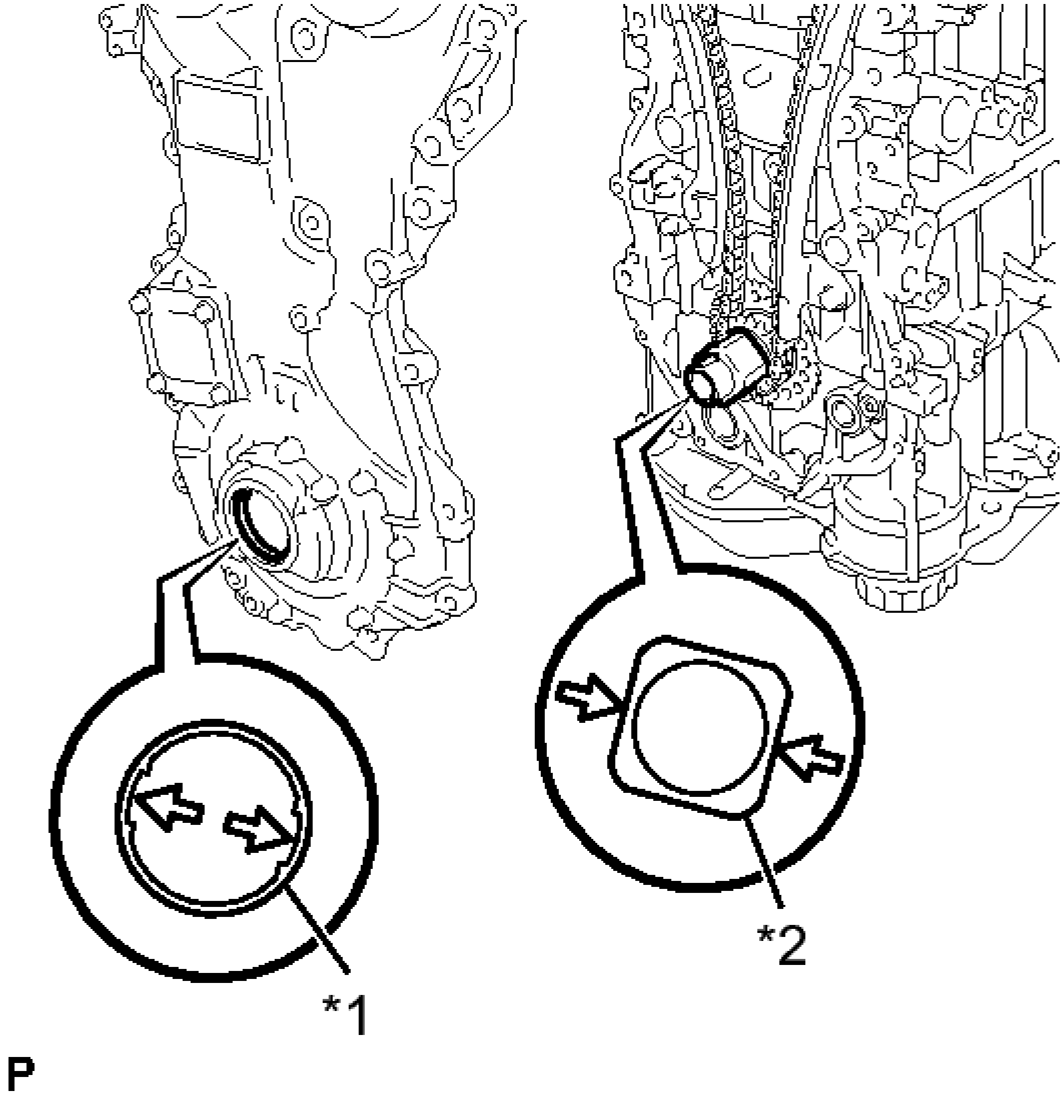

Fig. 25: Locating Drive Rotor Spline & Crankshaft Timing Sprocket
Courtesy of TOYOTA MOTOR SALES, U.S.A., INC.

TEXT IN ILLUSTRATION

*1	Drive Rotor Spline
*2	Crankshaft Timing Sprocket

d. Apply seal packing in a line to the timing chain cover as shown in the following illustration.

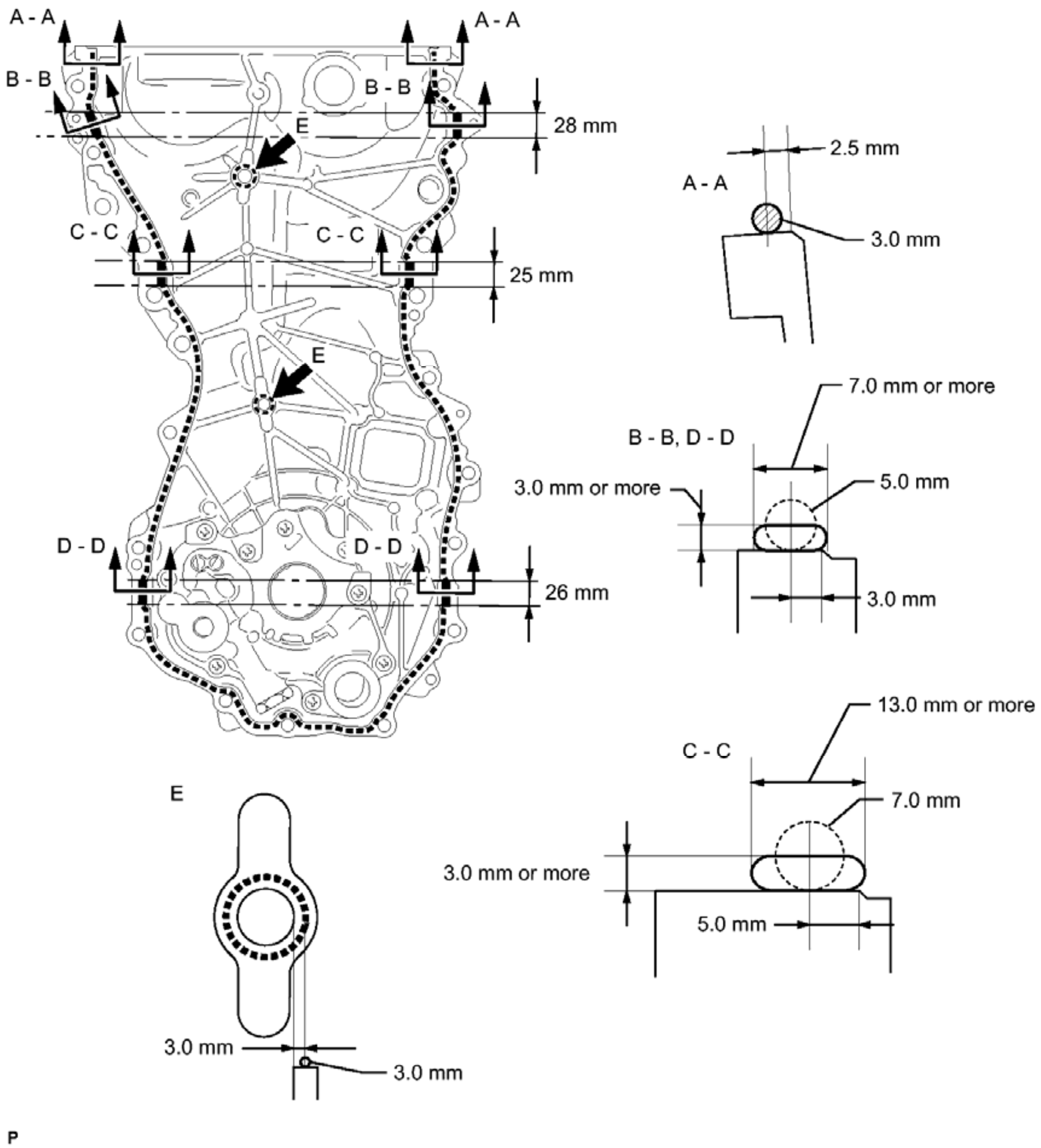
A - A
A - A
B - B
B - B
E
28 mm
C - C
C - C
25 mm
E
D - D
D - D
26 mm
2.5 mm
A - A
3.0 mm
7.0 mm or more
B - B, D - D
3.0 mm or more
5.0 mm
3.0 mm
13.0 mm or more
C - C
7.0 mm
3.0 mm or more
5.0 mm
E
3.0 mm
3.0 mm
P

Fig. 26: Applying Seal Packing Continuous Line To Timing Chain Cover
Courtesy of TOYOTA MOTOR SALES, U.S.A., INC.

Seal packing

Toyota Genuine Seal Packing Black, Three Bond 1207B or equivalent.

Apply Seal Packing as Follows

	Seal Packing Diameter (Round)	Distance from Edge of	Seal

Area	Seal Pacing Dimension (Flat)	Cover to Center of Seal Packing	Packing Application Length
Dashed Line	3.0 mm (0.118 in.)	2.5 mm (0.0984 in.)	-
	-		
A - A	3.0 mm (0.118 in.)	2.5 mm (0.0984 in.)	-
	-		
B - B	5.0 mm (0.197 in.)	3.0 mm (0.118 in.)	28 mm (1.10 in.)
	7.0 mm (0.276 in.) or more wide and 3.0 mm (0.118 in.) or more thick		
C - C	7.0 mm (0.276 in.)	5.0 mm (0.197 in.)	25 mm (0.984 in.)
	13.0 mm (0.512 in.) or more wide and 3.0 mm (0.118 in.) or more thick		
D - D	5.0 mm (0.197 in.)	3.0 mm (0.118 in.)	26 mm (1.02 in.)
	7.0 mm (0.276 in.) or more wide and 3.0 mm (0.118 in.) or more thick		
E	3.0 mm (0.118 in.)	3.0 mm (0.118 in.)	-
	-		

NOTE:

- **When the contact surfaces are wet, clean the surfaces with non-residue solvent before applying seal packing.**
- **Install the timing chain cover within 3 minutes and tighten the bolts within 10 minutes after applying seal packing.**
- **After applying seal packing to the timing chain cover, install the engine mounting bracket within 10 minutes.**
- **Do not apply oil for at least 2 hours after the installation.**
- **Do not start the engine for at least 2 hours after the installation.**

e. Temporarily install the timing chain cover with the 17 bolts and 2 nuts.

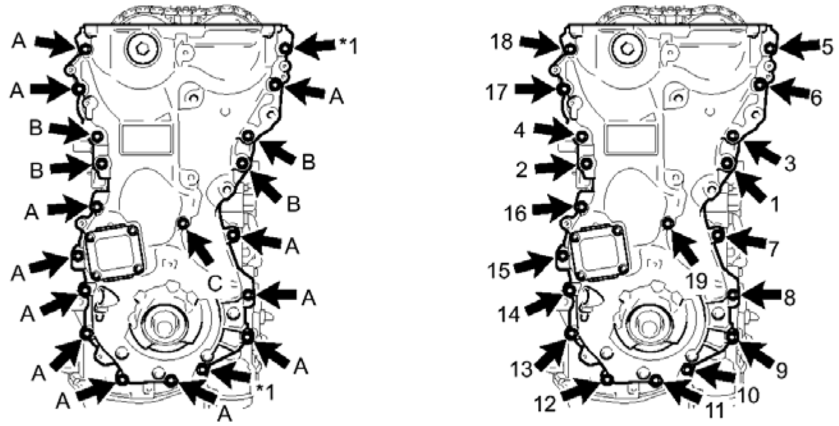

Fig. 27: Locating Timing Chain Cover Bolts & Nuts
Courtesy of TOYOTA MOTOR SALES, U.S.A., INC.

TEXT IN ILLUSTRATION

*1	Nut	-	-

Bolt Length

Item	Length	Thread Diameter
Bolt A	30 mm (1.18 in.)	8 mm (0.315 in.)
Bolt B	35 mm (1.38 in.)	10 mm (0.394 in.)
Bolt C	45 mm (1.77 in.)	8 mm (0.315 in.)

NOTE: **Make sure there is no oil on the bolts. If oil is found on any bolt, clean**

it before installation.

f. Tighten the 17 bolts and 2 nuts in several steps, in the sequence shown in the illustration.

for bolt A, C, and Nut

Torque: 21 N*m (214 kgf*cm, 15 ft.*lbf)

for bolt B

Torque: 55 N*m (561 kgf*cm, 41 ft.*lbf)

2. **INSTALL ENGINE MOUNTING BRACKET RH**
   a. Install the engine mounting bracket RH with the 5 bolts in the order shown in the illustration.

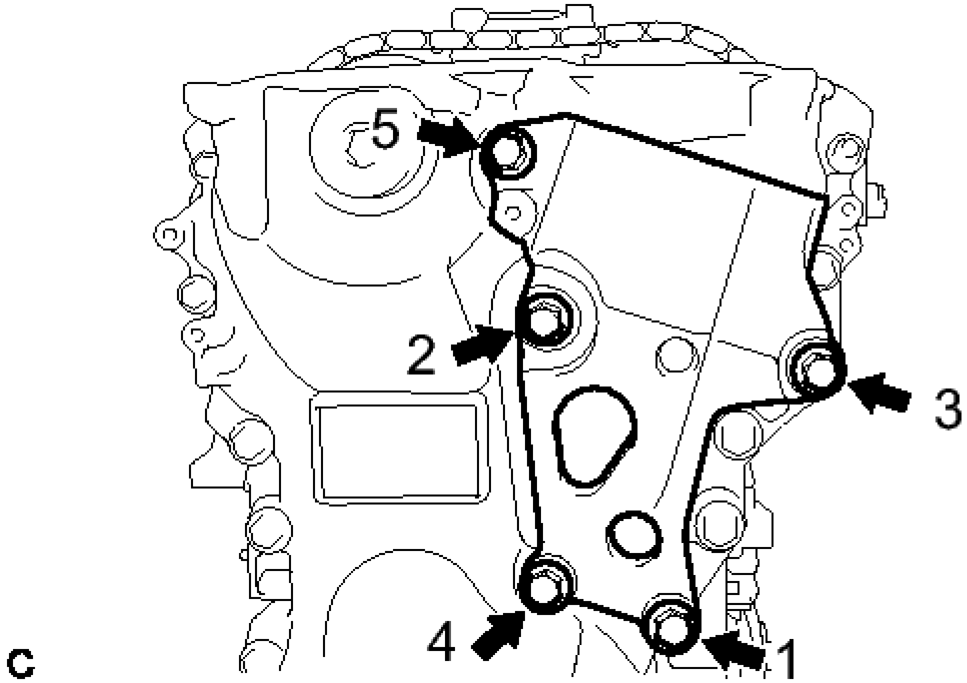

Fig. 28: Identifying Engine Mounting Bracket RH Bolts
Courtesy of TOYOTA MOTOR SALES, U.S.A., INC.

for bolt 1, 2 and 3

Torque: 55 N*m (561 kgf*cm, 41 ft.*lbf)

for bolt 4 and 5

Torque: 21 N*m (214 kgf*cm, 15 ft.*lbf)

NOTE: After applying seal packing to the timing chain cover, install the engine mounting bracket within 10 minutes.

3. **INSTALL TIMING CHAIN COVER OIL SEAL** . Refer to **INSTALLATION - Step 1**
4. **INSTALL CRANKSHAFT PULLEY** . Refer to **REASSEMBLY - Step 45**
5. **INSTALL CRANKSHAFT POSITION SENSOR** . Refer to **INSTALLATION - Step 1**
6. **INSTALL CYLINDER HEAD COVER SUB-ASSEMBLY**
   a. Apply a light coat of engine oil to 2 new gaskets.

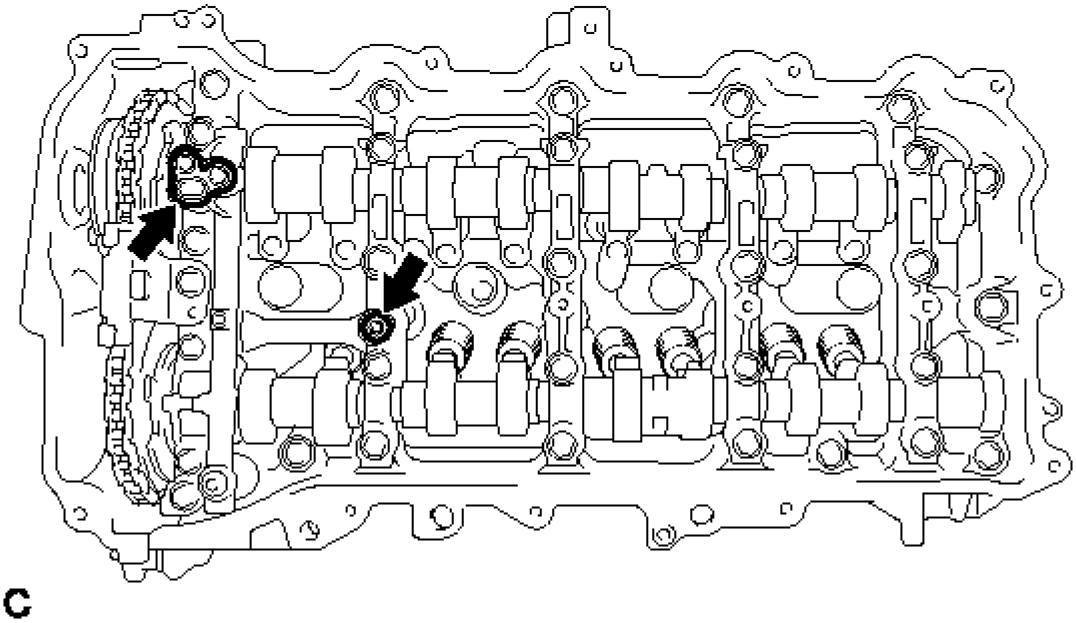

Fig. 29: Identifying Gaskets
Courtesy of TOYOTA MOTOR SALES, U.S.A., INC.

   b. Install the 2 gaskets to the camshaft bearing caps.
   c. Visually check the spark plug tube gasket.

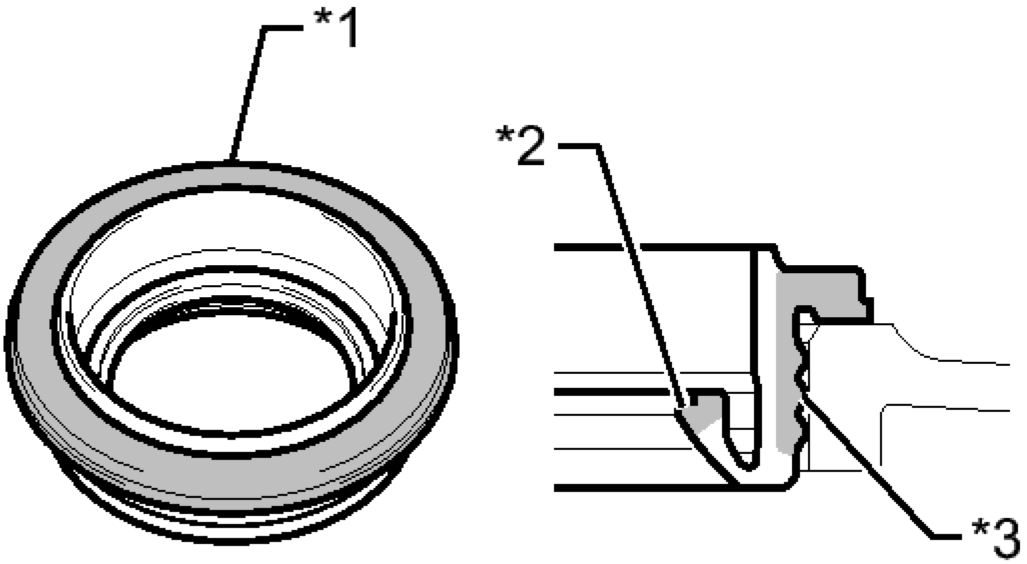

P

Fig. 30: Spark Plug Tube Gasket
Courtesy of TOYOTA MOTOR SALES, U.S.A., INC.

OK

Area	Specified Condition
Upper surface	No scratches or deformation
Outer lip	No scratches or deformation
Inner lip	No scratches

TEXT IN ILLUSTRATION

*1	Upper Surface
*2	Inner Lip
*3	Outer Lip

HINT:

If the result is not as specified, replace the spark plug tube gasket.

d. Install a new cylinder head cover gasket to the cylinder head cover.

NOTE: Remove any oil from the contact surface.

e. Apply seal packing as shown in the illustration.

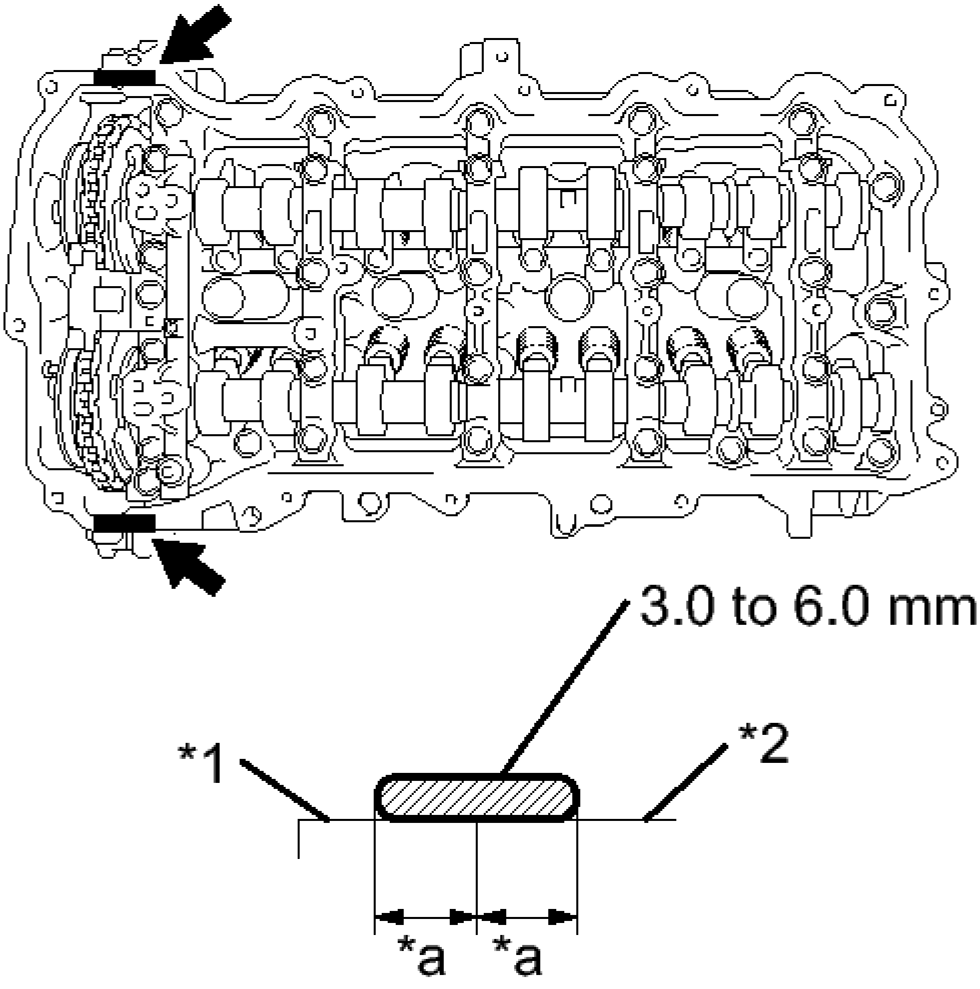

P

Fig. 31: Identifying Seal Packing Application Area
Courtesy of TOYOTA MOTOR SALES, U.S.A., INC.

Seal packing

Toyota Genuine Seal Packing Black, Three Bond 1207B or equivalent

Standard seal diameter

3.0 to 6.0 mm (0.118 to 0.236 in.)

TEXT IN ILLUSTRATION

*1	Timing Chain Cover
*2	Camshaft Housing
*a	Application width 5.0 mm (0.197 in.)
·	Seal packing

NOTE:

- **Remove any oil from the contact surface.**
- **Install the cylinder head cover within 3 minutes and tighten the bolts within 15 minutes of applying seal packing.**

f. Align the cylinder head cover with pin A. Then align the cylinder head cover with pin B and install the cylinder head cover.

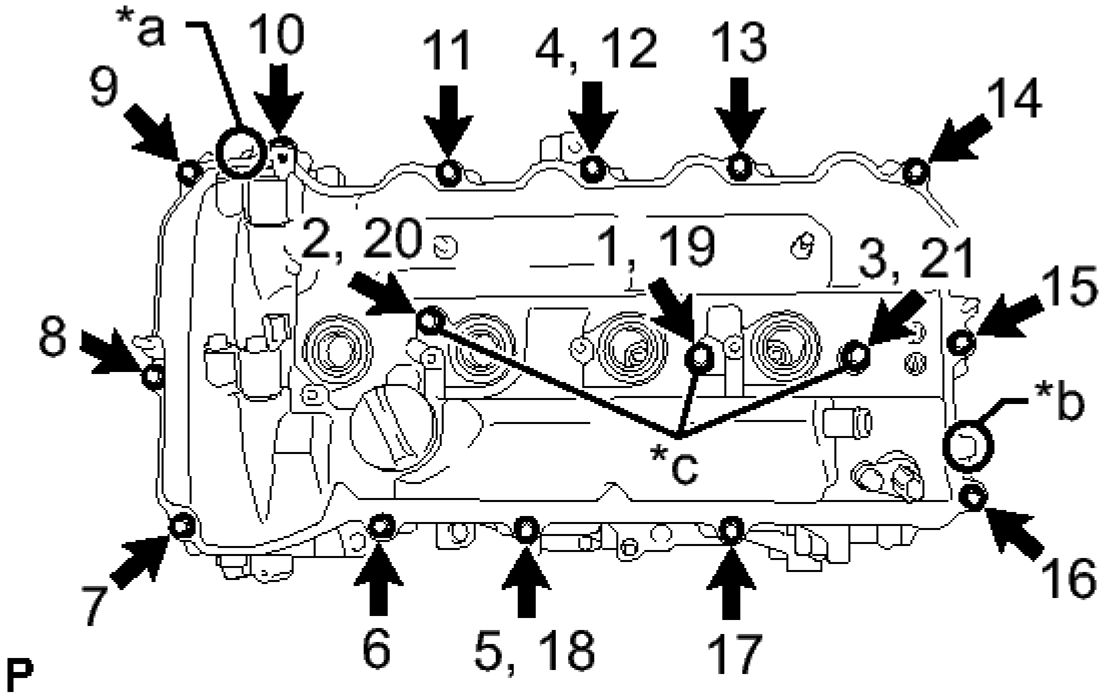

Fig. 32: Aligning Cylinder Head Cover With Pins
Courtesy of TOYOTA MOTOR SALES, U.S.A., INC.

TEXT IN ILLUSTRATION

*a	Pin A
*b	Pin B
*c	Bolt A

g. Install 3 new seal washers and the 16 bolts, and then tighten the bolts in the order shown in the illustration.

Torque: 12 N*m (122 kgf*cm, 9 ft.*lbf)

NOTE:

- **Do not apply oil for at least 2 hours after the installation.**

7. **INSTALL IGNITION COIL ASSEMBLY** . Refer to **INSTALLATION - Step 2**
8. **INSTALL ENGINE WIRE**
9. **INSTALL ENGINE AND TRANSAXLE**

   Refer to **INSTALLATION**

OUTSIDE VEHICLE

GENERAL MAINTENANCE

GENERAL MAINTENANCE

These are maintenance and inspection items that are considered to be the owner's responsibility.

The owner can do them or they can have them done at a service center.

These items include those that should be checked on a daily basis, those that in most cases do not require special tools, and those that are considered to be reasonable for the owner to do.

General maintenance items and procedures are as follows:

1. **GENERAL NOTES**
   - Maintenance requirements vary depending on the country.
   - Check the maintenance schedule in the owner's manual supplement.
   - Following the maintenance schedule is mandatory.
   - Determine the appropriate time to service the vehicle using either miles driven or time (months) elapsed, whichever reaches the specification first.
   - Failing to check each vehicle part could lead to poor engine performance and increase exhaust emissions.
2. **TIRES**
   a. Check the tire inflation pressure with a gauge. Make adjustments if necessary.
   b. Check the surfaces of the tires for cuts, damage or excessive wear.
3. **WHEEL NUTS**
   a. Check for nuts that are loose or missing. Tighten them if necessary.
4. **TIRE ROTATION**
   a. Check the maintenance schedule in the owner's manual supplement.
5. **WINDSHIELD WIPER BLADES**
   a. Check the blades for wear or cracks whenever they are unable to wipe the windshield clean. Replace them if necessary.
6. **FLUID LEAKS**
   a. Check under the vehicle for leaking fuel, oil, water and other fluids.

NOTE: If you smell fuel or notice any leaks, locate the cause and correct it.

7. **DOORS AND ENGINE HOOD**

   a. Check that all of the doors and the hood operate smoothly, and that all the latches lock securely.
   b. When the primary latch is released, check that the engine hood secondary latch prevents the hood from opening.

INSIDE VEHICLE

GENERAL MAINTENANCE

GENERAL MAINTENANCE

These are maintenance and inspection items that are considered to be the owner's responsibility.

The owner can do them or they can have them done at a service center.

These items include those that should be checked on a daily basis, those that in most cases do not require special tools, and those that are considered to be reasonable for the owner to do.

General maintenance items and procedures are as follows:

1. **GENERAL NOTES**
   - Maintenance requirements vary depending on the country.
   - Check the maintenance schedule in the owner's manual supplement.
   - Determine the appropriate time to service the vehicle using either miles driven or time (months) elapsed, whichever reaches the specification first.
   - Maintain similar intervals between periodic maintenance unless noted.
   - Failing to check each vehicle part could lead to poor engine performance and increase exhaust emissions.
2. **LIGHTS**
   a. Check that the headlights, stop lights, taillights, turn signal lights, and other lights illuminate or blink properly. Also, check if they have enough brightness.
   b. Check that the headlights are aimed properly.
3. **WARNING LIGHTS AND BUZZERS**
   a. Check that all the warning lights and buzzers are working.
4. **HORNS**
   a. Check if the horn is working correctly.
5. **WINDSHIELD GLASS**
   a. Check for scratches, pits or abrasions.
6. **WINDSHIELD WIPER AND WASHER**
   a. Check that the washers are aimed properly. Also, check that the washer fluid hits the center of the operating range of each wiper on the windshield.
   b. Check if the wipers streak. Replace them if necessary.
7. **WINDSHIELD DEFROSTER**

    a. When the air conditioning is on the defroster setting, check that air comes out of the defroster outlets.

8. **REAR VIEW MIRROR**
    a. Check that the rear view mirror is securely mounted.
9. **SUN VISORS**
    a. Check that the sun visors move freely and are securely mounted.
10. **STEERING WHEEL**
    a. Check that the steering wheel has the proper amount of free play. Also check for steering difficulty and unusual noises. Refer to **ON-VEHICLE INSPECTION - Step 1** .
11. **SEATS**
    a. Check that the seat adjusters, seatback recliner and other seat controls operate smoothly.
    b. Check that all the latches lock securely in all positions.
    c. Check that the locks hold securely in all positions.
    d. Check that the headrests move up and down smoothly and that the locks hold securely in all latched positions.
    e. Check power seat function.

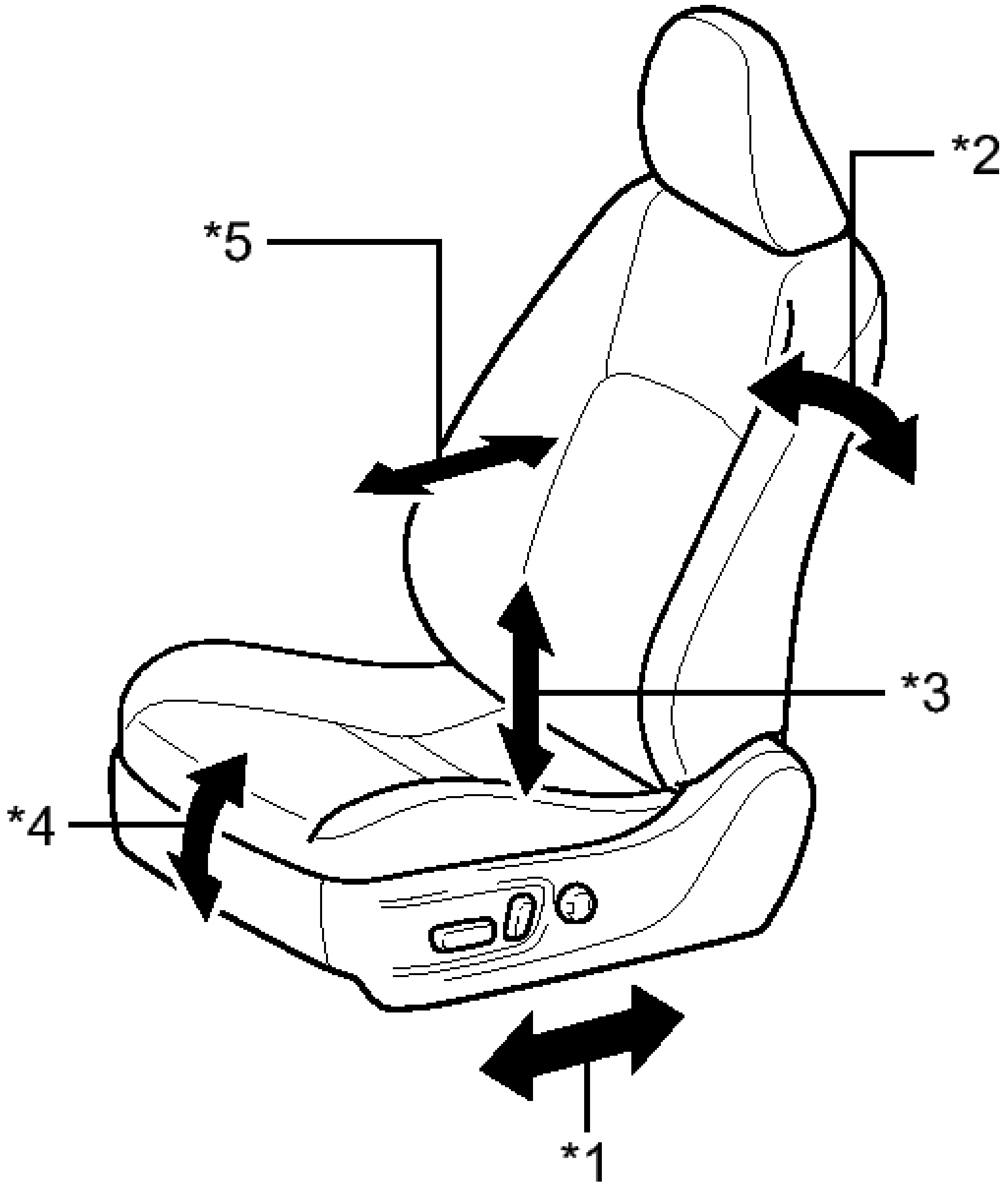

H

Fig. 1: Identifying Power Seat Functions
Courtesy of TOYOTA MOTOR SALES, U.S.A., INC.

TEXT IN ILLUSTRATION

	Sliding

*1	Function
*2	Reclining Function
*3	Lifter Function
*4	Front Vertical Function
*5	Lumbar Support Adjustment Function

1. Operate the power seat switches and check that each seat function operates properly:
    - Sliding function
    - Reclining function
    - Lifter function*
    - Front vertical function*
    - Lumbar support adjustment function*

      *: for Driver

12. **SEAT BELTS**
    a. Check that the seat belt components, such as the buckles, retractors and anchors, operate properly and smoothly.
    b. Check that the belt webbing is not cut, frayed, worn or damaged.
13. **ACCELERATOR PEDAL**
    a. Check that the pedal operates smoothly. Check that the pedal does not have uneven resistance or stick in certain positions.
14. **BRAKE PEDAL**
    a. Check that the brake pedal operates smoothly.
    b. Check that the pedal has the proper reserve distance and free play. Refer to **ADJUSTMENT - Step 3** .
    c. Start the engine and check the brake booster function.
    d. Start the engine and check the brake system indicator.
15. **BRAKES**
    a. In a safe place, check that the vehicle does not pull or lead to the side when applying the brakes.
16. **PARKING BRAKE**
    a. Check that the parking brake pedal has the proper amount of travel. Refer to **ADJUSTMENT - Step 1** .
    b. On a slight grade, check that the parking brake alone can hold the vehicle in place.
17. **HYBRID TRANSAXLE "PARK" MECHANISM**
    a. Check the lock release button of the shift lever for proper and smooth operation.

    b. Check the shift lever for proper and smooth operation.
    c. When the shift lever is in P and all brakes are released in an area that has a slight grade, check that the vehicle is stable.

18. **FLOOR MATS**
    a. Check that the correct floor mats are used, and that they are properly installed.

UNDER HOOD

GENERAL MAINTENANCE

GENERAL MAINTENANCE

1. **GENERAL NOTES**
    - Maintenance requirements vary depending on the country.
    - Check the maintenance schedule in the owner's manual supplement.
    - Following the maintenance schedule is mandatory.
    - Determine the appropriate time to service the vehicle using either miles driven or time (months) elapsed, whichever reaches the specification first.
    - Maintain similar intervals between periodic maintenance unless noted.
    - Failing to check each maintenance item could lead to poor engine performance and increase exhaust emissions.
2. **WINDSHIELD WASHER FLUID**
    a. Check that there is sufficient fluid in the tank.
3. **ENGINE COOLANT LEVEL**
    a. Check that the coolant level is between the "FULL" and "LOW" lines on the see-through reservoir.
4. **INVERTER COOLANT LEVEL**
    a. Check that there is sufficient fluid in the tank.
5. **RADIATOR AND HOSES**
    a. Check that the front of the radiator is clean and not blocked by leaves, dirt and bugs.
    b. Check the radiator and hoses for:
        - Damage
        - Cracks
        - Kinks
        - Corrosion
        - Rot
        - Clogging
        - Leaks
6. **BRAKE FLUID LEVEL**
    a. Check that the brake fluid level is near the upper level line on the see-through reservoirs.
7. **ENGINE OIL LEVEL**

   - a. Check that the engine oil level is between the full level and low level marks on the dipstick with the engine turned off.

8. **HYBRID TRANSAXLE FLUID LEVEL**
   - a. Check the level of the hybrid transaxle fluid. Refer to **ADJUSTMENT - Step 3** .
9. **EXHAUST SYSTEM**
   - a. Visually inspect for severe corrosion, cracks, holes or loose supports.

     HINT:

     If any change in the sound of the exhaust or smell of the exhaust fumes is noticed, inspect and repair the exhaust system.

ENGINE

GENERAL MAINTENANCE

GENERAL MAINTENANCE

HINT:

Perform these procedures after the engine has cooled down.

1. **REPLACE ENGINE OIL AND OIL FILTER**
   - a. Check the engine oil and oil filter. Refer to **REPLACEMENT** .
2. **REPLACE ENGINE COOLANT**
   - a. Check the engine coolant. Refer to **REPLACEMENT** .
3. **INSPECT SPARK PLUGS**
   - a. Check the spark plugs. Refer to **ON-VEHICLE INSPECTION** .
4. **INSPECT AUXILIARY BATTERY**
   - a. Check the auxiliary battery. Refer to **ON-VEHICLE INSPECTION** .
5. **INSPECT AIR CLEANER FILTER ELEMENT**
   - a. Remove the air filter.
   - b. Check that the air cleaner is not excessively dirty.

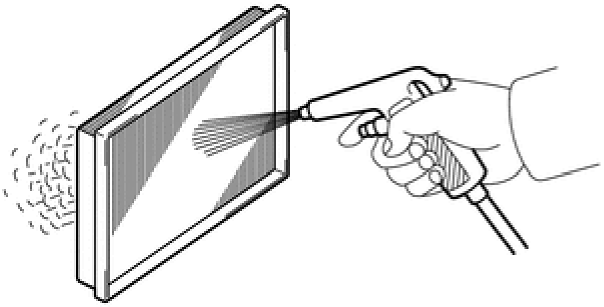

P

Fig. 2: Cleaning Air Cleaner Filter Element
Courtesy of TOYOTA MOTOR SALES, U.S.A., INC.

If the air cleaner is excessively dirty, replace the air cleaner filter element.

- c. If cleaning the air cleaner filter element, blow compressed air as shown in the illustration to clean it.
- d. Reinstall the air filter.
- e. When an excessive amount of dirt is present, replace the air filter.

6. **INSPECT EXHAUST PIPES AND MOUNTINGS**
    - a. Visually check the pipes, hangers and connections for severe corrosion, leaks or damage.
7. **INSPECT FUEL TANK CAP GASKET**
    - a. Check the fuel tank gasket. Refer to **INSPECTION** .
8. **INSPECT FUEL LINES, CONNECTIONS, FUEL TANK VAPOR VENT SYSTEM HOSES AND FUEL TANK BANDS**
    - a. Visually check the fuel lines and hoses for cracks, leaks, loose connections, or deformation.
    - b. Check for tank band looseness or deformation.
9. **INSPECT CHARCOAL CANISTER**
    - a. Check the charcoal canister. Refer to **INSPECTION** .

BRAKE

GENERAL MAINTENANCE

GENERAL MAINTENANCE

1. **INSPECT BRAKE LINE PIPES AND HOSES**

    HINT:

    Work in a well-lighted area. Turn the front wheels fully to the right or left before beginning the inspection.

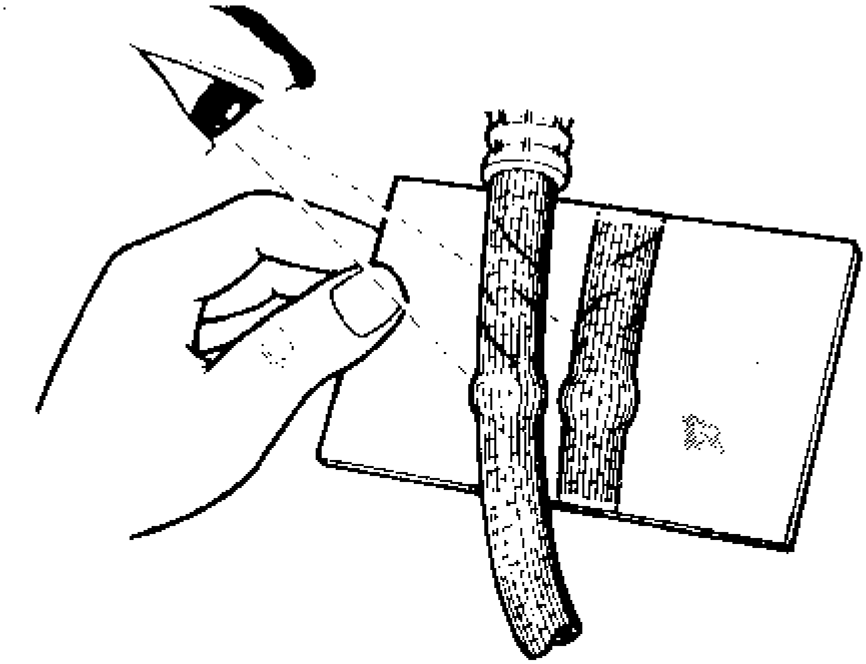

Fig. 3: Inspecting Brake Line Pipes And Hoses
Courtesy of TOYOTA MOTOR SALES, U.S.A., INC.

a. Using a mirror, check the entire circumference and length of the brake lines and hoses for:
  - Damage
  - Wear
  - Deformation
  - Cracks
  - Kinks
  - Corrosion
  - Leaks
  - Twists

b. Check all the clamps for tightness and check the connections for leakage.

c. Check that the hoses and lines are not near sharp edges, moving parts or the exhaust system.

d. Check that the lines are installed properly and pass through the center of the grommets.

2. **INSPECT BRAKE PEDAL**
   a. Check the brake pedal. Refer to **ADJUSTMENT** .
3. **INSPECT PARKING BRAKE**
   a. Check the parking brake shoe clearance and parking brake pedal travel. Refer to **ADJUSTMENT** .
   b. Check the parking brake cables to ensure that they are not deformed or binding.
4. **INSPECT BRAKE LININGS AND DRUMS**
   a. Check the parking brake linings and drums.
5. **INSPECT FRONT BRAKE**

   - a. Check the front brake pads and discs. Refer to **INSPECTION** .

6. **INSPECT REAR BRAKE**
   - a. Check the rear brake pads and discs. Refer to **INSPECTION** .
7. **INSPECT OR CHANGE BRAKE FLUID**
   - a. Inspect or change the brake fluid. Refer to **ON-VEHICLE INSPECTION** .

     Fluid

     SAE J1703 or FMVSS No. 116 DOT3

CHASSIS

GENERAL MAINTENANCE

GENERAL MAINTENANCE

1. **INSPECT STEERING LINKAGE AND GEAR HOUSING**
   - a. Check the steering wheel free play. Refer to **ON-VEHICLE INSPECTION** .
   - b. Check the steering linkage for looseness or damage.
     1. Check that the tie rod ends do not have any play.
     2. Check that the dust seals and boots are not damaged.
     3. Check that the boot clamps are not loose.
     4. Check that the steering gear housing is not damaged.
2. **INSPECT BALL JOINTS AND DUST COVERS**
   - a. Inspect the ball joints for excessive looseness.
     1. Jack up the front of the vehicle and place wooden blocks with a height of 180 to 200 mm (7.09 to 7.87 in.) under the front tires.
     2. Lower the vehicle until the front coil spring has about half its ordinary load. Place stands under the vehicle for safety.
     3. Check that the front wheels are pointing straight ahead. Use wheel chocks on all 4 wheels.
     4. Using a lever, pry up the end of the lower arm. Check the amount of play.

        Maximum ball joint vertical play

        0 mm (0 in.)

        If there is any play, replace the ball joint.
   - b. Check the dust cover for damage.
3. **INSPECT DRIVE SHAFT BOOTS**
   - a. Check the drive shaft boots for loose clamps, cracks, grease leaks, kinks or damage.
4. **INSPECT HV TRANSAXLE**

   a. Visually check the transaxle for fluid leakage. If oil fluid is leaking, find the cause and repair it.

5. **INSPECT FRONT AND REAR SUSPENSION**
   a. Check the front and rear suspension.

Suspension Type	**See Procedure**
Front Suspension	Refer to **ADJUSTMENT**
Rear Suspension	Refer to **ADJUSTMENT**

BODY

GENERAL MAINTENANCE

GENERAL MAINTENANCE

1. **TIGHTEN BOLTS AND NUTS ON CHASSIS AND BODY**
   a. If necessary, tighten the bolts and nuts on the chassis parts listed below.
      - Front axle and suspension
      - Drivetrain
      - Rear axle and suspension
      - Brake system
      - Engine mounts
      - Other chassis parts

   b. If necessary, tighten the bolts and nuts on the body parts listed below.
      - Seat belt system
      - Seats
      - Doors and hood
      - Body mounts
      - Fuel tank
      - Exhaust system
      - Other body parts
2. **REPLACE AIR CONDITIONING FILTER**
   a. Remove the air conditioning filter. Refer to **DISASSEMBLY - Step 7** .
   b. Visually inspect the surface of the air conditioning filter.
   c. If the air conditioning filter is contaminated with foreign matter, replace it.
3. **ROAD TEST**
   a. Check the engine and chassis for abnormal noises.
   b. Check that the vehicle does not wander or pull to one side.

    c. Check that the brakes work properly and do not drag.
    d. Bed-in the parking brake shoes to the drums.

4. **BODY INSPECTION**
    a. Check the body exterior for dents, scratches and rust.
    b. Check the underbody for rust and damage.

    If necessary, replace the damaged part or repair the damaged area.

5. **FINAL INSPECTION**
    a. Check the operation of the body parts.
        1. Hood
            - Auxiliary catch operates properly.
            - Hood locks securely when closed.
        2. Front and rear doors
            - Door locks operate properly.
            - Doors close properly.
        3. Luggage compartment door
            - Luggage compartment door opens and closes properly.
        4. Seats
            - Seats adjust easily and lock securely in any position.
            - Front seatbacks lock securely in any position.
            - Fold-down rear seatbacks lock securely.
        5. Be sure to deliver a clean car. Make sure to check the following:
            - Steering wheel
            - Shift lever knob
            - All switches and knobs
            - Door handles
            - Seats

REMINDER INDICATOR RESET PROCEDURES

Toyota - 1980-14

ENGINE OIL CHANGE REMINDER LIGHT

NOTE: **To determine the appropriate reset procedure, refer to ENGINE OIL CHANGE REMINDER LIGHT RESET INDEX. Only vehicles listed in this index have an Engine Oil Change Reminder Light reset.**

ENGINE OIL CHANGE REMINDER LIGHT RESET INDEX

Model & Year	**Reset Procedure**
4Runner	
2003-09	**Engine Oil Change Reminder Light Reset - Procedure 3**
2010-14	**Engine Oil Change Reminder Light Reset - Procedure 1**
Avalon	
2005-14	**Engine Oil Change Reminder Light Reset - Procedure 1**
Camry	
2004-06	**Engine Oil Change Reminder Light Reset - Procedure 3**
2007-14	**Engine Oil Change Reminder Light Reset - Procedure 2**
Camry Hybrid	
2007-11	**Engine Oil Change Reminder Light Reset - Procedure 8**
2012-2017-14	**Engine Oil Change Reminder Light Reset - Procedure 2**
Camry Solara	
2004-06	**Engine Oil Change Reminder Light Reset - Procedure 3**
2007-08	**Engine Oil Change Reminder Light Reset - Procedure 4**
Corolla	
2005-08	**Engine Oil Change Reminder Light Reset - Procedure 3**
2009-14	**Engine Oil Change Reminder Light Reset - Procedure 4**
FJ Cruiser	
2007-14	**Engine Oil Change Reminder Light Reset - Procedure 3**
Highlander	
2004-07	**Engine Oil Change Reminder Light Reset - Procedure 3**
2008-13	**Engine Oil Change Reminder Light Reset - Procedure 2**
2014	**Engine Oil Change Reminder Light Reset - Procedure 12**
Highlander Hybrid	
2006-07	**Engine Oil Change Reminder Light Reset - Procedure 5**
2008-13	**Engine Oil Change Reminder Light Reset - Procedure 2**
2014	**Engine Oil Change Reminder Light Reset - Procedure 12**
Land Cruiser	
2003-07	**Engine Oil Change Reminder Light Reset - Procedure 6**
2008-11	**Engine Oil Change Reminder Light Reset - Procedure 4**

2013-14	**Engine Oil Change Reminder Light Reset - Procedure 10**
Matrix	
2005-08	**Engine Oil Change Reminder Light Reset - Procedure 3**
2009-13	**Engine Oil Change Reminder Light Reset - Procedure 4**
Previa	
1991-97	**Engine Oil Change Reminder Light Reset - Procedure 7**
Prius (All Models Except C)	
2004-09	**Engine Oil Change Reminder Light Reset - Procedure 3**
2010-14	**Engine Oil Change Reminder Light Reset - Procedure 9**
Prius C	
2012-2017-14	**Engine Oil Change Reminder Light Reset - Procedure 11**
RAV4	
2004-05	**Engine Oil Change Reminder Light Reset - Procedure 3**
2006-14	**Engine Oil Change Reminder Light Reset - Procedure 4**
Sequoia	
2005-07	**Engine Oil Change Reminder Light Reset - Procedure 3**
2008-14	**Engine Oil Change Reminder Light Reset - Procedure 2**
Sienna	
2004-10	**Engine Oil Change Reminder Light Reset - Procedure 3**
2011-14	**Engine Oil Change Reminder Light Reset - Procedure 2**
Tacoma	
2005-11	**Engine Oil Change Reminder Light Reset - Procedure 3**
2012-14	**Engine Oil Change Reminder Light Reset - Procedure 10**
Tundra	
2005-06	**Engine Oil Change Reminder Light Reset - Procedure 3**
2007-14	**Engine Oil Change Reminder Light Reset - Procedure 2**
Venza	
2009-10	**Engine Oil Change Reminder Light Reset - Procedure 4**
2011-14	**Engine Oil Change Reminder Light Reset - Procedure 10**
Yaris	
2007-14	**Engine Oil Change Reminder Light Reset - Procedure 4**

ENGINE OIL CHANGE REMINDER LIGHT RESET - PROCEDURE 1

NOTE: **For all models, before starting reset procedure, switch the display to Trip Meter A while the engine is running.**

With Smart Key System

CAUTION: **To avoid engine from starting, DO NOT depress brake pedal when selecting modes.**

NOTE: **On vehicles with smart key system, make sure smart key is in the vehicle. Pressing the "ENGINE START STOP" switch changes the ignition switch mode as follows:**

- **First Time - ACC mode (accessories on).**
- **Second Time - ON mode (power on and all accessories on).**
- **Third Time - Power OFF mode (indicator light is off).**

1. Place smart key system in power OFF mode with odometer display showing.
2. Place smart key system in ON mode while holding down trip meter RESET button (stem).
3. Hold trip meter RESET button (stem) down for at least 5 seconds. Odometer should indicate "000000" and MAINT reminder light goes out.

Without Smart Key System

1. Turn ignition switch to OFF position with odometer display showing.
2. Turn ignition switch to ON position while holding down trip meter RESET button (stem).
3. Hold trip meter RESET button (stem) down for at least 5 seconds. Odometer should indicate "000000" and MAINT reminder light goes out.

ENGINE OIL CHANGE REMINDER LIGHT RESET - PROCEDURE 2

NOTE: **For all models, before starting reset procedure, switch the display to Trip Meter A while ignition is ON.**

To reset MAINT reminder indicator after engine oil change:

1. Set the "ENGINE START STOP" switch or ignition switch OFF with odometer showing TRIP A.
2. While pressing the trip meter reset button (stem), set the "ENGINE START STOP" switch or ignition switch ON.
3.
    - **Without multi-information display:** Continue to press and hold the button (stem) until the trip meter displays "000000".
    - **With multi-information display:** Continue to press and hold the button (stem) until "COMPLETE" (on some models, "RESETTING MAINTENANCE DATA") appears on the multi-information display.

ENGINE OIL CHANGE REMINDER LIGHT RESET - PROCEDURE 3

To reset MAINT reminder indicator after engine oil change:

1. With ignition or POWER switch ON, press the ODO / TRIP switch until odometer displays "ODO".
2. Turn ignition or POWER switch to OFF position with odometer display showing.
3. Turn ignition POWER switch to ON position while holding down trip meter RESET button.

4. Hold trip meter RESET button down for at least 5 seconds. Odometer should indicate "000000", and MAINT reminder light goes out.

NOTE: On some models, before the light goes off, light will illuminate for 3 seconds, flash for 2 seconds and illuminate for 1 second.

5. If system fails to reset, light will remain flashing.

ENGINE OIL CHANGE REMINDER LIGHT RESET - PROCEDURE 4

To reset MAINT reminder indicator after engine oil change:

1. With the ignition switch (or Power switch) ON, ensure the odometer is showing TRIP A. Turn ignition (or Power) switch OFF.
2. Set the ignition switch (or Power switch) to ON position (DO NOT start engine) while holding down trip meter RESET (DISP on some models) button.
3. Hold trip meter RESET button down for at least 5 seconds until odometer indicates 000000.
4. When 000000 disappears and the indicator light turns off, the reset is complete.

ENGINE OIL CHANGE REMINDER LIGHT RESET - PROCEDURE 5

To reset MAINT reminder indicator after engine oil change:

1. Turn ignition key to LOCK position with odometer display showing.
2. Turn ignition key to ON position while holding down on trip meter reset knob. A message MAINT REQD RESET MODE will appear on display.
3. Hold trip meter knob for at least 5 seconds. A message COMPLETE will appear and beep will be heard.
4. If system fails to reset, repeat reset procedure.

ENGINE OIL CHANGE REMINDER LIGHT RESET - PROCEDURE 6

To reset MAINT reminder indicator after engine oil change:

1. Turn ignition switch to OFF position with odometer display showing.
2. Turn ignition switch to ON position while holding down ODO/TRIP reset button on instrument cluster.
3. Hold down reset button until MAINT REQD light goes off. Before MAINT REQD light goes off, it will illuminate for 3 seconds, flash for 2 seconds, illuminate again for one second.
4. If system fails to reset, MAINT REQD light will remain flashing.

ENGINE OIL CHANGE REMINDER LIGHT RESET - PROCEDURE 7

After changing oil and filter, reset warning light mileage counter.

NOTE: Reset mileage counter after oil and filter change even if light has not come on.

1. Remove plug from instrument panel faceplate below speedometer.
2. Insert a small punch or rod through plug hole and depress knob. See **Fig. 1**.

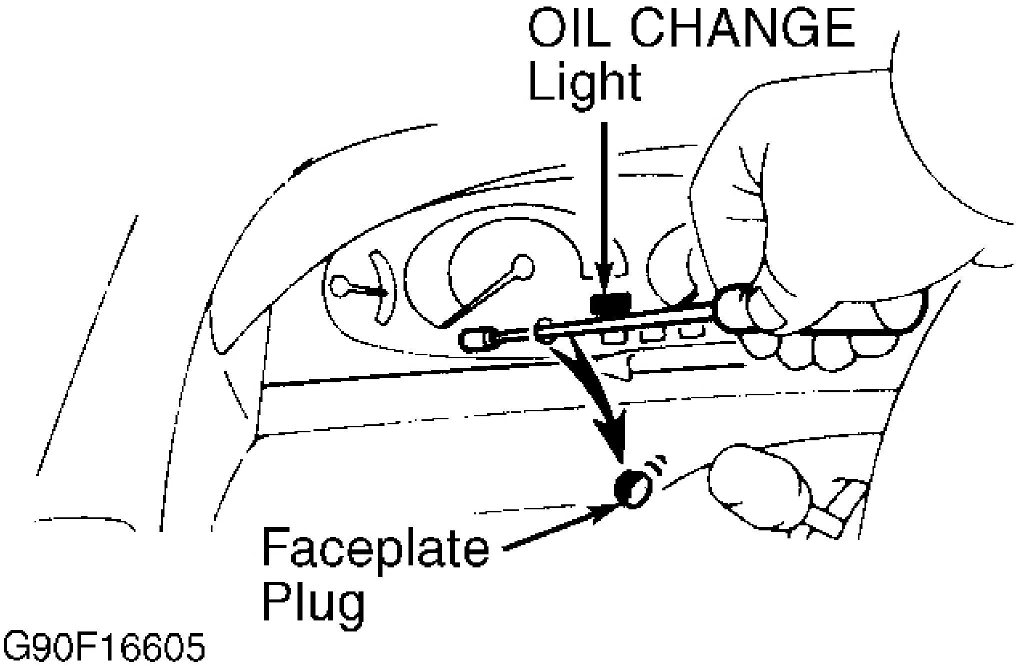

Fig. 1: Identifying Engine Oil Change Indicator Light Reset Button (Previa)
Courtesy of TOYOTA MOTOR SALES, U.S.A., INC.

ENGINE OIL CHANGE REMINDER LIGHT RESET - PROCEDURE 8

To reset MAINT reminder indicator after engine oil change:

1. Turn off the hybrid system with odometer showing TRIP A.
2. While holding down the trip meter reset knob, turn the POWER switch to ON mode. A message "MAINT REQD RESET MODE" will appear on the display.
3. Hold down the knob for at least 5 seconds. When "MAINT REQD RESET MODE COMPLETE" disappears and the master caution indicator light turns off, the reset is complete.

ENGINE OIL CHANGE REMINDER LIGHT RESET - PROCEDURE 9

To reset MAINT reminder indicator after engine oil change:

1. Switch the odometer display to TRIP A with the POWER switch ON.

2. Turn the POWER switch OFF.
3. Turn the POWER switch ON with the km/h MPH button (upper left on center console) held down.
4. Keep pressing the km/h MPH button until the odometer indicates 000000 and the multi-information display indicates that the reset is complete.

ENGINE OIL CHANGE REMINDER LIGHT RESET - PROCEDURE 10

To reset MAINT reminder indicator after engine oil change:

1. Switch the odometer display to TRIP A while the engine is running.
2. Set the "ENGINE START STOP" (or ignition) switch to OFF.
3. While pressing the trip meter reset button, set the "ENGINE START STOP" (or ignition) switch to ON mode (DO NOT start the engine). Continue to press and hold the button until the odometer displays 000000, or the multi-information display indicates that the reset is complete.

NOTE: For Tacoma models, there is a significant difference between the reset procedure in the owner's manual (used above) and the instructions given in the Toyota service information. The owner's manual is considered to be more reliable for this type procedure, but in the event that the service information is correct, it is this:

- **a. Turn the ignition switch to ON.**
- **b. Set the ODO/TRIP indication to ODO.**
- **c. While pressing the reset switch, turn the ignition switch OFF and ON again.**
- **d. Press the reset switch for more than 5 seconds.**

NOTE: If the system fails to reset, the warning light will continue flashing.

ENGINE OIL CHANGE REMINDER LIGHT RESET - PROCEDURE 11

To reset MAINT reminder indicator after engine oil change:

1. With the Engine switch (or Power switch) ON, ensure the odometer is displayed. Turn Engine (or Power) switch OFF.
2. Turn the Engine (or Power) switch to the ON position. The multi-information display's initial screen will be displayed for a few seconds. While the initial screen is being displayed, press the TRIP button on the steering wheel 3 times, holding the button down on the third press.
3. Continue to press and hold the button until the trip meter displays 000000.

ENGINE OIL CHANGE REMINDER LIGHT RESET - PROCEDURE 12

Using Trip Meter (Monochrome Multi-information Display)

1. Turn ignition ON.
2. Press the ODO/TRIP switch knob until the TRIP A meter appears.
3. Turn the ignition switch OFF.
4. Turn the ignition switch to ON while pressing and holding the ODO/TRIP switch knob. Hold the ODO/TRIP switch knob until TRIP A meter shows "000000" and the multi-information display shows that the reset is complete.

Using Multi-information Display (Color Display)

1. Turn the ignition switch to ON.
2. Using the steering pad switch assembly, display the SETTING display on the multi-information display.
3. Select MAINTENANCE SYSTEM from the setting display and perform initialization according to the multi-information display.
4. "Initialization Completed" will be displayed on the multi-information display when the reset procedure has finished.

OXYGEN SENSOR WARNING LIGHT

NOTE: To determine the appropriate reset procedure, refer to OXYGEN SENSOR WARNING LIGHT RESET INDEX. Only vehicles listed in this index have an Oxygen Sensor Warning Light reset.

OXYGEN SENSOR WARNING LIGHT RESET INDEX

Model & Year	Reset Procedure
Corolla	
1980-81	Oxygen Sensor Warning Light Reset - Procedure 1
Corona	
1980-81	Oxygen Sensor Warning Light Reset - Procedure 1
Cressida	
1980-81	Oxygen Sensor Warning Light Reset - Procedure 1
Land Cruiser	
1980-81	Oxygen Sensor Warning Light Reset - Procedure 1
Pickup	
1980-81	Oxygen Sensor Warning Light Reset - Procedure 1
Supra	
1980-81	Oxygen Sensor Warning Light Reset - Procedure 1
Tercel	
1980-81	Oxygen Sensor Warning Light Reset - Procedure 1

OXYGEN SENSOR WARNING LIGHT RESET - PROCEDURE 1

1. At 30,000 mile intervals, a mileage counter activates warning light in dash to indicate oxygen sensor must be replaced. After replacing sensor, reset mileage counter.

2. To reset mileage counter, move switch to opposite position. On 1980 Celica Supra, cancel switch (Black) is located on bracket above brake pedal. On Cressida, switch is behind small trim panel next to steering column. On all other models, cancel switch (White) is on top of left kick panel. See **Fig. 2**.

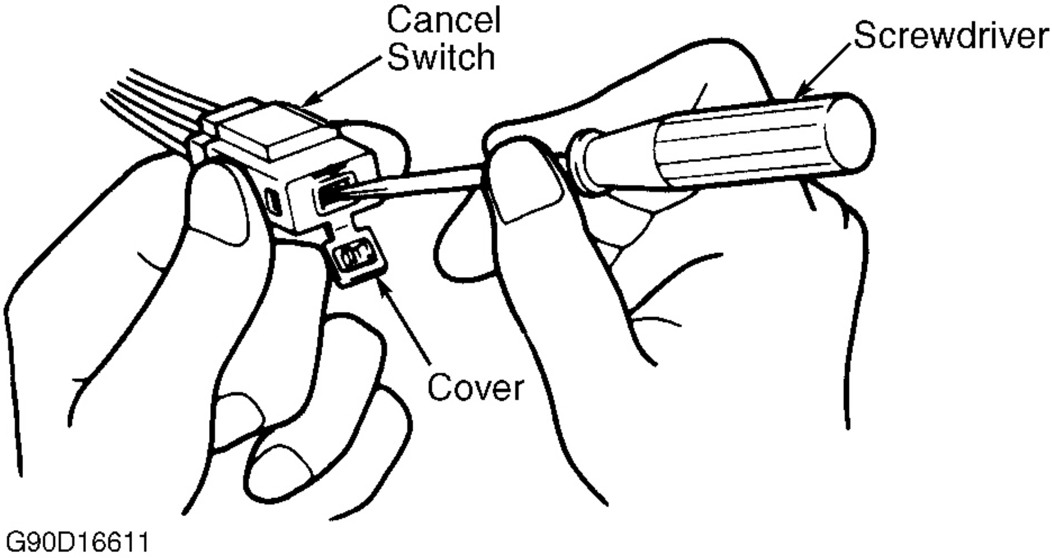

Fig. 2: Resetting Oxygen Sensor Warning Light Counter (1980-81 Models)
Courtesy of TOYOTA MOTOR SALES, U.S.A., INC.

TIMING BELT REMINDER LIGHT

NOTE: To determine the appropriate reset procedure, refer to TIMING BELT REMINDER LIGHT RESET INDEX. Only vehicles listed in this index have a Timing Belt Reminder Light reset.

TIMING BELT REMINDER LIGHT RESET INDEX

Model & Year	Reset Procedure
Pickup (Diesel)	
1981-87	Timing Belt Reminder Light Reset - Procedure 1

TIMING BELT REMINDER LIGHT RESET - PROCEDURE 1

TIMING BELT light will come on every 100,000 miles to indicate engine timing belt should be replaced. After belt is replaced, remove rubber grommet from speedometer bezel and reset speedometer counter by pressing reset switch. See **Fig. 3**.

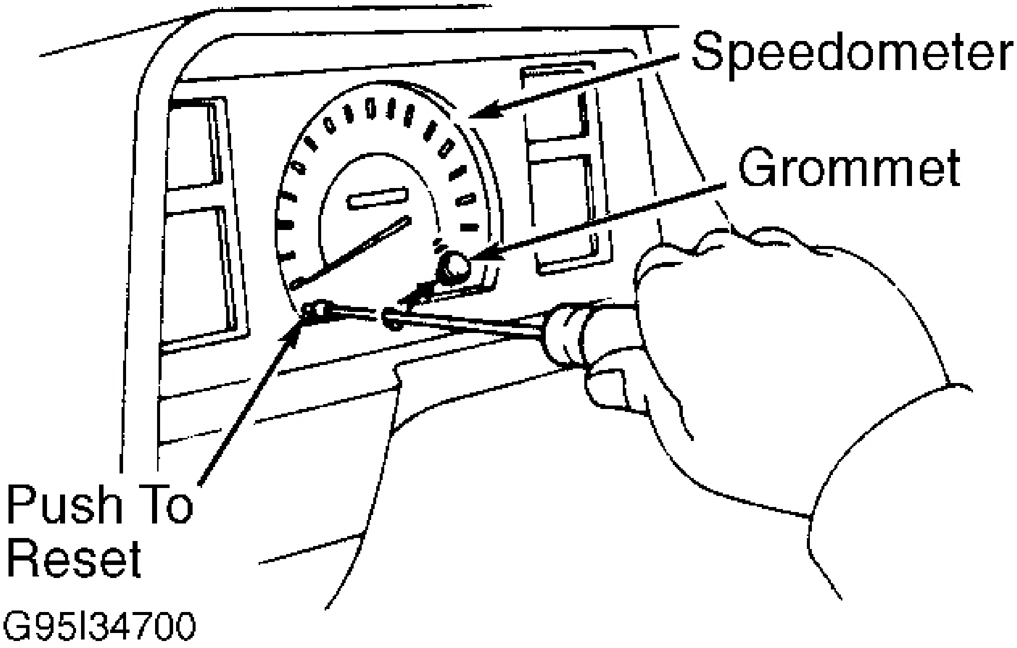

Fig. 3: Resetting Speedometer Counter
Courtesy of TOYOTA MOTOR SALES, U.S.A., INC.

TIRE PRESSURE MONITOR SYSTEM (TPMS)

NOTE: **To determine the appropriate reset procedure, refer to TPMS RESET INDEX. Only vehicles listed in this index have a TPMS reset.**

TPMS RESET INDEX

Model & Year	**Reset Procedure**
4Runner	
2004-07	**TPMS Reset - Procedure 15**
2008-14	**TPMS Reset - Procedure 16**
Avalon	
2007	**TPMS Reset - Procedure 13**
2008-14	**TPMS Reset - Procedure 17**
Camry	
2007	**TPMS Reset - Procedure 1**
2008-12	**TPMS Reset - Procedure 17**
2013-14	**TPMS Reset - Procedure 16**

Camry Solara	
2004-06	**TPMS Reset - Procedure 2**
2007	**TPMS Reset - Procedure 1**
2008	**TPMS Reset - Procedure 17**
Corolla	
2005-07	**TPMS Reset - Procedure 4**
2008-14	**TPMS Reset - Procedure 17**
FJ Cruiser	
2007-11	**TPMS Reset - Procedure 5**
2012-14	**TPMS Reset - Procedure 17**
Highlander	
2004-07	**TPMS Reset - Procedure 6**
2008-14	**TPMS Reset - Procedure 17**
Highlander Hybrid	
2008-13	**TPMS Reset - Procedure 16**
2014	**TPMS Reset - Procedure 17**
Land Cruiser	
2005-07	**TPMS Reset - Procedure 7**
2008-14	**TPMS Reset - Procedure 17**
Matrix	
2005-07	**TPMS Reset - Procedure 8**
2008-13	**TPMS Reset - Procedure 17**
Prius (All Models)	
2006-07	**TPMS Reset - Procedure 9**
2008-14	**TPMS Reset - Procedure 17**
RAV4	
2004-05	**TPMS Reset - Procedure 10**
2006-07	**TPMS Reset - Procedure 11**
2008-12	**TPMS Reset - Procedure 16**
2013-14	**TPMS Reset - Procedure 17**
Sequoia	
2005 to Aug.2007	**TPMS Reset - Procedure 7**
Sept.2007 to 2014	**TPMS Reset - Procedure 17**
Sienna	
1998-06	**TPMS Reset - Procedure 12**
2007	**TPMS Reset - Procedure 13**
2008-14	**TPMS Reset - Procedure 17**
Tacoma	
2006-07	**TPMS Reset - Procedure 14**
2008-14	**TPMS Reset - Procedure 17**
Tundra	
2005-07	

	TPMS Reset - Procedure 15
2008-14	**TPMS Reset - Procedure 17**
Venza	
2009-14	**TPMS Reset - Procedure 16**
Yaris	
2008-11	**TPMS Reset - Procedure 16**
2012-14	**TPMS Reset - Procedure 17**

TPMS RESET - PROCEDURE 1

NOTE: Initialization is NOT required if re-inflating tires to the currently specified tire pressure.

NOTE: The system will need to be initialized when tires are replaced with tires of different pressures; tire pressure sensor and/or tire pressure monitor ECU are replaced. Set tire pressure within the specified range before initializing. When a tire pressure sensor and/or tire pressure monitor ECU are replaced, the sensor ID must be memorized by the tire pressure monitor ECU prior to system initialization. See Tire Pressure Sensor Registration.

Initializing Tire Pressure Monitor System

CAUTION: Set tire pressure within the specified range before initializing. DO NOT push the reset switch without adjusting tire inflation pressure of all 4 tires. Otherwise, the low tire pressure warning light may not come on even if the tire pressure is low, or it may come on when the tire inflation pressure is actually normal. If you push the reset switch while the vehicle is moving, initialization is not performed.

NOTE: When initializing the system, the present tire condition is stored as a standard.

NOTE: Perform the tire pressure adjustment after the vehicle has sufficiently cooled down. If it hasn't sufficiently cooled, increase the air pressure in the tires approximately 3-4psi (20-30kPa)

NOTE: The initialization mode can be terminated by making a short circuit between terminals No. 4 and 13 of the DLC3 connector (located under left side of instrument panel).

During initialization, the tire pressure monitor valve sub-assembly measures the inflation pressure of the tires, and registers the signals that are transmitted into the tire pressure monitor ECU at a frequency of one per minute. The initialization process is completed when the signals from the 4 tires have been received.

The initialization process is canceled if the ignition switch is turned to OFF position prior to the completion of initialization. To restart initialization, the tire pressure warning reset switch must be pressed again.

1. Set the tire pressure of all wheels to pressure specified on the tire and loading information label.
2. With the vehicle parked in a safe place, connect the intelligent tester to the DLC3 and turn ignition switch to the ON position.
3. Turn the intelligent tester ON and navigate to the "TIREPRESS" option using the on-screen prompts.
4. Within 30 seconds of turning the ignition ON, press and hold the tire pressure warning reset switch (located at left side of glove compartment opening) until the tire pressure warning light blinks 3 times at one-second intervals. See **Fig. 4**.

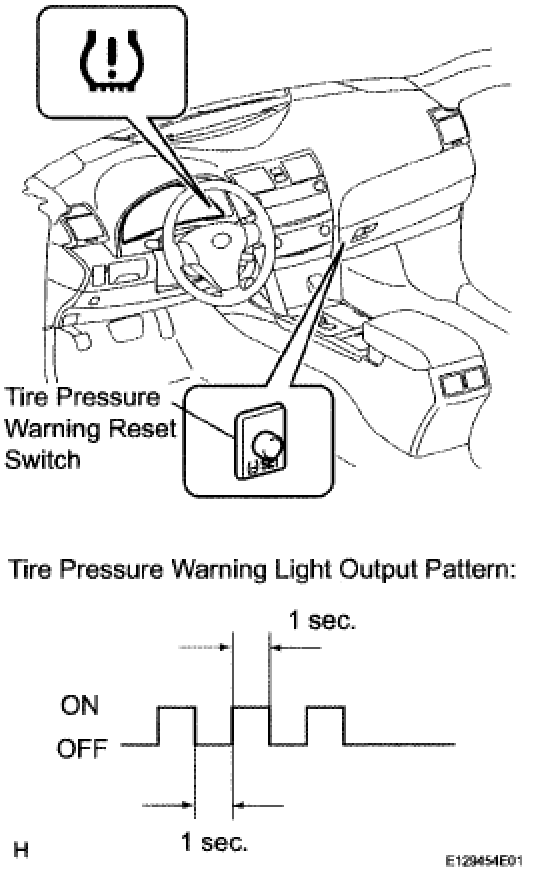
Tire Pressure Warning Reset Switch
Tire Pressure Warning Light Output Pattern:
1 sec.
ON
OFF
1 sec.
H
E129454E01

Fig. 4: Tire Pressure Warning Reset Switch - Blinking Pattern
Courtesy of TOYOTA MOTOR SALES, U.S.A., INC.

5. Wait 2 - 3 minutes, with the ignition ON, for the initialization process to complete. If the initialization has not been completed successfully, Diagnostic Trouble Code (DTC) C2177/77 is set in the tire pressure monitor ECU about 20 minutes after driving starts.
6. Confirm that initialization is complete by verifying that the correct tire pressure values are displayed on the intelligent tester.

NOTE: **In winter, tire pressure may decrease due to low ambient temperatures - about 1.45 psi (10 kPa) for every 18°F (10°C) drop in ambient temperature.**

Therefore, the tire pressure warning is more likely to operate if the tire pressures are not adjusted appropriately. If the daily temperature variation is large, pressurize the tires so that they are in the specified range under cold conditions. With this adjustment, unnecessary warnings are less likely.

Tire Pressure Sensor Registration

NOTE: **When a tire, wheel, tire pressure monitor valve sub-assembly and/or tire pressure monitor ECU are replaced, the transmitter ID needs to be registered in the tire pressure monitor ECU. To perform this procedure, a Toyota hand-held tester must be used.**

Register Transmitter ID

1. Set the pressure of all tires (including spare tire) to the pressure specified on the tire and loading information label.
2. Connect the hand-held tester to DLC3. See **Fig. 5**.
3. Turn the ignition switch to the ON position.
4. Select REGISTER from the UTILITY menu. See **Fig. 6**.
5. Enter the transmitter ID(s) using the hand-held tester and transmit it to the tire pressure monitor ECU.
6. Set ID transmission condition to "ID Registration is complete".

NOTE: **If steps 4-6 are not completed within 5 minutes, the mode will return to the normal operation mode.**

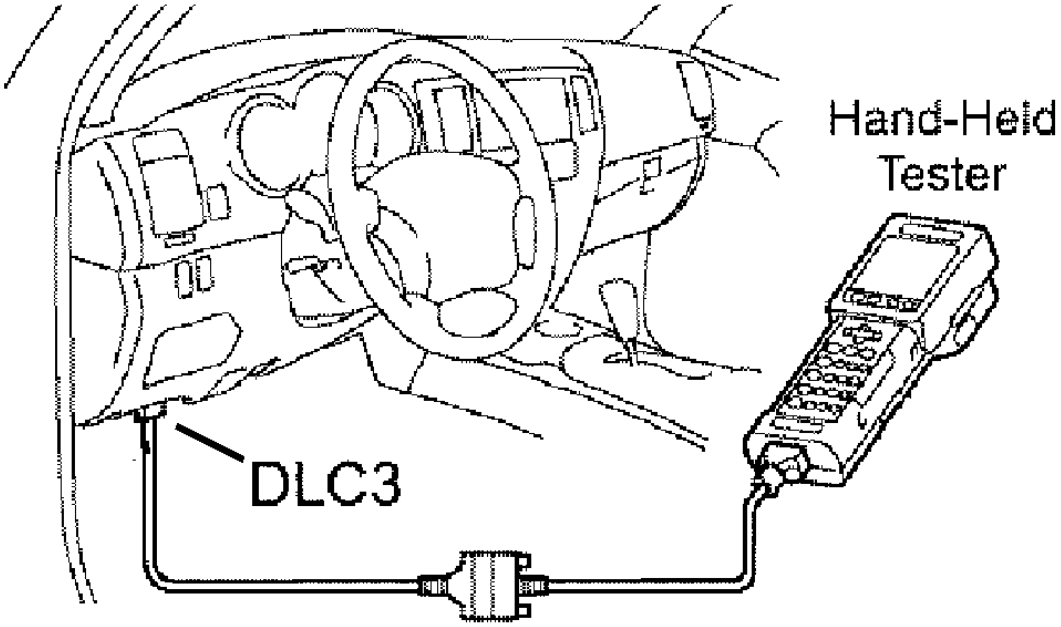

G00225399

Fig. 5: Connecting Hand-Held Tester To DLC3
Courtesy of TOYOTA MOTOR SALES, U.S.A., INC.

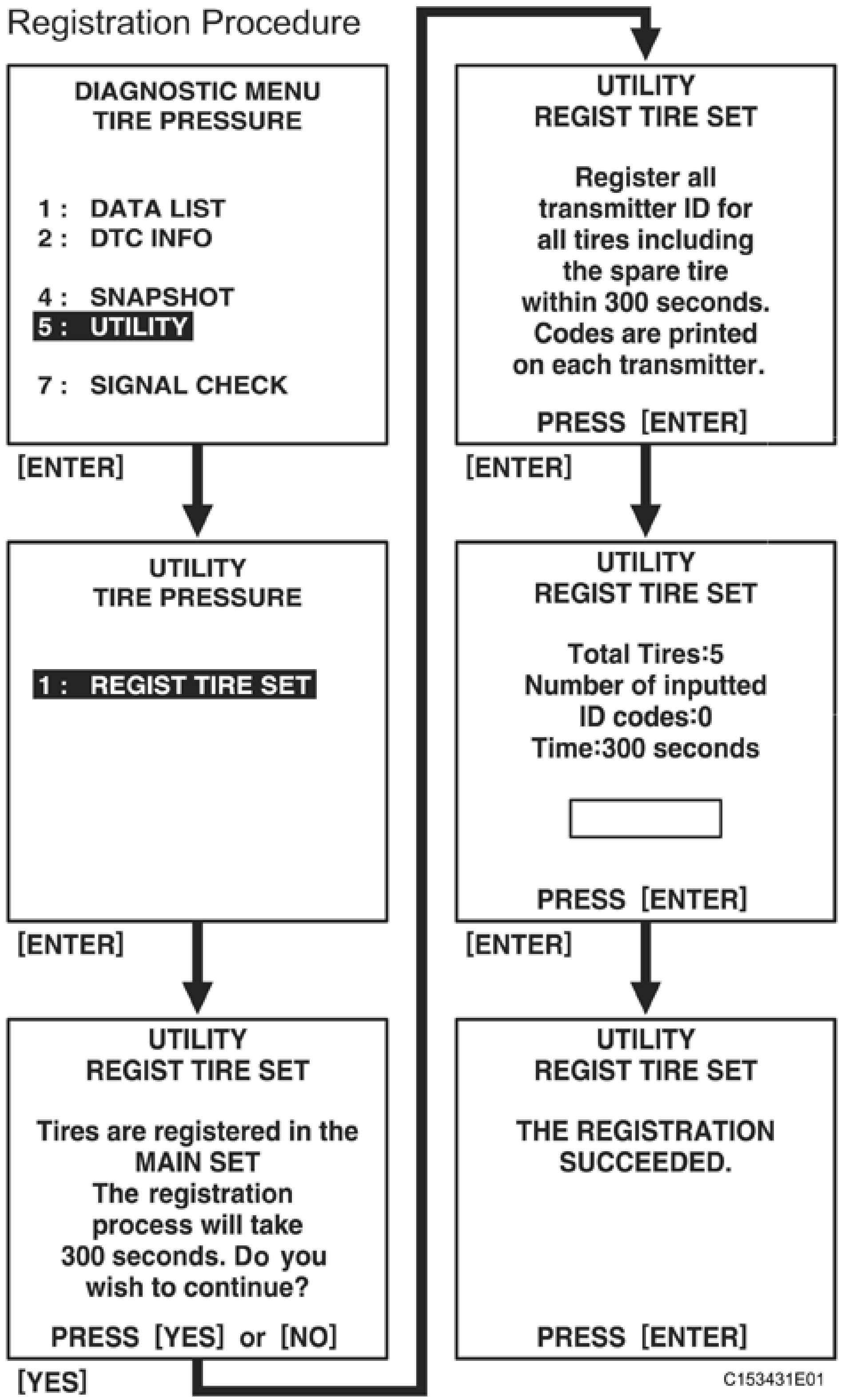

DIAGNOSTIC MENU
TIRE PRESSURE

1 : DATA LIST
2 : DTC INFO
4 : SNAPSHOT
5 : UTILITY
7 : SIGNAL CHECK

UTILITY
TIRE PRESSURE

1 : REGIST TIRE SET

UTILITY
REGIST TIRE SET

Tires are registered in the MAIN SET
The registration process will take 300 seconds. Do you wish to continue?

PRESS [YES] or [NO]

UTILITY
REGIST TIRE SET

Register all transmitter ID for all tires including the spare tire within 300 seconds. Codes are printed on each transmitter.

PRESS [ENTER]

UTILITY
REGIST TIRE SET

Total Tires:5
Number of inputted ID codes:0
Time:300 seconds

PRESS [ENTER]

UTILITY
REGIST TIRE SET

THE REGISTRATION SUCCEEDED.

PRESS [ENTER]

G00445150

Fig. 6: Registering Transmitter ID

Courtesy of TOYOTA MOTOR SALES, U.S.A., INC.

Confirmation Of Transmitter ID Registration

1. Set the pressure of all tires (including spare tire) to the pressure specified on the tire and loading information label.
2. Connect the hand-held tester to DLC3.
3. Turn ignition switch to ON position.
4. Select the "TIRE PRESS" by following the prompts on the hand-held tester.
5. Confirm accurately registered tire pressures for all tires. If all values are displayed correctly, registration was completed successfully.

NOTE: It may take 2-3 minutes to update the tire pressure data. If ID registration has not occurred, DTC 2171/71 will be recorded in the ECU after 51 minutes or more.

TPMS RESET - PROCEDURE 2

NOTE: Initialization is NOT required if re-inflating tires to the currently specified tire pressure.

NOTE: This system requires initializing after changing tires or wheels, after rotating the tires, or when tire pressure warning light blinks twice every second. Set tire pressure within the specified range before initializing. If the tire air pressure is not within the specified range, tire pressure warning system will not function.

NOTE: If the negative battery terminal is disconnected, initialize the following systems after the terminal is reconnected: power window and sliding roof. Refer to owner's manual or appropriate manufacturer service information.

CAUTION: DO NOT push the reset switch without adjusting tire inflation pressure. Otherwise, the low tire pressure warning light may not come on even if the tire pressure is low, or it may come on when the tire inflation pressure is actually normal. If you push the reset switch while the vehicle is moving, initialization is not performed.

1. Set the tire pressure of all wheels to pressure specified on the tire and loading information label.
2. With vehicle stopped and parking brake applied, turn ignition switch to ON position.
3. Press and hold the tire pressure warning reset switch until the tire pressure warning light blinks 3 times at one-second intervals.

NOTE: If the tire pressure warning light does not blink, turn ignition switch to OFF position and perform the initialization procedure again starting at step 2. If light still does not blink, there is a problem in the TPM system. See

appropriate manufacturer service information.

4. Drive the vehicle at 19 mph (30 km/h) or more to complete the initialization of the skid control ECU (it takes 0.5-1 hour). Vehicle should be driven under the following conditions:
    - The vehicle speed is between 31-62 mph (50-100 km/h).
    - The roads are dry, smooth and straight.
    - The number of passengers is 1 or 2 (including driver).

NOTE: If the tire pressure warning light blinks at 0.25 second intervals while the vehicle is being driven, the initialization may have failed. If so, turn ignition switch to OFF position and perform the initialization procedure again starting at step 1.

5. After initialization is completed, the skid control ECU monitors the tire pressure by using the wheel speed sensors.
6. To verify the system has been initialized, check the length of time the tire pressure warning light is on after turning the ignition switch to the ON position. Light will stay on for 3 seconds if system is initialized, or 4 seconds if system is not initialized.

TPMS RESET - PROCEDURE 3

NOTE: Initialization is required when changing tire size, rotating tire on vehicle with different front and rear tire inflation pressures.

1. Park vehicle in a safe place and turn ignition key to LOCK position.
2. Adjust the pressure of all installed tires to specified cold tire inflation pressure level.
3. Turn ignition to ON position.
4. Push and hold tire pressure warning reset switch (located below left side of dash) until the tire pressure warning light blinks slowly 3 times.
5. Leave system for a few minutes with ignition switch in ON position, and then turn ignition key to LOCK position.

If the tire warning reset switch is pushed while vehicle is moving, initialization will not take place. If reset switch is accidentally pushed, and initialization takes place, adjust tire inflation pressure to the specified level and initialize the system again.

If tire pressure warning light does not blink slowly 3 times when you push and hold the reset switch, initialization has failed and tire pressure warning system may not work properly. In this case, initialize the system again. If initialization cannot be performed, have the system checked at an authorized dealer.

TPMS RESET - PROCEDURE 4

NOTE: Initialization is NOT required if re-inflating tires to the currently specified tire pressure.

NOTE: This system requires initializing after changing tires or wheels, after rotating the tires, or when tire pressure warning light blinks once every 3 seconds. Set tire pressure within the specified range before initializing. If the tire air pressure is not within the specified range, tire pressure warning system will not function.

CAUTION: DO NOT push the reset switch without adjusting tire inflation pressure. Otherwise, the low tire pressure warning light may not come on even if the tire pressure is low, or it may come on when the tire inflation pressure is actually normal. If you push the reset switch while the vehicle is moving, initialization is not performed.

1. Set the tire pressure of all wheels to pressure specified on the tire and loading information label.
2. With vehicle stopped and parking brake applied, turn ignition switch to ON position.
3. Press and hold the tire pressure warning reset switch until the tire pressure warning light blinks 3 times at one-second intervals. See **Fig. 7**.

NOTE: If the tire pressure warning light does not blink, turn ignition switch to OFF position and perform the initialization procedure again starting at step 2. If light still does not blink, there is a problem in the TPM system. See appropriate manufacturer service information.

4. Drive the vehicle at 19 mph (30 km/h) or more to complete the initialization of the skid control ECU (it takes more than one hour). See **Fig. 8**. Vehicle should be driven under the following conditions:
   - The vehicle speed is between 31-62 mph (50-100 km/h).
   - The roads are dry, smooth and straight.
   - The number of passengers is 1 or 2 (including driver).

NOTE: If the tire pressure warning light repeats a cycle of ON (0.5 second) and OFF (2.5 seconds) while the vehicle is being driven, initialization may have failed. If so, turn ignition switch to OFF position and perform the initialization procedure again starting at step 1.

5. After initialization is completed, the skid control ECU monitors the tire pressure by using the wheel speed sensors.
6. To verify the system has been initialized, check the length of time the tire pressure warning light is on after turning the ignition switch to the ON position. Light will stay on for 3 seconds if system is initialized, or 4 seconds if system is not initialized.

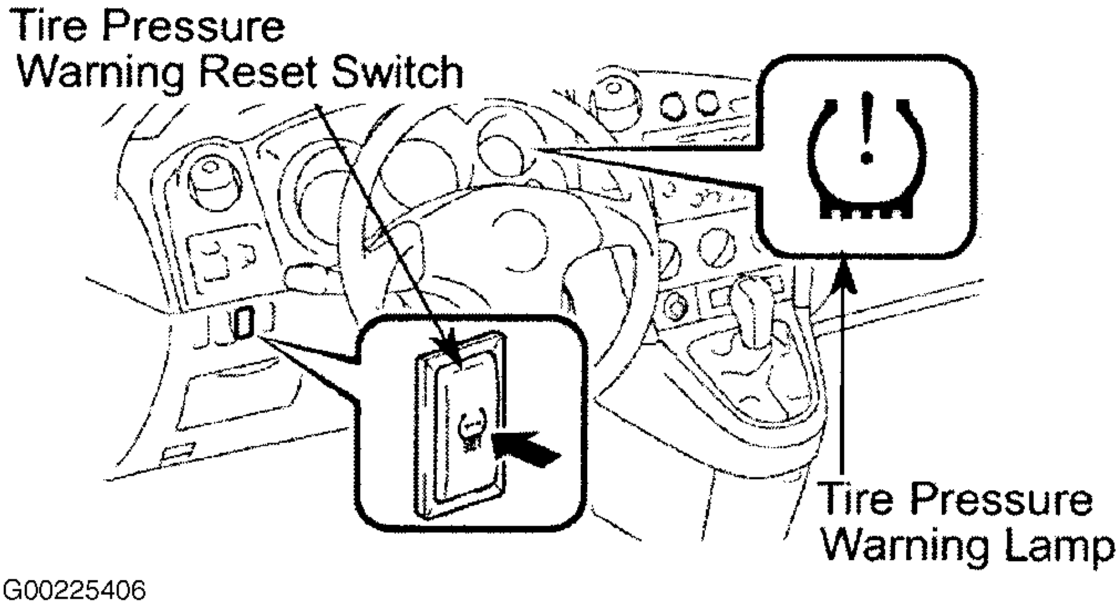
Tire Pressure
Warning Reset Switch
Tire Pressure
Warning Lamp
G00225406

Fig. 7: Locating TPM System Reset Switch
Courtesy of TOYOTA MOTOR SALES, U.S.A., INC.

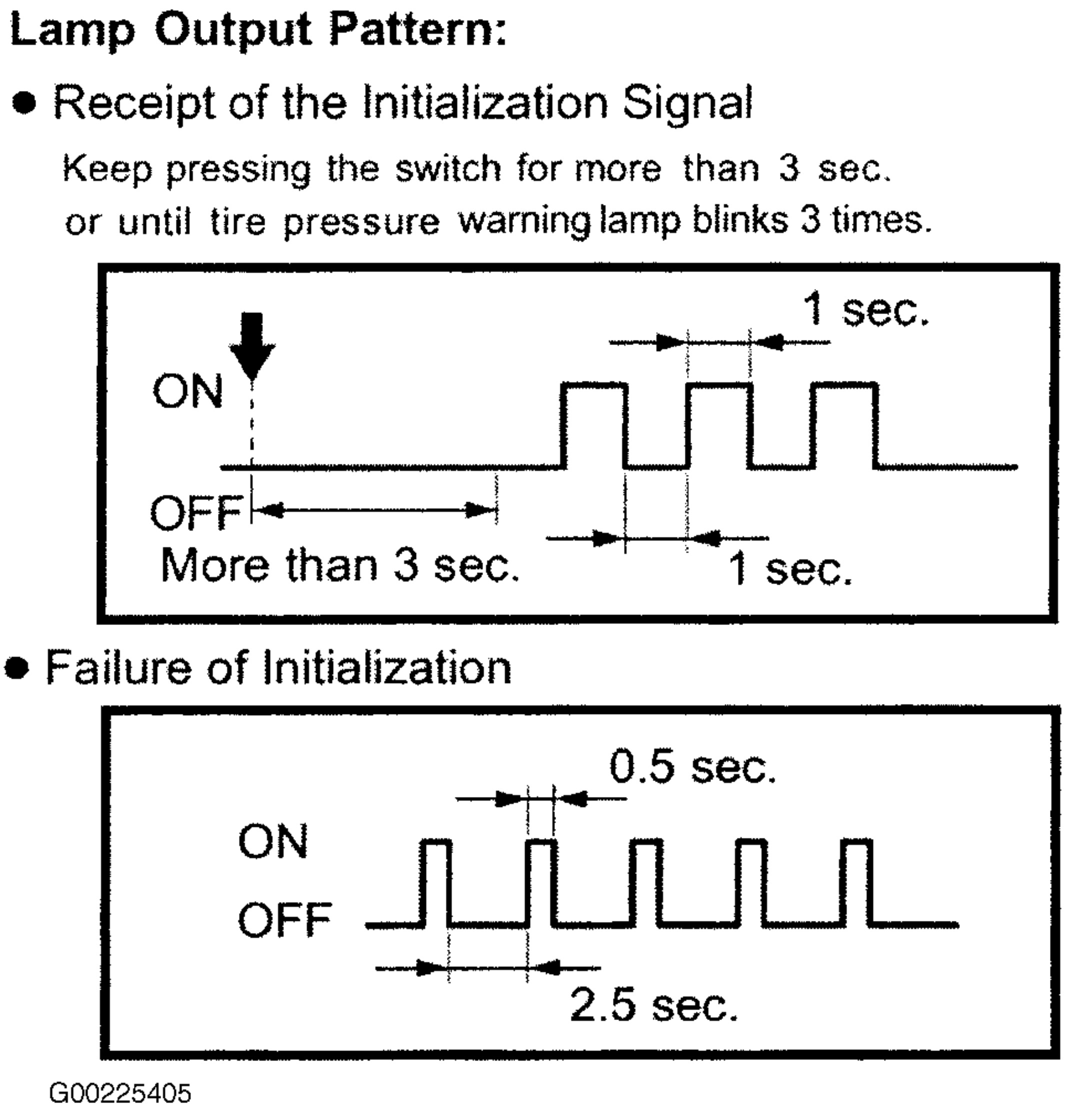
Lamp Output Pattern:
● Receipt of the Initialization Signal
Keep pressing the switch for more than 3 sec.
or until tire pressure warning lamp blinks 3 times.
1 sec.
ON
OFF
More than 3 sec.
1 sec.
● Failure of Initialization
0.5 sec.
ON
OFF
2.5 sec.
G00225405

Fig. 8: Initializing TPM System
Courtesy of TOYOTA MOTOR SALES, U.S.A., INC.

TPMS RESET - PROCEDURE 5

NOTE: **Reset is NOT required if re-inflating tires to the currently specified tire pressure.**

NOTE: **It is necessary to register the transmitter ID in the tire pressure warning ECU when replacing the tire pressure warning valve, transmitter and/or tire pressure warning ECU. The transmitter ID is written on the tire pressure warning valve and transmitter. You will not be able to read the ID numbers after installing the tire pressure warning valve and transmitter on the tire and wheel. Take a note of the 7 digit number (transmitter ID) before starting registration.**

When the tire pressure warning light does not go off, or when it comes on during driving, check tire pressure (including spare tire) and adjust as necessary. The warning light should go out within a few minutes.

Register Transmitter ID

1. Set the pressure of all tires (including spare tire) to the pressure specified on the tire and loading information label.
2. Turn ignition switch OFF.
3. Connect a Techstream to the DLC3.
4. Turn ignition switch ON.
5. Turn Techstream ON.
6. Enter the following menus: Chassis / Tire Pressure Monitor / Utility / ID Registration.
7. Follow the procedures displayed on the screen.
8. Confirm the ID numbers for all tires (including the spare tire) are displayed on the screen.

NOTE:

- **It may take up to 2 or 3 minutes to update the tire pressure data. If the values are not displayed after a few minutes, see the appropriate manufacturer service information.**
- **If the IDs have not been registered, DTC C2171/71 is set in the tire pressure warning ECU after 3 minutes or more.**
- **If normal pressure values are displayed, the IDs have been registered correctly.**
- **If the tire pressure values are not displayed after a few minutes, the IDs may be incorrect or the system may have a malfunction.**
- **After all IDs are registered, DTC C2126/26 (Transmitter ID not Received in Main Mode) is set in the tire pressure warning ECU and the tire pressure warning light blinks for 1 minute and then stays on. When the tire pressure warning ECU successfully receives radio waves from all the transmitters whose IDs are stored in the ECU, DTC C2126/26 is deleted and the tire pressure warning light goes off.**

Confirmation Of Transmitter ID Registration

1. Set the pressure of all tires (including spare tire) to the pressure specified on the tire and loading information label.
2. Connect a Techstream to the DLC3.
3. Turn ignition switch ON.
4. Turn Techstream ON.
5. Enter the following menus: Chassis / Tire Pressure Monitor / Data List.
6. Observe the "ID Tire Inflation Pressure" values.
7. Confirm the ID numbers for all tires (including the spare tire) are displayed on the screen. If all values are displayed correctly, registration was completed successfully.

TPMS RESET - PROCEDURE 6

NOTE: Initialization is NOT required if re-inflating tires to the currently specified tire pressure.

NOTE: This system requires initializing after changing tires or wheels, after rotating the tires, or when tire pressure warning light blinks twice every second. Set tire pressure within the specified range before initializing. If the tire air pressure is not within the specified range, tire pressure warning system will not function.

NOTE: If the negative battery terminal is disconnected, initialize the following system after the terminal is reconnected: Moon Roof. Refer to owner's manual or appropriate manufacturer service information.

CAUTION: DO NOT push the reset switch without adjusting tire inflation pressure. Otherwise, the low tire pressure warning light may not come on even if the tire pressure is low, or it may come on when the tire inflation pressure is actually normal. If you push the reset switch while the vehicle is moving, initialization is not performed.

1. Set the tire pressure of all wheels to pressure specified on the tire and loading information label.
2. With vehicle stopped and parking brake applied, turn ignition switch to ON position.
3. Press and hold the tire pressure warning reset switch until the tire pressure warning light blinks 3 times at one-second intervals.

   NOTE: If the tire pressure warning light does not blink, turn ignition switch to OFF position and perform the initialization procedure again starting at step 2. If light still does not blink, there is a problem in the TPM system. See appropriate manufacturer service information.

4. Drive the vehicle at 19 MPH (30 KM/H) or more to complete the initialization of the skid control ECU (it takes more than one hour.) Vehicle should be driven under the following conditions:
   - The vehicle speed is between 31-62 MPH (50-100 KM/H).
   - The roads are dry, smooth and straight.
   - The number of passengers is 1 or 2 (including driver).

   NOTE: If the tire pressure warning light blinks at 0.25-second intervals while the vehicle is being driven, the initialization may have failed. If so, turn ignition switch to OFF position and perform the initialization procedure again starting at step 1.

5. After initialization is completed, the skid control ECU monitors the tire pressure by using the wheel speed sensors.
6. To verify the system has been initialized, check the length of time the tire pressure warning light is on

after turning the ignition switch to the ON position. Light will stay on for 3 seconds if system is initialized, or 4 seconds if system is not initialized.

TPMS RESET - PROCEDURE 7

NOTE: For Sequoia, this procedure applies to vehicles from 2005 up to August 2007. For Sequoia models from September 2007, see TPMS RESET - PROCEDURE 17.

NOTE: Initialization is NOT required if re-inflating tires to the currently specified tire pressure.

NOTE: The system will need to be initialized when tires are rotated; tires are replaced with tires of different pressures; tire pressure sensor and/or tire pressure monitor ECU are replaced. Set tire pressure within the specified range before initializing. If tire pressure sensor and/or tire pressure monitor ECU were replaced, ensure that tire pressure sensor IDs are registered prior to initialization. Refer to owner's manual or appropriate manufacturer service information.

CAUTION: DO NOT push the reset switch without adjusting tire inflation pressure of all 5 tires (including the spare). Otherwise, the low tire pressure warning light may not come on even if the tire pressure is low, or it may come on when the tire inflation pressure is actually normal. If you push the reset switch while the vehicle is moving, initialization is not performed.

NOTE: When initializing the system, the present tire condition is stored as a standard.

During initialization, the tire pressure monitor valve sub-assembly measures the inflation pressure of the tires, and registers the signals that are transmitted into the tire pressure monitor ECU at a frequency of one per minute. The initialization process is completed when the signals from the 5 tires have been received.

The initialization process is canceled if the ignition switch is turned to OFF position during initialization. To initialize again, the tire pressure warning reset switch must be pressed again. For this reason, once the tire pressure warning reset switch has been pressed, turning ignition switch to OFF position is not recommended for a minimum of 20 minutes.

1. Set the tire pressure of all wheels (including spare tire) to pressure specified on the tire and loading information label.
2. With the vehicle stopped and parking brake applied, turn the ignition switch to the ON position.
3. Press and hold the tire pressure warning reset switch until the tire pressure warning light blinks 3 times at one-second intervals. See **Fig. 9**.

NOTE: Do not turn the ignition switch to OFF position during initialization (the initialization process takes about 20 minutes). Initialization will be complete if signals are received from all the wheels including the spare.

Initialization will be canceled if the ignition switch is turned to OFF position during initialization.

4. Confirm that initialization is complete using the intelligent tester. Check that the pressure for each tire is displayed in INIT THRESHOLD 1 to 5.

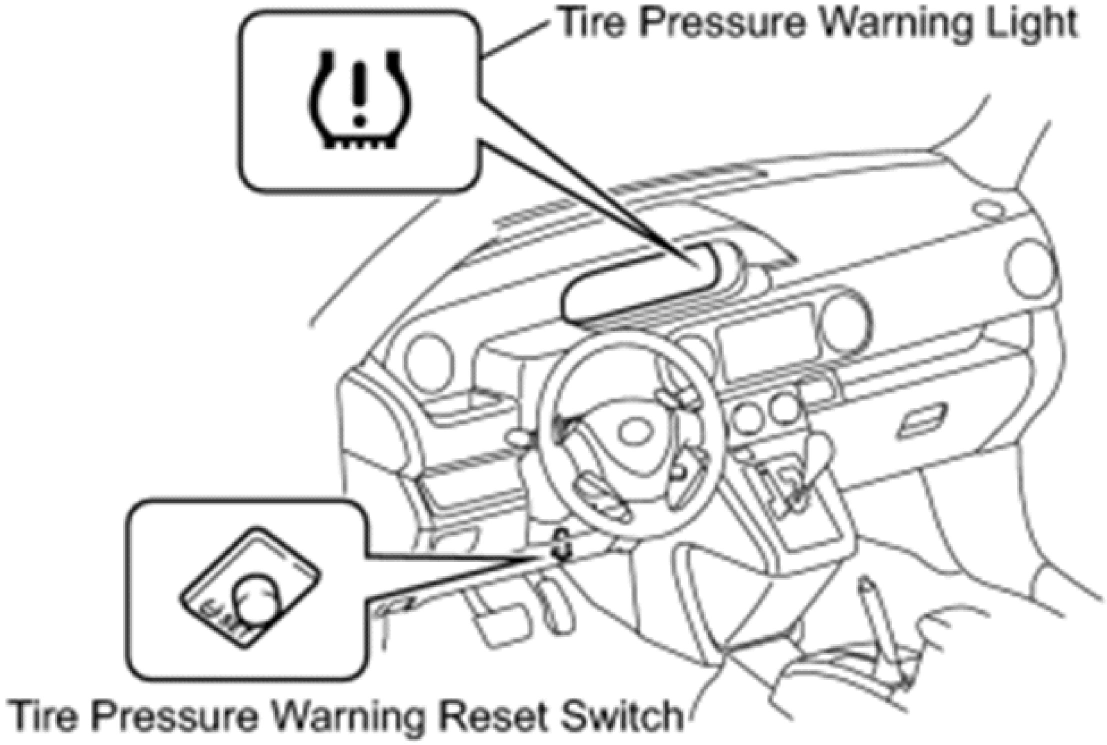
Tire Pressure Warning Light
Tire Pressure Warning Reset Switch

Fig. 9: Locating TPM System Reset Switch (Typical)
Courtesy of TOYOTA MOTOR SALES, U.S.A., INC.

TPMS RESET - PROCEDURE 8

NOTE: **Initialization is NOT required if re-inflating tires to the currently specified tire pressure.**

NOTE: **This system requires initializing after changing tires or wheels, after rotating the tires, or if warning light blinks once every 3 seconds. Set tire pressure within the specified range before initializing. If the tire air pressure is not within the specified range, tire pressure warning system will not function.**

CAUTION: **DO NOT push the reset switch without adjusting tire inflation pressure. Otherwise, the low tire pressure warning light may not come on even if the tire pressure is low, or it may come on when the tire inflation pressure is actually normal. If you push the reset switch while the vehicle is moving, initialization is not performed.**

1. Set the tire pressure of all wheels to pressure specified on the tire and loading information label.
2. With vehicle stopped and parking brake applied, turn ignition switch to ON position.
3. Press and hold the tire pressure warning reset switch until the tire pressure warning light blinks 3 times at one-second intervals. See **Fig. 10**.

NOTE: If the tire pressure warning light does not blink, turn ignition switch to OFF position and perform the initialization procedure again starting at step 2. If light still does not blink, there is a problem in the TPM system. See appropriate manufacturer service information.

4. Drive the vehicle at 19 mph (30 km/h) or more to complete the initialization of the skid control ECU (it takes more than one hour). Vehicle should be driven under the following conditions:
   - The vehicle speed is between 31-62 mph (50-100 km/h).
   - The roads are dry, smooth and straight.
   - The number of passengers is 1 or 2 (including driver).

NOTE: If the tire pressure warning light repeats a cycle of ON (0.5 second) and OFF (2.5 seconds) while the vehicle is being driven, initialization may have failed. If so, turn ignition switch to OFF position and perform the initialization procedure again starting at step 1.

5. After initialization is completed, the skid control ECU monitors the tire pressure by using the wheel speed sensors.
6. To verify the system has been initialized, check the length of time the tire pressure warning light is on after turning the ignition switch to the ON position. Light will stay on for 3 seconds if system is initialized, or 4 seconds if system is not initialized.

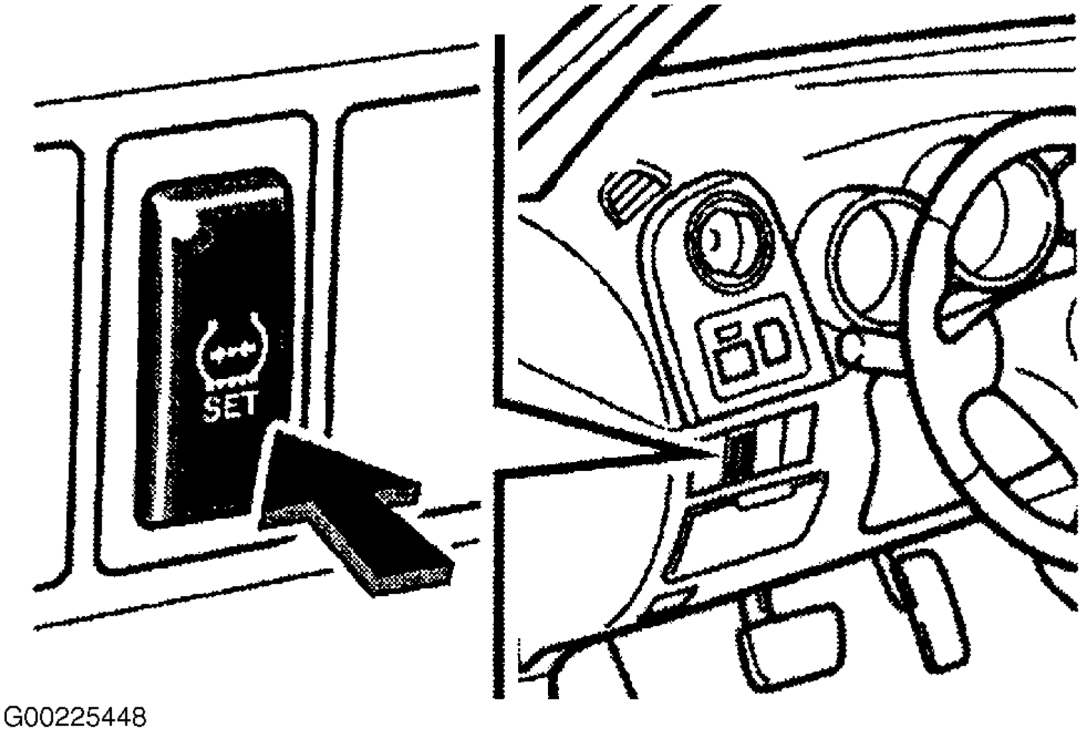

Fig. 10: Locating TPM System Reset Switch
Courtesy of TOYOTA MOTOR SALES, U.S.A., INC.

TPMS RESET - PROCEDURE 9

NOTE: Initialization is NOT required if re-inflating tires to the currently specified tire pressure.

NOTE: The system will need to be initialized when tires are replaced with tires of different pressures; tire pressure sensor and/or tire pressure monitor ECU are replaced; or when a new vehicle is delivered. Set tire pressure within the specified range before initializing. When a tire pressure sensor and/or tire pressure monitor ECU are replaced, the sensor ID must be memorized by the tire pressure monitor ECU prior to system initialization. See Tire Pressure Sensor Registration.

Initializing Tire Pressure Monitor System

CAUTION: Set tire pressure within the specified range before initializing. DO NOT push the reset switch without adjusting tire inflation pressure of all 4 tires. Otherwise, the low tire pressure warning light may not come on even if the tire pressure is low, or it may come on when the tire inflation pressure is actually normal. If you push the reset switch while the vehicle is moving, initialization is not performed.

NOTE: The initialization mode can be terminated by making a short circuit between terminals No. 4 and 13 of the DLC3 connector (located under left side of instrument panel).

NOTE: When initializing the system, the present tire condition is stored as a standard.

During initialization, the tire pressure monitor valve sub-assembly measures the inflation pressure of the tires, and registers the signals that are transmitted into the tire pressure monitor ECU at a frequency of one per minute. The initialization process is completed when the signals from the 4 tires have been received.

The initialization process is canceled if the ignition switch is turned to OFF position during initialization. To initialize again, the tire pressure warning reset switch must be pressed again. For this reason, once the tire pressure warning reset switch has been pressed, turning ignition switch to OFF position is not recommended for a minimum of 20 minutes.

1. Set the tire pressure of all wheels to pressure specified on the tire and loading information label.
2. With the vehicle parked in a safe place and hybrid system turned off, turn the POWER switch to the IG-ON position.
3. Press and hold the tire pressure warning reset switch (located under steering wheel) until the tire pressure warning light blinks 3 times at one-second intervals.
4. After 2-3 minutes, the initialization process should be completed. If the initialization has not been completed successfully, Diagnostic Trouble Code (DTC) C2177/77 is set in the tire pressure monitor ECU about 20 minutes after driving starts.
5. Confirm that initialization is complete using the intelligent tester. This may be done by checking for the test DTCS (C2181/81 to C2191/91) to be indicated, or by ensuring that tire pressure values can be displayed on the tester (it can take 2-3 minutes to display tire pressure data).

    NOTE: If outside temperatures are very low, tire pressures may be lower than expected. Leave ignition on for about 20 minute after confirmation that initialization has been completed, and increase the tire inflation pressure by 3-4 psi (20-30 kPa).

Tire Pressure Sensor Registration

NOTE: When a tire pressure sensor and/or tire pressure monitor ECU are replaced, the sensor ID must be memorized by the tire pressure monitor ECU prior to system initialization. To perform this procedure, a Toyota intelligent tester (with CAN VIM) must be used. It is not necessary to register the sensor IDs when only tire rotation is performed.

NOTE: Before beginning registration process on vehicles where tire pressure sensors have not been replaced, retrieve sensor transmitter IDs using intelligent tester or by reading the ID on the tire pressure sensor. If sensor is being replaced with a new one, make a note of the 7-digit number (transmitter ID) before installation, as it cannot be seen after sensor is installed. See Fig. 12.

1. Set the tire pressure of all wheels to pressure specified on the tire and loading information label.
2. Connect the intelligent tester (with CAN VIM) to DLC3. See **Fig. 11**.

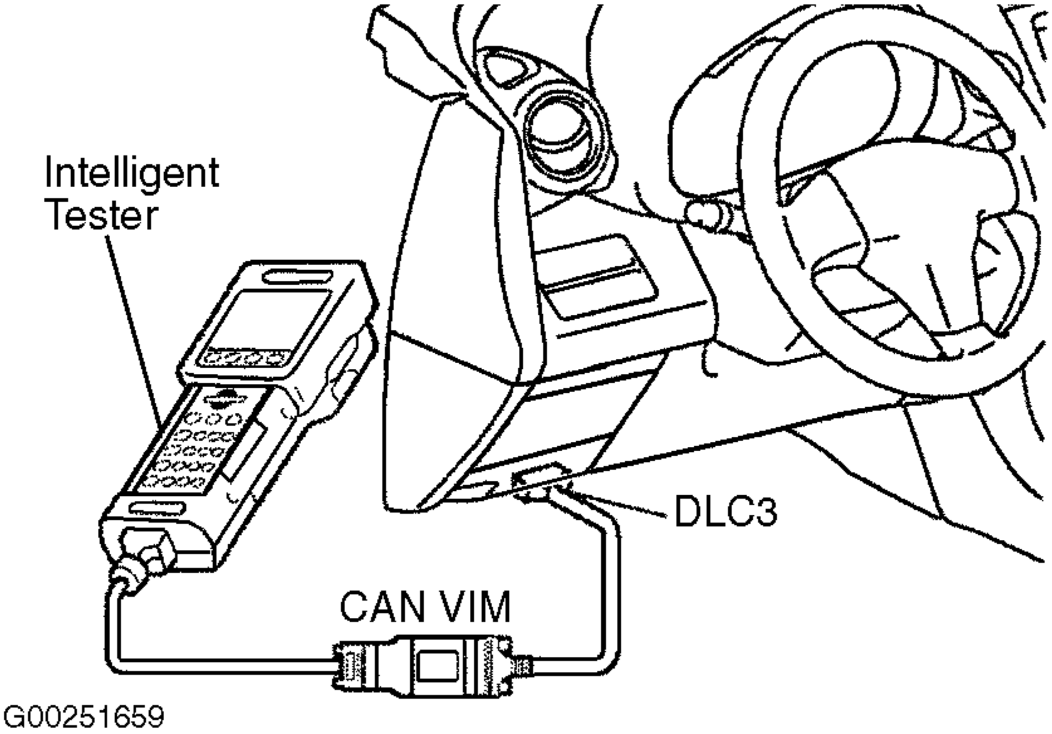

Fig. 11: Connecting Intelligent Tester (With CAN VIM)
Courtesy of TOYOTA MOTOR SALES, U.S.A., INC.

3. Turn the ignition switch to ON position.
4. Read and record the transmitter IDs (ID1 to ID4) by using the DATA LIST. See **Fig. 12** and **Fig. 13** .
5. Select the "REGIST TIRE" mode.
6. Select the "MAIN" registration mode.
7. Input the transmitter IDs (ID1 to ID4) using the intelligent tester and transmit it to the tire pressure monitor ECU.
8. Set ID transmission condition to "SUCCEEDED".

NOTE: The previously registered IDs will be deleted from the memory when the registration is completed.

NOTE: If steps 4-8 are not completed within 5 minutes, the mode will return to the normal operation mode.

9. When intelligent tester confirms that ID registration has successfully been completed, turn ignition switch to OFF position.
10. Turn ignition switch to ON position. Select the "SIGNAL CHECK" mode on the intelligent tester.

11. Confirm that the transmitter IDs and the tire pressure data is displayed for all 4 tires on the intelligent tester.

NOTE: **It may take up to one minute to update the tire pressure data.**

NOTE: **If the IDs have not been registered, DTC C2171/71 is set in the tire pressure monitor ECU after about 60 minutes.**

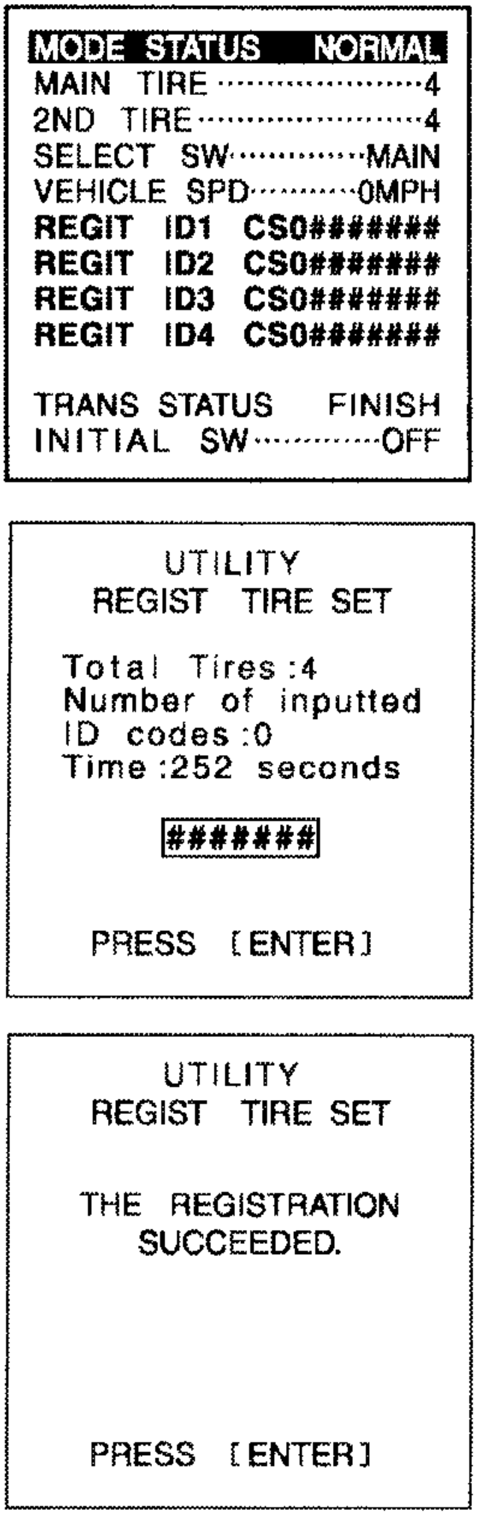

```
MODE STATUS    NORMAL
MAIN  TIRE .....................4
2ND  TIRE ......................4
SELECT  SW.............MAIN
VEHICLE  SPD..........0MPH
REGIT   ID1   CS0#######
REGIT   ID2   CS0#######
REGIT   ID3   CS0#######
REGIT   ID4   CS0#######

TRANS STATUS     FINISH
INITIAL  SW............OFF
```

```
          UTILITY
      REGIST   TIRE SET

  Total  Tires :4
  Number  of  inputted
  ID  codes :0
  Time :252  seconds

          #######


      PRESS   [ENTER]
```

```
          UTILITY
      REGIST   TIRE SET

     THE   REGISTRATION
         SUCCEEDED.



      PRESS   [ENTER]
```

G00251660

Fig. 12: Registering Transmitter ID Using Intelligent Tester (1 Of 2)
Courtesy of TOYOTA MOTOR SALES, U.S.A., INC.

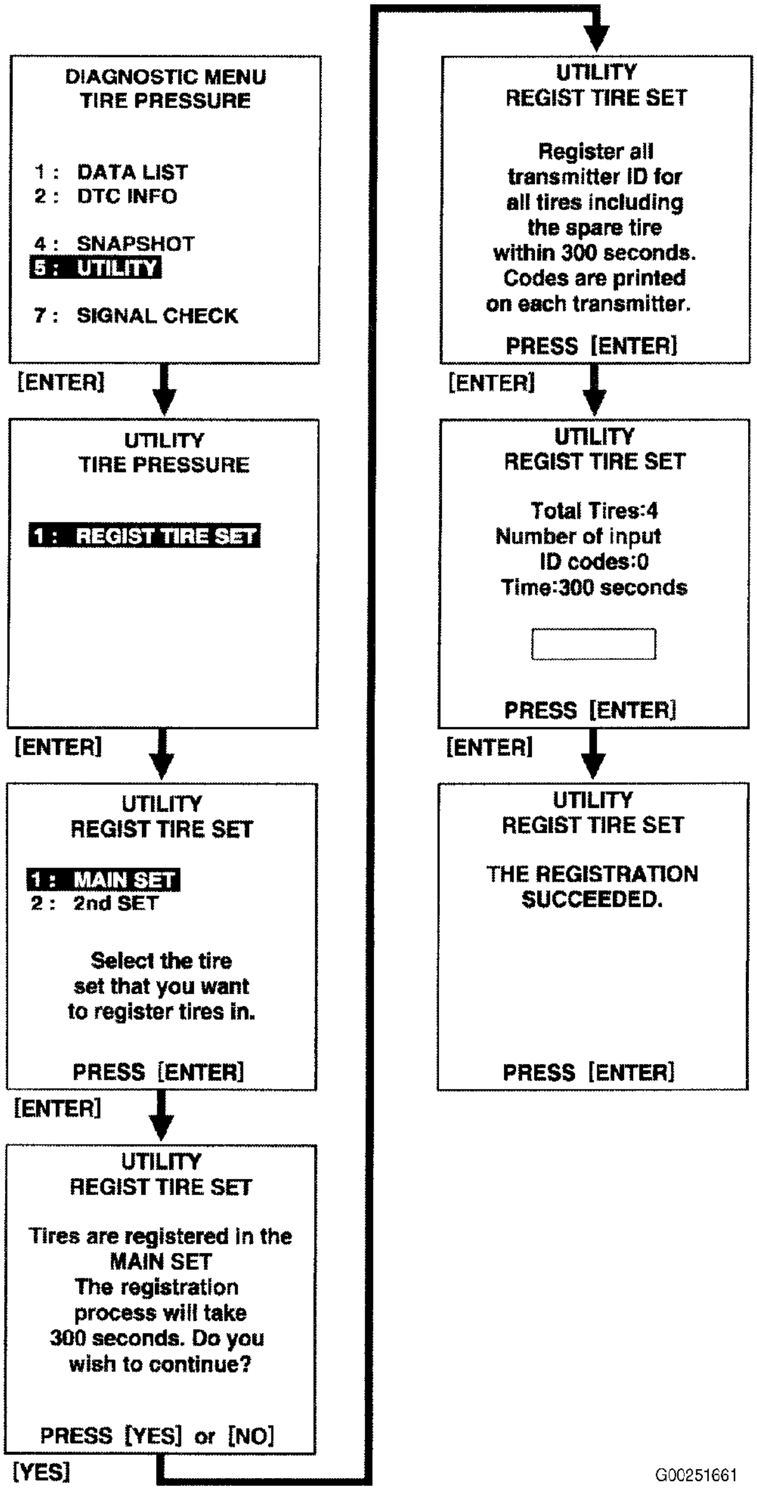
DIAGNOSTIC MENU
TIRE PRESSURE
1 : DATA LIST
2 : DTC INFO
4 : SNAPSHOT
5 : UTILITY
7 : SIGNAL CHECK
[ENTER]
UTILITY
TIRE PRESSURE
1 : REGIST TIRE SET
[ENTER]
UTILITY
REGIST TIRE SET
1 : MAIN SET
2 : 2nd SET

Select the tire set that you want to register tires in.

PRESS [ENTER]
[ENTER]
UTILITY
REGIST TIRE SET

Tires are registered in the MAIN SET The registration process will take 300 seconds. Do you wish to continue?

PRESS [YES] or [NO]
[YES]
UTILITY
REGIST TIRE SET

Register all transmitter ID for all tires including the spare tire within 300 seconds. Codes are printed on each transmitter.

PRESS [ENTER]
[ENTER]
UTILITY
REGIST TIRE SET

Total Tires:4
Number of input ID codes:0
Time:300 seconds

PRESS [ENTER]
[ENTER]
UTILITY
REGIST TIRE SET

THE REGISTRATION SUCCEEDED.

PRESS [ENTER]
G00251661

Fig. 13: Registering Transmitter ID Using Intelligent Tester (2 Of 2)
Courtesy of TOYOTA MOTOR SALES, U.S.A., INC.

TPMS RESET - PROCEDURE 10

NOTE: **Initialization is NOT required if re-inflating tires to the currently specified tire pressure.**

NOTE: **This system requires initializing after changing tires or wheels, after rotating the tires, or when tire pressure warning light blinks twice every second. Set tire pressure within the specified range before initializing. If the tire air pressure is not within the specified range, tire pressure warning system will not function.**

CAUTION: **Do not push the reset switch without adjusting tire inflation pressure. Otherwise, the low tire pressure warning light may not come on even if the tire pressure is low, or it may come on when the tire inflation pressure is actually normal. If you push the reset switch while the vehicle is moving, initialization is not performed.**

1. Set the tire pressure of all wheels to pressure specified on the tire and loading information label.
2. With vehicle stopped and parking brake applied, turn ignition switch to ON position.
3. Press and hold the tire pressure warning reset switch until the tire pressure warning light blinks 3 times at one-second intervals.

NOTE: **If the tire pressure warning light does not blink, turn ignition switch to OFF position. Perform the initialization procedure again starting at step 2. If light still does not blink, there is a problem in the TPM system. See appropriate manufacturer service information.**

4. Drive the vehicle at 19 mph (30 km/h) or more to complete the initialization of the ABS/skid control ECU (it takes more than one hour). Vehicle should be driven under the following conditions:
   - The vehicle speed is between 31-62 mph (50-100 km/h).
   - The roads are dry, smooth and straight.
   - The number of passengers is 1 or 2 (including driver).

NOTE: **If the tire pressure warning light blinks at 0.25 second intervals while the vehicle is being driven, the initialization may have failed. If so, turn ignition switch to OFF position. Perform the initialization procedure again starting at step 1.**

5. After initialization is completed, the ABS/skid control ECU monitors the tire pressure by using the wheel speed sensors.
6. To verify the system has been initialized, check the length of time the tire pressure warning light is on after turning the ignition switch to the ON position. Light will stay on for 3 seconds if system is initialized, or 4 seconds if system is not initialized.

TPMS RESET - PROCEDURE 11

NOTE: **Reset is NOT required if re-inflating tires to the currently specified tire pressure.**

NOTE: **When a tire pressure sensor and/or tire pressure monitor ECU are replaced, the sensor ID must be memorized by the tire pressure monitor ECU. See Tire Pressure Sensor Registration.**

Tire Pressure Monitor Warning Light

NOTE: **The tire pressure warning light may turn on due to natural causes such as natural air leaks or tire pressure changes caused by temperature. In this case, adjusting the tire pressure will turn off the warning light.**

NOTE: **If warning light turned on due to very low outside temperatures (such as in winter) causing decreases in tire pressure, adjust pressure to a higher pressure suitable to cold conditions. Tire pressure decreases by about 1.45 psi (10 kPa) for every 50°F (10°C) drop in ambient temperature.**

When the tire pressure warning light does not go off, or when it comes on during driving, check tire pressure (including spare tire) and adjust as necessary. The warning light should turn off within a few minutes. If the warning light is still on even though the tire pressure is correctly adjusted, the tire could be punctured. Repair as necessary. If the warning light turns on within several hours after adjusting the tire pressure, the tire may have a slow air leak. Repair as necessary. If the warning light stays on or blinks, there is a malfunction in the TPM system. See appropriate manufacturer service information.

Under the following conditions, the system may not function properly:

- The areas, facilities or devices that use similar radio wave frequencies are located in the vicinity of the vehicle.
- A radio device of similar frequency is used near the vehicle.
- A lot of snow or ice is stuck to the vehicle, especially around the wheels or wheel housings.
- Tires and wheels are installed that are not equipped with a tire pressure sensor.
- Snow tires or tire chains are used.
- The battery of the sensor has been depleted.
- Wheels other than manufacturer factory wheels are used. If any other wheels than the specified ones are used, the system may not function properly because the radio waves are differently transmitted from the tire pressure sensor.
- Radio waves from the air pressure sensor installed on the spare tire cannot be received. If this problem has occurred, rotate spare tire 90 degrees and recheck system.
- Depending on the tire type, the system may not function properly even though the specified wheels are used.
- Using a different type of tire in combination with genuine tires.
- If system was initialized with tire pressures which are not the specified values.

Tire Pressure Sensor Registration

NOTE: **When a tire pressure sensor and/or tire pressure monitor ECU are replaced, the**

sensor ID must be memorized by the tire pressure monitor ECU. To perform this procedure, a Toyota intelligent tester (with CAN VIM) must be used. It is not necessary to register the sensor IDs when only tire rotation is performed.

NOTE: **Before beginning registration process on vehicles where tire pressure sensors have not been replaced, retrieve sensor transmitter IDs using intelligent tester or by reading the ID on the tire pressure sensor. If sensor is being replaced with a new one, make a note of the 7-digit number (transmitter ID) before installation, as it cannot be seen after sensor is installed.**

1. Set the tire pressure of all wheels (including spare tire) to pressure specified on the tire and loading information label.
2. Connect the intelligent tester (with CAN VIM) to DLC3. See **Fig. 11**.
3. Turn the ignition switch to ON position.
4. Read and record the transmitter IDs (ID1 to ID5) by using the DATA LIST. See **Fig. 14** and **Fig. 15** .
5. Select the "REGIST TIRE" mode.
6. Select the "MAIN" registration mode.
7. Input the transmitter IDs (ID1 to ID5) using the intelligent tester and transmit it to the tire pressure monitor ECU.
8. Set ID transmission condition to "COMPLETE".

   NOTE: **The previously registered IDs will be deleted from the memory when the registration is completed.**

   NOTE: **If steps 4-8 are not completed within 5 minutes, the mode will return to the normal operation mode.**

9. When intelligent tester confirms that ID registration has successfully been completed, turn ignition switch to OFF position.
10. Turn ignition switch to ON position. Select the "SIGNAL CHECK" mode on the intelligent tester.
11. Confirm that the transmitter IDs and the tire pressure data is displayed for all 5 tires on the intelligent tester.

   NOTE: **It may take up to one minute to update the tire pressure data.**

   NOTE: **If the IDs have not been registered, DTC C2171/71 is set in the tire pressure monitor ECU after about 60 minutes.**

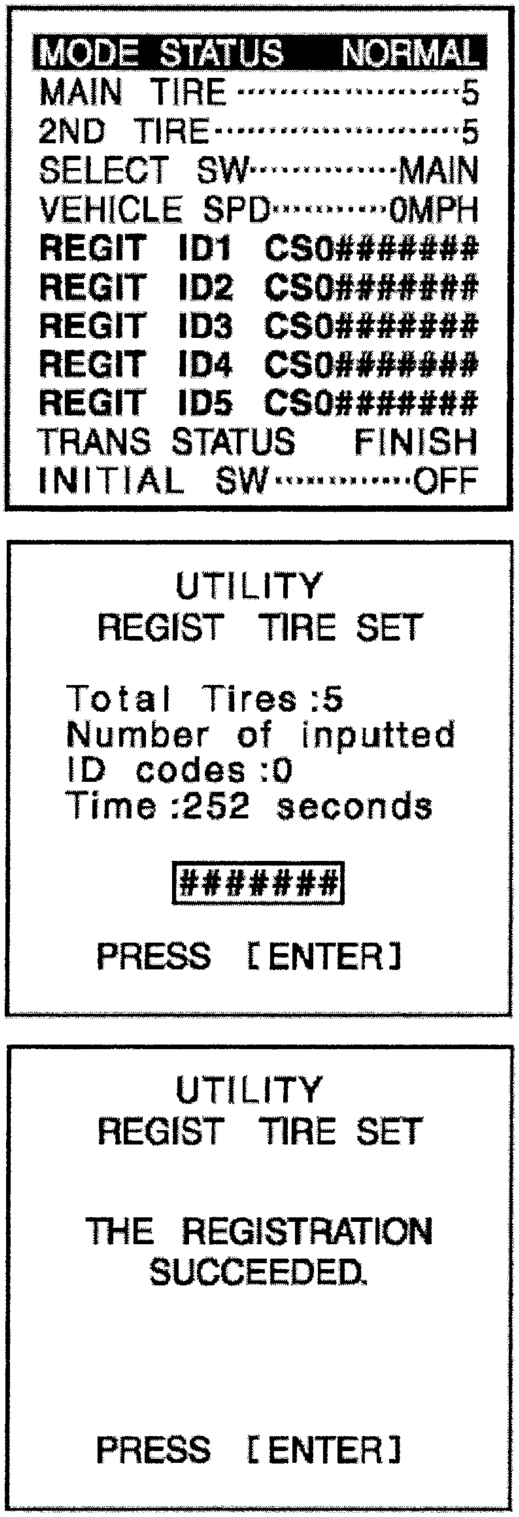

```
MODE STATUS    NORMAL
MAIN  TIRE ··················5
2ND  TIRE ····················5
SELECT  SW·············MAIN
VEHICLE SPD··········0MPH
REGIT  ID1  CS0#######
REGIT  ID2  CS0#######
REGIT  ID3  CS0#######
REGIT  ID4  CS0#######
REGIT  ID5  CS0#######
TRANS STATUS    FINISH
INITIAL  SW············OFF
```

```
        UTILITY
    REGIST  TIRE SET

  Total  Tires :5
  Number  of  inputted
  ID  codes :0
  Time :252  seconds

        #######

    PRESS  [ENTER]
```

```
        UTILITY
    REGIST  TIRE SET

    THE  REGISTRATION
       SUCCEEDED.

    PRESS  [ENTER]
```

Fig. 14: Registering Transmitter ID Using Intelligent Tester (1 Of 2)
Courtesy of TOYOTA MOTOR SALES, U.S.A., INC.

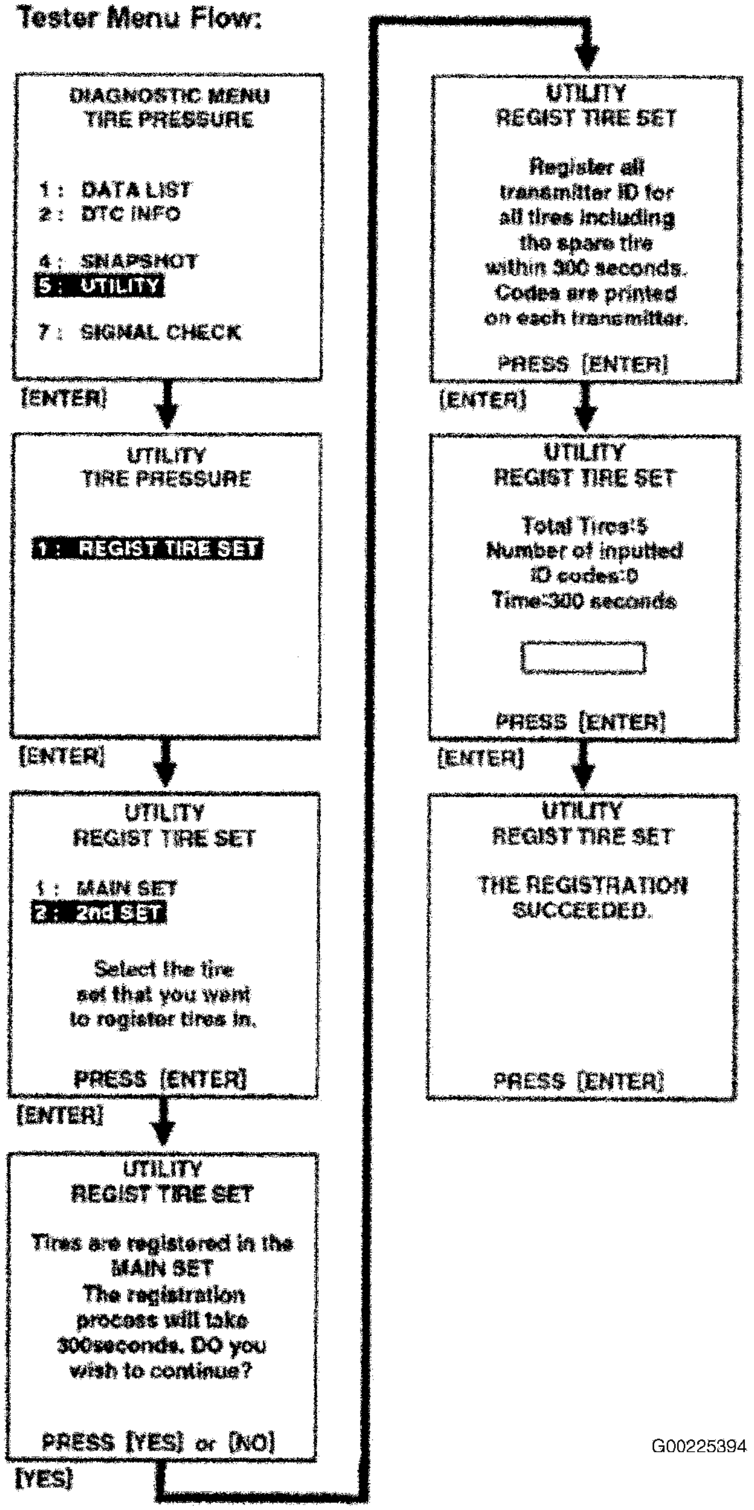
Tester Menu Flow:
DIAGNOSTIC MENU
TIRE PRESSURE
1 : DATA LIST
2 : DTC INFO
4 : SNAPSHOT
5 : UTILITY
7 : SIGNAL CHECK
[ENTER]
UTILITY
TIRE PRESSURE
1 : REGIST TIRE SET
[ENTER]
UTILITY
REGIST TIRE SET
1 : MAIN SET
2 : 2nd SET
Select the tire set that you want to register tires in.
PRESS [ENTER]
[ENTER]
UTILITY
REGIST TIRE SET
Tires are registered in the MAIN SET
The registration process will take 300seconds. DO you wish to continue?
PRESS [YES] or [NO]
[YES]
UTILITY
REGIST TIRE SET
Register all transmitter ID for all tires including the spare tire within 300 seconds. Codes are printed on each transmitter.
PRESS [ENTER]
[ENTER]
UTILITY
REGIST TIRE SET
Total Tires:5
Number of inputted ID codes:0
Time:300 seconds
PRESS [ENTER]
[ENTER]
UTILITY
REGIST TIRE SET
THE REGISTRATION SUCCEEDED.
PRESS [ENTER]
G00225394

Fig. 15: Registering Transmitter ID Using Intelligent Tester (2 Of 2)
Courtesy of TOYOTA MOTOR SALES, U.S.A., INC.

TPMS RESET - PROCEDURE 12

NOTE: Initialization is NOT required if re-inflating tires to the currently specified tire pressure.

NOTE: This system requires initializing after changing tires or wheels, after rotating the tires, or when tire pressure warning light blinks twice every second. Set tire pressure within the specified range before initializing. If the tire air pressure is not within the specified range, tire pressure warning system will not function. See appropriate manufacturer service information.

NOTE: If the negative battery terminal is disconnected, initialize the following systems after the terminal is reconnected: power window, power sliding door, power back door and moon roof. Refer to owner's manual or appropriate manufacturer service information.

CAUTION: Do not push the reset switch without adjusting tire inflation pressure. Otherwise, the low tire pressure warning light may not come on even if the tire pressure is low, or it may come on when the tire inflation pressure is actually normal. If you push the reset switch while the vehicle is moving, initialization is not performed.

1. Set the tire pressure of all wheels to pressure specified on the tire and loading information label.
2. With the vehicle stopped and parking brake applied, turn the ignition switch to the ON position.
3. Press and hold the tire pressure warning reset switch until the tire pressure warning light blinks 3 times at one-second intervals (continue pressing the switch for about 3-4 seconds). See **Fig. 16**.

NOTE: If the tire pressure warning light does not blink, turn ignition switch to OFF position and perform the initialization procedure again starting at step 2. If light still does not blink, there is a problem in the TPM system. See appropriate manufacturer service information.

4. On 2004-06 models, drive the vehicle at 19 MPH (30 KM/H) or more to initialize the skid control ECU. This may take 30-60 minutes.

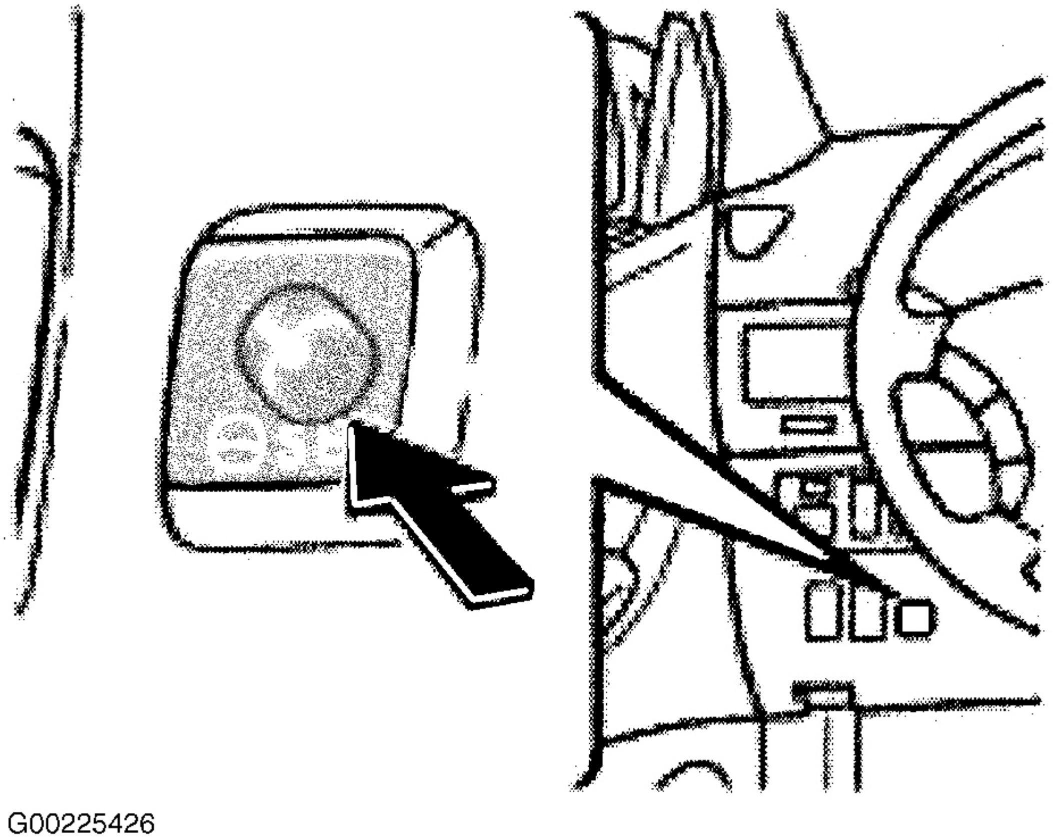

Fig. 16: Locating TPM System Reset Switch
Courtesy of TOYOTA MOTOR SALES, U.S.A., INC.

TPMS RESET - PROCEDURE 13

NOTE: Initialization is NOT required if re-inflating tires to the currently specified tire pressure.

NOTE: The system will need to be initialized when tires are replaced with tires of different pressures; tire pressure sensor and/or tire pressure monitor ECU are replaced; or when a new vehicle is delivered. Set tire pressure within the specified range before initializing. When a tire pressure sensor and/or tire pressure monitor ECU are replaced, the sensor ID must be memorized by the tire pressure monitor ECU prior to system initialization. See Tire Pressure Sensor Registration.

Initializing Tire Pressure Monitor System

CAUTION: Set tire pressure within the specified range before initializing. DO NOT

push the reset switch without adjusting tire inflation pressure of all 4 tires. Otherwise, the low tire pressure warning light may not come on even if the tire pressure is low, or it may come on when the tire inflation pressure is actually normal. If you push the reset switch while the vehicle is moving, initialization is not performed.

NOTE: **When initializing the system, the present tire condition is stored as a standard.**

NOTE: **Perform the tire pressure adjustment after the vehicle has sufficiently cooled down. If it hasn't sufficiently cooled, increase the air pressure in the tires approximately 3-4psi (20-30kPa)**

NOTE: **The initialization mode can be terminated by making a short circuit between terminals No. 4 and 13 of the DLC3 connector (located under left side of instrument panel).**

During initialization, the tire pressure monitor valve sub-assembly measures the inflation pressure of the tires, and registers the signals that are transmitted into the tire pressure monitor ECU at a frequency of one per minute. The initialization process is completed when the signals from the 4 tires have been received.

The initialization process is canceled if the ignition switch is turned to OFF position prior to the completion of initialization. To restart initialization, the tire pressure warning reset switch must be pressed again.

1. Set the tire pressure of all wheels to pressure specified on the tire and loading information label.
2. With the vehicle parked in a safe place, connect the intelligent tester to the DLC3 and turn POWER switch to the ON position.
3. Turn the intelligent tester ON and navigate to the "TIREPRESS" option using the on-screen prompts.
4. Within 30 seconds of turning the ignition ON, press and hold the tire pressure warning reset switch (located to the left of the steering wheel) until the tire pressure warning light blinks 3 times at one-second intervals.
5. Wait 5 - 6 minutes, with the ignition ON, for the initialization process to complete. If the initialization has not been completed successfully, Diagnostic Trouble Code (DTC) C2177/77 is set in the tire pressure monitor ECU about 20 minutes after driving starts.
6. Confirm that initialization is complete by verifying that the correct tire pressure values are displayed on the intelligent tester.

NOTE: **In winter, tire pressure may decrease due to low ambient temperatures (about 1.45 psi (10 kPa) for every 18°F (10°C) drop in ambient temperature). Therefore, the tire pressure warning is more likely to operate if the tire pressures are not adjusted appropriately. If the daily temperature variation is large, pressurize the tires so that they are in the specified range under cold conditions. With this adjustment, unnecessary warnings are less likely.**

Tire Pressure Sensor Registration

NOTE: When a tire pressure sensor and/or tire pressure monitor ECU are replaced, the sensor ID must be memorized by the tire pressure monitor ECU prior to system initialization. To perform this procedure, a Toyota intelligent tester (with CAN VIM) must be used. It is not necessary to register the sensor ID(s) when only tire rotation is performed.

NOTE: Before beginning registration process on vehicles where tire pressure sensors have not been replaced, retrieve sensor transmitter ID(s) using intelligent tester or by reading the ID on the tire pressure sensor. If sensor is being replaced with a new one, make a note of the 8-digit number (transmitter ID) before installation, as it cannot be seen after sensor is installed.

1. Set the tire pressure of all wheels to pressure specified on the tire and loading information label.
2. Connect the intelligent tester (with CAN VIM) to DLC3. See **Fig. 11**.
3. Turn the ignition switch to ON position.
4. Select the "REGIST TIRE" mode (UTILITY - REGIST TIRE).
5. Input the transmitter ID(s) (ID1 to ID4), using the intelligent tester, and transmit them to the tire pressure warning ECU. See **Fig. 17** and **Fig. 18** .
6. Set the ID transmission condition to "ID REGISTRATION COMPLETE".

   NOTE: Any previously registered ID(s) will be deleted from the memory when the registration is completed.

   NOTE: If steps 4-6 are not completed within 5 minutes, the mode will return to the normal operation mode.

7. Turn ignition switch to OFF position.
8. Turn ignition switch to ON position. Select the "TIRE PRESS" mode on the intelligent tester.
9. Confirm that the tire pressure data is displayed for all 4 tires on the intelligent tester. This will confirm that the registration has been completed successfully.

   NOTE: It may take 5 - 6 minutes to update the tire pressure data.

   NOTE: If the ID(s) have not been registered, DTC C2171/71 is set in the tire pressure monitor ECU after about 3 minutes.

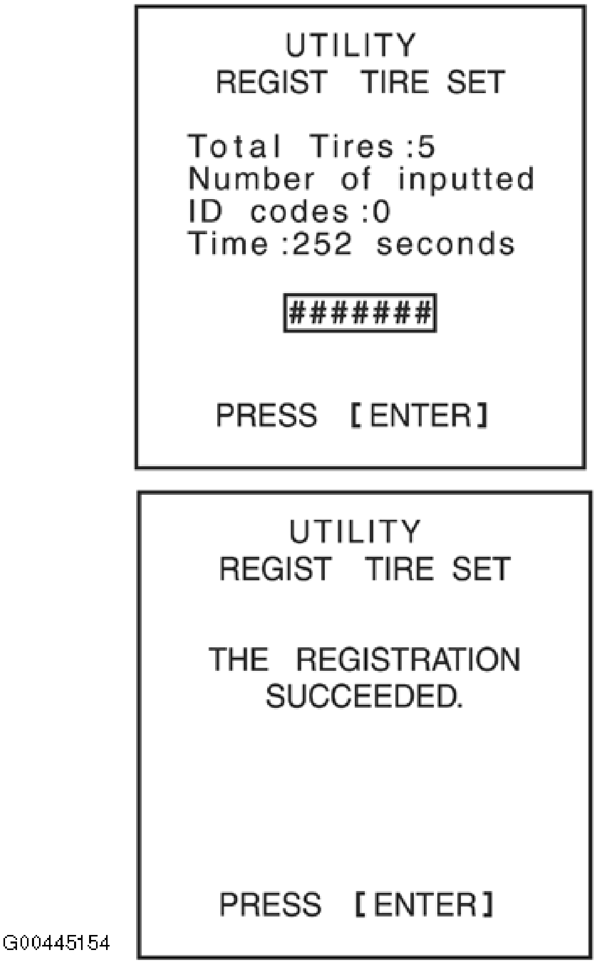

UTILITY
REGIST TIRE SET

Total Tires :5
Number of inputted
ID codes :0
Time :252 seconds

#######

PRESS [ENTER]

UTILITY
REGIST TIRE SET

THE REGISTRATION
SUCCEEDED.

PRESS [ENTER]

Fig. 17: Registering Transmitter ID Using Intelligent Tester (1 Of 2)
Courtesy of TOYOTA MOTOR SALES, U.S.A., INC.

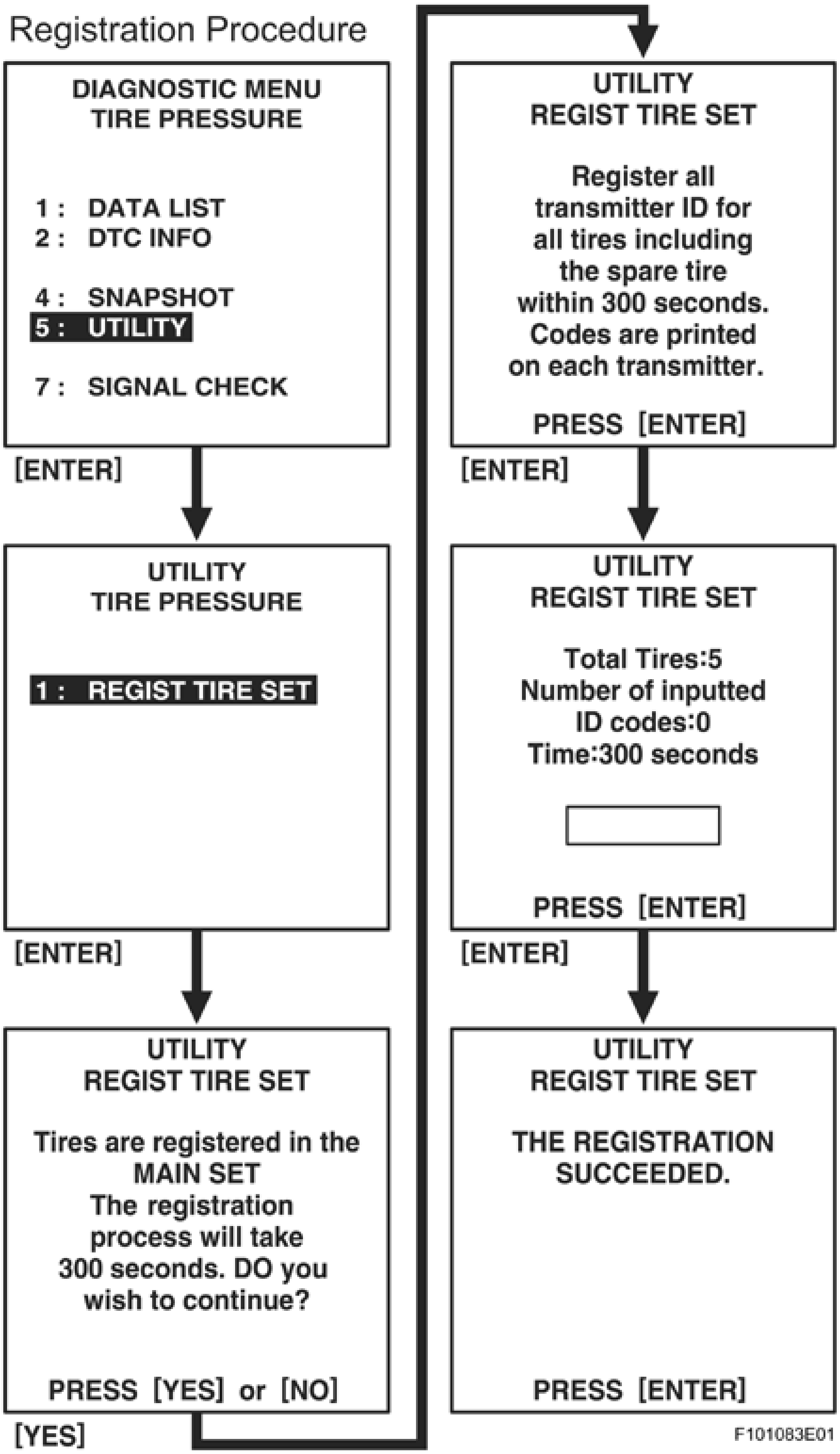
Registration Procedure
DIAGNOSTIC MENU
TIRE PRESSURE
1 : DATA LIST
2 : DTC INFO
4 : SNAPSHOT
5 : UTILITY
7 : SIGNAL CHECK
[ENTER]
UTILITY
TIRE PRESSURE
1 : REGIST TIRE SET
[ENTER]
UTILITY
REGIST TIRE SET
PRESS [YES] or [NO]
[YES]
UTILITY
REGIST TIRE SET
PRESS [ENTER]
[ENTER]
UTILITY
REGIST TIRE SET
PRESS [ENTER]
[ENTER]
UTILITY
REGIST TIRE SET
PRESS [ENTER]
F101083E01

Tires are registered in the MAIN SET The registration process will take 300 seconds. DO you wish to continue?

Register all transmitter ID for all tires including the spare tire within 300 seconds. Codes are printed on each transmitter.

Total Tires:5
Number of inputted ID codes:0
Time:300 seconds

THE REGISTRATION SUCCEEDED.

G00445155

Fig. 18: Registering Transmitter ID Using Intelligent Tester (2 Of 2)
Courtesy of TOYOTA MOTOR SALES, U.S.A., INC.

TPMS RESET - PROCEDURE 14

NOTE: Initialization is NOT required if re-inflating tires to the currently specified tire pressure.

NOTE: The system will need to be initialized when tires are replaced with tires of different pressures; tire pressure sensor and/or tire pressure monitor ECU are replaced; or when a new vehicle is delivered. Set tire pressure within the specified range before initializing. If tire pressure sensor and/or tire pressure monitor ECU were replaced, ensure that tire pressure sensor IDs are registered prior to initialization. See Tire Pressure Sensor Registration.

Initializing Tire Pressure Monitor System

CAUTION: Set tire pressure within the specified range before initializing. DO NOT push the reset switch without adjusting tire inflation pressure of all 5 tires (including the spare tire). Otherwise, the low tire pressure warning light may not come on even if the tire pressure is low, or it may come on when the tire inflation pressure is actually normal. If you push the reset switch while the vehicle is moving, initialization is not performed.

NOTE: The initialization mode can be terminated by making a short circuit between terminals No. 4 and 13 of the DLC3 connector (located under left side of instrument panel).

NOTE: When initializing the system, the present tire condition is stored as a standard.

During initialization, the tire pressure monitor valve sub-assembly measures the inflation pressure of the tires, and registers the signals that are transmitted into the tire pressure monitor ECU at a frequency of one per minute. The initialization process is completed when the signals from the 5 tires have been received.

The initialization process is canceled if the ignition switch is turned to OFF position during initialization. To initialize again, the tire pressure warning reset switch must be pressed again. For this reason, once the tire pressure warning reset switch has been pressed, turning ignition switch to OFF position is not recommended for a minimum of 20 minutes.

1. Set the tire pressure of all wheels (including spare tire) to pressure specified on the tire and loading information label.
2. With the vehicle stopped and parking brake applied, turn the ignition switch to the ON position.
3. Press and hold the tire pressure warning reset switch (located under steering wheel) until the tire pressure warning light blinks 3 times at one-second intervals.
4. After 2-3 minutes, the initialization process should be completed. If the initialization has not been completed successfully, Diagnostic Trouble Code (DTC) C2177/77 is set in the tire pressure monitor ECU about 20 minutes after driving starts.
5. Confirm that initialization is complete using the intelligent tester. This may be done by checking for the

test DTCS (C2181/81 to C2191/91) to be indicated, or by ensuring that tire pressure values can be displayed on the tester (it can take 2-3 minutes to display tire pressure data).

NOTE: If outside temperatures are very low (such as in winter), which can cause decreases in tire pressure, leave ignition on for about 20 minutes after confirmation that initialization has been completed, and increase the tire inflation pressure by 3-4 psi (20-30 kPa).

Tire Pressure Sensor Registration

NOTE: When a tire pressure sensor and/or tire pressure monitor ECU are replaced, the sensor ID must be memorized by the tire pressure monitor ECU prior to system initialization. To perform this procedure, a Toyota intelligent tester must be used. It is not necessary to register the sensor IDs when only tire rotation is performed.

NOTE: If transmitter IDs cannot be registered, the tire pressure monitor ECU is probably in initialization mode. Initialization mode can be terminated by making a short circuit between terminals No. 4 and 13 of the DLC3 connector (located under left side of instrument panel).

NOTE: Before beginning registration process on vehicles where tire pressure sensors have not been replaced, retrieve sensor transmitter IDs using intelligent tester or by reading the ID on the tire pressure sensor. If sensor is being replaced with a new one, make a note of the 7-digit number (transmitter ID) before installation, as it cannot be seen after sensor is installed.

NOTE: When system is in initialization mode after the reset switch has been operated, the registration is disabled until the initialization process is canceled or completed.

1. Set the tire pressure of all wheels (including spare tire) to pressure specified on the tire and loading information label.
2. Connect the intelligent tester to DLC3. See **Fig. 19**.

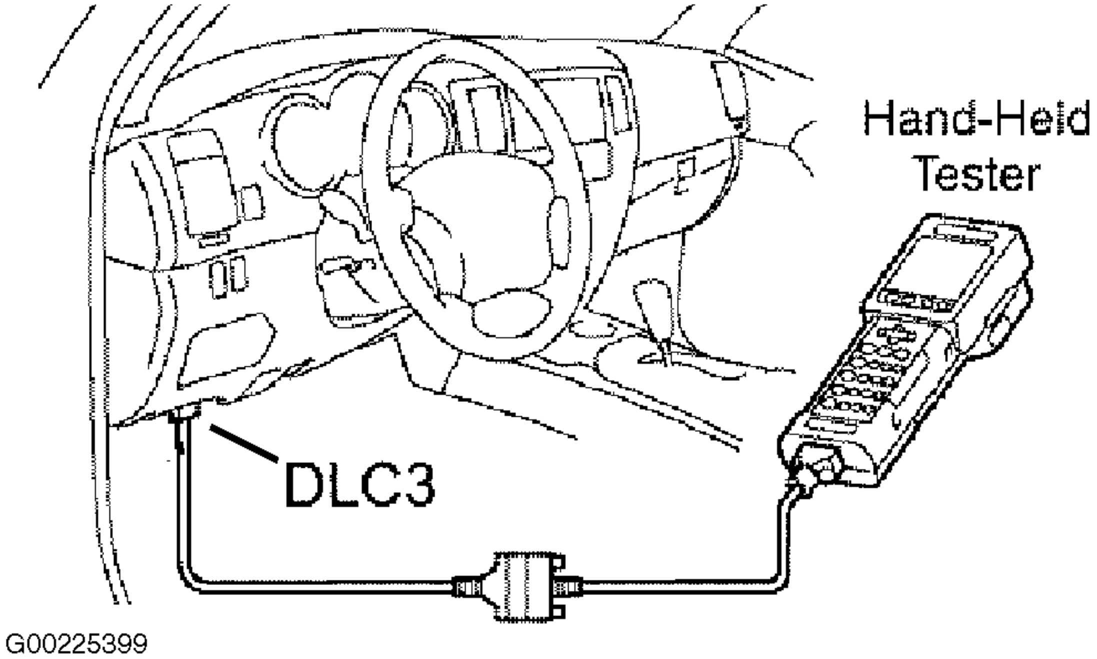

Fig. 19: Connecting Intelligent Tester To DLC3
Courtesy of TOYOTA MOTOR SALES, U.S.A., INC.

3. Turn the ignition switch to the ON position.
4. Read and record the transmitter IDs (ID1 to ID5) by using the DATA LIST. See **Fig. 14**.
5. Input the transmitter IDs (ID1 to ID5) using the intelligent tester and transmit it to the tire pressure monitor ECU. See **Fig. 15**.
6. Select the "REGIST TIRE" mode.
7. Select the "MAIN" registration mode.
8. Set ID transmission condition to "COMPLETE".

NOTE: The previously registered IDs will be deleted from the memory when the registration is completed.

NOTE: If steps 4-8 are not completed within 5 minutes, the mode will return to the normal operation mode.

9. When intelligent tester confirms that ID registration has successfully been completed, turn ignition switch to OFF position.
10. Turn ignition switch to ON position. Select the "SIGNAL CHECK" mode on the intelligent tester.
11. Confirm that the transmitter IDs and the tire pressure data is displayed for all 5 tires on the intelligent tester.

NOTE: It may take up to one minute to update the tire pressure data.

NOTE: **If the IDs have not been registered, DTC C2171/71 is set in the tire pressure monitor ECU after about 30 minutes.**

TPMS RESET - PROCEDURE 15

NOTE: **Initialization is NOT required if re-inflating tires to the currently specified tire pressure.**

NOTE: **The system will need to be initialized when tires are rotated; tires are replaced with tires of different pressures; tire pressure sensor and/or tire pressure monitor ECU are replaced. Set tire pressure within the specified range before initializing. See Initializing Tire Pressure Monitor System. When a tire pressure sensor and/or tire pressure monitor ECU are replaced, the sensor ID must be memorized by the tire pressure monitor ECU prior to system initialization. See Tire Pressure Sensor Registration.**

Tire Pressure Monitor Warning Light

NOTE: **The tire pressure warning light may turn on due to natural causes such as natural air leaks or tire pressure changes caused by temperature. In this case, adjusting the tire pressure will turn off the warning light.**

When the tire pressure warning light does not go off, or when it comes on during driving, check tire pressure (including spare tire) and adjust as necessary. The warning light should turn off after a few minutes. If the warning light is still on even though the tire pressure is correctly adjusted, the tire could be punctured. Repair as necessary. If the warning light is still on or blinks, there is a malfunction in the TPM system. See appropriate manufacturer service information.

Under the following conditions, the system may not function properly:

- The areas, facilities or devices that use similar radio wave frequencies are located in the vicinity of the vehicle.
- A radio device of similar frequency is used in or near the vehicle.
- A lot of snow or ice is stuck to the vehicle, especially the wheels and around the wheel houses.
- The battery of the sensor has been depleted.
- A tire without tire pressure monitor valve sub-assembly is used.
- Tire chains are used.
- If any other wheels than the specified ones are used, the system may not function properly because the radio waves are differently transmitted from the tire pressure sensor.
- Depending on the tire type, the system may not function properly even though the specified wheels are used.

Initializing Tire Pressure Monitor System

NOTE: The system will need to be initialized when tires are rotated; tires are replaced with tires of different pressures; tire pressure sensor and/or tire pressure monitor ECU are replaced; or when a new vehicle is delivered. Set tire pressure within the specified range before initializing.

NOTE: When initializing the system, the present tire condition is stored as a standard.

During initialization, the tire pressure monitor valve sub-assembly measures the inflation pressure of the tires, and registers the signals that are transmitted into the tire pressure monitor ECU at a frequency of one per 3 minutes. The initialization process is completed when the signals from the 5 tires have been received.

1. Set the tire pressure of all wheels (including spare tire) to pressure specified on the tire and loading information label.
2. With the vehicle stopped and parking brake applied, turn the ignition switch to the ON position.
3. Press and hold the tire pressure warning reset switch until the tire pressure warning lamp blinks 3 times at one-second intervals.
4. Confirm that initialization is complete using the hand-held tester. First select "DATA LIST" on the hand-held tester, then verify that the "TIREPRESS" values are displayed. It may take 5 to 6 minutes for the "TIREPRESS" values to display on the hand-held tester screen

   NOTE: The initialization process takes 5 to 6 minutes to be completed. The initialization process can be terminated by connecting terminals 4 (TC) and 13 (CG) of the DLC3.

Tire Pressure Sensor Registration

NOTE: If the tire pressure sensor and/or tire pressure monitor ECU are replaced, the transmitter ID needs to be registered in the tire pressure monitor ECU prior to system initialization. To perform this procedure, the Toyota hand-held tester must be used.

Register Transmitter ID

1. Set the tire pressure of all wheels (including spare tire) to pressure specified on the tire and loading information label.
2. Connect the hand-held tester to DLC3.
3. Turn ignition switch to ON position.
4. Select the "REGIST TIRE" mode. See **Fig. 14** and **Fig. 20** .
5. Input the transmitter IDs (ID1 to ID5) using the hand-held tester and transmit it to the tire pressure monitor ECU.
6. Set the ID transmission condition to "SUCCEEDED".

NOTE: If steps 4-6 are not completed within 5 minutes, the mode will return to the normal operation mode.

Confirmation Of Transmitter ID Registration

1. Set the tire pressure of all wheels (including spare tire) to the specified value.
2. Connect the hand-held tester to DLC3.
3. Turn ignition switch to ON position.
4. Select "DATA LIST" mode on the hand-held tester.
5. Confirm the "TIREPRESS" values are displayed on the hand-held tester screen.

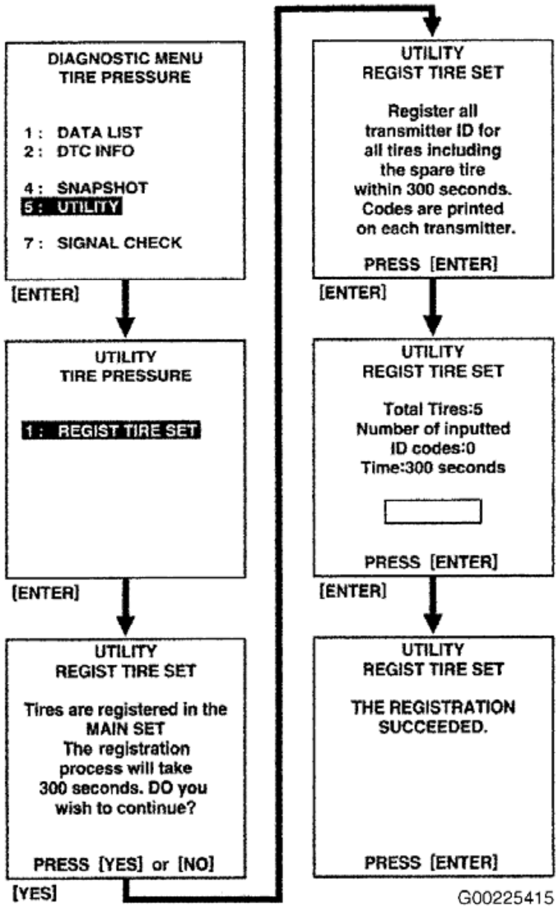
DIAGNOSTIC MENU
TIRE PRESSURE
1 : DATA LIST
2 : DTC INFO
4 : SNAPSHOT
5 : UTILITY
7 : SIGNAL CHECK
[ENTER]
UTILITY
TIRE PRESSURE
1 : REGIST TIRE SET
[ENTER]
UTILITY
REGIST TIRE SET
PRESS [YES] or [NO]
[YES]
UTILITY
REGIST TIRE SET
PRESS [ENTER]
[ENTER]
UTILITY
REGIST TIRE SET
PRESS [ENTER]
[ENTER]
UTILITY
REGIST TIRE SET
PRESS [ENTER]
G00225415

Tires are registered in the MAIN SET The registration process will take 300 seconds. DO you wish to continue?

Register all transmitter ID for all tires including the spare tire within 300 seconds. Codes are printed on each transmitter.

Total Tires:5
Number of inputted ID codes:0
Time:300 seconds

THE REGISTRATION SUCCEEDED.

Fig. 20: Registering Transmitter ID Using Hand-Held Tester
Courtesy of TOYOTA MOTOR SALES, U.S.A., INC.

TPMS RESET - PROCEDURE 16

NOTE:	**Reset is NOT required if re-inflating tires to the currently specified tire pressure.**
NOTE:	**When a tire pressure sensor and/or tire pressure monitor ECU are replaced, the sensor ID must be memorized by the tire pressure monitor ECU. See Tire**

Pressure Sensor Registration.

NOTE: If the negative battery terminal is disconnected, initialize the following system after the terminal is reconnected: Power Window Control System. Refer to owner's manual or appropriate manufacturer service information.

Tire Pressure Monitor Warning Light

When the tire pressure warning light does not go off, or when it comes on during driving, check tire pressure and adjust as necessary. The warning light should turn off within a few minutes. If the warning light is still on even though the tire pressure is correctly adjusted, the tire could be punctured. Repair as necessary. If the warning light turns on within several hours after adjusting the tire pressure, the tire may have a slow air leak. If the warning light is still on or blinks, there is a malfunction in the TPM system. See appropriate manufacturer service information.

NOTE: The tire pressure warning light may turn on due to natural causes such as natural air leaks or tire pressure changes caused by temperature. In this case, adjusting the tire pressure will turn off the warning light. Under the following conditions, the system may not function properly:

- **Facilities or devices that use similar radio wave frequencies are located in the vicinity of the vehicle.**
- **A radio device of similar frequency is used near the vehicle.**
- **A lot of snow or ice is stuck to the vehicle, especially around the wheels or wheel housings.**
- **Tires and wheels are installed that are not equipped with a tire pressure sensor.**
- **Snow tires or tire chains are used.**
- **The battery of the sensor has been depleted.**
- **Wheels other than manufacturer factory wheels are used. If any other wheels than the specified ones are used, the system may not function properly because the radio waves are differently transmitted from the tire pressure sensor.**
- **Depending on the tire type, the system may not function properly even though the specified wheels are used.**
- **Using a different type of tire in combination with genuine tires.**

Tire Pressure Sensor Registration

NOTE: When a tire pressure sensor and/or tire pressure monitor ECU are replaced, the sensor ID must be memorized by the tire pressure monitor ECU. To perform this procedure, a Toyota Techstream must be used. It is not necessary to register the sensor ID(s) when only tire rotation is performed.

NOTE: Before beginning registration process on vehicles where tire pressure sensors have not been replaced, retrieve sensor transmitter ID(s) using intelligent tester or by reading the ID on the tire pressure sensor. If sensor is being replaced with a new one, make a note of the transmitter ID before installation, as it cannot be seen after sensor is installed. See Fig. 21.

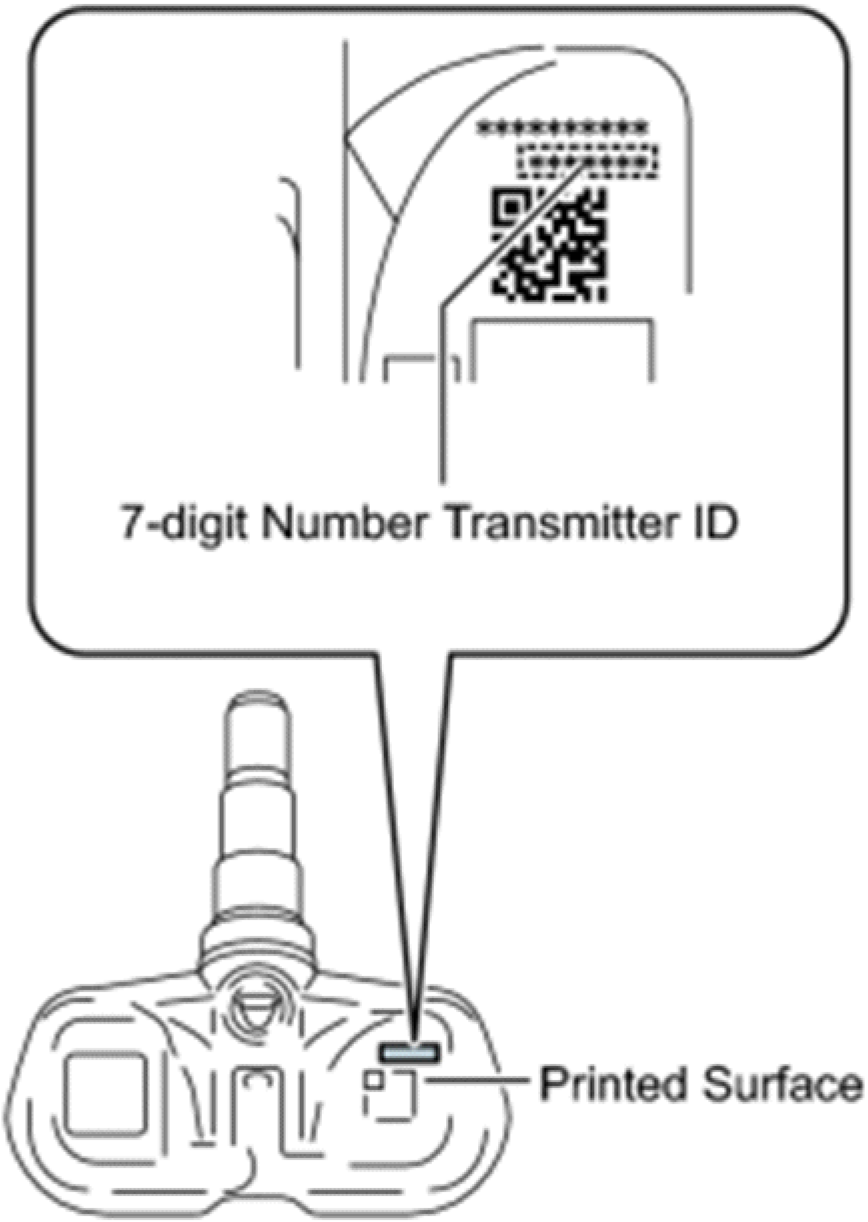

Fig. 21: Locating Tire Pressure Monitor Valve Sub-Assembly Transmitter ID
Courtesy of TOYOTA MOTOR SALES, U.S.A., INC.

1. Set the tire pressure of all wheels to pressure specified on the tire and loading information label.
2. Connect the intelligent tester to DLC3. See **Fig. 11**.

3. Turn the Tachstream scan tool on and the ignition switch to ON position.
4. Enter the following menus: Chassis / Tire Pressure Monitor / Utility / ID Registration.
5. Perform the procedure displayed on the scan tool.

NOTE: Tire pressure sensor IDs that were previously registered will be deleted from the memory when registration is completed.

6. Confirm the tire pressure sensor's IDs are registered:
7. Enter the following menus: Chassis / Tire Pressure Monitor / Data List.
8. Confirm the tire pressure values are displayed for all 4 tires.

NOTE: It may take up to 2 or 3 minutes to update the tire pressure data. If tire pressure values do not display after 2 or 3 minutes, troubleshoot DTCs C2121/21 to C2124/24 (on some models, up to C2125/25).

NOTE: If the ID(s) have not been registered, DTC C2171/71 is set in the tire pressure monitor ECU after 3 minutes or more.

TPMS RESET - PROCEDURE 17

NOTE: For Sequoia, this procedure applies to vehicles from September 2007 and later. For Sequoia models from 2005 up to August 2007, see TPMS RESET - PROCEDURE 7.

NOTE: Initialization is NOT required if re-inflating tires to the currently specified tire pressure.

The system will need to be initialized when tires are rotated; tires are inflated to a specification different from currently logged pressures; tire pressure sensor and/or tire pressure monitor ECU are replaced. See **Initialization**. When a tire pressure sensor and/or tire pressure monitor ECU are replaced, the sensor IDs must be memorized by the tire pressure monitor ECU prior to system initialization. See **Registration**.

Registration

NOTE: The transmitter ID is written on the tire pressure warning valve and transmitter. It will be unable to be read after installing the tire pressure warning valve and transmitter on the tire and wheel. Therefore, take a note of the transmitter ID before installing the tire pressure warning valve and transmitter.

1. Set the air pressure of all wheels to the specified value
2. Turn the ignition switch off.
3. Connect Techstream to the DLC3.
4. Turn the ignition switch on (IG) and the Techstream on.

5. Enter the menu items in this order: Chassis / Tire Pressure Monitor / Utility / ID Registration
6. Perform the transmitter ID registration.
7. Input the transmitter IDs (ID1 to ID5) using the Techstream and transmit them to the tire pressure warning ECU.
8. The "ID Registration is complete" is displayed on the Techstream display.
9. Confirm transmitter ID registration.
   a. Enter the menu items in this order: Chassis / Tire Pressure Monitor / Data List
   b. Read the "ID Tire Inflation Pressure" values.
   c. Confirm that the data of tire pressure of all tires are displayed on the screen.

NOTE:

- **It may take up to about 2 or 3 minutes to update the tire pressure data. If the values are not displayed after a few minutes, perform troubleshooting according to the inspection procedure for DTCs C2121/21 to C2124/24 (on models with full-sized spare, up to C2125/25).**
- **If the IDs have not been registered, DTC C2171/71 is set in the tire pressure warning ECU after 3 minutes or more.**
- **If normal pressure values are displayed, the IDs have been registered correctly.**
- **If the tire pressure values are not displayed after a few minutes, the IDs may be incorrect or the system may have a malfunction.**
- **After all IDs are registered, DTC C2126/26 (Transmitter ID not Received in Main Mode) is set in the tire pressure warning ECU and the tire pressure warning light blinks for 1 minute and then comes on. When the tire pressure warning ECU successfully receives radio waves from all the transmitters whose IDs are stored in the ECU, DTC C2126/26 is deleted and the tire pressure warning light goes off.**

Initialization

NOTE: **Initialization is NOT required if re-inflating tires to the currently specified tire pressure.**

The purpose of Initialization is to tell the TPMS ECU what the inflation pressures should be for the current set of tires. Perform Initialization if the specification changes.

Also perform initialization in the following cases:

- After replacement of the tire pressure warning ECU. Perform initialization after the transmitter ID registration is completed.
- After replacement of the tire pressure warning valve and transmitter. Perform initialization after the transmitter ID registration is completed.
- After rotating the tires on vehicles whose front and rear tire inflation pressure standard values are different.

1. Turn the ignition switch to ON.
2. Press and hold the tire pressure warning reset switch for 3 seconds or more so that the tire pressure warning light blinks 3 times.
3. Turn the ignition switch to OFF.
4. Connect Techstream to the DLC3.
5. Turn the ignition switch to ON and turn the tester on.
6. Enter the following menus: Chassis / Tire Pressure Monitor / Data List.
7. Check that the initialization has been completed.
8. Confirm that the tire pressure data of all tires are displayed on the tester screen.

NOTE:

- **The initialization is normally completed within 2 to 3 minutes.**
- **If the initialization has not been completed successfully, DTC C2177/77 is set after a vehicle speed of 8 km/h (5 mph) or more continues for 20 minutes or more.**
- **The initialization can be terminated by connecting terminals 13 (TC) and 4 (CG) of the DLC3 connector.**

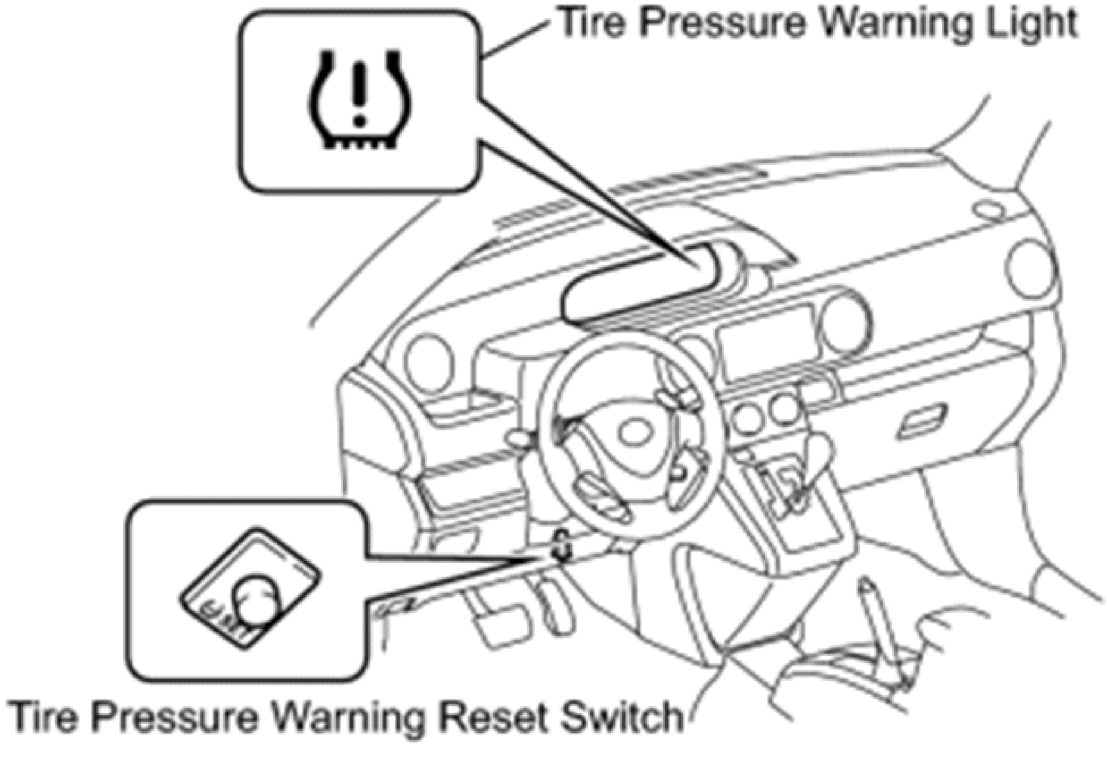
Tire Pressure Warning Light
Tire Pressure Warning Reset Switch

Fig. 22: Identifying Tire Pressure Warning Reset Switch (Typical)
Courtesy of TOYOTA MOTOR SALES, U.S.A., INC.

Maintenance - Camry (Except Hybrid)

OUTSIDE VEHICLE

GENERAL MAINTENANCE

GENERAL MAINTENANCE

These are maintenance and inspection items that are considered to be the owner's responsibility.

The owner can do them or they can have them done at a service center.

These items include those that should be checked on a daily basis, those that in most cases do not require special tools, and those that are considered to be reasonable for the owner to do.

General maintenance items and procedures are as follows:

1. **GENERAL NOTES**
    - Maintenance requirements vary depending on the country.
    - Check the maintenance schedule in the owner's manual supplement.
    - Following the maintenance schedule is mandatory.
    - Determine the appropriate time to service the vehicle using either miles driven or time (months) elapsed, whichever reaches the specification first.
    - Failing to check each vehicle part could lead to poor engine performance and increase exhaust emissions.
2. **TIRES**
    a. Check the tire inflation pressure with a gauge. Make adjustments if necessary.
    b. Check the surfaces of the tires for cuts, damage or excessive wear.
3. **WHEEL NUTS**
    a. Check for nuts that are loose or missing. Tighten them if necessary.
4. **TIRE ROTATION**
    a. Check the maintenance schedule in the owner's manual supplement.
5. **WINDSHIELD WIPER BLADES**
    a. Check the blades for wear or cracks whenever they are unable to wipe the windshield clean. Replace them if necessary.
6. **FLUID LEAKS**
    a. Check under the vehicle for leaking fuel, oil, water and other fluids.

NOTE: If you smell fuel or notice any leaks, locate the cause and correct it.

7. **DOORS AND ENGINE HOOD**

   a. Check that all of the doors and the hood operate smoothly, and that all the latches lock securely.
   b. When the primary latch is released, check that the engine hood secondary latch prevents the hood from opening.

INSIDE VEHICLE

GENERAL MAINTENANCE

GENERAL MAINTENANCE

These are maintenance and inspection items that are considered to be the owner's responsibility.

The owner can do them or they can have them done at a service center.

These items include those that should be checked on a daily basis, those that in most cases do not require special tools, and those that are considered to be reasonable for the owner to do.

General maintenance items and procedures are as follows:

1. **GENERAL NOTES**
   - Maintenance requirements vary depending on the country.
   - Check the maintenance schedule in the owner's manual supplement.
   - Determine the appropriate time to service the vehicle using either miles driven or time (months) elapsed, whichever reaches the specification first.
   - Maintain similar intervals between periodic maintenance unless noted.
   - Failing to check each vehicle part could lead to poor engine performance and increase exhaust emissions.
2. **LIGHTS**
   a. Check that the headlights, stop lights, taillights, turn signal lights, and other lights illuminate or blink properly. Also, check if they have enough brightness.
   b. Check that the headlights are aimed properly.
3. **WARNING LIGHTS AND BUZZERS**
   a. Check that all the warning lights and buzzers are working.
4. **HORNS**
   a. Check if the horn is working correctly.
5. **WINDSHIELD GLASS**
   a. Check for scratches, pits or abrasions.
6. **WINDSHIELD WIPER AND WASHER**
   a. Check that the washers are aimed properly. Also, check that the washer fluid hits the center of the operating range of each wiper on the windshield.
   b. Check if the wipers streak. Replace them if necessary.
7. **WINDSHIELD DEFROSTER**

   a. When the air conditioning is on the defroster setting, check that air comes out of the defroster outlets.

8. **REAR VIEW MIRROR**
   a. Check that the rear view mirror is securely mounted.
9. **SUN VISORS**
   a. Check that the sun visors move freely and are securely mounted.
10. **STEERING WHEEL**
    a. Check that the steering wheel has the proper amount of free play. Also check for steering difficulty and unusual noises. Refer to **ON-VEHICLE INSPECTION - Step 1** .
11. **SEATS**
    a. Check that the seat adjusters, seatback recliner and other seat controls operate smoothly.
    b. Check that all the latches lock securely in all positions.
    c. Check that the locks hold securely in all positions.
    d. Check that the headrests move up and down smoothly and that the locks hold securely in all latched positions.
    e. Check power seat function.

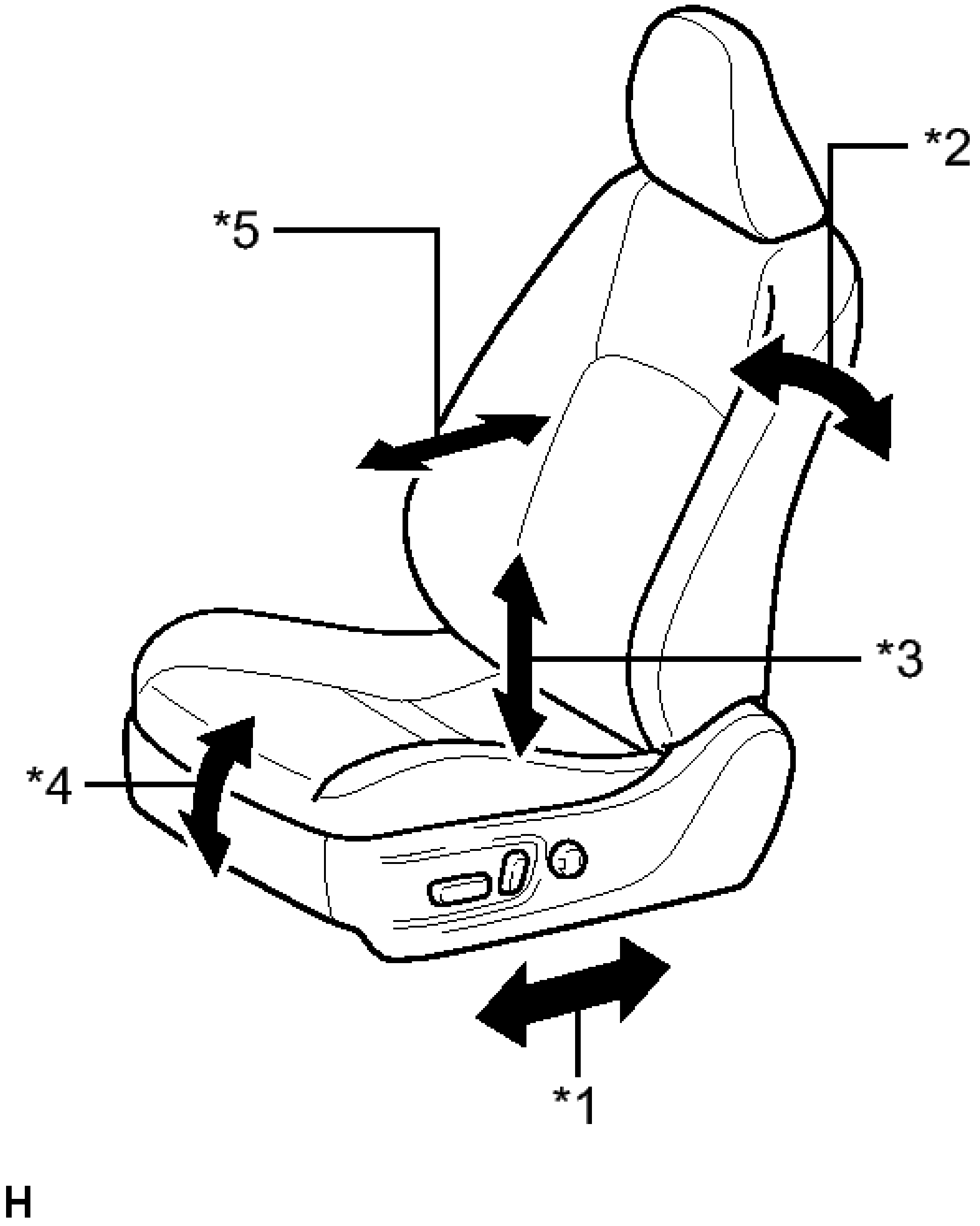

Fig. 1: Identifying Power Seat Functions
Courtesy of TOYOTA MOTOR SALES, U.S.A., INC.

TEXT IN ILLUSTRATION

	Sliding

*1	Function
*2	Reclining Function
*3	Lifter Function
*4	Front Vertical Function
*5	Lumbar Support Adjustment Function

1. Operate the power seat switches and check that each seat function operates properly:
    - Sliding function
    - Reclining function
    - Lifter function*
    - Front vertical function*
    - Lumbar support adjustment function*

    *: for Driver

12. **SEAT BELTS**
    a. Check that the seat belt components, such as the buckles, retractors and anchors, operate properly and smoothly.
    b. Check that the belt webbing is not cut, frayed, worn or damaged.
13. **ACCELERATOR PEDAL**
    a. Check that the pedal operates smoothly. Check that the pedal does not have uneven resistance or stick in certain positions.
14. **BRAKE PEDAL**
    a. Check that the brake pedal operates smoothly.
    b. Check that the pedal has the proper reserve distance and free play. Refer to **ADJUSTMENT - Step 2** .
    c. Start the engine and check the brake booster function.
    d. Start the engine and check the brake system indicator.
15. **BRAKES**
    a. In a safe place, check that the vehicle does not pull or lead to the side when applying the brakes.
16. **PARKING BRAKE**
    a. Check that the parking brake pedal has the proper amount of travel. Refer to **ADJUSTMENT** .
    b. On a slight grade, check that the parking brake alone can hold the vehicle in place.
17. **AUTOMATIC TRANSAXLE "PARK" MECHANISM**
    a. Check the lock release button of the shift lever for proper and smooth operation.

   b. Check the shift lever for proper and smooth operation.
   c. When the shift lever is in P and all brakes are released in an area that has a slight grade, check that the vehicle is stable.

18. **FLOOR MATS**
    a. Check that the correct floor mats are used, and that they are properly installed.

UNDER HOOD

GENERAL MAINTENANCE

GENERAL MAINTENANCE

1. **GENERAL NOTES**
   - Maintenance requirements vary depending on the country.
   - Check the maintenance schedule in the owner's manual supplement.
   - Following the maintenance schedule is mandatory.
   - Determine the appropriate time to service the vehicle using either miles driven or time (months) elapsed, whichever reaches the specification first.
   - Maintain similar intervals between periodic maintenance unless noted.
   - Failing to check each maintenance item could lead to poor engine performance and increase exhaust emissions.
2. **WINDSHIELD WASHER FLUID**
   a. Check that there is sufficient fluid in the tank.
3. **ENGINE COOLANT LEVEL**
   a. Check that the coolant level is between the "FULL" and "LOW" lines on the see-through reservoir.
4. **RADIATOR AND HOSES**
   a. Check that the front of the radiator is clean and not blocked by leaves, dirt and bugs.
   b. Check the radiator and hoses for:
      - Damage
      - Cracks
      - Kinks
      - Corrosion
      - Rot
      - Clogging
      - Leaks
5. **BATTERY ELECTROLYTE LEVEL**
   a. Check that the electrolyte level of all the battery cells is between the upper and lower level lines on the case.

      HINT:

If the electrolyte level is difficult to see, lightly shake the vehicle.

6. **BRAKE FLUID LEVEL**
   a. Check that the brake fluid level is near the upper level line on the see-through reservoirs.
7. **ENGINE DRIVE BELT**
   a. Check the drive belt for fraying, cracks, wear or oil.
8. **ENGINE OIL LEVEL**
   a. Check that the engine oil level is between the full level and low level marks on the dipstick with the engine turned off.
9. **EXHAUST SYSTEM**
   a. Visually inspect for severe corrosion, cracks, holes or loose supports.

   HINT:

   If any change in the sound of the exhaust or smell of the exhaust fumes is noticed, inspect and repair the exhaust system.

ENGINE

GENERAL MAINTENANCE

GENERAL MAINTENANCE

HINT:

Perform these procedures after the engine has cooled down.

1. **INSPECT DRIVE BELT**
   a. Check the drive belt.

Type	See procedures
2AR-FE	Refer to **ON-VEHICLE INSPECTION**
2GR-FE	Refer to **ON-VEHICLE INSPECTION**

2. **REPLACE ENGINE OIL AND OIL FILTER**
   a. Check the engine oil and oil filter.

Type	See procedures
2AR-	Refer to

FE	**REPLACEMENT**
2GR-FE	Refer to **REPLACEMENT**

3. **REPLACE ENGINE COOLANT**
    a. Check the engine coolant.

Type	See procedures
2AR-FE	Refer to **REPLACEMENT**
2GR-FE	Refer to **REPLACEMENT**

4. **INSPECT SPARK PLUGS**
    a. Check the spark plugs.

Type	See procedures
2AR-FE	Refer to **ON-VEHICLE INSPECTION**
2GR-FE	Refer to **ON-VEHICLE INSPECTION**

5. **INSPECT BATTERY**
    a. Check the battery.

Type	See procedures
2AR-FE	Refer to **ON-VEHICLE INSPECTION**
2GR-FE	Refer to **ON-VEHICLE INSPECTION**

6. **INSPECT AIR CLEANER FILTER ELEMENT**
    a. Remove the air filter.
    b. Check that the air cleaner is not excessively dirty.

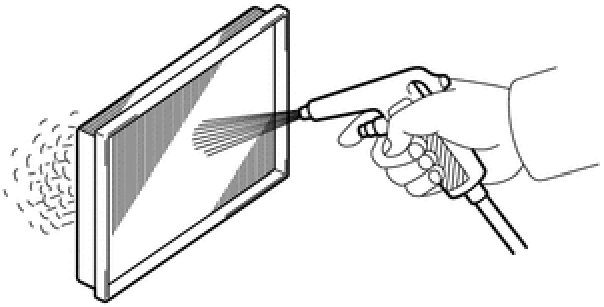

Fig. 2: Cleaning Air Cleaner Filter Element
Courtesy of TOYOTA MOTOR SALES, U.S.A., INC.

If the air cleaner is excessively dirty, replace the air cleaner filter element.

   c. If cleaning the air cleaner filter element, blow compressed air as shown in the illustration to clean it.
   d. Reinstall the air filter.
   e. When an excessive amount of dirt is present, replace the air filter.

7. **INSPECT EXHAUST PIPES AND MOUNTINGS**
   a. Visually check the pipes, hangers and connections for severe corrosion, leaks or damage.
8. **INSPECT FUEL TANK CAP ASSEMBLY**
   a. Check the fuel tank cap gasket.

Type	See procedures
2AR-FE	Refer to **INSPECTION**
2GR-FE	Refer to **INSPECTION**

9. **INSPECT FUEL LINES, CONNECTIONS, FUEL TANK VAPOR VENT SYSTEM HOSES AND FUEL TANK BANDS**
   a. Visually check the fuel lines and hoses for cracks, leaks, loose connections, or deformation.
   b. Check for tank band looseness or deformation.
10. **INSPECT CHARCOAL CANISTER**
   a. Check the charcoal canister.

Type	See procedures
2AR-FE	Refer to **INSPECTION**

2GR-FE	Refer to **INSPECTION**

BRAKE

GENERAL MAINTENANCE

GENERAL MAINTENANCE

1. **INSPECT BRAKE LINE PIPES AND HOSES**

   HINT:

   Work in a well-lighted area. Turn the front wheels fully to the right or left before beginning the inspection.

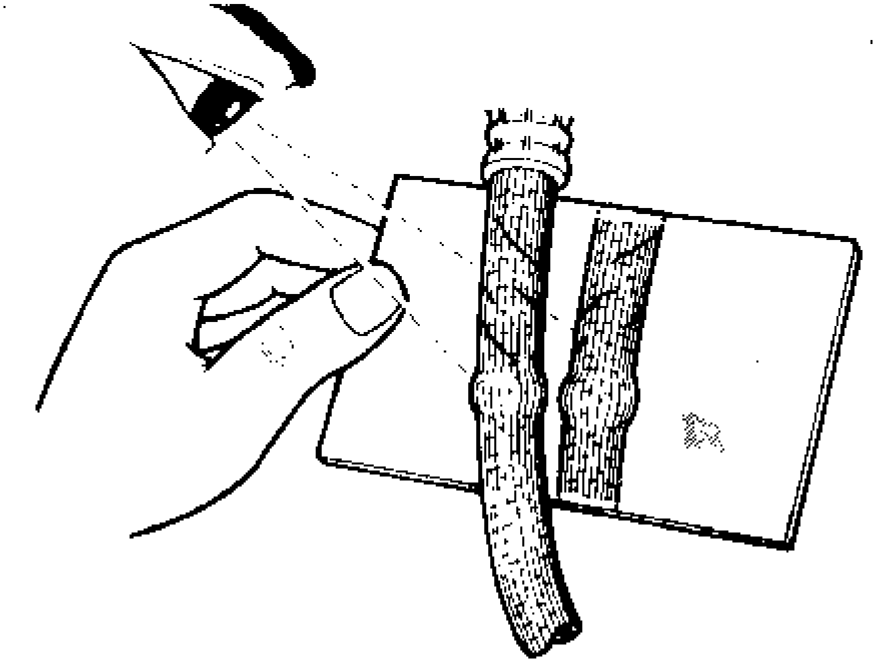

Fig. 3: Inspecting Brake Line Pipes And Hoses
Courtesy of TOYOTA MOTOR SALES, U.S.A., INC.

   a. Using a mirror, check the entire circumference and length of the brake lines and hoses for:
      - Damage
      - Wear
      - Deformation
      - Cracks
      - Kinks
      - Corrosion

        - Leaks
        - Twists
    b. Check all the clamps for tightness and check the connections for leakage.
    c. Check that the hoses and lines are not near sharp edges, moving parts or the exhaust system.
    d. Check that the lines are installed properly and pass through the center of the grommets.
2. **INSPECT BRAKE PEDAL**
    a. Check the brake pedal. Refer to **ADJUSTMENT** .
3. **INSPECT PARKING BRAKE**
    a. Check the parking brake shoe clearance and parking brake pedal travel. Refer to **ADJUSTMENT** .
    b. Check the parking brake cables to ensure that they are not deformed or binding.
4. **INSPECT BRAKE LININGS AND DRUMS**
    a. Check the parking brake linings and drums.
5. **INSPECT FRONT BRAKE**
    a. Check the front brake pads and discs. Refer to **INSPECTION** .
6. **INSPECT REAR BRAKE**
    a. Check the rear brake pads and discs. Refer to **INSPECTION** .
7. **INSPECT OR CHANGE BRAKE FLUID**
    a. Inspect or change the brake fluid. Refer to **ON-VEHICLE INSPECTION** .

       Fluid

       SAE J1703 or FMVSS No. 116 DOT3

CHASSIS

GENERAL MAINTENANCE

GENERAL MAINTENANCE

1. **INSPECT STEERING LINKAGE AND GEAR HOUSING**
    a. Check the steering wheel free play. Refer to **ON-VEHICLE INSPECTION - Step 1** .
    b. Check the steering linkage for looseness or damage.
        1. Check that the tie rod ends do not have any play.
        2. Check that the dust seals and boots are not damaged.
        3. Check that the boot clamps are not loose.
        4. Check that the steering gear housing is not damaged.
2. **INSPECT BALL JOINTS AND DUST COVERS**
    a. Inspect the ball joints for excessive looseness.
        1. Jack up the front of the vehicle and place wooden blocks with a height of 180 to 200 mm (7.09 to 7.87 in.) under the front tires.

    2. Lower the vehicle until the front coil spring has about half its ordinary load. Place stands under the vehicle for safety.
    3. Check that the front wheels are pointing straight ahead. Use wheel chocks on all 4 wheels.
    4. Using a lever, pry up the end of the lower arm. Check the amount of play.

       Maximum ball joint vertical play

       0 mm (0 in.)

       If there is any play, replace the ball joint.

  b. Check the dust cover for damage.

3. **INSPECT DRIVE SHAFT BOOTS**
   a. Check the drive shaft boots for loose clamps, cracks, grease leaks, kinks or damage.
4. **INSPECT AUTOMATIC TRANSAXLE**
   a. Visually check the transaxle for fluid leaks. If fluid is leaking, find the cause and repair it.
5. **INSPECT FRONT AND REAR SUSPENSION**
   a. Check the front and rear suspension.

Suspension Type	**See Procedure**
Front Suspension	Refer to **ADJUSTMENT**
Rear Suspension	Refer to **ADJUSTMENT**

BODY

GENERAL MAINTENANCE

GENERAL MAINTENANCE

1. **TIGHTEN BOLTS AND NUTS ON CHASSIS AND BODY**
   a. If necessary, tighten the bolts and nuts on the chassis parts listed below.
      - Front axle and suspension
      - Drivetrain
      - Rear axle and suspension
      - Brake system
      - Engine mounts
      - Other chassis parts
   b. If necessary, tighten the bolts and nuts on the body parts listed below.
      - Seat belt system

        - Seats
        - Doors and hood
        - Body mounts
        - Fuel tank
        - Exhaust system
        - Other body parts

2. **REPLACE AIR CONDITIONING FILTER**
    1. Remove the air conditioning filter. Refer to **DISASSEMBLY - Step 7** .
    2. Visually inspect the surface of the air conditioning filter.
    3. If the air conditioning filter is contaminated with foreign matter, replace it.
3. **ROAD TEST**
    1. Check the engine and chassis for abnormal noises.
    2. Check that the vehicle does not wander or pull to one side.
    3. Check that the brakes work properly and do not drag.
    4. Bed-in the parking brake shoes to the drums.
4. **BODY INSPECTION**
    1. Check the body exterior for dents, scratches and rust.
    2. Check the underbody for rust and damage.

        If necessary, replace the damaged part or repair the damaged area.

5. **FINAL INSPECTION**
    1. Check the operation of the body parts.
        1. Hood
            - Auxiliary catch operates properly.
            - Hood locks securely when closed.
        2. Front and rear doors
            - Door locks operate properly.
            - Doors close properly.
        3. Luggage compartment door
            - Luggage compartment door opens and closes properly.
        4. Seats
            - Seats adjust easily and lock securely in any position.
            - Front seatbacks lock securely in any position.
            - Fold-down rear seatbacks lock securely.
        5. Be sure to deliver a clean car. Make sure to check the following:
            - Steering wheel
            - Shift lever knob

- All switches and knobs
- Door handles
- Seats

COMBINATION METER

COMPONENTS

ILLUSTRATION

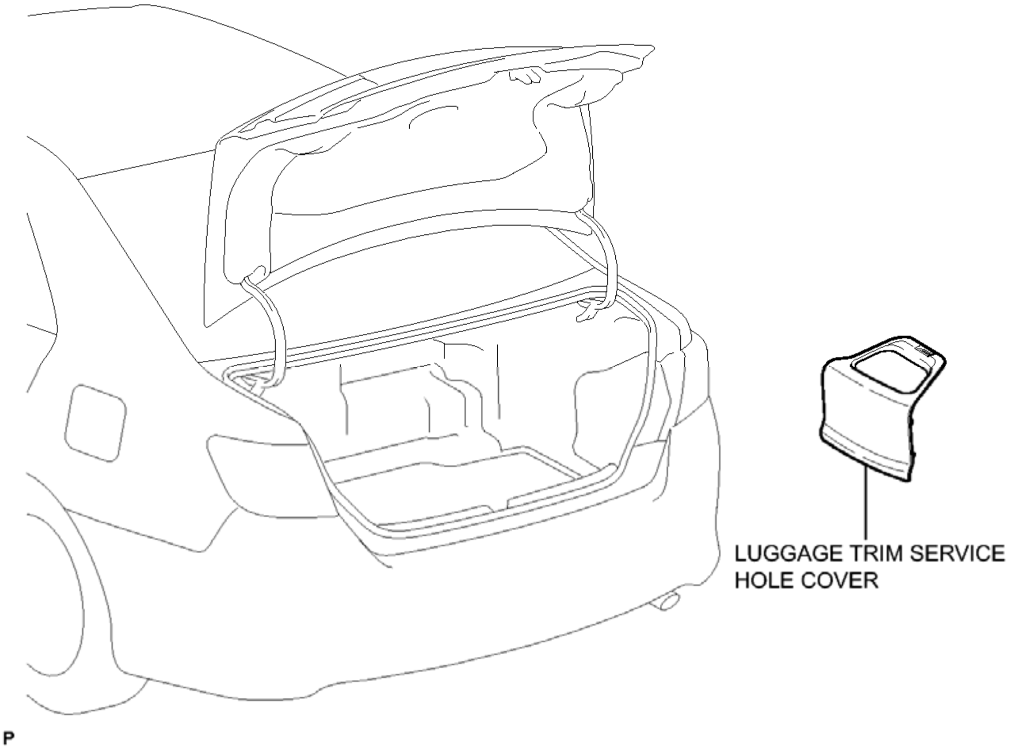
LUGGAGE TRIM SERVICE HOLE COVER
P

Fig. 1: Identifying Combination Meter Replacement Components (1 Of 2)
Courtesy of TOYOTA MOTOR SALES, U.S.A., INC.

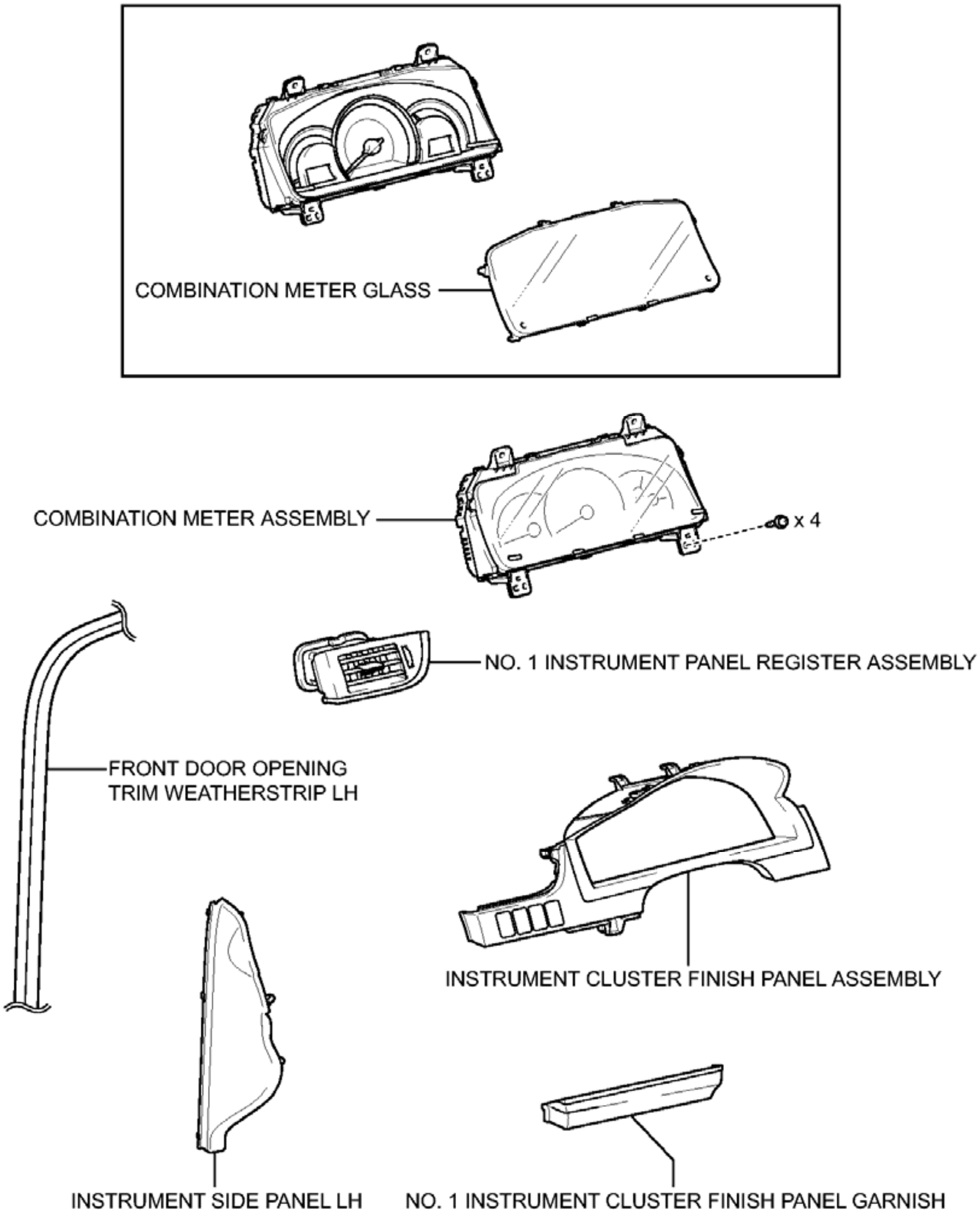
COMBINATION METER GLASS
COMBINATION METER ASSEMBLY
x 4
NO. 1 INSTRUMENT PANEL REGISTER ASSEMBLY
FRONT DOOR OPENING TRIM WEATHERSTRIP LH
INSTRUMENT CLUSTER FINISH PANEL ASSEMBLY
INSTRUMENT SIDE PANEL LH
NO. 1 INSTRUMENT CLUSTER FINISH PANEL GARNISH

P

Fig. 2: Identifying Combination Meter Replacement Components (2 Of 2)
Courtesy of TOYOTA MOTOR SALES, U.S.A., INC.

REMOVAL

REMOVAL

1. **PRECAUTION**

NOTE: **After turning the power switch off, waiting time may be required before disconnecting the cable from the auxiliary battery negative (-) terminal. Therefore, make sure to read the disconnecting the cable from the auxiliary battery negative (-) terminal notices before proceeding with work. Refer to PRECAUTION .**

2. **REMOVE LUGGAGE TRIM SERVICE HOLE COVER** . Refer to **REMOVAL - Step 2**
3. **DISCONNECT CABLE FROM AUXILIARY BATTERY NEGATIVE TERMINAL**

NOTE: **When disconnecting the cable, some systems need to be initialized after the cable is reconnected. Refer to INITIALIZATION .**

4. **DISCONNECT FRONT DOOR OPENING TRIM WEATHERSTRIP LH** . Refer to **REMOVAL - Step 6**
5. **REMOVE INSTRUMENT SIDE PANEL LH** . Refer to **REMOVAL - Step 7**
6. **REMOVE NO. 1 INSTRUMENT CLUSTER FINISH PANEL GARNISH** . Refer to **REMOVAL - Step 8**
7. **REMOVE NO. 1 INSTRUMENT PANEL REGISTER ASSEMBLY** . Refer to **REMOVAL - Step 9**
8. **REMOVE INSTRUMENT CLUSTER FINISH PANEL ASSEMBLY** . Refer to **REMOVAL - Step 10**
9. **REMOVE COMBINATION METER ASSEMBLY**
   a. Remove the 4 screws.

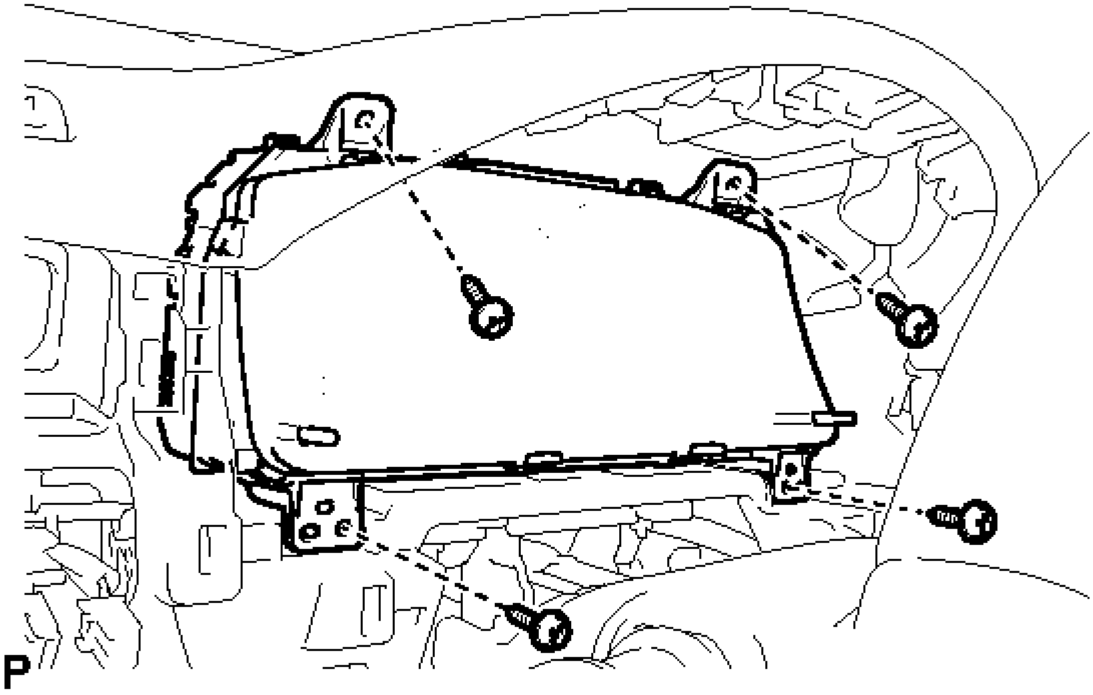

Fig. 3: Identifying Combination Meter Assembly Screws
Courtesy of TOYOTA MOTOR SALES, U.S.A., INC.

b. Disengage the wire harness clamp.

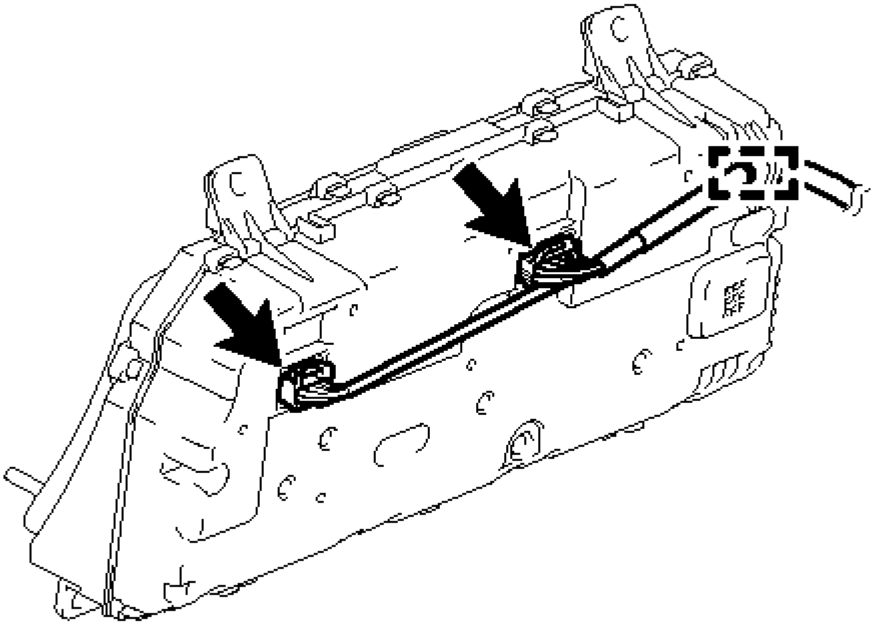

P

Fig. 4: Identifying Combination Meter Assembly Connectors
Courtesy of TOYOTA MOTOR SALES, U.S.A., INC.

c. Disconnect the 2 connectors to remove the combination meter assembly.

DISASSEMBLY

DISASSEMBLY

1. **REMOVE COMBINATION METER GLASS**
    a. Disengage the 8 claws and remove the combination meter glass.

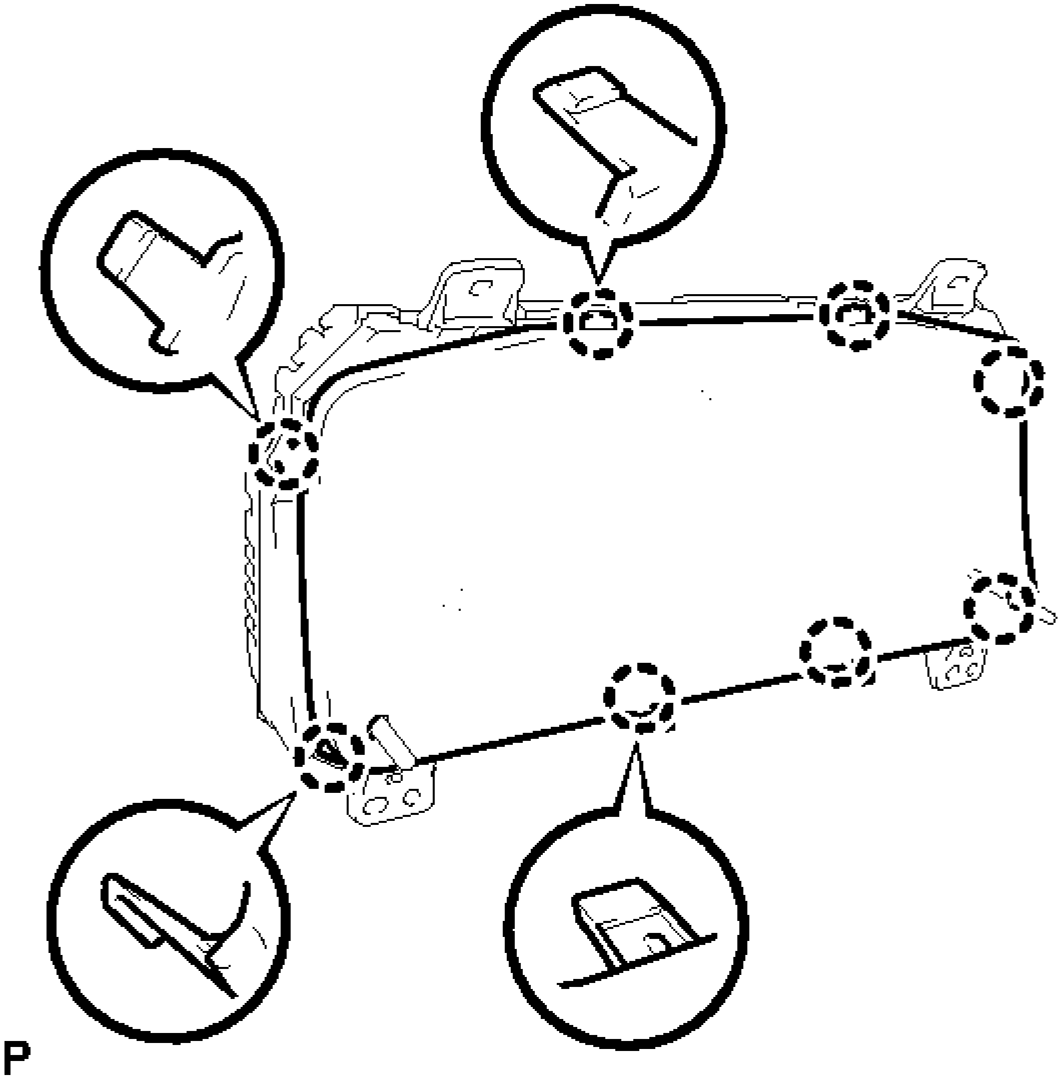

Fig. 5: Identifying Combination Meter Glass Claws
Courtesy of TOYOTA MOTOR SALES, U.S.A., INC.

REASSEMBLY

REASSEMBLY

1. **INSTALL COMBINATION METER GLASS**
   a. Engage the 8 claws to install the combination meter glass.

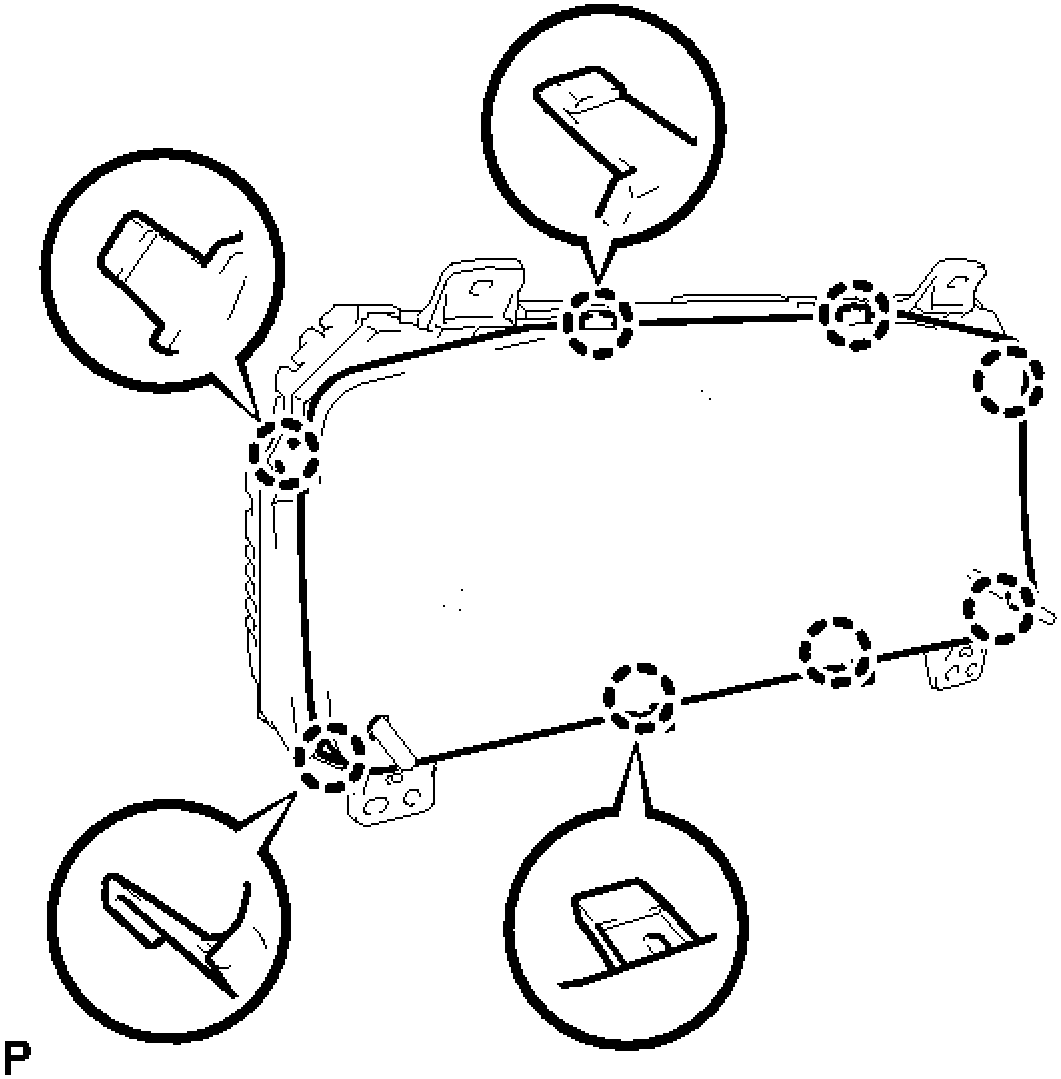

Fig. 6: Identifying Combination Meter Glass Claws
Courtesy of TOYOTA MOTOR SALES, U.S.A., INC.

INSTALLATION

INSTALLATION

1. **INSTALL COMBINATION METER ASSEMBLY**
    a. Connect the 2 connectors.
    b. Engage the wire harness clamp.
    c. Install the combination meter assembly with the 4 screws.
2. **INSTALL INSTRUMENT CLUSTER FINISH PANEL ASSEMBLY** . Refer to **INSTALLATION - Step 42**
3. **INSTALL NO. 1 INSTRUMENT PANEL REGISTER ASSEMBLY** . Refer to **INSTALLATION - Step 43**

4. **INSTALL NO. 1 INSTRUMENT CLUSTER FINISH PANEL GARNISH** . Refer to **INSTALLATION - Step 44**
5. **INSTALL INSTRUMENT SIDE PANEL LH** . Refer to **INSTALLATION - Step 45**
6. **INSTALL FRONT DOOR OPENING TRIM WEATHERSTRIP LH** . Refer to **INSTALLATION - Step 43**
7. **CONNECT CABLE TO AUXILIARY BATTERY NEGATIVE TERMINAL**

   NOTE: **When disconnecting the cable, some systems need to be initialized after the cable is reconnected. Refer to INITIALIZATION .**

8. **INSTALL LUGGAGE TRIM SERVICE HOLE COVER** . Refer to **INSTALLATION - Step 3**

CLOCK

COMPONENTS

ILLUSTRATION

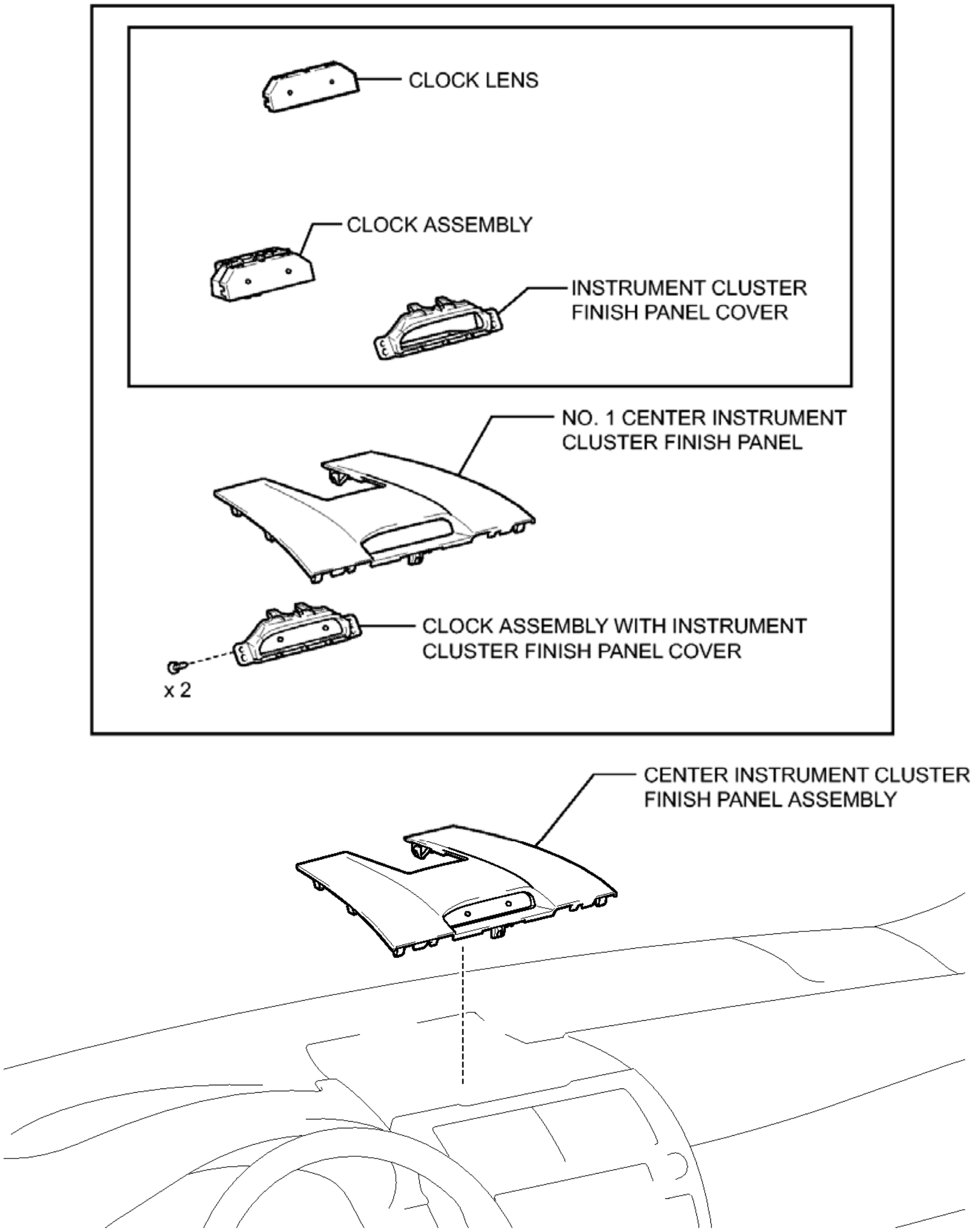
CLOCK LENS
CLOCK ASSEMBLY
INSTRUMENT CLUSTER FINISH PANEL COVER
NO. 1 CENTER INSTRUMENT CLUSTER FINISH PANEL
CLOCK ASSEMBLY WITH INSTRUMENT CLUSTER FINISH PANEL COVER
x 2
CENTER INSTRUMENT CLUSTER FINISH PANEL ASSEMBLY

P

Fig. 7: Identifying Clock Replacement Components
Courtesy of TOYOTA MOTOR SALES, U.S.A., INC.

REMOVAL

REMOVAL

1. **REMOVE CENTER INSTRUMENT CLUSTER FINISH PANEL ASSEMBLY** . Refer to **REMOVAL - Step 22**

2. **REMOVE CLOCK ASSEMBLY**
   a. Remove the 2 screws and clock assembly with instrument cluster finish panel cover from the No. 1 center instrument cluster finish panel.

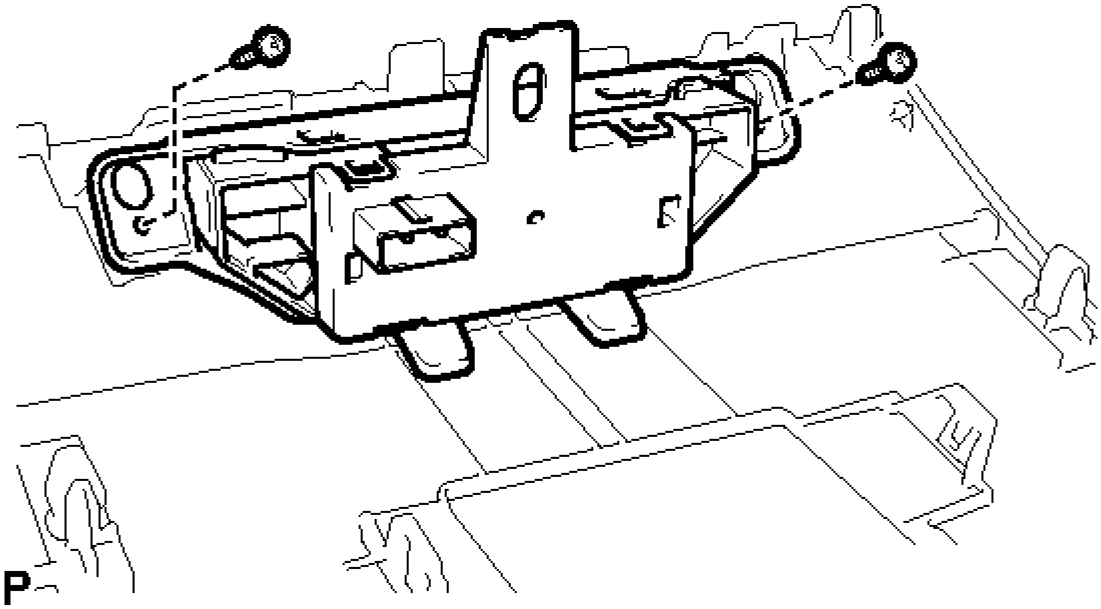

Fig. 8: Identifying Clock Assembly Screws
Courtesy of TOYOTA MOTOR SALES, U.S.A., INC.

   b. Disengage the 4 claws and remove the clock assembly.

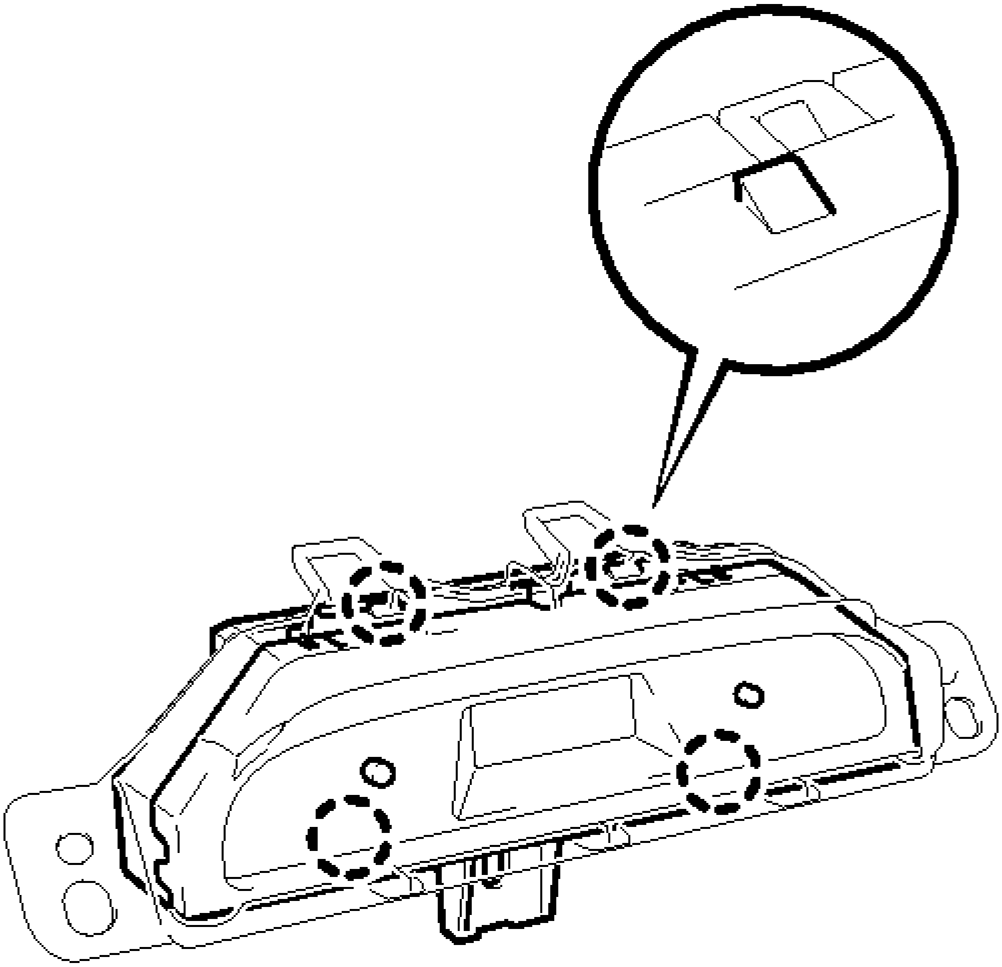

Fig. 9: Identifying Clock Assembly Claws
Courtesy of TOYOTA MOTOR SALES, U.S.A., INC.

DISASSEMBLY

DISASSEMBLY

1. **REMOVE CLOCK LENS**
    a. Disengage the 5 claws and remove the clock lens.

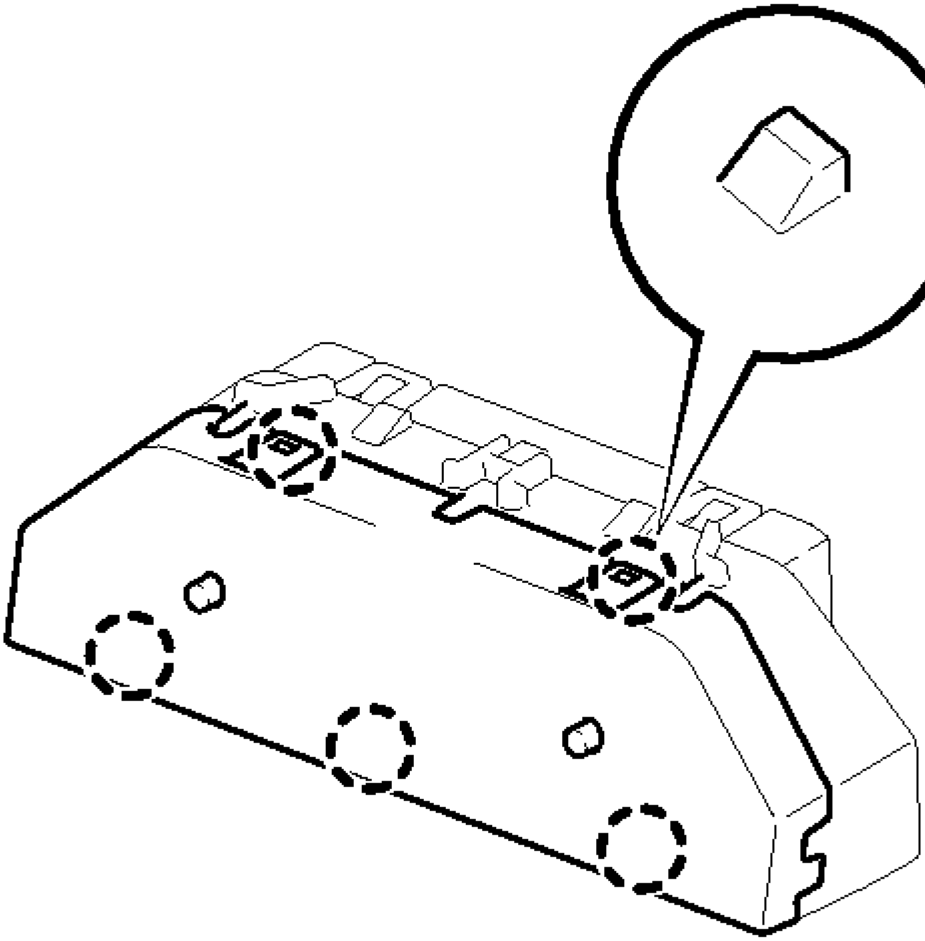

Fig. 10: Identifying Clock Lens Claws
Courtesy of TOYOTA MOTOR SALES, U.S.A., INC.

REASSEMBLY

REASSEMBLY

1. **INSTALL CLOCK LENS**
    a. Engage the 5 claws to install the clock lens.

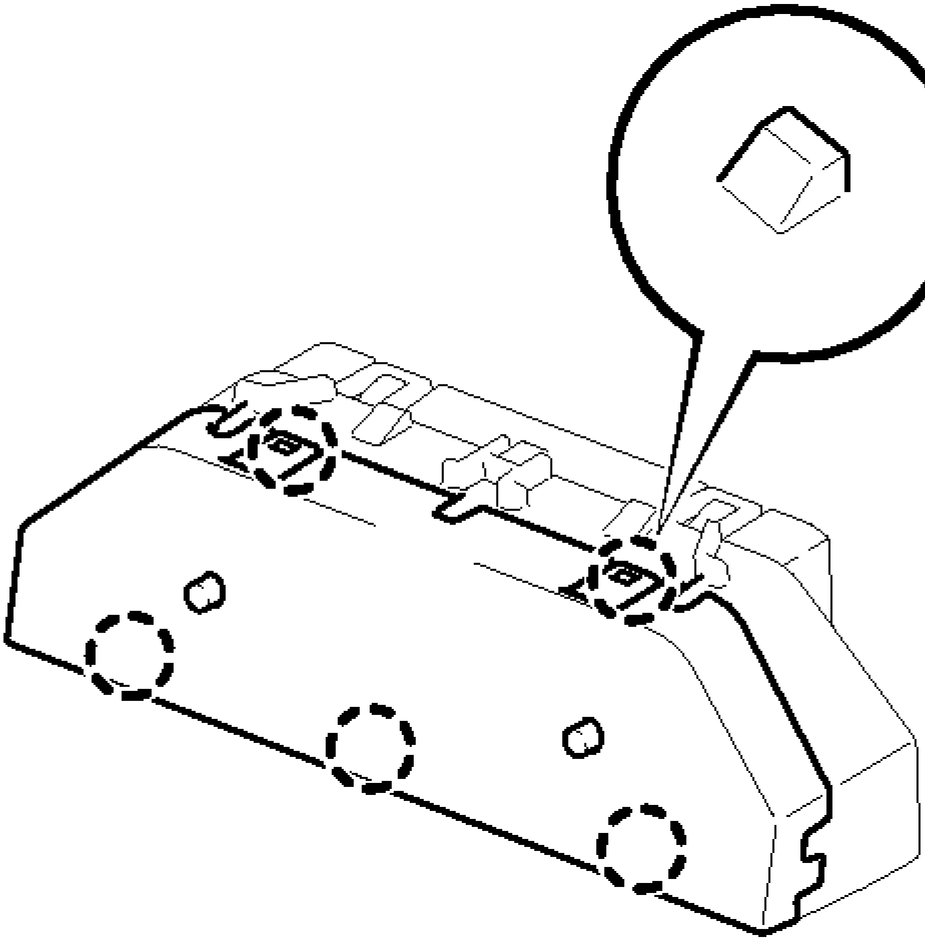

Fig. 11: Identifying Clock Lens Claws
Courtesy of TOYOTA MOTOR SALES, U.S.A., INC.

INSTALLATION

INSTALLATION

1. **INSTALL CLOCK ASSEMBLY**
    a. Engage the 4 claws to install the clock assembly.
    b. Install the clock assembly with instrument cluster finish panel cover to the No. 1 center instrument cluster finish panel with the 2 screws.
2. **INSTALL CENTER INSTRUMENT CLUSTER FINISH PANEL ASSEMBLY** . Refer to **INSTALLATION - Step 30**

COMBINATION METER

COMPONENTS

ILLUSTRATION

Fig. 1: Identifying Combination Meter Replacement Components
Courtesy of TOYOTA MOTOR SALES, U.S.A., INC.

REMOVAL

REMOVAL

1. **PRECAUTION**

NOTE: After turning the ignition switch off, waiting time may be required before disconnecting the cable from the negative (-) battery terminal. Therefore, make sure to read the disconnecting the cable from the negative (-) battery terminal notices before proceeding with work. Refer to PRECAUTION .

2. **DISCONNECT CABLE FROM NEGATIVE BATTERY TERMINAL**

NOTE: When disconnecting the cable, some systems need to be initialized after the cable is reconnected. Refer to INITIALIZATION .

3. **DISCONNECT FRONT DOOR OPENING TRIM WEATHERSTRIP LH** . Refer to **REMOVAL - Step 5**
4. **REMOVE INSTRUMENT SIDE PANEL LH** . Refer to **REMOVAL - Step 6**
5. **REMOVE NO. 1 INSTRUMENT CLUSTER FINISH PANEL GARNISH** . Refer to **REMOVAL - Step 7**
6. **REMOVE NO. 1 INSTRUMENT PANEL REGISTER ASSEMBLY** . Refer to **REMOVAL - Step 8**
7. **REMOVE INSTRUMENT CLUSTER FINISH PANEL ASSEMBLY** . Refer to **REMOVAL - Step 9**
8. **REMOVE COMBINATION METER ASSEMBLY**
   a. Remove the 4 screws.

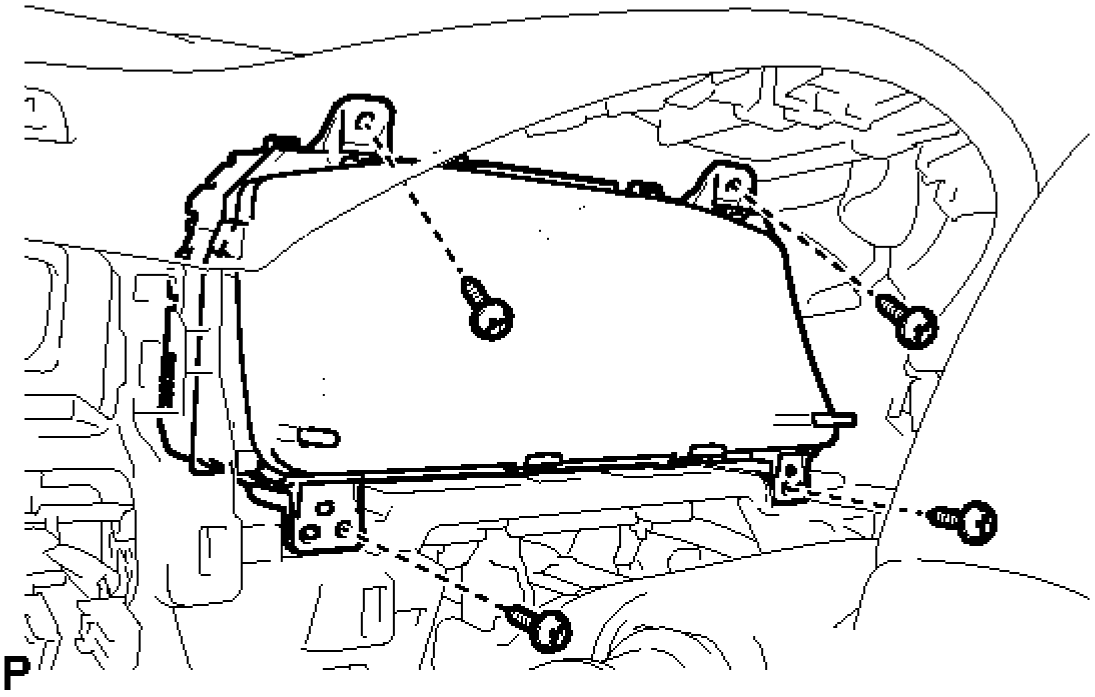

Fig. 2: Identifying Combination Meter Assembly Screws
Courtesy of TOYOTA MOTOR SALES, U.S.A., INC.

   b. Disengage the wire harness clamp.

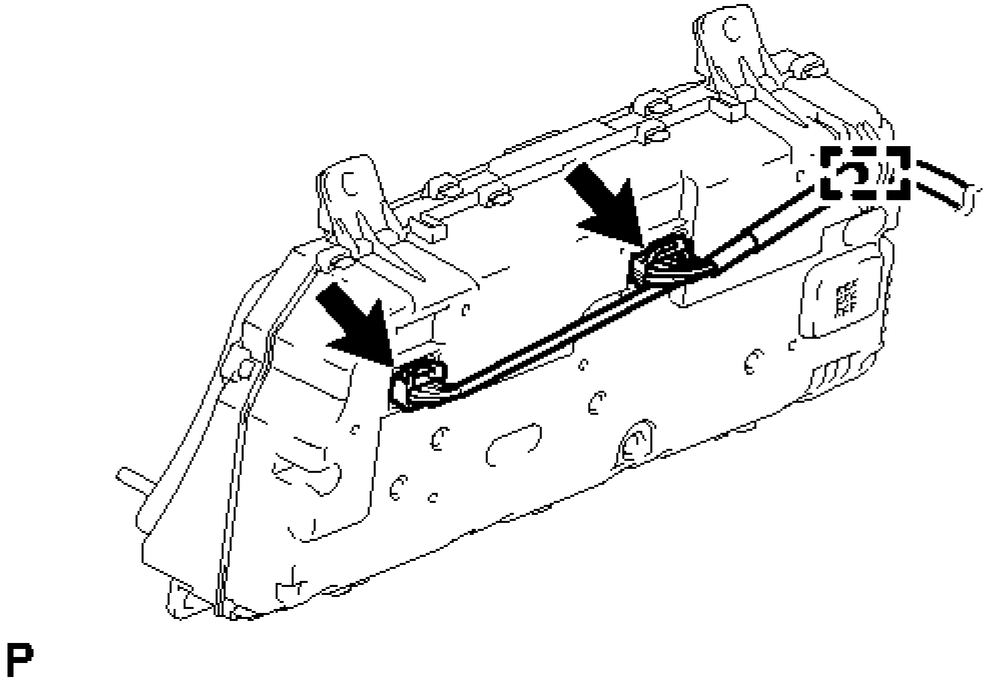

Fig. 3: Identifying Combination Meter Assembly Wire Harness Clamp
Courtesy of TOYOTA MOTOR SALES, U.S.A., INC.

c. Disconnect the 2 connectors to remove the combination meter assembly.

DISASSEMBLY

DISASSEMBLY

1. **REMOVE COMBINATION METER GLASS**
    a. Disengage the 8 claws and remove the combination meter glass.

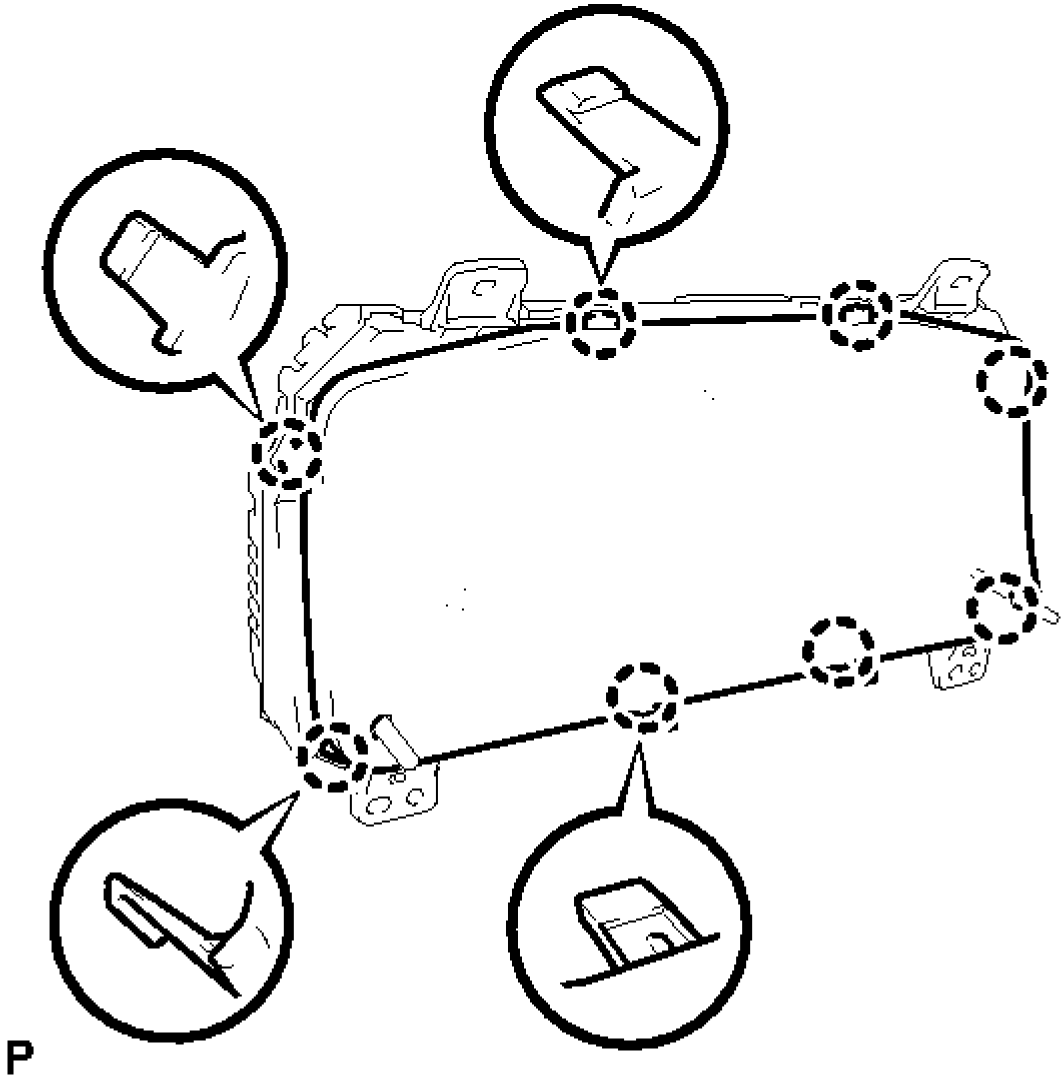

Fig. 4: Identifying Combination Meter Glass Claws
Courtesy of TOYOTA MOTOR SALES, U.S.A., INC.

REASSEMBLY

REASSEMBLY

1. **INSTALL COMBINATION METER GLASS**
   1. Engage the 8 claws to install the combination meter glass.

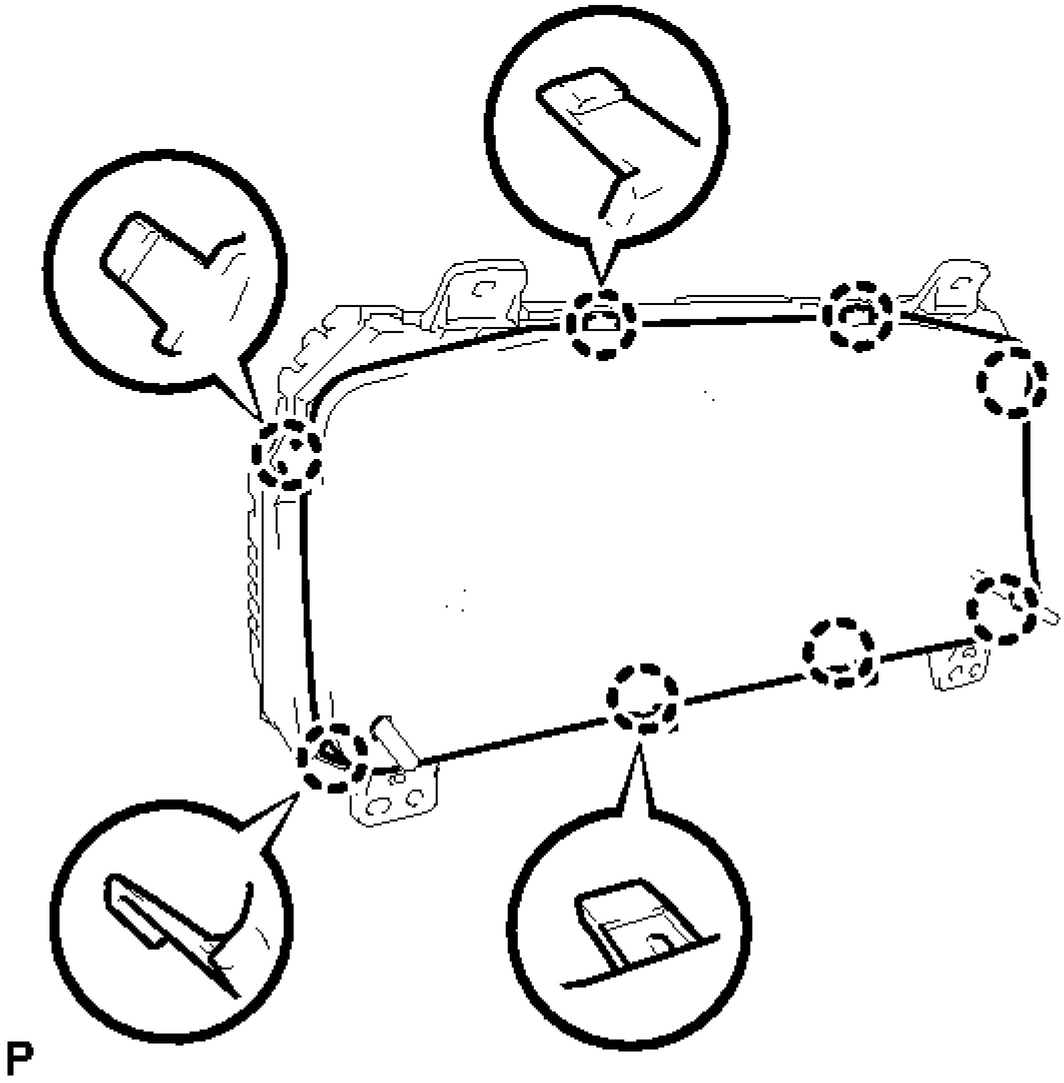

Fig. 5: Identifying Combination Meter Glass Claws
Courtesy of TOYOTA MOTOR SALES, U.S.A., INC.

INSTALLATION

INSTALLATION

1. **INSTALL COMBINATION METER ASSEMBLY**
    a. Connect the 2 connectors.
    b. Engage the wire harness clamp.
    c. Install the combination meter assembly with the 4 screws.
2. **INSTALL INSTRUMENT CLUSTER FINISH PANEL ASSEMBLY** . Refer to **INSTALLATION - Step 44**
3. **INSTALL NO. 1 INSTRUMENT PANEL REGISTER ASSEMBLY** . Refer to **INSTALLATION - Step 45**

4. **INSTALL NO. 1 INSTRUMENT CLUSTER FINISH PANEL GARNISH** . Refer to **INSTALLATION - Step 46**
5. **INSTALL INSTRUMENT SIDE PANEL LH** . Refer to **INSTALLATION - Step 47**
6. **INSTALL FRONT DOOR OPENING TRIM WEATHERSTRIP LH** . Refer to **INSTALLATION - Step 42**
7. **CONNECT CABLE TO NEGATIVE BATTERY TERMINAL**

NOTE: **When disconnecting the cable, some systems need to be initialized after the cable is reconnected. Refer to INITIALIZATION .**

CLOCK

COMPONENTS

ILLUSTRATION

Fig. 6: Identifying Clock Replacement Components
Courtesy of TOYOTA MOTOR SALES, U.S.A., INC.

REMOVAL

REMOVAL

1. **REMOVE CENTER INSTRUMENT CLUSTER FINISH PANEL ASSEMBLY** . Refer to **REMOVAL - Step 23**

2. **REMOVE CLOCK ASSEMBLY**
   a. Remove the 2 screws and clock assembly with instrument cluster finish panel cover from the No. 1 center instrument cluster finish panel.

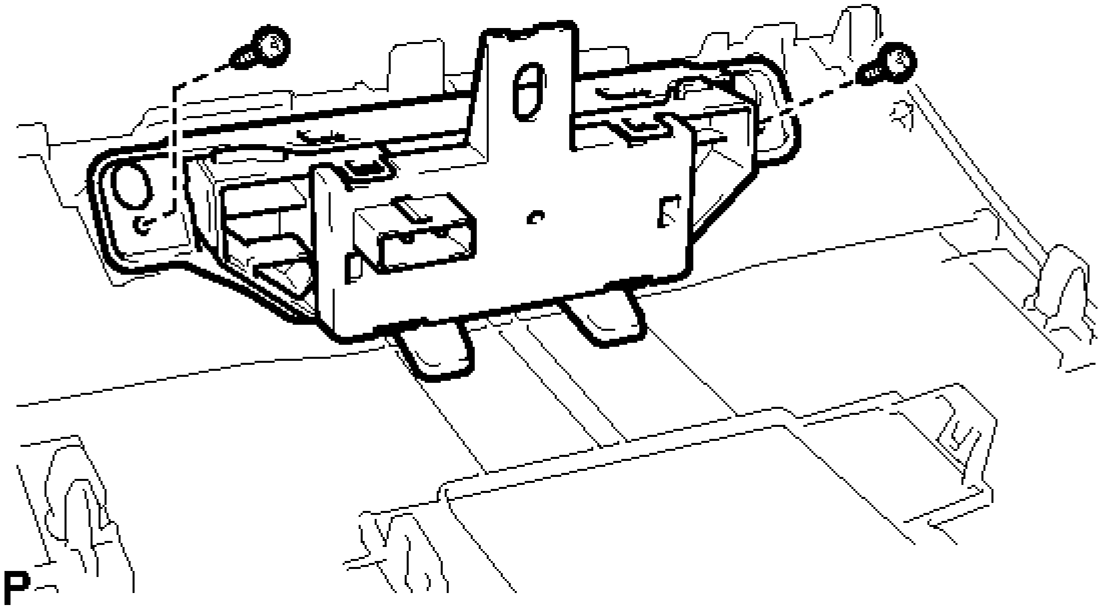

Fig. 7: Identifying Clock Assembly Screws
Courtesy of TOYOTA MOTOR SALES, U.S.A., INC.

   b. Disengage the 4 claws and remove the clock assembly.

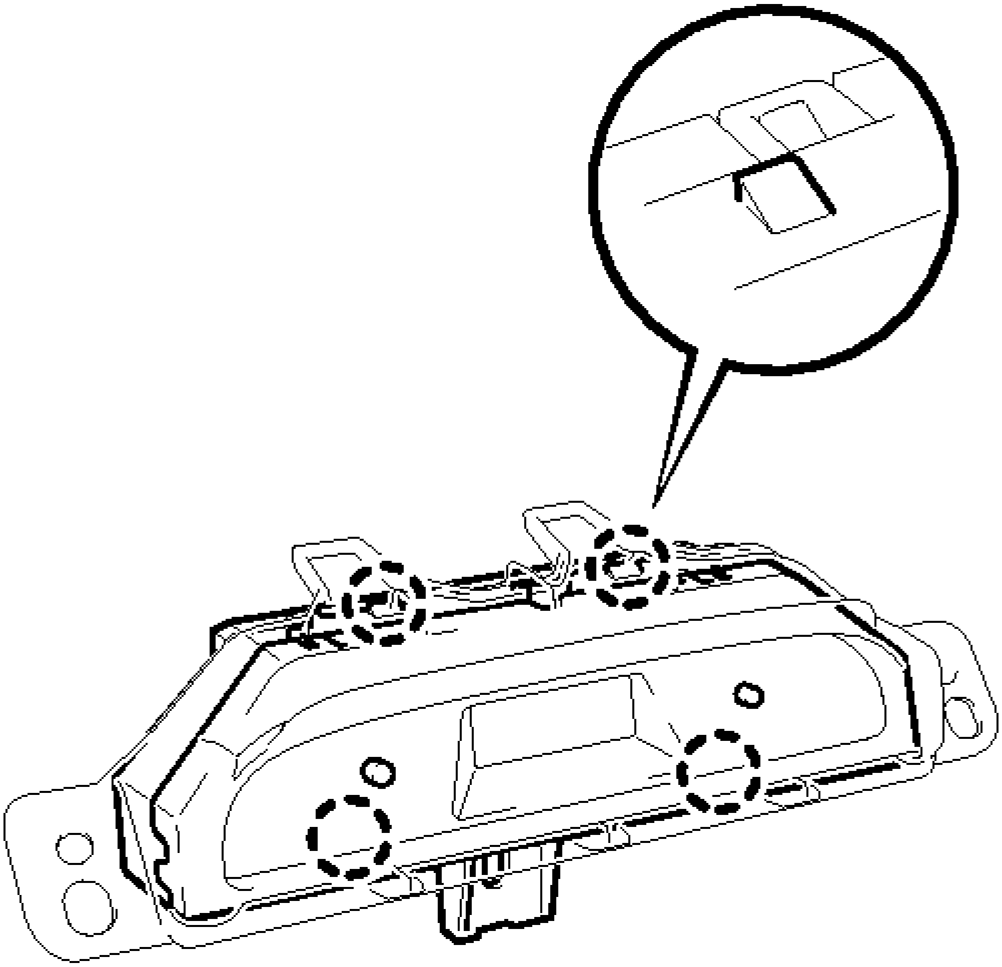

Fig. 8: Identifying Clock Assembly Claws
Courtesy of TOYOTA MOTOR SALES, U.S.A., INC.

DISASSEMBLY

DISASSEMBLY

1. **REMOVE CLOCK LENS**
   a. Disengage the 5 claws and remove the clock lens.

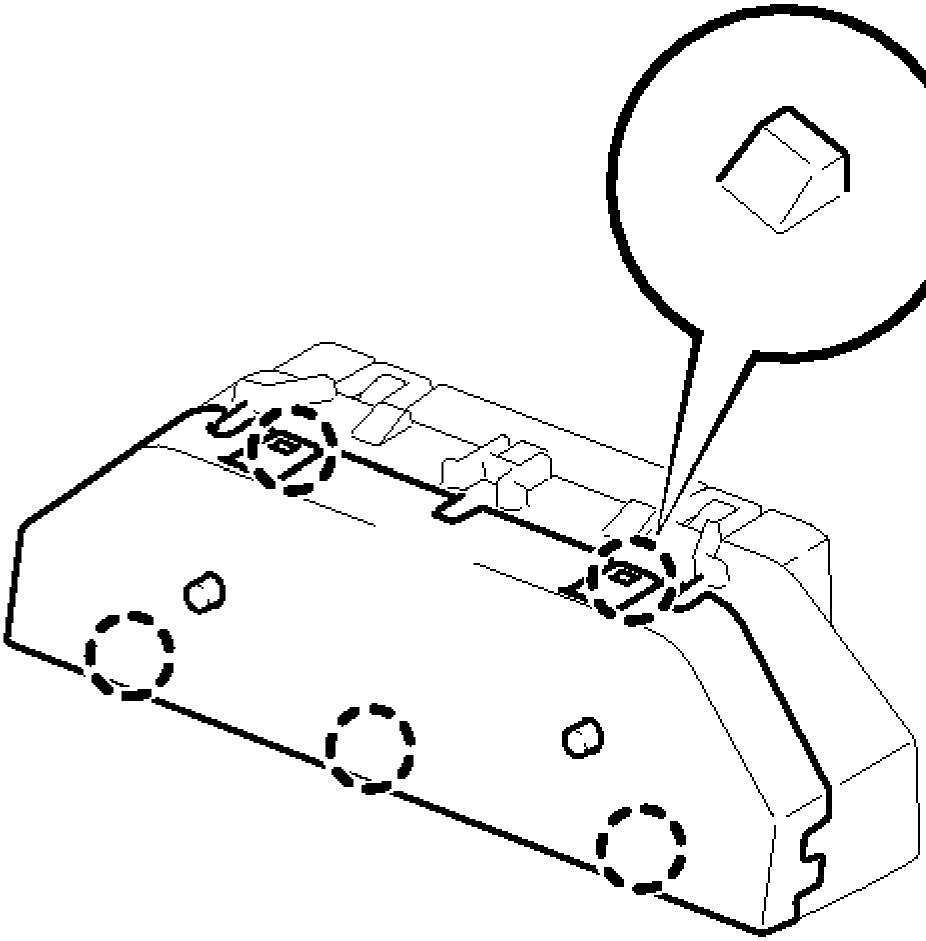

P

Fig. 9: Identifying Clock Lens Claws
Courtesy of TOYOTA MOTOR SALES, U.S.A., INC.

REASSEMBLY

REASSEMBLY

1. **INSTALL CLOCK LENS**
    a. Engage the 5 claws to install the clock lens.

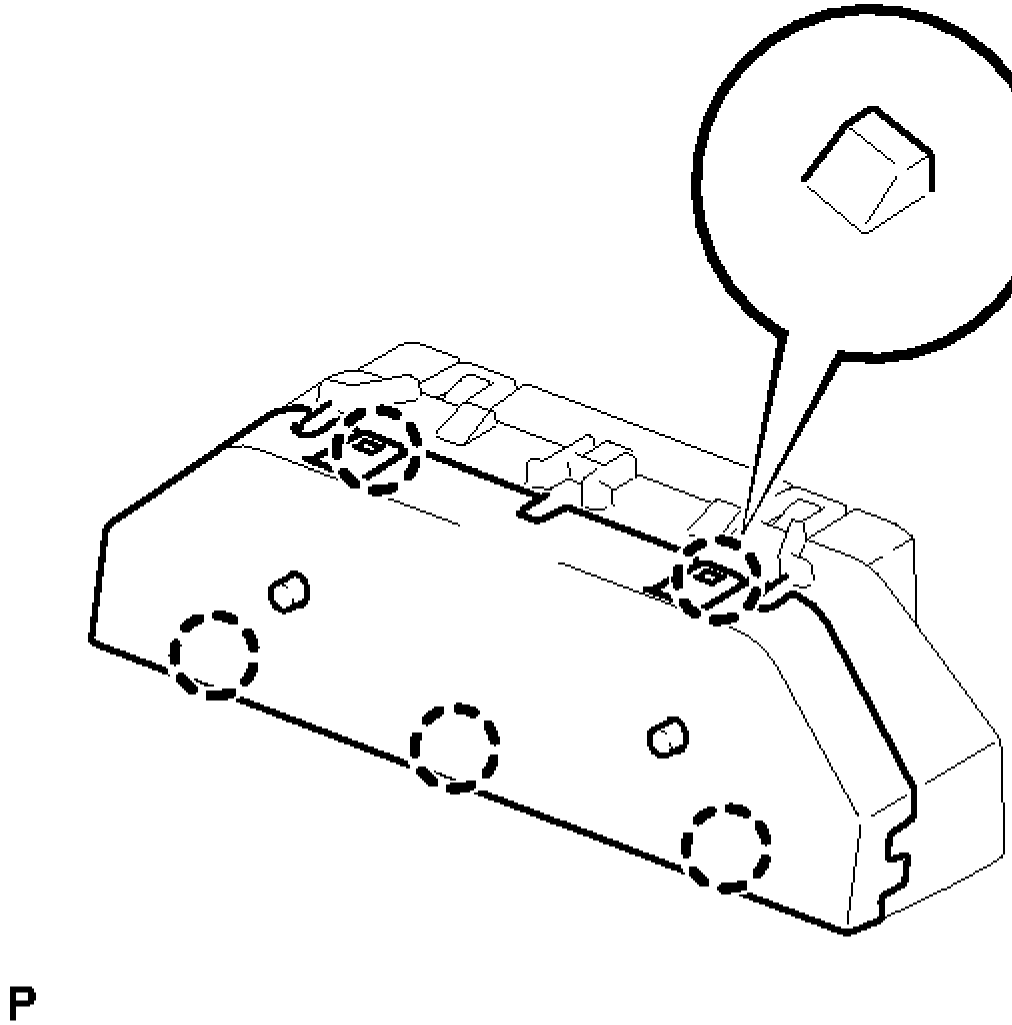

Fig. 10: Identifying Clock Lens Claws
Courtesy of TOYOTA MOTOR SALES, U.S.A., INC.

INSTALLATION

INSTALLATION

1. **INSTALL CLOCK ASSEMBLY**
    a. Engage the 4 claws to install the clock assembly.
    b. Install the clock assembly with instrument cluster finish panel cover to the No. 1 center instrument cluster finish panel with the 2 screws.
2. **INSTALL CENTER INSTRUMENT CLUSTER FINISH PANEL ASSEMBLY** . Refer to **INSTALLATION - Step 30**

OUTER REAR VIEW MIRROR

COMPONENTS

ILLUSTRATION

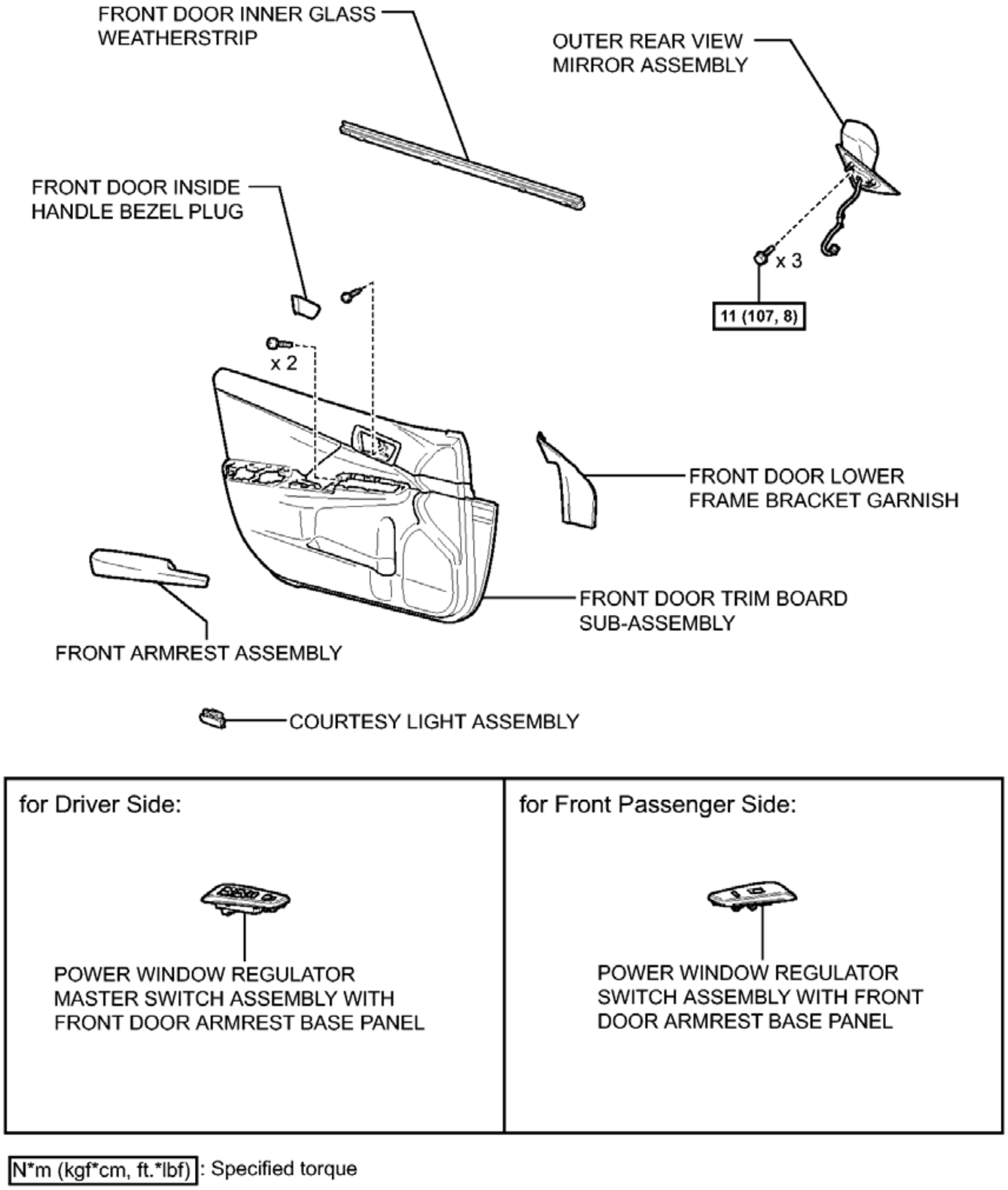
FRONT DOOR INNER GLASS WEATHERSTRIP
OUTER REAR VIEW MIRROR ASSEMBLY
FRONT DOOR INSIDE HANDLE BEZEL PLUG
x 3
11 (107, 8)
x 2
FRONT DOOR LOWER FRAME BRACKET GARNISH
FRONT DOOR TRIM BOARD SUB-ASSEMBLY
FRONT ARMREST ASSEMBLY
COURTESY LIGHT ASSEMBLY
for Driver Side:
POWER WINDOW REGULATOR MASTER SWITCH ASSEMBLY WITH FRONT DOOR ARMREST BASE PANEL
for Front Passenger Side:
POWER WINDOW REGULATOR SWITCH ASSEMBLY WITH FRONT DOOR ARMREST BASE PANEL
N*m (kgf*cm, ft.*lbf) : Specified torque

P

Fig. 1: Identifying Outer Rear View Mirror Replacement Components With Torque Specifications (1 Of 2)

Courtesy of TOYOTA MOTOR SALES, U.S.A., INC.

ILLUSTRATION

w/o Retract Mirror:

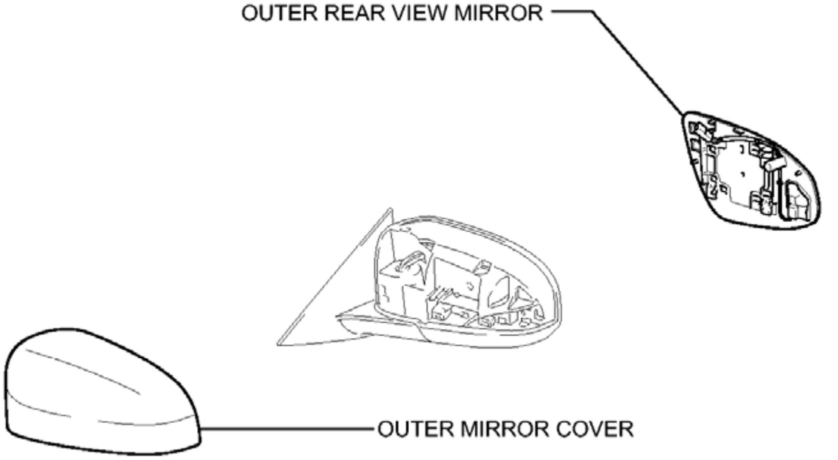
OUTER REAR VIEW MIRROR
OUTER MIRROR COVER

w/ Retract Mirror:

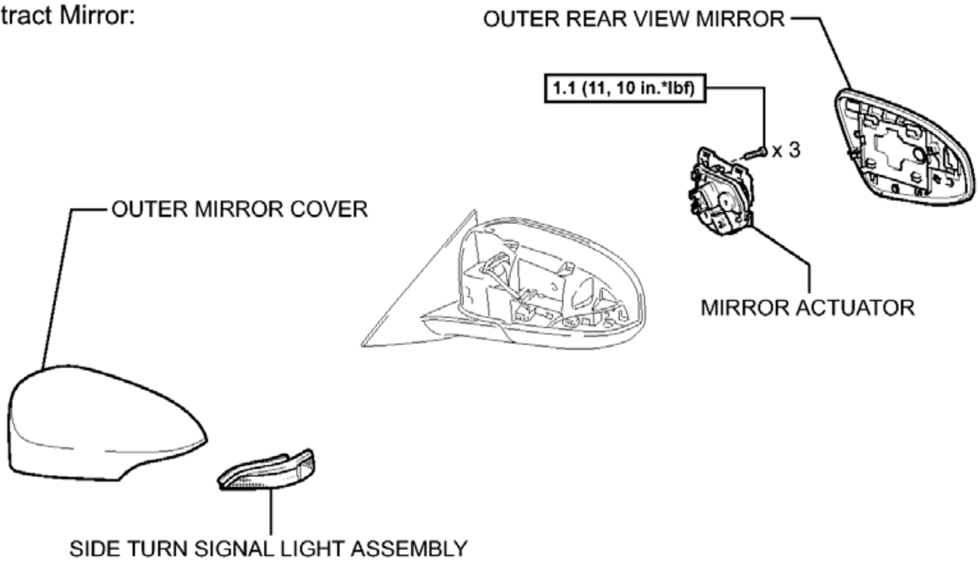
OUTER REAR VIEW MIRROR
1.1 (11, 10 in.*lbf)
x 3
OUTER MIRROR COVER
MIRROR ACTUATOR
SIDE TURN SIGNAL LIGHT ASSEMBLY

N*m (kgf*cm, ft.*lbf) : Specified torque

P

Fig. 2: Identifying Outer Rear View Mirror Replacement Components With Torque Specifications (2 Of 2)

Courtesy of TOYOTA MOTOR SALES, U.S.A., INC.

REMOVAL

REMOVAL

HINT:

- Use the same procedure for both the RH and LH sides.
- The procedure described below is for the LH side.

1. **REMOVE FRONT DOOR INSIDE HANDLE BEZEL PLUG** . Refer to **DISASSEMBLY - Step 4**
2. **REMOVE FRONT DOOR LOWER FRAME BRACKET GARNISH** . Refer to **DISASSEMBLY - Step 5**
3. **REMOVE POWER WINDOW REGULATOR MASTER SWITCH ASSEMBLY WITH FRONT DOOR ARMREST BASE PANEL (for Driver Side)** . Refer to **DISASSEMBLY - Step 6**
4. **REMOVE POWER WINDOW REGULATOR SWITCH ASSEMBLY WITH FRONT DOOR ARMREST BASE PANEL (for Front Passenger Side)** . Refer to **DISASSEMBLY - Step 7**
5. **REMOVE FRONT ARMREST ASSEMBLY** . Refer to **DISASSEMBLY - Step 8**
6. **REMOVE COURTESY LIGHT ASSEMBLY** . Refer to **REMOVAL - Step 1**
7. **REMOVE FRONT DOOR TRIM BOARD SUB-ASSEMBLY** . Refer to **DISASSEMBLY - Step 10**
8. **REMOVE FRONT DOOR INNER GLASS WEATHERSTRIP** . Refer to **DISASSEMBLY - Step 12**
9. **REMOVE OUTER REAR VIEW MIRROR ASSEMBLY**
    a. Disconnect the connector.

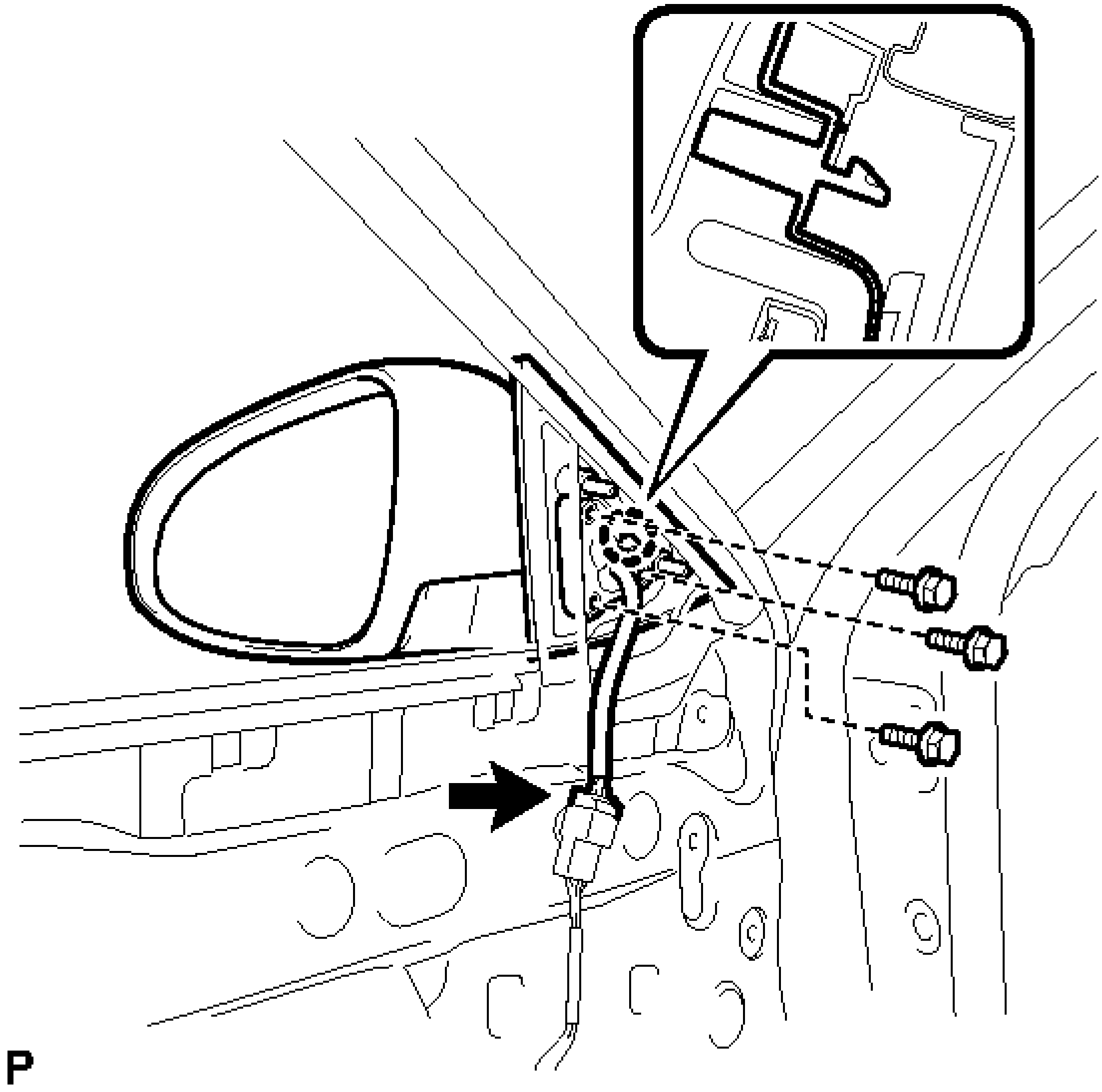

Fig. 3: Identifying Outer Rear View Mirror Assembly Connector, Bolts And Claw
Courtesy of TOYOTA MOTOR SALES, U.S.A., INC.

b. Remove the 3 bolts.
c. Disengage the claw and remove the outer rear view mirror assembly.

DISASSEMBLY

DISASSEMBLY

HINT:

- Use the same procedure for both the RH and LH sides.
- The procedure described below is for the LH side.

1. **REMOVE OUTER REAR VIEW MIRROR (w/o Retract Mirror)** See step 1

2. **REMOVE OUTER REAR VIEW MIRROR (w/ Retract Mirror)** See step 2
3. **REMOVE OUTER MIRROR COVER (w/o Retract Mirror)** See step 3
4. **REMOVE OUTER MIRROR COVER (w/ Retract Mirror)** See step 4
5. **REMOVE SIDE TURN SIGNAL LIGHT ASSEMBLY (w/ Retract Mirror)** . Refer to **REMOVAL - Step 3**

INSPECTION

INSPECTION

1. **INSPECT OUTER REAR VIEW MIRROR ASSEMBLY RH**
    a. Check the operation of the mirror surface (w/ Daytime Running Light).
        1. Disconnect the outer rear view mirror assembly RH connector.

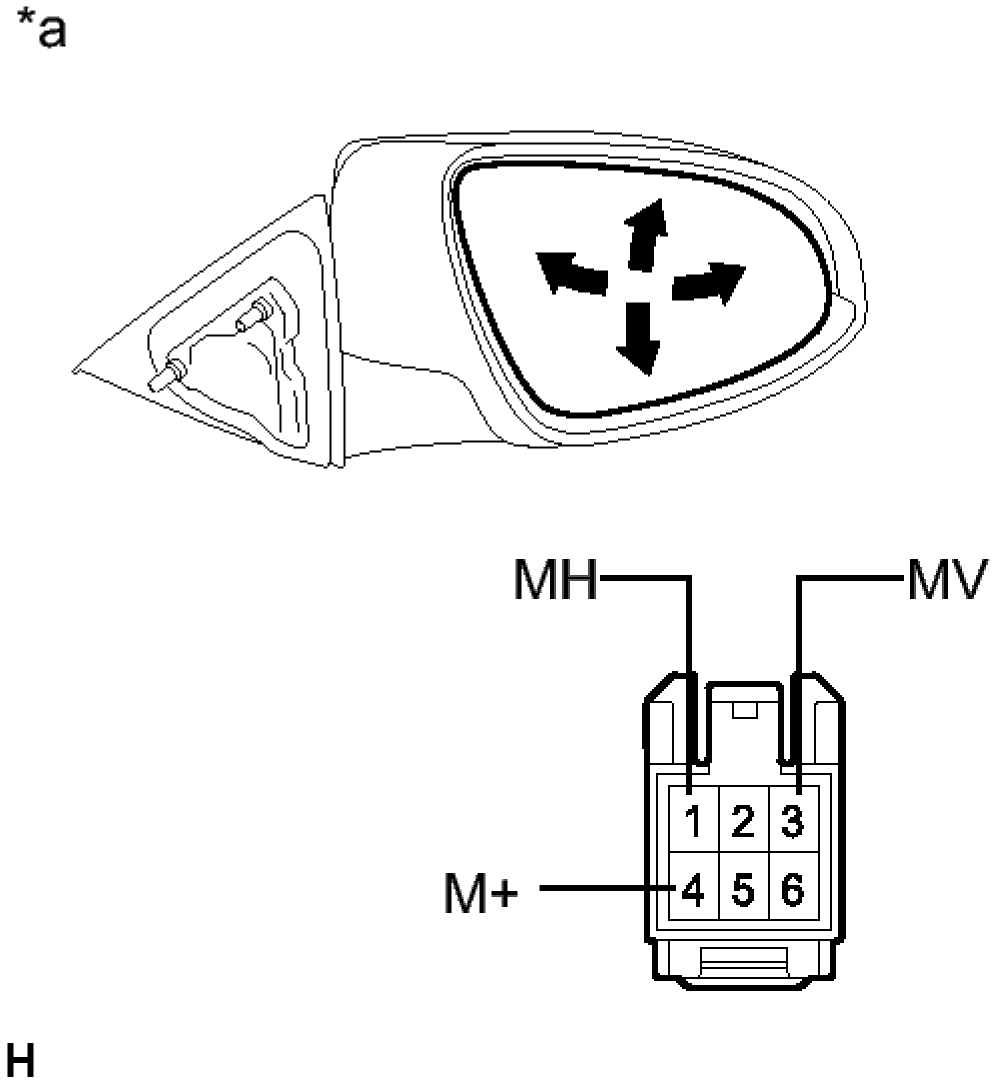

Fig. 4: Identifying Mirror Surface Connector Terminal Identification RH (W/Daytime

Running Light)
Courtesy of TOYOTA MOTOR SALES, U.S.A., INC.

2. Apply auxiliary battery voltage and check the operation of the mirror.

   OK

Measurement Condition	Specified Condition
Auxiliary battery positive (+) --> Terminal 3 (MV) Auxiliary battery negative (-) --> Terminal 4 (M+)	Turns upward
Auxiliary battery positive (+) --> Terminal 4 (M+) Auxiliary battery negative (-) --> Terminal 3 (MV)	Turns downward
Auxiliary battery positive (+) --> Terminal 1 (MH) Auxiliary battery negative (-) --> Terminal 4 (M+)	Turns left
Auxiliary battery positive (+) --> Terminal 4 (M+) Auxiliary battery negative (-) --	Turns right

> Terminal 1 (MH)	

TEXT IN ILLUSTRATION

*a	Component without harness connected (Outer Rear View Mirror Assembly RH)

If the result is not as specified, replace the outer rear view mirror assembly RH.

b. Check the operation of the mirror surface (w/o Daytime Running Light).
   1. Disconnect the outer rear view mirror assembly RH connector.

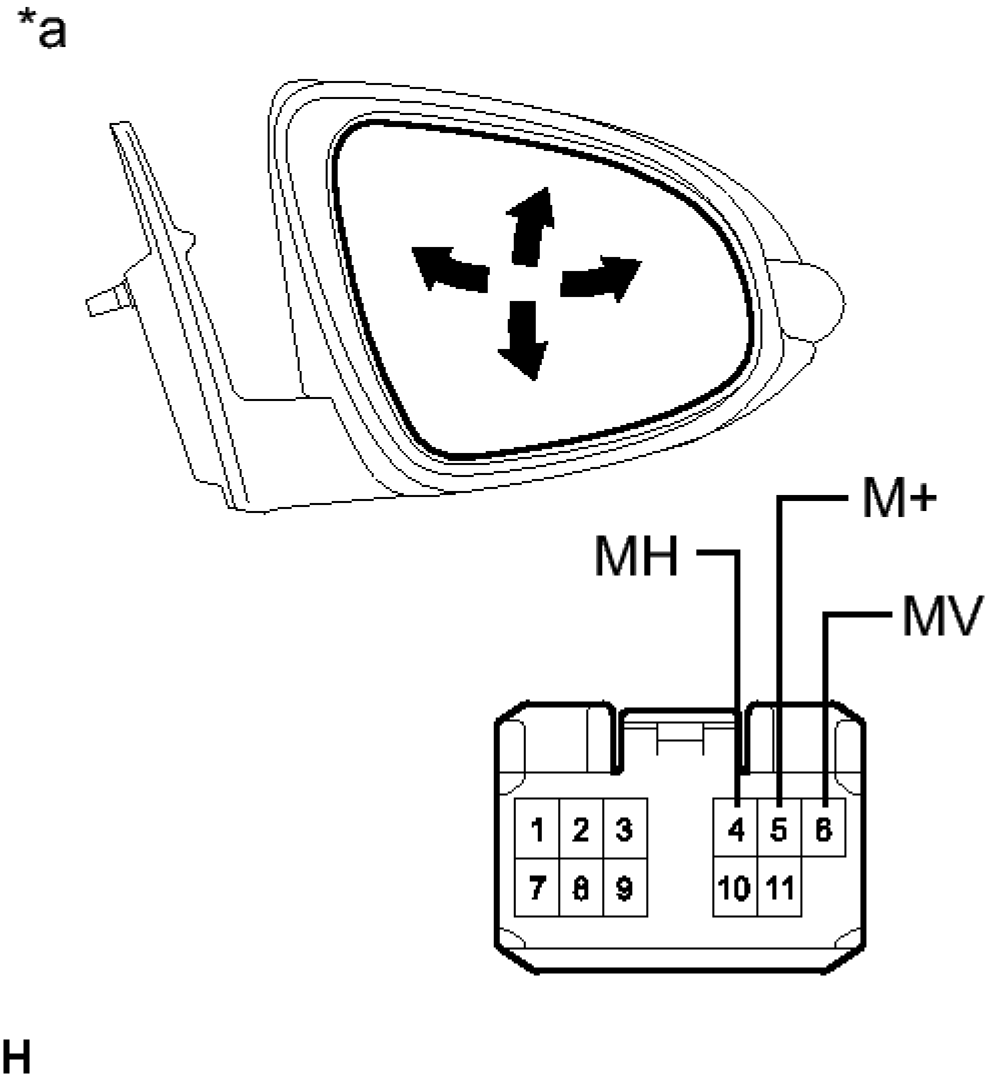

Fig. 5: Identifying Mirror Surface Connector Terminal Identification RH (W/O Daytime Running Lights)
Courtesy of TOYOTA MOTOR SALES, U.S.A., INC.

2. Apply auxiliary battery voltage and check the operation of the mirror.

   OK

Measurement Condition	Specified Condition
Auxiliary battery positive (+) --> Terminal 6 (MV) Auxiliary	Turns upward

battery negative (-) --> Terminal 5 (M+)	
Auxiliary battery positive (+) --> Terminal 5 (M+) Auxiliary battery negative (-) --> Terminal 6 (MV)	Turns downward
Auxiliary battery positive (+) --> Terminal 4 (MH) Auxiliary battery negative (-) --> Terminal 5 (M+)	Turns left
Auxiliary battery positive (+) --> Terminal 5 (M+) Auxiliary battery negative (-) --> Terminal 4 (MH)	Turns right

TEXT IN ILLUSTRATION

*a	Component without harness connected (Outer Rear View Mirror Assembly RH)

If the result is not as specified, replace the outer rear view mirror assembly RH.

c. Check the operation of the retractable mirror (w/o Daytime Running Light).

NOTE:

- **Disconnect and reconnect the auxiliary battery between each mirror position check.**
- **The mirror position cannot be changed manually when the auxiliary battery is connected. To change the mirror position manually, the auxiliary battery must be disconnected first.**

1. Disconnect the outer rear view mirror assembly RH connector.

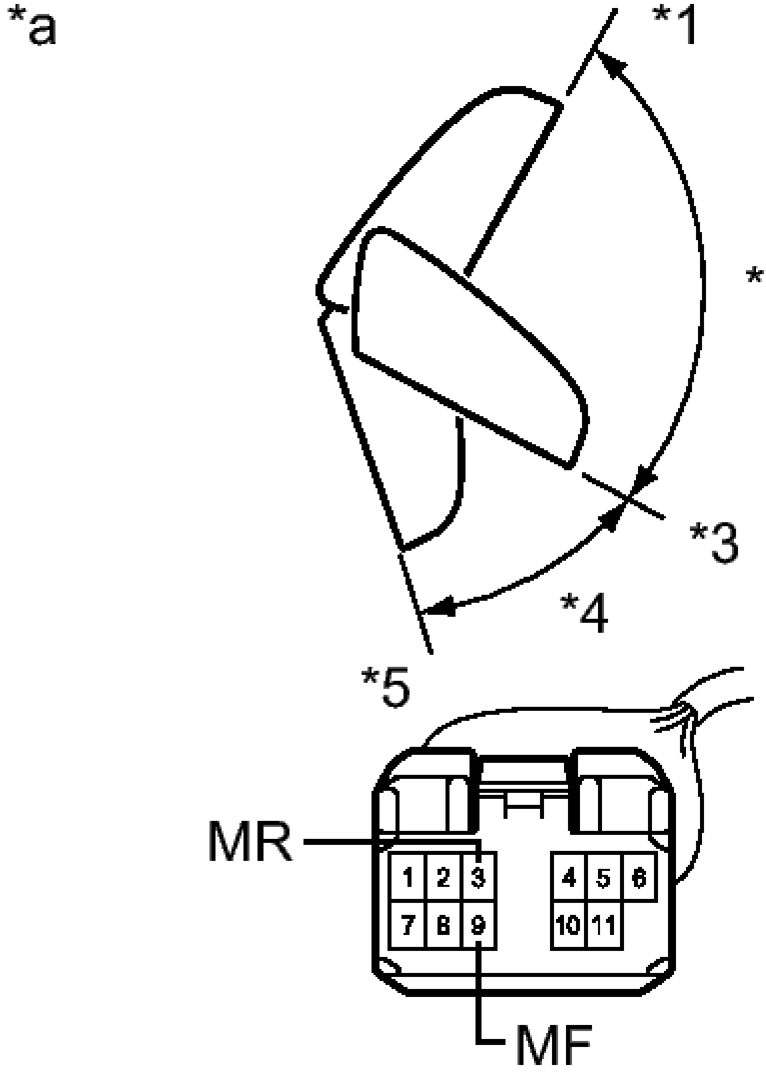

Fig. 6: Identifying Retractable Mirror Connector Terminal Identification RH (W/O Daytime Running Light)
Courtesy of TOYOTA MOTOR SALES, U.S.A., INC.

2. For each position: Disconnect the auxiliary battery, set the mirror position by hand, connect

the auxiliary battery, and check the retractable mirror's movement.

OK

Tester Connection	Condition	Specified Condition
Auxiliary battery positive (+) --> Terminal 3 (MR) Auxiliary battery negative (-) --> Terminal 9 (MF)	Forward position (A)	Moves from (A) to retracted position (E)
Auxiliary battery positive (+) --> Terminal 9 (MF) Auxiliary battery negative (-) --> Terminal 3 (MR)	Forward position (A)	Does not move
Auxiliary battery positive (+) --> Terminal 3 (MR) Auxiliary battery negative (-) --> Terminal 9 (MF)	Position between forward position (A) and driving position (C)	Moves from (B) to retracted position (E)
Auxiliary battery positive (+) --> Terminal 9	Position between forward	Moves from (B)

(MF) Auxiliary battery negative (-) --> Terminal 3 (MR)	position (A) and driving position (C)	to forward position (A)
Auxiliary battery positive (+) --> Terminal 3 (MR) Auxiliary battery negative (-) --> Terminal 9 (MF)	Driving position (C)	Moves from (C) to retracted position (E)
Auxiliary battery positive (+) --> Terminal 9 (MF) Auxiliary battery negative (-) --> Terminal 3 (MR)	Driving position (C)	Does not move
Auxiliary battery positive (+) --> Terminal 3 (MR) Auxiliary battery negative (-) --> Terminal 9 (MF)	Position between driving position (C) and retracted position (E)	Moves from (D) to retracted position (E)
Auxiliary battery positive (+) -->	Position between	Moves

Terminal 9 (MF) Auxiliary battery negative (-) --> Terminal 3 (MR)	driving position (C) and retracted position (E)	from (D) to driving position (C)
Auxiliary battery positive (+) --> Terminal 3 (MR) Auxiliary battery negative (-) --> Terminal 9 (MF)	Retracted position (E)	Does not move
Auxiliary battery positive (+) --> Terminal 9 (MF) Auxiliary battery negative (-) --> Terminal 3 (MR)	Retracted position (E)	Moves from (E) to driving position (C)

TEXT IN ILLUSTRATION

*1	(A) Forward Position
*2	(B)
*3	(C) Driving position
*4	(D)
*5	(E) Retracted Position
	Component

*a	without harness connected (Outer Rear View Mirror Assembly RH)

If the result is not as specified, replace the outer rear view mirror assembly RH.

d. Check the operation of the mirror heater (w/ Mirror Heater and Daytime Running Light).

   1. Disconnect the outer rear view mirror assembly RH connector.

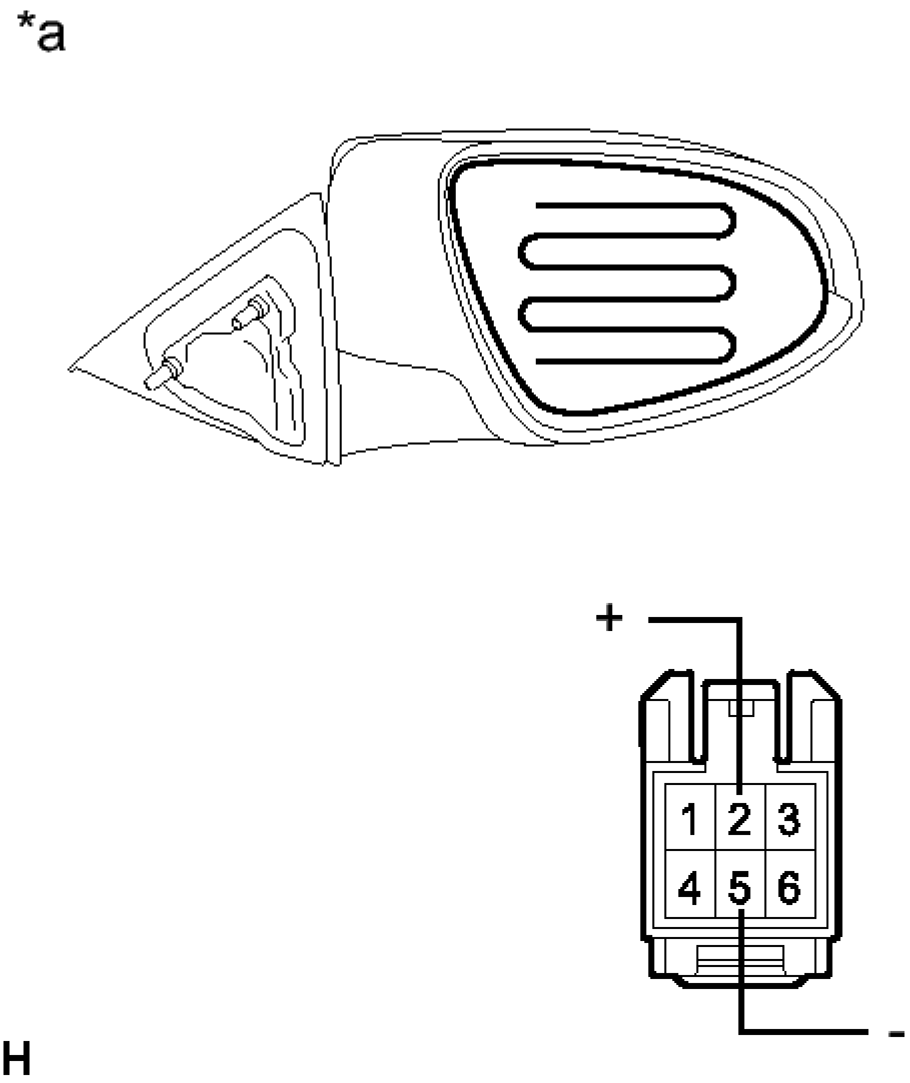

Fig. 7: Identifying Mirror Heater Connector Terminal Identification RH (W/Mirror Heater And Daytime Running Light)

Courtesy of TOYOTA MOTOR SALES, U.S.A., INC.

Measure the resistance according to the value(s) in the table below.

Standard Resistance

Tester Connection	Condition	Specified Condition
2 (+) - 5 (-)	25°C (75° F)	7.6 to 11.4 ohms

TEXT IN ILLUSTRATION

*a	Component without harness connected (Outer Rear View Mirror Assembly RH)

If the result is not as specified, replace the outer rear view mirror assembly RH.

2. Connect the cable from the positive (+) terminal to terminal 2 and the negative auxiliary battery (-) terminal to terminal 5, then check that the mirror becomes warm.

   HINT:

   It takes a short time for the mirror to become warm.

   OK

   Mirror becomes warm.

   If the result is not as specified, replace the outer rear view mirror assembly RH.

e. Check the operation of the mirror heater (w/ Mirror Heater and w/o Daytime Running Light).
   1. Disconnect the outer rear view mirror assembly RH connector.

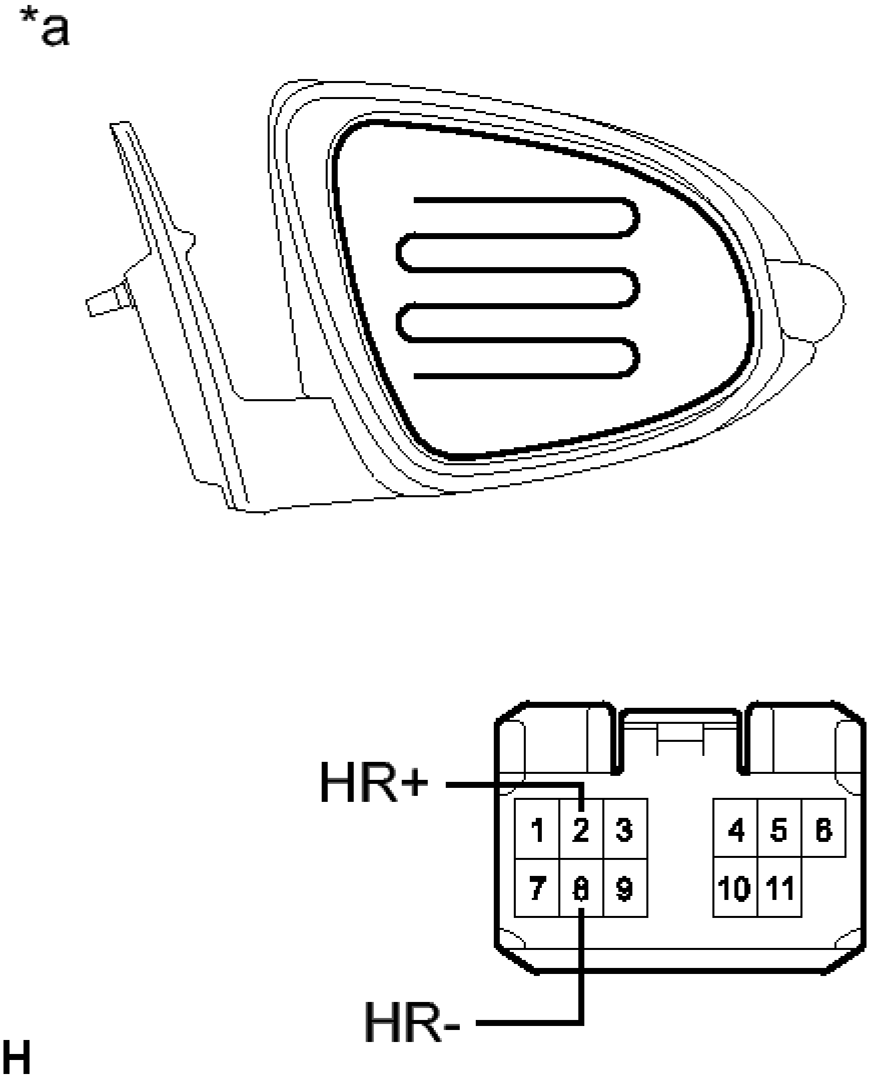

Fig. 8: Identifying Mirror Heater Assembly Connector Terminal Identification RH (W/Mirror Heater And W/O Daytime Running Light)
Courtesy of TOYOTA MOTOR SALES, U.S.A., INC.

2. Measure the resistance according to the value(s) in the table below.

   Standard Resistance

Tester Connection	Condition	Specified Condition
2 (+) - 8 (-)	25°C (75°F)	7.6 to 11.4 ohms

TEXT IN ILLUSTRATION

	Component

*a	without harness connected (Outer Rear View Mirror Assembly RH)

If the result is not as specified, replace the outer rear view mirror assembly RH.

3. Connect the cable from the positive (+) terminal to terminal 2 and the negative auxiliary battery (-) terminal to terminal 8, then check that the mirror becomes warm.

   HINT:

   It takes a short time for the mirror to become warm.

   OK

   Mirror becomes warm.

   If the result is not as specified, replace the outer rear view mirror assembly RH.

2. **INSPECT OUTER REAR VIEW MIRROR ASSEMBLY LH**
   a. Check the operation of the mirror surface (w/ Daytime Running Light).
      1. Disconnect the outer rear view mirror assembly LH connector.

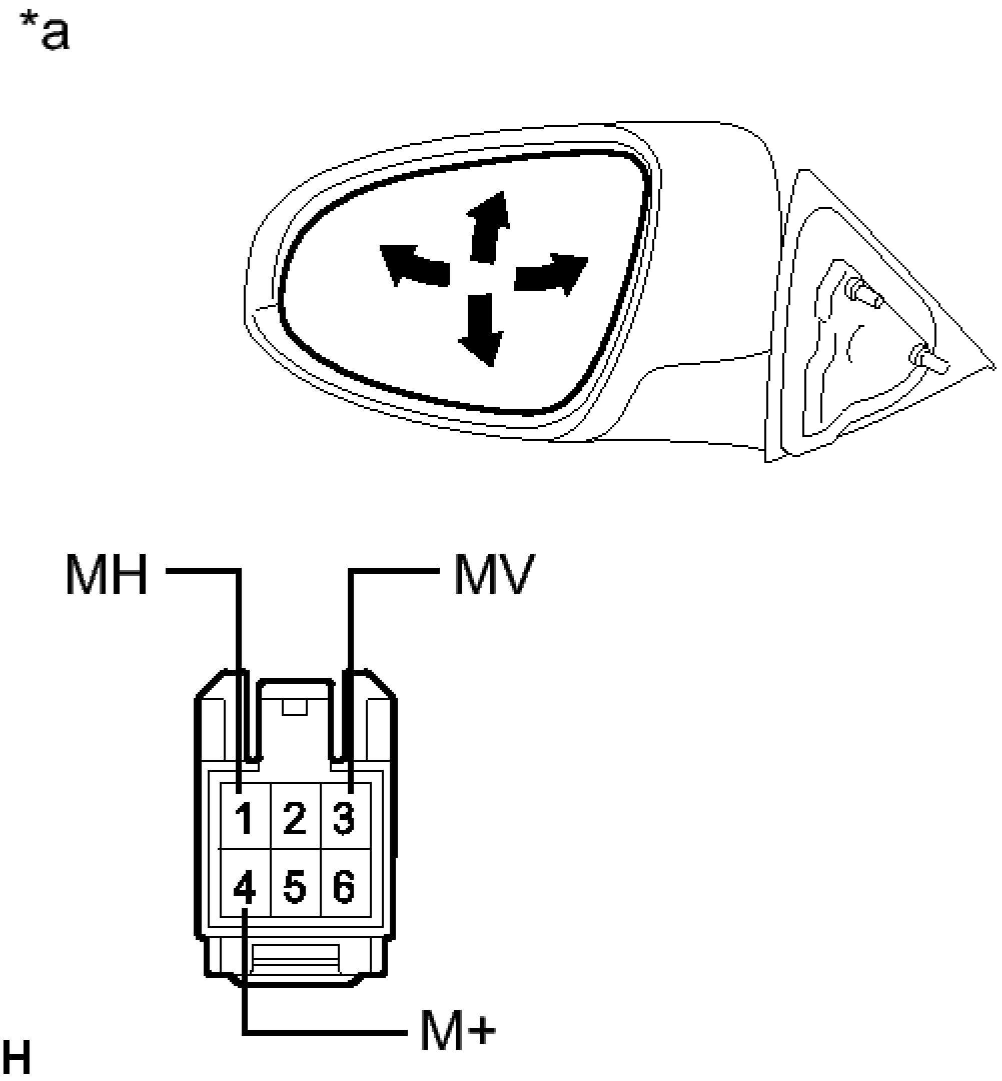

Fig. 9: Identifying Mirror Surface Connector Terminal Identification LH (W/Daytime Running Light)
Courtesy of TOYOTA MOTOR SALES, U.S.A., INC.

2. Apply auxiliary battery voltage and check the operation of the mirror.

   OK

Measurement Condition	Specified Condition
Auxiliary battery positive (+) --> Terminal 3 (MV) Auxiliary	Turns upward

battery negative (-) --> Terminal 4 (M+)	
Auxiliary battery positive (+) --> Terminal 4 (M+) Auxiliary battery negative (-) --> Terminal 3 (MV)	Turns downward
Auxiliary battery positive (+) --> Terminal 1 (MH) Auxiliary battery negative (-) --> Terminal 4 (M+)	Turns left
Auxiliary battery positive (+) --> Terminal 4 (M+) Auxiliary battery negative (-) --> Terminal 1 (MH)	Turns right

TEXT IN ILLUSTRATION

*a	Component without harness connected (Outer Rear View Mirror Assembly LH)

If the result is not as specified, replace the outer rear view mirror assembly LH.

b. Check the operation of the mirror surface (w/o Daytime Running Light).
    1. Disconnect the outer rear view mirror assembly LH connector.

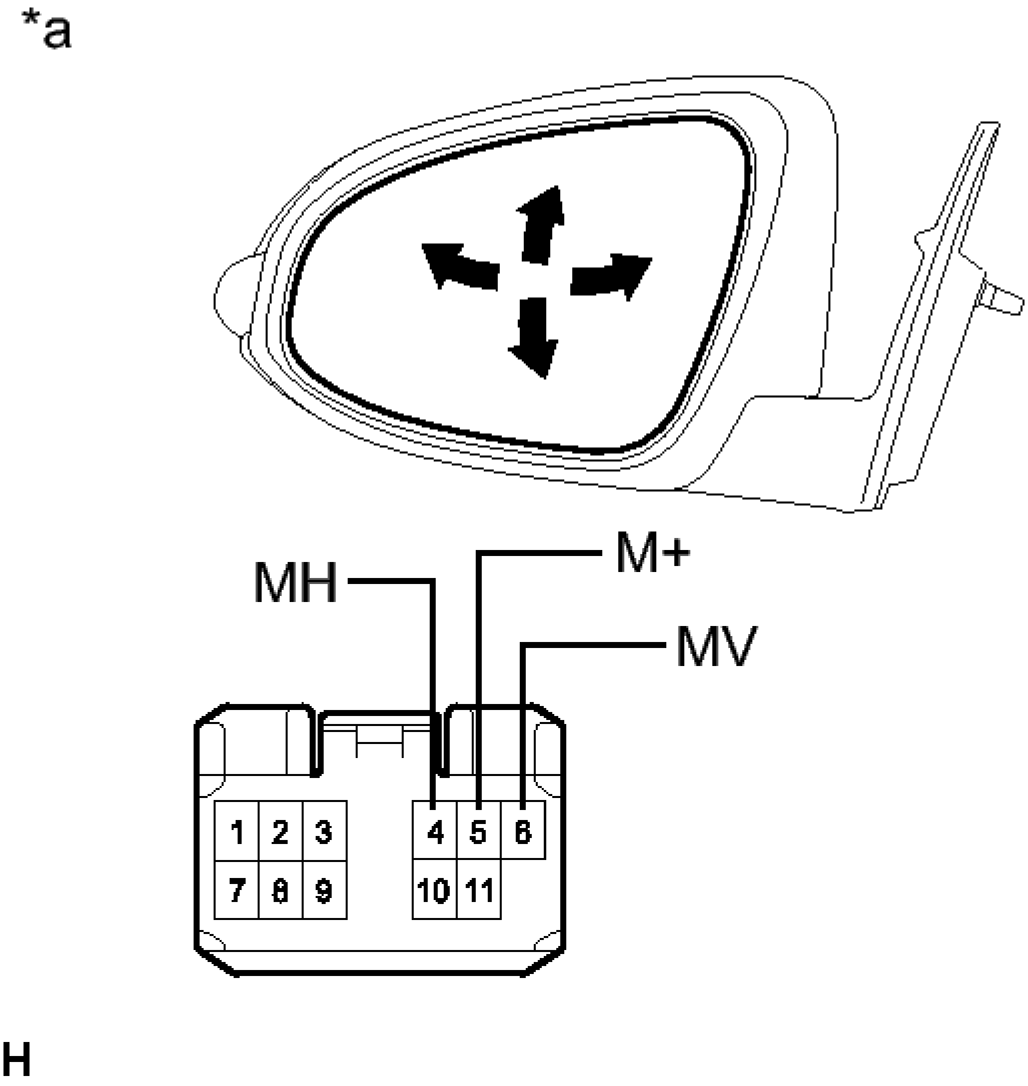

Fig. 10: Identifying Mirror Surface Connector Terminal Identification LH (W/O Daytime Running Light)
Courtesy of TOYOTA MOTOR SALES, U.S.A., INC.

    2. Apply auxiliary battery voltage and check the operation of the mirror.

OK

Measurement Condition	Specified Condition
Auxiliary battery	

positive (+) --> Terminal 6 (MV) Auxiliary battery negative (-) --> Terminal 5 (M+)	Turns upward
Auxiliary battery positive (+) --> Terminal 5 (M+) Auxiliary battery negative (-) --> Terminal 6 (MV)	Turns downward
Auxiliary battery positive (+) --> Terminal 4 (MH) Auxiliary battery negative (-) --> Terminal 5 (M+)	Turns left
Auxiliary battery positive (+) --> Terminal 5 (M+) Auxiliary battery negative (-) --> Terminal 4 (MH)	Turns right

TEXT IN ILLUSTRATION

*a	Component without harness connected (Outer Rear View Mirror

	Assembly LH)

If the result is not as specified, replace the outer rear view mirror assembly LH.

c. Check the operation of the retractable mirror (w/o Daytime Running Light).

NOTE:

- **Disconnect and reconnect the auxiliary battery between each mirror position check.**
- **The mirror position cannot be changed manually when the auxiliary battery is connected. To change the mirror position manually, the auxiliary battery must be disconnected first.**

1. Disconnect the outer rear view mirror assembly LH connector.

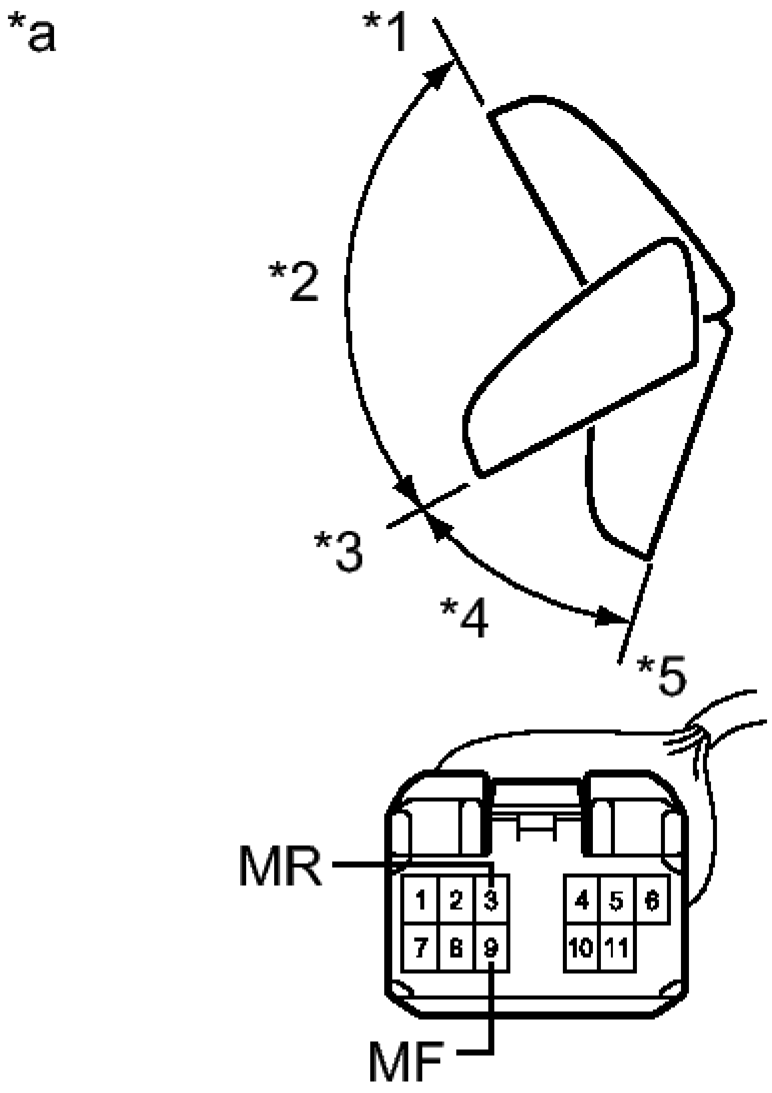

Fig. 11: Identifying Retractable Mirror Connector Terminal Identification LH (W/O Daytime Running Light)
Courtesy of TOYOTA MOTOR SALES, U.S.A., INC.

2. For each position: Disconnect the auxiliary battery, set the mirror position by hand, connect the auxiliary battery, and check the retractable mirror's movement.

   OK

Tester Connection	Condition	Specified Condition
Auxiliary battery positive (+) --> Terminal 3 (MR) Auxiliary battery negative (-) --> Terminal 9 (MF)	Forward position (A)	Moves from (A) to retracted position (E)
Auxiliary battery positive (+) --> Terminal 9 (MF) Auxiliary battery negative (-) --> Terminal 3 (MR)	Forward position (A)	Does not move
Auxiliary battery positive (+) --> Terminal 3 (MR) Auxiliary battery negative (-) --> Terminal 9 (MF)	Position between forward position (A) and driving position (C)	Moves from (B) to retracted position (E)

Auxiliary battery positive (+) --> Terminal 9 (MF) Auxiliary battery negative (-) --> Terminal 3 (MR)	Position between forward position (A) and driving position (C)	Moves from (B) to forward position (A)
Auxiliary battery positive (+) --> Terminal 3 (MR) Auxiliary battery negative (-) --> Terminal 9 (MF)	Driving position (C)	Moves from (C) to retracted position (E)
Auxiliary battery positive (+) --> Terminal 9 (MF) Auxiliary battery negative (-) --> Terminal 3 (MR)	Driving position (C)	Does not move
Auxiliary battery positive (+) --> Terminal 3 (MR) Auxiliary battery negative (-) --> Terminal 9	Position between driving position (C) and retracted position (E)	Moves from (D) to retracted position (E)

(MF)		
Auxiliary battery positive (+) --> Terminal 9 (MF) Auxiliary battery negative (-) --> Terminal 3 (MR)	Position between driving position (C) and retracted position (E)	Moves from (D) to driving position (C)
Auxiliary battery positive (+) --> Terminal 3 (MR) Auxiliary battery negative (-) --> Terminal 9 (MF)	Retracted position (E)	Does not move
Auxiliary battery positive (+) --> Terminal 9 (MF) Auxiliary battery negative (-) --> Terminal 3 (MR)	Retracted position (E)	Moves from (E) to driving position (C)

TEXT IN ILLUSTRATION

*1	(A) Forward Position
*2	(B)
*3	(C) Driving position
*4	(D)

*5	(E) Retracted Position
*a	Component without harness connected (Outer Rear View Mirror Assembly LH)

If the result is not as specified, replace the outer rear view mirror assembly LH.

d. Check the operation of the mirror heater (w/ Mirror Heater and Daytime Running Light).
   1. Disconnect the outer rear view mirror assembly LH connector.

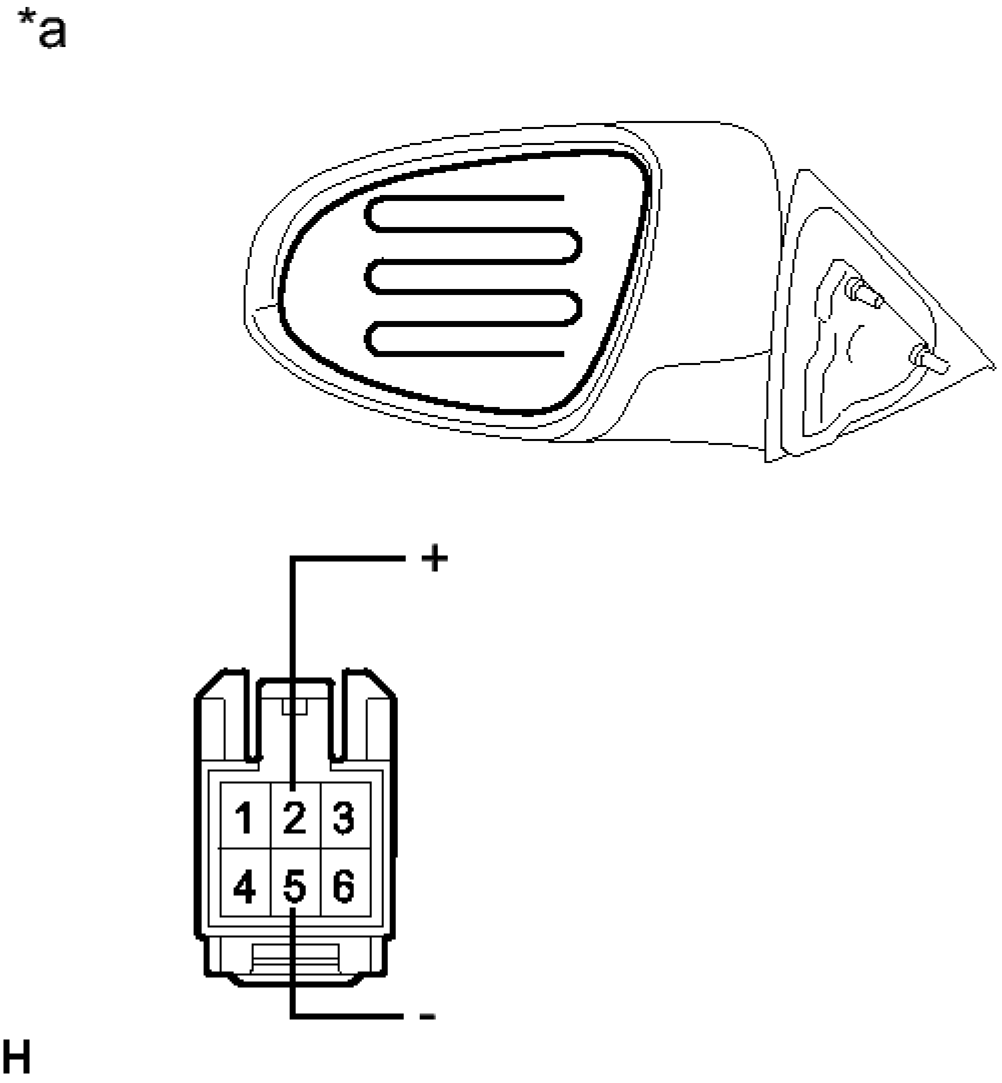

Fig. 12: Identifying Mirror Heater Connector Terminal Identification LH (W/Mirror Heater And Daytime Running Light)
Courtesy of TOYOTA MOTOR SALES, U.S.A., INC.

2. Measure the resistance according to the value(s) in the table below.

Standard Resistance

Tester Connection	Condition	Specified Condition
2 (+) - 5 (-)	25°C (75°F)	7.6 to 11.4 ohms

TEXT IN ILLUSTRATION

	Component

*a	without harness connected (Outer Rear View Mirror Assembly LH)

If the result is not as specified, replace the outer rear view mirror assembly LH.

3. Connect the cable from the positive (+) terminal to terminal 2 and the negative auxiliary battery (-) terminal to terminal 5, then check that the mirror becomes warm.

   HINT:

   It takes a short time for the mirror to become warm.

   OK

   Mirror becomes warm.

   If the result is not as specified, replace the outer rear view mirror assembly LH.

e. Check the operation of the mirror heater (w/ Mirror Heater and w/o Daytime Running Light).
   1. Disconnect the outer rear view mirror assembly LH connector.

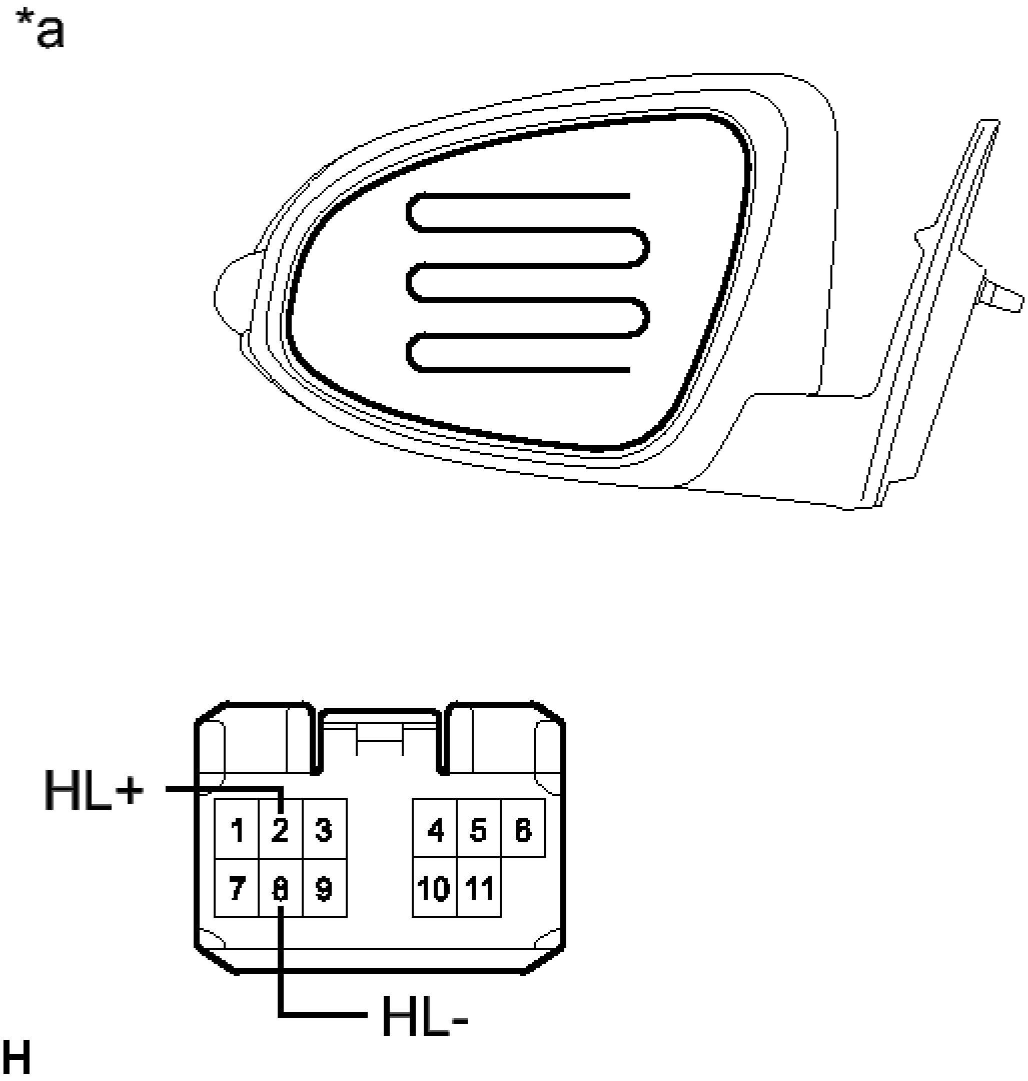

Fig. 13: Identifying Mirror Heater Connector Terminal Identification LH (W/Mirror Heater And W/O Daytime Running Light)
Courtesy of TOYOTA MOTOR SALES, U.S.A., INC.

2. Measure the resistance according to the value(s) in the table below.

Standard Resistance

Tester Connection	Condition	Specified Condition
2 (+) - 8 (-)	25°C (75°F)	7.6 to 11.4 ohms

TEXT IN ILLUSTRATION

	Component

*a	without harness connected (Outer Rear View Mirror Assembly LH)

If the result is not as specified, replace the outer rear view mirror assembly LH.

3. Connect the cable from the positive (+) terminal to terminal 2 and the negative auxiliary battery (-) terminal to terminal 8, then check that the mirror becomes warm.

   HINT:

   It takes a short time for the mirror to become warm.

   OK

   Mirror becomes warm.

   If the result is not as specified, replace the outer rear view mirror assembly LH.

REASSEMBLY

REASSEMBLY

HINT:

- Use the same procedure for both the RH and LH sides.
- The procedure described below is for the LH side.

1. **INSTALL SIDE TURN SIGNAL LIGHT ASSEMBLY (w/ Retract Mirror)** . Refer to **INSTALLATION - Step 1**
2. **INSTALL OUTER MIRROR COVER (w/o Retract Mirror)** See step 1
3. **INSTALL OUTER MIRROR COVER (w/ Retract Mirror)** See step 2
4. **INSTALL OUTER REAR VIEW MIRROR (w/o Retract Mirror)** See step 1
5. **INSTALL OUTER REAR VIEW MIRROR (w/ Retract Mirror)** See step 2

INSTALLATION

INSTALLATION

HINT:

- Use the same procedure for both the RH and LH sides.
- The procedure described below is for the LH side.

1. **INSTALL OUTER REAR VIEW MIRROR ASSEMBLY**
   1. Engage the claw to temporarily install the outer rear view mirror assembly.
   2. Install the outer rear view mirror assembly with the 3 bolts.

      Torque: 11 N*m (107 kgf*cm, 8 ft.*lbf)

   3. Connect the connector.
2. **INSTALL FRONT DOOR INNER GLASS WEATHERSTRIP** . Refer to **REASSEMBLY - Step 37**
3. **INSTALL FRONT DOOR TRIM BOARD SUB-ASSEMBLY** . Refer to **REASSEMBLY - Step 39**
4. **INSTALL COURTESY LIGHT ASSEMBLY** . Refer to **INSTALLATION - Step 1**
5. **INSTALL FRONT ARMREST ASSEMBLY** . Refer to **REASSEMBLY - Step 41**
6. **INSTALL POWER WINDOW REGULATOR MASTER SWITCH ASSEMBLY WITH FRONT DOOR ARMREST BASE PANEL (for Driver Side)** . Refer to **REASSEMBLY - Step 42**
7. **INSTALL POWER WINDOW REGULATOR SWITCH ASSEMBLY WITH FRONT DOOR ARMREST BASE PANEL (for Front Passenger Side)** . Refer to **REASSEMBLY - Step 43**
8. **INSTALL FRONT DOOR LOWER FRAME BRACKET GARNISH** . Refer to **REASSEMBLY - Step 44**
9. **INSTALL FRONT DOOR INSIDE HANDLE BEZEL PLUG** . Refer to **REASSEMBLY - Step 45**

OUTER REAR VIEW MIRROR GLASS

COMPONENTS

ILLUSTRATION

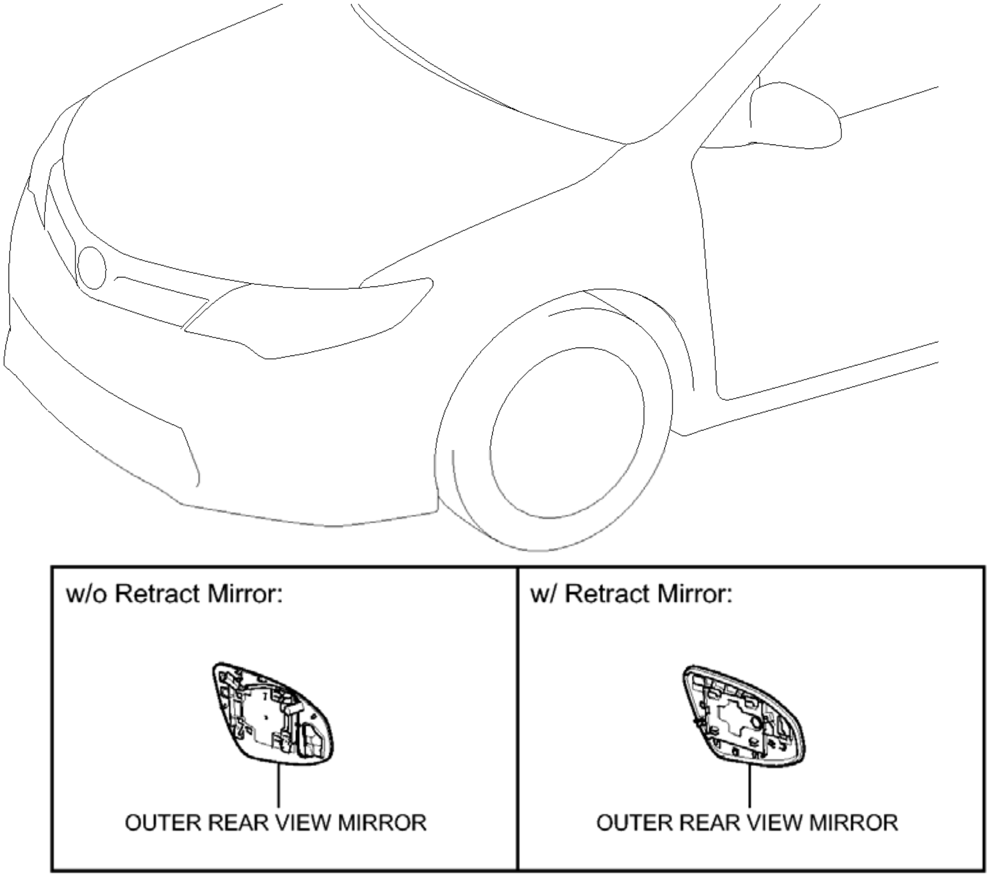
w/o Retract Mirror:
OUTER REAR VIEW MIRROR
w/ Retract Mirror:
OUTER REAR VIEW MIRROR

P

Fig. 14: Identifying Outer Rear View Mirror Glass Replacement Components
Courtesy of TOYOTA MOTOR SALES, U.S.A., INC.

REMOVAL

REMOVAL

HINT:

- Use the same procedure for both the RH and LH sides.
- The procedure described below is for the LH side.

1. **REMOVE OUTER REAR VIEW MIRROR (w/o Retract Mirror)**
    a. Apply protective tape to the areas shown in the illustration.

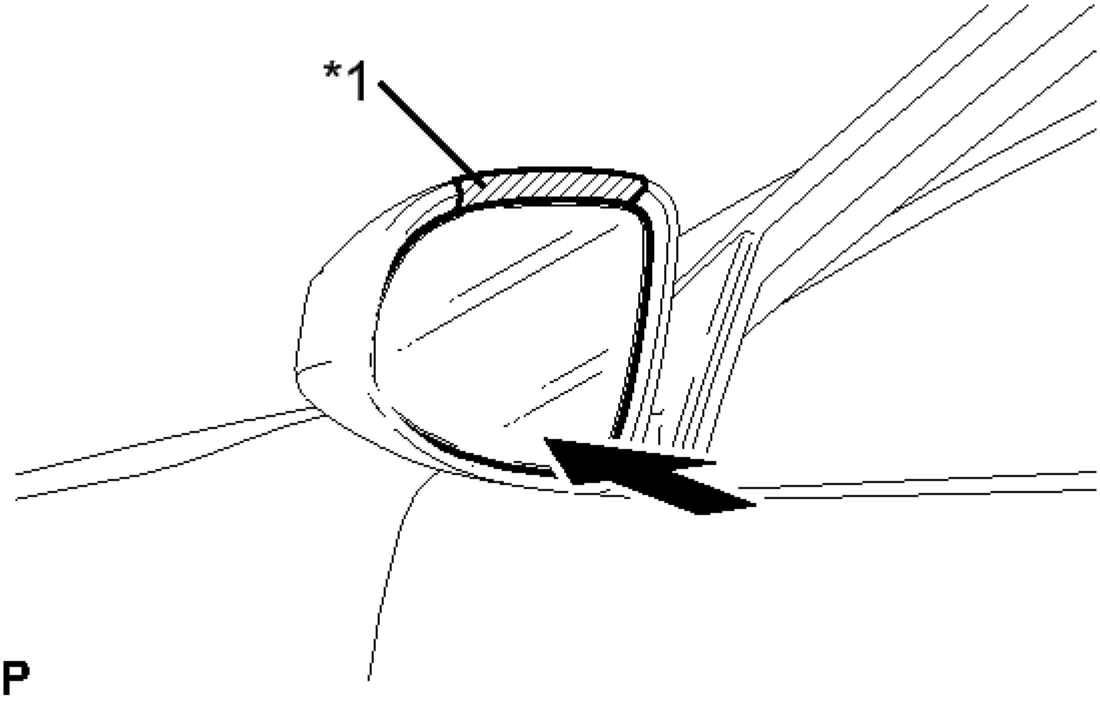

Fig. 15: Removing Outer Rear View Mirror Using Protective Tape (W/O Retract Mirror)
Courtesy of TOYOTA MOTOR SALES, U.S.A., INC.

TEXT IN ILLUSTRATION

*1	Protective Tape

b. Push the lower part of the mirror surface and tilt it.
c. Using a moulding remover, disengage the 2 claws at the upper part of the outer rear view mirror as shown in the illustration.

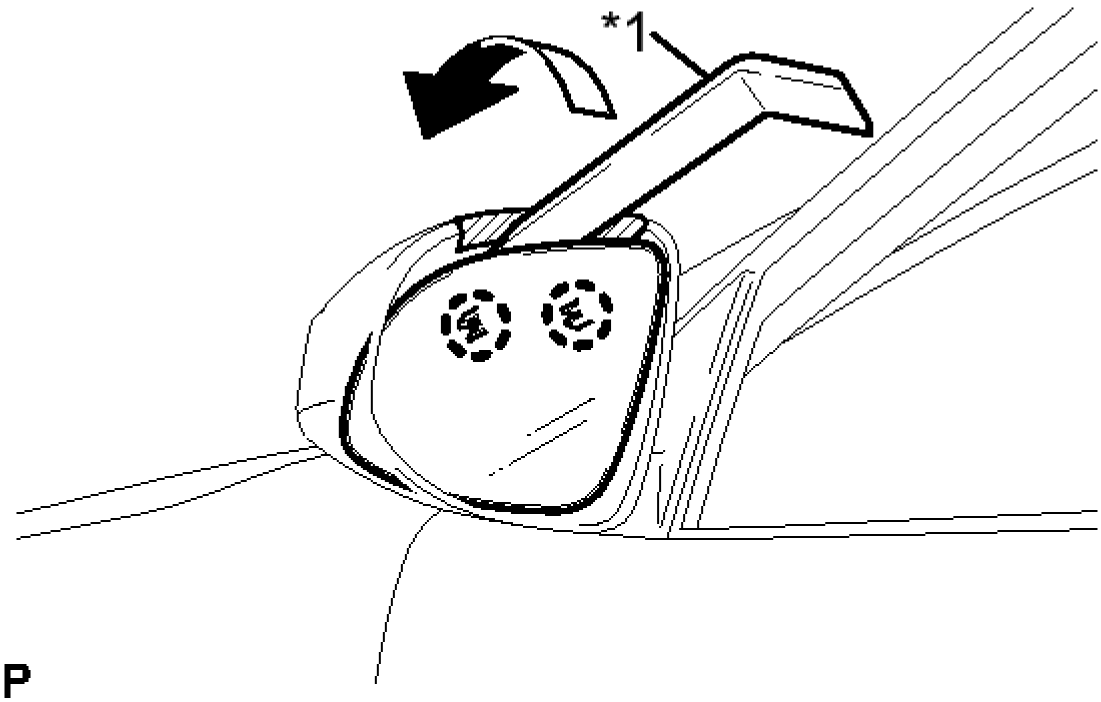

Fig. 16: Identifying Moulding Remover
Courtesy of TOYOTA MOTOR SALES, U.S.A., INC.

TEXT IN ILLUSTRATION

*1	Moulding Remover

d. Disengage the 2 guides and remove the outer rear view mirror as shown in the illustration.

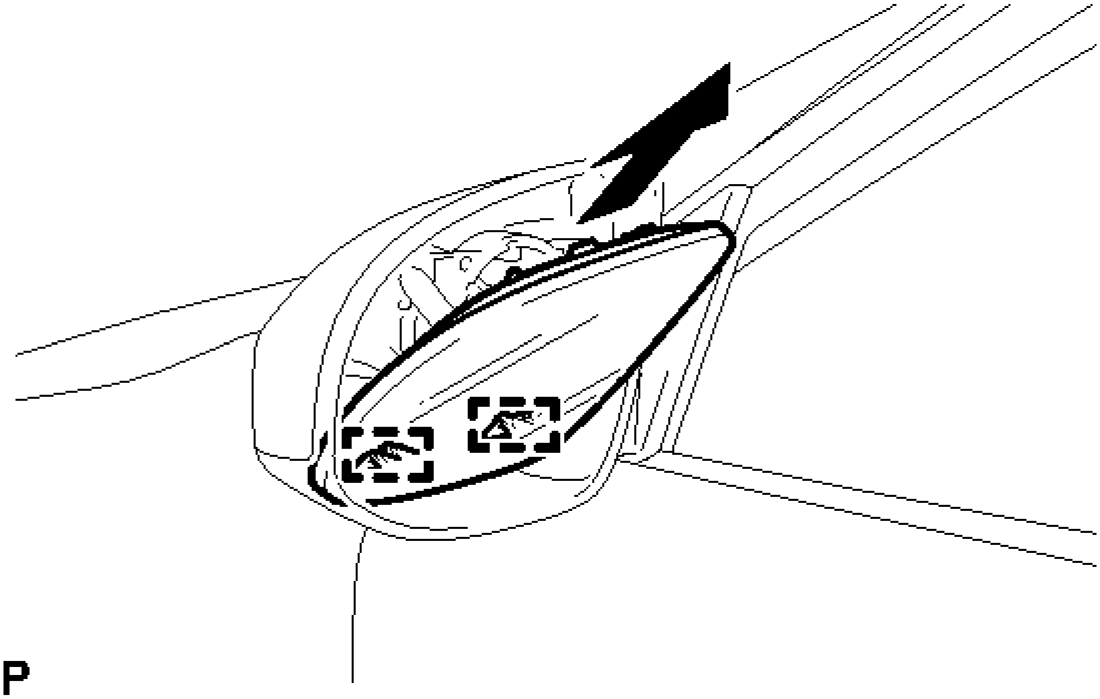

Fig. 17: Removing Outer Rear View Mirror Guides
Courtesy of TOYOTA MOTOR SALES, U.S.A., INC.

e. w/ Mirror Heater:
   1. Disconnect the 2 connectors and remove the outer rear view mirror.

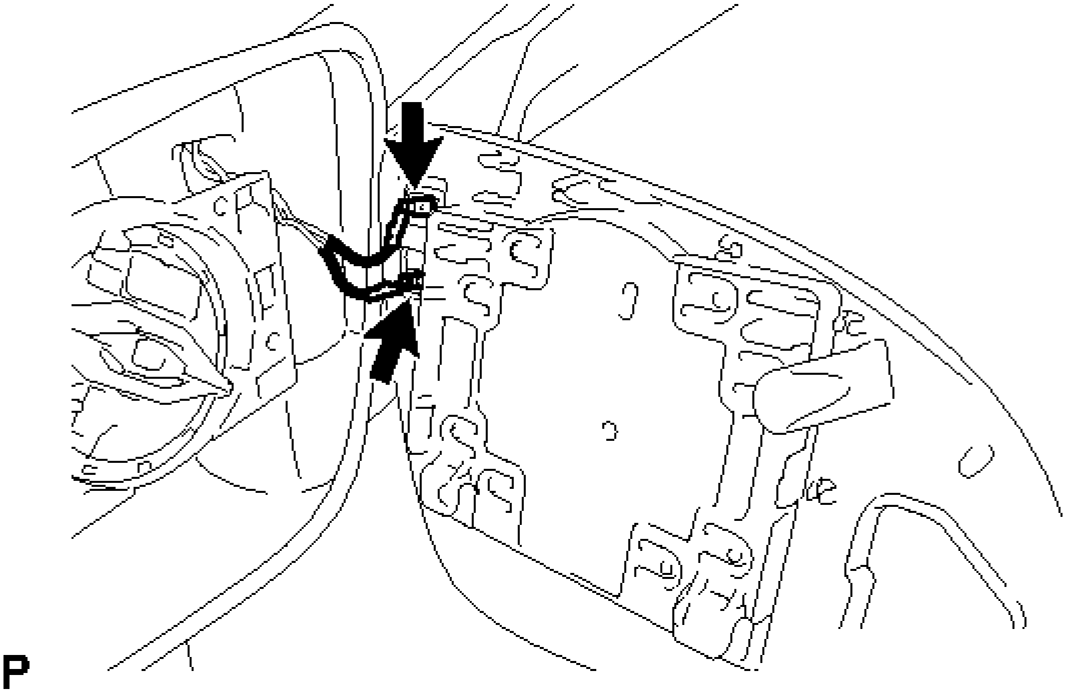

Fig. 18: Identifying Outer Rear View Mirror Connectors

Courtesy of TOYOTA MOTOR SALES, U.S.A., INC.

f. w/ Mirror Heater and Blind Spot Monitor System:

1. Disconnect the 2 mirror heater connectors.
2. Disengage the 2 claws.
3. Using a screwdriver, release the tabs of the blind spot monitor indicator connector to disconnect the connector and remove the outer rear view mirror.

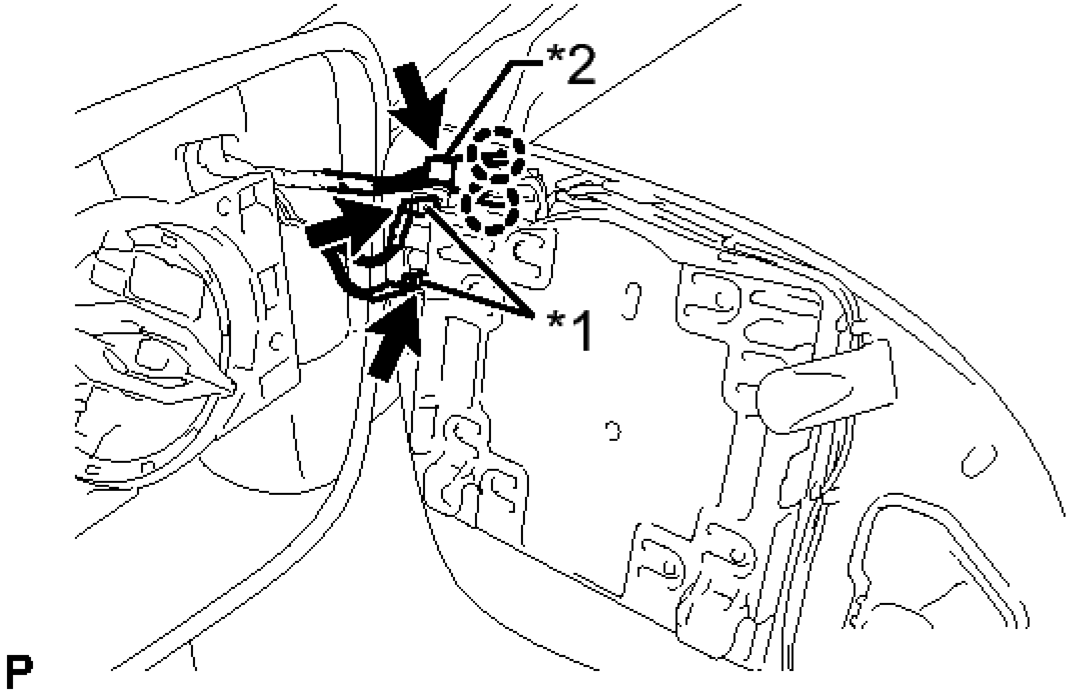

Fig. 19: Identifying Mirror Heater Connector And Blind Spot Monitor Indicator Connector
Courtesy of TOYOTA MOTOR SALES, U.S.A., INC.

TEXT IN ILLUSTRATION

*1	Mirror Heater Connector
*2	Blind Spot Monitor Indicator Connector

NOTE:

- **Do not bend the tabs excessively to prevent them from being damaged.**
- **If the tabs are damaged, replace the outer rear view mirror**

with a new one.

2. **REMOVE OUTER REAR VIEW MIRROR (w/ Retract Mirror)**
    a. Apply protective tape to the areas shown in the illustration.

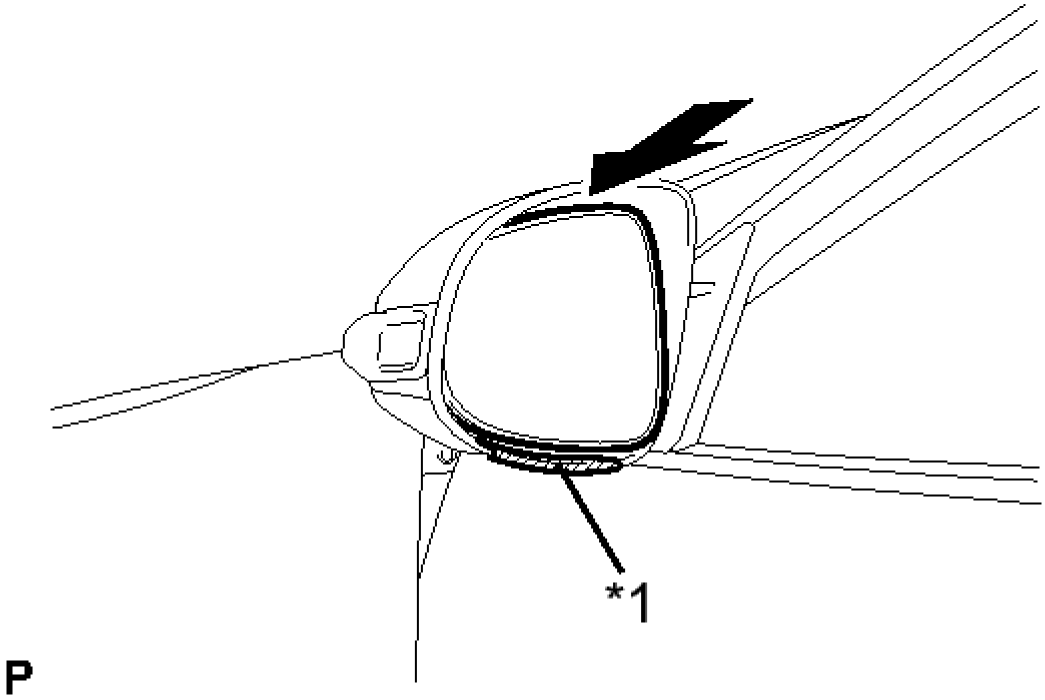

Fig. 20: Identifying Protective Tape (W/Retract Mirror)
Courtesy of TOYOTA MOTOR SALES, U.S.A., INC.

TEXT IN ILLUSTRATION

*1	Protective Tape

    b. Push the upper part of the mirror surface and tilt it.
    c. Using a moulding remover, disengage the 2 claws at the lower part of the outer rear view mirror as shown in the illustration.

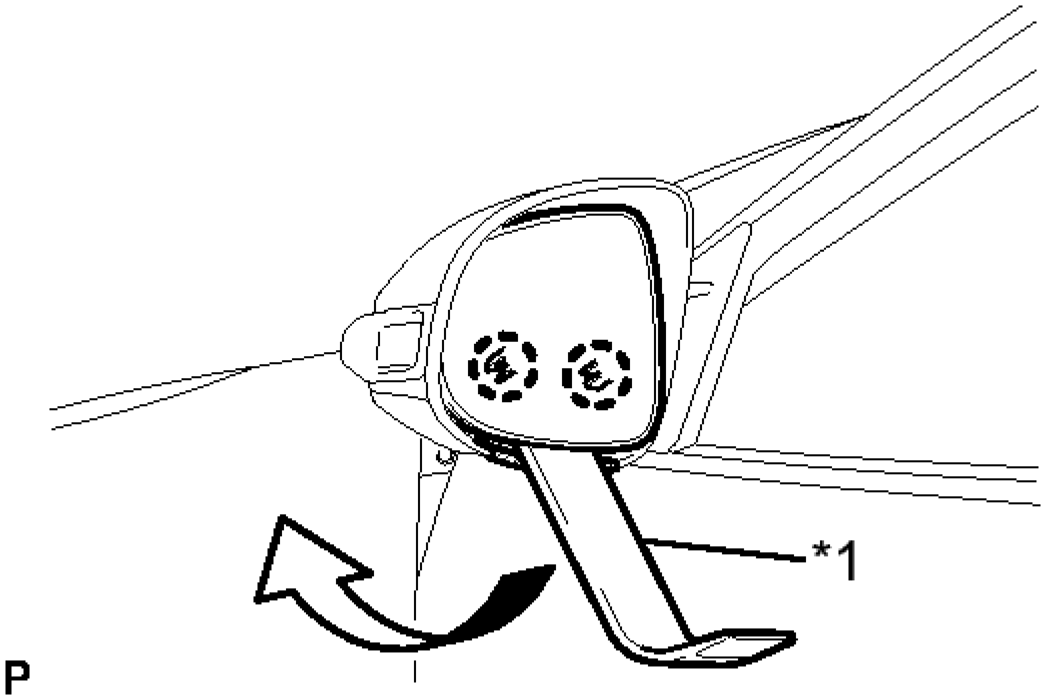

Fig. 21: Identifying Moulding Remover
Courtesy of TOYOTA MOTOR SALES, U.S.A., INC.

TEXT IN ILLUSTRATION

*1	Moulding Remover

d. Disengage the 2 guides as shown in the illustration.

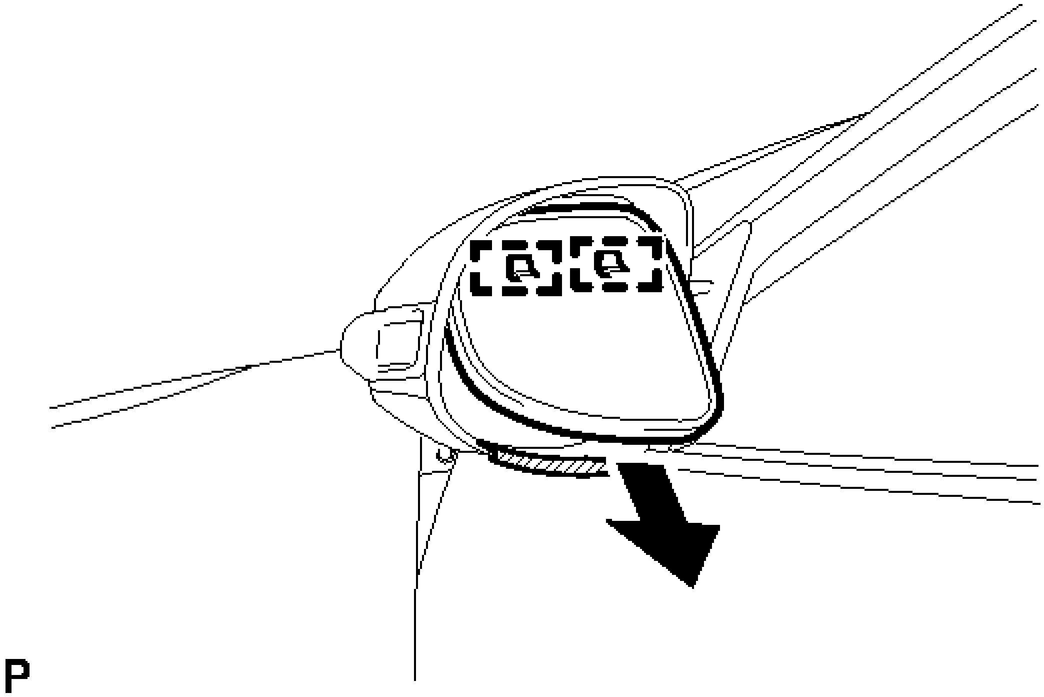

Fig. 22: Identifying Lower Part Of Outer Rear View Mirror Guides
Courtesy of TOYOTA MOTOR SALES, U.S.A., INC.

e. Disconnect the 2 connectors and remove the outer rear view mirror.

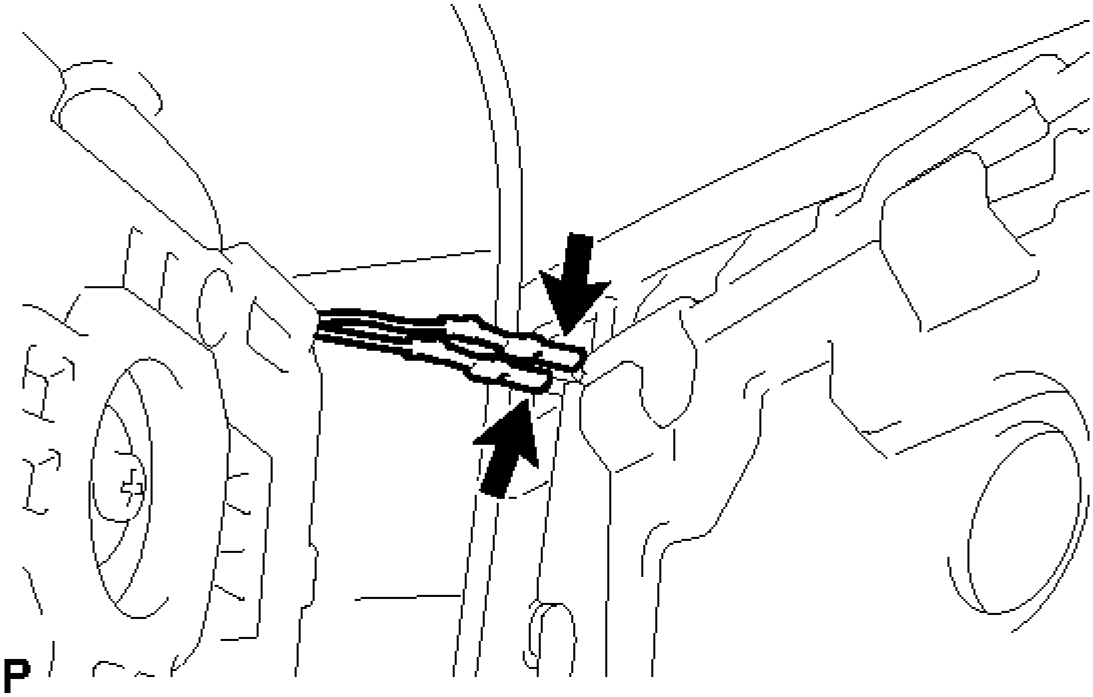

Fig. 23: Identifying Outer Rear View Mirror Connectors
Courtesy of TOYOTA MOTOR SALES, U.S.A., INC.

INSPECTION

INSPECTION

1. **INSPECT OUTER REAR VIEW MIRROR RH**
    1. Check the outer mirror heater operation (w/ Blind Spot Monitor System).

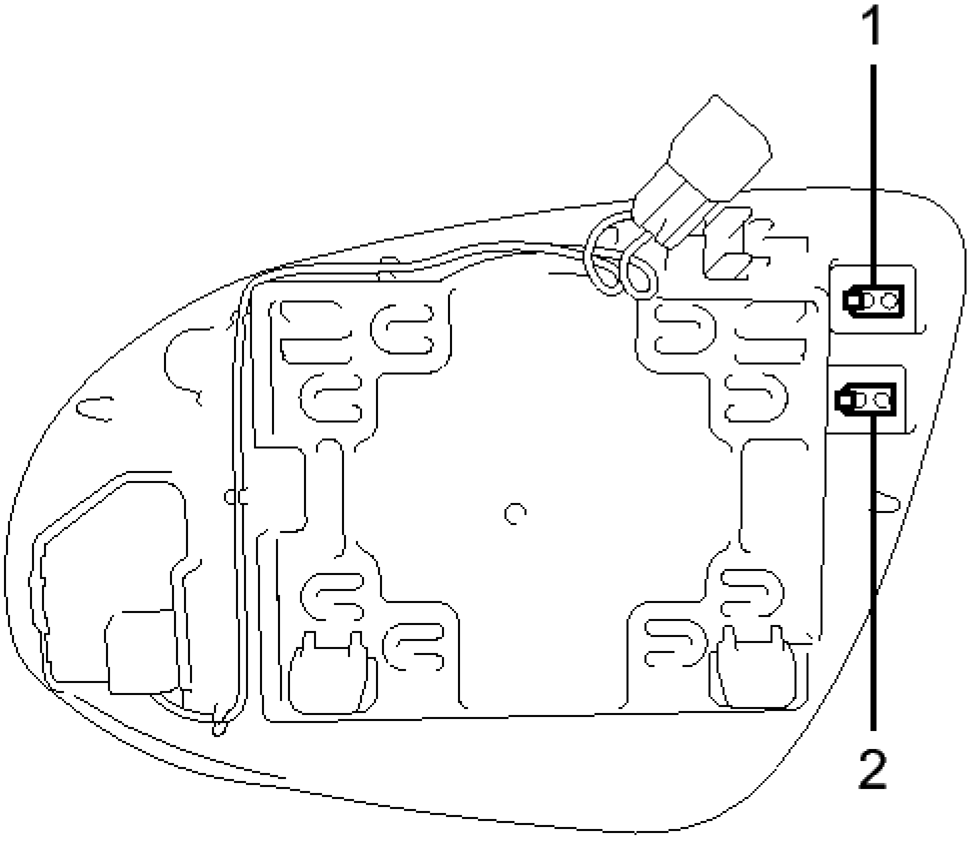

Fig. 24: Measuring Resistance Of Outer Mirror Heater (W/Blind Spot Monitor System)
Courtesy of TOYOTA MOTOR SALES, U.S.A., INC.

1. Measure the resistance according to the value(s) in the table below.

   Standard Resistance

Tester Connection	Condition	Specified Condition

1 - 2	25°C (77° F)	7.6 to 11.4 ohms

If the result is not as specified, replace the outer rear view mirror RH.

b. Check the outer mirror heater operation (w/o Blind Spot Monitor System).

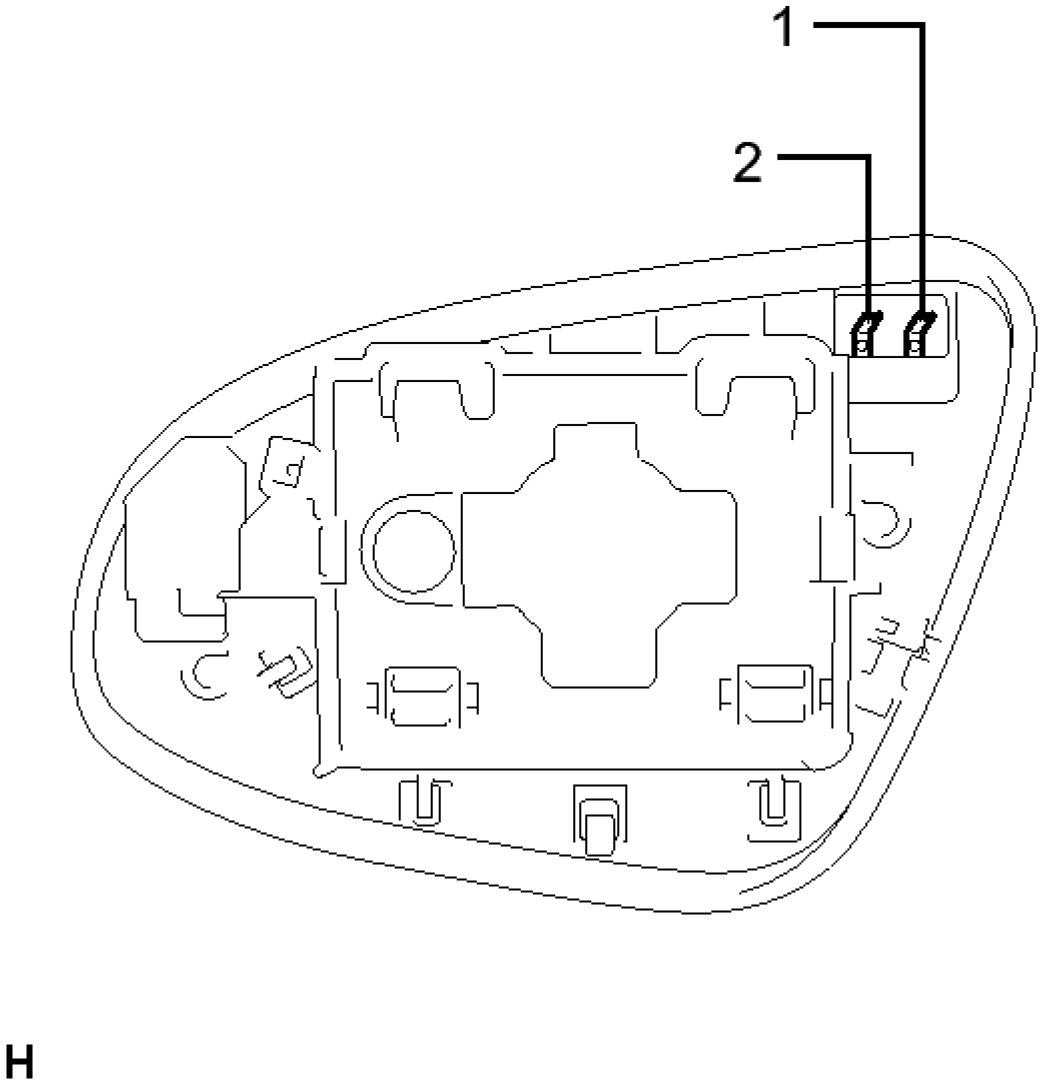

Fig. 25: Measuring Resistance Of Outer Mirror Heater (W/O Blind Spot Monitor System)
Courtesy of TOYOTA MOTOR SALES, U.S.A., INC.

1. Measure the resistance according to the value(s) in the table below.

   Standard Resistance

Tester Connection	Condition	Specified Condition

1 - 2	25°C (77° F)	7.6 to 11.4 ohms

If the result is not as specified, replace the outer rear view mirror RH.

c. Check the outer rear view mirror indicator RH operation (w/ Blind Spot Monitor System).

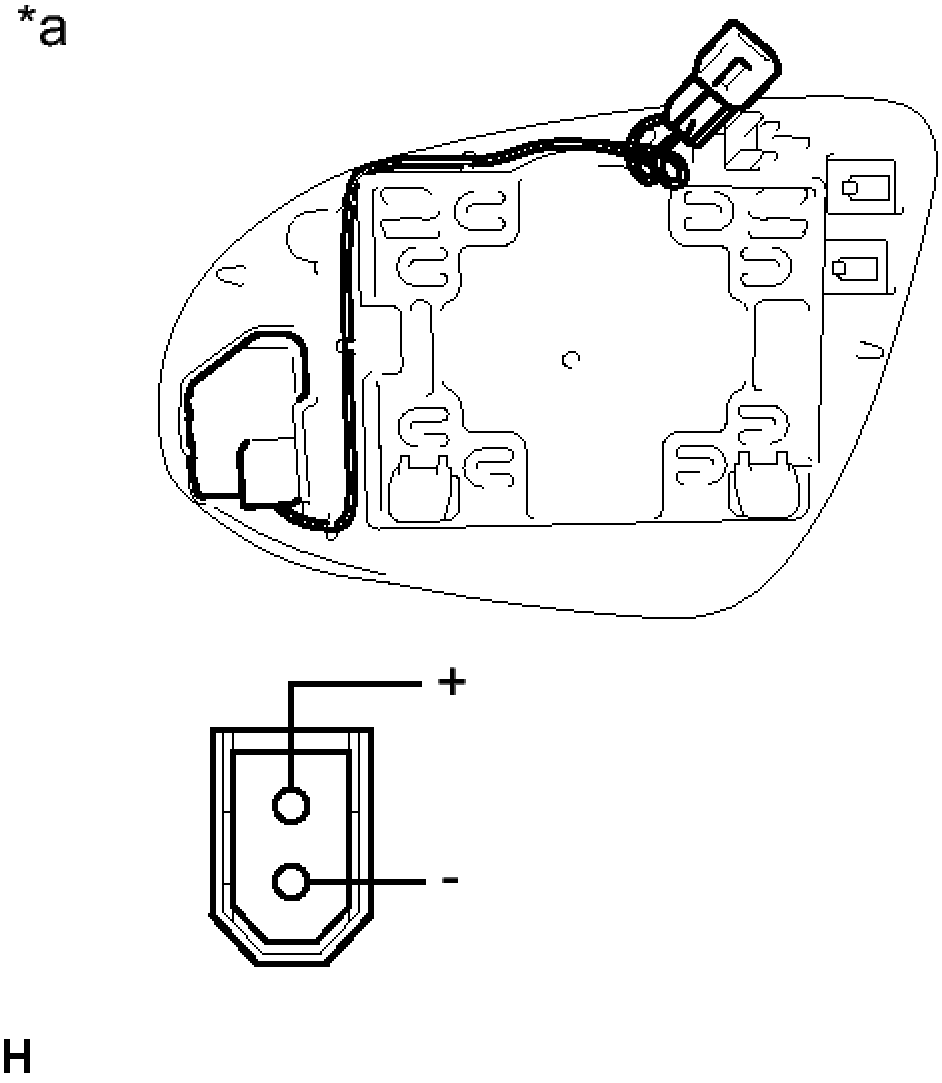

Fig. 26: Identifying Outer Rear View Mirror Component Without Harness Connected RH (W/Blind Spot Monitor System)
Courtesy of TOYOTA MOTOR SALES, U.S.A., INC.

1. Connect a positive (+) lead from the auxiliary battery to terminal 1 (+) and a negative (-) lead to terminal 2 (-).
2. Check that the outer rear view mirror indicator comes on.

   OK

Outer rear view mirror indicator comes on.

TEXT IN ILLUSTRATION

*a	Component without harness connected (Outer rear view mirror RH)

If the result is not as specified, replace the outer rear view mirror RH.

2. **INSPECT OUTER REAR VIEW MIRROR LH**
   a. Check the outer mirror heater operation (w/ Blind Spot Monitor System).

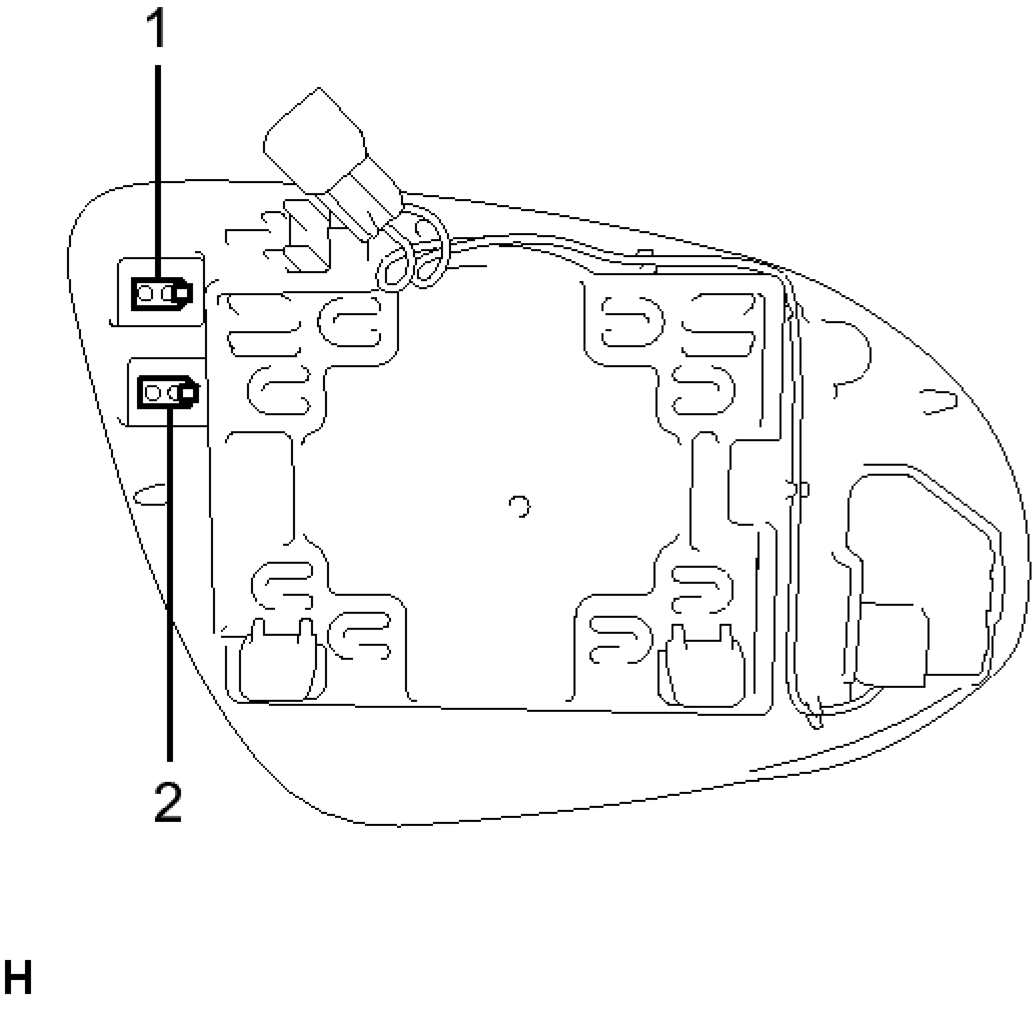

Fig. 27: Measuring Outer Mirror Heater Resistance (W/Blind Spot Monitor System)
Courtesy of TOYOTA MOTOR SALES, U.S.A., INC.

1. Measure the resistance according the value(s) in the table below.

   Standard Resistance

Tester Connection	Condition	Specified Condition
1 - 2	25°C (77° F)	7.6 to 11.4 ohms

   If the result is not as specified, replace the outer rear view mirror LH.

b. Check the outer mirror heater operation (w/o Blind Spot Monitor System).

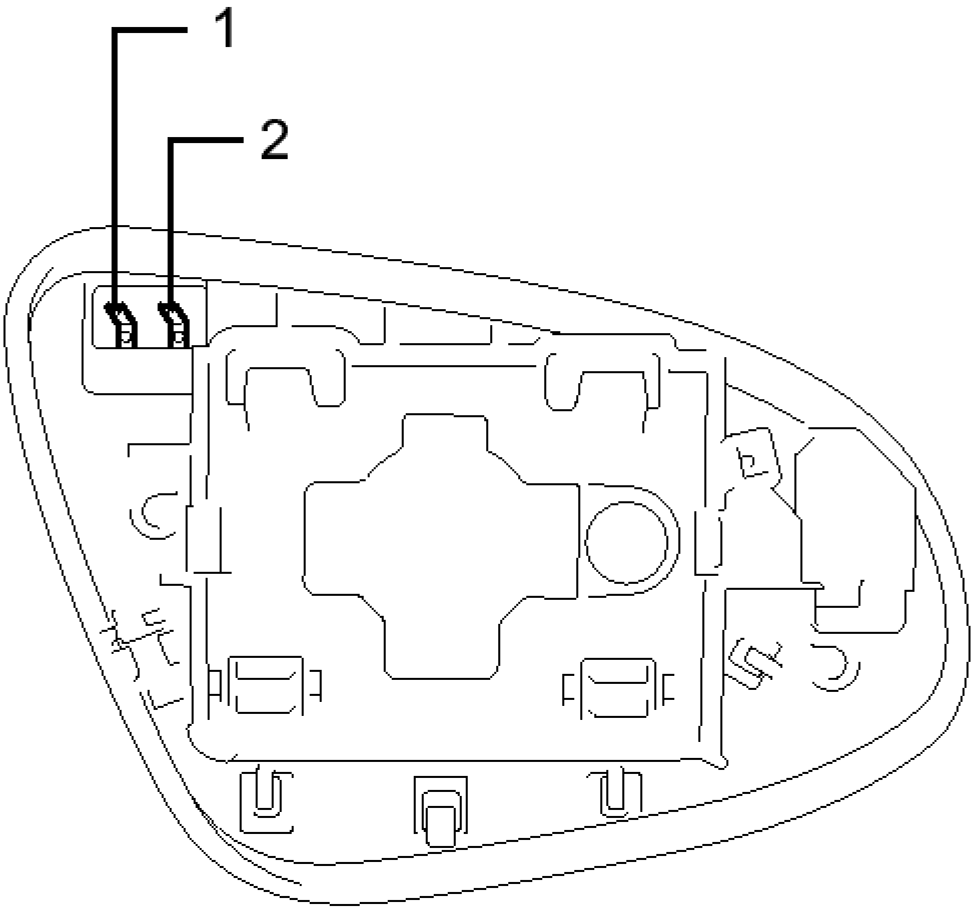

H

Fig. 28: Measuring Outer Mirror Heater Resistance (W/O Blind Spot Monitor System)
Courtesy of TOYOTA MOTOR SALES, U.S.A., INC.

1. Measure the resistance according the value(s) in the table below.

   Standard Resistance

Tester Connection	Condition	Specified Condition
1 - 2	25°C (77° F)	7.6 to 11.4 ohms

   If the result is not as specified, replace the outer rear view mirror LH.

c. Check the outer rear view mirror indicator LH operation.

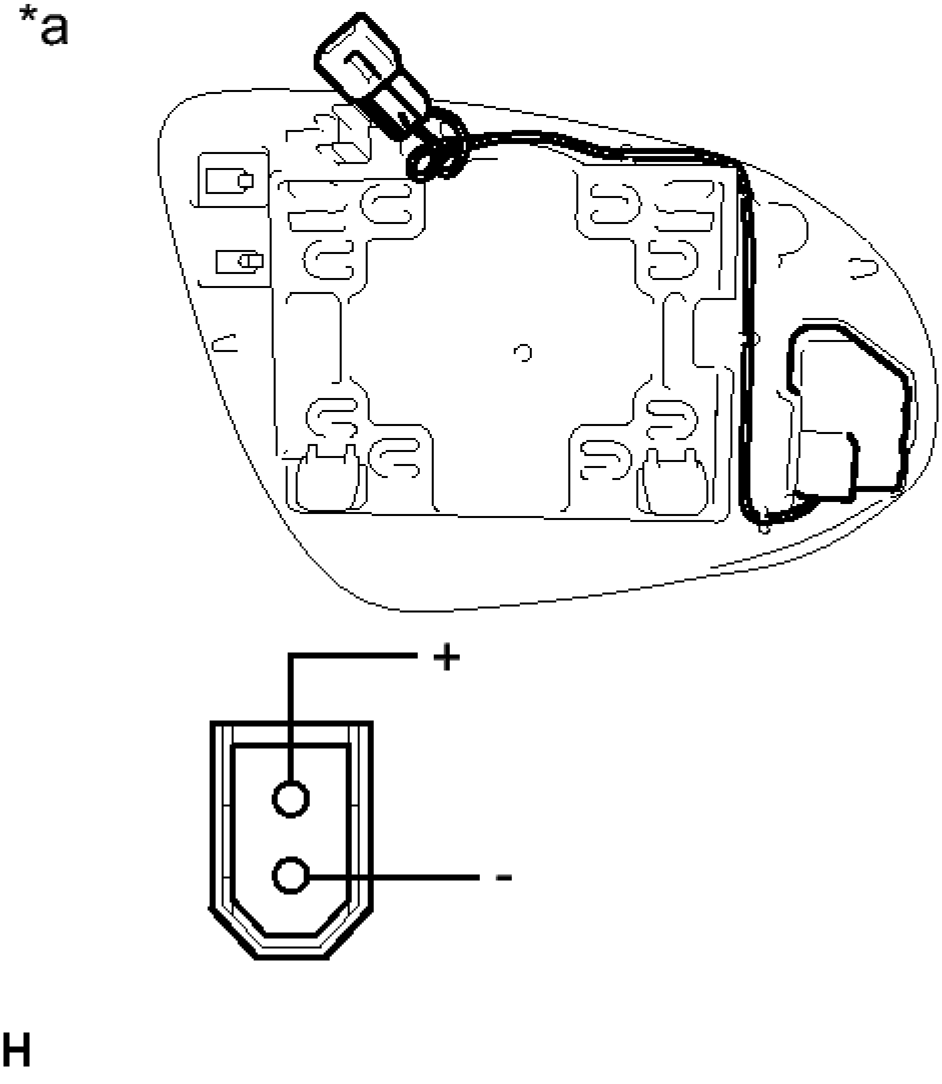

Fig. 29: Identifying Outer Rear View Mirror Component With Harness Connected LH
Courtesy of TOYOTA MOTOR SALES, U.S.A., INC.

1. Connect a positive (+) lead from the auxiliary battery to terminal 1 (+) and a negative (-) lead to terminal 2 (-).
2. Check that the outer rear view mirror indicator comes on.

   OK

   Outer rear view mirror indicator comes on.

   TEXT IN ILLUSTRATION

*a	Component without harness connected (Outer rear view mirror LH)

   If the result is not as specified, replace the outer rear view mirror LH.

INSTALLATION

INSTALLATION

HINT:

- Use the same procedure for both the RH and LH sides.
- The procedure described below is for the LH side.

1. **INSTALL OUTER REAR VIEW MIRROR (w/o Retract Mirror)**
   a. w/ Mirror Heater:
      1. Connect the 2 connectors.
   b. w/ Mirror Heater and Blind Spot Monitor System:
      1. Connect the 3 connectors.
      2. Engage the 2 claws.
   c. Engage the 2 guides on the lower part of the outer mirror to the outer rear view mirror.

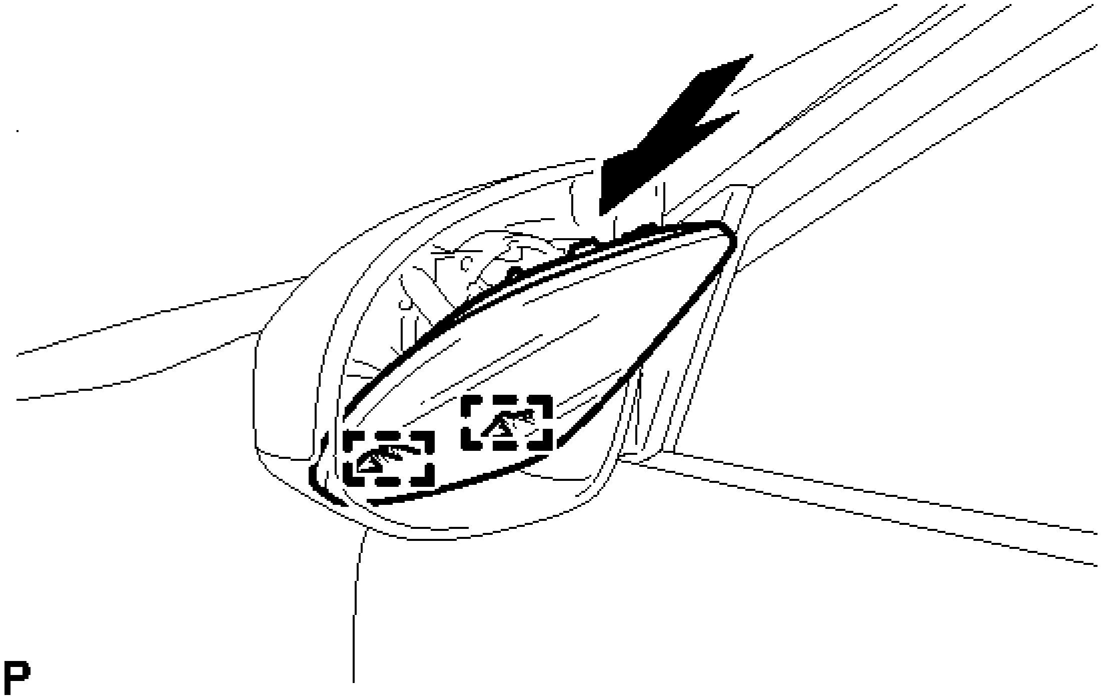

Fig. 30: Identifying Lower Part Of Outer Rear View Mirror Guides
Courtesy of TOYOTA MOTOR SALES, U.S.A., INC.

d. Engage the 2 claws on the upper part of the outer mirror to the outer rear view mirror.

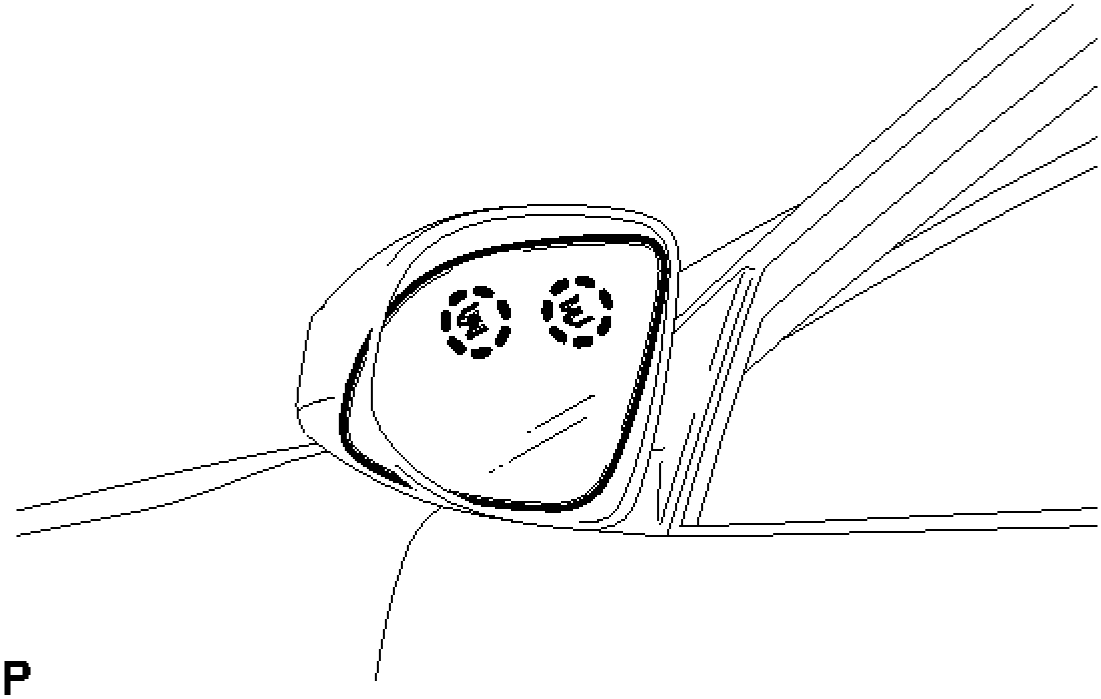

Fig. 31: Identifying Upper Part Of Outer Rear View Mirror Claws
Courtesy of TOYOTA MOTOR SALES, U.S.A., INC.

2. **INSTALL OUTER REAR VIEW MIRROR (w/ Retract Mirror)**
   a. Connect the 2 connectors.
   b. Engage the 2 guides on the upper part of the outer mirror to the outer rear view mirror.

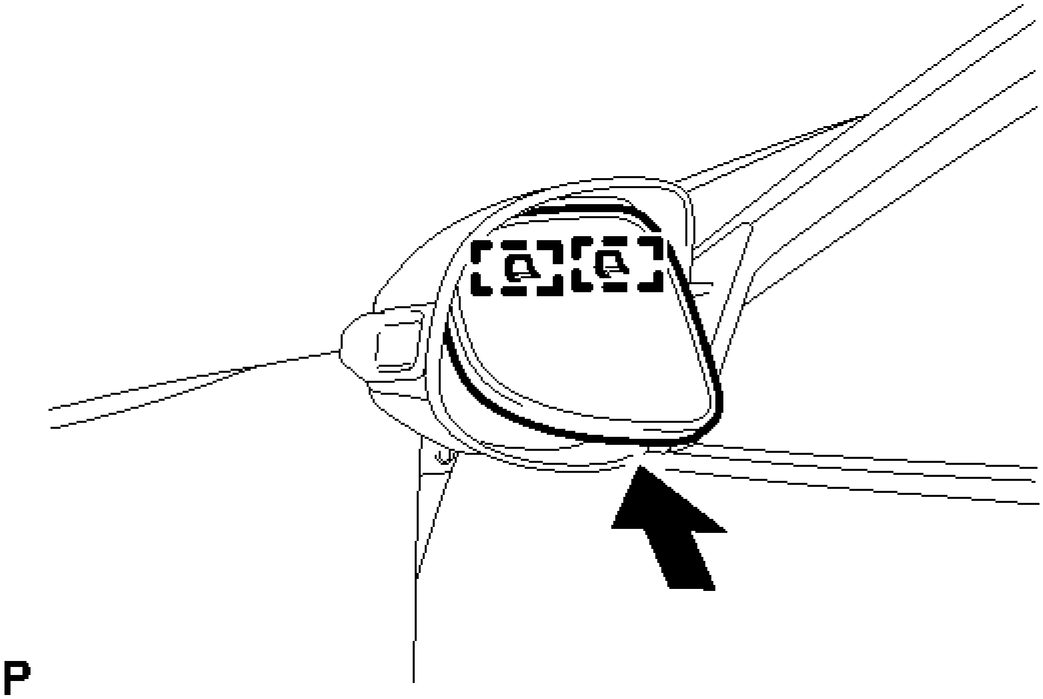

Fig. 32: Identifying Upper Part Of Outer Rear View Mirror Guides (W/Retract Mirror)
Courtesy of TOYOTA MOTOR SALES, U.S.A., INC.

   c. Engage the 2 claws on the lower part of the outer mirror to the outer rear view mirror.

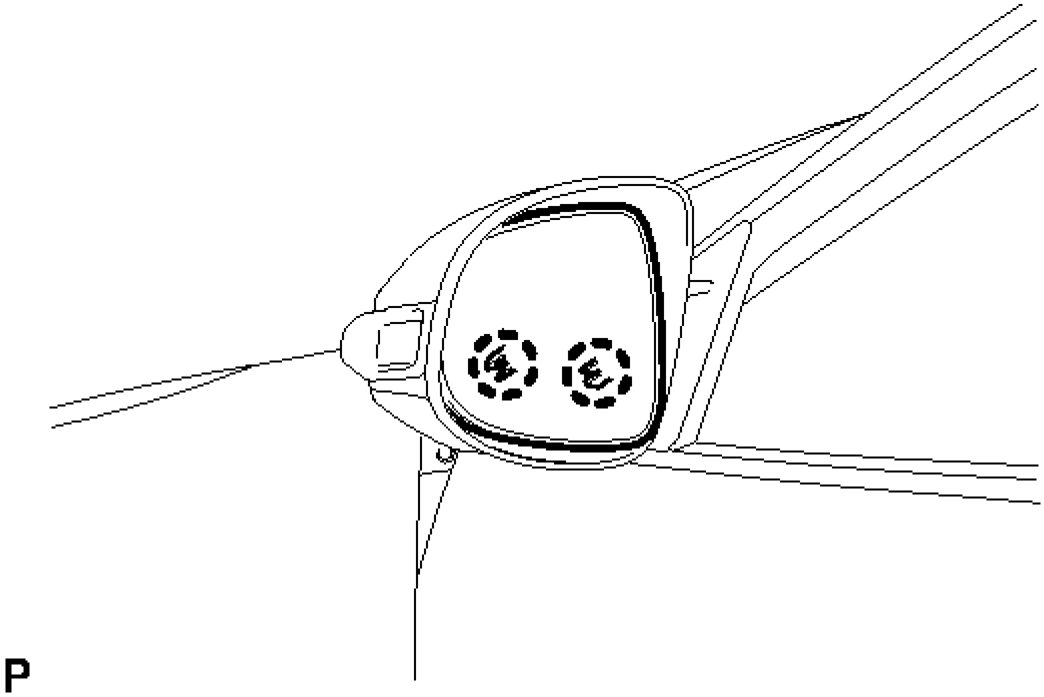

Fig. 33: Identifying Lower Part Of Outer Rear View Mirror Claws (W/Retract Mirror)
Courtesy of TOYOTA MOTOR SALES, U.S.A., INC.

OUTER REAR VIEW MIRROR COVER

COMPONENTS

ILLUSTRATION

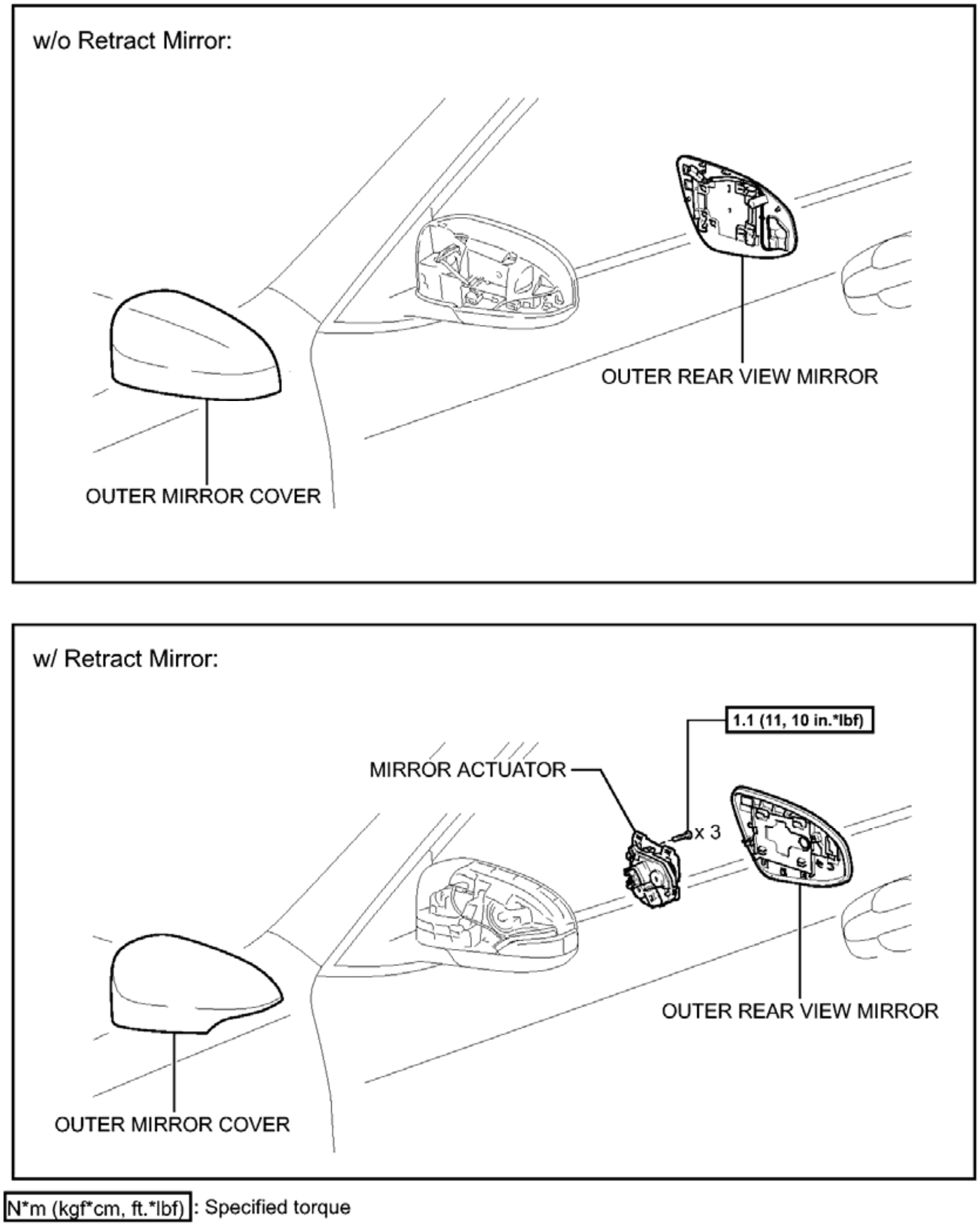
w/o Retract Mirror:
OUTER REAR VIEW MIRROR
OUTER MIRROR COVER
w/ Retract Mirror:
1.1 (11, 10 in.*lbf)
MIRROR ACTUATOR
x 3
OUTER REAR VIEW MIRROR
OUTER MIRROR COVER
N*m (kgf*cm, ft.*lbf) : Specified torque
P

Fig. 34: Identifying Outer Rear View Mirror Cover Replacement Components With Torque Specifications
Courtesy of TOYOTA MOTOR SALES, U.S.A., INC.

REMOVAL

REMOVAL

HINT:

- Use the same procedure for both the RH and LH sides.
- The procedure described below is for the LH side.

1. **REMOVE OUTER REAR VIEW MIRROR (w/o Retract Mirror)** See step 1
2. **REMOVE OUTER REAR VIEW MIRROR (w/ Retract Mirror)** See step 2
3. **REMOVE OUTER MIRROR COVER (w/o Retract Mirror)**
    a. Disengage the 8 claws and remove the outer mirror cover.

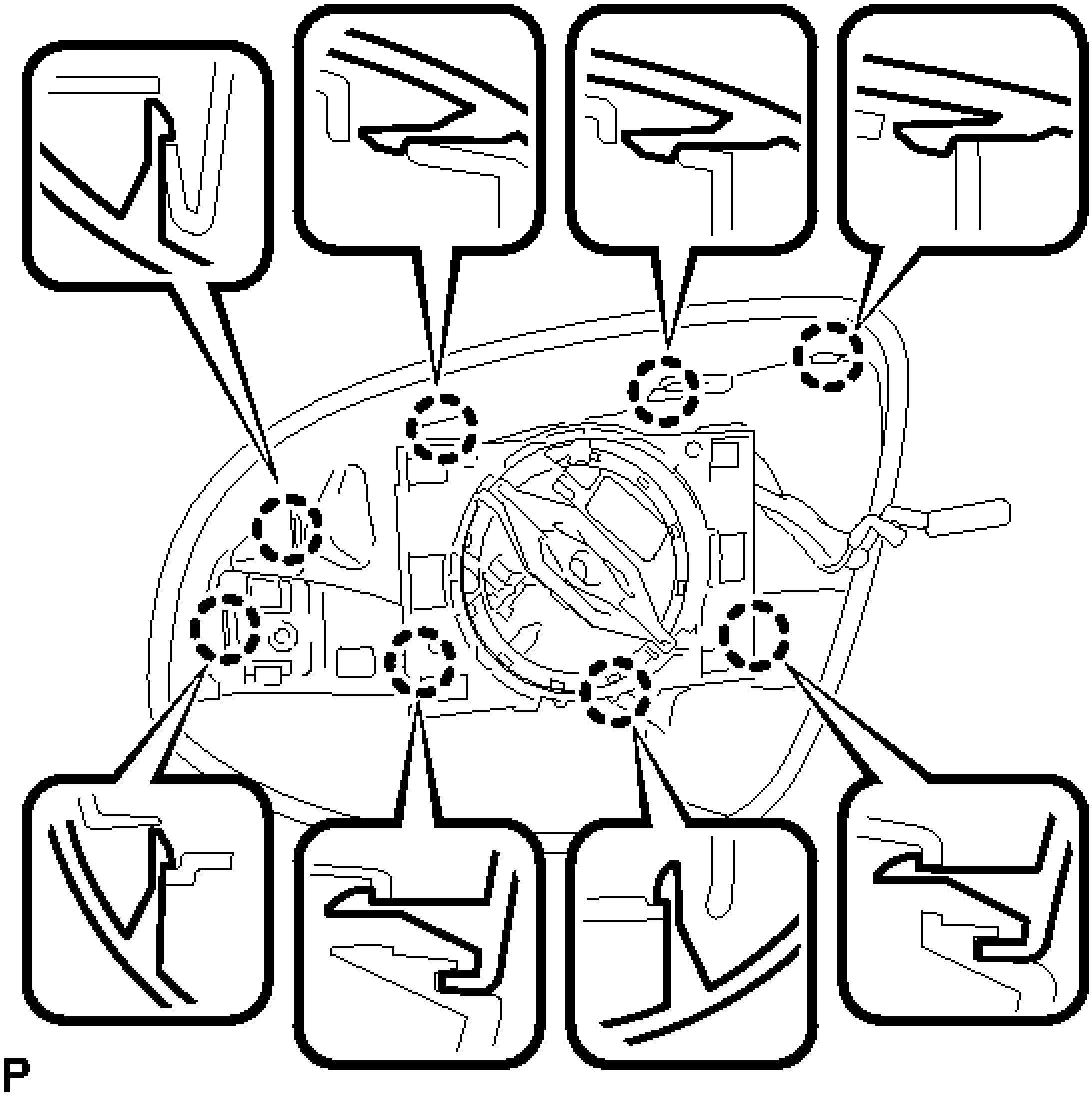

Fig. 35: Identifying Outer Mirror Cover Claws (W/O Retract Mirror)
Courtesy of TOYOTA MOTOR SALES, U.S.A., INC.

4. **REMOVE OUTER MIRROR COVER (w/ Retract Mirror)**
    a. Remove the 3 screws.

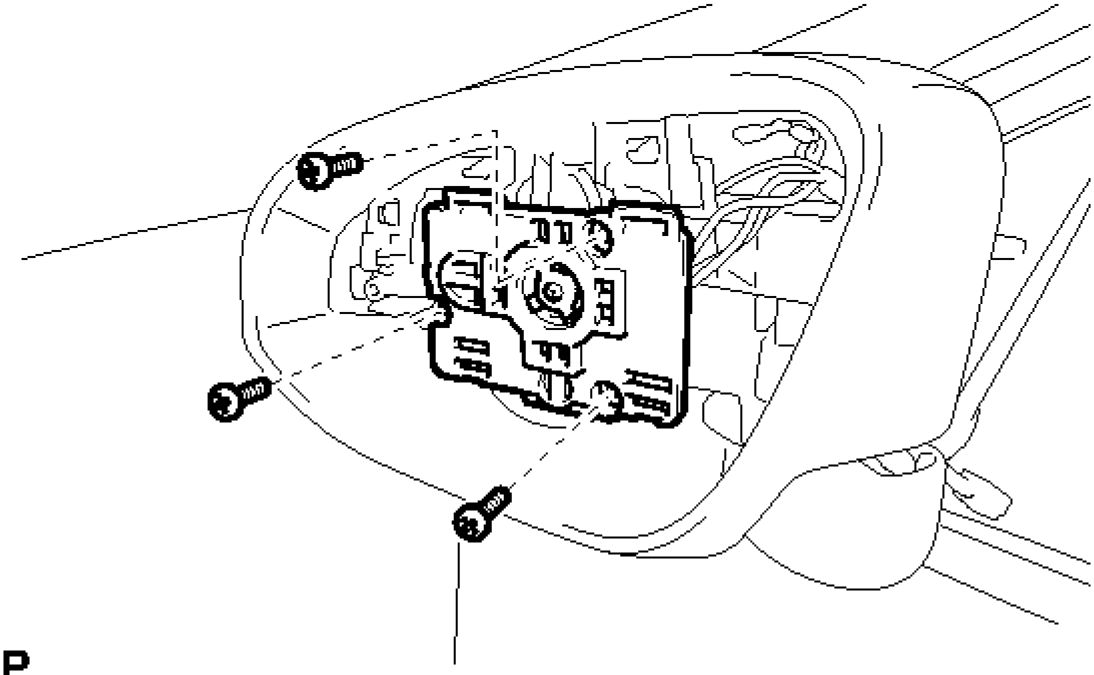

Fig. 36: Identifying Outer Mirror Cover Screws (W/Retract Mirror)
Courtesy of TOYOTA MOTOR SALES, U.S.A., INC.

b. Disengage the clamp.

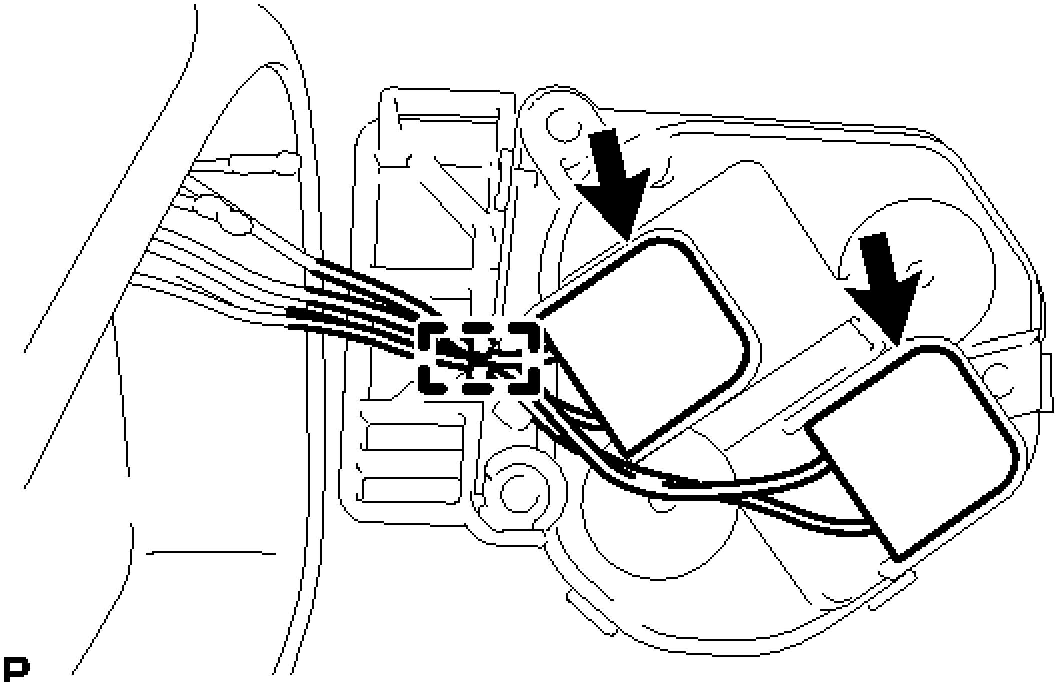

Fig. 37: Identifying Outer Mirror Cover Clamp (W/Retract Mirror)
Courtesy of TOYOTA MOTOR SALES, U.S.A., INC.

c. Disconnect the 2 connectors and remove the mirror actuator.
d. Disengage the 7 claws and remove the outer mirror cover.

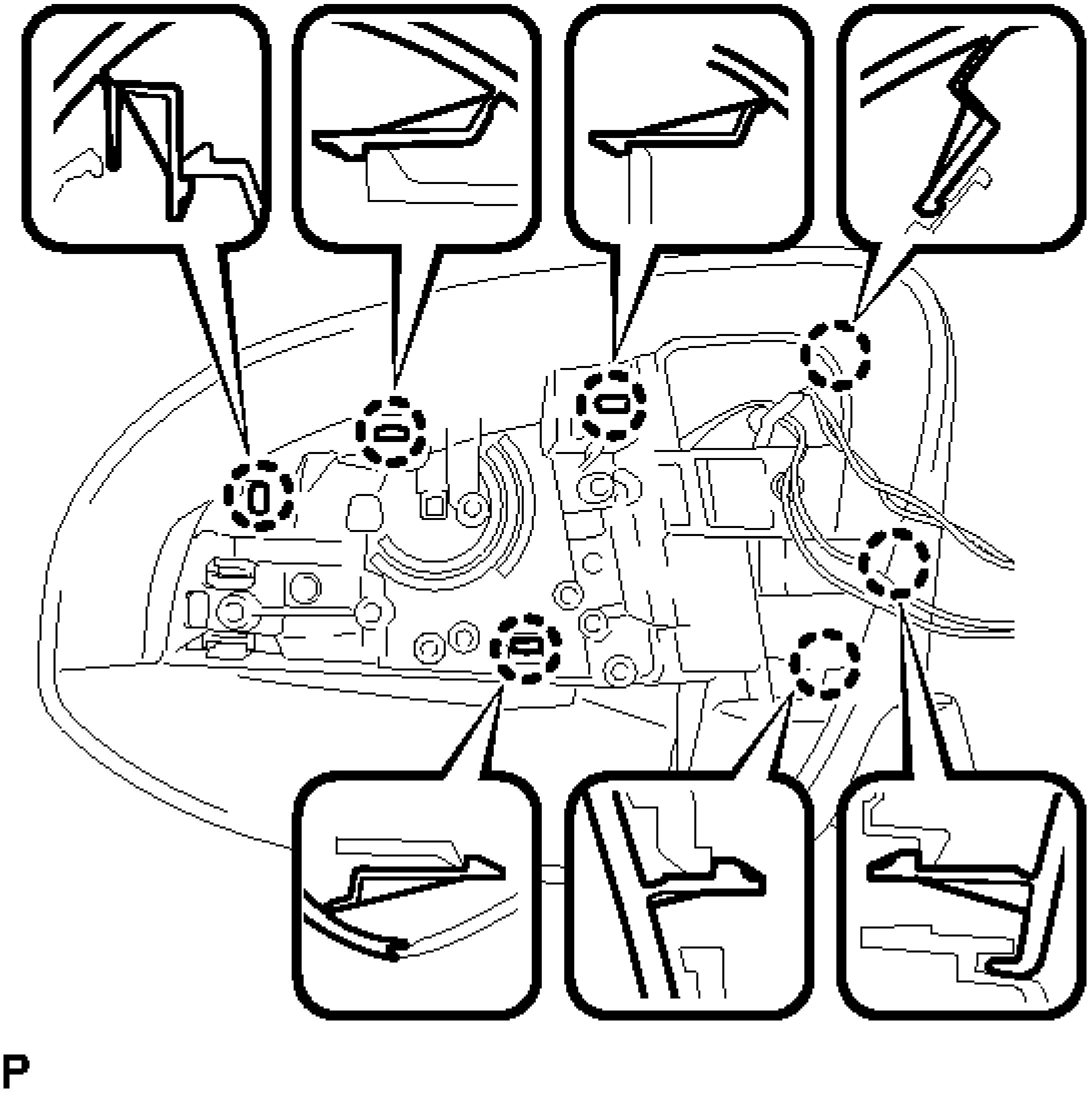

Fig. 38: Identifying Outer Mirror Cover Claws (W/Retract Mirror)
Courtesy of TOYOTA MOTOR SALES, U.S.A., INC.

INSTALLATION

INSTALLATION

HINT:

- Use the same procedure for both the RH and LH sides.
- The procedure described below is for the LH side.

1. **INSTALL OUTER MIRROR COVER (w/o Retract Mirror)**

    a. Engage the 8 claws to install the outer mirror cover.

2. **INSTALL OUTER MIRROR COVER (w/ Retract Mirror)**
    a. Engage the 7 claws to install the outer mirror cover.
    b. Connect the 2 connectors.
    c. Engage the clamp.
    d. Install the mirror actuator with the 3 screws.

       Torque: 1.1 N*m (11 kgf*cm, 10 in.*lbf)

3. **INSTALL OUTER REAR VIEW MIRROR (w/o Retract Mirror)** See step 1
4. **INSTALL OUTER REAR VIEW MIRROR (w/ Retract Mirror)** See step 2

OUTER MIRROR SWITCH

COMPONENTS

ILLUSTRATION

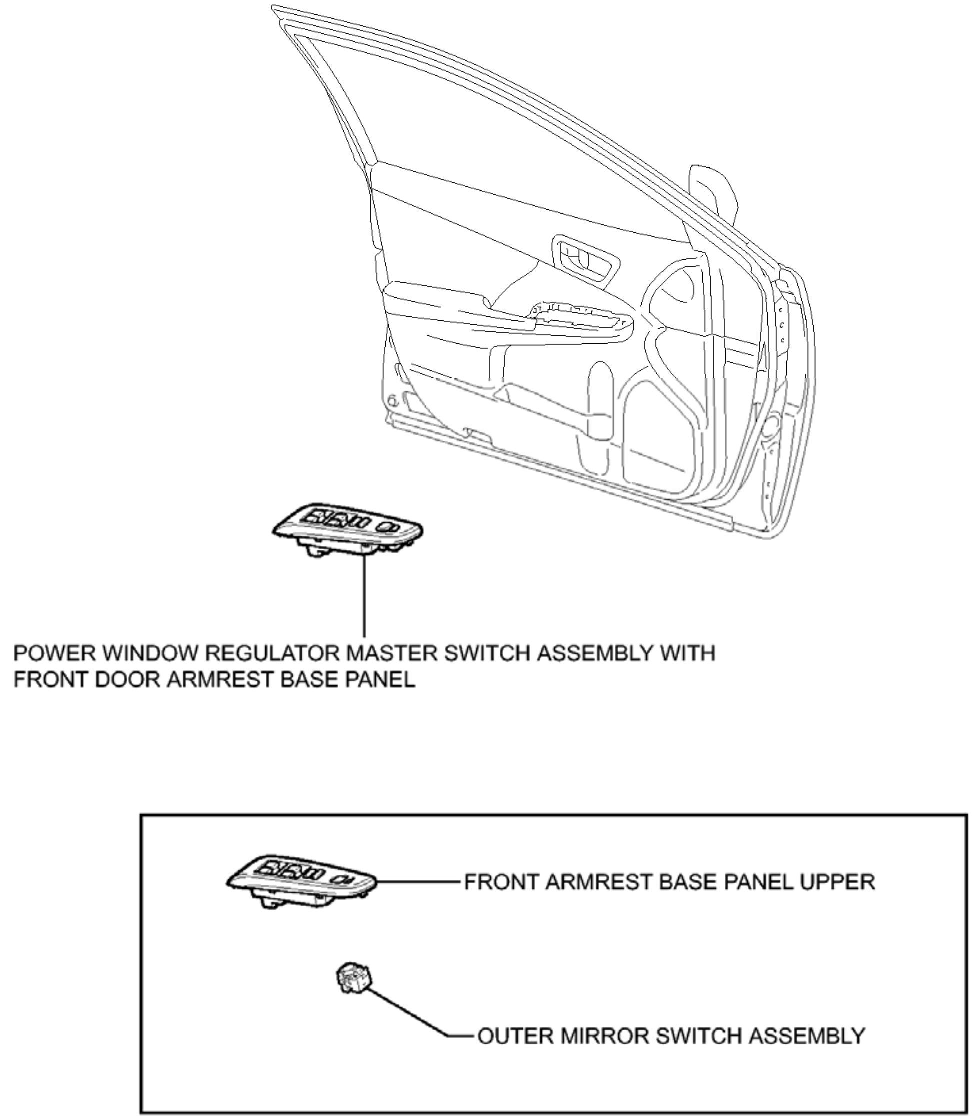
POWER WINDOW REGULATOR MASTER SWITCH ASSEMBLY WITH FRONT DOOR ARMREST BASE PANEL
FRONT ARMREST BASE PANEL UPPER
OUTER MIRROR SWITCH ASSEMBLY

P

Fig. 39: Identifying Outer Mirror Switch Replacement Components
Courtesy of TOYOTA MOTOR SALES, U.S.A., INC.

REMOVAL

REMOVAL

1. **REMOVE POWER WINDOW REGULATOR MASTER SWITCH ASSEMBLY WITH FRONT DOOR ARMREST BASE PANEL** . Refer to **DISASSEMBLY - Step 6**
2. **REMOVE OUTER MIRROR SWITCH ASSEMBLY**
    a. Disengage the 4 claws and remove the outer mirror switch assembly.

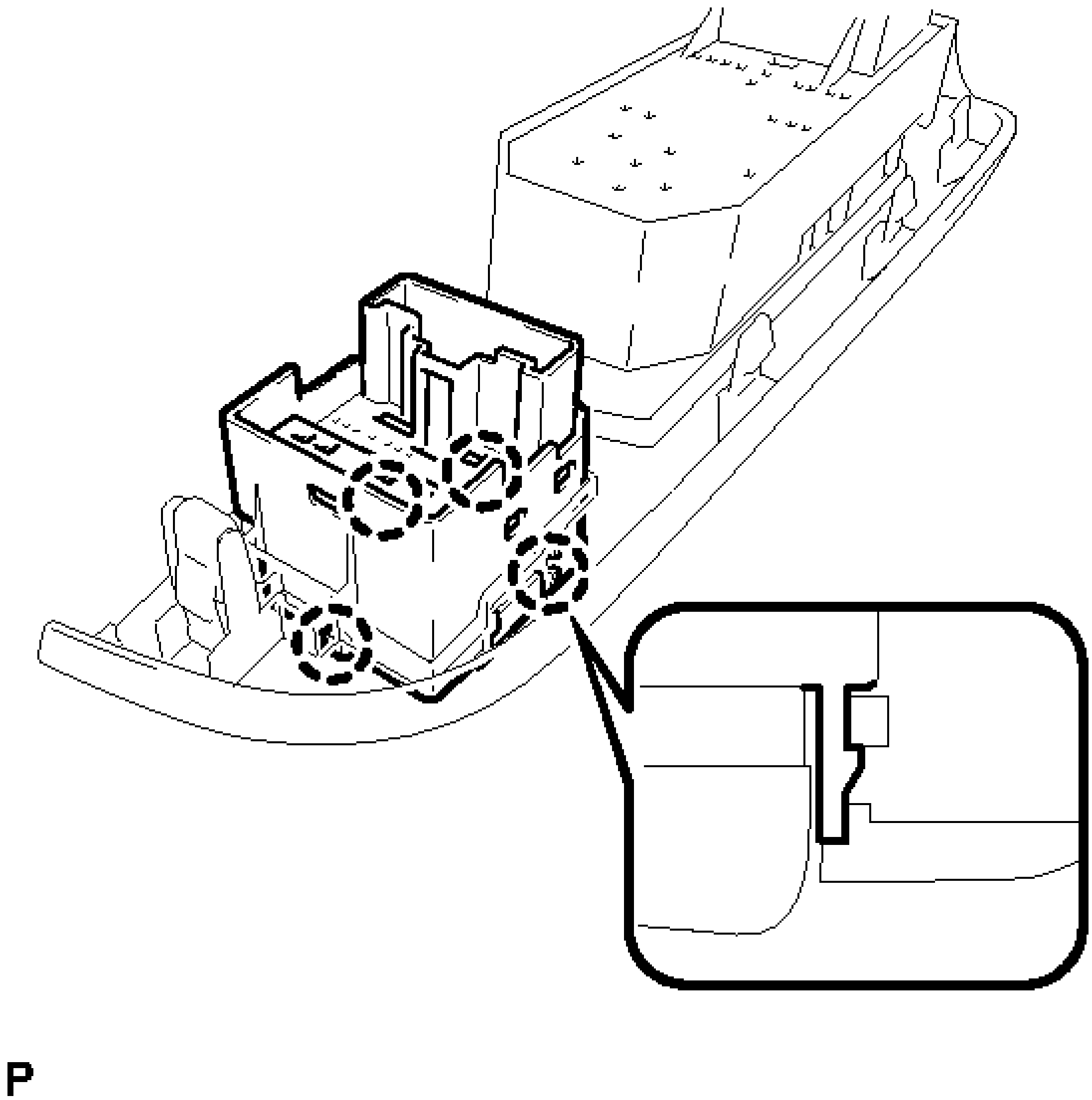

Fig. 40: Identifying Outer Mirror Switch Assembly Claws
Courtesy of TOYOTA MOTOR SALES, U.S.A., INC.

INSPECTION

INSPECTION

1. **INSPECT OUTER MIRROR SWITCH ASSEMBLY**
    a. w/o Retract mirror
        1. Check the mirror select switch and mirror surface adjust switch.
        2. Turn the mirror select switch to the L position.

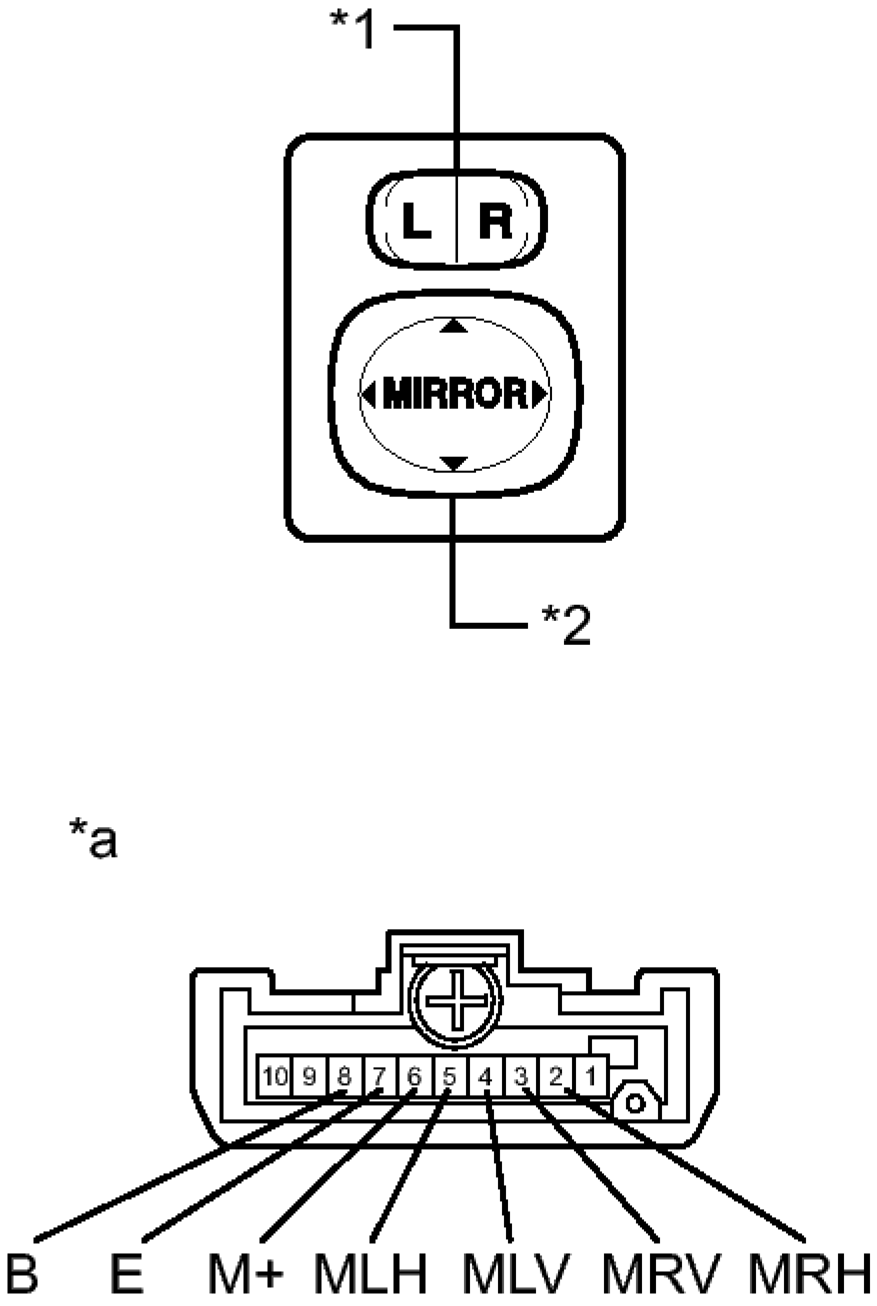
*1
L
R
MIRROR
*2
*a
10
9
8
7
6
5
4
3
2
1
B
E
M+
MLH
MLV
MRV
MRH

Fig. 41: Identifying Mirror Select Switch And Mirror Surface Adjust Switch (W/O Retract Mirror)
Courtesy of TOYOTA MOTOR SALES, U.S.A., INC.

3. Measure the resistance according to the value(s) in the table below.

TEXT IN ILLUSTRATION

*1	Mirror select switch
*2	Mirror surface adjust switch
*a	Component without harness connected (Outer Mirror Switch Assembly)

Standard Resistance (for left side)

Tester Connection	Switch Condition	Specified Condition
4 (MLV) - 8 (B) 6 (M+) - 7 (E)	UP	Below 1 ohms
	OFF	10 kohms or higher
4 (MLV) - 7 (E) 6 (M+) - 8 (B)	DOWN	Below 1 ohms
	OFF	10 kohms or higher
5 (MLH) - 8 (B) 6 (M+) - 7 (E)	LEFT	Below 1 ohms
	OFF	10 kohms or higher
5 (MLH) - 7 (E) 6 (M+) - 8 (B)	RIGHT	Below 1 ohms
	OFF	10 kohms or higher

4. Turn the mirror select switch to the R position.
5. Measure the resistance according to the value(s) in the table below.

Standard Resistance (for right side)

Tester Connection	Switch Condition	Specified Condition

3 (MRV) - 8 (B) 6 (M+) - 7 (E)	UP	Below 1 ohms
	OFF	10 kohms or higher
3 (MRV) - 7 (E) 6 (M+) - 8 (B)	DOWN	Below 1 ohms
	OFF	10 kohms or higher
2 (MRH) - 8 (B) 6 (M+) - 7 (E)	LEFT	Below 1 ohms
	OFF	10 kohms or higher
2 (MRH) - 7 (E) 6 (M+) - 8 (B)	RIGHT	Below 1 ohms
	OFF	10 kohms or higher

If the result is not as specified, replace the outer mirror switch assembly.

b. w/ Retract mirror
    1. Check the mirror select switch and mirror surface adjust switch.
    2. Turn the mirror select switch to the L position.

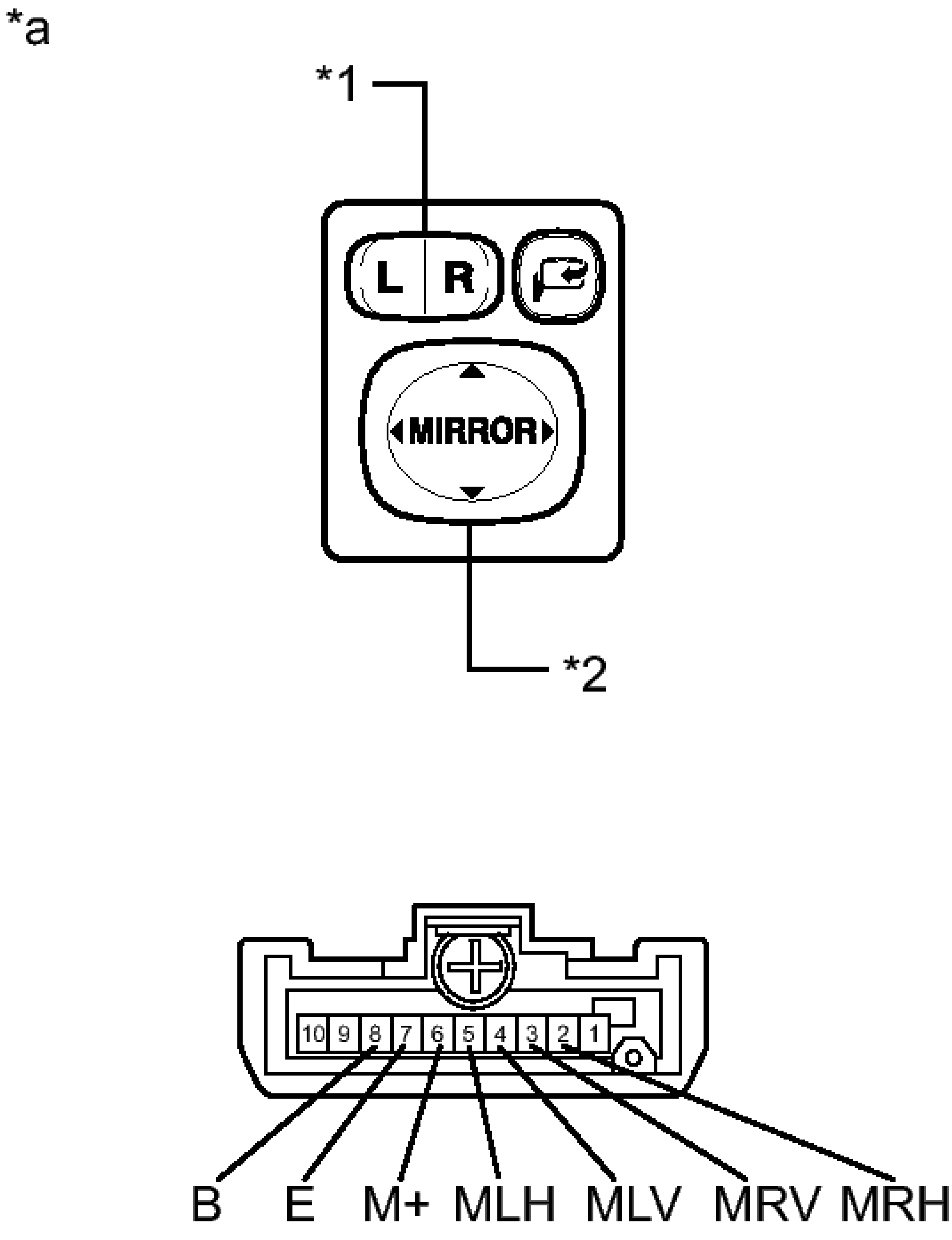
*a
*1
L
R
MIRROR
*2
10
9
8
7
6
5
4
3
2
1
B
E
M+
MLH
MLV
MRV
MRH

Fig. 42: Identifying Mirror Select Switch And Mirror Surface Adjust Switch (W/Retract Mirror)
Courtesy of TOYOTA MOTOR SALES, U.S.A., INC.

3. Measure the resistance according to the value(s) in the table below.

TEXT IN ILLUSTRATION

*1	Mirror select switch
*2	Mirror surface adjust switch
*a	Component without harness connected (Outer Mirror Switch Assembly)

Standard Resistance (for left side)

Tester Connection	Switch Condition	Specified Condition
4 (MLV) - 8 (B) 6 (M+) - 7 (E)	UP	Below 1 ohms
	OFF	10 kohms or higher
4 (MLV) - 7 (E) 6 (M+) - 8 (B)	DOWN	Below 1 ohms
	OFF	10 kohms or higher
5 (MLH) - 8 (B) 6 (M+) - 7 (E)	LEFT	Below 1 ohms
	OFF	10 kohms or higher
5 (MLH) - 7 (E) 6 (M+) - 8 (B)	RIGHT	Below 1 ohms
	OFF	10 kohms or higher

4. Turn the mirror select switch to the R position.
5. Measure the resistance according to the value(s) in the table below.

Standard Resistance (for right side)

Tester Connection	Switch Condition	Specified Condition

3 (MRV) - 8 (B) 6 (M+) - 7 (E)	UP	Below 1 ohms
	OFF	10 kohms or higher
3 (MRV) - 7 (E) 6 (M+) - 8 (B)	DOWN	Below 1 ohms
	OFF	10 kohms or higher
2 (MRH) - 8 (B) 6 (M+) - 7 (E)	LEFT	Below 1 ohms
	OFF	10 kohms or higher
2 (MRH) - 7 (E) 6 (M+) - 8 (B)	RIGHT	Below 1 ohms
	OFF	10 kohms or higher

If the result is not as specified, replace the outer mirror switch assembly.

c. Check the mirror retract switch.
    1. Measure the resistance according to the value(s) in the table below.

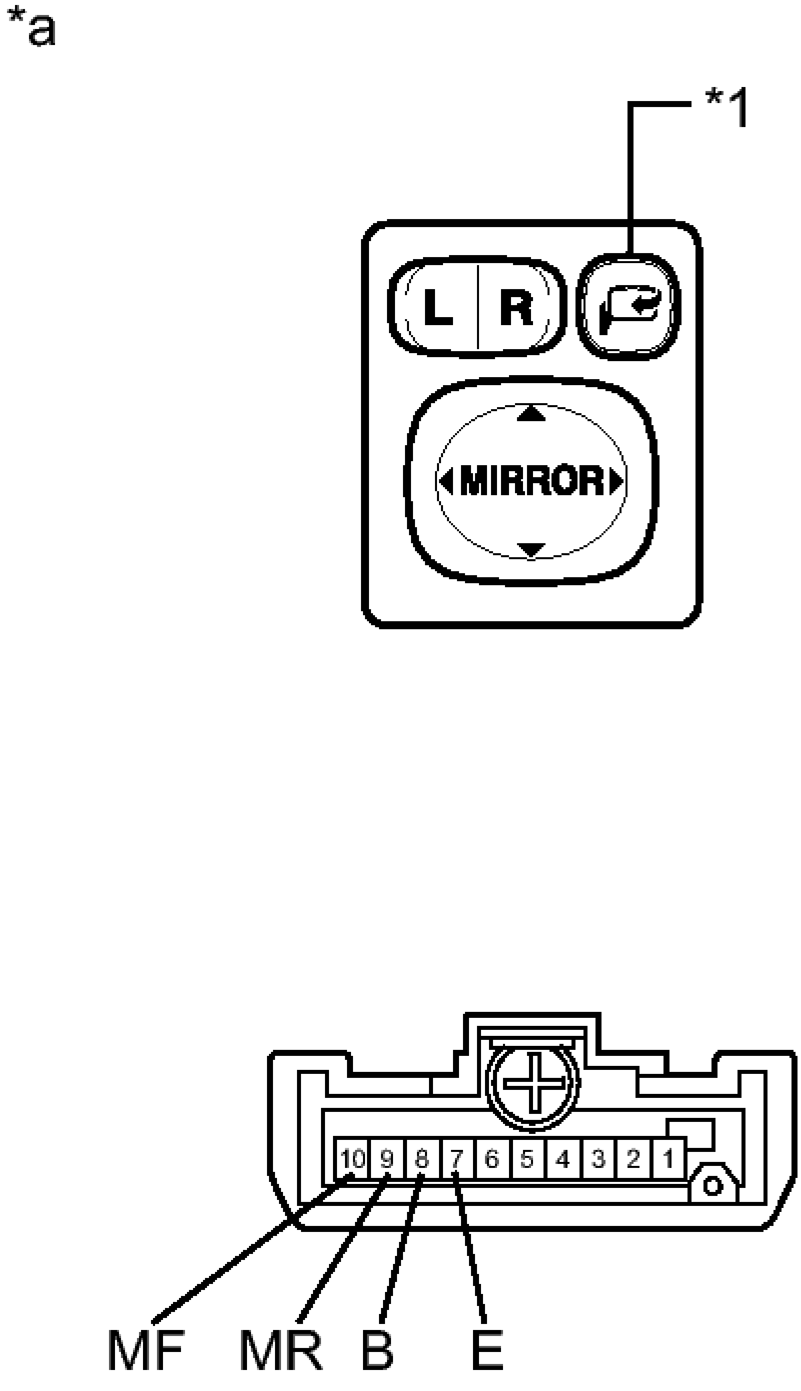
*a
*1
L
R
MIRROR
10
9
8
7
6
5
4
3
2
1
MF
MR
B
E

Fig. 43: Identifying Retract Switch Connector Terminal Identification
Courtesy of TOYOTA MOTOR SALES, U.S.A., INC.

TEXT IN ILLUSTRATION

	Mirror

*1	retract switch
*a	Component without harness connected (Outer Mirror Switch Assembly)

Standard Resistance

Tester Connection	Switch Condition	Specified Condition
10 (MF) - 7 (E)	Mirror retract switch retract position	Below 1 ohms
9 (MR) - 8 (B)		Below 1 ohms
10 (MF) - 8 (B)	Mirror retract switch return position	Below 1 ohms
9 (MR) - 7 (E)		Below 1 ohms

If the result is not as specified, replace the outer mirror switch assembly.

INSTALLATION

INSTALLATION

1. **INSTALL OUTER MIRROR SWITCH ASSEMBLY**
    a. Engage the 4 claws and install the outer mirror switch assembly.
2. **INSTALL POWER WINDOW REGULATOR MASTER SWITCH ASSEMBLY WITH FRONT DOOR ARMREST BASE PANEL** . Refer to **REASSEMBLY - Step 42**

OUTER REAR VIEW MIRROR

COMPONENTS

ILLUSTRATION

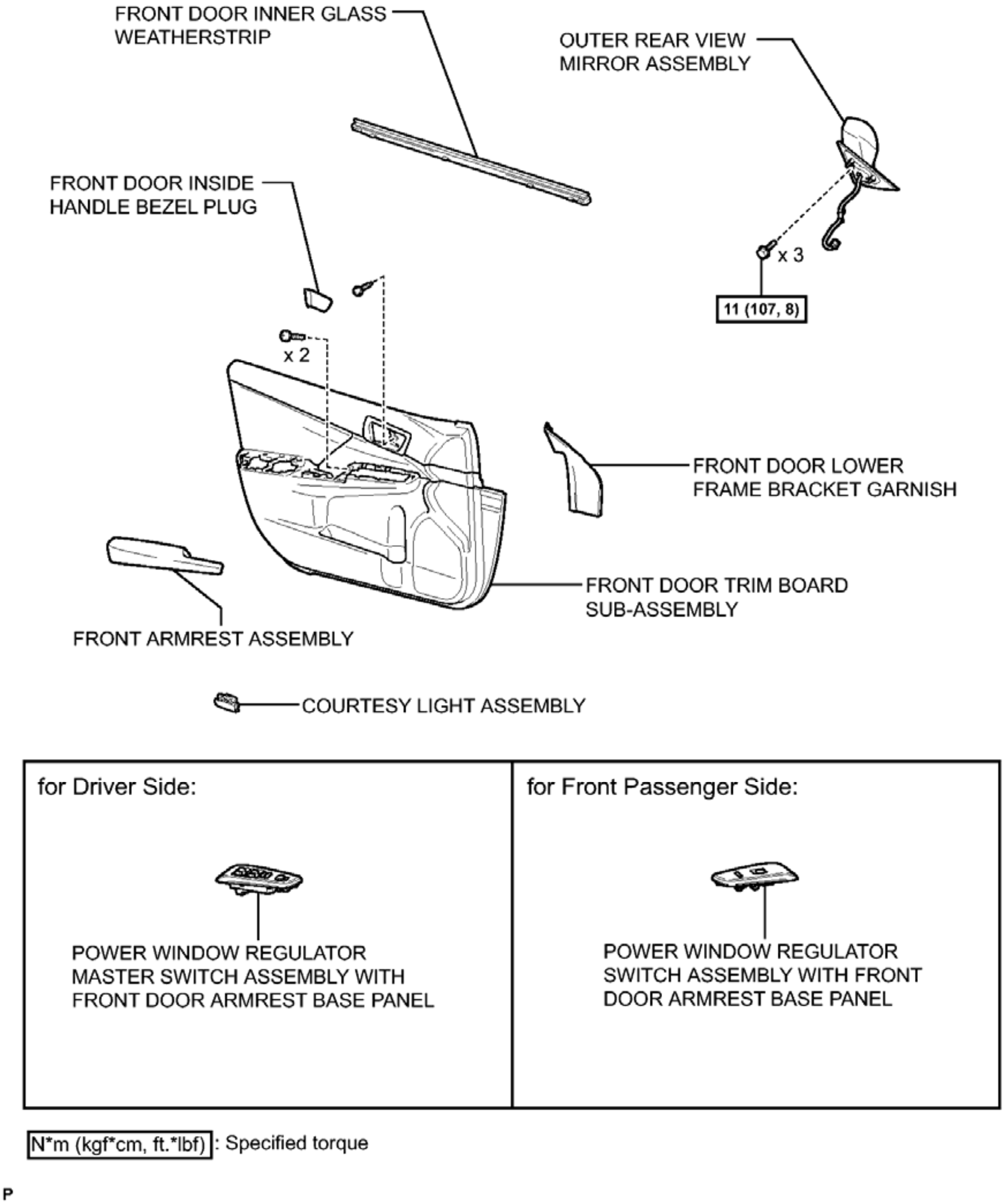
FRONT DOOR INNER GLASS WEATHERSTRIP
OUTER REAR VIEW MIRROR ASSEMBLY
FRONT DOOR INSIDE HANDLE BEZEL PLUG
x 3
11 (107, 8)
x 2
FRONT DOOR LOWER FRAME BRACKET GARNISH
FRONT DOOR TRIM BOARD SUB-ASSEMBLY
FRONT ARMREST ASSEMBLY
COURTESY LIGHT ASSEMBLY
for Driver Side:
POWER WINDOW REGULATOR MASTER SWITCH ASSEMBLY WITH FRONT DOOR ARMREST BASE PANEL
for Front Passenger Side:
POWER WINDOW REGULATOR SWITCH ASSEMBLY WITH FRONT DOOR ARMREST BASE PANEL
N*m (kgf*cm, ft.*lbf) : Specified torque
P

Fig. 1: Identifying Outer Rear View Mirror Replacement Components With Torque Specifications (1 Of 2)
Courtesy of TOYOTA MOTOR SALES, U.S.A., INC.

ILLUSTRATION

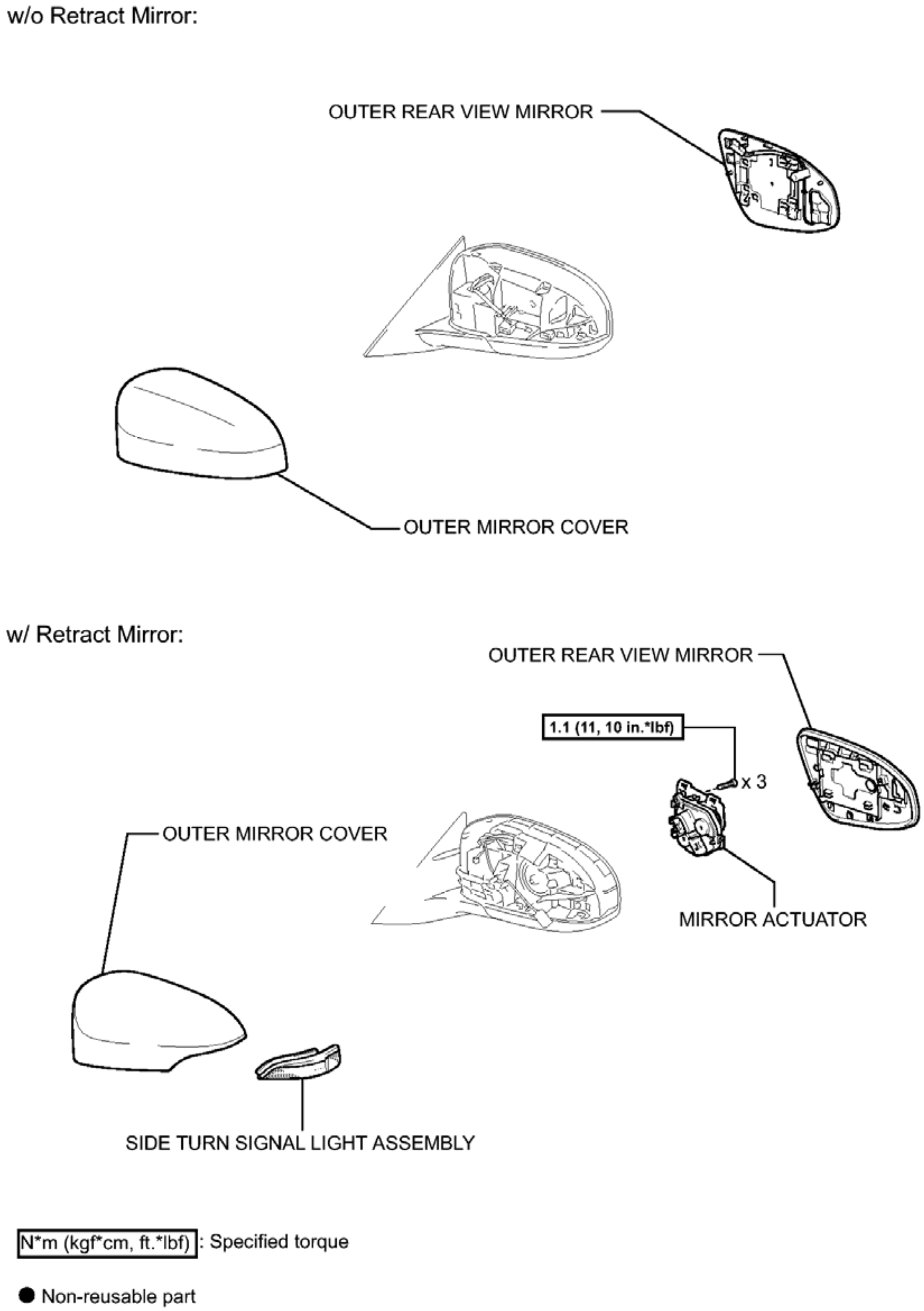
w/o Retract Mirror:
OUTER REAR VIEW MIRROR
OUTER MIRROR COVER
w/ Retract Mirror:
OUTER REAR VIEW MIRROR
1.1 (11, 10 in.*lbf)
x 3
OUTER MIRROR COVER
MIRROR ACTUATOR
SIDE TURN SIGNAL LIGHT ASSEMBLY
N*m (kgf*cm, ft.*lbf) : Specified torque
● Non-reusable part

P

Fig. 2: Identifying Outer Rear View Mirror Replacement Components With Torque Specifications (2 Of 2)
Courtesy of TOYOTA MOTOR SALES, U.S.A., INC.

REMOVAL

REMOVAL

HINT:

- Use the same procedure for both the RH and LH sides.
- The procedure described below is for the LH side.

1. **REMOVE FRONT DOOR INSIDE HANDLE BEZEL PLUG** . Refer to **DISASSEMBLY - Step 3**
2. **REMOVE FRONT DOOR LOWER FRAME BRACKET GARNISH** . Refer to **DISASSEMBLY - Step 4**
3. **REMOVE POWER WINDOW REGULATOR MASTER SWITCH ASSEMBLY WITH FRONT DOOR ARMREST BASE PANEL (for Driver Side)** . Refer to **DISASSEMBLY - Step 5**
4. **REMOVE POWER WINDOW REGULATOR SWITCH ASSEMBLY WITH FRONT DOOR ARMREST BASE PANEL (for Front Passenger Side)** . Refer to **DISASSEMBLY - Step 6**
5. **REMOVE FRONT ARMREST ASSEMBLY** . Refer to **DISASSEMBLY - Step 7**
6. **REMOVE COURTESY LIGHT ASSEMBLY** . Refer to **REMOVAL - Step 1**
7. **REMOVE FRONT DOOR TRIM BOARD SUB-ASSEMBLY** . Refer to **DISASSEMBLY - Step 9**
8. **REMOVE FRONT DOOR INNER GLASS WEATHERSTRIP** . Refer to **DISASSEMBLY - Step 11**
9. **REMOVE OUTER REAR VIEW MIRROR ASSEMBLY**
    a. Disconnect the connector.

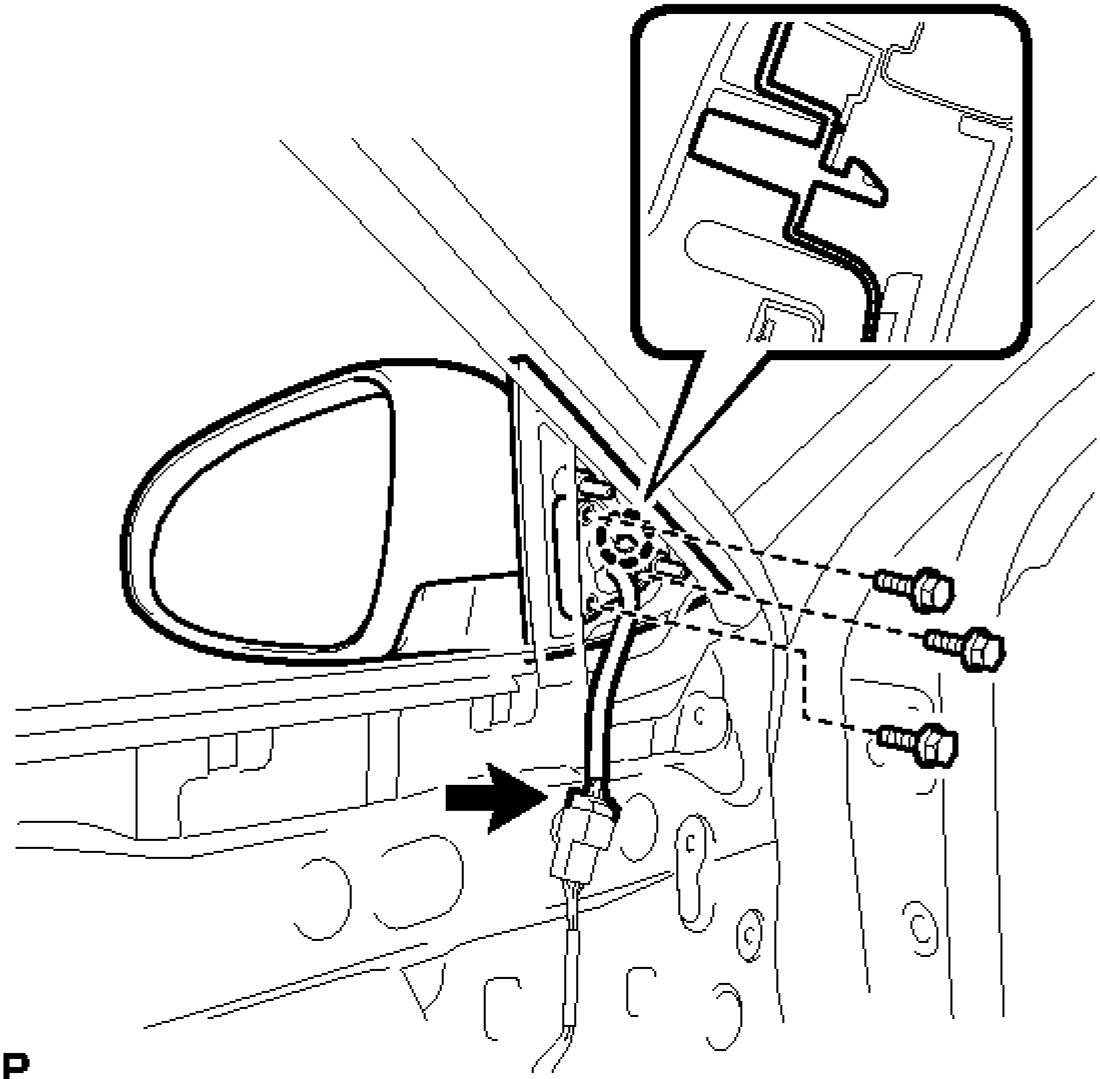

Fig. 3: Identifying Outer Rear View Mirror Assembly Connector
Courtesy of TOYOTA MOTOR SALES, U.S.A., INC.

b. Remove the 3 bolts.
c. Disengage the claw and remove the outer rear view mirror assembly.

DISASSEMBLY

DISASSEMBLY

HINT:

- Use the same procedure for both the RH and LH sides.
- The procedure described below is for the LH side.

1. **REMOVE OUTER REAR VIEW MIRROR (w/o Retract Mirror)** See step 1

2. **REMOVE OUTER REAR VIEW MIRROR (w/ Retract Mirror)** See step 2
3. **REMOVE OUTER MIRROR COVER (w/o Retract Mirror)** See step 3
4. **REMOVE OUTER MIRROR COVER (w/ Retract Mirror)** See step 4
5. **REMOVE SIDE TURN SIGNAL LIGHT ASSEMBLY (w/ Retract Mirror)** . Refer to **REMOVAL - Step 3**

INSPECTION

INSPECTION

1. **INSPECT OUTER REAR VIEW MIRROR ASSEMBLY RH**
    a. Check the operation of the mirror surface (w/ Daytime Running Light Control).
        1. Disconnect the outer rear view mirror assembly RH connector.

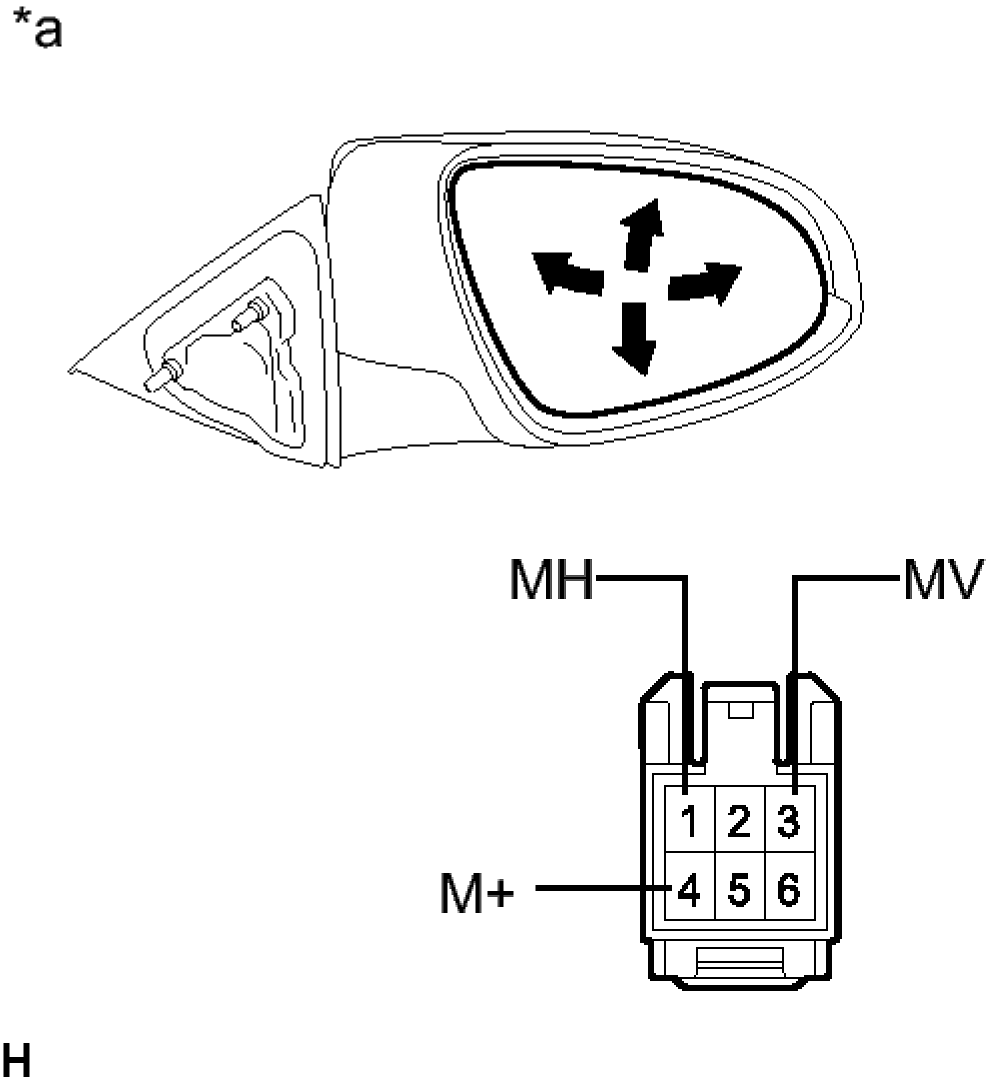

Fig. 4: Identifying Mirror Surface (W/Daytime Running Light Control) RH

2. Apply battery voltage and check the operation of the mirror.

   OK

Measurement Condition	**Specified Condition**
Battery positive (+) --> Terminal 3 (MV) Battery negative (-) --> Terminal 4 (M+)	Turns upward
Battery positive (+) --> Terminal 4 (M+) Battery negative (-) --> Terminal 3 (MV)	Turns downward
Battery positive (+) --> Terminal 1 (MH) Battery negative (-) --> Terminal 4 (M+)	Turns left
Battery positive (+) --> Terminal 4 (M+) Battery negative (-) --> Terminal 1 (MH)	Turns right

TEXT IN ILLUSTRATION

*a	Component without harness connected (Outer

	Rear View Mirror Assembly RH)

If the result is not as specified, replace the outer rear view mirror assembly RH.

b. Check the operation of the mirror surface (w/o Daytime Running Light Control).
   1. Disconnect the outer rear view mirror assembly RH connector.

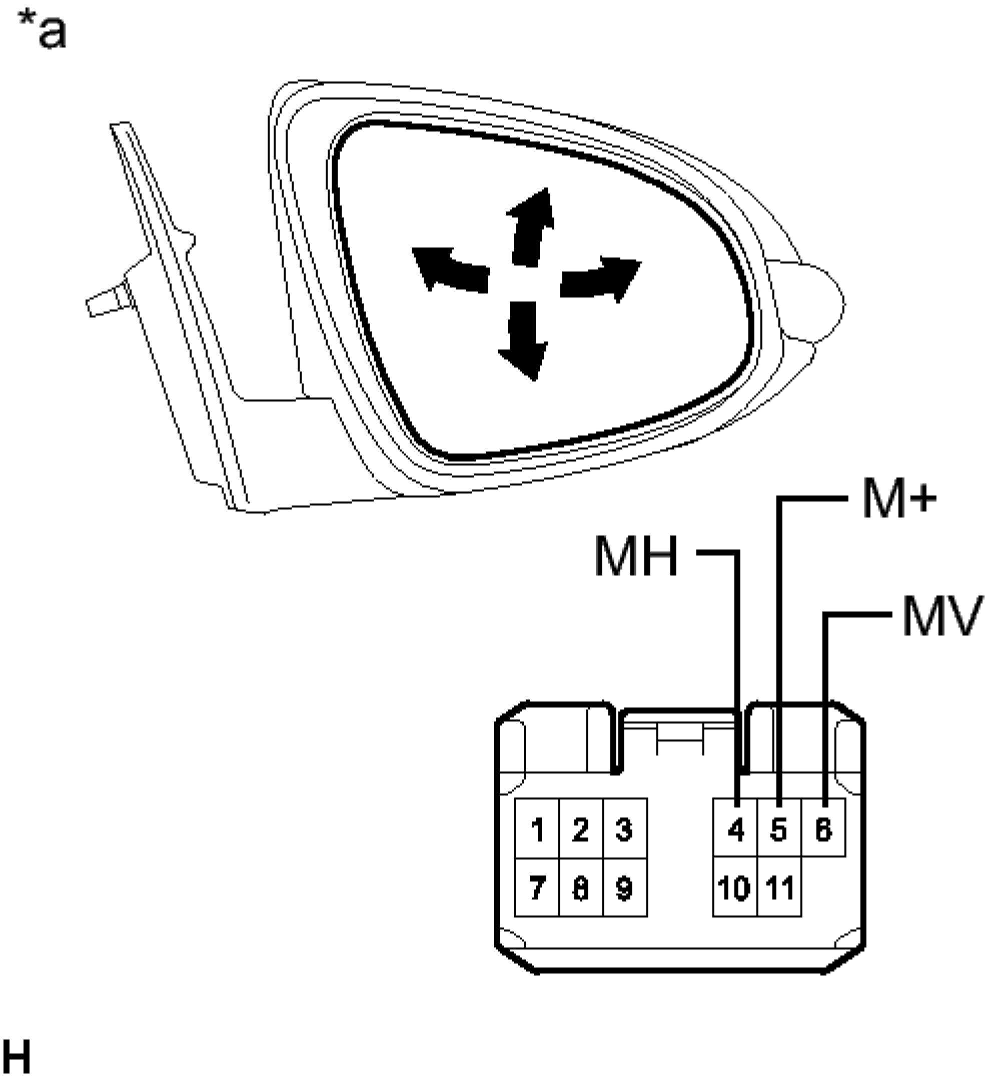

Fig. 5: Identifying Mirror Surface (W/O Daytime Running Light Control) RH
Courtesy of TOYOTA MOTOR SALES, U.S.A., INC.

   2. Apply battery voltage and check the operation of the mirror.

      OK

Measurement Condition	**Specified Condition**
Battery positive (+) --> Terminal 6 (MV) Battery negative (-) --> Terminal 5 (M+)	Turns upward
Battery positive (+) --> Terminal 5 (M+) Battery negative (-) --> Terminal 6 (MV)	Turns downward
Battery positive (+) --> Terminal 4 (MH) Battery negative (-) --> Terminal 5 (M+)	Turns left
Battery positive (+) --> Terminal 5 (M+) Battery negative (-) --> Terminal 4 (MH)	Turns right

TEXT IN ILLUSTRATION

*a	Component without harness connected (Outer Rear View Mirror Assembly RH)

If the result is not as specified, replace the outer rear view mirror assembly RH.

c. Check the operation of the retractable mirror (w/o Daytime Running Light Control).

NOTE:

- **Disconnect and reconnect the battery between each mirror position check.**
- **The mirror position cannot be changed manually when the battery is connected. To change the mirror position manually, the battery must be disconnected first.**

1. Disconnect the outer rear view mirror assembly RH connector.

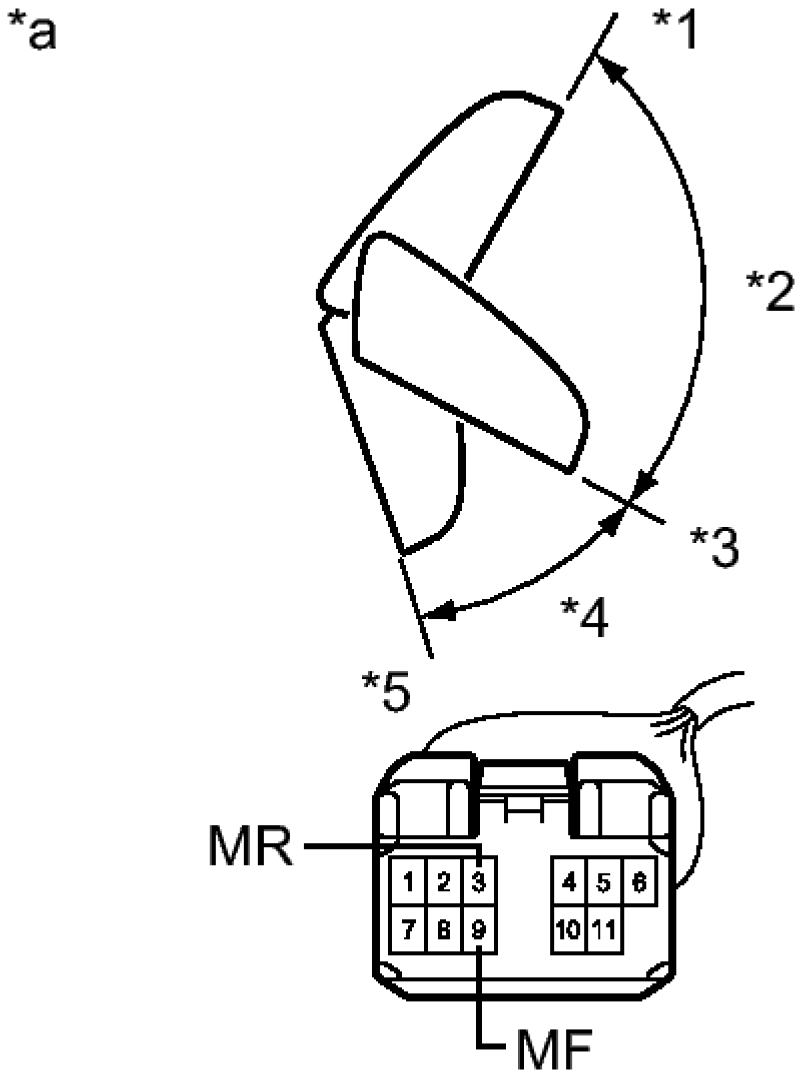

Fig. 6: Identifying Retractable Mirror (W/O Daytime Running Light Control)
Courtesy of TOYOTA MOTOR SALES, U.S.A., INC.

2. For each position: Disconnect the battery, set the mirror position by hand, connect the battery, and check the retractable mirror's movement.

OK

Tester Connection	**Condition**	**Specified Condition**
Battery positive (+) --> Terminal 3 (MR) Battery negative (-) --> Terminal 9 (MF)	Forward position (A)	Moves from (A) to retracted position (E)
Battery positive (+) --> Terminal 9 (MF) Battery negative (-) --> Terminal 3 (MR)	Forward position (A)	Does not move
Battery positive (+) --> Terminal 3 (MR) Battery negative (-) --> Terminal 9 (MF)	Position between forward position (A) and driving position (C)	Moves from (B) to retracted position (E)
Battery positive (+) --> Terminal 9 (MF) Battery negative (-) --> Terminal 3 (MR)	Position between forward position (A) and driving position (C)	Moves from (B) to forward position (A)
Battery positive (+) -->		Moves

Terminal 3 (MR) Battery negative (-) --> Terminal 9 (MF)	Driving position (C)	from (C) to retracted position (E)
Battery positive (+) --> Terminal 9 (MF) Battery negative (-) --> Terminal 3 (MR)	Driving position (C)	Does not move
Battery positive (+) --> Terminal 3 (MR) Battery negative (-) --> Terminal 9 (MF)	Position between driving position (C) and retracted position (E)	Moves from (D) to retracted position (E)
Battery positive (+) --> Terminal 9 (MF) Battery negative (-) --> Terminal 3 (MR)	Position between driving position (C) and retracted position (E)	Moves from (D) to driving position (C)
Battery positive (+) --> Terminal 3 (MR) Battery negative (-) --> Terminal 9 (MF)	Retracted position (E)	Does not move

Battery positive (+) --> Terminal 9 (MF) Battery negative (-) --> Terminal 3 (MR)	Retracted position (E)	Moves from (E) to driving position (C)

TEXT IN ILLUSTRATION

*1	(A) Forward Position
*2	(B)
*3	(C) Driving position
*4	(D)
*5	(E) Retracted Position
*a	Component without harness connected (Outer Rear View Mirror Assembly RH)

If the result is not as specified, replace the outer rear view mirror assembly RH.

d. Check the operation of the mirror heater (w/ Mirror Heater and Daytime Running Light Control).
   1. Disconnect the outer rear view mirror assembly RH connector.

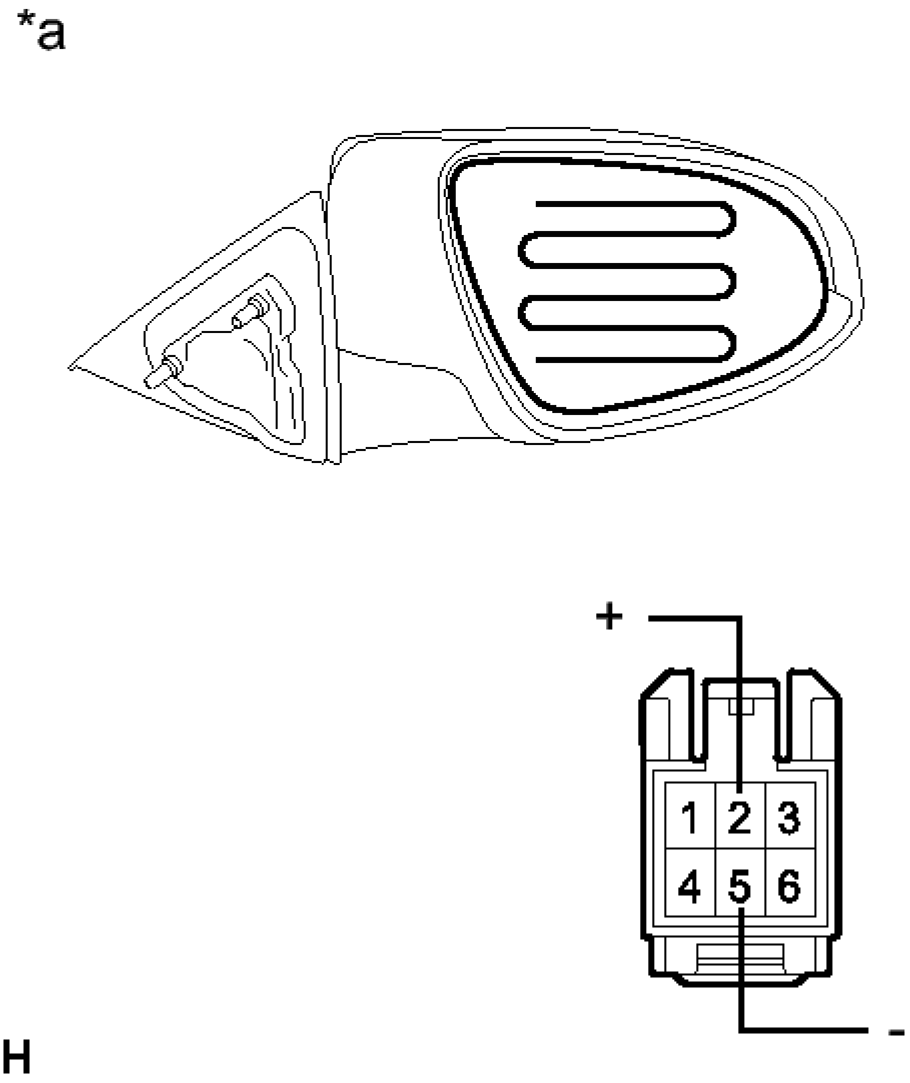

Fig. 7: Identifying Mirror Heater (W/Mirror Heater And Daytime Running Light Control)
Courtesy of TOYOTA MOTOR SALES, U.S.A., INC.

Measure the resistance according to the value(s) in the table below.

Standard Resistance

Tester Connection	Condition	Specified Condition
2 (+) - 5 (-)	25°C (75°F)	7.6 to 11.4 ohms

TEXT IN ILLUSTRATION

	Component

*a	without harness connected (Outer Rear View Mirror Assembly RH)

If the result is not as specified, replace the outer rear view mirror assembly RH.

2. Connect the cable from the positive (+) terminal to terminal 2 and the negative battery (-) terminal to terminal 5, then check that the mirror becomes warm.

   HINT:

   It takes a short time for the mirror to become warm.

   OK

   Mirror becomes warm.

   If the result is not as specified, replace the outer rear view mirror assembly RH.

e. Check the operation of the mirror heater (w/ Mirror Heater and w/o Daytime Running Light Control).
   1. Disconnect the outer rear view mirror assembly RH connector.

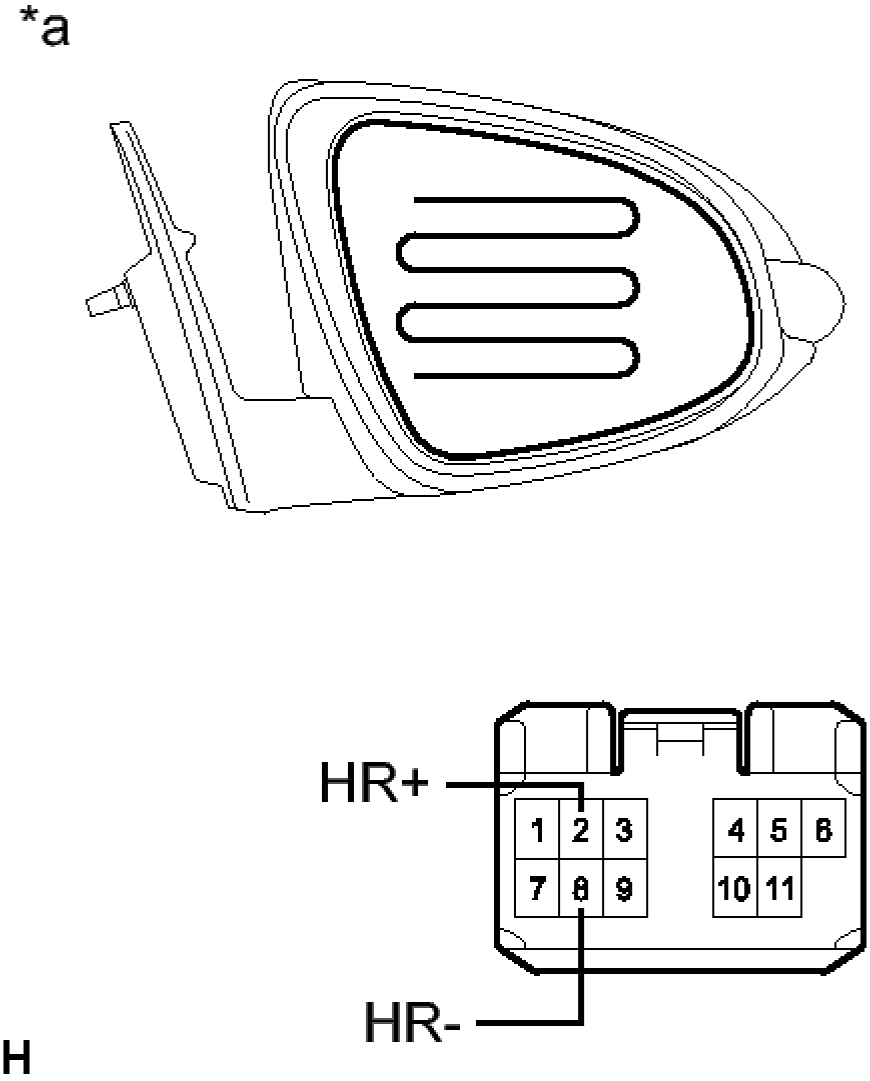

Fig. 8: Identifying Mirror Heater (W/Mirror Heater And W/O Daytime Running Light Control)
Courtesy of TOYOTA MOTOR SALES, U.S.A., INC.

2. Measure the resistance according to the value(s) in the table below.

   Standard Resistance

Tester Connection	Condition	Specified Condition
2 (+) - 8 (-)	25°C (75°F)	7.6 to 11.4 ohms

TEXT IN ILLUSTRATION

	Component

*a	without harness connected (Outer Rear View Mirror Assembly RH)

If the result is not as specified, replace the outer rear view mirror assembly RH.

3. Connect the cable from the positive (+) terminal to terminal 2 and the negative battery (-) terminal to terminal 8, then check that the mirror becomes warm.

   HINT:

   It takes a short time for the mirror to become warm.

   OK

   Mirror becomes warm.

   If the result is not as specified, replace the outer rear view mirror assembly RH.

2. **INSPECT OUTER REAR VIEW MIRROR ASSEMBLY LH**
   a. Check the operation of the mirror surface (w/ Daytime Running Light Control).
      1. Disconnect the outer rear view mirror assembly LH connector.

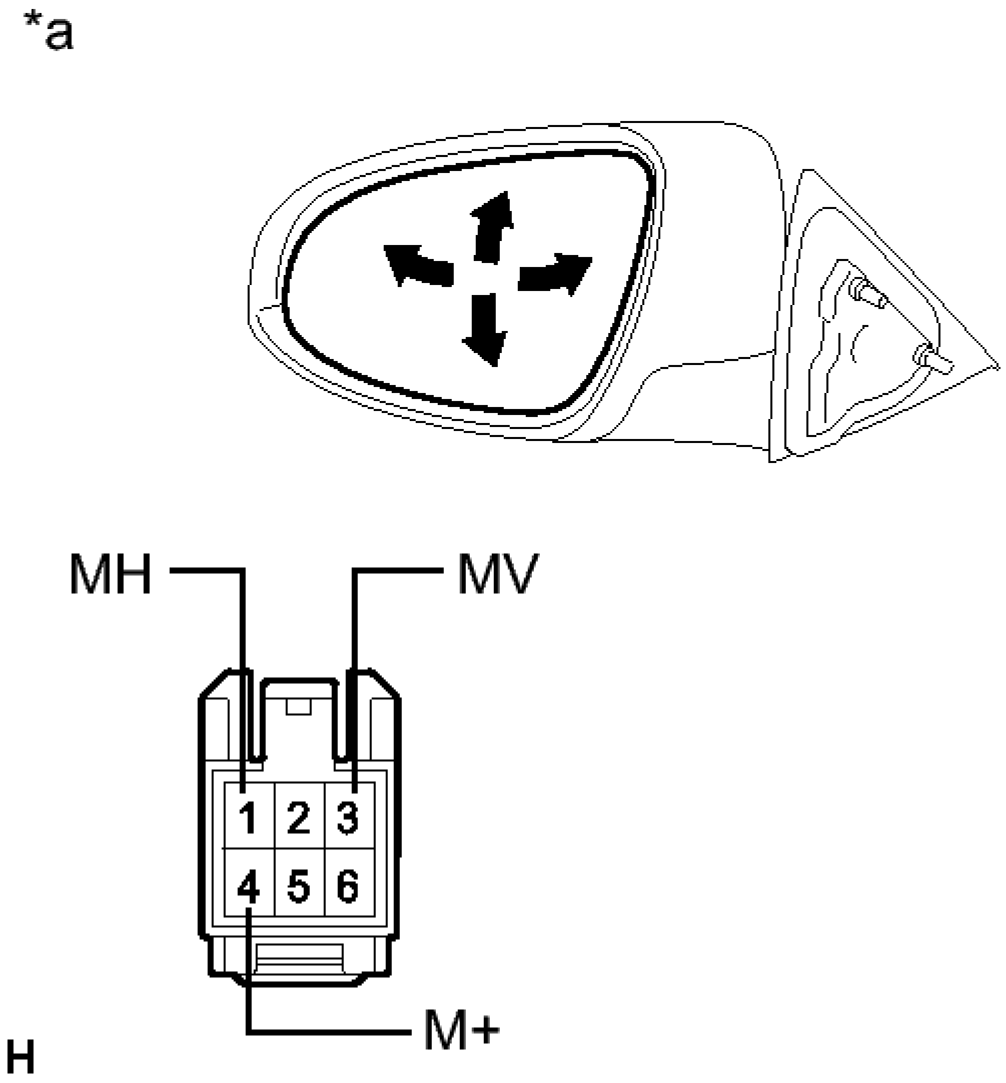

Fig. 9: Applying Voltage To Mirror Surface (W/Daytime Running Light Control)
Courtesy of TOYOTA MOTOR SALES, U.S.A., INC.

2. Apply battery voltage and check the operation of the mirror.

   OK

Measurement Condition	Specified Condition
Battery positive (+) --> Terminal 3 (MV) Battery negative (-) --> Terminal 4	Turns upward

(M+)	
Battery positive (+) --> Terminal 4 (M+) Battery negative (-) --> Terminal 3 (MV)	Turns downward
Battery positive (+) --> Terminal 1 (MH) Battery negative (-) --> Terminal 4 (M+)	Turns left
Battery positive (+) --> Terminal 4 (M+) Battery negative (-) --> Terminal 1 (MH)	Turns right

TEXT IN ILLUSTRATION

*a	Component without harness connected (Outer Rear View Mirror Assembly LH)

If the result is not as specified, replace the outer rear view mirror assembly LH.

b. Check the operation of the mirror surface (w/o Daytime Running Light Control).
    1. Disconnect the outer rear view mirror assembly LH connector.

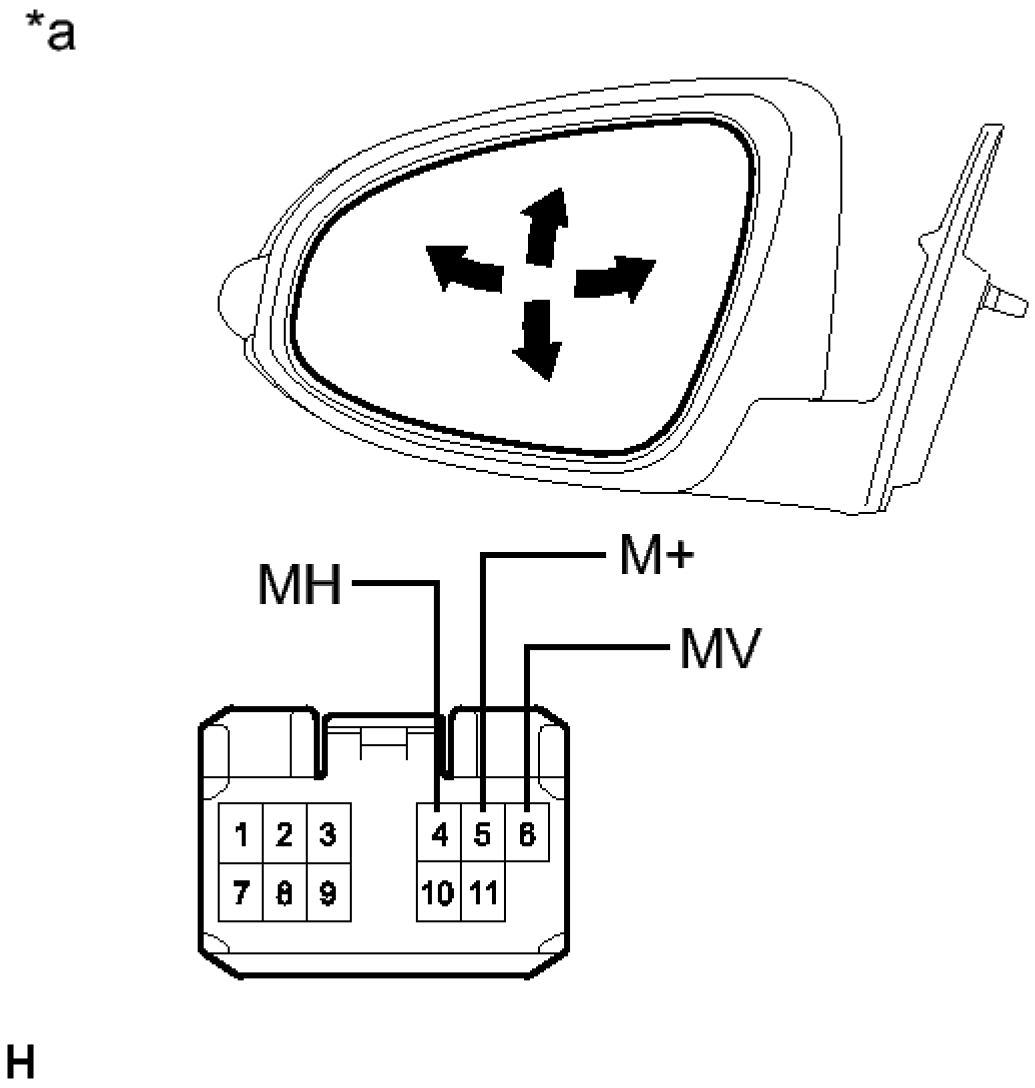

Fig. 10: Identifying Mirror Surface Connector Terminal Identification LH (W/O Daytime Running Light Control)
Courtesy of TOYOTA MOTOR SALES, U.S.A., INC.

2. Apply battery voltage and check the operation of the mirror.

OK

Measurement Condition	Specified Condition
Battery positive (+) --> Terminal 6 (MV) Battery negative (-) --	Turns upward

> Terminal 5 (M+)	
Battery positive (+) --> Terminal 5 (M+) Battery negative (-) --> Terminal 6 (MV)	Turns downward
Battery positive (+) --> Terminal 4 (MH) Battery negative (-) --> Terminal 5 (M+)	Turns left
Battery positive (+) --> Terminal 5 (M+) Battery negative (-) --> Terminal 4 (MH)	Turns right

TEXT IN ILLUSTRATION

*a	Component without harness connected (Outer Rear View Mirror Assembly LH)

If the result is not as specified, replace the outer rear view mirror assembly LH.

c. Check the operation of the retractable mirror (w/o Daytime Running Light Control).

NOTE:

- **Disconnect and reconnect the battery between each mirror position check.**
- **The mirror position cannot be changed manually when the battery is connected. To change the mirror position manually,**

the battery must be disconnected first.

1. Disconnect the outer rear view mirror assembly LH connector.

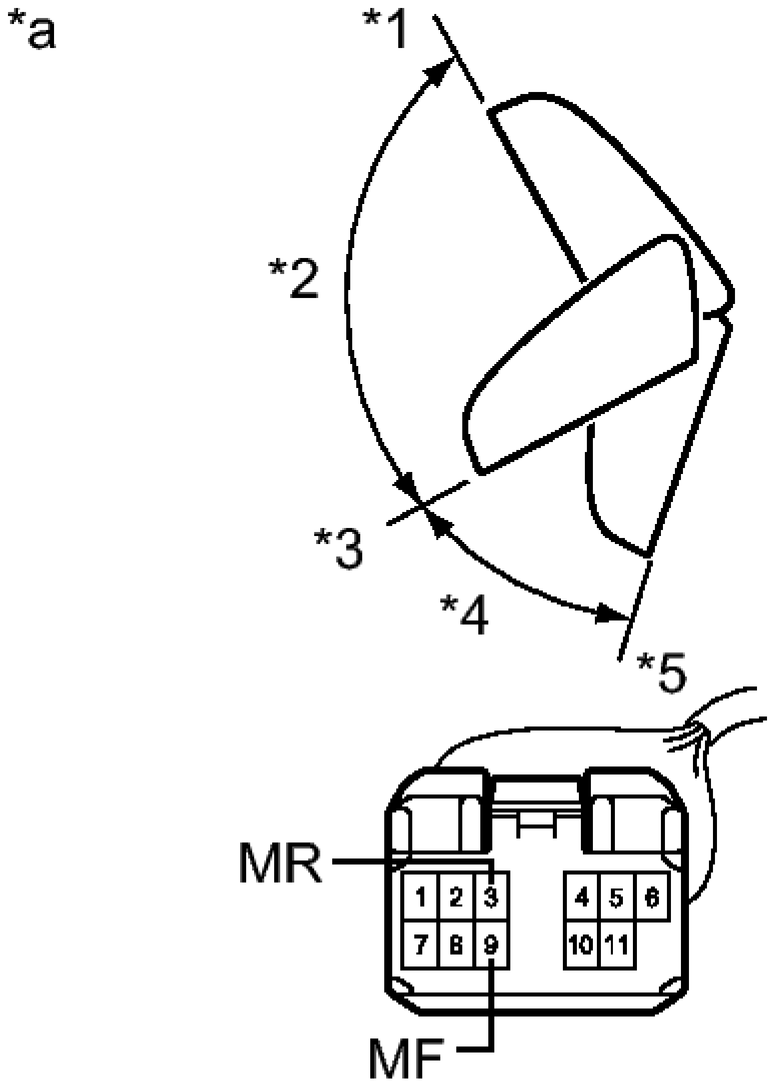

Fig. 11: Identifying Retractable Mirror Connector Terminal Identification LH (W/O Daytime Running Light Control)
Courtesy of TOYOTA MOTOR SALES, U.S.A., INC.

2. For each position: Disconnect the battery, set the mirror position by hand, connect the battery, and check the retractable mirror's movement.

   OK

Tester Connection	Condition	Specified Condition

Battery positive (+) --> Terminal 3 (MR) Battery negative (-) --> Terminal 9 (MF)	Forward position (A)	Moves from (A) to retracted position (E)
Battery positive (+) --> Terminal 9 (MF) Battery negative (-) --> Terminal 3 (MR)	Forward position (A)	Does not move
Battery positive (+) --> Terminal 3 (MR) Battery negative (-) --> Terminal 9 (MF)	Position between forward position (A) and driving position (C)	Moves from (B) to retracted position (E)
Battery positive (+) --> Terminal 9 (MF) Battery negative (-) --> Terminal 3 (MR)	Position between forward position (A) and driving position (C)	Moves from (B) to forward position (A)
Battery positive (+) --> Terminal 3 (MR) Battery negative (-)	Driving position (C)	Moves from (C) to retracted position

--> Terminal 9 (MF)		(E)
Battery positive (+) --> Terminal 9 (MF) Battery negative (-) --> Terminal 3 (MR)	Driving position (C)	Does not move
Battery positive (+) --> Terminal 3 (MR) Battery negative (-) --> Terminal 9 (MF)	Position between driving position (C) and retracted position (E)	Moves from (D) to retracted position (E)
Battery positive (+) --> Terminal 9 (MF) Battery negative (-) --> Terminal 3 (MR)	Position between driving position (C) and retracted position (E)	Moves from (D) to driving position (C)
Battery positive (+) --> Terminal 3 (MR) Battery negative (-) --> Terminal 9 (MF)	Retracted position (E)	Does not move
Battery positive (+) --> Terminal 9	Retracted	Moves from (E)

(MF) Battery negative (-) --> Terminal 3 (MR)	position (E)	to driving position (C)

TEXT IN ILLUSTRATION

*1	(A) Forward Position
*2	(B)
*3	(C) Driving position
*4	(D)
*5	(E) Retracted Position
*a	Component without harness connected (Outer Rear View Mirror Assembly LH)

If the result is not as specified, replace the outer rear view mirror assembly LH.

d. Check the operation of the mirror heater (w/ Mirror Heater and Daytime Running Light Control).
    1. Disconnect the outer rear view mirror assembly LH connector.

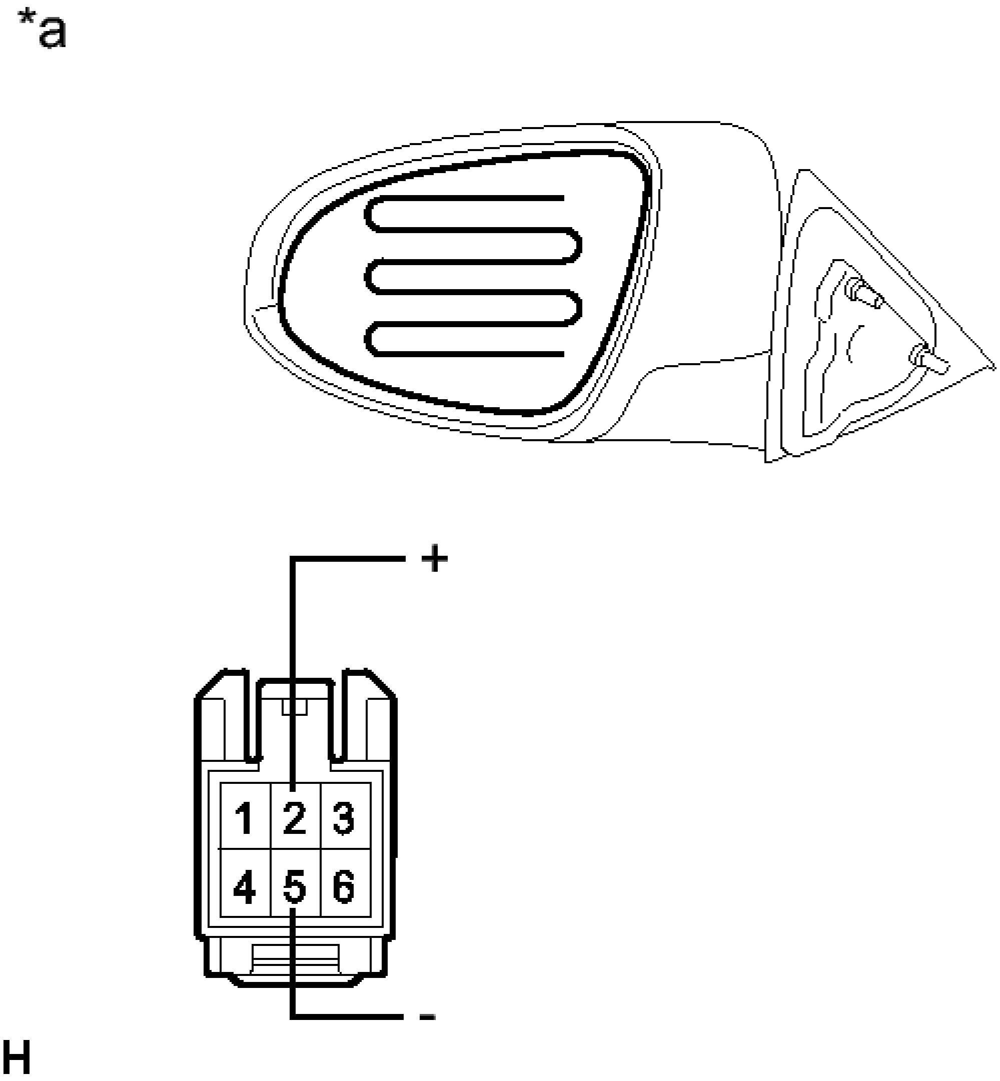

Fig. 12: Identifying Mirror Heater Connector Terminal Identification LH (W/Mirror Heater And Daytime Light Control)
Courtesy of TOYOTA MOTOR SALES, U.S.A., INC.

2. Measure the resistance according to the value(s) in the table below.

   Standard Resistance

Tester Connection	Condition	Specified Condition
2 (+) - 5 (-)	25°C (75°F)	7.6 to 11.4 ohms

TEXT IN ILLUSTRATION

	Component

*a	without harness connected (Outer Rear View Mirror Assembly LH)

If the result is not as specified, replace the outer rear view mirror assembly LH.

3. Connect the cable from the positive (+) terminal to terminal 2 and the negative battery (-) terminal to terminal 5, then check that the mirror becomes warm.

   HINT:

   It takes a short time for the mirror to become warm.

   OK

   Mirror becomes warm.

   If the result is not as specified, replace the outer rear view mirror assembly LH.

e. Check the operation of the mirror heater (w/ Mirror Heater and w/o Daytime Running Light Control).
   1. Disconnect the outer rear view mirror assembly LH connector.

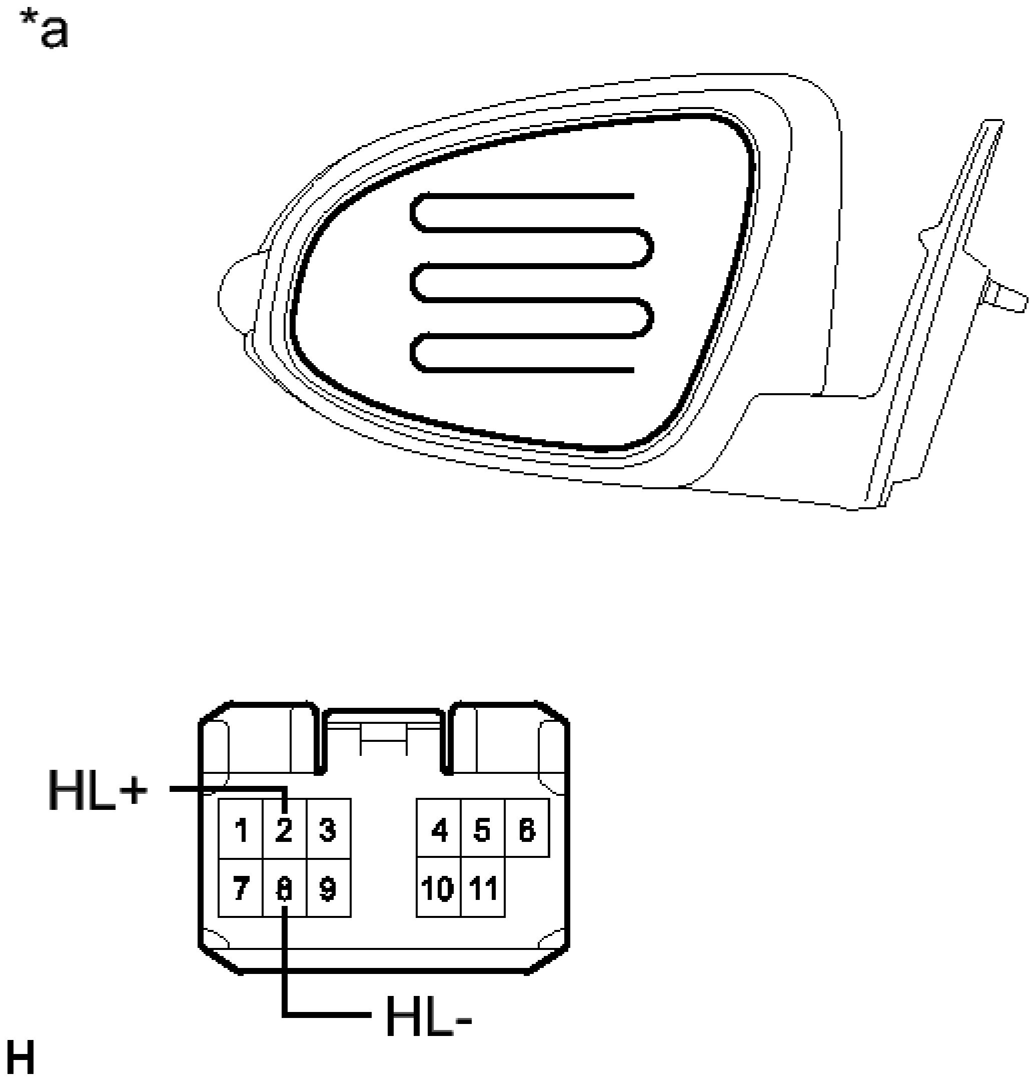

Fig. 13: Identifying Mirror Heater Connector Terminal Identification LH (W/Mirror Heater And W/O Daytime Running Light Control)
Courtesy of TOYOTA MOTOR SALES, U.S.A., INC.

2. Measure the resistance according to the value(s) in the table below.

   Standard Resistance

Tester Connection	Condition	Specified Condition
2 (+) - 8 (-)	25°C (75°F)	7.6 to 11.4 ohms

TEXT IN ILLUSTRATION

	Component

*a	without harness connected (Outer Rear View Mirror Assembly LH)

If the result is not as specified, replace the outer rear view mirror assembly LH.

3. Connect the cable from the positive (+) terminal to terminal 2 and the negative battery (-) terminal to terminal 8, then check that the mirror becomes warm.

   HINT:

   It takes a short time for the mirror to become warm.

   OK

   Mirror becomes warm.

   If the result is not as specified, replace the outer rear view mirror assembly LH.

REASSEMBLY

REASSEMBLY

HINT:

- Use the same procedure for both the RH and LH sides.
- The procedure described below is for the LH side.

1. **INSTALL SIDE TURN SIGNAL LIGHT ASSEMBLY (w/ Retract Mirror)** . Refer to **INSTALLATION - Step 1**
2. **INSTALL OUTER MIRROR COVER (w/o Retract Mirror)** See step 1
3. **INSTALL OUTER MIRROR COVER (w/ Retract Mirror)** See step 2
4. **INSTALL OUTER REAR VIEW MIRROR (w/o Retract Mirror)** See step 1
5. **INSTALL OUTER REAR VIEW MIRROR (w/ Retract Mirror)** See step 2

INSTALLATION

INSTALLATION

HINT:

- Use the same procedure for both the RH and LH sides.
- The procedure described below is for the LH side.

1. **INSTALL OUTER REAR VIEW MIRROR ASSEMBLY**
    a. Engage the claw to temporarily install the outer rear view mirror assembly.
    b. Install the outer rear view mirror assembly with the 3 bolts.

       Torque: 11 N*m (107 kgf*cm, 8 ft.*lbf)

    c. Connect the connector.
2. **INSTALL FRONT DOOR INNER GLASS WEATHERSTRIP** . Refer to **REASSEMBLY - Step 38**
3. **INSTALL FRONT DOOR TRIM BOARD SUB-ASSEMBLY** . Refer to **REASSEMBLY - Step 40**
4. **INSTALL COURTESY LIGHT ASSEMBLY** . Refer to **INSTALLATION - Step 1**
5. **INSTALL FRONT ARMREST ASSEMBLY** . Refer to **REASSEMBLY - Step 42**
6. **INSTALL POWER WINDOW REGULATOR MASTER SWITCH ASSEMBLY WITH FRONT DOOR ARMREST BASE PANEL (for Driver Side)** . Refer to **REASSEMBLY - Step 43**
7. **INSTALL POWER WINDOW REGULATOR SWITCH ASSEMBLY WITH FRONT DOOR ARMREST BASE PANEL (for Front Passenger Side)** . Refer to **REASSEMBLY - Step 44**
8. **INSTALL FRONT DOOR LOWER FRAME BRACKET GARNISH** . Refer to **REASSEMBLY - Step 45**
9. **INSTALL FRONT DOOR INSIDE HANDLE BEZEL PLUG** . Refer to **REASSEMBLY - Step 46**

OUTER REAR VIEW MIRROR GLASS

COMPONENTS

ILLUSTRATION

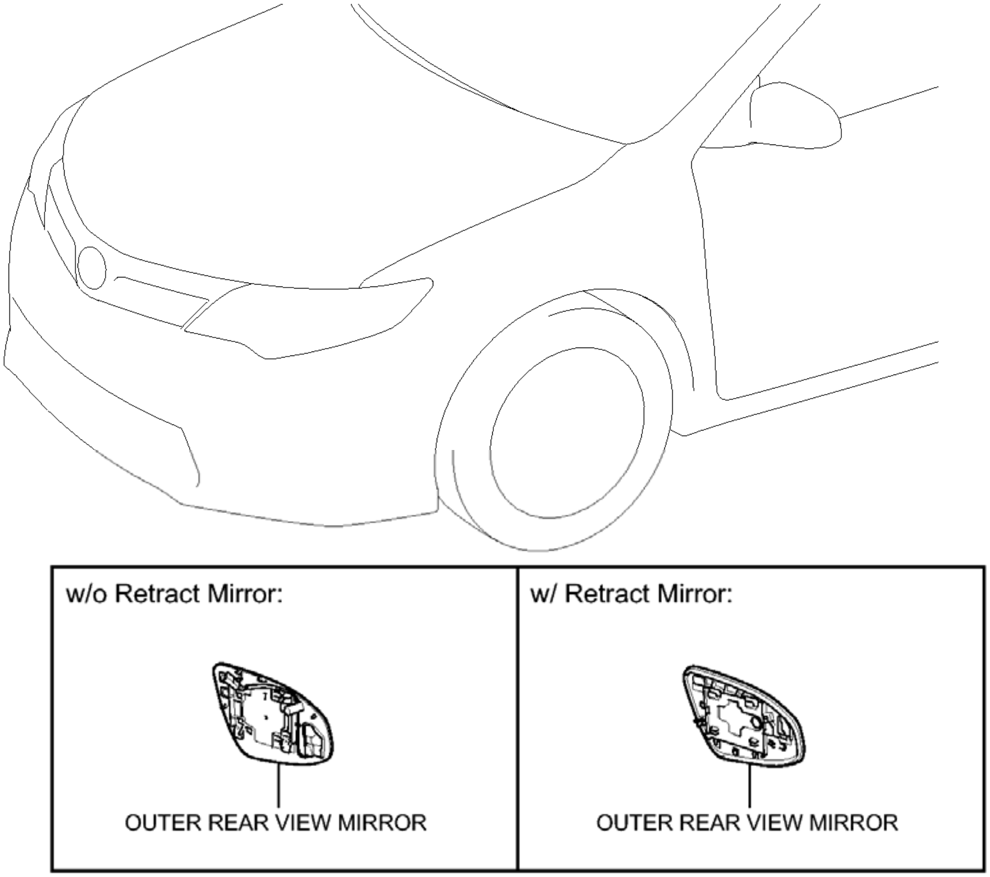
w/o Retract Mirror:
OUTER REAR VIEW MIRROR
w/ Retract Mirror:
OUTER REAR VIEW MIRROR
P

Fig. 14: Identifying Outer Rear View Mirror Glass Replacement Components
Courtesy of TOYOTA MOTOR SALES, U.S.A., INC.

REMOVAL

REMOVAL

HINT:

- Use the same procedure for both the RH and LH sides.
- The procedure described below is for the LH side.

1. **REMOVE OUTER REAR VIEW MIRROR (w/o Retract Mirror)**
   a. Apply protective tape to the areas shown in the illustration.

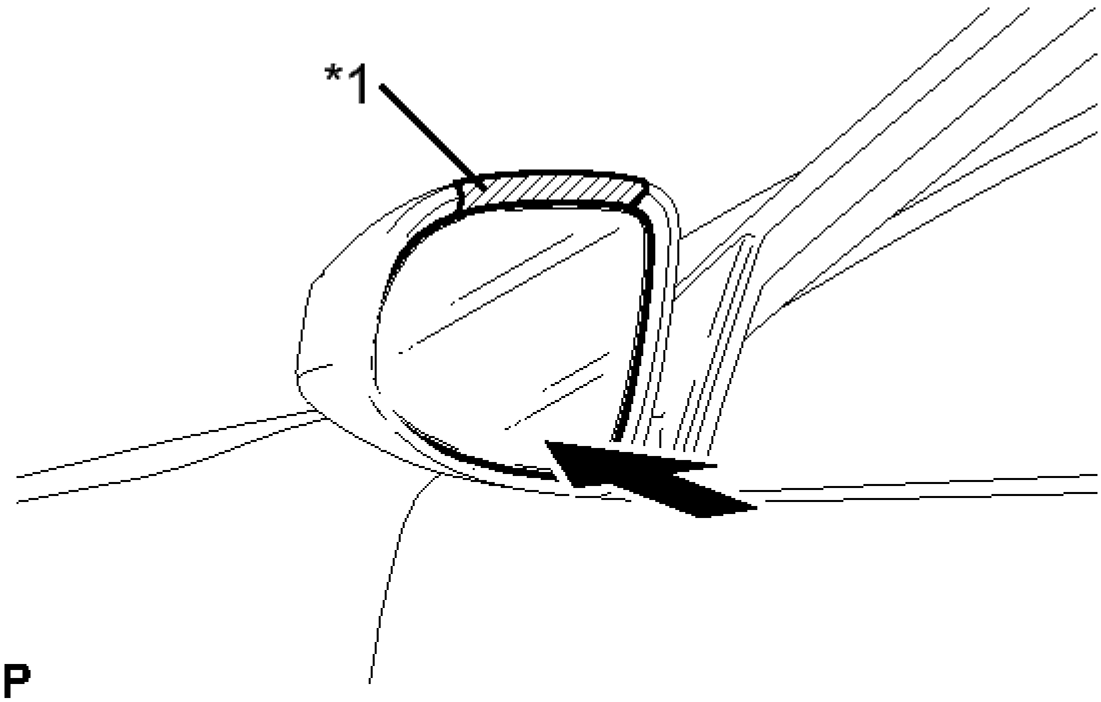

Fig. 15: Identifying Outer Rear View Mirror Protective Tape (W/O Retract Mirror)
Courtesy of TOYOTA MOTOR SALES, U.S.A., INC.

TEXT IN ILLUSTRATION

*1	Protective Tape

b. Push the lower part of the mirror surface and tilt it.
c. Using a moulding remover, disengage the 2 claws at the upper part of the outer rear view mirror as shown in the illustration.

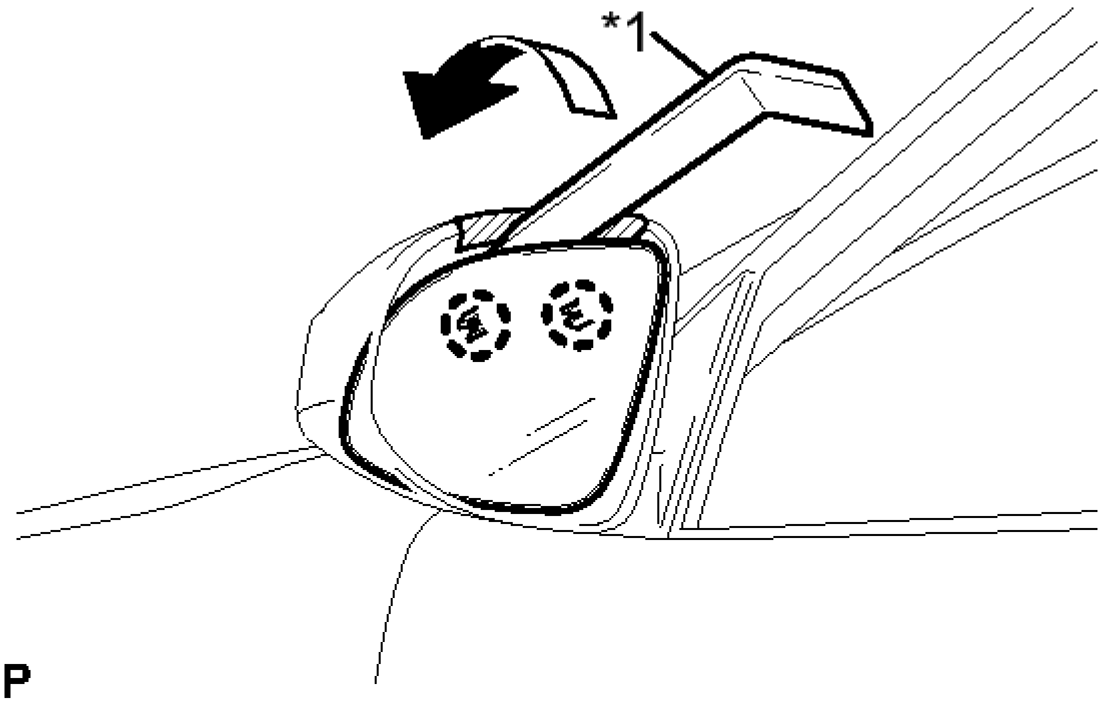

Fig. 16: Identifying Moulding Remover
Courtesy of TOYOTA MOTOR SALES, U.S.A., INC.

TEXT IN ILLUSTRATION

*1	Moulding Remover

d. Disengage the 2 guides and remove the outer rear view mirror as shown in the illustration.

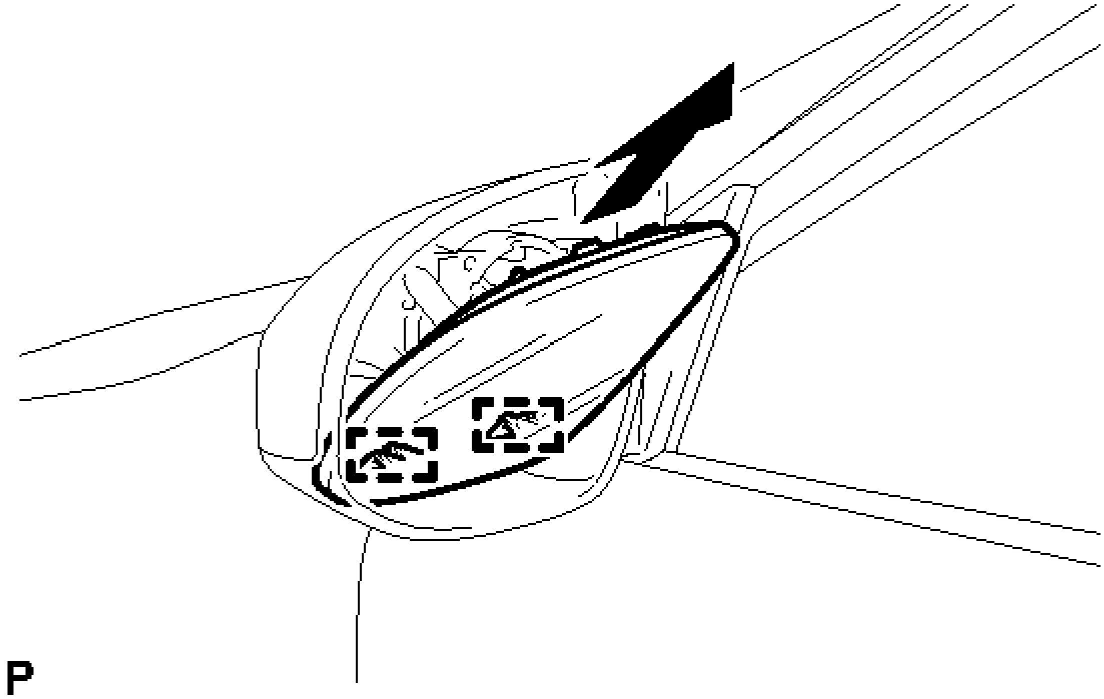

Fig. 17: Removing Outer Rear View Mirror Guides
Courtesy of TOYOTA MOTOR SALES, U.S.A., INC.

e. w/ Mirror Heater:

  1. Disconnect the 2 connectors and remove the outer rear view mirror.

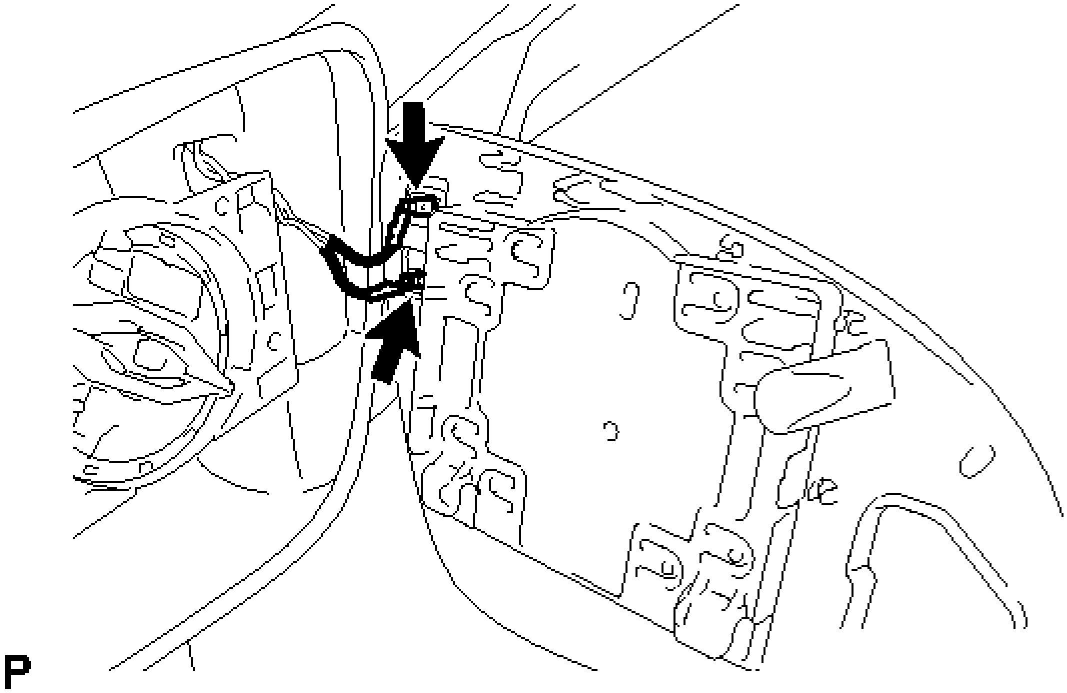

Fig. 18: Identifying Outer Rear View Mirror Connectors (W/Mirror Heater)

Courtesy of TOYOTA MOTOR SALES, U.S.A., INC.

f. w/ Mirror Heater and Blind Spot Monitor System:
   1. Disconnect the 2 mirror heater connectors.
   2. Disengage the 2 claws.
   3. Using a screwdriver, release the tabs of the blind spot monitor indicator connector to disconnect the connector and remove the outer rear view mirror.

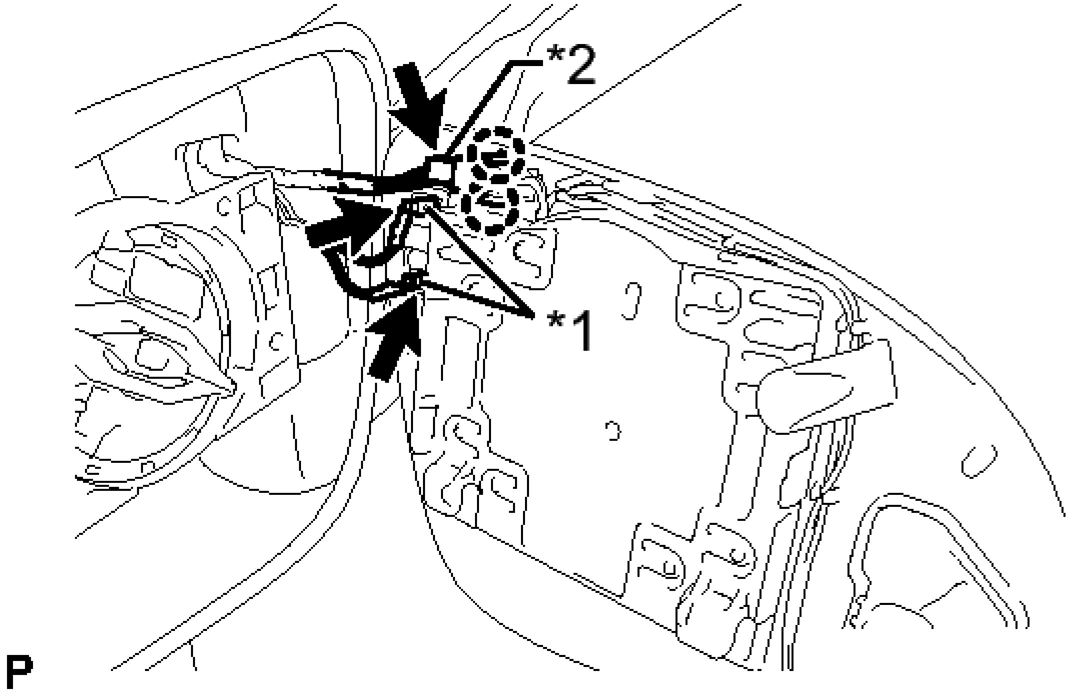

Fig. 19: Identifying Blind Spot Monitor Indicator Connectors (W/Mirror Heater And Blind Spot Monitor System)
Courtesy of TOYOTA MOTOR SALES, U.S.A., INC.

TEXT IN ILLUSTRATION

*1	Mirror Heater Connector
*2	Blind Spot Monitor Indicator Connector

NOTE:

- **Do not bend the tabs excessively to prevent them from being damaged.**
- **If the tabs are damaged, replace the outer rear view mirror**

with a new one.

2. **REMOVE OUTER REAR VIEW MIRROR (w/ Retract Mirror)**
   a. Apply protective tape to the areas shown in the illustration.

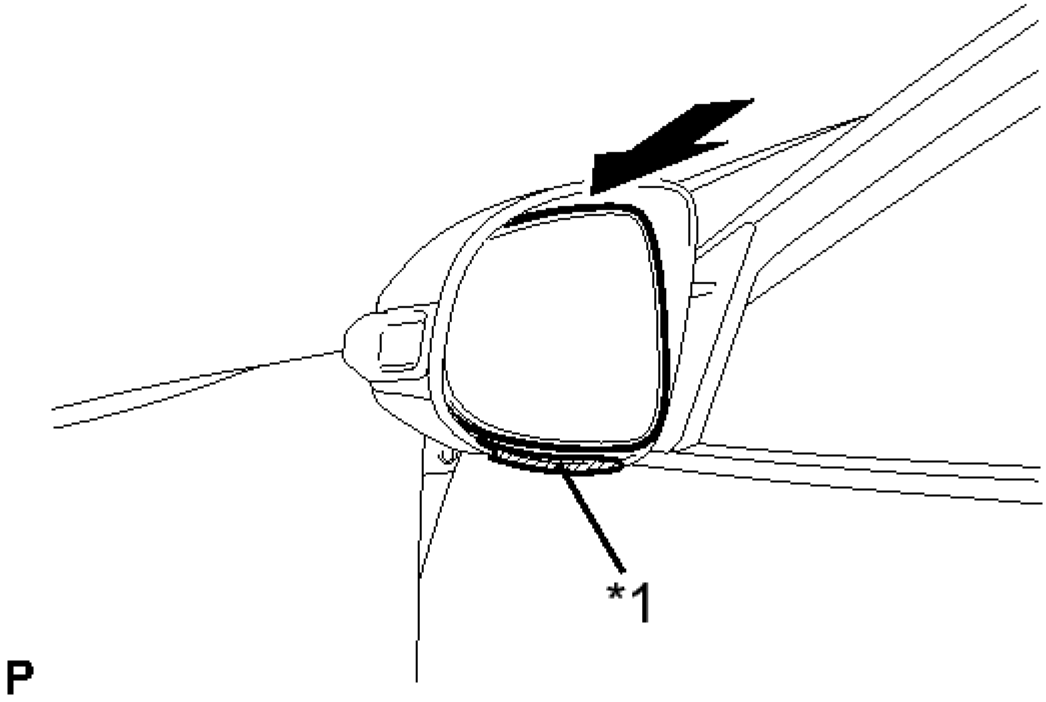

Fig. 20: Identifying Protective Tape (W/Retract Mirror)
Courtesy of TOYOTA MOTOR SALES, U.S.A., INC.

TEXT IN ILLUSTRATION

*1	Protective Tape

   b. Push the upper part of the mirror surface and tilt it.
   c. Using a moulding remover, disengage the 2 claws at the lower part of the outer rear view mirror as shown in the illustration.

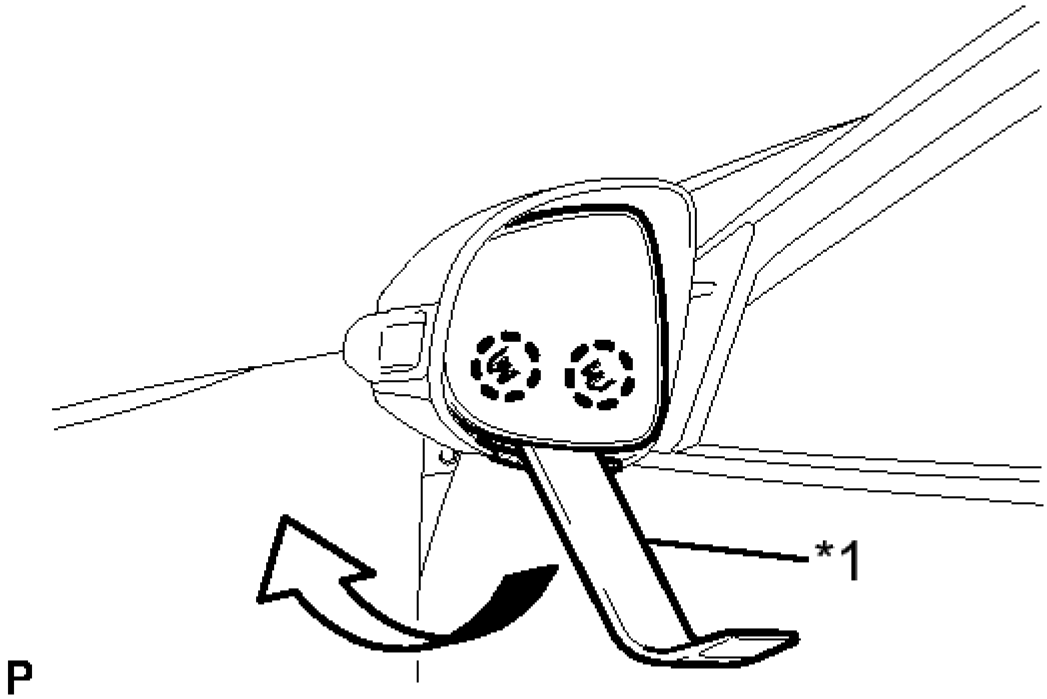

Fig. 21: Identifying Moulding Remover
Courtesy of TOYOTA MOTOR SALES, U.S.A., INC.

TEXT IN ILLUSTRATION

*1	Moulding Remover

d. Disengage the 2 guides as shown in the illustration.

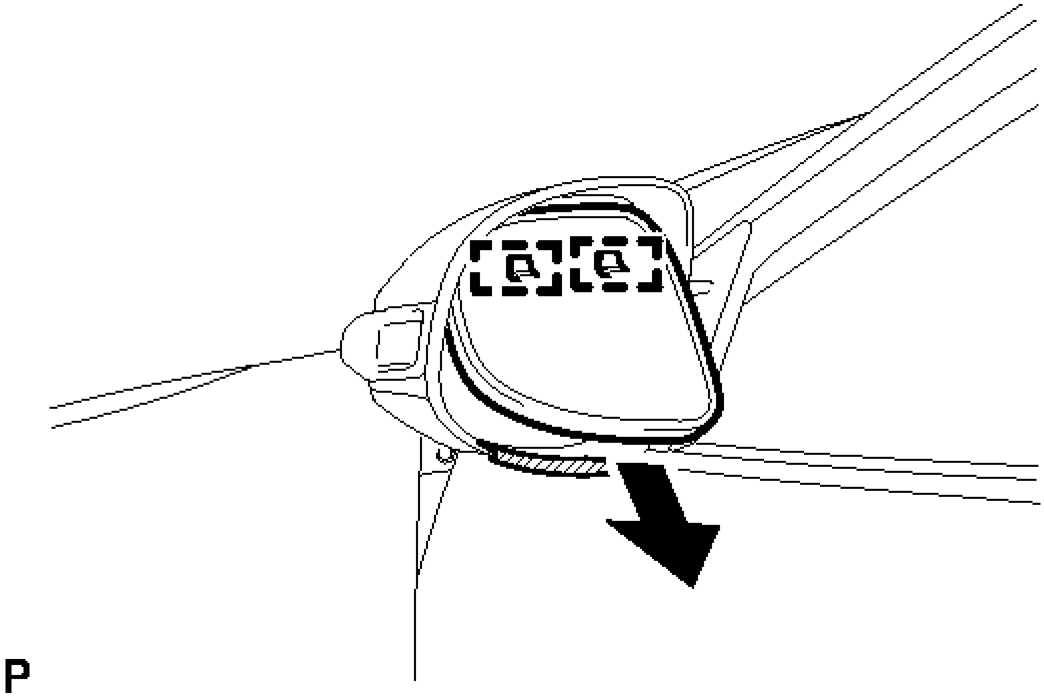

Fig. 22: Identifying Outer Rear View Mirror Guides
Courtesy of TOYOTA MOTOR SALES, U.S.A., INC.

e. Disconnect the 2 connectors and remove the outer rear view mirror.

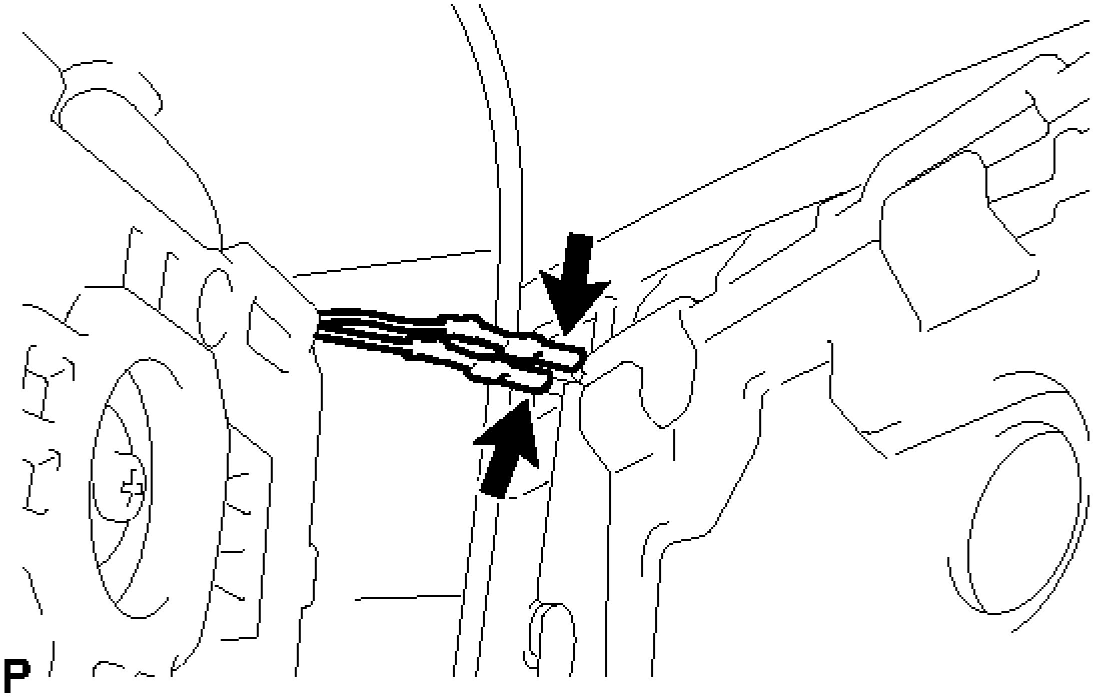

Fig. 23: Identifying Outer Rear View Mirror Connectors
Courtesy of TOYOTA MOTOR SALES, U.S.A., INC.

INSPECTION

INSPECTION

1. **INSPECT OUTER REAR VIEW MIRROR RH**
   a. Check the outer mirror heater operation (w/ Blind Spot Monitor System).

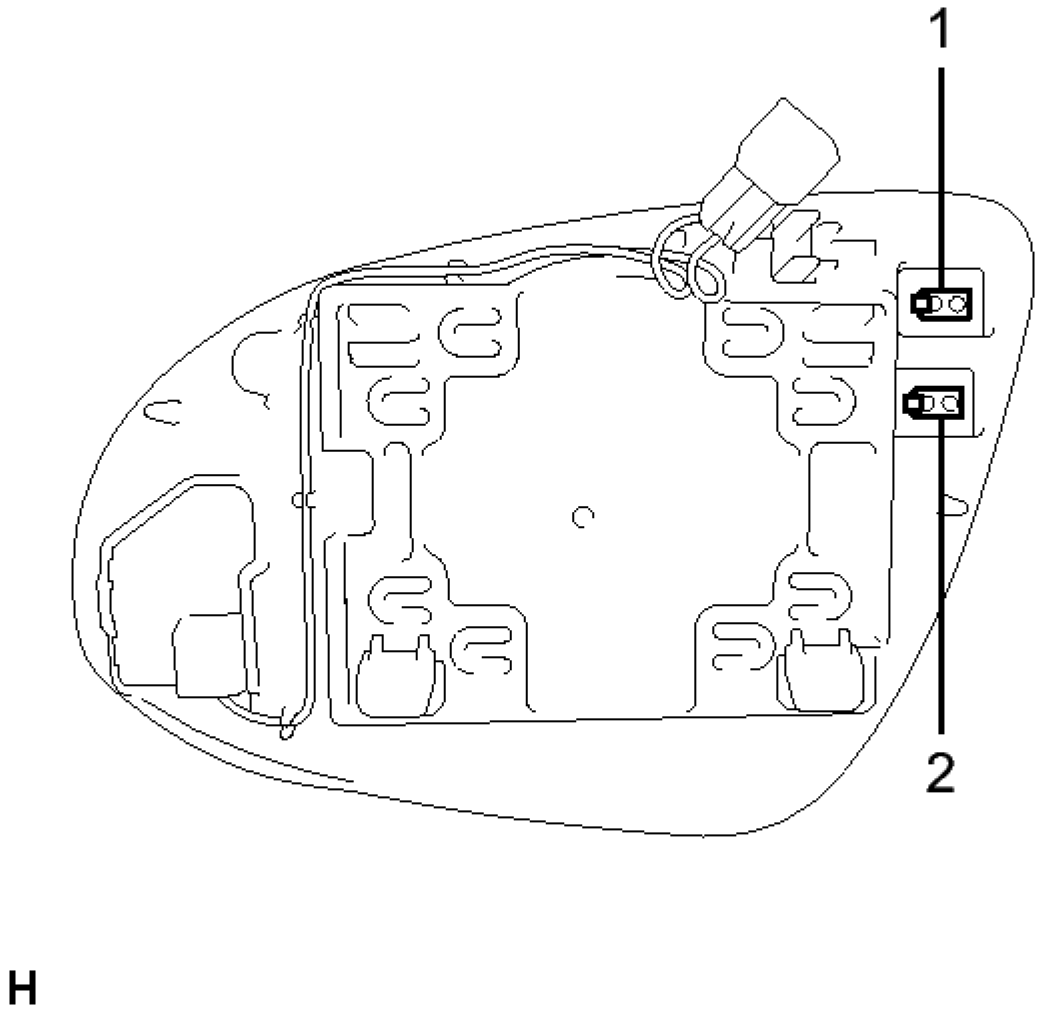

Fig. 24: Measuring Resistance Of Outer Mirror Heater (W/Blind Spot Monitor System)
Courtesy of TOYOTA MOTOR SALES, U.S.A., INC.

1. Measure the resistance according to the value(s) in the table below.

   Standard Resistance

Tester Connection	Condition	Specified Condition

1 - 2	25°C (77° F)	7.6 to 11.4 ohms

If the result is not as specified, replace the outer rear view mirror RH.

b. Check the outer mirror heater operation (w/o Blind Spot Monitor System).

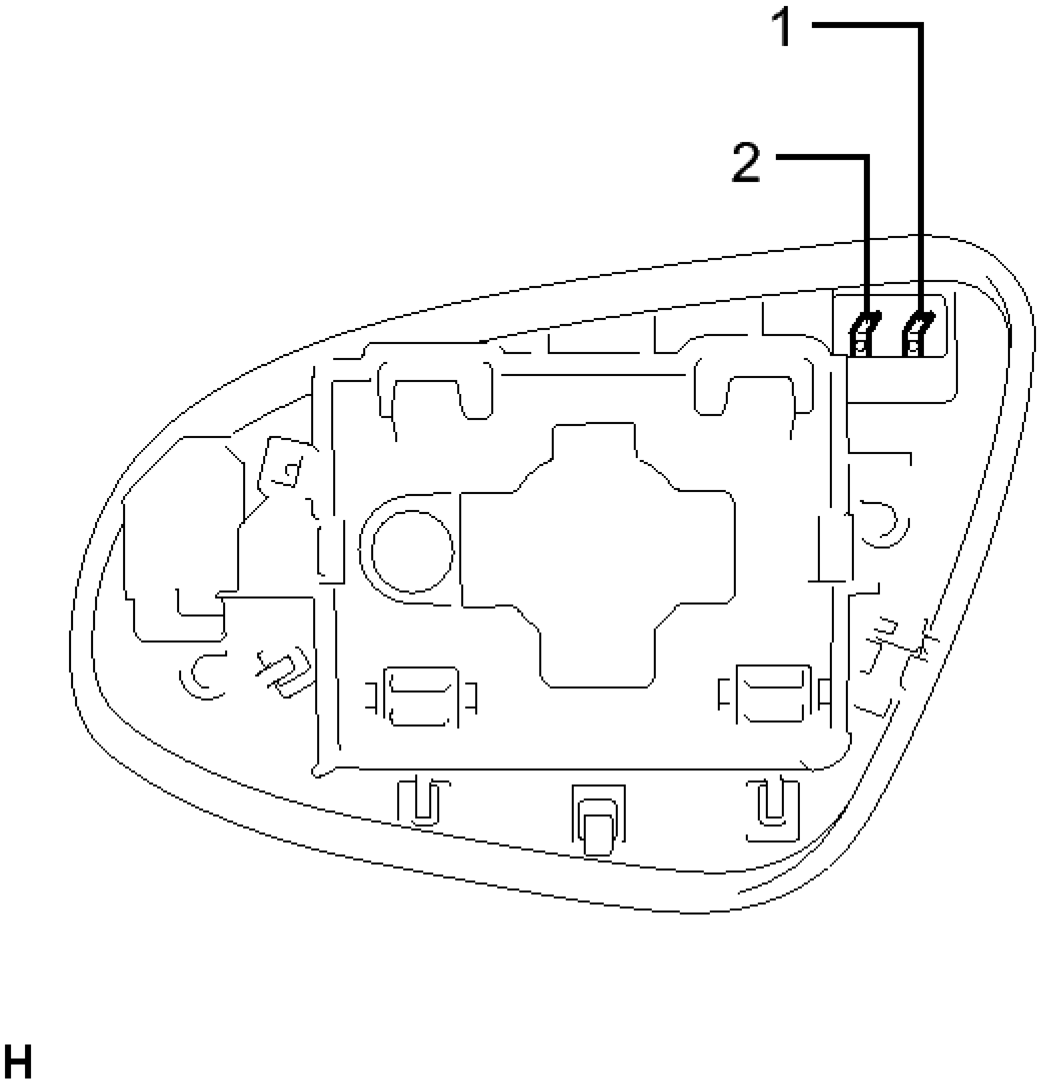

Fig. 25: Identifying Mirror Heater Operation (W/O Blind Spot Monitor System)
Courtesy of TOYOTA MOTOR SALES, U.S.A., INC.

1. Measure the resistance according to the value(s) in the table below.

   Standard Resistance

Tester Connection	Condition	Specified Condition

1 - 2	25°C (77°F)	7.6 to 11.4 ohms

If the result is not as specified, replace the outer rear view mirror RH.

c. Check the outer rear view mirror indicator RH operation (w/ Blind Spot Monitor System).

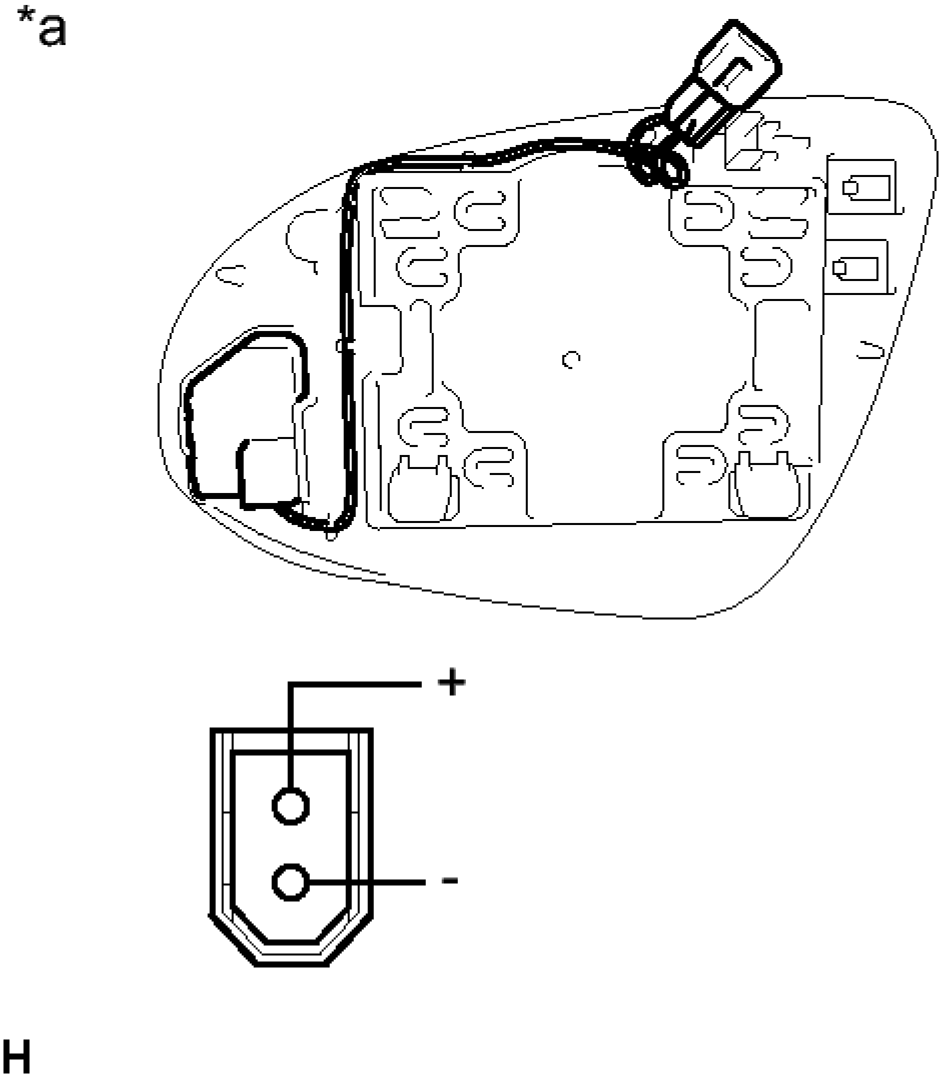

Fig. 26: Identifying Outer Rear View Mirror Indicator Operation RH (W/Blind Spot Monitor System)
Courtesy of TOYOTA MOTOR SALES, U.S.A., INC.

1. Connect a positive (+) lead from the battery to terminal 1 (+) and a negative (-) lead to terminal 2 (-).
2. Check that the outer rear view mirror indicator comes on.

   OK

Outer rear view mirror indicator comes on.

TEXT IN ILLUSTRATION

*a	Component without harness connected (Outer rear view mirror RH)

If the result is not as specified, replace the outer rear view mirror RH.

2. **INSPECT OUTER REAR VIEW MIRROR LH**
    a. Check the outer mirror heater operation (w/ Blind Spot Monitor System).

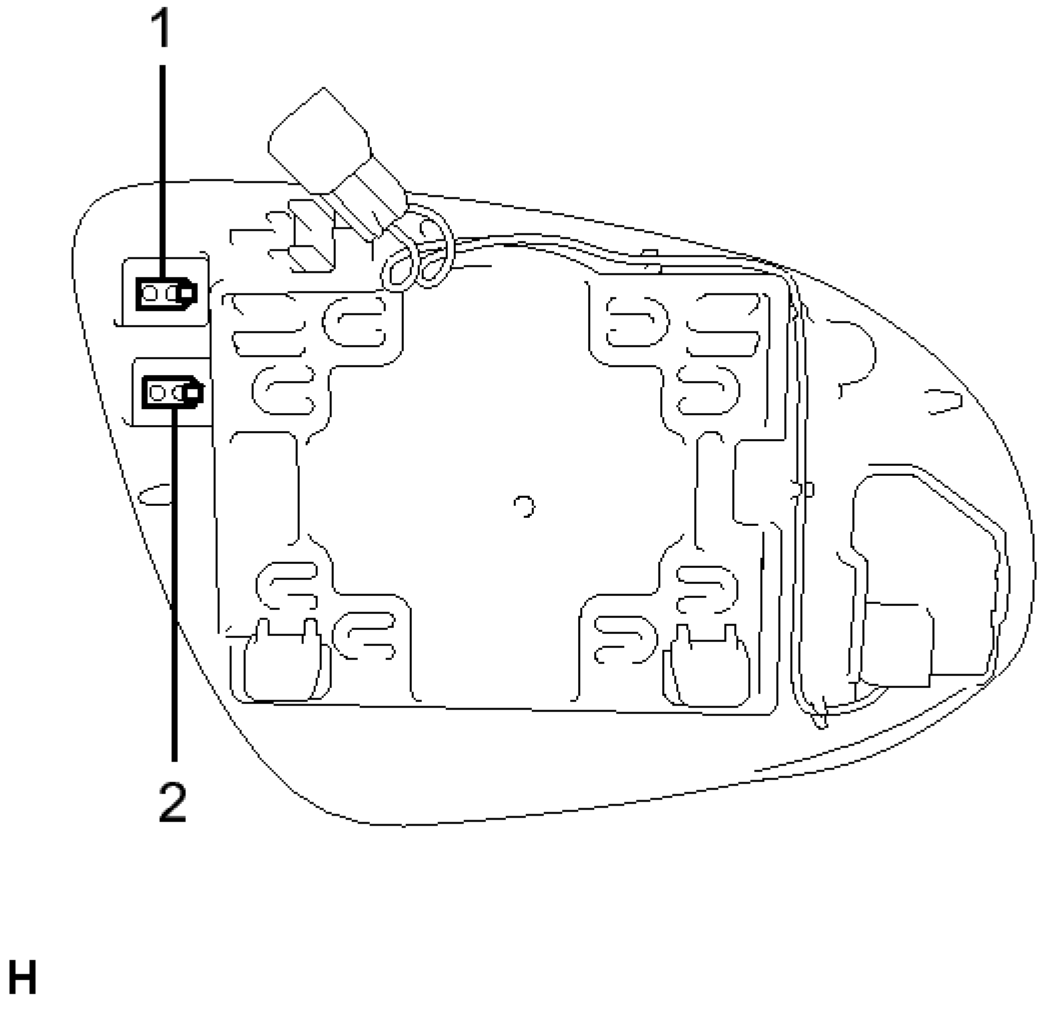

Fig. 27: Measuring Outer Mirror Heater Resistance (W/Blind Spot Monitor System)
Courtesy of TOYOTA MOTOR SALES, U.S.A., INC.

1. Measure the resistance according the value(s) in the table below.

   Standard Resistance

Tester Connection	Condition	Specified Condition
1 - 2	25°C (77°F)	7.6 to 11.4 ohms

   If the result is not as specified, replace the outer rear view mirror LH.

b. Check the outer mirror heater operation (w/o Blind Spot Monitor System).

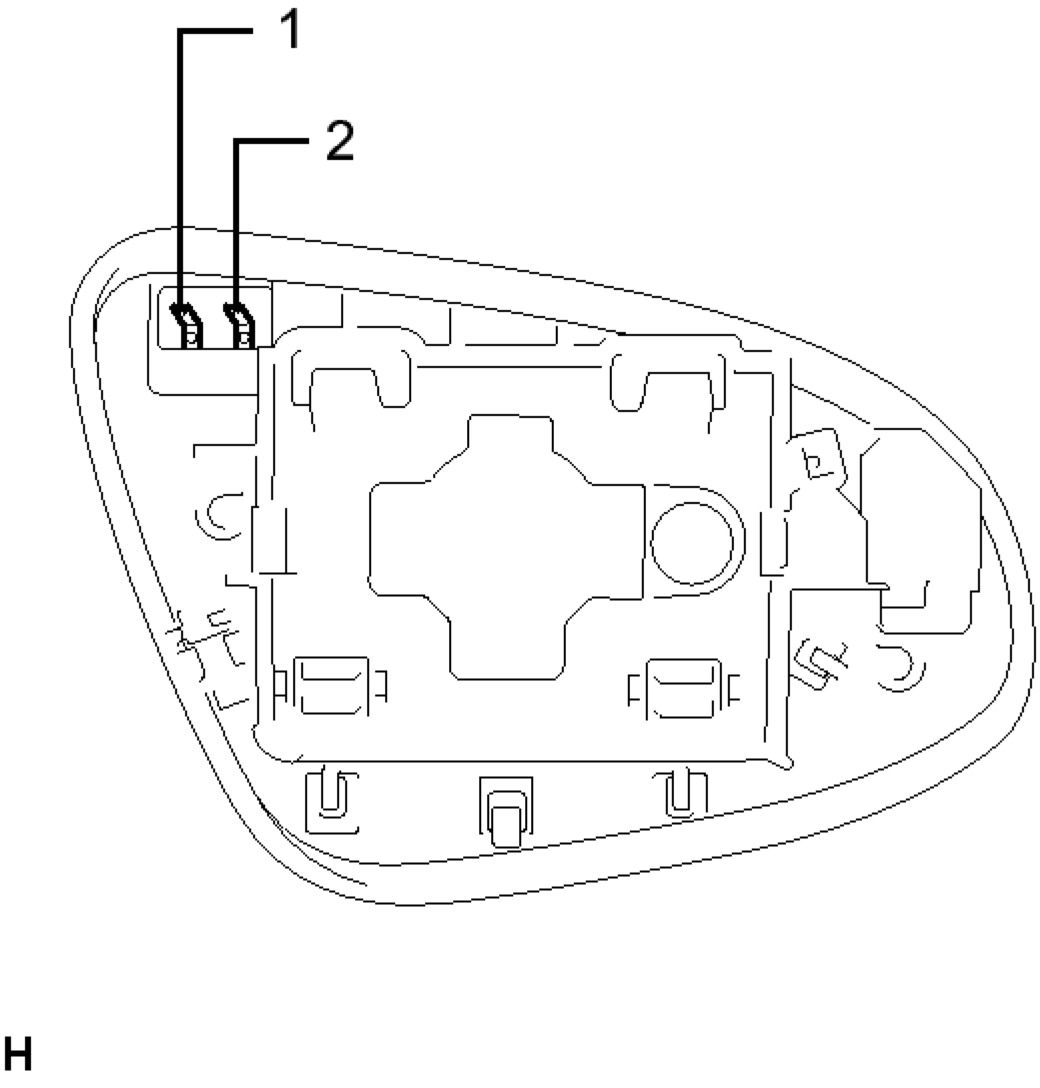

Fig. 28: Identifying Outer Mirror Heater Operation (W/O Blind Spot Monitor System)
Courtesy of TOYOTA MOTOR SALES, U.S.A., INC.

1. Measure the resistance according the value(s) in the table below.

   Standard Resistance

Tester Connection	Condition	Specified Condition
1 - 2	25°C (77°F)	7.6 to 11.4 ohms

   If the result is not as specified, replace the outer rear view mirror LH.

c. Check the outer rear view mirror indicator LH operation.

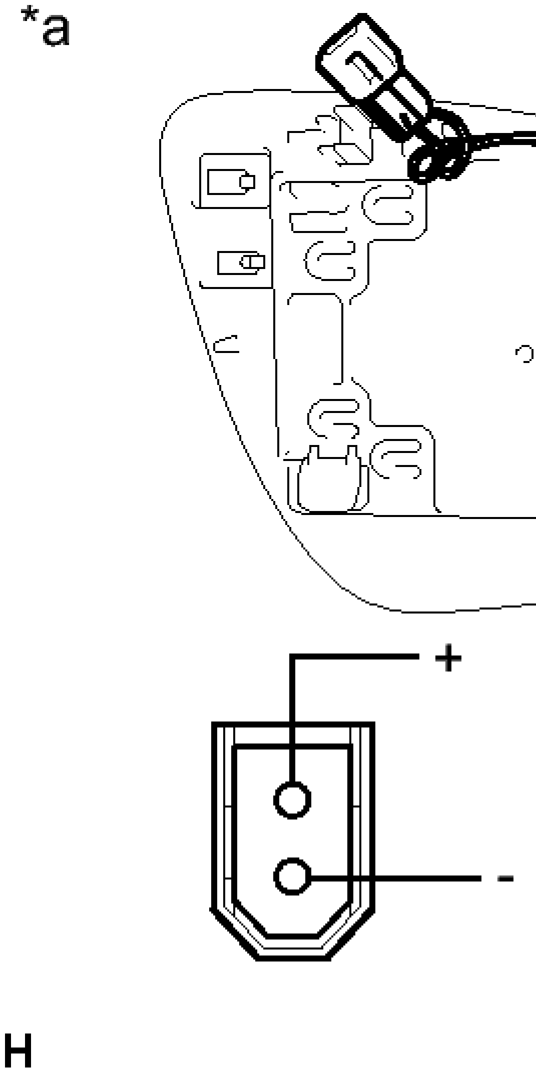

Fig. 29: Identifying Outer Rear View Mirror Component LH
Courtesy of TOYOTA MOTOR SALES, U.S.A., INC.

1. Connect a positive (+) lead from the battery to terminal 1 (+) and a negative (-) lead to terminal 2 (-).
2. Check that the outer rear view mirror indicator comes on.

   OK

   Outer rear view mirror indicator comes on.

   TEXT IN ILLUSTRATION

*a	Component without harness connected (Outer rear view mirror LH)

   If the result is not as specified, replace the outer rear view mirror LH.

INSTALLATION

INSTALLATION

HINT:

- Use the same procedure for both the RH and LH sides.
- The procedure described below is for the LH side.

1. **INSTALL OUTER REAR VIEW MIRROR (w/o Retract Mirror)**
   a. w/ Mirror Heater:
      1. Connect the 2 connectors.
   b. w/ Mirror Heater and Blind Spot Monitor System:
      1. Connect the 3 connectors.
      2. Engage the 2 claws.
   c. Engage the 2 guides on the lower part of the outer mirror to the outer rear view mirror.

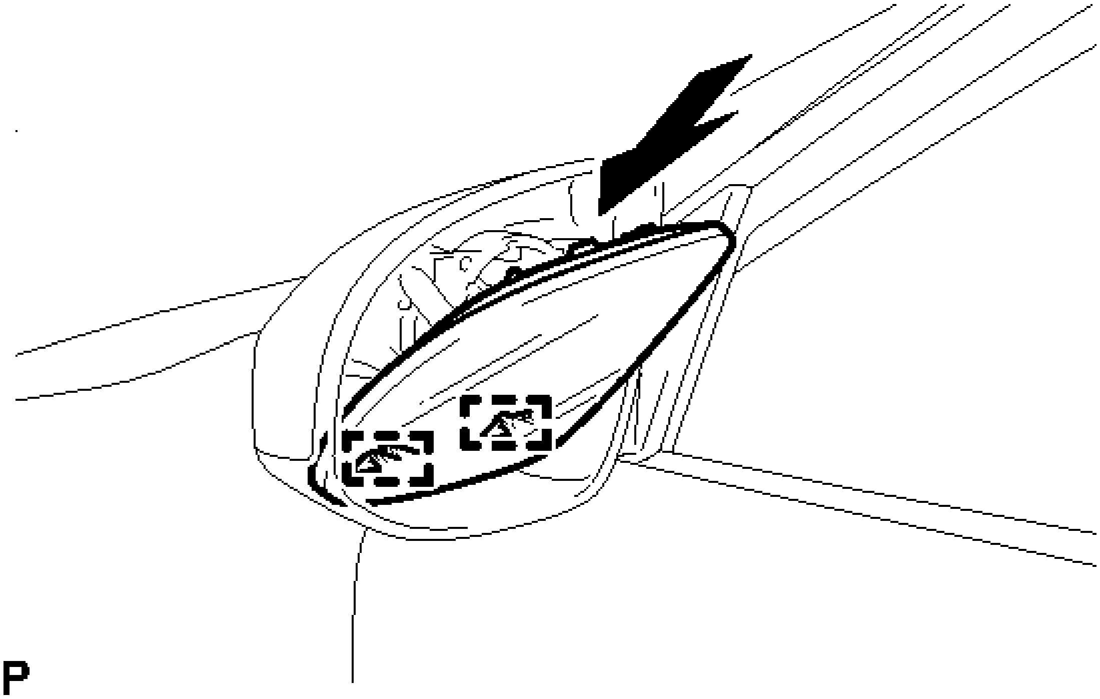

Fig. 30: Identifying Outer Rear View Mirror Guides (W/Mirror Heater And Blind Spot Monitor System)
Courtesy of TOYOTA MOTOR SALES, U.S.A., INC.

d. Engage the 2 claws on the upper part of the outer mirror to the outer rear view mirror.

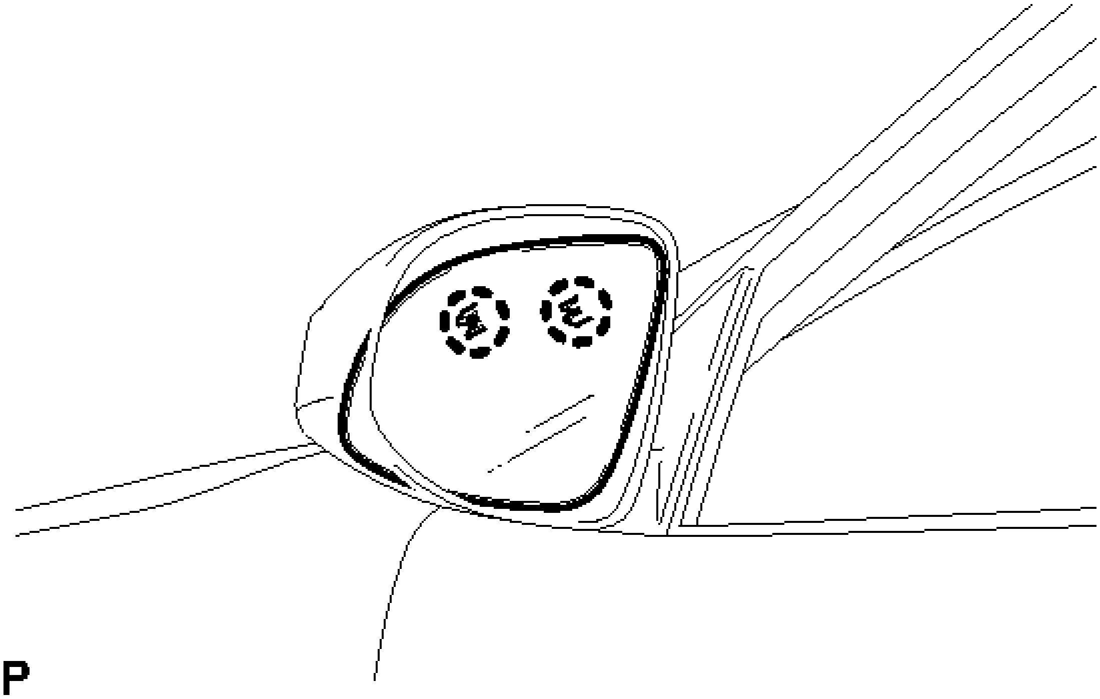

Fig. 31: Identifying Outer Rear View Mirror Claws (W/Mirror Heater And Blind Spot

Monitor System)
Courtesy of TOYOTA MOTOR SALES, U.S.A., INC.

2. **INSTALL OUTER REAR VIEW MIRROR (w/ Retract Mirror)**
    a. Connect the 2 connectors.
    b. Engage the 2 guides on the upper part of the outer mirror to the outer rear view mirror.

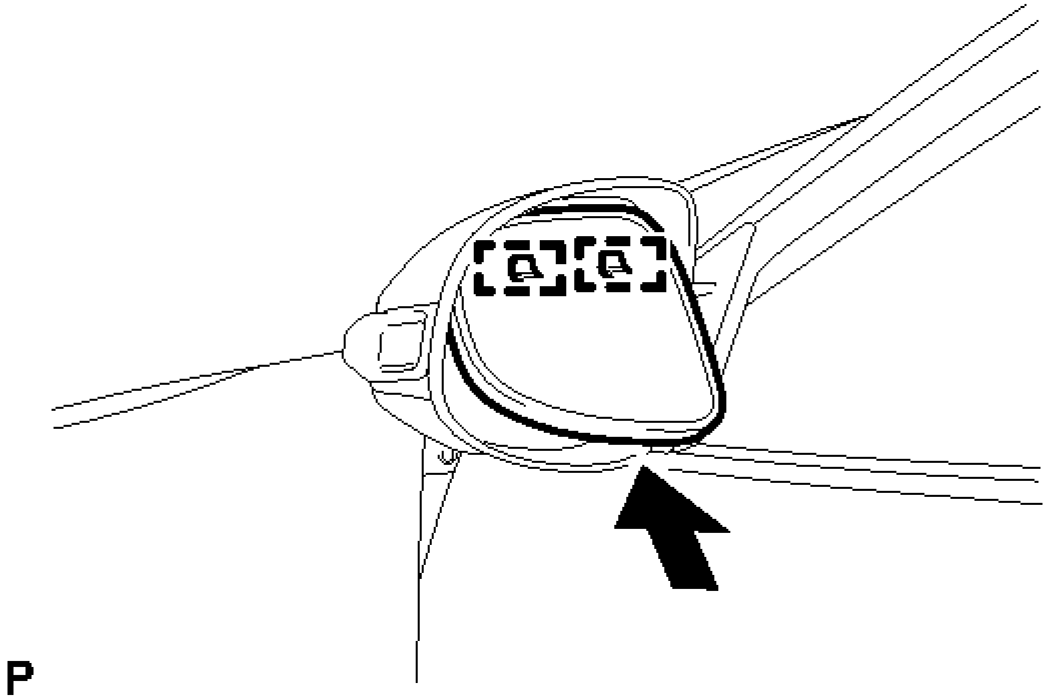

Fig. 32: Identifying Outer Rear View Mirror Guides (W/Retract Mirror)
Courtesy of TOYOTA MOTOR SALES, U.S.A., INC.

    c. Engage the 2 claws on the lower part of the outer mirror to the outer rear view mirror.

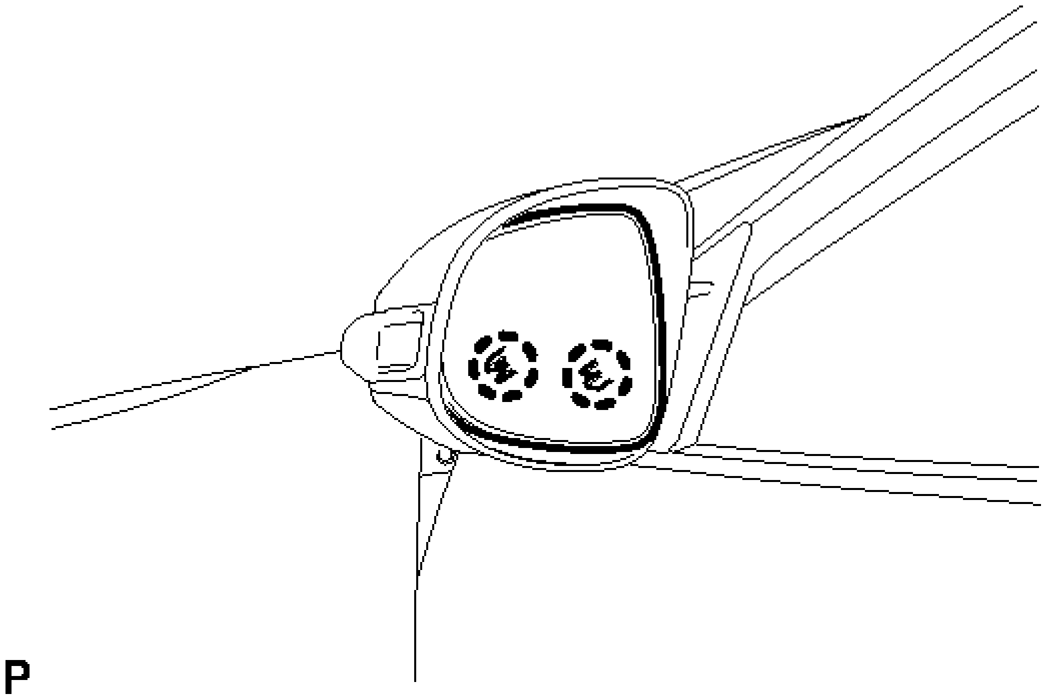

Fig. 33: Identifying Outer Rear View Mirror Claws (W/Retract Mirror)
Courtesy of TOYOTA MOTOR SALES, U.S.A., INC.

OUTER REAR VIEW MIRROR COVER

COMPONENTS

ILLUSTRATION

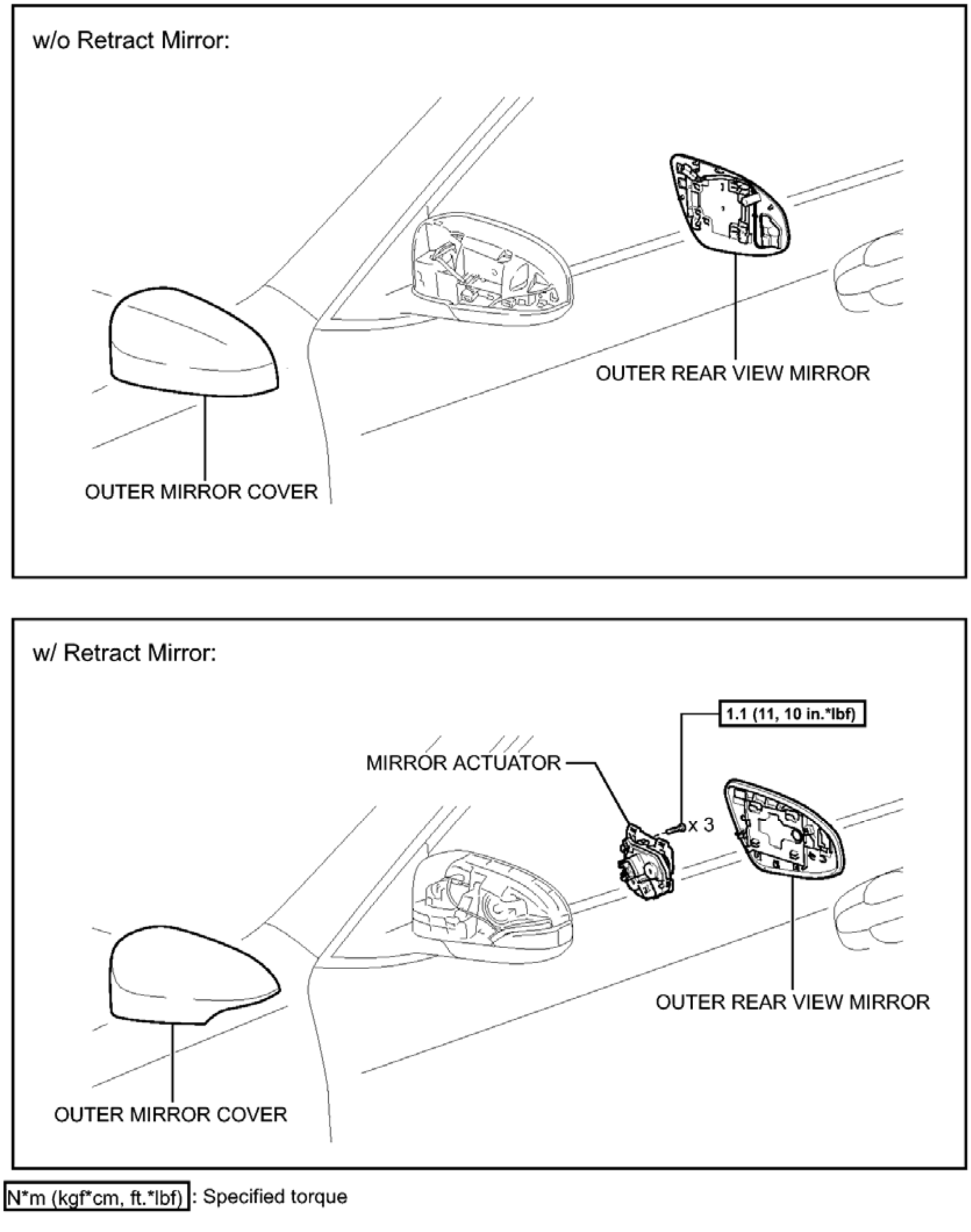
w/o Retract Mirror:
OUTER REAR VIEW MIRROR
OUTER MIRROR COVER
w/ Retract Mirror:
1.1 (11, 10 in.*lbf)
MIRROR ACTUATOR
x 3
OUTER REAR VIEW MIRROR
OUTER MIRROR COVER
N*m (kgf*cm, ft.*lbf) : Specified torque

P

Fig. 34: Identifying Outer Rear View Mirror Cover Replacement Components With Torque Specifications
Courtesy of TOYOTA MOTOR SALES, U.S.A., INC.

REMOVAL

REMOVAL

HINT:

- Use the same procedure for both the RH and LH sides.
- The procedure described below is for the LH side.

1. **REMOVE OUTER REAR VIEW MIRROR (w/o Retract Mirror)** See step 1
2. **REMOVE OUTER REAR VIEW MIRROR (w/ Retract Mirror)** See step 2
3. **REMOVE OUTER MIRROR COVER (w/o Retract Mirror)**
    a. Disengage the 8 claws and remove the outer mirror cover.

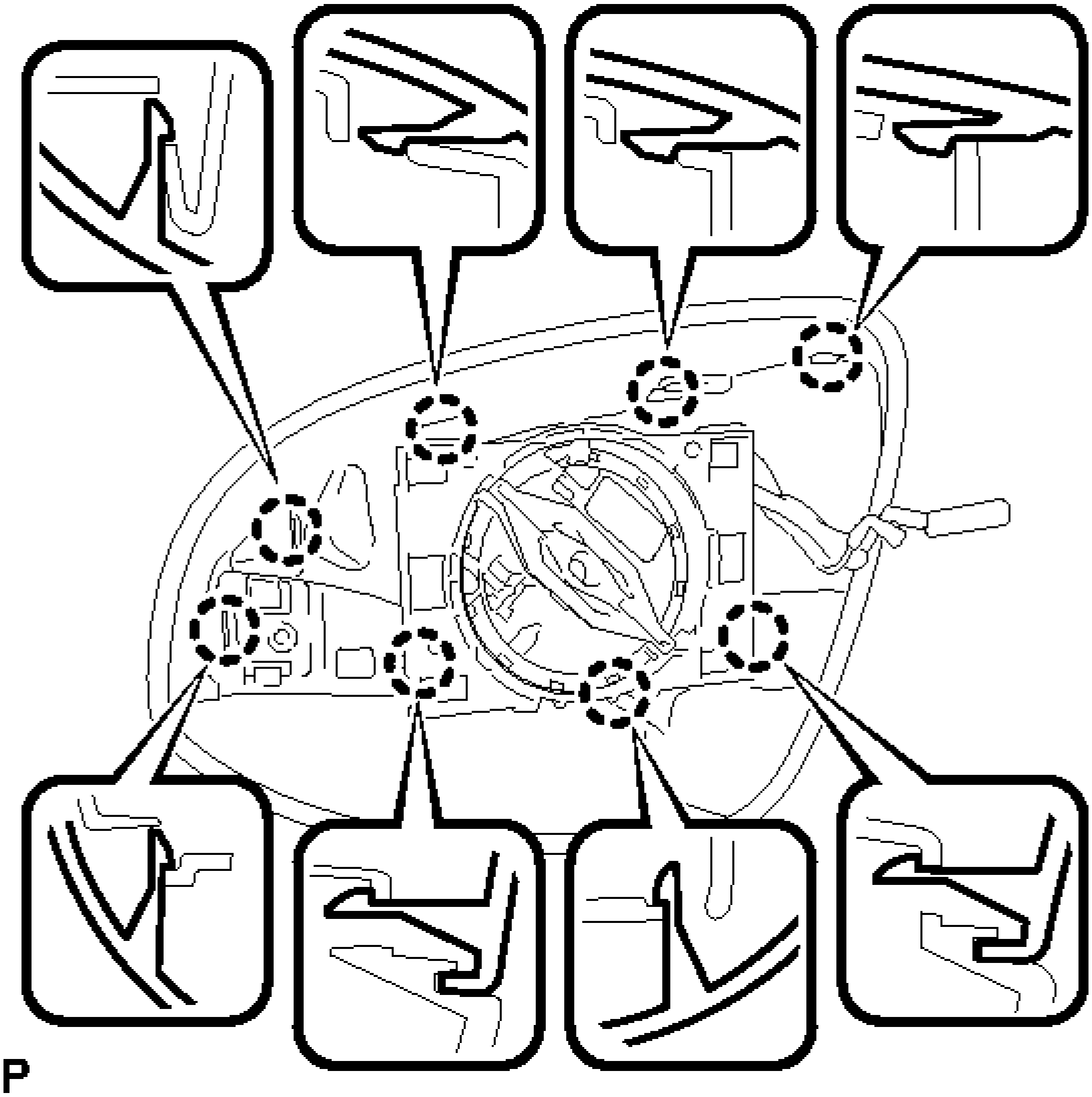

Fig. 35: Identifying Outer Mirror Cover Claws (W/O Retract Mirror)
Courtesy of TOYOTA MOTOR SALES, U.S.A., INC.

4. **REMOVE OUTER MIRROR COVER (w/ Retract Mirror)**
    a. Remove the 3 screws.

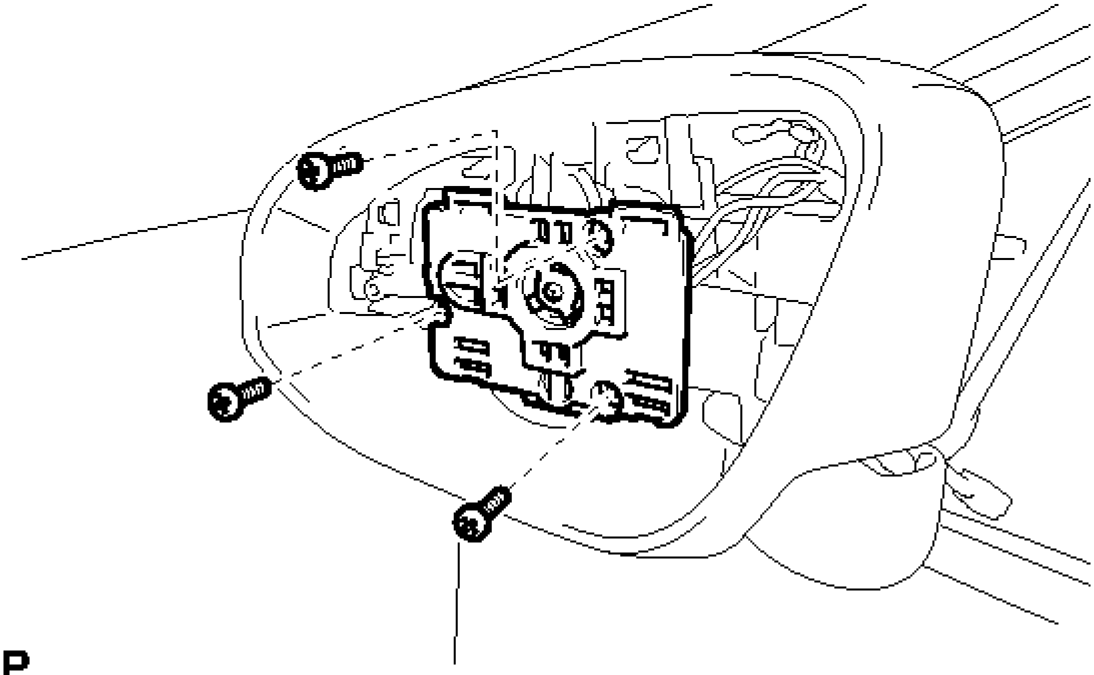

Fig. 36: Identifying Outer Mirror Cover (W/Retract Mirror)
Courtesy of TOYOTA MOTOR SALES, U.S.A., INC.

b. Disengage the clamp.

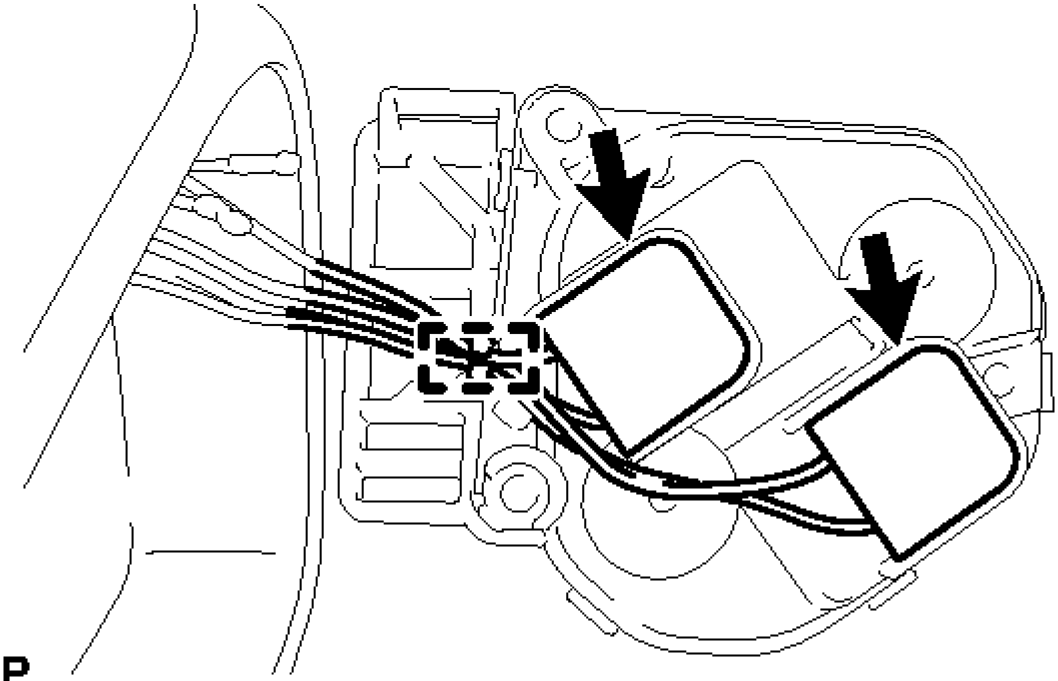

Fig. 37: Identifying Outer Mirror Cover Clamp (W/Retract Mirror)
Courtesy of TOYOTA MOTOR SALES, U.S.A., INC.

c. Disconnect the 2 connectors and remove the mirror actuator.
d. Disengage the 7 claws and remove the outer mirror cover.

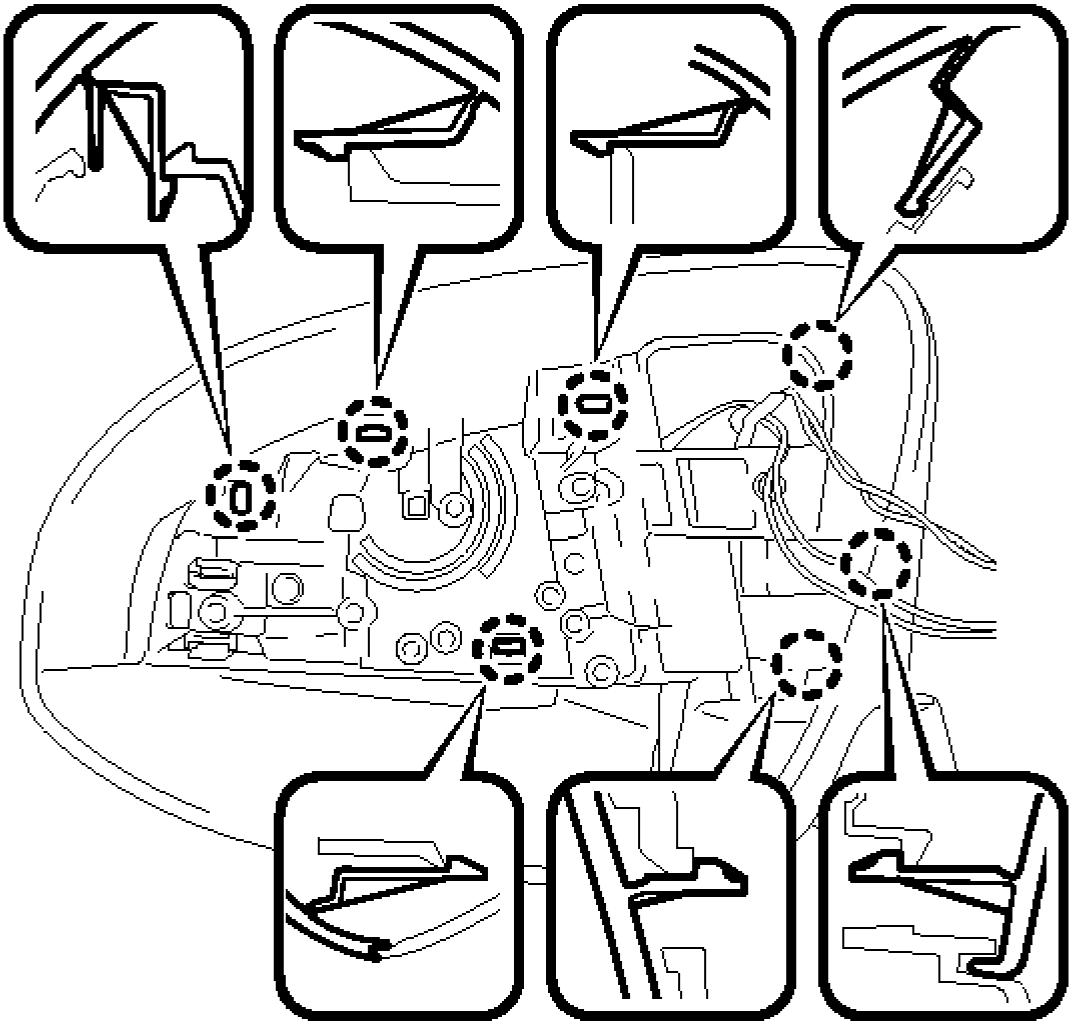

P

Fig. 38: Identifying Outer Mirror Cover Claws And Connectors (W/Retract Mirror)
Courtesy of TOYOTA MOTOR SALES, U.S.A., INC.

INSTALLATION

INSTALLATION

HINT:

- Use the same procedure for both the RH and LH sides.
- The procedure described below is for the LH side.

1. **INSTALL OUTER MIRROR COVER (w/o Retract Mirror)**

    a. Engage the 8 claws to install the outer mirror cover.

2. **INSTALL OUTER MIRROR COVER (w/ Retract Mirror)**
    a. Engage the 7 claws to install the outer mirror cover.
    b. Connect the 2 connectors.
    c. Engage the clamp.
    d. Install the mirror actuator with the 3 screws.

       Torque: 1.1 N*m (11 kgf*cm, 10 in.*lbf)

3. **INSTALL OUTER REAR VIEW MIRROR (w/o Retract Mirror)** See step 1
4. **INSTALL OUTER REAR VIEW MIRROR (w/ Retract Mirror)** See step 2

OUTER MIRROR SWITCH

COMPONENTS

ILLUSTRATION

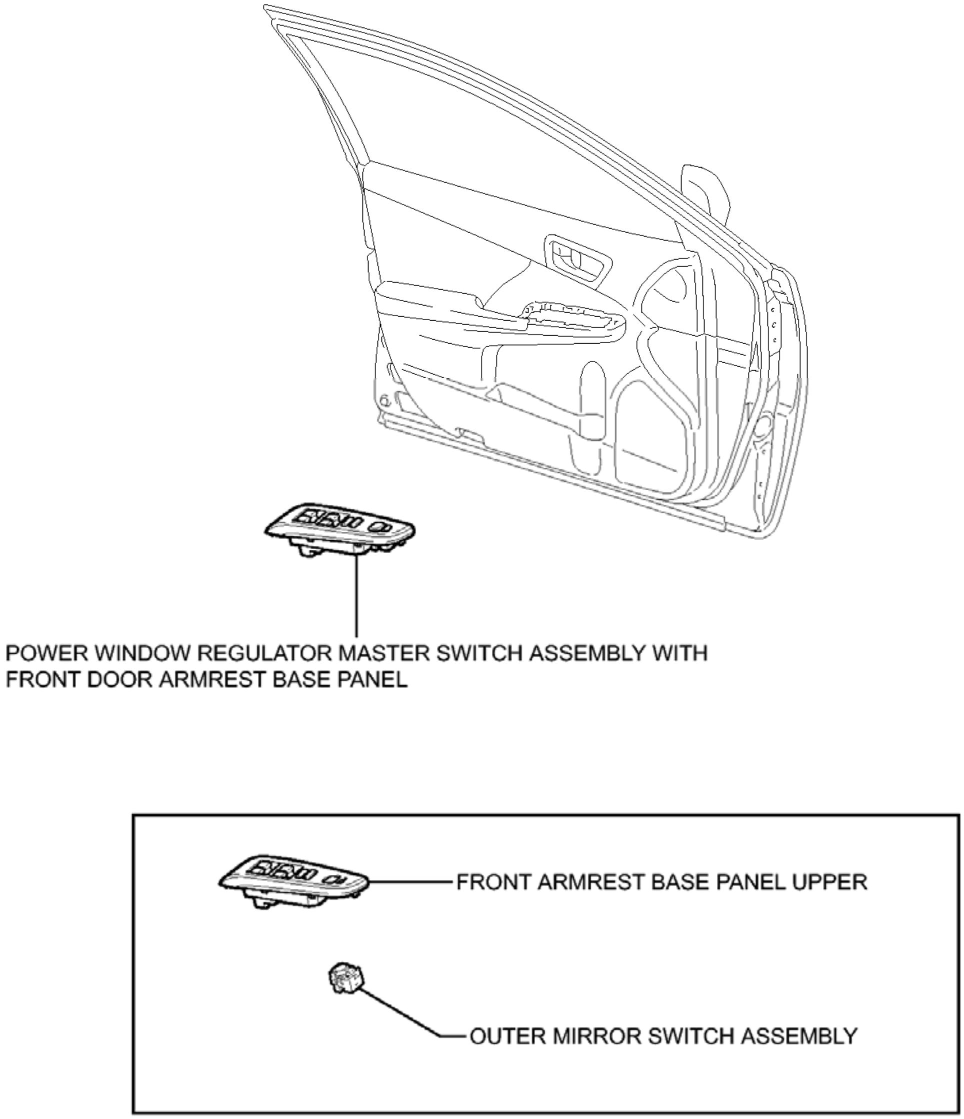
POWER WINDOW REGULATOR MASTER SWITCH ASSEMBLY WITH
FRONT DOOR ARMREST BASE PANEL
FRONT ARMREST BASE PANEL UPPER
OUTER MIRROR SWITCH ASSEMBLY

P

Fig. 39: Identifying Outer Mirror Switch Replacement Components
Courtesy of TOYOTA MOTOR SALES, U.S.A., INC.

REMOVAL

REMOVAL

1. **REMOVE POWER WINDOW REGULATOR MASTER SWITCH ASSEMBLY WITH FRONT DOOR ARMREST BASE PANEL** . Refer to **DISASSEMBLY - Step 5**
2. **REMOVE OUTER MIRROR SWITCH ASSEMBLY**
   a. Disengage the 4 claws and remove the outer mirror switch assembly.

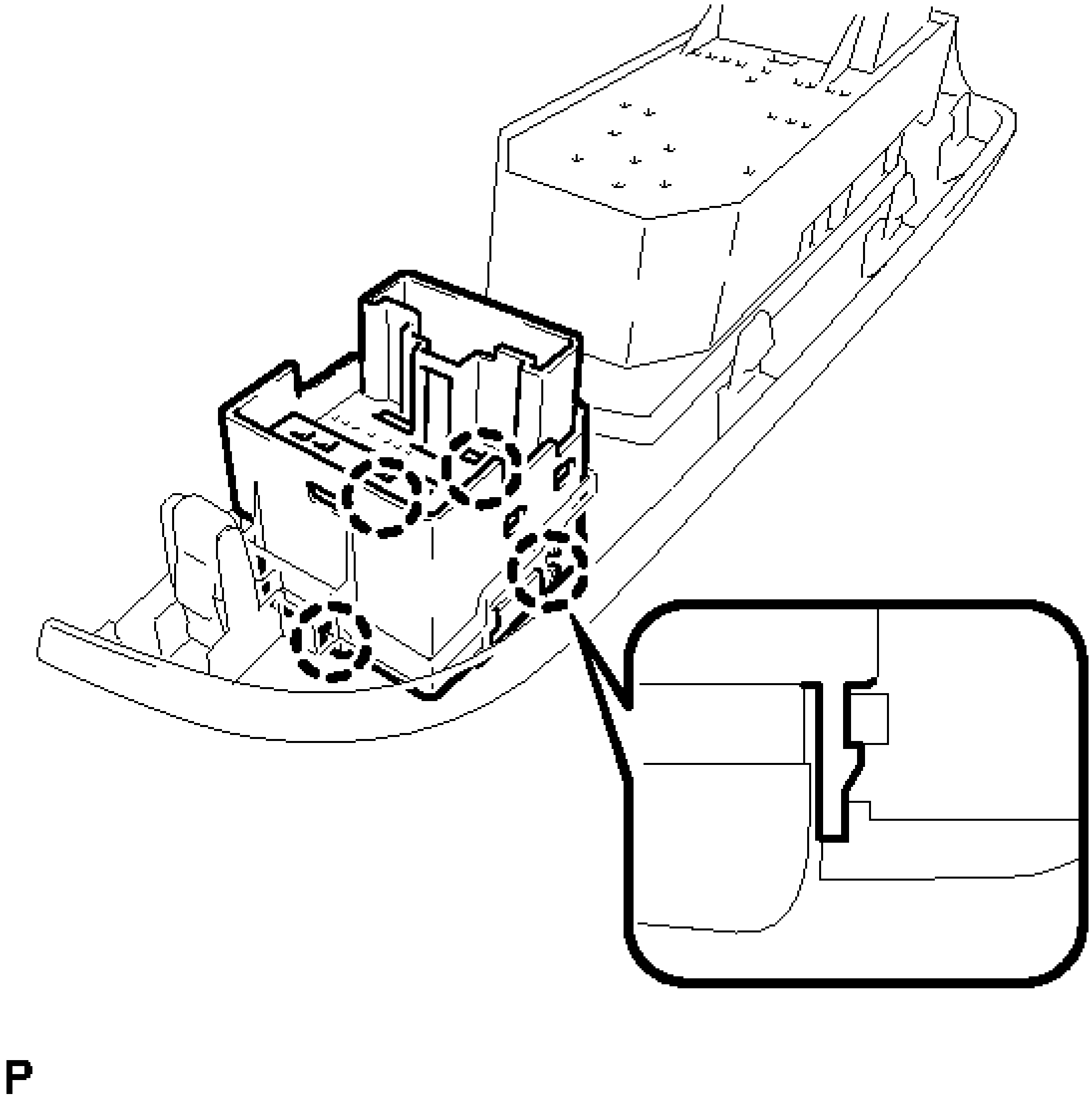

Fig. 40: Identifying Outer Mirror Switch Assembly Claws
Courtesy of TOYOTA MOTOR SALES, U.S.A., INC.

INSPECTION

INSPECTION

1. **INSPECT OUTER MIRROR SWITCH ASSEMBLY**
    a. w/o Retract mirror
        1. Check the mirror select switch and mirror surface adjust switch.
        2. Turn the mirror select switch to the L position.

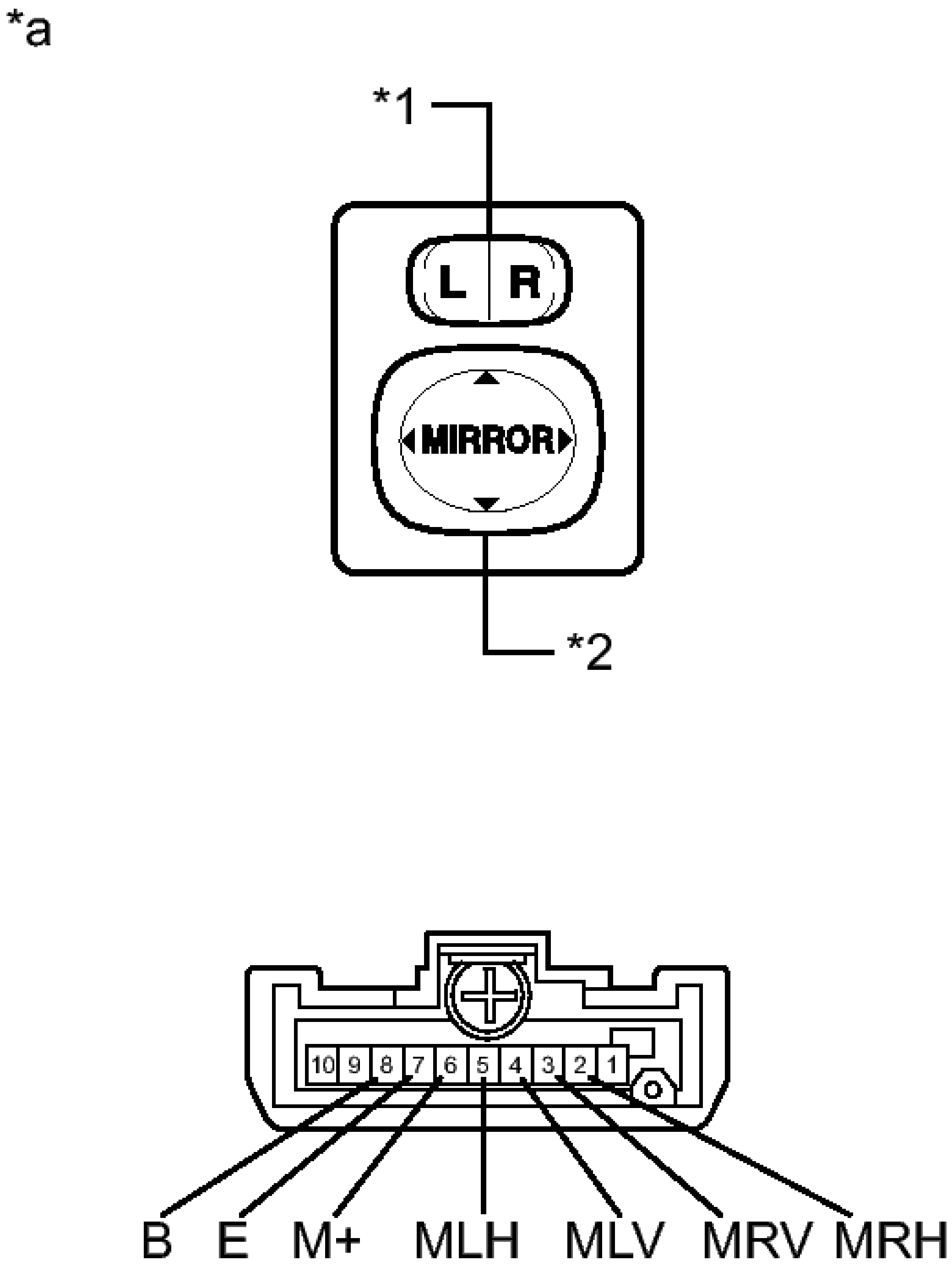
*a
*1
L
R
MIRROR
*2
10
9
8
7
6
5
4
3
2
1
B
E
M+
MLH
MLV
MRV
MRH

Fig. 41: Identifying Mirror Select Switch And Mirror Surface Adjust Switch (W/O Retract Mirror)
Courtesy of TOYOTA MOTOR SALES, U.S.A., INC.

3. Measure the resistance according to the value(s) in the table below.

TEXT IN ILLUSTRATION

*1	Mirror select switch
*2	Mirror surface adjust switch
*a	Component without harness connected (Outer Mirror Switch Assembly)

Standard Resistance (for left side)

Tester Connection	Switch Condition	Specified Condition
4 (MLV) - 8 (B) 6 (M+) - 7 (E)	UP	Below 1 ohms
	OFF	10 kohms or higher
4 (MLV) - 7 (E) 6 (M+) - 8 (B)	DOWN	Below 1 ohms
	OFF	10 kohms or higher
5 (MLH) - 8 (B) 6 (M+) - 7 (E)	LEFT	Below 1 ohms
	OFF	10 kohms or higher
5 (MLH) - 7 (E) 6 (M+) - 8 (B)	RIGHT	Below 1 ohms
	OFF	10 kohms or higher

4. Turn the mirror select switch to the R position.
5. Measure the resistance according to the value(s) in the table below.

Standard Resistance (for right side)

Tester Connection	Switch Condition	Specified Condition

3 (MRV) - 8 (B) 6 (M+) - 7 (E)	UP	Below 1 ohms
	OFF	10 kohms or higher
3 (MRV) - 7 (E) 6 (M+) - 8 (B)	DOWN	Below 1 ohms
	OFF	10 kohms or higher
2 (MRH) - 8 (B) 6 (M+) - 7 (E)	LEFT	Below 1 ohms
	OFF	10 kohms or higher
2 (MRH) - 7 (E) 6 (M+) - 8 (B)	RIGHT	Below 1 ohms
	OFF	10 kohms or higher

If the result is not as specified, replace the outer mirror switch assembly.

b. w/ Retract mirror
    1. Check the mirror select switch and mirror surface adjust switch.
    2. Turn the mirror select switch to the L position.

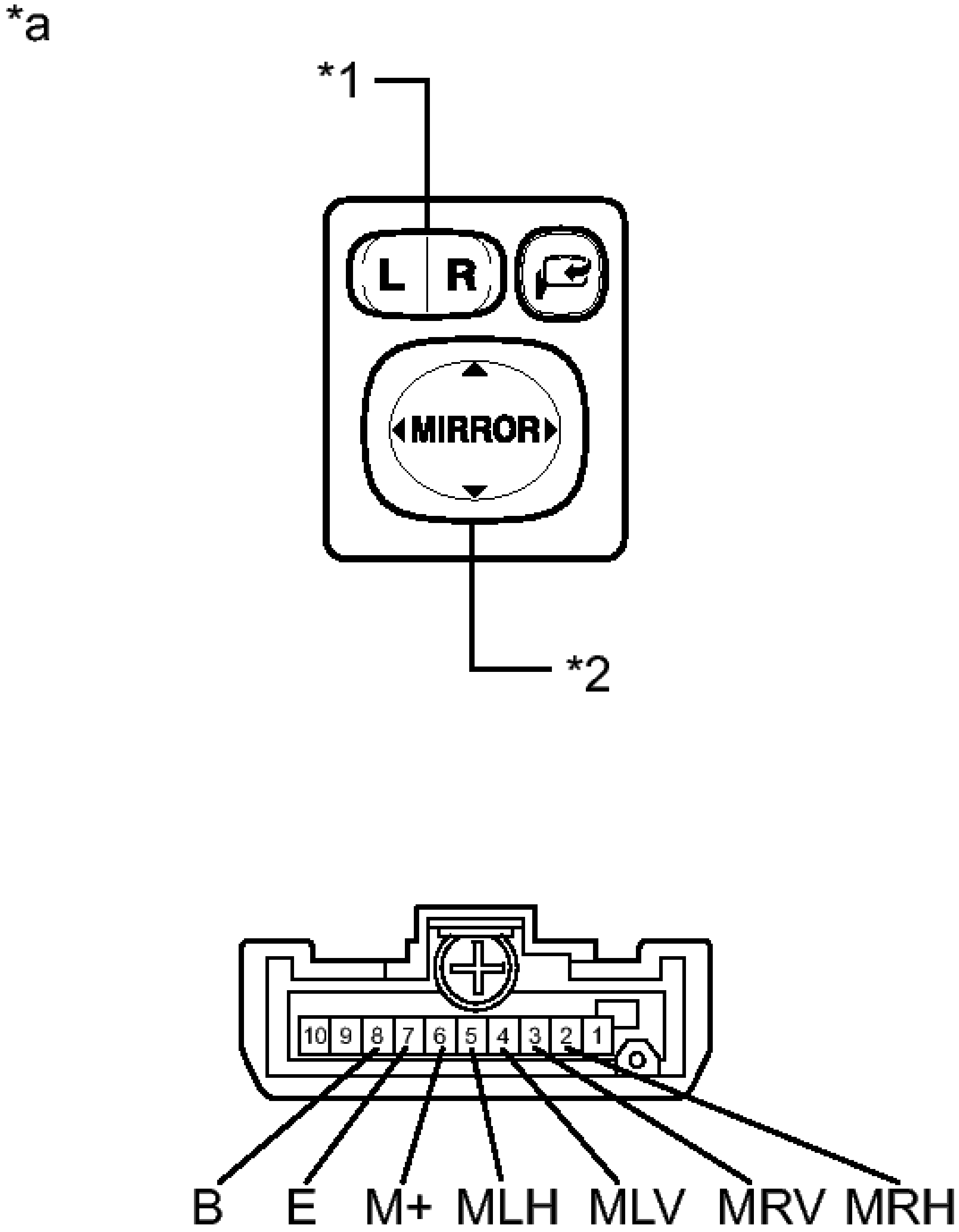
*a
*1
L
R
MIRROR
*2
10
9
8
7
6
5
4
3
2
1
B
E
M+
MLH
MLV
MRV
MRH

Fig. 42: Identifying Mirror Select Switch And Mirror Surface Adjust Switch (W/Retract Mirror)
Courtesy of TOYOTA MOTOR SALES, U.S.A., INC.

3. Measure the resistance according to the value(s) in the table below.

TEXT IN ILLUSTRATION

*1	Mirror select switch
*2	Mirror surface adjust switch
*a	Component without harness connected (Outer Mirror Switch Assembly)

Standard Resistance (for left side)

Tester Connection	Switch Condition	Specified Condition
4 (MLV) - 8 (B) 6 (M+) - 7 (E)	UP	Below 1 ohms
	OFF	10 kohms or higher
4 (MLV) - 7 (E) 6 (M+) - 8 (B)	DOWN	Below 1 ohms
	OFF	10 kohms or higher
5 (MLH) - 8 (B) 6 (M+) - 7 (E)	LEFT	Below 1 ohms
	OFF	10 kohms or higher
5 (MLH) - 7 (E) 6 (M+) - 8 (B)	RIGHT	Below 1 ohms
	OFF	10 kohms or higher

4. Turn the mirror select switch to the R position.
5. Measure the resistance according to the value(s) in the table below.

Standard Resistance (for right side)

Tester Connection	Switch Condition	Specified Condition

3 (MRV) - 8 (B) 6 (M+) - 7 (E)	UP	Below 1 ohms
	OFF	10 kohms or higher
3 (MRV) - 7 (E) 6 (M+) - 8 (B)	DOWN	Below 1 ohms
	OFF	10 kohms or higher
2 (MRH) - 8 (B) 6 (M+) - 7 (E)	LEFT	Below 1 ohms
	OFF	10 kohms or higher
2 (MRH) - 7 (E) 6 (M+) - 8 (B)	RIGHT	Below 1 ohms
	OFF	10 kohms or higher

If the result is not as specified, replace the outer mirror switch assembly.

c. Check the mirror retract switch.
   1. Measure the resistance according to the value(s) in the table below.

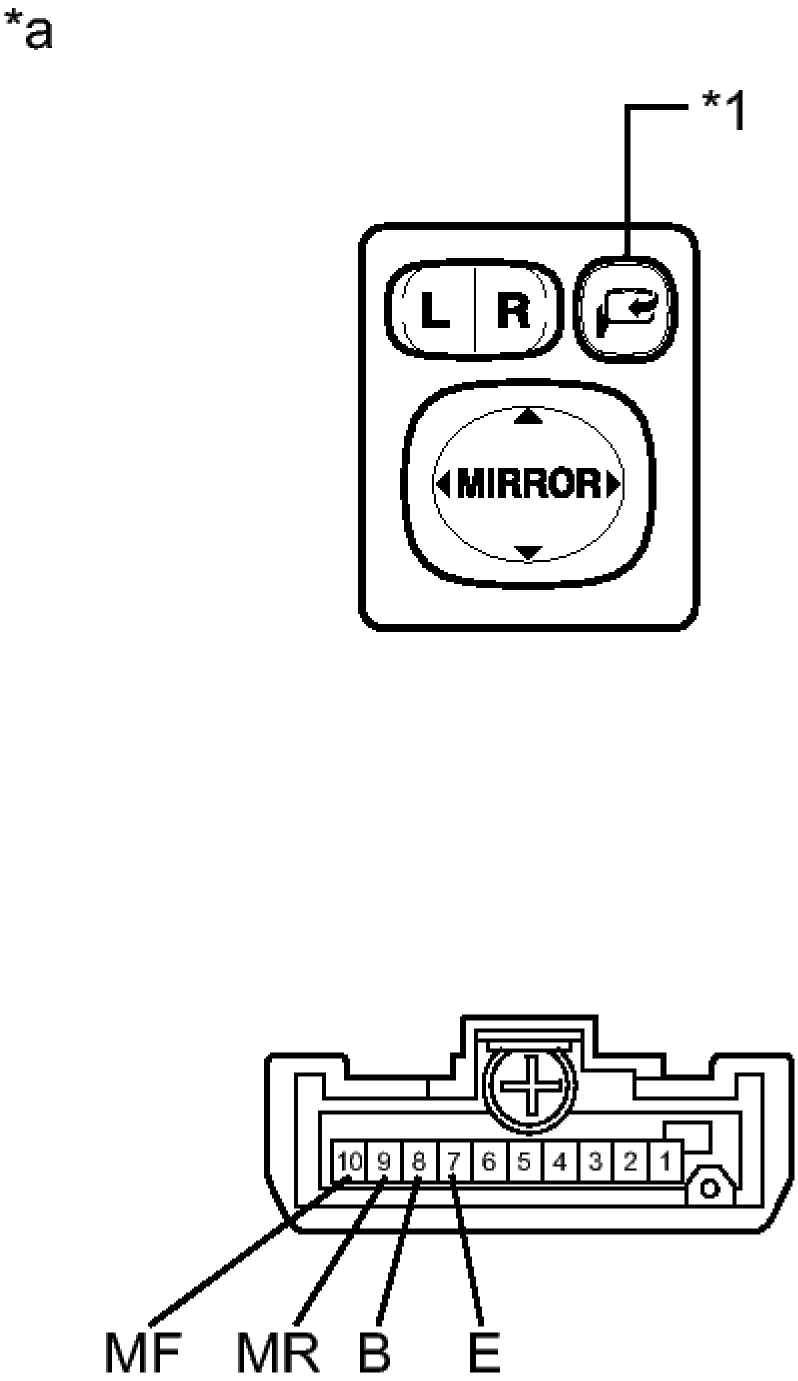
*a
*1
L
R
MIRROR
10
9
8
7
6
5
4
3
2
1
MF
MR
B
E

Fig. 43: Identifying Retract Switch Connector Terminal Identification
Courtesy of TOYOTA MOTOR SALES, U.S.A., INC.

TEXT IN ILLUSTRATION

	Mirror

*1	retract switch
*a	Component without harness connected (Outer Mirror Switch Assembly)

Standard Resistance

Tester Connection	Switch Condition	Specified Condition
10 (MF) - 7 (E)	Mirror retract switch retract position	Below 1 ohms
9 (MR) - 8 (B)		Below 1 ohms
10 (MF) - 8 (B)	Mirror retract switch return position	Below 1 ohms
9 (MR) - 7 (E)		Below 1 ohms

If the result is not as specified, replace the outer mirror switch assembly.

INSTALLATION

INSTALLATION

1. **INSTALL OUTER MIRROR SWITCH ASSEMBLY**
   a. Engage the 4 claws and install the outer mirror switch assembly.
2. **INSTALL POWER WINDOW REGULATOR MASTER SWITCH ASSEMBLY WITH FRONT DOOR ARMREST BASE PANEL** . Refer to **REASSEMBLY - Step 43**

INNER REAR VIEW MIRROR

PRECAUTION

PRECAUTION

1. **PRECAUTION FOR DISCONNECTING CABLE FROM NEGATIVE AUXILIARY BATTERY TERMINAL**

NOTE: **When disconnecting the cable from the negative (-) auxiliary battery terminal, initialize the following system after the cable is reconnected.**

System Name	See Procedure
Parking Assist Monitor System	Refer to INITIALIZATION

COMPONENTS

ILLUSTRATION

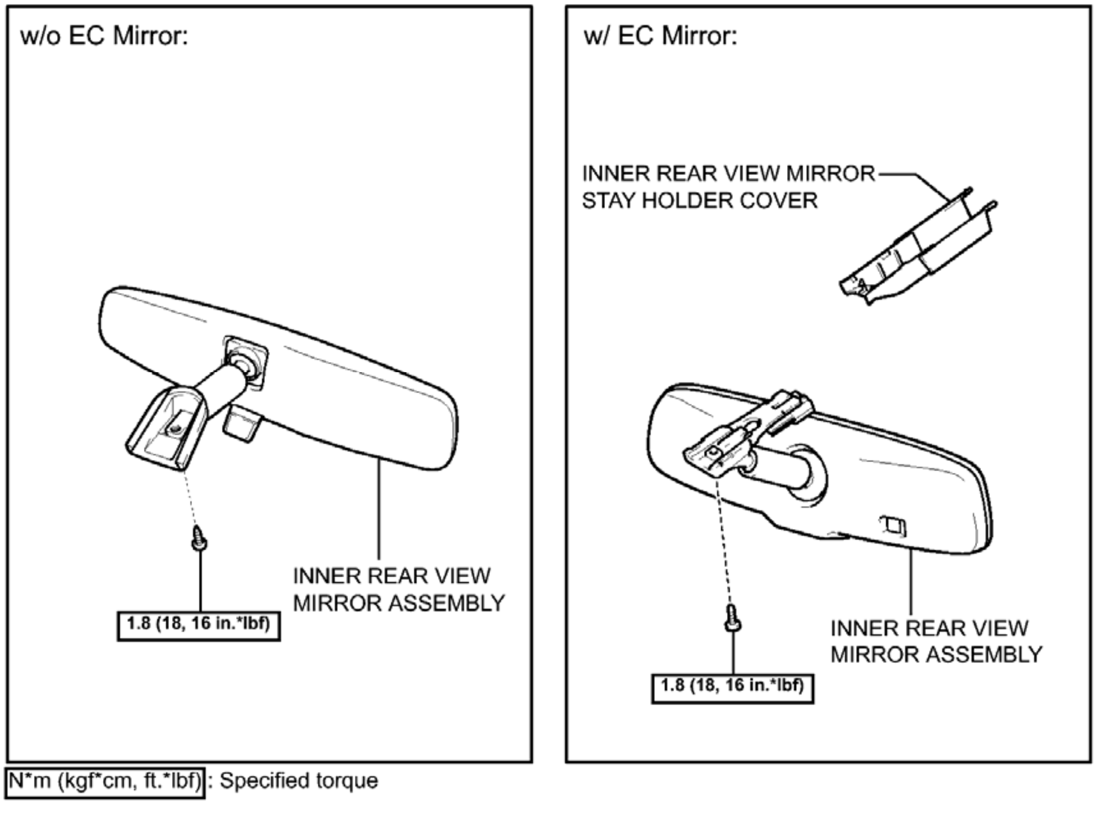
w/o EC Mirror:
INNER REAR VIEW
MIRROR ASSEMBLY
1.8 (18, 16 in.*lbf)
w/ EC Mirror:
INNER REAR VIEW MIRROR
STAY HOLDER COVER
INNER REAR VIEW
MIRROR ASSEMBLY
1.8 (18, 16 in.*lbf)
N*m (kgf*cm, ft.*lbf) : Specified torque
P

Fig. 1: Identifying Inner Rear View Mirror Replacement Components With Torque Specifications
Courtesy of TOYOTA MOTOR SALES, U.S.A., INC.

SYSTEM DIAGRAM

SYSTEM DIAGRAM

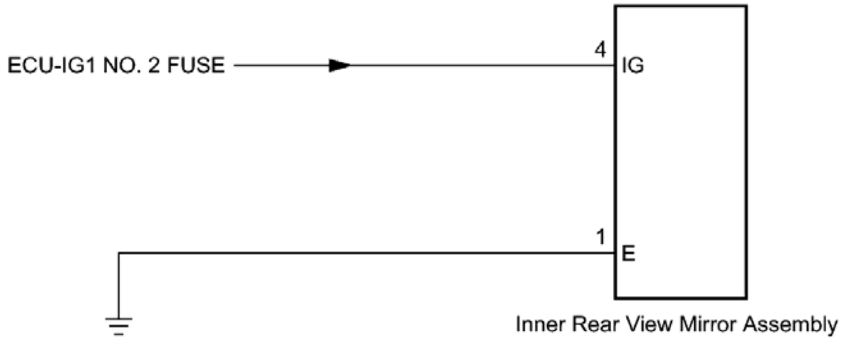
ECU-IG1 NO. 2 FUSE
4
IG
1
E
Inner Rear View Mirror Assembly

Fig. 2: Identifying Inner Rear View Mirror System Diagram
Courtesy of TOYOTA MOTOR SALES, U.S.A., INC.

CALIBRATION

CALIBRATION

1. **SELECT COMPASS DISPLAY MODE**
   a. The AUTO switch allows selection of the compass display.

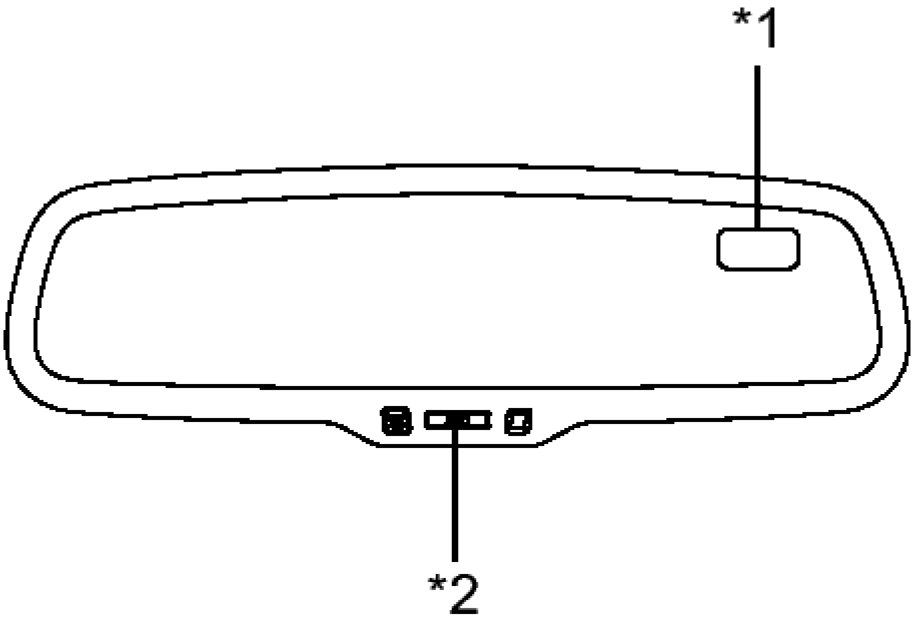

Fig. 3: Identifying Compass Display And AUTO Switch
Courtesy of TOYOTA MOTOR SALES, U.S.A., INC.

TEXT IN ILLUSTRATION

*1	Compass Display
*2	AUTO Switch

2. **SET ZONE**
   a. The compass indicates the direction that the vehicle is heading by detecting the direction and strength of the earth's magnetic field (magnetic north). However, there is a difference between magnetic north and actual north depending on the location of the vehicle. To compensate for this difference, it is necessary to set the zone in which the vehicle will be used (refer to Compass Zone Map). The zone setting can be changed using the AUTO switch of the inner mirror.
3. **PERFORM CALIBRATION**
   a. Because each vehicle has its own magnetic field, calibration should be performed. The calibration function is used to compensate for the residual magnetism of the vehicle.
4. **WHEN COMPASS IS MAGNETIZED**

a. The compass or vehicle may become magnetized while the vehicle is being shipped. As a result, it is necessary to perform calibration for the compass before the vehicle is delivered to the customer. If calibration cannot be performed successfully (calibration cannot be completed in spite of driving around several times), it may be caused by excessive magnetization of the vehicle. Demagnetize the vehicle using a demagnetizer and perform calibration again.

5. **SET COMPASS**

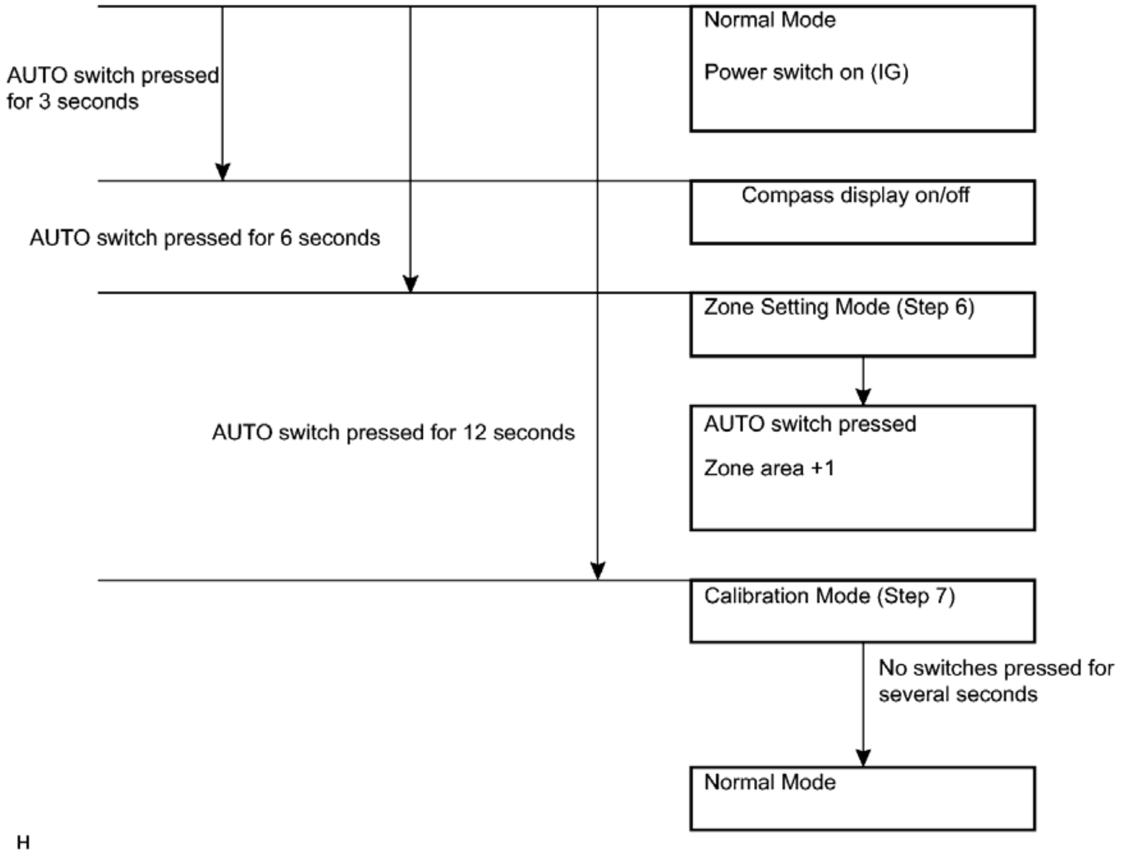
Normal Mode
Power switch on (IG)
AUTO switch pressed for 3 seconds
Compass display on/off
AUTO switch pressed for 6 seconds
Zone Setting Mode (Step 6)
AUTO switch pressed for 12 seconds
AUTO switch pressed
Zone area +1
Calibration Mode (Step 7)
No switches pressed for several seconds
Normal Mode
H

Fig. 4: Compass Calibration Flow Chart
Courtesy of TOYOTA MOTOR SALES, U.S.A., INC.

6. **ZONE SETTING MODE**

a. When the compass is in normal mode, pressing the AUTO switch for 6 seconds will activate zone setting mode. A number from 1 to 15 will be displayed on the compass display.

   HINT:

   If the initial zone setting has not been changed, 8 will be displayed.

b. The displayed number increases by 1 every time the AUTO switch is pressed. Referring to the compass zone map, check the number for the area where the vehicle will be used and set the zone number.

    c. Do not touch the AUTO switch for several seconds after setting the zone. Check that the compass display shows a direction (N, NE, E, SE, S, SW, W or NW).

7. **CALIBRATION MODE**
    a. When the compass is in normal mode, pressing the AUTO switch for 12 seconds will activate calibration mode.
    b. Drive the vehicle in a circle at a speed of 8 km/h (5 mph) or less.

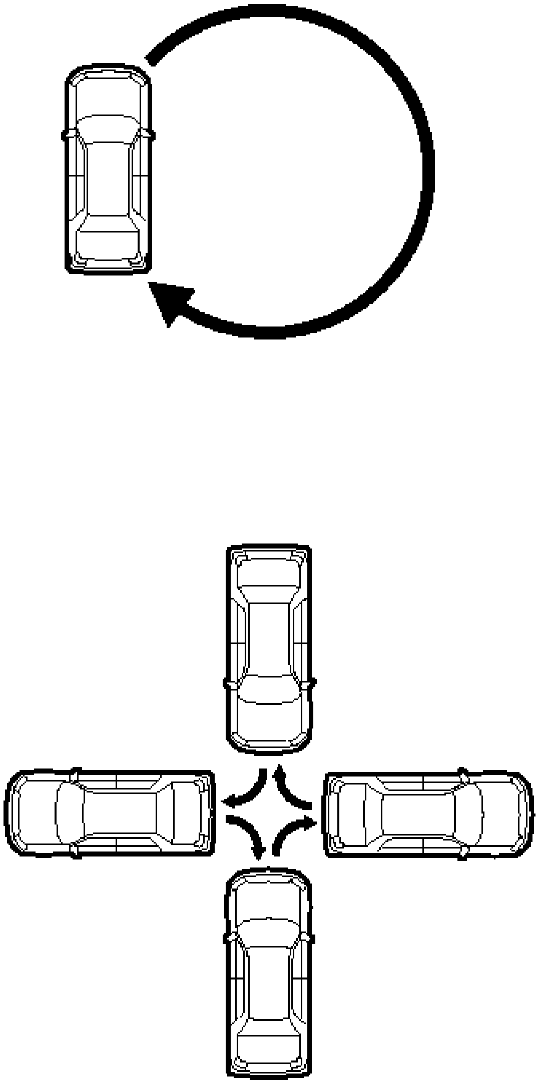

Fig. 5: Identifying Calibration Mode
Courtesy of TOYOTA MOTOR SALES, U.S.A., INC.

c. After driving around in a circle 1 to 3 times, the direction (N, NE, E, SE, S, SW, W or NW) will be displayed on the compass display. This indicates that calibration has finished.

HINT:

After calibration is performed, it is not necessary to repeat the calibration procedure unless the magnetic field of the vehicle changes drastically. If the magnetic field changes drastically, the compass display will indicate "C".

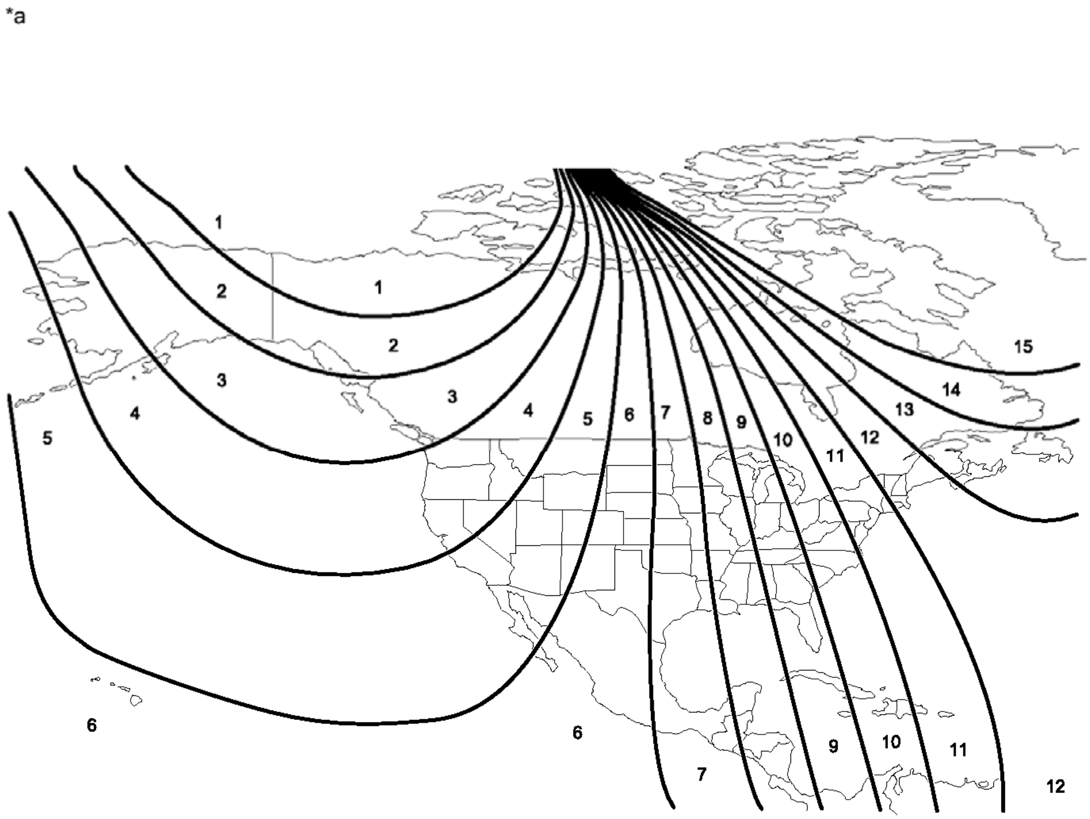
*a
1
1
2
2
3
3
4
4
5
5
6
7
8
9
10
11
12
13
14
15
6
6
7
9
10
11
12

P

Fig. 6: Identifying Compass Zone Map (1 Of 2)
Courtesy of TOYOTA MOTOR SALES, U.S.A., INC.

TEXT IN ILLUSTRATION

*a	Compass Zone Map	-	-

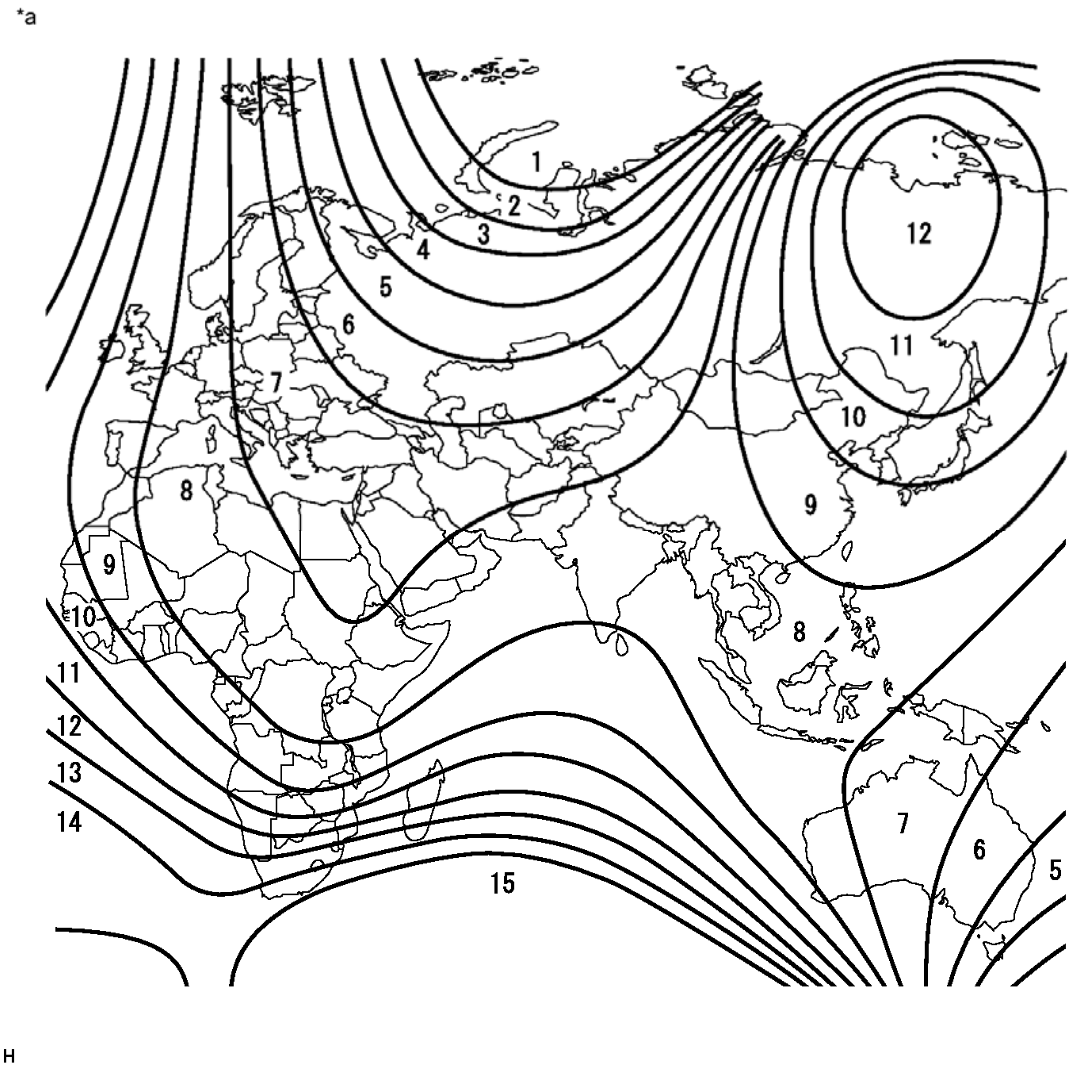

Fig. 7: Identifying Compass Zone Map (2 Of 2)
Courtesy of TOYOTA MOTOR SALES, U.S.A., INC.

TEXT IN ILLUSTRATION

*a	Compass Zone Map	-	-

PROBLEM SYMPTOMS TABLE

PROBLEM SYMPTOMS TABLE

HINT:

- Use the table below to help determine the cause of problem symptoms. If multiple suspected areas are listed, the potential causes of the symptoms are listed in order of probability in the "Suspected Area" column of the table. Check each symptom by checking the suspected areas in the order they are listed.

Replace parts as necessary.

AUTOMATIC GLARE-RESISTANT EC MIRROR

Symptom	Suspected Area	See
Auto glare-resistant EC mirror does not operate	ECU-IG1 No. 2 fuse	-
	Inner rear view mirror	Refer to **INSPECTION**
	Wire harness or connector	-

REMOVAL

REMOVAL

1. **REMOVE INNER REAR VIEW MIRROR ASSEMBLY (w/o EC Mirror)**
    a. Using a T20 "TORX" socket wrench, remove the screw.

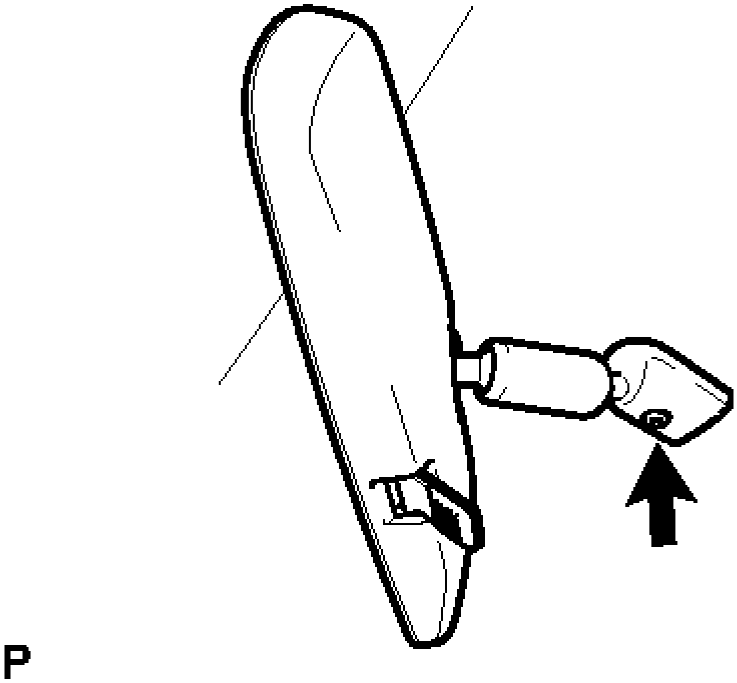

Fig. 8: Identifying Inner Rear View Mirror Assembly Screw (W/O EC Mirror)
Courtesy of TOYOTA MOTOR SALES, U.S.A., INC.

b. Slide the inner rear view mirror assembly in the direction indicated by the arrow shown in the illustration to remove it.

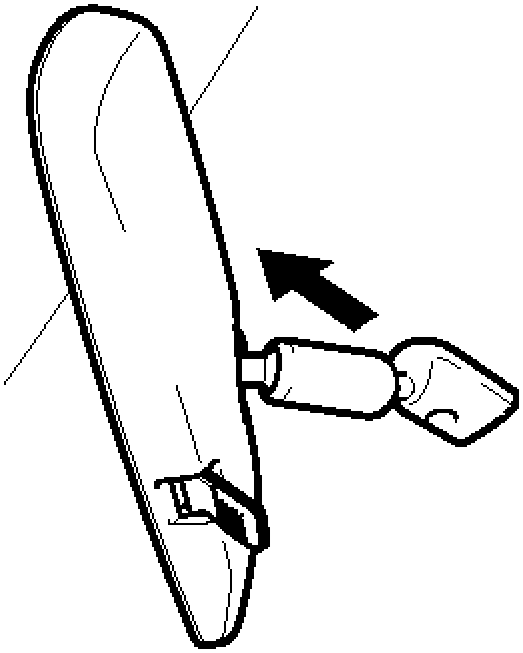

Fig. 9: Sliding Inner Rear View Mirror Assembly (W/O EC Mirror)
Courtesy of TOYOTA MOTOR SALES, U.S.A., INC.

2. **REMOVE INNER REAR VIEW MIRROR STAY HOLDER COVER (w/ EC Mirror)**
   a. Disengage the 2 claws and slide the inner rear view mirror stay holder cover in the direction indicated by the arrow shown in the illustration.

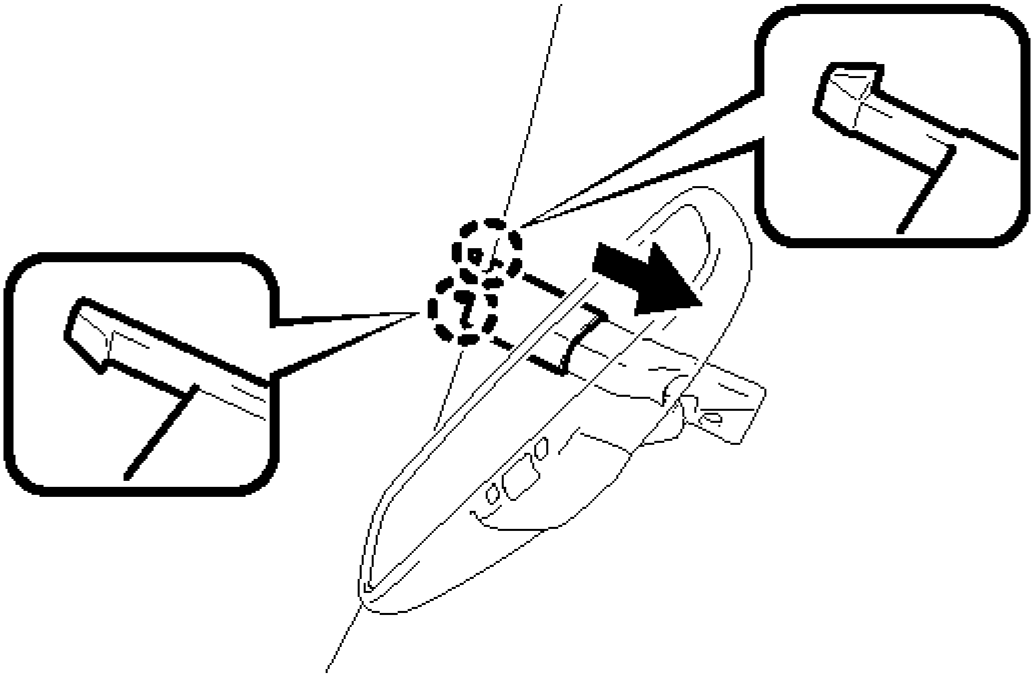

Fig. 10: Identifying Inner Rear View Mirror Stay Holder Cover Claws (W/EC Mirror)
Courtesy of TOYOTA MOTOR SALES, U.S.A., INC.

b. Disengage the 6 claws and remove the inner rear view mirror stay holder cover.

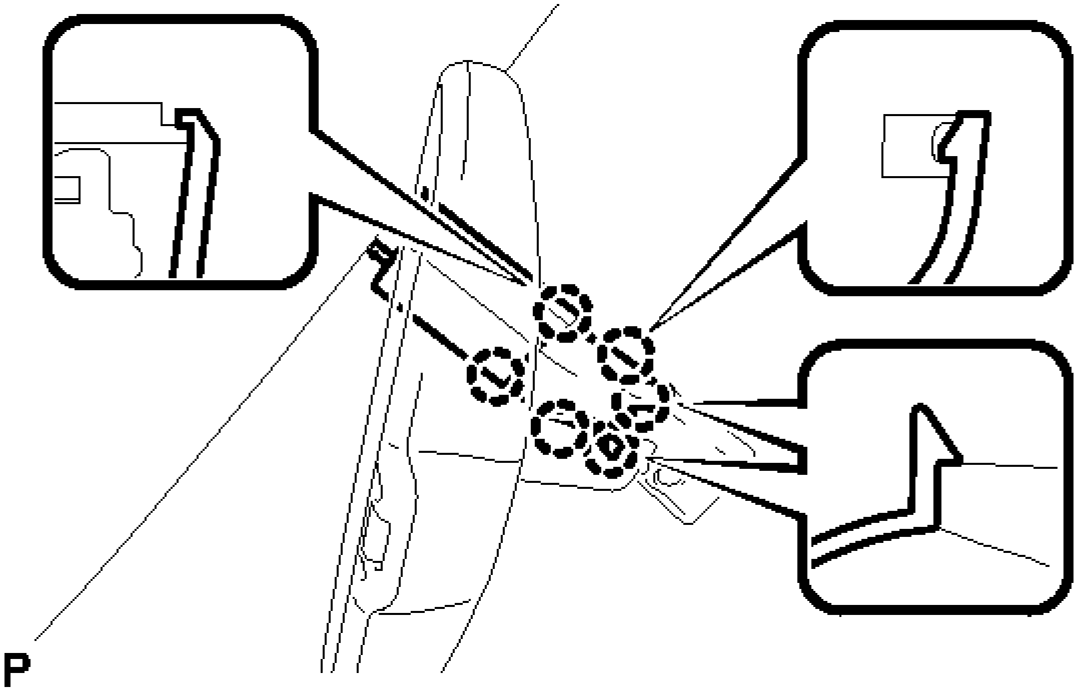

Fig. 11: Identifying Inner Rear View Mirror Stay Holder Cover Claws (W/EC Mirror)
Courtesy of TOYOTA MOTOR SALES, U.S.A., INC.

3. **REMOVE INNER REAR VIEW MIRROR ASSEMBLY (w/ EC Mirror)**
   a. Disconnect the connector.

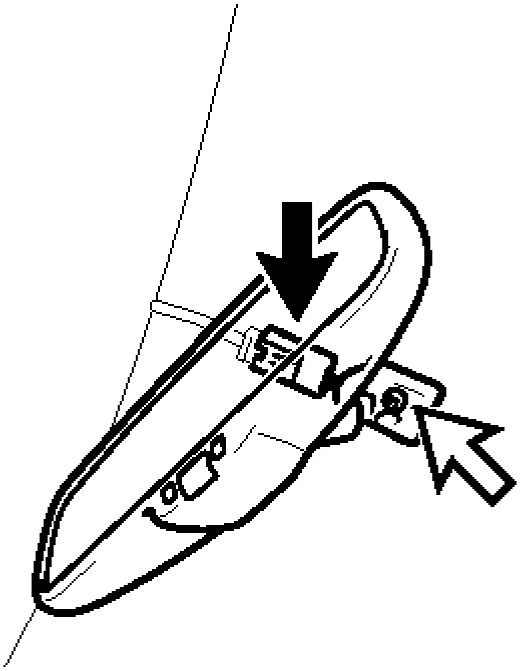

P

Fig. 12: Identifying Inner Rear View Mirror Assembly Connector (W/EC Mirror)
Courtesy of TOYOTA MOTOR SALES, U.S.A., INC.

b. Using a T20 "TORX" socket wrench, remove the screw and inner rear view mirror assembly.

INSPECTION

INSPECTION

1. **INSPECT INNER REAR VIEW MIRROR ASSEMBLY**
   a. Inspect the operation of the electrochromic inner mirror.

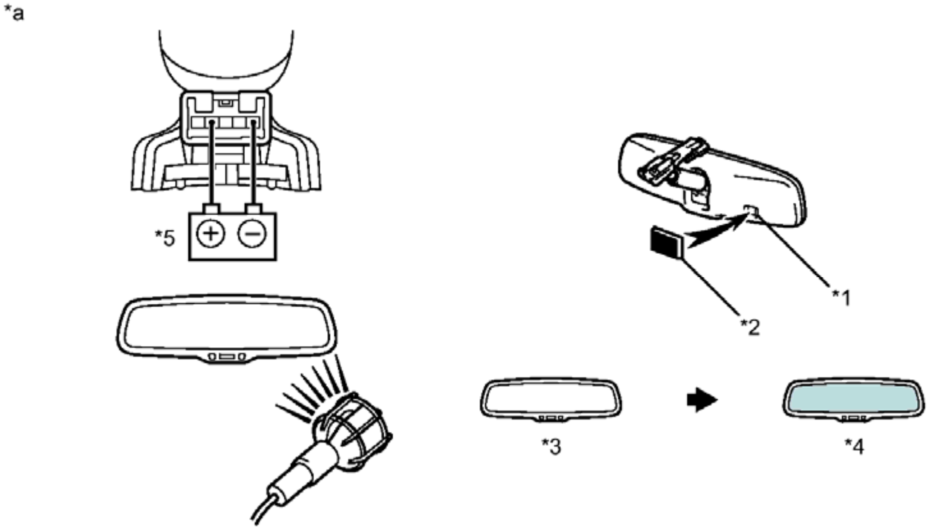

Fig. 13: Inspecting Operation Of Electrochromic Inner Mirror
Courtesy of TOYOTA MOTOR SALES, U.S.A., INC.

TEXT IN ILLUSTRATION

*1	Forward Sensor	*2	Black Colored Tape
*3	Bright	*4	Dark
*5	Auxiliary Battery	-	-
*a	Component without harness connected (Inner Rear View Mirror Assembly)	-	-

1. Connect a positive (+) lead from the auxiliary battery to terminal 4 and a negative (-) lead to terminal 1.
2. Press the AUTO switch.
3. Attach black colored tape to the forward sensor to prevent it from sensing.
4. Light up the mirror with an electric light, and check that the mirror surface changes from bright to dark.

   Standard

   Mirror surface changes from bright to dark.

If the result is not as specified, replace the inner rear view mirror assembly.

INSTALLATION

INSTALLATION

1. **INSTALL INNER REAR VIEW MIRROR ASSEMBLY (w/o EC Mirror)**
    a. Slide the inner rear view mirror assembly in the direction indicated by the arrow shown in the illustration.

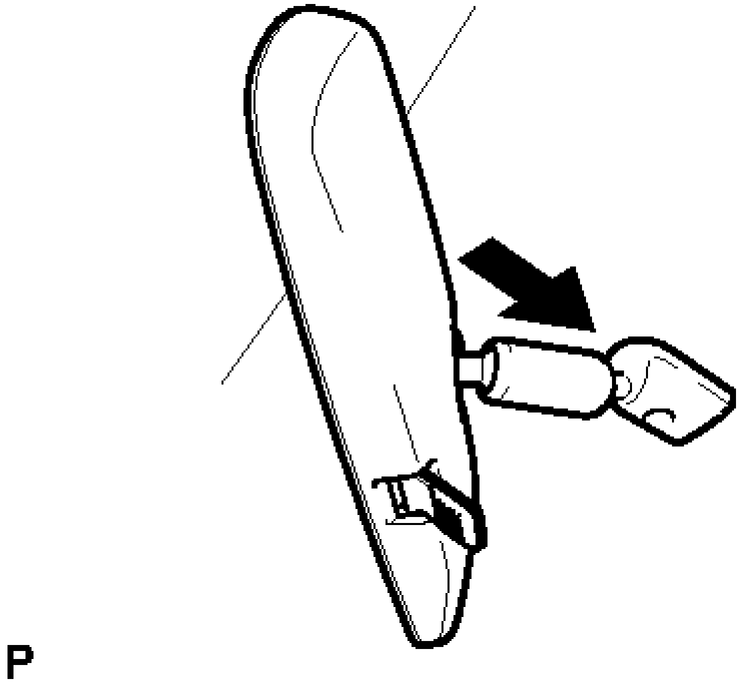

Fig. 14: Sliding Inner Rear View Mirror Assembly (W/O EC Mirror)
Courtesy of TOYOTA MOTOR SALES, U.S.A., INC.

    b. Using a T20 "TORX" socket wrench, install the inner rear view mirror assembly with the screw.

    Torque: 1.8 N*m (18 kgf*cm, 16 in.*lbf)

2. **INSTALL INNER REAR VIEW MIRROR ASSEMBLY (w/ EC Mirror)**
    a. Using a T20 "TORX" socket wrench, install the inner rear view mirror assembly with the screw.

    Torque: 1.8 N*m (18 kgf*cm, 16 in.*lbf)

    b. Connect the connector.
3. **INSTALL INNER REAR VIEW MIRROR STAY HOLDER COVER (w/ EC Mirror)**
    a. Engage the 6 claws and temporarily install the inner rear view mirror stay holder cover.
    b. Slide the inner rear view mirror stay holder cover in the direction indicated by arrow shown in the

illustration and engage the 2 claws to install the cover.

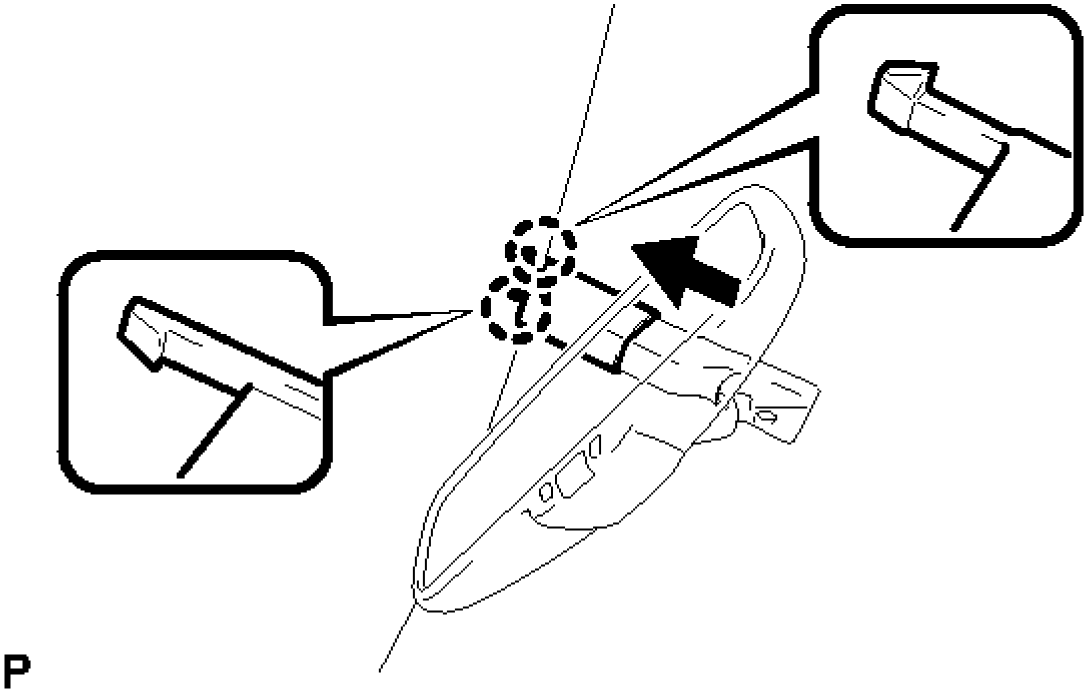

Fig. 15: Sliding Inner Rear View Mirror Stay Holder Cover (W/EC Mirror)
Courtesy of TOYOTA MOTOR SALES, U.S.A., INC.

INNER REAR VIEW MIRROR

PRECAUTION

PRECAUTION

1. **PRECAUTION FOR DISCONNECTING CABLE FROM NEGATIVE BATTERY TERMINAL**

NOTE: **When disconnecting the cable from the negative (-) battery terminal, initialize the following system after the cable is reconnected.**

System Name	See Procedure
Parking Assist Monitor System	Refer to **INITIALIZATION**

2. **IGNITION SWITCH EXPRESSIONS**
   a. The type of ignition switch used on this model differs according to the specifications of the vehicle. The expressions listed in the table below are used in this service information.

Expression	Ignition Switch (Position)	Engine Switch (Condition)
Ignition Switch off	LOCK	Off
Ignition Switch ACC	ACC	On (ACC)
Ignition Switch ON	ON	On (IG)
Engine Start	START	Start

COMPONENTS

ILLUSTRATION

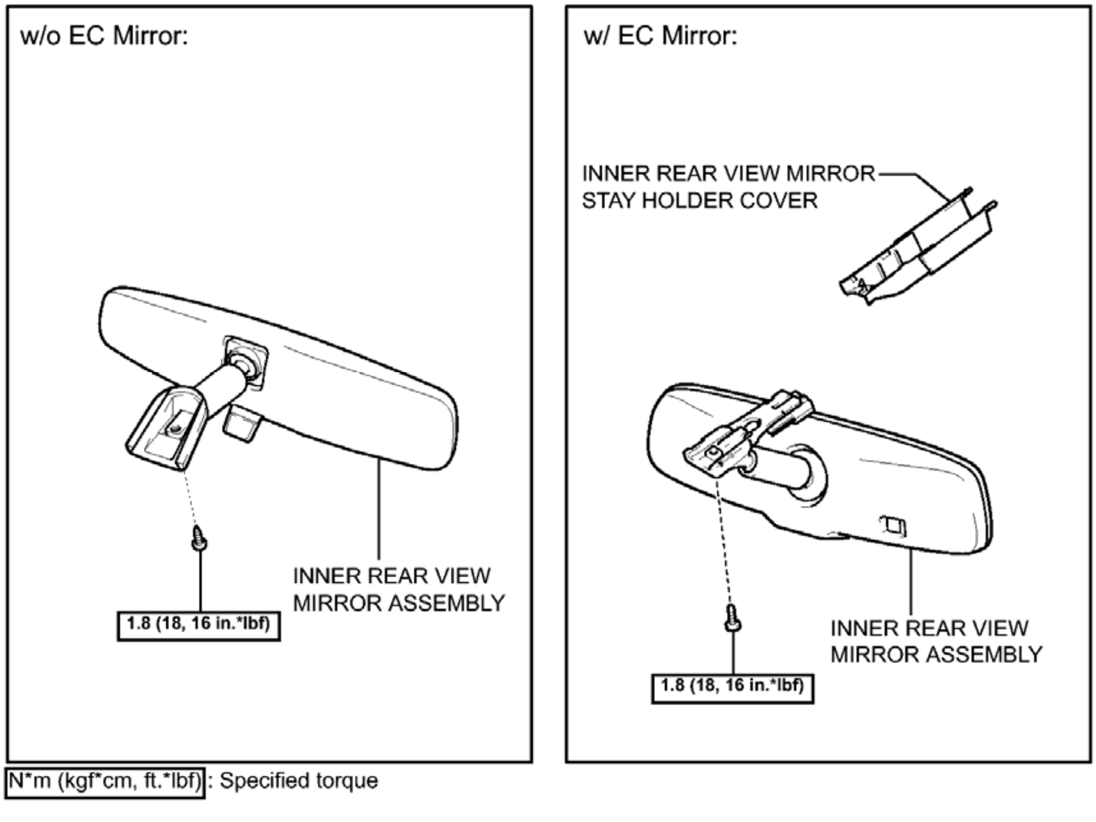
w/o EC Mirror:
INNER REAR VIEW
MIRROR ASSEMBLY
1.8 (18, 16 in.*lbf)
w/ EC Mirror:
INNER REAR VIEW MIRROR
STAY HOLDER COVER
INNER REAR VIEW
MIRROR ASSEMBLY
1.8 (18, 16 in.*lbf)
N*m (kgf*cm, ft.*lbf): Specified torque
P

Fig. 1: Identifying Inner Rear View Mirror Replacement Components With Torque Specifications
Courtesy of TOYOTA MOTOR SALES, U.S.A., INC.

SYSTEM DIAGRAM

SYSTEM DIAGRAM

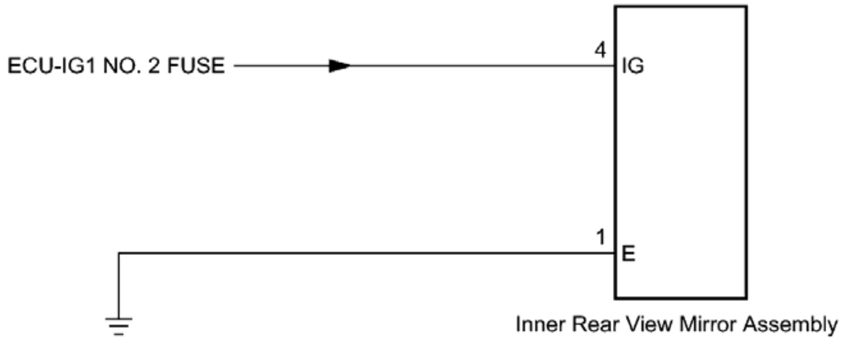
ECU-IG1 NO. 2 FUSE
4
IG
1
E
Inner Rear View Mirror Assembly

Fig. 2: Identifying Inner Rear View Mirror System Diagram
Courtesy of TOYOTA MOTOR SALES, U.S.A., INC.

CALIBRATION

CALIBRATION

1. **SELECT COMPASS DISPLAY MODE**
    a. The AUTO switch allows selection of the compass display.

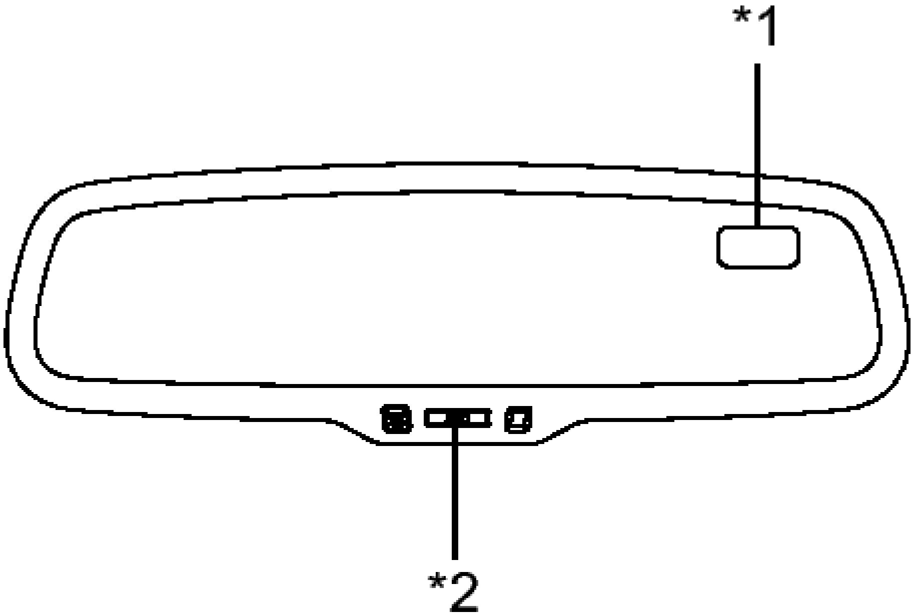

Fig. 3: Identifying Compass Display And AUTO Switch
Courtesy of TOYOTA MOTOR SALES, U.S.A., INC.

TEXT IN ILLUSTRATION

*1	Compass Display
*2	AUTO Switch

2. **SET ZONE**
    a. The compass indicates the direction that the vehicle is heading by detecting the direction and strength of the earth's magnetic field (magnetic north). However, there is a difference between magnetic north and actual north depending on the location of the vehicle. To compensate for this difference, it is necessary to set the zone in which the vehicle will be used (refer to Compass Zone Map in **Fig. 6**). The zone setting can be changed using the AUTO switch of the inner mirror.
3. **PERFORM CALIBRATION**
    a. Because each vehicle has its own magnetic field, calibration should be performed. The calibration function is used to compensate for the residual magnetism of the vehicle.
4. **WHEN COMPASS IS MAGNETIZED**

a. The compass or vehicle may become magnetized while the vehicle is being shipped. As a result, it is necessary to perform calibration for the compass before the vehicle is delivered to the customer. If calibration cannot be performed successfully (calibration cannot be completed in spite of driving around several times), it may be caused by excessive magnetization of the vehicle. Demagnetize the vehicle using a demagnetizer and perform calibration again.

5. **SET COMPASS**

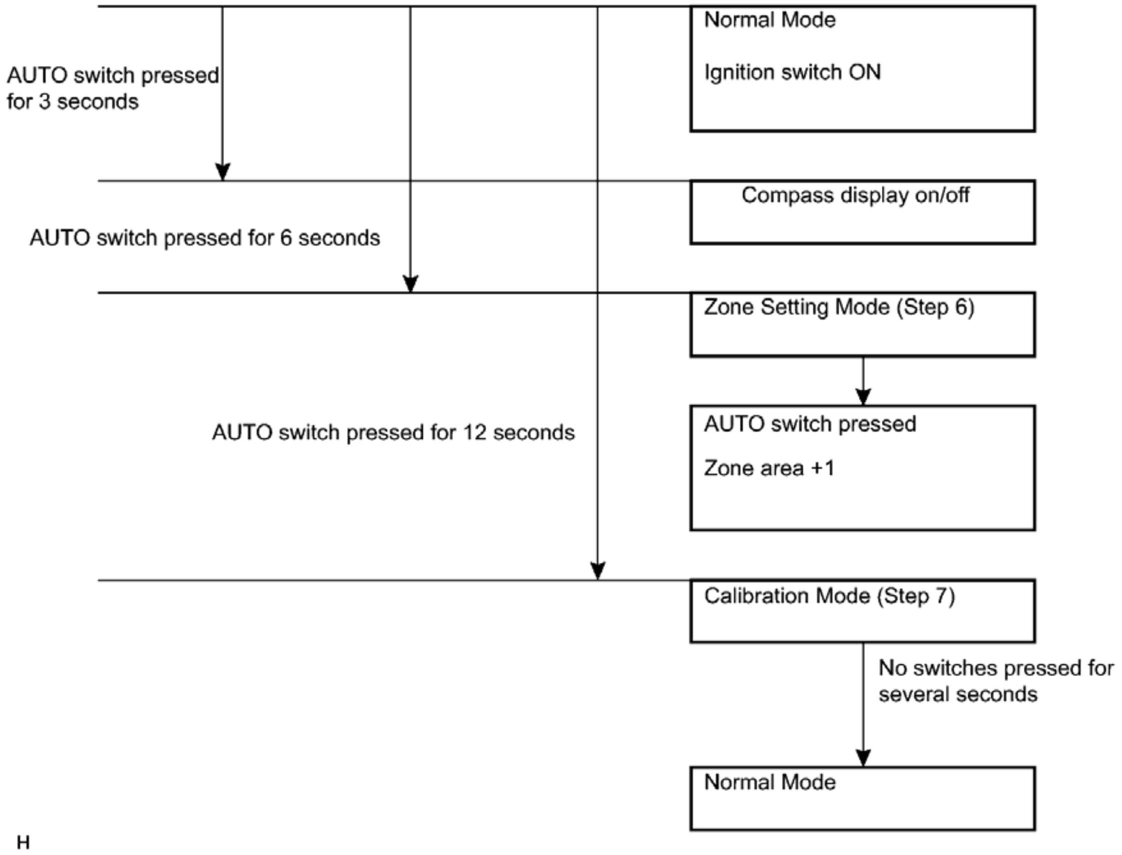
Normal Mode
Ignition switch ON
AUTO switch pressed for 3 seconds
Compass display on/off
AUTO switch pressed for 6 seconds
Zone Setting Mode (Step 6)
AUTO switch pressed for 12 seconds
AUTO switch pressed
Zone area +1
Calibration Mode (Step 7)
No switches pressed for several seconds
Normal Mode
H

Fig. 4: Set Compass Chart
Courtesy of TOYOTA MOTOR SALES, U.S.A., INC.

6. **ZONE SETTING MODE**

a. When the compass is in normal mode, pressing the AUTO switch for 6 seconds will activate zone setting mode. A number from 1 to 15 will be displayed on the compass display.

HINT:

If the initial zone setting has not been changed, 8 will be displayed.

b. The displayed number increases by 1 every time the AUTO switch is pressed. Referring to the compass zone map, check the number for the area where the vehicle will be used and set the zone number.

c. Do not touch the AUTO switch for several seconds after setting the zone. Check that the compass display shows a direction (N, NE, E, SE, S, SW, W or NW).

7. **CALIBRATION MODE**
    a. When the compass is in normal mode, pressing the AUTO switch for 12 seconds will activate calibration mode.
    b. Drive the vehicle in a circle at a speed of 8 km/h (5 mph) or less.

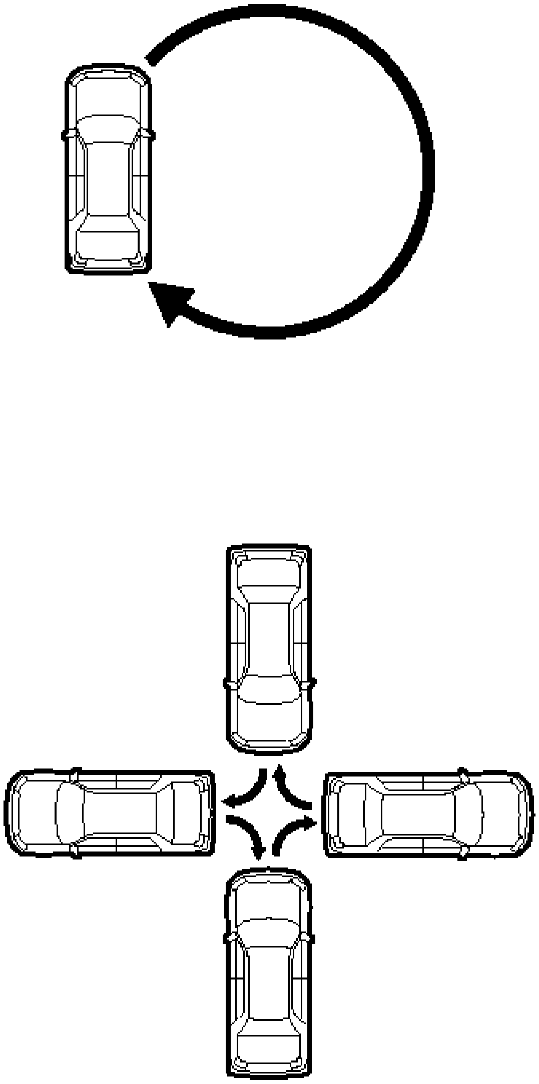

Fig. 5: Identifying Calibration Mode
Courtesy of TOYOTA MOTOR SALES, U.S.A., INC.

c. After driving around in a circle 1 to 3 times, the direction (N, NE, E, SE, S, SW, W or NW) will be displayed on the compass display. This indicates that calibration has finished.

HINT:

After calibration is performed, it is not necessary to repeat the calibration procedure unless the magnetic field of the vehicle changes drastically. If the magnetic field changes drastically, the compass display will indicate "C".

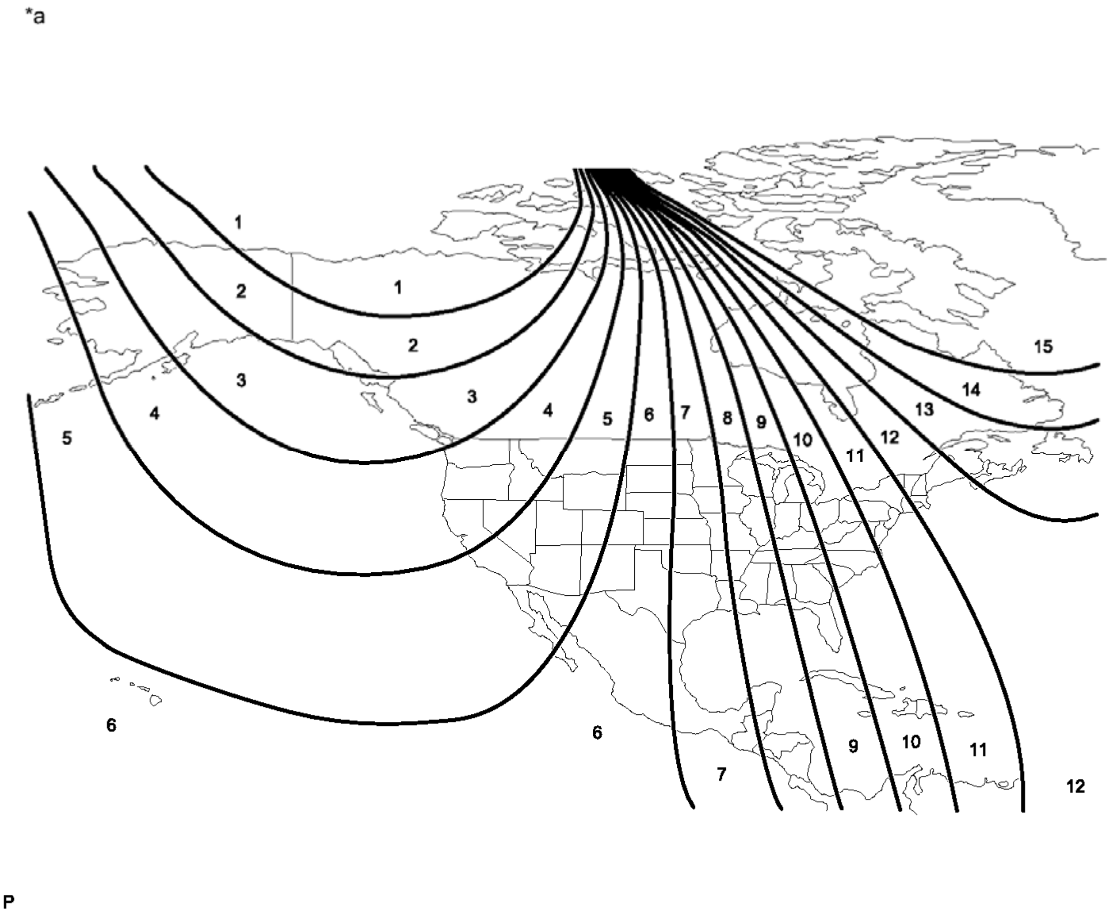
*a
1
1
2
2
3
3
4
4
5
5
6
7
8
9
10
11
12
13
14
15
6
6
7
9
10
11
12
P

Fig. 6: Identifying Compass Zone Map (1 Of 2)
Courtesy of TOYOTA MOTOR SALES, U.S.A., INC.

TEXT IN ILLUSTRATION

*a	Compass Zone Map	-	-

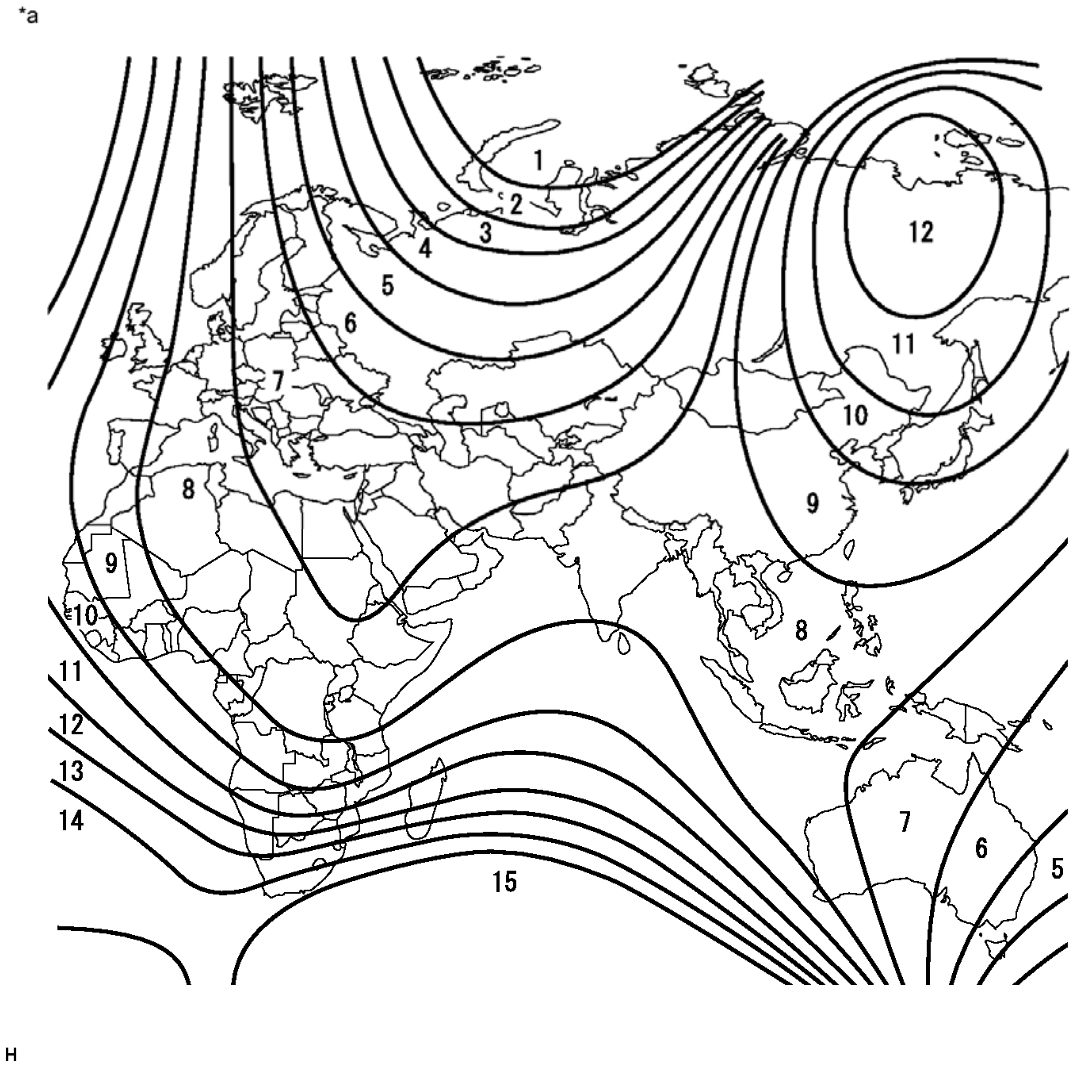

Fig. 7: Identifying Compass Zone Map (2 Of 2)
Courtesy of TOYOTA MOTOR SALES, U.S.A., INC.

TEXT IN ILLUSTRATION

*a	Compass Zone Map	-	-

PROBLEM SYMPTOMS TABLE

PROBLEM SYMPTOMS TABLE

HINT:

- Use the table below to help determine the cause of problem symptoms. If multiple suspected areas are listed, the potential causes of the symptoms are listed in order of probability in the "Suspected Area" column of the table. Check each symptom by checking the suspected areas in the order they are listed.

Replace parts as necessary.

AUTOMATIC GLARE-RESISTANT EC MIRROR

Symptom	Suspected Area	See
Auto glare-resistant EC mirror does not operate	ECU-IG1 No. 2 fuse	-
	Inner rear view mirror	Refer to **INSPECTION**
	Wire harness or connector	-

REMOVAL

REMOVAL

1. **REMOVE INNER REAR VIEW MIRROR ASSEMBLY (w/o EC Mirror)**
    a. Using a T20 "TORX" socket wrench, remove the screw.

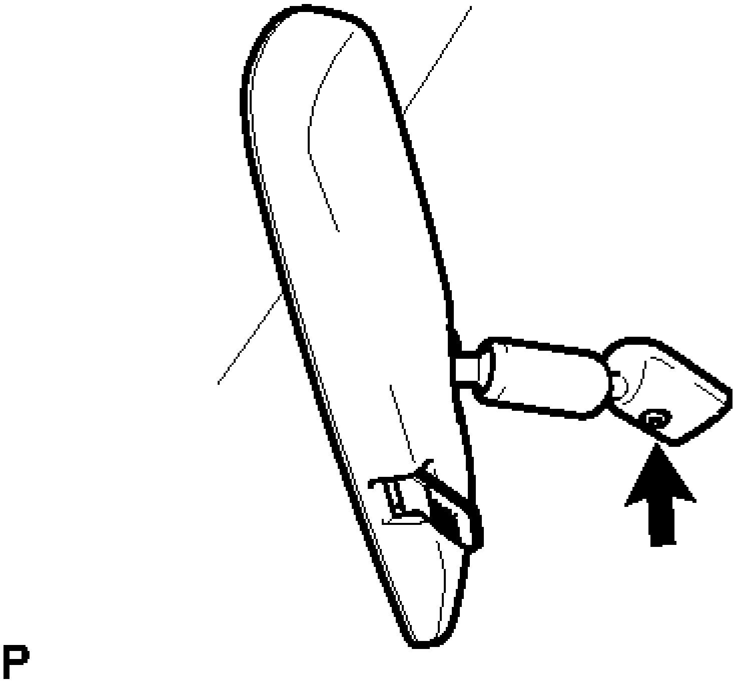

Fig. 8: Identifying Inner Rear View Mirror Assembly Screw (W/O EC Mirror)
Courtesy of TOYOTA MOTOR SALES, U.S.A., INC.

b. Slide the inner rear view mirror assembly in the direction indicated by the arrow shown in the illustration to remove it.

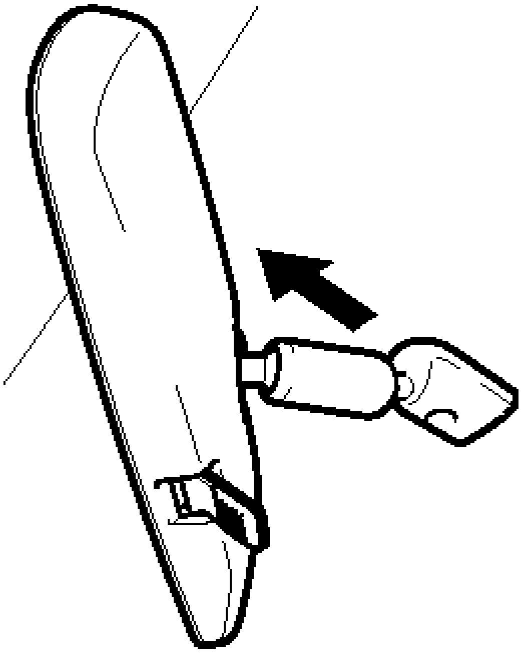

Fig. 9: Sliding Inner Rear View Mirror Assembly (W/O EC Mirror)
Courtesy of TOYOTA MOTOR SALES, U.S.A., INC.

2. **REMOVE INNER REAR VIEW MIRROR STAY HOLDER COVER (w/ EC Mirror)**
    a. Disengage the 2 claws and slide the inner rear view mirror stay holder cover in the direction indicated by the arrow shown in the illustration.

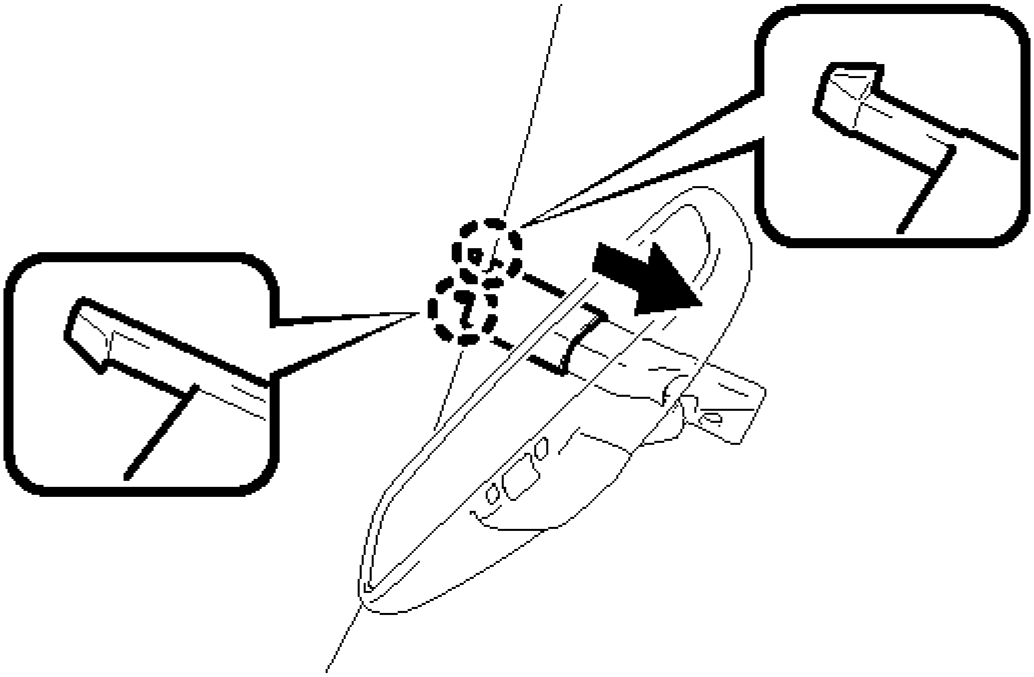

Fig. 10: Identifying Inner Rear View Mirror Stay Holder Cover Claws (W/EC Mirror)
Courtesy of TOYOTA MOTOR SALES, U.S.A., INC.

b. Disengage the 6 claws and remove the inner rear view mirror stay holder cover.

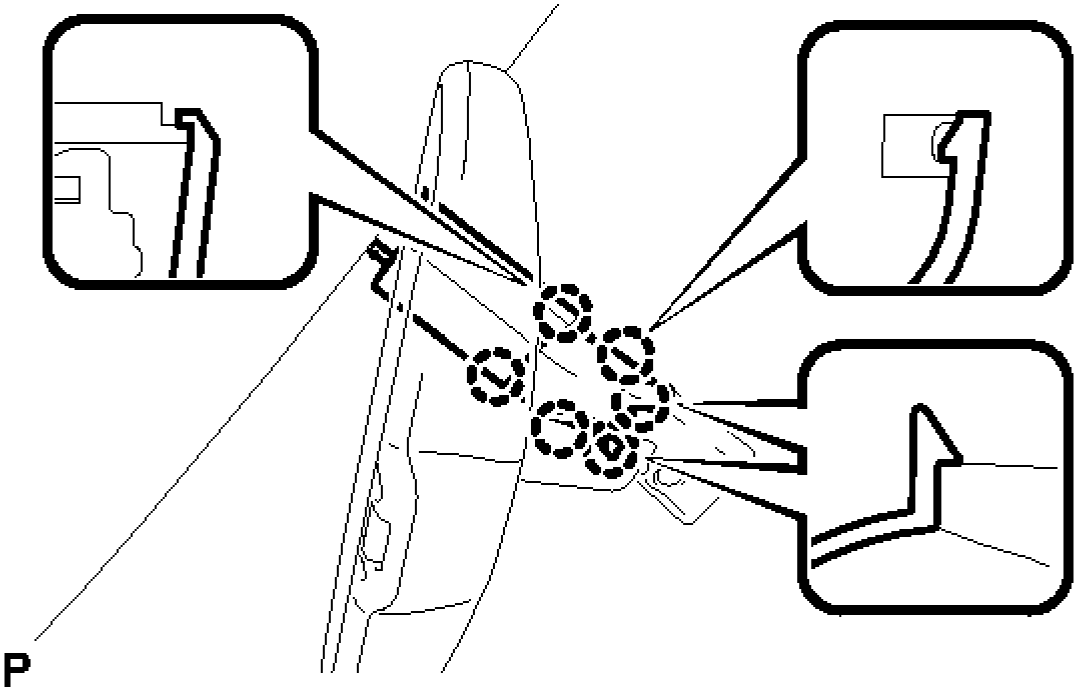

Fig. 11: Identifying Inner Rear View Mirror Stay Holder Cover Claws (W/EC Mirror)
Courtesy of TOYOTA MOTOR SALES, U.S.A., INC.

3. **REMOVE INNER REAR VIEW MIRROR ASSEMBLY (w/ EC Mirror)**
   a. Disconnect the connector.

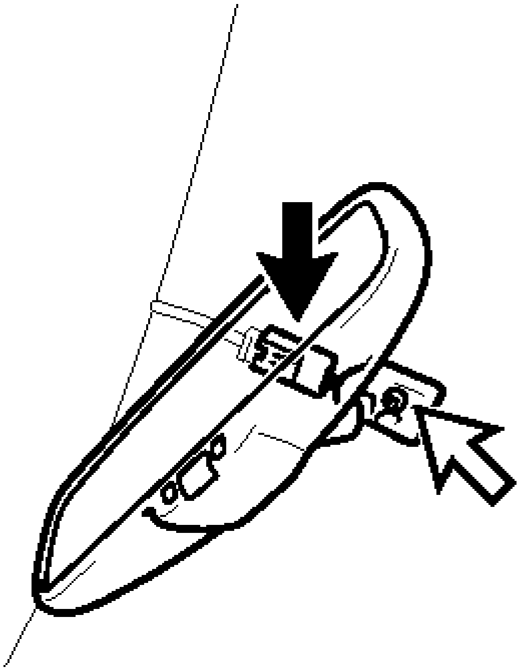

Fig. 12: Identifying Inner Rear View Mirror Assembly Connector (W/EC Mirror)
Courtesy of TOYOTA MOTOR SALES, U.S.A., INC.

b. Using a T20 "TORX" socket wrench, remove the screw and inner rear view mirror assembly.

INSPECTION

INSPECTION

1. **INSPECT INNER REAR VIEW MIRROR ASSEMBLY**
    a. Inspect the operation of the electrochromic inner mirror.

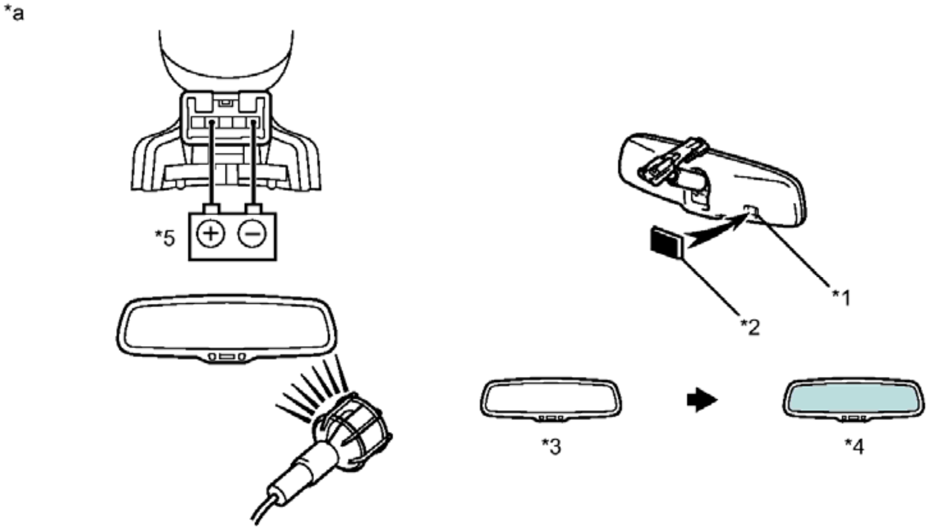

Fig. 13: Inspecting Operation Of Electrochromic Inner Mirror
Courtesy of TOYOTA MOTOR SALES, U.S.A., INC.

TEXT IN ILLUSTRATION

*1	Forward Sensor	*2	Black Colored Tape
*3	Bright	*4	Dark
*5	Battery	-	-
*a	Component without harness connected (Inner Rear View Mirror Assembly)	-	-

1. Connect a positive (+) lead from the battery to terminal 4 and a negative (-) lead to terminal 1.
2. Press the AUTO switch.
3. Attach black colored tape to the forward sensor to prevent it from sensing.
4. Light up the mirror with an electric light, and check that the mirror surface changes from bright to dark.

   Standard

   Mirror surface changes from bright to dark.

If the result is not as specified, replace the inner rear view mirror assembly.

INSTALLATION

INSTALLATION

1. **INSTALL INNER REAR VIEW MIRROR ASSEMBLY (w/o EC Mirror)**
    a. Slide the inner rear view mirror assembly in the direction indicated by the arrow shown in the illustration.

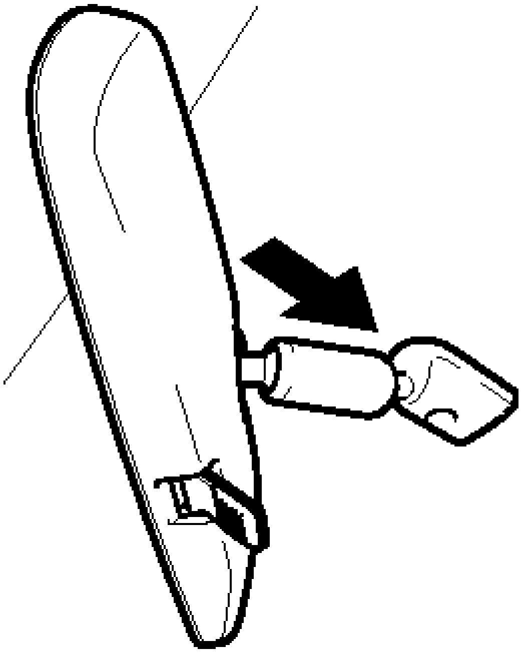

Fig. 14: Sliding Inner Rear View Mirror Assembly (W/O EC Mirror)
Courtesy of TOYOTA MOTOR SALES, U.S.A., INC.

    b. Using a T20 "TORX" socket wrench, install the inner rear view mirror assembly with the screw.

    Torque: 1.8 N*m (18 kgf*cm, 16 in.*lbf)

2. **INSTALL INNER REAR VIEW MIRROR ASSEMBLY (w/ EC Mirror)**
    a. Using a T20 "TORX" socket wrench, install the inner rear view mirror assembly with the screw.

    Torque: 1.8 N*m (18 kgf*cm, 16 in.*lbf)

    b. Connect the connector.
3. **INSTALL INNER REAR VIEW MIRROR STAY HOLDER COVER (w/ EC Mirror)**
    a. Engage the 6 claws and temporarily install the inner rear view mirror stay holder cover.
    b. Slide the inner rear view mirror stay holder cover in the direction indicated by arrow shown in the

illustration and engage the 2 claws to install the cover.

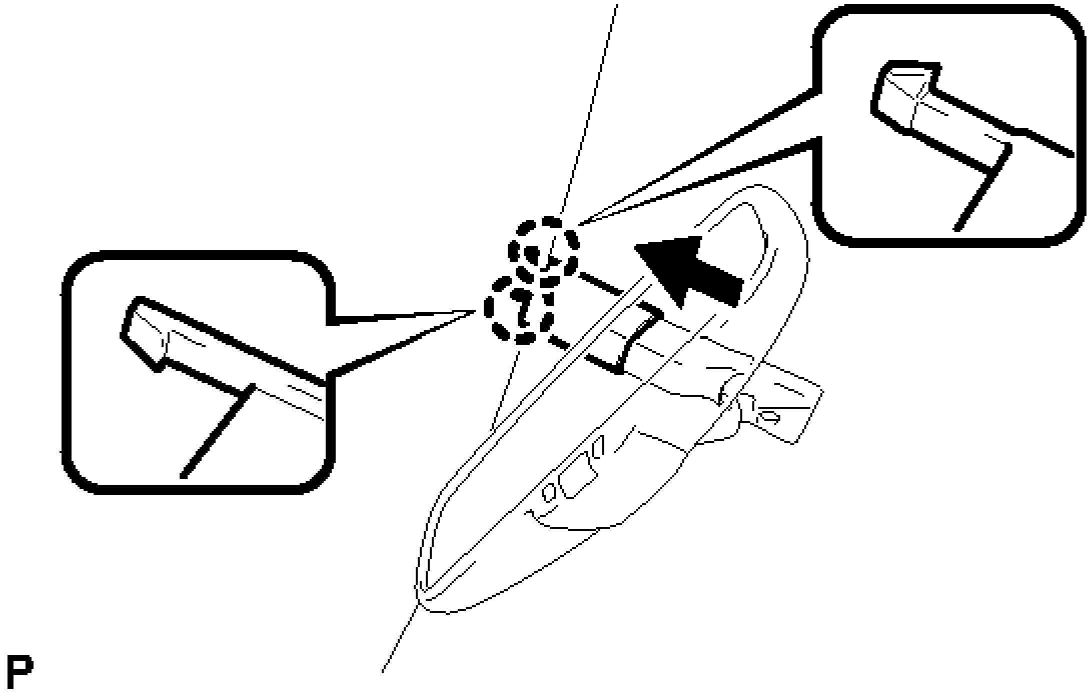

Fig. 15: Sliding Inner Rear View Mirror Stay Holder Cover (W/EC Mirror)
Courtesy of TOYOTA MOTOR SALES, U.S.A., INC.

NAVIGATION RECEIVER

COMPONENTS

ILLUSTRATION

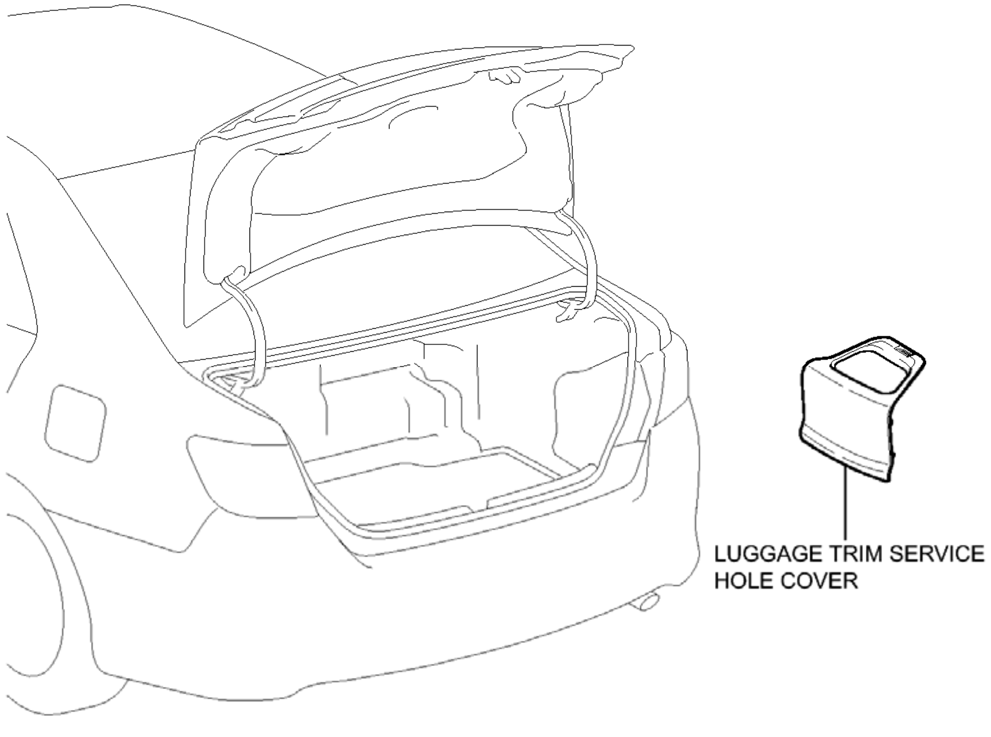
LUGGAGE TRIM SERVICE HOLE COVER
P

Fig. 1: Identifying Navigation Receiver Replacement Components (1 Of 3)
Courtesy of TOYOTA MOTOR SALES, U.S.A., INC.

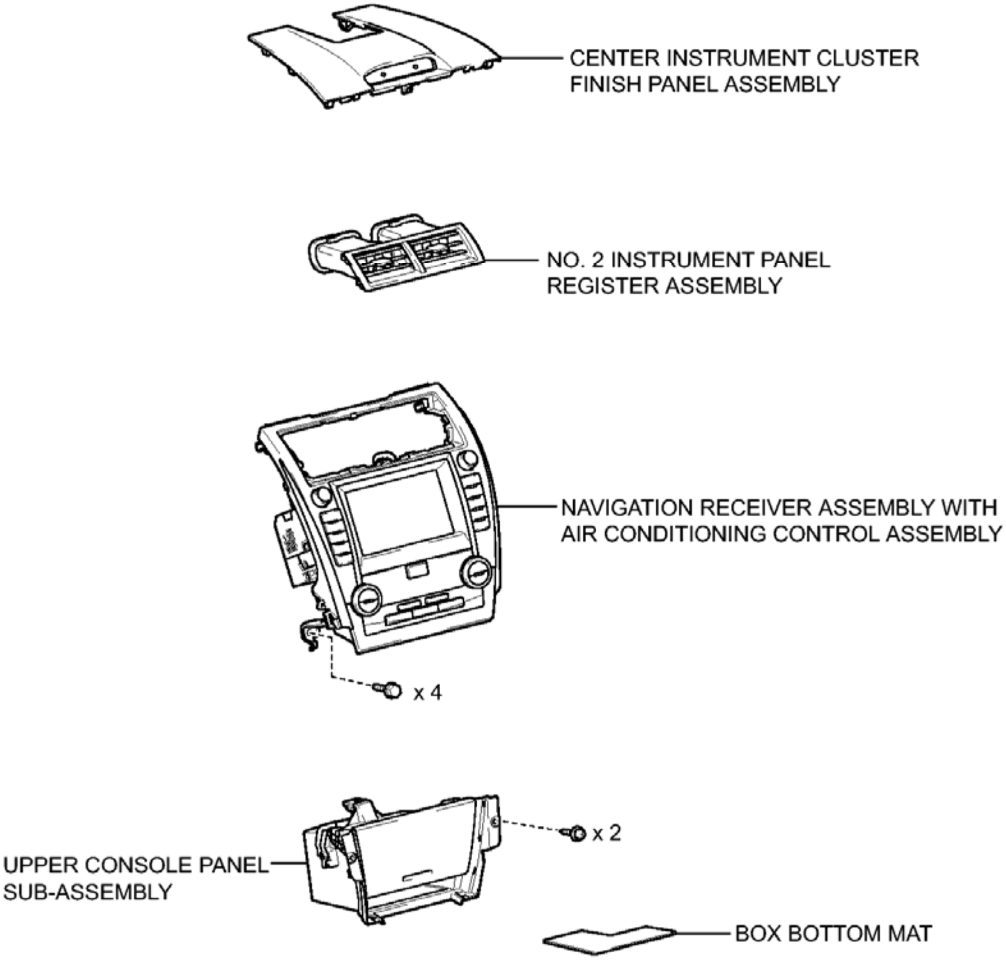
CENTER INSTRUMENT CLUSTER FINISH PANEL ASSEMBLY
NO. 2 INSTRUMENT PANEL REGISTER ASSEMBLY
NAVIGATION RECEIVER ASSEMBLY WITH AIR CONDITIONING CONTROL ASSEMBLY
x 4
x 2
UPPER CONSOLE PANEL SUB-ASSEMBLY
BOX BOTTOM MAT
P

Fig. 2: Identifying Navigation Receiver Replacement Components (2 Of 3)
Courtesy of TOYOTA MOTOR SALES, U.S.A., INC.

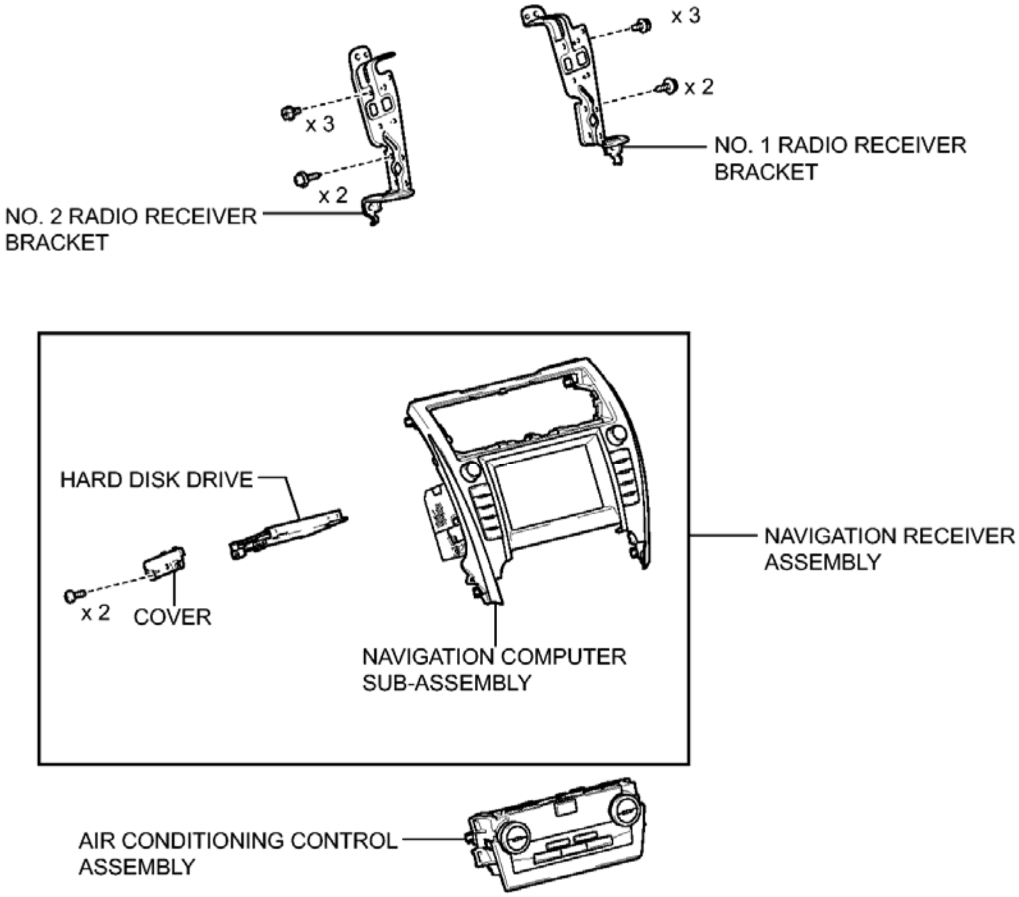
x 3
x 2
NO. 1 RADIO RECEIVER BRACKET
x 3
x 2
NO. 2 RADIO RECEIVER BRACKET
HARD DISK DRIVE
NAVIGATION RECEIVER ASSEMBLY
x 2
COVER
NAVIGATION COMPUTER SUB-ASSEMBLY
AIR CONDITIONING CONTROL ASSEMBLY

P

Fig. 3: Identifying Navigation Receiver Replacement Components (3 Of 3)
Courtesy of TOYOTA MOTOR SALES, U.S.A., INC.

REMOVAL

REMOVAL

1. **PRECAUTION**

NOTE:

- **After turning the power switch off, waiting time may be required before disconnecting the cable from the negative (-) auxiliary battery terminal. Therefore, make sure to read the disconnecting the cable from the negative (-) auxiliary battery terminal notices before proceeding with work. Refer to PRECAUTION .**
- **A Hard Disk Drive (HDD) is built into the navigation receiver assembly to store map and other data, and is used for the navigation system. Therefore, care must be taken for the following points when**

handling the navigation receiver assembly.

- **When removing the hard disk drive, eliminate static electricity by touching the vehicle body to prevent components from being damaged.**

2. **REMOVE LUGGAGE TRIM SERVICE HOLE COVER** . Refer to **REMOVAL - Step 2**
3. **DISCONNECT CABLE FROM AUXILIARY BATTERY NEGATIVE TERMINAL**

NOTE: **When disconnecting the cable, some systems need to be initialized after the cable is reconnected. Refer to INITIALIZATION .**

4. **REMOVE REAR CONSOLE BOX ASSEMBLY**

   Refer to **REMOVAL**

5. **REMOVE BOX BOTTOM MAT** . Refer to **REMOVAL - Step 24**
6. **REMOVE UPPER CONSOLE PANEL SUB-ASSEMBLY** . Refer to **REMOVAL - Step 25**
7. **REMOVE CENTER INSTRUMENT CLUSTER FINISH PANEL ASSEMBLY** . Refer to **REMOVAL - Step 22**
8. **REMOVE NO. 2 INSTRUMENT PANEL REGISTER ASSEMBLY** . Refer to **REMOVAL - Step 23**
9. **REMOVE NAVIGATION RECEIVER ASSEMBLY WITH AIR CONDITIONING CONTROL ASSEMBLY**
   a. Apply protective tape to the areas shown in the illustration.

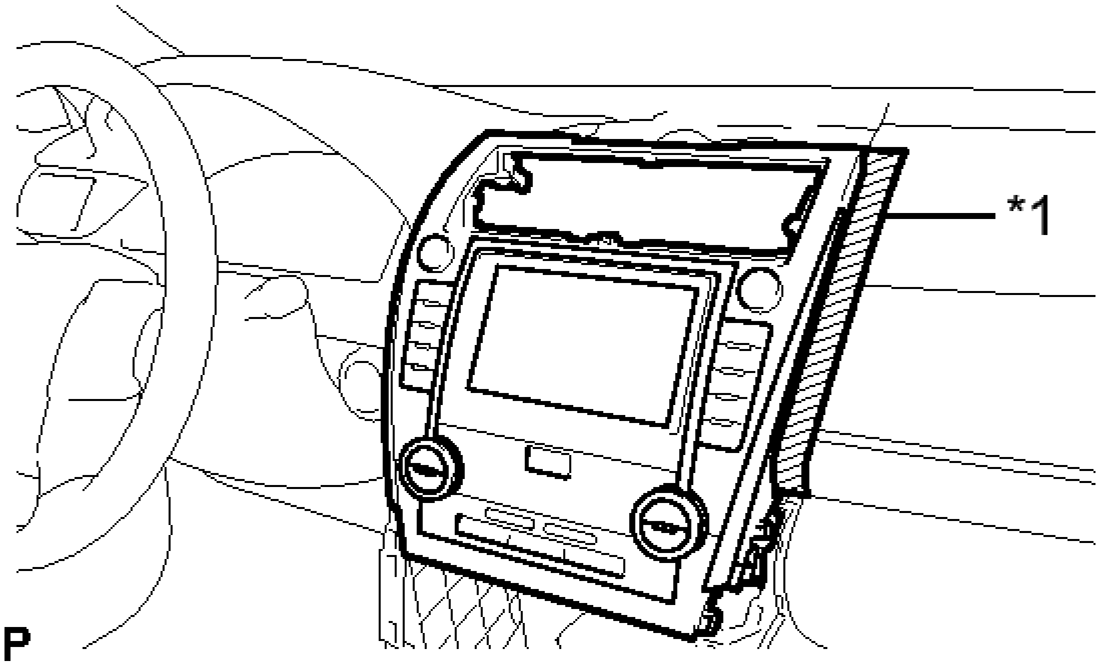

Fig. 4: Protective Tape Placement
Courtesy of TOYOTA MOTOR SALES, U.S.A., INC.

TEXT IN ILLUSTRATION

*1	Protective Tape

b. Remove the 4 bolts.

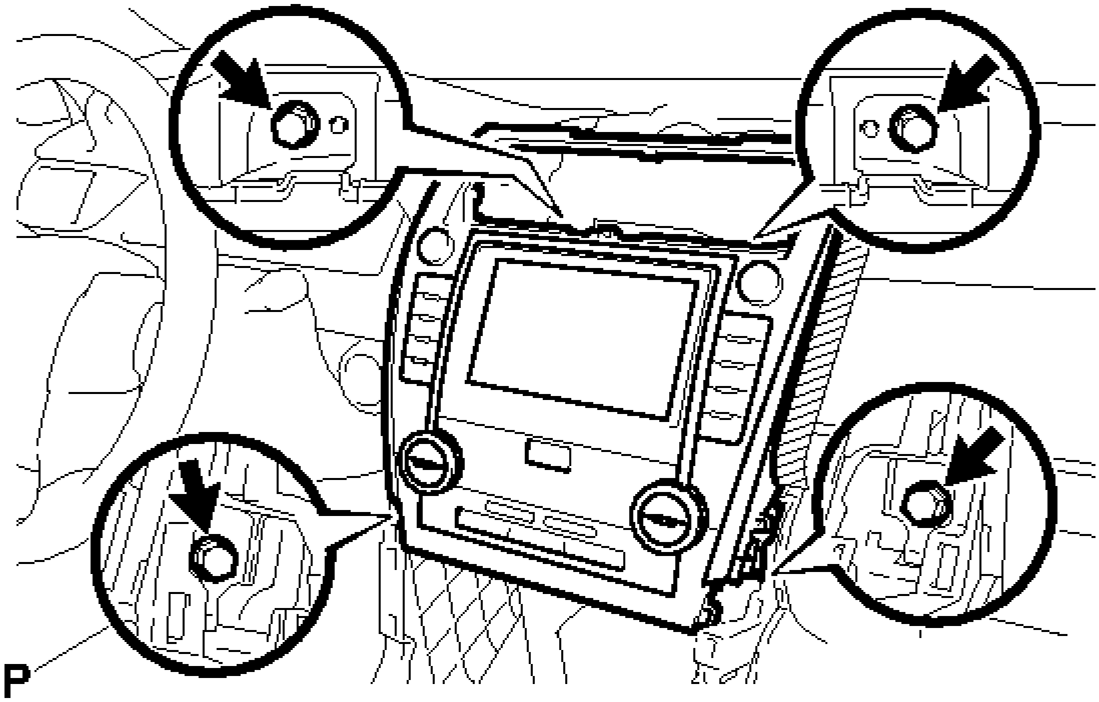

Fig. 5: Identifying Navigation Receiver Assembly Bolts
Courtesy of TOYOTA MOTOR SALES, U.S.A., INC.

c. Pull the navigation receiver assembly with air conditioning control assembly toward the rear of the vehicle and disengage the 8 clips.

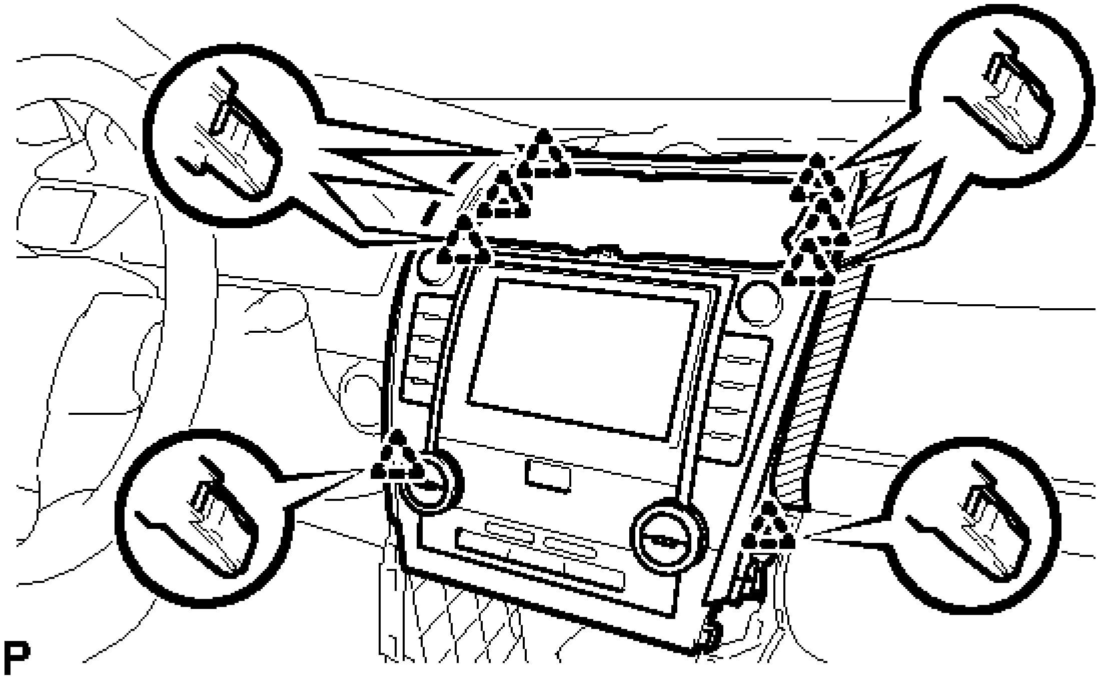

Fig. 6: Identifying Navigation Receiver Assembly Clips
Courtesy of TOYOTA MOTOR SALES, U.S.A., INC.

d. Disconnect each connector and remove the navigation receiver assembly with air conditioning control assembly.

10. **REMOVE NO. 1 RADIO RECEIVER BRACKET**

a. Remove the 5 screws and No. 1 radio receiver bracket.

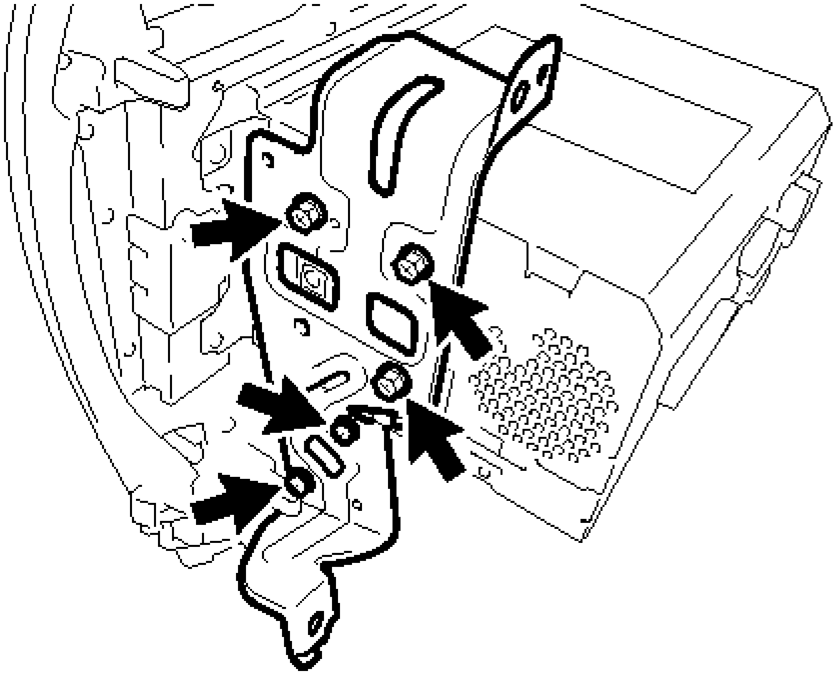

P

Fig. 7: Locating No. 1 Radio Receiver Bracket Fasteners (For Radio And Display Type With Intuitive Parking Assist System)
Courtesy of TOYOTA MOTOR SALES, U.S.A., INC.

11. **REMOVE NO. 2 RADIO RECEIVER BRACKET**
    a. Remove the 5 screws and No. 2 radio receiver bracket.

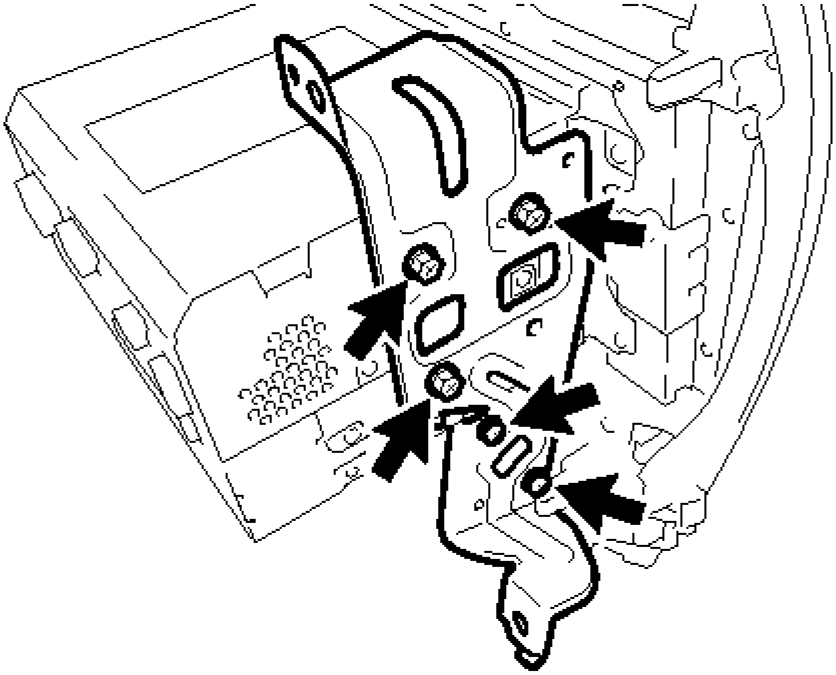

P

Fig. 8: Locating No. 2 Radio Receiver Bracket Fasteners (For Radio And Display Type With Intuitive Parking Assist System)
Courtesy of TOYOTA MOTOR SALES, U.S.A., INC.

12. **REMOVE AIR CONDITIONING CONTROL ASSEMBLY** . Refer to **REMOVAL - Step 21**
13. **REMOVE HARD DISK DRIVE** See step 13
14. **REMOVE NAVIGATION COMPUTER SUB-ASSEMBLY**

INSTALLATION

INSTALLATION

1. **PRECAUTION**

   NOTE: **When installing the hard disk drive, eliminate static electricity by touching the vehicle body to prevent components from being damaged.**

2. **INSTALL NAVIGATION COMPUTER SUB-ASSEMBLY**
3. **INSTALL HARD DISK DRIVE** See step 2
4. **INSTALL AIR CONDITIONING CONTROL ASSEMBLY** . Refer to **INSTALLATION - Step 1**
5. **INSTALL NO. 1 RADIO RECEIVER BRACKET**
   a. Install the No. 1 radio receiver bracket with the 5 screws.
6. **INSTALL NO. 2 RADIO RECEIVER BRACKET**
   a. Install the No. 2 radio receiver bracket with the 5 screws.
7. **INSTALL NAVIGATION RECEIVER ASSEMBLY WITH AIR CONDITIONING CONTROL ASSEMBLY**
   a. Connect each connector.
   b. Engage the 8 clips to the vehicle body to temporarily install the navigation receiver assembly with air conditioning control assembly.
   c. Install the navigation receiver assembly with air conditioning control assembly with the 4 bolts.
8. **INSTALL NO. 2 INSTRUMENT PANEL REGISTER ASSEMBLY** . Refer to **INSTALLATION - Step 29**
9. **INSTALL CENTER INSTRUMENT CLUSTER FINISH PANEL ASSEMBLY** . Refer to **INSTALLATION - Step 30**
10. **INSTALL UPPER CONSOLE PANEL SUB-ASSEMBLY** . Refer to **INSTALLATION - Step 27**
11. **INSTALL BOX BOTTOM MAT** . Refer to **INSTALLATION - Step 28**
12. **INSTALL REAR CONSOLE BOX ASSEMBLY**

    Refer to **INSTALLATION**

13. **CONNECT CABLE TO AUXILIARY BATTERY NEGATIVE TERMINAL**

NOTE: **When disconnecting the cable, some systems need to be initialized after the cable is reconnected. Refer to INITIALIZATION .**

14. **INSTALL LUGGAGE TRIM SERVICE HOLE COVER** . Refer to **INSTALLATION - Step 3**
15. **INSPECT HARD DISK DRIVE**

    Refer to **OPERATION CHECK**

16. **REPLACED OPERATION (w/ Parking Assist Monitor System)**

    Refer to **CALIBRATION**

NAVIGATION ECU

COMPONENTS

ILLUSTRATION

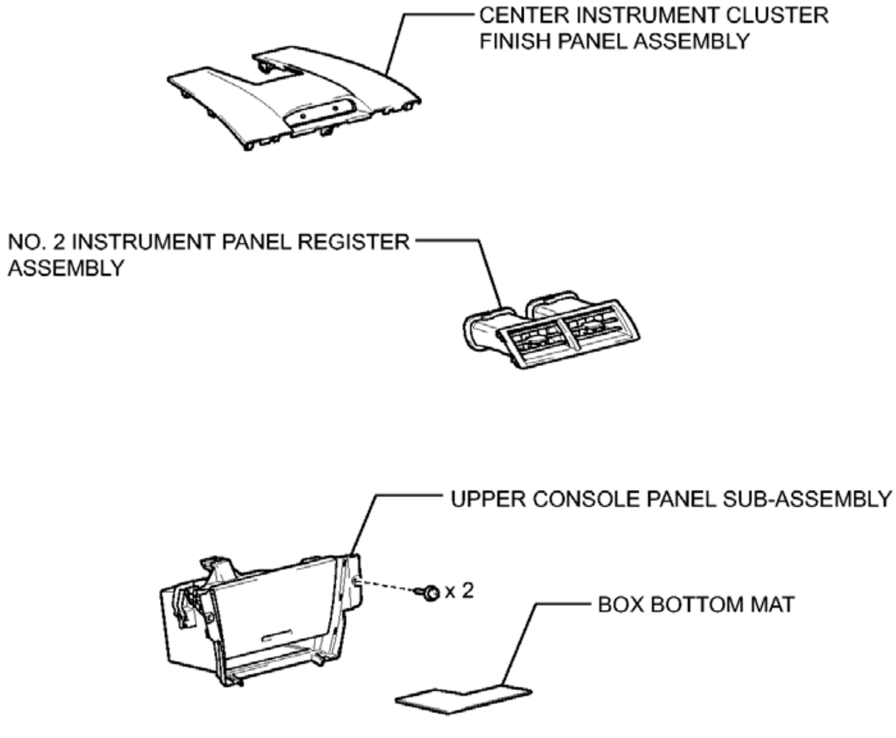
CENTER INSTRUMENT CLUSTER FINISH PANEL ASSEMBLY
NO. 2 INSTRUMENT PANEL REGISTER ASSEMBLY
UPPER CONSOLE PANEL SUB-ASSEMBLY
x 2
BOX BOTTOM MAT
P

Fig. 9: Identifying Navigation ECU Replacement Components (1 Of 2)
Courtesy of TOYOTA MOTOR SALES, U.S.A., INC.

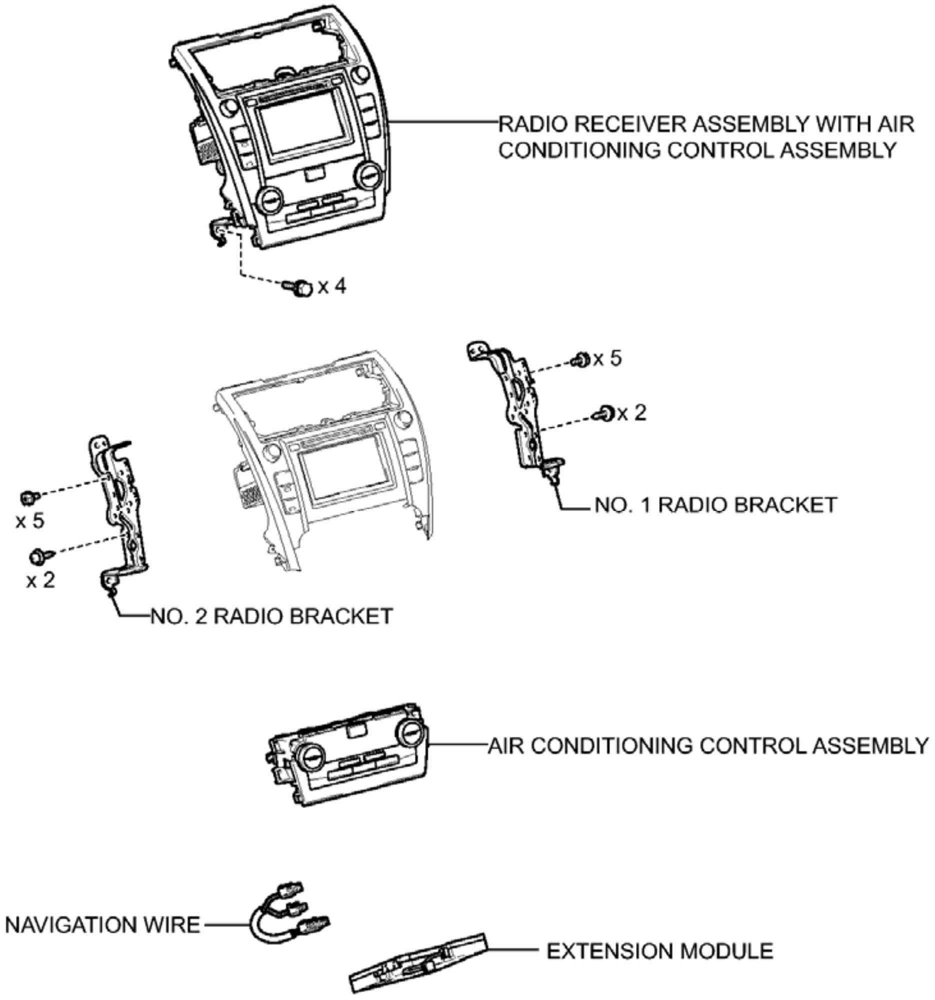
RADIO RECEIVER ASSEMBLY WITH AIR CONDITIONING CONTROL ASSEMBLY
x 4
x 5
x 2
NO. 1 RADIO BRACKET
x 5
x 2
NO. 2 RADIO BRACKET
AIR CONDITIONING CONTROL ASSEMBLY
NAVIGATION WIRE
EXTENSION MODULE

P

Fig. 10: Identifying Navigation ECU Replacement Components (2 Of 2)
Courtesy of TOYOTA MOTOR SALES, U.S.A., INC.

REMOVAL

REMOVAL

1. **REMOVE REAR CONSOLE BOX ASSEMBLY**

   Refer to **REMOVAL**

2. **REMOVE BOX BOTTOM MAT** . Refer to **REMOVAL - Step 24**
3. **REMOVE UPPER CONSOLE PANEL SUB-ASSEMBLY** . Refer to **REMOVAL - Step 25**
4. **REMOVE CENTER INSTRUMENT CLUSTER FINISH PANEL ASSEMBLY** . Refer to **REMOVAL - Step 22**
5. **REMOVE NO. 2 INSTRUMENT PANEL REGISTER ASSEMBLY** . Refer to **REMOVAL - Step 23**

6. **REMOVE RADIO RECEIVER ASSEMBLY WITH AIR CONDITIONING CONTROL ASSEMBLY** . Refer to **REMOVAL - Step 10**
7. **REMOVE NO. 1 RADIO BRACKET** . Refer to **REMOVAL - Step 13**
8. **REMOVE NO. 2 RADIO BRACKET** . Refer to **REMOVAL - Step 14**
9. **REMOVE AIR CONDITIONING CONTROL ASSEMBLY** . Refer to **REMOVAL - Step 21**
10. **REMOVE EXTENSION MODULE**
    1. Disconnect the 3 connectors to remove the navigation wire.

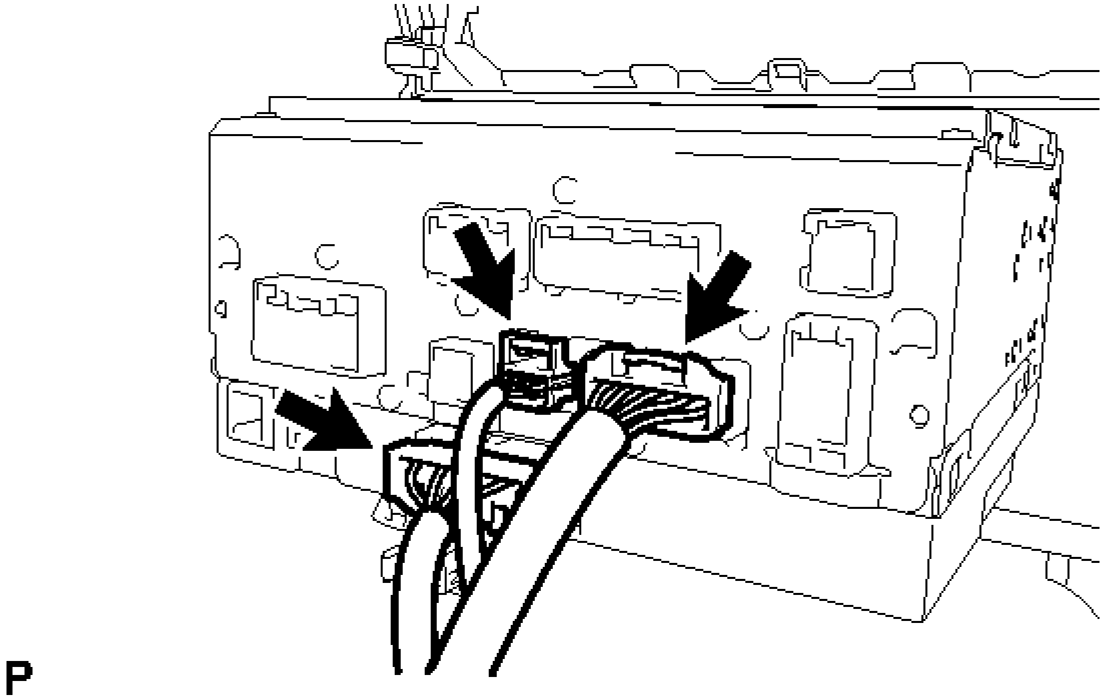

Fig. 11: Identifying Extension Module Connectors
Courtesy of TOYOTA MOTOR SALES, U.S.A., INC.

b. Disconnect the connector to remove the extension module.

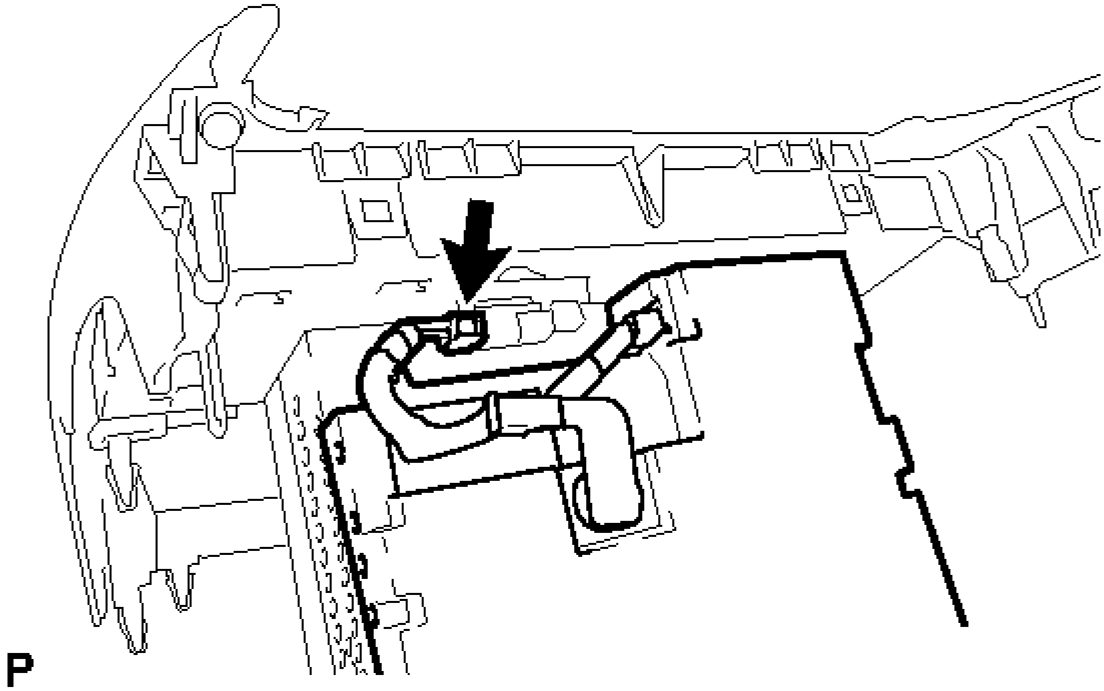

Fig. 12: Identifying Extension Module And Connector
Courtesy of TOYOTA MOTOR SALES, U.S.A., INC.

INSTALLATION

INSTALLATION

1. **INSTALL EXTENSION MODULE**
    a. Connect the connector to install the extension module.
    b. Connect the 3 connectors to install the navigation wire.
2. **INSTALL AIR CONDITIONING CONTROL ASSEMBLY** . Refer to **INSTALLATION - Step 1**
3. **INSTALL NO. 1 RADIO BRACKET** . Refer to **INSTALLATION - Step 10**
4. **INSTALL NO. 2 RADIO BRACKET** . Refer to **INSTALLATION - Step 11**
5. **INSTALL RADIO RECEIVER ASSEMBLY WITH AIR CONDITIONING CONTROL ASSEMBLY** . Refer to **INSTALLATION - Step 15**
6. **INSTALL NO. 2 INSTRUMENT PANEL REGISTER ASSEMBLY** . Refer to **INSTALLATION - Step 29**
7. **INSTALL CENTER INSTRUMENT CLUSTER FINISH PANEL ASSEMBLY** . Refer to **INSTALLATION - Step 30**
8. **INSTALL UPPER CONSOLE PANEL SUB-ASSEMBLY** . Refer to **INSTALLATION - Step 27**
9. **INSTALL BOX BOTTOM MAT** . Refer to **INSTALLATION - Step 28**
10. **INSTALL REAR CONSOLE BOX ASSEMBLY**

    Refer to **INSTALLATION**

HARD DISK DRIVE

COMPONENTS

ILLUSTRATION

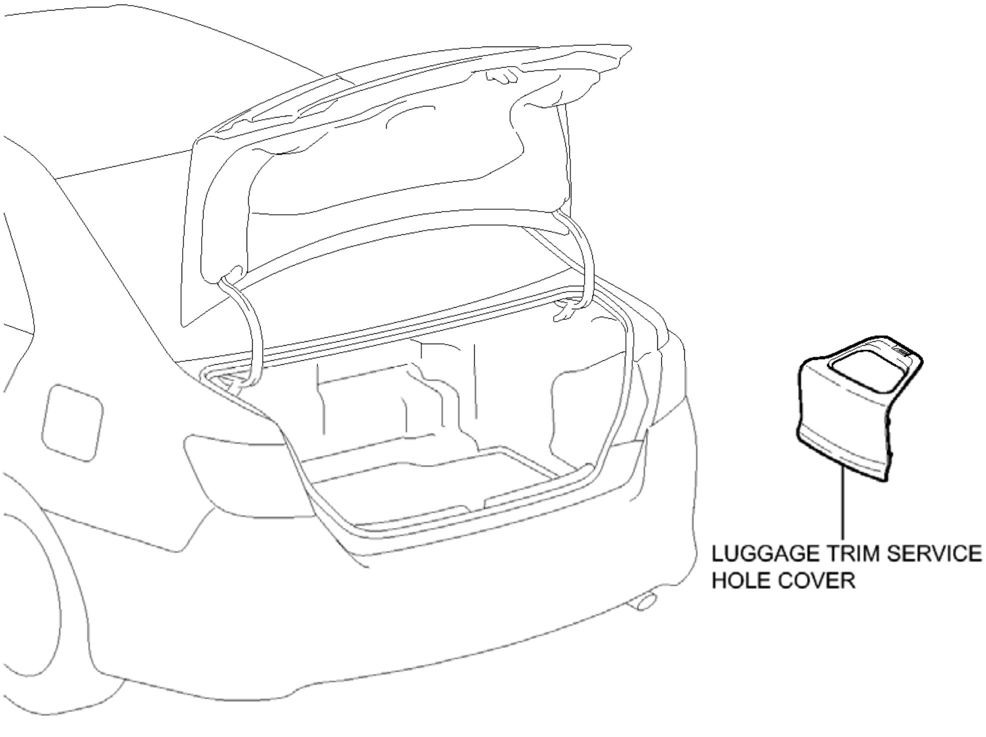
LUGGAGE TRIM SERVICE
HOLE COVER
P

Fig. 13: Identifying Hard Disk Drive Replacement Components (1 Of 3)
Courtesy of TOYOTA MOTOR SALES, U.S.A., INC.

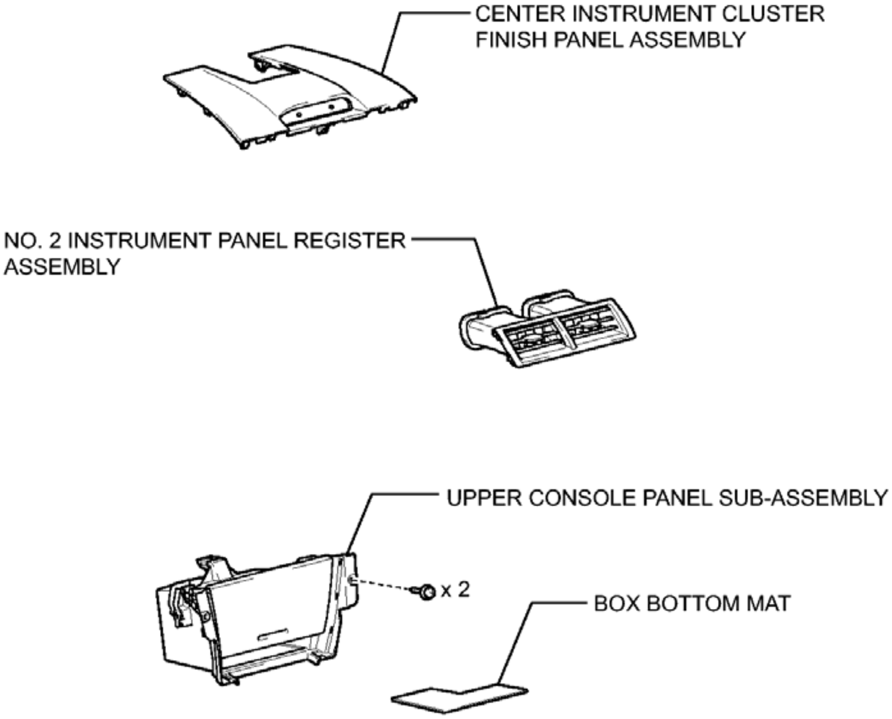
CENTER INSTRUMENT CLUSTER FINISH PANEL ASSEMBLY
NO. 2 INSTRUMENT PANEL REGISTER ASSEMBLY
UPPER CONSOLE PANEL SUB-ASSEMBLY
x 2
BOX BOTTOM MAT
P

Fig. 14: Identifying Hard Disk Drive Replacement Components (2 Of 3)
Courtesy of TOYOTA MOTOR SALES, U.S.A., INC.

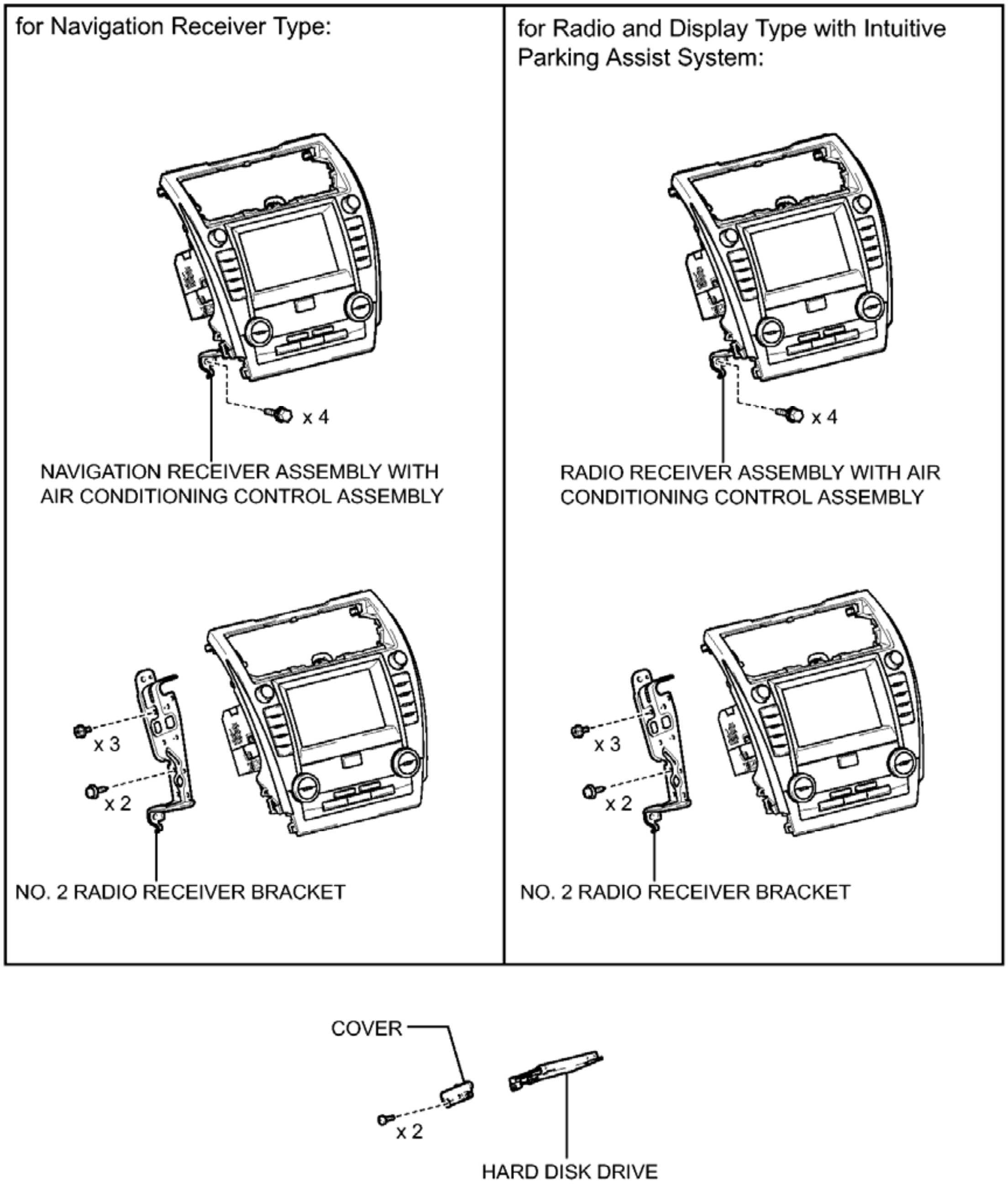
for Navigation Receiver Type:
x 4
NAVIGATION RECEIVER ASSEMBLY WITH AIR CONDITIONING CONTROL ASSEMBLY
x 3
x 2
NO. 2 RADIO RECEIVER BRACKET
for Radio and Display Type with Intuitive Parking Assist System:
x 4
RADIO RECEIVER ASSEMBLY WITH AIR CONDITIONING CONTROL ASSEMBLY
x 3
x 2
NO. 2 RADIO RECEIVER BRACKET
COVER
x 2
HARD DISK DRIVE

P

Fig. 15: Identifying Hard Disk Drive Replacement Components (3 Of 3)
Courtesy of TOYOTA MOTOR SALES, U.S.A., INC.

REMOVAL

REMOVAL

1. **PRECAUTION**

NOTE:

- **After turning the power switch off, waiting time may be required before disconnecting the cable from the negative (-) auxiliary battery terminal. Therefore, make sure to read the disconnecting the cable from the negative (-) auxiliary battery terminal notices before proceeding with work. Refer to PRECAUTION .**
- **for Navigation Receiver Type:**

  A Hard Disk Drive (HDD) is built into the navigation receiver assembly to store map and other data, and is used for the navigation system. Therefore, care must be taken for the following points when handling the navigation receiver assembly.
- **for Radio and Display Type with Intuitive Parking Assist System:**

  A Hard Disk Drive (HDD) is built into the navigation receiver assembly to store multi-media data, and is used for the audio and visual system. Therefore, care must be taken for the following points when handling the navigation receiver assembly.
- **When removing the hard disk drive, eliminate static electricity by touching the vehicle body to prevent components from being damaged.**

2. **REMOVE LUGGAGE TRIM SERVICE HOLE COVER** . Refer to **REMOVAL - Step 2**
3. **DISCONNECT CABLE FROM AUXILIARY BATTERY NEGATIVE TERMINAL**

   NOTE: **When disconnecting the cable, some systems need to be initialized after the cable is reconnected. Refer to INITIALIZATION .**

4. **REMOVE REAR CONSOLE BOX ASSEMBLY**

   Refer to **REMOVAL**

5. **REMOVE BOX BOTTOM MAT** . Refer to **REMOVAL - Step 24**
6. **REMOVE UPPER CONSOLE PANEL SUB-ASSEMBLY** . Refer to **REMOVAL - Step 25**
7. **REMOVE CENTER INSTRUMENT CLUSTER FINISH PANEL ASSEMBLY** . Refer to **REMOVAL - Step 22**
8. **REMOVE NO. 2 INSTRUMENT PANEL REGISTER ASSEMBLY** . Refer to **REMOVAL - Step 23**
9. **REMOVE NAVIGATION RECEIVER ASSEMBLY WITH AIR CONDITIONING CONTROL ASSEMBLY (for Navigation Receiver Type)** See step 9
10. **REMOVE RADIO RECEIVER ASSEMBLY WITH AIR CONDITIONING CONTROL ASSEMBLY (for Radio and Display Type with Intuitive Parking Assist System)** . Refer to **REMOVAL - Step 10**
11. **REMOVE NO. 2 RADIO RECEIVER BRACKET (for Navigation Receiver Type)** See step 11

12. **REMOVE NO. 2 RADIO RECEIVER BRACKET (for Radio and Display Type with Intuitive Parking Assist System)** . Refer to **REMOVAL - Step 16**
13. **REMOVE HARD DISK DRIVE**
    a. Remove the 2 screws.

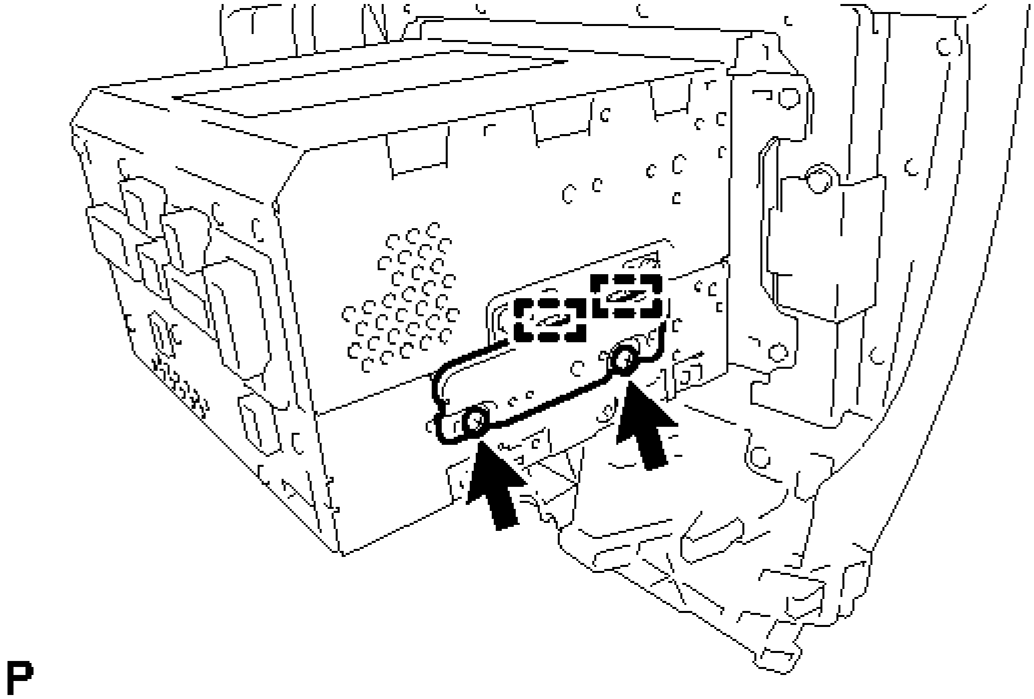

Fig. 16: Identifying Hard Disk Drive Cover Screws And Guides
Courtesy of TOYOTA MOTOR SALES, U.S.A., INC.

    b. Disengage the 2 guides to remove the cover.
    c. Pull out the hard disk drive from the navigation receiver assembly or radio and display receiver assembly in the direction shown by the arrow in the illustration to remove it.

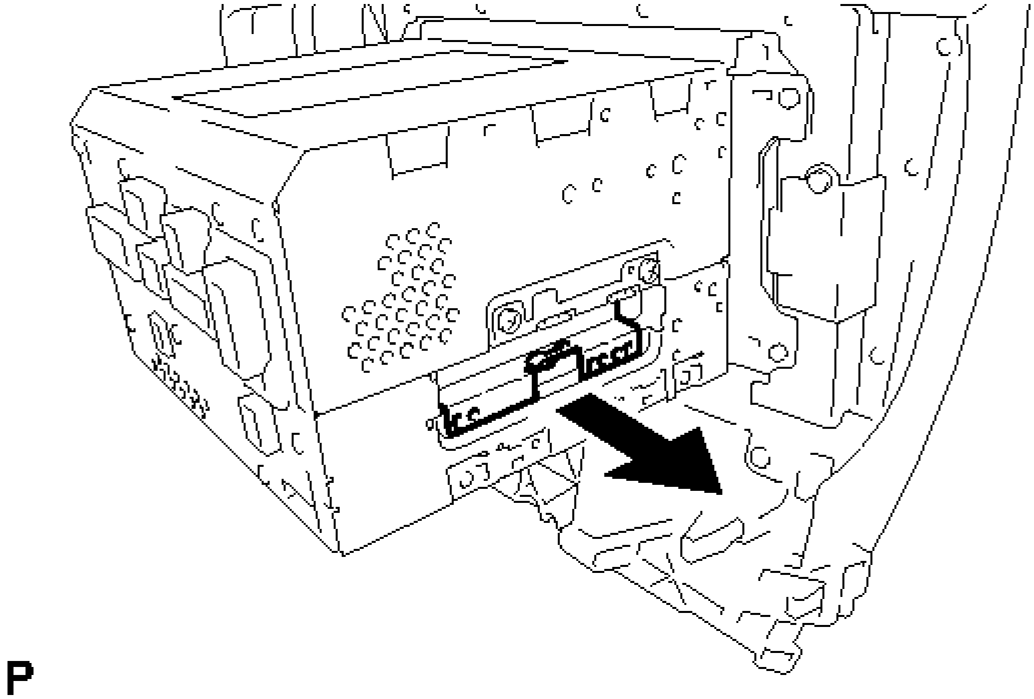

Fig. 17: Pulling Out The Hard Disk Drive From The Navigation Receiver Assembly
Courtesy of TOYOTA MOTOR SALES, U.S.A., INC.

INSTALLATION

INSTALLATION

1. **PRECAUTION**

   NOTE: When installing the hard disk drive, eliminate static electricity by touching the vehicle body to prevent components from being damaged.

2. **INSTALL HARD DISK DRIVE**
   1. Insert the hard disk drive in the direction shown by the arrow in the illustration to install it.

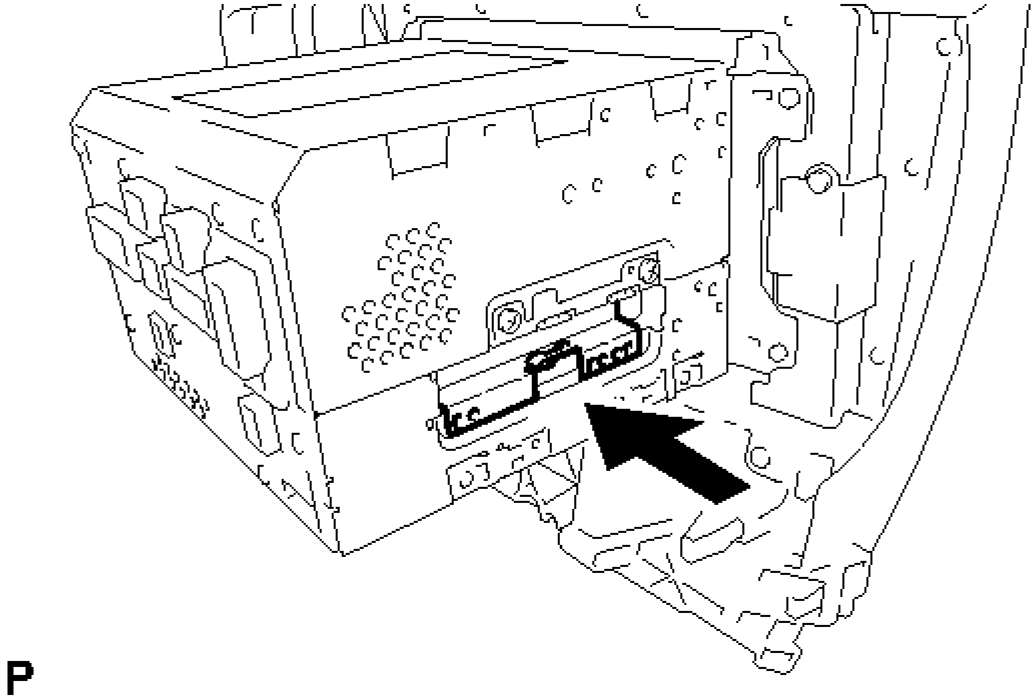

Fig. 18: Inserting The Hard Disk Drive
Courtesy of TOYOTA MOTOR SALES, U.S.A., INC.

   b. Engage the 2 guides to temporarily install the cover.
   c. Install the cover with the 2 screws.

3. **INSTALL NO. 2 RADIO RECEIVER BRACKET (for Navigation Receiver Type)** See step 6
4. **INSTALL NO. 2 RADIO RECEIVER BRACKET (for Radio and Display Type with Intuitive Parking Assist System)** . Refer to **INSTALLATION - Step 13**
5. **INSTALL NAVIGATION RECEIVER ASSEMBLY WITH AIR CONDITIONING CONTROL ASSEMBLY (for Navigation Receiver Type)** See step 7
6. **INSTALL RADIO RECEIVER ASSEMBLY WITH AIR CONDITIONING CONTROL ASSEMBLY (for Radio and Display Type with Intuitive Parking Assist System)** . Refer to **INSTALLATION - Step 15**
7. **INSTALL NO. 2 INSTRUMENT PANEL REGISTER ASSEMBLY** . Refer to **INSTALLATION - Step 29**
8. **INSTALL CENTER INSTRUMENT CLUSTER FINISH PANEL ASSEMBLY** . Refer to **INSTALLATION - Step 30**
9. **INSTALL UPPER CONSOLE PANEL SUB-ASSEMBLY** . Refer to **INSTALLATION - Step 27**
10. **INSTALL BOX BOTTOM MAT** . Refer to **INSTALLATION - Step 28**
11. **INSTALL REAR CONSOLE BOX ASSEMBLY**

    Refer to **INSTALLATION**

12. **CONNECT CABLE TO AUXILIARY BATTERY NEGATIVE TERMINAL**

NOTE: **When disconnecting the cable, some systems need to be initialized after the cable is reconnected. Refer to INITIALIZATION .**

13. **INSTALL LUGGAGE TRIM SERVICE HOLE COVER** . Refer to **INSTALLATION - Step 3**
14. **INSPECT HARD DISK DRIVE**

for Navigation Receiver Type: Refer to **OPERATION CHECK**

for Radio and Display Type with Intuitive Parking Assist System: Refer to **OPERATION CHECK**

NAVIGATION ANTENNA

COMPONENTS

ILLUSTRATION

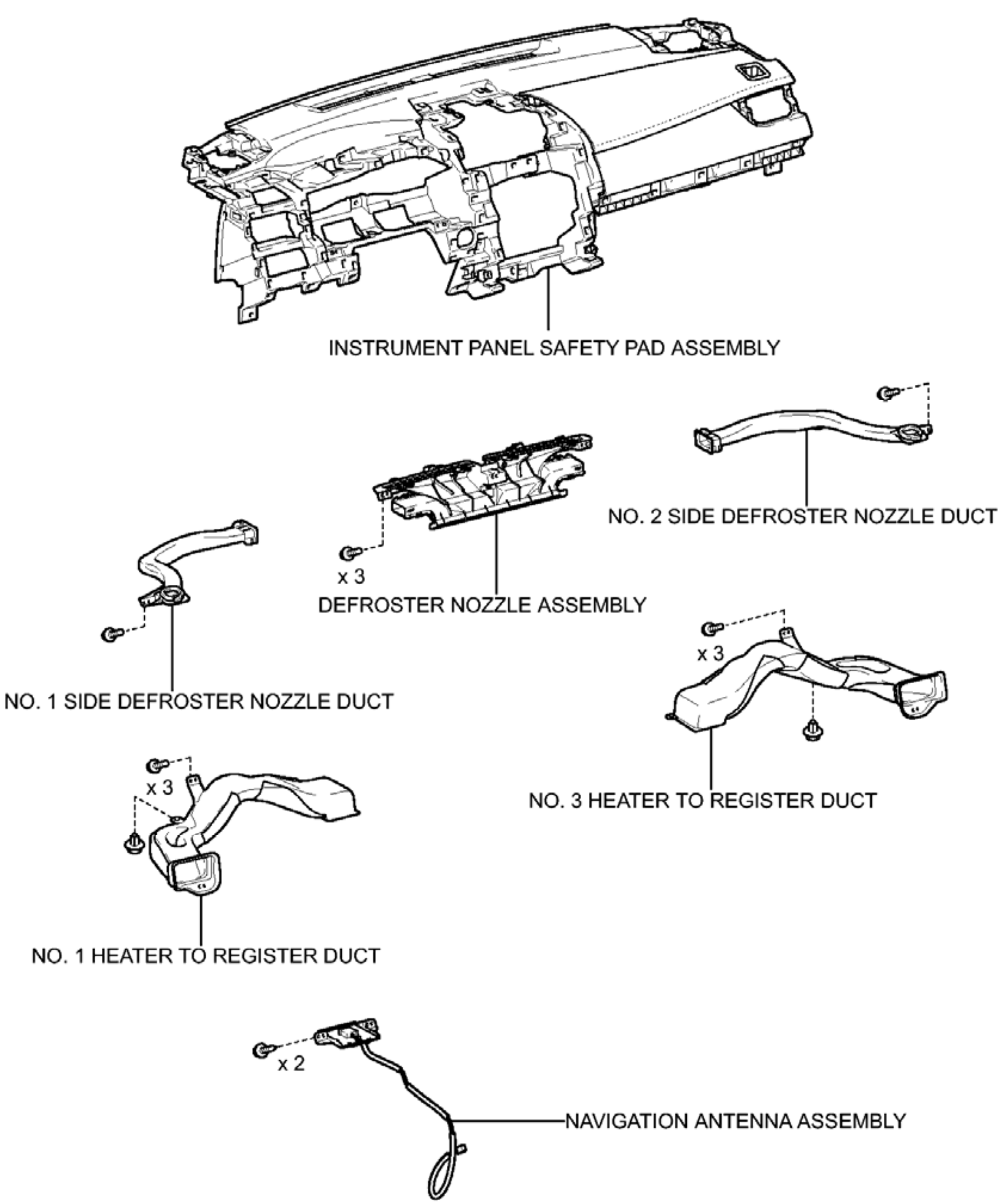
INSTRUMENT PANEL SAFETY PAD ASSEMBLY
NO. 2 SIDE DEFROSTER NOZZLE DUCT
x 3
DEFROSTER NOZZLE ASSEMBLY
NO. 1 SIDE DEFROSTER NOZZLE DUCT
x 3
NO. 3 HEATER TO REGISTER DUCT
x 3
NO. 1 HEATER TO REGISTER DUCT
x 2
NAVIGATION ANTENNA ASSEMBLY
P

Fig. 19: Identifying Navigation Antenna Replacement Components
Courtesy of TOYOTA MOTOR SALES, U.S.A., INC.

REMOVAL

REMOVAL

1. **REMOVE INSTRUMENT PANEL SAFETY PAD ASSEMBLY**

Refer to **REMOVAL**

2. **REMOVE NO. 1 HEATER TO REGISTER DUCT** . Refer to **DISASSEMBLY - Step 3**
3. **REMOVE NO. 1 SIDE DEFROSTER NOZZLE DUCT** . Refer to **DISASSEMBLY - Step 4**
4. **REMOVE NO. 3 HEATER TO REGISTER DUCT** . Refer to **DISASSEMBLY - Step 5**
5. **REMOVE NO. 2 SIDE DEFROSTER NOZZLE DUCT** . Refer to **DISASSEMBLY - Step 6**
6. **REMOVE DEFROSTER NOZZLE ASSEMBLY** . Refer to **DISASSEMBLY - Step 8**
7. **REMOVE NAVIGATION ANTENNA ASSEMBLY**
   a. Remove the 2 screws.

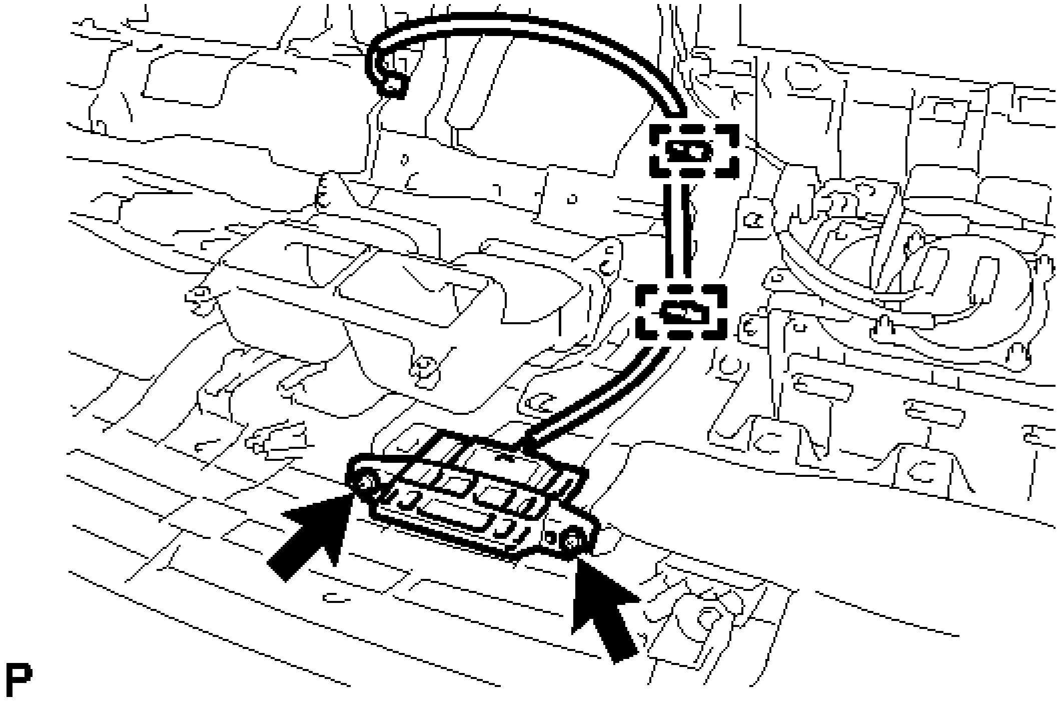

Fig. 20: Identifying Navigation Antenna Screws And Clamps
Courtesy of TOYOTA MOTOR SALES, U.S.A., INC.

   b. Disengage the 2 clamps and remove the navigation antenna assembly.

INSTALLATION

INSTALLATION

1. **INSTALL NAVIGATION ANTENNA ASSEMBLY**
   a. Engage the 2 clamps.
   b. Install the navigation antenna assembly with the 2 screws.
2. **INSTALL DEFROSTER NOZZLE ASSEMBLY** . Refer to **REASSEMBLY - Step 4**
3. **INSTALL NO. 2 SIDE DEFROSTER NOZZLE DUCT** . Refer to **REASSEMBLY - Step 6**
4. **INSTALL NO. 3 HEATER TO REGISTER DUCT** . Refer to **REASSEMBLY - Step 7**

5. **INSTALL NO. 1 SIDE DEFROSTER NOZZLE DUCT** . Refer to **REASSEMBLY - Step 8**
6. **INSTALL NO. 1 HEATER TO REGISTER DUCT** . Refer to **REASSEMBLY - Step 9**
7. **INSTALL INSTRUMENT PANEL SAFETY PAD ASSEMBLY**

   Refer to **INSTALLATION**

NAVIGATION RECEIVER

COMPONENTS

ILLUSTRATION

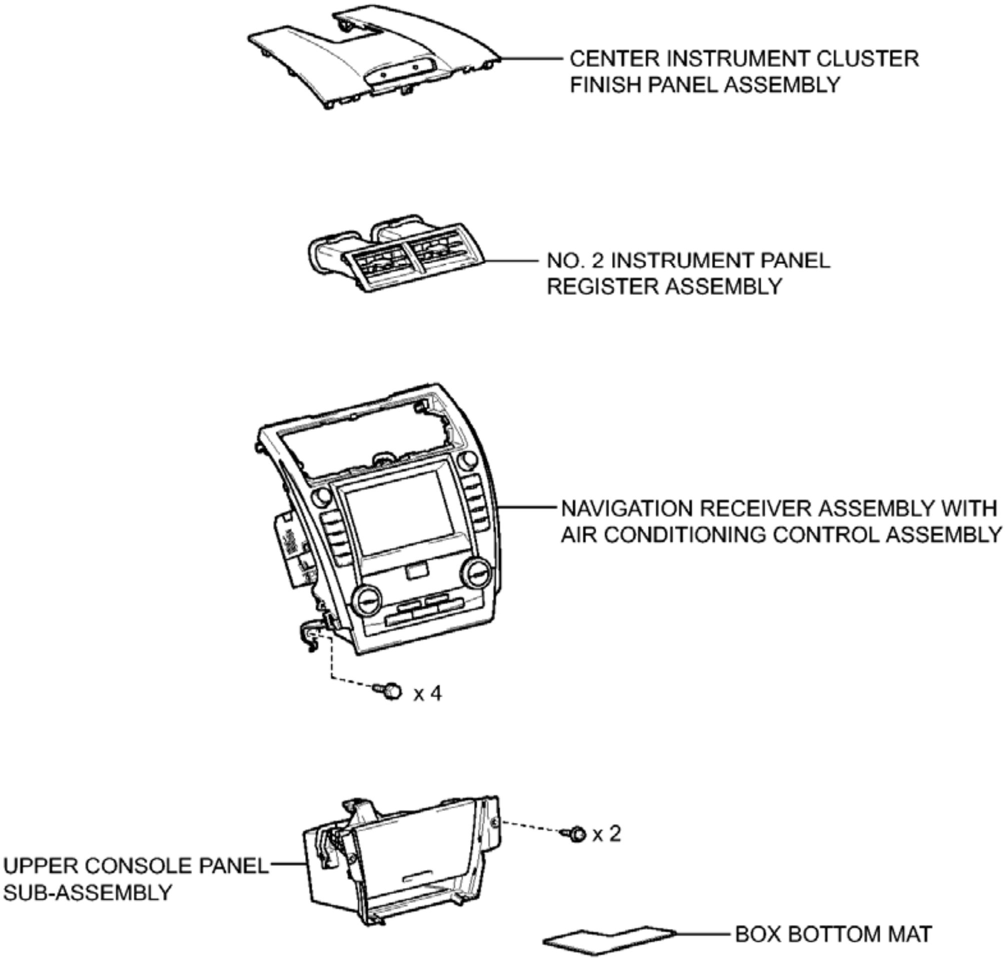
CENTER INSTRUMENT CLUSTER FINISH PANEL ASSEMBLY
NO. 2 INSTRUMENT PANEL REGISTER ASSEMBLY
NAVIGATION RECEIVER ASSEMBLY WITH AIR CONDITIONING CONTROL ASSEMBLY
x 4
x 2
UPPER CONSOLE PANEL SUB-ASSEMBLY
BOX BOTTOM MAT
P

Fig. 1: Identifying Navigation Receiver Replacement Components (1 Of 2)
Courtesy of TOYOTA MOTOR SALES, U.S.A., INC.

ILLUSTRATION

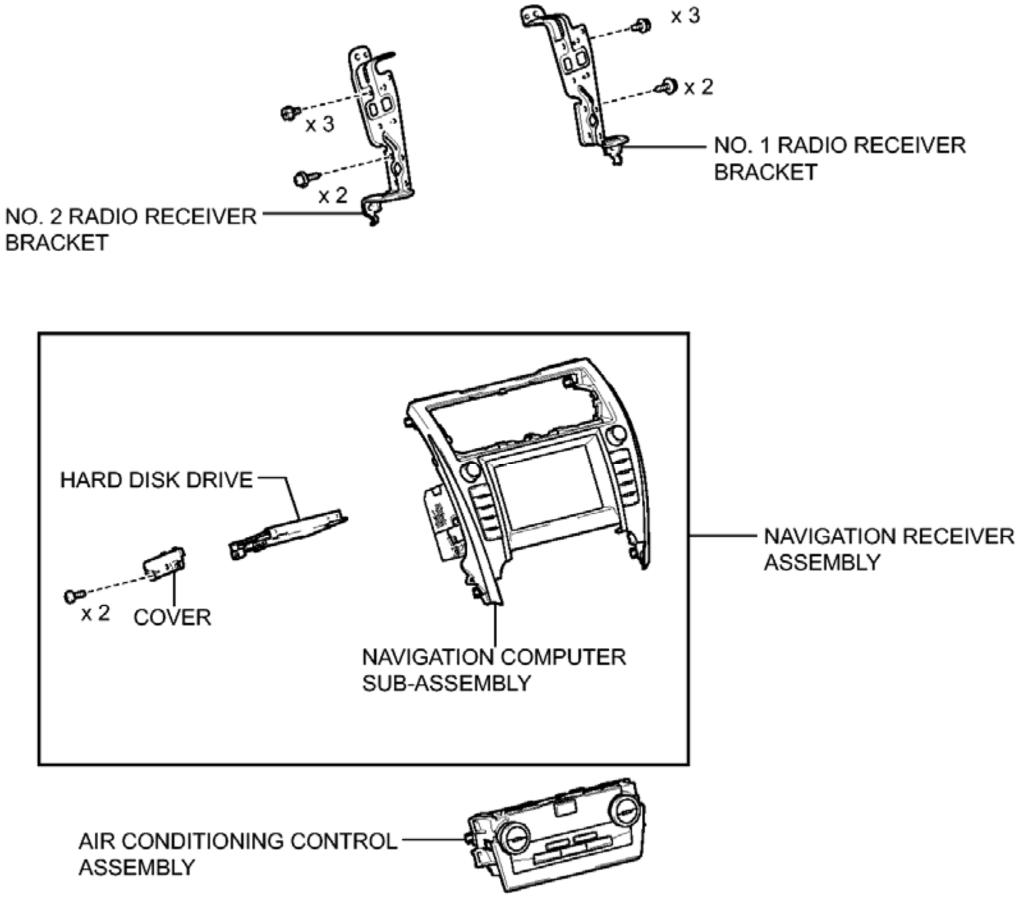
x 3
x 2
NO. 1 RADIO RECEIVER BRACKET
x 3
x 2
NO. 2 RADIO RECEIVER BRACKET
HARD DISK DRIVE
NAVIGATION RECEIVER ASSEMBLY
x 2
COVER
NAVIGATION COMPUTER SUB-ASSEMBLY
AIR CONDITIONING CONTROL ASSEMBLY

P

Fig. 2: Identifying Navigation Receiver Replacement Components (2 Of 2)
Courtesy of TOYOTA MOTOR SALES, U.S.A., INC.

REMOVAL

REMOVAL

1. **PRECAUTION**

NOTE:

- **After turning the ignition switch off, waiting time may be required before disconnecting the cable from the negative (-) battery terminal. Therefore, make sure to read the disconnecting the cable from the negative (-) battery terminal notices before proceeding with work. Refer to PRECAUTION .**
- **A Hard Disk Drive (HDD) is built into the navigation receiver**

assembly to store map and other data, and is used for the navigation system. Therefore, care must be taken when handling the navigation receiver assembly.

- **When removing the hard disc drive, eliminate static electricity by touching the vehicle body to prevent components from being damaged.**

2. **DISCONNECT CABLE FROM NEGATIVE BATTERY TERMINAL**

NOTE: **When disconnecting the cable, some systems need to be initialized after the cable is reconnected. Refer to INITIALIZATION .**

3. **REMOVE REAR CONSOLE BOX ASSEMBLY**

   Refer to **REMOVAL**

4. **REMOVE BOX BOTTOM MAT** . Refer to **REMOVAL - Step 25**
5. **REMOVE UPPER CONSOLE PANEL SUB-ASSEMBLY** . Refer to **REMOVAL - Step 26**
6. **REMOVE CENTER INSTRUMENT CLUSTER FINISH PANEL ASSEMBLY** . Refer to **REMOVAL - Step 23**
7. **REMOVE NO. 2 INSTRUMENT PANEL REGISTER ASSEMBLY** . Refer to **REMOVAL - Step 24**
8. **REMOVE NAVIGATION RECEIVER ASSEMBLY WITH AIR CONDITIONING CONTROL ASSEMBLY**
   a. Apply protective tape to the area shown in the illustration.

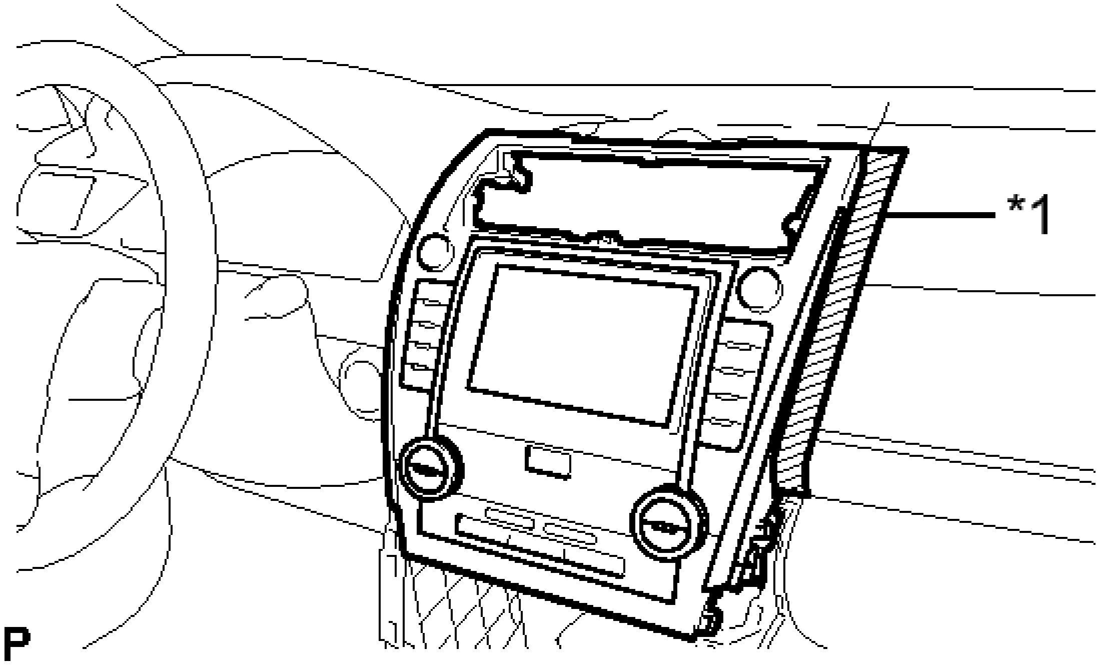

Fig. 3: Identifying Protective Tape
Courtesy of TOYOTA MOTOR SALES, U.S.A., INC.

TEXT IN ILLUSTRATION

*1	Protective Tape

b. Remove the 4 bolts.

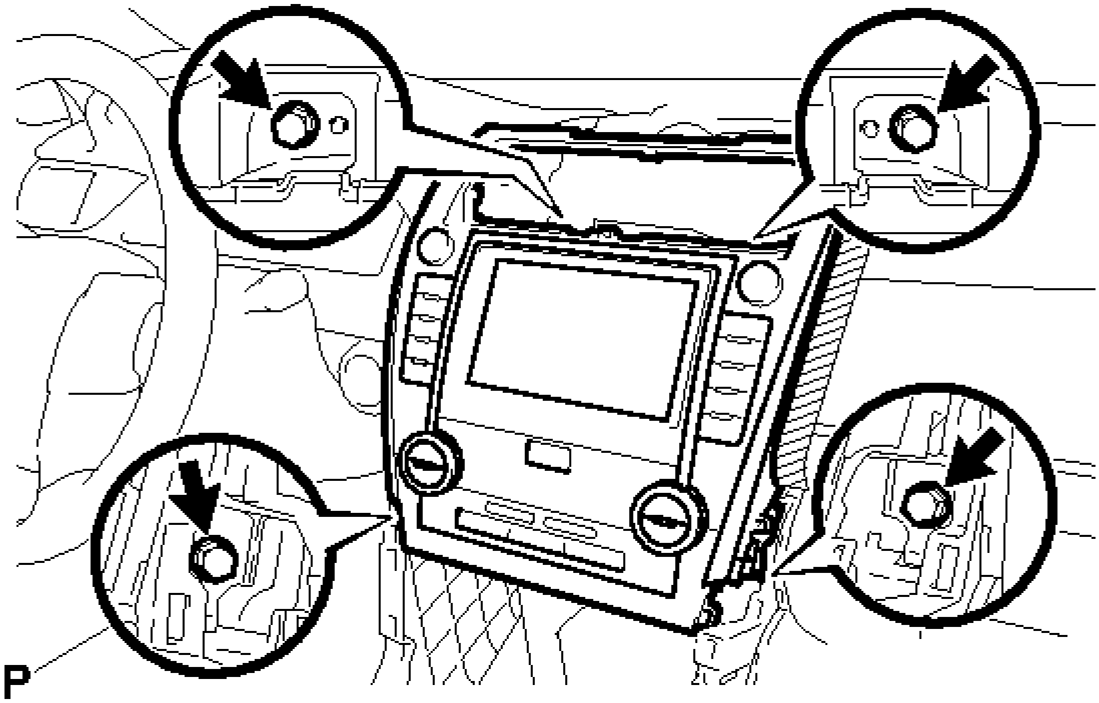

Fig. 4: Identifying Navigation Receiver Assembly With Air Conditioning Control Assembly Bolts
Courtesy of TOYOTA MOTOR SALES, U.S.A., INC.

c. Pull the navigation receiver assembly with air conditioning control assembly toward the rear of the vehicle and disengage the 8 clips.

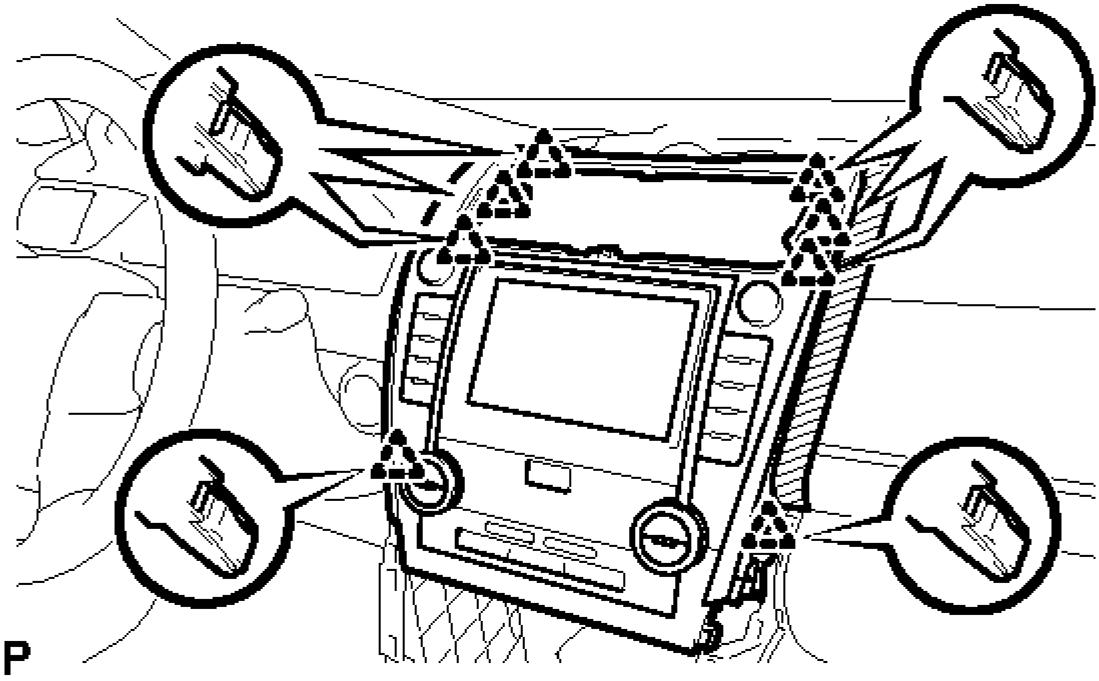

Fig. 5: Identifying Navigation Receiver Assembly With Air Conditioning Control Assembly Clips
Courtesy of TOYOTA MOTOR SALES, U.S.A., INC.

d. Disconnect each connector and remove the navigation receiver assembly with air conditioning control assembly.

9. **REMOVE NO. 1 RADIO RECEIVER BRACKET**
    a. Remove the 5 screws and No. 1 radio receiver bracket.

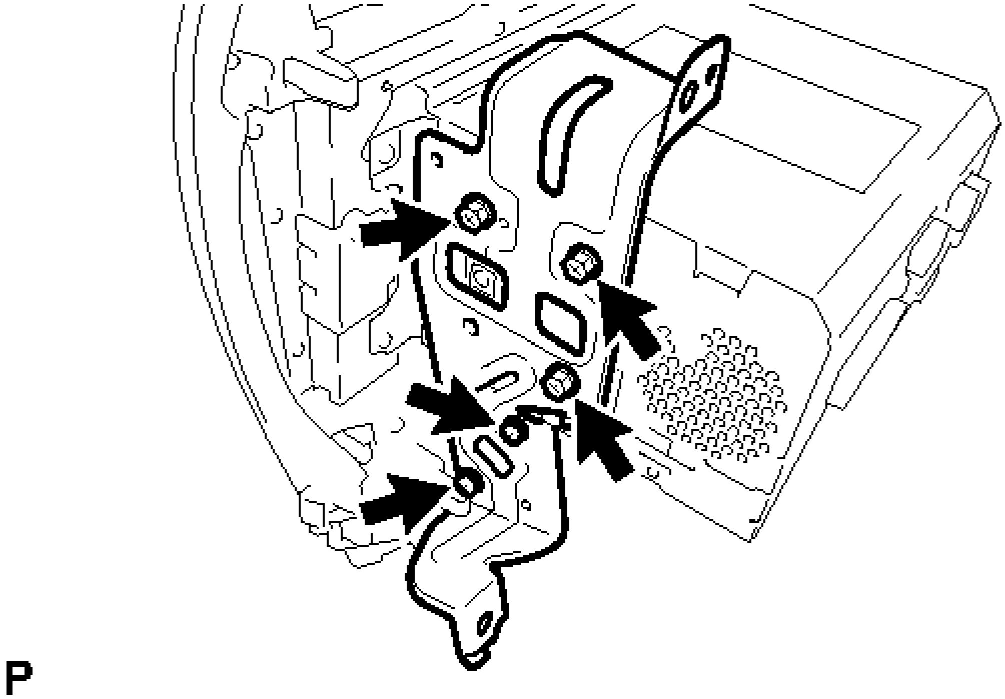

Fig. 6: Locating No. 1 Radio Receiver Bracket Screws
Courtesy of TOYOTA MOTOR SALES, U.S.A., INC.

10. **REMOVE NO. 2 RADIO RECEIVER BRACKET**
    a. Remove the 5 screws and No. 2 radio receiver bracket.

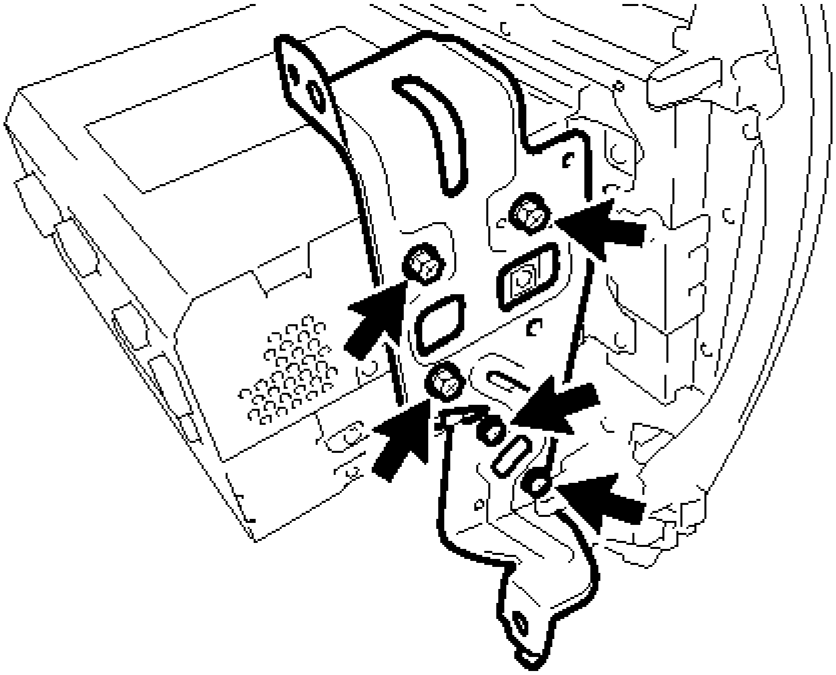

Fig. 7: Locating No. 2 Radio Receiver Bracket Screws
Courtesy of TOYOTA MOTOR SALES, U.S.A., INC.

11. **REMOVE HARD DISK DRIVE** See step 12
12. **REMOVE AIR CONDITIONING CONTROL ASSEMBLY** . Refer to **REMOVAL - Step 20**
13. **REMOVE NAVIGATION COMPUTER SUB-ASSEMBLY**

INSTALLATION

INSTALLATION

1. **PRECAUTION**

NOTE: When installing the hard disc drive, eliminate static electricity by touching the vehicle body to prevent components from being damaged.

2. **INSTALL NAVIGATION COMPUTER SUB-ASSEMBLY**
3. **INSTALL AIR CONDITIONING CONTROL ASSEMBLY** . Refer to **INSTALLATION - Step 1**
4. **INSTALL HARD DISK DRIVE** See step 2
5. **INSTALL NO. 1 RADIO RECEIVER BRACKET**
   a. Install the No. 1 radio receiver bracket with the 5 screws.
6. **INSTALL NO. 2 RADIO RECEIVER BRACKET**
   a. Install the No. 2 radio receiver bracket with the 5 screws.
7. **INSTALL NAVIGATION RECEIVER ASSEMBLY WITH AIR CONDITIONING CONTROL ASSEMBLY**

    a. Connect each connector.
    b. Engage the 8 clips to the vehicle body to temporarily install the navigation receiver assembly with air conditioning control assembly.
    c. Install the navigation receiver assembly with air conditioning control assembly with the 4 bolts.
8. **INSTALL NO. 2 INSTRUMENT PANEL REGISTER ASSEMBLY** . Refer to **INSTALLATION - Step 29**
9. **INSTALL CENTER INSTRUMENT CLUSTER FINISH PANEL ASSEMBLY** . Refer to **INSTALLATION - Step 30**
10. **INSTALL UPPER CONSOLE PANEL SUB-ASSEMBLY** . Refer to **INSTALLATION - Step 27**
11. **INSTALL BOX BOTTOM MAT** . Refer to **INSTALLATION - Step 28**
12. **INSTALL REAR CONSOLE BOX ASSEMBLY**

    Refer to **INSTALLATION**

13. **CONNECT CABLE TO NEGATIVE BATTERY TERMINAL**

    NOTE: **When disconnecting the cable, some systems need to be initialized after the cable is reconnected. Refer to INITIALIZATION .**

14. **INSPECT HARD DISK DRIVE**

    Refer to **OPERATION CHECK**

15. **REPLACED OPERATION (w/ Parking Assist Monitor System)**

    Refer to **CALIBRATION**

NAVIGATION ECU

COMPONENTS

ILLUSTRATION

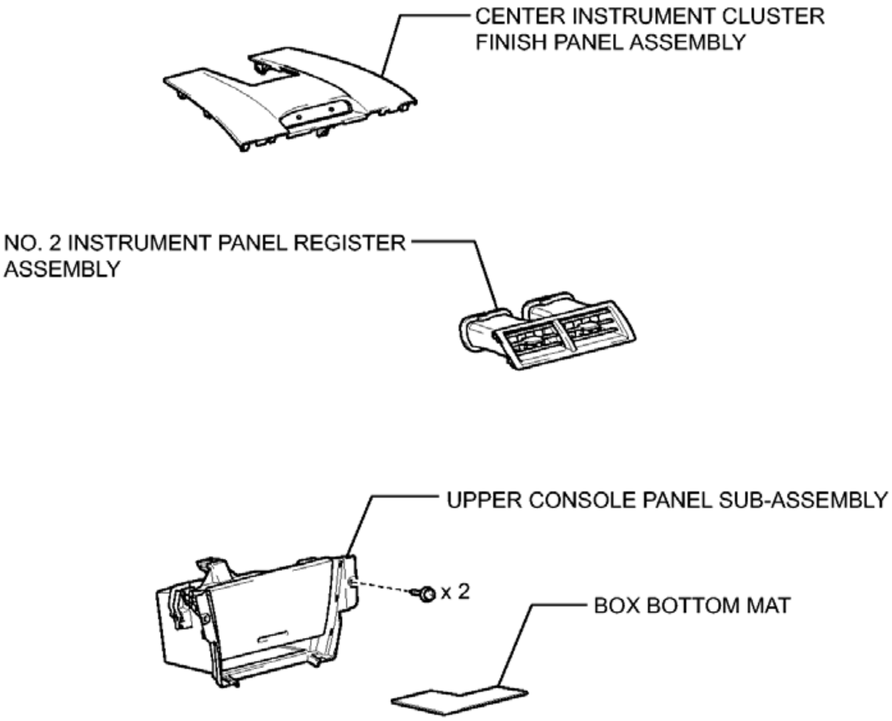
CENTER INSTRUMENT CLUSTER FINISH PANEL ASSEMBLY
NO. 2 INSTRUMENT PANEL REGISTER ASSEMBLY
UPPER CONSOLE PANEL SUB-ASSEMBLY
x 2
BOX BOTTOM MAT
P

Fig. 8: Identifying Navigation ECU Replacement Components (1 Of 2)
Courtesy of TOYOTA MOTOR SALES, U.S.A., INC.

ILLUSTRATION

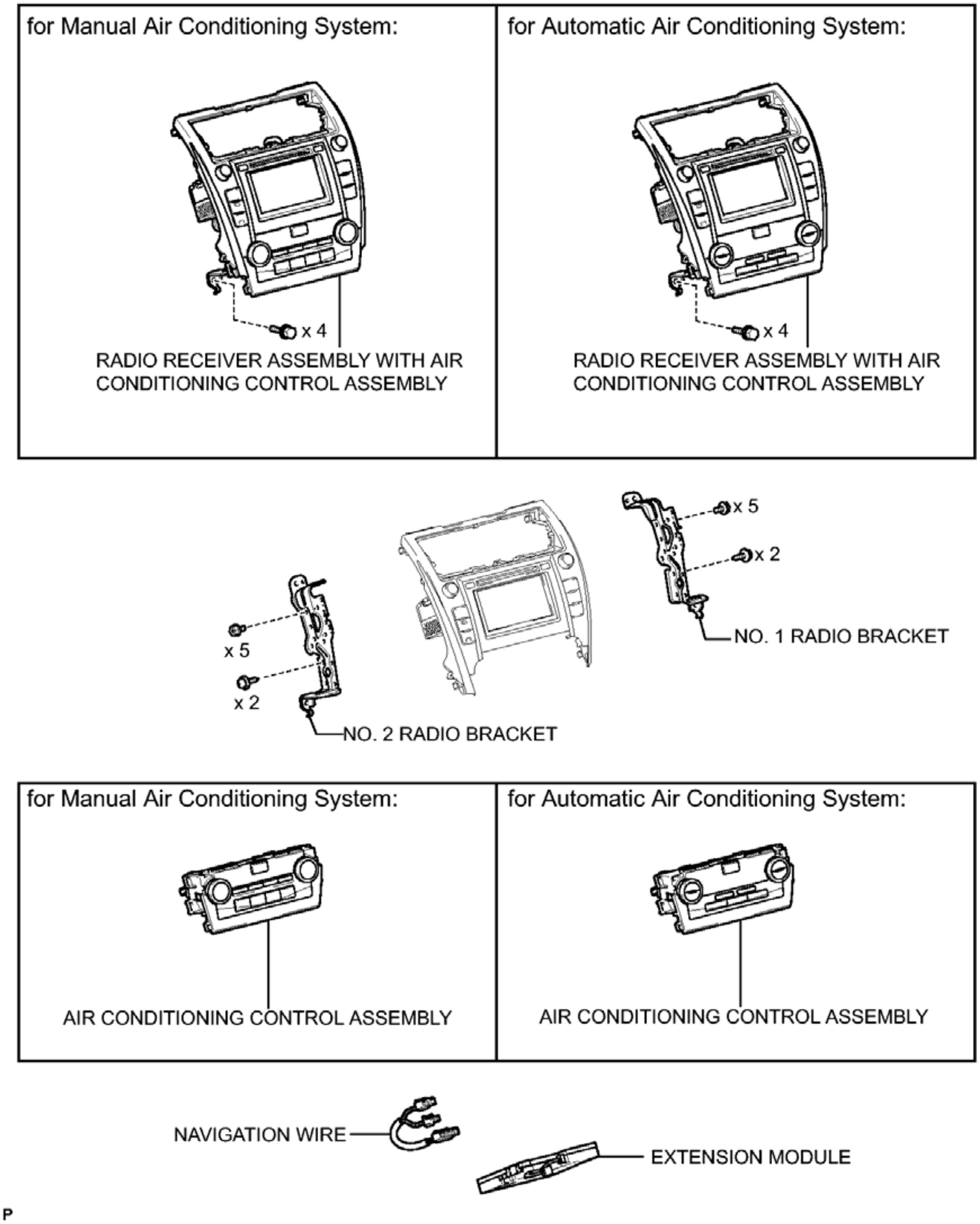
for Manual Air Conditioning System:
x 4
RADIO RECEIVER ASSEMBLY WITH AIR CONDITIONING CONTROL ASSEMBLY
for Automatic Air Conditioning System:
x 4
RADIO RECEIVER ASSEMBLY WITH AIR CONDITIONING CONTROL ASSEMBLY
x 5
x 2
NO. 1 RADIO BRACKET
x 5
x 2
NO. 2 RADIO BRACKET
for Manual Air Conditioning System:
AIR CONDITIONING CONTROL ASSEMBLY
for Automatic Air Conditioning System:
AIR CONDITIONING CONTROL ASSEMBLY
NAVIGATION WIRE
EXTENSION MODULE
P

Fig. 9: Identifying Navigation ECU Replacement Components (2 Of 2)
Courtesy of TOYOTA MOTOR SALES, U.S.A., INC.

REMOVAL

REMOVAL

1. **REMOVE REAR CONSOLE BOX ASSEMBLY**

Refer to **REMOVAL**

2. **REMOVE BOX BOTTOM MAT** . Refer to **REMOVAL - Step 25**
3. **REMOVE UPPER CONSOLE PANEL SUB-ASSEMBLY** . Refer to **REMOVAL - Step 26**
4. **REMOVE CENTER INSTRUMENT CLUSTER FINISH PANEL ASSEMBLY** . Refer to **REMOVAL - Step 23**
5. **REMOVE NO. 2 INSTRUMENT PANEL REGISTER ASSEMBLY** . Refer to **REMOVAL - Step 24**
6. **REMOVE RADIO RECEIVER ASSEMBLY WITH AIR CONDITIONING CONTROL ASSEMBLY** . Refer to **REMOVAL - Step 9**
7. **REMOVE NO. 1 RADIO BRACKET** . Refer to **REMOVAL - Step 12**
8. **REMOVE NO. 2 RADIO BRACKET** . Refer to **REMOVAL - Step 13**
9. **REMOVE AIR CONDITIONING CONTROL ASSEMBLY** . Refer to **REMOVAL - Step 20**
10. **REMOVE EXTENSION MODULE**
    a. Disconnect the 3 connectors to remove the navigation wire.

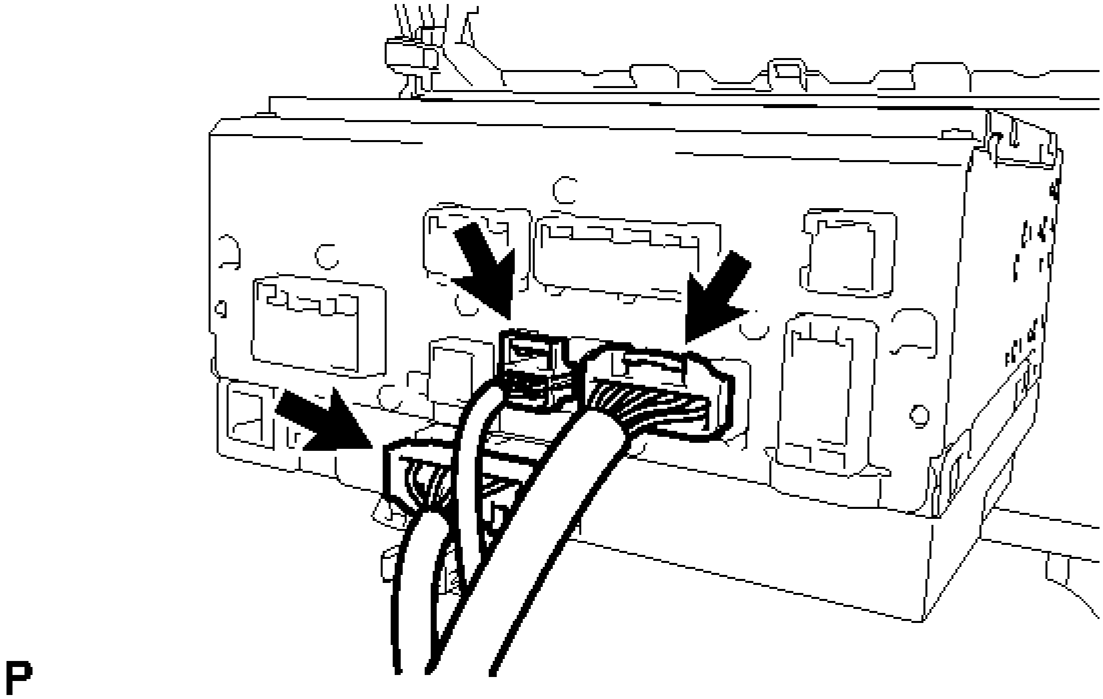

Fig. 10: Identifying Navigation Wire Connectors
Courtesy of TOYOTA MOTOR SALES, U.S.A., INC.

    b. Disconnect the connector to remove the extension module.

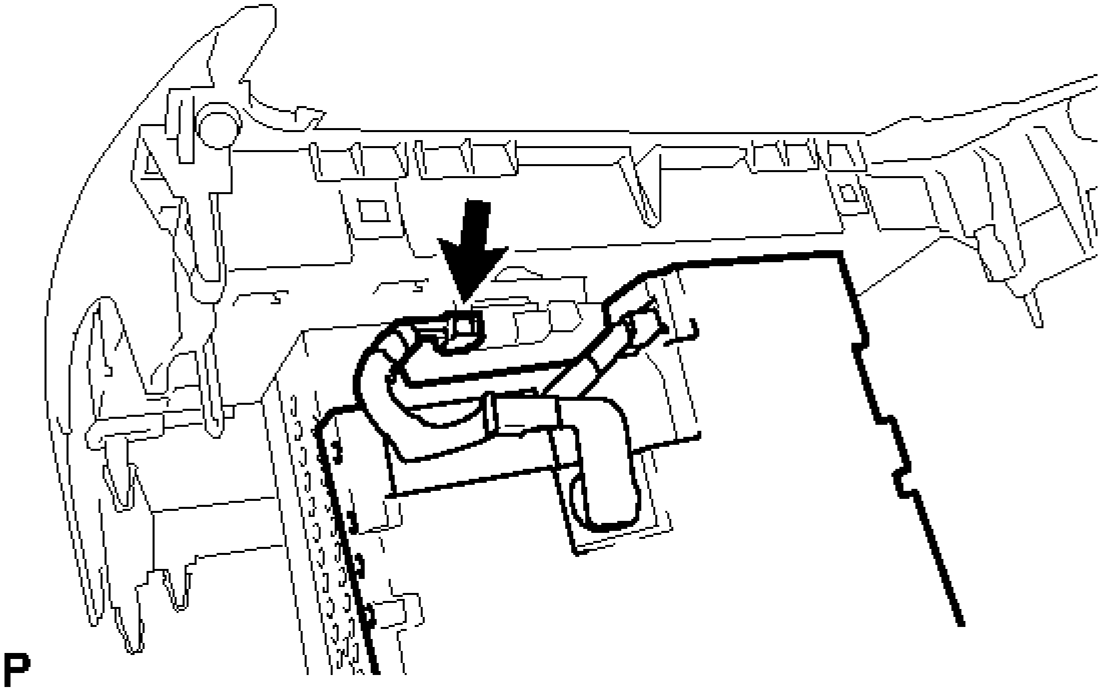

Fig. 11: Identifying Extension Module Connector
Courtesy of TOYOTA MOTOR SALES, U.S.A., INC.

INSTALLATION

INSTALLATION

1. **INSTALL EXTENSION MODULE**
    a. Connect the connector to install the extension module.
    b. Connect the 3 connectors to install the navigation wire.
2. **INSTALL AIR CONDITIONING CONTROL ASSEMBLY** . Refer to **INSTALLATION - Step 1**
3. **INSTALL NO. 1 RADIO BRACKET** . Refer to **INSTALLATION - Step 10**
4. **INSTALL NO. 2 RADIO BRACKET** . Refer to **INSTALLATION - Step 11**
5. **INSTALL RADIO RECEIVER ASSEMBLY WITH AIR CONDITIONING CONTROL ASSEMBLY** . Refer to **INSTALLATION - Step 15**
6. **INSTALL NO. 2 INSTRUMENT PANEL REGISTER ASSEMBLY** . Refer to **INSTALLATION - Step 29**
7. **INSTALL CENTER INSTRUMENT CLUSTER FINISH PANEL ASSEMBLY** . Refer to **INSTALLATION - Step 30**
8. **INSTALL UPPER CONSOLE PANEL SUB-ASSEMBLY** . Refer to **INSTALLATION - Step 27**
9. **INSTALL BOX BOTTOM MAT** . Refer to **INSTALLATION - Step 28**
10. **INSTALL REAR CONSOLE BOX ASSEMBLY**

    Refer to **INSTALLATION**

HARD DISK DRIVE

COMPONENTS

ILLUSTRATION

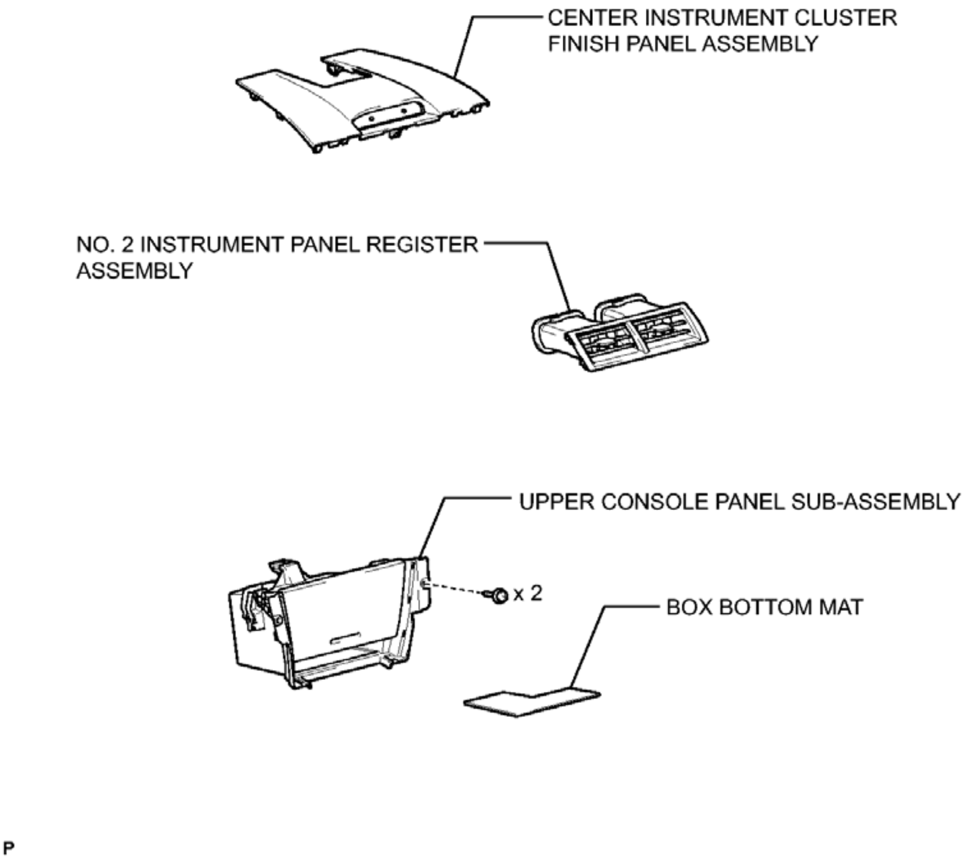
CENTER INSTRUMENT CLUSTER FINISH PANEL ASSEMBLY
NO. 2 INSTRUMENT PANEL REGISTER ASSEMBLY
UPPER CONSOLE PANEL SUB-ASSEMBLY
x 2
BOX BOTTOM MAT
P

Fig. 12: Identifying Hard Disk Drive Replacement Components (1 Of 2)
Courtesy of TOYOTA MOTOR SALES, U.S.A., INC.

ILLUSTRATION

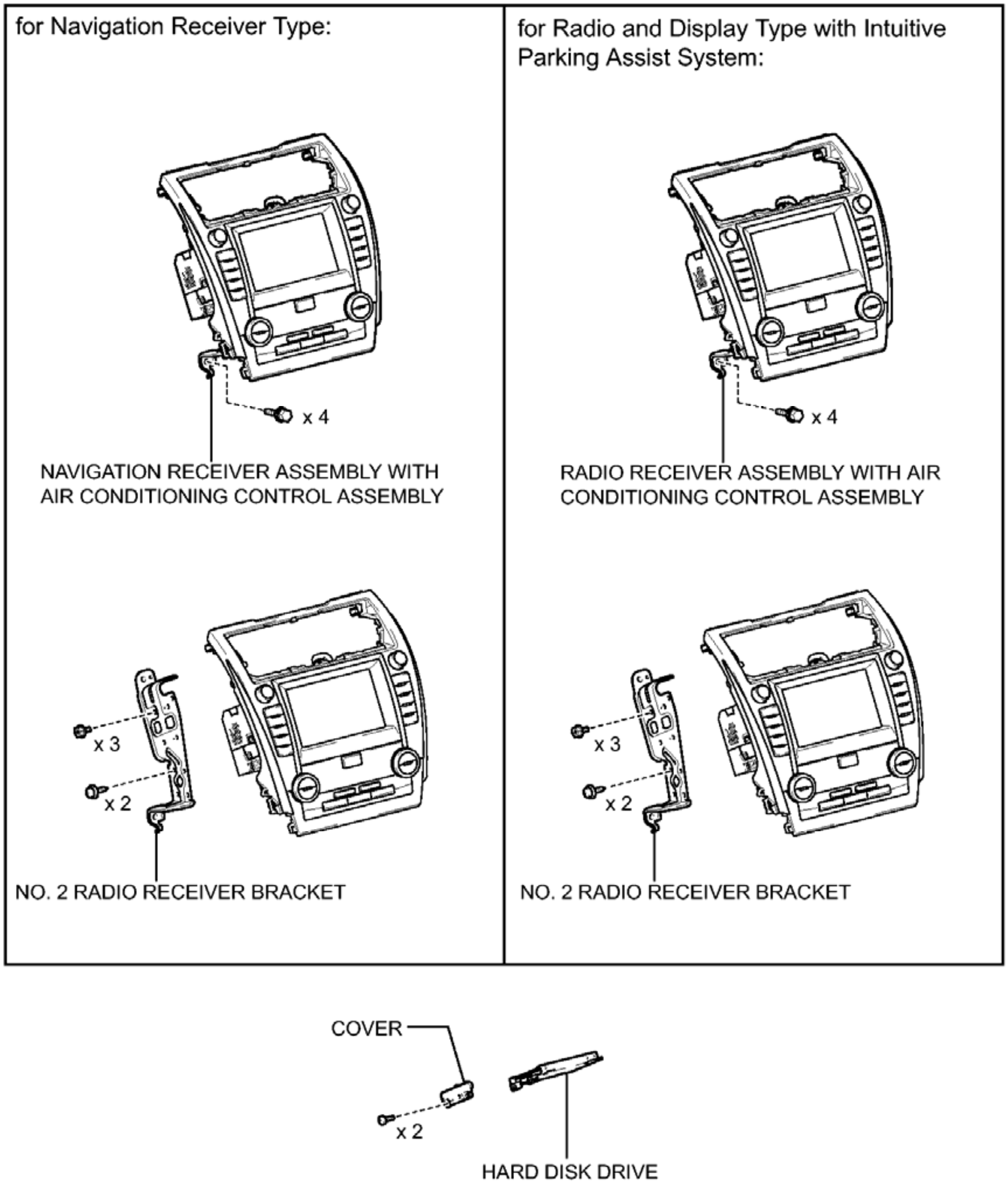
for Navigation Receiver Type:
x 4
NAVIGATION RECEIVER ASSEMBLY WITH AIR CONDITIONING CONTROL ASSEMBLY
x 3
x 2
NO. 2 RADIO RECEIVER BRACKET
for Radio and Display Type with Intuitive Parking Assist System:
x 4
RADIO RECEIVER ASSEMBLY WITH AIR CONDITIONING CONTROL ASSEMBLY
x 3
x 2
NO. 2 RADIO RECEIVER BRACKET
COVER
x 2
HARD DISK DRIVE

P

Fig. 13: Identifying Hard Disk Drive Replacement Components (2 Of 2)
Courtesy of TOYOTA MOTOR SALES, U.S.A., INC.

REMOVAL

REMOVAL

1. **PRECAUTION**

NOTE:

- **After turning the ignition switch off, waiting time may be required before disconnecting the cable from the negative (-) battery terminal. Therefore, make sure to read the disconnecting the cable from the negative (-) battery terminal notices before proceeding with work. Refer to PRECAUTION .**
- **for Navigation Receiver Type:**

  A Hard Disk Drive (HDD) is built into the navigation receiver assembly to store map and other data, and is used for the navigation system. Therefore, care must be taken for the following points when handling the navigation receiver assembly.
- **for Radio and Display Type with Intuitive Parking Assist System:**

  A Hard Disk Drive (HDD) is built into the radio and display receiver assembly to store multi-media data, and is used for the audio and visual system. Therefore, care must be taken for the following points when handling the radio and display receiver assembly.
- **When removing the hard disc drive, eliminate static electricity by touching the vehicle body to prevent components from being damaged.**

2. **DISCONNECT CABLE FROM NEGATIVE BATTERY TERMINAL**

   NOTE: **When disconnecting the cable, some systems need to be initialized after the cable is reconnected. Refer to INITIALIZATION .**

3. **REMOVE REAR CONSOLE BOX ASSEMBLY**

   Refer to **REMOVAL**

4. **REMOVE BOX BOTTOM MAT** . Refer to **REMOVAL - Step 25**
5. **REMOVE UPPER CONSOLE PANEL SUB-ASSEMBLY** . Refer to **REMOVAL - Step 26**
6. **REMOVE CENTER INSTRUMENT CLUSTER FINISH PANEL ASSEMBLY** . Refer to **REMOVAL - Step 23**
7. **REMOVE NO. 2 INSTRUMENT PANEL REGISTER ASSEMBLY** . Refer to **REMOVAL - Step 24**
8. **REMOVE NAVIGATION RECEIVER ASSEMBLY WITH AIR CONDITIONING CONTROL ASSEMBLY (for Navigation Receiver Type)** See step 8
9. **REMOVE RADIO RECEIVER ASSEMBLY WITH AIR CONDITIONING CONTROL ASSEMBLY (for Radio and Display Type with Intuitive Parking Assist System)** . Refer to **REMOVAL - Step 9**
10. **REMOVE NO. 2 RADIO RECEIVER BRACKET (for Navigation Receiver Type)** See step 10
11. **REMOVE NO. 2 RADIO RECEIVER BRACKET (for Radio and Display Type with Intuitive**

Parking Assist System) . Refer to **REMOVAL - Step 15**

12. **REMOVE HARD DISK DRIVE**
    a. Remove the 2 screws.

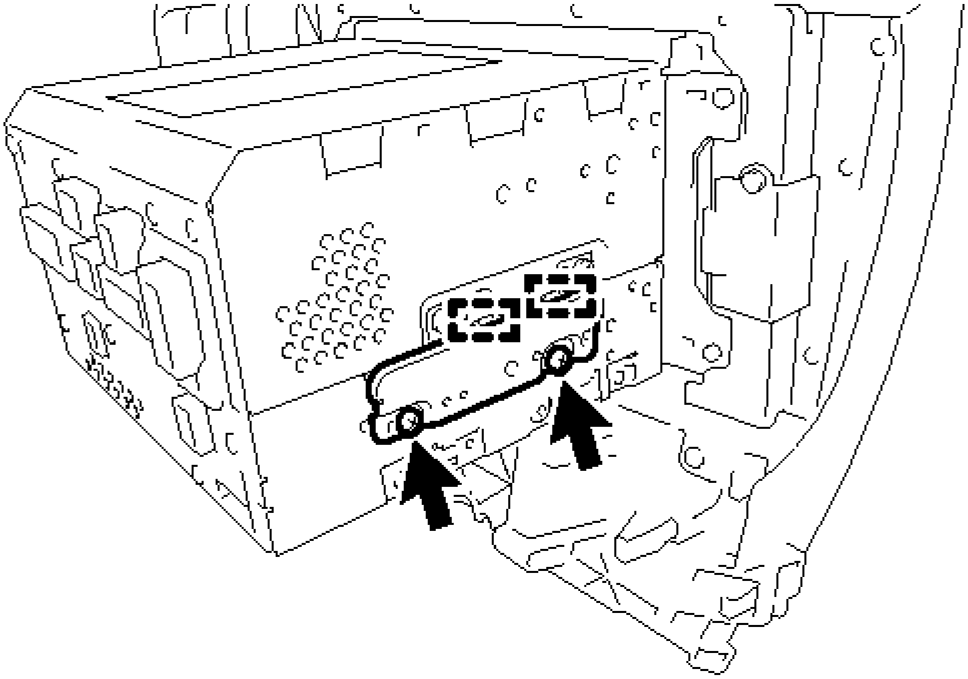

P

Fig. 14: Identifying Hard Disk Drive Screws
Courtesy of TOYOTA MOTOR SALES, U.S.A., INC.

    b. Disengage the 2 guides to remove the cover.
    c. Pull out the hard disk drive from the navigation receiver assembly or radio and display receiver assembly in the direction shown by the arrow in the illustration to remove it.

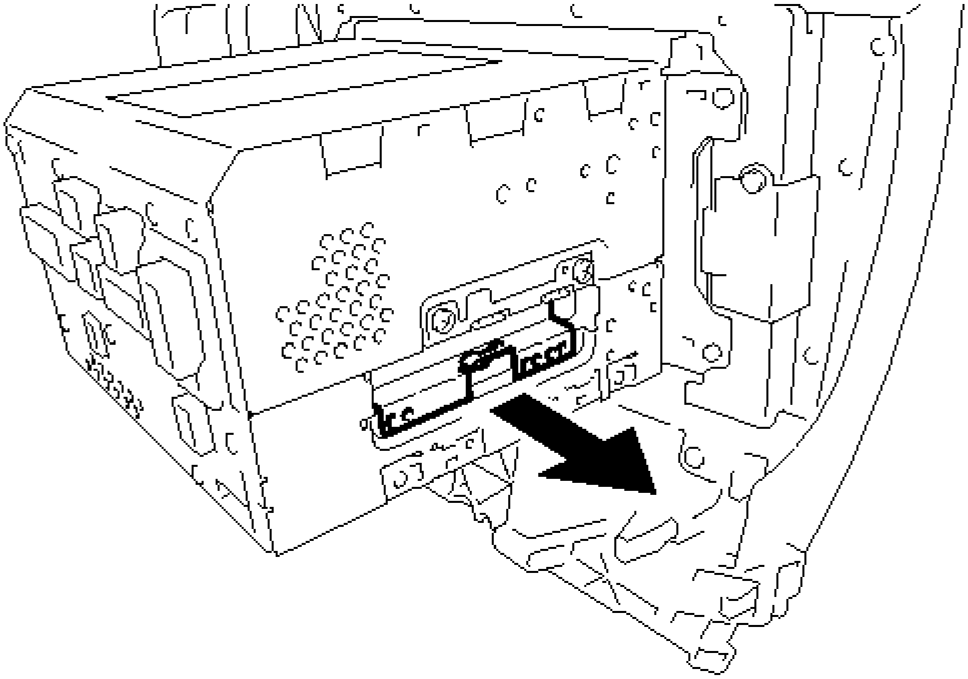

P

Fig. 15: Removing Hard Disk Drive

Courtesy of TOYOTA MOTOR SALES, U.S.A., INC.

INSTALLATION

INSTALLATION

1. **PRECAUTION**

NOTE: When installing the hard disc drive, eliminate static electricity by touching the vehicle body to prevent components from being damaged.

2. **INSTALL HARD DISK DRIVE**
    1. Insert the hard disk drive in the direction shown by the arrow in the illustration to install it.

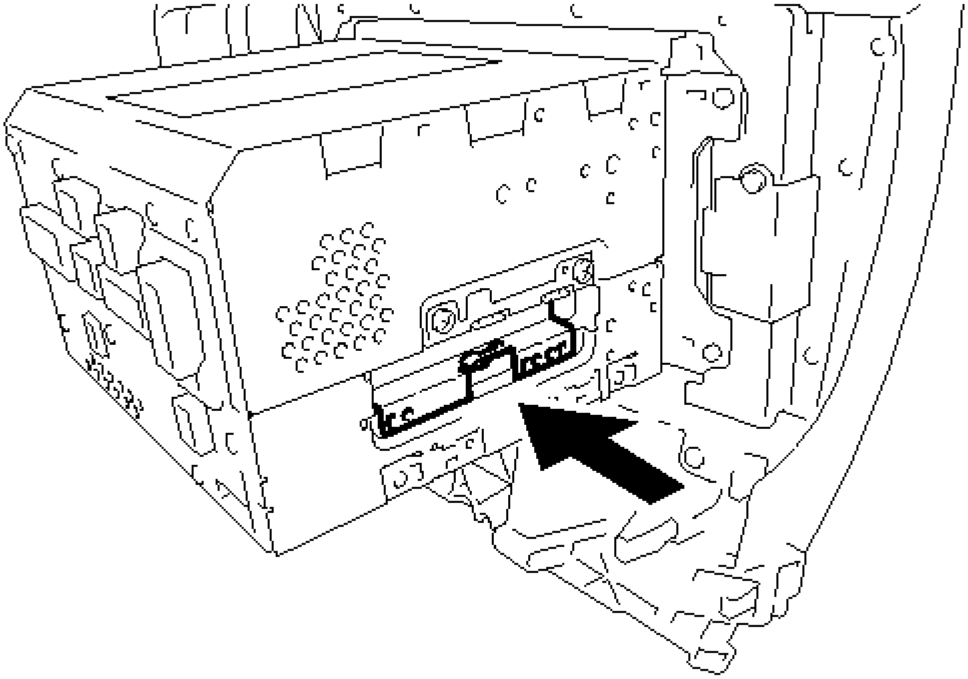

Fig. 16: Installing Hard Disk Drive
Courtesy of TOYOTA MOTOR SALES, U.S.A., INC.

b. Engage the 2 guides to temporarily install the cover.
c. Install the cover with the 2 screws.

3. **INSTALL NO. 2 RADIO RECEIVER BRACKET (for Navigation Receiver Type)** See step 6
4. **INSTALL NO. 2 RADIO RECEIVER BRACKET (for Radio and Display Type with Intuitive Parking Assist System)** . Refer to **INSTALLATION - Step 13**
5. **INSTALL NAVIGATION RECEIVER ASSEMBLY WITH AIR CONDITIONING CONTROL ASSEMBLY (for Navigation Receiver Type)** See step 7
6. **INSTALL RADIO RECEIVER ASSEMBLY WITH AIR CONDITIONING CONTROL ASSEMBLY (for Radio and Display Type with Intuitive Parking Assist System)** . Refer to **INSTALLATION - Step 15**
7. **INSTALL NO. 2 INSTRUMENT PANEL REGISTER ASSEMBLY** . Refer to **INSTALLATION - Step 29**
8. **INSTALL CENTER INSTRUMENT CLUSTER FINISH PANEL ASSEMBLY** . Refer to **INSTALLATION - Step 30**
9. **INSTALL UPPER CONSOLE PANEL SUB-ASSEMBLY** . Refer to **INSTALLATION - Step 27**
10. **INSTALL BOX BOTTOM MAT** . Refer to **INSTALLATION - Step 28**
11. **INSTALL REAR CONSOLE BOX ASSEMBLY**

    Refer to **INSTALLATION**

12. **CONNECT CABLE TO NEGATIVE BATTERY TERMINAL**

NOTE: **When disconnecting the cable, some systems need to be initialized after the cable is reconnected. Refer to INITIALIZATION .**

13. **INSPECT HARD DISK DRIVE**

    Refer to **OPERATION CHECK**

NAVIGATION ANTENNA

COMPONENTS

ILLUSTRATION

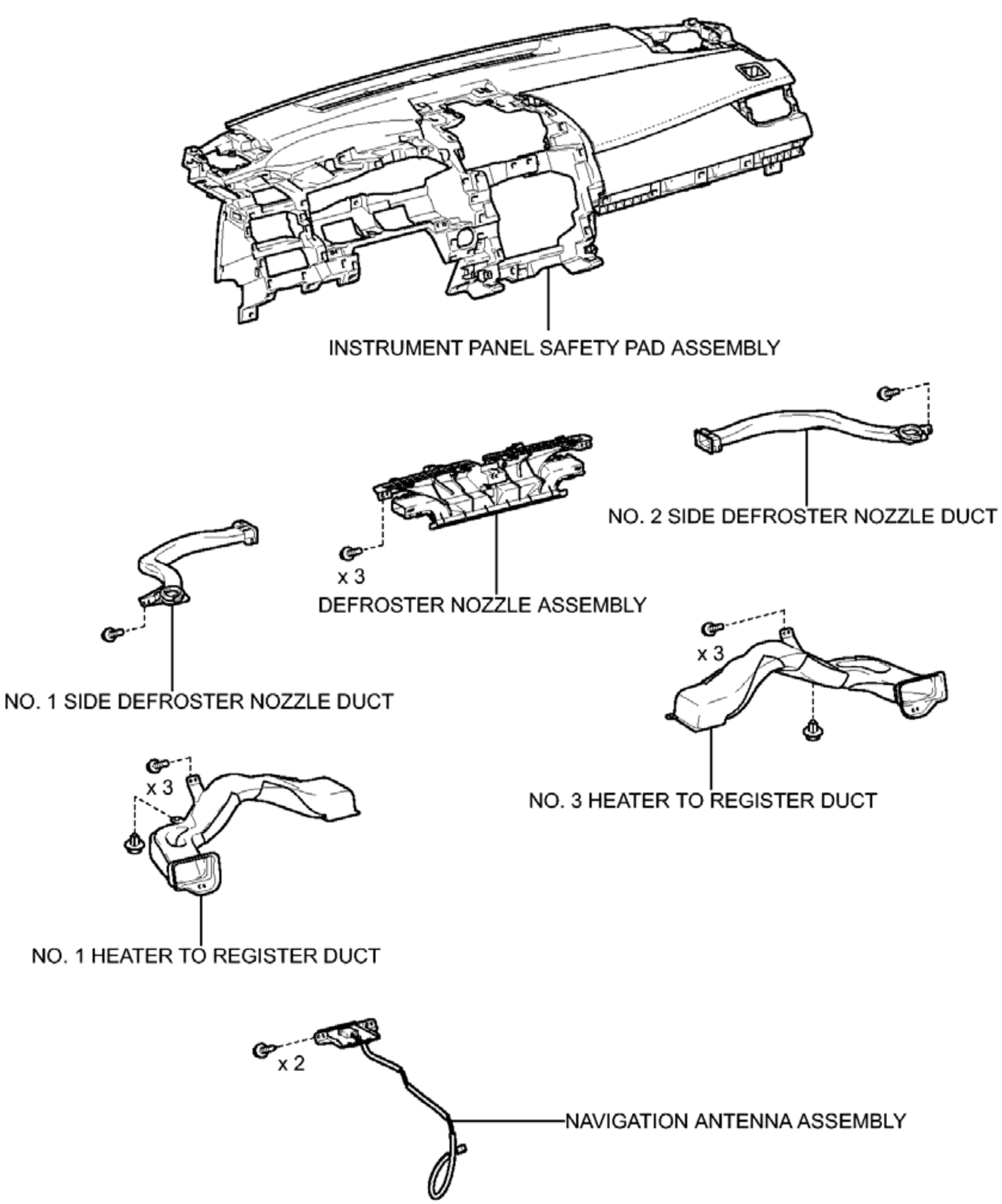
INSTRUMENT PANEL SAFETY PAD ASSEMBLY
NO. 2 SIDE DEFROSTER NOZZLE DUCT
x 3
DEFROSTER NOZZLE ASSEMBLY
NO. 1 SIDE DEFROSTER NOZZLE DUCT
x 3
NO. 3 HEATER TO REGISTER DUCT
x 3
NO. 1 HEATER TO REGISTER DUCT
x 2
NAVIGATION ANTENNA ASSEMBLY

P

Fig. 17: Identifying Navigation Antenna Replacement Components
Courtesy of TOYOTA MOTOR SALES, U.S.A., INC.

REMOVAL

REMOVAL

1. **REMOVE INSTRUMENT PANEL SAFETY PAD ASSEMBLY**

Refer to **REMOVAL**

2. **REMOVE NO. 1 HEATER TO REGISTER DUCT** . Refer to **DISASSEMBLY - Step 3**
3. **REMOVE NO. 1 SIDE DEFROSTER NOZZLE DUCT** . Refer to **DISASSEMBLY - Step 4**
4. **REMOVE NO. 3 HEATER TO REGISTER DUCT** . Refer to **DISASSEMBLY - Step 5**
5. **REMOVE NO. 2 SIDE DEFROSTER NOZZLE DUCT** . Refer to **DISASSEMBLY - Step 6**
6. **REMOVE DEFROSTER NOZZLE ASSEMBLY** . Refer to **DISASSEMBLY - Step 8**
7. **REMOVE NAVIGATION ANTENNA ASSEMBLY**
   a. Remove the 2 screws.

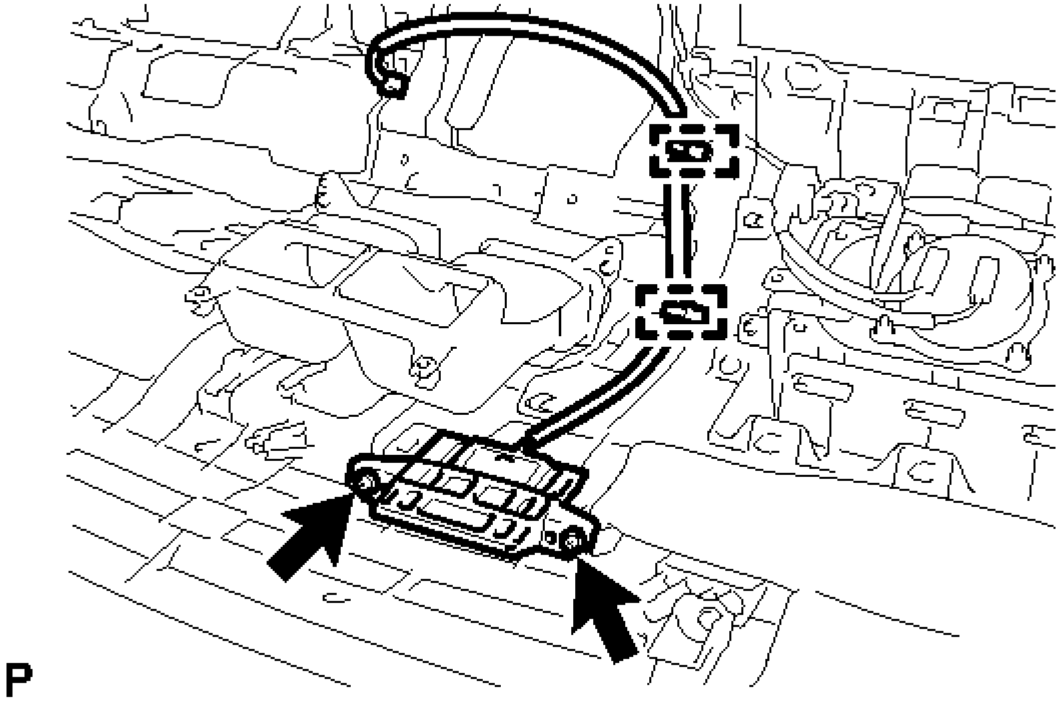

Fig. 18: Identifying Navigation Antenna Assembly Screws And Clamps
Courtesy of TOYOTA MOTOR SALES, U.S.A., INC.

   b. Disengage the 2 clamps and remove the navigation antenna assembly.

INSTALLATION

INSTALLATION

1. **INSTALL NAVIGATION ANTENNA ASSEMBLY**
   a. Engage the 2 clamps.
   b. Install the navigation antenna assembly with the 2 screws.
2. **INSTALL DEFROSTER NOZZLE ASSEMBLY** . Refer to **REASSEMBLY - Step 4**
3. **INSTALL NO. 2 SIDE DEFROSTER NOZZLE DUCT** . Refer to **REASSEMBLY - Step 6**
4. **INSTALL NO. 3 HEATER TO REGISTER DUCT** . Refer to **REASSEMBLY - Step 7**

5. **INSTALL NO. 1 SIDE DEFROSTER NOZZLE DUCT** . Refer to **REASSEMBLY - Step 8**
6. **INSTALL NO. 1 HEATER TO REGISTER DUCT** . Refer to **REASSEMBLY - Step 9**
7. **INSTALL INSTRUMENT PANEL SAFETY PAD ASSEMBLY**

   Refer to **INSTALLATION**

2012-2017 ACCESSORIES & EQUIPMENT

Network Gateway ECU (Service Information) (Except Hybrid) - Camry

NETWORK GATEWAY ECU

COMPONENTS

ILLUSTRATION

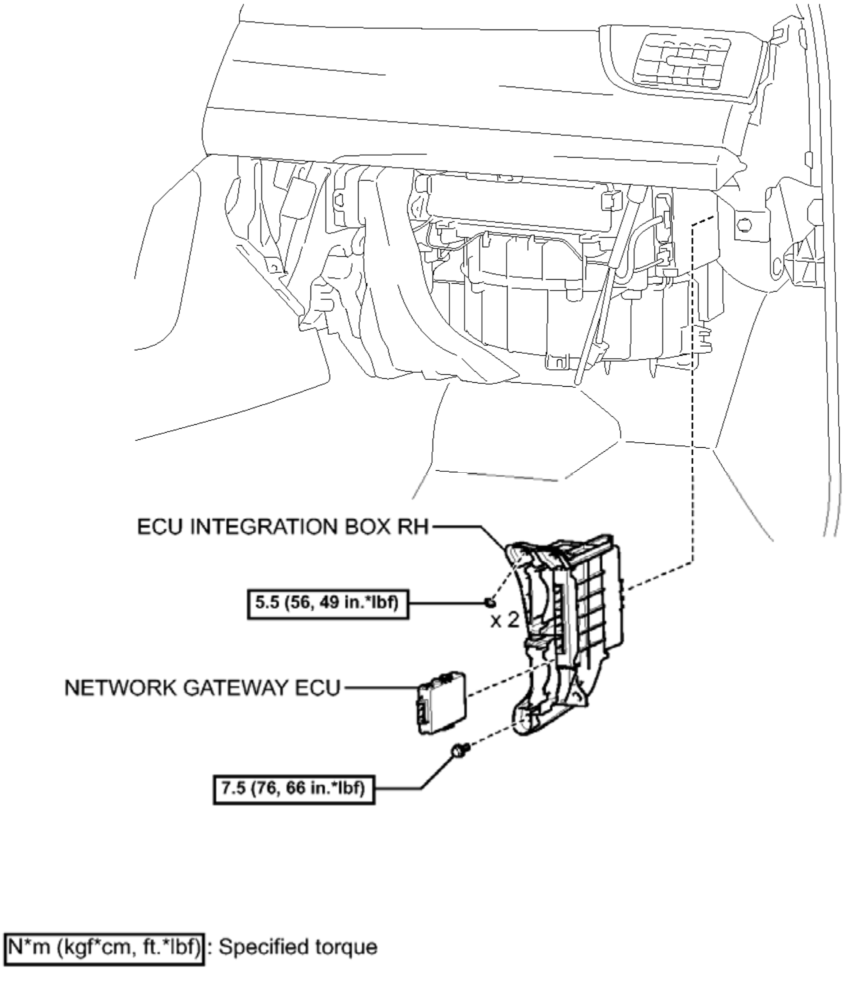
ECU INTEGRATION BOX RH
5.5 (56, 49 in.*lbf)
x 2
NETWORK GATEWAY ECU
7.5 (76, 66 in.*lbf)
N*m (kgf*cm, ft.*lbf): Specified torque
c

Fig. 1: Identifying Network Gateway ECU Replacement Components With Torque Specifications
Courtesy of TOYOTA MOTOR SALES, U.S.A., INC.

REMOVAL

REMOVAL

NOTE:

- **When disassembling the network gateway ECU, eliminate static electricity by touching the vehicle body to prevent the components from being damaged.**
- **After turning the ignition switch off, waiting time may be required before disconnecting the cable from the negative (-) battery terminal. Therefore, make sure to read the disconnecting the cable from the negative (-) battery terminal notices before proceeding with work. Refer to PRECAUTION .**

1. **DISCONNECT CABLE FROM NEGATIVE BATTERY TERMINAL**

   NOTE: **When disconnecting the cable, some systems need to be initialized after the cable is reconnected. Refer to INITIALIZATION .**

2. **REMOVE ECU INTEGRATION BOX RH**

   Refer to **REMOVAL** .

3. **REMOVE NETWORK GATEWAY ECU**
   1. Disengage the 2 claws and remove the network gateway ECU.

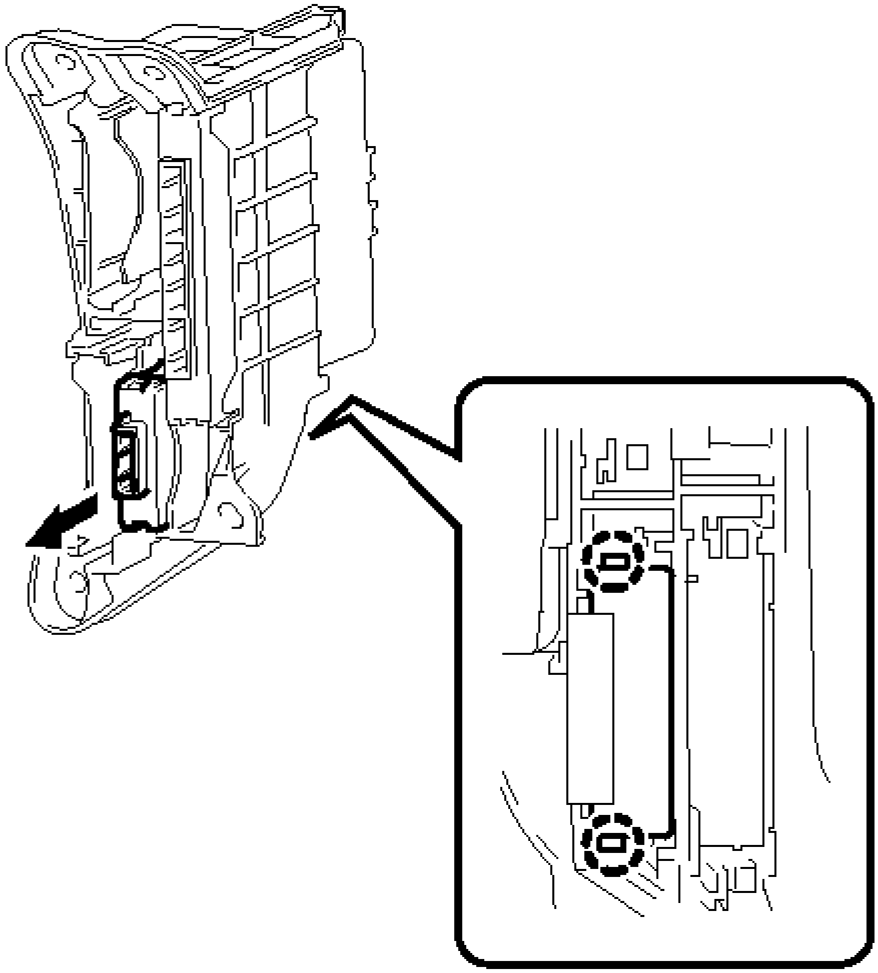

Fig. 2: Identifying Network Gateway ECU Claws
Courtesy of TOYOTA MOTOR SALES, U.S.A., INC.

INSTALLATION

INSTALLATION

1. **INSTALL NETWORK GATEWAY ECU**
    a. Install the network gateway ECU.
2. **INSTALL ECU INTEGRATION BOX RH**

    Refer to **INSTALLATION** .

3. **CONNECT CABLE TO NEGATIVE BATTERY TERMINAL**

NOTE: When disconnecting the cable, some systems need to be initialized after the cable is reconnected. Refer to INITIALIZATION .

2012-2017 ELECTRICAL

OEM Connector List - Camry Hybrid

CONNECTOR LIST

NOTE: **For any illustration containing an asterisk *, refer to ADDITIONAL INFORMATION at the end of this article.**

LOW PITCHED HORN ASSEMBLY CONNECTOR END VIEW (A1)

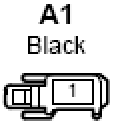

Fig. 1: Low Pitched Horn Assembly Connector End View (A1)
Courtesy of TOYOTA MOTOR SALES, U.S.A., INC.

ENGINE HOOD COURTESY SWITCH (HOOD LOCK ASSEMBLY) CONNECTOR END VIEW (A2)

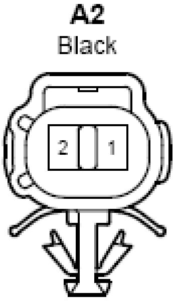

Fig. 2: Engine Hood Courtesy Switch (Hood Lock Assembly) Connector End View (A2)
Courtesy of TOYOTA MOTOR SALES, U.S.A., INC.

AMBIENT TEMPERATURE SENSOR (THERMISTOR ASSEMBLY) CONNECTOR END VIEW (A3)

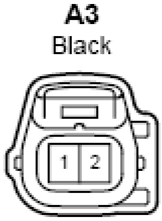

Fig. 3: Ambient Temperature Sensor (Thermistor Assembly) Connector End View (A3)
Courtesy of TOYOTA MOTOR SALES, U.S.A., INC.

HIGH PITCHED HORN ASSEMBLY CONNECTOR END VIEW (A4)

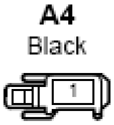

Fig. 4: High Pitched Horn Assembly Connector End View (A4)
Courtesy of TOYOTA MOTOR SALES, U.S.A., INC.

FRONT NO. 1 ULTRASONIC SENSOR LH CONNECTOR END VIEW (A5)

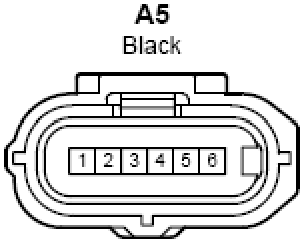

Fig. 5: Front No. 1 Ultrasonic Sensor LH Connector End View (A5)
Courtesy of TOYOTA MOTOR SALES, U.S.A., INC.

FOG LIGHT ASSEMBLY LH CONNECTOR END VIEW (A6)

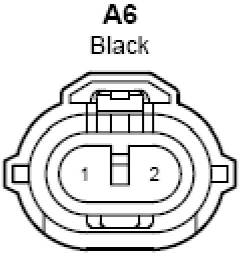

Fig. 6: Fog Light Assembly LH Connector End View (A6)
Courtesy of TOYOTA MOTOR SALES, U.S.A., INC.

COOLING FAN ECU CONNECTOR END VIEW (A10)

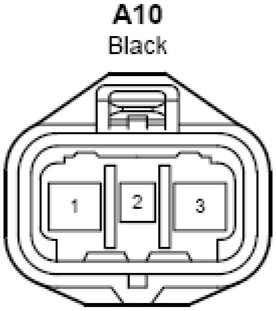

Fig. 7: Cooling Fan ECU Connector End View (A10)
Courtesy of TOYOTA MOTOR SALES, U.S.A., INC.

VEHICLE APPROACHING SPEAKER ASSEMBLY CONNECTOR END VIEW (A11)

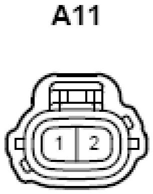

Fig. 8: Vehicle Approaching Speaker Assembly Connector End View (A11)
Courtesy of TOYOTA MOTOR SALES, U.S.A., INC.

FRONT AIRBAG SENSOR LH CONNECTOR END VIEW (A12)

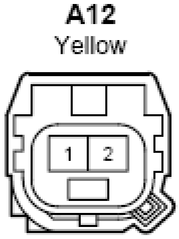

Fig. 9: Front Airbag Sensor LH Connector End View (A12)
Courtesy of TOYOTA MOTOR SALES, U.S.A., INC.

INVERTER WITH CONVERTER ASSEMBLY CONNECTOR END VIEW (A13)

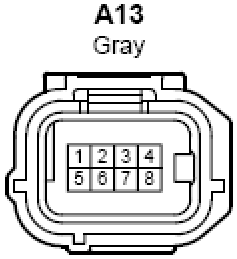

Fig. 10: Inverter With Converter Assembly Connector End View (A13)
Courtesy of TOYOTA MOTOR SALES, U.S.A., INC.

INVERTER WITH CONVERTER ASSEMBLY CONNECTOR END VIEW (A14)

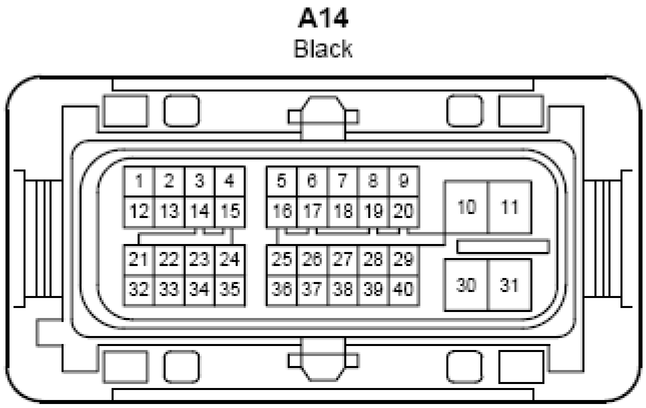
A14
Black
1 2 3 4
12 13 14 15
5 6 7 8 9
16 17 18 19 20
10 11
21 22 23 24
32 33 34 35
25 26 27 28 29
36 37 38 39 40
30 31

Fig. 11: Inverter With Converter Assembly Connector End View (A14)
Courtesy of TOYOTA MOTOR SALES, U.S.A., INC.

WIRELESS DOOR LOCK BUZZER CONNECTOR END VIEW (A15)

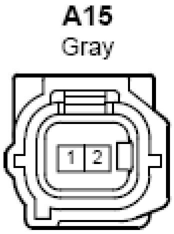

Fig. 12: Wireless Door Lock Buzzer Connector End View (A15)
Courtesy of TOYOTA MOTOR SALES, U.S.A., INC.

FRONT SPEED SENSOR LH CONNECTOR END VIEW (A16)

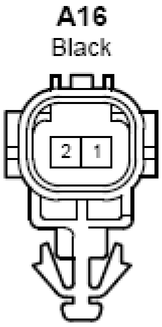
A16
Black
2 1

Fig. 13: Front Speed Sensor LH Connector End View (A16)
Courtesy of TOYOTA MOTOR SALES, U.S.A., INC.

HEADLIGHT ASSEMBLY LH CONNECTOR END VIEW (A17)

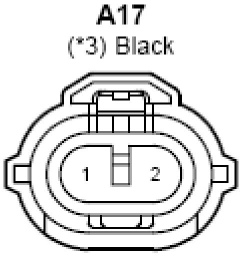
A17
(*3) Black
1
2

Fig. 14: Headlight Assembly LH Connector End View (A17)
Courtesy of TOYOTA MOTOR SALES, U.S.A., INC.

HEADLIGHT ASSEMBLY LH CONNECTOR END VIEW (A20)

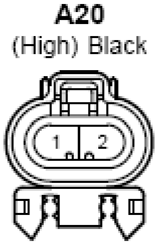
A20
(High) Black
1
2

Fig. 15: Headlight Assembly LH Connector End View (A20)
Courtesy of TOYOTA MOTOR SALES, U.S.A., INC.

HEADLIGHT ASSEMBLY LH CONNECTOR END VIEW (A24)

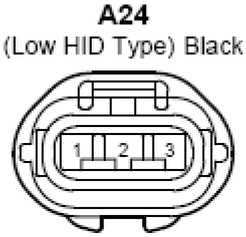
A24
(Low HID Type) Black
1
2
3

Fig. 16: Headlight Assembly LH Connector End View (A24)
Courtesy of TOYOTA MOTOR SALES, U.S.A., INC.

ECM CONNECTOR END VIEW (A25)

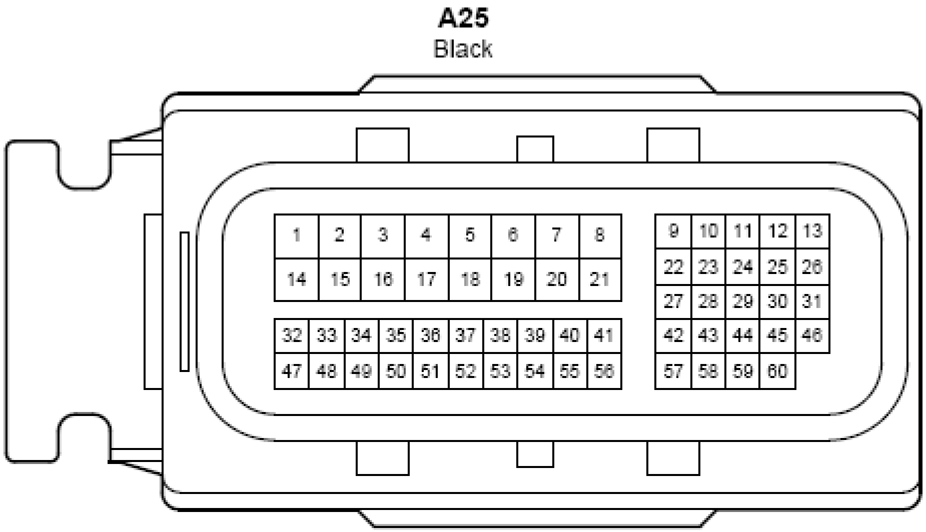
A25
Black
1
2
3
4
5
6
7
8
9
10
11
12
13
14
15
16
17
18
19
20
21
22
23
24
25
26
27
28
29
30
31
32
33
34
35
36
37
38
39
40
41
42
43
44
45
46
47
48
49
50
51
52
53
54
55
56
57
58
59
60

Fig. 17: ECM Connector End View (A25)
Courtesy of TOYOTA MOTOR SALES, U.S.A., INC.

SKID CONTROL ECU WITH ACTUATOR (BRAKE BOOSTER WITH MASTER CYLINDER ASSEMBLY) CONNECTOR END VIEW (A28)

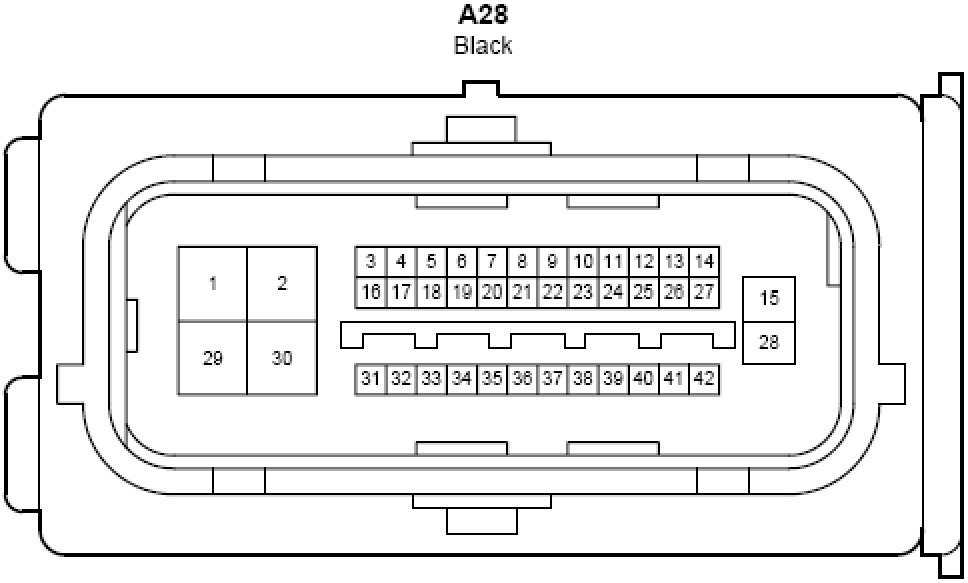
A28
Black
1
2
29
30
3
4
5
6
7
8
9
10
11
12
13
14
16
17
18
19
20
21
22
23
24
25
26
27
15
28
31
32
33
34
35
36
37
38
39
40
41
42

Fig. 18: Skid Control ECU With Actuator (Brake Booster With Master Cylinder Assembly) Connector End View (A28)
Courtesy of TOYOTA MOTOR SALES, U.S.A., INC.

WINDSHIELD WIPER MOTOR ASSEMBLY CONNECTOR END VIEW (A29)

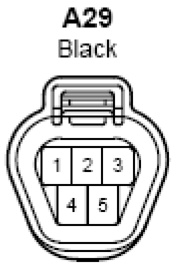

Fig. 19: Windshield Wiper Motor Assembly Connector End View (A29)
Courtesy of TOYOTA MOTOR SALES, U.S.A., INC.

BRAKE FLUID LEVEL WARNING SWITCH (BRAKE MASTER CYLINDER RESERVOIR ASSEMBLY) CONNECTOR END VIEW (A30)

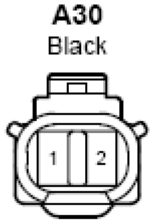

Fig. 20: Brake Fluid Level Warning Switch (Brake Master Cylinder Reservoir Assembly) Connector End View (A30)
Courtesy of TOYOTA MOTOR SALES, U.S.A., INC.

STOP LIGHT SWITCH ASSEMBLY CONNECTOR END VIEW (A33)

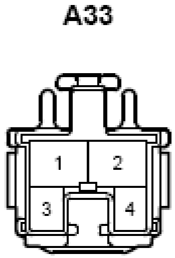

Fig. 21: Stop Light Switch Assembly Connector End View (A33)
Courtesy of TOYOTA MOTOR SALES, U.S.A., INC.

HEADLIGHT LEVELING ECU ASSEMBLY CONNECTOR END VIEW (A34)

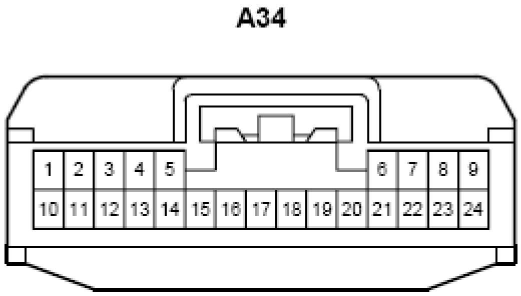
A34
1
2
3
4
5
6
7
8
9
10
11
12
13
14
15
16
17
18
19
20
21
22
23
24

Fig. 22: Headlight Leveling ECU Assembly Connector End View (A34)
Courtesy of TOYOTA MOTOR SALES, U.S.A., INC.

ACCELERATOR PEDAL SENSOR ASSEMBLY CONNECTOR END VIEW (A36)

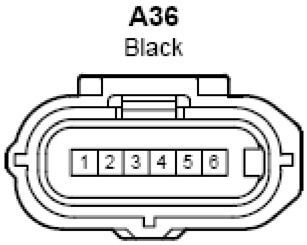
A36
Black
1
2
3
4
5
6

Fig. 23: Accelerator Pedal Sensor Assembly Connector End View (A36)
Courtesy of TOYOTA MOTOR SALES, U.S.A., INC.

POWER MANAGEMENT CONTROL ECU CONNECTOR END VIEW (A38)

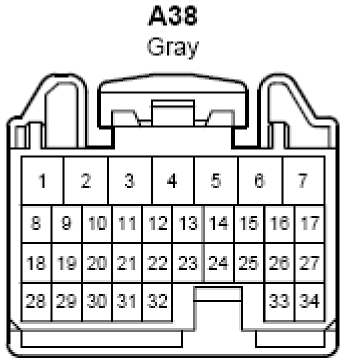
A38
Gray
1
2
3
4
5
6
7
8
9
10
11
12
13
14
15
16
17
18
19
20
21
22
23
24
25
26
27
28
29
30
31
32
33
34

Fig. 24: Power Management Control ECU Connector End View (A38)
Courtesy of TOYOTA MOTOR SALES, U.S.A., INC.

POWER MANAGEMENT CONTROL ECU CONNECTOR END VIEW (A39)

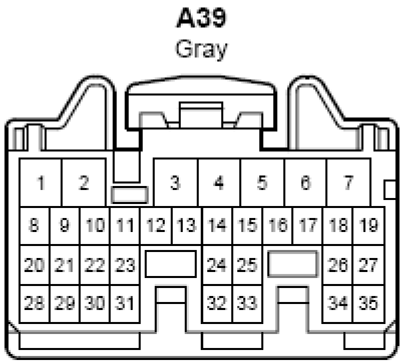
A39
Gray
1
2
3
4
5
6
7
8
9
10
11
12
13
14
15
16
17
18
19
20
21
22
23
24
25
26
27
28
29
30
31
32
33
34
35

Fig. 25: Power Management Control ECU Connector End View (A39)
Courtesy of TOYOTA MOTOR SALES, U.S.A., INC.

BRAKE PEDAL STROKE SENSOR ASSEMBLY CONNECTOR END VIEW (A41)

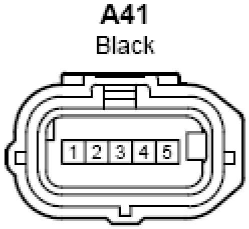
A41
Black
1
2
3
4
5

Fig. 26: Brake Pedal Stroke Sensor Assembly Connector End View (A41)
Courtesy of TOYOTA MOTOR SALES, U.S.A., INC.

PARKING BRAKE SWITCH ASSEMBLY CONNECTOR END VIEW (A42)

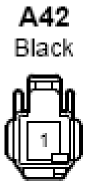

Fig. 27: Parking Brake Switch Assembly Connector End View (A42)
Courtesy of TOYOTA MOTOR SALES, U.S.A., INC.

BRAKE BOOSTER PUMP ASSEMBLY CONNECTOR END VIEW (A46)

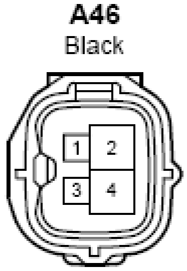
A46
Black
1
2
3
4

Fig. 28: Brake Booster Pump Assembly Connector End View (A46)
Courtesy of TOYOTA MOTOR SALES, U.S.A., INC.

BRAKE BOOSTER PUMP ASSEMBLY CONNECTOR END VIEW (A47)

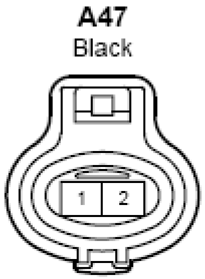

Fig. 29: Brake Booster Pump Assembly Connector End View (A47)
Courtesy of TOYOTA MOTOR SALES, U.S.A., INC.

INVERTER WATER PUMP ASSEMBLY CONNECTOR END VIEW (A50)

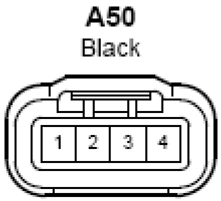

Fig. 30: Inverter Water Pump Assembly Connector End View (A50)
Courtesy of TOYOTA MOTOR SALES, U.S.A., INC.

FRONT SPEED SENSOR RH CONNECTOR END VIEW (A53)

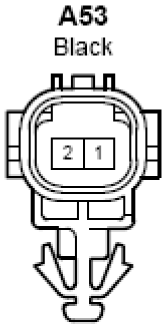

Fig. 31: Front Speed Sensor RH Connector End View (A53)
Courtesy of TOYOTA MOTOR SALES, U.S.A., INC.

WINDSHIELD WASHER MOTOR AND PUMP ASSEMBLY CONNECTOR END VIEW (A54)

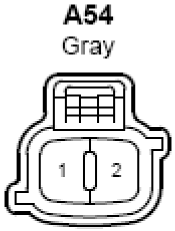

Fig. 32: Windshield Washer Motor And Pump Assembly Connector End View (A54)
Courtesy of TOYOTA MOTOR SALES, U.S.A., INC.

A/C PRESSURE SENSOR (A/C TUBE&ACCESSORY ASSEMBLY) CONNECTOR END VIEW (A55)

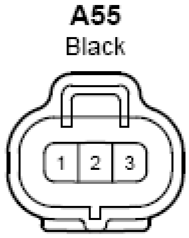

Fig. 33: A/C Pressure Sensor (A/C Tube&Accessory Assembly) Connector End View (A55)
Courtesy of TOYOTA MOTOR SALES, U.S.A., INC.

FRONT NO. 1 ULTRASONIC SENSOR RH CONNECTOR END VIEW (A56)

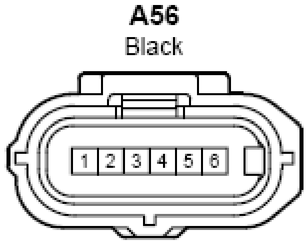

Fig. 34: Front No. 1 Ultrasonic Sensor RH Connector End View (A56)
Courtesy of TOYOTA MOTOR SALES, U.S.A., INC.

FOG LIGHT ASSEMBLY RH CONNECTOR END VIEW (A57)

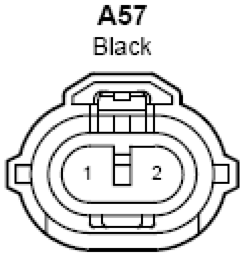

Fig. 35: Fog Light Assembly RH Connector End View (A57)
Courtesy of TOYOTA MOTOR SALES, U.S.A., INC.

FRONT AIRBAG SENSOR RH CONNECTOR END VIEW (A58)

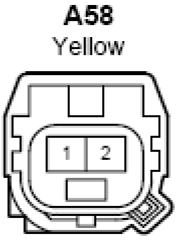

Fig. 36: Front Airbag Sensor RH Connector End View (A58)
Courtesy of TOYOTA MOTOR SALES, U.S.A., INC.

HEADLIGHT ASSEMBLY RH CONNECTOR END VIEW (A60)

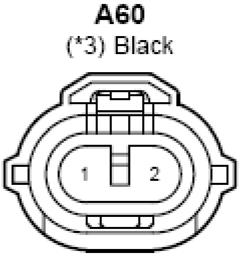

Fig. 37: Headlight Assembly RH Connector End View (A60)
Courtesy of TOYOTA MOTOR SALES, U.S.A., INC.

HEADLIGHT ASSEMBLY RH CONNECTOR END VIEW (A63)

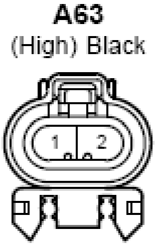

Fig. 38: Headlight Assembly RH Connector End View (A63)
Courtesy of TOYOTA MOTOR SALES, U.S.A., INC.

HEADLIGHT ASSEMBLY RH CONNECTOR END VIEW (A66)

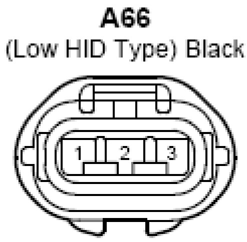
A66
(Low HID Type) Black
1
2
3

Fig. 39: Headlight Assembly RH Connector End View (A66)
Courtesy of TOYOTA MOTOR SALES, U.S.A., INC.

JUNCTION CONNECTOR END VIEW (A71)

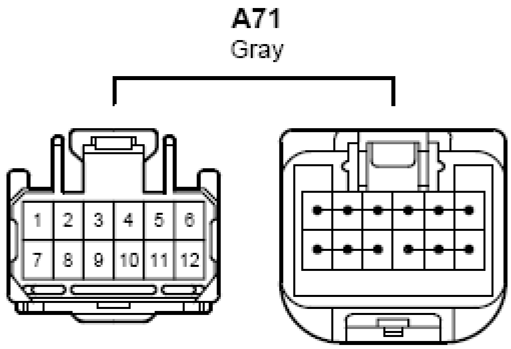
A71
Gray
1
2
3
4
5
6
7
8
9
10
11
12

Fig. 40: Junction Connector End View (A71)
Courtesy of TOYOTA MOTOR SALES, U.S.A., INC.

JUNCTION CONNECTOR END VIEW (A72)

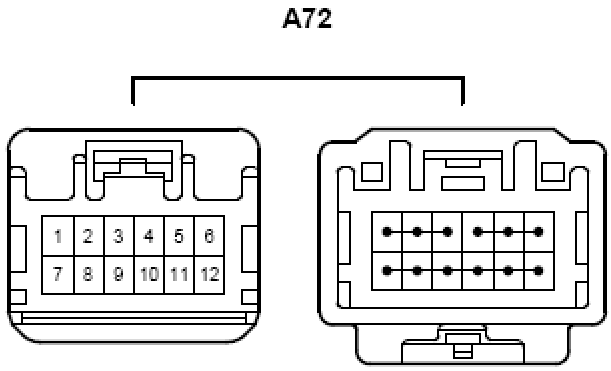
A72
1
2
3
4
5
6
7
8
9
10
11
12

Fig. 41: Junction Connector End View (A72)
Courtesy of TOYOTA MOTOR SALES, U.S.A., INC.

JUNCTION CONNECTOR END VIEW (A73)

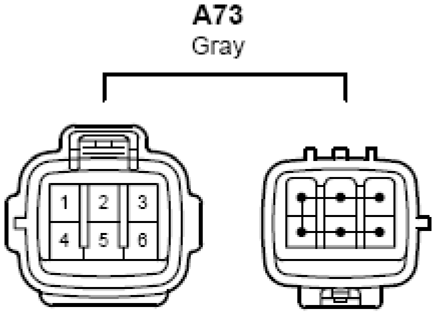
A73
Gray
1
2
3
4
5
6

Fig. 42: Junction Connector End View (A73)
Courtesy of TOYOTA MOTOR SALES, U.S.A., INC.

HEADLIGHT ASSEMBLY LH CONNECTOR END VIEW (A74)

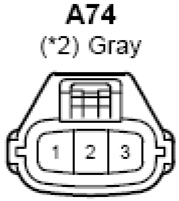
A74
(*2) Gray
1
2
3

Fig. 43: Headlight Assembly LH Connector End View (A74)
Courtesy of TOYOTA MOTOR SALES, U.S.A., INC.

HEADLIGHT ASSEMBLY LH CONNECTOR END VIEW (A75)

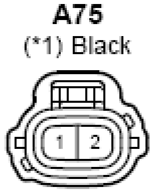
A75
(*1) Black
1
2

Fig. 44: Headlight Assembly LH Connector End View (A75)
Courtesy of TOYOTA MOTOR SALES, U.S.A., INC.

HEADLIGHT ASSEMBLY RH CONNECTOR END VIEW (A76)

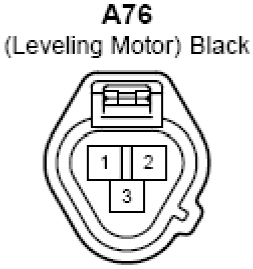
A76
(Leveling Motor) Black
1
2
3

Fig. 45: Headlight Assembly RH Connector End View (A76)

Courtesy of TOYOTA MOTOR SALES, U.S.A., INC.

HEADLIGHT ASSEMBLY RH CONNECTOR END VIEW (A77)

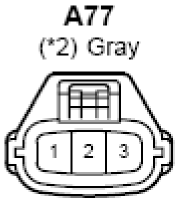
A77
(*2) Gray
1
2
3

Fig. 46: Headlight Assembly RH Connector End View (A77)
Courtesy of TOYOTA MOTOR SALES, U.S.A., INC.

HEADLIGHT ASSEMBLY RH CONNECTOR END VIEW (A78)

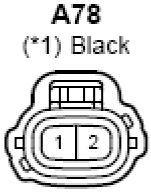
A78
(*1) Black
1
2

Fig. 47: Headlight Assembly RH Connector End View (A78)
Courtesy of TOYOTA MOTOR SALES, U.S.A., INC.

HEADLIGHT ASSEMBLY LH CONNECTOR END VIEW (A79)

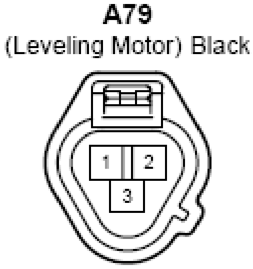
A79
(Leveling Motor) Black
1
2
3

Fig. 48: Headlight Assembly LH Connector End View (A79)
Courtesy of TOYOTA MOTOR SALES, U.S.A., INC.

LEVEL WARNING SWITCH ASSEMBLY CONNECTOR END VIEW (A80)

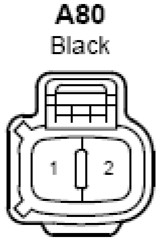
A80
Black
1
2

Fig. 49: Level Warning Switch Assembly Connector End View (A80)
Courtesy of TOYOTA MOTOR SALES, U.S.A., INC.

SUPER LOW PITCHED HORN ASSEMBLY CONNECTOR END VIEW (A81)

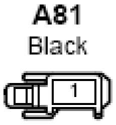

Fig. 50: Super Low Pitched Horn Assembly Connector End View (A81)
Courtesy of TOYOTA MOTOR SALES, U.S.A., INC.

INVERTER WITH CONVERTER ASSEMBLY CONNECTOR END VIEW (C1)

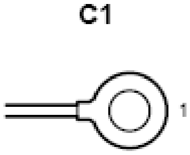

Fig. 51: Inverter With Converter Assembly Connector End View (C1)
Courtesy of TOYOTA MOTOR SALES, U.S.A., INC.

INVERTER WITH CONVERTER ASSEMBLY CONNECTOR END VIEW (E1)

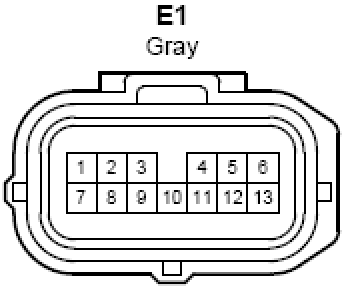

Fig. 52: Inverter with Converter Assembly Connector End View (E1)
Courtesy of TOYOTA MOTOR SALES, U.S.A., INC.

SHIFT LEVER POSITION SENSOR CONNECTOR END VIEW (E11)

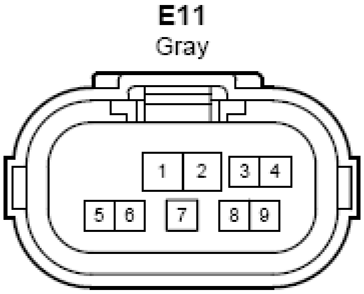

Fig. 53: Shift Lever Position Sensor Connector End View (E11)
Courtesy of TOYOTA MOTOR SALES, U.S.A., INC.

HYBRID VEHICLE TRANSAXLE ASSEMBLY CONNECTOR END VIEW (E12)

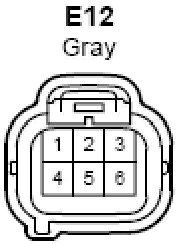

Fig. 54: Hybrid Vehicle Transaxle Assembly Connector End View (E12)
Courtesy of TOYOTA MOTOR SALES, U.S.A., INC.

HYBRID VEHICLE TRANSAXLE ASSEMBLY CONNECTOR END VIEW (E13)

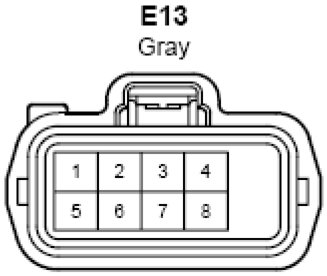

Fig. 55: Hybrid Vehicle Transaxle Assembly Connector End View (E13)
Courtesy of TOYOTA MOTOR SALES, U.S.A., INC.

INTAKE MASS AIR FLOW METER SUB-ASSEMBLY CONNECTOR END VIEW (E14)

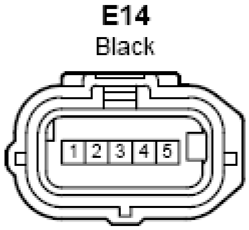

Fig. 56: Intake Mass Air Flow Meter Sub-Assembly Connector End View (E14)
Courtesy of TOYOTA MOTOR SALES, U.S.A., INC.

HYBRID VEHICLE TRANSAXLE ASSEMBLY CONNECTOR END VIEW (E15)

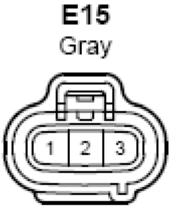

Fig. 57: Hybrid Vehicle Transaxle Assembly Connector End View (E15)
Courtesy of TOYOTA MOTOR SALES, U.S.A., INC.

THROTTLE BODY ASSEMBLY WITH MOTOR CONNECTOR END VIEW (E16)

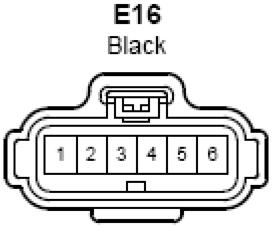

Fig. 58: Throttle Body Assembly With Motor Connector End View (E16)
Courtesy of TOYOTA MOTOR SALES, U.S.A., INC.

AIR FUEL RATIO SENSOR (BANK 1 SENSOR 1) CONNECTOR END VIEW (E19)

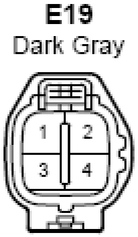

Fig. 59: Air Fuel Ratio Sensor (Bank 1 Sensor 1) Connector End View (E19)
Courtesy of TOYOTA MOTOR SALES, U.S.A., INC.

OXYGEN SENSOR (BANK 1 SENSOR 2) CONNECTOR END VIEW (E21)

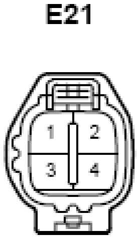

Fig. 60: Oxygen Sensor (Bank 1 Sensor 2) Connector End View (E21)
Courtesy of TOYOTA MOTOR SALES, U.S.A., INC.

EGR VALVE ASSEMBLY CONNECTOR END VIEW (E24)

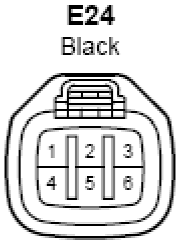
E24
Black
1
2
3
4
5
6

Fig. 61: EGR Valve Assembly Connector End View (E24)
Courtesy of TOYOTA MOTOR SALES, U.S.A., INC.

E.F.I. VACUUM SENSOR ASSEMBLY CONNECTOR END VIEW (E25)

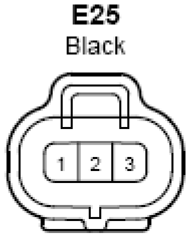
E25
Black
1
2
3

Fig. 62: E.F.I. Vacuum Sensor Assembly Connector End View (E25)
Courtesy of TOYOTA MOTOR SALES, U.S.A., INC.

ECM CONNECTOR END VIEW (E28)

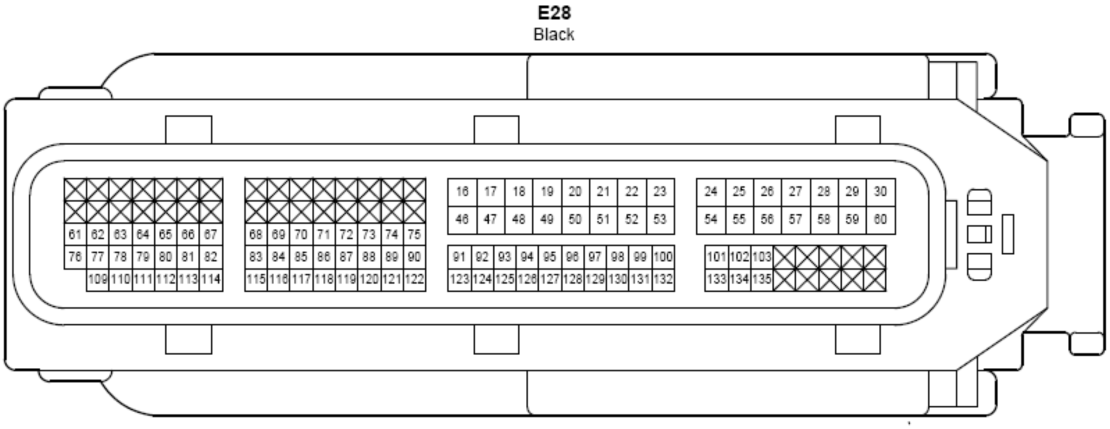
E28
Black
16 17 18 19 20 21 22 23
24 25 26 27 28 29 30
46 47 48 49 50 51 52 53
54 55 56 57 58 59 60
61 62 63 64 65 66 67
68 69 70 71 72 73 74 75
76 77 78 79 80 81 82
83 84 85 86 87 88 89 90
91 92 93 94 95 96 97 98 99 100
101 102 103
109 110 111 112 113 114
115 116 117 118 119 120 121 122
123 124 125 126 127 128 129 130 131 132
133 134 135

Fig. 63: ECM Connector End View (E28)
Courtesy of TOYOTA MOTOR SALES, U.S.A., INC.

FUEL INJECTOR ASSEMBLY NO. 1 CONNECTOR END VIEW (E29)

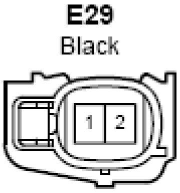

Fig. 64: Fuel Injector Assembly No. 1 Connector End View (E29)
Courtesy of TOYOTA MOTOR SALES, U.S.A., INC.

FUEL INJECTOR ASSEMBLY NO. 2 CONNECTOR END VIEW (E34)

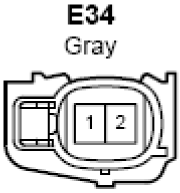

Fig. 65: Fuel Injector Assembly No. 2 Connector End View (E34)
Courtesy of TOYOTA MOTOR SALES, U.S.A., INC.

IGNITION COIL ASSEMBLY NO. 1 CONNECTOR END VIEW (E37)

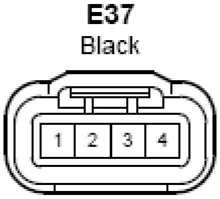

Fig. 66: Ignition Coil Assembly No. 1 Connector End View (E37)
Courtesy of TOYOTA MOTOR SALES, U.S.A., INC.

IGNITION COIL ASSEMBLY NO. 3 CONNECTOR END VIEW (E38)

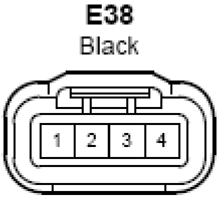

Fig. 67: Ignition Coil Assembly No. 3 Connector End View (E38)
Courtesy of TOYOTA MOTOR SALES, U.S.A., INC.

IGNITION COIL ASSEMBLY NO. 2 CONNECTOR END VIEW (E40)

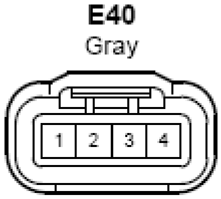

Fig. 68: Ignition Coil Assembly No. 2 Connector End View (E40)
Courtesy of TOYOTA MOTOR SALES, U.S.A., INC.

IGNITION COIL ASSEMBLY NO. 4 CONNECTOR END VIEW (E43)

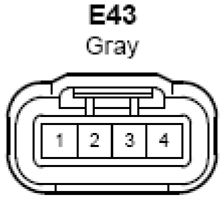

Fig. 69: Ignition Coil Assembly No. 4 Connector End View (E43)
Courtesy of TOYOTA MOTOR SALES, U.S.A., INC.

E.F.I. ENGINE COOLANT TEMPERATURE SENSOR CONNECTOR END VIEW (E47)

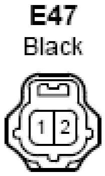

Fig. 70: E.F.I. Engine Coolant Temperature Sensor Connector End View (E47)
Courtesy of TOYOTA MOTOR SALES, U.S.A., INC.

PURGE VSV CONNECTOR END VIEW (E49)

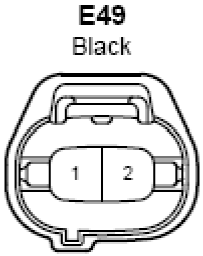

Fig. 71: Purge VSV Connector End View (E49)
Courtesy of TOYOTA MOTOR SALES, U.S.A., INC.

VVT SENSOR (CAMSHAFT POSITION SENSOR) CONNECTOR END VIEW (E55)

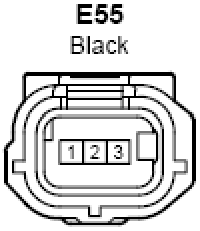

Fig. 72: VVT Sensor (Camshaft Position Sensor) Connector End View (E55)
Courtesy of TOYOTA MOTOR SALES, U.S.A., INC.

CAMSHAFT TIMING OIL CONTROL VALVE ASSEMBLY (INTAKE SIDE) CONNECTOR END VIEW (E63)

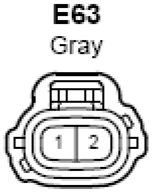

Fig. 73: Camshaft Timing Oil Control Valve Assembly (Intake Side) Connector End View (E63)
Courtesy of TOYOTA MOTOR SALES, U.S.A., INC.

ENGINE OIL PRESSURE SWITCH ASSEMBLY CONNECTOR END VIEW (E64)

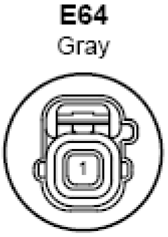

Fig. 74: Engine Oil Pressure Switch Assembly Connector End View (E64)
Courtesy of TOYOTA MOTOR SALES, U.S.A., INC.

COMPRESSOR WITH MOTOR ASSEMBLY CONNECTOR END VIEW (E65)

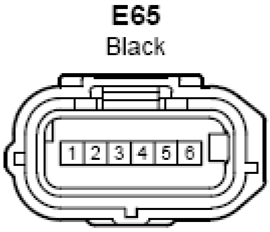

Fig. 75: Compressor With Motor Assembly Connector End View (E65)
Courtesy of TOYOTA MOTOR SALES, U.S.A., INC.

ENGINE WATER PUMP ASSEMBLY CONNECTOR END VIEW (E66)

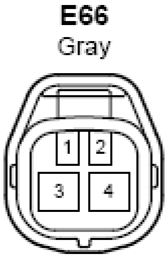

Fig. 76: Engine Water Pump Assembly Connector End View (E66)
Courtesy of TOYOTA MOTOR SALES, U.S.A., INC.

CRANK POSITION SENSOR CONNECTOR END VIEW (E72)

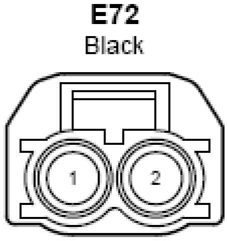

Fig. 77: Crank Position Sensor Connector End View (E72)
Courtesy of TOYOTA MOTOR SALES, U.S.A., INC.

COMPRESSOR WITH MOTOR ASSEMBLY CONNECTOR END VIEW (G1)

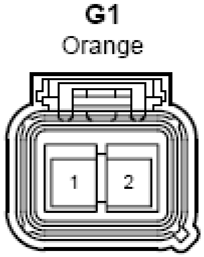

Fig. 78: Compressor With Motor Assembly Connector End View (G1)
Courtesy of TOYOTA MOTOR SALES, U.S.A., INC.

INVERTER WITH CONVERTER ASSEMBLY CONNECTOR END VIEW (G2)

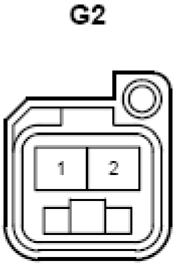

Fig. 79: Inverter with Converter Assembly Connector End View (G2)
Courtesy of TOYOTA MOTOR SALES, U.S.A., INC.

FUEL INJECTOR ASSEMBLY NO. 3 CONNECTOR END VIEW (H1)

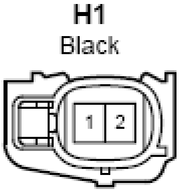

Fig. 80: Fuel Injector Assembly No. 3 Connector End View (H1)
Courtesy of TOYOTA MOTOR SALES, U.S.A., INC.

FUEL INJECTOR ASSEMBLY NO. 4 CONNECTOR END VIEW (H2)

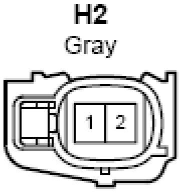

Fig. 81: Fuel Injector Assembly No. 4 Connector End View (H2)
Courtesy of TOYOTA MOTOR SALES, U.S.A., INC.

FRONT NO. 2 SPEAKER ASSEMBLY LH CONNECTOR END VIEW (I1)

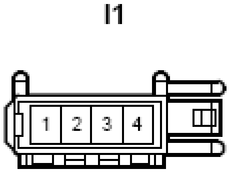

Fig. 82: Front No. 2 Speaker Assembly LH Connector End View (I1)
Courtesy of TOYOTA MOTOR SALES, U.S.A., INC.

FRONT NO. 2 SPEAKER ASSEMBLY LH CONNECTOR END VIEW (I2)

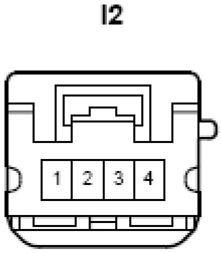

Fig. 83: Front No. 2 Speaker Assembly LH Connector End View (I2)
Courtesy of TOYOTA MOTOR SALES, U.S.A., INC.

POWER MANAGEMENT CONTROL ECU CONNECTOR END VIEW (I3)

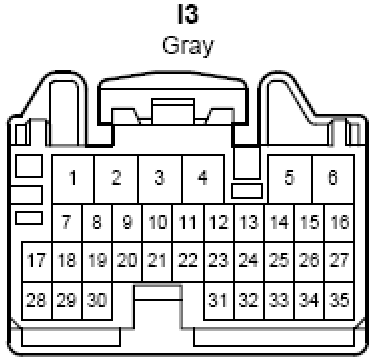
I3
Gray
1 2 3 4 5 6
7 8 9 10 11 12 13 14 15 16
17 18 19 20 21 22 23 24 25 26 27
28 29 30 31 32 33 34 35

Fig. 84: Power Management Control ECU Connector End View (I3)
Courtesy of TOYOTA MOTOR SALES, U.S.A., INC.

POWER MANAGEMENT CONTROL ECU CONNECTOR END VIEW (I4)

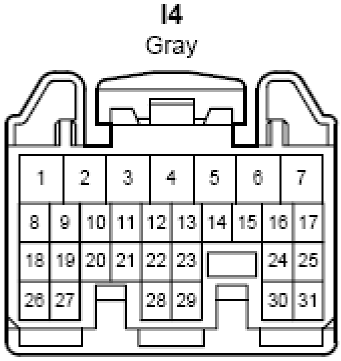
I4
Gray
1 2 3 4 5 6 7
8 9 10 11 12 13 14 15 16 17
18 19 20 21 22 23 24 25
26 27 28 29 30 31

Fig. 85: Power Management Control ECU Connector End View (I4)
Courtesy of TOYOTA MOTOR SALES, U.S.A., INC.

BACK SONAR OR CLEARANCE SONAR SWITCH ASSEMBLY CONNECTOR END VIEW (I5)

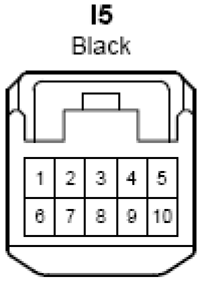
I5
Black
1
2
3
4
5
6
7
8
9
10

Fig. 86: Back Sonar or Clearance Sonar Switch Assembly Connector End View (I5)
Courtesy of TOYOTA MOTOR SALES, U.S.A., INC.

BLIND SPOT MONITOR MAIN SWITCH (WARNING CANCELING SWITCH ASSEMBLY) CONNECTOR END VIEW (I10)

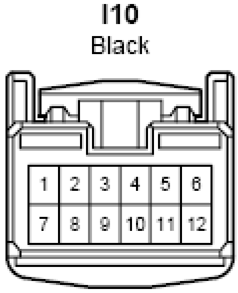
I10
Black
1
2
3
4
5
6
7
8
9
10
11
12

Fig. 87: Blind Spot Monitor Main Switch (Warning Canceling Switch Assembly) Connector End View (I10)
Courtesy of TOYOTA MOTOR SALES, U.S.A., INC.

MAIN BODY ECU CONNECTOR END VIEW (I12)

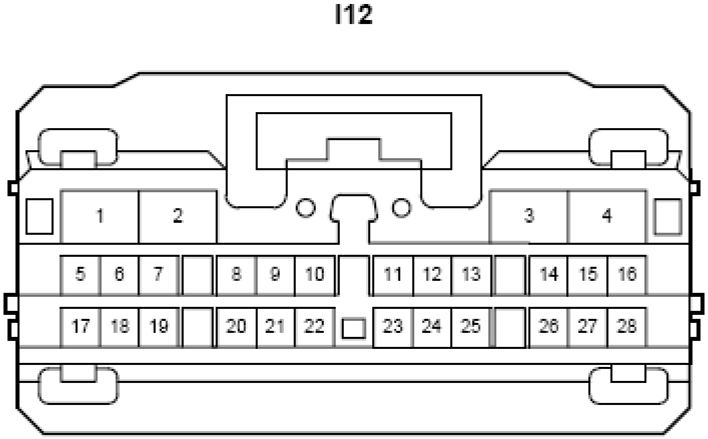
I12
1
2
3
4
5
6
7
8
9
10
11
12
13
14
15
16
17
18
19
20
21
22
23
24
25
26
27
28

Fig. 88: Main Body ECU Connector End View (I12)
Courtesy of TOYOTA MOTOR SALES, U.S.A., INC.

MAIN BODY ECU CONNECTOR END VIEW (I13)

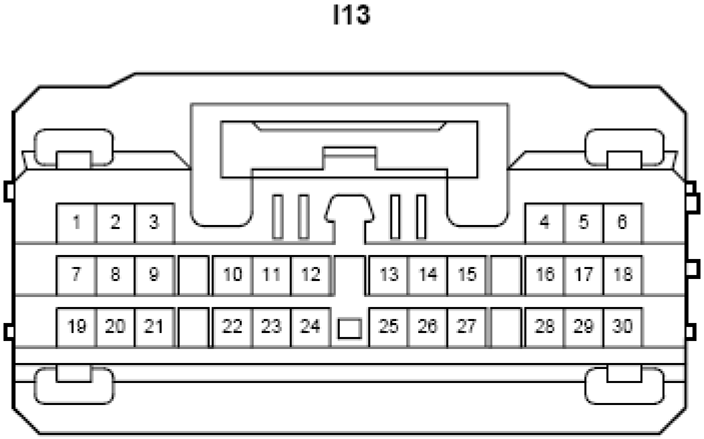
I13
1
2
3
4
5
6
7
8
9
10
11
12
13
14
15
16
17
18
19
20
21
22
23
24
25
26
27
28
29
30

Fig. 89: Main Body ECU Connector End View (I13)
Courtesy of TOYOTA MOTOR SALES, U.S.A., INC.

COMBINATION METER ASSEMBLY CONNECTOR END VIEW (I17)

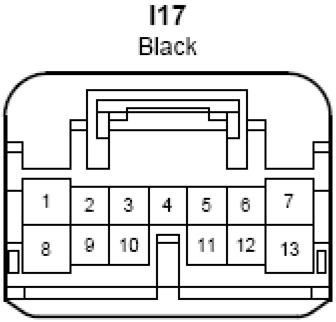
I17
Black
1
2
3
4
5
6
7
8
9
10
11
12
13

Fig. 90: Combination Meter Assembly Connector End View (I17)
Courtesy of TOYOTA MOTOR SALES, U.S.A., INC.

COMBINATION METER ASSEMBLY CONNECTOR END VIEW (I18)

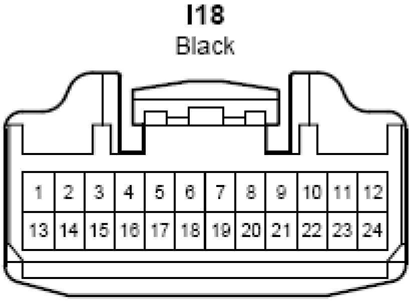
I18
Black
1
2
3
4
5
6
7
8
9
10
11
12
13
14
15
16
17
18
19
20
21
22
23
24

Fig. 91: Combination Meter Assembly Connector End View (I18)
Courtesy of TOYOTA MOTOR SALES, U.S.A., INC.

STEERING LOCK ACTUATOR ASSEMBLY CONNECTOR END VIEW (I24)

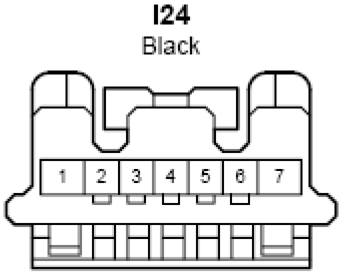
I24
Black
1
2
3
4
5
6
7

Fig. 92: Steering Lock Actuator Assembly Connector End View (I24)
Courtesy of TOYOTA MOTOR SALES, U.S.A., INC.

HEADLIGHT DIMMER SWITCH ASSEMBLY CONNECTOR END VIEW (I25)

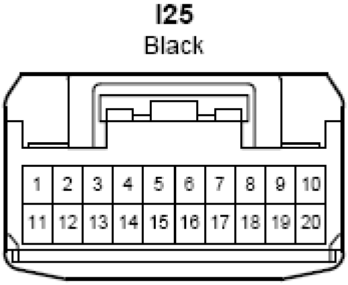
I25
Black
1
2
3
4
5
6
7
8
9
10
11
12
13
14
15
16
17
18
19
20

Fig. 93: Headlight Dimmer Switch Assembly Connector End View (I25)
Courtesy of TOYOTA MOTOR SALES, U.S.A., INC.

SPIRAL CABLE SUB-ASSEMBLY CONNECTOR END VIEW (I27)

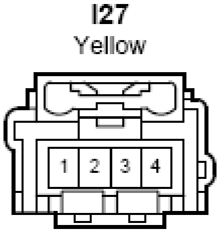
I27
Yellow
1
2
3
4

Fig. 94: Spiral Cable Sub-Assembly Connector End View (I27)
Courtesy of TOYOTA MOTOR SALES, U.S.A., INC.

SPIRAL CABLE SUB-ASSEMBLY CONNECTOR END VIEW (I28)

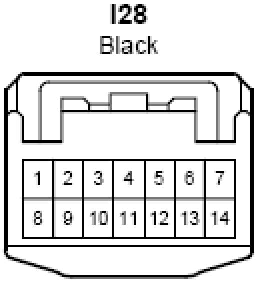
I28
Black
1
2
3
4
5
6
7
8
9
10
11
12
13
14

Fig. 95: Spiral Cable Sub-Assembly Connector End View (I28)
Courtesy of TOYOTA MOTOR SALES, U.S.A., INC.

STEERING SENSOR CONNECTOR END VIEW (I29)

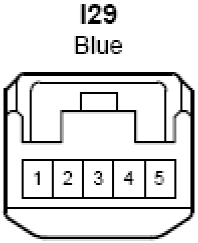
I29
Blue
1
2
3
4
5

Fig. 96: Steering Sensor Connector End View (I29)
Courtesy of TOYOTA MOTOR SALES, U.S.A., INC.

WINDSHIELD WIPER SWITCH ASSEMBLY CONNECTOR END VIEW (I31)

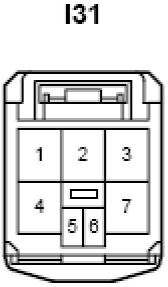
I31
1
2
3
4
7
5
6

Fig. 97: Windshield Wiper Switch Assembly Connector End View (I31)
Courtesy of TOYOTA MOTOR SALES, U.S.A., INC.

WINDSHIELD WIPER SWITCH ASSEMBLY CONNECTOR END VIEW (I32)

I32

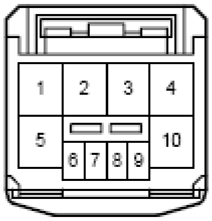

Fig. 98: Windshield Wiper Switch Assembly Connector End View (I32)
Courtesy of TOYOTA MOTOR SALES, U.S.A., INC.

DATA LINK CONNECTOR 3 CONNECTOR END VIEW (I39)

I39

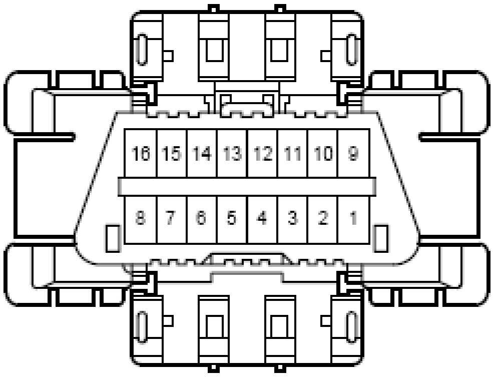

Fig. 99: Data Link Connector 3 Connector End View (I39)
Courtesy of TOYOTA MOTOR SALES, U.S.A., INC.

LOWER NO. 1 INSTRUMENT PANEL AIRBAG ASSEMBLY CONNECTOR END VIEW (I40)

I40
Black

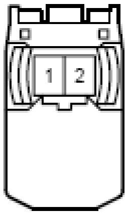

Fig. 100: Lower No. 1 Instrument Panel Airbag Assembly Connector End View (I40)
Courtesy of TOYOTA MOTOR SALES, U.S.A., INC.

QUICK HEATER ASSEMBLY CONNECTOR END VIEW (I41)

I41

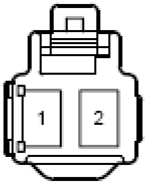

Fig. 101: Quick Heater Assembly Connector End View (I41)
Courtesy of TOYOTA MOTOR SALES, U.S.A., INC.

SHIFT LOCK CONTROL ECU (LOWER SHIFT LEVER ASSEMBLY) CONNECTOR END VIEW (I42)

I42

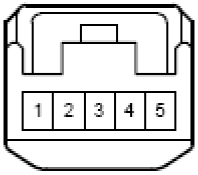

Fig. 102: Shift Lock Control ECU (Lower Shift Lever Assembly) Connector End View (I42)
Courtesy of TOYOTA MOTOR SALES, U.S.A., INC.

REAR POWER OUTLET SOCKET ASSEMBLY CONNECTOR END VIEW (I45)

I45

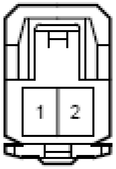

Fig. 103: Rear Power Outlet Socket Assembly Connector End View (I45)
Courtesy of TOYOTA MOTOR SALES, U.S.A., INC.

NO. 1 INDOOR ELECTRICAL KEY ANTENNA ASSEMBLY CONNECTOR END VIEW (I46)

I46

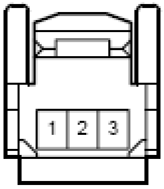

Fig. 104: No. 1 Indoor Electrical Key Antenna Assembly Connector End View (I46)
Courtesy of TOYOTA MOTOR SALES, U.S.A., INC.

AIRBAG SENSOR ASSEMBLY CONNECTOR END VIEW (I47)

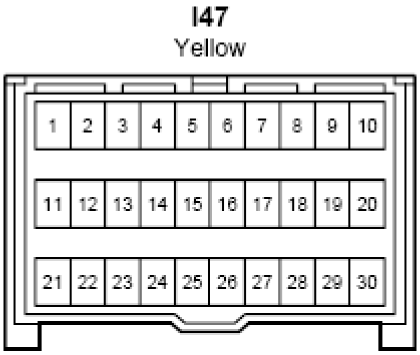
I47
Yellow
1
2
3
4
5
6
7
8
9
10
11
12
13
14
15
16
17
18
19
20
21
22
23
24
25
26
27
28
29
30

Fig. 105: Airbag Sensor Assembly Connector End View (I47)
Courtesy of TOYOTA MOTOR SALES, U.S.A., INC.

PATTERN SELECT SWITCH ASSEMBLY CONNECTOR END VIEW (I48)

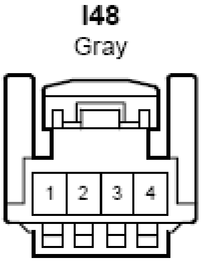
I48
Gray
1
2
3
4

Fig. 106: Pattern Select Switch Assembly Connector End View (I48)
Courtesy of TOYOTA MOTOR SALES, U.S.A., INC.

ECO SWITCH ASSEMBLY CONNECTOR END VIEW (I49)

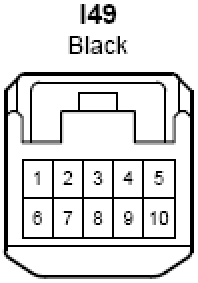
I49
Black
1
2
3
4
5
6
7
8
9
10

Fig. 107: ECO Switch Assembly Connector End View (I49)
Courtesy of TOYOTA MOTOR SALES, U.S.A., INC.

SEAT HEATER SWITCH LH CONNECTOR END VIEW (I52)

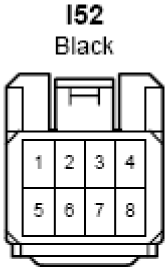
I52
Black
1
2
3
4
5
6
7
8

Fig. 108: Seat Heater Switch LH Connector End View (I52)
Courtesy of TOYOTA MOTOR SALES, U.S.A., INC.

SEAT HEATER SWITCH RH CONNECTOR END VIEW (I53)

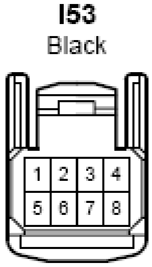
I53
Black
1
2
3
4
5
6
7
8

Fig. 109: Seat Heater Switch RH Connector End View (I53)
Courtesy of TOYOTA MOTOR SALES, U.S.A., INC.

NO. 1 CLEARANCE WARNING BUZZER CONNECTOR END VIEW (I54)

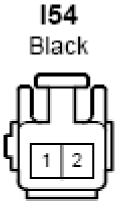
I54
Black
1
2

Fig. 110: No. 1 Clearance Warning Buzzer Connector End View (I54)
Courtesy of TOYOTA MOTOR SALES, U.S.A., INC.

FRONT POWER OUTLET SOCKET ASSEMBLY CONNECTOR END VIEW (I55)

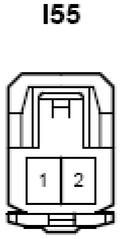

Fig. 111: Front Power Outlet Socket Assembly Connector End View (I55)

Courtesy of TOYOTA MOTOR SALES, U.S.A., INC.

A/C CONTROL ASSEMBLY CONNECTOR END VIEW (I56)

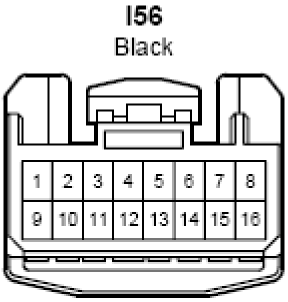
I56
Black
1
2
3
4
5
6
7
8
9
10
11
12
13
14
15
16

Fig. 112: A/C Control Assembly Connector End View (I56)
Courtesy of TOYOTA MOTOR SALES, U.S.A., INC.

COOLER (ROOM TEMPERATURE SENSOR) THERMISTOR CONNECTOR END VIEW (I57)

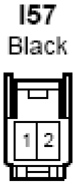
I57
Black
1
2

Fig. 113: Cooler (Room Temperature Sensor) Thermistor Connector End View (I57)
Courtesy of TOYOTA MOTOR SALES, U.S.A., INC.

POWER SWITCH CONNECTOR END VIEW (I58)

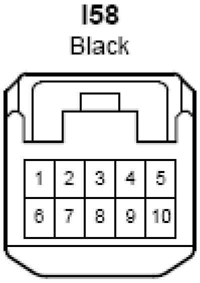
I58
Black
1
2
3
4
5
6
7
8
9
10

Fig. 114: Power Switch Connector End View (I58)
Courtesy of TOYOTA MOTOR SALES, U.S.A., INC.

CLOCK ASSEMBLY CONNECTOR END VIEW (I59)

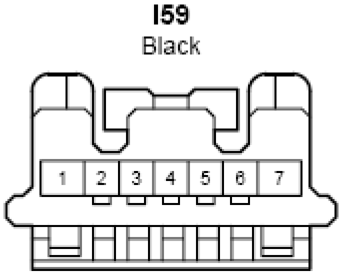

Fig. 115: Clock Assembly Connector End View (I59)
Courtesy of TOYOTA MOTOR SALES, U.S.A., INC.

FRONT NO. 3 SPEAKER ASSEMBLY CONNECTOR END VIEW (I60)

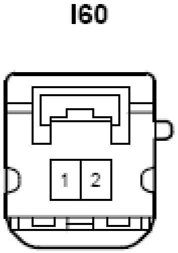

Fig. 116: Front No. 3 Speaker Assembly Connector End View (I60)
Courtesy of TOYOTA MOTOR SALES, U.S.A., INC.

AUTOMATIC LIGHT CONTROL SENSOR CONNECTOR END VIEW (I61)

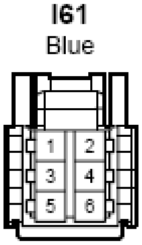

Fig. 117: Automatic Light Control Sensor Connector End View (I61)
Courtesy of TOYOTA MOTOR SALES, U.S.A., INC.

SHIFT POSITION INDICATOR (INDICATOR LIGHT WIRE SUB-ASSEMBLY) CONNECTOR END VIEW (I62)

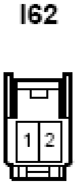

Fig. 118: Shift Position Indicator (Indicator Light Wire Sub-Assembly) Connector End View (I62)

Courtesy of TOYOTA MOTOR SALES, U.S.A., INC.

MULTI-MEDIA MODULE RECEIVER SUB-ASSEMBLY CONNECTOR END VIEW (I64)

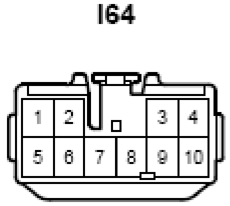

Fig. 119: Multi-Media Module Receiver Sub-Assembly Connector End View (I64)

Courtesy of TOYOTA MOTOR SALES, U.S.A., INC.

MULTI-MEDIA MODULE RECEIVER SUB-ASSEMBLY CONNECTOR END VIEW (I65)

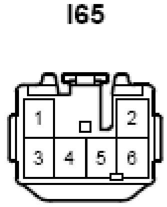

Fig. 120: Multi-Media Module Receiver Sub-Assembly Connector End View (I65)

Courtesy of TOYOTA MOTOR SALES, U.S.A., INC.

MULTI-MEDIA MODULE RECEIVER SUB-ASSEMBLY CONNECTOR END VIEW (I66)

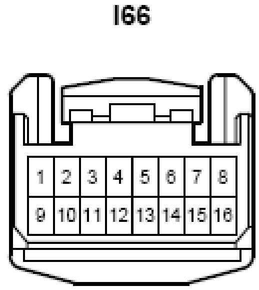

Fig. 121: Multi-Media Module Receiver Sub-Assembly Connector End View (I66)

Courtesy of TOYOTA MOTOR SALES, U.S.A., INC.

MULTI-MEDIA MODULE RECEIVER SUB-ASSEMBLY CONNECTOR END VIEW (I67)

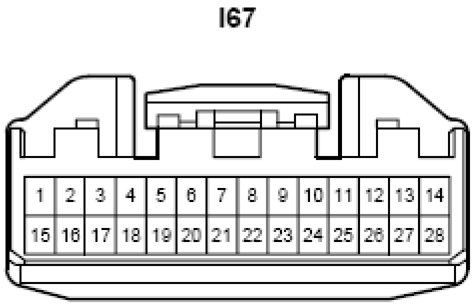
I67
1 2 3 4 5 6 7 8 9 10 11 12 13 14
15 16 17 18 19 20 21 22 23 24 25 26 27 28

Fig. 122: Multi-Media Module Receiver Sub-Assembly Connector End View (I67)
Courtesy of TOYOTA MOTOR SALES, U.S.A., INC.

STEREO COMPONENT AMPLIFIER ASSEMBLY CONNECTOR END VIEW (I68)

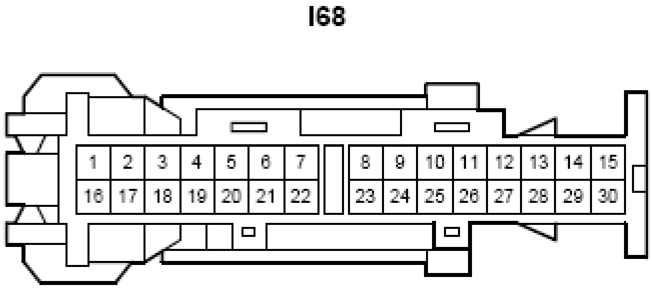
I68
1 2 3 4 5 6 7
16 17 18 19 20 21 22
8 9 10 11 12 13 14 15
23 24 25 26 27 28 29 30

Fig. 123: Stereo Component Amplifier Assembly Connector End View (I68)
Courtesy of TOYOTA MOTOR SALES, U.S.A., INC.

STEREO COMPONENT AMPLIFIER ASSEMBLY CONNECTOR END VIEW (I69)

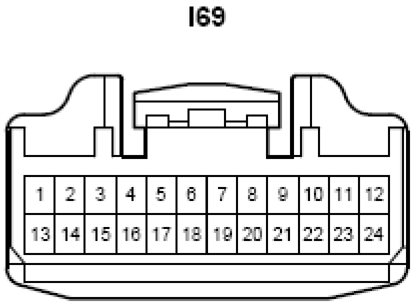
I69
1 2 3 4 5 6 7 8 9 10 11 12
13 14 15 16 17 18 19 20 21 22 23 24

Fig. 124: Stereo Component Amplifier Assembly Connector End View (I69)
Courtesy of TOYOTA MOTOR SALES, U.S.A., INC.

VEHICLE APPROACHING SPEAKER CONTROLLER CONNECTOR END VIEW (I71)

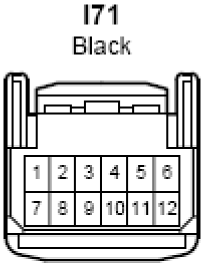
I71
Black
1
2
3
4
5
6
7
8
9
10
11
12

Fig. 125: Vehicle Approaching Speaker Controller Connector End View (I71)
Courtesy of TOYOTA MOTOR SALES, U.S.A., INC.

DIODE (FRONT COURTESY LIGHT) CONNECTOR END VIEW (I75)

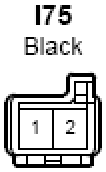
I75
Black
1
2

Fig. 126: Diode (Front Courtesy Light) Connector End View (I75)
Courtesy of TOYOTA MOTOR SALES, U.S.A., INC.

BLOWER MOTOR SUB-ASSEMBLY WITH FAN CONNECTOR END VIEW (I76)

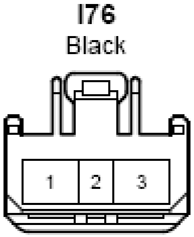
I76
Black
1
2
3

Fig. 127: Blower Motor Sub-Assembly with Fan Connector End View (I76)
Courtesy of TOYOTA MOTOR SALES, U.S.A., INC.

A/C AMPLIFIER ASSEMBLY CONNECTOR END VIEW (I77)

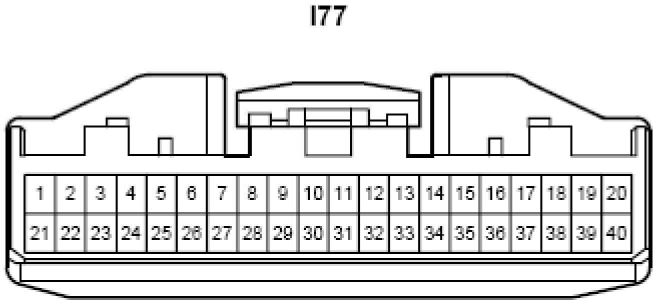
I77
1
2
3
4
5
6
7
8
9
10
11
12
13
14
15
16
17
18
19
20
21
22
23
24
25
26
27
28
29
30
31
32
33
34
35
36
37
38
39
40

Fig. 128: A/C Amplifier Assembly Connector End View (I77)

Courtesy of TOYOTA MOTOR SALES, U.S.A., INC.

CLEARANCE WARNING ECU ASSEMBLY CONNECTOR END VIEW (I82)

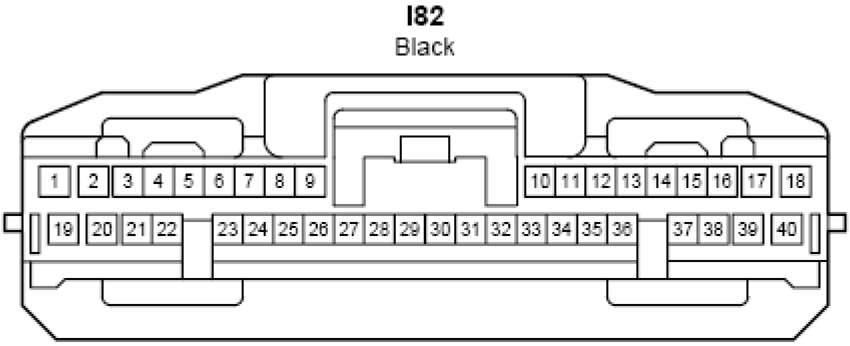
I82
Black
1
2
3
4
5
6
7
8
9
10
11
12
13
14
15
16
17
18
19
20
21
22
23
24
25
26
27
28
29
30
31
32
33
34
35
36
37
38
39
40

Fig. 129: Clearance Warning ECU Assembly Connector End View (I82)
Courtesy of TOYOTA MOTOR SALES, U.S.A., INC.

FRONT NO. 2 SPEAKER ASSEMBLY RH CONNECTOR END VIEW (I83)

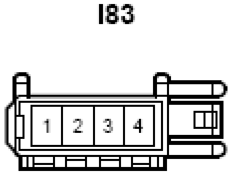

Fig. 130: Front No. 2 Speaker Assembly RH Connector End View (I83)
Courtesy of TOYOTA MOTOR SALES, U.S.A., INC.

FRONT NO. 2 SPEAKER ASSEMBLY RH CONNECTOR END VIEW (I84)

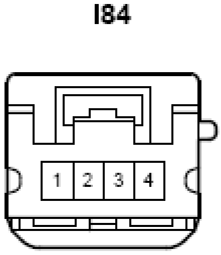

Fig. 131: Front No. 2 Speaker Assembly RH Connector End View (I84)
Courtesy of TOYOTA MOTOR SALES, U.S.A., INC.

CERTIFICATION ECU CONNECTOR END VIEW (I86)

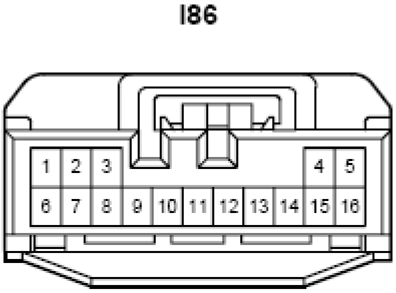
I86
1
2
3
4
5
6
7
8
9
10
11
12
13
14
15
16

Fig. 132: Certification ECU Connector End View (I86)
Courtesy of TOYOTA MOTOR SALES, U.S.A., INC.

CERTIFICATION ECU CONNECTOR END VIEW (I87)

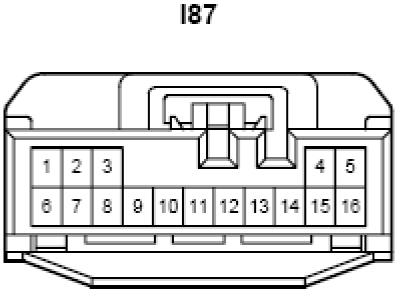
I87
1
2
3
4
5
6
7
8
9
10
11
12
13
14
15
16

Fig. 133: Certification ECU Connector End View (I87)
Courtesy of TOYOTA MOTOR SALES, U.S.A., INC.

OPTION CONNECTOR (REMOTE ENGINE STARTER) CONNECTOR END VIEW (I89)

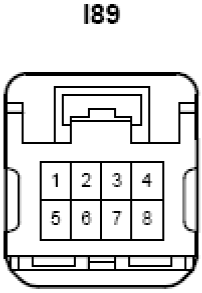
I89
1
2
3
4
5
6
7
8

Fig. 134: Option Connector (Remote Engine Starter) Connector End View (I89)
Courtesy of TOYOTA MOTOR SALES, U.S.A., INC.

JUNCTION CONNECTOR END VIEW (I92)

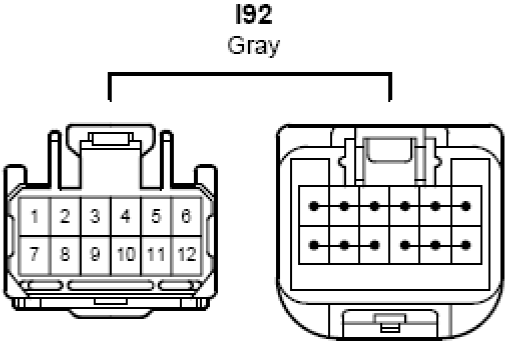
I92
Gray
1
2
3
4
5
6
7
8
9
10
11
12

Fig. 135: Junction Connector End View (I92)
Courtesy of TOYOTA MOTOR SALES, U.S.A., INC.

JUNCTION CONNECTOR END VIEW (I93)

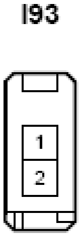

Fig. 136: Junction Connector End View (I93)
Courtesy of TOYOTA MOTOR SALES, U.S.A., INC.

JUNCTION CONNECTOR END VIEW (I94)

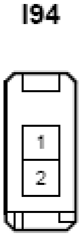

Fig. 137: Junction Connector End View (I94)
Courtesy of TOYOTA MOTOR SALES, U.S.A., INC.

JUNCTION CONNECTOR END VIEW (I95)

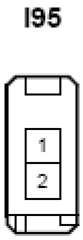

Fig. 138: Junction Connector End View (I95)
Courtesy of TOYOTA MOTOR SALES, U.S.A., INC.

JUNCTION CONNECTOR END VIEW (I96)

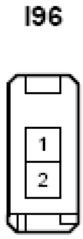

Fig. 139: Junction Connector End View (I96)
Courtesy of TOYOTA MOTOR SALES, U.S.A., INC.

JUNCTION CONNECTOR END VIEW (I97)

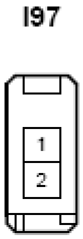

Fig. 140: Junction Connector End View (I97)
Courtesy of TOYOTA MOTOR SALES, U.S.A., INC.

JUNCTION CONNECTOR END VIEW (I100)

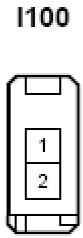

Fig. 141: Junction Connector End View (I100)
Courtesy of TOYOTA MOTOR SALES, U.S.A., INC.

JUNCTION CONNECTOR END VIEW (I101)

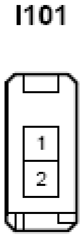

Fig. 142: Junction Connector End View (I101)
Courtesy of TOYOTA MOTOR SALES, U.S.A., INC.

JUNCTION CONNECTOR END VIEW (I102)

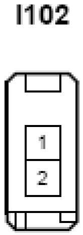

Fig. 143: Junction Connector End View (I102)
Courtesy of TOYOTA MOTOR SALES, U.S.A., INC.

JUNCTION CONNECTOR END VIEW (I103)

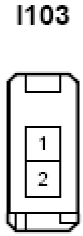

Fig. 144: Junction Connector End View (I103)
Courtesy of TOYOTA MOTOR SALES, U.S.A., INC.

JUNCTION CONNECTOR END VIEW (I104)

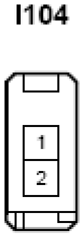

Fig. 145: Junction Connector End View (I104)
Courtesy of TOYOTA MOTOR SALES, U.S.A., INC.

JUNCTION CONNECTOR END VIEW (I106)

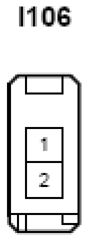

Fig. 146: Junction Connector End View (I106)
Courtesy of TOYOTA MOTOR SALES, U.S.A., INC.

JUNCTION CONNECTOR END VIEW (I107)

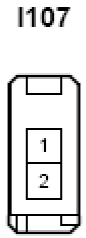

Fig. 147: Junction Connector End View (I107)
Courtesy of TOYOTA MOTOR SALES, U.S.A., INC.

JUNCTION CONNECTOR END VIEW (I109)

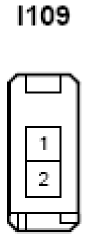

Fig. 148: Junction Connector End View (I109)
Courtesy of TOYOTA MOTOR SALES, U.S.A., INC.

JUNCTION CONNECTOR END VIEW (I110)

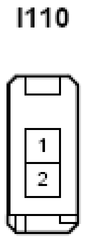

Fig. 149: Junction Connector End View (I110)
Courtesy of TOYOTA MOTOR SALES, U.S.A., INC.

JUNCTION CONNECTOR END VIEW (I111)

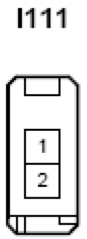

Fig. 150: Junction Connector End View (I111)
Courtesy of TOYOTA MOTOR SALES, U.S.A., INC.

JUNCTION CONNECTOR END VIEW (I124)

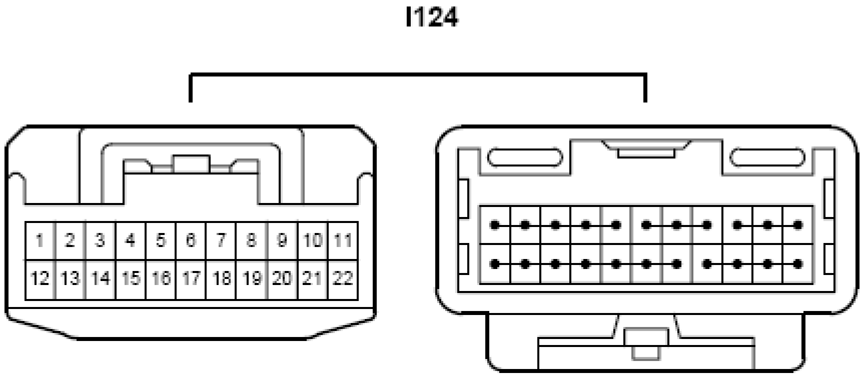
I124
1
2
3
4
5
6
7
8
9
10
11
12
13
14
15
16
17
18
19
20
21
22

Fig. 151: Junction Connector End View (I124)
Courtesy of TOYOTA MOTOR SALES, U.S.A., INC.

JUNCTION CONNECTOR END VIEW (I125)

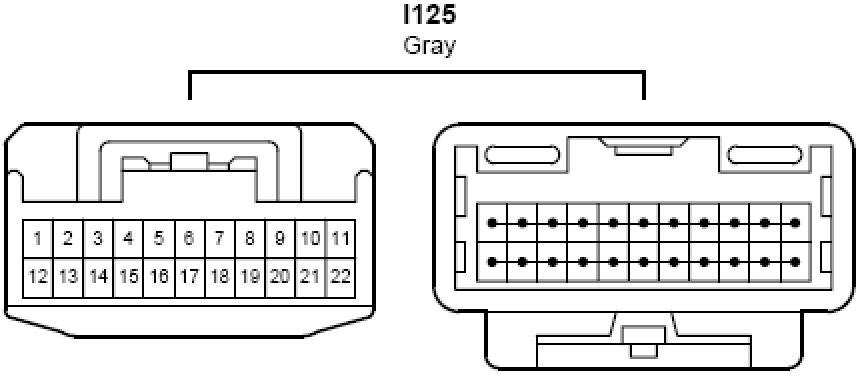
I125
Gray
1
2
3
4
5
6
7
8
9
10
11
12
13
14
15
16
17
18
19
20
21
22

Fig. 152: Junction Connector End View (I125)
Courtesy of TOYOTA MOTOR SALES, U.S.A., INC.

JUNCTION CONNECTOR END VIEW (I126)

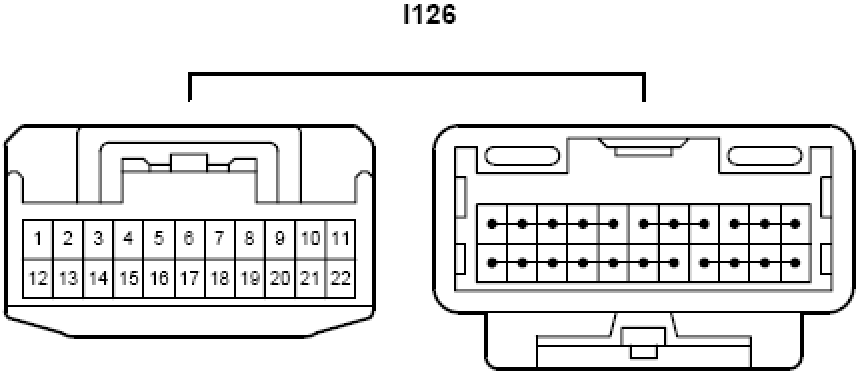
I126
1
2
3
4
5
6
7
8
9
10
11
12
13
14
15
16
17
18
19
20
21
22

Fig. 153: Junction Connector End View (I126)
Courtesy of TOYOTA MOTOR SALES, U.S.A., INC.

JUNCTION CONNECTOR END VIEW (I128)

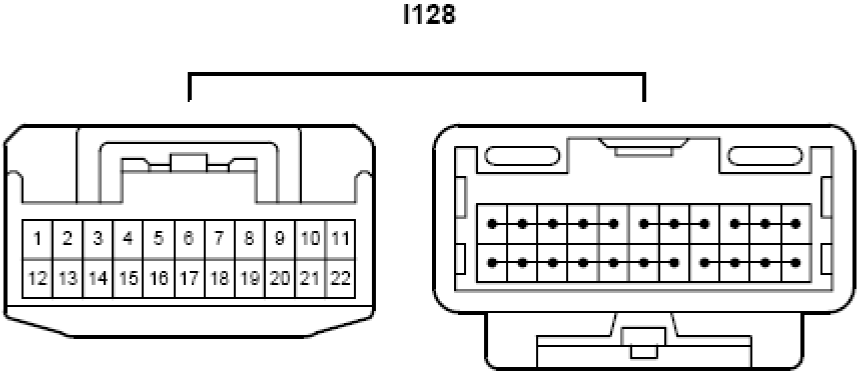
I128
1
2
3
4
5
6
7
8
9
10
11
12
13
14
15
16
17
18
19
20
21
22

Fig. 154: Junction Connector End View (I128)
Courtesy of TOYOTA MOTOR SALES, U.S.A., INC.

VSC OFF SWITCH CONNECTOR END VIEW (I130)

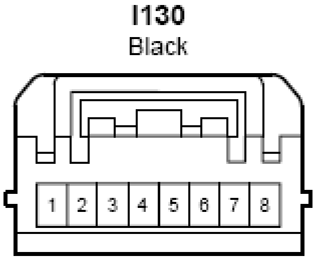
I130
Black
1
2
3
4
5
6
7
8

Fig. 155: VSC Off Switch Connector End View (I130)
Courtesy of TOYOTA MOTOR SALES, U.S.A., INC.

HEADLIGHT LEVELING SWITCH CONNECTOR END VIEW (I131)

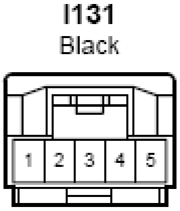
I131
Black
1
2
3
4
5

Fig. 156: Headlight Leveling Switch Connector End View (I131)
Courtesy of TOYOTA MOTOR SALES, U.S.A., INC.

RADIO & DISPLAY RECEIVER ASSEMBLY CONNECTOR END VIEW (I134)

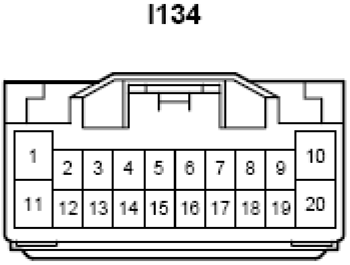
I134
1
2
3
4
5
6
7
8
9
10
11
12
13
14
15
16
17
18
19
20

Fig. 157: Radio & Display Receiver Assembly Connector End View (I134)
Courtesy of TOYOTA MOTOR SALES, U.S.A., INC.

DCM (TELEMATICS TRANSCEIVER) CONNECTOR END VIEW (I135)

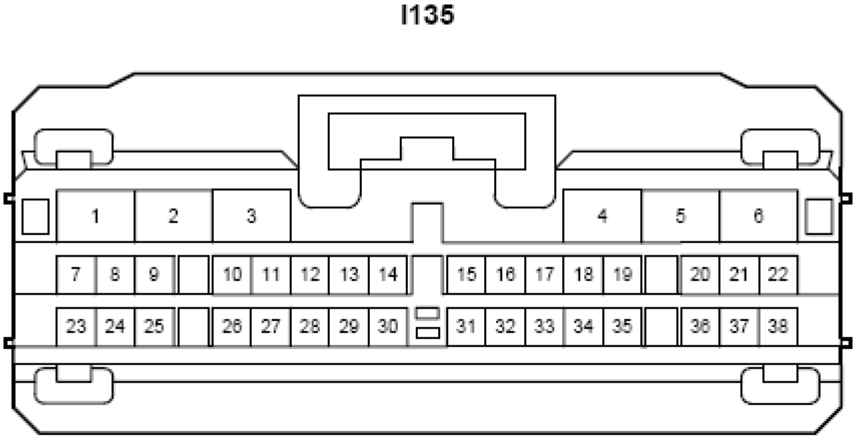
I135
1
2
3
4
5
6
7
8
9
10
11
12
13
14
15
16
17
18
19
20
21
22
23
24
25
26
27
28
29
30
31
32
33
34
35
36
37
38

Fig. 158: DCM (Telematics Transceiver) Connector End View (I135)
Courtesy of TOYOTA MOTOR SALES, U.S.A., INC.

BACK-UP BATTERY (MAYDAY BATTERY) CONNECTOR END VIEW (I136)

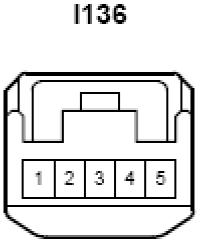

Fig. 159: Back-Up Battery (Mayday Battery) Connector End View (I136)
Courtesy of TOYOTA MOTOR SALES, U.S.A., INC.

TIRE PRESSURE WARNING RESET SWITCH CONNECTOR END VIEW (I137)

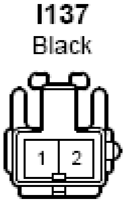
I137
Black
1
2

Fig. 160: Tire Pressure Warning Reset Switch Connector End View (I137)
Courtesy of TOYOTA MOTOR SALES, U.S.A., INC.

GLOVE BOX LIGHT ASSEMBLY CONNECTOR END VIEW (I138)

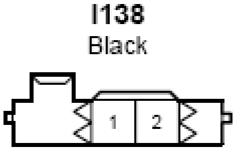
I138
Black
1
2

Fig. 161: Glove Box Light Assembly Connector End View (I138)
Courtesy of TOYOTA MOTOR SALES, U.S.A., INC.

LOWER NO. 2 INSTRUMENT PANEL AIRBAG ASSEMBLY CONNECTOR END VIEW (I140)

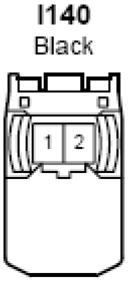

Fig. 162: Lower No. 2 Instrument Panel Airbag Assembly Connector End View (I140)
Courtesy of TOYOTA MOTOR SALES, U.S.A., INC.

NO. 1 STEREO JACK ADAPTER ASSEMBLY CONNECTOR END VIEW (I146)

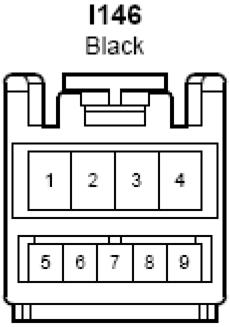

Fig. 163: No. 1 Stereo Jack Adapter Assembly Connector End View (I146)
Courtesy of TOYOTA MOTOR SALES, U.S.A., INC.

MULTI-MEDIA MODULE RECEIVER SUB-ASSEMBLY CONNECTOR END VIEW (I147)

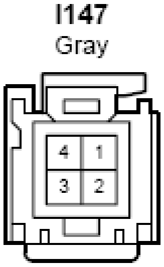

Fig. 164: Multi-Media Module Receiver Sub-Assembly Connector End View (I147)
Courtesy of TOYOTA MOTOR SALES, U.S.A., INC.

RADIO RECEIVER ASSEMBLY CONNECTOR END VIEW (I148)

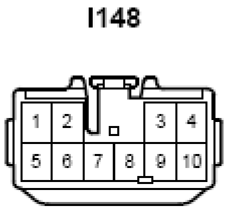
I148
1
2
3
4
5
6
7
8
9
10

Fig. 165: Radio Receiver Assembly Connector End View (I148)
Courtesy of TOYOTA MOTOR SALES, U.S.A., INC.

RADIO RECEIVER ASSEMBLY CONNECTOR END VIEW (I149)

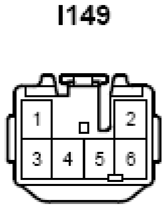
I149
1
2
3
4
5
6

Fig. 166: Radio Receiver Assembly Connector End View (I149)
Courtesy of TOYOTA MOTOR SALES, U.S.A., INC.

RADIO RECEIVER ASSEMBLY CONNECTOR END VIEW (I150)

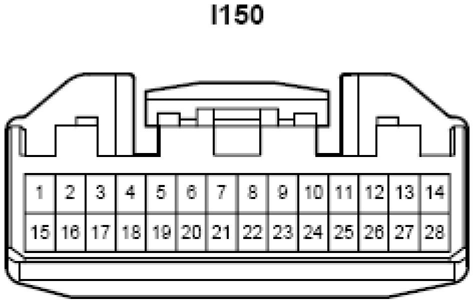
I150
1
2
3
4
5
6
7
8
9
10
11
12
13
14
15
16
17
18
19
20
21
22
23
24
25
26
27
28

Fig. 167: Radio Receiver Assembly Connector End View (I150)
Courtesy of TOYOTA MOTOR SALES, U.S.A., INC.

RADIO RECEIVER ASSEMBLY CONNECTOR END VIEW (I151)

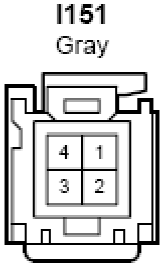
I151
Gray
4
1
3
2

Fig. 168: Radio Receiver Assembly Connector End View (I151)

Courtesy of TOYOTA MOTOR SALES, U.S.A., INC.

RADIO & DISPLAY RECEIVER ASSEMBLY CONNECTOR END VIEW (I152)

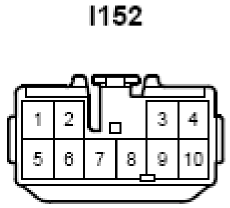

Fig. 169: Radio & Display Receiver Assembly Connector End View (I152)
Courtesy of TOYOTA MOTOR SALES, U.S.A., INC.

RADIO & DISPLAY RECEIVER ASSEMBLY CONNECTOR END VIEW (I153)

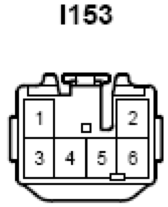

Fig. 170: Radio & Display Receiver Assembly Connector End View (I153)
Courtesy of TOYOTA MOTOR SALES, U.S.A., INC.

RADIO & DISPLAY RECEIVER ASSEMBLY CONNECTOR END VIEW (I154)

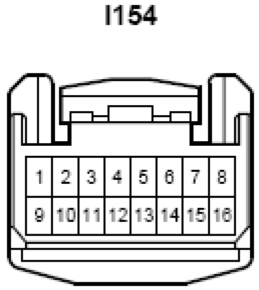

Fig. 171: Radio & Display Receiver Assembly Connector End View (I154)
Courtesy of TOYOTA MOTOR SALES, U.S.A., INC.

RADIO & DISPLAY RECEIVER ASSEMBLY CONNECTOR END VIEW (I155)

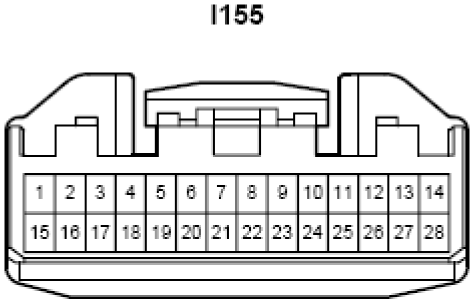
I155
1
2
3
4
5
6
7
8
9
10
11
12
13
14
15
16
17
18
19
20
21
22
23
24
25
26
27
28

Fig. 172: Radio & Display Receiver Assembly Connector End View (I155)
Courtesy of TOYOTA MOTOR SALES, U.S.A., INC.

RADIO & DISPLAY RECEIVER ASSEMBLY CONNECTOR END VIEW (I156)

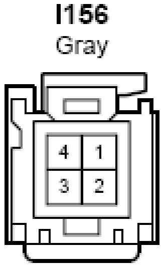
I156
Gray
4
1
3
2

Fig. 173: Radio & Display Receiver Assembly Connector End View (I156)
Courtesy of TOYOTA MOTOR SALES, U.S.A., INC.

EXTENSION MODULE CONNECTOR END VIEW (I157)

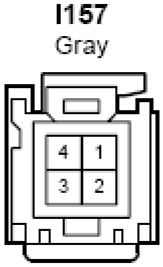
I157
Gray
4
1
3
2

Fig. 174: Extension Module Connector End View (I157)
Courtesy of TOYOTA MOTOR SALES, U.S.A., INC.

YAW RATE SENSOR CONNECTOR END VIEW (I158)

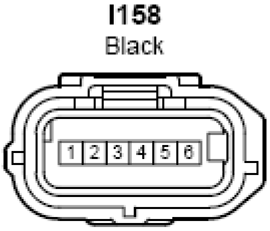

Fig. 175: Yaw Rate Sensor Connector End View (I158)
Courtesy of TOYOTA MOTOR SALES, U.S.A., INC.

JUNCTION CONNECTOR END VIEW (I159)

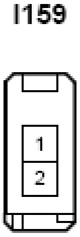

Fig. 176: Junction Connector End View (I159)
Courtesy of TOYOTA MOTOR SALES, U.S.A., INC.

FRONT DOOR LOCK ASSEMBLY WITH MOTOR RH CONNECTOR END VIEW (J1)

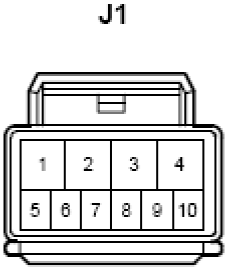

Fig. 177: Front Door Lock Assembly with Motor RH Connector End View (J1)
Courtesy of TOYOTA MOTOR SALES, U.S.A., INC.

FRONT COURTESY LIGHT ASSEMBLY RH CONNECTOR END VIEW (J2)

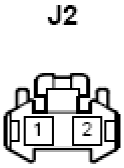

Fig. 178: Front Courtesy Light Assembly RH Connector End View (J2)
Courtesy of TOYOTA MOTOR SALES, U.S.A., INC.

FRONT NO. 1 SPEAKER ASSEMBLY RH CONNECTOR END VIEW (J5)

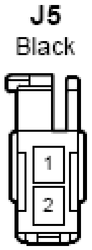

Fig. 179: Front No. 1 Speaker Assembly RH Connector End View (J5)
Courtesy of TOYOTA MOTOR SALES, U.S.A., INC.

OUTER REAR VIEW MIRROR ASSEMBLY RH CONNECTOR END VIEW (J7)

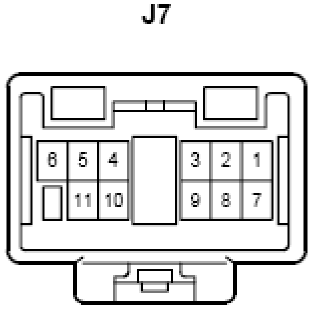

Fig. 180: Outer Rear View Mirror Assembly RH Connector End View (J7)
Courtesy of TOYOTA MOTOR SALES, U.S.A., INC.

DOOR SIDE AIRBAG SENSOR RH CONNECTOR END VIEW (J10)

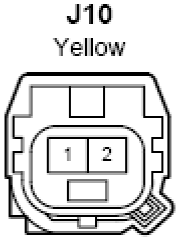

Fig. 181: Door Side Airbag Sensor RH Connector End View (J10)
Courtesy of TOYOTA MOTOR SALES, U.S.A., INC.

FRONT POWER WINDOW REGULATOR SWITCH ASSEMBLY RH CONNECTOR END VIEW (J11)

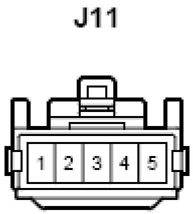

Fig. 182: Front Power Window Regulator Switch Assembly RH Connector End View (J11)
Courtesy of TOYOTA MOTOR SALES, U.S.A., INC.

DOOR CONTROL SWITCH ASSEMBLY CONNECTOR END VIEW (J12)

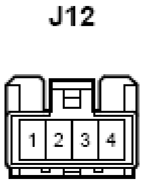

Fig. 183: Door Control Switch Assembly Connector End View (J12)
Courtesy of TOYOTA MOTOR SALES, U.S.A., INC.

OUTER REAR VIEW MIRROR ASSEMBLY RH CONNECTOR END VIEW (J13)

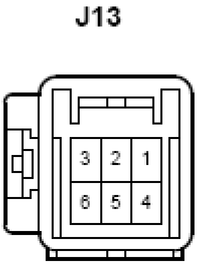

Fig. 184: Outer Rear View Mirror Assembly RH Connector End View (J13)
Courtesy of TOYOTA MOTOR SALES, U.S.A., INC.

FRONT POWER WINDOW REGULATOR MOTOR ASSEMBLY RH CONNECTOR END VIEW (J14)

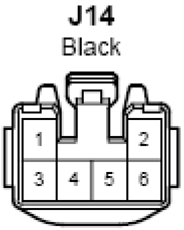

Fig. 185: Front Power Window Regulator Motor Assembly RH Connector End View (J14)
Courtesy of TOYOTA MOTOR SALES, U.S.A., INC.

FRONT DOOR LOCK ASSEMBLY WITH MOTOR LH CONNECTOR END VIEW (K1)

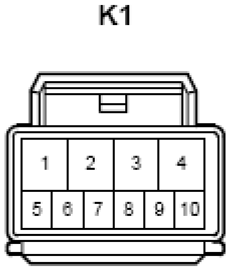

Fig. 186: Front Door Lock Assembly with Motor LH Connector End View (K1)
Courtesy of TOYOTA MOTOR SALES, U.S.A., INC.

FRONT COURTESY LIGHT ASSEMBLY LH CONNECTOR END VIEW (K2)

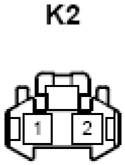

Fig. 187: Front Courtesy Light Assembly LH Connector End View (K2)
Courtesy of TOYOTA MOTOR SALES, U.S.A., INC.

FRONT NO. 1 SPEAKER ASSEMBLY LH CONNECTOR END VIEW (K5)

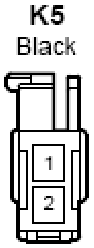

Fig. 188: Front No. 1 Speaker Assembly LH Connector End View (K5)
Courtesy of TOYOTA MOTOR SALES, U.S.A., INC.

OUTER MIRROR SWITCH ASSEMBLY CONNECTOR END VIEW (K6)

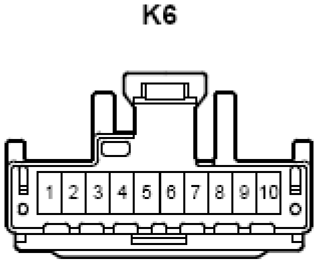

Fig. 189: Outer Mirror Switch Assembly Connector End View (K6)
Courtesy of TOYOTA MOTOR SALES, U.S.A., INC.

OUTER REAR VIEW MIRROR ASSEMBLY LH CONNECTOR END VIEW (K7)

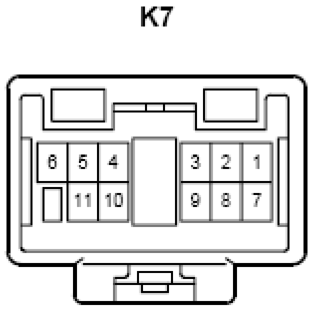

Fig. 190: Outer Rear View Mirror Assembly LH Connector End View (K7)
Courtesy of TOYOTA MOTOR SALES, U.S.A., INC.

FRONT POWER WINDOW REGULATOR MOTOR ASSEMBLY LH CONNECTOR END VIEW (K9)

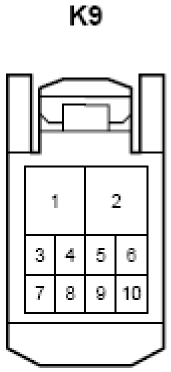

Fig. 191: Front Power Window Regulator Motor Assembly LH Connector End View (K9)
Courtesy of TOYOTA MOTOR SALES, U.S.A., INC.

DOOR SIDE AIRBAG SENSOR LH CONNECTOR END VIEW (K10)

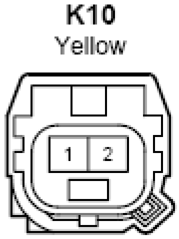

Fig. 192: Door Side Airbag Sensor LH Connector End View (K10)
Courtesy of TOYOTA MOTOR SALES, U.S.A., INC.

POWER WINDOW REGULATOR MASTER SWITCH ASSEMBLY CONNECTOR END VIEW (K11)

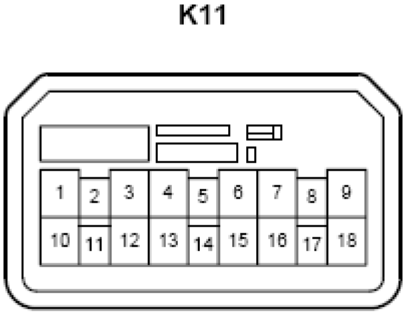
K11
1
2
3
4
5
6
7
8
9
10
11
12
13
14
15
16
17
18

Fig. 193: Power Window Regulator Master Switch Assembly Connector End View (K11)
Courtesy of TOYOTA MOTOR SALES, U.S.A., INC.

OUTER REAR VIEW MIRROR ASSEMBLY LH CONNECTOR END VIEW (K12)

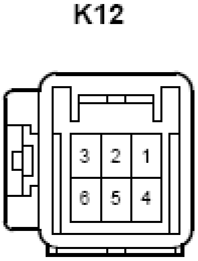

Fig. 194: Outer Rear View Mirror Assembly LH Connector End View (K12)
Courtesy of TOYOTA MOTOR SALES, U.S.A., INC.

REAR DOOR LOCK ASSEMBLY WITH MOTOR RH CONNECTOR END VIEW (L1)

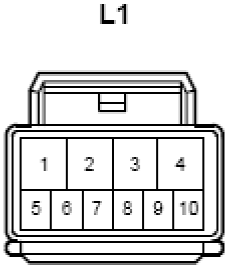
L1
1
2
3
4
5
6
7
8
9
10

Fig. 195: Rear Door Lock Assembly with Motor RH Connector End View (L1)
Courtesy of TOYOTA MOTOR SALES, U.S.A., INC.

REAR POWER WINDOW REGULATOR MOTOR ASSEMBLY RH CONNECTOR END VIEW (L5)

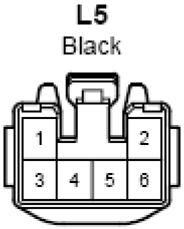

Fig. 196: Rear Power Window Regulator Motor Assembly RH Connector End View (L5)
Courtesy of TOYOTA MOTOR SALES, U.S.A., INC.

REAR POWER WINDOW REGULATOR SWITCH ASSEMBLY RH CONNECTOR END VIEW (L6)

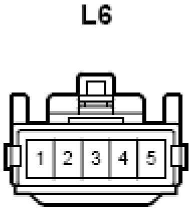

Fig. 197: Rear Power Window Regulator Switch Assembly RH Connector End View (L6)
Courtesy of TOYOTA MOTOR SALES, U.S.A., INC.

REAR DOOR LOCK ASSEMBLY WITH MOTOR LH CONNECTOR END VIEW (M1)

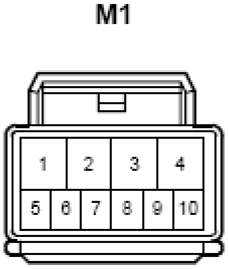

Fig. 198: Rear Door Lock Assembly With Motor LH Connector End View (M1)
Courtesy of TOYOTA MOTOR SALES, U.S.A., INC.

REAR POWER WINDOW REGULATOR MOTOR ASSEMBLY LH CONNECTOR END VIEW (M5)

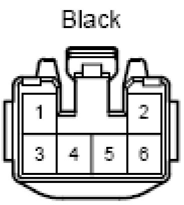

Fig. 199: Rear Power Window Regulator Motor Assembly LH Connector End View (M5)
Courtesy of TOYOTA MOTOR SALES, U.S.A., INC.

REAR POWER WINDOW REGULATOR SWITCH ASSEMBLY LH CONNECTOR END VIEW (M6)

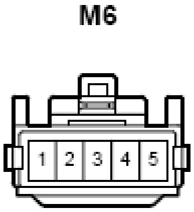

Fig. 200: Rear Power Window Regulator Switch Assembly LH Connector End View (M6)
Courtesy of TOYOTA MOTOR SALES, U.S.A., INC.

AIRBAG SENSOR ASSEMBLY CONNECTOR END VIEW (N5)

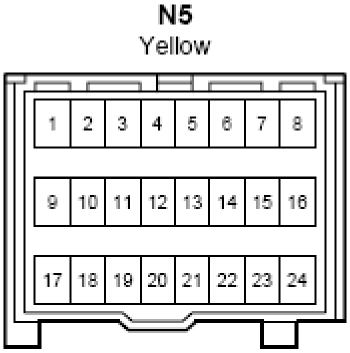
N5
Yellow
1
2
3
4
5
6
7
8
9
10
11
12
13
14
15
16
17
18
19
20
21
22
23
24

Fig. 201: Airbag Sensor Assembly Connector End View (N5)
Courtesy of TOYOTA MOTOR SALES, U.S.A., INC.

FRONT DOOR COURTESY LIGHT SWITCH ASSEMBLY LH CONNECTOR END VIEW (N7)

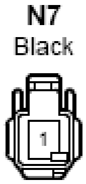

Fig. 202: Front Door Courtesy Light Switch Assembly LH Connector End View (N7)
Courtesy of TOYOTA MOTOR SALES, U.S.A., INC.

SIDE AIRBAG SENSOR ASSEMBLY LH CONNECTOR END VIEW (N8)

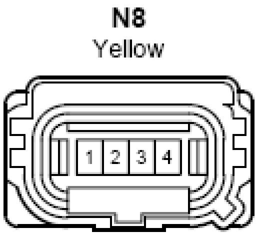
N8
Yellow
1
2
3
4

Fig. 203: Side Airbag Sensor Assembly LH Connector End View (N8)
Courtesy of TOYOTA MOTOR SALES, U.S.A., INC.

FRONT SEAT OUTER BELT ASSEMBLY LH CONNECTOR END VIEW (N9)

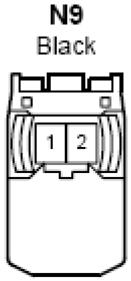

Fig. 204: Front Seat Outer Belt Assembly LH Connector End View (N9)
Courtesy of TOYOTA MOTOR SALES, U.S.A., INC.

NO. 2 INDOOR ELECTRICAL KEY ANTENNA ASSEMBLY CONNECTOR END VIEW (N10)

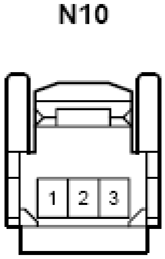

Fig. 205: No. 2 Indoor Electrical Key Antenna Assembly Connector End View (N10)
Courtesy of TOYOTA MOTOR SALES, U.S.A., INC.

FUEL SUCTION TUBE ASSEMBLY WITH PUMP&GAGE CONNECTOR END VIEW (N11)

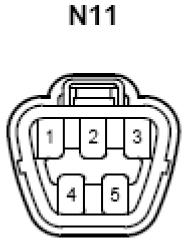

Fig. 206: Fuel Suction Tube Assembly With Pump&Gage Connector End View (N11)
Courtesy of TOYOTA MOTOR SALES, U.S.A., INC.

REAR DOOR COURTESY LIGHT SWITCH ASSEMBLY LH CONNECTOR END VIEW (N15)

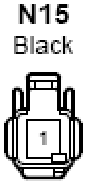

Fig. 207: Rear Door Courtesy Light Switch Assembly LH Connector End View (N15)
Courtesy of TOYOTA MOTOR SALES, U.S.A., INC.

BATTERY VOLTAGE SENSOR CONNECTOR END VIEW (N18)

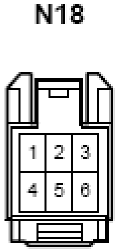

Fig. 208: Battery Voltage Sensor Connector End View (N18)
Courtesy of TOYOTA MOTOR SALES, U.S.A., INC.

NO. 1 LUGGAGE COMPARTMENT LIGHT ASSEMBLY CONNECTOR END VIEW (N23)

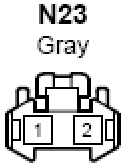

Fig. 209: No. 1 Luggage Compartment Light Assembly Connector End View (N23)
Courtesy of TOYOTA MOTOR SALES, U.S.A., INC.

RADIO SETTING CONDENSER (CENTER STOP LIGHT) CONNECTOR END VIEW (N26)

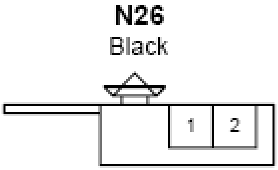

Fig. 210: Radio Setting Condenser (Center Stop Light) Connector End View (N26)
Courtesy of TOYOTA MOTOR SALES, U.S.A., INC.

CURTAIN SHIELD AIRBAG ASSEMBLY LH CONNECTOR END VIEW (N27)

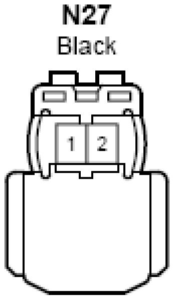

Fig. 211: Curtain Shield Airbag Assembly LH Connector End View (N27)
Courtesy of TOYOTA MOTOR SALES, U.S.A., INC.

RADIO SETTING CONDENSER (REAR WINDOW DEFOGGER) CONNECTOR END VIEW (N28)

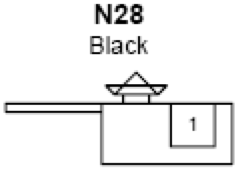

Fig. 212: Radio Setting Condenser (Rear Window Defogger) Connector End View (N28)
Courtesy of TOYOTA MOTOR SALES, U.S.A., INC.

REAR WINDOW DEFOGGER (BACK WINDOW GLASS) CONNECTOR END VIEW (N29)

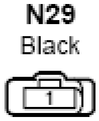

Fig. 213: Rear Window Defogger (Back Window Glass) Connector End View (N29)
Courtesy of TOYOTA MOTOR SALES, U.S.A., INC.

FRONT SEAT INNER BELT ASSEMBLY LH CONNECTOR END VIEW (N32)

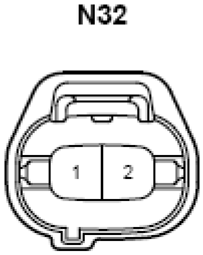

Fig. 214: Front Seat Inner Belt Assembly LH Connector End View (N32)
Courtesy of TOYOTA MOTOR SALES, U.S.A., INC.

NO. 2 SIDE AIRBAG SENSOR ASSEMBLY LH CONNECTOR END VIEW (N33)

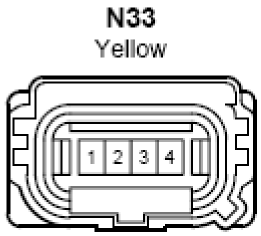

Fig. 215: No. 2 Side Airbag Sensor Assembly LH Connector End View (N33)
Courtesy of TOYOTA MOTOR SALES, U.S.A., INC.

CANISTER PUMP MODULE CONNECTOR END VIEW (N34)

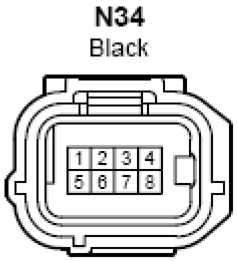

Fig. 216: Canister Pump Module Connector End View (N34)
Courtesy of TOYOTA MOTOR SALES, U.S.A., INC.

NO. 3 INDOOR ELECTRICAL KEY ANTENNA ASSEMBLY CONNECTOR END VIEW (N36)

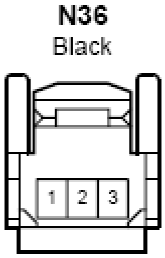

Fig. 217: No. 3 Indoor Electrical Key Antenna Assembly Connector End View (N36)
Courtesy of TOYOTA MOTOR SALES, U.S.A., INC.

CENTER STOP LIGHT SET CONNECTOR END VIEW (N37)

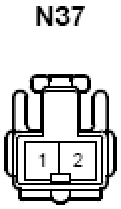

Fig. 218: Center Stop Light Set Connector End View (N37)
Courtesy of TOYOTA MOTOR SALES, U.S.A., INC.

AIRBAG SENSOR ASSEMBLY CONNECTOR END VIEW (N38)

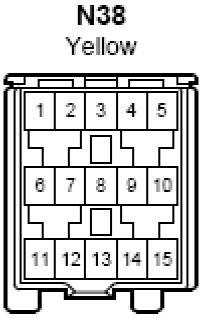
N38
Yellow
1
2
3
4
5
6
7
8
9
10
11
12
13
14
15

Fig. 219: Airbag Sensor Assembly Connector End View (N38)
Courtesy of TOYOTA MOTOR SALES, U.S.A., INC.

CERTIFICATION ECU CONNECTOR END VIEW (O2)

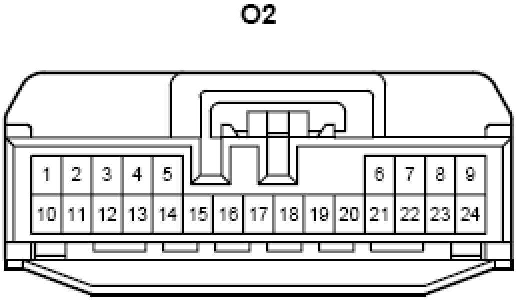
O2
1
2
3
4
5
6
7
8
9
10
11
12
13
14
15
16
17
18
19
20
21
22
23
24

Fig. 220: Certification ECU Connector End View (O2)
Courtesy of TOYOTA MOTOR SALES, U.S.A., INC.

AIRBAG SENSOR ASSEMBLY CONNECTOR END VIEW (O7)

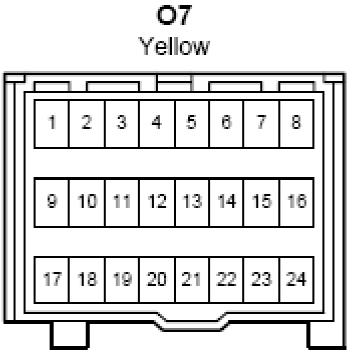
O7
Yellow
1
2
3
4
5
6
7
8
9
10
11
12
13
14
15
16
17
18
19
20
21
22
23
24

Fig. 221: Airbag Sensor Assembly Connector End View (O7)
Courtesy of TOYOTA MOTOR SALES, U.S.A., INC.

HYBRID BATTERY JUNCTION BLOCK ASSEMBLY CONNECTOR END VIEW (O9)

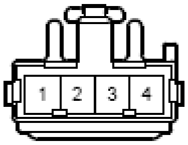

Fig. 222: Hybrid Battery Junction Block Assembly Connector End View (O9)
Courtesy of TOYOTA MOTOR SALES, U.S.A., INC.

FRONT DOOR COURTESY LIGHT SWITCH ASSEMBLY RH CONNECTOR END VIEW (O10)

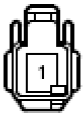

Fig. 223: Front Door Courtesy Light Switch Assembly RH Connector End View (O10)
Courtesy of TOYOTA MOTOR SALES, U.S.A., INC.

SIDE AIRBAG SENSOR ASSEMBLY RH CONNECTOR END VIEW (O11)

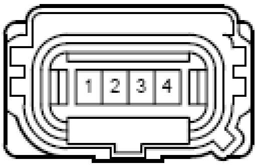

Fig. 224: Side Airbag Sensor Assembly RH Connector End View (O11)
Courtesy of TOYOTA MOTOR SALES, U.S.A., INC.

FRONT SEAT OUTER BELT ASSEMBLY RH CONNECTOR END VIEW (O12)

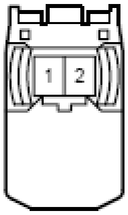

Fig. 225: Front Seat Outer Belt Assembly RH Connector End View (O12)
Courtesy of TOYOTA MOTOR SALES, U.S.A., INC.

REAR DOOR COURTESY LIGHT SWITCH ASSEMBLY RH CONNECTOR END VIEW (O16)

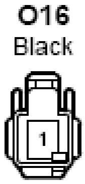

Fig. 226: Rear Door Courtesy Light Switch Assembly RH Connector End View (O16)
Courtesy of TOYOTA MOTOR SALES, U.S.A., INC.

REAR HEIGHT CONTROL SENSOR SUB-ASSEMBLY CONNECTOR END VIEW (O17)

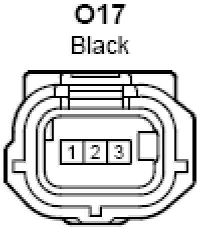

Fig. 227: Rear Height Control Sensor Sub-Assembly Connector End View (O17)
Courtesy of TOYOTA MOTOR SALES, U.S.A., INC.

REAR SPEAKER ASSEMBLY RH CONNECTOR END VIEW (O18)

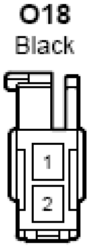

Fig. 228: Rear Speaker Assembly RH Connector End View (O18)
Courtesy of TOYOTA MOTOR SALES, U.S.A., INC.

REAR NO. 2 SPEAKER ASSEMBLY RH CONNECTOR END VIEW (O19)

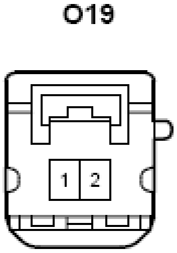

Fig. 229: Rear No. 2 Speaker Assembly RH Connector End View (O19)

Courtesy of TOYOTA MOTOR SALES, U.S.A., INC.

REAR NO. 2 SPEAKER ASSEMBLY LH CONNECTOR END VIEW (O20)

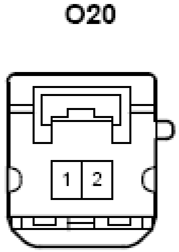

Fig. 230: Rear No. 2 Speaker Assembly LH Connector End View (O20)
Courtesy of TOYOTA MOTOR SALES, U.S.A., INC.

REAR SPEAKER ASSEMBLY LH CONNECTOR END VIEW (O21)

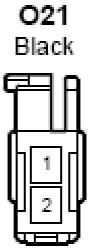

Fig. 231: Rear Speaker Assembly LH Connector End View (O21)
Courtesy of TOYOTA MOTOR SALES, U.S.A., INC.

WOOFER SPEAKER (REAR SPEAKER ASSEMBLY) CONNECTOR END VIEW (O22)

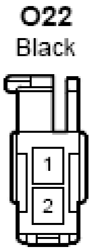

Fig. 232: Woofer Speaker (Rear Speaker Assembly) Connector End View (O22)
Courtesy of TOYOTA MOTOR SALES, U.S.A., INC.

CURTAIN SHIELD AIRBAG ASSEMBLY RH CONNECTOR END VIEW (O23)

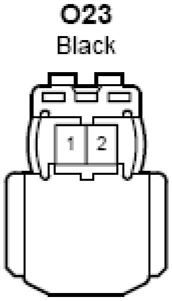

Fig. 233: Curtain Shield Airbag Assembly RH Connector End View (O23)
Courtesy of TOYOTA MOTOR SALES, U.S.A., INC.

DOOR CONTROL RECEIVER CONNECTOR END VIEW (O25)

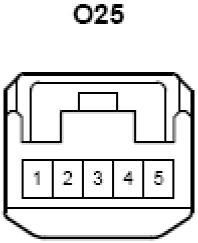

Fig. 234: Door Control Receiver Connector End View (O25)
Courtesy of TOYOTA MOTOR SALES, U.S.A., INC.

BATTERY THERMOMETER SENSOR (THERMISTOR ASSEMBLY) CONNECTOR END VIEW (O26)

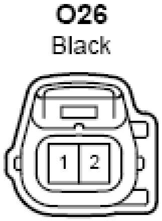

Fig. 235: Battery Thermometer Sensor (Thermistor Assembly) Connector End View (O26)
Courtesy of TOYOTA MOTOR SALES, U.S.A., INC.

SECURITY HORN ASSEMBLY CONNECTOR END VIEW (O27)

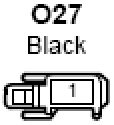

Fig. 236: Security Horn Assembly Connector End View (O27)
Courtesy of TOYOTA MOTOR SALES, U.S.A., INC.

BLIND SPOT MONITOR SENSOR RH CONNECTOR END VIEW (O28)

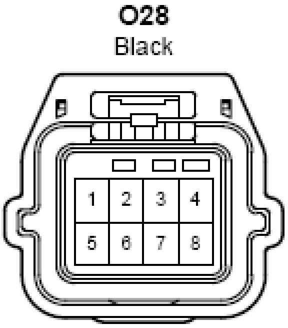
O28
Black
1
2
3
4
5
6
7
8

Fig. 237: Blind Spot Monitor Sensor RH Connector End View (O28)
Courtesy of TOYOTA MOTOR SALES, U.S.A., INC.

FUSIBLE LINK BLOCK ASSEMBLY CONNECTOR END VIEW (O29)

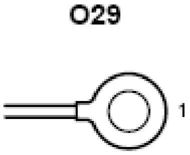

Fig. 238: Fusible Link Block Assembly Connector End View (O29)
Courtesy of TOYOTA MOTOR SALES, U.S.A., INC.

JUNCTION CONNECTOR END VIEW (O30)

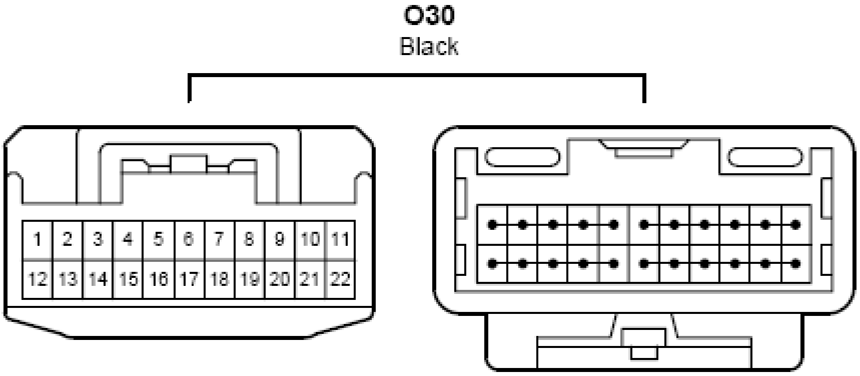
O30
Black
1
2
3
4
5
6
7
8
9
10
11
12
13
14
15
16
17
18
19
20
21
22

Fig. 239: Junction Connector End View (O30)
Courtesy of TOYOTA MOTOR SALES, U.S.A., INC.

NO. 2 SIDE AIRBAG SENSOR ASSEMBLY RH CONNECTOR END VIEW (O32)

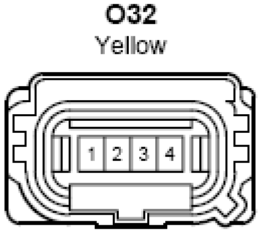

Fig. 240: No. 2 Side Airbag Sensor Assembly RH Connector End View (O32)
Courtesy of TOYOTA MOTOR SALES, U.S.A., INC.

TIRE PRESSURE WARNING ECU AND RECEIVER (DOOR CONTROL AND TIRE PRESSURE MONITORING SYSTEM RECEIVER ASSEMBLY) CONNECTOR END VIEW (O33)

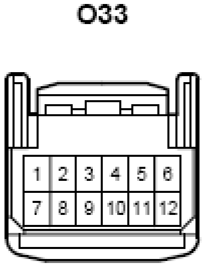

Fig. 241: Tire Pressure Warning ECU And Receiver (Door Control And Tire Pressure Monitoring System Receiver Assembly) Connector End View (O33)
Courtesy of TOYOTA MOTOR SALES, U.S.A., INC.

ROOF ANTENNA ASSEMBLY CONNECTOR END VIEW (O34)

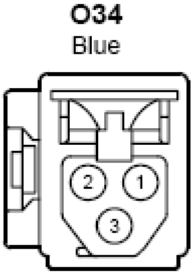

Fig. 242: Roof Antenna Assembly Connector End View (O34)
Courtesy of TOYOTA MOTOR SALES, U.S.A., INC.

NO. 3 ANTENNA CORD SUB-ASSEMBLY CONNECTOR END VIEW (O35)

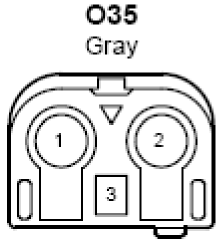

Fig. 243: No. 3 Antenna Cord Sub-Assembly Connector End View (O35)
Courtesy of TOYOTA MOTOR SALES, U.S.A., INC.

DCM (TELEMATICS TRANSCEIVER) CONNECTOR END VIEW (O36)

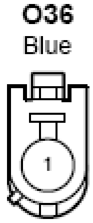

Fig. 244: DCM (Telematics Transceiver) Connector End View (O36)
Courtesy of TOYOTA MOTOR SALES, U.S.A., INC.

DCM (TELEMATICS TRANSCEIVER) CONNECTOR END VIEW (O37)

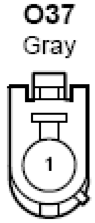

Fig. 245: DCM (Telematics Transceiver) Connector End View (O37)
Courtesy of TOYOTA MOTOR SALES, U.S.A., INC.

DOOR CONTROL RECEIVER CONNECTOR END VIEW (O38)

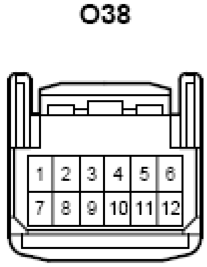

Fig. 246: Door Control Receiver Connector End View (O38)
Courtesy of TOYOTA MOTOR SALES, U.S.A., INC.

AIRBAG SENSOR ASSEMBLY CONNECTOR END VIEW (O39)

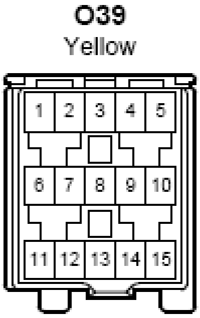

Fig. 247: Airbag Sensor Assembly Connector End View (O39)
Courtesy of TOYOTA MOTOR SALES, U.S.A., INC.

REAR WINDOW DEFOGGER (BACK WINDOW GLASS) CONNECTOR END VIEW (P1)

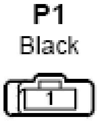

Fig. 248: Rear Window Defogger (Back Window Glass) Connector End View (P1)
Courtesy of TOYOTA MOTOR SALES, U.S.A., INC.

INVERTER WITH CONVERTER ASSEMBLY CONNECTOR END VIEW (Q1)

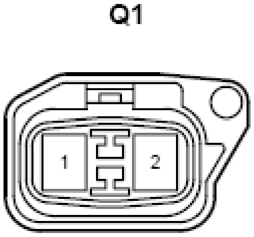

Fig. 249: Inverter with Converter Assembly Connector End View (Q1)
Courtesy of TOYOTA MOTOR SALES, U.S.A., INC.

HYBRID BATTERY JUNCTION BLOCK ASSEMBLY CONNECTOR END VIEW (Q2)

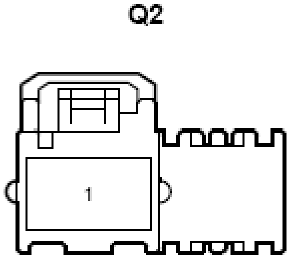

Fig. 250: Hybrid Battery Junction Block Assembly Connector End View (Q2)

Courtesy of TOYOTA MOTOR SALES, U.S.A., INC.

HYBRID BATTERY JUNCTION BLOCK ASSEMBLY CONNECTOR END VIEW (Q3)

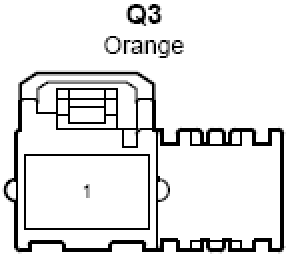

Fig. 251: Hybrid Battery Junction Block Assembly Connector End View (Q3)
Courtesy of TOYOTA MOTOR SALES, U.S.A., INC.

HUMIDITY SENSOR (A/C THERMISTOR ASSEMBLY) CONNECTOR END VIEW (S3)

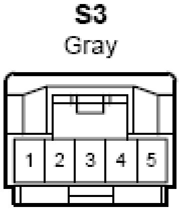

Fig. 252: Humidity Sensor (A/C Thermistor Assembly) Connector End View (S3)
Courtesy of TOYOTA MOTOR SALES, U.S.A., INC.

SLIDING ROOF CONTROL ECU (SLIDING ROOF DRIVE GEAR SUB-ASSEMBLY) CONNECTOR END VIEW (S4)

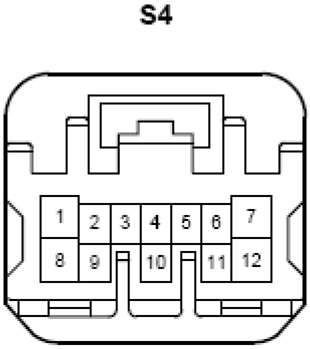

Fig. 253: Sliding Roof Control ECU (Sliding Roof Drive Gear Sub-Assembly) Connector End View (S4)
Courtesy of TOYOTA MOTOR SALES, U.S.A., INC.

VANITY LIGHT ASSEMBLY LH CONNECTOR END VIEW (S5)

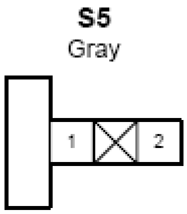

Fig. 254: Vanity Light Assembly LH Connector End View (S5)
Courtesy of TOYOTA MOTOR SALES, U.S.A., INC.

VISOR ASSEMBLY LH CONNECTOR END VIEW (S6)

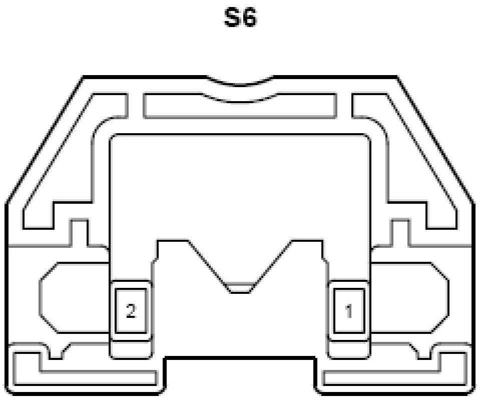

Fig. 255: Visor Assembly LH Connector End View (S6)
Courtesy of TOYOTA MOTOR SALES, U.S.A., INC.

VANITY LIGHT ASSEMBLY RH CONNECTOR END VIEW (S8)

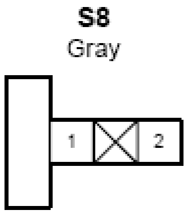

Fig. 256: Vanity Light Assembly RH Connector End View (S8)
Courtesy of TOYOTA MOTOR SALES, U.S.A., INC.

VISOR ASSEMBLY RH CONNECTOR END VIEW (S9)

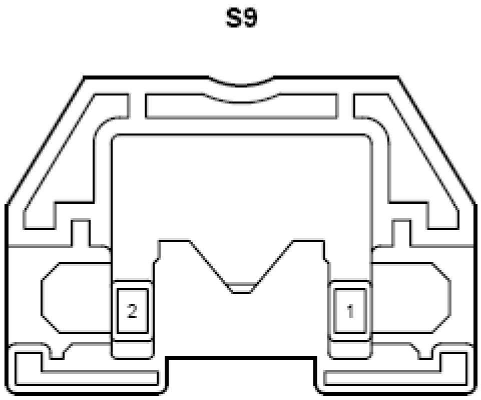

Fig. 257: Visor Assembly RH Connector End View (S9)
Courtesy of TOYOTA MOTOR SALES, U.S.A., INC.

INNER REAR VIEW MIRROR ASSEMBLY CONNECTOR END VIEW (S11)

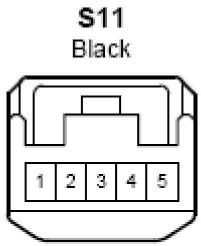
S11
Black
1
2
3
4
5

Fig. 258: Inner Rear View Mirror Assembly Connector End View (S11)
Courtesy of TOYOTA MOTOR SALES, U.S.A., INC.

ROOF CONSOLE BOX ASSEMBLY CONNECTOR END VIEW (S12)

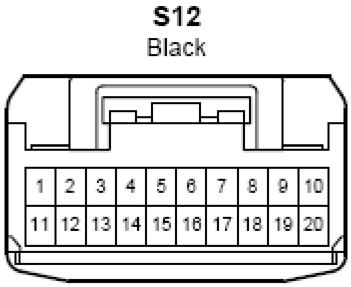
S12
Black
1
2
3
4
5
6
7
8
9
10
11
12
13
14
15
16
17
18
19
20

Fig. 259: Roof Console Box Assembly Connector End View (S12)
Courtesy of TOYOTA MOTOR SALES, U.S.A., INC.

NO. 1 ROOM LIGHT ASSEMBLY CONNECTOR END VIEW (S13)

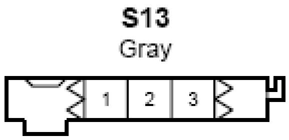

Fig. 260: No. 1 Room Light Assembly Connector End View (S13)
Courtesy of TOYOTA MOTOR SALES, U.S.A., INC.

SPOT LIGHT ASSEMBLY LH CONNECTOR END VIEW (S14)

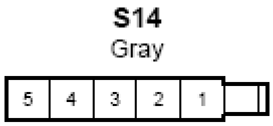

Fig. 261: Spot Light Assembly LH Connector End View (S14)
Courtesy of TOYOTA MOTOR SALES, U.S.A., INC.

SPOT LIGHT ASSEMBLY RH CONNECTOR END VIEW (S15)

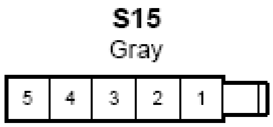

Fig. 262: Spot Light Assembly RH Connector End View (S15)
Courtesy of TOYOTA MOTOR SALES, U.S.A., INC.

OPTION CONNECTOR (AUTOMATIC GLARE-RESISTANT EC MIRROR) CONNECTOR END VIEW (S16)

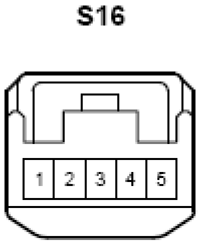

Fig. 263: Option Connector (Automatic Glare-Resistant EC Mirror) Connector End View (S16)
Courtesy of TOYOTA MOTOR SALES, U.S.A., INC.

LICENSE PLATE LIGHT ASSEMBLY RH CONNECTOR END VIEW (T2)

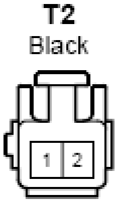

Fig. 264: License Plate Light Assembly RH Connector End View (T2)
Courtesy of TOYOTA MOTOR SALES, U.S.A., INC.

LUGGAGE COMPARTMENT DOOR LOCK ASSEMBLY CONNECTOR END VIEW (T3)

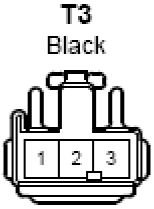

Fig. 265: Luggage Compartment Door Lock Assembly Connector End View (T3)
Courtesy of TOYOTA MOTOR SALES, U.S.A., INC.

LUGGAGE DOOR OPENING SWITCH ASSEMBLY CONNECTOR END VIEW (T4)

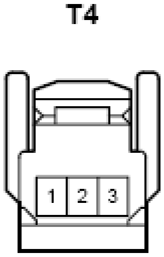

Fig. 266: Luggage Door Opening Switch Assembly Connector End View (T4)
Courtesy of TOYOTA MOTOR SALES, U.S.A., INC.

LICENSE PLATE LIGHT ASSEMBLY LH CONNECTOR END VIEW (T5)

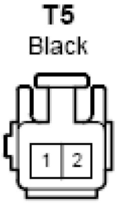

Fig. 267: License Plate Light Assembly LH Connector End View (T5)
Courtesy of TOYOTA MOTOR SALES, U.S.A., INC.

REAR TELEVISION CAMERA ASSEMBLY CONNECTOR END VIEW (T6)

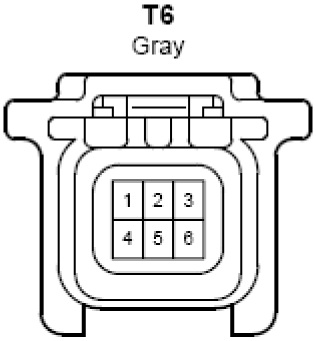

Fig. 268: Rear Television Camera Assembly Connector End View (T6)
Courtesy of TOYOTA MOTOR SALES, U.S.A., INC.

REAR COMBINATION LIGHT ASSEMBLY LH CONNECTOR END VIEW (T8)

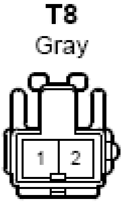

Fig. 269: Rear Combination Light Assembly LH Connector End View (T8)
Courtesy of TOYOTA MOTOR SALES, U.S.A., INC.

REAR COMBINATION LIGHT ASSEMBLY LH CONNECTOR END VIEW (T9)

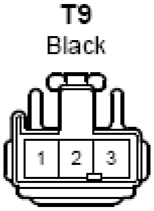

Fig. 270: Rear Combination Light Assembly LH Connector End View (T9)
Courtesy of TOYOTA MOTOR SALES, U.S.A., INC.

BLIND SPOT MONITOR SENSOR LH CONNECTOR END VIEW (T10)

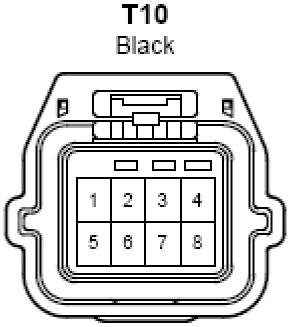
T10
Black
1
2
3
4
5
6
7
8

Fig. 271: Blind Spot Monitor Sensor LH Connector End View (T10)
Courtesy of TOYOTA MOTOR SALES, U.S.A., INC.

REAR ELECTRICAL KEY ANTENNA CONNECTOR END VIEW (T11)

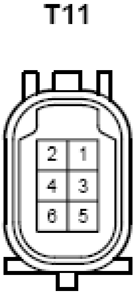

Fig. 272: Rear Electrical Key Antenna Connector End View (T11)
Courtesy of TOYOTA MOTOR SALES, U.S.A., INC.

REAR COMBINATION LIGHT ASSEMBLY RH CONNECTOR END VIEW (T12)

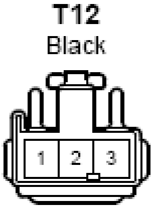
T12
Black
1
2
3

Fig. 273: Rear Combination Light Assembly RH Connector End View (T12)
Courtesy of TOYOTA MOTOR SALES, U.S.A., INC.

REAR COMBINATION LIGHT ASSEMBLY RH CONNECTOR END VIEW (T13)

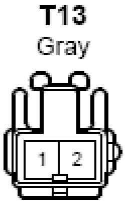

Fig. 274: Rear Combination Light Assembly RH Connector End View (T13)
Courtesy of TOYOTA MOTOR SALES, U.S.A., INC.

REAR ELECTRICAL KEY ANTENNA CONNECTOR END VIEW (T14)

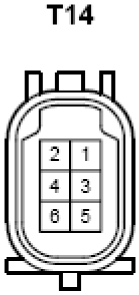

Fig. 275: Rear Electrical Key Antenna Connector End View (T14)
Courtesy of TOYOTA MOTOR SALES, U.S.A., INC.

JUNCTION CONNECTOR END VIEW (T15)

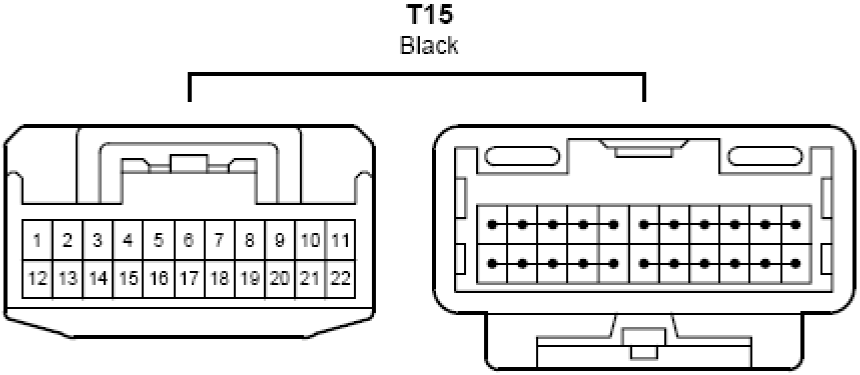
T15
Black
1
2
3
4
5
6
7
8
9
10
11
12
13
14
15
16
17
18
19
20
21
22

Fig. 276: Junction Connector End View (T15)
Courtesy of TOYOTA MOTOR SALES, U.S.A., INC.

JUNCTION TERMINAL CONNECTOR END VIEW (T16)

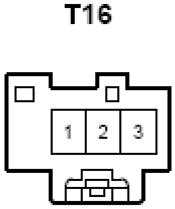

Fig. 277: Junction Terminal Connector End View (T16)
Courtesy of TOYOTA MOTOR SALES, U.S.A., INC.

REAR LIGHT ASSEMBLY RH CONNECTOR END VIEW (T17)

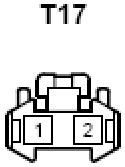

Fig. 278: Rear Light Assembly RH Connector End View (T17)
Courtesy of TOYOTA MOTOR SALES, U.S.A., INC.

REAR LIGHT ASSEMBLY LH CONNECTOR END VIEW (T18)

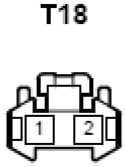

Fig. 279: Rear Light Assembly LH Connector End View (T18)
Courtesy of TOYOTA MOTOR SALES, U.S.A., INC.

REAR COMBINATION LIGHT ASSEMBLY LH CONNECTOR END VIEW (T19)

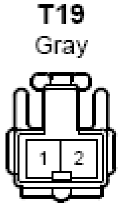

Fig. 280: Rear Combination Light Assembly LH Connector End View (T19)
Courtesy of TOYOTA MOTOR SALES, U.S.A., INC.

REAR COMBINATION LIGHT ASSEMBLY RH CONNECTOR END VIEW (T20)

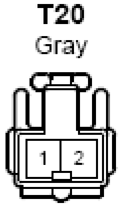

Fig. 281: Rear Combination Light Assembly RH Connector End View (T20)
Courtesy of TOYOTA MOTOR SALES, U.S.A., INC.

REAR NO. 1 ULTRASONIC SENSOR LH CONNECTOR END VIEW (U1)

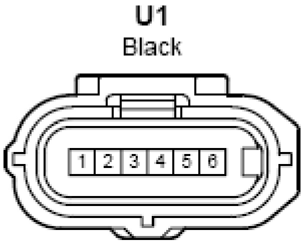

Fig. 282: Rear No. 1 Ultrasonic Sensor LH Connector End View (U1)
Courtesy of TOYOTA MOTOR SALES, U.S.A., INC.

REAR NO. 1 ULTRASONIC SENSOR CENTER LH CONNECTOR END VIEW (U2)

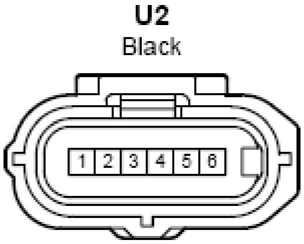

Fig. 283: Rear No. 1 Ultrasonic Sensor Center LH Connector End View (U2)
Courtesy of TOYOTA MOTOR SALES, U.S.A., INC.

REAR NO. 1 ULTRASONIC SENSOR CENTER RH CONNECTOR END VIEW (U3)

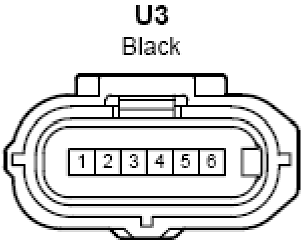

Fig. 284: Rear No. 1 Ultrasonic Sensor Center RH Connector End View (U3)
Courtesy of TOYOTA MOTOR SALES, U.S.A., INC.

REAR NO. 1 ULTRASONIC SENSOR RH CONNECTOR END VIEW (U4)

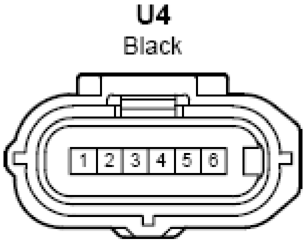

Fig. 285: Rear No. 1 Ultrasonic Sensor RH Connector End View (U4)
Courtesy of TOYOTA MOTOR SALES, U.S.A., INC.

FRONT DOOR OUTSIDE HANDLE ASSEMBLY RH CONNECTOR END VIEW (V1)

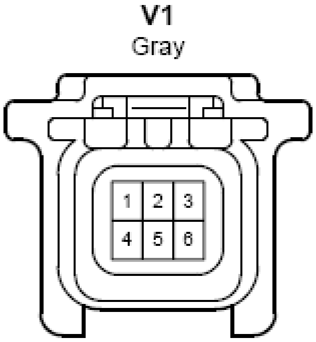

Fig. 286: Front Door Outside Handle Assembly RH Connector End View (V1)
Courtesy of TOYOTA MOTOR SALES, U.S.A., INC.

FRONT DOOR OUTSIDE HANDLE ASSEMBLY LH CONNECTOR END VIEW (W1)

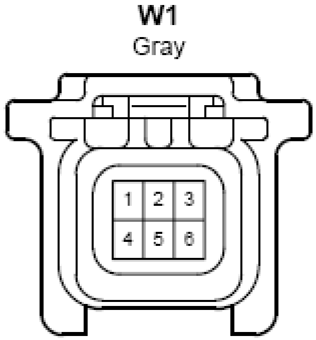

Fig. 287: Front Door Outside Handle Assembly LH Connector End View (W1)
Courtesy of TOYOTA MOTOR SALES, U.S.A., INC.

KNOCK CONTROL SENSOR (BANK 1) CONNECTOR END VIEW (Y1)

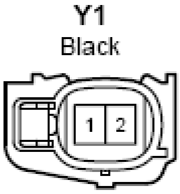

Fig. 288: Knock Control Sensor (Bank 1) Connector End View (Y1)
Courtesy of TOYOTA MOTOR SALES, U.S.A., INC.

INSTRUMENT PANEL PASSENGER AIRBAG ASSEMBLY WITHOUT DOOR CONNECTOR END VIEW (B1)

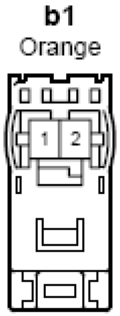

Fig. 289: Instrument Panel Passenger Airbag Assembly without Door Connector End View (b1)
Courtesy of TOYOTA MOTOR SALES, U.S.A., INC.

INSTRUMENT PANEL PASSENGER AIRBAG ASSEMBLY WITHOUT DOOR CONNECTOR END VIEW (B2)

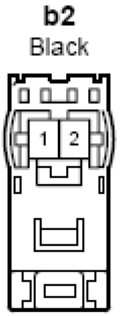

Fig. 290: Instrument Panel Passenger Airbag Assembly without Door Connector End View (b2)
Courtesy of TOYOTA MOTOR SALES, U.S.A., INC.

LIGHT CUT RELAY CONNECTOR END VIEW (C1)

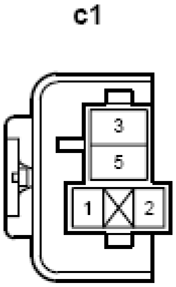

Fig. 291: Light Cut Relay Connector End View (c1)
Courtesy of TOYOTA MOTOR SALES, U.S.A., INC.

OCCUPANT DETECTION ECU CONNECTOR END VIEW (D8)

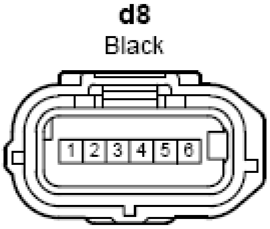
d8
Black
1
2
3
4
5
6

Fig. 292: Occupant Detection ECU Connector End View (d8)
Courtesy of TOYOTA MOTOR SALES, U.S.A., INC.

FRONT SEAT INNER BELT ASSEMBLY RH CONNECTOR END VIEW (D9)

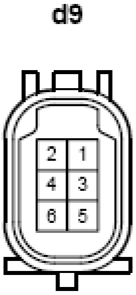

Fig. 293: Front Seat Inner Belt Assembly RH Connector End View (d9)
Courtesy of TOYOTA MOTOR SALES, U.S.A., INC.

FRONT OUT WEIGHT DETECTOR SENSOR SUB-ASSEMBLY CONNECTOR END VIEW (D10)

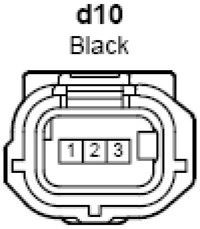
d10
Black
1
2
3

Fig. 294: Front Out Weight Detector Sensor Sub-Assembly Connector End View (d10)
Courtesy of TOYOTA MOTOR SALES, U.S.A., INC.

OCCUPANT DETECTION ECU CONNECTOR END VIEW (D11)

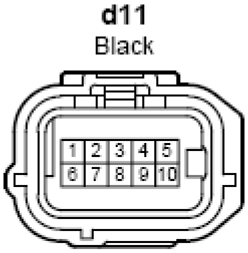
d11
Black
1
2
3
4
5
6
7
8
9
10

Fig. 295: Occupant Detection ECU Connector End View (d11)

Courtesy of TOYOTA MOTOR SALES, U.S.A., INC.

FRONT IN WEIGHT DETECTOR SENSOR SUB-ASSEMBLY CONNECTOR END VIEW (D12)

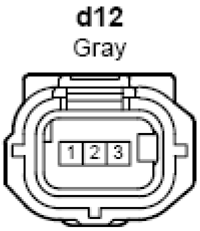

Fig. 296: Front In Weight Detector Sensor Sub-Assembly Connector End View (d12)
Courtesy of TOYOTA MOTOR SALES, U.S.A., INC.

FRONT SEAT INNER BELT ASSEMBLY RH CONNECTOR END VIEW (D13)

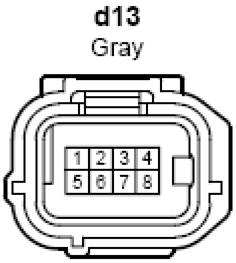

Fig. 297: Front Seat Inner Belt Assembly RH Connector End View (d13)
Courtesy of TOYOTA MOTOR SALES, U.S.A., INC.

FRONT SEAT CUSHION HEATER ASSEMBLY RH CONNECTOR END VIEW (D14)

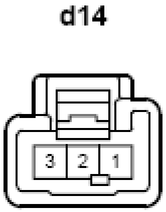

Fig. 298: Front Seat Cushion Heater Assembly RH Connector End View (d14)
Courtesy of TOYOTA MOTOR SALES, U.S.A., INC.

FRONT POWER SEAT SLIDE POSITION MOTOR RH (FRONT SEAT FRAME ASSEMBLY WITH ADJUSTER RH) CONNECTOR END VIEW (D15)

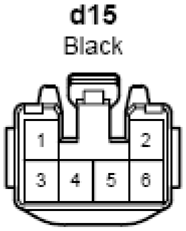

Fig. 299: Front Power Seat Slide Position Motor RH (Front Seat Frame Assembly with Adjuster RH) Connector End View (d15)
Courtesy of TOYOTA MOTOR SALES, U.S.A., INC.

FRONT POWER SEAT SWITCH RH CONNECTOR END VIEW (D16)

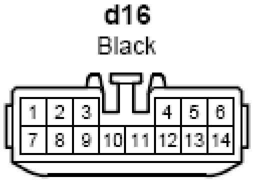

Fig. 300: Front Power Seat Switch RH Connector End View (d16)
Courtesy of TOYOTA MOTOR SALES, U.S.A., INC.

FRONT POWER SEAT RECLINING POSITION MOTOR RH (FRONT SEAT BACK FRAME SUB-ASSEMBLY RH) CONNECTOR END VIEW (D17)

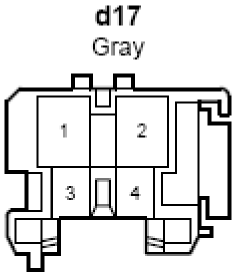

Fig. 301: Front Power Seat Reclining Position Motor RH (Front Seat Back Frame Sub-Assembly RH) Connector End View (d17)
Courtesy of TOYOTA MOTOR SALES, U.S.A., INC.

FRONT POWER SEAT LUMBAR SWITCH LH CONNECTOR END VIEW (E5)

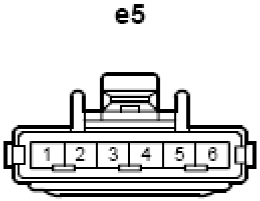

Fig. 302: Front Power Seat Lumbar Switch LH Connector End View (e5)

Courtesy of TOYOTA MOTOR SALES, U.S.A., INC.

FRONT POWER SEAT LIFT POSITION MOTOR LH (FRONT SEAT FRAME ASSEMBLY WITH ADJUSTER LH) CONNECTOR END VIEW (E8)

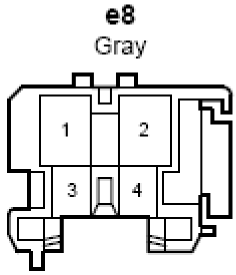

Fig. 303: Front Power Seat Lift Position Motor LH (Front Seat Frame Assembly with Adjuster LH) Connector End View (e8)
Courtesy of TOYOTA MOTOR SALES, U.S.A., INC.

FRONT POWER SEAT TILT POSITION MOTOR LH (FRONT SEAT FRAME ASSEMBLY WITH ADJUSTER LH) CONNECTOR END VIEW (E9)

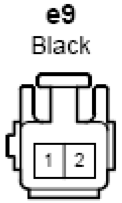

Fig. 304: Front Power Seat Tilt Position Motor LH (Front Seat Frame Assembly with Adjuster LH) Connector End View (e9)
Courtesy of TOYOTA MOTOR SALES, U.S.A., INC.

FRONT SEAT CUSHION HEATER ASSEMBLY LH CONNECTOR END VIEW (E10)

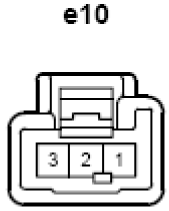

Fig. 305: Front Seat Cushion Heater Assembly LH Connector End View (e10)
Courtesy of TOYOTA MOTOR SALES, U.S.A., INC.

FRONT POWER SEAT SLIDE POSITION MOTOR LH (FRONT SEAT FRAME ASSEMBLY WITH ADJUSTER LH) CONNECTOR END VIEW (E11)

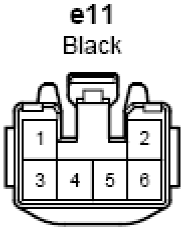
e11
Black
1
2
3
4
5
6

Fig. 306: Front Power Seat Slide Position Motor LH (Front Seat Frame Assembly with Adjuster LH) Connector End View (e11)
Courtesy of TOYOTA MOTOR SALES, U.S.A., INC.

FRONT POWER SEAT SWITCH LH CONNECTOR END VIEW (E12)

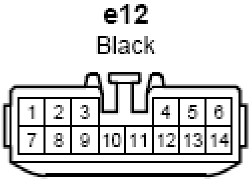
e12
Black
1
2
3
4
5
6
7
8
9
10
11
12
13
14

Fig. 307: Front Power Seat Switch LH Connector End View (e12)
Courtesy of TOYOTA MOTOR SALES, U.S.A., INC.

FRONT POWER SEAT RECLINING POSITION MOTOR LH (FRONT SEAT BACK FRAME SUB-ASSEMBLY LH) CONNECTOR END VIEW (E13)

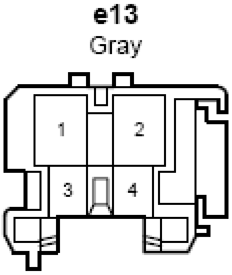
e13
Gray
1
2
3
4

Fig. 308: Front Power Seat Reclining Position Motor LH (Front Seat Back Frame Sub-Assembly LH) Connector End View (e13)
Courtesy of TOYOTA MOTOR SALES, U.S.A., INC.

FRONT POWER SEAT LUMBAR SUPPORT MOTOR LH (LUMBAR SUPPORT ADJUSTER ASSEMBLY LH) CONNECTOR END VIEW (E14)

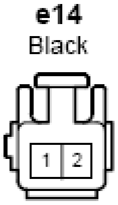
e14
Black
1
2

Fig. 309: Front Power Seat Lumbar Support Motor LH (Lumbar Support Adjuster Assembly LH) Connector End View (e14)
Courtesy of TOYOTA MOTOR SALES, U.S.A., INC.

REAR SPEED SENSOR RH CONNECTOR END VIEW (H1)

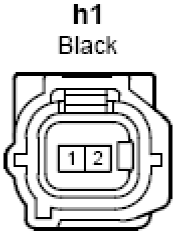

Fig. 310: Rear Speed Sensor RH Connector End View (h1)
Courtesy of TOYOTA MOTOR SALES, U.S.A., INC.

REAR SPEED SENSOR LH CONNECTOR END VIEW (I1)

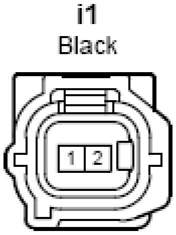

Fig. 311: Rear Speed Sensor LH Connector End View (i1)
Courtesy of TOYOTA MOTOR SALES, U.S.A., INC.

POWER STEERING ECU ASSEMBLY CONNECTOR END VIEW (J2)

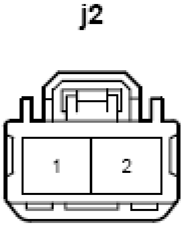

Fig. 312: Power Steering ECU Assembly Connector End View (j2)
Courtesy of TOYOTA MOTOR SALES, U.S.A., INC.

POWER STEERING ECU ASSEMBLY CONNECTOR END VIEW (J3)

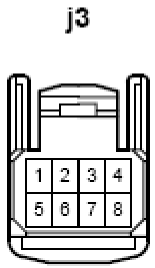
j3
1
2
3
4
5
6
7
8

Fig. 313: Power Steering ECU Assembly Connector End View (j3)
Courtesy of TOYOTA MOTOR SALES, U.S.A., INC.

GLASS BREAKAGE SENSOR ECU ASSEMBLY CONNECTOR END VIEW (K1)

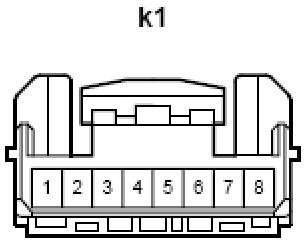
k1
1
2
3
4
5
6
7
8

Fig. 314: Glass Breakage Sensor ECU Assembly Connector End View (k1)
Courtesy of TOYOTA MOTOR SALES, U.S.A., INC.

GLASS BREAKAGE SENSOR MICROPHONE CONNECTOR END VIEW (K2)

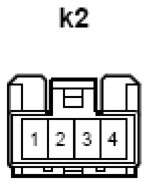

Fig. 315: Glass Breakage Sensor Microphone Connector End View (k2)
Courtesy of TOYOTA MOTOR SALES, U.S.A., INC.

EXTENSION MODULE CONNECTOR END VIEW (M1)

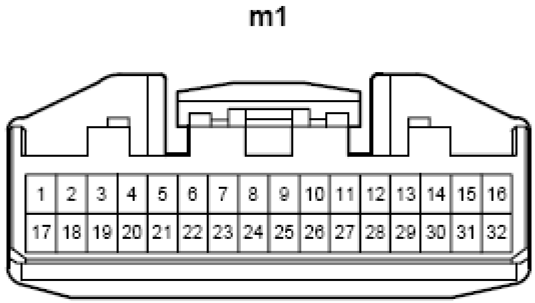
m1
1
2
3
4
5
6
7
8
9
10
11
12
13
14
15
16
17
18
19
20
21
22
23
24
25
26
27
28
29
30
31
32

Fig. 316: Extension Module Connector End View (m1)

Courtesy of TOYOTA MOTOR SALES, U.S.A., INC.

RADIO & DISPLAY RECEIVER ASSEMBLY CONNECTOR END VIEW (M2)

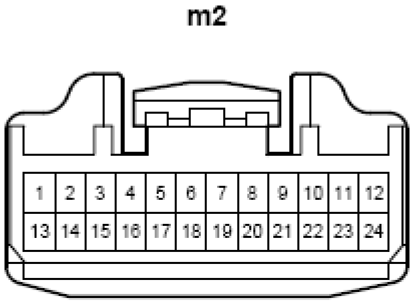
m2
1
2
3
4
5
6
7
8
9
10
11
12
13
14
15
16
17
18
19
20
21
22
23
24

Fig. 317: Radio & Display Receiver Assembly Connector End View (m2)
Courtesy of TOYOTA MOTOR SALES, U.S.A., INC.

RADIO & DISPLAY RECEIVER ASSEMBLY CONNECTOR END VIEW (M3)

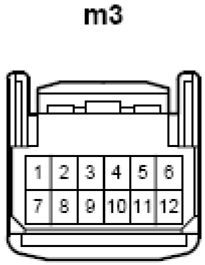
m3
1
2
3
4
5
6
7
8
9
10
11
12

Fig. 318: Radio & Display Receiver Assembly Connector End View (m3)
Courtesy of TOYOTA MOTOR SALES, U.S.A., INC.

INVERTER WITH CONVERTER ASSEMBLY CONNECTOR END VIEW (N1)

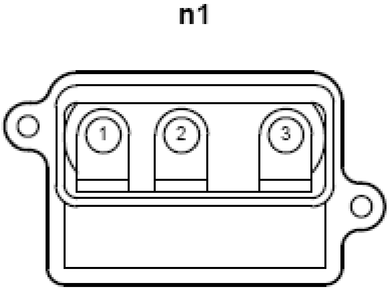

Fig. 319: Inverter with Converter Assembly Connector End View (n1)
Courtesy of TOYOTA MOTOR SALES, U.S.A., INC.

HYBRID VEHICLE TRANSAXLE ASSEMBLY CONNECTOR END VIEW (N2)

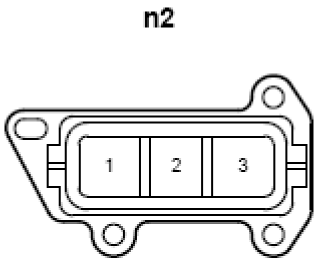

Fig. 320: Hybrid Vehicle Transaxle Assembly Connector End View (n2)
Courtesy of TOYOTA MOTOR SALES, U.S.A., INC.

INVERTER WITH CONVERTER ASSEMBLY CONNECTOR END VIEW (O1)

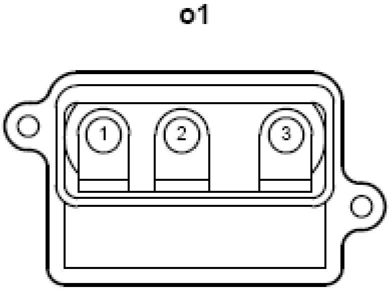

Fig. 321: Inverter with Converter Assembly Connector End View (o1)
Courtesy of TOYOTA MOTOR SALES, U.S.A., INC.

HYBRID VEHICLE TRANSAXLE ASSEMBLY CONNECTOR END VIEW (O2)

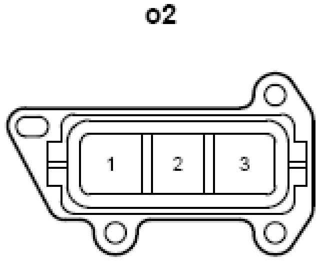

Fig. 322: Hybrid Vehicle Transaxle Assembly Connector End View (o2)
Courtesy of TOYOTA MOTOR SALES, U.S.A., INC.

HYBRID BATTERY JUNCTION BLOCK ASSEMBLY CONNECTOR END VIEW (Q1)

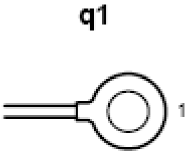

Fig. 323: Hybrid Battery Junction Block Assembly Connector End View (q1)
Courtesy of TOYOTA MOTOR SALES, U.S.A., INC.

BATTERY VOLTAGE SENSOR, HV SUPPLY BATTERY ASSEMBLY CONNECTOR END VIEW (Q2)

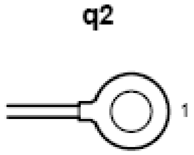

Fig. 324: Battery Voltage Sensor, HV Supply Battery Assembly Connector End View (q2)
Courtesy of TOYOTA MOTOR SALES, U.S.A., INC.

BATTERY COOLING BLOWER ASSEMBLY CONNECTOR END VIEW (R1)

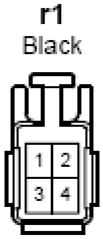

Fig. 325: Battery Cooling Blower Assembly Connector End View (r1)
Courtesy of TOYOTA MOTOR SALES, U.S.A., INC.

INTERLOCK SWITCH (SERVICE PLUG GRIP) CONNECTOR END VIEW (R2)

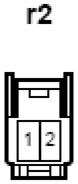

Fig. 326: Interlock Switch (Service Plug Grip) Connector End View (r2)
Courtesy of TOYOTA MOTOR SALES, U.S.A., INC.

A/C AMPLIFIER ASSEMBLY, A/C UNIT (A/C HARNESS ASSEMBLY) CONNECTOR END VIEW (Z1)

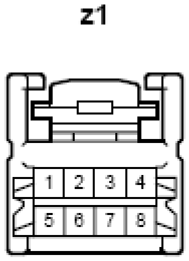

Fig. 327: A/C Amplifier Assembly, A/C Unit (A/C Harness Assembly) Connector End View (z1)

Courtesy of TOYOTA MOTOR SALES, U.S.A., INC.

CRUISE CONTROL MAIN SWITCH, SPIRAL CABLE SUB-ASSEMBLY CONNECTOR END VIEW (Z2)

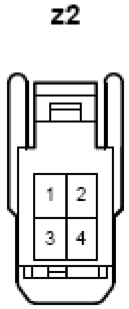

Fig. 328: Cruise Control Main Switch, Spiral Cable Sub-Assembly Connector End View (z2)
Courtesy of TOYOTA MOTOR SALES, U.S.A., INC.

SPIRAL CABLE SUB-ASSEMBLY, STEERING PAD SWITCH ASSEMBLY CONNECTOR END VIEW (Z3)

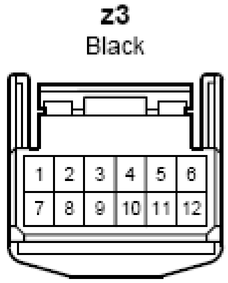

Fig. 329: Spiral Cable Sub-Assembly, Steering Pad Switch Assembly Connector End View (z3)
Courtesy of TOYOTA MOTOR SALES, U.S.A., INC.

SPIRAL CABLE SUB-ASSEMBLY, DRIVER SIDE SQUIB CIRCUIT, (HORN BUTTON ASSEMBLY) CONNECTOR END VIEW (Z4)

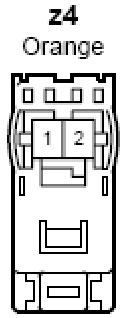

Fig. 330: Spiral Cable Sub-Assembly, Driver Side Squib Circuit, (Horn Button Assembly) Connector End View (z4)

Courtesy of TOYOTA MOTOR SALES, U.S.A., INC.

SPIRAL CABLE SUB-ASSEMBLY, DRIVER SIDE SQUIB CIRCUIT (HORN BUTTON ASSEMBLY) CONNECTOR END VIEW (Z5)

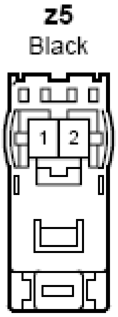

Fig. 331: Spiral Cable Sub-Assembly, Driver Side Squib Circuit (Horn Button Assembly) Connector End View (z5)
Courtesy of TOYOTA MOTOR SALES, U.S.A., INC.

BATTERY VOLTAGE SENSOR, HV SUPPLY BATTERY ASSEMBLY CONNECTOR END VIEW (Z7)

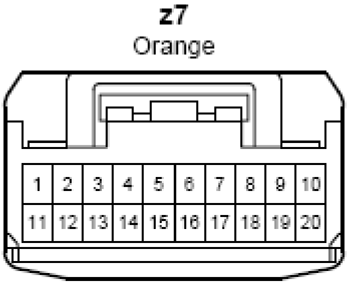
z7
Orange
1
2
3
4
5
6
7
8
9
10
11
12
13
14
15
16
17
18
19
20

Fig. 332: Battery Voltage Sensor, HV Supply Battery Assembly Connector End View (z7)
Courtesy of TOYOTA MOTOR SALES, U.S.A., INC.

BATTERY VOLTAGE SENSOR, HV SUPPLY BATTERY ASSEMBLY CONNECTOR END VIEW (Z8)

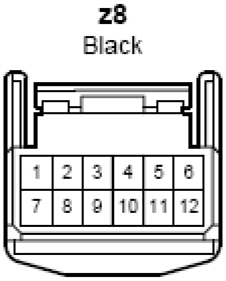
z8
Black
1
2
3
4
5
6
7
8
9
10
11
12

Fig. 333: Battery Voltage Sensor, HV Supply Battery Assembly Connector End View (z8)
Courtesy of TOYOTA MOTOR SALES, U.S.A., INC.

HYBRID BATTERY JUNCTION BLOCK ASSEMBLY CONNECTOR END VIEW (Z9)

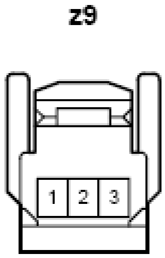

Fig. 334: Hybrid Battery Junction Block Assembly Connector End View (z9)
Courtesy of TOYOTA MOTOR SALES, U.S.A., INC.

FRONT SEAT AIRBAG ASSEMBLY LH CONNECTOR END VIEW (Z10)

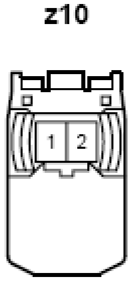

Fig. 335: Front Seat Airbag Assembly LH Connector End View (z10)
Courtesy of TOYOTA MOTOR SALES, U.S.A., INC.

FRONT SEAT AIRBAG ASSEMBLY RH CONNECTOR END VIEW (Z11)

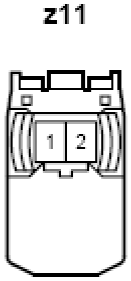

Fig. 336: Front Seat Airbag Assembly RH Connector End View (z11)
Courtesy of TOYOTA MOTOR SALES, U.S.A., INC.

REAR SEAT AIRBAG ASSEMBLY LH CONNECTOR END VIEW (Z12)

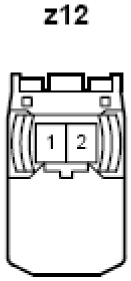

Fig. 337: Rear Seat Airbag Assembly LH Connector End View (z12)
Courtesy of TOYOTA MOTOR SALES, U.S.A., INC.

REAR SEAT AIRBAG ASSEMBLY RH CONNECTOR END VIEW (Z13)

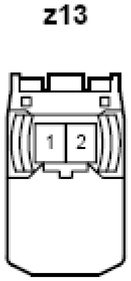

Fig. 338: Rear Seat Airbag Assembly RH Connector End View (z13)
Courtesy of TOYOTA MOTOR SALES, U.S.A., INC.

COOLING FAN ECU, COOLING FAN MOTOR CONNECTOR END VIEW (Z14)

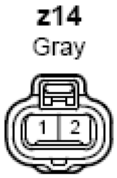

Fig. 339: Cooling Fan ECU, Cooling Fan Motor Connector End View (z14)
Courtesy of TOYOTA MOTOR SALES, U.S.A., INC.

COOLING FAN ECU, NO. 2 COOLING FAN MOTOR CONNECTOR END VIEW (Z15)

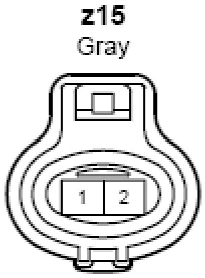

Fig. 340: Cooling Fan ECU, No. 2 Cooling Fan Motor Connector End View (z15)
Courtesy of TOYOTA MOTOR SALES, U.S.A., INC.

CONNECTOR END VIEW (AA1)

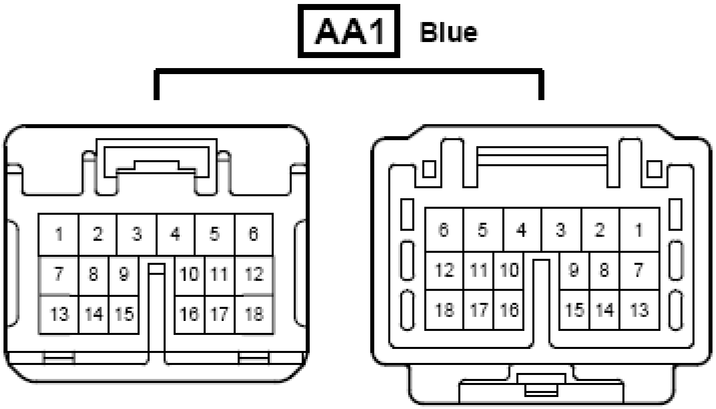
AA1
Blue
1 2 3 4 5 6
7 8 9 10 11 12
13 14 15 16 17 18
6 5 4 3 2 1
12 11 10 9 8 7
18 17 16 15 14 13

Fig. 341: Connector End View (AA1)
Courtesy of TOYOTA MOTOR SALES, U.S.A., INC.

CONNECTOR END VIEW (AN1)

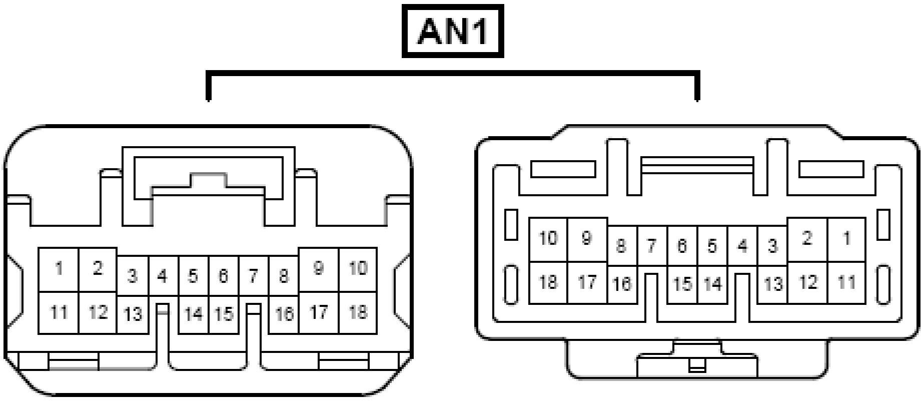
AN1
1 2 3 4 5 6 7 8 9 10
11 12 13 14 15 16 17 18
10 9 8 7 6 5 4 3 2 1
18 17 16 15 14 13 12 11

Fig. 342: Connector End View (AN1)
Courtesy of TOYOTA MOTOR SALES, U.S.A., INC.

CONNECTOR END VIEW (AN2)

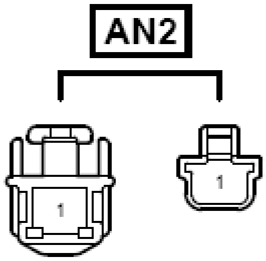

Fig. 343: Connector End View (AN2)
Courtesy of TOYOTA MOTOR SALES, U.S.A., INC.

CONNECTOR END VIEW (AN3)

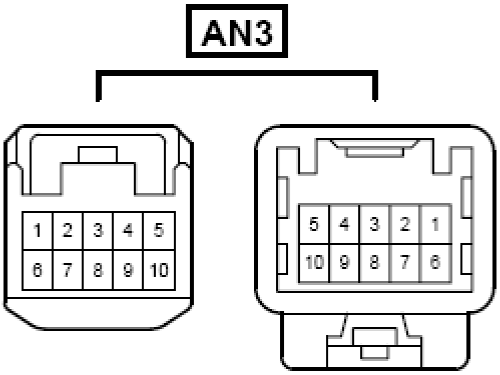
AN3
1
2
3
4
5
6
7
8
9
10
5
4
3
2
1
10
9
8
7
6

Fig. 344: Connector End View (AN3)
Courtesy of TOYOTA MOTOR SALES, U.S.A., INC.

CONNECTOR END VIEW (EA1)

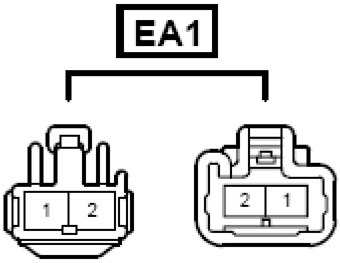

Fig. 345: Connector End View (EA1)
Courtesy of TOYOTA MOTOR SALES, U.S.A., INC.

CONNECTOR END VIEW (EA2)

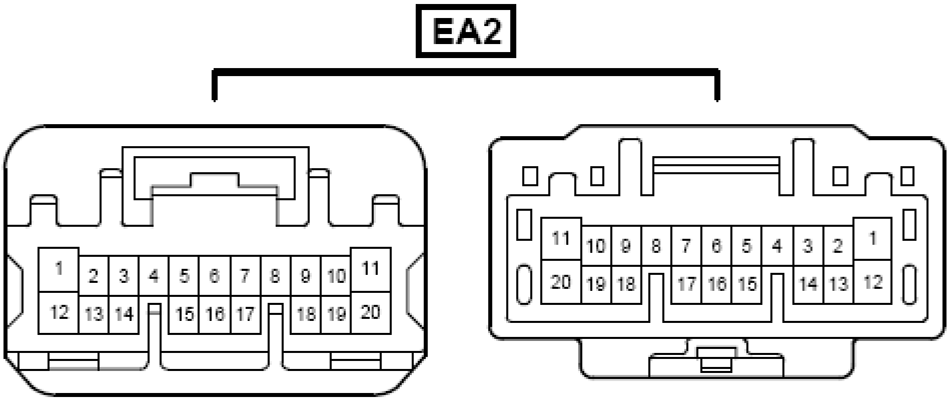
EA2
1
2
3
4
5
6
7
8
9
10
11
12
13
14
15
16
17
18
19
20
11
10
9
8
7
6
5
4
3
2
1
20
19
18
17
16
15
14
13
12

Fig. 346: Connector End View (EA2)

Courtesy of TOYOTA MOTOR SALES, U.S.A., INC.

CONNECTOR END VIEW (EA3)

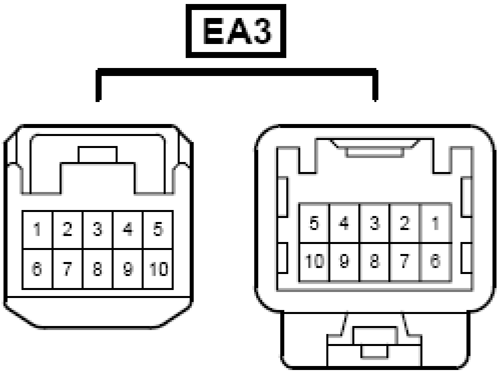
EA3
1
2
3
4
5
6
7
8
9
10
5
4
3
2
1
10
9
8
7
6

Fig. 347: Connector End View (EA3)
Courtesy of TOYOTA MOTOR SALES, U.S.A., INC.

CONNECTOR END VIEW (EH1)

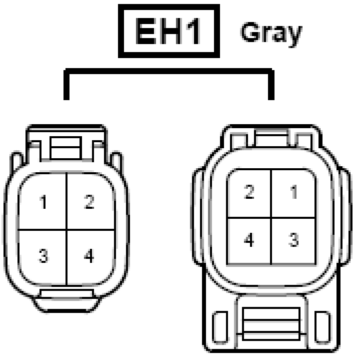
EH1
Gray
1
2
3
4
2
1
4
3

Fig. 348: Connector End View (EH1)
Courtesy of TOYOTA MOTOR SALES, U.S.A., INC.

CONNECTOR END VIEW (EY2)

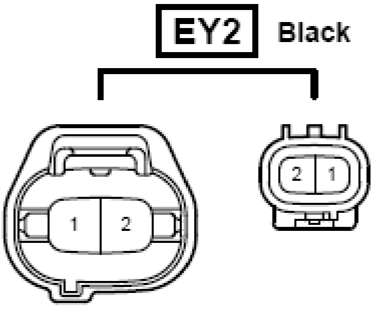
EY2
Black
1
2
2
1

Fig. 349: Connector End View (EY2)
Courtesy of TOYOTA MOTOR SALES, U.S.A., INC.

CONNECTOR END VIEW (IA2)

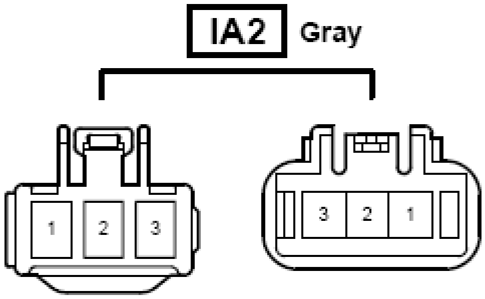
IA2
Gray
1
2
3
3
2
1

Fig. 350: Connector End View (IA2)
Courtesy of TOYOTA MOTOR SALES, U.S.A., INC.

CONNECTOR END VIEW (IA3)

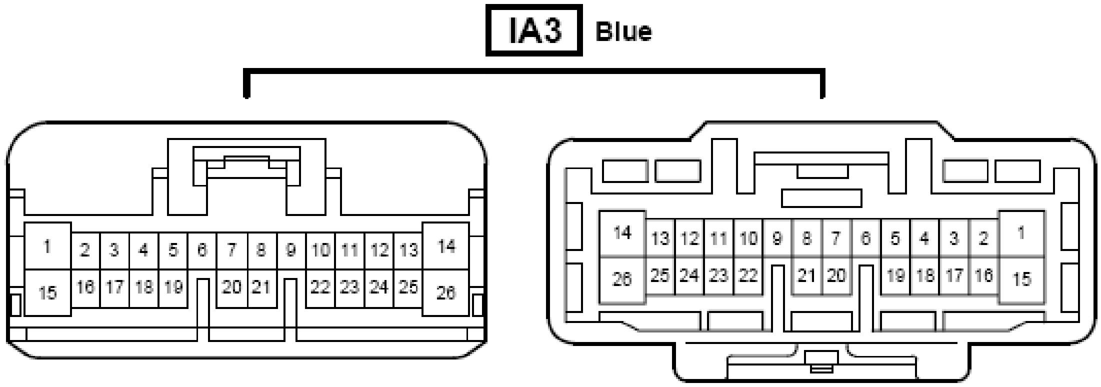
IA3
Blue
1
2
3
4
5
6
7
8
9
10
11
12
13
14
15
16
17
18
19
20
21
22
23
24
25
26
14
13
12
11
10
9
8
7
6
5
4
3
2
1
26
25
24
23
22
21
20
19
18
17
16
15

Fig. 351: Connector End View (IA3)
Courtesy of TOYOTA MOTOR SALES, U.S.A., INC.

CONNECTOR END VIEW (IA4)

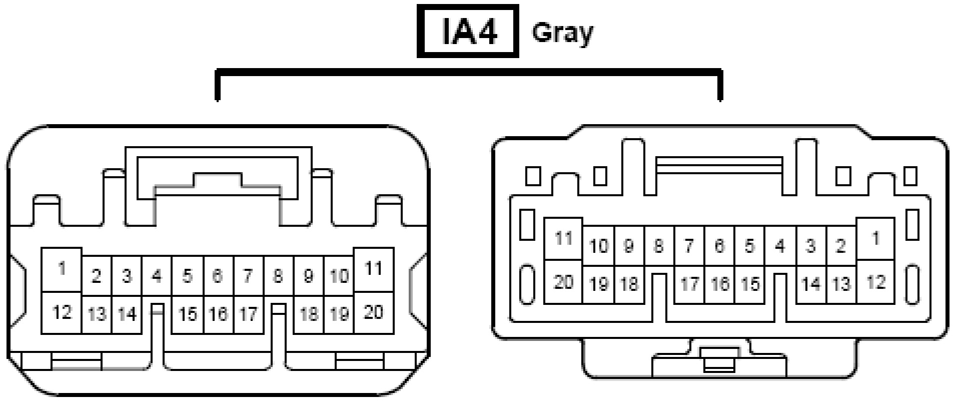
IA4
Gray
1
2
3
4
5
6
7
8
9
10
11
12
13
14
15
16
17
18
19
20
11
10
9
8
7
6
5
4
3
2
1
20
19
18
17
16
15
14
13
12

Fig. 352: Connector End View (IA4)
Courtesy of TOYOTA MOTOR SALES, U.S.A., INC.

CONNECTOR END VIEW (IA5)

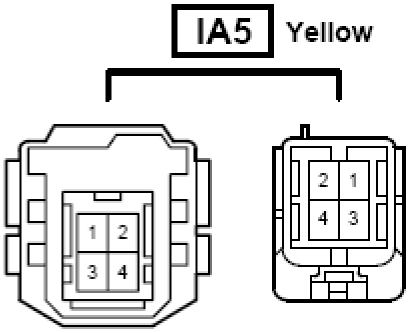
IA5
Yellow
1 2
3 4
2 1
4 3

Fig. 353: Connector End View (IA5)
Courtesy of TOYOTA MOTOR SALES, U.S.A., INC.

CONNECTOR END VIEW (IA6)

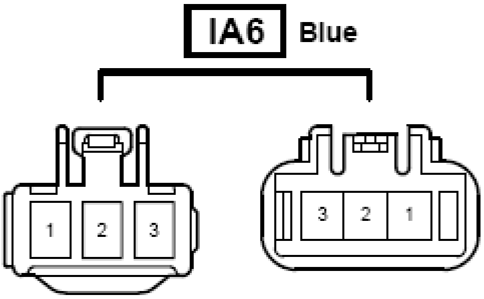
IA6
Blue
1 2 3
3 2 1

Fig. 354: Connector End View (IA6)
Courtesy of TOYOTA MOTOR SALES, U.S.A., INC.

CONNECTOR END VIEW (IA8)

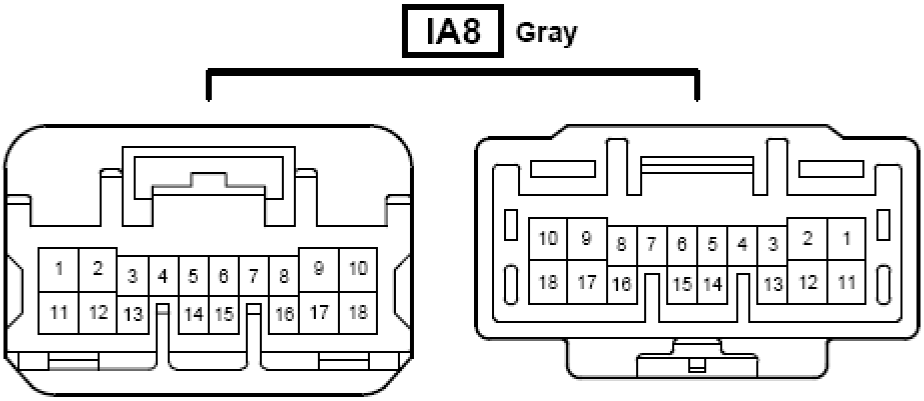
IA8
Gray
1 2 3 4 5 6 7 8 9 10
11 12 13 14 15 16 17 18
10 9 8 7 6 5 4 3 2 1
18 17 16 15 14 13 12 11

Fig. 355: Connector End View (IA8)
Courtesy of TOYOTA MOTOR SALES, U.S.A., INC.

CONNECTOR END VIEW (IA9)

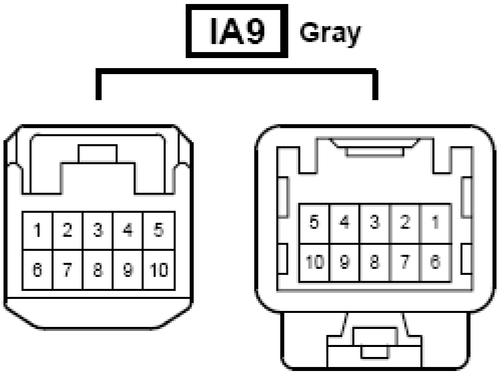
IA9
Gray
1 2 3 4 5
6 7 8 9 10
5 4 3 2 1
10 9 8 7 6

Fig. 356: Connector End View (IA9)
Courtesy of TOYOTA MOTOR SALES, U.S.A., INC.

CONNECTOR END VIEW (II2)

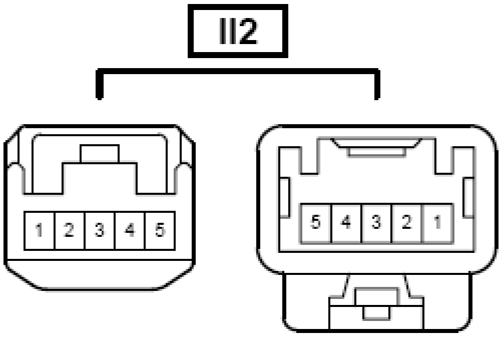
II2
1 2 3 4 5
5 4 3 2 1

Fig. 357: Connector End View (II2)
Courtesy of TOYOTA MOTOR SALES, U.S.A., INC.

CONNECTOR END VIEW (IN1)

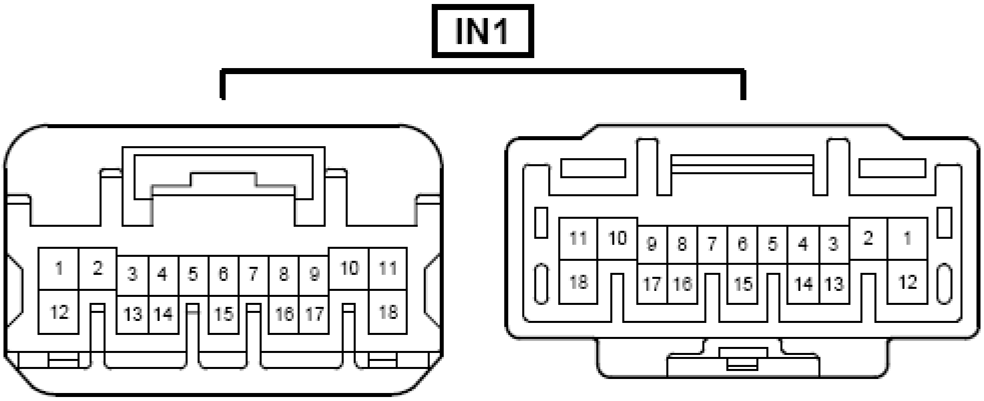
IN1
1 2 3 4 5 6 7 8 9 10 11
12 13 14 15 16 17 18
11 10 9 8 7 6 5 4 3 2 1
18 17 16 15 14 13 12

Fig. 358: Connector End View (IN1)
Courtesy of TOYOTA MOTOR SALES, U.S.A., INC.

CONNECTOR END VIEW (IO1)

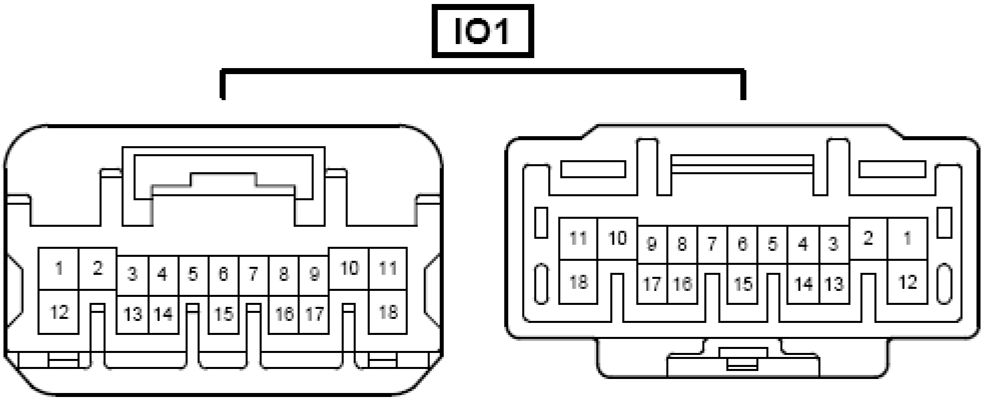
IO1
1 2 3 4 5 6 7 8 9 10 11
12 13 14 15 16 17 18
11 10 9 8 7 6 5 4 3 2 1
18 17 16 15 14 13 12

Fig. 359: Connector End View (IO1)
Courtesy of TOYOTA MOTOR SALES, U.S.A., INC.

CONNECTOR END VIEW (IO2)

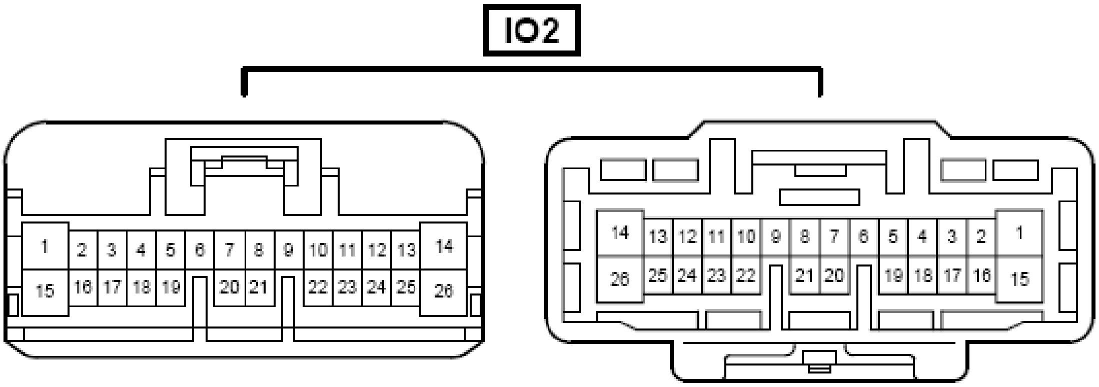
IO2
1 2 3 4 5 6 7 8 9 10 11 12 13 14
15 16 17 18 19 20 21 22 23 24 25 26
14 13 12 11 10 9 8 7 6 5 4 3 2 1
26 25 24 23 22 21 20 19 18 17 16 15

Fig. 360: Connector End View (IO2)
Courtesy of TOYOTA MOTOR SALES, U.S.A., INC.

CONNECTOR END VIEW (IO3)

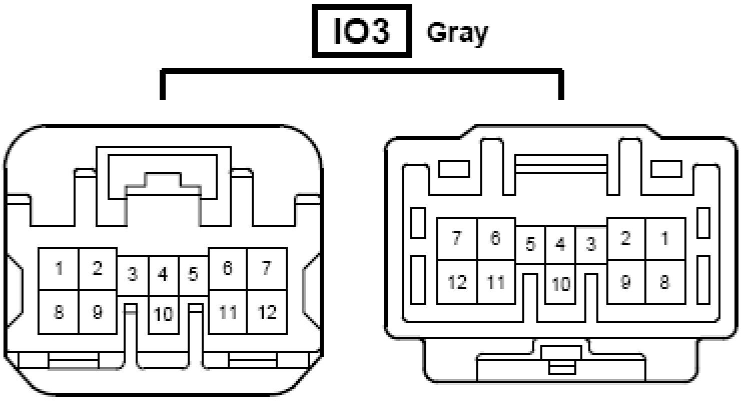
IO3
Gray
1 2 3 4 5 6 7
8 9 10 11 12
7 6 5 4 3 2 1
12 11 10 9 8

Fig. 361: Connector End View (IO3)
Courtesy of TOYOTA MOTOR SALES, U.S.A., INC.

CONNECTOR END VIEW (IS1)

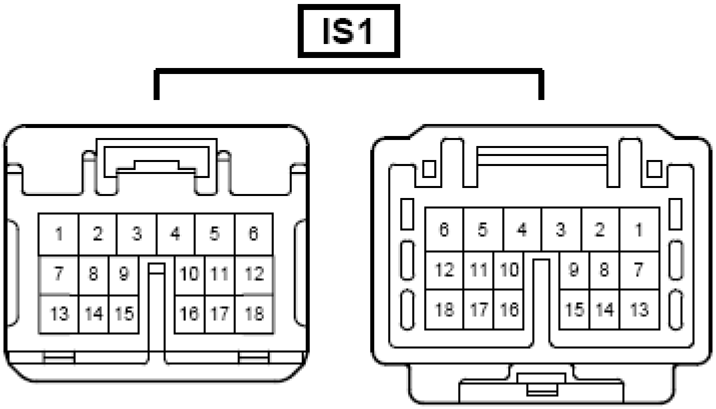
IS1
1 2 3 4 5 6
7 8 9 10 11 12
13 14 15 16 17 18
6 5 4 3 2 1
12 11 10 9 8 7
18 17 16 15 14 13

Fig. 362: Connector End View (IS1)
Courtesy of TOYOTA MOTOR SALES, U.S.A., INC.

CONNECTOR END VIEW (IS2)

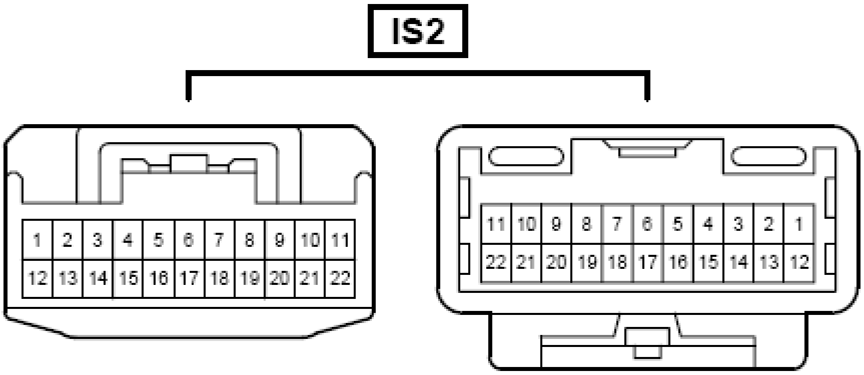
IS2
1 2 3 4 5 6 7 8 9 10 11
12 13 14 15 16 17 18 19 20 21 22
11 10 9 8 7 6 5 4 3 2 1
22 21 20 19 18 17 16 15 14 13 12

Fig. 363: Connector End View (IS2)
Courtesy of TOYOTA MOTOR SALES, U.S.A., INC.

CONNECTOR END VIEW (IB2)

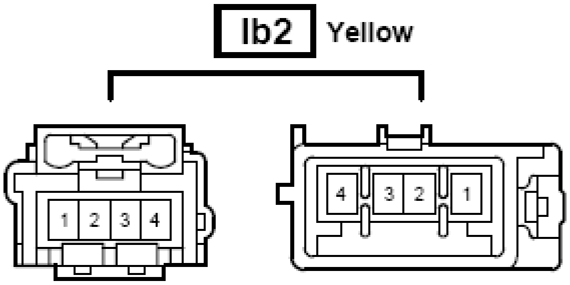
Ib2
Yellow
1 2 3 4
4 3 2 1

Fig. 364: Connector End View (Ib2)
Courtesy of TOYOTA MOTOR SALES, U.S.A., INC.

CONNECTOR END VIEW (IC1)

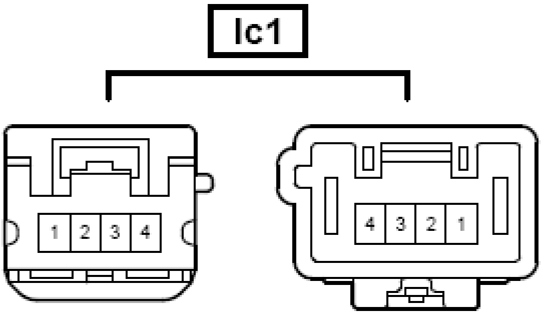
Ic1
1
2
3
4
4
3
2
1

Fig. 365: Connector End View (Ic1)
Courtesy of TOYOTA MOTOR SALES, U.S.A., INC.

CONNECTOR END VIEW (IJ1)

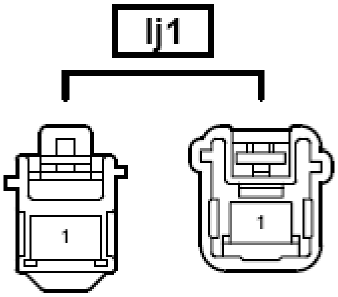

Fig. 366: Connector End View (Ij1)
Courtesy of TOYOTA MOTOR SALES, U.S.A., INC.

CONNECTOR END VIEW (IJ2)

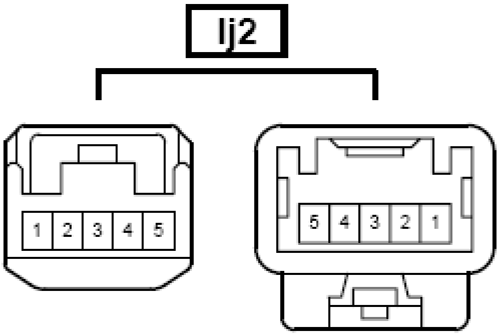
Ij2
1
2
3
4
5
5
4
3
2
1

Fig. 367: Connector End View (Ij2)
Courtesy of TOYOTA MOTOR SALES, U.S.A., INC.

CONNECTOR END VIEW (IK1)

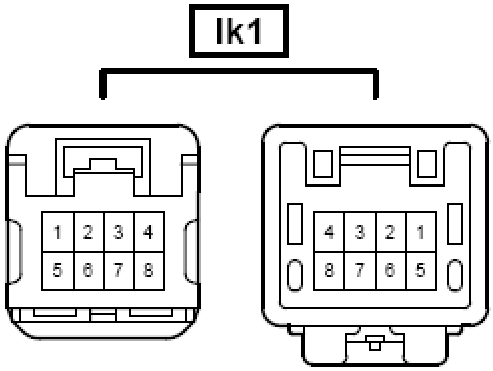
Ik1
1 2 3 4
5 6 7 8
4 3 2 1
8 7 6 5

Fig. 368: Connector End View (Ik1)
Courtesy of TOYOTA MOTOR SALES, U.S.A., INC.

CONNECTOR END VIEW (JI1)

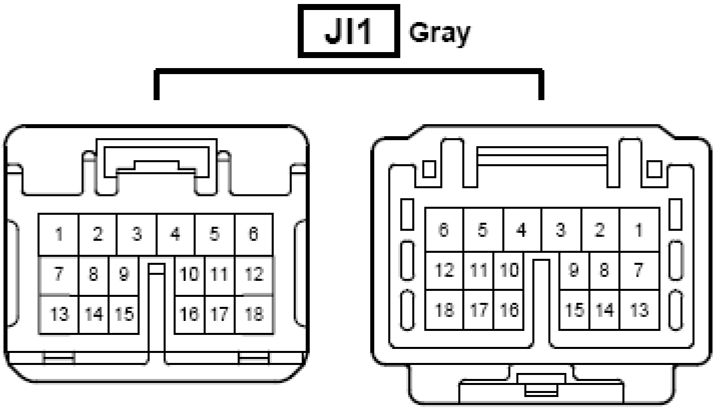
JI1
Gray
1 2 3 4 5 6
7 8 9 10 11 12
13 14 15 16 17 18
6 5 4 3 2 1
12 11 10 9 8 7
18 17 16 15 14 13

Fig. 369: Connector End View (JI1)
Courtesy of TOYOTA MOTOR SALES, U.S.A., INC.

CONNECTOR END VIEW (JI2)

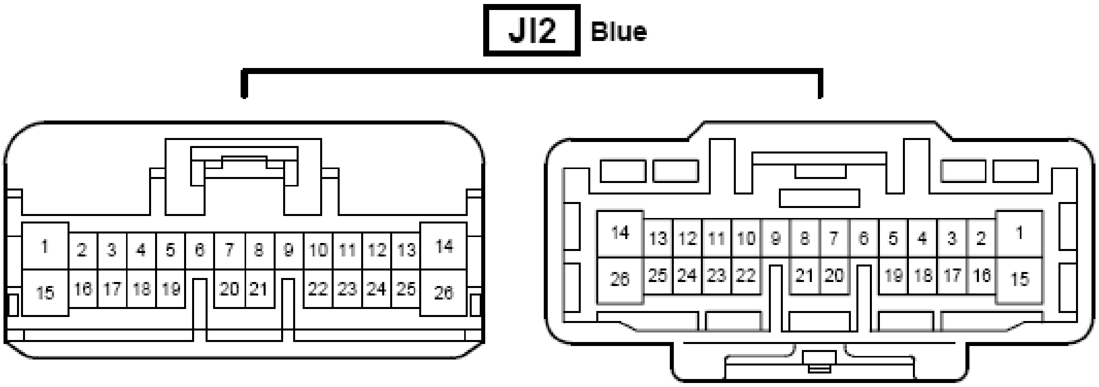
JI2
Blue
1 2 3 4 5 6 7 8 9 10 11 12 13 14
15 16 17 18 19 20 21 22 23 24 25 26
14 13 12 11 10 9 8 7 6 5 4 3 2 1
26 25 24 23 22 21 20 19 18 17 16 15

Fig. 370: Connector End View (JI2)
Courtesy of TOYOTA MOTOR SALES, U.S.A., INC.

CONNECTOR END VIEW (JO1)

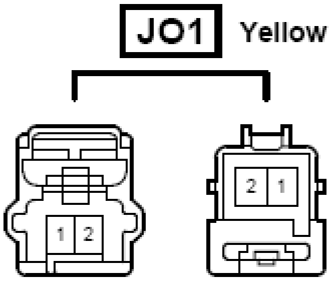
JO1
Yellow
1
2
2
1

Fig. 371: Connector End View (JO1)
Courtesy of TOYOTA MOTOR SALES, U.S.A., INC.

CONNECTOR END VIEW (KI1)

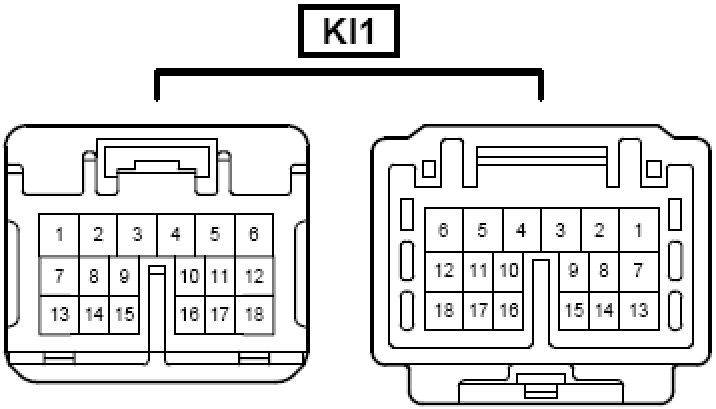
KI1
1 2 3 4 5 6
7 8 9 10 11 12
13 14 15 16 17 18
6 5 4 3 2 1
12 11 10 9 8 7
18 17 16 15 14 13

Fig. 372: Connector End View (KI1)
Courtesy of TOYOTA MOTOR SALES, U.S.A., INC.

CONNECTOR END VIEW (KI2)

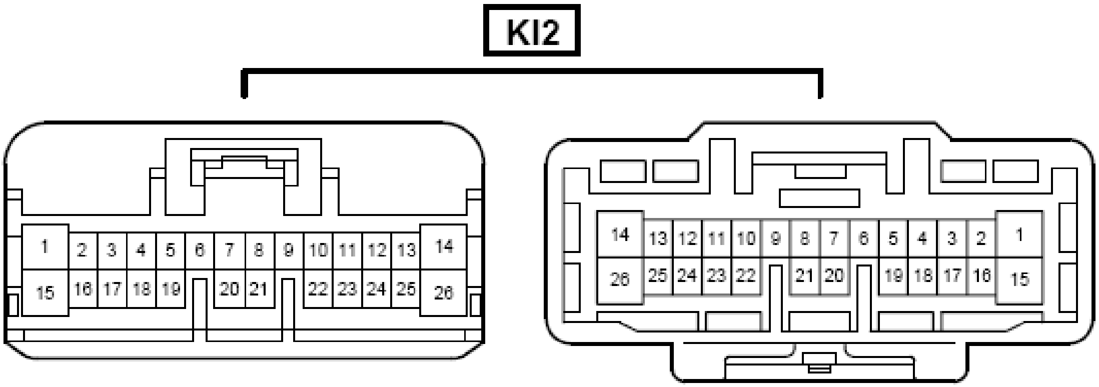
KI2
1 2 3 4 5 6 7 8 9 10 11 12 13 14
15 16 17 18 19 20 21 22 23 24 25 26
14 13 12 11 10 9 8 7 6 5 4 3 2 1
26 25 24 23 22 21 20 19 18 17 16 15

Fig. 373: Connector End View (KI2)
Courtesy of TOYOTA MOTOR SALES, U.S.A., INC.

CONNECTOR END VIEW (KN1)

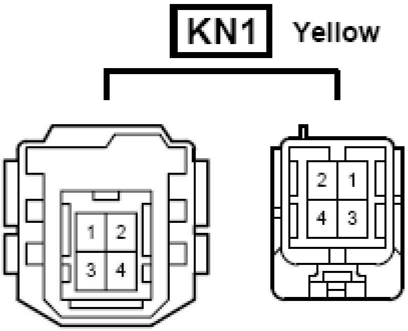
KN1
Yellow
1 2
3 4
2 1
4 3

Fig. 374: Connector End View (KN1)
Courtesy of TOYOTA MOTOR SALES, U.S.A., INC.

CONNECTOR END VIEW (LO1)

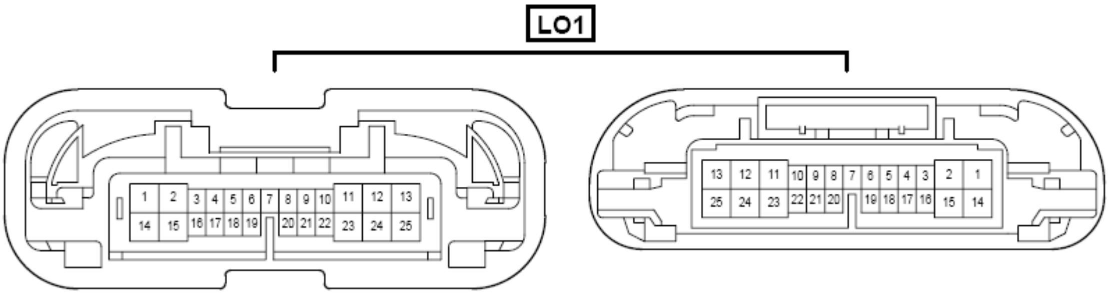
LO1
1 2 3 4 5 6 7 8 9 10 11 12 13
14 15 16 17 18 19 20 21 22 23 24 25
13 12 11 10 9 8 7 6 5 4 3 2 1
25 24 23 22 21 20 19 18 17 16 15 14

Fig. 375: Connector End View (LO1)
Courtesy of TOYOTA MOTOR SALES, U.S.A., INC.

CONNECTOR END VIEW (MN1)

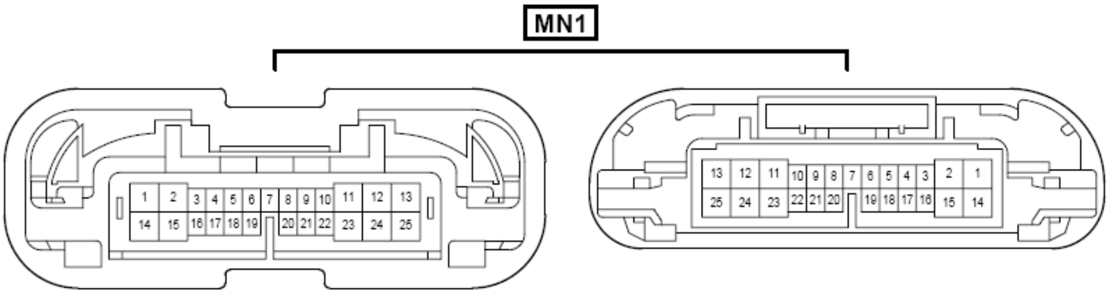
MN1
1 2 3 4 5 6 7 8 9 10 11 12 13
14 15 16 17 18 19 20 21 22 23 24 25
13 12 11 10 9 8 7 6 5 4 3 2 1
25 24 23 22 21 20 19 18 17 16 15 14

Fig. 376: Connector End View (MN1)
Courtesy of TOYOTA MOTOR SALES, U.S.A., INC.

CONNECTOR END VIEW (NI1)

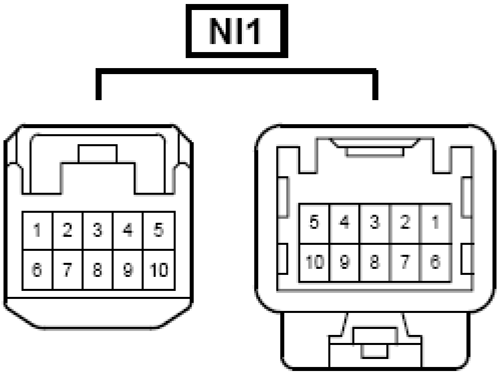
NI1
1
2
3
4
5
6
7
8
9
10
5
4
3
2
1
10
9
8
7
6

Fig. 377: Connector End View (NI1)
Courtesy of TOYOTA MOTOR SALES, U.S.A., INC.

CONNECTOR END VIEW (NE1)

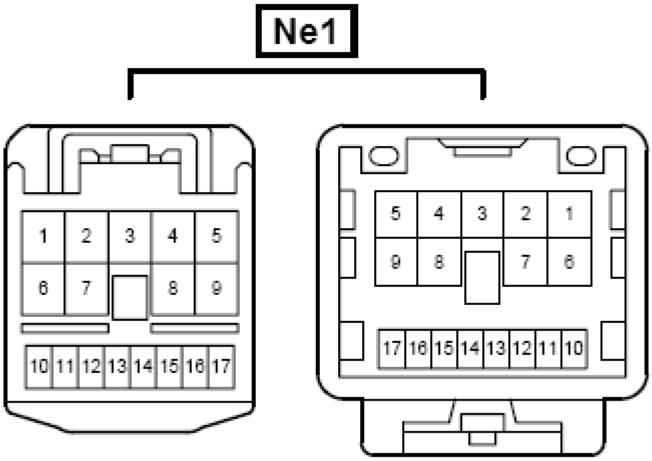
Ne1
1
2
3
4
5
6
7
8
9
10
11
12
13
14
15
16
17
5
4
3
2
1
9
8
7
6
17
16
15
14
13
12
11
10

Fig. 378: Connector End View (Ne1)
Courtesy of TOYOTA MOTOR SALES, U.S.A., INC.

CONNECTOR END VIEW (NR1)

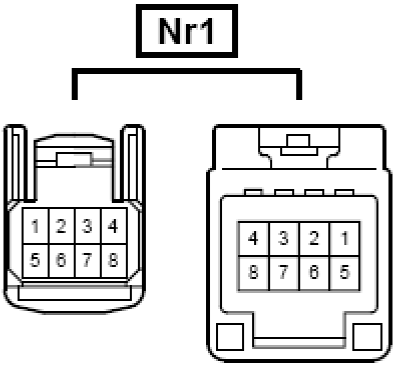
Nr1
1
2
3
4
5
6
7
8
4
3
2
1
8
7
6
5

Fig. 379: Connector End View (Nr1)

Courtesy of TOYOTA MOTOR SALES, U.S.A., INC.

CONNECTOR END VIEW (NZ1)

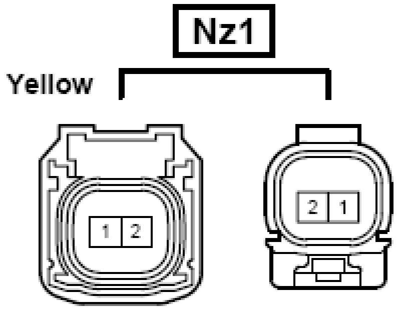
Nz1
Yellow
1 2
2 1

Fig. 380: Connector End View (Nz1)
Courtesy of TOYOTA MOTOR SALES, U.S.A., INC.

CONNECTOR END VIEW (NZ2)

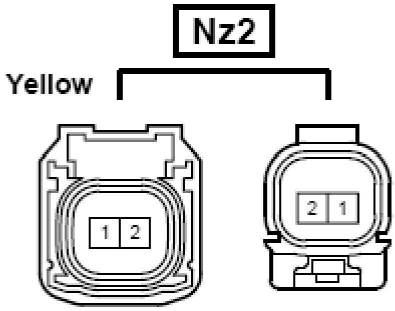
Nz2
Yellow
1 2
2 1

Fig. 381: Connector End View (Nz2)
Courtesy of TOYOTA MOTOR SALES, U.S.A., INC.

CONNECTOR END VIEW (OA1)

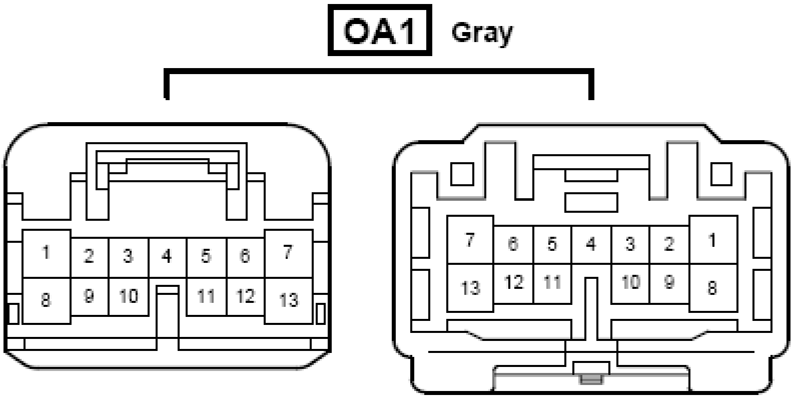
OA1
Gray
1 2 3 4 5 6 7
8 9 10 11 12 13
7 6 5 4 3 2 1
13 12 11 10 9 8

Fig. 382: Connector End View (OA1)
Courtesy of TOYOTA MOTOR SALES, U.S.A., INC.

CONNECTOR END VIEW (OD1)

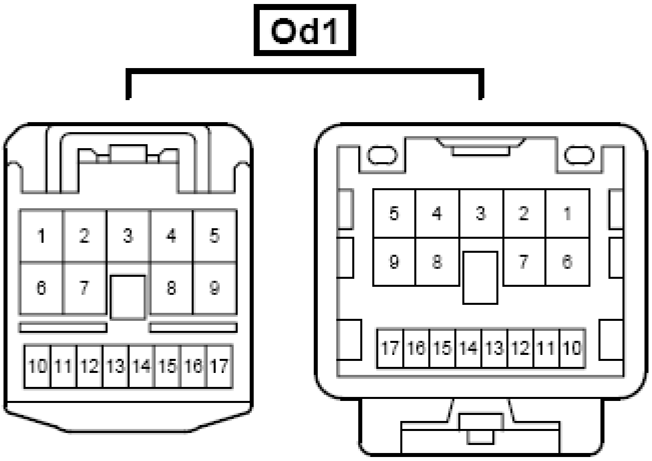
Od1
1 2 3 4 5
6 7 8 9
10 11 12 13 14 15 16 17
5 4 3 2 1
9 8 7 6
17 16 15 14 13 12 11 10

Fig. 383: Connector End View (Od1)
Courtesy of TOYOTA MOTOR SALES, U.S.A., INC.

CONNECTOR END VIEW (OD2)

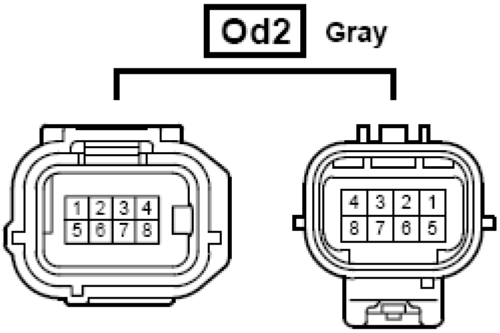
Od2
Gray
1 2 3 4
5 6 7 8
4 3 2 1
8 7 6 5

Fig. 384: Connector End View (Od2)
Courtesy of TOYOTA MOTOR SALES, U.S.A., INC.

CONNECTOR END VIEW (OZ1)

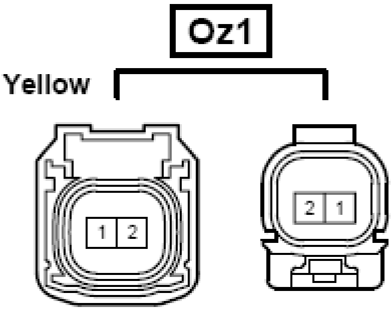
Oz1
Yellow
1 2
2 1

Fig. 385: Connector End View (Oz1)
Courtesy of TOYOTA MOTOR SALES, U.S.A., INC.

CONNECTOR END VIEW (OZ2)

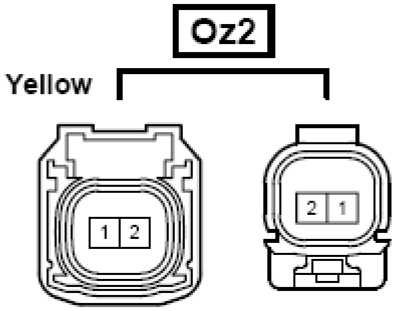
Oz2
Yellow
1
2
2
1

Fig. 386: Connector End View (Oz2)
Courtesy of TOYOTA MOTOR SALES, U.S.A., INC.

CONNECTOR END VIEW (QA1)

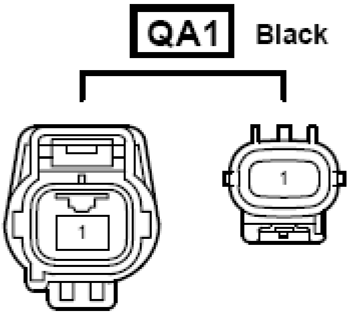
QA1
Black
1
1

Fig. 387: Connector End View (QA1)
Courtesy of TOYOTA MOTOR SALES, U.S.A., INC.

CONNECTOR END VIEW (QO1)

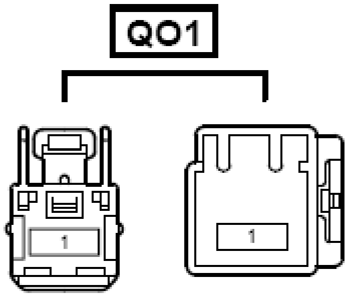

Fig. 388: Connector End View (QO1)
Courtesy of TOYOTA MOTOR SALES, U.S.A., INC.

CONNECTOR END VIEW (TN1)

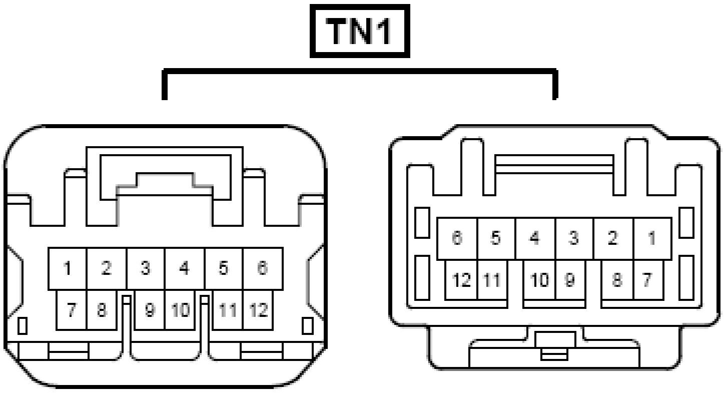
TN1
1
2
3
4
5
6
7
8
9
10
11
12
6
5
4
3
2
1
12
11
10
9
8
7

Fig. 389: Connector End View (TN1)
Courtesy of TOYOTA MOTOR SALES, U.S.A., INC.

CONNECTOR END VIEW (TN2)

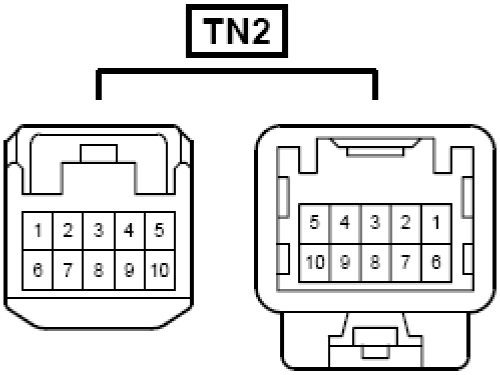
TN2
1
2
3
4
5
6
7
8
9
10
5
4
3
2
1
10
9
8
7
6

Fig. 390: Connector End View (TN2)
Courtesy of TOYOTA MOTOR SALES, U.S.A., INC.

CONNECTOR END VIEW (TO1)

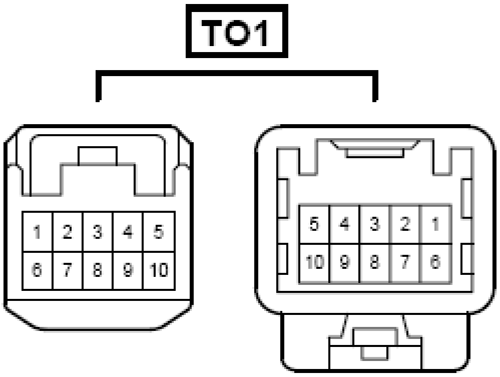
TO1
1
2
3
4
5
6
7
8
9
10
5
4
3
2
1
10
9
8
7
6

Fig. 391: Connector End View (TO1)
Courtesy of TOYOTA MOTOR SALES, U.S.A., INC.

CONNECTOR END VIEW (UO1)

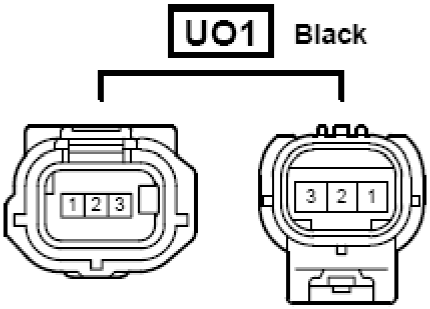
UO1
Black
1
2
3
3
2
1

Fig. 392: Connector End View (UO1)
Courtesy of TOYOTA MOTOR SALES, U.S.A., INC.

CONNECTOR END VIEW (VJ1)

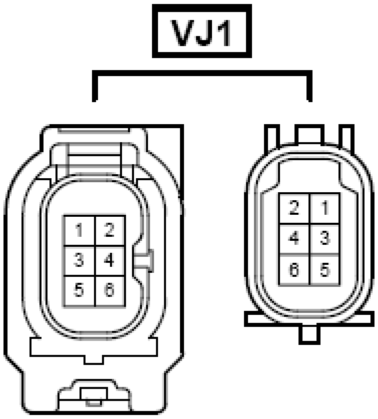
VJ1
1
2
3
4
5
6
2
1
4
3
6
5

Fig. 393: Connector End View (VJ1)
Courtesy of TOYOTA MOTOR SALES, U.S.A., INC.

CONNECTOR END VIEW (WK1)

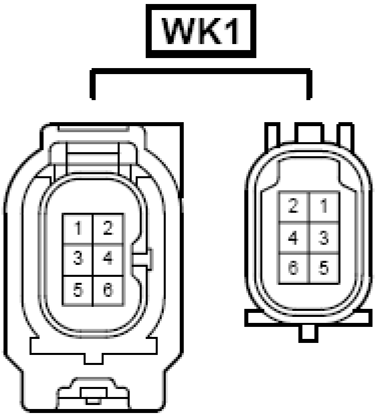
WK1
1
2
3
4
5
6
2
1
4
3
6
5

Fig. 394: Connector End View (WK1)

Courtesy of TOYOTA MOTOR SALES, U.S.A., INC.

CONNECTOR END VIEW (DD1)

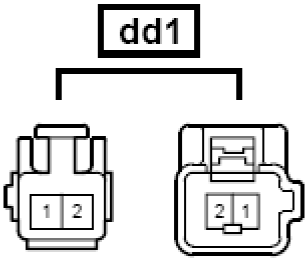

Fig. 395: Connector End View (dd1)
Courtesy of TOYOTA MOTOR SALES, U.S.A., INC.

CONNECTOR END VIEW (EE1)

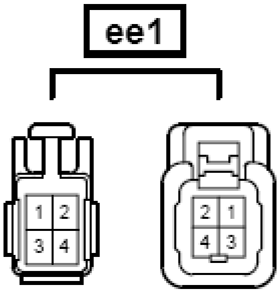

Fig. 396: Connector End View (ee1)
Courtesy of TOYOTA MOTOR SALES, U.S.A., INC.

CONNECTOR END VIEW (HO1)

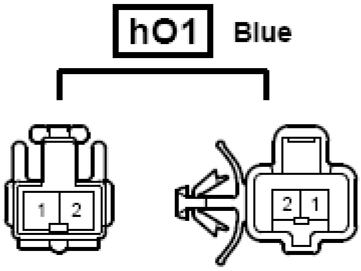

Fig. 397: Connector End View (hO1)
Courtesy of TOYOTA MOTOR SALES, U.S.A., INC.

CONNECTOR END VIEW (IN1)

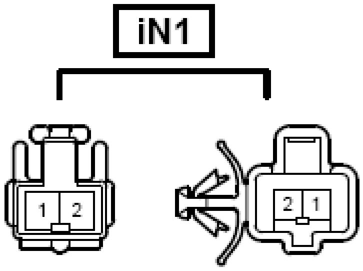

Fig. 398: Connector End View (iN1)
Courtesy of TOYOTA MOTOR SALES, U.S.A., INC.

ADDITIONAL INFORMATION

*1: Front Side Marker

*2: Front Turn Signal and Parking Light

*3: Low Halogen Type

CONNECTOR LIST

NOTE: **For any illustration containing an asterisk *, refer to ADDITIONAL INFORMATION at the end of this article.**

LOW PITCHED HORN ASSEMBLY CONNECTOR END VIEW (A1)

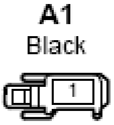

Fig. 1: Low Pitched Horn Assembly Connector End View (A1)
Courtesy of TOYOTA MOTOR SALES, U.S.A., INC.

ENGINE HOOD COURTESY SWITCH (HOOD LOCK ASSEMBLY) CONNECTOR END VIEW (A2)

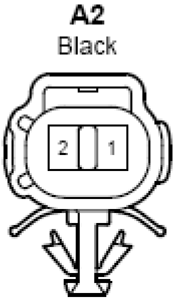

Fig. 2: Engine Hood Courtesy Switch (Hood Lock Assembly) Connector End View (A2)
Courtesy of TOYOTA MOTOR SALES, U.S.A., INC.

AMBIENT TEMPERATURE SENSOR (THERMISTOR ASSEMBLY) CONNECTOR END VIEW (A3)

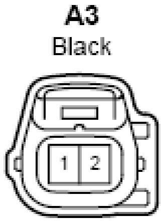

Fig. 3: Ambient Temperature Sensor (Thermistor Assembly) Connector End View (A3)
Courtesy of TOYOTA MOTOR SALES, U.S.A., INC.

HIGH PITCHED HORN ASSEMBLY CONNECTOR END VIEW (A4)

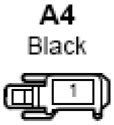

Fig. 4: High Pitched Horn Assembly Connector End View (A4)
Courtesy of TOYOTA MOTOR SALES, U.S.A., INC.

FRONT NO. 1 ULTRASONIC SENSOR LH CONNECTOR END VIEW (A5)

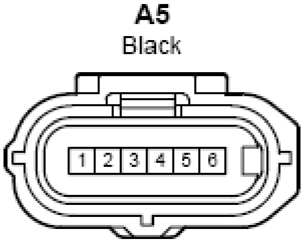

Fig. 5: Front No. 1 Ultrasonic Sensor LH Connector End View (A5)
Courtesy of TOYOTA MOTOR SALES, U.S.A., INC.

FOG LIGHT ASSEMBLY LH CONNECTOR END VIEW (A6)

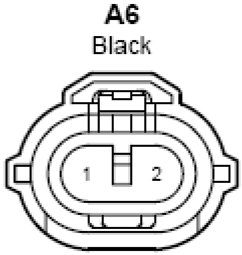

Fig. 6: Fog Light Assembly LH Connector End View (A6)
Courtesy of TOYOTA MOTOR SALES, U.S.A., INC.

COOLING FAN MOTOR CONNECTOR END VIEW (A7)

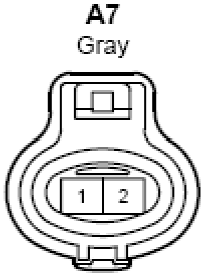

Fig. 7: Cooling Fan Motor Connector End View (A7)
Courtesy of TOYOTA MOTOR SALES, U.S.A., INC.

NO. 2 COOLING FAN MOTOR CONNECTOR END VIEW (A8)

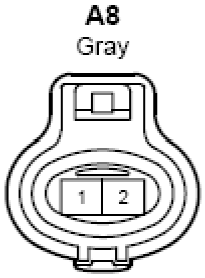

Fig. 8: No. 2 Cooling Fan Motor Connector End View (A8)
Courtesy of TOYOTA MOTOR SALES, U.S.A., INC.

VSV (AIR INTAKE CONTROL) CONNECTOR END VIEW (A9)

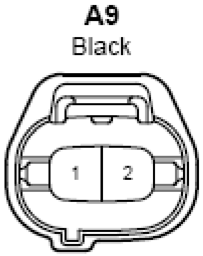

Fig. 9: VSV (Air Intake Control) Connector End View (A9)
Courtesy of TOYOTA MOTOR SALES, U.S.A., INC.

COOLING FAN ECU CONNECTOR END VIEW (A10)

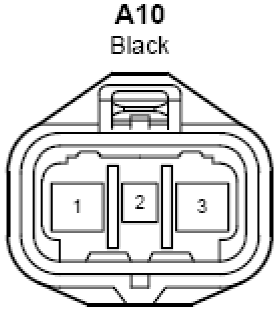

Fig. 10: Cooling Fan ECU Connector End View (A10)
Courtesy of TOYOTA MOTOR SALES, U.S.A., INC.

FRONT AIRBAG SENSOR LH CONNECTOR END VIEW (A12)

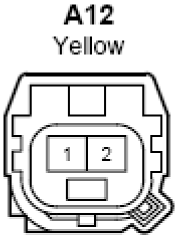

Fig. 11: Front Airbag Sensor LH Connector End View (A12)
Courtesy of TOYOTA MOTOR SALES, U.S.A., INC.

WIRELESS DOOR LOCK BUZZER CONNECTOR END VIEW (A15)

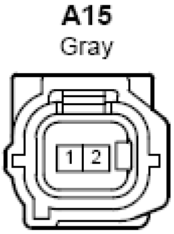

Fig. 12: Wireless Door Lock Buzzer Connector End View (A15)
Courtesy of TOYOTA MOTOR SALES, U.S.A., INC.

FRONT SPEED SENSOR LH CONNECTOR END VIEW (A16)

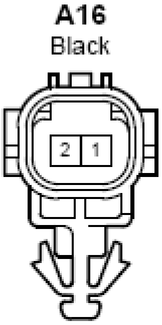

Fig. 13: Front Speed Sensor LH Connector End View (A16)
Courtesy of TOYOTA MOTOR SALES, U.S.A., INC.

HEADLIGHT ASSEMBLY LH CONNECTOR END VIEW (A17)

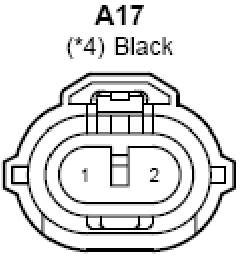
A17
(*4) Black
1
2

Fig. 14: Headlight Assembly LH Connector End View (A17)
Courtesy of TOYOTA MOTOR SALES, U.S.A., INC.

HEADLIGHT ASSEMBLY LH CONNECTOR END VIEW (A20)

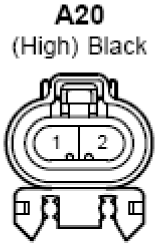
A20
(High) Black
1
2

Fig. 15: Headlight Assembly LH Connector End View (A20)
Courtesy of TOYOTA MOTOR SALES, U.S.A., INC.

HEADLIGHT ASSEMBLY LH CONNECTOR END VIEW (A24)

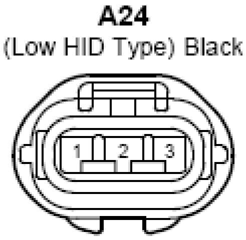
A24
(Low HID Type) Black
1
2
3

Fig. 16: Headlight Assembly LH Connector End View (A24)
Courtesy of TOYOTA MOTOR SALES, U.S.A., INC.

ECM CONNECTOR END VIEW (A25)

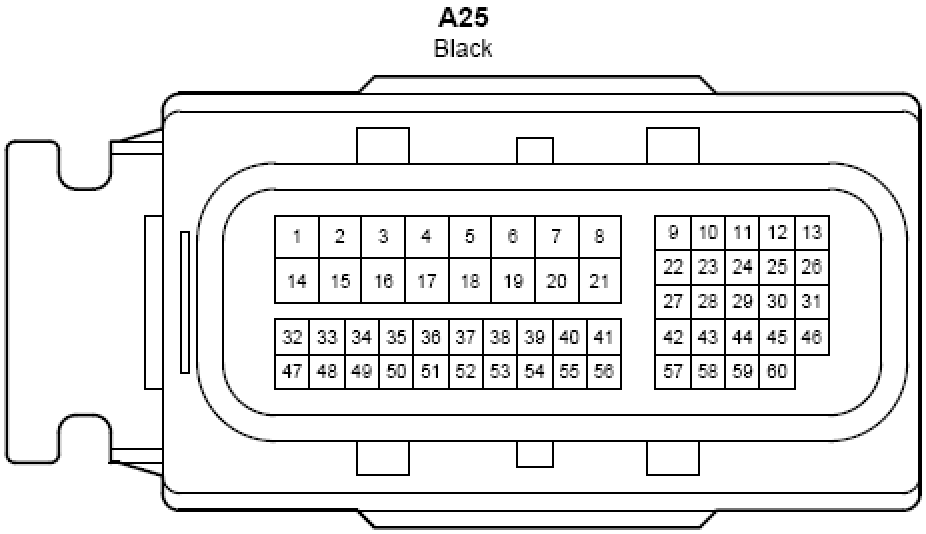
A25
Black
1 2 3 4 5 6 7 8
14 15 16 17 18 19 20 21
32 33 34 35 36 37 38 39 40 41
47 48 49 50 51 52 53 54 55 56
9 10 11 12 13
22 23 24 25 26
27 28 29 30 31
42 43 44 45 46
57 58 59 60

Fig. 17: ECM Connector End View (A25)
Courtesy of TOYOTA MOTOR SALES, U.S.A., INC.

WINDSHIELD WIPER MOTOR ASSEMBLY CONNECTOR END VIEW (A29)

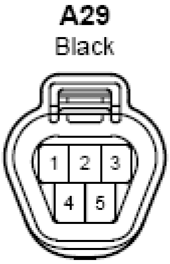
A29
Black
1 2 3
4 5

Fig. 18: Windshield Wiper Motor Assembly Connector End View (A29)
Courtesy of TOYOTA MOTOR SALES, U.S.A., INC.

BRAKE FLUID LEVEL WARNING SWITCH (BRAKE MASTER CYLINDER RESERVOIR SUB-ASSEMBLY) CONNECTOR END VIEW (A30)

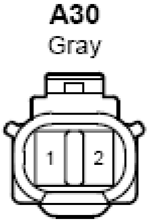

Fig. 19: Brake Fluid Level Warning Switch (Brake Master Cylinder Reservoir Sub-Assembly) Connector End View (A30)
Courtesy of TOYOTA MOTOR SALES, U.S.A., INC.

STOP LIGHT SWITCH ASSEMBLY CONNECTOR END VIEW (A33)

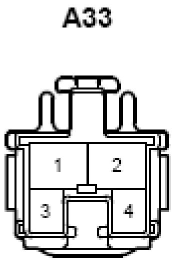

Fig. 20: Stop Light Switch Assembly Connector End View (A33)
Courtesy of TOYOTA MOTOR SALES, U.S.A., INC.

HEADLIGHT LEVELING ECU ASSEMBLY CONNECTOR END VIEW (A34)

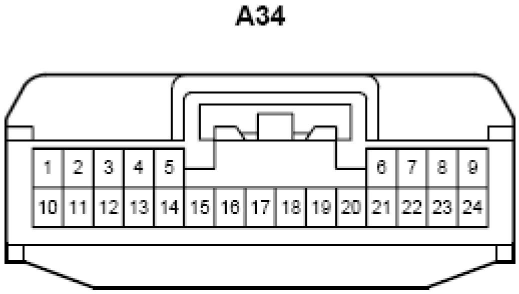
A34
1
2
3
4
5
6
7
8
9
10
11
12
13
14
15
16
17
18
19
20
21
22
23
24

Fig. 21: Headlight Leveling ECU Assembly Connector End View (A34)
Courtesy of TOYOTA MOTOR SALES, U.S.A., INC.

ACCELERATOR PEDAL SENSOR ASSEMBLY CONNECTOR END VIEW (A36)

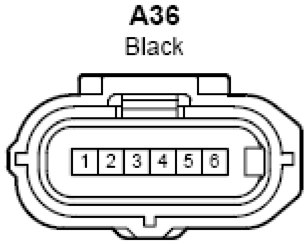
A36
Black
1
2
3
4
5
6

Fig. 22: Accelerator Pedal Sensor Assembly Connector End View (A36)
Courtesy of TOYOTA MOTOR SALES, U.S.A., INC.

BRAKE PEDAL LOAD SENSING SWITCH (BRAKE PEDAL SUPPORT ASSEMBLY) CONNECTOR END VIEW (A40)

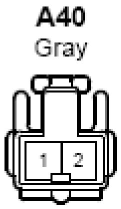

Fig. 23: Brake Pedal Load Sensing Switch (Brake Pedal Support Assembly) Connector End View (A40)
Courtesy of TOYOTA MOTOR SALES, U.S.A., INC.

PARKING BRAKE SWITCH ASSEMBLY CONNECTOR END VIEW (A42)

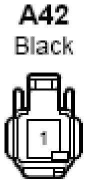

Fig. 24: Parking Brake Switch Assembly Connector End View (A42)
Courtesy of TOYOTA MOTOR SALES, U.S.A., INC.

CERTIFICATION ECU CONNECTOR END VIEW (A43)

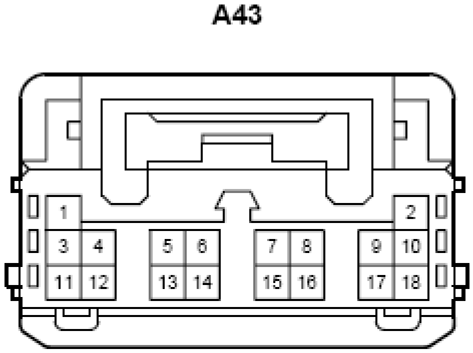

Fig. 25: Certification ECU Connector End View (A43)
Courtesy of TOYOTA MOTOR SALES, U.S.A., INC.

SECURITY HORN ASSEMBLY CONNECTOR END VIEW (A44)

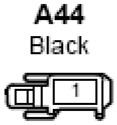

Fig. 26: Security Horn Assembly Connector End View (A44)
Courtesy of TOYOTA MOTOR SALES, U.S.A., INC.

BRAKE ACTUATOR ASSEMBLY CONNECTOR END VIEW (A49)

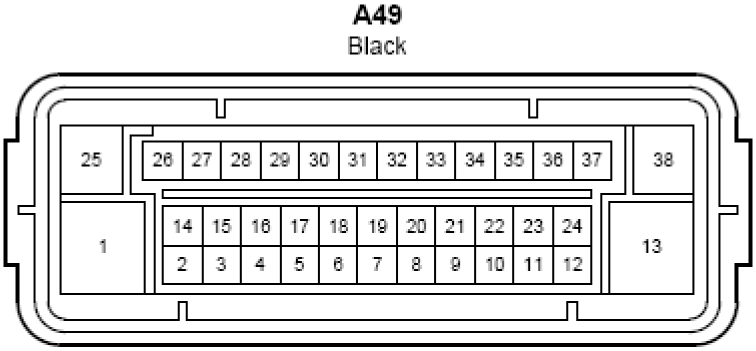
A49
Black
25
26
27
28
29
30
31
32
33
34
35
36
37
38
1
14
15
16
17
18
19
20
21
22
23
24
2
3
4
5
6
7
8
9
10
11
12
13

Fig. 27: Brake Actuator Assembly Connector End View (A49)
Courtesy of TOYOTA MOTOR SALES, U.S.A., INC.

FRONT SPEED SENSOR RH CONNECTOR END VIEW (A53)

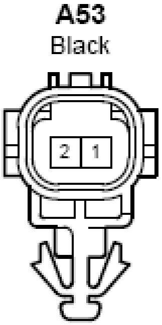
A53
Black
2
1

Fig. 28: Front Speed Sensor RH Connector End View (A53)
Courtesy of TOYOTA MOTOR SALES, U.S.A., INC.

WINDSHIELD WASHER MOTOR AND PUMP ASSEMBLY CONNECTOR END VIEW (A54)

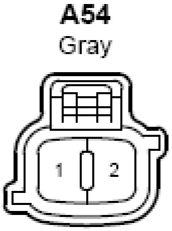

Fig. 29: Windshield Washer Motor And Pump Assembly Connector End View (A54)
Courtesy of TOYOTA MOTOR SALES, U.S.A., INC.

A/C PRESSURE SENSOR (A/C TUBE&ACCESSORY ASSEMBLY) CONNECTOR END VIEW (A55)

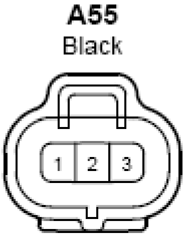
A55
Black
1
2
3

Fig. 30: A/C Pressure Sensor (A/C Tube&Accessory Assembly) Connector End View (A55)
Courtesy of TOYOTA MOTOR SALES, U.S.A., INC.

FRONT NO. 1 ULTRASONIC SENSOR RH CONNECTOR END VIEW (A56)

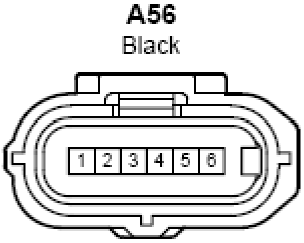
A56
Black
1
2
3
4
5
6

Fig. 31: Front No. 1 Ultrasonic Sensor RH Connector End View (A56)
Courtesy of TOYOTA MOTOR SALES, U.S.A., INC.

FOG LIGHT ASSEMBLY RH CONNECTOR END VIEW (A57)

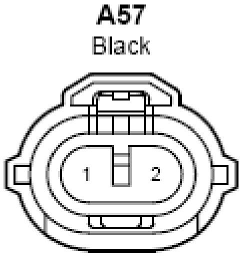
A57
Black
1
2

Fig. 32: Fog Light Assembly RH Connector End View (A57)
Courtesy of TOYOTA MOTOR SALES, U.S.A., INC.

FRONT AIRBAG SENSOR RH CONNECTOR END VIEW (A58)

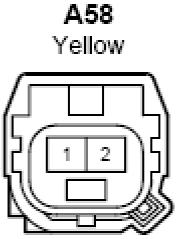
A58
Yellow
1
2

Fig. 33: Front Airbag Sensor RH Connector End View (A58)

Courtesy of TOYOTA MOTOR SALES, U.S.A., INC.

HEADLIGHT ASSEMBLY RH CONNECTOR END VIEW (A60)

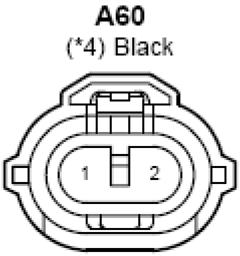
A60
(*4) Black
1
2

Fig. 34: Headlight Assembly RH Connector End View (A60)
Courtesy of TOYOTA MOTOR SALES, U.S.A., INC.

HEADLIGHT ASSEMBLY RH CONNECTOR END VIEW (A63)

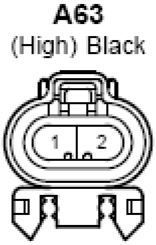
A63
(High) Black
1
2

Fig. 35: Headlight Assembly RH Connector End View (A63)
Courtesy of TOYOTA MOTOR SALES, U.S.A., INC.

HEADLIGHT ASSEMBLY RH CONNECTOR END VIEW (A66)

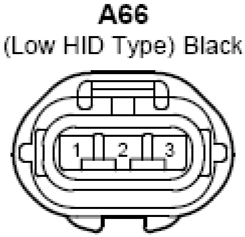
A66
(Low HID Type) Black
1
2
3

Fig. 36: Headlight Assembly RH Connector End View (A66)
Courtesy of TOYOTA MOTOR SALES, U.S.A., INC.

JUNCTION CONNECTOR END VIEW (A70)

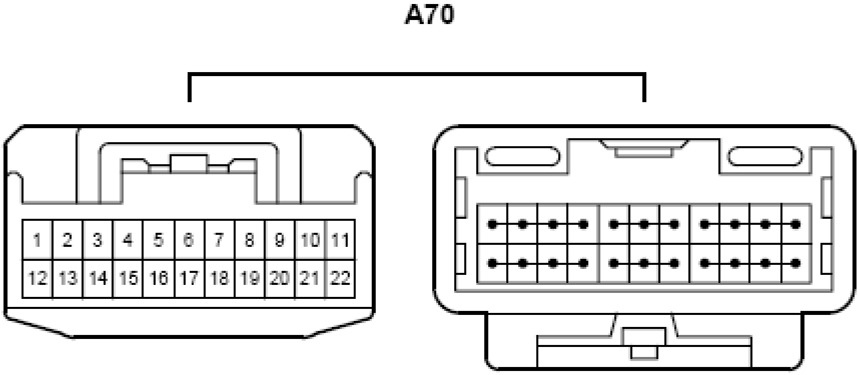
A70
1
2
3
4
5
6
7
8
9
10
11
12
13
14
15
16
17
18
19
20
21
22

Fig. 37: Junction Connector End View (A70)
Courtesy of TOYOTA MOTOR SALES, U.S.A., INC.

JUNCTION CONNECTOR END VIEW (A71)

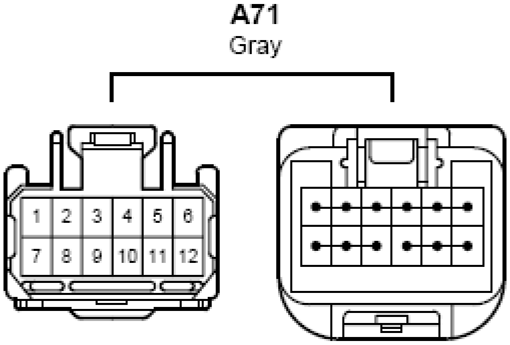
A71
Gray
1
2
3
4
5
6
7
8
9
10
11
12

Fig. 38: Junction Connector End View (A71)
Courtesy of TOYOTA MOTOR SALES, U.S.A., INC.

JUNCTION CONNECTOR END VIEW (A73)

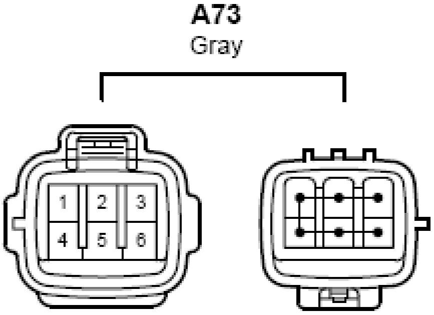
A73
Gray
1
2
3
4
5
6

Fig. 39: Junction Connector End View (A73)
Courtesy of TOYOTA MOTOR SALES, U.S.A., INC.

HEADLIGHT ASSEMBLY LH CONNECTOR END VIEW (A74)

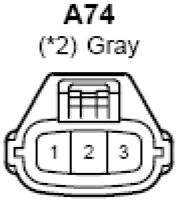

Fig. 40: Headlight Assembly LH Connector End View (A74)
Courtesy of TOYOTA MOTOR SALES, U.S.A., INC.

HEADLIGHT ASSEMBLY LH CONNECTOR END VIEW (A75)

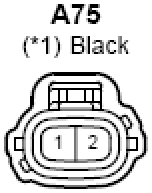

Fig. 41: Headlight Assembly LH Connector End View (A75)
Courtesy of TOYOTA MOTOR SALES, U.S.A., INC.

HEADLIGHT ASSEMBLY RH CONNECTOR END VIEW (A76)

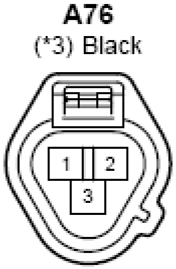

Fig. 42: Headlight Assembly RH Connector End View (A76)
Courtesy of TOYOTA MOTOR SALES, U.S.A., INC.

HEADLIGHT ASSEMBLY RH CONNECTOR END VIEW (A77)

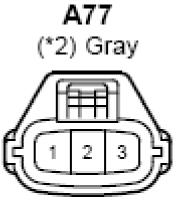

Fig. 43: Headlight Assembly RH Connector End View (A77)
Courtesy of TOYOTA MOTOR SALES, U.S.A., INC.

HEADLIGHT ASSEMBLY RH CONNECTOR END VIEW (A78)

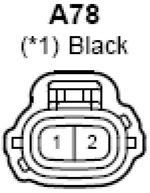

Fig. 44: Headlight Assembly RH Connector End View (A78)
Courtesy of TOYOTA MOTOR SALES, U.S.A., INC.

HEADLIGHT ASSEMBLY LH CONNECTOR END VIEW (A79)

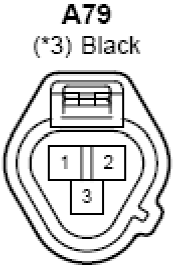

Fig. 45: Headlight Assembly LH Connector End View (A79)
Courtesy of TOYOTA MOTOR SALES, U.S.A., INC.

LEVEL WARNING SWITCH ASSEMBLY CONNECTOR END VIEW (A80)

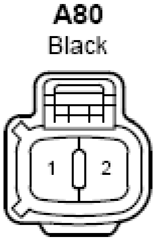

Fig. 46: Level Warning Switch Assembly Connector End View (A80)
Courtesy of TOYOTA MOTOR SALES, U.S.A., INC.

SUPER LOW PITCHED HORN ASSEMBLY CONNECTOR END VIEW (A84)

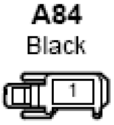

Fig. 47: Super Low Pitched Horn Assembly Connector End View (A84)
Courtesy of TOYOTA MOTOR SALES, U.S.A., INC.

PARK/NEUTRAL POSITION SWITCH ASSEMBLY CONNECTOR END VIEW (E4)

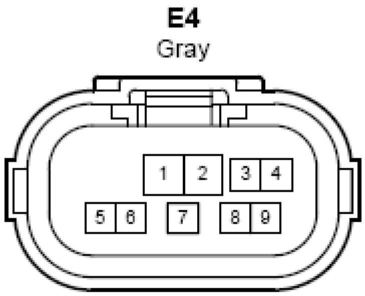
E4
Gray
1
2
3
4
5
6
7
8
9

Fig. 48: Park/Neutral Position Switch Assembly Connector End View (E4)
Courtesy of TOYOTA MOTOR SALES, U.S.A., INC.

TRANSMISSION CONTROL ECU ASSEMBLY CONNECTOR END VIEW (E7)

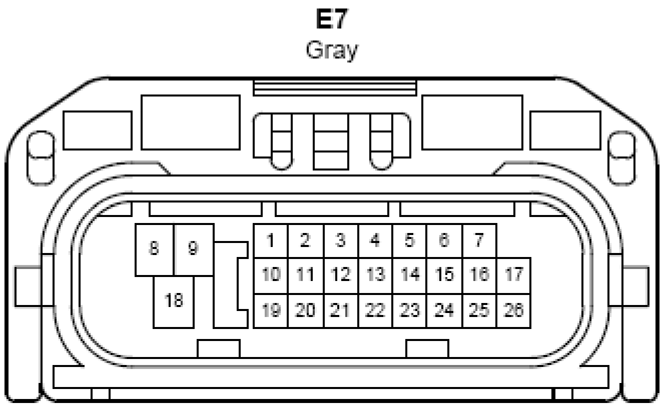
E7
Gray
8
9
18
1
2
3
4
5
6
7
10
11
12
13
14
15
16
17
19
20
21
22
23
24
25
26

Fig. 49: Transmission Control ECU Assembly Connector End View (E7)
Courtesy of TOYOTA MOTOR SALES, U.S.A., INC.

ELECTRONICALLY CONTROLLED TRANSMISSION SOLENOID (TRANSMISSION WIRE) CONNECTOR END VIEW (E8)

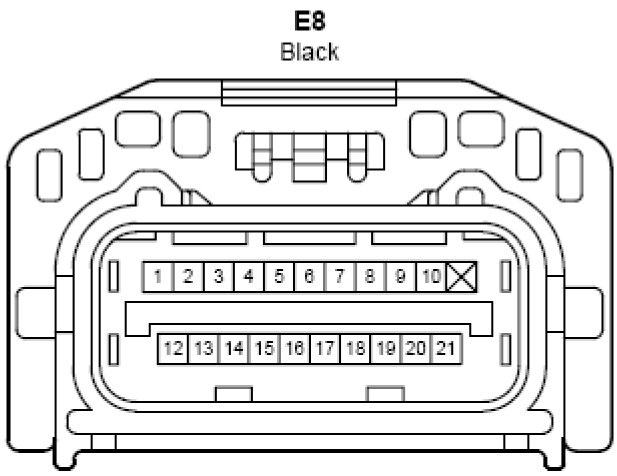
E8
Black
1
2
3
4
5
6
7
8
9
10
12
13
14
15
16
17
18
19
20
21

Fig. 50: Electronically Controlled Transmission Solenoid (Transmission Wire) Connector End View (E8)

Courtesy of TOYOTA MOTOR SALES, U.S.A., INC.

STARTER ASSEMBLY CONNECTOR END VIEW (E9)

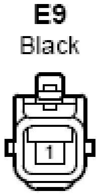

Fig. 51: Starter Assembly Connector End View (E9)
Courtesy of TOYOTA MOTOR SALES, U.S.A., INC.

VSV (ACM) CONNECTOR END VIEW (E10)

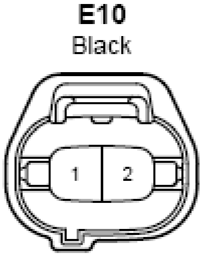

Fig. 52: VSV (ACM) Connector End View (E10)
Courtesy of TOYOTA MOTOR SALES, U.S.A., INC.

INTAKE MASS AIR FLOW METER SUB-ASSEMBLY CONNECTOR END VIEW (E14)

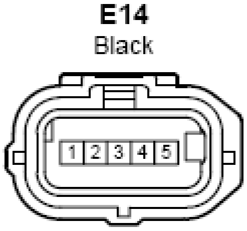

Fig. 53: Intake Mass Air Flow Meter Sub-Assembly Connector End View (E14)
Courtesy of TOYOTA MOTOR SALES, U.S.A., INC.

THROTTLE BODY ASSEMBLY WITH MOTOR CONNECTOR END VIEW (E16)

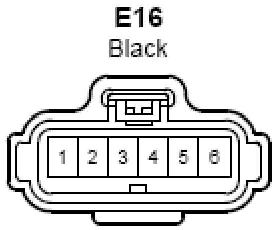

Fig. 54: Throttle Body Assembly with Motor Connector End View (E16)
Courtesy of TOYOTA MOTOR SALES, U.S.A., INC.

AIR FUEL RATIO SENSOR (BANK 1 SENSOR 1) CONNECTOR END VIEW (E19)

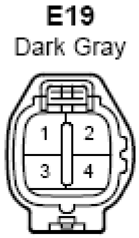

Fig. 55: Air Fuel Ratio Sensor (Bank 1 Sensor 1) Connector End View (E19)
Courtesy of TOYOTA MOTOR SALES, U.S.A., INC.

OXYGEN SENSOR (BANK 2 SENSOR 2) CONNECTOR END VIEW (E20)

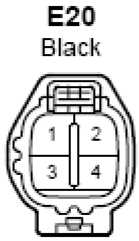

Fig. 56: Oxygen Sensor (Bank 2 Sensor 2) Connector End View (E20)
Courtesy of TOYOTA MOTOR SALES, U.S.A., INC.

OXYGEN SENSOR (BANK 1 SENSOR 2) CONNECTOR END VIEW (E21)

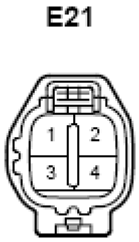

Fig. 57: Oxygen Sensor (Bank 1 Sensor 2) Connector End View (E21)
Courtesy of TOYOTA MOTOR SALES, U.S.A., INC.

OXYGEN SENSOR (BANK 1 SENSOR 2) CONNECTOR END VIEW (E22)

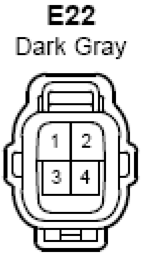

Fig. 58: Oxygen Sensor (Bank 1 Sensor 2) Connector End View (E22)
Courtesy of TOYOTA MOTOR SALES, U.S.A., INC.

ECM CONNECTOR END VIEW (E26)

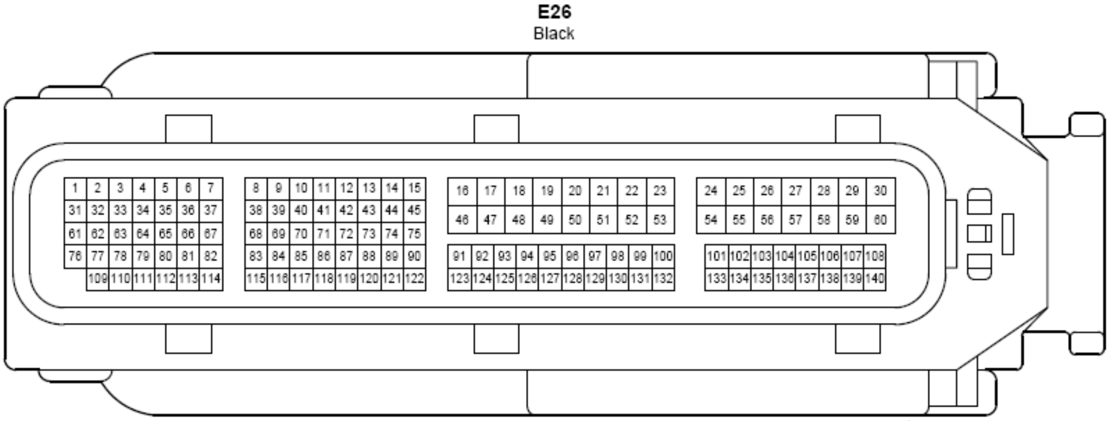

Fig. 59: ECM Connector End View (E26)
Courtesy of TOYOTA MOTOR SALES, U.S.A., INC.

FUEL INJECTOR ASSEMBLY NO. 1 CONNECTOR END VIEW (E29)

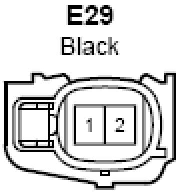

Fig. 60: Fuel Injector Assembly No. 1 Connector End View (E29)
Courtesy of TOYOTA MOTOR SALES, U.S.A., INC.

FUEL INJECTOR ASSEMBLY NO. 1 CONNECTOR END VIEW (E30)

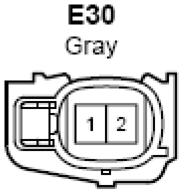

Fig. 61: Fuel Injector Assembly No. 1 Connector End View (E30)
Courtesy of TOYOTA MOTOR SALES, U.S.A., INC.

FUEL INJECTOR ASSEMBLY NO. 3 CONNECTOR END VIEW (E31)

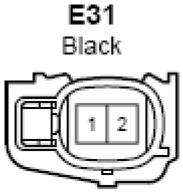

Fig. 62: Fuel Injector Assembly No. 3 Connector End View (E31)
Courtesy of TOYOTA MOTOR SALES, U.S.A., INC.

FUEL INJECTOR ASSEMBLY NO. 3 CONNECTOR END VIEW (E32)

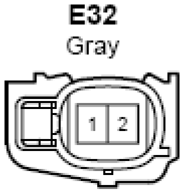

Fig. 63: Fuel Injector Assembly No. 3 Connector End View (E32)
Courtesy of TOYOTA MOTOR SALES, U.S.A., INC.

FUEL INJECTOR ASSEMBLY NO. 5 CONNECTOR END VIEW (E33)

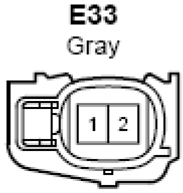

Fig. 64: Fuel Injector Assembly No. 5 Connector End View (E33)
Courtesy of TOYOTA MOTOR SALES, U.S.A., INC.

FUEL INJECTOR ASSEMBLY NO. 2 CONNECTOR END VIEW (E34)

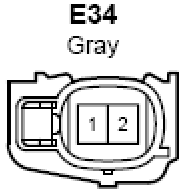

Fig. 65: Fuel Injector Assembly No. 2 Connector End View (E34)
Courtesy of TOYOTA MOTOR SALES, U.S.A., INC.

FUEL INJECTOR ASSEMBLY NO. 4 CONNECTOR END VIEW (E35)

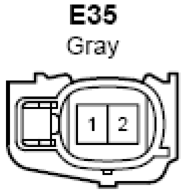

Fig. 66: Fuel Injector Assembly No. 4 Connector End View (E35)
Courtesy of TOYOTA MOTOR SALES, U.S.A., INC.

FUEL INJECTOR ASSEMBLY NO. 6 CONNECTOR END VIEW (E36)

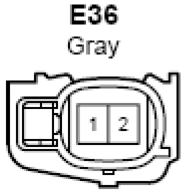

Fig. 67: Fuel Injector Assembly No. 6 Connector End View (E36)
Courtesy of TOYOTA MOTOR SALES, U.S.A., INC.

IGNITION COIL ASSEMBLY NO. 1 CONNECTOR END VIEW (E37)

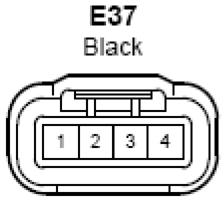

Fig. 68: Ignition Coil Assembly No. 1 Connector End View (E37)
Courtesy of TOYOTA MOTOR SALES, U.S.A., INC.

IGNITION COIL ASSEMBLY NO. 3 CONNECTOR END VIEW (E38)

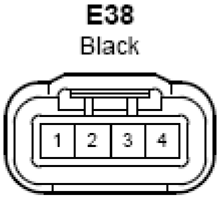

Fig. 69: Ignition Coil Assembly No. 3 Connector End View (E38)
Courtesy of TOYOTA MOTOR SALES, U.S.A., INC.

IGNITION COIL ASSEMBLY NO. 5 CONNECTOR END VIEW (E39)

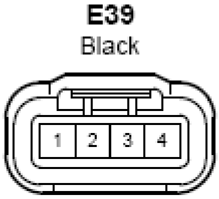

Fig. 70: Ignition Coil Assembly No. 5 Connector End View (E39)
Courtesy of TOYOTA MOTOR SALES, U.S.A., INC.

IGNITION COIL ASSEMBLY NO. 2 CONNECTOR END VIEW (E40)

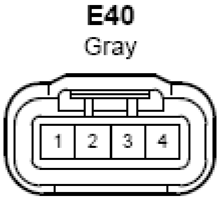

Fig. 71: Ignition Coil Assembly No. 2 Connector End View (E40)
Courtesy of TOYOTA MOTOR SALES, U.S.A., INC.

IGNITION COIL ASSEMBLY NO. 2 CONNECTOR END VIEW (E41)

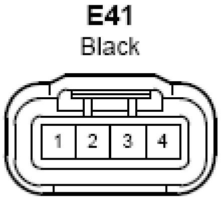

Fig. 72: Ignition Coil Assembly No. 2 Connector End View (E41)
Courtesy of TOYOTA MOTOR SALES, U.S.A., INC.

IGNITION COIL ASSEMBLY NO. 4 CONNECTOR END VIEW (E42)

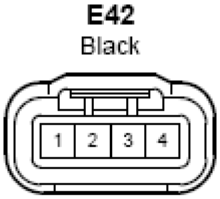

Fig. 73: Ignition Coil Assembly No. 4 Connector End View (E42)
Courtesy of TOYOTA MOTOR SALES, U.S.A., INC.

IGNITION COIL ASSEMBLY NO. 4 CONNECTOR END VIEW (E43)

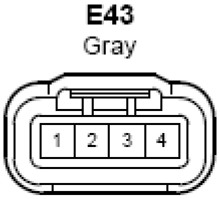

Fig. 74: Ignition Coil Assembly No. 4 Connector End View (E43)
Courtesy of TOYOTA MOTOR SALES, U.S.A., INC.

IGNITION COIL ASSEMBLY NO. 6 CONNECTOR END VIEW (E44)

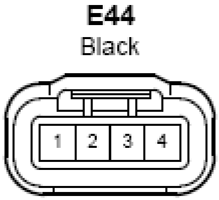

Fig. 75: Ignition Coil Assembly No. 6 Connector End View (E44)
Courtesy of TOYOTA MOTOR SALES, U.S.A., INC.

VSV (ACIS) CONNECTOR END VIEW (E45)

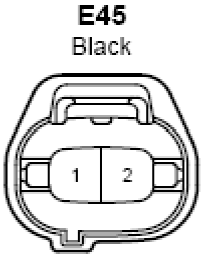

Fig. 76: VSV (ACIS) Connector End View (E45)
Courtesy of TOYOTA MOTOR SALES, U.S.A., INC.

VSV (ACIS) CONNECTOR END VIEW (E46)

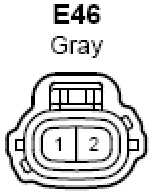

Fig. 77: VSV (ACIS) Connector End View (E46)
Courtesy of TOYOTA MOTOR SALES, U.S.A., INC.

E.F.I. ENGINE COOLANT TEMPERATURE SENSOR CONNECTOR END VIEW (E47)

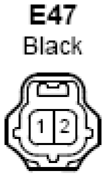

Fig. 78: E.F.I. Engine Coolant Temperature Sensor Connector End View (E47)
Courtesy of TOYOTA MOTOR SALES, U.S.A., INC.

AIR FUEL RATIO SENSOR (BANK 2 SENSOR 1) CONNECTOR END VIEW (E48)

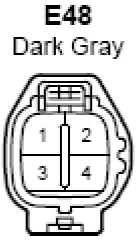

Fig. 79: Air Fuel Ratio Sensor (Bank 2 Sensor 1) Connector End View (E48)
Courtesy of TOYOTA MOTOR SALES, U.S.A., INC.

PURGE VSV CONNECTOR END VIEW (E49)

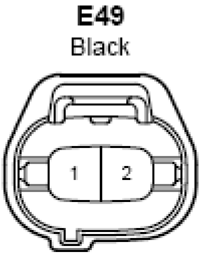

Fig. 80: Purge VSV Connector End View (E49)
Courtesy of TOYOTA MOTOR SALES, U.S.A., INC.

PURGE VSV CONNECTOR END VIEW (E50)

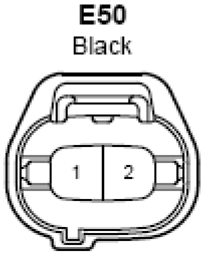

Fig. 81: Purge VSV Connector End View (E50)
Courtesy of TOYOTA MOTOR SALES, U.S.A., INC.

VVT SENSOR (BANK 1 EXHAUST SIDE) CONNECTOR END VIEW (E52)

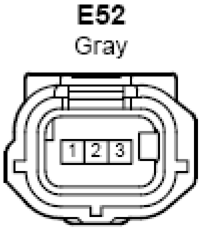

Fig. 82: VVT Sensor (Bank 1 Exhaust Side) Connector End View (E52)
Courtesy of TOYOTA MOTOR SALES, U.S.A., INC.

VVT SENSOR (BANK 1 EXHAUST SIDE) CONNECTOR END VIEW (E53)

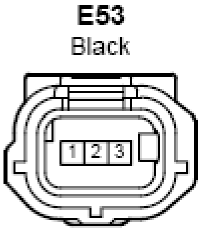

Fig. 83: VVT Sensor (Bank 1 Exhaust Side) Connector End View (E53)
Courtesy of TOYOTA MOTOR SALES, U.S.A., INC.

VVT SENSOR (BANK 1 INTAKE SIDE) CONNECTOR END VIEW (E54)

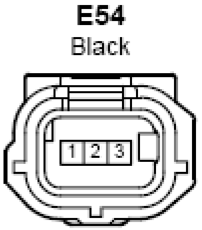

Fig. 84: VVT Sensor (Bank 1 Intake Side) Connector End View (E54)
Courtesy of TOYOTA MOTOR SALES, U.S.A., INC.

VVT SENSOR (BANK 1 INTAKE SIDE) CONNECTOR END VIEW (E55)

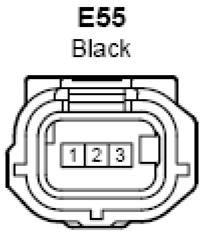

Fig. 85: VVT Sensor (Bank 1 Intake Side) Connector End View (E55)
Courtesy of TOYOTA MOTOR SALES, U.S.A., INC.

CAMSHAFT TIMING OIL CONTROL VALVE ASSEMBLY (EXHAUST SIDE) CONNECTOR END VIEW (E56)

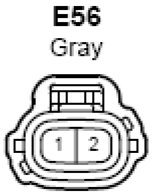

Fig. 86: Camshaft Timing Oil Control Valve Assembly (Exhaust Side) Connector End View (E56)
Courtesy of TOYOTA MOTOR SALES, U.S.A., INC.

CAMSHAFT TIMING OIL CONTROL VALVE ASSEMBLY (BANK 1 EXHAUST SIDE) CONNECTOR END VIEW (E57)

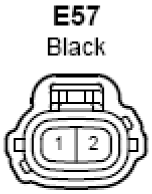

Fig. 87: Camshaft Timing Oil Control Valve Assembly (Bank 1 Exhaust Side) Connector End View (E57)
Courtesy of TOYOTA MOTOR SALES, U.S.A., INC.

CAMSHAFT TIMING OIL CONTROL VALVE ASSEMBLY (BANK 1 INTAKE SIDE) CONNECTOR END VIEW (E58)

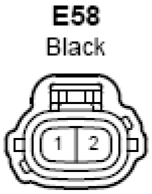

Fig. 88: Camshaft Timing Oil Control Valve Assembly (Bank 1 Intake Side) Connector End View (E58)

Courtesy of TOYOTA MOTOR SALES, U.S.A., INC.

VVT SENSOR (BANK 2 EXHAUST SIDE) CONNECTOR END VIEW (E59)

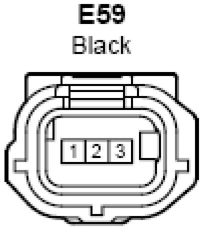

Fig. 89: VVT Sensor (Bank 2 Exhaust Side) Connector End View (E59)
Courtesy of TOYOTA MOTOR SALES, U.S.A., INC.

VVT SENSOR (BANK 2 INTAKE SIDE) CONNECTOR END VIEW (E60)

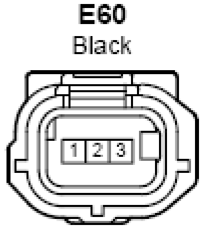

Fig. 90: VVT Sensor (Bank 2 Intake Side) Connector End View (E60)
Courtesy of TOYOTA MOTOR SALES, U.S.A., INC.

CAMSHAFT TIMING OIL CONTROL VALVE ASSEMBLY (BANK 2 EXHAUST SIDE) CONNECTOR END VIEW (E61)

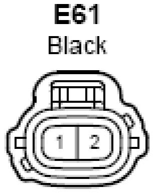

Fig. 91: Camshaft Timing Oil Control Valve Assembly (Bank 2 Exhaust Side) Connector End View (E61)
Courtesy of TOYOTA MOTOR SALES, U.S.A., INC.

CAMSHAFT TIMING OIL CONTROL VALVE ASSEMBLY (BANK 2 INTAKE SIDE) CONNECTOR END VIEW (E62)

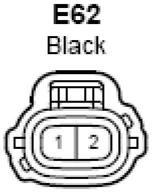

Fig. 92: Camshaft Timing Oil Control Valve Assembly (Bank 2 Intake Side) Connector End View (E62)
Courtesy of TOYOTA MOTOR SALES, U.S.A., INC.

CAMSHAFT TIMING OIL CONTROL VALVE ASSEMBLY (INTAKE SIDE) CONNECTOR END VIEW (E63)

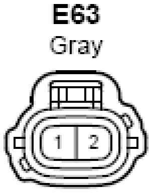

Fig. 93: Camshaft Timing Oil Control Valve Assembly (Intake Side) Connector End View (E63)
Courtesy of TOYOTA MOTOR SALES, U.S.A., INC.

ENGINE OIL PRESSURE SWITCH ASSEMBLY CONNECTOR END VIEW (E64)

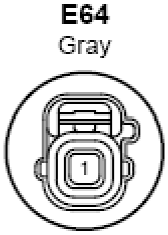

Fig. 94: Engine Oil Pressure Switch Assembly Connector End View (E64)
Courtesy of TOYOTA MOTOR SALES, U.S.A., INC.

GENERATOR ASSEMBLY CONNECTOR END VIEW (E67)

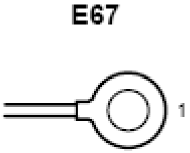

Fig. 95: Generator Assembly Connector End View (E67)
Courtesy of TOYOTA MOTOR SALES, U.S.A., INC.

GENERATOR ASSEMBLY CONNECTOR END VIEW (E68)

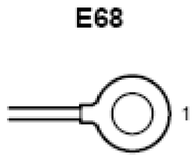

Fig. 96: Generator Assembly Connector End View (E68)
Courtesy of TOYOTA MOTOR SALES, U.S.A., INC.

GENERATOR ASSEMBLY CONNECTOR END VIEW (E70)

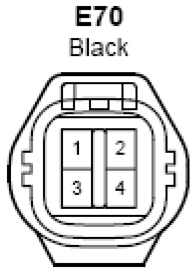

Fig. 97: Generator Assembly Connector End View (E70)
Courtesy of TOYOTA MOTOR SALES, U.S.A., INC.

CRANK POSITION SENSOR CONNECTOR END VIEW (E72)

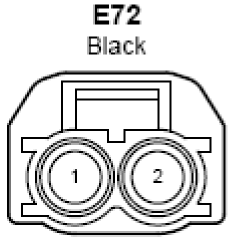

Fig. 98: Crank Position Sensor Connector End View (E72)
Courtesy of TOYOTA MOTOR SALES, U.S.A., INC.

COMPRESSOR ASSEMBLY WITH PULLEY CONNECTOR END VIEW (E73)

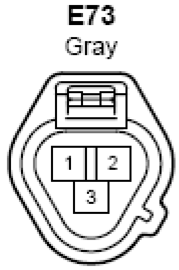

Fig. 99: Compressor Assembly with Pulley Connector End View (E73)
Courtesy of TOYOTA MOTOR SALES, U.S.A., INC.

COMPRESSOR ASSEMBLY WITH PULLEY CONNECTOR END VIEW (E74)

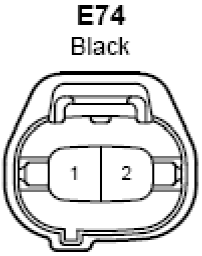
E74
Black
1
2

Fig. 100: Compressor Assembly with Pulley Connector End View (E74)
Courtesy of TOYOTA MOTOR SALES, U.S.A., INC.

COMPRESSOR ASSEMBLY WITH PULLEY CONNECTOR END VIEW (E75)

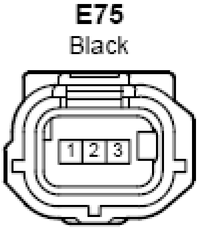
E75
Black
1
2
3

Fig. 101: Compressor Assembly with Pulley Connector End View (E75)
Courtesy of TOYOTA MOTOR SALES, U.S.A., INC.

JUNCTION CONNECTOR END VIEW (E76)

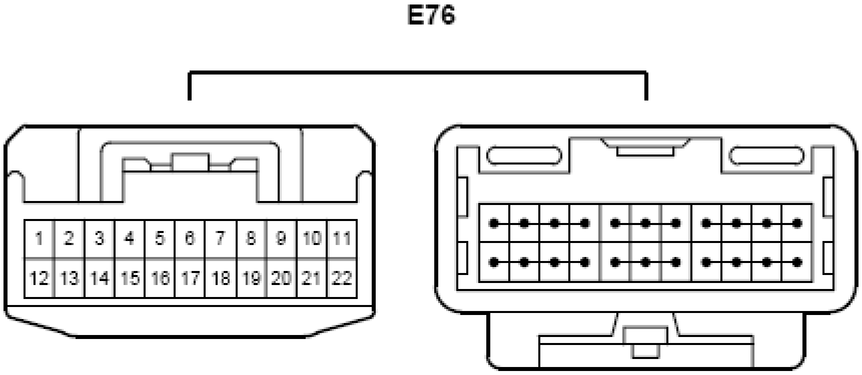
E76
1
2
3
4
5
6
7
8
9
10
11
12
13
14
15
16
17
18
19
20
21
22

Fig. 102: Junction Connector End View (E76)
Courtesy of TOYOTA MOTOR SALES, U.S.A., INC.

STARTER ASSEMBLY CONNECTOR END VIEW (F2)

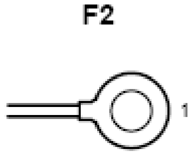

Fig. 103: Starter Assembly Connector End View (F2)
Courtesy of TOYOTA MOTOR SALES, U.S.A., INC.

FRONT NO. 2 SPEAKER ASSEMBLY LH CONNECTOR END VIEW (I1)

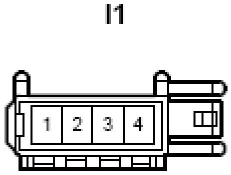

Fig. 104: Front No. 2 Speaker Assembly LH Connector End View (I1)
Courtesy of TOYOTA MOTOR SALES, U.S.A., INC.

FRONT NO. 2 SPEAKER ASSEMBLY LH CONNECTOR END VIEW (I2)

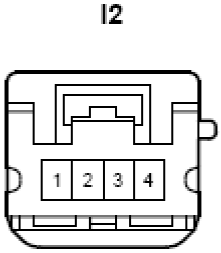

Fig. 105: Front No. 2 Speaker Assembly LH Connector End View (I2)
Courtesy of TOYOTA MOTOR SALES, U.S.A., INC.

BACK SONAR OR CLEARANCE SONAR SWITCH ASSEMBLY CONNECTOR END VIEW (I5)

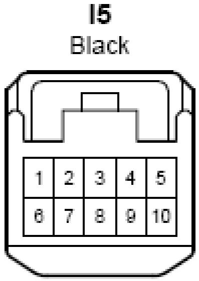

Fig. 106: Back Sonar or Clearance Sonar Switch Assembly Connector End View (I5)
Courtesy of TOYOTA MOTOR SALES, U.S.A., INC.

BLIND SPOT MONITOR MAIN SWITCH (WARNING CANCELING SWITCH ASSEMBLY) CONNECTOR END VIEW (I10)

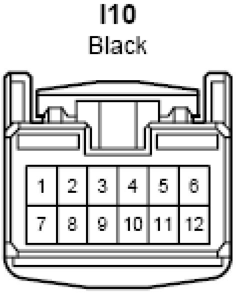
I10
Black
1
2
3
4
5
6
7
8
9
10
11
12

Fig. 107: Blind Spot Monitor Main Switch (Warning Canceling Switch Assembly) Connector End View (I10)
Courtesy of TOYOTA MOTOR SALES, U.S.A., INC.

MAIN BODY ECU CONNECTOR END VIEW (I12)

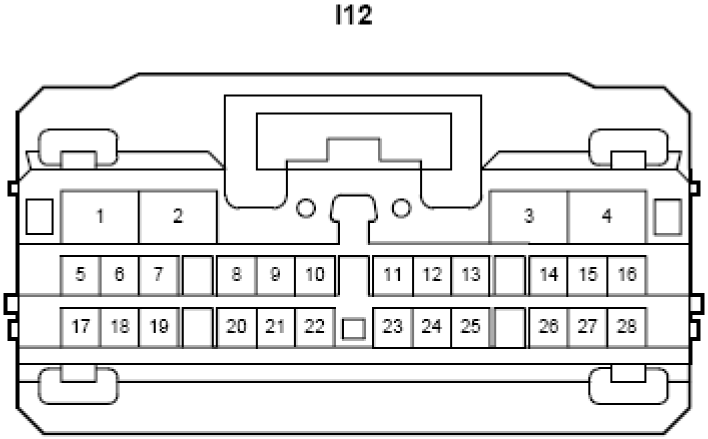
I12
1
2
3
4
5
6
7
8
9
10
11
12
13
14
15
16
17
18
19
20
21
22
23
24
25
26
27
28

Fig. 108: Main Body ECU Connector End View (I12)
Courtesy of TOYOTA MOTOR SALES, U.S.A., INC.

MAIN BODY ECU CONNECTOR END VIEW (I13)

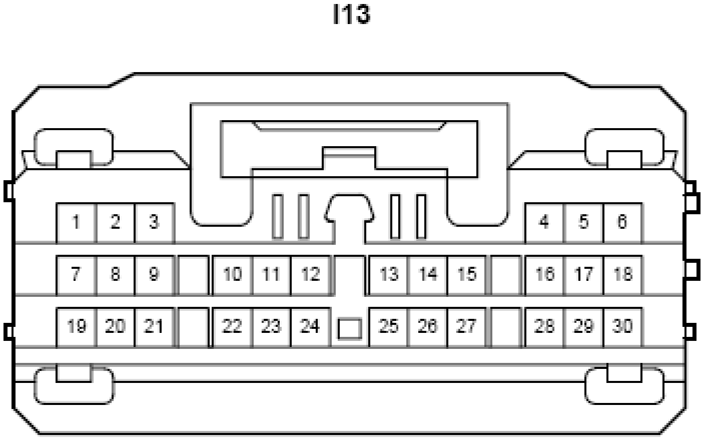
I13
1
2
3
4
5
6
7
8
9
10
11
12
13
14
15
16
17
18
19
20
21
22
23
24
25
26
27
28
29
30

Fig. 109: Main Body ECU Connector End View (I13)

Courtesy of TOYOTA MOTOR SALES, U.S.A., INC.

COMBINATION METER ASSEMBLY CONNECTOR END VIEW (I17)

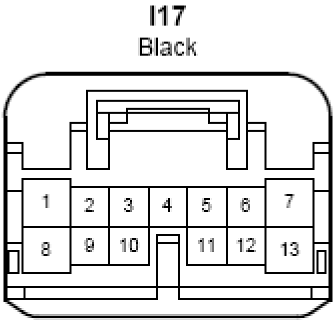
I17
Black
1
2
3
4
5
6
7
8
9
10
11
12
13

Fig. 110: Combination Meter Assembly Connector End View (I17)
Courtesy of TOYOTA MOTOR SALES, U.S.A., INC.

COMBINATION METER ASSEMBLY CONNECTOR END VIEW (I18)

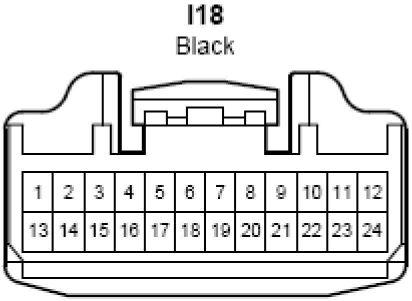
I18
Black
1
2
3
4
5
6
7
8
9
10
11
12
13
14
15
16
17
18
19
20
21
22
23
24

Fig. 111: Combination Meter Assembly Connector End View (I18)
Courtesy of TOYOTA MOTOR SALES, U.S.A., INC.

TRANSPONDER KEY ECU ASSEMBLY CONNECTOR END VIEW (I19)

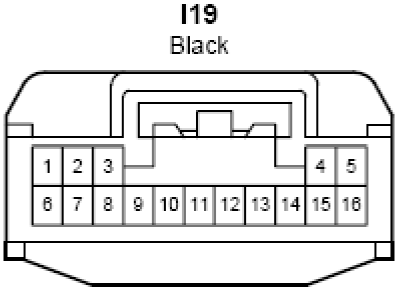
I19
Black
1
2
3
4
5
6
7
8
9
10
11
12
13
14
15
16

Fig. 112: Transponder Key ECU Assembly Connector End View (I19)
Courtesy of TOYOTA MOTOR SALES, U.S.A., INC.

STEERING LOCK ACTUATOR ASSEMBLY CONNECTOR END VIEW (I24)

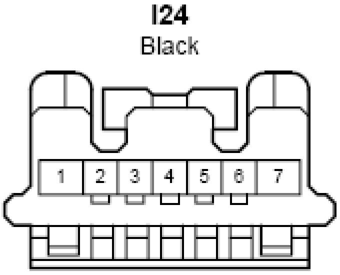
I24
Black
1
2
3
4
5
6
7

Fig. 113: Steering Lock Actuator Assembly Connector End View (I24)
Courtesy of TOYOTA MOTOR SALES, U.S.A., INC.

HEADLIGHT DIMMER SWITCH ASSEMBLY CONNECTOR END VIEW (I25)

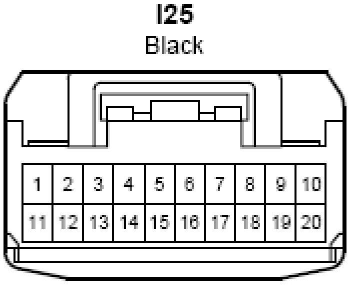
I25
Black
1
2
3
4
5
6
7
8
9
10
11
12
13
14
15
16
17
18
19
20

Fig. 114: Headlight Dimmer Switch Assembly Connector End View (I25)
Courtesy of TOYOTA MOTOR SALES, U.S.A., INC.

SPIRAL CABLE SUB-ASSEMBLY CONNECTOR END VIEW (I27)

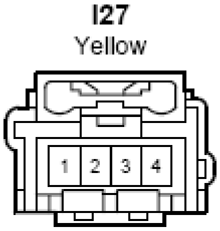
I27
Yellow
1
2
3
4

Fig. 115: Spiral Cable Sub-Assembly Connector End View (I27)
Courtesy of TOYOTA MOTOR SALES, U.S.A., INC.

SPIRAL CABLE SUB-ASSEMBLY CONNECTOR END VIEW (I28)

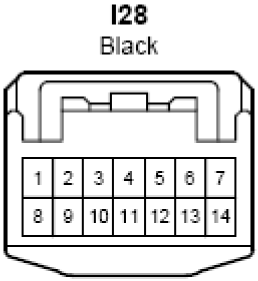
I28
Black
1
2
3
4
5
6
7
8
9
10
11
12
13
14

Fig. 116: Spiral Cable Sub-Assembly Connector End View (I28)
Courtesy of TOYOTA MOTOR SALES, U.S.A., INC.

STEERING SENSOR CONNECTOR END VIEW (I29)

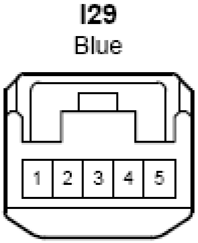
I29
Blue
1
2
3
4
5

Fig. 117: Steering Sensor Connector End View (I29)
Courtesy of TOYOTA MOTOR SALES, U.S.A., INC.

WINDSHIELD WIPER SWITCH ASSEMBLY CONNECTOR END VIEW (I31)

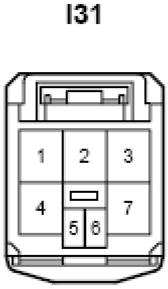
I31
1
2
3
4
5
6
7

Fig. 118: Windshield Wiper Switch Assembly Connector End View (I31)
Courtesy of TOYOTA MOTOR SALES, U.S.A., INC.

WINDSHIELD WIPER SWITCH ASSEMBLY CONNECTOR END VIEW (I32)

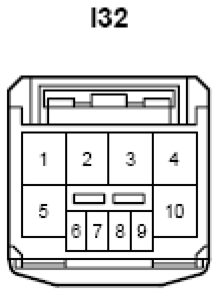

Fig. 119: Windshield Wiper Switch Assembly Connector End View (I32)
Courtesy of TOYOTA MOTOR SALES, U.S.A., INC.

UN-LOCK WARNING SWITCH ASSEMBLY CONNECTOR END VIEW (I33)

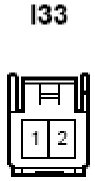

Fig. 120: Un-Lock Warning Switch Assembly Connector End View (I33)
Courtesy of TOYOTA MOTOR SALES, U.S.A., INC.

TRANSPONDER KEY AMPLIFIER CONNECTOR END VIEW (I34)

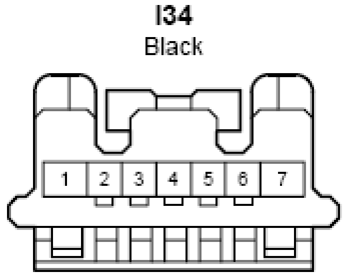

Fig. 121: Transponder Key Amplifier Connector End View (I34)
Courtesy of TOYOTA MOTOR SALES, U.S.A., INC.

KEY INTER LOCK SOLENOID CONNECTOR END VIEW (I35)

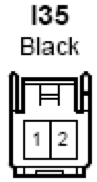

Fig. 122: Key Inter Lock Solenoid Connector End View (I35)
Courtesy of TOYOTA MOTOR SALES, U.S.A., INC.

IGNITION OR STARTER SWITCH ASSEMBLY CONNECTOR END VIEW (I36)

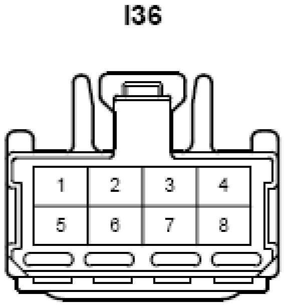

Fig. 123: Ignition or Starter Switch Assembly Connector End View (I36)
Courtesy of TOYOTA MOTOR SALES, U.S.A., INC.

DATA LINK CONNECTOR 3 CONNECTOR END VIEW (I39)

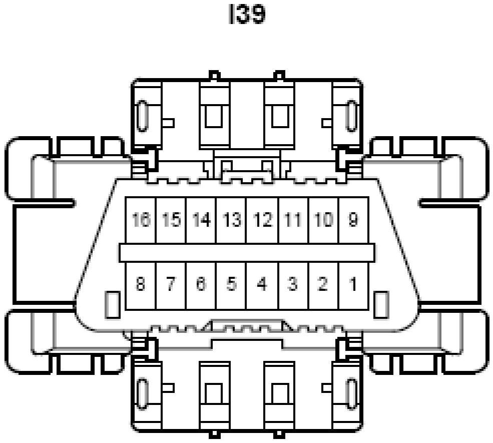

Fig. 124: Data Link Connector 3 Connector End View (I39)
Courtesy of TOYOTA MOTOR SALES, U.S.A., INC.

LOWER NO. 1 INSTRUMENT PANEL AIRBAG ASSEMBLY CONNECTOR END VIEW (I40)

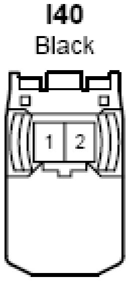

Fig. 125: Lower No. 1 Instrument Panel Airbag Assembly Connector End View (I40)
Courtesy of TOYOTA MOTOR SALES, U.S.A., INC.

SHIFT LOCK CONTROL ECU (LOWER SHIFT LEVER ASSEMBLY) CONNECTOR END VIEW

(I42)

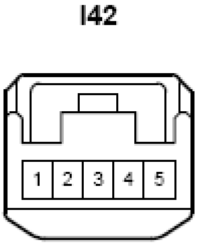

Fig. 126: Shift Lock Control ECU (Lower Shift Lever Assembly) Connector End View (I42)
Courtesy of TOYOTA MOTOR SALES, U.S.A., INC.

SHIFT LOCK CONTROL ECU (LOWER SHIFT LEVER ASSEMBLY) CONNECTOR END VIEW (I43)

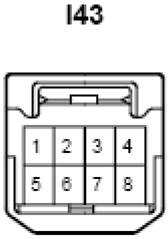

Fig. 127: Shift Lock Control ECU (Lower Shift Lever Assembly) Connector End View (I43)
Courtesy of TOYOTA MOTOR SALES, U.S.A., INC.

TRANSMISSION CONTROL SWITCH (LOWER SHIFT LEVER ASSEMBLY) CONNECTOR END VIEW (I44)

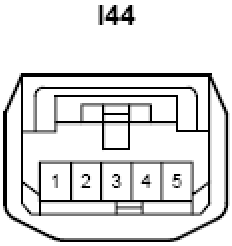

Fig. 128: Transmission Control Switch (Lower Shift Lever Assembly) Connector End View (I44)
Courtesy of TOYOTA MOTOR SALES, U.S.A., INC.

REAR POWER OUTLET SOCKET ASSEMBLY CONNECTOR END VIEW (I45)

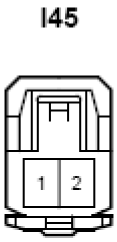

Fig. 129: Rear Power Outlet Socket Assembly Connector End View (I45)
Courtesy of TOYOTA MOTOR SALES, U.S.A., INC.

NO. 1 INDOOR ELECTRICAL KEY ANTENNA ASSEMBLY CONNECTOR END VIEW (I46)

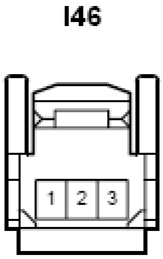

Fig. 130: No. 1 Indoor Electrical Key Antenna Assembly Connector End View (I46)
Courtesy of TOYOTA MOTOR SALES, U.S.A., INC.

AIRBAG SENSOR ASSEMBLY CONNECTOR END VIEW (I47)

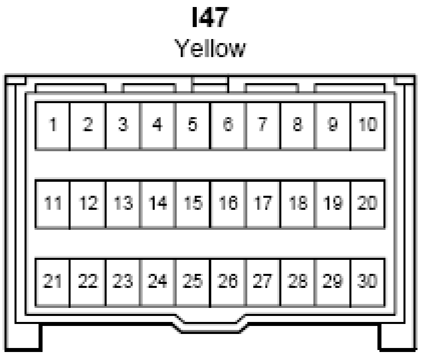
I47
Yellow
1
2
3
4
5
6
7
8
9
10
11
12
13
14
15
16
17
18
19
20
21
22
23
24
25
26
27
28
29
30

Fig. 131: Airbag Sensor Assembly Connector End View (I47)
Courtesy of TOYOTA MOTOR SALES, U.S.A., INC.

SEAT HEATER SWITCH LH CONNECTOR END VIEW (I52)

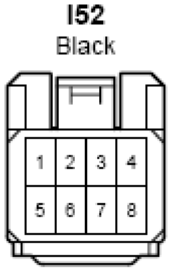
I52
Black
1
2
3
4
5
6
7
8

Fig. 132: Seat Heater Switch LH Connector End View (I52)
Courtesy of TOYOTA MOTOR SALES, U.S.A., INC.

SEAT HEATER SWITCH RH CONNECTOR END VIEW (I53)

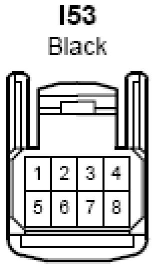
I53
Black
1
2
3
4
5
6
7
8

Fig. 133: Seat Heater Switch RH Connector End View (I53)
Courtesy of TOYOTA MOTOR SALES, U.S.A., INC.

NO. 1 CLEARANCE WARNING BUZZER CONNECTOR END VIEW (I54)

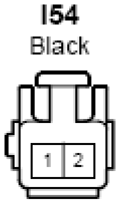
I54
Black
1
2

Fig. 134: No. 1 Clearance Warning Buzzer Connector End View (I54)
Courtesy of TOYOTA MOTOR SALES, U.S.A., INC.

FRONT POWER OUTLET SOCKET ASSEMBLY CONNECTOR END VIEW (I55)

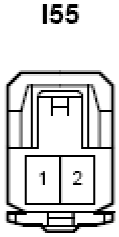

Fig. 135: Front Power Outlet Socket Assembly Connector End View (I55)

Courtesy of TOYOTA MOTOR SALES, U.S.A., INC.

A/C CONTROL ASSEMBLY CONNECTOR END VIEW (I56)

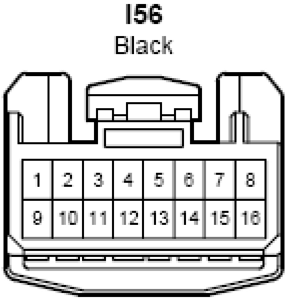
I56
Black
1
2
3
4
5
6
7
8
9
10
11
12
13
14
15
16

Fig. 136: A/C Control Assembly Connector End View (I56)
Courtesy of TOYOTA MOTOR SALES, U.S.A., INC.

COOLER (ROOM TEMPERATURE SENSOR) THERMISTOR CONNECTOR END VIEW (I57)

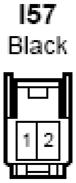
I57
Black
1
2

Fig. 137: Cooler (Room Temperature Sensor) Thermistor Connector End View (I57)
Courtesy of TOYOTA MOTOR SALES, U.S.A., INC.

ENGINE SWITCH CONNECTOR END VIEW (I58)

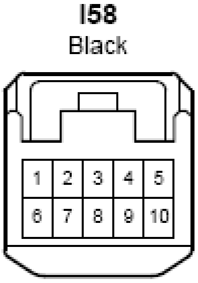
I58
Black
1
2
3
4
5
6
7
8
9
10

Fig. 138: Engine Switch Connector End View (I58)
Courtesy of TOYOTA MOTOR SALES, U.S.A., INC.

CLOCK ASSEMBLY CONNECTOR END VIEW (I59)

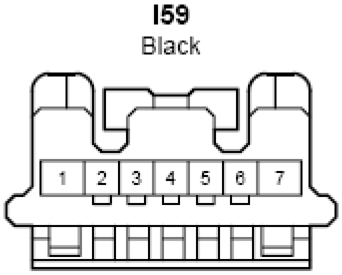

Fig. 139: Clock Assembly Connector End View (I59)
Courtesy of TOYOTA MOTOR SALES, U.S.A., INC.

FRONT NO. 3 SPEAKER ASSEMBLY CONNECTOR END VIEW (I60)

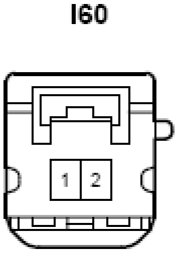

Fig. 140: Front No. 3 Speaker Assembly Connector End View (I60)
Courtesy of TOYOTA MOTOR SALES, U.S.A., INC.

AUTOMATIC LIGHT CONTROL SENSOR CONNECTOR END VIEW (I61)

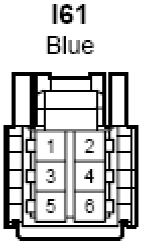

Fig. 141: Automatic Light Control Sensor Connector End View (I61)
Courtesy of TOYOTA MOTOR SALES, U.S.A., INC.

SHIFT POSITION INDICATOR (INDICATOR LIGHT WIRE SUB-ASSEMBLY) CONNECTOR END VIEW (I62)

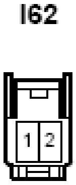

Fig. 142: Shift Position Indicator (Indicator Light Wire Sub-Assembly) Connector End View (I62)

Courtesy of TOYOTA MOTOR SALES, U.S.A., INC.

MULTI-MEDIA MODULE RECEIVER SUB-ASSEMBLY CONNECTOR END VIEW (I64)

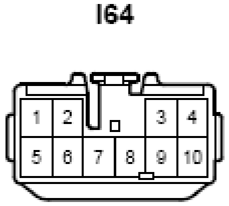

Fig. 143: Multi-Media Module Receiver Sub-Assembly Connector End View (I64)
Courtesy of TOYOTA MOTOR SALES, U.S.A., INC.

MULTI-MEDIA MODULE RECEIVER SUB-ASSEMBLY CONNECTOR END VIEW (I65)

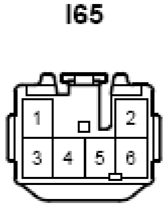

Fig. 144: Multi-Media Module Receiver Sub-Assembly Connector End View (I65)
Courtesy of TOYOTA MOTOR SALES, U.S.A., INC.

MULTI-MEDIA MODULE RECEIVER SUB-ASSEMBLY CONNECTOR END VIEW (I66)

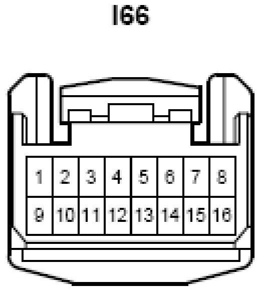

Fig. 145: Multi-Media Module Receiver Sub-Assembly Connector End View (I66)
Courtesy of TOYOTA MOTOR SALES, U.S.A., INC.

MULTI-MEDIA MODULE RECEIVER SUB-ASSEMBLY CONNECTOR END VIEW (I67)

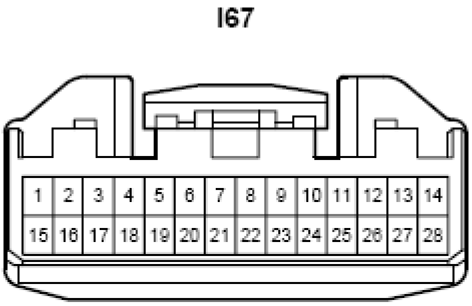
I67
1
2
3
4
5
6
7
8
9
10
11
12
13
14
15
16
17
18
19
20
21
22
23
24
25
26
27
28

Fig. 146: Multi-Media Module Receiver Sub-Assembly Connector End View (I67)
Courtesy of TOYOTA MOTOR SALES, U.S.A., INC.

STEREO COMPONENT AMPLIFIER ASSEMBLY CONNECTOR END VIEW (I68)

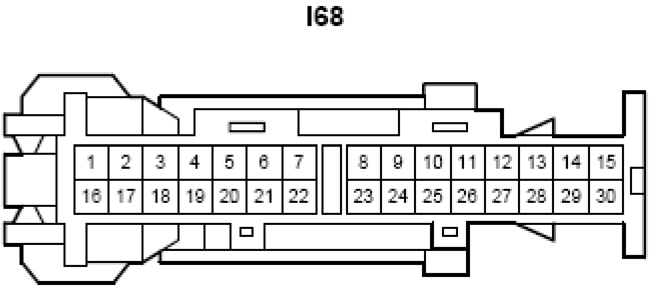
I68
1
2
3
4
5
6
7
8
9
10
11
12
13
14
15
16
17
18
19
20
21
22
23
24
25
26
27
28
29
30

Fig. 147: Stereo Component Amplifier Assembly Connector End View (I68)
Courtesy of TOYOTA MOTOR SALES, U.S.A., INC.

STEREO COMPONENT AMPLIFIER ASSEMBLY CONNECTOR END VIEW (I69)

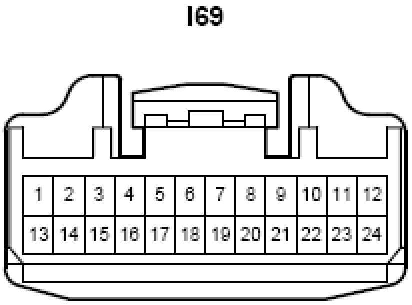
I69
1
2
3
4
5
6
7
8
9
10
11
12
13
14
15
16
17
18
19
20
21
22
23
24

Fig. 148: Stereo Component Amplifier Assembly Connector End View (I69)
Courtesy of TOYOTA MOTOR SALES, U.S.A., INC.

GLOVE BOX LIGHT ASSEMBLY CONNECTOR END VIEW (I74)

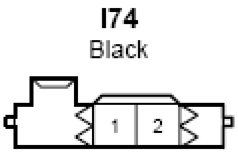
I74
Black
1
2

Fig. 149: Glove Box Light Assembly Connector End View (I74)
Courtesy of TOYOTA MOTOR SALES, U.S.A., INC.

DIODE (FRONT COURTESY LIGHT) CONNECTOR END VIEW (I75)

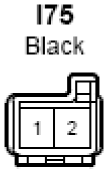
I75
Black
1
2

Fig. 150: Diode (Front Courtesy Light) Connector End View (I75)
Courtesy of TOYOTA MOTOR SALES, U.S.A., INC.

BLOWER MOTOR SUB-ASSEMBLY WITH FAN CONNECTOR END VIEW (I76)

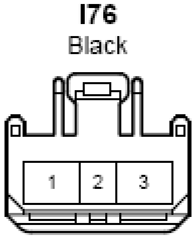
I76
Black
1
2
3

Fig. 151: Blower Motor Sub-Assembly with Fan Connector End View (I76)
Courtesy of TOYOTA MOTOR SALES, U.S.A., INC.

A/C AMPLIFIER ASSEMBLY CONNECTOR END VIEW (I77)

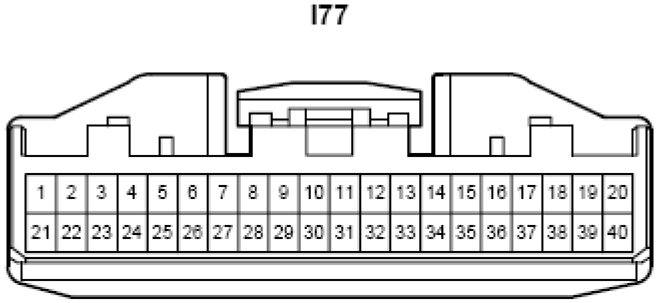
I77
1 2 3 4 5 6 7 8 9 10 11 12 13 14 15 16 17 18 19 20
21 22 23 24 25 26 27 28 29 30 31 32 33 34 35 36 37 38 39 40

Fig. 152: A/C Amplifier Assembly Connector End View (I77)
Courtesy of TOYOTA MOTOR SALES, U.S.A., INC.

CERTIFICATION ECU CONNECTOR END VIEW (I78)

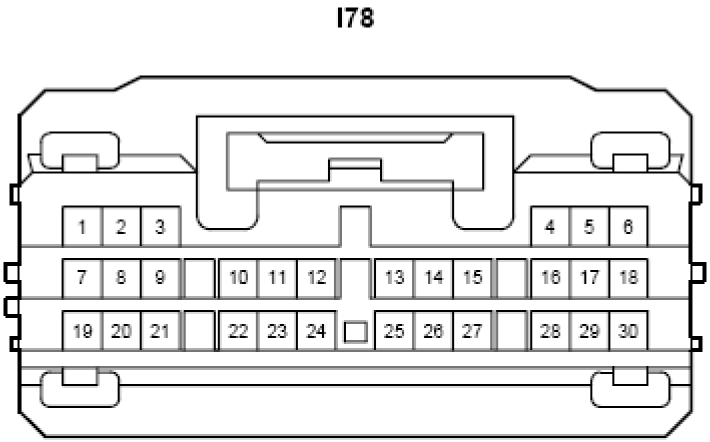
I78
1 2 3 4 5 6
7 8 9 10 11 12 13 14 15 16 17 18
19 20 21 22 23 24 25 26 27 28 29 30

Fig. 153: Certification ECU Connector End View (I78)
Courtesy of TOYOTA MOTOR SALES, U.S.A., INC.

NETWORK GATEWAY ECU CONNECTOR END VIEW (I81)

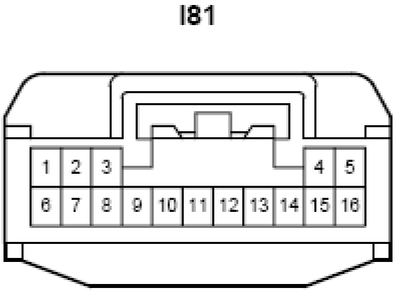
I81
1 2 3 4 5
6 7 8 9 10 11 12 13 14 15 16

Fig. 154: Network Gateway ECU Connector End View (I81)
Courtesy of TOYOTA MOTOR SALES, U.S.A., INC.

CLEARANCE WARNING ECU ASSEMBLY CONNECTOR END VIEW (I82)

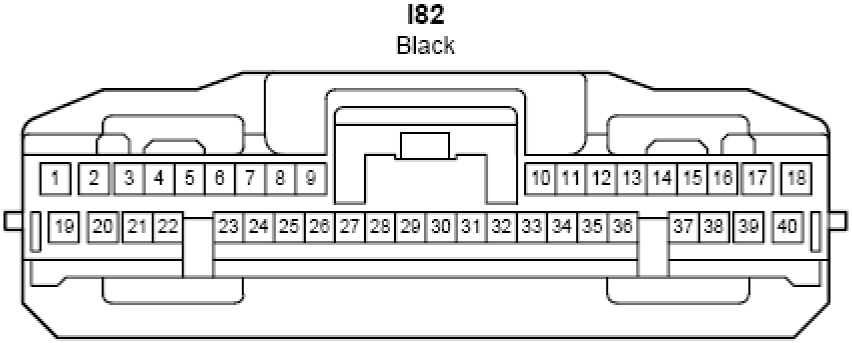
I82
Black
1 2 3 4 5 6 7 8 9 10 11 12 13 14 15 16 17 18
19 20 21 22 23 24 25 26 27 28 29 30 31 32 33 34 35 36 37 38 39 40

Fig. 155: Clearance Warning ECU Assembly Connector End View (I82)
Courtesy of TOYOTA MOTOR SALES, U.S.A., INC.

FRONT NO. 2 SPEAKER ASSEMBLY RH CONNECTOR END VIEW (I83)

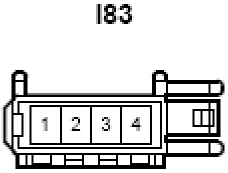

Fig. 156: Front No. 2 Speaker Assembly RH Connector End View (I83)
Courtesy of TOYOTA MOTOR SALES, U.S.A., INC.

FRONT NO. 2 SPEAKER ASSEMBLY RH CONNECTOR END VIEW (I84)

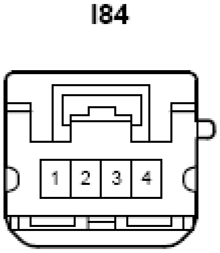

Fig. 157: Front No. 2 Speaker Assembly RH Connector End View (I84)
Courtesy of TOYOTA MOTOR SALES, U.S.A., INC.

JUNCTION CONNECTOR END VIEW (I92)

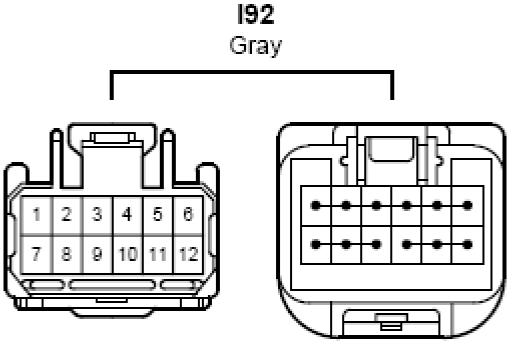
I92
Gray
1
2
3
4
5
6
7
8
9
10
11
12

Fig. 158: Junction Connector End View (I92)
Courtesy of TOYOTA MOTOR SALES, U.S.A., INC.

JUNCTION CONNECTOR END VIEW (I93)

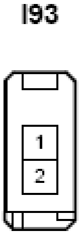

Fig. 159: Junction Connector End View (I93)

Courtesy of TOYOTA MOTOR SALES, U.S.A., INC.

JUNCTION CONNECTOR END VIEW (I94)

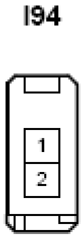

Fig. 160: Junction Connector End View (I94)
Courtesy of TOYOTA MOTOR SALES, U.S.A., INC.

JUNCTION CONNECTOR END VIEW (I95)

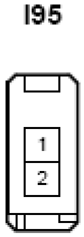

Fig. 161: Junction Connector End View (I95)
Courtesy of TOYOTA MOTOR SALES, U.S.A., INC.

JUNCTION CONNECTOR END VIEW (I96)

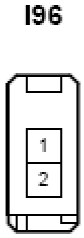

Fig. 162: Junction Connector End View (I96)
Courtesy of TOYOTA MOTOR SALES, U.S.A., INC.

JUNCTION CONNECTOR END VIEW (I97)

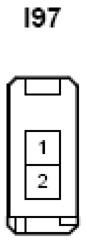

Fig. 163: Junction Connector End View (I97)
Courtesy of TOYOTA MOTOR SALES, U.S.A., INC.

JUNCTION CONNECTOR END VIEW (I100)

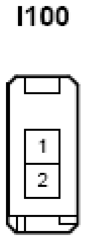

Fig. 164: Junction Connector End View (I100)
Courtesy of TOYOTA MOTOR SALES, U.S.A., INC.

JUNCTION CONNECTOR END VIEW (I101)

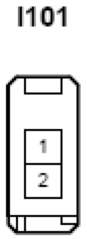

Fig. 165: Junction Connector End View (I101)
Courtesy of TOYOTA MOTOR SALES, U.S.A., INC.

JUNCTION CONNECTOR END VIEW (I102)

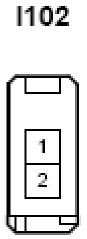

Fig. 166: Junction Connector End View (I102)
Courtesy of TOYOTA MOTOR SALES, U.S.A., INC.

JUNCTION CONNECTOR END VIEW (I103)

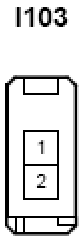

Fig. 167: Junction Connector End View (I103)
Courtesy of TOYOTA MOTOR SALES, U.S.A., INC.

JUNCTION CONNECTOR END VIEW (I104)

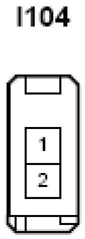

Fig. 168: Junction Connector End View (I104)
Courtesy of TOYOTA MOTOR SALES, U.S.A., INC.

JUNCTION CONNECTOR END VIEW (I105)

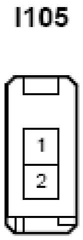

Fig. 169: Junction Connector End View (I105)
Courtesy of TOYOTA MOTOR SALES, U.S.A., INC.

JUNCTION CONNECTOR END VIEW (I106)

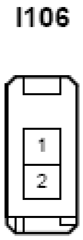

Fig. 170: Junction Connector End View (I106)
Courtesy of TOYOTA MOTOR SALES, U.S.A., INC.

JUNCTION CONNECTOR END VIEW (I107)

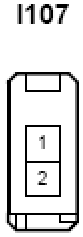

Fig. 171: Junction Connector End View (I107)
Courtesy of TOYOTA MOTOR SALES, U.S.A., INC.

JUNCTION CONNECTOR END VIEW (I108)

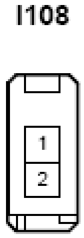

Fig. 172: Junction Connector End View (I108)
Courtesy of TOYOTA MOTOR SALES, U.S.A., INC.

JUNCTION CONNECTOR END VIEW (I111)

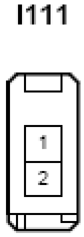

Fig. 173: Junction Connector End View (I111)
Courtesy of TOYOTA MOTOR SALES, U.S.A., INC.

JUNCTION CONNECTOR END VIEW (I124)

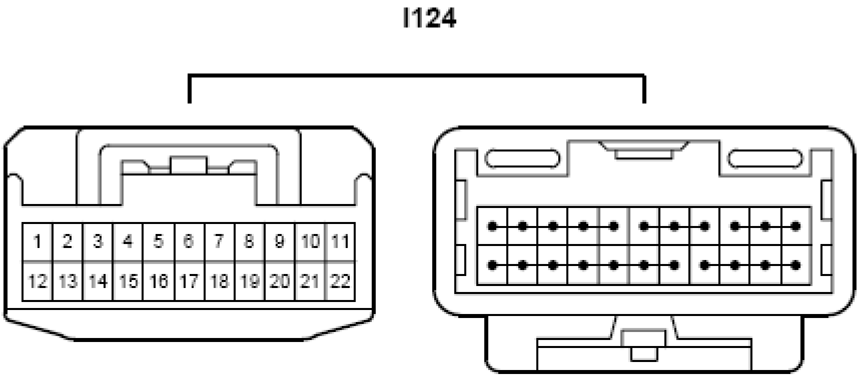
I124
1
2
3
4
5
6
7
8
9
10
11
12
13
14
15
16
17
18
19
20
21
22

Fig. 174: Junction Connector End View (I124)
Courtesy of TOYOTA MOTOR SALES, U.S.A., INC.

JUNCTION CONNECTOR END VIEW (I125)

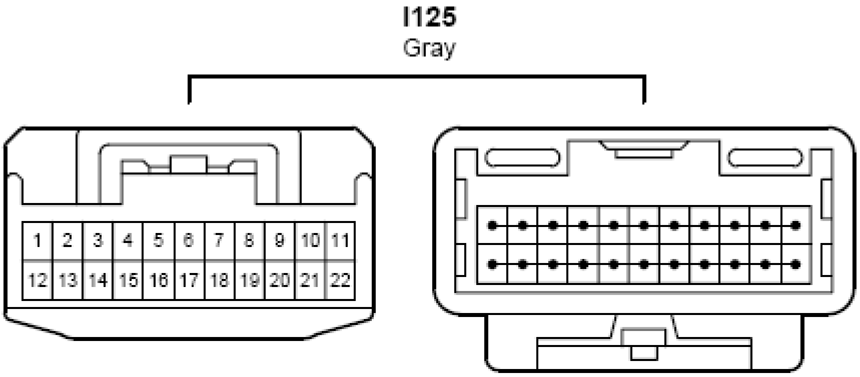
I125
Gray
1
2
3
4
5
6
7
8
9
10
11
12
13
14
15
16
17
18
19
20
21
22

Fig. 175: Junction Connector End View (I125)
Courtesy of TOYOTA MOTOR SALES, U.S.A., INC.

JUNCTION CONNECTOR END VIEW (I126)

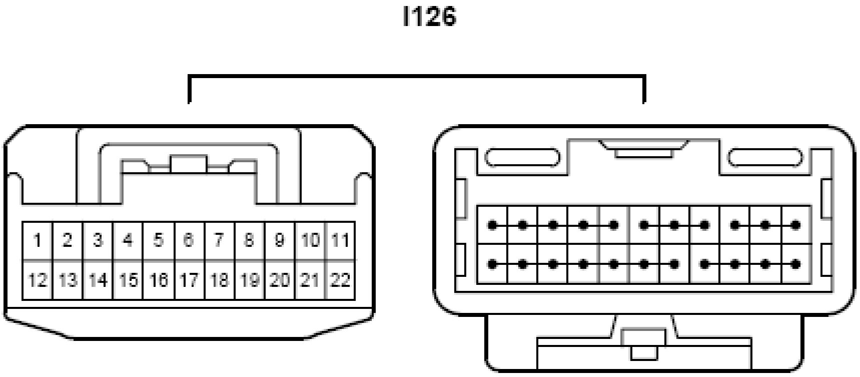
I126
1
2
3
4
5
6
7
8
9
10
11
12
13
14
15
16
17
18
19
20
21
22

Fig. 176: Junction Connector End View (I126)
Courtesy of TOYOTA MOTOR SALES, U.S.A., INC.

JUNCTION CONNECTOR END VIEW (I128)

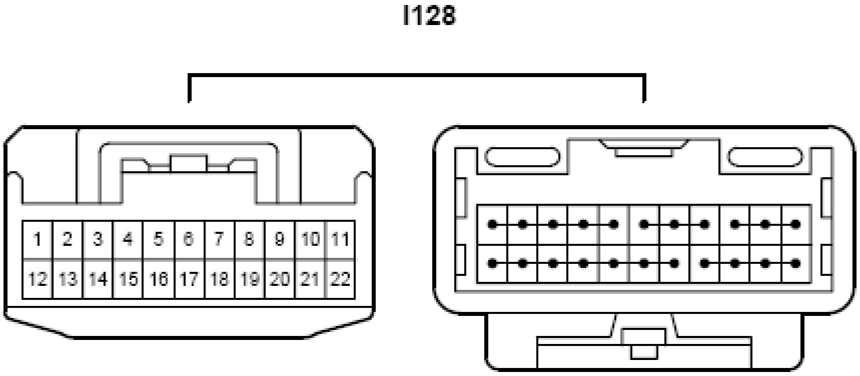
I128
1
2
3
4
5
6
7
8
9
10
11
12
13
14
15
16
17
18
19
20
21
22

Fig. 177: Junction Connector End View (I128)
Courtesy of TOYOTA MOTOR SALES, U.S.A., INC.

VSC OFF SWITCH CONNECTOR END VIEW (I130)

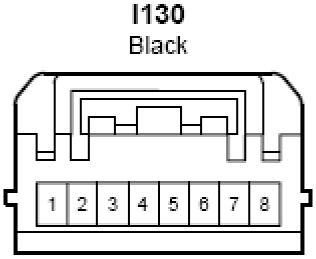
I130
Black
1
2
3
4
5
6
7
8

Fig. 178: VSC Off Switch Connector End View (I130)
Courtesy of TOYOTA MOTOR SALES, U.S.A., INC.

HEADLIGHT LEVELING SWITCH CONNECTOR END VIEW (I131)

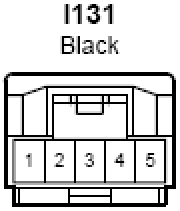
I131
Black
1
2
3
4
5

Fig. 179: Headlight Leveling Switch Connector End View (I131)
Courtesy of TOYOTA MOTOR SALES, U.S.A., INC.

AUTOMATIC LIGHT CONTROL SENSOR CONNECTOR END VIEW (I132)

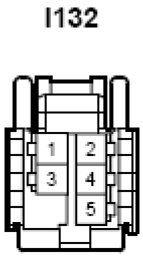

Fig. 180: Automatic Light Control Sensor Connector End View (I132)
Courtesy of TOYOTA MOTOR SALES, U.S.A., INC.

RADIO & DISPLAY RECEIVER ASSEMBLY CONNECTOR END VIEW (I134)

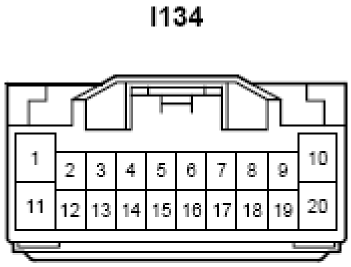
I134
1
2
3
4
5
6
7
8
9
10
11
12
13
14
15
16
17
18
19
20

Fig. 181: Radio & Display Receiver Assembly Connector End View (I134)
Courtesy of TOYOTA MOTOR SALES, U.S.A., INC.

DCM (TELEMATICS TRANSCEIVER) CONNECTOR END VIEW (I135)

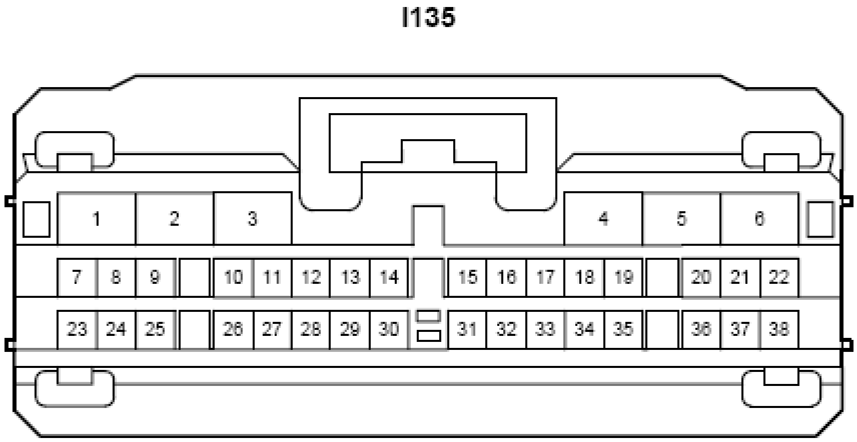
I135
1
2
3
4
5
6
7
8
9
10
11
12
13
14
15
16
17
18
19
20
21
22
23
24
25
26
27
28
29
30
31
32
33
34
35
36
37
38

Fig. 182: DCM (Telematics Transceiver) Connector End View (I135)
Courtesy of TOYOTA MOTOR SALES, U.S.A., INC.

BACK-UP BATTERY (MAYDAY BATTERY) CONNECTOR END VIEW (I136)

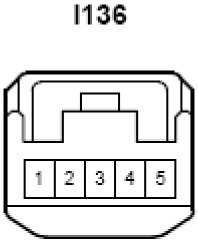

Fig. 183: Back-Up Battery (Mayday Battery) Connector End View (I136)
Courtesy of TOYOTA MOTOR SALES, U.S.A., INC.

TIRE PRESSURE WARNING RESET SWITCH CONNECTOR END VIEW (I137)

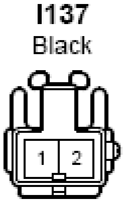
I137
Black
1
2

Fig. 184: Tire Pressure Warning Reset Switch Connector End View (I137)
Courtesy of TOYOTA MOTOR SALES, U.S.A., INC.

LOWER NO. 2 INSTRUMENT PANEL AIRBAG ASSEMBLY CONNECTOR END VIEW (I140)

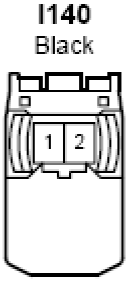
I140
Black
1
2

Fig. 185: Lower No. 2 Instrument Panel Airbag Assembly Connector End View (I140)
Courtesy of TOYOTA MOTOR SALES, U.S.A., INC.

REMOTE ENGINE STARTER CONNECTOR END VIEW (I141)

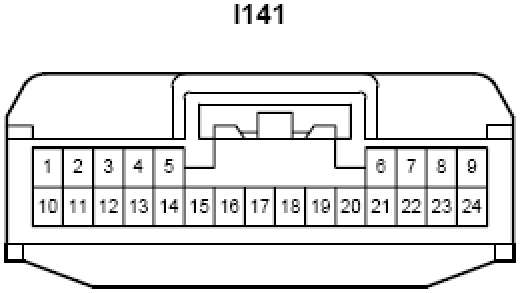
I141
1
2
3
4
5
6
7
8
9
10
11
12
13
14
15
16
17
18
19
20
21
22
23
24

Fig. 186: Remote Engine Starter Connector End View (I141)
Courtesy of TOYOTA MOTOR SALES, U.S.A., INC.

CHECK CONNECTOR (REMOTE ENGINE STARTER) CONNECTOR END VIEW (I143)

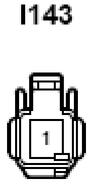

Fig. 187: Check Connector (Remote Engine Starter) Connector End View (I143)
Courtesy of TOYOTA MOTOR SALES, U.S.A., INC.

CHECK CONNECTOR (REMOTE ENGINE STARTER) CONNECTOR END VIEW (I144)

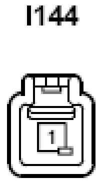

Fig. 188: Check Connector (Remote Engine Starter) Connector End View (I144)
Courtesy of TOYOTA MOTOR SALES, U.S.A., INC.

NO. 1 STEREO JACK ADAPTER ASSEMBLY CONNECTOR END VIEW (I146)

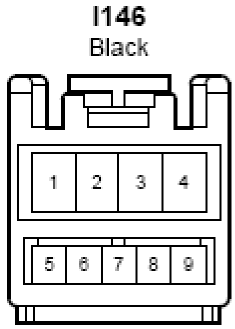

Fig. 189: No. 1 Stereo Jack Adapter Assembly Connector End View (I146)
Courtesy of TOYOTA MOTOR SALES, U.S.A., INC.

MULTI-MEDIA MODULE RECEIVER SUB-ASSEMBLY CONNECTOR END VIEW (I147)

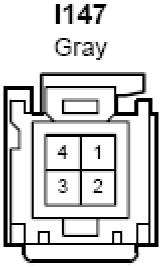
I147
Gray
4
1
3
2

Fig. 190: Multi-Media Module Receiver Sub-Assembly Connector End View (I147)
Courtesy of TOYOTA MOTOR SALES, U.S.A., INC.

RADIO RECEIVER ASSEMBLY CONNECTOR END VIEW (I148)

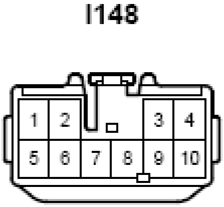
I148
1
2
3
4
5
6
7
8
9
10

Fig. 191: Radio Receiver Assembly Connector End View (I148)
Courtesy of TOYOTA MOTOR SALES, U.S.A., INC.

RADIO RECEIVER ASSEMBLY CONNECTOR END VIEW (I149)

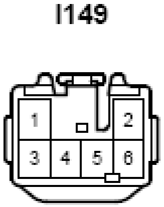
I149
1
2
3
4
5
6

Fig. 192: Radio Receiver Assembly Connector End View (I149)
Courtesy of TOYOTA MOTOR SALES, U.S.A., INC.

RADIO RECEIVER ASSEMBLY CONNECTOR END VIEW (I150)

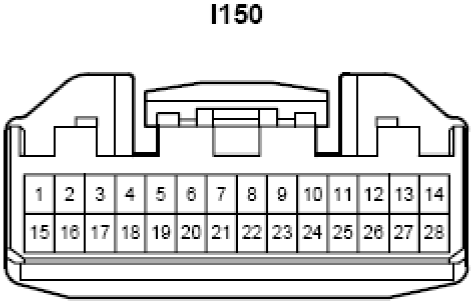
I150
1
2
3
4
5
6
7
8
9
10
11
12
13
14
15
16
17
18
19
20
21
22
23
24
25
26
27
28

Fig. 193: Radio Receiver Assembly Connector End View (I150)

Courtesy of TOYOTA MOTOR SALES, U.S.A., INC.

RADIO RECEIVER ASSEMBLY CONNECTOR END VIEW (I151)

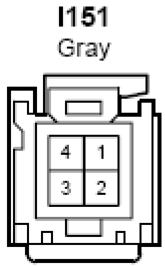

Fig. 194: Radio Receiver Assembly Connector End View (I151)
Courtesy of TOYOTA MOTOR SALES, U.S.A., INC.

RADIO&DISPLAY RECEIVER ASSEMBLY CONNECTOR END VIEW (I152)

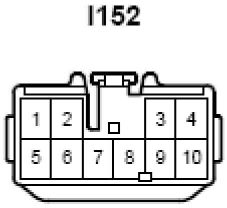

Fig. 195: Radio&Display Receiver Assembly Connector End View (I152)
Courtesy of TOYOTA MOTOR SALES, U.S.A., INC.

RADIO&DISPLAY RECEIVER ASSEMBLY CONNECTOR END VIEW (I153)

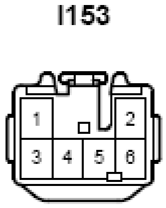

Fig. 196: Radio&Display Receiver Assembly Connector End View (I153)
Courtesy of TOYOTA MOTOR SALES, U.S.A., INC.

RADIO&DISPLAY RECEIVER ASSEMBLY CONNECTOR END VIEW (I154)

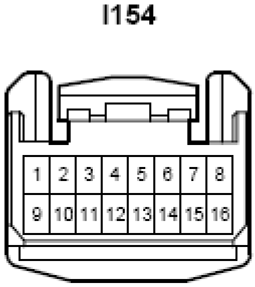
I154
1
2
3
4
5
6
7
8
9
10
11
12
13
14
15
16

Fig. 197: Radio&Display Receiver Assembly Connector End View (I154)
Courtesy of TOYOTA MOTOR SALES, U.S.A., INC.

RADIO&DISPLAY RECEIVER ASSEMBLY CONNECTOR END VIEW (I155)

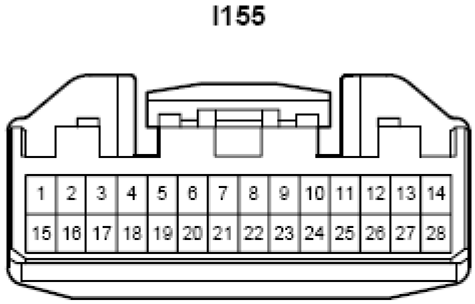
I155
1
2
3
4
5
6
7
8
9
10
11
12
13
14
15
16
17
18
19
20
21
22
23
24
25
26
27
28

Fig. 198: Radio&Display Receiver Assembly Connector End View (I155)
Courtesy of TOYOTA MOTOR SALES, U.S.A., INC.

RADIO&DISPLAY RECEIVER ASSEMBLY CONNECTOR END VIEW (I156)

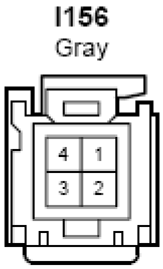
I156
Gray
4
1
3
2

Fig. 199: Radio&Display Receiver Assembly Connector End View (I156)
Courtesy of TOYOTA MOTOR SALES, U.S.A., INC.

YAW RATE SENSOR CONNECTOR END VIEW (I172)

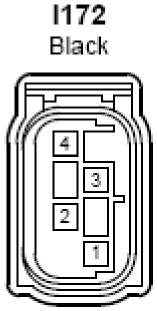

Fig. 200: Yaw Rate Sensor Connector End View (I172)
Courtesy of TOYOTA MOTOR SALES, U.S.A., INC.

JUNCTION CONNECTOR END VIEW (I173)

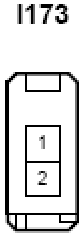

Fig. 201: Junction Connector End View (I173)
Courtesy of TOYOTA MOTOR SALES, U.S.A., INC.

EXTENSION MODULE CONNECTOR END VIEW (I175)

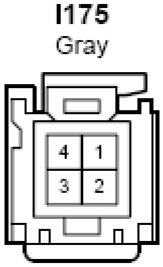

Fig. 202: Extension Module Connector End View (I175)
Courtesy of TOYOTA MOTOR SALES, U.S.A., INC.

FRONT DOOR LOCK ASSEMBLY WITH MOTOR RH CONNECTOR END VIEW (J1)

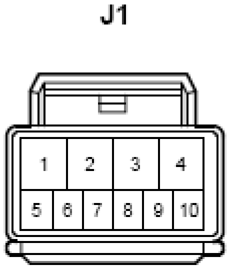

Fig. 203: Front Door Lock Assembly with Motor RH Connector End View (J1)
Courtesy of TOYOTA MOTOR SALES, U.S.A., INC.

FRONT COURTESY LIGHT ASSEMBLY RH CONNECTOR END VIEW (J2)

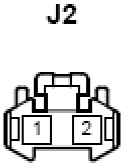

Fig. 204: Front Courtesy Light Assembly RH Connector End View (J2)
Courtesy of TOYOTA MOTOR SALES, U.S.A., INC.

FRONT NO. 1 SPEAKER ASSEMBLY RH CONNECTOR END VIEW (J5)

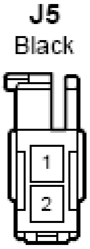

Fig. 205: Front No. 1 Speaker Assembly RH Connector End View (J5)
Courtesy of TOYOTA MOTOR SALES, U.S.A., INC.

OUTER REAR VIEW MIRROR ASSEMBLY RH CONNECTOR END VIEW (J7)

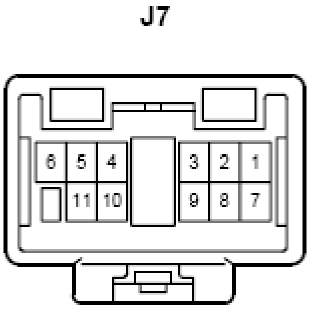

Fig. 206: Outer Rear View Mirror Assembly RH Connector End View (J7)

Courtesy of TOYOTA MOTOR SALES, U.S.A., INC.

DOOR SIDE AIRBAG SENSOR RH CONNECTOR END VIEW (J10)

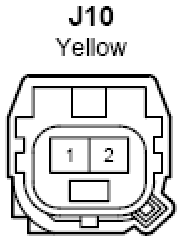

Fig. 207: Door Side Airbag Sensor RH Connector End View (J10)
Courtesy of TOYOTA MOTOR SALES, U.S.A., INC.

FRONT POWER WINDOW REGULATOR SWITCH ASSEMBLY RH CONNECTOR END VIEW (J11)

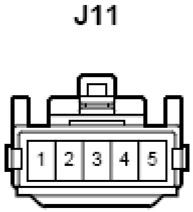

Fig. 208: Front Power Window Regulator Switch Assembly RH Connector End View (J11)
Courtesy of TOYOTA MOTOR SALES, U.S.A., INC.

DOOR CONTROL SWITCH ASSEMBLY CONNECTOR END VIEW (J12)

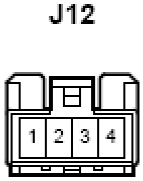

Fig. 209: Door Control Switch Assembly Connector End View (J12)
Courtesy of TOYOTA MOTOR SALES, U.S.A., INC.

OUTER REAR VIEW MIRROR ASSEMBLY RH CONNECTOR END VIEW (J13)

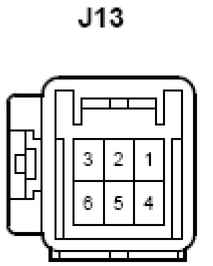

Fig. 210: Outer Rear View Mirror Assembly RH Connector End View (J13)
Courtesy of TOYOTA MOTOR SALES, U.S.A., INC.

FRONT POWER WINDOW REGULATOR MOTOR ASSEMBLY RH CONNECTOR END VIEW (J14)

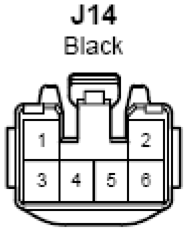

Fig. 211: Front Power Window Regulator Motor Assembly RH Connector End View (J14)
Courtesy of TOYOTA MOTOR SALES, U.S.A., INC.

FRONT DOOR LOCK ASSEMBLY WITH MOTOR LH CONNECTOR END VIEW (K1)

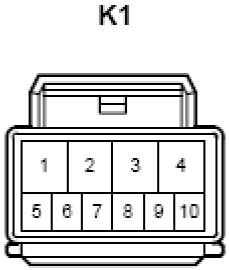

Fig. 212: Front Door Lock Assembly With Motor LH Connector End View (K1)
Courtesy of TOYOTA MOTOR SALES, U.S.A., INC.

FRONT COURTESY LIGHT ASSEMBLY LH CONNECTOR END VIEW (K2)

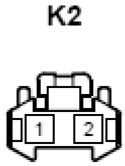

Fig. 213: Front Courtesy Light Assembly LH Connector End View (K2)
Courtesy of TOYOTA MOTOR SALES, U.S.A., INC.

FRONT NO. 1 SPEAKER ASSEMBLY LH CONNECTOR END VIEW (K5)

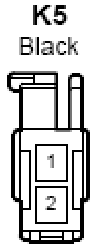

Fig. 214: Front No. 1 Speaker Assembly LH Connector End View (K5)
Courtesy of TOYOTA MOTOR SALES, U.S.A., INC.

OUTER MIRROR SWITCH ASSEMBLY CONNECTOR END VIEW (K6)

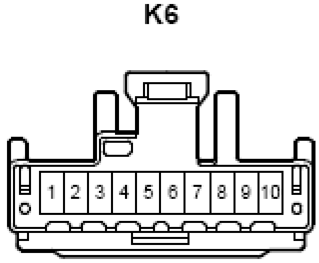

Fig. 215: Outer Mirror Switch Assembly Connector End View (K6)
Courtesy of TOYOTA MOTOR SALES, U.S.A., INC.

OUTER REAR VIEW MIRROR ASSEMBLY LH CONNECTOR END VIEW (K7)

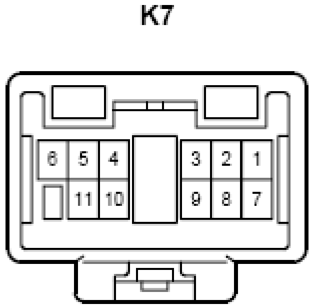

Fig. 216: Outer Rear View Mirror Assembly LH Connector End View (K7)
Courtesy of TOYOTA MOTOR SALES, U.S.A., INC.

FRONT POWER WINDOW REGULATOR MOTOR ASSEMBLY LH CONNECTOR END VIEW (K9)

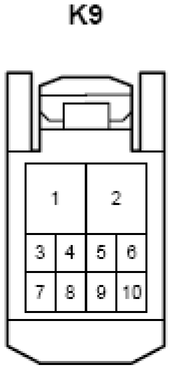
K9
1
2
3
4
5
6
7
8
9
10

Fig. 217: Front Power Window Regulator Motor Assembly LH Connector End View (K9)
Courtesy of TOYOTA MOTOR SALES, U.S.A., INC.

DOOR SIDE AIRBAG SENSOR LH CONNECTOR END VIEW (K10)

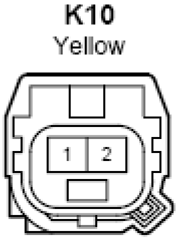
K10
Yellow
1
2

Fig. 218: Door Side Airbag Sensor LH Connector End View (K10)
Courtesy of TOYOTA MOTOR SALES, U.S.A., INC.

POWER WINDOW REGULATOR MASTER SWITCH ASSEMBLY CONNECTOR END VIEW (K11)

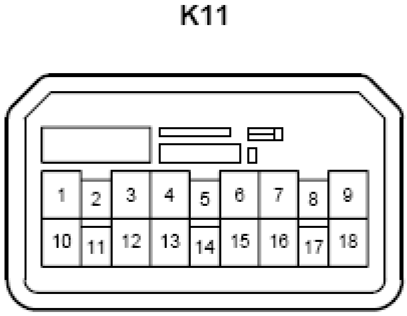
K11
1
2
3
4
5
6
7
8
9
10
11
12
13
14
15
16
17
18

Fig. 219: Power Window Regulator Master Switch Assembly Connector End View (K11)
Courtesy of TOYOTA MOTOR SALES, U.S.A., INC.

OUTER REAR VIEW MIRROR ASSEMBLY LH CONNECTOR END VIEW (K12)

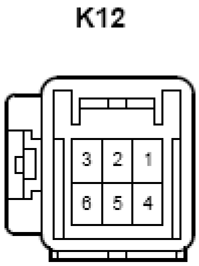

Fig. 220: Outer Rear View Mirror Assembly LH Connector End View (K12)
Courtesy of TOYOTA MOTOR SALES, U.S.A., INC.

REAR DOOR LOCK ASSEMBLY WITH MOTOR RH CONNECTOR END VIEW (L1)

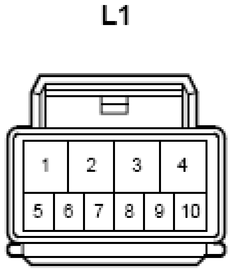

Fig. 221: Rear Door Lock Assembly with Motor RH Connector End View (L1)
Courtesy of TOYOTA MOTOR SALES, U.S.A., INC.

REAR POWER WINDOW REGULATOR MOTOR ASSEMBLY RH CONNECTOR END VIEW (L5)

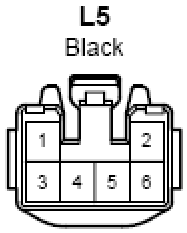

Fig. 222: Rear Power Window Regulator Motor Assembly RH Connector End View (L5)
Courtesy of TOYOTA MOTOR SALES, U.S.A., INC.

REAR POWER WINDOW REGULATOR SWITCH ASSEMBLY RH CONNECTOR END VIEW (L6)

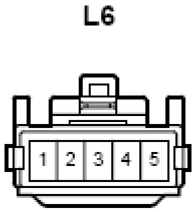

Fig. 223: Rear Power Window Regulator Switch Assembly RH Connector End View (L6)

Courtesy of TOYOTA MOTOR SALES, U.S.A., INC.

REAR DOOR LOCK ASSEMBLY WITH MOTOR LH CONNECTOR END VIEW (M1)

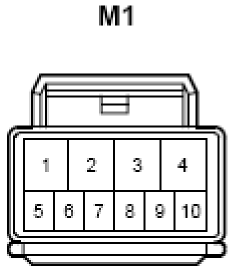

Fig. 224: Rear Door Lock Assembly With Motor LH Connector End View (M1)
Courtesy of TOYOTA MOTOR SALES, U.S.A., INC.

REAR POWER WINDOW REGULATOR MOTOR ASSEMBLY LH CONNECTOR END VIEW (M5)

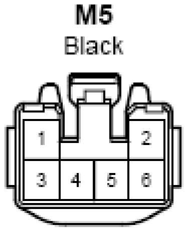

Fig. 225: Rear Power Window Regulator Motor Assembly LH Connector End View (M5)
Courtesy of TOYOTA MOTOR SALES, U.S.A., INC.

REAR POWER WINDOW REGULATOR SWITCH ASSEMBLY LH CONNECTOR END VIEW (M6)

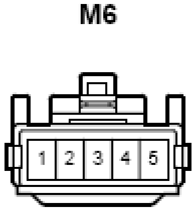

Fig. 226: Rear Power Window Regulator Switch Assembly LH Connector End View (M6)
Courtesy of TOYOTA MOTOR SALES, U.S.A., INC.

AIRBAG SENSOR ASSEMBLY CONNECTOR END VIEW (N5)

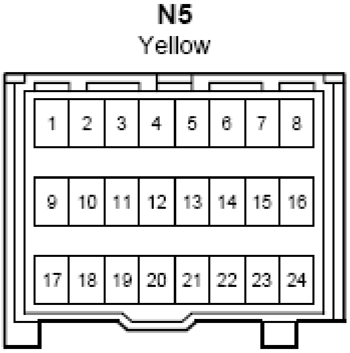
N5
Yellow
1
2
3
4
5
6
7
8
9
10
11
12
13
14
15
16
17
18
19
20
21
22
23
24

Fig. 227: Airbag Sensor Assembly Connector End View (N5)
Courtesy of TOYOTA MOTOR SALES, U.S.A., INC.

FRONT DOOR COURTESY LIGHT SWITCH ASSEMBLY LH CONNECTOR END VIEW (N7)

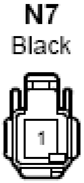

Fig. 228: Front Door Courtesy Light Switch Assembly LH Connector End View (N7)
Courtesy of TOYOTA MOTOR SALES, U.S.A., INC.

SIDE AIRBAG SENSOR ASSEMBLY LH CONNECTOR END VIEW (N8)

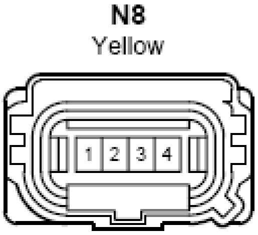
N8
Yellow
1
2
3
4

Fig. 229: Side Airbag Sensor Assembly LH Connector End View (N8)
Courtesy of TOYOTA MOTOR SALES, U.S.A., INC.

FRONT SEAT OUTER BELT ASSEMBLY LH CONNECTOR END VIEW (N9)

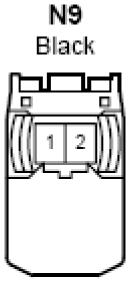

Fig. 230: Front Seat Outer Belt Assembly LH Connector End View (N9)
Courtesy of TOYOTA MOTOR SALES, U.S.A., INC.

NO. 2 INDOOR ELECTRICAL KEY ANTENNA ASSEMBLY CONNECTOR END VIEW (N10)

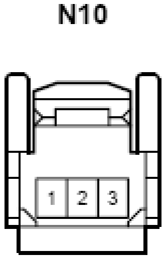

Fig. 231: No. 2 Indoor Electrical Key Antenna Assembly Connector End View (N10)
Courtesy of TOYOTA MOTOR SALES, U.S.A., INC.

FUEL SUCTION TUBE ASSEMBLY WITH PUMP&GAGE CONNECTOR END VIEW (N11)

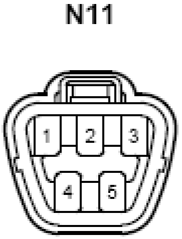

Fig. 232: Fuel Suction Tube Assembly With Pump&Gage Connector End View (N11)
Courtesy of TOYOTA MOTOR SALES, U.S.A., INC.

REAR DOOR COURTESY LIGHT SWITCH ASSEMBLY LH CONNECTOR END VIEW (N15)

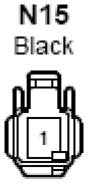

Fig. 233: Rear Door Courtesy Light Switch Assembly LH Connector End View (N15)
Courtesy of TOYOTA MOTOR SALES, U.S.A., INC.

NO. 1 LUGGAGE COMPARTMENT LIGHT ASSEMBLY CONNECTOR END VIEW (N23)

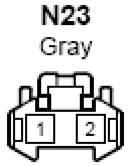

Fig. 234: No. 1 Luggage Compartment Light Assembly Connector End View (N23)
Courtesy of TOYOTA MOTOR SALES, U.S.A., INC.

RADIO SETTING CONDENSER (CENTER STOP LIGHT) CONNECTOR END VIEW (N26)

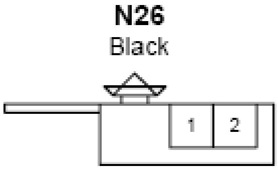

Fig. 235: Radio Setting Condenser (Center Stop Light) Connector End View (N26)
Courtesy of TOYOTA MOTOR SALES, U.S.A., INC.

CURTAIN SHIELD AIRBAG ASSEMBLY LH CONNECTOR END VIEW (N27)

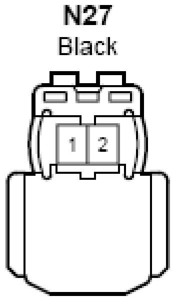

Fig. 236: Curtain Shield Airbag Assembly LH Connector End View (N27)
Courtesy of TOYOTA MOTOR SALES, U.S.A., INC.

RADIO SETTING CONDENSER (REAR WINDOW DEFOGGER) CONNECTOR END VIEW (N28)

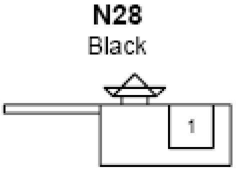

Fig. 237: Radio Setting Condenser (Rear Window Defogger) Connector End View (N28)
Courtesy of TOYOTA MOTOR SALES, U.S.A., INC.

REAR WINDOW DEFOGGER (BACK WINDOW GLASS) CONNECTOR END VIEW (N29)

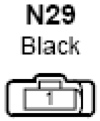

Fig. 238: Rear Window Defogger (Back Window Glass) Connector End View (N29)
Courtesy of TOYOTA MOTOR SALES, U.S.A., INC.

FUEL PUMP CONTROL ECU ASSEMBLY CONNECTOR END VIEW (N30)

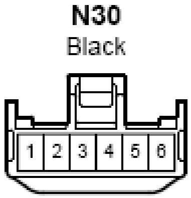

Fig. 239: Fuel Pump Control ECU Assembly Connector End View (N30)
Courtesy of TOYOTA MOTOR SALES, U.S.A., INC.

FRONT SEAT INNER BELT ASSEMBLY LH CONNECTOR END VIEW (N32)

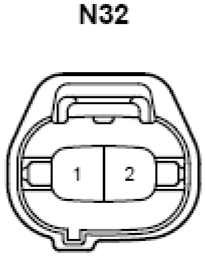

Fig. 240: Front Seat Inner Belt Assembly LH Connector End View (N32)
Courtesy of TOYOTA MOTOR SALES, U.S.A., INC.

NO. 2 SIDE AIRBAG SENSOR ASSEMBLY LH CONNECTOR END VIEW (N33)

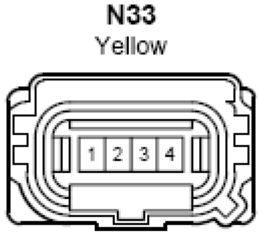

Fig. 241: No. 2 Side Airbag Sensor Assembly LH Connector End View (N33)
Courtesy of TOYOTA MOTOR SALES, U.S.A., INC.

CANISTER PUMP MODULE CONNECTOR END VIEW (N35)

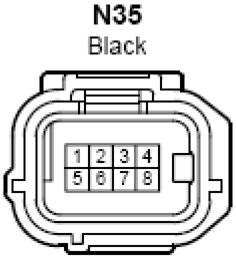
N35
Black
1
2
3
4
5
6
7
8

Fig. 242: Canister Pump Module Connector End View (N35)
Courtesy of TOYOTA MOTOR SALES, U.S.A., INC.

NO. 3 INDOOR ELECTRICAL KEY ANTENNA ASSEMBLY CONNECTOR END VIEW (N36)

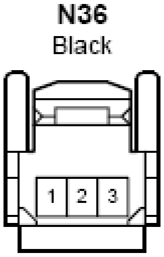
N36
Black
1
2
3

Fig. 243: No. 3 Indoor Electrical Key Antenna Assembly Connector End View (N36)
Courtesy of TOYOTA MOTOR SALES, U.S.A., INC.

CENTER STOP LIGHT SET CONNECTOR END VIEW (N37)

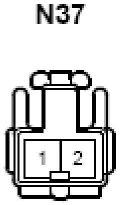

Fig. 244: Center Stop Light Set Connector End View (N37)
Courtesy of TOYOTA MOTOR SALES, U.S.A., INC.

AIRBAG SENSOR ASSEMBLY CONNECTOR END VIEW (N40)

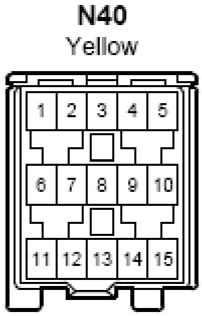
N40
Yellow
1
2
3
4
5
6
7
8
9
10
11
12
13
14
15

Fig. 245: Airbag Sensor Assembly Connector End View (N40)
Courtesy of TOYOTA MOTOR SALES, U.S.A., INC.

CERTIFICATION ECU CONNECTOR END VIEW (O1)

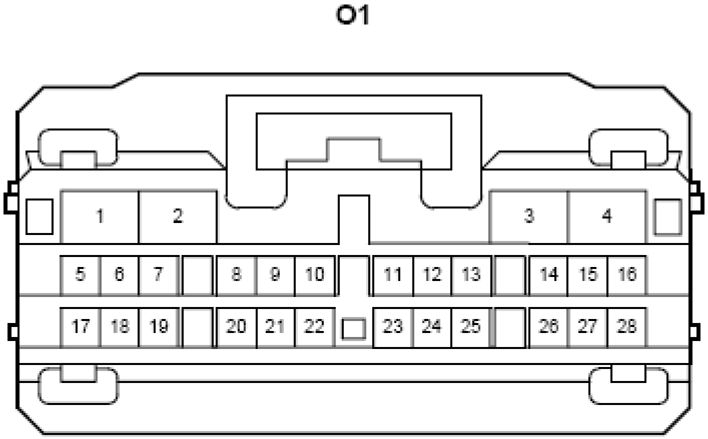
O1
1
2
3
4
5
6
7
8
9
10
11
12
13
14
15
16
17
18
19
20
21
22
23
24
25
26
27
28

Fig. 246: Certification ECU Connector End View (O1)
Courtesy of TOYOTA MOTOR SALES, U.S.A., INC.

AIRBAG SENSOR ASSEMBLY CONNECTOR END VIEW (O7)

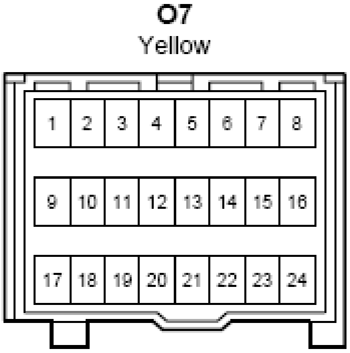
O7
Yellow
1
2
3
4
5
6
7
8
9
10
11
12
13
14
15
16
17
18
19
20
21
22
23
24

Fig. 247: Airbag Sensor Assembly Connector End View (O7)
Courtesy of TOYOTA MOTOR SALES, U.S.A., INC.

FRONT DOOR COURTESY LIGHT SWITCH ASSEMBLY RH CONNECTOR END VIEW (O10)

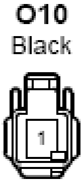

Fig. 248: Front Door Courtesy Light Switch Assembly RH Connector End View (O10)
Courtesy of TOYOTA MOTOR SALES, U.S.A., INC.

SIDE AIRBAG SENSOR ASSEMBLY RH CONNECTOR END VIEW (O11)

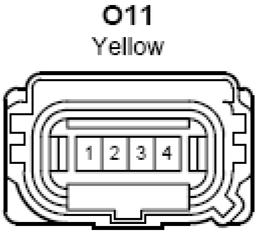

Fig. 249: Side Airbag Sensor Assembly RH Connector End View (O11)
Courtesy of TOYOTA MOTOR SALES, U.S.A., INC.

FRONT SEAT OUTER BELT ASSEMBLY RH CONNECTOR END VIEW (O12)

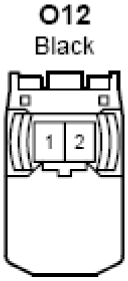

Fig. 250: Front Seat Outer Belt Assembly RH Connector End View (O12)
Courtesy of TOYOTA MOTOR SALES, U.S.A., INC.

REAR DOOR COURTESY LIGHT SWITCH ASSEMBLY RH CONNECTOR END VIEW (O16)

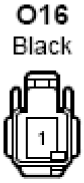

Fig. 251: Rear Door Courtesy Light Switch Assembly RH Connector End View (O16)
Courtesy of TOYOTA MOTOR SALES, U.S.A., INC.

REAR HEIGHT CONTROL SENSOR SUB-ASSEMBLY CONNECTOR END VIEW (O17)

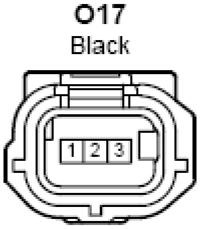

Fig. 252: Rear Height Control Sensor Sub-Assembly Connector End View (O17)

Courtesy of TOYOTA MOTOR SALES, U.S.A., INC.

REAR SPEAKER ASSEMBLY RH CONNECTOR END VIEW (O18)

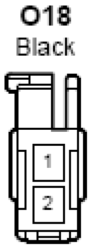

Fig. 253: Rear Speaker Assembly RH Connector End View (O18)
Courtesy of TOYOTA MOTOR SALES, U.S.A., INC.

REAR NO. 2 SPEAKER ASSEMBLY RH CONNECTOR END VIEW (O19)

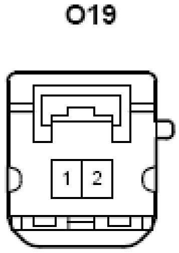

Fig. 254: Rear No. 2 Speaker Assembly RH Connector End View (O19)
Courtesy of TOYOTA MOTOR SALES, U.S.A., INC.

REAR NO. 2 SPEAKER ASSEMBLY LH CONNECTOR END VIEW (O20)

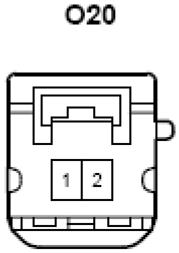

Fig. 255: Rear No. 2 Speaker Assembly LH Connector End View (O20)
Courtesy of TOYOTA MOTOR SALES, U.S.A., INC.

REAR SPEAKER ASSEMBLY LH CONNECTOR END VIEW (O21)

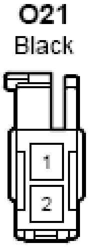

Fig. 256: Rear Speaker Assembly LH Connector End View (O21)
Courtesy of TOYOTA MOTOR SALES, U.S.A., INC.

WOOFER SPEAKER (REAR SPEAKER ASSEMBLY) CONNECTOR END VIEW (O22)

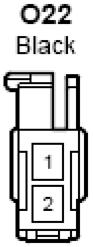

Fig. 257: Woofer Speaker (Rear Speaker Assembly) Connector End View (O22)
Courtesy of TOYOTA MOTOR SALES, U.S.A., INC.

CURTAIN SHIELD AIRBAG ASSEMBLY RH CONNECTOR END VIEW (O23)

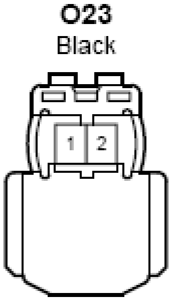

Fig. 258: Curtain Shield Airbag Assembly RH Connector End View (O23)
Courtesy of TOYOTA MOTOR SALES, U.S.A., INC.

DOOR CONTROL RECEIVER CONNECTOR END VIEW (O24)

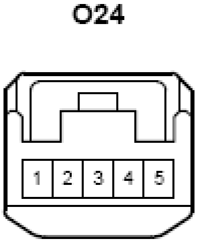

Fig. 259: Door Control Receiver Connector End View (O24)
Courtesy of TOYOTA MOTOR SALES, U.S.A., INC.

TIRE PRESSURE WARNING ECU AND RECEIVER (DOOR CONTROL AND TIRE PRESSURE MONITORING SYSTEM RECEIVER ASSEMBLY) CONNECTOR END VIEW (O25)

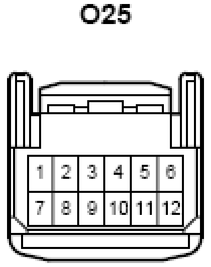
O25
1
2
3
4
5
6
7
8
9
10
11
12

Fig. 260: Tire Pressure Warning ECU And Receiver (Door Control And Tire Pressure Monitoring System Receiver Assembly) Connector End View (O25)
Courtesy of TOYOTA MOTOR SALES, U.S.A., INC.

BLIND SPOT MONITOR SENSOR RH CONNECTOR END VIEW (O28)

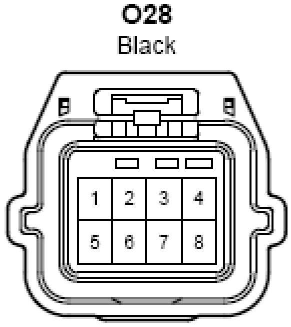
O28
Black
1
2
3
4
5
6
7
8

Fig. 261: Blind Spot Monitor Sensor RH Connector End View (O28)
Courtesy of TOYOTA MOTOR SALES, U.S.A., INC.

JUNCTION CONNECTOR END VIEW (O30)

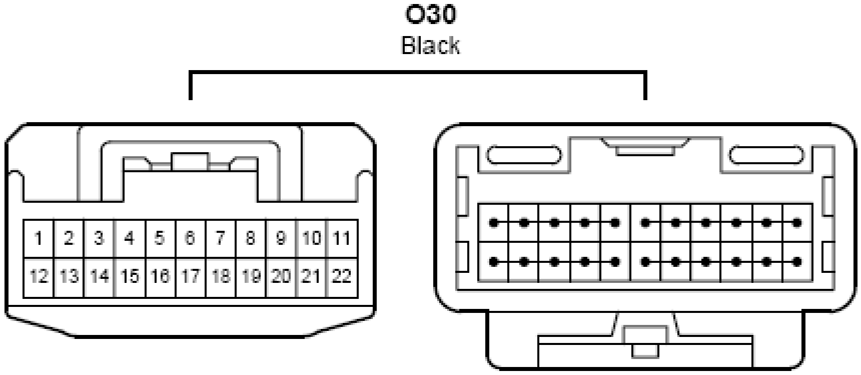
O30
Black
1
2
3
4
5
6
7
8
9
10
11
12
13
14
15
16
17
18
19
20
21
22

Fig. 262: Junction Connector End View (O30)

Courtesy of TOYOTA MOTOR SALES, U.S.A., INC.

NO. 2 SIDE AIRBAG SENSOR ASSEMBLY RH CONNECTOR END VIEW (O32)

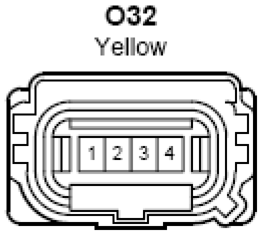

Fig. 263: No. 2 Side Airbag Sensor Assembly RH Connector End View (O32)
Courtesy of TOYOTA MOTOR SALES, U.S.A., INC.

TIRE PRESSURE WARNING ECU AND RECEIVER CONNECTOR END VIEW (O33)

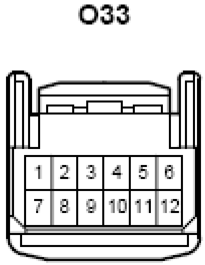

Fig. 264: Tire Pressure Warning ECU And Receiver Connector End View (O33)
Courtesy of TOYOTA MOTOR SALES, U.S.A., INC.

ROOF ANTENNA ASSEMBLY CONNECTOR END VIEW (O34)

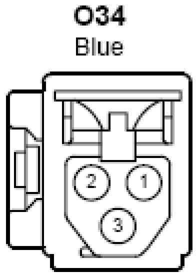

Fig. 265: Roof Antenna Assembly Connector End View (O34)
Courtesy of TOYOTA MOTOR SALES, U.S.A., INC.

NO. 3 ANTENNA CORD SUB-ASSEMBLY CONNECTOR END VIEW (O35)

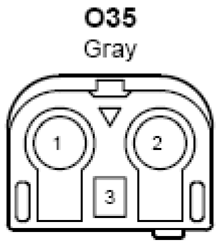
O35
Gray
1
2
3

Fig. 266: No. 3 Antenna Cord Sub-Assembly Connector End View (O35)
Courtesy of TOYOTA MOTOR SALES, U.S.A., INC.

DCM (TELEMATICS TRANSCEIVER) CONNECTOR END VIEW (O36)

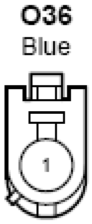

Fig. 267: DCM (Telematics Transceiver) Connector End View (O36)
Courtesy of TOYOTA MOTOR SALES, U.S.A., INC.

DCM (TELEMATICS TRANSCEIVER) CONNECTOR END VIEW (O37)

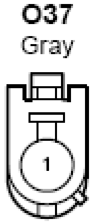

Fig. 268: DCM (Telematics Transceiver) Connector End View (O37)
Courtesy of TOYOTA MOTOR SALES, U.S.A., INC.

AIRBAG SENSOR ASSEMBLY CONNECTOR END VIEW (O42)

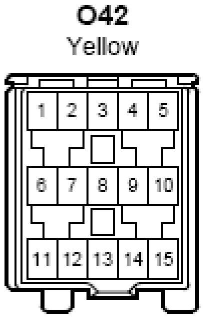
O42
Yellow
1
2
3
4
5
6
7
8
9
10
11
12
13
14
15

Fig. 269: Airbag Sensor Assembly Connector End View (O42)

Courtesy of TOYOTA MOTOR SALES, U.S.A., INC.

REAR WINDOW DEFOGGER (BACK WINDOW GLASS) CONNECTOR END VIEW (P1)

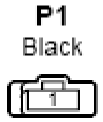

Fig. 270: Rear Window Defogger (Back Window Glass) Connector End View (P1)
Courtesy of TOYOTA MOTOR SALES, U.S.A., INC.

SLIDING ROOF CONTROL ECU (SLIDING ROOF DRIVE GEAR SUB-ASSEMBLY) CONNECTOR END VIEW (S4)

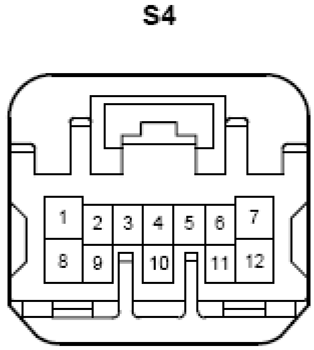

Fig. 271: Sliding Roof Control ECU (Sliding Roof Drive Gear Sub-Assembly) Connector End View (S4)
Courtesy of TOYOTA MOTOR SALES, U.S.A., INC.

VANITY LIGHT ASSEMBLY LH CONNECTOR END VIEW (S5)

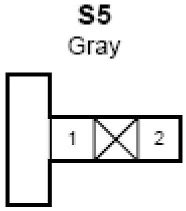

Fig. 272: Vanity Light Assembly LH Connector End View (S5)
Courtesy of TOYOTA MOTOR SALES, U.S.A., INC.

VISOR ASSEMBLY LH CONNECTOR END VIEW (S6)

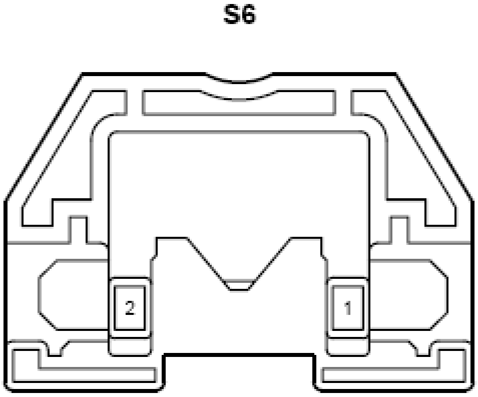

Fig. 273: Visor Assembly LH Connector End View (S6)
Courtesy of TOYOTA MOTOR SALES, U.S.A., INC.

VANITY LIGHT ASSEMBLY RH CONNECTOR END VIEW (S8)

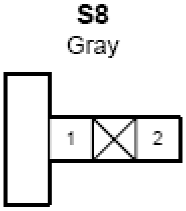

Fig. 274: Vanity Light Assembly RH Connector End View (S8)
Courtesy of TOYOTA MOTOR SALES, U.S.A., INC.

VISOR ASSEMBLY RH CONNECTOR END VIEW (S9)

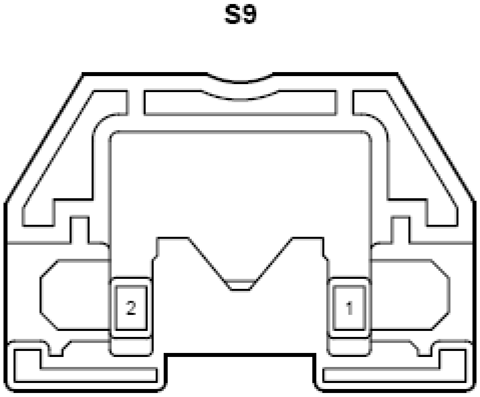

Fig. 275: Visor Assembly RH Connector End View (S9)
Courtesy of TOYOTA MOTOR SALES, U.S.A., INC.

INNER REAR VIEW MIRROR ASSEMBLY CONNECTOR END VIEW (S11)

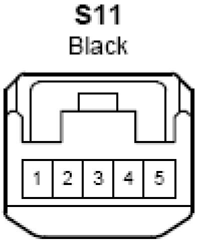
S11
Black
1
2
3
4
5

Fig. 276: Inner Rear View Mirror Assembly Connector End View (S11)
Courtesy of TOYOTA MOTOR SALES, U.S.A., INC.

ROOF CONSOLE BOX ASSEMBLY CONNECTOR END VIEW (S12)

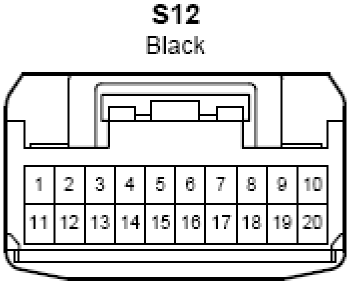
S12
Black
1
2
3
4
5
6
7
8
9
10
11
12
13
14
15
16
17
18
19
20

Fig. 277: Roof Console Box Assembly Connector End View (S12)
Courtesy of TOYOTA MOTOR SALES, U.S.A., INC.

NO. 1 ROOM LIGHT ASSEMBLY CONNECTOR END VIEW (S13)

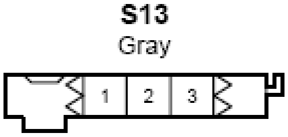
S13
Gray
1
2
3

Fig. 278: No. 1 Room Light Assembly Connector End View (S13)
Courtesy of TOYOTA MOTOR SALES, U.S.A., INC.

SPOT LIGHT ASSEMBLY LH CONNECTOR END VIEW (S14)

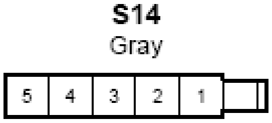
S14
Gray
5
4
3
2
1

Fig. 279: Spot Light Assembly LH Connector End View (S14)
Courtesy of TOYOTA MOTOR SALES, U.S.A., INC.

SPOT LIGHT ASSEMBLY RH CONNECTOR END VIEW (S15)

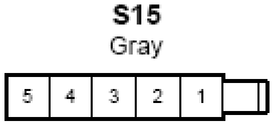

Fig. 280: Spot Light Assembly RH Connector End View (S15)
Courtesy of TOYOTA MOTOR SALES, U.S.A., INC.

OPTION CONNECTOR (AUTOMATIC GLARE-RESISTANT EC MIRROR) CONNECTOR END VIEW (S16)

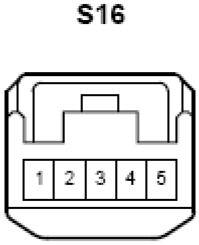

Fig. 281: Option Connector (Automatic Glare-Resistant EC Mirror) Connector End View (S16)
Courtesy of TOYOTA MOTOR SALES, U.S.A., INC.

LICENSE PLATE LIGHT ASSEMBLY RH CONNECTOR END VIEW (T2)

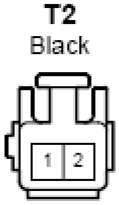

Fig. 282: License Plate Light Assembly RH Connector End View (T2)
Courtesy of TOYOTA MOTOR SALES, U.S.A., INC.

LUGGAGE COMPARTMENT DOOR LOCK ASSEMBLY CONNECTOR END VIEW (T3)

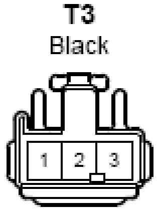

Fig. 283: Luggage Compartment Door Lock Assembly Connector End View (T3)
Courtesy of TOYOTA MOTOR SALES, U.S.A., INC.

LUGGAGE DOOR OPENING SWITCH ASSEMBLY CONNECTOR END VIEW (T4)

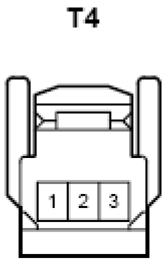

Fig. 284: Luggage Door Opening Switch Assembly Connector End View (T4)
Courtesy of TOYOTA MOTOR SALES, U.S.A., INC.

LICENSE PLATE LIGHT ASSEMBLY LH CONNECTOR END VIEW (T5)

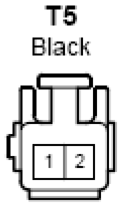

Fig. 285: License Plate Light Assembly LH Connector End View (T5)
Courtesy of TOYOTA MOTOR SALES, U.S.A., INC.

REAR TELEVISION CAMERA ASSEMBLY CONNECTOR END VIEW (T6)

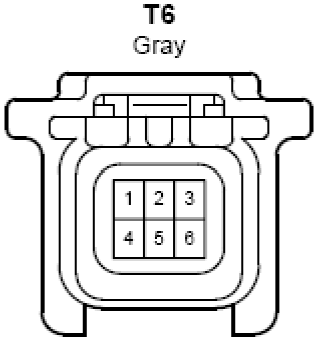

Fig. 286: Rear Television Camera Assembly Connector End View (T6)
Courtesy of TOYOTA MOTOR SALES, U.S.A., INC.

REAR COMBINATION LIGHT ASSEMBLY LH CONNECTOR END VIEW (T8)

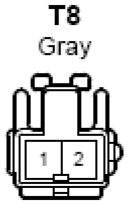

Fig. 287: Rear Combination Light Assembly LH Connector End View (T8)

Courtesy of TOYOTA MOTOR SALES, U.S.A., INC.

REAR COMBINATION LIGHT ASSEMBLY LH CONNECTOR END VIEW (T9)

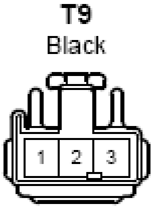

Fig. 288: Rear Combination Light Assembly LH Connector End View (T9)
Courtesy of TOYOTA MOTOR SALES, U.S.A., INC.

BLIND SPOT MONITOR SENSOR LH CONNECTOR END VIEW (T10)

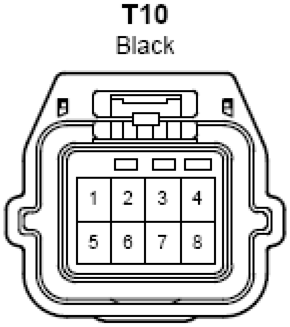

Fig. 289: Blind Spot Monitor Sensor LH Connector End View (T10)
Courtesy of TOYOTA MOTOR SALES, U.S.A., INC.

REAR ELECTRICAL KEY ANTENNA CONNECTOR END VIEW (T11)

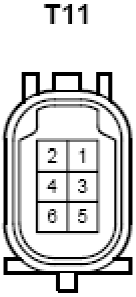

Fig. 290: Rear Electrical Key Antenna Connector End View (T11)
Courtesy of TOYOTA MOTOR SALES, U.S.A., INC.

REAR COMBINATION LIGHT ASSEMBLY RH CONNECTOR END VIEW (T12)

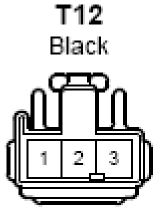

Fig. 291: Rear Combination Light Assembly RH Connector End View (T12)
Courtesy of TOYOTA MOTOR SALES, U.S.A., INC.

REAR COMBINATION LIGHT ASSEMBLY RH CONNECTOR END VIEW (T13)

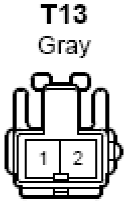

Fig. 292: Rear Combination Light Assembly RH Connector End View (T13)
Courtesy of TOYOTA MOTOR SALES, U.S.A., INC.

REAR ELECTRICAL KEY ANTENNA CONNECTOR END VIEW (T14)

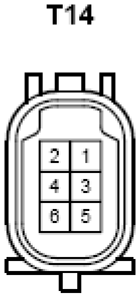

Fig. 293: Rear Electrical Key Antenna Connector End View (T14)
Courtesy of TOYOTA MOTOR SALES, U.S.A., INC.

JUNCTION CONNECTOR END VIEW (T15)

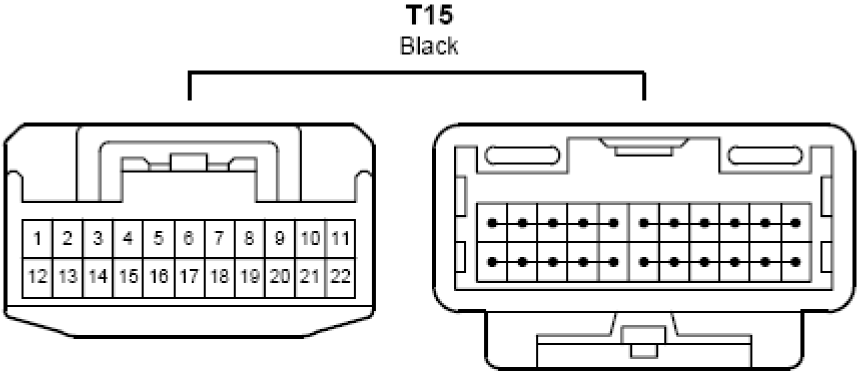
T15
Black
1
2
3
4
5
6
7
8
9
10
11
12
13
14
15
16
17
18
19
20
21
22

Fig. 294: Junction Connector End View (T15)
Courtesy of TOYOTA MOTOR SALES, U.S.A., INC.

JUNCTION TERMINAL CONNECTOR END VIEW (T16)

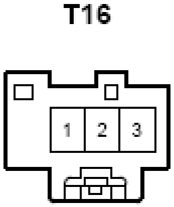

Fig. 295: Junction Terminal Connector End View (T16)
Courtesy of TOYOTA MOTOR SALES, U.S.A., INC.

REAR LIGHT ASSEMBLY RH CONNECTOR END VIEW (T17)

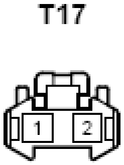

Fig. 296: Rear Light Assembly RH Connector End View (T17)
Courtesy of TOYOTA MOTOR SALES, U.S.A., INC.

REAR LIGHT ASSEMBLY LH CONNECTOR END VIEW (T18)

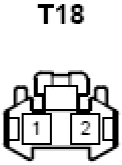

Fig. 297: Rear Light Assembly LH Connector End View (T18)
Courtesy of TOYOTA MOTOR SALES, U.S.A., INC.

REAR COMBINATION LIGHT ASSEMBLY LH CONNECTOR END VIEW (T19)

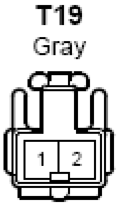

Fig. 298: Rear Combination Light Assembly LH Connector End View (T19)
Courtesy of TOYOTA MOTOR SALES, U.S.A., INC.

REAR COMBINATION LIGHT ASSEMBLY RH CONNECTOR END VIEW (T20)

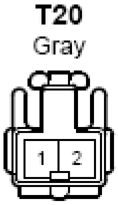

Fig. 299: Rear Combination Light Assembly RH Connector End View (T20)
Courtesy of TOYOTA MOTOR SALES, U.S.A., INC.

REAR NO. 1 ULTRASONIC SENSOR LH CONNECTOR END VIEW (U1)

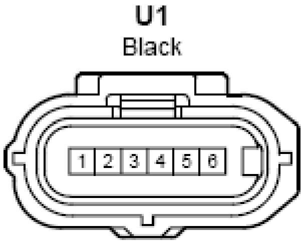

Fig. 300: Rear No. 1 Ultrasonic Sensor LH Connector End View (U1)
Courtesy of TOYOTA MOTOR SALES, U.S.A., INC.

REAR NO. 1 ULTRASONIC SENSOR CENTER LH CONNECTOR END VIEW (U2)

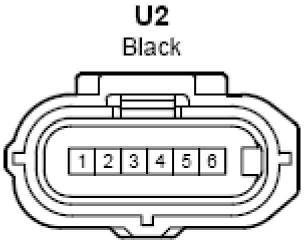

Fig. 301: Rear No. 1 Ultrasonic Sensor Center LH Connector End View (U2)
Courtesy of TOYOTA MOTOR SALES, U.S.A., INC.

REAR NO. 1 ULTRASONIC SENSOR CENTER RH CONNECTOR END VIEW (U3)

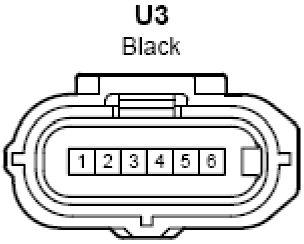

Fig. 302: Rear No. 1 Ultrasonic Sensor Center RH Connector End View (U3)
Courtesy of TOYOTA MOTOR SALES, U.S.A., INC.

REAR NO. 1 ULTRASONIC SENSOR RH CONNECTOR END VIEW (U4)

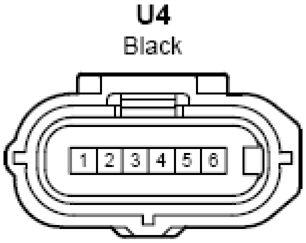

Fig. 303: Rear No. 1 Ultrasonic Sensor RH Connector End View (U4)
Courtesy of TOYOTA MOTOR SALES, U.S.A., INC.

FRONT DOOR OUTSIDE HANDLE ASSEMBLY RH CONNECTOR END VIEW (V1)

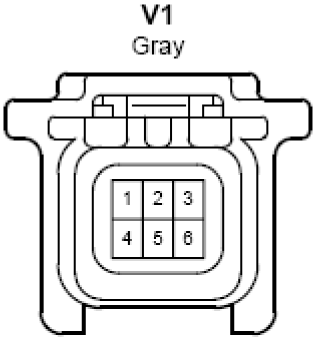

Fig. 304: Front Door Outside Handle Assembly RH Connector End View (V1)
Courtesy of TOYOTA MOTOR SALES, U.S.A., INC.

FRONT DOOR OUTSIDE HANDLE ASSEMBLY LH CONNECTOR END VIEW (W1)

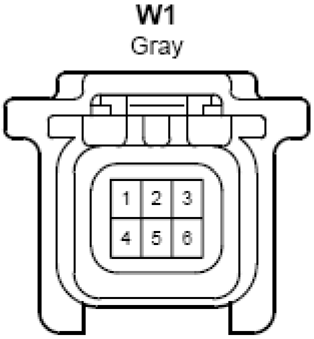

Fig. 305: Front Door Outside Handle Assembly LH Connector End View (W1)
Courtesy of TOYOTA MOTOR SALES, U.S.A., INC.

KNOCK CONTROL SENSOR (BANK 1) CONNECTOR END VIEW (Y1)

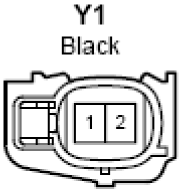

Fig. 306: Knock Control Sensor (Bank 1) Connector End View (Y1)
Courtesy of TOYOTA MOTOR SALES, U.S.A., INC.

KNOCK CONTROL SENSOR (BANK 2) CONNECTOR END VIEW (Y2)

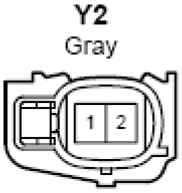

Fig. 307: Knock Control Sensor (Bank 2) Connector End View (Y2)
Courtesy of TOYOTA MOTOR SALES, U.S.A., INC.

INTAKE AIR CONTROL VALVE ACTUATOR CONNECTOR END VIEW (Y4)

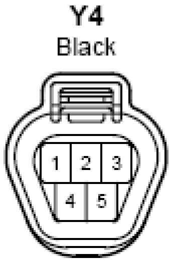

Fig. 308: Intake Air Control Valve Actuator Connector End View (Y4)

Courtesy of TOYOTA MOTOR SALES, U.S.A., INC.

INSTRUMENT PANEL PASSENGER AIRBAG ASSEMBLY WITHOUT DOOR CONNECTOR END VIEW (B1)

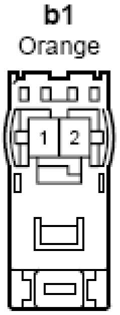

Fig. 309: Instrument Panel Passenger Airbag Assembly Without Door Connector End View (b1)
Courtesy of TOYOTA MOTOR SALES, U.S.A., INC.

INSTRUMENT PANEL PASSENGER AIRBAG ASSEMBLY WITHOUT DOOR CONNECTOR END VIEW (B2)

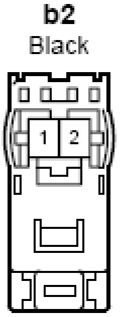

Fig. 310: Instrument Panel Passenger Airbag Assembly Without Door Connector End View (b2)
Courtesy of TOYOTA MOTOR SALES, U.S.A., INC.

LIGHT CUT RELAY CONNECTOR END VIEW (C1)

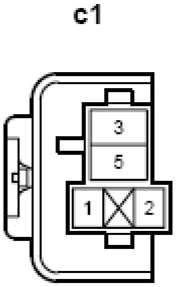

Fig. 311: Light Cut Relay Connector End View (c1)
Courtesy of TOYOTA MOTOR SALES, U.S.A., INC.

FRONT POWER SEAT SLIDE POSITION MOTOR RH (FRONT SEAT FRAME ASSEMBLY WITH ADJUSTER RH) CONNECTOR END VIEW (D1)

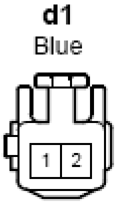

Fig. 312: Front Power Seat Slide Position Motor RH (Front Seat Frame Assembly With Adjuster RH) Connector End View (d1)
Courtesy of TOYOTA MOTOR SALES, U.S.A., INC.

FRONT POWER SEAT SWITCH RH CONNECTOR END VIEW (D4)

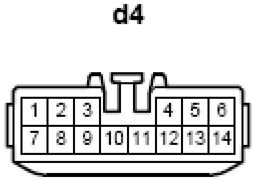

Fig. 313: Front Power Seat Switch RH Connector End View (d4)
Courtesy of TOYOTA MOTOR SALES, U.S.A., INC.

SEAT HEATER CONTROL SUB-ASSEMBLY RH CONNECTOR END VIEW (D6)

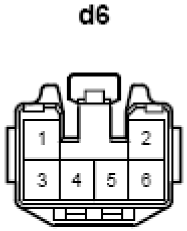

Fig. 314: Seat Heater Control Sub-Assembly RH Connector End View (d6)
Courtesy of TOYOTA MOTOR SALES, U.S.A., INC.

JUNCTION CONNECTOR END VIEW (D7)

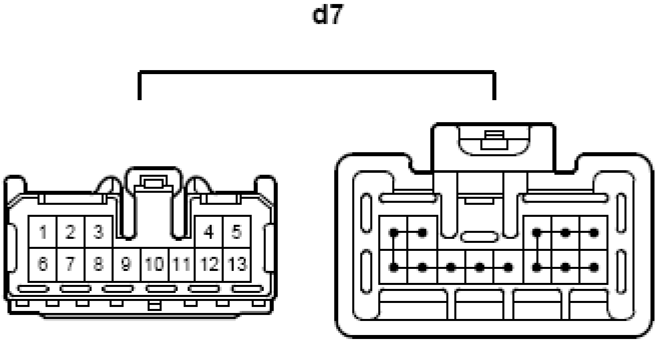

Fig. 315: Junction Connector End View (d7)
Courtesy of TOYOTA MOTOR SALES, U.S.A., INC.

OCCUPANT DETECTION ECU CONNECTOR END VIEW (D8)

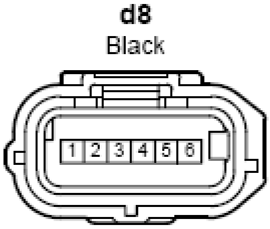

Fig. 316: Occupant Detection ECU Connector End View (d8)
Courtesy of TOYOTA MOTOR SALES, U.S.A., INC.

FRONT SEAT INNER BELT ASSEMBLY RH CONNECTOR END VIEW (D9)

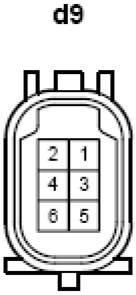

Fig. 317: Front Seat Inner Belt Assembly RH Connector End View (d9)
Courtesy of TOYOTA MOTOR SALES, U.S.A., INC.

FRONT OUT WEIGHT DETECTOR SENSOR SUB-ASSEMBLY CONNECTOR END VIEW (D10)

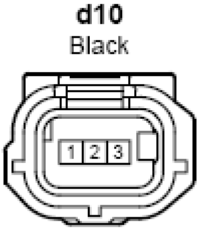
d10
Black
1
2
3

Fig. 318: Front Out Weight Detector Sensor Sub-Assembly Connector End View (d10)
Courtesy of TOYOTA MOTOR SALES, U.S.A., INC.

OCCUPANT DETECTION ECU CONNECTOR END VIEW (D11)

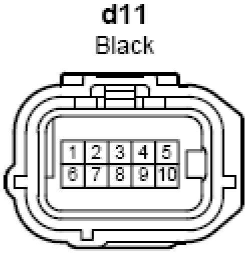
d11
Black
1
2
3
4
5
6
7
8
9
10

Fig. 319: Occupant Detection ECU Connector End View (d11)
Courtesy of TOYOTA MOTOR SALES, U.S.A., INC.

FRONT IN WEIGHT DETECTOR SENSOR SUB-ASSEMBLY CONNECTOR END VIEW (D12)

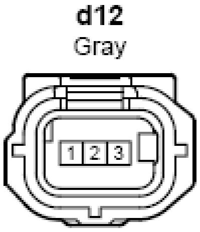
d12
Gray
1
2
3

Fig. 320: Front In Weight Detector Sensor Sub-Assembly Connector End View (d12)
Courtesy of TOYOTA MOTOR SALES, U.S.A., INC.

FRONT SEAT INNER BELT ASSEMBLY RH CONNECTOR END VIEW (D13)

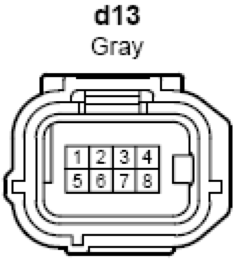
d13
Gray
1
2
3
4
5
6
7
8

Fig. 321: Front Seat Inner Belt Assembly RH Connector End View (d13)

Courtesy of TOYOTA MOTOR SALES, U.S.A., INC.

FRONT SEAT CUSHION HEATER ASSEMBLY RH CONNECTOR END VIEW (D14)

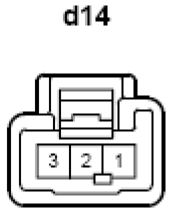

Fig. 322: Front Seat Cushion Heater Assembly RH Connector End View (d14)
Courtesy of TOYOTA MOTOR SALES, U.S.A., INC.

FRONT POWER SEAT SLIDE POSITION MOTOR RH (FRONT SEAT FRAME ASSEMBLY WITH ADJUSTER RH) CONNECTOR END VIEW (D15)

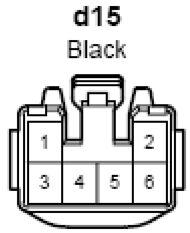

Fig. 323: Front Power Seat Slide Position Motor RH (Front Seat Frame Assembly With Adjuster RH) Connector End View (d15)
Courtesy of TOYOTA MOTOR SALES, U.S.A., INC.

FRONT POWER SEAT SWITCH RH CONNECTOR END VIEW (D16)

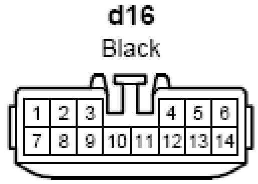

Fig. 324: Front Power Seat Switch RH Connector End View (d16)
Courtesy of TOYOTA MOTOR SALES, U.S.A., INC.

FRONT POWER SEAT RECLINING POSITION MOTOR RH (FRONT SEAT BACK FRAME SUB-ASSEMBLY RH) CONNECTOR END VIEW (D17)

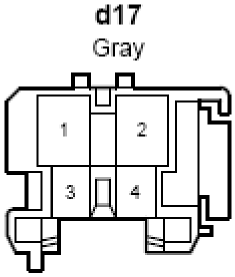

Fig. 325: Front Power Seat Reclining Position Motor RH (Front Seat Back Frame Sub-Assembly RH) Connector End View (d17)
Courtesy of TOYOTA MOTOR SALES, U.S.A., INC.

OCCUPANT DETECTION ECU CONNECTOR END VIEW (D18)

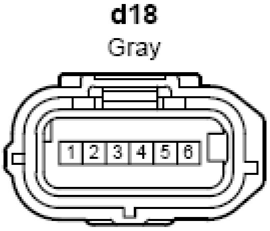

Fig. 326: Occupant Detection ECU Connector End View (d18)
Courtesy of TOYOTA MOTOR SALES, U.S.A., INC.

FRONT SEAT INNER BELT ASSEMBLY RH CONNECTOR END VIEW (D19)

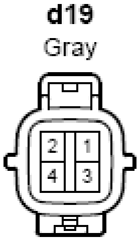

Fig. 327: Front Seat Inner Belt Assembly RH Connector End View (d19)
Courtesy of TOYOTA MOTOR SALES, U.S.A., INC.

FRONT POWER SEAT SLIDE POSITION MOTOR LH (FRONT SEAT FRAME ASSEMBLY WITH ADJUSTER LH) CONNECTOR END VIEW (E1)

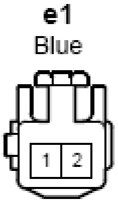

Fig. 328: Front Power Seat Slide Position Motor LH (Front Seat Frame Assembly With Adjuster LH) Connector End View (e1)
Courtesy of TOYOTA MOTOR SALES, U.S.A., INC.

FRONT POWER SEAT TILT POSITION MOTOR LH (FRONT SEAT FRAME ASSEMBLY WITH ADJUSTER LH) CONNECTOR END VIEW (E2)

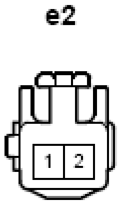

Fig. 329: Front Power Seat Tilt Position Motor LH (Front Seat Frame Assembly with Adjuster LH) Connector End View (e2)
Courtesy of TOYOTA MOTOR SALES, U.S.A., INC.

FRONT POWER SEAT LIFT POSITION MOTOR LH (FRONT SEAT FRAME ASSEMBLY WITH ADJUSTER LH) CONNECTOR END VIEW (E3)

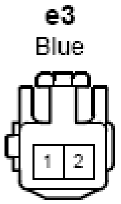

Fig. 330: Front Power Seat Lift Position Motor LH (Front Seat Frame Assembly With Adjuster LH) Connector End View (e3)
Courtesy of TOYOTA MOTOR SALES, U.S.A., INC.

FRONT POWER SEAT SWITCH LH CONNECTOR END VIEW (E4)

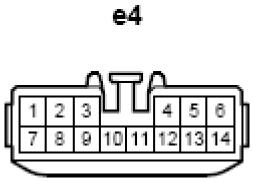

Fig. 331: Front Power Seat Switch LH Connector End View (e4)
Courtesy of TOYOTA MOTOR SALES, U.S.A., INC.

FRONT POWER SEAT LUMBAR SWITCH CONNECTOR END VIEW (E5)

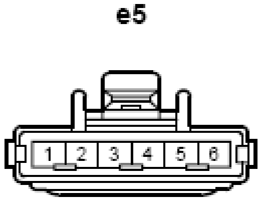

Fig. 332: Front Power Seat Lumbar Switch Connector End View (e5)
Courtesy of TOYOTA MOTOR SALES, U.S.A., INC.

SEAT HEATER CONTROL SUB-ASSEMBLY LH CONNECTOR END VIEW (E6)

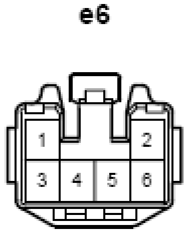

Fig. 333: Seat Heater Control Sub-Assembly LH Connector End View (e6)
Courtesy of TOYOTA MOTOR SALES, U.S.A., INC.

JUNCTION CONNECTOR END VIEW (E7)

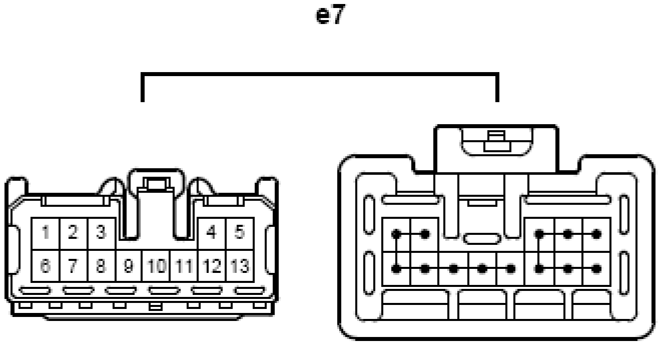

Fig. 334: Junction Connector End View (e7)
Courtesy of TOYOTA MOTOR SALES, U.S.A., INC.

FRONT POWER SEAT LIFT POSITION MOTOR LH (FRONT SEAT FRAME ASSEMBLY WITH ADJUSTER LH) CONNECTOR END VIEW (E8)

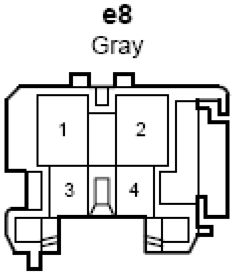

Fig. 335: Front Power Seat Lift Position Motor LH (Front Seat Frame Assembly With Adjuster LH) Connector End View (e8)
Courtesy of TOYOTA MOTOR SALES, U.S.A., INC.

FRONT POWER SEAT TILT POSITION MOTOR LH (FRONT SEAT FRAME ASSEMBLY WITH ADJUSTER LH) CONNECTOR END VIEW (E9)

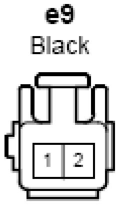

Fig. 336: Front Power Seat Tilt Position Motor LH (Front Seat Frame Assembly With Adjuster LH) Connector End View (e9)
Courtesy of TOYOTA MOTOR SALES, U.S.A., INC.

FRONT SEAT CUSHION HEATER ASSEMBLY LH CONNECTOR END VIEW (E10)

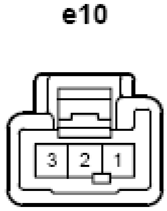

Fig. 337: Front Seat Cushion Heater Assembly LH Connector End View (e10)
Courtesy of TOYOTA MOTOR SALES, U.S.A., INC.

FRONT POWER SEAT SLIDE POSITION MOTOR LH (FRONT SEAT FRAME ASSEMBLY WITH ADJUSTER LH) CONNECTOR END VIEW (E11)

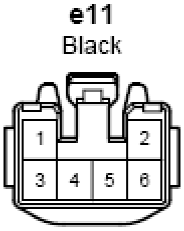
e11
Black
1
2
3
4
5
6

Fig. 338: Front Power Seat Slide Position Motor LH (Front Seat Frame Assembly With Adjuster LH) Connector End View (e11)
Courtesy of TOYOTA MOTOR SALES, U.S.A., INC.

FRONT POWER SEAT SWITCH LH CONNECTOR END VIEW (E12)

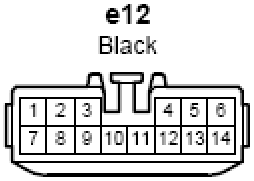
e12
Black
1
2
3
4
5
6
7
8
9
10
11
12
13
14

Fig. 339: Front Power Seat Switch LH Connector End View (e12)
Courtesy of TOYOTA MOTOR SALES, U.S.A., INC.

FRONT POWER SEAT RECLINING POSITION MOTOR LH (FRONT SEAT BACK FRAME SUB-ASSEMBLY LH) CONNECTOR END VIEW (E13)

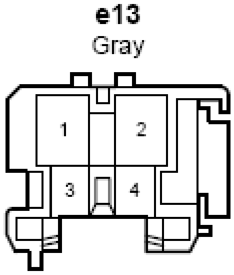
e13
Gray
1
2
3
4

Fig. 340: Front Power Seat Reclining Position Motor LH (Front Seat Back Frame Sub-Assembly LH) Connector End View (e13)
Courtesy of TOYOTA MOTOR SALES, U.S.A., INC.

FRONT POWER SEAT LUMBAR SUPPORT MOTOR LH (LUMBAR SUPPORT ADJUSTER ASSEMBLY LH) CONNECTOR END VIEW (E14)

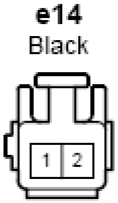
e14
Black
1
2

Fig. 341: Front Power Seat Lumbar Support Motor LH (Lumbar Support Adjuster Assembly LH) Connector End View (e14)
Courtesy of TOYOTA MOTOR SALES, U.S.A., INC.

FRONT POWER SEAT RECLINING POSITION MOTOR RH (FRONT SEAT BACK FRAME SUB-ASSEMBLY RH) CONNECTOR END VIEW (F1)

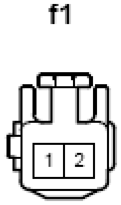

Fig. 342: Front Power Seat Reclining Position Motor RH (Front Seat Back Frame Sub-Assembly RH) Connector End View (f1)
Courtesy of TOYOTA MOTOR SALES, U.S.A., INC.

FRONT POWER SEAT RECLINING POSITION MOTOR LH (FRONT SEAT BACK FRAME SUB-ASSEMBLY LH) CONNECTOR END VIEW (G1)

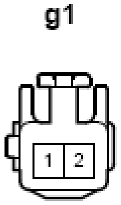

Fig. 343: Front Power Seat Reclining Position Motor LH (Front Seat Back Frame Sub-Assembly LH) Connector End View (g1)
Courtesy of TOYOTA MOTOR SALES, U.S.A., INC.

FRONT POWER SEAT LUMBAR SUPPORT MOTOR LH (LUMBAR SUPPORT ADJUSTER ASSEMBLY LH) CONNECTOR END VIEW (G2)

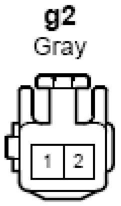

Fig. 344: Front Power Seat Lumbar Support Motor LH (Lumbar Support Adjuster Assembly LH) Connector End View (g2)
Courtesy of TOYOTA MOTOR SALES, U.S.A., INC.

REAR SPEED SENSOR RH CONNECTOR END VIEW (H1)

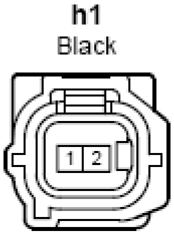

Fig. 345: Rear Speed Sensor RH Connector End View (h1)
Courtesy of TOYOTA MOTOR SALES, U.S.A., INC.

REAR SPEED SENSOR LH CONNECTOR END VIEW (I1)

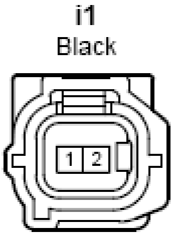

Fig. 346: Rear Speed Sensor LH Connector End View (i1)
Courtesy of TOYOTA MOTOR SALES, U.S.A., INC.

POWER STEERING ECU ASSEMBLY CONNECTOR END VIEW (J1)

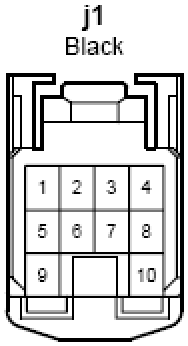
j1
Black
1
2
3
4
5
6
7
8
9
10

Fig. 347: Power Steering ECU Assembly Connector End View (j1)
Courtesy of TOYOTA MOTOR SALES, U.S.A., INC.

POWER STEERING ECU ASSEMBLY CONNECTOR END VIEW (J2)

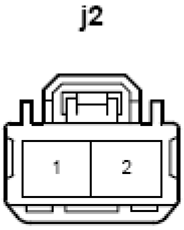

Fig. 348: Power Steering ECU Assembly Connector End View (j2)
Courtesy of TOYOTA MOTOR SALES, U.S.A., INC.

POWER STEERING ECU ASSEMBLY CONNECTOR END VIEW (J3)

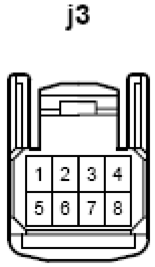

Fig. 349: Power Steering ECU Assembly Connector End View (j3)
Courtesy of TOYOTA MOTOR SALES, U.S.A., INC.

GLASS BREAKAGE SENSOR ECU ASSEMBLY CONNECTOR END VIEW (K1)

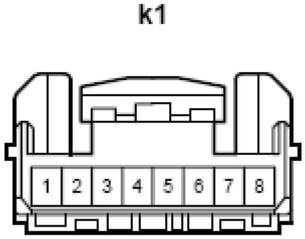

Fig. 350: Glass Breakage Sensor ECU Assembly Connector End View (k1)
Courtesy of TOYOTA MOTOR SALES, U.S.A., INC.

GLASS BREAKAGE SENSOR MICROPHONE CONNECTOR END VIEW (K2)

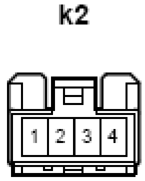

Fig. 351: Glass Breakage Sensor Microphone Connector End View (k2)
Courtesy of TOYOTA MOTOR SALES, U.S.A., INC.

EXTENSION MODULE CONNECTOR END VIEW (M1)

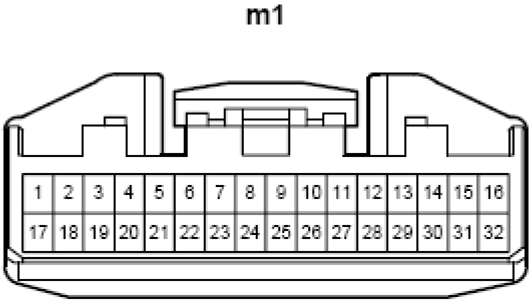
m1
1
2
3
4
5
6
7
8
9
10
11
12
13
14
15
16
17
18
19
20
21
22
23
24
25
26
27
28
29
30
31
32

Fig. 352: Extension Module Connector End View (m1)
Courtesy of TOYOTA MOTOR SALES, U.S.A., INC.

RADIO&DISPLAY RECEIVER ASSEMBLY CONNECTOR END VIEW (M2)

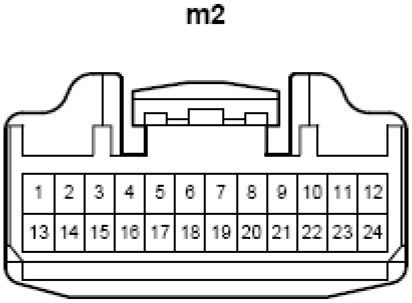
m2
1
2
3
4
5
6
7
8
9
10
11
12
13
14
15
16
17
18
19
20
21
22
23
24

Fig. 353: Radio&Display Receiver Assembly Connector End View (m2)
Courtesy of TOYOTA MOTOR SALES, U.S.A., INC.

RADIO&DISPLAY RECEIVER ASSEMBLY CONNECTOR END VIEW (M3)

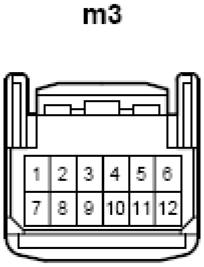
m3
1
2
3
4
5
6
7
8
9
10
11
12

Fig. 354: Radio&Display Receiver Assembly Connector End View (m3)
Courtesy of TOYOTA MOTOR SALES, U.S.A., INC.

A/C AMPLIFIER ASSEMBLY, A/C UNIT (A/C HARNESS ASSEMBLY) CONNECTOR END VIEW (Z1)

z1

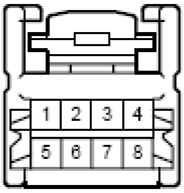

Fig. 355: A/C Amplifier Assembly, A/C Unit (A/C Harness Assembly) Connector End View (z1)
Courtesy of TOYOTA MOTOR SALES, U.S.A., INC.

CRUISE CONTROL MAIN SWITCH, SPIRAL CABLE SUB-ASSEMBLY CONNECTOR END VIEW (Z2)

z2

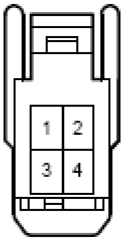

Fig. 356: Cruise Control Main Switch, Spiral Cable Sub-Assembly Connector End View (z2)
Courtesy of TOYOTA MOTOR SALES, U.S.A., INC.

SPIRAL CABLE SUB-ASSEMBLY, STEERING PAD SWITCH ASSEMBLY CONNECTOR END VIEW (Z3)

z3
Black

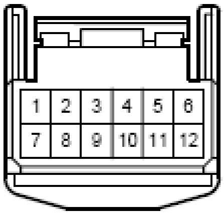

Fig. 357: Spiral Cable Sub-Assembly, Steering Pad Switch Assembly Connector End View (z3)
Courtesy of TOYOTA MOTOR SALES, U.S.A., INC.

SPIRAL CABLE SUB-ASSEMBLY, DRIVER SIDE SQUIB CIRCUIT (HORN BUTTON ASSEMBLY) CONNECTOR END VIEW (Z4)

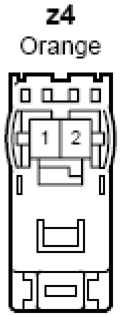

Fig. 358: Spiral Cable Sub-Assembly, Driver Side Squib Circuit (Horn Button Assembly) Connector End View (z4)
Courtesy of TOYOTA MOTOR SALES, U.S.A., INC.

SPIRAL CABLE SUB-ASSEMBLY, DRIVER SIDE SQUIB CIRCUIT (HORN BUTTON ASSEMBLY) CONNECTOR END VIEW (Z5)

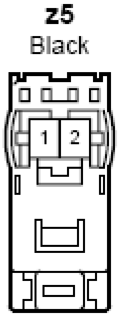

Fig. 359: Spiral Cable Sub-Assembly, Driver Side Squib Circuit (Horn Button Assembly) Connector End View (z5)
Courtesy of TOYOTA MOTOR SALES, U.S.A., INC.

FRONT SEAT AIRBAG ASSEMBLY LH CONNECTOR END VIEW (Z10)

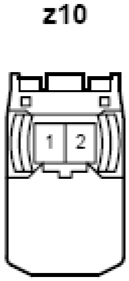

Fig. 360: Front Seat Airbag Assembly LH Connector End View (z10)
Courtesy of TOYOTA MOTOR SALES, U.S.A., INC.

FRONT SEAT AIRBAG ASSEMBLY RH CONNECTOR END VIEW (Z11)

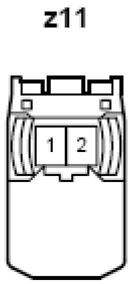

Fig. 361: Front Seat Airbag Assembly RH Connector End View (z11)
Courtesy of TOYOTA MOTOR SALES, U.S.A., INC.

REAR SEAT AIRBAG ASSEMBLY LH CONNECTOR END VIEW (Z12)

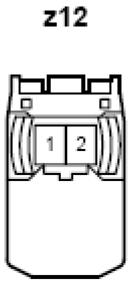

Fig. 362: Rear Seat Airbag Assembly LH Connector End View (z12)
Courtesy of TOYOTA MOTOR SALES, U.S.A., INC.

REAR SEAT AIRBAG ASSEMBLY RH CONNECTOR END VIEW (Z13)

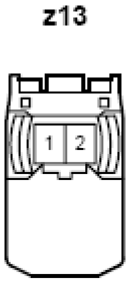

Fig. 363: Rear Seat Airbag Assembly RH Connector End View (z13)
Courtesy of TOYOTA MOTOR SALES, U.S.A., INC.

COOLING FAN ECU, COOLING FAN MOTOR CONNECTOR END VIEW (Z14)

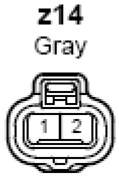

Fig. 364: Cooling Fan ECU, Cooling Fan Motor Connector End View (z14)
Courtesy of TOYOTA MOTOR SALES, U.S.A., INC.

COOLING FAN ECU, NO. 2 COOLING FAN MOTOR CONNECTOR END VIEW (Z15)

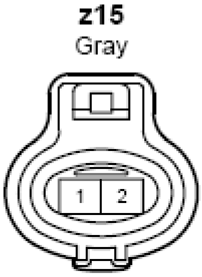

Fig. 365: Cooling Fan ECU, No. 2 Cooling Fan Motor Connector End View (z15)
Courtesy of TOYOTA MOTOR SALES, U.S.A., INC.

ELECTRIC POWER STEERING COLUMN SUB-ASSEMBLY CONNECTOR END VIEW (Z16)

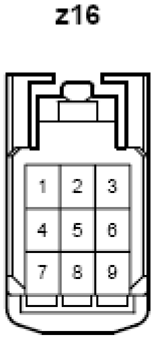

Fig. 366: Electric Power Steering Column Sub-Assembly Connector End View (z16)
Courtesy of TOYOTA MOTOR SALES, U.S.A., INC.

POWER STEERING MOTOR ASSEMBLY CONNECTOR END VIEW (Z18)

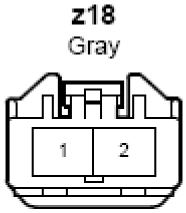

Fig. 367: Power Steering Motor Assembly Connector End View (z18)
Courtesy of TOYOTA MOTOR SALES, U.S.A., INC.

CONNECTOR END VIEW (AN1)

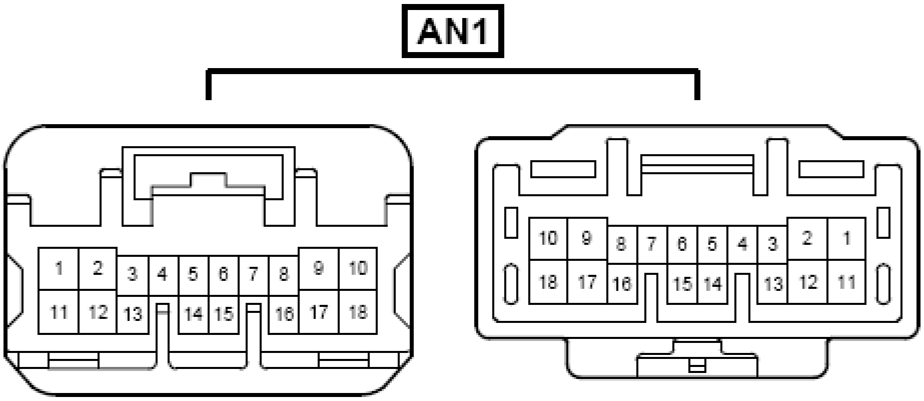
AN1
1 2 3 4 5 6 7 8 9 10
11 12 13 14 15 16 17 18
10 9 8 7 6 5 4 3 2 1
18 17 16 15 14 13 12 11

Fig. 368: Connector End View (AN1)
Courtesy of TOYOTA MOTOR SALES, U.S.A., INC.

CONNECTOR END VIEW (AN2)

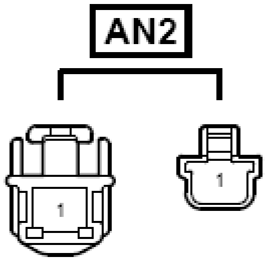

Fig. 369: Connector End View (AN2)
Courtesy of TOYOTA MOTOR SALES, U.S.A., INC.

CONNECTOR END VIEW (EA1)

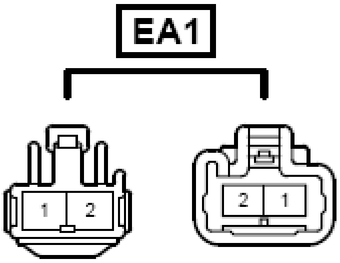

Fig. 370: Connector End View (EA1)
Courtesy of TOYOTA MOTOR SALES, U.S.A., INC.

CONNECTOR END VIEW (EA2)

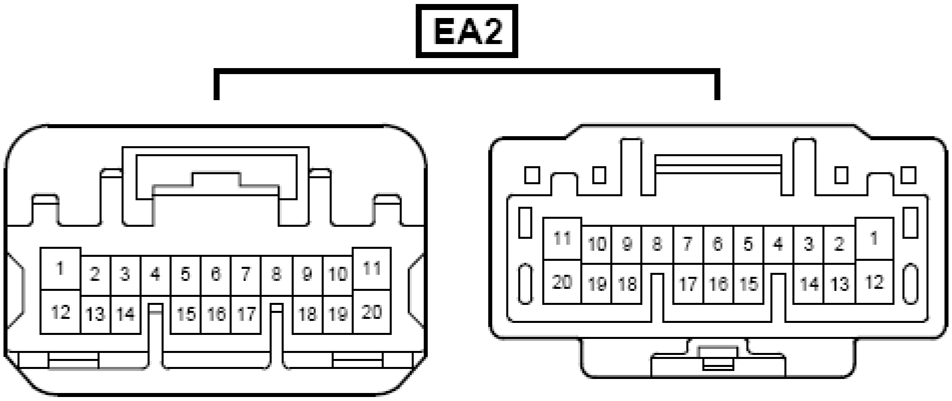
EA2
1 2 3 4 5 6 7 8 9 10 11
12 13 14 15 16 17 18 19 20
11 10 9 8 7 6 5 4 3 2 1
20 19 18 17 16 15 14 13 12

Fig. 371: Connector End View (EA2)
Courtesy of TOYOTA MOTOR SALES, U.S.A., INC.

CONNECTOR END VIEW (EY1)

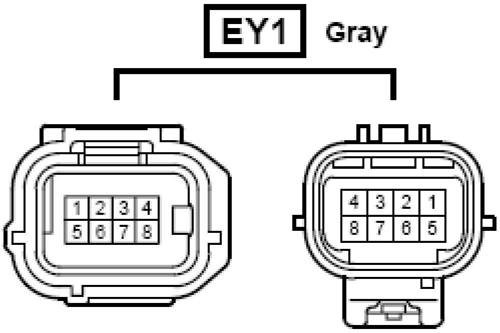
EY1
Gray
1 2 3 4
5 6 7 8
4 3 2 1
8 7 6 5

Fig. 372: Connector End View (EY1)
Courtesy of TOYOTA MOTOR SALES, U.S.A., INC.

CONNECTOR END VIEW (EY3)

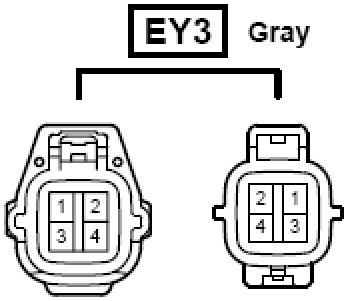
EY3
Gray
1 2
3 4
2 1
4 3

Fig. 373: Connector End View (EY3)
Courtesy of TOYOTA MOTOR SALES, U.S.A., INC.

CONNECTOR END VIEW (IA2)

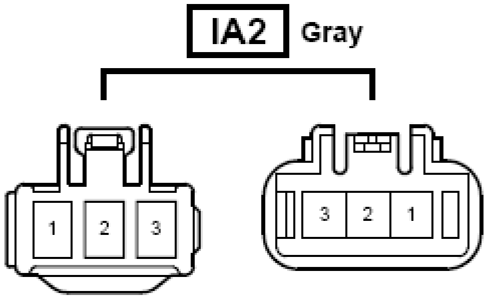
IA2
Gray
1
2
3
3
2
1

Fig. 374: Connector End View (IA2)
Courtesy of TOYOTA MOTOR SALES, U.S.A., INC.

CONNECTOR END VIEW (IA3)

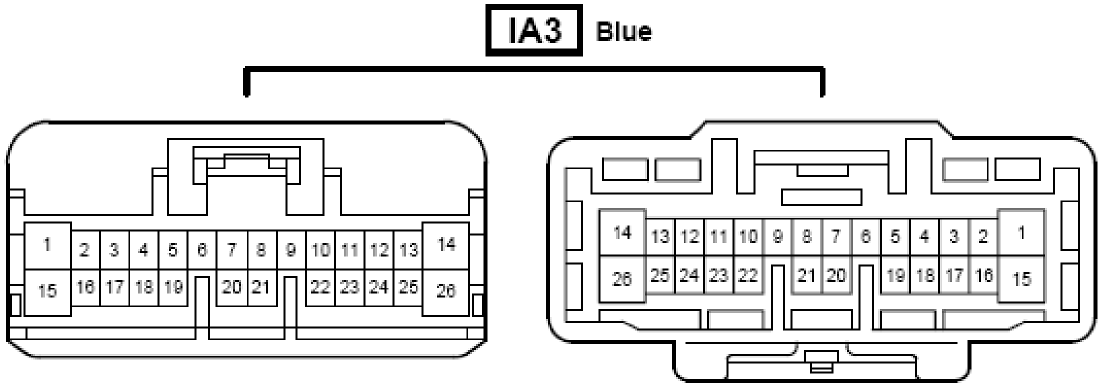
IA3
Blue
1 2 3 4 5 6 7 8 9 10 11 12 13 14
15 16 17 18 19 20 21 22 23 24 25 26
14 13 12 11 10 9 8 7 6 5 4 3 2 1
26 25 24 23 22 21 20 19 18 17 16 15

Fig. 375: Connector End View (IA3)
Courtesy of TOYOTA MOTOR SALES, U.S.A., INC.

CONNECTOR END VIEW (IA4)

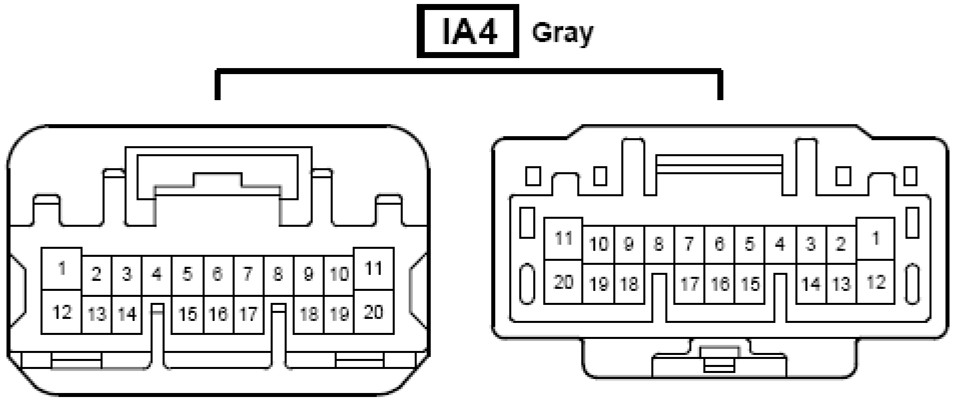
IA4
Gray
1 2 3 4 5 6 7 8 9 10 11
12 13 14 15 16 17 18 19 20
11 10 9 8 7 6 5 4 3 2 1
20 19 18 17 16 15 14 13 12

Fig. 376: Connector End View (IA4)
Courtesy of TOYOTA MOTOR SALES, U.S.A., INC.

CONNECTOR END VIEW (IA5)

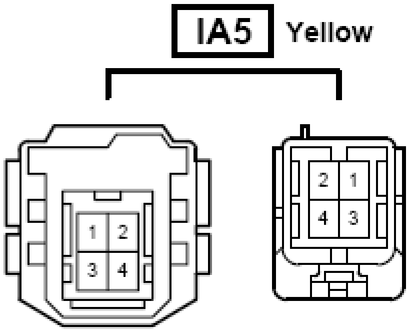
IA5
Yellow
1 2
3 4
2 1
4 3

Fig. 377: Connector End View (IA5)
Courtesy of TOYOTA MOTOR SALES, U.S.A., INC.

CONNECTOR END VIEW (IA6)

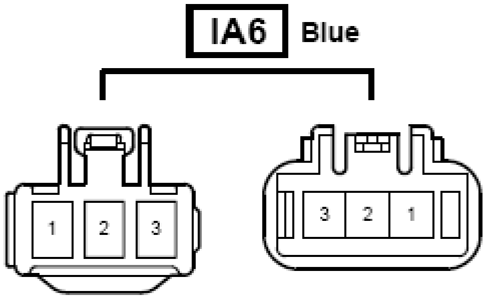
IA6
Blue
1 2 3
3 2 1

Fig. 378: Connector End View (IA6)
Courtesy of TOYOTA MOTOR SALES, U.S.A., INC.

CONNECTOR END VIEW (IA7)

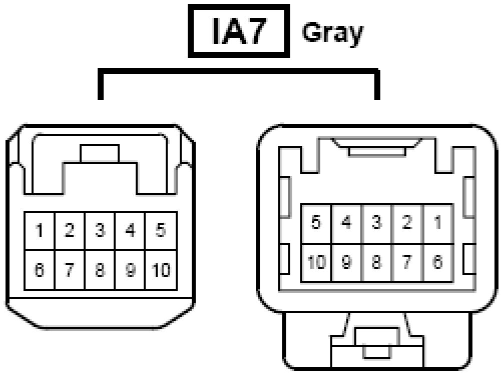
IA7
Gray
1 2 3 4 5
6 7 8 9 10
5 4 3 2 1
10 9 8 7 6

Fig. 379: Connector End View (IA7)
Courtesy of TOYOTA MOTOR SALES, U.S.A., INC.

CONNECTOR END VIEW (IA8)

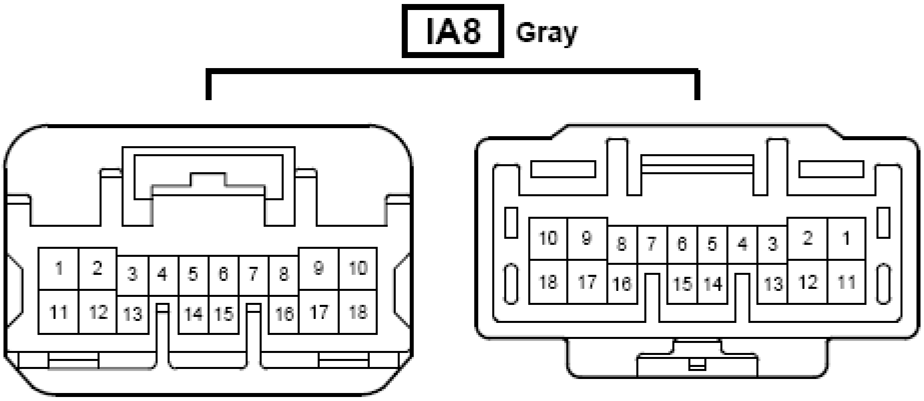
IA8
Gray
1 2 3 4 5 6 7 8 9 10
11 12 13 14 15 16 17 18
10 9 8 7 6 5 4 3 2 1
18 17 16 15 14 13 12 11

Fig. 380: Connector End View (IA8)
Courtesy of TOYOTA MOTOR SALES, U.S.A., INC.

CONNECTOR END VIEW (II2)

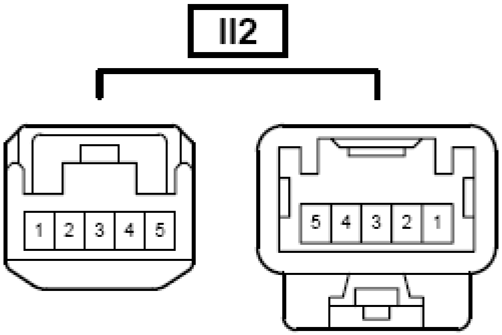
II2
1 2 3 4 5
5 4 3 2 1

Fig. 381: Connector End View (II2)
Courtesy of TOYOTA MOTOR SALES, U.S.A., INC.

CONNECTOR END VIEW (IN1)

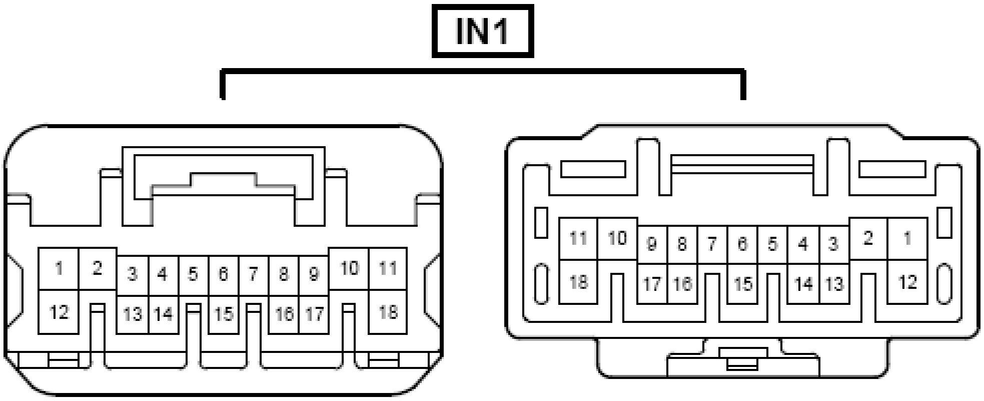
IN1
1 2 3 4 5 6 7 8 9 10 11
12 13 14 15 16 17 18
11 10 9 8 7 6 5 4 3 2 1
18 17 16 15 14 13 12

Fig. 382: Connector End View (IN1)
Courtesy of TOYOTA MOTOR SALES, U.S.A., INC.

CONNECTOR END VIEW (IO1)

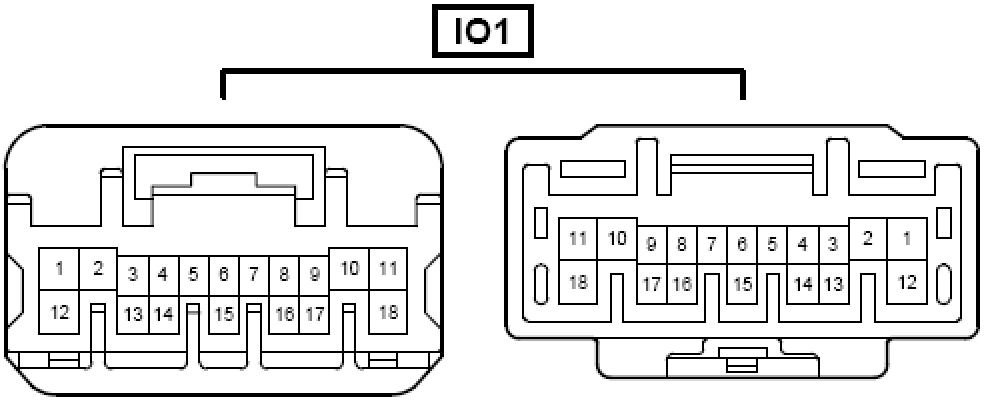
IO1
1 2 3 4 5 6 7 8 9 10 11
12 13 14 15 16 17 18
11 10 9 8 7 6 5 4 3 2 1
18 17 16 15 14 13 12

Fig. 383: Connector End View (IO1)
Courtesy of TOYOTA MOTOR SALES, U.S.A., INC.

CONNECTOR END VIEW (IO2)

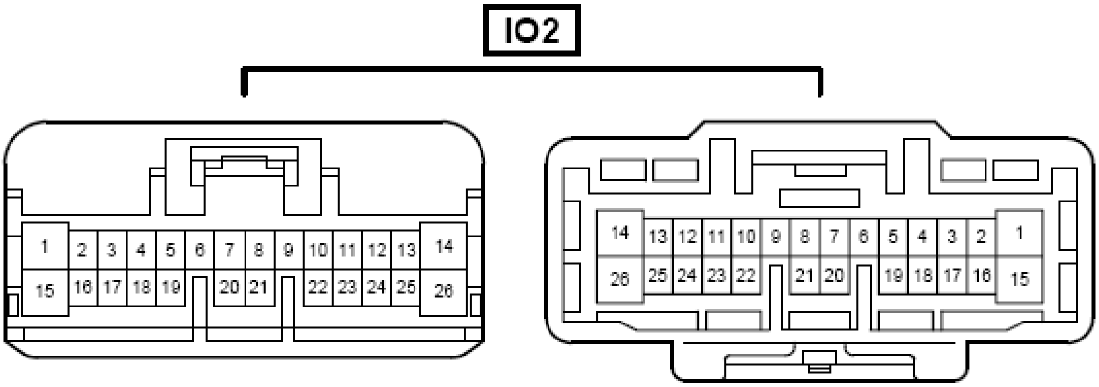
IO2
1 2 3 4 5 6 7 8 9 10 11 12 13 14
15 16 17 18 19 20 21 22 23 24 25 26
14 13 12 11 10 9 8 7 6 5 4 3 2 1
26 25 24 23 22 21 20 19 18 17 16 15

Fig. 384: Connector End View (IO2)
Courtesy of TOYOTA MOTOR SALES, U.S.A., INC.

CONNECTOR END VIEW (IO3)

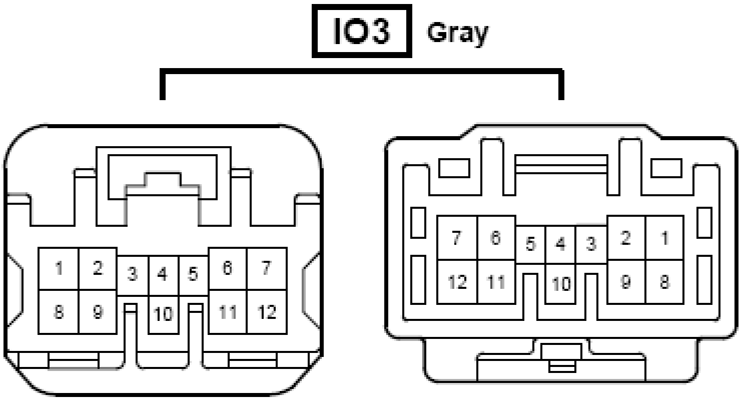
IO3
Gray
1 2 3 4 5 6 7
8 9 10 11 12
7 6 5 4 3 2 1
12 11 10 9 8

Fig. 385: Connector End View (IO3)
Courtesy of TOYOTA MOTOR SALES, U.S.A., INC.

CONNECTOR END VIEW (IS1)

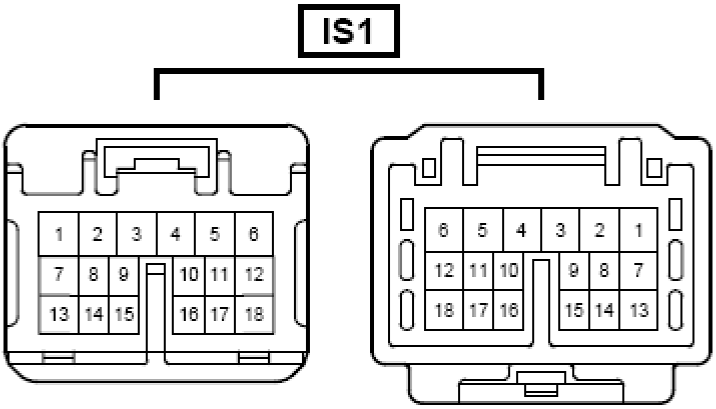
IS1
1 2 3 4 5 6
7 8 9 10 11 12
13 14 15 16 17 18
6 5 4 3 2 1
12 11 10 9 8 7
18 17 16 15 14 13

Fig. 386: Connector End View (IS1)
Courtesy of TOYOTA MOTOR SALES, U.S.A., INC.

CONNECTOR END VIEW (IS2)

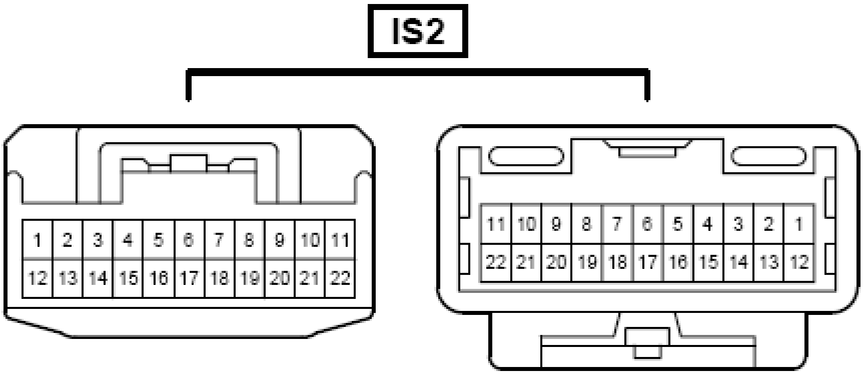
IS2
1 2 3 4 5 6 7 8 9 10 11
12 13 14 15 16 17 18 19 20 21 22
11 10 9 8 7 6 5 4 3 2 1
22 21 20 19 18 17 16 15 14 13 12

Fig. 387: Connector End View (IS2)
Courtesy of TOYOTA MOTOR SALES, U.S.A., INC.

CONNECTOR END VIEW (IB2)

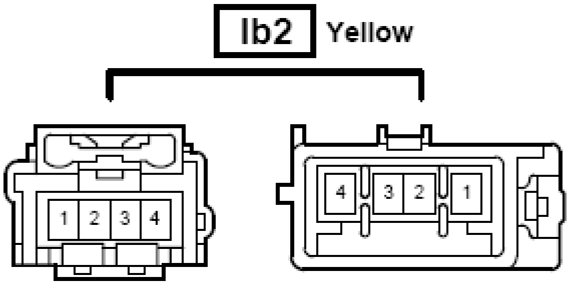
Ib2
Yellow
1 2 3 4
4 3 2 1

Fig. 388: Connector End View (Ib2)
Courtesy of TOYOTA MOTOR SALES, U.S.A., INC.

CONNECTOR END VIEW (IC1)

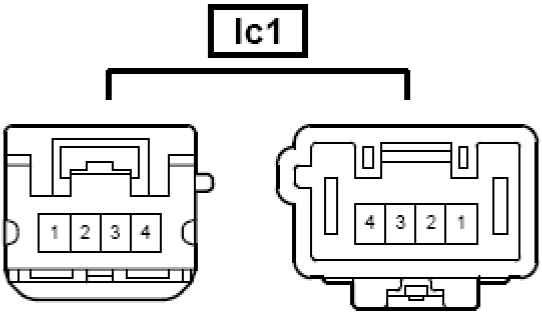

Fig. 389: Connector End View (Ic1)
Courtesy of TOYOTA MOTOR SALES, U.S.A., INC.

CONNECTOR END VIEW (IJ1)

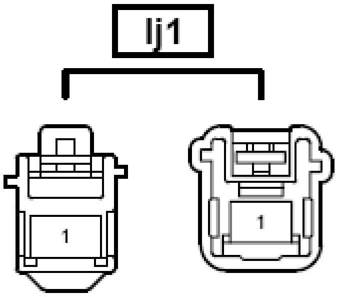

Fig. 390: Connector End View (Ij1)
Courtesy of TOYOTA MOTOR SALES, U.S.A., INC.

CONNECTOR END VIEW (IJ2)

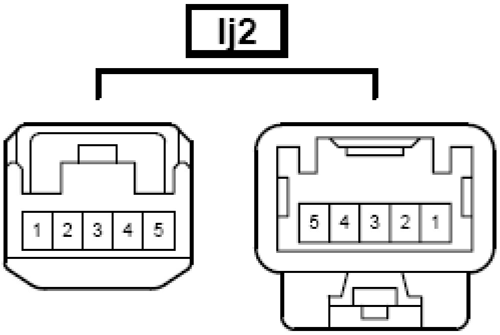

Fig. 391: Connector End View (Ij2)
Courtesy of TOYOTA MOTOR SALES, U.S.A., INC.

CONNECTOR END VIEW (IK1)

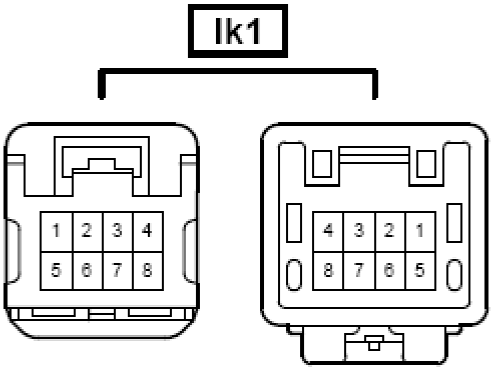
Ik1
1 2 3 4
5 6 7 8
4 3 2 1
8 7 6 5

Fig. 392: Connector End View (Ik1)
Courtesy of TOYOTA MOTOR SALES, U.S.A., INC.

CONNECTOR END VIEW (JI1)

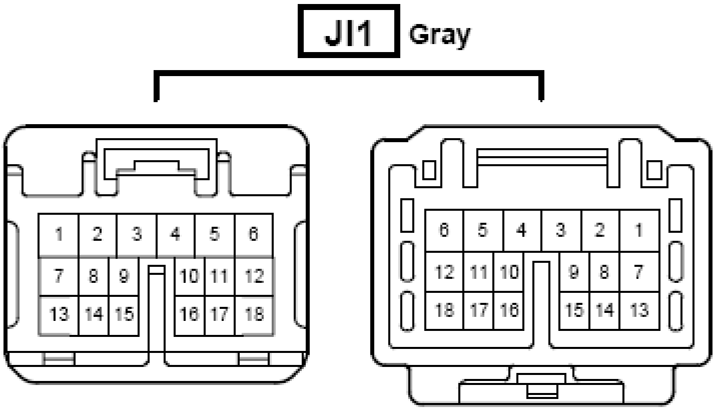
JI1
Gray
1 2 3 4 5 6
7 8 9 10 11 12
13 14 15 16 17 18
6 5 4 3 2 1
12 11 10 9 8 7
18 17 16 15 14 13

Fig. 393: Connector End View (JI1)
Courtesy of TOYOTA MOTOR SALES, U.S.A., INC.

CONNECTOR END VIEW (JI2)

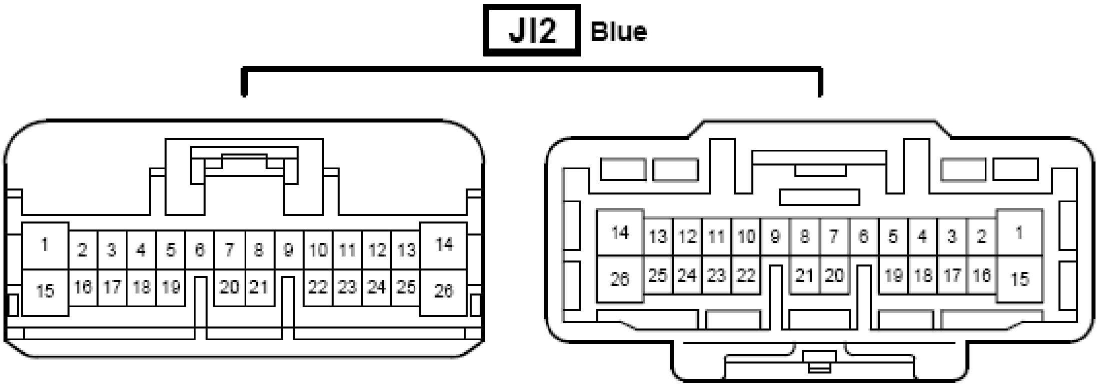
JI2
Blue
1 2 3 4 5 6 7 8 9 10 11 12 13 14
15 16 17 18 19 20 21 22 23 24 25 26
14 13 12 11 10 9 8 7 6 5 4 3 2 1
26 25 24 23 22 21 20 19 18 17 16 15

Fig. 394: Connector End View (JI2)
Courtesy of TOYOTA MOTOR SALES, U.S.A., INC.

CONNECTOR END VIEW (JO1)

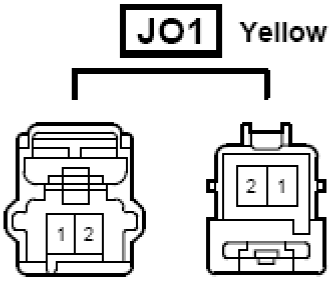
JO1
Yellow
1 2
2 1

Fig. 395: Connector End View (JO1)
Courtesy of TOYOTA MOTOR SALES, U.S.A., INC.

CONNECTOR END VIEW (KI1)

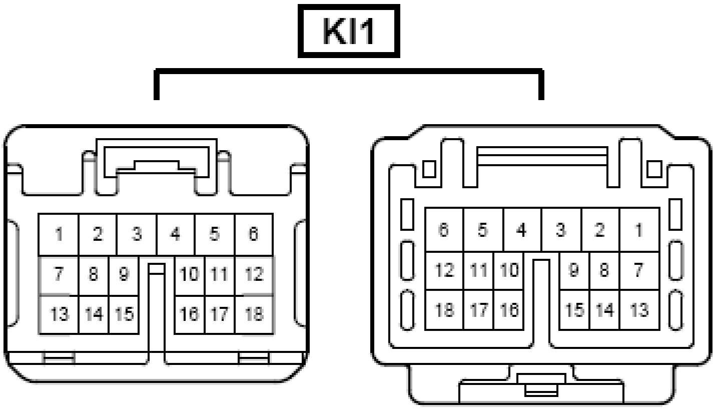
KI1
1 2 3 4 5 6
7 8 9 10 11 12
13 14 15 16 17 18
6 5 4 3 2 1
12 11 10 9 8 7
18 17 16 15 14 13

Fig. 396: Connector End View (KI1)
Courtesy of TOYOTA MOTOR SALES, U.S.A., INC.

CONNECTOR END VIEW (KI2)

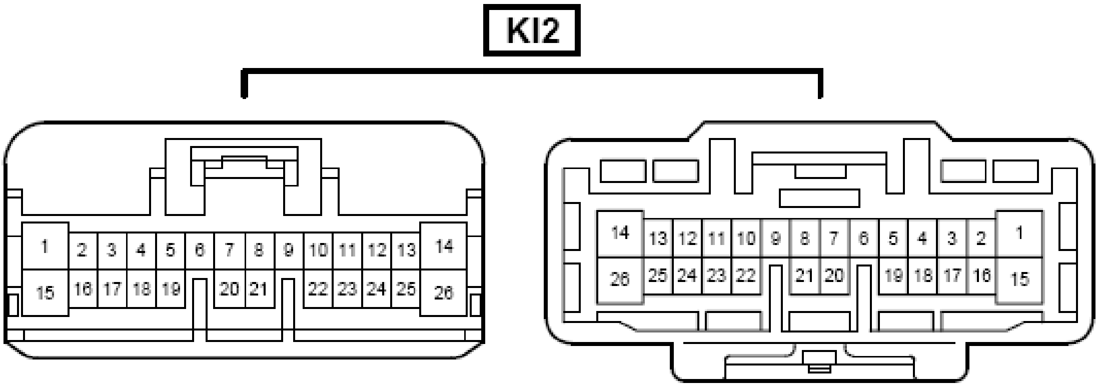
KI2
1 2 3 4 5 6 7 8 9 10 11 12 13 14
15 16 17 18 19 20 21 22 23 24 25 26
14 13 12 11 10 9 8 7 6 5 4 3 2 1
26 25 24 23 22 21 20 19 18 17 16 15

Fig. 397: Connector End View (KI2)
Courtesy of TOYOTA MOTOR SALES, U.S.A., INC.

CONNECTOR END VIEW (KN1)

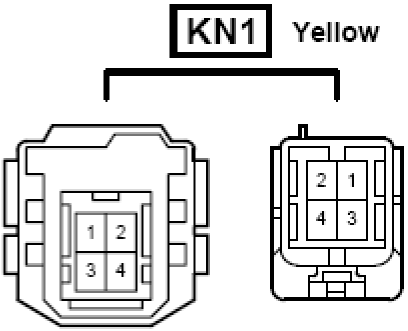
KN1
Yellow
1 2
3 4
2 1
4 3

Fig. 398: Connector End View (KN1)
Courtesy of TOYOTA MOTOR SALES, U.S.A., INC.

CONNECTOR END VIEW (LO1)

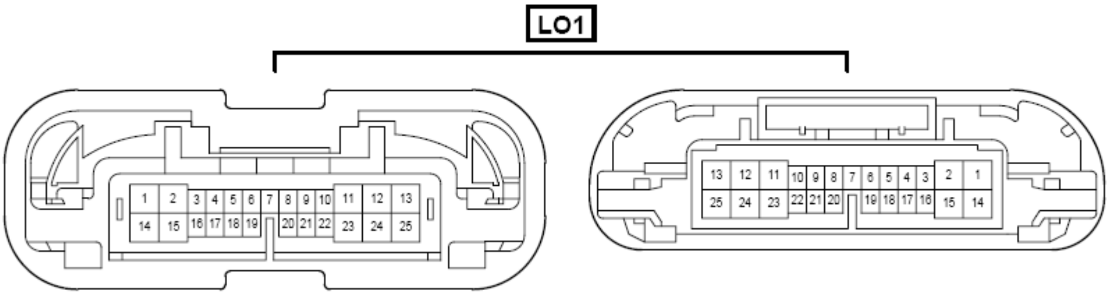
LO1
1 2 3 4 5 6 7 8 9 10 11 12 13
14 15 16 17 18 19 20 21 22 23 24 25
13 12 11 10 9 8 7 6 5 4 3 2 1
25 24 23 22 21 20 19 18 17 16 15 14

Fig. 399: Connector End View (LO1)
Courtesy of TOYOTA MOTOR SALES, U.S.A., INC.

CONNECTOR END VIEW (MN1)

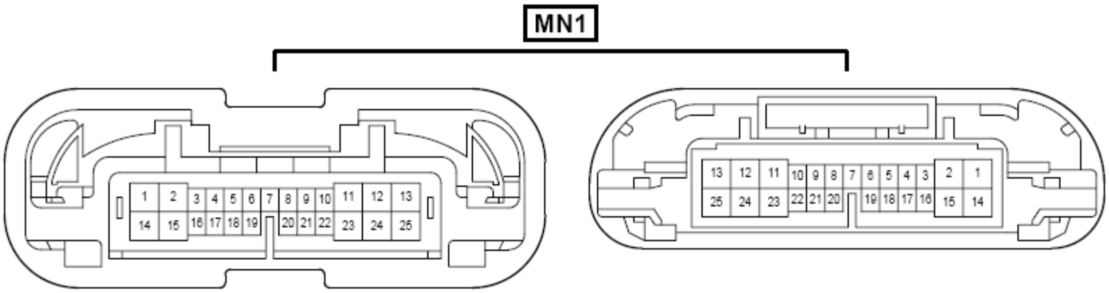
MN1
1 2 3 4 5 6 7 8 9 10 11 12 13
14 15 16 17 18 19 20 21 22 23 24 25
13 12 11 10 9 8 7 6 5 4 3 2 1
25 24 23 22 21 20 19 18 17 16 15 14

Fig. 400: Connector End View (MN1)
Courtesy of TOYOTA MOTOR SALES, U.S.A., INC.

CONNECTOR END VIEW (NI1)

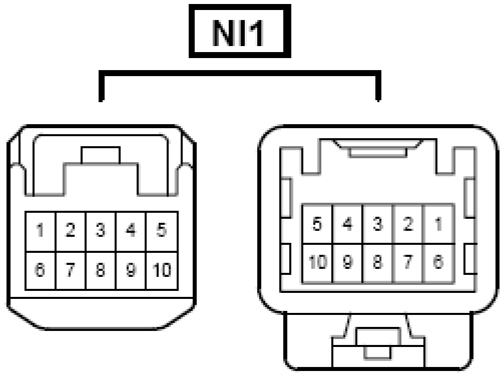
NI1
1 2 3 4 5
6 7 8 9 10
5 4 3 2 1
10 9 8 7 6

Fig. 401: Connector End View (NI1)
Courtesy of TOYOTA MOTOR SALES, U.S.A., INC.

CONNECTOR END VIEW (NE1)

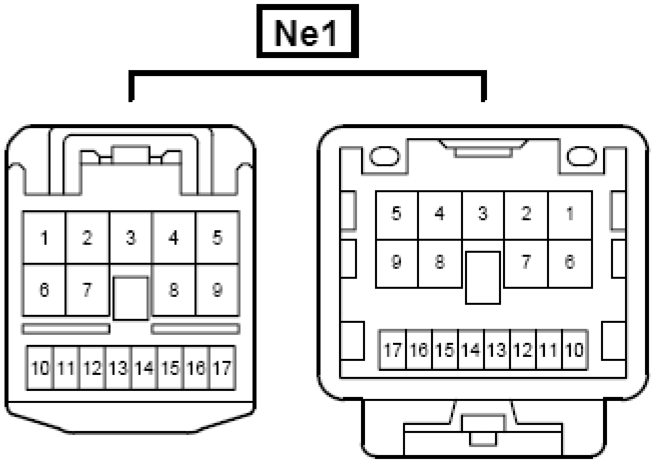
Ne1
1 2 3 4 5
6 7 8 9
10 11 12 13 14 15 16 17
5 4 3 2 1
9 8 7 6
17 16 15 14 13 12 11 10

Fig. 402: Connector End View (Ne1)
Courtesy of TOYOTA MOTOR SALES, U.S.A., INC.

CONNECTOR END VIEW (NZ1)

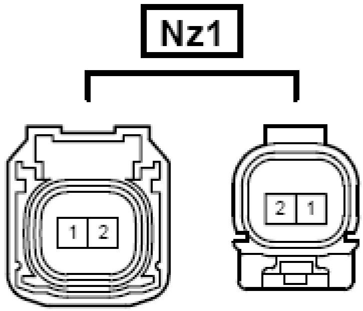

Fig. 403: Connector End View (Nz1)
Courtesy of TOYOTA MOTOR SALES, U.S.A., INC.

CONNECTOR END VIEW (NZ2)

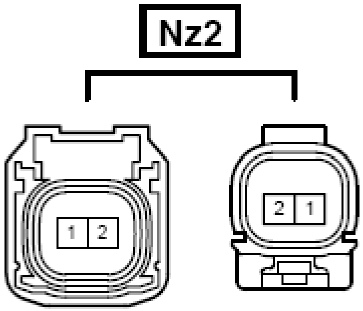

Fig. 404: Connector End View (Nz2)
Courtesy of TOYOTA MOTOR SALES, U.S.A., INC.

CONNECTOR END VIEW (OA1)

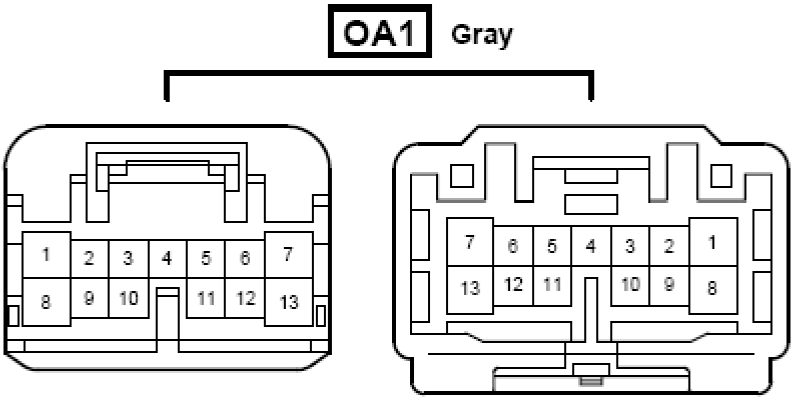
OA1
Gray
1
2
3
4
5
6
7
8
9
10
11
12
13
7
6
5
4
3
2
1
13
12
11
10
9
8

Fig. 405: Connector End View (OA1)
Courtesy of TOYOTA MOTOR SALES, U.S.A., INC.

CONNECTOR END VIEW (OD1)

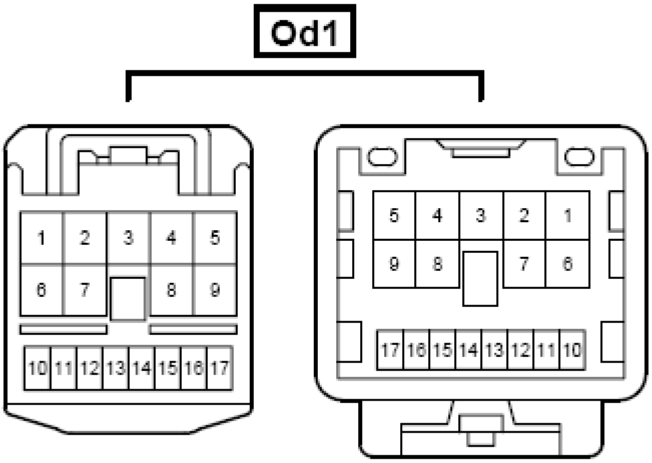
Od1
1
2
3
4
5
6
7
8
9
10
11
12
13
14
15
16
17
5
4
3
2
1
9
8
7
6
17
16
15
14
13
12
11
10

Fig. 406: Connector End View (Od1)
Courtesy of TOYOTA MOTOR SALES, U.S.A., INC.

CONNECTOR END VIEW (OD2)

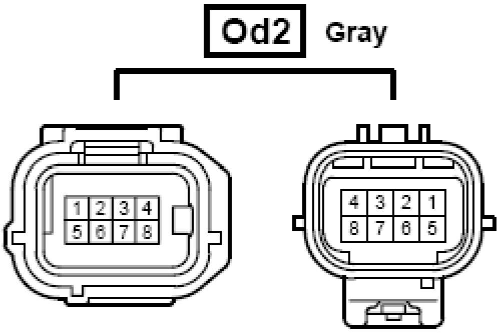
Od2
Gray
1 2 3 4
5 6 7 8
4 3 2 1
8 7 6 5

Fig. 407: Connector End View (Od2)
Courtesy of TOYOTA MOTOR SALES, U.S.A., INC.

CONNECTOR END VIEW (OZ1)

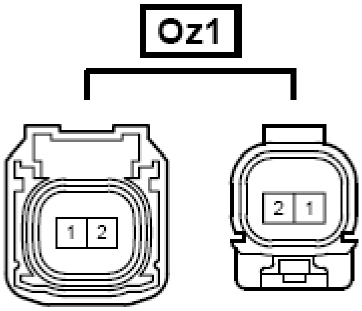

Fig. 408: Connector End View (Oz1)
Courtesy of TOYOTA MOTOR SALES, U.S.A., INC.

CONNECTOR END VIEW (OZ2)

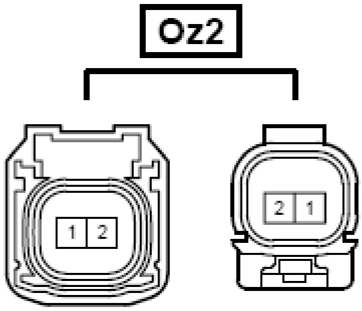

Fig. 409: Connector End View (Oz2)
Courtesy of TOYOTA MOTOR SALES, U.S.A., INC.

CONNECTOR END VIEW (TN1)

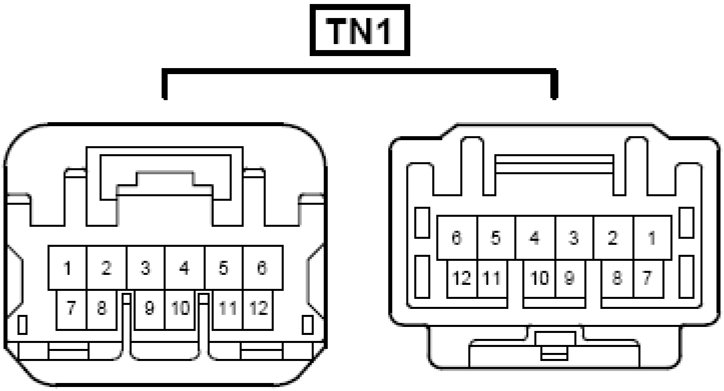
TN1
1
2
3
4
5
6
7
8
9
10
11
12
6
5
4
3
2
1
12
11
10
9
8
7

Fig. 410: Connector End View (TN1)
Courtesy of TOYOTA MOTOR SALES, U.S.A., INC.

CONNECTOR END VIEW (TN2)

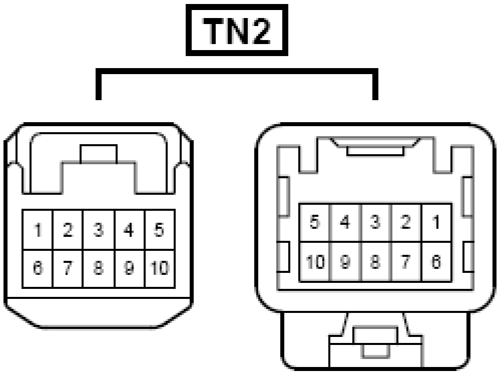
TN2
1
2
3
4
5
6
7
8
9
10
5
4
3
2
1
10
9
8
7
6

Fig. 411: Connector End View (TN2)
Courtesy of TOYOTA MOTOR SALES, U.S.A., INC.

CONNECTOR END VIEW (TO1)

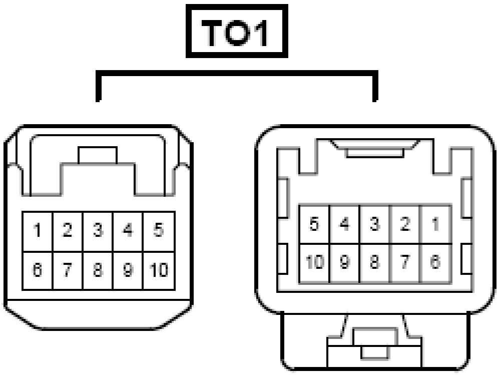
TO1
1
2
3
4
5
6
7
8
9
10
5
4
3
2
1
10
9
8
7
6

Fig. 412: Connector End View (TO1)

Courtesy of TOYOTA MOTOR SALES, U.S.A., INC.

CONNECTOR END VIEW (UO1)

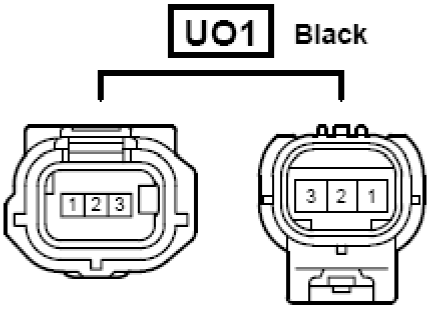
UO1
Black
1 2 3
3 2 1

Fig. 413: Connector End View (UO1)
Courtesy of TOYOTA MOTOR SALES, U.S.A., INC.

CONNECTOR END VIEW (VJ1)

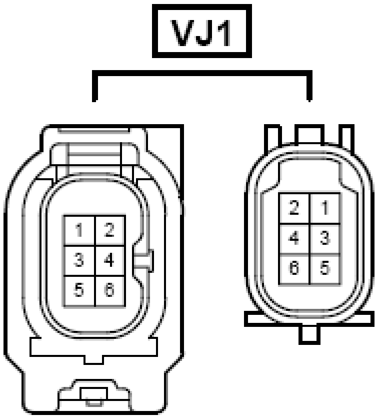
VJ1
1 2
3 4
5 6
2 1
4 3
6 5

Fig. 414: Connector End View (VJ1)
Courtesy of TOYOTA MOTOR SALES, U.S.A., INC.

CONNECTOR END VIEW (WK1)

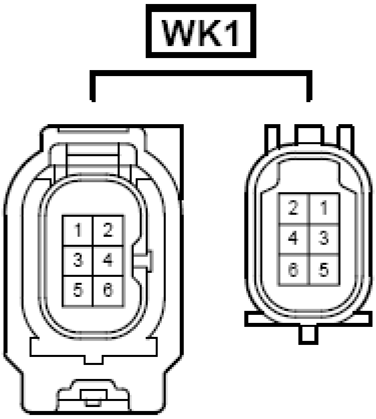
WK1
1
2
3
4
5
6
2
1
4
3
6
5

Fig. 415: Connector End View (WK1)
Courtesy of TOYOTA MOTOR SALES, U.S.A., INC.

CONNECTOR END VIEW (DD1)

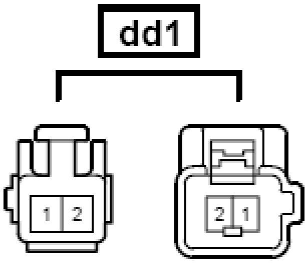

Fig. 416: Connector End View (dd1)
Courtesy of TOYOTA MOTOR SALES, U.S.A., INC.

CONNECTOR END VIEW (EE1)

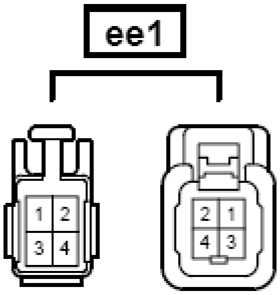
ee1
1
2
3
4
2
1
4
3

Fig. 417: Connector End View (ee1)
Courtesy of TOYOTA MOTOR SALES, U.S.A., INC.

CONNECTOR END VIEW (FD1)

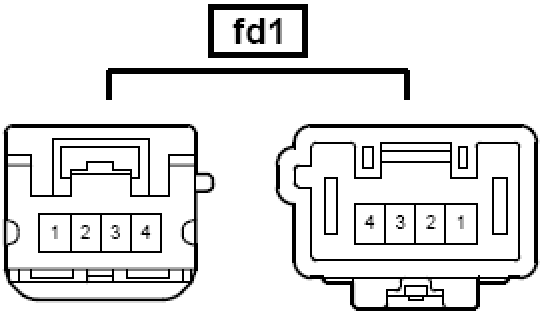
fd1
1
2
3
4
4
3
2
1

Fig. 418: Connector End View (fd1)
Courtesy of TOYOTA MOTOR SALES, U.S.A., INC.

CONNECTOR END VIEW (GE1)

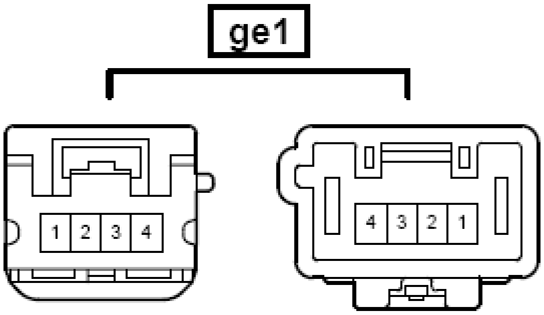
ge1
1
2
3
4
4
3
2
1

Fig. 419: Connector End View (ge1)
Courtesy of TOYOTA MOTOR SALES, U.S.A., INC.

CONNECTOR END VIEW (HO1)

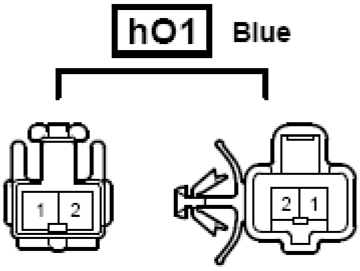
hO1
Blue
1
2
2
1

Fig. 420: Connector End View (hO1)
Courtesy of TOYOTA MOTOR SALES, U.S.A., INC.

CONNECTOR END VIEW (IN1)

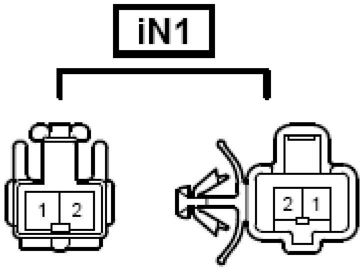

Fig. 421: Connector End View (iN1)
Courtesy of TOYOTA MOTOR SALES, U.S.A., INC.

ADDITIONAL INFORMATION

*1: Front Side Marker Light

*2: Front Turn Signal and Parking Light

*3: Headlight Leveling Motor

*4: Low Halogen Type

CLEARANCE WARNING ECU

COMPONENTS

ILLUSTRATION

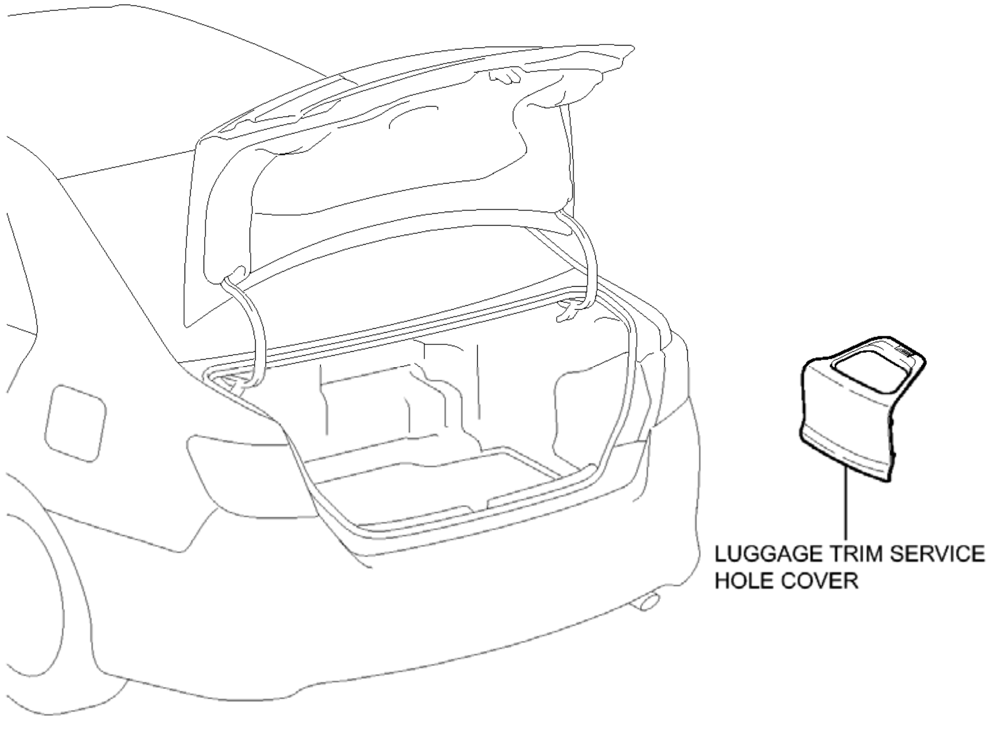
LUGGAGE TRIM SERVICE HOLE COVER
P

Fig. 1: Identifying Clearance Warning ECU Replacement Components (1 Of 3)
Courtesy of TOYOTA MOTOR SALES, U.S.A., INC.

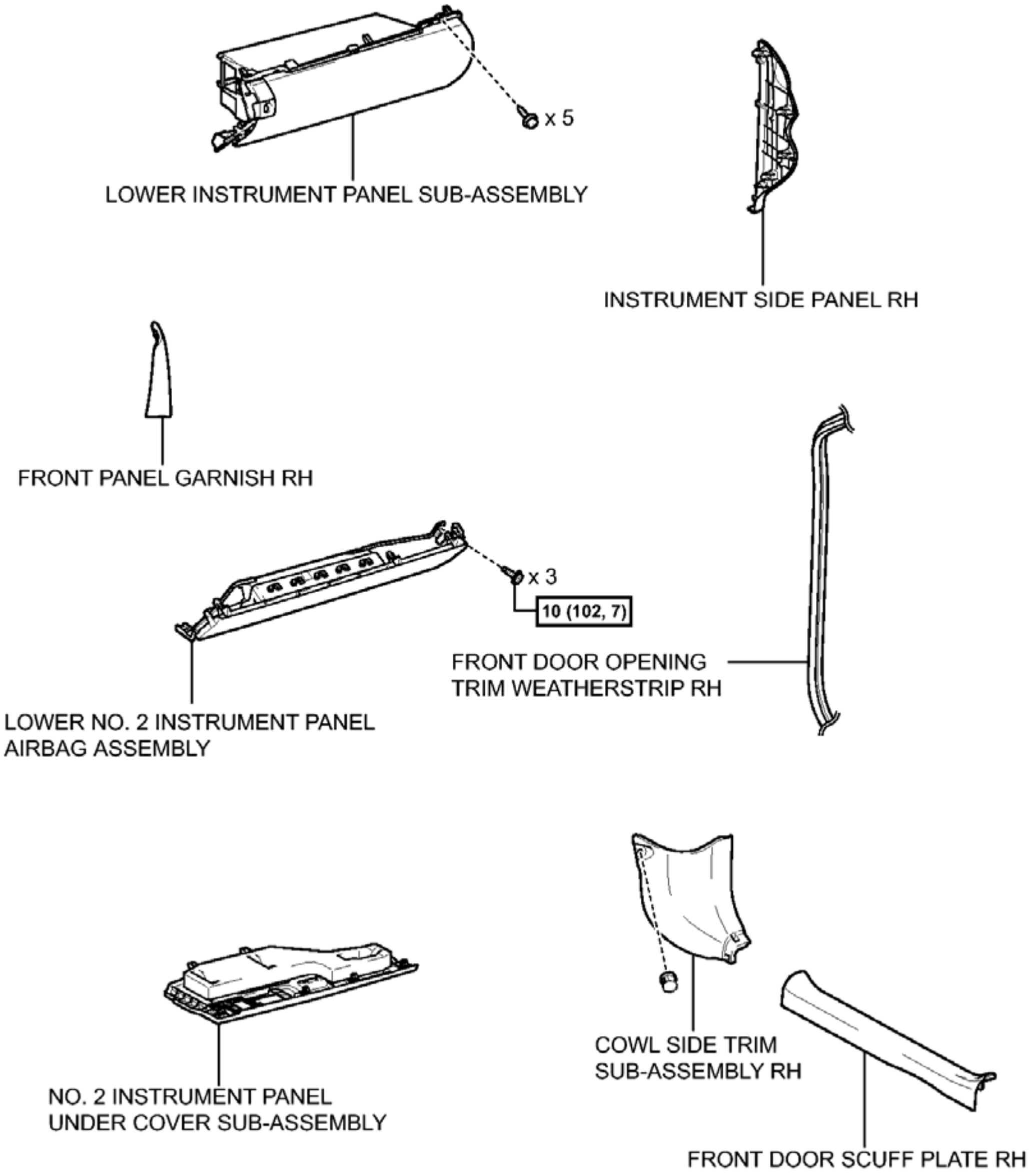
x 5
LOWER INSTRUMENT PANEL SUB-ASSEMBLY
INSTRUMENT SIDE PANEL RH
FRONT PANEL GARNISH RH
x 3
10 (102, 7)
FRONT DOOR OPENING
TRIM WEATHERSTRIP RH
LOWER NO. 2 INSTRUMENT PANEL
AIRBAG ASSEMBLY
NO. 2 INSTRUMENT PANEL
UNDER COVER SUB-ASSEMBLY
COWL SIDE TRIM
SUB-ASSEMBLY RH
FRONT DOOR SCUFF PLATE RH
P

Fig. 2: Identifying Clearance Warning ECU Replacement Components (2 Of 3)
Courtesy of TOYOTA MOTOR SALES, U.S.A., INC.

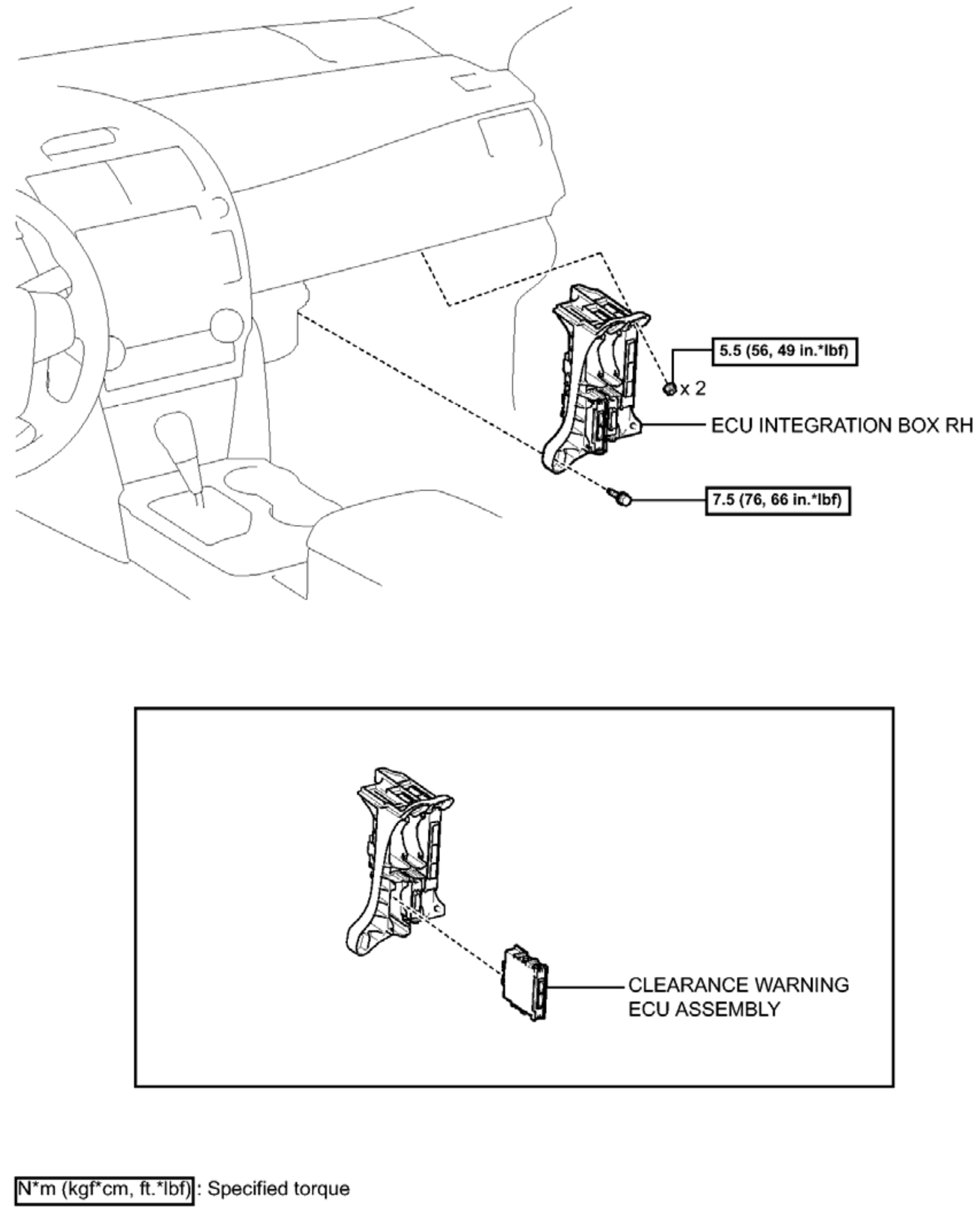
5.5 (56, 49 in.*lbf)
x 2
ECU INTEGRATION BOX RH
7.5 (76, 66 in.*lbf)
CLEARANCE WARNING
ECU ASSEMBLY
N*m (kgf*cm, ft.*lbf) : Specified torque

P

Fig. 3: Identifying Clearance Warning ECU Replacement Components With Torque Specifications (3 Of 3)
Courtesy of TOYOTA MOTOR SALES, U.S.A., INC.

REMOVAL

REMOVAL

1. **PRECAUTION**

NOTE: **After turning the power switch off, waiting time may be required before disconnecting the cable from the negative (-) auxiliary battery terminal. Therefore, make sure to read the disconnecting the cable from the negative (-) auxiliary battery terminal notices before proceeding with work. Refer to PRECAUTION .**

2. **REMOVE LUGGAGE TRIM SERVICE HOLE COVER** . Refer to **REMOVAL - Step 2**
3. **DISCONNECT CABLE FROM AUXILIARY BATTERY NEGATIVE TERMINAL**

   WARNING: **Wait at least 90 seconds after disconnecting the cable from the negative (-) auxiliary battery terminal to disable the SRS system.**

   NOTE: **When disconnecting the cable, some systems need to be initialized after the cable is reconnected. Refer to INITIALIZATION .**

4. **REMOVE FRONT DOOR SCUFF PLATE RH**

   HINT:

   Use the same procedure as for the LH side. Refer to **REMOVAL - Step 4** .

5. **REMOVE COWL SIDE TRIM SUB-ASSEMBLY RH**

   HINT:

   Use the same procedure as for the LH side. Refer to **REMOVAL - Step 5** .

6. **DISCONNECT FRONT DOOR OPENING TRIM WEATHERSTRIP RH** . Refer to **REMOVAL - Step 33**
7. **REMOVE INSTRUMENT SIDE PANEL RH** . Refer to **REMOVAL - Step 34**
8. **REMOVE FRONT PANEL GARNISH RH** . Refer to **REMOVAL - Step 15**
9. **REMOVE NO. 2 INSTRUMENT PANEL UNDER COVER SUB-ASSEMBLY** . Refer to **REMOVAL - Step 35**
10. **REMOVE LOWER NO. 2 INSTRUMENT PANEL AIRBAG ASSEMBLY** . Refer to **REMOVAL - Step 9**
11. **REMOVE LOWER INSTRUMENT PANEL SUB-ASSEMBLY** . Refer to **REMOVAL - Step 37**
12. **REMOVE ECU INTEGRATION BOX RH**
    a. Disconnect each connector.
    b. Remove the bolt, 2 nuts and ECU integration box RH.

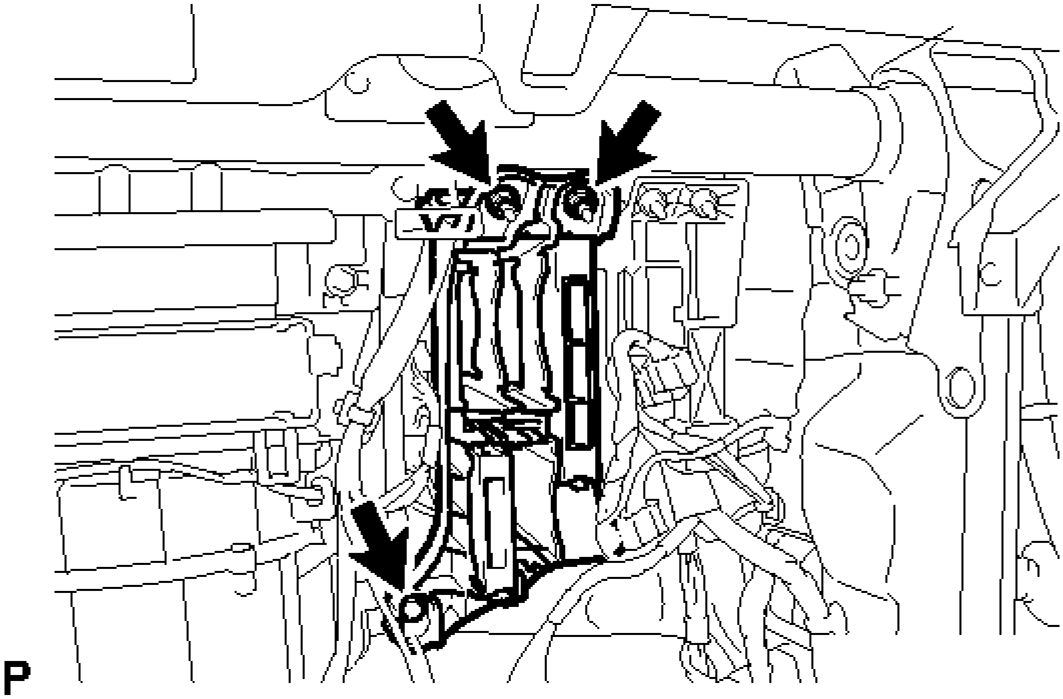

Fig. 4: Locating ECU Integration Box RH Fasteners
Courtesy of TOYOTA MOTOR SALES, U.S.A., INC.

13. **REMOVE CLEARANCE WARNING ECU ASSEMBLY**
    a. Disengage the 2 claws and remove the clearance warning ECU assembly.

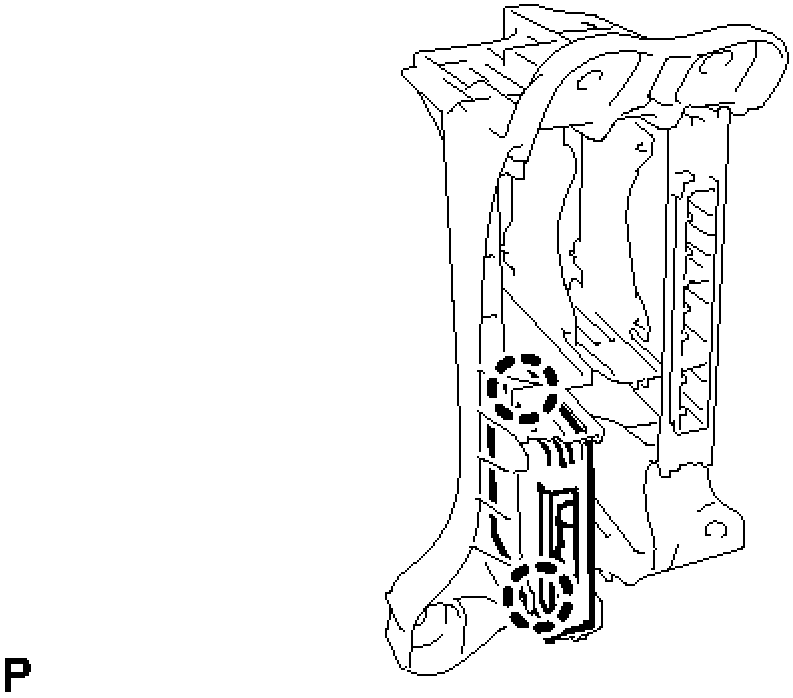

Fig. 5: Locating Clearance Warning ECU Assembly And Claws

INSTALLATION

INSTALLATION

1. **INSTALL CLEARANCE WARNING ECU ASSEMBLY**
   a. Engage the 2 claws to install the clearance warning ECU assembly.
2. **INSTALL ECU INTEGRATION BOX RH**
   a. Install the ECU integration box RH with the 2 nuts and bolt.

      Bolt

      Torque: 7.5 N*m (76 kgf*cm, 66 in.*lbf)

      Nut

      Torque: 5.5 N*m (56 kgf*cm, 49 in.*lbf)

   b. Connect each connector.
3. **INSTALL LOWER INSTRUMENT PANEL SUB-ASSEMBLY** . Refer to **INSTALLATION - Step 15**
4. **INSTALL LOWER NO. 2 INSTRUMENT PANEL AIRBAG ASSEMBLY** . Refer to **INSTALLATION - Step 1**
5. **INSTALL NO. 2 INSTRUMENT PANEL UNDER COVER SUB-ASSEMBLY** . Refer to **INSTALLATION - Step 17**
6. **INSTALL FRONT PANEL GARNISH RH** . Refer to **INSTALLATION - Step 37**
7. **INSTALL INSTRUMENT SIDE PANEL RH** . Refer to **INSTALLATION - Step 18**
8. **INSTALL FRONT DOOR OPENING TRIM WEATHERSTRIP RH** . Refer to **INSTALLATION - Step 47**
9. **INSTALL COWL SIDE TRIM SUB-ASSEMBLY RH**

   HINT:

   Use the same procedure as for the LH side. Refer to **INSTALLATION - Step 44** .

10. **INSTALL FRONT DOOR SCUFF PLATE RH**

    HINT:

    Use the same procedure as for the LH side. Refer to **INSTALLATION - Step 45** .

11. **CONNECT CABLE TO AUXILIARY BATTERY NEGATIVE TERMINAL**

NOTE: **When disconnecting the cable, some systems need to be initialized after the cable is reconnected. Refer to INITIALIZATION .**

12. **INSTALL LUGGAGE TRIM SERVICE HOLE COVER** . Refer to **INSTALLATION - Step 3**
13. **INSPECT SRS WARNING LIGHT**

    for Built-in Type Yaw Rate Sensor: Refer to **DIAGNOSIS SYSTEM**

    for Separate Type Yaw Rate Sensor: Refer to **DIAGNOSIS SYSTEM**

CLEARANCE WARNING BUZZER

COMPONENTS

ILLUSTRATION

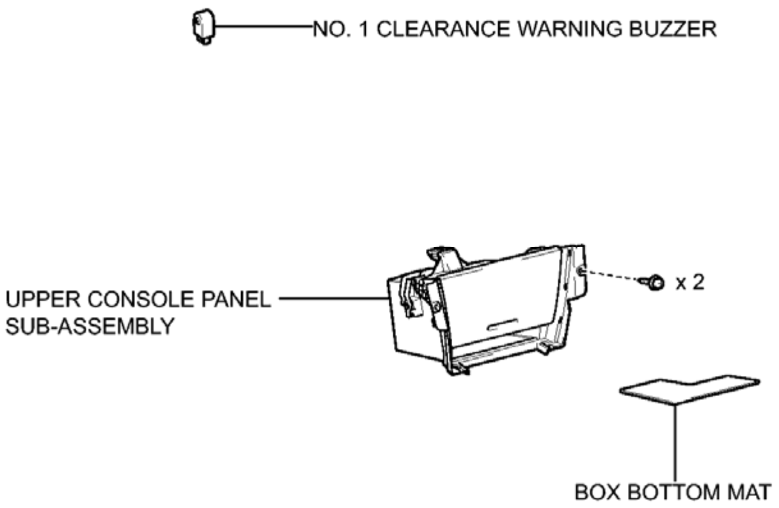
NO. 1 CLEARANCE WARNING BUZZER
UPPER CONSOLE PANEL SUB-ASSEMBLY
x 2
BOX BOTTOM MAT

P

Fig. 6: Identifying Clearance Warning Buzzer Replacement Components
Courtesy of TOYOTA MOTOR SALES, U.S.A., INC.

REMOVAL

REMOVAL

1. **REMOVE REAR CONSOLE BOX ASSEMBLY**

Refer to **REMOVAL**

2. **REMOVE BOX BOTTOM MAT** . Refer to **REMOVAL - Step 24**
3. **REMOVE UPPER CONSOLE PANEL SUB-ASSEMBLY** . Refer to **REMOVAL - Step 25**
4. **REMOVE NO. 1 CLEARANCE WARNING BUZZER**
    a. Disconnect the connector.

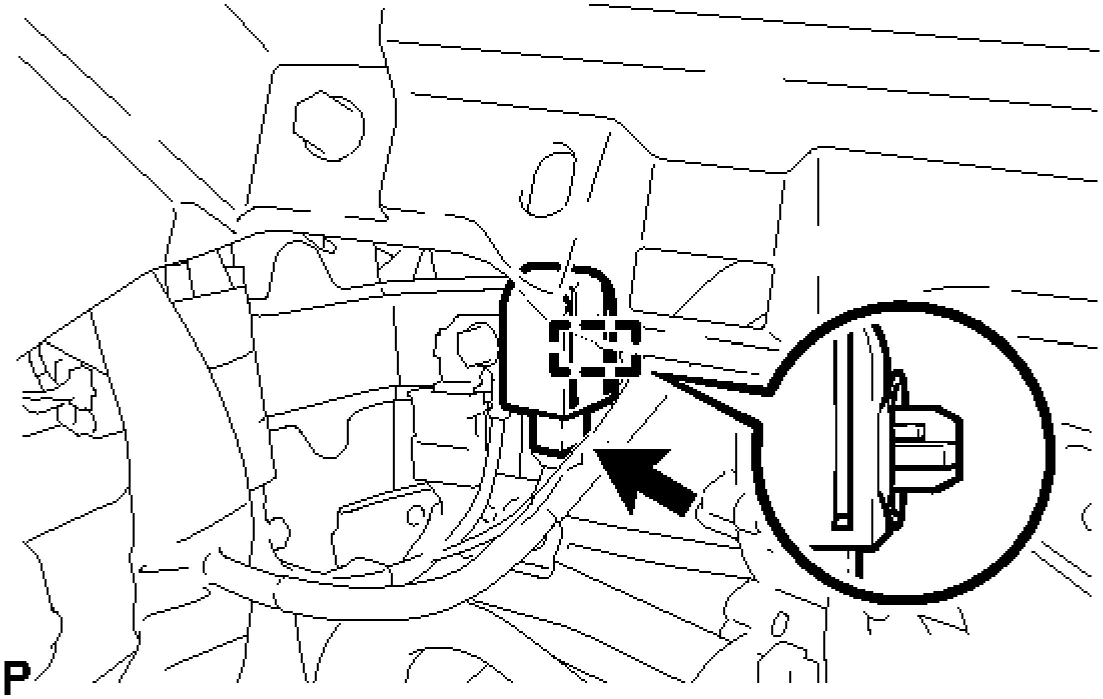

Fig. 7: Locating No. 1 Clearance Warning Buzzer Connector
Courtesy of TOYOTA MOTOR SALES, U.S.A., INC.

    b. Disengage the clamp to remove the No. 1 clearance warning buzzer.

INSTALLATION

INSTALLATION

1. **INSTALL NO. 1 CLEARANCE WARNING BUZZER**
    a. Engage the clamp to install the No. 1 clearance warning buzzer.
    b. Connect the connector.
2. **INSTALL UPPER CONSOLE PANEL SUB-ASSEMBLY** . Refer to **INSTALLATION - Step 27**
3. **INSTALL BOX BOTTOM MAT** . Refer to **INSTALLATION - Step 28**
4. **INSTALL REAR CONSOLE BOX ASSEMBLY**

Refer to **INSTALLATION**

ULTRASONIC SENSOR (FOR FRONT SIDE)

COMPONENTS

ILLUSTRATION

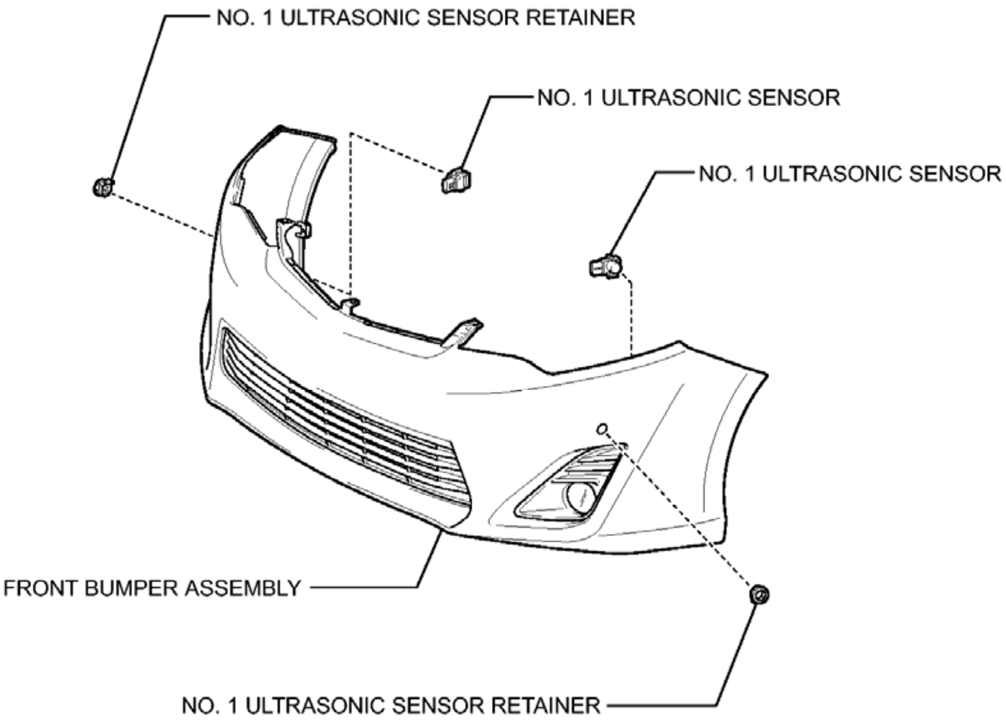
NO. 1 ULTRASONIC SENSOR RETAINER
NO. 1 ULTRASONIC SENSOR
NO. 1 ULTRASONIC SENSOR
FRONT BUMPER ASSEMBLY
NO. 1 ULTRASONIC SENSOR RETAINER

P

Fig. 8: Identifying Ultrasonic Sensor (For Front Side) Replacement Components
Courtesy of TOYOTA MOTOR SALES, U.S.A., INC.

REMOVAL

REMOVAL

1. **REMOVE FRONT BUMPER ASSEMBLY**

   Refer to **REMOVAL**

2. **REMOVE NO. 1 ULTRASONIC SENSOR**
    a. Disengage the 2 claws to remove the No. 1 ultrasonic sensor.

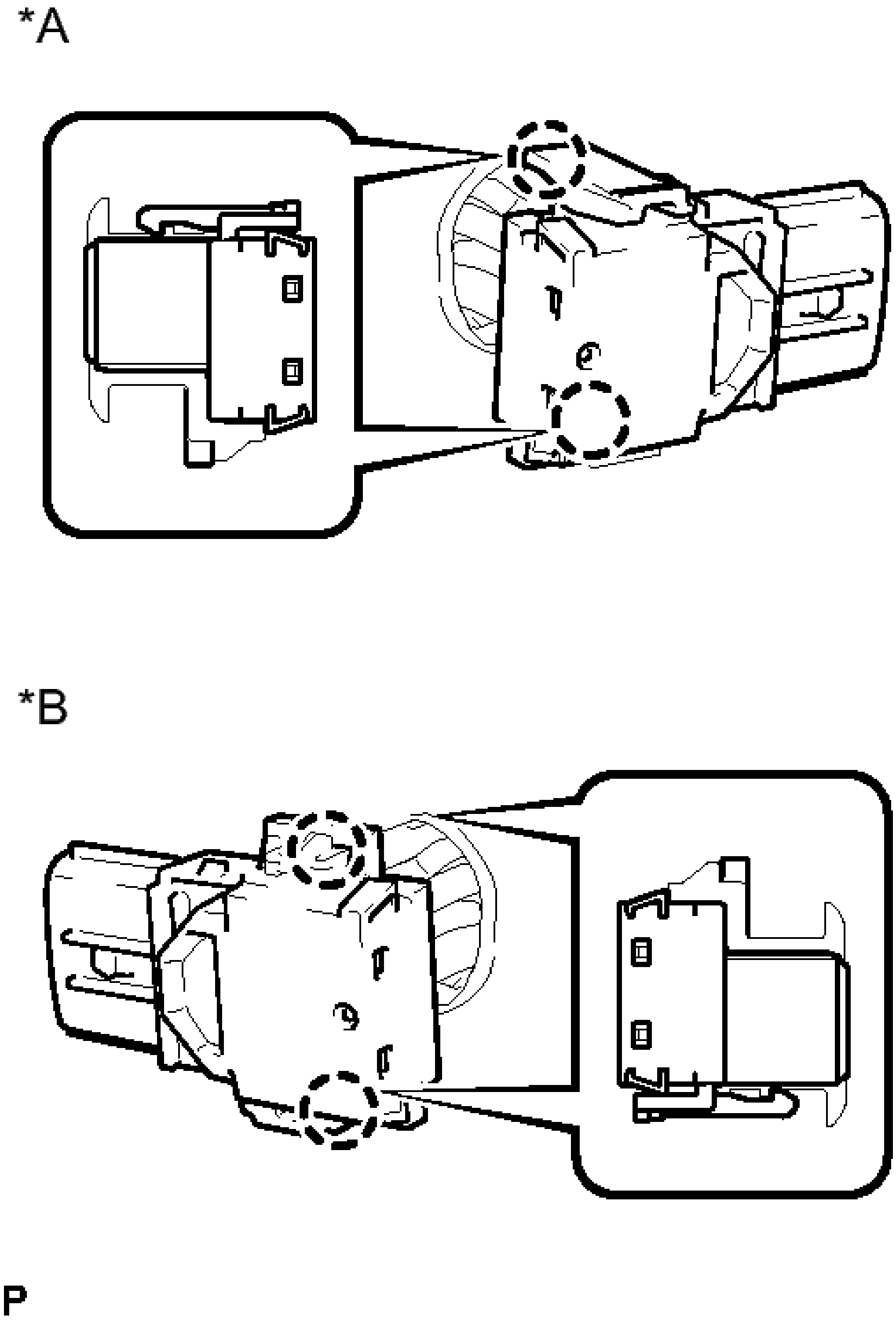

Fig. 9: Identifying No. 1 Ultrasonic Sensor And Claws
Courtesy of TOYOTA MOTOR SALES, U.S.A., INC.

TEXT IN ILLUSTRATION

*A	LH Side
*B	RH Side

3. **REMOVE NO. 1 ULTRASONIC SENSOR RETAINER**
   a. Disengage the 2 claws to remove the No. 1 ultrasonic sensor retainer from the front bumper assembly.

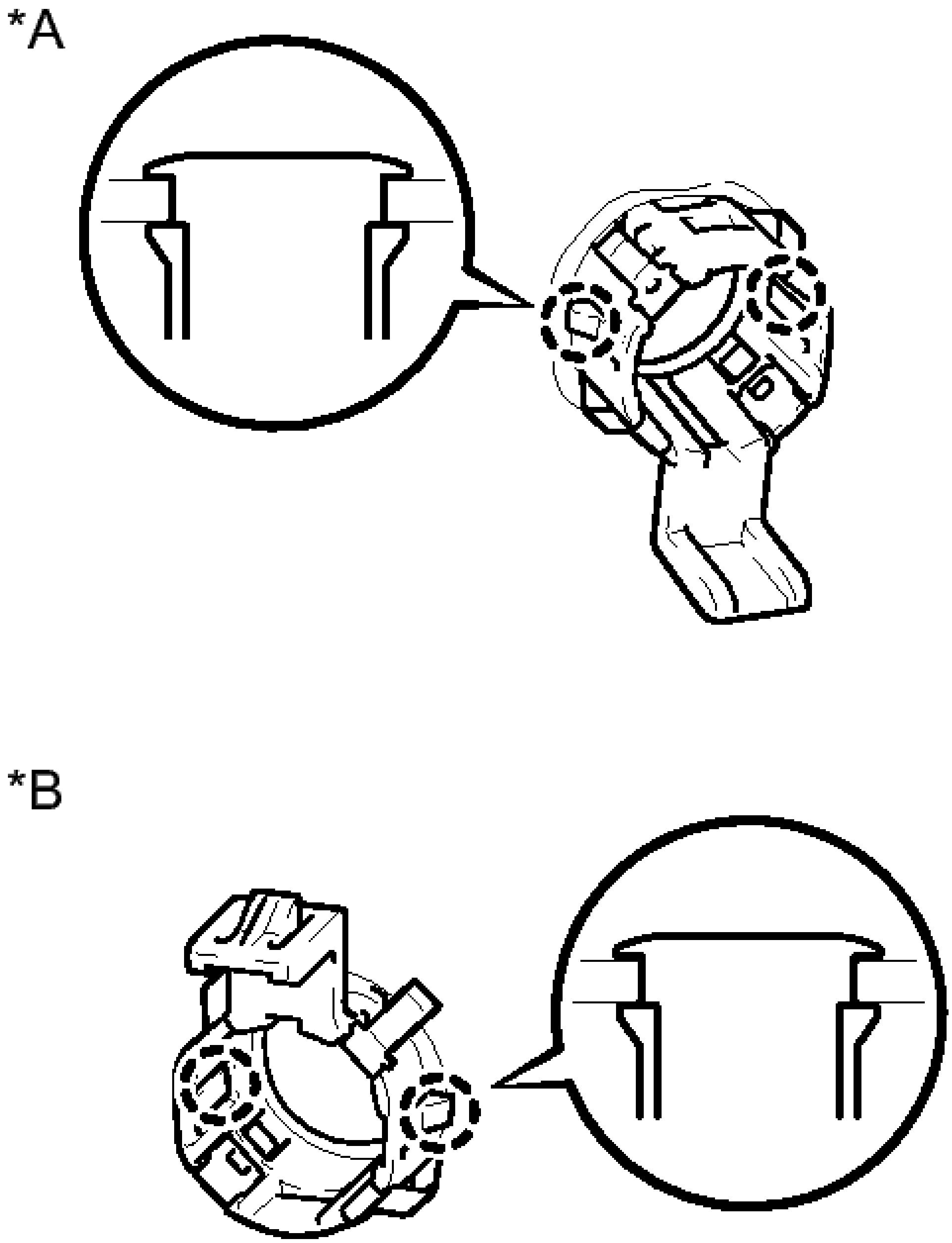

P

Fig. 10: Identifying No. 1 Ultrasonic Sensor Retainer And Claws
Courtesy of TOYOTA MOTOR SALES, U.S.A., INC.

TEXT IN ILLUSTRATION

	LH

*A	Side
*B	RH Side

INSPECTION

INSPECTION

1. **INSPECT NO. 1 ULTRASONIC SENSOR**
    a. Measure the resistance according to the value(s) in the table below.

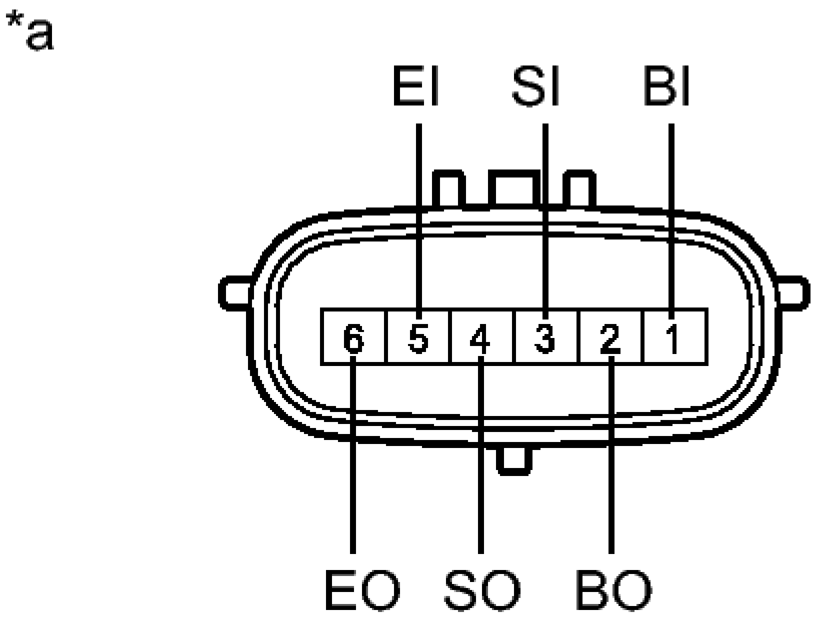

Fig. 11: No. 1 Ultrasonic Sensor Connector End View
Courtesy of TOYOTA MOTOR SALES, U.S.A., INC.

Standard Resistance

Tester Connection	Condition	Specified Condition
1 (BI) - 5 (EI)	Always	10 kohms or higher
1 (BI) - 2 (BO)	Always	10 kohms or higher
3 (SI) - 4 (SO)	Always	Below 1 ohms
5 (EI) - 6 (EO)	Always	Below 1 ohms

TEXT IN ILLUSTRATION

*a	Component without harness connected: (No. 1 Ultrasonic Sensor)

If the result is not as specified, replace the No. 1 ultrasonic sensor.

INSTALLATION

INSTALLATION

1. **INSTALL NO. 1 ULTRASONIC SENSOR RETAINER**
    a. Engage the 2 claws to install the No. 1 ultrasonic sensor retainer to the front bumper assembly.

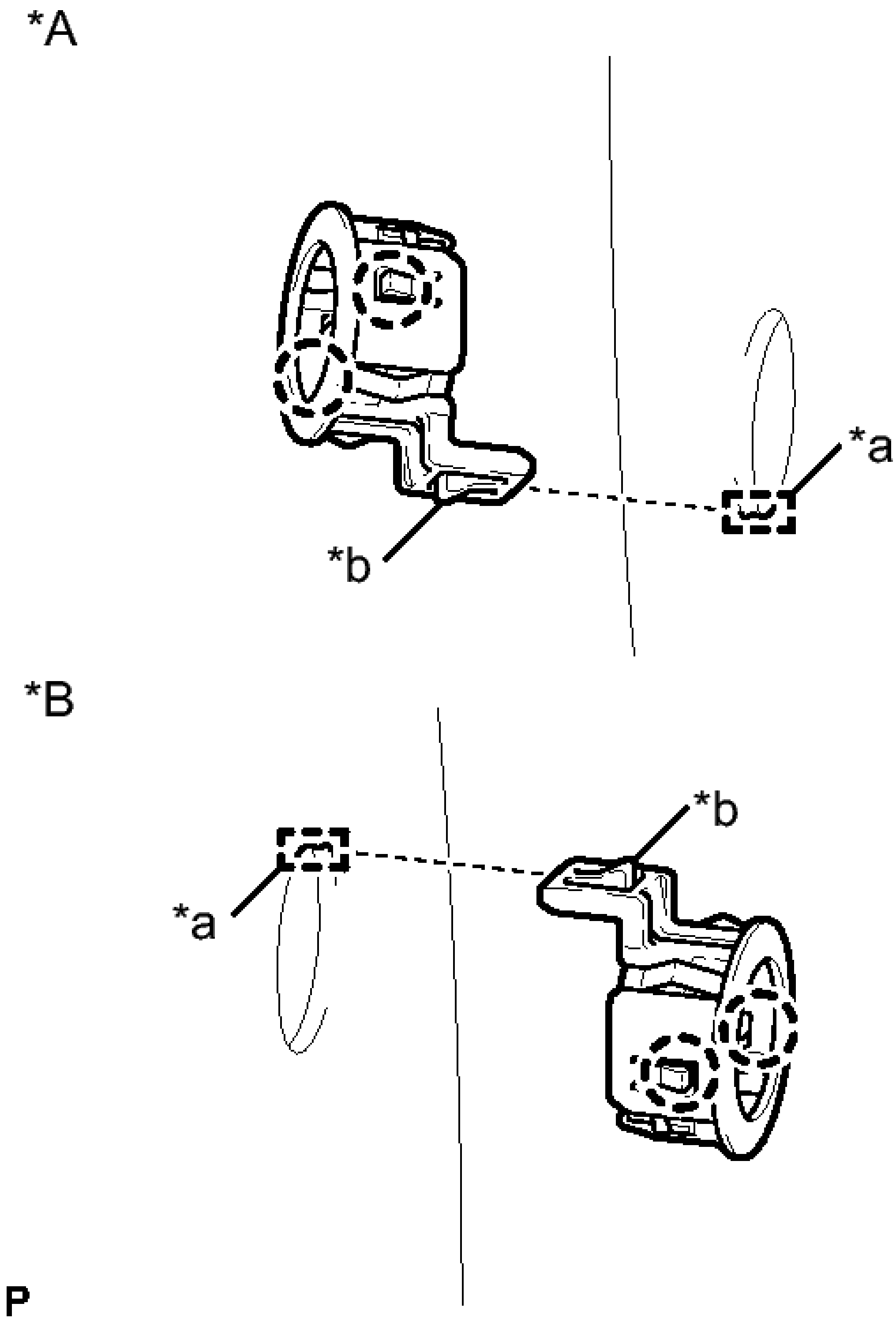

Fig. 12: Identifying No. 1 Ultrasonic Sensor Retainer And Claws
Courtesy of TOYOTA MOTOR SALES, U.S.A., INC.

TEXT IN ILLUSTRATION

*A	LH Side

*B	RH Side
*a	Keyhole
*b	Snap

NOTE:

- **Do not damage the front bumper with the protrusion when installing the retainer.**
- **Securely install the No. 1 ultrasonic sensor retainer so that there are no gaps between the retainer and surface of the front bumper.**

HINT:

When installing the retainer, align the keyhole and snap as shown in the illustration.

2. **INSTALL NO. 1 ULTRASONIC SENSOR**
    a. Engage the 2 claws to install the No. 1 ultrasonic sensor to the No. 1 ultrasonic sensor retainer.

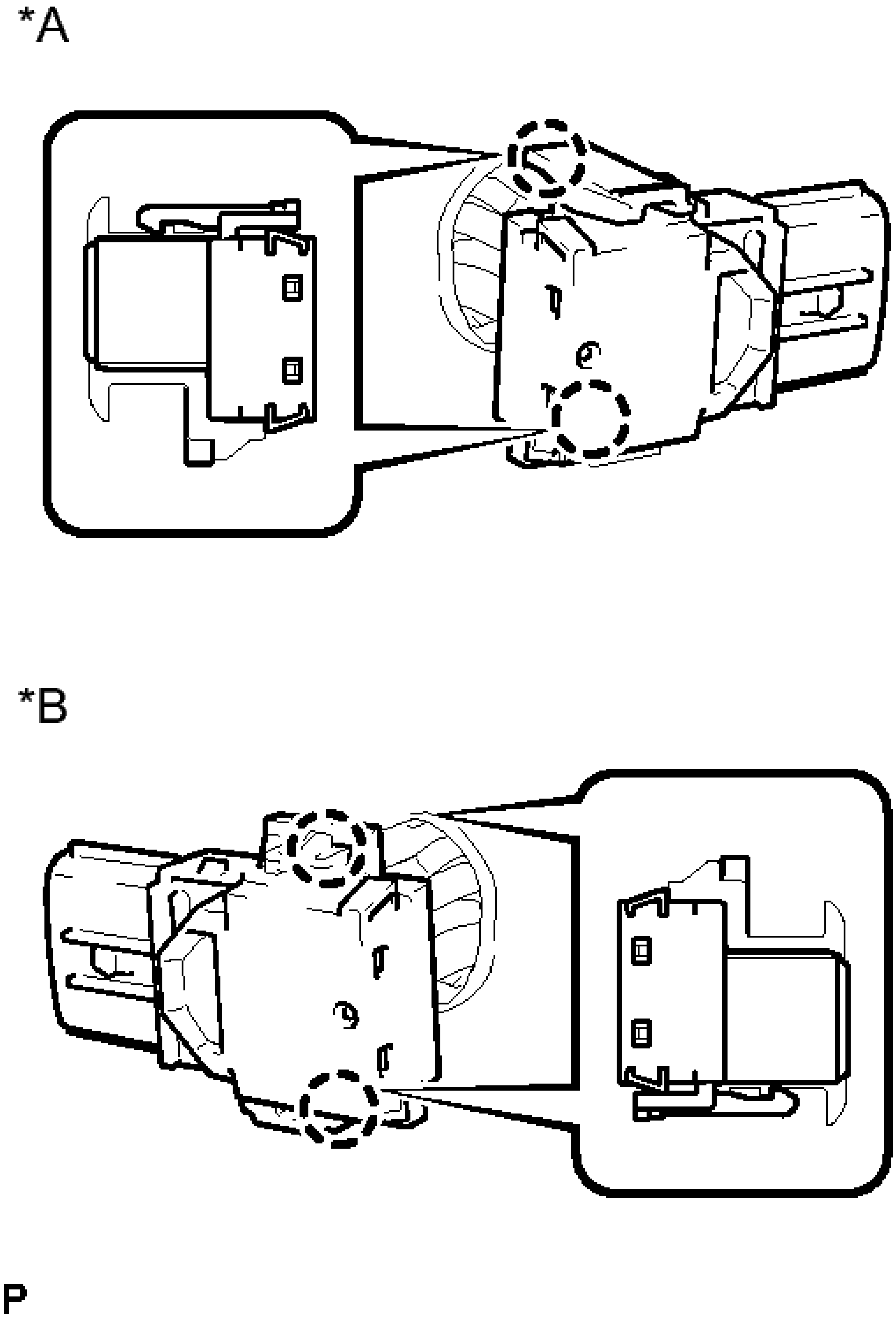

Fig. 13: Identifying No. 1 Ultrasonic Sensor And Claws
Courtesy of TOYOTA MOTOR SALES, U.S.A., INC.

TEXT IN ILLUSTRATION

	LH

*A	Side
*B	RH Side

NOTE: **Push the No. 1 ultrasonic sensor retainer from the outside of the bumper when there is a gap between the retainer and the bumper surface. In this case, do not push on the ultrasonic sensor.**

3. **INSTALL FRONT BUMPER ASSEMBLY**

   Refer to **INSTALLATION**

ULTRASONIC SENSOR (FOR REAR SIDE)

COMPONENTS

ILLUSTRATION

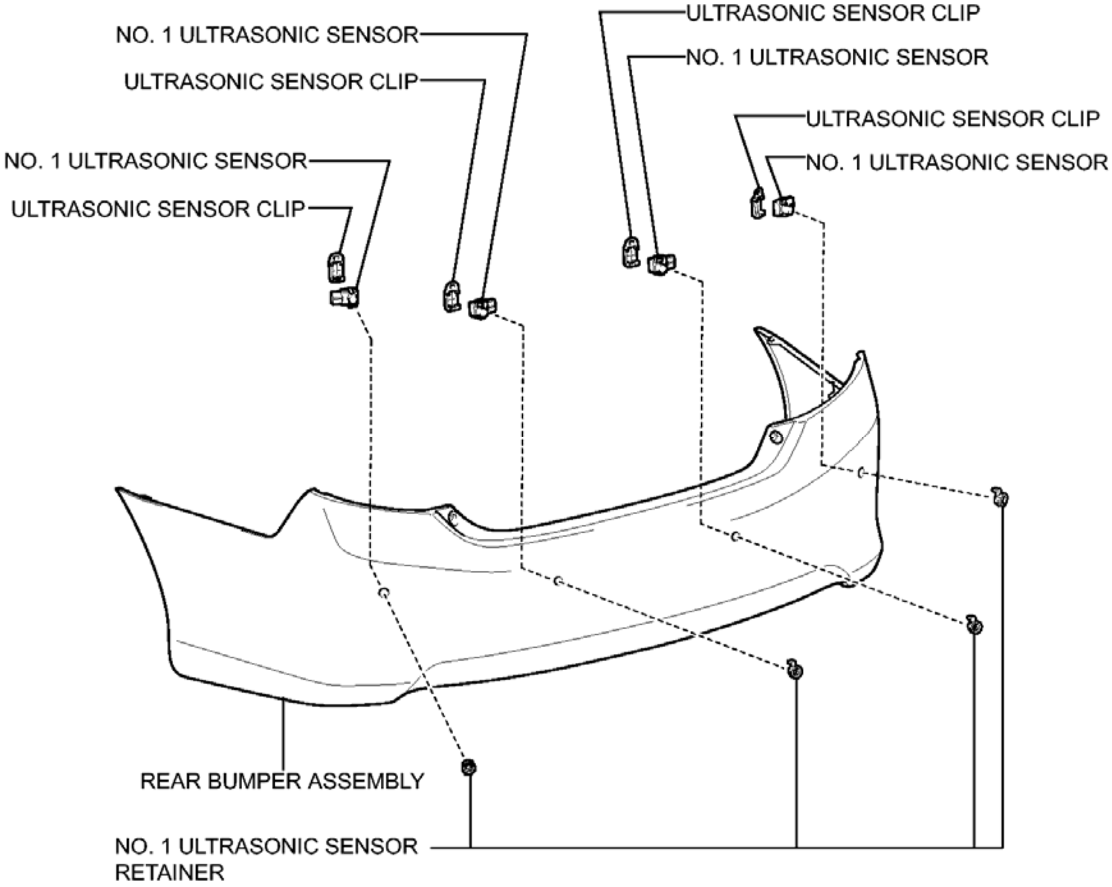
NO. 1 ULTRASONIC SENSOR
ULTRASONIC SENSOR CLIP
NO. 1 ULTRASONIC SENSOR
ULTRASONIC SENSOR CLIP
ULTRASONIC SENSOR CLIP
NO. 1 ULTRASONIC SENSOR
ULTRASONIC SENSOR CLIP
NO. 1 ULTRASONIC SENSOR
REAR BUMPER ASSEMBLY
NO. 1 ULTRASONIC SENSOR RETAINER
P

Fig. 14: Identifying Ultrasonic Sensor (For Rear Side) Replacement Components
Courtesy of TOYOTA MOTOR SALES, U.S.A., INC.

REMOVAL

REMOVAL

1. **REMOVE REAR BUMPER ASSEMBLY**

   Refer to **REMOVAL**

2. **REMOVE ULTRASONIC SENSOR CLIP**
   a. Disconnect the connector.

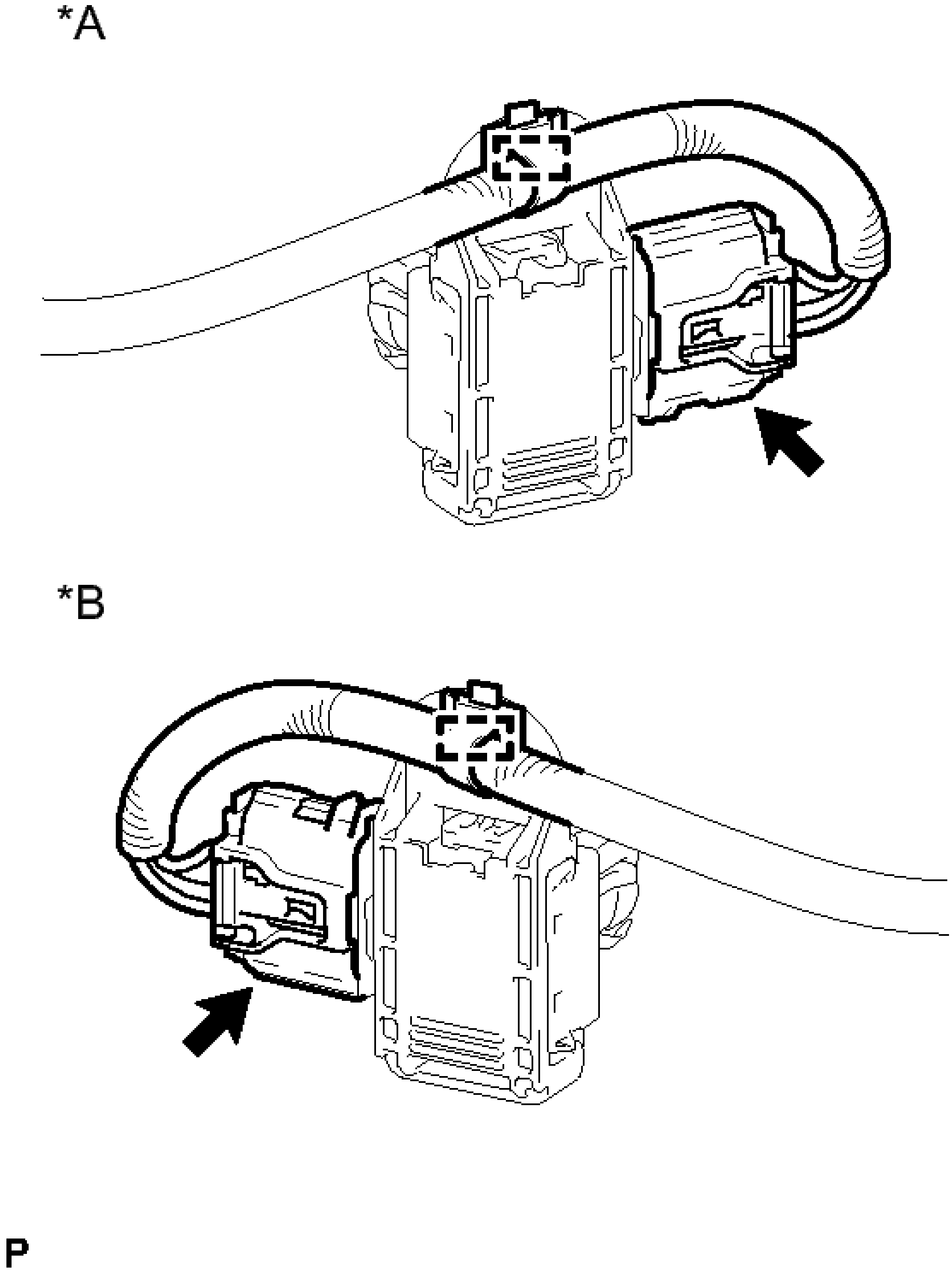

Fig. 15: Locating Ultrasonic Sensor Clip And Connector
Courtesy of TOYOTA MOTOR SALES, U.S.A., INC.

TEXT IN ILLUSTRATION

	LH

*A	Side
*B	Other Side

b. Disengage the clamp.
c. Disengage the 4 claws to remove the ultrasonic sensor clip.

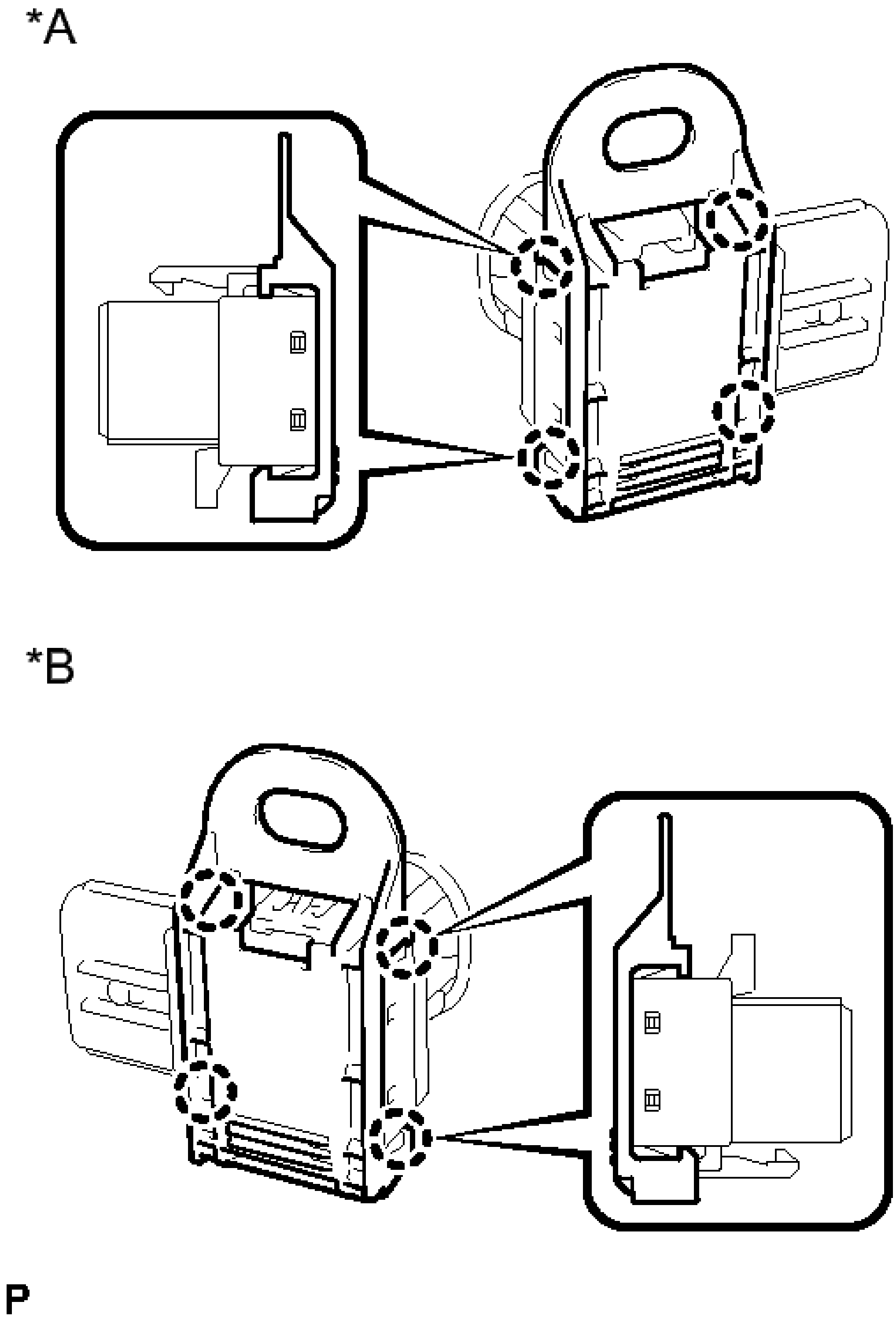

Fig. 16: Identifying Ultrasonic Sensor Clip And Claws
Courtesy of TOYOTA MOTOR SALES, U.S.A., INC.

TEXT IN ILLUSTRATION

	LH

*A	Side
*B	Other Side

3. **REMOVE NO. 1 ULTRASONIC SENSOR**
    a. Disengage the 2 claws to remove the No. 1 ultrasonic sensor.

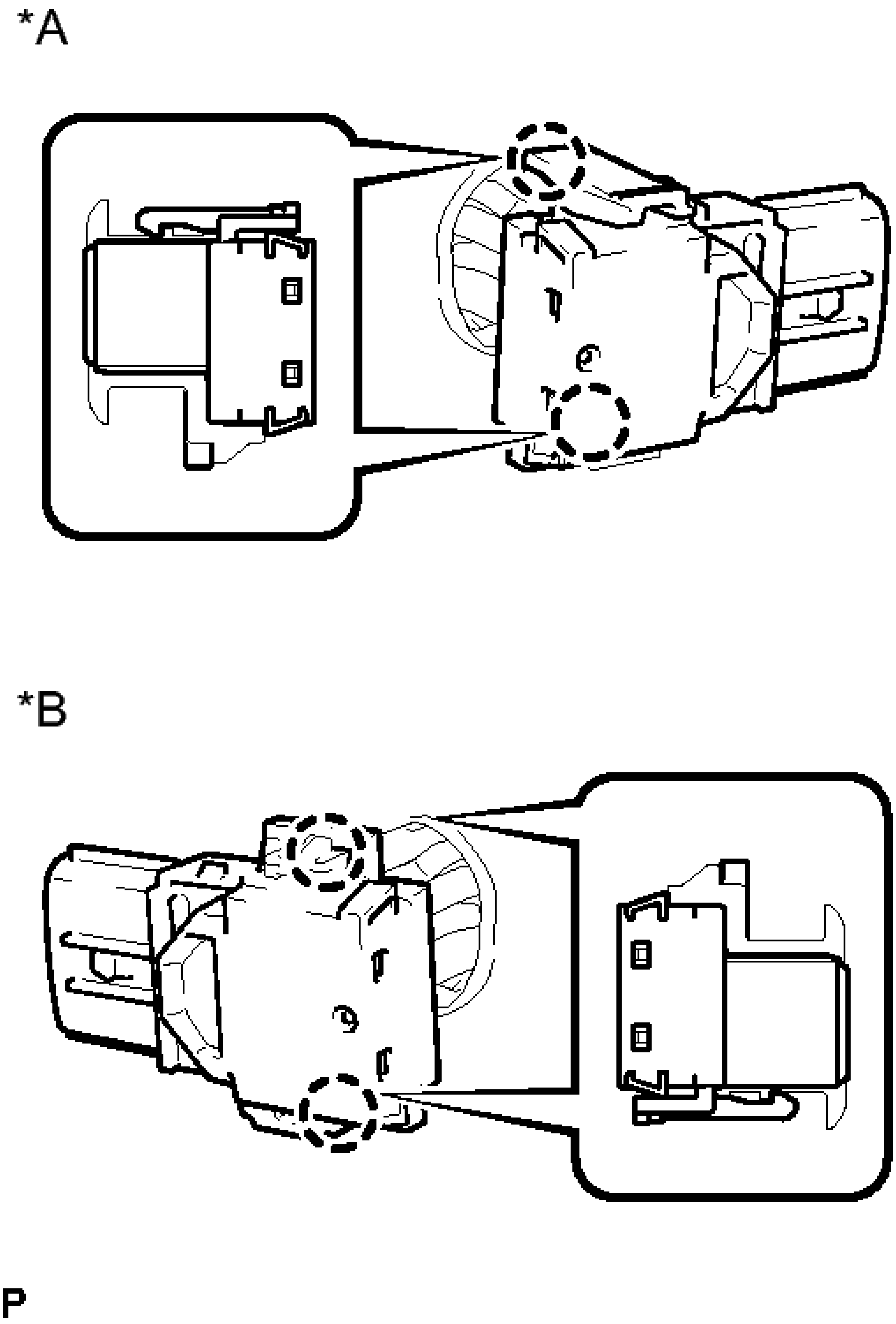

Fig. 17: Identifying No. 1 Ultrasonic Sensor And Claws
Courtesy of TOYOTA MOTOR SALES, U.S.A., INC.

TEXT IN ILLUSTRATION

	LH

*A	Side
*B	Other Side

4. **REMOVE NO. 1 ULTRASONIC SENSOR RETAINER**
    a. Disengage the 2 claws to remove the No. 1 ultrasonic sensor retainer from the rear bumper assembly.

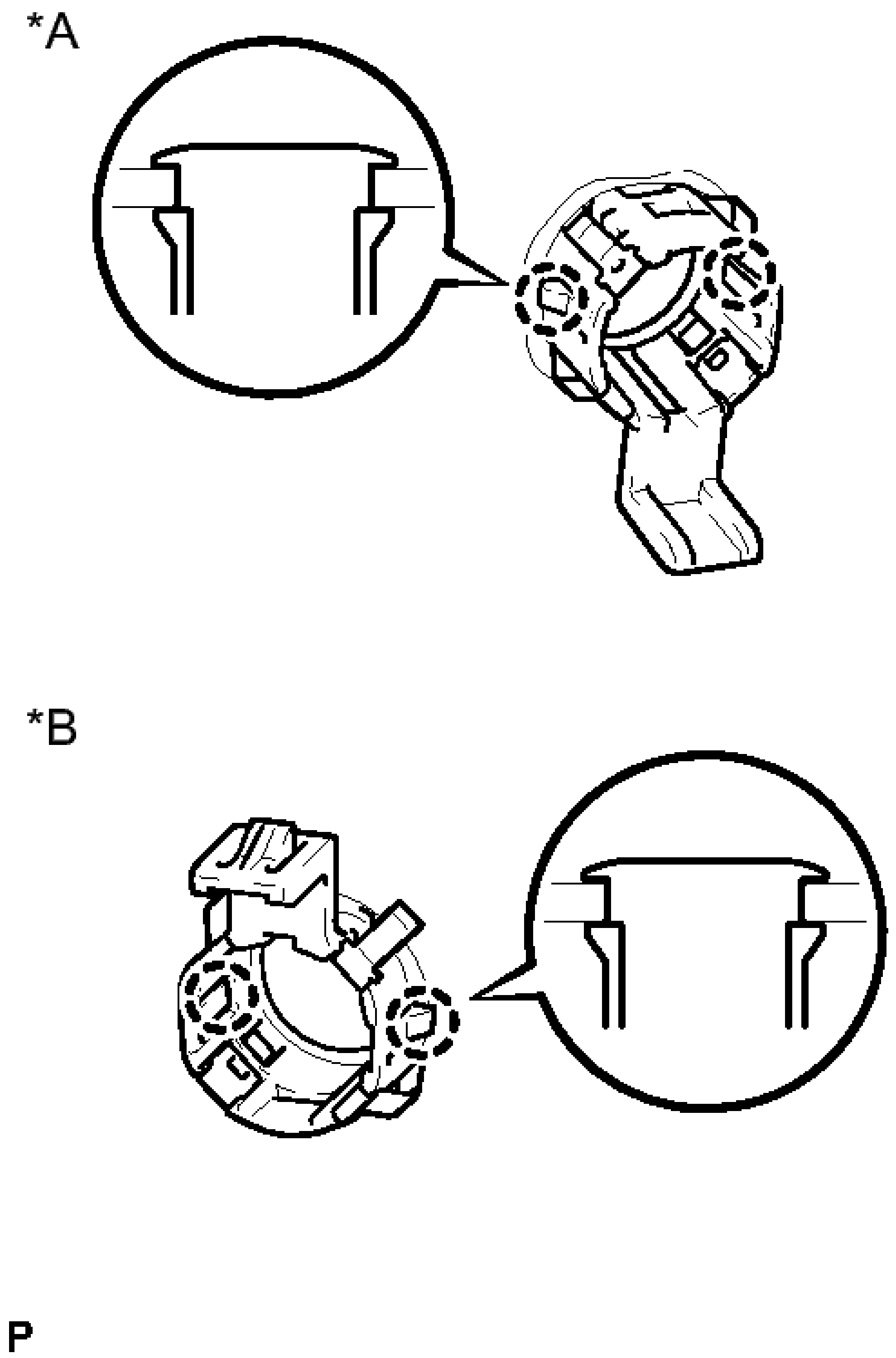

Fig. 18: Identifying No. 1 Ultrasonic Sensor Retainer And Claws
Courtesy of TOYOTA MOTOR SALES, U.S.A., INC.

TEXT IN ILLUSTRATION

	LH

*A	Side
*B	Other Side

INSPECTION

INSPECTION

1. **INSPECT NO. 1 ULTRASONIC SENSOR**
   a. Measure the resistance according to the value(s) in the table below.

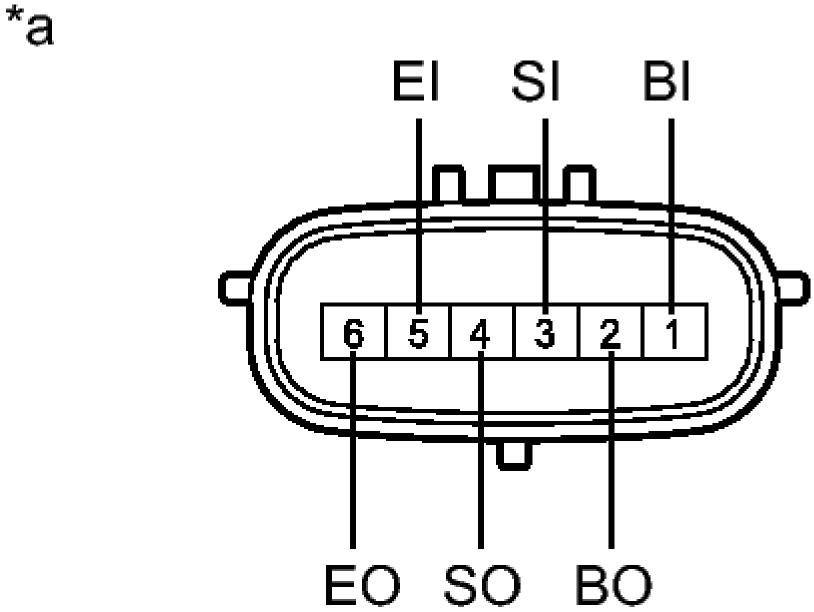

Fig. 19: No. 1 Ultrasonic Sensor Connector End View
Courtesy of TOYOTA MOTOR SALES, U.S.A., INC.

Standard Resistance

Tester Connection	Condition	Specified Condition
1 (BI) - 5 (EI)	Always	10 kohms or higher
1 (BI) - 2 (BO)	Always	10 kohms or higher
3 (SI) - 4 (SO)	Always	Below 1 ohms
5 (EI) - 6 (EO)	Always	Below 1 ohms

TEXT IN ILLUSTRATION

*a	Component without harness connected: (No. 1 Ultrasonic Sensor)

If the result is not as specified, replace the No. 1 ultrasonic sensor.

INSTALLATION

INSTALLATION

1. **INSTALL NO. 1 ULTRASONIC SENSOR RETAINER**
    a. Engage the 2 claws to install the No. 1 ultrasonic sensor retainer to the rear bumper assembly.

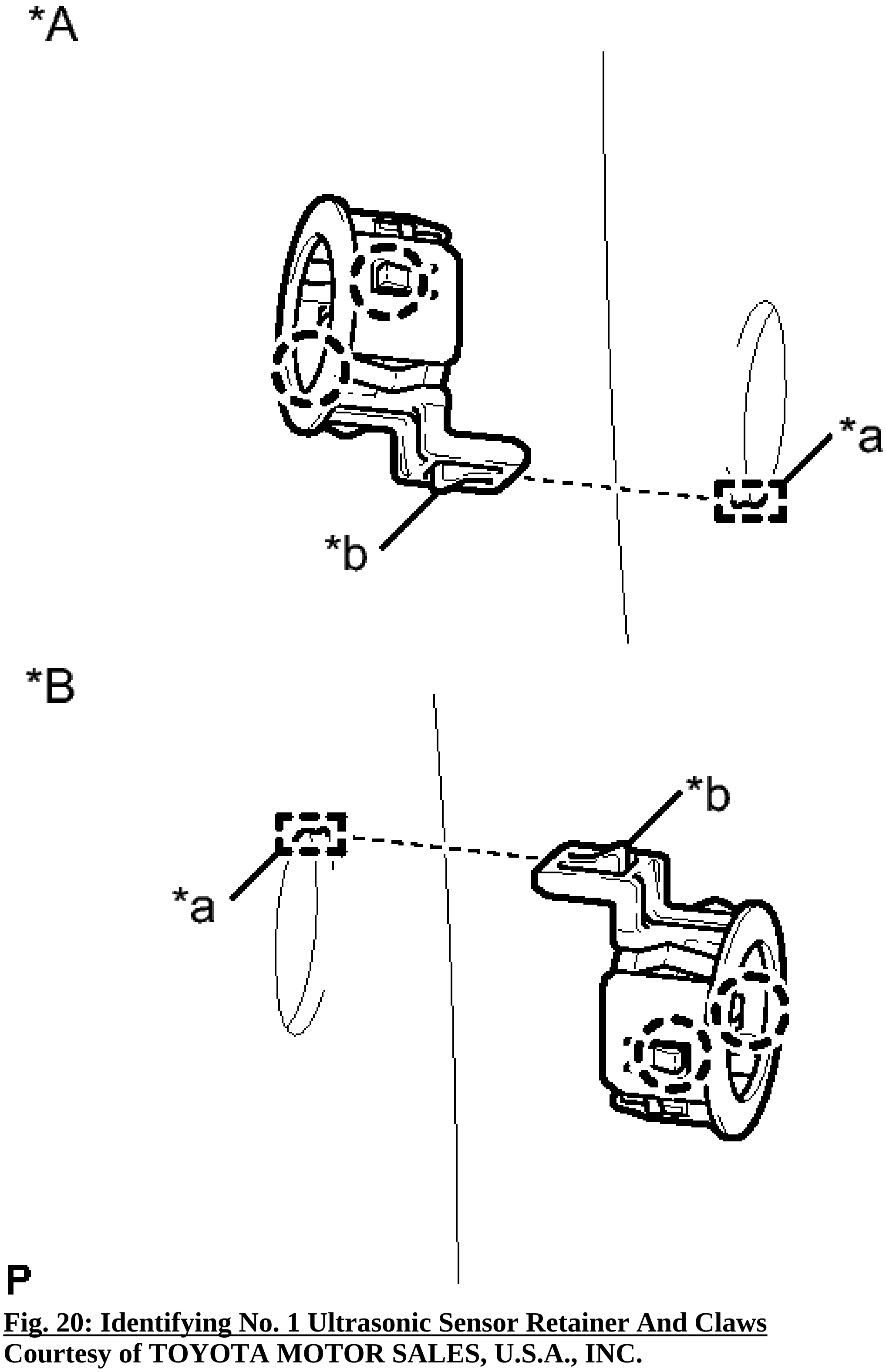

Fig. 20: Identifying No. 1 Ultrasonic Sensor Retainer And Claws
Courtesy of TOYOTA MOTOR SALES, U.S.A., INC.

TEXT IN ILLUSTRATION

*A	LH Side

*B	Other Side
*a	Keyhole
*b	Snap

NOTE:

- **Do not damage the front bumper with the protrusion when installing the retainer.**
- **Securely install the No. 1 ultrasonic sensor retainer so that there are no gaps between the retainer and surface of the front bumper.**

HINT:

When installing the retainer, align the keyhole and snap as shown in the illustration.

2. **INSTALL NO. 1 ULTRASONIC SENSOR**
   a. Engage the 2 claws to install the No. 1 ultrasonic sensor to the No. 1 ultrasonic sensor retainer.

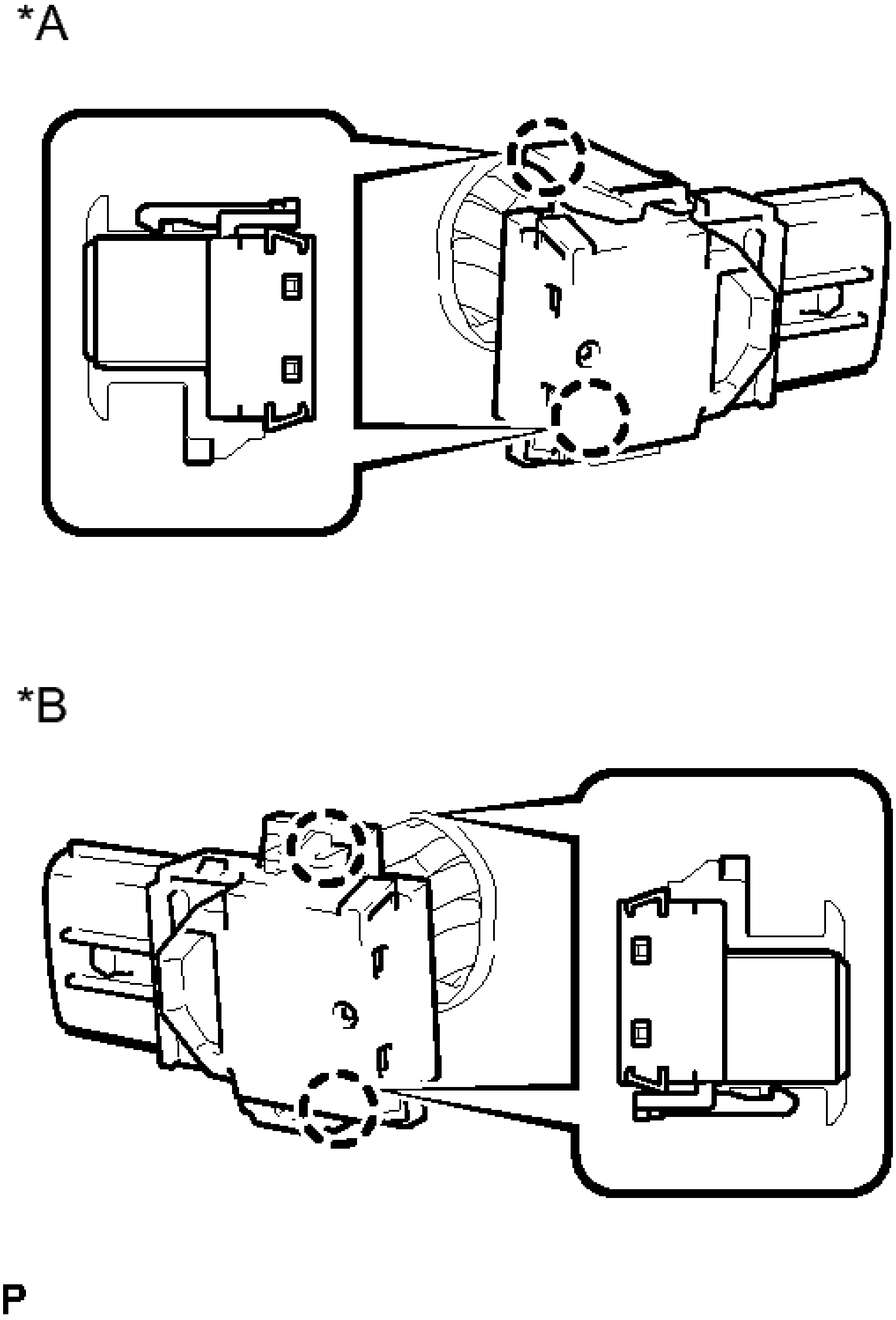

Fig. 21: Identifying No. 1 Ultrasonic Sensor And Claws
Courtesy of TOYOTA MOTOR SALES, U.S.A., INC.

TEXT IN ILLUSTRATION

	LH

*A	Side
*B	Other Side

NOTE: **Push the No. 1 ultrasonic sensor retainer from the outside of the bumper when there is a gap between the retainer and the bumper surface. In this case, do not push on the ultrasonic sensor.**

3. **INSTALL ULTRASONIC SENSOR CLIP**
    a. Engage the 4 claws to install the ultrasonic sensor clip.

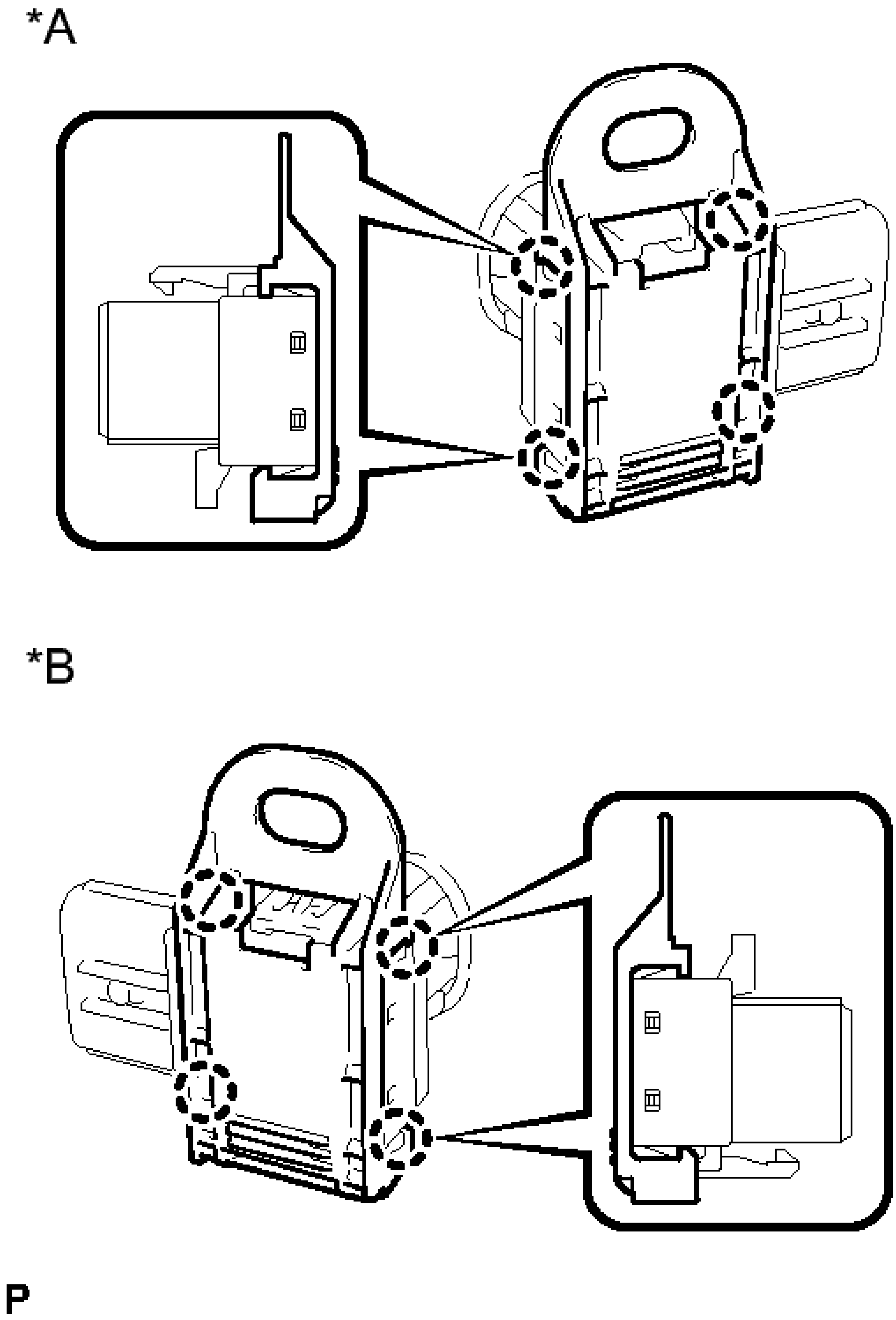

Fig. 22: Identifying Ultrasonic Sensor Clip And Claws
Courtesy of TOYOTA MOTOR SALES, U.S.A., INC.

TEXT IN ILLUSTRATION

	LH

*A	Side
*B	Other Side

b. Engage the clamp.

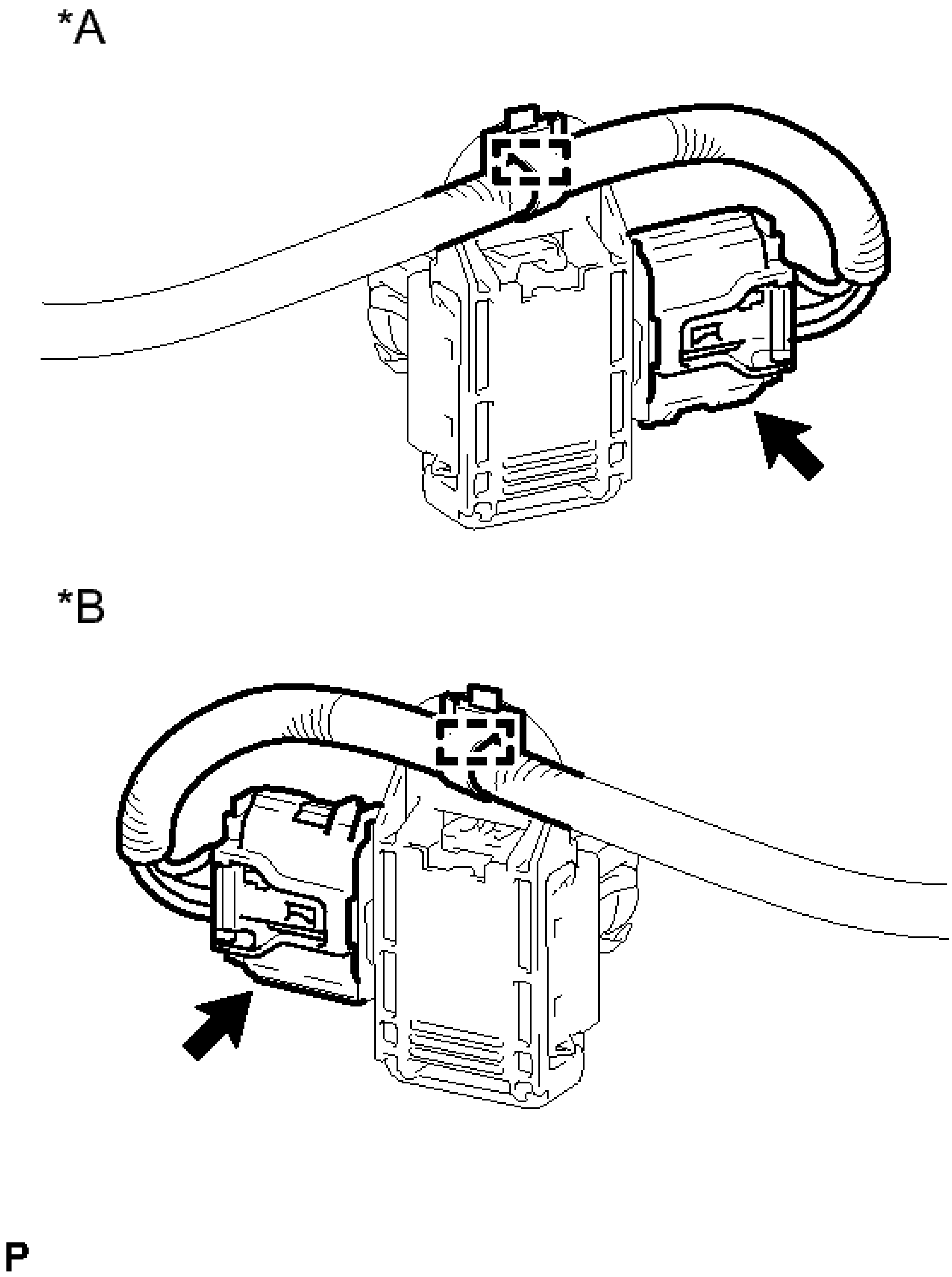

Fig. 23: Locating Ultrasonic Sensor Clip And Connector
Courtesy of TOYOTA MOTOR SALES, U.S.A., INC.

TEXT IN ILLUSTRATION

	LH

*A	Side
*B	Other Side

c. Connect the connector.

4. **INSTALL REAR BUMPER ASSEMBLY**

   Refer to **INSTALLATION**

BLIND SPOT MONITOR SENSOR

COMPONENTS

ILLUSTRATION

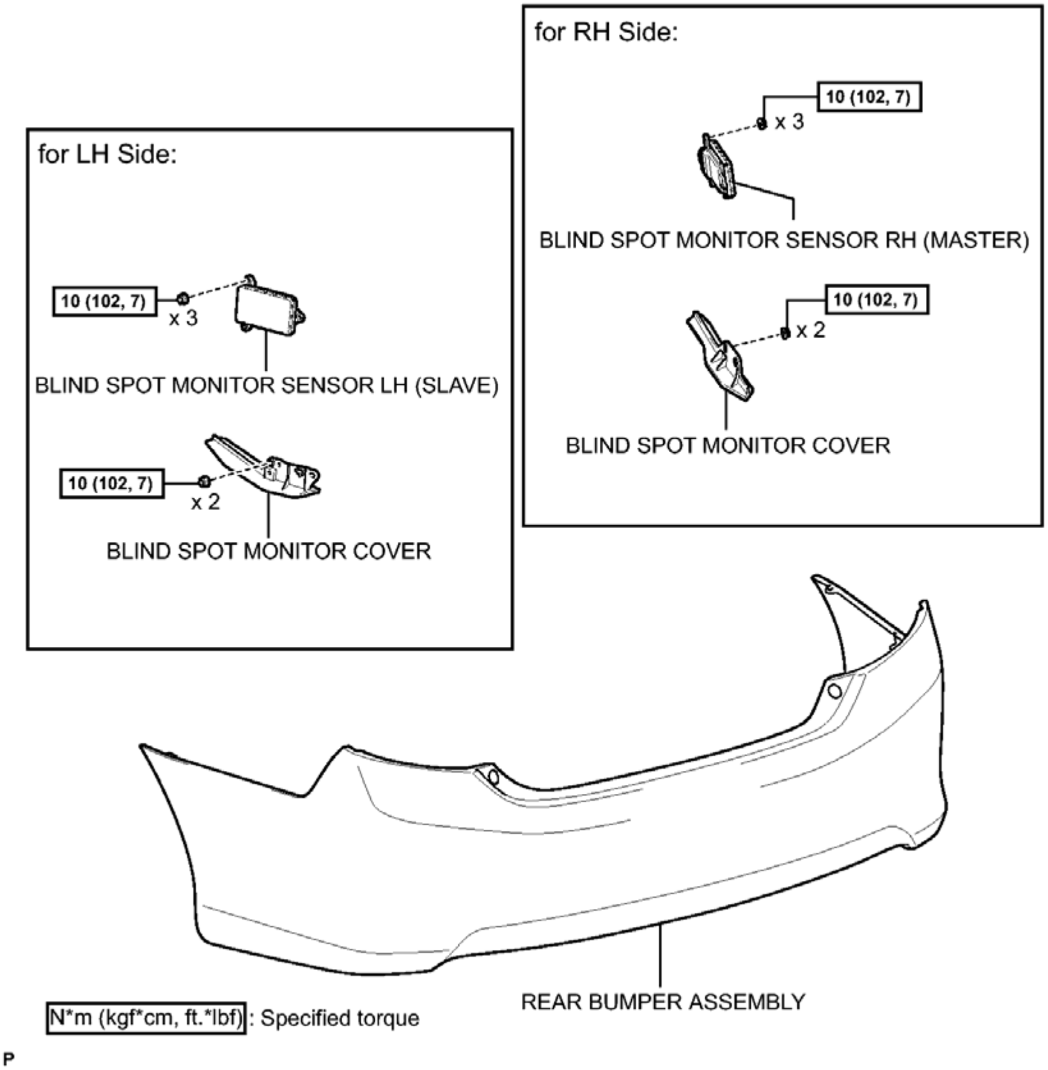
for RH Side:
10 (102, 7)
x 3
BLIND SPOT MONITOR SENSOR RH (MASTER)
10 (102, 7)
x 2
BLIND SPOT MONITOR COVER
for LH Side:
10 (102, 7)
x 3
BLIND SPOT MONITOR SENSOR LH (SLAVE)
10 (102, 7)
x 2
BLIND SPOT MONITOR COVER
REAR BUMPER ASSEMBLY
N*m (kgf*cm, ft.*lbf) : Specified torque
P

Fig. 24: Identifying Blind Spot Monitor Sensor Replacement Components With Torque Specifications

Courtesy of TOYOTA MOTOR SALES, U.S.A., INC.

REMOVAL

REMOVAL

1. **REMOVE REAR BUMPER ASSEMBLY**

   Refer to **REMOVAL**

2. **REMOVE BLIND SPOT MONITOR SENSOR**
   a. for LH Side:
      1. Disengage the 2 clamps.

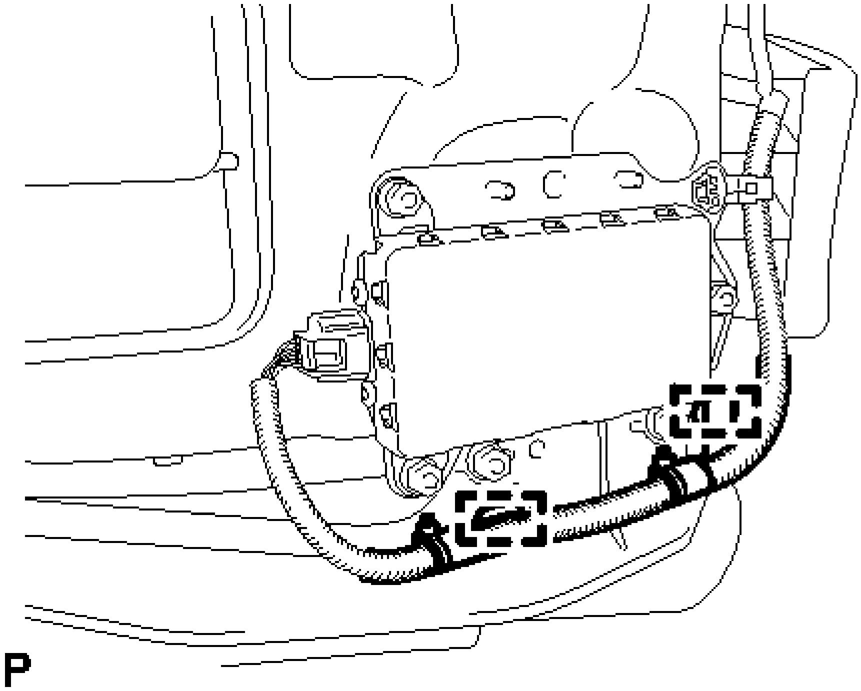

Fig. 25: Locating LH Blind Spot Monitor Sensor Clamps
Courtesy of TOYOTA MOTOR SALES, U.S.A., INC.

   b. for RH Side:
      1. Disengage the clamp.

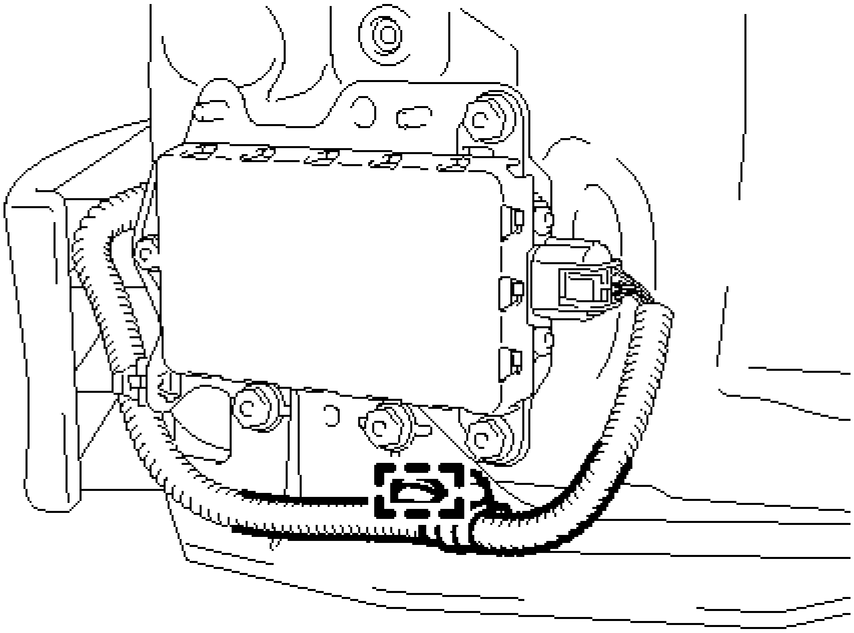

Fig. 26: Locating RH Blind Spot Monitor Sensor Clamps
Courtesy of TOYOTA MOTOR SALES, U.S.A., INC.

c. Remove the 3 nuts.

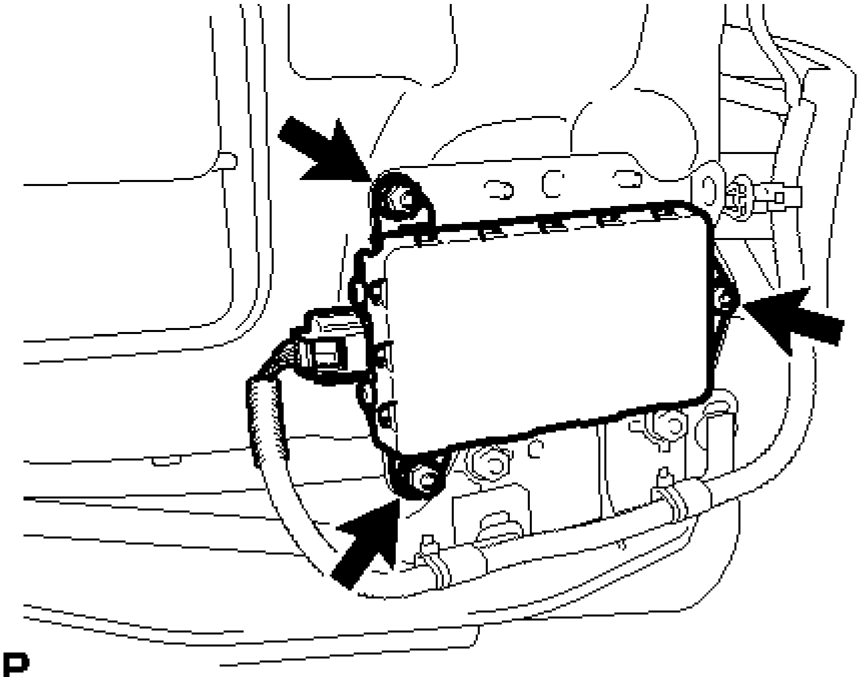

Fig. 27: Locating Blind Spot Monitor Sensor Fasteners
Courtesy of TOYOTA MOTOR SALES, U.S.A., INC.

d. Disconnect the connector to remove the blind spot monitor sensor.

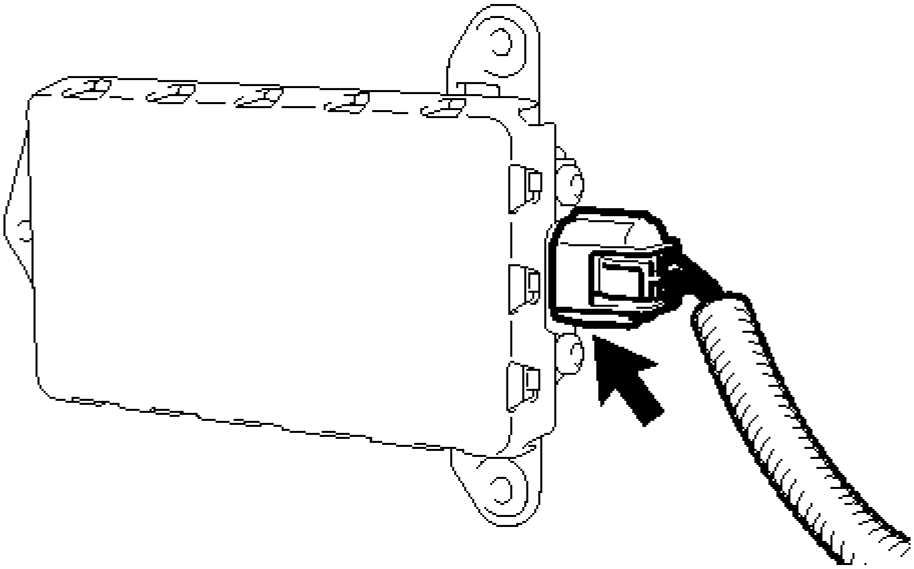

Fig. 28: Identifying Blind Spot Monitor Sensor Connector
Courtesy of TOYOTA MOTOR SALES, U.S.A., INC.

NOTE: Replace the blind spot monitor sensor if it has been dropped or subjected to a severe impact.

3. **REMOVE BLIND SPOT MONITOR COVER**
    a. Remove the 2 nuts.

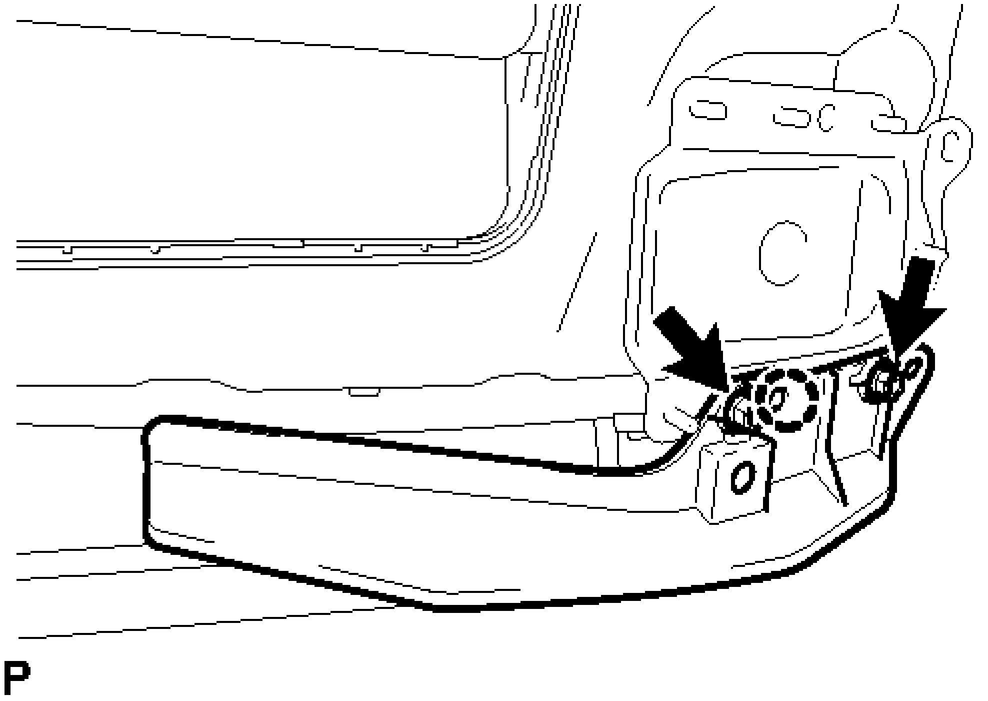

Fig. 29: Locating Blind Spot Monitor Cover Fasteners
Courtesy of TOYOTA MOTOR SALES, U.S.A., INC.

b. Disengage the claw to remove the blind spot monitor cover.

INSTALLATION

INSTALLATION

1. **INSTALL BLIND SPOT MONITOR COVER**
    a. Engage the claw.
    b. Install the blind spot monitor cover with the 2 nuts.

    Torque: 10 N*m (102 kgf*cm, 7 ft.*lbf)

2. **INSTALL BLIND SPOT MONITOR SENSOR**
    a. Connect the connector.

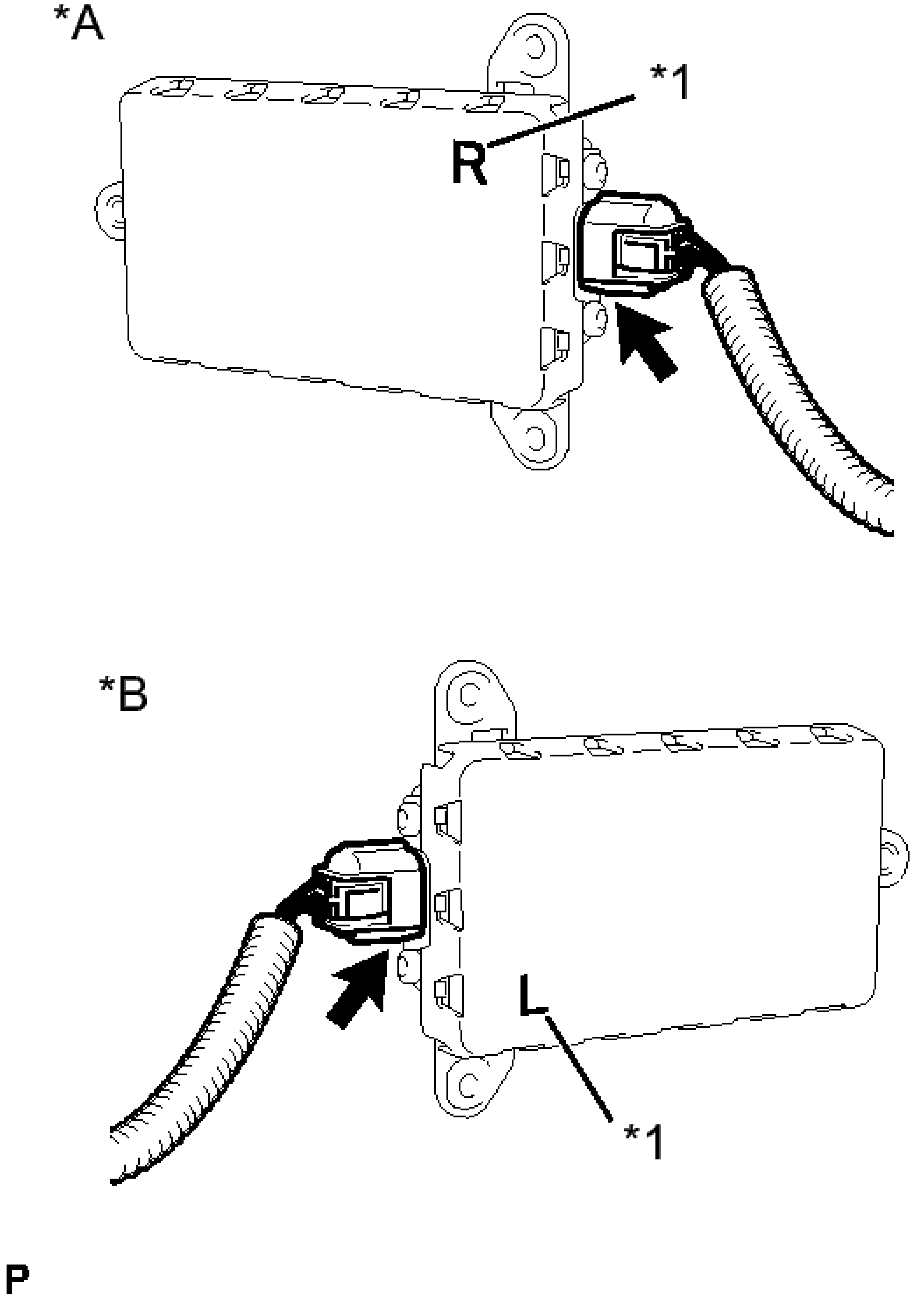

Fig. 30: Identifying RH & LH Blind Spot Monitor Sensor And Connectors
Courtesy of TOYOTA MOTOR SALES, U.S.A., INC.

TEXT IN ILLUSTRATION

*A	for RH Side:

*B	for LH Side:
*1	Identification Mark

NOTE:

- **Replace the blind spot monitor sensor if it has been dropped or subjected to a severe impact.**
- **Confirm the identification marks on the blind spot monitor sensor before installing it.**
- **If the blind spot monitor sensors are not installed to the correct side, the blind spot monitor system will not operate.**

b. Install the blind spot monitor sensor with the 3 nuts.

Torque: 10 N*m (102 kgf*cm, 7 ft.*lbf)

c. for LH Side:
    1. Engage the 2 clamps.

d. for RH Side:
    1. Engage the clamp.

3. **INSTALL REAR BUMPER ASSEMBLY**

    Refer to **INSTALLATION**

4. **PERFORM BLIND SPOT MONITOR BEAM AXIS INSPECTION**
    a. Refer to operation check. Refer to **OPERATION CHECK** .
        - **SST: 09870-60000**
          09870-60010
        - **SST: 09870-60040**

5. **PERFORM DIAGNOSTIC SYSTEM CHECK**

    Refer to **DTC CHECK / CLEAR**

TELEVISION CAMERA

COMPONENTS

ILLUSTRATION

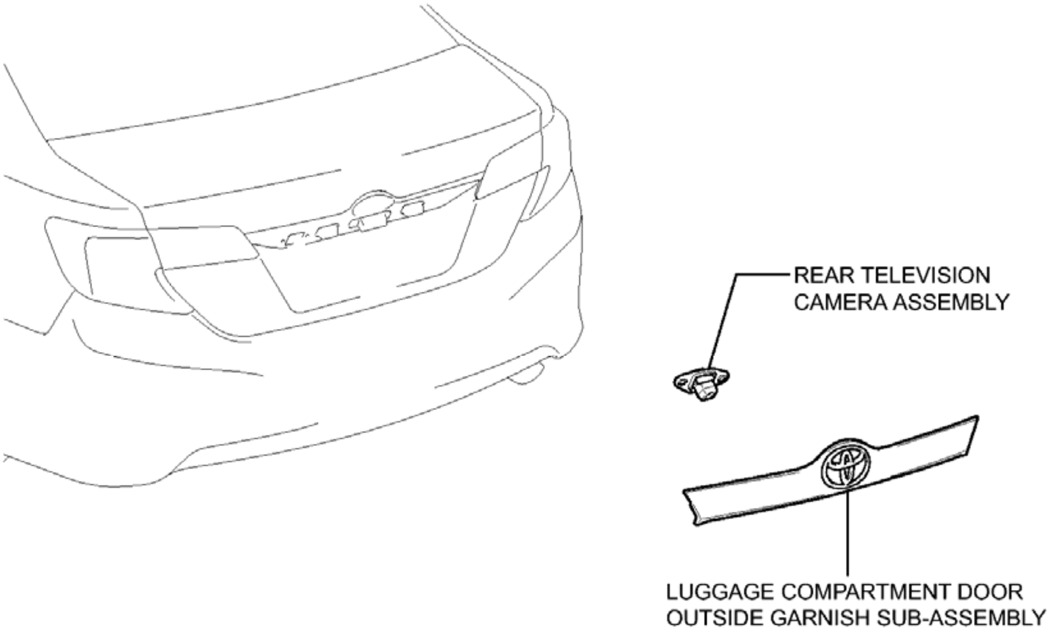
REAR TELEVISION CAMERA ASSEMBLY
LUGGAGE COMPARTMENT DOOR OUTSIDE GARNISH SUB-ASSEMBLY

P

Fig. 31: Identifying Television Camera Replacement Components
Courtesy of TOYOTA MOTOR SALES, U.S.A., INC.

REMOVAL

REMOVAL

1. **REMOVE LUGGAGE COMPARTMENT DOOR OUTSIDE GARNISH SUB-ASSEMBLY**

   Refer to **REMOVAL**

2. **REMOVE REAR TELEVISION CAMERA ASSEMBLY**
   a. Disconnect the connector.

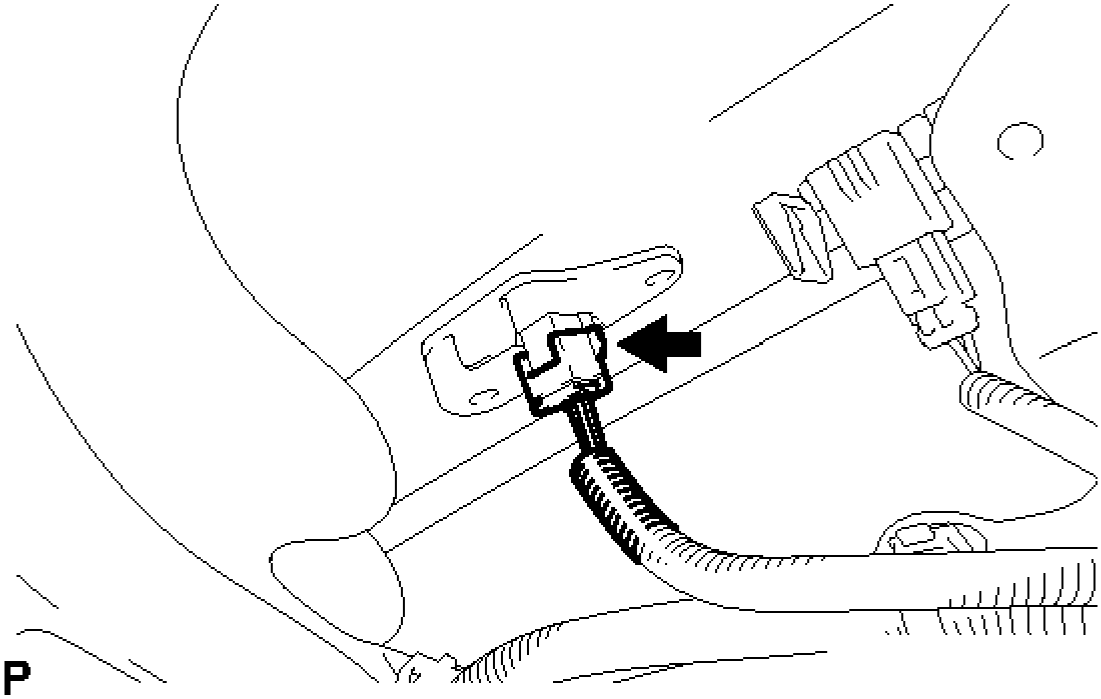

Fig. 32: Locating Rear Television Camera Assembly Connector
Courtesy of TOYOTA MOTOR SALES, U.S.A., INC.

b. Disengage the 2 claws to remove the rear television camera assembly.

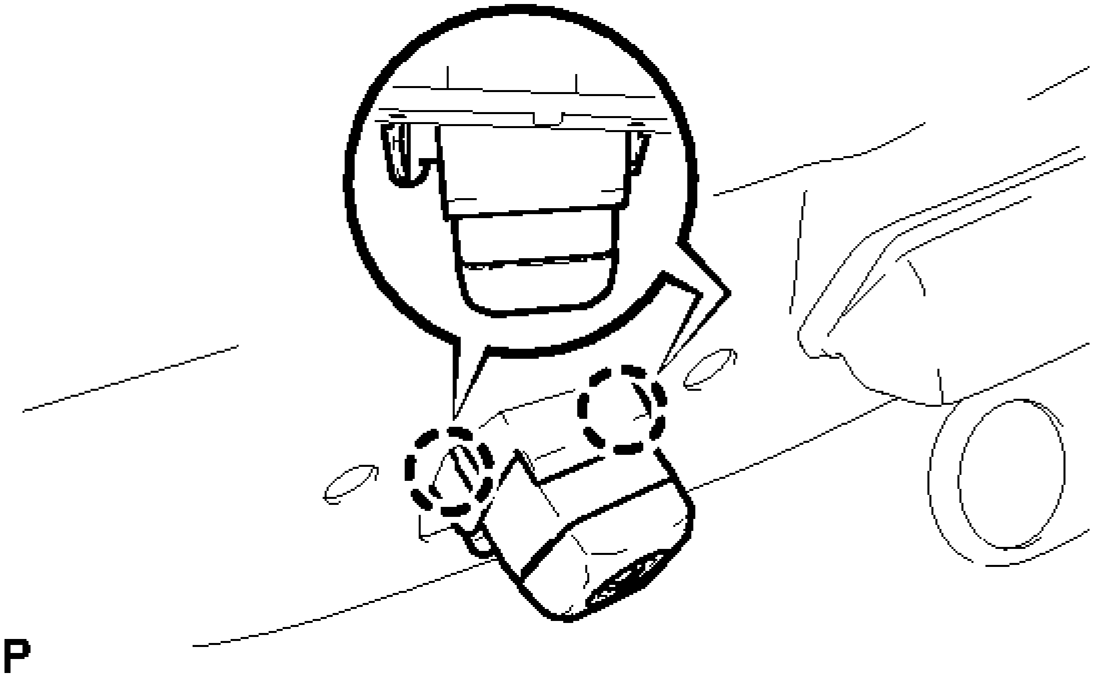

Fig. 33: Identifying Rear Television Camera Assembly Claws
Courtesy of TOYOTA MOTOR SALES, U.S.A., INC.

INSTALLATION

INSTALLATION

1. **INSTALL REAR TELEVISION CAMERA ASSEMBLY**
    a. Engage the 2 claws to install the rear television camera assembly.
    b. Connect the connector.
2. **INSTALL LUGGAGE COMPARTMENT DOOR OUTSIDE GARNISH SUB-ASSEMBLY**

    Refer to **INSTALLATION**

3. **ADJUST REAR TELEVISION CAMERA ASSEMBLY OPTICAL AXIS (w/ Parking Assist Monitor System)**

    Refer to **CALIBRATION**

CLEARANCE SONAR MAIN SWITCH

COMPONENTS

ILLUSTRATION

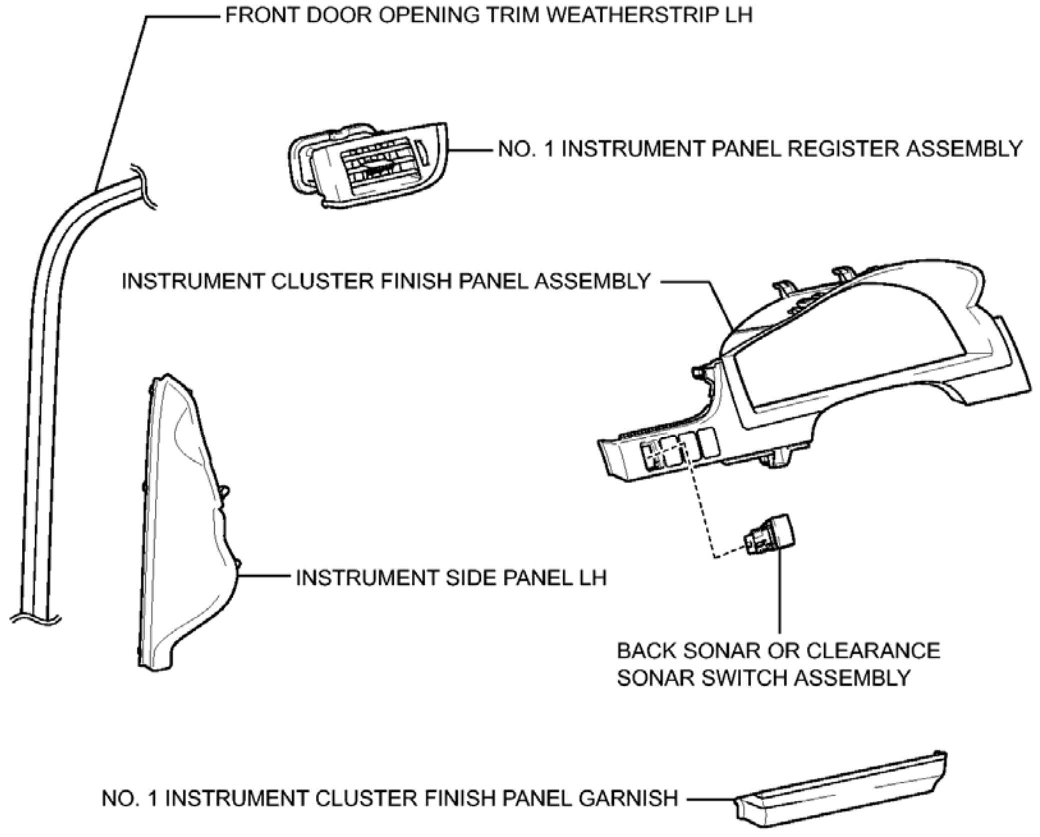
FRONT DOOR OPENING TRIM WEATHERSTRIP LH
NO. 1 INSTRUMENT PANEL REGISTER ASSEMBLY
INSTRUMENT CLUSTER FINISH PANEL ASSEMBLY
INSTRUMENT SIDE PANEL LH
BACK SONAR OR CLEARANCE SONAR SWITCH ASSEMBLY
NO. 1 INSTRUMENT CLUSTER FINISH PANEL GARNISH

P

Fig. 34: Identifying Clearance Sonar Main Switch Replacement Components
Courtesy of TOYOTA MOTOR SALES, U.S.A., INC.

REMOVAL

REMOVAL

1. **DISCONNECT FRONT DOOR OPENING TRIM WEATHERSTRIP LH** . Refer to **REMOVAL - Step 6**
2. **REMOVE INSTRUMENT SIDE PANEL LH** . Refer to **REMOVAL - Step 7**
3. **REMOVE NO. 1 INSTRUMENT CLUSTER FINISH PANEL GARNISH** . Refer to **REMOVAL - Step 8**
4. **REMOVE NO. 1 INSTRUMENT PANEL REGISTER ASSEMBLY** . Refer to **REMOVAL - Step 9**
5. **REMOVE INSTRUMENT CLUSTER FINISH PANEL ASSEMBLY** . Refer to **REMOVAL - Step 10**
6. **REMOVE BACK SONAR OR CLEARANCE SONAR SWITCH ASSEMBLY**

a. Disengage the 2 claws and remove the back sonar or clearance sonar switch assembly.

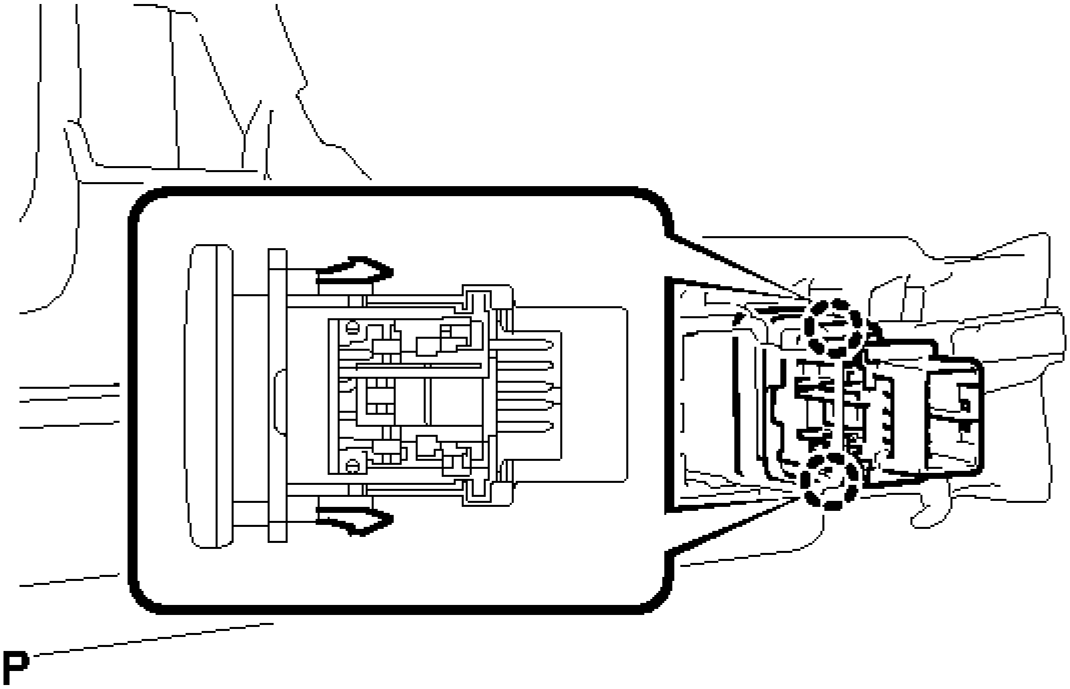

Fig. 35: Identifying Back Sonar Or Clearance Sonar Switch Assembly Claws
Courtesy of TOYOTA MOTOR SALES, U.S.A., INC.

INSPECTION

INSPECTION

1. **INSPECT BACK SONAR OR CLEARANCE SONAR SWITCH ASSEMBLY**
    a. Measure the resistance according to the value(s) in the table below.

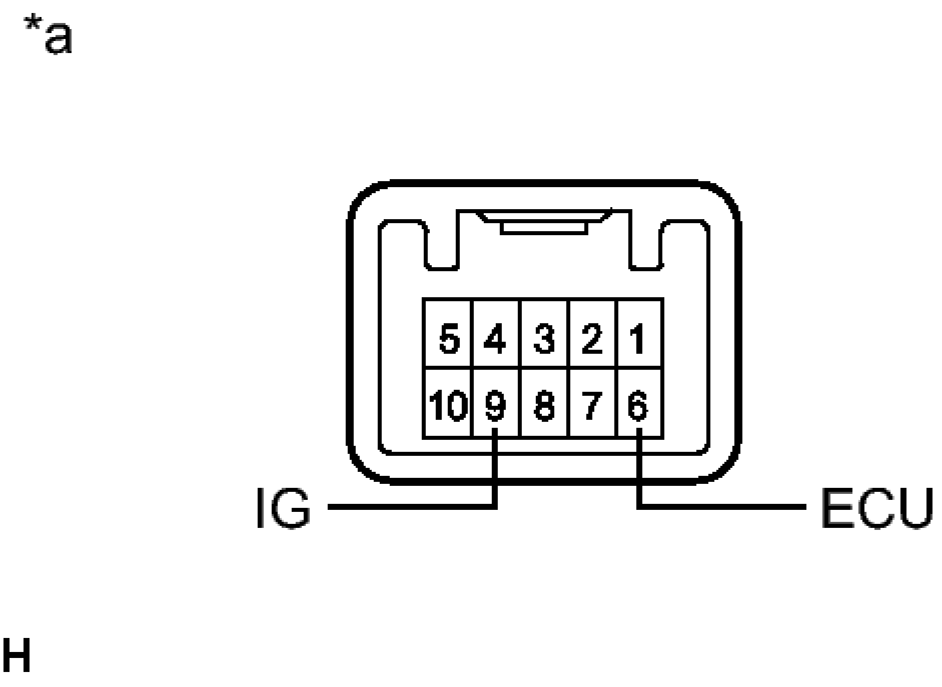

Fig. 36: Inspecting Back Sonar Or Clearance Sonar Switch Assembly (IG) & (ECU) Connector Terminals
Courtesy of TOYOTA MOTOR SALES, U.S.A., INC.

Standard Resistance

Tester Connection	Switch Condition	Specified Condition
9 (IG) - 6 (ECU)	Clearance sonar main switch on	Below 1 ohms
9 (IG) - 6 (ECU)	Clearance sonar main switch off	10 kohms or higher

TEXT IN ILLUSTRATION

*a	Component without harness connected (Back Sonar or Clearance Sonar Switch

	Assembly)

If the result is not as specified, replace the back sonar or clearance sonar switch assembly.

b. Check that the switch illuminates.
   1. Apply auxiliary battery voltage to the back sonar or clearance sonar switch assembly and check that the switch illuminates.

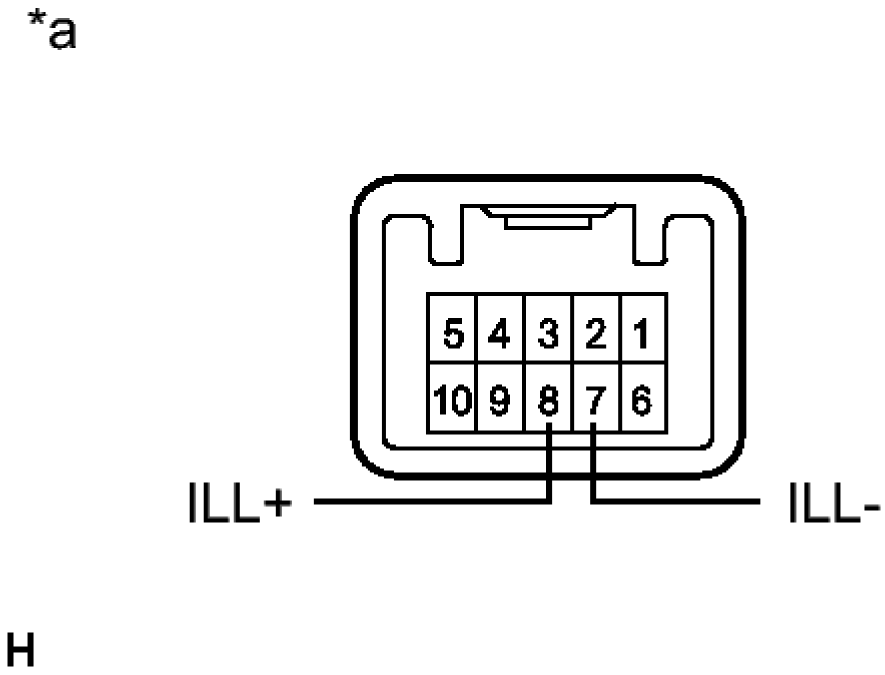

Fig. 37: Inspecting Back Sonar Or Clearance Sonar Switch Assembly (ILL+) & (ILL-) Connector Terminals
Courtesy of TOYOTA MOTOR SALES, U.S.A., INC.

OK

Tester Connection	Specified Condition
Auxiliary battery positive (+) --> Terminal 8 (ILL+) Auxiliary battery negative (-) -->	Illuminates

Terminal 7 (ILL-)	

TEXT IN ILLUSTRATION

*a	Component without harness connected (Back Sonar or Clearance Sonar Switch Assembly)

If the result is not as specified, replace the back sonar or clearance sonar switch assembly.

c. Check switch indicator operation.
   1. Apply auxiliary battery voltage to the back sonar or clearance sonar switch assembly and check that the switch indicator illuminates.

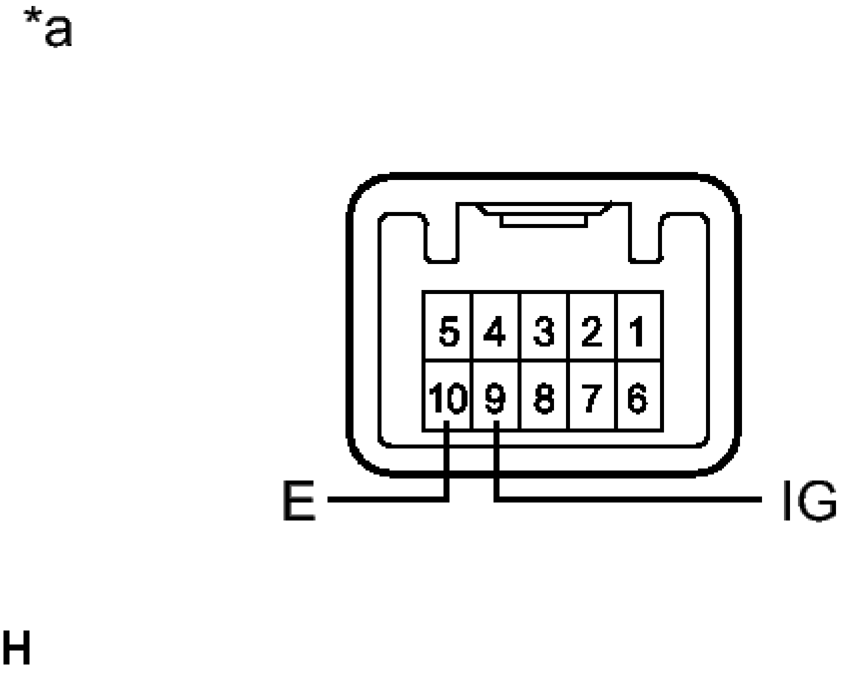

Fig. 38: Inspecting Back Sonar Or Clearance Sonar Switch Assembly (E) & (IG) Connector Terminals
Courtesy of TOYOTA MOTOR SALES, U.S.A., INC.

OK

Tester Connection	Switch Condition	Specified Condition
Auxiliary battery positive (+) --> Terminal 9 (IG) Auxiliary battery negative (-) --> Terminal 10 (E)	Clearance sonar main switch on	Indicator Illuminates

TEXT IN ILLUSTRATION

*a	Component without harness connected (Back Sonar or Clearance Sonar Switch Assembly)

If the result is not as specified, replace the back sonar or clearance sonar switch assembly.

INSTALLATION

INSTALLATION

1. **INSTALL BACK SONAR OR CLEARANCE SONAR SWITCH ASSEMBLY**
    a. Engage the 2 claws to install the back sonar or clearance sonar switch assembly.
2. **INSTALL INSTRUMENT CLUSTER FINISH PANEL ASSEMBLY** . Refer to **INSTALLATION - Step 42**
3. **INSTALL NO. 1 INSTRUMENT PANEL REGISTER ASSEMBLY** . Refer to **INSTALLATION - Step 43**
4. **INSTALL NO. 1 INSTRUMENT CLUSTER FINISH PANEL GARNISH** . Refer to **INSTALLATION - Step 44**
5. **INSTALL INSTRUMENT SIDE PANEL LH** . Refer to **INSTALLATION - Step 45**
6. **INSTALL FRONT DOOR OPENING TRIM WEATHERSTRIP LH** . Refer to **INSTALLATION - Step 43**

BLIND SPOT MONITOR MAIN SWITCH

COMPONENTS

ILLUSTRATION

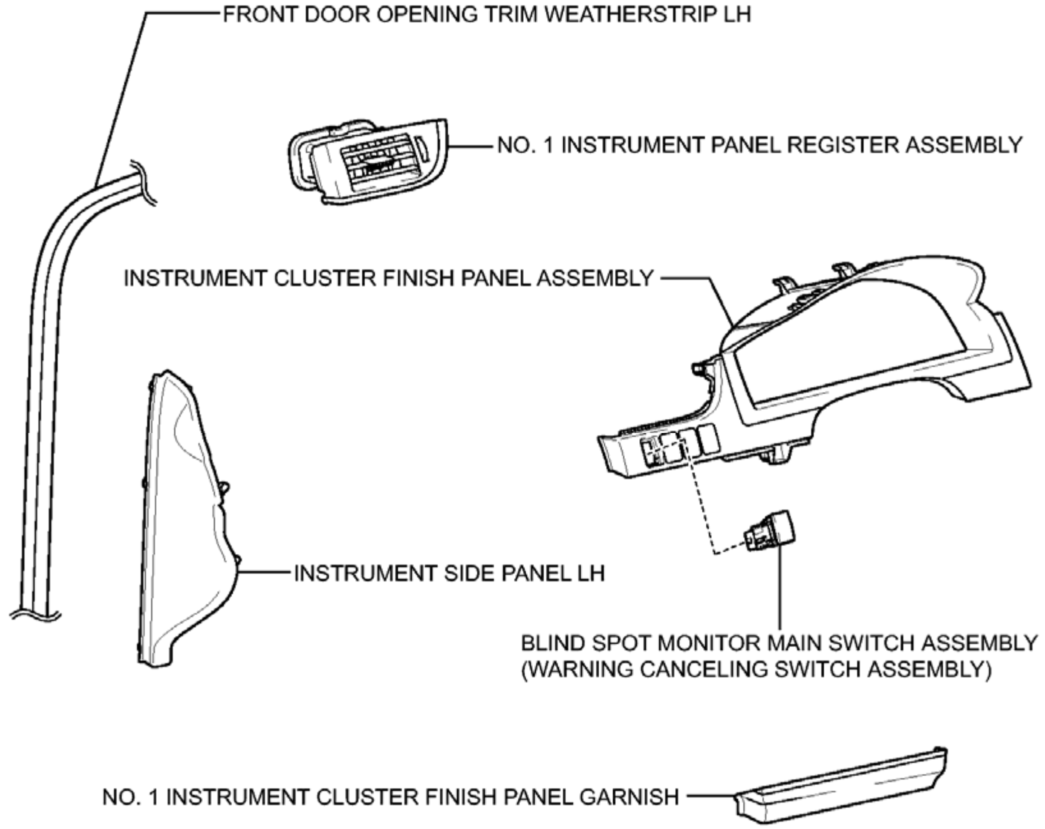
FRONT DOOR OPENING TRIM WEATHERSTRIP LH
NO. 1 INSTRUMENT PANEL REGISTER ASSEMBLY
INSTRUMENT CLUSTER FINISH PANEL ASSEMBLY
INSTRUMENT SIDE PANEL LH
BLIND SPOT MONITOR MAIN SWITCH ASSEMBLY
(WARNING CANCELING SWITCH ASSEMBLY)
NO. 1 INSTRUMENT CLUSTER FINISH PANEL GARNISH
P

Fig. 39: Identifying Blind Spot Monitor Main Switch Replacement Components
Courtesy of TOYOTA MOTOR SALES, U.S.A., INC.

REMOVAL

REMOVAL

1. **DISCONNECT FRONT DOOR OPENING TRIM WEATHERSTRIP LH** . Refer to **REMOVAL - Step 6**
2. **REMOVE INSTRUMENT SIDE PANEL LH** . Refer to **REMOVAL - Step 7**
3. **REMOVE NO. 1 INSTRUMENT CLUSTER FINISH PANEL GARNISH** . Refer to **REMOVAL -**

Step 8

4. **REMOVE NO. 1 INSTRUMENT PANEL REGISTER ASSEMBLY** . Refer to **REMOVAL - Step 9**
5. **REMOVE INSTRUMENT CLUSTER FINISH PANEL ASSEMBLY** . Refer to **REMOVAL - Step 10**
6. **REMOVE BLIND SPOT MONITOR MAIN SWITCH ASSEMBLY (WARNING CANCELING SWITCH ASSEMBLY)**
   a. Disengage the 2 claws to remove the blind spot monitor main switch assembly (warning canceling switch assembly).

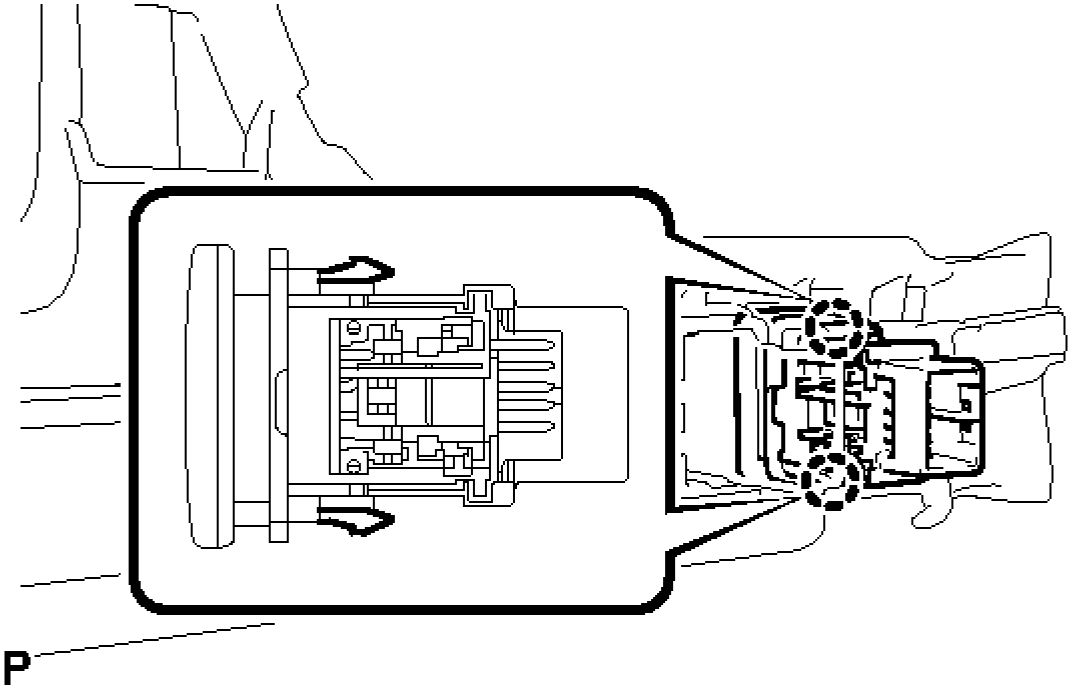

Fig. 40: Identifying Back Sonar Or Clearance Sonar Switch Assembly Claws
Courtesy of TOYOTA MOTOR SALES, U.S.A., INC.

INSPECTION

INSPECTION

1. **INSPECT BLIND SPOT MONITOR MAIN SWITCH (WARNING CANCELING SWITCH ASSEMBLY)**
   a. Measure the resistance according to the value(s) in the table below.

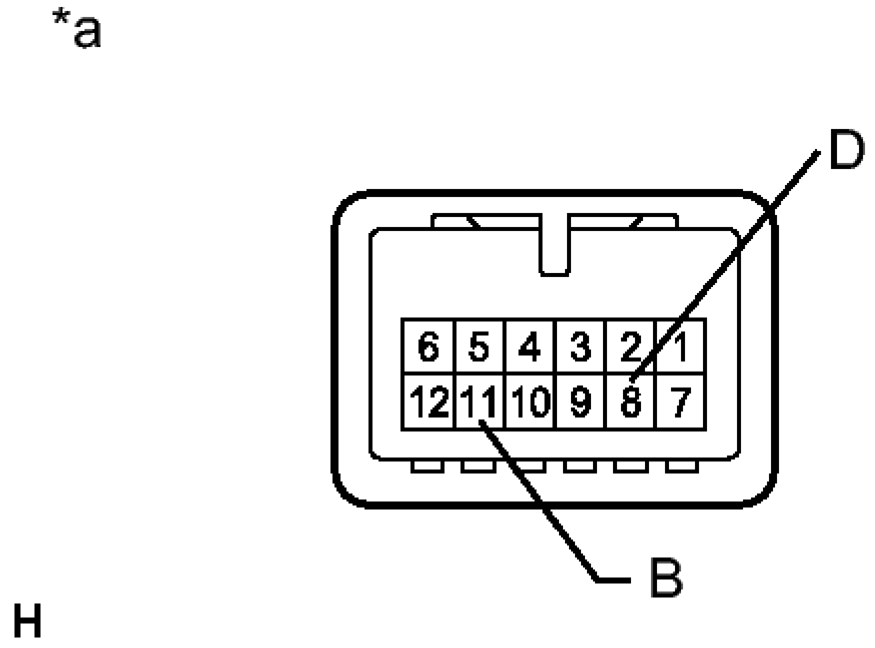

Fig. 41: Identifying Blind Spot Monitor Main Switch Connector Terminals (1 Of 3)
Courtesy of TOYOTA MOTOR SALES, U.S.A., INC.

Standard Resistance

Tester Connection	Switch Condition	Specified Condition
11 (B) - 8 (D)	Blind spot monitor main switch assembly on (not protruding)	Below 1 ohms
11 (B) - 8 (D)	Blind spot monitor main switch assembly off (protruding)	10 kohms or higher

TEXT IN ILLUSTRATION

	Component without harness connected (Blind Spot Monitor

*a	Main Switch (Warning Canceling Switch Assembly))

If the result is not as specified, replace the blind spot monitor main switch (warning canceling switch assembly).

b. Check that the switch illuminates.
   1. Apply auxiliary battery voltage to the blind spot monitor main switch (warning canceling switch assembly) and check that the switch illuminates.

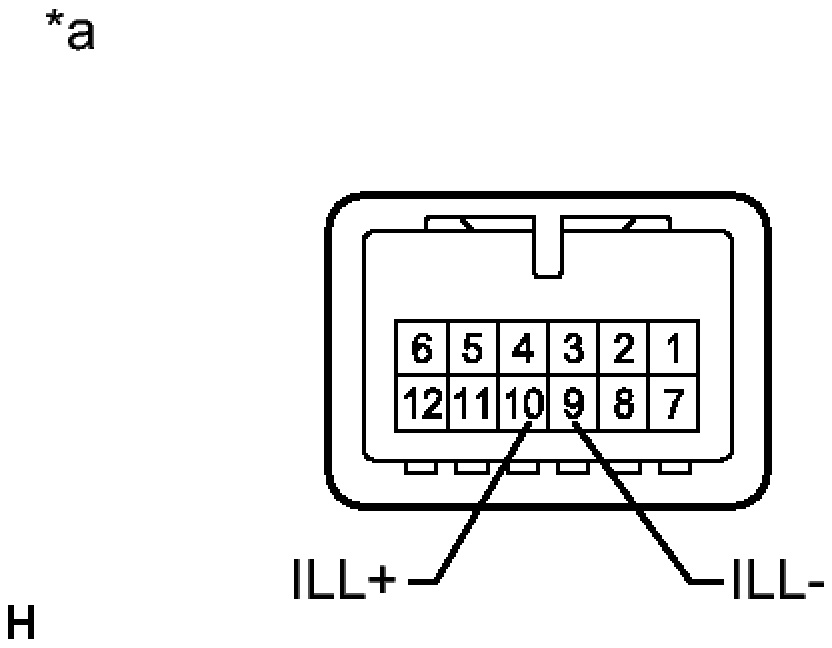

Fig. 42: Identifying Blind Spot Monitor Main Switch Connector Terminals (2 Of 3)
Courtesy of TOYOTA MOTOR SALES, U.S.A., INC.

OK

Connection	**Specified Condition**
Auxiliary battery positive (+) --> Terminal	

10 (ILL+) Auxiliary battery negative (-) --> Terminal 9 (ILL-)	Illuminates

TEXT IN ILLUSTRATION

*a	Component without harness connected (Blind Spot Monitor Main Switch (Warning Canceling Switch Assembly))

If the result is not as specified, replace the blind spot monitor main switch (warning canceling switch assembly).

c. Check that the switch indicator illuminates.
   1. Apply auxiliary battery voltage to the blind spot monitor main switch assembly and check the operation of the switch, as shown in the table below.

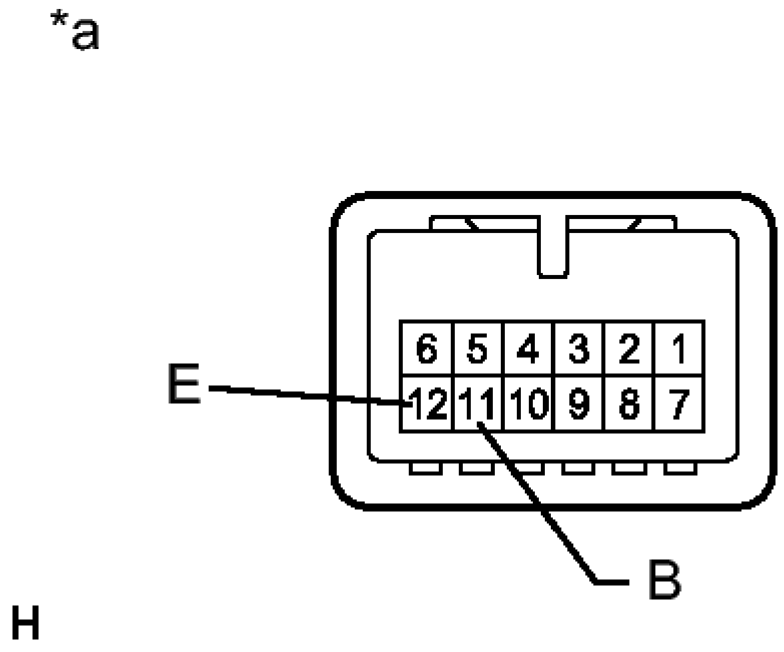

Fig. 43: Identifying Blind Spot Monitor Main Switch Connector Terminals (3 Of 3)
Courtesy of TOYOTA MOTOR SALES, U.S.A., INC.

OK

Connection	Switch Condition	Specified Condition
Auxiliary battery positive (+) --> Terminal 11 (B) Auxiliary battery negative (-) --> Terminal 12 (E)	Blind spot monitor main switch assembly on (not protruding)	Indicator Illuminates

TEXT IN ILLUSTRATION

	Component without harness connected (Blind Spot Monitor

*a	Main Switch (Warning Canceling Switch Assembly))

If the result is not as specified, replace the blind spot monitor main switch (warning canceling switch assembly).

INSTALLATION

INSTALLATION

1. **INSTALL BLIND SPOT MONITOR MAIN SWITCH ASSEMBLY (WARNING CANCELING SWITCH ASSEMBLY)**
    a. Engage the 2 claws to install the blind spot monitor main switch assembly (warning canceling switch assembly).
2. **INSTALL INSTRUMENT CLUSTER FINISH PANEL ASSEMBLY** . Refer to **INSTALLATION - Step 42**
3. **INSTALL NO. 1 INSTRUMENT PANEL REGISTER ASSEMBLY** . Refer to **INSTALLATION - Step 43**
4. **INSTALL NO. 1 INSTRUMENT CLUSTER FINISH PANEL GARNISH** . Refer to **INSTALLATION - Step 44**
5. **INSTALL INSTRUMENT SIDE PANEL LH** . Refer to **INSTALLATION - Step 45**
6. **INSTALL FRONT DOOR OPENING TRIM WEATHERSTRIP LH** . Refer to **INSTALLATION - Step 43**

2012-2017 ACCESSORIES & EQUIPMENT

Park Assist & Monitoring System (Service Information) (Except Hybrid) - Camry

CLEARANCE WARNING ECU

COMPONENTS

ILLUSTRATION

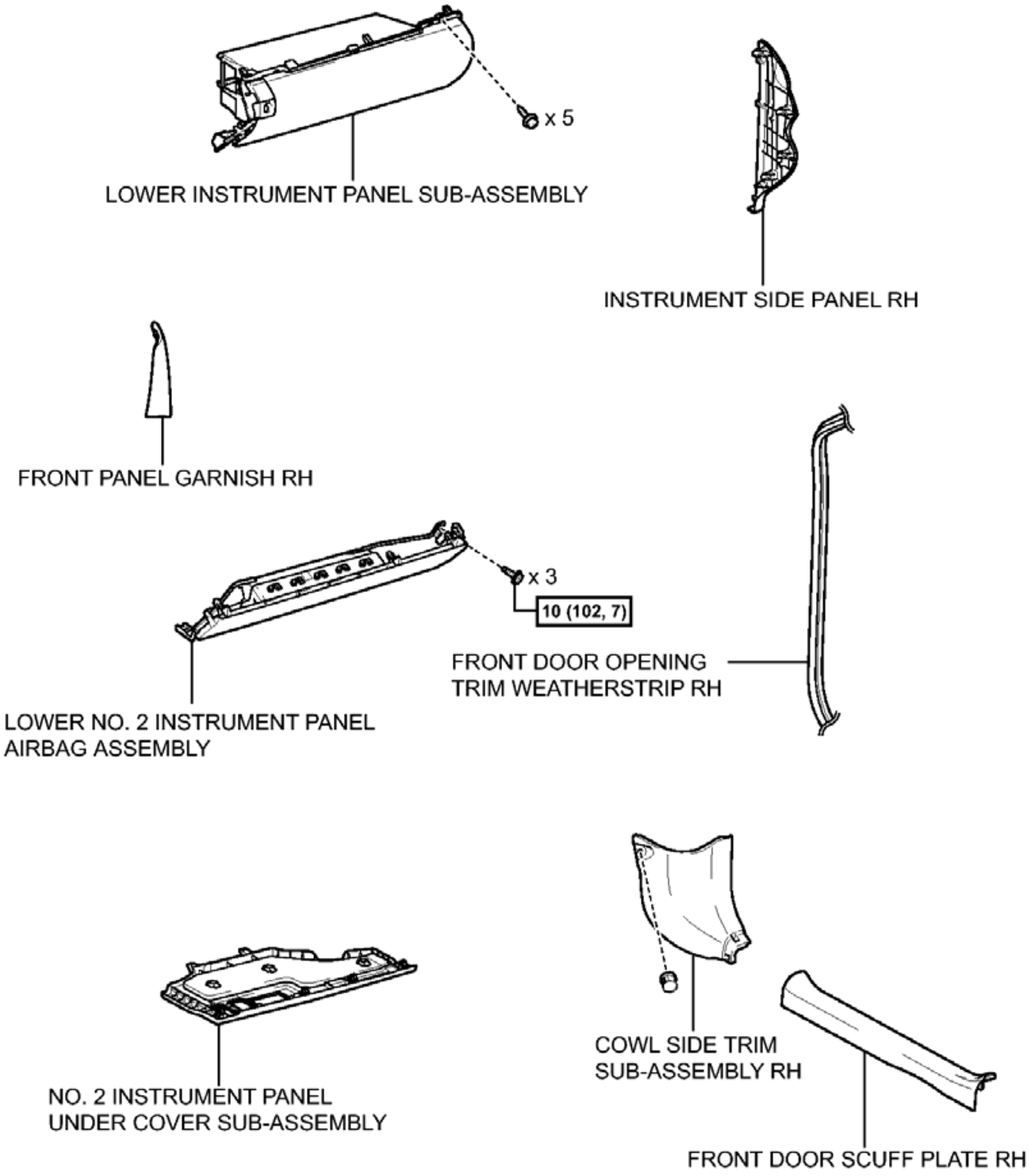
x 5
LOWER INSTRUMENT PANEL SUB-ASSEMBLY
INSTRUMENT SIDE PANEL RH
FRONT PANEL GARNISH RH
x 3
10 (102, 7)
FRONT DOOR OPENING
TRIM WEATHERSTRIP RH
LOWER NO. 2 INSTRUMENT PANEL
AIRBAG ASSEMBLY
COWL SIDE TRIM
SUB-ASSEMBLY RH
NO. 2 INSTRUMENT PANEL
UNDER COVER SUB-ASSEMBLY
FRONT DOOR SCUFF PLATE RH

P

Fig. 1: Identifying Clearance Warning ECU Replacement Components With Torque Specifications (1 Of 2)
Courtesy of TOYOTA MOTOR SALES, U.S.A., INC.

ILLUSTRATION

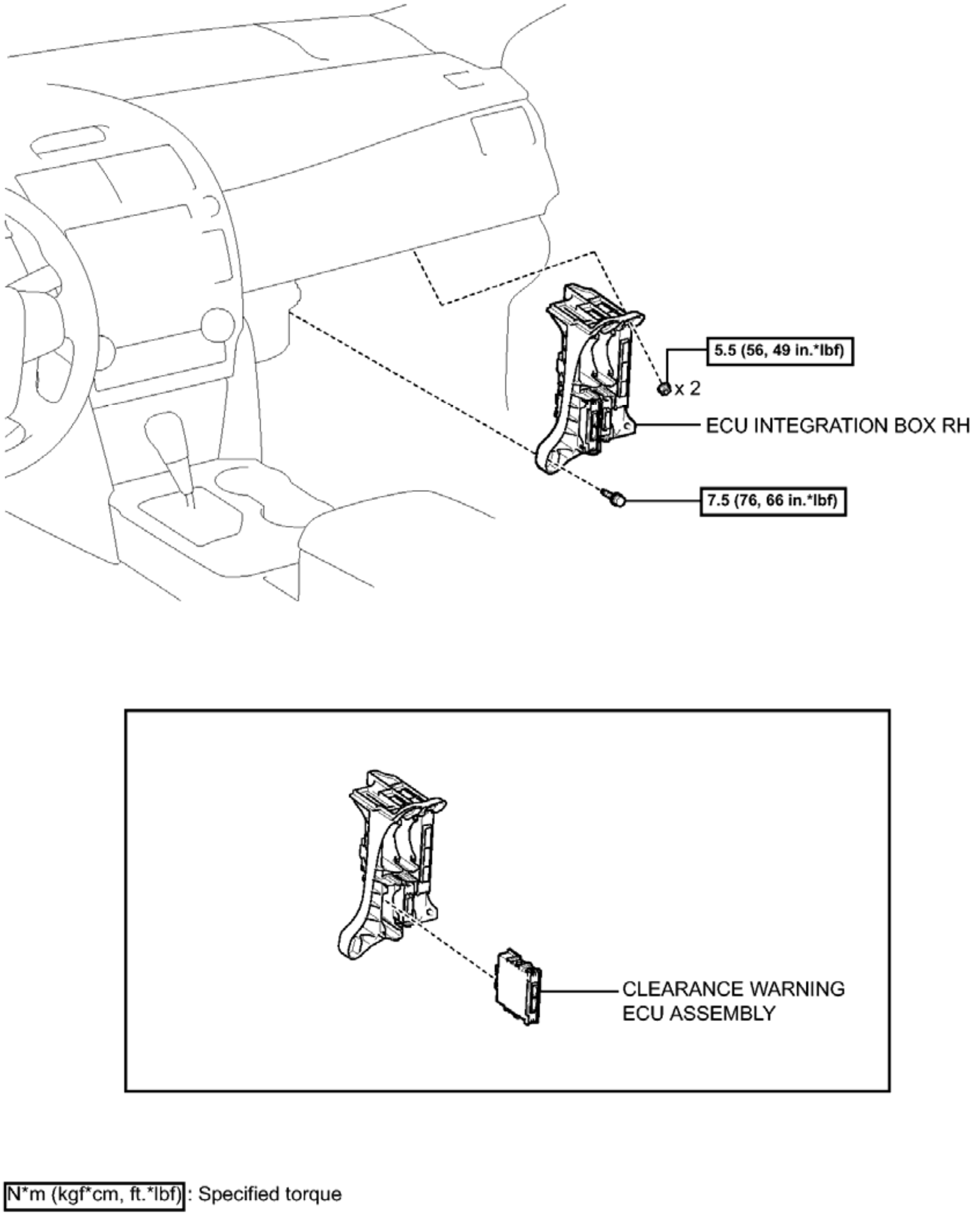
5.5 (56, 49 in.*lbf)
x 2
ECU INTEGRATION BOX RH
7.5 (76, 66 in.*lbf)
CLEARANCE WARNING
ECU ASSEMBLY
N*m (kgf*cm, ft.*lbf) : Specified torque

P

Fig. 2: Identifying Clearance Warning ECU Replacement Components With Torque Specifications (2 Of 2)
Courtesy of TOYOTA MOTOR SALES, U.S.A., INC.

REMOVAL

REMOVAL

1. **PRECAUTION**

NOTE: After turning the ignition switch off, waiting time may be required before disconnecting the cable from the negative (-) battery terminal. Therefore, make sure to read the disconnecting the cable from the negative (-) battery terminal notices before proceeding with work. Refer to PRECAUTION .

2. **DISCONNECT CABLE FROM NEGATIVE BATTERY TERMINAL**

   WARNING: Wait at least 90 seconds after disconnecting the cable from the negative (-) battery terminal to disable the SRS system.

   NOTE: When disconnecting the cable, some systems need to be initialized after the cable is reconnected. Refer to INITIALIZATION .

3. **REMOVE FRONT DOOR SCUFF PLATE RH**

   HINT:

   Use the same procedure as for the LH side. Refer to **REMOVAL - Step 3** .

4. **REMOVE COWL SIDE TRIM SUB-ASSEMBLY RH**

   HINT:

   Use the same procedure as for the LH side. Refer to **REMOVAL - Step 4** .

5. **DISCONNECT FRONT DOOR OPENING TRIM WEATHERSTRIP RH** . Refer to **REMOVAL - Step 34** .
6. **REMOVE INSTRUMENT SIDE PANEL RH** . Refer to **REMOVAL - Step 35** .
7. **REMOVE FRONT PANEL GARNISH RH** . Refer to **REMOVAL - Step 14** .
8. **REMOVE NO. 2 INSTRUMENT PANEL UNDER COVER SUB-ASSEMBLY** . Refer to **REMOVAL - Step 36** .
9. **REMOVE LOWER NO. 2 INSTRUMENT PANEL AIRBAG ASSEMBLY** . Refer to **REMOVAL - Step 8** .
10. **REMOVE LOWER INSTRUMENT PANEL SUB-ASSEMBLY** . Refer to **REMOVAL - Step 38** .
11. **REMOVE ECU INTEGRATION BOX RH**
    a. Disconnect each connector.
    b. Remove the bolt, 2 nuts and ECU integration box RH.

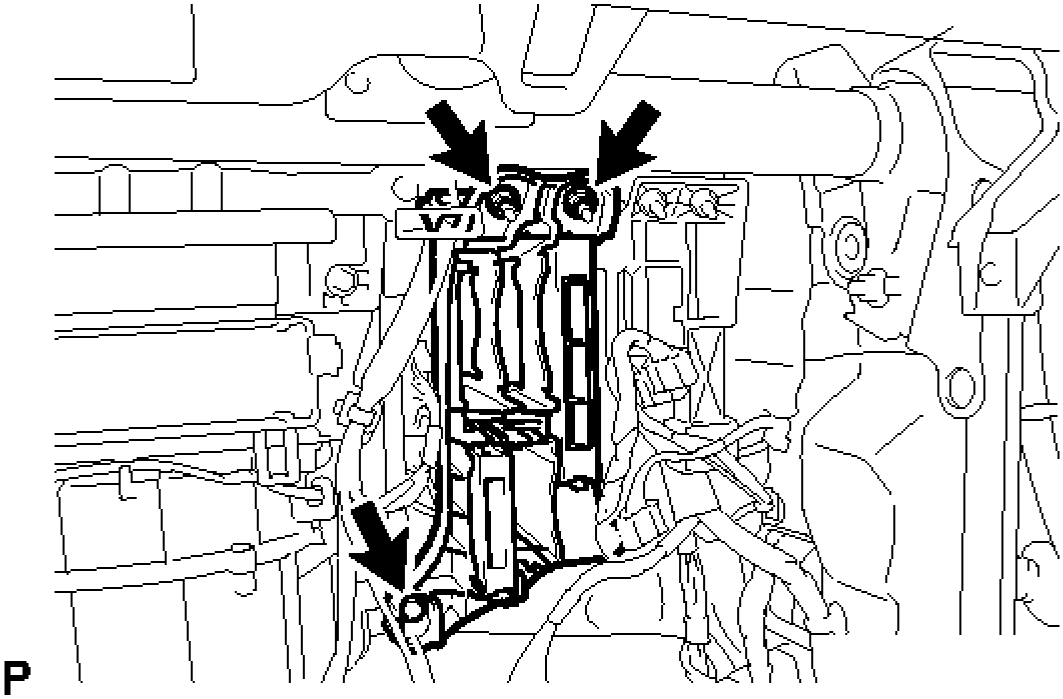

Fig. 3: Locating ECU Integration Box RH Fasteners
Courtesy of TOYOTA MOTOR SALES, U.S.A., INC.

12. **REMOVE CLEARANCE WARNING ECU ASSEMBLY**
    a. Disengage the 2 claws and remove the clearance warning ECU assembly.

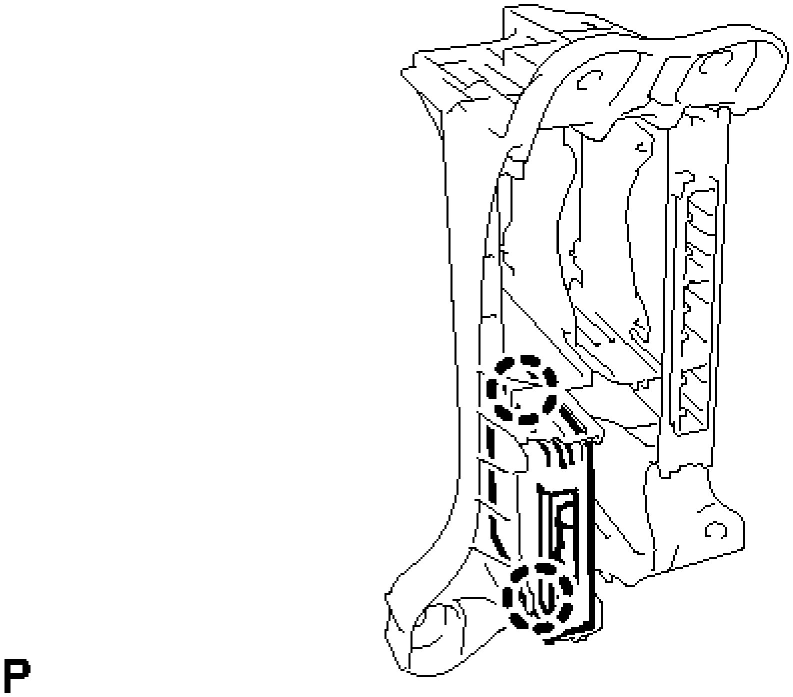

Fig. 4: Locating Clearance Warning ECU Assembly And Claws

INSTALLATION

INSTALLATION

1. **INSTALL CLEARANCE WARNING ECU ASSEMBLY**
   1. Engage the 2 claws to install the clearance warning ECU assembly.
2. **INSTALL ECU INTEGRATION BOX RH**
   1. Install the ECU integration box RH with the 2 nuts and bolt.

      Bolt

      Torque: 7.5 N*m (76 kgf*cm, 66 in.*lbf)

      Nut

      Torque: 5.5 N*m (56 kgf*cm, 49 in.*lbf)

   2. Connect each connector.
3. **INSTALL LOWER INSTRUMENT PANEL SUB-ASSEMBLY** . Refer to **INSTALLATION - Step 15** .
4. **INSTALL LOWER NO. 2 INSTRUMENT PANEL AIRBAG ASSEMBLY** . Refer to **INSTALLATION - Step 1** .
5. **INSTALL NO. 2 INSTRUMENT PANEL UNDER COVER SUB-ASSEMBLY** . Refer to **INSTALLATION - Step 17** .
6. **INSTALL FRONT PANEL GARNISH RH** . Refer to **INSTALLATION - Step 39** .
7. **INSTALL INSTRUMENT SIDE PANEL RH** . Refer to **INSTALLATION - Step 18** .
8. **INSTALL FRONT DOOR OPENING TRIM WEATHERSTRIP RH** . Refer to **INSTALLATION - Step 46** .
9. **INSTALL COWL SIDE TRIM SUB-ASSEMBLY RH**

   HINT:

   Use the same procedure as for the LH side. Refer to **INSTALLATION - Step 43** .

10. **INSTALL FRONT DOOR SCUFF PLATE RH**

    HINT:

    Use the same procedure as for the LH side. Refer to **INSTALLATION - Step 44** .

11. **CONNECT CABLE TO NEGATIVE BATTERY TERMINAL**

NOTE: **When disconnecting the cable, some systems need to be initialized after the cable is reconnected. Refer to INITIALIZATION .**

12. **INSPECT SRS WARNING LIGHT**

    for Built-in Type Yaw Rate Sensor: Refer to **DIAGNOSIS SYSTEM** .

    for Separate Type Yaw Rate Sensor: Refer to **DIAGNOSIS SYSTEM** .

CLEARANCE WARNING BUZZER

COMPONENTS

ILLUSTRATION

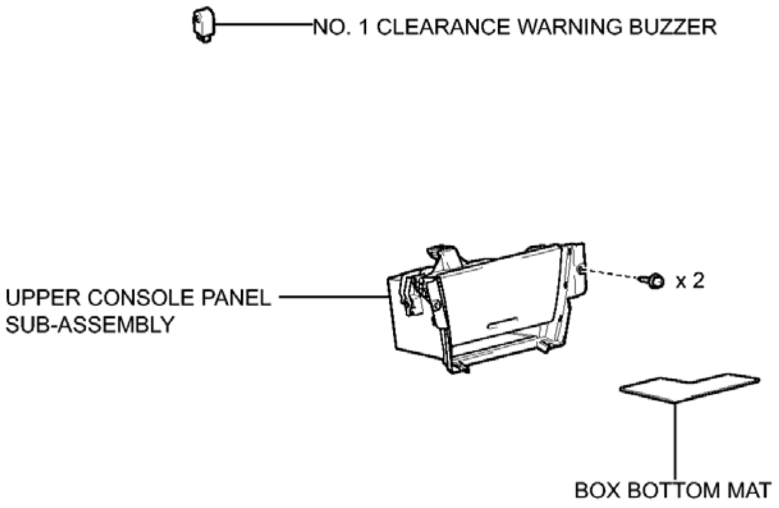
NO. 1 CLEARANCE WARNING BUZZER
UPPER CONSOLE PANEL SUB-ASSEMBLY
x 2
BOX BOTTOM MAT

P

Fig. 5: Identifying Clearance Warning Buzzer Replacement Components
Courtesy of TOYOTA MOTOR SALES, U.S.A., INC.

REMOVAL

REMOVAL

1. **REMOVE REAR CONSOLE BOX ASSEMBLY**

   Refer to **REMOVAL** .

2. **REMOVE BOX BOTTOM MAT** . Refer to **REMOVAL - Step 25** .
3. **REMOVE UPPER CONSOLE PANEL SUB-ASSEMBLY** . Refer to **REMOVAL - Step 26** .
4. **REMOVE NO. 1 CLEARANCE WARNING BUZZER**
    a. Disconnect the connector.

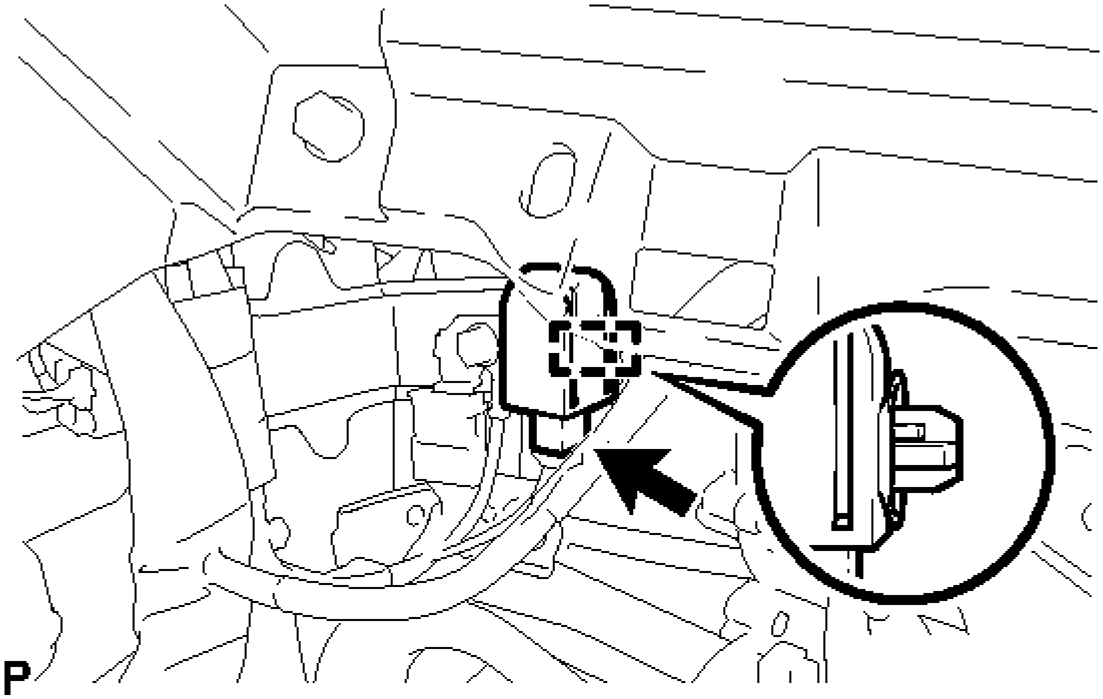

Fig. 6: Locating No. 1 Clearance Warning Buzzer Connector
Courtesy of TOYOTA MOTOR SALES, U.S.A., INC.

    b. Disengage the clamp to remove the No. 1 clearance warning buzzer.

INSTALLATION

INSTALLATION

1. **INSTALL NO. 1 CLEARANCE WARNING BUZZER**
    a. Engage the clamp to install the No. 1 clearance warning buzzer.
    b. Connect the connector.
2. **INSTALL UPPER CONSOLE PANEL SUB-ASSEMBLY** . Refer to **INSTALLATION - Step 27** .
3. **INSTALL BOX BOTTOM MAT** . Refer to **INSTALLATION - Step 28** .
4. **INSTALL REAR CONSOLE BOX ASSEMBLY**

    Refer to **INSTALLATION** .

ULTRASONIC SENSOR (FOR FRONT SIDE)

COMPONENTS

ILLUSTRATION

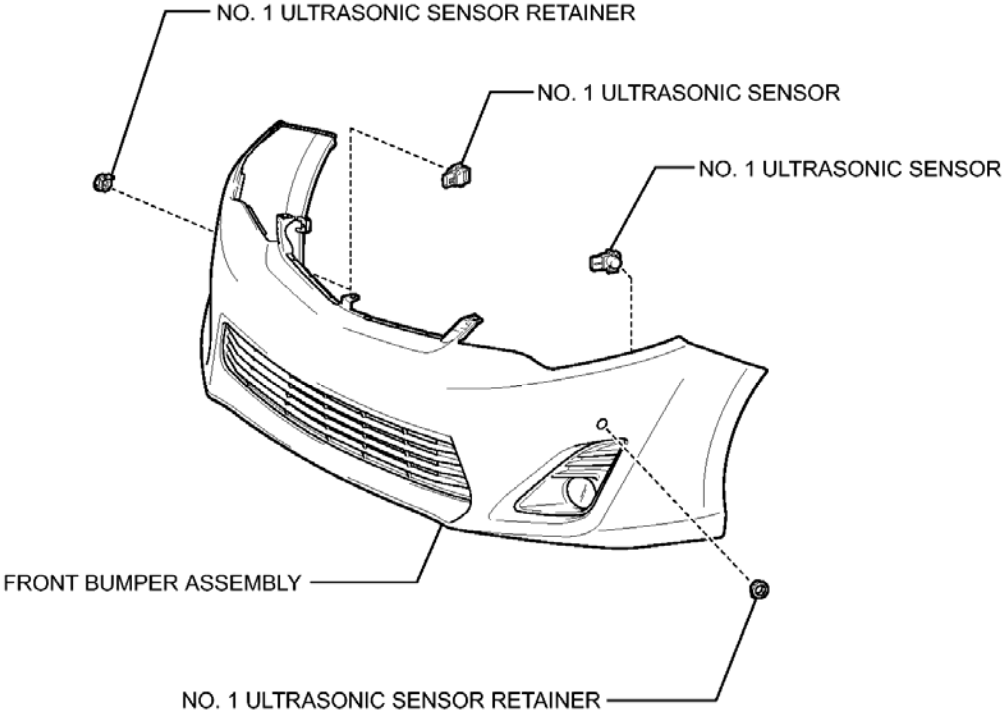
NO. 1 ULTRASONIC SENSOR RETAINER
NO. 1 ULTRASONIC SENSOR
NO. 1 ULTRASONIC SENSOR
FRONT BUMPER ASSEMBLY
NO. 1 ULTRASONIC SENSOR RETAINER

P

Fig. 7: Identifying Ultrasonic Sensor (For Front Side) Replacement Components
Courtesy of TOYOTA MOTOR SALES, U.S.A., INC.

REMOVAL

REMOVAL

1. **REMOVE FRONT BUMPER ASSEMBLY**

   Refer to **REMOVAL** .

2. **REMOVE NO. 1 ULTRASONIC SENSOR**
   a. Disengage the 2 claws to remove the No. 1 ultrasonic sensor.

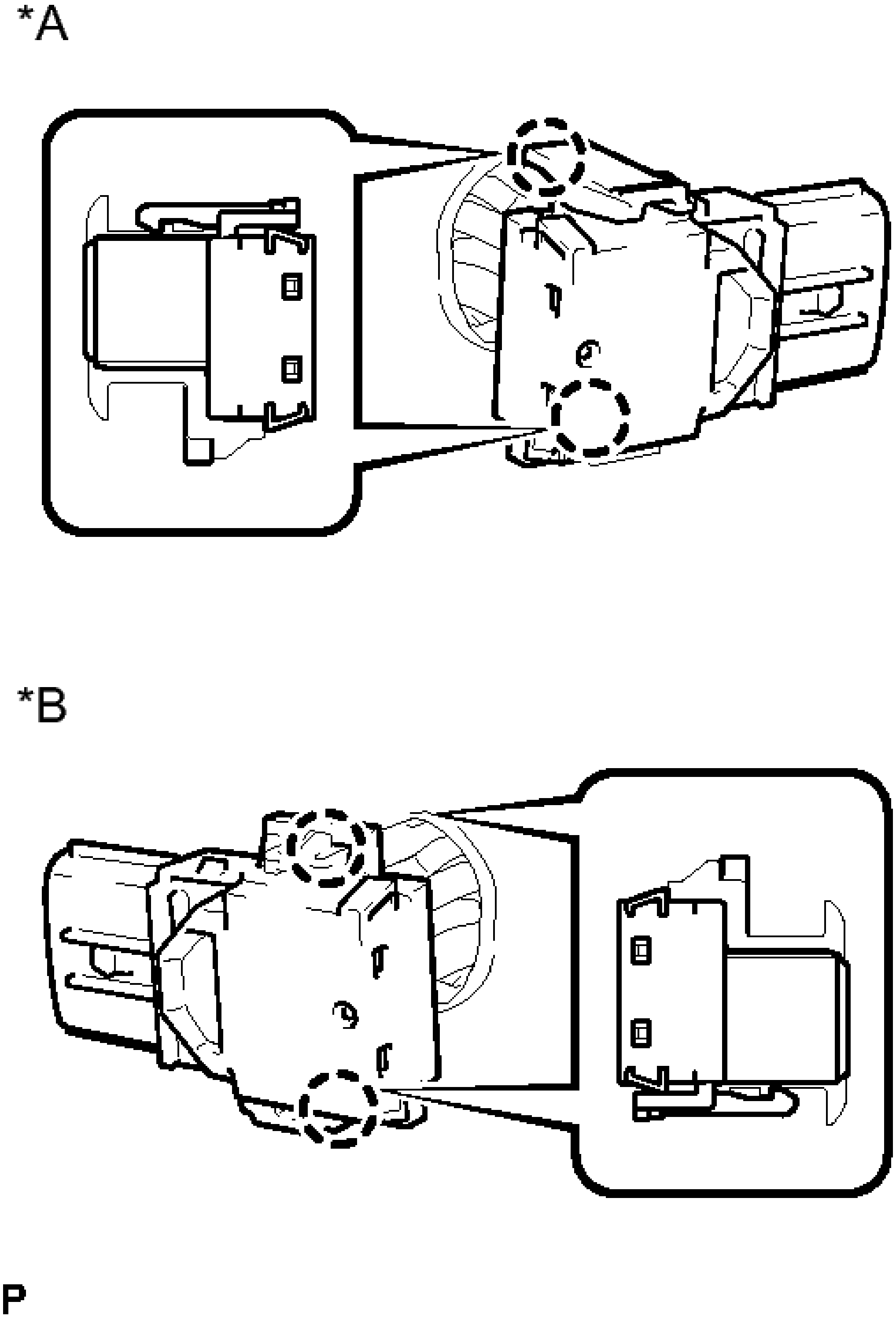

Fig. 8: Identifying No. 1 Ultrasonic Sensor And Claws
Courtesy of TOYOTA MOTOR SALES, U.S.A., INC.

TEXT IN ILLUSTRATION

	LH

*A	Side
*B	RH Side

3. **REMOVE NO. 1 ULTRASONIC SENSOR RETAINER**
   a. Disengage the 2 claws to remove the No. 1 ultrasonic sensor retainer from the front bumper assembly.

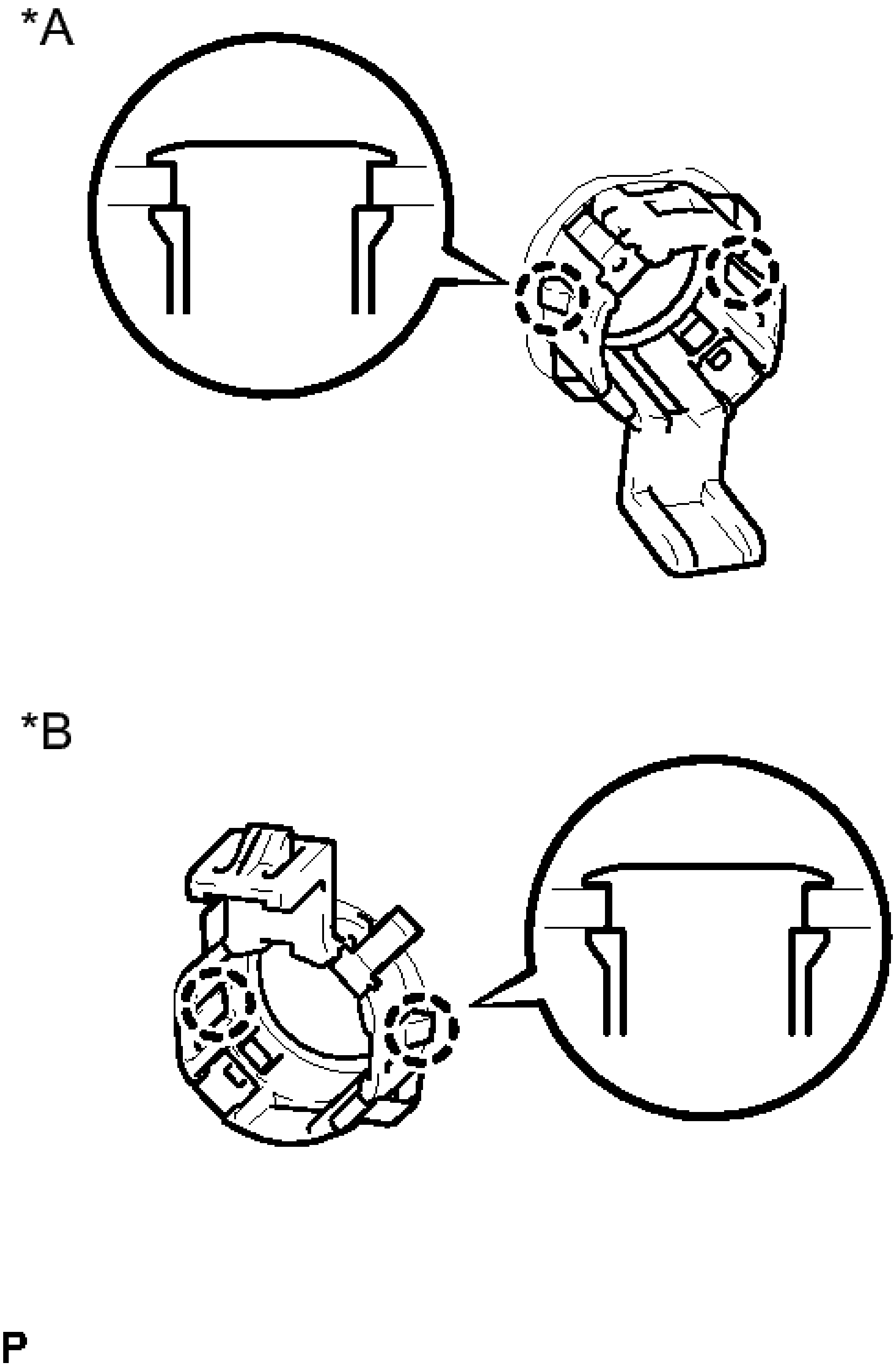

Fig. 9: Identifying No. 1 Ultrasonic Sensor Retainer And Claws

Courtesy of TOYOTA MOTOR SALES, U.S.A., INC.

TEXT IN ILLUSTRATION

	LH

*A	Side
*B	RH Side

INSPECTION

INSPECTION

1. **INSPECT NO. 1 ULTRASONIC SENSOR**
    a. Measure the resistance according to the value(s) in the table below.

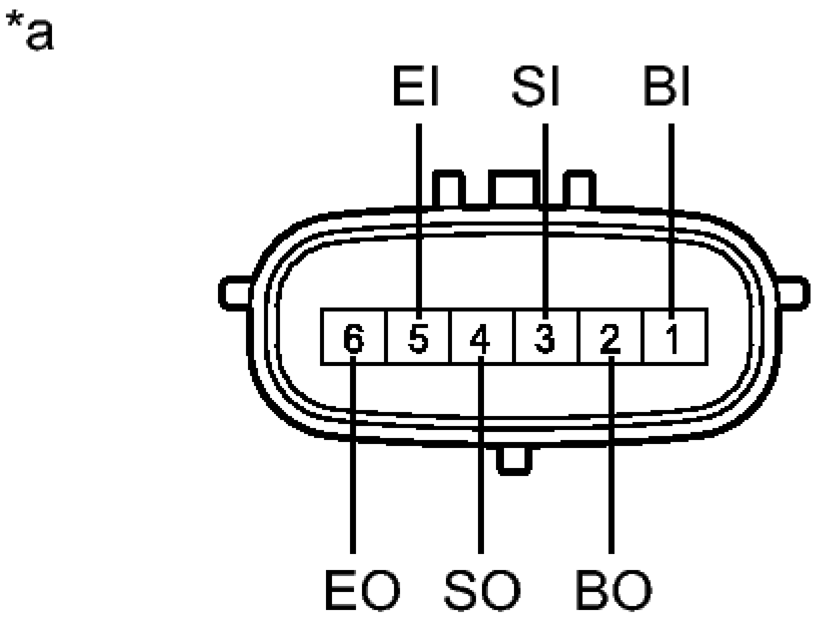

Fig. 10: Inspecting No. 1 Ultrasonic Sensor Connector Terminals
Courtesy of TOYOTA MOTOR SALES, U.S.A., INC.

Standard Resistance

Tester Connection	Condition	Specified Condition
1 (BI) - 5 (EI)	Always	10 kohms or higher
1 (BI) - 2 (BO)	Always	10 kohms or higher
3 (SI) - 4 (SO)	Always	Below 1 ohms
5 (EI) - 6 (EO)	Always	Below 1 ohms

TEST IN ILLUSTRATION

*a	Component without harness connected: (No. 1 Ultrasonic Sensor)

If the result is not as specified, replace the No. 1 ultrasonic sensor.

INSTALLATION

INSTALLATION

1. **INSTALL NO. 1 ULTRASONIC SENSOR RETAINER**
    a. Engage the 2 claws to install the No. 1 ultrasonic sensor retainer to the front bumper assembly.

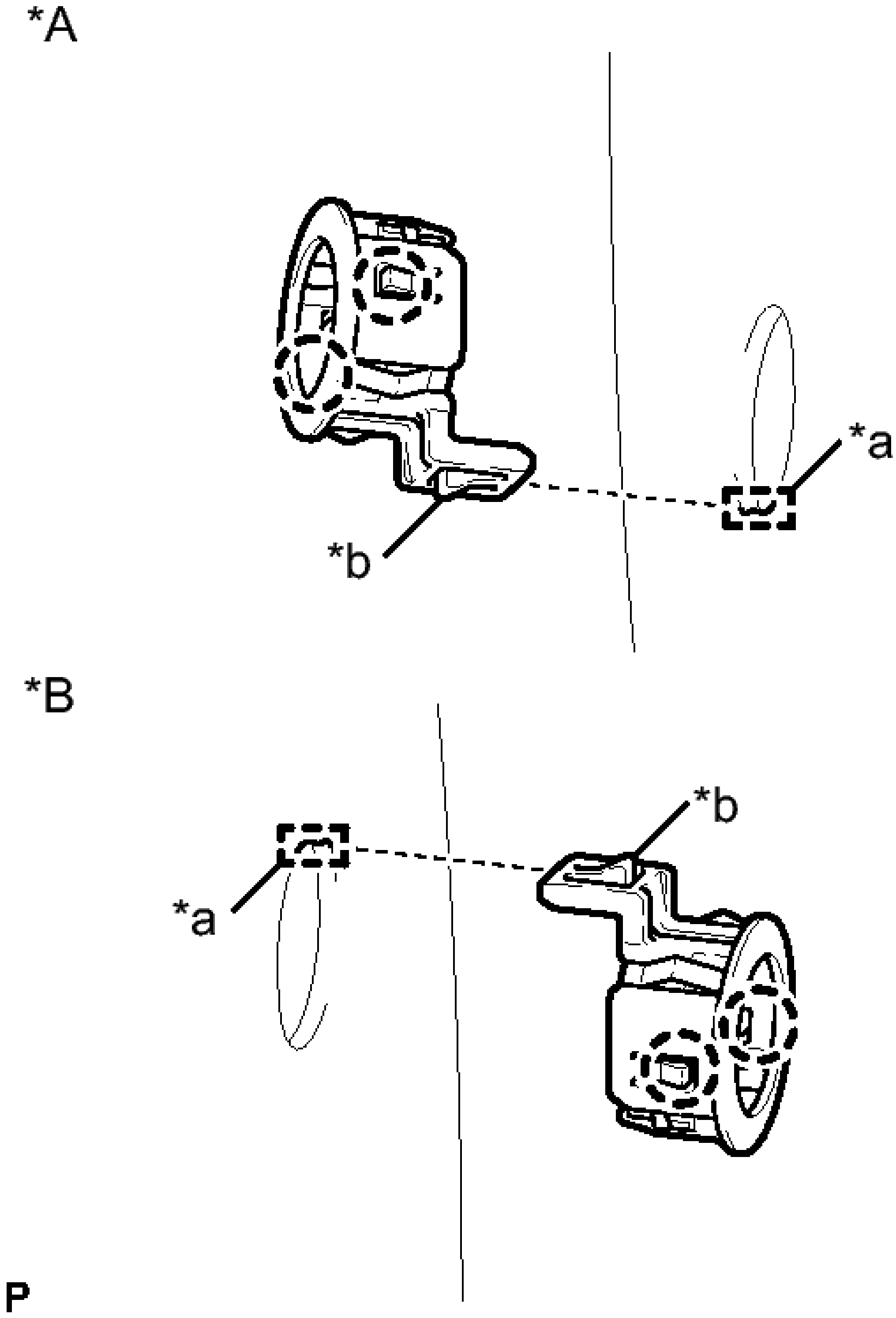

Fig. 11: Identifying No. 1 Ultrasonic Sensor Retainer And Claws
Courtesy of TOYOTA MOTOR SALES, U.S.A., INC.

TEXT IN ILLUSTRATION

*A	LH Side

*B	RH Side
*a	Keyhole
*b	Snap

NOTE:

- **Do not damage the front bumper with the protrusion when installing the retainer.**
- **Securely install the No. 1 ultrasonic sensor retainer so that there are no gaps between the retainer and surface of the front bumper.**

HINT:

When installing the retainer, align the keyhole and snap as shown in the illustration.

2. **INSTALL NO. 1 ULTRASONIC SENSOR**
    a. Engage the 2 claws to install the No. 1 ultrasonic sensor to the No. 1 ultrasonic sensor retainer.

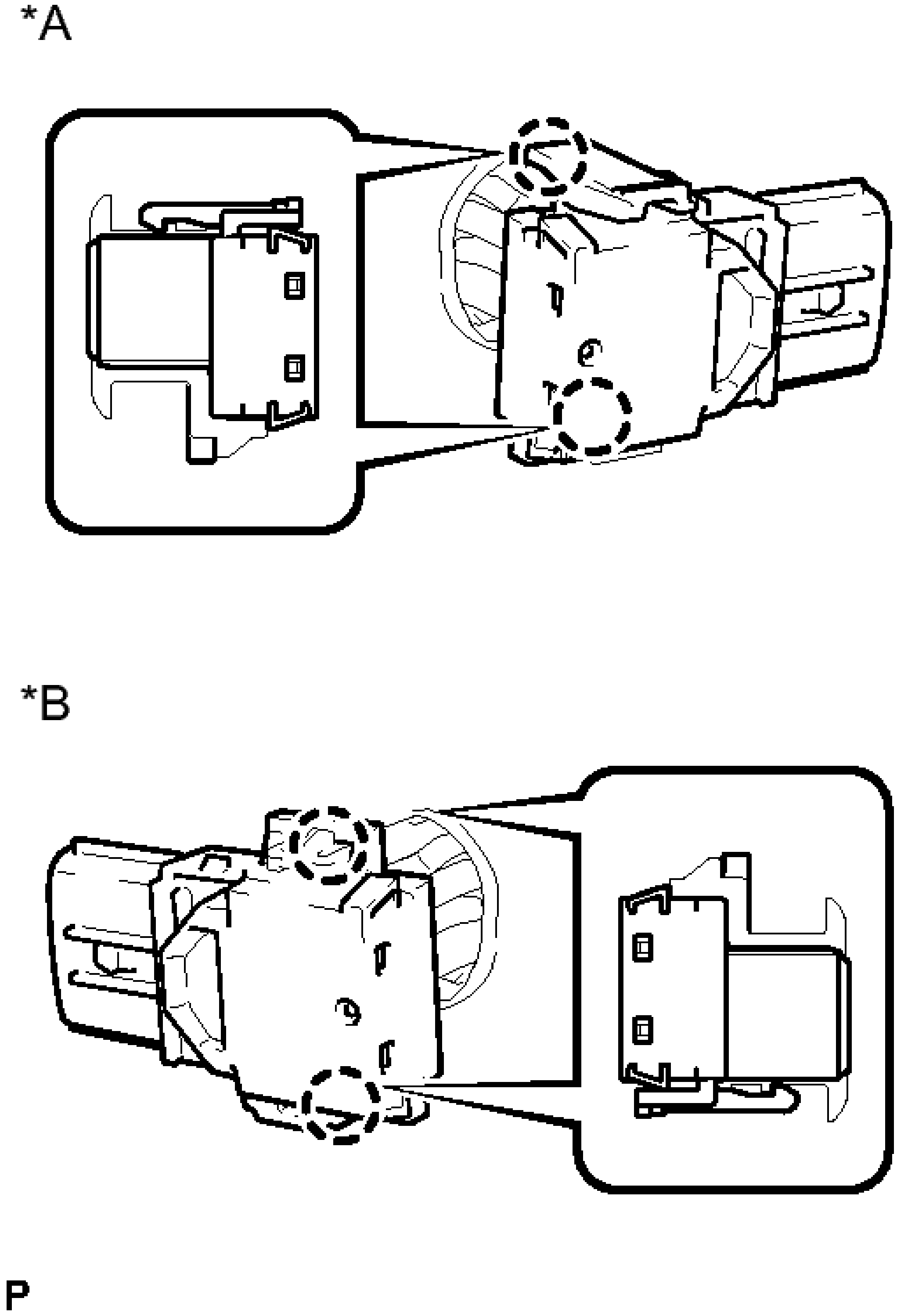

Fig. 12: Identifying No. 1 Ultrasonic Sensor And Claws
Courtesy of TOYOTA MOTOR SALES, U.S.A., INC.

TEXT IN ILLUSTRATION

	LH

*A	Side
*B	RH Side

NOTE: **Push the No. 1 ultrasonic sensor retainer from the outside of the bumper when there is a gap between the retainer and the bumper surface. In this case, do not push on the ultrasonic sensor.**

3. **INSTALL FRONT BUMPER ASSEMBLY**

   Refer to **INSTALLATION** .

ULTRASONIC SENSOR (FOR REAR SIDE)

COMPONENTS

ILLUSTRATION

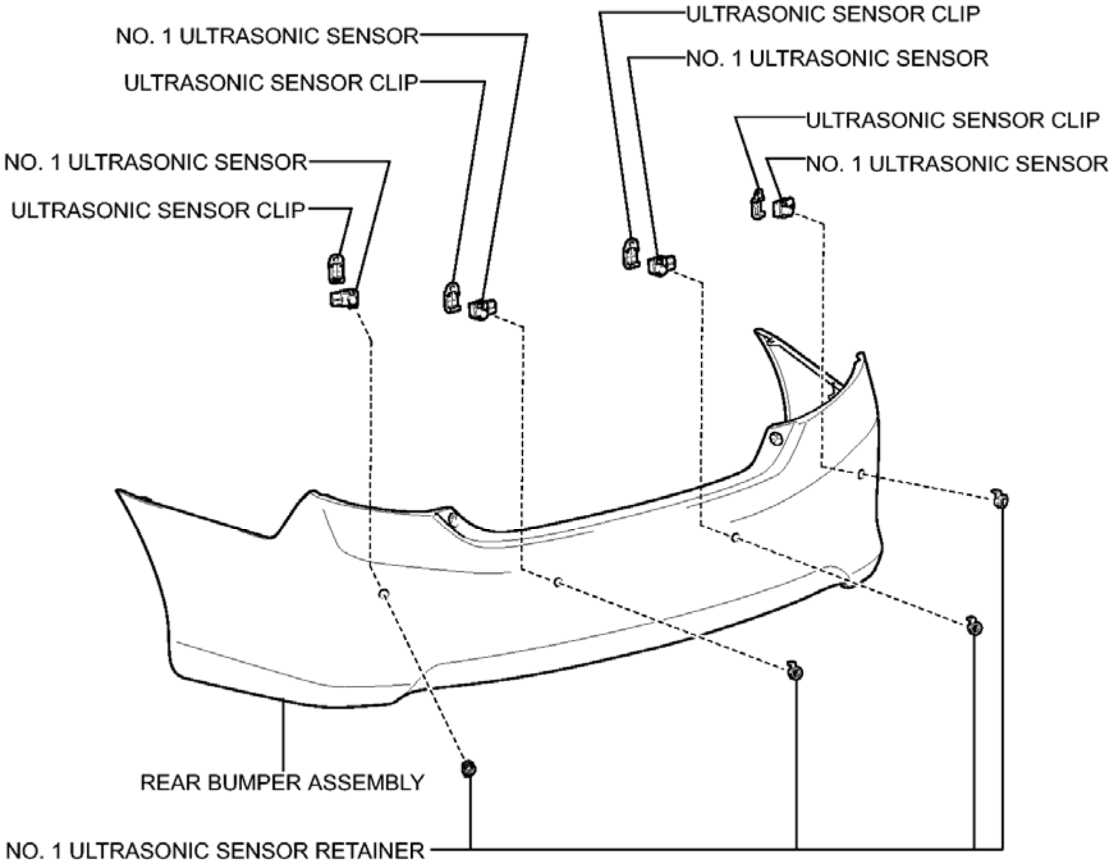
NO. 1 ULTRASONIC SENSOR
ULTRASONIC SENSOR CLIP
NO. 1 ULTRASONIC SENSOR
ULTRASONIC SENSOR CLIP
ULTRASONIC SENSOR CLIP
NO. 1 ULTRASONIC SENSOR
ULTRASONIC SENSOR CLIP
NO. 1 ULTRASONIC SENSOR
REAR BUMPER ASSEMBLY
NO. 1 ULTRASONIC SENSOR RETAINER

P

Fig. 13: Identifying Ultrasonic Sensor (For Rear Side) Replacement Components
Courtesy of TOYOTA MOTOR SALES, U.S.A., INC.

REMOVAL

REMOVAL

1. **REMOVE REAR BUMPER ASSEMBLY**

   Refer to **REMOVAL** .

2. **REMOVE ULTRASONIC SENSOR CLIP**
   a. Disconnect the connector.

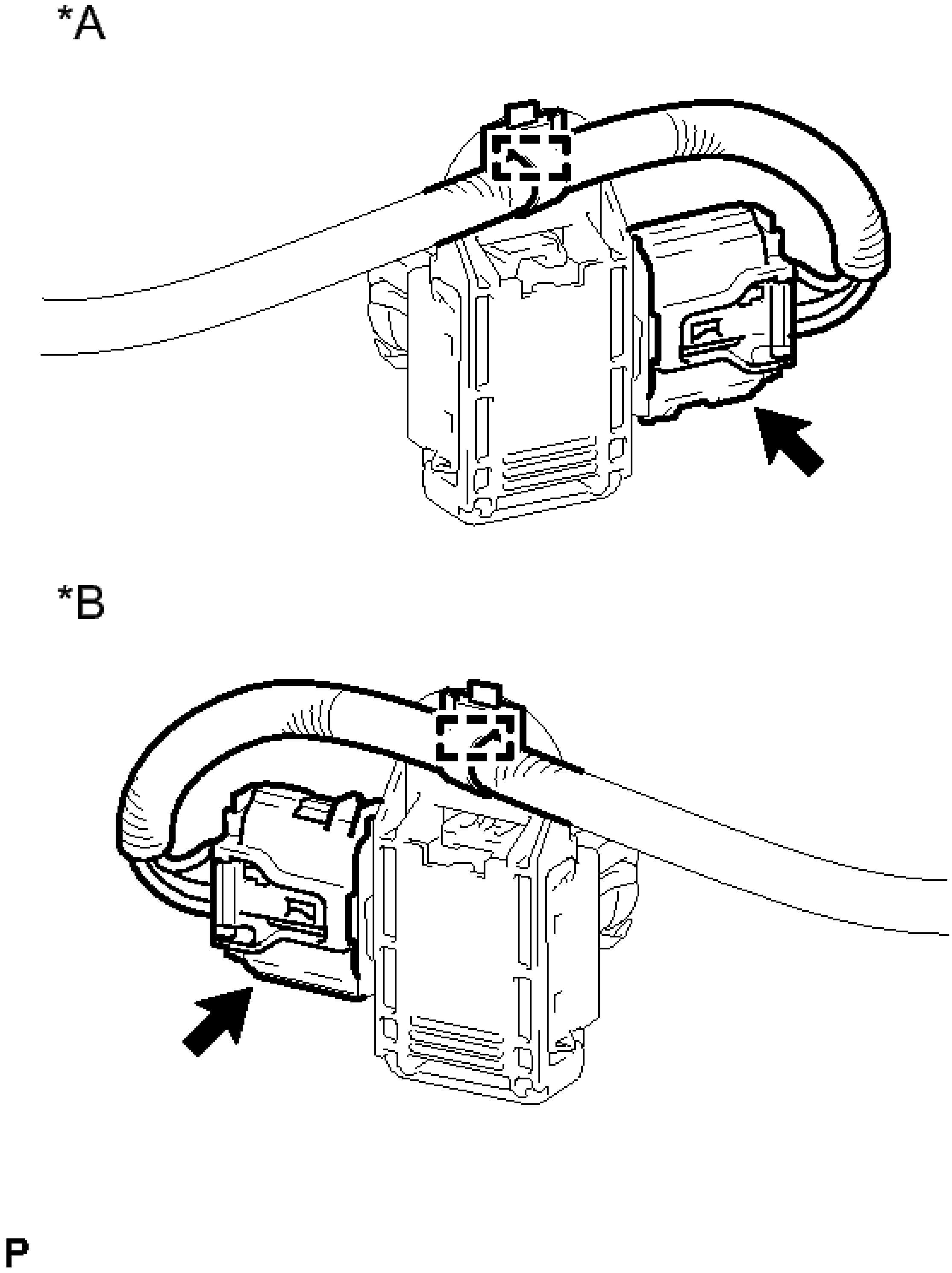

Fig. 14: Locating Ultrasonic Sensor Clip And Connector

Courtesy of TOYOTA MOTOR SALES, U.S.A., INC.

TEXT IN ILLUSTRATION

	LH

*A	Side
*B	Other Side

b. Disengage the clamp.
c. Disengage the 4 claws to remove the ultrasonic sensor clip.

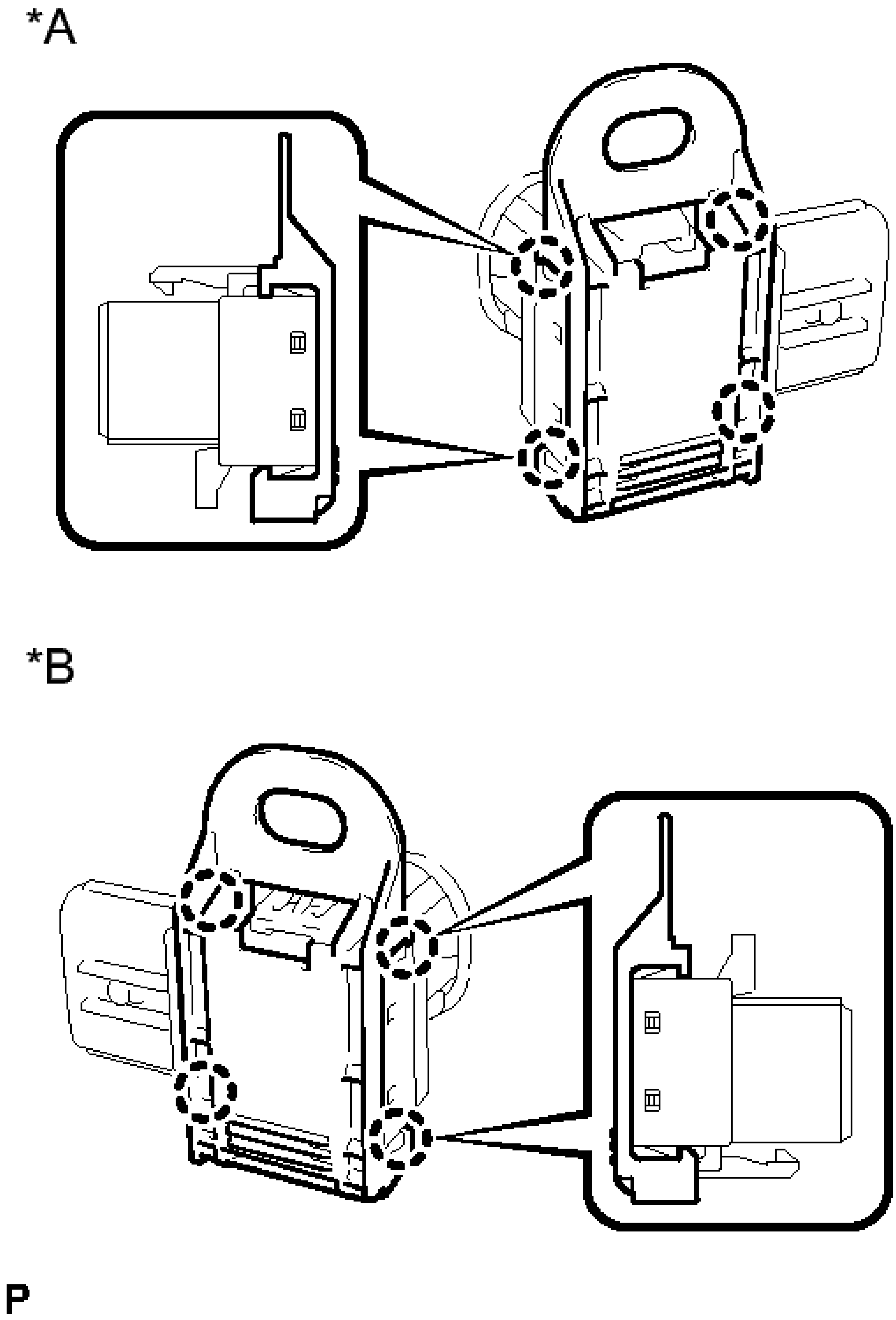

Fig. 15: Identifying Ultrasonic Sensor Clip And Claws
Courtesy of TOYOTA MOTOR SALES, U.S.A., INC.

TEXT IN ILLUSTRATION

	LH

*A	Side
*B	Other Side

3. **REMOVE NO. 1 ULTRASONIC SENSOR**
    a. Disengage the 2 claws to remove the No. 1 ultrasonic sensor.

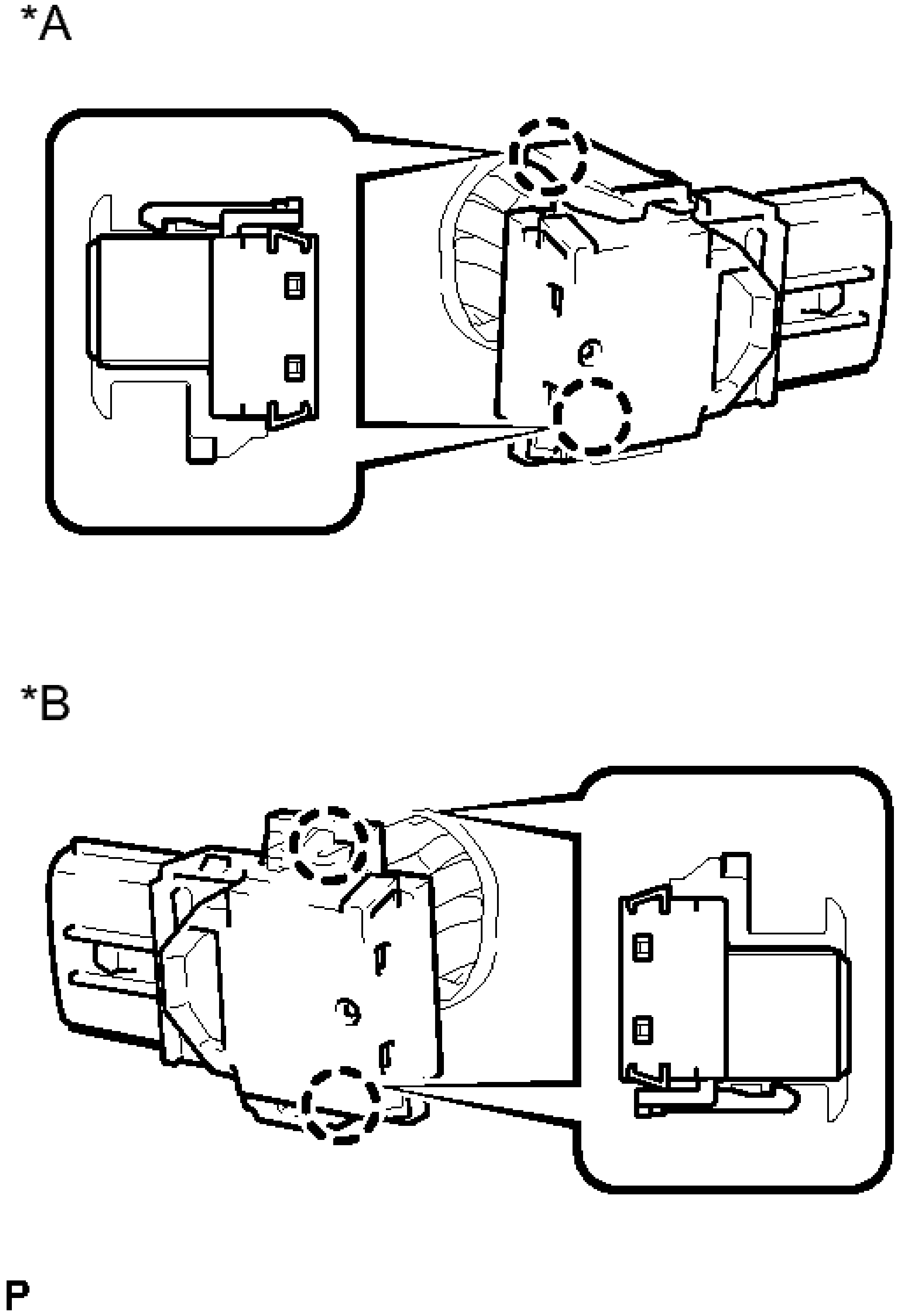

Fig. 16: Identifying No. 1 Ultrasonic Sensor And Claws
Courtesy of TOYOTA MOTOR SALES, U.S.A., INC.

TEXT IN ILLUSTRATION

	LH

*A	Side
*B	Other Side

4. **REMOVE NO. 1 ULTRASONIC SENSOR RETAINER**
    a. Disengage the 2 claws to remove the No. 1 ultrasonic sensor retainer from the rear bumper assembly.

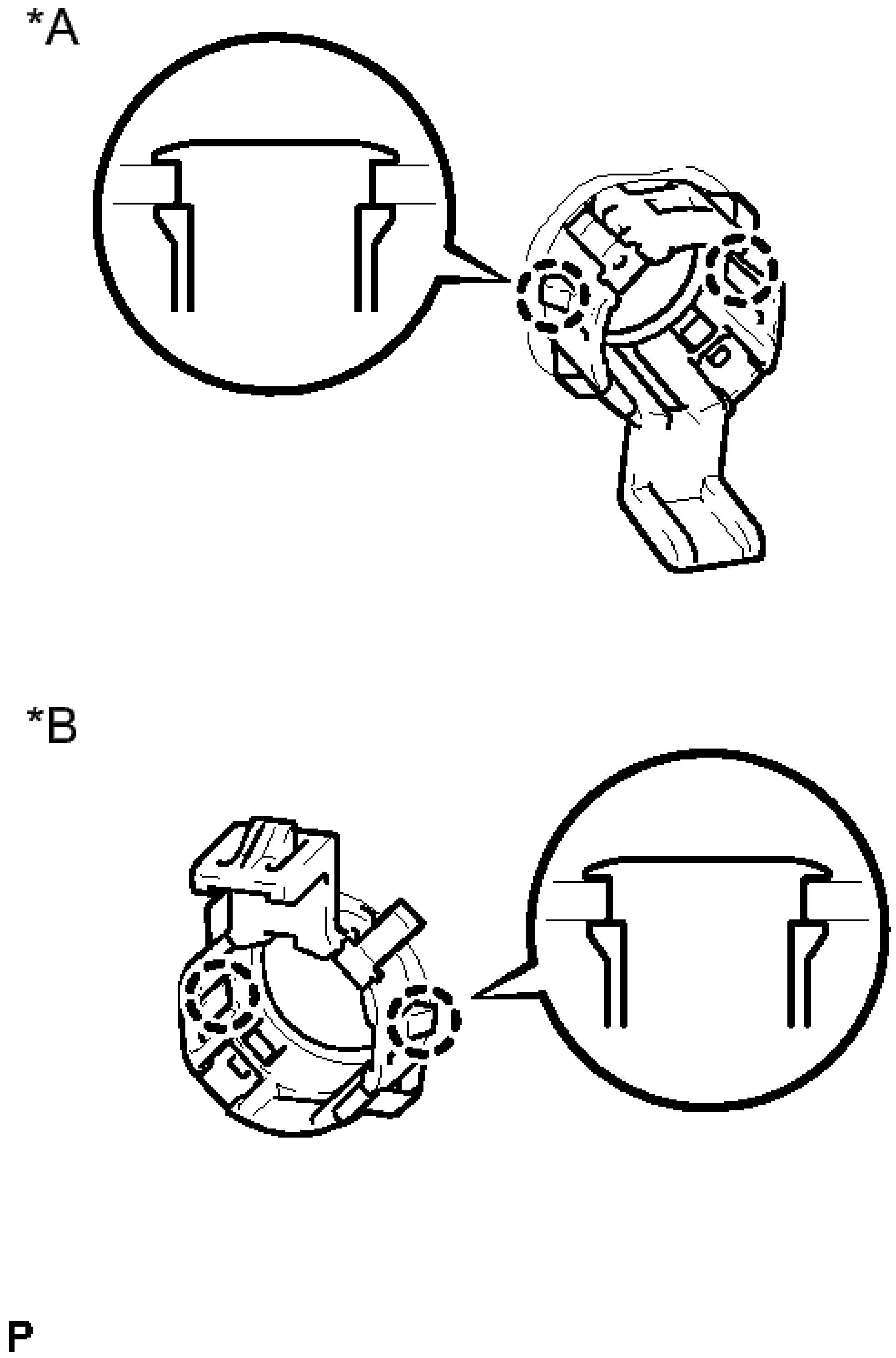

Fig. 17: Identifying No. 1 Ultrasonic Sensor Retainer And Claws
Courtesy of TOYOTA MOTOR SALES, U.S.A., INC.

TEXT IN ILLUSTRATION

	LH

*A	Side
*B	Other Side

INSPECTION

INSPECTION

1. **INSPECT NO. 1 ULTRASONIC SENSOR**
   a. Measure the resistance according to the value(s) in the table below.

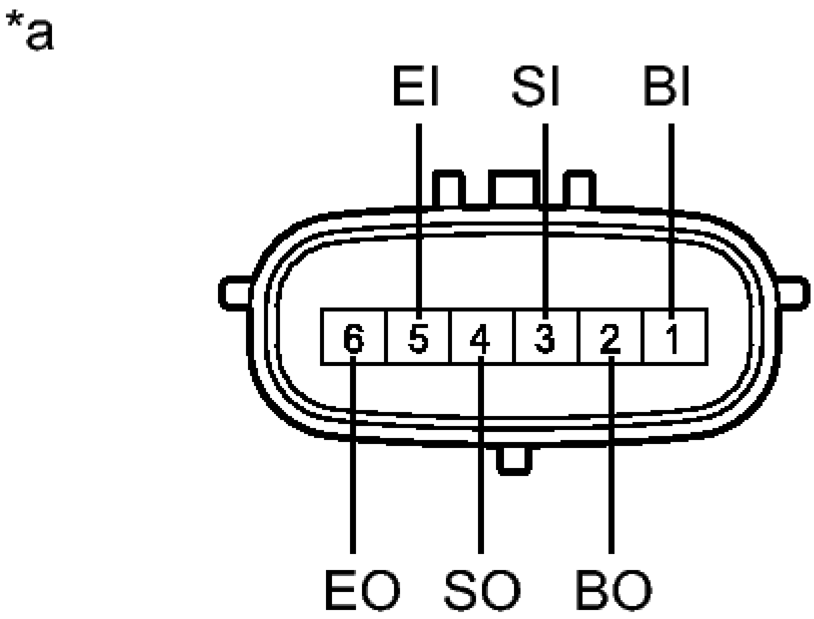

Fig. 18: Inspecting No. 1 Ultrasonic Sensor Connector Terminals
Courtesy of TOYOTA MOTOR SALES, U.S.A., INC.

Standard Resistance

Tester Connection	Condition	Specified Condition
1 (BI) - 5 (EI)	Always	10 kohms or higher
1 (BI) - 2 (BO)	Always	10 kohms or higher
3 (SI) - 4 (SO)	Always	Below 1 ohms
5 (EI) - 6 (EO)	Always	Below 1 ohms

TEST IN ILLUSTRATION

*a	Component without harness connected: (No. 1 Ultrasonic Sensor)

If the result is not as specified, replace the No. 1 ultrasonic sensor.

INSTALLATION

INSTALLATION

1. **INSTALL NO. 1 ULTRASONIC SENSOR RETAINER**
    a. Engage the 2 claws to install the No. 1 ultrasonic sensor retainer to the rear bumper assembly.

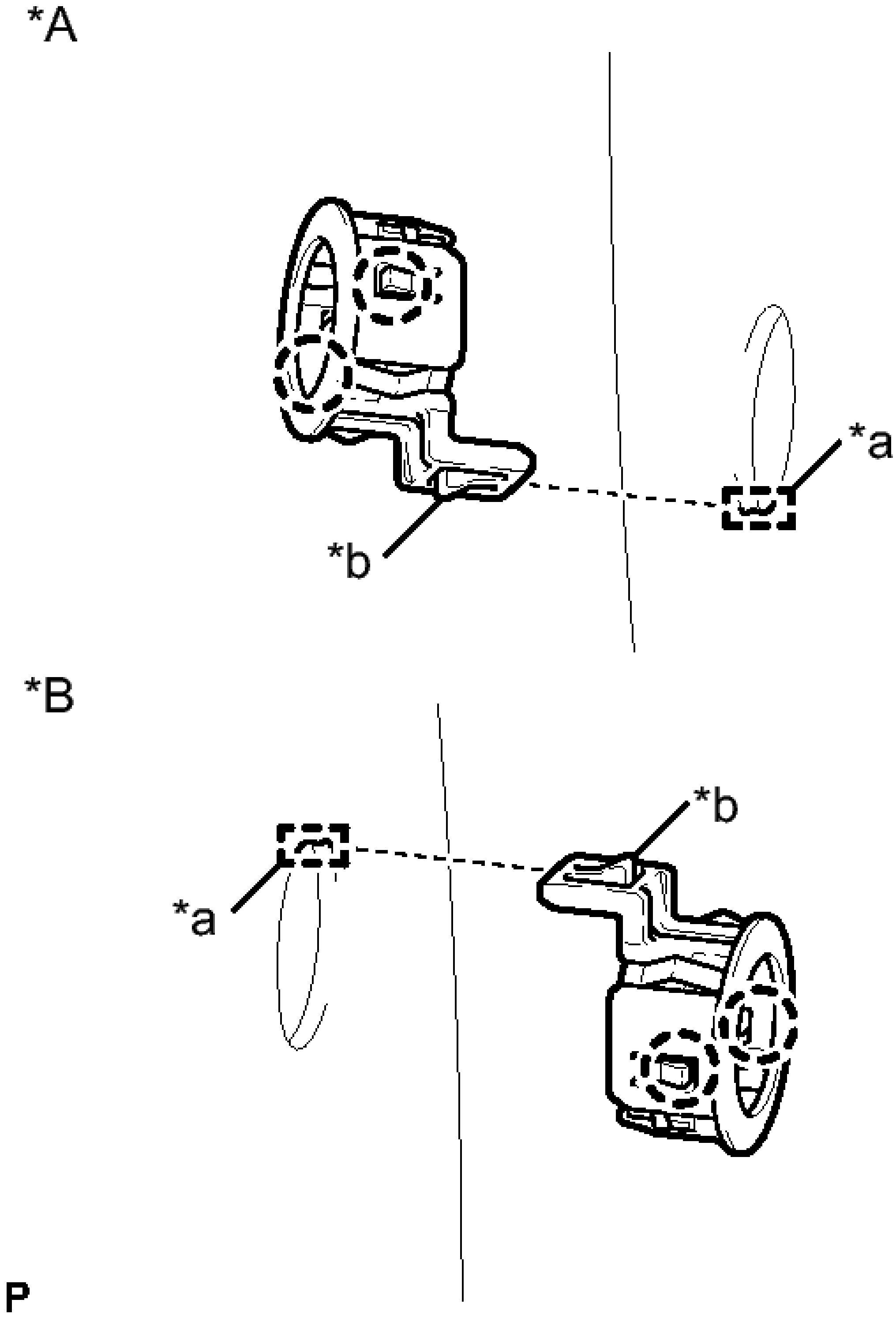

Fig. 19: Identifying No. 1 Ultrasonic Sensor Retainer And Claws
Courtesy of TOYOTA MOTOR SALES, U.S.A., INC.

TEXT IN ILLUSTRATION

*A	LH Side

*B	Other Side
*a	Keyhole
*b	Snap

NOTE:

- **Do not damage the front bumper with the protrusion when installing the retainer.**
- **Securely install the No. 1 ultrasonic sensor retainer so that there are no gaps between the retainer and surface of the front bumper.**

HINT:

When installing the retainer, align the keyhole and snap as shown in the illustration.

2. **INSTALL NO. 1 ULTRASONIC SENSOR**
   a. Engage the 2 claws to install the No. 1 ultrasonic sensor to the No. 1 ultrasonic sensor retainer.

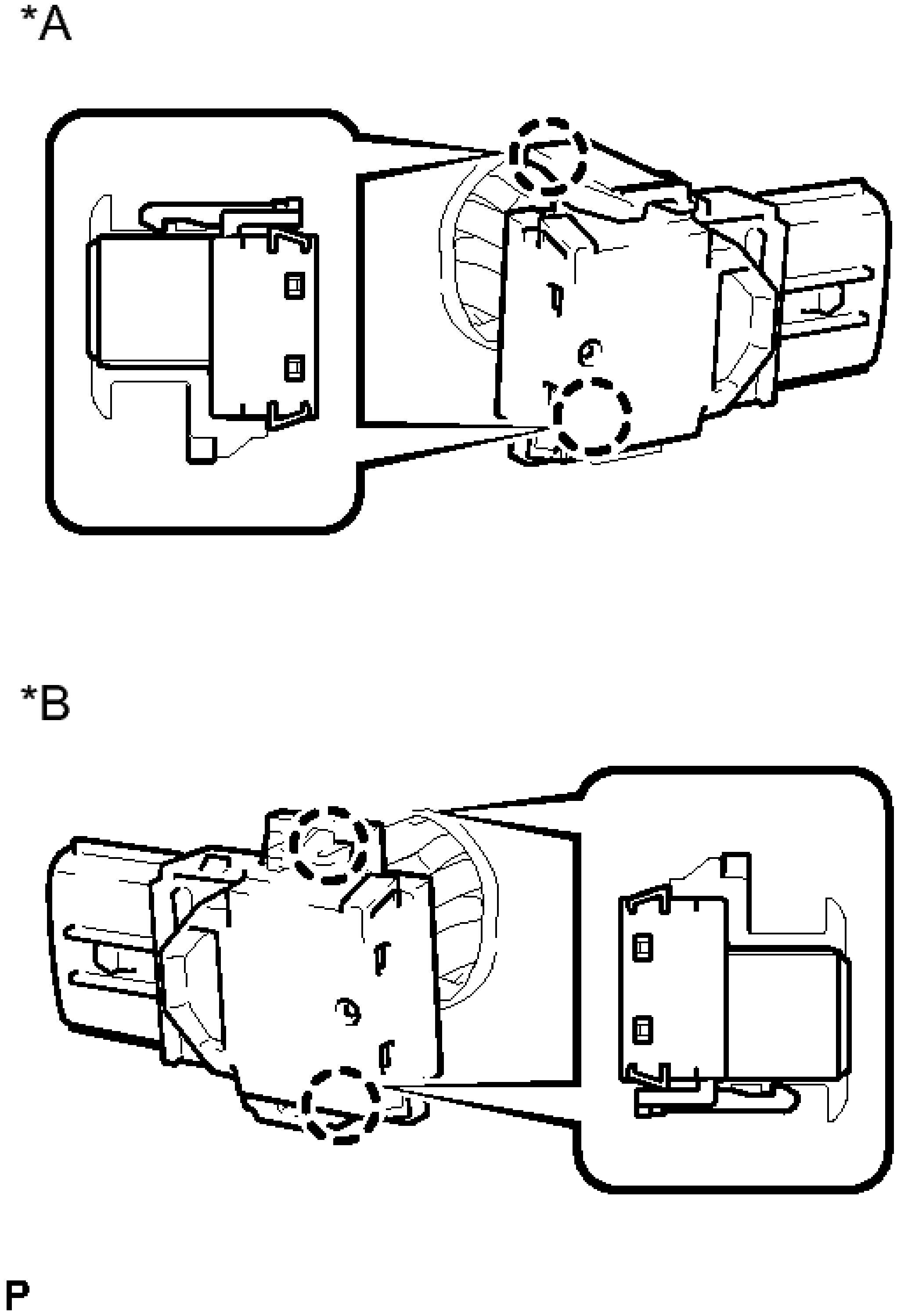

Fig. 20: Identifying No. 1 Ultrasonic Sensor And Claws
Courtesy of TOYOTA MOTOR SALES, U.S.A., INC.

TEXT IN ILLUSTRATION

	LH

*A	Side
*B	Other Side

NOTE: **Push the No. 1 ultrasonic sensor retainer from the outside of the bumper when there is a gap between the retainer and the bumper surface. In this case, do not push on the ultrasonic sensor.**

3. **INSTALL ULTRASONIC SENSOR CLIP**
    a. Engage the 4 claws to install the ultrasonic sensor clip.

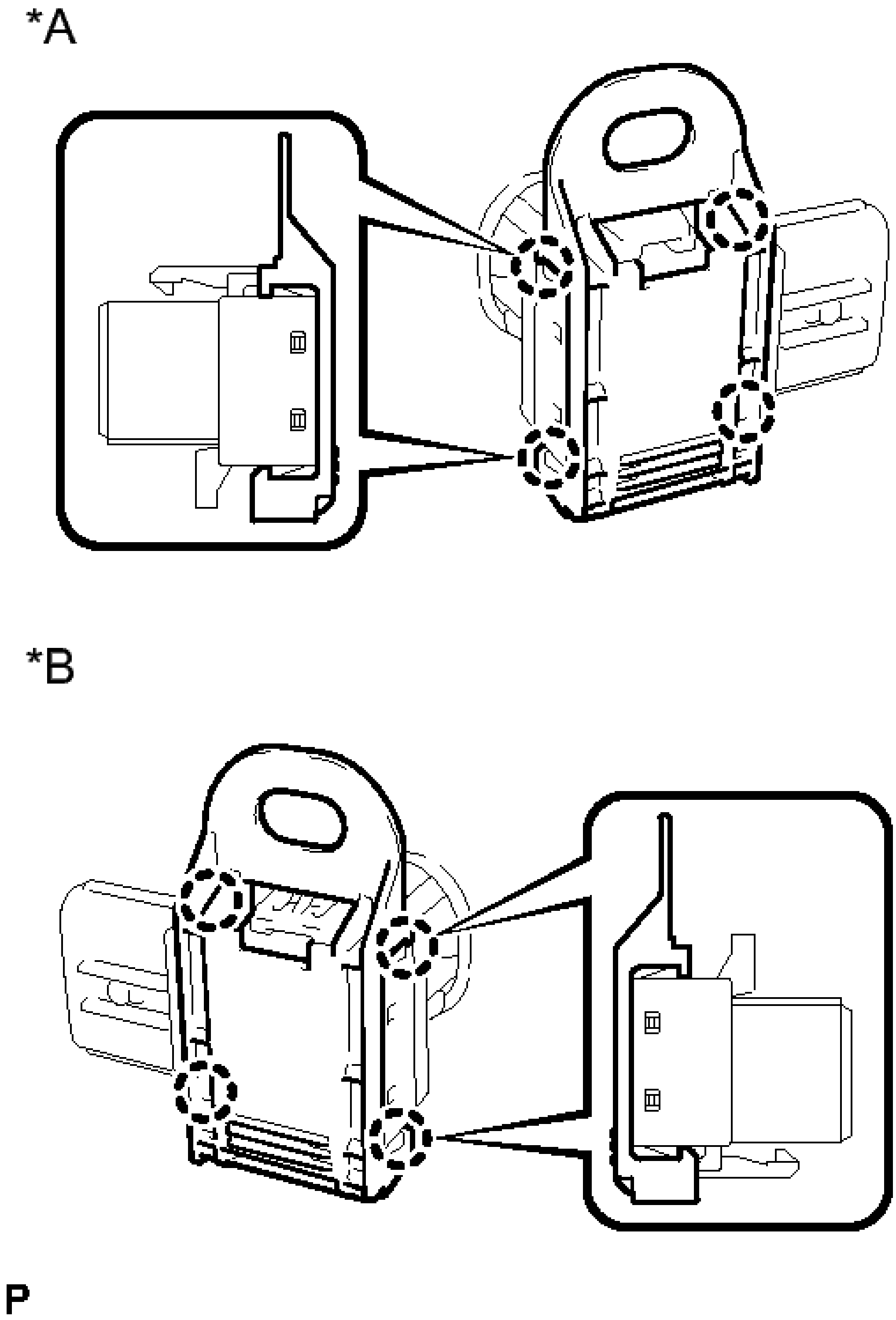

Fig. 21: Identifying Ultrasonic Sensor Clip And Claws
Courtesy of TOYOTA MOTOR SALES, U.S.A., INC.

TEXT IN ILLUSTRATION

	LH

*A	Side
*B	Other Side

b. Engage the clamp.

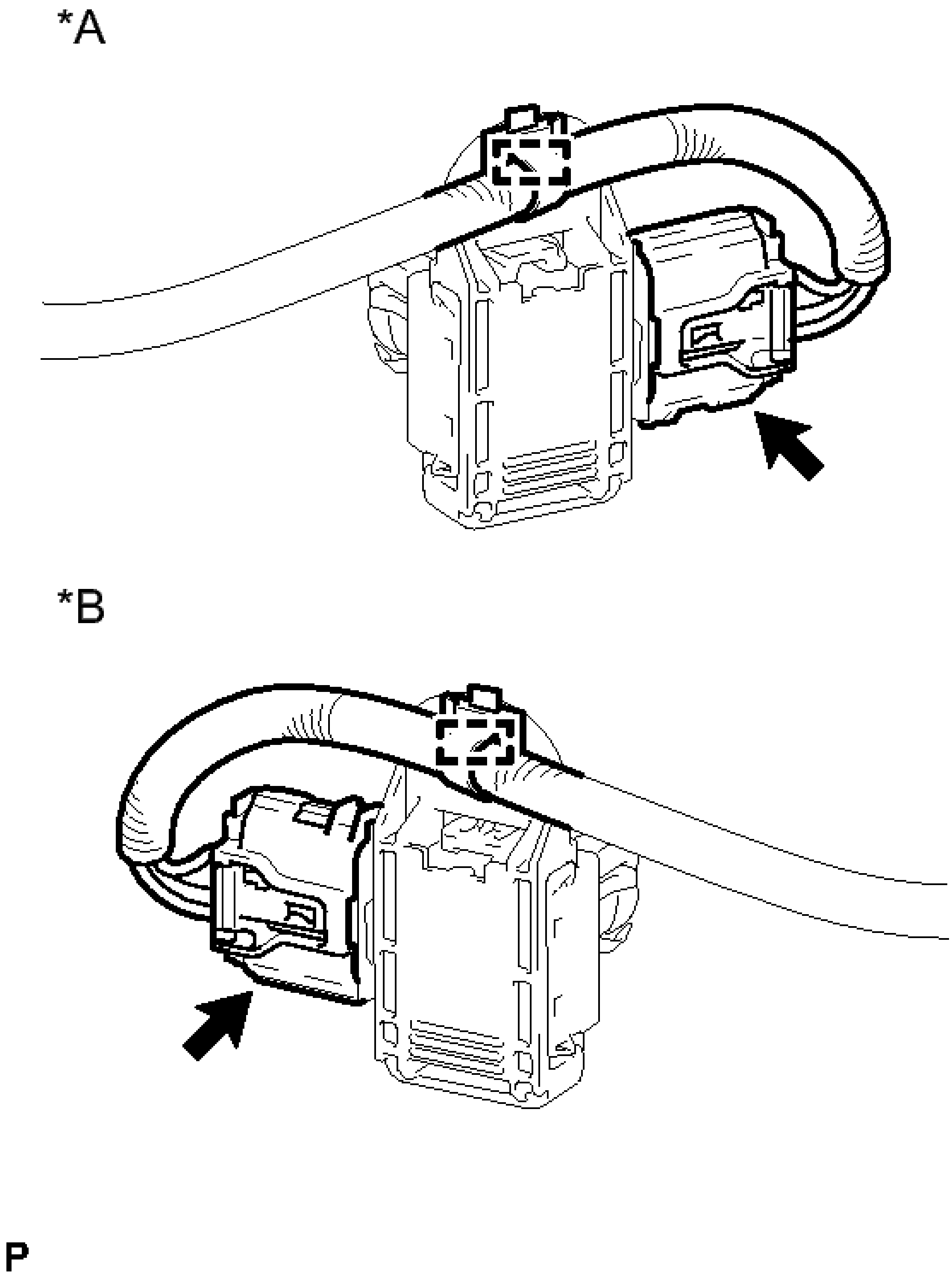

Fig. 22: Locating Ultrasonic Sensor Clip And Connector
Courtesy of TOYOTA MOTOR SALES, U.S.A., INC.

TEXT IN ILLUSTRATION

	LH

*A	Side
*B	Other Side

c. Connect the connector.

4. **INSTALL REAR BUMPER ASSEMBLY**

   Refer to **INSTALLATION** .

BLIND SPOT MONITOR SENSOR

COMPONENTS

ILLUSTRATION

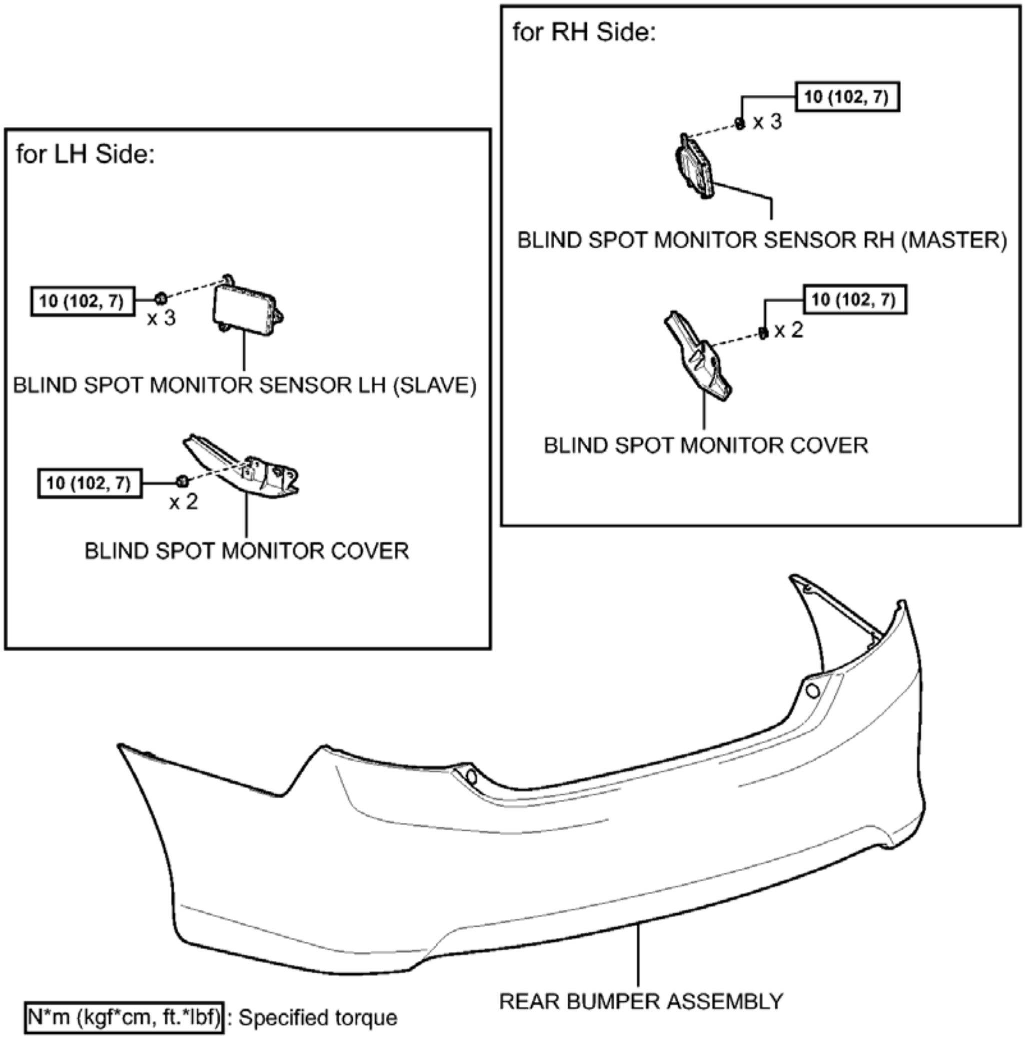
for RH Side:
10 (102, 7)
x 3
BLIND SPOT MONITOR SENSOR RH (MASTER)
10 (102, 7)
x 2
BLIND SPOT MONITOR COVER
for LH Side:
10 (102, 7)
x 3
BLIND SPOT MONITOR SENSOR LH (SLAVE)
10 (102, 7)
x 2
BLIND SPOT MONITOR COVER
REAR BUMPER ASSEMBLY
N*m (kgf*cm, ft.*lbf) : Specified torque
P

Fig. 23: Identifying Blind Spot Monitor Sensor Replacement Components With Torque Specifications

Courtesy of TOYOTA MOTOR SALES, U.S.A., INC.

REMOVAL

REMOVAL

1. **REMOVE REAR BUMPER ASSEMBLY**

   Refer to **REMOVAL** .

2. **REMOVE BLIND SPOT MONITOR SENSOR**
   a. for LH Side:
      1. Disengage the 2 clamps.

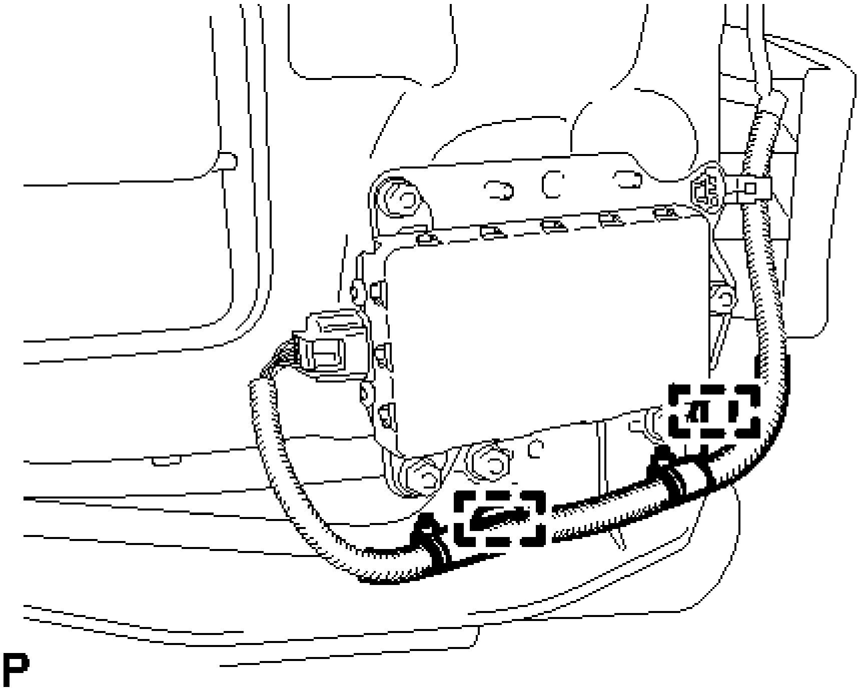

Fig. 24: Locating LH Blind Spot Monitor Sensor Clamps
Courtesy of TOYOTA MOTOR SALES, U.S.A., INC.

   b. for RH Side:
      1. Disengage the clamp.

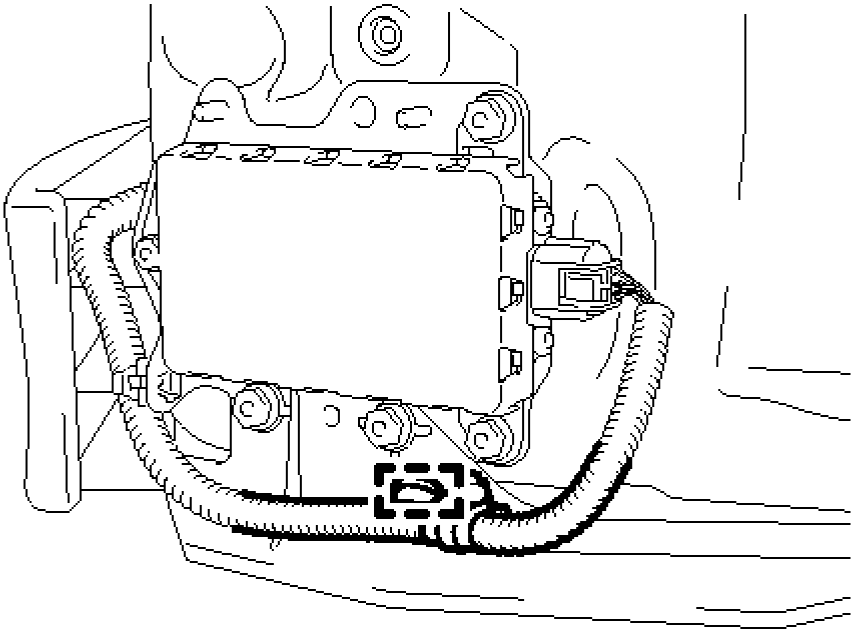

Fig. 25: Locating RH Blind Spot Monitor Sensor Clamps
Courtesy of TOYOTA MOTOR SALES, U.S.A., INC.

c. Remove the 3 nuts.

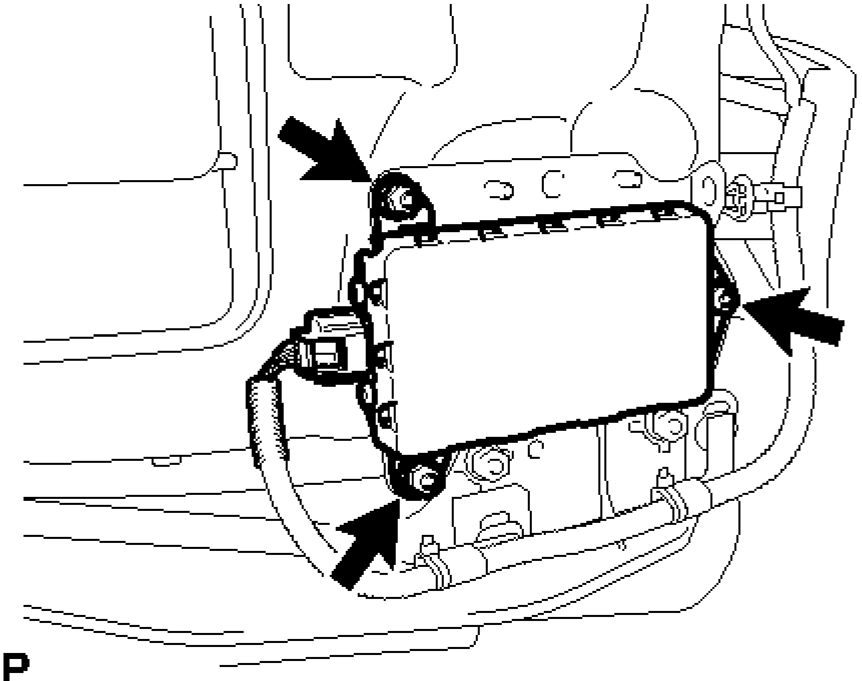

Fig. 26: Locating Blind Spot Monitor Sensor Fasteners
Courtesy of TOYOTA MOTOR SALES, U.S.A., INC.

d. Disconnect the connector to remove the blind spot monitor sensor.

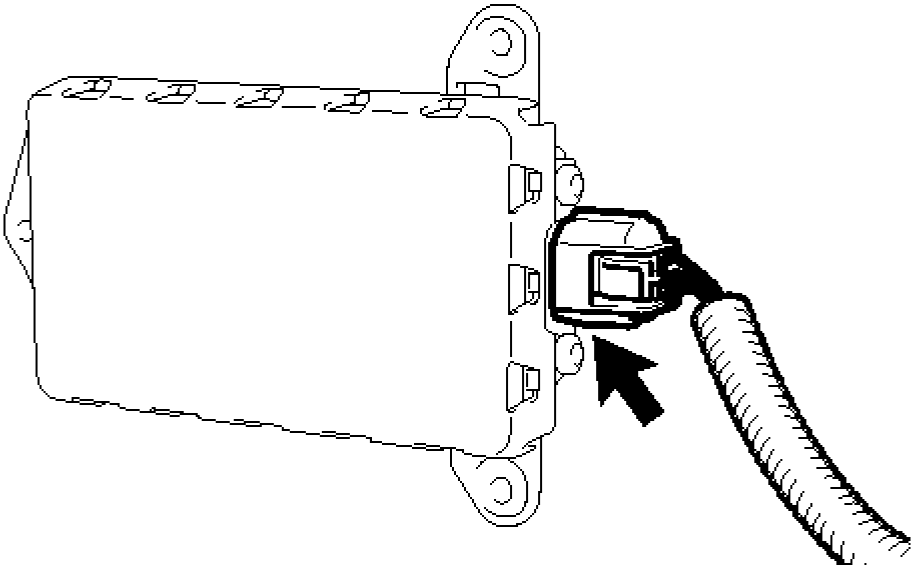

P

Fig. 27: Identifying Blind Spot Monitor Sensor Connector
Courtesy of TOYOTA MOTOR SALES, U.S.A., INC.

NOTE: Replace the blind spot monitor sensor if it has been dropped or subjected to a severe impact.

3. **REMOVE BLIND SPOT MONITOR COVER**

   a. Remove the 2 nuts.

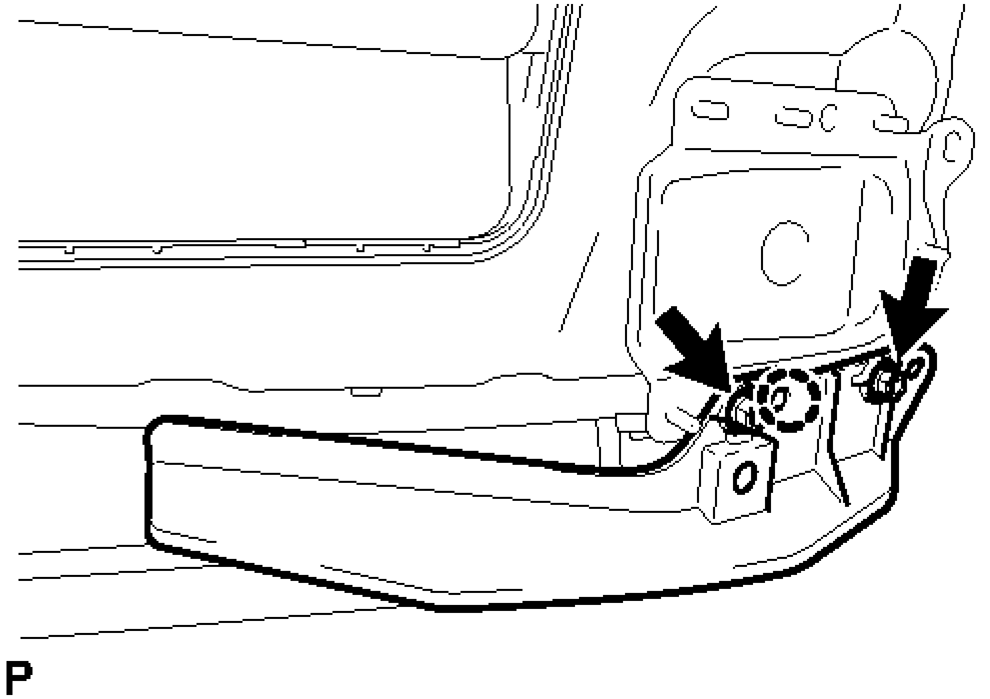

Fig. 28: Locating Blind Spot Monitor Cover Fasteners
Courtesy of TOYOTA MOTOR SALES, U.S.A., INC.

b. Disengage the claw to remove the blind spot monitor cover.

INSTALLATION

INSTALLATION

1. **INSTALL BLIND SPOT MONITOR COVER**
    a. Engage the claw.
    b. Install the blind spot monitor cover with the 2 nuts.

    Torque: 10 N*m (102 kgf*cm, 7 ft.*lbf)

2. **INSTALL BLIND SPOT MONITOR SENSOR**
    a. Connect the connector.

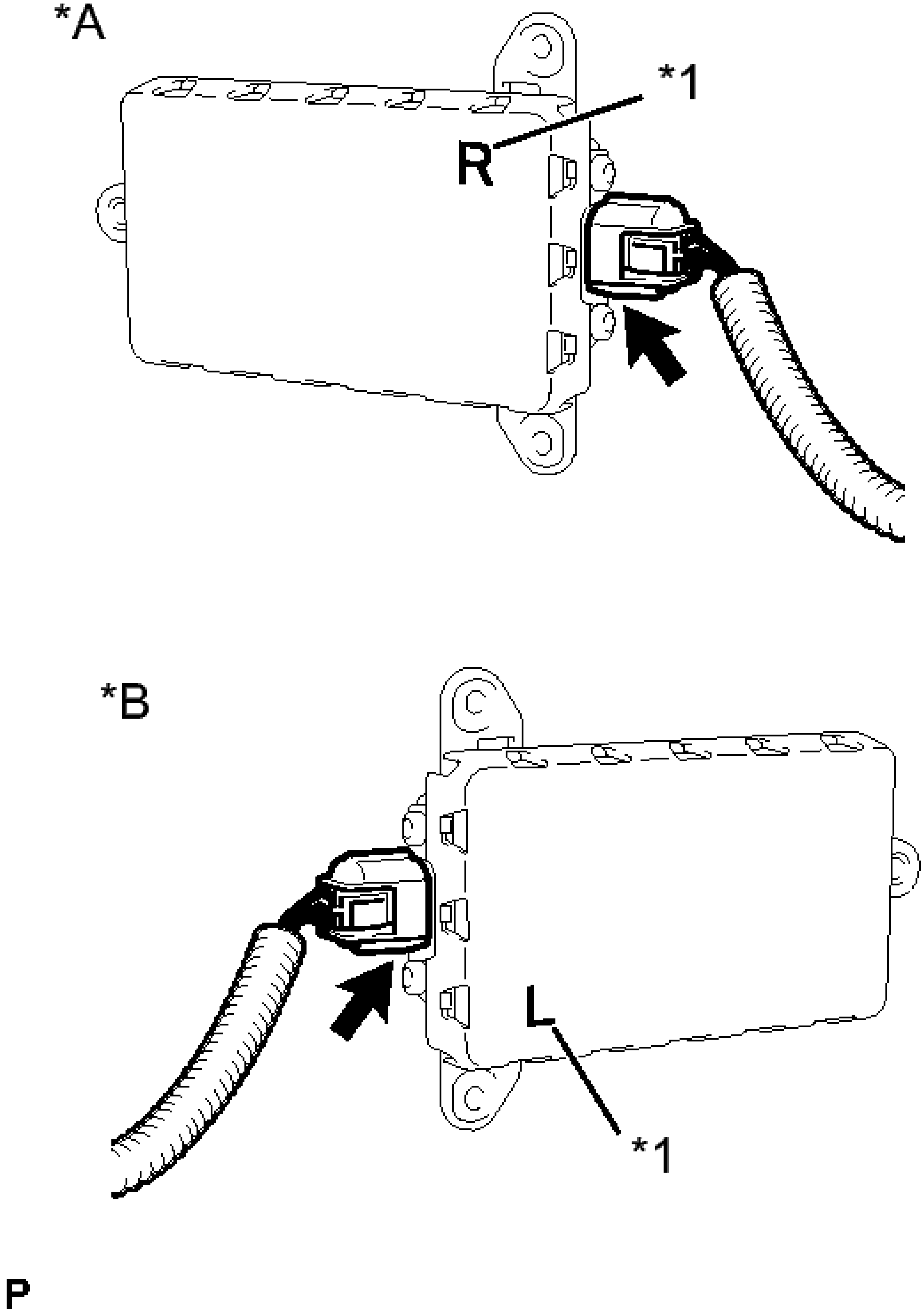

Fig. 29: Identifying RH & LH Blind Spot Monitor Sensor And Connectors
Courtesy of TOYOTA MOTOR SALES, U.S.A., INC.

TEXT IN ILLUSTRATION

*A	for RH Side:

*B	for LH Side:
*1	Identification Mark

NOTE:

- **Replace the blind spot monitor sensor if it has been dropped or subjected to a severe impact.**
- **Confirm the identification marks on the blind spot monitor sensor before installing it.**
- **If the blind spot monitor sensors are not installed to the correct side, the blind spot monitor system will not operate.**

b. Install the blind spot monitor sensor with the 3 nuts.

Torque: 10 N*m (102 kgf*cm, 7 ft.*lbf)

c. for LH Side:
   1. Engage the 2 clamps.

d. for RH Side:
   1. Engage the clamp.

3. **INSTALL REAR BUMPER ASSEMBLY**

   Refer to **INSTALLATION** .

4. **PERFORM BLIND SPOT MONITOR BEAM AXIS INSPECTION**
   a. Refer to **OPERATION CHECK** .
      - **SST: 09870-60000**
        09870-60010
      - **SST: 09870-60040**

5. **PERFORM DIAGNOSTIC SYSTEM CHECK**

   Refer to **DTC CHECK / CLEAR** .

TELEVISION CAMERA

COMPONENTS

ILLUSTRATION

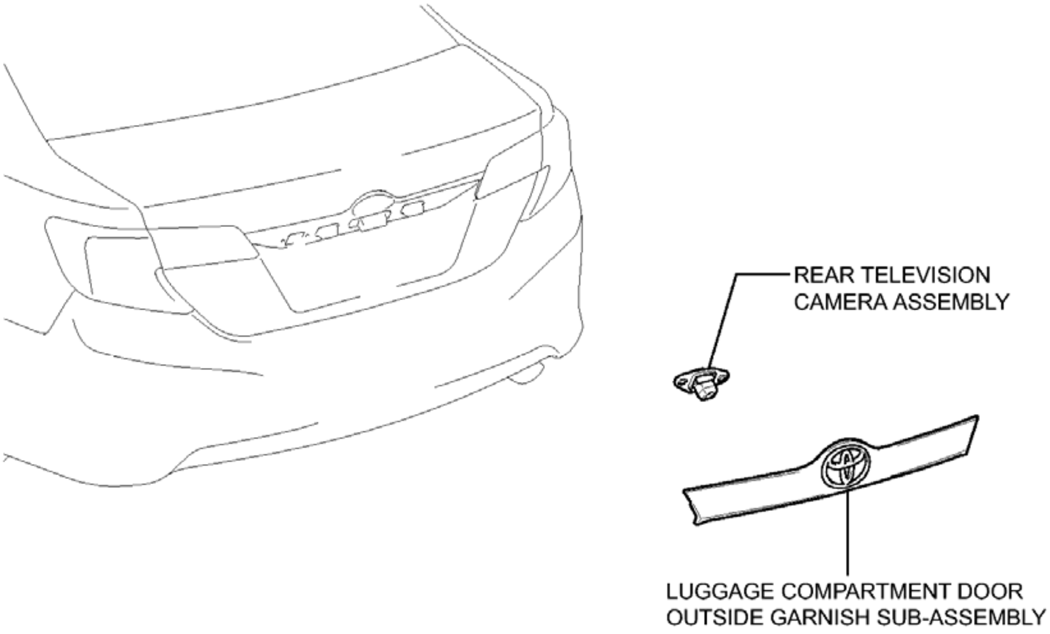
REAR TELEVISION CAMERA ASSEMBLY
LUGGAGE COMPARTMENT DOOR OUTSIDE GARNISH SUB-ASSEMBLY

P

Fig. 30: Identifying Television Camera Replacement Components
Courtesy of TOYOTA MOTOR SALES, U.S.A., INC.

REMOVAL

REMOVAL

1. **REMOVE LUGGAGE COMPARTMENT DOOR OUTSIDE GARNISH SUB-ASSEMBLY**

   Refer to **REMOVAL** .

2. **REMOVE REAR TELEVISION CAMERA ASSEMBLY**
   a. Disconnect the connector.

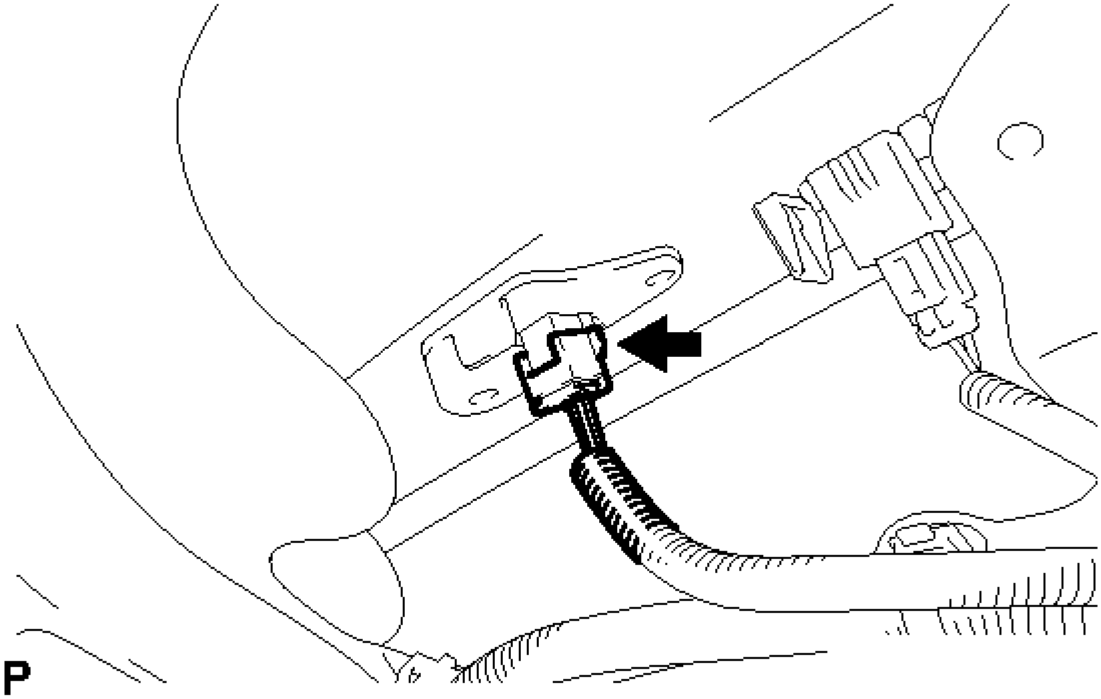

Fig. 31: Locating Rear Television Camera Assembly Connector
Courtesy of TOYOTA MOTOR SALES, U.S.A., INC.

b. Disengage the 2 claws to remove the rear television camera assembly.

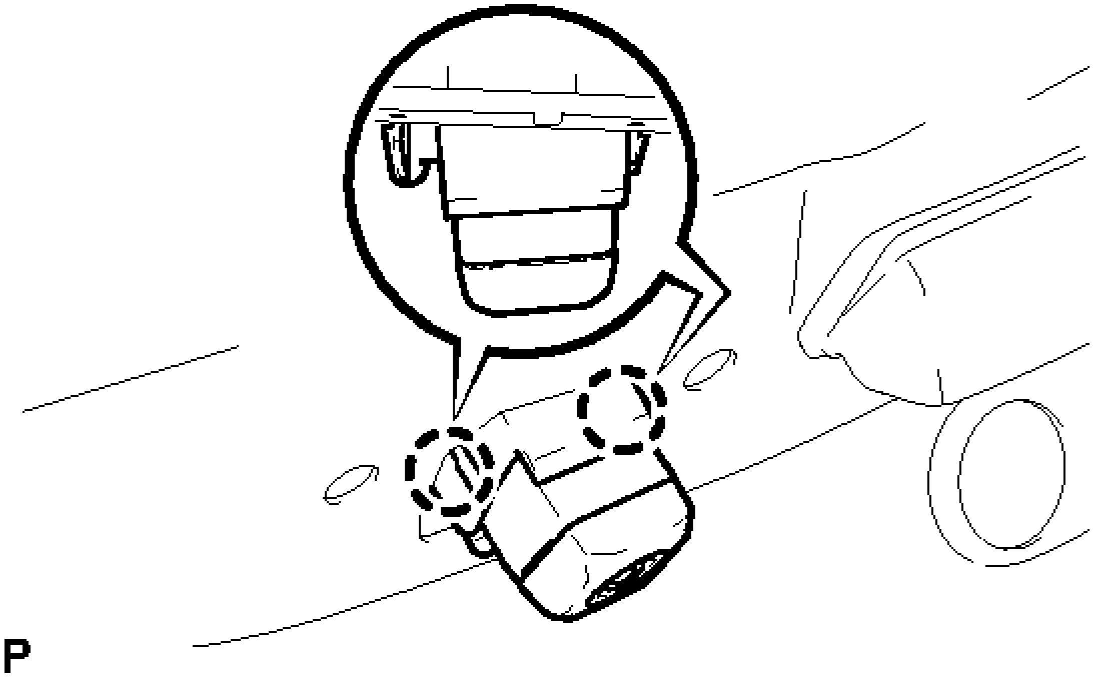

Fig. 32: Identifying Rear Television Camera Assembly Claws
Courtesy of TOYOTA MOTOR SALES, U.S.A., INC.

INSTALLATION

INSTALLATION

1. **INSTALL REAR TELEVISION CAMERA ASSEMBLY**
    a. Engage the 2 claws to install the rear television camera assembly.
    b. Connect the connector.
2. **INSTALL LUGGAGE COMPARTMENT DOOR OUTSIDE GARNISH SUB-ASSEMBLY**

    Refer to **INSTALLATION** .

3. **ADJUST REAR TELEVISION CAMERA ASSEMBLY OPTICAL AXIS (w/ Parking Assist Monitor System)**

    Refer to **CALIBRATION** .

CLEARANCE SONAR MAIN SWITCH

COMPONENTS

ILLUSTRATION

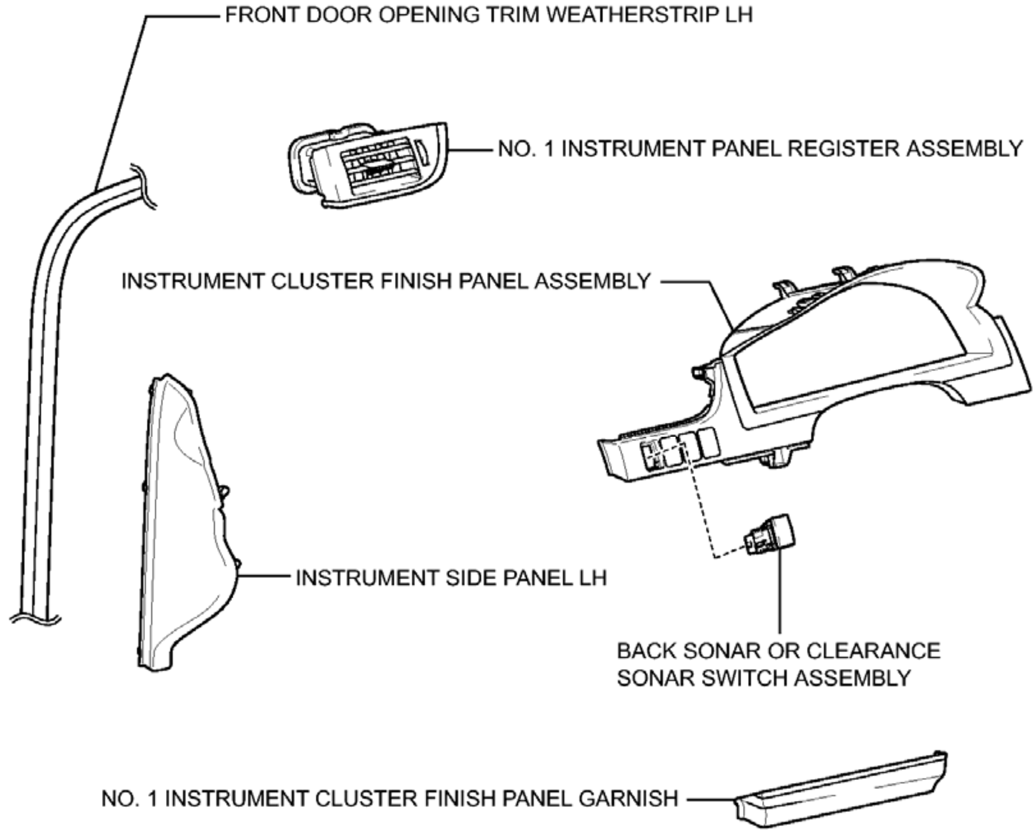
FRONT DOOR OPENING TRIM WEATHERSTRIP LH
NO. 1 INSTRUMENT PANEL REGISTER ASSEMBLY
INSTRUMENT CLUSTER FINISH PANEL ASSEMBLY
INSTRUMENT SIDE PANEL LH
BACK SONAR OR CLEARANCE SONAR SWITCH ASSEMBLY
NO. 1 INSTRUMENT CLUSTER FINISH PANEL GARNISH
P

Fig. 33: Identifying Clearance Sonar Main Switch Replacement Components
Courtesy of TOYOTA MOTOR SALES, U.S.A., INC.

REMOVAL

REMOVAL

1. **DISCONNECT FRONT DOOR OPENING TRIM WEATHERSTRIP LH** . Refer to **REMOVAL - Step 5** .
2. **REMOVE INSTRUMENT SIDE PANEL LH** . Refer to **REMOVAL - Step 6** .
3. **REMOVE NO. 1 INSTRUMENT CLUSTER FINISH PANEL GARNISH** . Refer to **REMOVAL - Step 7** .
4. **REMOVE NO. 1 INSTRUMENT PANEL REGISTER ASSEMBLY** . Refer to **REMOVAL - Step 8** .
5. **REMOVE INSTRUMENT CLUSTER FINISH PANEL ASSEMBLY** . Refer to **REMOVAL - Step 9** .

6. **REMOVE BACK SONAR OR CLEARANCE SONAR SWITCH ASSEMBLY**
    a. Disengage the 2 claws and remove the back sonar or clearance sonar switch assembly.

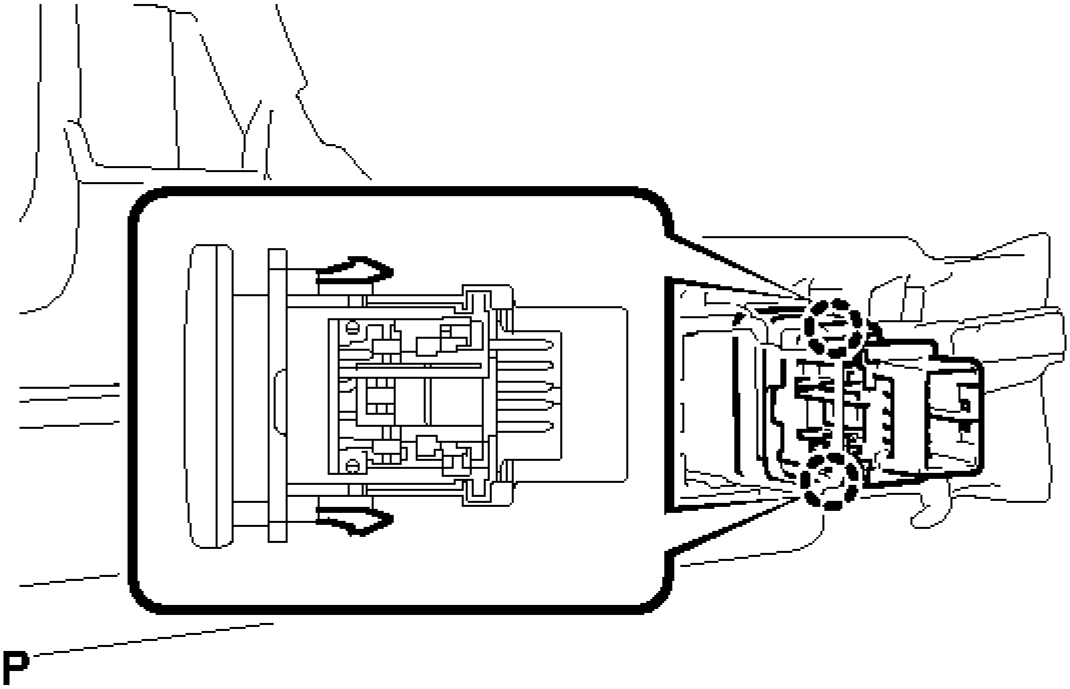

Fig. 34: Identifying Back Sonar Or Clearance Sonar Switch Assembly Claws
Courtesy of TOYOTA MOTOR SALES, U.S.A., INC.

INSPECTION

INSPECTION

1. **INSPECT BACK SONAR OR CLEARANCE SONAR SWITCH ASSEMBLY**
    a. Measure the resistance according to the value(s) in the table below.

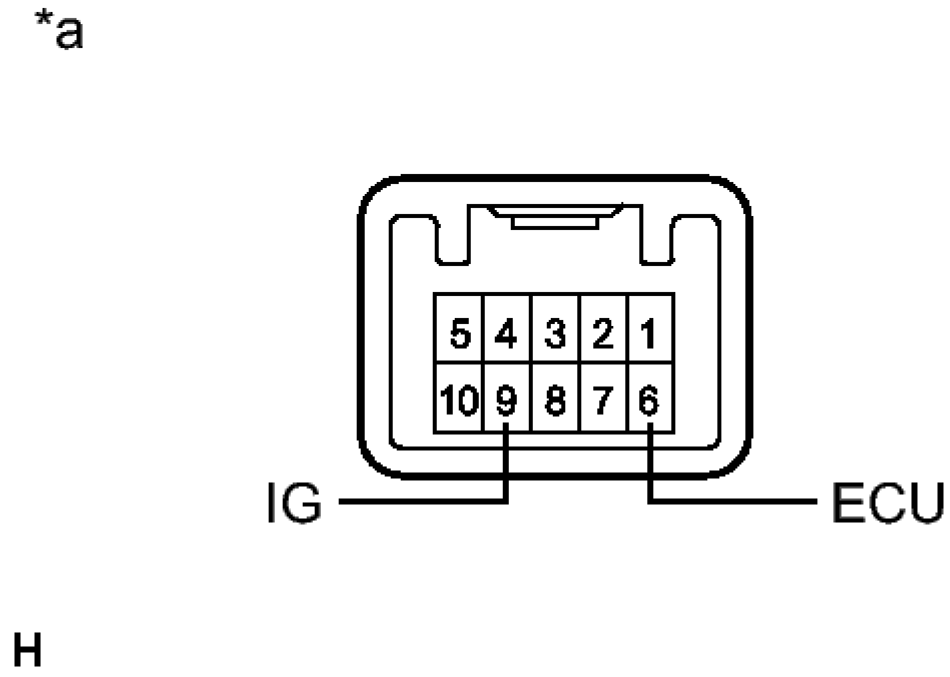

Fig. 35: Inspecting Back Sonar Or Clearance Sonar Switch Assembly (IG) & (ECU) Connector Terminals
Courtesy of TOYOTA MOTOR SALES, U.S.A., INC.

Standard Resistance

Tester Connection	Switch Condition	Specified Condition
9 (IG) - 6 (ECU)	Clearance sonar main switch on	Below 1 ohms
9 (IG) - 6 (ECU)	Clearance sonar main switch off	10 kohms or higher

TEXT IN ILLUSTRATION

*a	Component without harness connected (Back Sonar or Clearance Sonar Switch

	Assembly)

If the result is not as specified, replace the back sonar or clearance sonar switch assembly.

b. Check that the switch illuminates.
   1. Apply battery voltage to the back sonar or clearance sonar switch assembly and check that the switch illuminates.

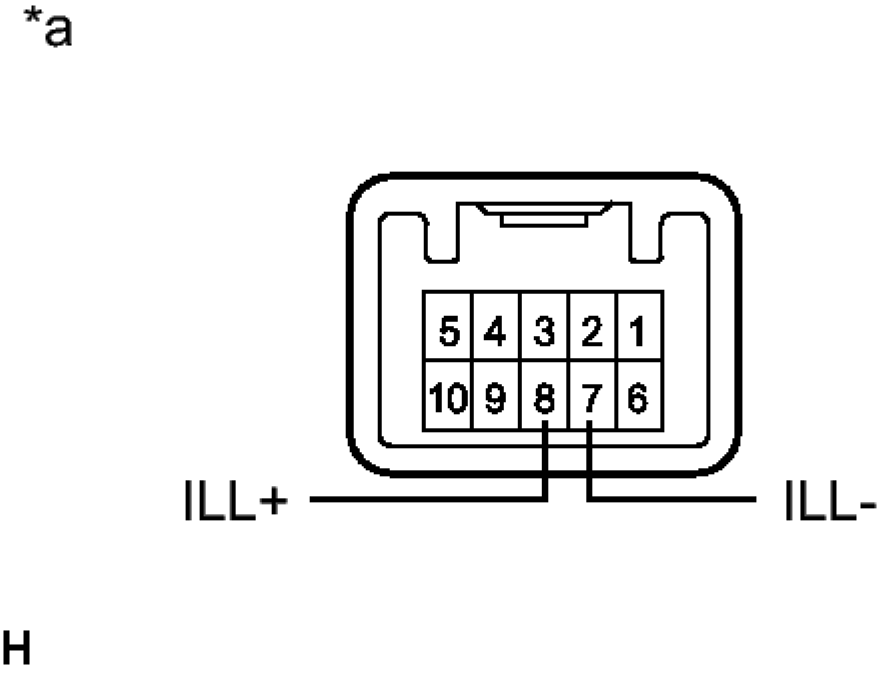

Fig. 36: Inspecting Back Sonar Or Clearance Sonar Switch Assembly (ILL+) & (ILL-) Connector Terminals
Courtesy of TOYOTA MOTOR SALES, U.S.A., INC.

OK

Tester Connection	**Specified Condition**
Battery positive (+) --> Terminal 8 (ILL+) Battery negative (-) --> Terminal 7 (ILL-)	Illuminates

TEXT IN ILLUSTRATION

*a	Component without harness connected (Back Sonar or Clearance Sonar Switch Assembly)

If the result is not as specified, replace the back sonar or clearance sonar switch assembly.

c. Check switch indicator operation.
   1. Apply battery voltage to the back sonar or clearance sonar switch assembly and check that the switch indicator illuminates.

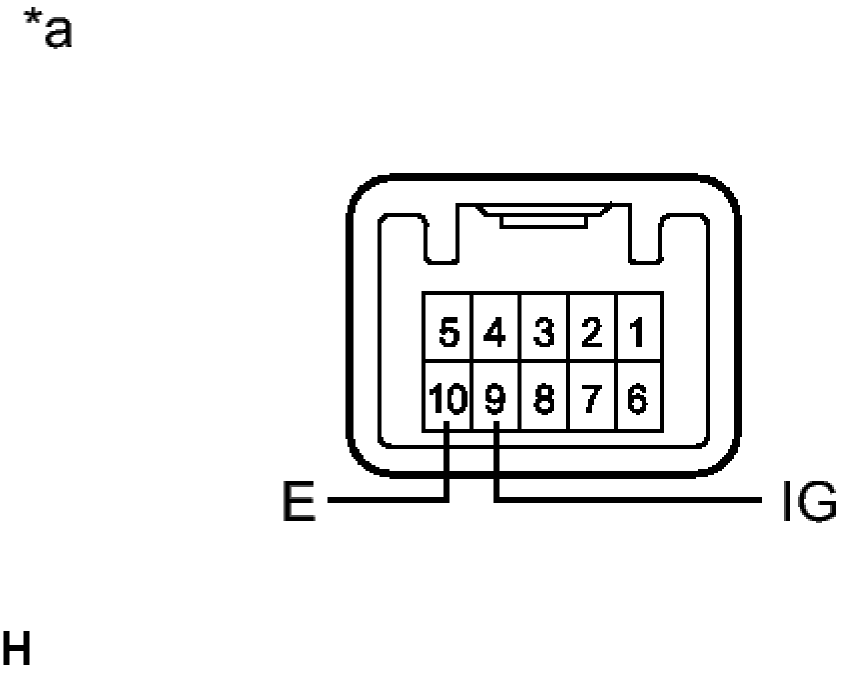

Fig. 37: Inspecting Back Sonar Or Clearance Sonar Switch Assembly (E) & (IG) Connector Terminals
Courtesy of TOYOTA MOTOR SALES, U.S.A., INC.

OK

Tester Connection	Switch Condition	Specified Condition

Battery positive (+) --> Terminal 9 (IG) Battery negative (-) --> Terminal 10 (E)	Clearance sonar main switch on	Indicator Illuminates

TEXT IN ILLUSTRATION

*a	Component without harness connected (Back Sonar or Clearance Sonar Switch Assembly)

If the result is not as specified, replace the back sonar or clearance sonar switch assembly.

INSTALLATION

INSTALLATION

1. **INSTALL BACK SONAR OR CLEARANCE SONAR SWITCH ASSEMBLY**
    a. Engage the 2 claws to install the back sonar or clearance sonar switch assembly.
2. **INSTALL INSTRUMENT CLUSTER FINISH PANEL ASSEMBLY** . Refer to **INSTALLATION - Step 44** .
3. **INSTALL NO. 1 INSTRUMENT PANEL REGISTER ASSEMBLY** . Refer to **INSTALLATION - Step 45** .
4. **INSTALL NO. 1 INSTRUMENT CLUSTER FINISH PANEL GARNISH** . Refer to **INSTALLATION - Step 46** .
5. **INSTALL INSTRUMENT SIDE PANEL LH** . Refer to **INSTALLATION - Step 47** .
6. **INSTALL FRONT DOOR OPENING TRIM WEATHERSTRIP LH** . Refer to **INSTALLATION - Step 42** .

BLIND SPOT MONITOR MAIN SWITCH

COMPONENTS

ILLUSTRATION

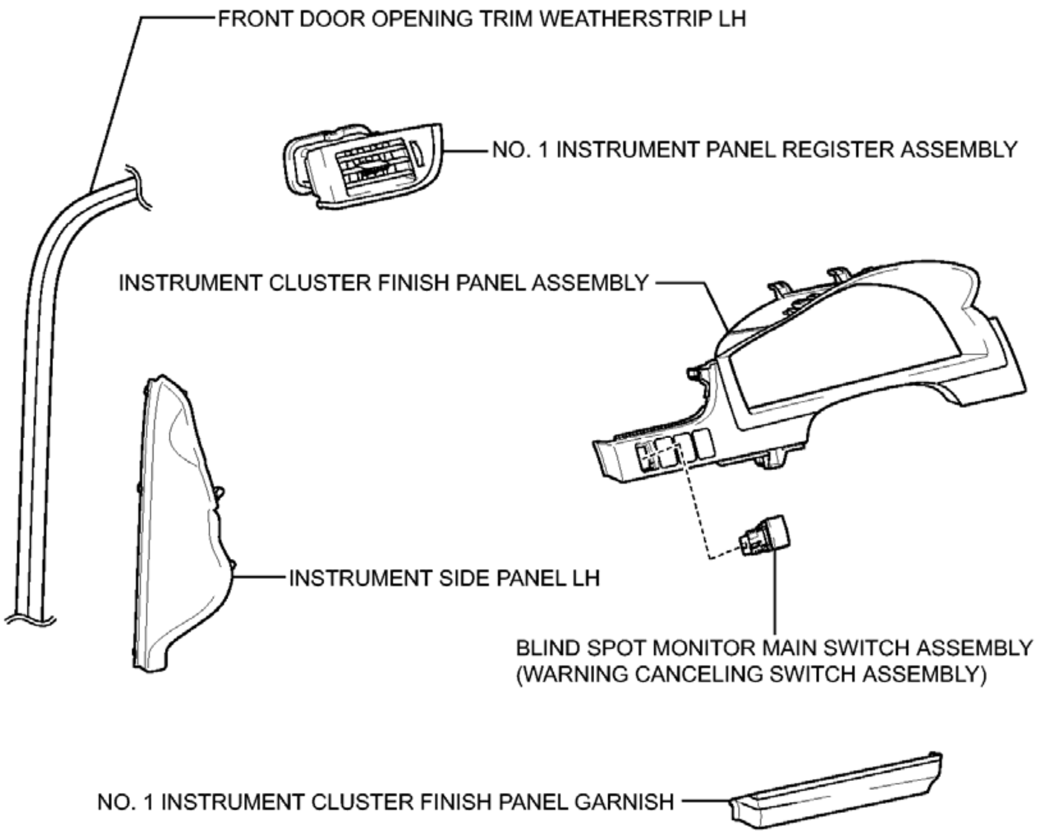
FRONT DOOR OPENING TRIM WEATHERSTRIP LH
NO. 1 INSTRUMENT PANEL REGISTER ASSEMBLY
INSTRUMENT CLUSTER FINISH PANEL ASSEMBLY
INSTRUMENT SIDE PANEL LH
BLIND SPOT MONITOR MAIN SWITCH ASSEMBLY
(WARNING CANCELING SWITCH ASSEMBLY)
NO. 1 INSTRUMENT CLUSTER FINISH PANEL GARNISH

P

Fig. 38: Identifying Blind Spot Monitor Main Switch Replacement Components
Courtesy of TOYOTA MOTOR SALES, U.S.A., INC.

REMOVAL

REMOVAL

1. **DISCONNECT FRONT DOOR OPENING TRIM WEATHERSTRIP LH** . Refer to **REMOVAL - Step 5** .
2. **REMOVE INSTRUMENT SIDE PANEL LH** . Refer to **REMOVAL - Step 6** .
3. **REMOVE NO. 1 INSTRUMENT CLUSTER FINISH PANEL GARNISH** . Refer to **REMOVAL - Step 7** .
4. **REMOVE NO. 1 INSTRUMENT PANEL REGISTER ASSEMBLY** . Refer to **REMOVAL - Step 8** .
5. **REMOVE INSTRUMENT CLUSTER FINISH PANEL ASSEMBLY** . Refer to **REMOVAL - Step**

9 .

6. **REMOVE BLIND SPOT MONITOR MAIN SWITCH ASSEMBLY (WARNING CANCELING SWITCH ASSEMBLY)**
    a. Disengage the 2 claws to remove the blind spot monitor main switch assembly (warning canceling switch assembly).

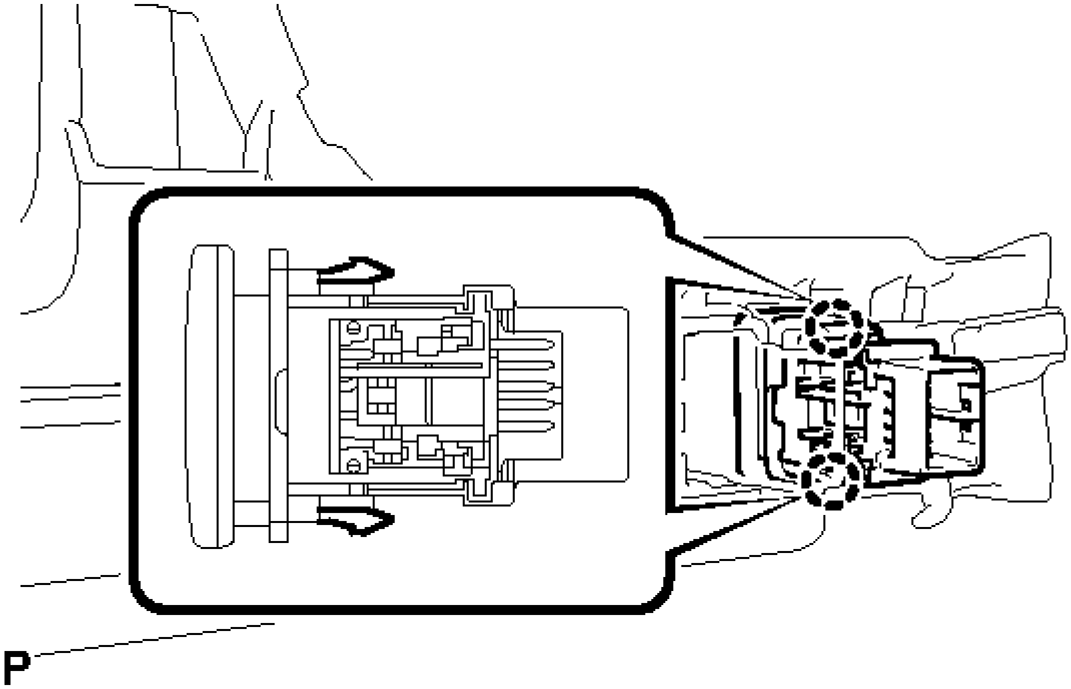

Fig. 39: Identifying Back Sonar Or Clearance Sonar Switch Assembly Claws
Courtesy of TOYOTA MOTOR SALES, U.S.A., INC.

INSPECTION

INSPECTION

1. **INSPECT BLIND SPOT MONITOR MAIN SWITCH (WARNING CANCELING SWITCH ASSEMBLY)**
    a. Measure the resistance according to the value(s) in the table below.

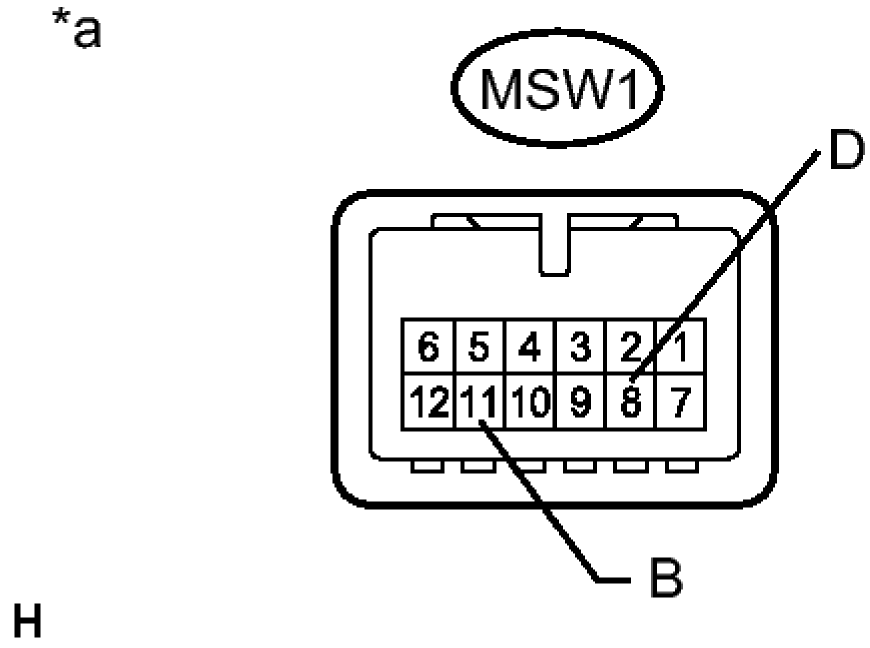

Fig. 40: Inspecting MSW1 (B) & (D) Connector Terminals
Courtesy of TOYOTA MOTOR SALES, U.S.A., INC.

Standard Resistance

Tester Connection	Switch Condition	Specified Condition
11 (B) - 8 (D)	Blind spot monitor main switch assembly on (not protruding)	Below 1 ohms
11 (B) - 8 (D)	Blind spot monitor main switch assembly off (protruding)	10 kohms or higher

TEXT IN ILLUSTRATION

	Component without harness connected (Blind Spot Monitor

*a	Main Switch (Warning Canceling Switch Assembly))

If the result is not as specified, replace the blind spot monitor main switch (warning canceling switch assembly).

b. Check that the switch illuminates.

   1. Apply battery voltage to the blind spot monitor main switch (warning canceling switch assembly) and check that the switch illuminates.

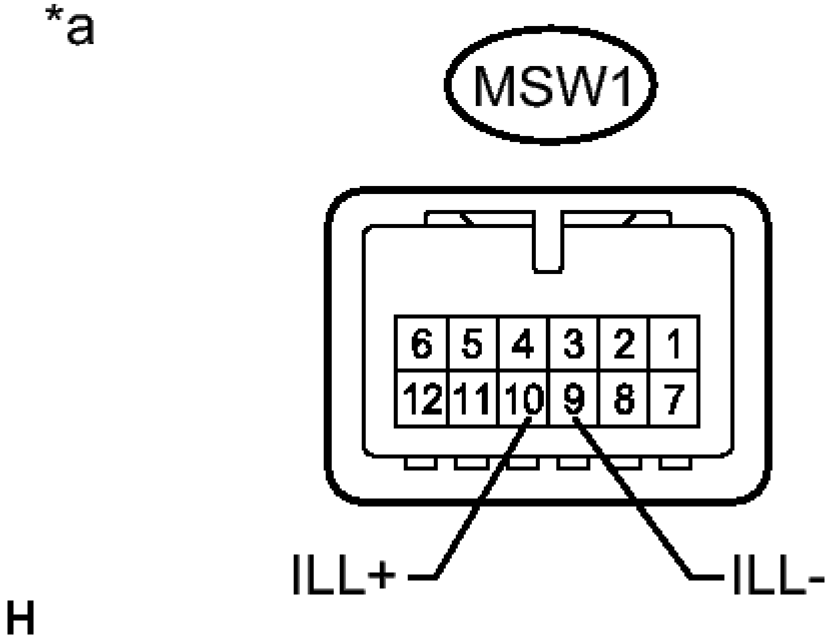

Fig. 41: Inspecting MSW1 (ILL+) & (ILL-) Connector Terminals
Courtesy of TOYOTA MOTOR SALES, U.S.A., INC.

OK

Connection	**Specified Condition**
Battery positive (+) --> Terminal 10 (ILL+)	Illuminates

Battery negative (-) --> Terminal 9 (ILL-)	

TEXT IN ILLUSTRATION

*a	Component without harness connected (Blind Spot Monitor Main Switch (Warning Canceling Switch Assembly))

If the result is not as specified, replace the blind spot monitor main switch (warning canceling switch assembly).

c. Check that the switch indicator.
    1. Apply battery voltage to the blind spot monitor main switch assembly and check operation of the switch, as shown in the table below.

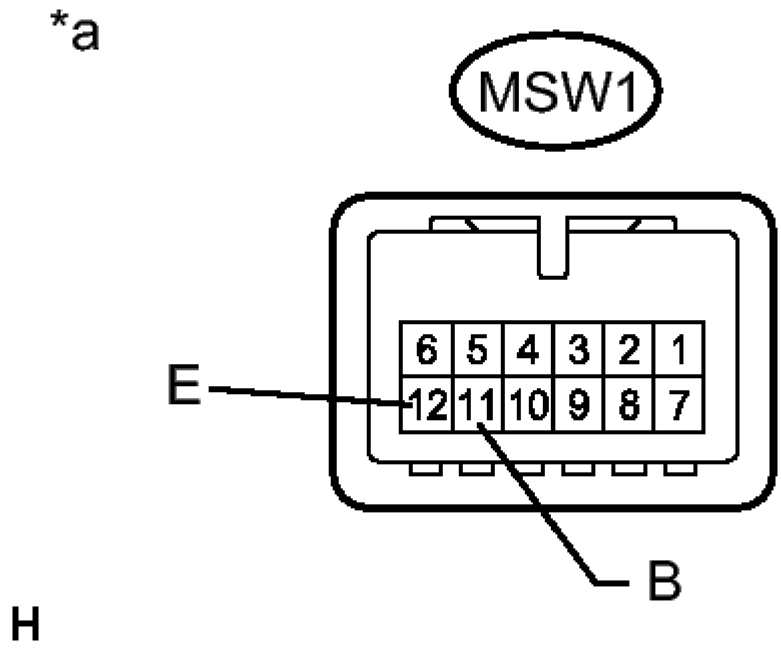

Fig. 42: Inspecting MSW1 (E) & (B) Connector Terminals
Courtesy of TOYOTA MOTOR SALES, U.S.A., INC.

OK

Connection	Switch Condition	Specified Condition
Battery positive (+) --> Terminal 11 (B) Battery negative (-) --> Terminal 12 (E)	Blind spot monitor main switch assembly on (not protruding)	Indicator Illuminates

TEXT IN ILLUSTRATION

*a	Component without harness connected (Blind Spot Monitor Main Switch (Warning Canceling Switch Assembly))

If the result is not as specified, replace the back sonar or blind spot monitor main switch (warning canceling switch assembly).

INSTALLATION

INSTALLATION

1. **INSTALL BLIND SPOT MONITOR MAIN SWITCH ASSEMBLY (WARNING CANCELING SWITCH ASSEMBLY)**
   a. Engage the 2 claws to install the blind spot monitor main switch assembly (warning canceling switch assembly).
2. **INSTALL INSTRUMENT CLUSTER FINISH PANEL ASSEMBLY** . Refer to **INSTALLATION - Step 44** .
3. **INSTALL NO. 1 INSTRUMENT PANEL REGISTER ASSEMBLY** . Refer to **INSTALLATION -**

Step 45 .

4. **INSTALL NO. 1 INSTRUMENT CLUSTER FINISH PANEL GARNISH** . Refer to **INSTALLATION - Step 46** .
5. **INSTALL INSTRUMENT SIDE PANEL LH** . Refer to **INSTALLATION - Step 47** .
6. **INSTALL FRONT DOOR OPENING TRIM WEATHERSTRIP LH** . Refer to **INSTALLATION - Step 42** .

2012-2017 BRAKES

Parking Brake (Service Information) (Hybrid)

PARKING BRAKE PEDAL

COMPONENTS

ILLUSTRATION

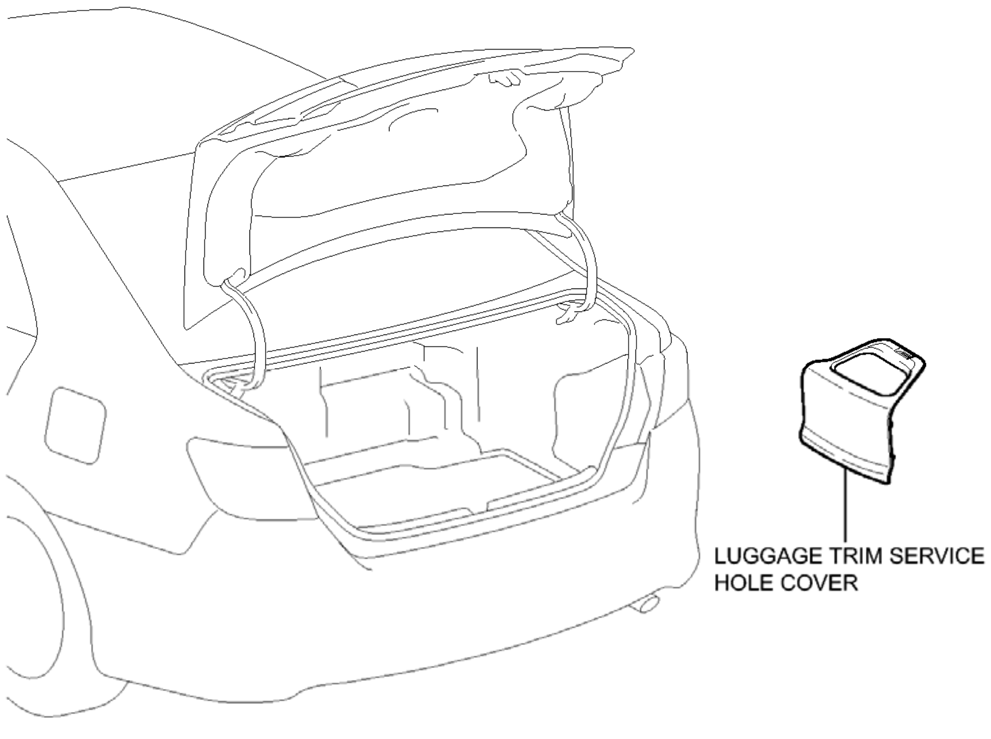
LUGGAGE TRIM SERVICE HOLE COVER
P

Fig. 1: Identifying Parking Brake Pedal Replacement Components (1 Of 5)
Courtesy of TOYOTA MOTOR SALES, U.S.A., INC.

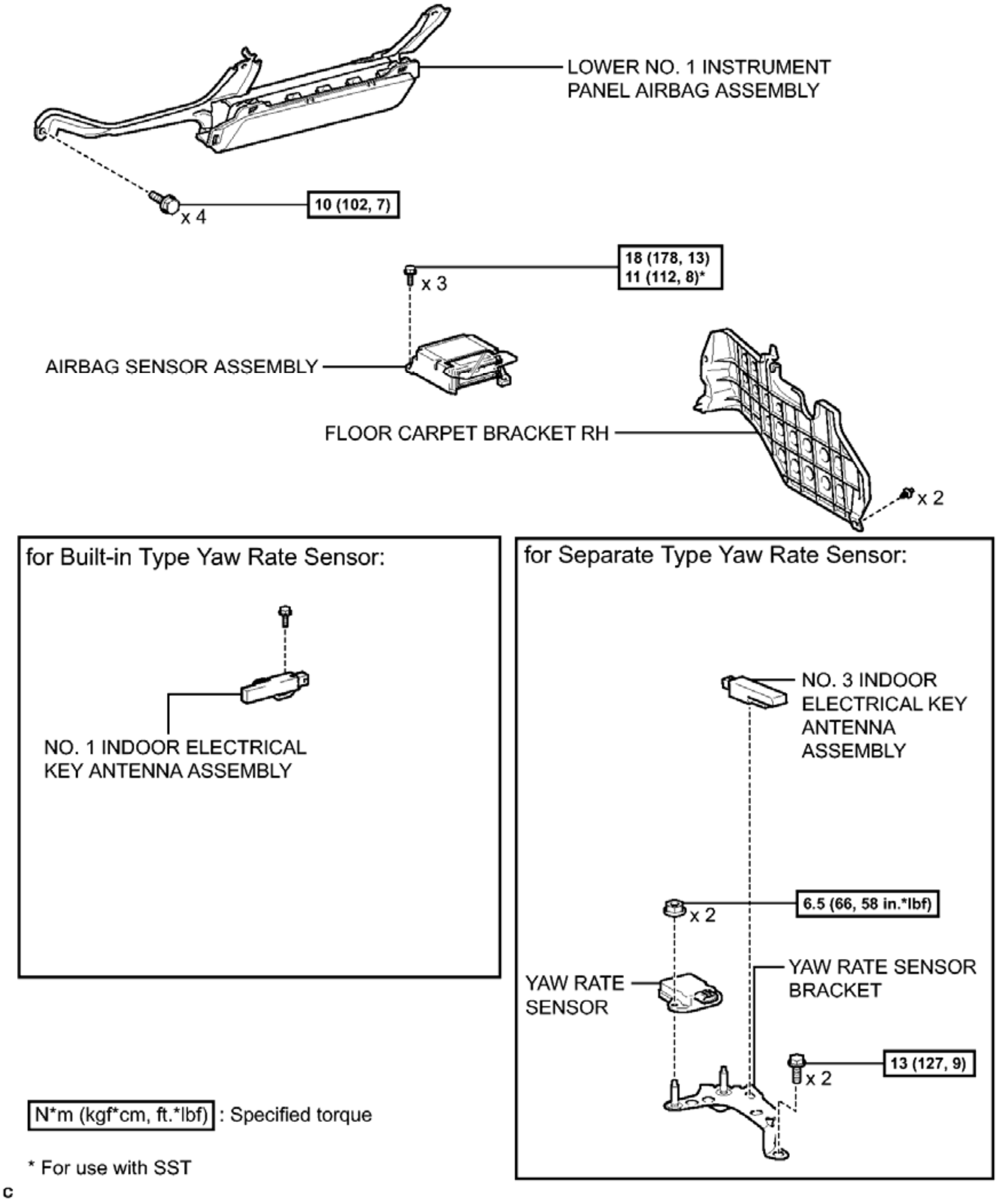
LOWER NO. 1 INSTRUMENT PANEL AIRBAG ASSEMBLY
x 4
10 (102, 7)
x 3
18 (178, 13)
11 (112, 8)*
AIRBAG SENSOR ASSEMBLY
FLOOR CARPET BRACKET RH
x 2
for Built-in Type Yaw Rate Sensor:
NO. 1 INDOOR ELECTRICAL KEY ANTENNA ASSEMBLY
for Separate Type Yaw Rate Sensor:
NO. 3 INDOOR ELECTRICAL KEY ANTENNA ASSEMBLY
x 2
6.5 (66, 58 in.*lbf)
YAW RATE SENSOR
YAW RATE SENSOR BRACKET
13 (127, 9)
x 2
N*m (kgf*cm, ft.*lbf) : Specified torque
* For use with SST
c

Fig. 2: Identifying Parking Brake Pedal Replacement Components With Torque Specifications (2 Of 5)
Courtesy of TOYOTA MOTOR SALES, U.S.A., INC.

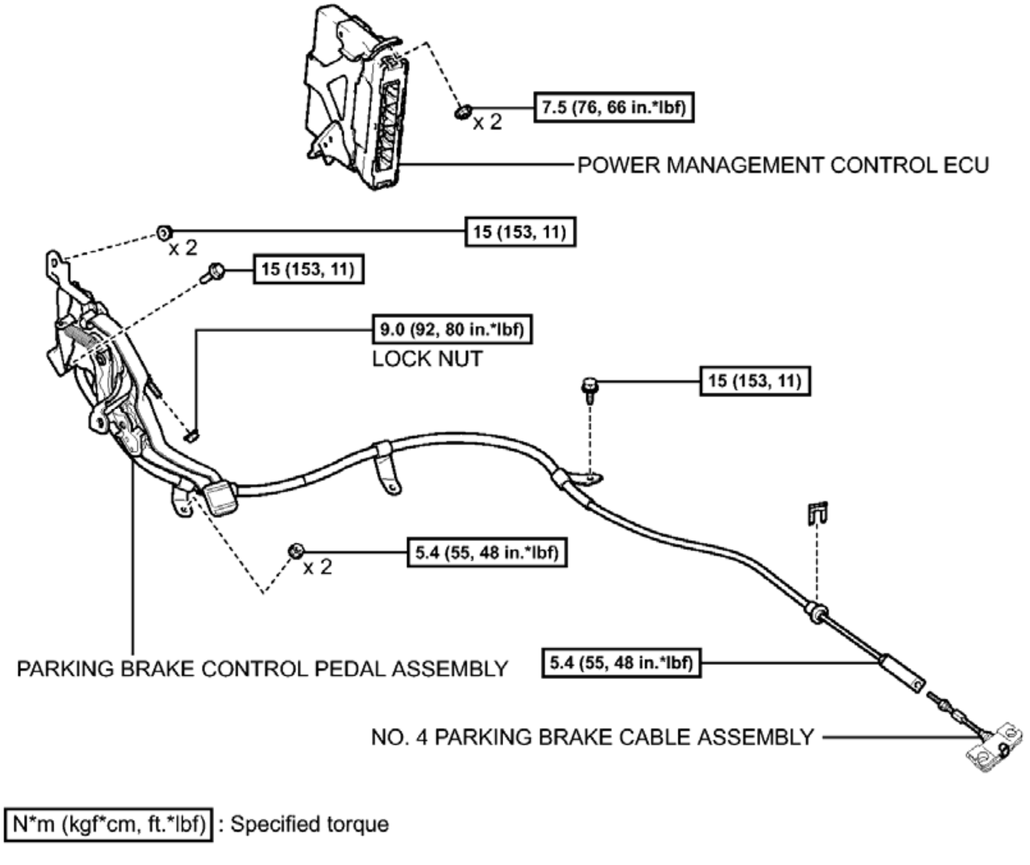
7.5 (76, 66 in.*lbf)
x 2
POWER MANAGEMENT CONTROL ECU
15 (153, 11)
x 2
15 (153, 11)
9.0 (92, 80 in.*lbf)
LOCK NUT
15 (153, 11)
5.4 (55, 48 in.*lbf)
x 2
PARKING BRAKE CONTROL PEDAL ASSEMBLY
5.4 (55, 48 in.*lbf)
NO. 4 PARKING BRAKE CABLE ASSEMBLY
N*m (kgf*cm, ft.*lbf) : Specified torque
c

Fig. 3: Identifying Parking Brake Pedal Replacement Components With Torque Specifications (3 Of 5)
Courtesy of TOYOTA MOTOR SALES, U.S.A., INC.

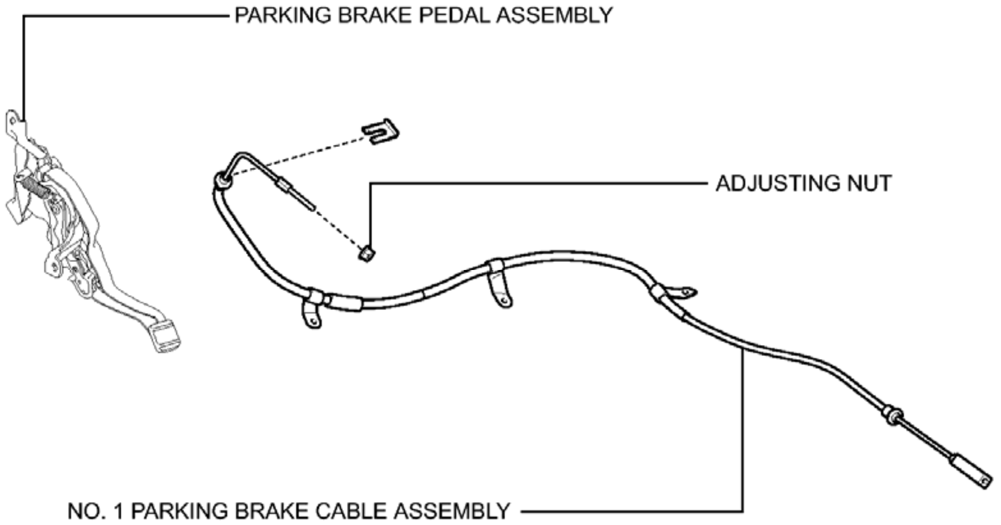
PARKING BRAKE PEDAL ASSEMBLY
ADJUSTING NUT
NO. 1 PARKING BRAKE CABLE ASSEMBLY

c

Fig. 4: Identifying Parking Brake Pedal Replacement Components (4 Of 5)
Courtesy of TOYOTA MOTOR SALES, U.S.A., INC.

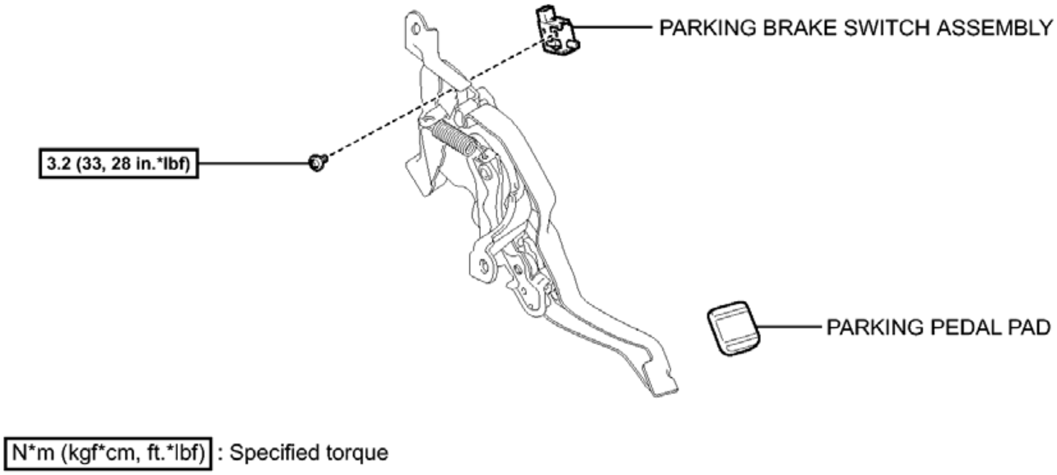
PARKING BRAKE SWITCH ASSEMBLY
3.2 (33, 28 in.*lbf)
PARKING PEDAL PAD
N*m (kgf*cm, ft.*lbf) : Specified torque

c

Fig. 5: Identifying Parking Brake Pedal Replacement Components With Torque Specifications (5 Of 5)
Courtesy of TOYOTA MOTOR SALES, U.S.A., INC.

REMOVAL

REMOVAL

1. **PRECAUTION**

   WARNING: **Be sure to read Precaution thoroughly before servicing.**

   - **for Separate Type Yaw Rate Sensor: Refer to PRECAUTION**
   - **for Built-in Type Yaw Rate Sensor: Refer to PRECAUTION**

   HINT:

   After turning the power switch off, waiting time may be required before disconnecting the cable from the negative (-) auxiliary battery terminal. Therefore, make sure to read the disconnecting the cable from the negative (-) auxiliary battery terminal notices before proceeding with work. Refer to **PRECAUTION** .

2. **REMOVE LUGGAGE TRIM SERVICE HOLE COVER** . Refer to **REMOVAL - Step 2**
3. **DISCONNECT CABLE FROM AUXILIARY BATTERY NEGATIVE TERMINAL**

   WARNING: **Wait at least 90 seconds after disconnecting the cable from the negative (-) auxiliary battery terminal to disable the SRS system.**

   HINT:

   When disconnecting the cable, some systems need to be initialized after the cable is reconnected. Refer to **INITIALIZATION** .

4. **REMOVE SHIFT LEVER SUPPORT**

   Refer to **REMOVAL**

5. **REMOVE LOWER NO. 1 INSTRUMENT PANEL AIRBAG ASSEMBLY** . Refer to **REMOVAL - Step 10**
6. **REMOVE NO. 1 INDOOR ELECTRICAL KEY ANTENNA ASSEMBLY (for Built-in Type Yaw Rate Sensor)** . Refer to **REMOVAL - Step 7**
7. **REMOVE YAW RATE SENSOR (for Separate Type Yaw Rate Sensor)** . Refer to **REMOVAL - Step 4**
8. **REMOVE NO. 3 INDOOR ELECTRICAL KEY ANTENNA ASSEMBLY (for Separate Type Yaw Rate Sensor)** . Refer to **REMOVAL - Step 5**
9. **REMOVE YAW RATE SENSOR BRACKET (for Separate Type Yaw Rate Sensor)** . Refer to **REMOVAL - Step 6**
10. **REMOVE FLOOR CARPET BRACKET RH** . Refer to **REMOVAL - Step 29**
11. **REMOVE AIRBAG SENSOR ASSEMBLY** . Refer to **REMOVAL - Step 17**

12. **REMOVE POWER MANAGEMENT CONTROL ECU** . Refer to **REMOVAL - Step 2**

13. **LOOSEN ADJUSTING NUT**

    a. Remove the lock nut and loosen the adjusting nut.

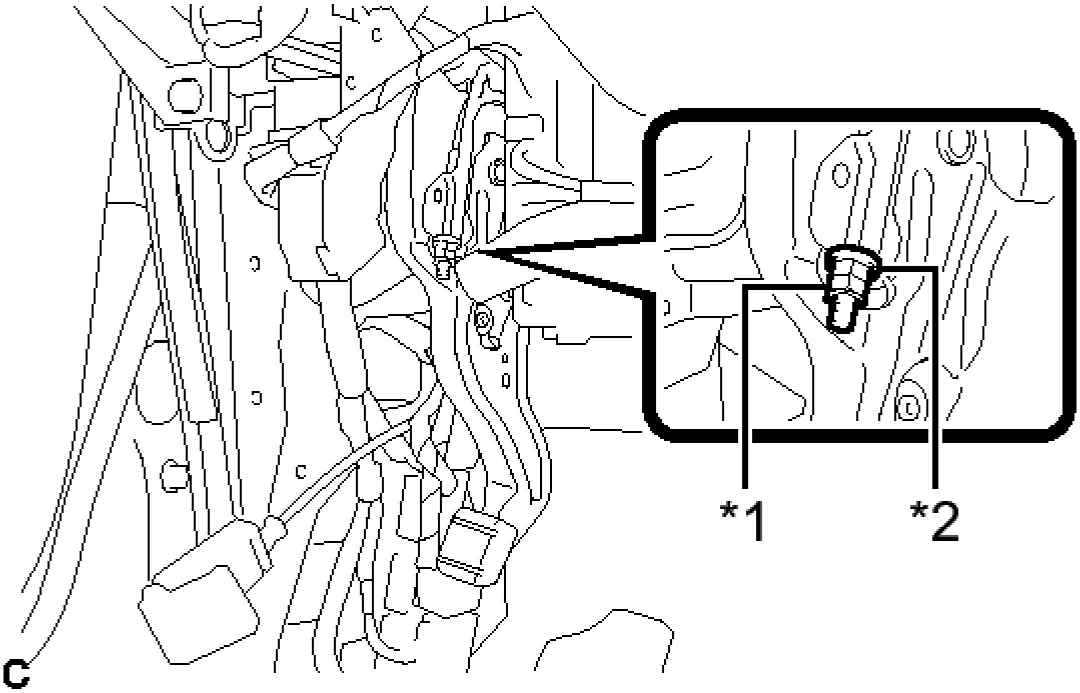

Fig. 6: Identifying Parking Brake Cable Lock Nut And Adjusting Nut
Courtesy of TOYOTA MOTOR SALES, U.S.A., INC.

TEXT IN ILLUSTRATION

*1	Lock Nut
*2	Adjusting Nut

14. **SEPARATE NO. 4 PARKING BRAKE CABLE ASSEMBLY**

    a. Separate the No. 4 parking brake cable assembly from the parking brake control pedal assembly as shown in the illustration.

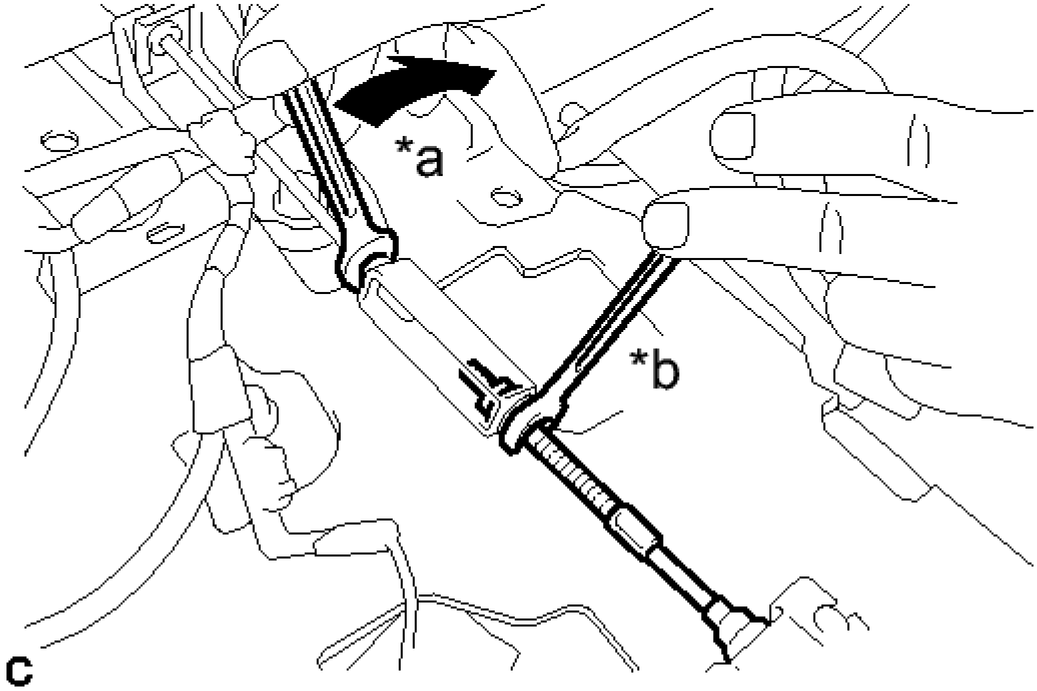

Fig. 7: Separating No. 4 Parking Brake Cable Assembly From Control Pedal
Courtesy of TOYOTA MOTOR SALES, U.S.A., INC.

TEXT IN ILLUSTRATION

*a	Turn
*b	Hold

15. **REMOVE PARKING BRAKE CONTROL PEDAL ASSEMBLY**
    a. Turn back the floor carpet.
    b. Remove the clip from the No. 1 parking brake cable assembly.

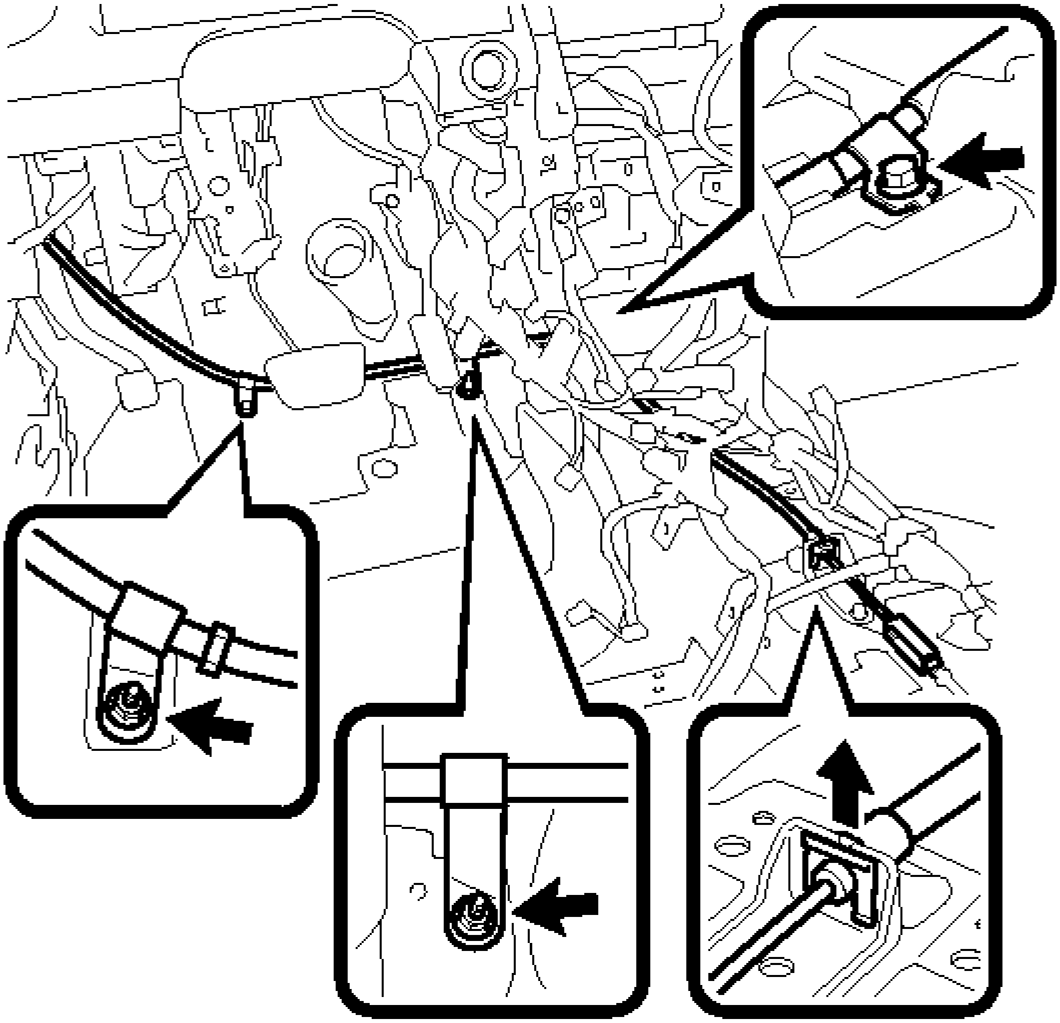

Fig. 8: Identifying No. 1 Parking Brake Cable Assembly Clips, Bolt, Nuts
Courtesy of TOYOTA MOTOR SALES, U.S.A., INC.

c. Remove the bolt and 2 nuts, and separate the No. 1 parking brake cable assembly.
d. Disconnect the parking brake switch connector.

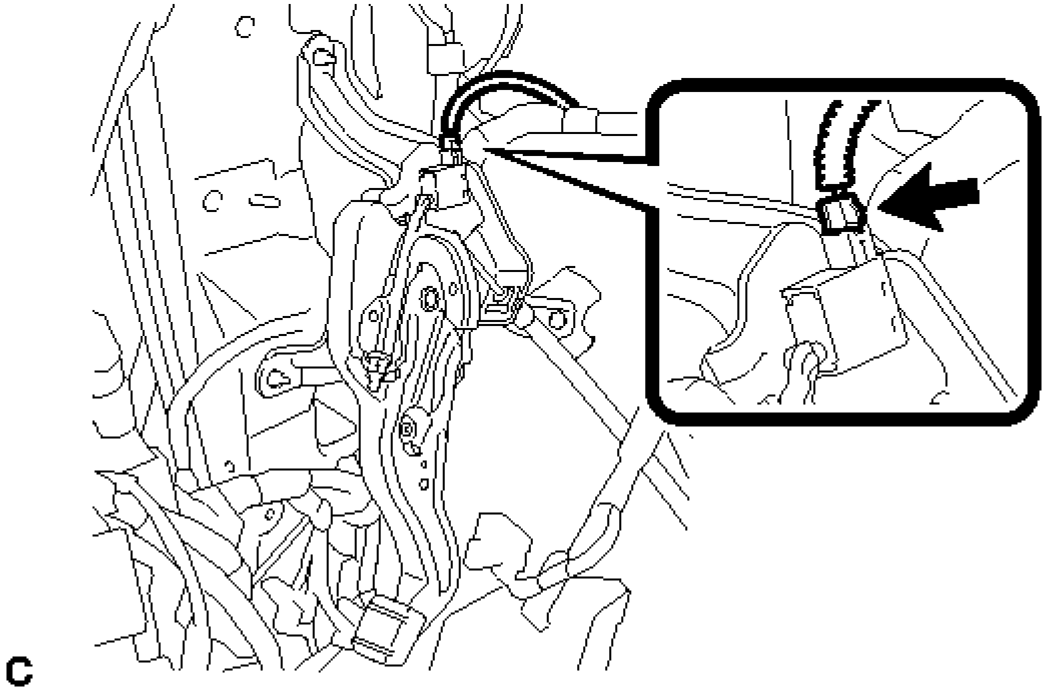

Fig. 9: Identifying Parking Brake Switch Connector
Courtesy of TOYOTA MOTOR SALES, U.S.A., INC.

e. Remove the bolt, 2 nuts and parking brake control pedal assembly.

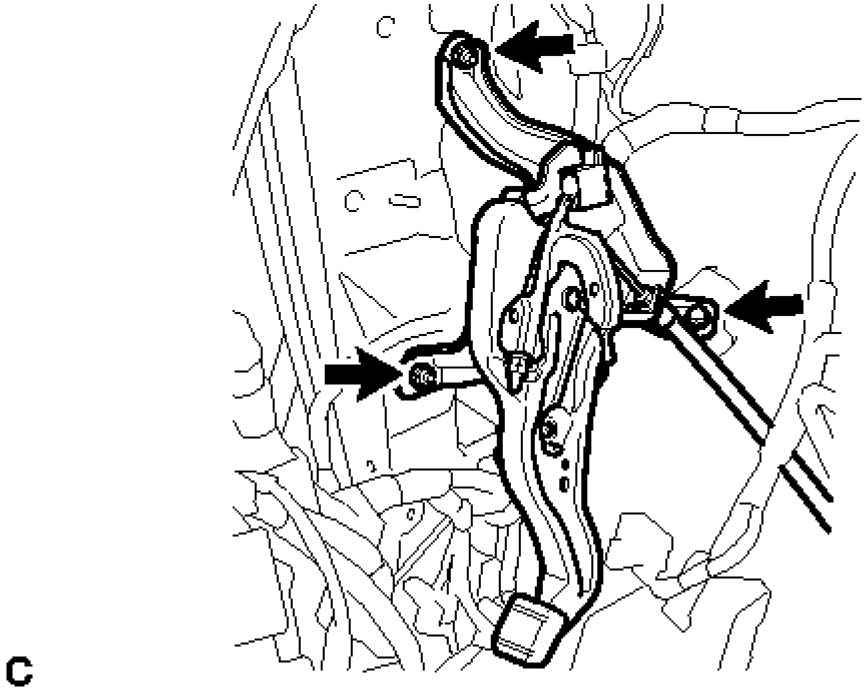

Fig. 10: Identifying Parking Brake Control Pedal Assembly Nuts And Bolt
Courtesy of TOYOTA MOTOR SALES, U.S.A., INC.

DISASSEMBLY

DISASSEMBLY

1. **REMOVE NO. 1 PARKING BRAKE CABLE ASSEMBLY** See step 2
2. **REMOVE PARKING BRAKE SWITCH ASSEMBLY** See step 2
3. **REMOVE PARKING PEDAL PAD**
    a. Remove the parking pedal pad from the parking brake pedal assembly.

REASSEMBLY

REASSEMBLY

1. **INSTALL PARKING PEDAL PAD**
    a. Install the parking pedal pad to the parking brake pedal assembly.
2. **INSTALL PARKING BRAKE SWITCH ASSEMBLY** See step 1
3. **INSTALL NO. 1 PARKING BRAKE CABLE ASSEMBLY** See step 27

INSTALLATION

INSTALLATION

1. **INSTALL PARKING BRAKE CONTROL PEDAL ASSEMBLY**
    a. Install the parking brake control pedal assembly with the bolt and 2 nuts.

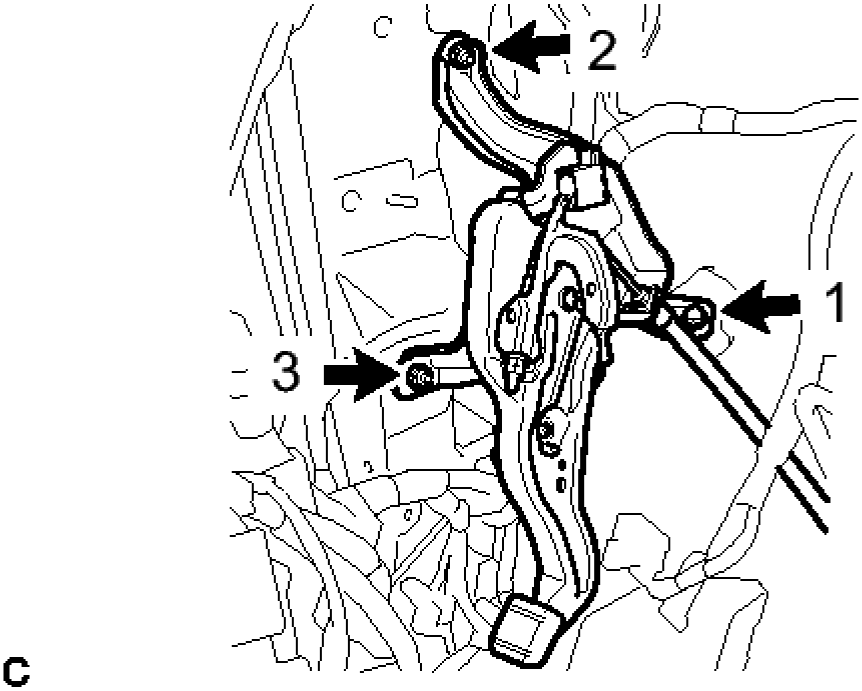

Fig. 11: Identifying Parking Brake Control Pedal Assembly Nuts And Bolt

Courtesy of TOYOTA MOTOR SALES, U.S.A., INC.

Torque: 15 N*m (153 kgf*cm, 11 ft.*lbf)

NOTE: **Tighten the bolt and 2 nuts in the order shown in the illustration.**

b. Connect the parking brake switch connector.
c. Install the No. 1 parking brake cable assembly with the bolt and 2 nuts.

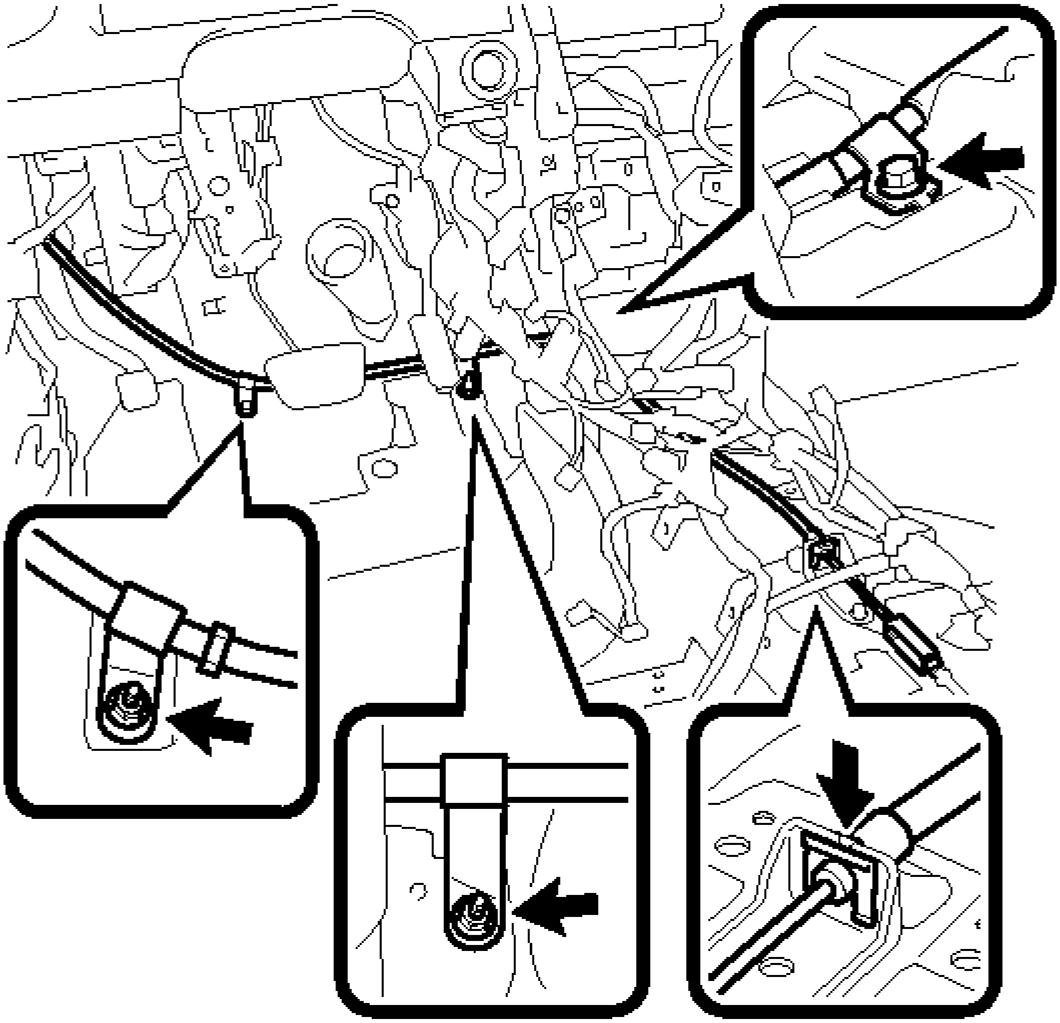

C

Fig. 12: Identifying No. 1 Parking Brake Cable Assembly Clips, Bolt, Nuts
Courtesy of TOYOTA MOTOR SALES, U.S.A., INC.

Bolt

Torque: 15 N*m (153 kgf*cm, 11 ft.*lbf)

Nut

Torque: 5.4 N*m (55 kgf*cm, 48 in.*lbf)

d. Install the clip to the No. 1 parking brake cable assembly.
e. Install the floor carpet.
f. Temporarily install the lock nut.

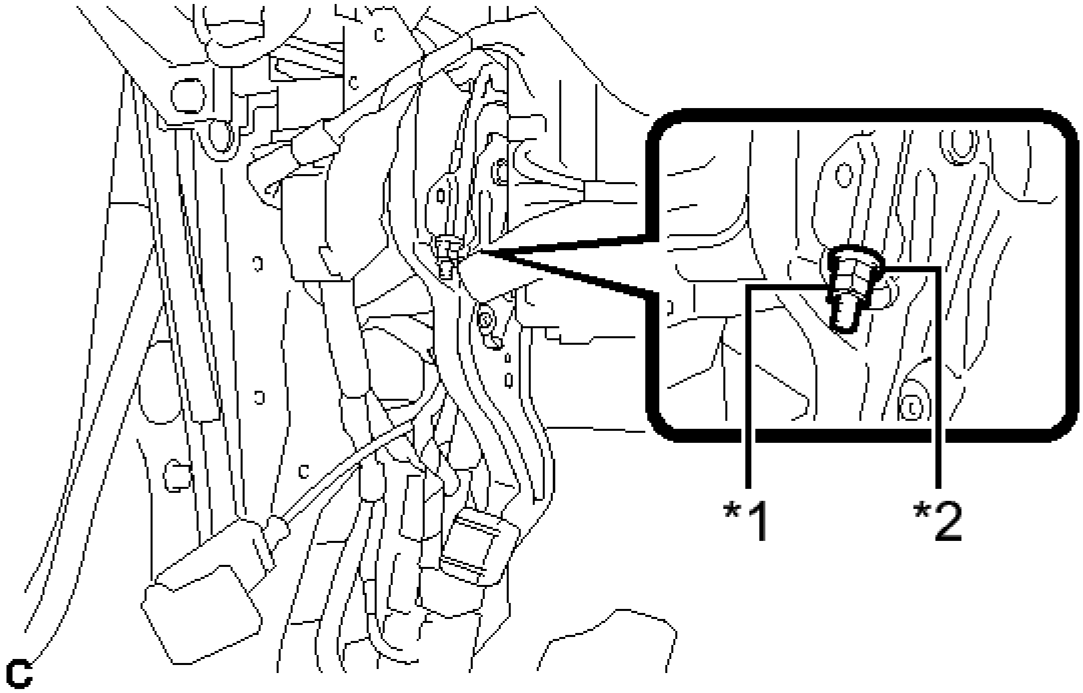

Fig. 13: Identifying Parking Brake Cable Lock Nut And Adjusting Nut
Courtesy of TOYOTA MOTOR SALES, U.S.A., INC.

TEXT IN ILLUSTRATION

*1	Lock Nut
*2	Adjusting Nut

HINT:

After adjusting parking brake pedal travel, tighten the lock nut.

2. **CONNECT NO. 4 PARKING BRAKE CABLE ASSEMBLY**
   a. Connect the No. 4 parking brake cable assembly to the parking brake control pedal assembly as shown in the illustration.

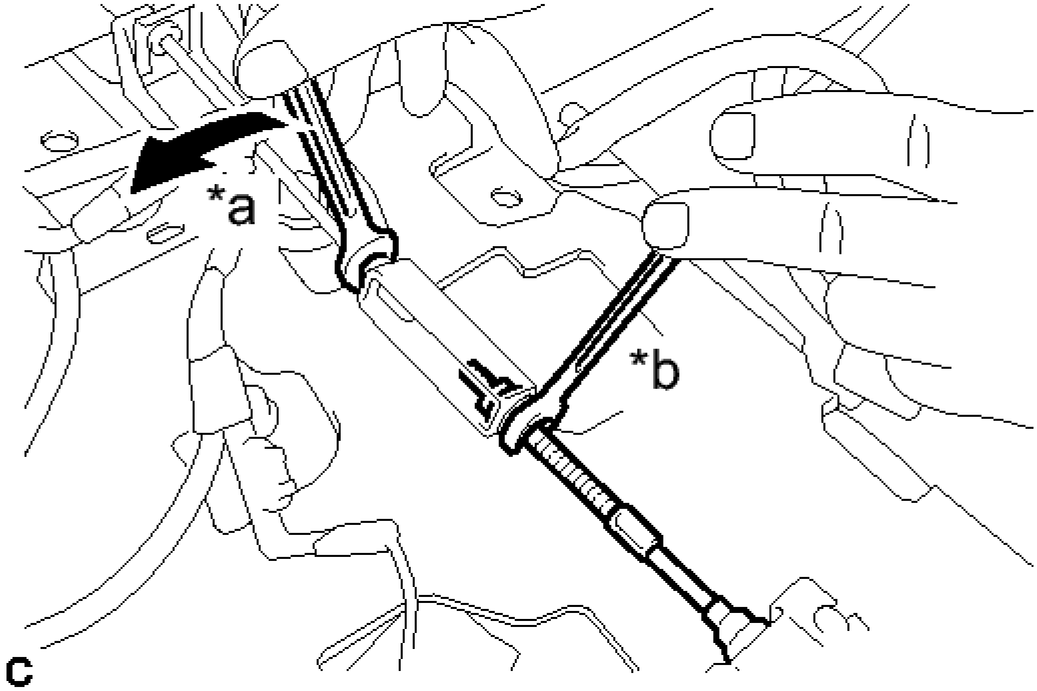

Fig. 14: Connecting No. 4 Parking Brake Cable Assembly From Control Pedal
Courtesy of TOYOTA MOTOR SALES, U.S.A., INC.

TEXT IN ILLUSTRATION

*a	Turn
*b	Hold

Torque: 5.4 N*m (55 kgf*cm, 48 in.*lbf)

3. **INSTALL POWER MANAGEMENT CONTROL ECU** . Refer to **INSTALLATION - Step 1**
4. **INSTALL AIRBAG SENSOR ASSEMBLY** . Refer to **INSTALLATION - Step 1**
5. **INSTALL FLOOR CARPET BRACKET RH** . Refer to **INSTALLATION - Step 14**
6. **INSTALL NO. 1 INDOOR ELECTRICAL KEY ANTENNA ASSEMBLY (for Built-in Type Yaw Rate Sensor)** . Refer to **INSTALLATION - Step 1**
7. **INSTALL YAW RATE SENSOR BRACKET (for Separate Type Yaw Rate Sensor)** . Refer to **INSTALLATION - Step 1**
8. **INSTALL NO. 3 INDOOR ELECTRICAL KEY ANTENNA ASSEMBLY (for Separate Type Yaw Rate Sensor)** . Refer to **INSTALLATION - Step 2**
9. **INSTALL YAW RATE SENSOR (for Separate Type Yaw Rate Sensor)** . Refer to **INSTALLATION - Step 3**
10. **INSTALL LOWER NO. 1 INSTRUMENT PANEL AIRBAG ASSEMBLY** . Refer to **INSTALLATION - Step 1**
11. **INSTALL SHIFT LEVER SUPPORT**

    Refer to **INSTALLATION**

12. **CONNECT CABLE TO AUXILIARY BATTERY NEGATIVE TERMINAL**

    NOTE: **When disconnecting the cable, some systems need to be initialized after the cable is reconnected. Refer to INITIALIZATION .**

13. **INSTALL LUGGAGE TRIM SERVICE HOLE COVER** . Refer to **INSTALLATION - Step 3**
14. **PERFORM DIAGNOSTIC SYSTEM CHECK**
    - for Separate Type Yaw Rate Sensor: Refer to **DTC CHECK / CLEAR**
    - for Built-in Type Yaw Rate Sensor: Refer to **DTC CHECK / CLEAR**
15. **INSPECT SRS WARNING LIGHT**
    - for Separate Type Yaw Rate Sensor: Refer to **DIAGNOSIS SYSTEM**
    - for Built-in Type Yaw Rate Sensor: Refer to **DIAGNOSIS SYSTEM**
16. **ADJUST PARKING BRAKE PEDAL TRAVEL** . Refer to **ADJUSTMENT - Step 2**
17. **INSPECT BRAKE WARNING LIGHT** . Refer to **ADJUSTMENT - Step 3**

PARKING BRAKE CABLE

COMPONENTS

ILLUSTRATION

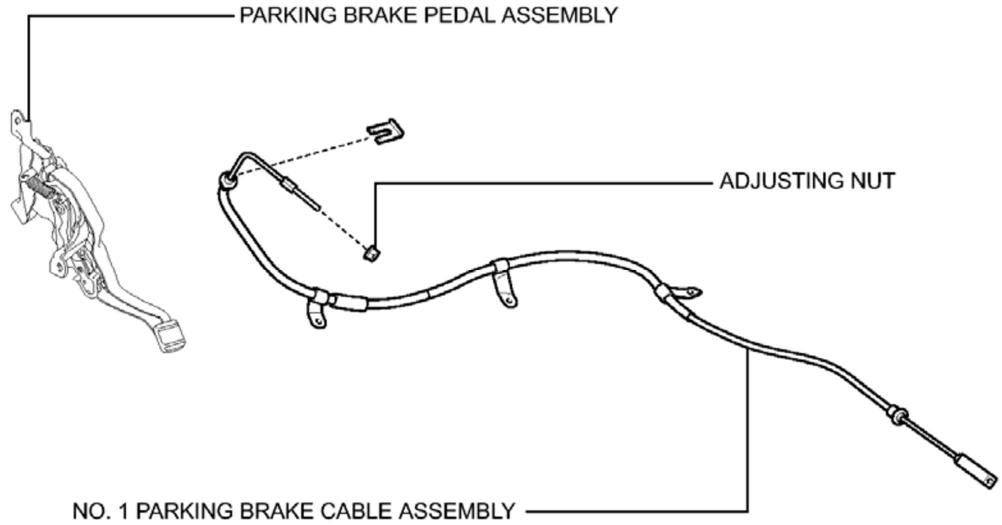
PARKING BRAKE PEDAL ASSEMBLY
ADJUSTING NUT
NO. 1 PARKING BRAKE CABLE ASSEMBLY

c

Fig. 15: Identifying Parking Brake Cable Replacement Components With Torque Specifications (1 Of 7)
Courtesy of TOYOTA MOTOR SALES, U.S.A., INC.

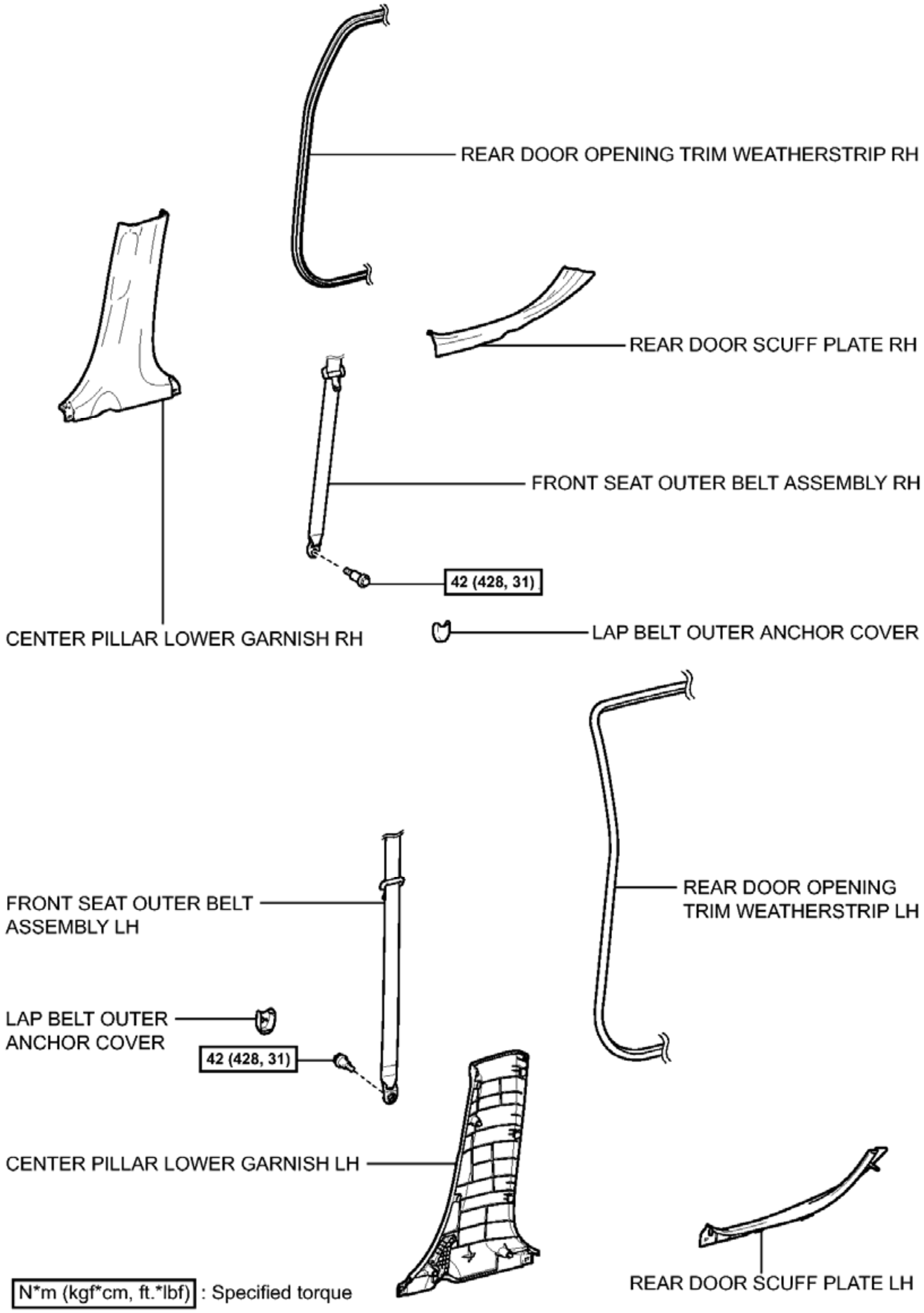
REAR DOOR OPENING TRIM WEATHERSTRIP RH
REAR DOOR SCUFF PLATE RH
FRONT SEAT OUTER BELT ASSEMBLY RH
42 (428, 31)
CENTER PILLAR LOWER GARNISH RH
LAP BELT OUTER ANCHOR COVER
FRONT SEAT OUTER BELT ASSEMBLY LH
REAR DOOR OPENING TRIM WEATHERSTRIP LH
LAP BELT OUTER ANCHOR COVER
42 (428, 31)
CENTER PILLAR LOWER GARNISH LH
N*m (kgf*cm, ft.*lbf) : Specified torque
REAR DOOR SCUFF PLATE LH

Fig. 16: Identifying Parking Brake Cable Replacement Components With Torque Specifications (2 Of 7)
Courtesy of TOYOTA MOTOR SALES, U.S.A., INC.

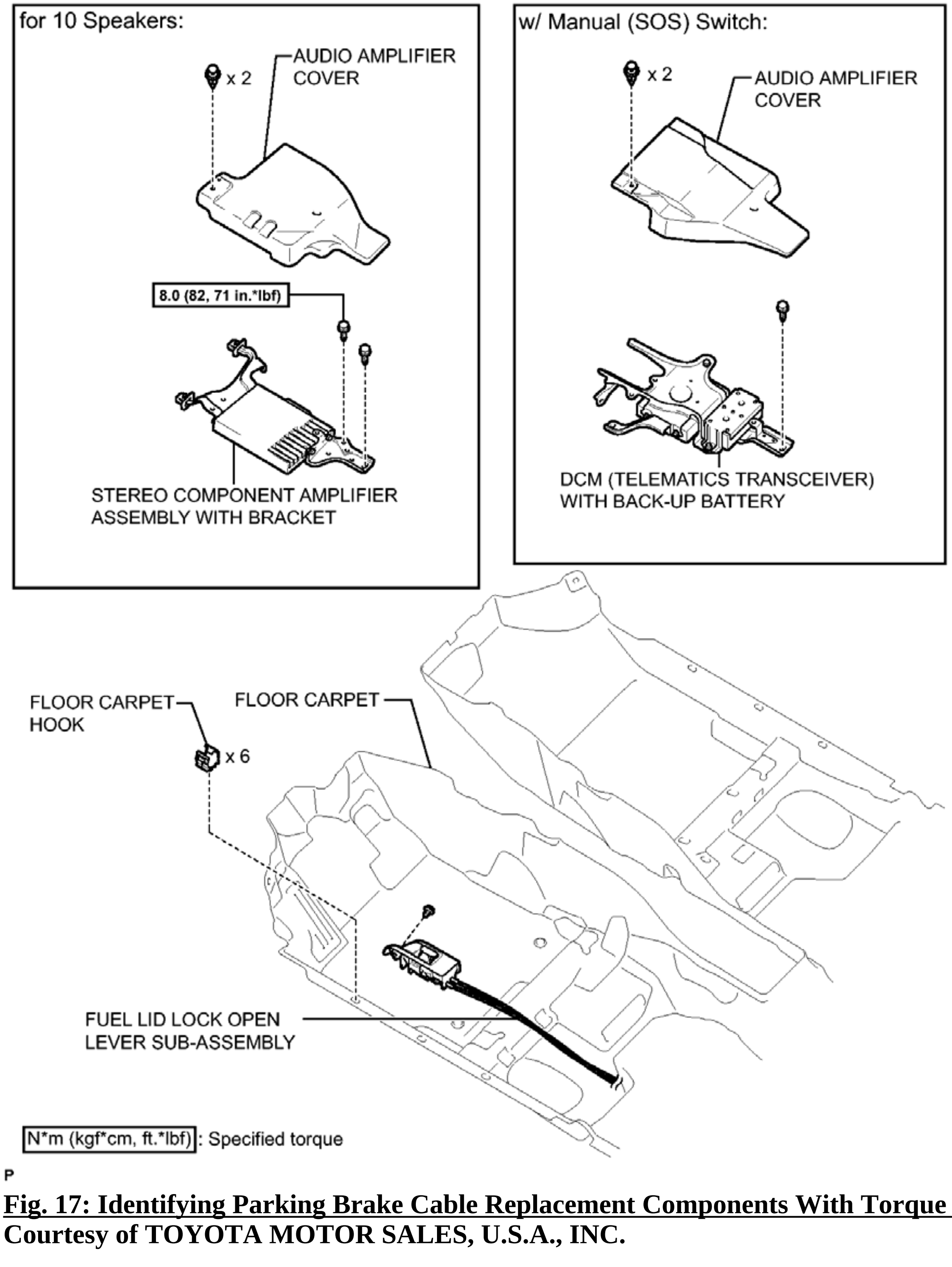
for 10 Speakers:
x 2
AUDIO AMPLIFIER COVER
8.0 (82, 71 in.*lbf)
STEREO COMPONENT AMPLIFIER ASSEMBLY WITH BRACKET
w/ Manual (SOS) Switch:
x 2
AUDIO AMPLIFIER COVER
DCM (TELEMATICS TRANSCEIVER) WITH BACK-UP BATTERY
FLOOR CARPET HOOK
x 6
FLOOR CARPET
FUEL LID LOCK OPEN LEVER SUB-ASSEMBLY
N*m (kgf*cm, ft.*lbf): Specified torque
P

Fig. 17: Identifying Parking Brake Cable Replacement Components With Torque Specifications (3 Of 7)
Courtesy of TOYOTA MOTOR SALES, U.S.A., INC.

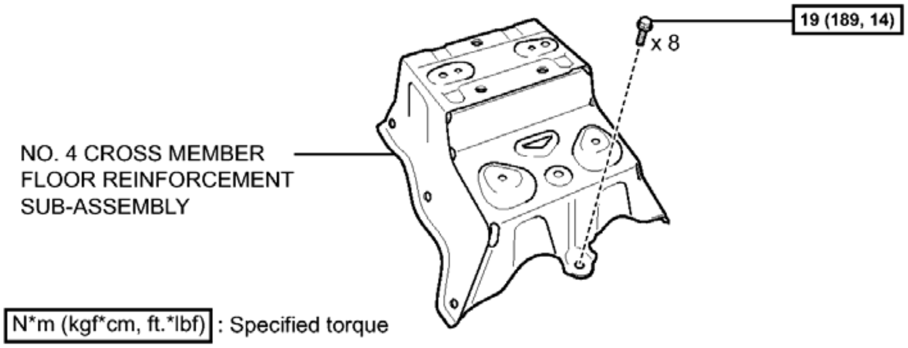
19 (189, 14)
x 8
NO. 4 CROSS MEMBER FLOOR REINFORCEMENT SUB-ASSEMBLY
N*m (kgf*cm, ft.*lbf) : Specified torque

c

Fig. 18: Identifying Parking Brake Cable Replacement Components With Torque Specifications (4 Of 7)
Courtesy of TOYOTA MOTOR SALES, U.S.A., INC.

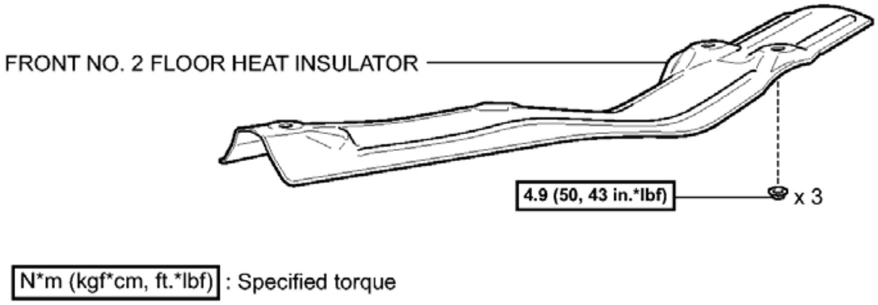
FRONT NO. 2 FLOOR HEAT INSULATOR
4.9 (50, 43 in.*lbf)
x 3
N*m (kgf*cm, ft.*lbf) : Specified torque

c

Fig. 19: Identifying Parking Brake Cable Replacement Components With Torque Specifications (5 Of 7)
Courtesy of TOYOTA MOTOR SALES, U.S.A., INC.

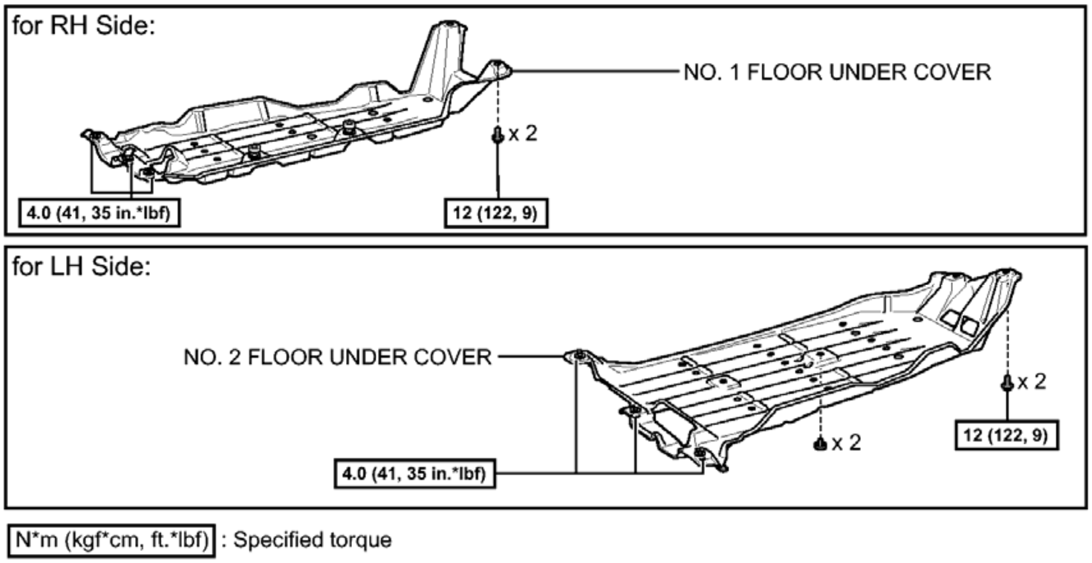
for RH Side:
NO. 1 FLOOR UNDER COVER
x 2
4.0 (41, 35 in.*lbf)
12 (122, 9)
for LH Side:
NO. 2 FLOOR UNDER COVER
x 2
12 (122, 9)
x 2
4.0 (41, 35 in.*lbf)
N*m (kgf*cm, ft.*lbf) : Specified torque

c

Fig. 20: Identifying Parking Brake Cable Replacement Components With Torque Specifications (6 Of 7)
Courtesy of TOYOTA MOTOR SALES, U.S.A., INC.

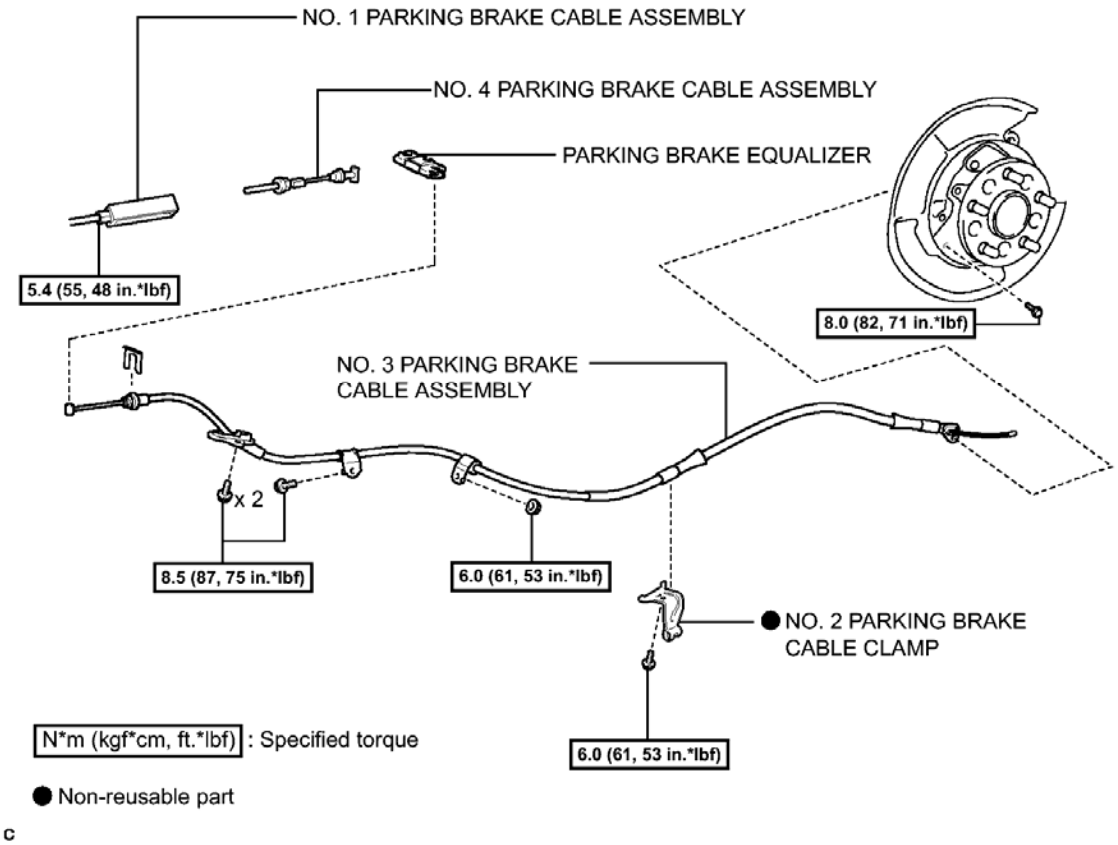
NO. 1 PARKING BRAKE CABLE ASSEMBLY
NO. 4 PARKING BRAKE CABLE ASSEMBLY
PARKING BRAKE EQUALIZER
5.4 (55, 48 in.*lbf)
8.0 (82, 71 in.*lbf)
NO. 3 PARKING BRAKE CABLE ASSEMBLY
x 2
8.5 (87, 75 in.*lbf)
6.0 (61, 53 in.*lbf)
● NO. 2 PARKING BRAKE CABLE CLAMP
N*m (kgf*cm, ft.*lbf) : Specified torque
6.0 (61, 53 in.*lbf)
● Non-reusable part
C

Fig. 21: Identifying Parking Brake Cable Replacement Components With Torque Specifications (7 Of 7)
Courtesy of TOYOTA MOTOR SALES, U.S.A., INC.

REMOVAL

REMOVAL

HINT:

- The following procedure is for the No. 1 parking brake cable assembly, No. 3 parking brake cable assembly and No. 4 parking brake cable assembly.
- Use the same procedure for the No. 3 parking brake cable assembly and No. 2 parking brake cable assembly.

1. **REMOVE PARKING BRAKE CONTROL PEDAL ASSEMBLY**

   Refer to **REMOVAL**

2. **REMOVE NO. 1 PARKING BRAKE CABLE ASSEMBLY**

a. Pull up the parking brake pedal claw.

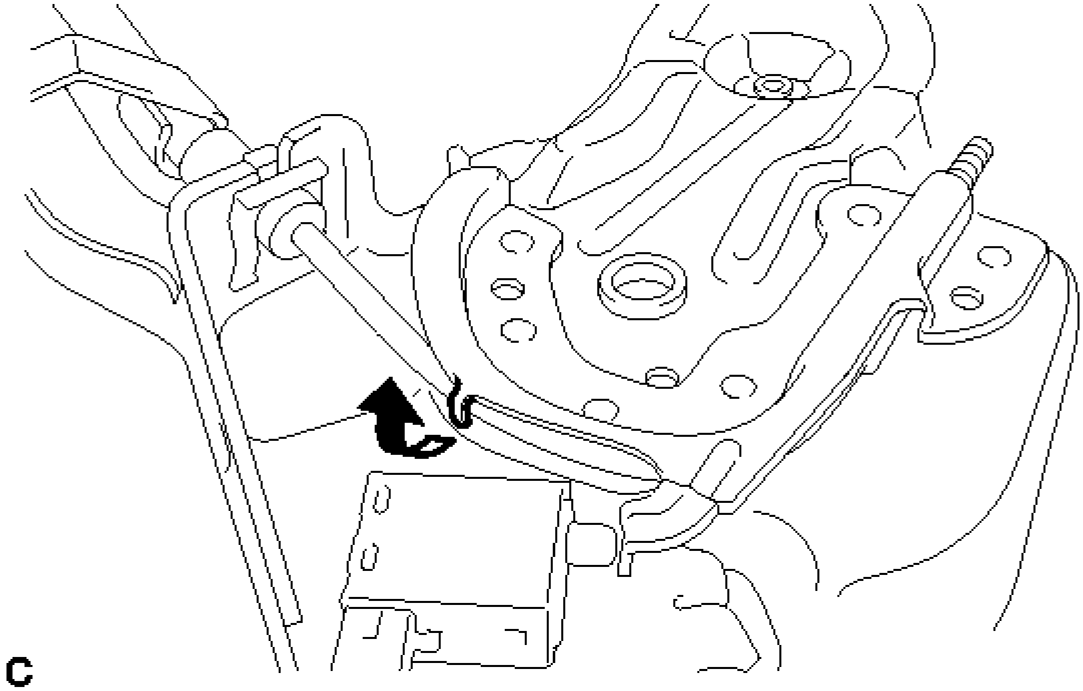

Fig. 22: Pulling Up The Parking Brake Pedal Claw
Courtesy of TOYOTA MOTOR SALES, U.S.A., INC.

NOTE: Do not damage the No. 1 parking brake cable assembly.

b. Remove the adjusting nut.

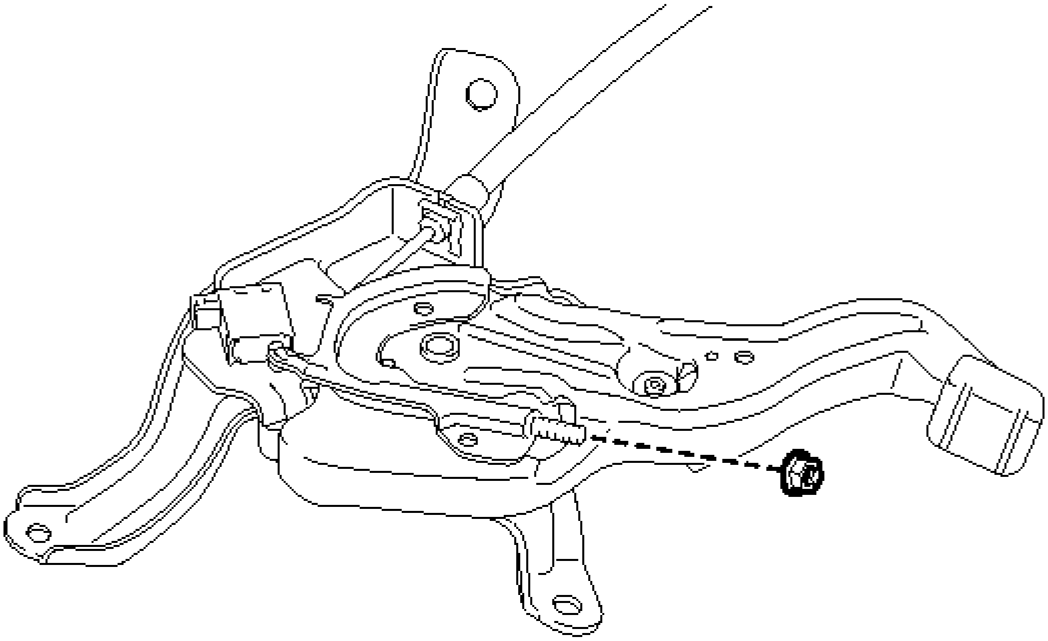

Fig. 23: Identifying Parking Brake Pedal Adjusting Nut
Courtesy of TOYOTA MOTOR SALES, U.S.A., INC.

c. Remove the clip from the No. 1 parking brake cable assembly.

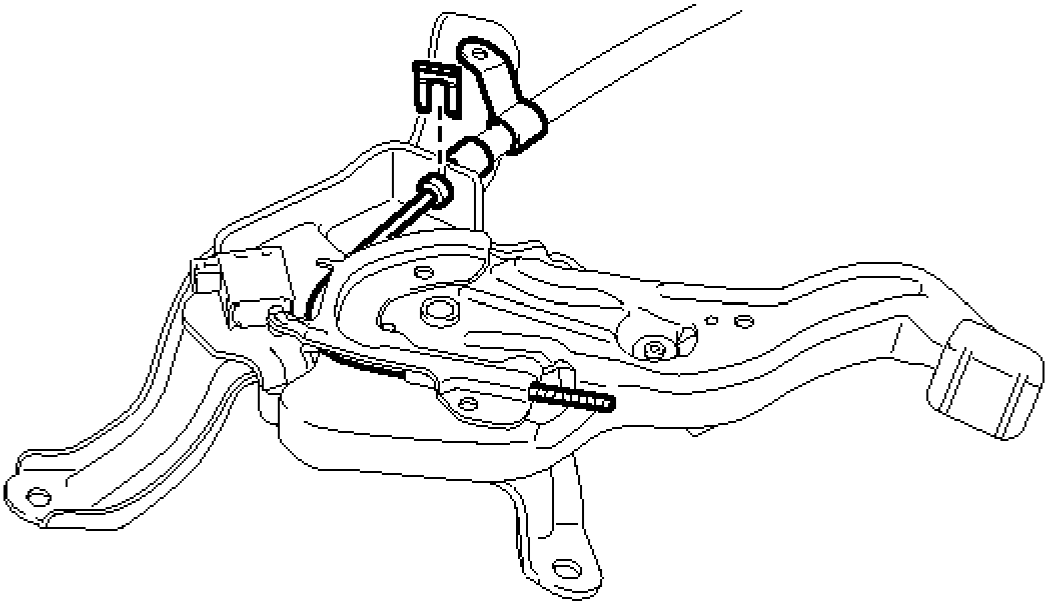

Fig. 24: Removing The No. 1 Parking Brake Clip And Cable
Courtesy of TOYOTA MOTOR SALES, U.S.A., INC.

   d. Remove the No. 1 parking brake cable assembly from the parking brake pedal assembly.

3. **REMOVE REAR DOOR SCUFF PLATE LH** . Refer to **REMOVAL - Step 19**
4. **DISCONNECT REAR DOOR OPENING TRIM WEATHERSTRIP LH**
   a. Disconnect the rear door opening trim weatherstrip LH.
5. **REMOVE LAP BELT OUTER ANCHOR COVER (for LH Side)** . Refer to **REMOVAL - Step 8**
6. **DISCONNECT FRONT SEAT OUTER BELT ASSEMBLY LH** . Refer to **REMOVAL - Step 9**
7. **REMOVE CENTER PILLAR LOWER GARNISH LH** . Refer to **REMOVAL - Step 23**
8. **REMOVE REAR DOOR SCUFF PLATE RH** . Refer to **REMOVAL - Step 26**
9. **DISCONNECT REAR DOOR OPENING TRIM WEATHERSTRIP RH**

   HINT:

   Use the same procedure as for the LH side.

10. **REMOVE LAP BELT OUTER ANCHOR COVER (for RH Side)** . Refer to **REMOVAL - Step 28**
11. **DISCONNECT FRONT SEAT OUTER BELT ASSEMBLY RH** . Refer to **REMOVAL - Step 29**
12. **REMOVE CENTER PILLAR LOWER GARNISH RH** . Refer to **REMOVAL - Step 30**
13. **REMOVE FRONT SEAT ASSEMBLY LH**
    - for Manual Seat: Refer to **REMOVAL**
    - for Power Seat: Refer to **REMOVAL**
14. **REMOVE FRONT SEAT ASSEMBLY RH**

    HINT:

    Use the same procedure as for the LH side.

15. **REMOVE AUDIO AMPLIFIER COVER (for 10 Speakers)** . Refer to **REMOVAL - Step 2**
16. **REMOVE STEREO COMPONENT AMPLIFIER ASSEMBLY WITH BRACKET (for 10 Speakers)** . Refer to **REMOVAL - Step 3**
17. **REMOVE AUDIO AMPLIFIER COVER (w/ Manual (SOS) Switch)** . Refer to **REMOVAL - Step 2**
18. **REMOVE DCM (TELEMATICS TRANSCEIVER) WITH BACK-UP BATTERY (w/ Manual (SOS) Switch)** . Refer to **REMOVAL - Step 3**
19. **REMOVE FLOOR CARPET HOOK** . Refer to **REMOVAL - Step 23**
20. **REMOVE NO. 4 CROSS MEMBER FLOOR REINFORCEMENT SUB-ASSEMBLY**
    a. Remove the screw.

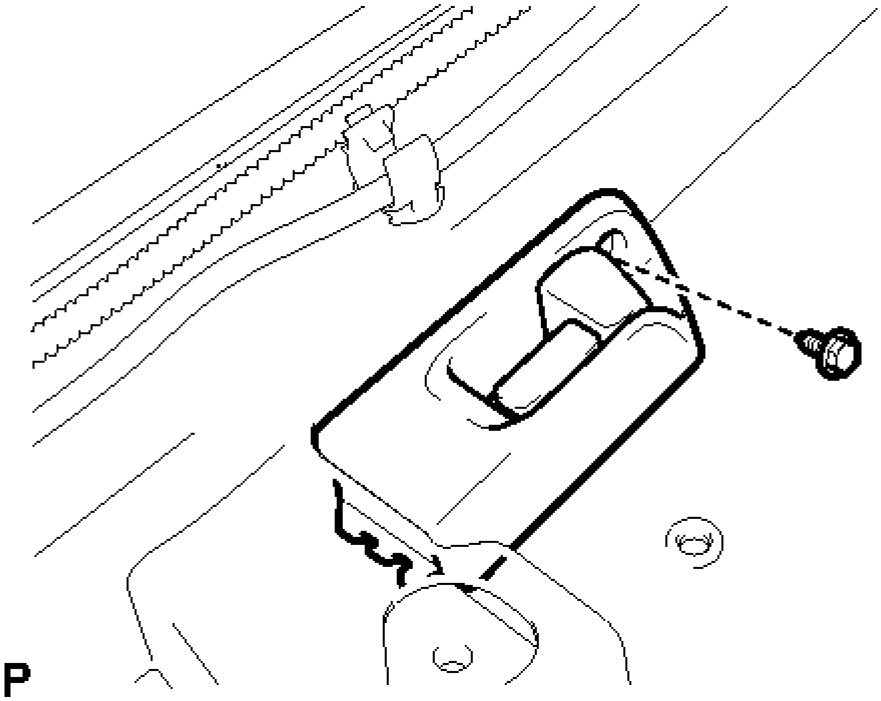

Fig. 25: Identifying Fuel Lid Lock Open Lever Screw
Courtesy of TOYOTA MOTOR SALES, U.S.A., INC.

b. Disengage the guide to disconnect the fuel lid lock open lever sub-assembly as shown in the illustration.

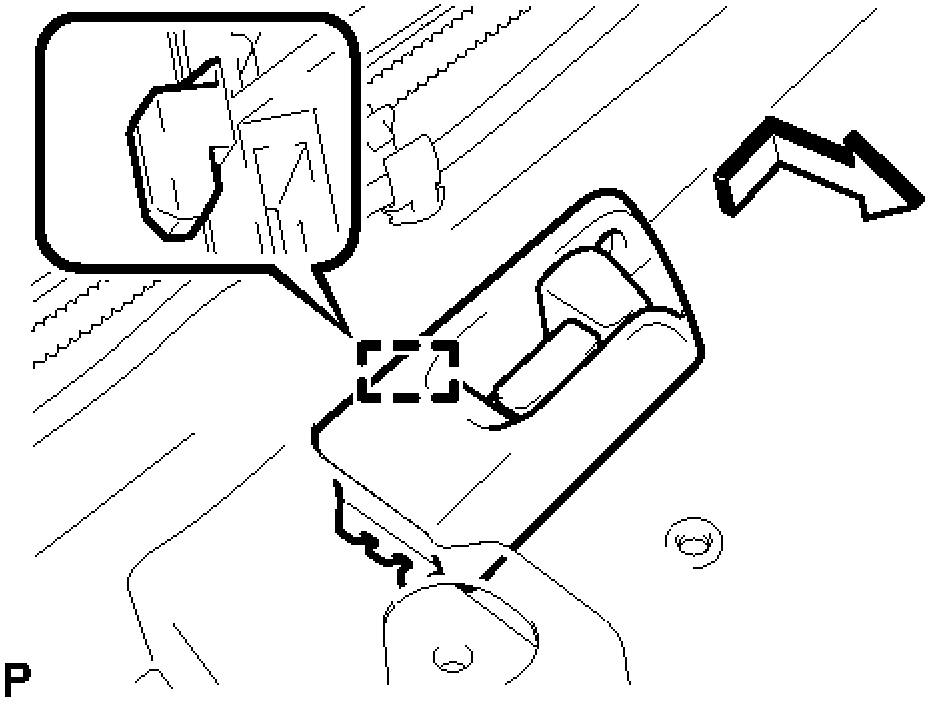

Fig. 26: Identifying Fuel Lid Lock Open Lever Guide

Courtesy of TOYOTA MOTOR SALES, U.S.A., INC.

c. Turn back the floor carpet to a position where the No. 4 cross member floor reinforcement sub-assembly can be removed.
d. Remove the 8 bolts and No. 4 cross member floor reinforcement sub-assembly.

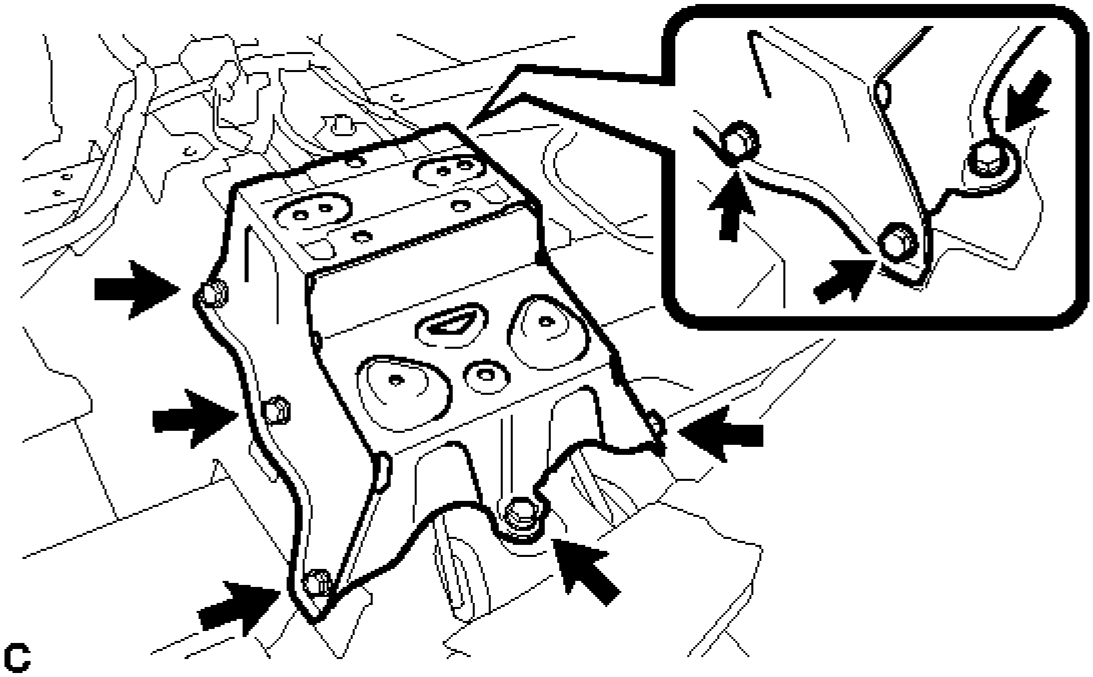

Fig. 27: Identifying No. 4 Cross Member Floor Reinforcement Sub-Assembly Bolts
Courtesy of TOYOTA MOTOR SALES, U.S.A., INC.

21. **REMOVE NO. 4 PARKING BRAKE CABLE ASSEMBLY**
    a. Separate the No. 3 parking brake cable assembly from the parking brake equalizer.

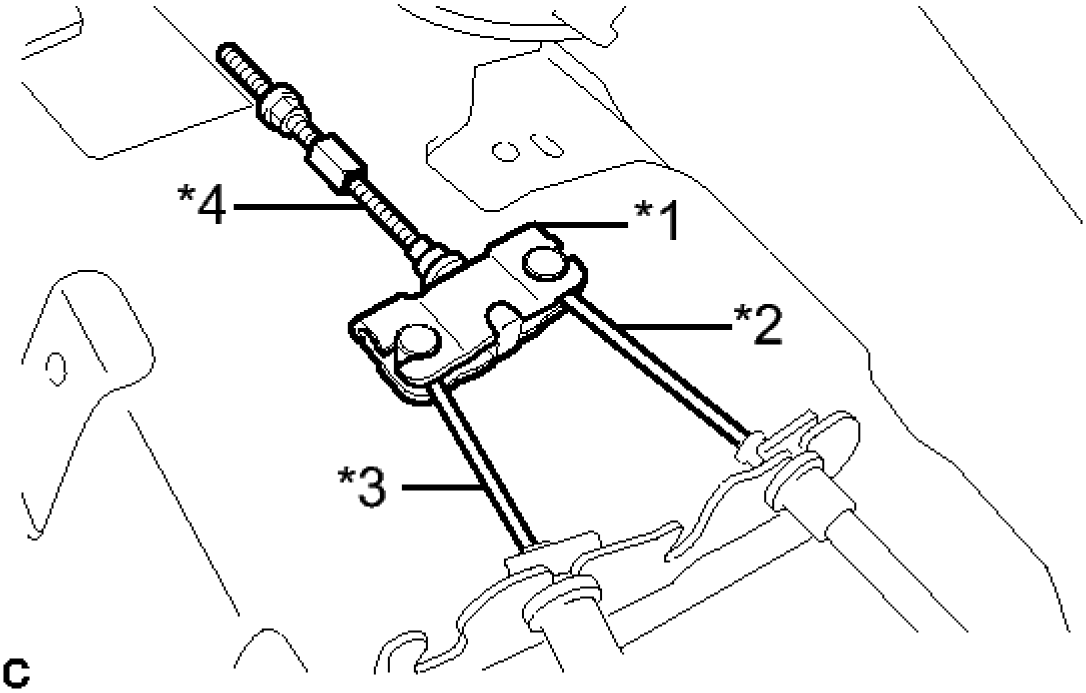

Fig. 28: Identifying No. 2, 3, 4 Parking Brake Cables And Parking Brake Equalizer
Courtesy of TOYOTA MOTOR SALES, U.S.A., INC.

TEXT IN ILLUSTRATION

*1	Parking Brake Equalizer
*2	No. 2 Parking Brake Cable Assembly
*3	No. 3 Parking Brake Cable Assembly
*4	No. 4 Parking Brake Cable Assembly

b. Separate the No. 2 parking brake cable assembly to remove the parking brake equalizer.

c. Slide the parking brake equalizer and rubber boot.

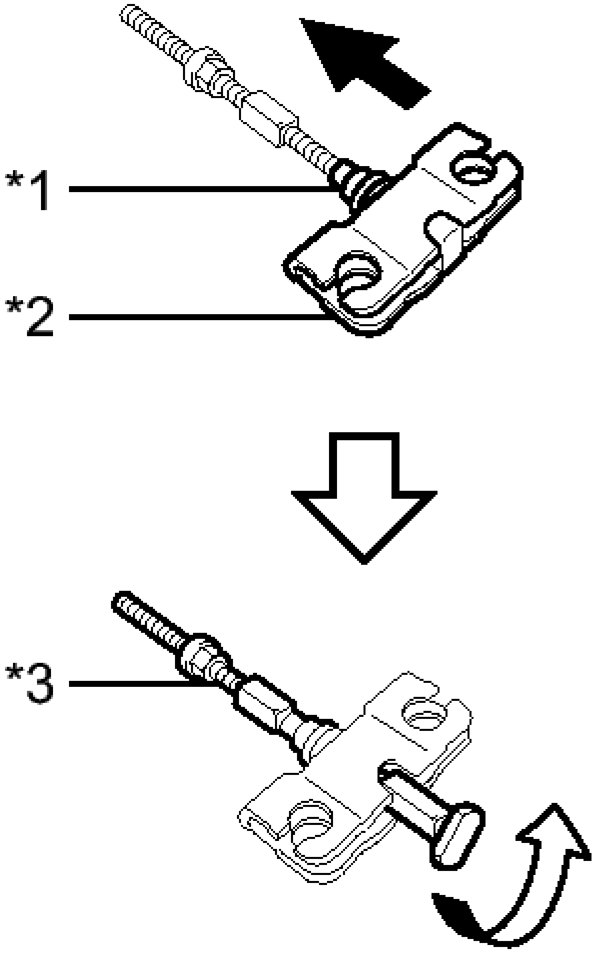

Fig. 29: Identifying Parking Brake Equalizer, Rubber Boot And No. 4 Parking Brake Cable Assembly

Courtesy of TOYOTA MOTOR SALES, U.S.A., INC.

TEXT IN ILLUSTRATION

*1	Rubber Boot
*2	Parking Brake Equalizer
*3	No. 4 Parking Brake Cable Assembly

d. Remove the No. 4 parking brake cable assembly from the parking brake equalizer.

22. **REMOVE FRONT EXHAUST PIPE ASSEMBLY**

Refer to **REMOVAL**

23. **REMOVE FRONT NO. 2 FLOOR HEAT INSULATOR**

a. Remove the 3 nuts and front No. 2 floor heat insulator.

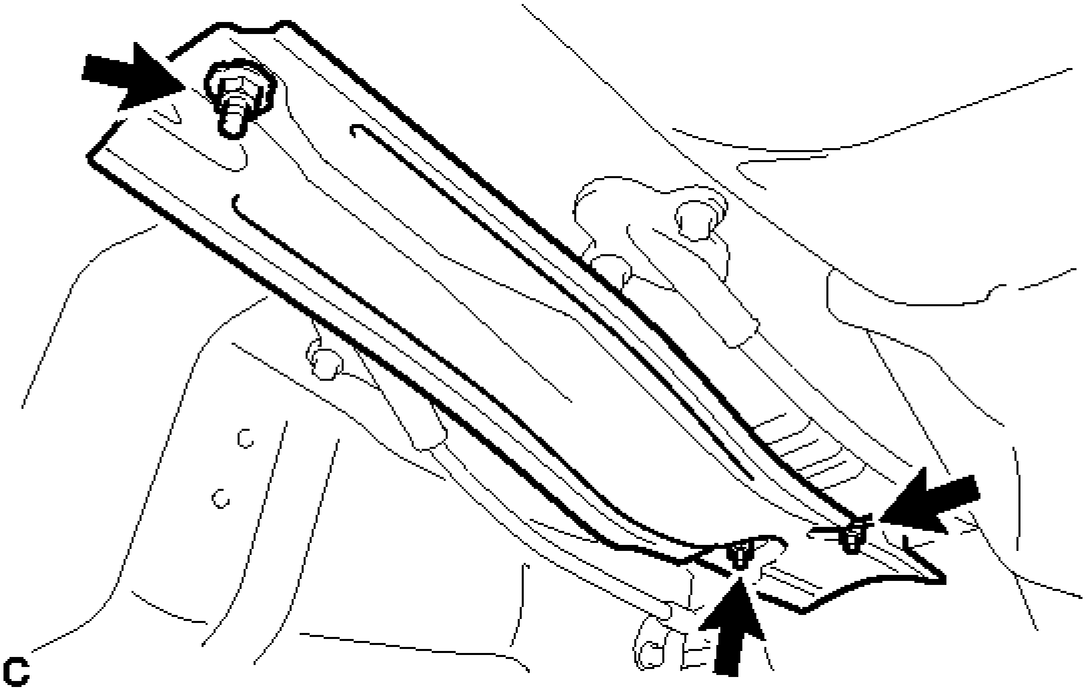

Fig. 30: Identifying No. 2 Floor Heat Insulator Nuts
Courtesy of TOYOTA MOTOR SALES, U.S.A., INC.

24. **REMOVE PARKING BRAKE SHOE LEVER**

Refer to **DISASSEMBLY**

25. **REMOVE NO. 2 FLOOR UNDER COVER (for LH Side)** . Refer to **REMOVAL - Step 2**
26. **REMOVE NO. 1 FLOOR UNDER COVER (for RH Side)** . Refer to **REMOVAL - Step 3**
27. **REMOVE NO. 3 PARKING BRAKE CABLE ASSEMBLY**

a. Remove the clip from the No. 3 parking brake cable assembly.

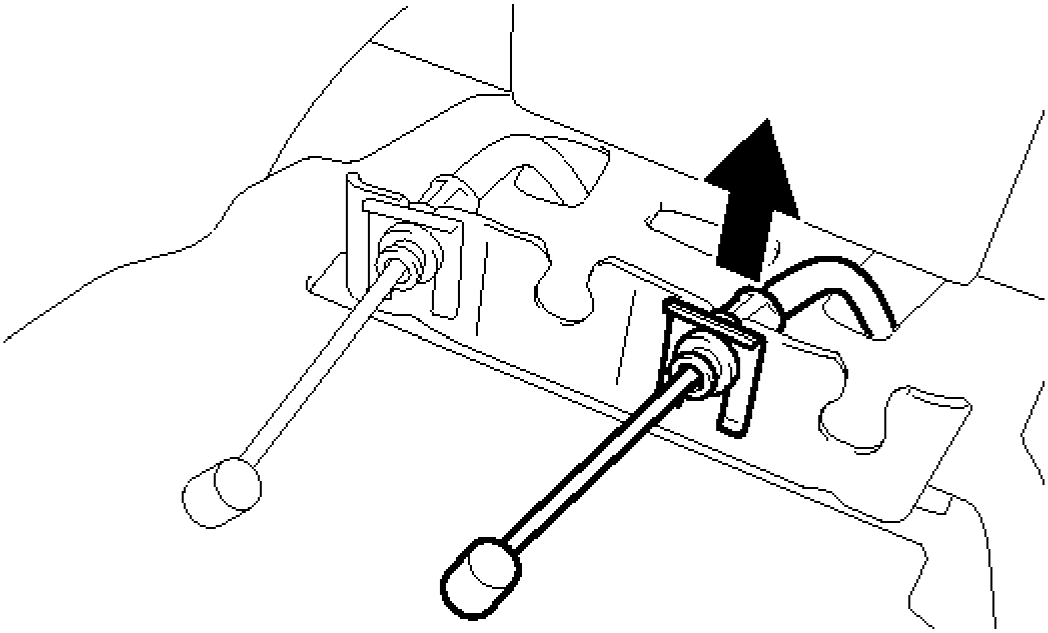

Fig. 31: Removing No. 3 Parking Brake Cable Assembly
Courtesy of TOYOTA MOTOR SALES, U.S.A., INC.

b. Remove the bolt and separate the No. 3 parking brake cable assembly.

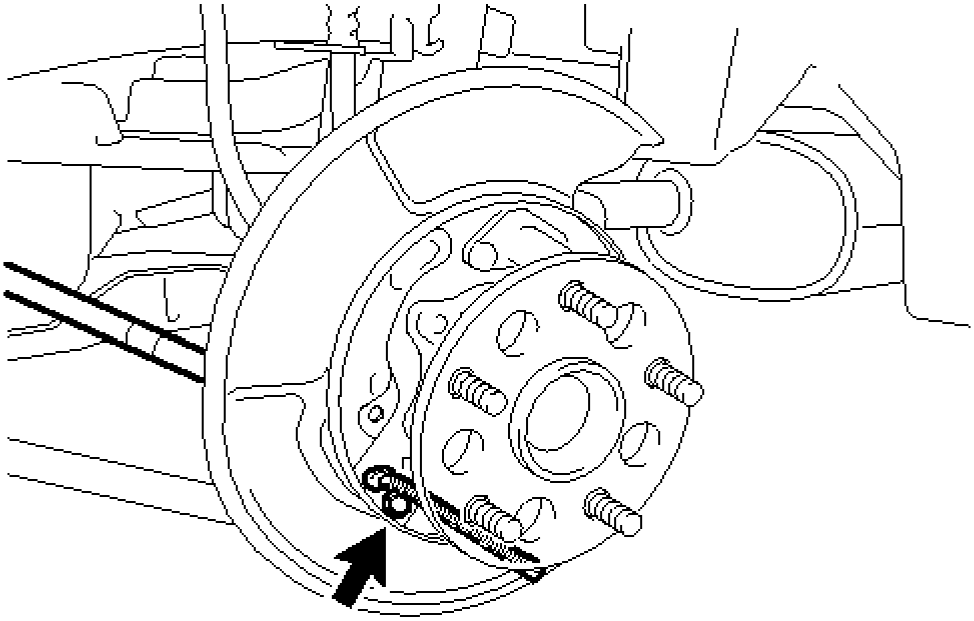

Fig. 32: Identifying No. 3 Parking Brake Cable Bolt
Courtesy of TOYOTA MOTOR SALES, U.S.A., INC.

c. Remove the 4 bolts, nut and No. 3 parking brake cable assembly.

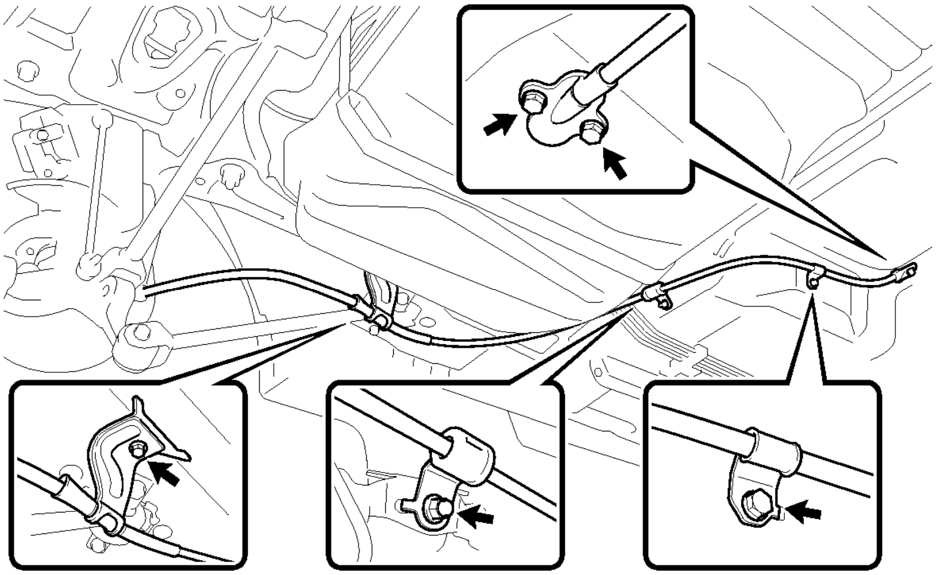

Fig. 33: Identifying No. 3 Parking Brake Cable Nut And Bolts
Courtesy of TOYOTA MOTOR SALES, U.S.A., INC.

28. **REMOVE NO. 2 PARKING BRAKE CABLE CLAMP**
    a. Remove the No. 2 parking brake cable clamp.

INSTALLATION

INSTALLATION

1. **INSTALL NO. 2 PARKING BRAKE CABLE CLAMP**
    a. Install a new No. 2 parking brake cable clamp to the No. 3 parking brake cable assembly.
2. **INSTALL NO. 3 PARKING BRAKE CABLE ASSEMBLY**
    a. Install the No. 3 parking brake cable assembly with the 4 bolts and nut.

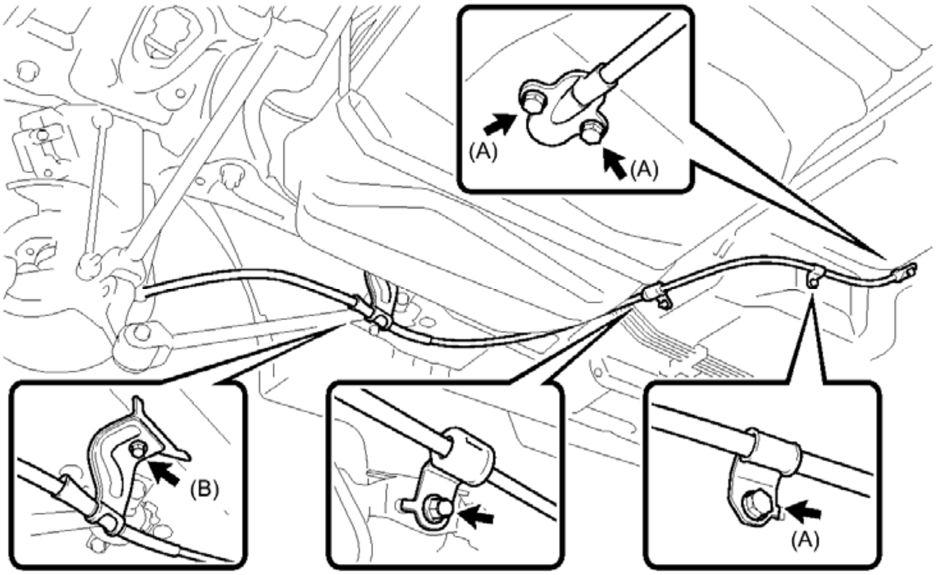

Fig. 34: Identifying No. 3 Parking Brake Cable Nut And Bolts
Courtesy of TOYOTA MOTOR SALES, U.S.A., INC.

Bolt (A)

Torque: 8.5 N*m (87 kgf*cm, 75 in.*lbf)

Bolt (B) and Nut

Torque: 6.0 N*m (61 kgf*cm, 53 in.*lbf)

b. Install the No. 3 parking brake cable assembly with the bolt.

Torque: 8.0 N*m (82 kgf*cm, 71 in.*lbf)

c. Install the clip to the No. 3 parking brake cable assembly.

3. **INSTALL NO. 2 FLOOR UNDER COVER (for LH Side)** . Refer to **INSTALLATION - Step 10**
4. **INSTALL NO. 1 FLOOR UNDER COVER (for RH Side)** . Refer to **INSTALLATION - Step 11**
5. **INSTALL PARKING BRAKE SHOE LEVER**

   See step 6

6. **INSTALL FRONT NO. 2 FLOOR HEAT INSULATOR**
   a. Install the front No. 2 floor heat insulator with the 3 nuts.

   Torque: 4.9 N*m (50 kgf*cm, 43 in.*lbf)

7. **INSTALL FRONT EXHAUST PIPE ASSEMBLY**

Refer to **INSTALLATION - Step 1**

8. **INSTALL NO. 4 PARKING BRAKE CABLE ASSEMBLY**
    a. Install the No. 4 parking brake cable assembly to the parking brake equalizer.

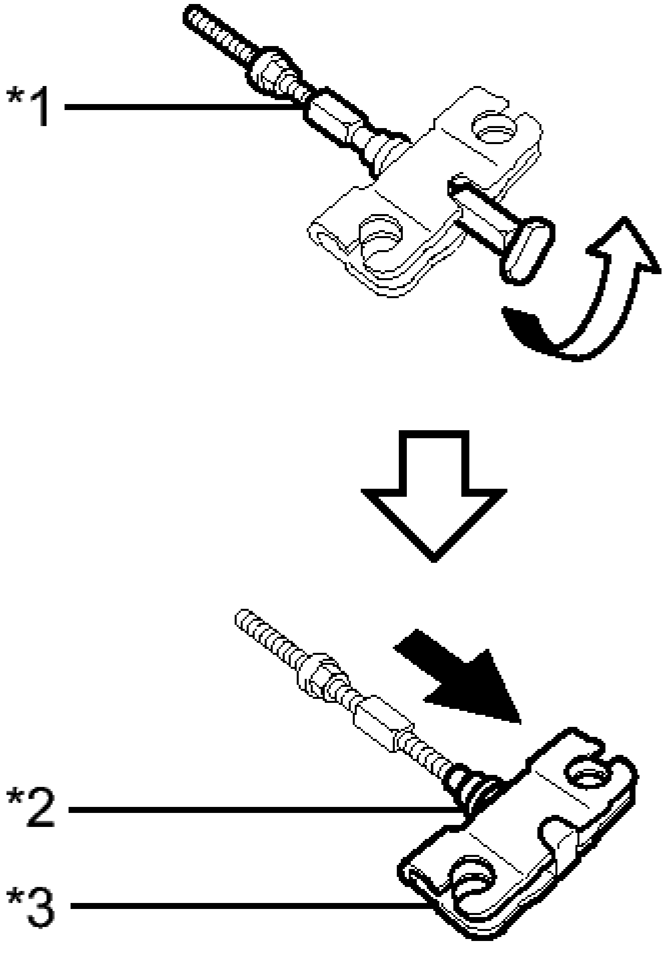

Fig. 35: Identifying Parking Brake Equalizer, Rubber Boot And No. 4 Parking Brake Cable Assembly
Courtesy of TOYOTA MOTOR SALES, U.S.A., INC.

TEXT IN ILLUSTRATION

*1	No. 4 Parking Brake Cable Assembly
	Rubber

*2	Boot
*3	Parking Brake Equalizer

b. Slide the parking brake equalizer and rubber boot as shown in the illustration.

NOTE: Make sure that the rubber boot is securely inserted into the groove of the No. 4 parking brake cable assembly.

c. Connect the No. 3 parking brake cable assembly to the parking brake equalizer.

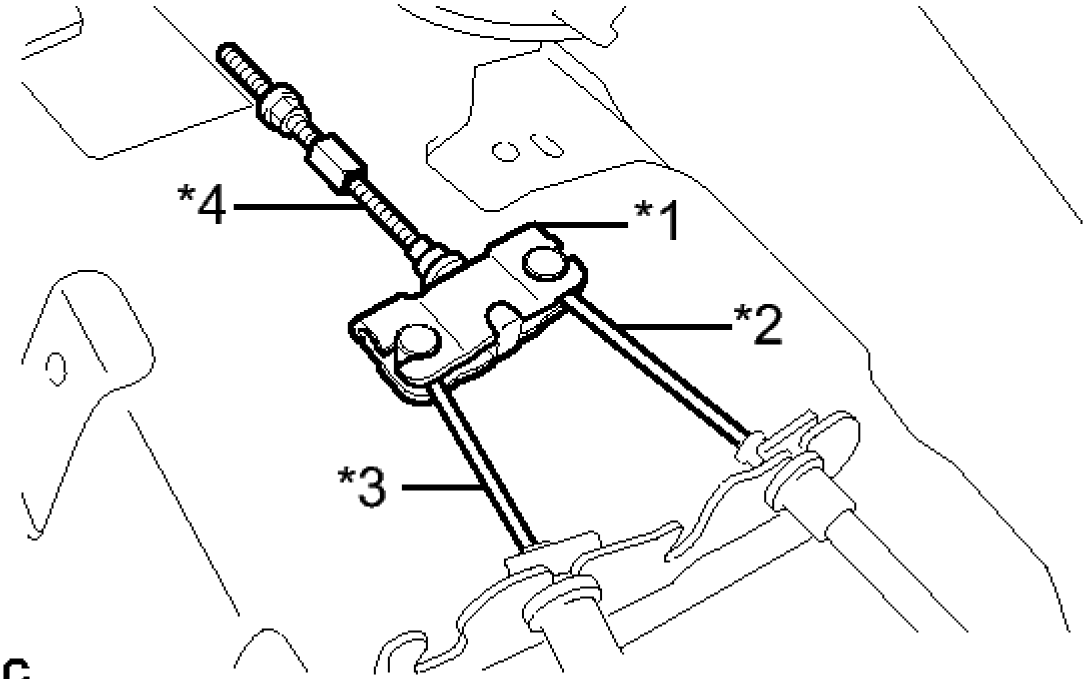

Fig. 36: Identifying No. 2, 3, 4 Parking Brake Cables And Parking Brake Equalizer
Courtesy of TOYOTA MOTOR SALES, U.S.A., INC.

TEXT IN ILLUSTRATION

*1	Parking Brake Equalizer
*2	No. 2 Parking Brake Cable Assembly
	No. 3 Parking

*3	Brake Cable Assembly
*4	No. 4 Parking Brake Cable Assembly

d. Connect the No. 2 parking brake cable assembly to the parking brake equalizer.

9. **INSTALL NO. 4 CROSS MEMBER FLOOR REINFORCEMENT SUB-ASSEMBLY**

a. Install the No. 4 cross member floor reinforcement sub-assembly with the 8 bolts.

Torque: 19 N*m (189 kgf*cm, 14 ft.*lbf)

b. Install the floor carpet.

c. Engage the guide to connect the fuel lid lock open lever sub-assembly as shown in the illustration.

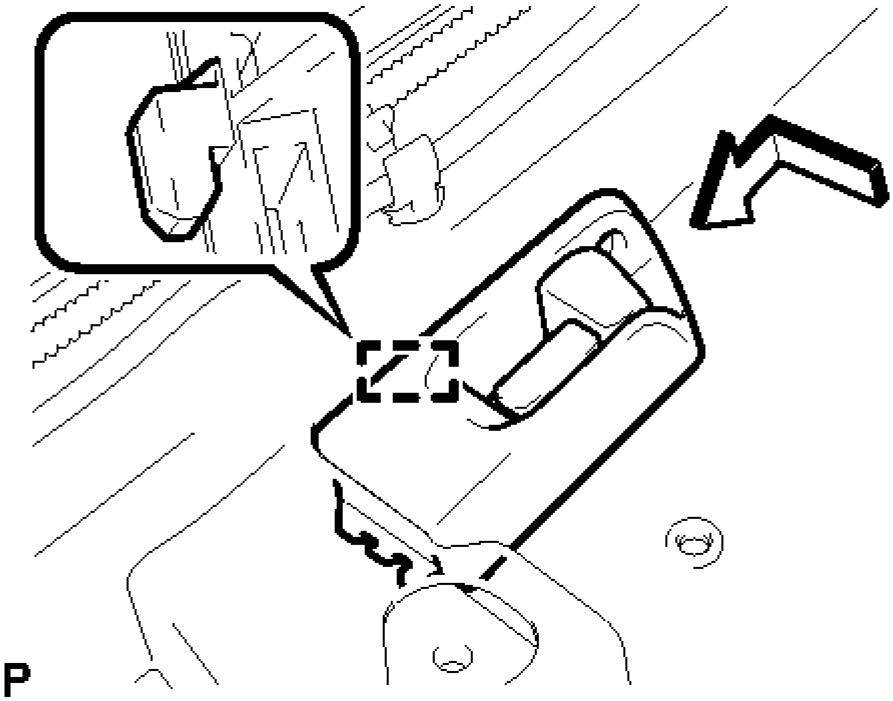

Fig. 37: Identifying Fuel Lid Lock Open Lever Guide
Courtesy of TOYOTA MOTOR SALES, U.S.A., INC.

d. Install the screw.

10. **INSTALL FLOOR CARPET HOOK** . Refer to **INSTALLATION - Step 16**

11. **INSTALL DCM (TELEMATICS TRANSCEIVER) WITH BACK-UP BATTERY (w/ Manual (SOS) Switch)** . Refer to **INSTALLATION - Step 4**

12. **INSTALL AUDIO AMPLIFIER COVER (w/ Manual (SOS) Switch)** . Refer to **INSTALLATION - Step 5**
13. **INSTALL STEREO COMPONENT AMPLIFIER ASSEMBLY WITH BRACKET (for 10 Speakers)** . Refer to **INSTALLATION - Step 4**
14. **INSTALL AUDIO AMPLIFIER COVER (for 10 Speakers)** . Refer to **INSTALLATION - Step 5**
15. **INSTALL FRONT SEAT ASSEMBLY LH**
    - for Manual Seat: Refer to **INSTALLATION**
    - for Power Seat: Refer to **INSTALLATION**
16. **INSTALL FRONT SEAT ASSEMBLY RH**

    HINT:

    Use the same procedure as for the LH side.

17. **INSTALL CENTER PILLAR LOWER GARNISH LH** . Refer to **INSTALLATION - Step 23**
18. **CONNECT FRONT SEAT OUTER BELT ASSEMBLY LH** . Refer to **INSTALLATION - Step 6**
19. **INSTALL LAP BELT OUTER ANCHOR COVER (for LH Side)** . Refer to **INSTALLATION - Step 7**
20. **INSTALL REAR DOOR OPENING TRIM WEATHERSTRIP LH** . Refer to **INSTALLATION - Step 26**
21. **INSTALL REAR DOOR SCUFF PLATE LH** . Refer to **INSTALLATION - Step 27**
22. **INSTALL CENTER PILLAR LOWER GARNISH RH** . Refer to **INSTALLATION - Step 30**
23. **CONNECT FRONT SEAT OUTER BELT ASSEMBLY RH** . Refer to **INSTALLATION - Step 31**
24. **INSTALL LAP BELT OUTER ANCHOR COVER (for RH Side)** . Refer to **INSTALLATION - Step 32**
25. **INSTALL REAR DOOR OPENING TRIM WEATHERSTRIP RH** . Refer to **INSTALLATION - Step 33**
26. **INSTALL REAR DOOR SCUFF PLATE RH** . Refer to **INSTALLATION - Step 34**
27. **INSTALL NO. 1 PARKING BRAKE CABLE ASSEMBLY**
    a. Pass the No. 1 parking brake cable assembly through the parking brake pedal assembly.
    b. Install the clip to the No. 1 parking brake cable assembly.
    c. Temporarily install the adjusting nut.
    d. Bend the parking brake pedal claw.

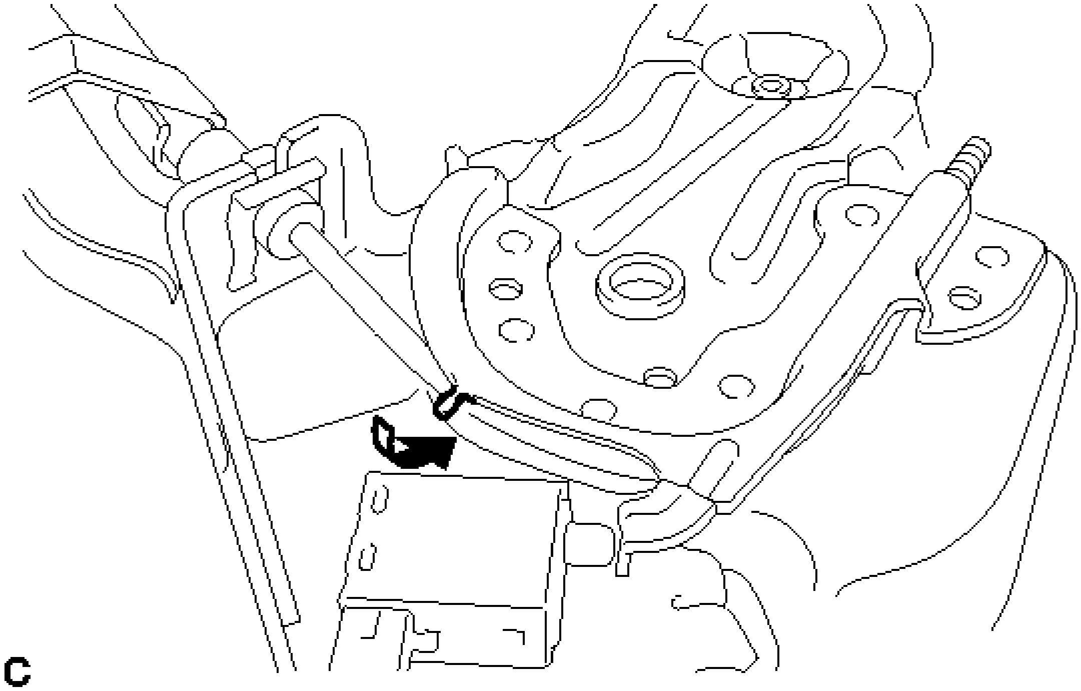

Fig. 38: Bending Parking Brake Pedal Claw
Courtesy of TOYOTA MOTOR SALES, U.S.A., INC.

28. **INSTALL PARKING BRAKE CONTROL PEDAL ASSEMBLY**

    Refer to **INSTALLATION**

PARKING BRAKE ASSEMBLY

COMPONENTS

ILLUSTRATION

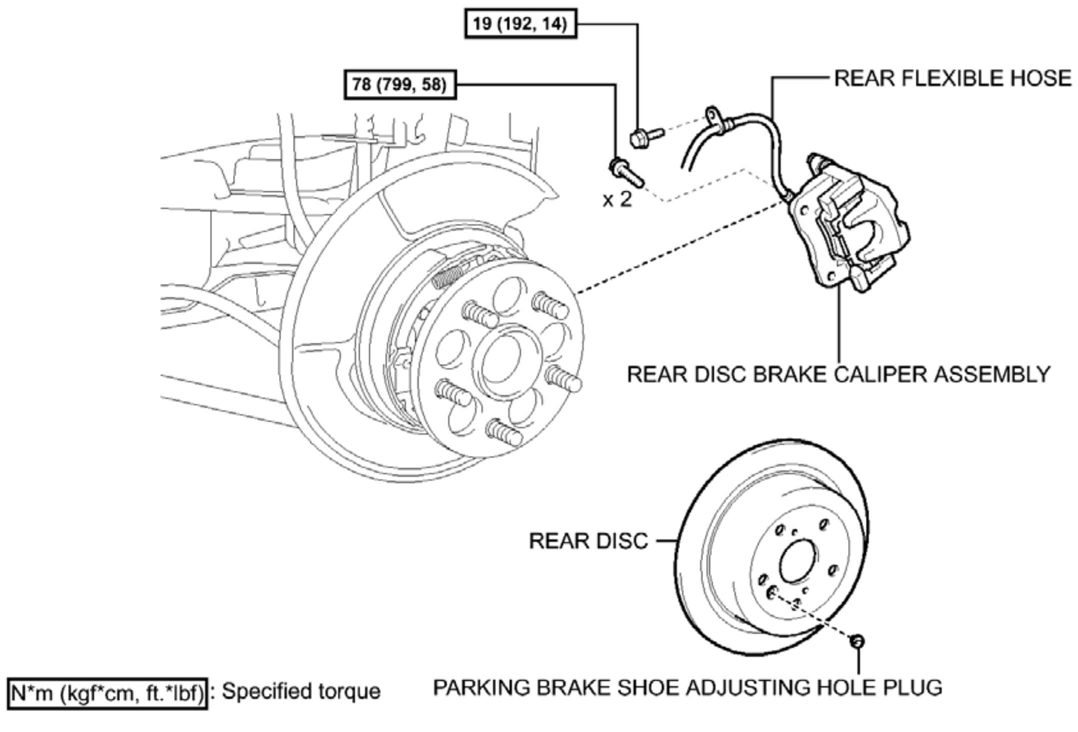
19 (192, 14)
78 (799, 58)
REAR FLEXIBLE HOSE
x 2
REAR DISC BRAKE CALIPER ASSEMBLY
REAR DISC
N*m (kgf*cm, ft.*lbf): Specified torque
PARKING BRAKE SHOE ADJUSTING HOLE PLUG
c

Fig. 39: Identifying Parking Brake Assembly Replacement Components With Torque Specifications (1 Of 3)

Courtesy of TOYOTA MOTOR SALES, U.S.A., INC.

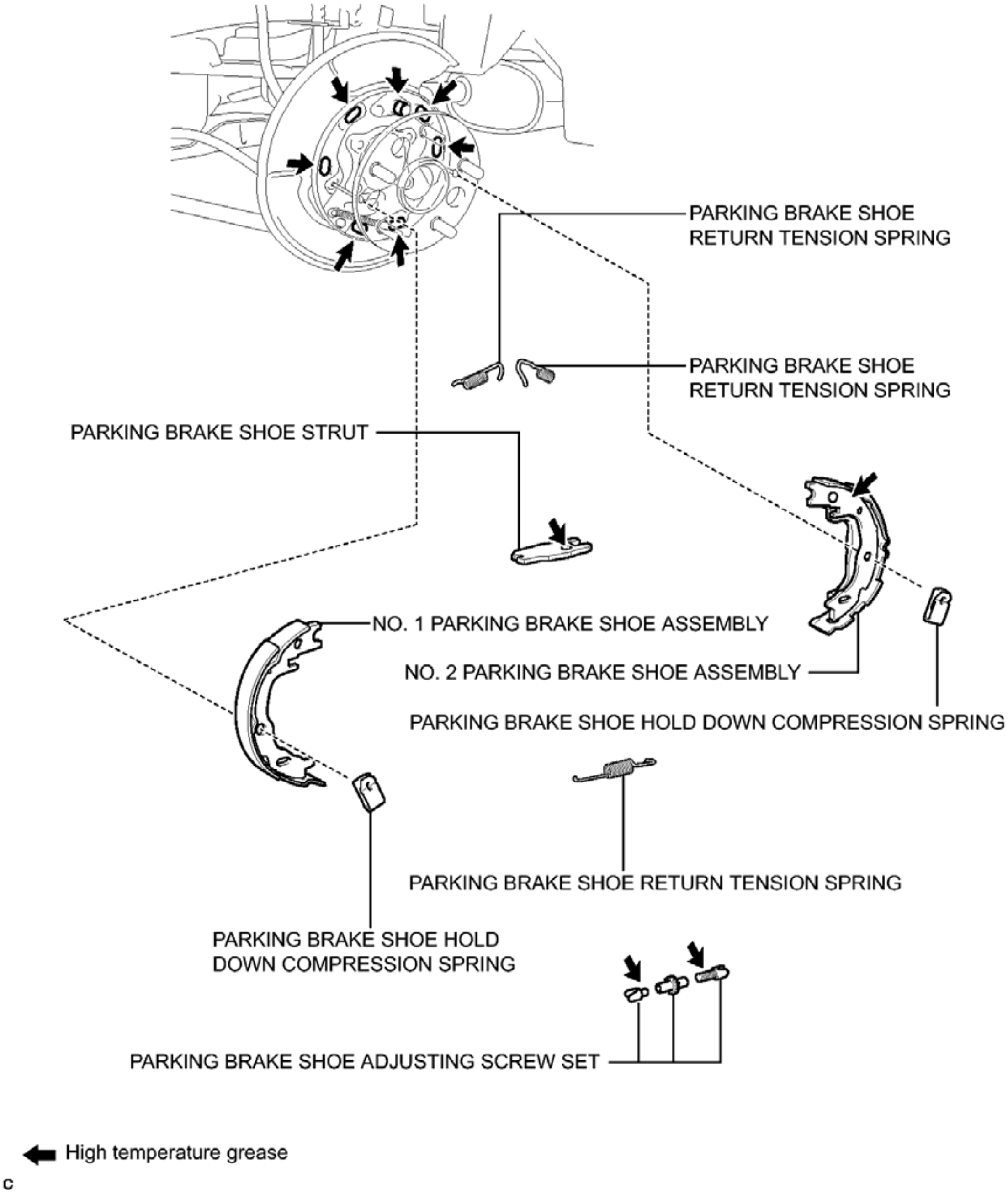
PARKING BRAKE SHOE RETURN TENSION SPRING
PARKING BRAKE SHOE RETURN TENSION SPRING
PARKING BRAKE SHOE STRUT
NO. 1 PARKING BRAKE SHOE ASSEMBLY
NO. 2 PARKING BRAKE SHOE ASSEMBLY
PARKING BRAKE SHOE HOLD DOWN COMPRESSION SPRING
PARKING BRAKE SHOE RETURN TENSION SPRING
PARKING BRAKE SHOE HOLD DOWN COMPRESSION SPRING
PARKING BRAKE SHOE ADJUSTING SCREW SET
High temperature grease
c

Fig. 40: Identifying Parking Brake Assembly Replacement Components (2 Of 3)
Courtesy of TOYOTA MOTOR SALES, U.S.A., INC.

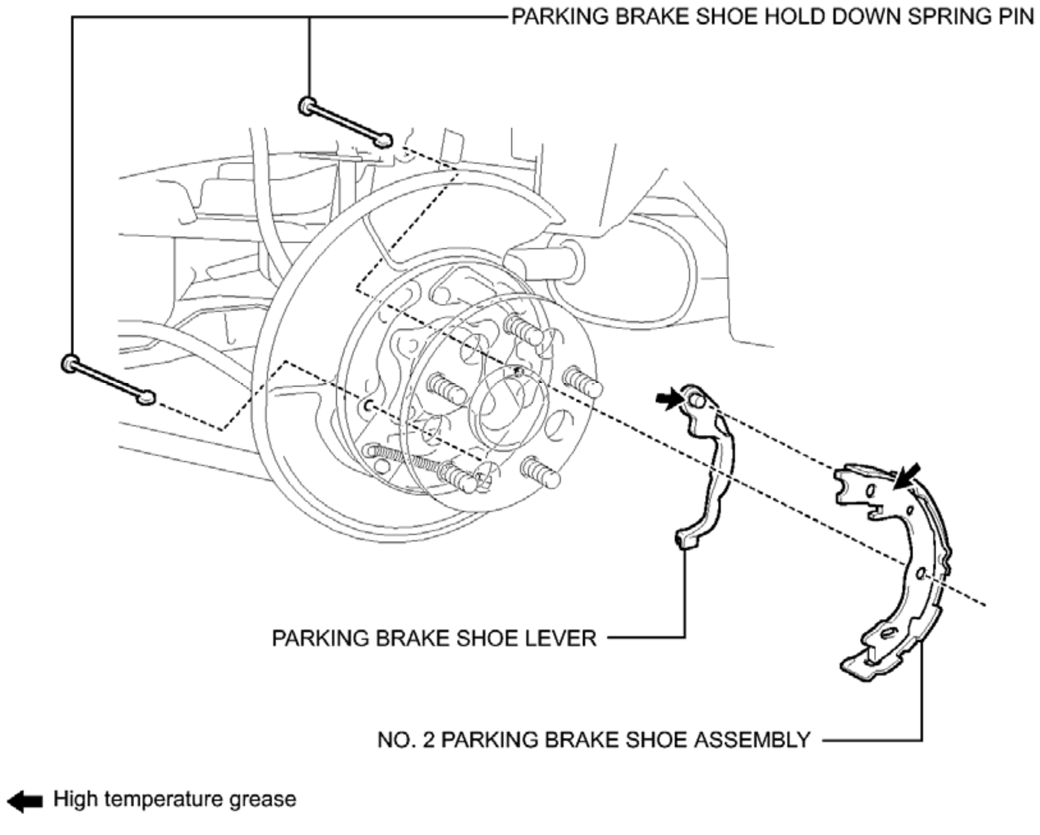
PARKING BRAKE SHOE HOLD DOWN SPRING PIN
PARKING BRAKE SHOE LEVER
NO. 2 PARKING BRAKE SHOE ASSEMBLY
High temperature grease
c

Fig. 41: Identifying Parking Brake Assembly Replacement Components (3 Of 3)
Courtesy of TOYOTA MOTOR SALES, U.S.A., INC.

DISASSEMBLY

DISASSEMBLY

NOTE:

- **When the brake pedal is first depressed after replacing the brake pads or pushing back the disc brake piston, DTC C1214 may be output. As there is no malfunction, clear the DTC.**
- **While the auxiliary battery is connected, even if the power switch is off, the brake control system activates when the brake pedal is depressed or the door courtesy switch is turned on. Therefore, even if only brake pads are to be removed and installed, be sure to perform the Disable Brake Control procedure and disconnect the cable from the negative (-) terminal of the auxiliary battery before beginning work.**

HINT:

- Use the same procedure for the RH side and LH side.
- The following procedure is for the LH side.

1. **PRECAUTION**

NOTE: **After turning the power switch off, waiting time may be required before disconnecting the cable from the negative (-) auxiliary battery terminal, Therefore, make sure to read the disconnecting the cable from the negative (-) auxiliary battery terminal notice before proceeding with work. Refer to PRECAUTION .**

2. **DISABLE BRAKE CONTROL** . Refer to **REMOVAL - Step 2**
3. **REMOVE REAR WHEEL**
4. **SEPARATE REAR DISC BRAKE CALIPER ASSEMBLY** . Refer to **REPLACEMENT - Step 4**
5. **REMOVE PARKING BRAKE SHOE ADJUSTING HOLE PLUG**
6. **REMOVE REAR DISC** . Refer to **REMOVAL - Step 16**
7. **REMOVE PARKING BRAKE SHOE RETURN TENSION SPRING (for Front Side)**
    a. Remove the parking brake shoe return tension spring.

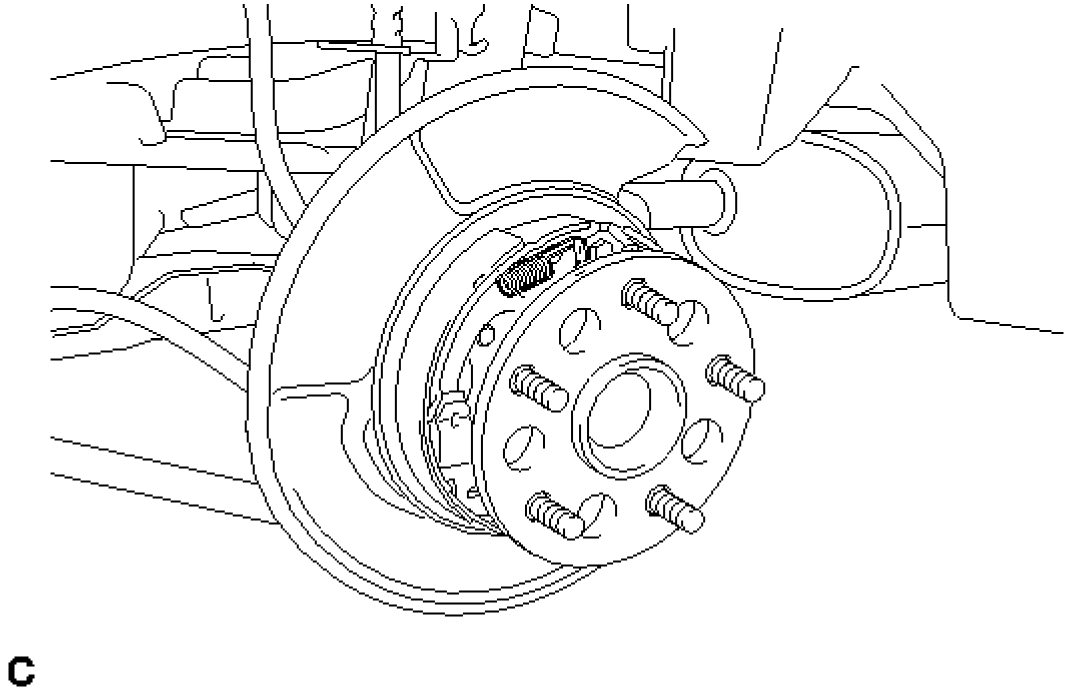

Fig. 42: Identifying Parking Brake Shoe Return Tension Spring
Courtesy of TOYOTA MOTOR SALES, U.S.A., INC.

8. **REMOVE PARKING BRAKE SHOE RETURN TENSION SPRING (for Rear Side)**
    a. Remove the parking brake shoe return tension spring.

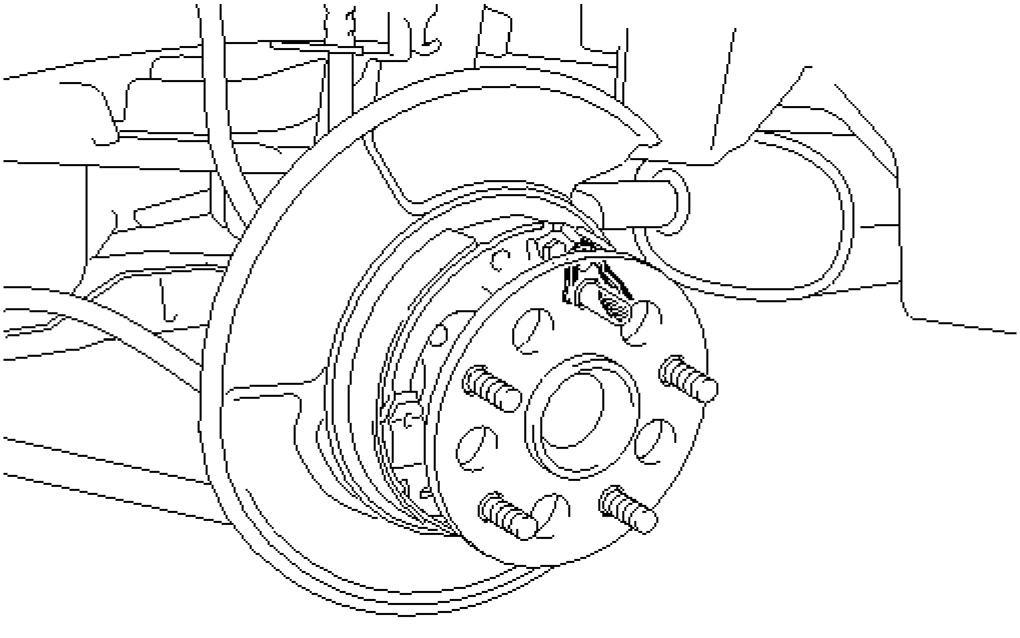

Fig. 43: Identifying Parking Brake Shoe Return Tension Spring
Courtesy of TOYOTA MOTOR SALES, U.S.A., INC.

9. **REMOVE PARKING BRAKE SHOE HOLD DOWN COMPRESSION SPRING (for Front Side)**
   a. Using SST, remove the parking brake shoe hold down compression spring.

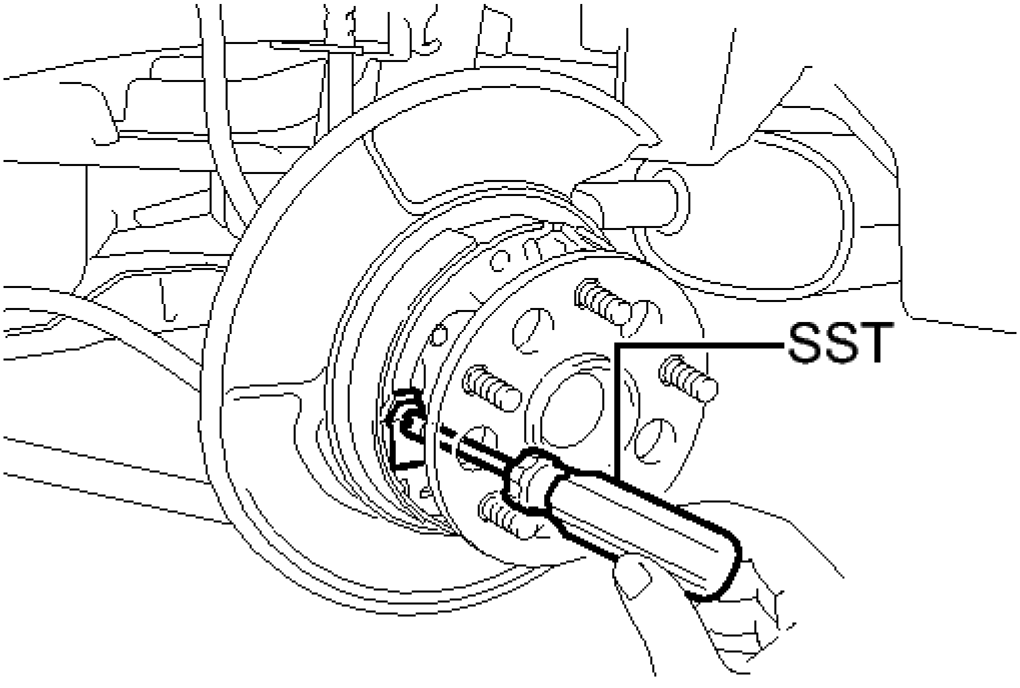

Fig. 44: Removing Parking Brake Shoe Hold Down Compression Spring

Courtesy of TOYOTA MOTOR SALES, U.S.A., INC.

- **SST: 09718-00011**

10. **REMOVE PARKING BRAKE SHOE STRUT**
    a. Pull the No. 1 parking brake shoe assembly towards the front of the vehicle by hand as shown in the illustration.

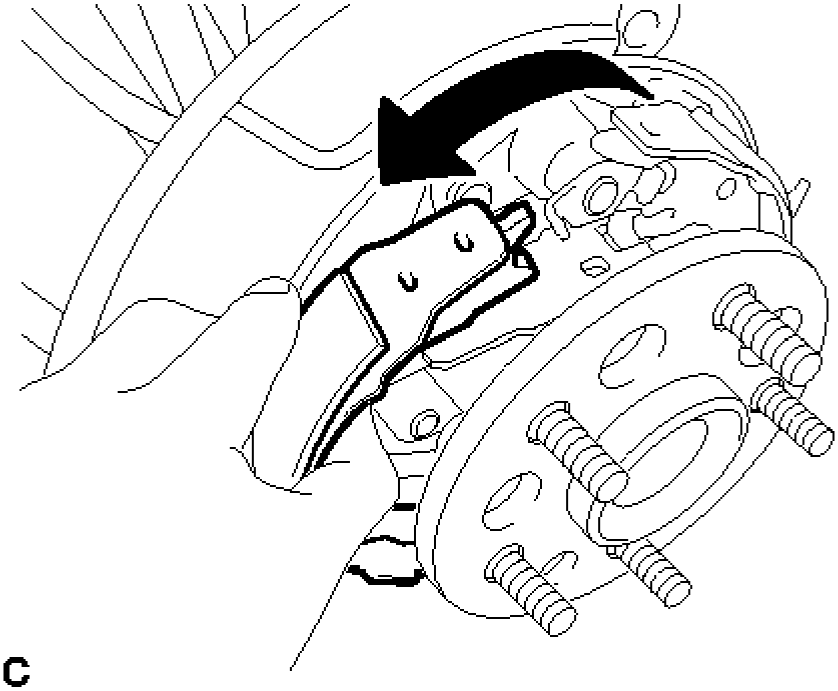

Fig. 45: Pulling No. 1 Parking Brake Shoe Assembly
Courtesy of TOYOTA MOTOR SALES, U.S.A., INC.

    b. Remove the parking brake shoe strut.

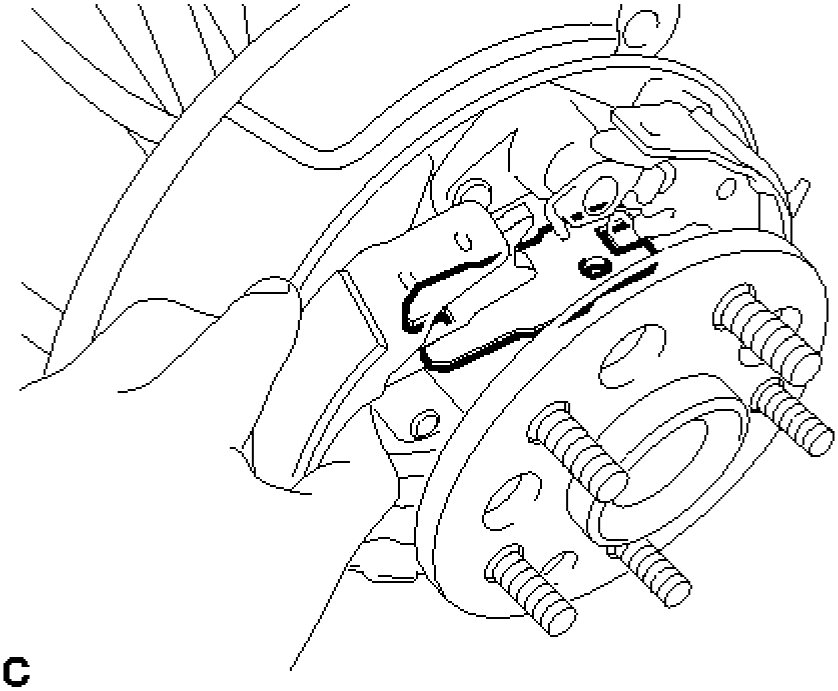

Fig. 46: Identifying Parking Brake Shoe Strut
Courtesy of TOYOTA MOTOR SALES, U.S.A., INC.

11. **REMOVE PARKING BRAKE SHOE HOLD DOWN COMPRESSION SPRING (for Rear Side)**
    a. Using SST, remove the parking brake shoe hold down compression spring.

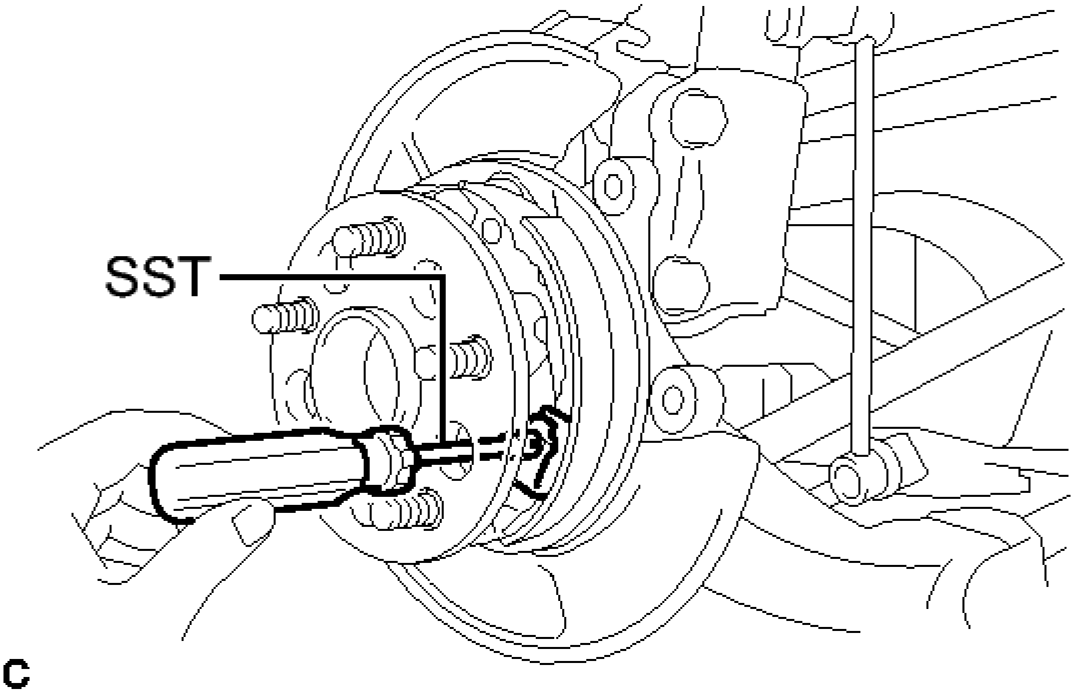

Fig. 47: Removing Parking Brake Shoe Hold Down Compression Spring

Courtesy of TOYOTA MOTOR SALES, U.S.A., INC.

- **SST: 09718-00011**

12. **SEPARATE PARKING BRAKE SHOE LEVER**
    1. Expand the No. 1 and No. 2 parking brake shoe assemblies outward by hand and pull downward to separate them from the parking brake plate.

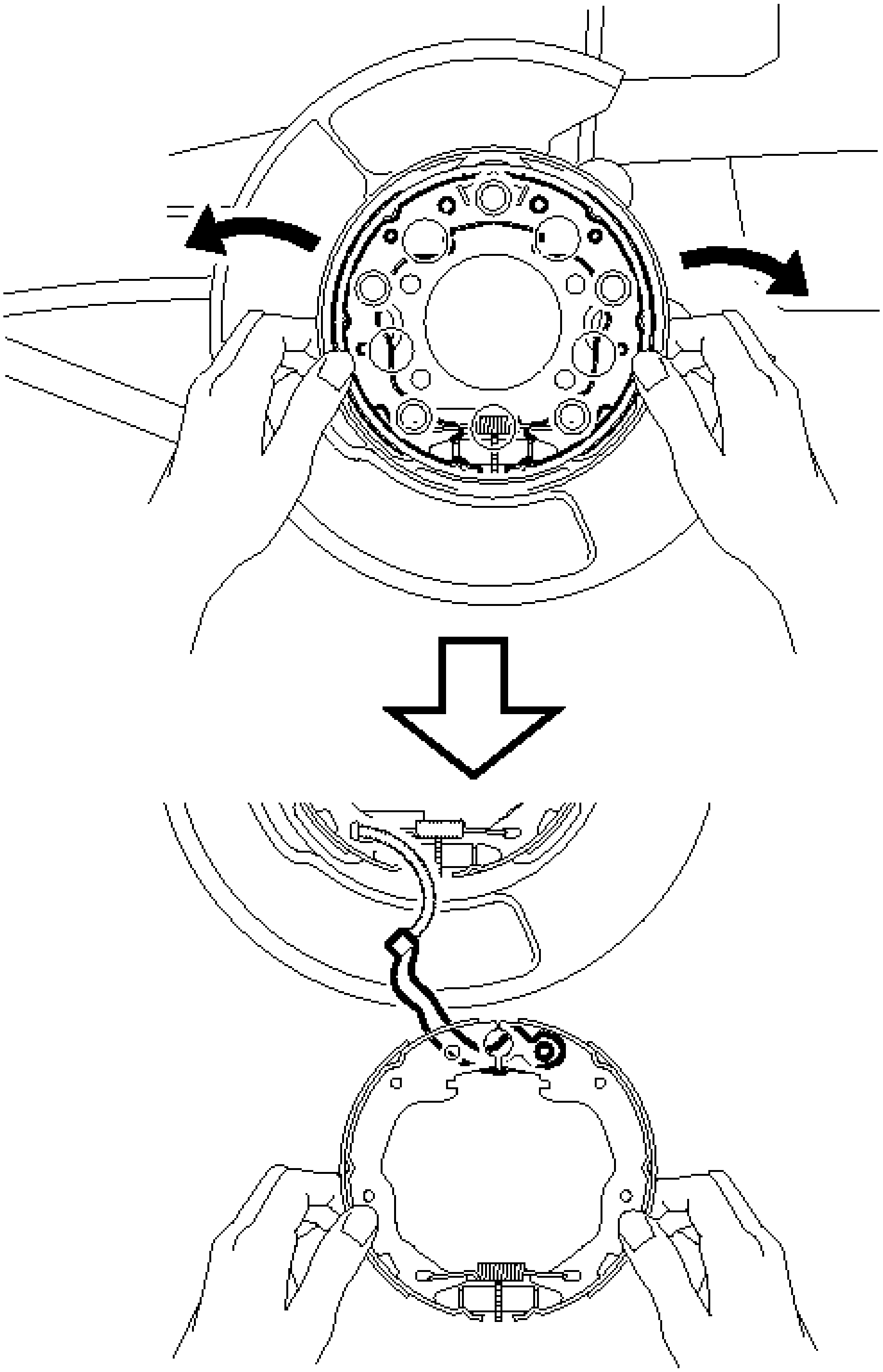

Fig. 48: Separating Parking Brake Shoe Lever
Courtesy of TOYOTA MOTOR SALES, U.S.A., INC.

b. Separate the parking brake shoe lever from the No. 2 parking brake shoe assembly.

13. **REMOVE PARKING BRAKE SHOE ADJUSTING SCREW SET**

a. Remove the parking brake shoe adjusting screw set.

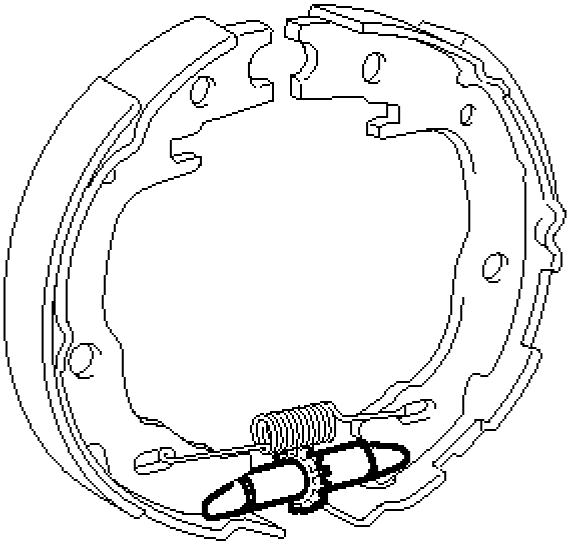

Fig. 49: Identifying Parking Brake Shoe Adjusting Screw Set
Courtesy of TOYOTA MOTOR SALES, U.S.A., INC.

14. REMOVE NO. 1 PARKING BRAKE SHOE ASSEMBLY

a. Remove the No. 1 parking brake shoe assembly.

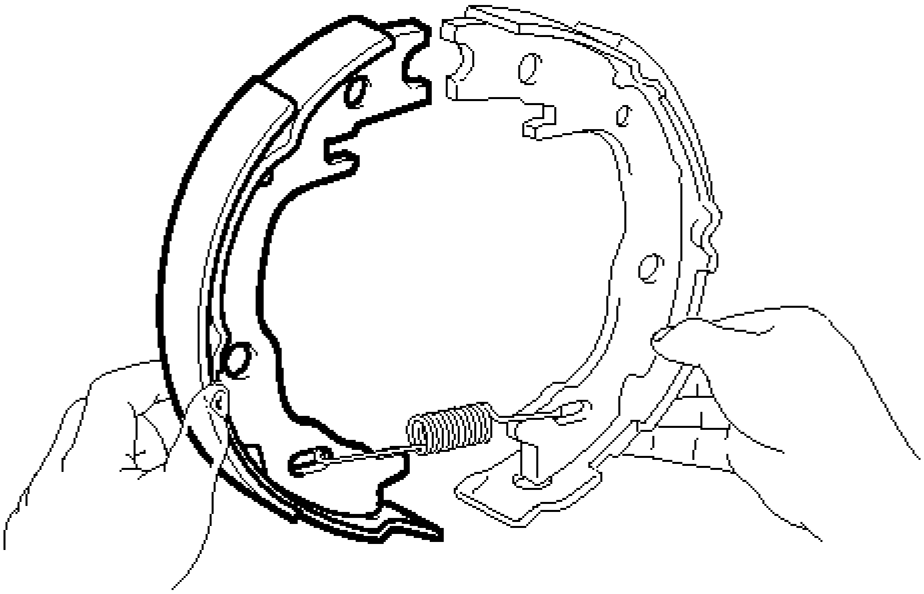

Fig. 50: Identifying No. 1 Parking Brake Shoe
Courtesy of TOYOTA MOTOR SALES, U.S.A., INC.

15. **REMOVE PARKING BRAKE SHOE RETURN TENSION SPRING (for Lower Side)**
    a. Remove the parking brake shoe return tension spring.

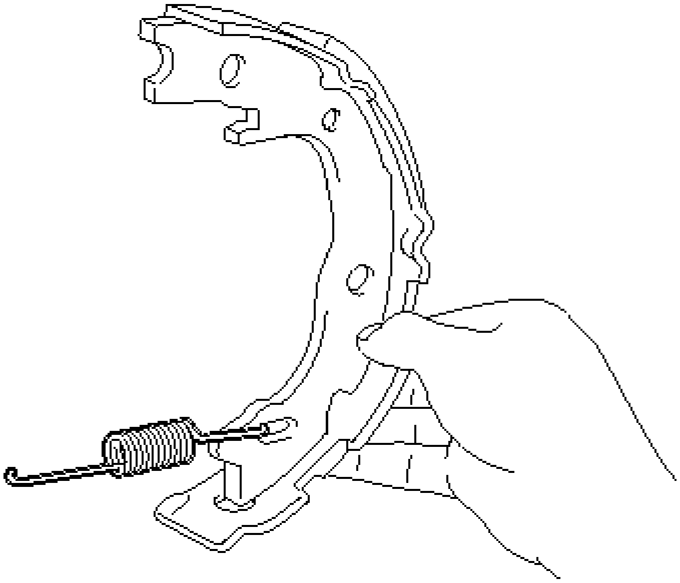

Fig. 51: Identifying Parking Brake Shoe Return Tension Spring

Courtesy of TOYOTA MOTOR SALES, U.S.A., INC.

16. **REMOVE PARKING BRAKE SHOE LEVER**
    a. Using needle-nose pliers, remove the parking brake shoe lever from the No. 3 parking brake cable assembly as shown in the illustration.

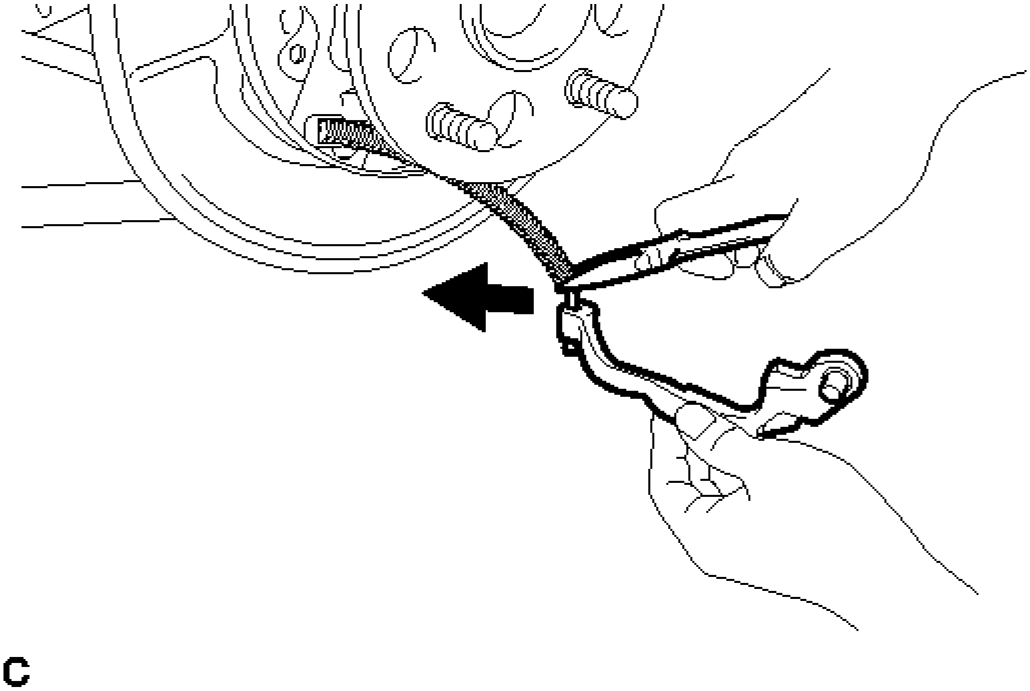

Fig. 52: Removing Parking Brake Shoe Lever From The No. 3 Parking Brake Cable
Courtesy of TOYOTA MOTOR SALES, U.S.A., INC.

17. **REMOVE PARKING BRAKE SHOE HOLD DOWN SPRING PIN**
    a. Remove the parking brake shoe hold down spring pin (for front side).

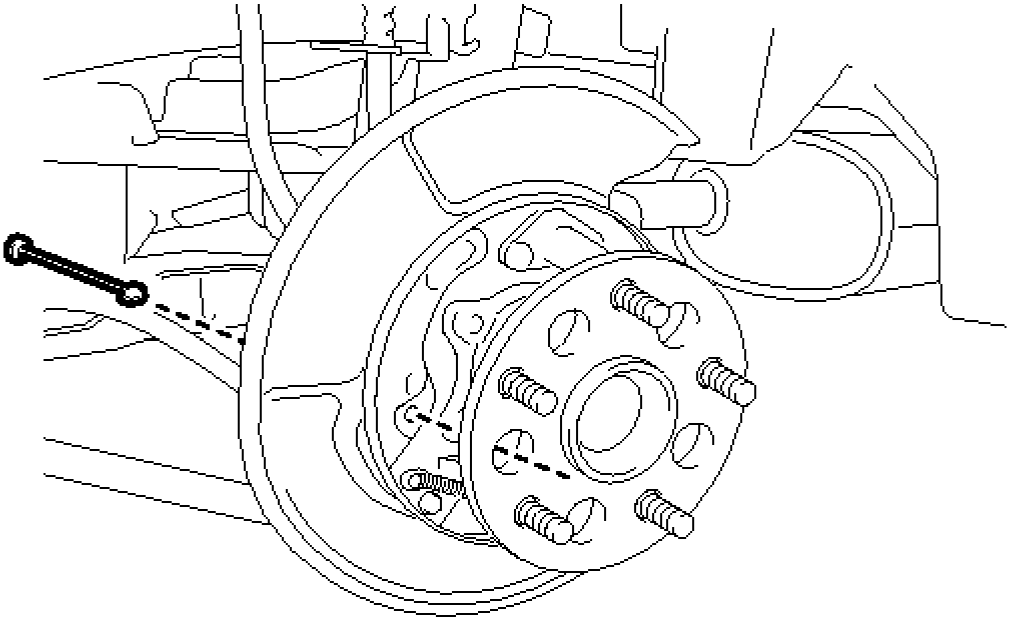

Fig. 53: Identifying Parking Brake Shoe Hold Down Spring Pin
Courtesy of TOYOTA MOTOR SALES, U.S.A., INC.

b. Remove the parking brake shoe hold down spring pin (for rear side).

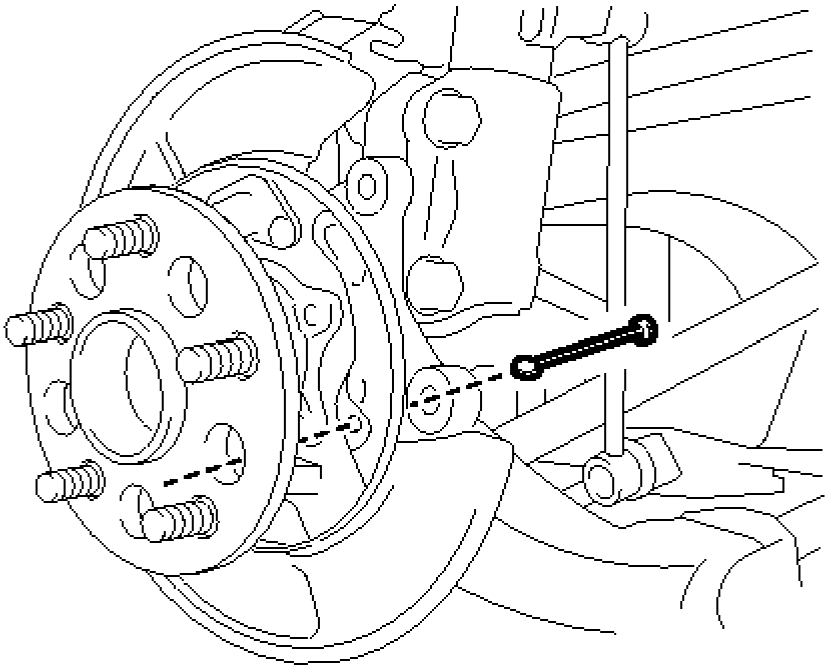

Fig. 54: Identifying Parking Brake Shoe Hold Down Spring Pin
Courtesy of TOYOTA MOTOR SALES, U.S.A., INC.

INSPECTION

INSPECTION

1. **INSPECT BRAKE DISC INSIDE DIAMETER**
    a. Using a brake drum gauge or an equivalent tool, measure the inside diameter of the disc.

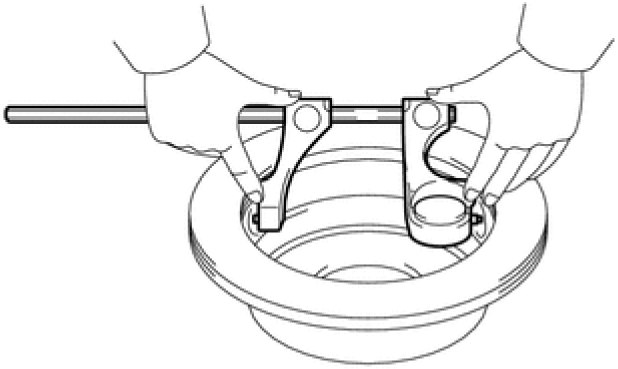

P

Fig. 55: Measuring Inside Diameter Of Disc
Courtesy of TOYOTA MOTOR SALES, U.S.A., INC.

Standard inside diameter

173 mm (6.81 in.)

Maximum inside diameter

174 mm (6.85 in.)

If the inside diameter is more than the maximum, replace the rear disc.

2. **INSPECT PARKING BRAKE SHOE LINING THICKNESS**
    a. Using a ruler, measure the thickness of the parking brake shoe lining.

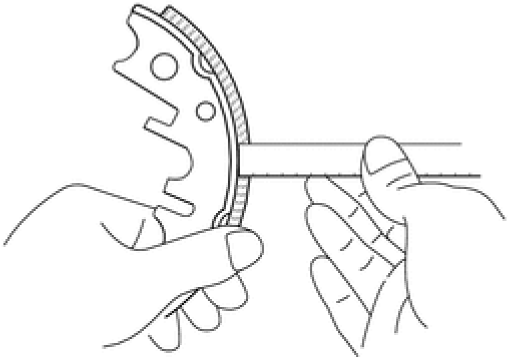

C

Fig. 56: Measuring Thickness Of Parking Brake Shoe Lining
Courtesy of TOYOTA MOTOR SALES, U.S.A., INC.

Standard thickness

3.35 mm (0.131 in.)

Minimum thickness

1.0 mm (0.0394 in.)

If the lining thickness is less than the minimum, or if there is severe or uneven wear, replace the parking brake shoe assembly.

NOTE: **Always replace both right and left parking brake shoes together.**

3. **INSPECT BRAKE DISC AND PARKING BRAKE SHOE LINING FOR PROPER CONTACT**
   a. Apply chalk to the inside surface of the disc, then slide the brake shoe against the disc to check the fit of the brake shoe lining to the disc.

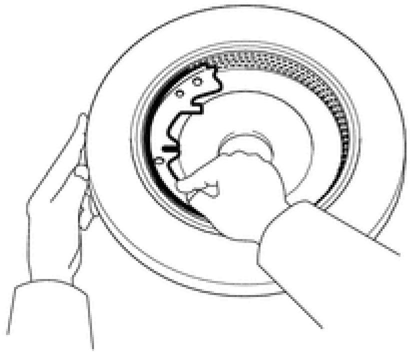

Fig. 57: Applying Chalk To Inside Surface Of Disc
Courtesy of TOYOTA MOTOR SALES, U.S.A., INC.

If the contact between the disc and the brake shoe lining is incorrect, repair it using a brake shoe grinder or replace the parking brake shoe assembly.

NOTE:

- **Always replace both right and left parking brake shoes together.**
- **Wipe off the chalk after inspection.**

REASSEMBLY

REASSEMBLY

1. **APPLY HIGH TEMPERATURE GREASE**

    a. Apply high temperature grease to the areas of the parking brake plate which make contact with the shoe as shown in the illustration.

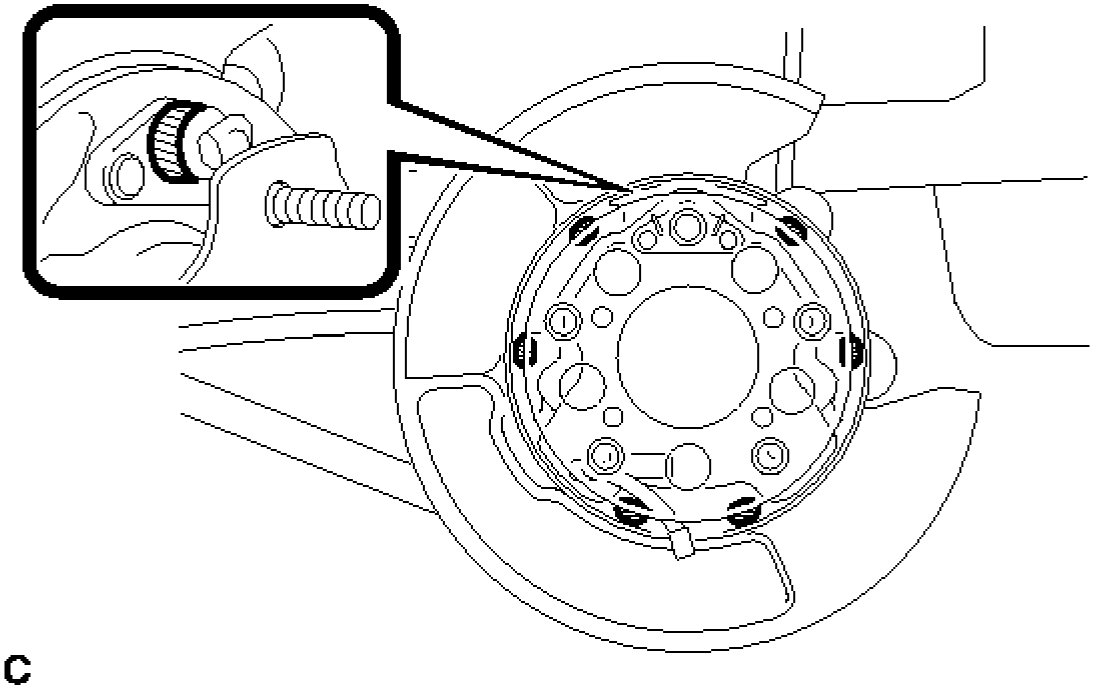

Fig. 58: Identifying High Temperature Grease Application Area
Courtesy of TOYOTA MOTOR SALES, U.S.A., INC.

TEXT IN ILLUSTRATION

High Temperature Grease

2. **INSTALL PARKING BRAKE SHOE HOLD DOWN SPRING PIN**
    a. Install the 2 parking brake shoe hold down spring pins.
3. **INSTALL PARKING BRAKE SHOE RETURN TENSION SPRING (for Lower Side)**
    a. Install the parking brake shoe return tension spring to the No. 2 parking brake shoe assembly.
4. **INSTALL NO. 1 PARKING BRAKE SHOE ASSEMBLY**
    a. Install the No. 1 parking brake shoe assembly to the parking brake shoe return tension spring.
5. **INSTALL PARKING BRAKE SHOE ADJUSTING SCREW SET**
    a. Apply high temperature grease to the parking brake shoe adjusting screw set as shown in the illustration.

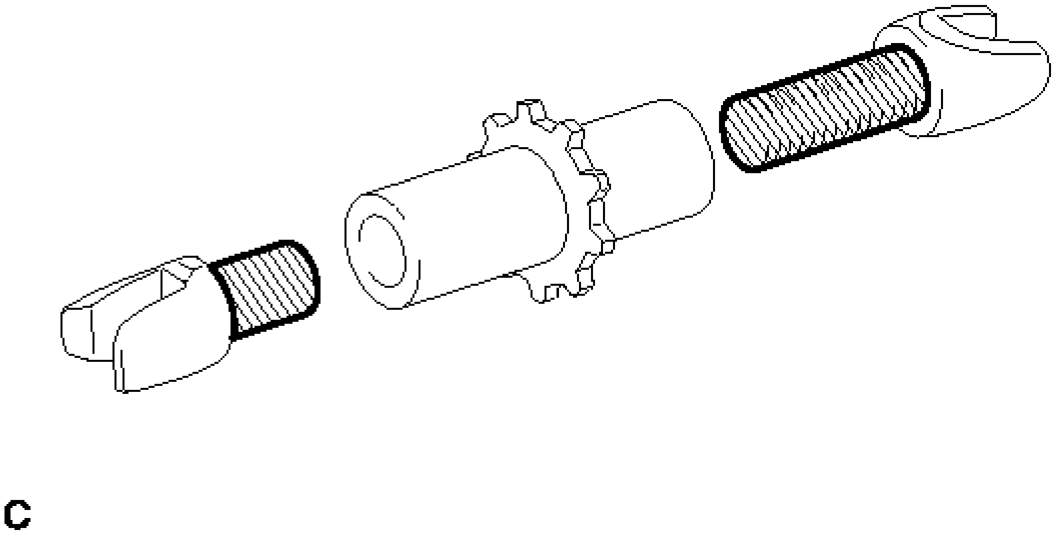

Fig. 59: Installing Parking Brake Shoe Adjusting Screw Set
Courtesy of TOYOTA MOTOR SALES, U.S.A., INC.

TEXT IN ILLUSTRATION

	High Temperature Grease

b. Install the parking brake shoe adjusting screw set to the No. 1 parking brake shoe assembly and No. 2 parking brake shoe assembly.

6. **INSTALL PARKING BRAKE SHOE LEVER**
   a. Using needle-nose pliers, install the parking brake shoe lever to the No. 3 parking brake cable assembly.

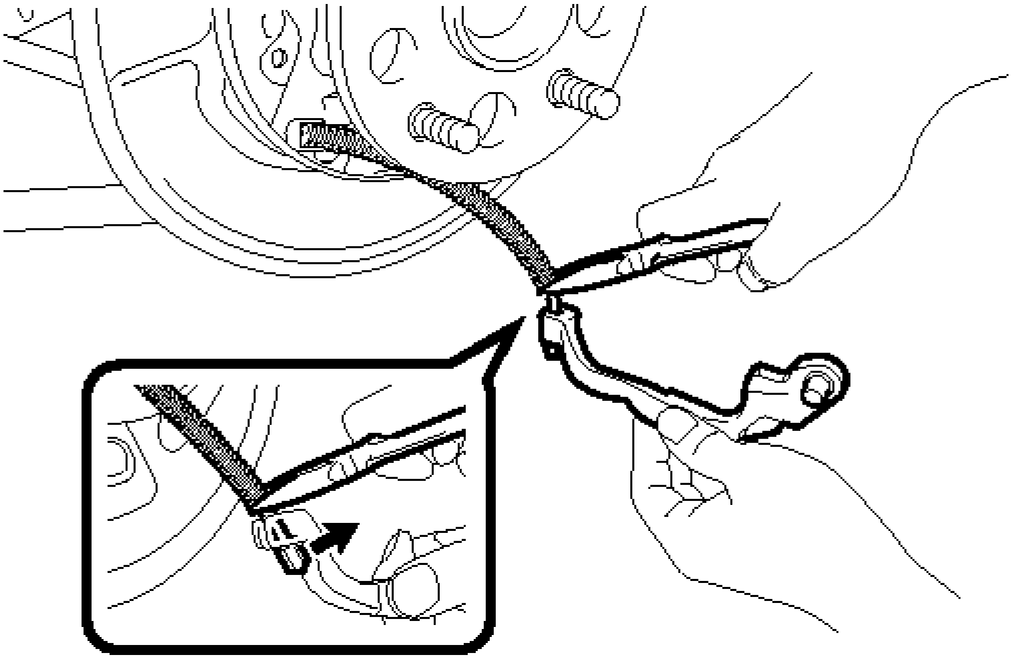

Fig. 60: Installing Parking Brake Shoe Lever From The No. 3 Parking Brake Cable
Courtesy of TOYOTA MOTOR SALES, U.S.A., INC.

b. Apply high temperature grease to the areas of the parking brake shoe lever which make contact with the No. 2 parking brake shoe assembly.

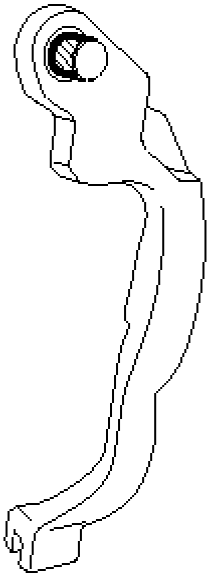

Fig. 61: Identifying High Temperature Grease Application Area

Courtesy of TOYOTA MOTOR SALES, U.S.A., INC.

TEXT IN ILLUSTRATION

	High Temperature Grease

c. Install the parking brake shoe lever to the No. 2 parking brake shoe assembly.

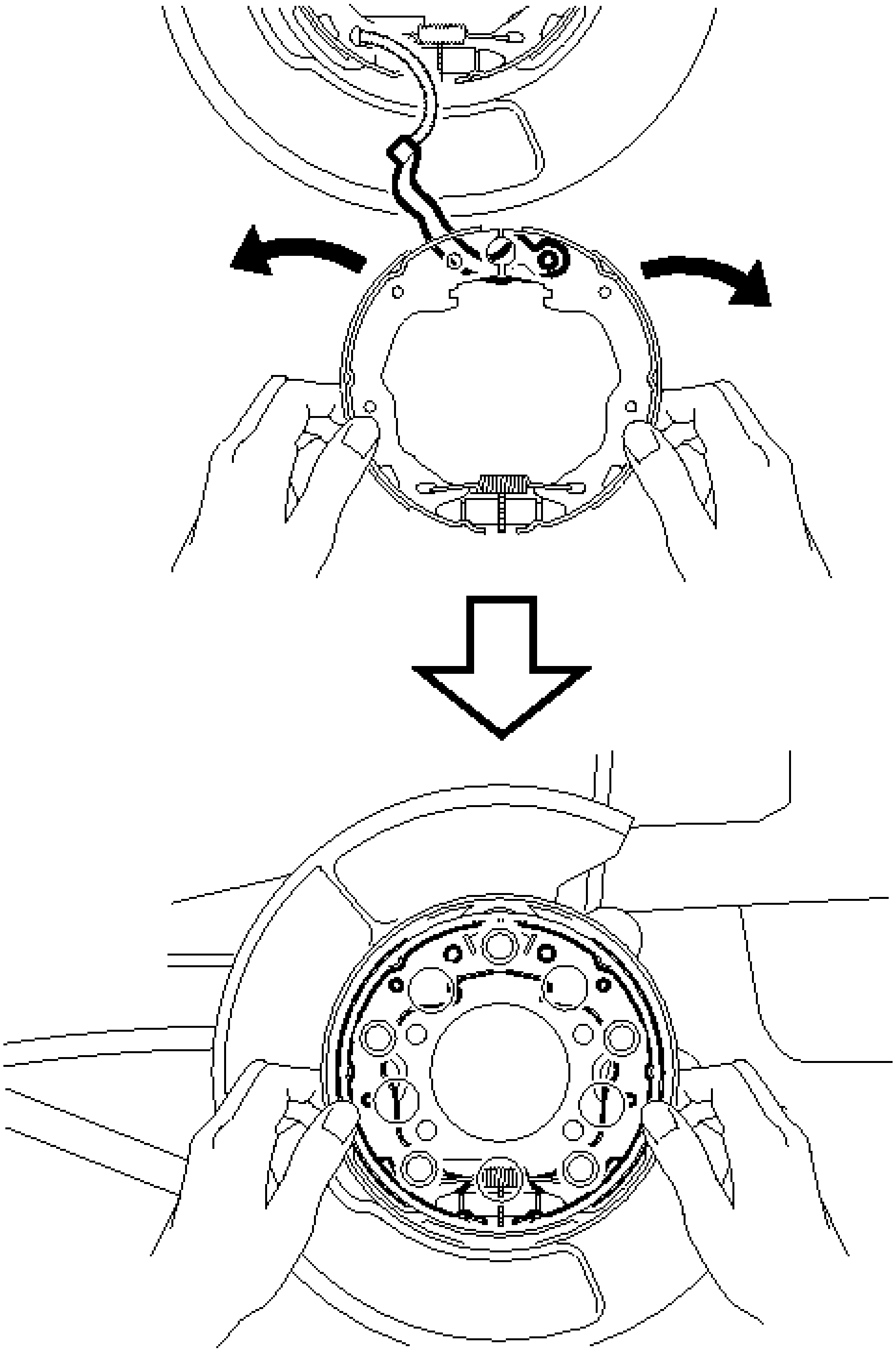

Fig. 62: Installing Parking Brake Shoe Lever
Courtesy of TOYOTA MOTOR SALES, U.S.A., INC.

d. Expand the No. 1 and No. 2 parking brake shoe assemblies outward by hand and fit them to the parking brake plate.

NOTE: Make sure that the parking brake shoe lever does not separate from the No. 2 parking brake shoe assembly.

7. **INSTALL PARKING BRAKE SHOE HOLD DOWN COMPRESSION SPRING (for Rear Side)**
    1. Using SST, install the parking brake shoe hold down compression spring.

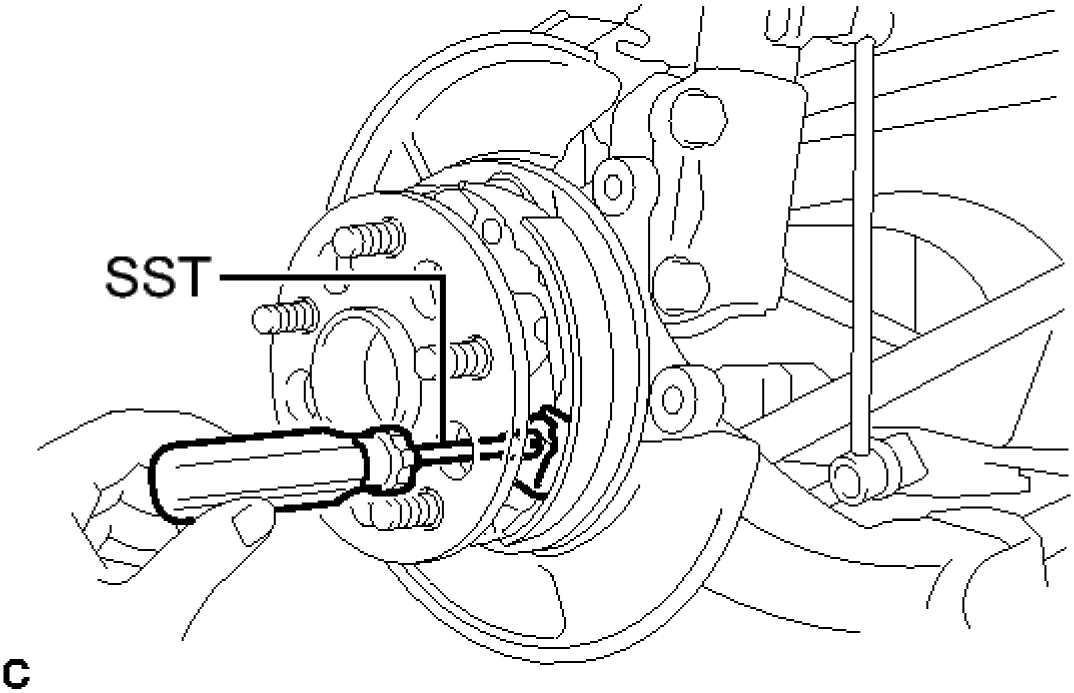

Fig. 63: Installing Parking Brake Shoe Hold Down Compression Spring
Courtesy of TOYOTA MOTOR SALES, U.S.A., INC.

- **SST: 09718-00011**

8. **INSTALL PARKING BRAKE SHOE STRUT**
    1. Install the parking brake shoe strut.
    2. Install the No. 1 parking brake shoe assembly.

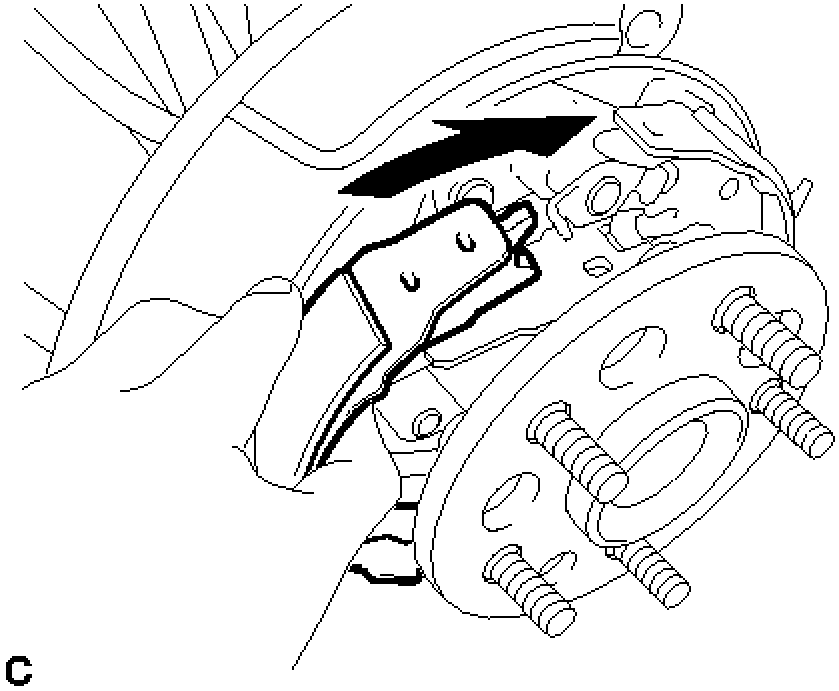

Fig. 64: Installing No. 1 Parking Brake Shoe Assembly
Courtesy of TOYOTA MOTOR SALES, U.S.A., INC.

9. **INSTALL PARKING BRAKE SHOE HOLD DOWN COMPRESSION SPRING (for Front Side)**
   a. Using SST, install the parking brake shoe hold down compression spring.

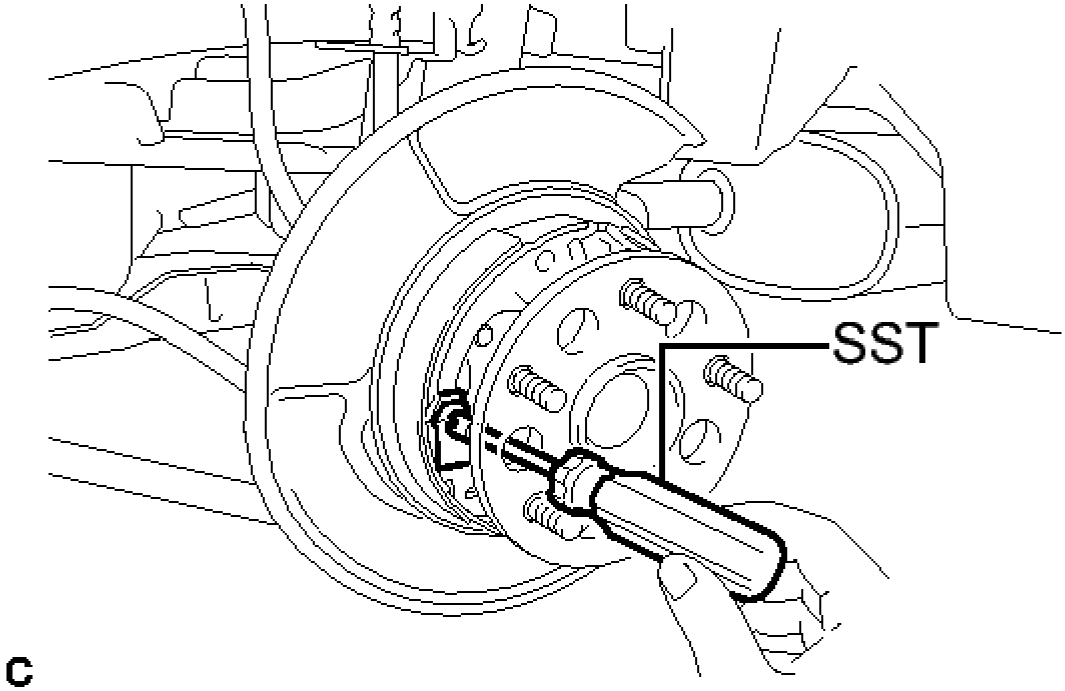

Fig. 65: Installing Parking Brake Shoe Hold Down Compression Spring

Courtesy of TOYOTA MOTOR SALES, U.S.A., INC.

- **SST: 09718-00011**

10. **INSTALL PARKING BRAKE SHOE RETURN TENSION SPRING (for Rear Side)**
    a. Apply a small amount of high temperature grease to the areas shown in the illustration.

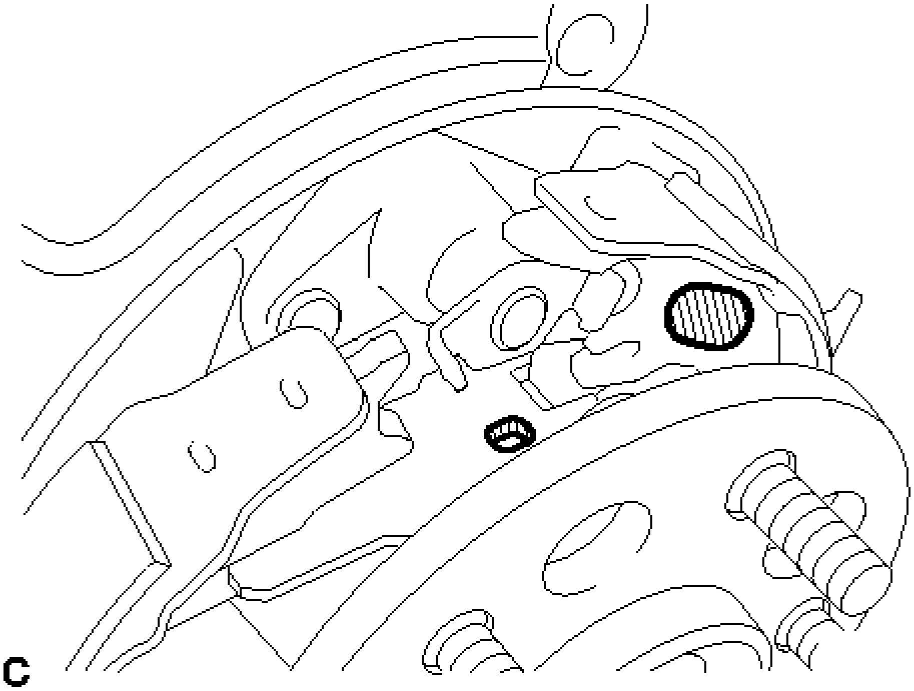

Fig. 66: Identifying High Temperature Grease Application Area
Courtesy of TOYOTA MOTOR SALES, U.S.A., INC.

TEXT IN ILLUSTRATION

▨	High Temperature Grease

    b. Install the parking brake shoe return tension spring.

11. **INSTALL PARKING BRAKE SHOE RETURN TENSION SPRING (for Front Side)**
    a. Install the parking brake shoe return tension spring.
12. **CHECK PARKING BRAKE INSTALLATION**
    a. Check that each part is installed properly.

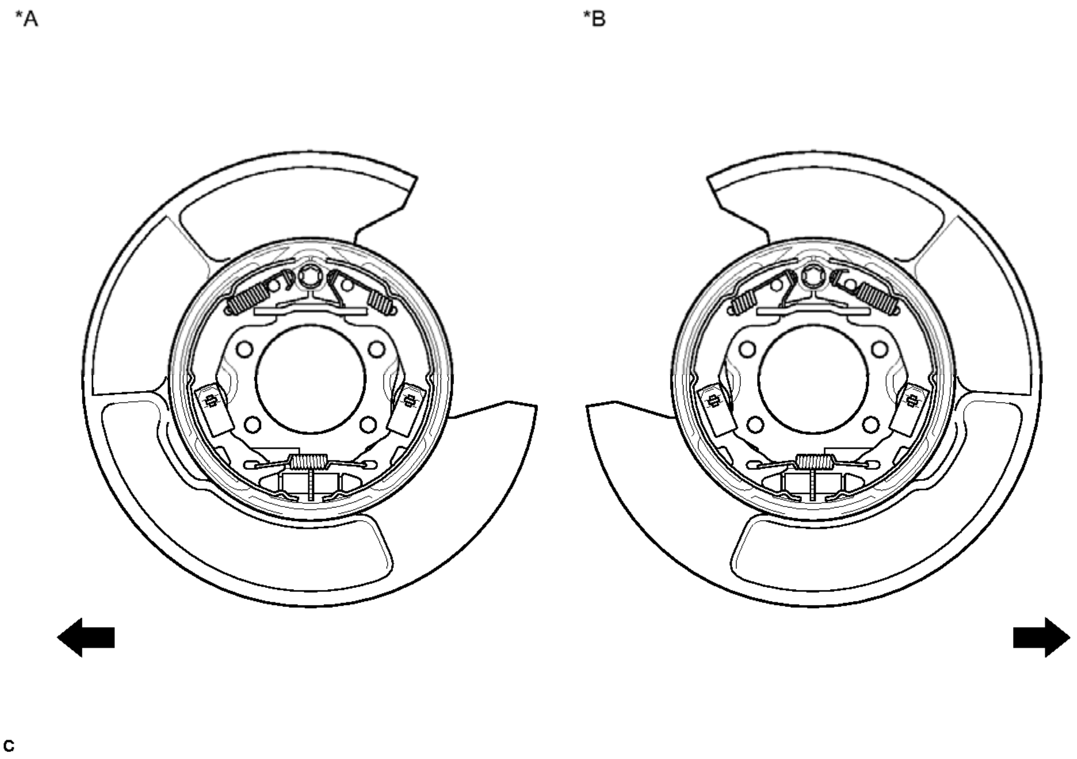

Fig. 67: Checking Parking Brake Installation
Courtesy of TOYOTA MOTOR SALES, U.S.A., INC.

TEXT IN ILLUSTRATION

*A	LH Side	*B	RH Side
	Front of the Vehicle	-	-

NOTE: **There should be no oil or grease on the friction surfaces of the shoe linings or discs.**

13. **INSTALL REAR DISC** . Refer to **INSTALLATION - Step 1**
14. **INSTALL PARKING BRAKE SHOE ADJUSTING HOLE PLUG**
15. **INSTALL REAR DISC BRAKE CALIPER ASSEMBLY** . Refer to **REPLACEMENT - Step 11**
16. **ADJUST PARKING BRAKE SHOE CLEARANCE AND PARKING BRAKE PEDAL TRAVEL** . Refer to **ADJUSTMENT - Step 2**
17. **INSTALL REAR WHEEL**

    Torque: 103 N*m (1049 kgf*cm, 76 ft.*lbf)

18. **CONNECT CABLE TO AUXILIARY BATTERY NEGATIVE TERMINAL**
    1. Connect the cable to the negative (-) auxiliary battery terminal. Refer to **INSTALLATION - Step**

2 .

- b. Connect the reservoir level switch connector.
- c. Clear the DTCs. Refer to **DTC CHECK / CLEAR** .

19. **BED IN PARKING BRAKE SHOES TO DISCS**
    - a. Drive the vehicle at about 50 km/h (31 mph) on a safe, level and dry road.
    - b. Depress the parking brake pedal with 150 N (15 kgf, 33.7 lbf) of force.
    - c. Drive the vehicle for about 400 m (0.25 mile) in this condition.
    - d. Repeat this procedure 3 times.

NOTE: **Set a 5-minute interval between each procedure to prevent the brake assembly from overheating.**

PARKING BRAKE SWITCH

COMPONENTS

ILLUSTRATION

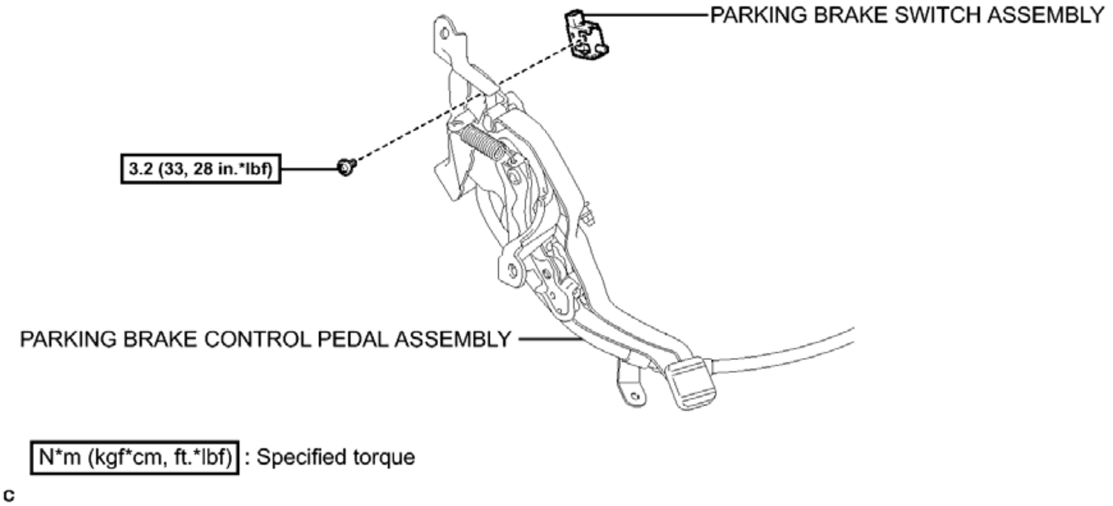
PARKING BRAKE SWITCH ASSEMBLY
3.2 (33, 28 in.*lbf)
PARKING BRAKE CONTROL PEDAL ASSEMBLY
N*m (kgf*cm, ft.*lbf) : Specified torque
c

Fig. 68: Identifying Parking Brake Switch Replacement Components With Torque Specifications
Courtesy of TOYOTA MOTOR SALES, U.S.A., INC.

REMOVAL

REMOVAL

1. **REMOVE PARKING BRAKE CONTROL PEDAL ASSEMBLY**

   Refer to **REMOVAL**

2. **REMOVE PARKING BRAKE SWITCH ASSEMBLY**
    a. Remove the screw and parking brake switch assembly from the parking brake control pedal assembly.

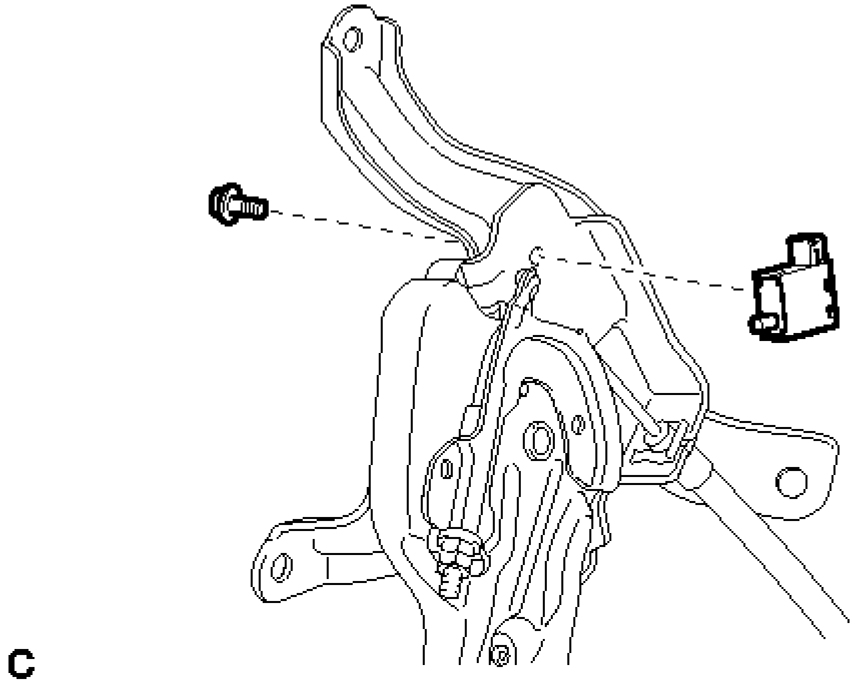

Fig. 69: Identifying Parking Brake Switch Assembly And Screw
Courtesy of TOYOTA MOTOR SALES, U.S.A., INC.

INSPECTION

INSPECTION

1. **INSPECT PARKING BRAKE SWITCH ASSEMBLY**
    a. Measure the resistance between the connector terminal and the nut inside the parking brake switch assembly.

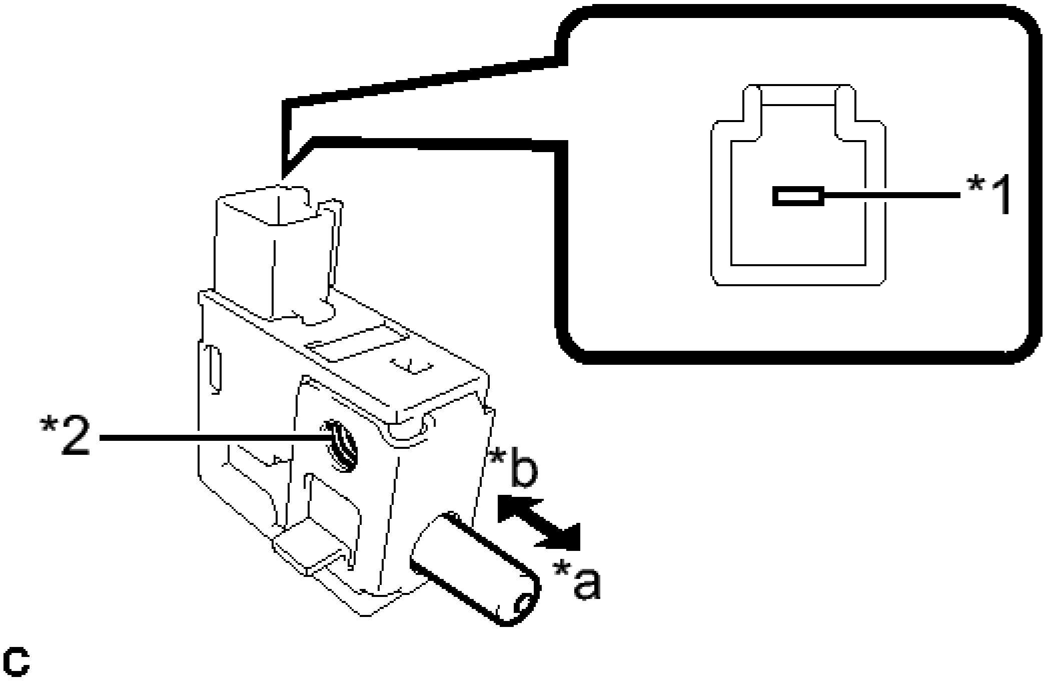

Fig. 70: Inspecting Parking Brake Switch Assembly
Courtesy of TOYOTA MOTOR SALES, U.S.A., INC.

TEXT IN ILLUSTRATION

*1	Terminal
*2	Nut
*a	ON
*b	OFF

STANDARD RESISTANCE

Tester Connection	Switch Condition	Specified Condition
Terminal - Nut	On (When shaft is not pressed)	Below 1 ohms
Terminal - Nut	Off (When shaft is pressed)	10 kohms or higher

If the value is not as specified, replace the parking brake switch assembly.

INSTALLATION

INSTALLATION

1. **INSTALL PARKING BRAKE SWITCH ASSEMBLY**
    1. Install the parking brake switch assembly to the parking brake control pedal assembly with the screw.

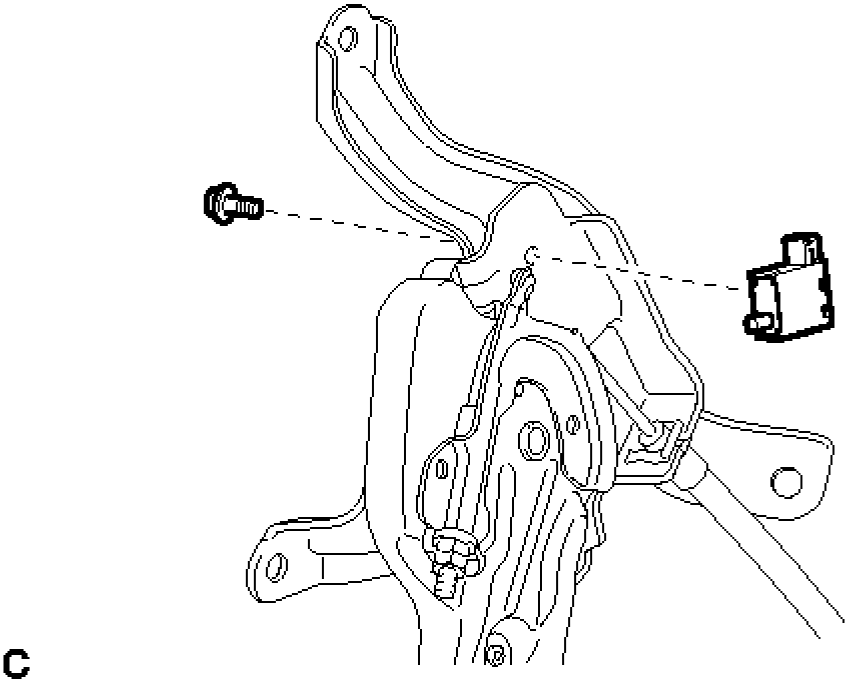

Fig. 71: Identifying Parking Brake Switch Assembly And Screw
Courtesy of TOYOTA MOTOR SALES, U.S.A., INC.

Torque: 3.2 N*m (33 kgf*cm, 28 in.*lbf)

2. **INSTALL PARKING BRAKE CONTROL PEDAL ASSEMBLY**

    Refer to **INSTALLATION**

PARKING BRAKE PEDAL

COMPONENTS

ILLUSTRATION

Fig. 1: Identifying Parking Brake Pedal Replacement Components With Torque Specifications (1 Of 4)
Courtesy of TOYOTA MOTOR SALES, U.S.A., INC.

ILLUSTRATION

Fig. 2: Identifying Parking Brake Pedal Replacement Components With Torque Specifications (2 Of 4)
Courtesy of TOYOTA MOTOR SALES, U.S.A., INC.

ILLUSTRATION

Fig. 3: Identifying Parking Brake Pedal Replacement Components (3 Of 4)
Courtesy of TOYOTA MOTOR SALES, U.S.A., INC.

ILLUSTRATION

Fig. 4: Identifying Parking Brake Pedal Replacement Components With Torque Specifications (4 Of 4)
Courtesy of TOYOTA MOTOR SALES, U.S.A., INC.

REMOVAL

REMOVAL

1. **REMOVE SHIFT LEVER SUPPORT**
    - For U660E: Refer to **REMOVAL** .
    - For U760E: Refer to **REMOVAL** .
2. **REMOVE LOWER NO. 1 INSTRUMENT PANEL AIRBAG ASSEMBLY** . Refer to **REMOVAL - Step 9** .
3. **REMOVE NO. 1 INDOOR ELECTRICAL KEY ANTENNA ASSEMBLY (for Built-in Type Yaw Rate Sensor)**

    w/ Smart Key System: Refer to **REMOVAL - Step 7** .

4. **REMOVE YAW RATE SENSOR (for Separate Type Yaw Rate Sensor)** . Refer to **REMOVAL - Step 4** .
5. **REMOVE NO. 3 INDOOR ELECTRICAL KEY ANTENNA ASSEMBLY (for Separate Type Yaw Rate Sensor)**

    w/ Smart Key System: Refer to **REMOVAL - Step 5** .

6. **REMOVE YAW RATE SENSOR BRACKET (for Separate Type Yaw Rate Sensor)** . Refer to **REMOVAL - Step 6** .
7. **REMOVE FLOOR CARPET BRACKET RH** . Refer to **REMOVAL - Step 34** .
8. **REMOVE AIRBAG SENSOR ASSEMBLY** . Refer to **REMOVAL - Step 17** .
9. **LOOSEN ADJUSTING NUT**
    a. Remove the lock nut and loosen the adjusting nut.

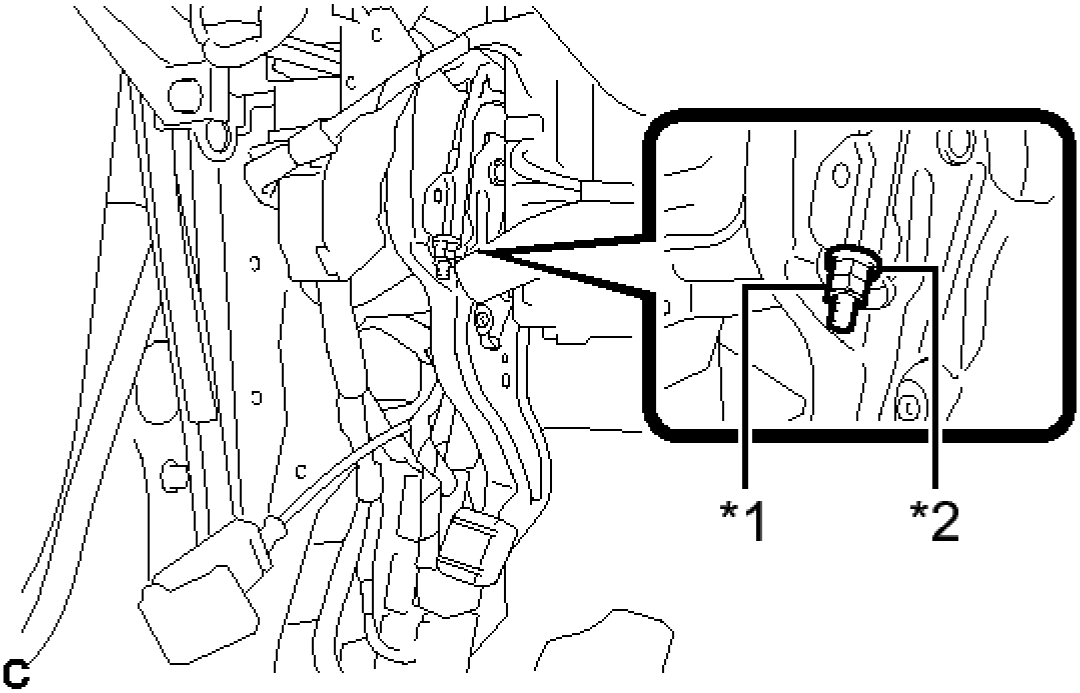

Fig. 5: Identifying Parking Brake Cable Lock Nut And Adjusting Nut
Courtesy of TOYOTA MOTOR SALES, U.S.A., INC.

TEXT IN ILLUSTRATION

*1	Lock Nut
*2	Adjusting Nut

10. **SEPARATE NO. 4 PARKING BRAKE CABLE ASSEMBLY**
    a. Separate the No. 4 parking brake cable assembly from the parking brake control pedal assembly as shown in the illustration.

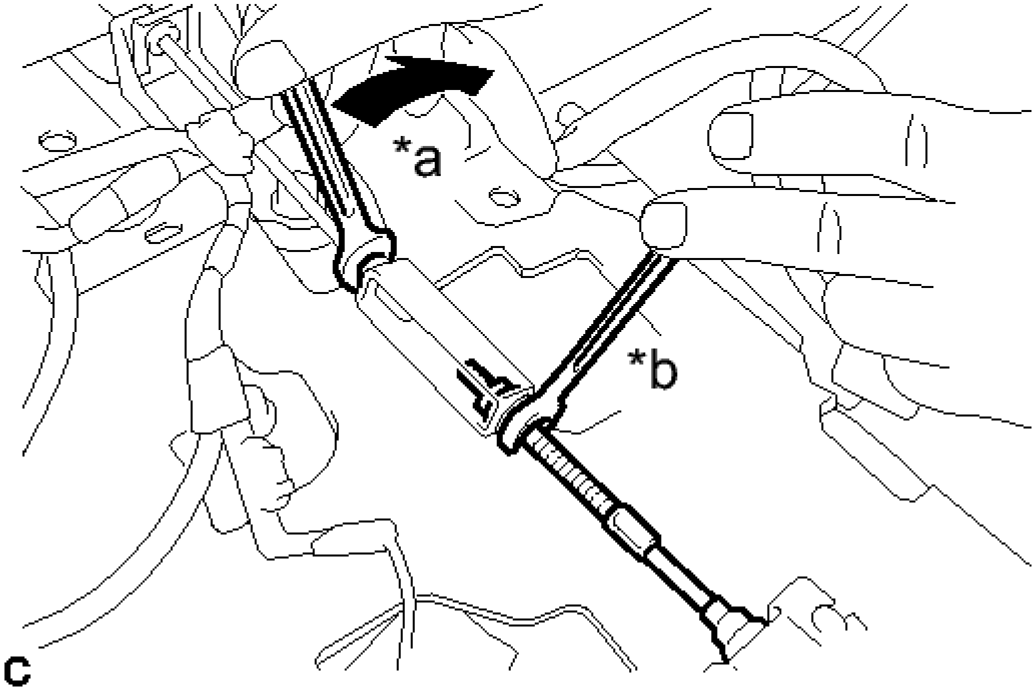

Fig. 6: Separating No. 4 Parking Brake Cable Assembly
Courtesy of TOYOTA MOTOR SALES, U.S.A., INC.

TEXT IN ILLUSTRATION

*a	Turn
*b	Hold

11. **REMOVE PARKING BRAKE CONTROL PEDAL ASSEMBLY**
    a. Turn back the floor carpet.
    b. Remove the clip from the No. 1 parking brake cable assembly.

Fig. 7: Removing Parking Brake Control Pedal Assembly
Courtesy of TOYOTA MOTOR SALES, U.S.A., INC.

c. Remove the bolt and 2 nuts, and separate the No. 1 parking brake cable assembly.
d. Disconnect the parking brake switch connector.

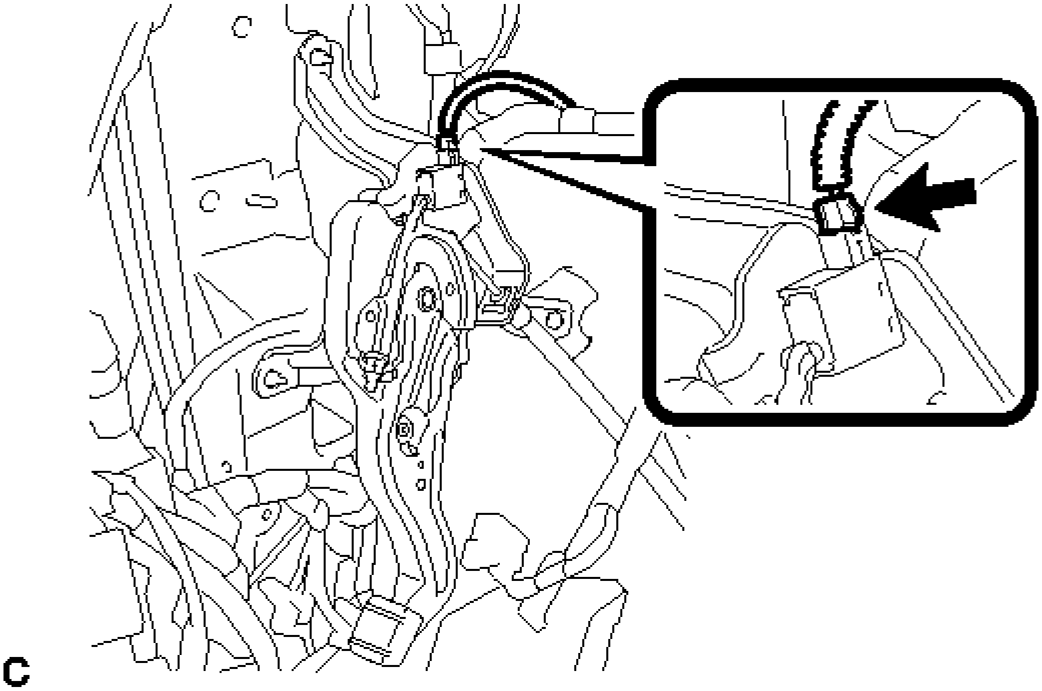

Fig. 8: Locating Parking Brake Switch Assembly Connector
Courtesy of TOYOTA MOTOR SALES, U.S.A., INC.

e. Remove the bolt, 2 nuts and parking brake control pedal assembly.

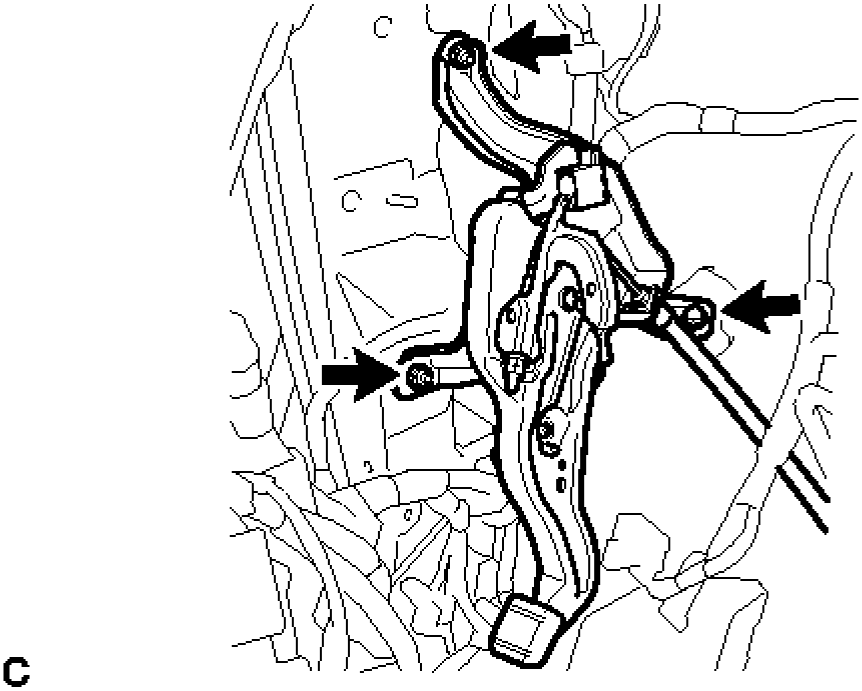

Fig. 9: Locating Parking Brake Control Pedal Assembly Fasteners
Courtesy of TOYOTA MOTOR SALES, U.S.A., INC.

DISASSEMBLY

DISASSEMBLY

1. **REMOVE NO. 1 PARKING BRAKE CABLE ASSEMBLY** . See step 2.
2. **REMOVE PARKING BRAKE SWITCH ASSEMBLY** . See step 2.
3. **REMOVE PARKING PEDAL PAD**
    a. Remove the parking pedal pad from the parking brake pedal assembly.

REASSEMBLY

REASSEMBLY

1. **INSTALL PARKING PEDAL PAD**
    a. Install the parking pedal pad to the parking brake pedal assembly.
2. **INSTALL PARKING BRAKE SWITCH ASSEMBLY** . See step 1.
3. **INSTALL NO. 1 PARKING BRAKE CABLE ASSEMBLY** . See step 27.

INSTALLATION

INSTALLATION

1. **INSTALL PARKING BRAKE CONTROL PEDAL ASSEMBLY**
    a. Install the parking brake control pedal assembly with the bolt and 2 nuts.

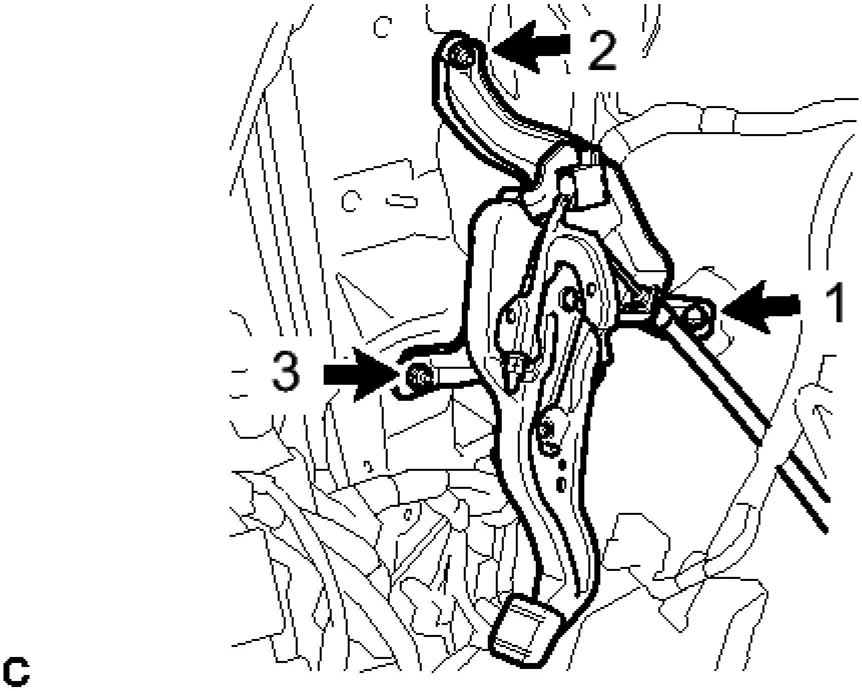

Fig. 10: Identifying Parking Brake Control Pedal Assembly Fasteners With Tightening

Sequence
Courtesy of TOYOTA MOTOR SALES, U.S.A., INC.

Torque: 15 N*m (153 kgf*cm, 11 ft.*lbf)

NOTE: Tighten the bolt and 2 nuts in the order shown in the illustration.

b. Connect the parking brake switch connector.
c. Install the No. 1 parking brake cable assembly with the bolt and 2 nuts.

Fig. 11: Installing Parking Brake Control Pedal Assembly
Courtesy of TOYOTA MOTOR SALES, U.S.A., INC.

Bolt

Torque: 15 N*m (153 kgf*cm, 11 ft.*lbf)

Nut

Torque: 5.4 N*m (55 kgf*cm, 48 in.*lbf)

d. Install the clip to the No. 1 parking brake cable assembly.
e. Install the floor carpet.
f. Temporarily install the lock nut.

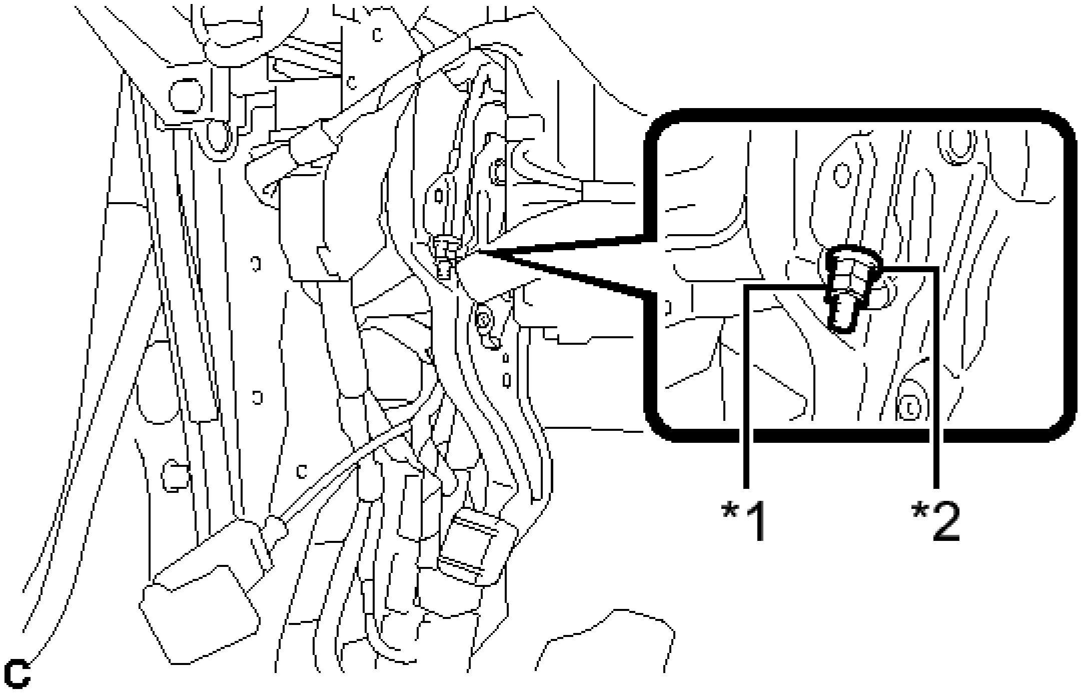

Fig. 12: Identifying Parking Brake Cable Lock Nut And Adjusting Nut
Courtesy of TOYOTA MOTOR SALES, U.S.A., INC.

TEXT IN ILLUSTRATION

*1	Lock Nut
*2	Adjusting Nut

HINT:

After adjusting parking brake pedal travel, tighten the lock nut.

2. **CONNECT NO. 4 PARKING BRAKE CABLE ASSEMBLY**

a. Connect the No. 4 parking brake cable assembly to the parking brake control pedal assembly as shown in the illustration.

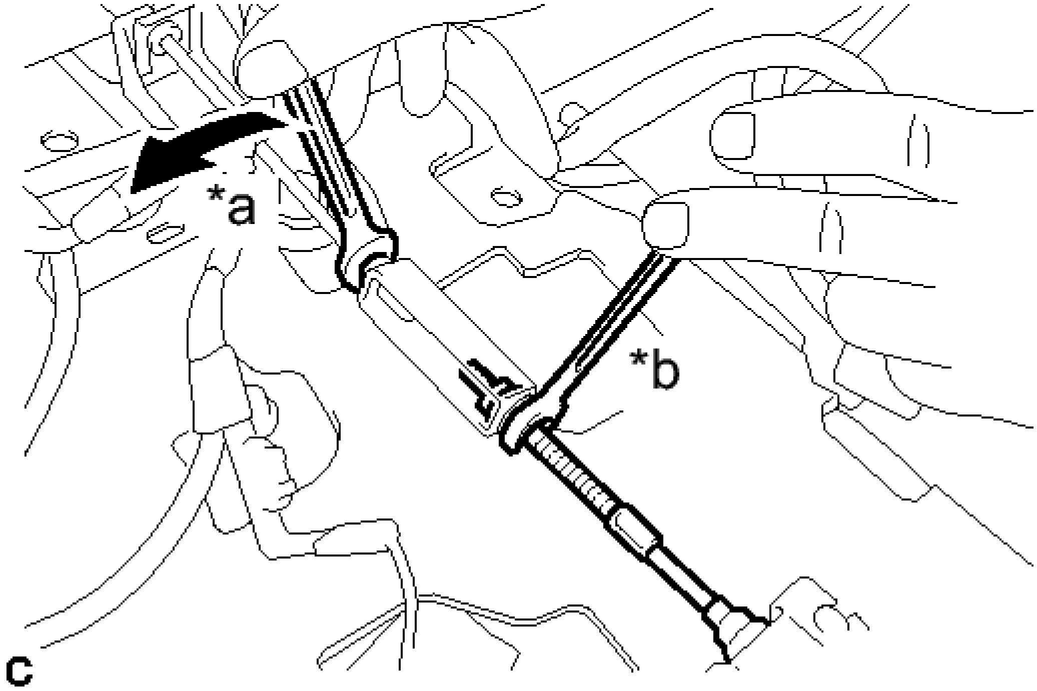

Fig. 13: Connecting No. 4 Parking Brake Cable Assembly
Courtesy of TOYOTA MOTOR SALES, U.S.A., INC.

TEXT IN ILLUSTRATION

*a	Turn
*b	Hold

Torque: 5.4 N*m (55 kgf*cm, 48 in.*lbf)

3. **INSTALL AIRBAG SENSOR ASSEMBLY** . Refer to **INSTALLATION - Step 1** .
4. **INSTALL FLOOR CARPET BRACKET RH** . Refer to **INSTALLATION - Step 14** .
5. **INSTALL NO. 1 INDOOR ELECTRICAL KEY ANTENNA ASSEMBLY (for Built-in Type Yaw Rate Sensor)**

   w/ Smart Key System: Refer to **INSTALLATION - Step 1** .

6. **INSTALL YAW RATE SENSOR BRACKET (for Separate Type Yaw Rate Sensor)** . Refer to **INSTALLATION - Step 1** .
7. **INSTALL NO. 3 INDOOR ELECTRICAL KEY ANTENNA ASSEMBLY (for Separate Type Yaw Rate Sensor)**

   w/ Smart Key System: Refer to **INSTALLATION - Step 2** .

8. **INSTALL YAW RATE SENSOR (for Separate Type Yaw Rate Sensor)** . Refer to **INSTALLATION - Step 3** .
9. **INSTALL LOWER NO. 1 INSTRUMENT PANEL AIRBAG ASSEMBLY** . Refer to

INSTALLATION - Step 1 .

10. **INSTALL SHIFT LEVER SUPPORT**
    - For U660E. Refer to **INSTALLATION** .
    - For U760E. Refer to **INSTALLATION** .
11. **ADJUST PARKING BRAKE PEDAL TRAVEL** . Refer to **ADJUSTMENT - Step 2** .
12. **INSPECT BRAKE WARNING LIGHT** . Refer to **ADJUSTMENT - Step 3** .

PARKING BRAKE CABLE

COMPONENTS

ILLUSTRATION

Fig. 14: Identifying Parking Brake Cable Replacement Components (1 Of 8)
Courtesy of TOYOTA MOTOR SALES, U.S.A., INC.

ILLUSTRATION

Fig. 15: Identifying Parking Brake Cable Replacement Components With Torque Specifications (2 Of 8)
Courtesy of TOYOTA MOTOR SALES, U.S.A., INC.

ILLUSTRATION

Fig. 16: Identifying Parking Brake Cable Replacement Components With Torque Specifications (3 Of 8)
Courtesy of TOYOTA MOTOR SALES, U.S.A., INC.

ILLUSTRATION

Fig. 17: Identifying Parking Brake Cable Replacement Components (4 Of 8)
Courtesy of TOYOTA MOTOR SALES, U.S.A., INC.

ILLUSTRATION

Fig. 18: Identifying Parking Brake Cable Replacement Components With Torque Specifications (5 Of 8)
Courtesy of TOYOTA MOTOR SALES, U.S.A., INC.

ILLUSTRATION

Fig. 19: Identifying Parking Brake Cable Replacement Components With Torque Specifications (6 Of 8)
Courtesy of TOYOTA MOTOR SALES, U.S.A., INC.

ILLUSTRATION

Fig. 20: Identifying Parking Brake Cable Replacement Components With Torque Specifications (7 Of 8)
Courtesy of TOYOTA MOTOR SALES, U.S.A., INC.

ILLUSTRATION

Fig. 21: Identifying Parking Brake Cable Replacement Components With Torque Specifications (8 Of 8)
Courtesy of TOYOTA MOTOR SALES, U.S.A., INC.

REMOVAL

REMOVAL

HINT:

- The following procedure is for the No. 1 parking brake cable assembly and No. 3 parking brake cable assembly.
- Use the same procedure for the No. 3 parking brake cable assembly and No. 2 parking brake cable assembly.

1. **REMOVE PARKING BRAKE CONTROL PEDAL ASSEMBLY**

   Refer to **REMOVAL**.

2. **REMOVE NO. 1 PARKING BRAKE CABLE ASSEMBLY**
   a. Pull up the parking brake pedal claw.

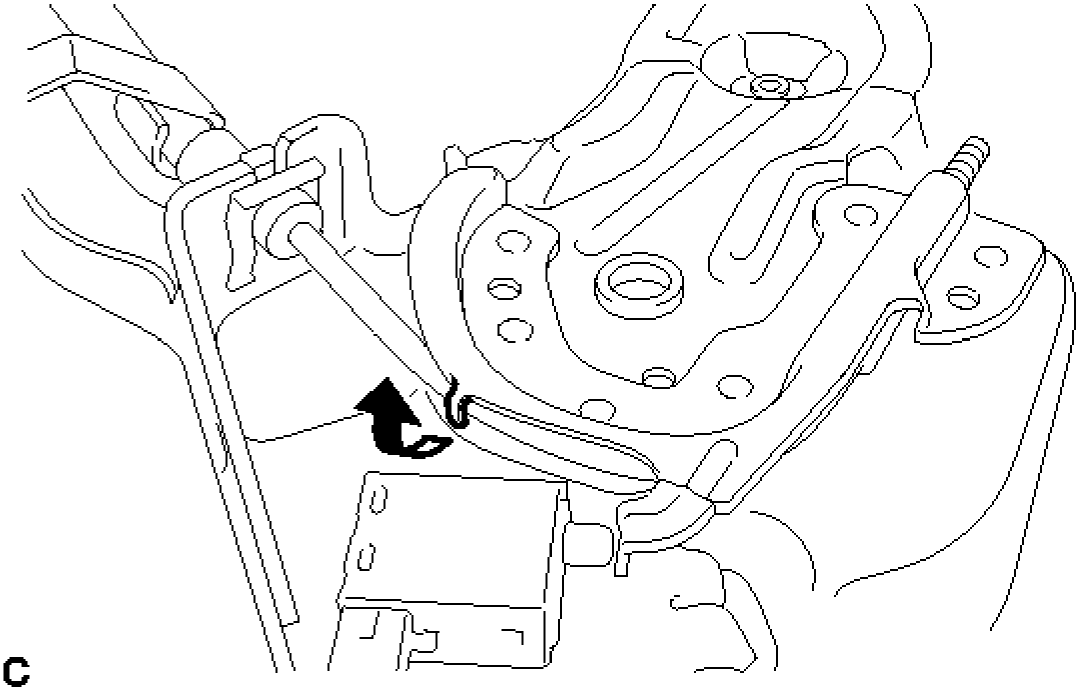

Fig. 22: Removing No. 1 Parking Brake Cable Assembly
Courtesy of TOYOTA MOTOR SALES, U.S.A., INC.

NOTE: Do not damage the No. 1 parking brake cable assembly.

   b. Remove the adjusting nut.

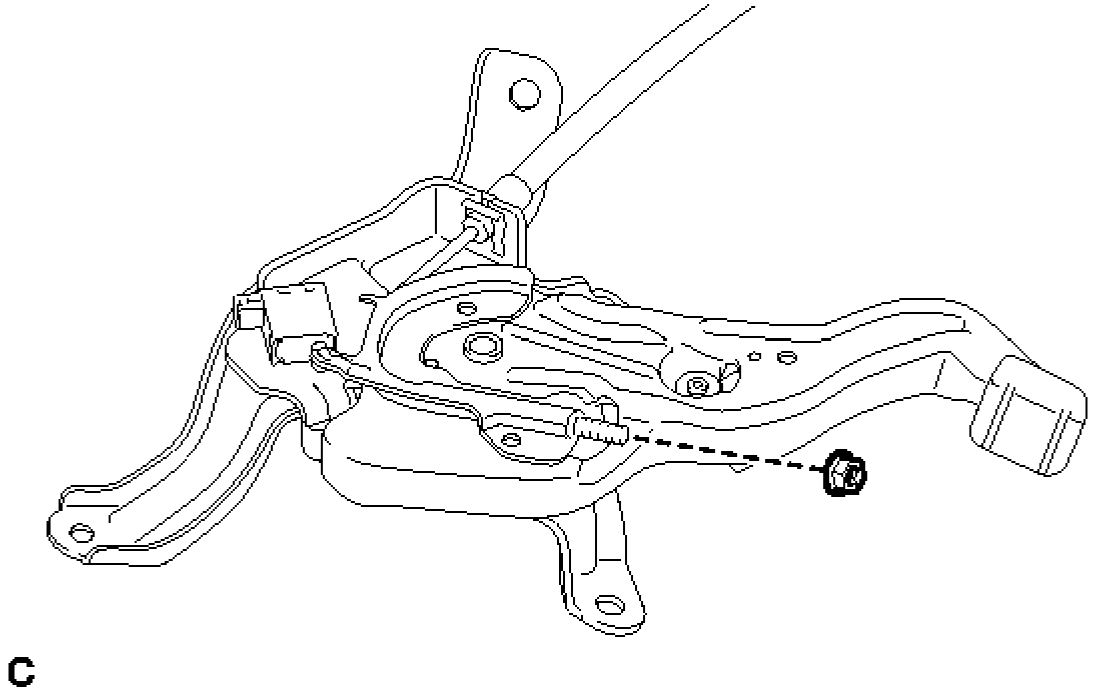

Fig. 23: Identifying No. 1 Parking Brake Cable Assembly Fastener
Courtesy of TOYOTA MOTOR SALES, U.S.A., INC.

c. Remove the clip from the No. 1 parking brake cable assembly.

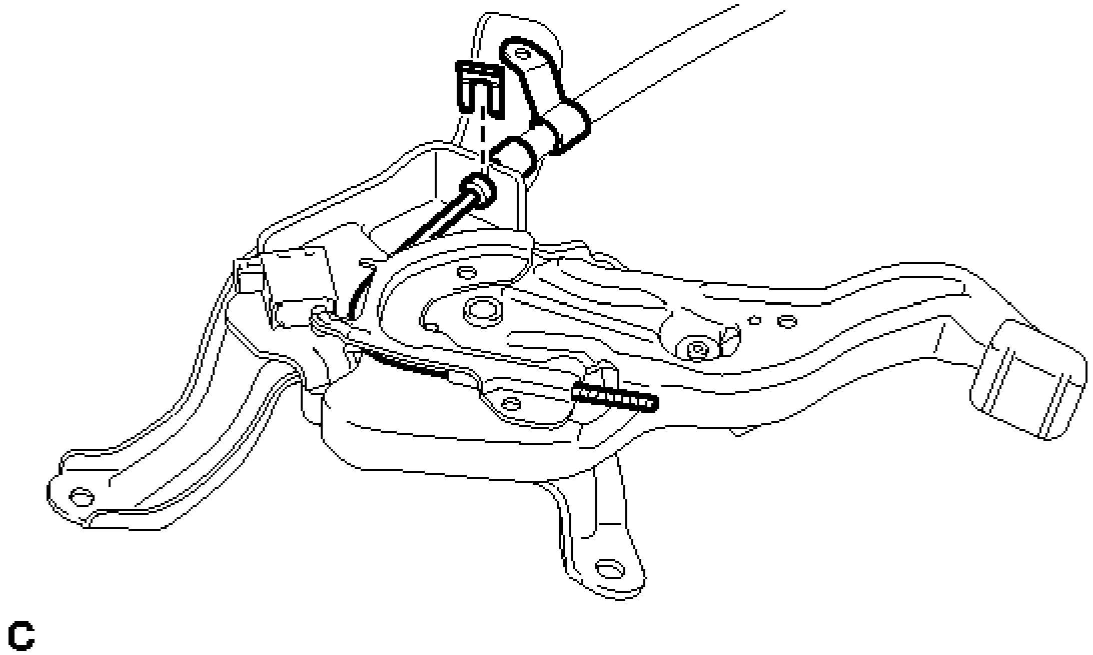

Fig. 24: Identifying No. 1 Parking Brake Cable Assembly Clip
Courtesy of TOYOTA MOTOR SALES, U.S.A., INC.

    d. Remove the No. 1 parking brake cable assembly from the parking brake pedal assembly.

3. **REMOVE REAR DOOR SCUFF PLATE LH** . Refer to **REMOVAL - Step 18** .
4. **DISCONNECT REAR DOOR OPENING TRIM WEATHERSTRIP LH**
    a. Disconnect the rear door opening trim weatherstrip LH.
5. **REMOVE LAP BELT OUTER ANCHOR COVER (for LH Side)** . Refer to **REMOVAL - Step 7** .
6. **DISCONNECT FRONT SEAT OUTER BELT ASSEMBLY LH** . Refer to **REMOVAL - Step 8** .
7. **REMOVE CENTER PILLAR LOWER GARNISH LH** . Refer to **REMOVAL - Step 22** .
8. **REMOVE REAR DOOR SCUFF PLATE RH** . Refer to **REMOVAL - Step 25** .
9. **DISCONNECT REAR DOOR OPENING TRIM WEATHERSTRIP RH**

    HINT:

    Use the same procedure as for the LH side.

10. **REMOVE LAP BELT OUTER ANCHOR COVER (for RH Side)** . Refer to **REMOVAL - Step 27** .
11. **DISCONNECT FRONT SEAT OUTER BELT ASSEMBLY RH** . Refer to **REMOVAL - Step 28** .
12. **REMOVE CENTER PILLAR LOWER GARNISH RH** . Refer to **REMOVAL - Step 29** .
13. **REMOVE FRONT SEAT ASSEMBLY LH**
    - For TMMK Made Manual Seat: Refer to **REMOVAL** .
    - For TMMK Made Power Seat: Refer to **REMOVAL** .
    - For SIA Made Manual Seat: Refer to **REMOVAL** .
    - For SIA Made Power Seat: Refer to **REMOVAL** .
14. **REMOVE FRONT SEAT ASSEMBLY RH**

    HINT:

    Use the same procedure as for the LH side.

15. **REMOVE AUDIO AMPLIFIER COVER (for 10 Speakers)** . Refer to **REMOVAL - Step 2** .
16. **REMOVE STEREO COMPONENT AMPLIFIER ASSEMBLY WITH BRACKET (for 10 Speakers)** . Refer to **REMOVAL - Step 3** .
17. **REMOVE AUDIO AMPLIFIER COVER (w/ Manual (SOS) Switch)** . Refer to **REMOVAL - Step 2** .
18. **REMOVE DCM (TELEMATICS TRANSCEIVER) WITH BACK-UP BATTERY (w/ Manual (SOS) Switch)** . Refer to **REMOVAL - Step 3** .
19. **REMOVE FLOOR CARPET HOOK** . Refer to **REMOVAL - Step 28** .
20. **REMOVE NO. 4 CROSS MEMBER FLOOR REINFORCEMENT SUB-ASSEMBLY**
    a. Remove the screw.

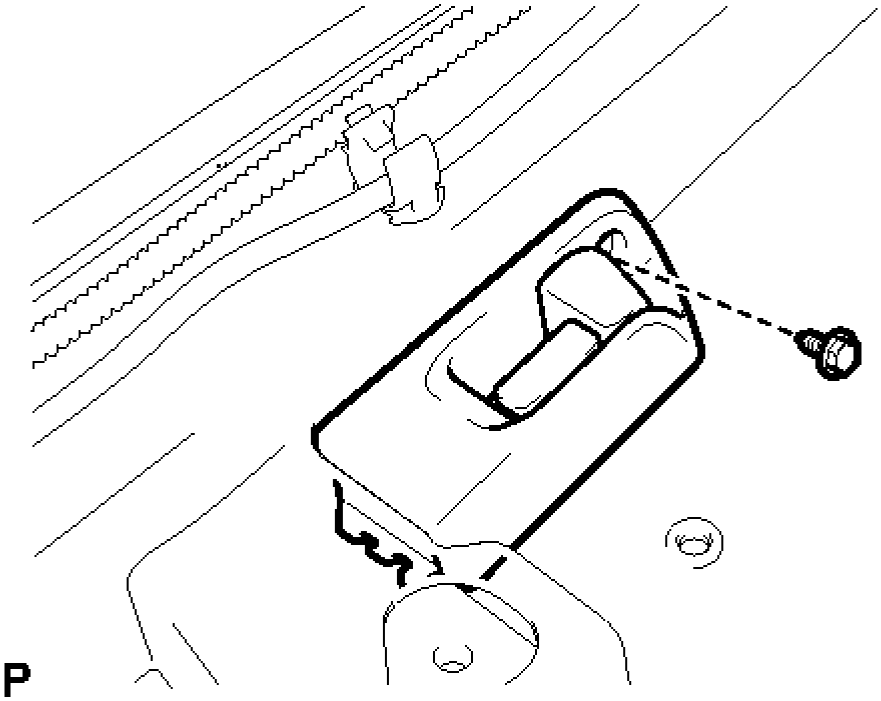

Fig. 25: Identifying Fuel Lid Lock Open Lever Screw
Courtesy of TOYOTA MOTOR SALES, U.S.A., INC.

b. Disengage the guide to disconnect the fuel lid lock open lever sub-assembly as shown in the illustration.

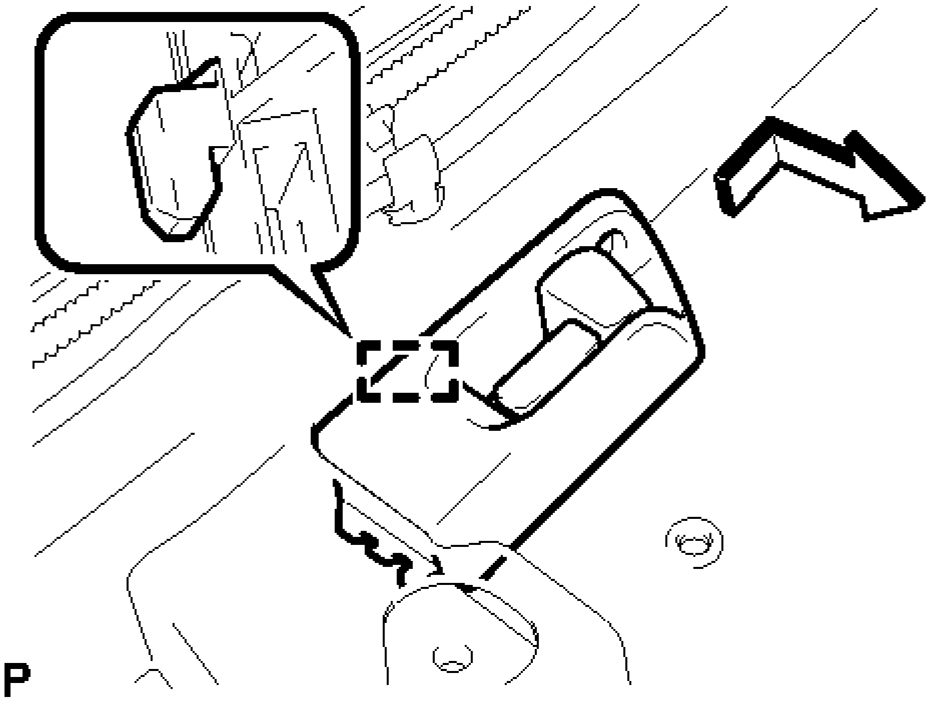

Fig. 26: Disengaging Fuel Lid Lock Open Lever Guide

Courtesy of TOYOTA MOTOR SALES, U.S.A., INC.

c. Turn back the floor carpet to a position where the No. 4 cross member floor reinforcement sub-assembly can be removed.
d. Remove the 8 bolts and No. 4 cross member floor reinforcement sub-assembly.

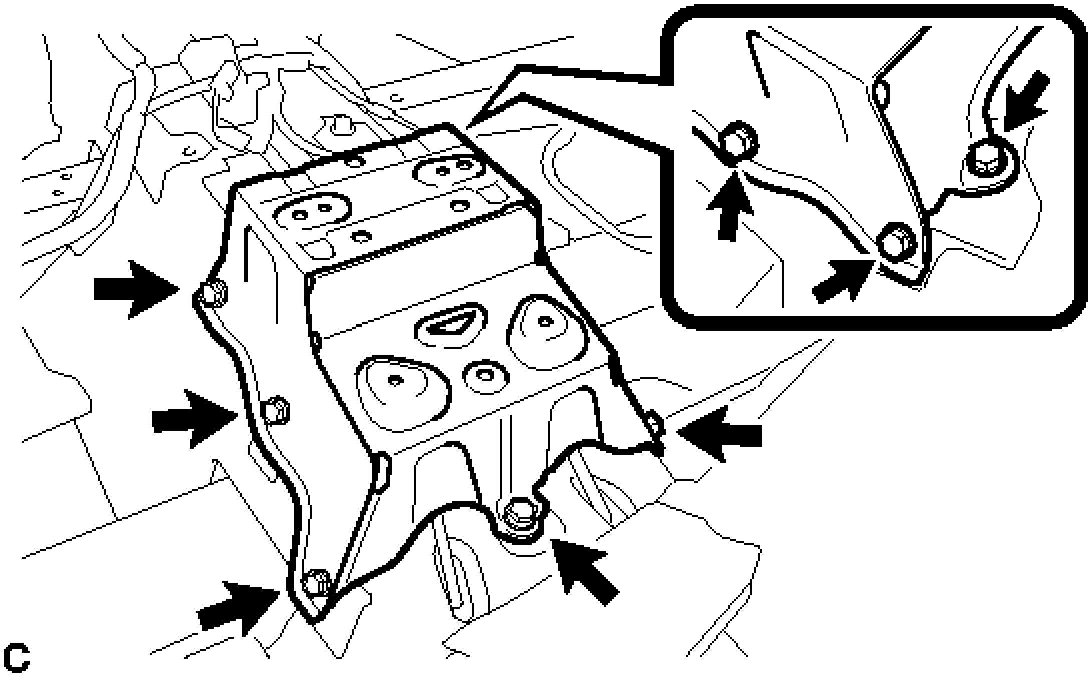

Fig. 27: Identifying No. 4 Cross Member Floor Reinforcement Sub-Assembly Fasteners
Courtesy of TOYOTA MOTOR SALES, U.S.A., INC.

21. **REMOVE NO. 4 PARKING BRAKE CABLE ASSEMBLY**
    a. Separate the No. 3 parking brake cable assembly from the parking brake equalizer.

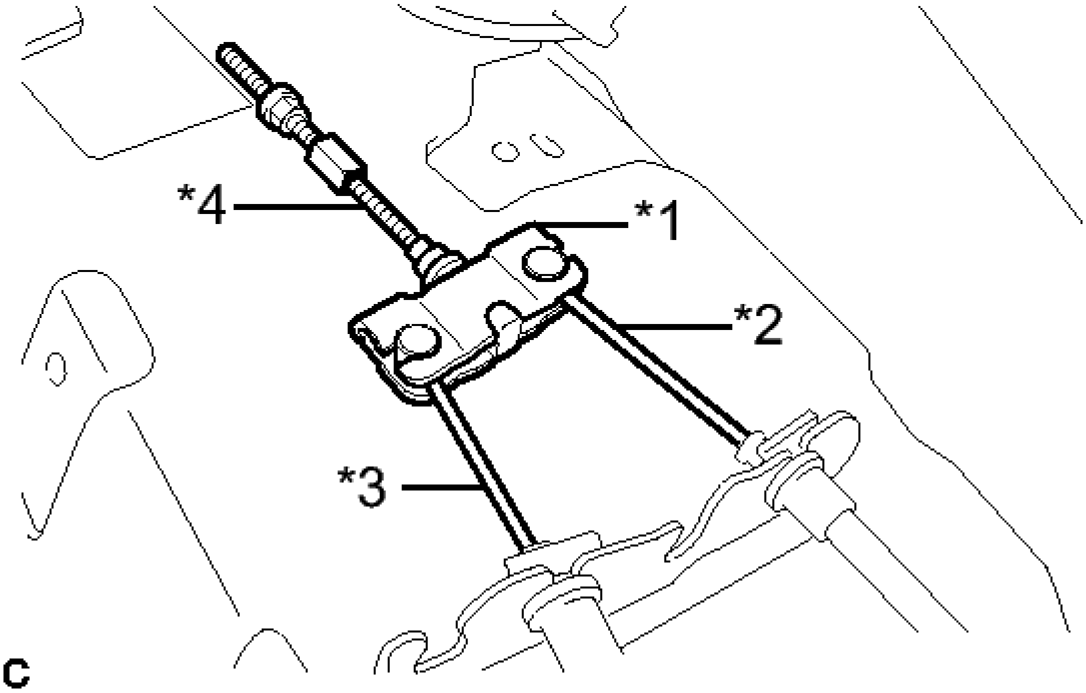

Fig. 28: Identifying Parking Brake Cable Assembly
Courtesy of TOYOTA MOTOR SALES, U.S.A., INC.

TEXT IN ILLUSTRATION

*1	Parking Brake Equalizer
*2	No. 2 Parking Brake Cable Assembly
*3	No. 3 Parking Brake Cable Assembly
*4	No. 4 Parking Brake Cable Assembly

b. Separate the No. 2 parking brake cable assembly to remove the parking brake equalizer.

c. Slide the parking brake equalizer and rubber boot.

Fig. 29: Removing Parking Brake Cable Assembly From Parking Brake Equalizer
Courtesy of TOYOTA MOTOR SALES, U.S.A., INC.

TEXT IN ILLUSTRATION

*1	Rubber Boot
*2	Parking Brake Equalizer
*3	No. 4 Parking Brake Cable Assembly

d. Remove the No. 4 parking brake cable assembly from the parking brake equalizer.

22. **REMOVE FRONT EXHAUST PIPE ASSEMBLY (for 2AR-FE)**

Refer to **REMOVAL** .

23. **REMOVE FRONT NO. 2 FLOOR HEAT INSULATOR (for 2AR-FE)**
    a. Remove the 3 nuts and front No. 2 floor heat insulator.

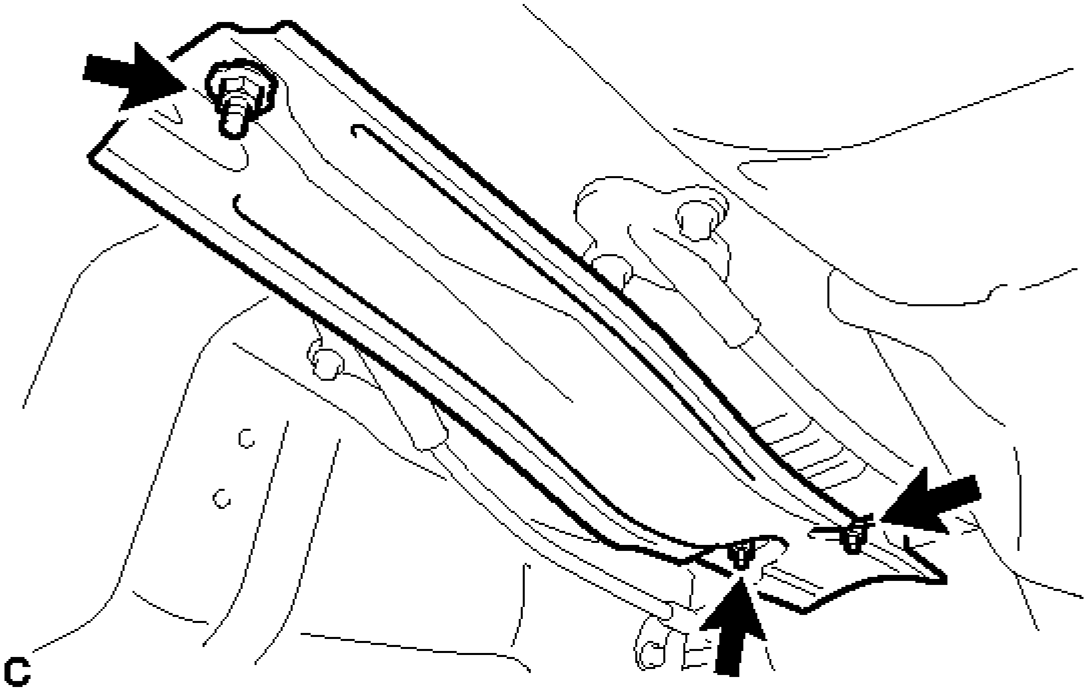

Fig. 30: Locating Front No. 2 Floor Heat Insulator (For 2AR-FE) Fasteners
Courtesy of TOYOTA MOTOR SALES, U.S.A., INC.

24. **REMOVE PARKING BRAKE SHOE LEVER**

Refer to **DISASSEMBLY**.

25. **REMOVE NO. 2 FLOOR UNDER COVER (for LH Side)**
    a. w/ Floor Under Cover:
        1. Remove the 2 bolts and 2 clips.

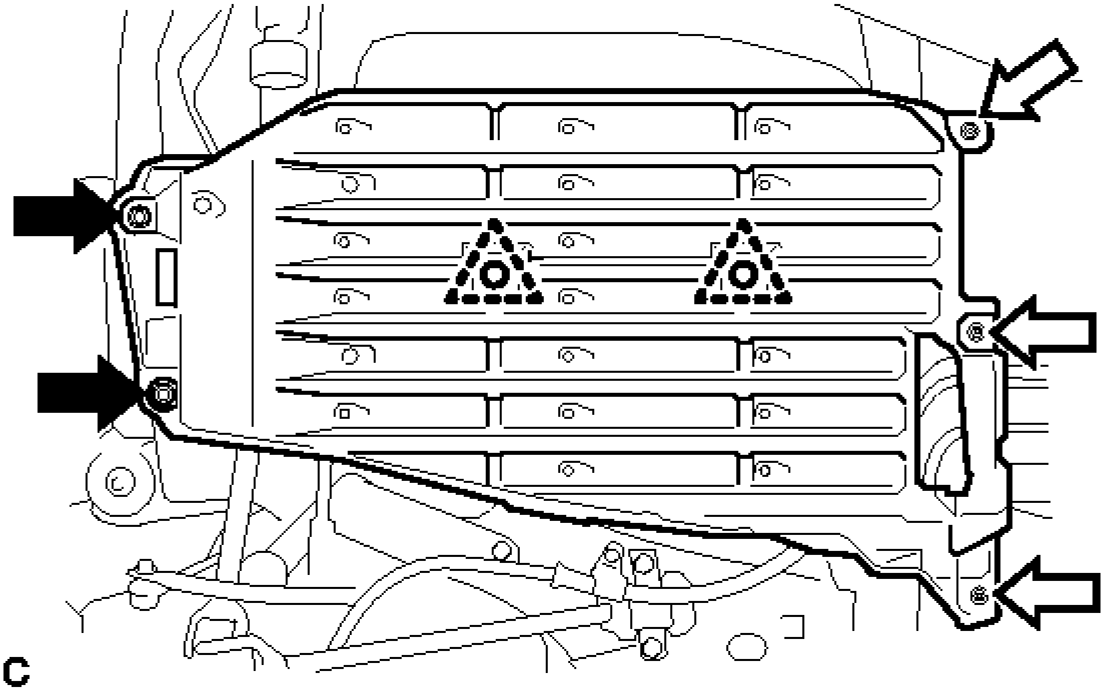

Fig. 31: Identifying No. 2 Floor Under Cover (For LH Side) Fasteners
Courtesy of TOYOTA MOTOR SALES, U.S.A., INC.

TEXT IN ILLUSTRATION

	Bolt
	Nut (attached to under cover)

2. Disengage the 3 nuts and remove the No. 2 floor under cover.

26. **REMOVE NO. 1 FLOOR UNDER COVER (for RH Side)**
    a. Remove the 2 bolts.

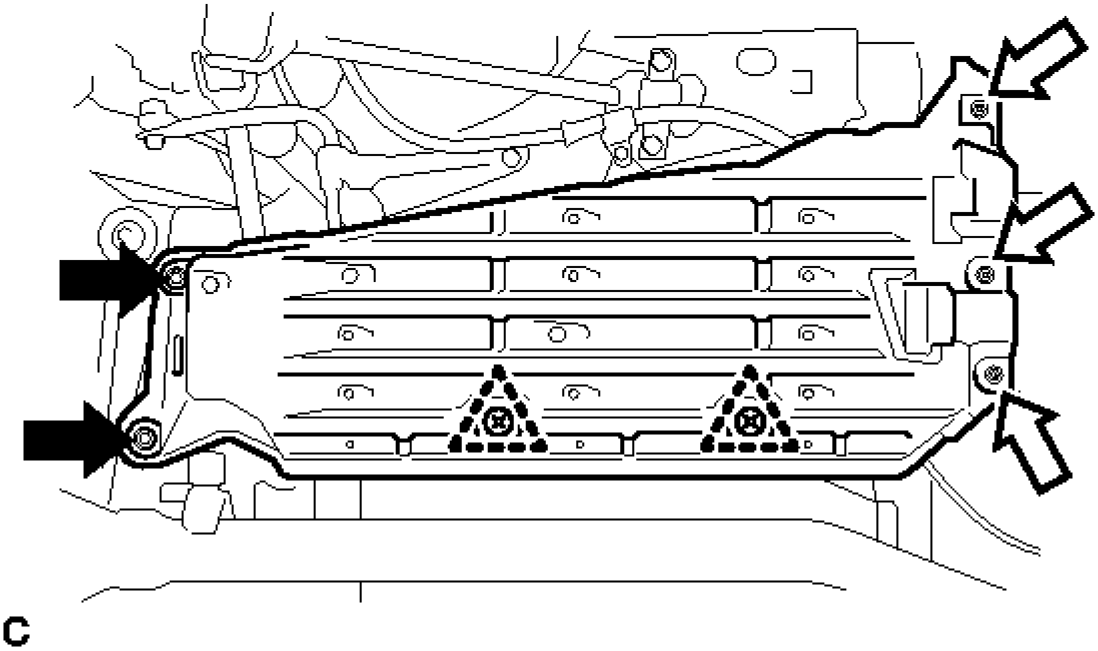

Fig. 32: Identifying No. 1 Floor Under Cover (For RH Side) Fasteners
Courtesy of TOYOTA MOTOR SALES, U.S.A., INC.

TEXT IN ILLUSTRATION

	Bolt
	Nut (attached to under cover)

b. Disengage the 3 nuts and 2 clips, and remove the No. 1 floor under cover.

27. **REMOVE NO. 3 PARKING BRAKE CABLE ASSEMBLY**

a. Remove the clip from the No. 3 parking brake cable assembly.

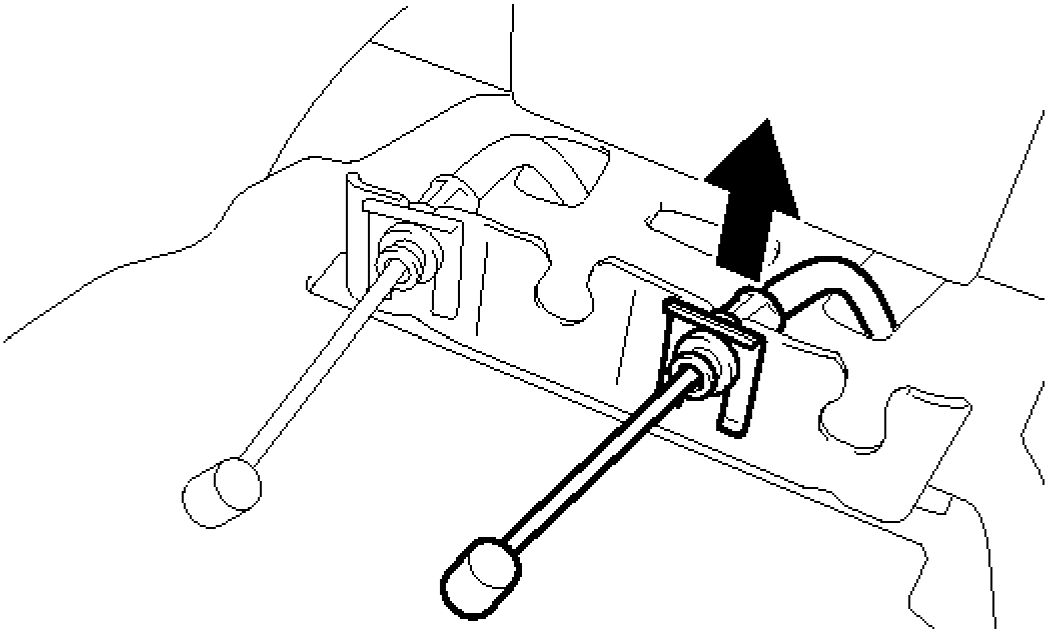

Fig. 33: Removing No. 3 Parking Brake Cable Assembly Clip
Courtesy of TOYOTA MOTOR SALES, U.S.A., INC.

b. Remove the bolt and separate the No. 3 parking brake cable assembly.

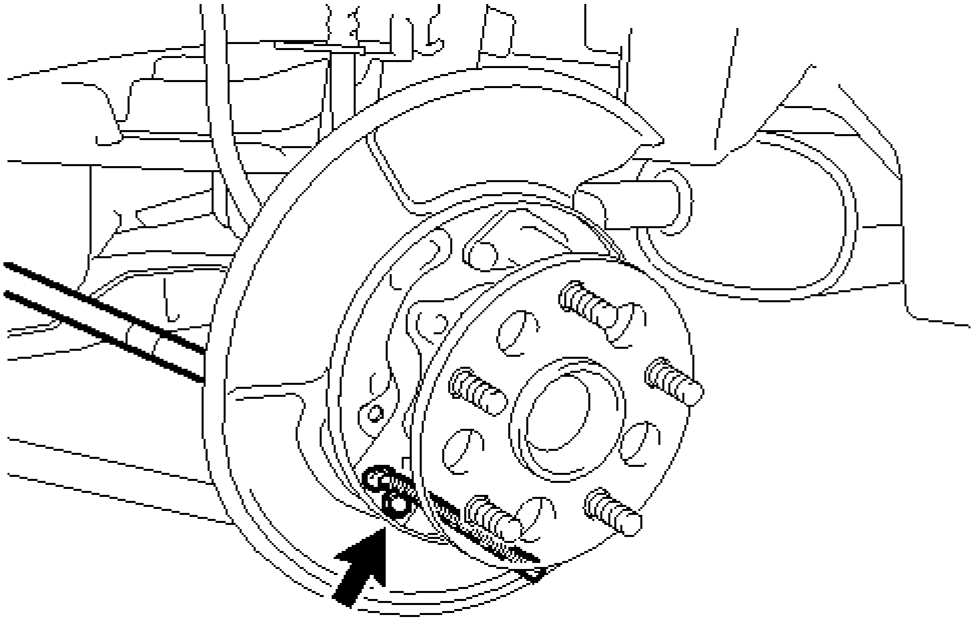

Fig. 34: Locating No. 3 Parking Brake Cable Assembly Bolt
Courtesy of TOYOTA MOTOR SALES, U.S.A., INC.

c. Remove the 4 bolts, nut and No. 3 parking brake cable assembly.

Fig. 35: Locating No. 3 Parking Brake Cable Assembly Fasteners
Courtesy of TOYOTA MOTOR SALES, U.S.A., INC.

28. **REMOVE NO. 2 PARKING BRAKE CABLE CLAMP**
    a. Remove the No. 2 parking brake cable clamp.

INSTALLATION

INSTALLATION

1. **INSTALL NO. 2 PARKING BRAKE CABLE CLAMP**
    a. Install a new No. 2 parking brake cable clamp to the No. 3 parking brake cable assembly.
2. **INSTALL NO. 3 PARKING BRAKE CABLE ASSEMBLY**
    a. Install the No. 3 parking brake cable assembly with the 4 bolts and nut.

Fig. 36: Locating No. 3 Parking Brake Cable Assembly Fasteners
Courtesy of TOYOTA MOTOR SALES, U.S.A., INC.

Bolt (A)

Torque: 8.5 N*m (87 kgf*cm, 75 in.*lbf)

Bolt (B) and Nut

Torque: 6.0 N*m (61 kgf*cm, 53 in.*lbf)

b. Install the No. 3 parking brake cable assembly with the bolt.

Torque: 8.0 N*m (82 kgf*cm, 71 in.*lbf)

c. Install the clip to the No. 3 parking brake cable assembly.

3. **INSTALL NO. 2 FLOOR UNDER COVER (for LH Side)**
    a. w/ Floor Under Cover:
        1. Install the No. 2 floor under cover with the 2 bolts, 3 nuts and 2 clips.

Bolt

Torque: 12 N*m (122 kgf*cm, 9 ft.*lbf)

Nut

Torque: 4.0 N*m (41 kgf*cm, 35 in.*lbf)

4. **INSTALL NO. 1 FLOOR UNDER COVER (for RH Side)**

a. Install the No. 1 floor under cover with the 2 bolts, 3 nuts and 2 clips.

   Bolt

   Torque: 12 N*m (122 kgf*cm, 9 ft.*lbf)

   Nut

   Torque: 4.0 N*m (41 kgf*cm, 35 in.*lbf)

5. **INSTALL PARKING BRAKE SHOE LEVER**

   See step 6.

6. **INSTALL FRONT NO. 2 FLOOR HEAT INSULATOR (for 2AR-FE)**
   a. Install the front No. 2 floor heat insulator with the 3 nuts.

      Torque: 4.9 N*m (50 kgf*cm, 43 in.*lbf)

7. **INSTALL FRONT EXHAUST PIPE ASSEMBLY (for 2AR-FE)**

   Refer to **INSTALLATION - Step 2** .

8. **INSTALL NO. 4 PARKING BRAKE CABLE ASSEMBLY**
   a. Install the No. 4 parking brake cable assembly to the parking brake equalizer.

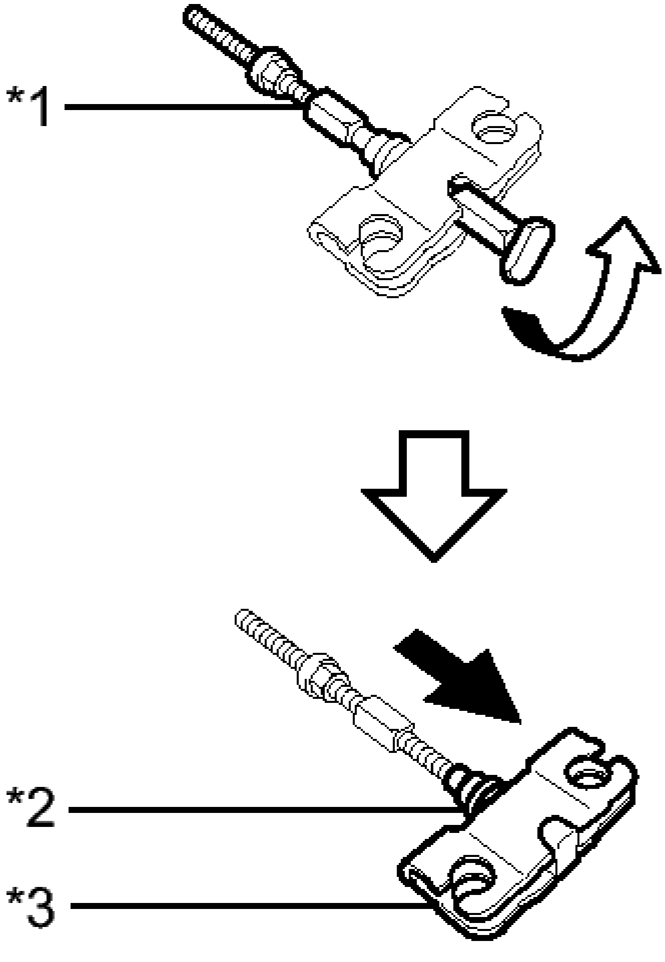

Fig. 37: Installing Parking Brake Cable Assembly To Parking Brake Equalizer
Courtesy of TOYOTA MOTOR SALES, U.S.A., INC.

TEXT IN ILLUSTRATION

*1	No. 4 Parking Brake Cable Assembly
*2	Rubber Boot
*3	Parking Brake Equalizer

b. Slide the parking brake equalizer and rubber boot as shown in the illustration.

NOTE: **Make sure that the rubber boot is securely inserted into the groove of the No. 4 parking brake cable assembly.**

c. Connect the No. 3 parking brake cable assembly to the parking brake equalizer.

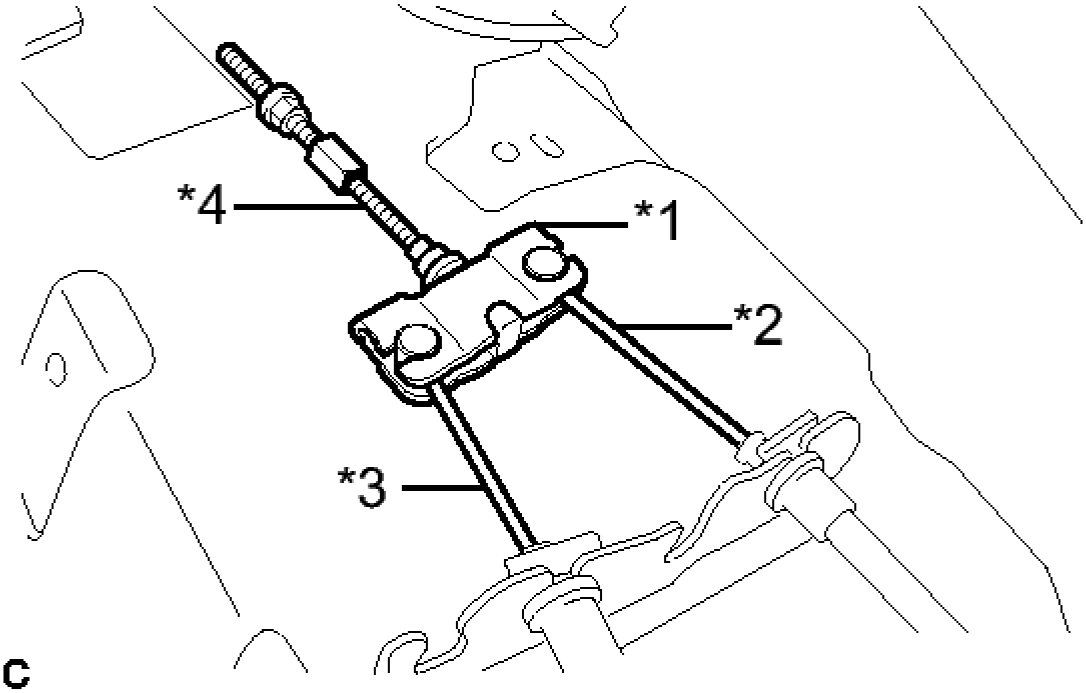

Fig. 38: Identifying Parking Brake Cable Assembly
Courtesy of TOYOTA MOTOR SALES, U.S.A., INC.

TEXT IN ILLUSTRATION

*1	Parking Brake Equalizer
*2	No. 2 Parking Brake Cable Assembly
*3	No. 3 Parking Brake Cable Assembly
*4	No. 4 Parking Brake Cable Assembly

d. Connect the No. 2 parking brake cable assembly to the parking brake equalizer.

9. **INSTALL NO. 4 CROSS MEMBER FLOOR REINFORCEMENT SUB-ASSEMBLY**

   a. Install the No. 4 cross member floor reinforcement sub-assembly with the 8 bolts.

      Torque: 19 N*m (189 kgf*cm, 14 ft.*lbf)

   b. Install the floor carpet.

   c. Engage the guide to connect the fuel lid lock open lever sub-assembly as shown in the illustration.

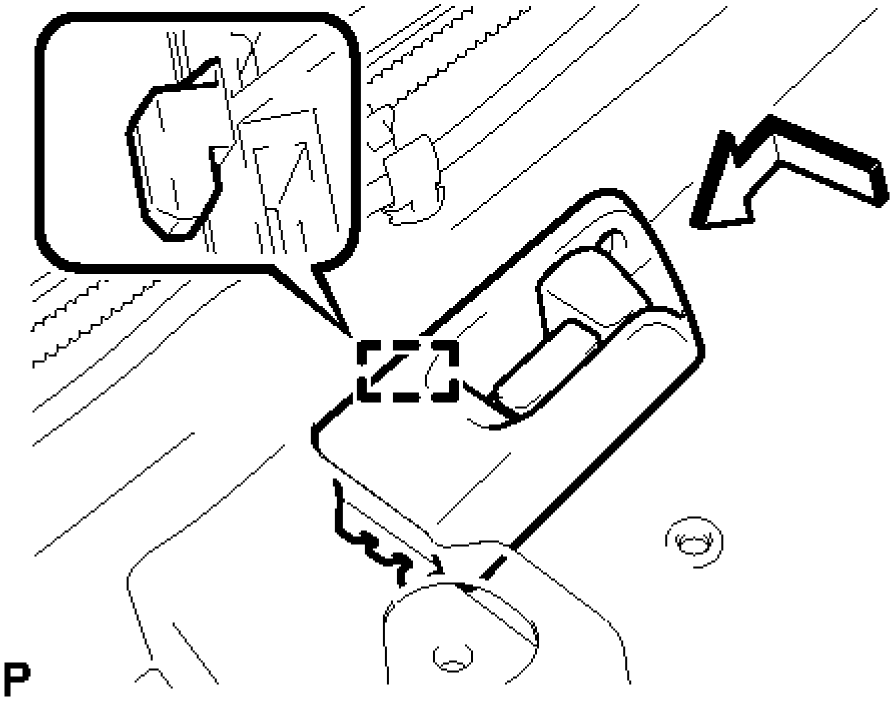

Fig. 39: Engaging Fuel Lid Lock Open Lever Guide
Courtesy of TOYOTA MOTOR SALES, U.S.A., INC.

   d. Install the screw.

10. **INSTALL FLOOR CARPET HOOK** . Refer to **INSTALLATION - Step 16** .
11. **INSTALL DCM (TELEMATICS TRANSCEIVER) WITH BACK-UP BATTERY (w/ Manual (SOS) Switch)** . Refer to **INSTALLATION - Step 4** .
12. **INSTALL AUDIO AMPLIFIER COVER (w/ Manual (SOS) Switch)** . Refer to **INSTALLATION - Step 5** .
13. **INSTALL STEREO COMPONENT AMPLIFIER ASSEMBLY WITH BRACKET (for 10 Speakers)** . Refer to **INSTALLATION - Step 4** .
14. **INSTALL AUDIO AMPLIFIER COVER (for 10 Speakers)** . Refer to **INSTALLATION - Step 5** .
15. **INSTALL FRONT SEAT ASSEMBLY LH**
    - For TMMK Made Manual Seat: Refer to **INSTALLATION** .
    - For TMMK Made Power Seat: Refer to **INSTALLATION** .

- For SIA Made Manual Seat: Refer to **INSTALLATION** .
- For SIA Made Power Seat: Refer to **INSTALLATION** .

16. **INSTALL FRONT SEAT ASSEMBLY RH**

    HINT:

    Use the same procedure as for the LH side.

17. **INSTALL CENTER PILLAR LOWER GARNISH LH** . Refer to **INSTALLATION - Step 22** .
18. **CONNECT FRONT SEAT OUTER BELT ASSEMBLY LH** . Refer to **INSTALLATION - Step 6** .
19. **INSTALL LAP BELT OUTER ANCHOR COVER (for LH Side)** . Refer to **INSTALLATION - Step 7** .
20. **INSTALL REAR DOOR OPENING TRIM WEATHERSTRIP LH** . Refer to **INSTALLATION - Step 25** .
21. **INSTALL REAR DOOR SCUFF PLATE LH** . Refer to **INSTALLATION - Step 26** .
22. **INSTALL CENTER PILLAR LOWER GARNISH RH** . Refer to **INSTALLATION - Step 29** .
23. **CONNECT FRONT SEAT OUTER BELT ASSEMBLY RH** . Refer to **INSTALLATION - Step 30** .
24. **INSTALL LAP BELT OUTER ANCHOR COVER (for RH Side)** . Refer to **INSTALLATION - Step 31** .
25. **INSTALL REAR DOOR OPENING TRIM WEATHERSTRIP RH** . Refer to **INSTALLATION - Step 32** .
26. **INSTALL REAR DOOR SCUFF PLATE RH** . Refer to **INSTALLATION - Step 33** .
27. **INSTALL NO. 1 PARKING BRAKE CABLE ASSEMBLY**
    a. Pass the No. 1 parking brake cable assembly through the parking brake pedal assembly.
    b. Install the clip to the No. 1 parking brake cable assembly.
    c. Temporarily install the adjusting nut.
    d. Bend the parking brake pedal claw.

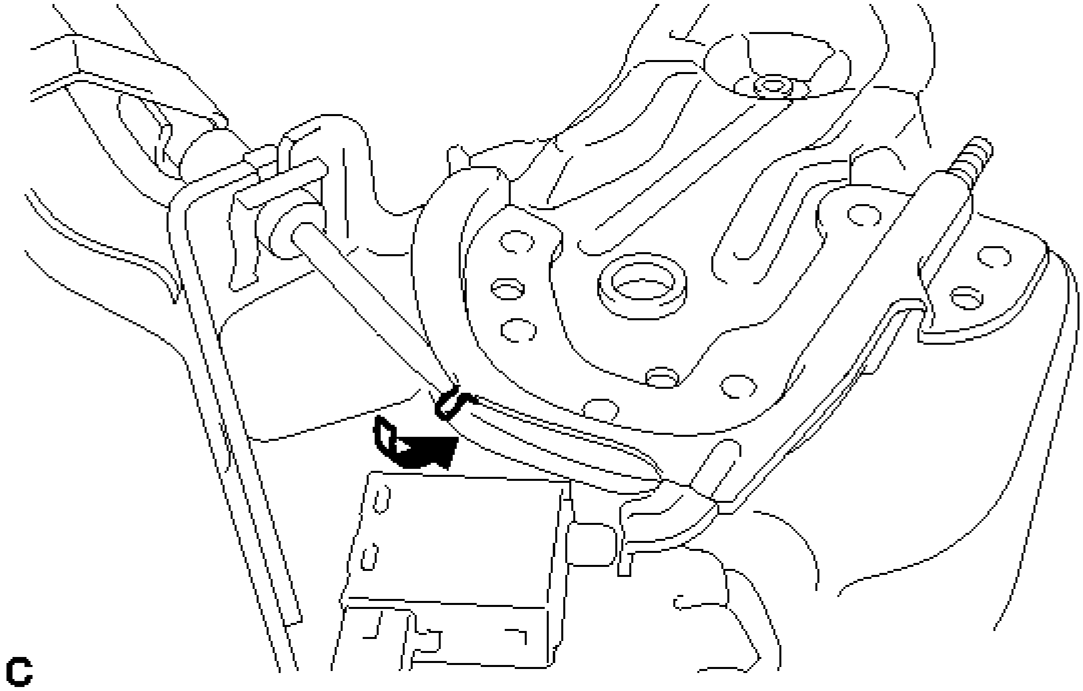

Fig. 40: Installing No. 1 Parking Brake Cable Assembly
Courtesy of TOYOTA MOTOR SALES, U.S.A., INC.

28. **INSTALL PARKING BRAKE CONTROL PEDAL ASSEMBLY**

Refer to **INSTALLATION**.

PARKING BRAKE ASSEMBLY

COMPONENTS

ILLUSTRATION

Fig. 41: Identifying Parking Brake Assembly Replacement Components With Torque Specifications (1 Of 3)
Courtesy of TOYOTA MOTOR SALES, U.S.A., INC.

ILLUSTRATION

Fig. 42: Identifying Parking Brake Assembly Replacement Components (2 Of 3)
Courtesy of TOYOTA MOTOR SALES, U.S.A., INC.

ILLUSTRATION

Fig. 43: Identifying Parking Brake Assembly Replacement Components (3 Of 3)
Courtesy of TOYOTA MOTOR SALES, U.S.A., INC.

DISASSEMBLY

DISASSEMBLY

HINT:

- Use the same procedure for the RH side and LH side.
- The following procedure is for the LH side.

1. **REMOVE REAR WHEEL**
2. **SEPARATE REAR DISC BRAKE CALIPER ASSEMBLY** . Refer to **REPLACEMENT - Step 2** .
3. **REMOVE PARKING BRAKE SHOE ADJUSTING HOLE PLUG**
4. **REMOVE REAR DISC** . Refer to **REMOVAL - Step 14** .
5. **REMOVE PARKING BRAKE SHOE RETURN TENSION SPRING (for Front Side)**
    a. Remove the parking brake shoe return tension spring.

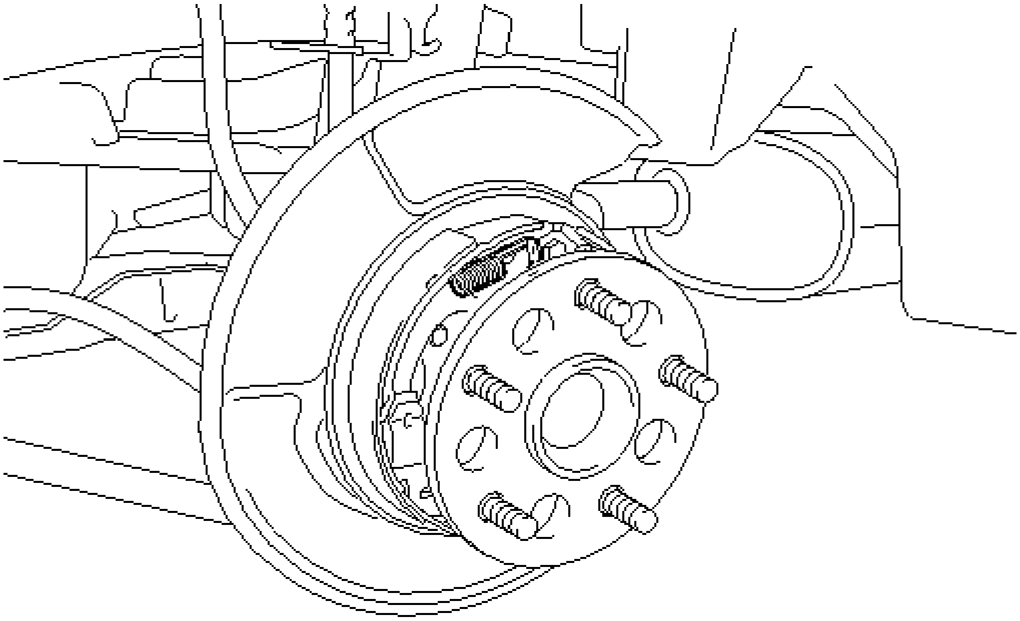

Fig. 44: Identifying Parking Brake Shoe Return Tension Spring (For Front Side)
Courtesy of TOYOTA MOTOR SALES, U.S.A., INC.

6. **REMOVE PARKING BRAKE SHOE RETURN TENSION SPRING (for Rear Side)**
   a. Remove the parking brake shoe return tension spring.

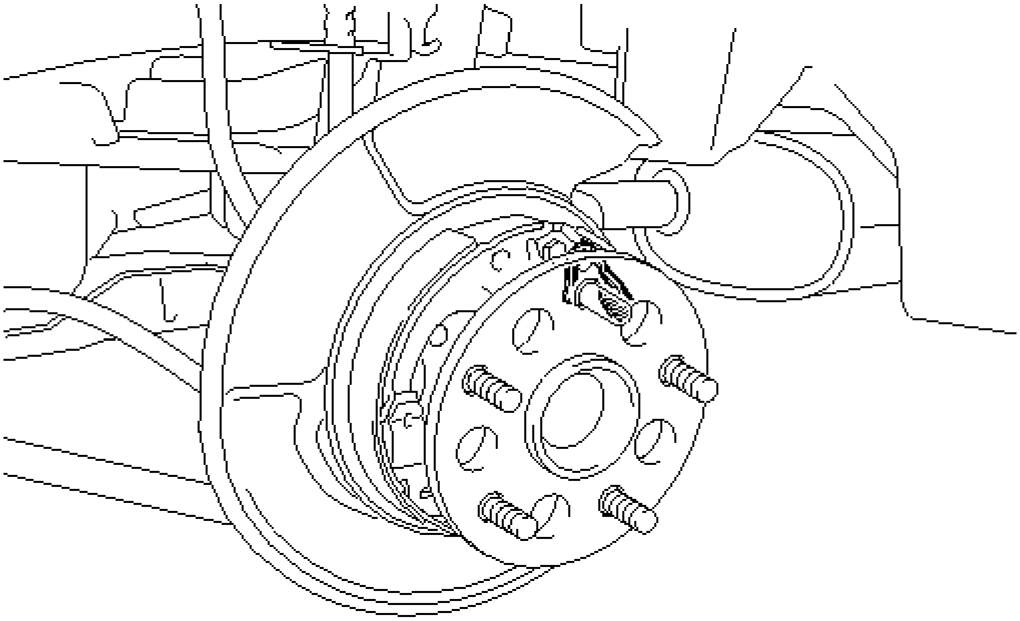

Fig. 45: Identifying Parking Brake Shoe Return Tension Spring (For Rear Side)

Courtesy of TOYOTA MOTOR SALES, U.S.A., INC.

7. **REMOVE PARKING BRAKE SHOE HOLD DOWN COMPRESSION SPRING (for Front Side)**
    a. Using SST, remove the parking brake shoe hold down compression spring.

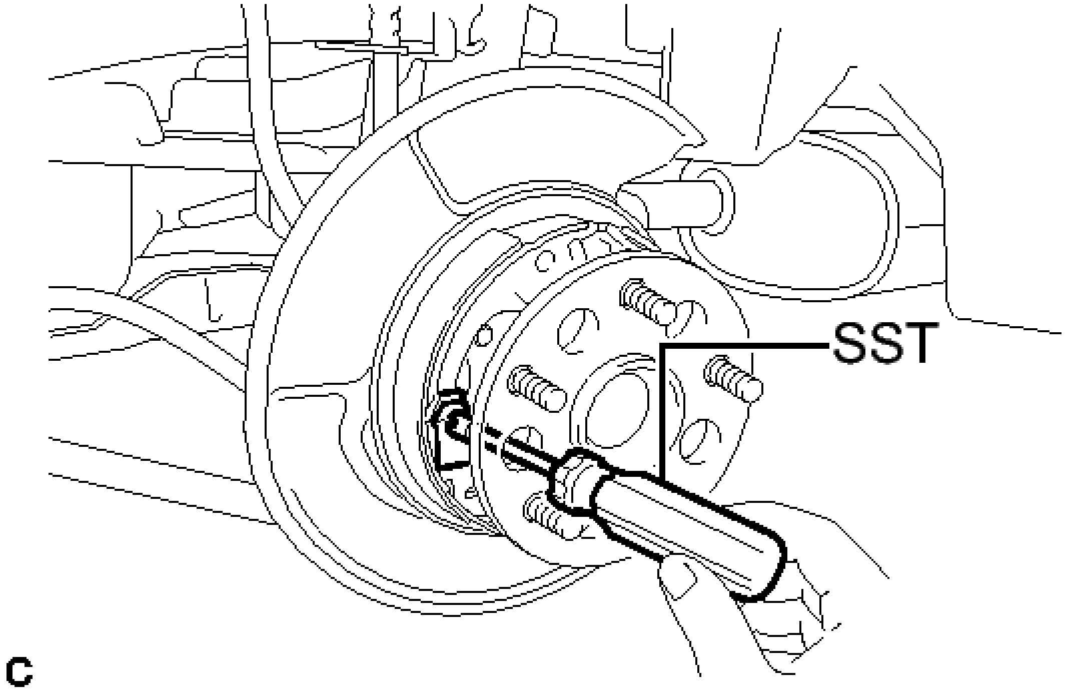

Fig. 46: Remove/Install Parking Brake Shoe Hold Down Compression Spring (For Front Side) Using SST
Courtesy of TOYOTA MOTOR SALES, U.S.A., INC.

- **SST: 09718-00011**

8. **REMOVE PARKING BRAKE SHOE STRUT**
    a. Pull the No. 1 parking brake shoe assembly towards the front of the vehicle by hand as shown in the illustration.

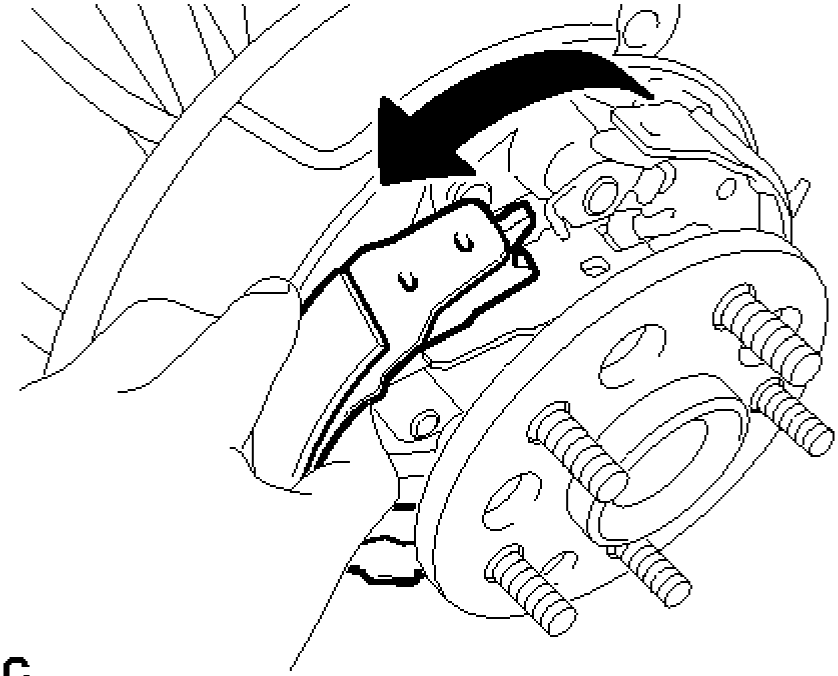

Fig. 47: Removing No. 1 Parking Brake Shoe Assembly
Courtesy of TOYOTA MOTOR SALES, U.S.A., INC.

b. Remove the parking brake shoe strut.

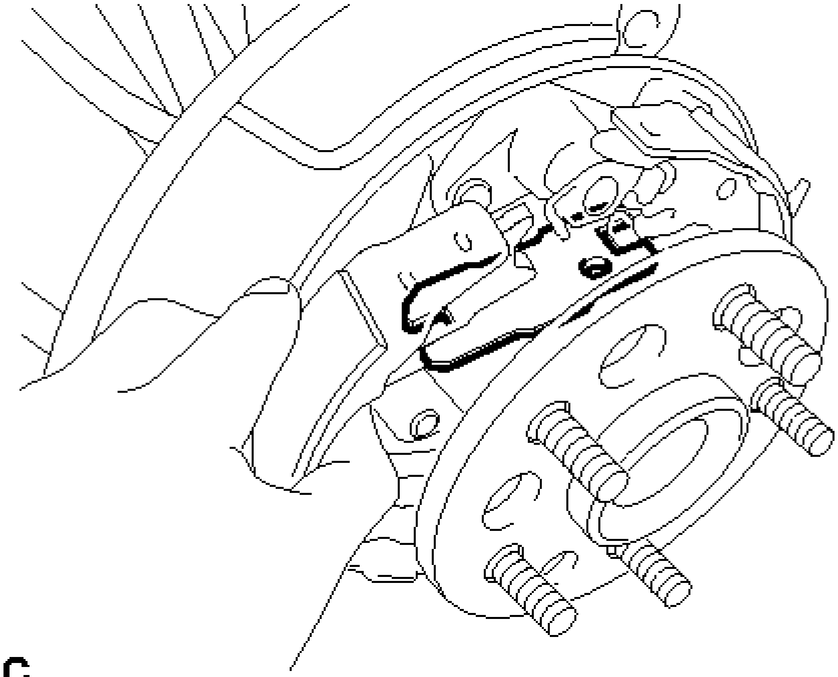

Fig. 48: Locating Parking Brake Shoe Strut
Courtesy of TOYOTA MOTOR SALES, U.S.A., INC.

9. **REMOVE PARKING BRAKE SHOE HOLD DOWN COMPRESSION SPRING (for Rear Side)**
    a. Using SST, remove the parking brake shoe hold down compression spring.

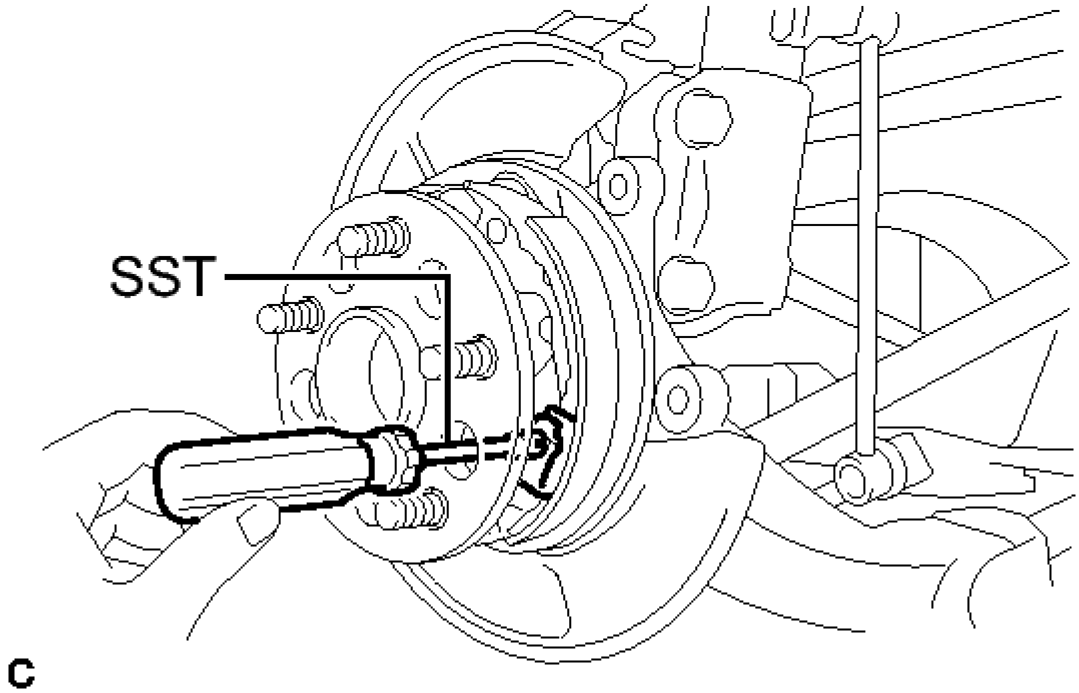

Fig. 49: Remove/Install Parking Brake Shoe Hold Down Compression Spring (For Rear Side)
Courtesy of TOYOTA MOTOR SALES, U.S.A., INC.

- **SST: 09718-00011**

10. **SEPARATE PARKING BRAKE SHOE LEVER**
    a. Expand the No. 1 and No. 2 parking brake shoe assemblies outward by hand and pull downward to separate them from the parking brake plate.

Fig. 50: Separating Parking Brake Shoe Assemblies
Courtesy of TOYOTA MOTOR SALES, U.S.A., INC.

b. Separate the parking brake shoe lever from the No. 2 parking brake shoe assembly.

11. **REMOVE PARKING BRAKE SHOE ADJUSTING SCREW SET**

a. Remove the parking brake shoe adjusting screw set.

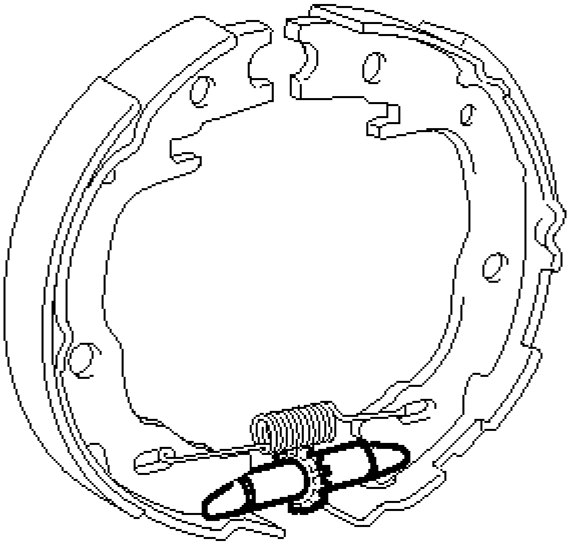

Fig. 51: Identifying Parking Brake Shoe Adjusting Screw Set
Courtesy of TOYOTA MOTOR SALES, U.S.A., INC.

12. **REMOVE NO. 1 PARKING BRAKE SHOE ASSEMBLY**
    a. Remove the No. 1 parking brake shoe assembly.

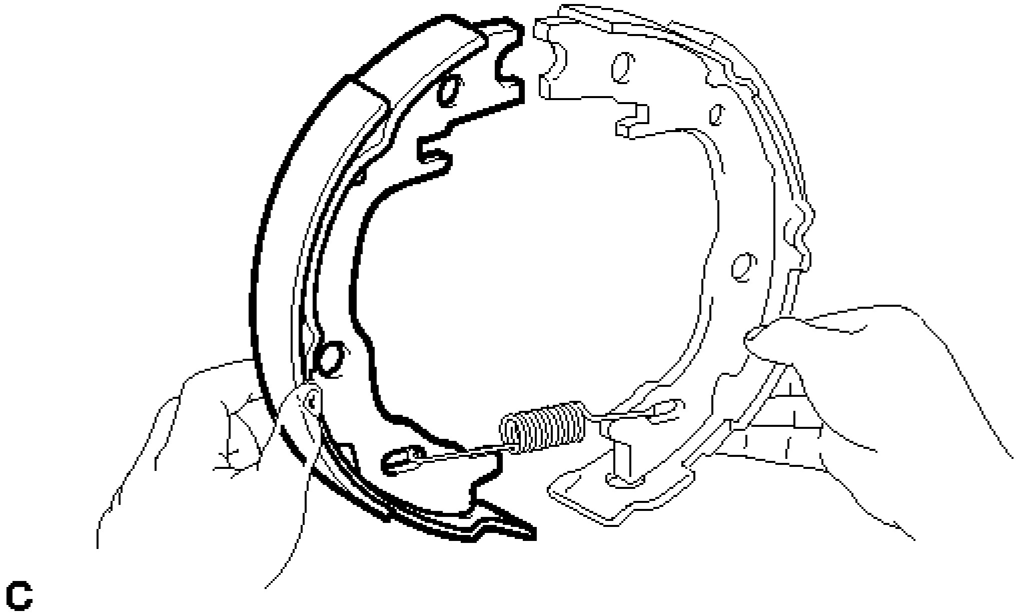

Fig. 52: Identifying No. 1 Parking Brake Shoe Assembly
Courtesy of TOYOTA MOTOR SALES, U.S.A., INC.

13. **REMOVE PARKING BRAKE SHOE RETURN TENSION SPRING (for Lower Side)**
    a. Remove the parking brake shoe return tension spring.

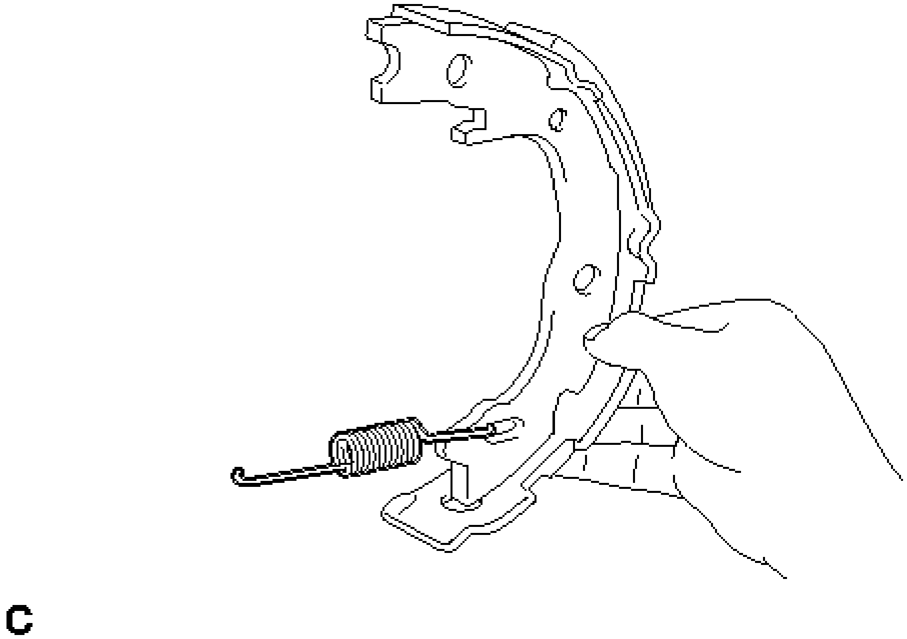

Fig. 53: Identifying Parking Brake Shoe Return Tension Spring (For Lower Side)

Courtesy of TOYOTA MOTOR SALES, U.S.A., INC.

14. **REMOVE PARKING BRAKE SHOE LEVER**
    a. Using needle-nose pliers, remove the parking brake shoe lever from the No. 3 parking brake cable assembly as shown in the illustration.

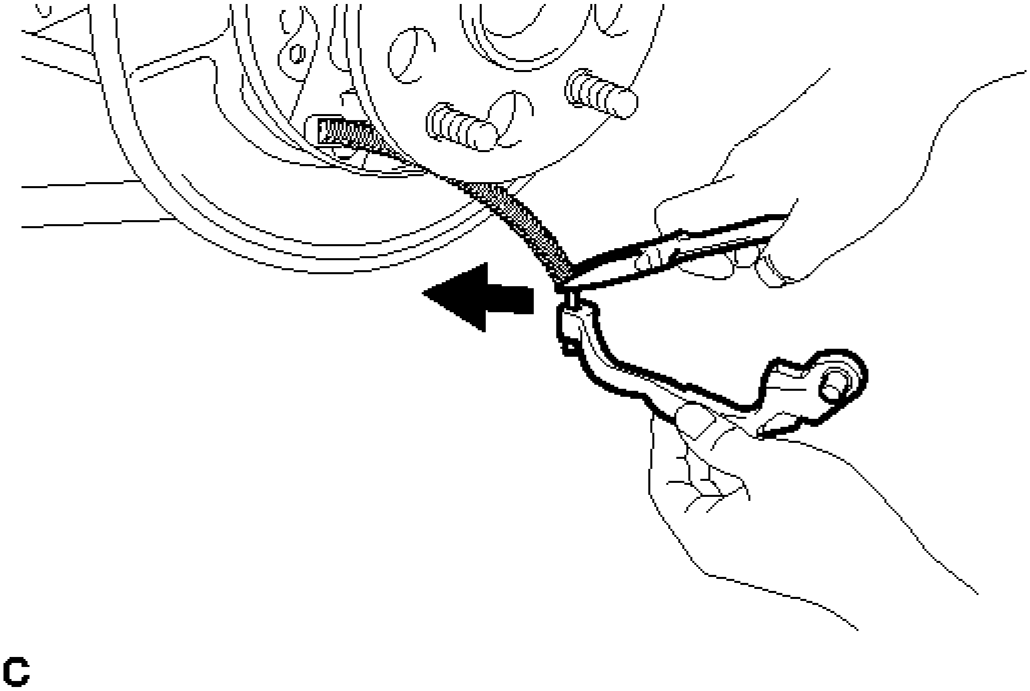

Fig. 54: Removing Parking Brake Shoe Lever From No. 3 Parking Brake Cable
Courtesy of TOYOTA MOTOR SALES, U.S.A., INC.

15. **REMOVE PARKING BRAKE SHOE HOLD DOWN SPRING PIN**
    a. Remove the parking brake shoe hold down spring pin (for front side).

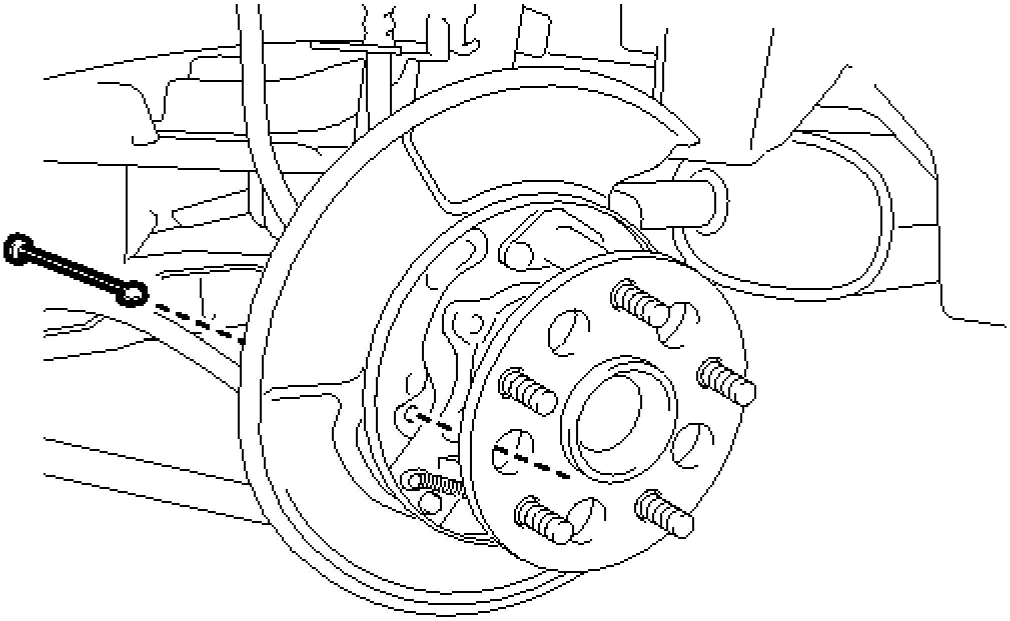

Fig. 55: Locating Parking Brake Shoe Hold Down Spring Pin (For Front Side)
Courtesy of TOYOTA MOTOR SALES, U.S.A., INC.

b. Remove the parking brake shoe hold down spring pin (for rear side).

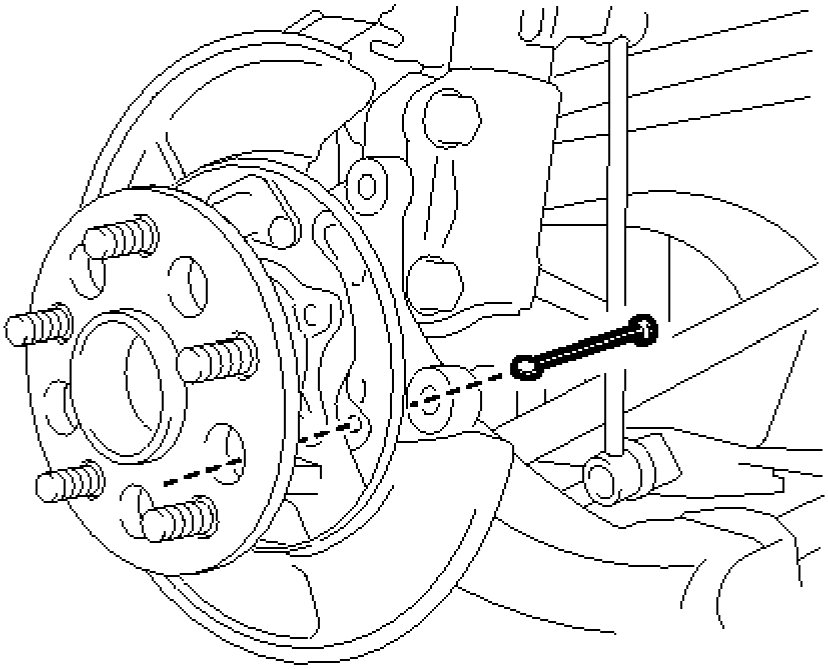

Fig. 56: Locating Parking Brake Shoe Hold Down Spring Pin (For Rear Side)
Courtesy of TOYOTA MOTOR SALES, U.S.A., INC.

INSPECTION

INSPECTION

1. **INSPECT BRAKE DISC INSIDE DIAMETER**
    a. Using a brake drum gauge or an equivalent tool, measure the inside diameter of the disc.

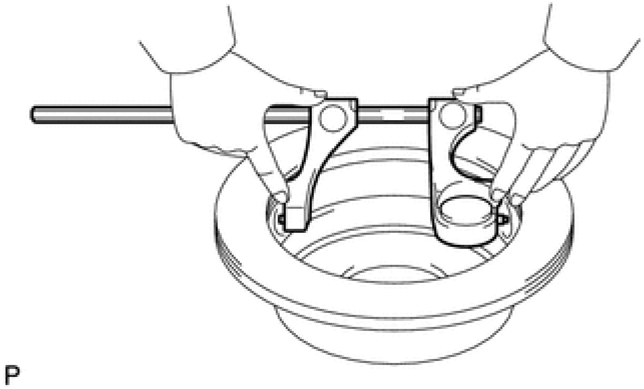

Fig. 57: Measuring Inside Diameter Of Disc
Courtesy of TOYOTA MOTOR SALES, U.S.A., INC.

Standard inside diameter

173 mm (6.81 in.)

Maximum inside diameter

174 mm (6.85 in.)

If the inside diameter is more than the maximum, replace the rear disc.

2. **INSPECT PARKING BRAKE SHOE LINING THICKNESS**
    a. Using a ruler, measure the thickness of the parking brake shoe lining.

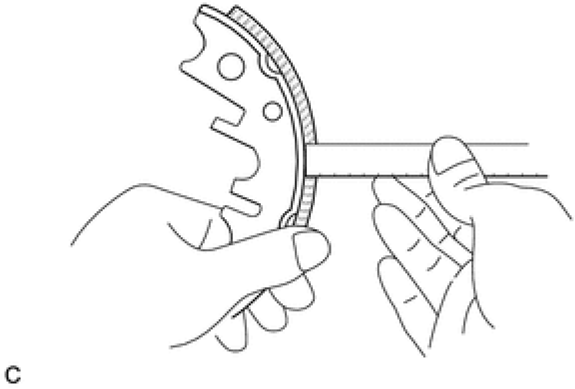

Fig. 58: Measuring Thickness Of Parking Brake Shoe Lining
Courtesy of TOYOTA MOTOR SALES, U.S.A., INC.

Standard thickness

3.35 mm (0.131 in.)

Minimum thickness

1.0 mm (0.0394 in.)

If the lining thickness is less than the minimum, or if there is severe or uneven wear, replace the parking brake shoe assembly.

NOTE: **Always replace both right and left parking brake shoes together.**

3. **INSPECT BRAKE DISC AND PARKING BRAKE SHOE LINING FOR PROPER CONTACT**
   1. Apply chalk to the inside surface of the disc, then slide the brake shoe against the disc to check the fit of the brake shoe lining to the disc.

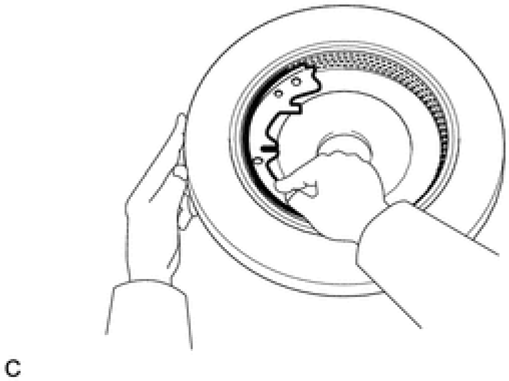

Fig. 59: Applying Chalk To Inside Surface Of Disc
Courtesy of TOYOTA MOTOR SALES, U.S.A., INC.

If the contact between the disc and the brake shoe lining is incorrect, repair it using a brake shoe grinder or replace the parking brake shoe assembly.

NOTE:

- **Always replace both right and left parking brake shoes together.**
- **Wipe off the chalk after inspection.**

REASSEMBLY

REASSEMBLY

1. **APPLY HIGH TEMPERATURE GREASE**

a. Apply high temperature grease to the areas of the parking brake plate which make contact with the shoe as shown in the illustration.

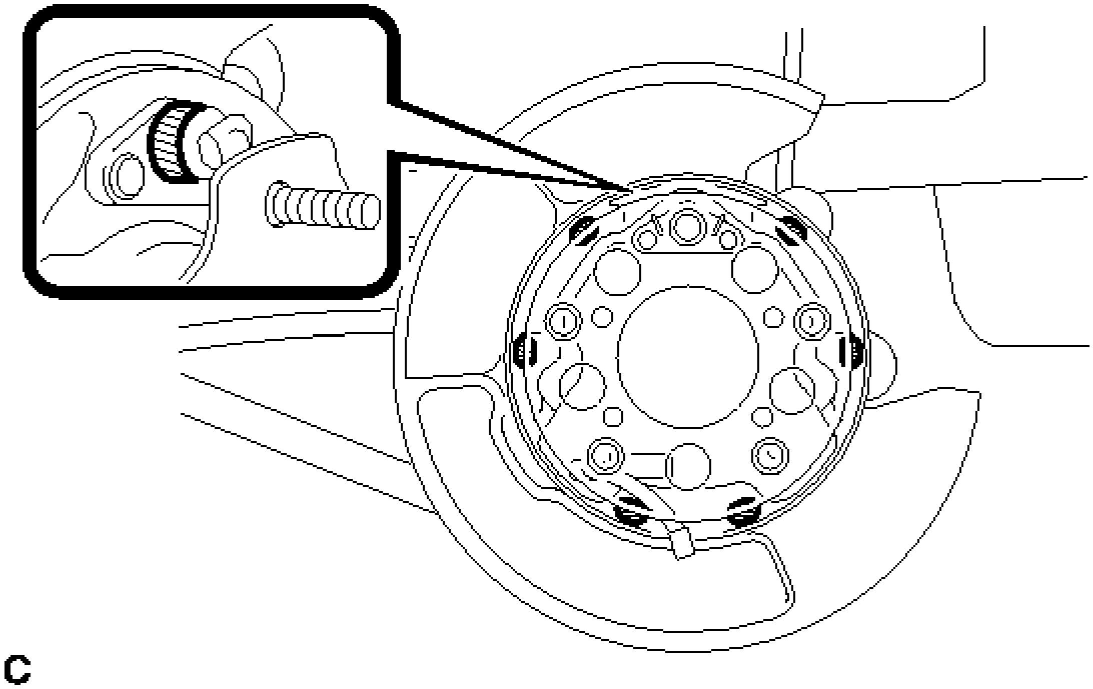

Fig. 60: Locating High Temperature Grease Applying Areas
Courtesy of TOYOTA MOTOR SALES, U.S.A., INC.

TEXT IN ILLUSTRATION

	High Temperature Grease

2. **INSTALL PARKING BRAKE SHOE HOLD DOWN SPRING PIN**
    a. Install the 2 parking brake shoe hold down spring pins.
3. **INSTALL PARKING BRAKE SHOE RETURN TENSION SPRING (for Lower Side)**
    a. Install the parking brake shoe return tension spring to the No. 2 parking brake shoe assembly.
4. **INSTALL NO. 1 PARKING BRAKE SHOE ASSEMBLY**
    a. Install the No. 1 parking brake shoe assembly to the parking brake shoe return tension spring.
5. **INSTALL PARKING BRAKE SHOE ADJUSTING SCREW SET**
    a. Apply high temperature grease to the parking brake shoe adjusting screw set as shown in the illustration.

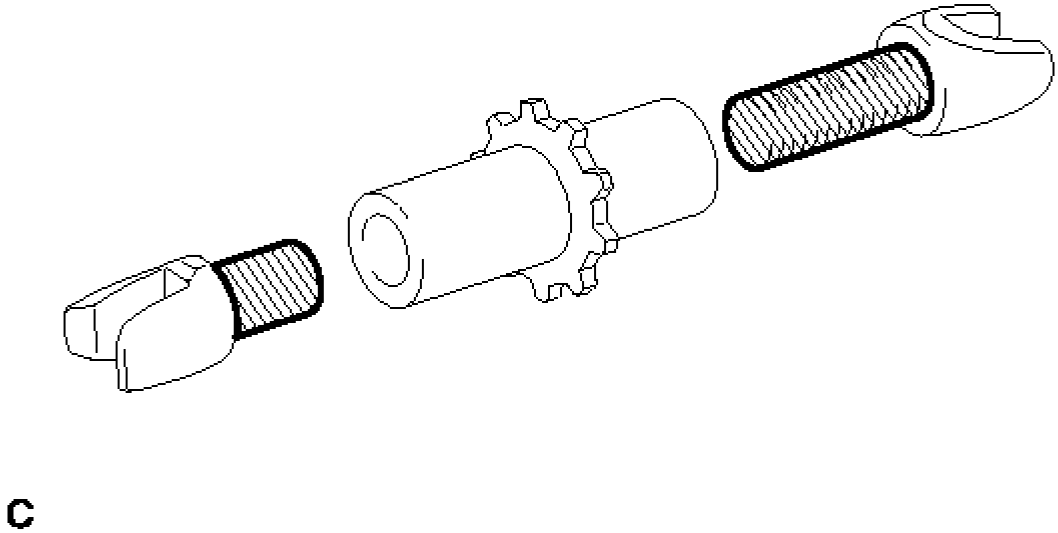

Fig. 61: Locating High Temperature Grease Applying Areas To Parking Brake Shoe Adjusting Screw Set
Courtesy of TOYOTA MOTOR SALES, U.S.A., INC.

TEXT IN ILLUSTRATION

	High Temperature Grease

b. Install the parking brake shoe adjusting screw set to the No. 1 parking brake shoe assembly and No. 2 parking brake shoe assembly.

6. **INSTALL PARKING BRAKE SHOE LEVER**

    a. Using needle-nose pliers, install the parking brake shoe lever to the No. 3 parking brake cable assembly.

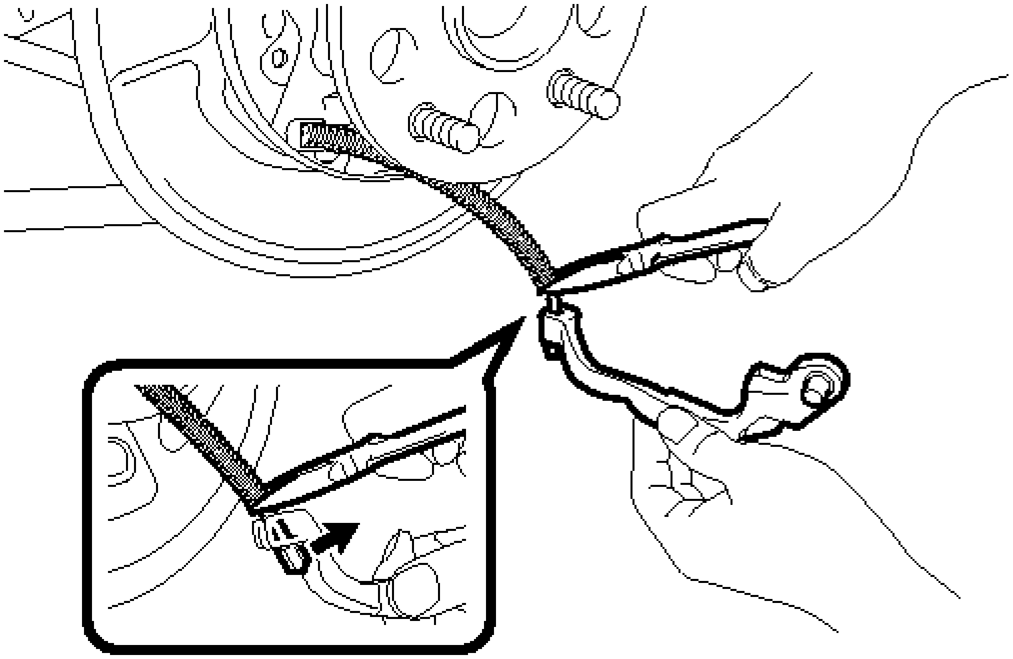

Fig. 62: Installing Parking Brake Shoe Lever To No. 3 Parking Brake Cable
Courtesy of TOYOTA MOTOR SALES, U.S.A., INC.

b. Apply high temperature grease to the areas of the parking brake shoe lever which make contact with the No. 2 parking brake shoe assembly.

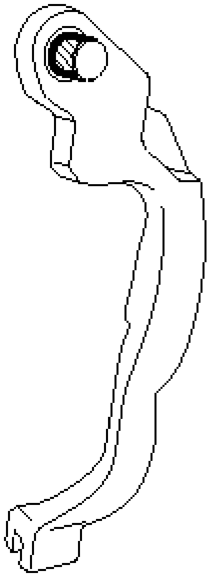

Fig. 63: Locating High Temperature Grease Applying Areas To Parking Brake Shoe Lever

Courtesy of TOYOTA MOTOR SALES, U.S.A., INC.

TEXT IN ILLUSTRATION

	High Temperature Grease

c. Install the parking brake shoe lever to the No. 2 parking brake shoe assembly.

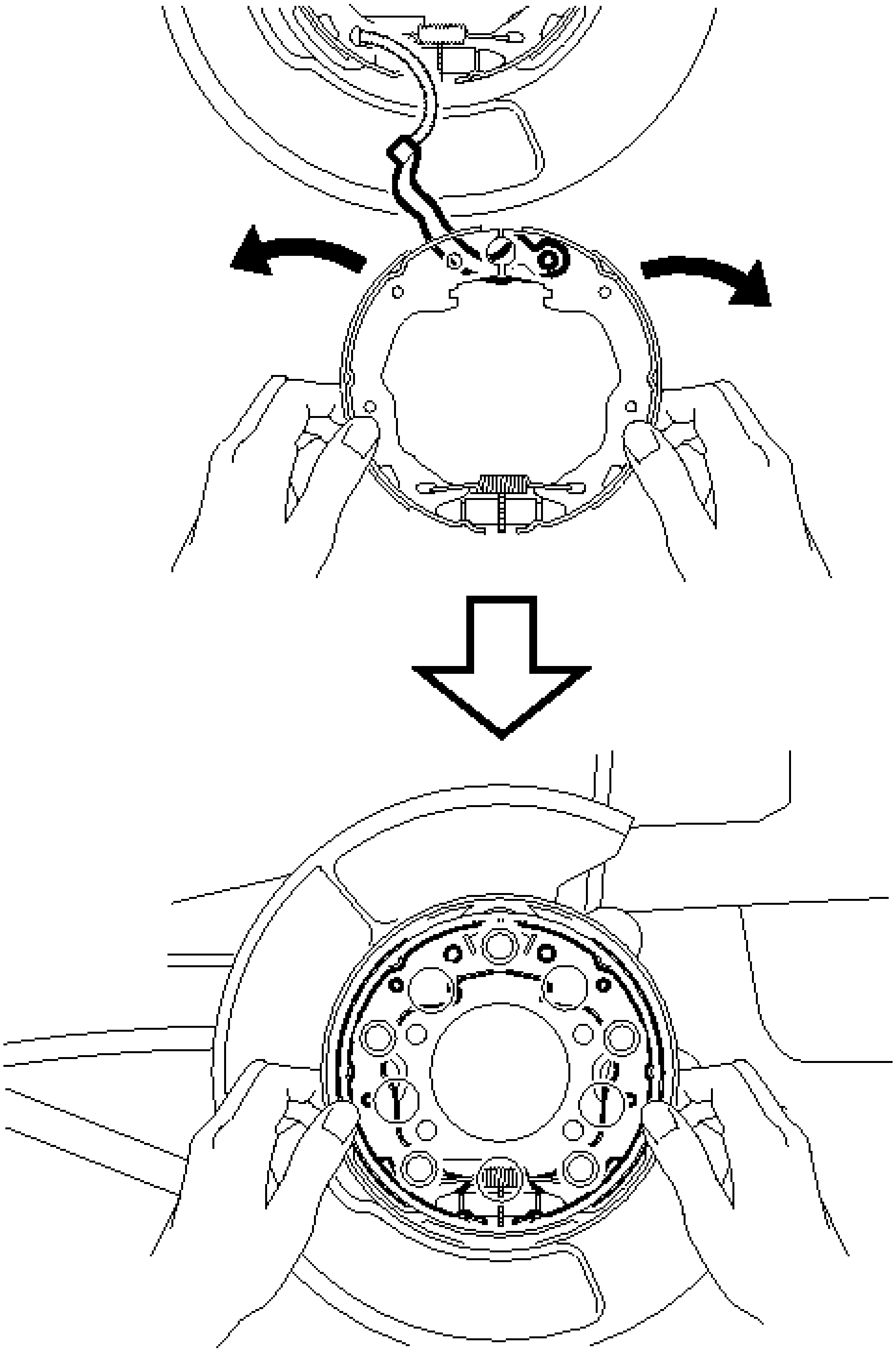

Fig. 64: Installing Parking Brake Shoe Assembly
Courtesy of TOYOTA MOTOR SALES, U.S.A., INC.

d. Expand the No. 1 and No. 2 parking brake shoe assemblies outward by hand and fit them to the parking brake plate.

NOTE: Make sure that the parking brake shoe lever does not separate from the No. 2 parking brake shoe assembly.

7. **INSTALL PARKING BRAKE SHOE HOLD DOWN COMPRESSION SPRING (for Rear Side)**
   1. Using SST, install the parking brake shoe hold down compression spring.

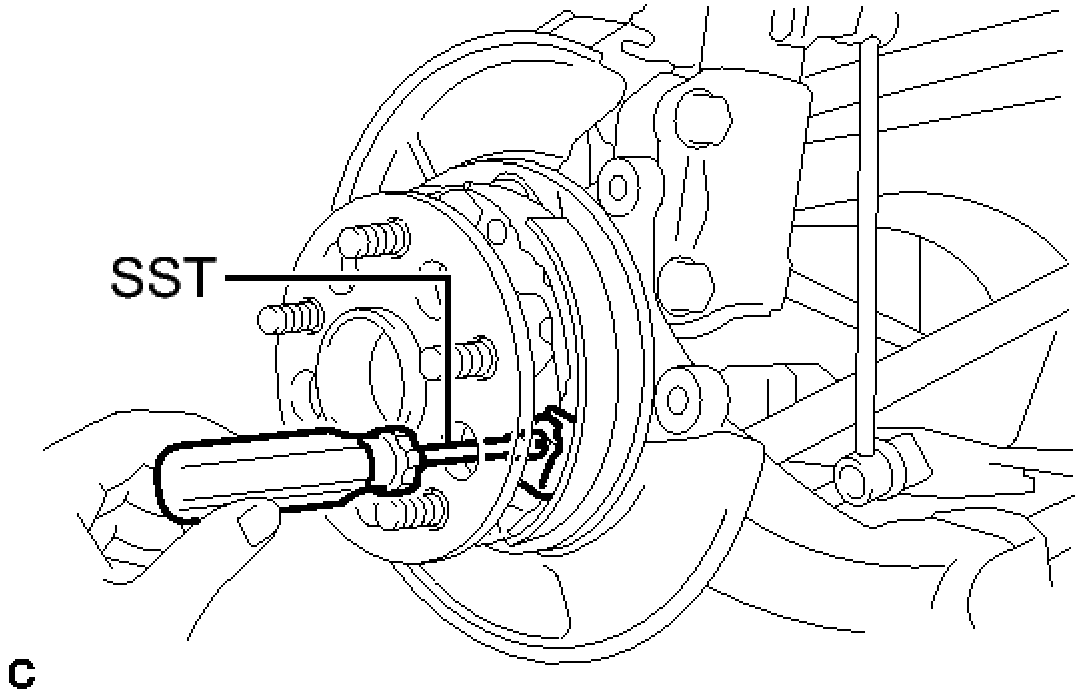

Fig. 65: Remove/Install Parking Brake Shoe Hold Down Compression Spring (For Rear Side)
Courtesy of TOYOTA MOTOR SALES, U.S.A., INC.

- **SST: 09718-00011**

8. **INSTALL PARKING BRAKE SHOE STRUT**
   1. Install the parking brake shoe strut.
   2. Install the No. 1 parking brake shoe assembly.

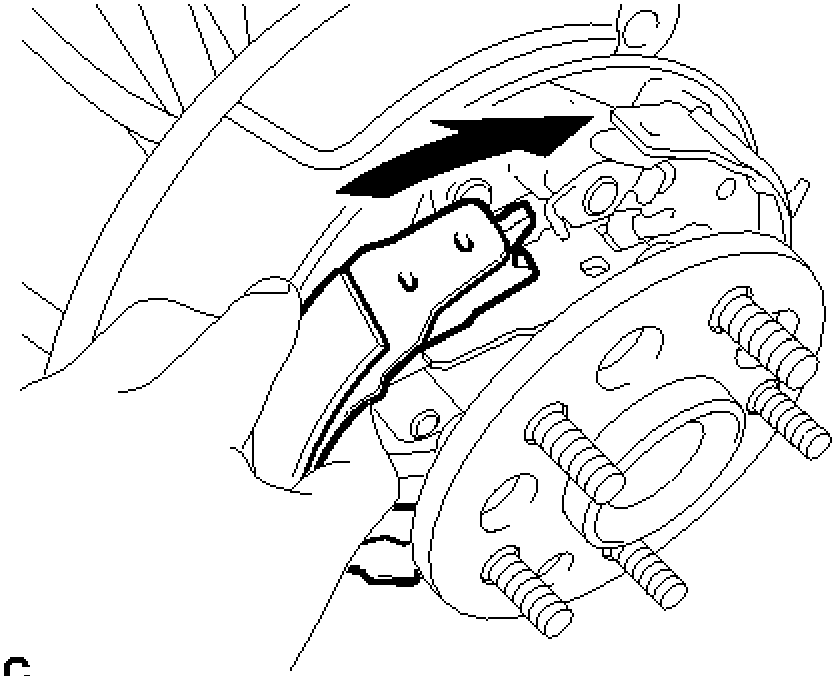

Fig. 66: Installing No. 1 Parking Brake Shoe Assembly
Courtesy of TOYOTA MOTOR SALES, U.S.A., INC.

9. **INSTALL PARKING BRAKE SHOE HOLD DOWN COMPRESSION SPRING (for Front Side)**
   a. Using SST, install the parking brake shoe hold down compression spring.

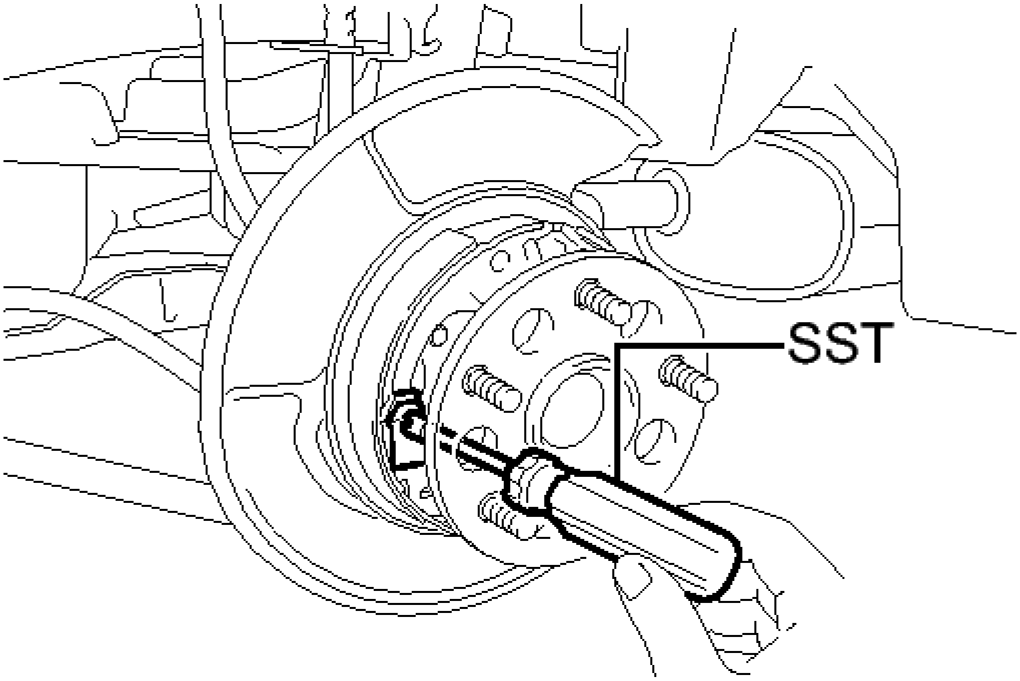

Fig. 67: Remove/Install Parking Brake Shoe Hold Down Compression Spring (For Front

Side) Using SST
Courtesy of TOYOTA MOTOR SALES, U.S.A., INC.

- **SST: 09718-00011**

10. **INSTALL PARKING BRAKE SHOE RETURN TENSION SPRING (for Rear Side)**
    a. Apply a small amount of high temperature grease to the areas shown in the illustration.

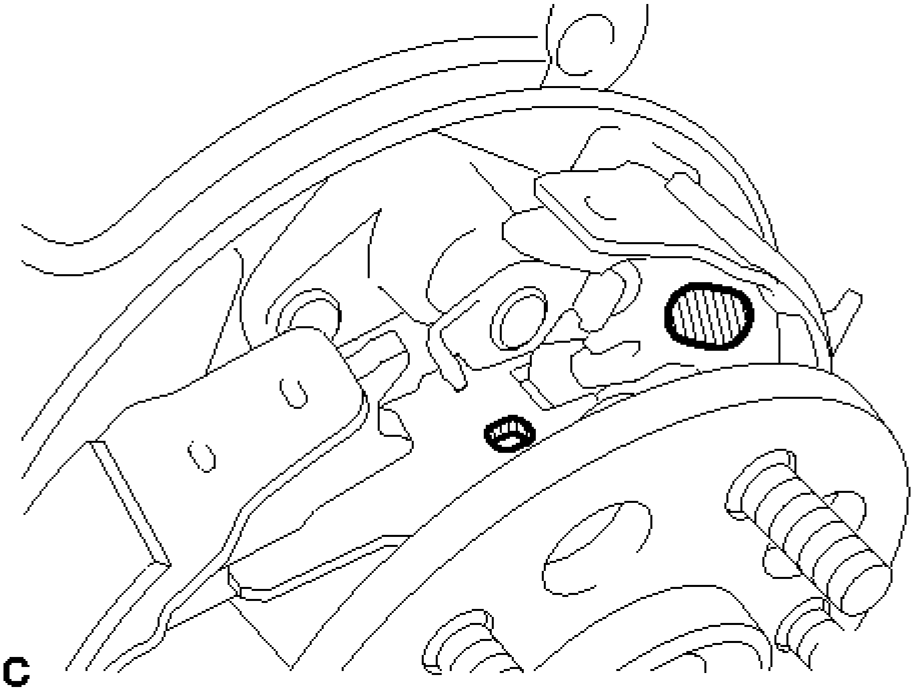

Fig. 68: Locating High Temperature Grease Applying Areas To Parking Brake Shoe Assembly
Courtesy of TOYOTA MOTOR SALES, U.S.A., INC.

TEXT IN ILLUSTRATION

	High Temperature Grease

    b. Install the parking brake shoe return tension spring.

11. **INSTALL PARKING BRAKE SHOE RETURN TENSION SPRING (for Front Side)**
    a. Install the parking brake shoe return tension spring.
12. **CHECK PARKING BRAKE INSTALLATION**
    a. Check that each part is installed properly.

Fig. 69: Identifying Correct Parking Brake Installation
Courtesy of TOYOTA MOTOR SALES, U.S.A., INC.

TEXT IN ILLUSTRATION

*A	LH Side	*B	RH Side
	Front of the Vehicle	-	-

NOTE: **There should be no oil or grease on the friction surfaces of the shoe linings or discs.**

13. **INSTALL REAR DISC** . Refer to **INSTALLATION - Step 1** .
14. **INSTALL PARKING BRAKE SHOE ADJUSTING HOLE PLUG**
15. **INSTALL REAR DISC BRAKE CALIPER ASSEMBLY** . Refer to **REPLACEMENT - Step 9** .
16. **ADJUST PARKING BRAKE SHOE CLEARANCE AND PARKING BRAKE PEDAL TRAVEL** . Refer to **ADJUSTMENT - Step 2** .
17. **INSTALL REAR WHEEL**

    Torque: 103 N*m (1049 kgf*cm, 76 ft.*lbf)

18. **BED IN PARKING BRAKE SHOES TO DISCS**
    a. Drive the vehicle at about 50 km/h (31 mph) on a safe, level and dry road.

b. Depress the parking brake pedal with 150 N (15 kgf, 33.7 lbf) of force.
c. Drive the vehicle for about 400 m (0.25 mile) in this condition.
d. Repeat this procedure 3 times.

NOTE: Set a 5-minute interval between each procedure to prevent the brake assembly from overheating.

PARKING BRAKE SWITCH

COMPONENTS

ILLUSTRATION

Fig. 70: Identifying Parking Brake Switch Replacement Components With Torque Specifications
Courtesy of TOYOTA MOTOR SALES, U.S.A., INC.

REMOVAL

REMOVAL

1. **REMOVE PARKING BRAKE CONTROL PEDAL ASSEMBLY**

   Refer to **REMOVAL**.

2. **REMOVE PARKING BRAKE SWITCH ASSEMBLY**
   a. Remove the screw and parking brake switch assembly from the parking brake control pedal assembly.

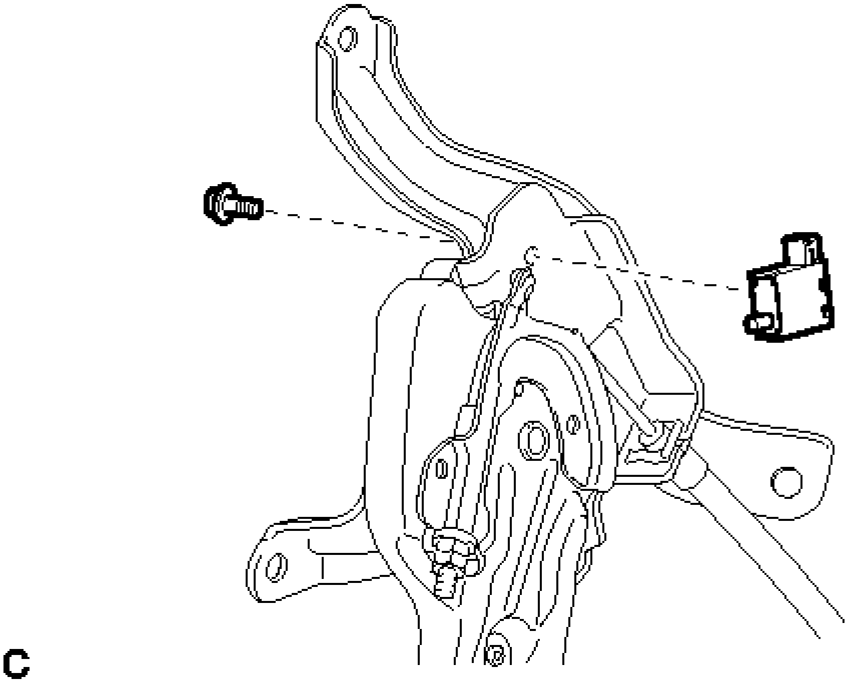

Fig. 71: Identifying Parking Brake Switch Assembly
Courtesy of TOYOTA MOTOR SALES, U.S.A., INC.

INSPECTION

INSPECTION

1. **INSPECT PARKING BRAKE SWITCH ASSEMBLY**
    a. Measure the resistance between the connector terminal and the nut inside the parking brake switch assembly.

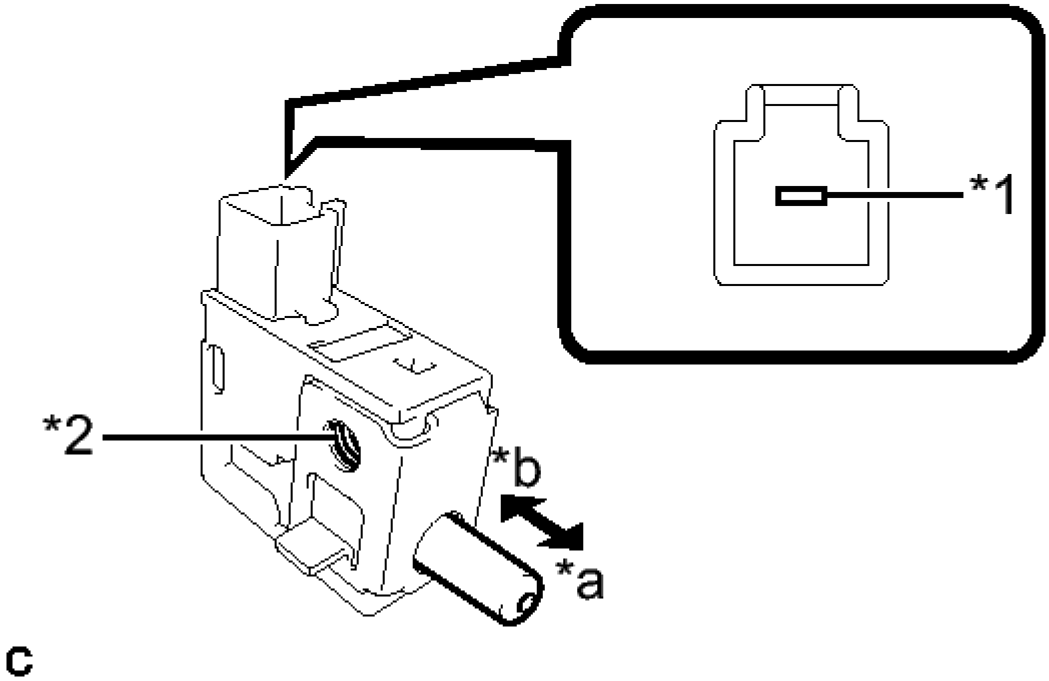

Fig. 72: Inspecting Parking Brake Switch Assembly
Courtesy of TOYOTA MOTOR SALES, U.S.A., INC.

TEXT IN ILLUSTRATION

*1	Terminal
*2	Nut
*a	ON
*b	OFF

STANDARD RESISTANCE

Tester Connection	Switch Condition	Specified Condition
Terminal - Nut	On (When shaft is not pressed)	Below 1 ohms
Terminal - Nut	Off (When shaft is pressed)	10 kohms or higher

If the value is not as specified, replace the parking brake switch assembly.

INSTALLATION

INSTALLATION

1. **INSTALL PARKING BRAKE SWITCH ASSEMBLY**
    a. Install the parking brake switch assembly to the parking brake control pedal assembly with the screw.

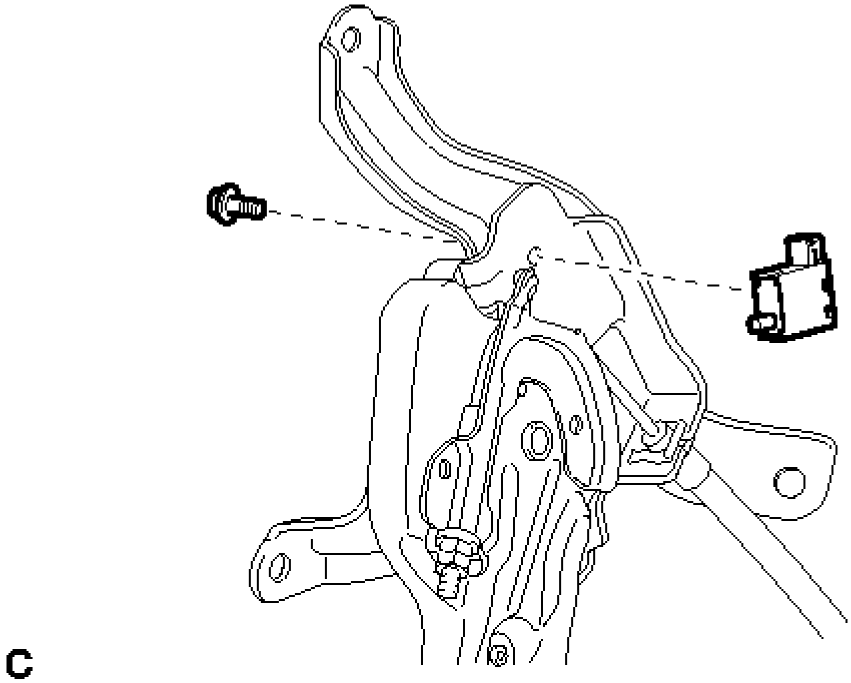

Fig. 73: Identifying Parking Brake Switch Assembly
Courtesy of TOYOTA MOTOR SALES, U.S.A., INC.

Torque: 3.2 N*m (33 kgf*cm, 28 in.*lbf)

2. **INSTALL PARKING BRAKE CONTROL PEDAL ASSEMBLY**

    Refer to **INSTALLATION**.

MAIN BODY ECU

COMPONENTS

ILLUSTRATION

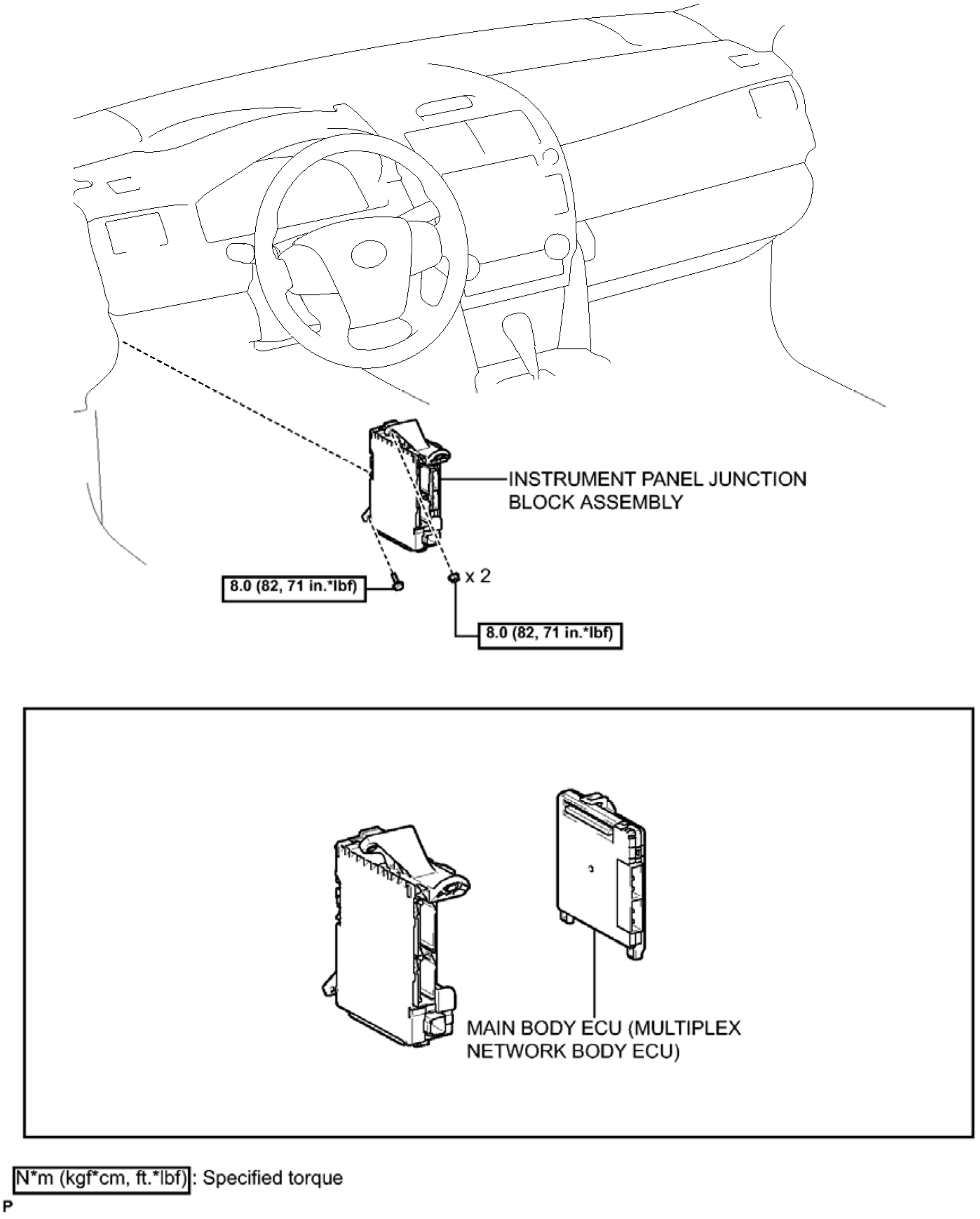
INSTRUMENT PANEL JUNCTION BLOCK ASSEMBLY
8.0 (82, 71 in.*lbf)
x 2
8.0 (82, 71 in.*lbf)
MAIN BODY ECU (MULTIPLEX NETWORK BODY ECU)
N*m (kgf*cm, ft.*lbf): Specified torque
P

Fig. 1: Identifying Main Body ECU Replacement Components With Torque Specifications
Courtesy of TOYOTA MOTOR SALES, U.S.A., INC.

REMOVAL

REMOVAL

1. **REMOVE POWER MANAGEMENT CONTROL ECU**

Refer to **REMOVAL**

2. **REMOVE INSTRUMENT PANEL JUNCTION BLOCK ASSEMBLY**
   a. Disconnect the 5 connectors.

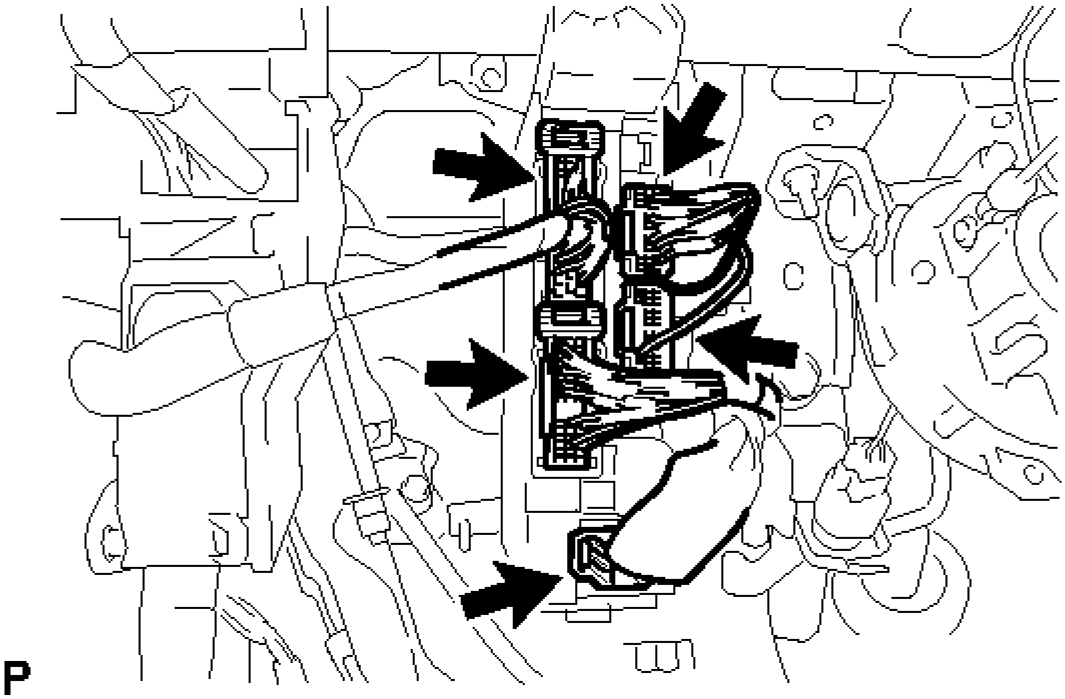

Fig. 2: Identifying Instrument Panel Junction Block Connectors
Courtesy of TOYOTA MOTOR SALES, U.S.A., INC.

   b. Remove the bolt and 2 nuts, and disconnect the instrument panel junction block assembly.

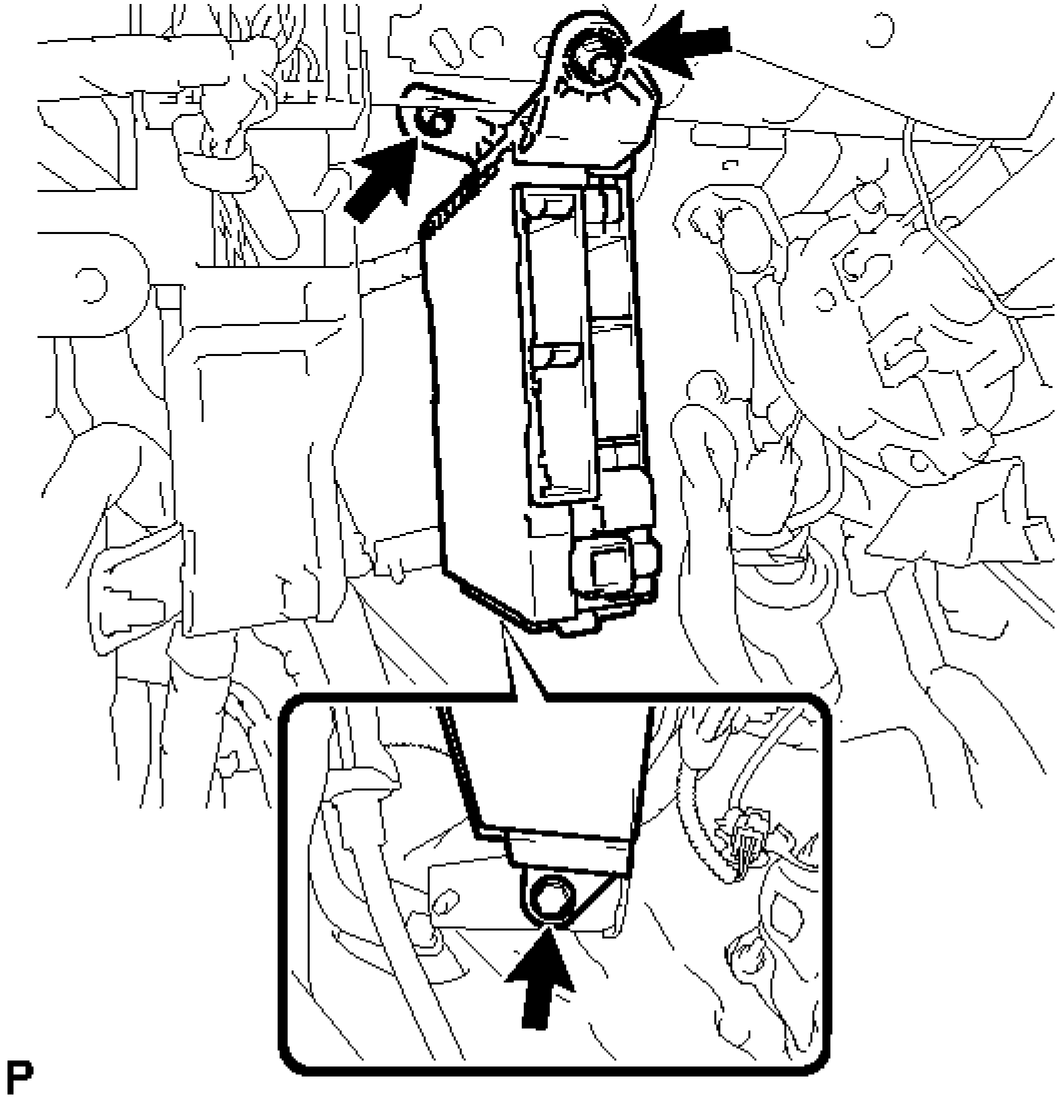

Fig. 3: Identifying Instrument Panel Junction Block Bolt And Nuts
Courtesy of TOYOTA MOTOR SALES, U.S.A., INC.

c. Disengage the claw and disconnect the connector as shown in the illustration.

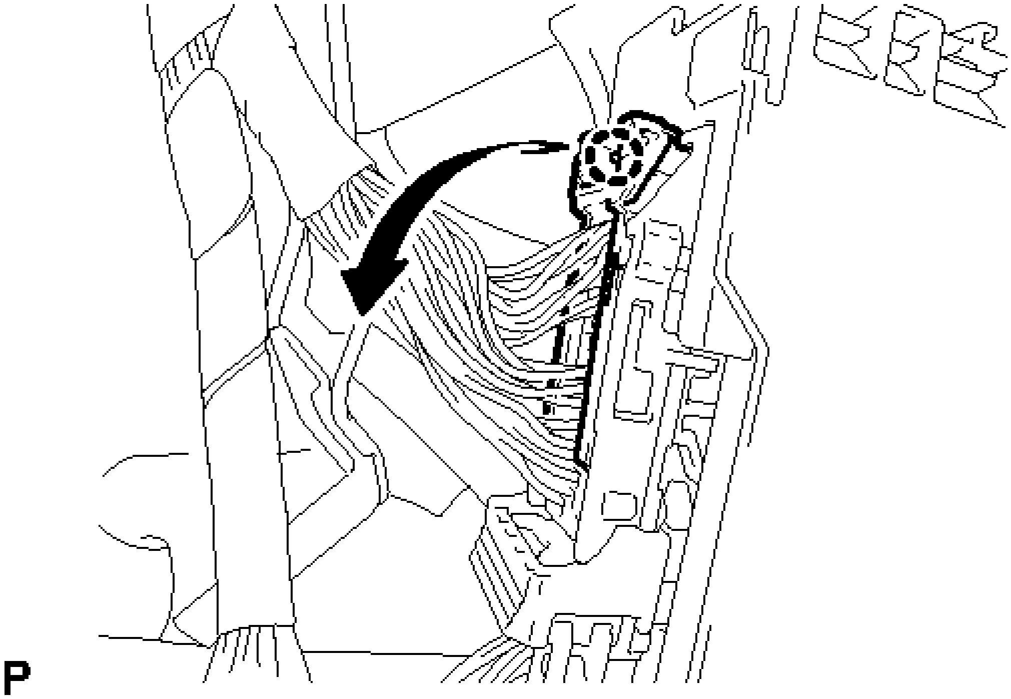

Fig. 4: Identifying Instrument Panel Junction Block Connector Claw
Courtesy of TOYOTA MOTOR SALES, U.S.A., INC.

d. Disengage the claw and release the connector lock as shown in the illustration.

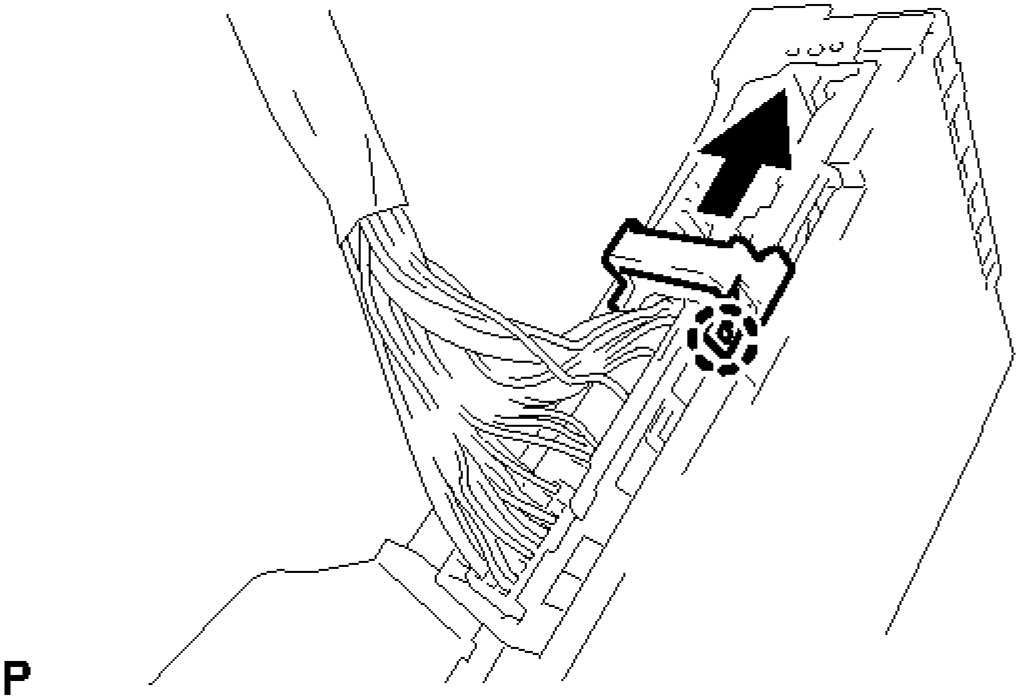

Fig. 5: Releasing Instrument Panel Junction Block Assembly Connector Lock
Courtesy of TOYOTA MOTOR SALES, U.S.A., INC.

e. Disengage the claw and disconnect the connector as shown in the illustration to remove the instrument panel junction block assembly.

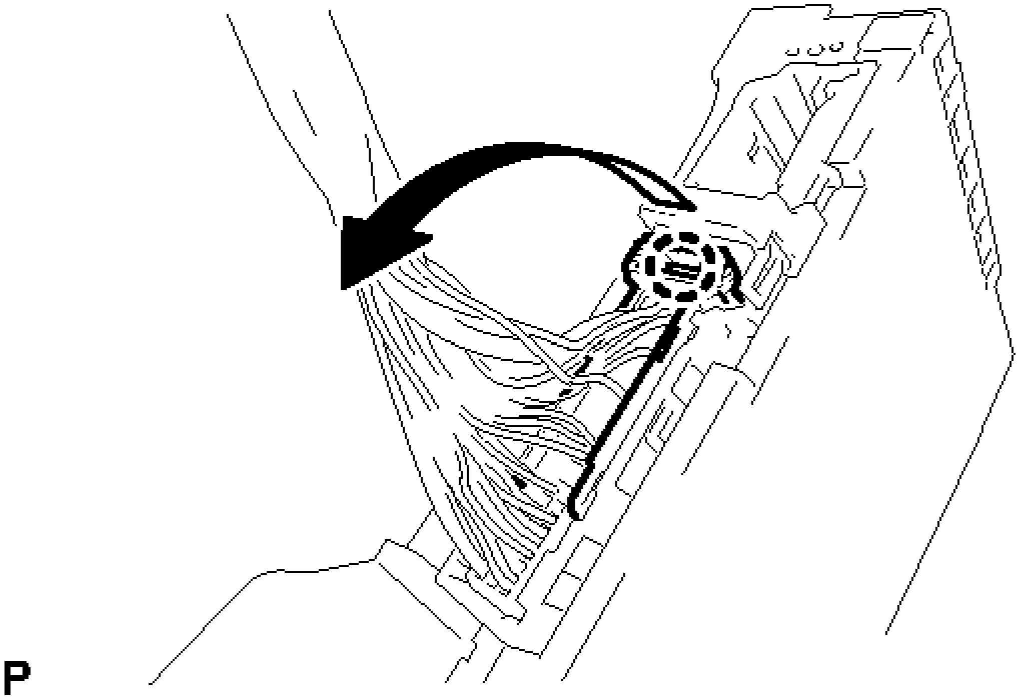

Fig. 6: Disconnecting Instrument Panel Junction Block Assembly Connector
Courtesy of TOYOTA MOTOR SALES, U.S.A., INC.

3. **REMOVE MAIN BODY ECU (MULTIPLEX NETWORK BODY ECU)**
   a. Press the claw of the junction block as shown in the illustration to release the lock.

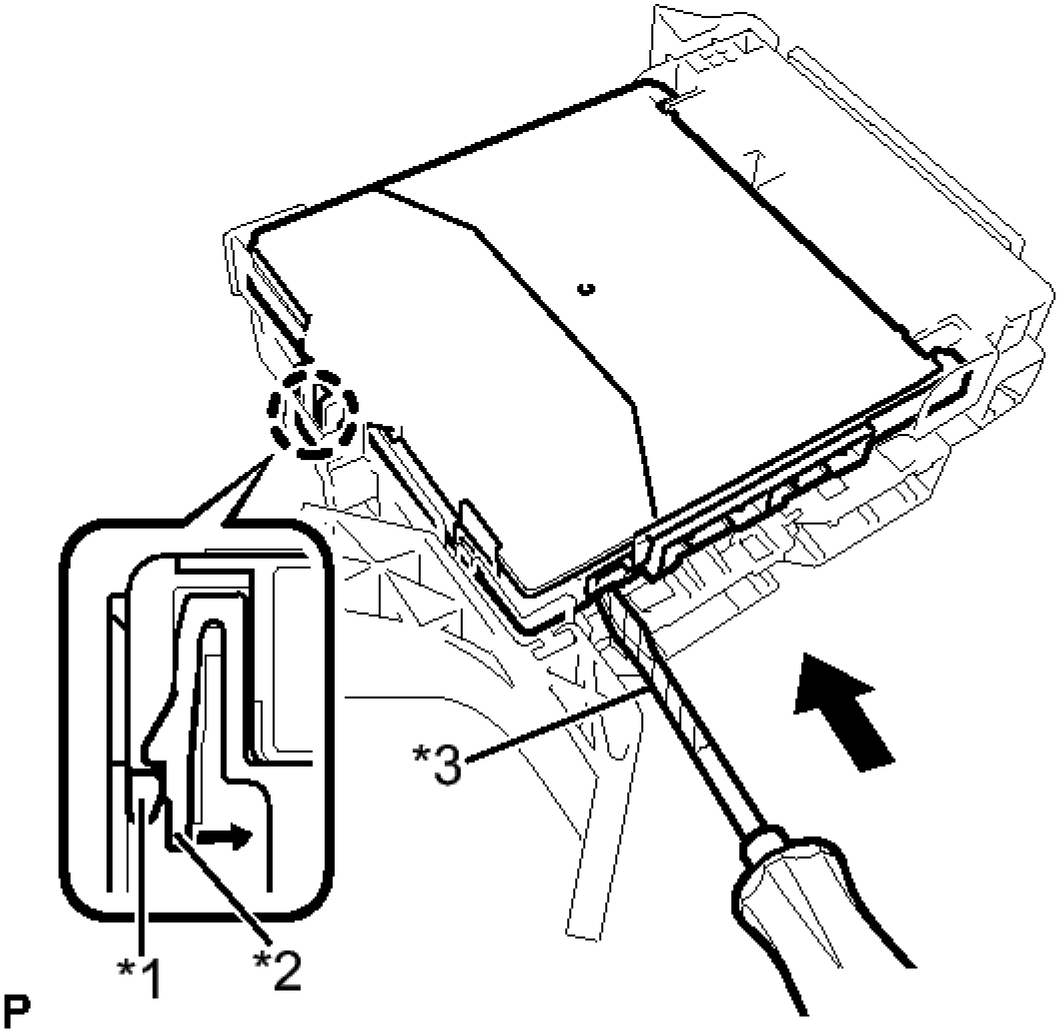

Fig. 7: Identifying Junction Block Claw
Courtesy of TOYOTA MOTOR SALES, U.S.A., INC.

TEXT IN ILLUSTRATION

*1	Main Body ECU (Multiplex Network Body ECU)
*2	Claw of Junction Block
*3	Protective Tape

b. With the junction block lock released, insert a screwdriver with its tip wrapped with protective tape horizontally between the main body ECU (multiplex network body ECU) and junction block.

NOTE: **Use a screwdriver with a diameter of between 5.0 mm (0.197 in.) and 6.3 mm (0.248 in.) and a length of approximately 90 mm (3.54 in.).**

c. Using the screwdriver, carefully raise the main body ECU (multiplex network body ECU) up to the position where the connector becomes disengaged.

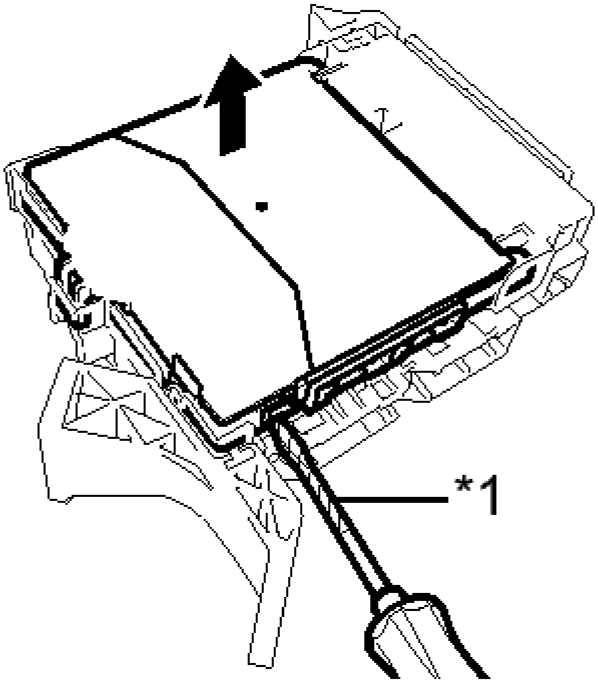

Fig. 8: Identifying Main Body ECU (Multiplex Network Body ECU)
Courtesy of TOYOTA MOTOR SALES, U.S.A., INC.

TEXT IN ILLUSTRATION

*1	Protective Tape

NOTE:

- **Do not insert the screwdriver opening between the junction block and the connector of the main body ECU (multiplex network body ECU).**
- **Do not twist the screwdriver to raise the main body ECU (multiplex network body ECU).**

d. Raise the main body ECU (multiplex network body ECU) as shown by the arrow (1), and then pull it out as shown by the arrow (2) in the illustration.

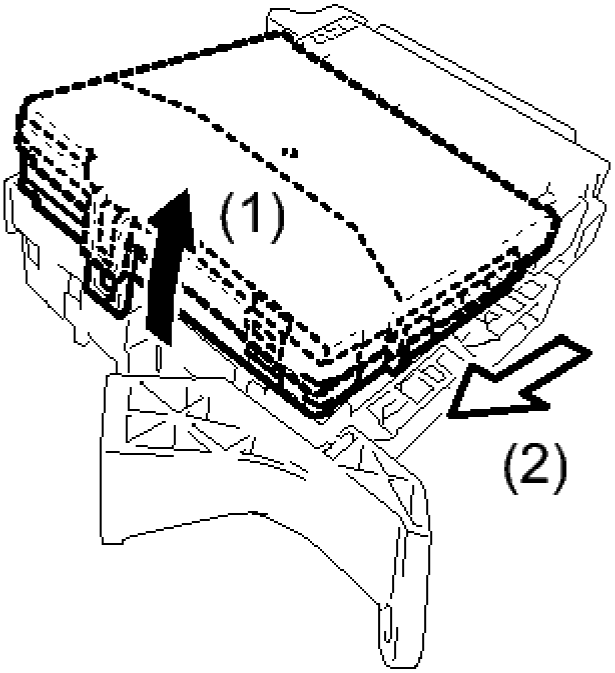

P

Fig. 9: Identifying Main Body ECU (Multiplex Network Body ECU)
Courtesy of TOYOTA MOTOR SALES, U.S.A., INC.

NOTE: **Do not touch the ECU connector.**

INSTALLATION

INSTALLATION

1. **INSTALL MAIN BODY ECU (MULTIPLEX NETWORK BODY ECU)**

NOTE:

- **Make sure that no foreign matter gets on the connecting surfaces.**
- **Do not touch the ECU connector.**

a. Insert the main body ECU (multiplex network body ECU) up to the position where it contacts the housing sidewall of the guide as shown in the illustration.

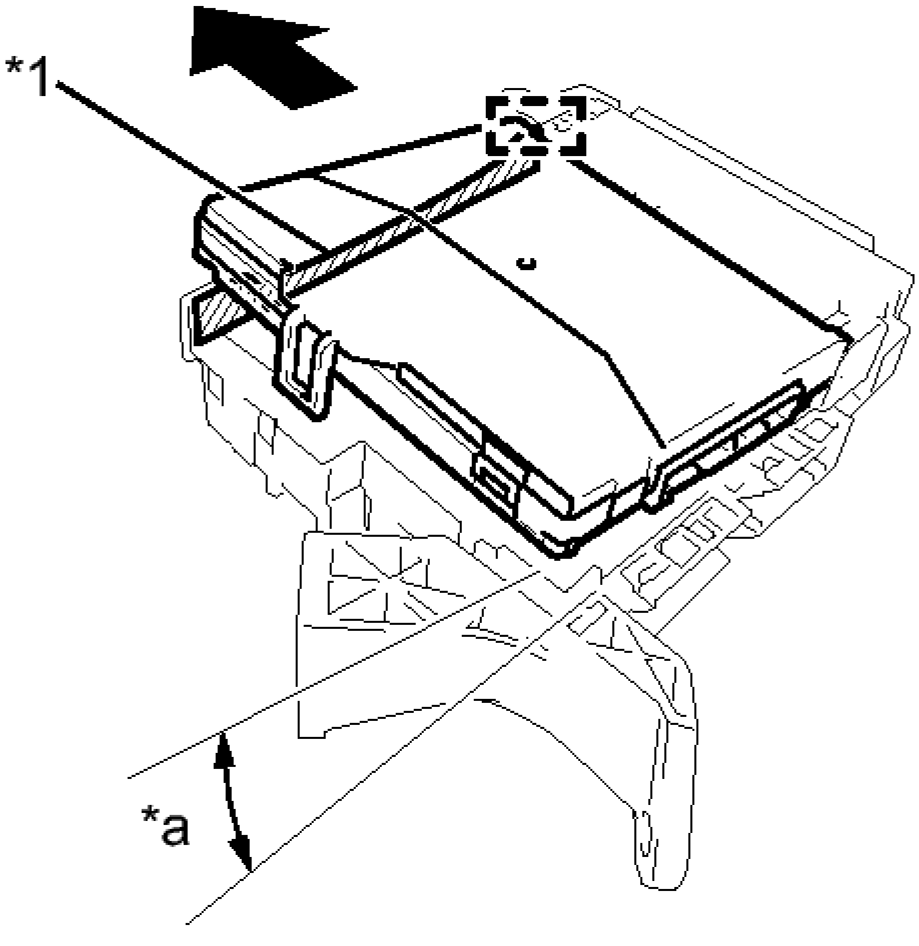

Fig. 10: Identifying Housing Sidewall
Courtesy of TOYOTA MOTOR SALES, U.S.A., INC.

TEXT IN ILLUSTRATION

*1	Housing Sidewall
*a	20°

HINT:

Make sure to keep the angle 20° or more as shown in the illustration.

b. Slide the guide of the main body ECU (multiplex network body ECU) along the housing sidewall so that it contacts the junction block fuses as shown in the illustration.

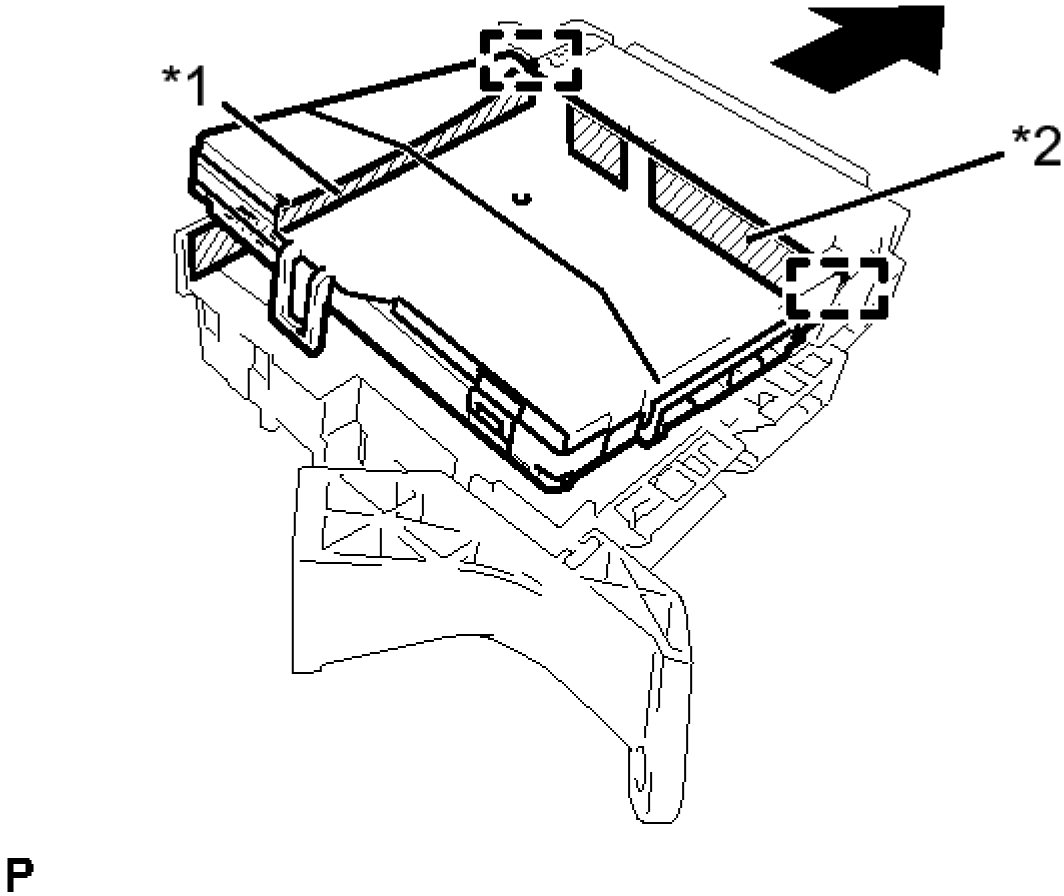

Fig. 11: Identifying Housing Sidewall And Junction Block Fuse
Courtesy of TOYOTA MOTOR SALES, U.S.A., INC.

TEXT IN ILLUSTRATION

*1	Housing Sidewall
*2	Junction Block Fuse

c. While keeping the main body ECU (multiplex network body ECU) in contact with side A of the junction block (axis of rotation), rotate it downward as shown in the illustration.

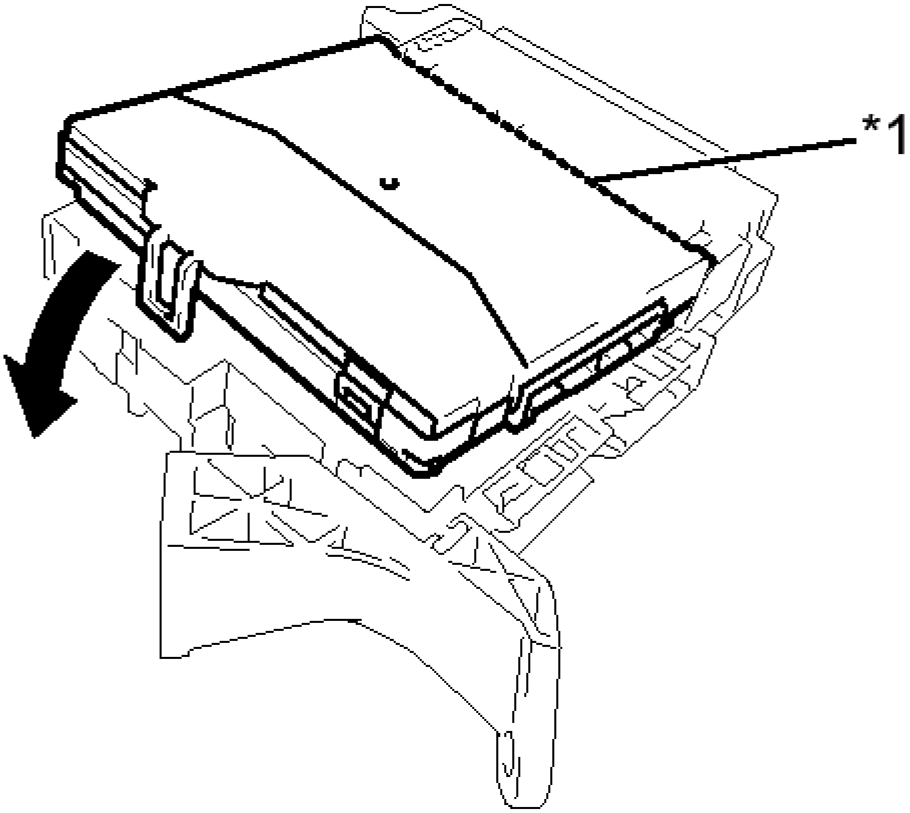

Fig. 12: Identifying Side A Contact Portion
Courtesy of TOYOTA MOTOR SALES, U.S.A., INC.

TEXT IN ILLUSTRATION

*1	Side A Contact Portion

d. Press the push area until the claw engages to install the main body ECU (multiplex network body ECU).

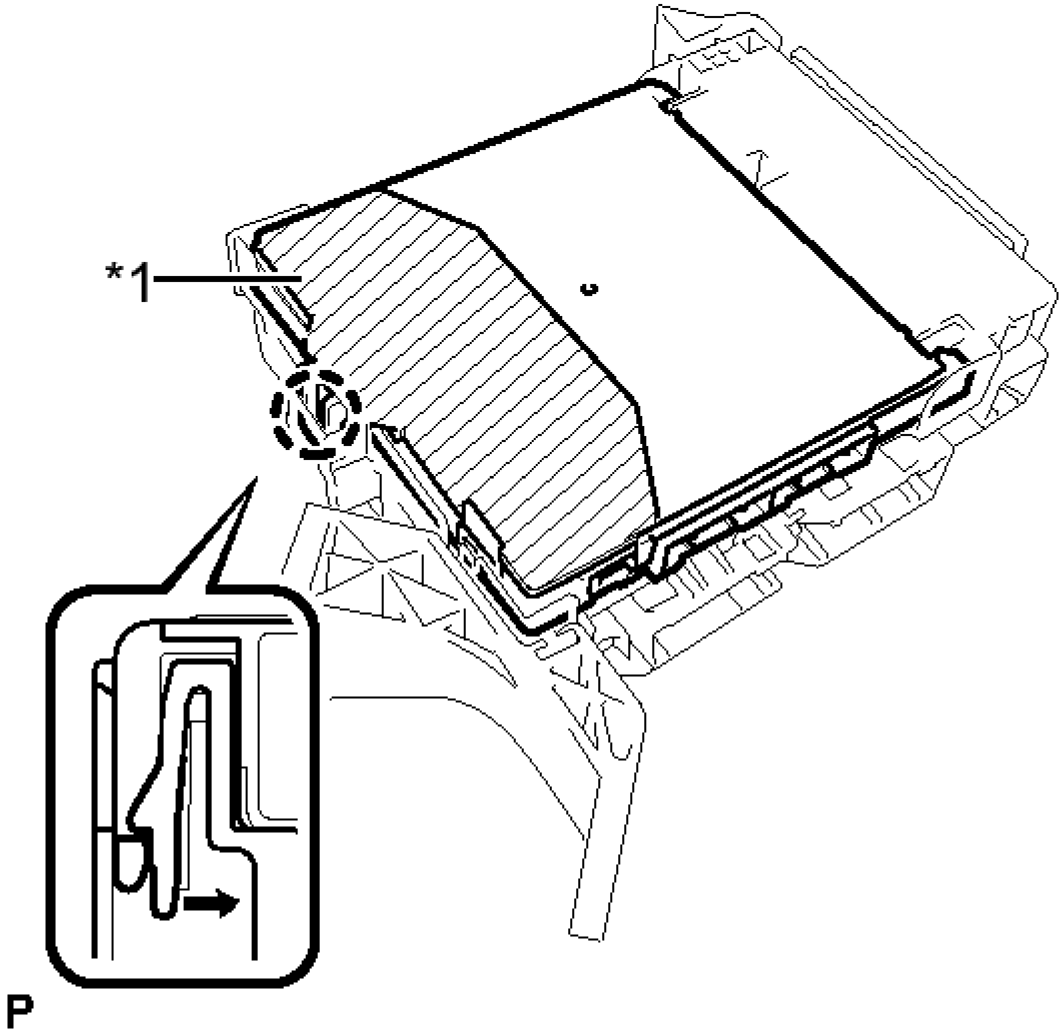

Fig. 13: Identifying Push Area
Courtesy of TOYOTA MOTOR SALES, U.S.A., INC.

TEXT IN ILLUSTRATION

*1	Push Area

NOTE:

- **Make sure to press only the push area.**
- **Confirm the engagement of the main body ECU (multiplex network body ECU) and junction block by listening for the lock sound.**

HINT:

If a lock sound cannot be heard, visually check the lock part engagement. The engagement can also be confirmed if the main body ECU (multiplex network body ECU) and junction block are flush.

2. **INSTALL INSTRUMENT PANEL JUNCTION BLOCK ASSEMBLY**
    a. Engage the claw to connect the connector as shown in the illustration.

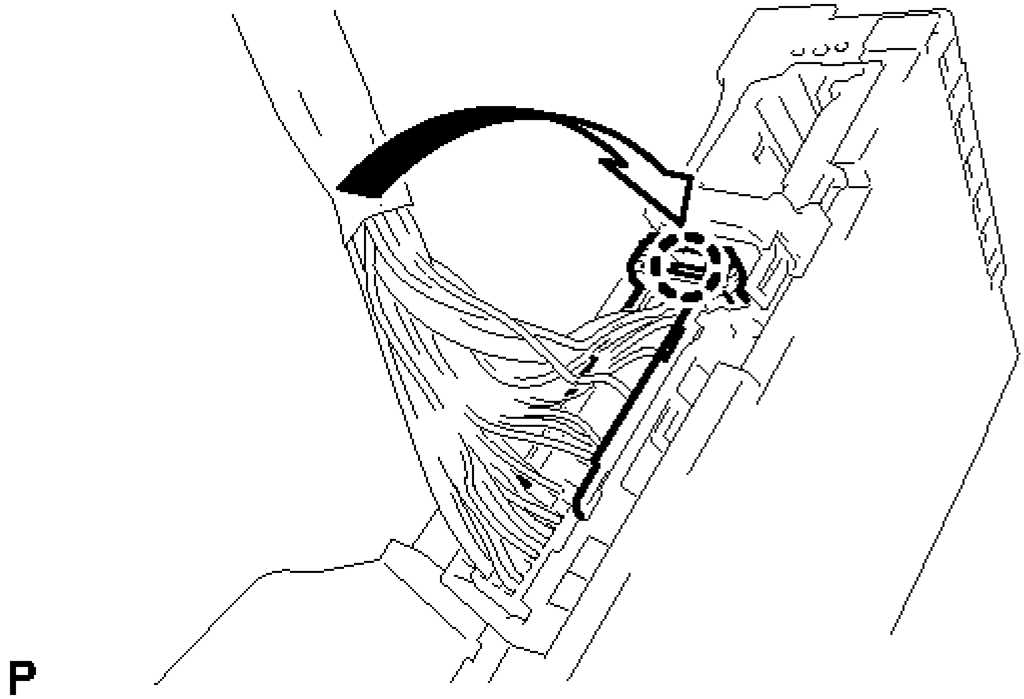

Fig. 14: Identifying Instrument Panel Junction Block Assembly Claw
Courtesy of TOYOTA MOTOR SALES, U.S.A., INC.

NOTE: Be sure to engage the connector securely.

b. Engage the claw to lock the connector lock as shown in the illustration.

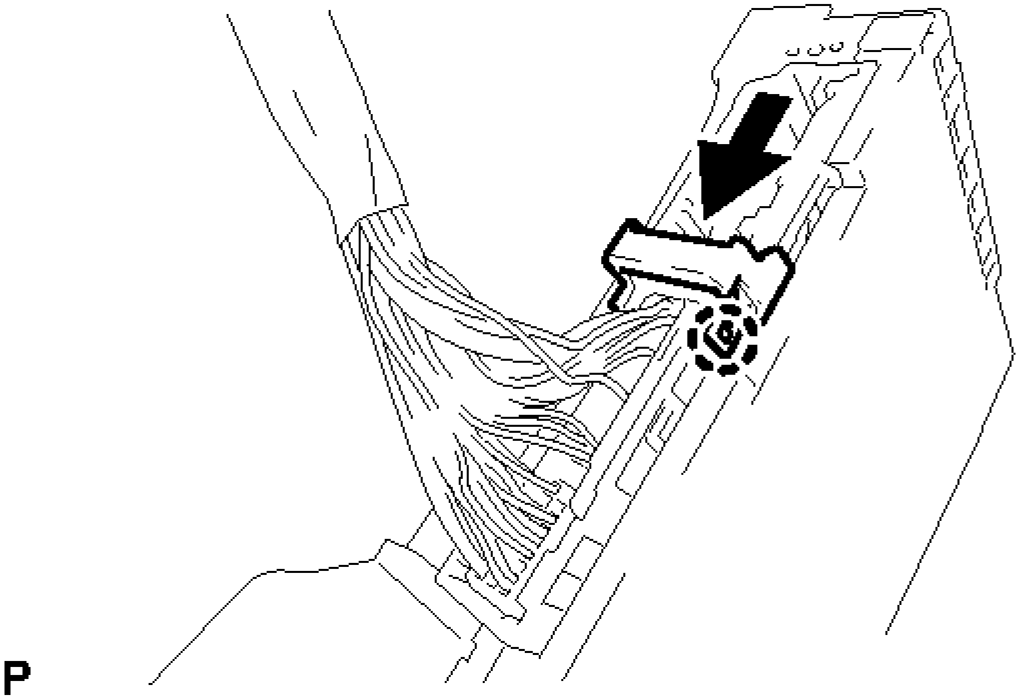

Fig. 15: Identifying Claw To Lock Connector Lock
Courtesy of TOYOTA MOTOR SALES, U.S.A., INC.

c. Engage the claw to connect the connector as shown in the illustration.

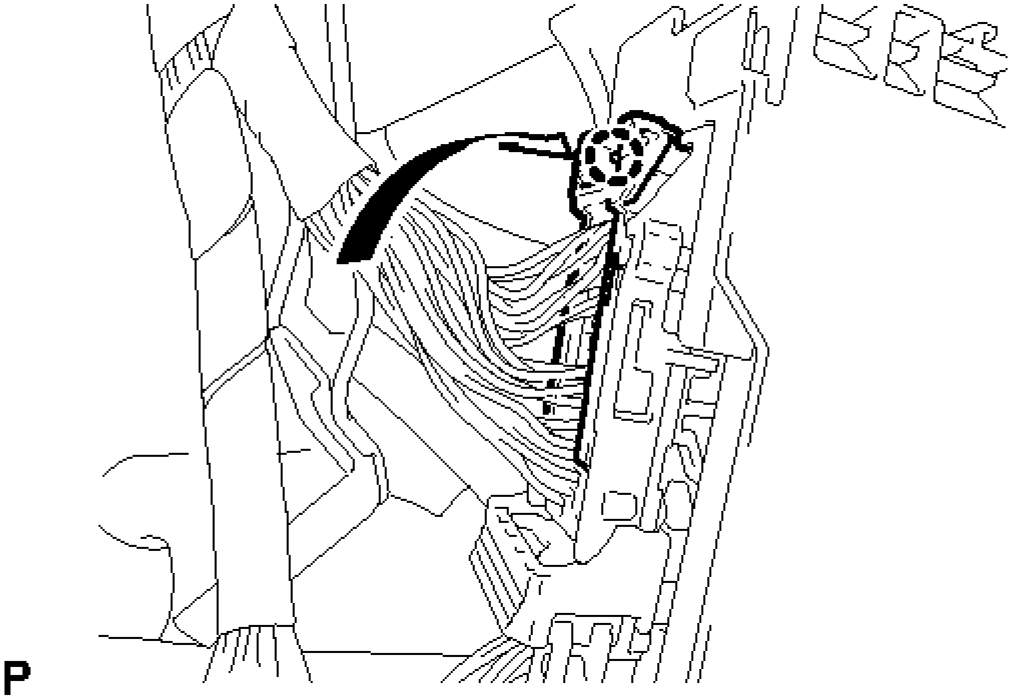

Fig. 16: Identifying Connector Claw
Courtesy of TOYOTA MOTOR SALES, U.S.A., INC.

NOTE: **Be sure to engage the connector securely.**

d. Install the instrument panel junction block assembly with the bolt and 2 nuts.

Torque: 8.0 N*m (82 kgf*cm, 71 in.*lbf)

e. Connect each connector.

NOTE: **Be sure to engage each connector securely.**

3. **INSTALL POWER MANAGEMENT CONTROL ECU**

   Refer to **INSTALLATION**

POWER MANAGEMENT CONTROL ECU

COMPONENTS

ILLUSTRATION

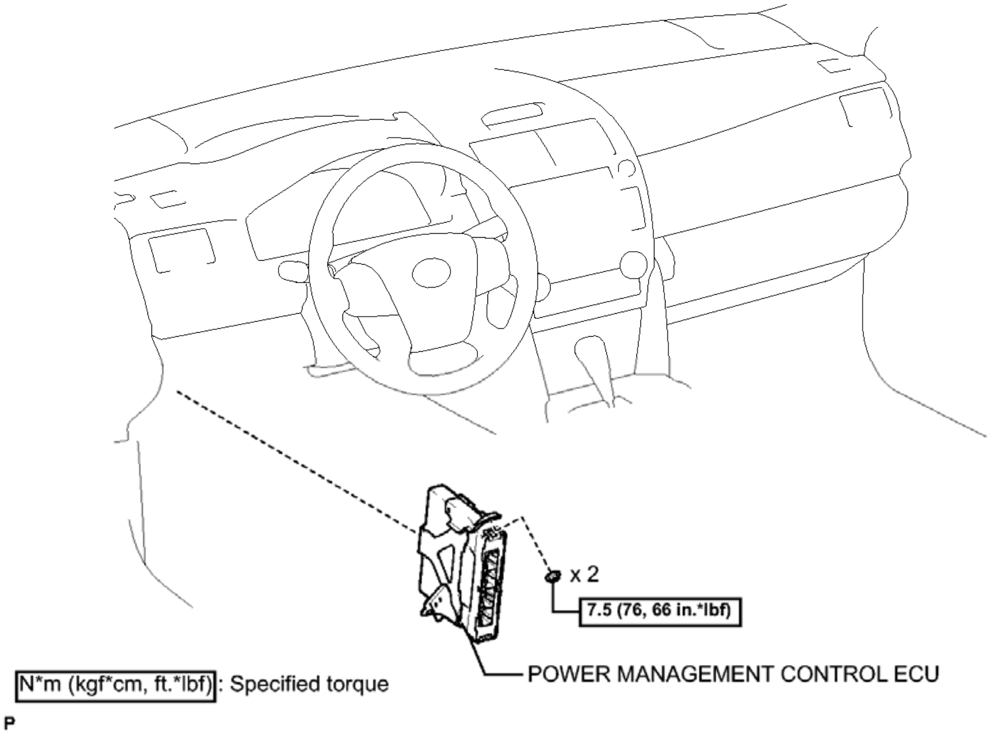
x 2
7.5 (76, 66 in.*lbf)
POWER MANAGEMENT CONTROL ECU
N*m (kgf*cm, ft.*lbf) : Specified torque
P

Fig. 17: Identifying Power Management Control ECU Replacement Components With Torque Specifications
Courtesy of TOYOTA MOTOR SALES, U.S.A., INC.

REMOVAL

REMOVAL

1. **REMOVE LOWER NO. 1 INSTRUMENT PANEL AIRBAG ASSEMBLY**

   Refer to **REMOVAL**

2. **REMOVE POWER MANAGEMENT CONTROL ECU**
   1. Disconnect the 4 connectors.

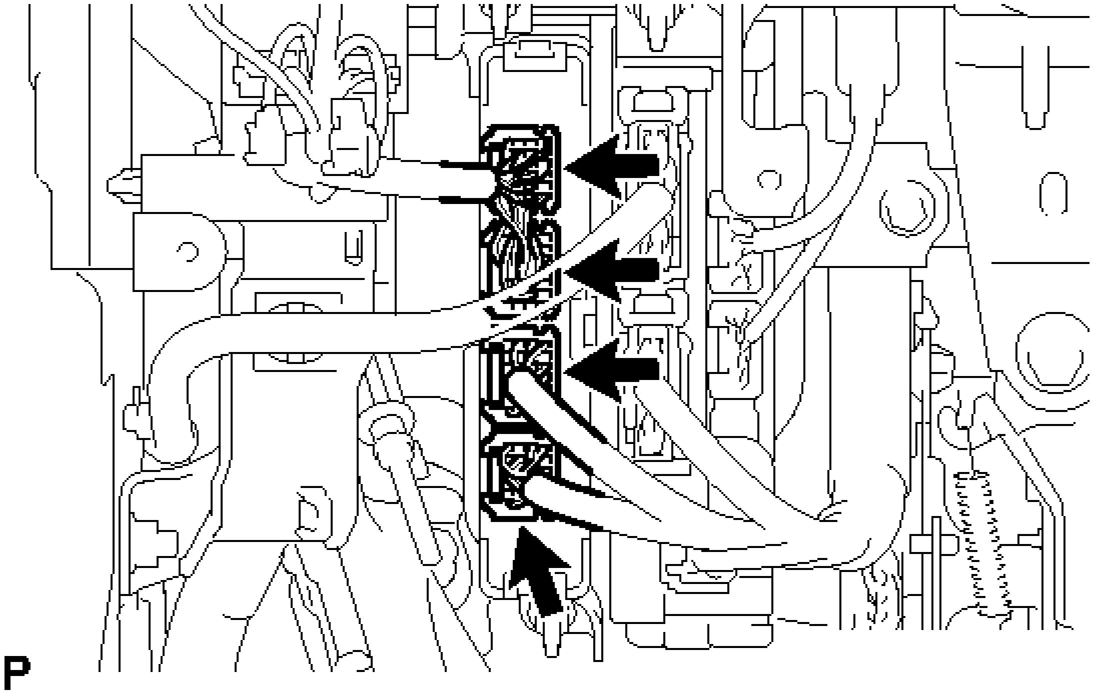

Fig. 18: Identifying Power Management Control ECU Connectors
Courtesy of TOYOTA MOTOR SALES, U.S.A., INC.

   2. Remove the 2 nuts and power management control ECU.

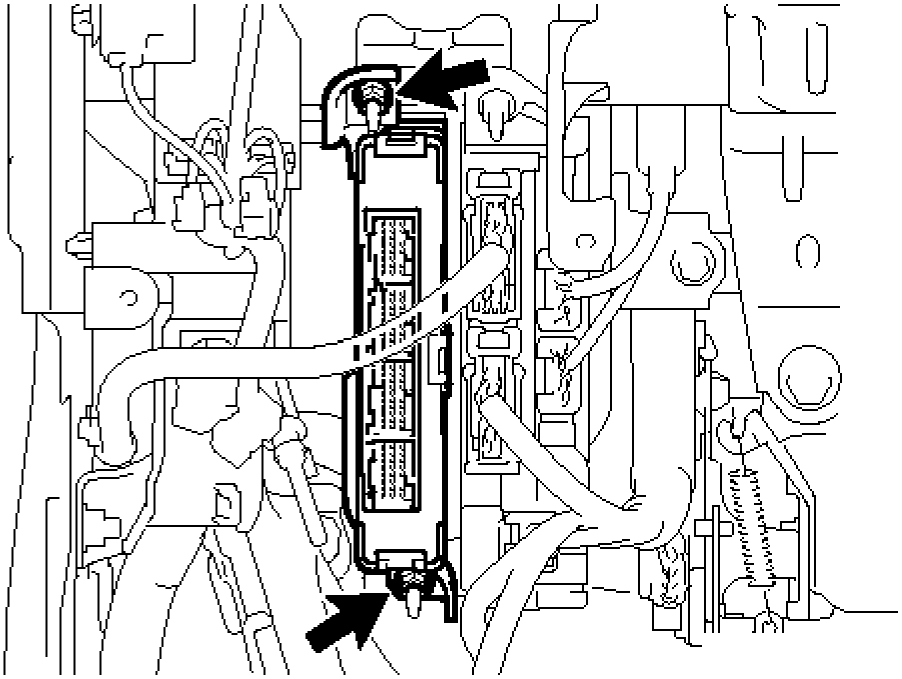

Fig. 19: Identifying Power Management Control ECU Nuts
Courtesy of TOYOTA MOTOR SALES, U.S.A., INC.

INSTALLATION

INSTALLATION

1. **INSTALL POWER MANAGEMENT CONTROL ECU**
    a. Install the power management control ECU with the 2 nuts in the order shown in the illustration.

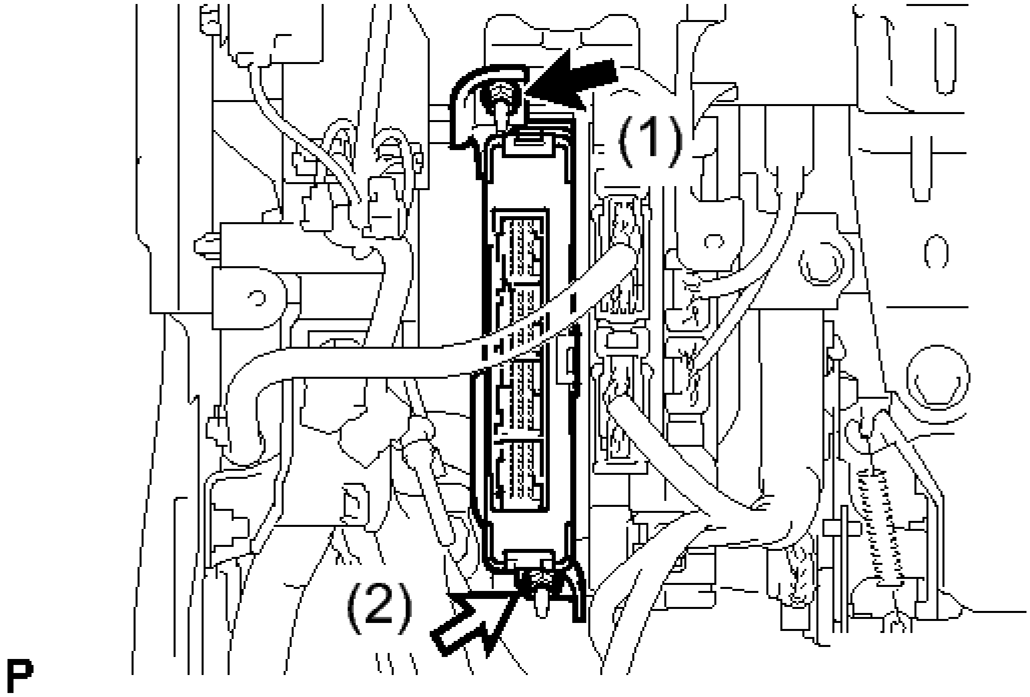

Fig. 20: Identifying Power Management Control ECU Nuts
Courtesy of TOYOTA MOTOR SALES, U.S.A., INC.

Torque: 7.5 N*m (76 kgf*cm, 66 in.*lbf)

b. Connect the 4 connectors.

2. **INSTALL LOWER NO. 1 INSTRUMENT PANEL AIRBAG ASSEMBLY**

   Refer to **INSTALLATION**

INTEGRATION RELAY

COMPONENTS

ILLUSTRATION

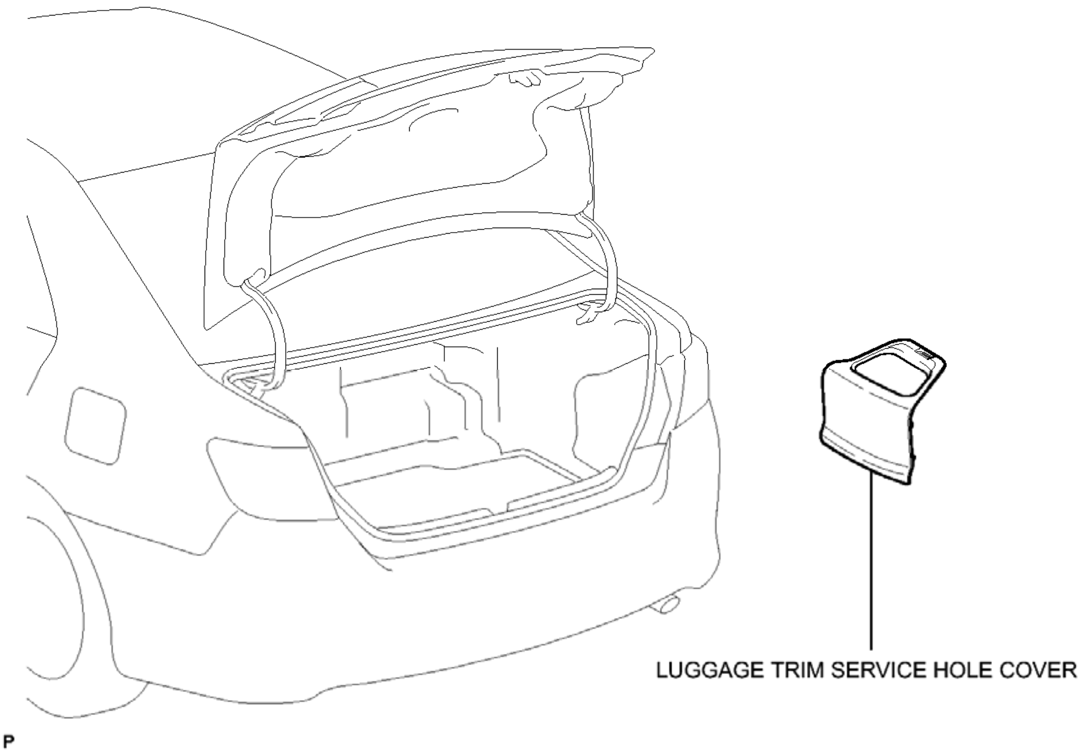
LUGGAGE TRIM SERVICE HOLE COVER
P

Fig. 21: Identifying Integration Relay Replacement Components (1 Of 2)
Courtesy of TOYOTA MOTOR SALES, U.S.A., INC.

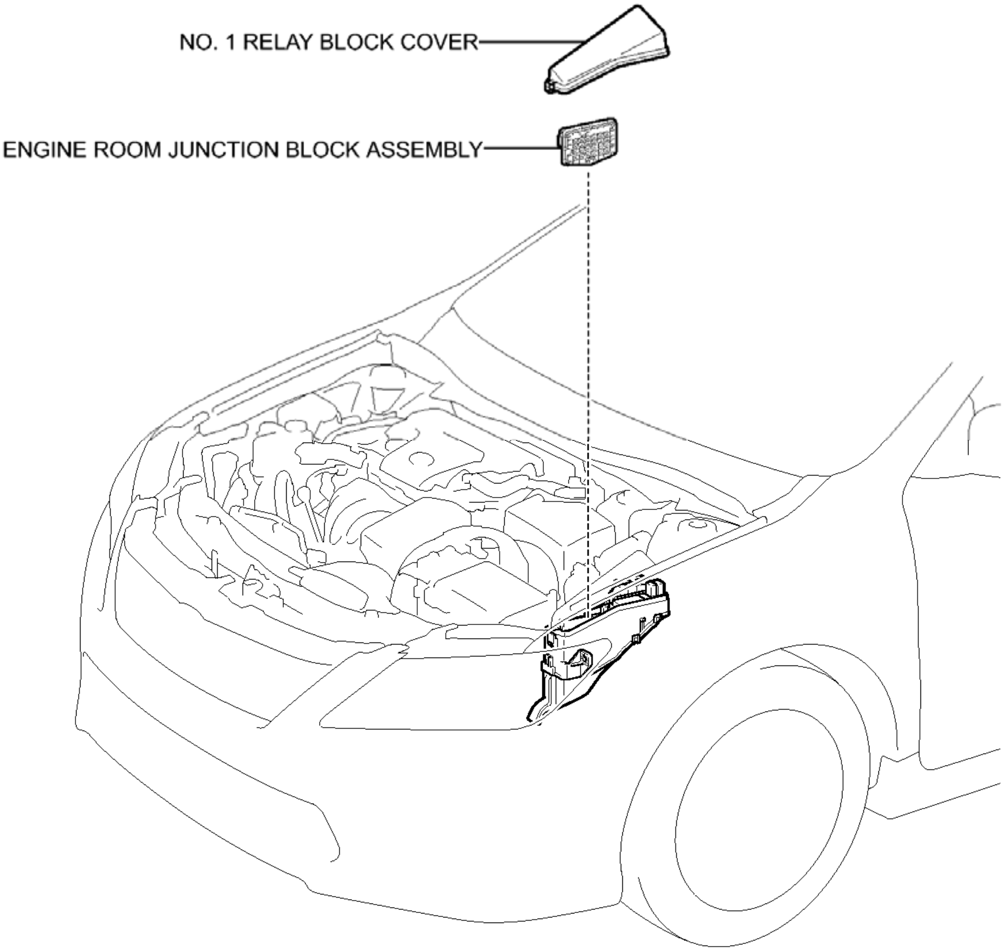
NO. 1 RELAY BLOCK COVER
ENGINE ROOM JUNCTION BLOCK ASSEMBLY

P

Fig. 22: Identifying Integration Relay Replacement Components (2 Of 2)
Courtesy of TOYOTA MOTOR SALES, U.S.A., INC.

ON-VEHICLE INSPECTION

ON-VEHICLE INSPECTION

1. **INSPECT ENGINE ROOM JUNCTION BLOCK ASSEMBLY (SIGNAL READING CHECK)**

   NOTE: Both present and history signal readings will be cleared if the engine room junction block assembly is removed. Make sure not to remove it before inspection.

   HINT:

   The signal readings of the engine room junction block assembly can be checked by inspecting the voltage at the diagnosis terminal.

a. Signal reading check
    1. Turn the power switch on (IG).
    2. Connect the positive (+) terminal of a voltmeter to the engine room junction block assembly and the negative (-) terminal to the body ground.

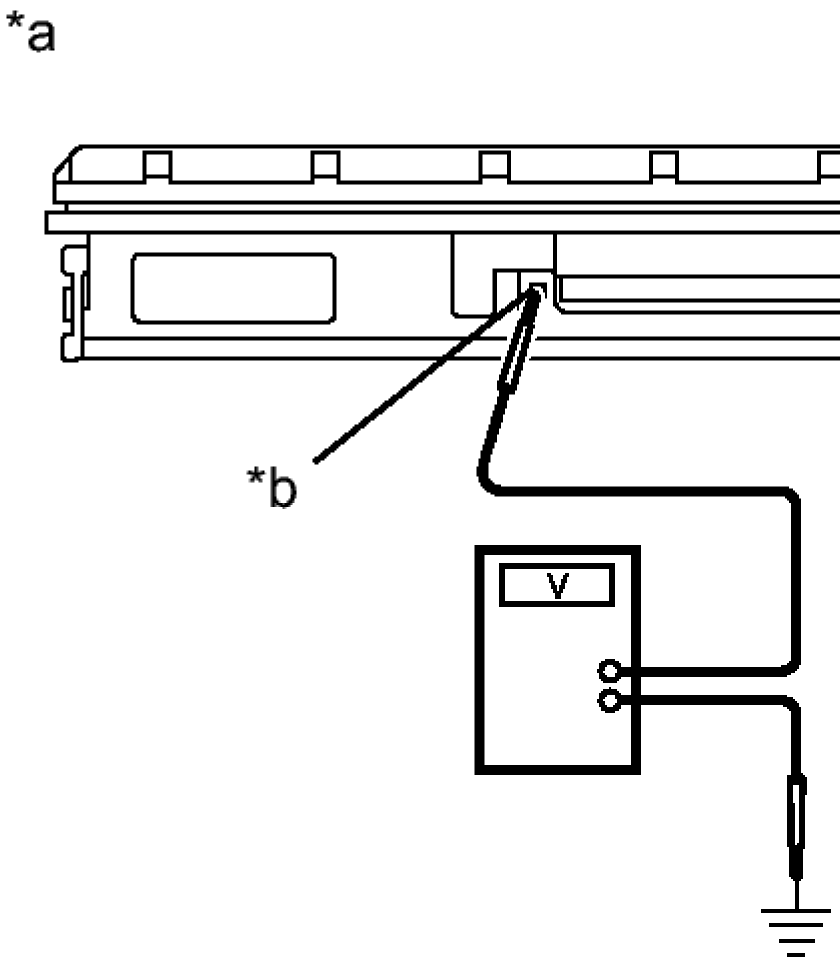

Fig. 23: Identifying Engine Room Junction Block Assembly Voltmeter To Body Ground
Courtesy of TOYOTA MOTOR SALES, U.S.A., INC.

TEXT IN ILLUSTRATION

*a	Component with harness connected (Engine Room

	Junction Block Assembly)
*b	Diagnosis Terminal

3. Using the illustration below as a reference, determine whether any channels are malfunctioning based on the observed signal reading.

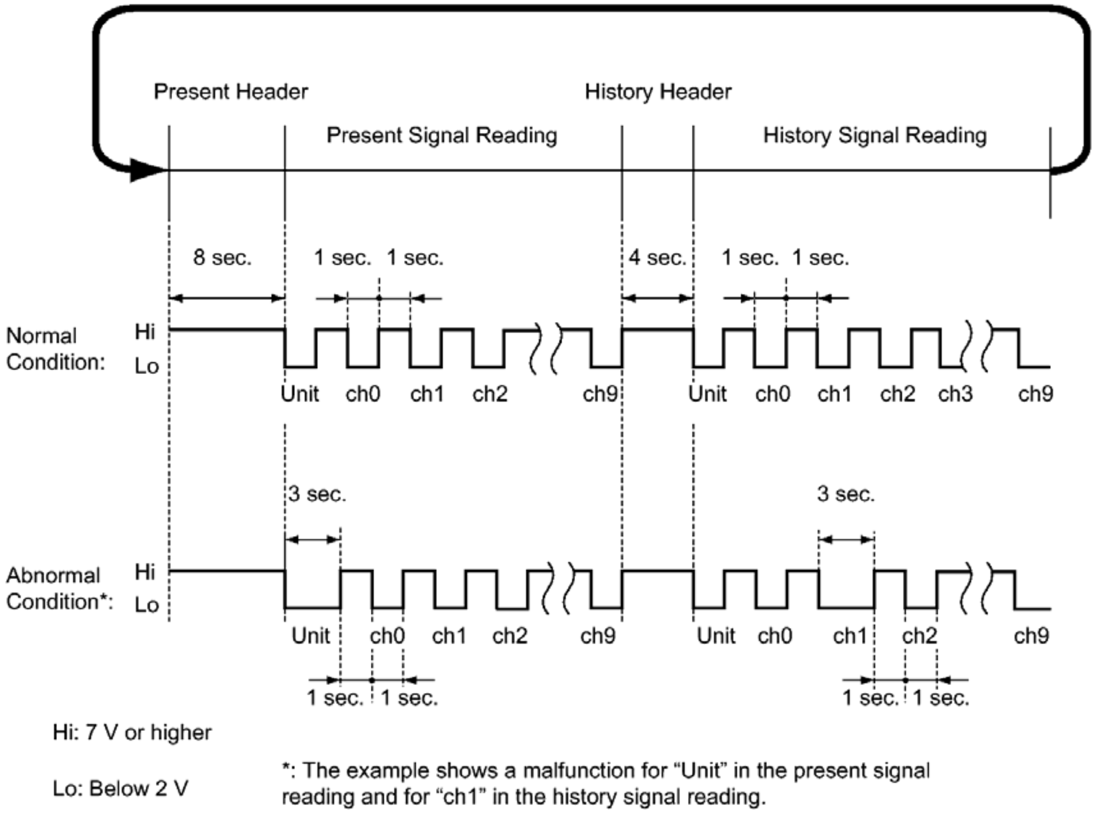
Present Header
History Header
Present Signal Reading
History Signal Reading
8 sec.
1 sec.
1 sec.
4 sec.
1 sec.
1 sec.
Normal Condition:
Hi
Lo
Unit
ch0
ch1
ch2
ch9
Unit
ch0
ch1
ch2
ch3
ch9
3 sec.
3 sec.
Abnormal Condition*:
Hi
Lo
Unit
ch0
ch1
ch2
ch9
Unit
ch0
ch1
ch2
ch9
1 sec.
1 sec.
1 sec.
1 sec.
Hi: 7 V or higher
Lo: Below 2 V

*: The example shows a malfunction for “Unit” in the present signal reading and for “ch1” in the history signal reading.

Fig. 24: Engine Room Junction Block Assembly Blinking Pattern
Courtesy of TOYOTA MOTOR SALES, U.S.A., INC.

HINT:

- Present signal reading and history signal reading will be displayed alternately after the power switch is turned on (IG). By measuring the duration of each header, the present signal reading and history signal reading can be recognized.
- A unit malfunction indicates an internal malfunction of the engine room junction block assembly. If a malfunction is detected for any channel from channel 0 to 9, an electrical load connected to the engine room junction block assembly may be malfunctioning or there may be a short in the engine room junction block assembly

circuit or in the wire harness.

- The present signal reading will be stored as a history signal reading when electrical loads are operated after a malfunctioning part returns to normal.
- Both present and history signal readings can be cleared by disconnecting the cable from the negative (-) auxiliary battery terminal.
- Regarding electrical loads connected to channels 0 to 9, refer to the table below:

Channel	Connected Electrical Load
ch0	Back-up lights
ch1	-
ch2	Mirror heater
ch3	-
ch4	-
ch5	Rear fog lights
ch6	Front fog lights
ch7	Rear window defogger wire
ch8	High beam headlight LH
ch9	High beam headlight RH

2. **INSPECT ENGINE ROOM JUNCTION BLOCK ASSEMBLY (RESULTS OF SIGNAL READING CHECK)**
   a. Results of signal reading check
      1. Depending on the signal reading, perform troubleshooting according the table below.

Output Signal Reading	Repair Method
Normal	Continue troubleshooting for each system.
	Replace the

The unit is malfunctioning.	engine room junction block.
A malfunction in a channel (ch0 to ch9)	a. Check for a short in the wire harnesses between the engine room junction block assembly and each electrical load. b. Inspect each of the electrical loads. c. Replace the engine room junction block.

HINT:

Make sure to clear the signal readings by disconnecting the cable from the negative (-) auxiliary battery terminal after replacement or repair of the malfunctioning part.

2. If no signal readings are output, perform troubleshooting according to the following troubleshooting procedure.

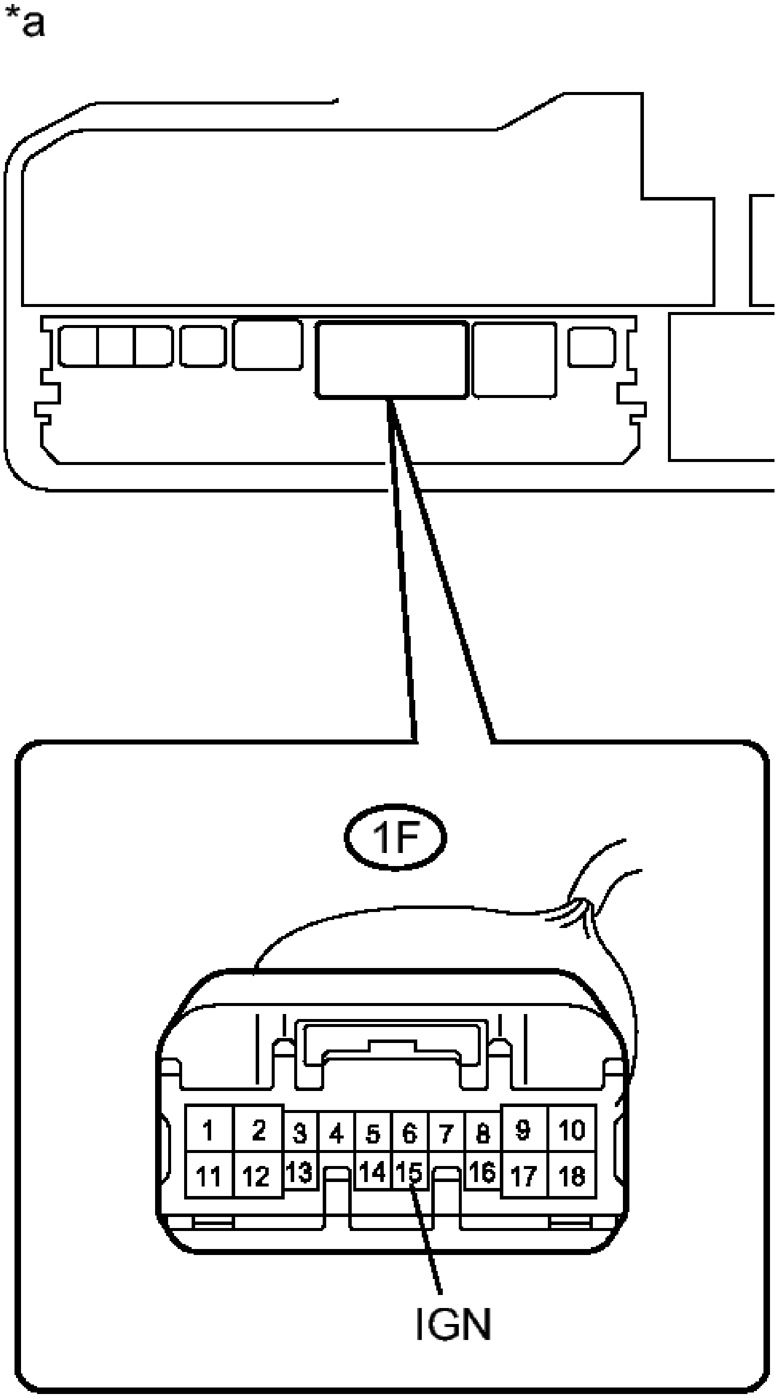
*a
1F
1
2
3
4
5
6
7
8
9
10
11
12
13
14
15
16
17
18
IGN

Fig. 25: Identifying Engine Room Junction Block Assembly Connector Terminal Identification
Courtesy of TOYOTA MOTOR SALES, U.S.A., INC.

a. Remove the engine room junction block assembly. Refer to **REMOVAL**.

b. Measure the voltage according to the value(s) in the table below.

Standard Voltage

Tester Connection	Condition	Specified Condition
1F-15 (IGN) - Body ground	Power switch on (IG)	11 to 14 V

TEXT IN ILLUSTRATION

*a	Component without engine room junction block assembly (Engine Room Relay Block and Junction Block Assembly)

If the result is not as specified, repair or replace the wire harness or connector.

REMOVAL

REMOVAL

1. **PRECAUTION**

NOTE: **After turning the power switch off, waiting time may be required before disconnecting the cable from the negative (-) auxiliary battery terminal. Therefore, make sure to read the disconnecting the cable from the negative (-) auxiliary battery terminal notices before proceeding with work. Refer to PRECAUTION .**

2. **REMOVE LUGGAGE TRIM SERVICE HOLE COVER** . Refer to **REMOVAL - Step 2**
3. **DISCONNECT CABLE FROM AUXILIARY BATTERY NEGATIVE TERMINAL**

NOTE: **When disconnecting the cable, some systems need to be initialized after the cable is reconnected. Refer to INITIALIZATION .**

4. **REMOVE NO. 1 RELAY BLOCK COVER**
    a. Disengage the 2 claws and remove the No. 1 relay block cover as shown in the illustration.

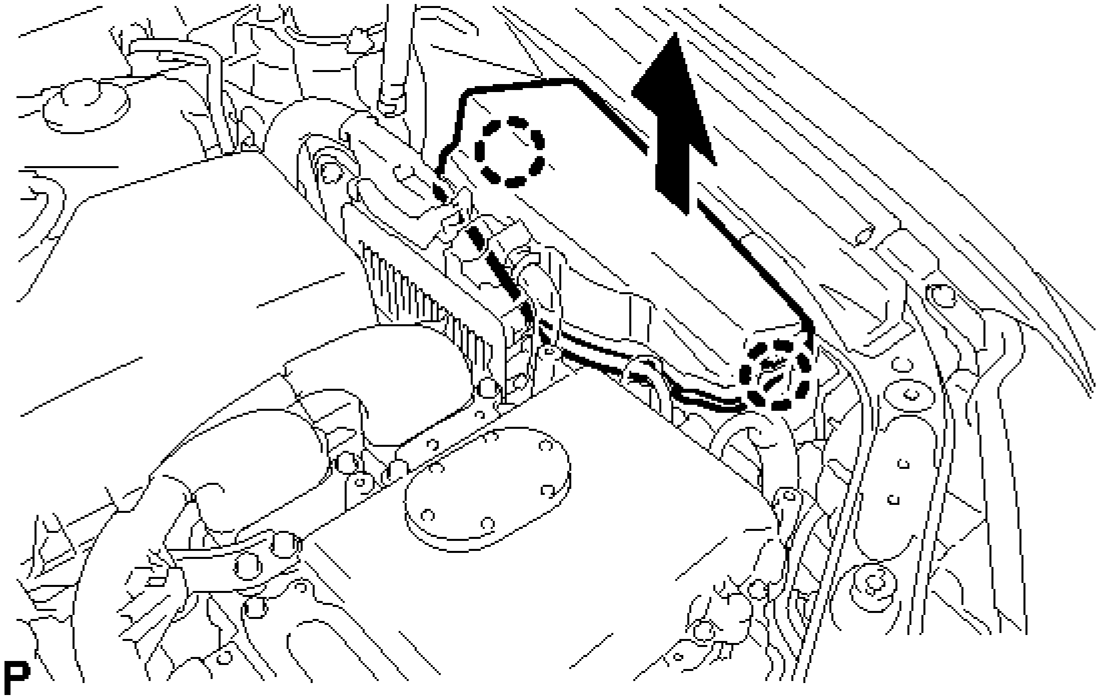

Fig. 26: Removing No. 1 Relay Block Cover
Courtesy of TOYOTA MOTOR SALES, U.S.A., INC.

5. **REMOVE ENGINE ROOM JUNCTION BLOCK ASSEMBLY**
    a. Disengage the 2 claws as shown in the illustration.

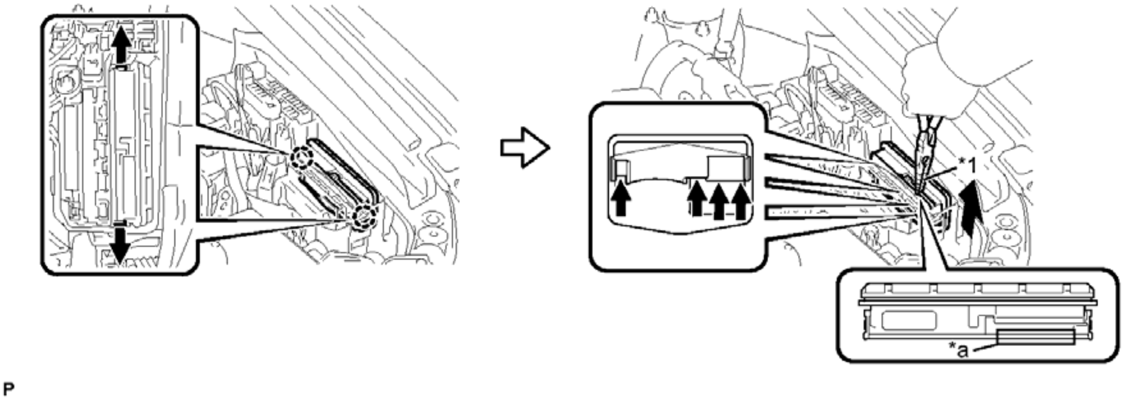

Fig. 27: Identifying Engine Room Junction Block Assembly Claws
Courtesy of TOYOTA MOTOR SALES, U.S.A., INC.

TEXT IN ILLUSTRATION

	Protective		

*1	Tape	-	-
*a	Pulled Position	-	-

b. Using pliers, pull up the engine room junction block assembly at the position indicated in the illustration and disconnect the 4 connectors from the engine room relay block assembly.

NOTE: **When pulling a engine room junction block assembly, take care not to damage the engine room junction block assembly.**

HINT:

Tape the pliers tip before use.

c. Disconnect the 2 connectors and remove the engine room junction block assembly.

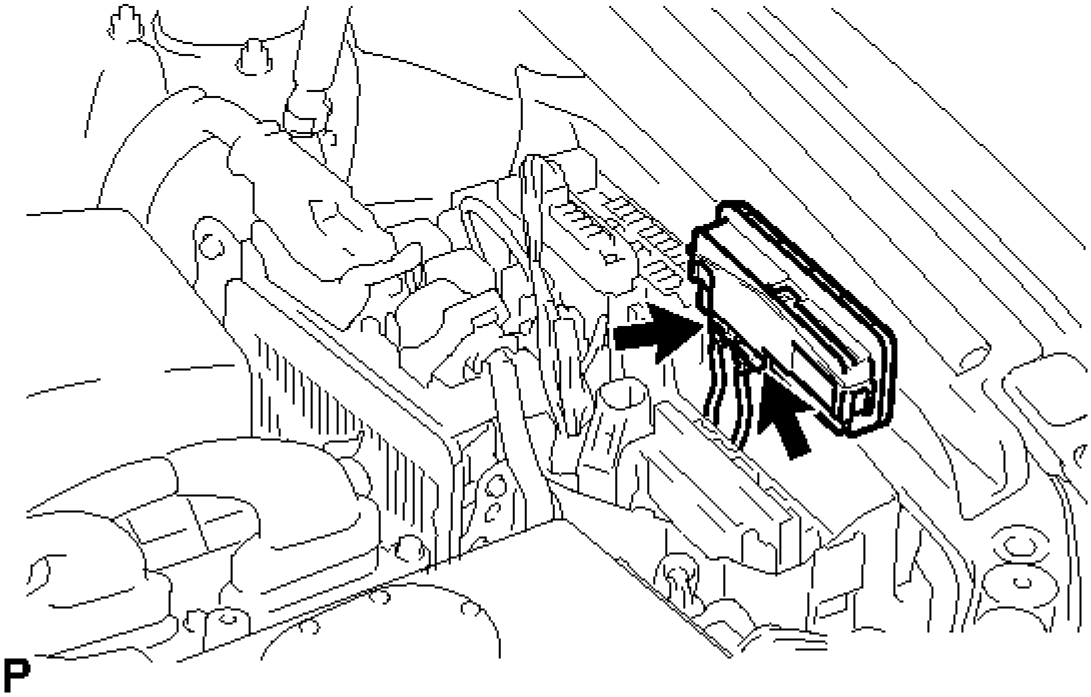

Fig. 28: Identifying Engine Room Junction Block Assembly Connectors
Courtesy of TOYOTA MOTOR SALES, U.S.A., INC.

NOTE:

- **Do not drop or allow any impact on parts.**
- **Do not touch the connector.**

INSTALLATION

INSTALLATION

1. **INSTALL ENGINE ROOM JUNCTION BLOCK ASSEMBLY**
    1. Connect the 2 connectors.
    2. Connect the 4 connectors to the engine room relay block assembly.

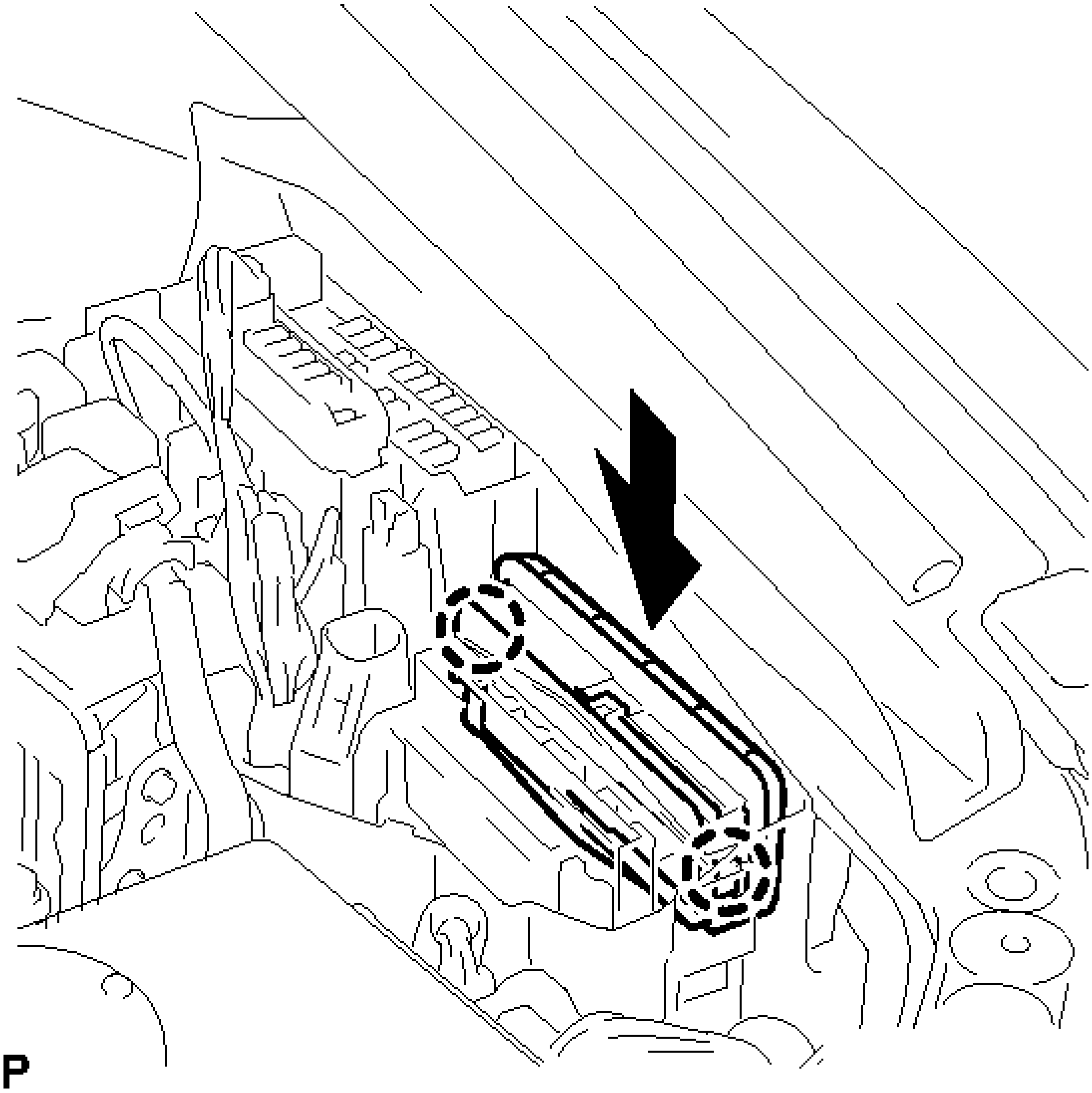

Fig. 29: Installing Engine Room Junction Block Assembly
Courtesy of TOYOTA MOTOR SALES, U.S.A., INC.

    3. Engage the 2 claws to install the engine room junction block assembly.

2. **INSTALL NO. 1 RELAY BLOCK COVER**
    1. Engage the 2 claws to install the No. 1 relay block cover.

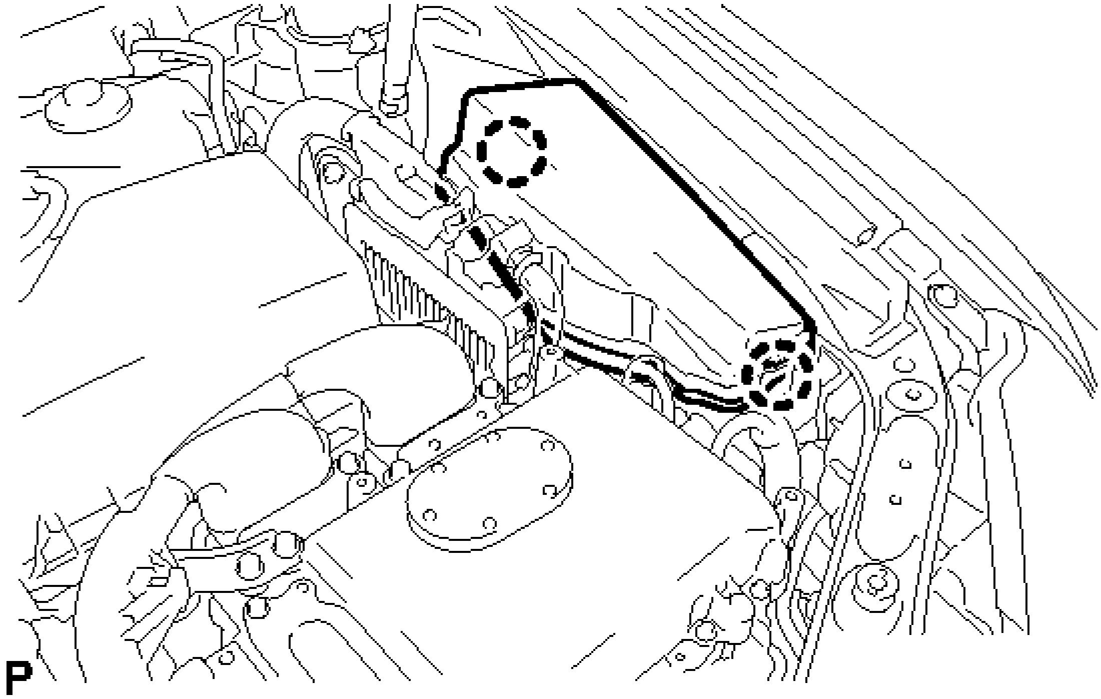

Fig. 30: Installing No. 1 Relay Block Cover
Courtesy of TOYOTA MOTOR SALES, U.S.A., INC.

3. **CONNECT CABLE TO NEGATIVE AUXILIARY BATTERY TERMINAL**

NOTE: **When disconnecting the cable, some systems need to be initialized after the cable is reconnected. Refer to INITIALIZATION .**

4. **INSTALL LUGGAGE TRIM SERVICE HOLE COVER** . Refer to **INSTALLATION - Step 3**

2012-2017 ELECTRICAL

Power Distribution (Service Information) - Camry (Except Hybrid)

MAIN BODY ECU

COMPONENTS

ILLUSTRATION

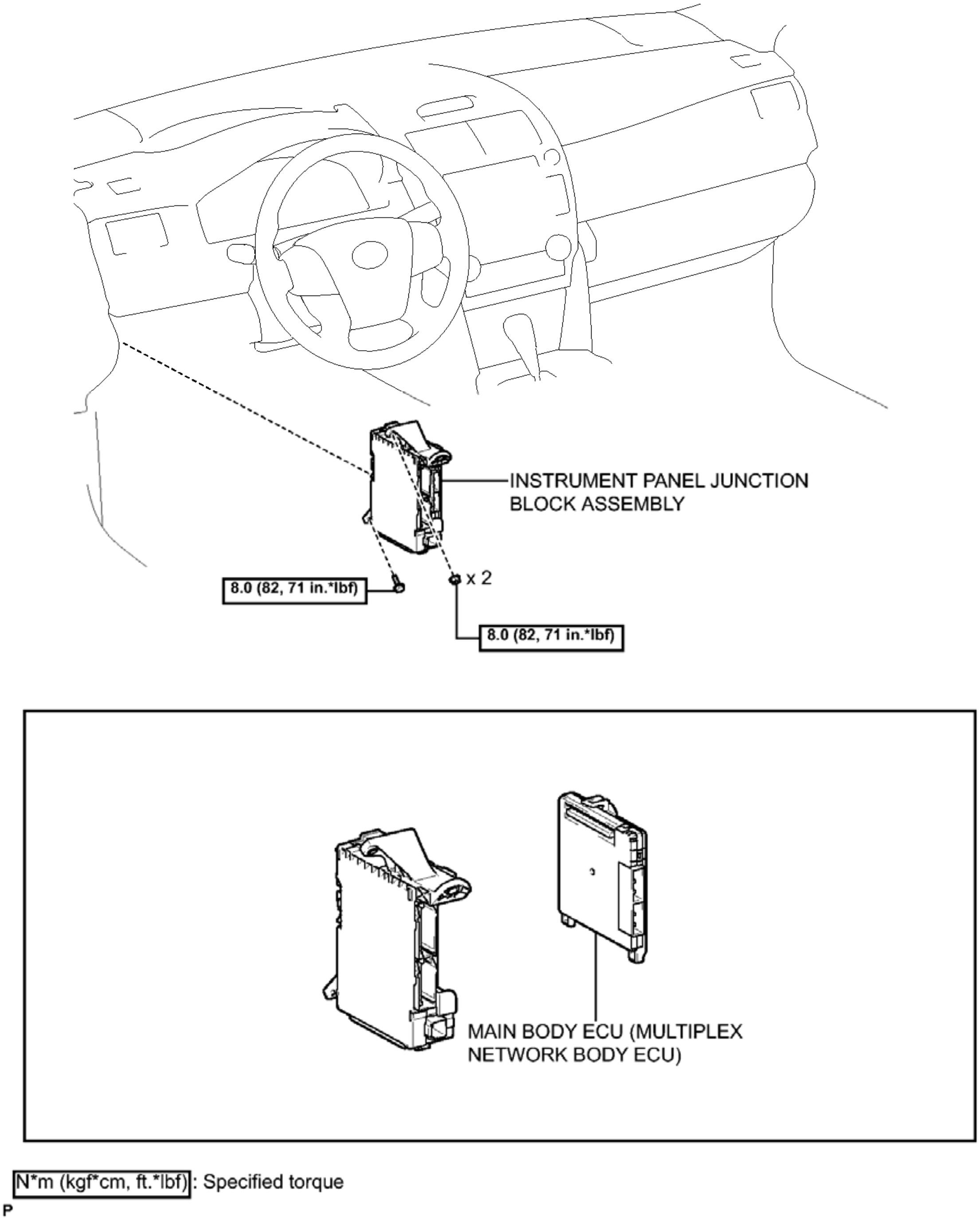
INSTRUMENT PANEL JUNCTION BLOCK ASSEMBLY
8.0 (82, 71 in.*lbf)
x 2
8.0 (82, 71 in.*lbf)
MAIN BODY ECU (MULTIPLEX NETWORK BODY ECU)
N*m (kgf*cm, ft.*lbf): Specified torque
P

Fig. 1: Identifying Main Body ECU Replacement Components With Torque Specifications
Courtesy of TOYOTA MOTOR SALES, U.S.A., INC.

REMOVAL

REMOVAL

1. **REMOVE LOWER NO. 1 INSTRUMENT PANEL AIR BAG ASSEMBLY**

Refer to **REMOVAL**

2. **REMOVE INSTRUMENT PANEL JUNCTION BLOCK ASSEMBLY**
    a. Disconnect the 5 connectors.

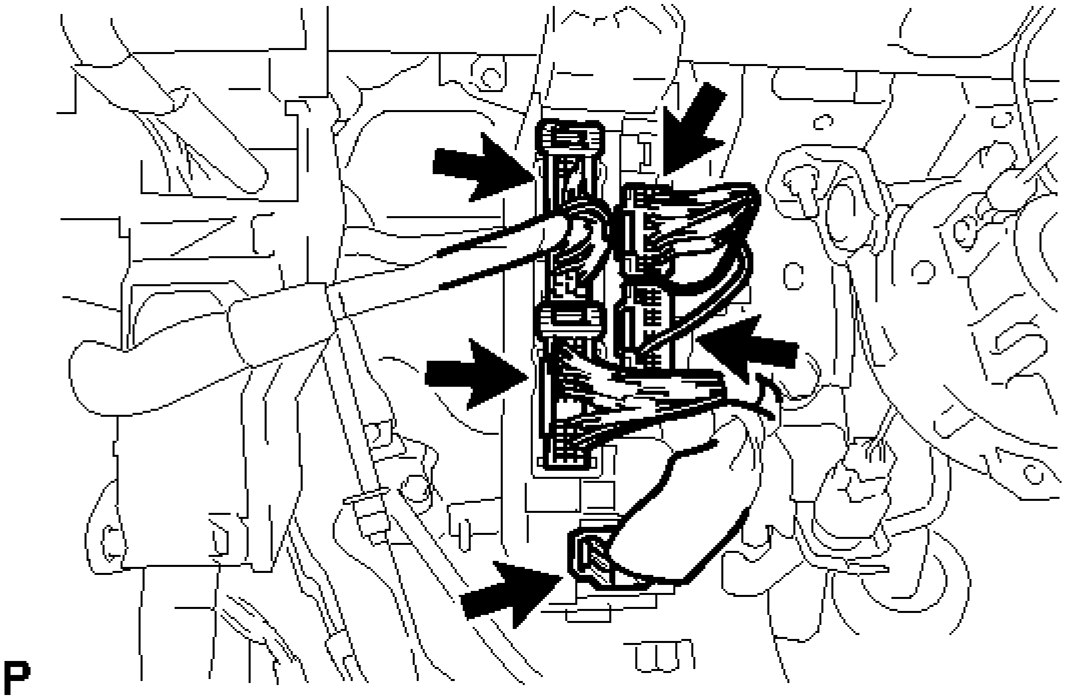

Fig. 2: Identifying Instrument Panel Junction Block Assembly Connectors
Courtesy of TOYOTA MOTOR SALES, U.S.A., INC.

    b. Remove the bolt and 2 nuts, and disconnect the instrument panel junction block assembly.

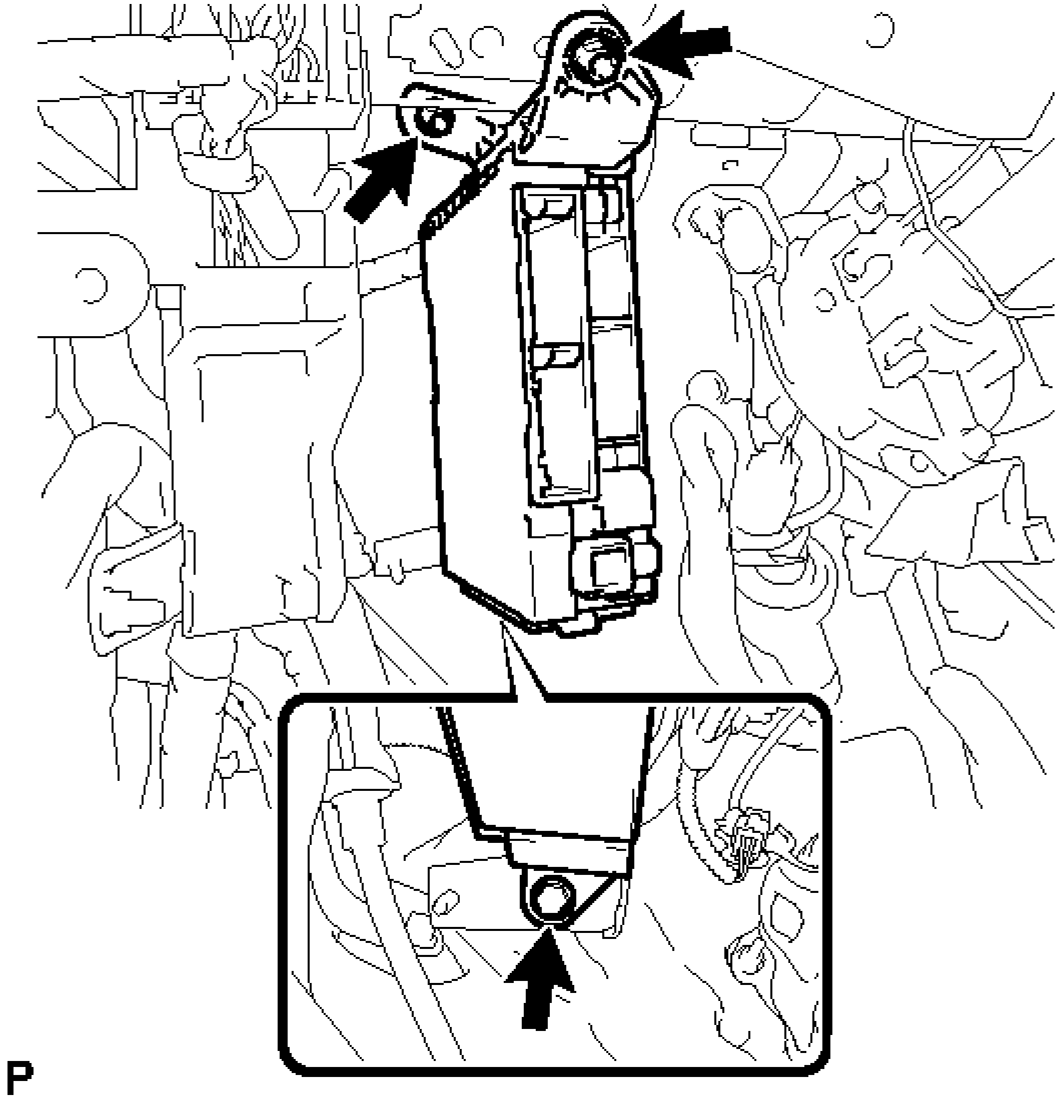

Fig. 3: Identifying Instrument Panel Junction Block Assembly Bolt And Nuts
Courtesy of TOYOTA MOTOR SALES, U.S.A., INC.

c. Disengage the claw and disconnect the connector as shown in the illustration.

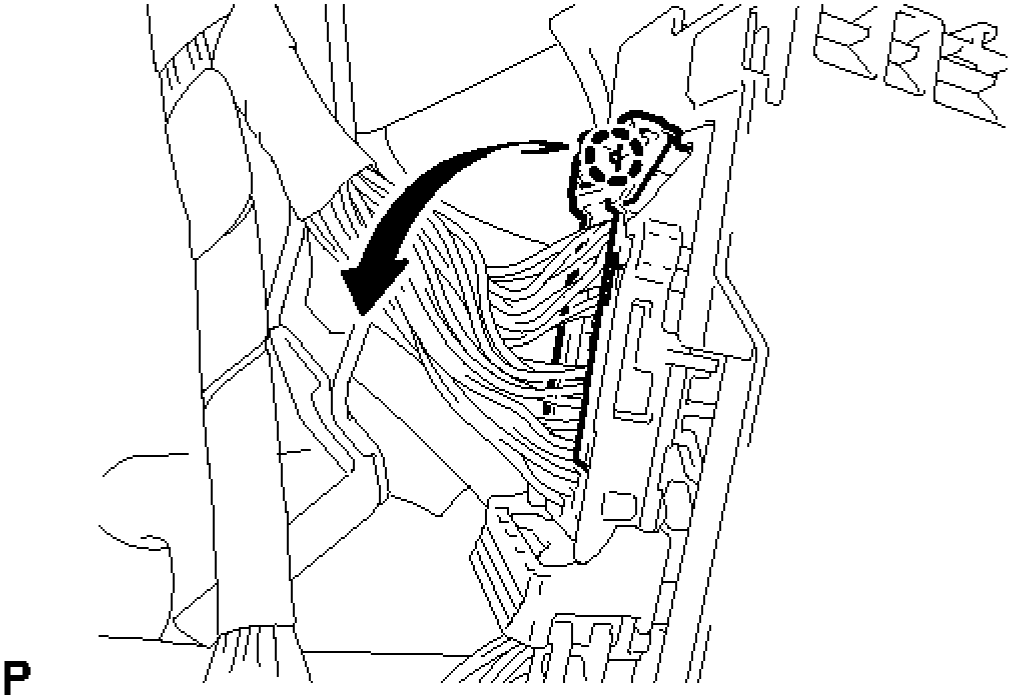

Fig. 4: Disconnecting Instrument Panel Junction Block Assembly Connector
Courtesy of TOYOTA MOTOR SALES, U.S.A., INC.

d. Disengage the claw and release the connector lock as shown in the illustration.

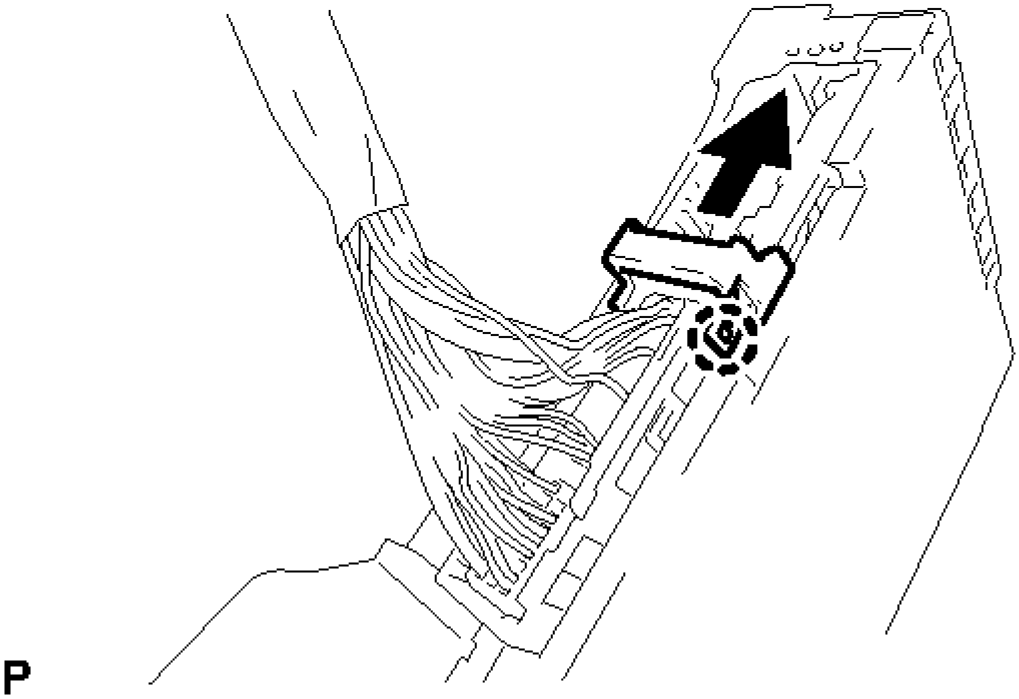

Fig. 5: Releasing Instrument Panel Junction Block Assembly Connector Lock
Courtesy of TOYOTA MOTOR SALES, U.S.A., INC.

e. Disengage the claw and disconnect the connector as shown in the illustration to remove the instrument panel junction block assembly.

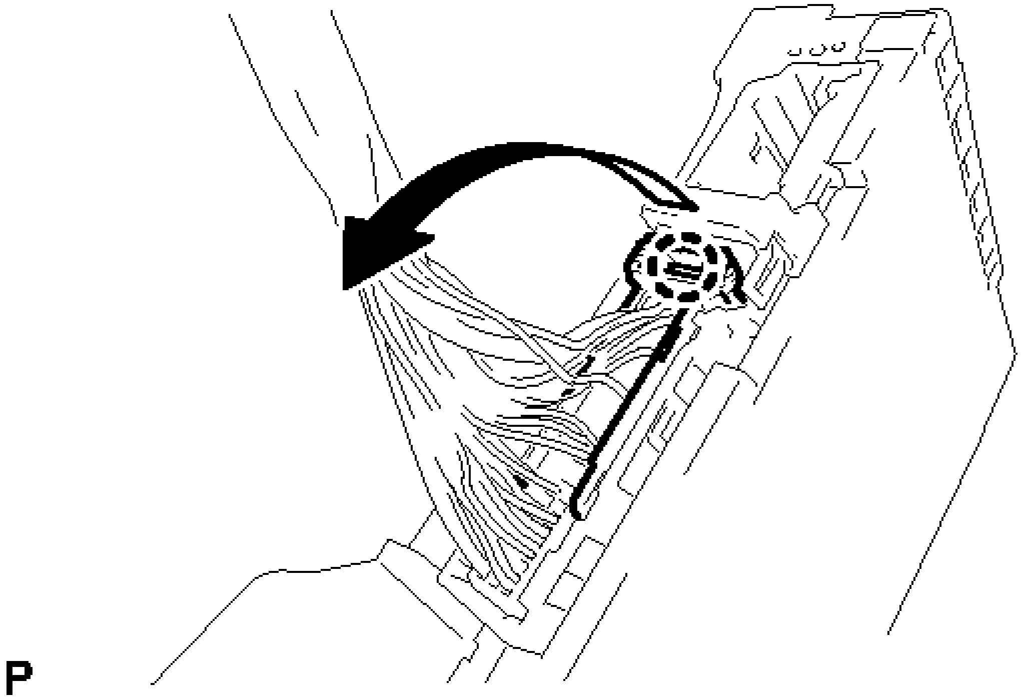

Fig. 6: Disconnecting Instrument Panel Junction Block Assembly Connector
Courtesy of TOYOTA MOTOR SALES, U.S.A., INC.

3. REMOVE MAIN BODY ECU (MULTIPLEX NETWORK BODY ECU)

a. Press the claw of the junction block as shown in the illustration to release the lock.

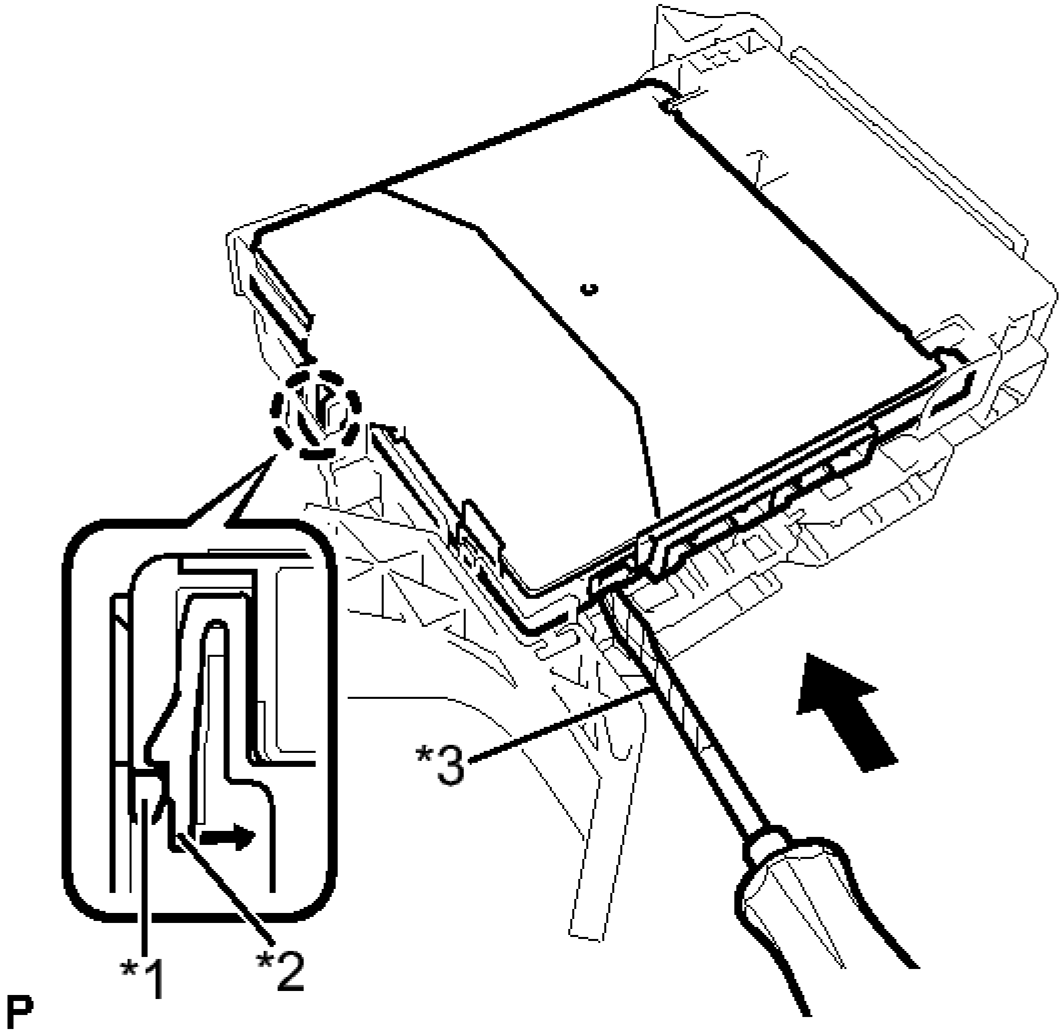

Fig. 7: Identifying Junction Block Claw
Courtesy of TOYOTA MOTOR SALES, U.S.A., INC.

TEXT IN ILLUSTRATION

*1	Main Body ECU (Multiplex Network Body ECU)
*2	Claw of Junction Block
*3	Protective Tape

b. With the junction block lock released, insert a screwdriver with its tip wrapped with protective tape horizontally between the main body ECU (multiplex network body ECU) and junction block.

NOTE: **Use a screwdriver with a diameter of between 5.0 mm (0.197 in.) and 6.3 mm (0.248 in.) and a length of approximately 90 mm (3.54 in.).**

c. Using the screwdriver, carefully raise the main body ECU (multiplex network body ECU) up to the position where the connector becomes disengaged.

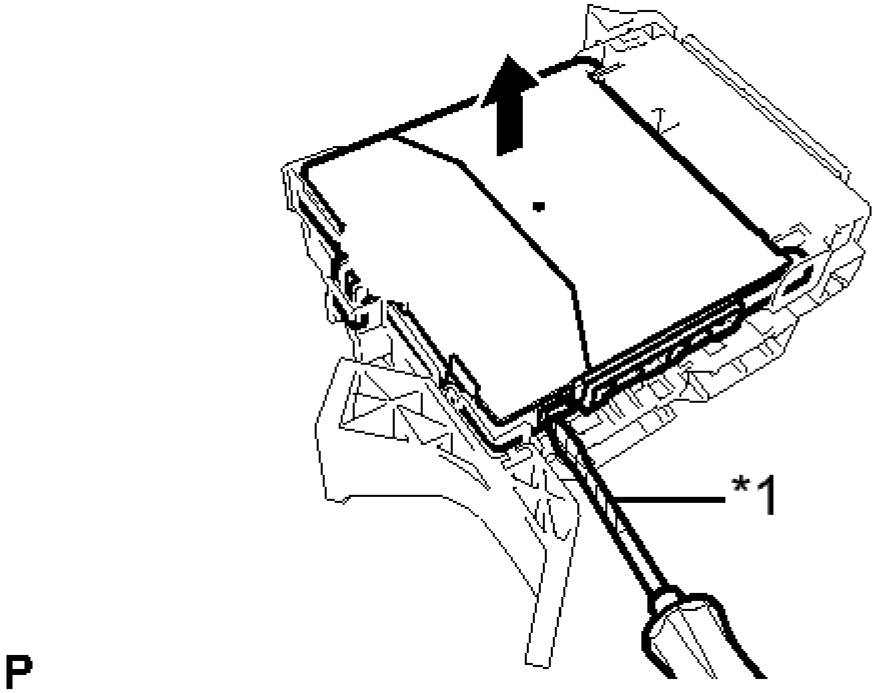

Fig. 8: Identifying Main Body ECU (Multiplex Network Body ECU)
Courtesy of TOYOTA MOTOR SALES, U.S.A., INC.

TEXT IN ILLUSTRATION

*1	Protective Tape

NOTE: **Do not insert the screwdriver opening between the junction block and the connector of the main body ECU (multiplex network body ECU).**

Do not twist the screwdriver to raise the main body ECU (multiplex network body ECU).

d. Raise the main body ECU (multiplex network body ECU) as shown by the arrow (1), and then pull it out as shown by the arrow (2) in the illustration.

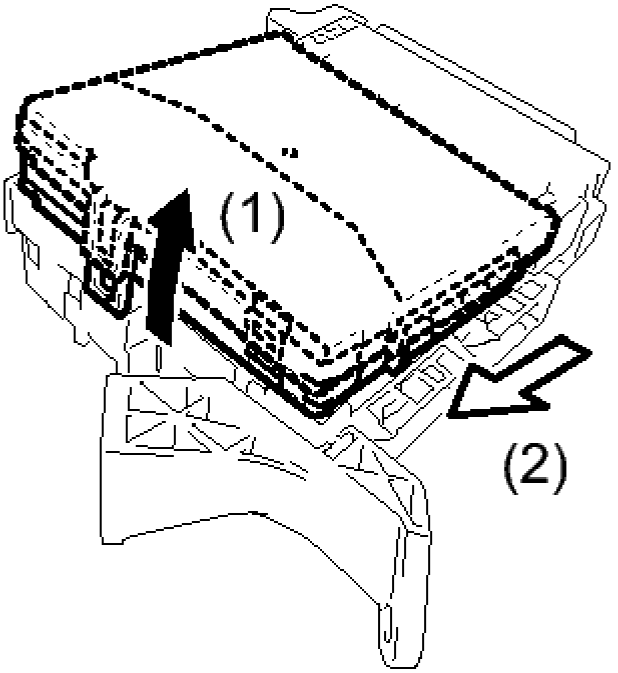

Fig. 9: Identifying Main Body ECU (Multiplex Network Body ECU)
Courtesy of TOYOTA MOTOR SALES, U.S.A., INC.

NOTE: **Do not touch the ECU connector.**

INSTALLATION

INSTALLATION

1. **INSTALL MAIN BODY ECU (MULTIPLEX NETWORK BODY ECU)**

   NOTE:
   - **Make sure that no foreign matter gets on the connecting surfaces.**
   - **Do not touch the ECU connector.**

   a. Insert the main body ECU (multiplex network body ECU) up to the position where it contacts the housing sidewall of the guide as shown in the illustration.

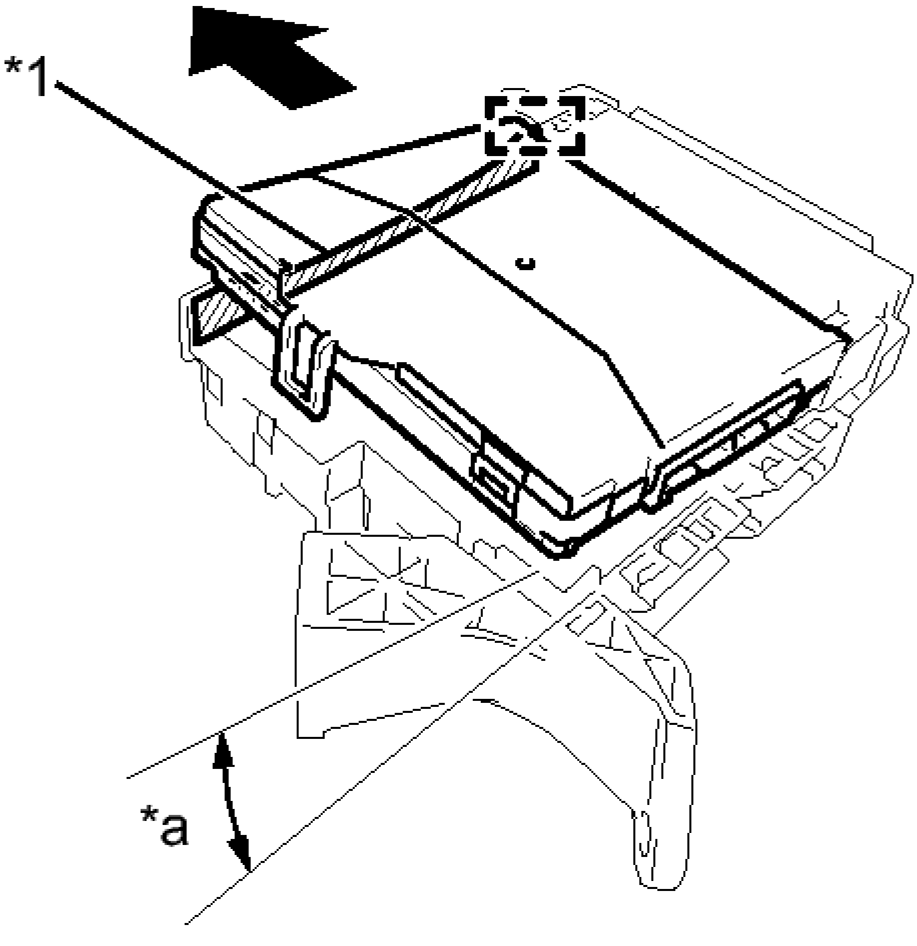

Fig. 10: Identifying Housing Sidewall
Courtesy of TOYOTA MOTOR SALES, U.S.A., INC.

TEXT IN ILLUSTRATION

*1	Housing Sidewall
*a	20°

HINT:

Make sure to keep the angle 20° or more as shown in the illustration.

b. Slide the guide of the main body ECU (multiplex network body ECU) along the housing sidewall so that it contacts the junction block fuses as shown in the illustration.

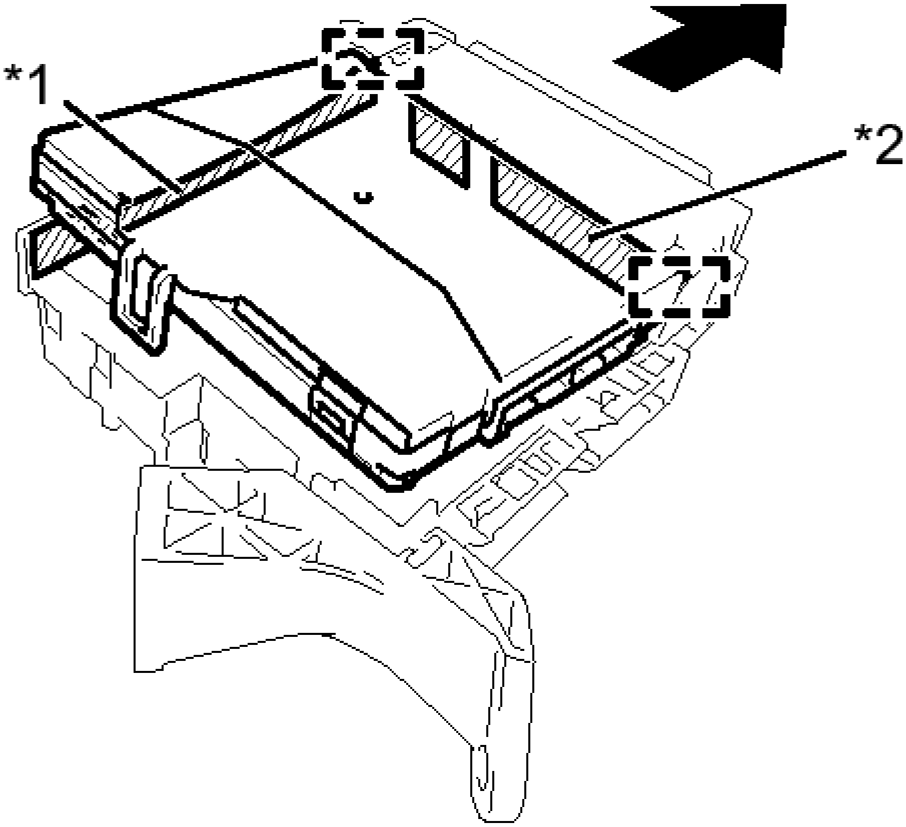

Fig. 11: Identifying Housing Sidewall And Junction Block Fuse
Courtesy of TOYOTA MOTOR SALES, U.S.A., INC.

TEXT IN ILLUSTRATION

*1	Housing Sidewall
*2	Junction Block Fuse

c. While keeping the main body ECU (multiplex network body ECU) in contact with side A of the junction block (axis of rotation), rotate it downward as shown in the illustration.

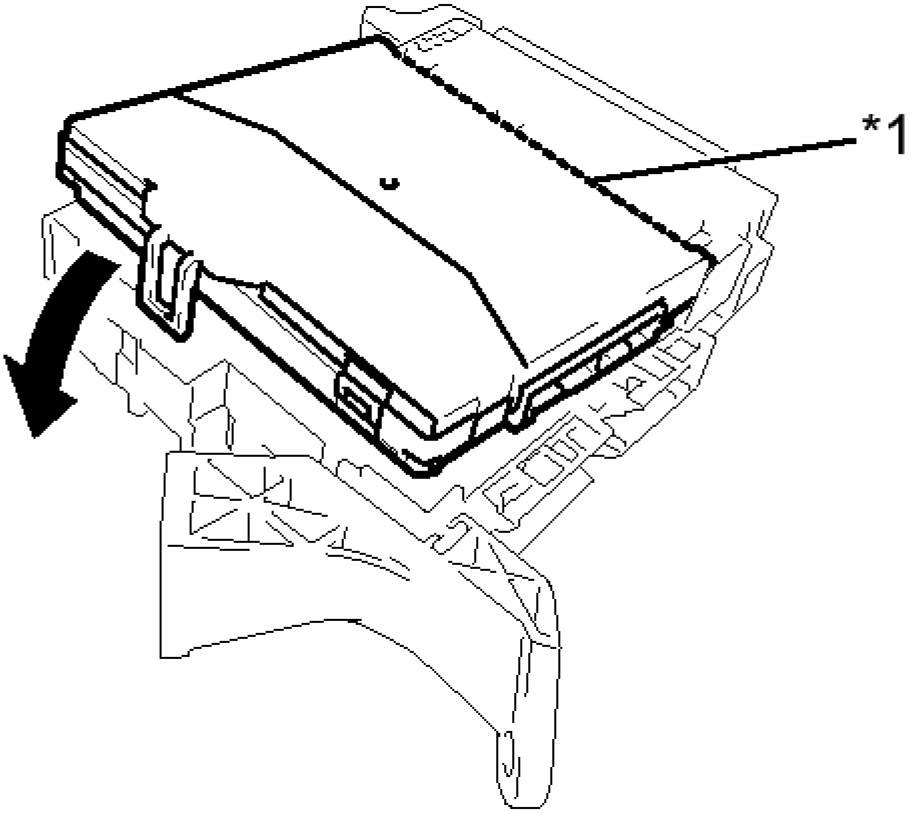

P

Fig. 12: Identifying Side A Contact Portion
Courtesy of TOYOTA MOTOR SALES, U.S.A., INC.

TEXT IN ILLUSTRATION

*1	Side A Contact Portion

d. Press the push area until the claw engages to install the main body ECU (multiplex network body ECU).

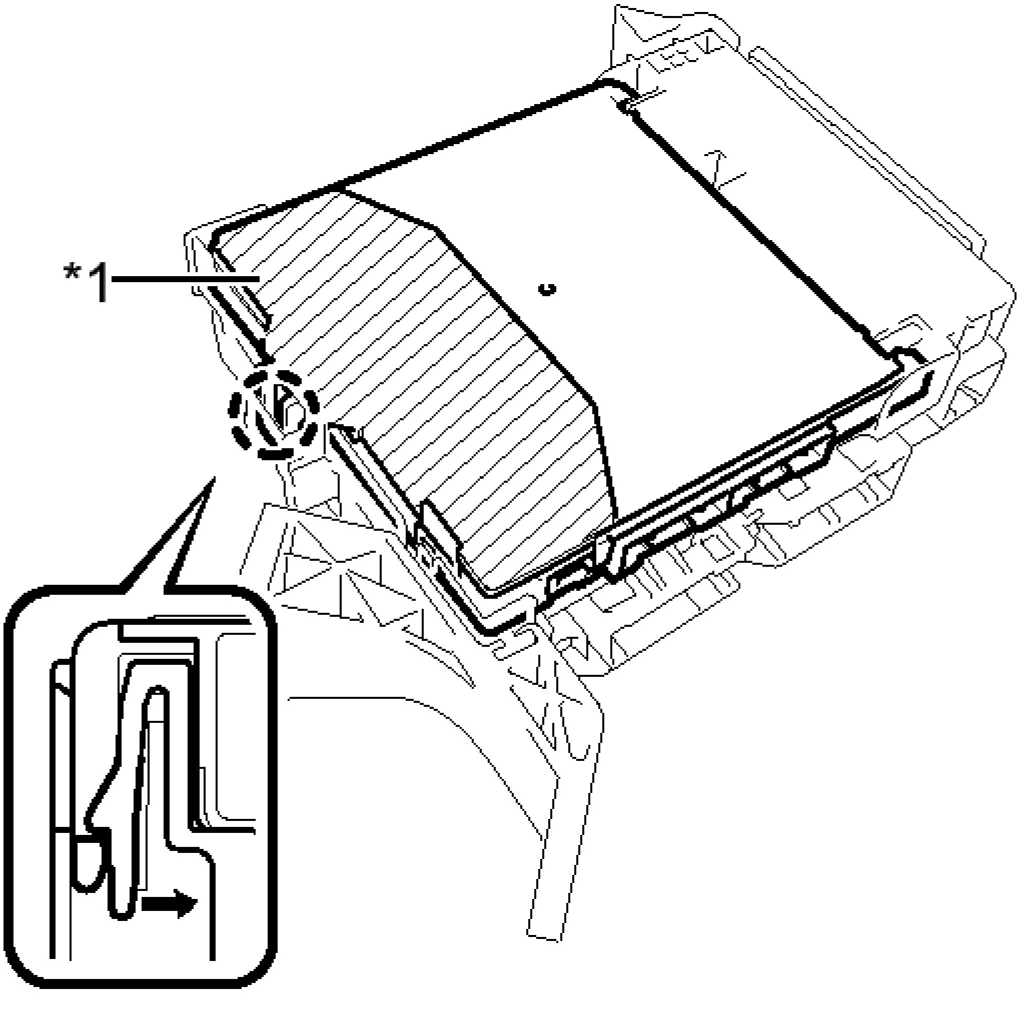

Fig. 13: Identifying Push Area
Courtesy of TOYOTA MOTOR SALES, U.S.A., INC.

TEXT IN ILLUSTRATION

*1	Push Area

NOTE:

- **Make sure to press only the push area.**
- **Confirm the engagement of the main body ECU (multiplex network body ECU) and junction block by listening for the lock sound.**

HINT:

If a lock sound cannot be heard, visually check the lock part engagement. The engagement can also be confirmed if the main body ECU (multiplex network body ECU) and junction block are flush.

2. **INSTALL INSTRUMENT PANEL JUNCTION BLOCK ASSEMBLY**
   a. Engage the claw to install the connector as shown in the illustration.

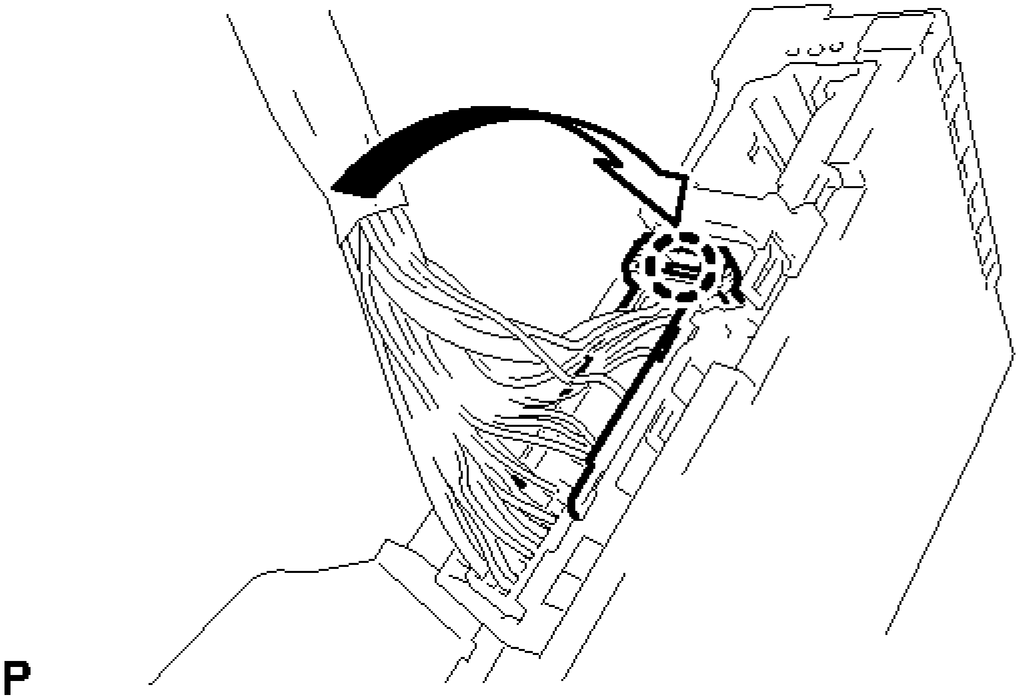

Fig. 14: Identifying Instrument Panel Junction Block Assembly Claw
Courtesy of TOYOTA MOTOR SALES, U.S.A., INC.

NOTE: **Be sure to engage the connector securely.**

   b. Engage the claw to lock the connector lock as shown in the illustration.

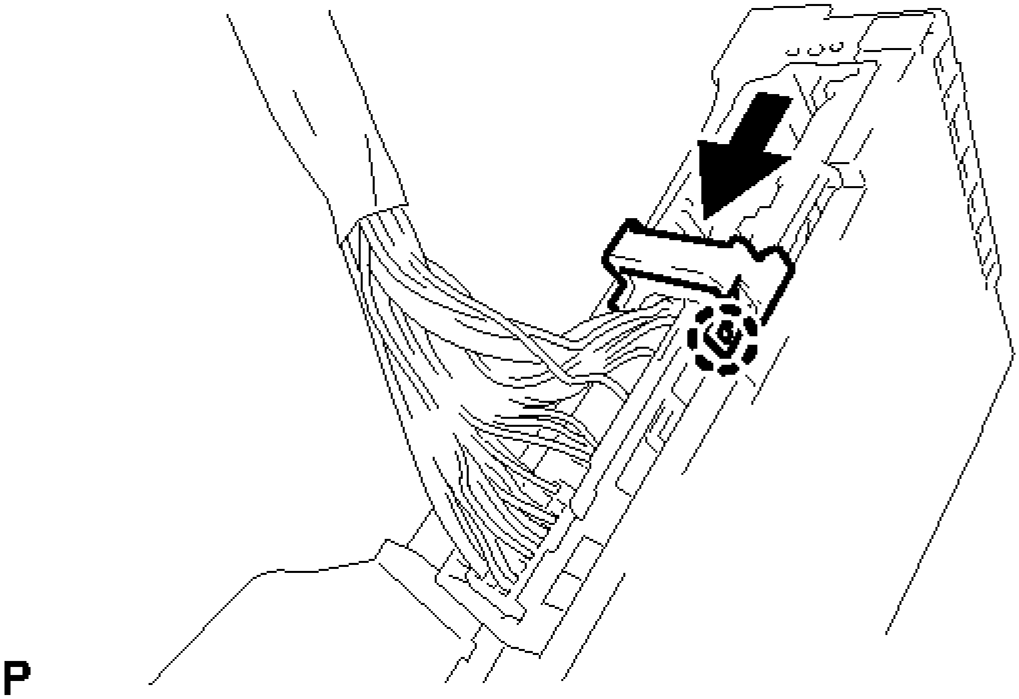

Fig. 15: Identifying Claw To Lock Connector Lock
Courtesy of TOYOTA MOTOR SALES, U.S.A., INC.

c. Engage the claw to connect the connector as shown in the illustration.

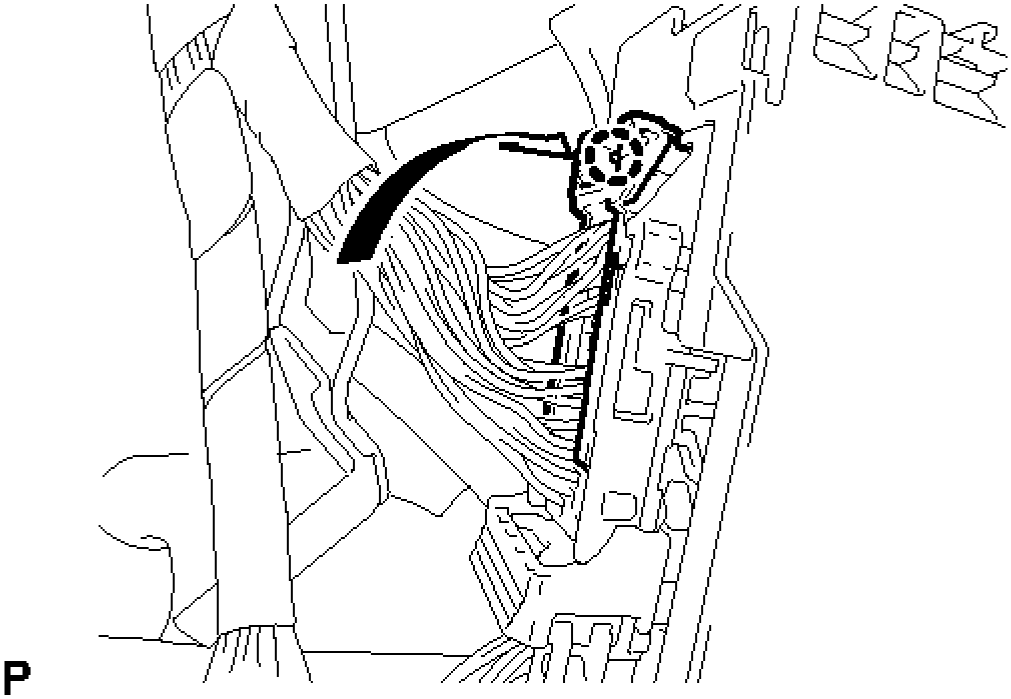

Fig. 16: Identifying Connector Claw
Courtesy of TOYOTA MOTOR SALES, U.S.A., INC.

NOTE: Be sure to engage the connector securely.

d. Install the instrument panel junction block assembly with the bolt and 2 nuts.

Torque: 8.0 N*m (82 kgf*cm, 71 in.*lbf)

e. Connect each connector.

NOTE: Be sure to engage each connector securely.

3. **INSTALL LOWER NO. 1 INSTRUMENT PANEL AIR BAG ASSEMBLY**

   Refer to **INSTALLATION**

INTEGRATION RELAY

COMPONENTS

ILLUSTRATION

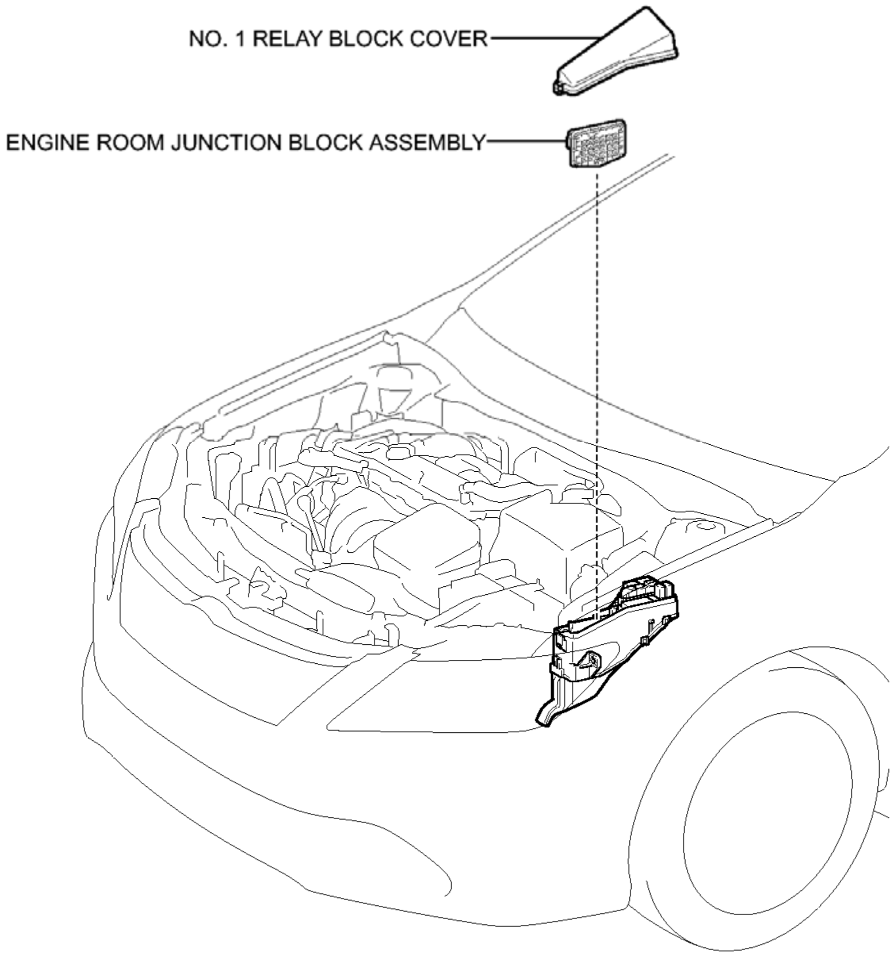
NO. 1 RELAY BLOCK COVER
ENGINE ROOM JUNCTION BLOCK ASSEMBLY

P

Fig. 17: Identifying Integration Relay Replacement Components
Courtesy of TOYOTA MOTOR SALES, U.S.A., INC.

ON-VEHICLE INSPECTION

ON-VEHICLE INSPECTION

1. **INSPECT ENGINE ROOM JUNCTION BLOCK ASSEMBLY (SIGNAL READING CHECK)**

   NOTE: **Both present and history signal readings will be cleared if the engine room junction block assembly is removed. Make sure not to remove it before inspection.**

   HINT:

   The signal readings of the engine room junction block assembly can be checked by inspecting the voltage at the diagnosis terminal.

a. Signal reading check
    1. Turn the ignition switch to ON.
    2. Connect the positive (+) terminal of a voltmeter to the engine room junction block assembly and the negative (-) terminal to the body ground.

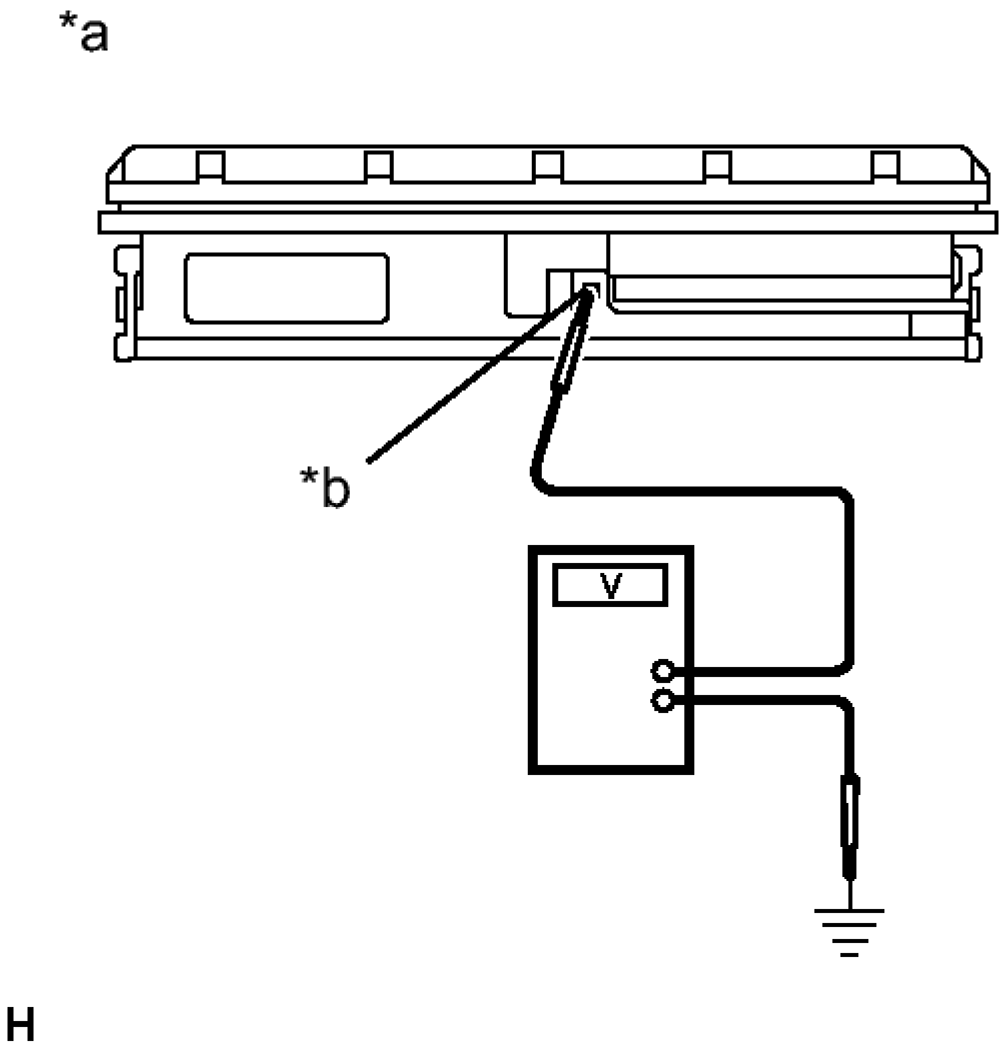

Fig. 18: Identifying Engine Room Junction Block Assembly Voltmeter To Body Ground
Courtesy of TOYOTA MOTOR SALES, U.S.A., INC.

TEXT IN ILLUSTRATION

*a	Component with harness connected (Engine Room

	Junction Block Assembly)
*b	Diagnosis Terminal

3. Using the illustration below as a reference, determine whether any channels are malfunctioning based on the observed signal reading.

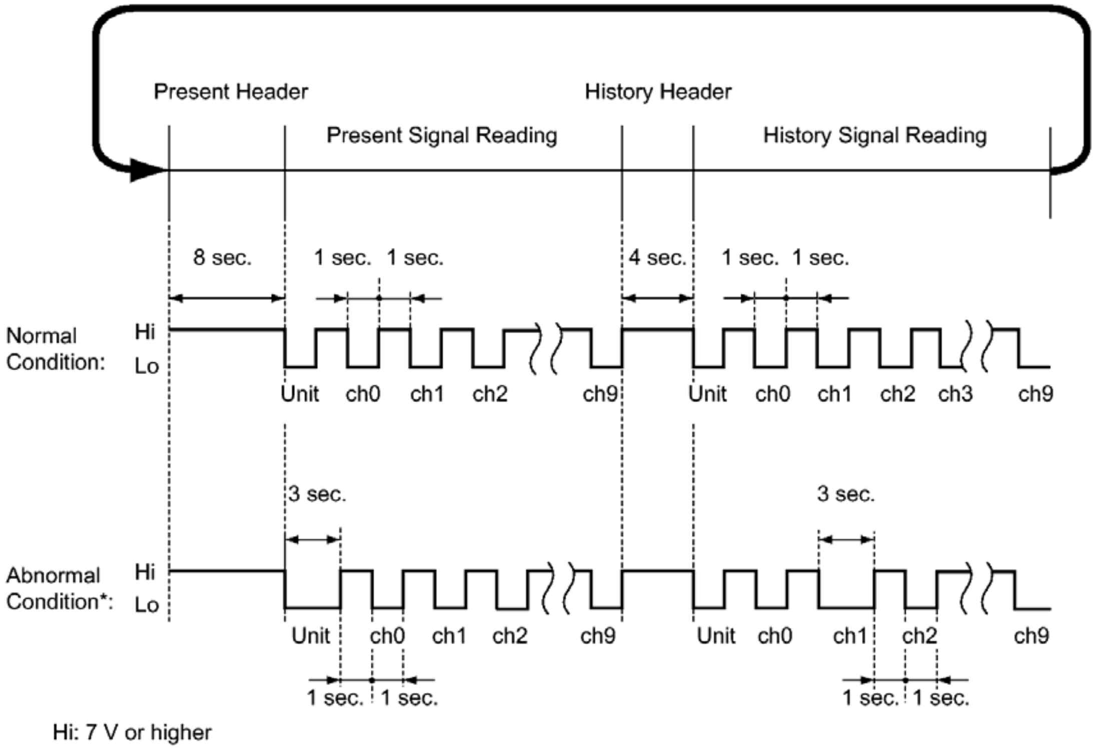

Present Header
History Header
Present Signal Reading
History Signal Reading
8 sec.
1 sec.
1 sec.
4 sec.
1 sec.
1 sec.
Normal Condition:
Hi
Lo
Unit
ch0
ch1
ch2
ch9
Unit
ch0
ch1
ch2
ch3
ch9
3 sec.
3 sec.
Abnormal Condition*:
Hi
Lo
Unit
ch0
ch1
ch2
ch9
Unit
ch0
ch1
ch2
ch9
1 sec.
1 sec.
1 sec.
1 sec.

Hi: 7 V or higher

Lo: Below 2 V

*: The example shows a malfunction for "Unit" in the present signal reading and for "ch1" in the history signal reading.

Fig. 19: Engine Room Junction Block Assembly Blinking Pattern
Courtesy of TOYOTA MOTOR SALES, U.S.A., INC.

HINT:

- Present signal reading and history signal reading will be displayed alternately after the ignition switch is turned to ON. By measuring the duration of each header, the present signal reading and history signal reading can be recognized.
- A unit malfunction indicates an internal malfunction of the engine room junction block assembly. If a malfunction is detected for any channel from channel 0 to 9, an electrical load connected to the engine room junction block assembly may be malfunctioning or there may be a short in the engine room junction block assembly

circuit or in the wire harness.

- The present signal reading will be stored as a history signal reading when electrical loads are operated after a malfunctioning part returns to normal.
- Both present and history signal readings can be cleared by disconnecting the cable from the negative (-) battery terminal.
- Depending on the specification, different electrical loads connected to channels 0 to 9 are provided. Refer to the table below:

Channel	**Connected Electrical Load**			
	for 2AR-FE			**for 2GR-FE**
	w/ Front Fog Light	**w/ Mirror Heater**	**w/o Mirror Heater**	
ch0	Radiator fan motor	-	-	Magnetic clutch
ch1	Condenser fan motor	-	-	-
ch2	Mirror heater	Mirror heater	-	Mirror heater
ch3	-	-	-	-
ch4	-	-	-	-
ch5	-	Rear window defogger wire	Rear window defogger wire	-
ch6	Front fog lights	Condenser fan motor	Condenser fan motor	Front fog lights
ch7	Rear window defogger wire	Radiator fan motor	Radiator fan motor	Rear window defogger wire
ch8	High beam headlight LH			
ch9	High beam headlight RH			

2. **INSPECT ENGINE ROOM JUNCTION BLOCK ASSEMBLY (RESULTS OF SIGNAL READING CHECK)**
    a. Results of signal reading check
        1. Depending on the signal reading, perform troubleshooting according the table below.

Output Signal Reading	**Repair Method**
Normal	Continue troubleshooting for each

	system.
The unit is malfunctioning.	Replace the engine room junction block.
A malfunction in a channel (ch0 to ch9)	a. Check for a short in the wire harnesses between the engine room junction block assembly and each electrical load. b. Inspect each of the electrical loads. c. Replace the engine room junction block.

HINT:

Make sure to clear the signal readings by disconnecting the cable from the negative (-) battery terminal after replacement or repair of the malfunctioning part.

2. If no signal readings are output, perform troubleshooting according to the following troubleshooting procedure.

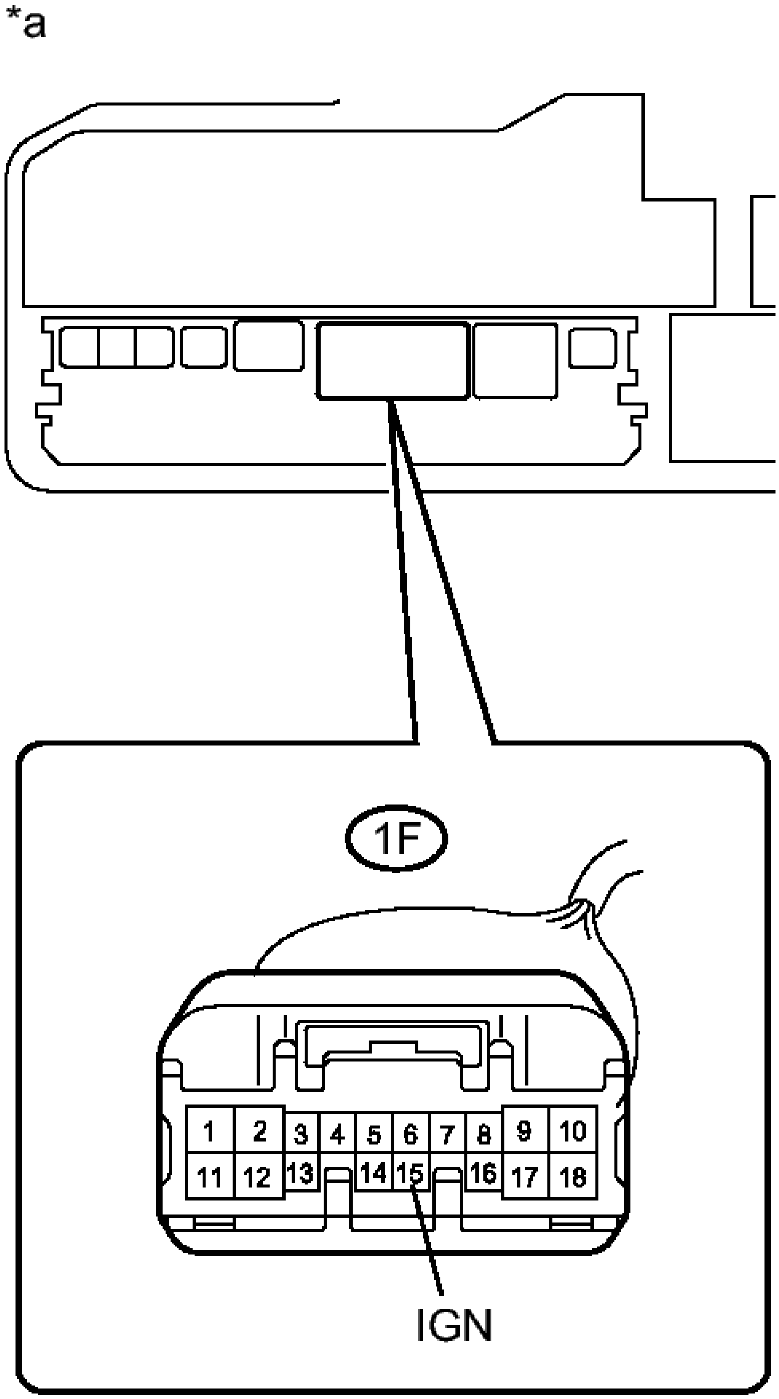
*a
1F
1
2
3
4
5
6
7
8
9
10
11
12
13
14
15
16
17
18
IGN

Fig. 20: Identifying Engine Room Junction Block Assembly Connector Terminal Identification
Courtesy of TOYOTA MOTOR SALES, U.S.A., INC.

a. Remove the engine room junction block assembly. Refer to **REMOVAL**.

b. Measure the voltage according to the value(s) in the table below.

Standard Voltage

Tester Connection	**Switch Condition**	**Specified Condition**
1F-15 (IGN) - Body ground	Ignition switch ON	11 to 14 V

TEXT IN ILLUSTRATION

*a	Component without engine room junction block assembly (Engine Room Relay Block and Junction Block Assembly)

If the result is not as specified, repair or replace the wire harness or connector.

REMOVAL

REMOVAL

1. **PRECAUTION**

NOTE: **After turning the ignition switch off, waiting time may be required before disconnecting the cable from the negative (-) battery terminal. Therefore, make sure to read the disconnecting the cable from the negative (-) battery terminal notices before proceeding with work. Refer to PRECAUTION .**

2. **DISCONNECT CABLE FROM NEGATIVE BATTERY TERMINAL**

NOTE: **When disconnecting the cable, some systems need to be initialized after the cable is reconnected. Refer to INITIALIZATION .**

3. **REMOVE NO. 1 RELAY BLOCK COVER**

a. Disengage the 2 claws and remove the No. 1 relay block cover as shown in the illustration.

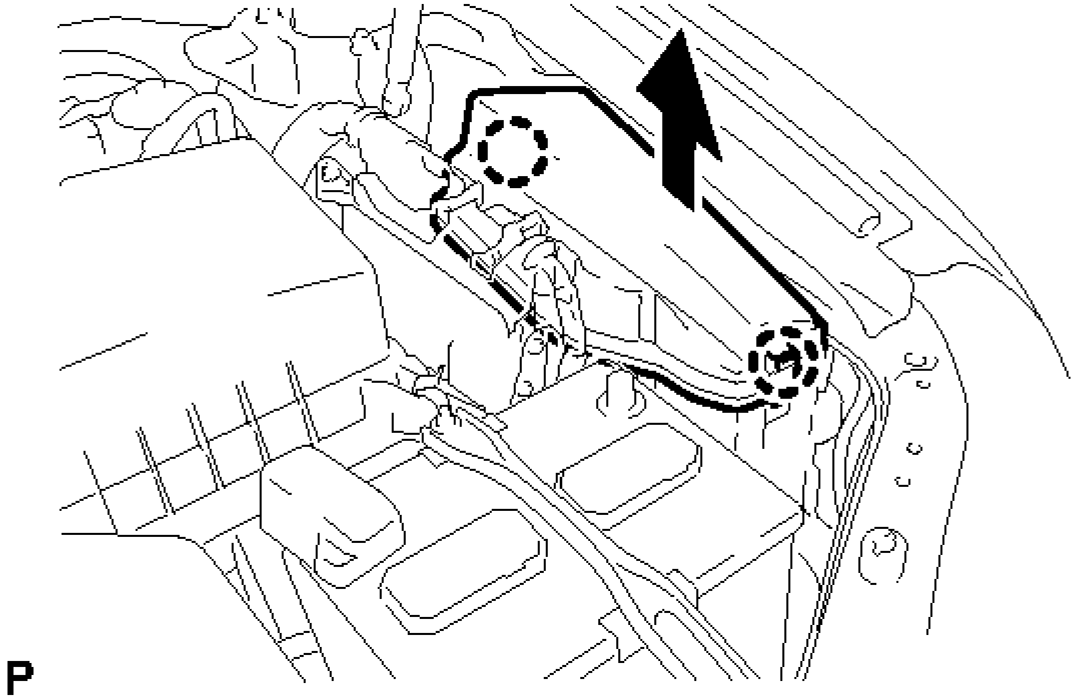

Fig. 21: Removing No. 1 Relay Block Cover Claws
Courtesy of TOYOTA MOTOR SALES, U.S.A., INC.

4. **REMOVE ENGINE ROOM JUNCTION BLOCK ASSEMBLY**
    a. Disengage the 2 claws as shown in the illustration.

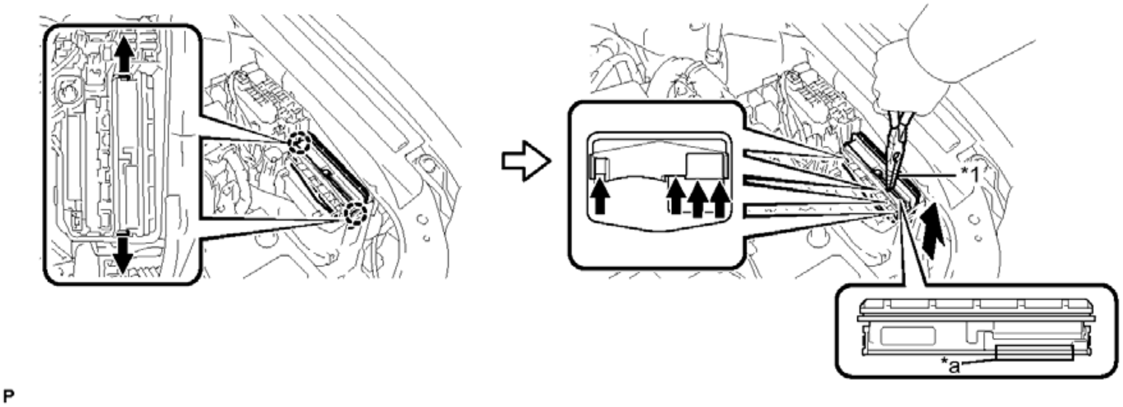

Fig. 22: Removing Engine Room Junction Block Assembly Claws
Courtesy of TOYOTA MOTOR SALES, U.S.A., INC.

TEXT IN ILLUSTRATION

*1	Protective Tape	*a	Pulled Position

b. Using pliers, pull up the engine room junction block assembly at the position indicated in the illustration and disconnect the 4 connectors from the engine room relay block assembly.

NOTE: **When pulling a engine room junction block assembly, take care not to damage the engine room junction block assembly.**

HINT:

Tape the pliers tip before use.

c. Disconnect the 2 connectors and remove the engine room junction block assembly.

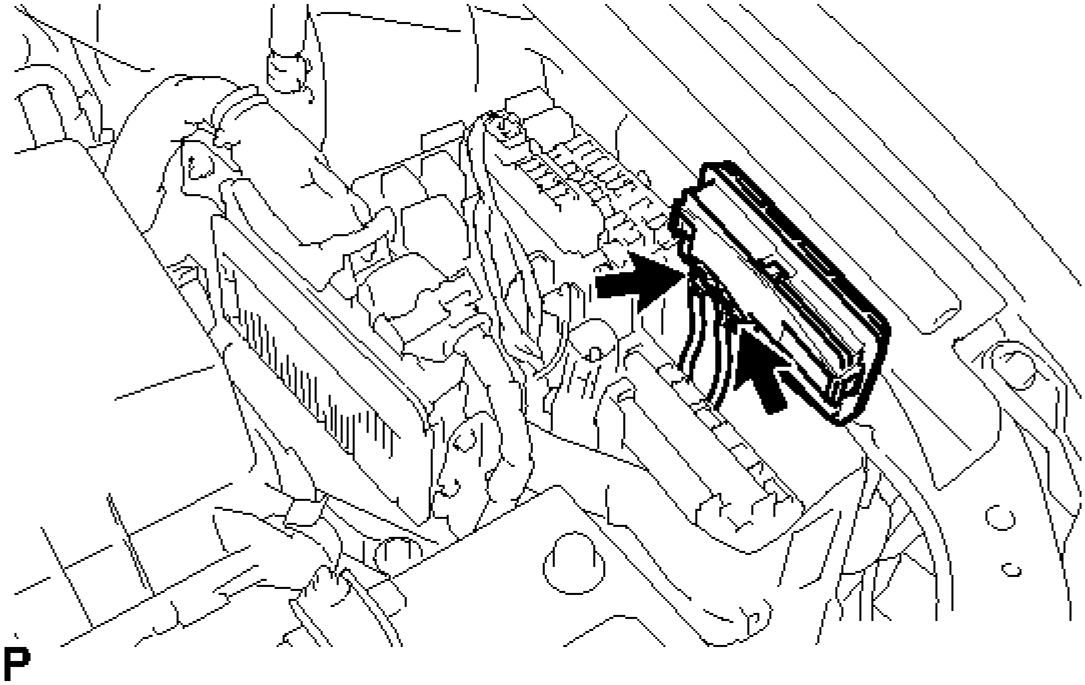

Fig. 23: Identifying Engine Room Junction Block Assembly Connectors
Courtesy of TOYOTA MOTOR SALES, U.S.A., INC.

NOTE:

- **Do not drop or allow any impact on parts.**
- **Do not touch the connector.**

INSTALLATION

INSTALLATION

1. **INSTALL ENGINE ROOM JUNCTION BLOCK ASSEMBLY**
    a. Connect the 2 connectors.
    b. Connect the 4 connectors to the engine room relay block assembly.

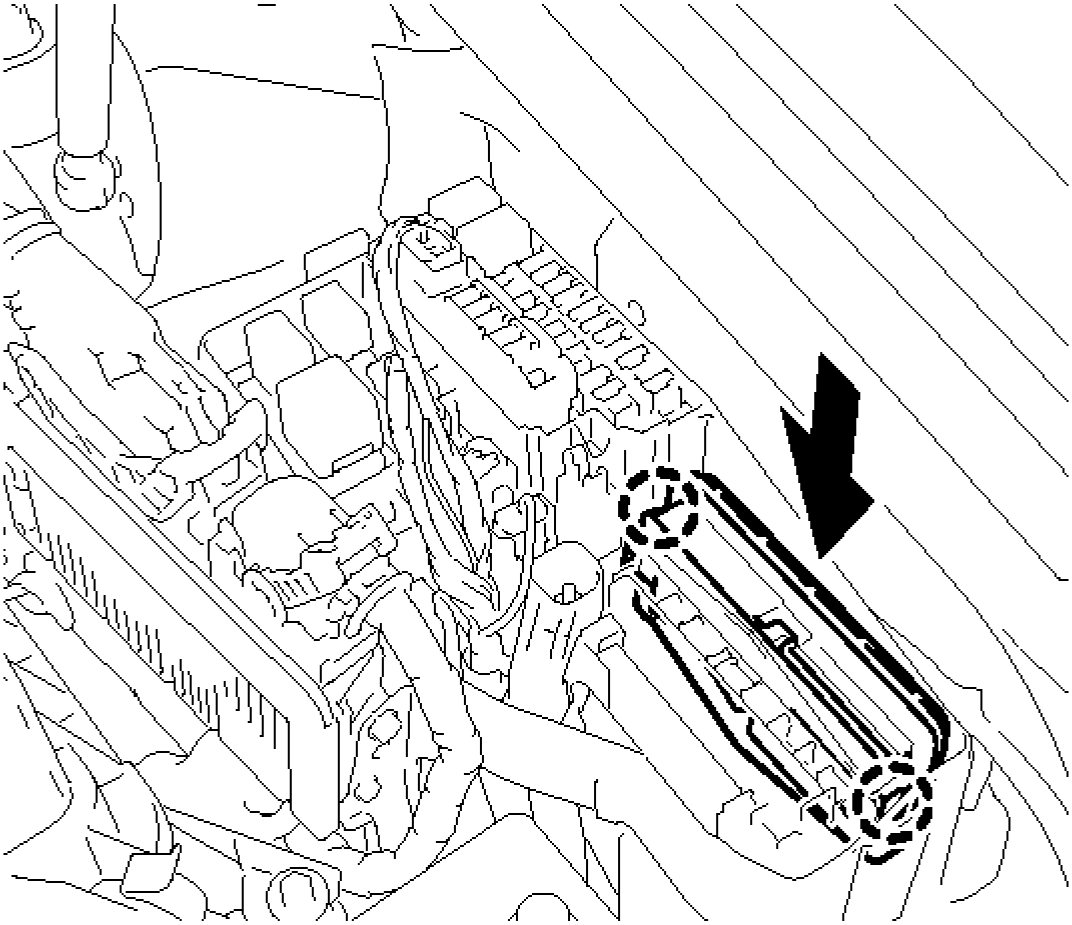

P

Fig. 24: Identifying Engine Room Junction Block Assembly Connectors And Claws
Courtesy of TOYOTA MOTOR SALES, U.S.A., INC.

c. Engage the 2 claws to install the engine room junction block assembly.

2. **INSTALL NO. 1 RELAY BLOCK COVER**
    a. Engage the 2 claws to install the No. 1 relay block cover.

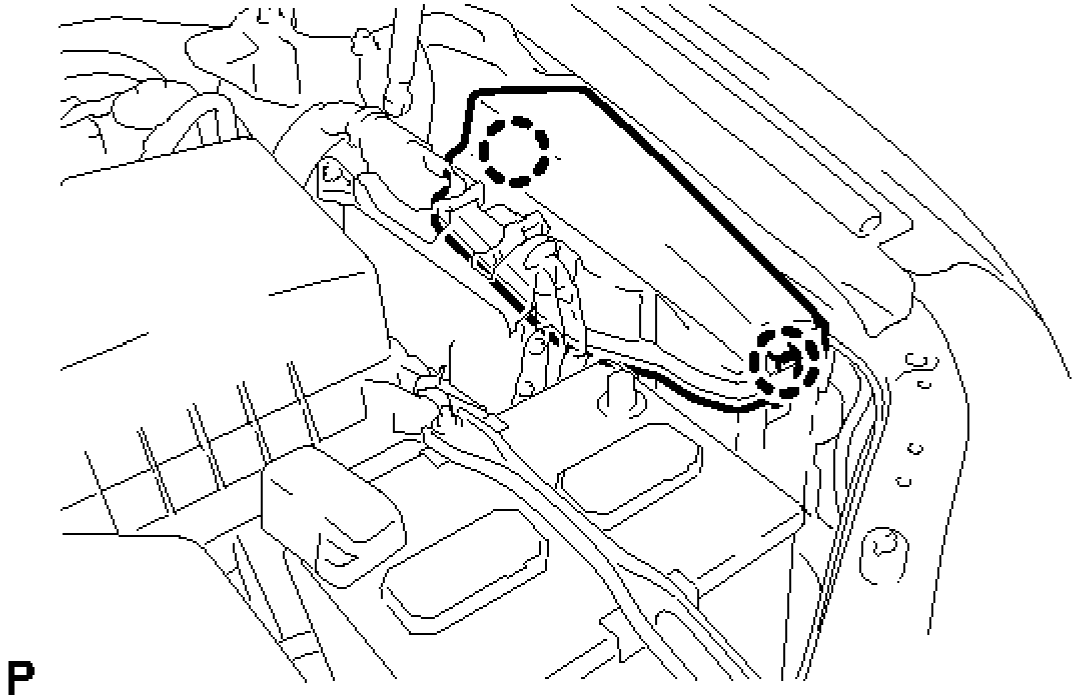

Fig. 25: Identifying No. 1 Relay Block Cover Claws
Courtesy of TOYOTA MOTOR SALES, U.S.A., INC.

3. **CONNECT CABLE TO NEGATIVE BATTERY TERMINAL**

NOTE: **When disconnecting the cable, some systems need to be initialized after the cable is reconnected. Refer to INITIALIZATION .**

POWER OUTLET SOCKET

COMPONENTS

ILLUSTRATION

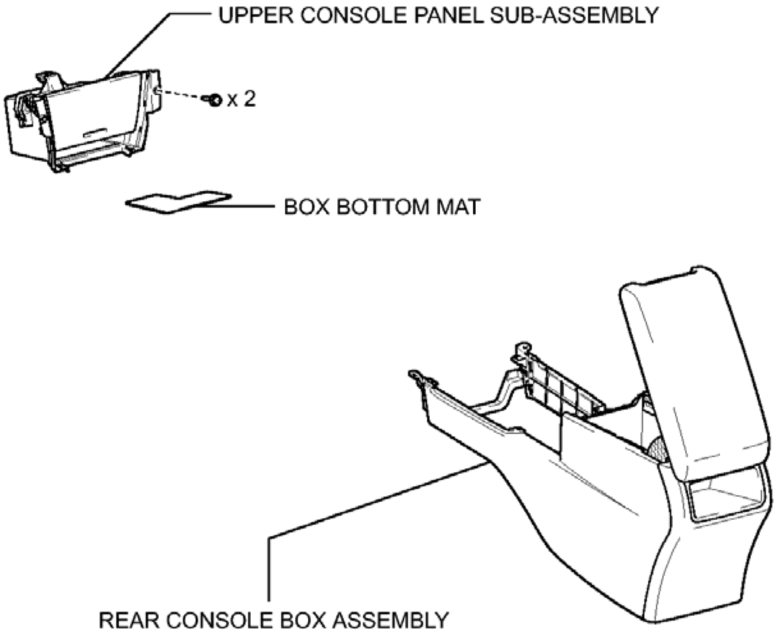
UPPER CONSOLE PANEL SUB-ASSEMBLY
x 2
BOX BOTTOM MAT
REAR CONSOLE BOX ASSEMBLY

P

Fig. 1: Identifying Power Outlet Socket Replacement Components (1 Of 2)
Courtesy of TOYOTA MOTOR SALES, U.S.A., INC.

ILLUSTRATION

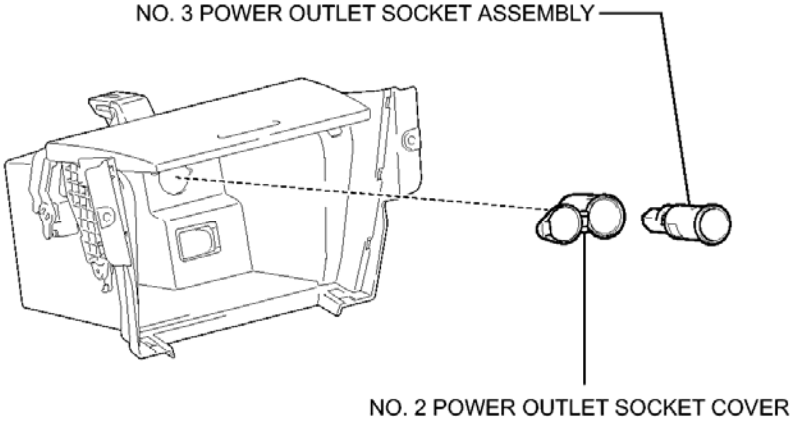
NO. 3 POWER OUTLET SOCKET ASSEMBLY
NO. 2 POWER OUTLET SOCKET COVER

P

Fig. 2: Identifying Power Outlet Socket Replacement Components (2 Of 2)
Courtesy of TOYOTA MOTOR SALES, U.S.A., INC.

REMOVAL

REMOVAL

1. **REMOVE REAR CONSOLE BOX ASSEMBLY**

   Refer to **REMOVAL**

2. **REMOVE BOX BOTTOM MAT** . Refer to **REMOVAL - Step 25**
3. **REMOVE UPPER CONSOLE PANEL SUB-ASSEMBLY** . Refer to **REMOVAL - Step 26**
4. **REMOVE NO. 3 POWER OUTLET SOCKET ASSEMBLY**
   a. Using a screwdriver, disengage the claw and remove the No. 3 power outlet socket assembly.

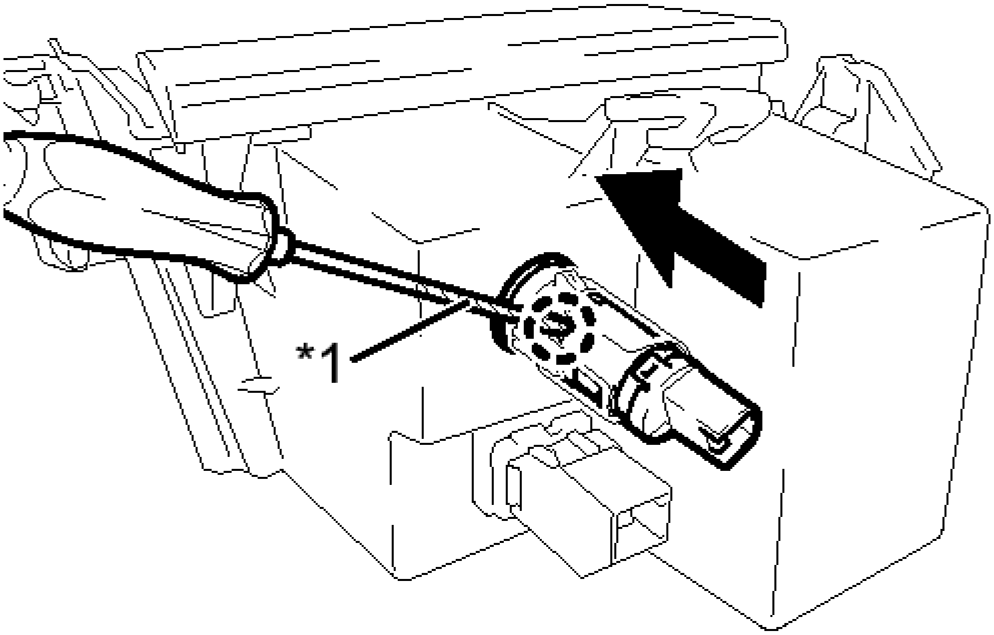

Fig. 3: Removing No. 3 Power Outlet Socket Assembly Claw
Courtesy of TOYOTA MOTOR SALES, U.S.A., INC.

TEXT IN ILLUSTRATION

*1	Protective Tape

HINT:

Tape the screwdriver tip before use.

5. **REMOVE NO. 2 POWER OUTLET SOCKET COVER**
    a. Disengage the 2 claws and remove the No. 2 power outlet socket cover.

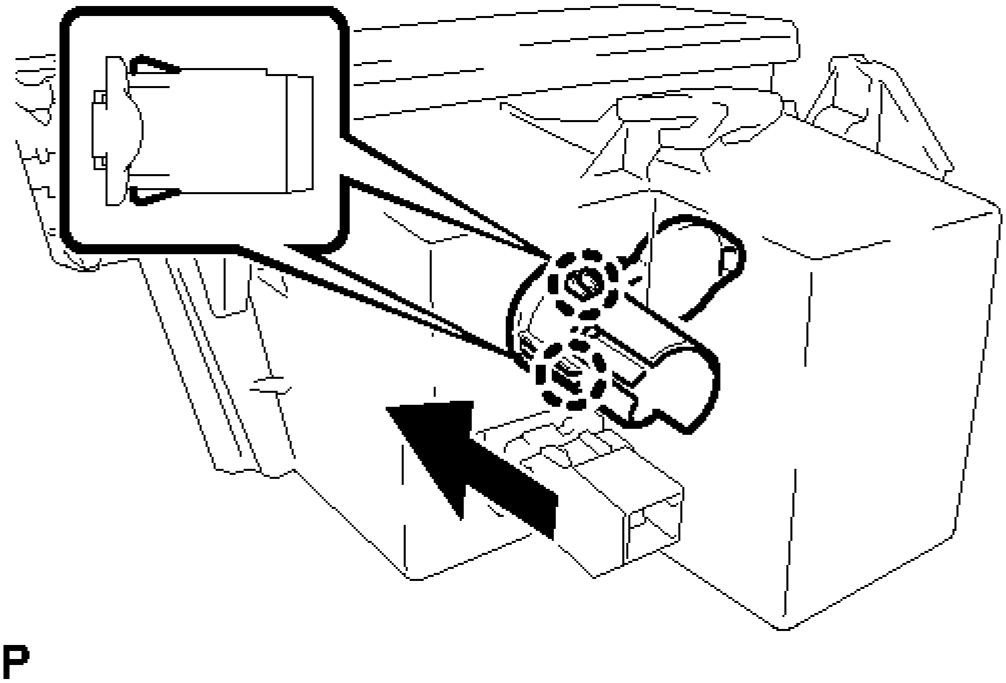

Fig. 4: Removing No. 2 Power Outlet Socket Cover Claws
Courtesy of TOYOTA MOTOR SALES, U.S.A., INC.

INSTALLATION

INSTALLATION

1. **INSTALL NO. 2 POWER OUTLET SOCKET COVER**
    a. Engage the 2 claws to install the No. 2 power outlet socket cover.

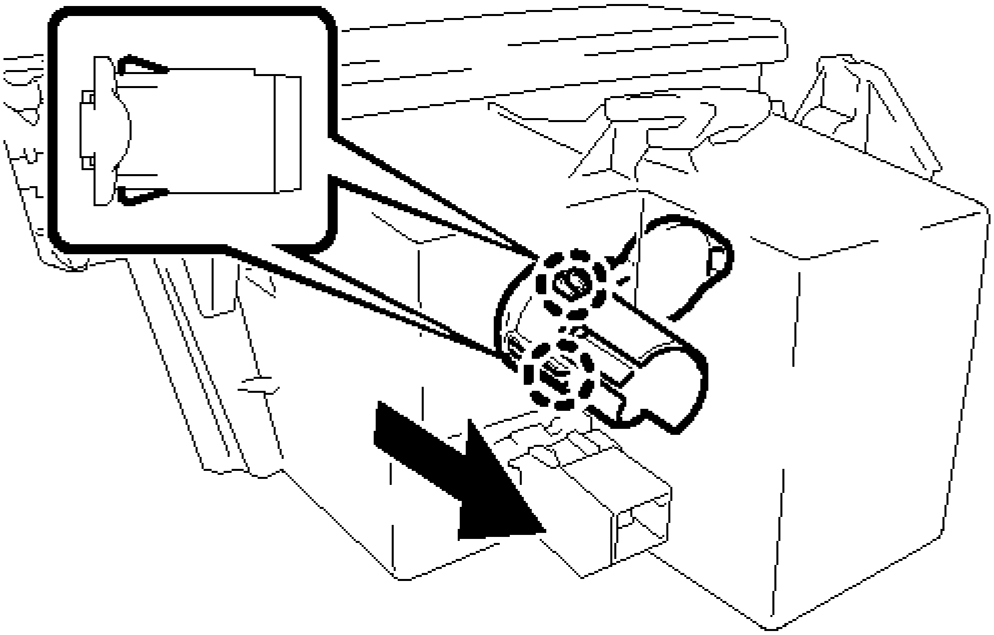

Fig. 5: Installing No. 2 Power Outlet Socket Cover Claws
Courtesy of TOYOTA MOTOR SALES, U.S.A., INC.

2. **INSTALL NO. 3 POWER OUTLET SOCKET ASSEMBLY**
   a. Engage the claw to install the No. 3 power outlet socket assembly.

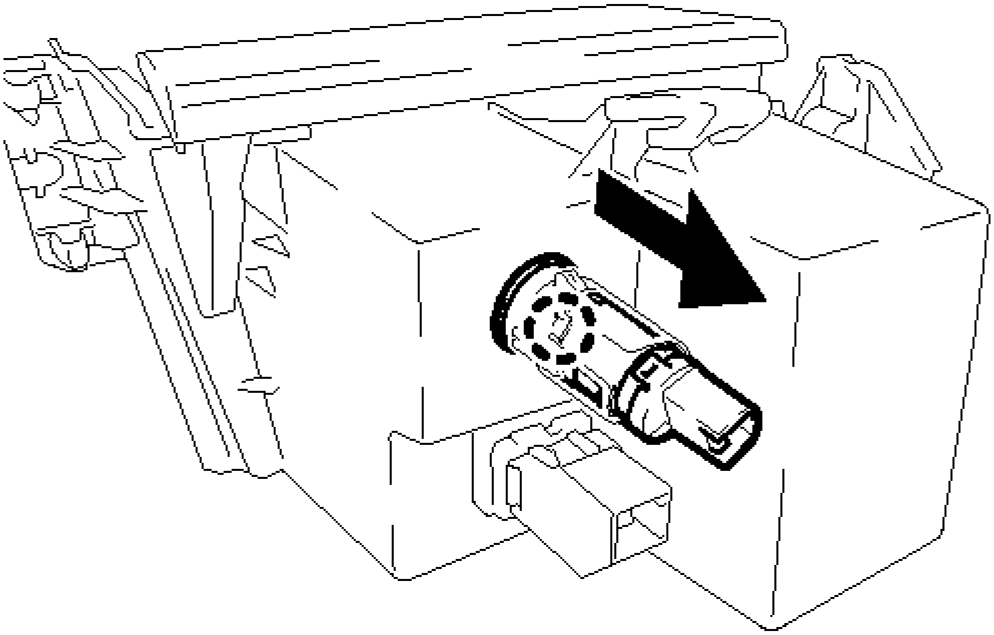

Fig. 6: Installing No. 3 Power Outlet Socket Assembly Claw

Courtesy of TOYOTA MOTOR SALES, U.S.A., INC.

3. **INSTALL UPPER CONSOLE PANEL SUB-ASSEMBLY** . Refer to **INSTALLATION - Step 27**
4. **INSTALL BOX BOTTOM MAT** . Refer to **INSTALLATION - Step 28**
5. **INSTALL REAR CONSOLE BOX ASSEMBLY**

   Refer to **INSTALLATION**

REAR POWER OUTLET SOCKET

COMPONENTS

ILLUSTRATION

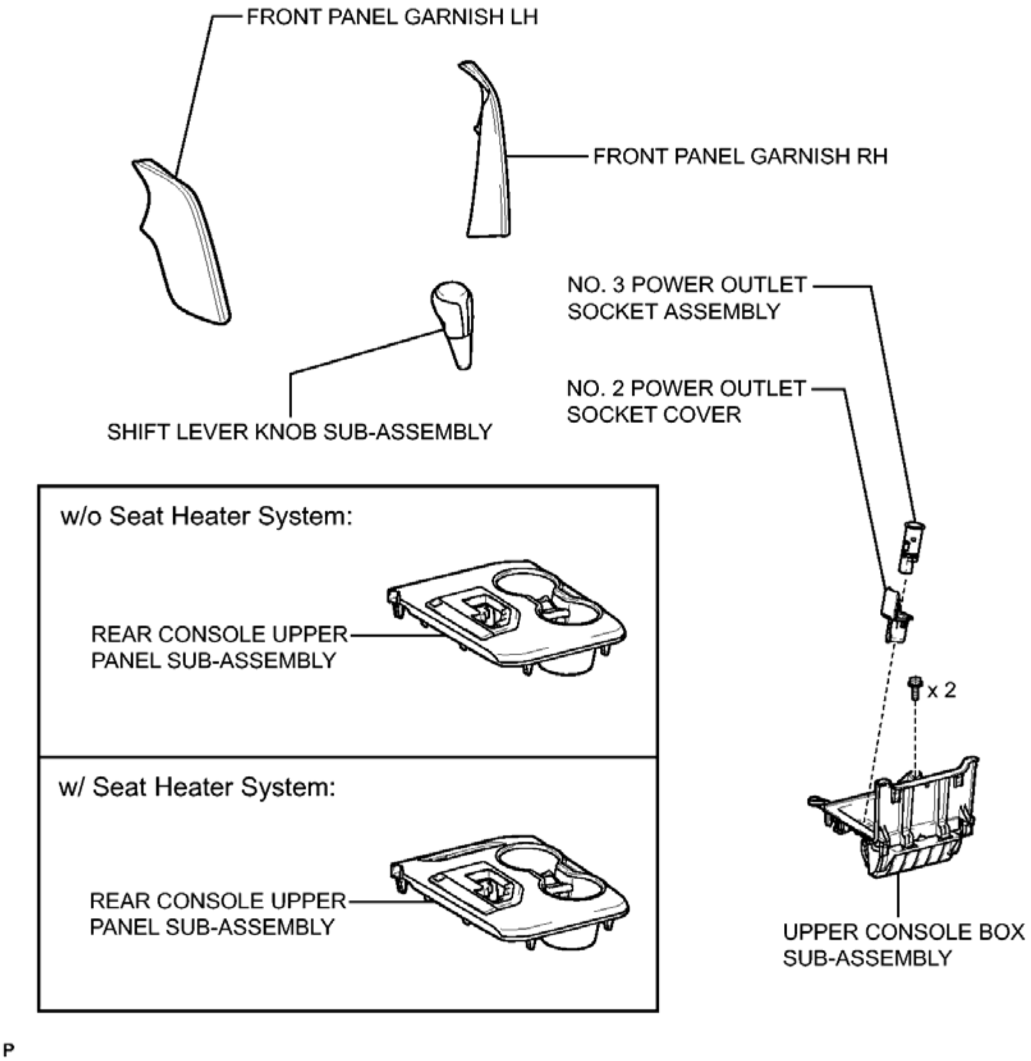
FRONT PANEL GARNISH LH
FRONT PANEL GARNISH RH
NO. 3 POWER OUTLET SOCKET ASSEMBLY
NO. 2 POWER OUTLET SOCKET COVER
SHIFT LEVER KNOB SUB-ASSEMBLY
w/o Seat Heater System:
REAR CONSOLE UPPER PANEL SUB-ASSEMBLY
w/ Seat Heater System:
REAR CONSOLE UPPER PANEL SUB-ASSEMBLY
x 2
UPPER CONSOLE BOX SUB-ASSEMBLY
P

Fig. 7: Identifying Rear Power Outlet Socket Replacement Components
Courtesy of TOYOTA MOTOR SALES, U.S.A., INC.

REMOVAL

REMOVAL

1. **REMOVE FRONT PANEL GARNISH LH** . Refer to **REMOVAL - Step 11**
2. **REMOVE FRONT PANEL GARNISH RH** . Refer to **REMOVAL - Step 14**
3. **REMOVE SHIFT LEVER KNOB SUB-ASSEMBLY** . Refer to **REMOVAL - Step 15**
4. **REMOVE REAR CONSOLE UPPER PANEL SUB-ASSEMBLY** . Refer to **REMOVAL - Step 16**
5. **REMOVE UPPER CONSOLE BOX SUB-ASSEMBLY** . Refer to **REMOVAL - Step 5**
6. **REMOVE NO. 3 POWER OUTLET SOCKET ASSEMBLY**
    a. Turn the No. 3 power outlet socket assembly in the direction shown in the illustration to disengage the claw.

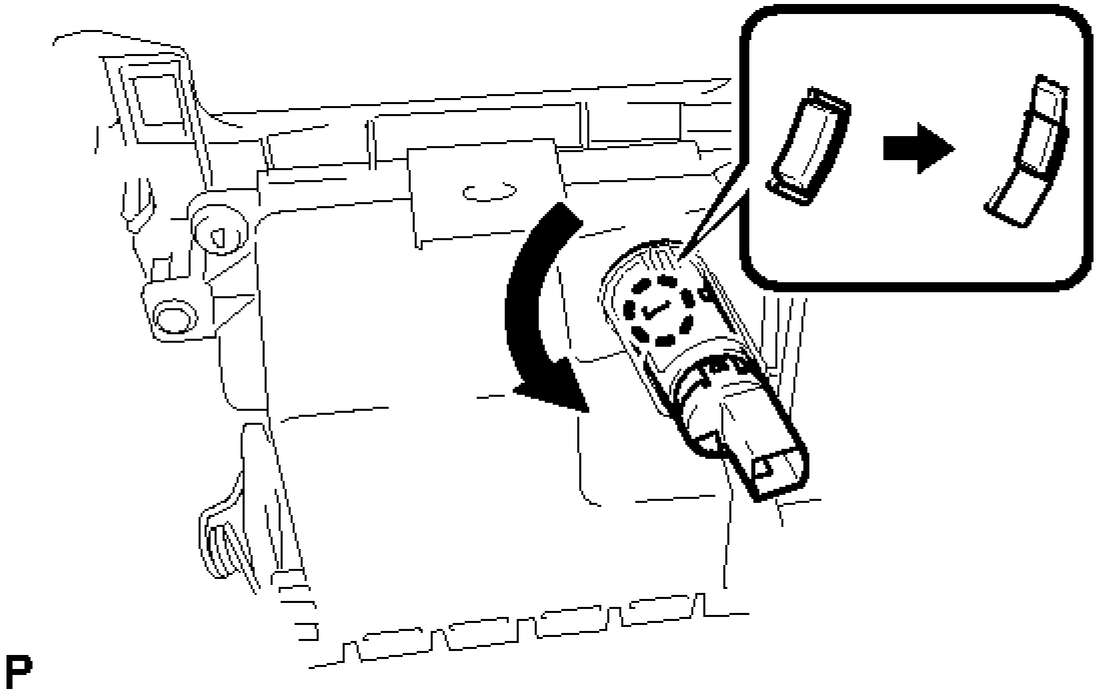

Fig. 8: Turning No. 3 Power Outlet Socket Assembly To Disengage Claw
Courtesy of TOYOTA MOTOR SALES, U.S.A., INC.

    b. Using a screwdriver, disengage the claw, and then push in the No. 3 power outlet socket assembly until the protrusion of the No. 3 power outlet socket assembly comes into contact with the No. 2 power outlet socket cover.

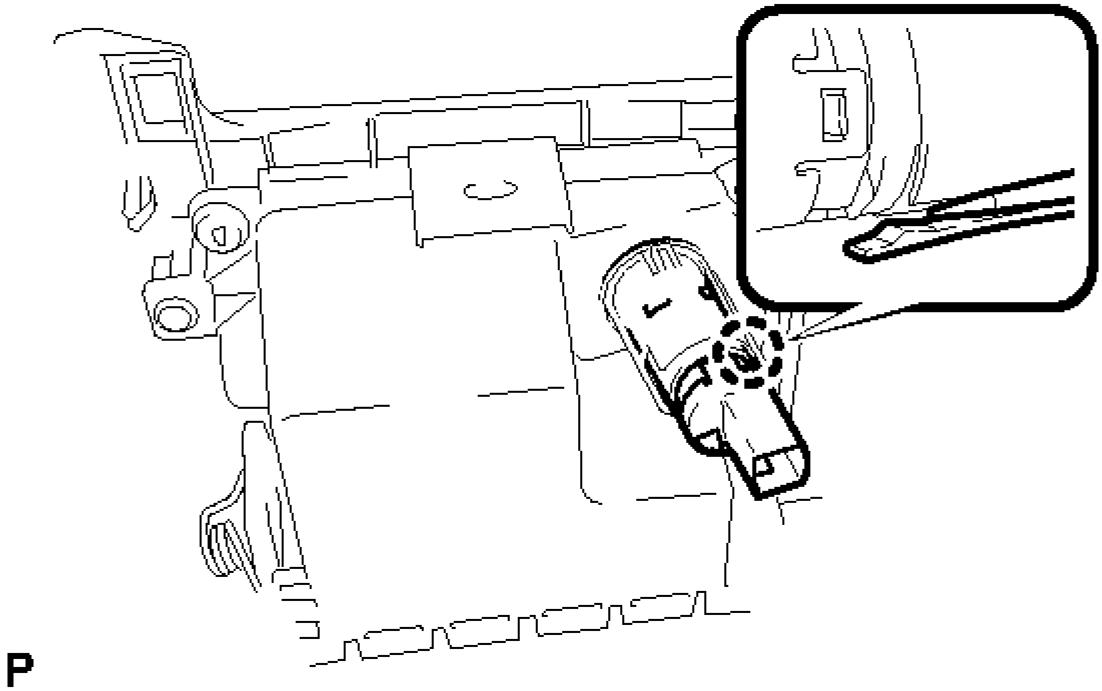

Fig. 9: Identifying No. 3 Power Outlet Socket Assembly Claw
Courtesy of TOYOTA MOTOR SALES, U.S.A., INC.

c. As shown in the illustration, align the protrusion of the No. 3 power outlet socket assembly and the notch of the No. 2 power outlet socket cover.

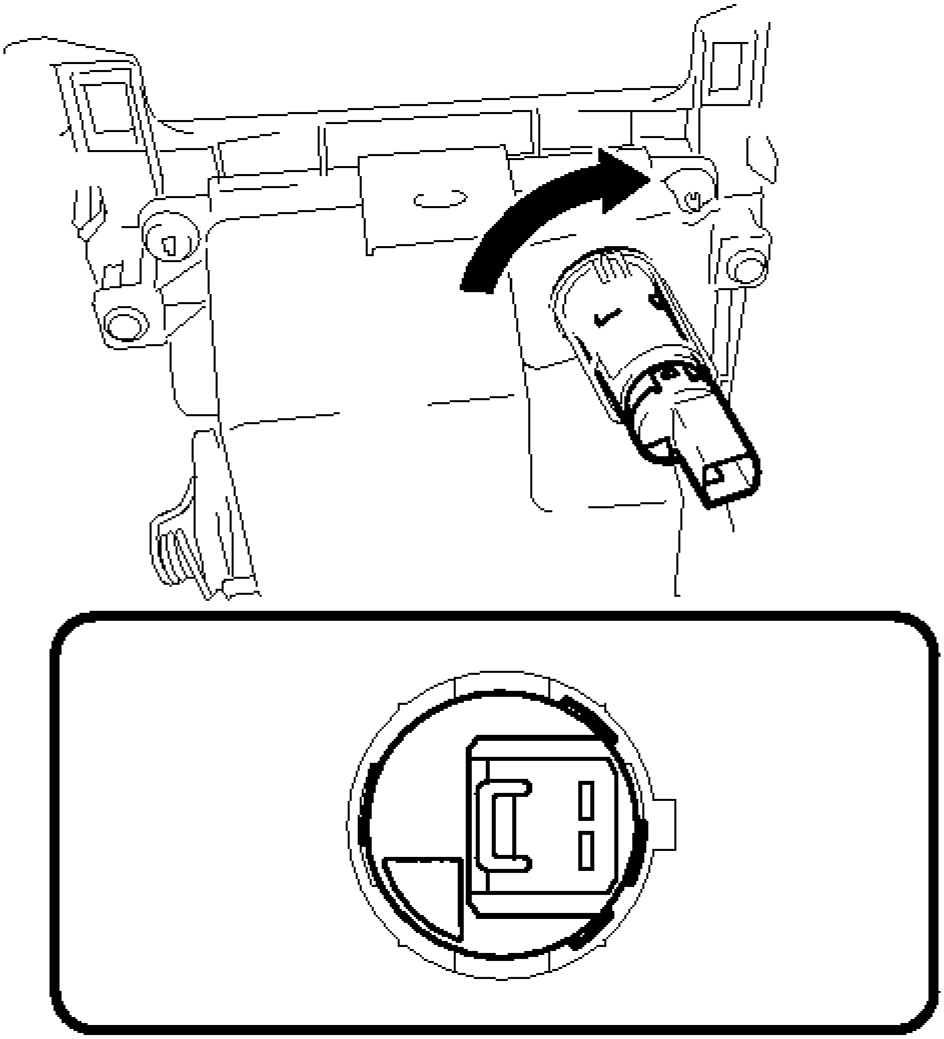

P

Fig. 10: Aligning Protrusion Of No. 3 Power Outlet Socket Assembly And No. 2 Power Outlet Socket Cover
Courtesy of TOYOTA MOTOR SALES, U.S.A., INC.

d. Using a screwdriver, disengage the claw and remove the No. 3 power outlet socket assembly from the No. 2 power outlet socket cover.

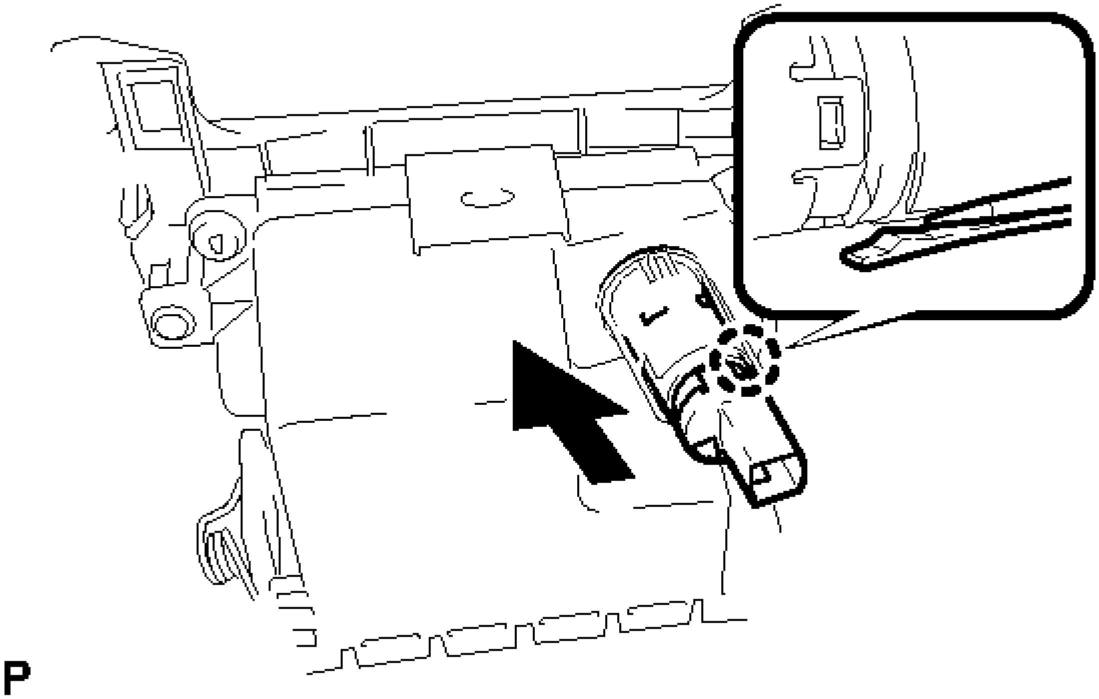

Fig. 11: Identifying No. 3 Power Outlet Socket Assembly And No. 2 Power Outlet Socket Cover
Courtesy of TOYOTA MOTOR SALES, U.S.A., INC.

7. **REMOVE NO. 2 POWER OUTLET SOCKET COVER**
   a. Disengage the 2 claws and remove the No. 2 power outlet socket cover.

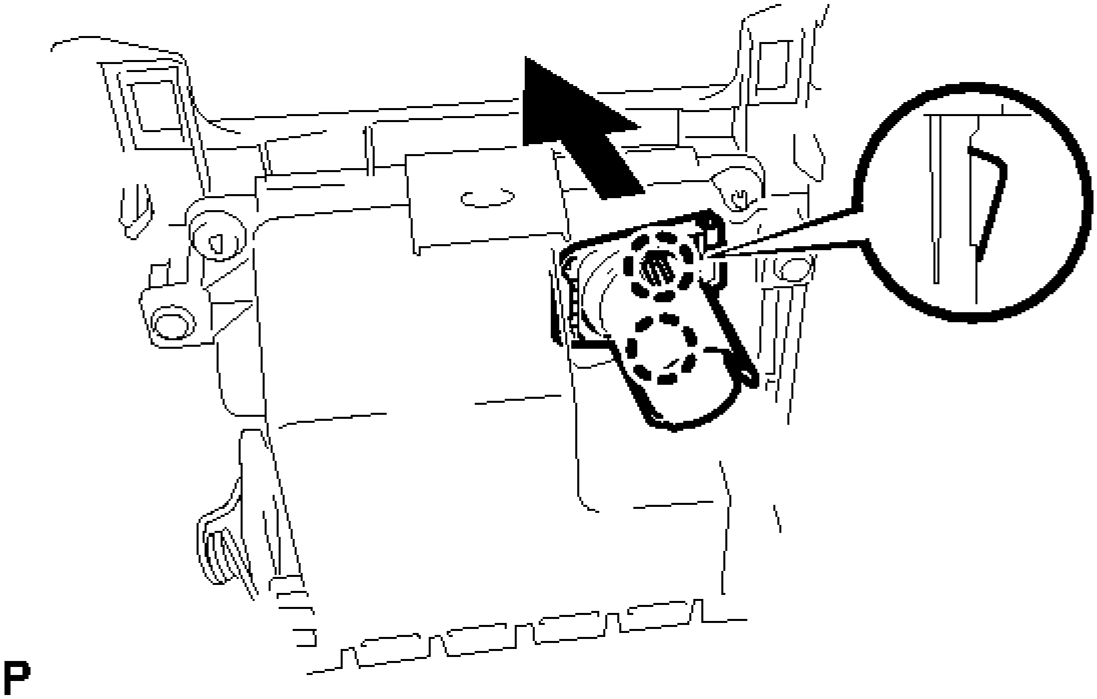

Fig. 12: Identifying No. 2 Power Outlet Socket Cover Claws
Courtesy of TOYOTA MOTOR SALES, U.S.A., INC.

INSTALLATION

INSTALLATION

1. **INSTALL NO. 2 POWER OUTLET SOCKET COVER**
    a. Engage the 2 claws to install the No. 2 power outlet socket cover.

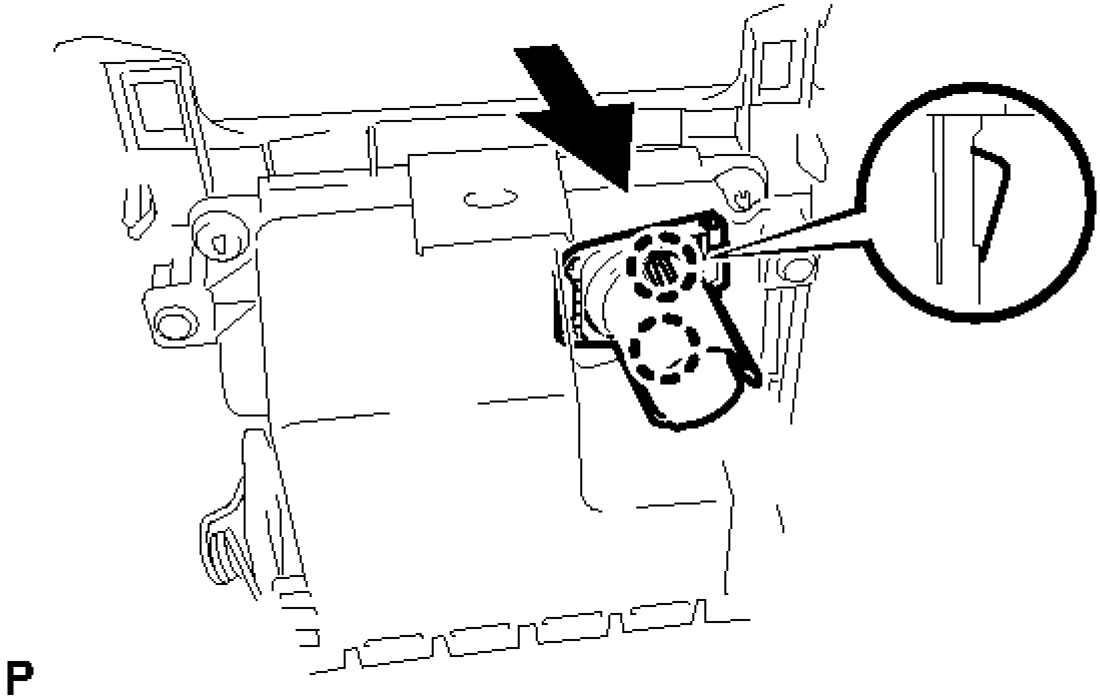

Fig. 13: Identifying No. 2 Power Outlet Socket Cover Claws
Courtesy of TOYOTA MOTOR SALES, U.S.A., INC.

2. **INSTALL NO. 3 POWER OUTLET SOCKET ASSEMBLY**
    a. As shown in the illustration, align the protrusion of the No. 3 power outlet socket assembly and the notch of the No. 2 power outlet socket cover.

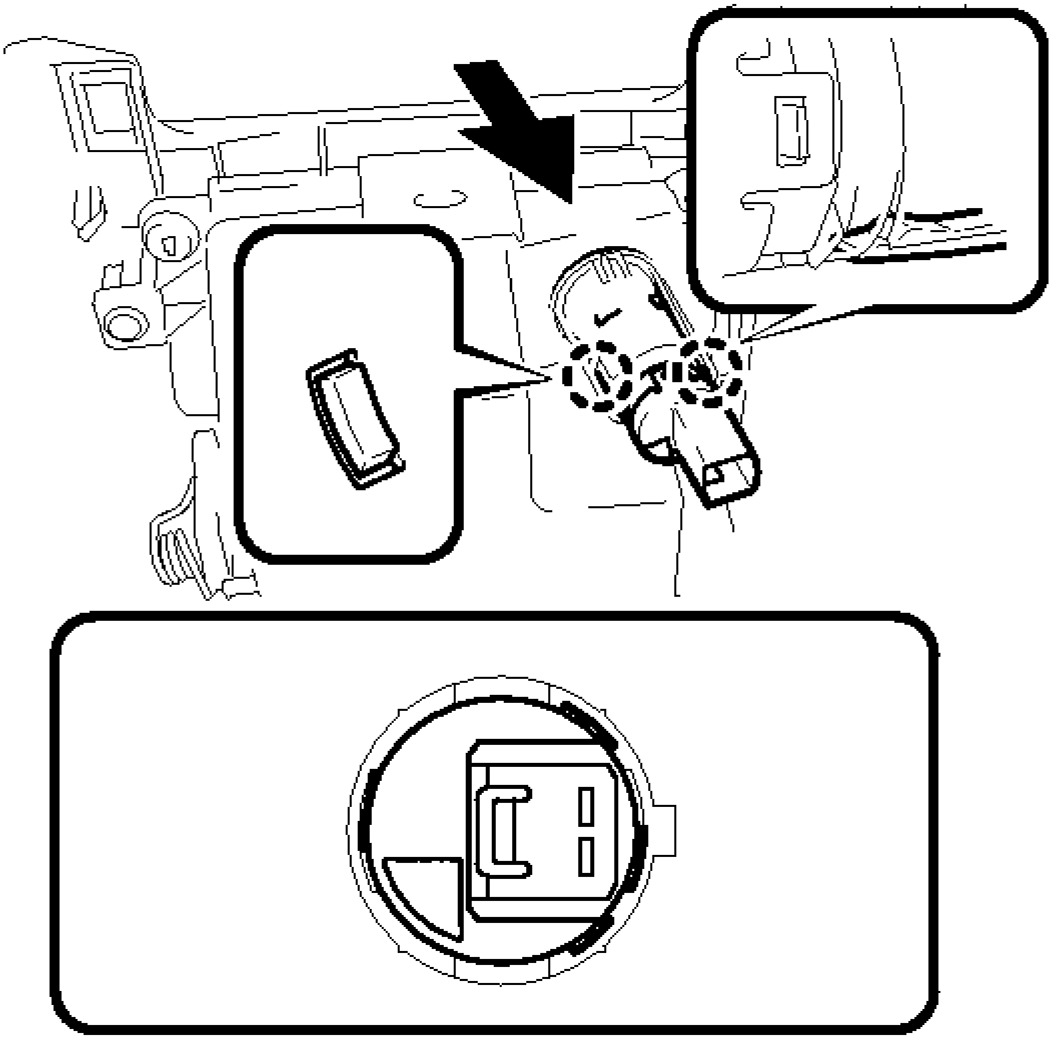

Fig. 14: Aligning Protrusion Of No. 3 Power Outlet Socket Assembly And No. 2 Power Outlet Socket Cover
Courtesy of TOYOTA MOTOR SALES, U.S.A., INC.

b. Engage the 2 claws to install the No. 3 power outlet socket assembly to the No. 2 power outlet socket cover.

3. **INSTALL UPPER CONSOLE BOX SUB-ASSEMBLY** . Refer to **INSTALLATION - Step 4**
4. **INSTALL REAR CONSOLE UPPER PANEL SUB-ASSEMBLY** . Refer to **INSTALLATION - Step 37**
5. **INSTALL SHIFT LEVER KNOB SUB-ASSEMBLY** . Refer to **INSTALLATION - Step 38**
6. **INSTALL FRONT PANEL GARNISH RH** . Refer to **INSTALLATION - Step 39**
7. **INSTALL FRONT PANEL GARNISH LH** . Refer to **INSTALLATION - Step 42**

POWER STEERING ECU

COMPONENTS

ILLUSTRATION

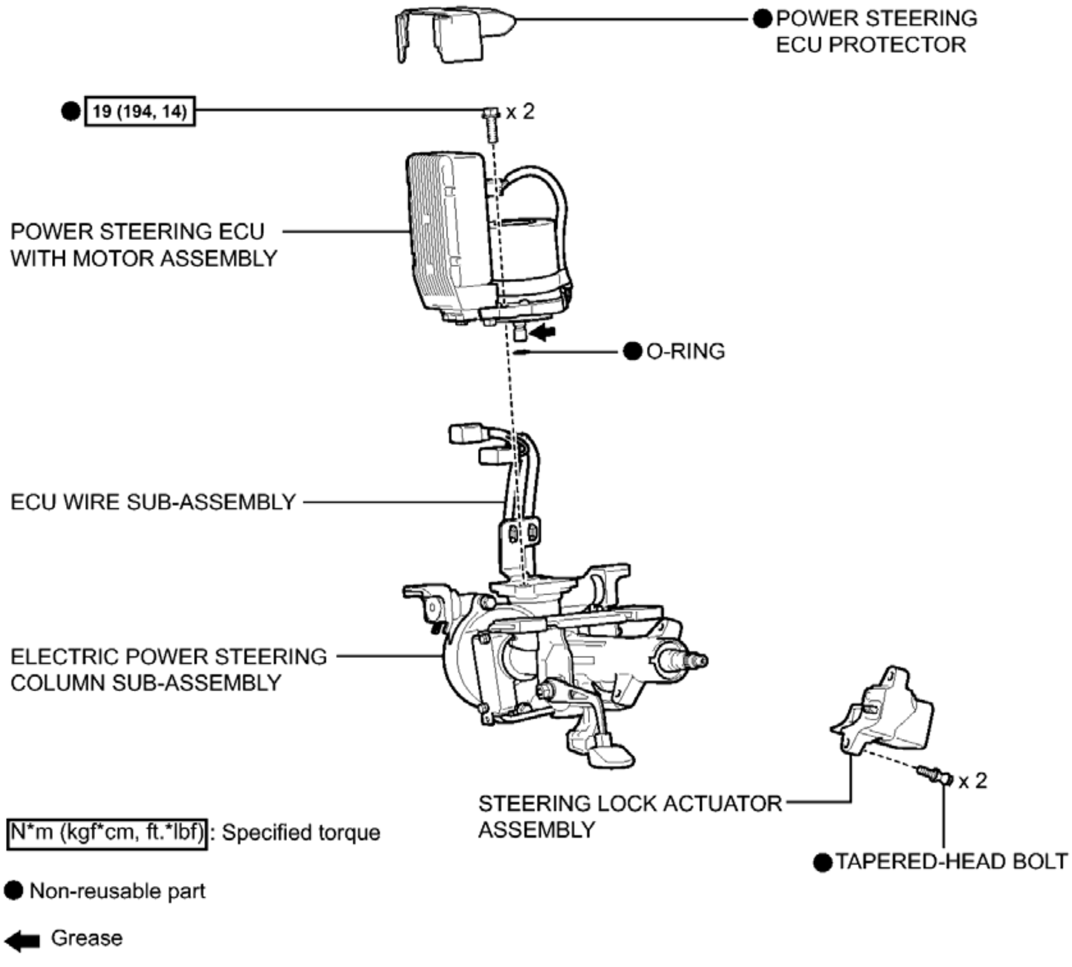
● POWER STEERING ECU PROTECTOR
● 19 (194, 14)
x 2
POWER STEERING ECU WITH MOTOR ASSEMBLY
● O-RING
ECU WIRE SUB-ASSEMBLY
ELECTRIC POWER STEERING COLUMN SUB-ASSEMBLY
STEERING LOCK ACTUATOR ASSEMBLY
x 2
● TAPERED-HEAD BOLT
N*m (kgf*cm, ft.*lbf): Specified torque
● Non-reusable part
Grease
c

Fig. 1: Identifying Power Steering ECU Replacement Components With Torque Specifications (1 Of 2)
Courtesy of TOYOTA MOTOR SALES, U.S.A., INC.

ILLUSTRATION

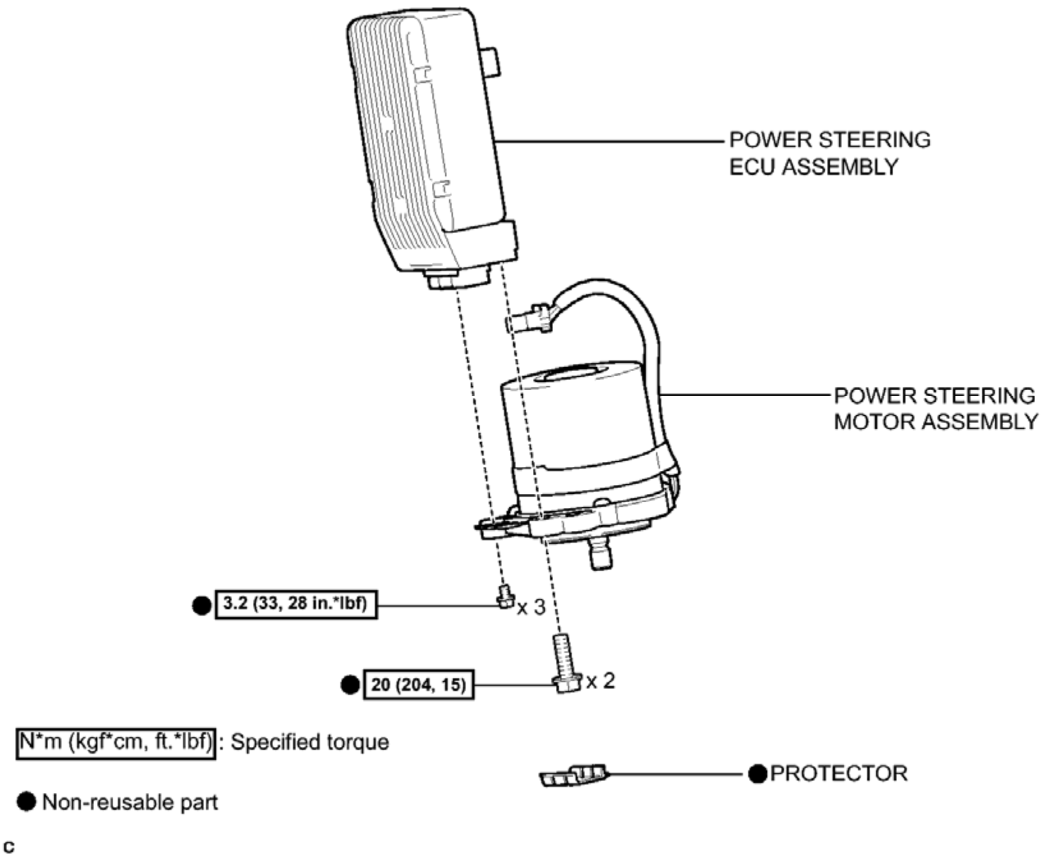
POWER STEERING ECU ASSEMBLY
POWER STEERING MOTOR ASSEMBLY
● 3.2 (33, 28 in.*lbf)
x 3
● 20 (204, 15)
x 2
N*m (kgf*cm, ft.*lbf) : Specified torque
● PROTECTOR
● Non-reusable part
c

Fig. 2: Identifying Power Steering ECU Replacement Components With Torque Specifications (2 Of 2)
Courtesy of TOYOTA MOTOR SALES, U.S.A., INC.

REMOVAL

REMOVAL

1. **REMOVE STEERING COLUMN ASSEMBLY**

   Refer to **REMOVAL**

2. **REMOVE STEERING LOCK ACTUATOR ASSEMBLY** . Refer to **DISASSEMBLY - Step 1**
3. **REMOVE POWER STEERING ECU PROTECTOR** . Refer to **DISASSEMBLY - Step 2**
4. **DISCONNECT ECU WIRE SUB-ASSEMBLY**
   a. Disconnect the 2 connectors from the power steering ECU assembly.

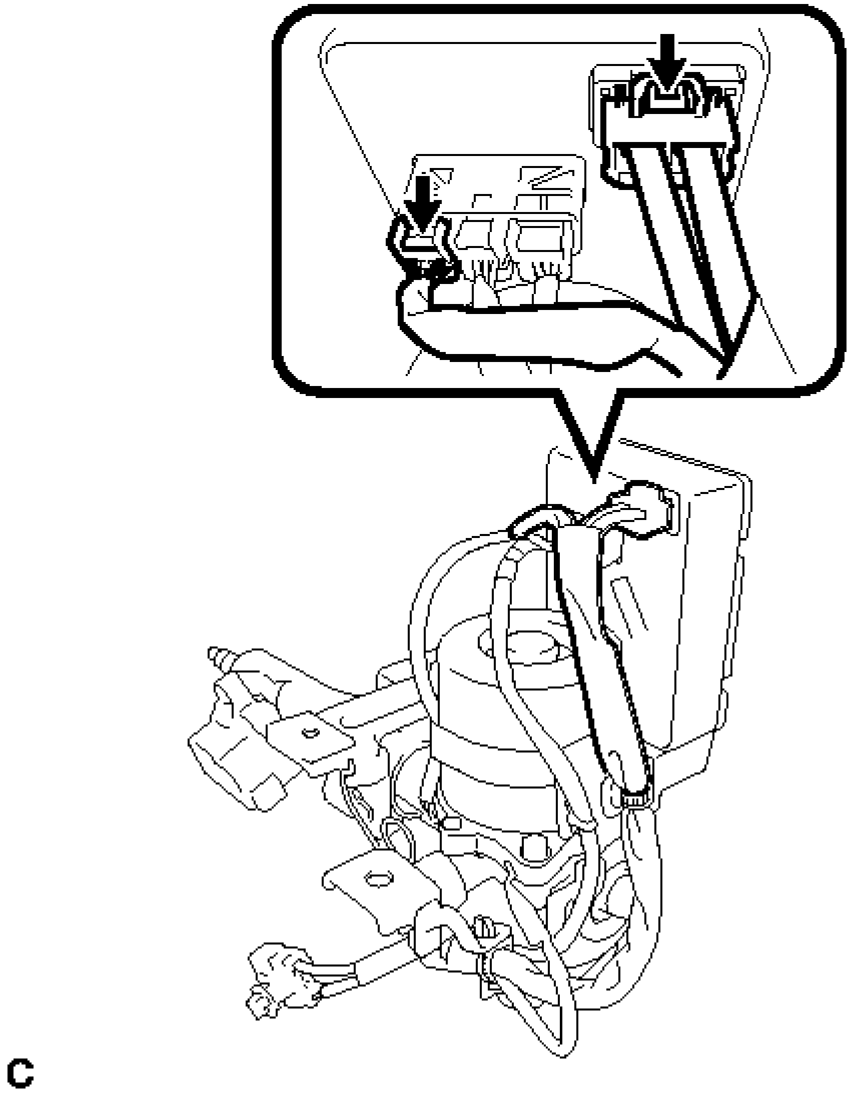

Fig. 3: Identifying Power Steering ECU Assembly Connectors
Courtesy of TOYOTA MOTOR SALES, U.S.A., INC.

5. **REMOVE POWER STEERING ECU WITH MOTOR ASSEMBLY** . Refer to **DISASSEMBLY - Step 4**
6. **REMOVE POWER STEERING ECU ASSEMBLY**
    a. Disengage the 4 claws to remove the protector.

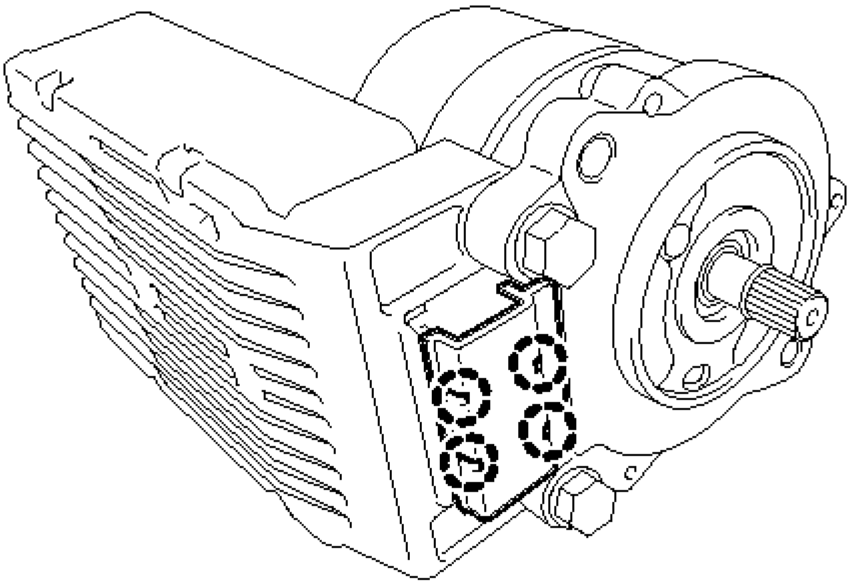

Fig. 4: Identifying Claws
Courtesy of TOYOTA MOTOR SALES, U.S.A., INC.

b. Remove the 3 bolts.

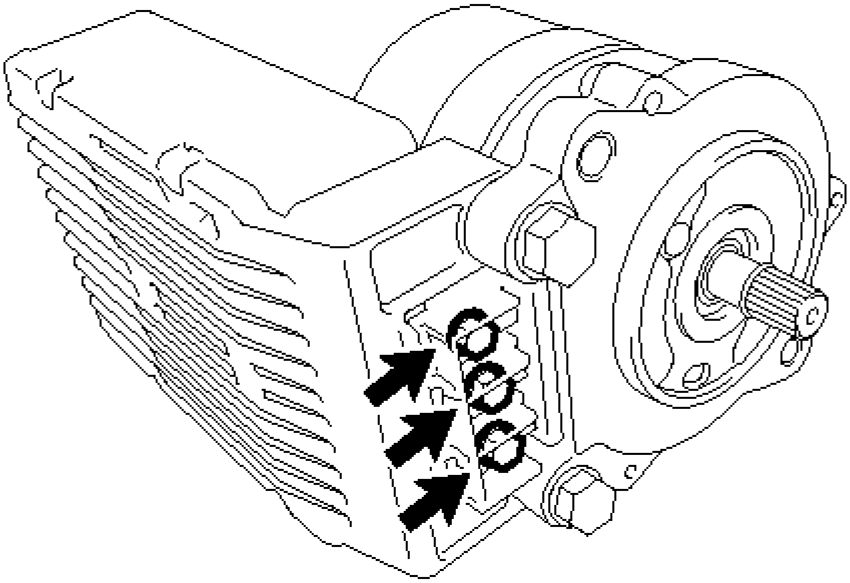

Fig. 5: Identifying Bolts
Courtesy of TOYOTA MOTOR SALES, U.S.A., INC.

c. Remove the 2 bolts to remove the power steering ECU assembly from the power steering motor assembly.

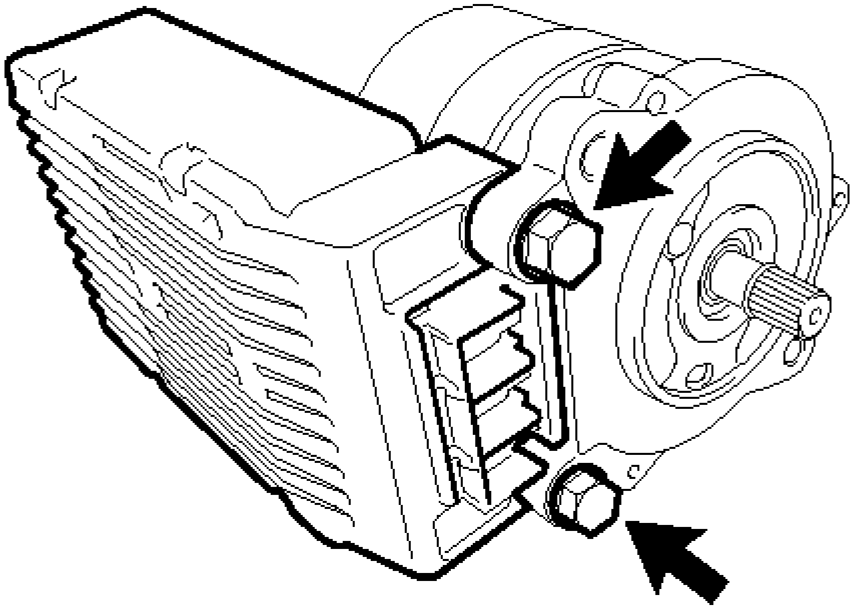

Fig. 6: Identifying Power Steering ECU Assembly Bolts
Courtesy of TOYOTA MOTOR SALES, U.S.A., INC.

INSTALLATION

INSTALLATION

1. **INSTALL POWER STEERING ECU ASSEMBLY**
    a. Install the power steering ECU assembly to the power steering motor assembly with 2 new bolts.

    Torque: 20 N*m (204 kgf*cm, 15 ft.*lbf)

    b. Install 3 new bolts.

    Torque: 3.2 N*m (33 kgf*cm, 28 in.*lbf)

    c. Engage the 4 claws to install a new protector.
2. **INSTALL POWER STEERING ECU WITH MOTOR ASSEMBLY** . Refer to **REASSEMBLY - Step 2**
3. **CONNECT ECU WIRE SUB-ASSEMBLY**
    a. Connect the 2 connectors to the power steering ECU assembly.
4. **INSTALL POWER STEERING ECU PROTECTOR** . Refer to **REASSEMBLY - Step 4**
5. **INSTALL STEERING LOCK ACTUATOR ASSEMBLY** . Refer to **REASSEMBLY - Step 5**

6. **INSTALL STEERING COLUMN ASSEMBLY**

   Refer to **INSTALLATION**

7. **ASSIST MAP WRITING**

   Refer to **CALIBRATION**

2012-2017 STEERING

Power Steering System (W/O Wireless Door Lock System) (Service Information) - Camry (Except Hybrid)

POWER STEERING ECU (W/O WIRELESS DOOR LOCK SYSTEM)

COMPONENTS

ILLUSTRATION

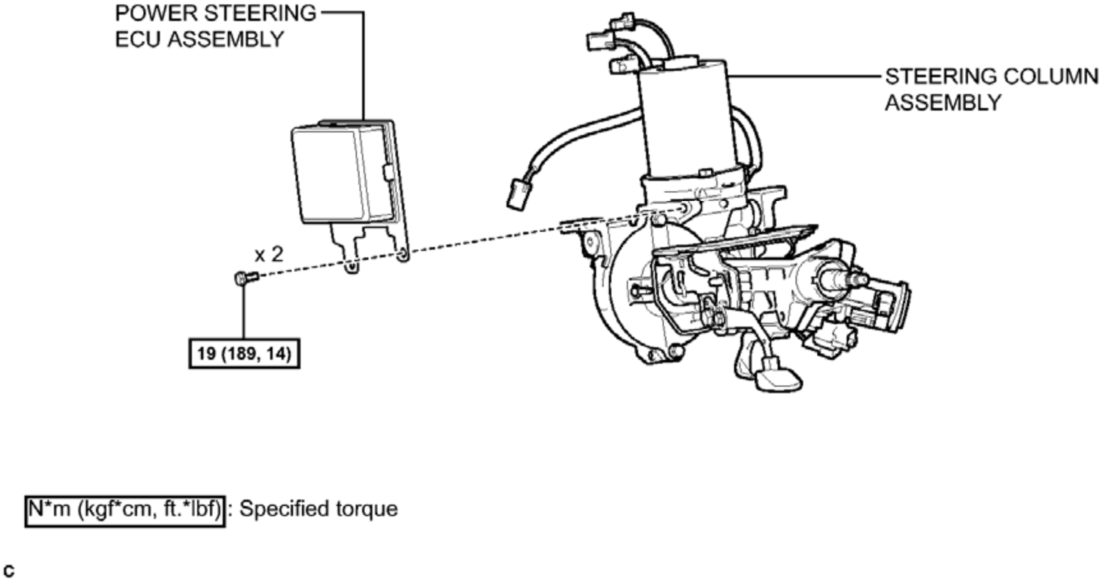
POWER STEERING ECU ASSEMBLY
STEERING COLUMN ASSEMBLY
x 2
19 (189, 14)
N*m (kgf*cm, ft.*lbf): Specified torque
c

Fig. 1: Identifying Power Steering ECU Replacement Components With Torque Specifications (W/O Wireless Door Lock System)
Courtesy of TOYOTA MOTOR SALES, U.S.A., INC.

REMOVAL

REMOVAL

1. **REMOVE STEERING COLUMN ASSEMBLY**

   Refer to **REMOVAL**

2. **REMOVE POWER STEERING ECU ASSEMBLY**
   a. Disconnect the 4 connectors from the power steering ECU assembly.

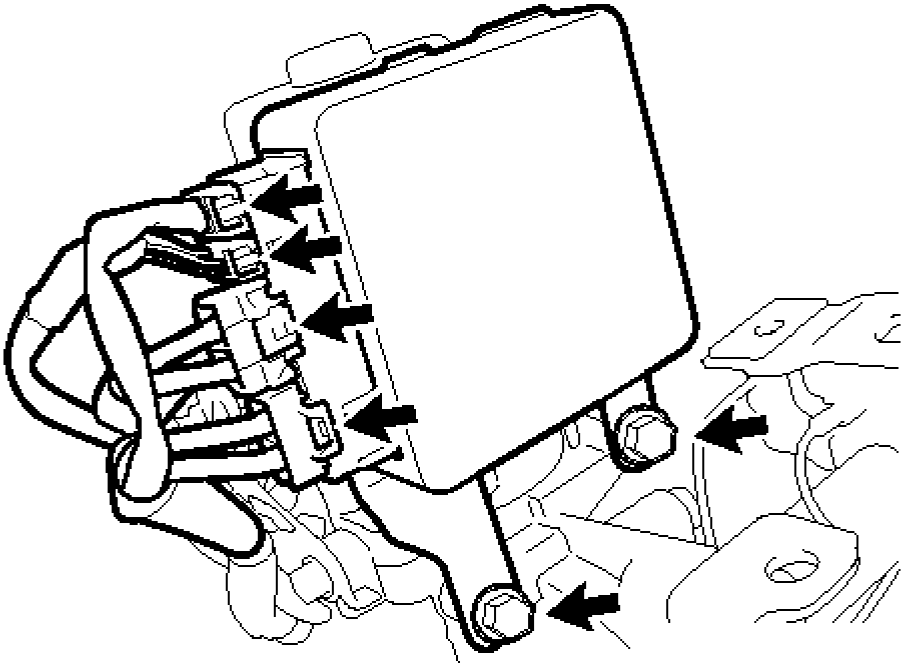

Fig. 2: Identifying Power Steering ECU Assembly Connectors And Bolts
Courtesy of TOYOTA MOTOR SALES, U.S.A., INC.

b. Remove the 2 bolts to remove the power steering ECU assembly from the steering column assembly.

INSTALLATION

INSTALLATION

1. **INSTALL POWER STEERING ECU ASSEMBLY**
    a. Install the power steering ECU assembly to the steering column assembly with the 2 bolts.

    Torque: 19 N*m (189 kgf*cm, 14 ft.*lbf)

    b. Connect the 4 connectors to the power steering ECU assembly.
2. **INSTALL STEERING COLUMN ASSEMBLY**

    Refer to **INSTALLATION**

3. **TORQUE SENSOR ZERO POINT CALIBRATION**

    Refer to **CALIBRATION**

4. **ASSIST MAP WRITING**

    Refer to **CALIBRATION**

2012-2017 STEERING

Power Steering System (W/ Wireless Door Lock System) (Service Information) - Camry (Except Hybrid)

POWER STEERING ECU (W/ WIRELESS DOOR LOCK SYSTEM)

COMPONENTS

ILLUSTRATION

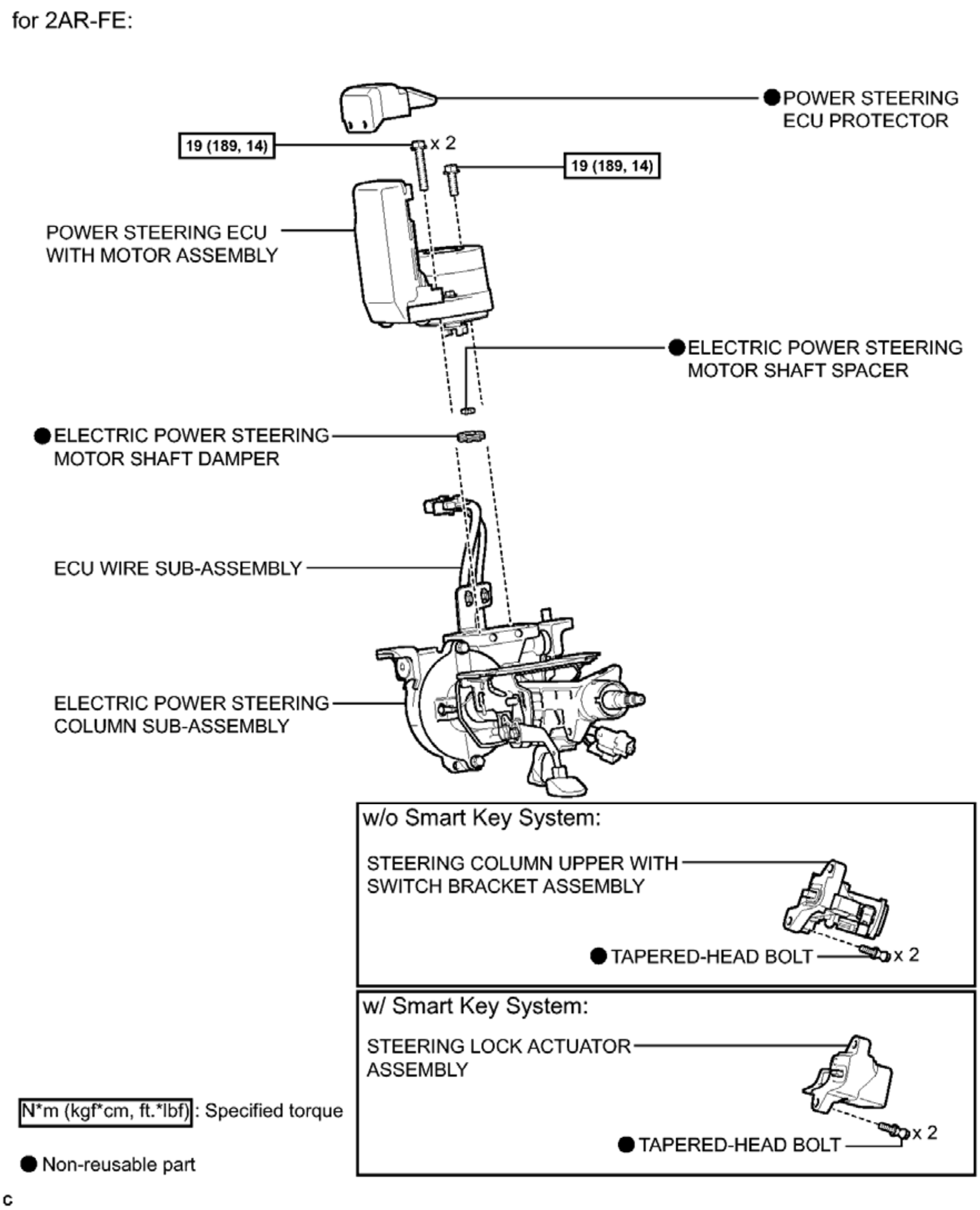
for 2AR-FE:
POWER STEERING ECU PROTECTOR
19 (189, 14)
x 2
19 (189, 14)
POWER STEERING ECU WITH MOTOR ASSEMBLY
ELECTRIC POWER STEERING MOTOR SHAFT SPACER
ELECTRIC POWER STEERING MOTOR SHAFT DAMPER
ECU WIRE SUB-ASSEMBLY
ELECTRIC POWER STEERING COLUMN SUB-ASSEMBLY
w/o Smart Key System:
STEERING COLUMN UPPER WITH SWITCH BRACKET ASSEMBLY
TAPERED-HEAD BOLT
x 2
w/ Smart Key System:
STEERING LOCK ACTUATOR ASSEMBLY
TAPERED-HEAD BOLT
x 2
N*m (kgf*cm, ft.*lbf): Specified torque
● Non-reusable part
c

Fig. 1: Identifying Power Steering ECU Replacement Components With Torque Specifications (W/Wireless Door Lock System) (2AR-FE)
Courtesy of TOYOTA MOTOR SALES, U.S.A., INC.

ILLUSTRATION

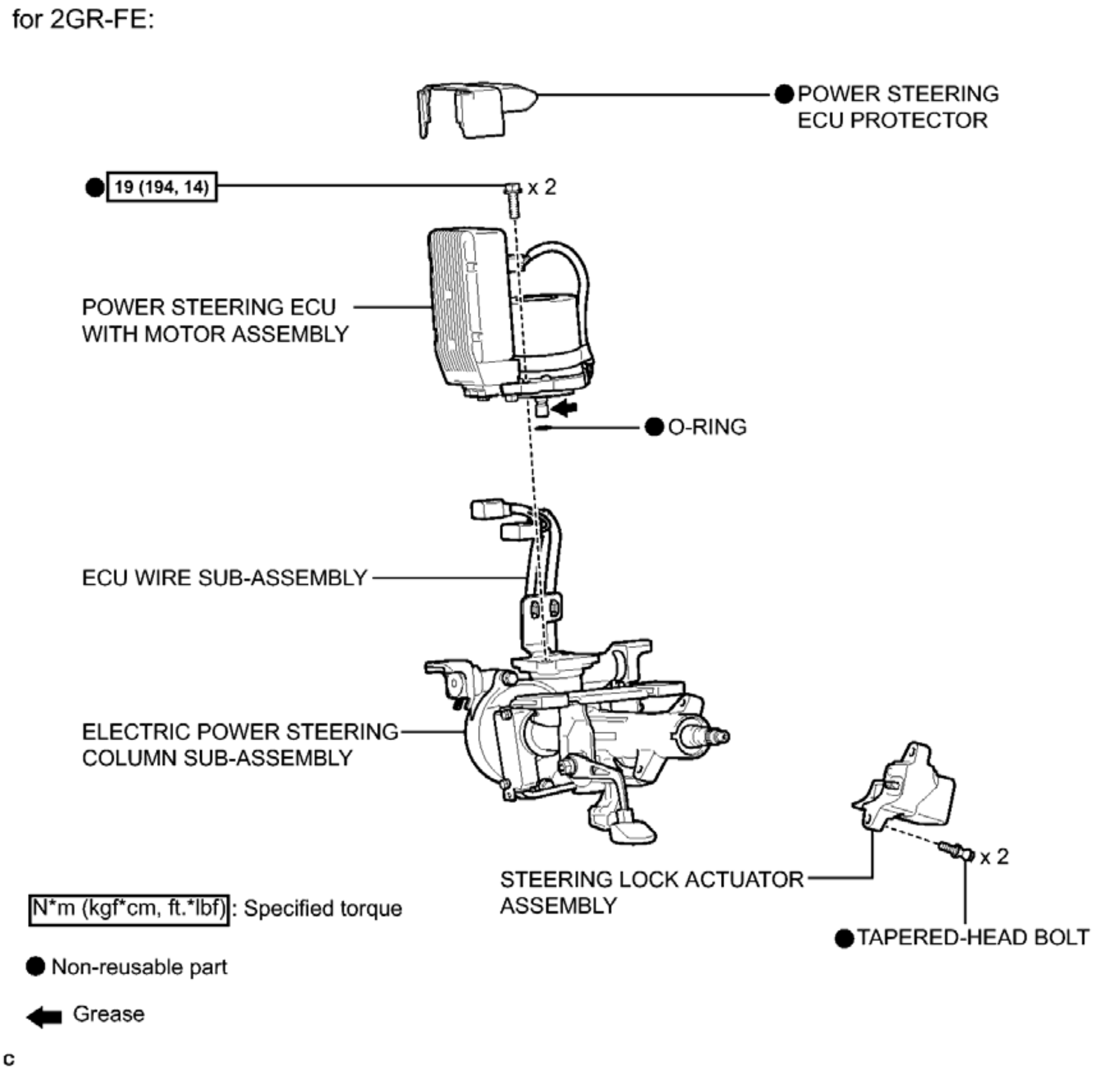
for 2GR-FE:
● POWER STEERING ECU PROTECTOR
● 19 (194, 14)
x 2
POWER STEERING ECU WITH MOTOR ASSEMBLY
● O-RING
ECU WIRE SUB-ASSEMBLY
ELECTRIC POWER STEERING COLUMN SUB-ASSEMBLY
x 2
STEERING LOCK ACTUATOR ASSEMBLY
● TAPERED-HEAD BOLT
N*m (kgf*cm, ft.*lbf) : Specified torque
● Non-reusable part
Grease
c

Fig. 2: Identifying Power Steering ECU Replacement Components With Torque Specifications (W/Wireless Door Lock System) (2GR-FE - 1 Of 2)
Courtesy of TOYOTA MOTOR SALES, U.S.A., INC.

ILLUSTRATION

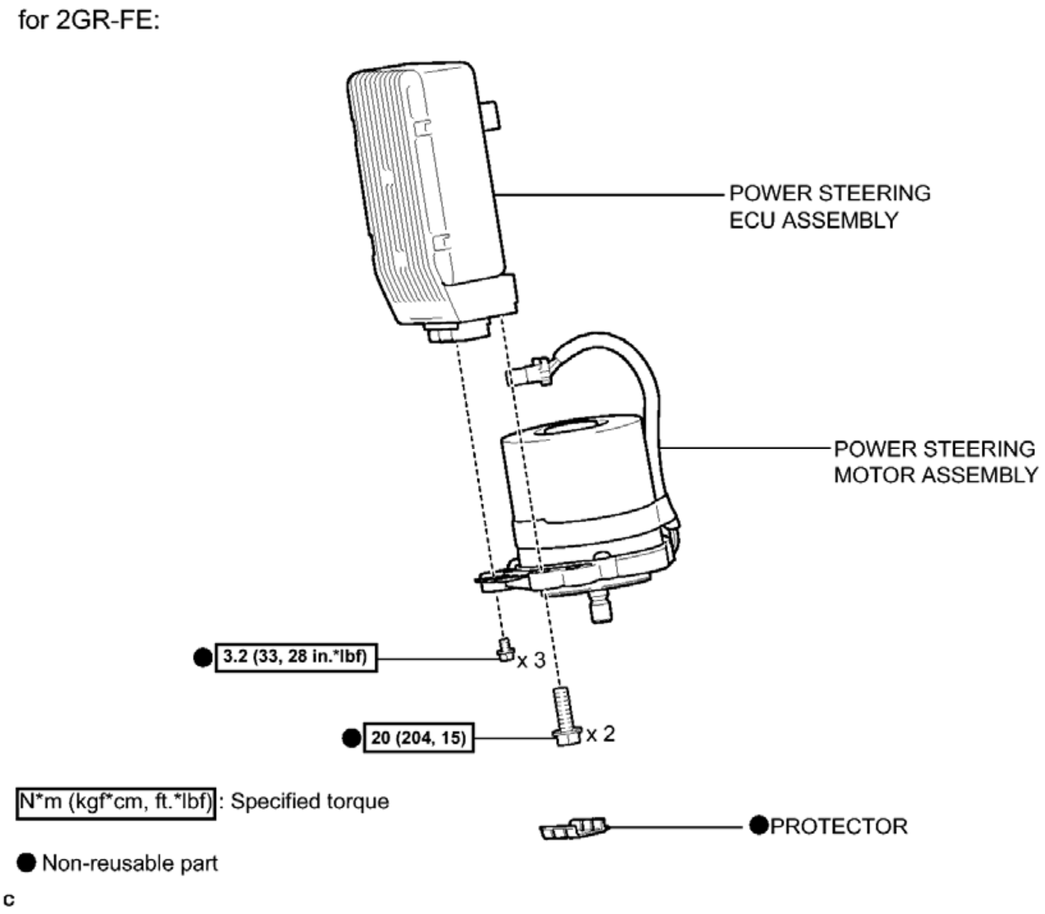
for 2GR-FE:
POWER STEERING ECU ASSEMBLY
POWER STEERING MOTOR ASSEMBLY
3.2 (33, 28 in.*lbf)
x 3
20 (204, 15)
x 2
N*m (kgf*cm, ft.*lbf) : Specified torque
● PROTECTOR
● Non-reusable part
c

Fig. 3: Identifying Power Steering ECU Replacement Components With Torque Specifications (W/Wireless Door Lock System) (2GR-FE - 2 Of 2)
Courtesy of TOYOTA MOTOR SALES, U.S.A., INC.

REMOVAL

REMOVAL

1. **REMOVE STEERING COLUMN ASSEMBLY**

   Refer to **REMOVAL**

2. **REMOVE STEERING COLUMN UPPER WITH SWITCH BRACKET ASSEMBLY (w/o Smart Key System)** . Refer to **DISASSEMBLY - Step 1**
3. **REMOVE STEERING LOCK ACTUATOR ASSEMBLY (w/ Smart Key System)** . Refer to **DISASSEMBLY - Step 2**
4. **REMOVE POWER STEERING ECU PROTECTOR (for 2AR-FE)** . Refer to **DISASSEMBLY - Step 6**
5. **DISCONNECT ECU WIRE SUB-ASSEMBLY (for 2AR-FE)**
   a. Disconnect the 2 connectors from the power steering ECU assembly.

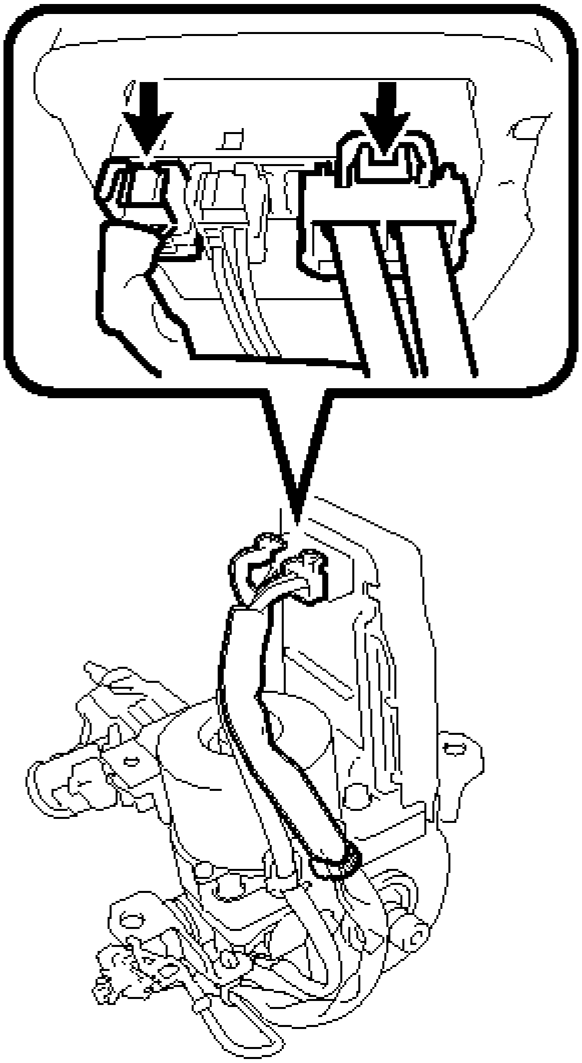

C

Fig. 4: Identifying Power Steering ECU Assembly Connectors
Courtesy of TOYOTA MOTOR SALES, U.S.A., INC.

6. **REMOVE POWER STEERING ECU WITH MOTOR ASSEMBLY (for 2AR-FE)** . Refer to **DISASSEMBLY - Step 8**
7. **REMOVE POWER STEERING ECU PROTECTOR (for 2GR-FE)** . Refer to **DISASSEMBLY - Step 9**
8. **DISCONNECT ECU WIRE SUB-ASSEMBLY (for 2GR-FE)**
    a. Disconnect the 2 connectors from the power steering ECU assembly.

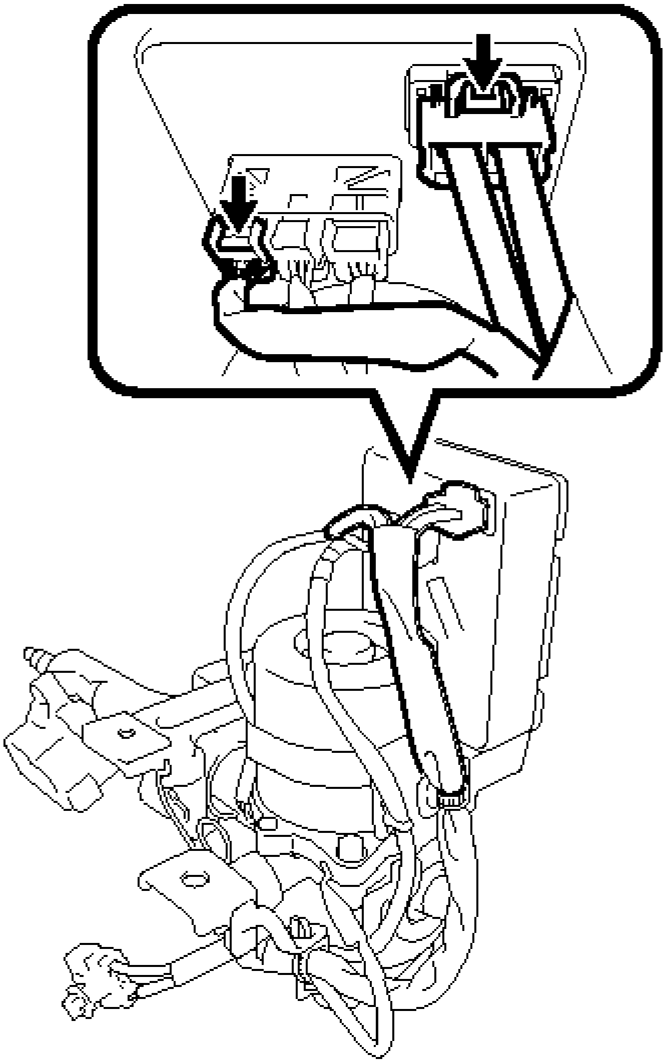

Fig. 5: Identifying Power Steering ECU Assembly Connectors
Courtesy of TOYOTA MOTOR SALES, U.S.A., INC.

9. **REMOVE POWER STEERING ECU WITH MOTOR ASSEMBLY (for 2GR-FE)** . Refer to **DISASSEMBLY - Step 11**
10. **REMOVE POWER STEERING ECU ASSEMBLY (for 2GR-FE)**
    a. Disengage the 4 claws to remove the protector.

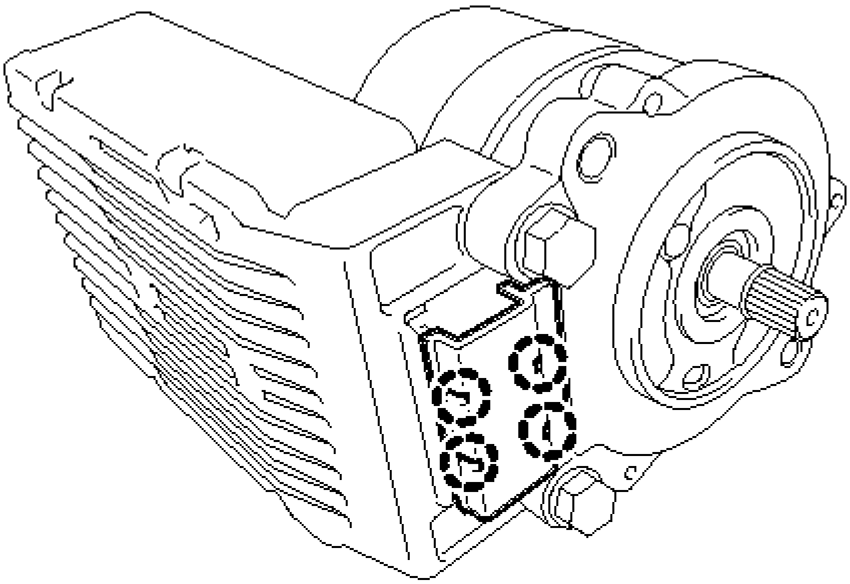

Fig. 6: Identifying Claws
Courtesy of TOYOTA MOTOR SALES, U.S.A., INC.

b. Remove the 3 bolts.

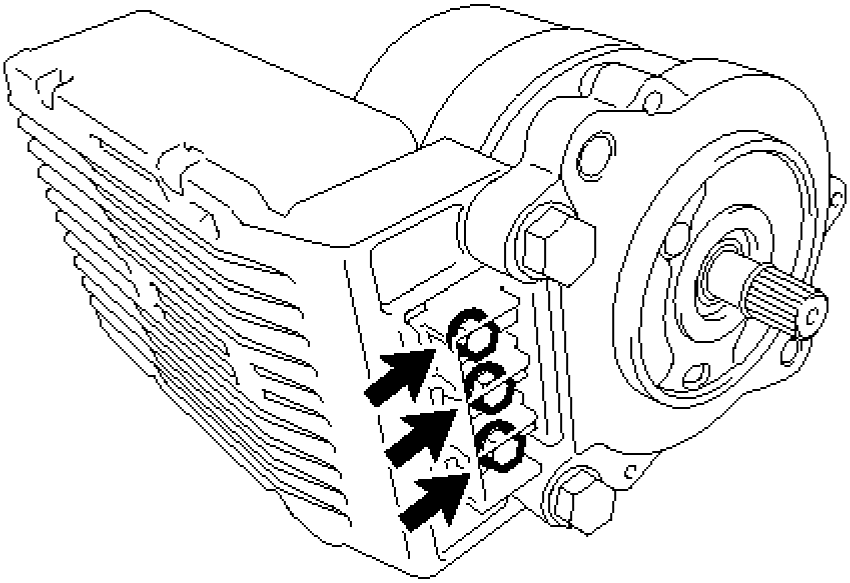

Fig. 7: Identifying Bolts
Courtesy of TOYOTA MOTOR SALES, U.S.A., INC.

   c. Remove the 2 bolts to remove the power steering ECU assembly from the power steering motor assembly.

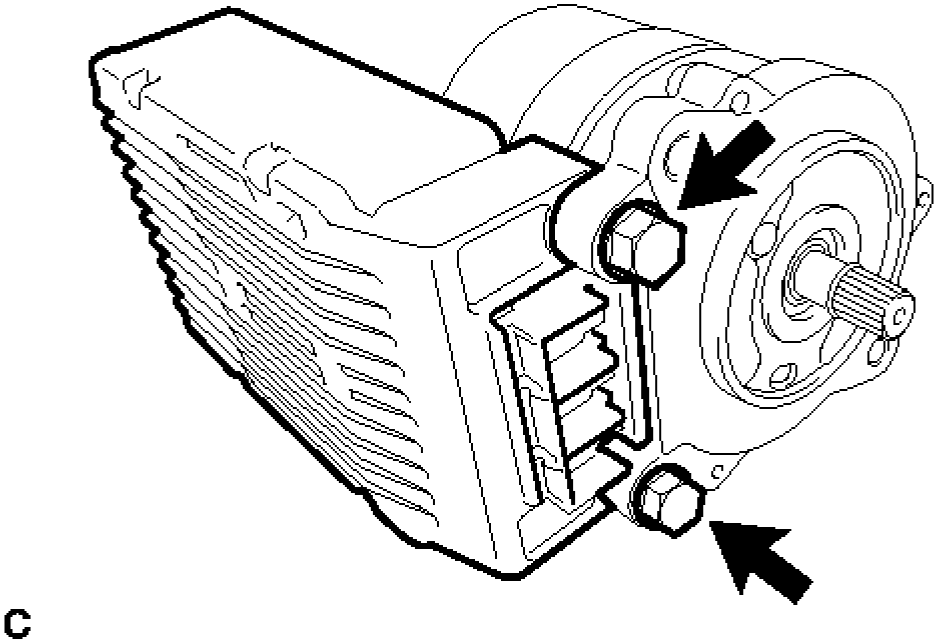

Fig. 8: Identifying Power Steering ECU Assembly Bolts
Courtesy of TOYOTA MOTOR SALES, U.S.A., INC.

INSTALLATION

INSTALLATION

1. **INSTALL POWER STEERING ECU WITH MOTOR ASSEMBLY (for 2AR-FE)** . Refer to **REASSEMBLY - Step 10**
2. **CONNECT ECU WIRE SUB-ASSEMBLY (for 2AR-FE)**
   a. Connect the 2 connectors to the power steering ECU assembly.
3. **INSTALL POWER STEERING ECU PROTECTOR (for 2AR-FE)** . Refer to **REASSEMBLY - Step 12**
4. **INSTALL POWER STEERING ECU ASSEMBLY (for 2GR-FE)**
   a. Install the power steering ECU assembly to the power steering motor assembly with the 2 new bolts.

      Torque: 20 N*m (204 kgf*cm, 15 ft.*lbf)

   b. Install the 3 new bolts.

      Torque: 3.2 N*m (33 kgf*cm, 28 in.*lbf)

   - c. Engage the 4 claws to install the new protector.

5. **INSTALL POWER STEERING ECU WITH MOTOR ASSEMBLY (for 2GR-FE)** . Refer to **REASSEMBLY - Step 14**
6. **CONNECT ECU WIRE SUB-ASSEMBLY (for 2GR-FE)**
   - a. Connect the 2 connectors to the power steering ECU assembly.
7. **INSTALL POWER STEERING ECU PROTECTOR (for 2GR-FE)** . Refer to **REASSEMBLY - Step 16**
8. **INSTALL STEERING COLUMN UPPER WITH SWITCH BRACKET ASSEMBLY (w/o Smart Key System)** . Refer to **REASSEMBLY - Step 17**
9. **INSTALL STEERING LOCK ACTUATOR ASSEMBLY (w/ Smart Key System)** . Refer to **REASSEMBLY - Step 18**
10. **INSTALL STEERING COLUMN ASSEMBLY**

    Refer to **INSTALLATION**

11. **TORQUE SENSOR ZERO POINT CALIBRATION (for 2AR-FE)**

    Refer to **CALIBRATION**

12. **ASSIST MAP WRITING (for 2AR-FE)**

    Refer to **CALIBRATION**

13. **ASSIST MAP WRITING (for 2GR-FE)**

    Refer to **CALIBRATION**

2012-2017 SUSPENSION

Rear Suspension (Service Information) (Hybrid)

REAR SHOCK ABSORBER

COMPONENTS

ILLUSTRATION

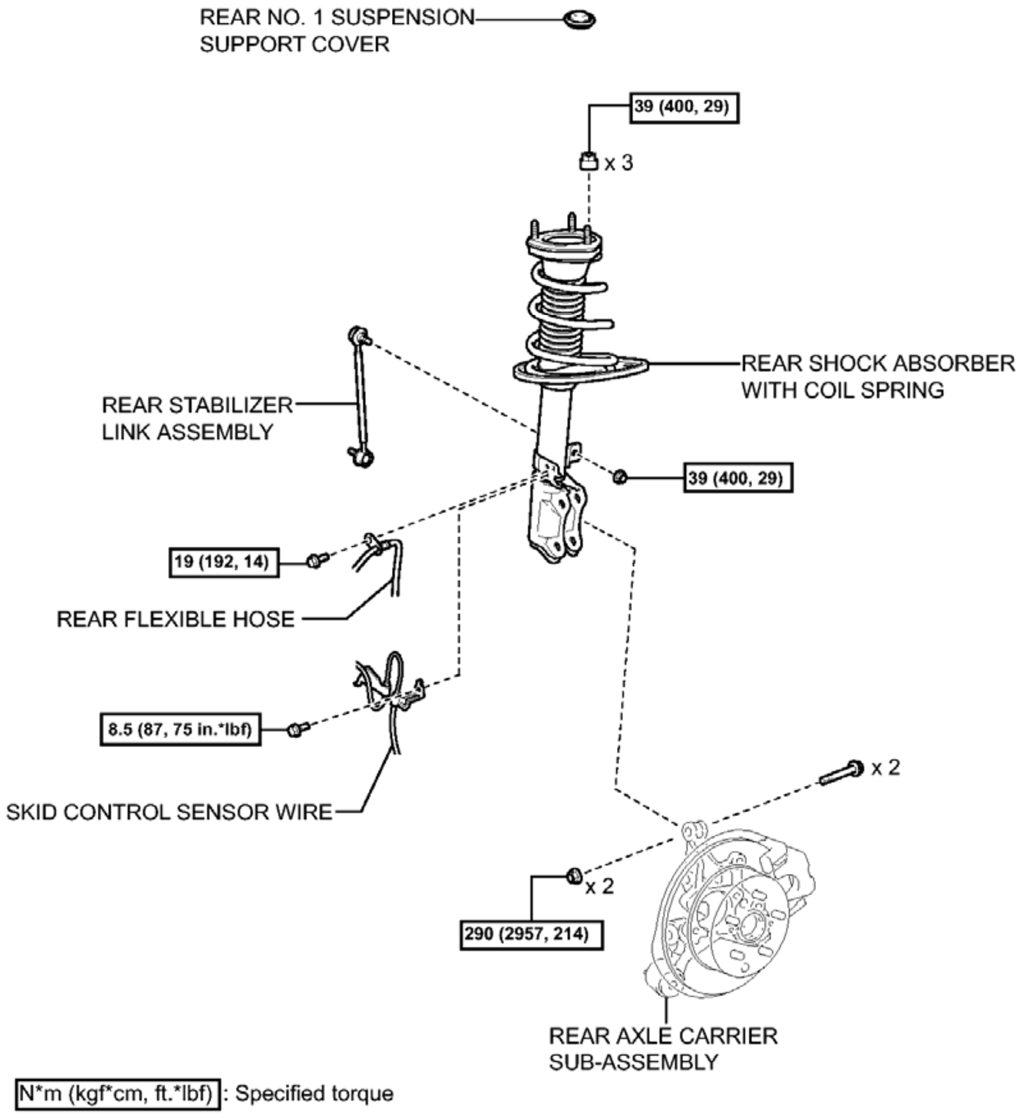
REAR NO. 1 SUSPENSION SUPPORT COVER
39 (400, 29)
x 3
REAR SHOCK ABSORBER WITH COIL SPRING
REAR STABILIZER LINK ASSEMBLY
39 (400, 29)
19 (192, 14)
REAR FLEXIBLE HOSE
8.5 (87, 75 in.*lbf)
SKID CONTROL SENSOR WIRE
x 2
x 2
290 (2957, 214)
REAR AXLE CARRIER SUB-ASSEMBLY
N*m (kgf*cm, ft.*lbf) : Specified torque
c

Fig. 1: Identifying Rear Shock Absorber Replacement Components With Torque Specifications (1 Of 2)
Courtesy of TOYOTA MOTOR SALES, U.S.A., INC.

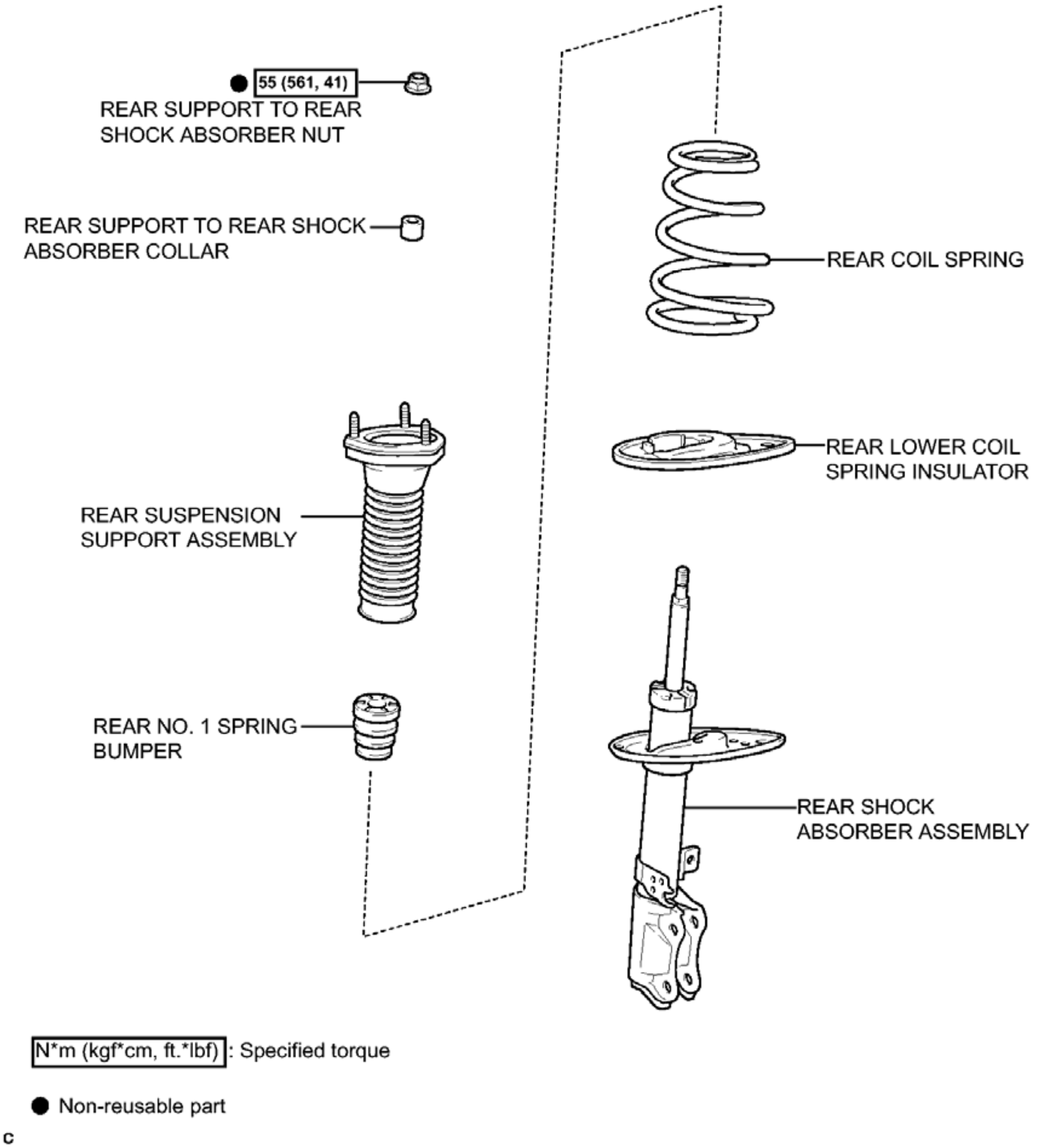
55 (561, 41)
REAR SUPPORT TO REAR SHOCK ABSORBER NUT
REAR SUPPORT TO REAR SHOCK ABSORBER COLLAR
REAR COIL SPRING
REAR LOWER COIL SPRING INSULATOR
REAR SUSPENSION SUPPORT ASSEMBLY
REAR NO. 1 SPRING BUMPER
REAR SHOCK ABSORBER ASSEMBLY
N*m (kgf*cm, ft.*lbf) : Specified torque
● Non-reusable part
c

Fig. 2: Identifying Rear Shock Absorber Replacement Components With Torque Specifications (2 Of 2)
Courtesy of TOYOTA MOTOR SALES, U.S.A., INC.

REMOVAL

REMOVAL

HINT:

- Use the same procedure for the RH side and LH side.
- The procedure listed below is for the LH side.

1. **REMOVE REAR SIDE SEATBACK ASSEMBLY**

   Refer to **REMOVAL**

2. **REMOVE REAR WHEEL**
3. **SEPARATE REAR STABILIZER LINK ASSEMBLY**
   1. Remove the nut and separate the rear stabilizer link assembly from the rear shock absorber with coil spring.

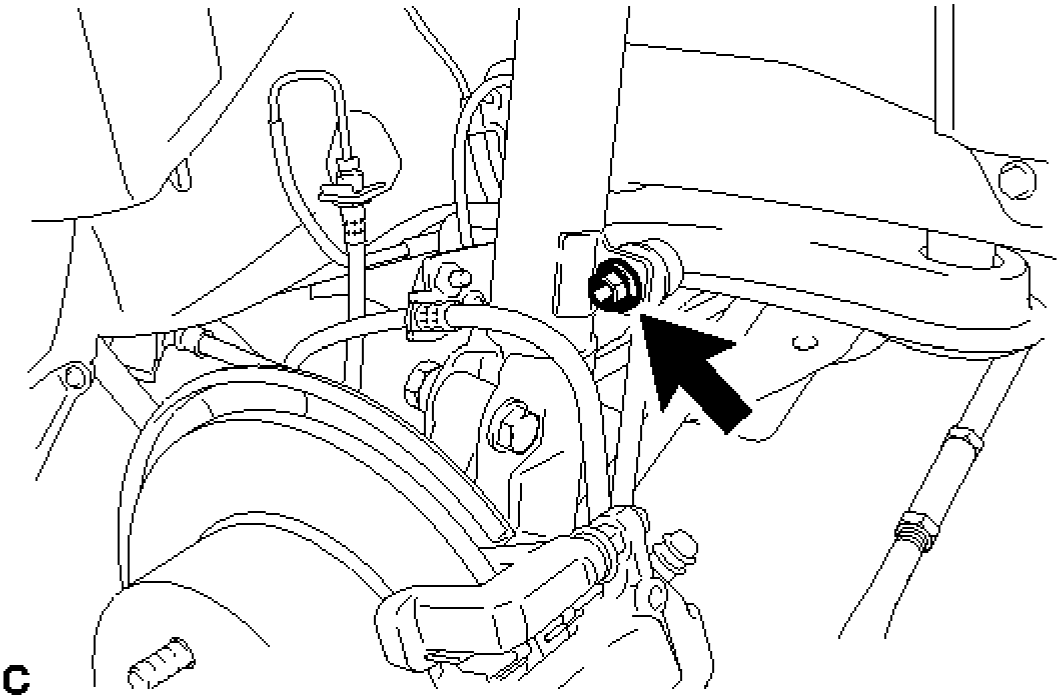

Fig. 3: Identifying Rear Stabilizer Link Nut
Courtesy of TOYOTA MOTOR SALES, U.S.A., INC.

If the ball joint turns together with the nut, use a hexagon wrench to hold the stud.

4. **SEPARATE SKID CONTROL SENSOR WIRE**
   1. Remove the 2 bolts, and disconnect the rear flexible hose and skid control sensor wire from the rear shock absorber with coil spring.

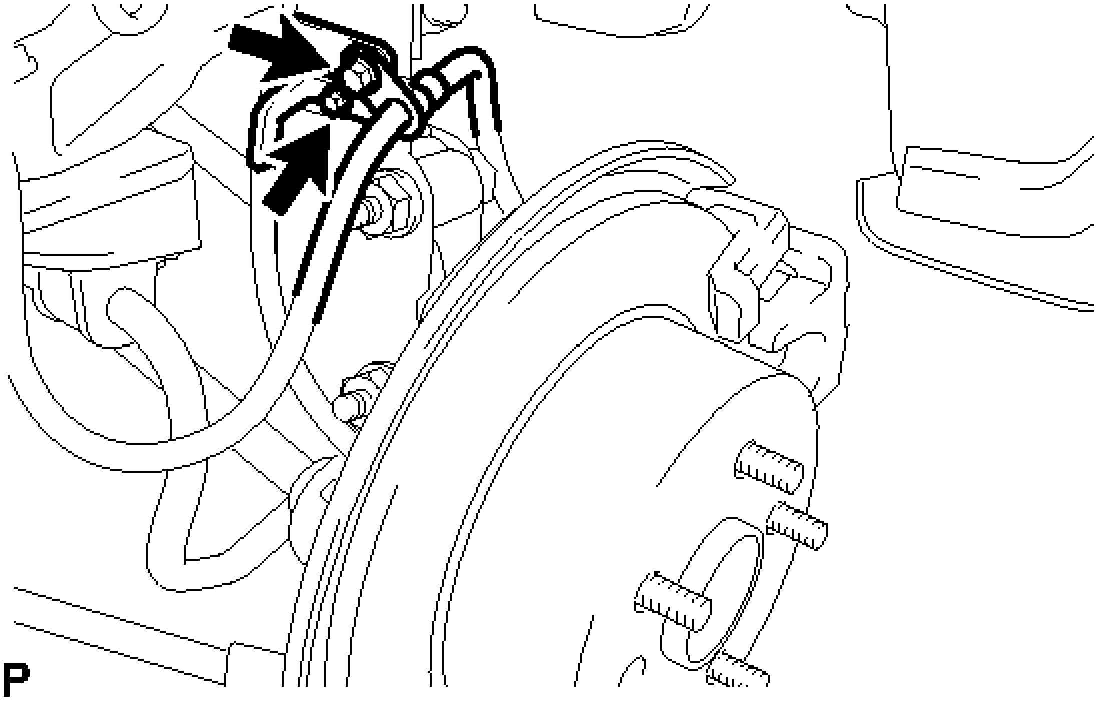

Fig. 4: Locating Rear Brake Flexible Hose Bolts
Courtesy of TOYOTA MOTOR SALES, U.S.A., INC.

5. **REMOVE REAR NO. 1 SUSPENSION SUPPORT COVER**
   a. Using a screwdriver, disengage the 4 claws and remove the rear No. 1 suspension support cover.

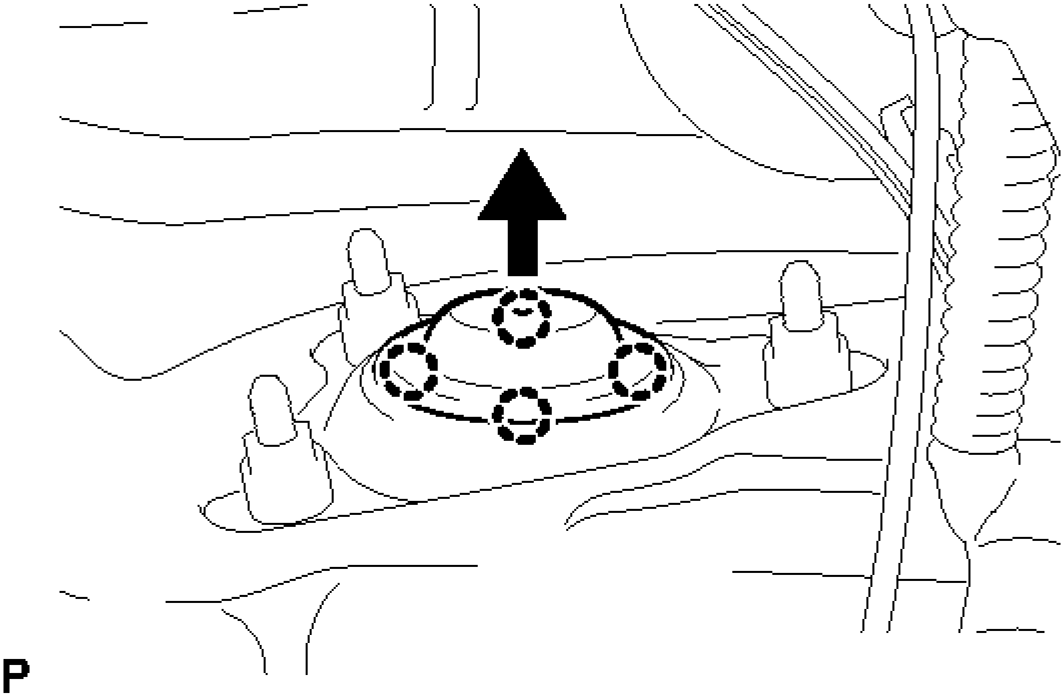

Fig. 5: Removing Rear Suspension Support No. 1 Cover

Courtesy of TOYOTA MOTOR SALES, U.S.A., INC.

6. **REMOVE REAR SHOCK ABSORBER WITH COIL SPRING**
   a. Support the rear axle carrier sub-assembly with a jack using a wooden block.

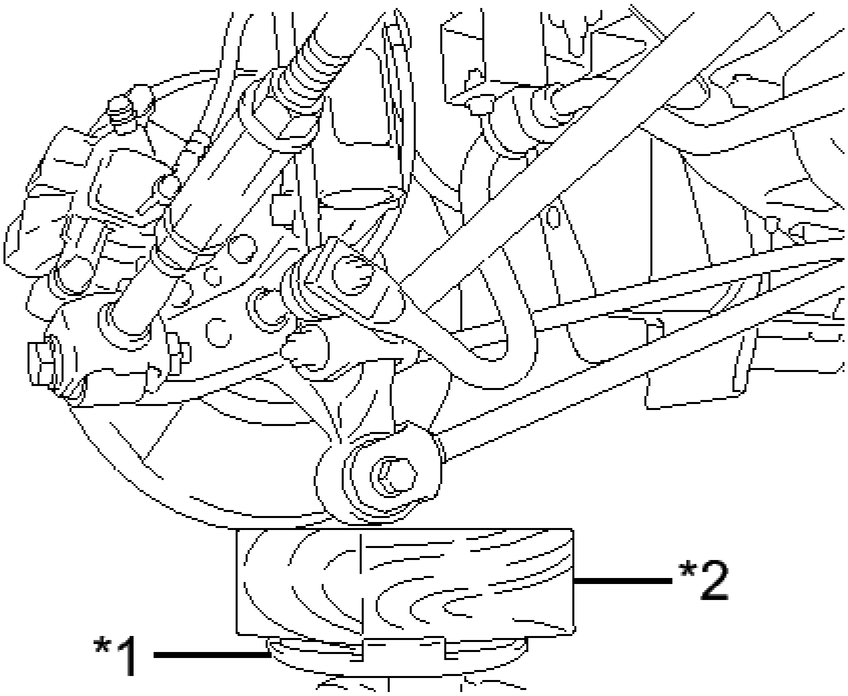

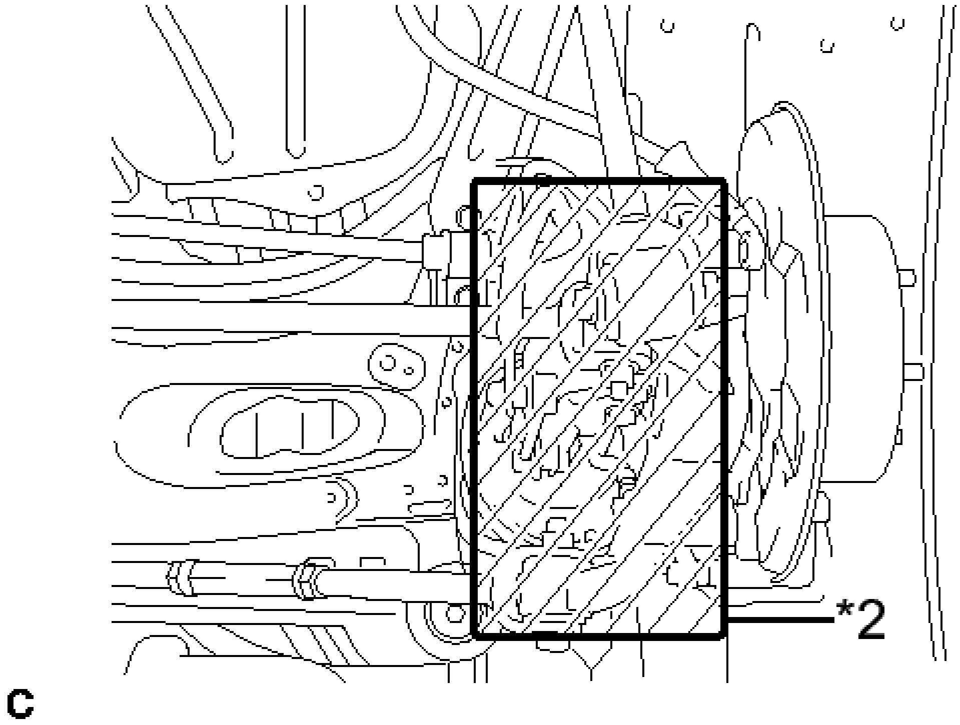

Fig. 6: Identifying Jack Placment On Rear Axle Carrier Sub-Assembly
Courtesy of TOYOTA MOTOR SALES, U.S.A., INC.

TEXT IN ILLUSTRATION

*1	Jack
*2	Wooden Block

HINT:

Support the rear axle carrier sub-assembly until reinstallation of the rear shock absorber with coil spring is complete.

b. Loosen the rear support to rear shock absorber nut of the rear shock absorber with coil spring.

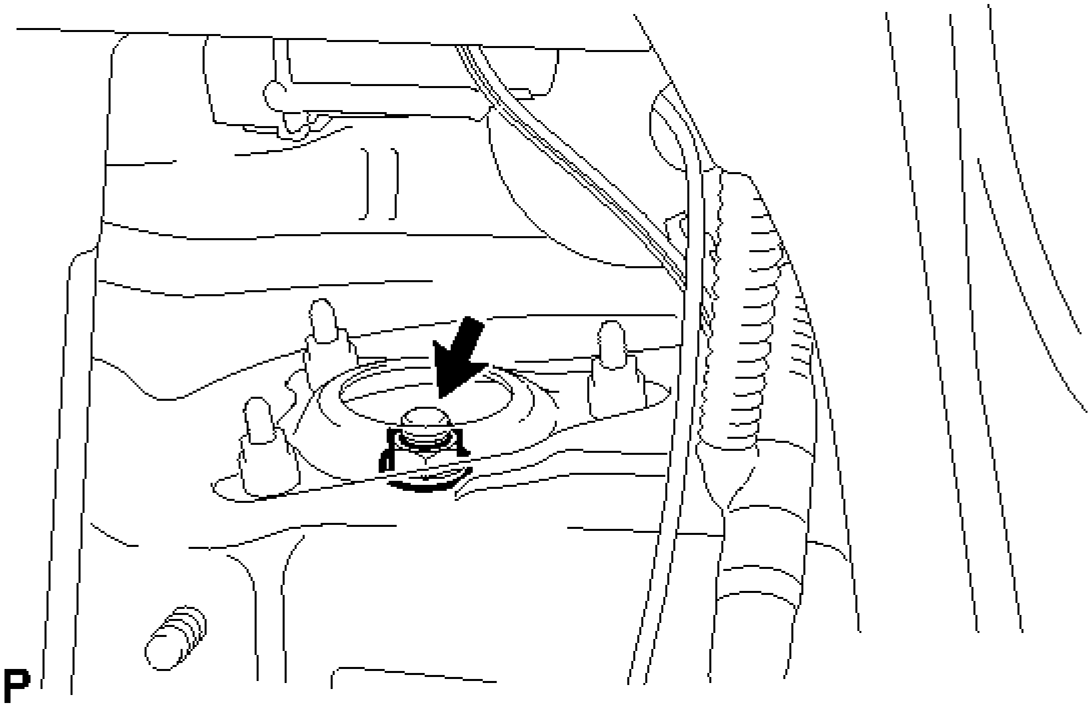

Fig. 7: Locating Rear Shock Absorber Lock Nut
Courtesy of TOYOTA MOTOR SALES, U.S.A., INC.

NOTE:

- **Do not remove the rear support to rear shock absorber nut.**
- **Loosen the nut only when the rear shock absorber with coil spring needs to be disassembled.**

c. Remove the 2 bolts and 2 nuts, and separate the rear shock absorber with coil spring from the rear axle carrier sub-assembly.

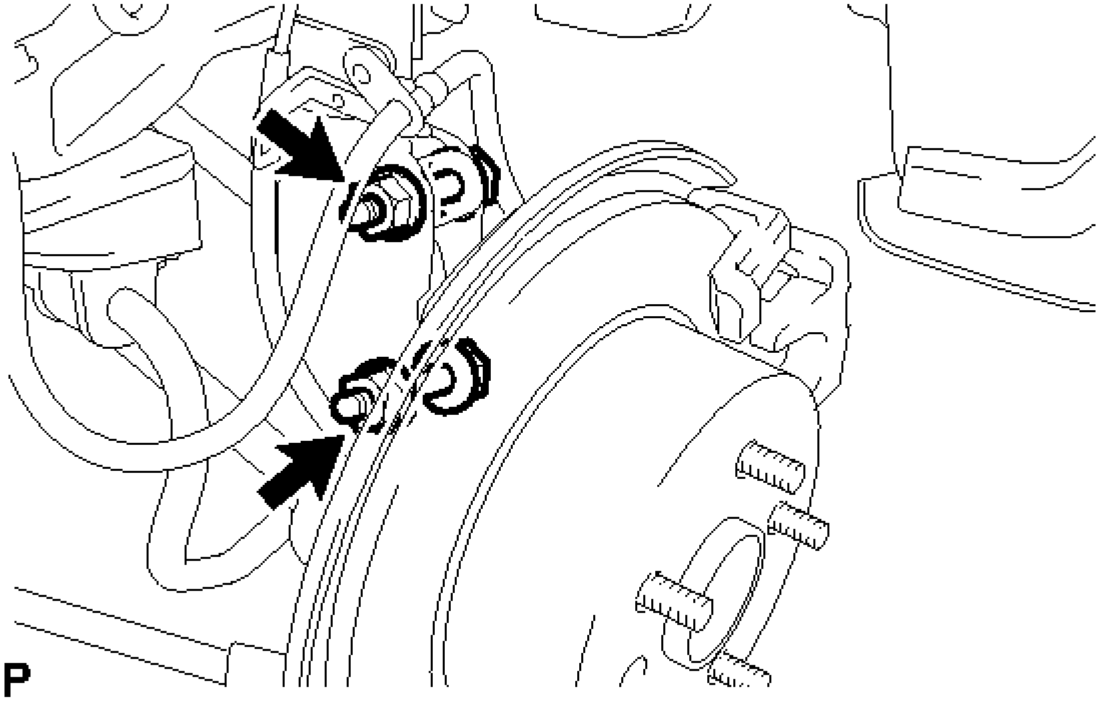

Fig. 8: Locating Rear Shock Absorber Nuts And Bolts
Courtesy of TOYOTA MOTOR SALES, U.S.A., INC.

NOTE: When removing the nuts, keep the bolts from rotating.

d. Remove the 3 nuts and rear shock absorber with coil spring.

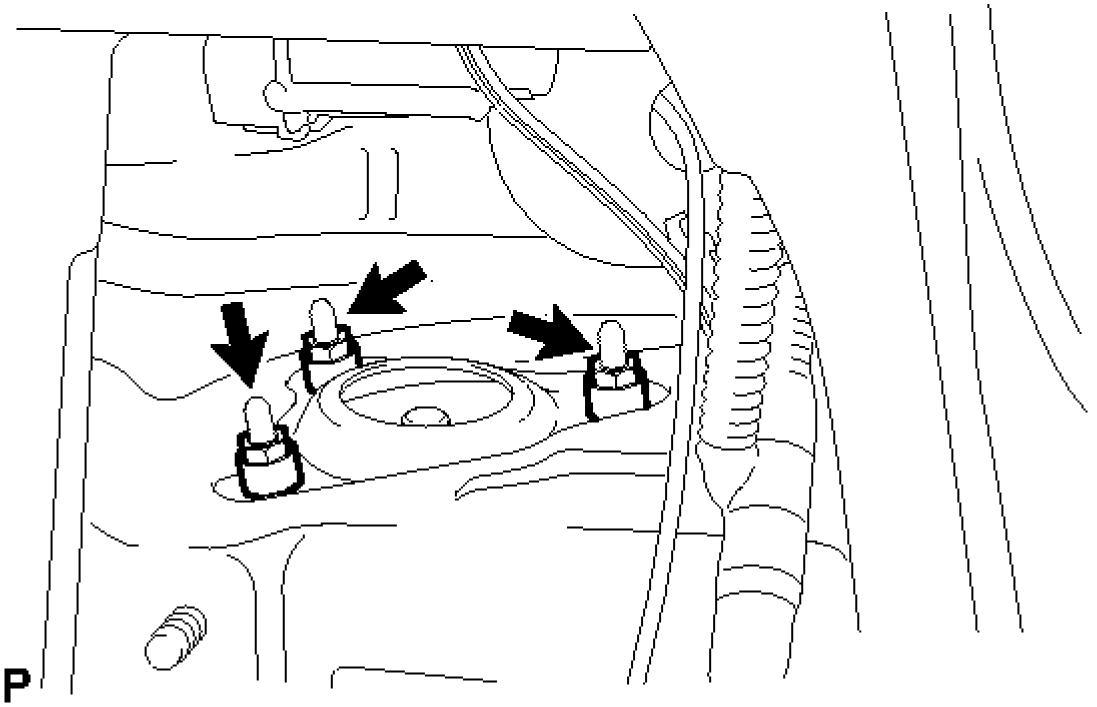

Fig. 9: Locating Rear Shock Absorber Nuts Upper Side
Courtesy of TOYOTA MOTOR SALES, U.S.A., INC.

NOTE: **Make sure that the skid control sensor wire and rear flexible hose are disconnected from the rear shock absorber with coil spring.**

7. **SECURE REAR SHOCK ABSORBER WITH COIL SPRING**
   a. Install the bolt and nut to the rear shock absorber assembly as shown in the illustration and secure the rear shock absorber assembly in a vise using aluminum plates.

      Standard length A

      28 mm (1.10 in.)

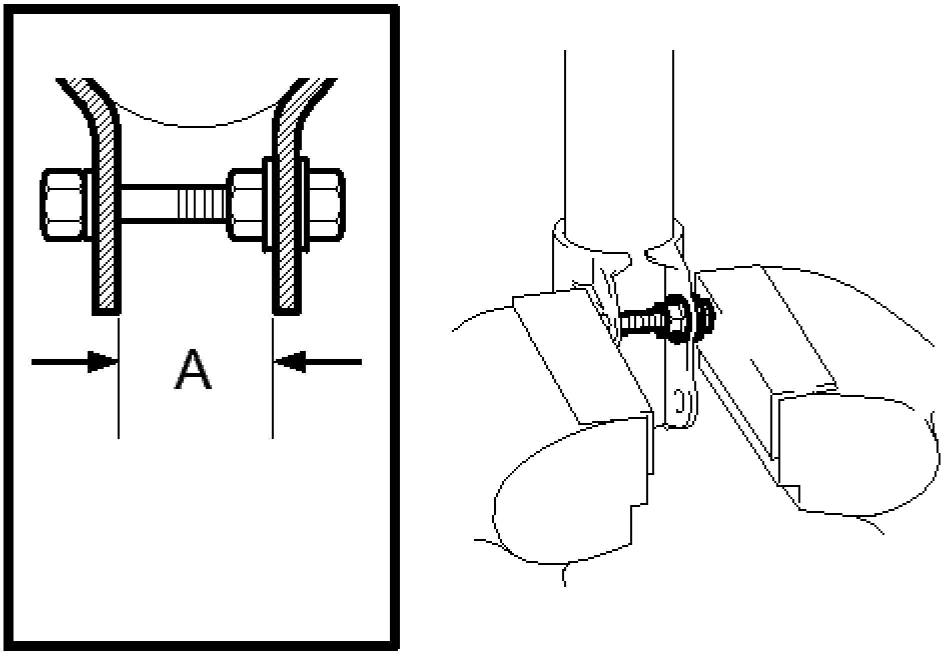

Fig. 10: Securing Rear Shock Absorber In Vise
Courtesy of TOYOTA MOTOR SALES, U.S.A., INC.

8. **REMOVE REAR SUPPORT TO REAR SHOCK ABSORBER NUT**
   a. Using SST, compress the rear coil spring.
      - **SST: 09727-30021**
        09727-00010
        09727-00021
        09727-00031

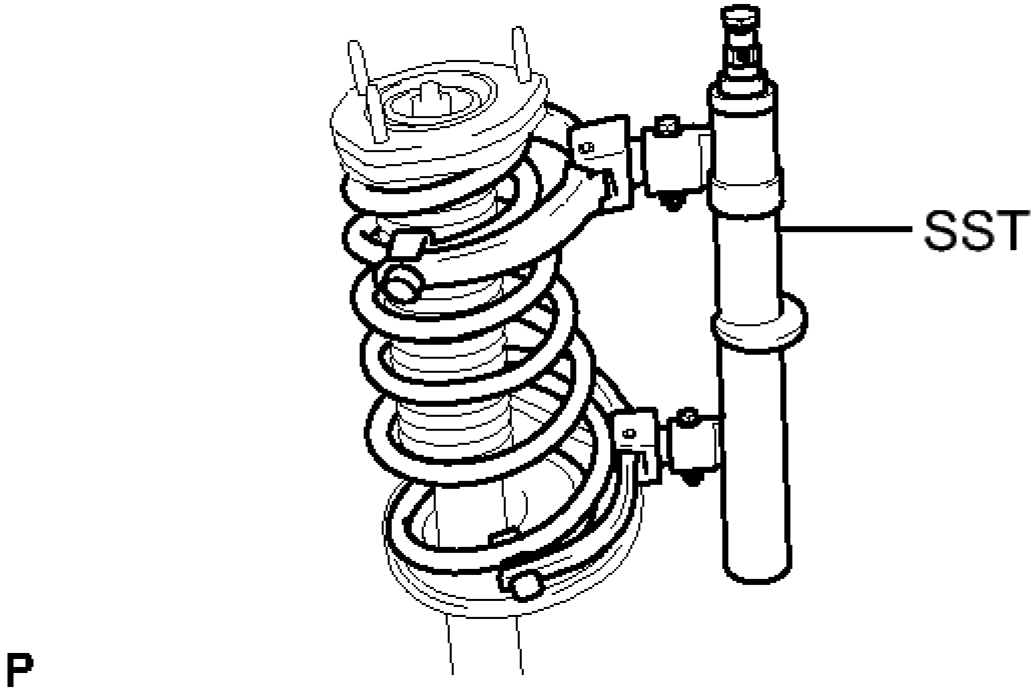

Fig. 11: Compressing Rear Coil Spring
Courtesy of TOYOTA MOTOR SALES, U.S.A., INC.

NOTE: **Do not use an impact wrench. It will damage SST.**

b. Remove the rear support to rear shock absorber nut to the rear shock absorber assembly.

9. **REMOVE REAR SUPPORT TO REAR SHOCK ABSORBER COLLAR**
10. **REMOVE REAR SUSPENSION SUPPORT ASSEMBLY**
11. **REMOVE REAR COIL SPRING**
12. **REMOVE REAR NO. 1 SPRING BUMPER**
13. **REMOVE REAR LOWER COIL SPRING INSULATOR**
14. **REMOVE REAR SHOCK ABSORBER ASSEMBLY**

INSPECTION

INSPECTION

1. **INSPECT REAR SHOCK ABSORBER ASSEMBLY**
   a. Compress and extend the shock absorber rod 4 or more times.

   Standard

   There is no abnormal resistance or sound and operation resistance is normal.

   If there is any abnormality, replace the rear shock absorber assembly with a new one.

INSTALLATION

INSTALLATION

HINT:

- Use the same procedure for the RH side and LH side.
- The procedure listed below is for the LH side.

1. **SECURE REAR SHOCK ABSORBER ASSEMBLY**
    a. Install the bolt and nut to the rear shock absorber assembly as shown in the illustration and secure the rear shock absorber assembly in a vise using aluminum plates.

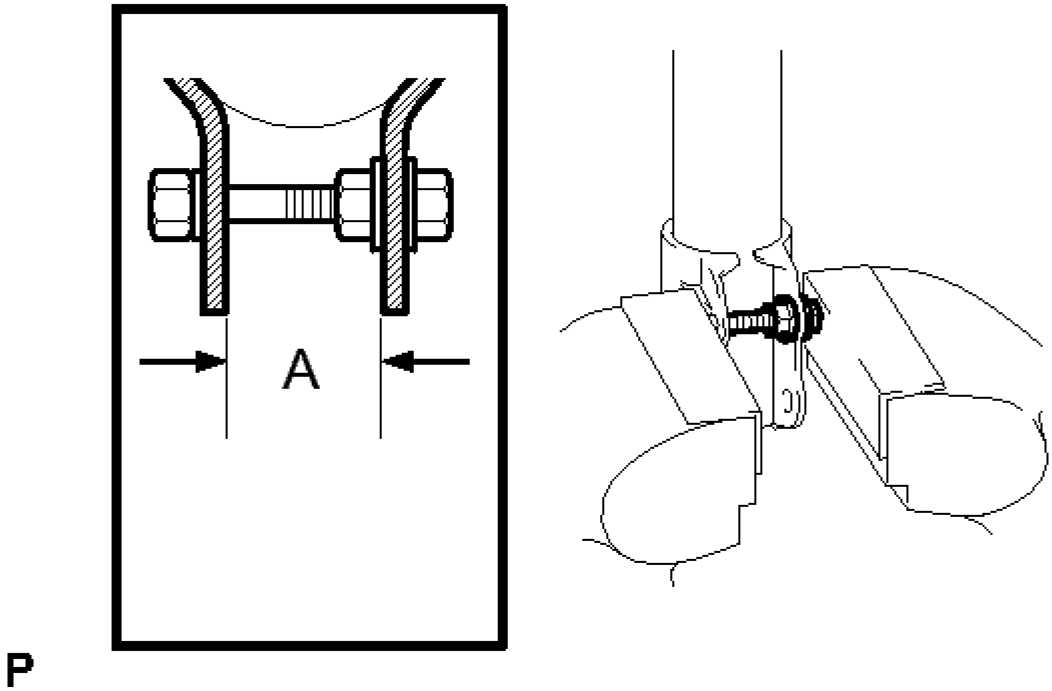

Fig. 12: Securing Rear Shock Absorber In Vise
Courtesy of TOYOTA MOTOR SALES, U.S.A., INC.

Standard length A

28 mm (1.10 in.)

2. **INSTALL REAR LOWER COIL SPRING INSULATOR**
    a. Install the rear lower coil spring insulator onto the rear shock absorber assembly.

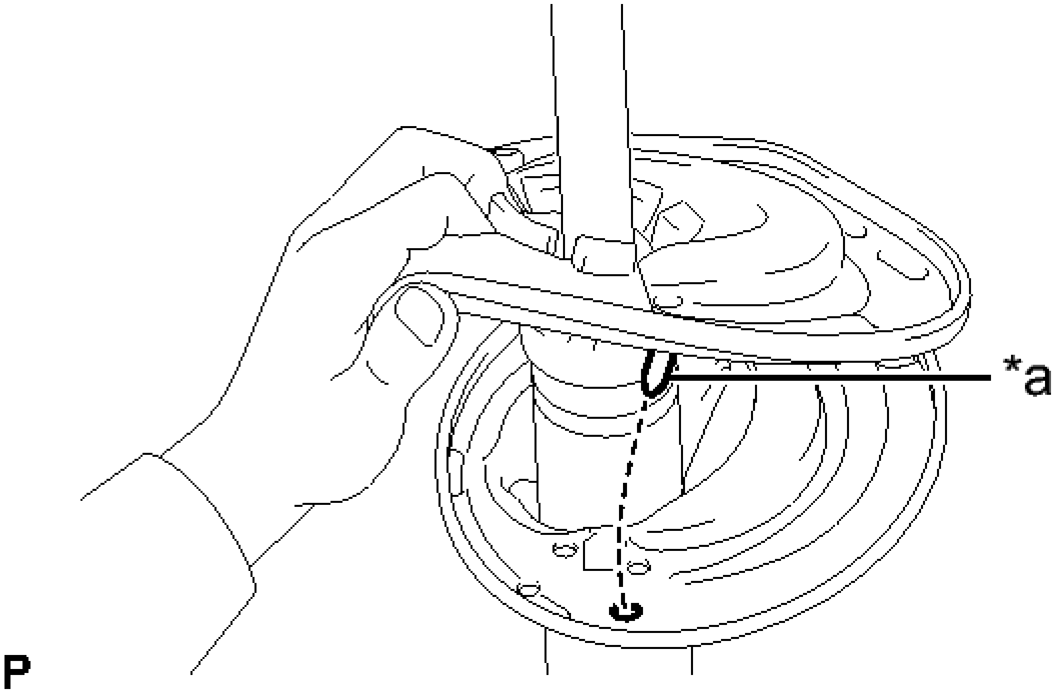

Fig. 13: Installing Rear Lower Coil Spring Insulator
Courtesy of TOYOTA MOTOR SALES, U.S.A., INC.

TEXT IN ILLUSTRATION

*a	Protrusion

NOTE: **Align the protrusion of the rear lower coil spring insulator and the hole in the rear shock absorber assembly.**

3. **INSTALL REAR NO. 1 SPRING BUMPER**
   a. Install the rear No. 1 spring bumper to rear shock absorber assembly.

NOTE: **Face the smaller diameter end of the rear No. 1 spring bumper downward.**

4. **INSTALL REAR COIL SPRING**
   a. Install SST to the rear coil spring with the hooks spread as far apart as possible from each other.
      - **SST: 09727-30021**
        09727-00010
        09727-00021
        09727-00031

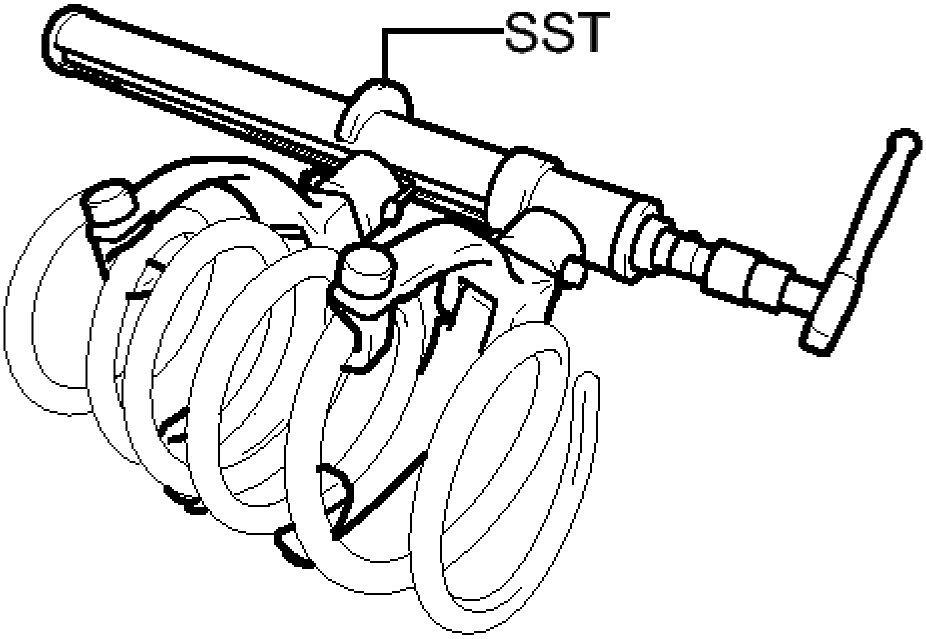

Fig. 14: Compressing Rear Coil Spring
Courtesy of TOYOTA MOTOR SALES, U.S.A., INC.

NOTE: **Make sure that the claws on the hooks are securely engaged to the spring.**

b. Using SST, compress the rear coil spring.

- **SST: 09727-30021**
  09727-00010
  09727-00021
  09727-00031

NOTE: **Do not use an impact wrench. It will damage SST.**

c. Install the rear coil spring to the rear shock absorber assembly.

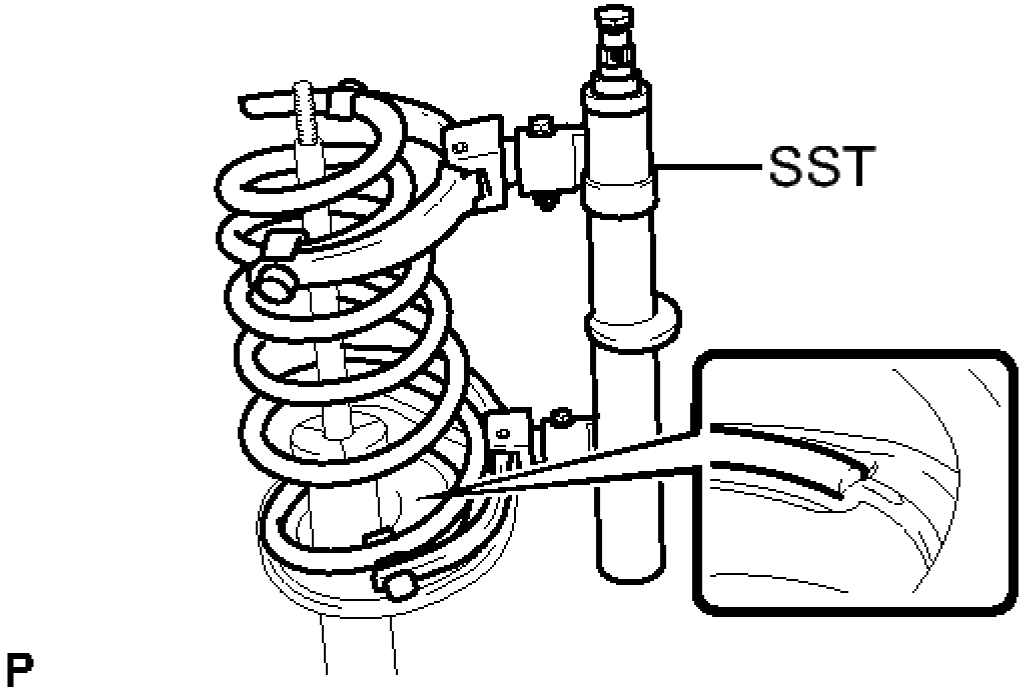

Fig. 15: Installing Coil Spring To Rear Shock Absorber
Courtesy of TOYOTA MOTOR SALES, U.S.A., INC.

NOTE:	- **The smaller diameter end must face upward.** - **Make sure that the end of the rear coil spring is positioned in the depression of the rear coil spring lower insulator.**

5. **INSTALL REAR SUSPENSION SUPPORT ASSEMBLY**
    a. Install the rear suspension support assembly to the rear shock absorber assembly.

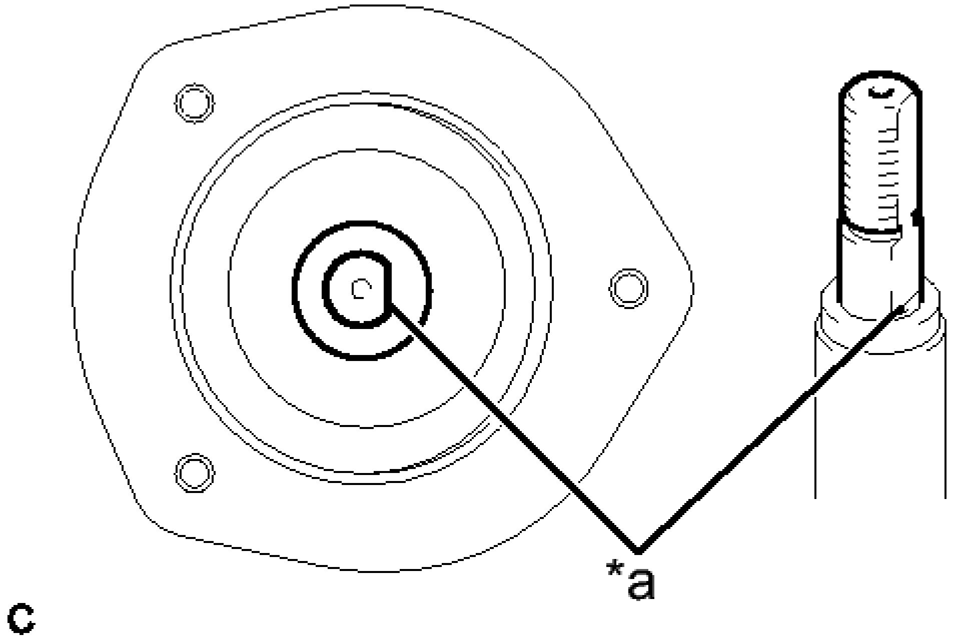

Fig. 16: Identifying Notches Of Piston Rod And Rear Suspension Support Assembly
Courtesy of TOYOTA MOTOR SALES, U.S.A., INC.

TEXT IN ILLUSTRATION

*a	Notch

NOTE: **Align the notches of the piston rod and the rear suspension support assembly as shown in the illustration before installing the rear suspension support assembly.**

b. Align the notches of the rear shock absorber assembly with the notch of the rear suspension support assembly so that the notches face the outside of the vehicle.

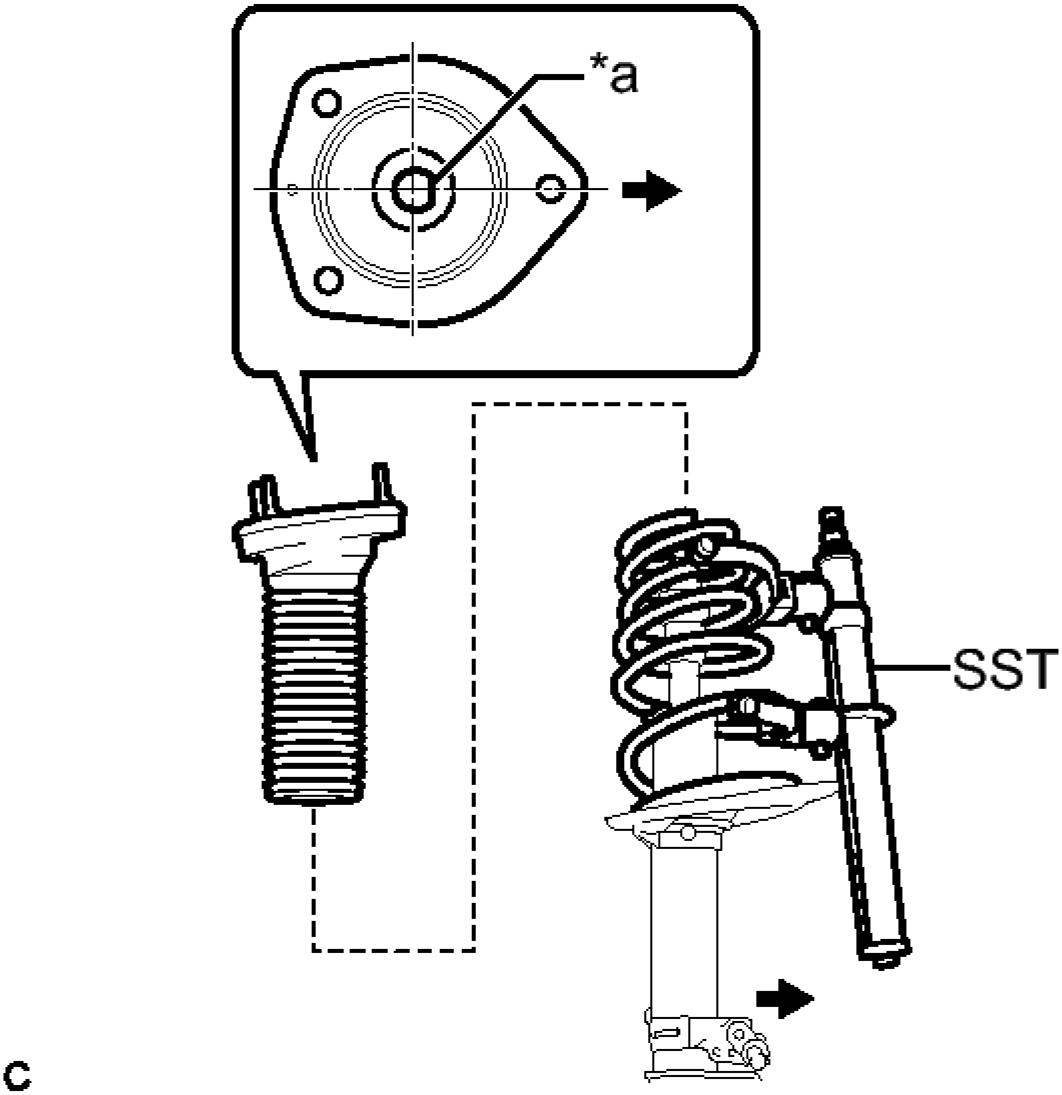

Fig. 17: Identifying Notches Of Rear Shock Absorber Assembly And Rear Suspension Support Assembly
Courtesy of TOYOTA MOTOR SALES, U.S.A., INC.

TEXT IN ILLUSTRATION

*a	Notch
·	Outside of the Vehicle

6. **INSTALL REAR SUPPORT TO REAR SHOCK ABSORBER COLLAR**
    a. Install the rear support to rear shock absorber collar to the rear shock absorber assembly.
7. **TEMPORARILY TIGHTEN REAR SUPPORT TO REAR SHOCK ABSORBER NUT**
    a. Temporarily tighten a new rear support to rear shock absorber nut to the rear shock absorber assembly.

b. Release the rear coil spring while adjusting the rear suspension support assembly to the position shown in the illustration, and remove SST from the rear coil spring.

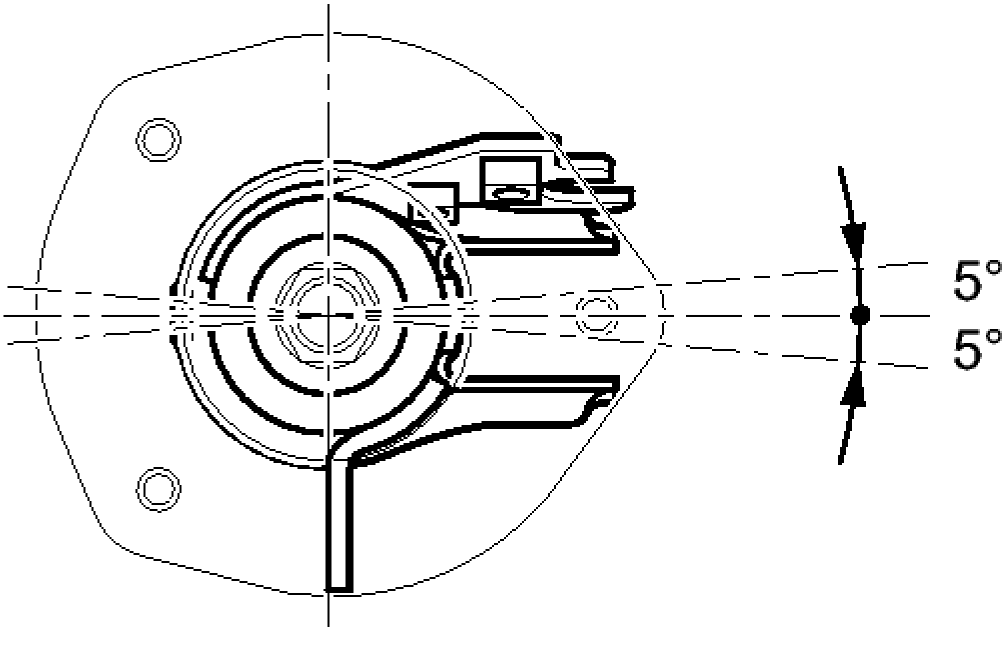

Fig. 18: Identifying Rear Suspension Support Assembly Component To Position
Courtesy of TOYOTA MOTOR SALES, U.S.A., INC.

NOTE: **Do not use an impact wrench. It will damage SST.**

HINT:

Make sure to align the outer stud bolt on the rear suspension support assembly to within +/- 5° of the center of the rear shock absorber lower bracket as shown in the illustration.

8. **INSTALL REAR SHOCK ABSORBER WITH COIL SPRING**
    a. Install the rear shock absorber with coil spring to the rear axle carrier sub-assembly and insert the 2 bolts from the rear of the vehicle.

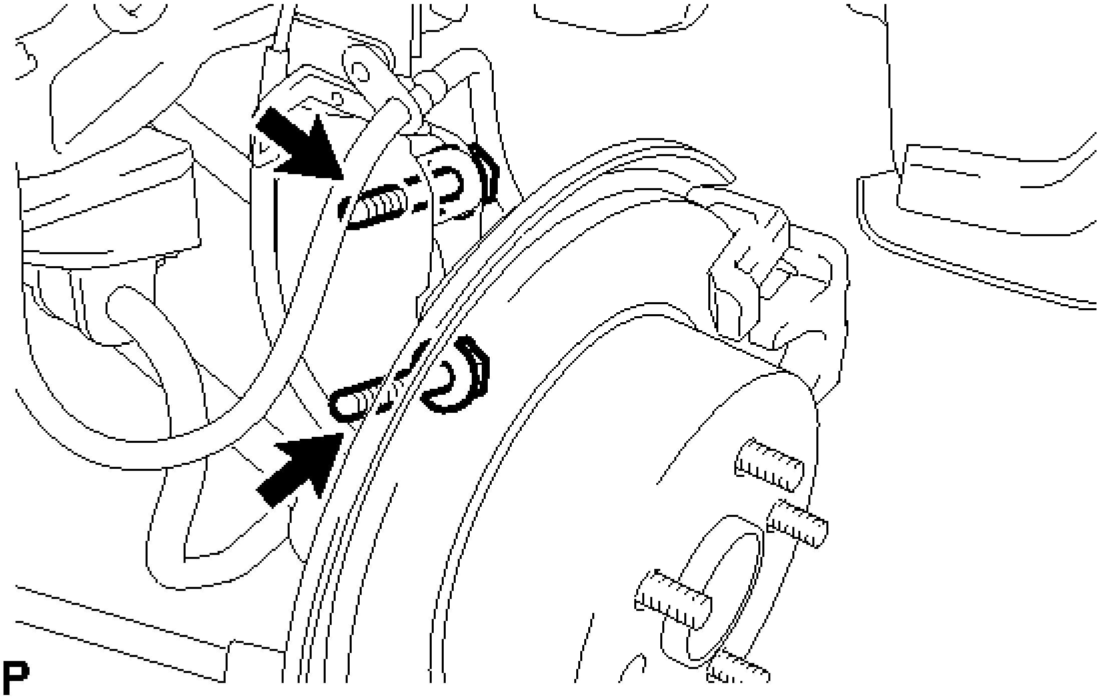

Fig. 19: Identifying Rear Shock Absorber Bolts
Courtesy of TOYOTA MOTOR SALES, U.S.A., INC.

b. Slowly jack up the suspension using a wooden block and install the rear shock absorber with coil spring (upper side) to the vehicle.
c. Install the 3 nuts to the upper side of the rear shock absorber with coil spring.

Torque: 39 N*m (400 kgf*cm, 29 ft.*lbf)

d. Install the 2 nuts to the lower side of the rear shock absorber with coil spring.

Torque: 290 N*m (2957 kgf*cm, 214 ft.*lbf)

NOTE: When installing the nuts, keep the bolts from rotating.

e. Fully tighten the rear support to rear shock absorber nut.

Torque: 55 N*m (561 kgf*cm, 41 ft.*lbf)

9. **INSTALL SKID CONTROL SENSOR WIRE**
   a. Install the skid control sensor wire and rear flexible hose to the rear shock absorber with coil spring with the 2 bolts.

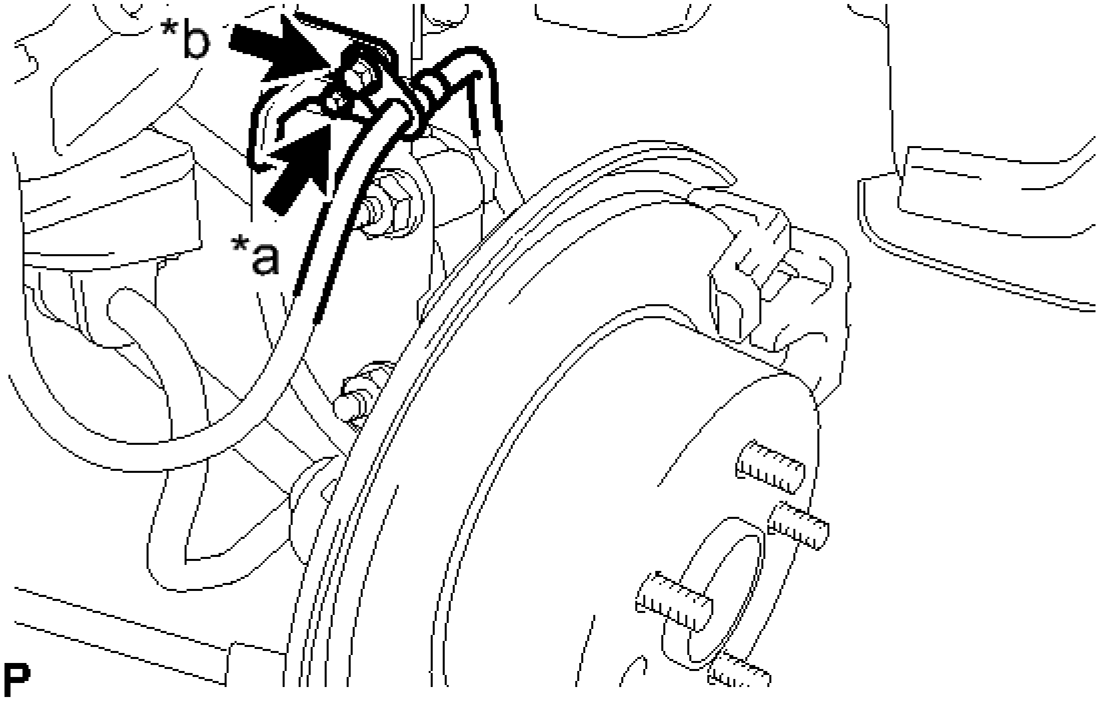

Fig. 20: Identifying Skid Control Sensor Wire And Rear Flexible Hose Bolts
Courtesy of TOYOTA MOTOR SALES, U.S.A., INC.

TEXT IN ILLUSTRATION

*a	Bolt (A)
*b	Bolt (B)

Bolt (A)

Torque: 8.5 N*m (87 kgf*cm, 75 in.*lbf)

Bolt (B)

Torque: 19 N*m (192 kgf*cm, 14 ft.*lbf)

10. **INSTALL REAR STABILIZER LINK ASSEMBLY**
    a. Install the rear stabilizer link assembly to the rear shock absorber with coil spring with the nut.

    Torque: 39 N*m (400 kgf*cm, 29 ft.*lbf)

    If the ball joint turns together with the nut, use a hexagon wrench to hold the stud.

11. **INSTALL REAR NO. 1 SUSPENSION SUPPORT COVER**
    a. Engage the 4 claws and install the rear No. 1 suspension support cover.

12. **INSTALL REAR WHEEL**

    Torque: 103 N*m (1049 kgf*cm, 76 ft.*lbf)

13. **INSTALL REAR SIDE SEATBACK ASSEMBLY**

    Refer to **INSTALLATION**

14. **INSPECT AND ADJUST REAR WHEEL ALIGNMENT**

    Refer to **ADJUSTMENT**

DISPOSAL

DISPOSAL

1. **DISPOSE OF REAR SHOCK ABSORBER ASSEMBLY**
    a. Fully extend the rear shock absorber piston rod.

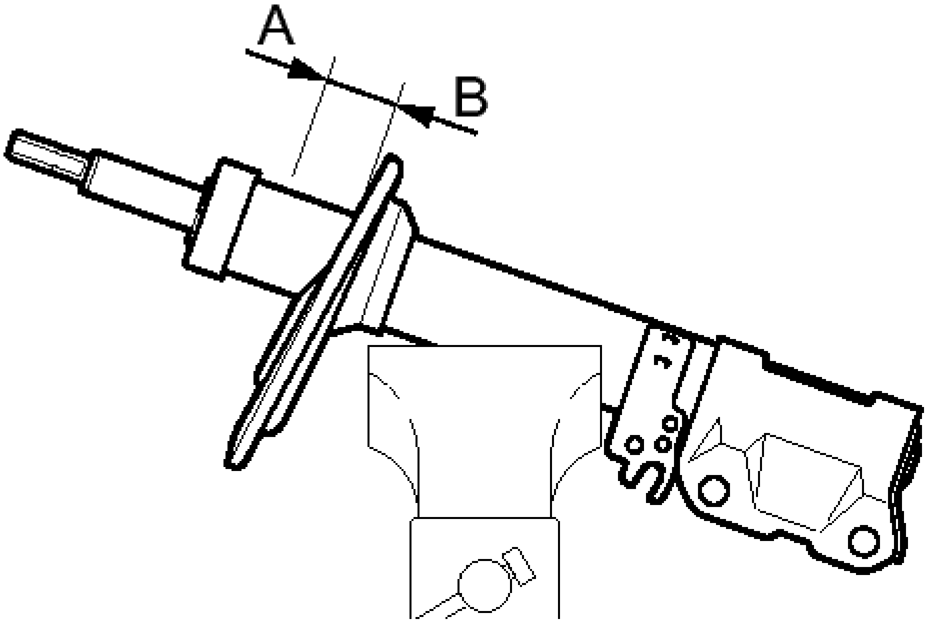

Fig. 21: Identifying Hole In Cylinder Component Between A And B
Courtesy of TOYOTA MOTOR SALES, U.S.A., INC.

    b. Using a drill, make a hole in the cylinder between A and B as shown in the illustration to discharge the gas inside.

WARNING: **Be careful when drilling as shards of metal may fly about, so always use proper safety equipment.**

HINT:

The gas is colorless, odorless and non-poisonous.

REAR LOWER ARM

COMPONENTS

ILLUSTRATION

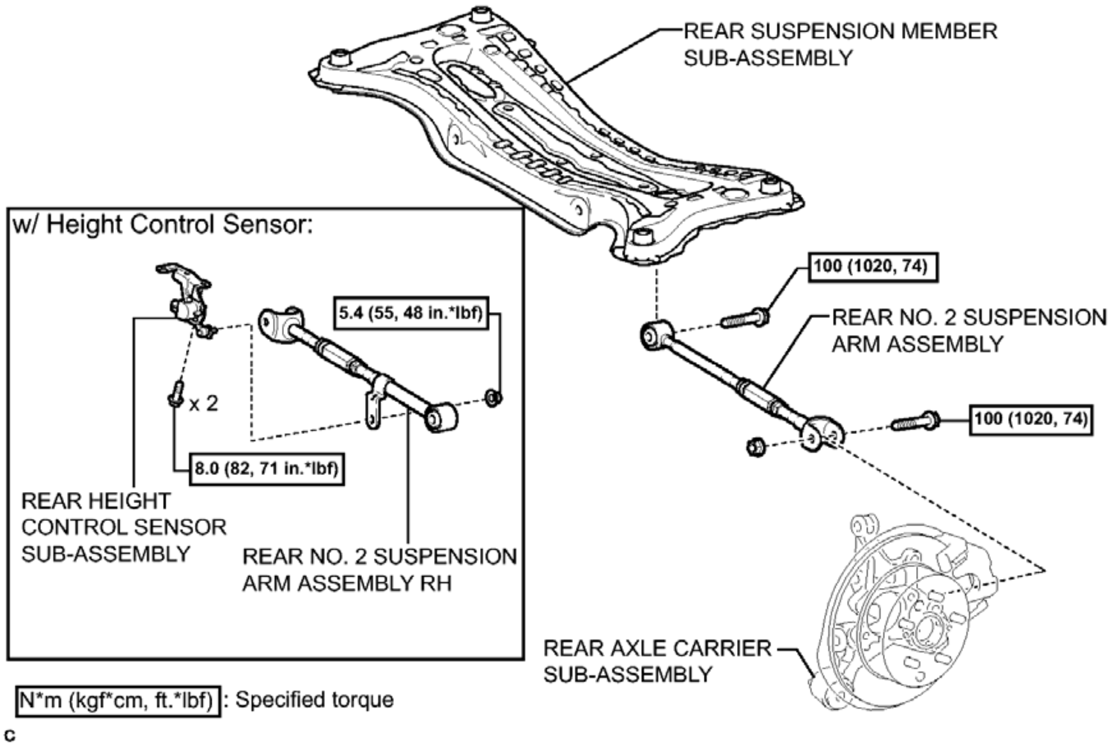
REAR SUSPENSION MEMBER SUB-ASSEMBLY
w/ Height Control Sensor:
5.4 (55, 48 in.*lbf)
x 2
8.0 (82, 71 in.*lbf)
REAR HEIGHT CONTROL SENSOR SUB-ASSEMBLY
REAR NO. 2 SUSPENSION ARM ASSEMBLY RH
100 (1020, 74)
REAR NO. 2 SUSPENSION ARM ASSEMBLY
100 (1020, 74)
REAR AXLE CARRIER SUB-ASSEMBLY
N*m (kgf*cm, ft.*lbf) : Specified torque
c

Fig. 22: Identifying Rear Lower Arm Replacement Components With Torque Specifications (1 Of 2)
Courtesy of TOYOTA MOTOR SALES, U.S.A., INC.

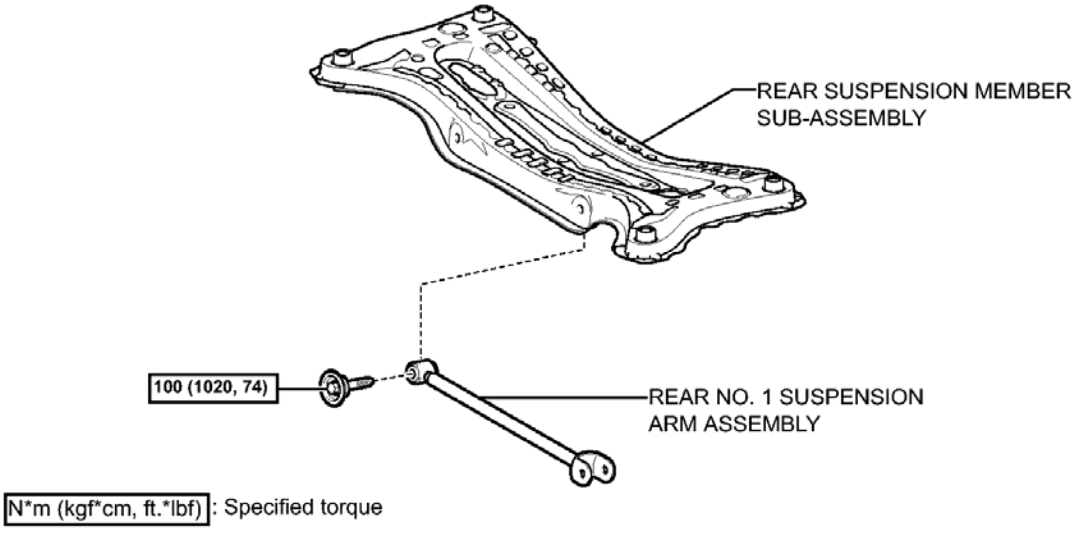
REAR SUSPENSION MEMBER SUB-ASSEMBLY
100 (1020, 74)
REAR NO. 1 SUSPENSION ARM ASSEMBLY
N*m (kgf*cm, ft.*lbf) : Specified torque
c

Fig. 23: Identifying Rear Lower Arm Replacement Components With Torque Specifications (2 Of 2)
Courtesy of TOYOTA MOTOR SALES, U.S.A., INC.

REMOVAL

REMOVAL

HINT:

- Use the same procedure for the RH side and LH side.
- The procedure listed below is for the LH side.
- The rear No. 2 suspension arm assembly can be removed directly from the vehicle.

1. **REMOVE REAR WHEELS**
2. **REMOVE REAR HEIGHT CONTROL SENSOR SUB-ASSEMBLY (w/ Height Control Sensor)**

   Refer to REMOVAL

3. **SEPARATE REAR NO. 2 SUSPENSION ARM ASSEMBLY**
   a. Remove the bolt and nut, and separate the rear No. 2 suspension arm assembly (outer side) from the rear axle carrier sub-assembly.

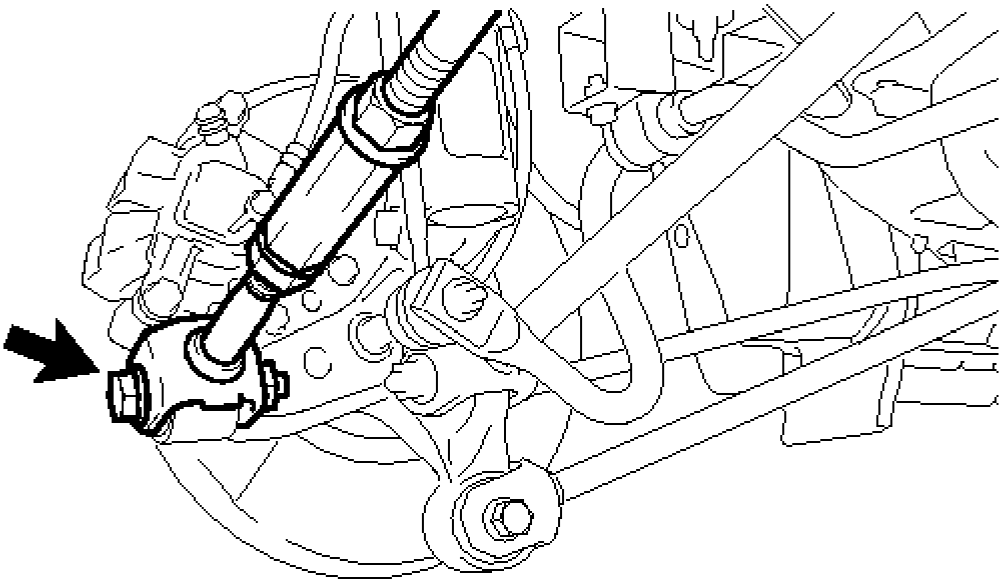

Fig. 24: Identifying Rear No. 2 Suspension Arm (Outer Side) Bolt
Courtesy of TOYOTA MOTOR SALES, U.S.A., INC.

NOTE: **When removing the bolt, keep the nut from rotating.**

4. **REMOVE REAR NO. 2 SUSPENSION ARM ASSEMBLY**
   a. Remove the bolt and rear No. 2 suspension arm assembly from the rear suspension member sub-assembly.

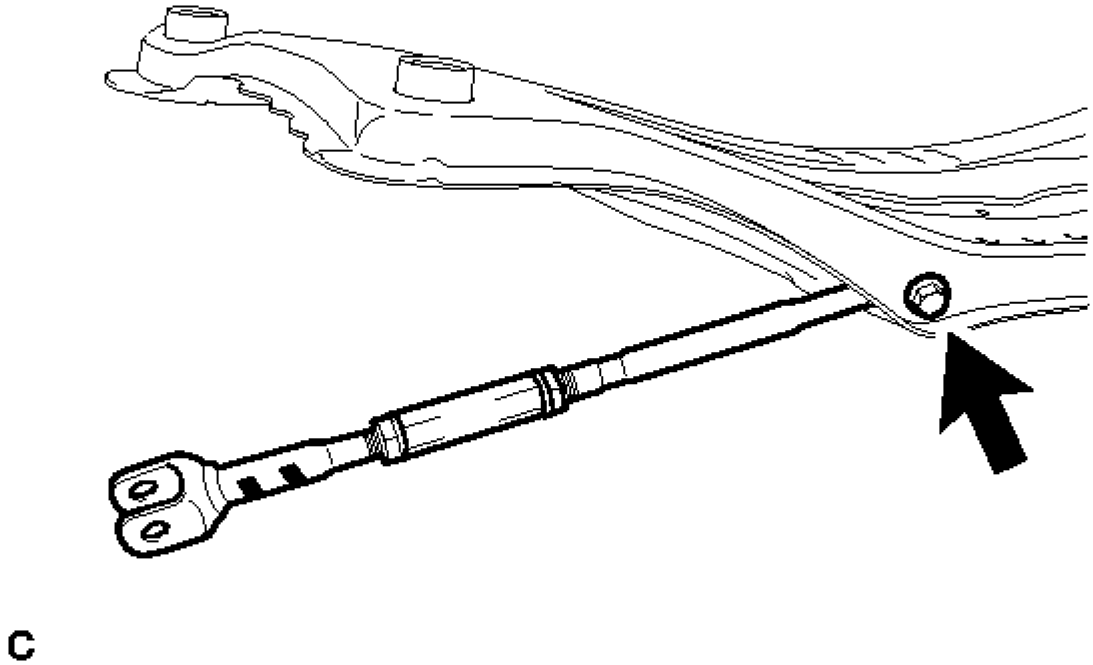

Fig. 25: Identifying Rear No. 2 Suspension Arm (Inner Side) Bolt
Courtesy of TOYOTA MOTOR SALES, U.S.A., INC.

5. **REMOVE REAR SUSPENSION MEMBER SUB-ASSEMBLY**

   Refer to **REMOVAL**

6. **REMOVE REAR NO. 1 SUSPENSION ARM ASSEMBLY**
   a. Remove the bolt and rear No. 1 suspension arm assembly from the rear suspension member sub-assembly.

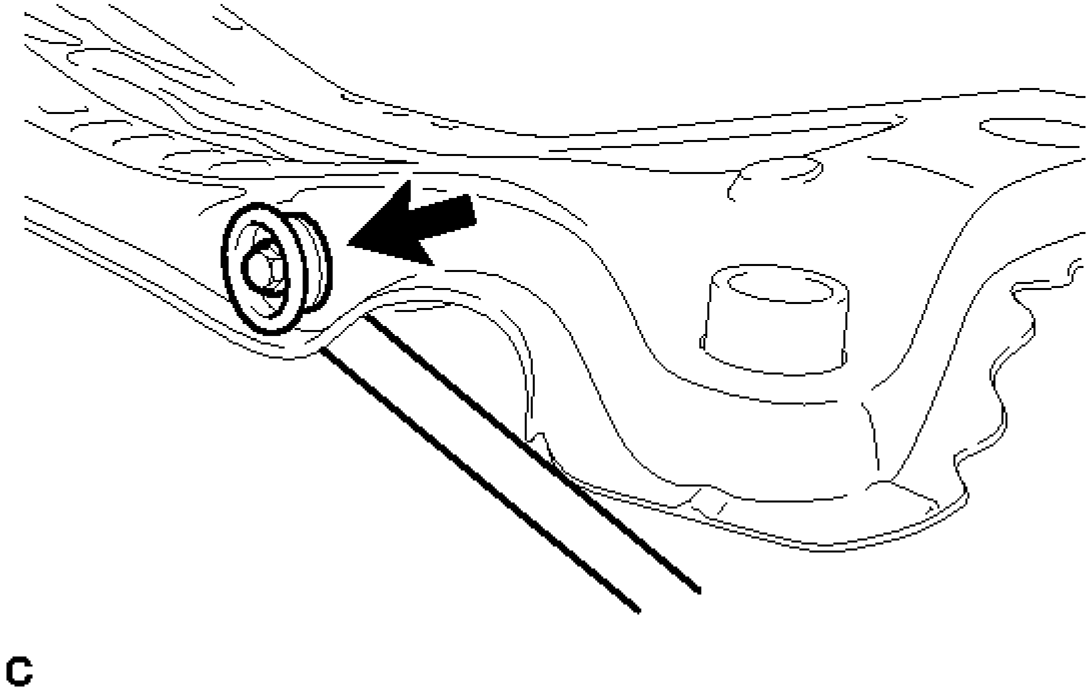

Fig. 26: Identifying Rear No. 1 Suspension Arm Assembly Bolt
Courtesy of TOYOTA MOTOR SALES, U.S.A., INC.

INSTALLATION

INSTALLATION

HINT:

- Use the same procedure for the RH side and LH side.
- The procedure listed below is for the LH side.
- The rear No. 2 suspension arm assembly can be installed directly to the vehicle.

1. **INSTALL REAR NO. 1 SUSPENSION ARM ASSEMBLY**
    a. Temporarily tighten the rear No. 1 suspension arm assembly (inner side) with the bolt.

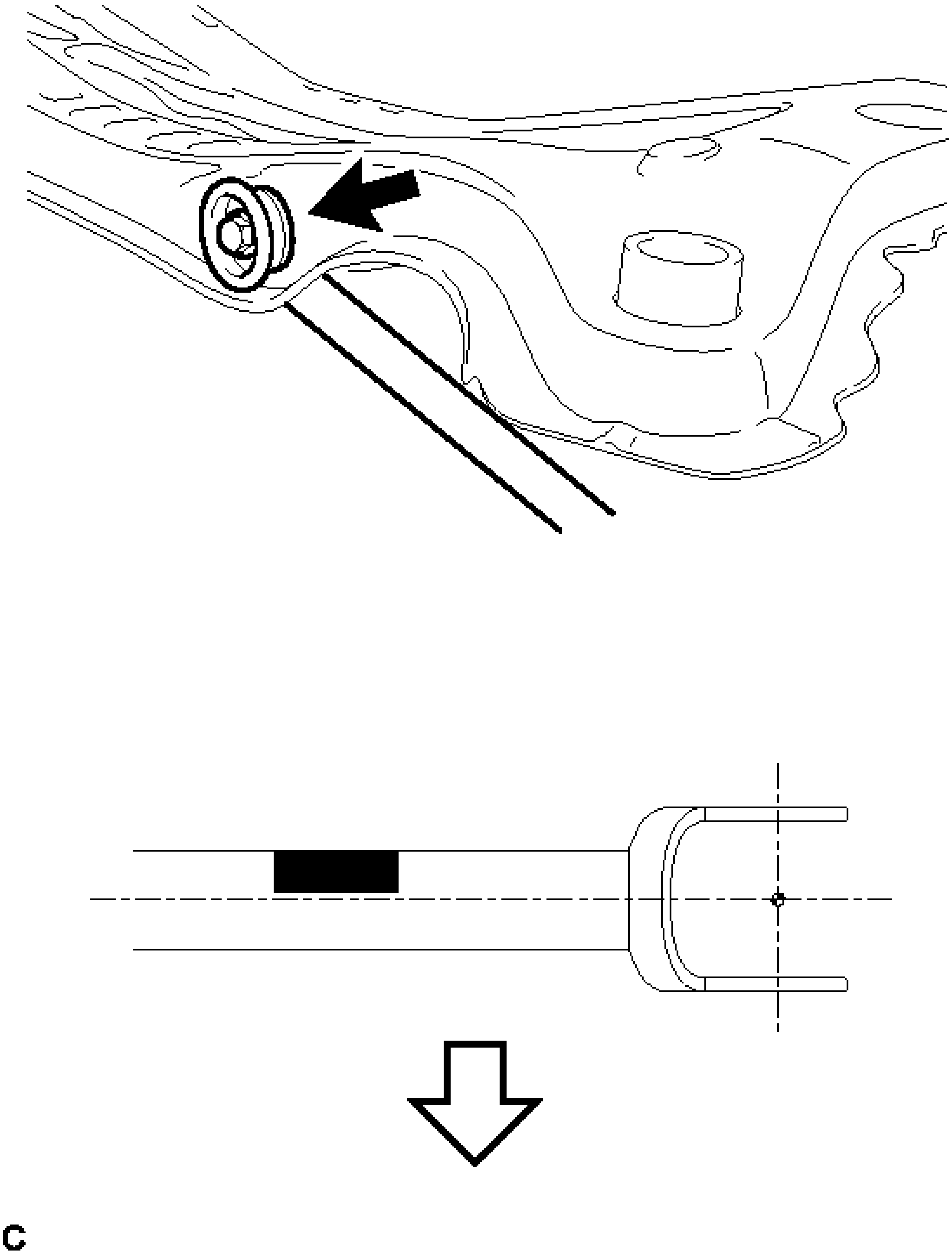

Fig. 27: Identifying Paint Mark
Courtesy of TOYOTA MOTOR SALES, U.S.A., INC.

TEXT IN ILLUSTRATION

	Bolt

	Front of the Vehicle
	Paint Mark

HINT:

Ensure that the paint mark faces the rear of the vehicle.

b. Set the rear No. 1 suspension arm assembly in the position shown in the illustration, and fully tighten the bolt.

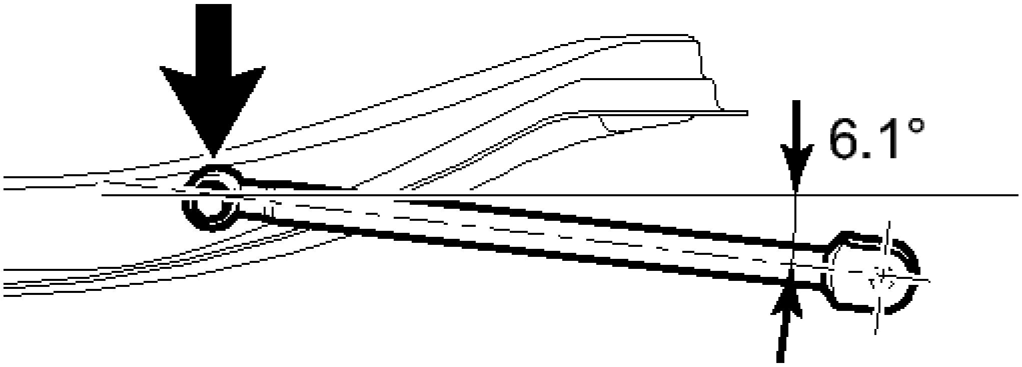

Fig. 28: Identifying Rear No. 1 Suspension Arm Component In Position
Courtesy of TOYOTA MOTOR SALES, U.S.A., INC.

Torque: 100 N*m (1020 kgf*cm, 74 ft.*lbf)

2. **INSTALL REAR SUSPENSION MEMBER SUB-ASSEMBLY**

   See step 10

3. **TEMPORARILY TIGHTEN REAR NO. 2 SUSPENSION ARM ASSEMBLY**
   a. Temporarily tighten the rear No. 2 suspension arm assembly (inside) with the bolt.

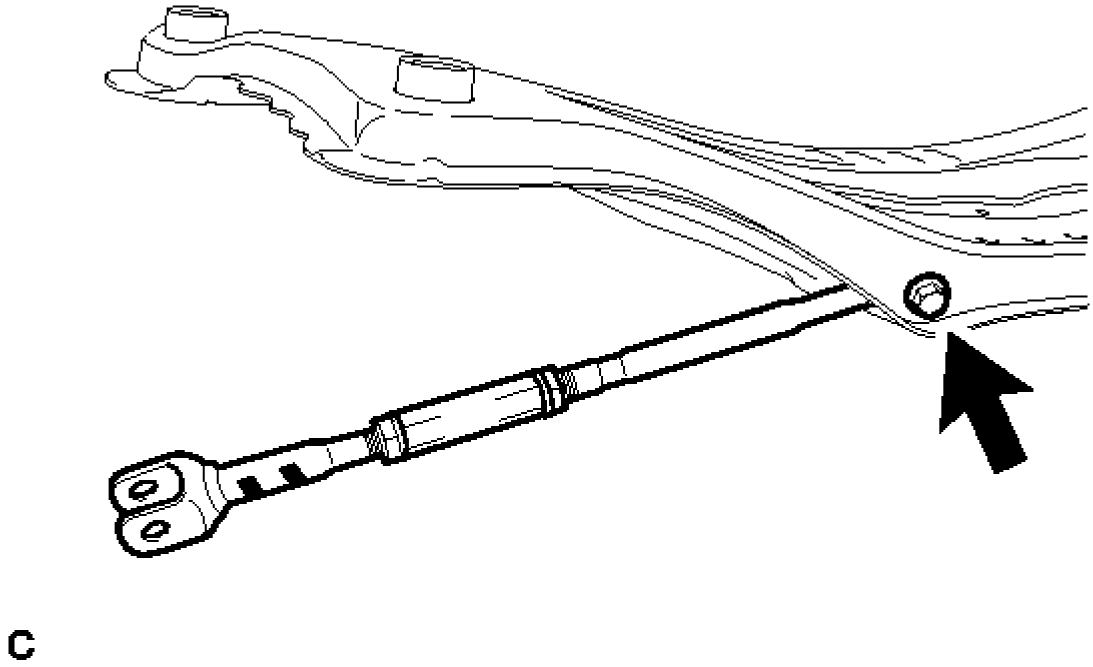

Fig. 29: Identifying Rear No. 2 Suspension Arm Assembly (Inside) Bolt
Courtesy of TOYOTA MOTOR SALES, U.S.A., INC.

TEXT IN ILLUSTRATION

·	Bolt
·	Paint Mark

HINT:

Ensure that the paint mark faces the rear of the vehicle.

4. **CONNECT REAR NO. 2 SUSPENSION ARM ASSEMBLY**
   a. Connect the rear No. 2 suspension arm assembly (outer side) to the rear axle carrier sub-assembly with the bolt and nut.

   NOTE: When temporarily tightening the bolt, keep the nut from rotating.

   HINT:

   Insert the bolt from the rear of the vehicle.

5. **STABILIZE SUSPENSION** . Refer to **INSTALLATION - Step 10**
6. **FULLY TIGHTEN REAR NO. 2 SUSPENSION ARM ASSEMBLY**
   a. Fully tighten the bolt (A).

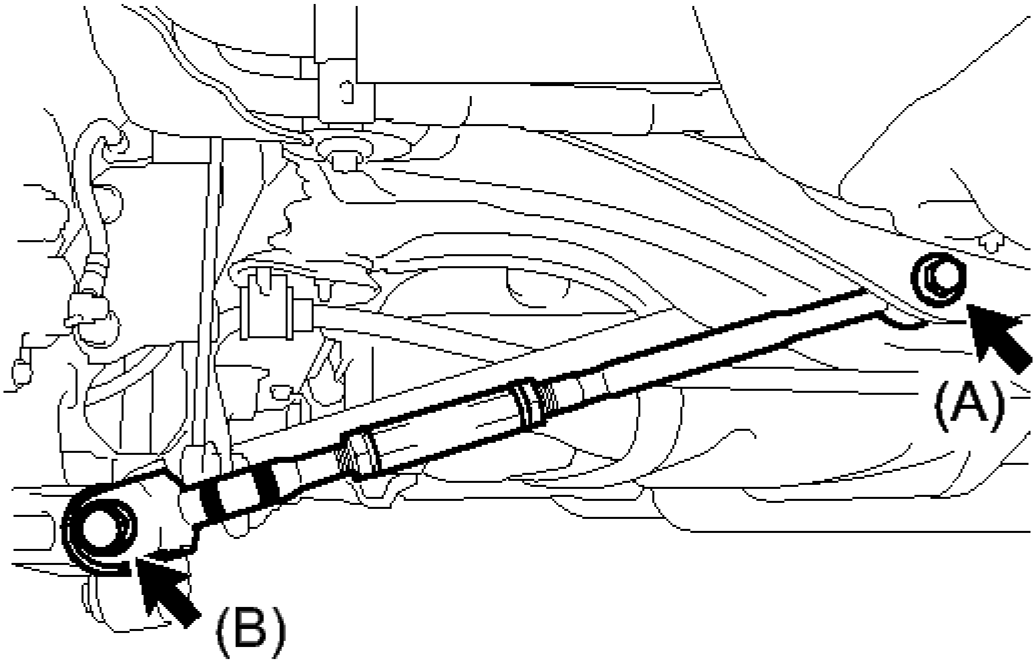

C

Fig. 30: Identifying Rear No. 2 Suspension Arm Bolts
Courtesy of TOYOTA MOTOR SALES, U.S.A., INC.

Torque: 100 N*m (1020 kgf*cm, 74 ft.*lbf)

b. Fully tighten the bolt (B).

Torque: 100 N*m (1020 kgf*cm, 74 ft.*lbf)

NOTE: When fully tightening the bolt, keep the nut from rotating.

7. **INSTALL REAR HEIGHT CONTROL SENSOR SUB-ASSEMBLY (w/ Height Control Sensor)**

   Refer to **INSTALLATION**

8. **INSTALL REAR WHEELS**

   Torque: 103 N*m (1049 kgf*cm, 76 ft.*lbf)

9. **INSPECT AND ADJUST REAR WHEEL ALIGNMENT**

   Refer to **ADJUSTMENT**

10. **HEIGHT CONTROL SENSOR SIGNAL INITIALIZE (w/ Height Control Sensor)**

    Refer to **INITIALIZATION**

11. **ADJUST HEADLIGHT AIMING (w/ Height Control Sensor)**

    Refer to **ADJUSTMENT**

REAR STRUT ROD

COMPONENTS

ILLUSTRATION

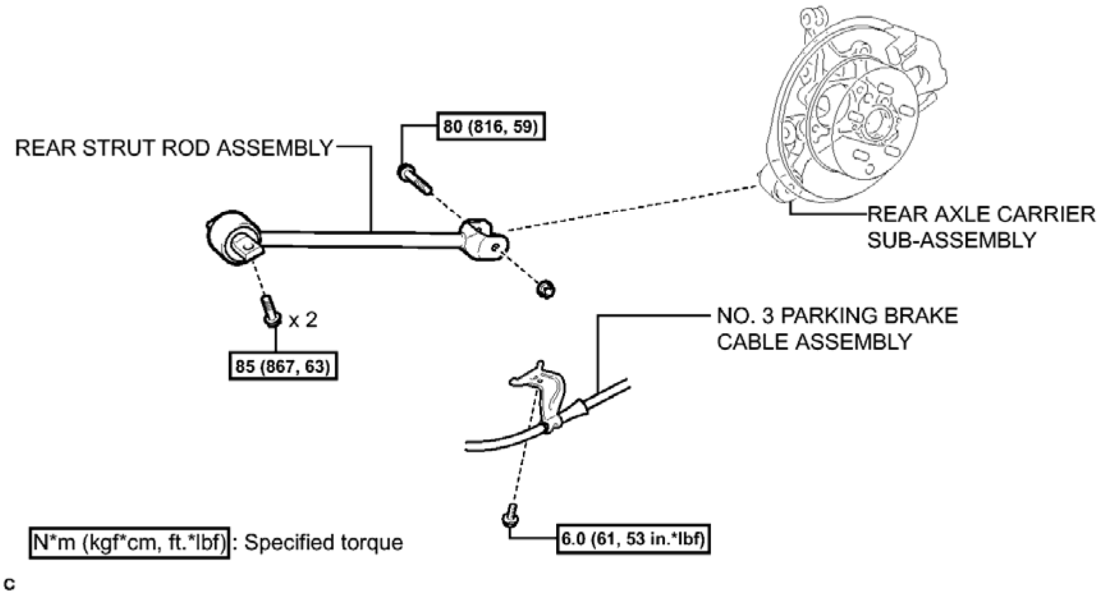
REAR STRUT ROD ASSEMBLY
80 (816, 59)
REAR AXLE CARRIER SUB-ASSEMBLY
x 2
85 (867, 63)
NO. 3 PARKING BRAKE CABLE ASSEMBLY
N*m (kgf*cm, ft.*lbf) : Specified torque
6.0 (61, 53 in.*lbf)
C

Fig. 31: Identifying Rear Strut Rod Replacement Components With Torque Specifications
Courtesy of TOYOTA MOTOR SALES, U.S.A., INC.

REMOVAL

REMOVAL

HINT:

- Use the same procedure for the RH side and LH side.
- The procedure listed below is for the LH side.

1. **REMOVE REAR WHEEL**
2. **SEPARATE NO. 3 PARKING BRAKE CABLE ASSEMBLY**
    a. Remove the bolt and separate the No. 3 parking brake cable assembly from the vehicle.

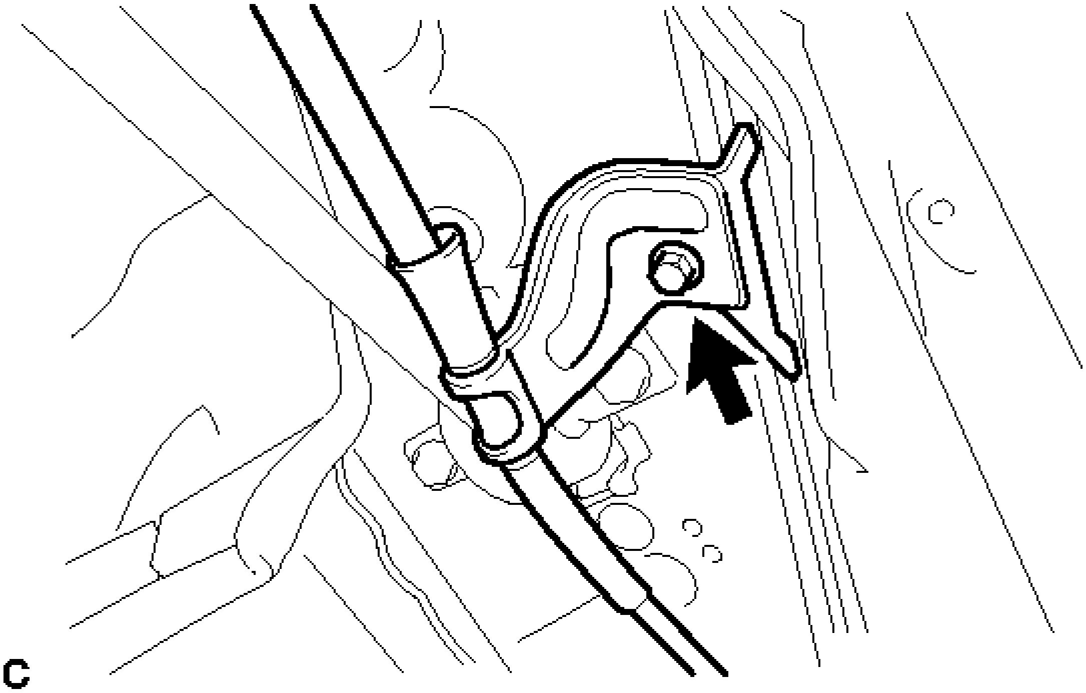

Fig. 32: Identifying No. 3 Parking Brake Cable Bolt
Courtesy of TOYOTA MOTOR SALES, U.S.A., INC.

3. **REMOVE REAR STRUT ROD ASSEMBLY**
    a. Support the rear axle carrier sub-assembly with a jack using a wooden block.

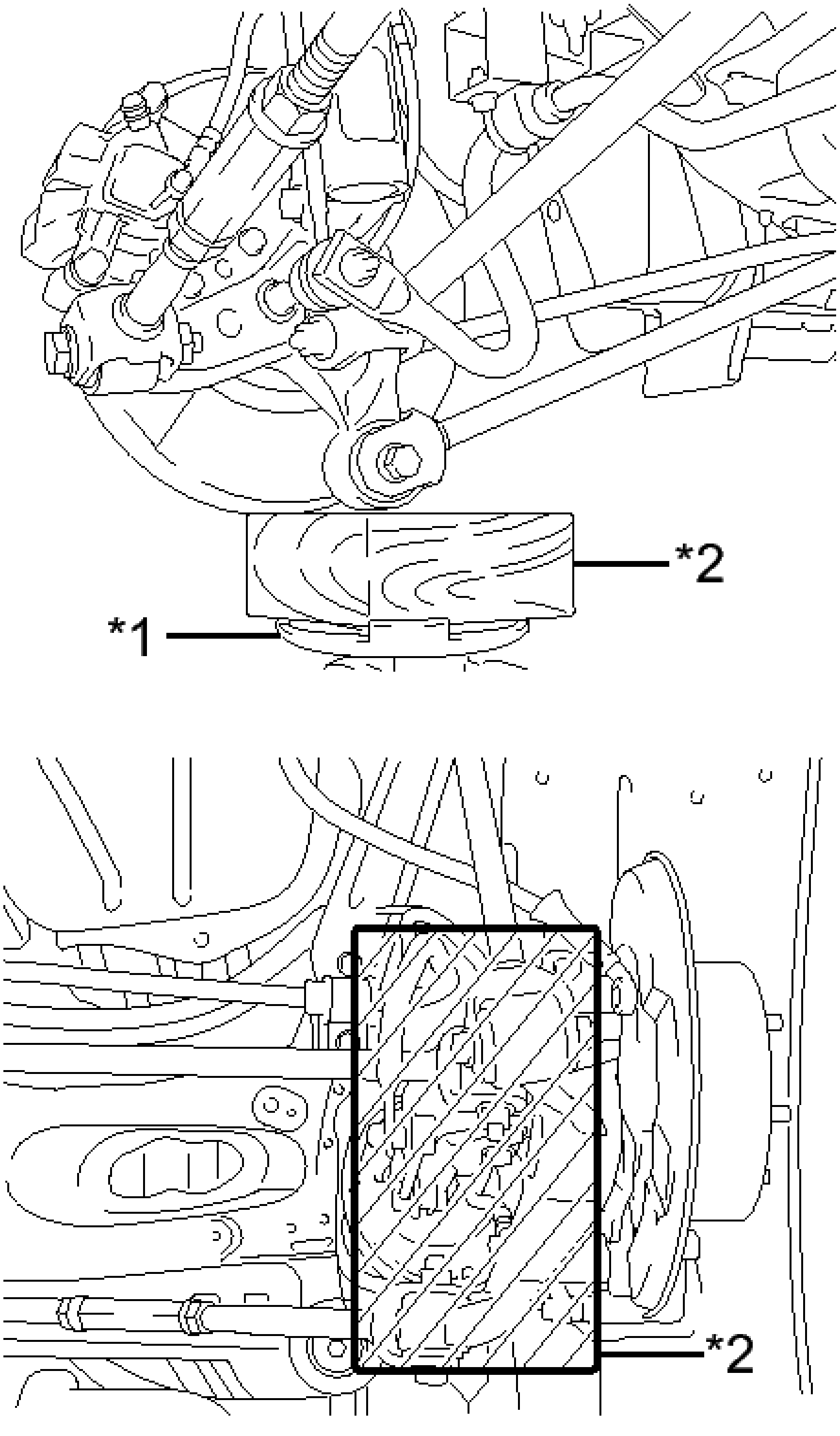

Fig. 33: Identifying Jack Placment On Rear Axle Carrier Sub-Assembly
Courtesy of TOYOTA MOTOR SALES, U.S.A., INC.

TEXT IN ILLUSTRATION

*1	Jack

*2	Wooden Block

b. Remove the 2 bolts and separate the rear strut rod assembly (front side).

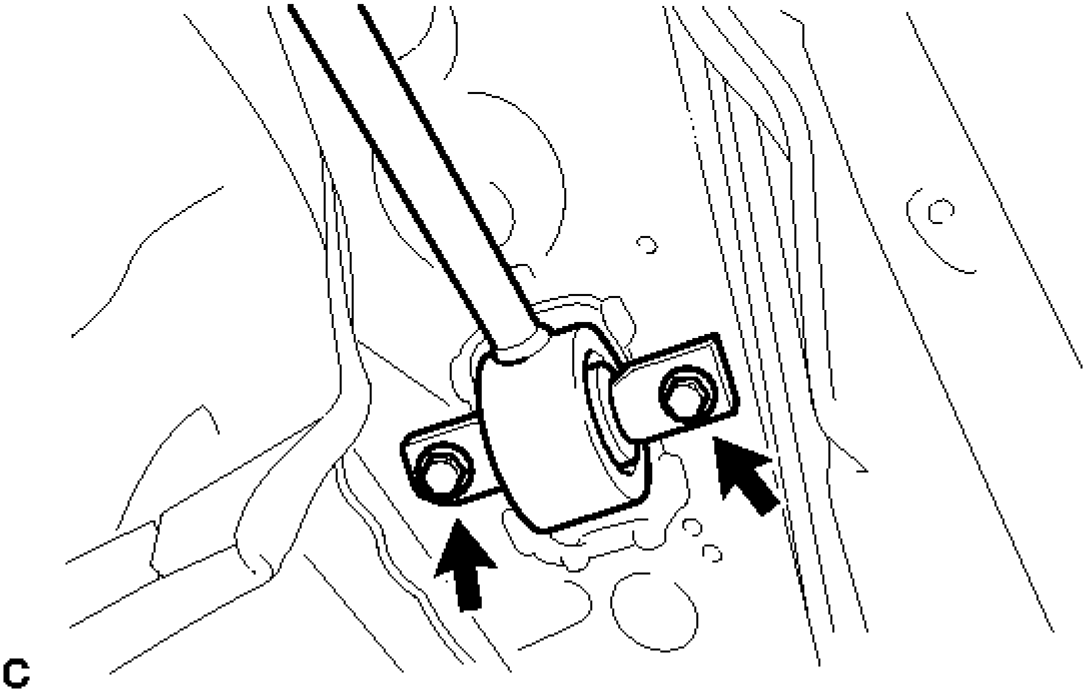

Fig. 34: Identifying Rear Strut Rod Front Side Bolts
Courtesy of TOYOTA MOTOR SALES, U.S.A., INC.

c. Remove the bolt, nut and rear strut rod assembly from the rear axle carrier sub-assembly.

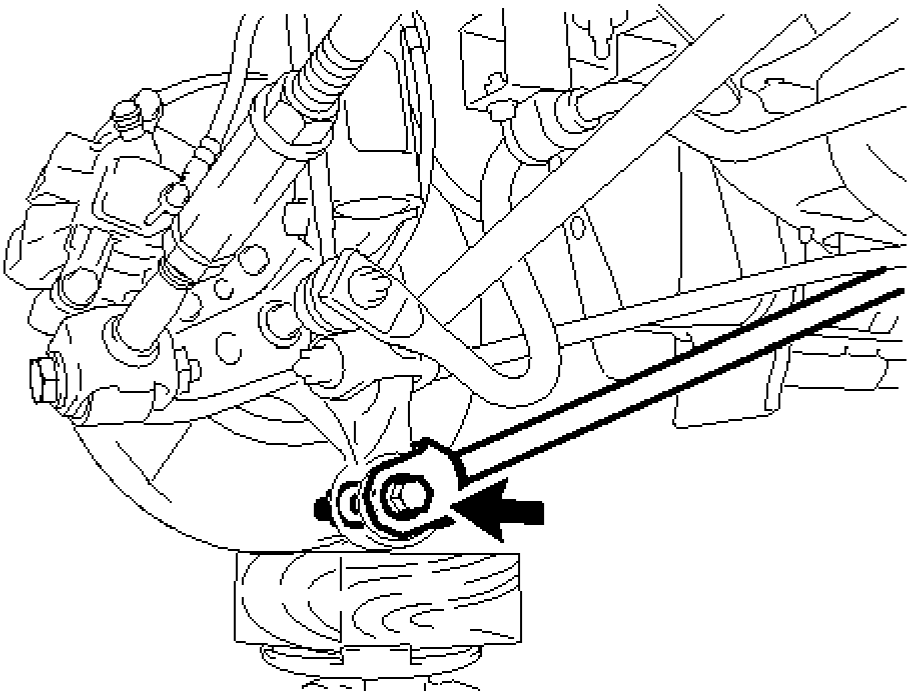

Fig. 35: Locating Rear Strut Rod Assembly Fasteners
Courtesy of TOYOTA MOTOR SALES, U.S.A., INC.

NOTE: **When removing the bolt, keep the nut from rotating.**

INSTALLATION

INSTALLATION

HINT:

- Use the same procedure for the RH side and LH side.
- The procedure listed below is for the LH side.

1. **TEMPORARILY TIGHTEN REAR STRUT ROD ASSEMBLY**
    a. Temporarily tighten rear strut rod assembly (rear side) with the bolt and nut.

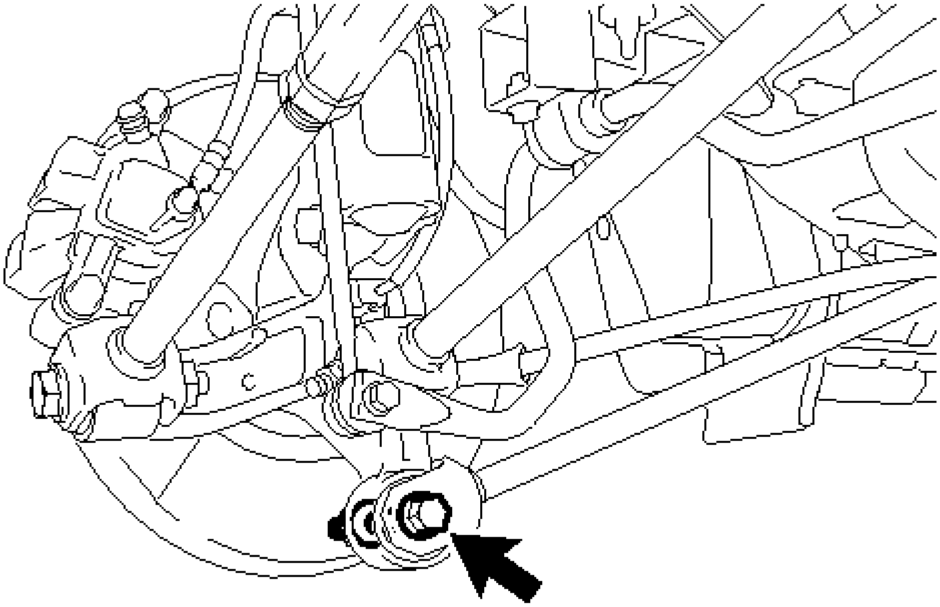

Fig. 36: Locating Rear Strut Rod
Courtesy of TOYOTA MOTOR SALES, U.S.A., INC.

NOTE: When temporarily tightening the bolt, keep the nut from rotating.

HINT:

Insert the bolt from the inside of the vehicle.

b. Support the rear axle carrier sub-assembly with a jack and a wooden block.
c. Connect the rear strut rod assembly (front side) with the 2 bolts.

2. **STABILIZE SUSPENSION** . Refer to **INSTALLATION - Step 10**
3. **FULLY TIGHTEN REAR STRUT ROD ASSEMBLY**
    a. Fully tighten the bolt (rear side).

    Torque: 80 N*m (816 kgf*cm, 59 ft.*lbf)

    NOTE: Since a stopper nut is used, fully tighten the bolt.

    b. Fully tighten the 2 bolts (front side).

    Torque: 85 N*m (867 kgf*cm, 63 ft.*lbf)

4. **CONNECT NO. 3 PARKING BRAKE CABLE ASSEMBLY**
    a. Connect the No. 3 parking brake cable assembly with the bolt.

Torque: 6.0 N*m (61 kgf*cm, 53 in.*lbf)

5. **INSTALL REAR WHEEL**

   Torque: 103 N*m (1049 kgf*cm, 76 ft.*lbf)

REAR STABILIZER BAR

COMPONENTS

ILLUSTRATION

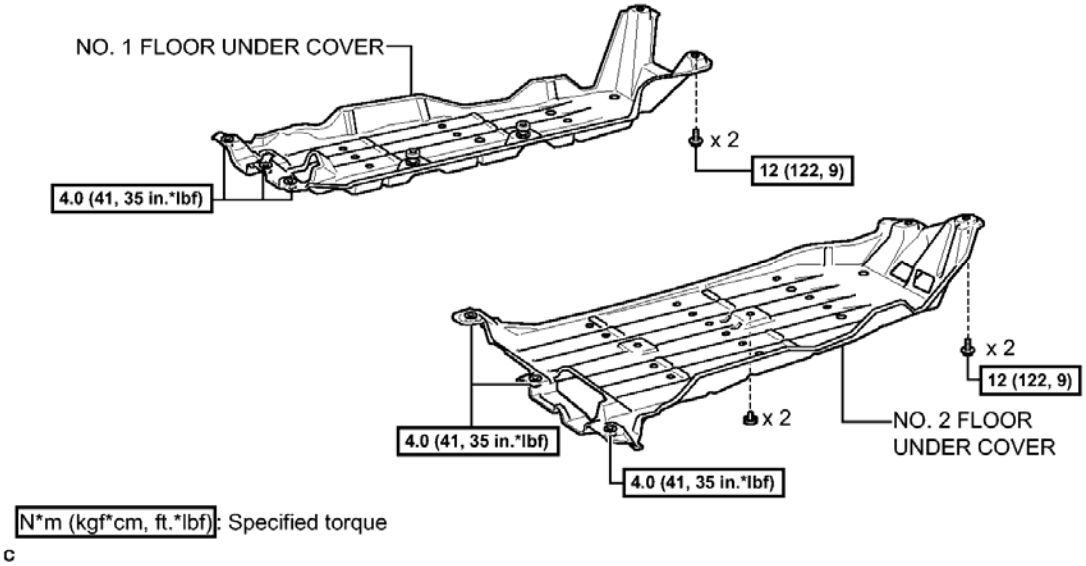
NO. 1 FLOOR UNDER COVER
x 2
12 (122, 9)
4.0 (41, 35 in.*lbf)
x 2
12 (122, 9)
4.0 (41, 35 in.*lbf)
x 2
NO. 2 FLOOR UNDER COVER
4.0 (41, 35 in.*lbf)
N*m (kgf*cm, ft.*lbf): Specified torque
c

Fig. 37: Identifying Rear Stabilizer Bar Replacement Components With Torque Specifications (1 Of 2)
Courtesy of TOYOTA MOTOR SALES, U.S.A., INC.

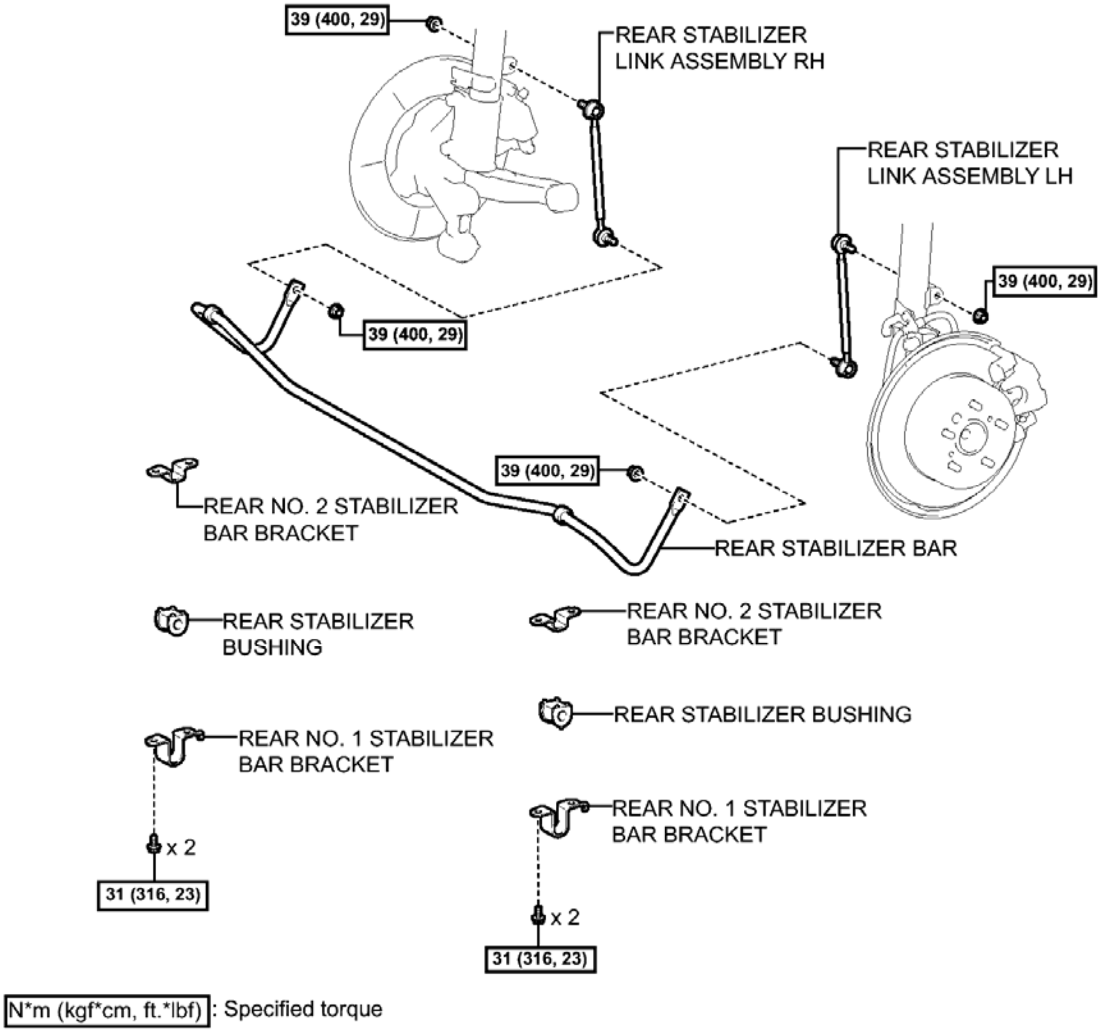
39 (400, 29)
REAR STABILIZER LINK ASSEMBLY RH
REAR STABILIZER LINK ASSEMBLY LH
39 (400, 29)
39 (400, 29)
39 (400, 29)
REAR NO. 2 STABILIZER BAR BRACKET
REAR STABILIZER BAR
REAR STABILIZER BUSHING
REAR NO. 2 STABILIZER BAR BRACKET
REAR STABILIZER BUSHING
REAR NO. 1 STABILIZER BAR BRACKET
REAR NO. 1 STABILIZER BAR BRACKET
x 2
31 (316, 23)
x 2
31 (316, 23)
N*m (kgf*cm, ft.*lbf) : Specified torque
c

Fig. 38: Identifying Rear Stabilizer Bar Replacement Components With Torque Specifications (2 Of 2)
Courtesy of TOYOTA MOTOR SALES, U.S.A., INC.

REMOVAL

REMOVAL

1. **REMOVE REAR WHEELS**
2. **REMOVE NO. 2 FLOOR UNDER COVER**
    a. Remove the 2 bolts and 2 clips.

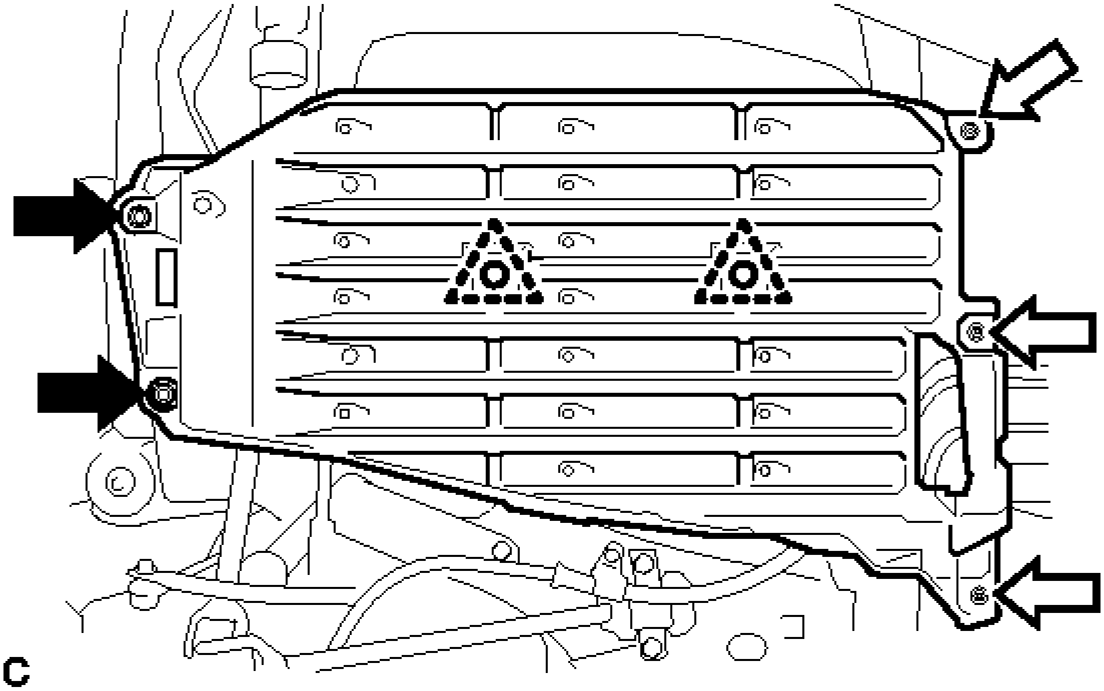

Fig. 39: Identifying No. 2 Floor Under Cover Bolts And Clips
Courtesy of TOYOTA MOTOR SALES, U.S.A., INC.

TEXT IN ILLUSTRATION

	Bolt
	Nut (attached to under cover)

b. Disengage the 3 nuts and remove the No. 2 floor under cover.

3. **REMOVE NO. 1 FLOOR UNDER COVER**
    a. Remove the 2 bolts.

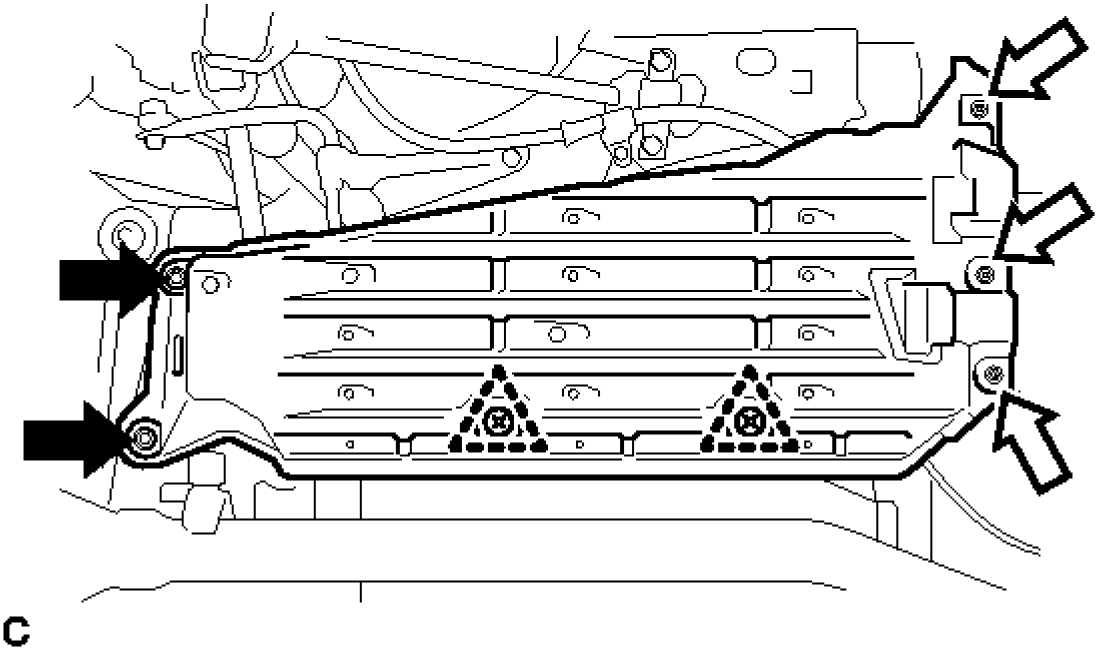

Fig. 40: Identifying No. 1 Floor Under Cover Nuts And Clips
Courtesy of TOYOTA MOTOR SALES, U.S.A., INC.

TEXT IN ILLUSTRATION

	Bolt
	Nut (attached to under cover)

b. Disengage the 3 nuts and 2 clips, and remove the No. 1 floor under cover.

4. **REMOVE REAR STABILIZER LINK ASSEMBLY LH**

   a. Remove the nut and separate the rear stabilizer link assembly LH from the rear shock absorber with coil spring.

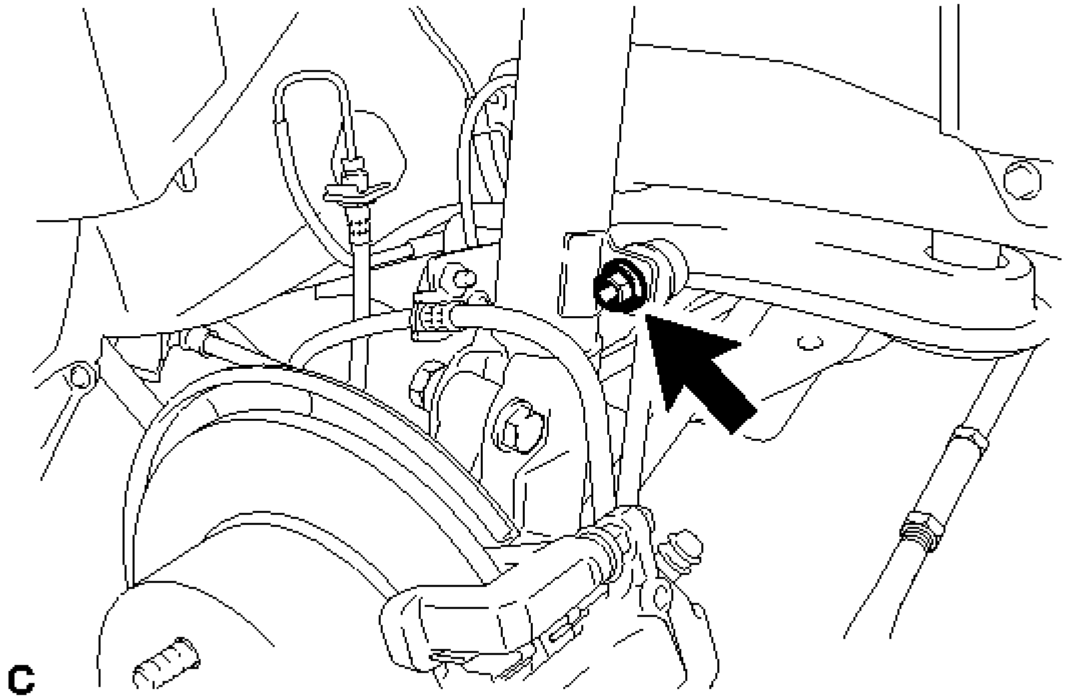

Fig. 41: Identifying Rear Stabilizer Link Assembly LH Nut
Courtesy of TOYOTA MOTOR SALES, U.S.A., INC.

If the ball joint turns together with the nut, use a hexagon wrench to hold the stud.

b. Remove the nut and rear stabilizer link assembly LH from the rear stabilizer bar.

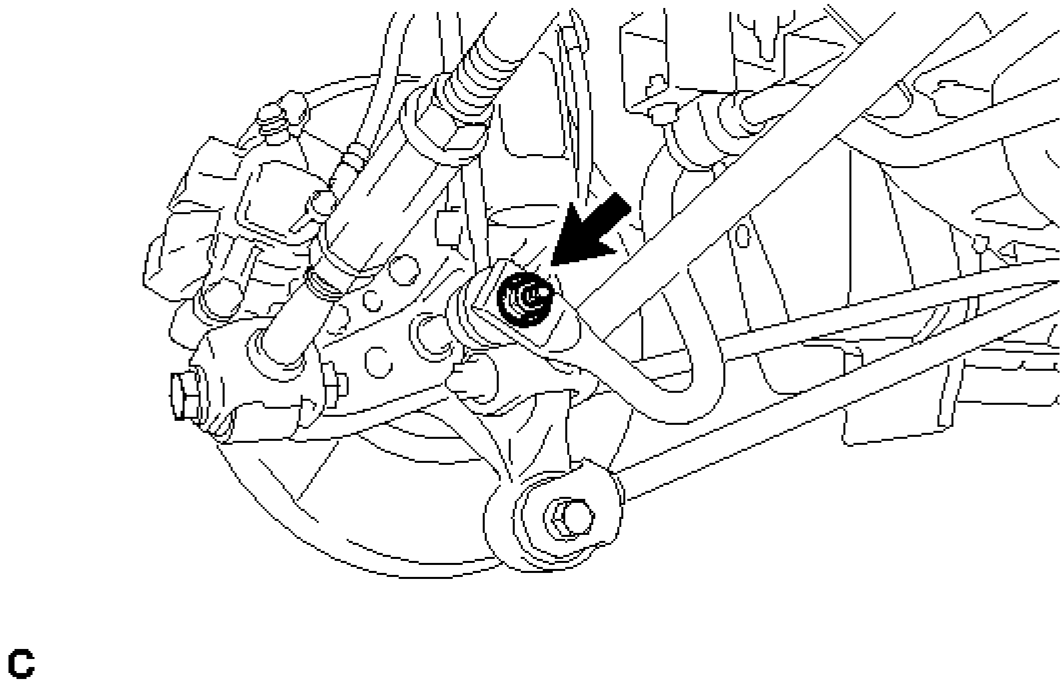

Fig. 42: Identifying Rear Stabilizer Link Assembly LH Nut
Courtesy of TOYOTA MOTOR SALES, U.S.A., INC.

If the ball joint turns together with the nut, use a hexagon wrench to hold the stud.

5. **REMOVE REAR STABILIZER LINK ASSEMBLY RH**

   HINT:

   Perform the same procedure as for the LH side.

6. **REMOVE REAR STABILIZER BAR**
   1. Remove the 4 bolts, rear stabilizer bar, 2 rear No. 1 stabilizer bar brackets, 2 rear No. 2 stabilizer bar brackets and 2 rear stabilizer bushings from the rear suspension member sub-assembly.

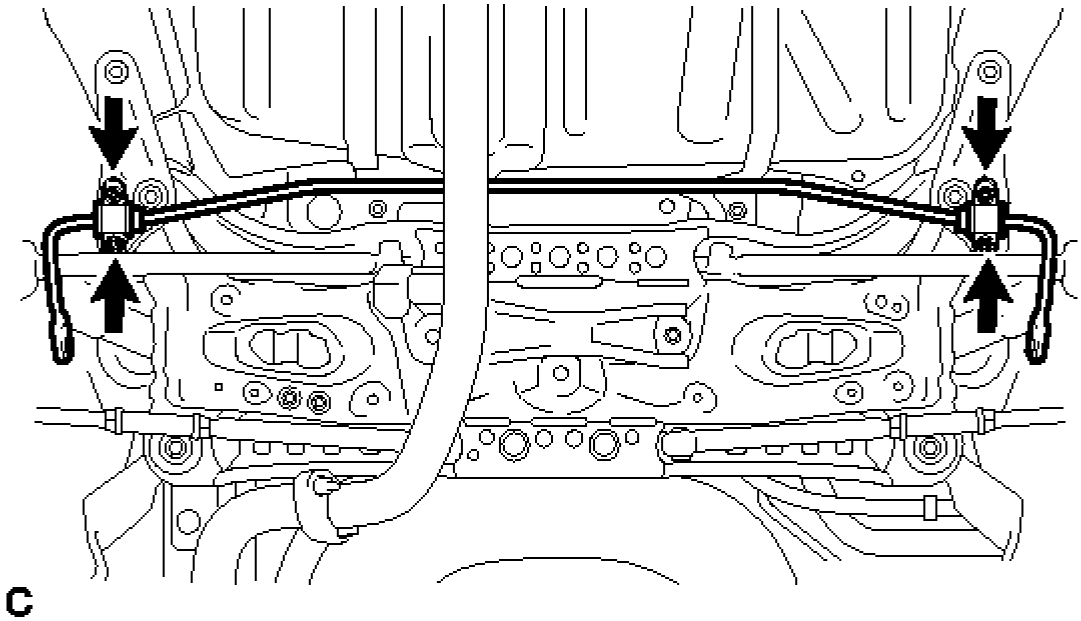

Fig. 43: Removing Rear Stabilizer Bar
Courtesy of TOYOTA MOTOR SALES, U.S.A., INC.

7. **REMOVE REAR NO. 2 STABILIZER BAR BRACKET**
   1. Remove the 2 rear No. 2 stabilizer bar brackets from the rear stabilizer bar.
8. **REMOVE REAR NO. 1 STABILIZER BAR BRACKET**
   1. Remove the 2 rear No. 1 stabilizer bar brackets from the rear stabilizer bar.
9. **REMOVE REAR STABILIZER BUSHING**
   1. Remove the 2 rear stabilizer bushings from the rear stabilizer bar.

INSPECTION

INSPECTION

1. **INSPECT REAR STABILIZER LINK ASSEMBLY**
   a. Inspect the turning torque of the ball joint.

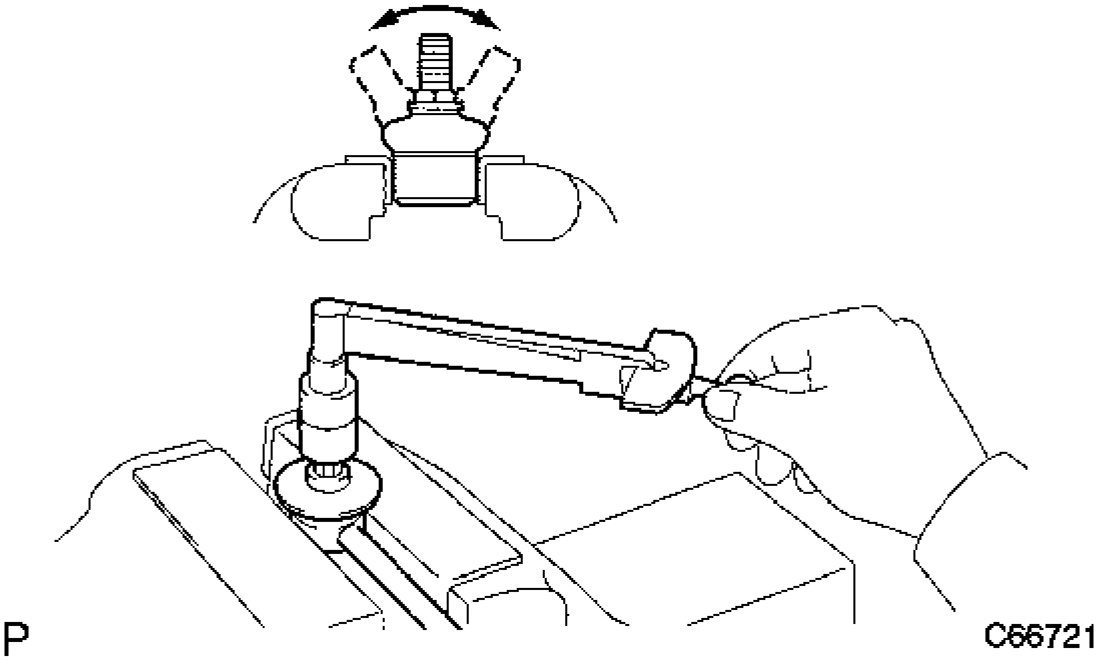

Fig. 44: Inspecting Front Stabilizer Link Assembly
Courtesy of TOYOTA MOTOR SALES, U.S.A., INC.

1. Secure the rear stabilizer link assembly in a vise using aluminum plates.
2. Install the nut to the rear stabilizer link assembly stud.
3. Using a torque wrench, turn the stud continuously at a rate of 3 to 5 seconds per turn and take the torque reading on the 5th turn.

   Turning torque

   0.05 to 1.0 N*m (0.5 to 10 kgf*cm, 0.4 to 8.7 in.*lbf)

   If the turning torque is not within the specified range, replace the rear stabilizer link assembly with a new one.

b. Inspect the dust cover.
   1. Check that the dust cover is not cracked and that there is no grease on it.

      If there is any abnormality, replace the rear stabilizer link assembly with a new one.

INSTALLATION

INSTALLATION

1. **INSTALL REAR STABILIZER BUSHING (for LH Side)**
   a. Install the rear stabilizer bushing to the outside of the stopper ring on the rear stabilizer bar as shown in the illustration.

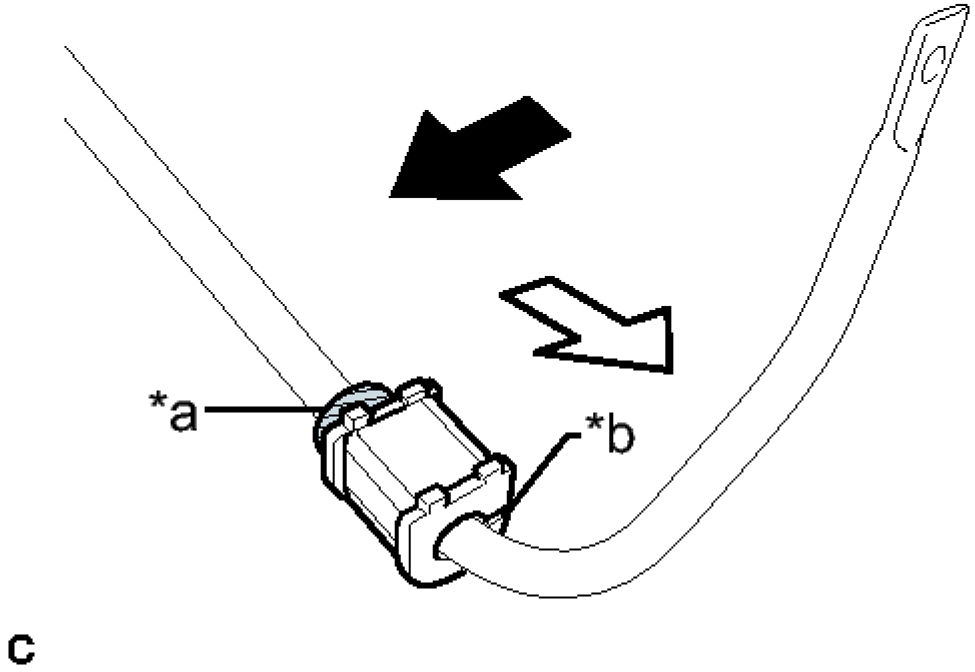

Fig. 45: Identifying Rear Stabilizer Bushing
Courtesy of TOYOTA MOTOR SALES, U.S.A., INC.

TEXT IN ILLUSTRATION

*a	Stopper Ring
*b	Cutout
	Front of the Vehicle
	Outside of the Vehicle

NOTE: **Install the rear stabilizer bushing so that the cutout face rearward.**

2. **INSTALL REAR STABILIZER BUSHING (for RH Side)**

   HINT:

Perform the same procedure as for the LH side.

3. **INSTALL REAR NO. 1 STABILIZER BAR BRACKET (for LH Side)**
   1. Install the rear No. 1 stabilizer bar bracket to the rear stabilizer bar.

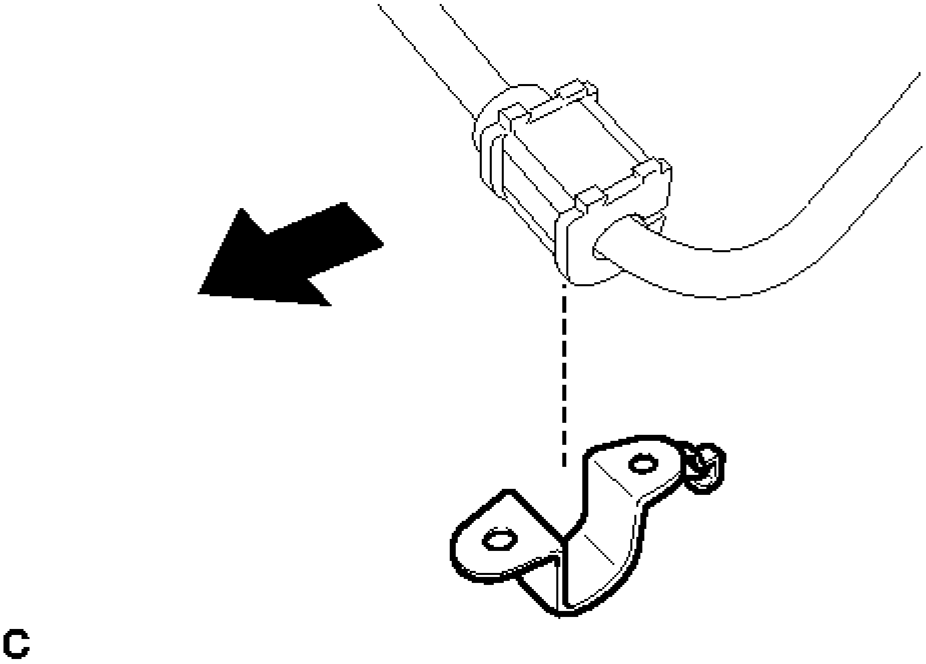

Fig. 46: Identifying Rear No. 1 Stabilizer Bar Bracket
Courtesy of TOYOTA MOTOR SALES, U.S.A., INC.

TEXT IN ILLUSTRATION

	Front of the Vehicle

NOTE: **Be sure to install the rear No. 1 stabilizer bar bracket in the correct direction.**

4. **INSTALL REAR NO. 1 STABILIZER BAR BRACKET (for RH Side)**

HINT:

Perform the same procedure as for the LH side.

5. **INSTALL REAR NO. 2 STABILIZER BAR BRACKET (for LH Side)**
   1. Install the rear No. 2 stabilizer bar bracket to the rear stabilizer bar.

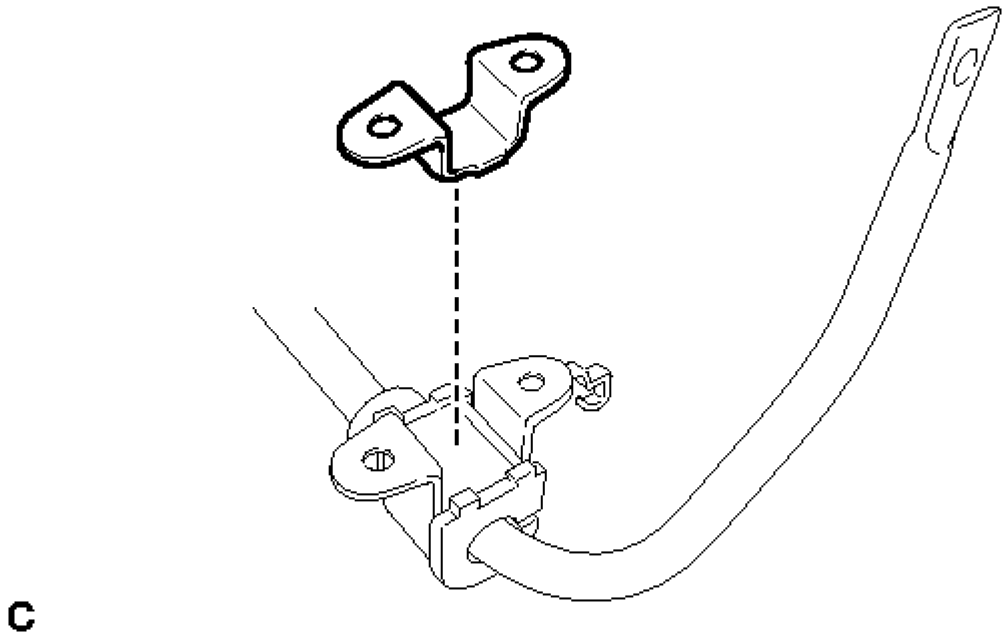

Fig. 47: Identifying Rear No. 2 Stabilizer Bar Bracket
Courtesy of TOYOTA MOTOR SALES, U.S.A., INC.

6. **INSTALL REAR NO. 2 STABILIZER BAR BRACKET (for RH Side)**

   HINT:

   Perform the same procedure as for the LH side.

7. **INSTALL REAR STABILIZER BAR**
   a. Install the rear stabilizer bar with the 4 bolts.

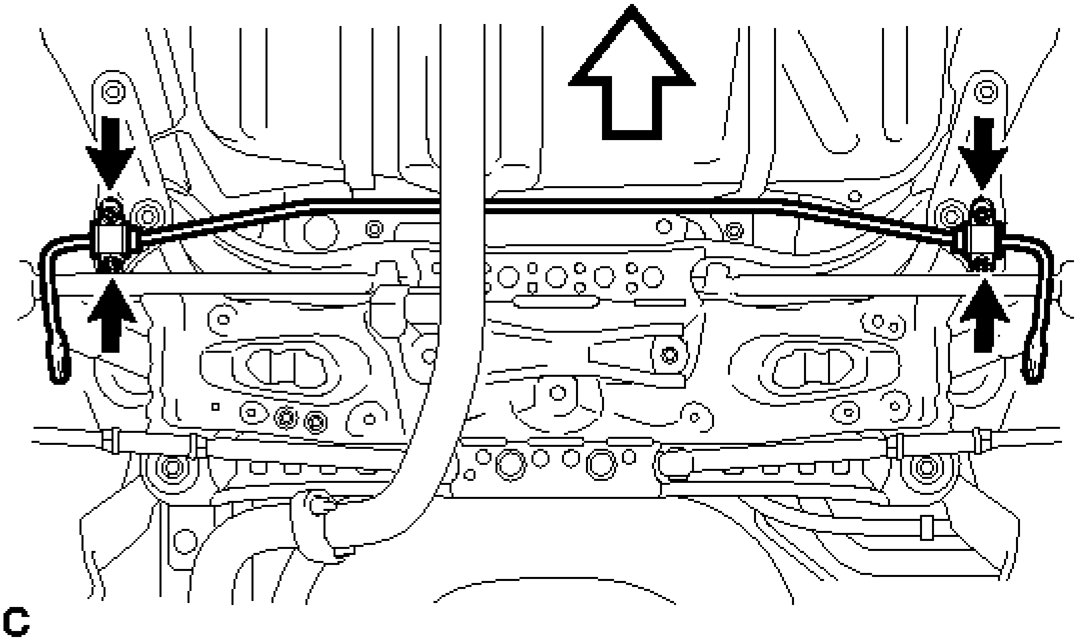

Fig. 48: Installing Rear Stabilizer Bar
Courtesy of TOYOTA MOTOR SALES, U.S.A., INC.

TEXT IN ILLUSTRATION

	Bolt
	Front of the Vehicle

Torque: 31 N*m (316 kgf*cm, 23 ft.*lbf)

8. **INSTALL REAR STABILIZER LINK ASSEMBLY LH**
    a. Install the rear stabilizer link assembly LH to the rear shock absorber with coil spring with the nut.

    Torque: 39 N*m (400 kgf*cm, 29 ft.*lbf)

    If the ball joint turns together with the nut, use a hexagon wrench to hold the stud.

    b. Install the rear stabilizer link assembly LH to the rear stabilizer bar with the nut.

    Torque: 39 N*m (400 kgf*cm, 29 ft.*lbf)

    If the ball joint turns together with the nut, use a hexagon wrench to hold the stud.

9. **INSTALL REAR STABILIZER LINK ASSEMBLY RH**

HINT:

Perform the same procedure as for the LH side.

10. **INSTALL NO. 2 FLOOR UNDER COVER**
    a. Install the No. 2 floor under cover with the 2 bolts, 3 nuts and 2 clips.

       Bolt

       Torque: 12 N*m (122 kgf*cm, 9 ft.*lbf)

       Nut

       Torque: 4.0 N*m (41 kgf*cm, 35 in.*lbf)

11. **INSTALL NO. 1 FLOOR UNDER COVER**
    a. Install the No. 1 floor under cover with the 2 bolts, 3 nuts and 2 clips.

       Bolt

       Torque: 12 N*m (122 kgf*cm, 9 ft.*lbf)

       Nut

       Torque: 4.0 N*m (41 kgf*cm, 35 in.*lbf)

12. **INSTALL REAR WHEELS**

    Torque: 103 N*m (1049 kgf*cm, 76 ft.*lbf)

REAR SUSPENSION MEMBER

COMPONENTS

ILLUSTRATION

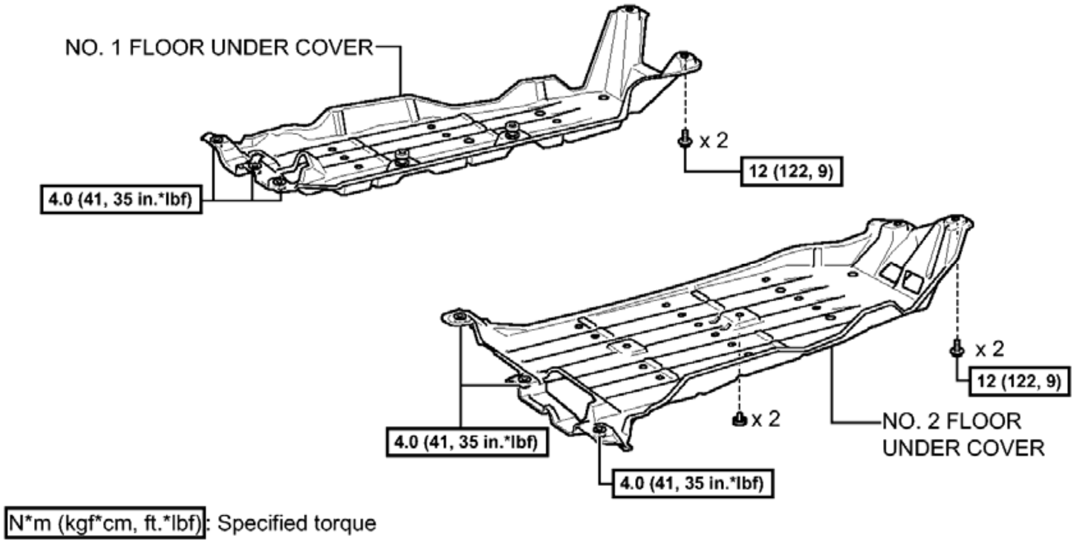
NO. 1 FLOOR UNDER COVER
x 2
12 (122, 9)
4.0 (41, 35 in.*lbf)
x 2
12 (122, 9)
x 2
NO. 2 FLOOR UNDER COVER
4.0 (41, 35 in.*lbf)
4.0 (41, 35 in.*lbf)
N*m (kgf*cm, ft.*lbf): Specified torque
c

Fig. 49: Identifying Rear Suspension Member Replacement Components With Torque Specifications (1 Of 5)

Courtesy of TOYOTA MOTOR SALES, U.S.A., INC.

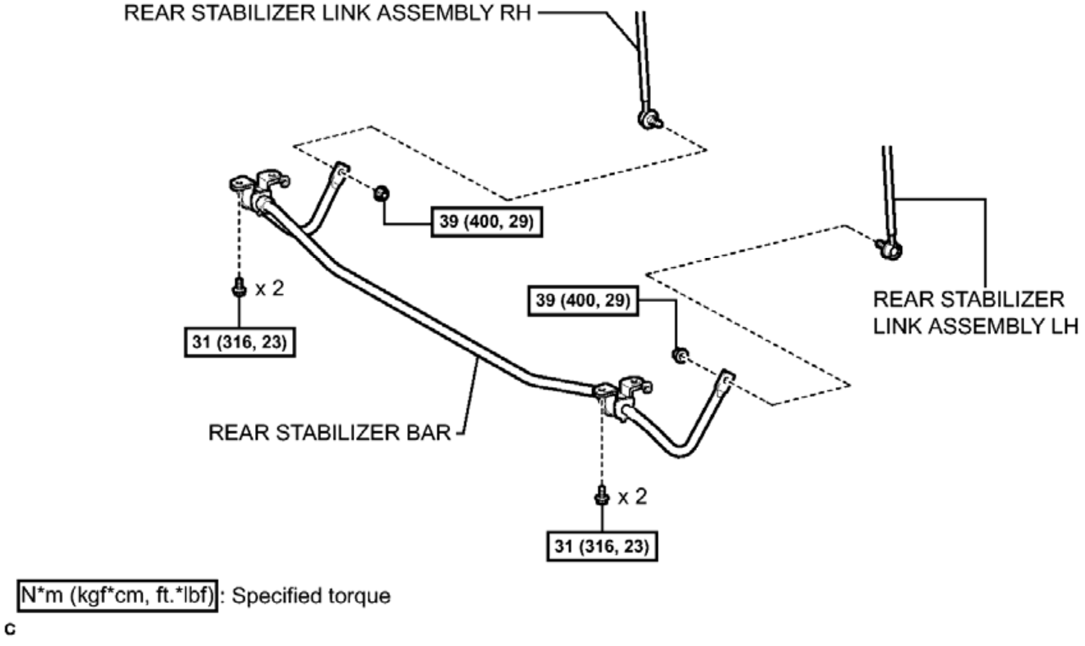
REAR STABILIZER LINK ASSEMBLY RH
39 (400, 29)
x 2
31 (316, 23)
39 (400, 29)
REAR STABILIZER LINK ASSEMBLY LH
REAR STABILIZER BAR
x 2
31 (316, 23)
N*m (kgf*cm, ft.*lbf): Specified torque
c

Fig. 50: Identifying Rear Suspension Member Replacement Components With Torque Specifications (2 Of 5)

Courtesy of TOYOTA MOTOR SALES, U.S.A., INC.

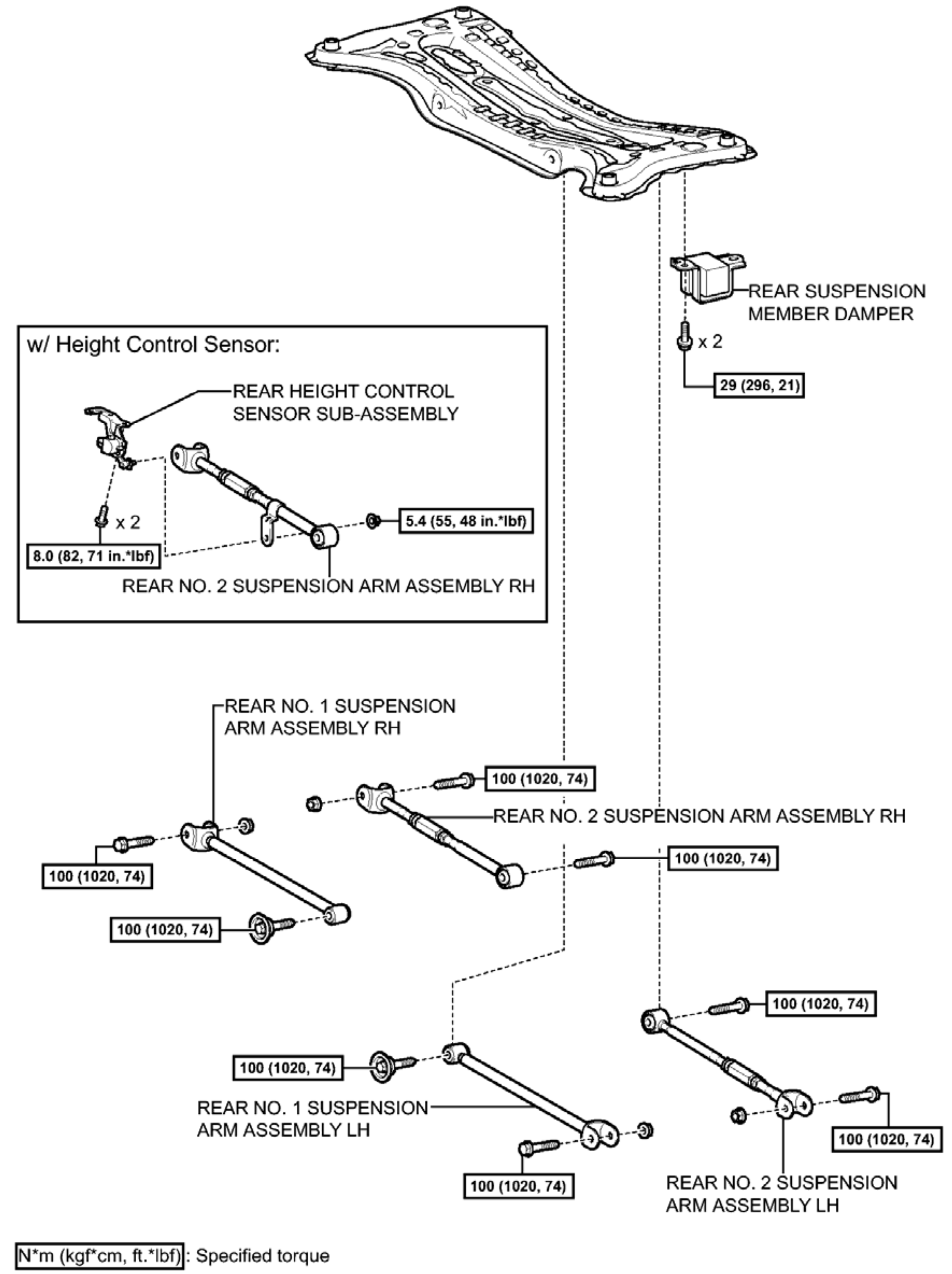
REAR SUSPENSION MEMBER DAMPER
x 2
29 (296, 21)
w/ Height Control Sensor:
REAR HEIGHT CONTROL SENSOR SUB-ASSEMBLY
x 2
5.4 (55, 48 in.*lbf)
8.0 (82, 71 in.*lbf)
REAR NO. 2 SUSPENSION ARM ASSEMBLY RH
REAR NO. 1 SUSPENSION ARM ASSEMBLY RH
100 (1020, 74)
REAR NO. 2 SUSPENSION ARM ASSEMBLY RH
100 (1020, 74)
100 (1020, 74)
100 (1020, 74)
100 (1020, 74)
100 (1020, 74)
REAR NO. 1 SUSPENSION ARM ASSEMBLY LH
100 (1020, 74)
100 (1020, 74)
REAR NO. 2 SUSPENSION ARM ASSEMBLY LH
N*m (kgf*cm, ft.*lbf): Specified torque
C

Fig. 51: Identifying Rear Suspension Member Replacement Components With Torque Specifications (3 Of 5)

Courtesy of TOYOTA MOTOR SALES, U.S.A., INC.

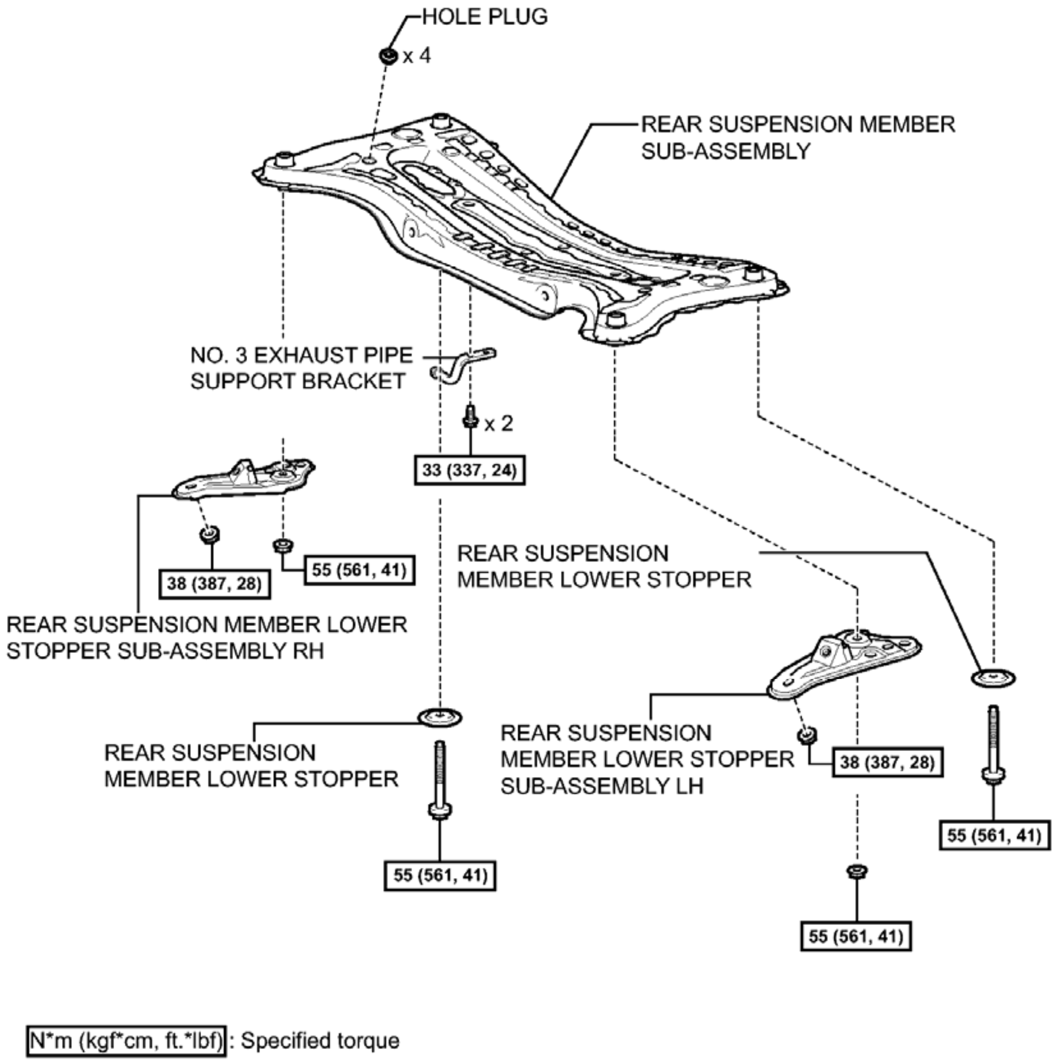
HOLE PLUG
x 4
REAR SUSPENSION MEMBER SUB-ASSEMBLY
NO. 3 EXHAUST PIPE SUPPORT BRACKET
x 2
33 (337, 24)
55 (561, 41)
38 (387, 28)
REAR SUSPENSION MEMBER LOWER STOPPER SUB-ASSEMBLY RH
REAR SUSPENSION MEMBER LOWER STOPPER
REAR SUSPENSION MEMBER LOWER STOPPER
55 (561, 41)
REAR SUSPENSION MEMBER LOWER STOPPER SUB-ASSEMBLY LH
38 (387, 28)
55 (561, 41)
55 (561, 41)
N*m (kgf*cm, ft.*lbf): Specified torque

c

Fig. 52: Identifying Rear Suspension Member Replacement Components With Torque Specifications (4 Of 5)

Courtesy of TOYOTA MOTOR SALES, U.S.A., INC.

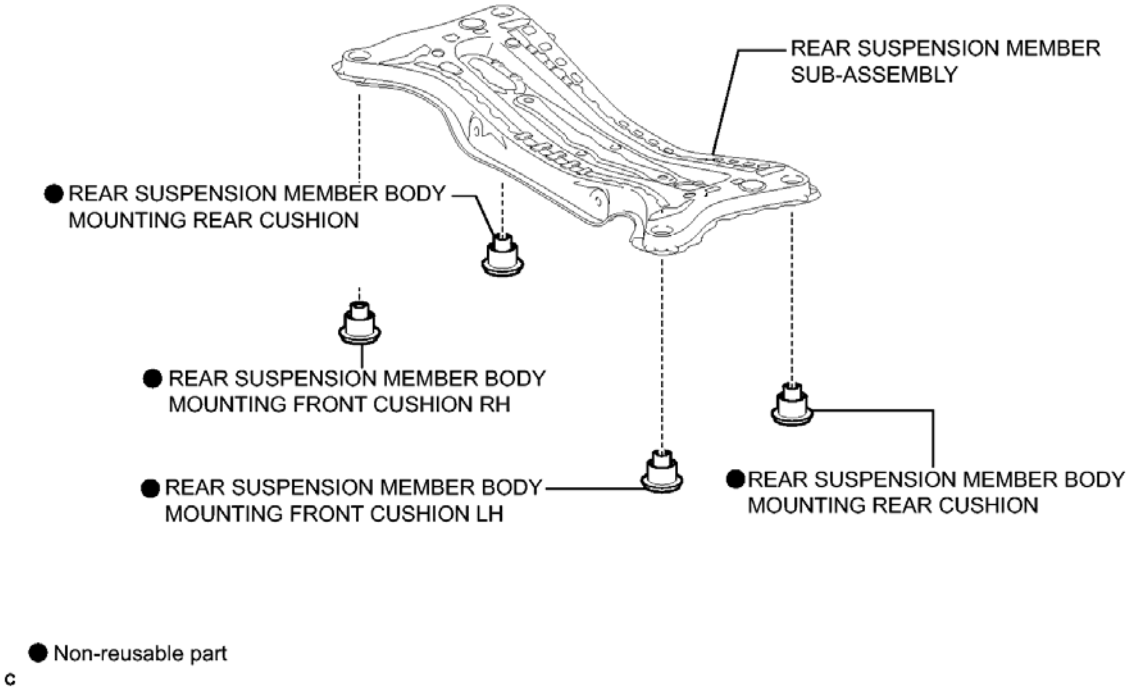
REAR SUSPENSION MEMBER SUB-ASSEMBLY
● REAR SUSPENSION MEMBER BODY MOUNTING REAR CUSHION
● REAR SUSPENSION MEMBER BODY MOUNTING FRONT CUSHION RH
● REAR SUSPENSION MEMBER BODY MOUNTING FRONT CUSHION LH
● REAR SUSPENSION MEMBER BODY MOUNTING REAR CUSHION
● Non-reusable part
c

Fig. 53: Identifying Rear Suspension Member Replacement Components (5 Of 5)
Courtesy of TOYOTA MOTOR SALES, U.S.A., INC.

REMOVAL

REMOVAL

1. **REMOVE REAR WHEELS**
2. **REMOVE CENTER EXHAUST PIPE ASSEMBLY**

   Refer to **REMOVAL**

3. **REMOVE NO. 2 FLOOR UNDER COVER** See step 2
4. **REMOVE NO. 1 FLOOR UNDER COVER** See step 3
5. **REMOVE NO. 3 EXHAUST PIPE SUPPORT BRACKET**
   a. Remove the 2 bolts and No. 3 exhaust pipe support bracket from the rear suspension member sub-assembly.

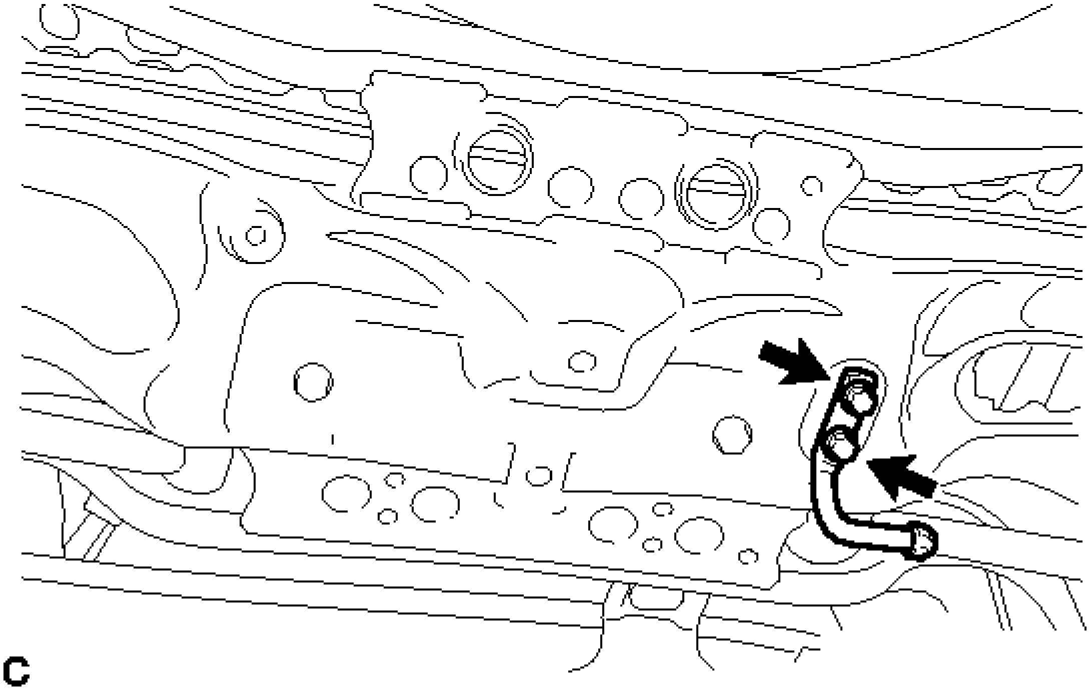

Fig. 54: Identifying No. 3 Exhaust Pipe Support Bracket Bolts
Courtesy of TOYOTA MOTOR SALES, U.S.A., INC.

6. **REMOVE REAR SUSPENSION MEMBER DAMPER**
   a. Remove the 2 bolts and rear suspension member damper from the rear suspension member sub-assembly.

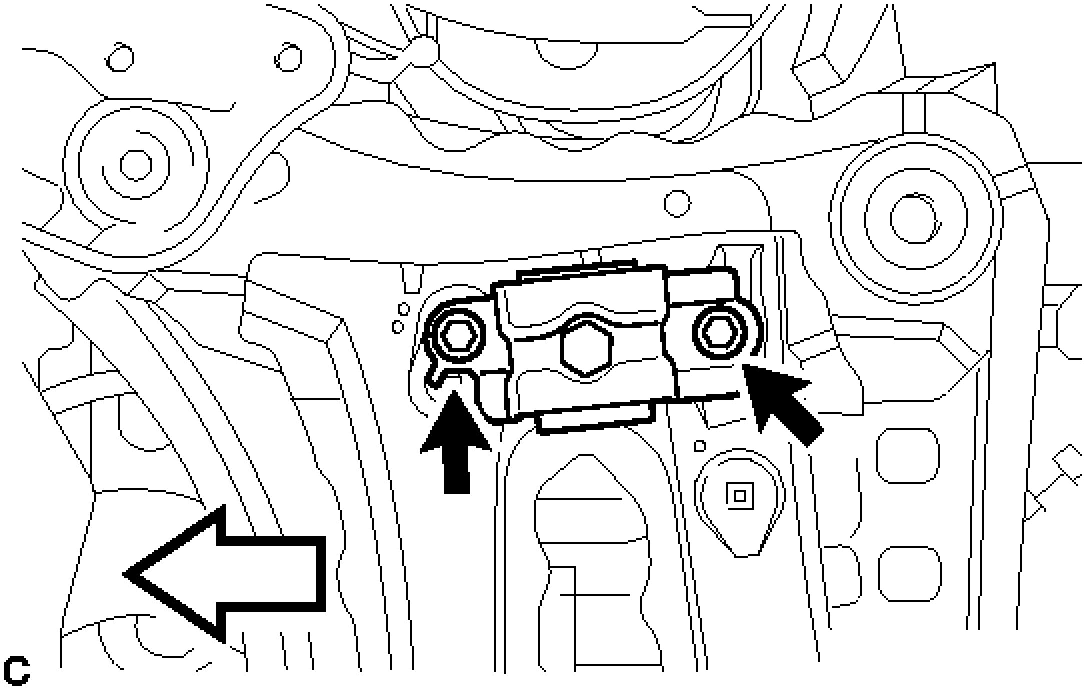

Fig. 55: Identifying Rear Suspension Member Damper Bolts
Courtesy of TOYOTA MOTOR SALES, U.S.A., INC.

TEXT IN ILLUSTRATION

	Front of the Vehicle

7. **SEPARATE REAR STABILIZER LINK ASSEMBLY LH**
    a. Remove the nut and separate the rear stabilizer link assembly LH from the rear stabilizer bar.

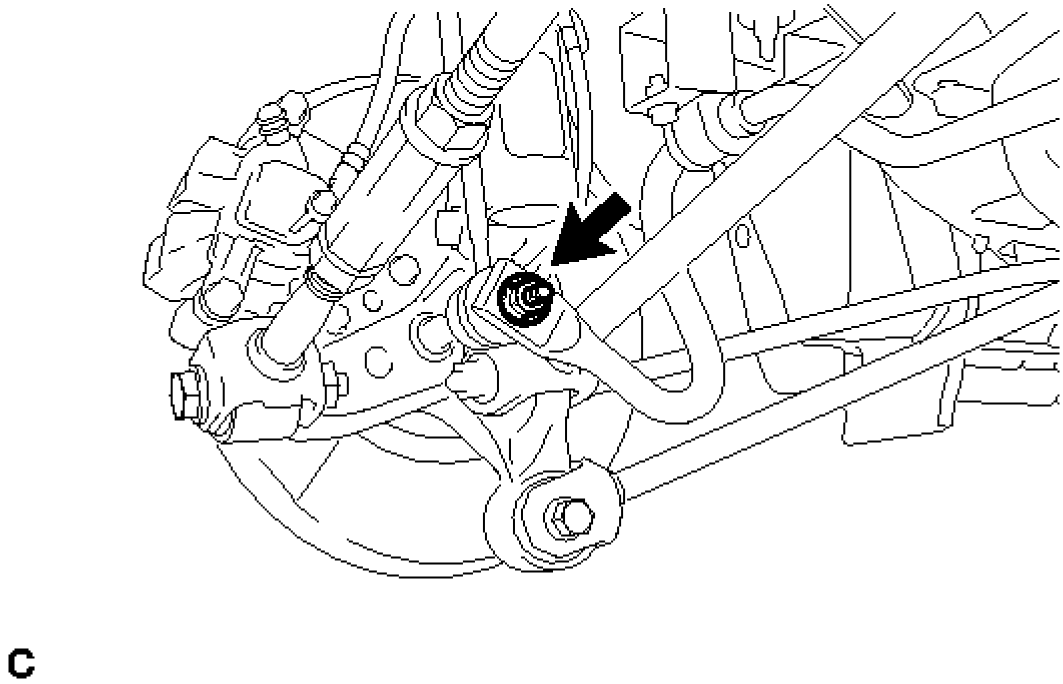

Fig. 56: Identifying Rear Stabilizer Link Assembly LH Nut
Courtesy of TOYOTA MOTOR SALES, U.S.A., INC.

If the ball joint turns together with the nut, use a hexagon wrench to hold the stud.

8. **SEPARATE REAR STABILIZER LINK ASSEMBLY RH**

    HINT:

    Perform the same procedure as for the LH side.

9. **REMOVE REAR STABILIZER BAR** See step 6
10. **REMOVE REAR HEIGHT CONTROL SENSOR SUB-ASSEMBLY (w/ Height Control Sensor)**

    Refer to **REMOVAL**

11. **SEPARATE REAR NO. 2 SUSPENSION ARM ASSEMBLY LH** See step 3
12. **SEPARATE REAR NO. 2 SUSPENSION ARM ASSEMBLY RH**

    HINT:

    Perform the same procedure as for the LH side.

13. **REMOVE REAR NO. 2 SUSPENSION ARM ASSEMBLY LH** See step 4
14. **REMOVE REAR NO. 2 SUSPENSION ARM ASSEMBLY RH**

    HINT:

    Perform the same procedure as for the LH side.

15. **SEPARATE REAR NO. 1 SUSPENSION ARM ASSEMBLY LH** . Refer to **REMOVAL - Step 12**
16. **SEPARATE REAR NO. 1 SUSPENSION ARM ASSEMBLY RH**

    HINT:

    Perform the same procedure as for the LH side.

17. **REMOVE REAR SUSPENSION MEMBER SUB-ASSEMBLY**
    1. Support the rear suspension member sub-assembly with an engine lifter using 4 attachments or equivalent tools as shown in the illustration.

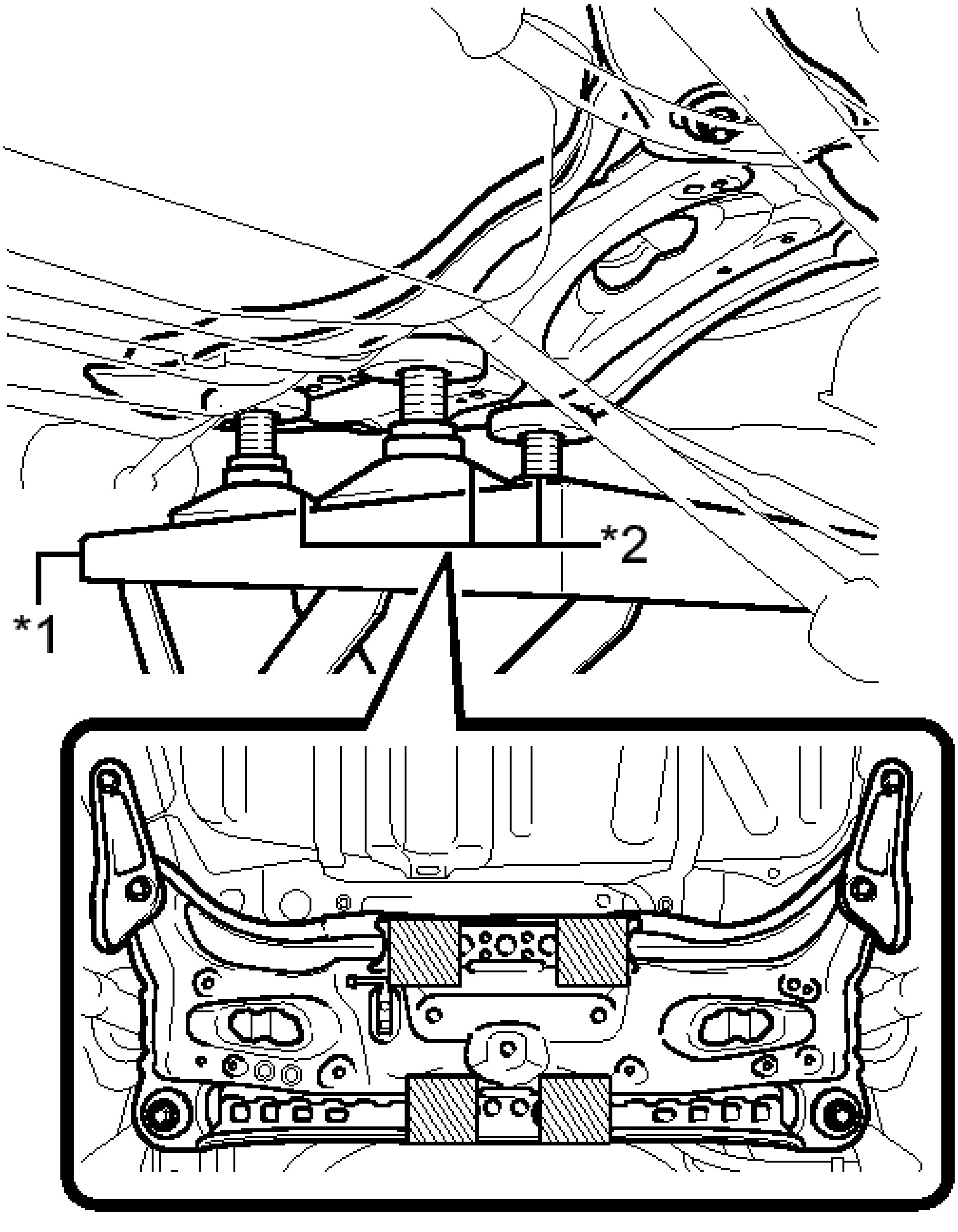

c

Fig. 57: Identifying Rear Suspension Member Sub-Assembly Lifting Points
Courtesy of TOYOTA MOTOR SALES, U.S.A., INC.

TEXT IN ILLUSTRATION

	Engine

*1	Lifter
*2	Attachment
	Attachment Placement Location

NOTE:

- **Make sure to secure the rear suspension member sub-assembly to prevent it from dropping.**
- **Use the attachments to keep the rear suspension member sub-assembly level.**

b. Remove the 2 bolts, 4 nuts, 2 rear suspension member lower stopper sub-assemblies and 2 rear suspension member lower stoppers.

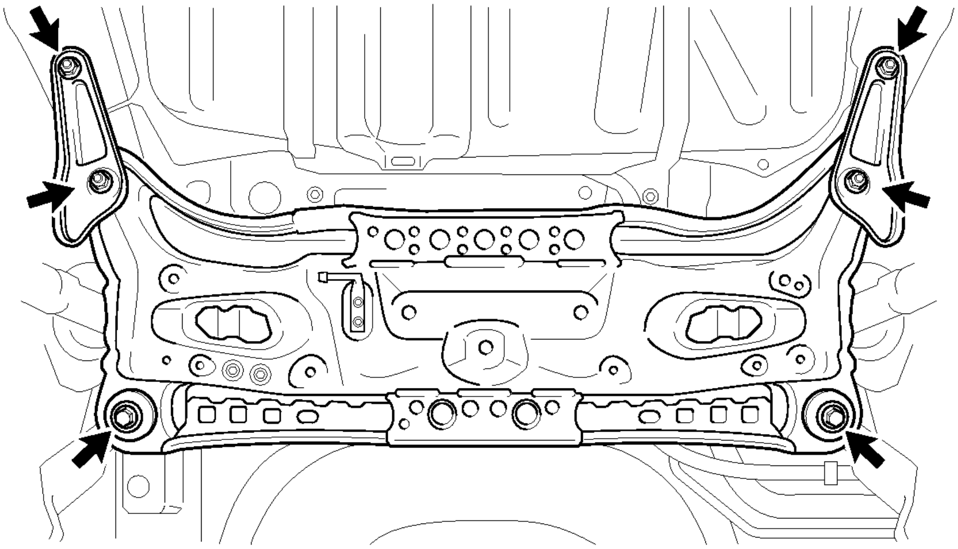

Fig. 58: Identifying Rear Suspension Member Lower Stopper Sub-Assemblies Bolts And Nuts
Courtesy of TOYOTA MOTOR SALES, U.S.A., INC.

c. Slowly lower the rear suspension member sub-assembly.

NOTE: **When lowering the rear suspension member sub-assembly, be careful not to damage the vehicle body or other components installed on the vehicle.**

18. **REMOVE REAR NO. 1 SUSPENSION ARM ASSEMBLY LH** See step 6
19. **REMOVE REAR NO. 1 SUSPENSION ARM ASSEMBLY RH**

HINT:

Perform the same procedure as for the LH side.

20. **REMOVE REAR SUSPENSION MEMBER BODY MOUNTING FRONT CUSHION LH**
    a. Using SST and a press, remove the rear suspension member body mounting front cushion LH from the rear suspension member sub-assembly.

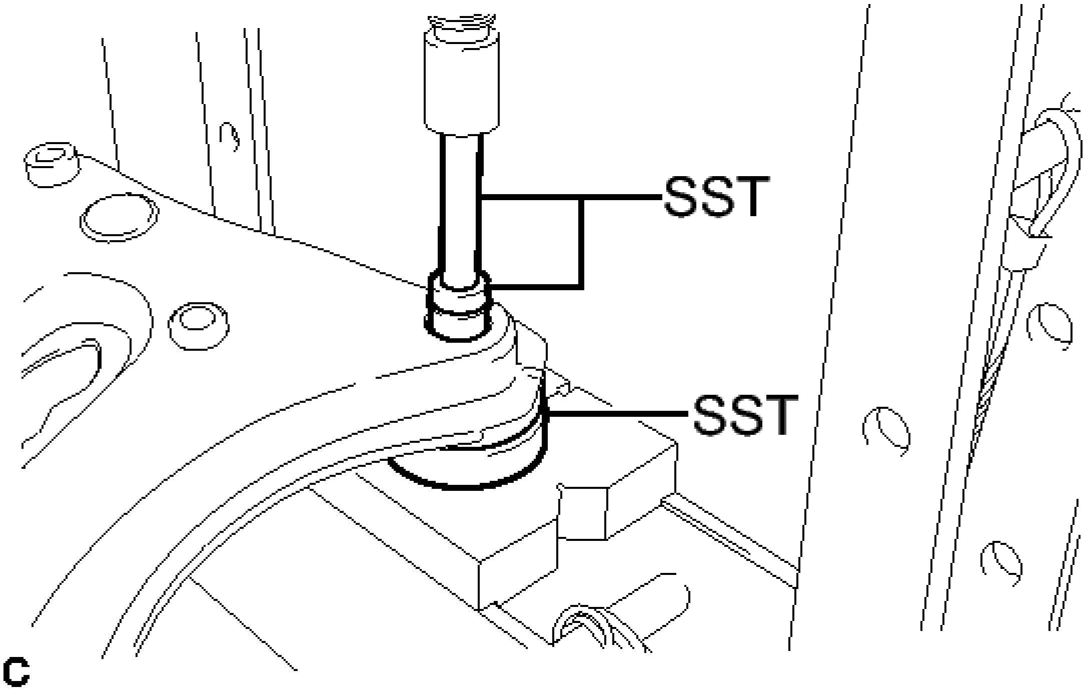

Fig. 59: Removing Rear Suspension Member Body Mounting Front Cushion LH
Courtesy of TOYOTA MOTOR SALES, U.S.A., INC.

- **SST: 09527-17011**
- **SST: 09950-60010**
  09951-00340
- **SST: 09950-70010**
  09951-07100

21. **REMOVE REAR SUSPENSION MEMBER BODY MOUNTING FRONT CUSHION RH**

HINT:

Perform the same procedure as the LH side.

22. **REMOVE REAR SUSPENSION MEMBER BODY MOUNTING REAR CUSHION (for LH Side)**
    a. Using SST and a press, remove the rear suspension member body mounting rear cushion from the rear suspension member sub-assembly.

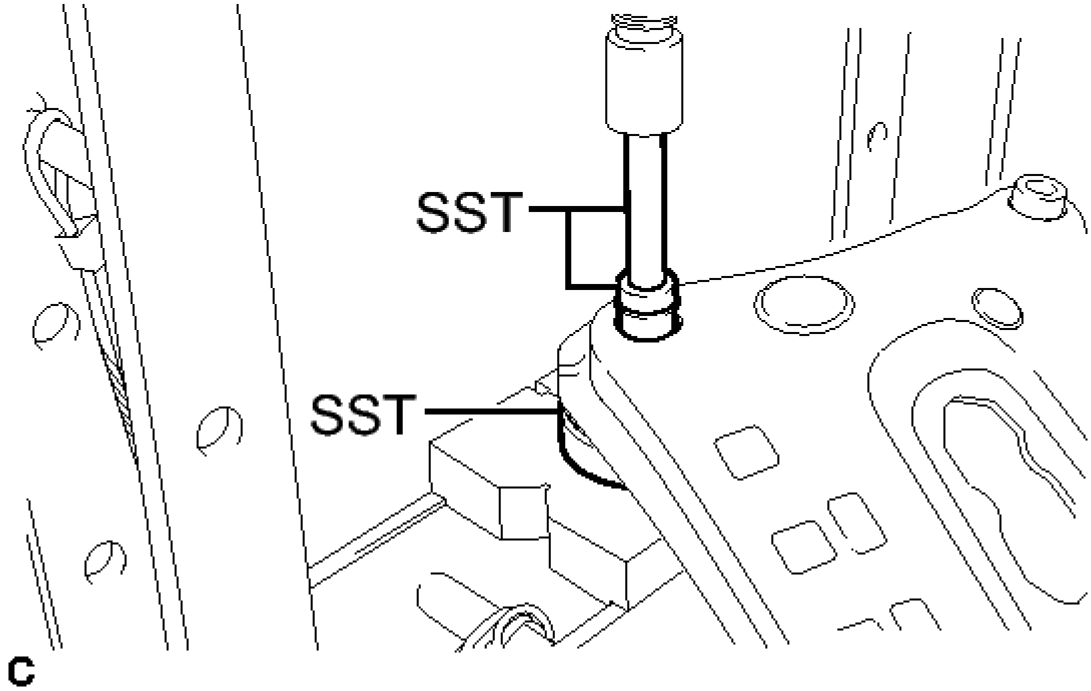

Fig. 60: Removing Rear Suspension Member Body Mounting Rear Cushion LH
Courtesy of TOYOTA MOTOR SALES, U.S.A., INC.

- **SST: 09527-17011**
- **SST: 09950-60010**
  09951-00340
- **SST: 09950-70010**
  09951-07100

23. **REMOVE REAR SUSPENSION MEMBER BODY MOUNTING REAR CUSHION (for RH Side)**

    HINT:

    Perform the same procedure as the LH side.

24. **REMOVE HOLE PLUG**
    a. Remove the 4 hole plugs from the rear suspension member sub-assembly.

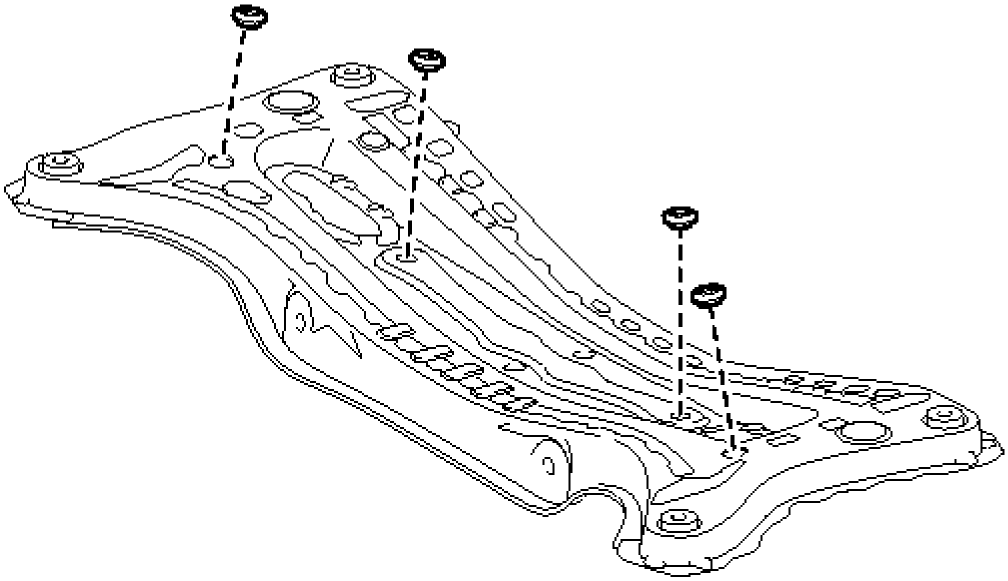

Fig. 61: Identifying Rear Suspension Member Sub-Assembly Hole Plugs
Courtesy of TOYOTA MOTOR SALES, U.S.A., INC.

INSTALLATION

INSTALLATION

1. **INSTALL HOLE PLUG**
   1. Install the 4 hole plugs to the rear suspension member sub-assembly.
2. **INSTALL REAR SUSPENSION MEMBER BODY MOUNTING FRONT CUSHION LH**
   1. Temporarily install a new rear suspension member body mounting front cushion LH to the position shown in the illustration.

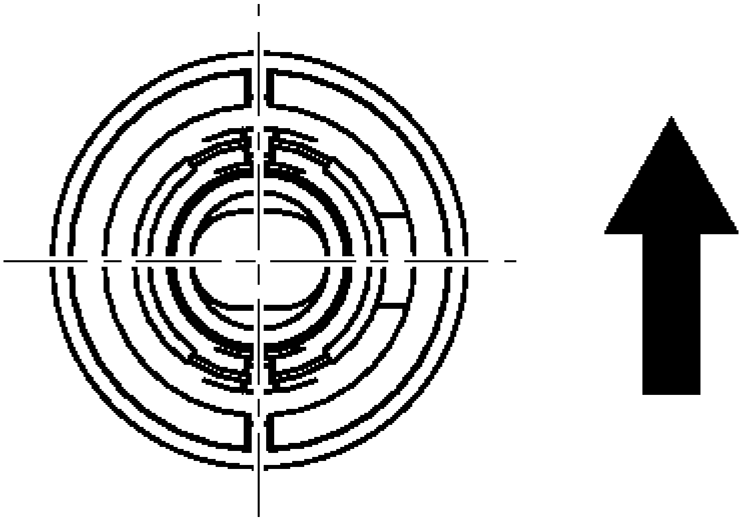

Fig. 62: Identifying Rear Suspension Member Body Mounting Front Cushion LH
Courtesy of TOYOTA MOTOR SALES, U.S.A., INC.

TEXT IN ILLUSTRATION

	Front of the Vehicle

b. Using SST and a press, install the rear suspension member body mounting front cushion LH to the rear suspension member sub-assembly.

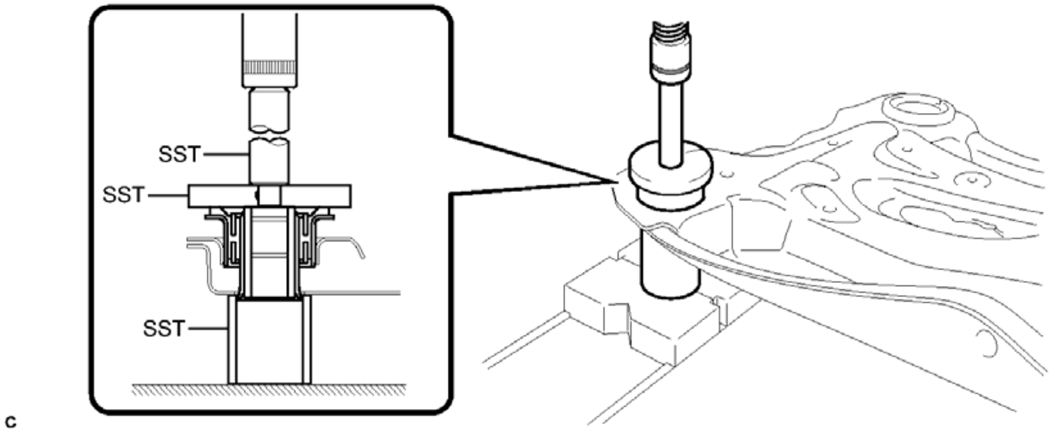

Fig. 63: Installing Rear Suspension Member Body Mounting Front Cushion LH
Courtesy of TOYOTA MOTOR SALES, U.S.A., INC.

- **SST: 09710-30012**

09710-04061

- **SST: 09950-60010**
  09951-00650
- **SST: 09950-70010**
  09951-07100

HINT:

Slowly press in the rear suspension member body mounting front cushion LH.

c. While observing from the side, press in the rear suspension member body mounting front cushion LH until there is no clearance between the rear suspension member body mounting front cushion LH and the rear suspension member sub-assembly as shown in the illustration.

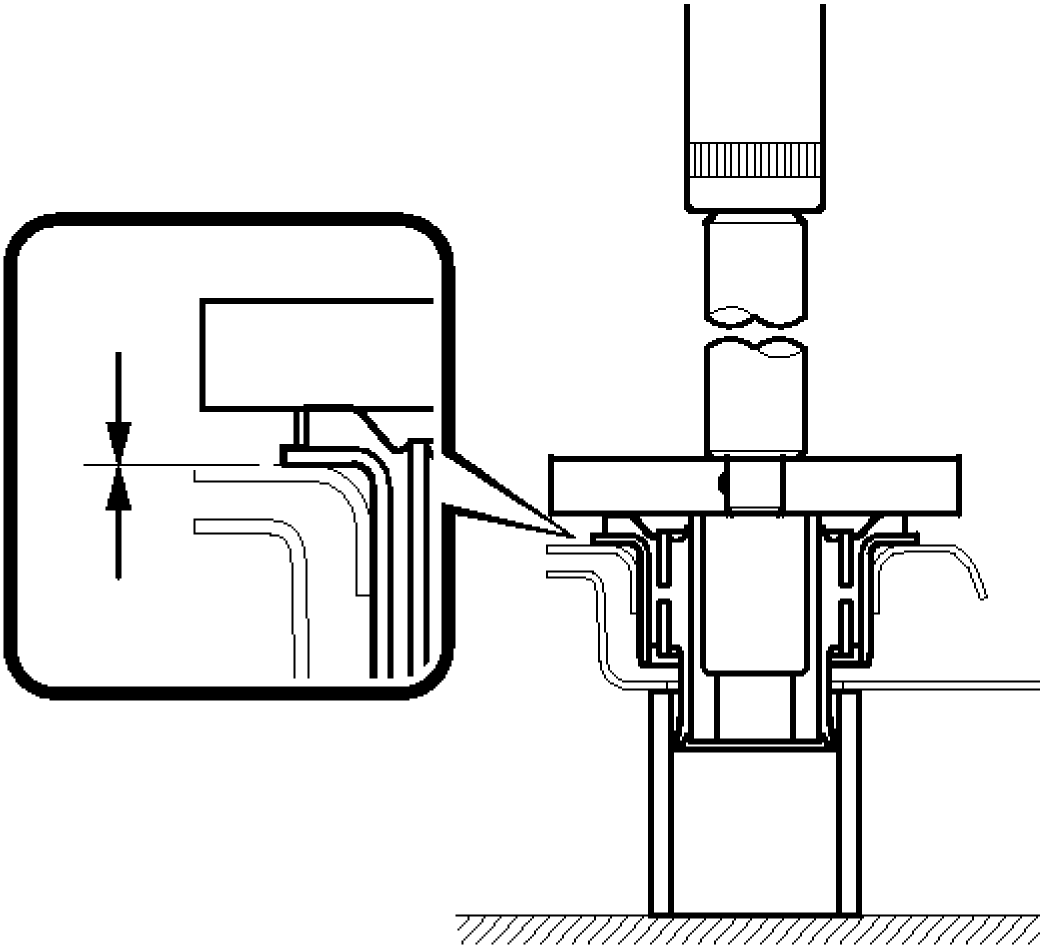

C

Fig. 64: Identifying Clearance Of Rear Suspension Member Body Mounting Front Cushion

LH
Courtesy of TOYOTA MOTOR SALES, U.S.A., INC.

NOTE: **Do not press the rear suspension member excessively, or it will easily deform.**

3. **INSTALL REAR SUSPENSION MEMBER BODY MOUNTING FRONT CUSHION RH**
    a. Temporarily install a new rear suspension member body mounting front cushion RH to the position shown in the illustration.

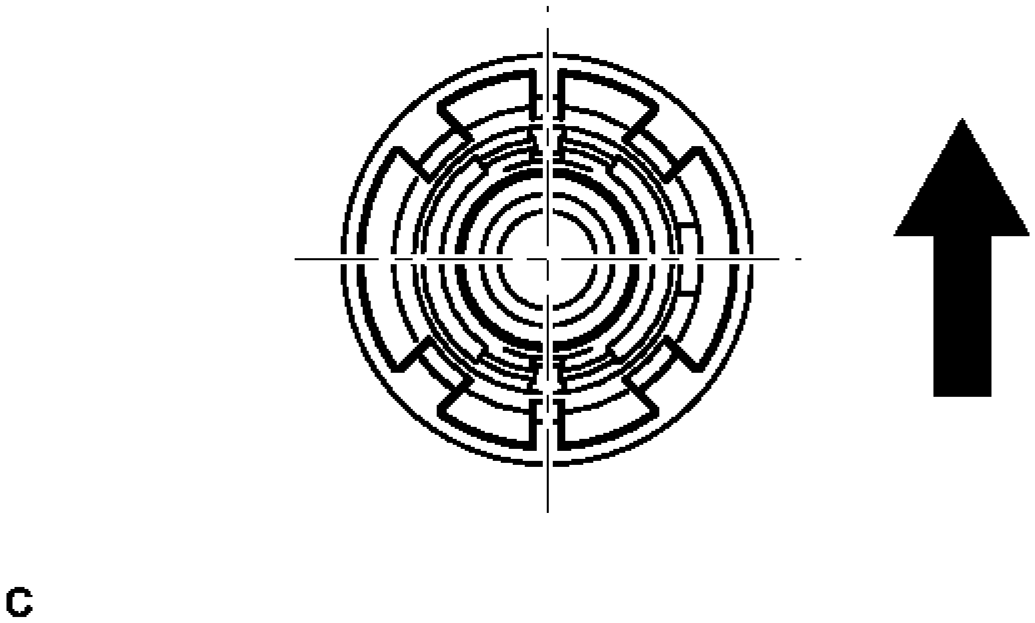

Fig. 65: Identifying Rear Suspension Member Body Mounting Front Cushion RH
Courtesy of TOYOTA MOTOR SALES, U.S.A., INC.

TEXT IN ILLUSTRATION

·	Front of the Vehicle

    b. Using SST and a press, install the rear suspension member body mounting front cushion RH to the rear suspension member sub-assembly.

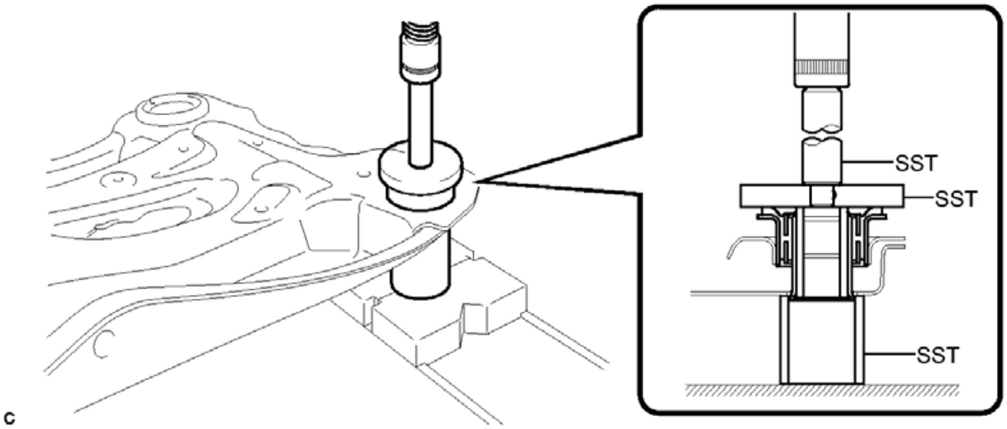

Fig. 66: Installing Rear Suspension Member Body Mounting Front Cushion RH
Courtesy of TOYOTA MOTOR SALES, U.S.A., INC.

- **SST: 09710-30012**
  09710-04061
- **SST: 09950-60010**
  09951-00650
- **SST: 09950-70010**
  09951-07100

HINT:

Slowly press in the rear suspension member body mounting front cushion RH.

c. While observing from the side, press in the rear suspension member body mounting front cushion RH until there is no clearance between the rear suspension member body mounting front cushion RH and the rear suspension member sub-assembly as shown in the illustration.

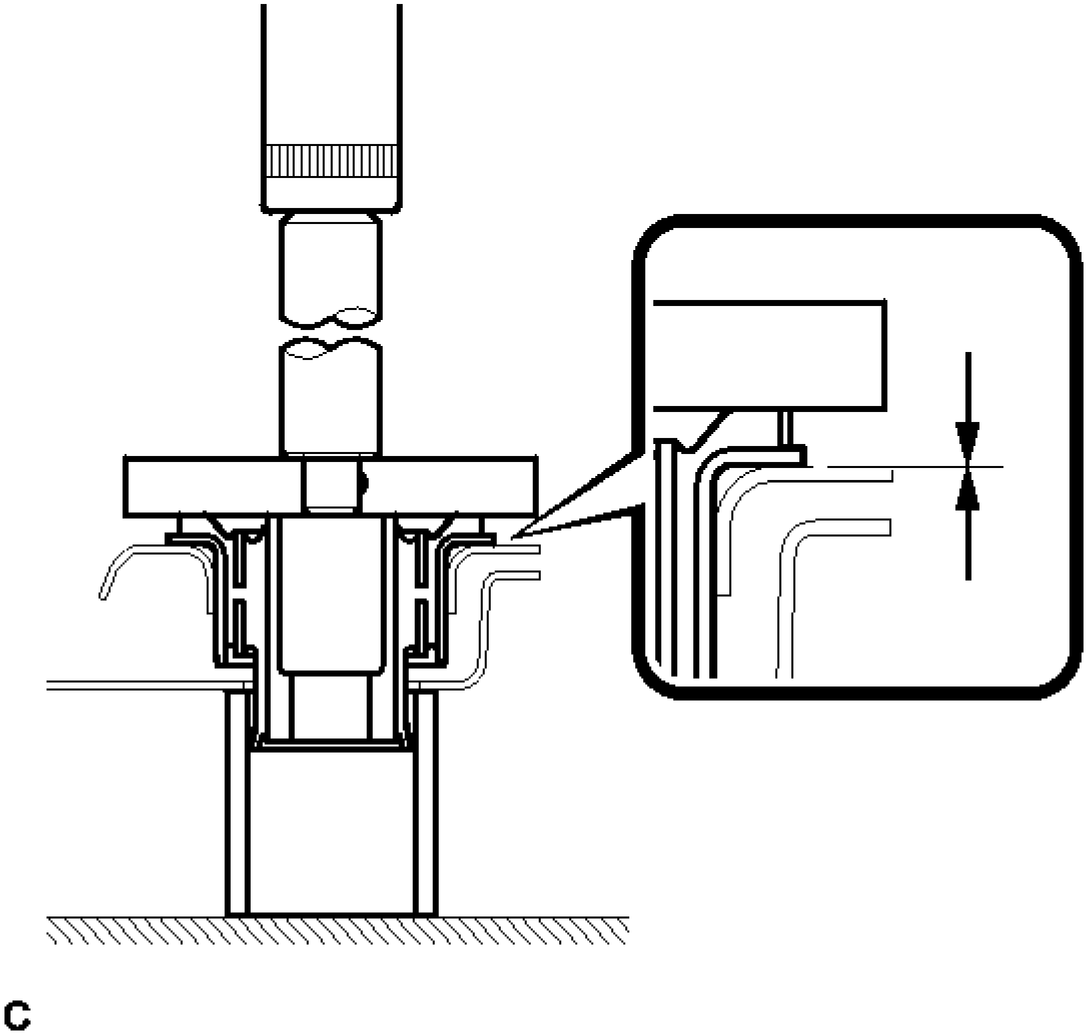

Fig. 67: Identifying Clearance Of Rear Suspension Member Body Mounting Front Cushion RH
Courtesy of TOYOTA MOTOR SALES, U.S.A., INC.

NOTE: **Do not press the rear suspension member excessively, or it will easily deform.**

4. **INSTALL REAR SUSPENSION MEMBER BODY MOUNTING REAR CUSHION (for LH Side)**
    a. Temporarily install a new rear suspension member body mounting rear cushion (LH side) to the position shown in the illustration.

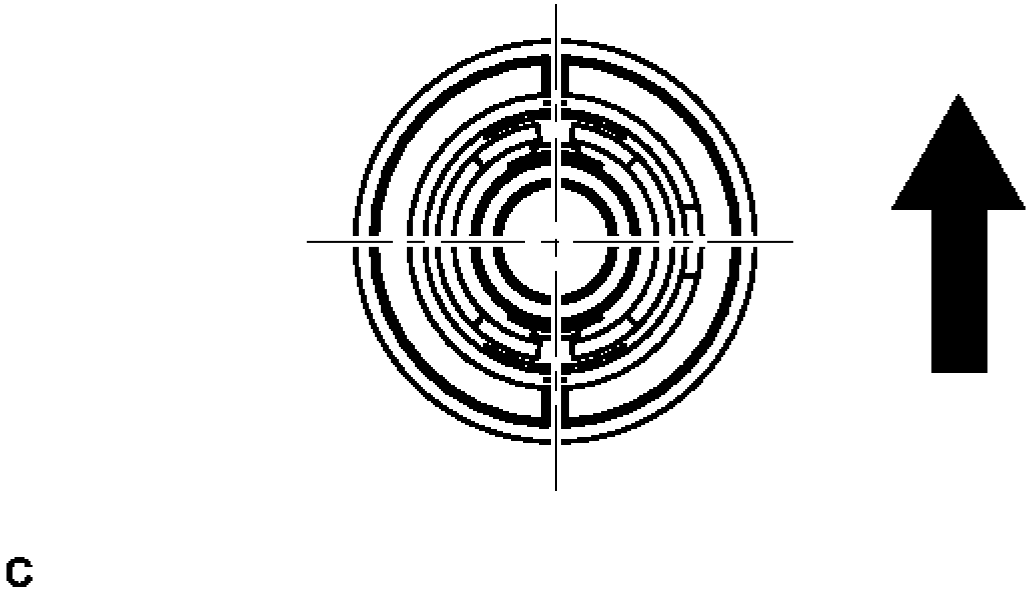

Fig. 68: Identifying Rear Suspension Member Body Mounting Rear Cushion LH
Courtesy of TOYOTA MOTOR SALES, U.S.A., INC.

TEXT IN ILLUSTRATION

	Front of the Vehicle

b. Using SST and a press, install the rear suspension member body mounting rear cushion (LH side) to the rear suspension member sub-assembly.

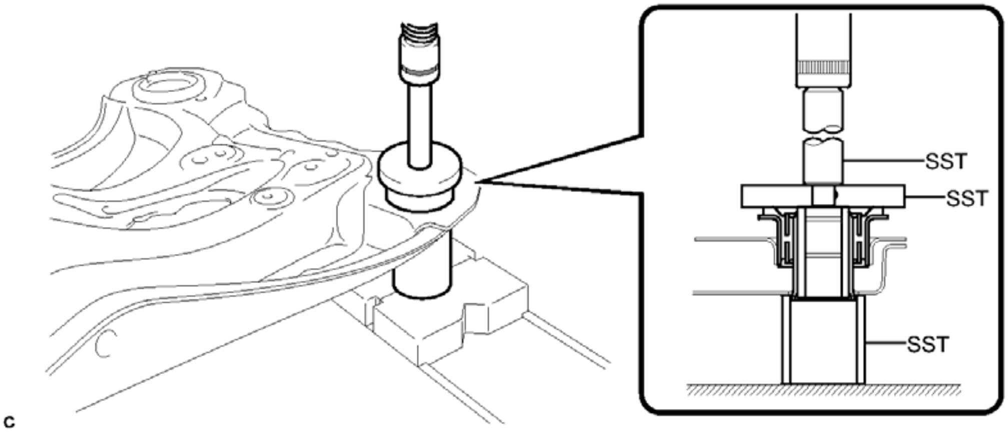

Fig. 69: Installing Rear Suspension Member Body Mounting Rear Cushion LH
Courtesy of TOYOTA MOTOR SALES, U.S.A., INC.

- **SST: 09710-30012**

09710-04061

- **SST: 09950-60010**

  09951-00650

- **SST: 09950-70010**

  09951-07100

HINT:

Slowly press in the rear suspension member body mounting rear cushion.

c. While observing from the side, press in the rear suspension member body mounting rear cushion (LH side) until there is no clearance between the rear suspension member body mounting rear cushion (LH side) and the rear suspension member sub-assembly as shown in the illustration.

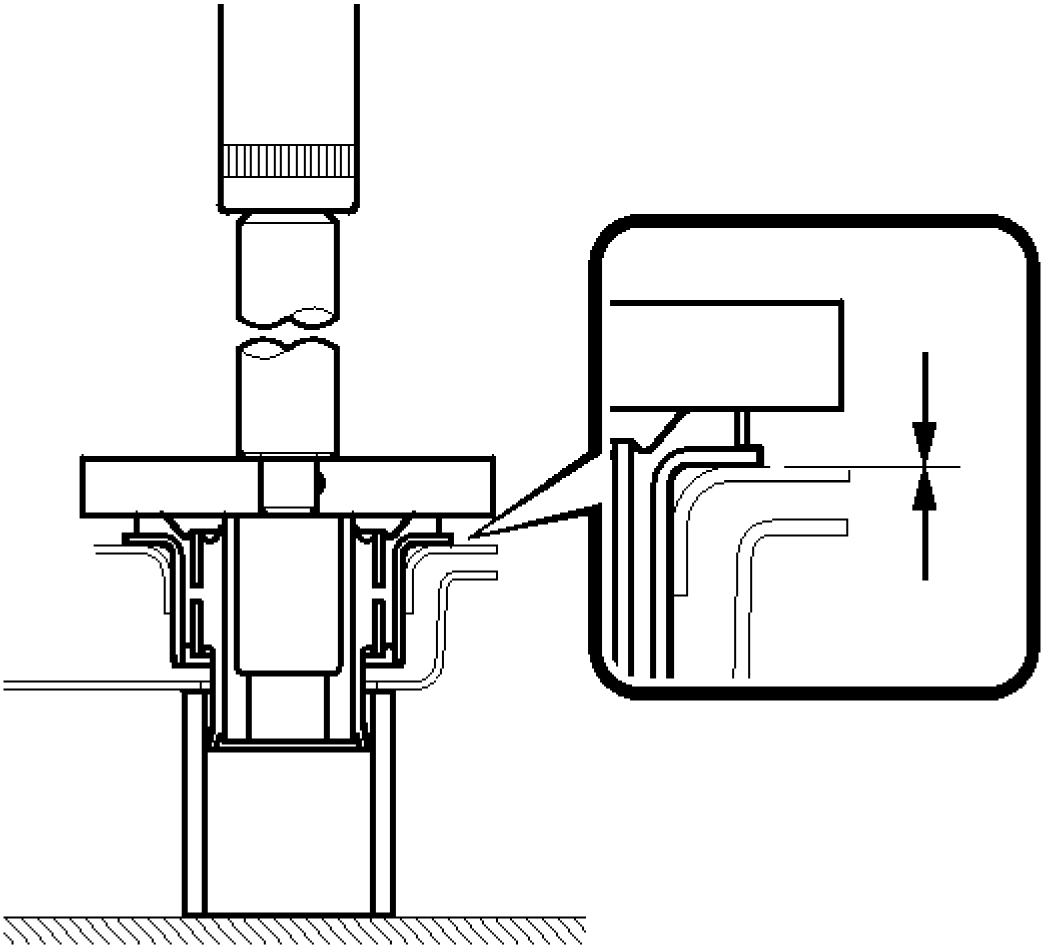

Fig. 70: Identifying Clearance Of Rear Suspension Member Body Mounting Rear Cushion

LH
Courtesy of TOYOTA MOTOR SALES, U.S.A., INC.

NOTE: **Do not press the rear suspension member excessively, or it will easily deform.**

5. **INSTALL REAR SUSPENSION MEMBER BODY MOUNTING REAR CUSHION (for RH Side)**

   HINT:

   Perform the same procedure as the LH side.

6. **INSTALL REAR NO. 1 SUSPENSION ARM ASSEMBLY LH** See step 1
7. **INSTALL REAR NO. 1 SUSPENSION ARM ASSEMBLY RH**

   HINT:

   Perform the same procedure as the LH side.

8. **TEMPORARILY INSTALL REAR NO. 2 SUSPENSION ARM ASSEMBLY LH** See step 3
9. **TEMPORARILY INSTALL REAR NO. 2 SUSPENSION ARM ASSEMBLY RH**

   HINT:

   Perform the same procedure as the LH side.

10. **INSTALL REAR SUSPENSION MEMBER SUB-ASSEMBLY**
    a. Support the rear suspension member sub-assembly with an engine lifter using 4 attachments or equivalent tools.

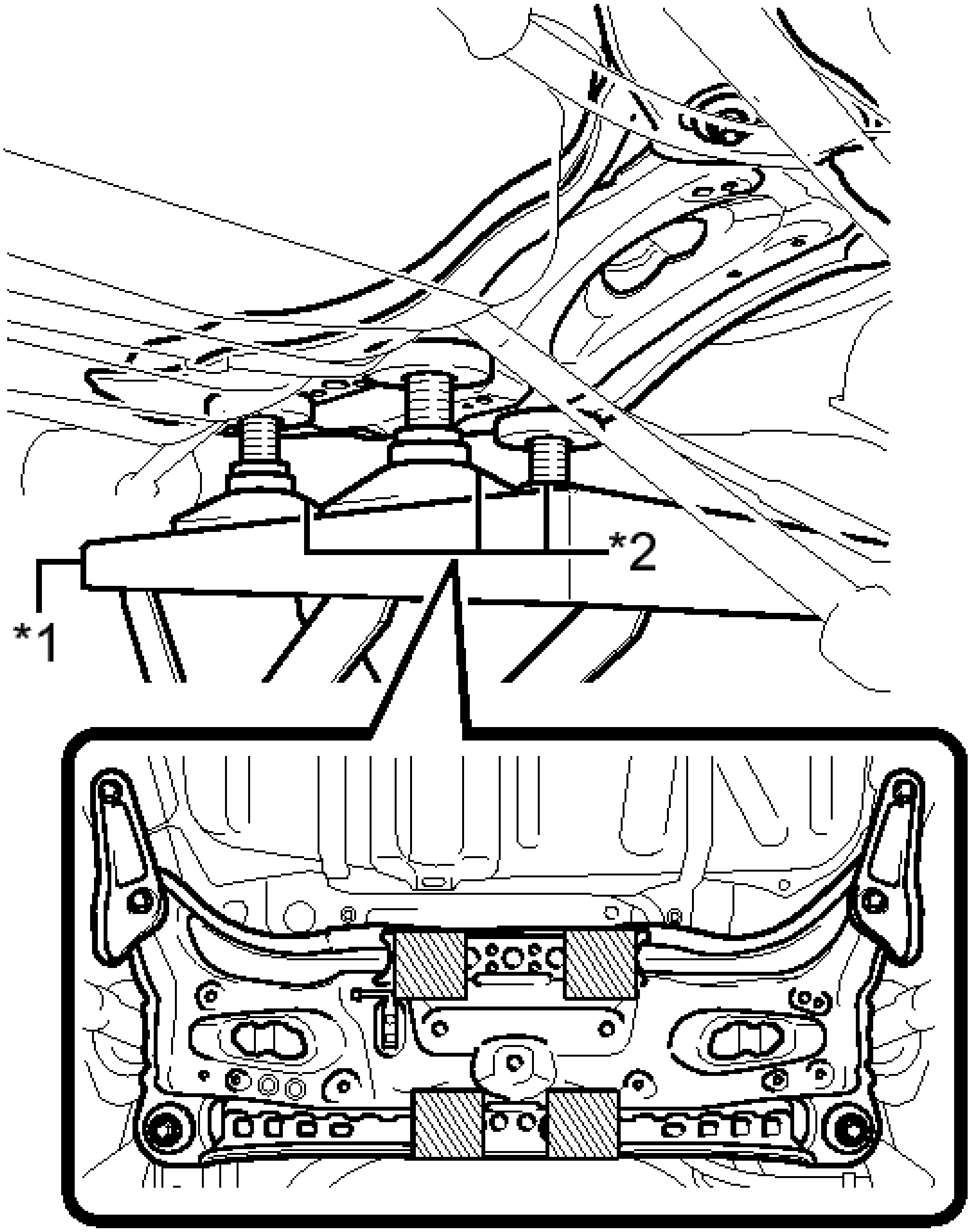

C

Fig. 71: Identifying Rear Suspension Member Sub-Assembly Lifting Points
Courtesy of TOYOTA MOTOR SALES, U.S.A., INC.

TEXT IN ILLUSTRATION

	Engine

*1	Lifter
*2	Attachment
	Attachment Placement Location

NOTE:

- **Make sure to secure the rear suspension member sub-assembly to prevent it from dropping.**
- **Use the attachments to keep the rear suspension member sub-assembly level.**

b. Raise the rear suspension member sub-assembly until there is no clearance between the rear suspension member sub-assembly and the vehicle body.

NOTE: **When raising the rear suspension member sub-assembly, be careful not to damage the vehicle body or other components installed on the vehicle.**

c. Install the rear suspension member sub-assembly, rear suspension member lower stopper sub-assembly LH and rear suspension member lower stopper sub-assembly RH with the 4 nuts.

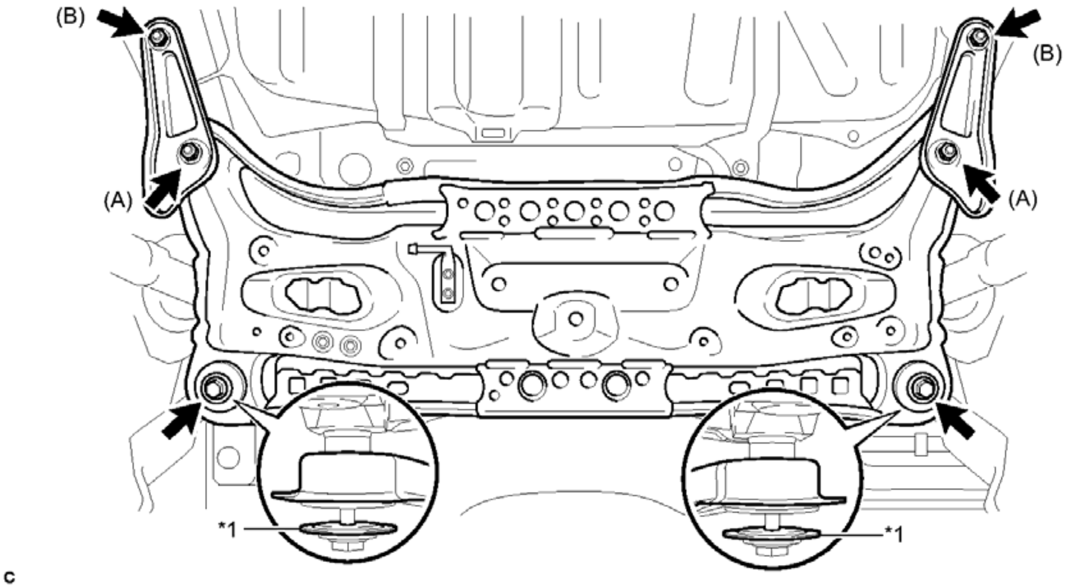

Fig. 72: Identifying Rear Suspension Member Lower Stopper Sub-Assemblies Bolts And Nuts
Courtesy of TOYOTA MOTOR SALES, U.S.A., INC.

TEXT IN ILLUSTRATION

*1	Rear suspension member	-	-

	lower stopper		

Nut A

Torque: 55 N*m (561 kgf*cm, 41 ft.*lbf)

Nut B

Torque: 38 N*m (387 kgf*cm, 28 ft.*lbf)

d. Install the 2 rear suspension member lower stoppers with the 2 bolts to the rear suspension member sub-assembly.

Torque: 55 N*m (561 kgf*cm, 41 ft.*lbf)

NOTE: **Be sure to install the rear suspension member sub-assembly with the rear suspension member lower stoppers in the correct direction, as shown in the illustration.**

11. **INSTALL NO. 3 EXHAUST PIPE SUPPORT BRACKET**
    a. Install the No. 3 exhaust pipe support bracket to the rear suspension member sub-assembly with the 2 bolts.

Torque: 33 N*m (337 kgf*cm, 24 ft.*lbf)

12. **INSTALL REAR SUSPENSION MEMBER DAMPER**
    a. Install the rear suspension member damper to the rear suspension member sub-assembly with the 2 bolts.

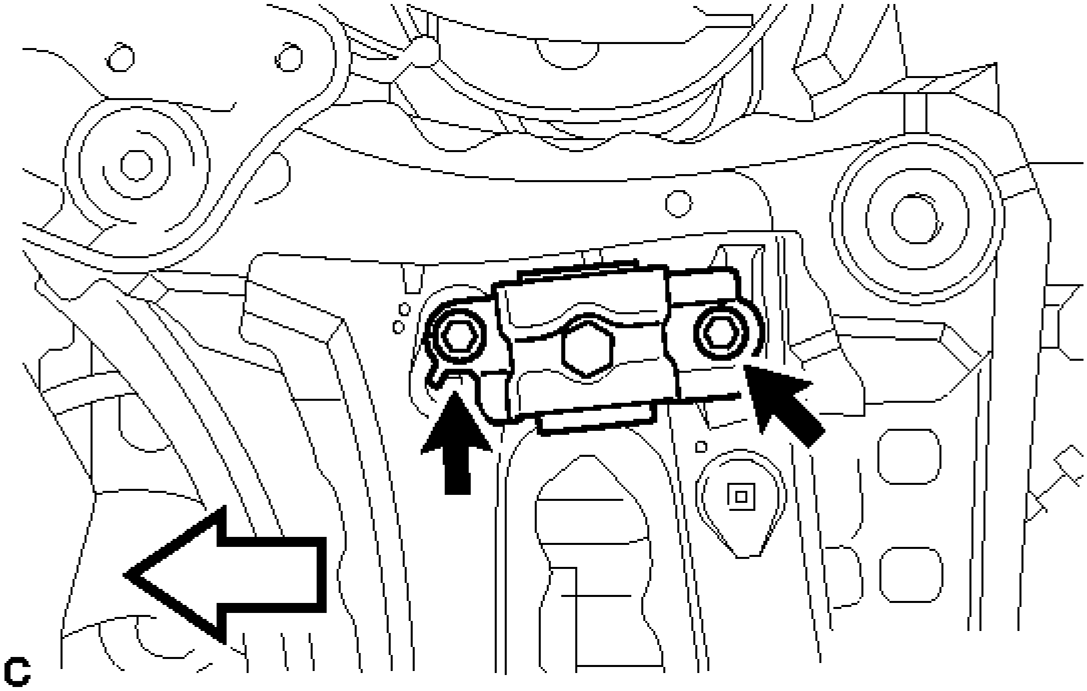

Fig. 73: Identifying Rear Suspension Member Damper Bolts
Courtesy of TOYOTA MOTOR SALES, U.S.A., INC.

TEXT IN ILLUSTRATION

	Front of the Vehicle

Torque: 29 N*m (296 kgf*cm, 21 ft.*lbf)

13. **CONNECT REAR NO. 1 SUSPENSION ARM ASSEMBLY LH** . Refer to **INSTALLATION - Step 2**
14. **CONNECT REAR NO. 1 SUSPENSION ARM ASSEMBLY RH**

    HINT:

    Perform the same procedure as the LH side.

15. **CONNECT REAR NO. 2 SUSPENSION ARM ASSEMBLY LH** See step 4
16. **CONNECT REAR NO. 2 SUSPENSION ARM ASSEMBLY RH**

    HINT:

    Perform the same procedure as the LH side.

17. **STABILIZE SUSPENSION** . Refer to **INSTALLATION - Step 10**

18. **FULLY TIGHTEN REAR NO. 1 SUSPENSION ARM ASSEMBLY LH** . Refer to **INSTALLATION - Step 11**
19. **FULLY TIGHTEN REAR NO. 1 SUSPENSION ARM ASSEMBLY RH**

    HINT:

    Perform the same procedure as the LH side.

20. **FULLY TIGHTEN REAR NO. 2 SUSPENSION ARM ASSEMBLY LH** See step 6
21. **FULLY TIGHTEN REAR NO. 2 SUSPENSION ARM ASSEMBLY RH**

    HINT:

    Perform the same procedure as the LH side.

22. **INSTALL REAR HEIGHT CONTROL SENSOR SUB-ASSEMBLY (w/ Height Control Sensor)**

    Refer to **INSTALLATION**

23. **INSTALL REAR STABILIZER BAR** See step 7
24. **CONNECT REAR STABILIZER LINK ASSEMBLY LH**
    1. Connect the rear stabilizer link assembly LH to the rear stabilizer bar with nut.

       Torque: 39 N*m (400 kgf*cm, 29 ft.*lbf)

       If the ball joint turns together with the nut, use a hexagon wrench to hold the stud.

25. **CONNECT REAR STABILIZER LINK ASSEMBLY RH**

    HINT:

    Perform the same procedure as the LH side.

26. **INSTALL CENTER EXHAUST PIPE ASSEMBLY**

    Refer to **INSTALLATION**

27. **INSTALL NO. 2 FLOOR UNDER COVER** See step 10
28. **INSTALL NO. 1 FLOOR UNDER COVER** See step 11
29. **INSTALL REAR WHEELS**

    Torque: 103 N*m (1049 kgf*cm, 76 ft.*lbf)

30. **INSPECT AND ADJUST REAR WHEEL ALIGNMENT**

Refer to **ADJUSTMENT**

31. **HEIGHT CONTROL SENSOR SIGNAL INITIALIZE (w/ Height Control Sensor)**

    Refer to **INITIALIZATION**

32. **ADJUST HEADLIGHT AIMING (w/ Height Control Sensor)**

    Refer to **ADJUSTMENT**

2012-2017 SUSPENSION

Rear Suspension (Service Information) - Camry (Except Hybrid)

REAR SHOCK ABSORBER

COMPONENTS

ILLUSTRATION

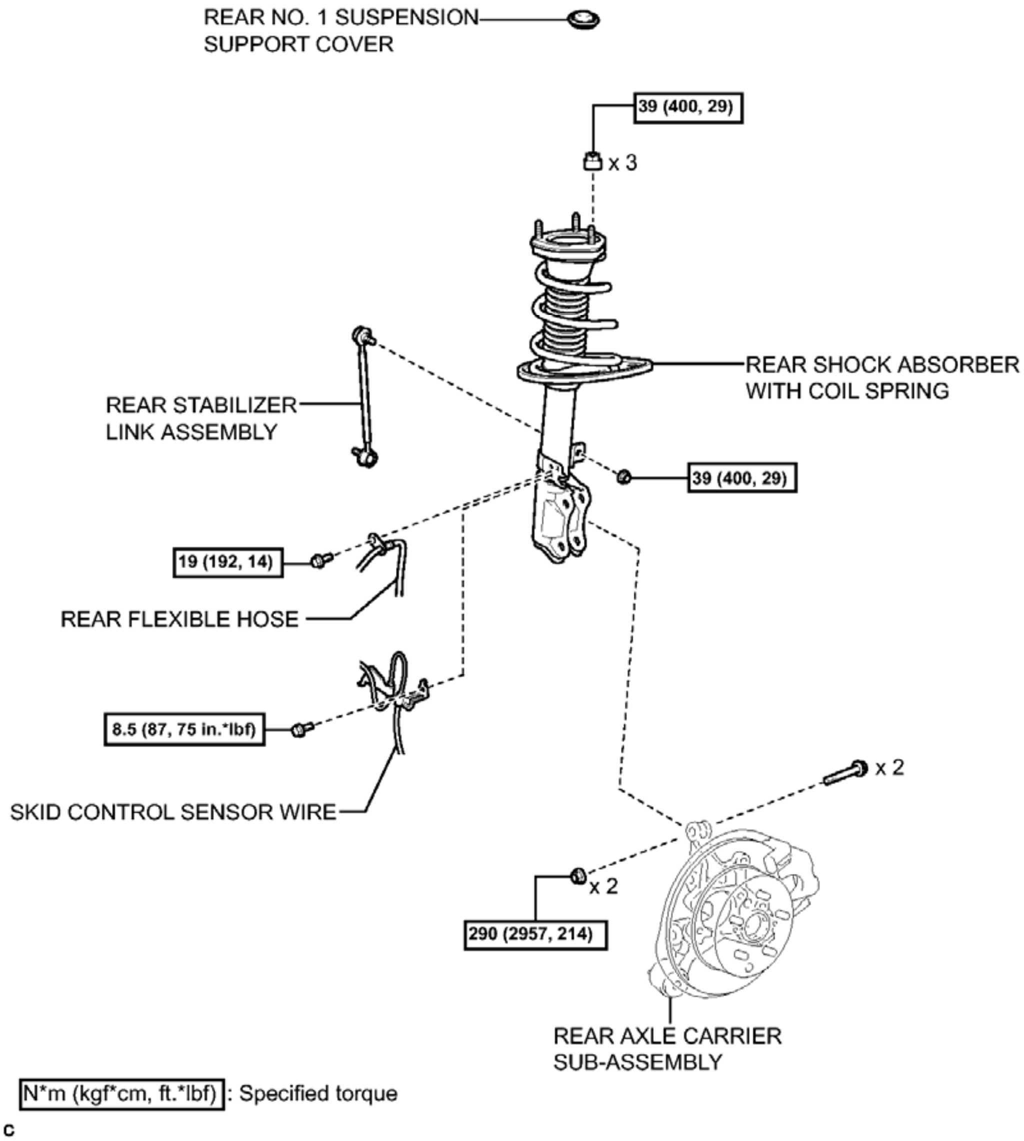
REAR NO. 1 SUSPENSION SUPPORT COVER
39 (400, 29)
x 3
REAR SHOCK ABSORBER WITH COIL SPRING
REAR STABILIZER LINK ASSEMBLY
39 (400, 29)
19 (192, 14)
REAR FLEXIBLE HOSE
8.5 (87, 75 in.*lbf)
x 2
SKID CONTROL SENSOR WIRE
x 2
290 (2957, 214)
REAR AXLE CARRIER SUB-ASSEMBLY
N*m (kgf*cm, ft.*lbf) : Specified torque
c

Fig. 1: Identifying Rear Shock Absorber Replacement Components With Torque Specifications (1 Of 2)
Courtesy of TOYOTA MOTOR SALES, U.S.A., INC.

ILLUSTRATION

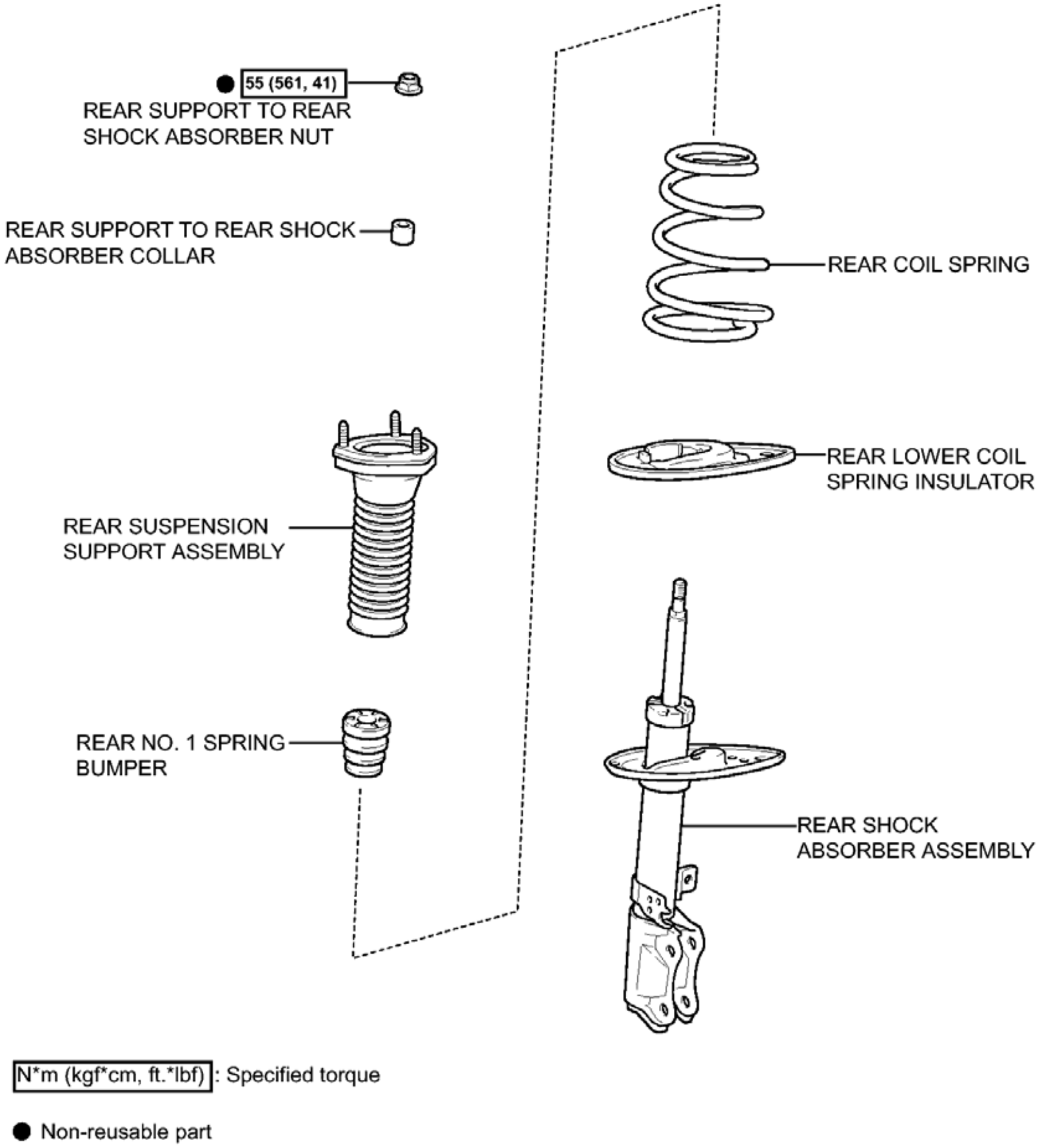
55 (561, 41)
REAR SUPPORT TO REAR SHOCK ABSORBER NUT
REAR SUPPORT TO REAR SHOCK ABSORBER COLLAR
REAR COIL SPRING
REAR LOWER COIL SPRING INSULATOR
REAR SUSPENSION SUPPORT ASSEMBLY
REAR NO. 1 SPRING BUMPER
REAR SHOCK ABSORBER ASSEMBLY
N*m (kgf*cm, ft.*lbf) : Specified torque
● Non-reusable part

c

Fig. 2: Identifying Rear Shock Absorber Replacement Components With Torque Specifications (2 Of 2)
Courtesy of TOYOTA MOTOR SALES, U.S.A., INC.

REMOVAL

REMOVAL

HINT:

- Use the same procedure for the RH side and LH side.
- The procedure listed below is for the LH side.

1. **REMOVE REAR SIDE SEATBACK ASSEMBLY**

   Refer to **REMOVAL**

2. **REMOVE REAR WHEEL**
3. **SEPARATE REAR STABILIZER LINK ASSEMBLY**
   1. Remove the nut and separate the rear stabilizer link assembly from the rear shock absorber with coil spring.

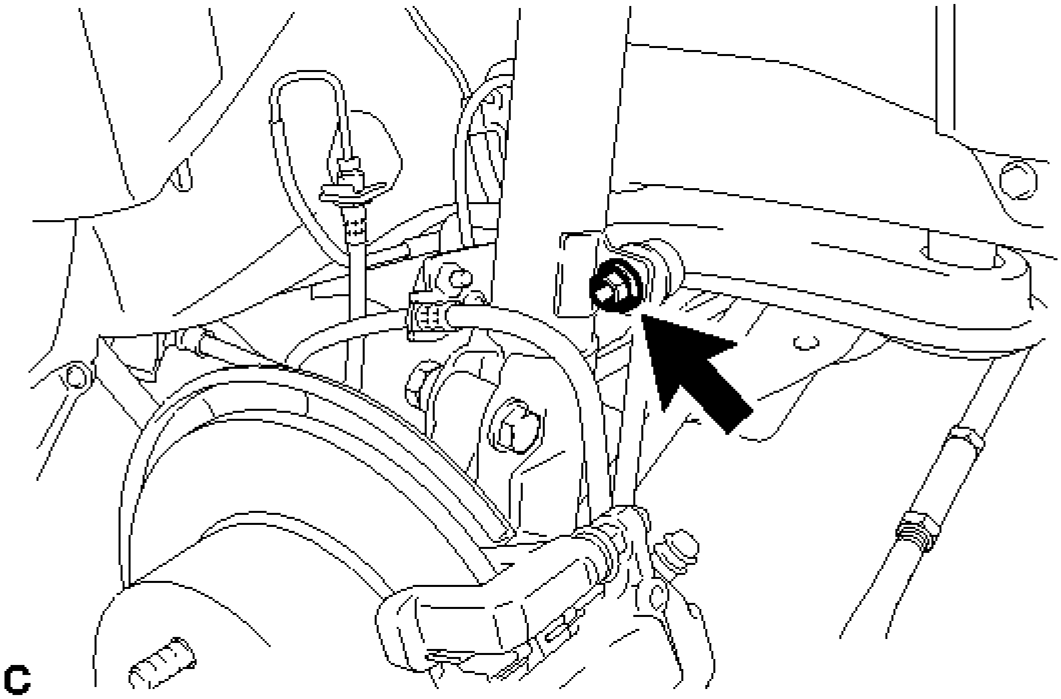

Fig. 3: Identifying Rear Stabilizer Link Assembly Nut
Courtesy of TOYOTA MOTOR SALES, U.S.A., INC.

If the ball joint turns together with the nut, use a hexagon wrench to hold the stud.

4. **SEPARATE SKID CONTROL SENSOR WIRE**
   1. Remove the 2 bolts, and disconnect the rear flexible hose and skid control sensor wire from the rear shock absorber with coil spring.

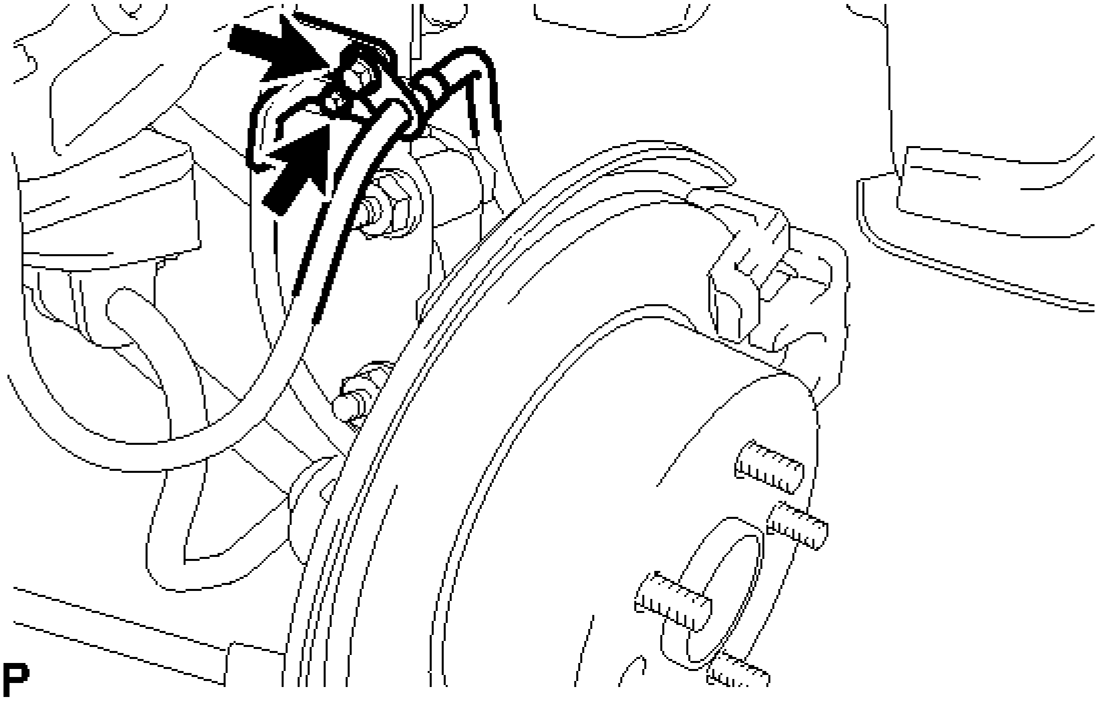

Fig. 4: Locating Rear Brake Flexible Hose Bolts
Courtesy of TOYOTA MOTOR SALES, U.S.A., INC.

5. **REMOVE REAR NO. 1 SUSPENSION SUPPORT COVER**
   a. Using a screwdriver, disengage the 4 claws and remove the rear No. 1 suspension support cover.

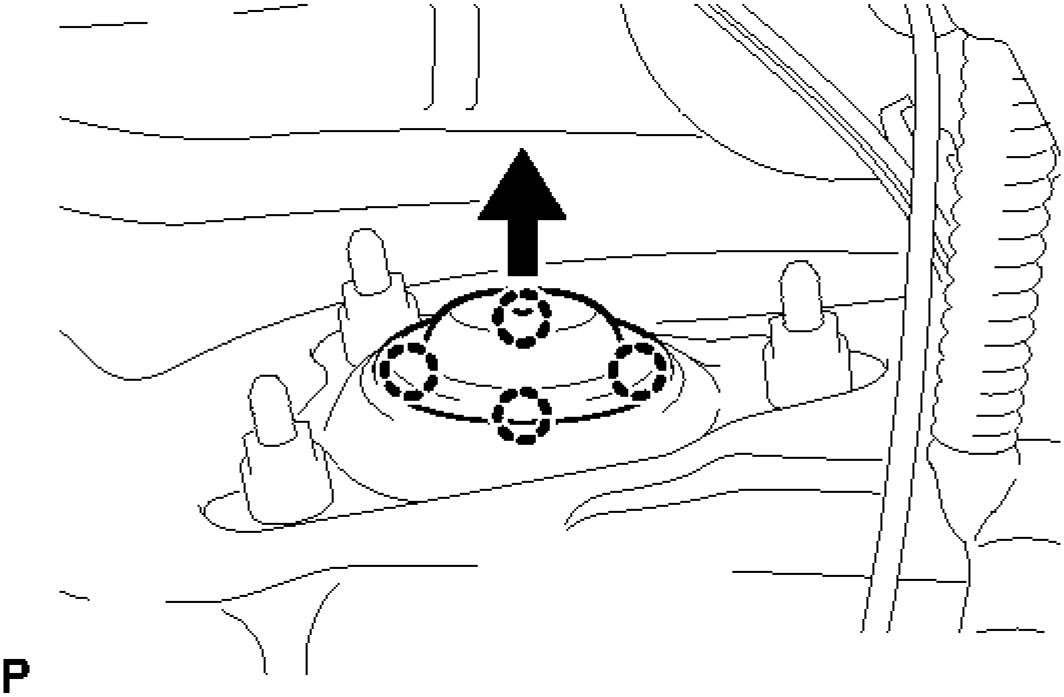

Fig. 5: Removing Rear Suspension Support No. 1 Cover

Courtesy of TOYOTA MOTOR SALES, U.S.A., INC.

6. **REMOVE REAR SHOCK ABSORBER WITH COIL SPRING**
    a. Support the rear axle carrier sub-assembly with a jack using a wooden block.

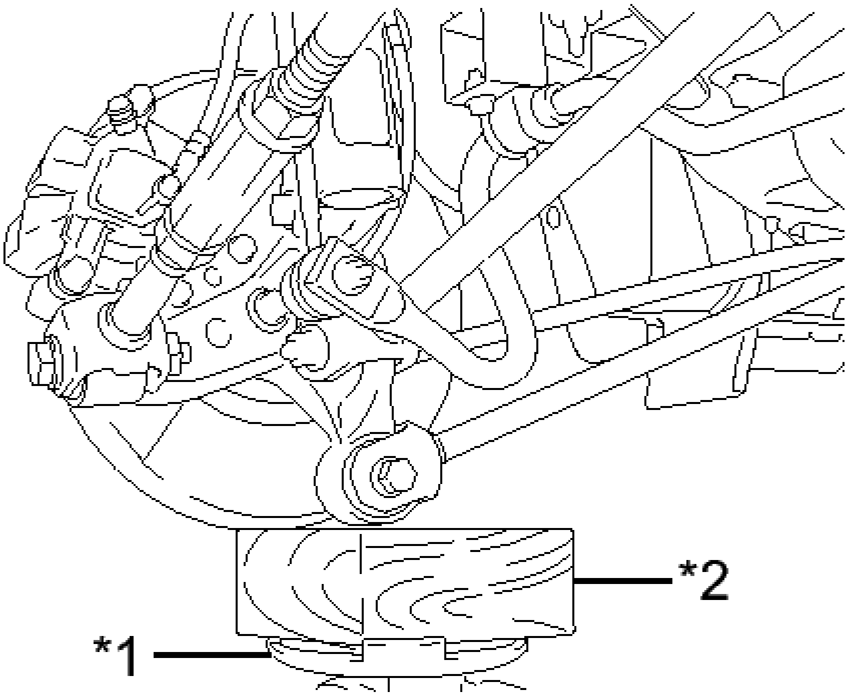

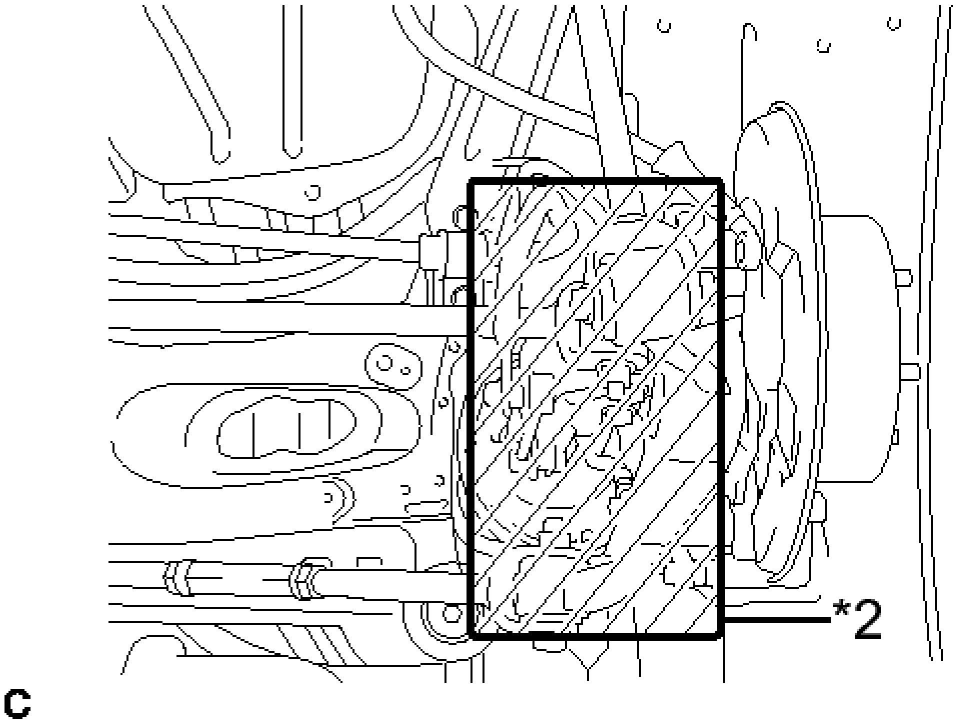

Fig. 6: Identifying Jack And Wooden Block
Courtesy of TOYOTA MOTOR SALES, U.S.A., INC.

TEXT IN ILLUSTRATION

*1	Jack
*2	Wooden Block

HINT:

Support the rear axle carrier sub-assembly until reinstallation of the rear shock absorber with coil spring is complete.

b. Loosen the rear support to rear shock absorber nut of the rear shock absorber with coil spring.

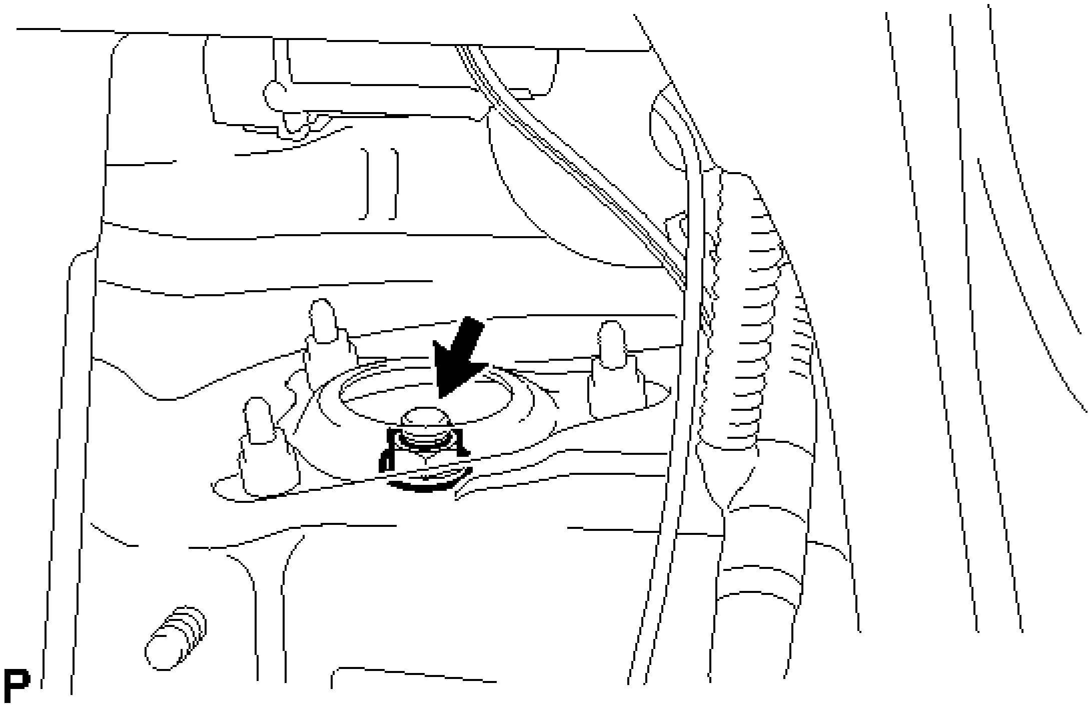

Fig. 7: Locating Rear Shock Absorber Lock Nut
Courtesy of TOYOTA MOTOR SALES, U.S.A., INC.

NOTE:

- **Do not remove the rear support to rear shock absorber nut.**
- **Loosen the nut only when the rear shock absorber with coil spring needs to be disassembled.**

c. Remove the 2 bolts and 2 nuts, and separate the rear shock absorber with coil spring from the rear axle carrier sub-assembly.

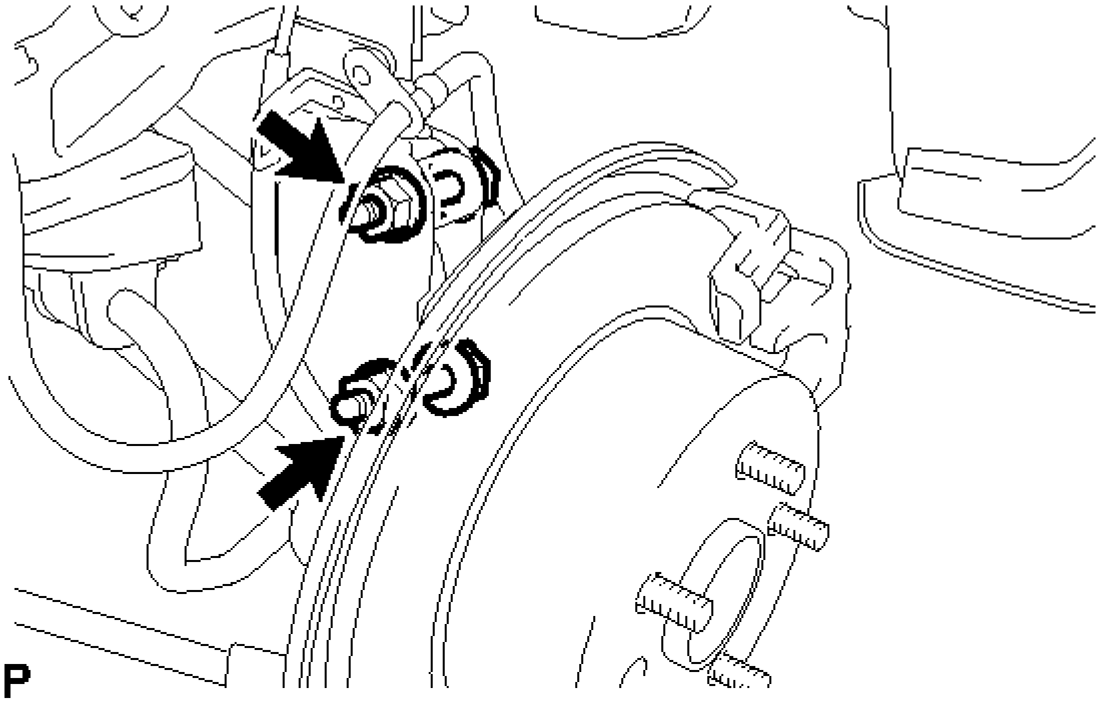

Fig. 8: Locating Rear Shock Absorber Nuts And Bolts
Courtesy of TOYOTA MOTOR SALES, U.S.A., INC.

NOTE: When removing the nuts, keep the bolts from rotating.

d. Remove the 3 nuts and rear shock absorber with coil spring.

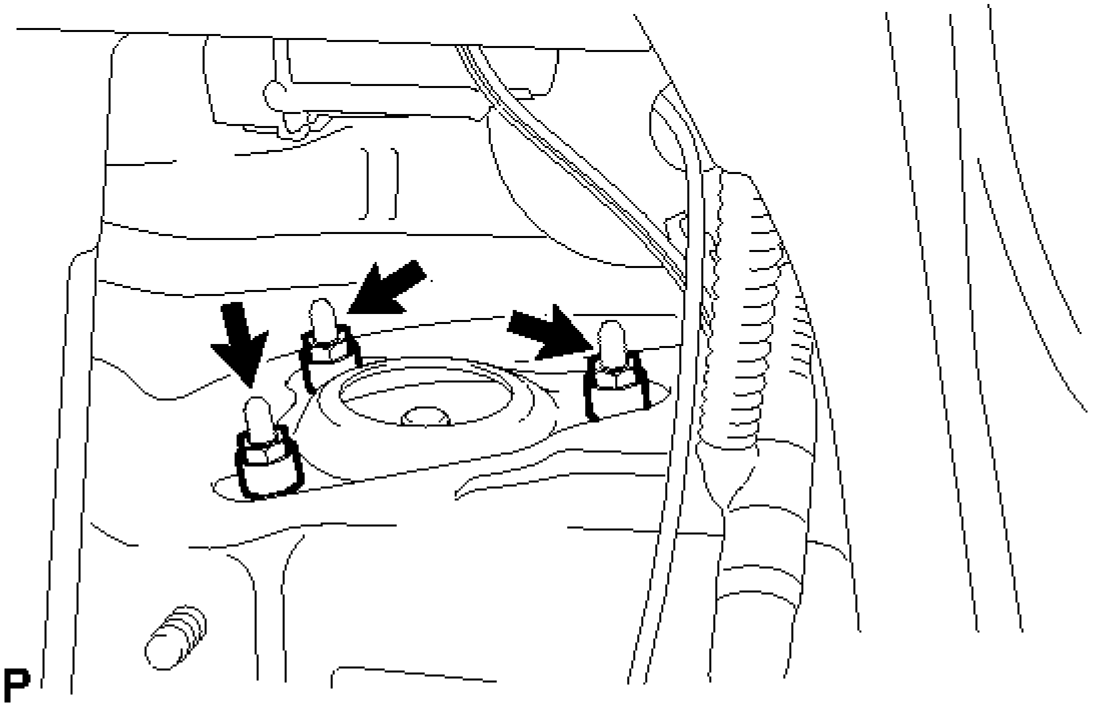

Fig. 9: Locating Rear Shock Absorber Nuts Upper Side
Courtesy of TOYOTA MOTOR SALES, U.S.A., INC.

NOTE: **Make sure that the skid control sensor wire and rear flexible hose are disconnected from the rear shock absorber with coil spring.**

7. **SECURE REAR SHOCK ABSORBER WITH COIL SPRING**
   a. Install the bolt and nut to the rear shock absorber assembly as shown in the illustration and secure the rear shock absorber assembly in a vise using aluminum plates.

      Standard length A

      28 mm (1.10 in.)

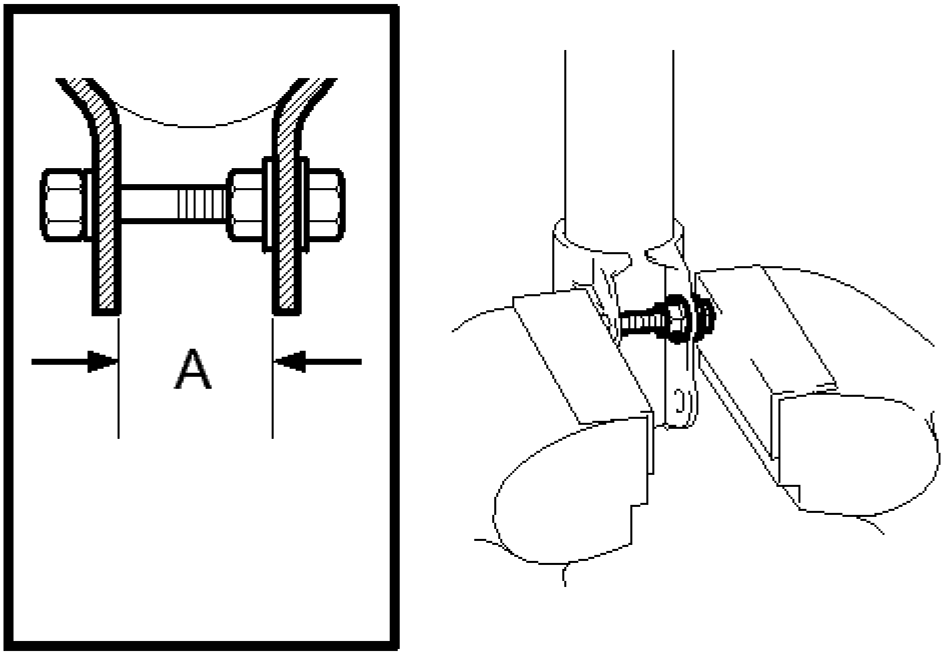

Fig. 10: Identifying Standard Length A
Courtesy of TOYOTA MOTOR SALES, U.S.A., INC.

8. **REMOVE REAR SUPPORT TO REAR SHOCK ABSORBER NUT**
   a. Using SST, compress the rear coil spring.
      - **SST: 09727-30021**

        09727-00010

        09727-00021

        09727-00031

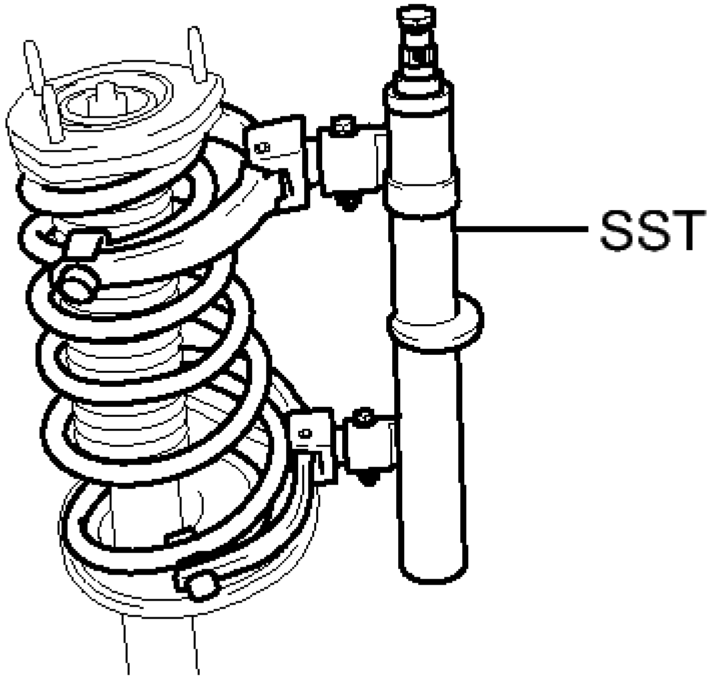

P

Fig. 11: Compressing Rear Coil Spring
Courtesy of TOYOTA MOTOR SALES, U.S.A., INC.

NOTE: **Do not use an impact wrench. It will damage SST.**

  b. Remove the rear support to rear shock absorber nut to the rear shock absorber assembly.

9. **REMOVE REAR SUPPORT TO REAR SHOCK ABSORBER COLLAR**
10. **REMOVE REAR SUSPENSION SUPPORT ASSEMBLY**
11. **REMOVE REAR COIL SPRING**
12. **REMOVE REAR NO. 1 SPRING BUMPER**
13. **REMOVE REAR LOWER COIL SPRING INSULATOR**
14. **REMOVE REAR SHOCK ABSORBER ASSEMBLY**

INSPECTION

INSPECTION

1. **INSPECT REAR SHOCK ABSORBER ASSEMBLY**
    a. Compress and extend the shock absorber rod 4 or more times.

    Standard

    There is no abnormal resistance or sound and operation resistance is normal.

    If there is any abnormality, replace the rear shock absorber assembly with a new one.

INSTALLATION

INSTALLATION

HINT:

- Use the same procedure for the RH side and LH side.
- The procedure listed below is for the LH side.

1. **SECURE REAR SHOCK ABSORBER ASSEMBLY**
    a. Install the bolt and nut to the rear shock absorber assembly as shown in the illustration and secure the rear shock absorber assembly in a vise using aluminum plates.

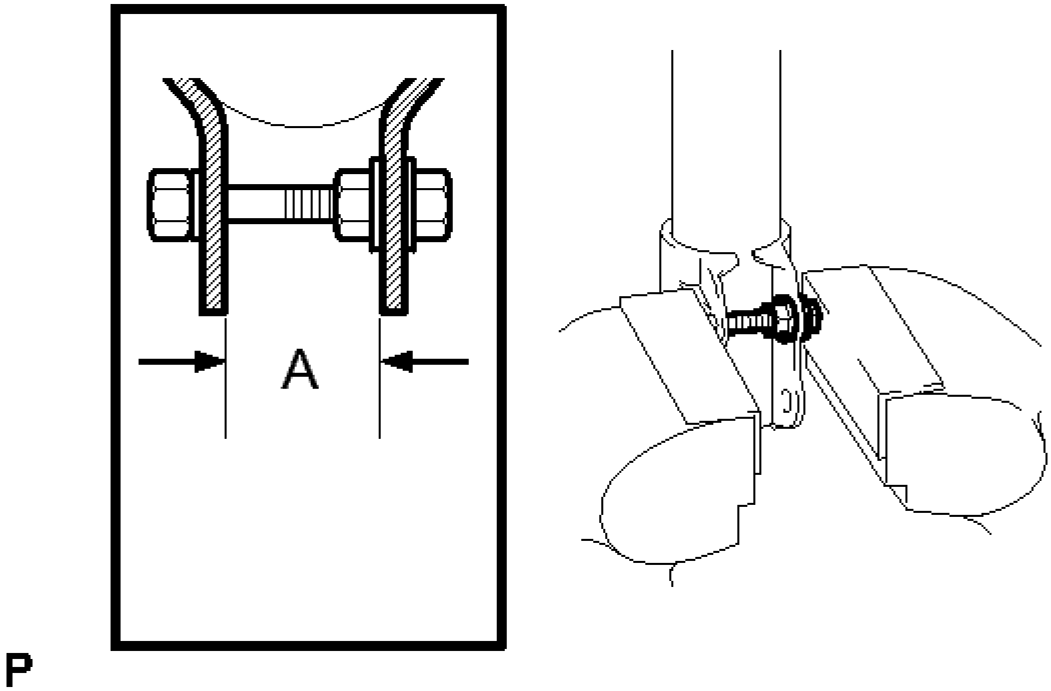

Fig. 12: Identifying Standard Length A
Courtesy of TOYOTA MOTOR SALES, U.S.A., INC.

Standard length A

28 mm (1.10 in.)

2. **INSTALL REAR LOWER COIL SPRING INSULATOR**
    a. Install the rear lower coil spring insulator onto the rear shock absorber assembly.

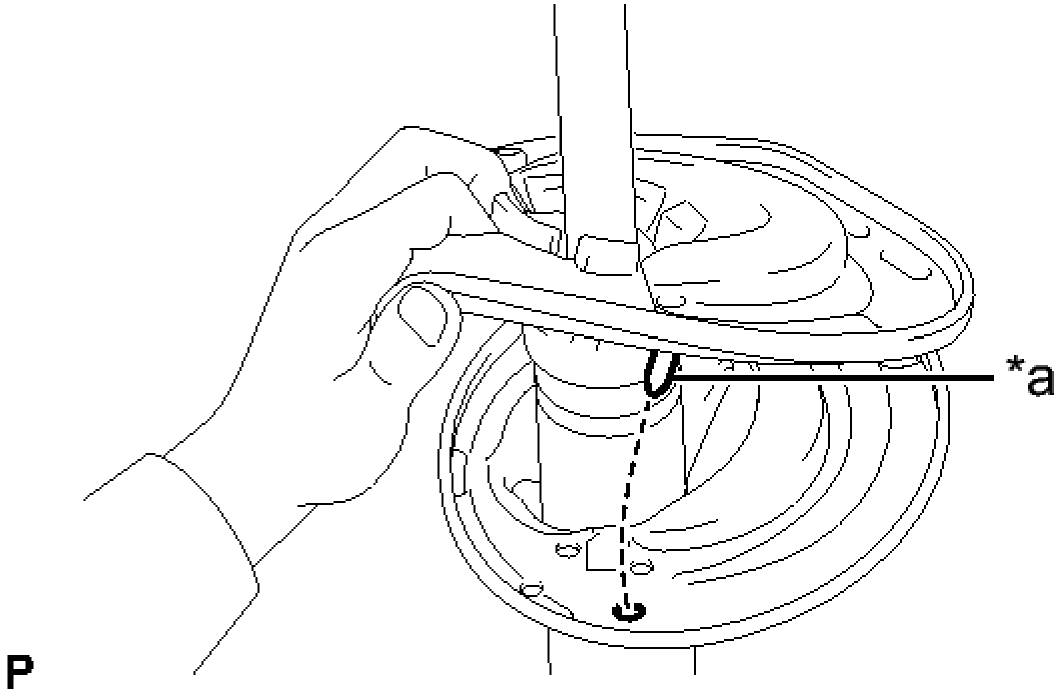

Fig. 13: Installing Rear Lower Coil Spring Insulator
Courtesy of TOYOTA MOTOR SALES, U.S.A., INC.

TEXT IN ILLUSTRATION

*a	Protrusion

NOTE: **Align the protrusion of the rear lower coil spring insulator and the hole in the rear shock absorber assembly.**

3. **INSTALL REAR NO. 1 SPRING BUMPER**
   a. Install the rear No. 1 spring bumper to rear shock absorber assembly.

NOTE: **Face the smaller diameter end of the rear No. 1 spring bumper downward.**

4. **INSTALL REAR COIL SPRING**
   a. Install SST to the rear coil spring with the hooks spread as far apart as possible from each other.
      - **SST: 09727-30021**
        09727-00010
        09727-00021
        09727-00031

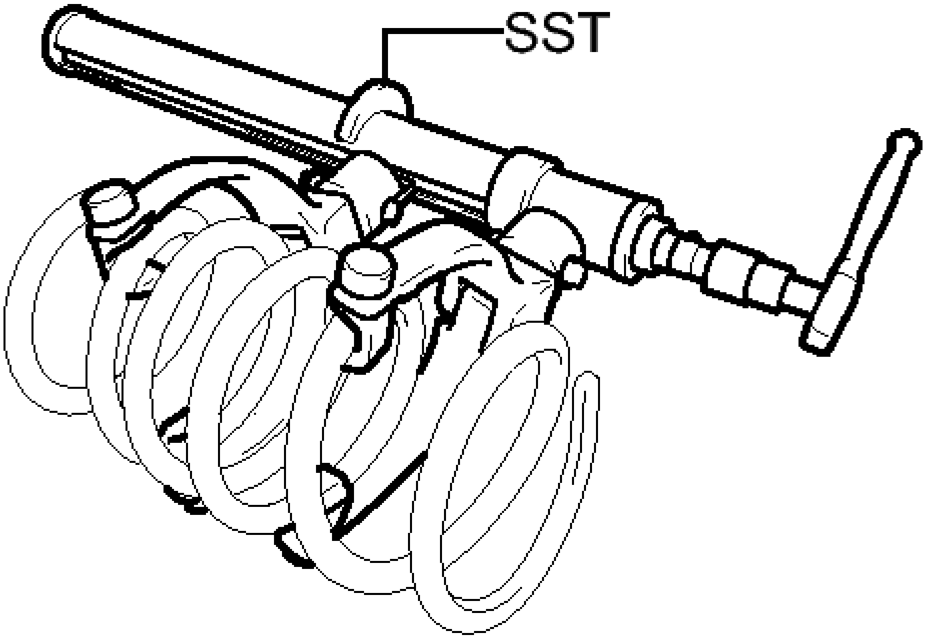

Fig. 14: Installing SST To Rear Coil Spring With Hooks
Courtesy of TOYOTA MOTOR SALES, U.S.A., INC.

NOTE: Make sure that the claws on the hooks are securely engaged to the spring.

b. Using SST, compress the rear coil spring.

- **SST: 09727-30021**
  09727-00010
  09727-00021
  09727-00031

NOTE: Do not use an impact wrench. It will damage SST.

c. Install the rear coil spring to the rear shock absorber assembly.

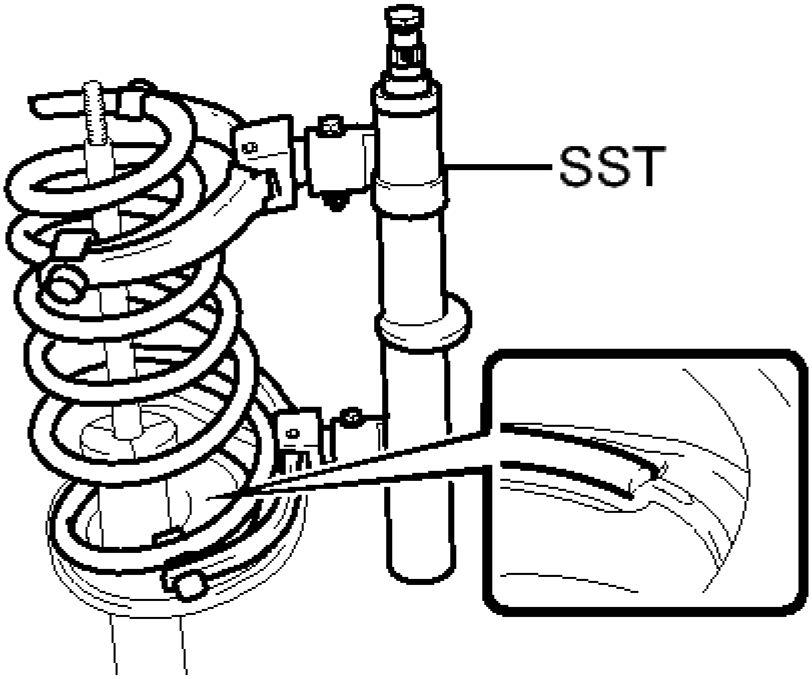

P

Fig. 15: Installing Coil Spring To Rear Shock Absorber
Courtesy of TOYOTA MOTOR SALES, U.S.A., INC.

NOTE:

- **The smaller diameter end must face upward.**
- **Make sure that the end of the rear coil spring is positioned in the depression of the rear coil spring lower insulator.**

5. **INSTALL REAR SUSPENSION SUPPORT ASSEMBLY**
   a. Install the rear suspension support assembly to the rear shock absorber assembly.

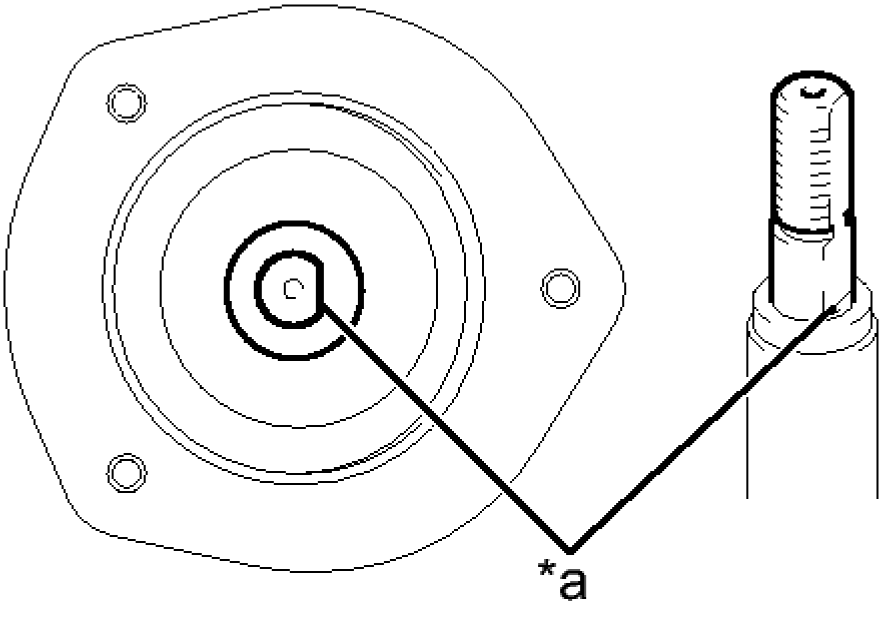

Fig. 16: Identifying Rear Suspension Support Assembly And Rear Shock Absorber Assembly Notch

Courtesy of TOYOTA MOTOR SALES, U.S.A., INC.

TEXT IN ILLUSTRATION

*a	Notch

NOTE: **Align the notches of the piston rod and the rear suspension support assembly as shown in the illustration before installing the rear suspension support assembly.**

b. Align the notches of the rear shock absorber assembly with the notch of the rear suspension support assembly so that the notches face the outside of the vehicle.

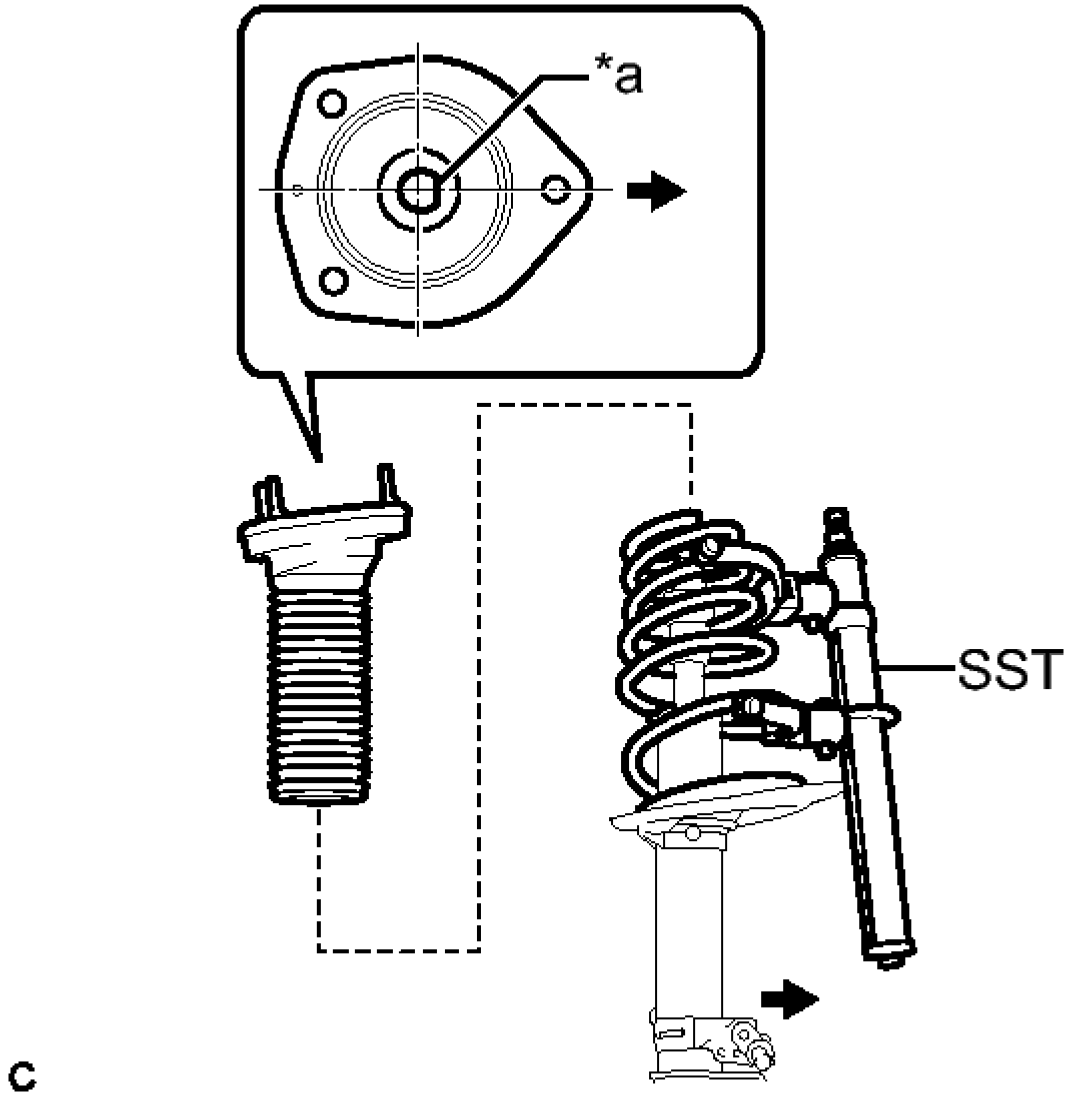

Fig. 17: Identifying Notch Faces Outside Of Vehicle
Courtesy of TOYOTA MOTOR SALES, U.S.A., INC.

TEXT IN ILLUSTRATION

*a	Notch
·	Outside of the Vehicle

6. **INSTALL REAR SUPPORT TO REAR SHOCK ABSORBER COLLAR**
   a. Install the rear support to rear shock absorber collar to the rear shock absorber assembly.
7. **TEMPORARILY TIGHTEN REAR SUPPORT TO REAR SHOCK ABSORBER NUT**
   a. Temporarily tighten a new rear support to rear shock absorber nut to the rear shock absorber assembly.
   b. Release the rear coil spring while adjusting the rear suspension support assembly to the position

shown in the illustration, and remove SST from the rear coil spring.

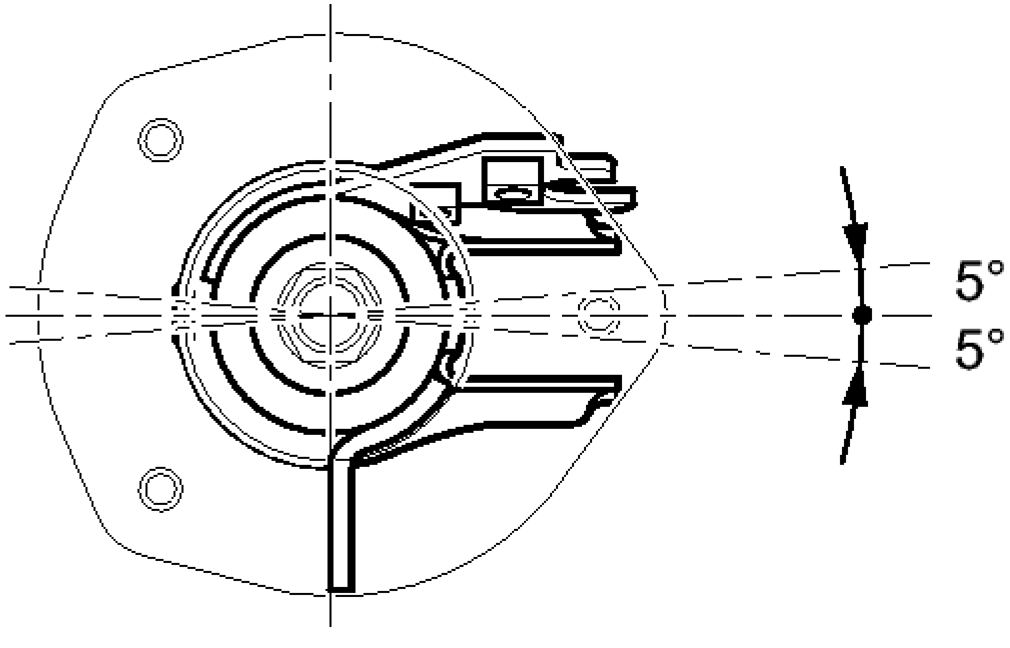

Fig. 18: Adjusting Rear Suspension Support Assembly
Courtesy of TOYOTA MOTOR SALES, U.S.A., INC.

NOTE: **Do not use an impact wrench. It will damage SST.**

HINT:

Make sure to align the outer stud bolt on the rear suspension support assembly to within +/- 5° of the center of the rear shock absorber lower bracket as shown in the illustration.

8. **INSTALL REAR SHOCK ABSORBER WITH COIL SPRING**
   a. Install the rear shock absorber with coil spring to the rear axle carrier sub-assembly and insert the 2 bolts from the rear of the vehicle.

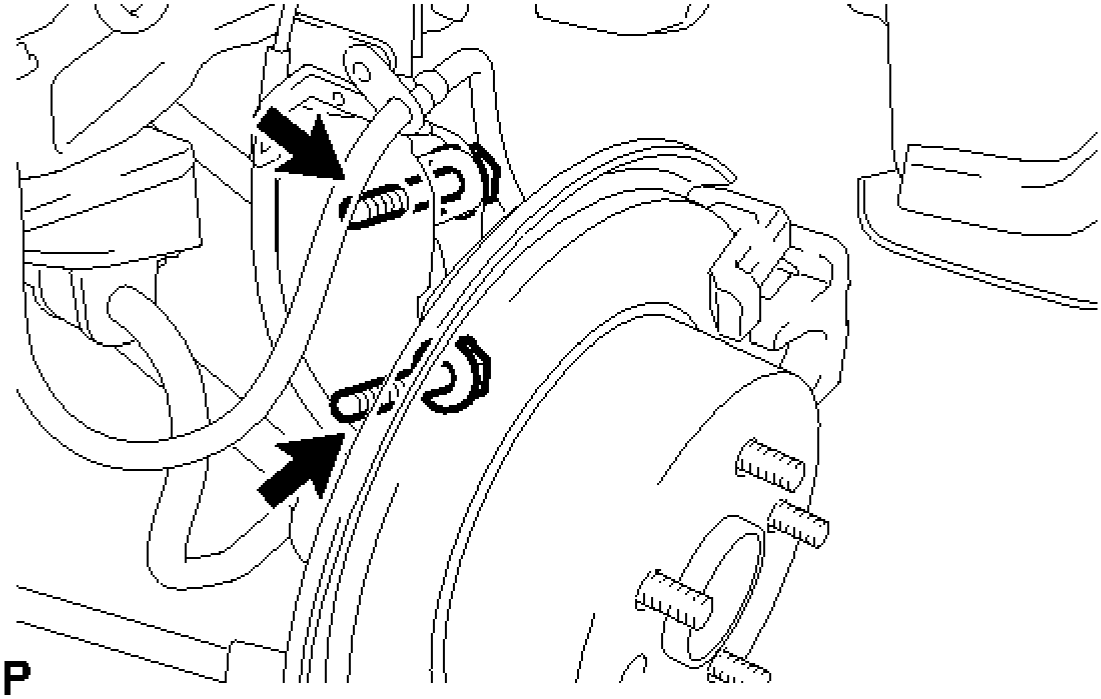

Fig. 19: Insert Bolts To Rear Shock Absorber With Coil Spring
Courtesy of TOYOTA MOTOR SALES, U.S.A., INC.

b. Slowly jack up the suspension using a wooden block and install the rear shock absorber with coil spring (upper side) to the vehicle.
c. Install the 3 nuts to the upper side of the rear shock absorber with coil spring.

   Torque: 39 N*m (400 kgf*cm, 29 ft.*lbf)

d. Install the 2 nuts to the lower side of the rear shock absorber with coil spring.

   Torque: 290 N*m (2957 kgf*cm, 214 ft.*lbf)

   NOTE: When installing the nuts, keep the bolts from rotating.

e. Fully tighten the rear support to rear shock absorber nut.

   Torque: 55 N*m (561 kgf*cm, 41 ft.*lbf)

9. **INSTALL SKID CONTROL SENSOR WIRE**

   a. Install the skid control sensor wire and rear flexible hose to the rear shock absorber with coil spring with the 2 bolts.

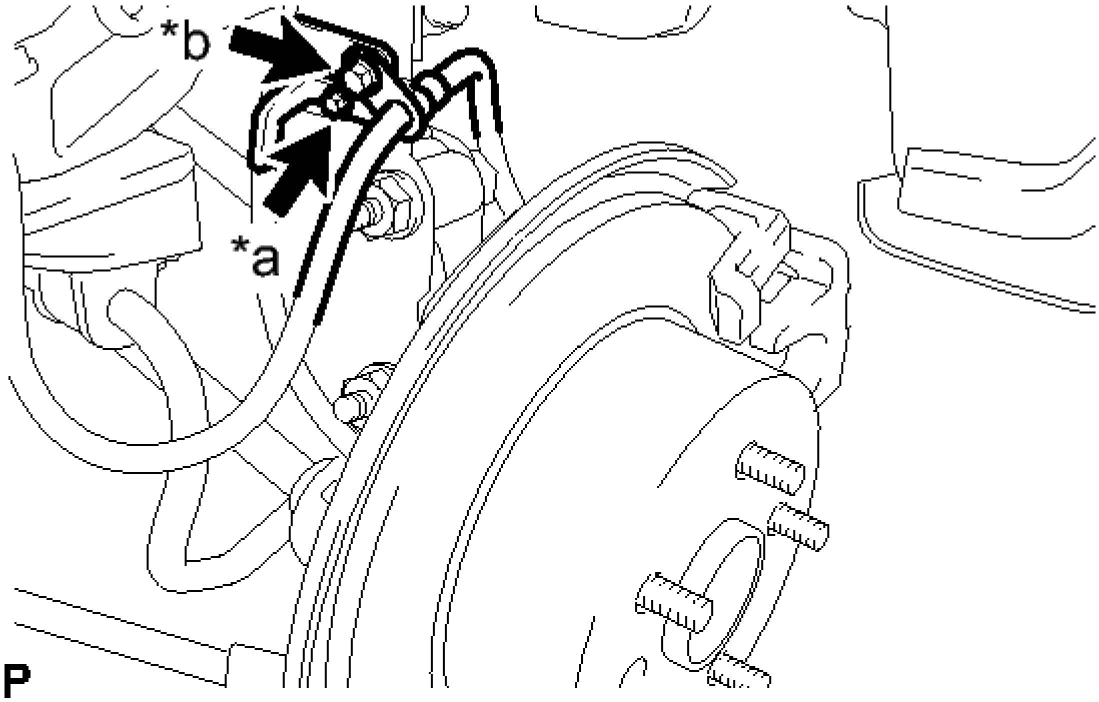

Fig. 20: Identifying Skid Control Sensor Wire And Rear Flexible Hose Bolts
Courtesy of TOYOTA MOTOR SALES, U.S.A., INC.

TEXT IN ILLUSTRATION

*a	Bolt (A)
*b	Bolt (B)

Bolt (A)

Torque: 8.5 N*m (87 kgf*cm, 75 in.*lbf)

Bolt (B)

Torque: 19 N*m (192 kgf*cm, 14 ft.*lbf)

10. **INSTALL REAR STABILIZER LINK ASSEMBLY**
    a. Install the rear stabilizer link assembly to the rear shock absorber with coil spring with the nut.

       Torque: 39 N*m (400 kgf*cm, 29 ft.*lbf)

       If the ball joint turns together with the nut, use a hexagon wrench to hold the stud.

11. **INSTALL REAR NO. 1 SUSPENSION SUPPORT COVER**
    a. Engage the 4 claws and install the rear No. 1 suspension support cover.

12. **INSTALL REAR WHEEL**

    Torque: 103 N*m (1049 kgf*cm, 76 ft.*lbf)

13. **INSTALL REAR SIDE SEATBACK ASSEMBLY**

    Refer to **INSTALLATION**

14. **INSPECT AND ADJUST REAR WHEEL ALIGNMENT**

    Refer to **ADJUSTMENT**

DISPOSAL

DISPOSAL

1. **DISPOSE OF REAR SHOCK ABSORBER ASSEMBLY**
    a. Fully extend the rear shock absorber piston rod.

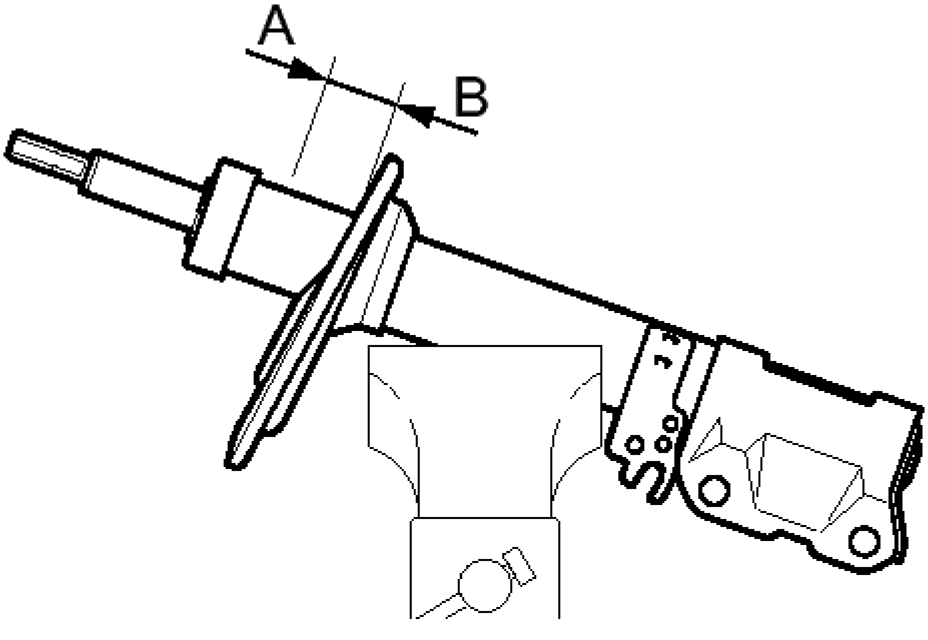

Fig. 21: Drilling Hole Between A And B
Courtesy of TOYOTA MOTOR SALES, U.S.A., INC.

    b. Using a drill, make a hole in the cylinder between A and B as shown in the illustration to discharge the gas inside.

WARNING: **Be careful when drilling as shards of metal may fly about, so always use proper safety equipment.**

HINT:

The gas is colorless, odorless and non-poisonous.

REAR LOWER ARM

COMPONENTS

ILLUSTRATION

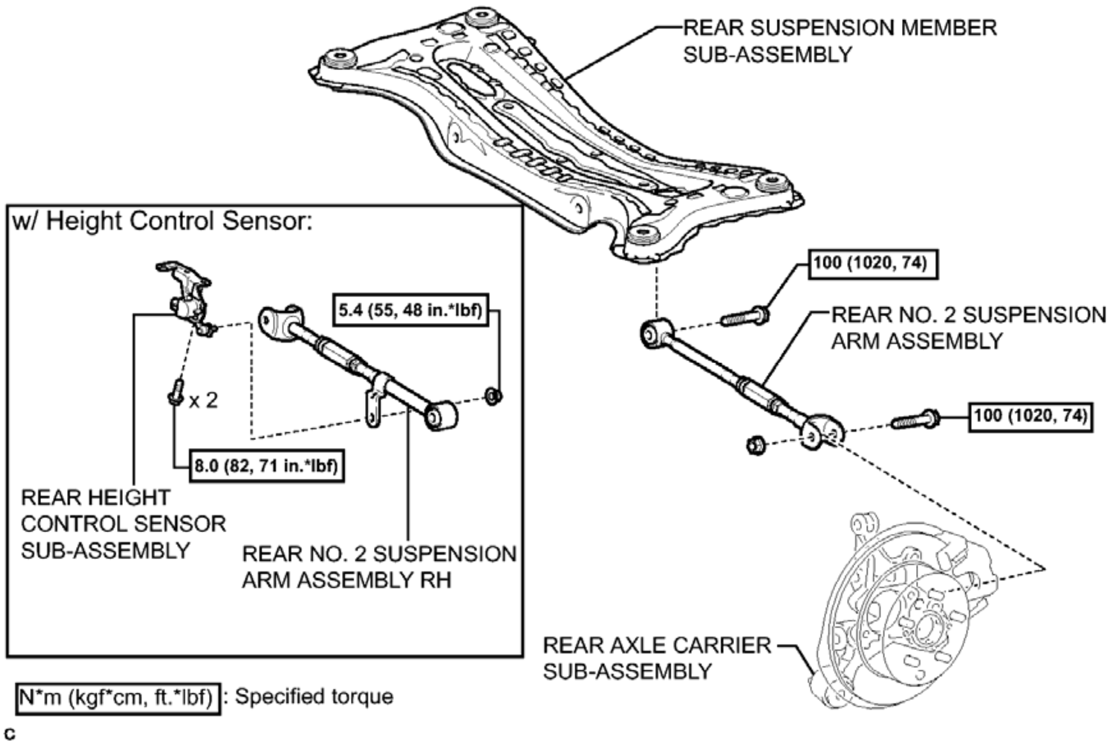
REAR SUSPENSION MEMBER SUB-ASSEMBLY
w/ Height Control Sensor:
5.4 (55, 48 in.*lbf)
x 2
8.0 (82, 71 in.*lbf)
REAR HEIGHT CONTROL SENSOR SUB-ASSEMBLY
REAR NO. 2 SUSPENSION ARM ASSEMBLY RH
100 (1020, 74)
REAR NO. 2 SUSPENSION ARM ASSEMBLY
100 (1020, 74)
REAR AXLE CARRIER SUB-ASSEMBLY
N*m (kgf*cm, ft.*lbf) : Specified torque
c

Fig. 22: Identifying Rear Lower Arm Replacement Components With Torque Specifications (1 Of 2)
Courtesy of TOYOTA MOTOR SALES, U.S.A., INC.

ILLUSTRATION

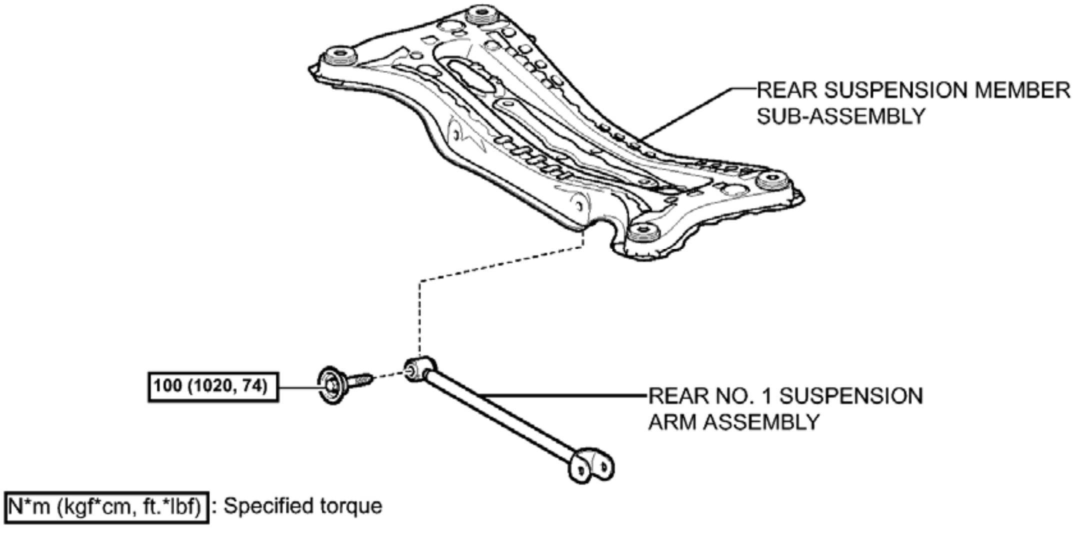
REAR SUSPENSION MEMBER SUB-ASSEMBLY
100 (1020, 74)
REAR NO. 1 SUSPENSION ARM ASSEMBLY
N*m (kgf*cm, ft.*lbf) : Specified torque
c

Fig. 23: Identifying Rear Lower Arm Replacement Components With Torque Specifications (2 Of 2)
Courtesy of TOYOTA MOTOR SALES, U.S.A., INC.

REMOVAL

REMOVAL

HINT:

- Use the same procedure for the RH side and LH side.
- The procedure listed below is for the LH side.
- The rear No. 2 suspension arm assembly can be removed directly from the vehicle.

1. **REMOVE REAR WHEELS**
2. **REMOVE REAR HEIGHT CONTROL SENSOR SUB-ASSEMBLY (w/ Height Control Sensor)**

   Refer to **REMOVAL**

3. **SEPARATE REAR NO. 2 SUSPENSION ARM ASSEMBLY**
   a. Remove the bolt and nut, and separate the rear No. 2 suspension arm assembly (outer side) from the rear axle carrier sub-assembly.

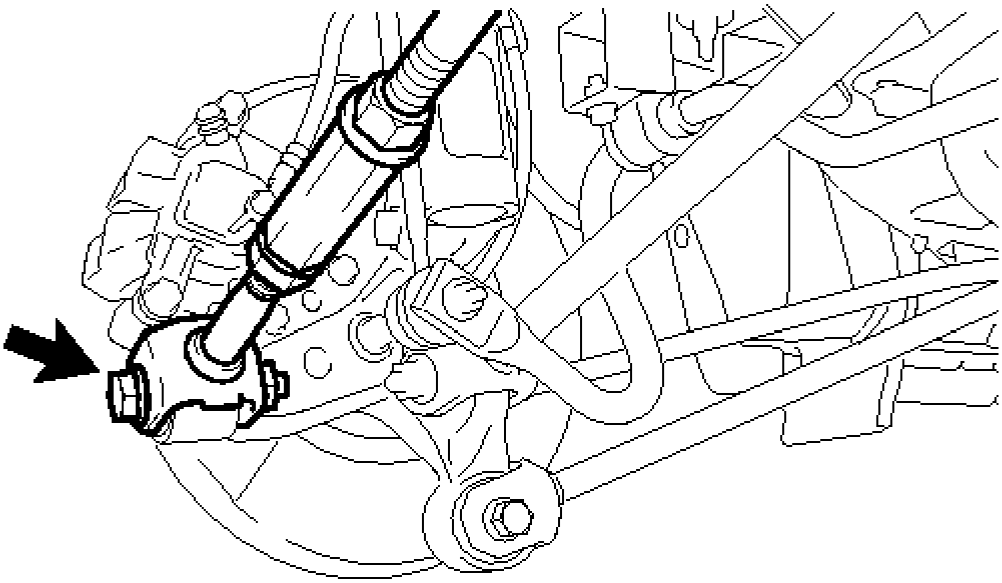

Fig. 24: Identifying Rear No. 2 Suspension Arm Assembly Bolt And Nut
Courtesy of TOYOTA MOTOR SALES, U.S.A., INC.

NOTE: When removing the bolt, keep the nut from rotating.

4. **REMOVE REAR NO. 2 SUSPENSION ARM ASSEMBLY**
    a. Remove the bolt and rear No. 2 suspension arm assembly from the rear suspension member sub-assembly.

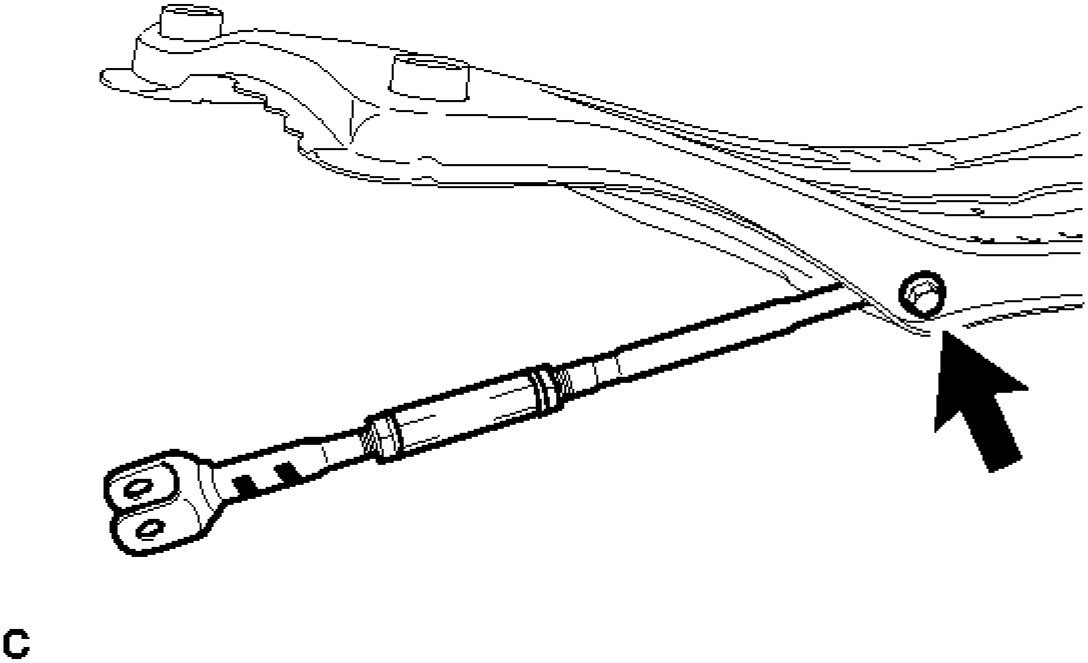

Fig. 25: Identifying Rear No. 2 Suspension Arm Assembly Bolt
Courtesy of TOYOTA MOTOR SALES, U.S.A., INC.

5. **REMOVE REAR SUSPENSION MEMBER SUB-ASSEMBLY**

   Refer to **REMOVAL**

6. **REMOVE REAR NO. 1 SUSPENSION ARM ASSEMBLY**
   1. Remove the bolt and rear No. 1 suspension arm assembly from the rear suspension member sub-assembly.

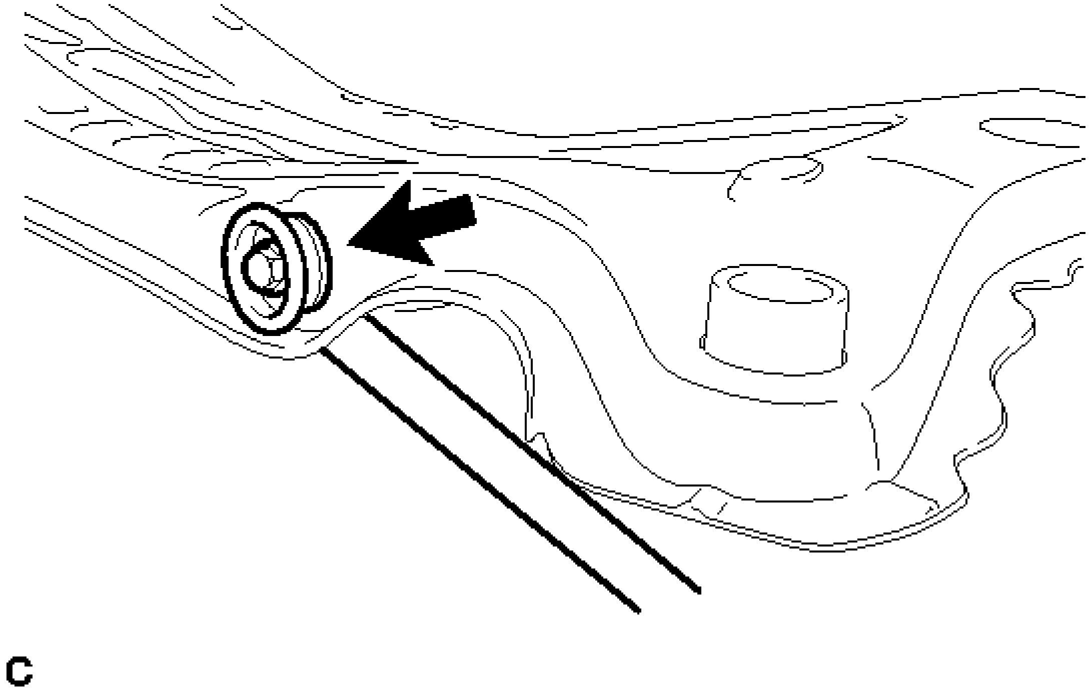

Fig. 26: Identifying Rear No. 1 Suspension Arm Assembly Bolt
Courtesy of TOYOTA MOTOR SALES, U.S.A., INC.

INSTALLATION

INSTALLATION

HINT:

- Use the same procedure for the RH side and LH side.
- The procedure listed below is for the LH side.
- The rear No. 2 suspension arm assembly can be installed directly to the vehicle.

1. **INSTALL REAR NO. 1 SUSPENSION ARM ASSEMBLY**
    a. Temporarily tighten the rear No. 1 suspension arm assembly (inner side) with the bolt.

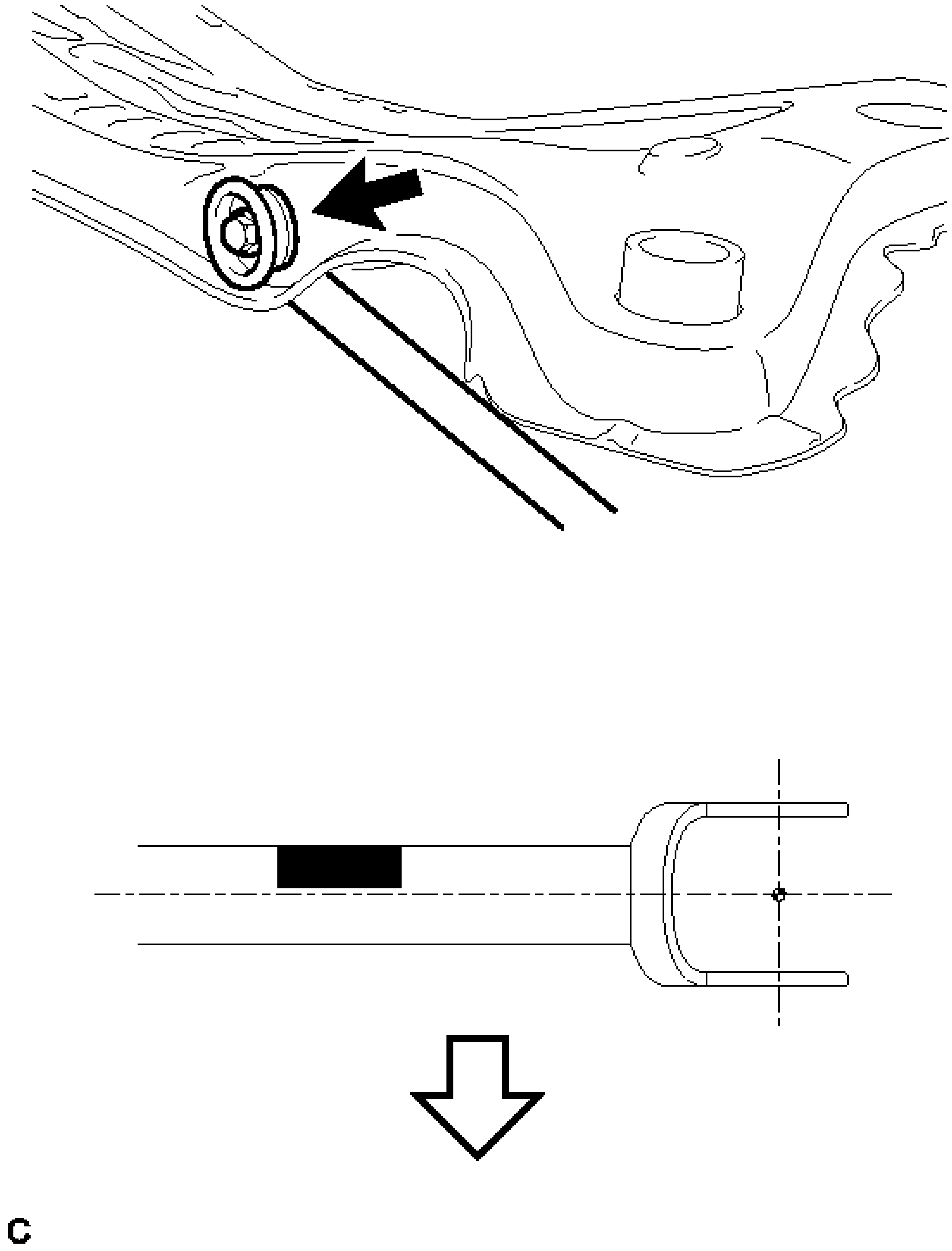

Fig. 27: Identifying Rear No. 1 Suspension Arm Assembly Bolt
Courtesy of TOYOTA MOTOR SALES, U.S.A., INC.

TEXT IN ILLUSTRATION

Bolt

	Front of the Vehicle
	Paint Mark

HINT:

Ensure that the paint mark faces the rear of the vehicle.

b. Set the rear No. 1 suspension arm assembly in the position shown in the illustration, and fully tighten the bolt.

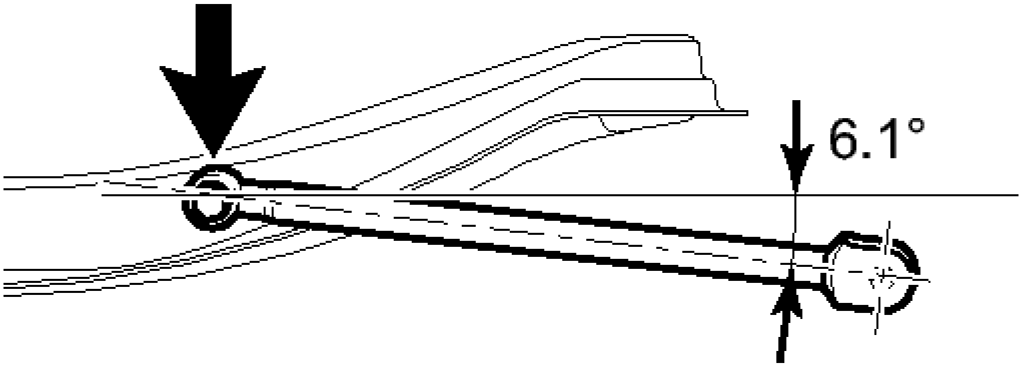

Fig. 28: Positioning No. 1 Suspension Arm Assembly
Courtesy of TOYOTA MOTOR SALES, U.S.A., INC.

Torque: 100 N*m (1020 kgf*cm, 74 ft.*lbf)

2. **INSTALL REAR SUSPENSION MEMBER SUB-ASSEMBLY**

   Refer to **INSTALLATION**

3. **TEMPORARILY TIGHTEN REAR NO. 2 SUSPENSION ARM ASSEMBLY**
   a. Temporarily tighten the rear No. 2 suspension arm assembly (inside) with the bolt.

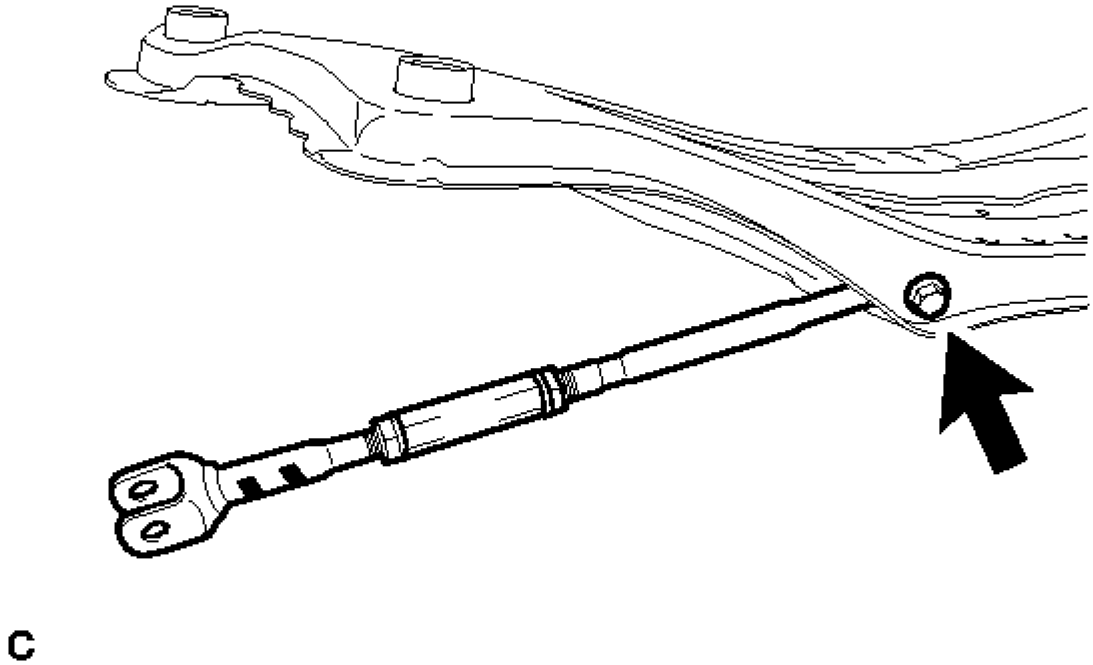

Fig. 29: Tightening Rear No. 2 Suspension Arm Assembly Bolt
Courtesy of TOYOTA MOTOR SALES, U.S.A., INC.

TEXT IN ILLUSTRATION

	Bolt
	Paint Mark

HINT:

Ensure that the paint mark faces the rear of the vehicle.

4. **CONNECT REAR NO. 2 SUSPENSION ARM ASSEMBLY**
    a. Connect the rear No. 2 suspension arm assembly (outer side) to the rear axle carrier sub-assembly with the bolt and nut.

    NOTE: **When temporarily tightening the bolt, keep the nut from rotating.**

    HINT:

    Insert the bolt from the rear of the vehicle.

5. **STABILIZE SUSPENSION** . Refer to **INSTALLATION - Step 10**
6. **FULLY TIGHTEN REAR NO. 2 SUSPENSION ARM ASSEMBLY**
    a. Fully tighten the 2 bolts.

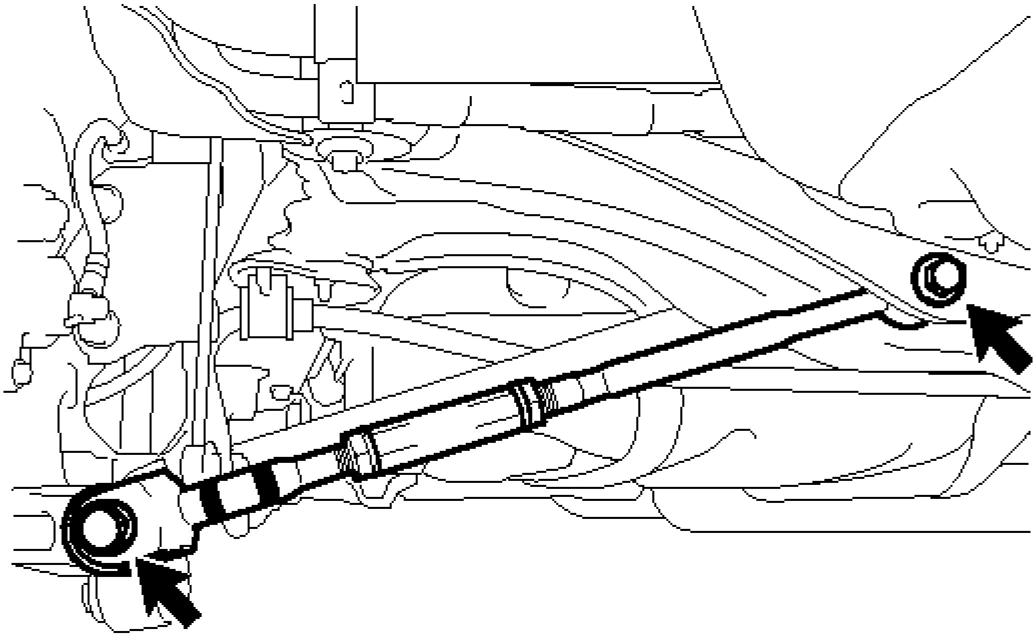

Fig. 30: Tightening Rear No. 2 Suspension Arm Assembly Bolts
Courtesy of TOYOTA MOTOR SALES, U.S.A., INC.

Torque: 100 N*m (1020 kgf*cm, 74 ft.*lbf)

7. **INSTALL REAR HEIGHT CONTROL SENSOR SUB-ASSEMBLY (w/ Height Control Sensor)**

   Refer to **INSTALLATION**

8. **INSTALL REAR WHEELS**

   Torque: 103 N*m (1049 kgf*cm, 76 ft.*lbf)

9. **INSPECT AND ADJUST REAR WHEEL ALIGNMENT**

   Refer to **ADJUSTMENT**

10. **HEIGHT CONTROL SENSOR SIGNAL INITIALIZE (w/ Height Control Sensor)**

    Refer to **INITIALIZATION**

11. **ADJUST HEADLIGHT AIMING (w/ Height Control Sensor)**

    Refer to **ADJUSTMENT**

REAR STRUT ROD

COMPONENTS

ILLUSTRATION

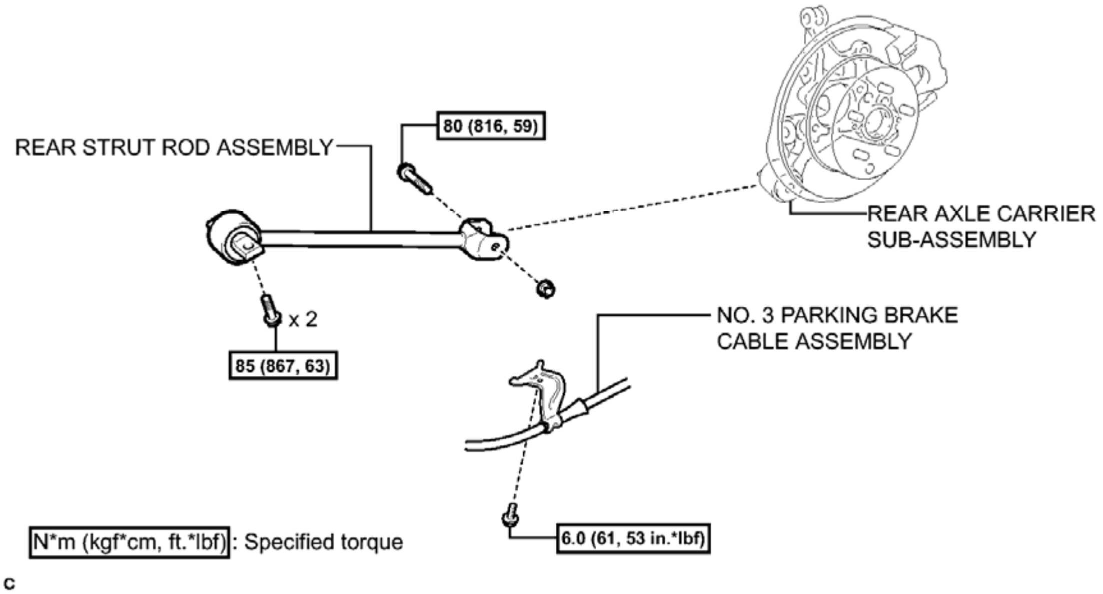
REAR STRUT ROD ASSEMBLY
80 (816, 59)
REAR AXLE CARRIER
SUB-ASSEMBLY
x 2
85 (867, 63)
NO. 3 PARKING BRAKE
CABLE ASSEMBLY
N*m (kgf*cm, ft.*lbf): Specified torque
6.0 (61, 53 in.*lbf)
c

Fig. 31: Identifying Rear Strut Rod Replacement Components With Torque Specifications
Courtesy of TOYOTA MOTOR SALES, U.S.A., INC.

REMOVAL

REMOVAL

HINT:

- Use the same procedure for the RH side and LH side.
- The procedure listed below is for the LH side.

1. **REMOVE REAR WHEEL**
2. **SEPARATE NO. 3 PARKING BRAKE CABLE ASSEMBLY**
    a. Remove the bolt and separate the No. 3 parking brake cable assembly from the vehicle.

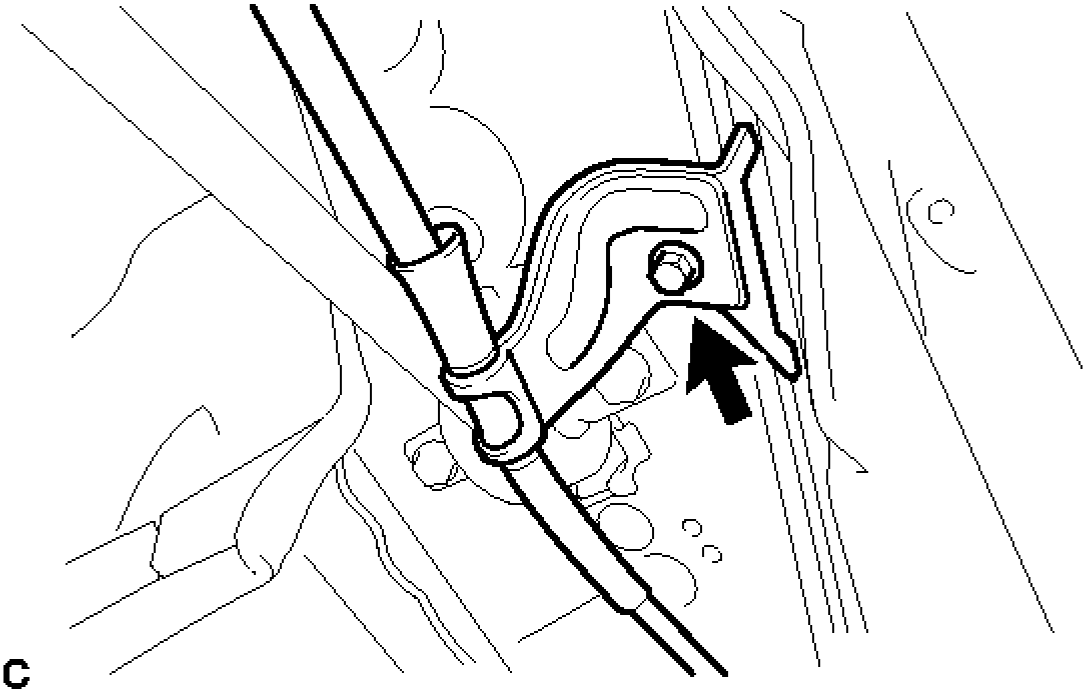

Fig. 32: Identifying No. 3 Parking Brake Cable Assembly Bolt
Courtesy of TOYOTA MOTOR SALES, U.S.A., INC.

3. **REMOVE REAR STRUT ROD ASSEMBLY**
   a. Support the rear axle carrier sub assembly with a jack using a wooden block.

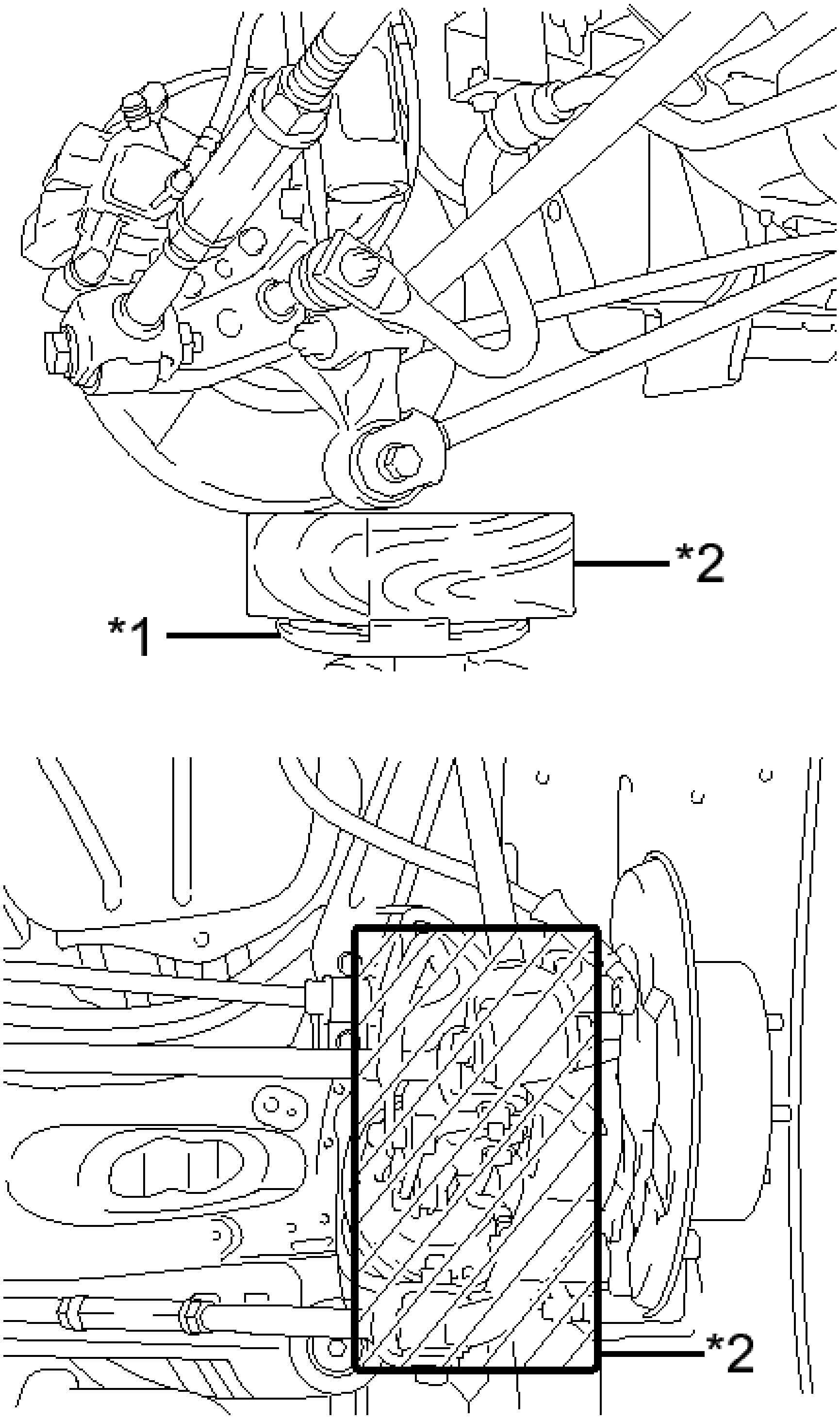

Fig. 33: Identifying Jack And Wooden Block
Courtesy of TOYOTA MOTOR SALES, U.S.A., INC.

TEXT IN ILLUSTRATION

*1	Jack

*2	Wooden Block

b. Remove the 2 bolts and separate the rear strut rod assembly (front side).

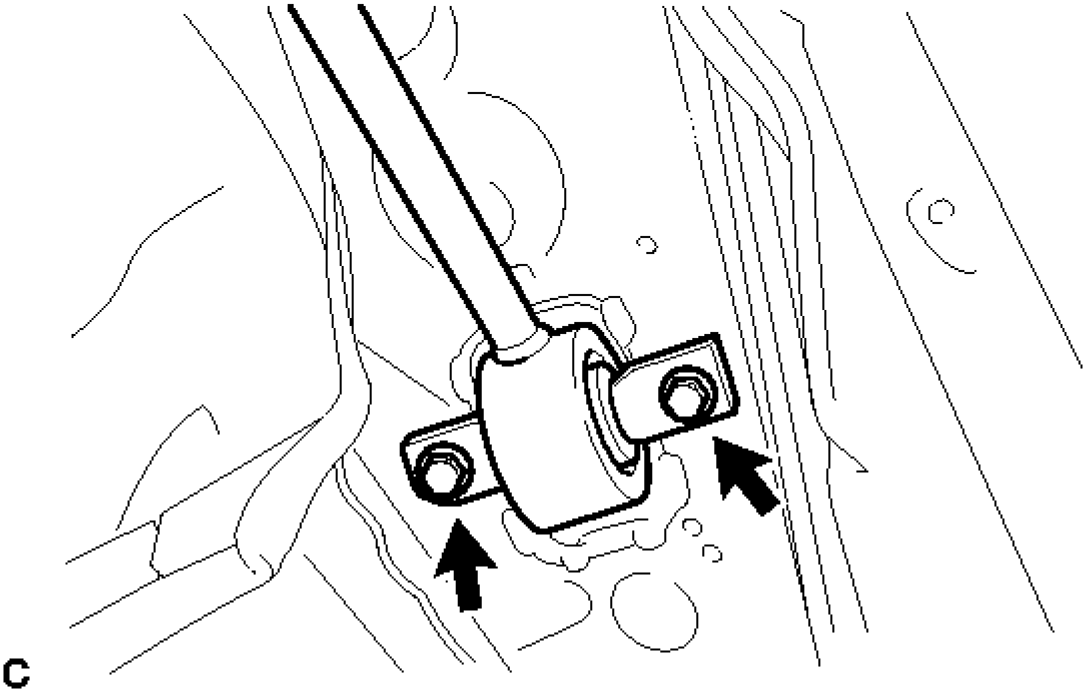

Fig. 34: Identifying Rear Strut Rod Assembly And Bolts (Front Side)
Courtesy of TOYOTA MOTOR SALES, U.S.A., INC.

c. Remove the bolt, nut and rear strut rod assembly from the rear axle carrier sub-assembly.

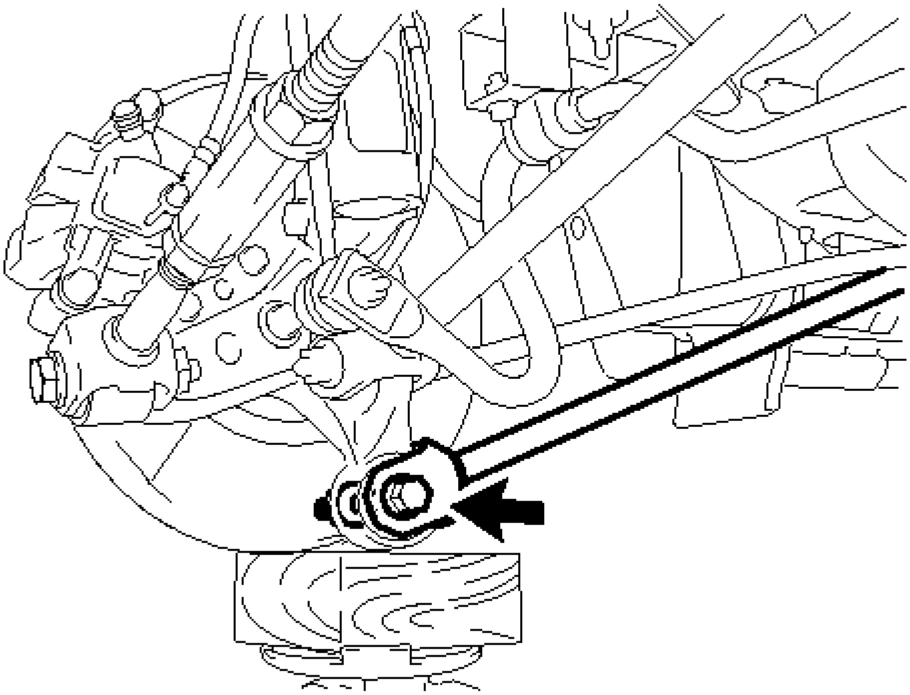

Fig. 35: Locating Rear Strut Rod Assembly Fasteners
Courtesy of TOYOTA MOTOR SALES, U.S.A., INC.

NOTE: **When removing the bolt, keep the nut from rotating.**

INSTALLATION

INSTALLATION

HINT:

- Use the same procedure for the RH side and LH side.
- The procedure listed below is for the LH side.

1. **TEMPORARILY TIGHTEN REAR STRUT ROD ASSEMBLY**
    a. Temporarily tighten rear strut rod assembly (rear side) with the bolt and nut.

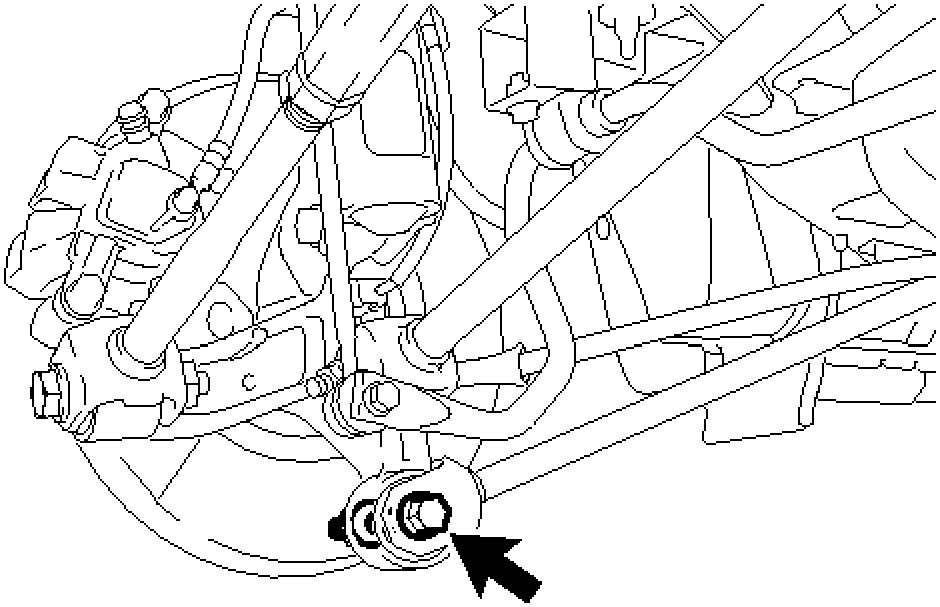

P

Fig. 36: Locating Rear Strut Rod
Courtesy of TOYOTA MOTOR SALES, U.S.A., INC.

NOTE: When temporarily tightening the bolt, keep the nut from rotating.

HINT:

Insert the bolt from the inside of the vehicle.

b. Support the rear axle carrier sub-assembly with a jack and a wooden block.
c. Connect the rear strut rod assembly (front side) with the 2 bolts.

2. **STABILIZE SUSPENSION** . Refer to **INSTALLATION - Step 10**
3. **FULLY TIGHTEN REAR STRUT ROD ASSEMBLY**
    a. Fully tighten the bolt (rear side).

    Torque: 80 N*m (816 kgf*cm, 59 ft.*lbf)

    NOTE: Since a stopper nut is used, fully tighten the bolt.

    b. Fully tighten the 2 bolts (front side).

    Torque: 85 N*m (867 kgf*cm, 63 ft.*lbf)

4. **CONNECT NO. 3 PARKING BRAKE CABLE ASSEMBLY**
    a. Connect the No. 3 parking brake cable assembly with the bolt.

Torque: 6.0 N*m (61 kgf*cm, 53 in.*lbf)

5. **INSTALL REAR WHEEL**

   Torque: 103 N*m (1049 kgf*cm, 76 ft.*lbf)

REAR STABILIZER BAR

COMPONENTS

ILLUSTRATION

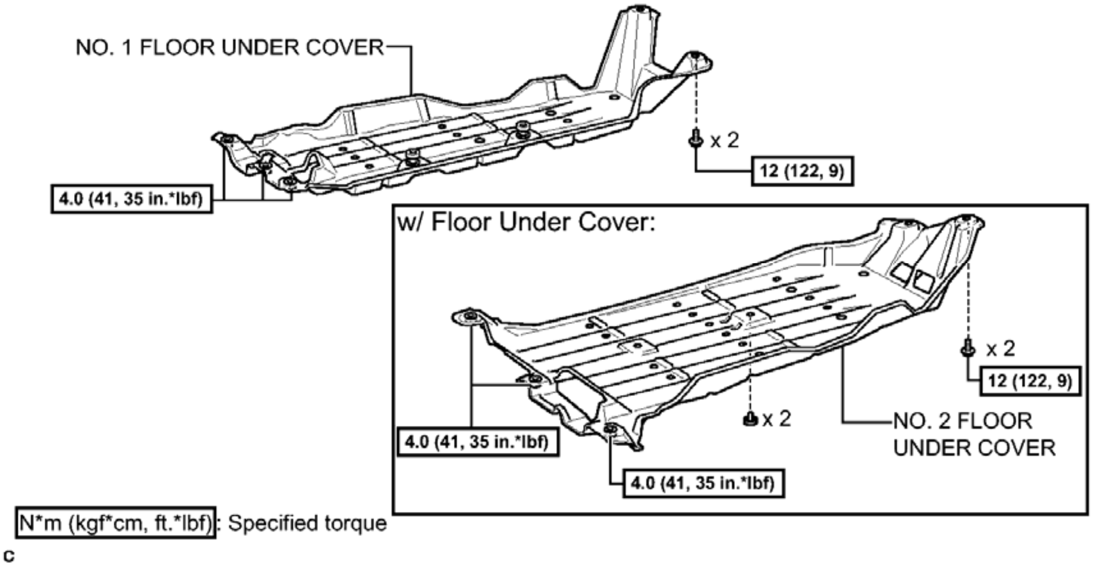
NO. 1 FLOOR UNDER COVER
x 2
12 (122, 9)
4.0 (41, 35 in.*lbf)
w/ Floor Under Cover:
x 2
12 (122, 9)
x 2
NO. 2 FLOOR UNDER COVER
4.0 (41, 35 in.*lbf)
4.0 (41, 35 in.*lbf)
N*m (kgf*cm, ft.*lbf): Specified torque
c

Fig. 37: Identifying Rear Stabilizer Bar Replacement Components With Torque Specifications (1 Of 2)
Courtesy of TOYOTA MOTOR SALES, U.S.A., INC.

ILLUSTRATION

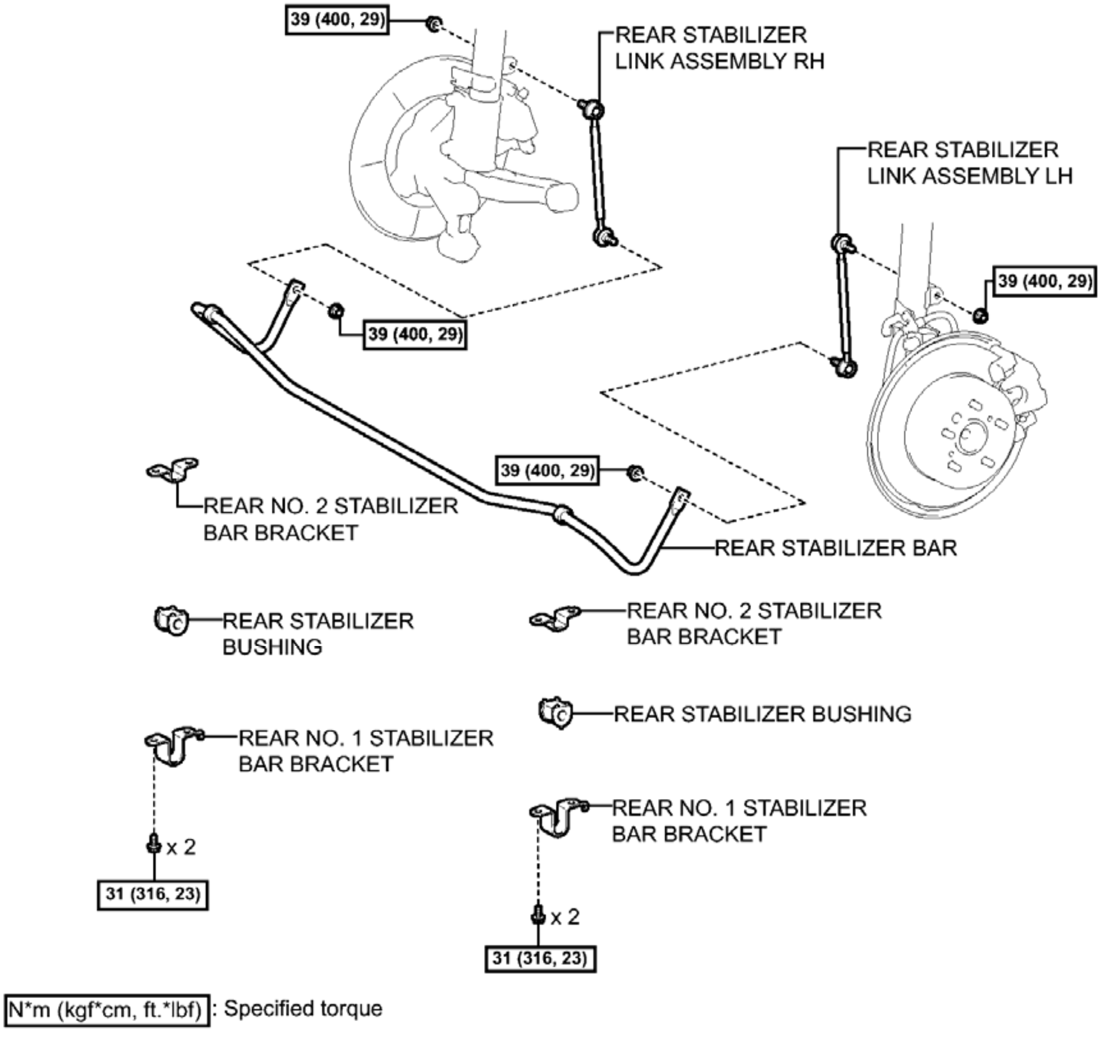
39 (400, 29)
REAR STABILIZER LINK ASSEMBLY RH
REAR STABILIZER LINK ASSEMBLY LH
39 (400, 29)
39 (400, 29)
39 (400, 29)
REAR NO. 2 STABILIZER BAR BRACKET
REAR STABILIZER BAR
REAR STABILIZER BUSHING
REAR NO. 2 STABILIZER BAR BRACKET
REAR STABILIZER BUSHING
REAR NO. 1 STABILIZER BAR BRACKET
x 2
31 (316, 23)
REAR NO. 1 STABILIZER BAR BRACKET
x 2
31 (316, 23)
N*m (kgf*cm, ft.*lbf) : Specified torque
c

Fig. 38: Identifying Rear Stabilizer Bar Replacement Components With Torque Specifications (2 Of 2)
Courtesy of TOYOTA MOTOR SALES, U.S.A., INC.

REMOVAL

REMOVAL

1. **REMOVE REAR WHEELS**
2. **REMOVE NO. 2 FLOOR UNDER COVER (w/ Floor Under Cover)**
    a. Remove the 2 bolts and 2 clips.

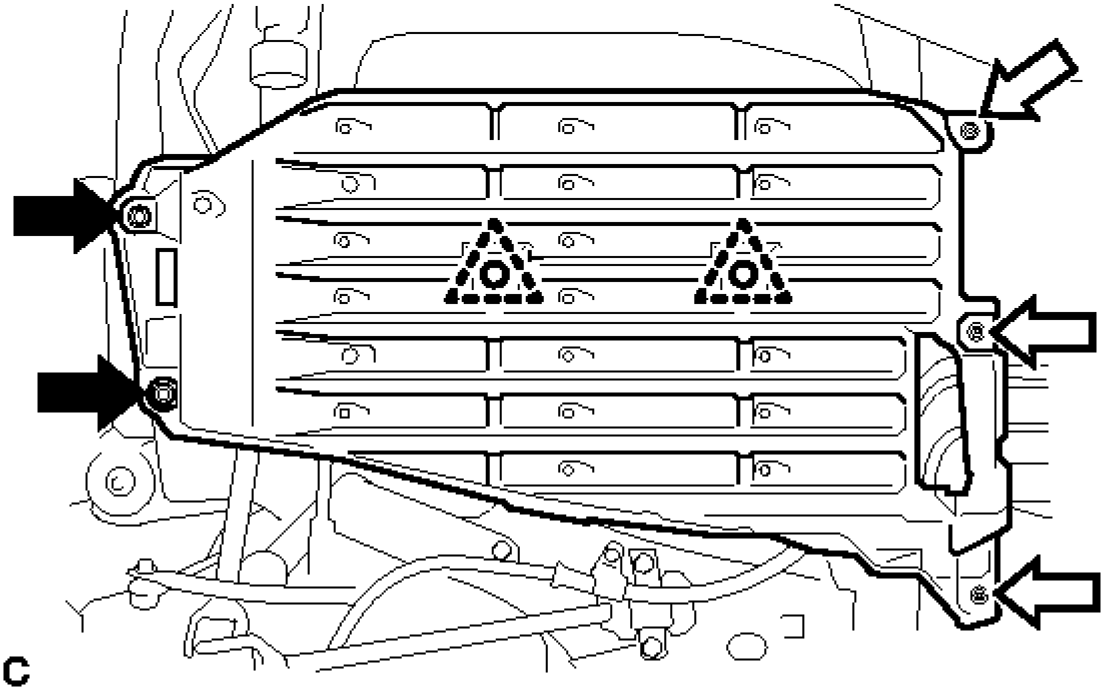

Fig. 39: Identifying No. 2 Floor Under Cover Fasteners (For LH Side)
Courtesy of TOYOTA MOTOR SALES, U.S.A., INC.

TEXT IN ILLUSTRATION

	Bolt
	Nut (attached to under cover)

b. Disengage the 3 nuts and remove the No. 2 floor under cover.

3. **REMOVE NO. 1 FLOOR UNDER COVER**
   a. Remove the 2 bolts.

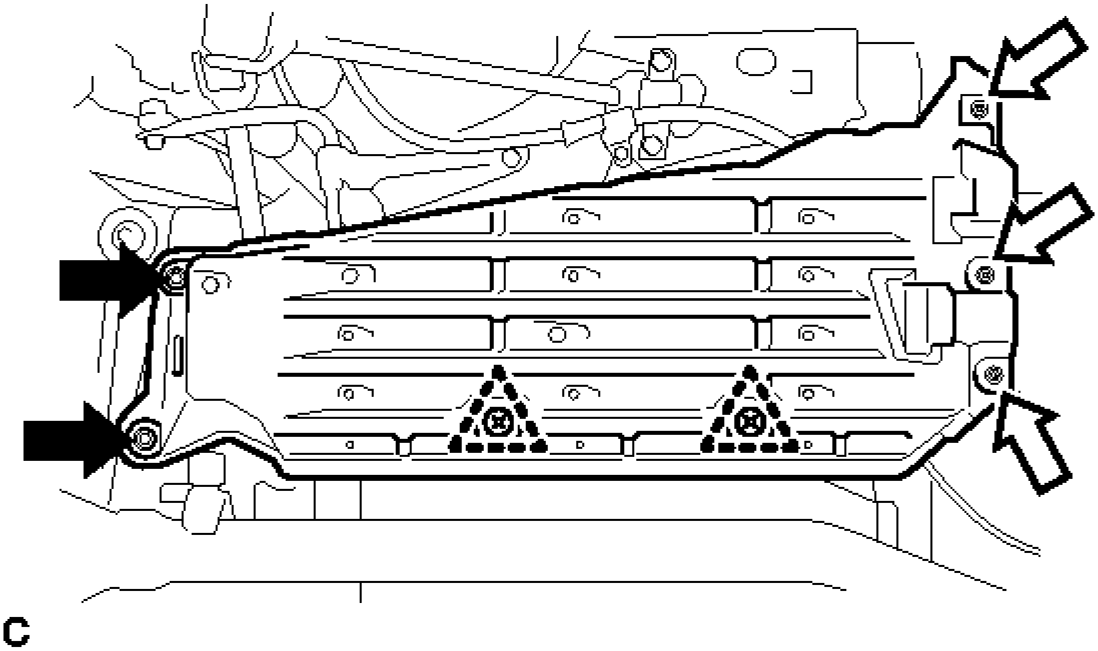

Fig. 40: Identifying No. 1 Floor Under Cover Fasteners (For RH Side)
Courtesy of TOYOTA MOTOR SALES, U.S.A., INC.

TEXT IN ILLUSTRATION

	Bolt
	Nut (attached to under cover)

b. Disengage the 3 nuts and 2 clips, and remove the No. 1 floor under cover.

4. **REMOVE REAR STABILIZER LINK ASSEMBLY LH**
   a. Remove the nut and separate the rear stabilizer link assembly LH from the rear shock absorber with coil spring.

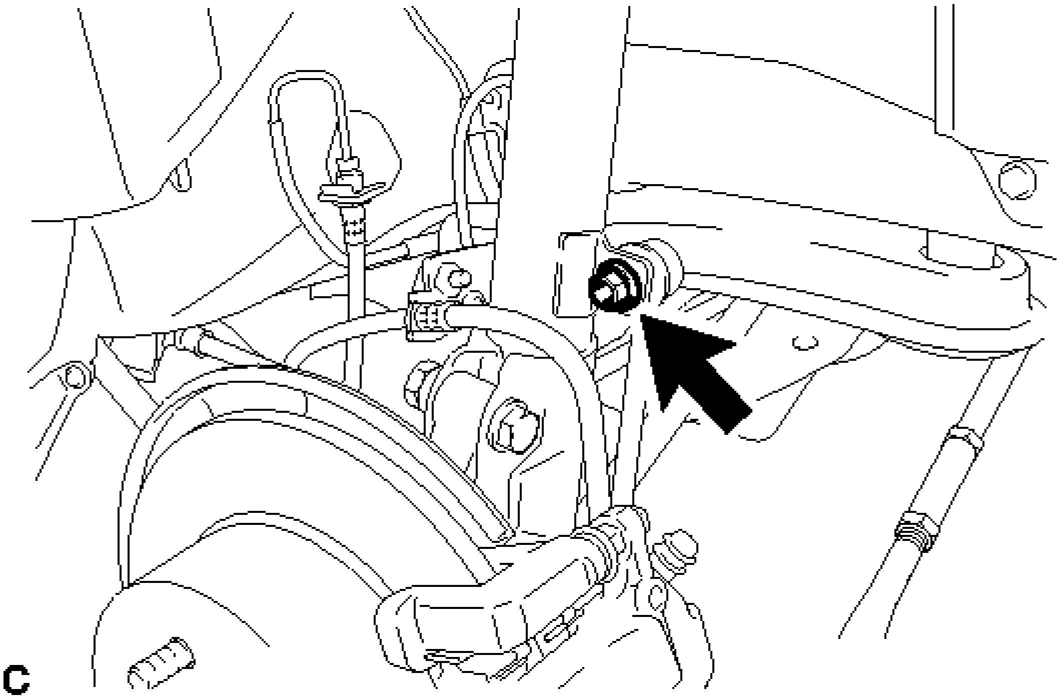

Fig. 41: Identifying Rear Stabilizer Link Assembly Nut LH
Courtesy of TOYOTA MOTOR SALES, U.S.A., INC.

If the ball joint turns together with the nut, use a hexagon wrench to hold the stud.

b. Remove the nut and rear stabilizer link assembly LH from the rear stabilizer bar.

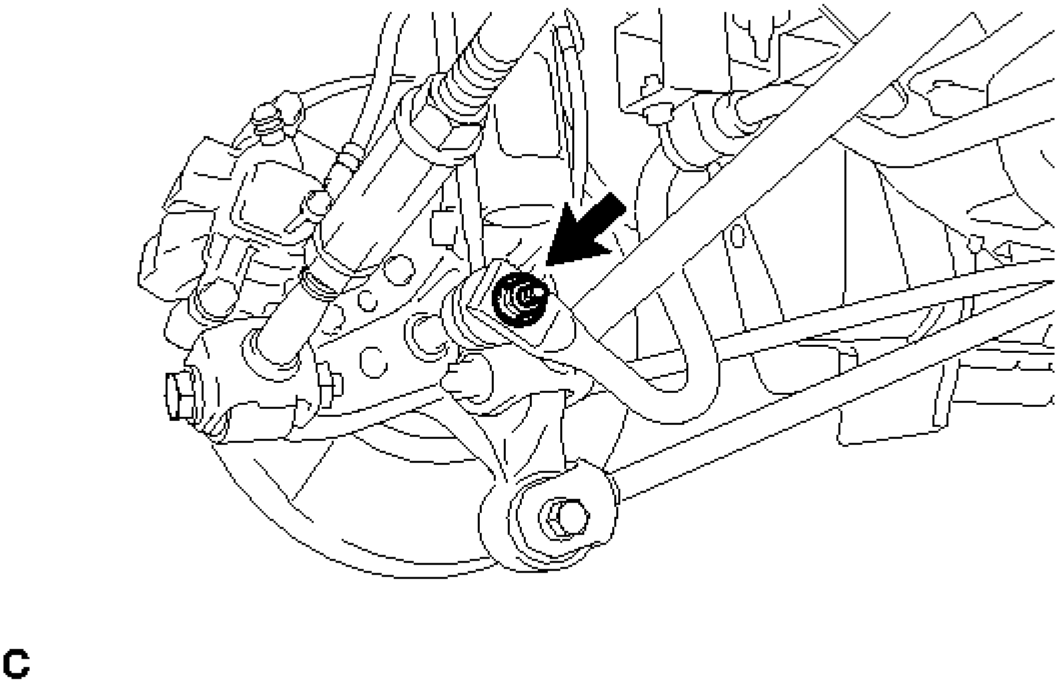

Fig. 42: Identifying Rear Stabilizer Assembly Nut LH
Courtesy of TOYOTA MOTOR SALES, U.S.A., INC.

If the ball joint turns together with the nut, use a hexagon wrench to hold the stud.

5. **REMOVE REAR STABILIZER LINK ASSEMBLY RH**

   HINT:

   Perform the same procedure as for the LH side.

6. **REMOVE REAR STABILIZER BAR**
   a. Remove the 4 bolts, rear stabilizer bar, 2 rear No. 1 stabilizer bar brackets, 2 rear No. 2 stabilizer bar brackets and 2 rear stabilizer bushings from the rear suspension member sub-assembly.

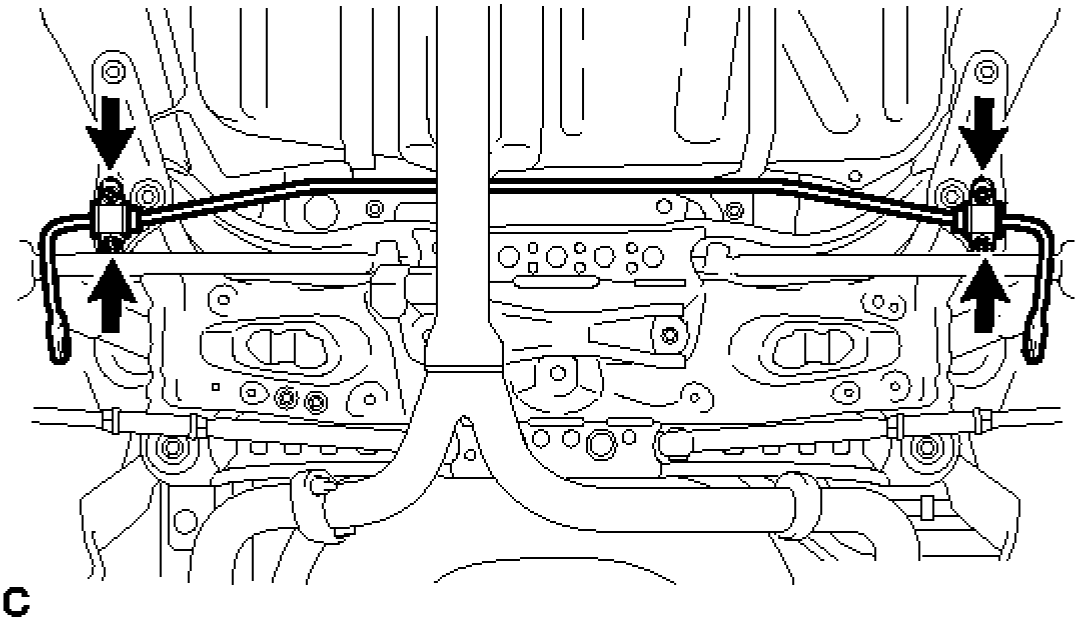

Fig. 43: Identifying Rear Stabilizer Bar Bolts
Courtesy of TOYOTA MOTOR SALES, U.S.A., INC.

7. **REMOVE REAR NO. 2 STABILIZER BAR BRACKET**
   a. Remove the 2 rear No. 2 stabilizer bar brackets from the rear stabilizer bar.
8. **REMOVE REAR NO. 1 STABILIZER BAR BRACKET**
   a. Remove the 2 rear No. 1 stabilizer bar brackets from the rear stabilizer bar.
9. **REMOVE REAR STABILIZER BUSHING**
   a. Remove the 2 rear stabilizer bushings from the rear stabilizer bar.

INSPECTION

INSPECTION

1. **INSPECT REAR STABILIZER LINK ASSEMBLY**
    a. Inspect the turning torque of the ball joint.

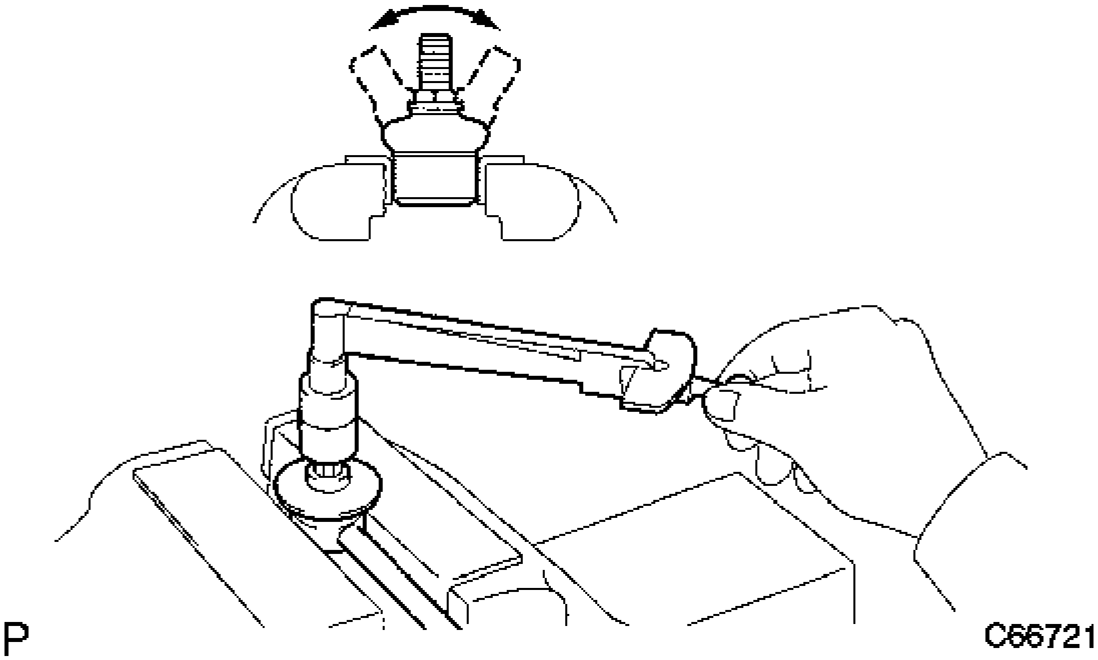

Fig. 44: Inspecting Rear Stabilizer Link Assembly
Courtesy of TOYOTA MOTOR SALES, U.S.A., INC.

1. Secure the rear stabilizer link assembly in a vise using aluminum plates.
2. Install the nut to the rear stabilizer link assembly stud.
3. Using a torque wrench, turn the stud continuously at a rate of 3 to 5 seconds per turn and take the torque reading on the 5th turn.

    Turning torque

    0.05 to 1.0 N*m (0.5 to 10 kgf*cm, 0.4 to 8.7 in.*lbf)

    If the turning torque is not within the specified range, replace the rear stabilizer link assembly with a new one.

b. Inspect the dust cover.
1. Check that the dust cover is not cracked and that there is no grease on it.

    If there is any abnormality, replace the rear stabilizer link assembly with a new one.

INSTALLATION

INSTALLATION

1. **INSTALL REAR STABILIZER BUSHING (for LH Side)**
    a. Install the rear stabilizer bushing to the outside of the stopper ring on the rear stabilizer bar as shown in the illustration.

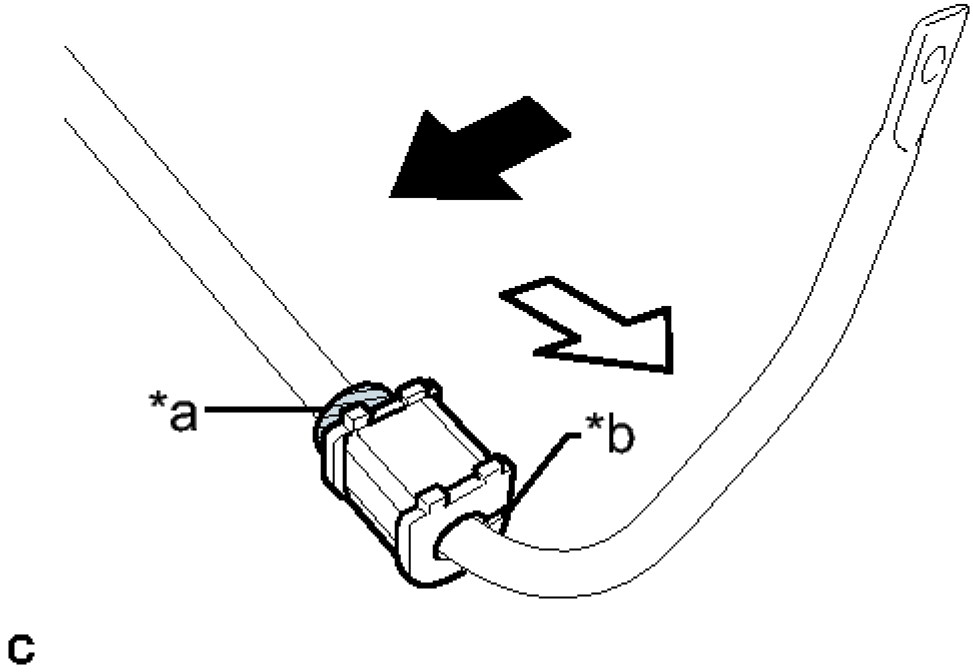

Fig. 45: Installing Rear Stabilizer Bushing (For LH Side)
Courtesy of TOYOTA MOTOR SALES, U.S.A., INC.

TEXT IN ILLUSTRATION

*a	Stopper Ring
*b	Cutout
·	Front of the Vehicle
·	Outside of the Vehicle

NOTE: **Install the rear stabilizer bushing so that the cutout face rearward.**

2. **INSTALL REAR STABILIZER BUSHING (for RH Side)**

HINT:

Perform the same procedure as for the LH side.

3. **INSTALL REAR NO. 1 STABILIZER BAR BRACKET (for LH Side)**
   a. Install the rear No. 1 stabilizer bar bracket to the rear stabilizer bar.

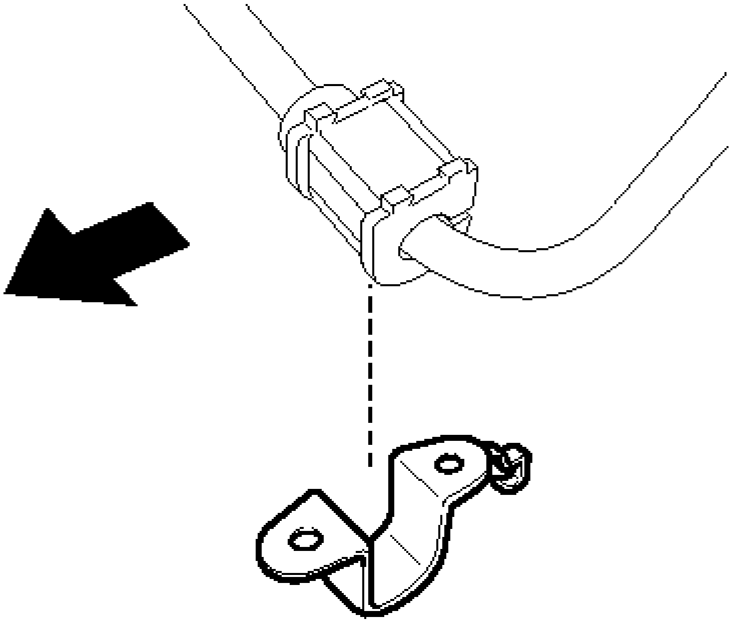

Fig. 46: Installing Rear No. 1 Stabilizer Bar Bracket (For LH Side)
Courtesy of TOYOTA MOTOR SALES, U.S.A., INC.

TEXT IN ILLUSTRATION

·	Front of the Vehicle

NOTE: **Be sure to install the rear No. 1 stabilizer bar bracket in the correct direction.**

4. **INSTALL REAR NO. 1 STABILIZER BAR BRACKET (for RH Side)**

HINT:

Perform the same procedure as for the LH side.

5. **INSTALL REAR NO. 2 STABILIZER BAR BRACKET (for LH Side)**
   a. Install the rear No. 2 stabilizer bar bracket to the rear stabilizer bar.

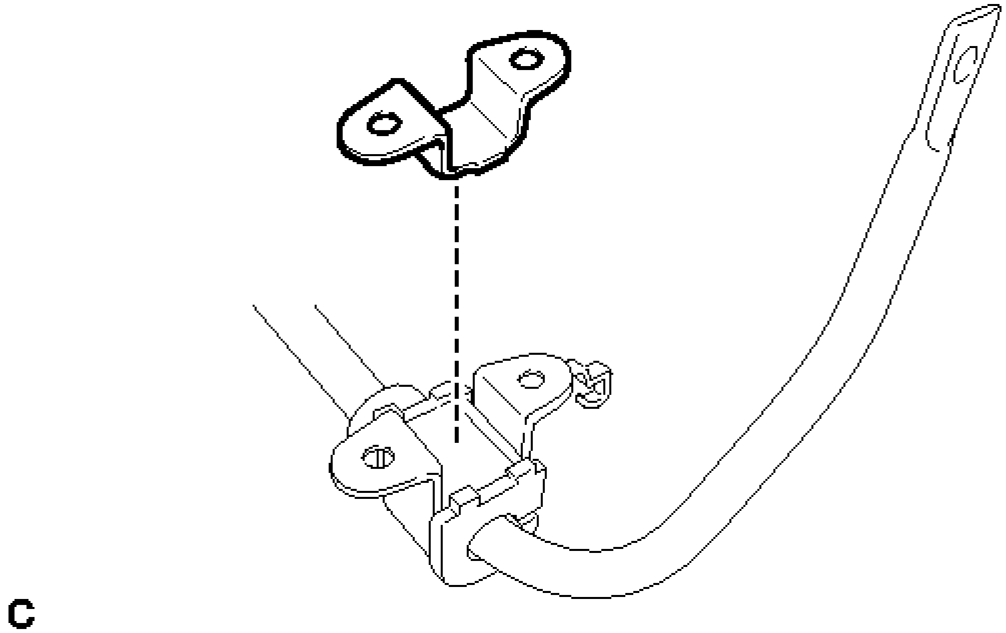

Fig. 47: Identifying No. 2 Stabilizer Bar Bracket
Courtesy of TOYOTA MOTOR SALES, U.S.A., INC.

6. **INSTALL REAR NO. 2 STABILIZER BAR BRACKET (for RH Side)**

   HINT:

   Perform the same procedure as for the LH side.

7. **INSTALL REAR STABILIZER BAR**
   a. Install the rear stabilizer bar with the 4 bolts.

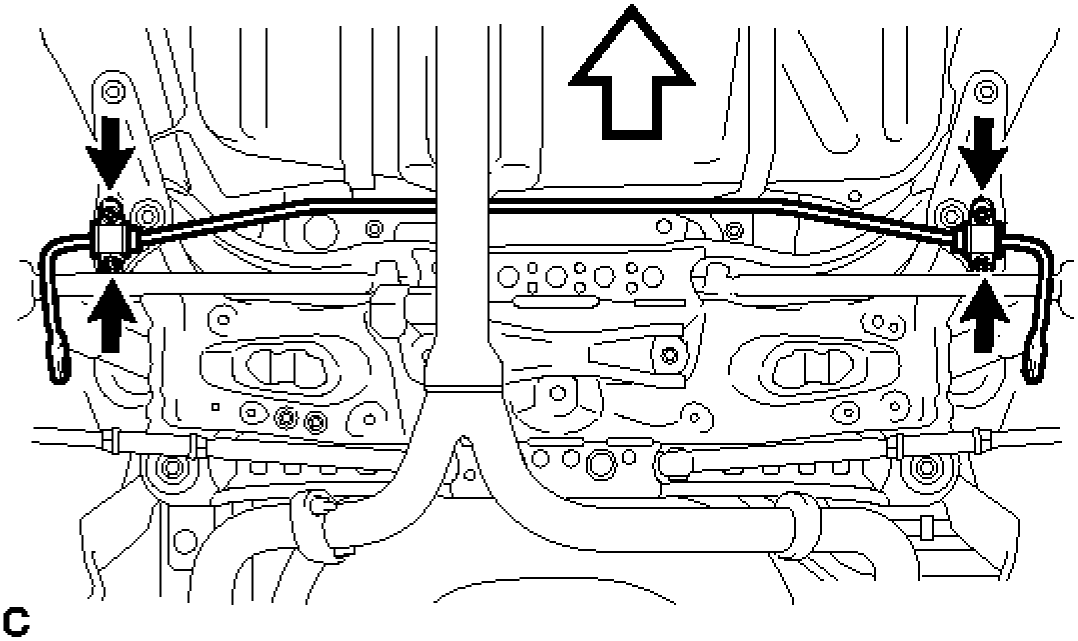

Fig. 48: Identifying Rear Stabilizer Bar Bolts
Courtesy of TOYOTA MOTOR SALES, U.S.A., INC.

TEXT IN ILLUSTRATION

	Bolt
	Front of the Vehicle

Torque: 31 N*m (316 kgf*cm, 23 ft.*lbf)

8. **INSTALL REAR STABILIZER LINK ASSEMBLY LH**
   a. Install the rear stabilizer link assembly LH to the rear shock absorber with coil spring with the nut.

      Torque: 39 N*m (400 kgf*cm, 29 ft.*lbf)

      If the ball joint turns together with the nut, use a hexagon wrench to hold the stud.

   b. Install the rear stabilizer link assembly LH to the rear stabilizer bar with the nut.

      Torque: 39 N*m (400 kgf*cm, 29 ft.*lbf)

      If the ball joint turns together with the nut, use a hexagon wrench to hold the stud.

9. **INSTALL REAR STABILIZER LINK ASSEMBLY RH**

   HINT:

Perform the same procedure as for the LH side.

10. **INSTALL NO. 2 FLOOR UNDER COVER (w/ Floor Under Cover)**
    1. Install the No. 2 floor under cover with the 2 bolts, 3 nuts and 2 clips.

       Bolt

       Torque: 12 N*m (122 kgf*cm, 9 ft.*lbf)

       Nut

       Torque: 4.0 N*m (41 kgf*cm, 35 in.*lbf)

11. **INSTALL NO. 1 FLOOR UNDER COVER**
    1. Install the No. 1 floor under cover with the 2 bolts, 3 nuts and 2 clips.

       Bolt

       Torque: 12 N*m (122 kgf*cm, 9 ft.*lbf)

       Nut

       Torque: 4.0 N*m (41 kgf*cm, 35 in.*lbf)

12. **INSTALL REAR WHEELS**

    Torque: 103 N*m (1049 kgf*cm, 76 ft.*lbf)

REAR SUSPENSION MEMBER

COMPONENTS

ILLUSTRATION

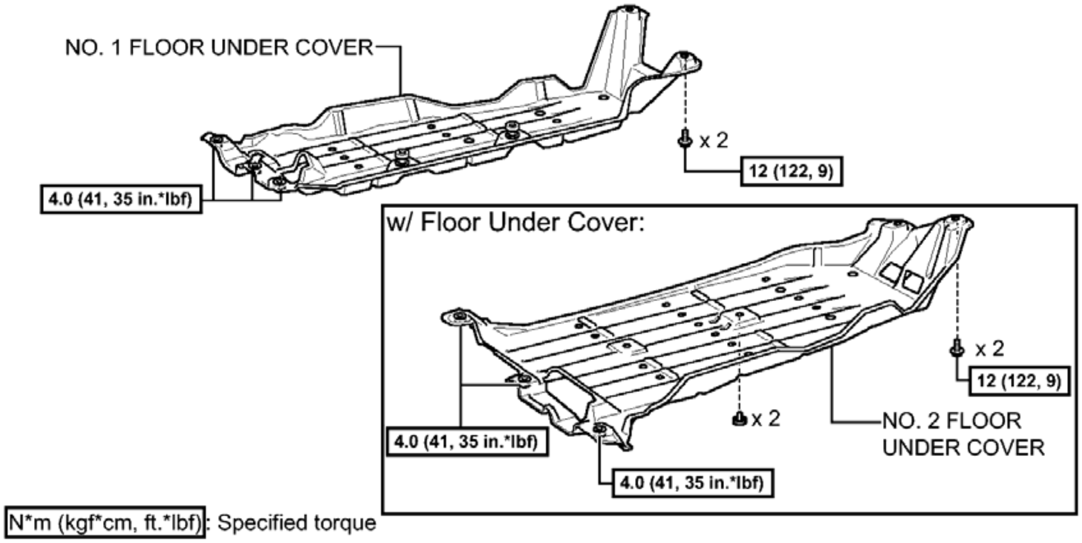
NO. 1 FLOOR UNDER COVER
x 2
12 (122, 9)
4.0 (41, 35 in.*lbf)
w/ Floor Under Cover:
x 2
12 (122, 9)
x 2
NO. 2 FLOOR UNDER COVER
4.0 (41, 35 in.*lbf)
4.0 (41, 35 in.*lbf)
N*m (kgf*cm, ft.*lbf): Specified torque

c

Fig. 49: Identifying Rear Suspension Member Replacement Components With Torque Specifications (1 Of 5)

Courtesy of TOYOTA MOTOR SALES, U.S.A., INC.

ILLUSTRATION

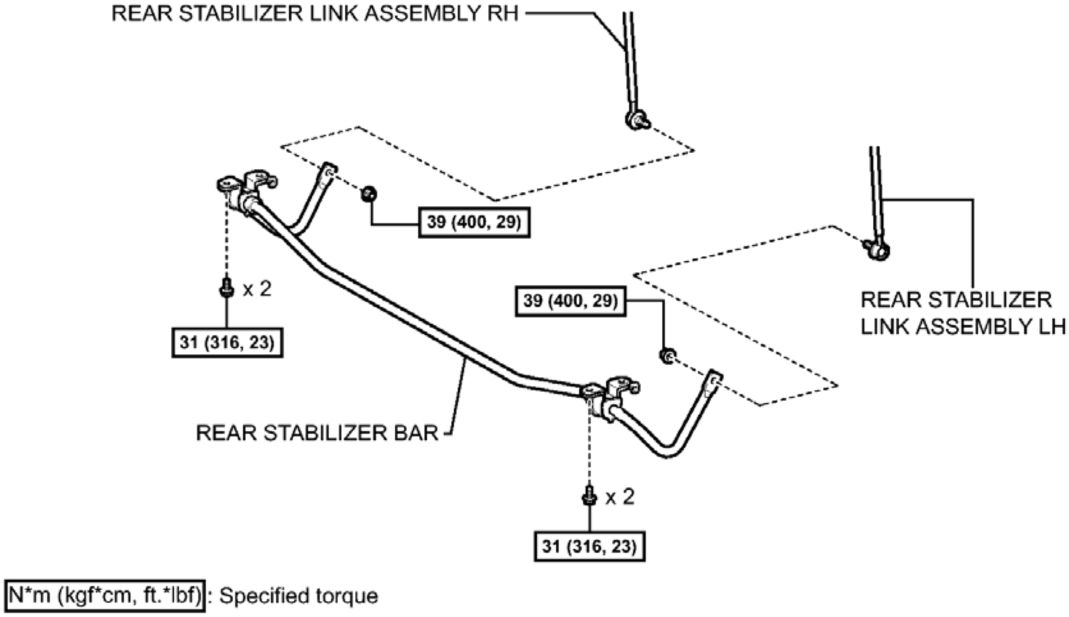
REAR STABILIZER LINK ASSEMBLY RH
39 (400, 29)
x 2
31 (316, 23)
39 (400, 29)
REAR STABILIZER LINK ASSEMBLY LH
REAR STABILIZER BAR
x 2
31 (316, 23)
N*m (kgf*cm, ft.*lbf): Specified torque

c

Fig. 50: Identifying Rear Suspension Member Replacement Components With Torque Specifications (2 Of 5)

Courtesy of TOYOTA MOTOR SALES, U.S.A., INC.

ILLUSTRATION

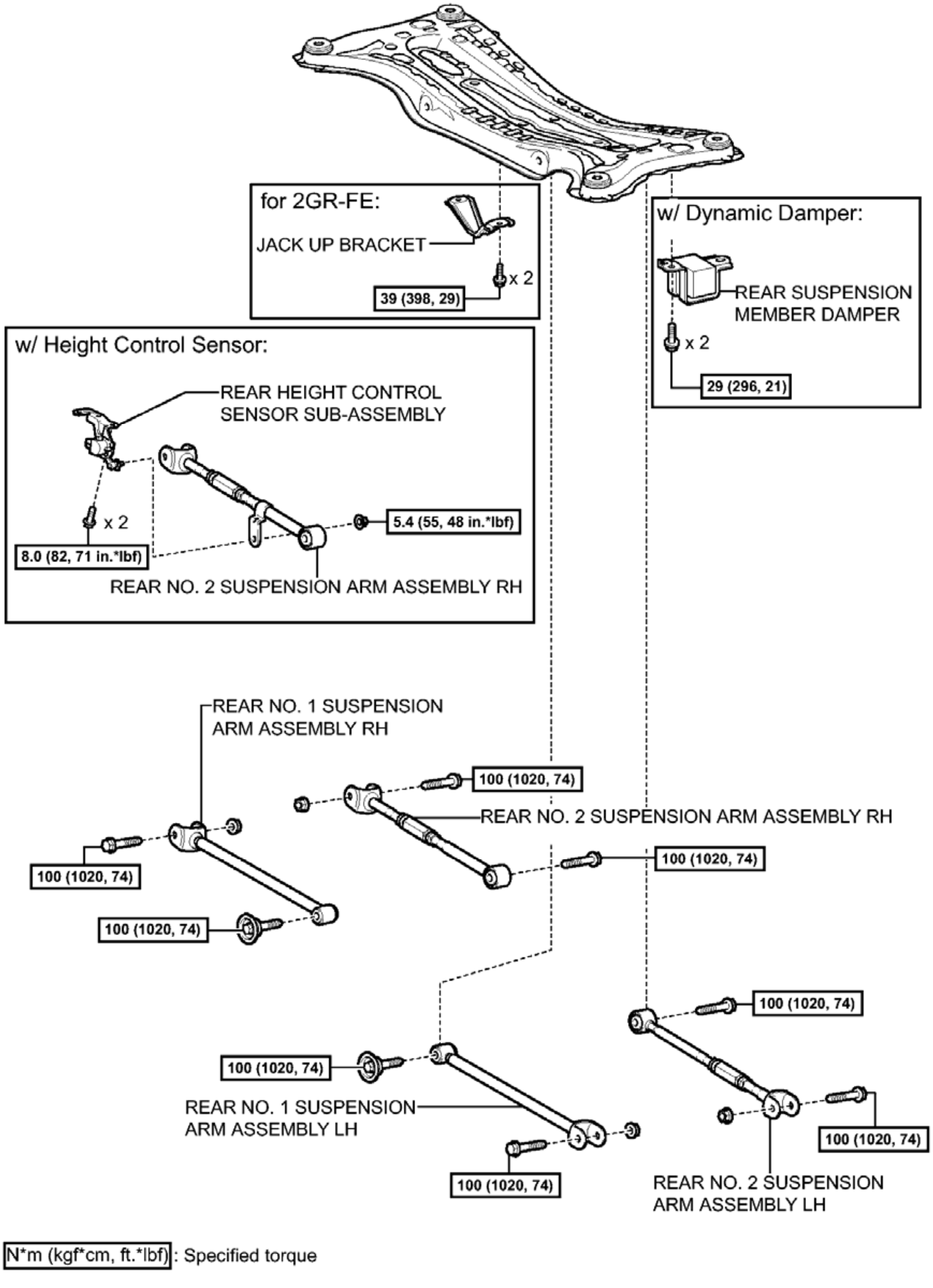
for 2GR-FE:
JACK UP BRACKET
x 2
39 (398, 29)
w/ Dynamic Damper:
REAR SUSPENSION
MEMBER DAMPER
x 2
29 (296, 21)
w/ Height Control Sensor:
REAR HEIGHT CONTROL
SENSOR SUB-ASSEMBLY
x 2
5.4 (55, 48 in.*lbf)
8.0 (82, 71 in.*lbf)
REAR NO. 2 SUSPENSION ARM ASSEMBLY RH
REAR NO. 1 SUSPENSION
ARM ASSEMBLY RH
100 (1020, 74)
REAR NO. 2 SUSPENSION ARM ASSEMBLY RH
100 (1020, 74)
100 (1020, 74)
100 (1020, 74)
100 (1020, 74)
100 (1020, 74)
REAR NO. 1 SUSPENSION
ARM ASSEMBLY LH
100 (1020, 74)
100 (1020, 74)
100 (1020, 74)
REAR NO. 2 SUSPENSION
ARM ASSEMBLY LH
N*m (kgf*cm, ft.*lbf) : Specified torque
C

Fig. 51: Identifying Rear Suspension Member Replacement Components With Torque Specifications (3 Of 5)

Courtesy of TOYOTA MOTOR SALES, U.S.A., INC.

ILLUSTRATION

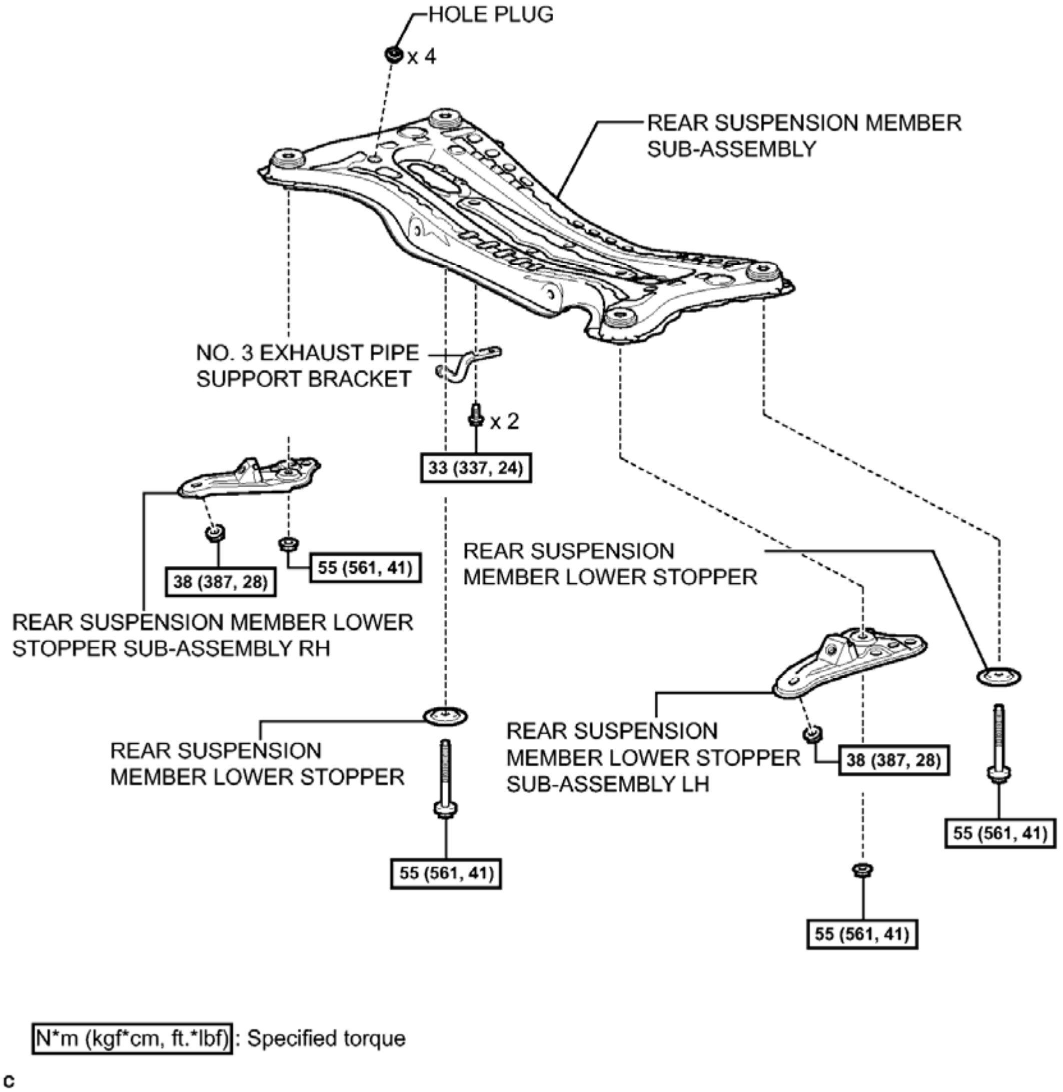
HOLE PLUG
x 4
REAR SUSPENSION MEMBER SUB-ASSEMBLY
NO. 3 EXHAUST PIPE SUPPORT BRACKET
x 2
33 (337, 24)
38 (387, 28)
55 (561, 41)
REAR SUSPENSION MEMBER LOWER STOPPER SUB-ASSEMBLY RH
REAR SUSPENSION MEMBER LOWER STOPPER
REAR SUSPENSION MEMBER LOWER STOPPER
REAR SUSPENSION MEMBER LOWER STOPPER SUB-ASSEMBLY LH
38 (387, 28)
55 (561, 41)
55 (561, 41)
55 (561, 41)
N*m (kgf*cm, ft.*lbf): Specified torque
c

Fig. 52: Identifying Rear Suspension Member Replacement Components With Torque Specifications (4 Of 5)

Courtesy of TOYOTA MOTOR SALES, U.S.A., INC.

ILLUSTRATION

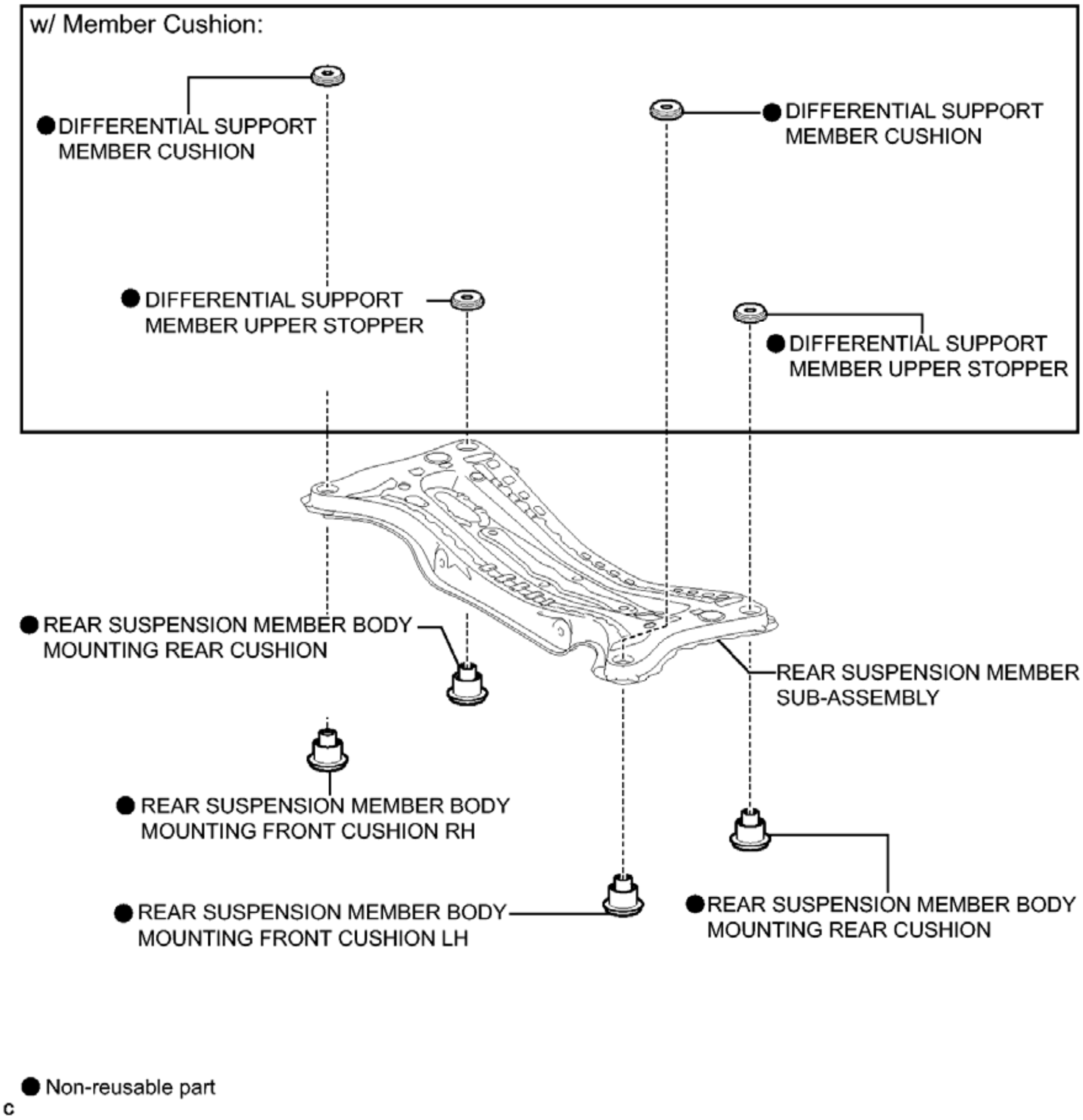
w/ Member Cushion:
● DIFFERENTIAL SUPPORT MEMBER CUSHION
● DIFFERENTIAL SUPPORT MEMBER CUSHION
● DIFFERENTIAL SUPPORT MEMBER UPPER STOPPER
● DIFFERENTIAL SUPPORT MEMBER UPPER STOPPER
● REAR SUSPENSION MEMBER BODY MOUNTING REAR CUSHION
REAR SUSPENSION MEMBER SUB-ASSEMBLY
● REAR SUSPENSION MEMBER BODY MOUNTING FRONT CUSHION RH
● REAR SUSPENSION MEMBER BODY MOUNTING FRONT CUSHION LH
● REAR SUSPENSION MEMBER BODY MOUNTING REAR CUSHION
● Non-reusable part
c

Fig. 53: Identifying Rear Suspension Member Replacement Components With Torque Specifications (5 Of 5)

Courtesy of TOYOTA MOTOR SALES, U.S.A., INC.

REMOVAL

REMOVAL

1. **REMOVE REAR WHEELS**
2. **REMOVE CENTER EXHAUST PIPE ASSEMBLY**
    - for 2GR-FE: Refer to **REMOVAL**
    - for 2AR-FE: Refer to **REMOVAL**

3. **REMOVE NO. 2 FLOOR UNDER COVER (w/ Floor Under Cover)** See step 2
4. **REMOVE NO. 1 FLOOR UNDER COVER** See step 3
5. **REMOVE NO. 3 EXHAUST PIPE SUPPORT BRACKET**
    a. Remove the 2 bolts and No. 3 exhaust pipe support bracket from the rear suspension member sub-assembly.

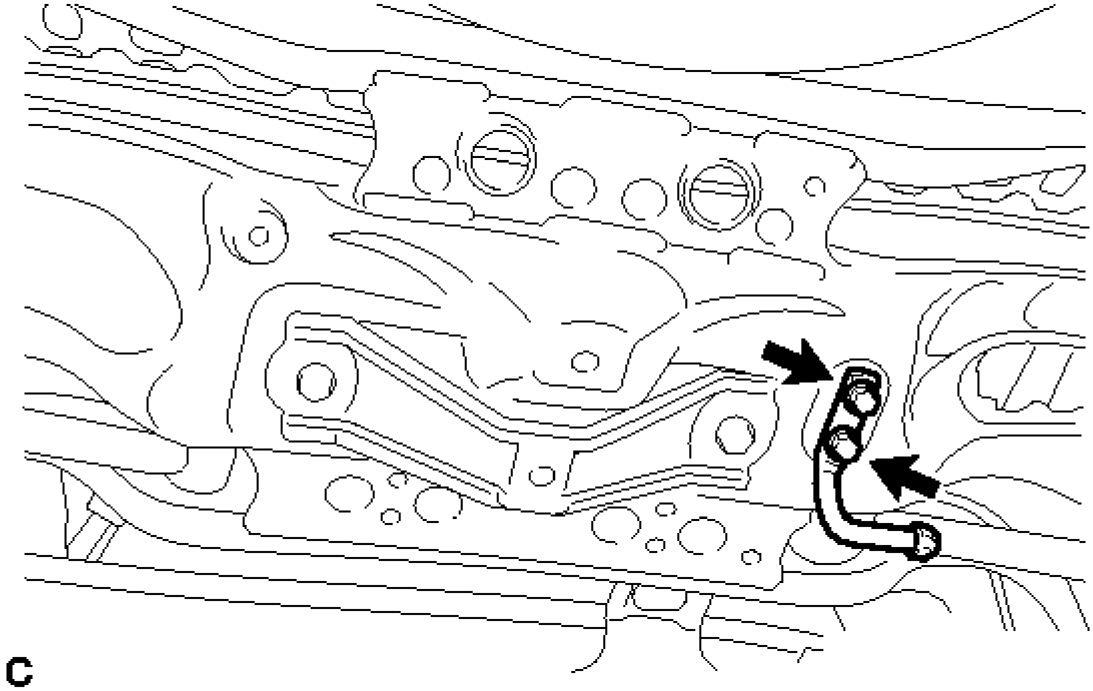

Fig. 54: Identifying No. 3 Exhaust Pipe Support Bracket Bolts
Courtesy of TOYOTA MOTOR SALES, U.S.A., INC.

6. **REMOVE JACK UP BRACKET (for 2GR-FE)**
    a. Remove the 2 bolts and jack up bracket from the rear suspension member sub-assembly.

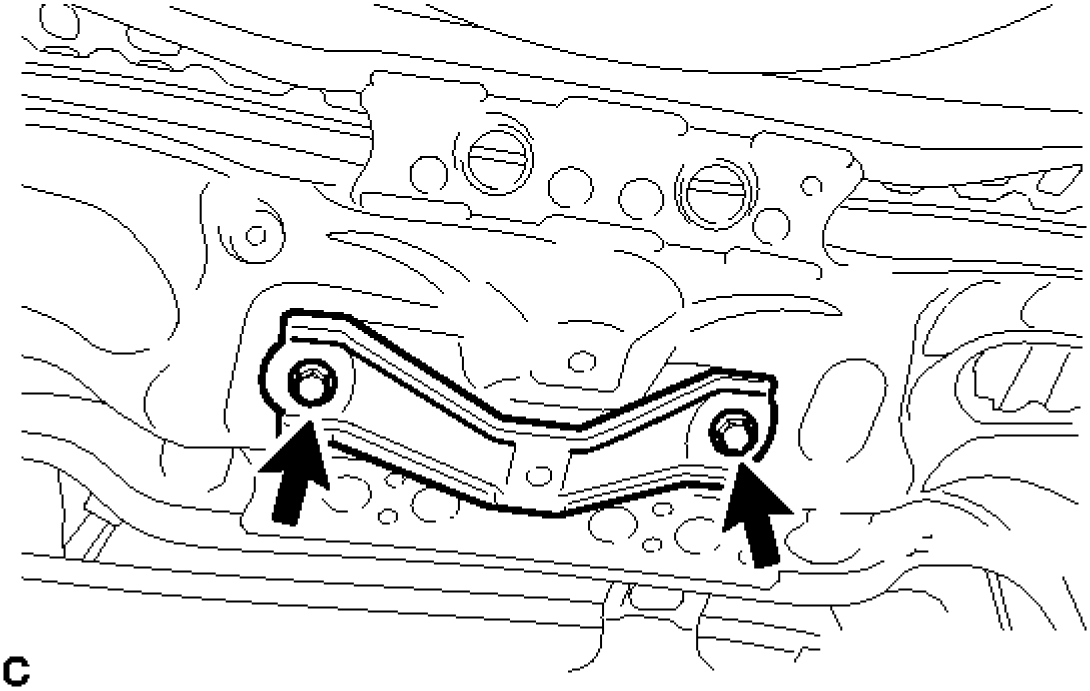

Fig. 55: Identifying Jack Up Bracket Bolts (For 2GR-FE)
Courtesy of TOYOTA MOTOR SALES, U.S.A., INC.

7. **REMOVE REAR SUSPENSION MEMBER DAMPER (w/ Dynamic Damper)**
   a. Remove the 2 bolts and rear suspension member damper from the rear suspension member sub-assembly.

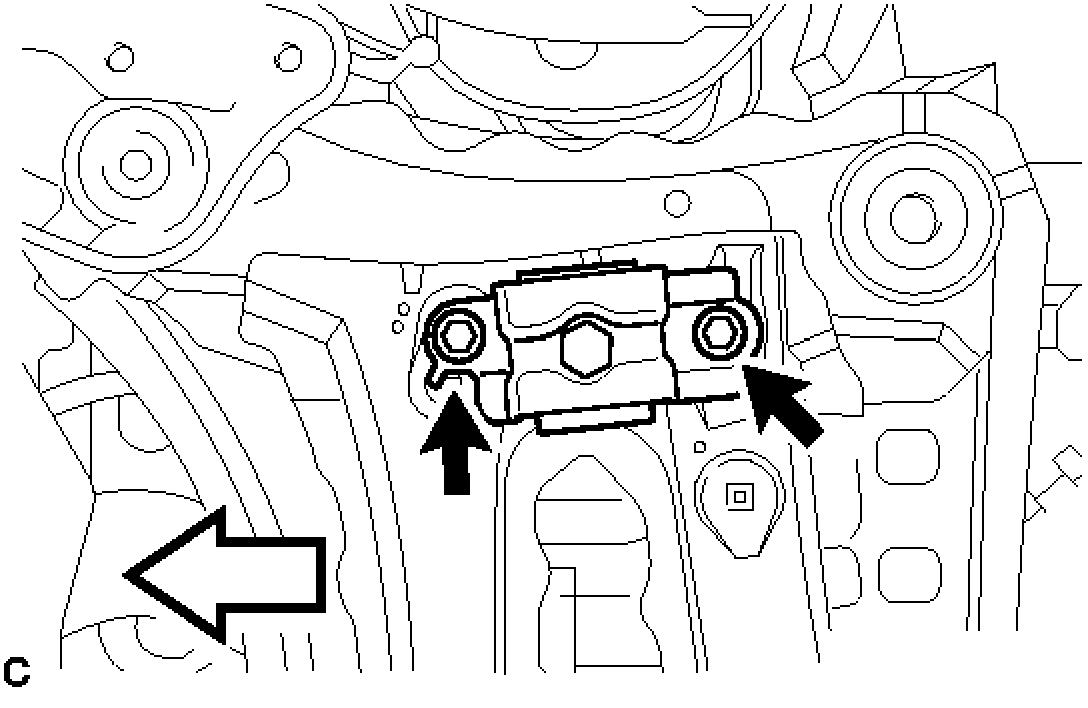

Fig. 56: Identifying Rear Suspension Member Damper Bolts (W/Dynamic Damper)
Courtesy of TOYOTA MOTOR SALES, U.S.A., INC.

TEXT IN ILLUSTRATION

	Front of the Vehicle

8. **SEPARATE REAR STABILIZER LINK ASSEMBLY LH**
    a. Remove the nut and separate the rear stabilizer link assembly LH from the rear stabilizer bar.

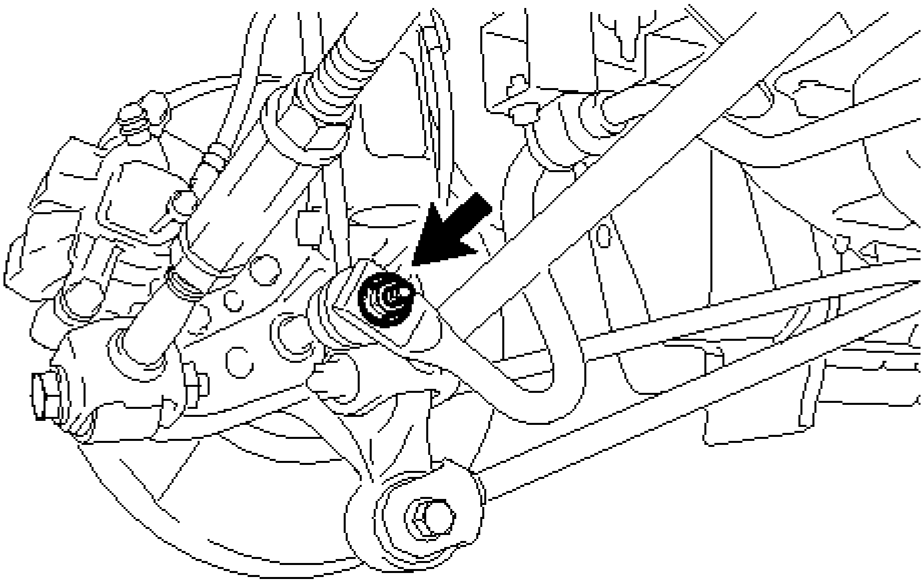

Fig. 57: Identifying Rear Stabilizer Assembly Nut LH
Courtesy of TOYOTA MOTOR SALES, U.S.A., INC.

If the ball joint turns together with the nut, use a hexagon wrench to hold the stud.

9. **SEPARATE REAR STABILIZER LINK ASSEMBLY RH**

    HINT:

    Perform the same procedure as for the LH side.

10. **REMOVE REAR STABILIZER BAR** See step 6
11. **REMOVE REAR HEIGHT CONTROL SENSOR SUB-ASSEMBLY (w/ Height Control Sensor)**

    Refer to **REMOVAL**

12. **SEPARATE REAR NO. 2 SUSPENSION ARM ASSEMBLY LH** See step 3
13. **SEPARATE REAR NO. 2 SUSPENSION ARM ASSEMBLY RH**

    HINT:

    Perform the same procedure as for the LH side.

14. **REMOVE REAR NO. 2 SUSPENSION ARM ASSEMBLY LH** See step 4
15. **REMOVE REAR NO. 2 SUSPENSION ARM ASSEMBLY RH**

    HINT:

    Perform the same procedure as for the LH side.

16. **SEPARATE REAR NO. 1 SUSPENSION ARM ASSEMBLY LH** . Refer to **REMOVAL - Step 10**
17. **SEPARATE REAR NO. 1 SUSPENSION ARM ASSEMBLY RH**

    HINT:

    Perform the same procedure as for the LH side.

18. **REMOVE REAR SUSPENSION MEMBER SUB-ASSEMBLY**
    a. Support the rear suspension member sub-assembly with an engine lifter using 4 attachments or equivalent tools as shown in the illustration.

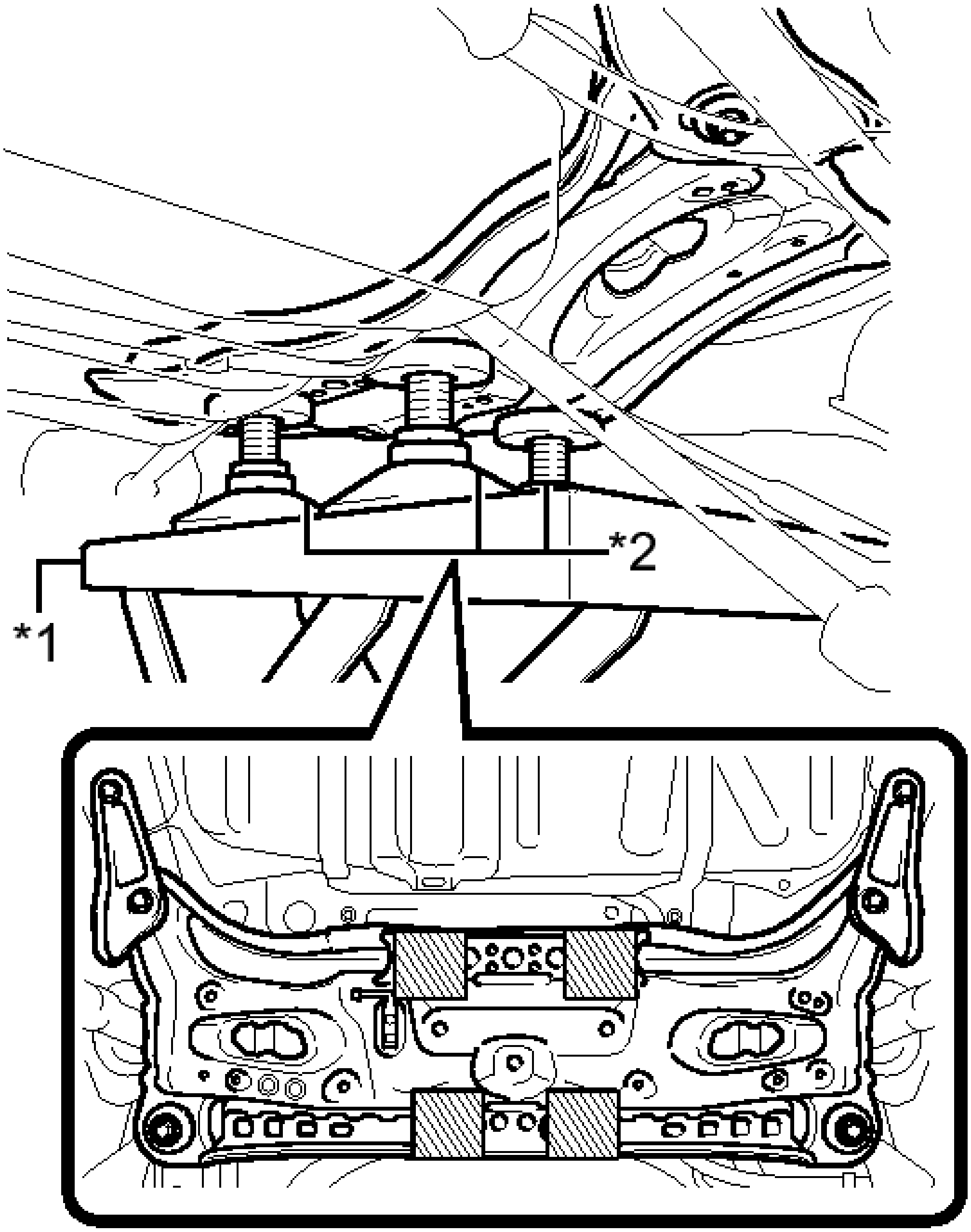

C

Fig. 58: Identifying Engine Lifter And Attachment
Courtesy of TOYOTA MOTOR SALES, U.S.A., INC.

TEXT IN ILLUSTRATION

	Engine

*1	Lifter
*2	Attachment
	Attachment Placement Location

NOTE:

- **Make sure to secure the rear suspension member sub-assembly to prevent it from dropping.**
- **Use the attachments to keep the rear suspension member sub-assembly level.**

b. Remove the 2 bolts, 4 nuts, 2 rear suspension member lower stopper sub-assemblies and 2 rear suspension member lower stoppers.

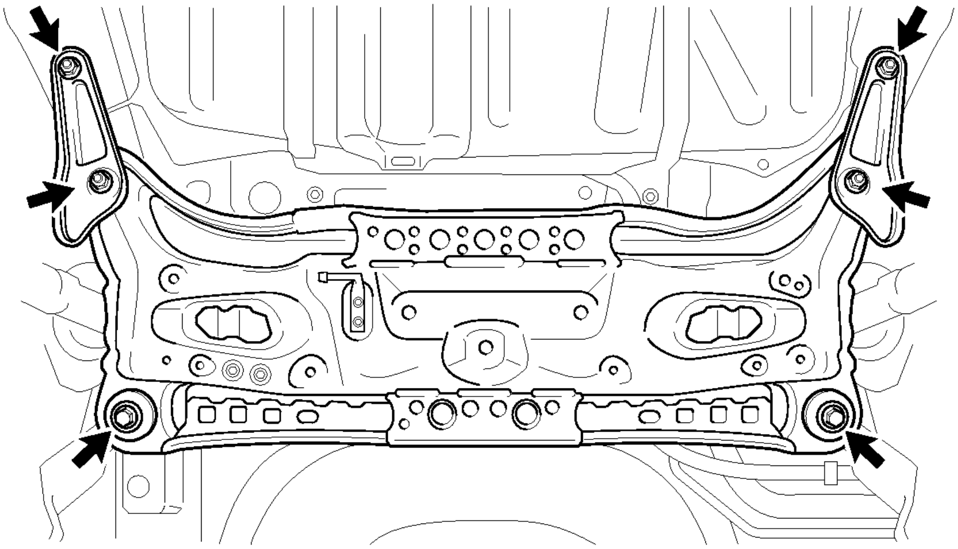

c

Fig. 59: Identifying Rear Suspension Lower Stopper Sub-Assemblies Bolts & Nuts And Rear Suspension Member Lower Stoppers
Courtesy of TOYOTA MOTOR SALES, U.S.A., INC.

c. Slowly lower the rear suspension member sub-assembly.

NOTE: **When lowering the rear suspension member sub-assembly, be careful not to damage the vehicle body or other components installed on the vehicle.**

d. w/ Member Cushion:
   1. Remove the 2 differential support member cushions and 2 differential support member upper stoppers from the rear suspension member sub-assembly.

19. **REMOVE REAR NO. 1 SUSPENSION ARM ASSEMBLY LH** See step 6

20. **REMOVE REAR NO. 1 SUSPENSION ARM ASSEMBLY RH**

HINT:

Perform the same procedure as for the LH side.

21. **REMOVE REAR SUSPENSION MEMBER BODY MOUNTING FRONT CUSHION LH**
    a. Using SST and a press, remove the rear suspension member body mounting front cushion LH from the rear suspension member sub-assembly.

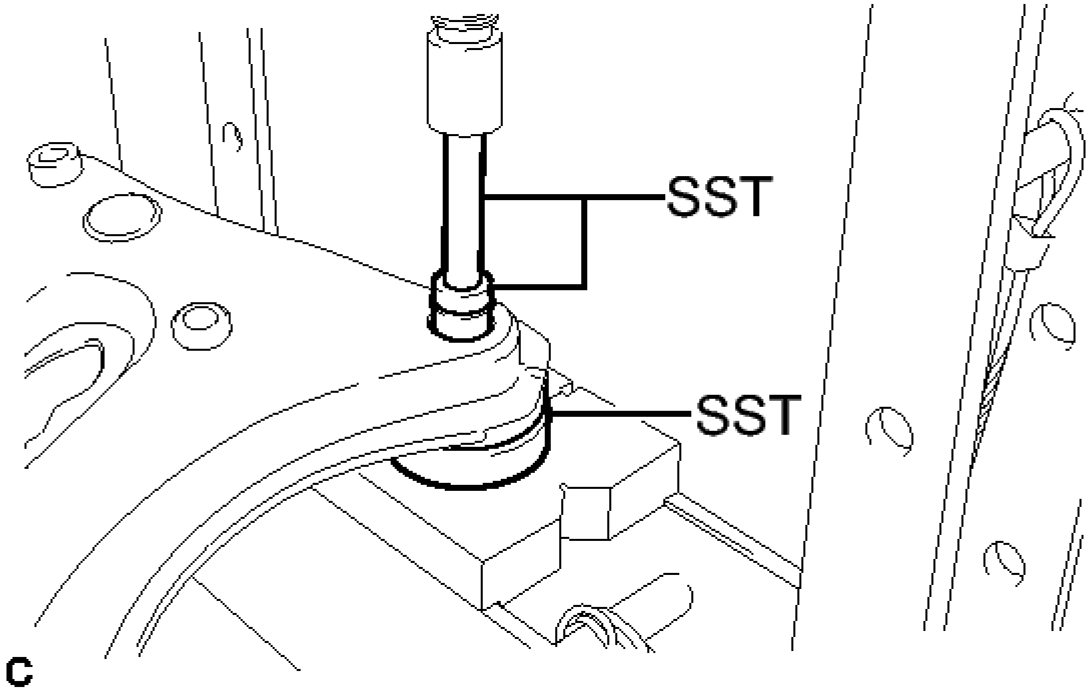

Fig. 60: Identifying Rear Suspension Member Body Mounting Front Cushion And SST LH
Courtesy of TOYOTA MOTOR SALES, U.S.A., INC.

- **SST: 09527-17011**
- **SST: 09950-60010**
  09951-00340
- **SST: 09950-70010**
  09951-07100

22. **REMOVE REAR SUSPENSION MEMBER BODY MOUNTING FRONT CUSHION RH**

HINT:

Perform the same procedure as the LH side.

23. **REMOVE REAR SUSPENSION MEMBER BODY MOUNTING REAR CUSHION (for LH Side)**

a. Using SST and a press, remove the rear suspension member body mounting rear cushion from the rear suspension member sub-assembly.

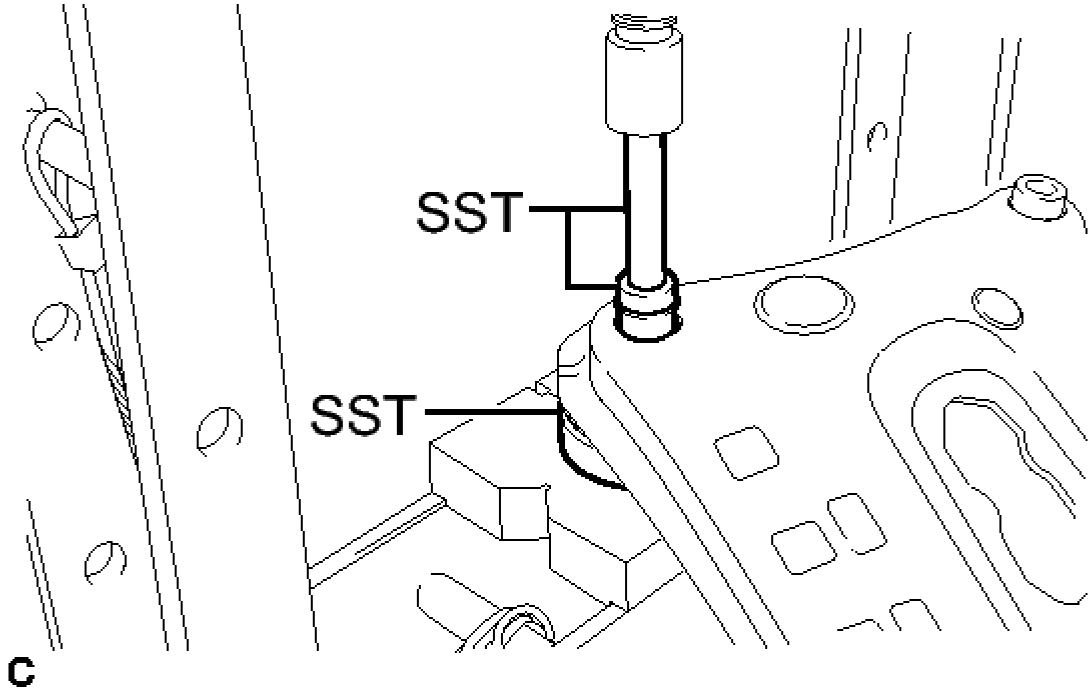

Fig. 61: Identifying Rear Suspension Member Body Mounting Rear Cushion And SST (For LH Side)
Courtesy of TOYOTA MOTOR SALES, U.S.A., INC.

- **SST: 09527-17011**
- **SST: 09950-60010**
  09951-00340
- **SST: 09950-70010**
  09951-07100

24. **REMOVE REAR SUSPENSION MEMBER BODY MOUNTING REAR CUSHION (for RH Side)**

    HINT:

    Perform the same procedure as the LH side.

25. **REMOVE HOLE PLUG**
    a. Remove the 4 hole plugs from the rear suspension member sub-assembly.

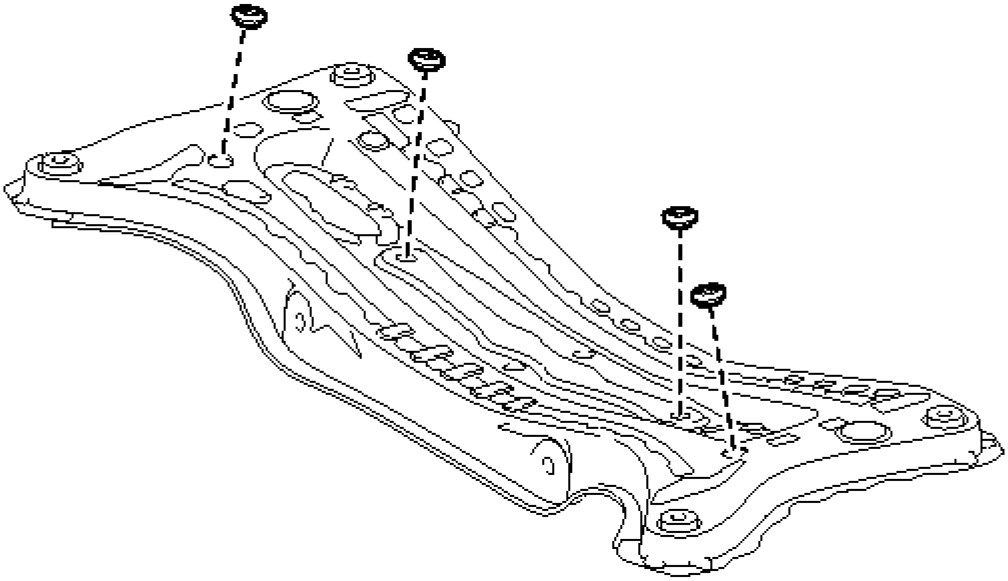

Fig. 62: Identifying Rear Suspension Member Sub-Assembly Hole Plugs
Courtesy of TOYOTA MOTOR SALES, U.S.A., INC.

INSTALLATION

INSTALLATION

1. **INSTALL HOLE PLUG**
    a. Install the 4 hole plugs to the rear suspension member sub-assembly.
2. **INSTALL REAR SUSPENSION MEMBER BODY MOUNTING FRONT CUSHION LH**
    a. Temporarily install a new rear suspension member body mounting front cushion LH to the position shown in the illustration.

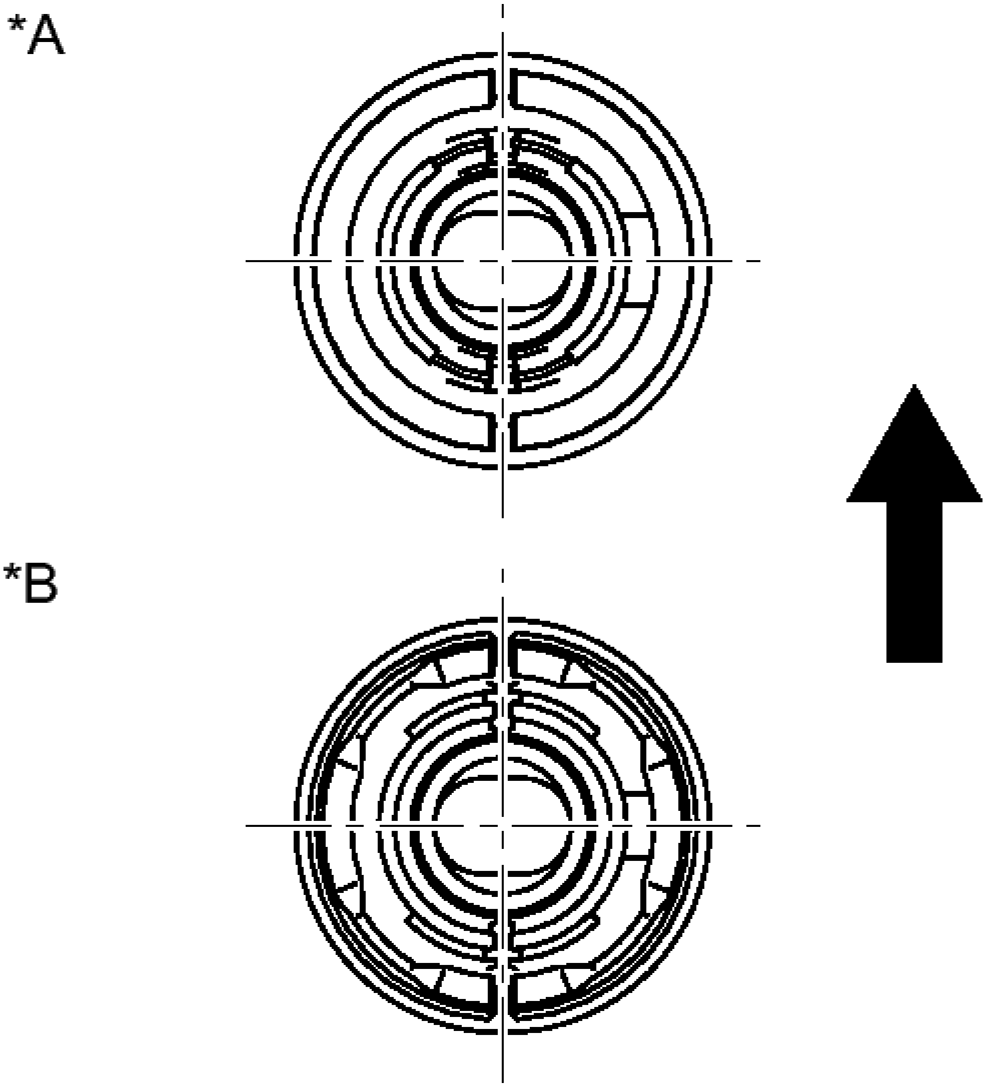

Fig. 63: Position Rear Suspension Member Body Mounting Front Cushion LH
Courtesy of TOYOTA MOTOR SALES, U.S.A., INC.

TEXT IN ILLUSTRATION

*A	Type A:
*B	Type B:
·	Front of the Vehicle

b. Using SST and a press, install the rear suspension member body mounting front cushion LH to the rear suspension member sub-assembly.

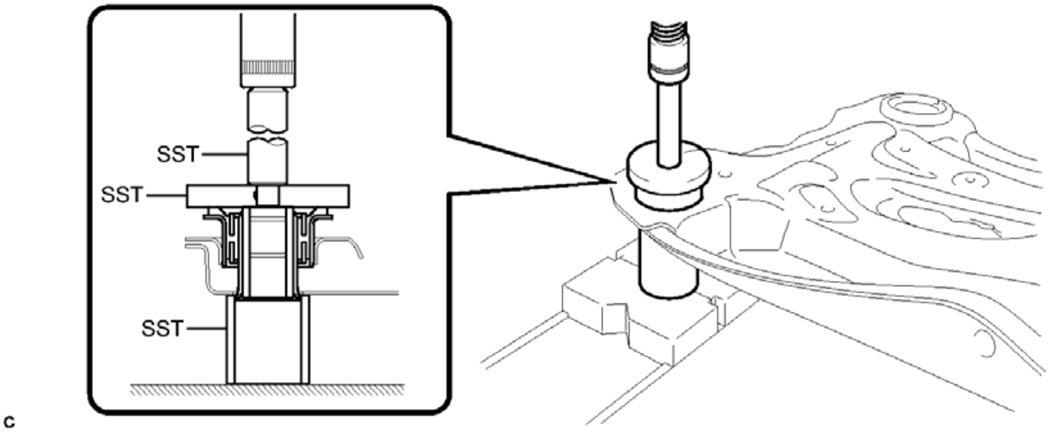

Fig. 64: Installing Rear Suspension Member Body Mounting Front Cushion Using SST LH
Courtesy of TOYOTA MOTOR SALES, U.S.A., INC.

- **SST: 09710-30012**
  09710-04061
- **SST: 09950-60010**
  09951-00650
- **SST: 09950-70010**
  09951-07100

HINT:

Slowly press in the rear suspension member body mounting front cushion LH.

c. While observing from the side, press in the rear suspension member body mounting front cushion LH until there is no clearance between the rear suspension member body mounting front cushion LH and the rear suspension member sub-assembly as shown in the illustration.

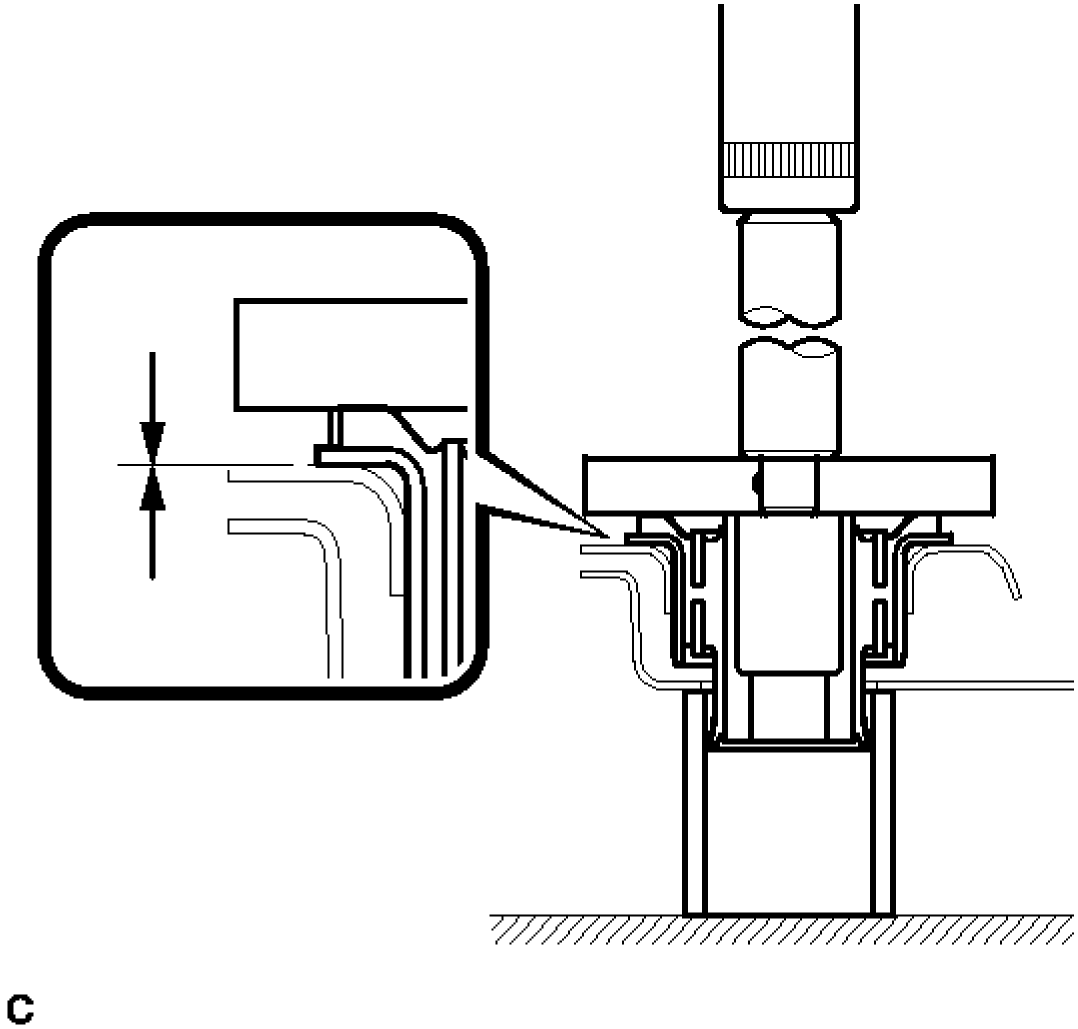

Fig. 65: Identifying No Clearance Between Rear Suspension Member Body Mounting Front Cushion LH And Rear Suspension Member Sub-Assembly
Courtesy of TOYOTA MOTOR SALES, U.S.A., INC.

NOTE: **Do not press the rear suspension member excessively, or it will easily deform.**

3. **INSTALL REAR SUSPENSION MEMBER BODY MOUNTING FRONT CUSHION RH**
    a. Temporarily install a new rear suspension member body mounting front cushion RH to the position shown in the illustration.

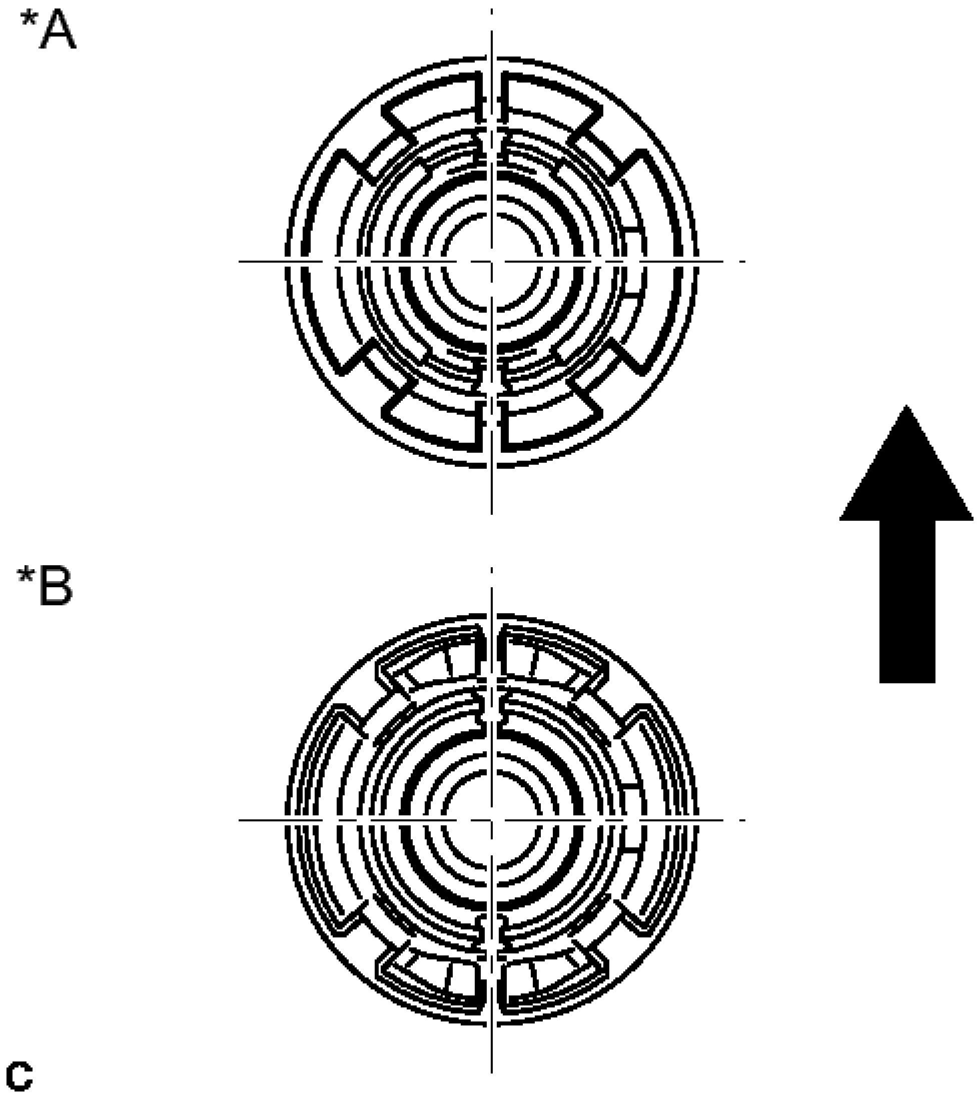

Fig. 66: Position Rear Suspension Member Body Mounting Front Cushion RH
Courtesy of TOYOTA MOTOR SALES, U.S.A., INC.

TEXT IN ILLUSTRATION

*A	Type A:
*B	Type B:
·	Front of the Vehicle

b. Using SST and a press, install the rear suspension member body mounting front cushion RH to the rear suspension member sub-assembly.

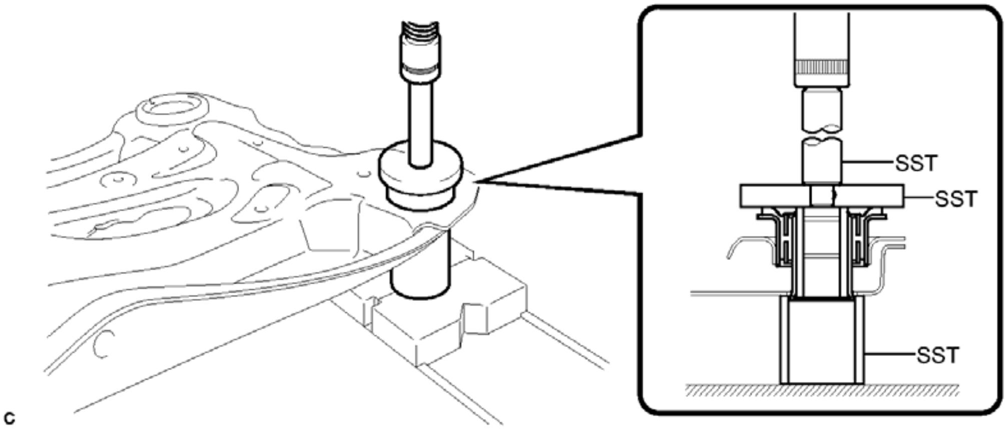

Fig. 67: Installing Rear Suspension Member Body Mounting Front Cushion Using SST RH
Courtesy of TOYOTA MOTOR SALES, U.S.A., INC.

- **SST: 09710-30012**
  09710-04061
- **SST: 09950-60010**
  09951-00650
- **SST: 09950-70010**
  09951-07100

HINT:

Slowly press in the rear suspension member body mounting front cushion RH.

c. While observing from the side, press in the rear suspension member body mounting front cushion RH until there is no clearance between the rear suspension member body mounting front cushion RH and the rear suspension member sub-assembly as shown in the illustration.

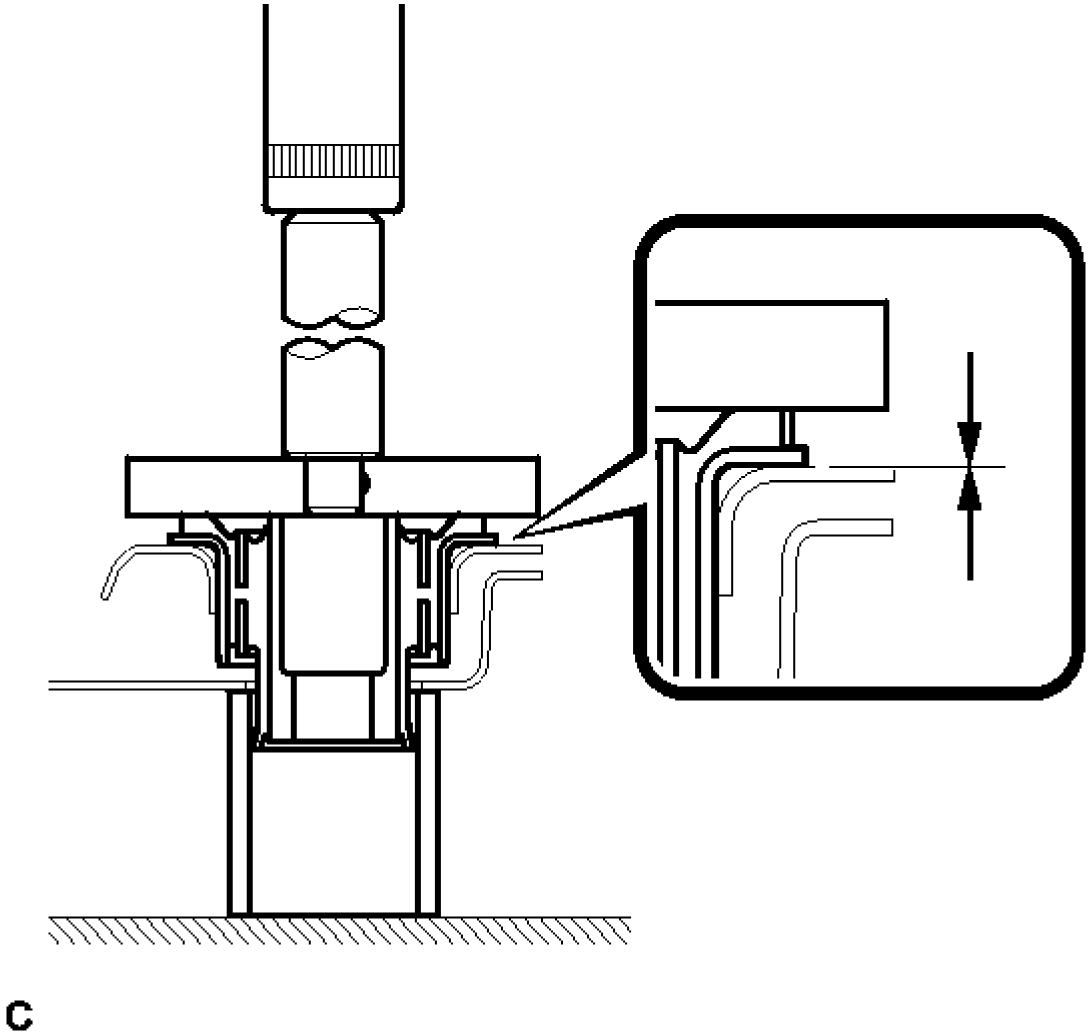

Fig. 68: Identifying No Clearance Between Rear Suspension Member Body Mounting Front Cushion RH And Rear Suspension Member Sub-Assembly
Courtesy of TOYOTA MOTOR SALES, U.S.A., INC.

NOTE: **Do not press the rear suspension member excessively, or it will easily deform.**

4. **INSTALL REAR SUSPENSION MEMBER BODY MOUNTING REAR CUSHION (for LH Side)**
   a. Temporarily install a new rear suspension member body mounting rear cushion (LH side) to the position shown in the illustration.

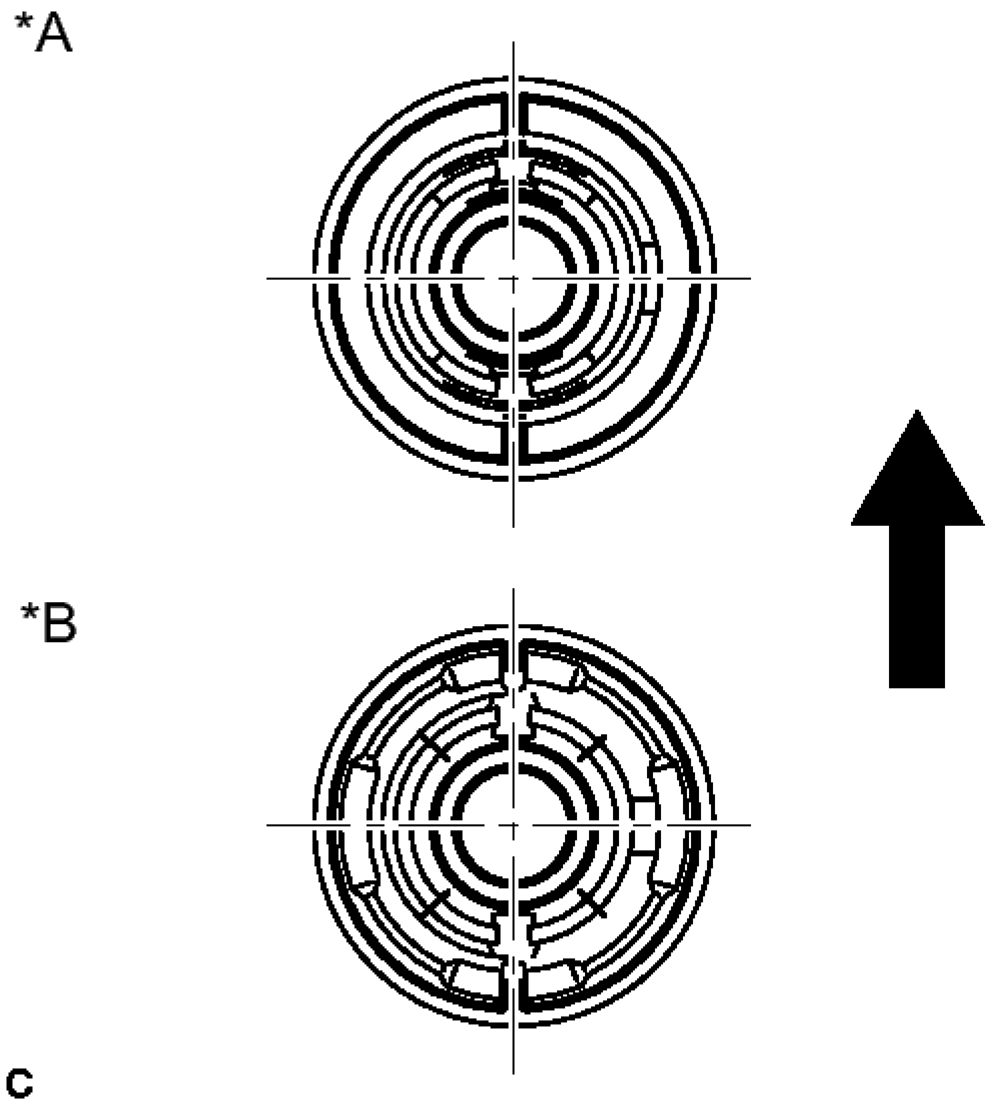

Fig. 69: Positioning Rear Suspension Member Body Mounting Rear Cushion (LH Side)
Courtesy of TOYOTA MOTOR SALES, U.S.A., INC.

TEXT IN ILLUSTRATION

*A	Type A:
*B	Type B:
·	Front of the Vehicle

b. Using SST and a press, install the rear suspension member body mounting rear cushion (LH side) to the rear suspension member sub-assembly.

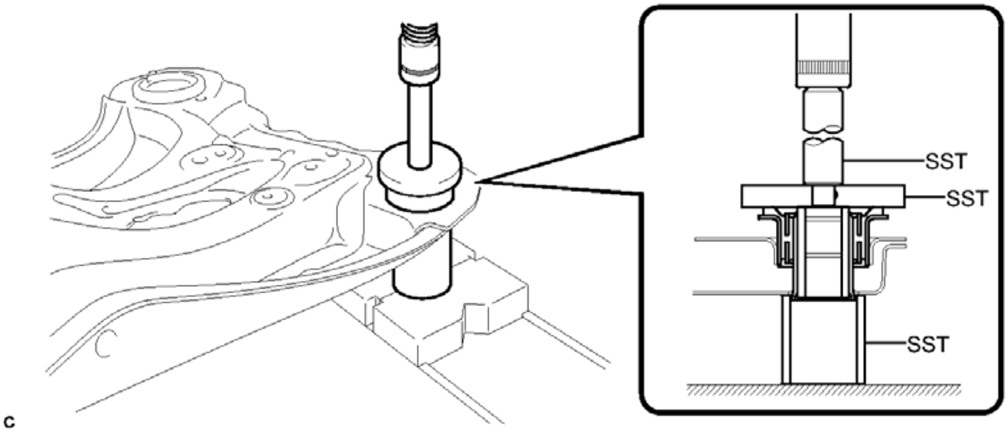

Fig. 70: Installing Rear Suspension Body Mounting Rear Cushion (LH Side) To Rear Suspension Member Sub-Assembly Using SST
Courtesy of TOYOTA MOTOR SALES, U.S.A., INC.

- **SST: 09710-30012**
  09710-04061
- **SST: 09950-60010**
  09951-00650
- **SST: 09950-70010**
  09951-07100

HINT:

Slowly press in the rear suspension member body mounting rear cushion.

c. While observing from the side, press in the rear suspension member body mounting rear cushion (LH side) until there is no clearance between the rear suspension member body mounting rear cushion (LH side) and the rear suspension member sub-assembly as shown in the illustration.

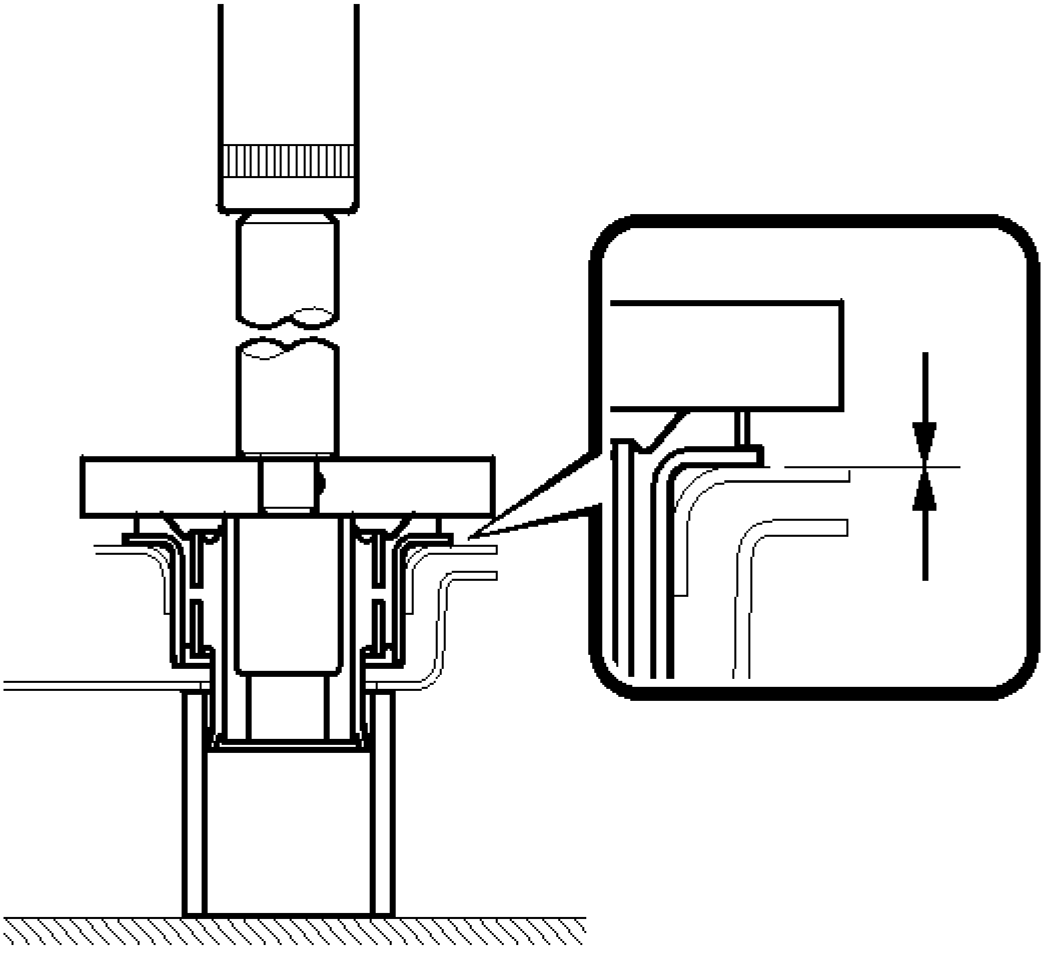

Fig. 71: Identifying No Clearance Between Rear Suspension Member Body Mounting Rear Cushion (LH Side) And Rear Suspension Member Sub-Assembly
Courtesy of TOYOTA MOTOR SALES, U.S.A., INC.

NOTE: **Do not press the rear suspension member excessively, or it will easily deform.**

5. **INSTALL REAR SUSPENSION MEMBER BODY MOUNTING REAR CUSHION (for RH Side)**

   HINT:

   Perform the same procedure as the LH side.

6. **INSTALL REAR NO. 1 SUSPENSION ARM ASSEMBLY LH** See step 1
7. **INSTALL REAR NO. 1 SUSPENSION ARM ASSEMBLY RH**

HINT:

Perform the same procedure as the LH side.

8. **TEMPORARILY INSTALL REAR NO. 2 SUSPENSION ARM ASSEMBLY LH** See step 3
9. **TEMPORARILY INSTALL REAR NO. 2 SUSPENSION ARM ASSEMBLY RH**

HINT:

Perform the same procedure as the LH side.

10. **INSTALL REAR SUSPENSION MEMBER SUB-ASSEMBLY**
    a. w/ Member Cushion:
        1. Install 2 new differential support member cushions and 2 new differential support member upper stoppers to the rear suspension member sub-assembly.
    b. Support the rear suspension member sub-assembly with an engine lifter using 4 attachments or equivalent tools.

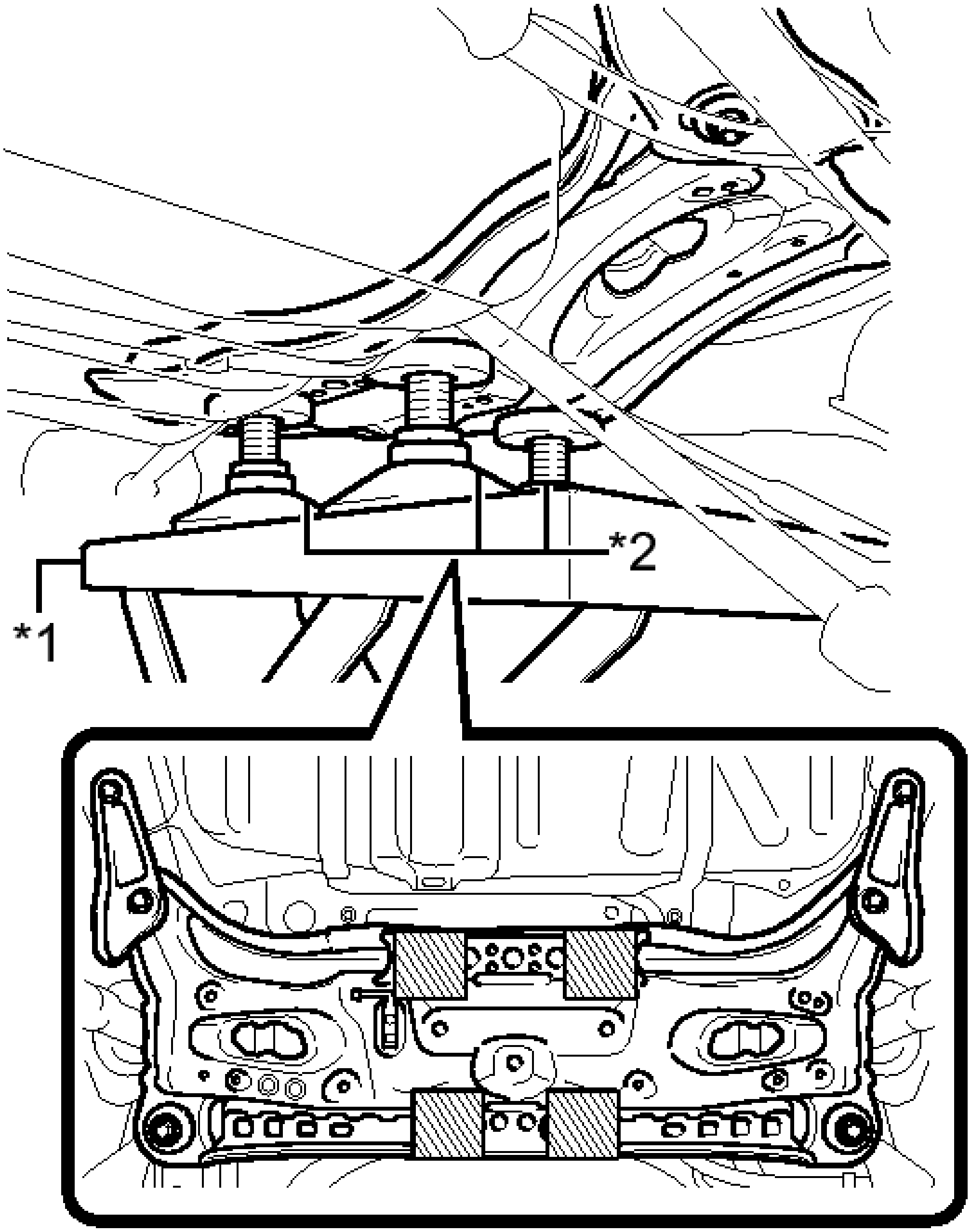

C

Fig. 72: Identifying Engine Lifter And Attachment
Courtesy of TOYOTA MOTOR SALES, U.S.A., INC.

TEXT IN ILLUSTRATION

	Engine

*1	Lifter
*2	Attachment
	Attachment Placement Location

NOTE:

- **Make sure to secure the rear suspension member sub-assembly to prevent it from dropping.**
- **Use the attachments to keep the rear suspension member sub-assembly level.**

c. Raise the rear suspension member sub-assembly until there is no clearance between the rear suspension member sub-assembly and the vehicle body.

NOTE: **When raising the rear suspension member sub-assembly, be careful not to damage the vehicle body or other components installed on the vehicle.**

d. Install the rear suspension member sub-assembly, rear suspension member lower stopper sub-assembly LH and rear suspension member lower stopper sub-assembly RH with the 4 nuts.

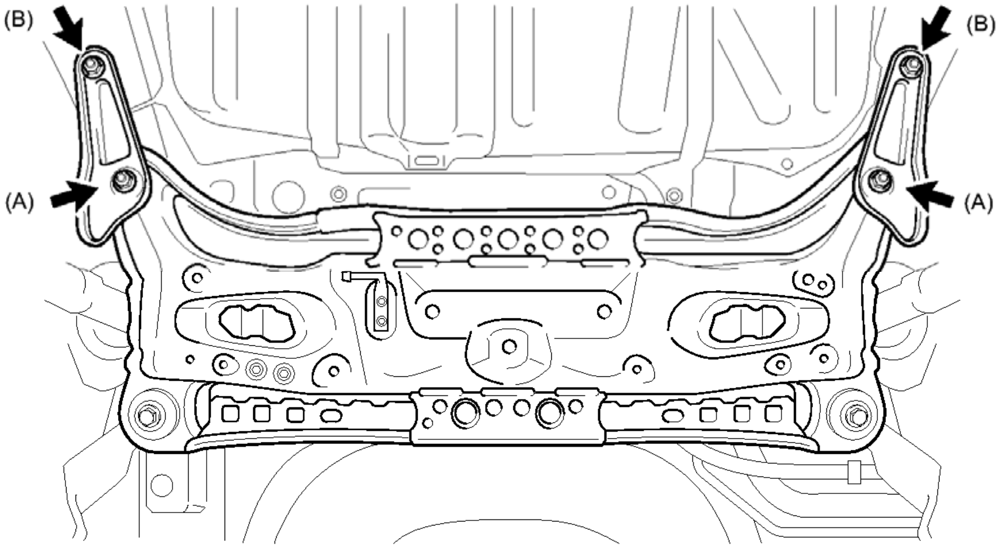

C

Fig. 73: Identifying Rear Suspension Member Sub-Assembly Nuts
Courtesy of TOYOTA MOTOR SALES, U.S.A., INC.

Nut A

Torque: 55 N*m (561 kgf*cm, 41 ft.*lbf)

Nut B

Torque: 38 N*m (387 kgf*cm, 28 ft.*lbf)

e. Install the rear suspension member sub-assembly and 2 rear suspension member lower stoppers with the 2 bolts.

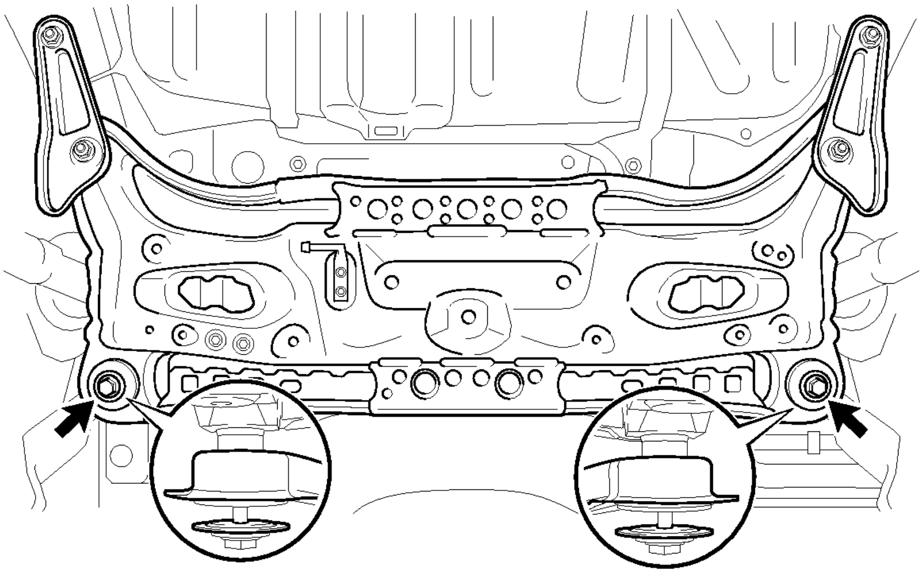

Fig. 74: Identifying Rear Suspension Member Sub-Assembly And Rear Suspension Member Lower Stopper Bolts
Courtesy of TOYOTA MOTOR SALES, U.S.A., INC.

Torque: 55 N*m (561 kgf*cm, 41 ft.*lbf)

NOTE: Be sure to install the rear suspension member sub-assembly with the rear suspension member lower stoppers in the correct direction, as shown in the illustration.

11. **INSTALL NO. 3 EXHAUST PIPE SUPPORT BRACKET**
    a. Install the No. 3 exhaust pipe support bracket to the rear suspension member sub-assembly with the 2 bolts.

    Torque: 33 N*m (337 kgf*cm, 24 ft.*lbf)

12. **INSTALL JACK UP BRACKET (for 2GR-FE)**
    a. Install the jack up bracket to the rear suspension member sub-assembly with the 2 bolts.

    Torque: 39 N*m (398 kgf*cm, 29 ft.*lbf)

13. **INSTALL REAR SUSPENSION MEMBER DAMPER (w/ Dynamic Damper)**
    a. Install the rear suspension member damper to the rear suspension member sub-assembly with the 2 bolts.

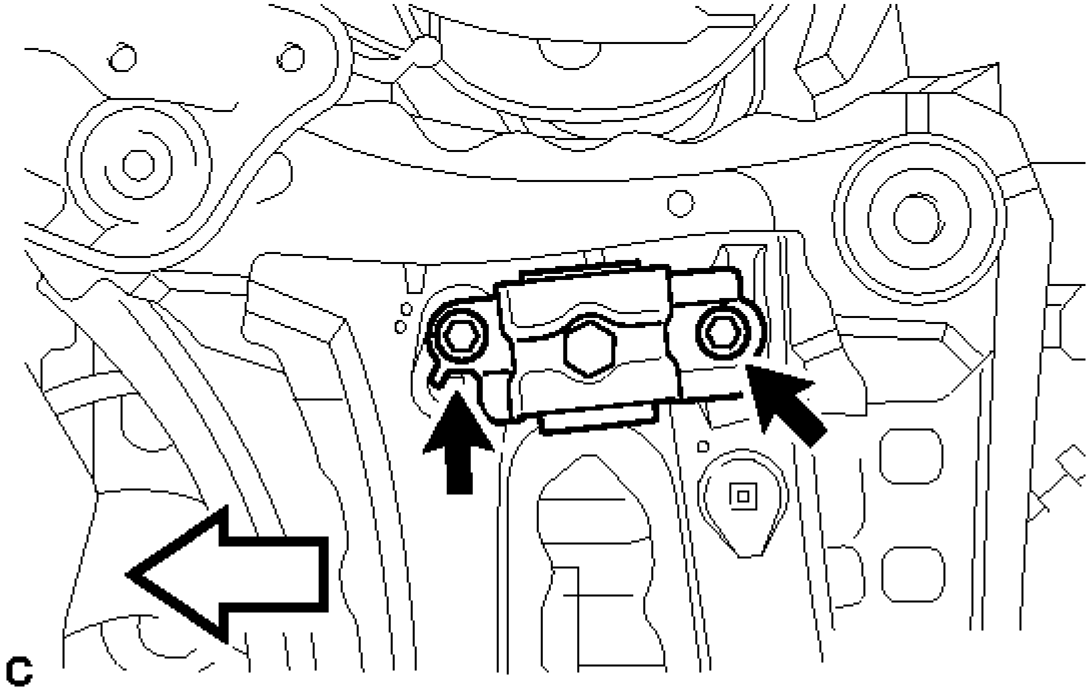

Fig. 75: Identifying Rear Suspension Member Damper Bolts (W/Dynamic Damper)
Courtesy of TOYOTA MOTOR SALES, U.S.A., INC.

TEXT IN ILLUSTRATION

	Front of the Vehicle

Torque: 29 N*m (296 kgf*cm, 21 ft.*lbf)

14. **CONNECT REAR NO. 1 SUSPENSION ARM ASSEMBLY LH** . Refer to **INSTALLATION - Step 2**
15. **CONNECT REAR NO. 1 SUSPENSION ARM ASSEMBLY RH**

    HINT:

    Perform the same procedure as the LH side.

16. **CONNECT REAR NO. 2 SUSPENSION ARM ASSEMBLY LH** See step 4
17. **CONNECT REAR NO. 2 SUSPENSION ARM ASSEMBLY RH**

    HINT:

    Perform the same procedure as the LH side.

18. **STABILIZE SUSPENSION** . Refer to **INSTALLATION - Step 10**

19. **FULLY TIGHTEN REAR NO. 1 SUSPENSION ARM ASSEMBLY LH** . Refer to **INSTALLATION - Step 11**
20. **FULLY TIGHTEN REAR NO. 1 SUSPENSION ARM ASSEMBLY RH**

    HINT:

    Perform the same procedure as the LH side.

21. **FULLY TIGHTEN REAR NO. 2 SUSPENSION ARM ASSEMBLY LH** See step 6
22. **FULLY TIGHTEN REAR NO. 2 SUSPENSION ARM ASSEMBLY RH**

    HINT:

    Perform the same procedure as the LH side.

23. **INSTALL REAR HEIGHT CONTROL SENSOR SUB-ASSEMBLY (w/ Height Control Sensor)**

    Refer to **INSTALLATION**

24. **INSTALL REAR STABILIZER BAR** See step 7
25. **CONNECT REAR STABILIZER LINK ASSEMBLY LH**
    a. Connect the rear stabilizer link assembly LH to the rear stabilizer bar with nut.

       Torque: 39 N*m (400 kgf*cm, 29 ft.*lbf)

       If the ball joint turns together with the nut, use a hexagon wrench to hold the stud.

26. **CONNECT REAR STABILIZER LINK ASSEMBLY RH**

    HINT:

    Perform the same procedure as the LH side.

27. **INSTALL CENTER EXHAUST PIPE ASSEMBLY**
    - for 2GR-FE: Refer to **INSTALLATION**
    - for 2AR-FE: Refer to **INSTALLATION**
28. **INSTALL NO. 2 FLOOR UNDER COVER (w/ Floor Under Cover)** See step 10
29. **INSTALL NO. 1 FLOOR UNDER COVER** See step 11
30. **INSTALL REAR WHEELS**

    Torque: 103 N*m (1049 kgf*cm, 76 ft.*lbf)

31. **INSPECT AND ADJUST REAR WHEEL ALIGNMENT**

    Refer to **ADJUSTMENT**

32. **HEIGHT CONTROL SENSOR SIGNAL INITIALIZE (w/ Height Control Sensor)**

Refer to **INITIALIZATION**

33. **ADJUST HEADLIGHT AIMING (w/ Height Control Sensor)**

Refer to **ADJUSTMENT**

FRONT SEAT INNER BELT ASSEMBLY

COMPONENTS

ILLUSTRATION

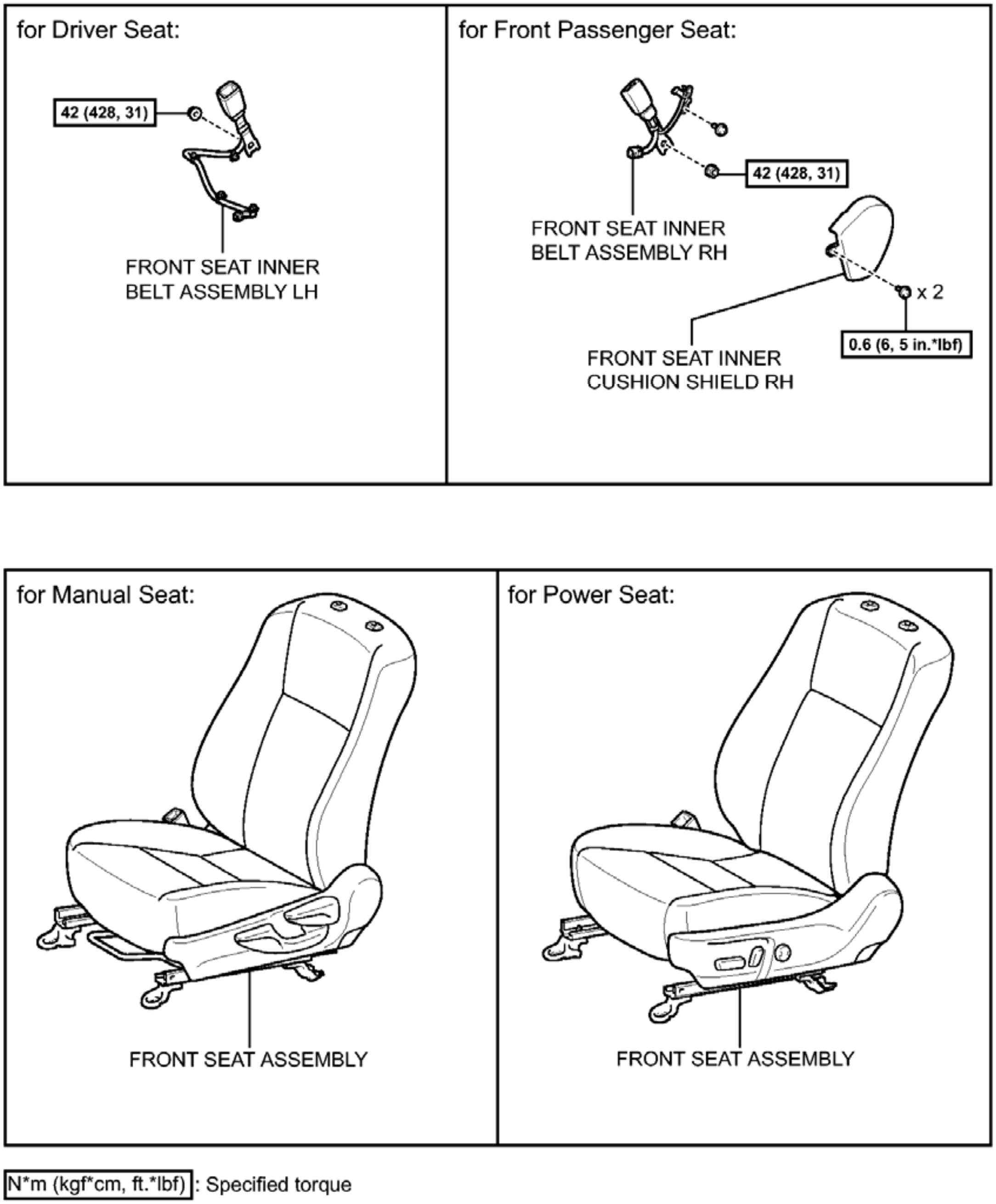
for Driver Seat:
42 (428, 31)
FRONT SEAT INNER BELT ASSEMBLY LH
for Front Passenger Seat:
42 (428, 31)
FRONT SEAT INNER BELT ASSEMBLY RH
x 2
0.6 (6, 5 in.*lbf)
FRONT SEAT INNER CUSHION SHIELD RH
for Manual Seat:
FRONT SEAT ASSEMBLY
for Power Seat:
FRONT SEAT ASSEMBLY
N*m (kgf*cm, ft.*lbf) : Specified torque

P

Fig. 1: Identifying Front Seat Inner Belt Assembly Replacement Components With Torque Specifications
Courtesy of TOYOTA MOTOR SALES, U.S.A., INC.

REMOVAL

REMOVAL

1. **REMOVE FRONT SEAT ASSEMBLY**

for Manual Seat: Refer to **REMOVAL**

for Power Seat: Refer to **REMOVAL**

2. **REMOVE FRONT SEAT INNER BELT ASSEMBLY LH (for Driver Seat)**
   1. Disengage each clamp under the front seat assembly.
   2. Disengage the clamp.

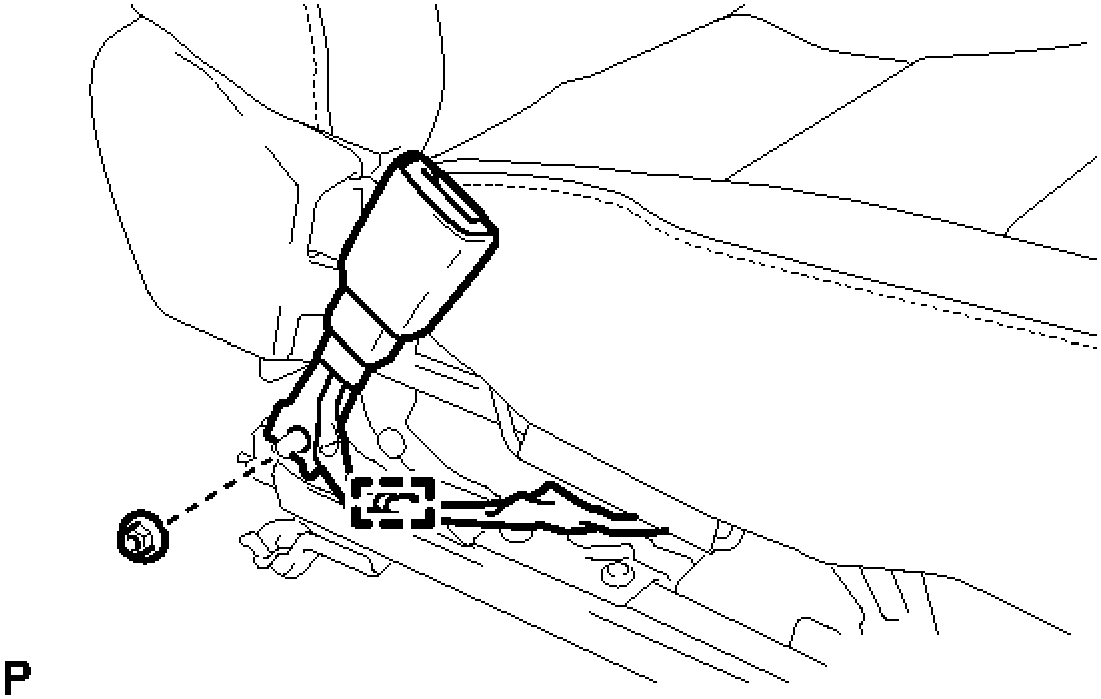

Fig. 2: Identifying Front Seat Inner Belt Assembly Clamp And Nut LH (For Driver Seat)
Courtesy of TOYOTA MOTOR SALES, U.S.A., INC.

   3. Remove the nut and front seat inner belt assembly LH.

3. **REMOVE FRONT SEAT INNER CUSHION SHIELD RH (for Front Passenger Seat)**

for Manual Seat: Refer to **DISASSEMBLY - Step 6**

for Power Seat: Refer to **DISASSEMBLY - Step 8**

4. **REMOVE FRONT SEAT INNER BELT ASSEMBLY RH (for Front Passenger Seat)**
   1. Disconnect the connector.

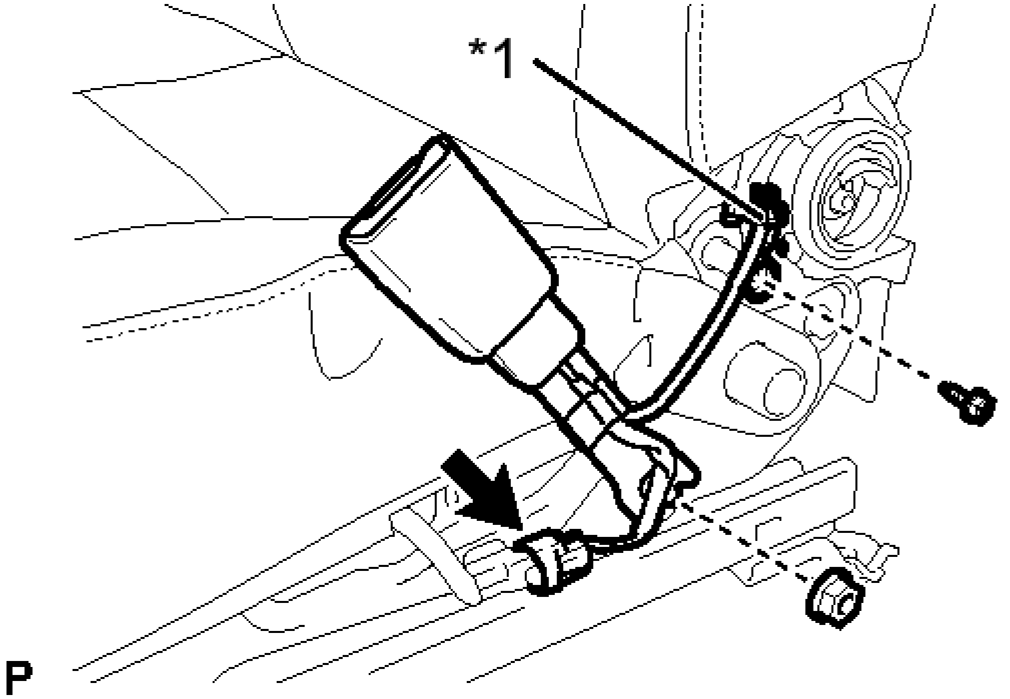

Fig. 3: Identifying Front Seat Inner Belt Assembly Connector And Fasteners RH (For Front Passenger Seat) (For TMMK Made)
Courtesy of TOYOTA MOTOR SALES, U.S.A., INC.

TEXT IN ILLUSTRATION

*1	Limit Switch

b. Remove the screw and disconnect the limit switch.
c. Remove the nut and front seat inner belt assembly RH.

INSTALLATION

INSTALLATION

1. **INSTALL FRONT SEAT INNER BELT ASSEMBLY LH (for Driver Seat)**
    a. Install the front seat inner belt assembly LH with the nut.

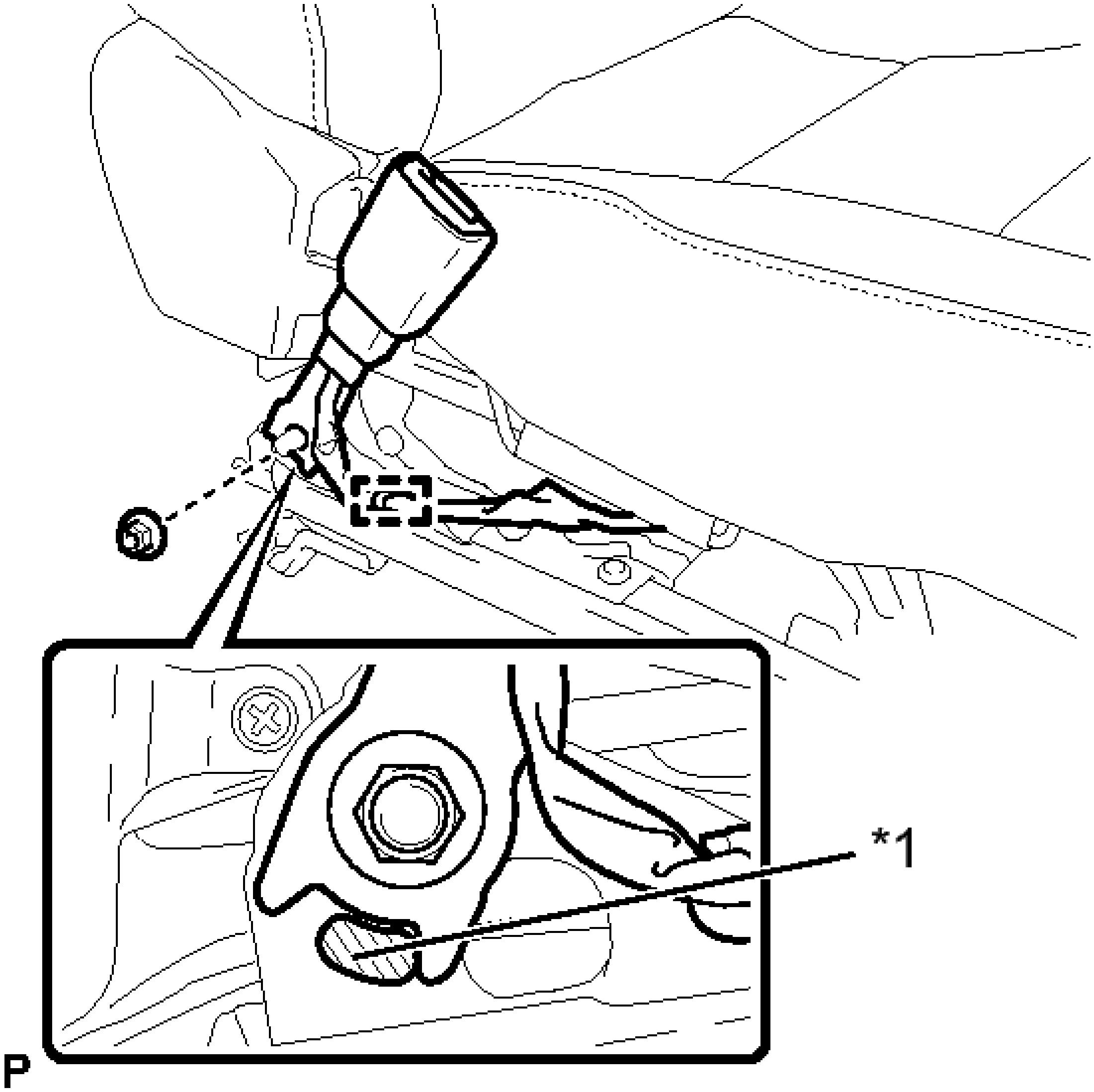

Fig. 4: Identifying Front Seat Inner Belt Assembly Nut LH (For Driver Seat)
Courtesy of TOYOTA MOTOR SALES, U.S.A., INC.

TEXT IN ILLUSTRATION

*1	Protruding Part

Torque: 42 N*m (428 kgf*cm, 31 ft.*lbf)

NOTE: **Do not allow the anchor part of the front seat inner belt assembly LH to overlap the protruding part of the front seat adjuster.**

b. Engage the clamp.
c. Engage each clamp under the front seat assembly.

2. **INSTALL FRONT SEAT INNER BELT ASSEMBLY RH (for Front Passenger Seat)**

a. Install the front seat inner belt assembly RH with the nut.

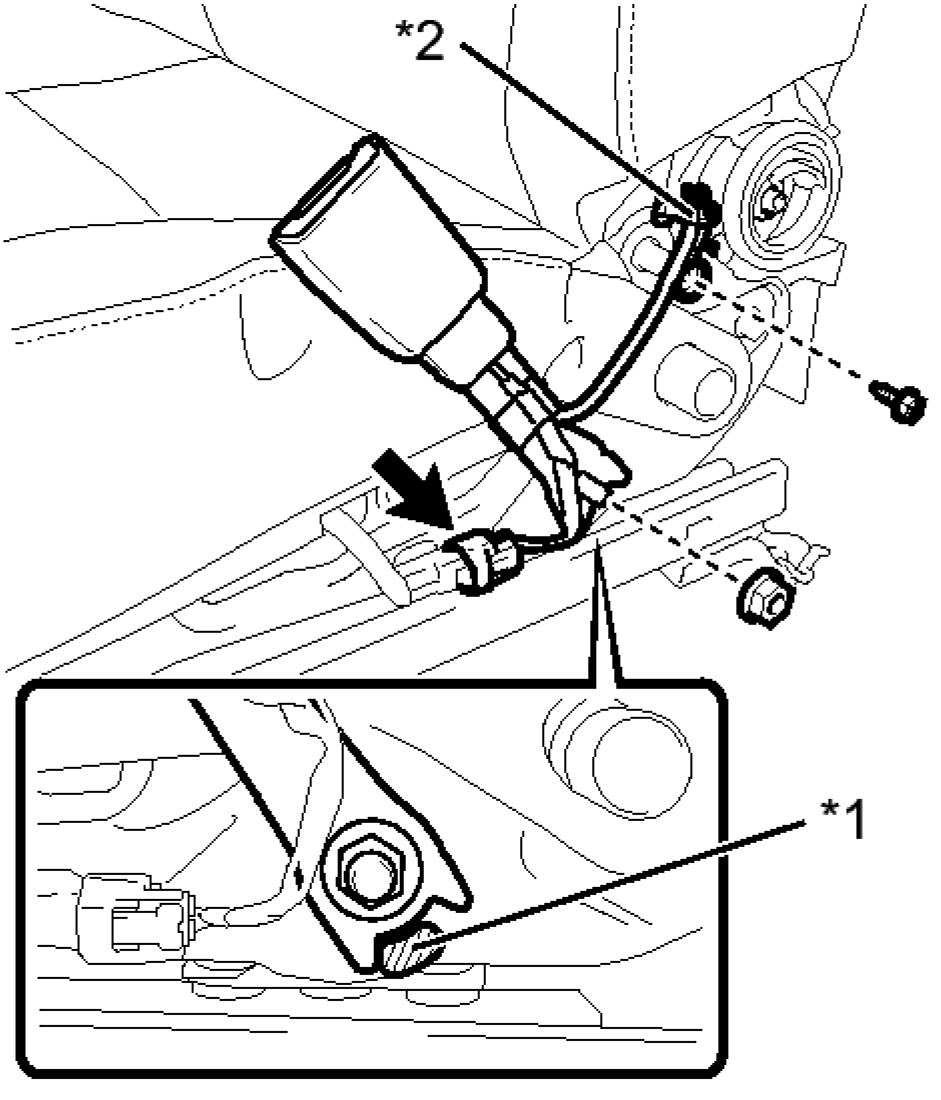

Fig. 5: Locating Front Seat Inner Belt Assembly Protruding Part, Limit Switch Connector And Fasteners RH (For Front Passenger Seat) (For TMMK Made)
Courtesy of TOYOTA MOTOR SALES, U.S.A., INC.

TEXT IN ILLUSTRATION

*1	Protruding Part
*2	Limit Switch

Torque: 42 N*m (428 kgf*cm, 31 ft.*lbf)

NOTE: **Do not allow the anchor part of the front seat inner belt assembly RH**

to overlap the protruding part of the front seat adjuster.

b. Connect the limit switch with the screw.
c. Connect the connector.

3. **INSTALL FRONT SEAT INNER CUSHION SHIELD RH (for Front Passenger Seat)**

   for Manual Seat: Refer to **REASSEMBLY - Step 23**

   for Power Seat: Refer to **REASSEMBLY - Step 27**

4. **INSTALL FRONT SEAT ASSEMBLY**

   for Manual Seat: Refer to **INSTALLATION**

   for Power Seat: Refer to **INSTALLATION**

FRONT SEAT OUTER BELT ASSEMBLY WITH PRETENSIONER

PRECAUTION

PRECAUTION

WARNING: **Replace any faulty parts of the seat belt systems (outer belt, inner belt, bolts, nuts, adjustable shoulder anchor, tether anchor hardware and other related parts). When inspecting a vehicle that was in a collision, be sure to check all of the seat belt systems regardless of whether or not the system was activated in the collision. Replace any damaged or malfunctioning systems.**

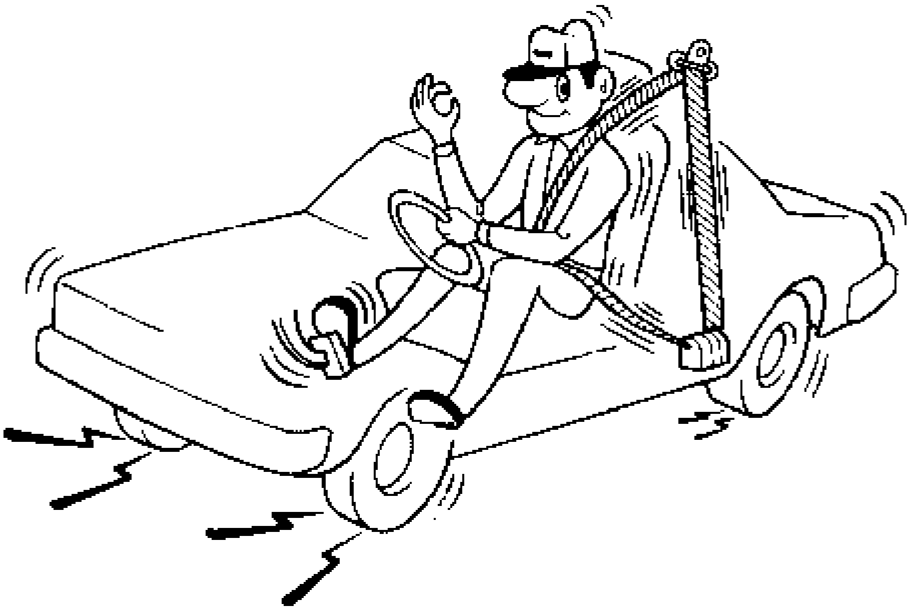

Fig. 6: Checking Belts Lock
Courtesy of TOYOTA MOTOR SALES, U.S.A., INC.

1. **ROAD TEST (IN SAFE AREA)**

   WARNING: Conduct this test in a safe area.

   a. Fasten the front seat belts.
   b. Drive the vehicle at 16 km/h (10 mph) and firmly depress the brake pedal. Check that the belts lock and cannot be extended at this time.

      If a belt does not lock, replace the seat belt assembly. Refer to **REMOVAL**.

      HINT:

      Inspect the seat belt assembly before installing it. Refer to **INSPECTION**.

COMPONENTS

ILLUSTRATION

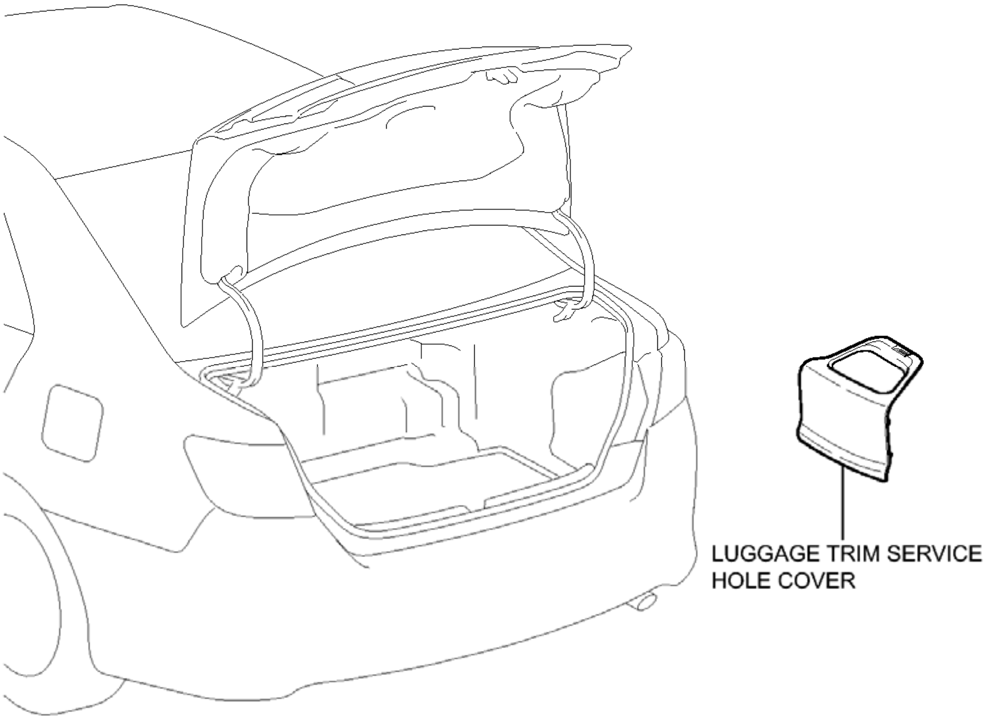
LUGGAGE TRIM SERVICE HOLE COVER
P

Fig. 7: Identifying Front Seat Outer Belt Assembly Replacement Components With Torque Specifications (1 Of 2)
Courtesy of TOYOTA MOTOR SALES, U.S.A., INC.

ILLUSTRATION

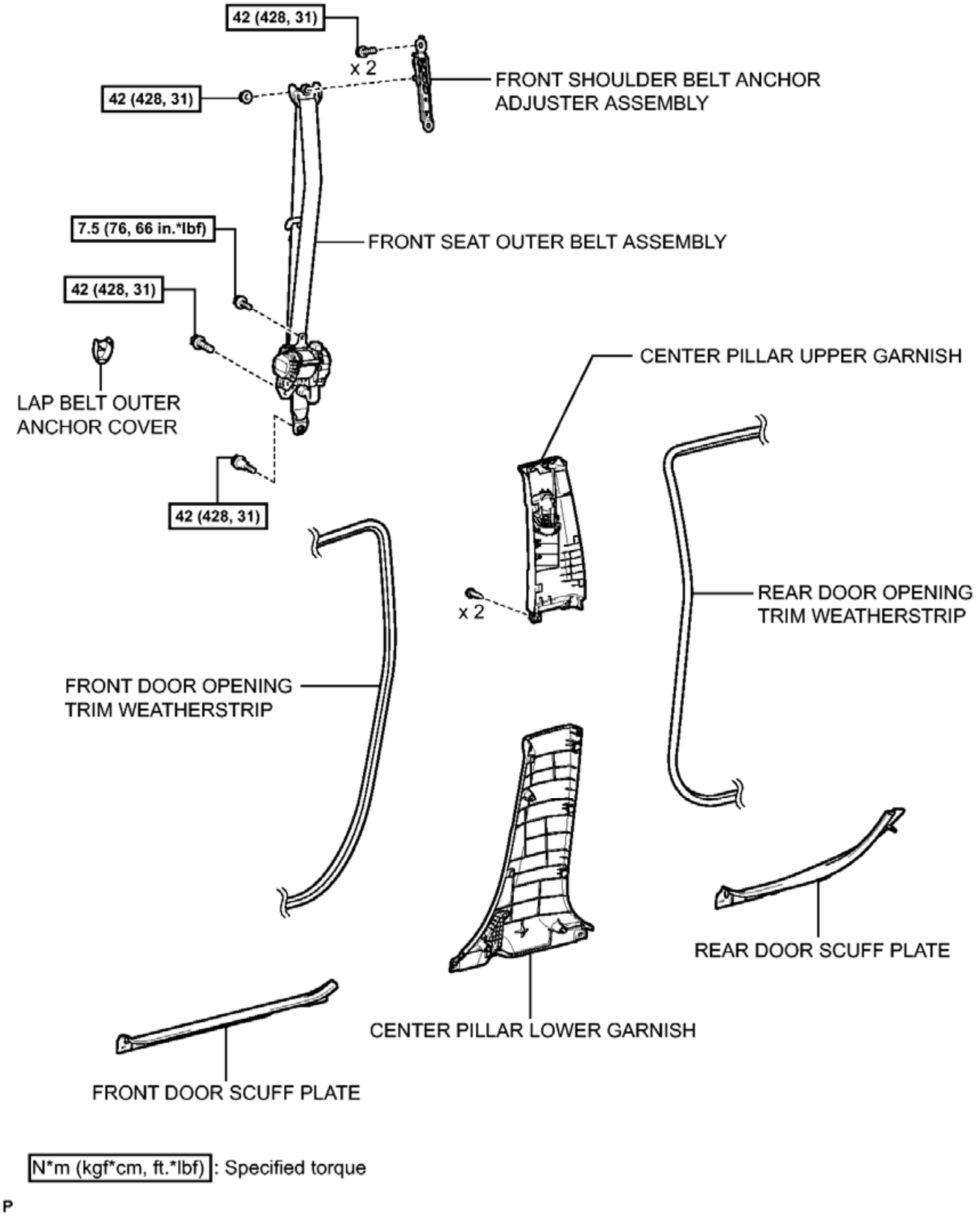
42 (428, 31)
x 2
FRONT SHOULDER BELT ANCHOR ADJUSTER ASSEMBLY
42 (428, 31)
7.5 (76, 66 in.*lbf)
FRONT SEAT OUTER BELT ASSEMBLY
42 (428, 31)
LAP BELT OUTER ANCHOR COVER
CENTER PILLAR UPPER GARNISH
42 (428, 31)
x 2
REAR DOOR OPENING TRIM WEATHERSTRIP
FRONT DOOR OPENING TRIM WEATHERSTRIP
REAR DOOR SCUFF PLATE
CENTER PILLAR LOWER GARNISH
FRONT DOOR SCUFF PLATE
N*m (kgf*cm, ft.*lbf) : Specified torque
P

Fig. 8: Identifying Front Seat Outer Belt Assembly Replacement Components With Torque Specifications (2 Of 2)

Courtesy of TOYOTA MOTOR SALES, U.S.A., INC.

ON-VEHICLE INSPECTION

ON-VEHICLE INSPECTION

WARNING: **Be sure to correctly follow the removal and installation procedures for the front seat outer belt assembly.**

1. **INSPECT FRONT SEAT OUTER BELT ASSEMBLY (for Vehicle not Involved in Collision)**
    a. Perform a diagnostic system check. Refer to **DTC CHECK / CLEAR** . (for Built-in Type Yaw Rate Sensor)
    b. Perform a diagnostic system check. Refer to **DTC CHECK / CLEAR** . (for Separate Type Yaw Rate Sensor)
    c. Visually check for defects with the front seat outer belt assembly installed on the vehicle.
        1. The defects are as follows:
            - Cuts on the front seat outer belt assembly
            - Small cracks on the front seat outer belt assembly
            - Significant discoloration on the front seat outer belt assembly

        OK

        No defects are found.

        HINT:

        If any of the defects is found, replace the front seat outer belt assembly with a new one.

2. **INSPECT FRONT SEAT OUTER BELT ASSEMBLY (for Vehicle Involved in Collision)**
    a. Perform a diagnostic system check. Refer to **DTC CHECK / CLEAR** . (for Built-in Type Yaw Rate Sensor)
    b. Perform a diagnostic system check. Refer to **DTC CHECK / CLEAR** . (for Separate Type Yaw Rate Sensor)
    c. Visually check for defects with the front seat outer belt assembly removed from the vehicle.
        1. The defects are as follows:
            - Cuts on the front seat outer belt assembly
            - Small cracks on the front seat outer belt assembly
            - Significant discoloration on the front seat outer belt assembly
            - Cracks or other damage to the connector

        OK

        No defects are found.

        HINT:

        If any of the defects is found, replace the front seat outer belt assembly with a new one.

REMOVAL

REMOVAL

1. **PRECAUTION**

   NOTE: **After turning the power switch off, waiting time may be required before disconnecting the cable from the negative (-) auxiliary battery terminal. Therefore, make sure to read the disconnecting the cable from the negative (-) auxiliary battery terminal notices before proceeding with work. Refer to PRECAUTION .**

2. **REMOVE LUGGAGE TRIM SERVICE HOLE COVER** . Refer to **REMOVAL - Step 2**
3. **DISCONNECT CABLE FROM AUXILIARY BATTERY NEGATIVE TERMINAL**

   WARNING: **Wait at least 90 seconds after disconnecting the cable from the negative (-) auxiliary battery terminal to disable the SRS system.**

   NOTE: **When disconnecting the cable, some systems need to be initialized after the cable is reconnected. Refer to INITIALIZATION .**

4. **REMOVE FRONT DOOR SCUFF PLATE** . Refer to **REMOVAL - Step 4**
5. **DISCONNECT FRONT DOOR OPENING TRIM WEATHERSTRIP**
   a. Disconnect the front door opening trim weatherstrip.
6. **REMOVE REAR DOOR SCUFF PLATE** . Refer to **REMOVAL - Step 19**
7. **DISCONNECT REAR DOOR OPENING TRIM WEATHERSTRIP**
   a. Disconnect the rear door opening trim weatherstrip.
8. **REMOVE LAP BELT OUTER ANCHOR COVER**
   a. Disengage the 3 claws and remove the lap belt outer anchor cover.

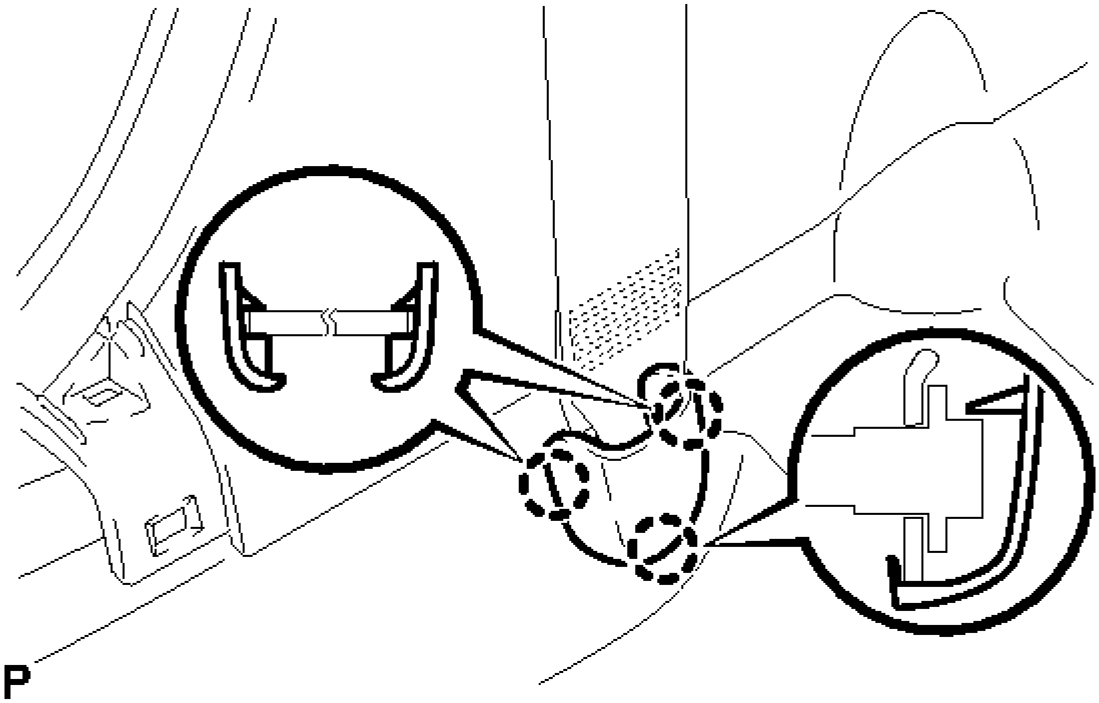

Fig. 9: Identifying Lap Belt Outer Anchor Cover Claws
Courtesy of TOYOTA MOTOR SALES, U.S.A., INC.

9. **DISCONNECT FRONT SEAT OUTER BELT ASSEMBLY**
   a. Remove the bolt and disconnect the floor anchor of the front seat outer belt assembly.

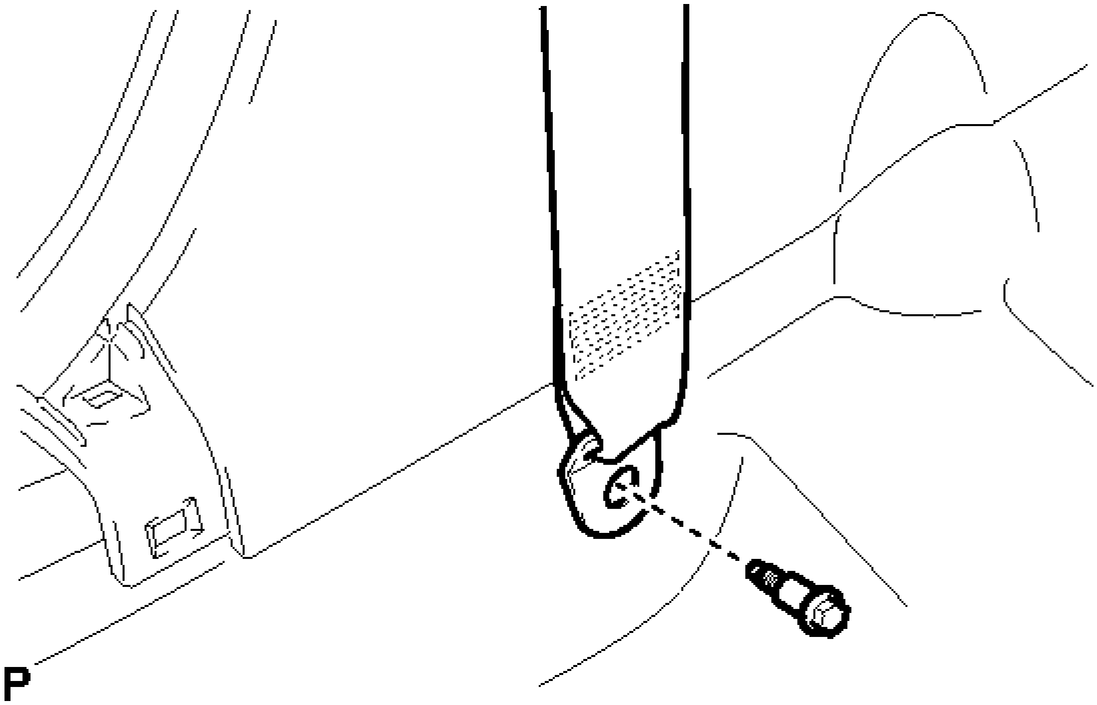

Fig. 10: Locating Front Seat Outer Belt Assembly Bolt

Courtesy of TOYOTA MOTOR SALES, U.S.A., INC.

10. **REMOVE CENTER PILLAR LOWER GARNISH** . Refer to **REMOVAL - Step 23**
11. **REMOVE CENTER PILLAR UPPER GARNISH** . Refer to **REMOVAL - Step 24**
12. **REMOVE FRONT SEAT OUTER BELT ASSEMBLY**
    1. Remove the nut and disconnect the shoulder anchor of the front seat outer belt assembly.

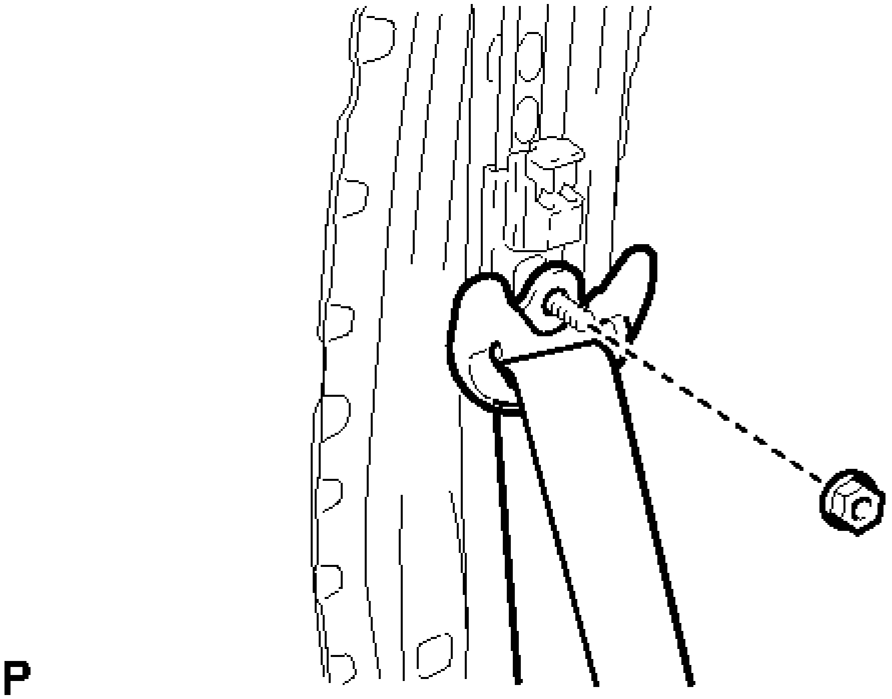

Fig. 11: Identifying Front Seat Outer Belt Assembly Fastener
Courtesy of TOYOTA MOTOR SALES, U.S.A., INC.

b. Using a screwdriver, pull out the locking button in the direction shown by the arrow in the illustration to release the lock, and disconnect the pretensioner connector as shown in the illustration.

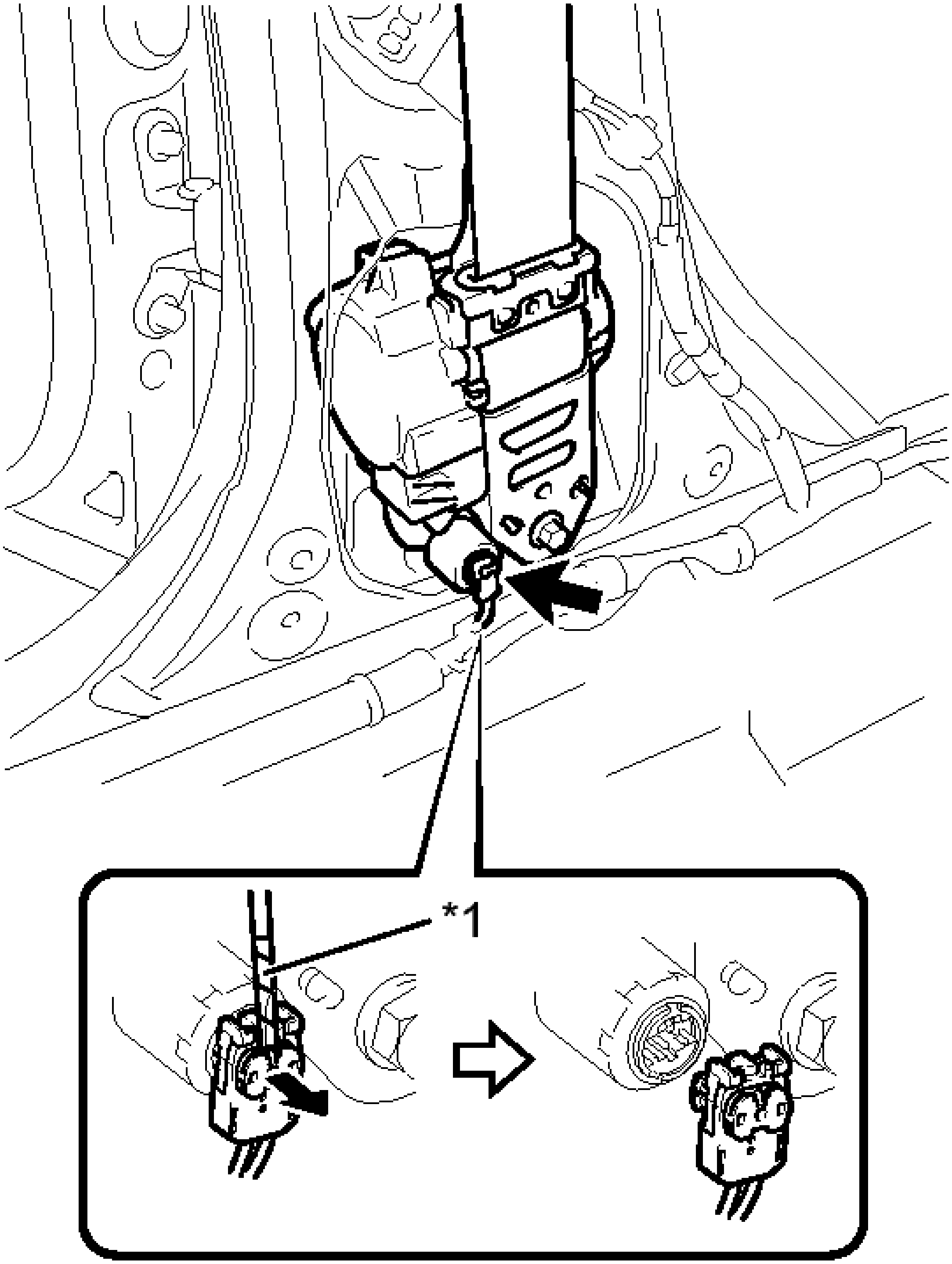

P

Fig. 12: Removing Front Seat Outer Belt Assembly Pretensioner Connector
Courtesy of TOYOTA MOTOR SALES, U.S.A., INC.

TEXT IN ILLUSTRATION

	Protective

*1	Tape

HINT:

Tape the screwdriver tip before use.

c. Remove the 2 bolts and front seat outer belt assembly.

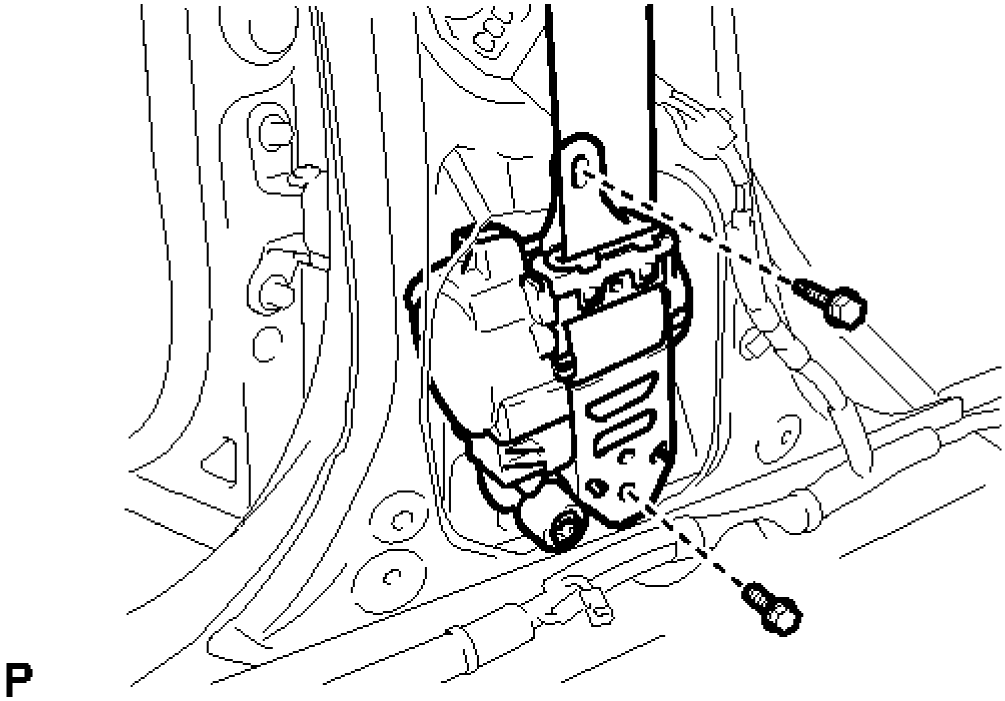

Fig. 13: Identifying Front Seat Outer Belt Assembly Bolts
Courtesy of TOYOTA MOTOR SALES, U.S.A., INC.

13. **REMOVE FRONT SHOULDER BELT ANCHOR ADJUSTER ASSEMBLY**

a. Remove the 2 bolts.

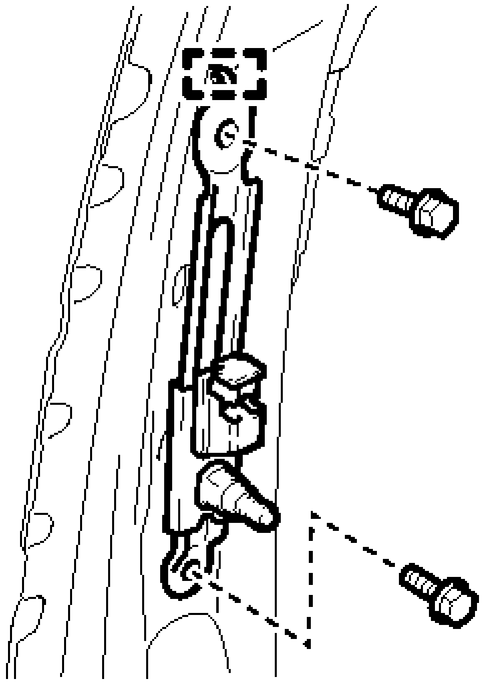

P

Fig. 14: Identifying Front Shoulder Belt Anchor Adjuster Assembly Bolts
Courtesy of TOYOTA MOTOR SALES, U.S.A., INC.

b. Disengage the guide and remove the front shoulder belt anchor adjuster assembly.

INSPECTION

INSPECTION

1. **INSPECT FRONT SEAT OUTER BELT ASSEMBLY**
    a. Before installing the front seat outer belt assembly, check the ELR function.

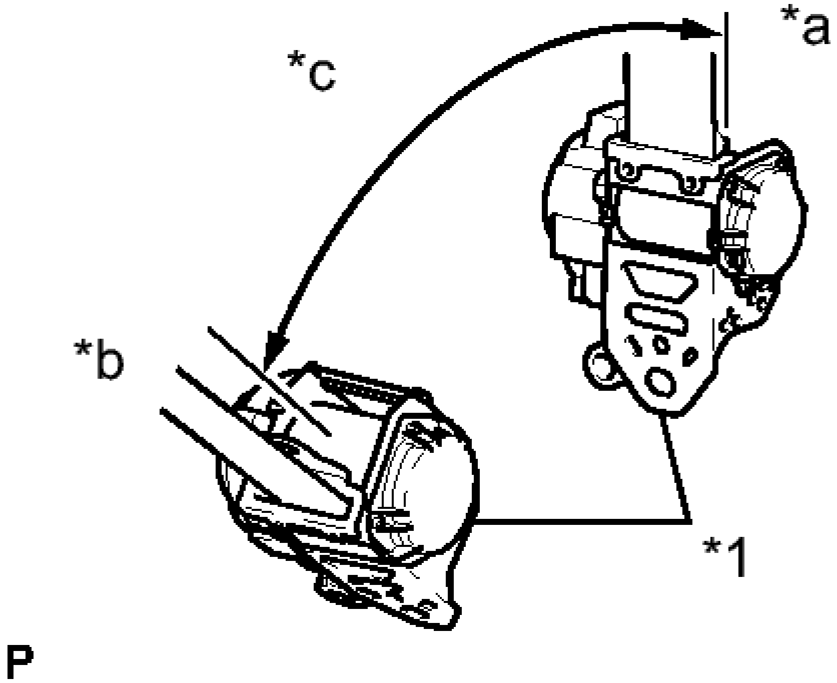

Fig. 15: Checking ELR Function
Courtesy of TOYOTA MOTOR SALES, U.S.A., INC.

NOTE: Do not disassemble the retractor.

1. When the inclination of the retractor is 15° or less, check that the belt can be pulled from the retractor. When the inclination of the retractor is over 45°, check that the belt locks.

   TEXT IN ILLUSTRATION

*1	Retractor
*a	Unlocked
*b	Locked
*c	45°

   If the result is not as specified, replace the front seat outer belt assembly.

INSTALLATION

INSTALLATION

1. **INSTALL FRONT SHOULDER BELT ANCHOR ADJUSTER ASSEMBLY**
   a. Engage the guide.

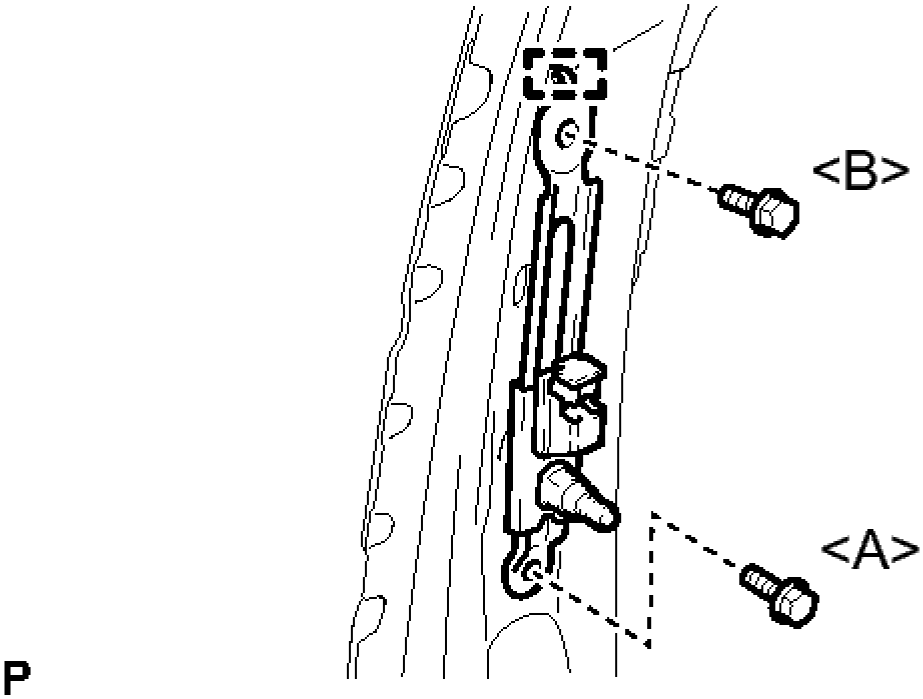

Fig. 16: Identifying Front Shoulder Belt Anchor Adjuster Assembly Bolts
Courtesy of TOYOTA MOTOR SALES, U.S.A., INC.

b. Install the bolt <A> first, then the bolt <B> to temporarily install the front shoulder belt anchor adjuster assembly.
c. Fully tighten the 2 bolts.

Torque: 42 N*m (428 kgf*cm, 31 ft.*lbf)

2. **INSPECT FRONT SEAT OUTER BELT ASSEMBLY** See step 1
3. **INSTALL FRONT SEAT OUTER BELT ASSEMBLY**
   a. Install the bolt <A> first, then the bolt <B> to temporarily install the front seat outer belt assembly.

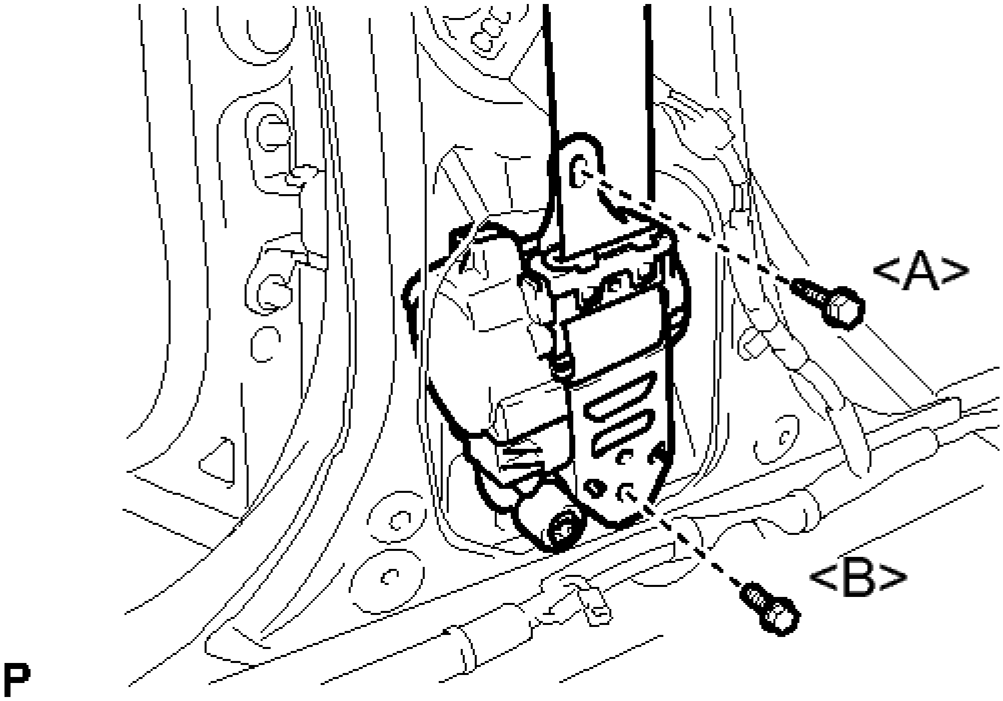

Fig. 17: Identifying Front Seat Outer Belt Assembly Bolts
Courtesy of TOYOTA MOTOR SALES, U.S.A., INC.

b. Fully tighten the 2 bolts.

Bolt <A>

Torque: 7.5 N*m (76 kgf*cm, 66 in.*lbf)

Bolt <B>

Torque: 42 N*m (428 kgf*cm, 31 ft.*lbf)

c. Connect the pretensioner connector and lock the locking button as shown in the illustration.

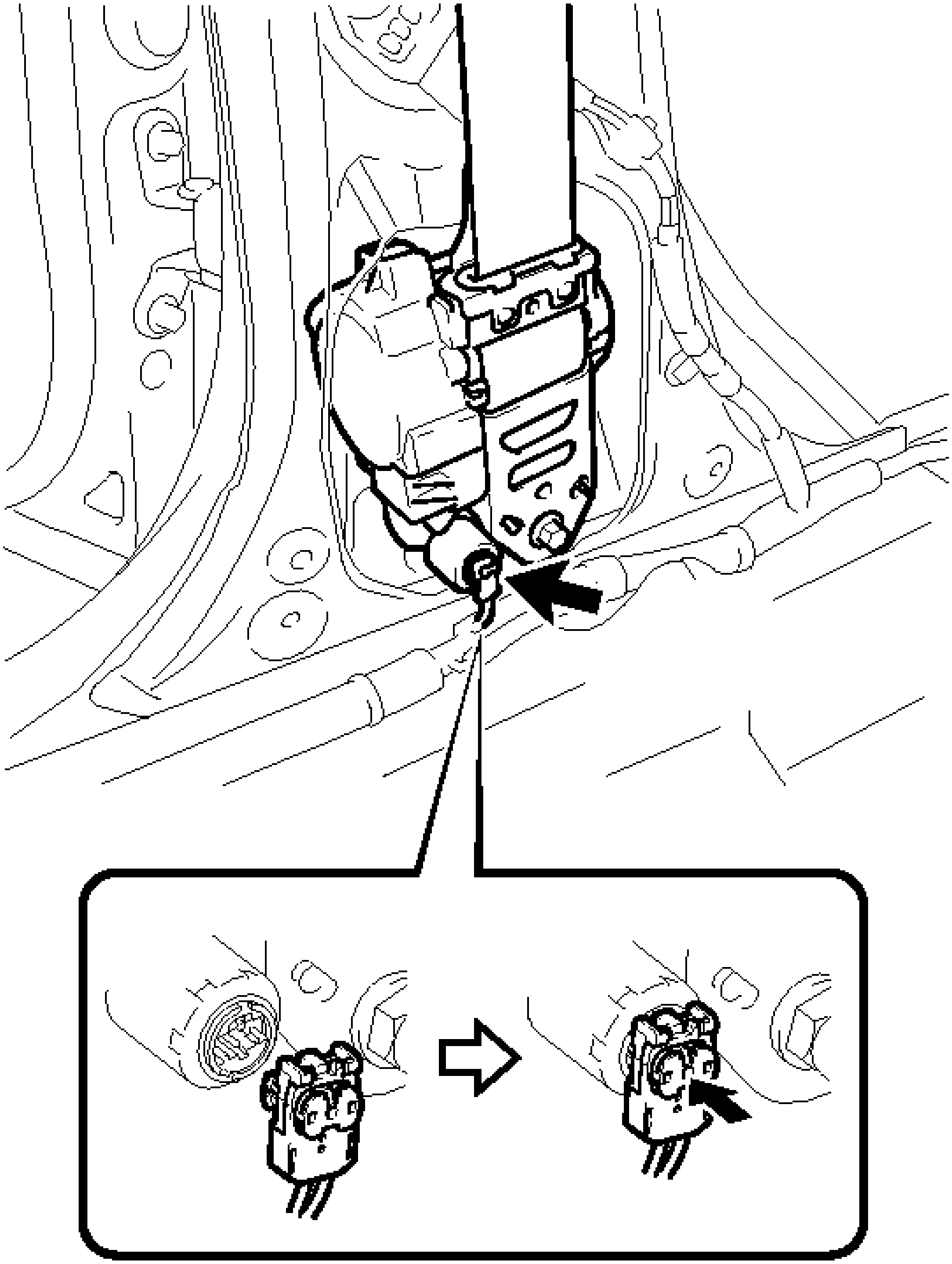

P

Fig. 18: Installing Front Seat Outer Belt Assembly Pretensioner Connector
Courtesy of TOYOTA MOTOR SALES, U.S.A., INC.

NOTE: **Securely lock the locking button.**

d. Connect the shoulder anchor of the front seat outer belt assembly with the nut.

Torque: 42 N*m (428 kgf*cm, 31 ft.*lbf)

4. **INSTALL CENTER PILLAR UPPER GARNISH** . Refer to **INSTALLATION - Step 22**
5. **INSTALL CENTER PILLAR LOWER GARNISH** . Refer to **INSTALLATION - Step 23**
6. **CONNECT FRONT SEAT OUTER BELT ASSEMBLY**
   a. Install the floor anchor of the front seat outer belt assembly with the bolt.

   Torque: 42 N*m (428 kgf*cm, 31 ft.*lbf)

   b. Check if the ELR locks.

   NOTE: The check should be performed with the front seat outer belt assembly installed.

   1. With the belt assembly installed, check that the belt locks when it is pulled out quickly.
7. **INSTALL LAP BELT OUTER ANCHOR COVER**
   a. Engage the 3 claws to install the lap belt outer anchor cover.
8. **INSTALL REAR DOOR OPENING TRIM WEATHERSTRIP**

   for LH Side: Refer to **INSTALLATION - Step 26**

   for RH Side: Refer to **INSTALLATION - Step 33**

9. **INSTALL REAR DOOR SCUFF PLATE** . Refer to **INSTALLATION - Step 27**
10. **INSTALL FRONT DOOR OPENING TRIM WEATHERSTRIP**

    for LH Side: Refer to **INSTALLATION - Step 43**

    for RH Side: Refer to **INSTALLATION - Step 47**

11. **INSTALL FRONT DOOR SCUFF PLATE** . Refer to **INSTALLATION - Step 45**
12. **CONNECT CABLE TO AUXILIARY BATTERY NEGATIVE TERMINAL**

    NOTE: When disconnecting the cable, some systems need to be initialized after the cable is reconnected. Refer to INITIALIZATION .

13. **INSTALL LUGGAGE TRIM SERVICE HOLE COVER** . Refer to **INSTALLATION - Step 3**
14. **INSPECT SRS WARNING LIGHT**

    for Built-in Type Yaw Rate Sensor: Refer to **DIAGNOSIS SYSTEM**

    for Separate Type Yaw Rate Sensor: Refer to **DIAGNOSIS SYSTEM**

DISPOSAL WITH PRETENSIONER

DISPOSAL

WARNING: **Before performing pre-disposal deployment of any SRS component, review and closely follow all applicable environmental and hazardous material regulations. Pre-disposal deployment may be considered hazardous material treatment.**

HINT:

When scrapping vehicles equipped with a seat belt pretensioner or disposing of a seat belt (with a seat belt pretensioner), always perform the procedure described below. If any abnormality occurs during deployment of the seat belt pretensioner, contact the SERVICE DEPARTMENT of TOYOTA MOTOR SALES, U.S.A., INC.

DISPOSAL

1. DISPOSE OF FRONT SEAT OUTER BELT ASSEMBLY (When Installed in Vehicle)

WARNING:

- **Use gloves and safety glasses when handling a seat belt with a deployed pretensioner.**
- **Always wash your hands with water after completing the operation.**
- **Do not apply water, etc. to a seat belt with a deployed pretensioner.**
- **When deploying a seat belt pretensioner, always use the specified SST (SRS airbag deployment tool). Perform the operation in a place away from electrical interference.**
- **When disposing of a seat belt with a pretensioner, never deploy the pretensioner in the customer's vehicle.**

NOTE:

- **Never dispose of a seat belt with a pretensioner that has not been deployed.**
- **The seat belt produces an exploding sound when the pretensioner deploys, so perform the operation outdoors where it will not disturb local residents.**
- **When deploying a seat belt pretensioner, perform the operation at least 10 m (33 ft.) away from the seat belt.**
- **Be sure to follow the procedure listed below when deploying a seat belt pretensioner.**

a. Check the function of SST.

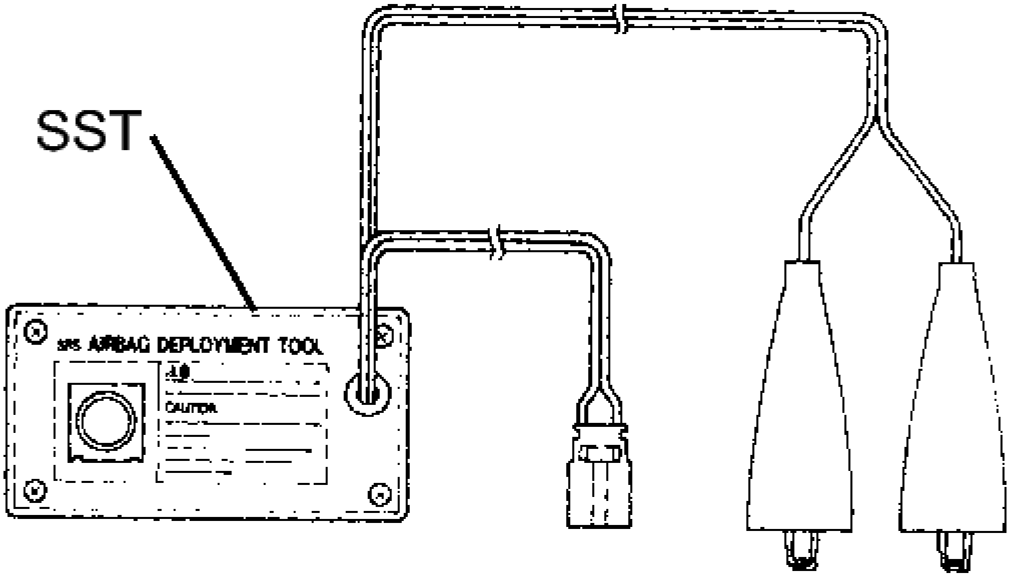
SST
SRS AIRBAG DEPLOYMENT TOOL
CAUTION

Fig. 19: Checking Function Of SST
Courtesy of TOYOTA MOTOR SALES, U.S.A., INC.

- **SST: 09082-00700**

WARNING: When deploying the seat belt pretensioner, always use the specified SST.

1. Connect the red clip of SST to the 12 V battery positive (+) terminal and the black clip to the 12 V battery negative (-) terminal.

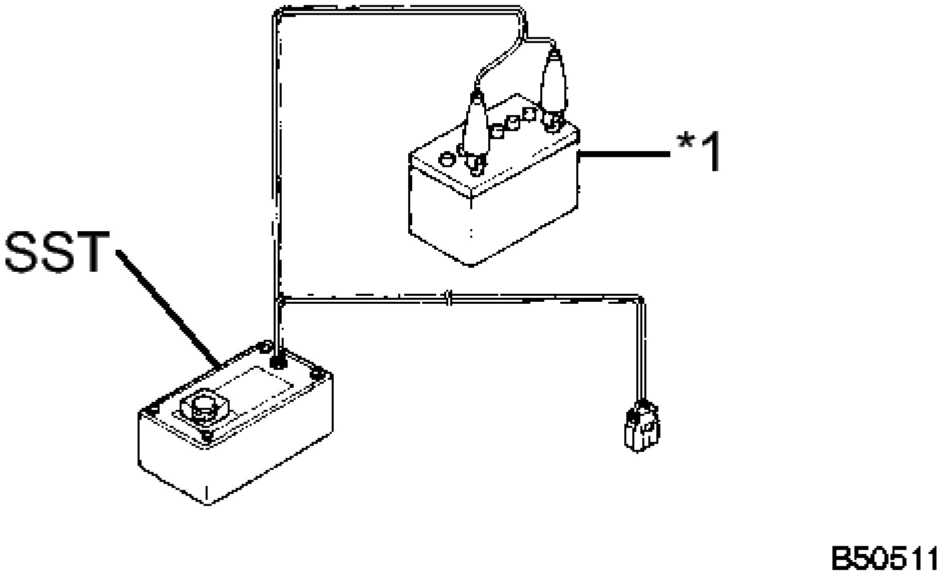

Fig. 20: Identifying SST & Battery
Courtesy of TOYOTA MOTOR SALES, U.S.A., INC.

TEXT IN ILLUSTRATION

*1	12 V battery

HINT:

At this time, do not connect the yellow connector. It will be connected to the seat belt pretensioner in a later step.

2. Press the SST deployment switch and check that the LED of the SST deployment switch illuminates.

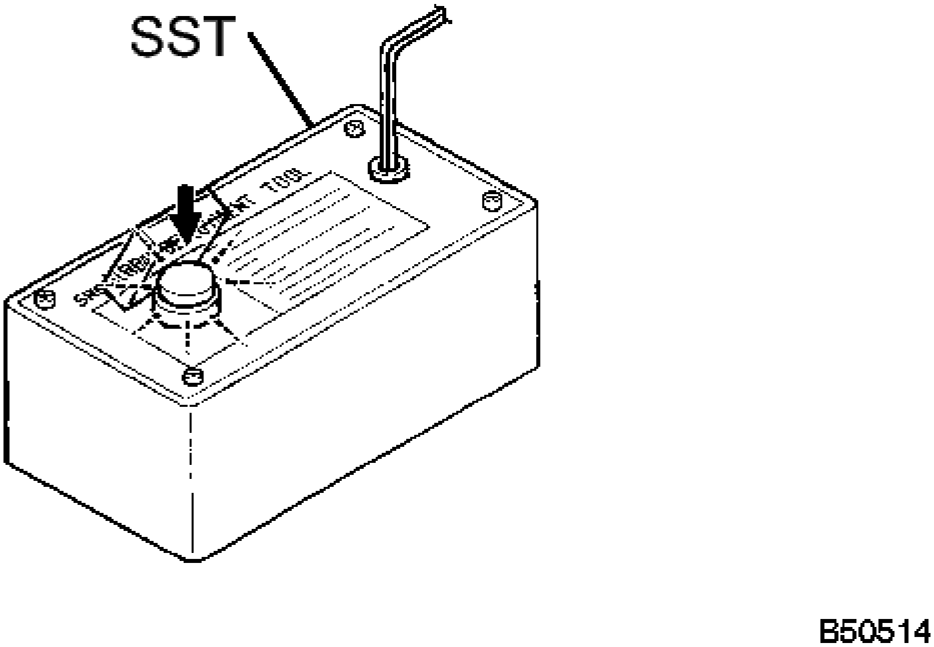

Fig. 21: Pressing SST Deployment Switch
Courtesy of TOYOTA MOTOR SALES, U.S.A., INC.

WARNING: **If the LED is illuminated when the deployment switch is not pressed, SST may be malfunctioning. In this case, do not use the malfunctioning SST.**

b. Disconnect the seat belt pretensioner connector.
   1. Disconnect the cable from the negative (-) auxiliary battery terminal.
   2. Remove the front door scuff plate. Refer to **REMOVAL - Step 4** .
   3. Disconnect the front door opening trim weatherstrip See step 5.
   4. Remove the rear door scuff plate. Refer to **REMOVAL - Step 19** .
   5. Disconnect the rear door opening trim weatherstrip See step 7.
   6. Remove the center pillar lower garnish. Refer to **REMOVAL - Step 23** .
   7. Using a screwdriver, pull out the locking button in the direction shown by the arrow in the illustration to release the lock, and disconnect the pretensioner connector as shown in the illustration.

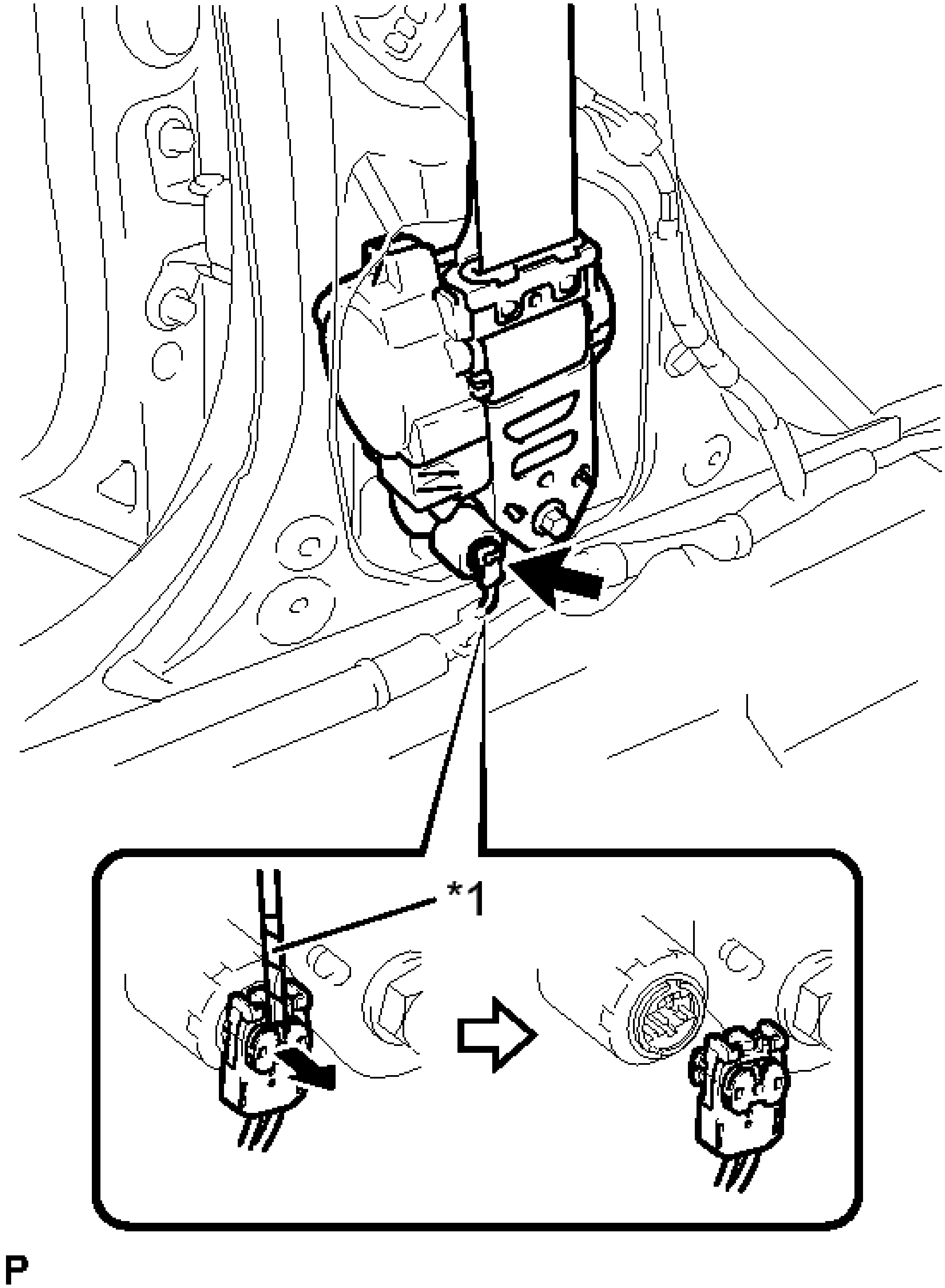

Fig. 22: Removing Front Seat Outer Belt Assembly Pretensioner Connector
Courtesy of TOYOTA MOTOR SALES, U.S.A., INC.

TEXT IN ILLUSTRATION

	Protective

*1	Tape

HINT:

Tape the screwdriver tip before use.

c. Connect SST.

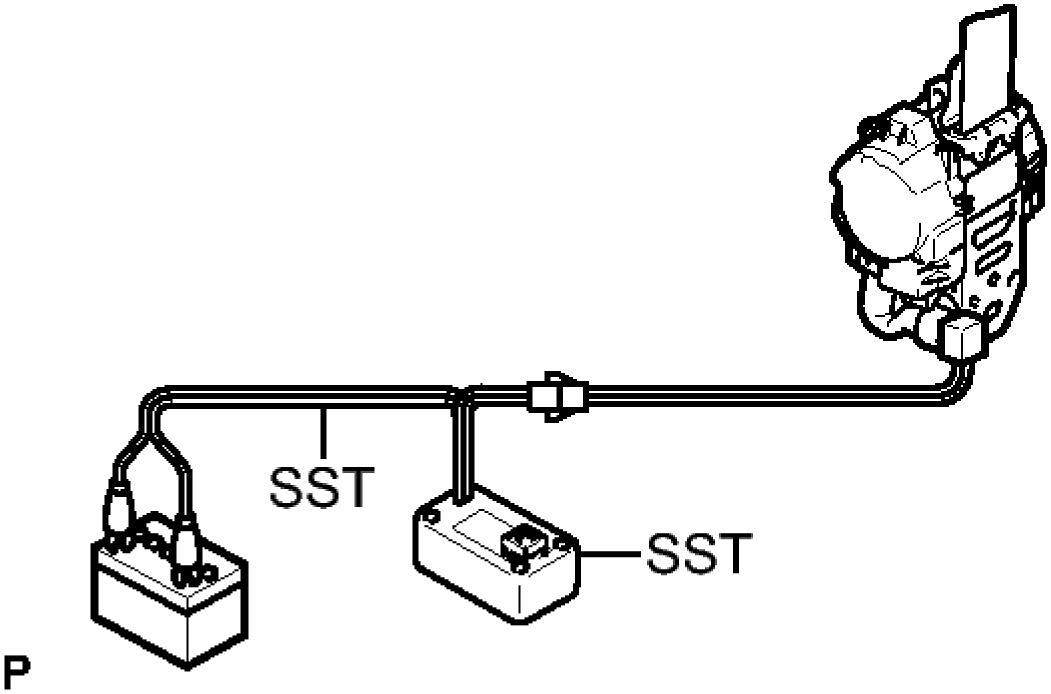

Fig. 23: Connecting SST's To Front Seat Outer Belt Pretensioner
Courtesy of TOYOTA MOTOR SALES, U.S.A., INC.

1. Connect 2 SST, and then connect them to the seat belt pretensioner.
    - **SST: 09082-00700**
    - **SST: 09082-00770**

NOTE: **To avoid damaging the SST connector and wire harness, do not lock the secondary lock of the pretensioner connector.**

2. Move SST at least 10 m (33 ft.) away from the front of the vehicle.

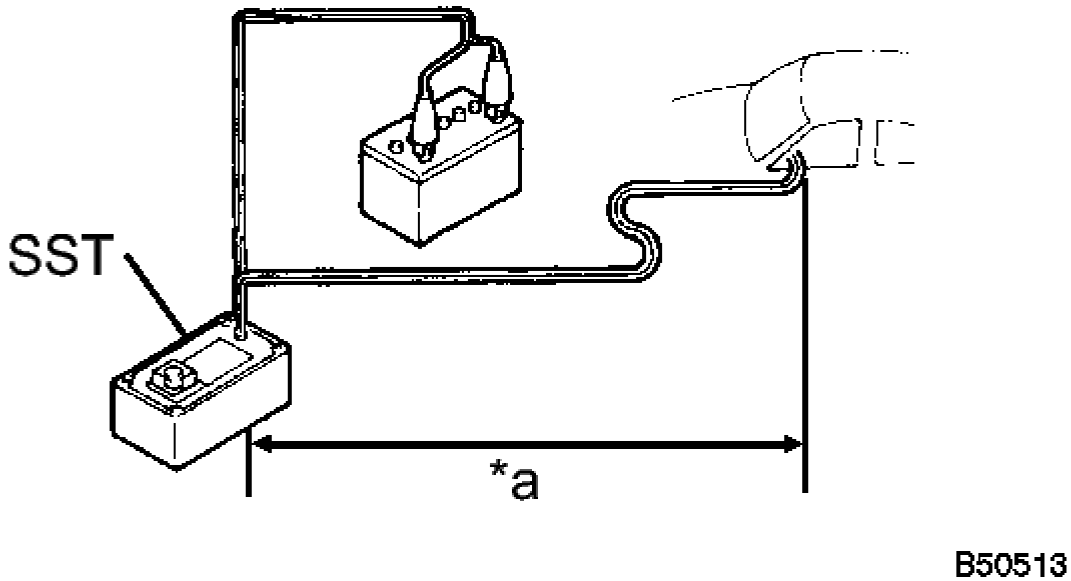

Fig. 24: Identifying SST Safe Distance
Courtesy of TOYOTA MOTOR SALES, U.S.A., INC.

TEXT IN ILLUSTRATION

*a	10 m or more

3. Close all the doors and windows of the vehicle.

   NOTE: **Do not damage the SST wire harness.**

d. Deploy the seat belt pretensioner.
   1. Confirm that no one is inside the vehicle or within a 10 m (33 ft.) radius of the vehicle.
   2. Connect the red clip of SST to the 12 V battery positive (+) terminal and the black clip to the 12 V battery negative (-) terminal.
   3. Press the SST deployment switch to deploy the seat belt pretensioner.

      HINT:

      The seat belt pretensioner will deploy at the same time as the LED of SST illuminates.

e. Dispose of the seat belt.

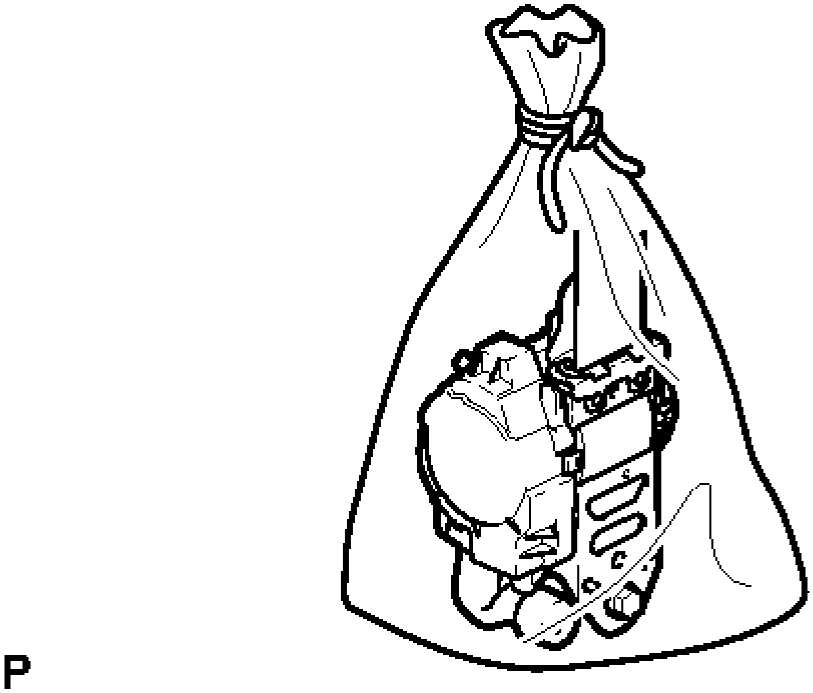

Fig. 25: Identifying Disposal Of Front Seat Outer Belt Assembly
Courtesy of TOYOTA MOTOR SALES, U.S.A., INC.

1. Remove the seat belt and SST.
2. Place the seat belt in a plastic bag, tie the end tightly, and dispose of it in the same way as other general parts.

WARNING:

- **The seat belt becomes very hot when the pretensioner is deployed, so leave it untouched for at least 30 minutes after the pretensioner is deployed.**
- **Use gloves and safety glasses when handling a seat belt with a deployed pretensioner.**
- **Always wash your hands with water after completing the operation.**
- **Do not apply water, etc. to a seat belt with a deployed pretensioner.**

HINT:

When scrapping a vehicle, deploy the seat belt pretensioner, and then scrap the vehicle with the seat belt installed.

2. **DISPOSE OF FRONT SEAT OUTER BELT ASSEMBLY (When Not Installed in Vehicle)**

WARNING:

- **Use gloves and safety glasses when handling a seat belt with a deployed pretensioner.**
- **Always wash your hands with water after completing the operation.**
- **Do not apply water, etc. to a seat belt with a deployed pretensioner.**
- **When deploying a seat belt pretensioner, always use the specified SST (SRS airbag deployment tool). Perform the operation in a place away from electrical interference.**
- **When disposing of a seat belt with a pretensioner, never deploy the pretensioner in the customer's vehicle.**

NOTE:

- **Never dispose of a seat belt with a pretensioner that has not been deployed.**
- **The seat belt produces an exploding sound when the pretensioner deploys, so perform the operation outdoors where it will not disturb local residents.**
- **When deploying a seat belt pretensioner, perform the operation at least 10 m (33 ft.) away from the seat belt.**
- **Be sure to follow the procedure listed below when deploying a seat belt pretensioner.**

a. Remove the seat belt. Refer to **REMOVAL**.
b. Wind the seat belt webbing with the retractor.

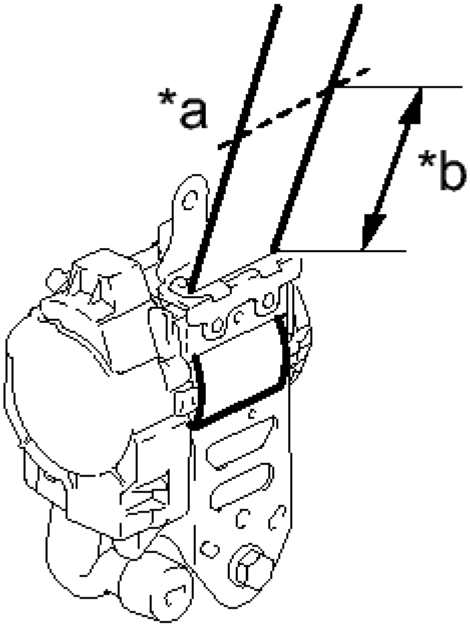

Fig. 26: Identifying Seat Belt Webbing Cutting Dimension
Courtesy of TOYOTA MOTOR SALES, U.S.A., INC.

TEXT IN ILLUSTRATION

*a	Cut
*b	100 mm

c. When the seat belt webbing is sufficiently wound, cut the seat belt webbing approximately 100 mm (3.94 in.) from the retractor, as shown in the illustration.

HINT:

The retractor resistance increases in correlation with how much the seat belt webbing is wound.

d. Check the function of SST.

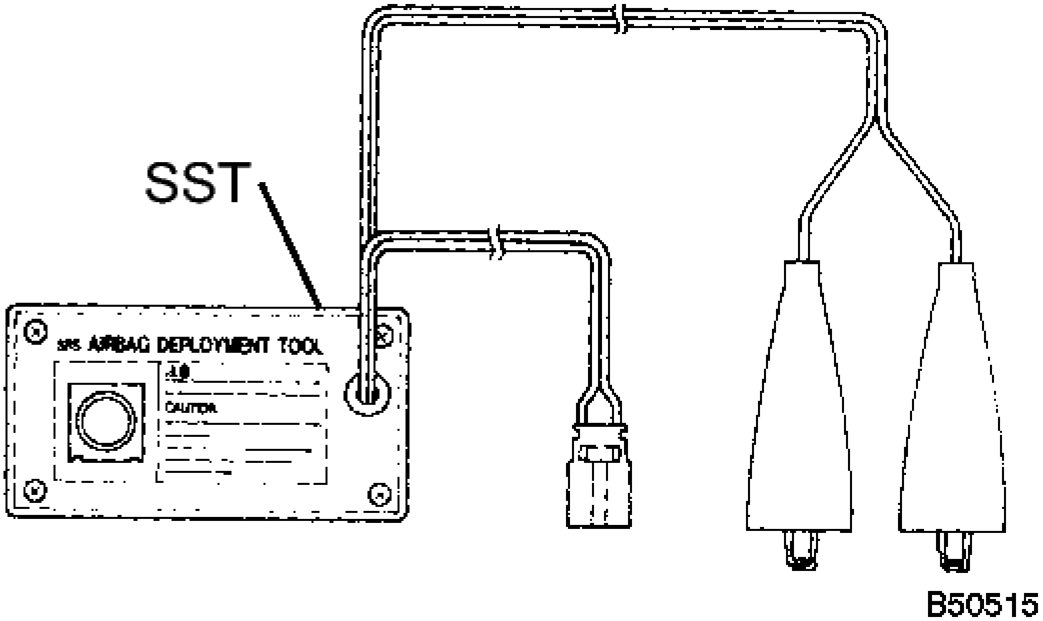
SST
SRS AIRBAG DEPLOYMENT TOOL
CAUTION
B50515

Fig. 27: Checking Function Of SST
Courtesy of TOYOTA MOTOR SALES, U.S.A., INC.

- **SST: 09082-00700**

WARNING: When deploying the seat belt pretensioner, always use the specified SST.

1. Connect the red clip of SST to the 12 V battery positive (+) terminal and the black clip to the 12 V battery negative (-) terminal.

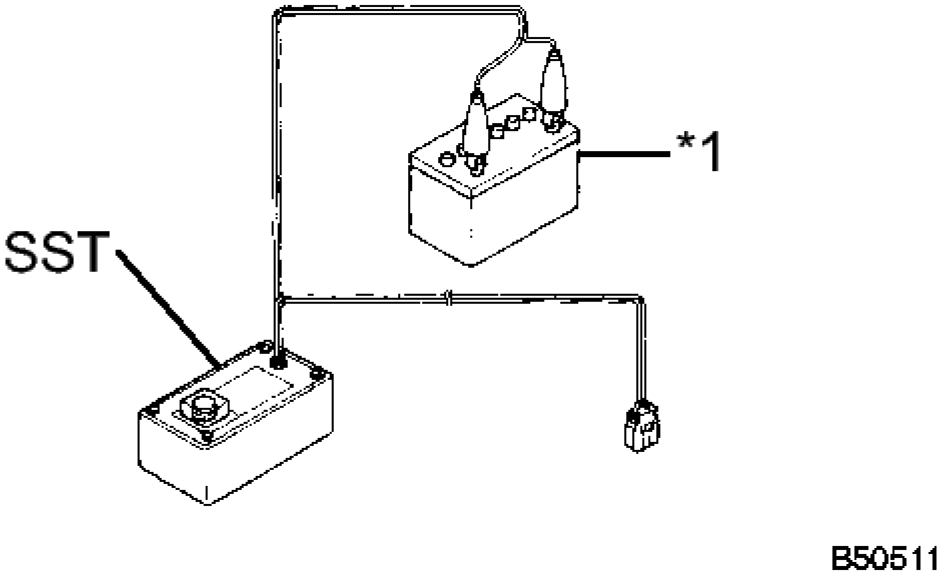

Fig. 28: Identifying SST & Battery
Courtesy of TOYOTA MOTOR SALES, U.S.A., INC.

TEXT IN ILLUSTRATION

*1	12 V battery

HINT:

At this time, do not connect the yellow connector. It will be connected to the seat belt pretensioner in a later step.

2. Press the SST deployment switch and check that the LED of the SST deployment switch illuminates.

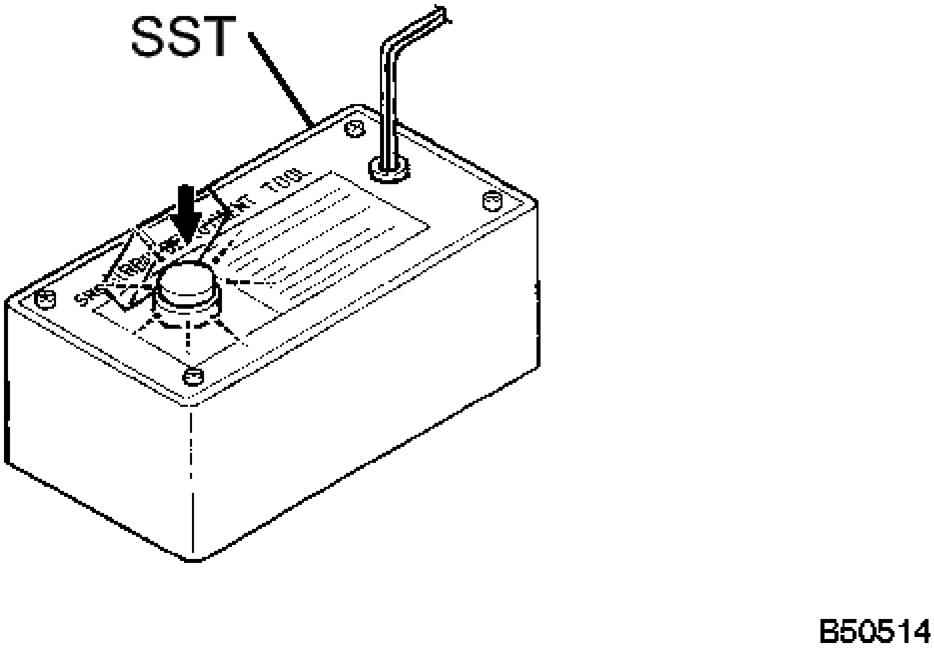

Fig. 29: Pressing SST Deployment Switch
Courtesy of TOYOTA MOTOR SALES, U.S.A., INC.

WARNING: If the LED is illuminated when the deployment switch is not pressed, SST may be malfunctioning. In this case, do not use the malfunctioning SST.

e. Connect SST.

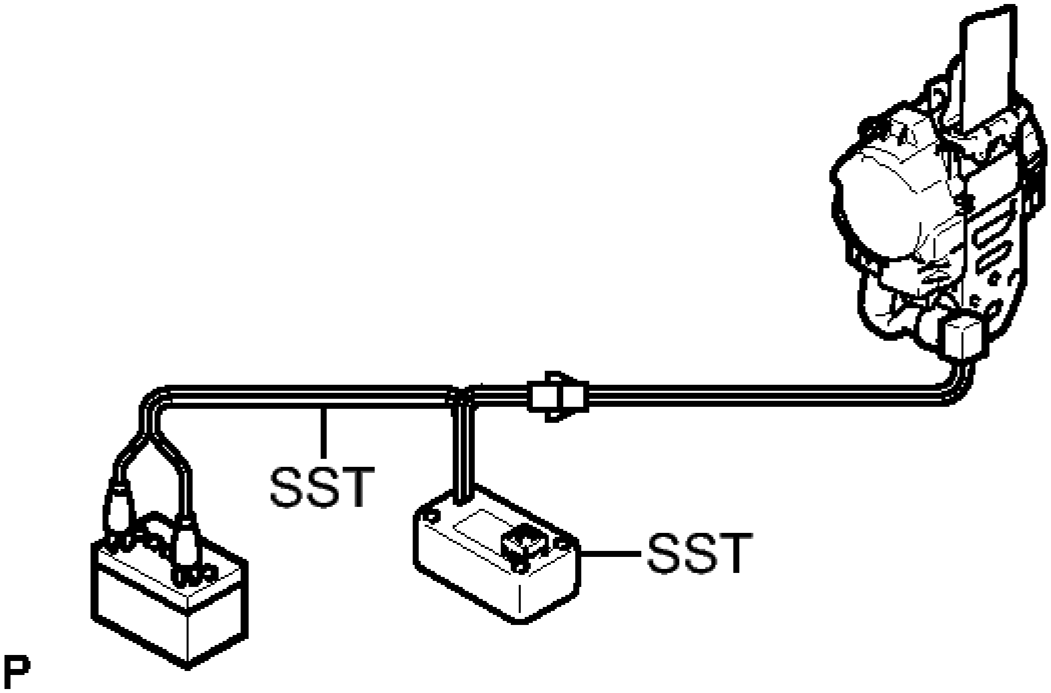

Fig. 30: Connecting SST's To Front Seat Outer Belt Pretensioner
Courtesy of TOYOTA MOTOR SALES, U.S.A., INC.

1. Connect 2 SST, and then connect them to the seat belt pretensioner.
    - **SST: 09082-00700**
    - **SST: 09082-00770**

NOTE: To avoid damaging the SST connector and wire harness, do not lock the secondary lock of the pretensioner connector.

2. Place the seat belt on the ground and cover it with a tire and wheel assembly.

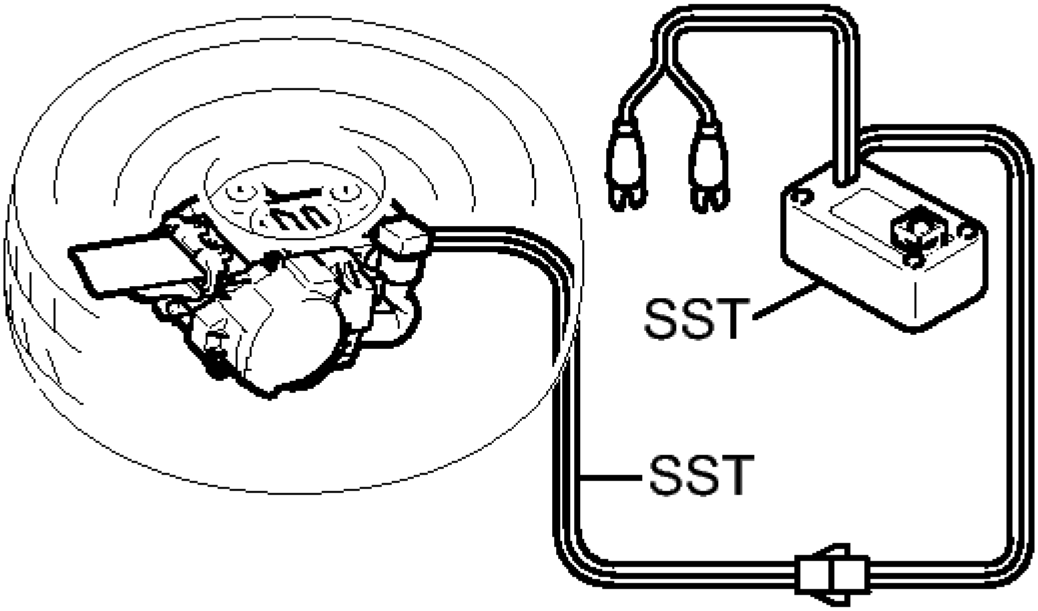

P

Fig. 31: Positioning Outer Belt Under Tire And Wheel Assembly
Courtesy of TOYOTA MOTOR SALES, U.S.A., INC.

NOTE:

- **Position the seat belt as shown in the illustration.**
- **Use a scrap tire and wheel assembly when disposing of a seat belt pretensioner.**

3. Position and hold SST at least 10 m (33 ft.) away from the wheel.

NOTE: **Do not damage the SST wire harness.**

f. Deploy the seat belt pretensioner.

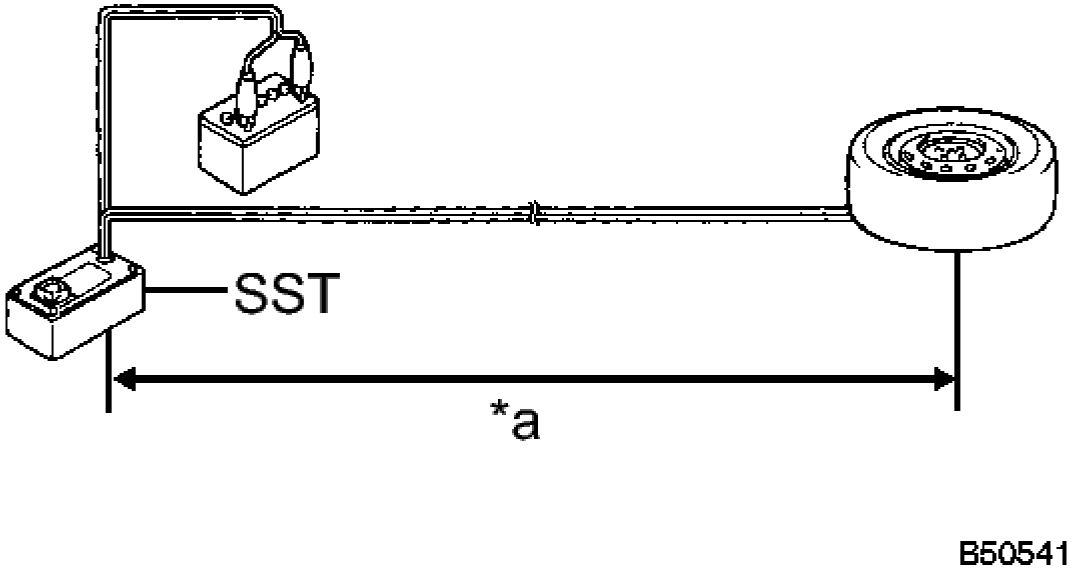

Fig. 32: Identifying SST Safe Distance
Courtesy of TOYOTA MOTOR SALES, U.S.A., INC.

TEXT IN ILLUSTRATION

*a	10 m or more

1. Check that no one is within a 10 m (33 ft.) radius of the wheel.
2. Connect the red clip of SST to the 12 V battery positive (+) terminal and the black clip to the 12 V battery negative (-) terminal.
3. Press the SST deployment switch to deploy the seat belt pretensioner.

   HINT:

   The seat belt pretensioner will deploy at the same time as the LED of SST illuminates.

g. Dispose of the seat belt.

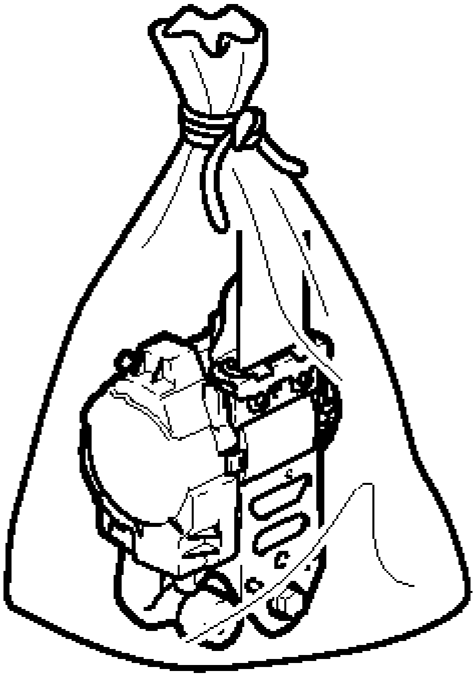

P

Fig. 33: Identifying Disposal Of Front Seat Outer Belt Assembly
Courtesy of TOYOTA MOTOR SALES, U.S.A., INC.

1. Remove the wheel and SST.
2. Place the seat belt in a plastic bag, tie the end tightly, and dispose of it in the same way as other general parts.

WARNING:

- **The seat belt becomes very hot when the pretensioner is deployed, so leave it untouched for at least 30 minutes after the pretensioner is deployed.**
- **Use gloves and safety glasses when handling a seat belt with a deployed pretensioner.**
- **Always wash your hands with water after completing the operation.**
- **Do not apply water, etc. to a seat belt with a deployed pretensioner.**

HINT:

When scrapping a vehicle, deploy the seat belt pretensioner, and then scrap the vehicle with the seat belt installed.

REAR SEAT INNER BELT ASSEMBLY

COMPONENTS

ILLUSTRATION

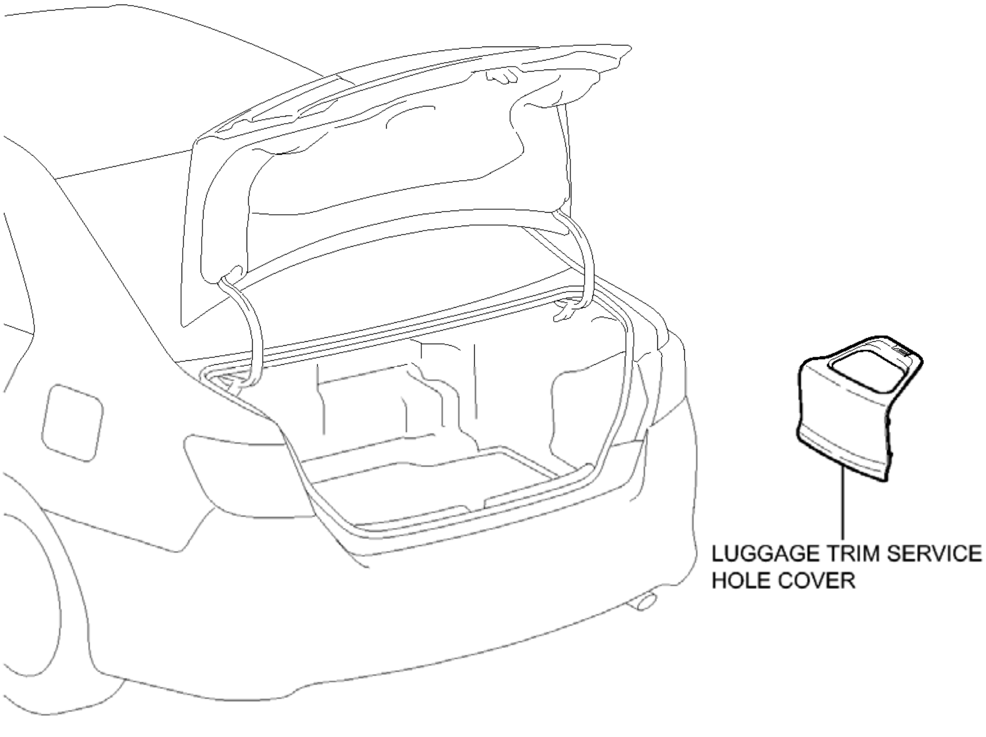
LUGGAGE TRIM SERVICE
HOLE COVER
P

Fig. 34: Identifying Rear Seat Inner Belt Assembly Replacement Components With Torque Specifications (1 Of 4)
Courtesy of TOYOTA MOTOR SALES, U.S.A., INC.

ILLUSTRATION

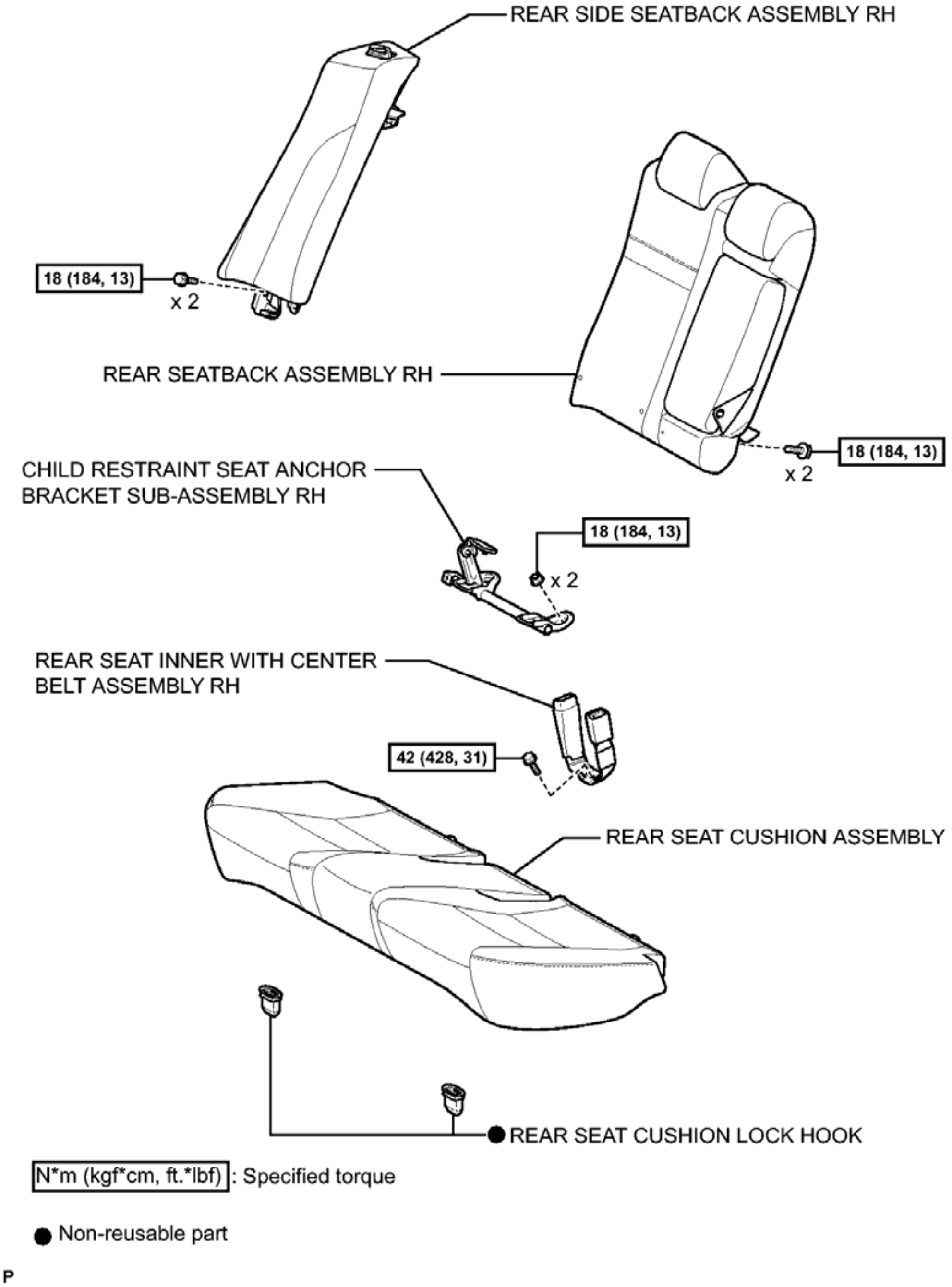
REAR SIDE SEATBACK ASSEMBLY RH
18 (184, 13)
x 2
REAR SEATBACK ASSEMBLY RH
18 (184, 13)
x 2
CHILD RESTRAINT SEAT ANCHOR BRACKET SUB-ASSEMBLY RH
18 (184, 13)
x 2
REAR SEAT INNER WITH CENTER BELT ASSEMBLY RH
42 (428, 31)
REAR SEAT CUSHION ASSEMBLY
● REAR SEAT CUSHION LOCK HOOK
N*m (kgf*cm, ft.*lbf) : Specified torque
● Non-reusable part
P

Fig. 35: Identifying Rear Seat Inner Belt Assembly Replacement Components With Torque Specifications (2 Of 4)

Courtesy of TOYOTA MOTOR SALES, U.S.A., INC.

ILLUSTRATION

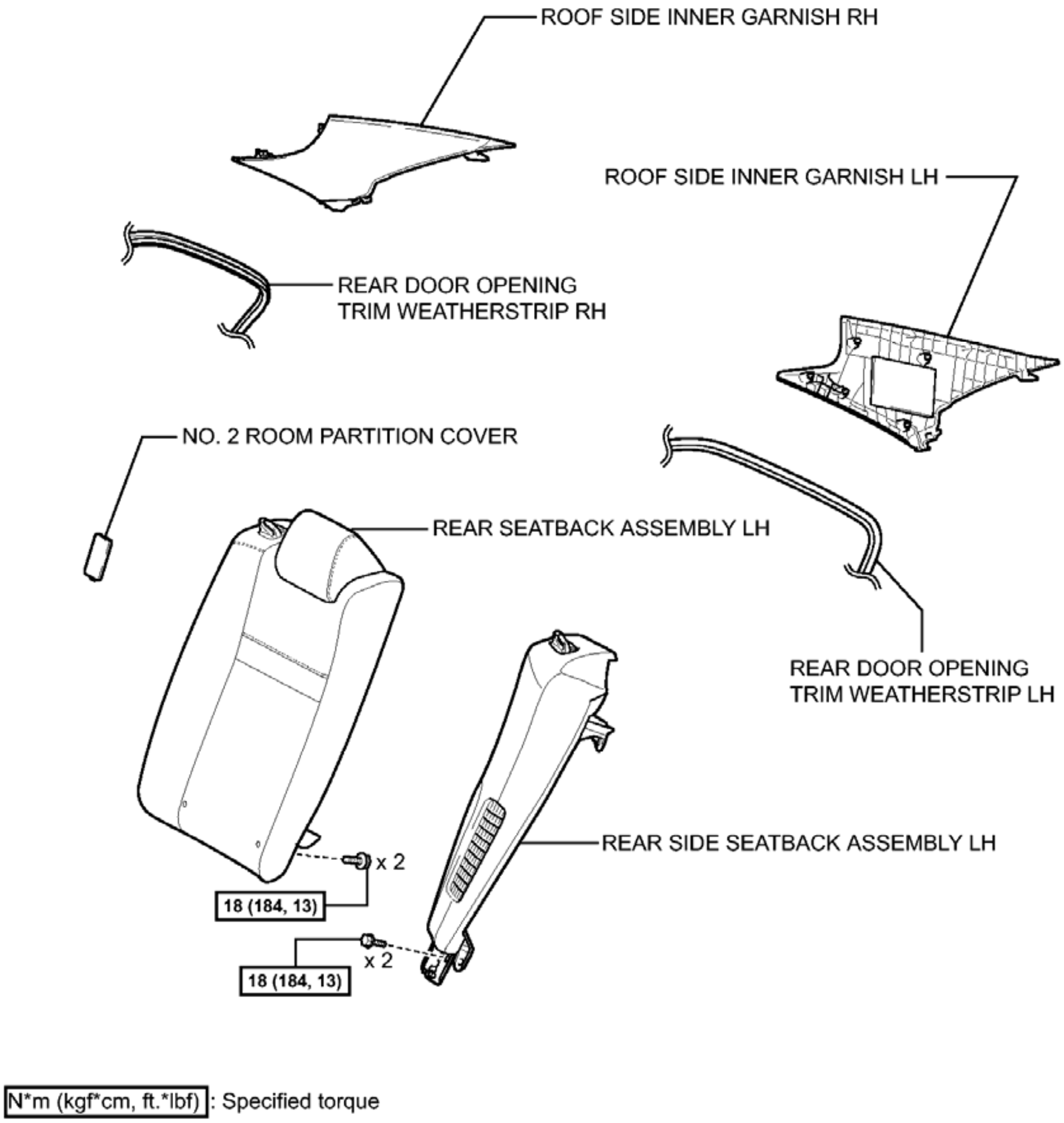
ROOF SIDE INNER GARNISH RH
ROOF SIDE INNER GARNISH LH
REAR DOOR OPENING TRIM WEATHERSTRIP RH
NO. 2 ROOM PARTITION COVER
REAR SEATBACK ASSEMBLY LH
REAR DOOR OPENING TRIM WEATHERSTRIP LH
REAR SIDE SEATBACK ASSEMBLY LH
x 2
18 (184, 13)
x 2
18 (184, 13)
N*m (kgf*cm, ft.*lbf) : Specified torque

P

Fig. 36: Identifying Rear Seat Inner Belt Assembly Replacement Components With Torque Specifications (3 Of 4)

Courtesy of TOYOTA MOTOR SALES, U.S.A., INC.

ILLUSTRATION

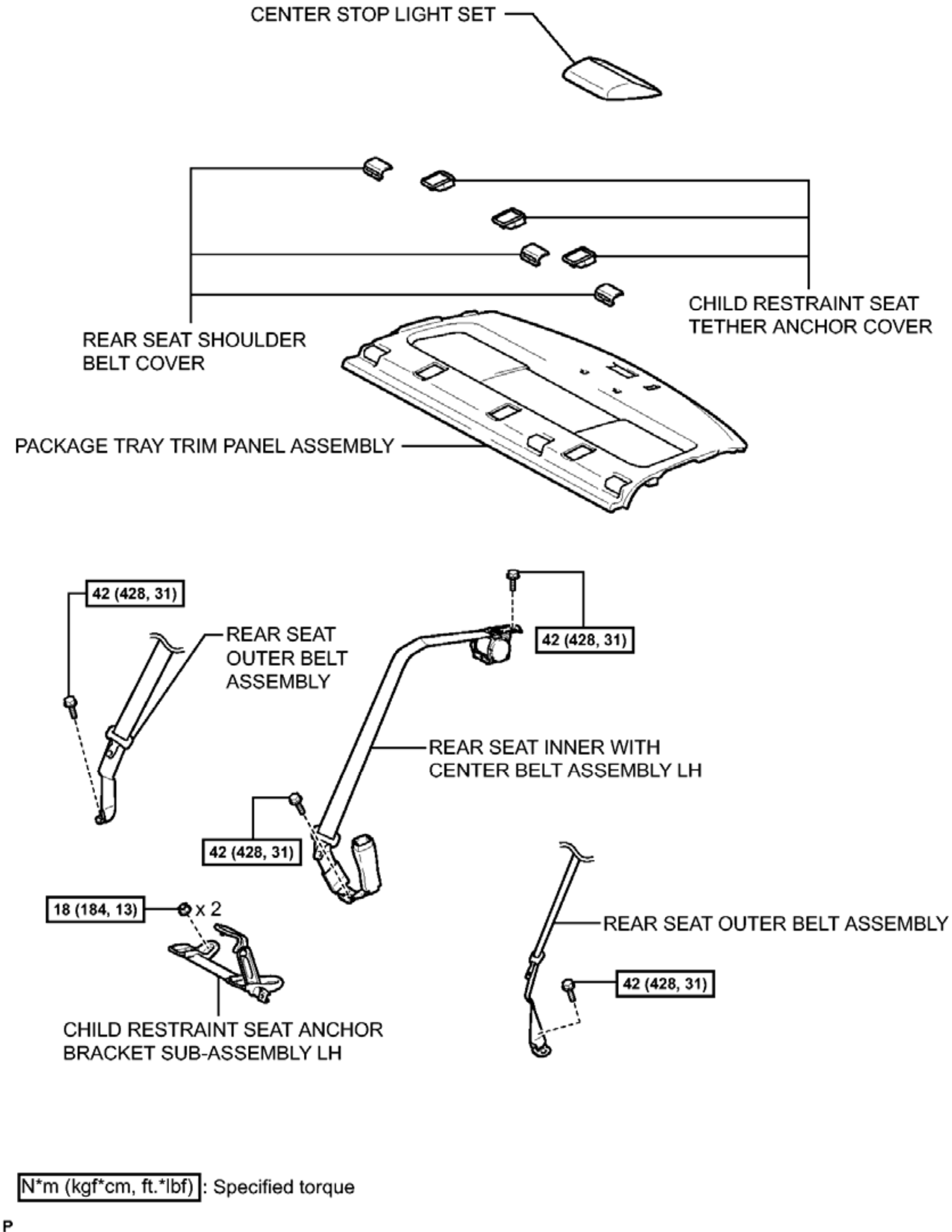
CENTER STOP LIGHT SET
CHILD RESTRAINT SEAT TETHER ANCHOR COVER
REAR SEAT SHOULDER BELT COVER
PACKAGE TRAY TRIM PANEL ASSEMBLY
42 (428, 31)
REAR SEAT OUTER BELT ASSEMBLY
42 (428, 31)
REAR SEAT INNER WITH CENTER BELT ASSEMBLY LH
42 (428, 31)
18 (184, 13)
x 2
REAR SEAT OUTER BELT ASSEMBLY
42 (428, 31)
CHILD RESTRAINT SEAT ANCHOR BRACKET SUB-ASSEMBLY LH
N*m (kgf*cm, ft.*lbf) : Specified torque
P

Fig. 37: Identifying Rear Seat Inner Belt Assembly Replacement Components With Torque Specifications (4 Of 4)

Courtesy of TOYOTA MOTOR SALES, U.S.A., INC.

ON-VEHICLE INSPECTION

ON-VEHICLE INSPECTION

WARNING: **Be sure to correctly follow the removal and installation procedures for the rear seat inner with center belt assembly LH.**

1. **INSPECT REAR SEAT INNER WITH CENTER BELT ASSEMBLY LH (for Vehicle not Involved in Collision)**
   a. Visually check for defects with the rear seat inner with center belt assembly LH installed on the vehicle.
      1. The defects are as follows:
         - Cuts on the rear seat inner with center belt assembly LH
         - Small cracks on the rear seat inner with center belt assembly LH
         - Significant discoloration on the rear seat inner with center belt assembly LH

         OK

         No defects are found.

         HINT:

         If any of the defects is found, replace the rear seat inner with center belt assembly LH with a new one.

2. **INSPECT REAR SEAT INNER WITH CENTER BELT ASSEMBLY LH (for Vehicle Involved in Collision)**
   a. Visually check for defects with the rear seat inner with center belt assembly LH removed from the vehicle.
      1. The defects are as follows:
         - Cuts on the rear seat inner with center belt assembly LH
         - Small cracks on the rear seat inner with center belt assembly LH
         - Significant discoloration on the rear seat inner with center belt assembly LH
         - Cracks or other damage to the connector

         OK

         No defects are found.

         HINT:

         If any of the defects is found, replace the rear seat inner with center belt assembly LH with a new one.

REMOVAL

REMOVAL

1. **PRECAUTION**

   NOTE: **After turning the power switch off, waiting time may be required before disconnecting the cable from the negative (-) auxiliary battery terminal. Therefore, make sure to read the disconnecting the cable from the negative (-) auxiliary battery terminal notices before proceeding with work. Refer to PRECAUTION .**

2. **REMOVE LUGGAGE TRIM SERVICE HOLE COVER** . Refer to **REMOVAL - Step 2**
3. **DISCONNECT CABLE FROM AUXILIARY BATTERY NEGATIVE TERMINAL**

   WARNING: **Wait at least 90 seconds after disconnecting the cable from the negative (-) auxiliary battery terminal to disable the SRS system.**

   NOTE: **When disconnecting the cable, some systems need to be initialized after the cable is reconnected. Refer to INITIALIZATION .**

4. **REMOVE REAR SEAT CUSHION ASSEMBLY** . Refer to **REMOVAL - Step 4**
5. **REMOVE REAR SEAT CUSHION LOCK HOOK** . Refer to **REMOVAL - Step 5**
6. **REMOVE REAR SEATBACK ASSEMBLY RH** . Refer to **REMOVAL - Step 6**
7. **REMOVE REAR SIDE SEATBACK ASSEMBLY RH** . Refer to **REMOVAL - Step 10**
8. **REMOVE CHILD RESTRAINT SEAT ANCHOR BRACKET SUB-ASSEMBLY RH** See step 12
9. **REMOVE REAR SEAT INNER WITH CENTER BELT ASSEMBLY RH**
   a. Remove the bolt and rear seat inner with center belt assembly RH.

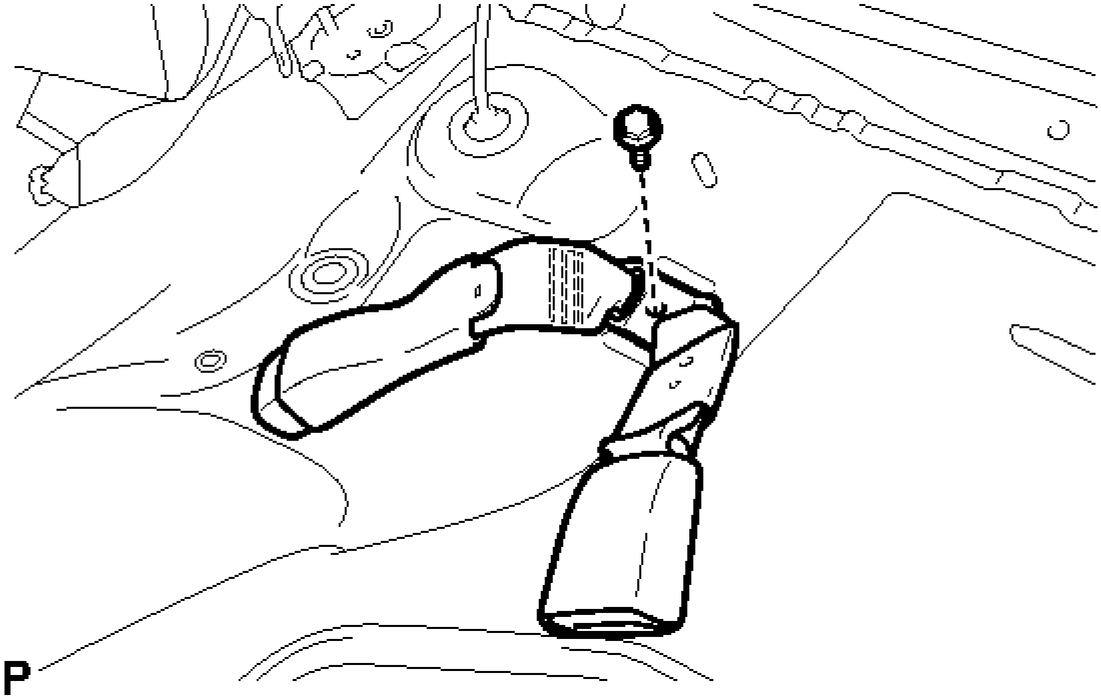

Fig. 38: Locating Rear Seat Inner Center Belt Assembly Bolt RH
Courtesy of TOYOTA MOTOR SALES, U.S.A., INC.

10. **REMOVE NO. 2 ROOM PARTITION COVER** . Refer to **REMOVAL - Step 7**
11. **REMOVE REAR SEATBACK ASSEMBLY LH** . Refer to **REMOVAL - Step 8**
12. **REMOVE REAR SIDE SEATBACK ASSEMBLY LH** . Refer to **REMOVAL - Step 9**
13. **DISCONNECT REAR DOOR OPENING TRIM WEATHERSTRIP LH**
    a. Disconnect the rear door opening trim weatherstrip LH.
14. **DISCONNECT REAR DOOR OPENING TRIM WEATHERSTRIP RH**
    a. Disconnect the rear door opening trim weatherstrip RH.
15. **REMOVE ROOF SIDE INNER GARNISH LH** . Refer to **REMOVAL - Step 25**
16. **REMOVE ROOF SIDE INNER GARNISH RH**

    HINT:

    Use the same procedure as for the LH side.

17. **DISCONNECT REAR SEAT OUTER BELT ASSEMBLY (for LH Side)** See step 14
18. **DISCONNECT REAR SEAT OUTER BELT ASSEMBLY (for RH Side)** See step 15
19. **REMOVE CHILD RESTRAINT SEAT ANCHOR BRACKET SUB-ASSEMBLY LH** See step 11
20. **DISCONNECT REAR SEAT INNER WITH CENTER BELT ASSEMBLY LH**
    a. Remove the bolt and disconnect the floor anchor of the rear seat inner with center belt assembly LH.

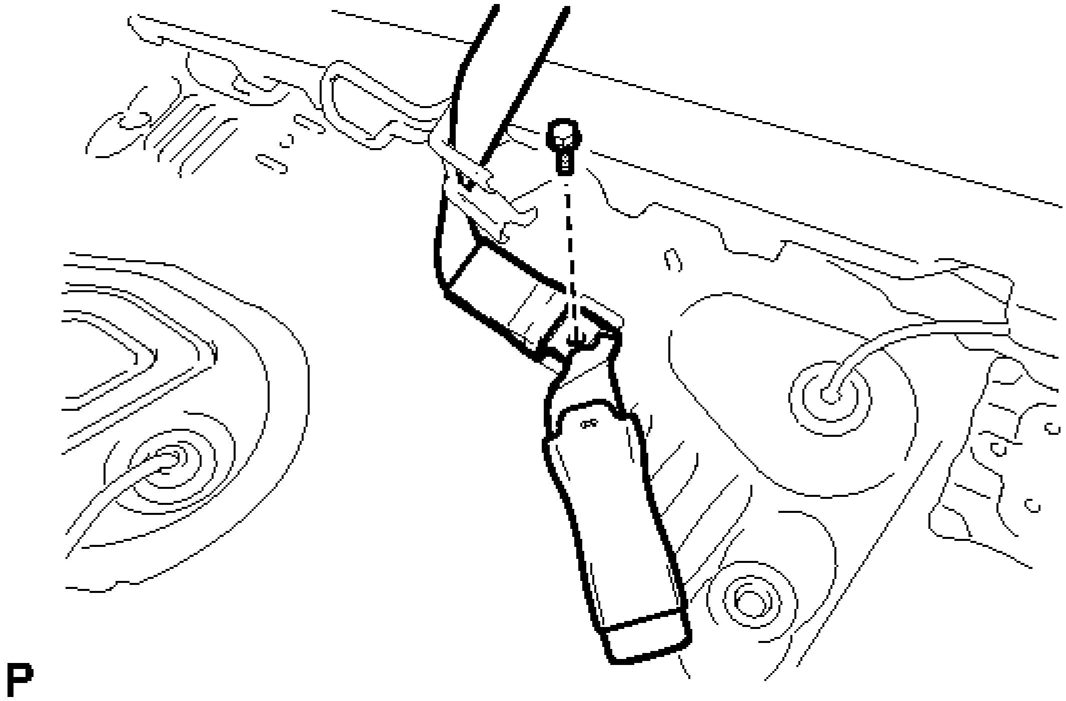

Fig. 39: Locating Rear Seat Inner Center Belt Assembly Bolt LH
Courtesy of TOYOTA MOTOR SALES, U.S.A., INC.

21. **REMOVE CENTER STOP LIGHT SET** . Refer to **REMOVAL - Step 1**
22. **REMOVE CHILD RESTRAINT SEAT TETHER ANCHOR COVER** See step 19
23. **REMOVE REAR SEAT SHOULDER BELT COVER** See step 20
24. **REMOVE PACKAGE TRAY TRIM PANEL ASSEMBLY** See step 21
25. **REMOVE REAR SEAT INNER WITH CENTER BELT ASSEMBLY LH**
    a. Remove the bolt.

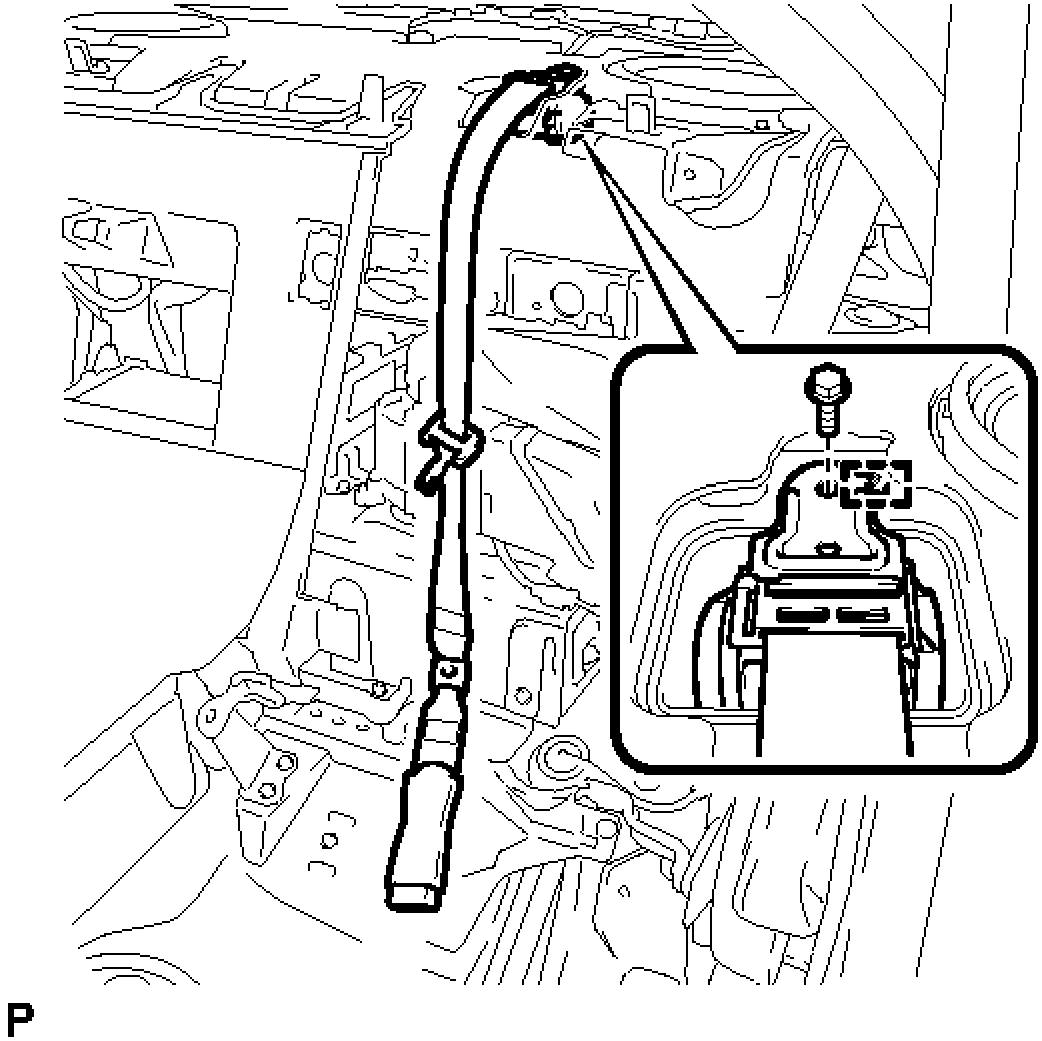

Fig. 40: Identifying Rear Seat Inner With Center Belt Assembly Guide LH
Courtesy of TOYOTA MOTOR SALES, U.S.A., INC.

b. Disengage the guide to remove the rear seat inner with center belt assembly LH.

INSPECTION

INSPECTION

1. **INSPECT REAR SEAT INNER WITH CENTER BELT ASSEMBLY LH**
    a. Before installing the rear seat inner with center belt assembly LH, check the ELR function.

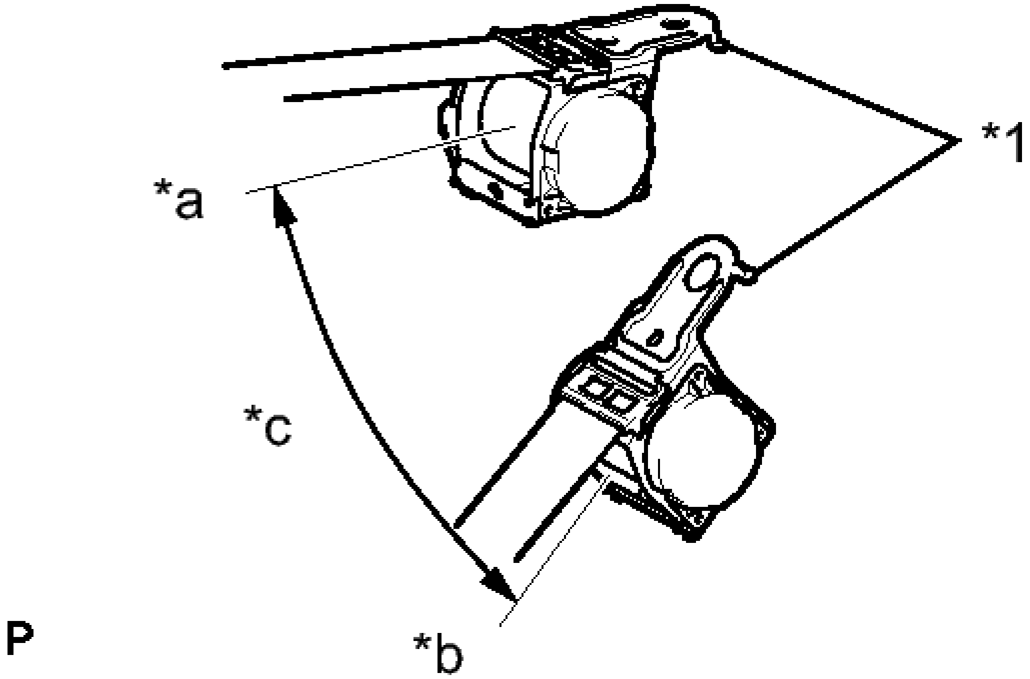

Fig. 41: Inspecting Rear Seat Inner With Center Belt Assembly LH
Courtesy of TOYOTA MOTOR SALES, U.S.A., INC.

NOTE: Do not disassemble the retractor.

1. When the inclination of the retractor is 15° or less, check that the belt can be pulled from the retractor. When the inclination of the retractor is over 45°, check that the belt locks.

   TEXT IN ILLUSTRATION

*1	Retractor
*a	Unlocked
*b	Locked
*c	45°

   If the result is not as specified, replace the rear seat inner with center belt assembly LH.

INSTALLATION

INSTALLATION

1. **INSPECT REAR SEAT INNER WITH CENTER BELT ASSEMBLY LH** See step 1
2. **INSTALL REAR SEAT INNER WITH CENTER BELT ASSEMBLY LH**
   a. Engage the guide to temporarily install the rear seat inner with center belt assembly LH.
   b. Install the bolt.

Torque: 42 N*m (428 kgf*cm, 31 ft.*lbf)

c. Check if the ELR locks.

NOTE: The check should be performed with the rear seat inner with center belt assembly LH installed.

1. With the belt assembly installed, check that the belt locks when it is pulled out quickly.

3. **INSTALL PACKAGE TRAY TRIM PANEL ASSEMBLY** See step 3
4. **INSTALL REAR SEAT SHOULDER BELT COVER** See step 4
5. **INSTALL CHILD RESTRAINT SEAT TETHER ANCHOR COVER** See step 5
6. **INSTALL CENTER STOP LIGHT SET** . Refer to **INSTALLATION - Step 1**
7. **CONNECT REAR SEAT INNER WITH CENTER BELT ASSEMBLY LH**

a. Connect the floor anchor of the rear seat inner with center belt assembly LH with the bolt.

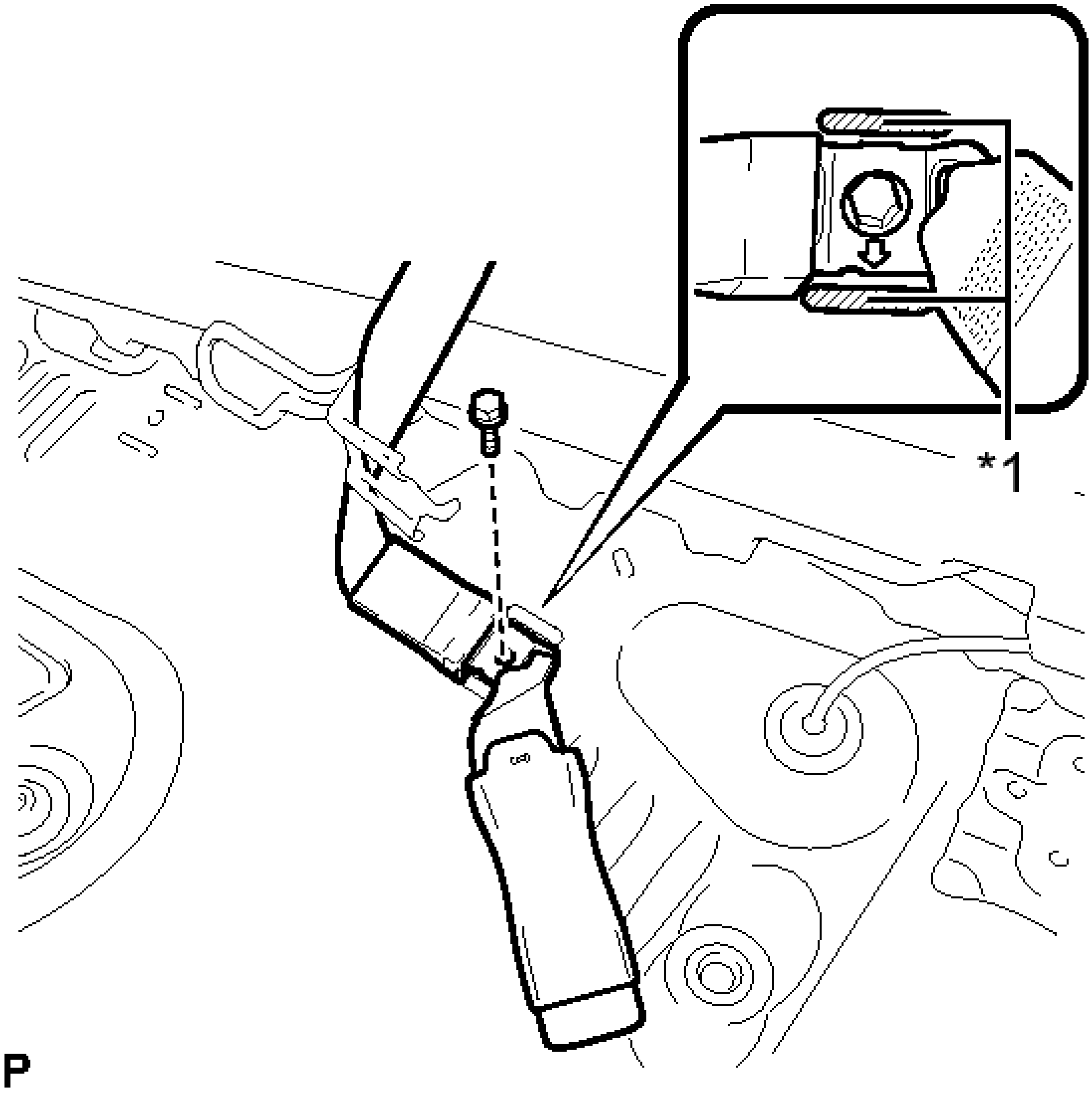

Fig. 42: Locating Rear Seat Inner Center Belt Assembly Bolt LH
Courtesy of TOYOTA MOTOR SALES, U.S.A., INC.

TEXT IN ILLUSTRATION

*1	Protruding Part

Torque: 42 N*m (428 kgf*cm, 31 ft.*lbf)

NOTE:

- **Install the rear seat inner with center belt assembly LH with the arrow on the anchor part facing the front of the vehicle.**
- **Do not allow the anchor part of the rear seat inner with center belt assembly LH to overlap the protruding parts of the floor panel.**

8. **INSTALL CHILD RESTRAINT SEAT ANCHOR BRACKET SUB-ASSEMBLY LH** See step 1
9. **CONNECT REAR SEAT OUTER BELT ASSEMBLY (for LH Side)** See step 9
10. **CONNECT REAR SEAT OUTER BELT ASSEMBLY (for RH Side)** See step 10
11. **INSTALL ROOF SIDE INNER GARNISH LH** . Refer to **INSTALLATION - Step 21**
12. **INSTALL ROOF SIDE INNER GARNISH RH**

    HINT:

    Use the same procedure as for the LH side.

13. **INSTALL REAR DOOR OPENING TRIM WEATHERSTRIP LH** . Refer to **INSTALLATION - Step 26**
14. **INSTALL REAR DOOR OPENING TRIM WEATHERSTRIP RH** . Refer to **INSTALLATION - Step 33**
15. **INSTALL REAR SIDE SEATBACK ASSEMBLY LH** . Refer to **INSTALLATION - Step 1**
16. **INSTALL REAR SEATBACK ASSEMBLY LH** . Refer to **INSTALLATION - Step 3**
17. **INSTALL NO. 2 ROOM PARTITION COVER** . Refer to **INSTALLATION - Step 4**
18. **INSTALL REAR SEAT INNER WITH CENTER BELT ASSEMBLY RH**
    a. Install the rear seat inner with center belt assembly RH with the bolt.

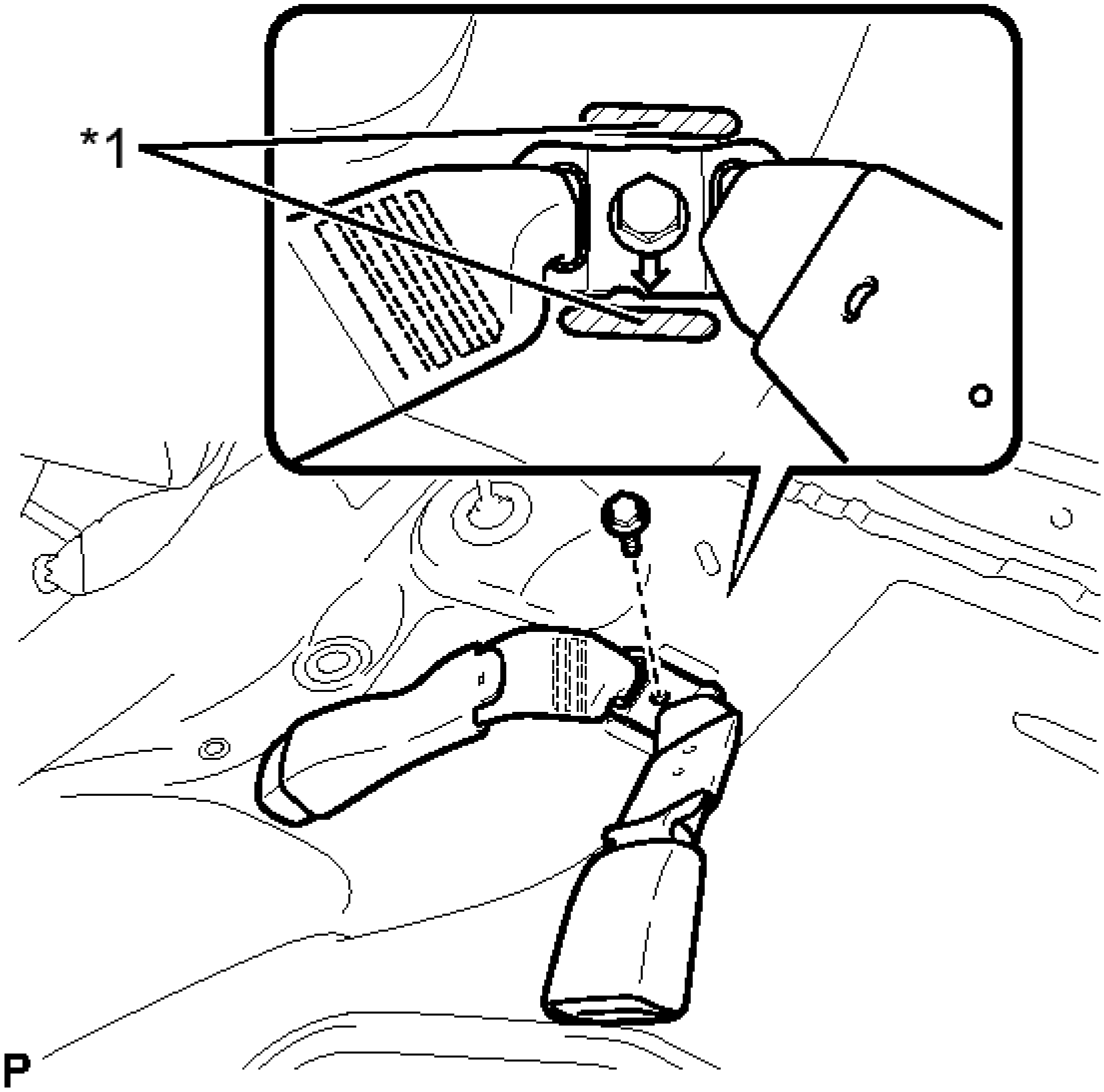

Fig. 43: Locating Rear Seat Inner Center Belt Assembly Bolt RH
Courtesy of TOYOTA MOTOR SALES, U.S.A., INC.

TEXT IN ILLUSTRATION

*1	Protruding Part

Torque: 42 N*m (428 kgf*cm, 31 ft.*lbf)

NOTE:

- **Install the rear seat inner with center belt assembly RH with the arrow on the anchor part facing the front of the vehicle.**
- **Do not allow the anchor part of the rear seat inner with center belt assembly RH to overlap the protruding parts of the floor panel.**

19. **INSTALL CHILD RESTRAINT SEAT ANCHOR BRACKET SUB-ASSEMBLY RH** See step 2
20. **INSTALL REAR SIDE SEATBACK ASSEMBLY RH** . Refer to **INSTALLATION - Step 2**
21. **INSTALL REAR SEATBACK ASSEMBLY RH** . Refer to **INSTALLATION - Step 5**
22. **INSTALL REAR SEAT CUSHION LOCK HOOK** . Refer to **INSTALLATION - Step 6**
23. **INSTALL REAR SEAT CUSHION ASSEMBLY** . Refer to **INSTALLATION - Step 7**
24. **CONNECT CABLE TO AUXILIARY BATTERY NEGATIVE TERMINAL**

    NOTE: When disconnecting the cable, some systems need to be initialized after the cable is reconnected. Refer to INITIALIZATION .

25. **INSTALL LUGGAGE TRIM SERVICE HOLE COVER** . Refer to **INSTALLATION - Step 3**
26. **INSPECT SRS WARNING LIGHT**

    for Built-in Type Yaw Rate Sensor: Refer to **DIAGNOSIS SYSTEM**

    for Separate Type Yaw Rate Sensor: Refer to **DIAGNOSIS SYSTEM**

REAR SEAT OUTER BELT ASSEMBLY

COMPONENTS

ILLUSTRATION

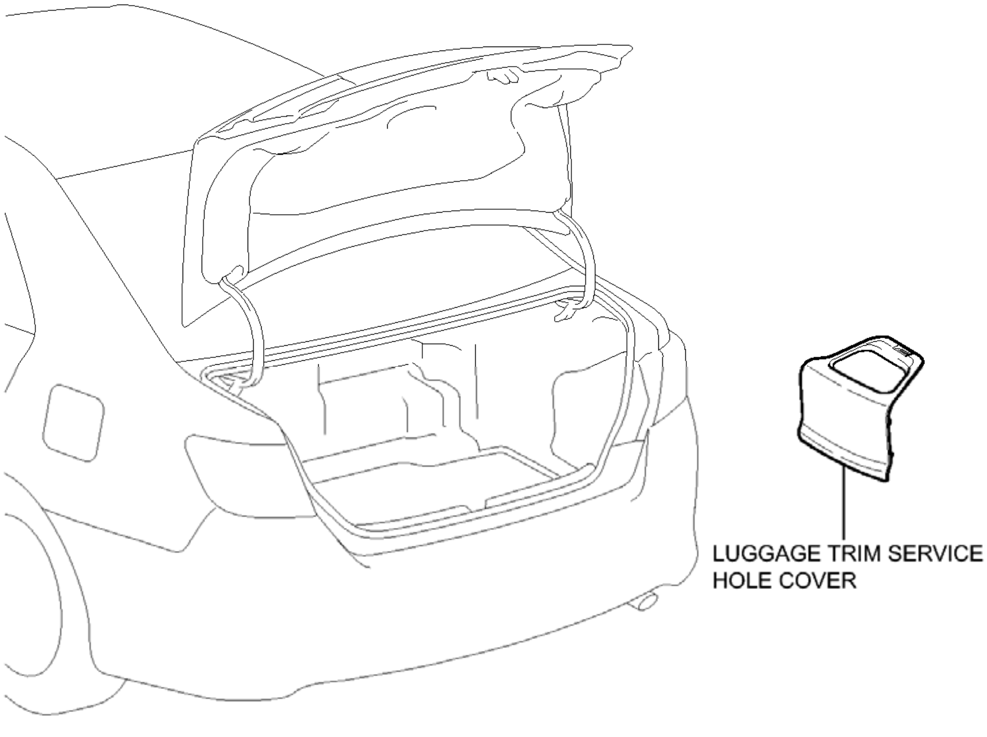

Fig. 44: Identifying Rear Seat Outer Belt Assembly Replacement Components With Torque

Specifications (1 Of 3)

Courtesy of TOYOTA MOTOR SALES, U.S.A., INC.

ILLUSTRATION

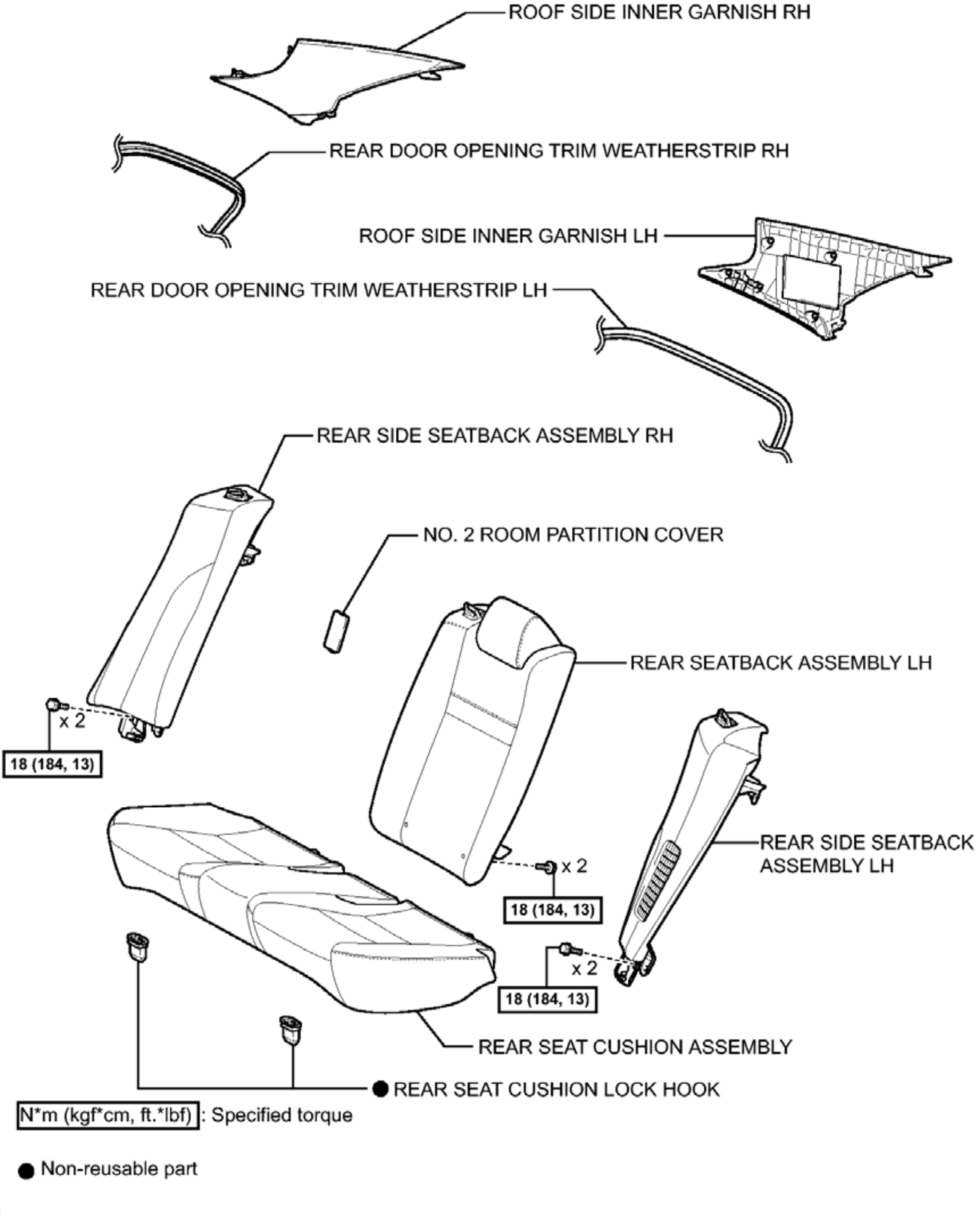
ROOF SIDE INNER GARNISH RH
REAR DOOR OPENING TRIM WEATHERSTRIP RH
ROOF SIDE INNER GARNISH LH
REAR DOOR OPENING TRIM WEATHERSTRIP LH
REAR SIDE SEATBACK ASSEMBLY RH
NO. 2 ROOM PARTITION COVER
REAR SEATBACK ASSEMBLY LH
x 2
18 (184, 13)
x 2
18 (184, 13)
REAR SIDE SEATBACK ASSEMBLY LH
x 2
18 (184, 13)
REAR SEAT CUSHION ASSEMBLY
● REAR SEAT CUSHION LOCK HOOK
N*m (kgf*cm, ft.*lbf) : Specified torque
● Non-reusable part
P

Fig. 45: Identifying Rear Seat Outer Belt Assembly Replacement Components With Torque Specifications (2 Of 3)

Courtesy of TOYOTA MOTOR SALES, U.S.A., INC.

ILLUSTRATION

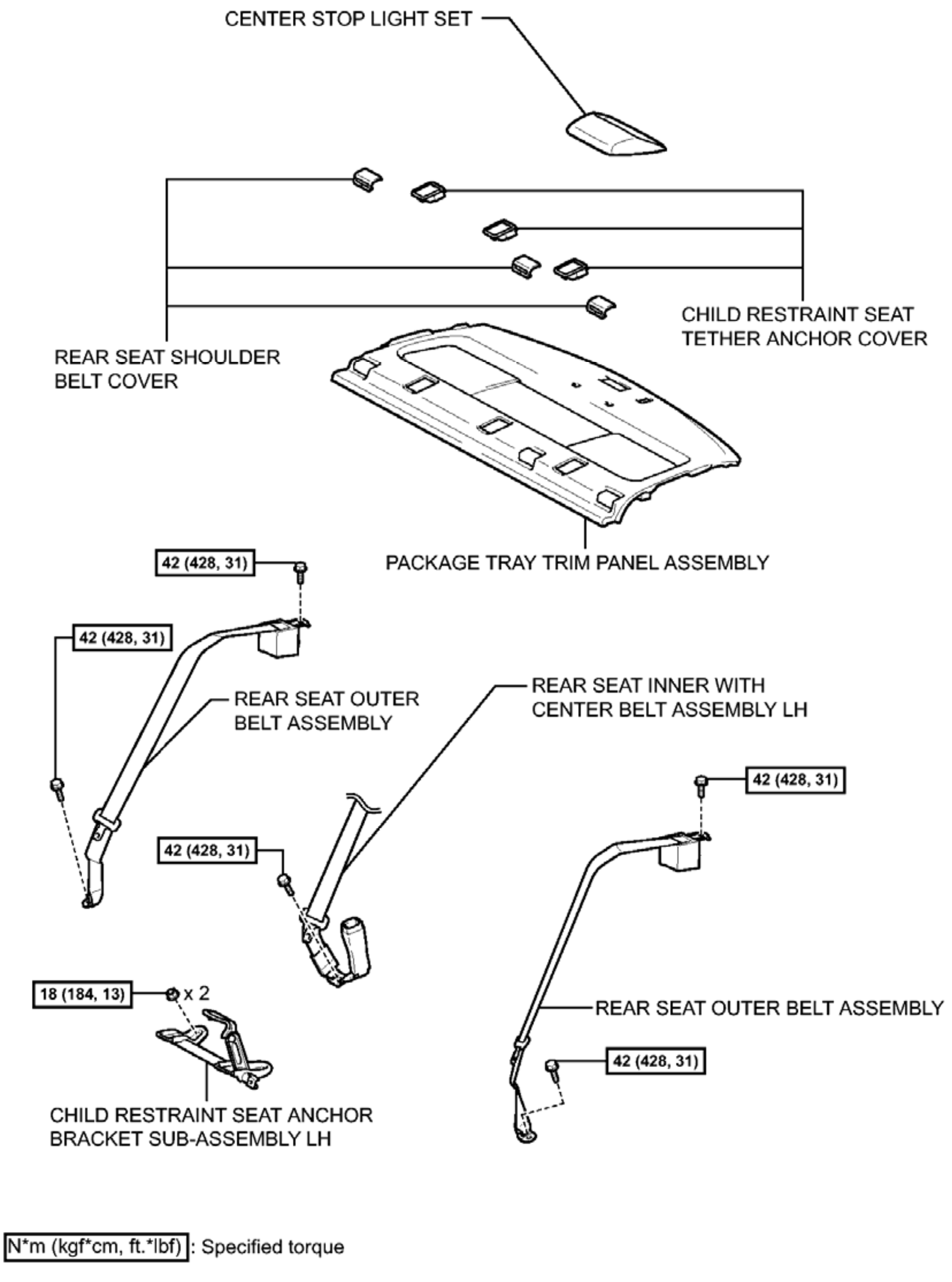
CENTER STOP LIGHT SET
CHILD RESTRAINT SEAT TETHER ANCHOR COVER
REAR SEAT SHOULDER BELT COVER
PACKAGE TRAY TRIM PANEL ASSEMBLY
42 (428, 31)
42 (428, 31)
REAR SEAT OUTER BELT ASSEMBLY
REAR SEAT INNER WITH CENTER BELT ASSEMBLY LH
42 (428, 31)
42 (428, 31)
18 (184, 13)
x 2
REAR SEAT OUTER BELT ASSEMBLY
42 (428, 31)
CHILD RESTRAINT SEAT ANCHOR BRACKET SUB-ASSEMBLY LH
N*m (kgf*cm, ft.*lbf) : Specified torque
P

Fig. 46: Identifying Rear Seat Outer Belt Assembly Replacement Components With Torque Specifications (3 Of 3)

Courtesy of TOYOTA MOTOR SALES, U.S.A., INC.

ON-VEHICLE INSPECTION

ON-VEHICLE INSPECTION

WARNING: Be sure to correctly follow the removal and installation procedures for the rear seat outer belt assembly.

1. **INSPECT REAR SEAT OUTER BELT ASSEMBLY (for Vehicle not Involved in Collision)**
    a. Visually check for defects with the rear seat outer belt assembly installed on the vehicle.
        1. The defects are as follows:
            - Cuts on the rear seat outer belt assembly
            - Small cracks on the rear seat outer belt assembly
            - Significant discoloration on the rear seat outer belt assembly

            OK

            No defects are found.

            HINT:

            If any of the defects is found, replace the rear seat outer belt assembly with a new one.

2. **INSPECT REAR SEAT OUTER BELT ASSEMBLY (for Vehicle Involved in Collision)**
    a. Visually check for defects with the rear seat outer belt assembly removed from the vehicle.
        1. The defects are as follows:
            - Cuts on the rear seat outer belt assembly
            - Small cracks on the rear seat outer belt assembly
            - Significant discoloration on the rear seat outer belt assembly
            - Cracks or other damage to the connector

            OK

            No defects are found.

            HINT:

            If any of the defects is found, replace the rear seat outer belt assembly with a new one.

REMOVAL

REMOVAL

1. **PRECAUTION**

   NOTE: **After turning the power switch off, waiting time may be required before disconnecting the cable from the negative (-) auxiliary battery terminal. Therefore, make sure to read the disconnecting the cable from the negative (-) auxiliary battery terminal notices before proceeding with work. Refer to PRECAUTION .**

2. **REMOVE LUGGAGE TRIM SERVICE HOLE COVER** . Refer to **REMOVAL - Step 2**
3. **DISCONNECT CABLE FROM AUXILIARY BATTERY NEGATIVE TERMINAL**

   WARNING: **Wait at least 90 seconds after disconnecting the cable from the negative (-) auxiliary battery terminal to disable the SRS system.**

   NOTE: **When disconnecting the cable, some systems need to be initialized after the cable is reconnected. Refer to INITIALIZATION .**

4. **REMOVE REAR SEAT CUSHION ASSEMBLY** . Refer to **REMOVAL - Step 4**
5. **REMOVE REAR SEAT CUSHION LOCK HOOK** . Refer to **REMOVAL - Step 5**
6. **REMOVE NO. 2 ROOM PARTITION COVER** . Refer to **REMOVAL - Step 7**
7. **REMOVE REAR SEATBACK ASSEMBLY LH** . Refer to **REMOVAL - Step 8**
8. **REMOVE REAR SIDE SEATBACK ASSEMBLY LH** . Refer to **REMOVAL - Step 9**
9. **REMOVE REAR SIDE SEATBACK ASSEMBLY RH** . Refer to **REMOVAL - Step 10**
10. **DISCONNECT REAR DOOR OPENING TRIM WEATHERSTRIP LH** See step 13
11. **DISCONNECT REAR DOOR OPENING TRIM WEATHERSTRIP RH** See step 14
12. **REMOVE ROOF SIDE INNER GARNISH LH** . Refer to **REMOVAL - Step 25**
13. **REMOVE ROOF SIDE INNER GARNISH RH**

    HINT:

    Use the same procedure as for the LH side.

14. **DISCONNECT REAR SEAT OUTER BELT ASSEMBLY (for LH Side)**
    a. Remove the bolt and disconnect the floor anchor of the rear seat outer belt assembly.

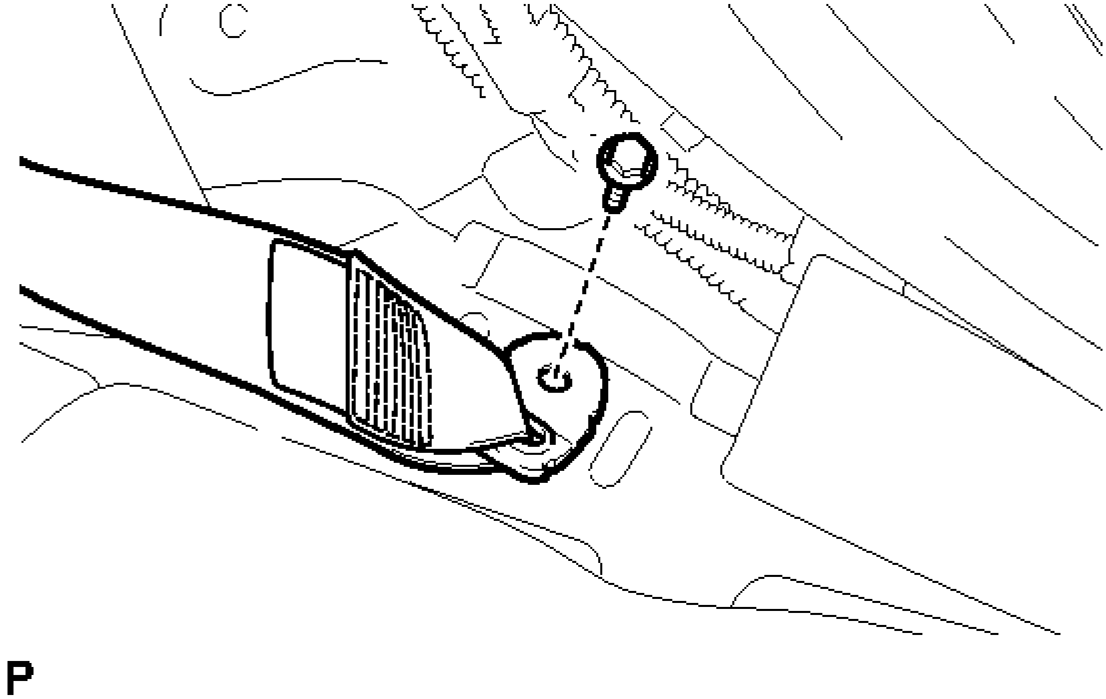

Fig. 47: Identifying Rear Seat Outer Belt Assembly Bolt (For LH Side)
Courtesy of TOYOTA MOTOR SALES, U.S.A., INC.

15. **DISCONNECT REAR SEAT OUTER BELT ASSEMBLY (for RH Side)**
    a. Remove the bolt and disconnect the floor anchor of the rear seat outer belt assembly.

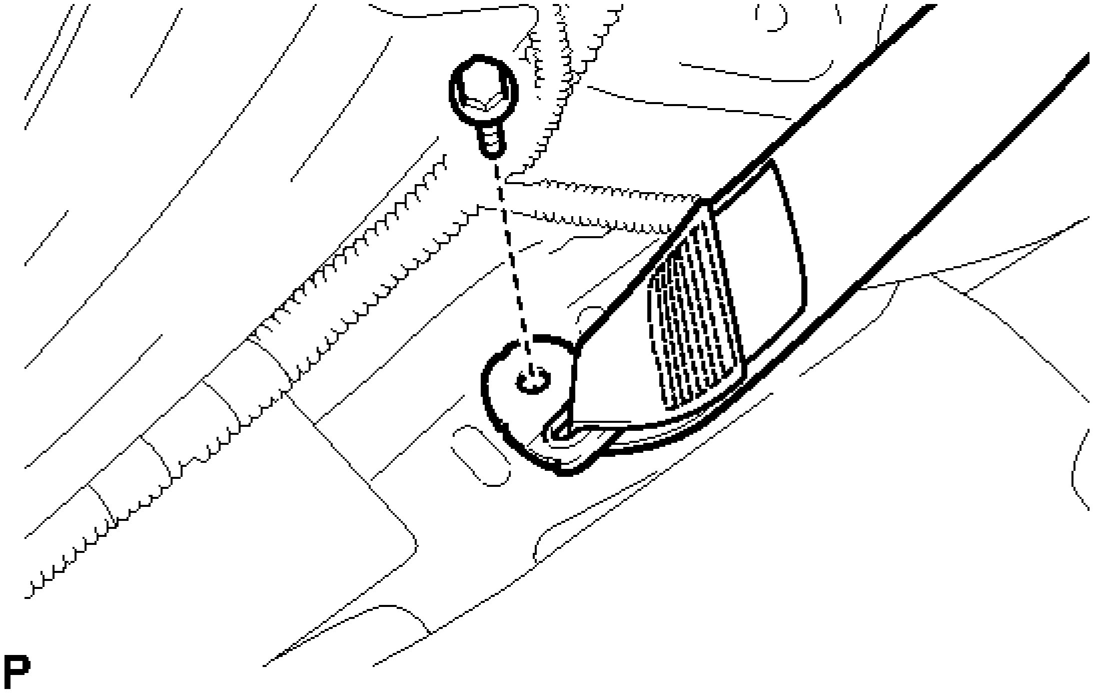

Fig. 48: Identifying Rear Seat Outer Belt Assembly Bolt (For RH Side)

Courtesy of TOYOTA MOTOR SALES, U.S.A., INC.

16. **REMOVE CHILD RESTRAINT SEAT ANCHOR BRACKET SUB-ASSEMBLY LH** See step 11
17. **DISCONNECT REAR SEAT INNER WITH CENTER BELT ASSEMBLY LH** See step 20
18. **REMOVE CENTER STOP LIGHT SET** . Refer to **REMOVAL - Step 1**
19. **REMOVE CHILD RESTRAINT SEAT TETHER ANCHOR COVER**
    a. Using a moulding remover, disengage the 2 claws and 2 guides to remove the child restraint seat tether anchor cover.

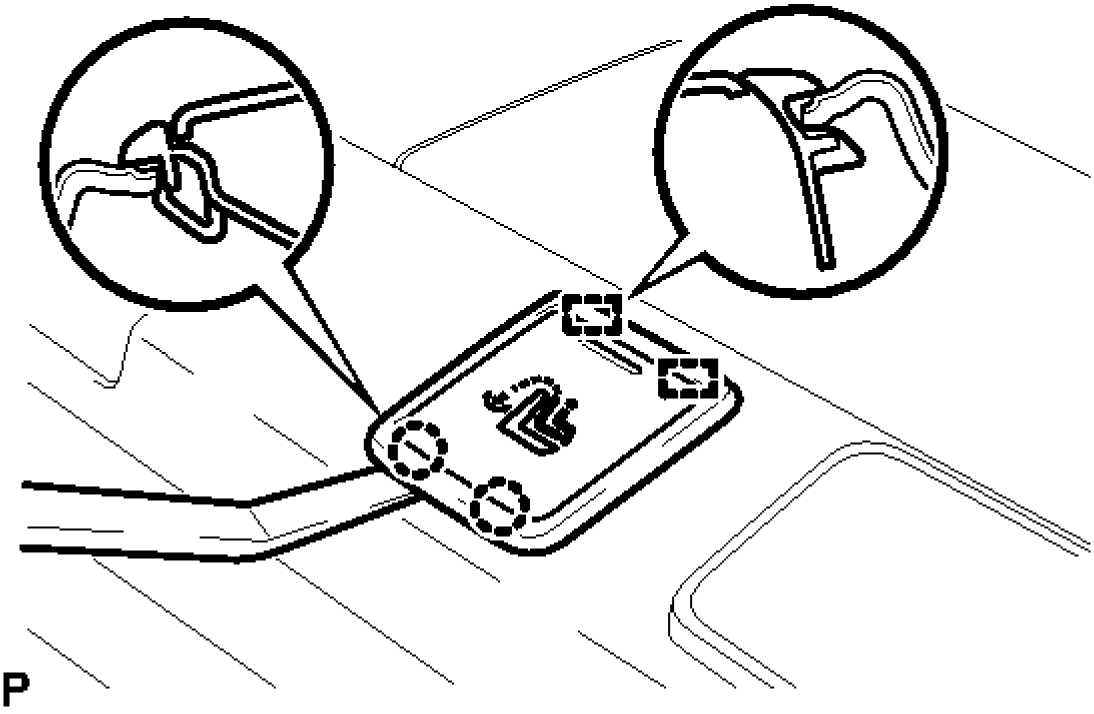

Fig. 49: Identifying Child Restraint Seat Tether Anchor Cover Claws And Guides
Courtesy of TOYOTA MOTOR SALES, U.S.A., INC.

HINT:

Use the same procedure for the other 2 child restraint seat tether anchor covers.

20. **REMOVE REAR SEAT SHOULDER BELT COVER**
    a. Using a moulding remover, disengage the 2 claws and 4 guides and remove the rear seat shoulder belt cover.

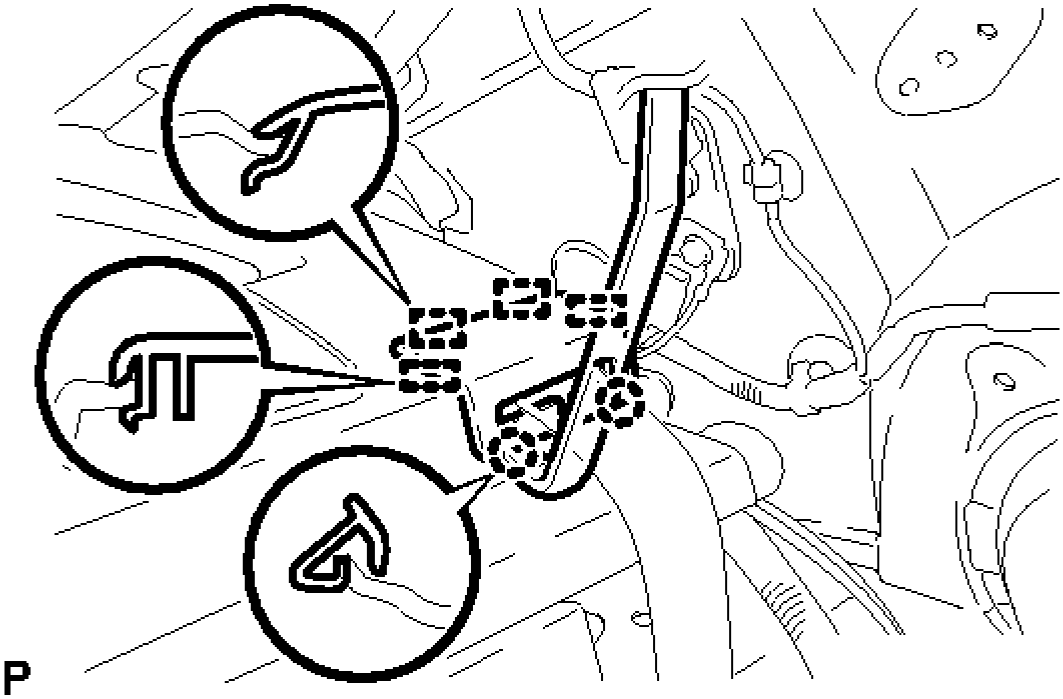

Fig. 50: Identifying Rear Seat Shoulder Belt Cover Claws And Guides
Courtesy of TOYOTA MOTOR SALES, U.S.A., INC.

HINT:

Use the same procedure for the other 2 rear seat shoulder belt covers.

21. **REMOVE PACKAGE TRAY TRIM PANEL ASSEMBLY**
    a. Using pliers, disengage the 3 clips from inside the luggage compartment as shown in the illustration.

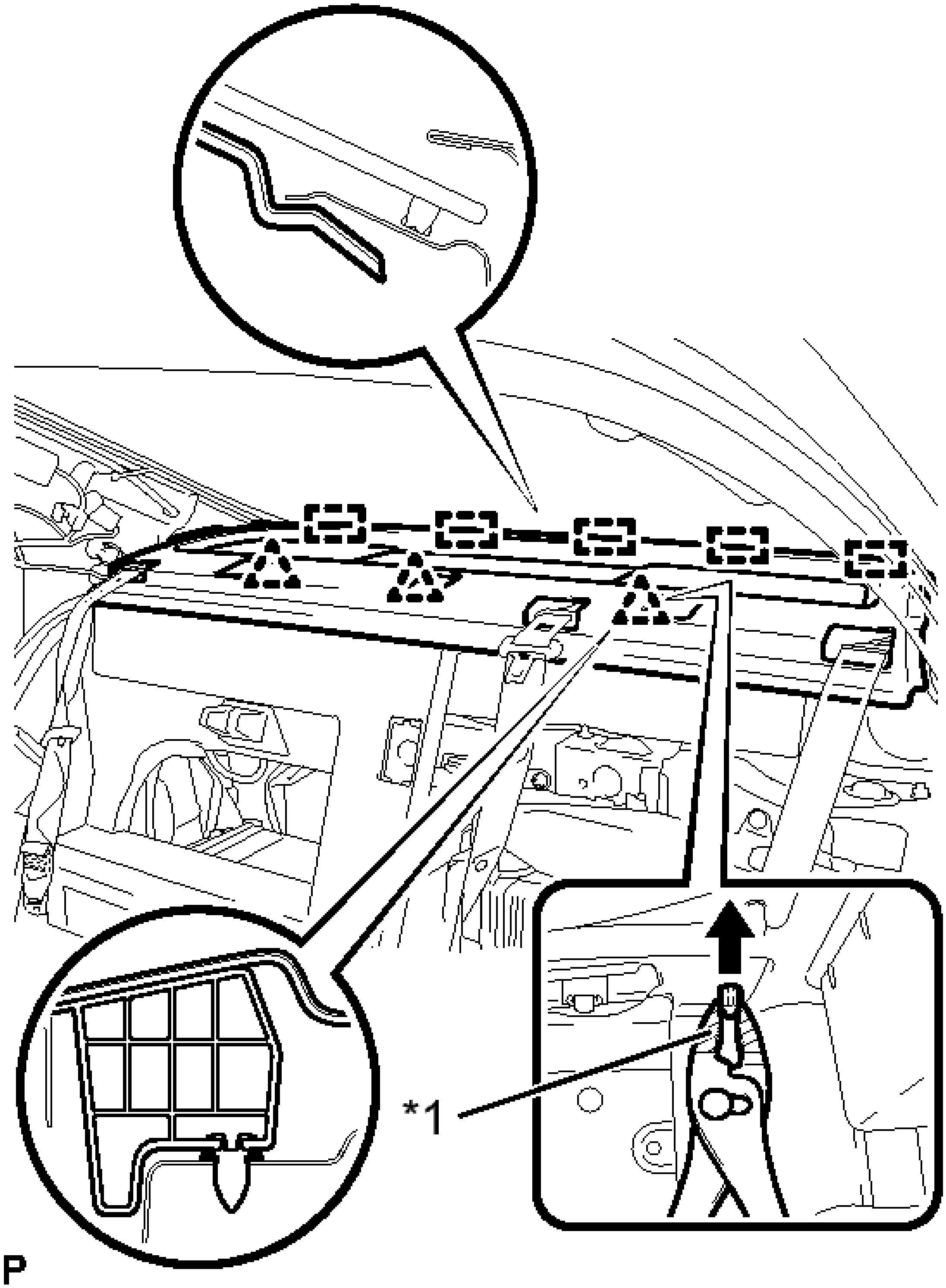

Fig. 51: Identifying Luggage Compartment Clips
Courtesy of TOYOTA MOTOR SALES, U.S.A., INC.

TEXT IN ILLUSTRATION

	Protective

*1	Tape

HINT:

Tape the tip of the pliers before use.

b. Disengage the 5 guides.

c. Pass the 3 rear seat belt floor anchors through the package tray trim panel assembly then remove the package tray trim panel assembly.

22. **REMOVE REAR SEAT OUTER BELT ASSEMBLY**

a. Remove the bolt.

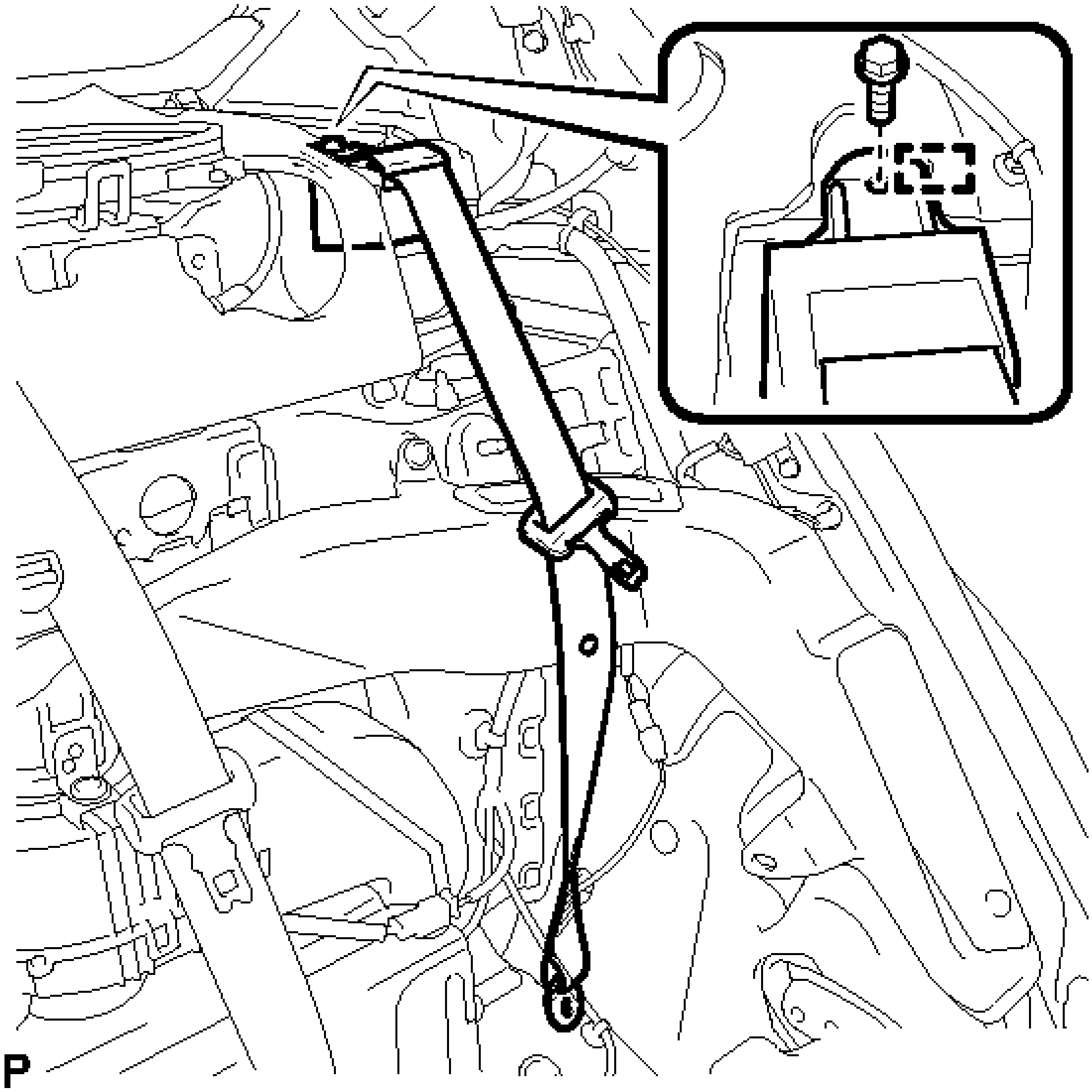

Fig. 52: Identifying Rear Seat Outer Belt Assembly Guide And Bolt
Courtesy of TOYOTA MOTOR SALES, U.S.A., INC.

b. Disengage the guide to remove the rear seat outer belt assembly.

HINT:

Use the same procedure for the RH side and LH side.

INSPECTION

INSPECTION

1. **INSPECT REAR SEAT OUTER BELT ASSEMBLY**
   a. Before installing the rear seat outer belt assembly, check the ELR function.

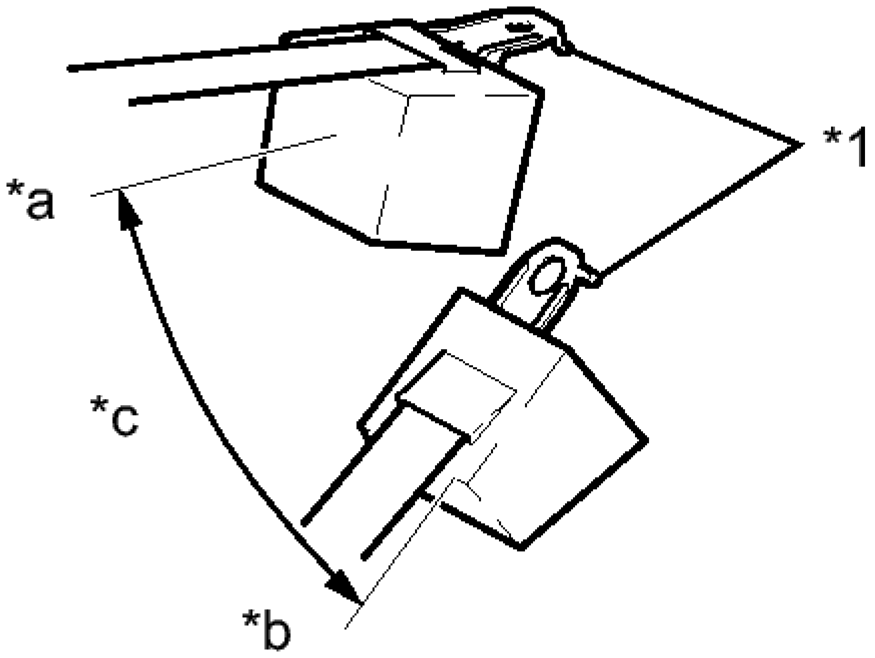

Fig. 53: Inspecting Rear Seat Outer Belt Assembly
Courtesy of TOYOTA MOTOR SALES, U.S.A., INC.

NOTE: Do not disassemble the retractor.

1. When the inclination of the retractor is 15° or less, check that the belt can be pulled from the retractor. When the inclination of the retractor is over 45°, check that the belt locks.

TEXT IN ILLUSTRATION

*1	Retractor
*a	Unlocked
*b	Locked
*c	45°

If the result is not as specified, replace the rear seat outer belt assembly.

INSTALLATION

INSTALLATION

1. **INSPECT REAR SEAT OUTER BELT ASSEMBLY** See step 1
2. **INSTALL REAR SEAT OUTER BELT ASSEMBLY**
   a. Engage the guide to temporarily install the rear seat outer belt assembly.
   b. Install the bolt.

      Torque: 42 N*m (428 kgf*cm, 31 ft.*lbf)

      HINT:

      Use the same procedure for the RH side and LH side.

   c. Check if the ELR locks.

      NOTE: The check should be performed with the rear seat outer belt assembly installed.

      1. With the belt assembly installed, check that the belt locks when it is pulled out quickly.
3. **INSTALL PACKAGE TRAY TRIM PANEL ASSEMBLY**
   a. Pass the 3 rear seat belt floor anchors through the package tray trim panel assembly.
   b. Engage the 5 guides and 3 clips to install the package tray trim panel assembly.

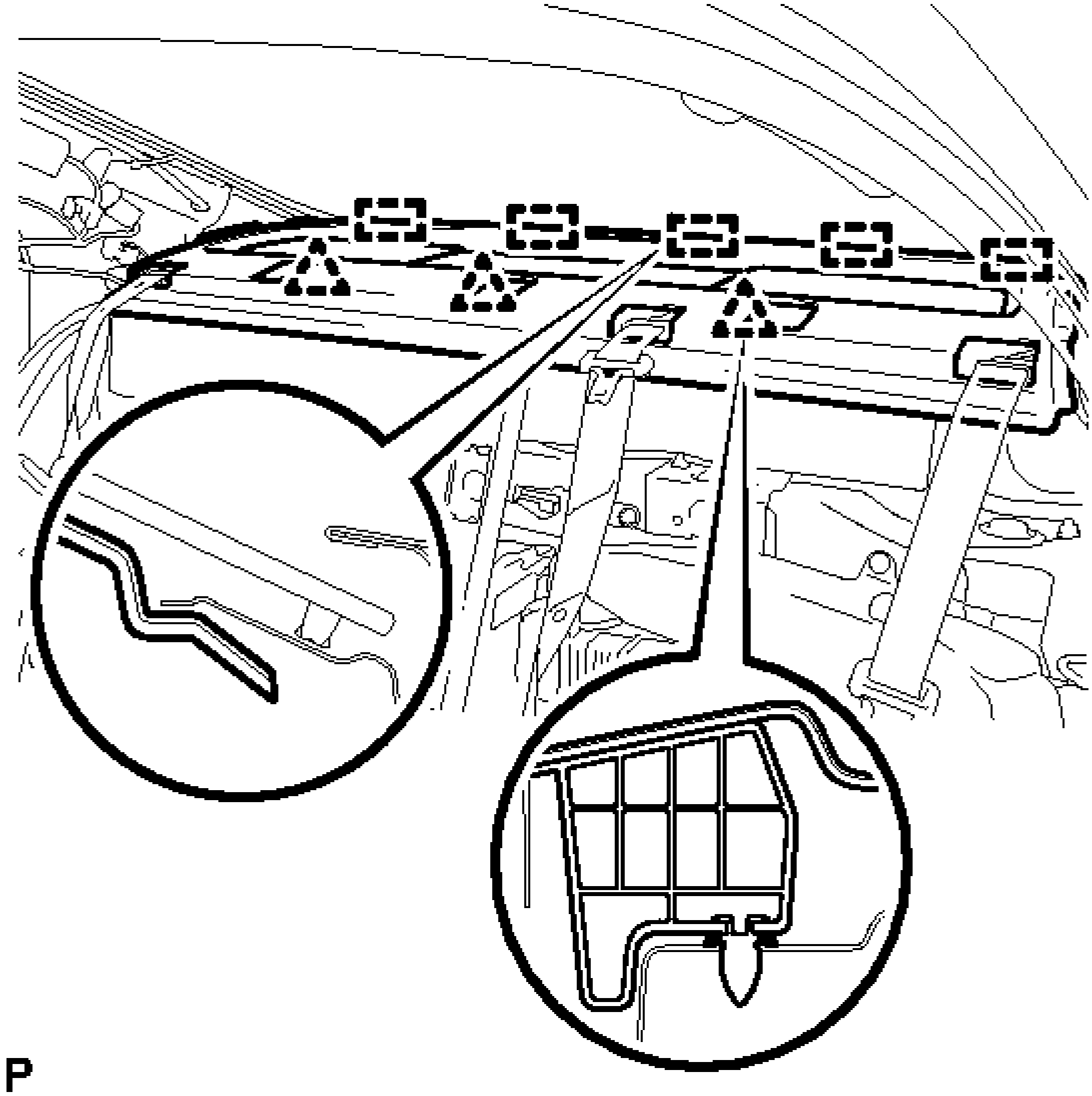

Fig. 54: Identifying Package Tray Trim Panel Assembly Guides And Clips
Courtesy of TOYOTA MOTOR SALES, U.S.A., INC.

4. **INSTALL REAR SEAT SHOULDER BELT COVER**
   a. Engage the 4 guides and 2 claws to install the rear seat shoulder belt cover.

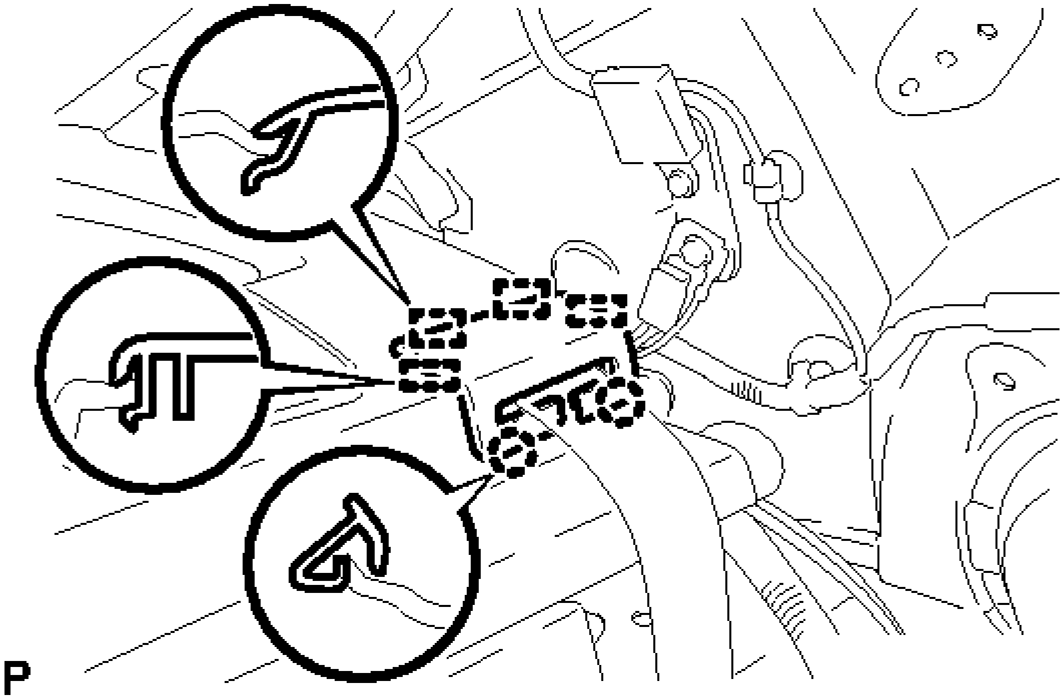

Fig. 55: Identifying Rear Seat Shoulder Belt Cover Guides And Claws
Courtesy of TOYOTA MOTOR SALES, U.S.A., INC.

HINT:

Use the same procedure for the other 2 rear seat shoulder belt covers.

5. **INSTALL CHILD RESTRAINT SEAT TETHER ANCHOR COVER**
   a. Engage the 2 guides and 2 claws to install the child restraint seat tether anchor cover.

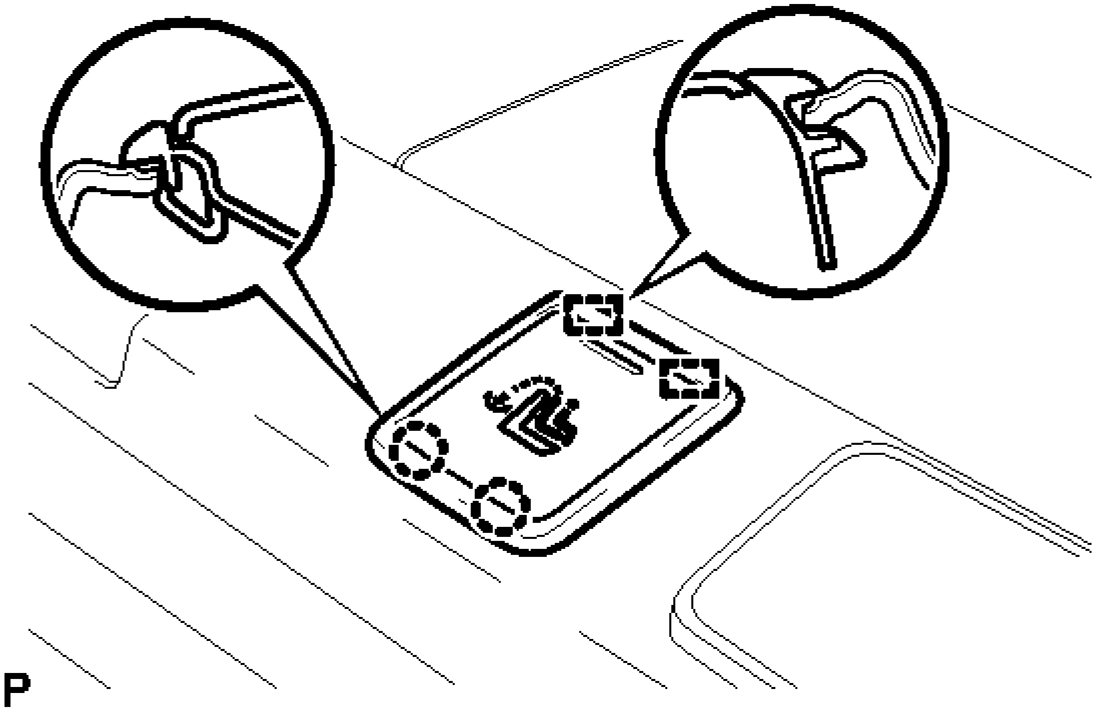

Fig. 56: Identifying Child Restraint Seat Tether Anchor Cover
Courtesy of TOYOTA MOTOR SALES, U.S.A., INC.

HINT:

Use the same procedure for the other 2 child restraint seat tether anchor covers.

6. **INSTALL CENTER STOP LIGHT SET** . Refer to **INSTALLATION - Step 1**
7. **CONNECT REAR SEAT INNER WITH CENTER BELT ASSEMBLY LH** See step 7
8. **INSTALL CHILD RESTRAINT SEAT ANCHOR BRACKET SUB-ASSEMBLY LH** See step 1
9. **CONNECT REAR SEAT OUTER BELT ASSEMBLY (for LH Side)**
   a. Connect the floor anchor of the rear seat outer belt assembly with the bolt.

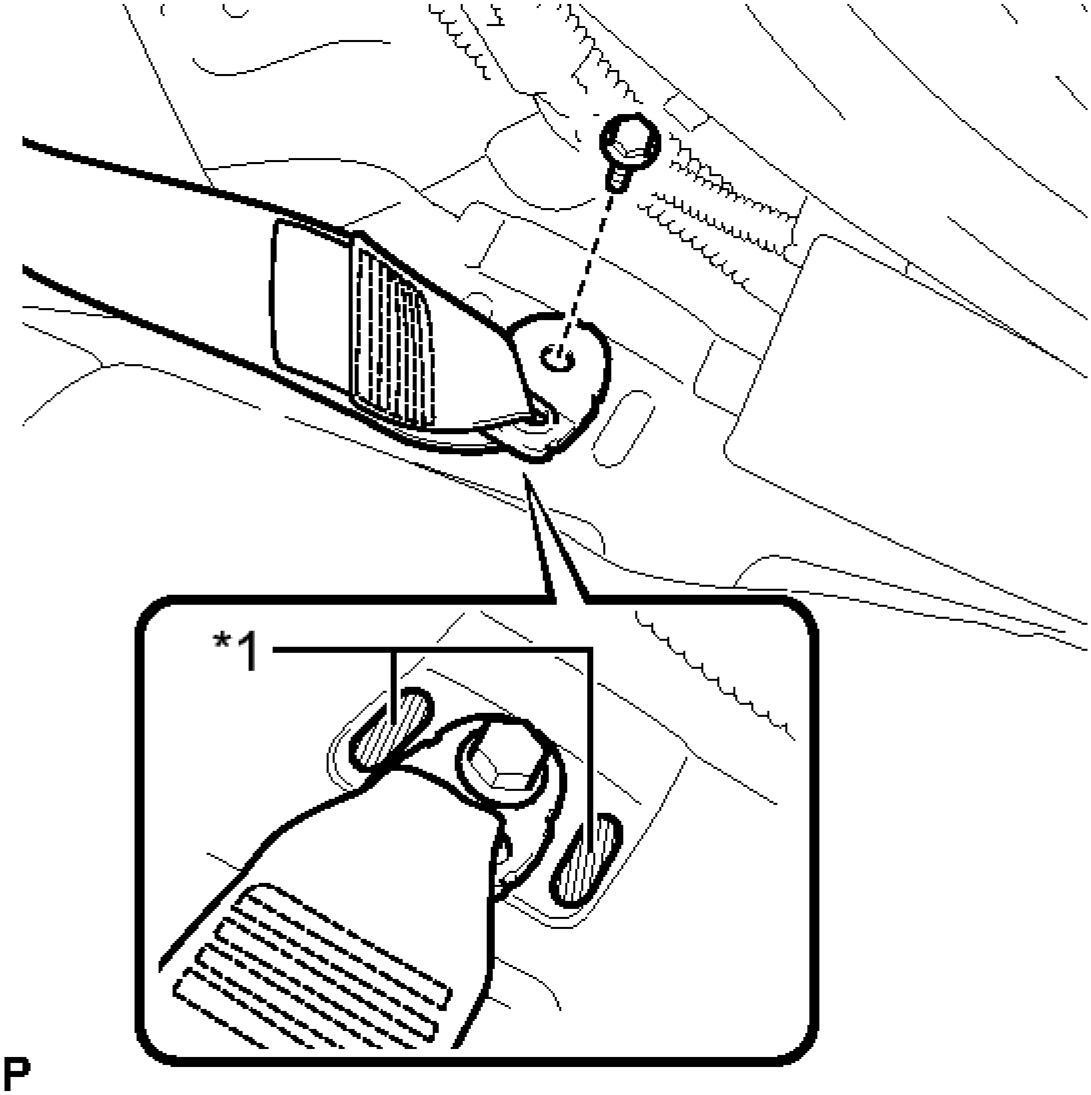

Fig. 57: Identifying Rear Seat Outer Belt Assembly Bolt And Protruding Parts (For LH Side)
Courtesy of TOYOTA MOTOR SALES, U.S.A., INC.

TEXT IN ILLUSTRATION

*1	Protruding Part

Torque: 42 N*m (428 kgf*cm, 31 ft.*lbf)

NOTE: **Do not allow the anchor part of the rear seat outer belt assembly to overlap the protruding parts of the floor panel.**

10. **CONNECT REAR SEAT OUTER BELT ASSEMBLY (for RH Side)**
    a. Connect the floor anchor of the rear seat outer belt assembly with the bolt.

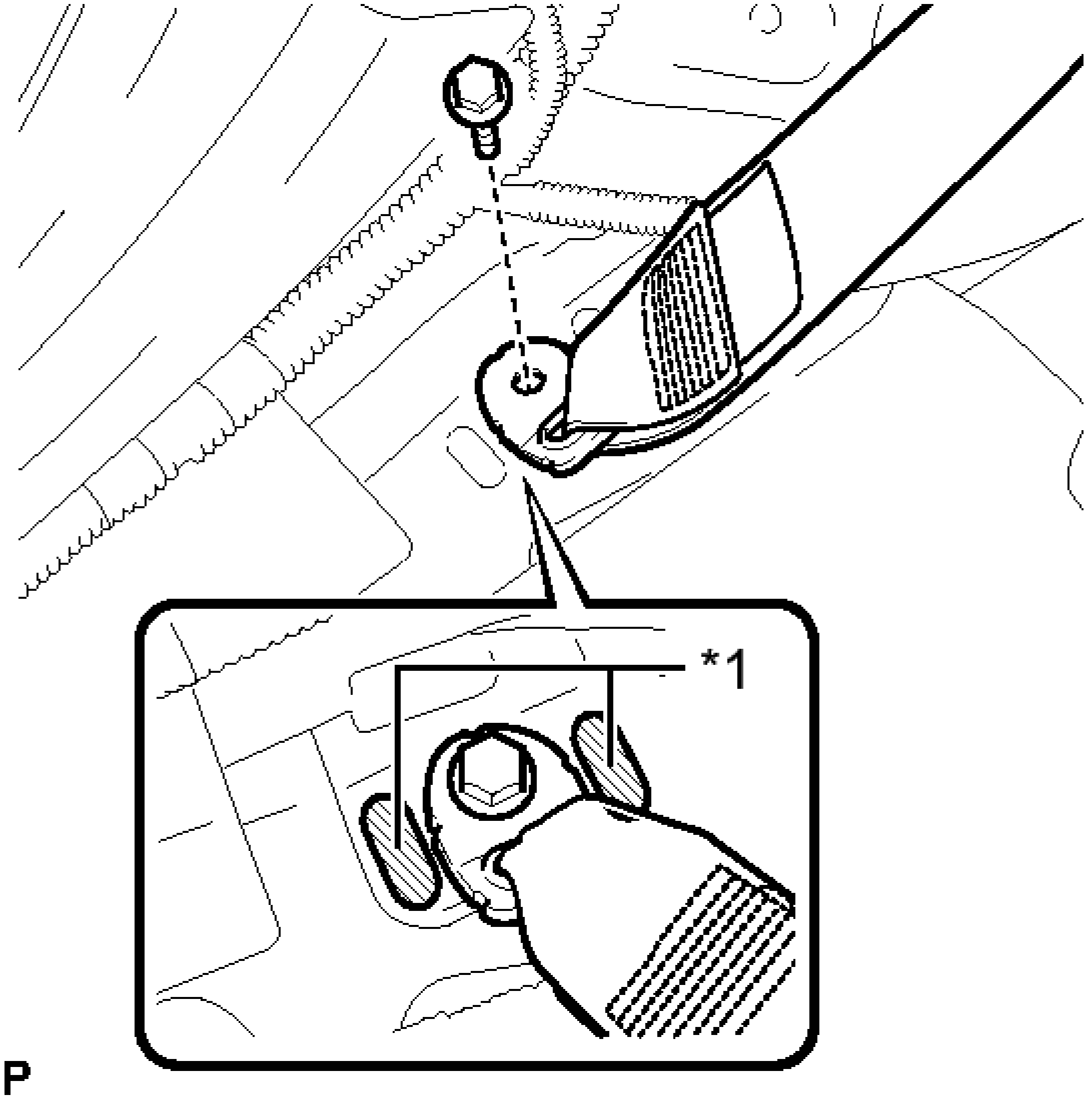

Fig. 58: Identifying Rear Seat Outer Belt Assembly Bolt And Protruding Parts (For RH Side)
Courtesy of TOYOTA MOTOR SALES, U.S.A., INC.

TEXT IN ILLUSTRATION

*1	Protruding Part

Torque: 42 N*m (428 kgf*cm, 31 ft.*lbf)

NOTE: **Do not allow the anchor part of the rear seat outer belt assembly to overlap the protruding parts of the floor panel.**

11. **INSTALL ROOF SIDE INNER GARNISH LH** . Refer to **INSTALLATION - Step 21**
12. **INSTALL ROOF SIDE INNER GARNISH RH**

HINT:

Use the same procedure as for the LH side.

13. **INSTALL REAR DOOR OPENING TRIM WEATHERSTRIP LH** . Refer to **INSTALLATION - Step 26**
14. **INSTALL REAR DOOR OPENING TRIM WEATHERSTRIP RH** . Refer to **INSTALLATION - Step 33**
15. **INSTALL REAR SIDE SEATBACK ASSEMBLY LH** . Refer to **INSTALLATION - Step 1**
16. **INSTALL REAR SIDE SEATBACK ASSEMBLY RH** . Refer to **INSTALLATION - Step 2**
17. **INSTALL REAR SEATBACK ASSEMBLY LH** . Refer to **INSTALLATION - Step 3**
18. **INSTALL NO. 2 ROOM PARTITION COVER** . Refer to **INSTALLATION - Step 4**
19. **INSTALL REAR SEAT CUSHION LOCK HOOK** . Refer to **INSTALLATION - Step 6**
20. **INSTALL REAR SEAT CUSHION ASSEMBLY** . Refer to **INSTALLATION - Step 7**
21. **CONNECT CABLE TO AUXILIARY BATTERY NEGATIVE TERMINAL**

NOTE: **When disconnecting the cable, some systems need to be initialized after the cable is reconnected. Refer to INITIALIZATION .**

22. **INSTALL LUGGAGE TRIM SERVICE HOLE COVER** . Refer to **INSTALLATION - Step 3**
23. **INSPECT SRS WARNING LIGHT**

for Built-in Type Yaw Rate Sensor: Refer to **DIAGNOSIS SYSTEM**

for Separate Type Yaw Rate Sensor: Refer to **DIAGNOSIS SYSTEM**

TONGUE PLATE STOPPER

COMPONENTS

ILLUSTRATION

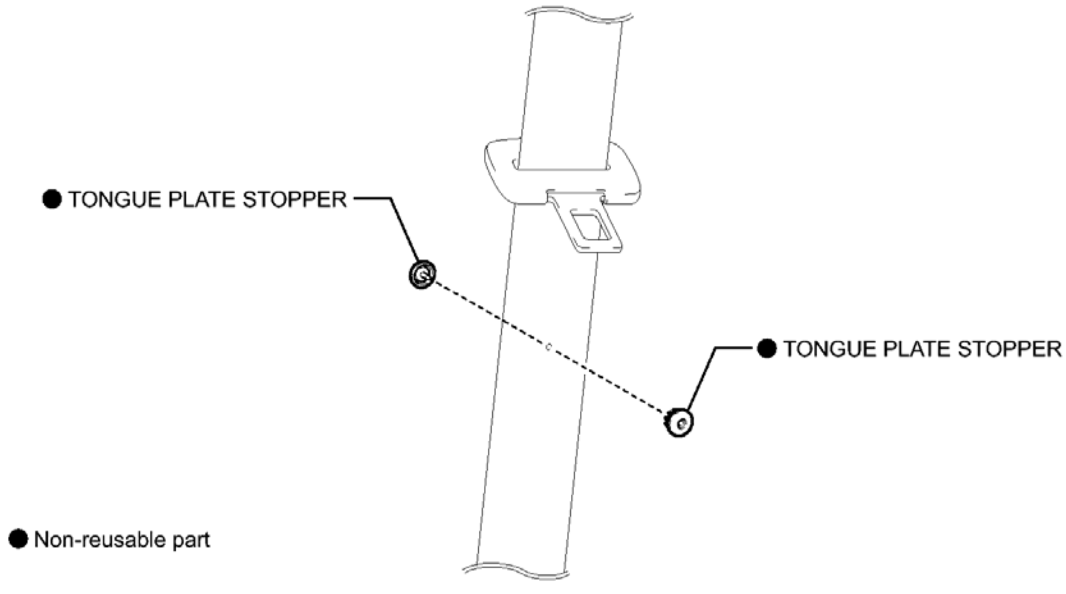
● TONGUE PLATE STOPPER
● TONGUE PLATE STOPPER
● Non-reusable part
P

Fig. 59: Identifying Tongue Plate Stopper Replacement Components
Courtesy of TOYOTA MOTOR SALES, U.S.A., INC.

REPLACEMENT

REPLACEMENT

1. **REMOVE TONGUE PLATE STOPPER**
   a. Slide the tongue plate above the installation position of the tongue plate stopper, and temporarily hold it with adhesive tape.

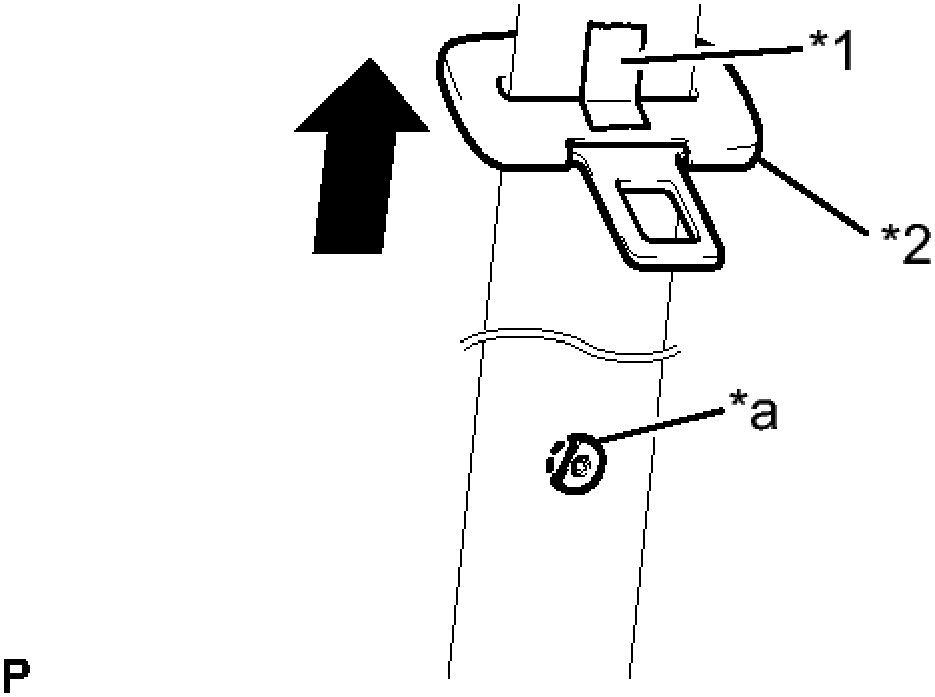

Fig. 60: Identifying Tongue Plate Stopper
Courtesy of TOYOTA MOTOR SALES, U.S.A., INC.

b. Remove any pieces of the original tongue plate stopper in the belt webbing with a pair of pliers.

NOTE: Be careful not to damage the belt webbing during repair.

TEXT IN ILLUSTRATION

*1	Adhesive Tape
*2	Tongue Plate
*a	Broken Tongue Plate Stopper

2. **INSTALL TONGUE PLATE STOPPER**
    a. Position a new tongue plate stopper in the hole of the belt webbing.

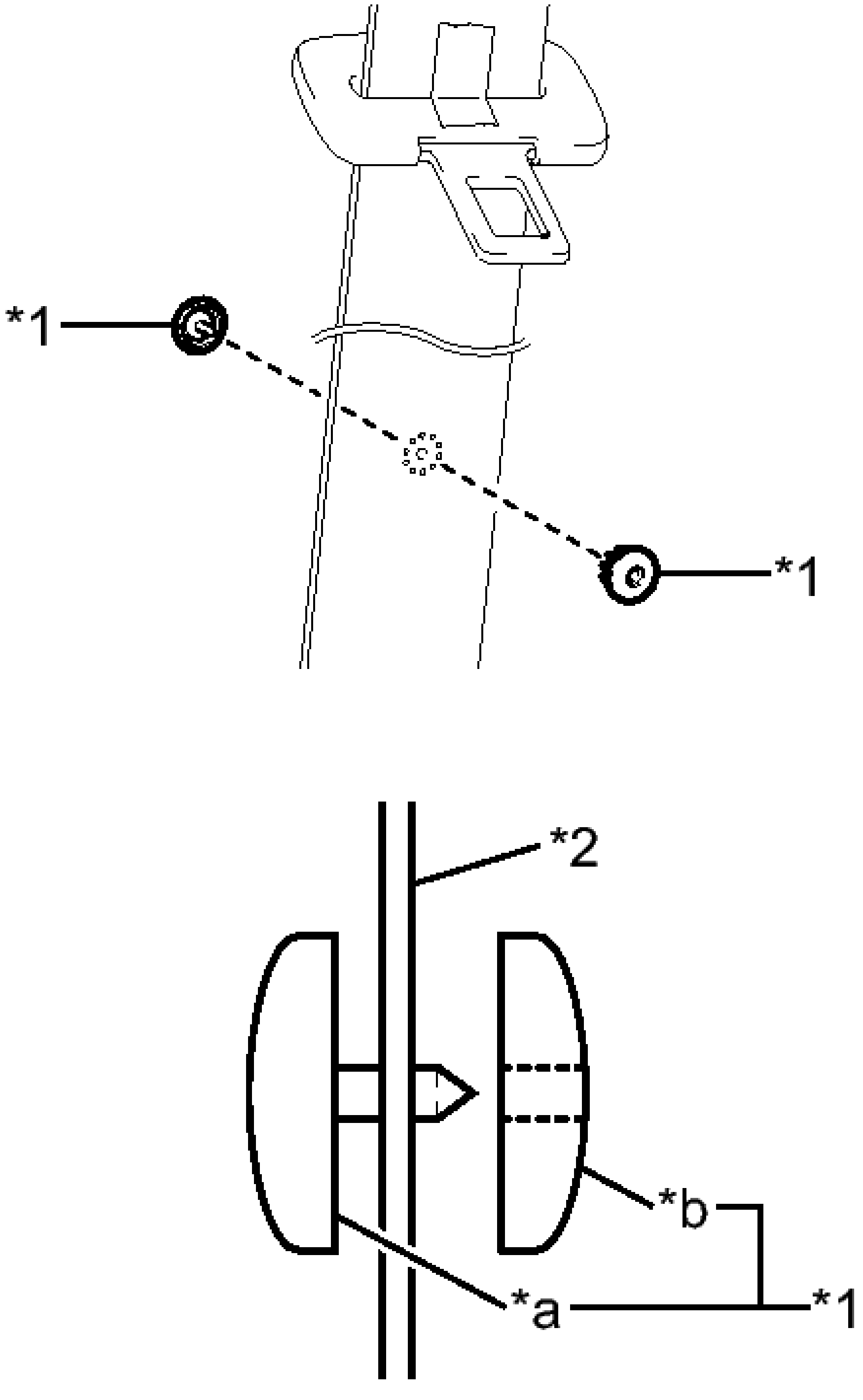

Fig. 61: Identifying Tongue Plate Stopper
Courtesy of TOYOTA MOTOR SALES, U.S.A., INC.

TEXT IN ILLUSTRATION

	Tongue

*1	Plate Stopper
*2	Belt Webbing
*a	Male
*b	Female

HINT:

Make sure that the installation direction of the tongue plate stopper is as shown in the illustration.

b. Hold the tongue plate stopper in the hole of the belt webbing using an adjustable wrench, and turn the adjustment screw of the adjustable wrench by hand to compress the tongue plate stopper.

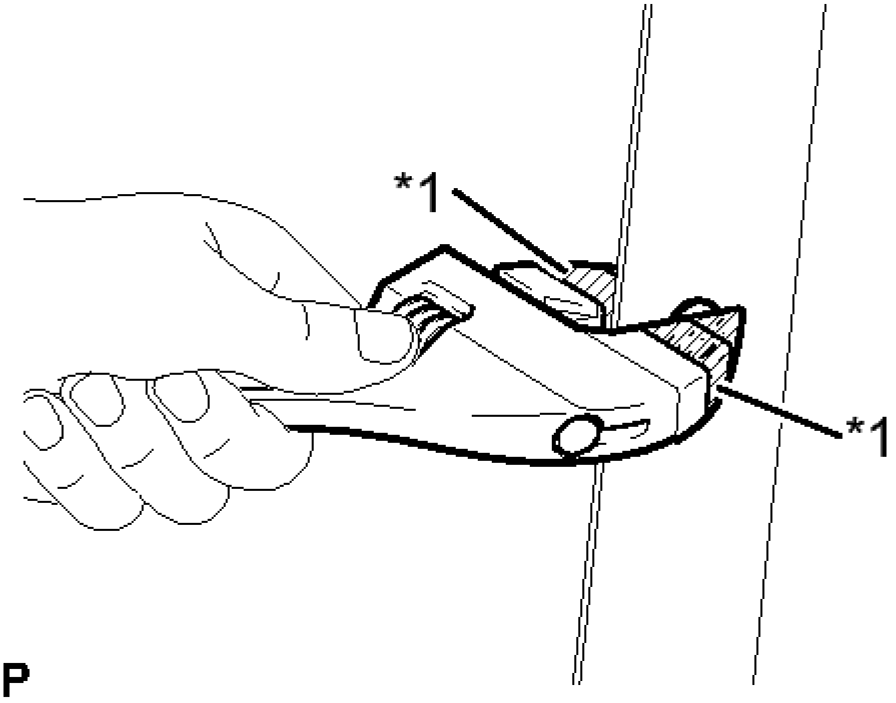

Fig. 62: Identifying Compressing Tongue Plate Stopper
Courtesy of TOYOTA MOTOR SALES, U.S.A., INC.

TEXT IN ILLUSTRATION

*1	Protective Tape

NOTE:

- **When using the adjustable wrench, make sure to position the male and female parts of the tongue plate stopper parallel to each other.**
- **Do not use pliers to compress the pin of the tongue plate**

stopper. They may damage the tongue plate stopper and belt webbing.

HINT:

Tape the jaws of the adjustable wrench before use.

c. When the adjustment screw of the adjustable wrench cannot be turned by hand, tighten the adjustment screw using a pair of adjustable joint pliers until the tongue plate stopper thickness is 4.5 to 5.0 mm (0.177 to 0.197 in.). (Refer to the illustrations.)

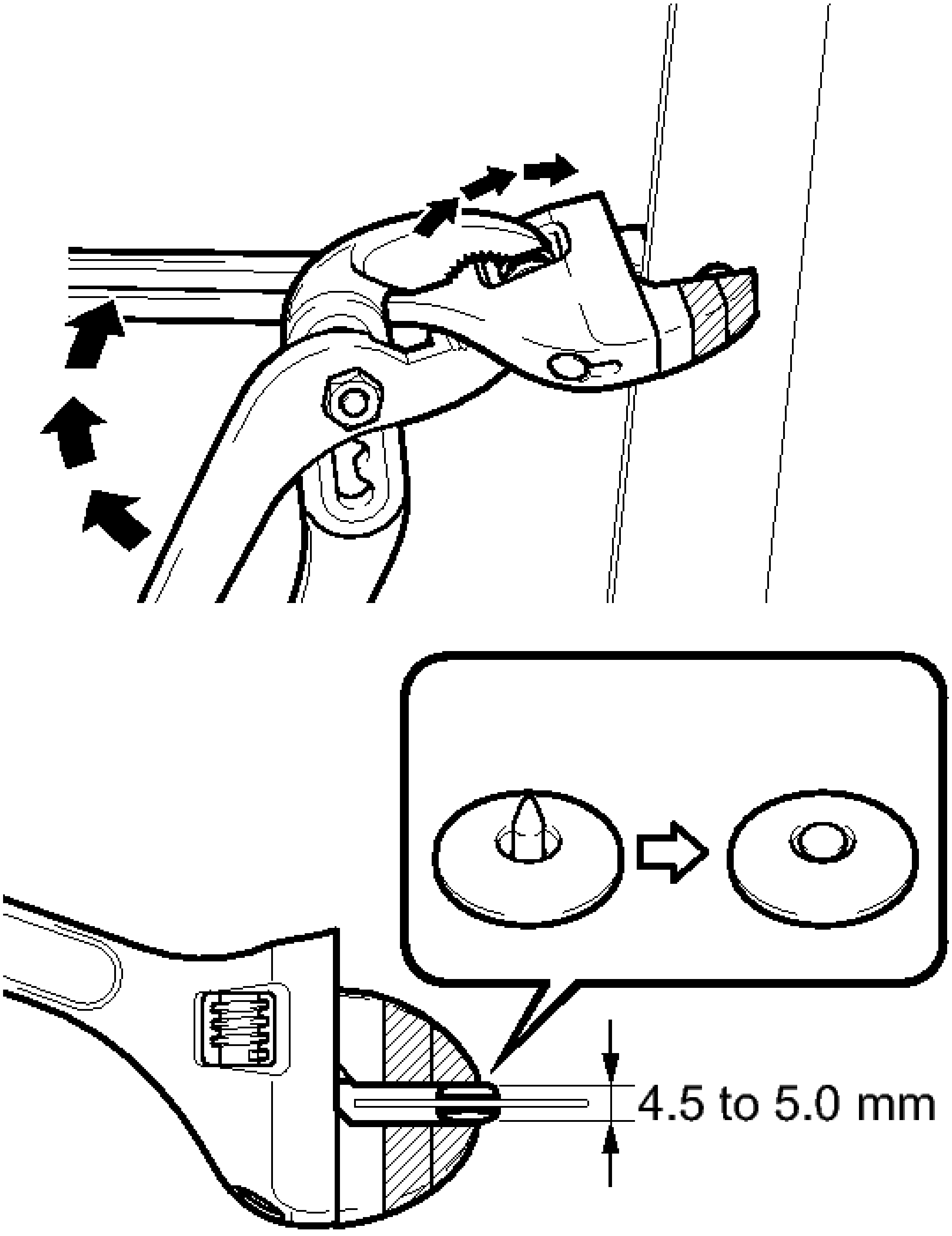

Fig. 63: Tightening Adjustment Screw
Courtesy of TOYOTA MOTOR SALES, U.S.A., INC.

d. Make sure that the male pin of the tongue plate stopper has expanded evenly in the hole of the female part and is firmly held to the belt webbing. (Refer to the illustrations.)

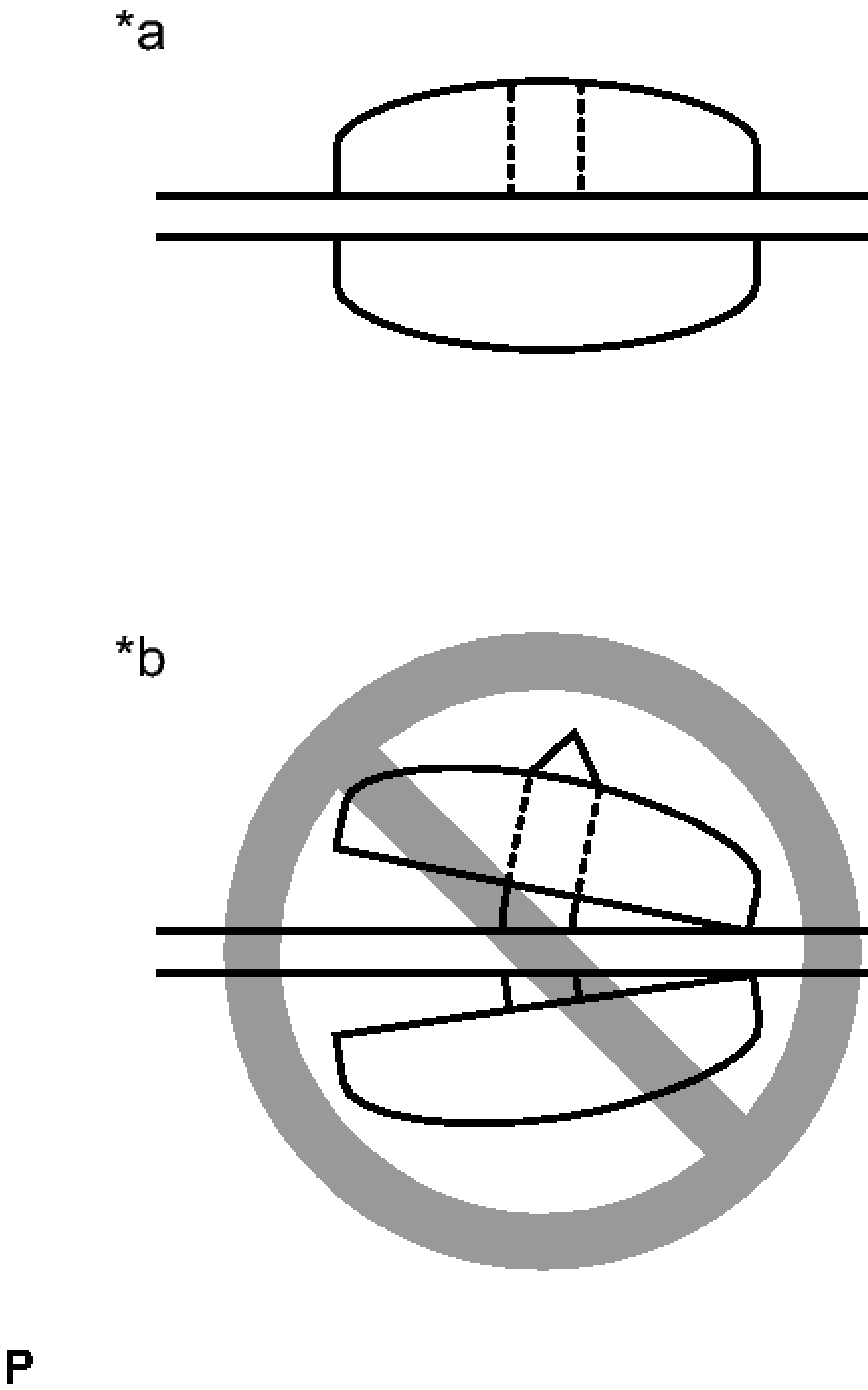

Fig. 64: Identifying Male Pin Of Tongue Plate Stopper
Courtesy of TOYOTA MOTOR SALES, U.S.A., INC.

TEXT IN ILLUSTRATION

*a	CORRECT

*b	INCORRECT

CHILD RESTRAINT SEAT TETHER ANCHOR

COMPONENTS

ILLUSTRATION

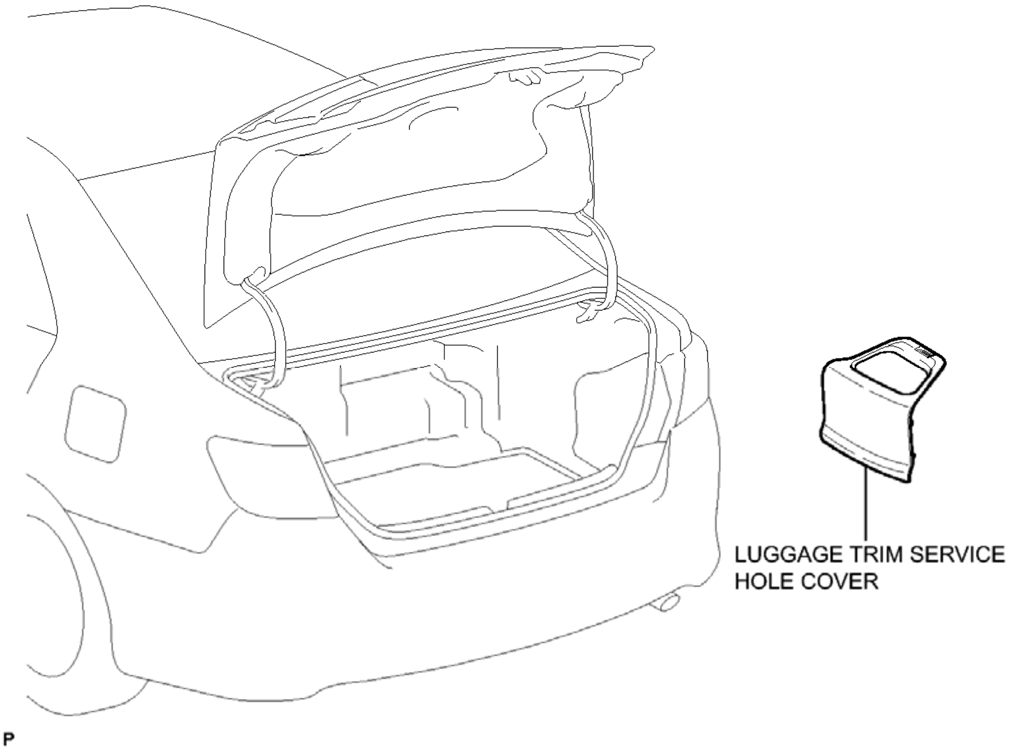
LUGGAGE TRIM SERVICE HOLE COVER
P

Fig. 65: Identifying Child Restraint Seat Tether Anchor Replacement Components With Torque Specifications (1 Of 3)
Courtesy of TOYOTA MOTOR SALES, U.S.A., INC.

ILLUSTRATION

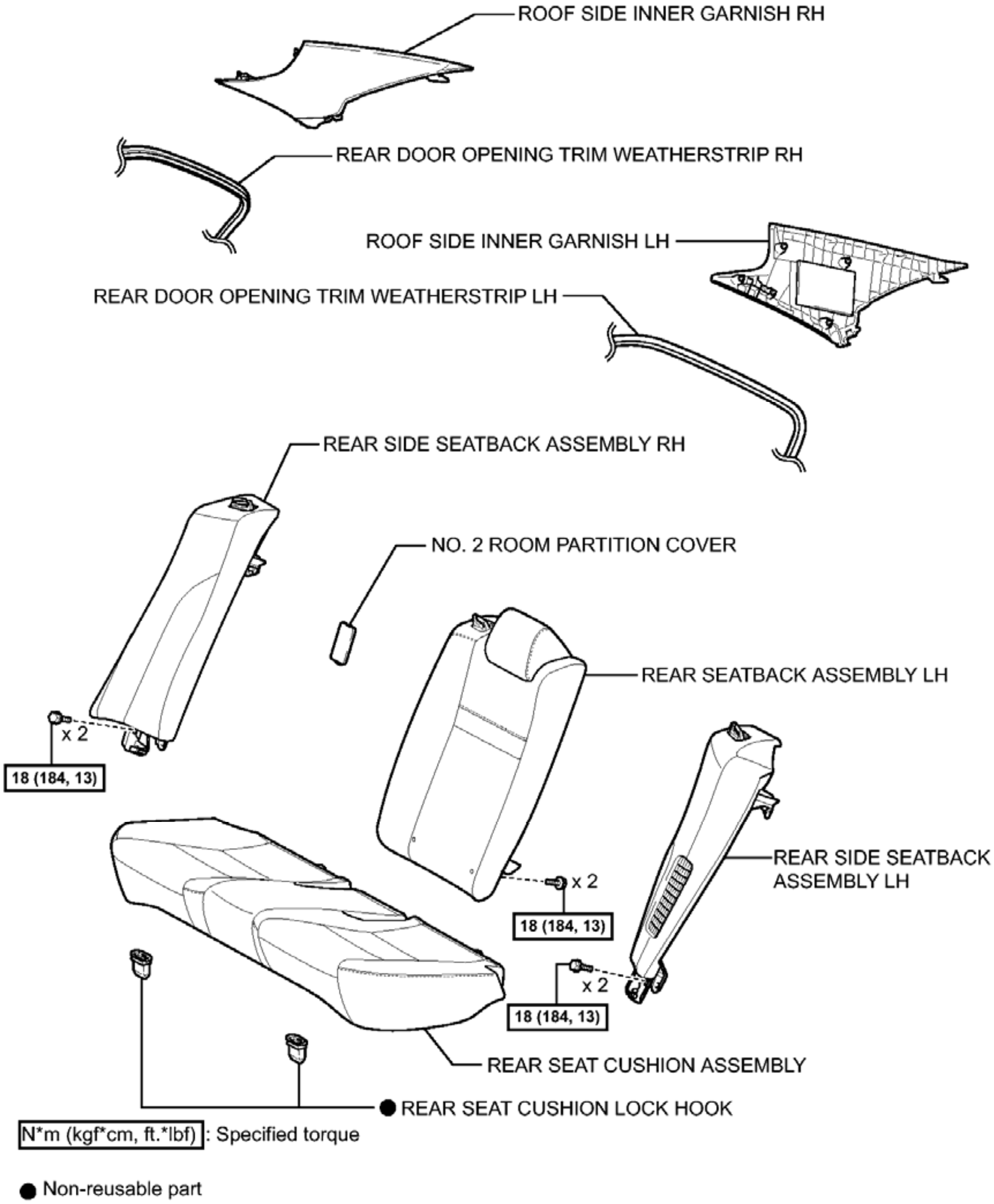
ROOF SIDE INNER GARNISH RH
REAR DOOR OPENING TRIM WEATHERSTRIP RH
ROOF SIDE INNER GARNISH LH
REAR DOOR OPENING TRIM WEATHERSTRIP LH
REAR SIDE SEATBACK ASSEMBLY RH
NO. 2 ROOM PARTITION COVER
REAR SEATBACK ASSEMBLY LH
x 2
18 (184, 13)
x 2
18 (184, 13)
REAR SIDE SEATBACK ASSEMBLY LH
x 2
18 (184, 13)
REAR SEAT CUSHION ASSEMBLY
● REAR SEAT CUSHION LOCK HOOK
N*m (kgf*cm, ft.*lbf) : Specified torque
● Non-reusable part

P

Fig. 66: Identifying Child Restraint Seat Tether Anchor Replacement Components With Torque Specifications (2 Of 3)
Courtesy of TOYOTA MOTOR SALES, U.S.A., INC.

ILLUSTRATION

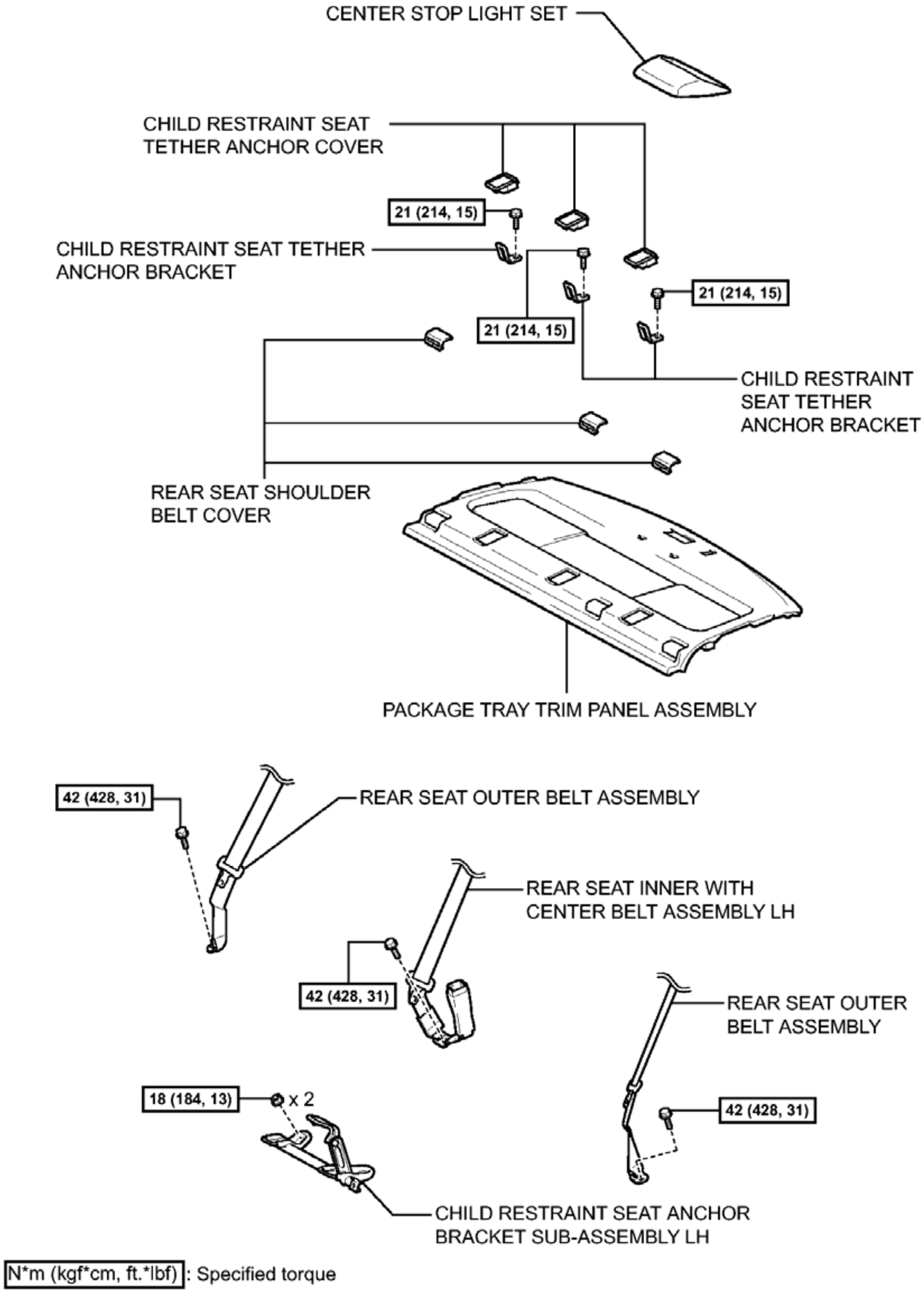
CENTER STOP LIGHT SET
CHILD RESTRAINT SEAT TETHER ANCHOR COVER
21 (214, 15)
CHILD RESTRAINT SEAT TETHER ANCHOR BRACKET
21 (214, 15)
21 (214, 15)
CHILD RESTRAINT SEAT TETHER ANCHOR BRACKET
REAR SEAT SHOULDER BELT COVER
PACKAGE TRAY TRIM PANEL ASSEMBLY
42 (428, 31)
REAR SEAT OUTER BELT ASSEMBLY
REAR SEAT INNER WITH CENTER BELT ASSEMBLY LH
42 (428, 31)
REAR SEAT OUTER BELT ASSEMBLY
18 (184, 13)
x 2
42 (428, 31)
CHILD RESTRAINT SEAT ANCHOR BRACKET SUB-ASSEMBLY LH
N*m (kgf*cm, ft.*lbf) : Specified torque
P

Fig. 67: Identifying Child Restraint Seat Tether Anchor Replacement Components With Torque Specifications (3 Of 3)

Courtesy of TOYOTA MOTOR SALES, U.S.A., INC.

REMOVAL

REMOVAL

1. **PRECAUTION**

   NOTE: **After turning the power switch off, waiting time may be required before disconnecting the cable from the negative (-) auxiliary battery terminal. Therefore, make sure to read the disconnecting the cable from the negative (-) auxiliary battery terminal notices before proceeding with work. Refer to PRECAUTION .**

2. **REMOVE LUGGAGE TRIM SERVICE HOLE COVER** . Refer to **REMOVAL - Step 2**
3. **DISCONNECT CABLE FROM AUXILIARY BATTERY NEGATIVE TERMINAL**

   WARNING: **Wait at least 90 seconds after disconnecting the cable from the negative (-) auxiliary battery terminal to disable the SRS system.**

   NOTE: **When disconnecting the cable, some systems need to be initialized after the cable is reconnected. Refer to INITIALIZATION .**

4. **REMOVE REAR SEAT CUSHION ASSEMBLY** . Refer to **REMOVAL - Step 4**
5. **REMOVE REAR SEAT CUSHION LOCK HOOK** . Refer to **REMOVAL - Step 5**
6. **REMOVE NO. 2 ROOM PARTITION COVER** . Refer to **REMOVAL - Step 7**
7. **REMOVE REAR SEATBACK ASSEMBLY LH** . Refer to **REMOVAL - Step 8**
8. **REMOVE REAR SIDE SEATBACK ASSEMBLY LH** . Refer to **REMOVAL - Step 9**
9. **REMOVE REAR SIDE SEATBACK ASSEMBLY RH** . Refer to **REMOVAL - Step 10**
10. **DISCONNECT REAR DOOR OPENING TRIM WEATHERSTRIP LH** See step 13
11. **DISCONNECT REAR DOOR OPENING TRIM WEATHERSTRIP RH** See step 14
12. **REMOVE ROOF SIDE INNER GARNISH LH** . Refer to **REMOVAL - Step 25**
13. **REMOVE ROOF SIDE INNER GARNISH RH**

    HINT:

    Use the same procedure as for the LH side.

14. **DISCONNECT REAR SEAT OUTER BELT ASSEMBLY (for LH Side)** See step 14
15. **DISCONNECT REAR SEAT OUTER BELT ASSEMBLY (for RH Side)** See step 15
16. **REMOVE CHILD RESTRAINT SEAT ANCHOR BRACKET SUB-ASSEMBLY LH** See step 11
17. **DISCONNECT REAR SEAT INNER WITH CENTER BELT ASSEMBLY LH** See step 20
18. **REMOVE CENTER STOP LIGHT SET** . Refer to **REMOVAL - Step 1**
19. **REMOVE CHILD RESTRAINT SEAT TETHER ANCHOR COVER** See step 19

20. **REMOVE REAR SEAT SHOULDER BELT COVER** See step 20
21. **REMOVE PACKAGE TRAY TRIM PANEL ASSEMBLY** See step 21
22. **REMOVE CHILD RESTRAINT SEAT TETHER ANCHOR BRACKET**
    a. Remove the bolt and child restraint seat tether anchor bracket.

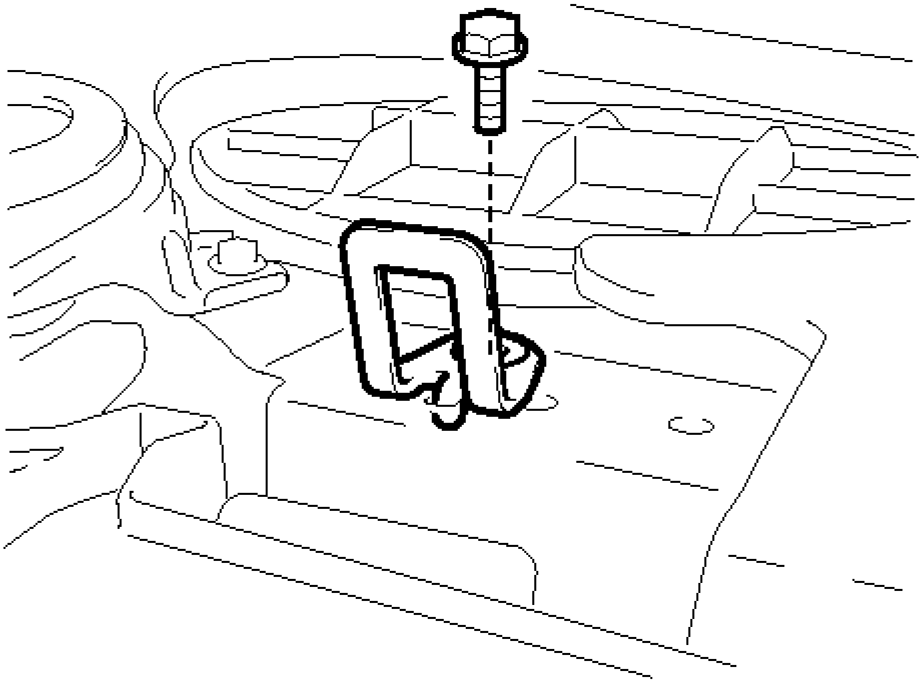

Fig. 68: Identifying Child Restraint Seat Tether Anchor Bracket And Bolt
Courtesy of TOYOTA MOTOR SALES, U.S.A., INC.

HINT:

Use the same procedure for the other 2 child restraint seat tether anchor brackets.

INSTALLATION

INSTALLATION

1. **INSTALL CHILD RESTRAINT SEAT TETHER ANCHOR BRACKET**
    a. Install the child restraint seat tether anchor bracket with the bolt.

    Torque: 21 N*m (214 kgf*cm, 15 ft.*lbf)

    HINT:

    Use the same procedure for the other 2 child restraint seat tether anchor brackets.

2. **INSTALL PACKAGE TRAY TRIM PANEL ASSEMBLY** See step 3

3. **INSTALL REAR SEAT SHOULDER BELT COVER** See step 4
4. **INSTALL CHILD RESTRAINT SEAT TETHER ANCHOR COVER** See step 5
5. **INSTALL CENTER STOP LIGHT SET** . Refer to **INSTALLATION - Step 1**
6. **CONNECT REAR SEAT INNER WITH CENTER BELT ASSEMBLY LH** See step 7
7. **INSTALL CHILD RESTRAINT SEAT ANCHOR BRACKET SUB-ASSEMBLY LH** See step 1
8. **CONNECT REAR SEAT OUTER BELT ASSEMBLY (for LH Side)** See step 9
9. **CONNECT REAR SEAT OUTER BELT ASSEMBLY (for RH Side)** See step 10
10. **INSTALL ROOF SIDE INNER GARNISH LH** . Refer to **INSTALLATION - Step 21**
11. **INSTALL ROOF SIDE INNER GARNISH RH**

    HINT:

    Use the same procedure as for the LH side.

12. **INSTALL REAR DOOR OPENING TRIM WEATHERSTRIP LH** . Refer to **INSTALLATION - Step 26**
13. **INSTALL REAR DOOR OPENING TRIM WEATHERSTRIP RH** . Refer to **INSTALLATION - Step 33**
14. **INSTALL REAR SIDE SEATBACK ASSEMBLY LH** . Refer to **INSTALLATION - Step 1**
15. **INSTALL REAR SIDE SEATBACK ASSEMBLY RH** . Refer to **INSTALLATION - Step 2**
16. **INSTALL REAR SEATBACK ASSEMBLY LH** . Refer to **INSTALLATION - Step 3**
17. **INSTALL NO. 2 ROOM PARTITION COVER** . Refer to **INSTALLATION - Step 4**
18. **INSTALL REAR SEAT CUSHION LOCK HOOK** . Refer to **INSTALLATION - Step 6**
19. **INSTALL REAR SEAT CUSHION ASSEMBLY** . Refer to **INSTALLATION - Step 7**
20. **CONNECT CABLE TO AUXILIARY BATTERY NEGATIVE TERMINAL**

    NOTE: **When disconnecting the cable, some systems need to be initialized after the cable is reconnected. Refer to INITIALIZATION .**

21. **INSTALL LUGGAGE TRIM SERVICE HOLE COVER** . Refer to **INSTALLATION - Step 3**
22. **INSPECT SRS WARNING LIGHT**

    for Built-in Type Yaw Rate Sensor: Refer to **DIAGNOSIS SYSTEM**

    for Separate Type Yaw Rate Sensor: Refer to **DIAGNOSIS SYSTEM**

CHILD RESTRAINT SEAT ANCHOR BRACKET

COMPONENTS

ILLUSTRATION

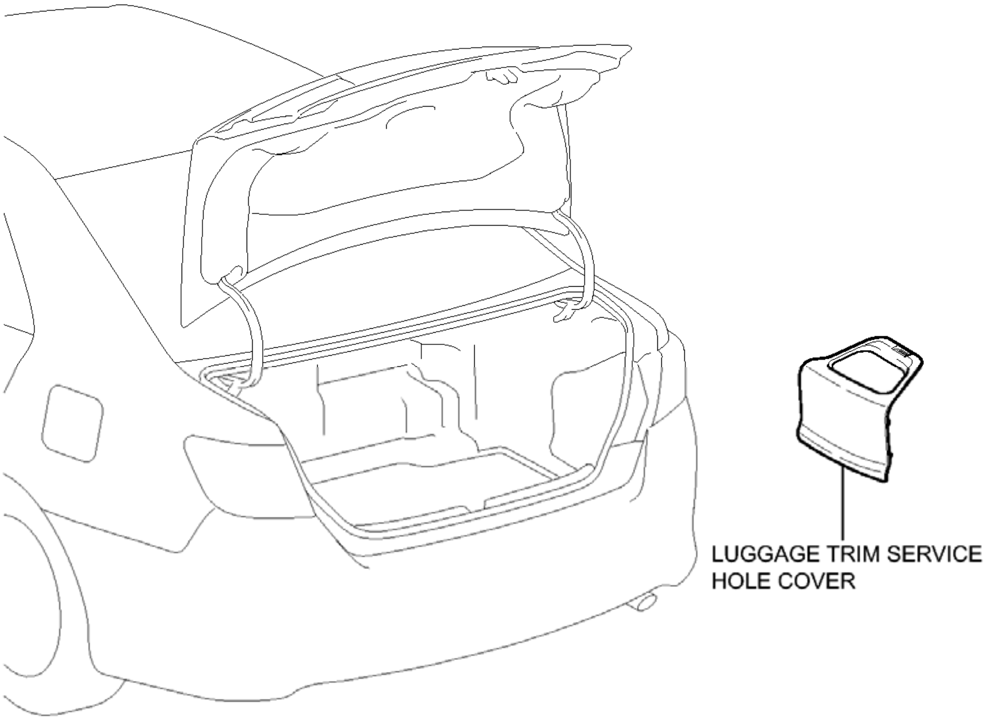
LUGGAGE TRIM SERVICE HOLE COVER
P

Fig. 69: Identifying Restraint Seat Anchor Bracket Replacement Components With Torque Specifications (1 Of 2)
Courtesy of TOYOTA MOTOR SALES, U.S.A., INC.

ILLUSTRATION

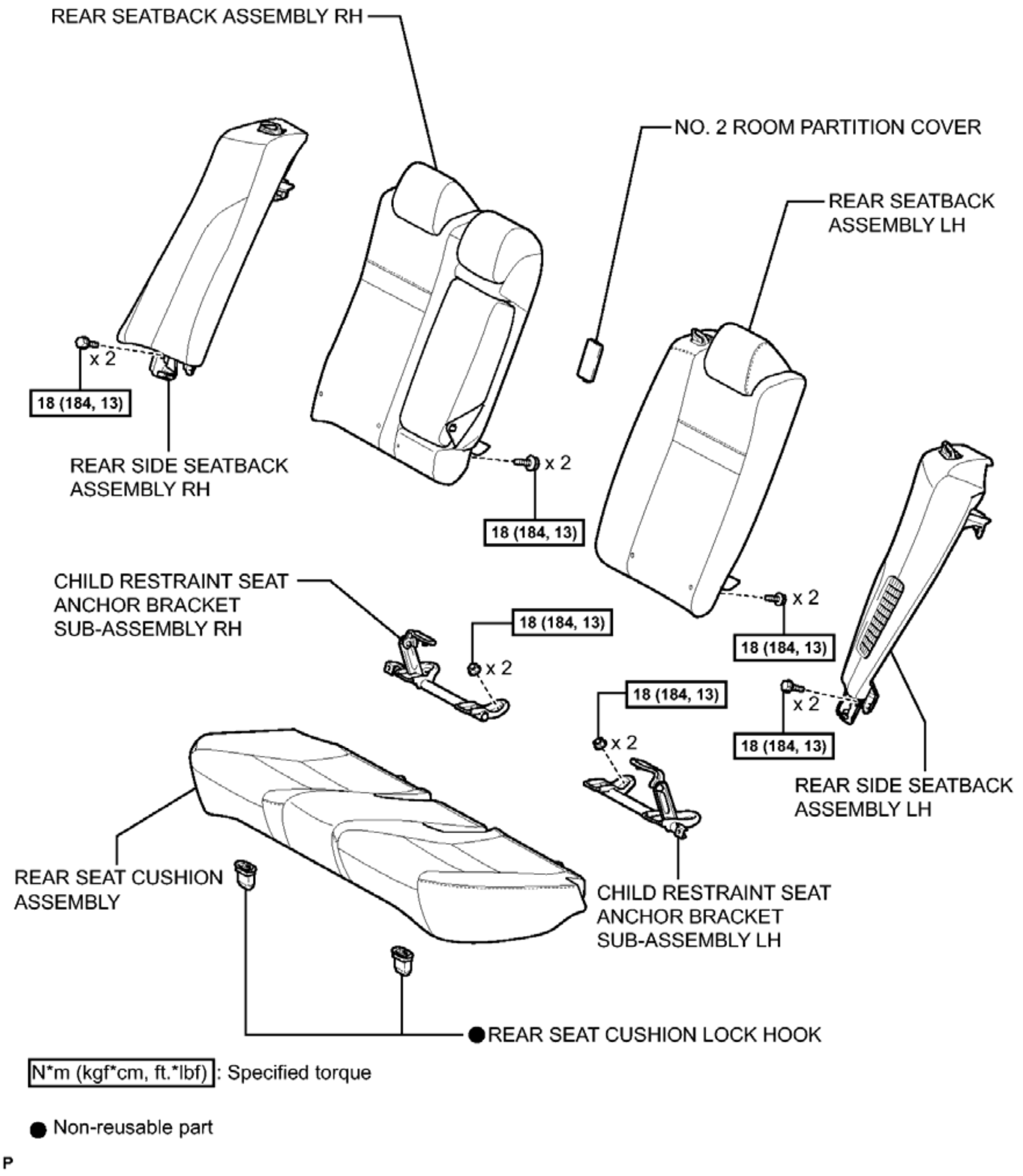
REAR SEATBACK ASSEMBLY RH
NO. 2 ROOM PARTITION COVER
REAR SEATBACK ASSEMBLY LH
x 2
18 (184, 13)
REAR SIDE SEATBACK ASSEMBLY RH
x 2
18 (184, 13)
CHILD RESTRAINT SEAT ANCHOR BRACKET SUB-ASSEMBLY RH
18 (184, 13)
x 2
x 2
18 (184, 13)
18 (184, 13)
x 2
18 (184, 13)
x 2
18 (184, 13)
REAR SIDE SEATBACK ASSEMBLY LH
REAR SEAT CUSHION ASSEMBLY
CHILD RESTRAINT SEAT ANCHOR BRACKET SUB-ASSEMBLY LH
● REAR SEAT CUSHION LOCK HOOK
N*m (kgf*cm, ft.*lbf) : Specified torque
● Non-reusable part
P

Fig. 70: Identifying Restraint Seat Anchor Bracket Replacement Components With Torque Specifications (2 Of 2)
Courtesy of TOYOTA MOTOR SALES, U.S.A., INC.

REMOVAL

REMOVAL

1. **PRECAUTION**

NOTE: **After turning the power switch off, waiting time may be required before disconnecting the cable from the negative (-) auxiliary battery terminal. Therefore, make sure to read the disconnecting the cable from the negative (-) auxiliary battery terminal notices before proceeding with work. Refer to PRECAUTION .**

2. **REMOVE LUGGAGE TRIM SERVICE HOLE COVER** . Refer to **REMOVAL - Step 2**
3. **DISCONNECT CABLE FROM AUXILIARY BATTERY NEGATIVE TERMINAL**

WARNING: **Wait at least 90 seconds after disconnecting the cable from the negative (-) auxiliary battery terminal to disable the SRS system.**

NOTE: **When disconnecting the cable, some systems need to be initialized after the cable is reconnected. Refer to INITIALIZATION .**

4. **REMOVE REAR SEAT CUSHION ASSEMBLY** . Refer to **REMOVAL - Step 4**
5. **REMOVE REAR SEAT CUSHION LOCK HOOK** . Refer to **REMOVAL - Step 5**
6. **REMOVE REAR SEATBACK ASSEMBLY RH** . Refer to **REMOVAL - Step 6**
7. **REMOVE NO. 2 ROOM PARTITION COVER** . Refer to **REMOVAL - Step 7**
8. **REMOVE REAR SEATBACK ASSEMBLY LH** . Refer to **REMOVAL - Step 8**
9. **REMOVE REAR SIDE SEATBACK ASSEMBLY LH** . Refer to **REMOVAL - Step 9**
10. **REMOVE REAR SIDE SEATBACK ASSEMBLY RH** . Refer to **REMOVAL - Step 10**
11. **REMOVE CHILD RESTRAINT SEAT ANCHOR BRACKET SUB-ASSEMBLY LH**
    a. Remove the 2 nuts and child restraint seat anchor bracket sub-assembly LH.

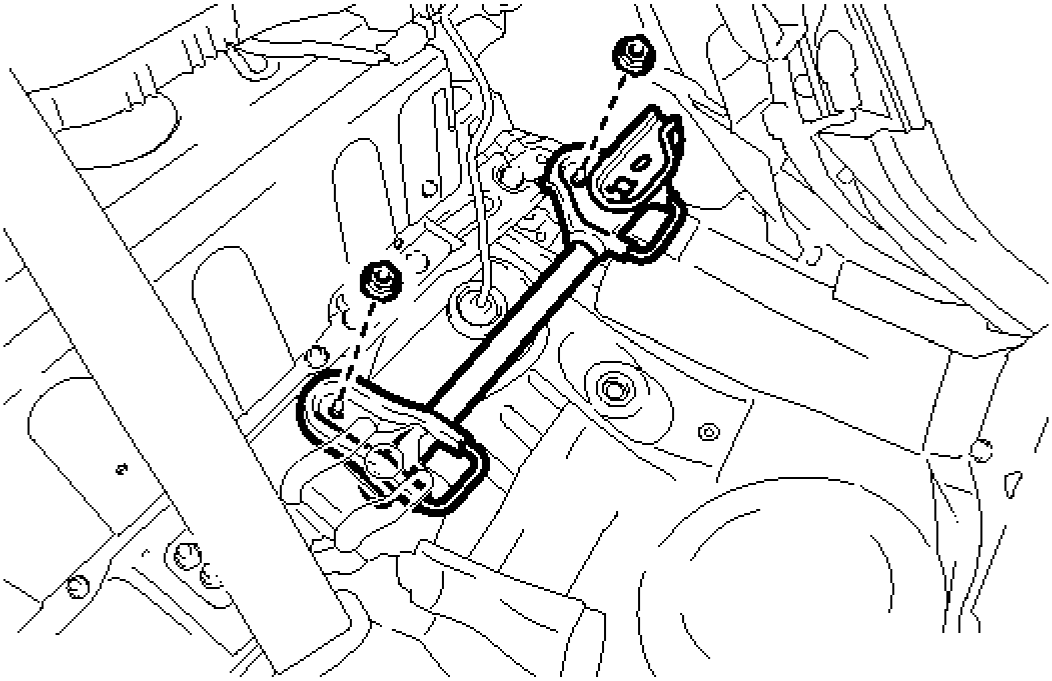

Fig. 71: Identifying Child Restraint Seat Anchor Bracket Sub-Assembly Nuts LH
Courtesy of TOYOTA MOTOR SALES, U.S.A., INC.

12. **REMOVE CHILD RESTRAINT SEAT ANCHOR BRACKET SUB-ASSEMBLY RH**
    a. Remove the 2 nuts and child restraint seat anchor bracket sub-assembly RH.

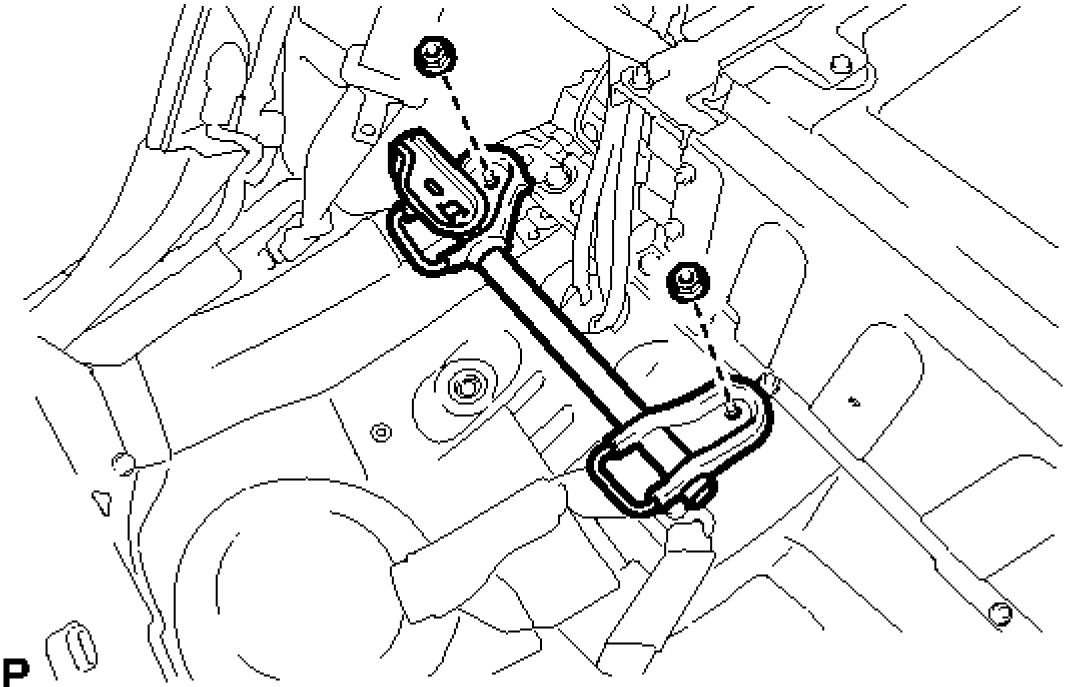

Fig. 72: Identifying Child Restraint Seat Anchor Bracket Sub-Assembly Nuts RH

INSTALLATION

INSTALLATION

1. **INSTALL CHILD RESTRAINT SEAT ANCHOR BRACKET SUB-ASSEMBLY LH**
   a. Install the child restraint seat anchor bracket sub-assembly LH with the 2 nuts.

      Torque: 18 N*m (184 kgf*cm, 13 ft.*lbf)

2. **INSTALL CHILD RESTRAINT SEAT ANCHOR BRACKET SUB-ASSEMBLY RH**
   a. Install the child restraint seat anchor bracket sub-assembly RH with the 2 nuts.

      Torque: 18 N*m (184 kgf*cm, 13 ft.*lbf)

3. **INSTALL REAR SIDE SEATBACK ASSEMBLY LH** . Refer to **INSTALLATION - Step 1**
4. **INSTALL REAR SIDE SEATBACK ASSEMBLY RH** . Refer to **INSTALLATION - Step 2**
5. **INSTALL REAR SEATBACK ASSEMBLY LH** . Refer to **INSTALLATION - Step 3**
6. **INSTALL NO. 2 ROOM PARTITION COVER** . Refer to **INSTALLATION - Step 4**
7. **INSTALL REAR SEATBACK ASSEMBLY RH** . Refer to **INSTALLATION - Step 5**
8. **INSTALL REAR SEAT CUSHION LOCK HOOK** . Refer to **INSTALLATION - Step 6**
9. **INSTALL REAR SEAT CUSHION ASSEMBLY** . Refer to **INSTALLATION - Step 7**
10. **CONNECT CABLE TO AUXILIARY BATTERY NEGATIVE TERMINAL**

    NOTE: **When disconnecting the cable, some systems need to be initialized after the cable is reconnected. Refer to INITIALIZATION .**

11. **INSTALL LUGGAGE TRIM SERVICE HOLE COVER** . Refer to **INSTALLATION - Step 3**
12. **INSPECT SRS WARNING LIGHT**

    for Built-in Type Yaw Rate Sensor: Refer to **DIAGNOSIS SYSTEM**

    for Separate Type Yaw Rate Sensor: Refer to **DIAGNOSIS SYSTEM**

FRONT SEAT INNER BELT ASSEMBLY (FOR MANUAL SEAT)

COMPONENTS

ILLUSTRATION

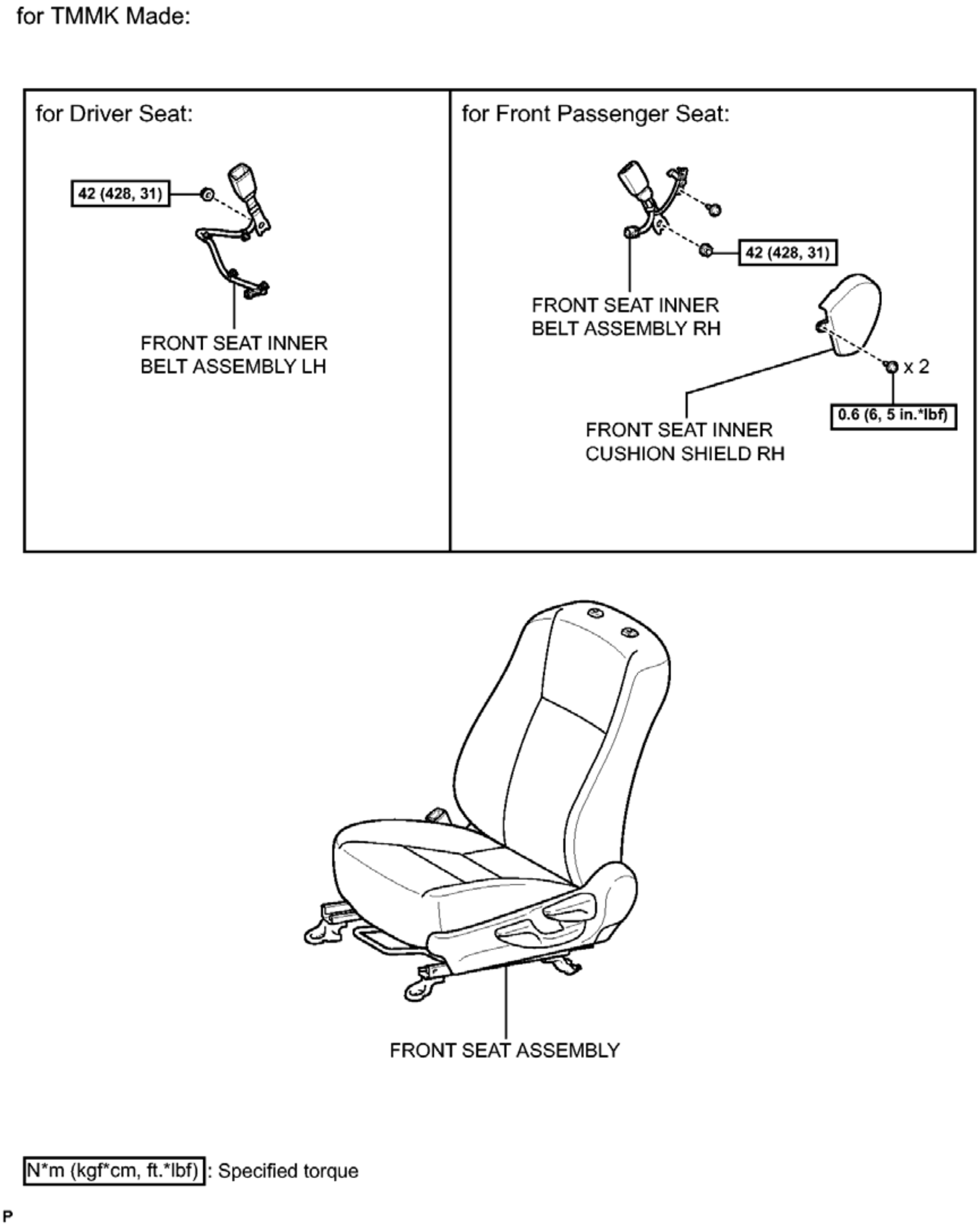
for TMMK Made:
for Driver Seat:
42 (428, 31)
FRONT SEAT INNER BELT ASSEMBLY LH
for Front Passenger Seat:
42 (428, 31)
FRONT SEAT INNER BELT ASSEMBLY RH
x 2
0.6 (6, 5 in.*lbf)
FRONT SEAT INNER CUSHION SHIELD RH
FRONT SEAT ASSEMBLY
N*m (kgf*cm, ft.*lbf) : Specified torque
P

Fig. 1: Identifying Front Seat Inner Belt Assembly (For Manual Seat) (For TMMK Made) Replacement Components With Torque Specifications (1 Of 2)
Courtesy of TOYOTA MOTOR SALES, U.S.A., INC.

ILLUSTRATION

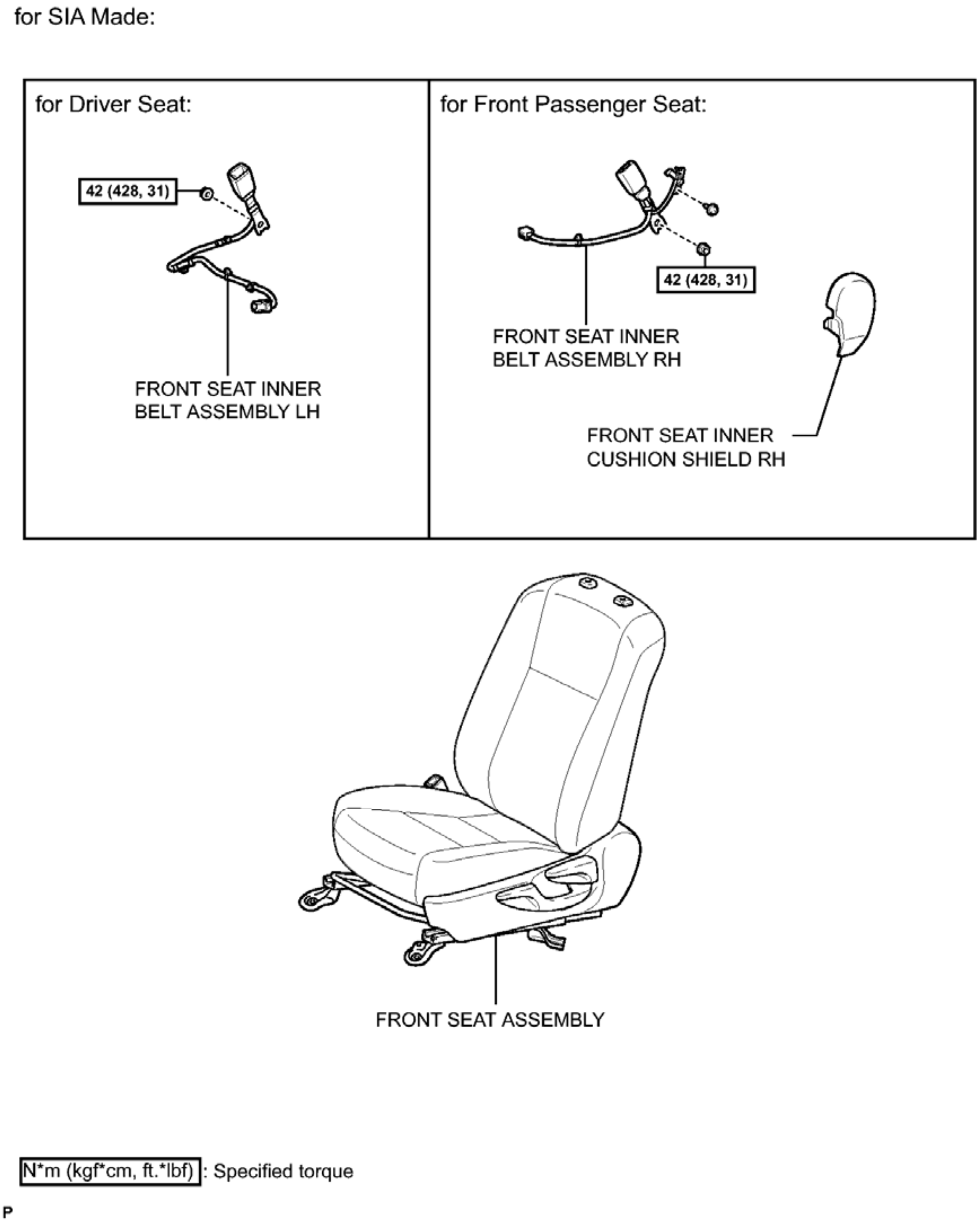
for SIA Made:
for Driver Seat:
42 (428, 31)
FRONT SEAT INNER BELT ASSEMBLY LH
for Front Passenger Seat:
42 (428, 31)
FRONT SEAT INNER BELT ASSEMBLY RH
FRONT SEAT INNER CUSHION SHIELD RH
FRONT SEAT ASSEMBLY
N*m (kgf*cm, ft.*lbf) : Specified torque
P

Fig. 2: Identifying Front Seat Inner Belt Assembly (For Manual Seat) (For SIA Made) Replacement Components With Torque Specifications (2 Of 2)
Courtesy of TOYOTA MOTOR SALES, U.S.A., INC.

REMOVAL

REMOVAL

1. **REMOVE FRONT SEAT ASSEMBLY**

For TMMK Made: Refer to **REMOVAL** .

For SIA Made: Refer to **REMOVAL** .

2. **REMOVE FRONT SEAT INNER BELT ASSEMBLY LH (for Driver Seat)**
   a. for TMMK Made:
      1. Disengage each clamp under the front seat assembly.
      2. Disengage the clamp.

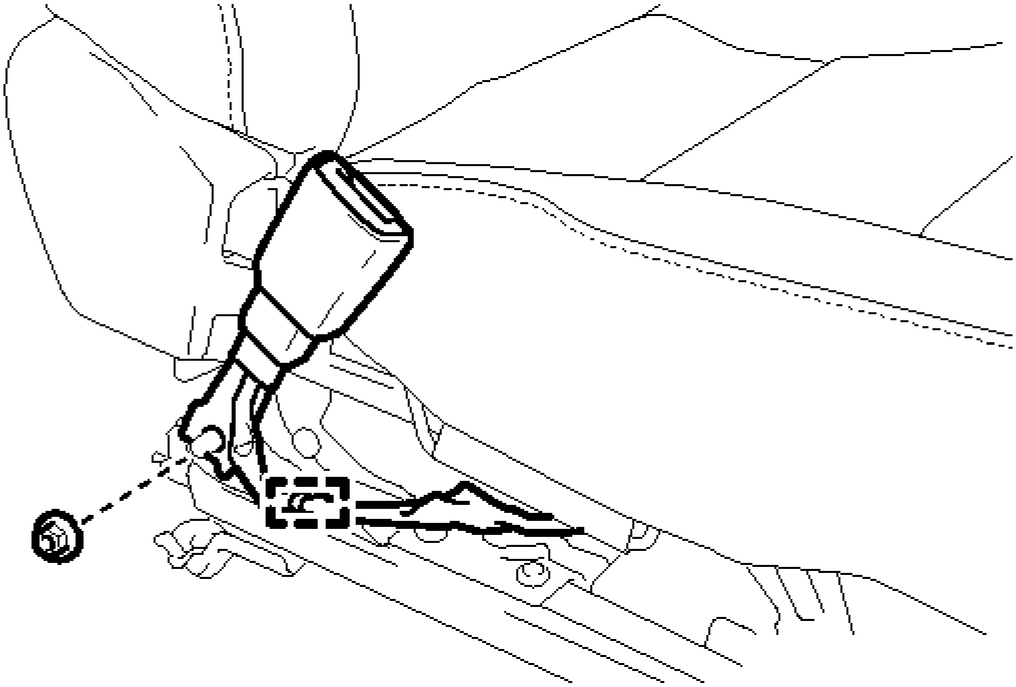

Fig. 3: Locating Front Seat Inner Belt Assembly LH (For Driver Seat) (For TMMK Made) Fasteners
Courtesy of TOYOTA MOTOR SALES, U.S.A., INC.

      3. Remove the nut and front seat inner belt assembly LH.
   b. for SIA Made:
      1. Disengage each clamp under the front seat assembly.
      2. Disengage the clamp.

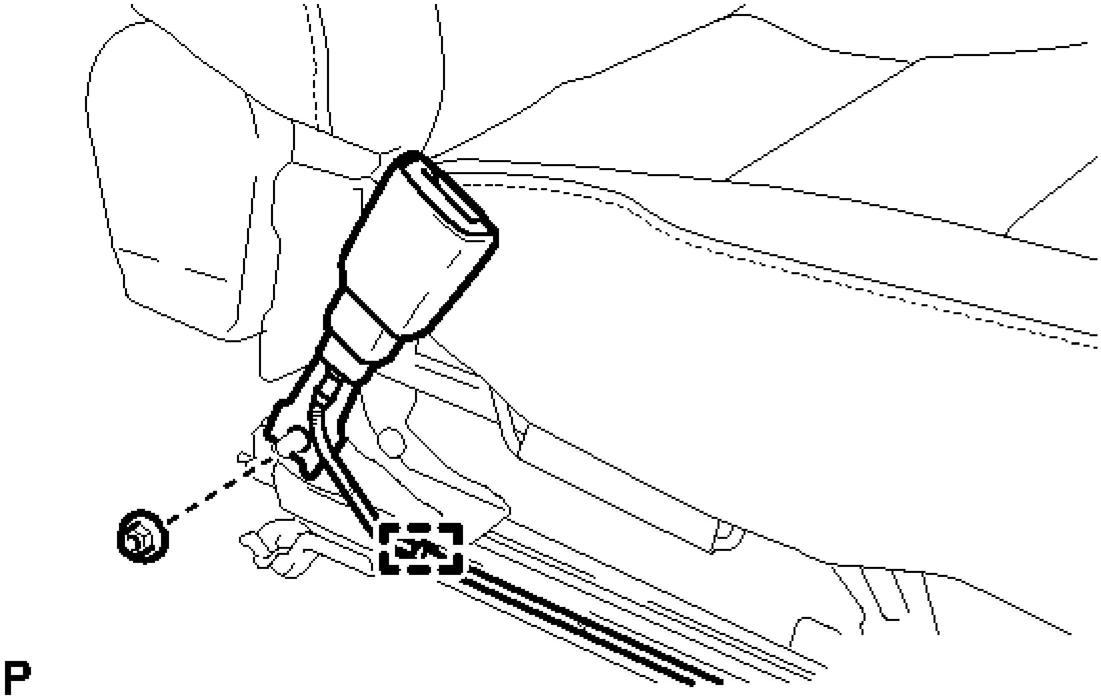

Fig. 4: Locating Front Seat Inner Belt Assembly LH (For Driver Seat) (For SIA Made) Fasteners
Courtesy of TOYOTA MOTOR SALES, U.S.A., INC.

        3. Remove the nut and front seat inner belt assembly LH.

3. **REMOVE FRONT SEAT INNER CUSHION SHIELD RH (for Front Passenger Seat)**

   For TMMK Made: Refer to **DISASSEMBLY - Step 6** .

   For SIA Made: Refer to **DISASSEMBLY - Step 8** .

4. **REMOVE FRONT SEAT INNER BELT ASSEMBLY RH (for Front Passenger Seat)**
   a. for TMMK Made:
      1. Disconnect the connector.

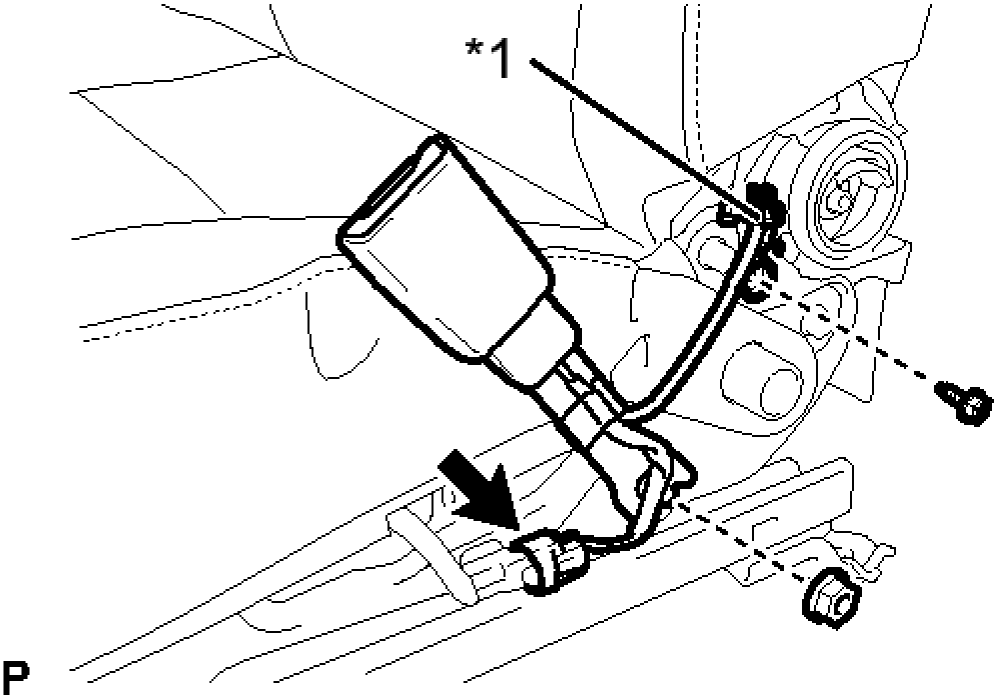

Fig. 5: Locating Front Seat Inner Belt Assembly RH (For Front Passenger Seat) (For TMMK Made) Limit Switch Connector And Fasteners
Courtesy of TOYOTA MOTOR SALES, U.S.A., INC.

TEXT IN ILLUSTRATION

*1	Limit Switch

2. Remove the screw and disconnect the limit switch.
3. Remove the nut and front seat inner belt assembly RH.

b. for SIA Made:

   1. Disengage each clamp under the front seat assembly.
   2. Remove the screw and disconnect the limit switch.

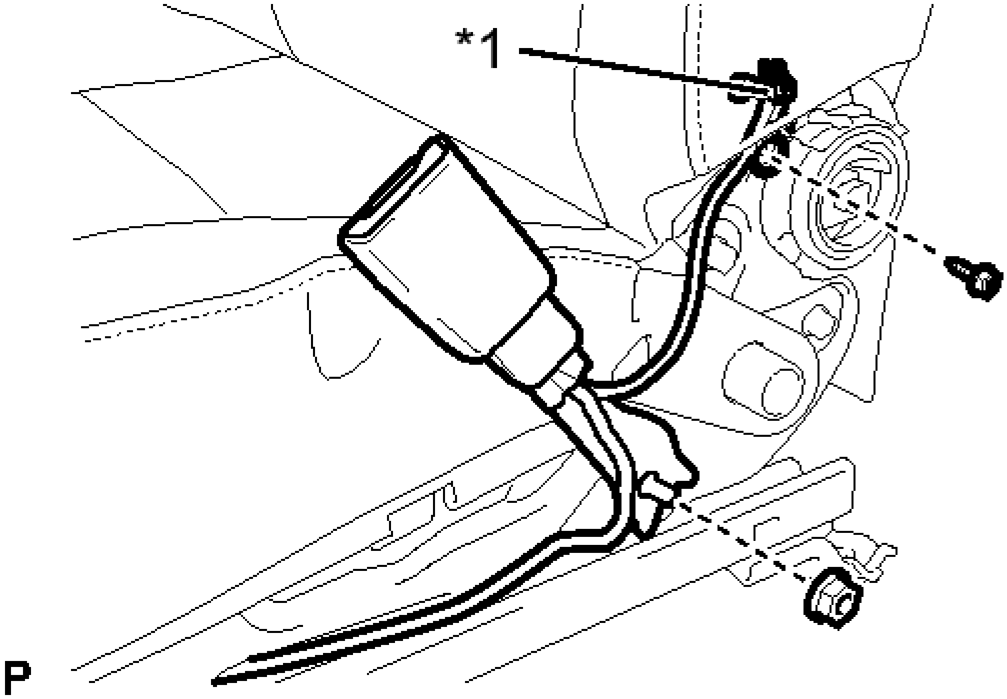

Fig. 6: Locating Front Seat Inner Belt Assembly RH (For Front Passenger Seat) (For SIA Made) Limit Switch Connector And Fasteners
Courtesy of TOYOTA MOTOR SALES, U.S.A., INC.

TEXT IN ILLUSTRATION

*1	Limit Switch

3. Remove the nut and front seat inner belt assembly RH.

INSTALLATION

INSTALLATION

1. **INSTALL FRONT SEAT INNER BELT ASSEMBLY LH (for Driver Seat)**
    a. for TMMK Made:
        1. Install the front seat inner belt assembly LH with the nut.

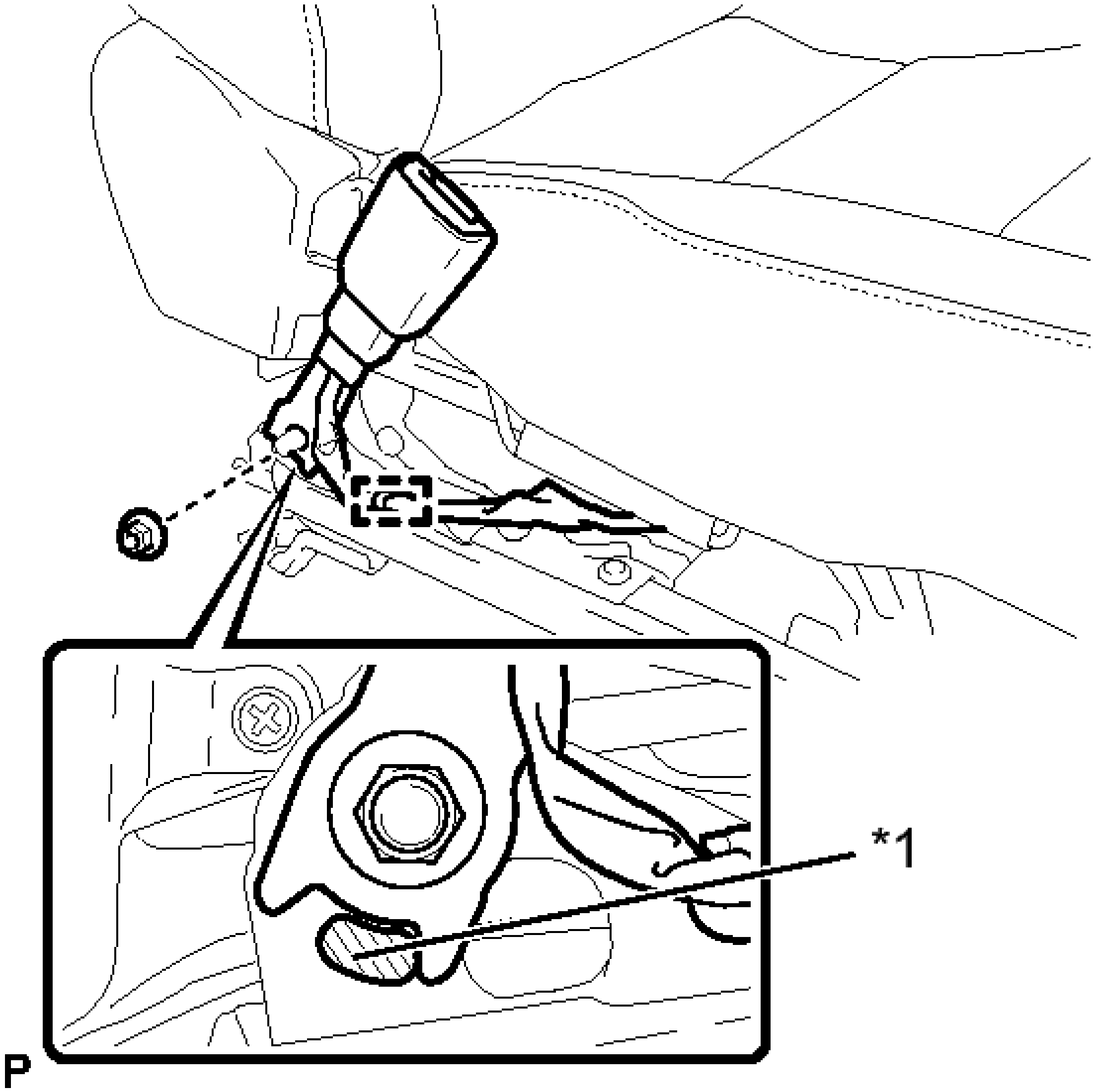

Fig. 7: Locating Front Seat Inner Belt Assembly LH (For Driver Seat) (For TMMK Made) Protruding Part And Fasteners
Courtesy of TOYOTA MOTOR SALES, U.S.A., INC.

TEXT IN ILLUSTRATION

*1	Protruding Part

Torque: 42 N*m (428 kgf*cm, 31 ft.*lbf)

NOTE: **Do not allow the anchor part of the front seat inner belt assembly LH to overlap the protruding part of the front seat adjuster.**

2. Engage the clamp.

3. Engage each clamp under the front seat assembly.

b. for SIA Made:

1. Install the front seat inner belt assembly LH with the nut.

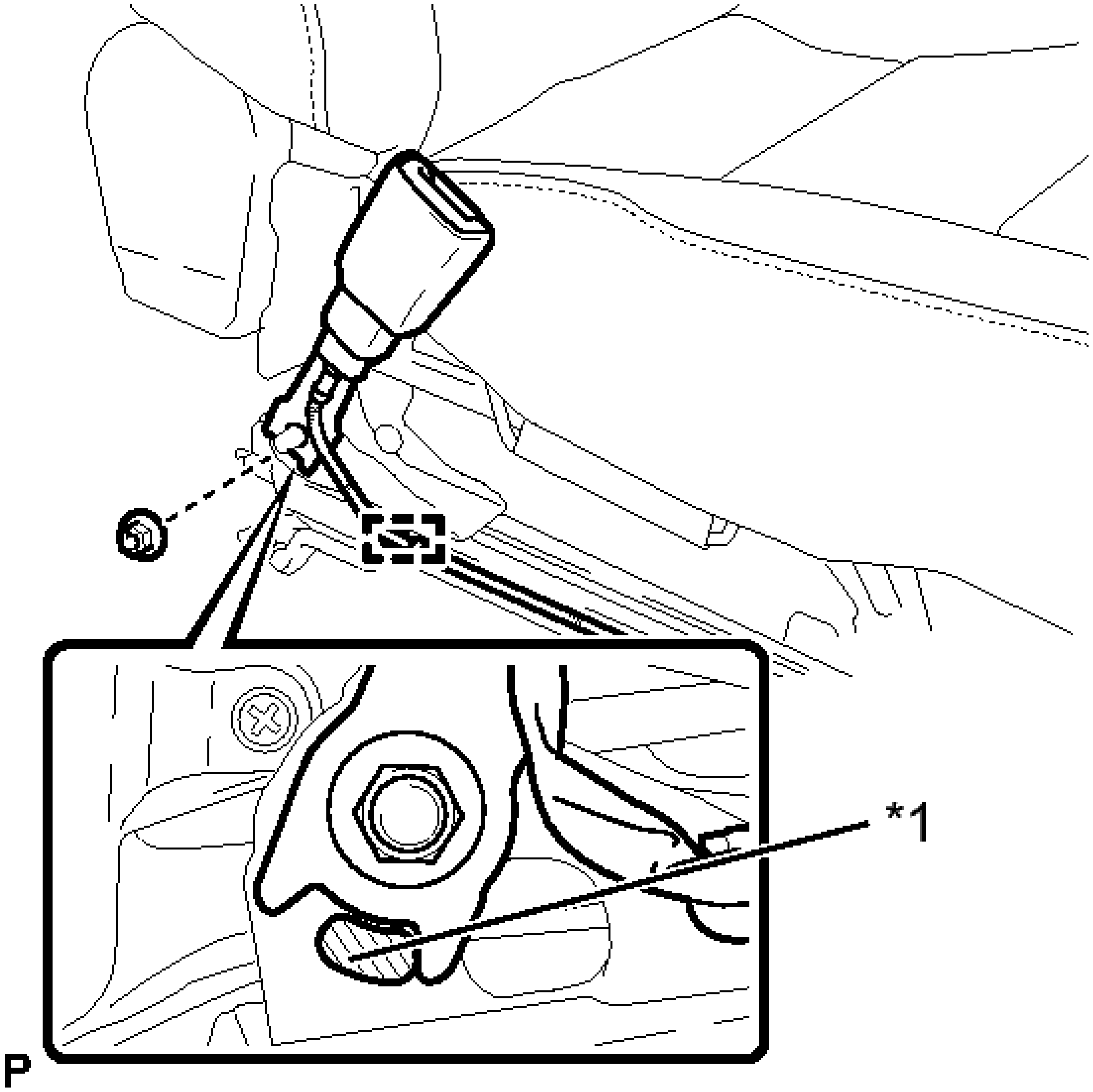

Fig. 8: Locating Front Seat Inner Belt Assembly LH (For Driver Seat) (For SIA Made) Protruding Part And Fasteners
Courtesy of TOYOTA MOTOR SALES, U.S.A., INC.

TEXT IN ILLUSTRATION

*1	Protruding Part

Torque: 42 N*m (428 kgf*cm, 31 ft.*lbf)

NOTE: **Do not allow the anchor part of the front seat inner belt**

assembly LH to overlap the protruding part of the front seat adjuster.

2. Engage the clamp.
3. Engage each clamp under the front seat assembly.

2. **INSTALL FRONT SEAT INNER BELT ASSEMBLY RH (for Front Passenger Seat)**
   a. for TMMK Made:
      1. Install the front seat inner belt assembly RH with the nut.

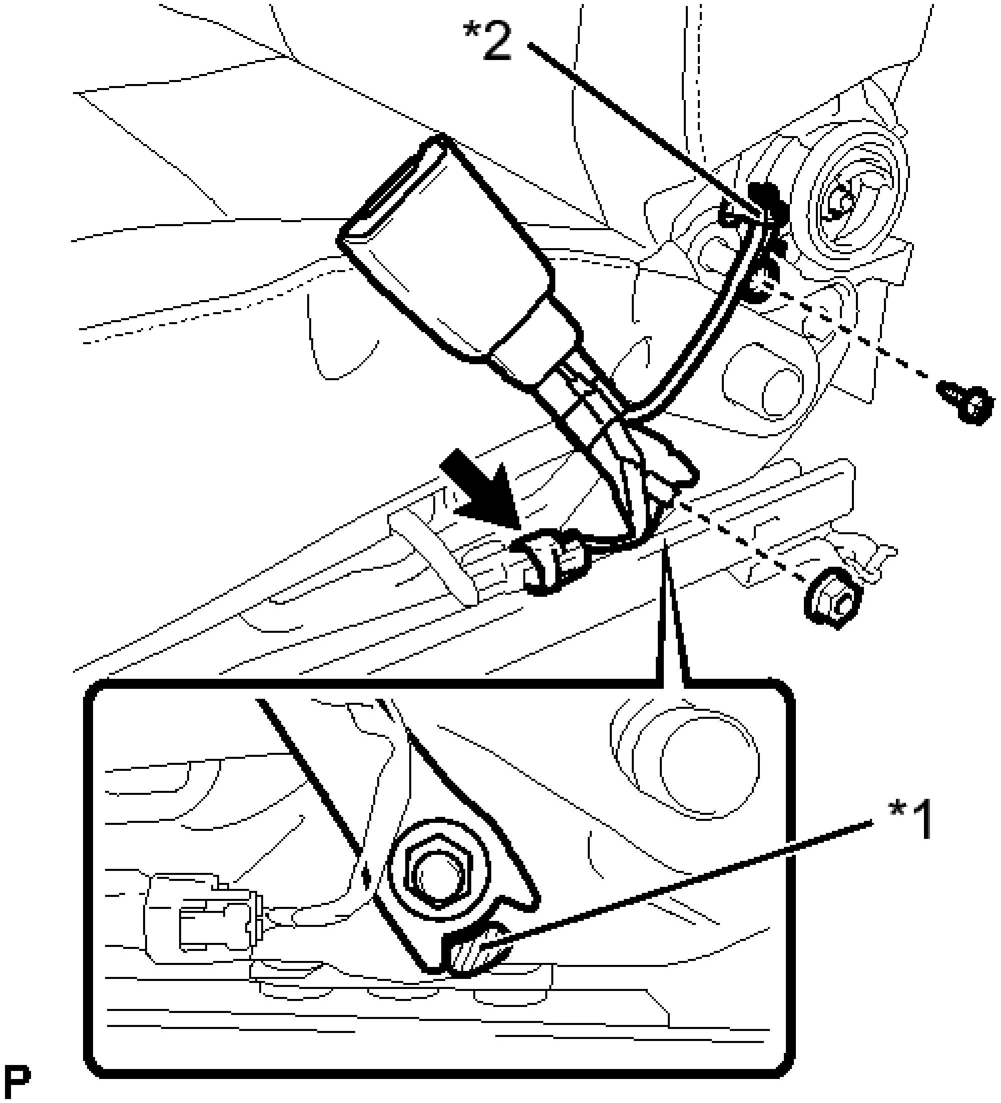

Fig. 9: Locating Front Seat Inner Belt Assembly RH (For Front Passenger Seat) (For TMMK Made) Protruding Part, Limit Switch Connector And Fasteners
Courtesy of TOYOTA MOTOR SALES, U.S.A., INC.

TEXT IN ILLUSTRATION

	Protruding

*1	Part
*2	Limit Switch

Torque: 42 N*m (428 kgf*cm, 31 ft.*lbf)

NOTE: **Do not allow the anchor part of the front seat inner belt assembly RH to overlap the protruding part of the front seat adjuster.**

2. Connect the limit switch with the screw.
3. Connect the connector.

b. for SIA Made:

1. Install the front seat inner belt assembly RH with the nut.

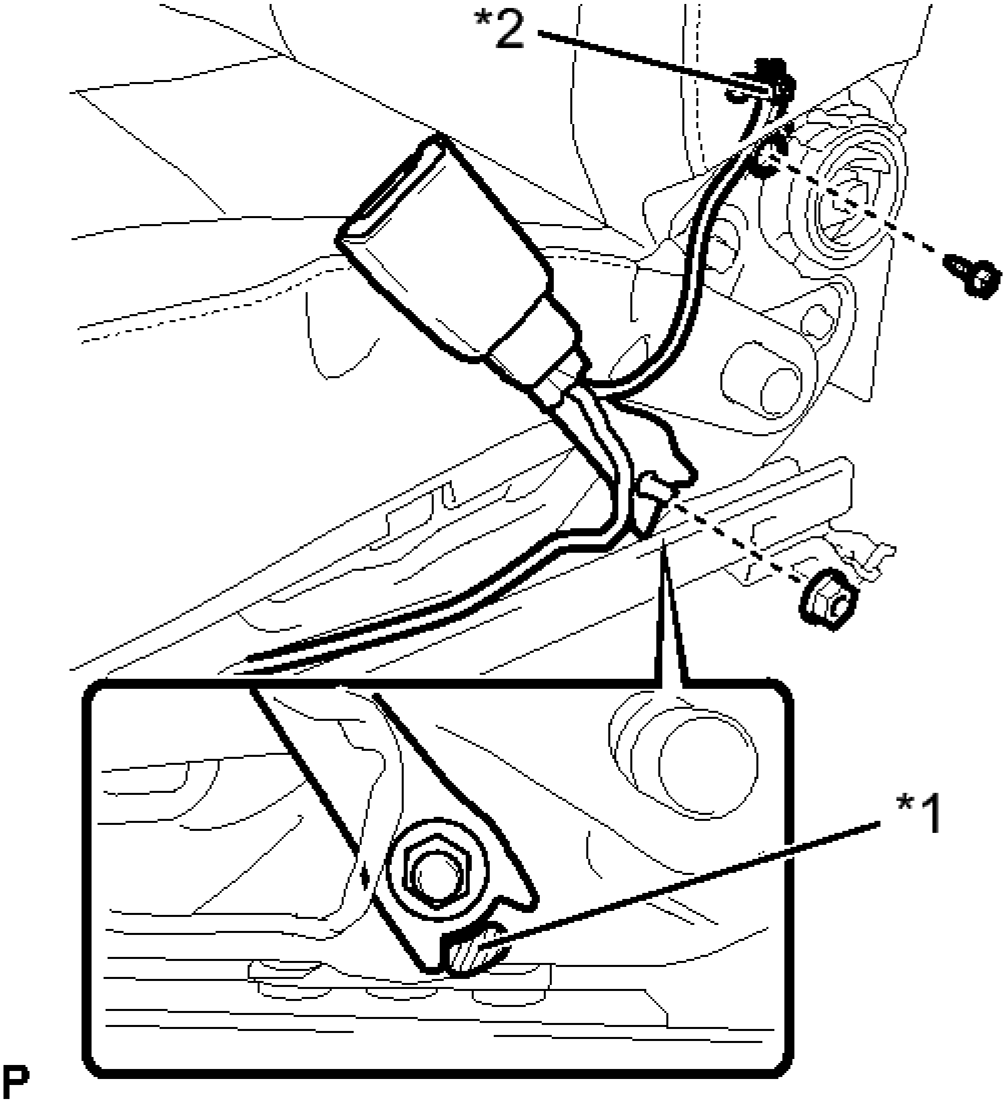

Fig. 10: Locating Front Seat Inner Belt Assembly RH (For Front Passenger Seat) (For SIA Made) Protruding Part, Limit Switch Connector And Fasteners
Courtesy of TOYOTA MOTOR SALES, U.S.A., INC.

TEXT IN ILLUSTRATION

*1	Protruding Part
*2	Limit Switch

Torque: 42 N*m (428 kgf*cm, 31 ft.*lbf)

NOTE: **Do not allow the anchor part of the front seat inner belt assembly RH to overlap the protruding part of the front seat adjuster.**

2. Connect the limit switch with the screw.
3. Engage each clamp under the front seat assembly.

3. **INSTALL FRONT SEAT INNER CUSHION SHIELD RH (for Front Passenger Seat)**

   For TMMK Made: Refer to **REASSEMBLY - Step 23** .

   For SIA Made: Refer to **REASSEMBLY - Step 21** .

4. **INSTALL FRONT SEAT ASSEMBLY**

   For TMMK Made: Refer to **INSTALLATION** .

   For SIA Made: Refer to **INSTALLATION** .

FRONT SEAT INNER BELT ASSEMBLY (FOR POWER SEAT)

COMPONENTS

ILLUSTRATION

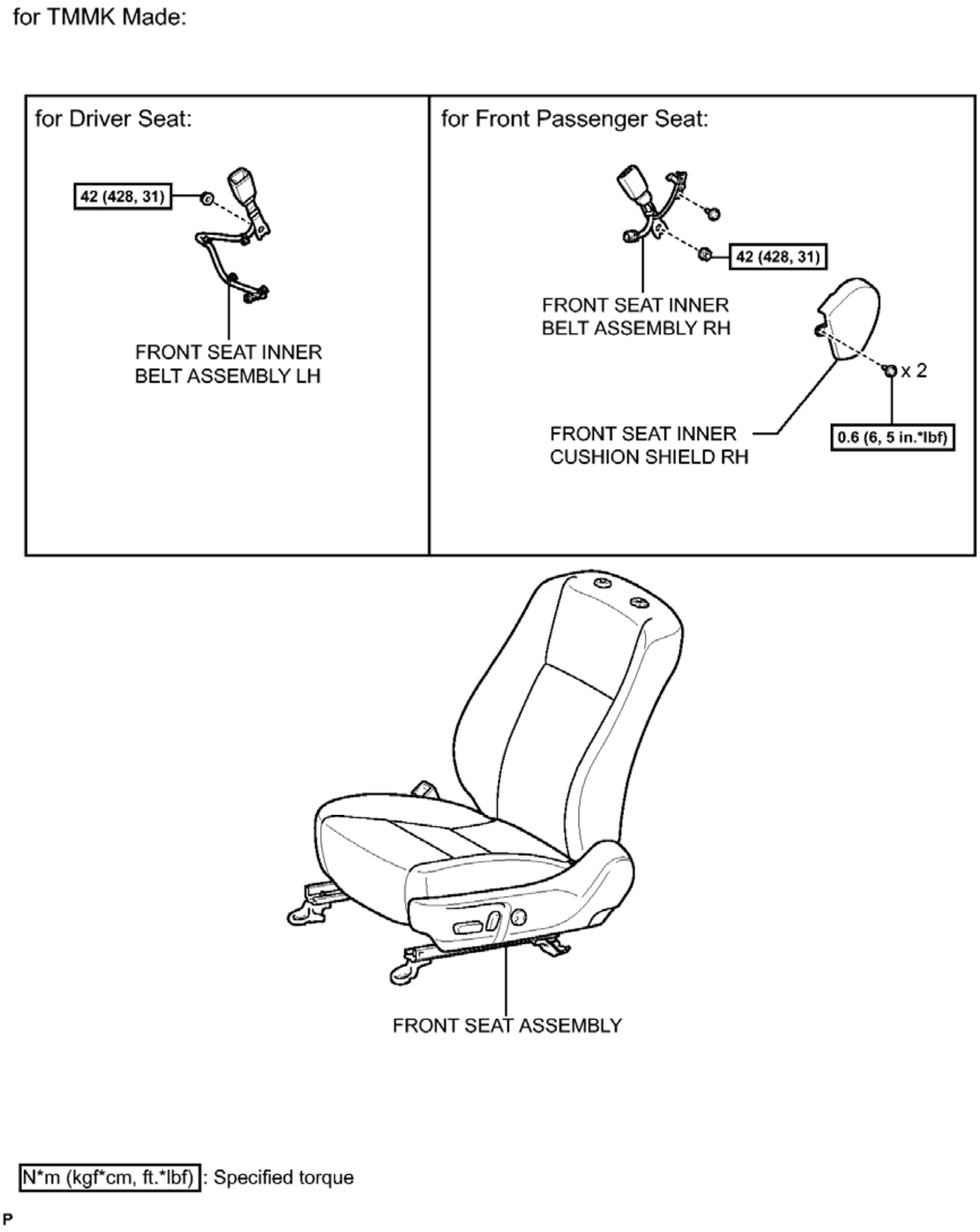
for TMMK Made:
for Driver Seat:
42 (428, 31)
FRONT SEAT INNER BELT ASSEMBLY LH
for Front Passenger Seat:
42 (428, 31)
FRONT SEAT INNER BELT ASSEMBLY RH
x 2
FRONT SEAT INNER CUSHION SHIELD RH
0.6 (6, 5 in.*lbf)
FRONT SEAT ASSEMBLY
N*m (kgf*cm, ft.*lbf) : Specified torque
P

Fig. 11: Identifying Front Seat Inner Belt Assembly (For Power Seat) (For TMMK Made) Replacement Components With Torque Specifications (1 Of 2)
Courtesy of TOYOTA MOTOR SALES, U.S.A., INC.

ILLUSTRATION

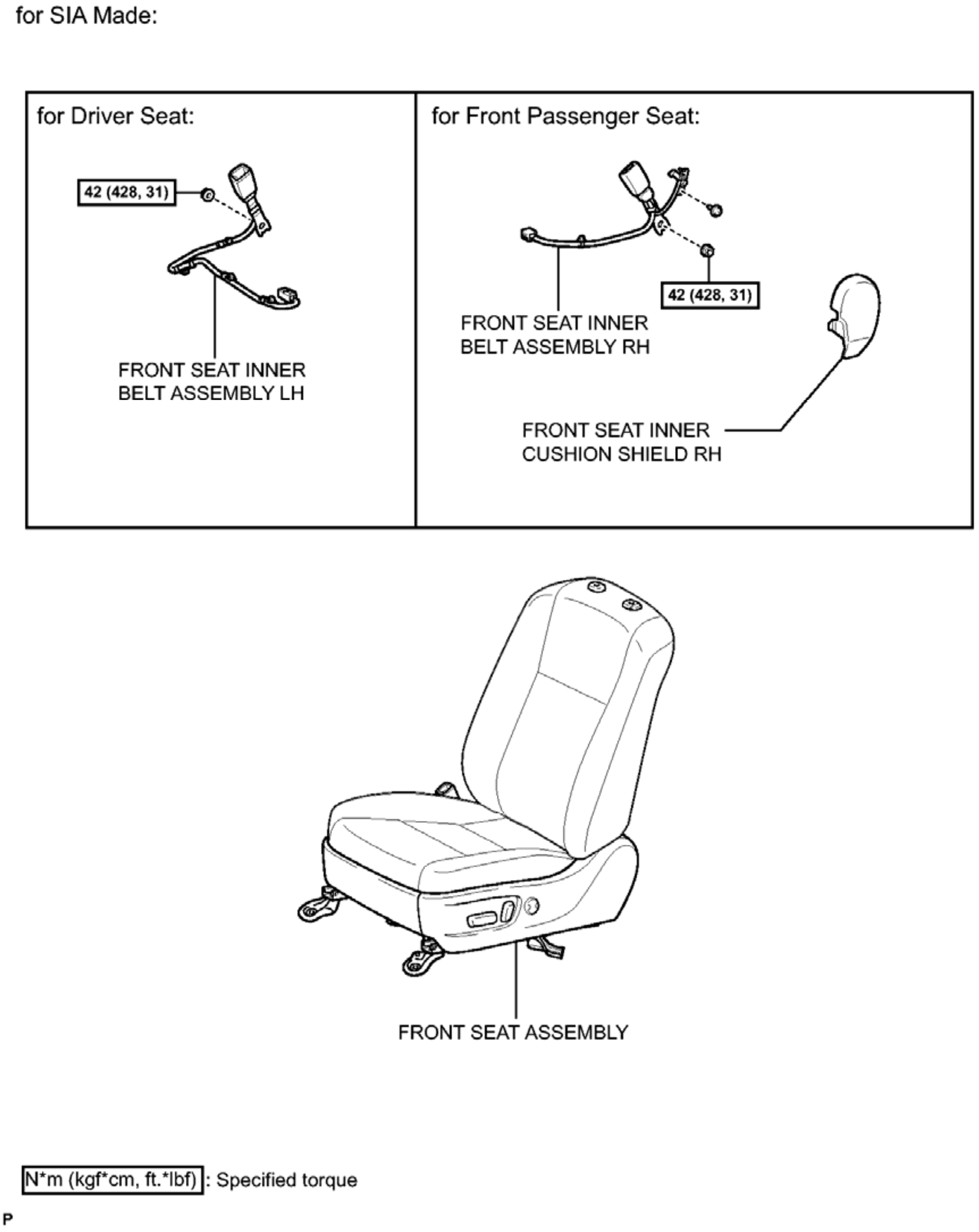
for SIA Made:
for Driver Seat:
42 (428, 31)
FRONT SEAT INNER BELT ASSEMBLY LH
for Front Passenger Seat:
FRONT SEAT INNER BELT ASSEMBLY RH
42 (428, 31)
FRONT SEAT INNER CUSHION SHIELD RH
FRONT SEAT ASSEMBLY
N*m (kgf*cm, ft.*lbf) : Specified torque
P

Fig. 12: Identifying Front Seat Inner Belt Assembly (For Power Seat) (For SIA Made) Replacement Components With Torque Specifications (2 Of 2)
Courtesy of TOYOTA MOTOR SALES, U.S.A., INC.

REMOVAL

REMOVAL

1. **REMOVE FRONT SEAT ASSEMBLY**

For TMMK Made: Refer to **REMOVAL** .

For SIA Made: Refer to **REMOVAL** .

2. **REMOVE FRONT SEAT INNER BELT ASSEMBLY LH (for Driver Seat)**
    a. for TMMK Made:
        1. Disengage each clamp under the front seat assembly.
        2. Disengage the clamp.

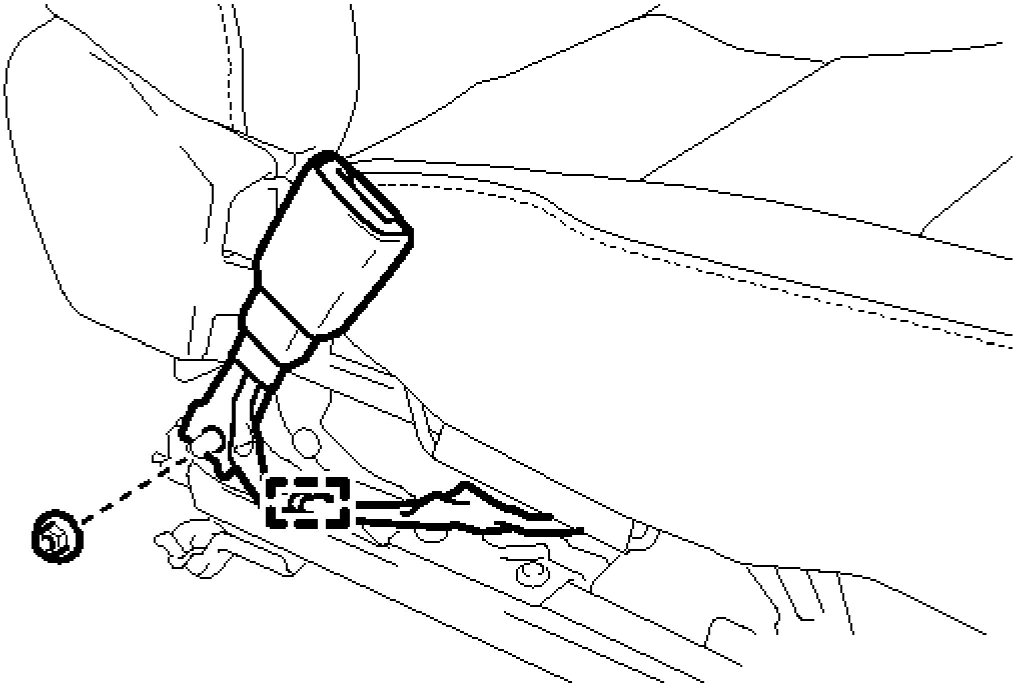

Fig. 13: Locating Front Seat Inner Belt Assembly LH (For Driver Seat) (For TMMK Made) Fasteners
Courtesy of TOYOTA MOTOR SALES, U.S.A., INC.

        3. Remove the nut and front seat inner belt assembly LH.
    b. for SIA Made:
        1. Disengage each clamp under the front seat assembly.
        2. Disengage the clamp.

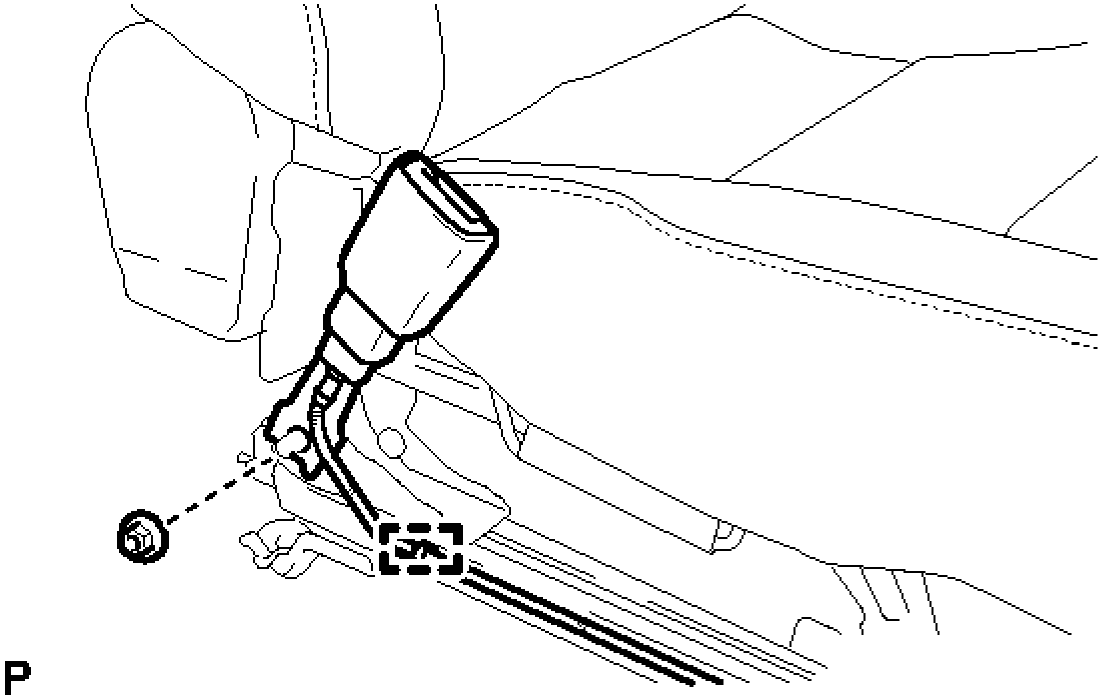

Fig. 14: Locating Front Seat Inner Belt Assembly LH (For Driver Seat) (For SIA Made) Fasteners
Courtesy of TOYOTA MOTOR SALES, U.S.A., INC.

3. Remove the nut and front seat inner belt assembly LH.

3. **REMOVE FRONT SEAT INNER CUSHION SHIELD RH (for Front Passenger Seat)**

   For TMMK Made: Refer to **DISASSEMBLY - Step 8** .

   For SIA Made: Refer to **DISASSEMBLY - Step 11** .

4. **REMOVE FRONT SEAT INNER BELT ASSEMBLY RH (for Front Passenger Seat)**
   a. for TMMK Made:
      1. Disconnect the connector.

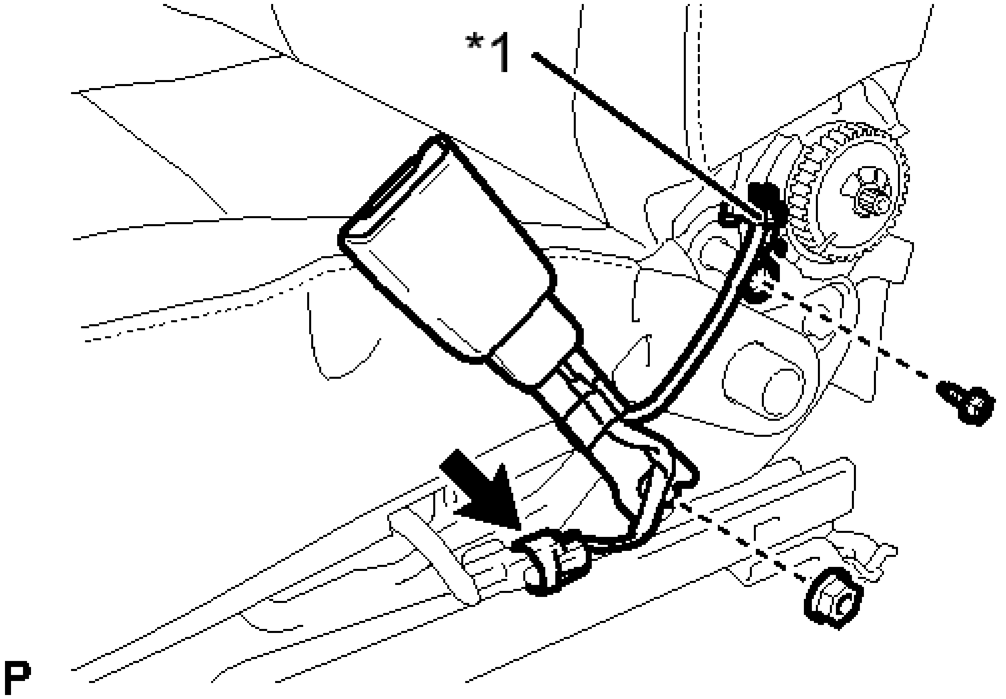

Fig. 15: Locating Front Seat Inner Belt Assembly RH (For Front Passenger Seat) (For TMMK Made) Limit Switch Connector And Fasteners
Courtesy of TOYOTA MOTOR SALES, U.S.A., INC.

TEXT IN ILLUSTRATION

*1	Limit Switch

2. Remove the screw and disconnect the limit switch.
3. Remove the nut and front seat inner belt assembly RH.

b. for SIA Made:
    1. Disengage each clamp under the front seat assembly.
    2. Remove the screw and disconnect the limit switch.

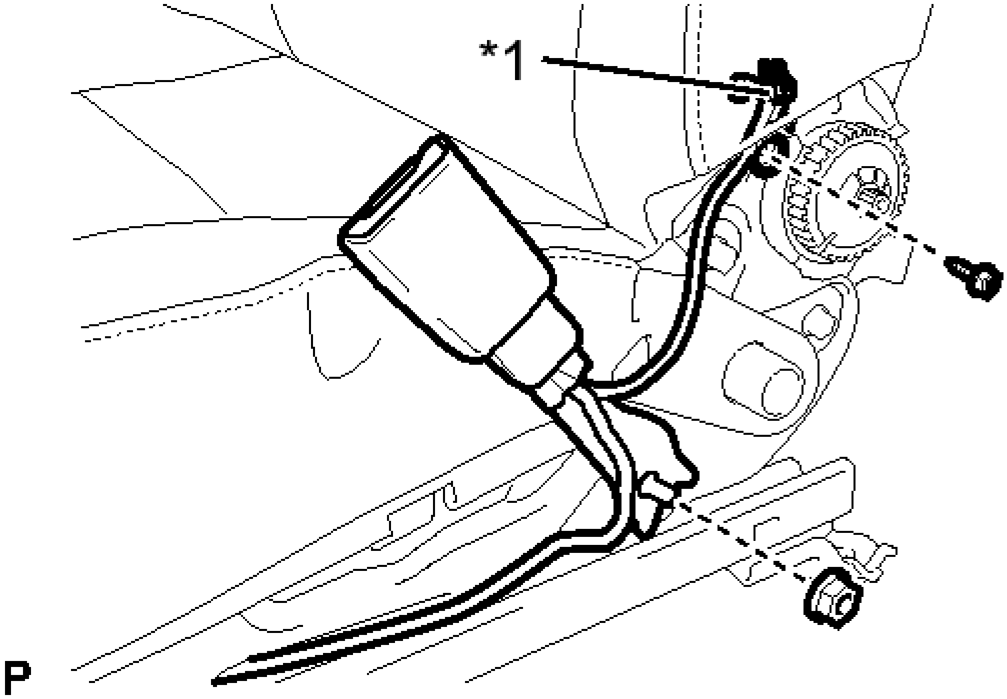

Fig. 16: Locating Front Seat Inner Belt Assembly RH (For Front Passenger Seat) (For SIA Made) Limit Switch Connector And Fasteners
Courtesy of TOYOTA MOTOR SALES, U.S.A., INC.

TEXT IN ILLUSTRATION

*1	Limit Switch

3. Remove the nut and front seat inner belt assembly RH.

INSTALLATION

INSTALLATION

1. **INSTALL FRONT SEAT INNER BELT ASSEMBLY LH (for Driver Seat)**
   - a. for TMMK Made:
     1. Install the front seat inner belt assembly LH with the nut.

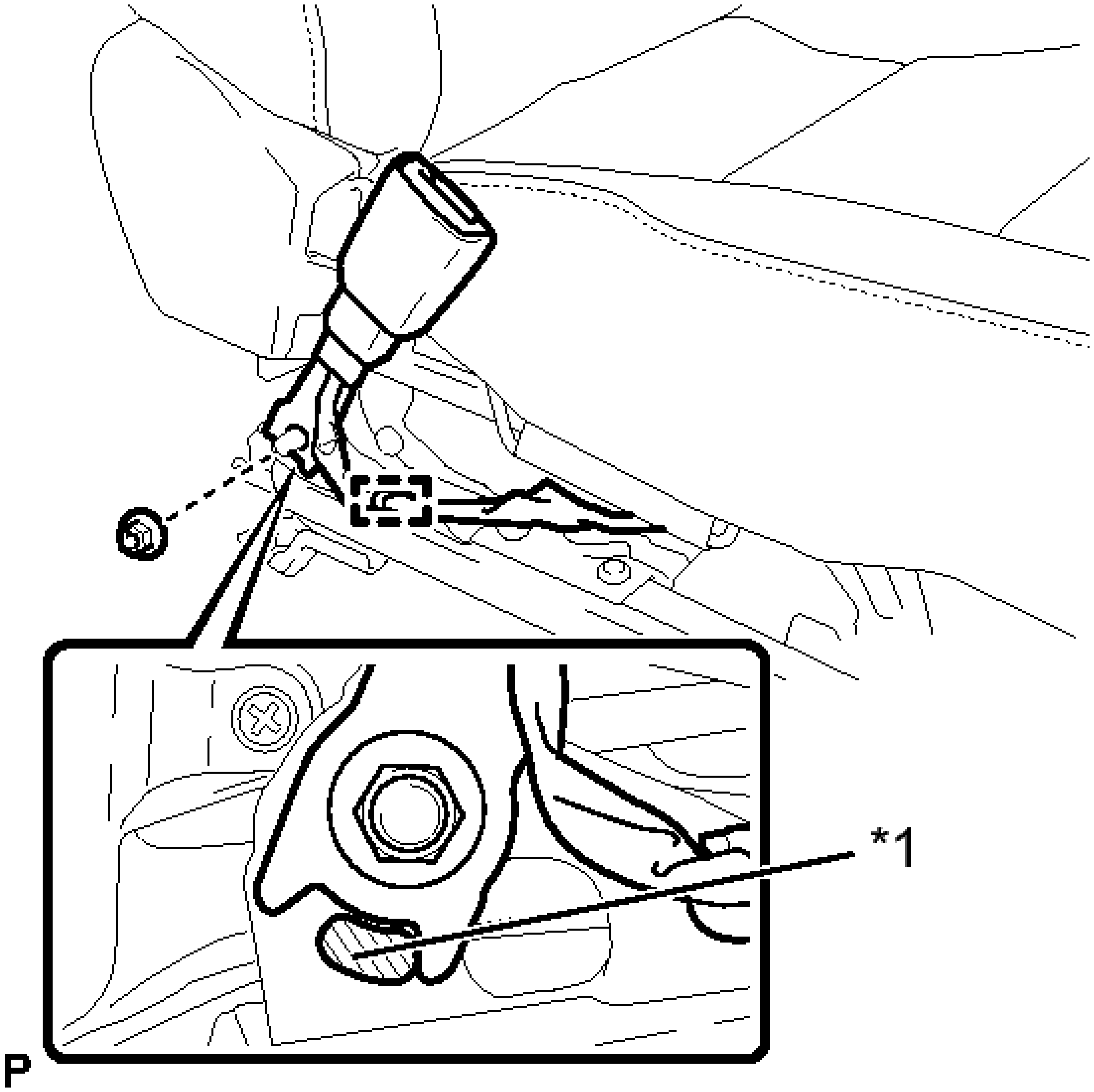

Fig. 17: Locating Front Seat Inner Belt Assembly LH (For Driver Seat) (For TMMK Made) Protruding Part And Fasteners
Courtesy of TOYOTA MOTOR SALES, U.S.A., INC.

TEXT IN ILLUSTRATION

*1	Protruding Part

Torque: 42 N*m (428 kgf*cm, 31 ft.*lbf)

NOTE: **Do not allow the anchor part of the front seat inner belt assembly LH to overlap the protruding part of the front seat adjuster.**

2. Engage the clamp.

3. Engage each clamp under the front seat assembly.

b. for SIA Made:

1. Install the front seat inner belt assembly LH with the nut.

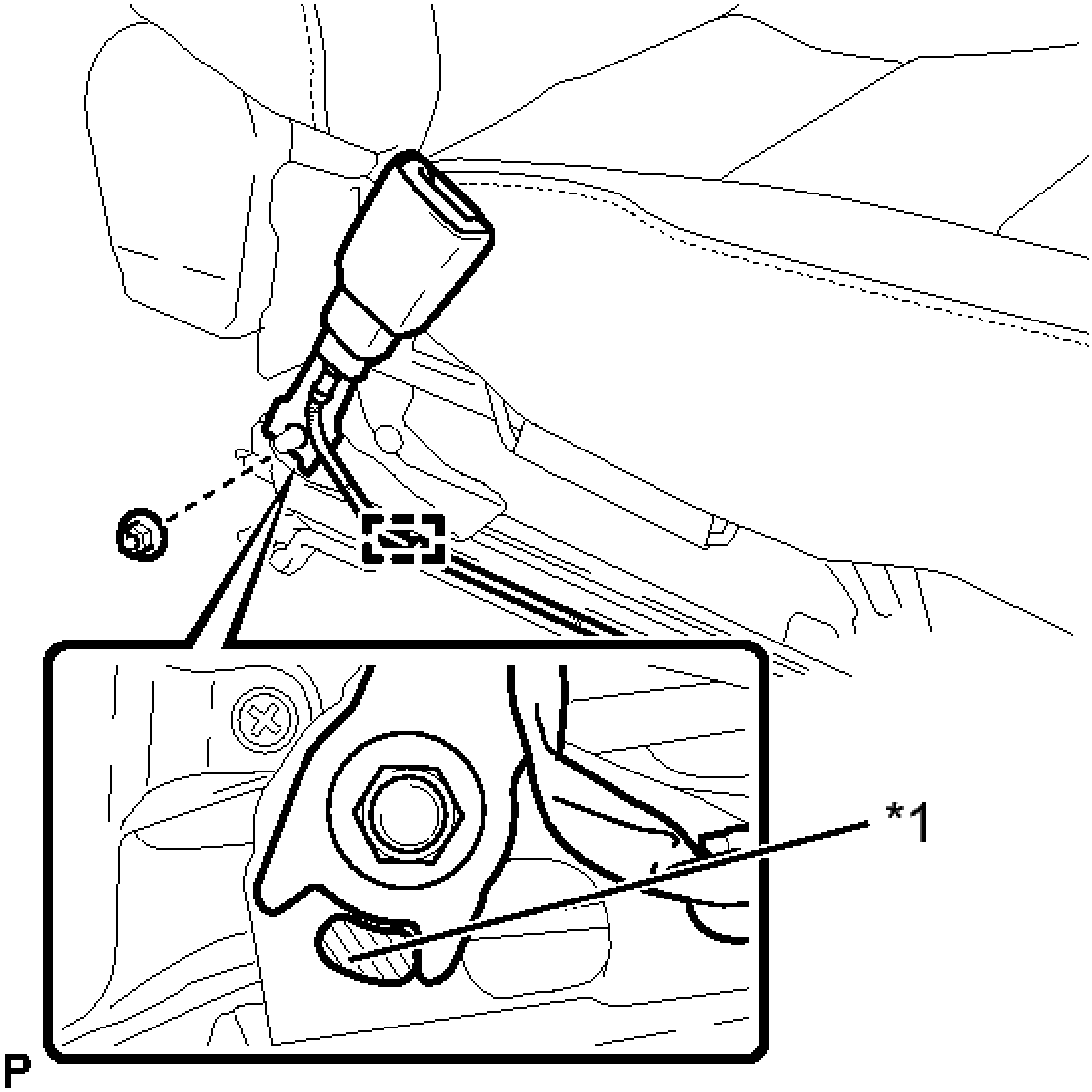

Fig. 18: Locating Front Seat Inner Belt Assembly LH (For Driver Seat) (For SIA Made) Protruding Part And Fasteners
Courtesy of TOYOTA MOTOR SALES, U.S.A., INC.

TEXT IN ILLUSTRATION

*1	Protruding Part

Torque: 42 N*m (428 kgf*cm, 31 ft.*lbf)

NOTE: **Do not allow the anchor part of the front seat inner belt**

assembly LH to overlap the protruding part of the front seat adjuster.

2. Engage the clamp.
3. Engage each clamp under the front seat assembly.

2. **INSTALL FRONT SEAT INNER BELT ASSEMBLY RH (for Front Passenger Seat)**
   a. for TMMK Made:
      1. Install the front seat inner belt assembly RH with the nut.

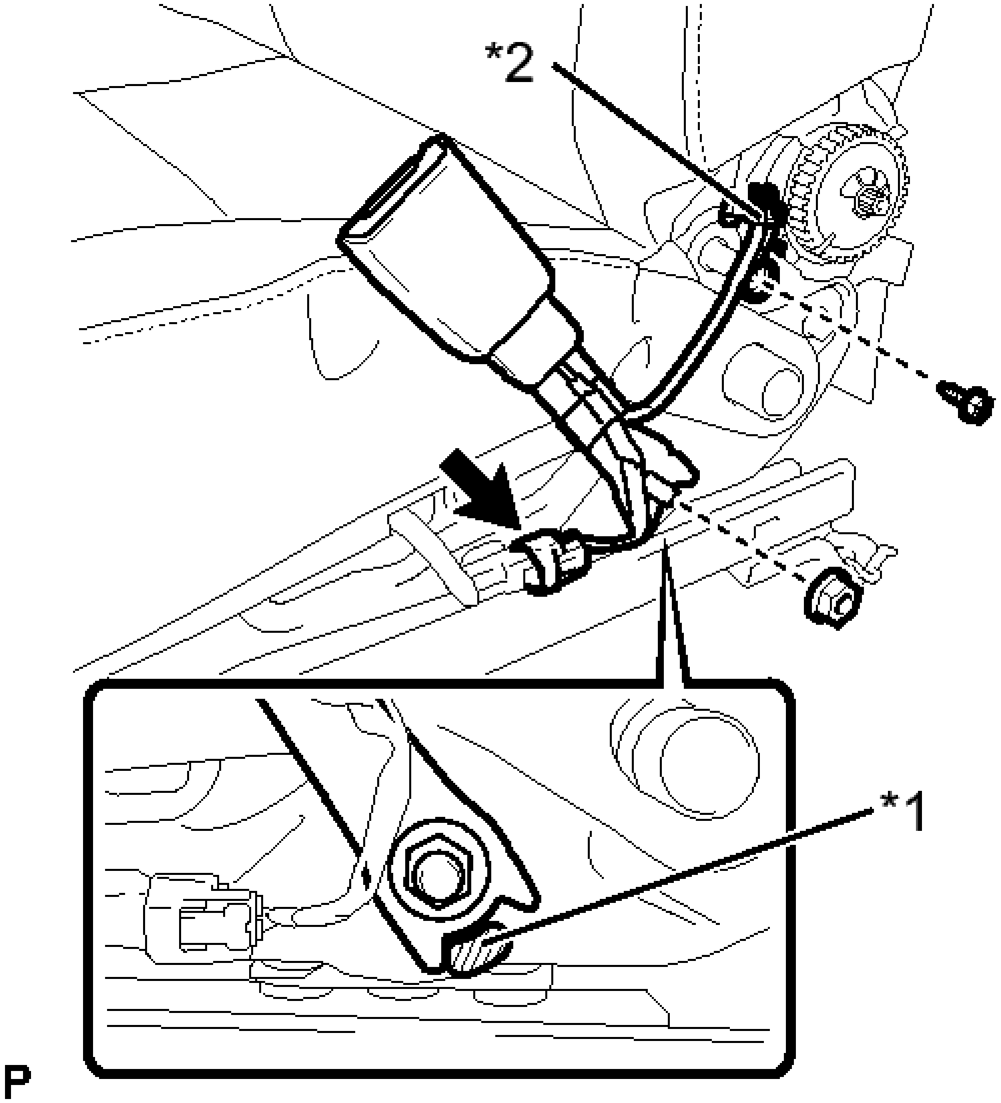

Fig. 19: Locating Front Seat Inner Belt Assembly RH (For Front Passenger Seat) (For TMMK Made) Protruding Part, Limit Switch Connector And Fasteners
Courtesy of TOYOTA MOTOR SALES, U.S.A., INC.

TEXT IN ILLUSTRATION

	Protruding

*1	Part
*2	Limit Switch

Torque: 42 N*m (428 kgf*cm, 31 ft.*lbf)

NOTE: **Do not allow the anchor part of the front seat inner belt assembly RH to overlap the protruding part of the front seat adjuster.**

2. Connect the limit switch with the screw.
3. Connect the connector.

b. for SIA Made:

1. Install the front seat inner belt assembly RH with the nut.

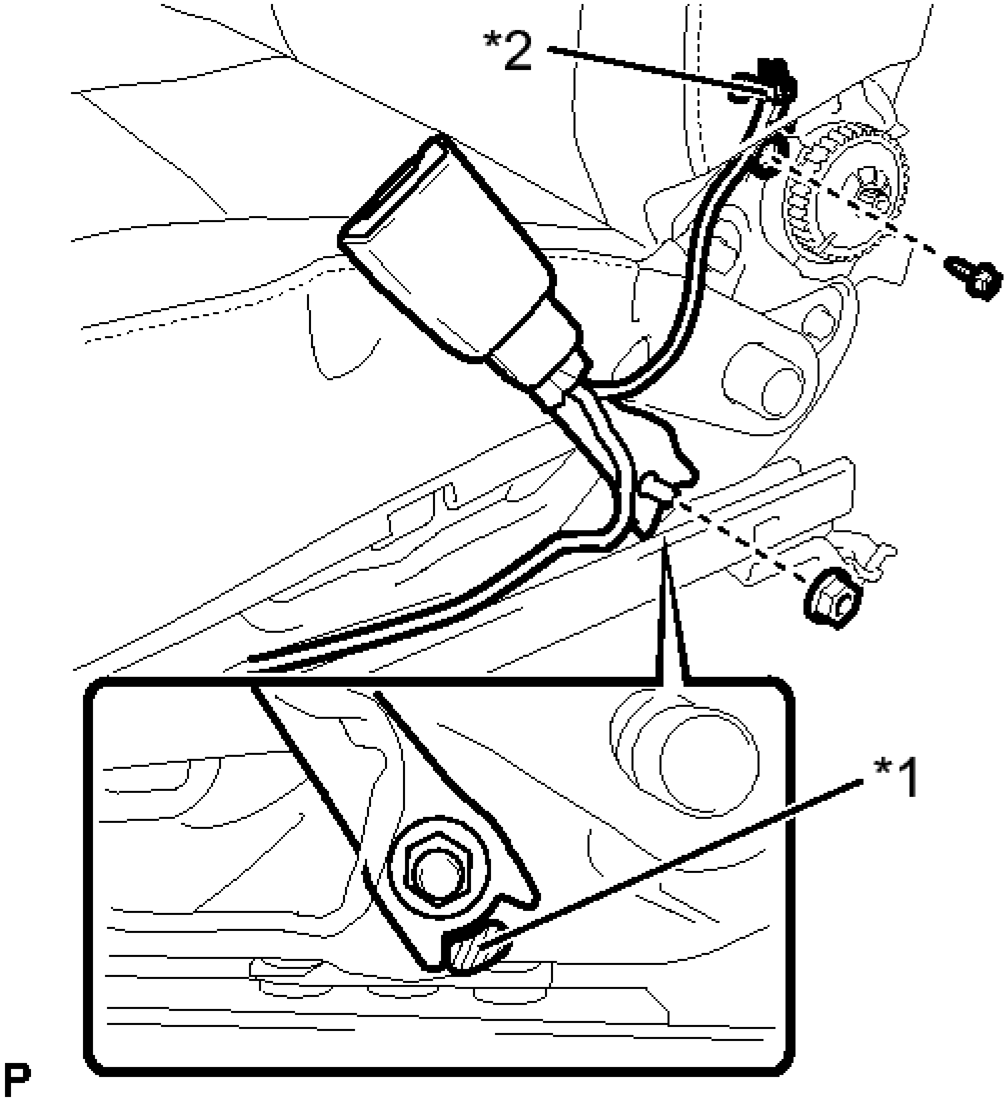

Fig. 20: Locating Front Seat Inner Belt Assembly RH (For Front Passenger Seat) (For SIA Made) Protruding Part, Limit Switch Connector And Fasteners
Courtesy of TOYOTA MOTOR SALES, U.S.A., INC.

TEXT IN ILLUSTRATION

*1	Protruding Part
*2	Limit Switch

Torque: 42 N*m (428 kgf*cm, 31 ft.*lbf)

NOTE: **Do not allow the anchor part of the front seat inner belt assembly RH to overlap the protruding part of the front seat adjuster.**

2. Connect the limit switch with the screw.
3. Engage each clamp under the front seat assembly.

3. **INSTALL FRONT SEAT INNER CUSHION SHIELD RH (for Front Passenger Seat)**

   For TMMK Made: Refer to **REASSEMBLY - Step 27** .

   For SIA Made: Refer to **REASSEMBLY - Step 25** .

4. **INSTALL FRONT SEAT ASSEMBLY**

   For TMMK Made: Refer to **INSTALLATION** .

   For SIA Made: Refer to **INSTALLATION** .

FRONT SEAT OUTER BELT ASSEMBLY WITH PRETENSIONER

PRECAUTION

PRECAUTION

WARNING: **Replace any faulty parts of the seat belt systems (outer belt, inner belt, bolts, nuts, adjustable shoulder anchor, tether anchor hardware and other related parts). When inspecting a vehicle that was in a collision, be sure to check all of the seat belt systems regardless of whether or not the system was activated in the collision. Replace any damaged or malfunctioning systems.**

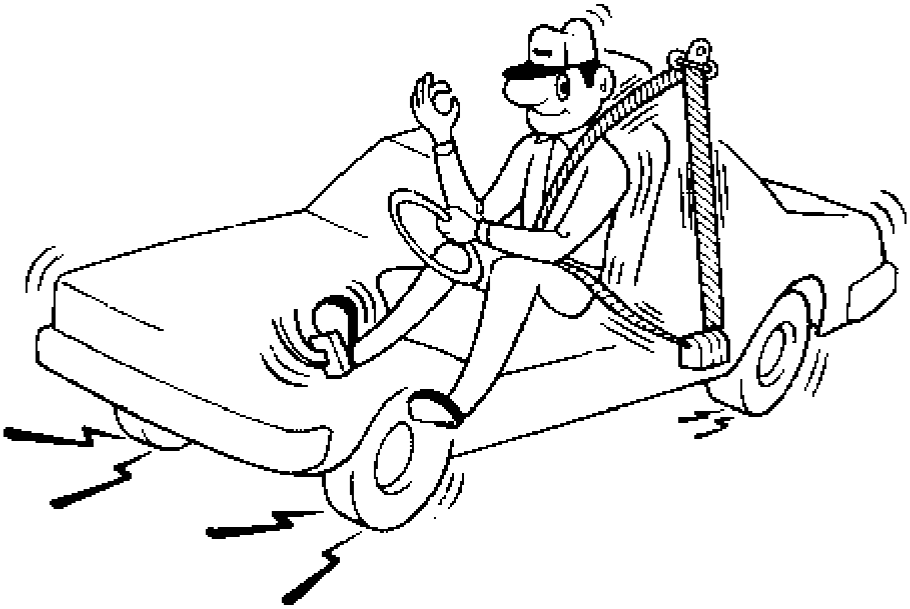

Fig. 21: Checking Belts Lock
Courtesy of TOYOTA MOTOR SALES, U.S.A., INC.

1. **ROAD TEST (IN SAFE AREA)**

   WARNING: **Conduct this test in a safe area.**

   a. Fasten the front seat belts.
   b. Drive the vehicle at 16 km/h (10 mph) and firmly depress the brake pedal. Check that the belts lock and cannot be extended at this time.

      If a belt does not lock, replace the seat belt assembly. Refer to **REMOVAL**.

      HINT:

      Inspect the seat belt assembly before installing it. Refer to **INSPECTION**.

COMPONENTS

ILLUSTRATION

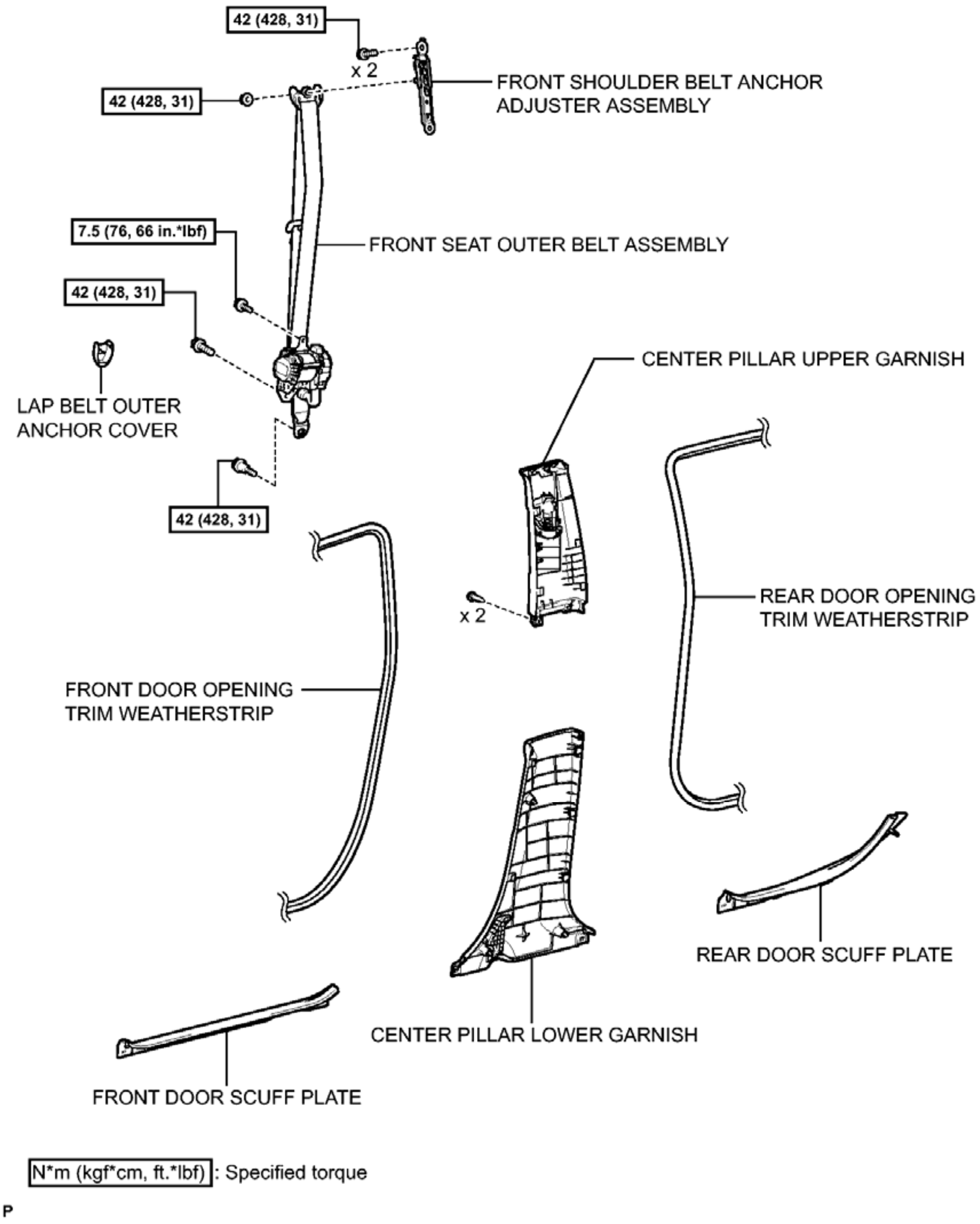
42 (428, 31)
x 2
42 (428, 31)
FRONT SHOULDER BELT ANCHOR ADJUSTER ASSEMBLY
7.5 (76, 66 in.*lbf)
FRONT SEAT OUTER BELT ASSEMBLY
42 (428, 31)
LAP BELT OUTER ANCHOR COVER
42 (428, 31)
CENTER PILLAR UPPER GARNISH
x 2
REAR DOOR OPENING TRIM WEATHERSTRIP
FRONT DOOR OPENING TRIM WEATHERSTRIP
REAR DOOR SCUFF PLATE
CENTER PILLAR LOWER GARNISH
FRONT DOOR SCUFF PLATE
N*m (kgf*cm, ft.*lbf) : Specified torque
P

Fig. 22: Identifying Front Seat Outer Belt Assembly Replacement Components With Torque Specifications
Courtesy of TOYOTA MOTOR SALES, U.S.A., INC.

ON-VEHICLE INSPECTION

ON-VEHICLE INSPECTION

WARNING: **Be sure to correctly follow the removal and installation procedures for the front seat outer belt assembly.**

1. **INSPECT FRONT SEAT OUTER BELT ASSEMBLY (for Vehicle not Involved in Collision)**
    a. Perform a diagnostic system check. Refer to **DTC CHECK / CLEAR** . (for Built-in Type Yaw Rate Sensor)
    b. Perform a diagnostic system check. Refer to **DTC CHECK / CLEAR** . (for Separate Type Yaw Rate Sensor)
    c. Visually check for defects with the front seat outer belt assembly installed on the vehicle.
        1. The defects are as follows:
            - Cuts on the front seat outer belt assembly
            - Small cracks on the front seat outer belt assembly
            - Significant discoloration on the front seat outer belt assembly

        OK

        No defects are found.

        HINT:

        If any of the defects is found, replace the front seat outer belt assembly with a new one.

2. **INSPECT FRONT SEAT OUTER BELT ASSEMBLY (for Vehicle Involved in Collision)**
    a. Perform a diagnostic system check. Refer to **DTC CHECK / CLEAR** . (for Built-in Type Yaw Rate Sensor)
    b. Perform a diagnostic system check. Refer to **DTC CHECK / CLEAR** . (for Separate Type Yaw Rate Sensor)
    c. Visually check for defects with the front seat outer belt assembly removed from the vehicle.
        1. The defects are as follows:
            - Cuts on the front seat outer belt assembly
            - Small cracks on the front seat outer belt assembly
            - Significant discoloration on the front seat outer belt assembly
            - Cracks or other damage to the connector

        OK

        No defects are found.

        HINT:

        If any of the defects is found, replace the front seat outer belt assembly with a new one.

REMOVAL

REMOVAL

1. **PRECAUTION**

   NOTE: **After turning the ignition switch off, waiting time may be required before disconnecting the cable from the negative (-) battery terminal. Therefore, make sure to read the disconnecting the cable from the negative (-) battery terminal notices before proceeding with work. Refer to PRECAUTION .**

2. **DISCONNECT CABLE FROM NEGATIVE BATTERY TERMINAL**

   WARNING: **Wait at least 90 seconds after disconnecting the cable from the negative (-) battery terminal to disable the SRS system.**

   NOTE: **When disconnecting the cable, some systems need to be initialized after the cable is reconnected. Refer to INITIALIZATION .**

3. **REMOVE FRONT DOOR SCUFF PLATE** . Refer to **REMOVAL - Step 3** .
4. **DISCONNECT FRONT DOOR OPENING TRIM WEATHERSTRIP**
   a. Disconnect the front door opening trim weatherstrip.
5. **REMOVE REAR DOOR SCUFF PLATE** . Refer to **REMOVAL - Step 18** .
6. **DISCONNECT REAR DOOR OPENING TRIM WEATHERSTRIP**
   a. Disconnect the rear door opening trim weatherstrip.
7. **REMOVE LAP BELT OUTER ANCHOR COVER**
   a. Disengage the 3 claws and remove the lap belt outer anchor cover.

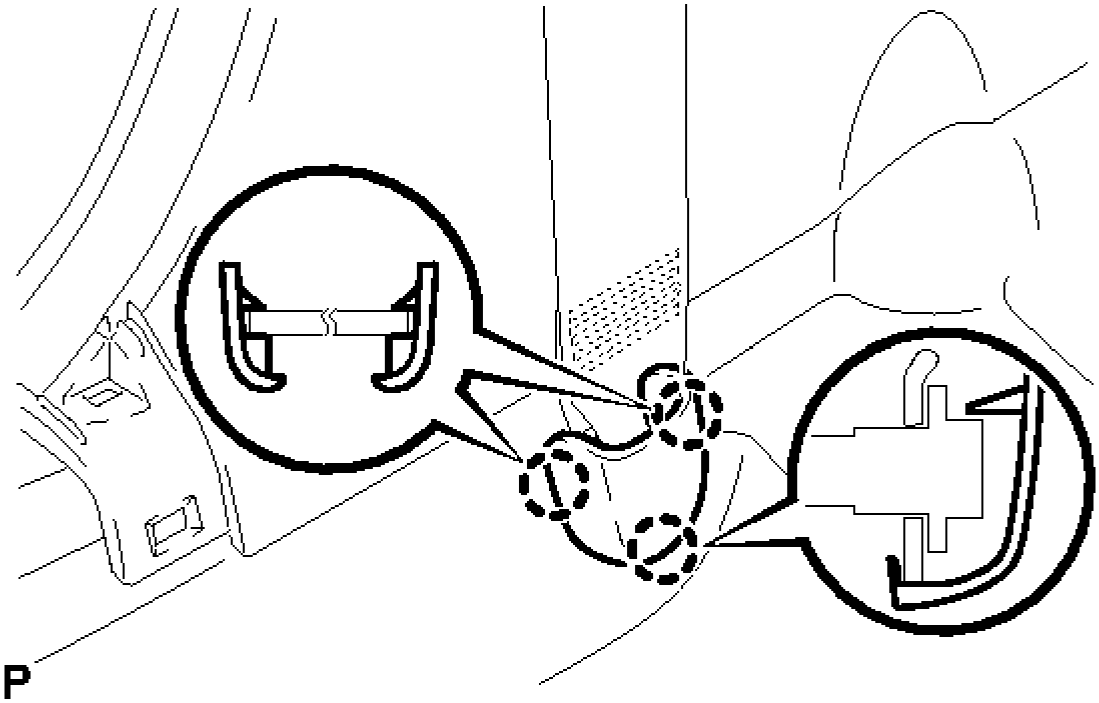

Fig. 23: Identifying Lap Belt Outer Anchor Cover Claws
Courtesy of TOYOTA MOTOR SALES, U.S.A., INC.

8. **DISCONNECT FRONT SEAT OUTER BELT ASSEMBLY**
    a. Remove the bolt and disconnect the floor anchor of the front seat outer belt assembly.

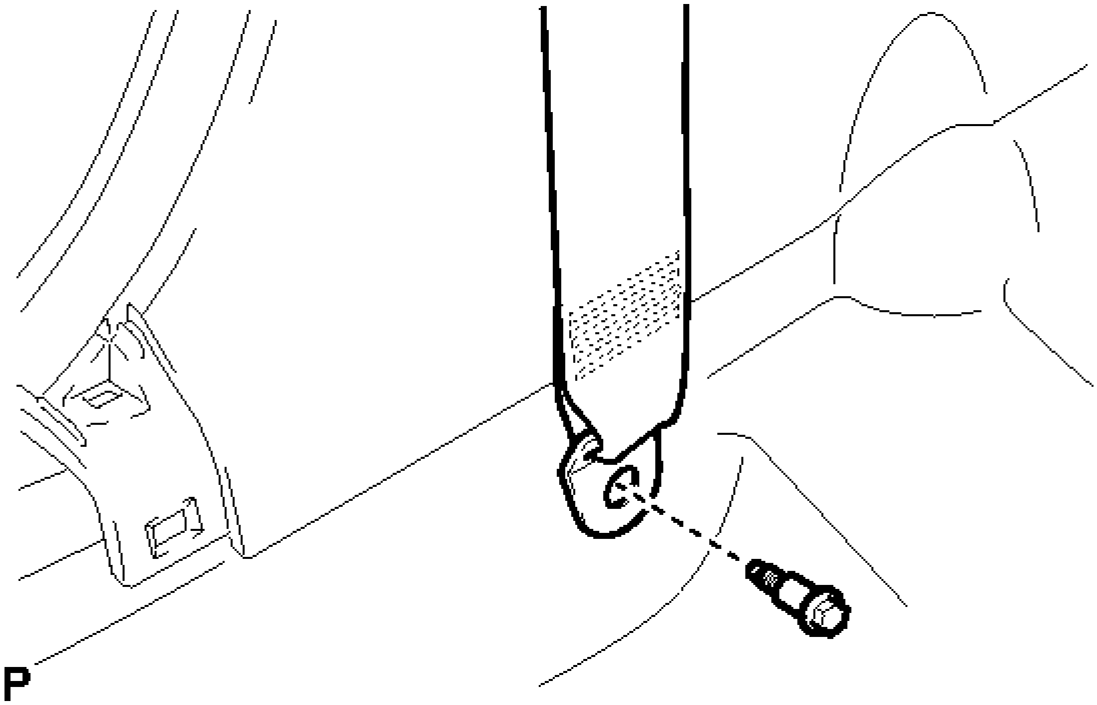

Fig. 24: Locating Front Seat Outer Belt Assembly Bolt

Courtesy of TOYOTA MOTOR SALES, U.S.A., INC.

9. **REMOVE CENTER PILLAR LOWER GARNISH** . Refer to **REMOVAL - Step 22** .
10. **REMOVE CENTER PILLAR UPPER GARNISH** . Refer to **REMOVAL - Step 23** .
11. **REMOVE FRONT SEAT OUTER BELT ASSEMBLY**
    a. Remove the nut and disconnect the shoulder anchor of the front seat outer belt assembly.

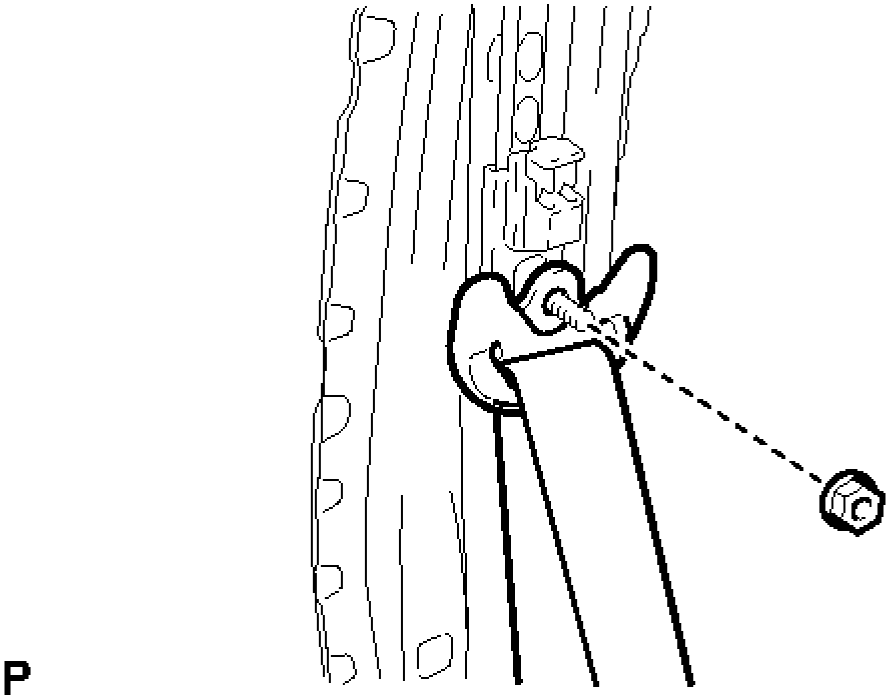

Fig. 25: Identifying Front Seat Outer Belt Assembly Fastener
Courtesy of TOYOTA MOTOR SALES, U.S.A., INC.

    b. Using a screwdriver, pull out the locking button in the direction shown by the arrow in the illustration to release the lock, and disconnect the pretensioner connector as shown in the illustration.

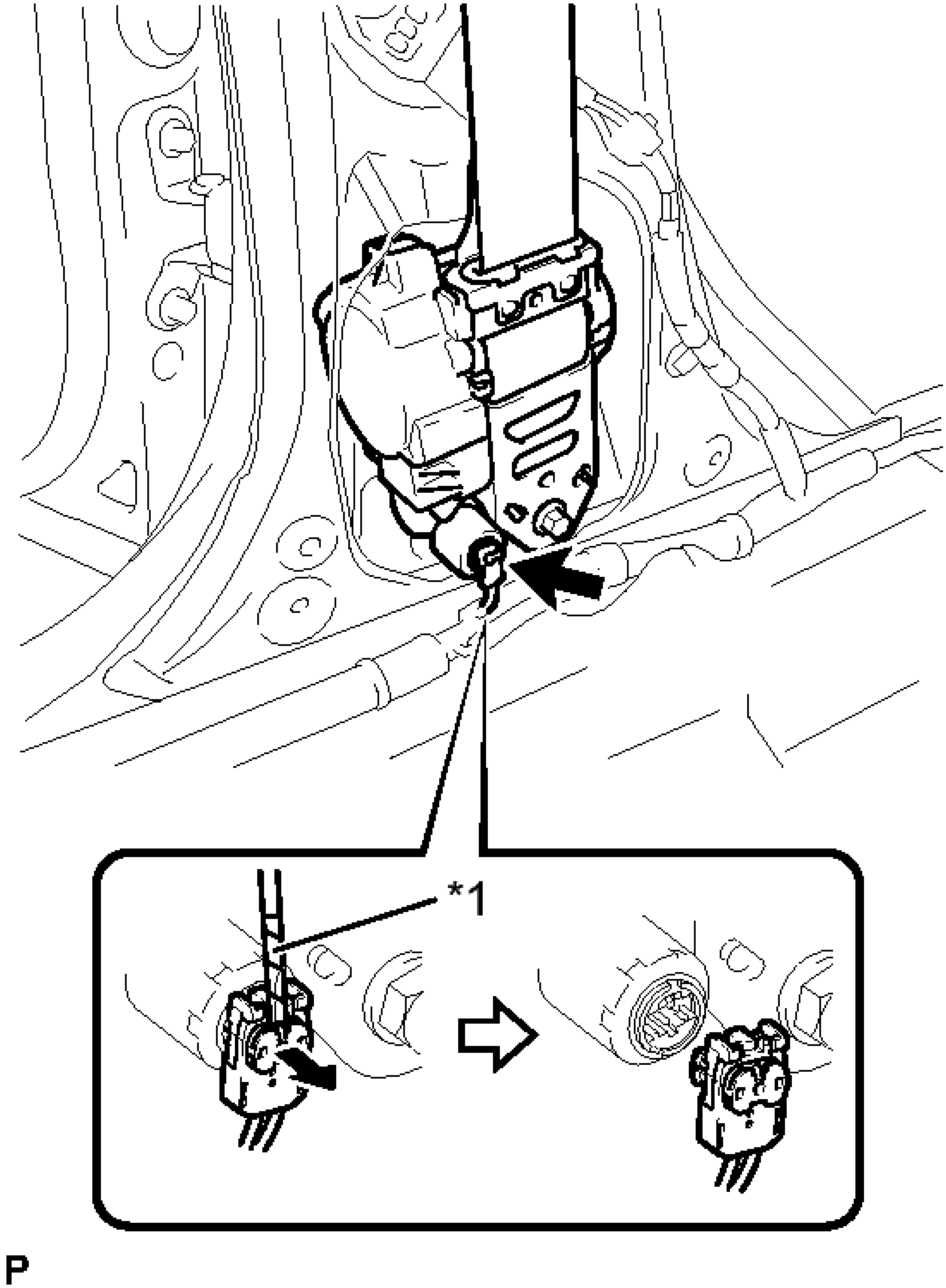

Fig. 26: Removing Front Seat Outer Belt Assembly Pretensioner Connector
Courtesy of TOYOTA MOTOR SALES, U.S.A., INC.

TEXT IN ILLUSTRATION

	Protective

*1	Tape

HINT:

Tape the screwdriver tip before use.

c. Remove the 2 bolts and front seat outer belt assembly.

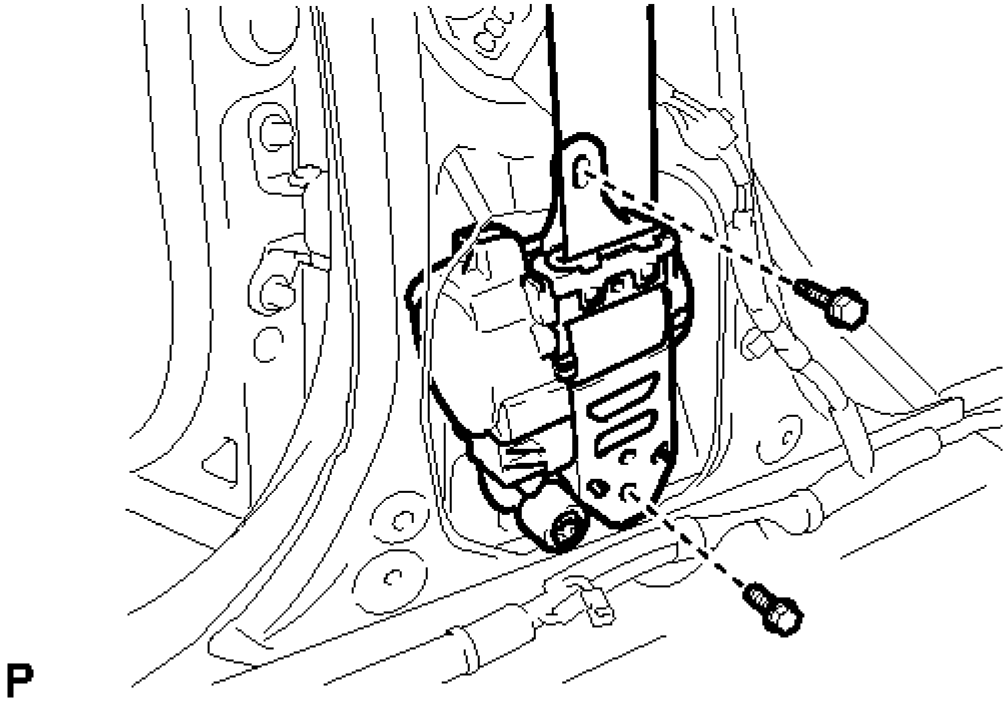

Fig. 27: Identifying Front Seat Outer Belt Assembly Bolts
Courtesy of TOYOTA MOTOR SALES, U.S.A., INC.

12. **REMOVE FRONT SHOULDER BELT ANCHOR ADJUSTER ASSEMBLY**
    a. Remove the 2 bolts.

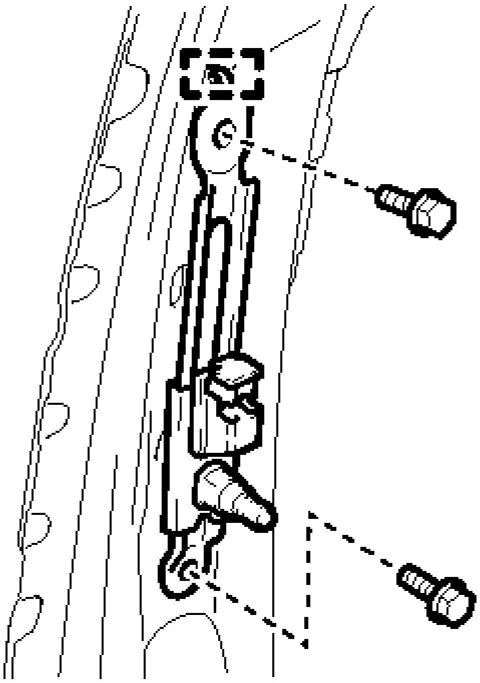

Fig. 28: Identifying Front Shoulder Belt Anchor Adjuster Assembly Bolts
Courtesy of TOYOTA MOTOR SALES, U.S.A., INC.

b. Disengage the guide and remove the front shoulder belt anchor adjuster assembly.

INSPECTION

INSPECTION

1. **INSPECT FRONT SEAT OUTER BELT ASSEMBLY**
    a. Before installing the front seat outer belt assembly, check the ELR function.

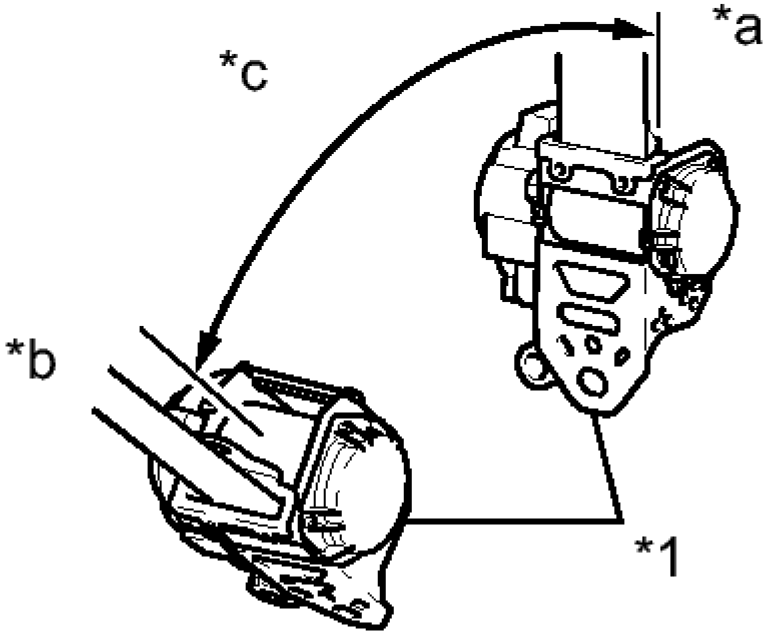

P

Fig. 29: Checking ELR Function
Courtesy of TOYOTA MOTOR SALES, U.S.A., INC.

NOTE: **Do not disassemble the retractor.**

1. When the inclination of the retractor is 15° or less, check that the belt can be pulled from the retractor. When the inclination of the retractor is over 45°, check that the belt locks.

TEXT IN ILLUSTRATION

*1	Retractor
*a	Unlocked
*b	Locked
*c	45°

If the result is not as specified, replace the front seat outer belt assembly.

INSTALLATION

INSTALLATION

1. **INSTALL FRONT SHOULDER BELT ANCHOR ADJUSTER ASSEMBLY**
    a. Engage the guide.

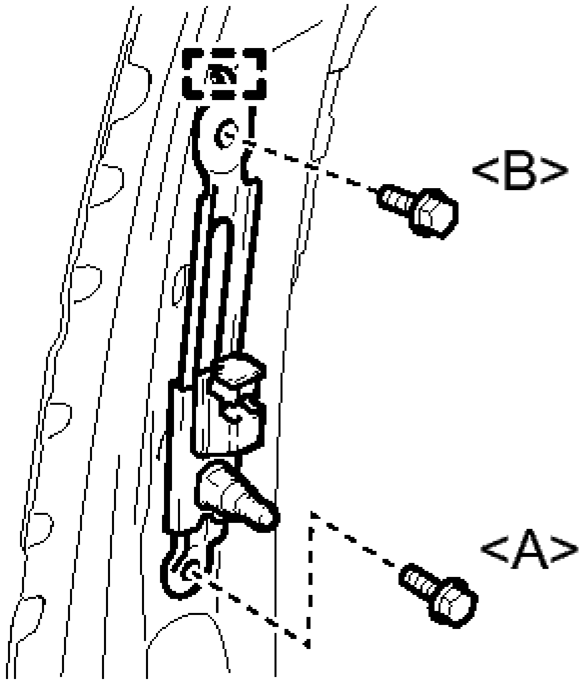

P

Fig. 30: Identifying Front Shoulder Belt Anchor Adjuster Assembly Bolts
Courtesy of TOYOTA MOTOR SALES, U.S.A., INC.

b. Install the bolt <A> first, then the bolt <B> to temporarily install the front shoulder belt anchor adjuster assembly.
c. Fully tighten the 2 bolts.

Torque: 42 N*m (428 kgf*cm, 31 ft.*lbf)

2. **INSPECT FRONT SEAT OUTER BELT ASSEMBLY** . See step 1.
3. **INSTALL FRONT SEAT OUTER BELT ASSEMBLY**
   a. Install the bolt <A> first, then the bolt <B> to temporarily install the front seat outer belt assembly.

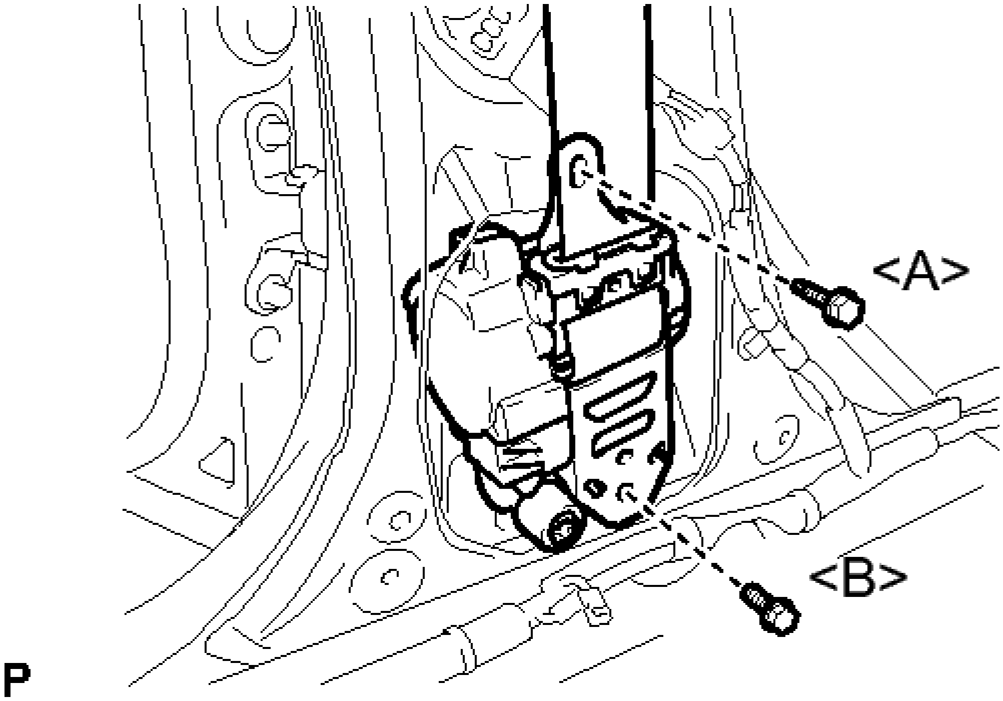

Fig. 31: Identifying Front Seat Outer Belt Assembly Bolts
Courtesy of TOYOTA MOTOR SALES, U.S.A., INC.

b. Fully tighten the 2 bolts.

Bolt <A>

Torque: 7.5 N*m (76 kgf*cm, 66 in.*lbf)

Bolt <B>

Torque: 42 N*m (428 kgf*cm, 31 ft.*lbf)

c. Connect the pretensioner connector and lock the locking button as shown in the illustration.

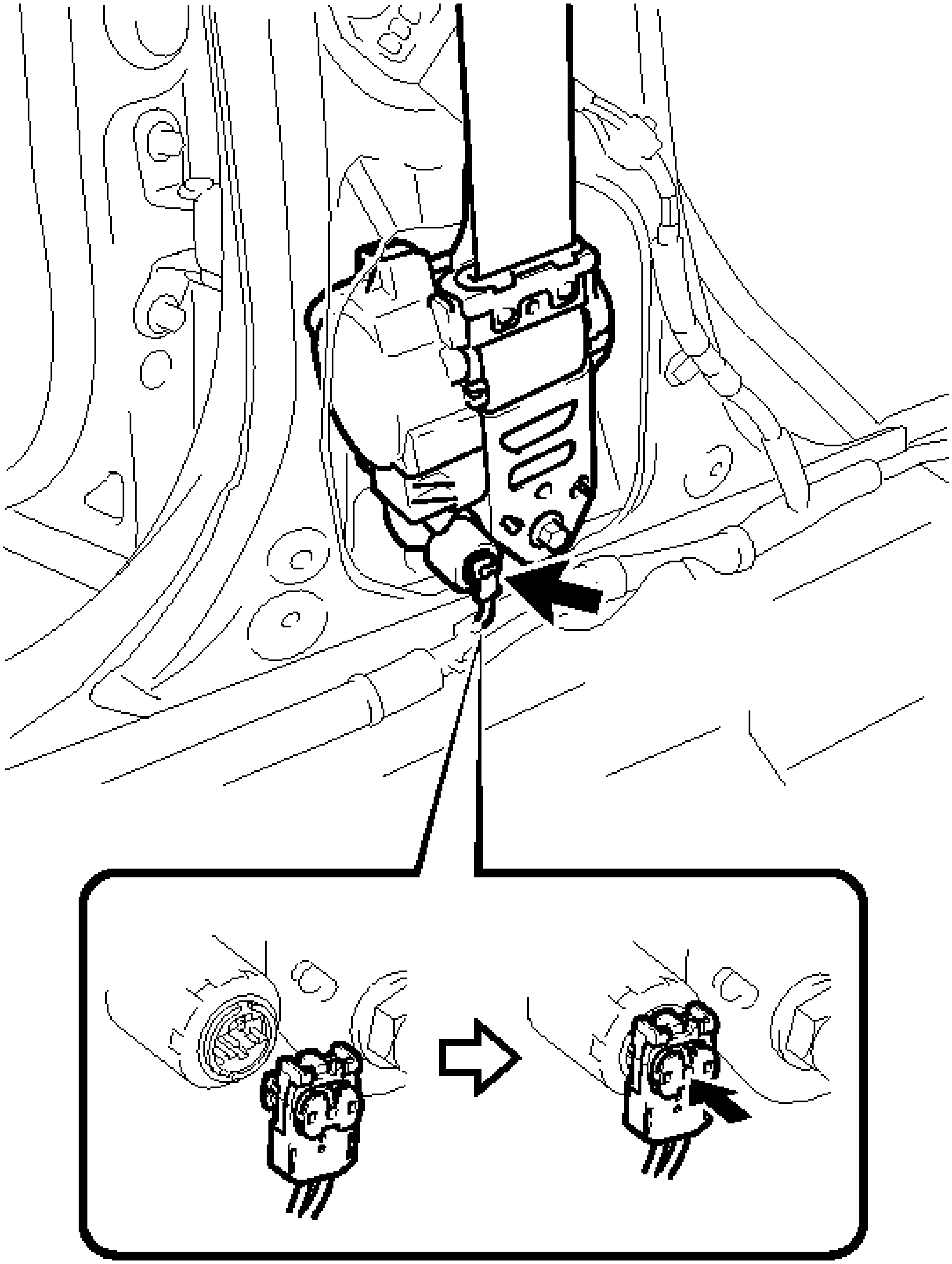

P

Fig. 32: Installing Front Seat Outer Belt Assembly Pretensioner Connector
Courtesy of TOYOTA MOTOR SALES, U.S.A., INC.

NOTE: **Securely lock the locking button.**

    d. Connect the shoulder anchor of the front seat outer belt assembly with the nut.

       Torque: 42 N*m (428 kgf*cm, 31 ft.*lbf)

4. **INSTALL CENTER PILLAR UPPER GARNISH** . Refer to **INSTALLATION - Step 21** .
5. **INSTALL CENTER PILLAR LOWER GARNISH** . Refer to **INSTALLATION - Step 22** .
6. **CONNECT FRONT SEAT OUTER BELT ASSEMBLY**
    a. Install the floor anchor of the front seat outer belt assembly with the bolt.

       Torque: 42 N*m (428 kgf*cm, 31 ft.*lbf)

    b. Check if the ELR locks.

       NOTE: **The check should be performed with the front seat outer belt assembly installed.**

        1. With the belt assembly installed, check that the belt locks when it is pulled out quickly.
7. **INSTALL LAP BELT OUTER ANCHOR COVER**
    a. Engage the 3 claws to install the lap belt outer anchor cover.
8. **INSTALL REAR DOOR OPENING TRIM WEATHERSTRIP**

   For LH Side: Refer to **INSTALLATION - Step 25** .

   For RH Side: Refer to **INSTALLATION - Step 32** .

9. **INSTALL REAR DOOR SCUFF PLATE** . Refer to **INSTALLATION - Step 26** .
10. **INSTALL FRONT DOOR OPENING TRIM WEATHERSTRIP**

    For LH Side: Refer to **INSTALLATION - Step 42** .

    For RH Side: Refer to **INSTALLATION - Step 46** .

11. **INSTALL FRONT DOOR SCUFF PLATE** . Refer to **INSTALLATION - Step 44** .
12. **CONNECT CABLE TO NEGATIVE BATTERY TERMINAL**

    NOTE: **When disconnecting the cable, some systems need to be initialized after the cable is reconnected. Refer to INITIALIZATION .**

13. **INSPECT SRS WARNING LIGHT**

    For Built-in Type Yaw Rate Sensor: Refer to **DIAGNOSIS SYSTEM** .

    For Separate Type Yaw Rate Sensor: Refer to **DIAGNOSIS SYSTEM** .

DISPOSAL WITH PRETENSIONER

DISPOSAL

WARNING: **Before performing pre-disposal deployment of any SRS component, review and closely follow all applicable environmental and hazardous material regulations. Pre-disposal deployment may be considered hazardous material treatment.**

HINT:

When scrapping vehicles equipped with a seat belt pretensioner or disposing of a seat belt (with a seat belt pretensioner), always deploy the procedures described below. If any abnormality occurs during deployment of the seat belt pretensioner, contact the SERVICE DEPARTMENT of TOYOTA MOTOR SALES, U.S.A., INC.

1. **DISPOSE OF FRONT SEAT OUTER BELT ASSEMBLY (WHEN INSTALLED IN VEHICLE)**

WARNING:

- **Use gloves and safety glasses when handling a seat belt with a deployed pretensioner.**
- **Always wash your hands with water after completing the operation.**
- **Do not apply water, etc. to a seat belt with a deployed pretensioner.**
- **When deploying a seat belt pretensioner, always use the specified SST (SRS airbag deployment tool). Perform the operation in a place away from electrical interference.**
- **When disposing of a seat belt with a pretensioner, never deploy the pretensioner in the customer's vehicle.**

NOTE:

- **Never dispose of a seat belt with a pretensioner that has not been deployed.**
- **The seat belt produces an exploding sound when the pretensioner deploys, so perform the operation outdoors where it will not disturb local residents.**
- **When deploying a seat belt pretensioner, perform the operation at least 10 m (33 ft.) away from the seat belt.**
- **Be sure to follow the procedure listed below when deploying a seat belt pretensioner.**

a. Check the function of SST.

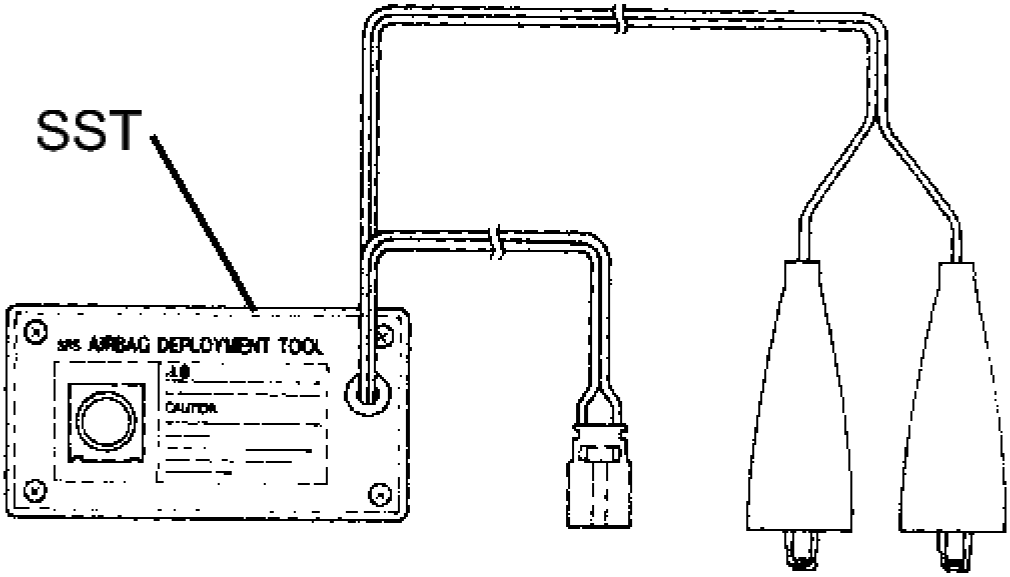
SST
SRS AIRBAG DEPLOYMENT TOOL
CAUTION

Fig. 33: Checking Function Of SST
Courtesy of TOYOTA MOTOR SALES, U.S.A., INC.

- **SST: 09082-00700**

> WARNING: **When deploying the seat belt pretensioner, always use the specified SST.**

1. Connect the red clip of SST to the battery positive (+) terminal and the black clip to the battery negative (-) terminal.

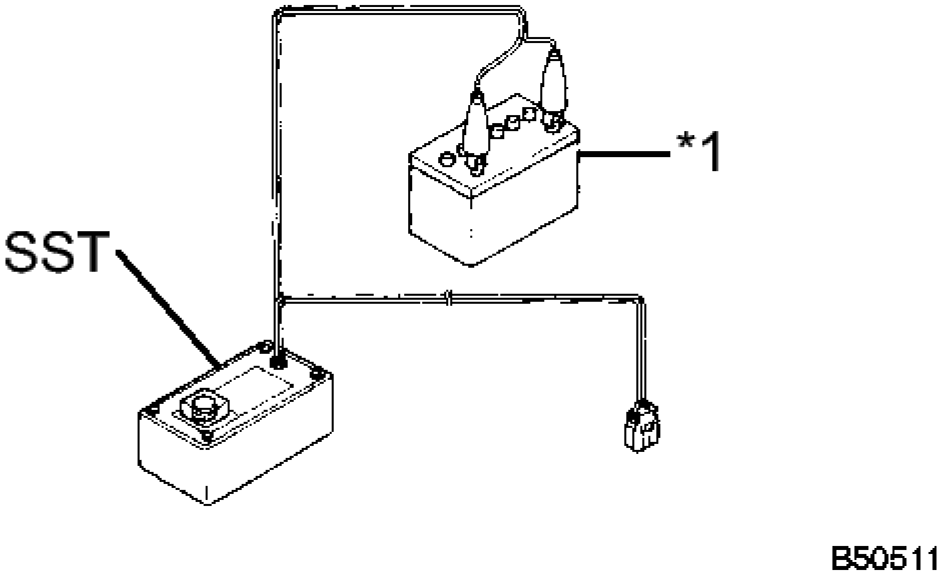

Fig. 34: Identifying SST & Battery
Courtesy of TOYOTA MOTOR SALES, U.S.A., INC.

TEXT IN ILLUSTRATION

*1	Battery

HINT:

At this time, do not connect the yellow connector. It will be connected to the seat belt pretensioner in a later step.

2. Press the SST deployment switch and check that the LED of the SST deployment switch illuminates.

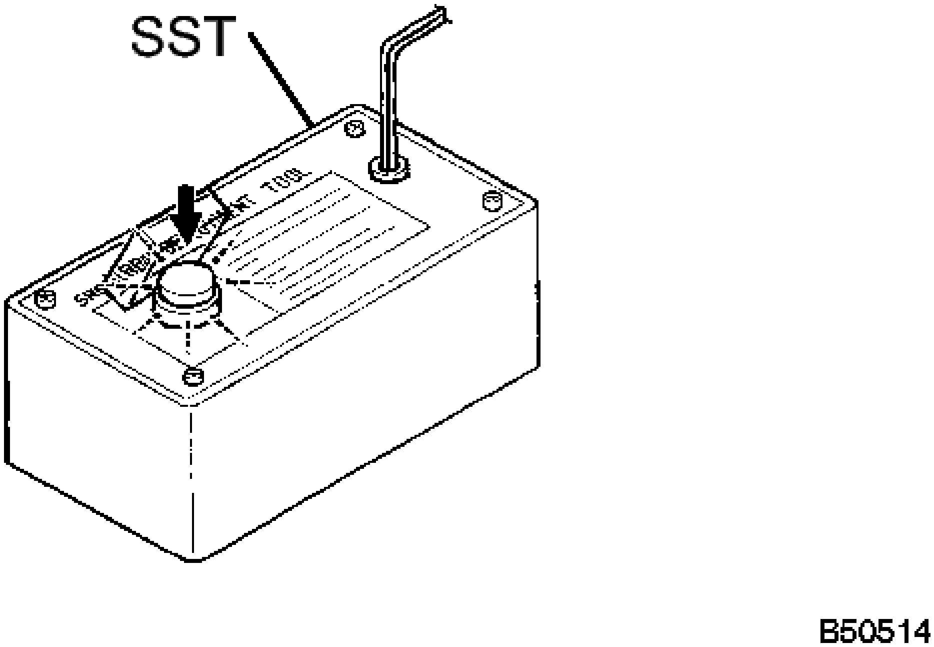

Fig. 35: Identifying SST Deployment Switch
Courtesy of TOYOTA MOTOR SALES, U.S.A., INC.

WARNING: **If the LED is illuminated when the deployment switch is not pressed, SST may be malfunctioning. In this case, do not use the malfunctioning SST.**

b. Disconnect the seat belt pretensioner connector.
    1. Disconnect the cable from the negative (-) battery terminal.
    2. Remove the front door scuff plate. Refer to **REMOVAL - Step 3** .
    3. Disconnect the front door opening trim weatherstrip, See step 4.
    4. Remove the rear door scuff plate. Refer to **REMOVAL - Step 18** .
    5. Disconnect the rear door opening trim weatherstrip, See step 6.
    6. Remove the center pillar lower garnish. Refer to **REMOVAL - Step 22** .
    7. Using a screwdriver, pull out the locking button in the direction shown by the arrow in the illustration to release the lock, and disconnect the pretensioner connector as shown in the illustration.

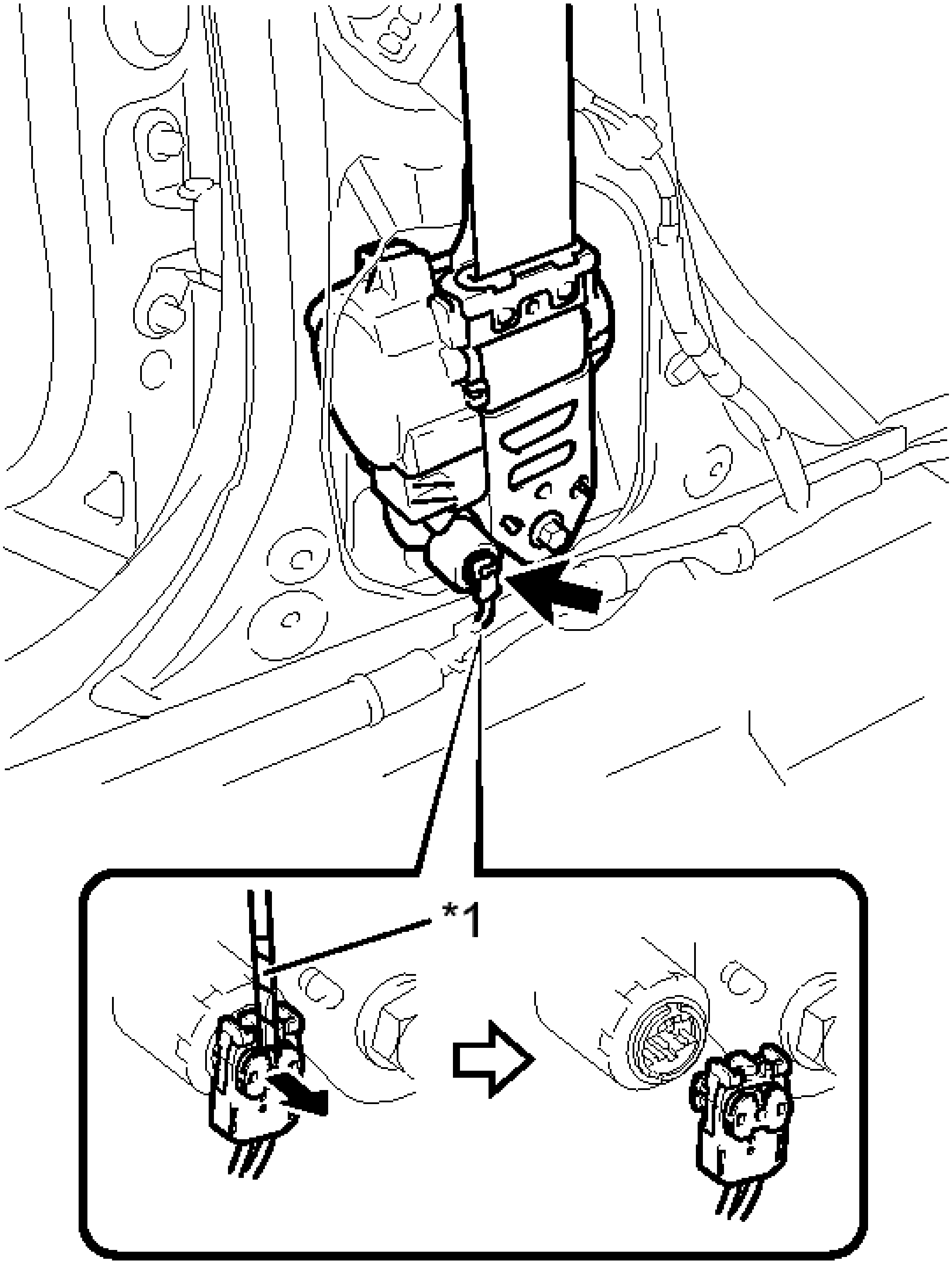

P

Fig. 36: Removing Front Seat Outer Belt Assembly Pretensioner Connector
Courtesy of TOYOTA MOTOR SALES, U.S.A., INC.

TEXT IN ILLUSTRATION

	Protective

*1	Tape

HINT:

Tape the screwdriver tip before use.

c. Connect SST.

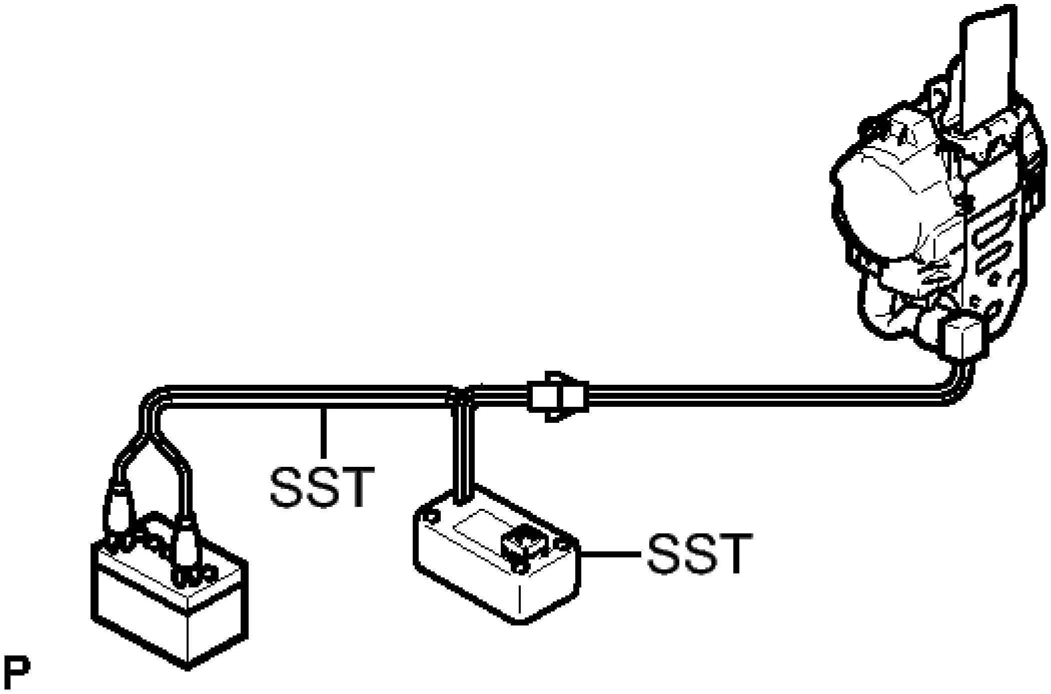

Fig. 37: Connecting SST's To Front Seat Outer Belt Pretensioner
Courtesy of TOYOTA MOTOR SALES, U.S.A., INC.

1. Connect 2 SST, and then connect them to the seat belt pretensioner.
    - **SST: 09082-00700**
    - **SST: 09082-00770**

NOTE: **To avoid damaging the SST connector and wire harness, do not lock the secondary lock of the pretensioner connector.**

2. Move SST at least 10 m (33 ft.) away from the front of the vehicle.

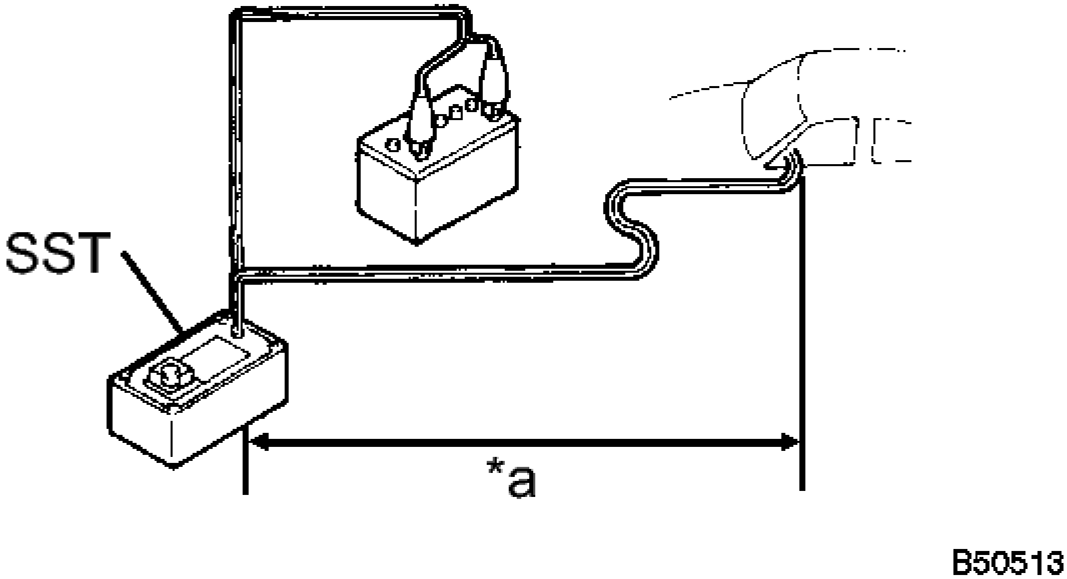

Fig. 38: Identifying SST Distance From Front Side Window
Courtesy of TOYOTA MOTOR SALES, U.S.A., INC.

TEXT IN ILLUSTRATION

*a	10 m or more

3. Close all the doors and windows of the vehicle.

NOTE: **Do not damage the SST wire harness.**

d. Deploy the seat belt pretensioner.
   1. Confirm that no one is inside the vehicle or within a 10 m (33 ft.) radius of the vehicle.
   2. Connect the red clip of SST to the battery positive (+) terminal and the black clip to the negative (-) terminal.
   3. Press the SST deployment switch to deploy the seat belt pretensioner.

   HINT:

   The seat belt pretensioner will deploy at the same time as the LED of SST illuminates.

e. Dispose of the seat belt.

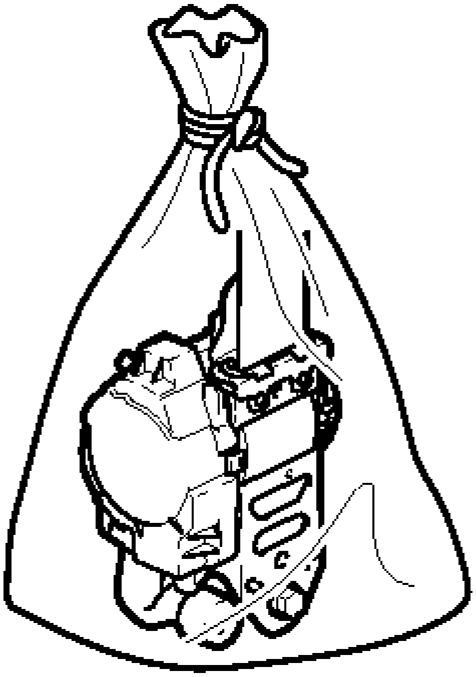

P

Fig. 39: Identifying Disposal Of Front Seat Outer Belt Assembly
Courtesy of TOYOTA MOTOR SALES, U.S.A., INC.

1. Remove the seat belt and SST.
2. Place the seat belt in a plastic bag, tie the end tightly, and dispose of it in the same way as other general parts.

WARNING:

- **The seat belt becomes very hot when the pretensioner is deployed, so leave it untouched for at least 30 minutes after the pretensioner is deployed.**
- **Use gloves and safety glasses when handling a seat belt with a deployed pretensioner.**
- **Always wash your hands with water after completing the operation.**
- **Do not apply water, etc. to a seat belt with a deployed pretensioner.**

HINT:

When scrapping a vehicle, deploy the seat belt pretensioner, and then scrap the vehicle with the seat belt installed.

2. **DISPOSE OF FRONT SEAT OUTER BELT ASSEMBLY (WHEN NOT INSTALLED IN VEHICLE)**

WARNING:

- **Use gloves and safety glasses when handling a seat belt with a deployed pretensioner.**
- **Always wash your hands with water after completing the operation.**
- **Do not apply water, etc. to a seat belt with a deployed pretensioner.**
- **When deploying a seat belt pretensioner, always use the specified SST (SRS airbag deployment tool). Perform the operation in a place away from electrical interference.**

NOTE:

- **When disposing of a seat belt with a pretensioner, never deploy the pretensioner in the customer's vehicle.**
- **Never dispose of a seat belt with a pretensioner that has not been deployed.**
- **The seat belt produces an exploding sound when the pretensioner deploys, so perform the operation outdoors where it will not disturb local residents.**
- **When deploying a seat belt pretensioner, perform the operation at least 10 m (33 ft.) away from the seat belt.**
- **Be sure to follow the procedure listed below when deploying a seat belt pretensioner.**

a. Remove the seat belt. Refer to **REMOVAL**.

b. Wind the seat belt webbing with the retractor.

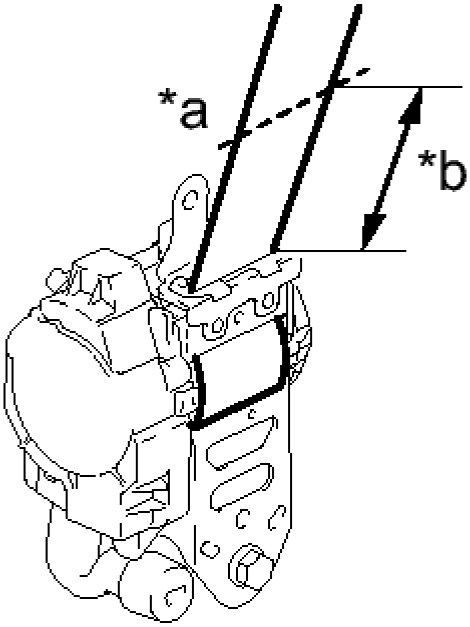

Fig. 40: Identifying Seat Belt Webbing Cutting Dimension
Courtesy of TOYOTA MOTOR SALES, U.S.A., INC.

TEXT IN ILLUSTRATION

*a	Cut
*b	100 mm

c. When the seat belt webbing is sufficiently wound, cut the seat belt webbing approximately 100 mm (3.94 in.) from the retractor, as shown in the illustration.

   HINT:

   The retractor resistance increases in correlation with how much the seat belt webbing is wound.

d. Check the function of SST.

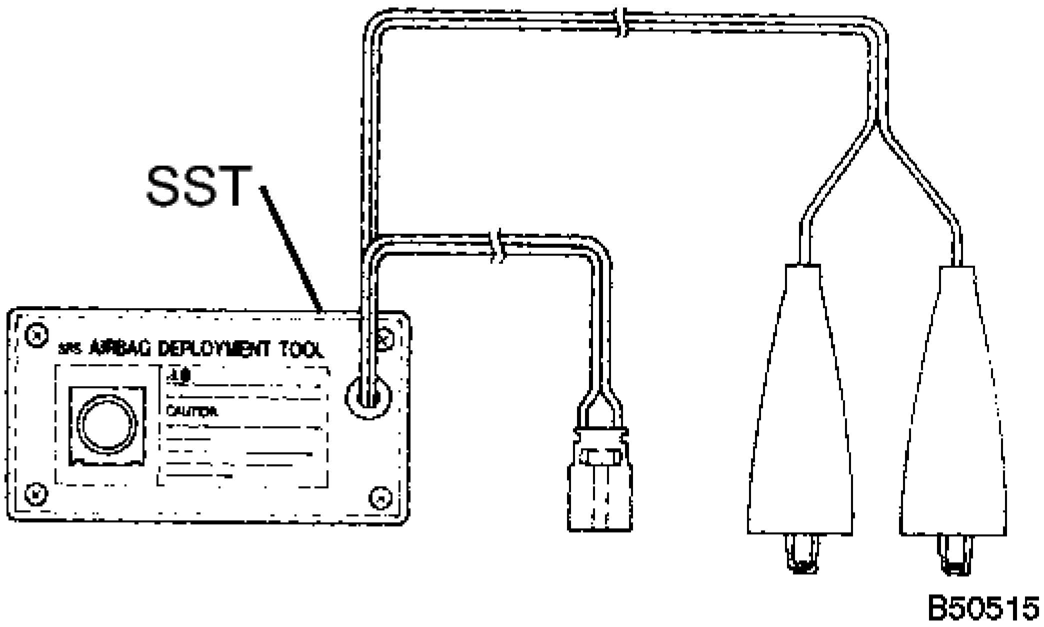
SST
SRS AIRBAG DEPLOYMENT TOOL
CAUTION
B50515

Fig. 41: Checking Function Of SST
Courtesy of TOYOTA MOTOR SALES, U.S.A., INC.

- **SST: 09082-00700**

WARNING: When deploying the seat belt pretensioner, always use the specified SST.

1. Connect the red clip of SST to the battery positive (+) terminal and the black clip to the battery negative (-) terminal.

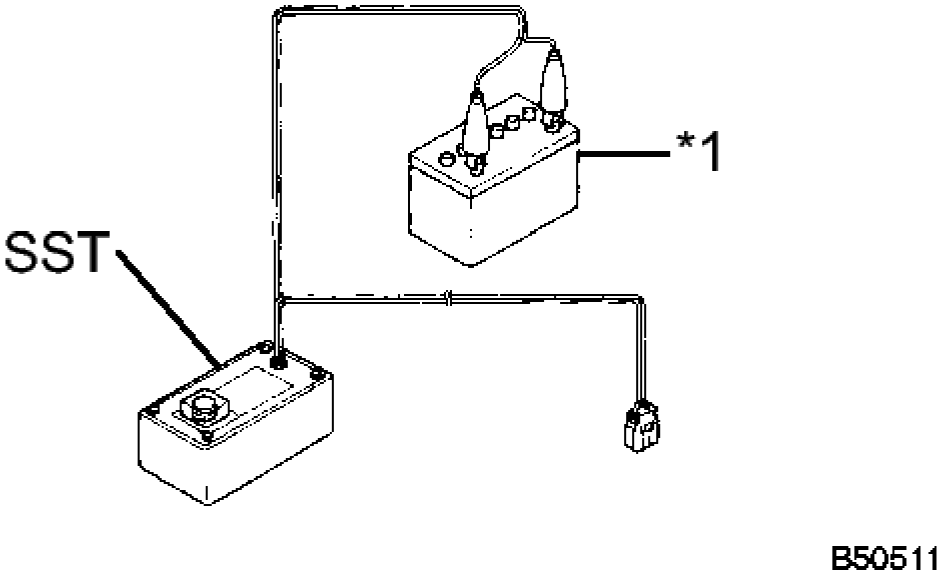

Fig. 42: Identifying SST & Battery
Courtesy of TOYOTA MOTOR SALES, U.S.A., INC.

TEXT IN ILLUSTRATION

*a	Battery

HINT:

At this time, do not connect the yellow connector. It will be connected to the seat belt pretensioner in a later step.

2. Press the SST deployment switch and check that the LED of the SST deployment switch illuminates.

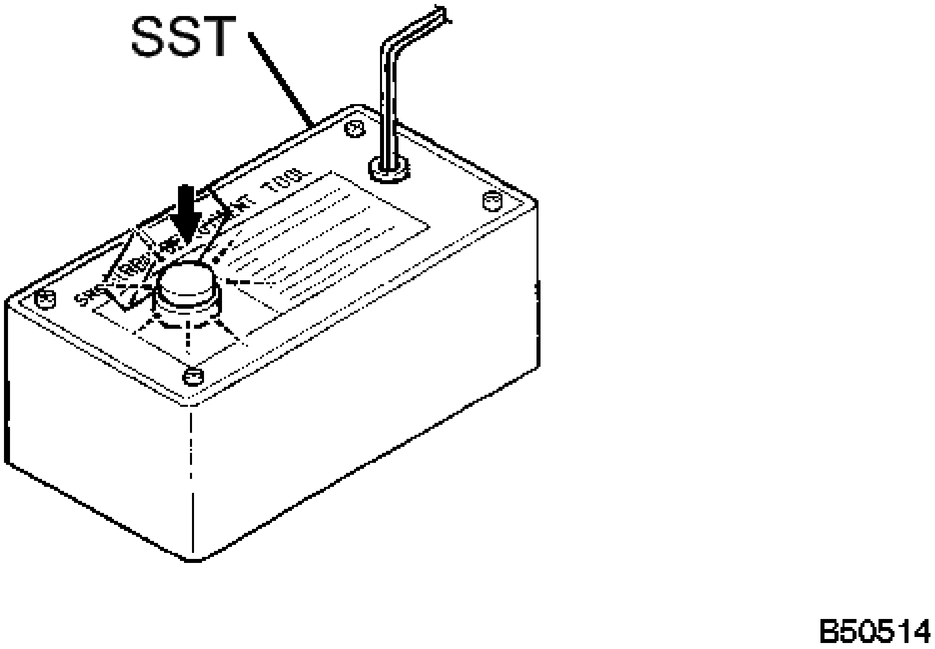

Fig. 43: Identifying SST Deployment Switch
Courtesy of TOYOTA MOTOR SALES, U.S.A., INC.

WARNING: **If the LED is illuminated when the deployment switch is not pressed, SST may be malfunctioning. In this case, do not use the malfunctioning SST.**

e. Connect SST.

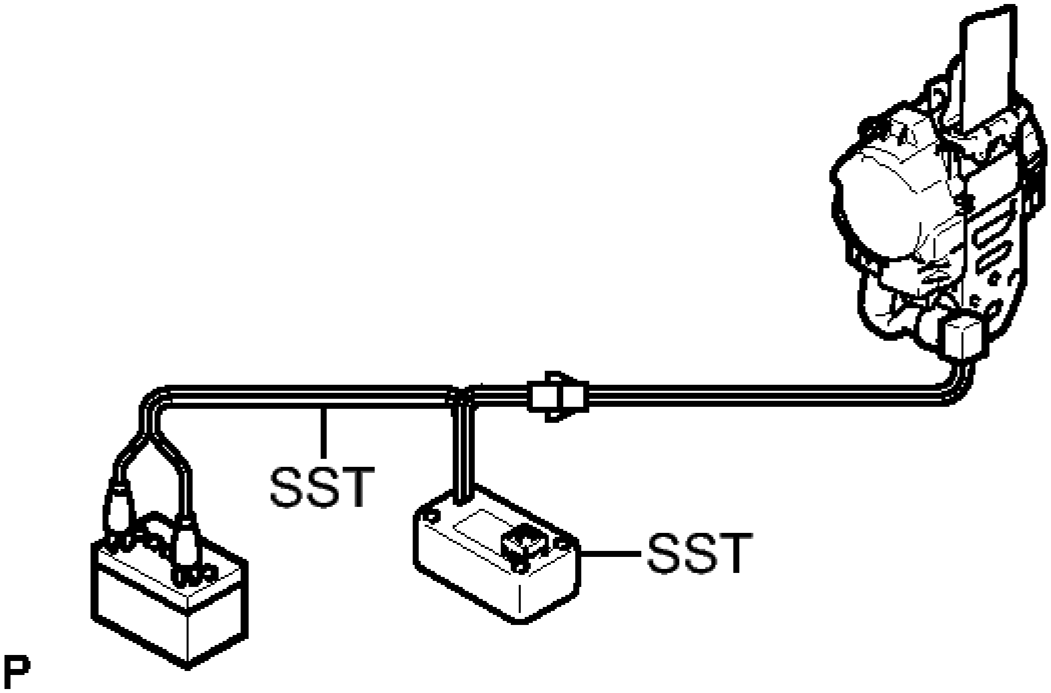

Fig. 44: Connecting SST's To Front Seat Outer Belt Pretensioner
Courtesy of TOYOTA MOTOR SALES, U.S.A., INC.

1. Connect 2 SST, and then connect them to the seat belt pretensioner.
    - **SST: 09082-00700**
    - **SST: 09082-00770**

    NOTE: To avoid damaging the SST connector and wire harness, do not lock the secondary lock of the pretensioner connector.

2. Place the seat belt on the ground and cover it with a tire and wheel assembly.

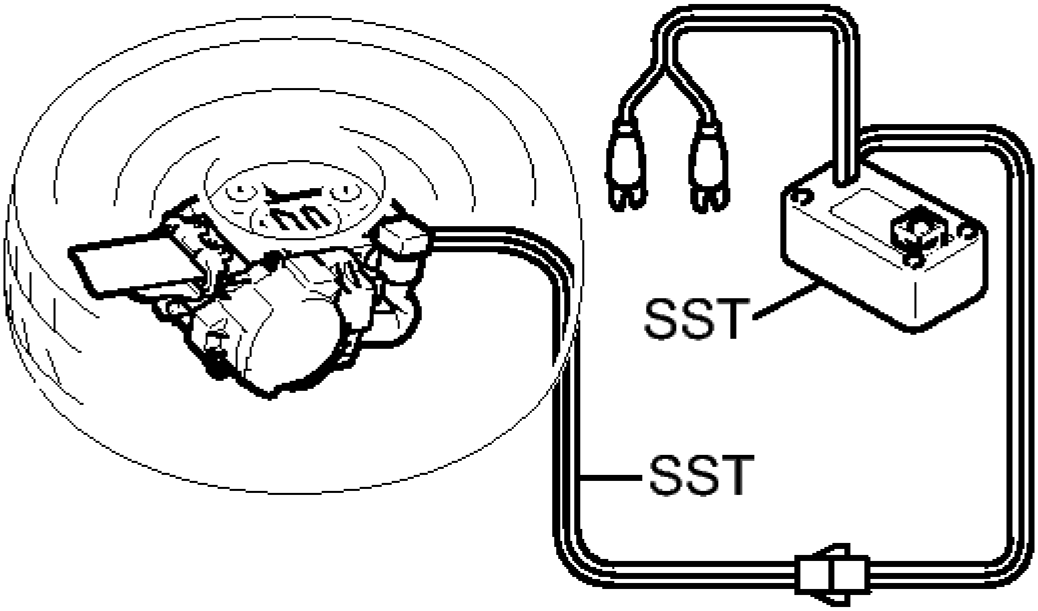

P

Fig. 45: SST Connected To Front Seat Outer Belt Pretensioner Under Tire And Wheel Assembly
Courtesy of TOYOTA MOTOR SALES, U.S.A., INC.

NOTE:

- **Position the seat belt as shown in the illustration.**
- **Use a scrap tire and wheel assembly when disposing of a seat belt pretensioner.**

3. Position and hold SST at least 10 m (33 ft.) away from the wheel.

NOTE: **Do not damage the SST wire harness.**

f. Deploy the seat belt pretensioner.

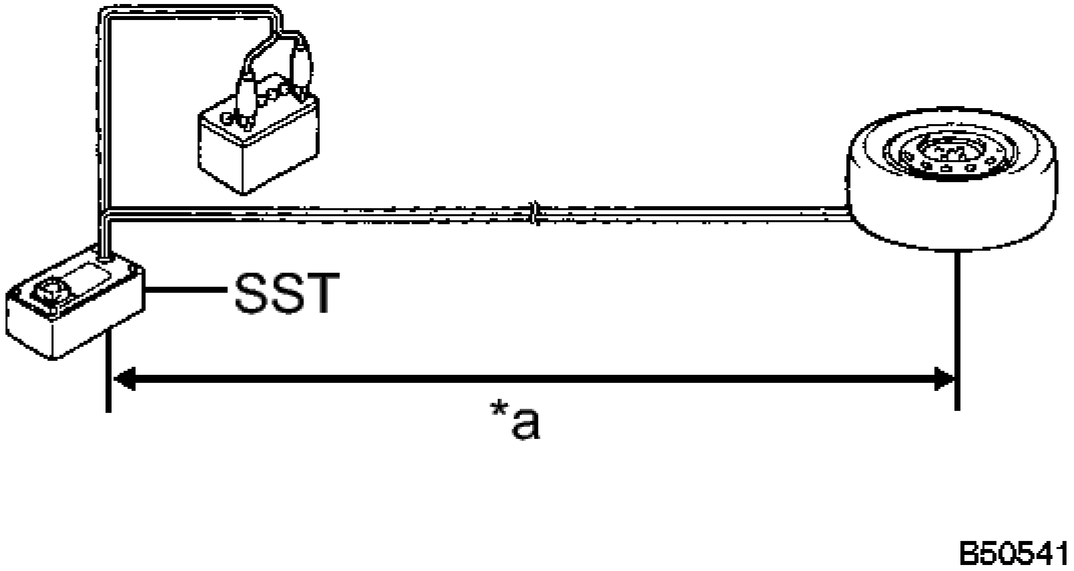

Fig. 46: Identifying SST Safe Distance
Courtesy of TOYOTA MOTOR SALES, U.S.A., INC.

TEXT IN ILLUSTRATION

*a	10 m or more

1. Check that no one is within a 10 m (33 ft.) radius of the wheel.
2. Connect the red clip of SST to the battery positive (+) terminal and the black clip to the battery negative (-) terminal.
3. Press the SST deployment switch to deploy the seat belt pretensioner.

   HINT:

   The seat belt pretensioner will deploy at the same time as the LED of SST illuminates.

g. Dispose of the seat belt.

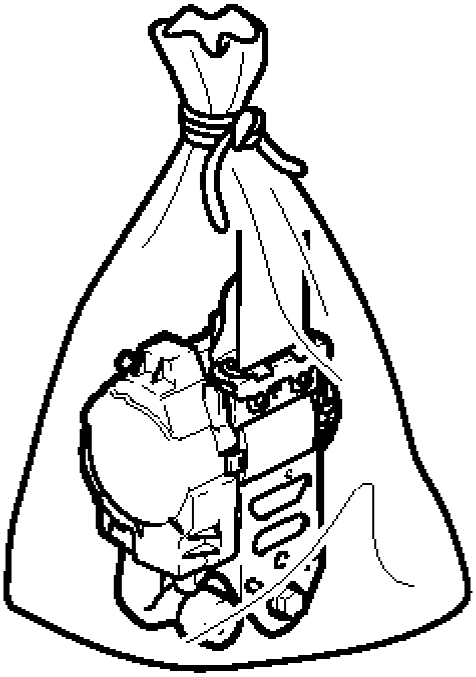

P

Fig. 47: Identifying Disposal Of Front Seat Outer Belt Assembly
Courtesy of TOYOTA MOTOR SALES, U.S.A., INC.

1. Remove the wheel and SST.
2. Place the seat belt in a plastic bag, tie the end tightly, and dispose of it in the same way as other general parts.

WARNING:

- **The seat belt becomes very hot when the pretensioner is deployed, so leave it untouched for at least 30 minutes after the pretensioner is deployed.**
- **Use gloves and safety glasses when handling a seat belt with a deployed pretensioner.**
- **Always wash your hands with water after completing the operation.**
- **Do not apply water, etc. to a seat belt with a deployed pretensioner.**

REAR SEAT INNER BELT ASSEMBLY

COMPONENTS

ILLUSTRATION

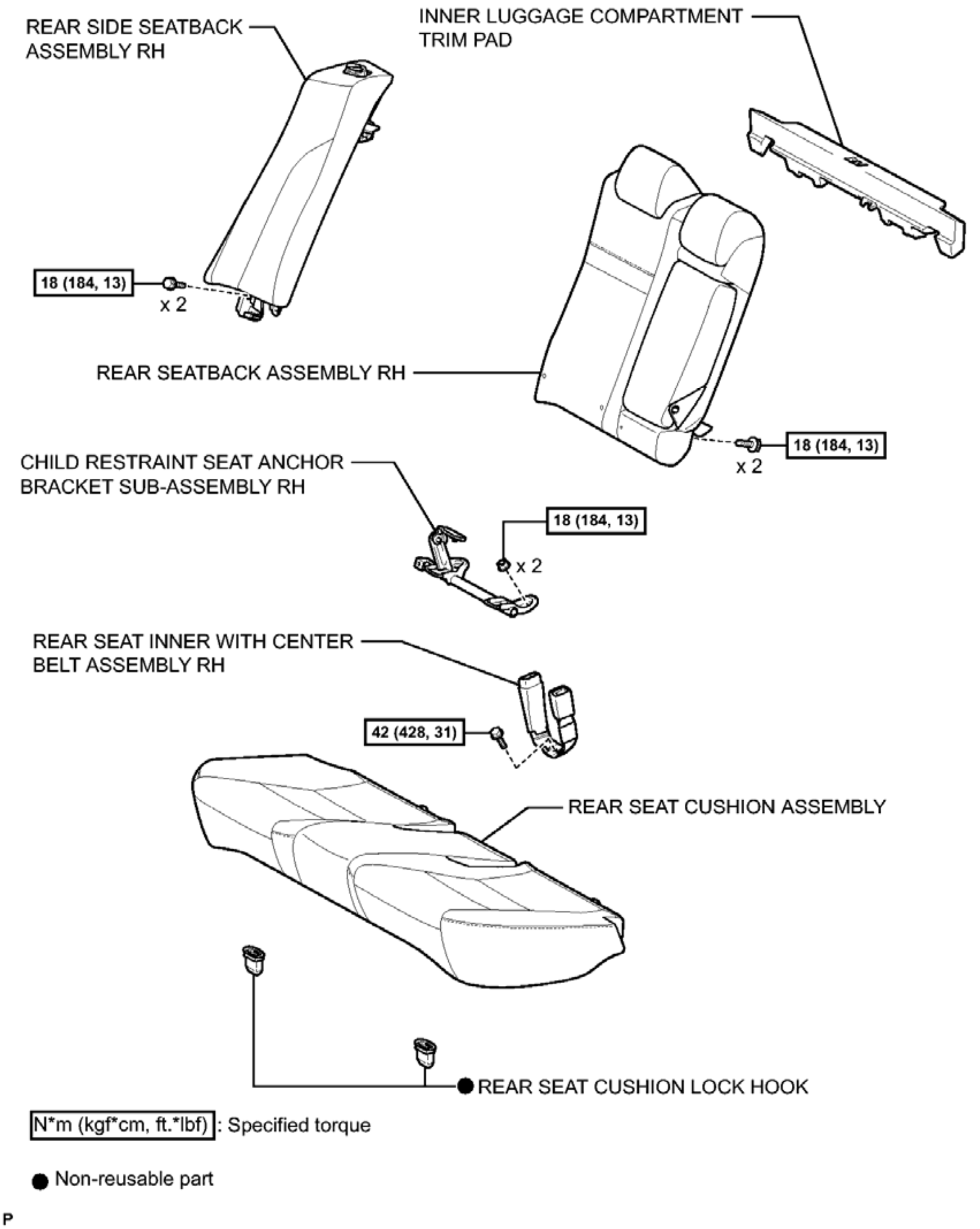
REAR SIDE SEATBACK ASSEMBLY RH
INNER LUGGAGE COMPARTMENT TRIM PAD
18 (184, 13)
x 2
REAR SEATBACK ASSEMBLY RH
18 (184, 13)
x 2
CHILD RESTRAINT SEAT ANCHOR BRACKET SUB-ASSEMBLY RH
18 (184, 13)
x 2
REAR SEAT INNER WITH CENTER BELT ASSEMBLY RH
42 (428, 31)
REAR SEAT CUSHION ASSEMBLY
● REAR SEAT CUSHION LOCK HOOK
N*m (kgf*cm, ft.*lbf) : Specified torque
● Non-reusable part
P

Fig. 48: Identifying Rear Seat Inner Belt Assembly Replacement Components With Torque Specifications (1 Of 3)

Courtesy of TOYOTA MOTOR SALES, U.S.A., INC.

ILLUSTRATION

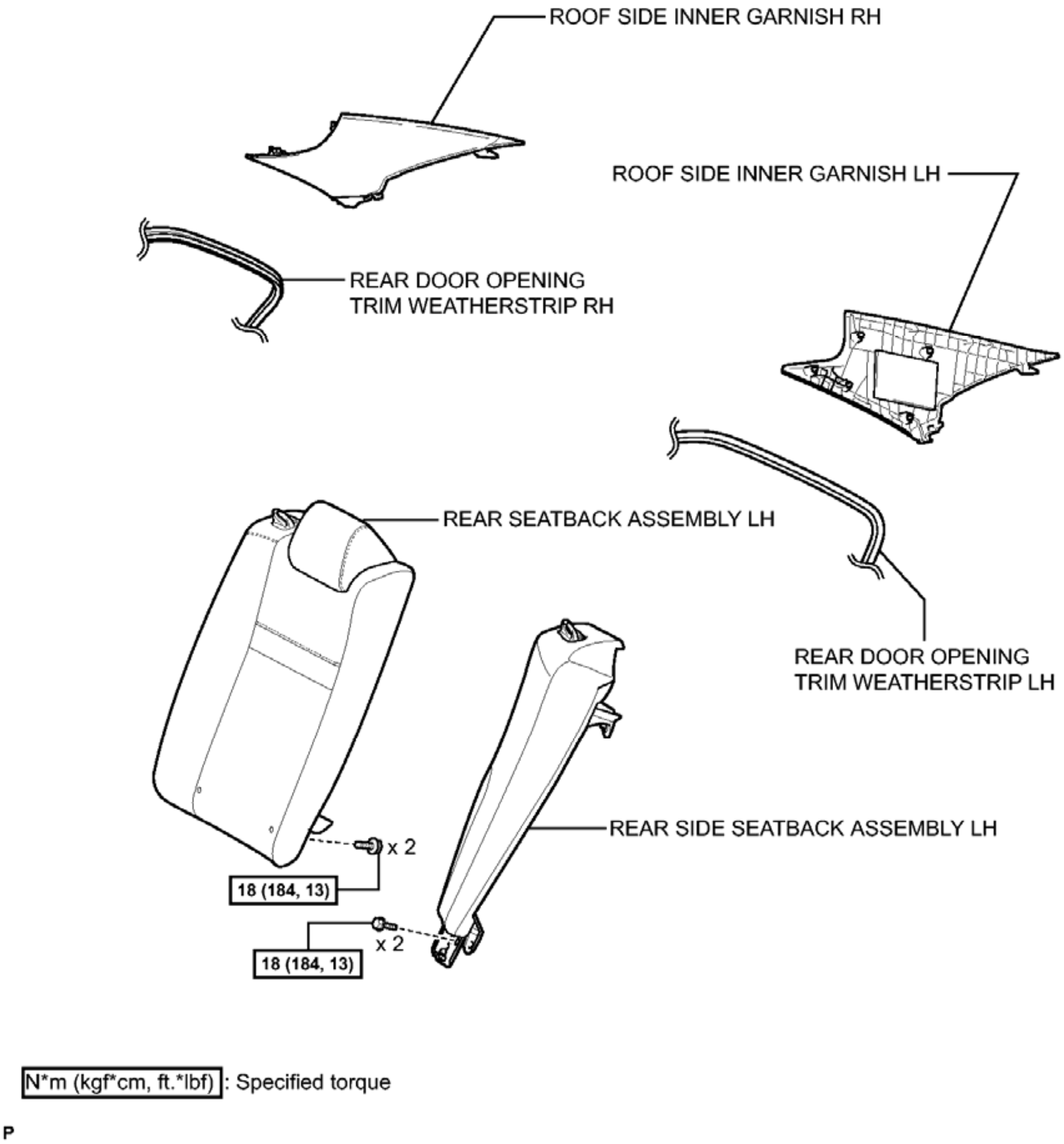
ROOF SIDE INNER GARNISH RH
ROOF SIDE INNER GARNISH LH
REAR DOOR OPENING TRIM WEATHERSTRIP RH
REAR SEATBACK ASSEMBLY LH
REAR DOOR OPENING TRIM WEATHERSTRIP LH
x 2
18 (184, 13)
REAR SIDE SEATBACK ASSEMBLY LH
x 2
18 (184, 13)
N*m (kgf*cm, ft.*lbf) : Specified torque
P

Fig. 49: Identifying Rear Seat Inner Belt Assembly Replacement Components With Torque Specifications (2 Of 3)
Courtesy of TOYOTA MOTOR SALES, U.S.A., INC.

ILLUSTRATION

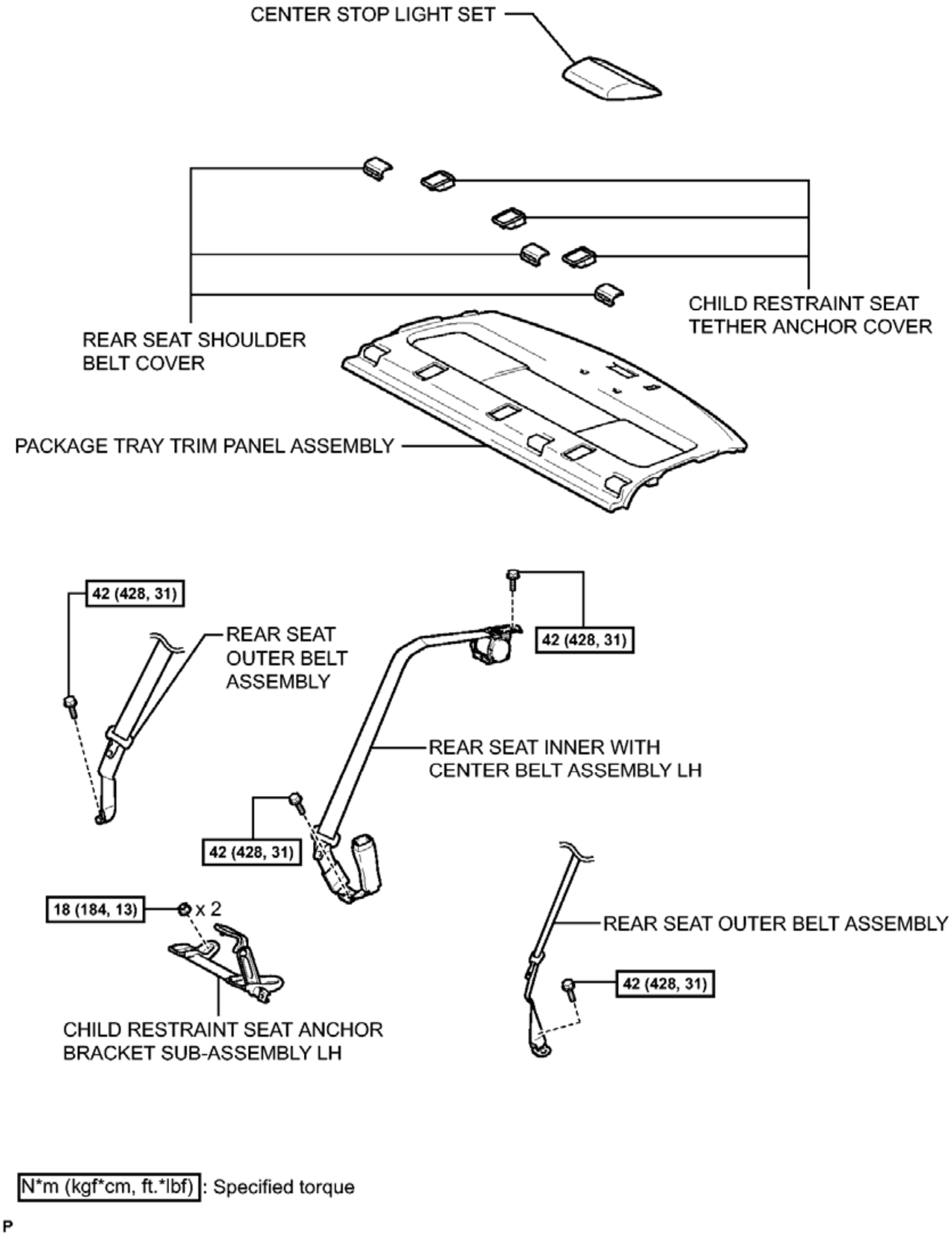
CENTER STOP LIGHT SET
REAR SEAT SHOULDER BELT COVER
CHILD RESTRAINT SEAT TETHER ANCHOR COVER
PACKAGE TRAY TRIM PANEL ASSEMBLY
42 (428, 31)
REAR SEAT OUTER BELT ASSEMBLY
42 (428, 31)
REAR SEAT INNER WITH CENTER BELT ASSEMBLY LH
42 (428, 31)
18 (184, 13)
x 2
CHILD RESTRAINT SEAT ANCHOR BRACKET SUB-ASSEMBLY LH
REAR SEAT OUTER BELT ASSEMBLY
42 (428, 31)
N*m (kgf*cm, ft.*lbf) : Specified torque
P

Fig. 50: Identifying Rear Seat Inner Belt Assembly Replacement Components With Torque Specifications (3 Of 3)

Courtesy of TOYOTA MOTOR SALES, U.S.A., INC.

ON-VEHICLE INSPECTION

ON-VEHICLE INSPECTION

WARNING: **Be sure to correctly follow the removal and installation procedures for the rear seat inner with center belt assembly LH.**

1. **INSPECT REAR SEAT INNER WITH CENTER BELT ASSEMBLY LH (for Vehicle not Involved in Collision)**
    a. Visually check for defects with the rear seat inner with center belt assembly LH installed on the vehicle.
        1. The defects are as follows:
            - Cuts on the rear seat inner with center belt assembly LH
            - Small cracks on the rear seat inner with center belt assembly LH
            - Significant discoloration on the rear seat inner with center belt assembly LH

           OK

           No defects are found.

           HINT:

           If any of the defects is found, replace the rear seat inner with center belt assembly LH with a new one.

2. **INSPECT REAR SEAT INNER WITH CENTER BELT ASSEMBLY LH (for Vehicle Involved in Collision)**
    a. Visually check for defects with the rear seat inner with center belt assembly LH removed from the vehicle.
        1. The defects are as follows:
            - Cuts on the rear seat inner with center belt assembly LH
            - Small cracks on the rear seat inner with center belt assembly LH
            - Significant discoloration on the rear seat inner with center belt assembly LH
            - Cracks or other damage to the connector

           OK

           No defects are found.

           HINT:

           If any of the defects is found, replace the rear seat inner with center belt assembly LH with a new one.

REMOVAL

REMOVAL

1. **PRECAUTION**

   NOTE: **After turning the ignition switch off, waiting time may be required before disconnecting the cable from the negative (-) battery terminal. Therefore, make sure to read the disconnecting the cable from the negative (-) battery terminal notices before proceeding with work. Refer to PRECAUTION .**

2. **DISCONNECT CABLE FROM NEGATIVE BATTERY TERMINAL**

   WARNING: **Wait at least 90 seconds after disconnecting the cable from the negative (-) battery terminal to disable the SRS system.**

   NOTE: **When disconnecting the cable, some systems need to be initialized after the cable is reconnected. Refer to INITIALIZATION .**

3. **REMOVE REAR SEAT CUSHION ASSEMBLY** . Refer to **REMOVAL - Step 3** .
4. **REMOVE REAR SEAT CUSHION LOCK HOOK** . Refer to **REMOVAL - Step 4** .
5. **REMOVE INNER LUGGAGE COMPARTMENT TRIM PAD** . Refer to **REMOVAL - Step 5** .
6. **REMOVE REAR SEATBACK ASSEMBLY RH** . Refer to **REMOVAL - Step 7** .
7. **REMOVE REAR SIDE SEATBACK ASSEMBLY RH** . Refer to **REMOVAL - Step 9** .
8. **REMOVE CHILD RESTRAINT SEAT ANCHOR BRACKET SUB-ASSEMBLY RH** . See step 11.
9. **REMOVE REAR SEAT INNER WITH CENTER BELT ASSEMBLY RH**
   a. Remove the bolt and rear seat inner with center belt assembly RH.

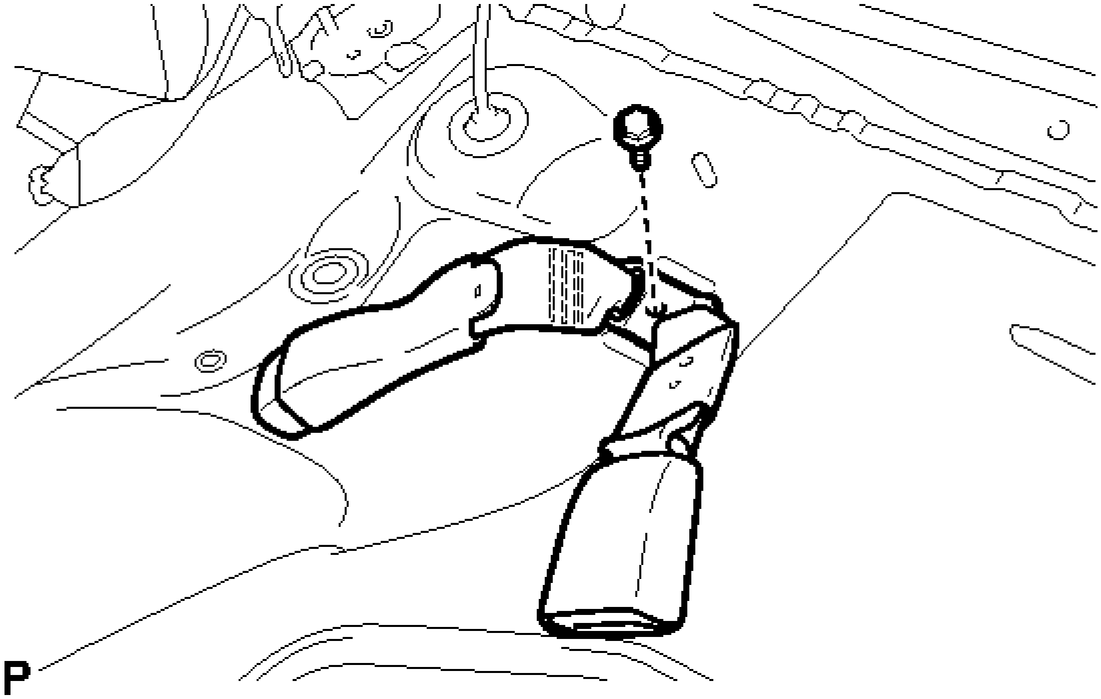

Fig. 51: Locating Rear Seat Inner Center Belt Assembly RH Bolt
Courtesy of TOYOTA MOTOR SALES, U.S.A., INC.

10. **REMOVE REAR SEATBACK ASSEMBLY LH** . Refer to **REMOVAL - Step 6** .
11. **REMOVE REAR SIDE SEATBACK ASSEMBLY LH** . Refer to **REMOVAL - Step 8** .
12. **DISCONNECT REAR DOOR OPENING TRIM WEATHERSTRIP LH**
    a. Disconnect the rear door opening trim weatherstrip LH.
13. **DISCONNECT REAR DOOR OPENING TRIM WEATHERSTRIP RH**
    a. Disconnect the rear door opening trim weatherstrip RH.
14. **REMOVE ROOF SIDE INNER GARNISH LH** . Refer to **REMOVAL - Step 24** .
15. **REMOVE ROOF SIDE INNER GARNISH RH**

    HINT:

    Use the same procedure as for the LH side.

16. **DISCONNECT REAR SEAT OUTER BELT ASSEMBLY (for LH Side)** . See step 13.
17. **DISCONNECT REAR SEAT OUTER BELT ASSEMBLY (for RH Side)** . See step 14.
18. **REMOVE CHILD RESTRAINT SEAT ANCHOR BRACKET SUB-ASSEMBLY LH** . See step 10.
19. **DISCONNECT REAR SEAT INNER WITH CENTER BELT ASSEMBLY LH**
    a. Remove the bolt and disconnect the floor anchor of the rear seat inner with center belt assembly LH.

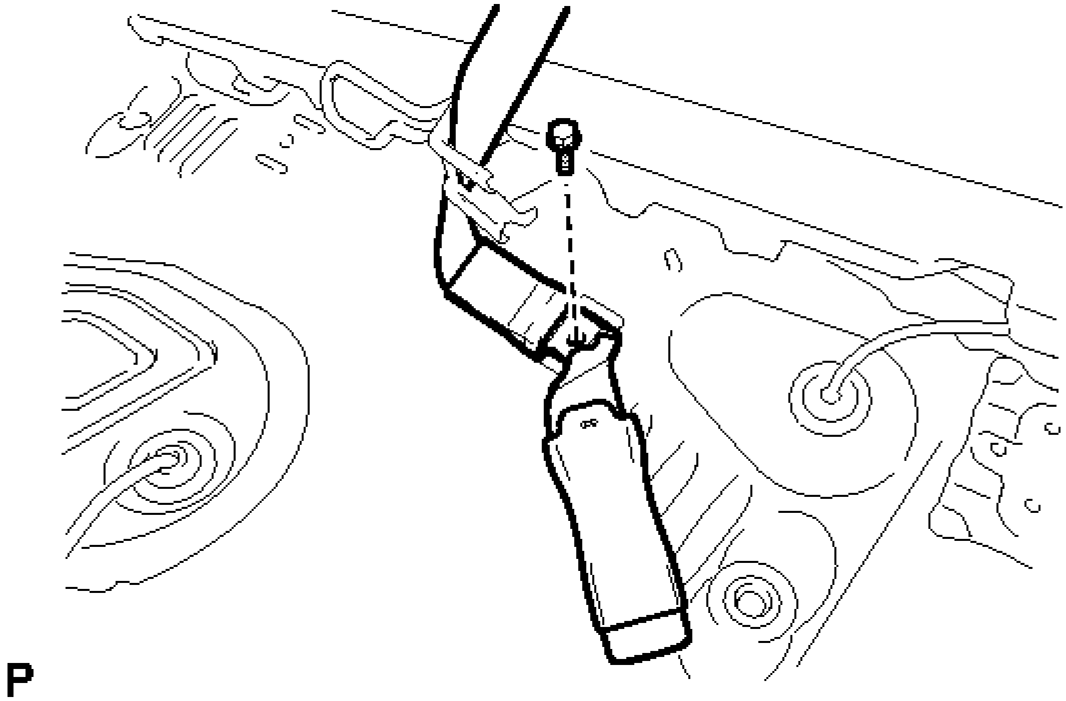

Fig. 52: Locating Rear Seat Inner Center Belt Assembly LH Bolt
Courtesy of TOYOTA MOTOR SALES, U.S.A., INC.

20. **REMOVE CENTER STOP LIGHT SET** . Refer to **REMOVAL - Step 1** .
21. **REMOVE CHILD RESTRAINT SEAT TETHER ANCHOR COVER** . See step 18.
22. **REMOVE REAR SEAT SHOULDER BELT COVER** . See step 19.
23. **REMOVE PACKAGE TRAY TRIM PANEL ASSEMBLY** . See step 20.
24. **REMOVE REAR SEAT INNER WITH CENTER BELT ASSEMBLY LH**
    a. Remove the bolt.

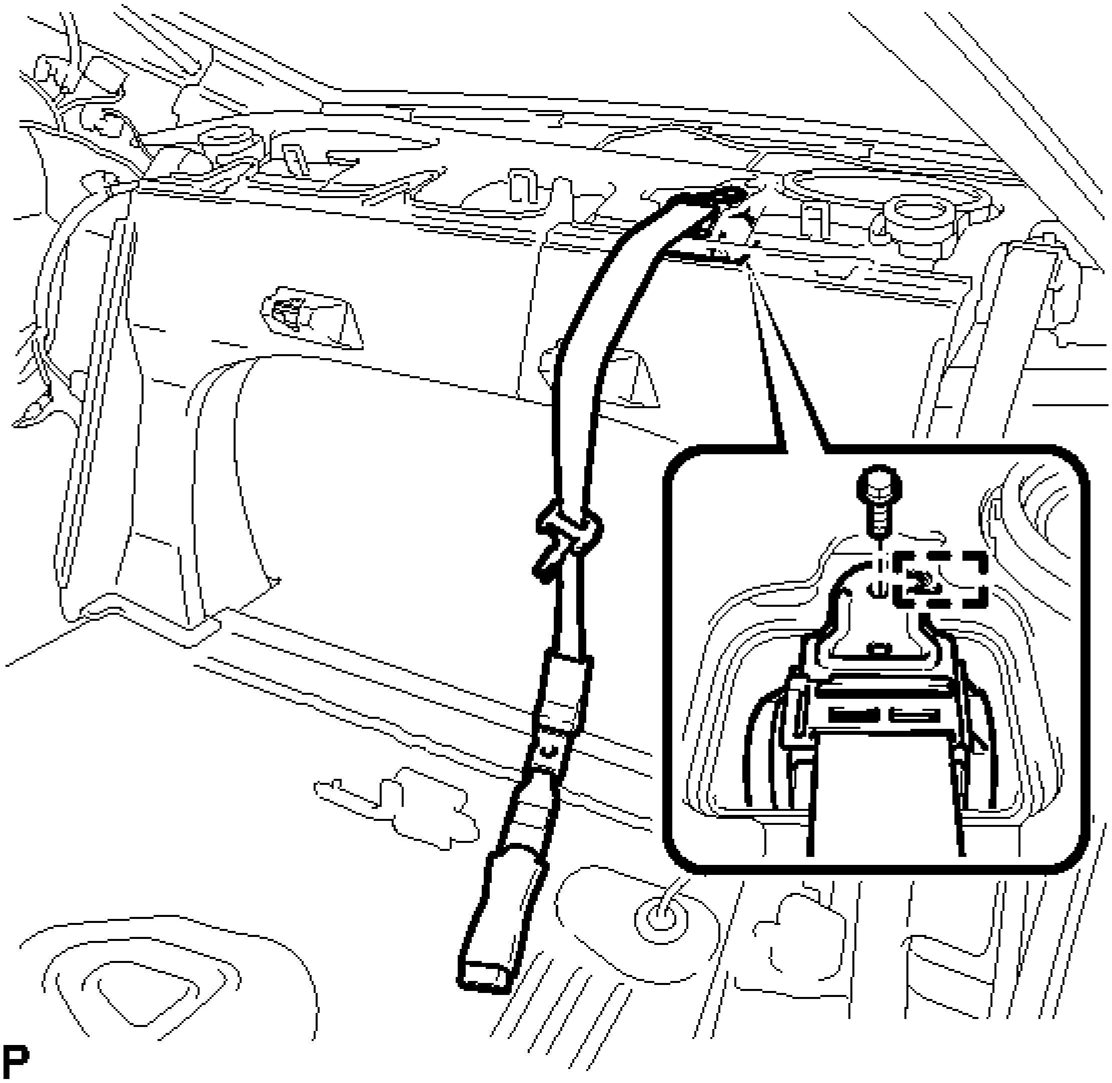

Fig. 53: Identifying Rear Seat Inner Center Belt Assembly LH Bolt And Guide
Courtesy of TOYOTA MOTOR SALES, U.S.A., INC.

b. Disengage the guide to remove the rear seat inner with center belt assembly LH.

INSPECTION

INSPECTION

1. **INSPECT REAR SEAT INNER WITH CENTER BELT ASSEMBLY LH**
   a. Before installing the rear seat inner with center belt assembly LH, check the ELR function.

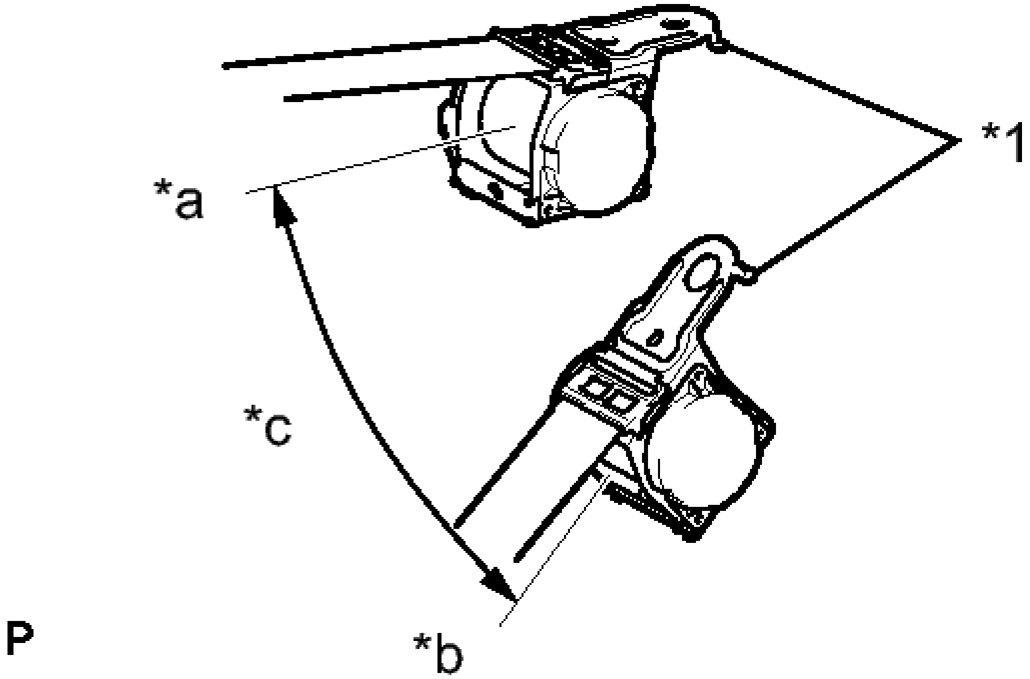

Fig. 54: Inspecting Rear Seat Inner With Center Belt Assembly LH
Courtesy of TOYOTA MOTOR SALES, U.S.A., INC.

NOTE: **Do not disassemble the retractor.**

1. When the inclination of the retractor is 15° or less, check that the belt can be pulled from the retractor. When the inclination of the retractor is over 45°, check that the belt locks.

   TEXT IN ILLUSTRATION

*1	Retractor
*a	Unlocked
*b	Locked
*c	45°

   If the result is not as specified, replace the rear seat inner with center belt assembly LH.

INSTALLATION

INSTALLATION

1. **INSPECT REAR SEAT INNER WITH CENTER BELT ASSEMBLY LH** . See step 1.
2. **INSTALL REAR SEAT INNER WITH CENTER BELT ASSEMBLY LH**
   a. Engage the guide to temporarily install the rear seat inner with center belt assembly LH.
   b. Install the bolt.

Torque: 42 N*m (428 kgf*cm, 31 ft.*lbf)

c. Check if the ELR locks.

NOTE: **The check should be performed with the rear seat inner with center belt assembly LH installed.**

1. With the belt assembly installed, check that the belt locks when it is pulled out quickly.

3. **INSTALL PACKAGE TRAY TRIM PANEL ASSEMBLY** . See step 3.
4. **INSTALL REAR SEAT SHOULDER BELT COVER** . See step 4.
5. **INSTALL CHILD RESTRAINT SEAT TETHER ANCHOR COVER** . See step 5.
6. **INSTALL CENTER STOP LIGHT SET** . Refer to **INSTALLATION - Step 1** .
7. **CONNECT REAR SEAT INNER WITH CENTER BELT ASSEMBLY LH**
   a. Connect the floor anchor of the rear seat inner with center belt assembly LH with the bolt.

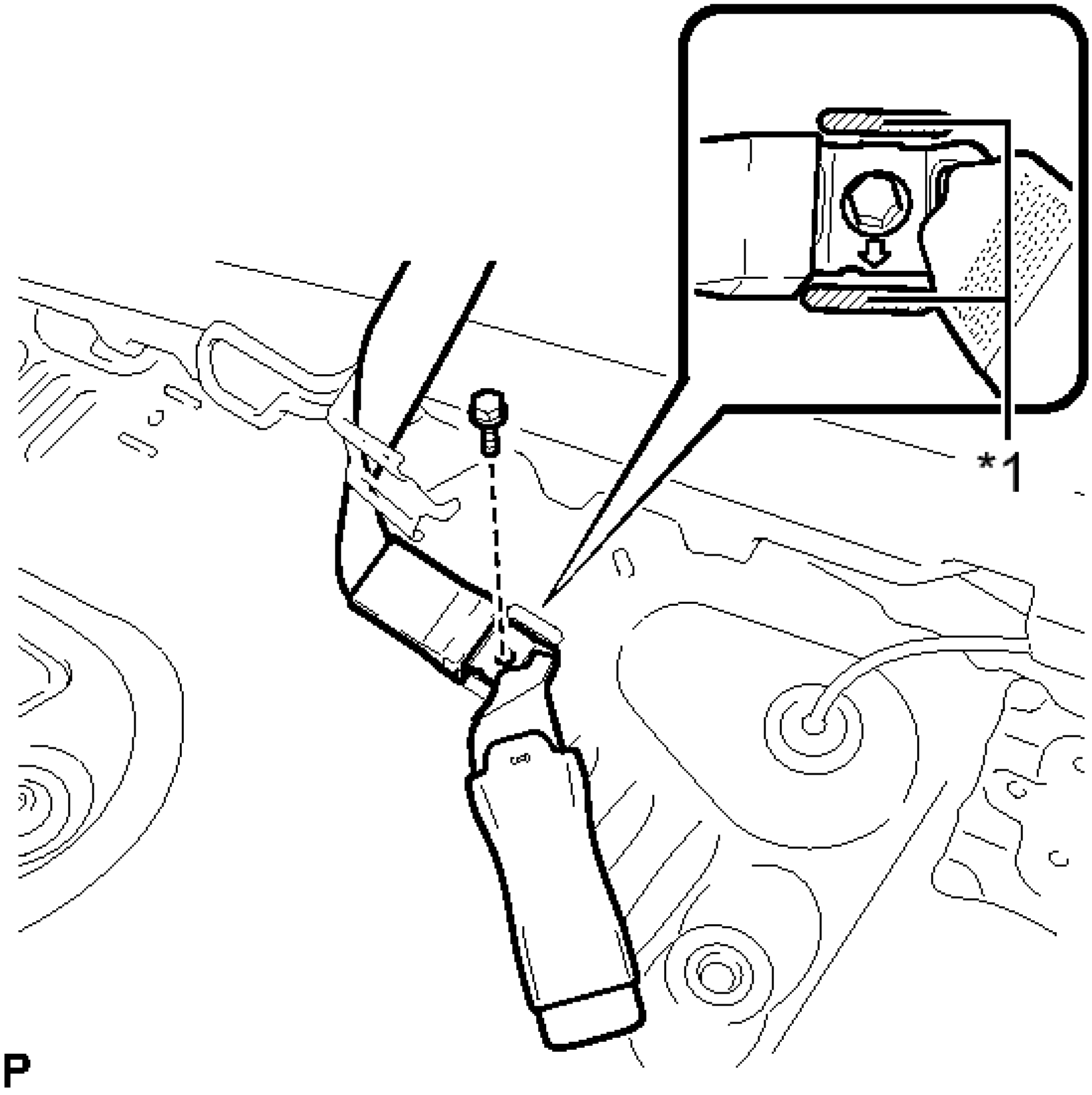

Fig. 55: Locating Rear Seat Inner Center Belt Assembly LH Bolt
Courtesy of TOYOTA MOTOR SALES, U.S.A., INC.

TEXT IN ILLUSTRATION

*1	Protruding Part

Torque: 42 N*m (428 kgf*cm, 31 ft.*lbf)

NOTE:

- **Install the rear seat inner with center belt assembly LH with the arrow on the anchor part facing the front of the vehicle.**
- **Do not allow the anchor part of the rear seat inner with center belt assembly LH to overlap the protruding parts of the floor panel.**

8. **INSTALL CHILD RESTRAINT SEAT ANCHOR BRACKET SUB-ASSEMBLY LH** . See step 1.
9. **CONNECT REAR SEAT OUTER BELT ASSEMBLY (for LH Side)** . See step 9.
10. **CONNECT REAR SEAT OUTER BELT ASSEMBLY (for RH Side)** . See step 10.
11. **INSTALL ROOF SIDE INNER GARNISH LH** . Refer to **INSTALLATION - Step 20** .
12. **INSTALL ROOF SIDE INNER GARNISH RH**

    HINT:

    Use the same procedure as for the LH side.

13. **INSTALL REAR DOOR OPENING TRIM WEATHERSTRIP LH** . Refer to **INSTALLATION - Step 25** .
14. **INSTALL REAR DOOR OPENING TRIM WEATHERSTRIP RH** . Refer to **INSTALLATION - Step 32** .
15. **INSTALL REAR SIDE SEATBACK ASSEMBLY LH** . Refer to **INSTALLATION - Step 2** .
16. **INSTALL REAR SEATBACK ASSEMBLY LH** . Refer to **INSTALLATION - Step 4** .
17. **INSTALL REAR SEAT INNER WITH CENTER BELT ASSEMBLY RH**
    1. Install the rear seat inner with center belt assembly RH with the bolt.

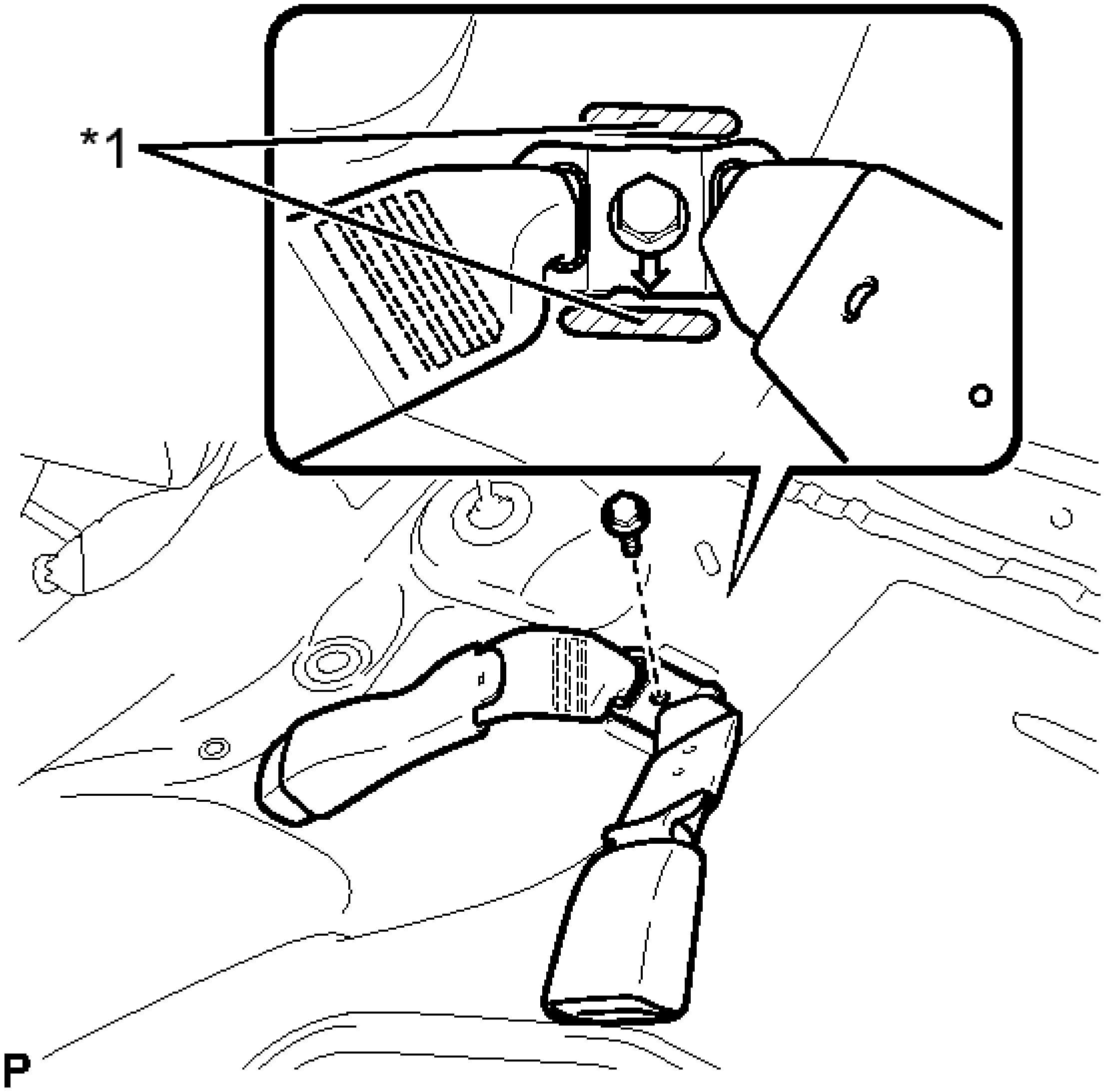

Fig. 56: Locating Rear Seat Inner Center Belt Assembly RH Bolt
Courtesy of TOYOTA MOTOR SALES, U.S.A., INC.

TEXT IN ILLUSTRATION

*1	Protruding Part

Torque: 42 N*m (428 kgf*cm, 31 ft.*lbf)

NOTE:

- **Install the rear seat inner with center belt assembly RH with the arrow on the anchor part facing the front of the vehicle.**
- **Do not allow the anchor part of the rear seat inner with center belt assembly RH to overlap the protruding parts of the floor panel.**

18. **INSTALL CHILD RESTRAINT SEAT ANCHOR BRACKET SUB-ASSEMBLY RH** . See step 2.
19. **INSTALL REAR SIDE SEATBACK ASSEMBLY RH** . Refer to **INSTALLATION - Step 1** .
20. **INSTALL REAR SEATBACK ASSEMBLY RH** . Refer to **INSTALLATION - Step 3** .
21. **INSTALL INNER LUGGAGE COMPARTMENT TRIM PAD** . Refer to **INSTALLATION - Step 5** .
22. **INSTALL REAR SEAT CUSHION LOCK HOOK** . Refer to **INSTALLATION - Step 6** .
23. **INSTALL REAR SEAT CUSHION ASSEMBLY** . Refer to **INSTALLATION - Step 7** .
24. **CONNECT CABLE TO NEGATIVE BATTERY TERMINAL**

    NOTE: When disconnecting the cable, some systems need to be initialized after the cable is reconnected. Refer to INITIALIZATION .

25. **INSPECT SRS WARNING LIGHT**

    For Built-in Type Yaw Rate Sensor: Refer to **DIAGNOSIS SYSTEM** .

    For Separate Type Yaw Rate Sensor: Refer to **DIAGNOSIS SYSTEM** .

REAR SEAT OUTER BELT ASSEMBLY

COMPONENTS

ILLUSTRATION

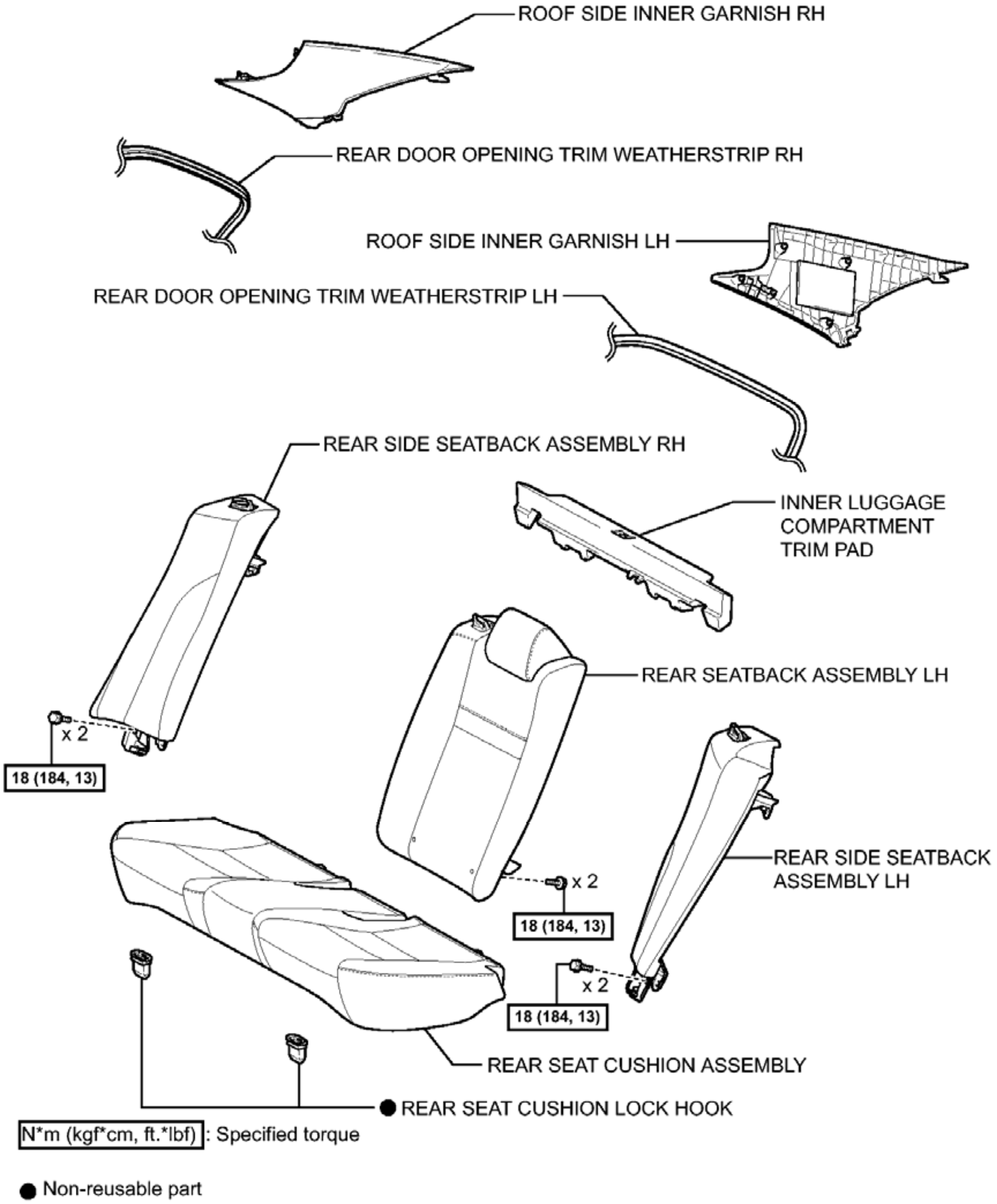
ROOF SIDE INNER GARNISH RH
REAR DOOR OPENING TRIM WEATHERSTRIP RH
ROOF SIDE INNER GARNISH LH
REAR DOOR OPENING TRIM WEATHERSTRIP LH
REAR SIDE SEATBACK ASSEMBLY RH
INNER LUGGAGE COMPARTMENT TRIM PAD
REAR SEATBACK ASSEMBLY LH
x 2
18 (184, 13)
x 2
18 (184, 13)
REAR SIDE SEATBACK ASSEMBLY LH
x 2
18 (184, 13)
REAR SEAT CUSHION ASSEMBLY
● REAR SEAT CUSHION LOCK HOOK
N*m (kgf*cm, ft.*lbf) : Specified torque
● Non-reusable part

P

Fig. 57: Identifying Rear Seat Outer Belt Assembly Replacement Components With Torque Specifications (1 Of 2)
Courtesy of TOYOTA MOTOR SALES, U.S.A., INC.

ILLUSTRATION

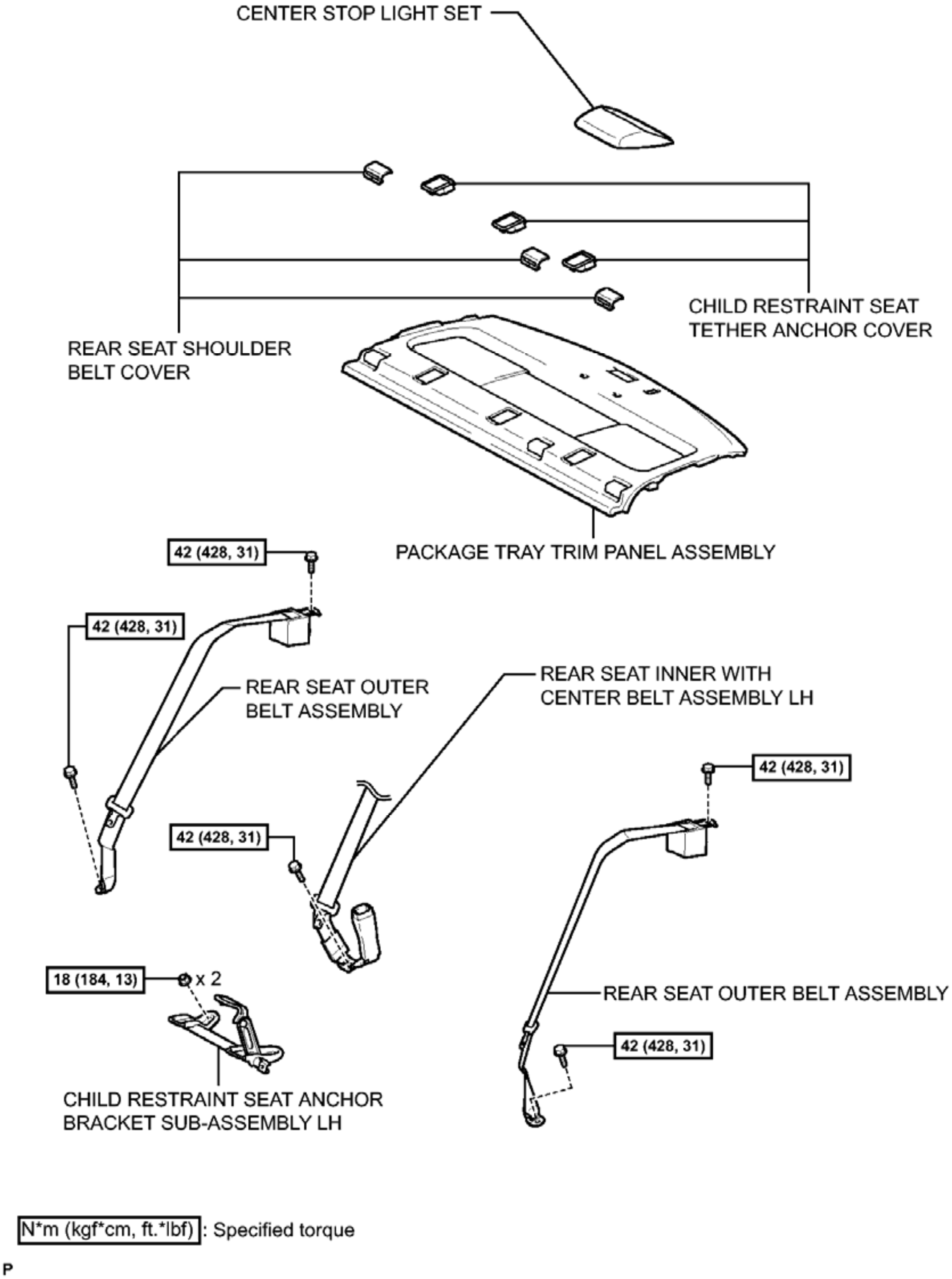
CENTER STOP LIGHT SET
REAR SEAT SHOULDER BELT COVER
CHILD RESTRAINT SEAT TETHER ANCHOR COVER
PACKAGE TRAY TRIM PANEL ASSEMBLY
42 (428, 31)
42 (428, 31)
REAR SEAT OUTER BELT ASSEMBLY
REAR SEAT INNER WITH CENTER BELT ASSEMBLY LH
42 (428, 31)
42 (428, 31)
18 (184, 13)
x 2
REAR SEAT OUTER BELT ASSEMBLY
42 (428, 31)
CHILD RESTRAINT SEAT ANCHOR BRACKET SUB-ASSEMBLY LH
N*m (kgf*cm, ft.*lbf) : Specified torque
P

Fig. 58: Identifying Rear Seat Outer Belt Assembly Replacement Components With Torque Specifications (2 Of 2)

Courtesy of TOYOTA MOTOR SALES, U.S.A., INC.

ON-VEHICLE INSPECTION

ON-VEHICLE INSPECTION

WARNING: **Be sure to correctly follow the removal and installation procedures for the rear seat outer belt assembly.**

1. **INSPECT REAR SEAT OUTER BELT ASSEMBLY (for Vehicle not Involved in Collision)**
    a. Visually check for defects with the rear seat outer belt assembly installed on the vehicle.
        1. The defects are as follows:
            - Cuts on the rear seat outer belt assembly
            - Small cracks on the rear seat outer belt assembly
            - Significant discoloration on the rear seat outer belt assembly

        OK

        No defects are found.

        HINT:

        If any of the defects is found, replace the rear seat outer belt assembly with a new one.

2. **INSPECT REAR SEAT OUTER BELT ASSEMBLY (for Vehicle Involved in Collision)**
    a. Visually check for defects with the rear seat outer belt assembly removed from the vehicle.
        1. The defects are as follows:
            - Cuts on the rear seat outer belt assembly
            - Small cracks on the rear seat outer belt assembly
            - Significant discoloration on the rear seat outer belt assembly
            - Cracks or other damage to the connector

        OK

        No defects are found.

        HINT:

        If any of the defects is found, replace the rear seat outer belt assembly with a new one.

REMOVAL

REMOVAL

1. **PRECAUTION**

NOTE: After turning the ignition switch off, waiting time may be required before disconnecting the cable from the negative (-) battery terminal. Therefore, make sure to read the disconnecting the cable from the negative (-) battery terminal notices before proceeding with work. Refer to PRECAUTION .

2. **DISCONNECT CABLE FROM NEGATIVE BATTERY TERMINAL**

   WARNING: Wait at least 90 seconds after disconnecting the cable from the negative (-) battery terminal to disable the SRS system.

   NOTE: When disconnecting the cable, some systems need to be initialized after the cable is reconnected. Refer to INITIALIZATION .

3. **REMOVE REAR SEAT CUSHION ASSEMBLY** . Refer to **REMOVAL - Step 3** .
4. **REMOVE REAR SEAT CUSHION LOCK HOOK** . Refer to **REMOVAL - Step 4** .
5. **REMOVE INNER LUGGAGE COMPARTMENT TRIM PAD** . Refer to **REMOVAL - Step 5** .
6. **REMOVE REAR SEATBACK ASSEMBLY LH** . Refer to **REMOVAL - Step 6** .
7. **REMOVE REAR SIDE SEATBACK ASSEMBLY LH** . Refer to **REMOVAL - Step 8** .
8. **REMOVE REAR SIDE SEATBACK ASSEMBLY RH** . Refer to **REMOVAL - Step 9** .
9. **DISCONNECT REAR DOOR OPENING TRIM WEATHERSTRIP LH** . See step 12.
10. **DISCONNECT REAR DOOR OPENING TRIM WEATHERSTRIP RH** . See step 13.
11. **REMOVE ROOF SIDE INNER GARNISH LH** . Refer to **REMOVAL - Step 24** .
12. **REMOVE ROOF SIDE INNER GARNISH RH**

    HINT:

    Use the same procedure as for the LH side.

13. **DISCONNECT REAR SEAT OUTER BELT ASSEMBLY (for LH Side)**
    a. Remove the bolt and disconnect the floor anchor of the rear seat outer belt assembly.

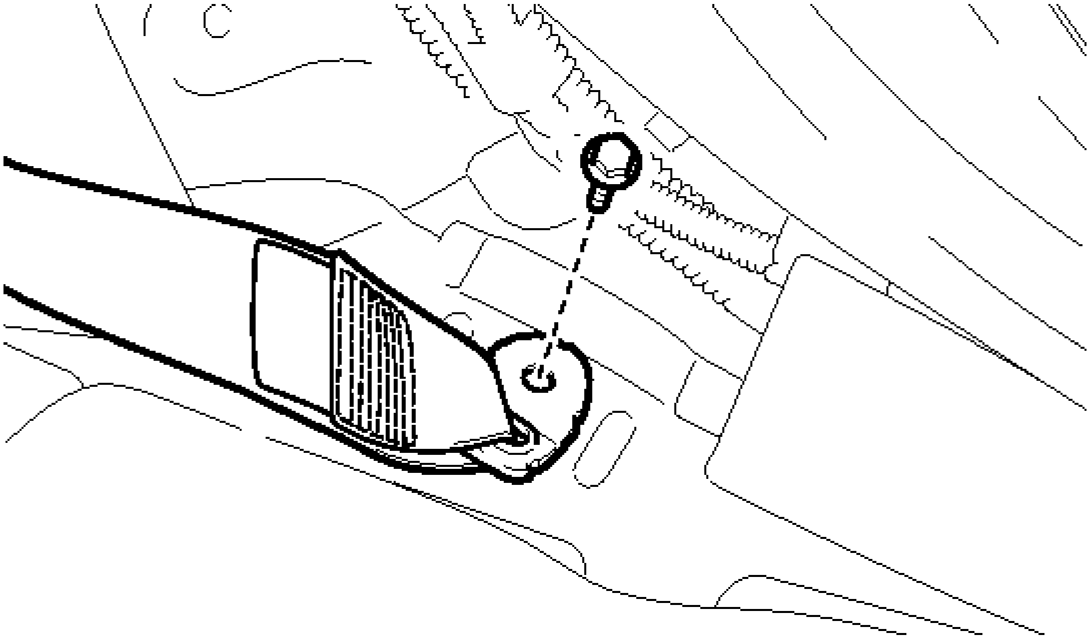

Fig. 59: Identifying Rear Seat Outer Belt Assembly (For LH Side) Bolt
Courtesy of TOYOTA MOTOR SALES, U.S.A., INC.

14. **DISCONNECT REAR SEAT OUTER BELT ASSEMBLY (for RH Side)**
    a. Remove the bolt and disconnect the floor anchor of the rear seat outer belt assembly.

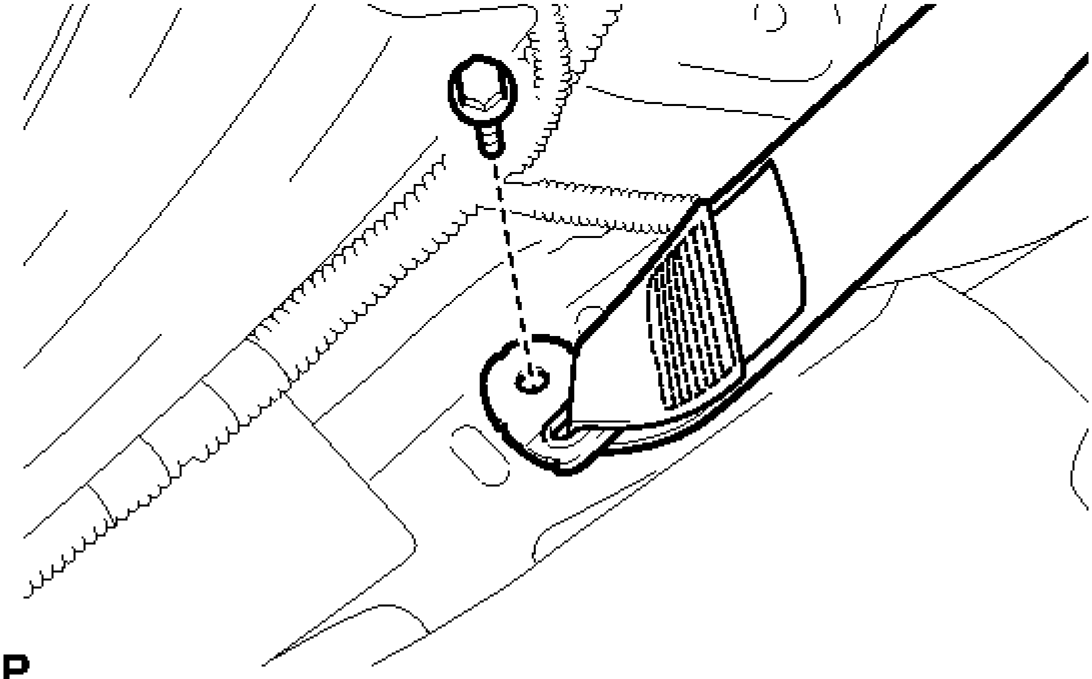

Fig. 60: Identifying Rear Seat Outer Belt Assembly (For RH Side) Bolt

Courtesy of TOYOTA MOTOR SALES, U.S.A., INC.

15. **REMOVE CHILD RESTRAINT SEAT ANCHOR BRACKET SUB-ASSEMBLY LH** . See step 10.
16. **DISCONNECT REAR SEAT INNER WITH CENTER BELT ASSEMBLY LH** . See step 19.
17. **REMOVE CENTER STOP LIGHT SET** . Refer to **REMOVAL - Step 1** .
18. **REMOVE CHILD RESTRAINT SEAT TETHER ANCHOR COVER**
    a. Using a moulding remover, disengage the 2 claws and 2 guides to remove the child restraint seat tether anchor cover.

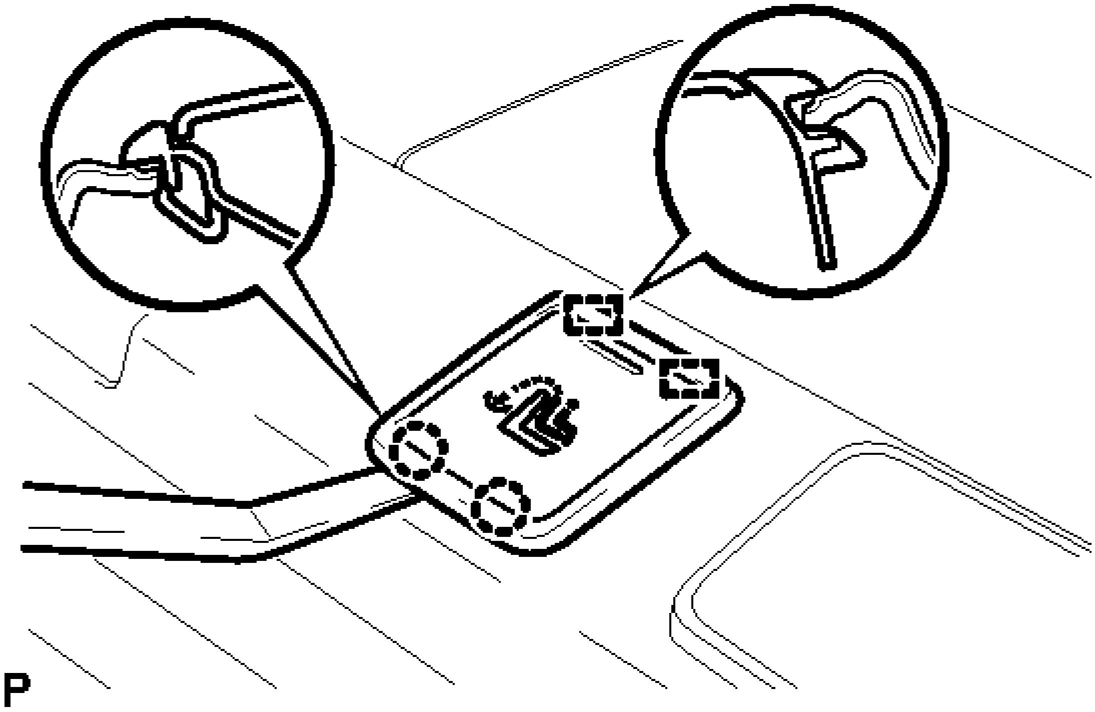

Fig. 61: Removing Child Restraint Seat Tether Anchor Cover
Courtesy of TOYOTA MOTOR SALES, U.S.A., INC.

HINT:

Use the same procedure for the other 2 child restraint seat tether anchor covers.

19. **REMOVE REAR SEAT SHOULDER BELT COVER**
    a. Using a moulding remover, disengage the 2 claws and 4 guides and remove the rear seat shoulder belt cover.

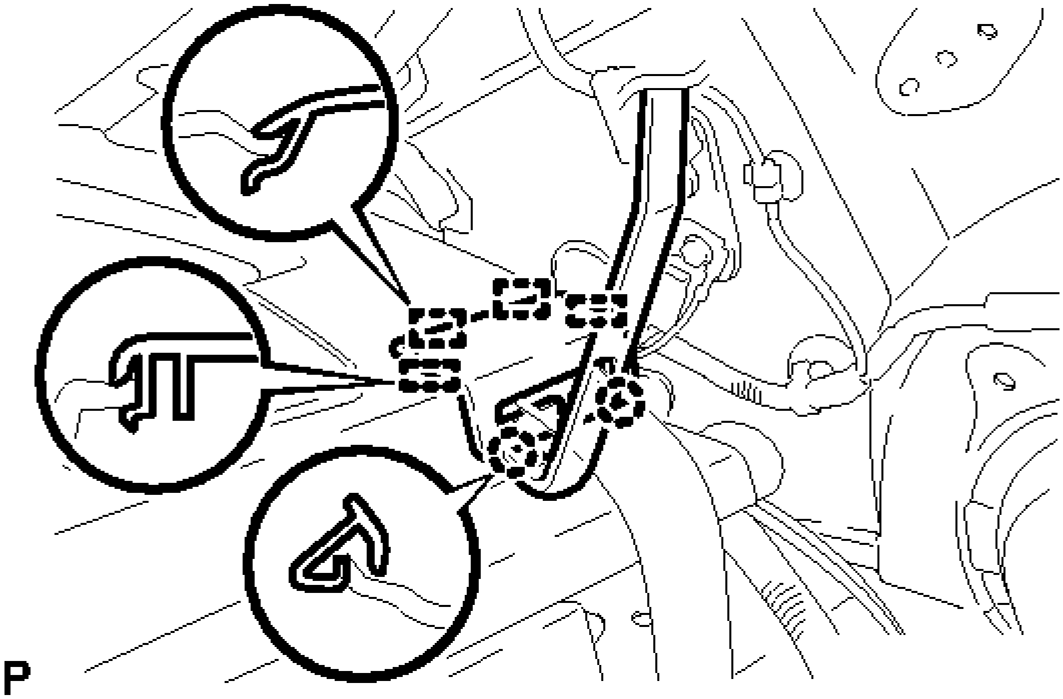

Fig. 62: Removing Rear Seat Shoulder Belt Cover
Courtesy of TOYOTA MOTOR SALES, U.S.A., INC.

HINT:

Use the same procedure for the other 2 rear seat shoulder belt covers.

20. **REMOVE PACKAGE TRAY TRIM PANEL ASSEMBLY**
    a. Using pliers, disengage the 3 clips from inside the luggage compartment as shown in the illustration.

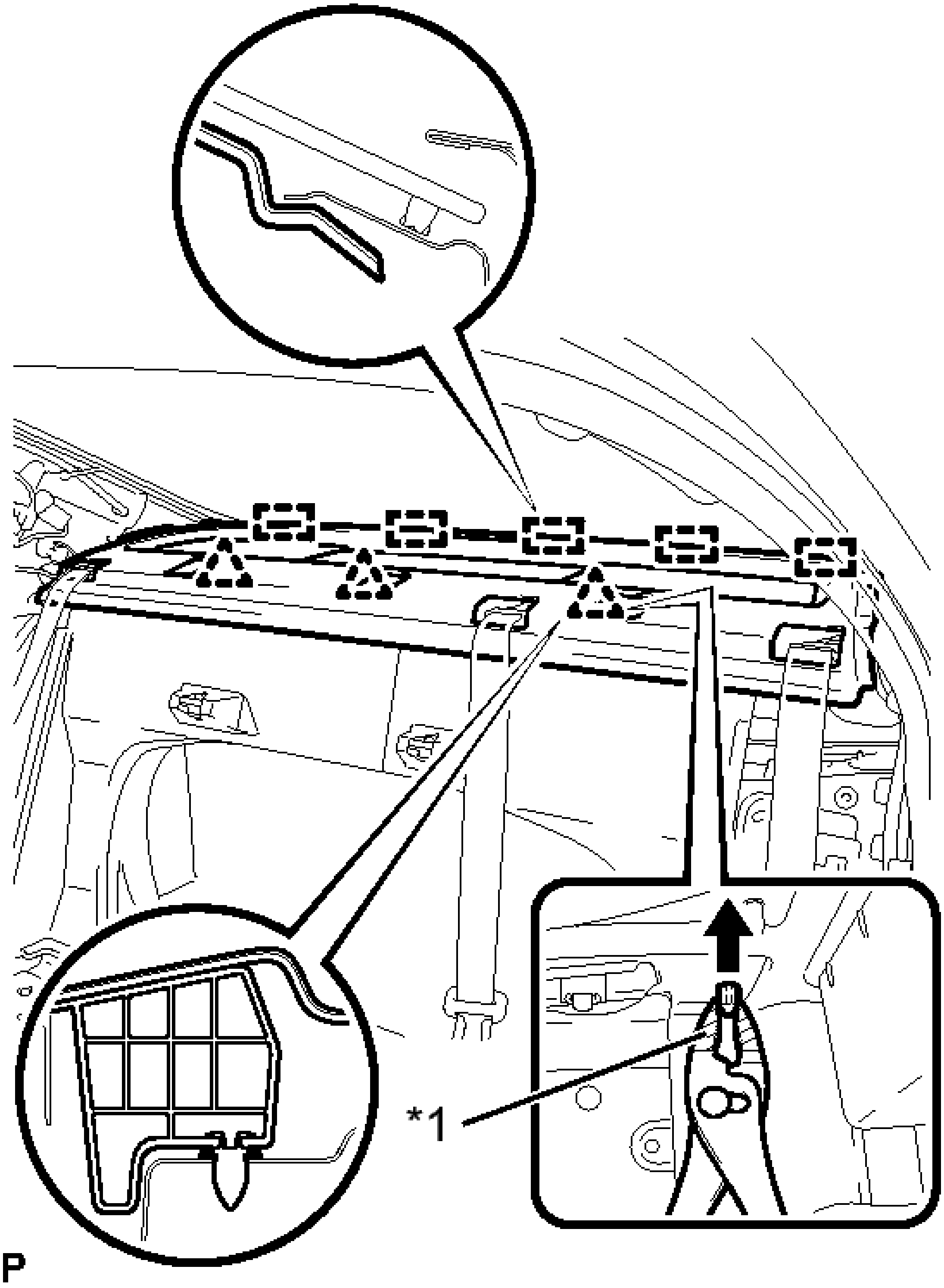

Fig. 63: Removing Package Tray Trim Panel Assembly
Courtesy of TOYOTA MOTOR SALES, U.S.A., INC.

TEXT IN ILLUSTRATION

	Protective

*1	Tape

HINT:

Tape the tip of the pliers before use.

b. Disengage the 5 guides.
c. Pass the 3 rear seat belt floor anchors through the package tray trim panel assembly then remove the package tray trim panel assembly.

21. **REMOVE REAR SEAT OUTER BELT ASSEMBLY**

a. Remove the bolt.

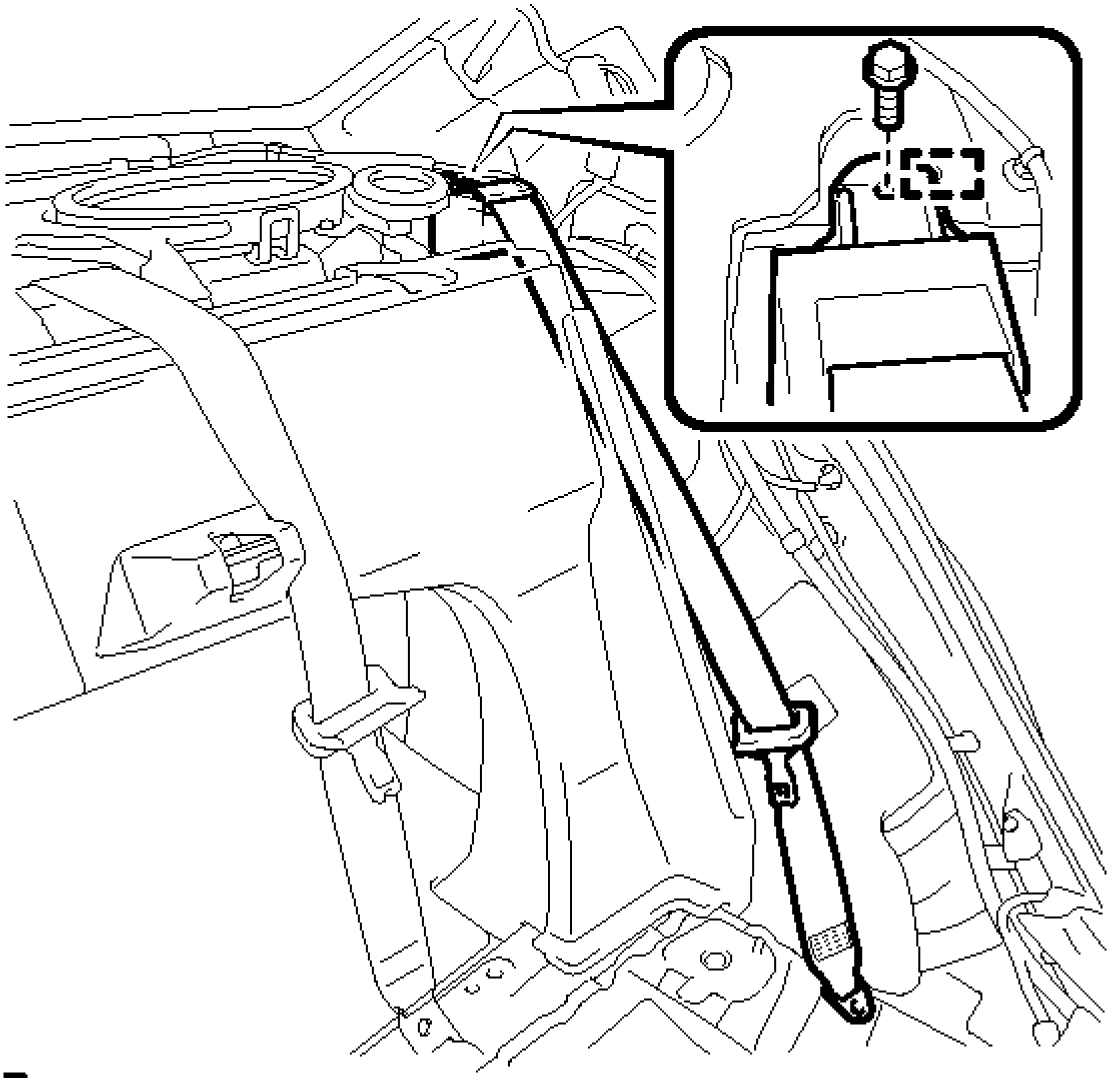

P

Fig. 64: Identifying Rear Seat Outer Belt Assembly
Courtesy of TOYOTA MOTOR SALES, U.S.A., INC.

b. Disengage the guide to remove the rear seat outer belt assembly.

HINT:

Use the same procedure for the RH side and LH side.

INSPECTION

INSPECTION

1. **INSPECT REAR SEAT OUTER BELT ASSEMBLY**
    a. Before installing the rear seat outer belt assembly, check the ELR function.

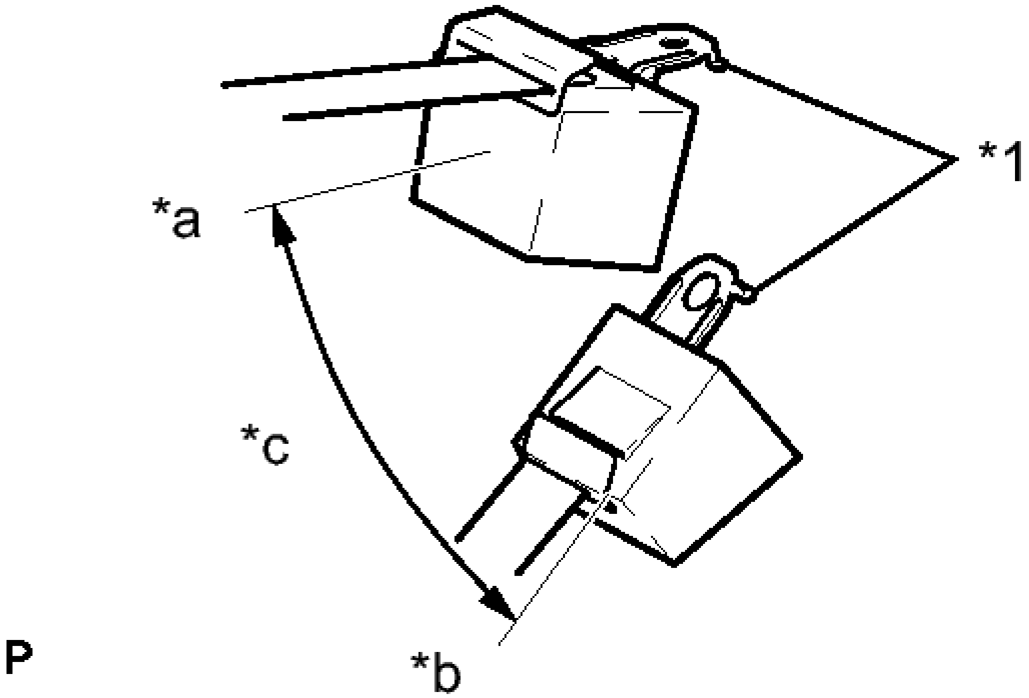

Fig. 65: Inspecting Rear Seat Outer Belt Assembly
Courtesy of TOYOTA MOTOR SALES, U.S.A., INC.

NOTE: **Do not disassemble the retractor.**

1. When the inclination of the retractor is 15° or less, check that the belt can be pulled from the retractor. When the inclination of the retractor is over 45°, check that the belt locks.

TEXT IN ILLUSTRATION

*1	Retractor
*a	Unlocked
*b	Locked

*c	45°

If the result is not as specified, replace the rear seat outer belt assembly.

INSTALLATION

INSTALLATION

1. **INSPECT REAR SEAT OUTER BELT ASSEMBLY** . See step 1.
2. **INSTALL REAR SEAT OUTER BELT ASSEMBLY**
    a. Engage the guide to temporarily install the rear seat outer belt assembly.
    b. Install the bolt.

    Torque: 42 N*m (428 kgf*cm, 31 ft.*lbf)

    HINT:

    Use the same procedure for the RH side and LH side.

    c. Check if the ELR locks.

    NOTE: **The check should be performed with the rear seat outer belt assembly installed.**

        1. With the belt assembly installed, check that the belt locks when it is pulled out quickly.
3. **INSTALL PACKAGE TRAY TRIM PANEL ASSEMBLY**
    a. Pass the 3 rear seat belt floor anchors through the package tray trim panel assembly.
    b. Engage the 5 guides and 3 clips to install the package tray trim panel assembly.

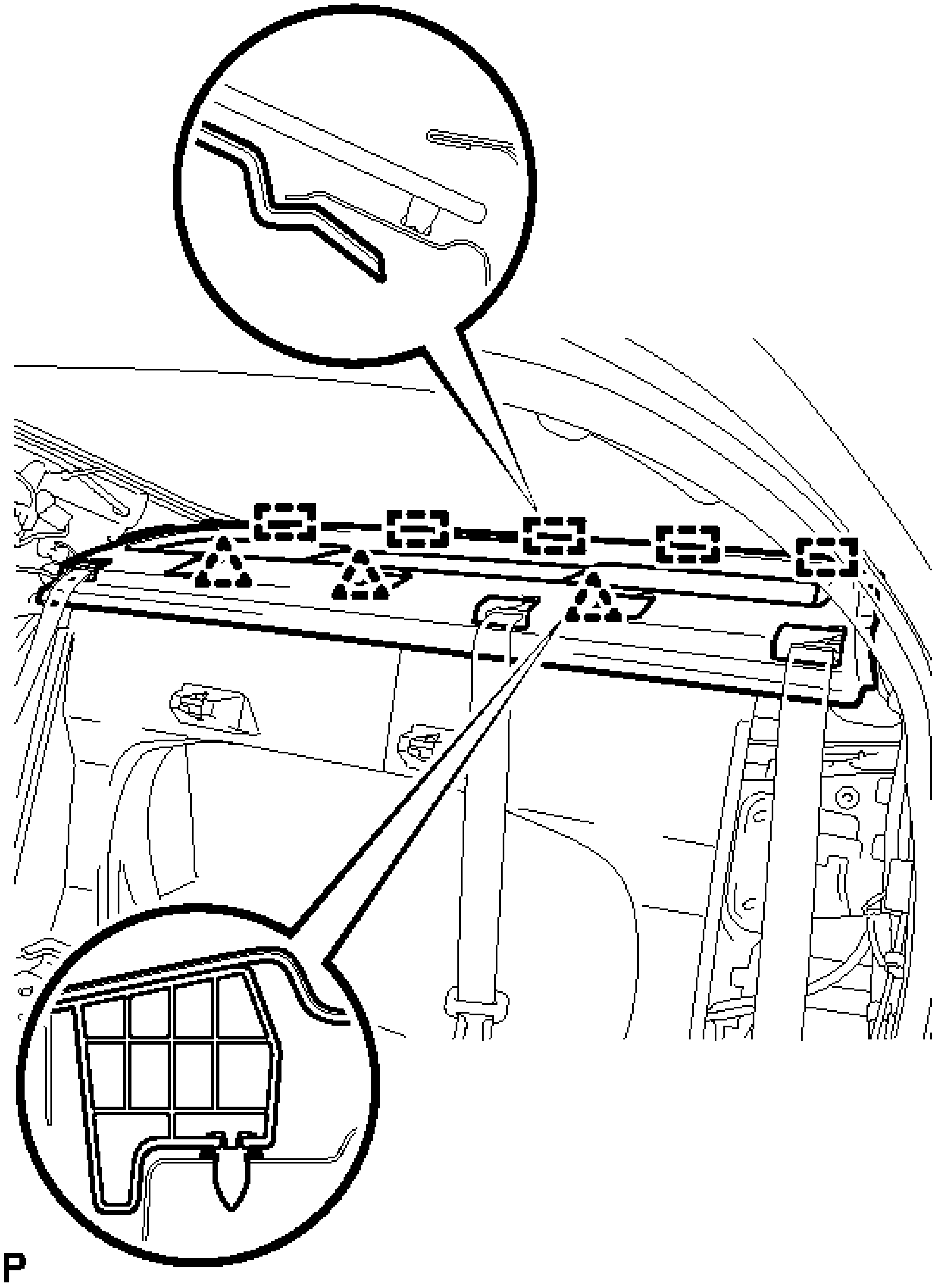

Fig. 66: Identifying Package Tray Trim Panel Assembly
Courtesy of TOYOTA MOTOR SALES, U.S.A., INC.

4. **INSTALL REAR SEAT SHOULDER BELT COVER**
    a. Engage the 4 guides and 2 claws to install the rear seat shoulder belt cover.

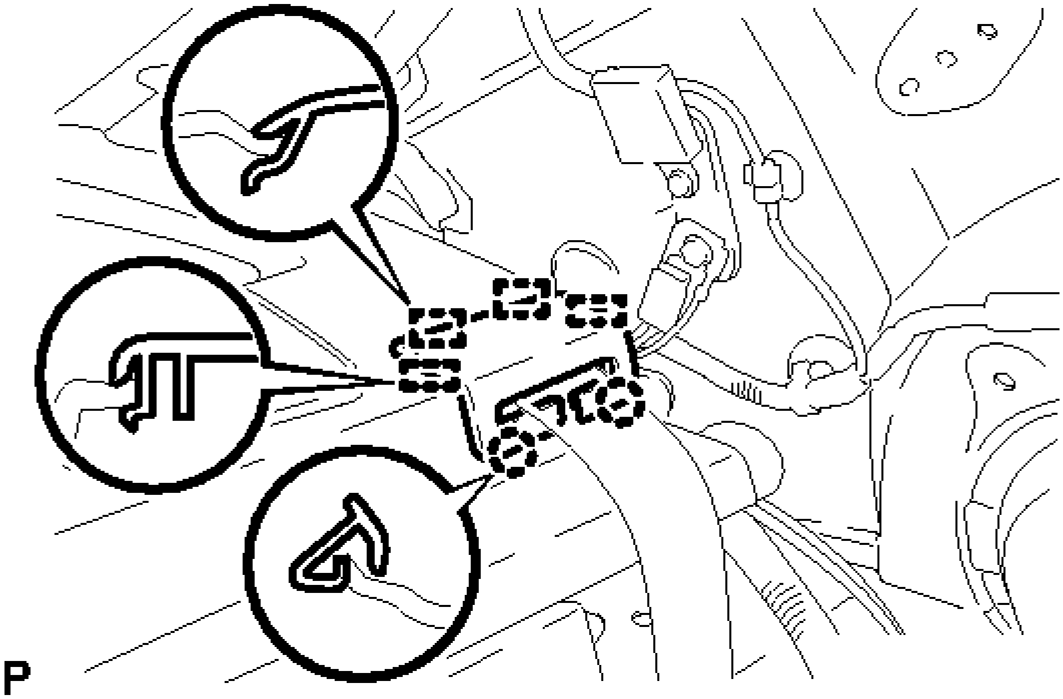

Fig. 67: Identifying Rear Seat Shoulder Belt Cover
Courtesy of TOYOTA MOTOR SALES, U.S.A., INC.

HINT:

Use the same procedure for the other 2 rear seat shoulder belt covers.

5. **INSTALL CHILD RESTRAINT SEAT TETHER ANCHOR COVER**
    a. Engage the 2 guides and 2 claws to install the child restraint seat tether anchor cover.

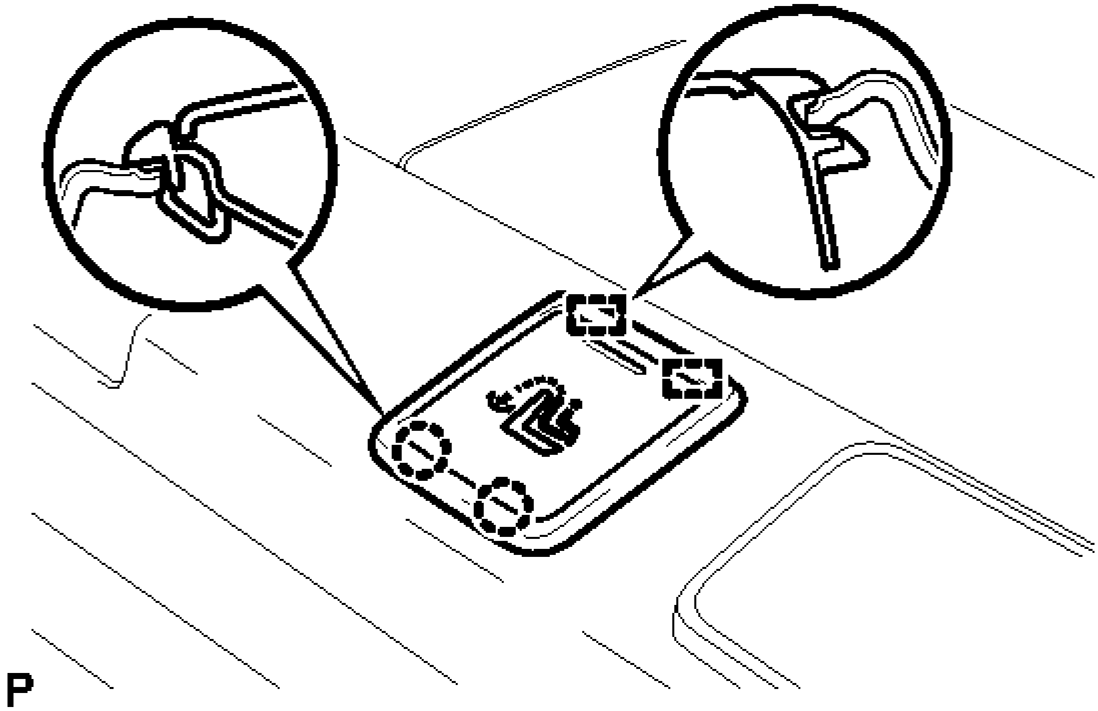

Fig. 68: Identifying Child Restraint Seat Tether Anchor Cover
Courtesy of TOYOTA MOTOR SALES, U.S.A., INC.

HINT:

Use the same procedure for the other 2 child restraint seat tether anchor covers.

6. **INSTALL CENTER STOP LIGHT SET** . Refer to **INSTALLATION - Step 1** .
7. **CONNECT REAR SEAT INNER WITH CENTER BELT ASSEMBLY LH** . See step 7.
8. **INSTALL CHILD RESTRAINT SEAT ANCHOR BRACKET SUB-ASSEMBLY LH** . See step 1.
9. **CONNECT REAR SEAT OUTER BELT ASSEMBLY (for LH Side)**
    a. Connect the floor anchor of the rear seat outer belt assembly with the bolt.

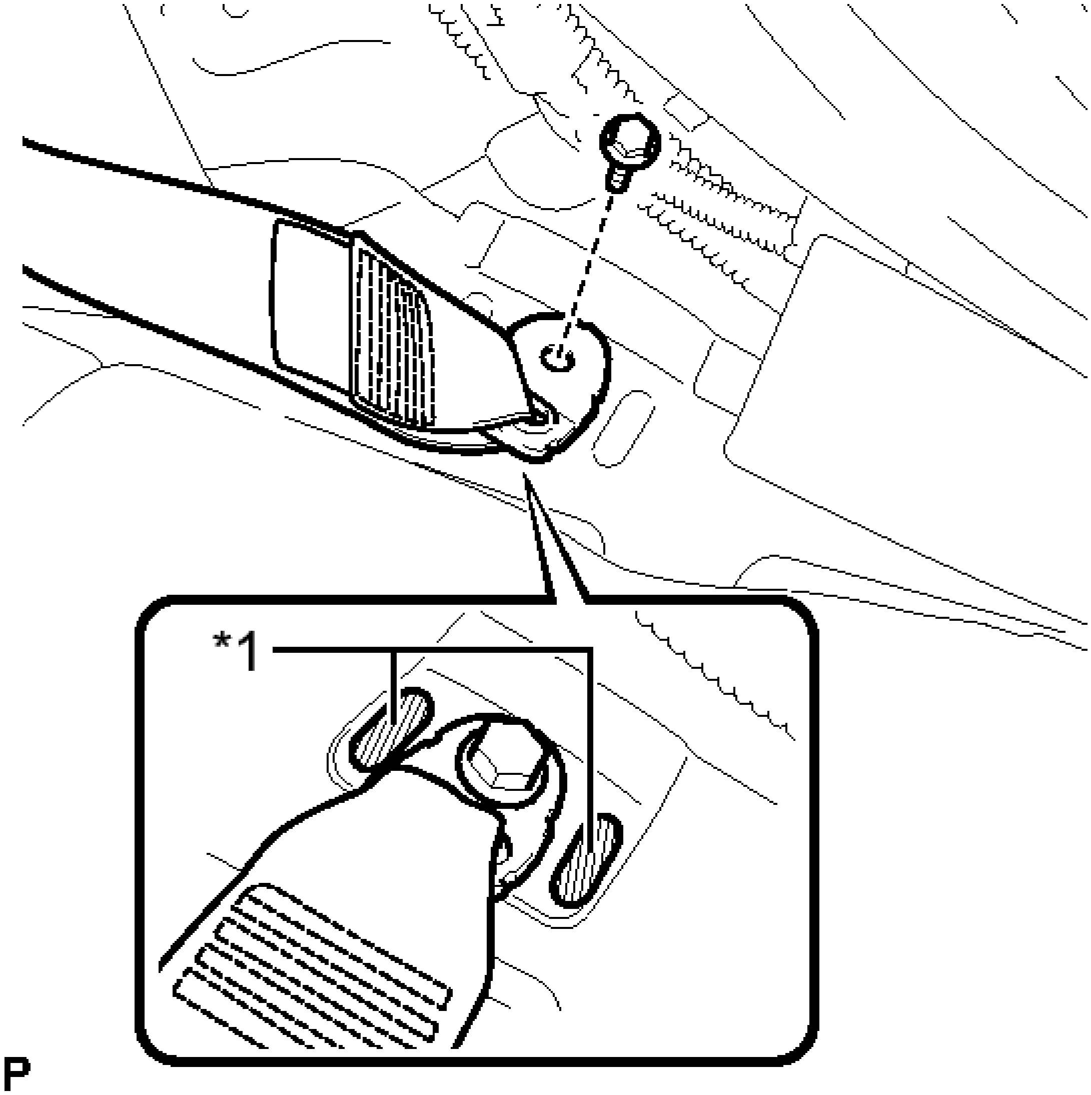

Fig. 69: Identifying Rear Seat Outer Belt Assembly (For LH Side) Bolt And Protruding Parts
Courtesy of TOYOTA MOTOR SALES, U.S.A., INC.

TEXT IN ILLUSTRATION

*1	Protruding Part

Torque: 42 N*m (428 kgf*cm, 31 ft.*lbf)

NOTE: **Do not allow the anchor part of the rear seat outer belt assembly to overlap the protruding parts of the floor panel.**

10. **CONNECT REAR SEAT OUTER BELT ASSEMBLY (for RH Side)**
    a. Connect the floor anchor of the rear seat outer belt assembly with the bolt.

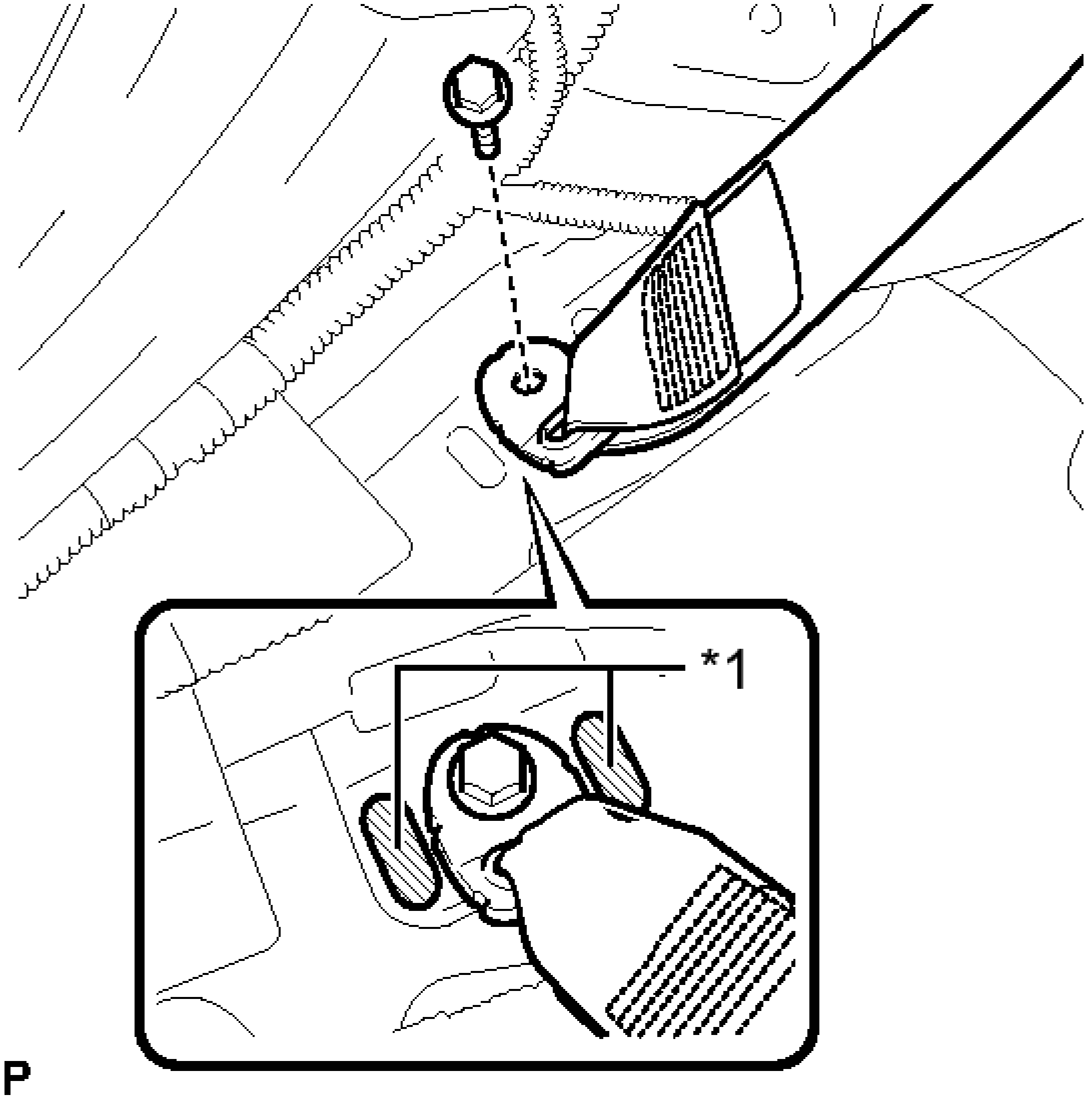

Fig. 70: Identifying Rear Seat Outer Belt Assembly (For RH Side) Bolt And Protruding Parts
Courtesy of TOYOTA MOTOR SALES, U.S.A., INC.

TEXT IN ILLUSTRATION

*1	Protruding Part

Torque: 42 N*m (428 kgf*cm, 31 ft.*lbf)

NOTE: **Do not allow the anchor part of the rear seat outer belt assembly to overlap the protruding parts of the floor panel.**

11. **INSTALL ROOF SIDE INNER GARNISH LH** . Refer to **INSTALLATION - Step 20** .
12. **INSTALL ROOF SIDE INNER GARNISH RH**

HINT:

Use the same procedure as for the LH side.

13. **INSTALL REAR DOOR OPENING TRIM WEATHERSTRIP LH** . Refer to **INSTALLATION - Step 25** .
14. **INSTALL REAR DOOR OPENING TRIM WEATHERSTRIP RH** . Refer to **INSTALLATION - Step 32** .
15. **INSTALL REAR SIDE SEATBACK ASSEMBLY LH** . Refer to **INSTALLATION - Step 2** .
16. **INSTALL REAR SIDE SEATBACK ASSEMBLY RH** . Refer to **INSTALLATION - Step 1** .
17. **INSTALL REAR SEATBACK ASSEMBLY LH** . Refer to **INSTALLATION - Step 4** .
18. **INSTALL INNER LUGGAGE COMPARTMENT TRIM PAD** . Refer to **INSTALLATION - Step 5** .
19. **INSTALL REAR SEAT CUSHION LOCK HOOK** . Refer to **INSTALLATION - Step 6** .
20. **INSTALL REAR SEAT CUSHION ASSEMBLY** . Refer to **INSTALLATION - Step 7** .
21. **CONNECT CABLE TO NEGATIVE BATTERY TERMINAL**

NOTE: **When disconnecting the cable, some systems need to be initialized after the cable is reconnected. Refer to INITIALIZATION .**

22. **INSPECT SRS WARNING LIGHT**

For Built-in Type Yaw Rate Sensor: Refer to **DIAGNOSIS SYSTEM** .

For Separate Type Yaw Rate Sensor: Refer to **DIAGNOSIS SYSTEM** .

TONGUE PLATE STOPPER

COMPONENTS

ILLUSTRATION

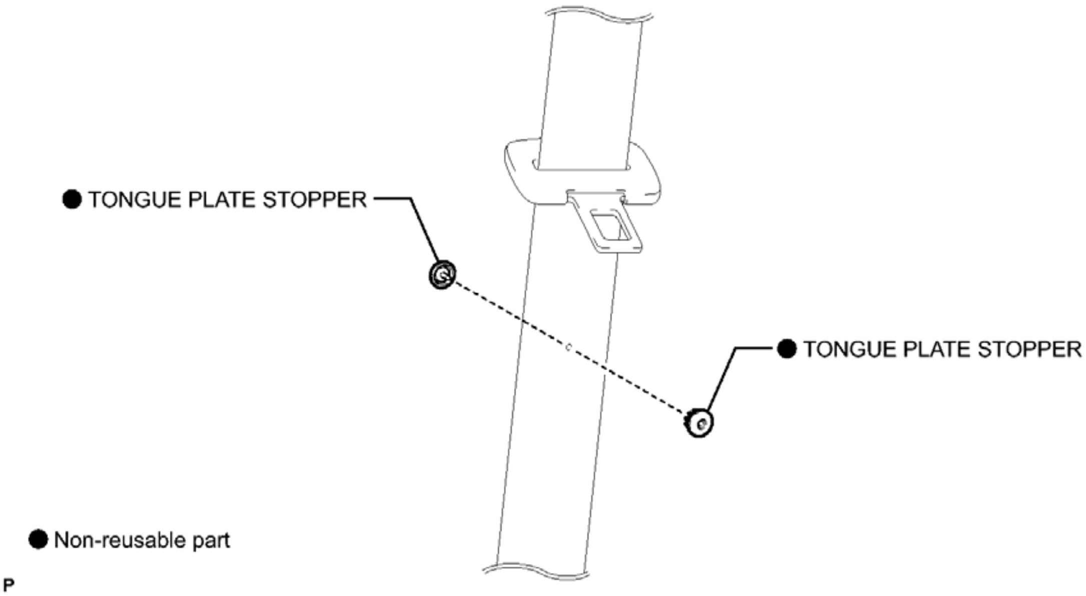
● TONGUE PLATE STOPPER
● TONGUE PLATE STOPPER
● Non-reusable part
P

Fig. 71: Identifying Tongue Plate Stopper Replacement Components
Courtesy of TOYOTA MOTOR SALES, U.S.A., INC.

REPLACEMENT

REPLACEMENT

1. **REMOVE TONGUE PLATE STOPPER**
    a. Slide the tongue plate above the installation position of the tongue plate stopper, and temporarily hold it with adhesive tape.

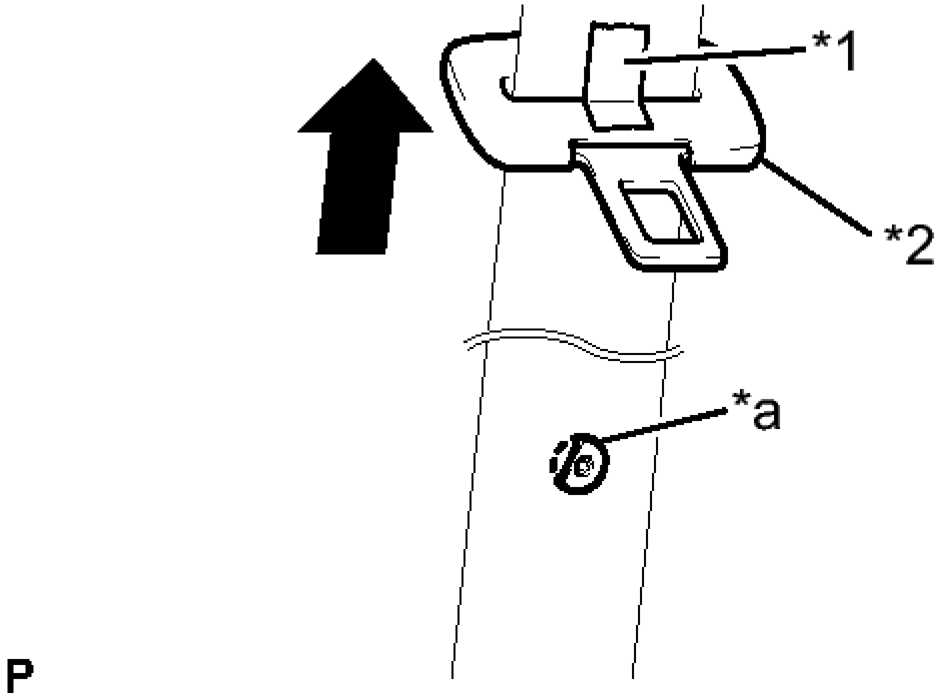

Fig. 72: Removing Tongue Plate Stopper
Courtesy of TOYOTA MOTOR SALES, U.S.A., INC.

b. Remove any pieces of the original tongue plate stopper in the belt webbing with a pair of pliers.

NOTE: Be careful not to damage the belt webbing during repair.

TEXT IN ILLUSTRATION

*1	Adhesive Tape
*2	Tongue Plate
*a	Broken Tongue Plate Stopper

2. **INSTALL TONGUE PLATE STOPPER**
    a. Position a new tongue plate stopper in the hole of the belt webbing.

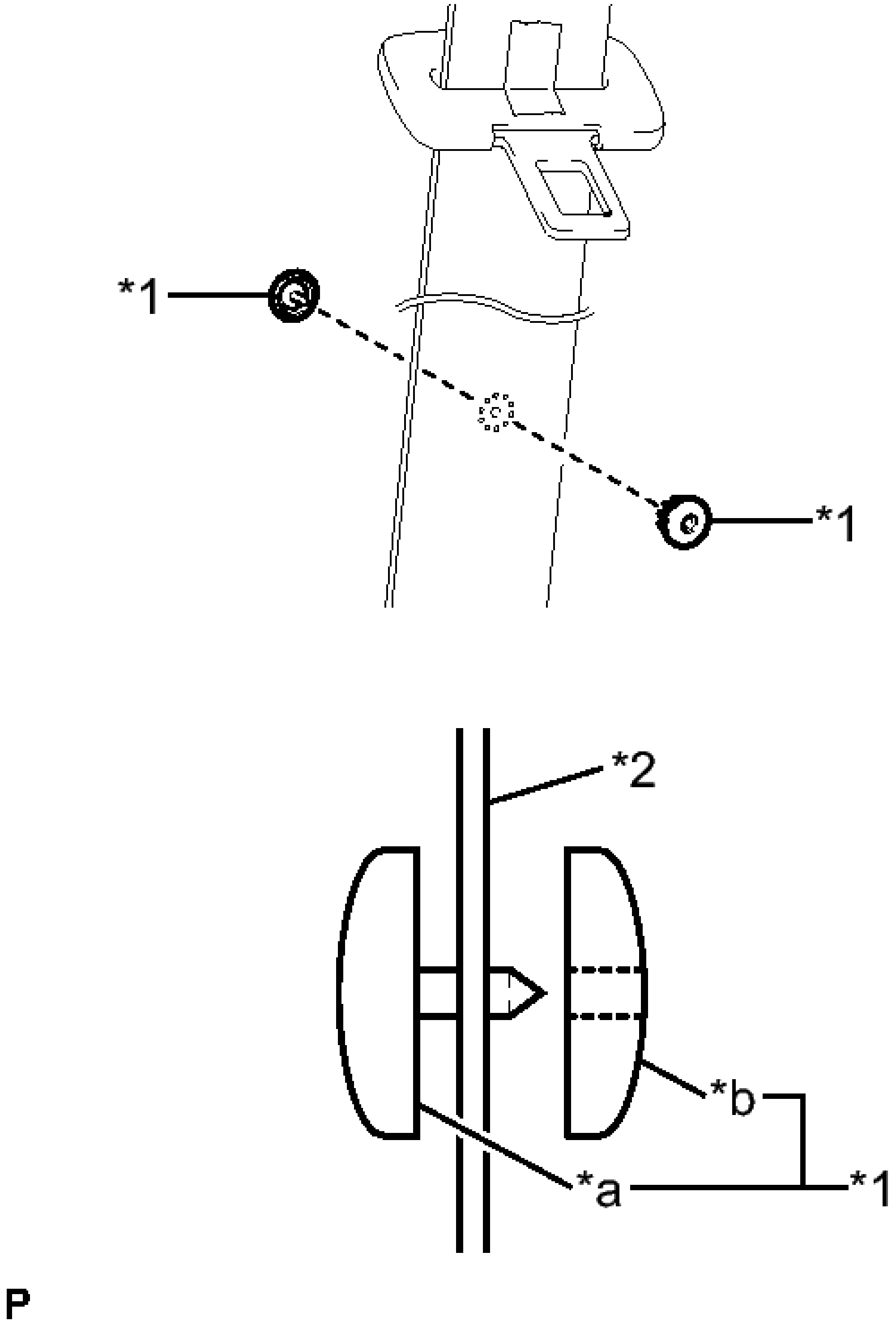

Fig. 73: View Of Tongue Plate Stopper
Courtesy of TOYOTA MOTOR SALES, U.S.A., INC.

TEXT IN ILLUSTRATION

	Tongue

*1	Plate Stopper
*2	Belt Webbing
*a	Male
*b	Female

HINT:

Make sure that the installation direction of the tongue plate stopper is as shown in the illustration.

b. Hold the tongue plate stopper in the hole of the belt webbing using an adjustable wrench, and turn the adjustment screw of the adjustable wrench by hand to compress the tongue plate stopper.

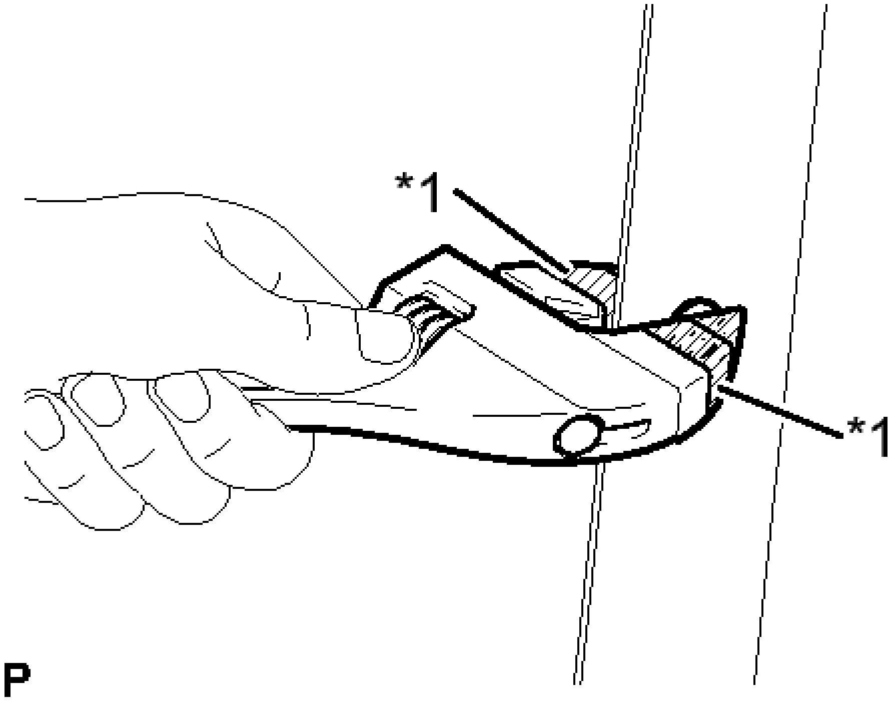

Fig. 74: Compressing Tongue Plate Stopper Using Adjustable Wrench
Courtesy of TOYOTA MOTOR SALES, U.S.A., INC.

TEXT IN ILLUSTRATION

*1	Protective Tape

NOTE:

- **When using the adjustable wrench, make sure to position the male and female parts of the tongue plate stopper parallel to each other.**
- **Do not use pliers to compress the pin of the tongue plate**

stopper. They may damage the tongue plate stopper and belt webbing.

HINT:

Tape the jaws of the adjustable wrench before use.

c. When the adjustment screw of the adjustable wrench cannot be turned by hand, tighten the adjustment screw using a pair of adjustable joint pliers until the tongue plate stopper thickness is 4.5 to 5.0 mm (0.177 to 0.197 in.). (Refer to **Fig. 75**.)

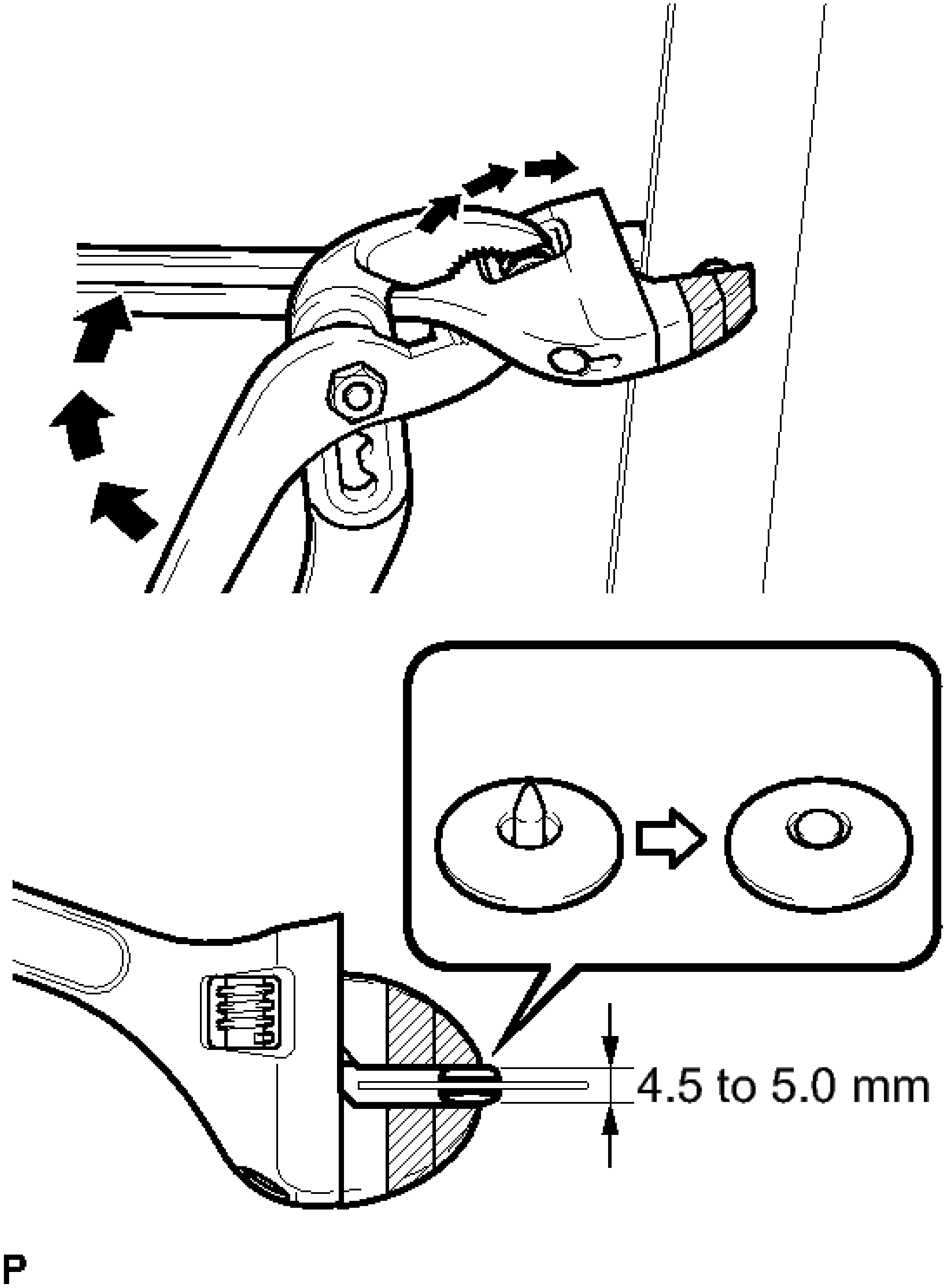

Fig. 75: Tightening Adjustment Screw Using Adjustable Joint Pliers
Courtesy of TOYOTA MOTOR SALES, U.S.A., INC.

d. Make sure that the male pin of the tongue plate stopper has expanded evenly in the hole of the female part and is firmly held to the belt webbing. (Refer to **Fig. 76**.)

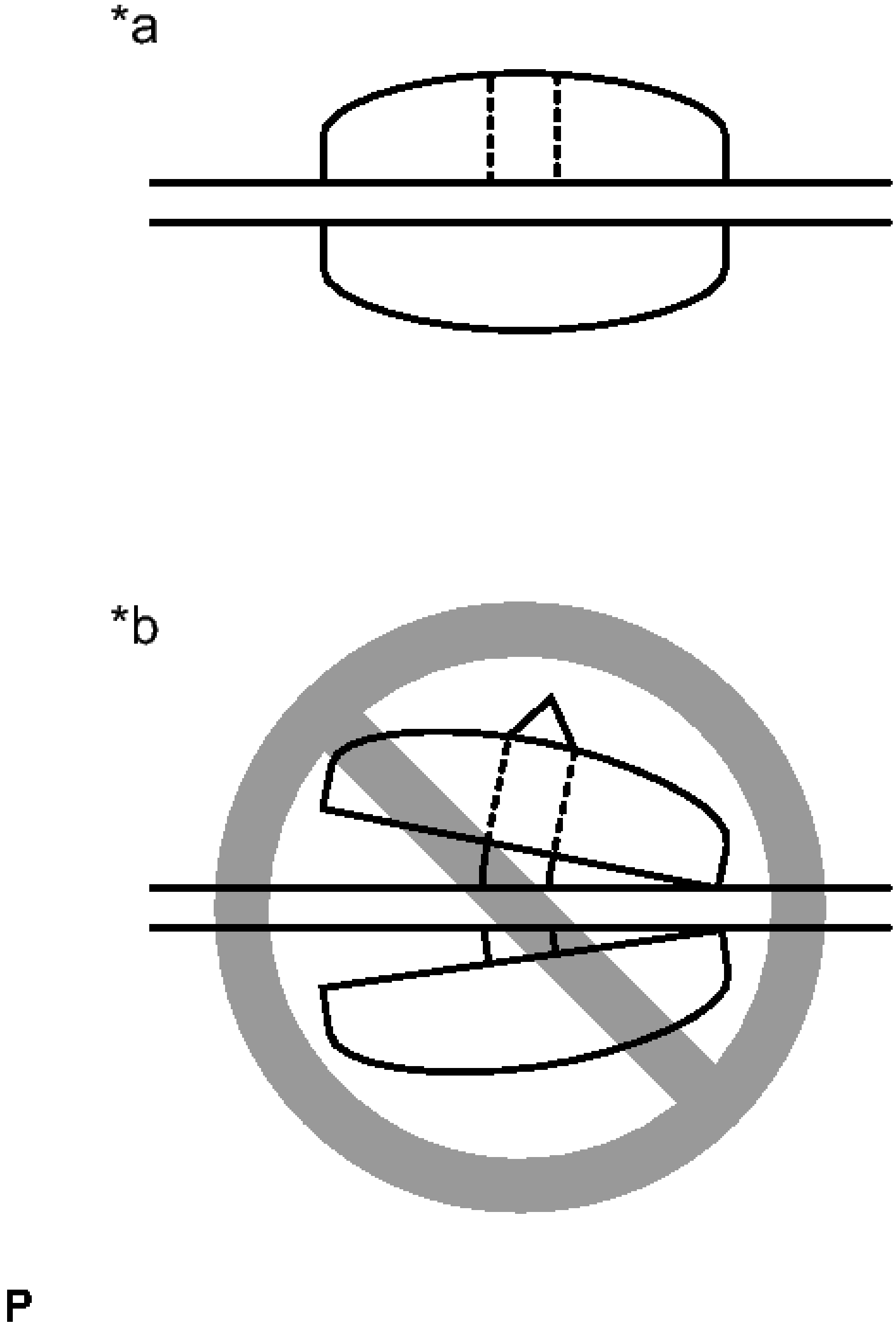

Fig. 76: View Of Correct/Incorrect Expanded Male Pin Of Tongue Plate Stopper
Courtesy of TOYOTA MOTOR SALES, U.S.A., INC.

TEXT IN ILLUSTRATION

*a	CORRECT

*b	INCORRECT

CHILD RESTRAINT SEAT TETHER ANCHOR

COMPONENTS

ILLUSTRATION

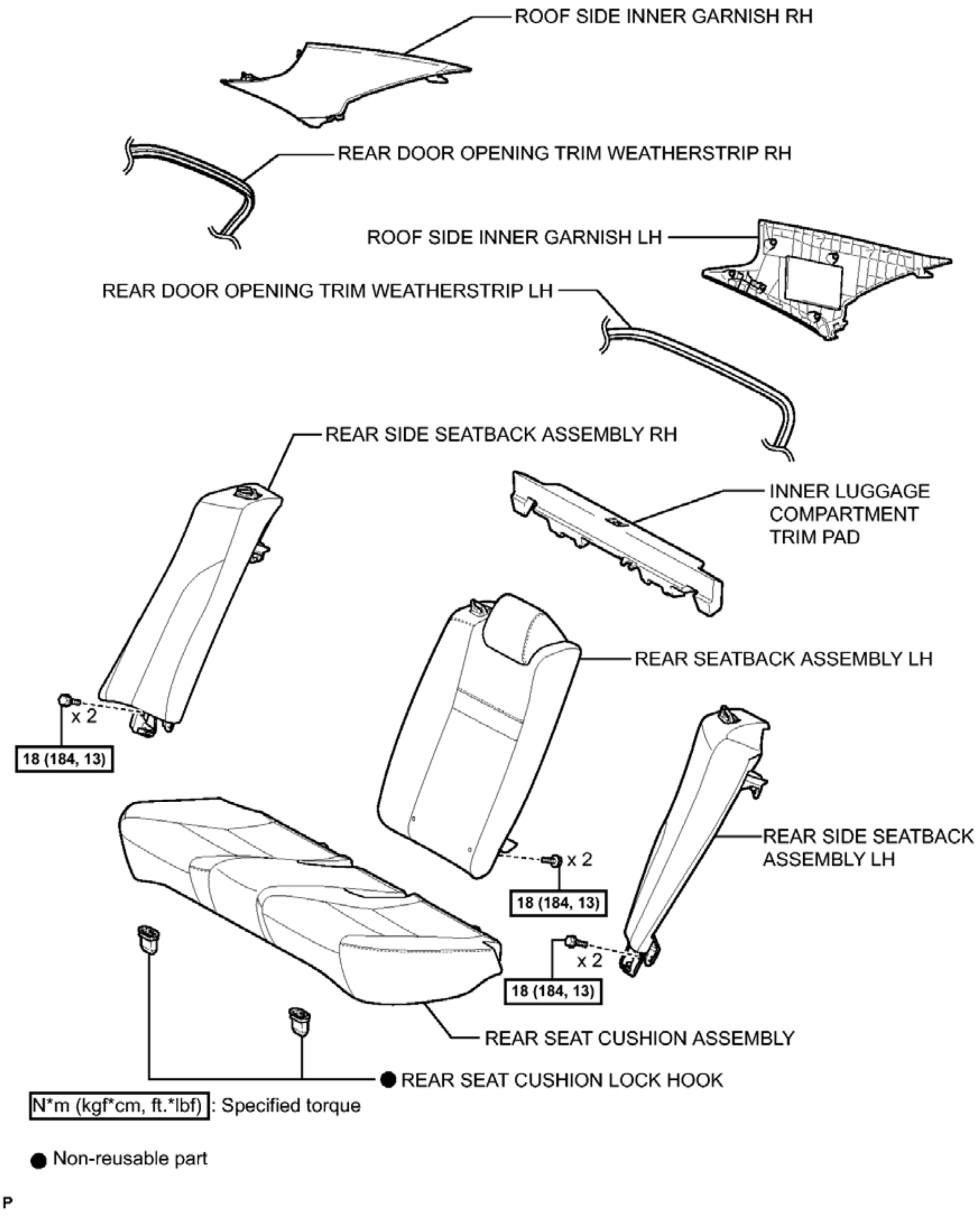
ROOF SIDE INNER GARNISH RH
REAR DOOR OPENING TRIM WEATHERSTRIP RH
ROOF SIDE INNER GARNISH LH
REAR DOOR OPENING TRIM WEATHERSTRIP LH
REAR SIDE SEATBACK ASSEMBLY RH
INNER LUGGAGE COMPARTMENT TRIM PAD
x 2
18 (184, 13)
REAR SEATBACK ASSEMBLY LH
x 2
18 (184, 13)
REAR SIDE SEATBACK ASSEMBLY LH
x 2
18 (184, 13)
REAR SEAT CUSHION ASSEMBLY
● REAR SEAT CUSHION LOCK HOOK
N*m (kgf*cm, ft.*lbf) : Specified torque
● Non-reusable part
P

Fig. 77: Identifying Child Restraint Seat Tether Anchor Replacement Components With Torque Specifications (1 Of 2)
Courtesy of TOYOTA MOTOR SALES, U.S.A., INC.

ILLUSTRATION

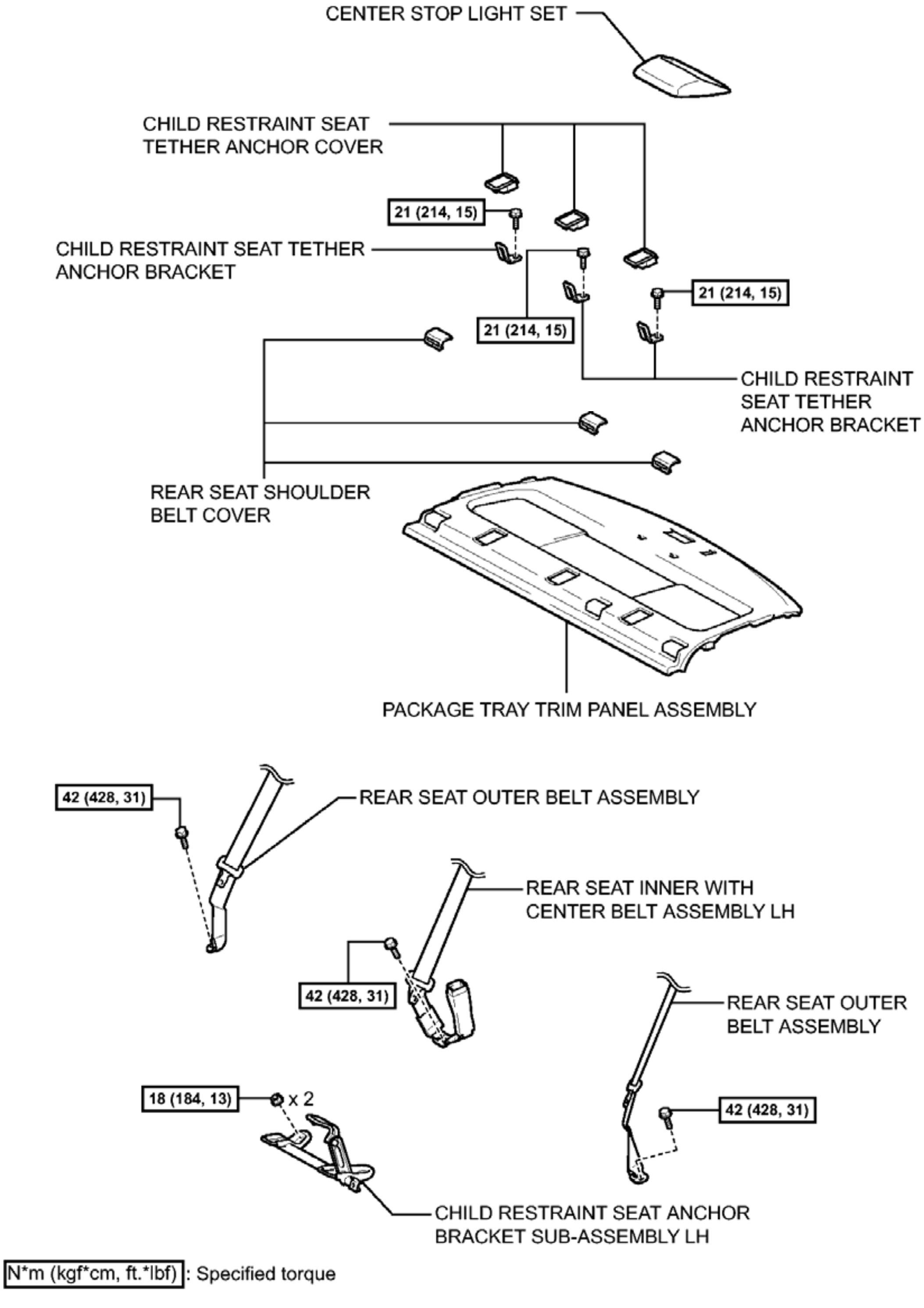
CENTER STOP LIGHT SET
CHILD RESTRAINT SEAT TETHER ANCHOR COVER
21 (214, 15)
CHILD RESTRAINT SEAT TETHER ANCHOR BRACKET
21 (214, 15)
21 (214, 15)
CHILD RESTRAINT SEAT TETHER ANCHOR BRACKET
REAR SEAT SHOULDER BELT COVER
PACKAGE TRAY TRIM PANEL ASSEMBLY
42 (428, 31)
REAR SEAT OUTER BELT ASSEMBLY
REAR SEAT INNER WITH CENTER BELT ASSEMBLY LH
42 (428, 31)
REAR SEAT OUTER BELT ASSEMBLY
18 (184, 13)
x 2
42 (428, 31)
CHILD RESTRAINT SEAT ANCHOR BRACKET SUB-ASSEMBLY LH
N*m (kgf*cm, ft.*lbf) : Specified torque
P

Fig. 78: Identifying Child Restraint Seat Tether Anchor Replacement Components With Torque Specifications (2 Of 2)

Courtesy of TOYOTA MOTOR SALES, U.S.A., INC.

REMOVAL

REMOVAL

1. **PRECAUTION**

   NOTE: **After turning the ignition switch off, waiting time may be required before disconnecting the cable from the negative (-) battery terminal. Therefore, make sure to read the disconnecting the cable from the negative (-) battery terminal notices before proceeding with work. Refer to PRECAUTION .**

2. **DISCONNECT CABLE FROM NEGATIVE BATTERY TERMINAL**

   WARNING: **Wait at least 90 seconds after disconnecting the cable from the negative (-) battery terminal to disable the SRS system.**

   NOTE: **When disconnecting the cable, some systems need to be initialized after the cable is reconnected. Refer to INITIALIZATION .**

3. **REMOVE REAR SEAT CUSHION ASSEMBLY** . Refer to **REMOVAL - Step 3** .
4. **REMOVE REAR SEAT CUSHION LOCK HOOK** . Refer to **REMOVAL - Step 4** .
5. **REMOVE INNER LUGGAGE COMPARTMENT TRIM PAD** . Refer to **REMOVAL - Step 5** .
6. **REMOVE REAR SEATBACK ASSEMBLY LH** . Refer to **REMOVAL - Step 6** .
7. **REMOVE REAR SIDE SEATBACK ASSEMBLY LH** . Refer to **REMOVAL - Step 8** .
8. **REMOVE REAR SIDE SEATBACK ASSEMBLY RH** . Refer to **REMOVAL - Step 9** .
9. **DISCONNECT REAR DOOR OPENING TRIM WEATHERSTRIP LH** . See step 12.
10. **DISCONNECT REAR DOOR OPENING TRIM WEATHERSTRIP RH** . See step 13.
11. **REMOVE ROOF SIDE INNER GARNISH LH** . Refer to **REMOVAL - Step 24** .
12. **REMOVE ROOF SIDE INNER GARNISH RH**

    HINT:

    Use the same procedure as for the LH side.

13. **DISCONNECT REAR SEAT OUTER BELT ASSEMBLY (for LH Side)** . See step 13.
14. **DISCONNECT REAR SEAT OUTER BELT ASSEMBLY (for RH Side)** . See step 14.
15. **REMOVE CHILD RESTRAINT SEAT ANCHOR BRACKET SUB-ASSEMBLY LH** . See step 10.
16. **DISCONNECT REAR SEAT INNER WITH CENTER BELT ASSEMBLY LH** . See step 19.
17. **REMOVE CENTER STOP LIGHT SET** . Refer to **REMOVAL - Step 1** .
18. **REMOVE CHILD RESTRAINT SEAT TETHER ANCHOR COVER** . See step 18.
19. **REMOVE REAR SEAT SHOULDER BELT COVER** . See step 19.
20. **REMOVE PACKAGE TRAY TRIM PANEL ASSEMBLY** . See step 20.

21. **REMOVE CHILD RESTRAINT SEAT TETHER ANCHOR BRACKET**
    a. Remove the bolt and child restraint seat tether anchor bracket.

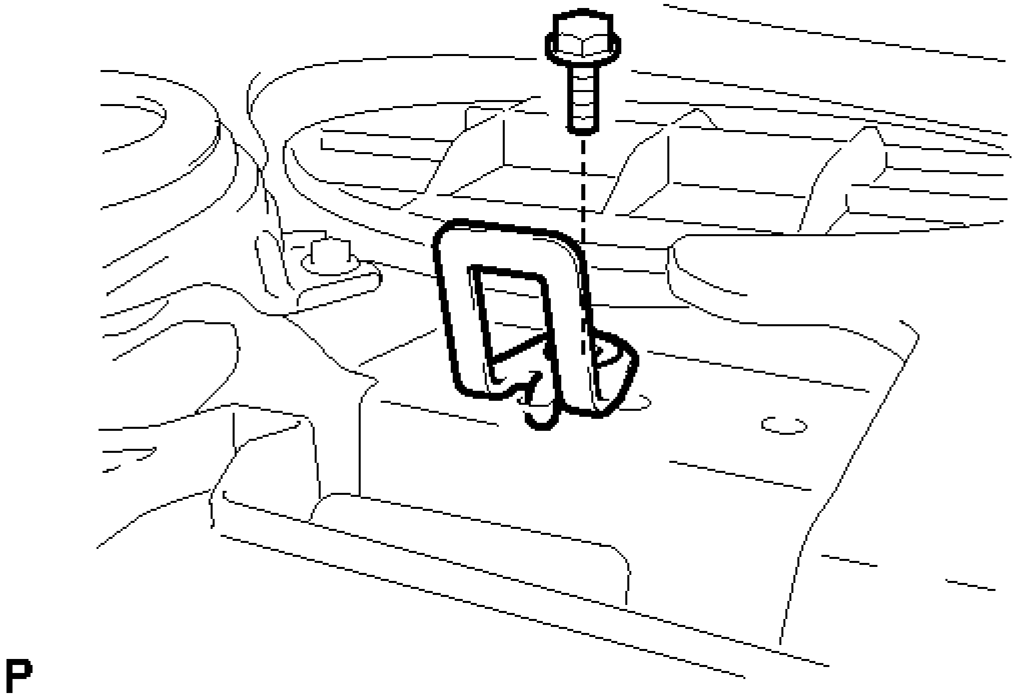

Fig. 79: Identifying Child Restraint Seat Tether Anchor Bracket And Bolt
Courtesy of TOYOTA MOTOR SALES, U.S.A., INC.

HINT:

Use the same procedure for the other 2 child restraint seat tether anchor brackets.

INSTALLATION

INSTALLATION

1. **INSTALL CHILD RESTRAINT SEAT TETHER ANCHOR BRACKET**
    a. Install the child restraint seat tether anchor bracket with the bolt.

    Torque: 21 N*m (214 kgf*cm, 15 ft.*lbf)

    HINT:

    Use the same procedure for the other 2 child restraint seat tether anchor brackets.

2. **INSTALL PACKAGE TRAY TRIM PANEL ASSEMBLY** . See step 3.
3. **INSTALL REAR SEAT SHOULDER BELT COVER** . See step 4.
4. **INSTALL CHILD RESTRAINT SEAT TETHER ANCHOR COVER** . See step 5.

5. **INSTALL CENTER STOP LIGHT SET** . Refer to **INSTALLATION - Step 1** .
6. **CONNECT REAR SEAT INNER WITH CENTER BELT ASSEMBLY LH** . See step 7.
7. **INSTALL CHILD RESTRAINT SEAT ANCHOR BRACKET SUB-ASSEMBLY LH** . See step 1.
8. **CONNECT REAR SEAT OUTER BELT ASSEMBLY (for LH Side)** . See step 9.
9. **CONNECT REAR SEAT OUTER BELT ASSEMBLY (for RH Side)** . See step 10.
10. **INSTALL ROOF SIDE INNER GARNISH LH** . Refer to **INSTALLATION - Step 20** .
11. **INSTALL ROOF SIDE INNER GARNISH RH**

    HINT:

    Use the same procedure as for the LH side.

12. **INSTALL REAR DOOR OPENING TRIM WEATHERSTRIP LH** . Refer to **INSTALLATION - Step 25** .
13. **INSTALL REAR DOOR OPENING TRIM WEATHERSTRIP RH** . Refer to **INSTALLATION - Step 32** .
14. **INSTALL REAR SIDE SEATBACK ASSEMBLY LH** . Refer to **INSTALLATION - Step 2** .
15. **INSTALL REAR SIDE SEATBACK ASSEMBLY RH** . Refer to **INSTALLATION - Step 1** .
16. **INSTALL REAR SEATBACK ASSEMBLY LH** . Refer to **INSTALLATION - Step 4** .
17. **INSTALL INNER LUGGAGE COMPARTMENT TRIM PAD** . Refer to **INSTALLATION - Step 5** .
18. **INSTALL REAR SEAT CUSHION LOCK HOOK** . Refer to **INSTALLATION - Step 6** .
19. **INSTALL REAR SEAT CUSHION ASSEMBLY** . Refer to **INSTALLATION - Step 7** .
20. **CONNECT CABLE TO NEGATIVE BATTERY TERMINAL**

    NOTE: **When disconnecting the cable, some systems need to be initialized after the cable is reconnected. Refer to INITIALIZATION .**

21. **INSPECT SRS WARNING LIGHT**

    For Built-in Type Yaw Rate Sensor: Refer to **DIAGNOSIS SYSTEM** .

    For Separate Type Yaw Rate Sensor: Refer to **DIAGNOSIS SYSTEM** .

CHILD RESTRAINT SEAT ANCHOR BRACKET

COMPONENTS

ILLUSTRATION

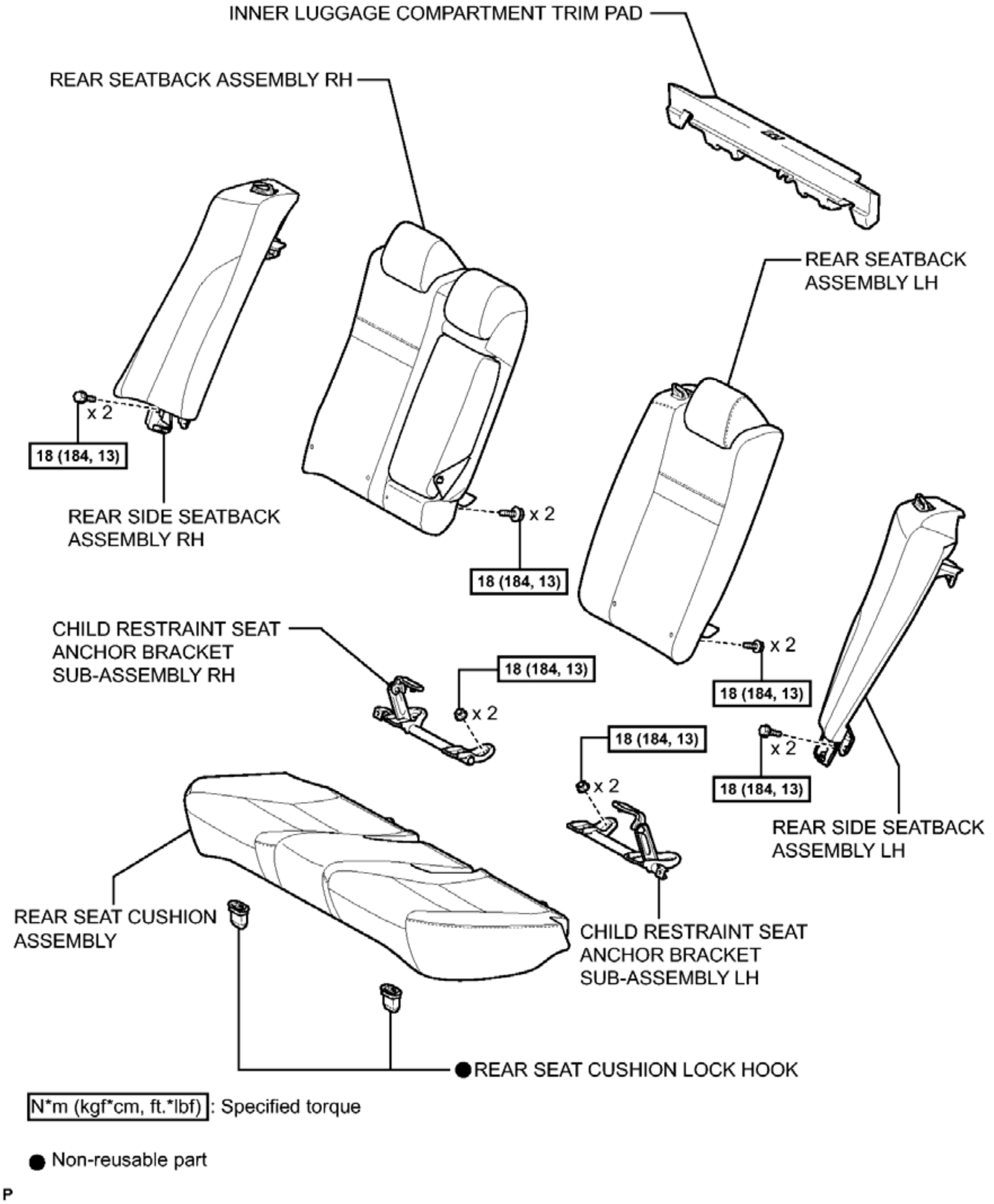
INNER LUGGAGE COMPARTMENT TRIM PAD
REAR SEATBACK ASSEMBLY RH
REAR SEATBACK ASSEMBLY LH
x 2
18 (184, 13)
REAR SIDE SEATBACK ASSEMBLY RH
x 2
18 (184, 13)
CHILD RESTRAINT SEAT ANCHOR BRACKET SUB-ASSEMBLY RH
18 (184, 13)
x 2
x 2
18 (184, 13)
18 (184, 13)
x 2
18 (184, 13)
x 2
18 (184, 13)
REAR SIDE SEATBACK ASSEMBLY LH
REAR SEAT CUSHION ASSEMBLY
CHILD RESTRAINT SEAT ANCHOR BRACKET SUB-ASSEMBLY LH
● REAR SEAT CUSHION LOCK HOOK
N*m (kgf*cm, ft.*lbf) : Specified torque
● Non-reusable part
P

Fig. 80: Identifying Child Restraint Seat Anchor Bracket Replacement Components With Torque Specifications

Courtesy of TOYOTA MOTOR SALES, U.S.A., INC.

REMOVAL

REMOVAL

1. **PRECAUTION**

NOTE: **After turning the ignition switch off, waiting time may be required before disconnecting the cable from the negative (-) battery terminal. Therefore, make sure to read the disconnecting the cable from the negative (-) battery terminal notices before proceeding with work. Refer to PRECAUTION .**

2. **DISCONNECT CABLE FROM NEGATIVE BATTERY TERMINAL**

WARNING: **Wait at least 90 seconds after disconnecting the cable from the negative (-) battery terminal to disable the SRS system.**

NOTE: **When disconnecting the cable, some systems need to be initialized after the cable is reconnected. Refer to INITIALIZATION .**

3. **REMOVE REAR SEAT CUSHION ASSEMBLY** . Refer to **REMOVAL - Step 3** .
4. **REMOVE REAR SEAT CUSHION LOCK HOOK** . Refer to **REMOVAL - Step 4** .
5. **REMOVE INNER LUGGAGE COMPARTMENT TRIM PAD** . Refer to **REMOVAL - Step 5** .
6. **REMOVE REAR SEATBACK ASSEMBLY LH** . Refer to **REMOVAL - Step 6** .
7. **REMOVE REAR SEATBACK ASSEMBLY RH** . Refer to **REMOVAL - Step 7** .
8. **REMOVE REAR SIDE SEATBACK ASSEMBLY LH** . Refer to **REMOVAL - Step 8** .
9. **REMOVE REAR SIDE SEATBACK ASSEMBLY RH** . Refer to **REMOVAL - Step 9** .
10. **REMOVE CHILD RESTRAINT SEAT ANCHOR BRACKET SUB-ASSEMBLY LH**
    a. Remove the 2 nuts and child restraint seat anchor bracket sub-assembly LH.

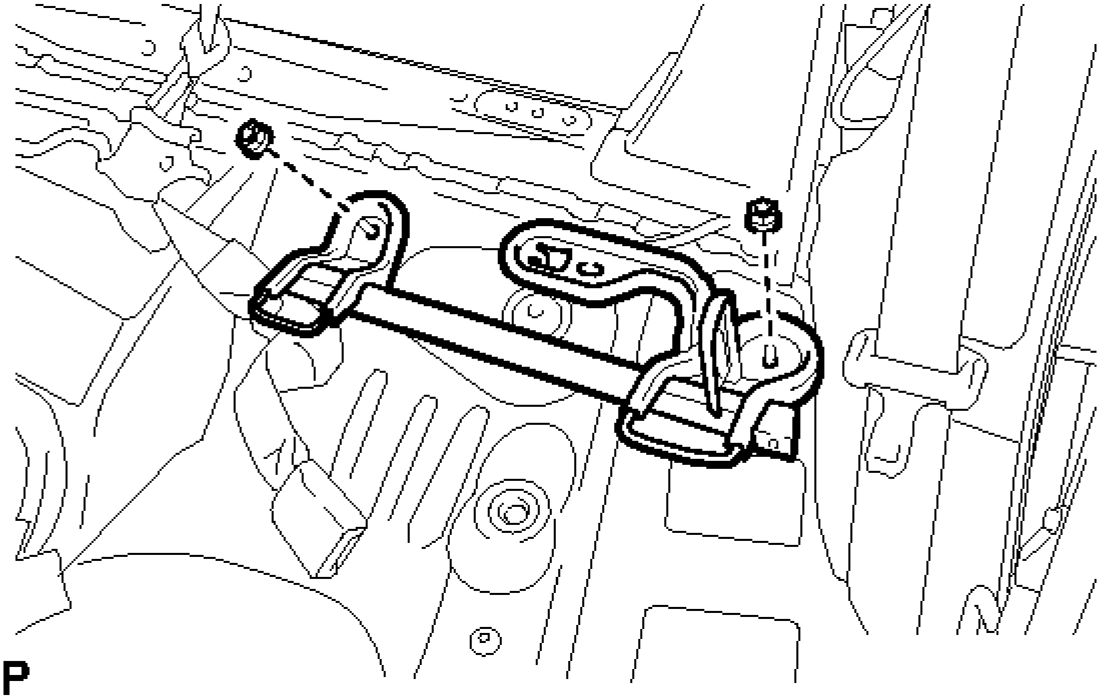

Fig. 81: Identifying Child Restraint Seat Anchor Bracket Sub-Assembly LH Fasteners

Courtesy of TOYOTA MOTOR SALES, U.S.A., INC.

11. **REMOVE CHILD RESTRAINT SEAT ANCHOR BRACKET SUB-ASSEMBLY RH**
    a. Remove the 2 nuts and child restraint seat anchor bracket sub-assembly RH.

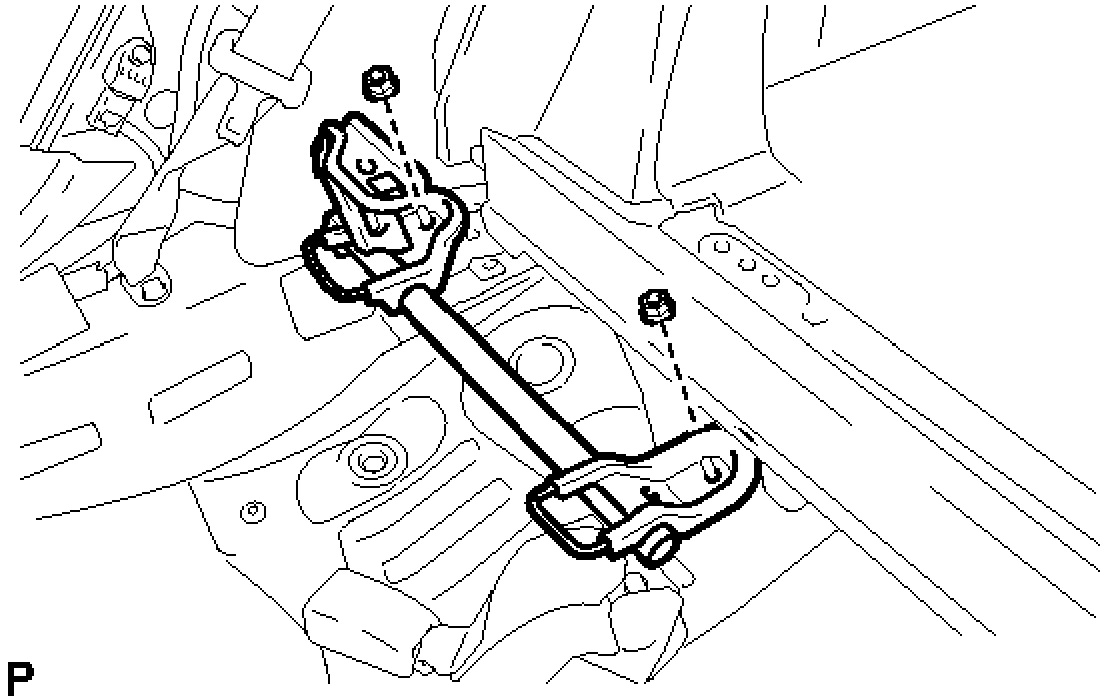

Fig. 82: Identifying Child Restraint Seat Anchor Bracket Sub-Assembly RH Fasteners
Courtesy of TOYOTA MOTOR SALES, U.S.A., INC.

INSTALLATION

INSTALLATION

1. **INSTALL CHILD RESTRAINT SEAT ANCHOR BRACKET SUB-ASSEMBLY LH**
    a. Install the child restraint seat anchor bracket sub-assembly LH with the 2 nuts.

    Torque: 18 N*m (184 kgf*cm, 13 ft.*lbf)

2. **INSTALL CHILD RESTRAINT SEAT ANCHOR BRACKET SUB-ASSEMBLY RH**
    a. Install the child restraint seat anchor bracket sub-assembly RH with the 2 nuts.

    Torque: 18 N*m (184 kgf*cm, 13 ft.*lbf)

3. **INSTALL REAR SIDE SEATBACK ASSEMBLY LH** . Refer to **INSTALLATION - Step 2** .
4. **INSTALL REAR SIDE SEATBACK ASSEMBLY RH** . Refer to **INSTALLATION - Step 1** .
5. **INSTALL REAR SEATBACK ASSEMBLY LH** . Refer to **INSTALLATION - Step 4** .
6. **INSTALL REAR SEATBACK ASSEMBLY RH** . Refer to **INSTALLATION - Step 3** .

7. **INSTALL INNER LUGGAGE COMPARTMENT TRIM PAD** . Refer to **INSTALLATION - Step 5** .
8. **INSTALL REAR SEAT CUSHION LOCK HOOK** . Refer to **INSTALLATION - Step 6** .
9. **INSTALL REAR SEAT CUSHION ASSEMBLY** . Refer to **INSTALLATION - Step 7** .
10. **CONNECT CABLE TO NEGATIVE BATTERY TERMINAL**

    NOTE: **When disconnecting the cable, some systems need to be initialized after the cable is reconnected. Refer to INITIALIZATION .**

11. **INSPECT SRS WARNING LIGHT**

    For Built-in Type Yaw Rate Sensor: Refer to **DIAGNOSIS SYSTEM** .

    For Separate Type Yaw Rate Sensor: Refer to **DIAGNOSIS SYSTEM** .

FRONT SEAT ASSEMBLY (FOR MANUAL SEAT)

COMPONENTS

ILLUSTRATION

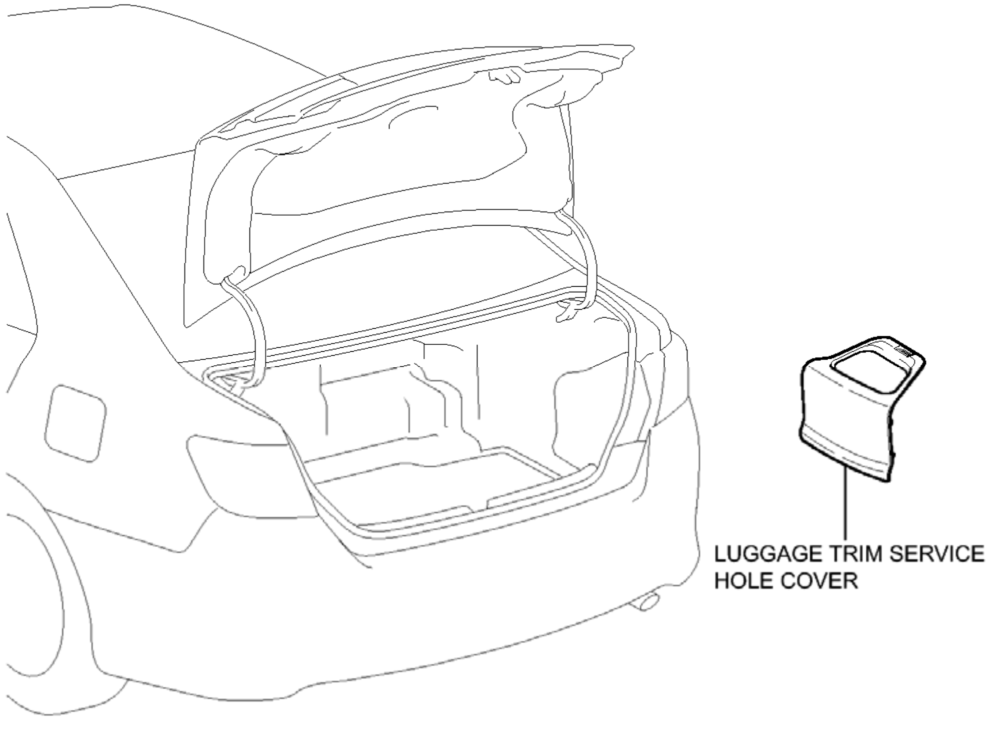

Fig. 1: Identifying Front Seat Assembly Replacement Components With Torque Specifications (For Manual Seat) (1 Of 10)
Courtesy of TOYOTA MOTOR SALES, U.S.A., INC.

ILLUSTRATION

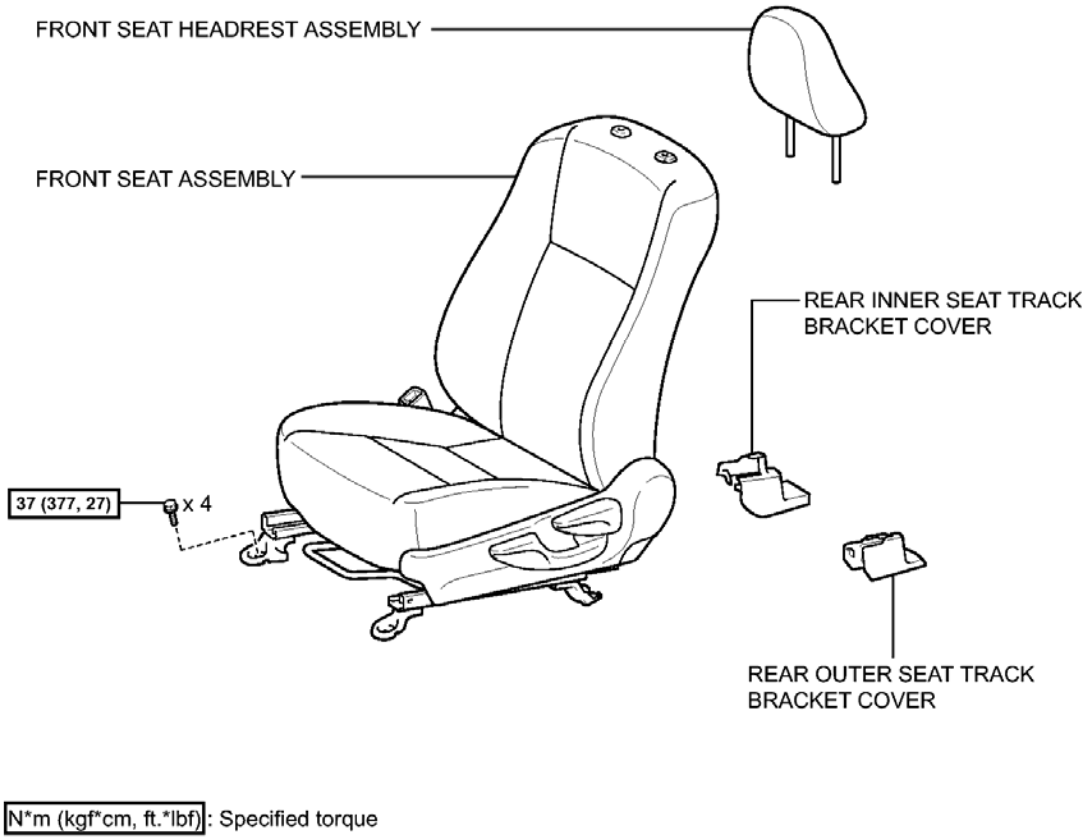
FRONT SEAT HEADREST ASSEMBLY
FRONT SEAT ASSEMBLY
REAR INNER SEAT TRACK BRACKET COVER
37 (377, 27)
x 4
REAR OUTER SEAT TRACK BRACKET COVER
N*m (kgf*cm, ft.*lbf): Specified torque

c

Fig. 2: Identifying Front Seat Assembly Replacement Components With Torque Specifications (For Manual Seat) (2 Of 10)
Courtesy of TOYOTA MOTOR SALES, U.S.A., INC.

ILLUSTRATION

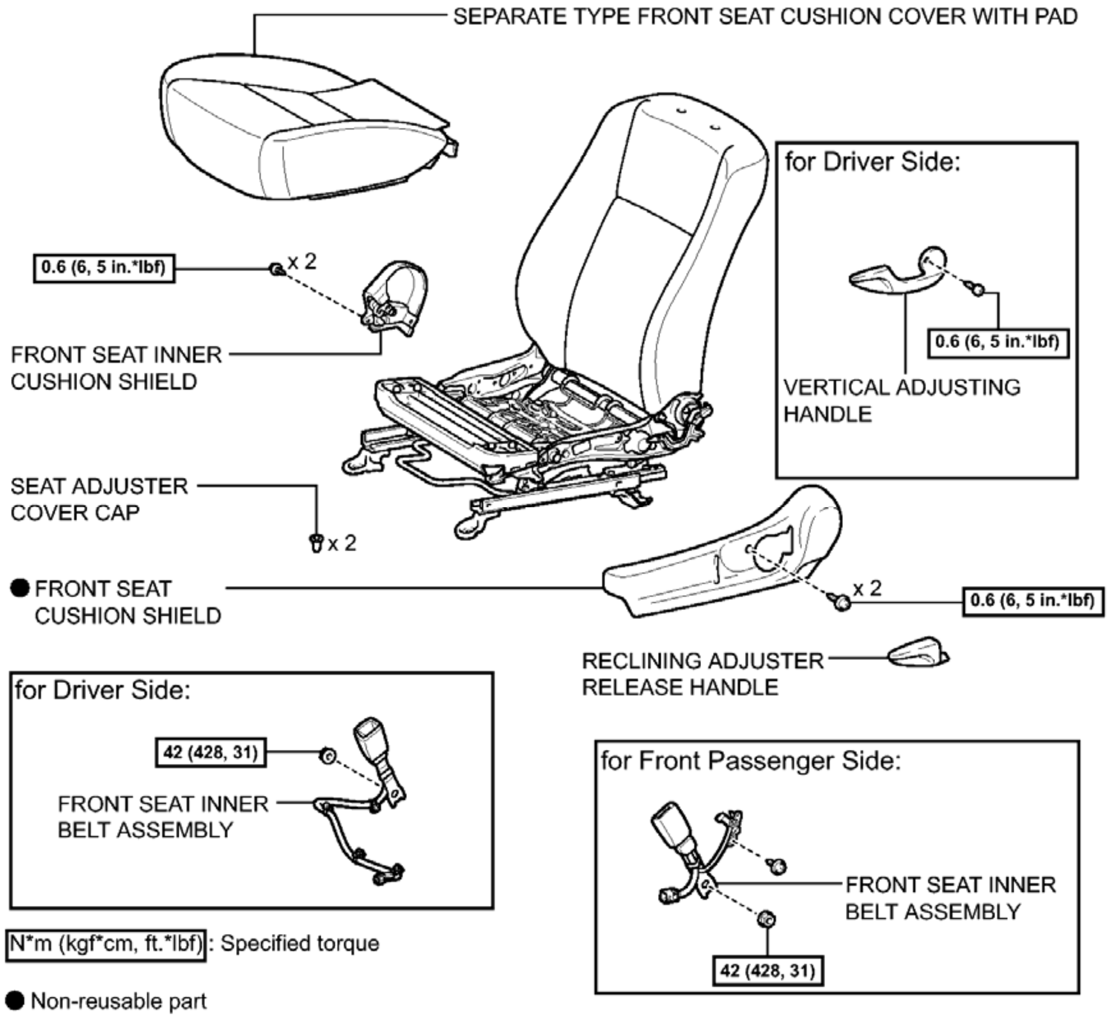
SEPARATE TYPE FRONT SEAT CUSHION COVER WITH PAD
0.6 (6, 5 in.*lbf)
x 2
FRONT SEAT INNER CUSHION SHIELD
for Driver Side:
0.6 (6, 5 in.*lbf)
VERTICAL ADJUSTING HANDLE
SEAT ADJUSTER COVER CAP
x 2
● FRONT SEAT CUSHION SHIELD
x 2
0.6 (6, 5 in.*lbf)
RECLINING ADJUSTER RELEASE HANDLE
for Driver Side:
42 (428, 31)
FRONT SEAT INNER BELT ASSEMBLY
for Front Passenger Side:
FRONT SEAT INNER BELT ASSEMBLY
42 (428, 31)
N*m (kgf*cm, ft.*lbf) : Specified torque
● Non-reusable part

c

Fig. 3: Identifying Front Seat Assembly Replacement Components With Torque Specifications (For Manual Seat) (3 Of 10)
Courtesy of TOYOTA MOTOR SALES, U.S.A., INC.

ILLUSTRATION

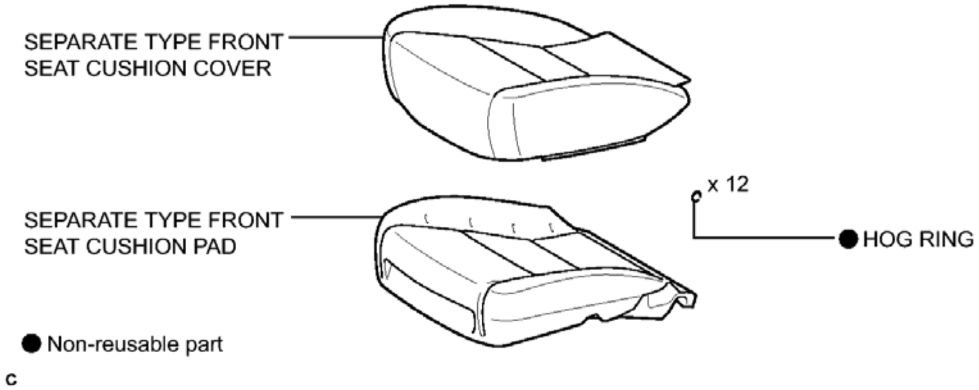
SEPARATE TYPE FRONT SEAT CUSHION COVER
x 12
SEPARATE TYPE FRONT SEAT CUSHION PAD
● HOG RING
● Non-reusable part
c

Fig. 4: Identifying Front Seat Assembly Replacement Components With Torque Specifications (For Manual Seat) (4 Of 10)

Courtesy of TOYOTA MOTOR SALES, U.S.A., INC.

ILLUSTRATION

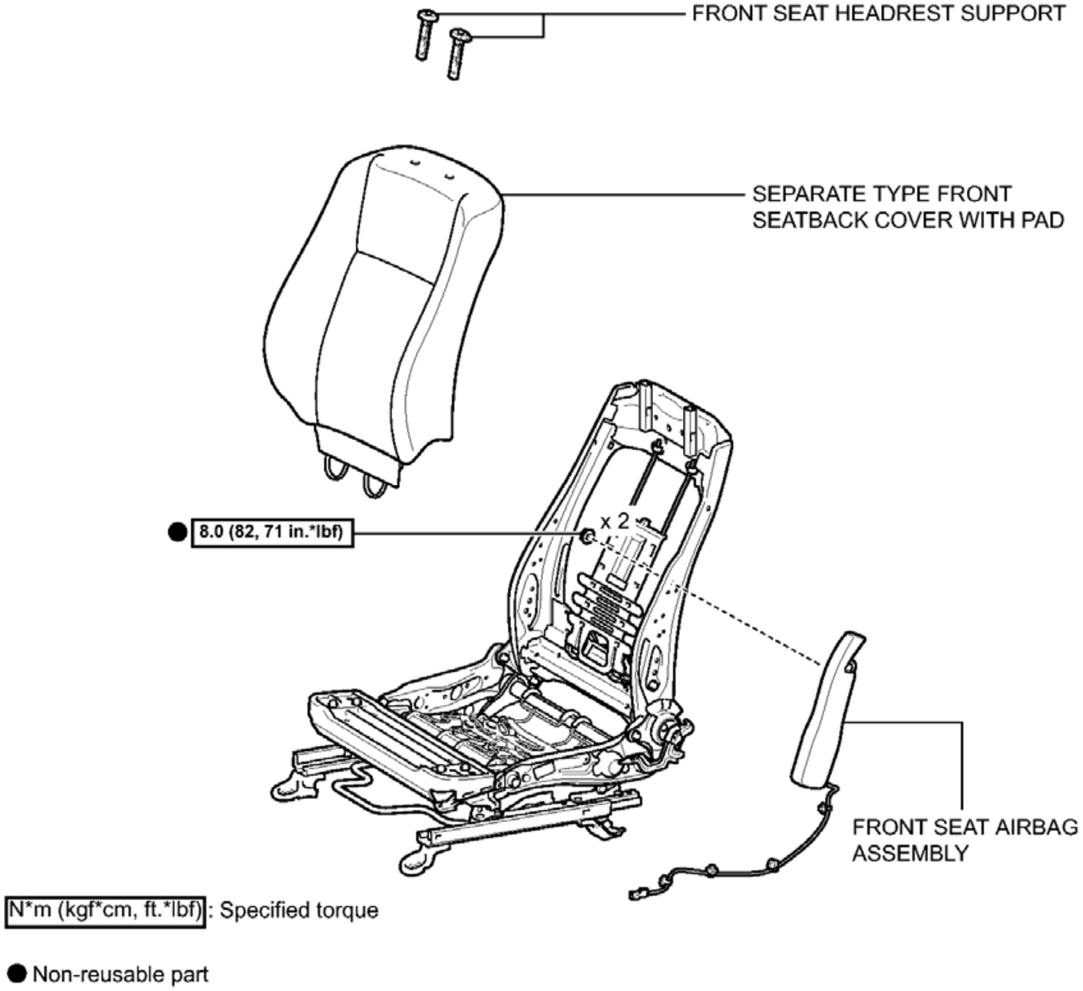
FRONT SEAT HEADREST SUPPORT
SEPARATE TYPE FRONT SEATBACK COVER WITH PAD
● 8.0 (82, 71 in.*lbf)
x 2
FRONT SEAT AIRBAG ASSEMBLY
N*m (kgf*cm, ft.*lbf): Specified torque
● Non-reusable part

c

Fig. 5: Identifying Front Seat Assembly Replacement Components With Torque Specifications (For Manual Seat) (5 Of 10)
Courtesy of TOYOTA MOTOR SALES, U.S.A., INC.

ILLUSTRATION

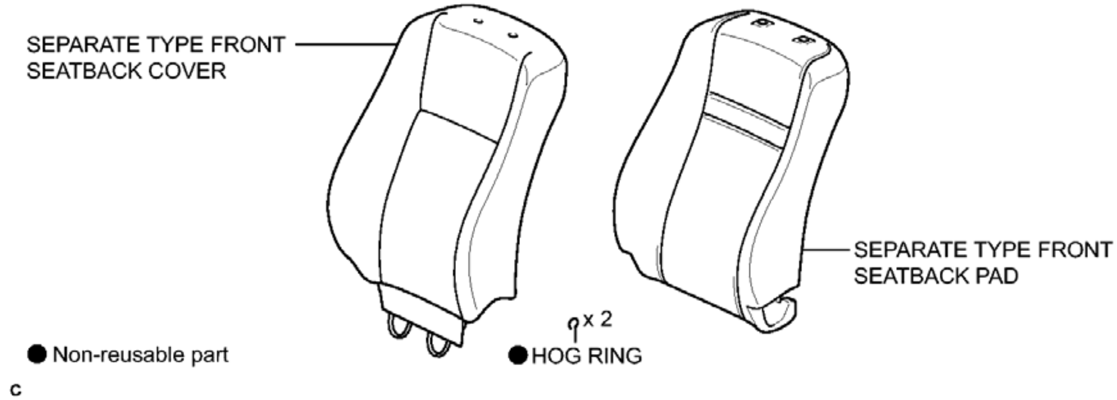
SEPARATE TYPE FRONT SEATBACK COVER
SEPARATE TYPE FRONT SEATBACK PAD
x 2
● Non-reusable part
● HOG RING
c

Fig. 6: Identifying Front Seat Assembly Replacement Components With Torque Specifications (For Manual Seat) (6 Of 10)
Courtesy of TOYOTA MOTOR SALES, U.S.A., INC.

ILLUSTRATION

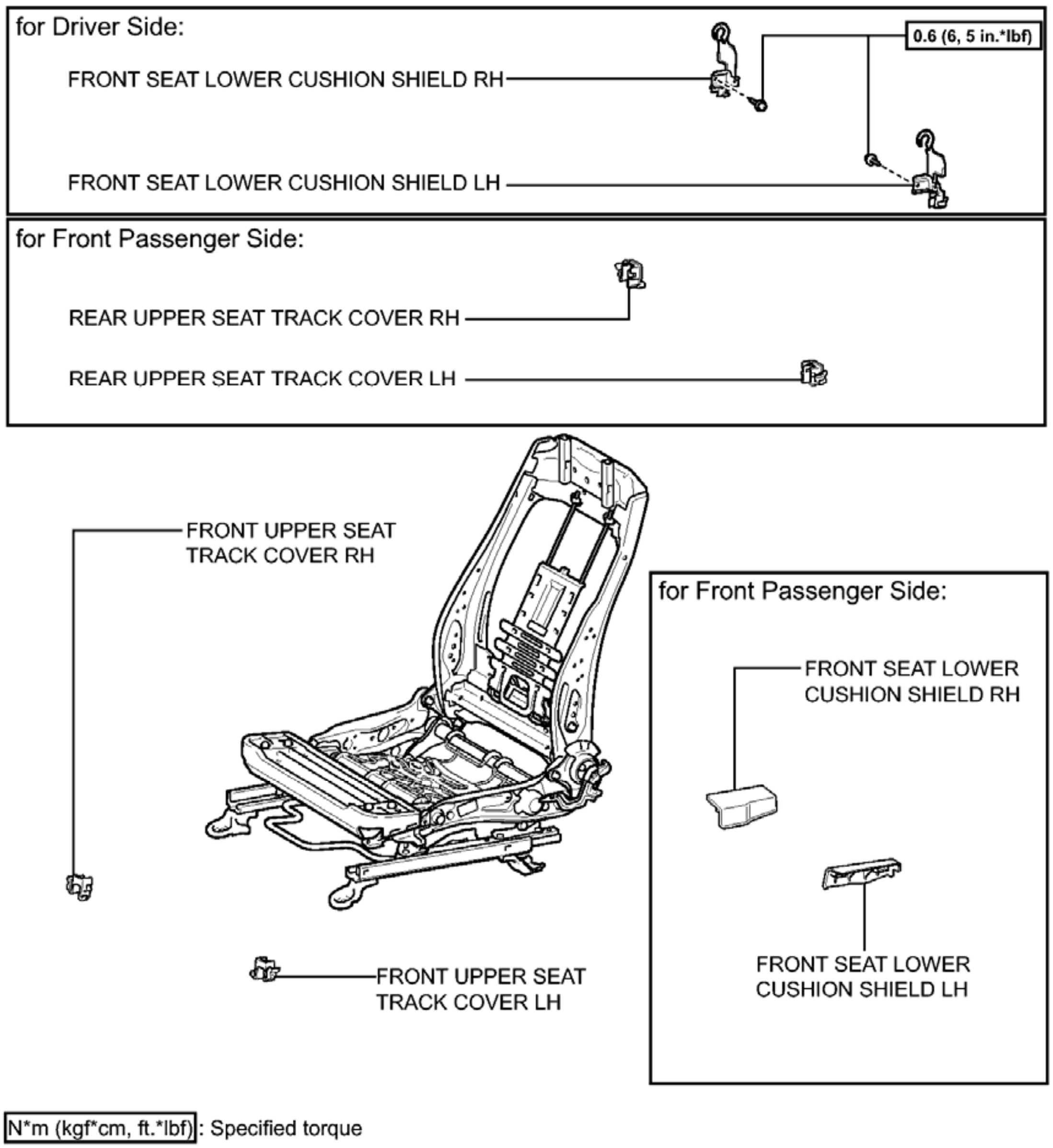
for Driver Side:
FRONT SEAT LOWER CUSHION SHIELD RH
0.6 (6, 5 in.*lbf)
FRONT SEAT LOWER CUSHION SHIELD LH
for Front Passenger Side:
REAR UPPER SEAT TRACK COVER RH
REAR UPPER SEAT TRACK COVER LH
FRONT UPPER SEAT TRACK COVER RH
for Front Passenger Side:
FRONT SEAT LOWER CUSHION SHIELD RH
FRONT SEAT LOWER CUSHION SHIELD LH
FRONT UPPER SEAT TRACK COVER LH
N*m (kgf*cm, ft.*lbf): Specified torque

c

Fig. 7: Identifying Front Seat Assembly Replacement Components With Torque Specifications (For Manual Seat) (7 Of 10)
Courtesy of TOYOTA MOTOR SALES, U.S.A., INC.

ILLUSTRATION

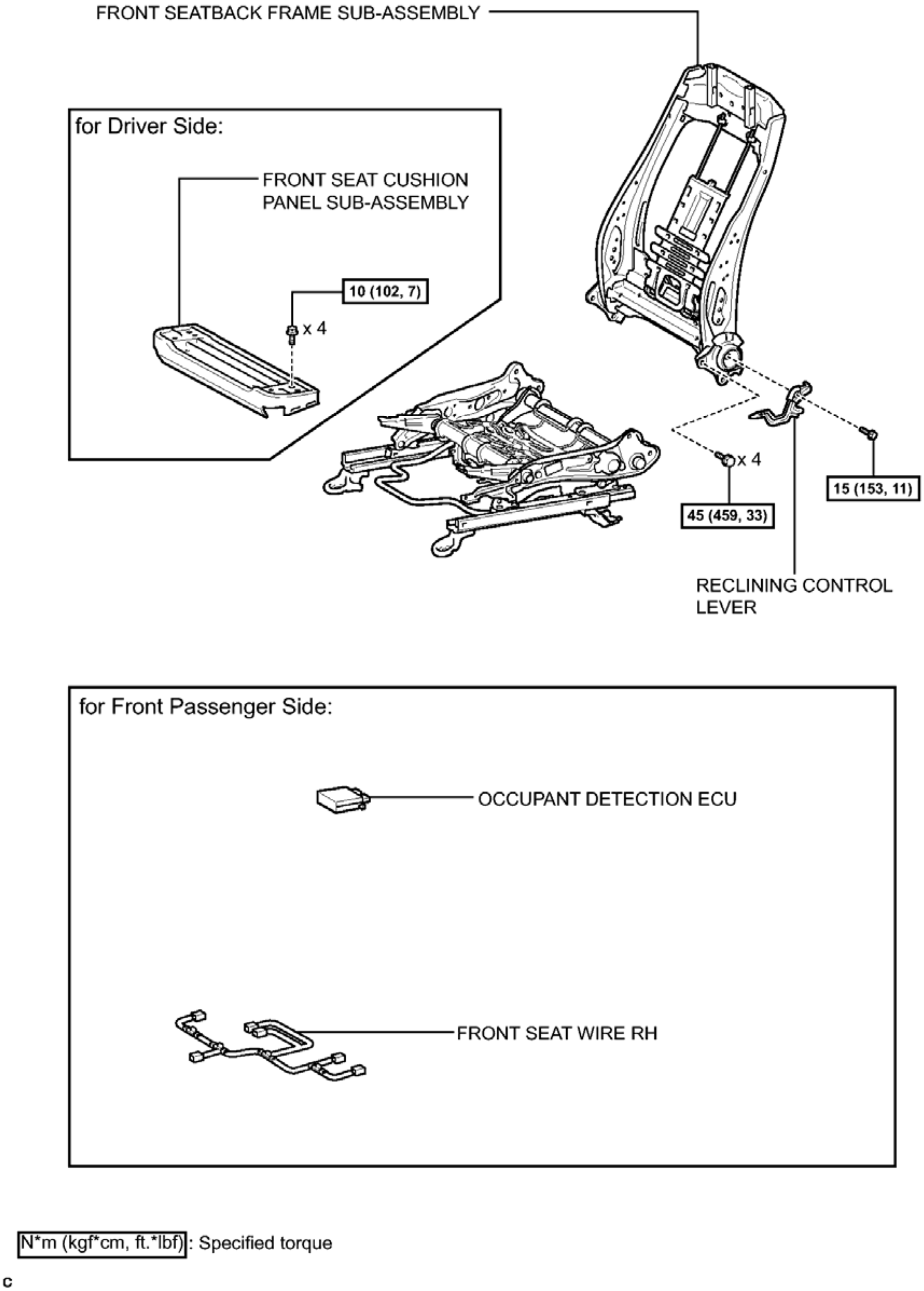
FRONT SEATBACK FRAME SUB-ASSEMBLY
for Driver Side:
FRONT SEAT CUSHION PANEL SUB-ASSEMBLY
10 (102, 7)
x 4
x 4
15 (153, 11)
45 (459, 33)
RECLINING CONTROL LEVER
for Front Passenger Side:
OCCUPANT DETECTION ECU
FRONT SEAT WIRE RH
N*m (kgf*cm, ft.*lbf): Specified torque
c

Fig. 8: Identifying Front Seat Assembly Replacement Components With Torque Specifications (For Manual Seat) (8 Of 10)
Courtesy of TOYOTA MOTOR SALES, U.S.A., INC.

ILLUSTRATION

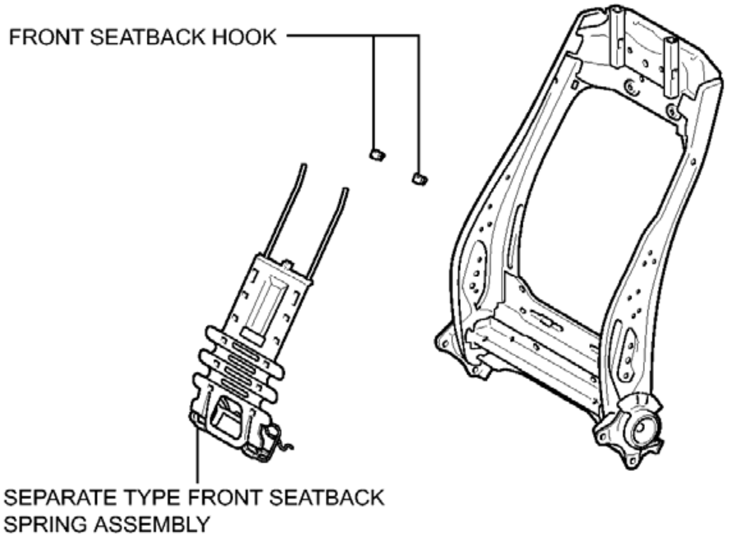
FRONT SEATBACK HOOK
SEPARATE TYPE FRONT SEATBACK SPRING ASSEMBLY

c

Fig. 9: Identifying Front Seat Assembly Replacement Components With Torque Specifications (For Manual Seat) (9 Of 10)
Courtesy of TOYOTA MOTOR SALES, U.S.A., INC.

ILLUSTRATION

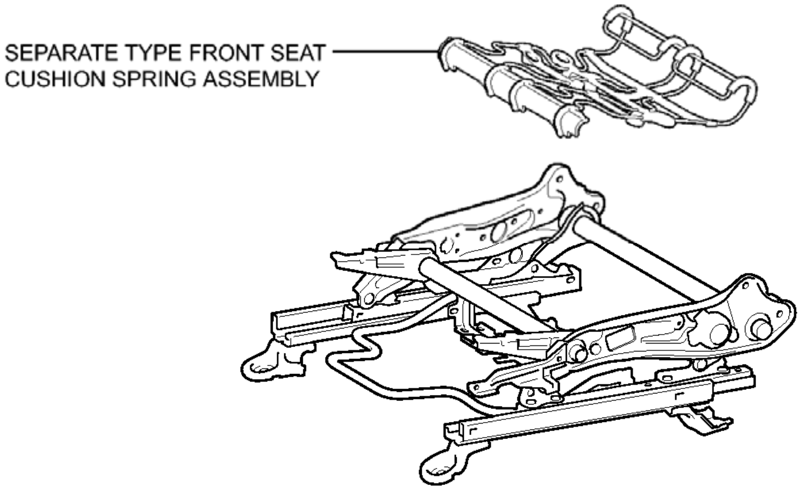

c

Fig. 10: Identifying Front Seat Assembly Replacement Components With Torque Specifications (For Manual Seat) (10 Of 10)
Courtesy of TOYOTA MOTOR SALES, U.S.A., INC.

REMOVAL

REMOVAL

1. **PRECAUTION**

WARNING:

- **Be sure to read Precaution thoroughly before servicing.**

  for Separate Type Yaw Rate Sensor: Refer to PRECAUTION

  for Built-in Type Yaw Rate Sensor: Refer to PRECAUTION

- **If the side airbag was deployed, replace the front seat airbag assembly, front seatback frame sub-assembly, separate type front seatback pad and separate type front seatback cover with the necessary parts in accordance with the extent of the collision damage.**

NOTE: **After turning the power switch off, waiting time may be required before disconnecting the cable from the negative (-) auxiliary battery terminal. Therefore, make sure to read the disconnecting the cable from the**

negative (-) auxiliary battery terminal notices before proceeding with work. Refer to PRECAUTION .

2. **REMOVE LUGGAGE TRIM SERVICE HOLE COVER** . Refer to **REMOVAL - Step 2**
3. **DISCONNECT CABLE FROM NEGATIVE AUXILIARY BATTERY TERMINAL**

WARNING: **Wait at least 90 seconds after disconnecting the cable from the negative (-) auxiliary battery terminal to disable the SRS system.**

NOTE: **When disconnecting the cable, some systems need to be initialized after the cable is reconnected. Refer to INITIALIZATION .**

4. **REMOVE FRONT SEAT HEADREST ASSEMBLY**
5. **REMOVE REAR OUTER SEAT TRACK BRACKET COVER**
   a. Lift up the seat track adjusting handle and move the seat to the foremost position.
   b. Disengage the 2 claws and remove the rear outer seat track bracket cover.

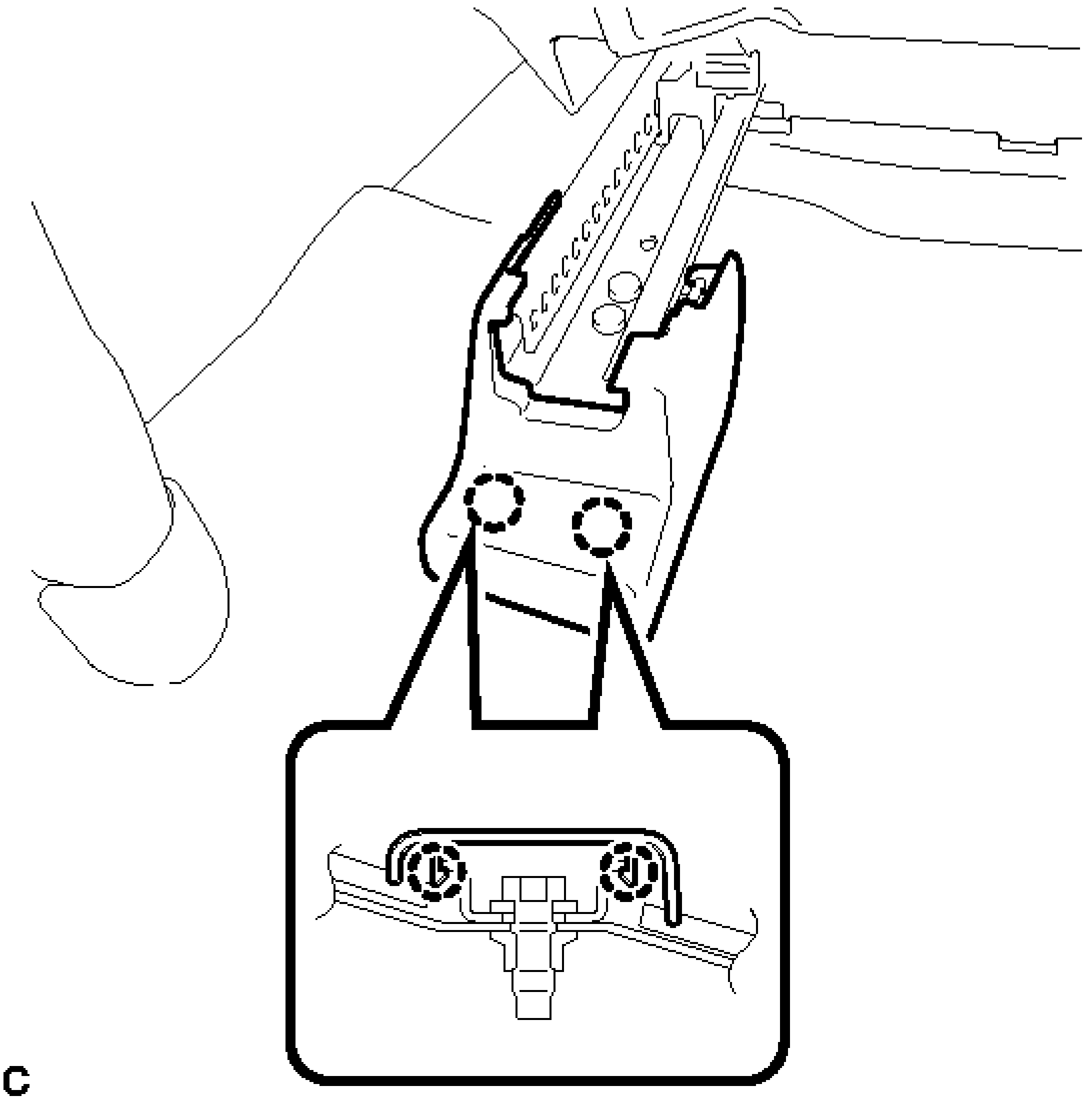

Fig. 11: Locating Rear Outer Seat Track Bracket Cover Claws
Courtesy of TOYOTA MOTOR SALES, U.S.A., INC.

6. **REMOVE REAR INNER SEAT TRACK BRACKET COVER**
   a. Disengage the 2 claws and remove the rear inner seat track bracket cover.

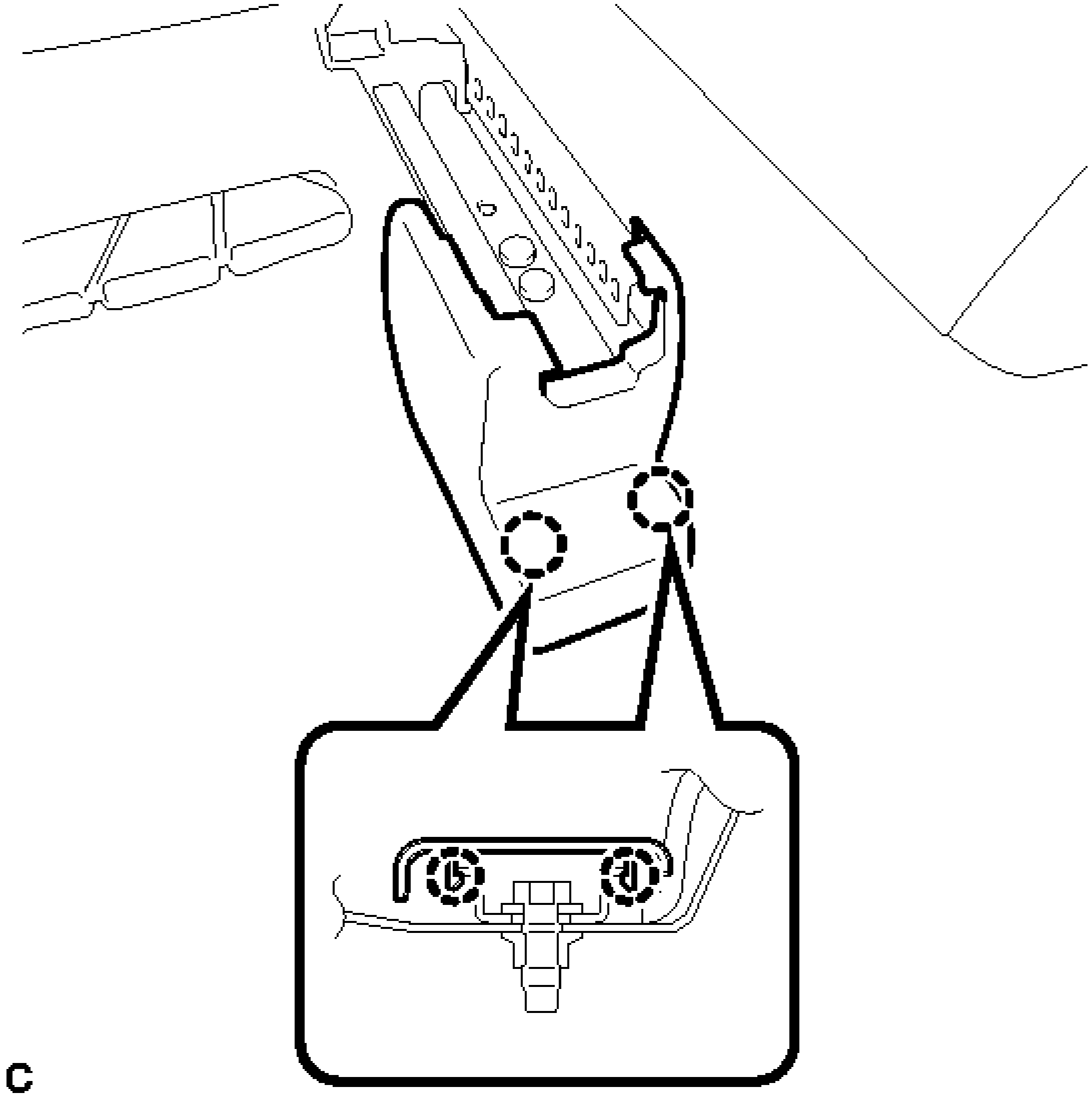

Fig. 12: Locating Rear Inner Seat Track Bracket Cover Claws
Courtesy of TOYOTA MOTOR SALES, U.S.A., INC.

7. **REMOVE FRONT SEAT ASSEMBLY**
   a. Remove the 2 bolts on the rear side of the seat.

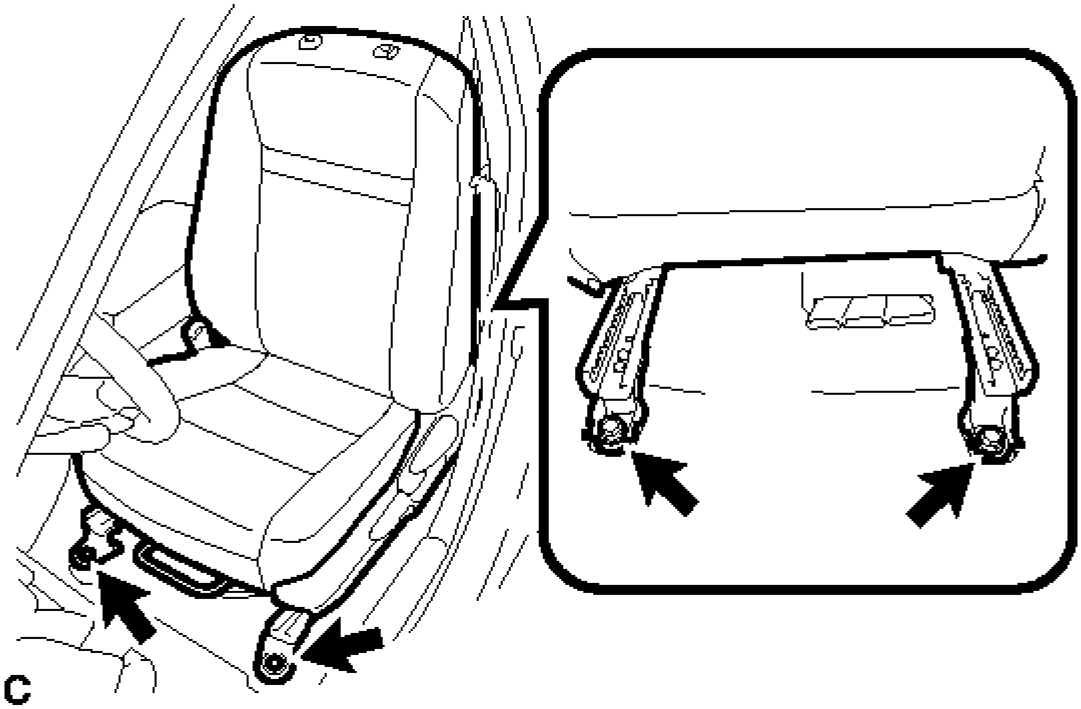

Fig. 13: Locating Front Seat Assembly Bolts
Courtesy of TOYOTA MOTOR SALES, U.S.A., INC.

b. Lift up the seat track adjusting handle and move the seat to the rearmost position.
c. Remove the 2 bolts on the front side of the seat.
d. Disconnect each connector and clamp under the seat.
e. Lift up the seat track adjusting handle and move the seat to the center position. Then, operate the reclining adjuster release handle and move the seatback to the upright position.
f. Remove the front seat assembly.

NOTE: Be careful not to damage the vehicle body.

DISASSEMBLY

DISASSEMBLY

1. **REMOVE SEAT ADJUSTER COVER CAP**
    a. Remove the 2 seat adjuster cover caps.

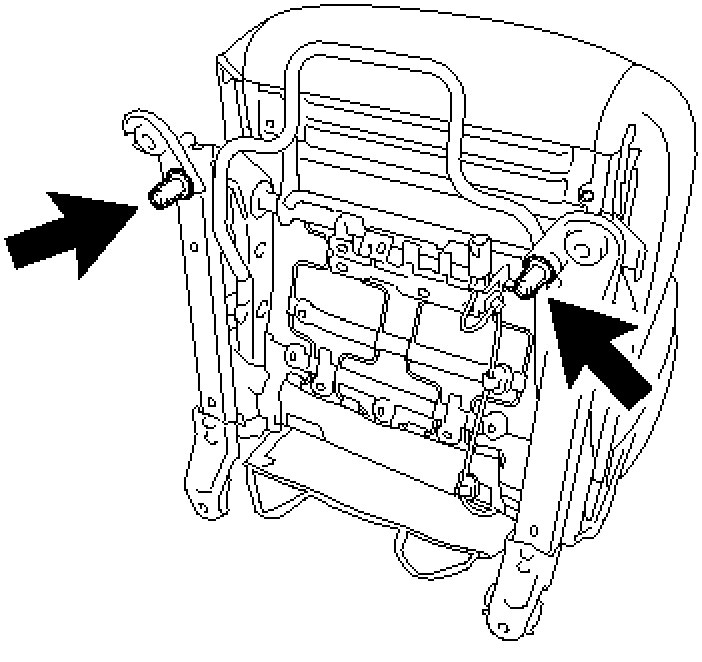

Fig. 14: Locating Seat Adjuster Cover Caps
Courtesy of TOYOTA MOTOR SALES, U.S.A., INC.

2. **REMOVE RECLINING ADJUSTER RELEASE HANDLE**
    a. Using a screwdriver with its tip wrapped with protective tape, disengage the claw and remove the reclining adjuster release handle.

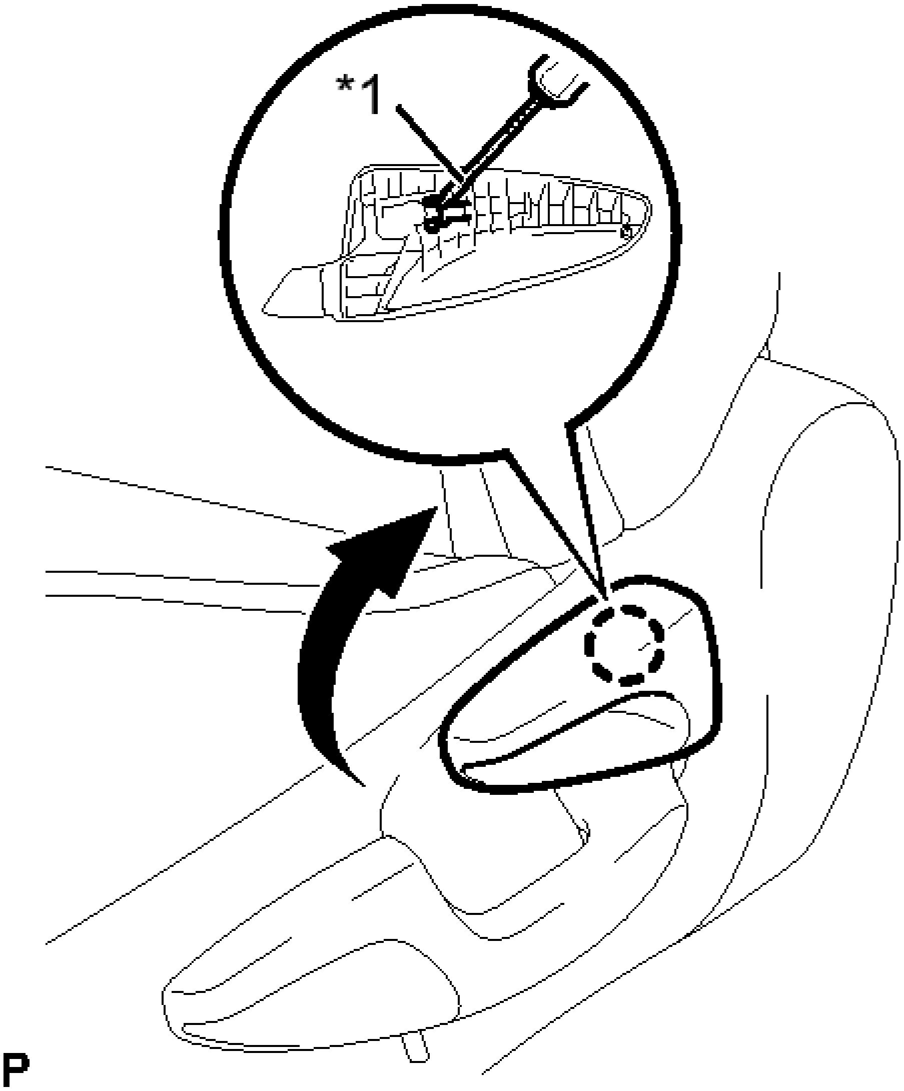

Fig. 15: Removing Reclining Adjuster Release Handle
Courtesy of TOYOTA MOTOR SALES, U.S.A., INC.

TEXT IN ILLUSTRATION

*1	Protective Tape

3. **REMOVE VERTICAL ADJUSTING HANDLE (for Driver Side)**
    a. Remove the screw and vertical adjusting handle.

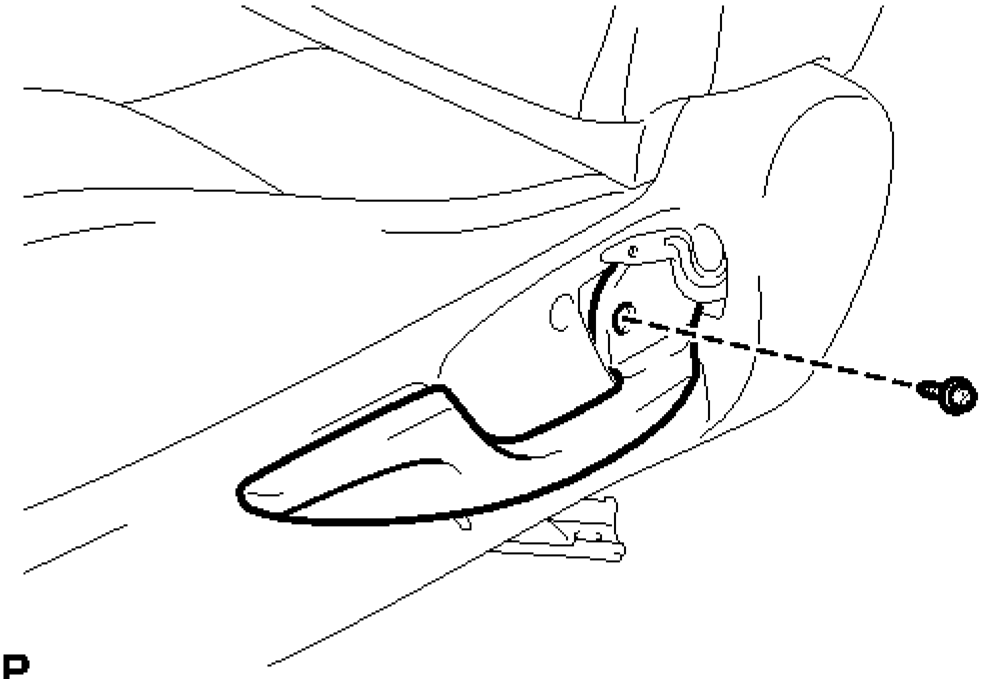

Fig. 16: Identifying Vertical adjusting Handle Screw
Courtesy of TOYOTA MOTOR SALES, U.S.A., INC.

4. **DISCONNECT SEPARATE TYPE FRONT SEATBACK COVER**
    a. Disconnect the 2 rubber bands of the separate type front seatback cover.

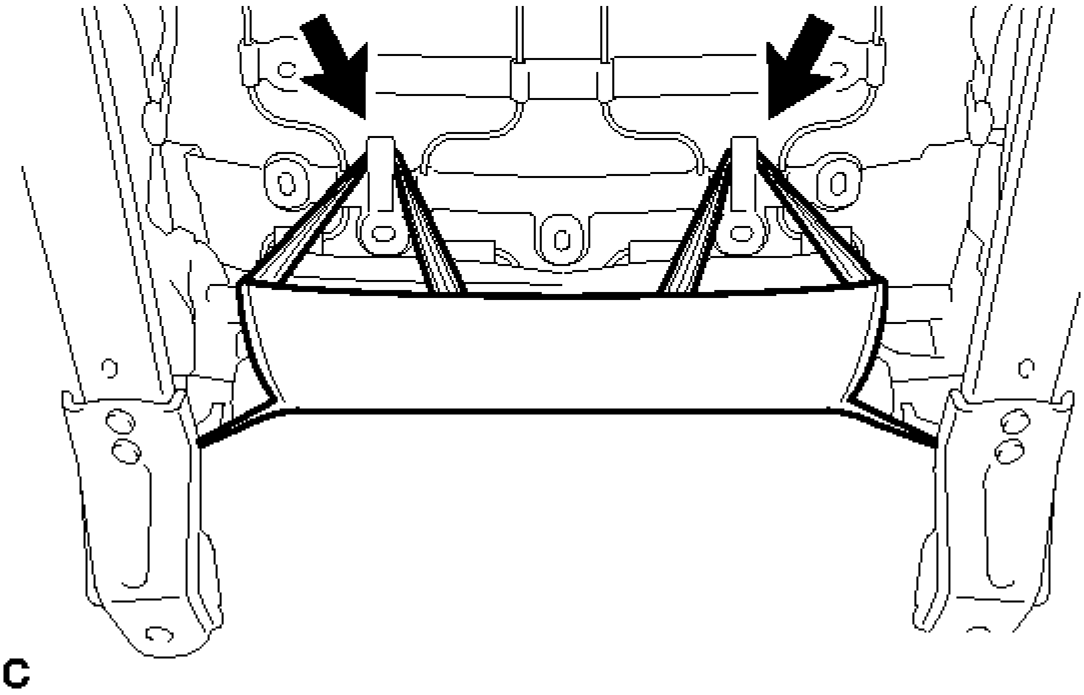

Fig. 17: Identifying Rubber Bands Of Front Seatback Cover (For Manual Seat)

Courtesy of TOYOTA MOTOR SALES, U.S.A., INC.

5. **REMOVE FRONT SEAT CUSHION SHIELD**
   a. Remove the 2 screws.

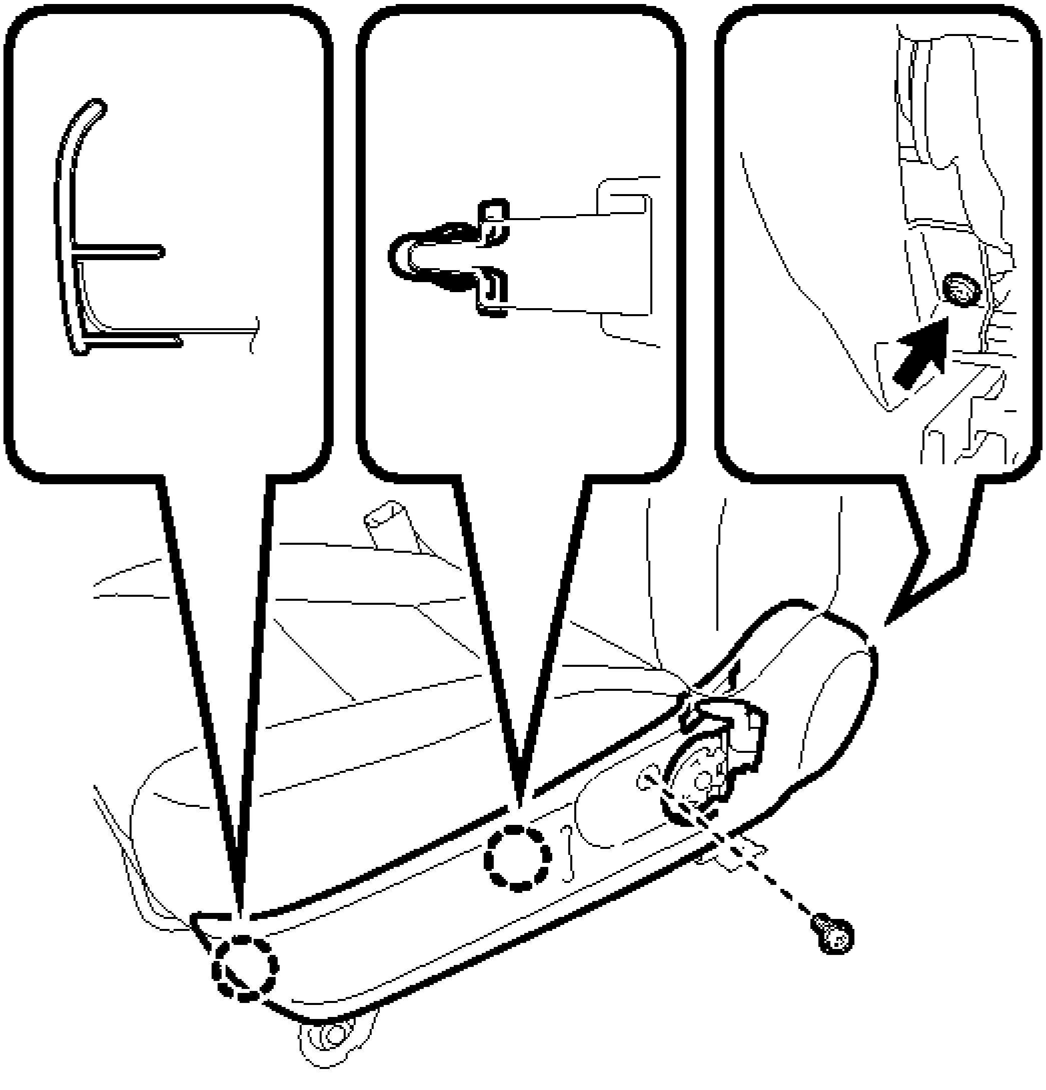

Fig. 18: Locating Front Seat Cushion Shield Claws And Fasteners
Courtesy of TOYOTA MOTOR SALES, U.S.A., INC.

   b. Disengage the 2 claws to remove the front seat cushion shield.

6. **REMOVE FRONT SEAT INNER CUSHION SHIELD**
   a. Remove the 2 screws and front seat inner cushion shield.

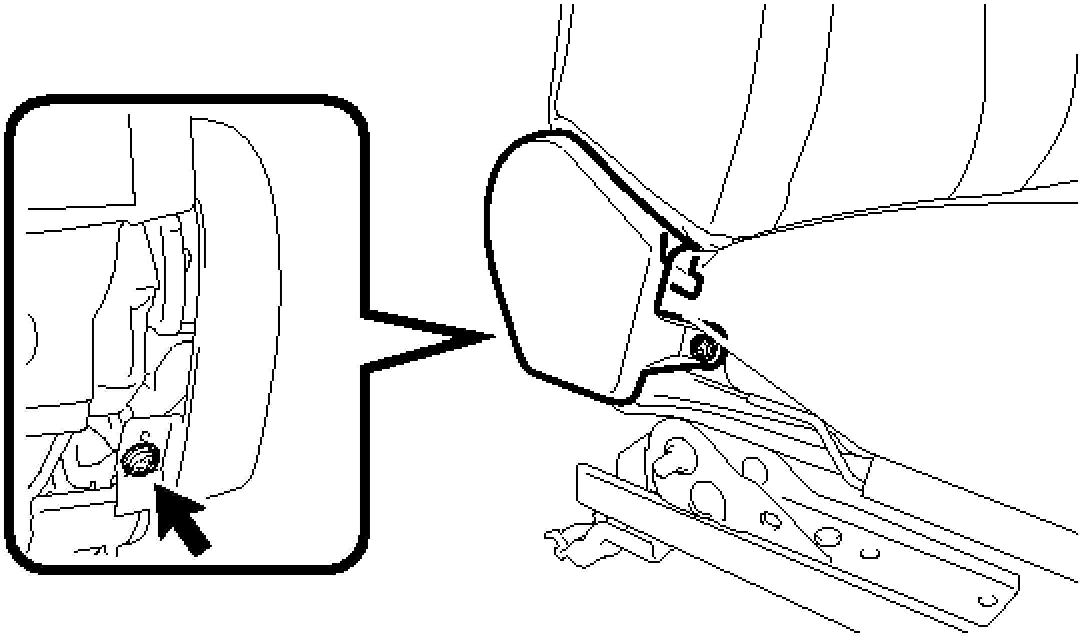

Fig. 19: Locating Front Seat Inner Cushion Shield Fasteners
Courtesy of TOYOTA MOTOR SALES, U.S.A., INC.

7. **REMOVE FRONT SEAT INNER BELT ASSEMBLY (for Driver Side)** . Refer to **REMOVAL - Step 2**
8. **REMOVE FRONT SEAT INNER BELT ASSEMBLY (for Front Passenger Side)** . Refer to **REMOVAL - Step 4**
9. **REMOVE SEPARATE TYPE FRONT SEAT CUSHION COVER WITH PAD**
    a. Disengage the claw and 3 clamps to separate the front seat airbag assembly wire harness.

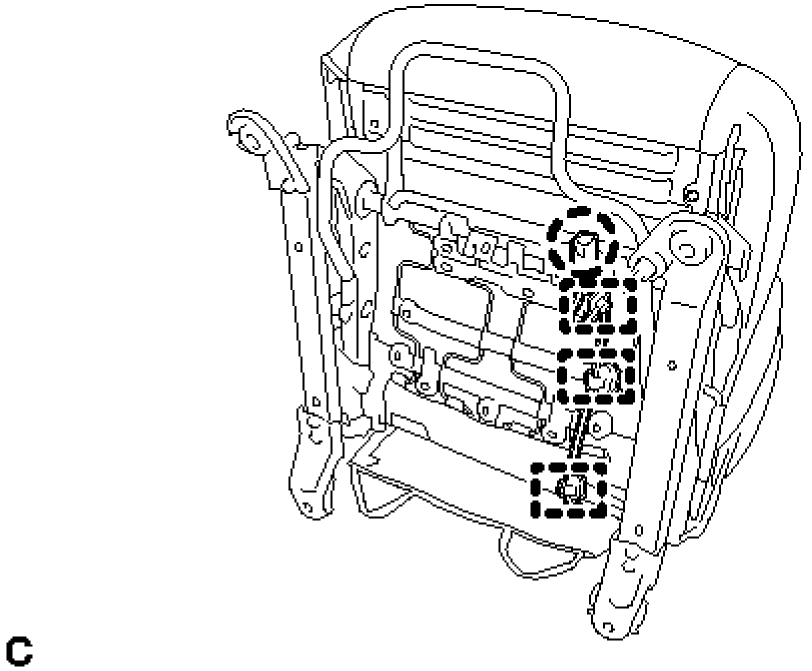

Fig. 20: Identifying Front Seatback Cover Claw And Clamps (For Manual Seat)
Courtesy of TOYOTA MOTOR SALES, U.S.A., INC.

b. for Driver Side:
    1. Separate the separate type front seat cushion cover.

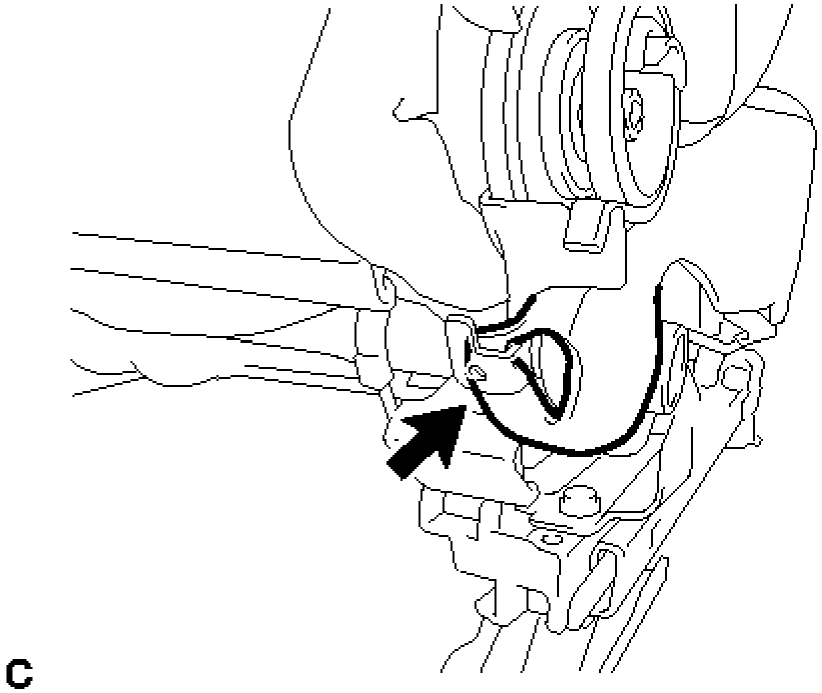

Fig. 21: Identifying Driver Side Front Seat Cushion Cover

Courtesy of TOYOTA MOTOR SALES, U.S.A., INC.

c. for Front Passenger Side:
   1. Separate the separate type front seat cushion cover.

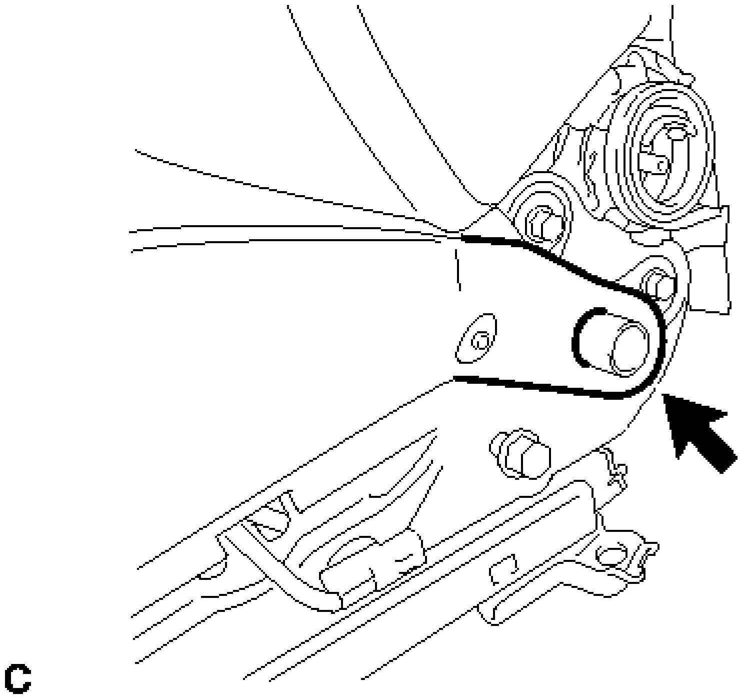

Fig. 22: Identifying Passenger Side Front Seat Cushion Cover
Courtesy of TOYOTA MOTOR SALES, U.S.A., INC.

d. Disengage each hook and remove the separate type front seat cushion cover with pad.

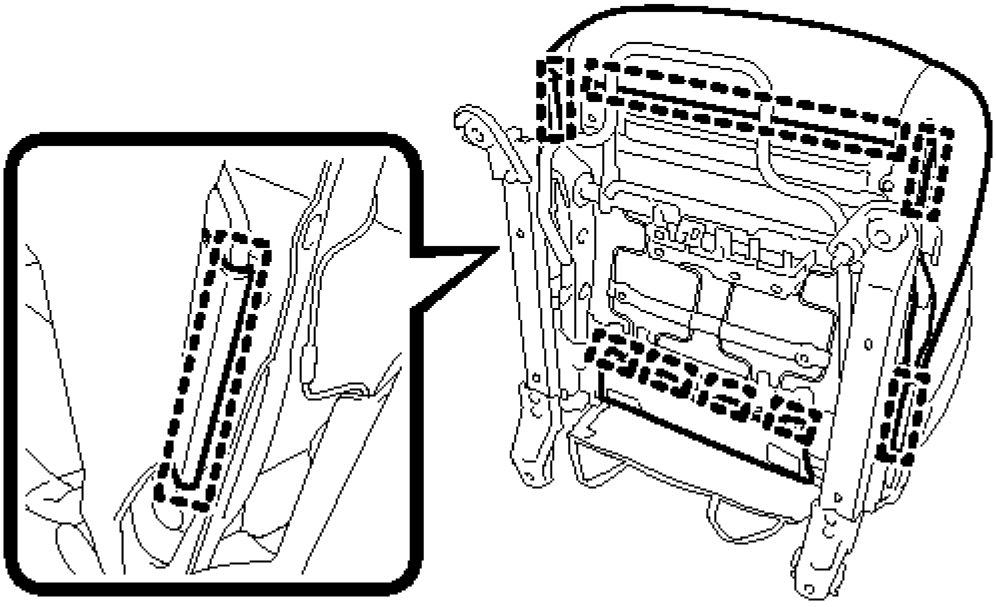

Fig. 23: Identifying Front Seat Cushion Cover Hooks
Courtesy of TOYOTA MOTOR SALES, U.S.A., INC.

10. **REMOVE SEPARATE TYPE FRONT SEAT CUSHION COVER**
    a. Remove the 12 hog rings and the separate type front seat cushion cover from the separate type front seat cushion pad.

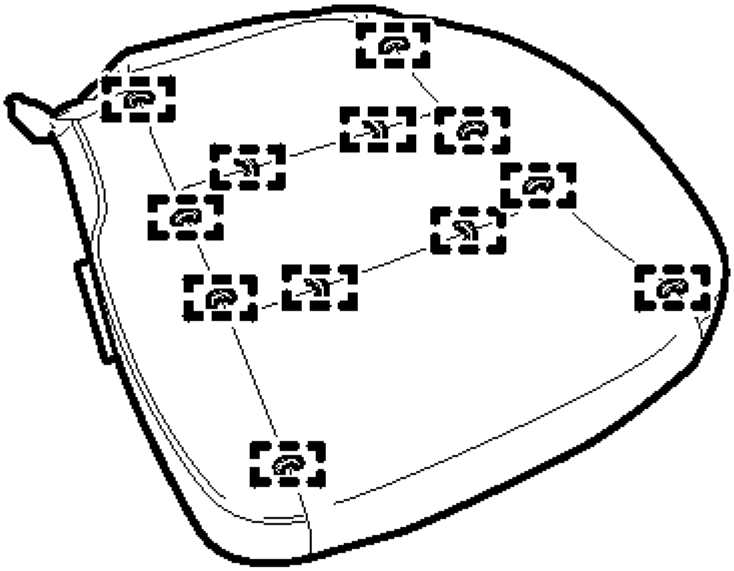

Fig. 24: Locating Front Seat Cushion Cover Hog Rings
Courtesy of TOYOTA MOTOR SALES, U.S.A., INC.

11. **REMOVE SEPARATE TYPE FRONT SEATBACK COVER WITH PAD**
    a. Disengage the hook.

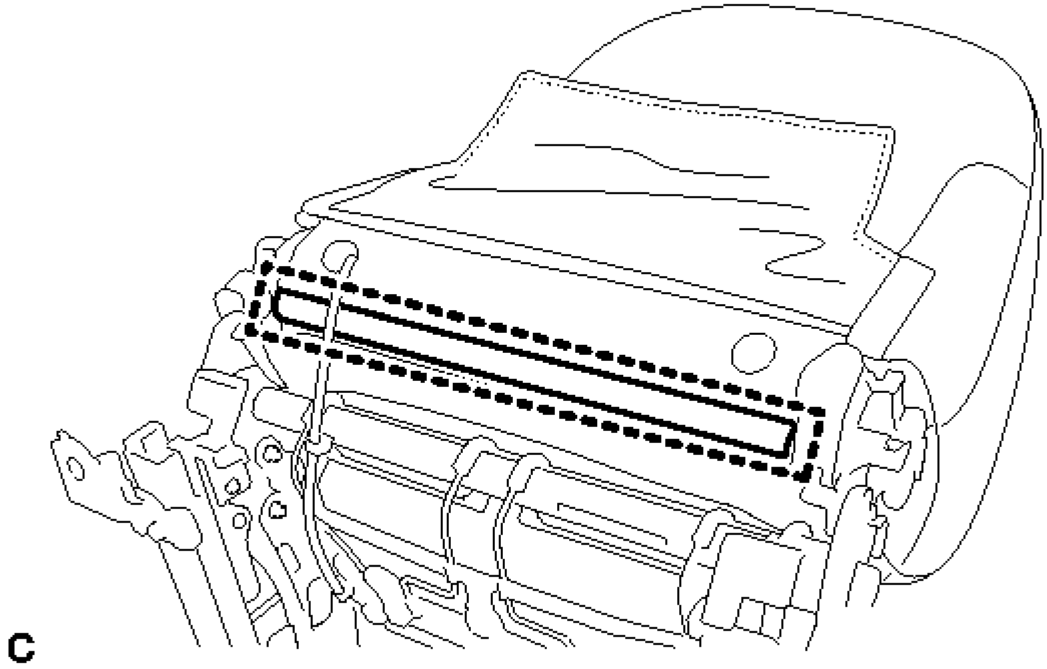

Fig. 25: Locating Front Seatback Cover Hook
Courtesy of TOYOTA MOTOR SALES, U.S.A., INC.

    b. Disengage the 2 fasteners.

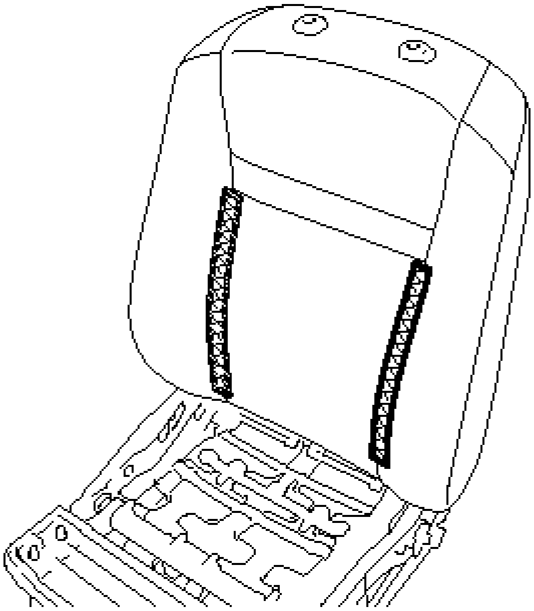

Fig. 26: Identifying Front Seatback Cover Fasteners
Courtesy of TOYOTA MOTOR SALES, U.S.A., INC.

c. Turn back the separate type front seatback cover.

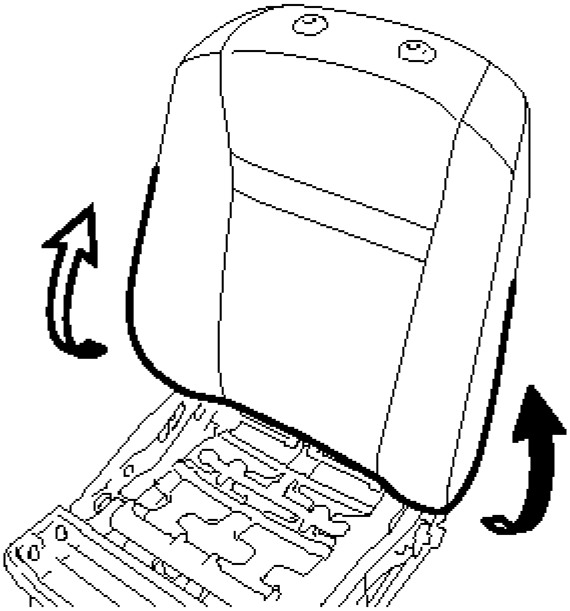

Fig. 27: Turning Back Front Seatback Cover
Courtesy of TOYOTA MOTOR SALES, U.S.A., INC.

d. Disengage the 2 hooks.

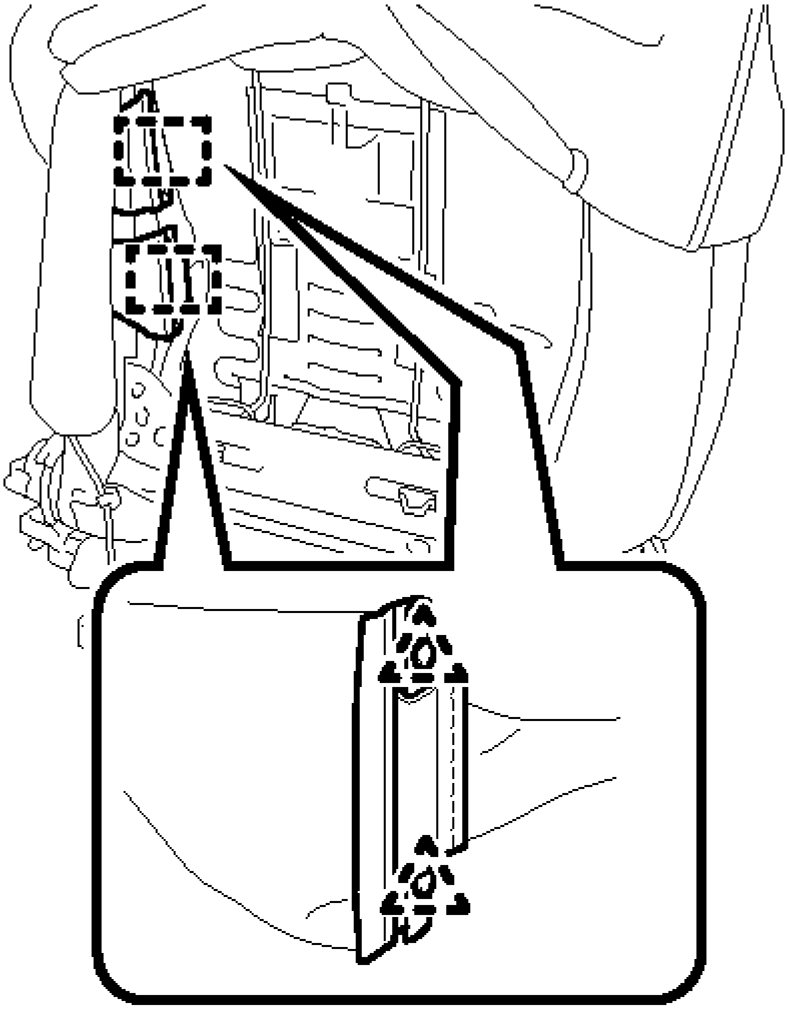

C

Fig. 28: Identifying Front Seatback Cover Hooks
Courtesy of TOYOTA MOTOR SALES, U.S.A., INC.

1. Remove the 4 clips.
2. Slide each hook to disengage them.

e. Disengage the 4 claws and remove the 2 front seat headrest supports.

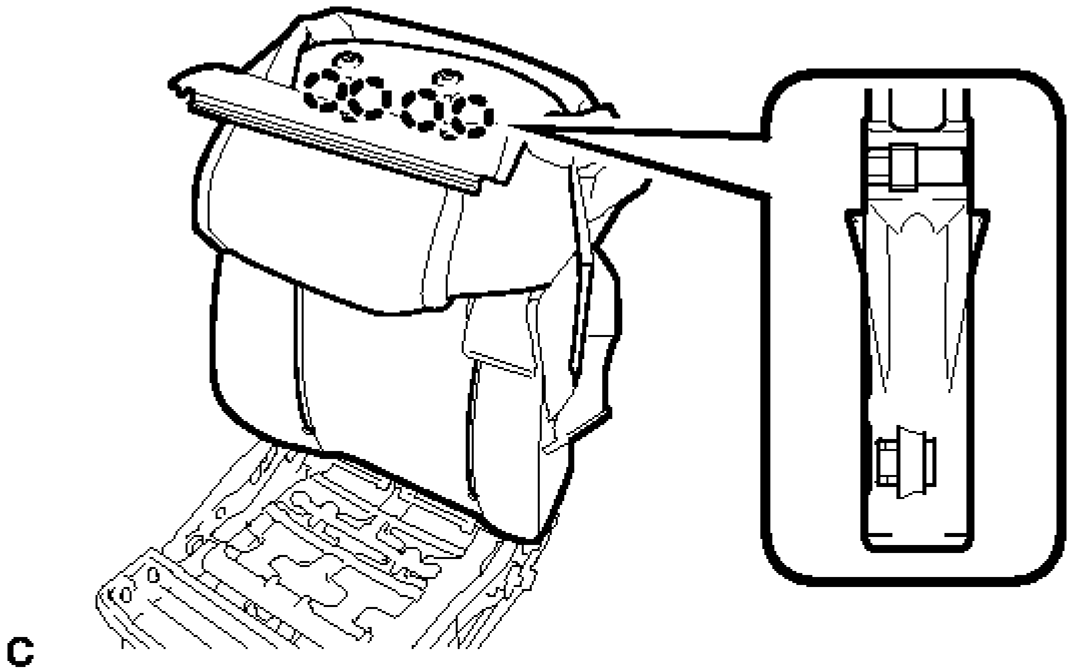

Fig. 29: Identifying Front Seatback Cover Headrest Support Claws
Courtesy of TOYOTA MOTOR SALES, U.S.A., INC.

f. Remove the separate type front seatback cover with pad.

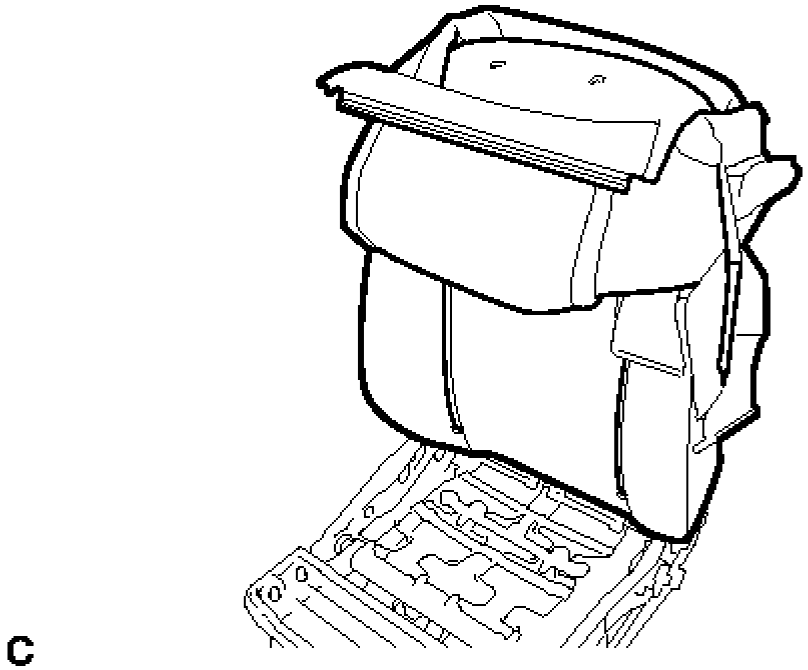

Fig. 30: Identifying Front Seatback Cover
Courtesy of TOYOTA MOTOR SALES, U.S.A., INC.

12. **REMOVE FRONT SEAT AIRBAG ASSEMBLY** . Refer to **REMOVAL - Step 7**
13. **REMOVE SEPARATE TYPE FRONT SEATBACK COVER**
    a. Remove the 2 hog rings.

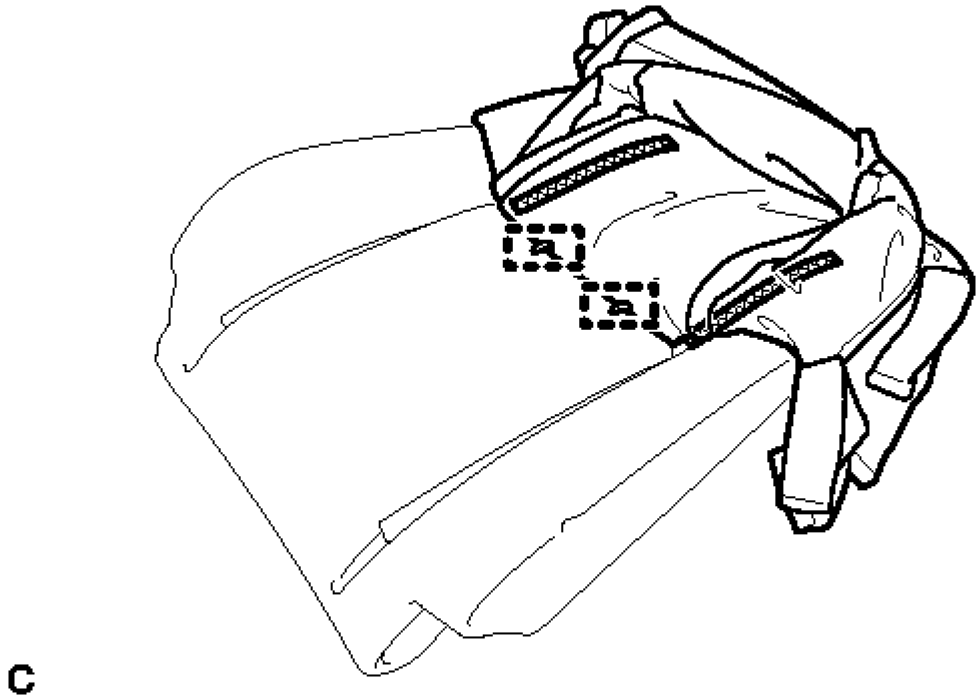

Fig. 31: Locating Front Seatback Cover Hog Rings
Courtesy of TOYOTA MOTOR SALES, U.S.A., INC.

    b. Disengage the 2 fasteners to remove the separate type front seatback cover from the separate type front seatback pad.
14. **REMOVE FRONT SEAT LOWER CUSHION SHIELD LH (for Driver Side)**
    a. Remove the screw.

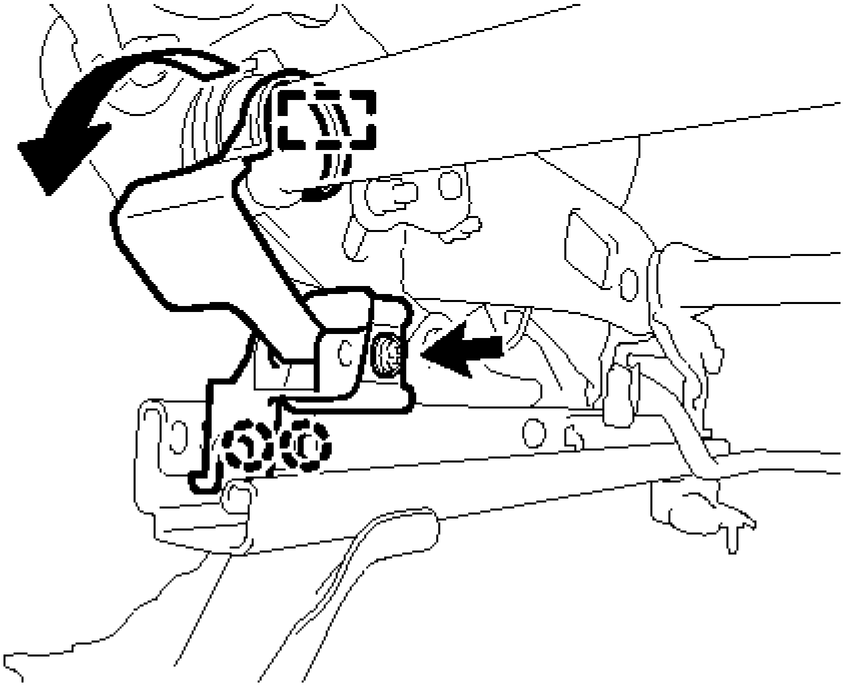

Fig. 32: Removing Front Seat Lower Cushion Shield LH (For Driver Side)
Courtesy of TOYOTA MOTOR SALES, U.S.A., INC.

b. Disengage the hook as shown in the illustration.
c. Disengage the 2 claws to remove the front seat lower cushion shield LH.

15. **REMOVE FRONT SEAT LOWER CUSHION SHIELD RH (for Driver Side)**
    a. Remove the screw.

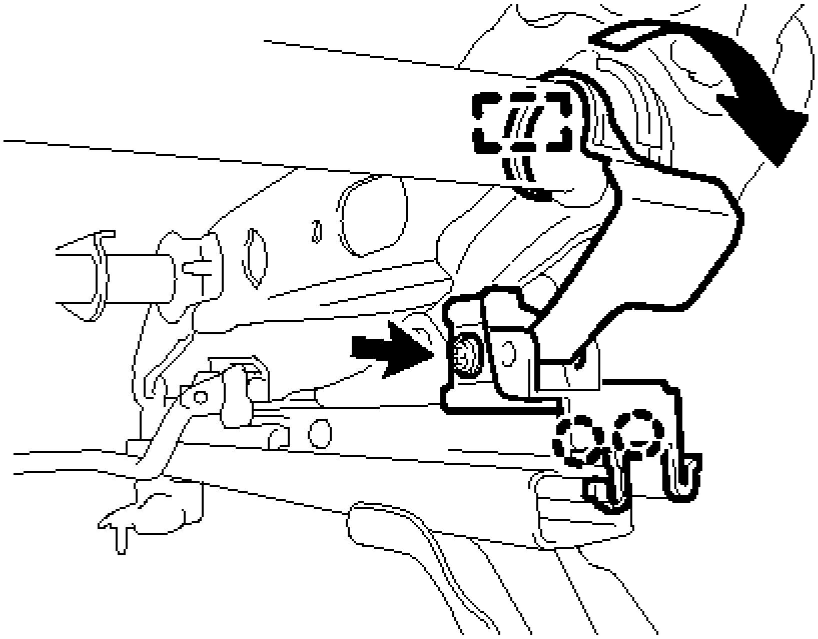

Fig. 33: Removing Front Seat Lower Cushion Shield RH (For Driver Side)
Courtesy of TOYOTA MOTOR SALES, U.S.A., INC.

b. Disengage the hook as shown in the illustration.

c. Disengage the 2 claws to remove the front seat lower cushion shield RH.

16. **REMOVE FRONT SEAT LOWER CUSHION SHIELD LH (for Front Passenger Side)**

a. Disengage the 2 claws to remove the front seat lower cushion shield LH.

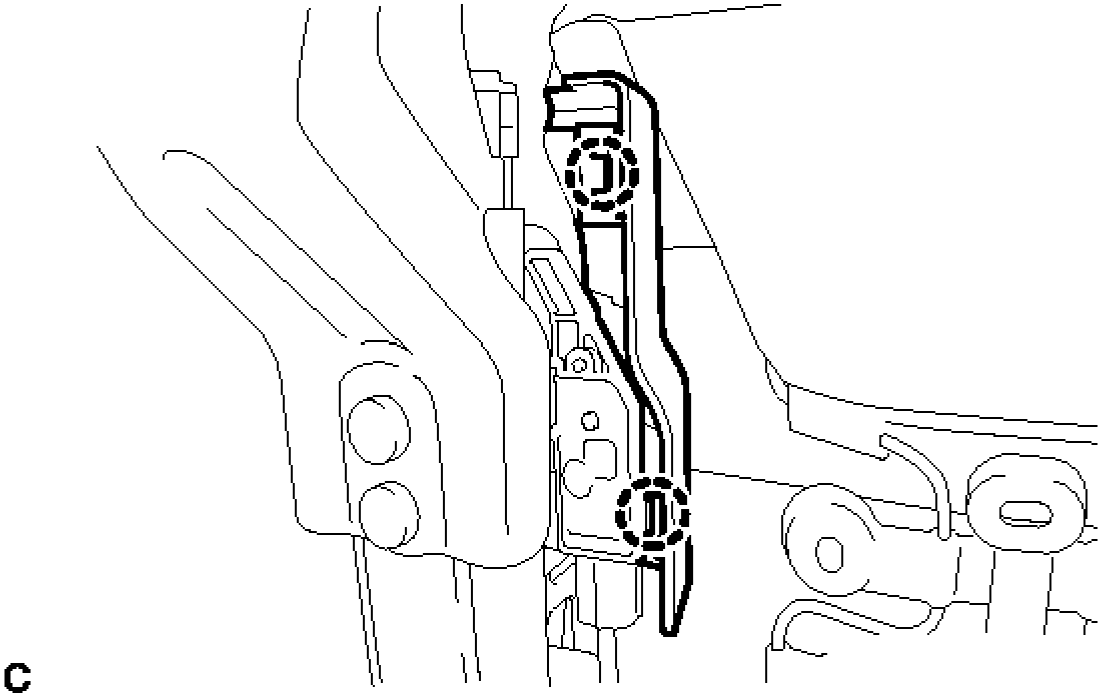

Fig. 34: Identifying Front Seat Lower Cushion Shield Claws LH (For Front Passenger Side)
Courtesy of TOYOTA MOTOR SALES, U.S.A., INC.

17. **REMOVE FRONT SEAT LOWER CUSHION SHIELD RH (for Front Passenger Side)**
    a. Disengage the 2 claws to remove the front seat lower cushion shield RH.

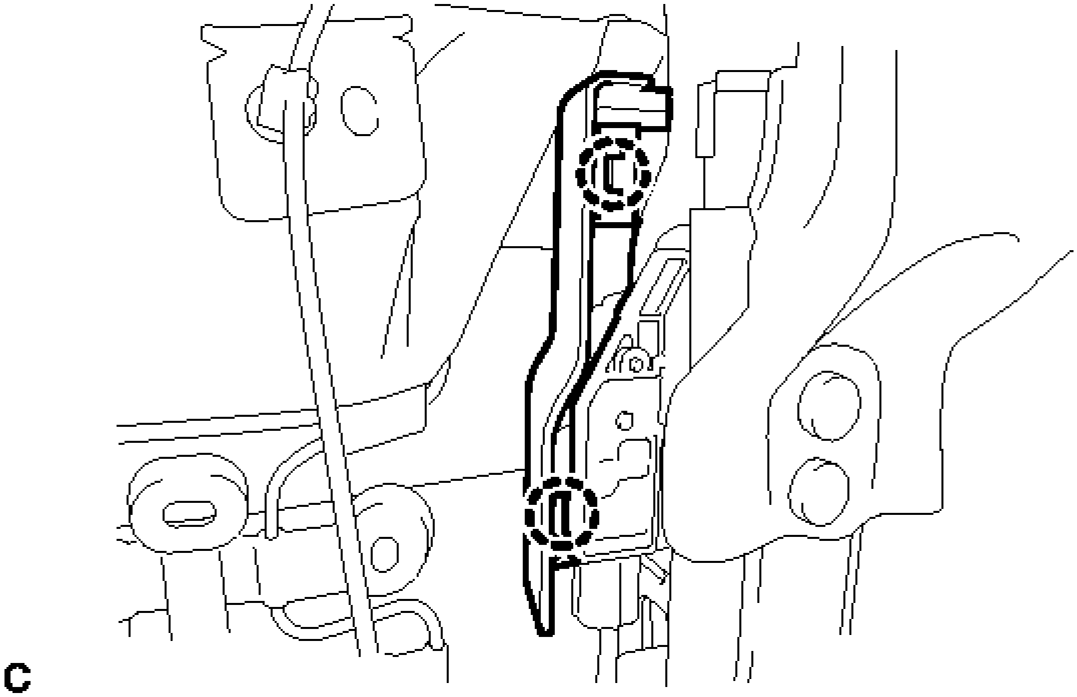

Fig. 35: Identifying Front Seat Lower Cushion Shield Claws RH (For Front Passenger Side)

Courtesy of TOYOTA MOTOR SALES, U.S.A., INC.

18. **REMOVE FRONT UPPER SEAT TRACK COVER LH**
    a. Disengage the 2 claws to remove the front upper seat track cover LH.

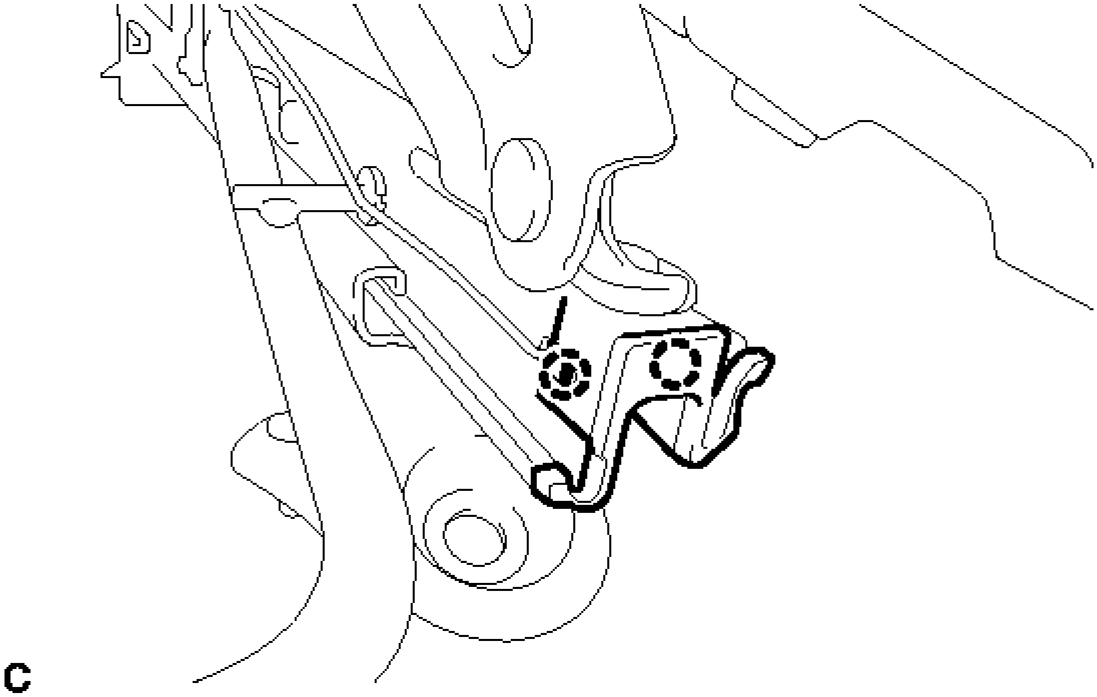

Fig. 36: Locating Front Upper Seat Track Cover Claws LH
Courtesy of TOYOTA MOTOR SALES, U.S.A., INC.

19. **REMOVE FRONT UPPER SEAT TRACK COVER RH**
    a. Disengage the 2 claws to remove the front upper seat track cover RH.

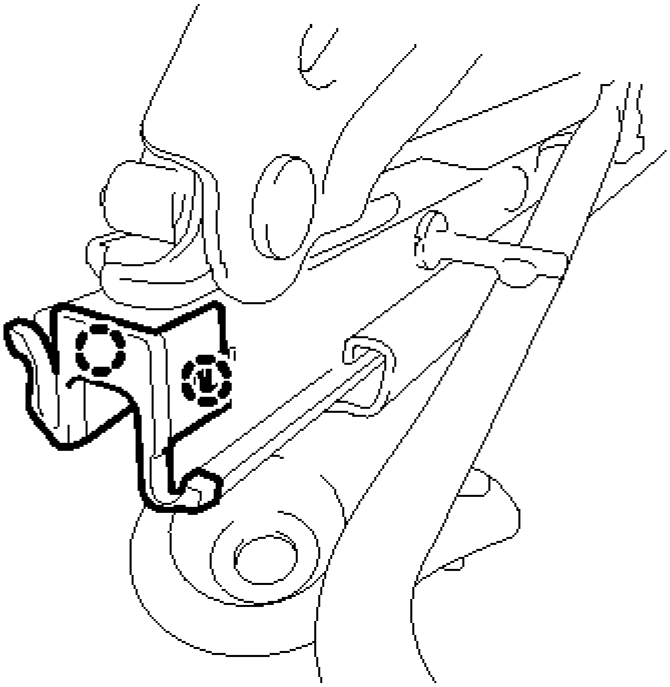

Fig. 37: Locating Front Upper Seat Track Cover Claws RH
Courtesy of TOYOTA MOTOR SALES, U.S.A., INC.

20. **REMOVE REAR UPPER SEAT TRACK COVER LH (for Front Passenger Side)**
    a. Disengage the 2 claws to remove the rear upper seat track cover LH.

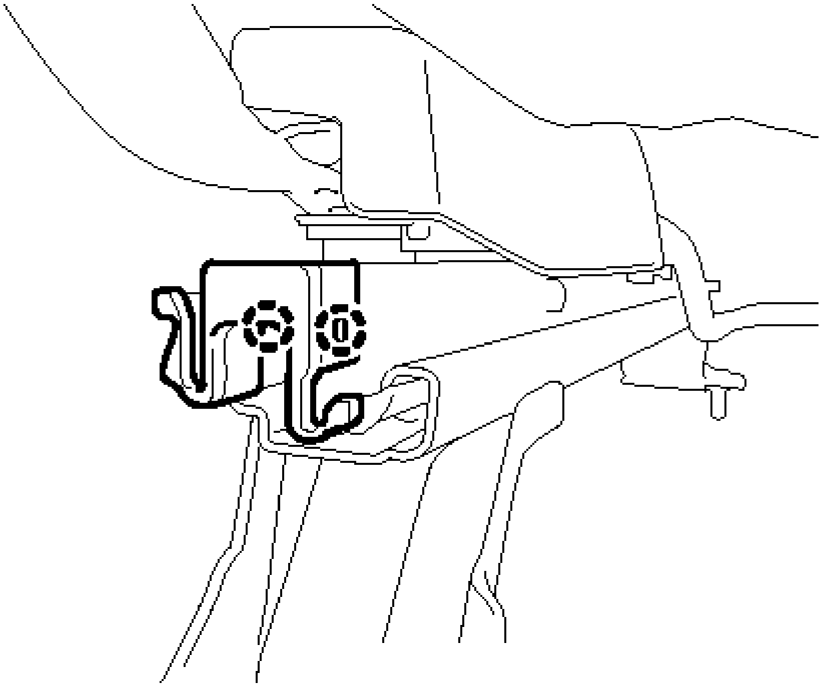

Fig. 38: Identifying Rear Upper Seat Track Cover Claws LH (For Front Passenger Side)

Courtesy of TOYOTA MOTOR SALES, U.S.A., INC.

21. **REMOVE REAR UPPER SEAT TRACK COVER RH (for Front Passenger Side)**
    a. Disengage the 2 claws to remove the rear upper seat track cover RH.

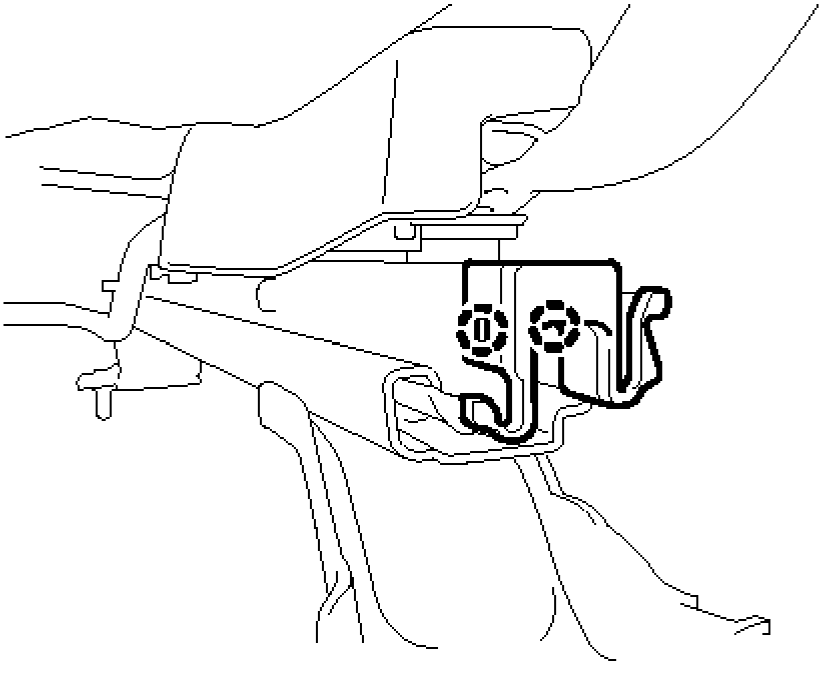

Fig. 39: Locating Rear Upper Seat Track Cover Claws RH (For Front Passenger Side)
Courtesy of TOYOTA MOTOR SALES, U.S.A., INC.

22. **REMOVE OCCUPANT DETECTION ECU (for Front Passenger Side)** . Refer to **REMOVAL - Step 3**
23. **REMOVE FRONT SEAT WIRE RH (for Front Passenger Side)**
    a. Disconnect each connector and disengage each wire harness clamp to remove the front seat wire RH.
24. **REMOVE RECLINING CONTROL LEVER**
    a. Remove the bolt and reclining control lever.

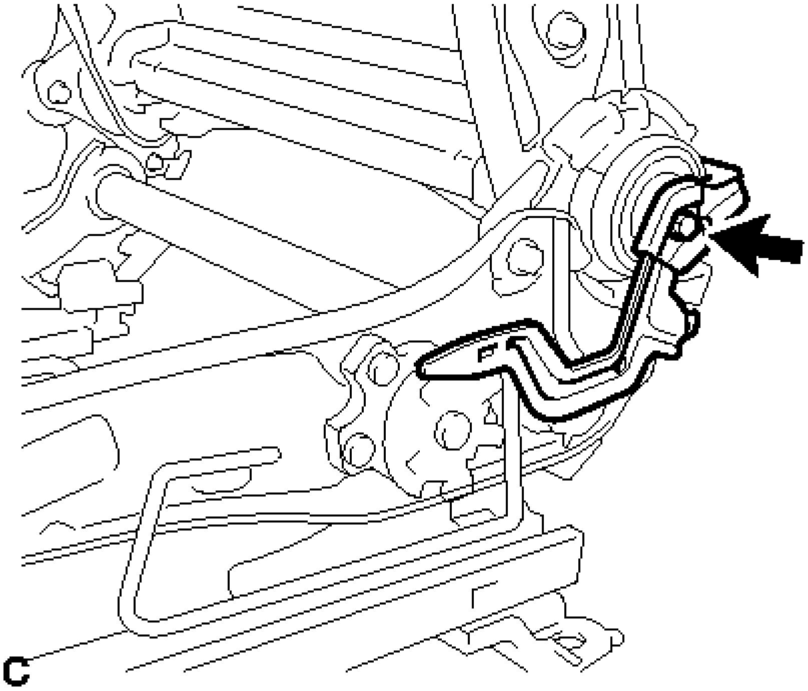

Fig. 40: Identifying Reclining Control Lever Bolt
Courtesy of TOYOTA MOTOR SALES, U.S.A., INC.

25. **REMOVE FRONT SEAT CUSHION PANEL SUB-ASSEMBLY (for Driver Side)**
    a. Remove the 4 bolts and front seat cushion panel sub-assembly.

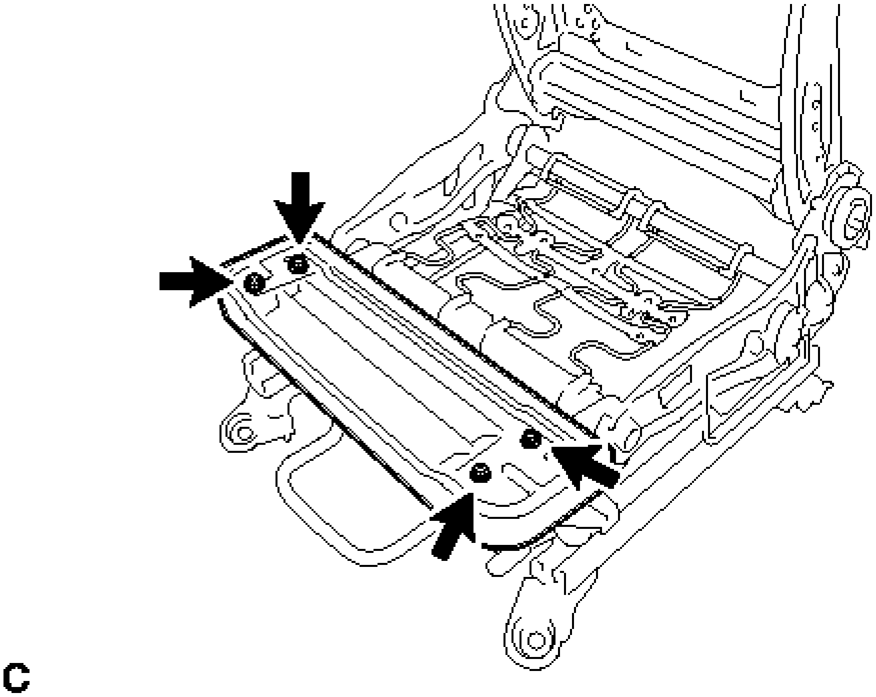

Fig. 41: Locating Front Seat Cushion Panel Sub-Assembly Bolts (For Driver Side)

Courtesy of TOYOTA MOTOR SALES, U.S.A., INC.

26. **REMOVE FRONT SEATBACK FRAME SUB-ASSEMBLY**
    a. Remove the 4 bolts and the front seatback frame sub-assembly.

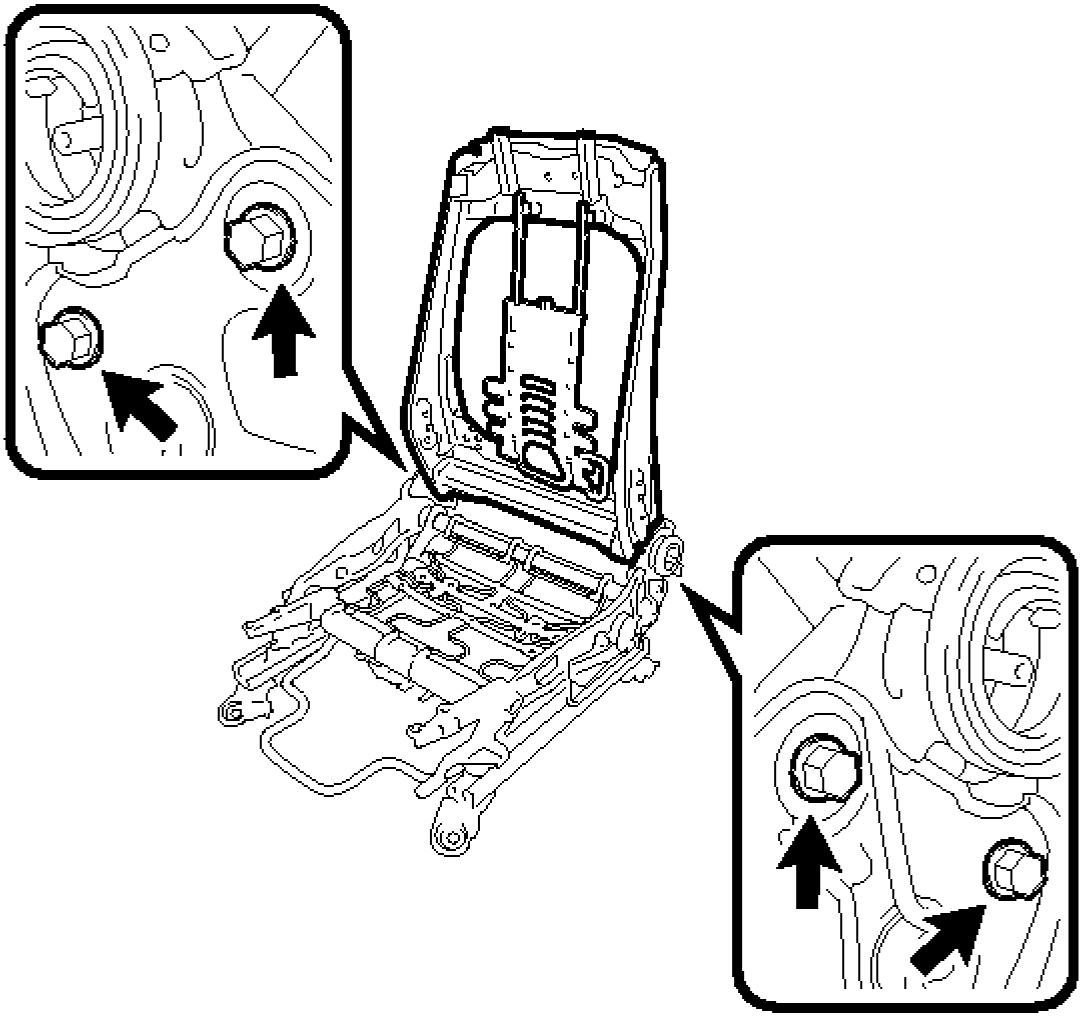

C

Fig. 42: Locating Front Seatback Frame Sub-Assembly Bolts
Courtesy of TOYOTA MOTOR SALES, U.S.A., INC.

27. **REMOVE SEPARATE TYPE FRONT SEATBACK SPRING ASSEMBLY**
    a. Disengage the 4 claws.

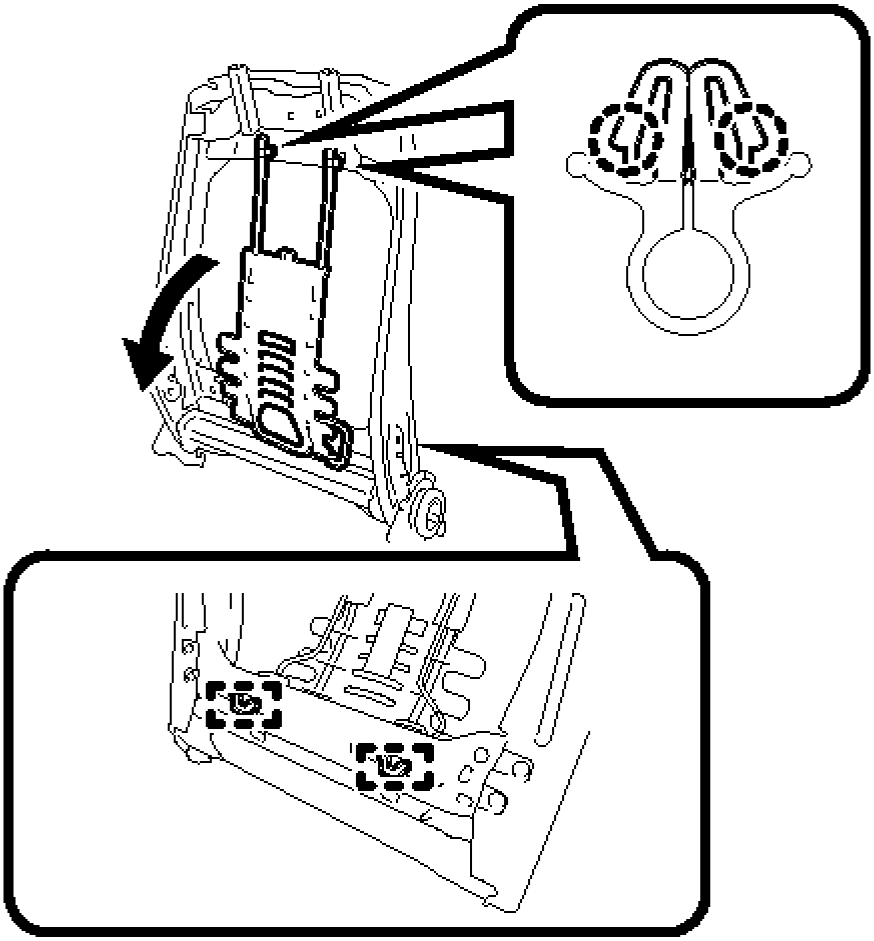

C

Fig. 43: Removing Front Seatback Spring Assembly
Courtesy of TOYOTA MOTOR SALES, U.S.A., INC.

b. Disengage the 2 guides to remove the separate type front seatback spring assembly.

c. Remove the 2 front seatback hooks from the separate type front seatback spring assembly.

28. **REMOVE SEPARATE TYPE FRONT SEAT CUSHION SPRING ASSEMBLY**

a. Remove the separate type front seat cushion spring assembly.

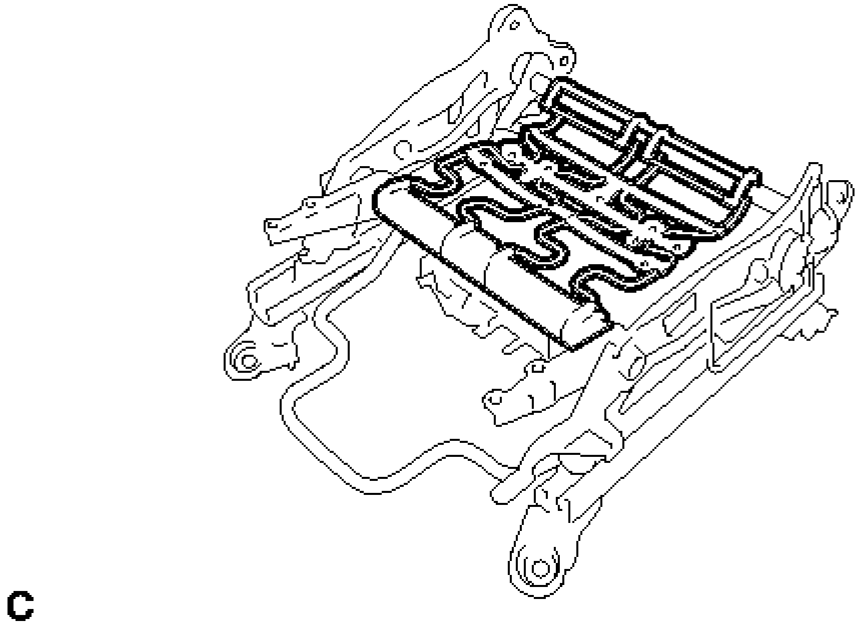

Fig. 44: Identifying Front Seat Cushion Spring Assembly
Courtesy of TOYOTA MOTOR SALES, U.S.A., INC.

REASSEMBLY

REASSEMBLY

1. **INSTALL SEPARATE TYPE FRONT SEAT CUSHION SPRING ASSEMBLY**
   a. Install the separate type front seat cushion spring assembly.
2. **INSTALL SEPARATE TYPE FRONT SEATBACK SPRING ASSEMBLY**
   a. Install the 2 front seatback hooks to the separate type front seatback spring assembly.
   b. Engage the 2 guides.

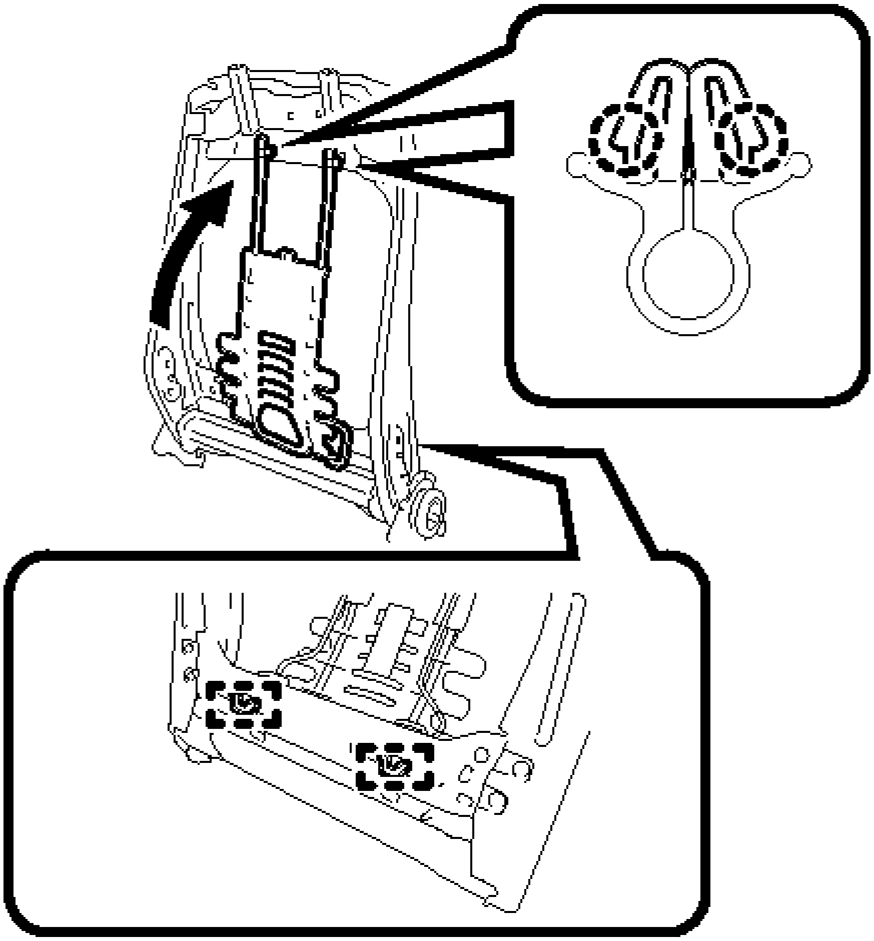

C

Fig. 45: Installing Front Seatback Spring Assembly
Courtesy of TOYOTA MOTOR SALES, U.S.A., INC.

c. Engage the 4 claws to install the separate type front seatback spring assembly.

3. **INSTALL FRONT SEATBACK FRAME SUB-ASSEMBLY**
   a. Install the front seatback frame sub-assembly with the 4 bolts.

   Torque: 45 N*m (459 kgf*cm, 33 ft.*lbf)

4. **INSTALL FRONT SEAT CUSHION PANEL SUB-ASSEMBLY (for Driver Side)**
   a. Install the front seat cushion panel sub-assembly with the 4 bolts.

   Torque: 10 N*m (102 kgf*cm, 7 ft.*lbf)

5. **INSTALL RECLINING CONTROL LEVER**

a. Install the reclining control lever with the bolt.

Torque: 15 N*m (153 kgf*cm, 11 ft.*lbf)

6. **INSTALL FRONT SEAT WIRE RH (for Front Passenger Side)**
    a. Connect each connector and engage each wire harness clamp to install the front seat wire RH.
7. **INSTALL OCCUPANT DETECTION ECU (for Front Passenger Side)** . Refer to **INSTALLATION - Step 1**
8. **INSTALL REAR UPPER SEAT TRACK COVER LH (for Front Passenger Side)**
    a. Engage the 2 claws to install the rear upper seat track cover LH.
9. **INSTALL REAR UPPER SEAT TRACK COVER RH (for Front Passenger Side)**
    a. Engage the 2 claws to install the rear upper seat track cover RH.
10. **INSTALL FRONT UPPER SEAT TRACK COVER LH**
    a. Engage the 2 claws to install the front upper seat track cover LH.
11. **INSTALL FRONT UPPER SEAT TRACK COVER RH**
    a. Engage the 2 claws to install the front upper seat track cover RH.
12. **INSTALL FRONT SEAT LOWER CUSHION SHIELD LH (for Driver Side)**
    a. Engage the 2 claws to install the front seat lower cushion shield LH.

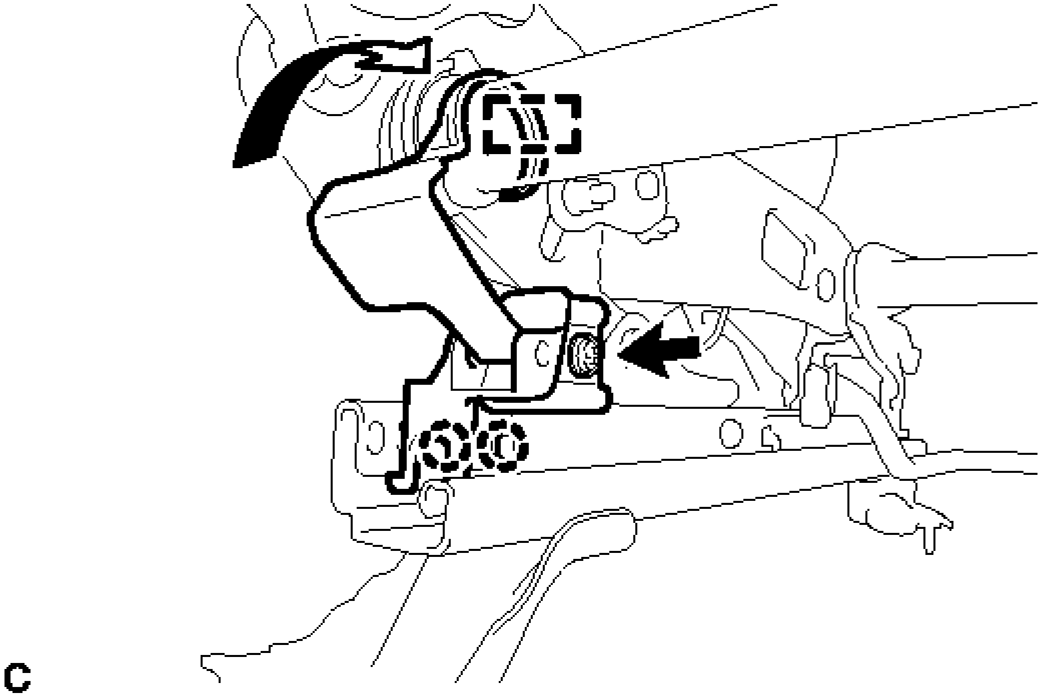

Fig. 46: Installing Front Seat Lower Cushion Shield LH (For Driver Side)
Courtesy of TOYOTA MOTOR SALES, U.S.A., INC.

b. Engage the hook as shown in the illustration.

c. Install the screw.

Torque: 0.6 N*m (6 kgf*cm, 5 in.*lbf)

13. **INSTALL FRONT SEAT LOWER CUSHION SHIELD RH (for Driver Side)**
    a. Engage the 2 claws to install the front seat lower cushion shield RH.

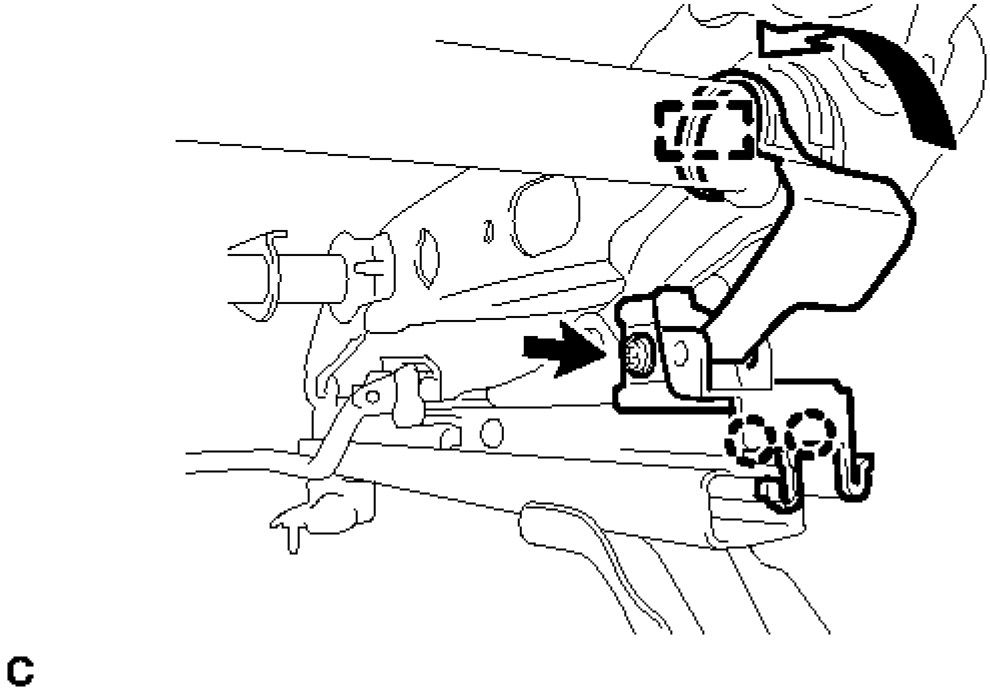

Fig. 47: Installing Front Seat Lower Cushion Shield RH (For Driver Side)
Courtesy of TOYOTA MOTOR SALES, U.S.A., INC.

    b. Engage the hook as shown in the illustration.
    c. Install the screw.

Torque: 0.6 N*m (6 kgf*cm, 5 in.*lbf)

14. **INSTALL FRONT SEAT LOWER CUSHION SHIELD LH (for Front Passenger Side)**
    a. Engage the 2 claws to install the front seat lower cushion shield LH.
15. **INSTALL FRONT SEAT LOWER CUSHION SHIELD RH (for Front Passenger Side)**
    a. Engage the 2 claws to install the front seat lower cushion shield RH.
16. **INSTALL SEPARATE TYPE FRONT SEATBACK COVER**
    a. Using hog ring pliers, install the separate type front seatback cover to the separate type front seatback pad with 2 new hog rings.

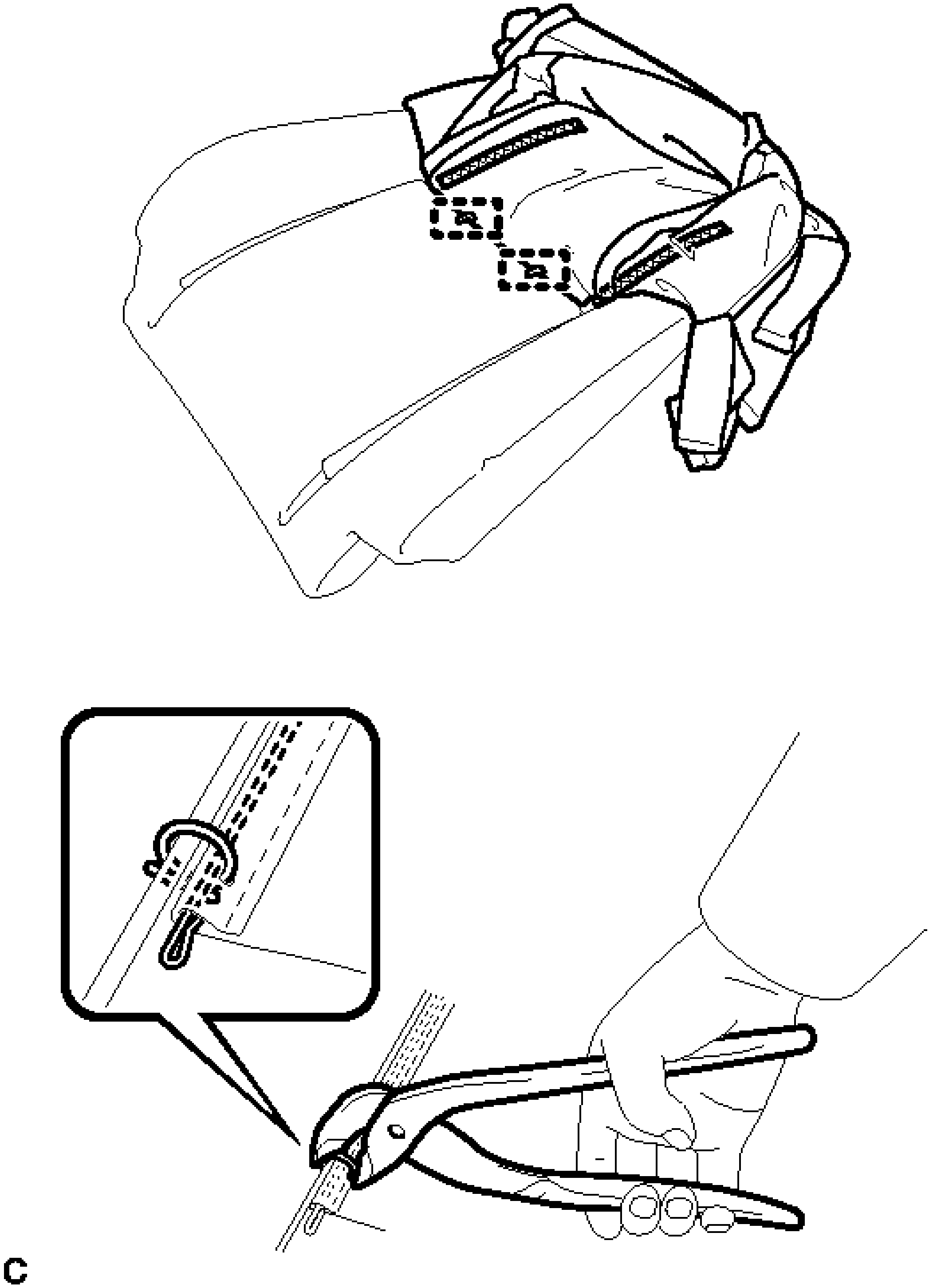

Fig. 48: Installing Front Seatback Cover Hog Rings
Courtesy of TOYOTA MOTOR SALES, U.S.A., INC.

NOTE:	- **Be careful not to damage the separate type front seatback cover.**

- **When installing the hog rings, take care to minimize wrinkles as much as possible.**

b. Engage the 2 fasteners.

17. **INSTALL FRONT SEAT AIRBAG ASSEMBLY** . Refer to **INSTALLATION - Step 1**
18. **INSTALL SEPARATE TYPE FRONT SEATBACK COVER WITH PAD**
    a. Temporarily install the separate type front seatback cover with pad.
    b. Engage the 4 claws to install the 2 front seat headrest supports.
    c. Engage the 2 hooks.

WARNING:

- **For vehicles with a front seat airbag assembly, the separate type front seatback cover must be securely installed. Otherwise, the front seat airbag assembly may not deploy properly.**
- **Make sure that the strap is not twisted after engaging the 2 hooks.**
- **Engage the 2 hooks securely.**

        1. Slide each hook to engage them.
        2. Install the 4 clips.
    d. Engage the 2 fasteners.
    e. Engage the hook.
19. **INSTALL SEPARATE TYPE FRONT SEAT CUSHION COVER**
    a. Using hog ring pliers, install the separate type front seat cushion cover to the separate type front seat cushion pad with 12 new hog rings.

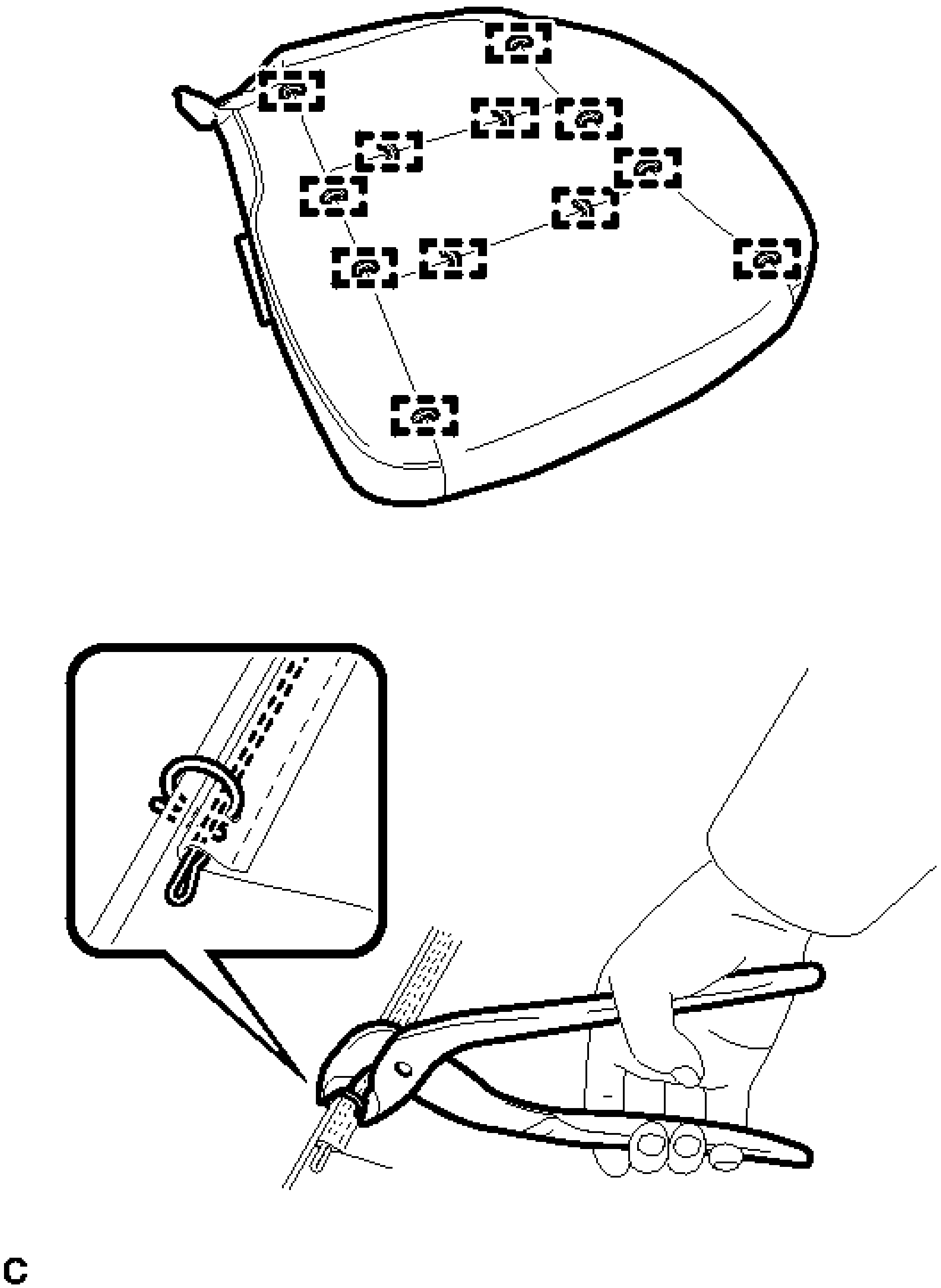

Fig. 49: Installing Front Seat Cushion Cover Hog Rings
Courtesy of TOYOTA MOTOR SALES, U.S.A., INC.

NOTE:

- **Be careful not to damage the separate type front seat cushion cover.**

- **When installing the hog rings, take care to minimize wrinkles as much as possible.**

20. **INSTALL SEPARATE TYPE FRONT SEAT CUSHION COVER WITH PAD**
    a. Temporarily install the separate type front seat cushion cover with pad.
    b. Engage each hook.
    c. for Driver Side:
        1. Install the separate type front seat cushion cover.

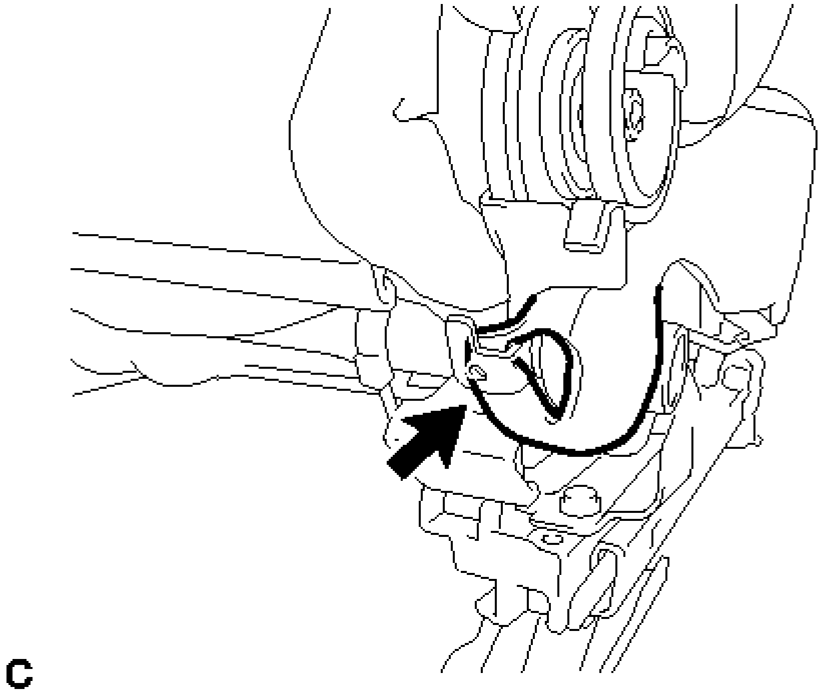

Fig. 50: Identifying Driver Side Front Seat Cushion Cover
Courtesy of TOYOTA MOTOR SALES, U.S.A., INC.

    d. for Front Passenger Side:
        1. Install the separate type front seat cushion cover.

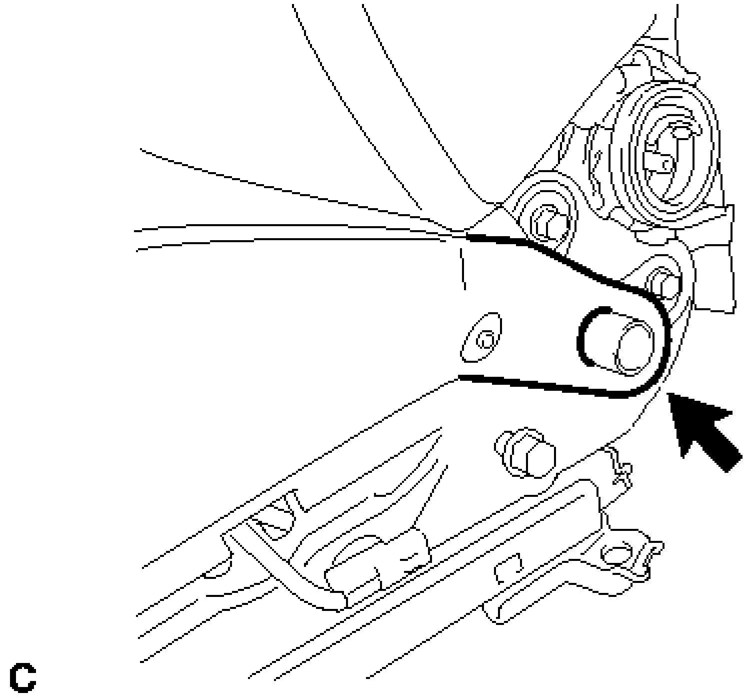

Fig. 51: Identifying Passenger Side Front Seat Cushion Cover
Courtesy of TOYOTA MOTOR SALES, U.S.A., INC.

   e. Engage the claw and 3 clamps to install the front seat airbag assembly wire harness.

21. **INSTALL FRONT SEAT INNER BELT ASSEMBLY (for Driver Side)** . Refer to **INSTALLATION - Step 1**
22. **INSTALL FRONT SEAT INNER BELT ASSEMBLY (for Front Passenger Side)** . Refer to **INSTALLATION - Step 2**
23. **INSTALL FRONT SEAT INNER CUSHION SHIELD**
    a. Install front seat inner cushion shield with the 2 screws.

       Torque: 0.6 N*m (6 kgf*cm, 5 in.*lbf)

24. **INSTALL FRONT SEAT CUSHION SHIELD**
    a. Engage the 2 claws to install a new front seat cushion shield.
    b. Install the 2 screws.

       Torque: 0.6 N*m (6 kgf*cm, 5 in.*lbf)

25. **CONNECT SEPARATE TYPE FRONT SEATBACK COVER**
    a. Connect the 2 rubber bands of the separate type front seatback cover.
26. **INSTALL VERTICAL ADJUSTING HANDLE (for Driver Side)**
    a. Install the vertical adjusting handle with the screw.

       Torque: 0.6 N*m (6 kgf*cm, 5 in.*lbf)

27. **INSTALL RECLINING ADJUSTER RELEASE HANDLE**
    a. Engage the claw to install the reclining adjuster release handle.
28. **INSTALL SEAT ADJUSTER COVER CAP**
    a. Install the 2 seat adjuster cover caps.

INSTALLATION

INSTALLATION

1. **INSTALL FRONT SEAT ASSEMBLY**
    a. Place the front seat assembly in the cabin.

NOTE: Be careful not to damage the vehicle body.

    b. Connect each connector and clamp under the seat.
    c. Temporarily install the front seat assembly with the 4 bolts.
    d. Lift up the seat track adjusting handle and move the seat to the rearmost position.
    e. Tighten the 2 bolts on the front side of the seat.

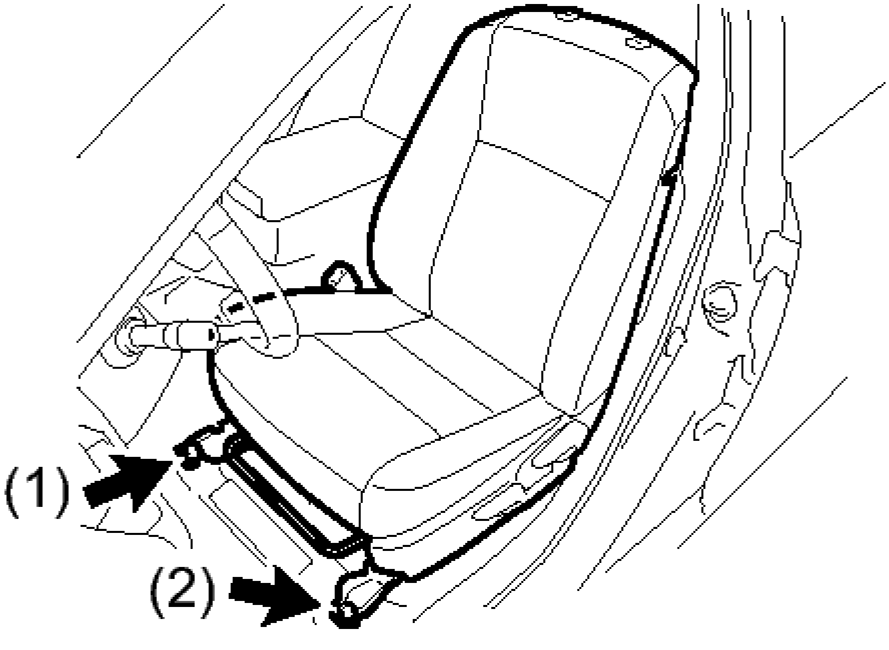

Fig. 52: Tightening Front Seat Assembly Front Bolts In Sequence
Courtesy of TOYOTA MOTOR SALES, U.S.A., INC.

Torque: 37 N*m (377 kgf*cm, 27 ft.*lbf)

NOTE: Tighten the bolts in the order indicated in the illustration.

f. Lift up the seat track adjusting handle and move the seat to the foremost position.
g. Tighten the 2 bolts on the rear side of the seat.

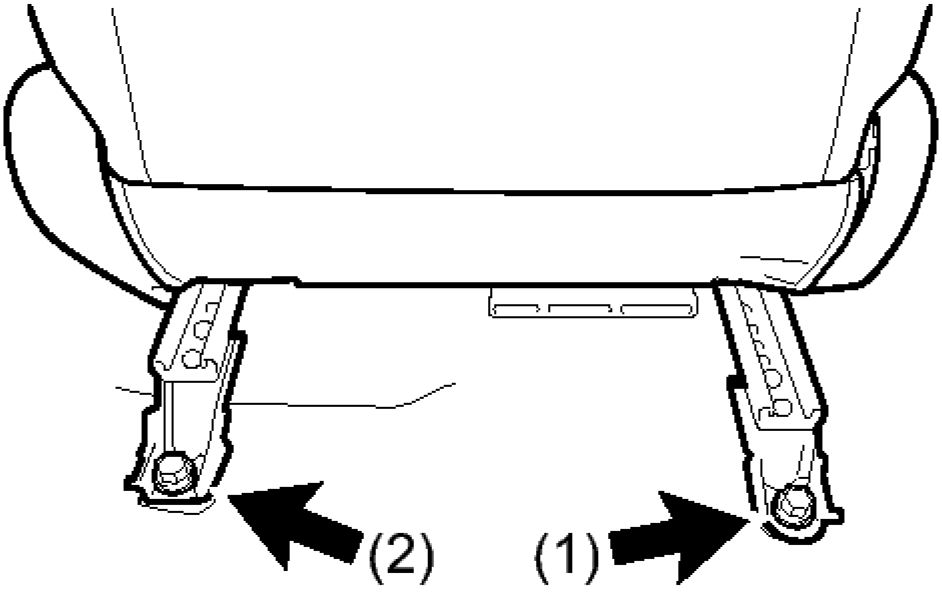

Fig. 53: Tightening Seat Tracking Bolts In Sequence
Courtesy of TOYOTA MOTOR SALES, U.S.A., INC.

Torque: 37 N*m (377 kgf*cm, 27 ft.*lbf)

NOTE: **Tighten the bolts in the order indicated in the illustration.**

2. **INSPECT SEAT SLIDE ADJUSTER LOCKS**
   a. During the sliding operation of the front seat, check that the left and right adjusters move together smoothly and lock simultaneously. If the seat adjusters do not lock simultaneously, loosen the seat installation bolts to adjust the adjuster position.
3. **INSTALL REAR INNER SEAT TRACK BRACKET COVER**
   a. Lift up the seat track adjusting handle and move the seat to the foremost position.
   b. Engage the 2 claws to install the rear inner seat track bracket cover.
4. **INSTALL REAR OUTER SEAT TRACK BRACKET COVER**
   a. Engage the 2 claws to install the rear outer seat track bracket cover.
5. **INSTALL FRONT SEAT HEADREST ASSEMBLY**
6. **CONNECT CABLE TO NEGATIVE AUXILIARY BATTERY TERMINAL**

NOTE: **When disconnecting the cable, some systems need to be initialized after the cable is reconnected. Refer to INITIALIZATION**

7. **INSTALL LUGGAGE TRIM SERVICE HOLE COVER** . Refer to **INSTALLATION - Step 3**
8. **PERFORM ZERO POINT CALIBRATION AND SENSITIVITY CHECK (for Front Passenger Side)**

   Refer to **INITIALIZATION**

9. **INSPECT SRS WARNING LIGHT**

   for Separate Type Yaw Rate Sensor: Refer to **DIAGNOSIS SYSTEM**

   for Built-in Type Yaw Rate Sensor: Refer to **DIAGNOSIS SYSTEM**

FRONT SEAT ASSEMBLY (FOR POWER SEAT)

COMPONENTS

ILLUSTRATION

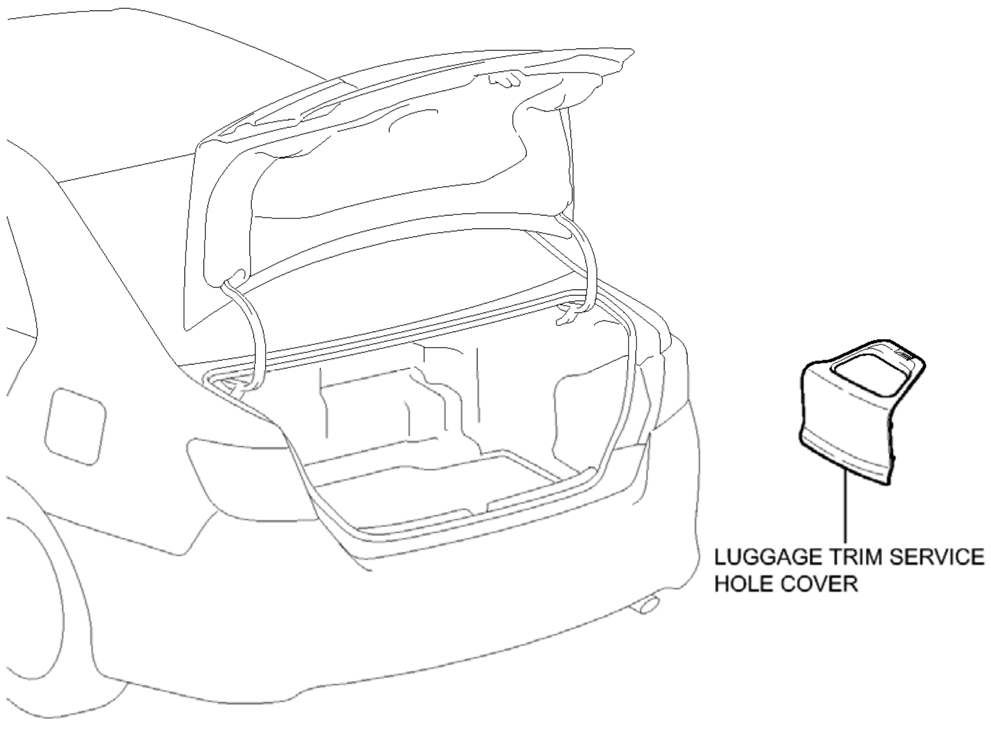

Fig. 54: Identifying Front Seat Assembly Replacement Components With Torque Specifications (For Power Seat) (1 Of 11)
Courtesy of TOYOTA MOTOR SALES, U.S.A., INC.

ILLUSTRATION

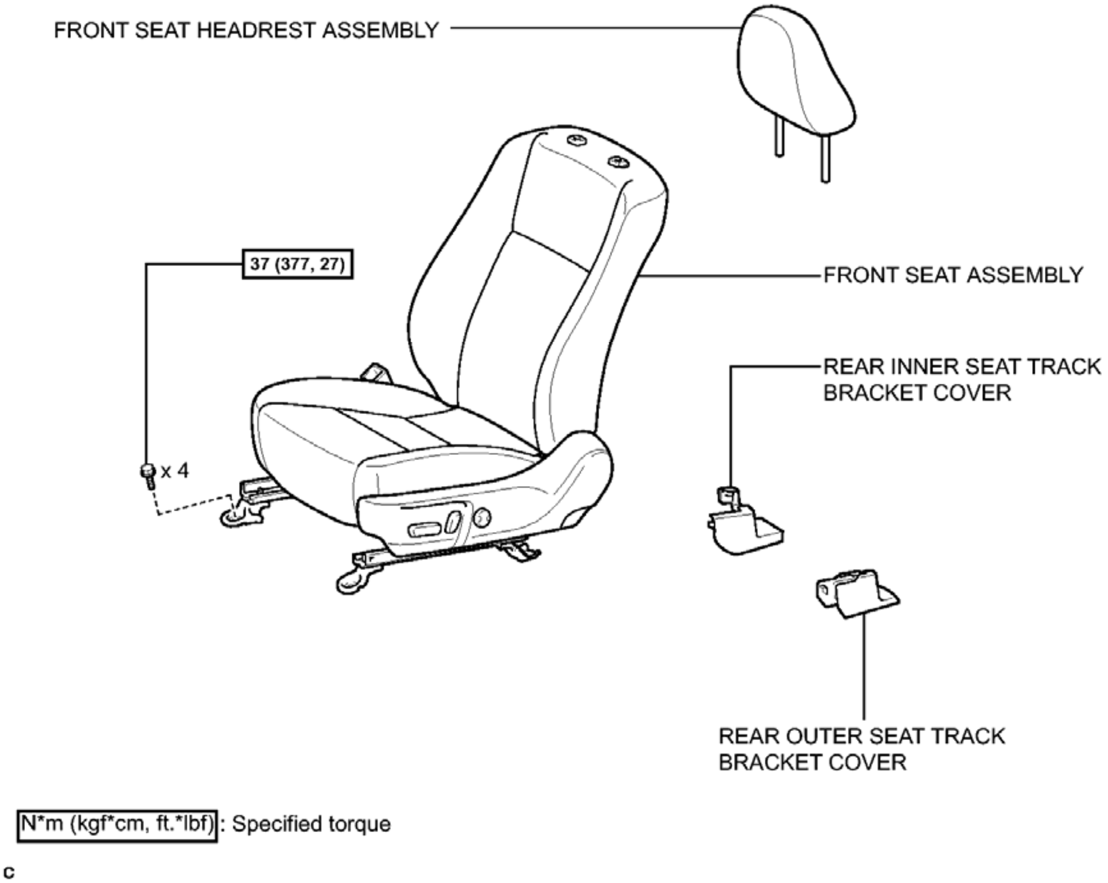
FRONT SEAT HEADREST ASSEMBLY
37 (377, 27)
FRONT SEAT ASSEMBLY
x 4
REAR INNER SEAT TRACK BRACKET COVER
REAR OUTER SEAT TRACK BRACKET COVER
N*m (kgf*cm, ft.*lbf): Specified torque
c

Fig. 55: Identifying Front Seat Assembly Replacement Components With Torque Specifications (For Power Seat) (2 Of 11)
Courtesy of TOYOTA MOTOR SALES, U.S.A., INC.

ILLUSTRATION

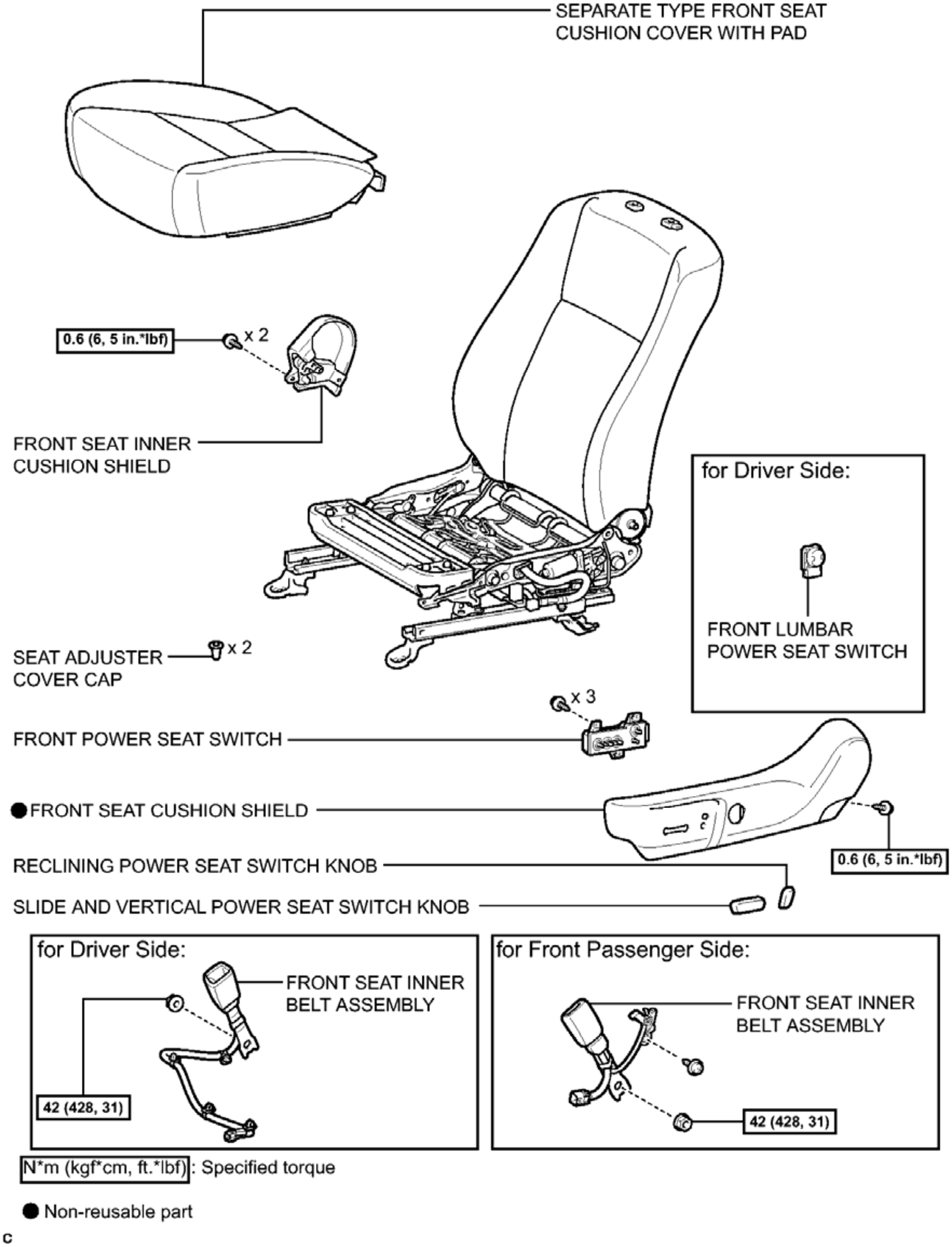
SEPARATE TYPE FRONT SEAT CUSHION COVER WITH PAD
0.6 (6, 5 in.*lbf)
x 2
FRONT SEAT INNER CUSHION SHIELD
for Driver Side:
FRONT LUMBAR POWER SEAT SWITCH
SEAT ADJUSTER COVER CAP
x 2
x 3
FRONT POWER SEAT SWITCH
● FRONT SEAT CUSHION SHIELD
0.6 (6, 5 in.*lbf)
RECLINING POWER SEAT SWITCH KNOB
SLIDE AND VERTICAL POWER SEAT SWITCH KNOB
for Driver Side:
FRONT SEAT INNER BELT ASSEMBLY
42 (428, 31)
for Front Passenger Side:
FRONT SEAT INNER BELT ASSEMBLY
42 (428, 31)
N*m (kgf*cm, ft.*lbf): Specified torque
● Non-reusable part
c

Fig. 56: Identifying Front Seat Assembly Replacement Components With Torque Specifications (For Power Seat) (3 Of 11)

Courtesy of TOYOTA MOTOR SALES, U.S.A., INC.

ILLUSTRATION

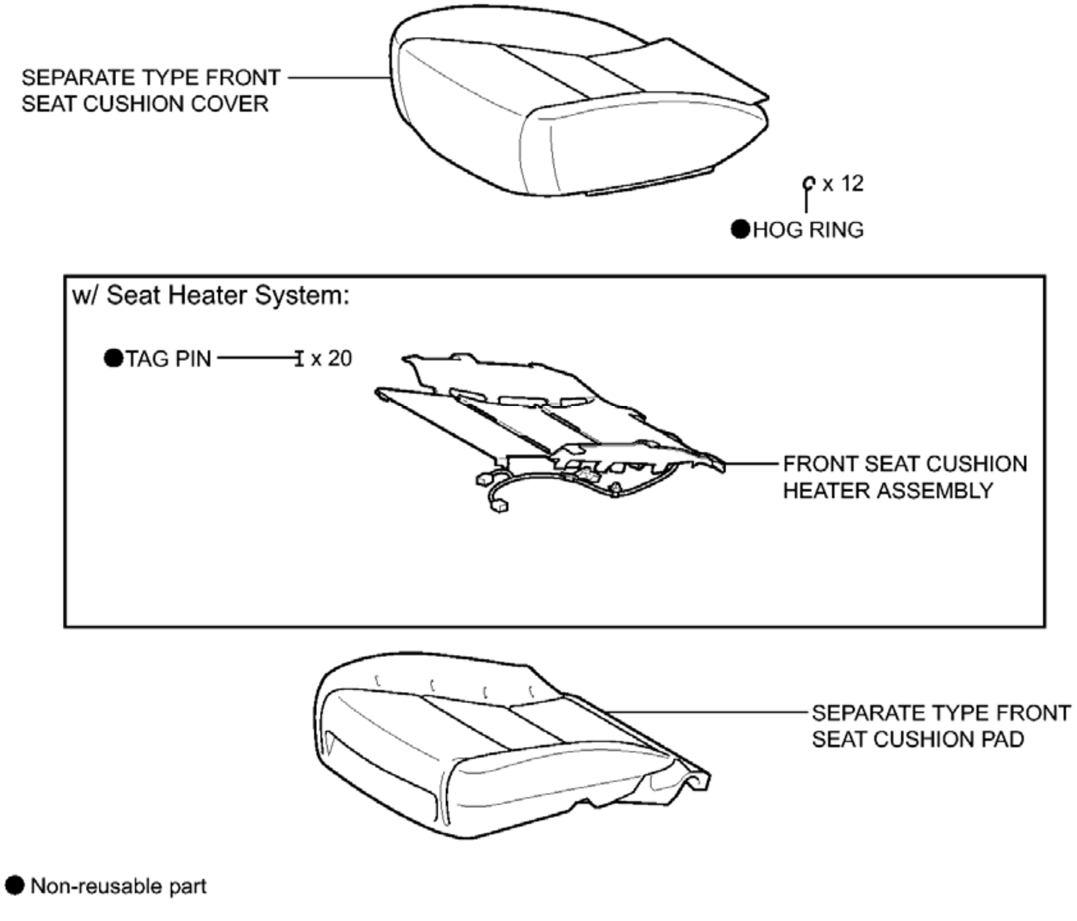
SEPARATE TYPE FRONT SEAT CUSHION COVER
x 12
● HOG RING
w/ Seat Heater System:
● TAG PIN
x 20
FRONT SEAT CUSHION HEATER ASSEMBLY
SEPARATE TYPE FRONT SEAT CUSHION PAD
● Non-reusable part
c

Fig. 57: Identifying Front Seat Assembly Replacement Components With Torque Specifications (For Power Seat) (4 Of 11)

Courtesy of TOYOTA MOTOR SALES, U.S.A., INC.

ILLUSTRATION

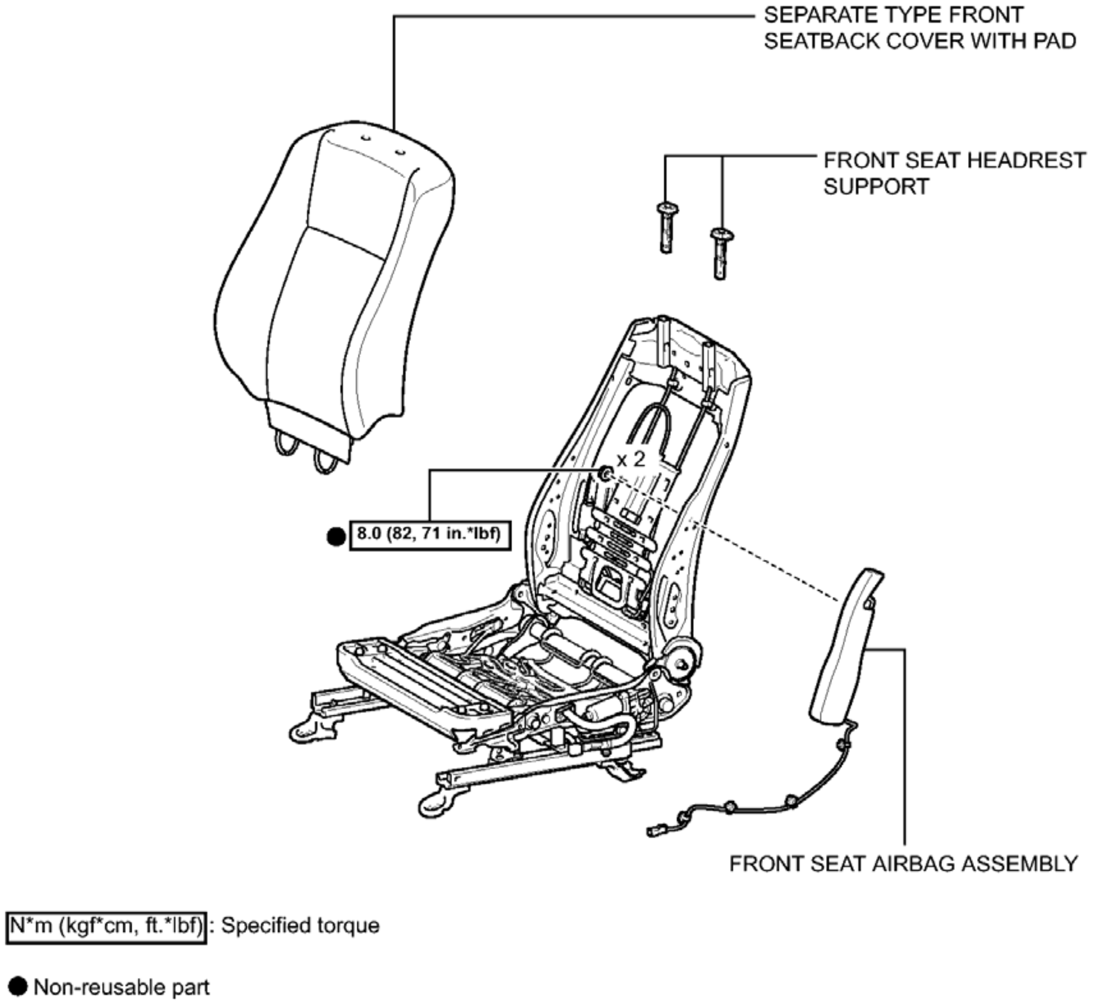
SEPARATE TYPE FRONT SEATBACK COVER WITH PAD
FRONT SEAT HEADREST SUPPORT
x 2
● 8.0 (82, 71 in.*lbf)
FRONT SEAT AIRBAG ASSEMBLY
N*m (kgf*cm, ft.*lbf): Specified torque
● Non-reusable part

c

Fig. 58: Identifying Front Seat Assembly Replacement Components With Torque Specifications (For Power Seat) (5 Of 11)
Courtesy of TOYOTA MOTOR SALES, U.S.A., INC.

ILLUSTRATION

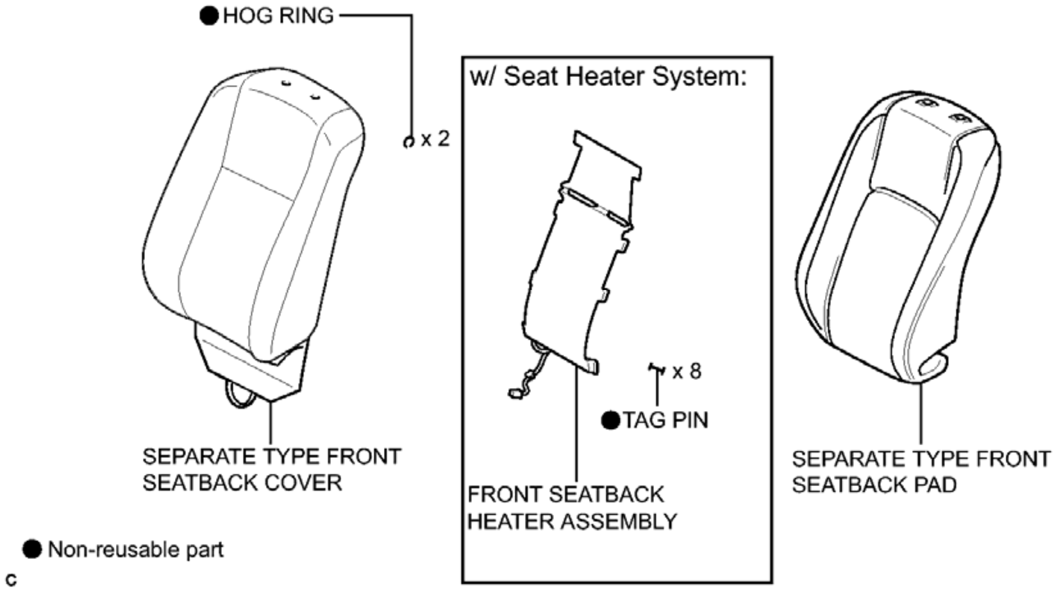
● HOG RING
x 2
w/ Seat Heater System:
x 8
● TAG PIN
SEPARATE TYPE FRONT SEATBACK COVER
FRONT SEATBACK HEATER ASSEMBLY
SEPARATE TYPE FRONT SEATBACK PAD
● Non-reusable part
c

Fig. 59: Identifying Front Seat Assembly Replacement Components With Torque Specifications (For Power Seat) (6 Of 11)

Courtesy of TOYOTA MOTOR SALES, U.S.A., INC.

ILLUSTRATION

for Driver Side:

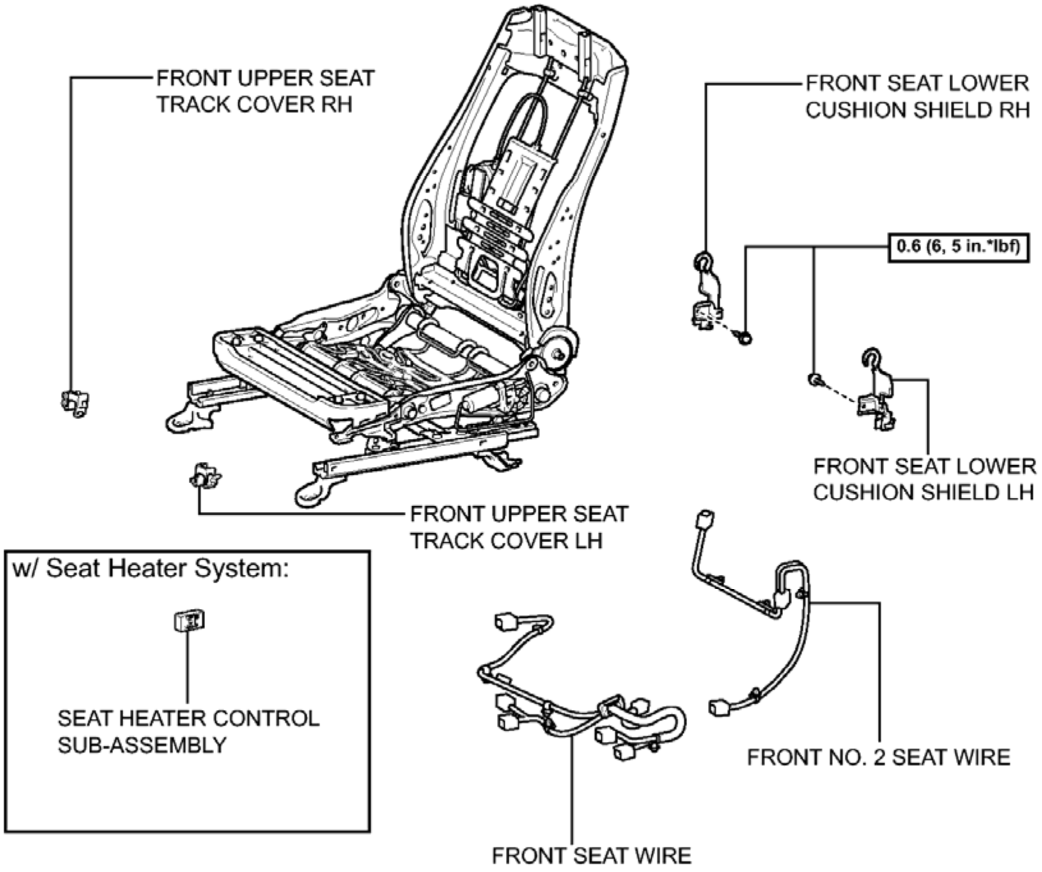
FRONT UPPER SEAT TRACK COVER RH
FRONT SEAT LOWER CUSHION SHIELD RH
0.6 (6, 5 in.*lbf)
FRONT SEAT LOWER CUSHION SHIELD LH
FRONT UPPER SEAT TRACK COVER LH
w/ Seat Heater System:
SEAT HEATER CONTROL SUB-ASSEMBLY
FRONT NO. 2 SEAT WIRE
FRONT SEAT WIRE

N*m (kgf*cm, ft.*lbf): Specified torque

c

Fig. 60: Identifying Front Seat Assembly Replacement Components With Torque Specifications (For Power Seat) (7 Of 11)
Courtesy of TOYOTA MOTOR SALES, U.S.A., INC.

ILLUSTRATION

for Front Passenger Side:

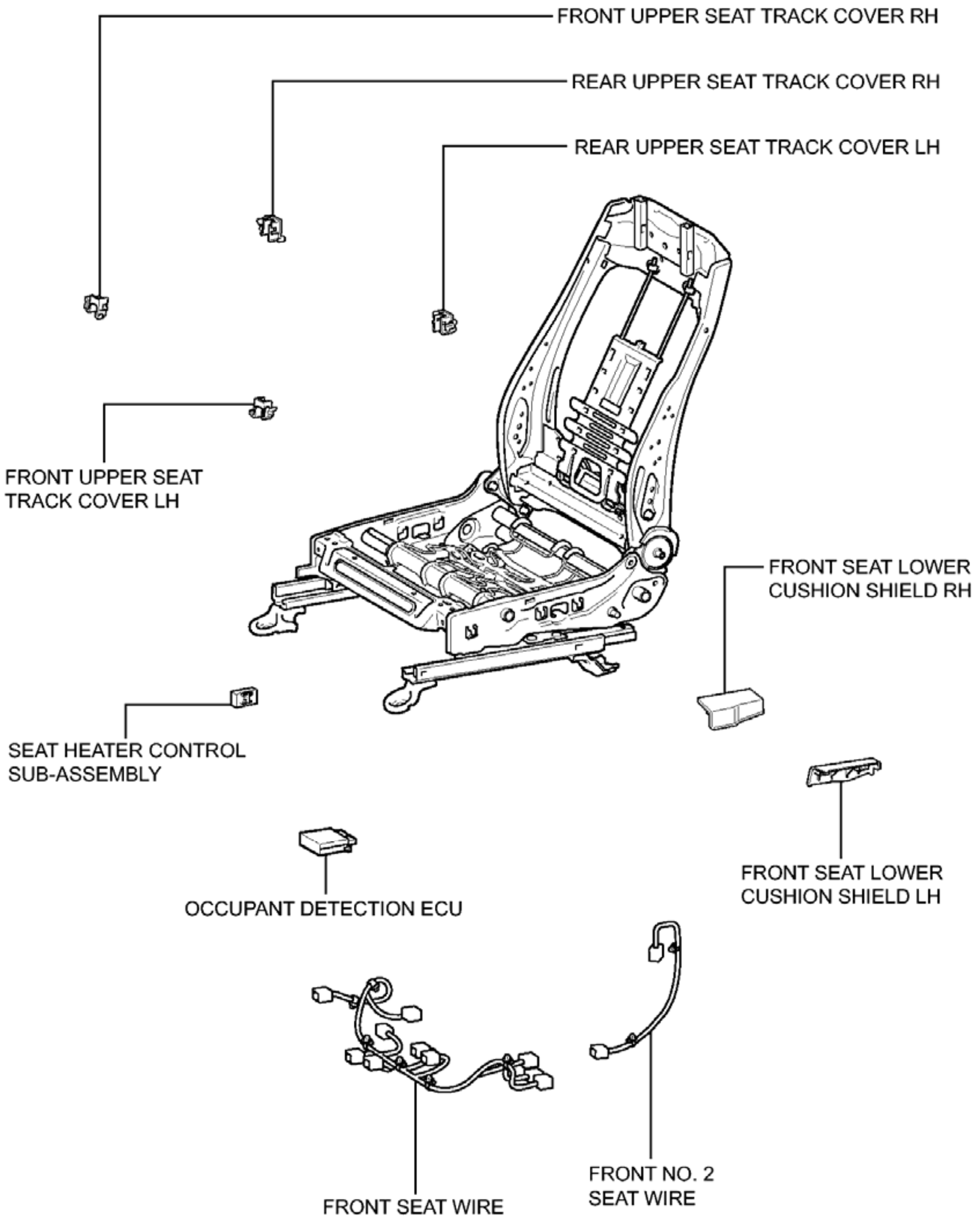
FRONT UPPER SEAT TRACK COVER RH
REAR UPPER SEAT TRACK COVER RH
REAR UPPER SEAT TRACK COVER LH
FRONT UPPER SEAT TRACK COVER LH
FRONT SEAT LOWER CUSHION SHIELD RH
SEAT HEATER CONTROL SUB-ASSEMBLY
OCCUPANT DETECTION ECU
FRONT SEAT LOWER CUSHION SHIELD LH
FRONT SEAT WIRE
FRONT NO. 2 SEAT WIRE

c

Fig. 61: Identifying Front Seat Assembly Replacement Components With Torque Specifications (For Power Seat) (8 Of 11)

Courtesy of TOYOTA MOTOR SALES, U.S.A., INC.

ILLUSTRATION

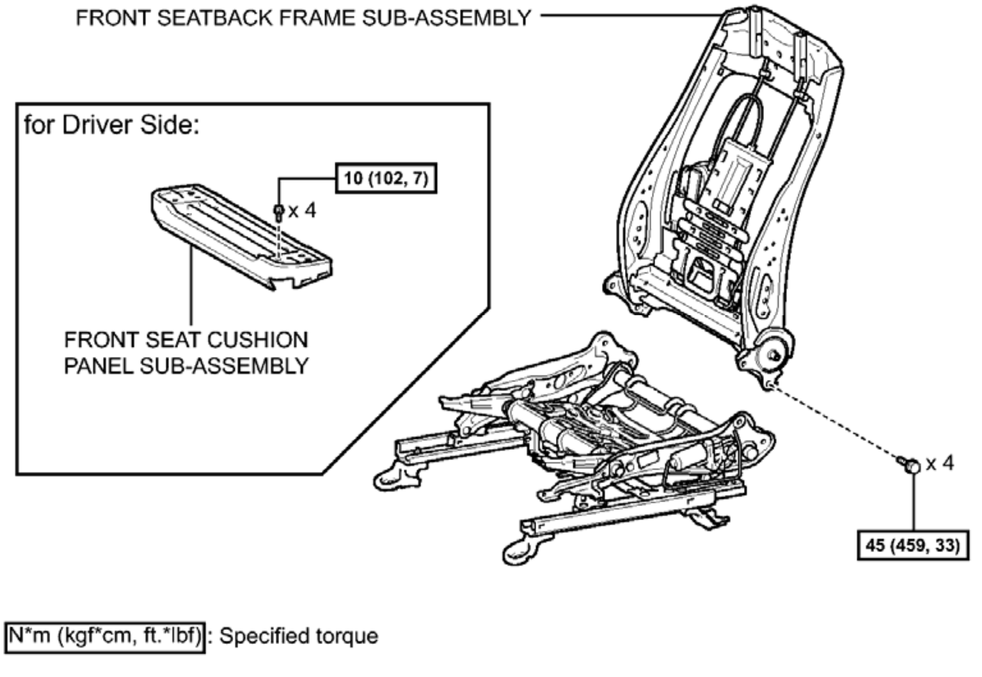
FRONT SEATBACK FRAME SUB-ASSEMBLY
for Driver Side:
10 (102, 7)
x 4
FRONT SEAT CUSHION PANEL SUB-ASSEMBLY
x 4
45 (459, 33)
N*m (kgf*cm, ft.*lbf): Specified torque
c

Fig. 62: Identifying Front Seat Assembly Replacement Components With Torque Specifications (For Power Seat) (9 Of 11)
Courtesy of TOYOTA MOTOR SALES, U.S.A., INC.

ILLUSTRATION

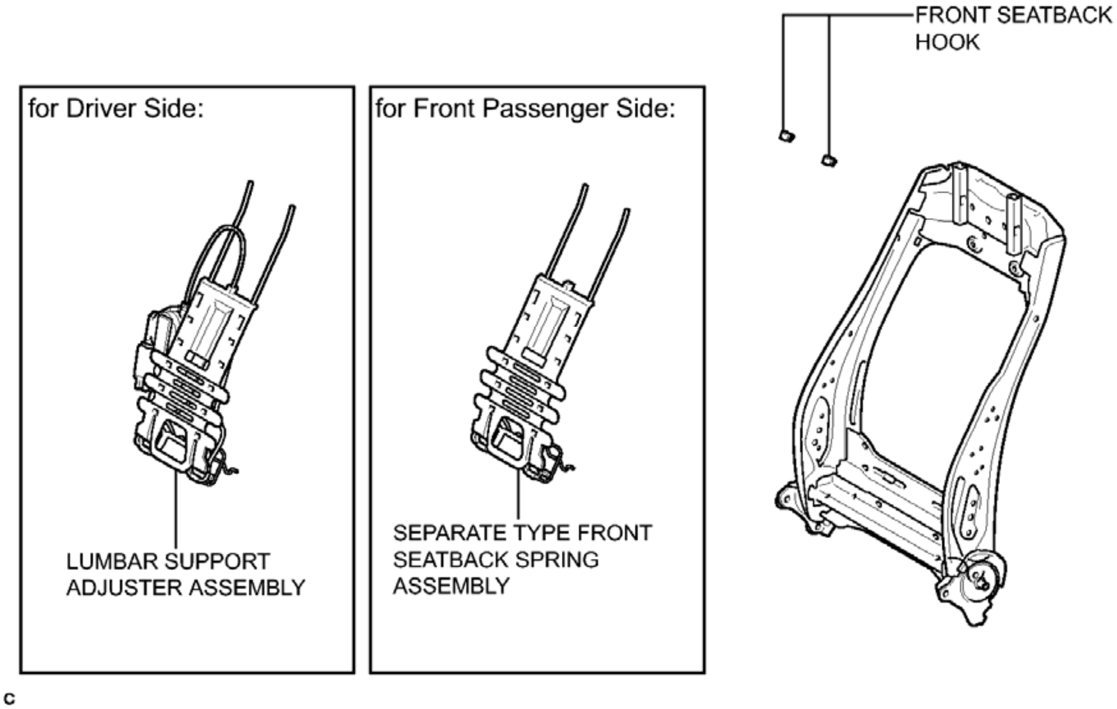
for Driver Side:
LUMBAR SUPPORT ADJUSTER ASSEMBLY
for Front Passenger Side:
SEPARATE TYPE FRONT SEATBACK SPRING ASSEMBLY
FRONT SEATBACK HOOK
c

Fig. 63: Identifying Front Seat Assembly Replacement Components With Torque Specifications (For Power Seat) (10 Of 11)
Courtesy of TOYOTA MOTOR SALES, U.S.A., INC.

ILLUSTRATION

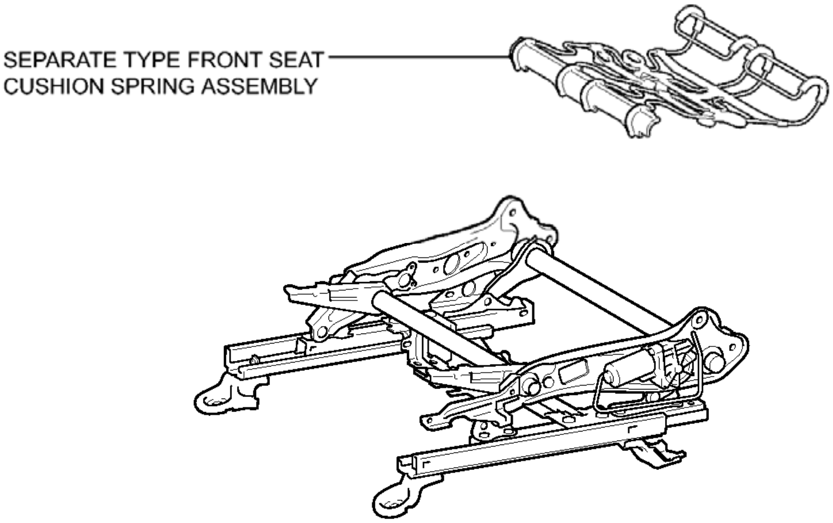

Fig. 64: Identifying Front Seat Assembly Replacement Components With Torque Specifications (For Power Seat) (11 Of 11)
Courtesy of TOYOTA MOTOR SALES, U.S.A., INC.

REMOVAL

REMOVAL

1. **PRECAUTION**

WARNING:

- **Be sure to read Precaution thoroughly before servicing.**

  for Separate Type Yaw Rate Sensor: Refer to PRECAUTION

  for Built-in Type Yaw Rate Sensor: Refer to PRECAUTION

- **If the side airbag has deployed, replace the front seat airbag assembly, front seatback frame sub-assembly, separate type front seatback pad and separate type front seatback cover with the necessary parts in accordance with the extent of the collision damage.**

NOTE:

- **After turning the power switch off, waiting time may be required before disconnecting the cable from the negative (-) auxiliary battery terminal. Therefore, make sure to read the disconnecting the cable**

from the negative (-) auxiliary battery terminal notices before proceeding with work. Refer to PRECAUTION .

2. **REMOVE LUGGAGE TRIM SERVICE HOLE COVER** . Refer to **REMOVAL - Step 2**
3. **REMOVE FRONT SEAT HEADREST ASSEMBLY**
4. **REMOVE REAR OUTER SEAT TRACK BRACKET COVER**
   a. Operate the slide and vertical power seat switch knob and move the seat to the foremost position.
   b. Disengage the 2 claws and remove the rear outer seat track bracket cover.

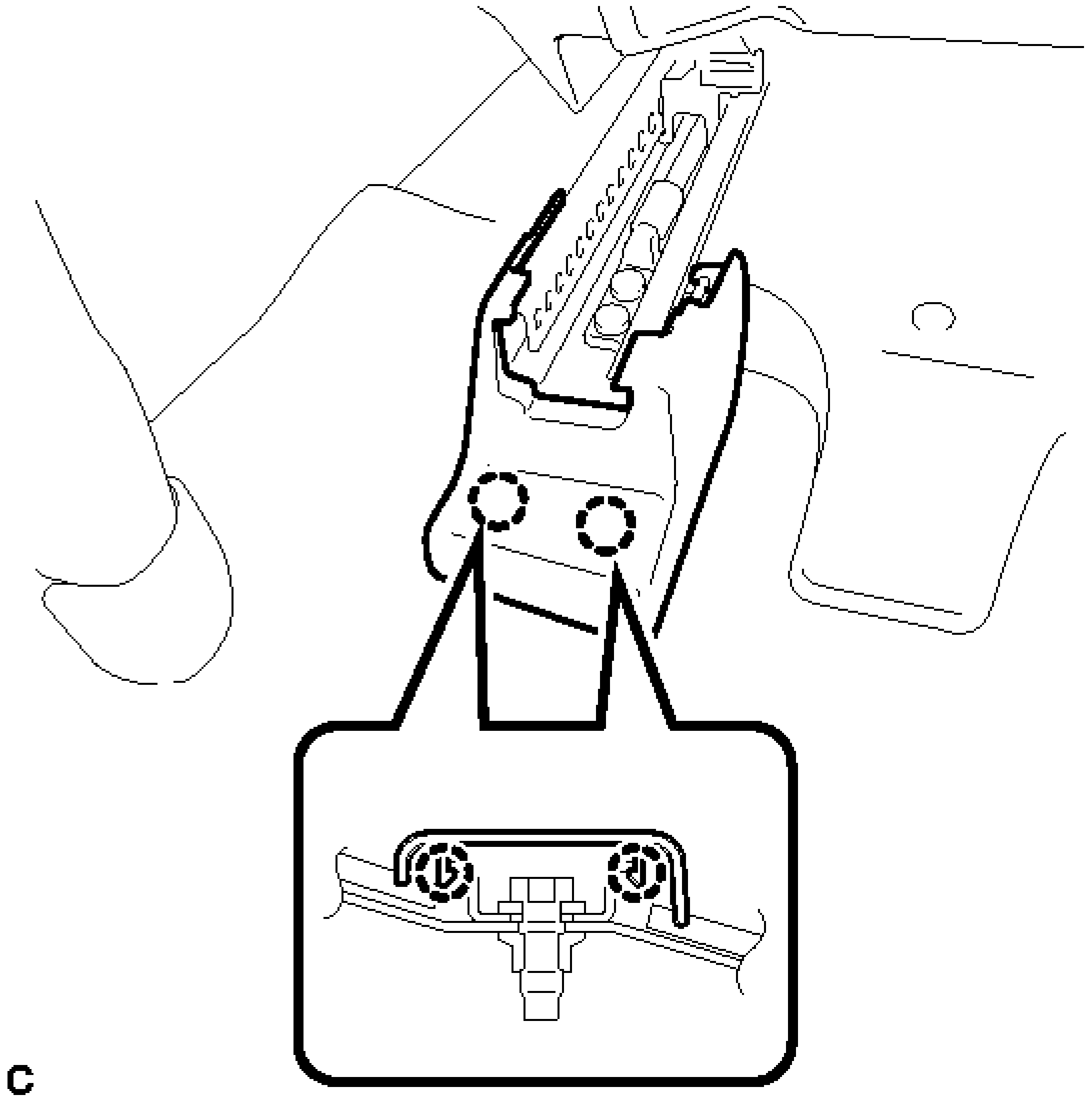

Fig. 65: Locating Rear Outer Seat Track Bracket Cover Claws
Courtesy of TOYOTA MOTOR SALES, U.S.A., INC.

5. **REMOVE REAR INNER SEAT TRACK BRACKET COVER**
   a. Disengage the 2 claws and remove the rear inner seat track bracket cover.

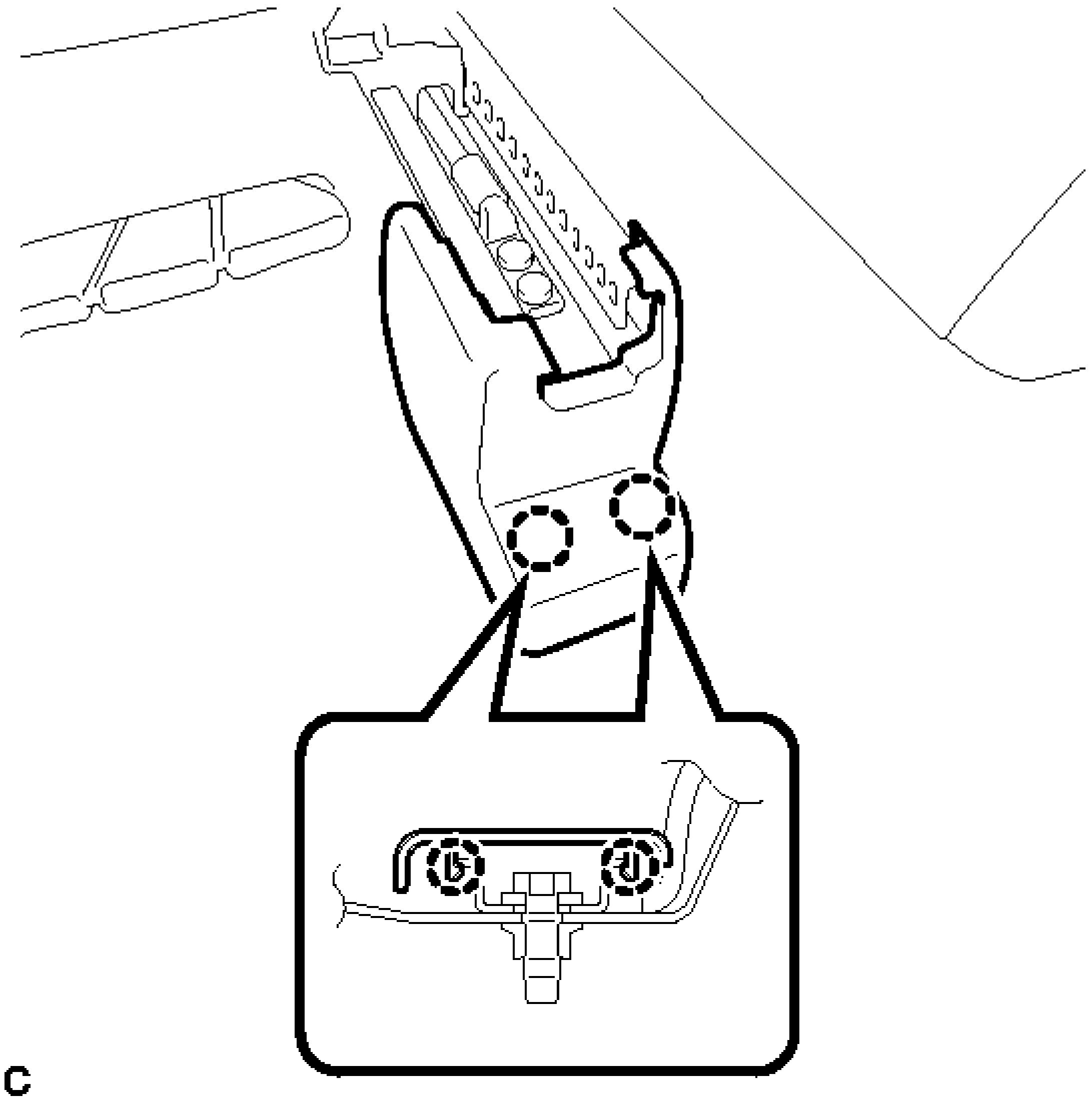

Fig. 66: Locating Rear Inner Seat Track Bracket Cover Claws
Courtesy of TOYOTA MOTOR SALES, U.S.A., INC.

6. **REMOVE FRONT SEAT ASSEMBLY**
   a. Remove the 2 bolts on the rear side of the seat.

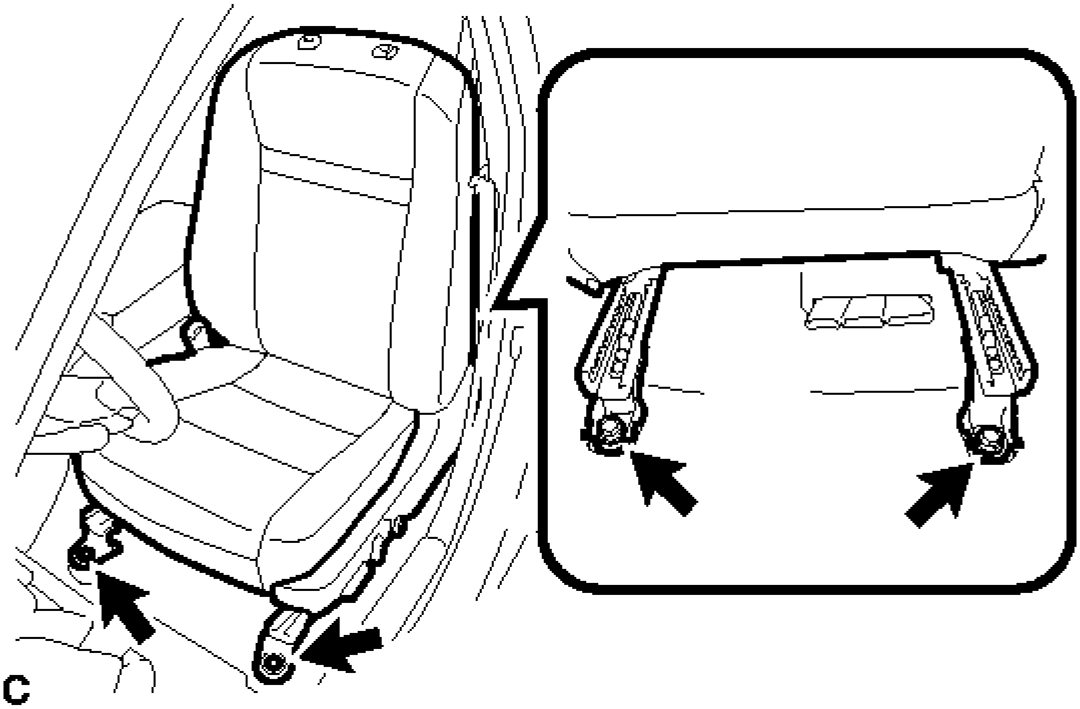

Fig. 67: Locating Front Seat Assembly Bolts
Courtesy of TOYOTA MOTOR SALES, U.S.A., INC.

b. Operate the slide and vertical power seat switch knob and move the seat to the rearmost position.
c. Remove the 2 bolts on the front side of the seat.
d. Operate the slide and vertical power seat switch knob and move the seat to the center position. Then, operate the reclining power seat switch knob and move the seatback to the upright position.
e. Disconnect the cable from the negative (-) auxiliary battery terminal.

WARNING: **Wait at least 90 seconds after disconnecting the cable from the negative (-) auxiliary battery terminal to disable the SRS system.**

NOTE: When disconnecting the cable, some systems need to be initialized after the cable is reconnected. Refer to INITIALIZATION .

f. Disconnect each connector and clamp under the seat.
g. Remove the front seat assembly.

NOTE: Be careful not to damage the vehicle body.

DISASSEMBLY

DISASSEMBLY

1. **REMOVE SEAT ADJUSTER COVER CAP**
    1. Remove the 2 seat adjuster cover caps.

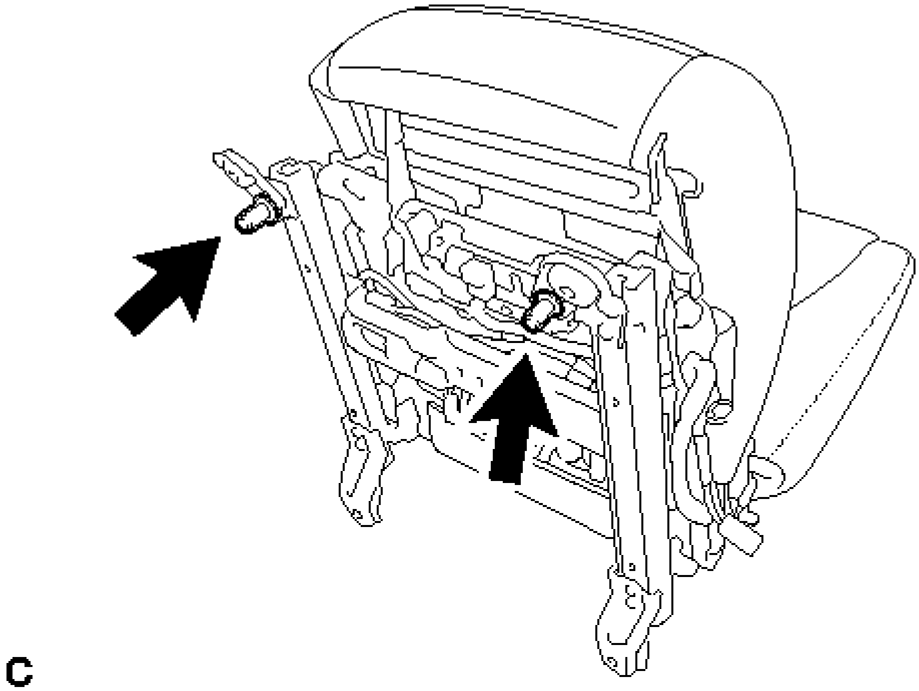

Fig. 68: Locating Seat Adjuster Cover Caps
Courtesy of TOYOTA MOTOR SALES, U.S.A., INC.

2. **REMOVE SLIDE AND VERTICAL POWER SEAT SWITCH KNOB**
    1. Using a moulding remover, disengage the 4 claws to remove the slide and vertical power seat switch knob.

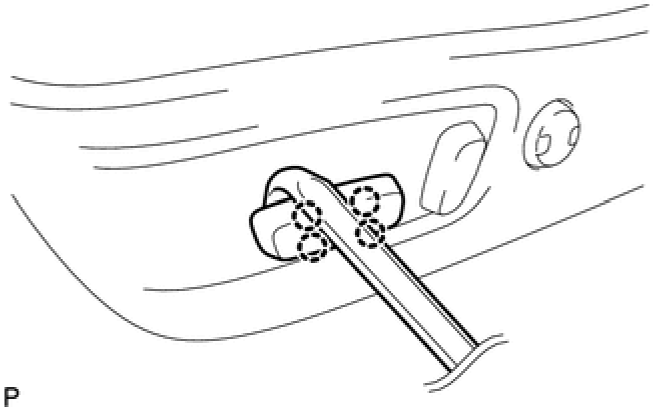

Fig. 69: Identifying Slide And Vertical Power Switch Knob Claws
Courtesy of TOYOTA MOTOR SALES, U.S.A., INC.

3. **REMOVE RECLINING POWER SEAT SWITCH KNOB**

a. Using a moulding remover, disengage the 4 claws to remove the reclining power seat switch knob.

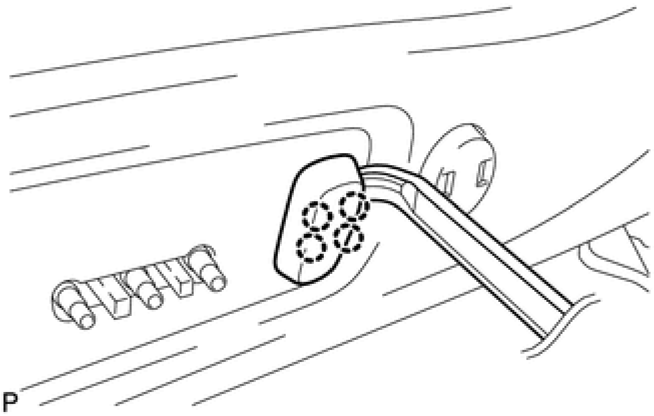

Fig. 70: Identifying Reclining Power Seat Switch Knob Claws
Courtesy of TOYOTA MOTOR SALES, U.S.A., INC.

4. **DISCONNECT SEPARATE TYPE FRONT SEATBACK COVER**
   a. Disconnect the 2 rubber bands of the separate type front seatback cover.

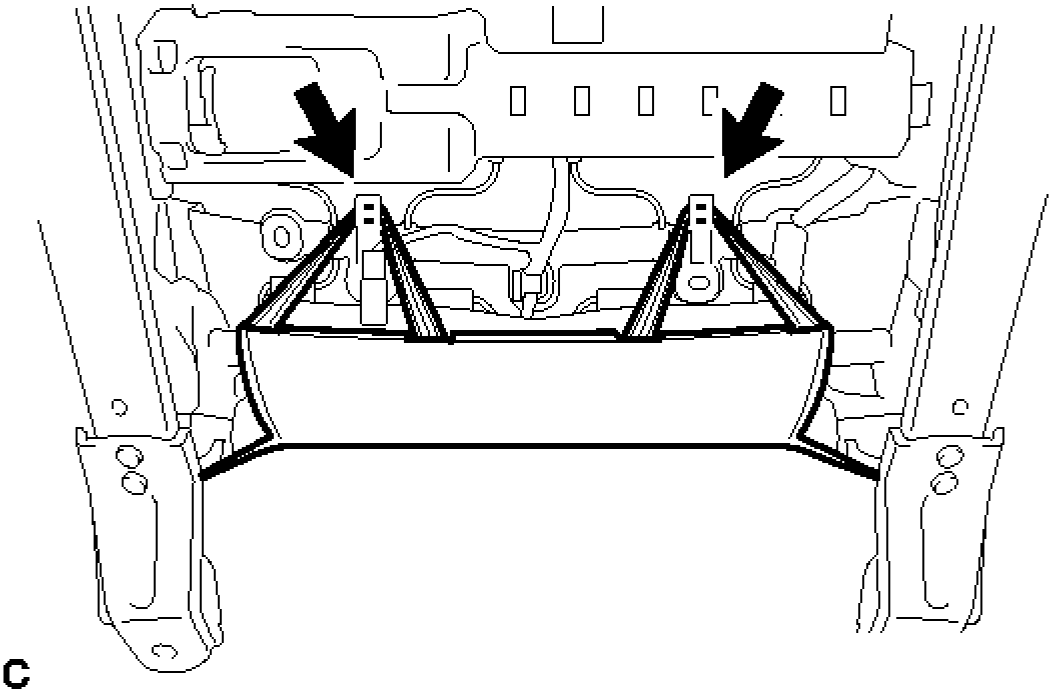

Fig. 71: Identifying Rubber Bands Of Front Seatback Cover (For Power Seat)
Courtesy of TOYOTA MOTOR SALES, U.S.A., INC.

5. **REMOVE FRONT SEAT CUSHION SHIELD**
   a. Remove the screw.

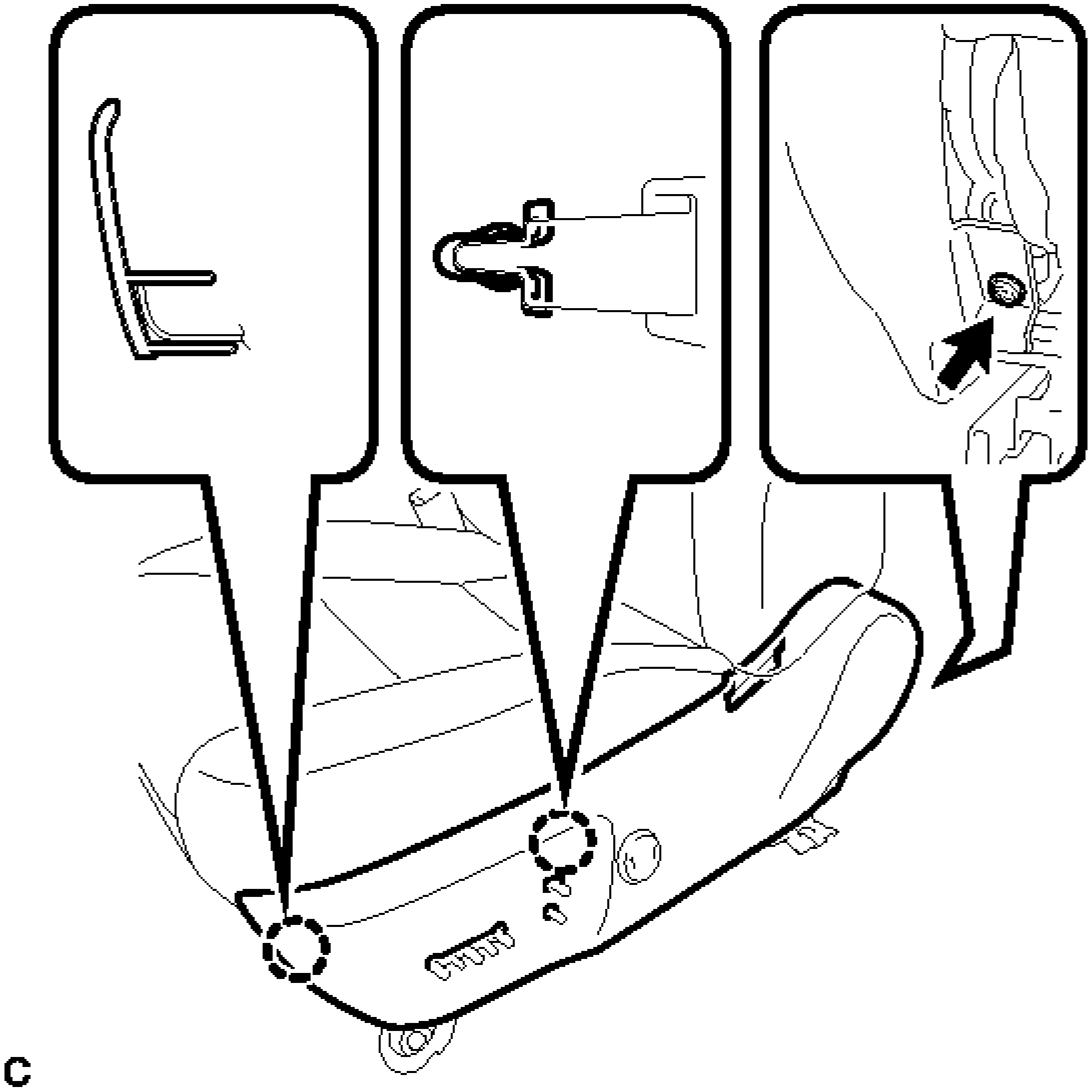

Fig. 72: Locating Front Seat Cushion Shield Claws And Fasteners
Courtesy of TOYOTA MOTOR SALES, U.S.A., INC.

b. Disengage the 2 claws to remove the front seat cushion shield.
c. Disengage the wire harness clamp.

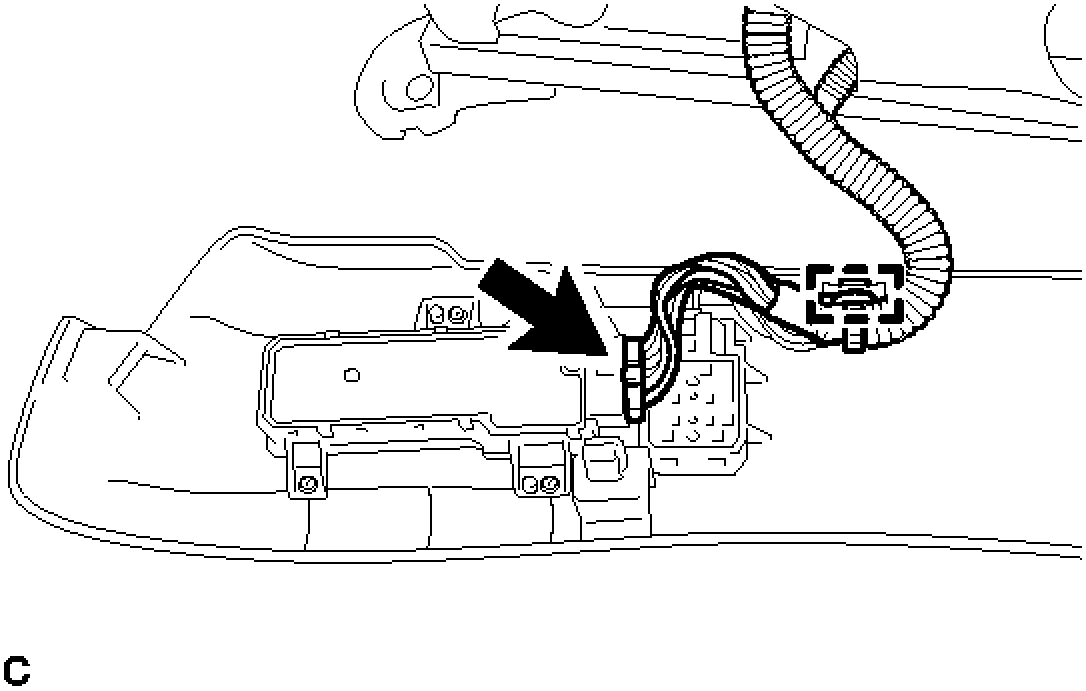

Fig. 73: Locating Front Power Seat Shield Switch Connector
Courtesy of TOYOTA MOTOR SALES, U.S.A., INC.

d. Disconnect the front power seat switch connector.

e. for Driver Side:

   1. Disengage 4 claws to remove the front lumbar power seat switch from the front seat cushion shield.

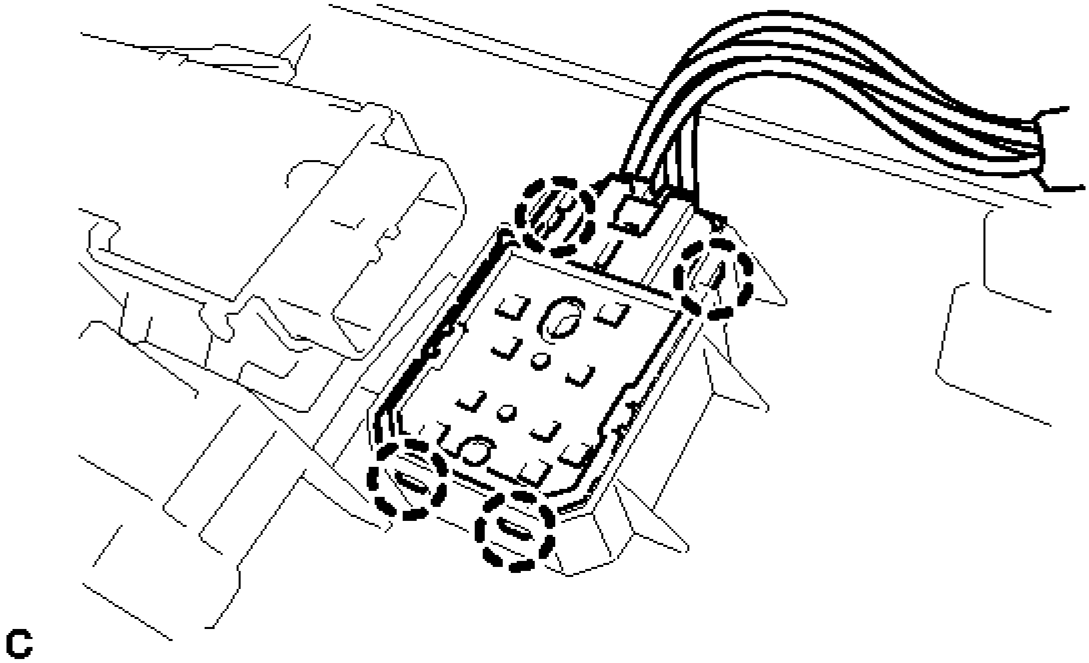

Fig. 74: Locating Front Lumbar Power Seat Switch Claws
Courtesy of TOYOTA MOTOR SALES, U.S.A., INC.

6. **REMOVE FRONT POWER SEAT SWITCH** See step 6
7. **REMOVE FRONT LUMBAR POWER SEAT SWITCH (for Driver Side)** See step 2
8. **REMOVE FRONT SEAT INNER CUSHION SHIELD**
    a. Remove the 2 screws and front seat inner cushion shield.

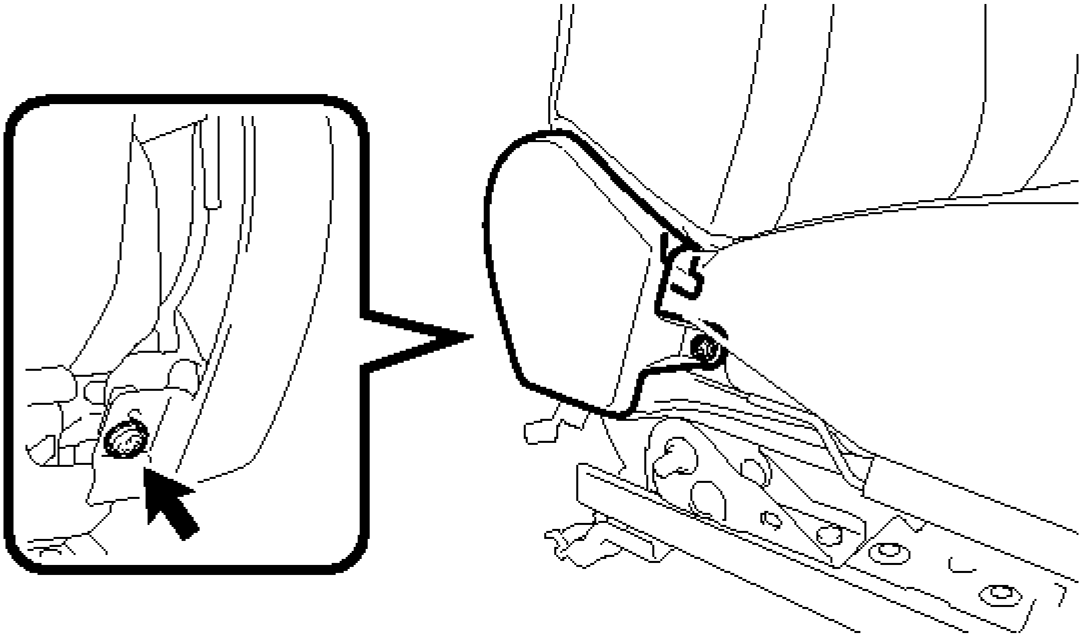

Fig. 75: Locating Front Seat Inner Cushion Shield Fasteners
Courtesy of TOYOTA MOTOR SALES, U.S.A., INC.

9. **REMOVE FRONT SEAT INNER BELT ASSEMBLY (for Driver Side)** . Refer to **REMOVAL - Step 2**
10. **REMOVE FRONT SEAT INNER BELT ASSEMBLY (for Front Passenger Side)** . Refer to **REMOVAL - Step 4**
11. **REMOVE SEPARATE TYPE FRONT SEAT CUSHION COVER WITH PAD**
    a. Disconnect the connector (A).

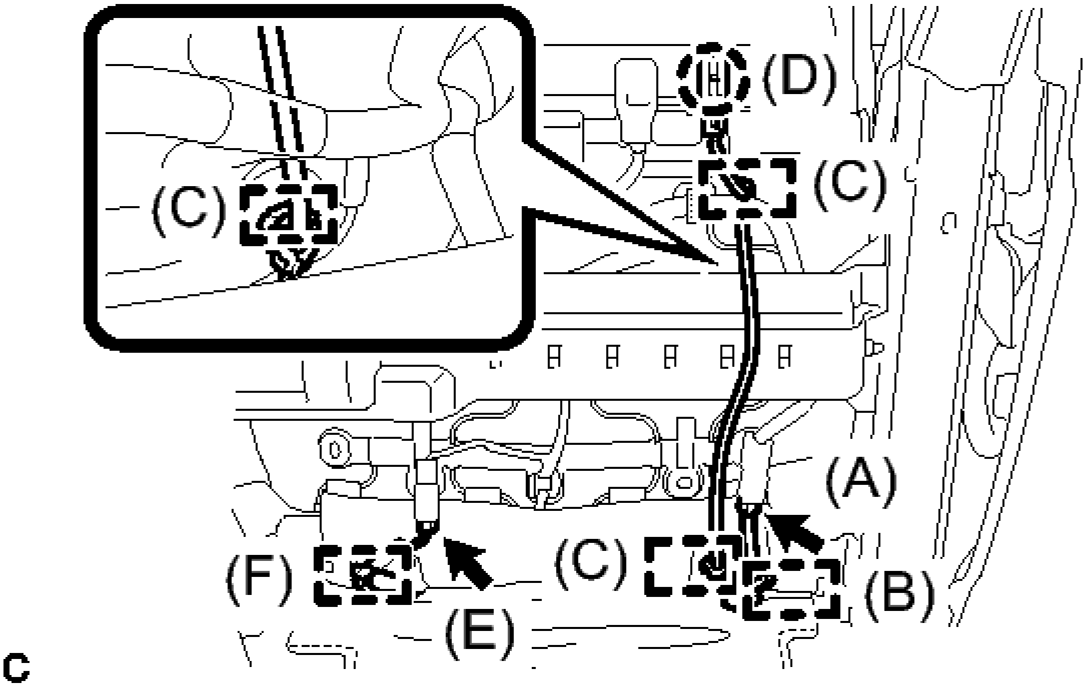

Fig. 76: Identifying Front Seatback Cover Connectors, Claw And Clamps (For Power Seat)
Courtesy of TOYOTA MOTOR SALES, U.S.A., INC.

b. Disengage the clamp (B).
c. Disengage the claw (D) and 3 clamps (C) to separate the front seat airbag assembly wire harness.
d. w/ Seat Heater System:
    1. Disconnect the connector (E).
    2. Disengage the clamp (F).
e. for Driver Side:
    1. Separate the separate type front seat cushion cover.

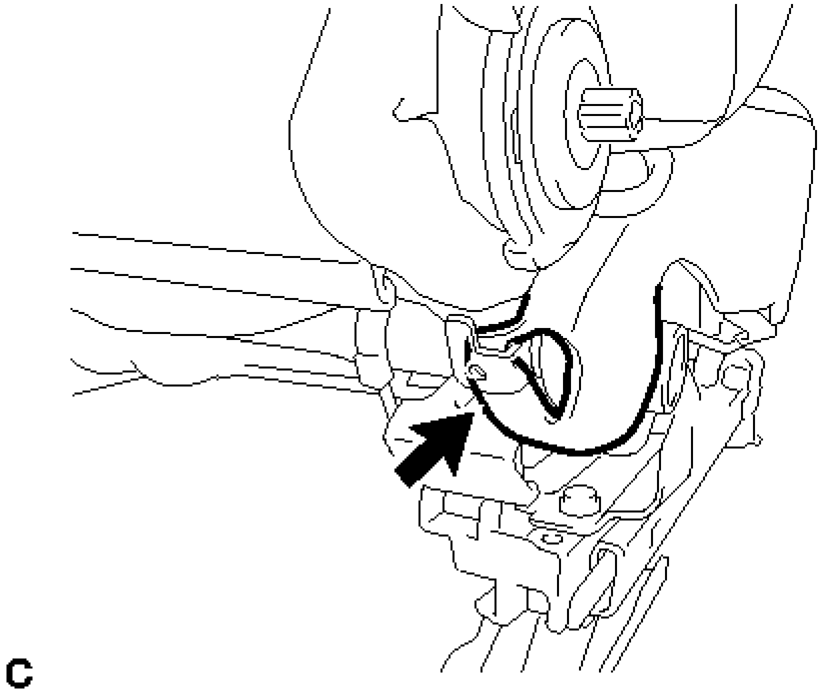

Fig. 77: Identifying Driver Side Front Seat Cushion Cover
Courtesy of TOYOTA MOTOR SALES, U.S.A., INC.

f. for Front Passenger Side:
    1. Separate the separate type front seat cushion cover.

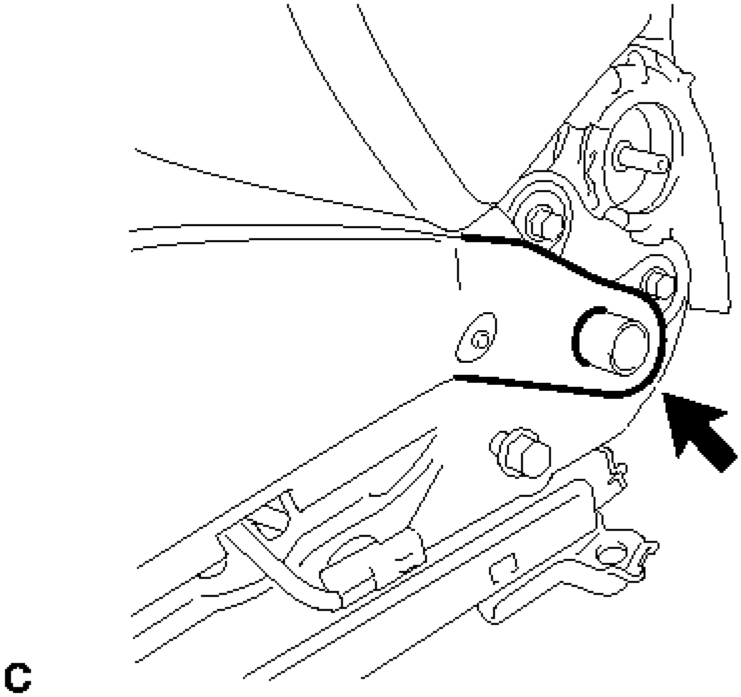

Fig. 78: Identifying Passenger Side Front Seat Cushion Cover

Courtesy of TOYOTA MOTOR SALES, U.S.A., INC.

g. Disengage the 4 hooks.

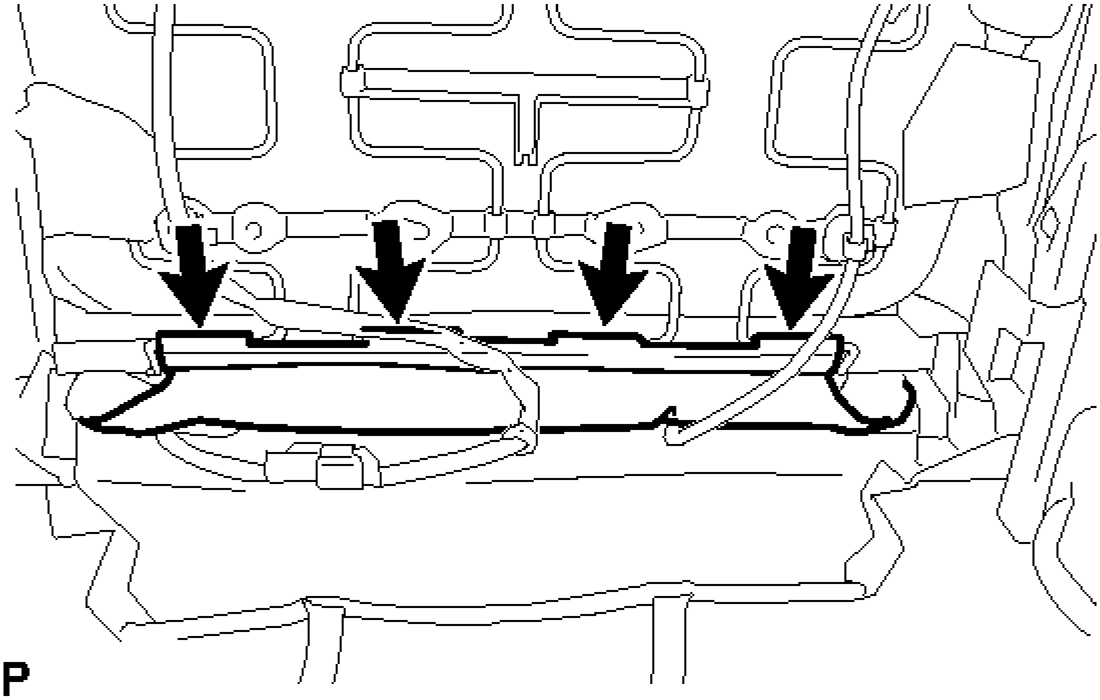

Fig. 79: Identifying Front Seat Cushion Cover Hooks
Courtesy of TOYOTA MOTOR SALES, U.S.A., INC.

h. Disengage each hook and remove the separate type front seat cushion cover with pad.

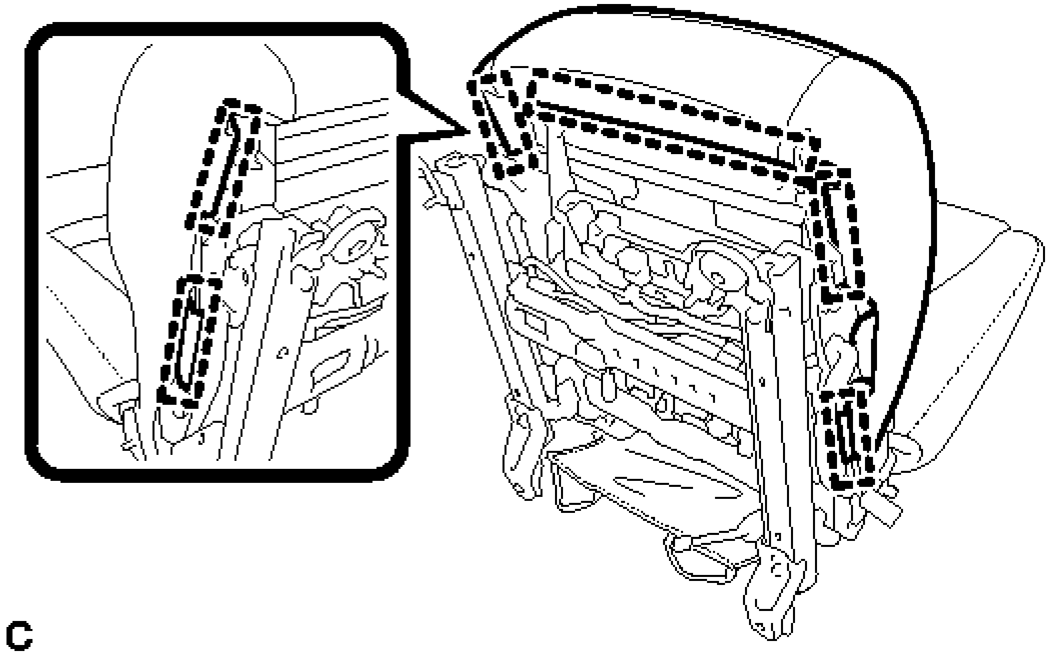

Fig. 80: Identifying Front Seat Cushion Cover Hooks
Courtesy of TOYOTA MOTOR SALES, U.S.A., INC.

12. **REMOVE SEPARATE TYPE FRONT SEAT CUSHION COVER**
    1. Remove the 12 hog rings and the separate type front seat cushion cover from the separate type front seat cushion pad.

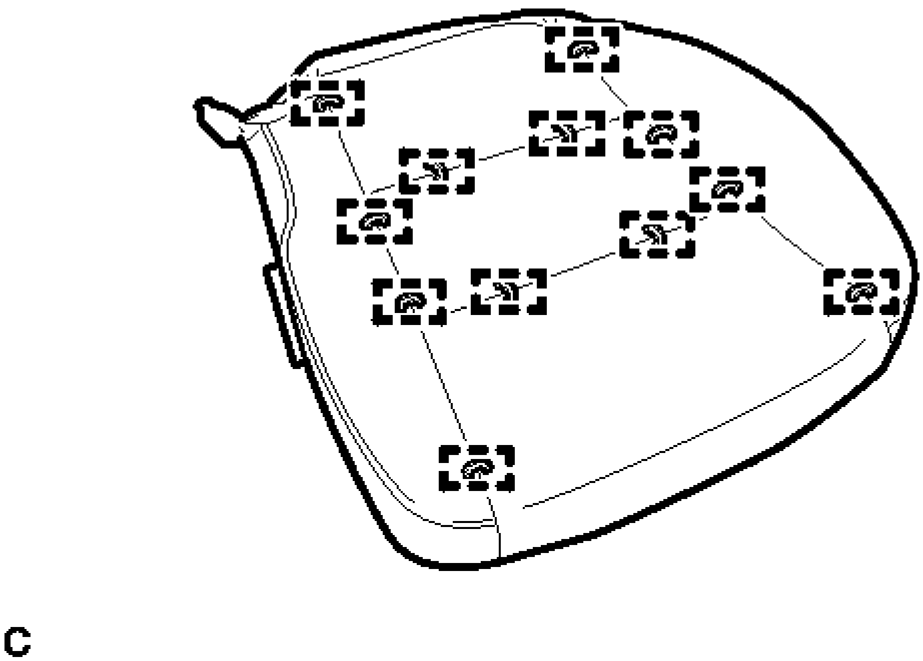

Fig. 81: Locating Front Seat Cushion Cover Hog Rings
Courtesy of TOYOTA MOTOR SALES, U.S.A., INC.

13. **REMOVE FRONT SEAT CUSHION HEATER ASSEMBLY (w/ Seat Heater System)** See step 5
14. **REMOVE SEPARATE TYPE FRONT SEATBACK COVER WITH PAD**
    a. Disengage the hook.

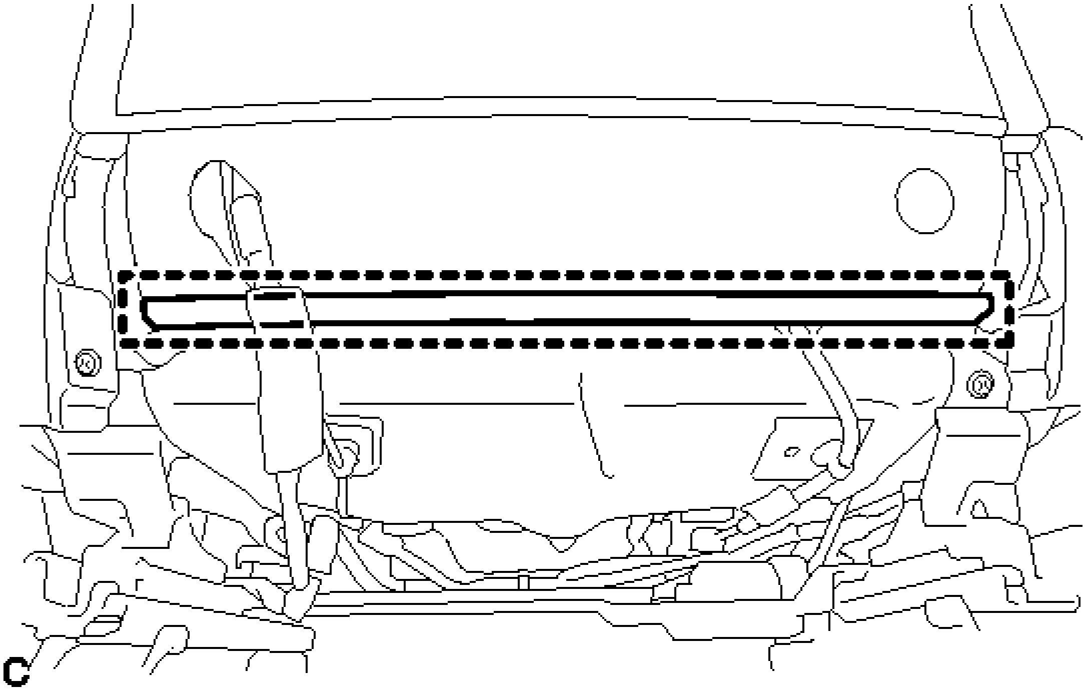

Fig. 82: Locating Front Seatback Cover Hook
Courtesy of TOYOTA MOTOR SALES, U.S.A., INC.

    b. Disengage the 2 fasteners.

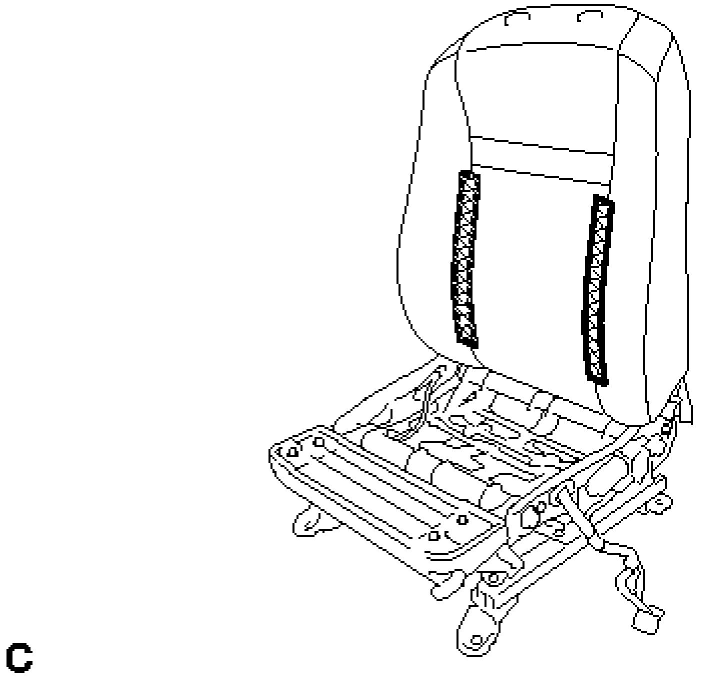

Fig. 83: Identifying Front Seatback Cover Fasteners
Courtesy of TOYOTA MOTOR SALES, U.S.A., INC.

c. Turn back the separate type front seatback cover.

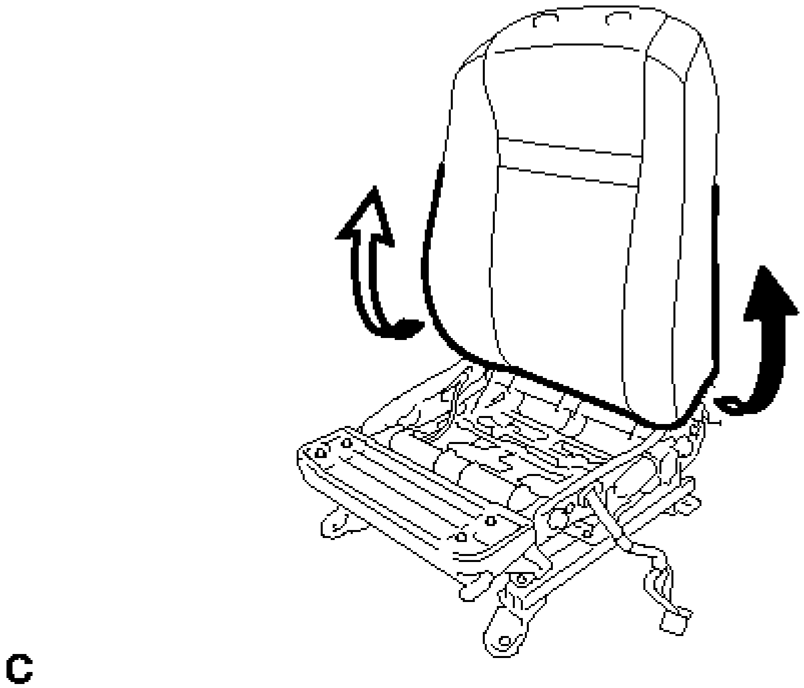

Fig. 84: Turning Back Front Seatback Cover
Courtesy of TOYOTA MOTOR SALES, U.S.A., INC.

d. Disengage the 2 hooks.

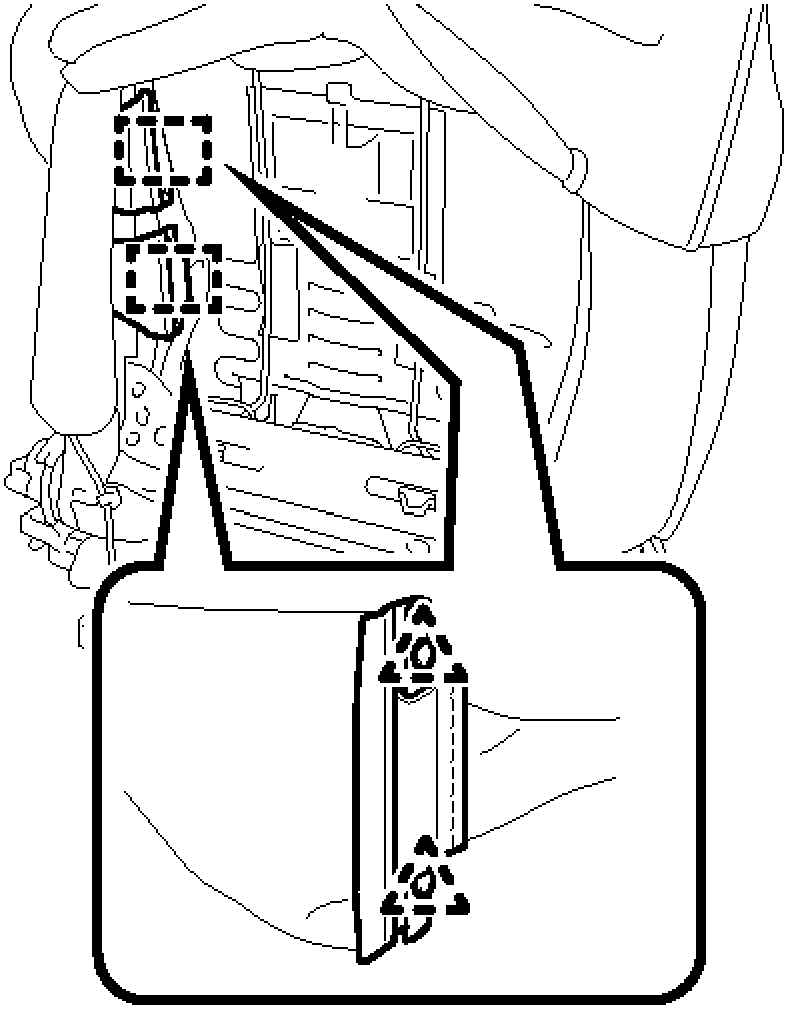

Fig. 85: Identifying Front Seatback Cover Hooks
Courtesy of TOYOTA MOTOR SALES, U.S.A., INC.

1. Remove the 4 clips.
2. Slide each hook to disengage them.

e. Disengage the 4 claws and remove the 2 front seat headrest supports.

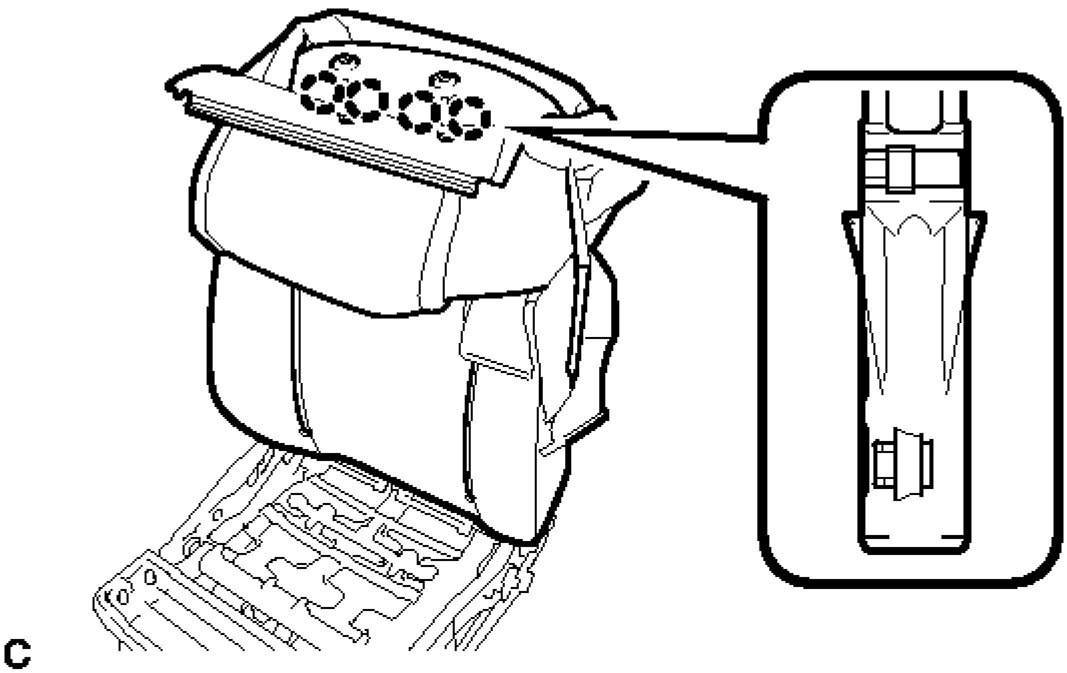

Fig. 86: Identifying Front Seatback Cover Headrest Support Claws
Courtesy of TOYOTA MOTOR SALES, U.S.A., INC.

f. Remove the separate type front seatback cover with pad.

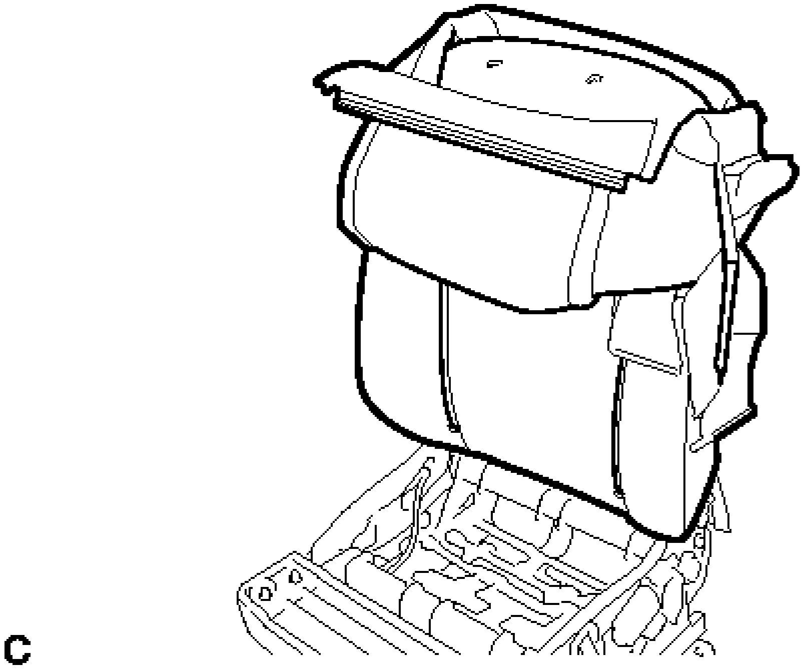

Fig. 87: Identifying Front Seatback Cover
Courtesy of TOYOTA MOTOR SALES, U.S.A., INC.

15. **REMOVE FRONT SEAT AIRBAG ASSEMBLY** . Refer to **REMOVAL - Step 7**
16. **REMOVE SEPARATE TYPE FRONT SEATBACK COVER**
    a. Remove the 2 hog rings.

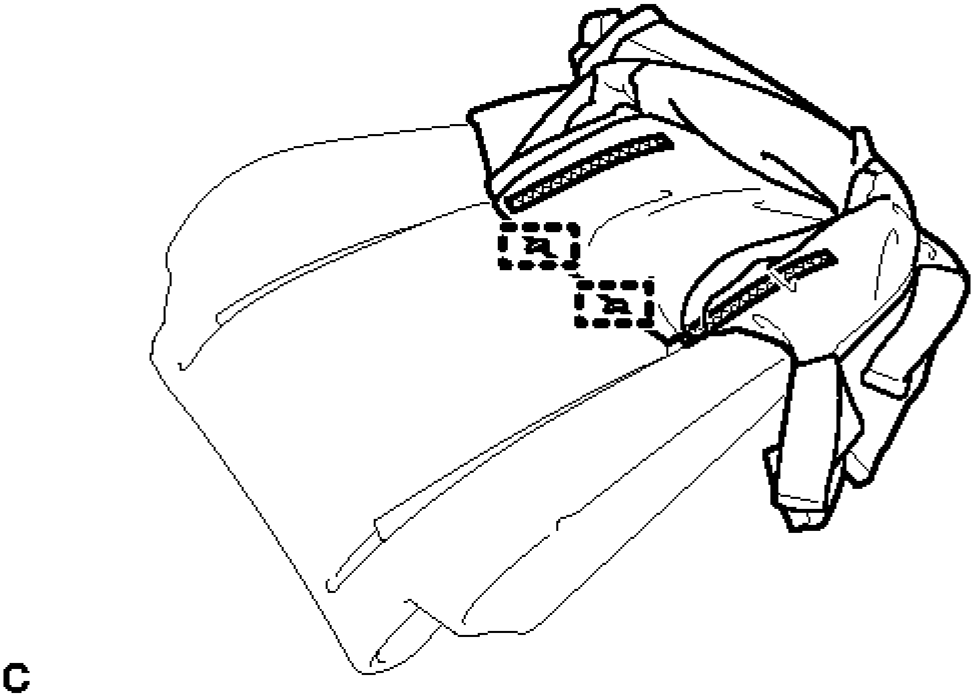

Fig. 88: Locating Front Seatback Cover Hog Rings
Courtesy of TOYOTA MOTOR SALES, U.S.A., INC.

    b. Disengage the 2 fasteners to remove the separate type front seatback cover from the separate type front seatback pad.
17. **REMOVE FRONT SEATBACK HEATER ASSEMBLY (w/ Seat Heater System)** See step 6
18. **REMOVE FRONT SEAT LOWER CUSHION SHIELD LH (for Driver Side)**
    a. Remove the screw.

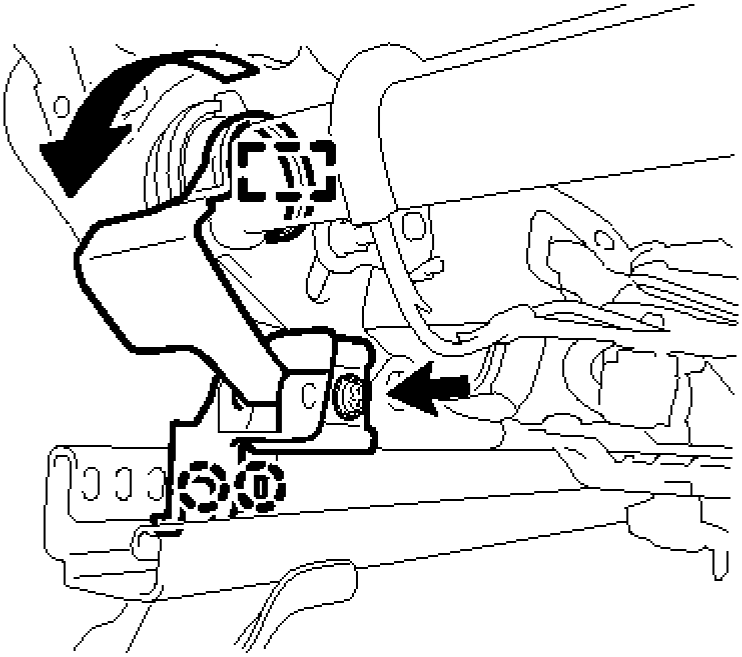

Fig. 89: Removing Front Seat Lower Cushion Shield LH (For Driver Side)
Courtesy of TOYOTA MOTOR SALES, U.S.A., INC.

b. Disengage the hook as shown in the illustration.

c. Disengage the 2 claws to remove the front seat lower cushion shield LH.

19. **REMOVE FRONT SEAT LOWER CUSHION SHIELD RH (for Driver Side)**

a. Remove the screw.

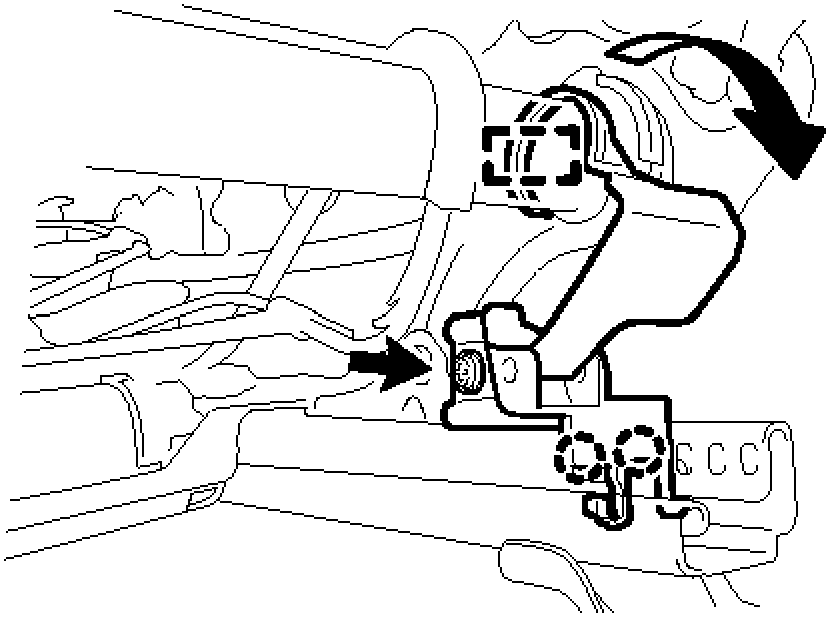

Fig. 90: Removing Front Seat Lower Cushion Shield RH (For Driver Side)
Courtesy of TOYOTA MOTOR SALES, U.S.A., INC.

b. Disengage the hook as shown in the illustration.
c. Disengage the 2 claws to remove the front seat lower cushion shield RH.

20. **REMOVE FRONT SEAT LOWER CUSHION SHIELD LH (for Front Passenger Side)**
    a. Disengage the 2 claws to remove the front seat lower cushion shield LH.

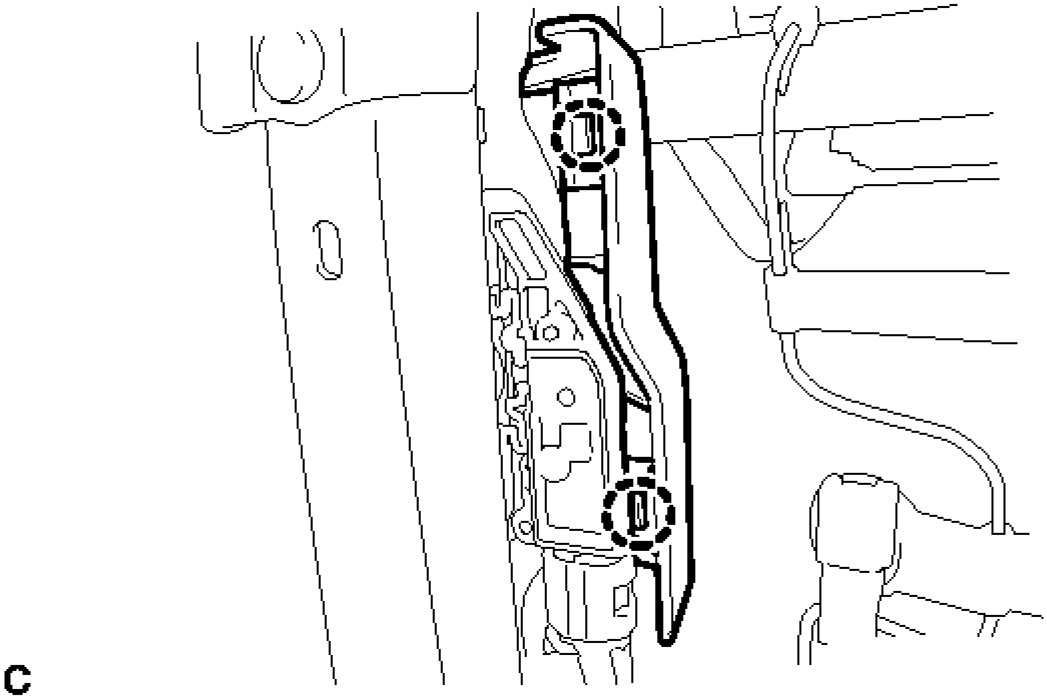

Fig. 91: Locating Front Seat Lower Cushion Shield Claws LH (For Front Passenger Side)
Courtesy of TOYOTA MOTOR SALES, U.S.A., INC.

21. **REMOVE FRONT SEAT LOWER CUSHION SHIELD RH (for Front Passenger Side)**
    a. Disengage the 2 claws to remove the front seat lower cushion shield RH.

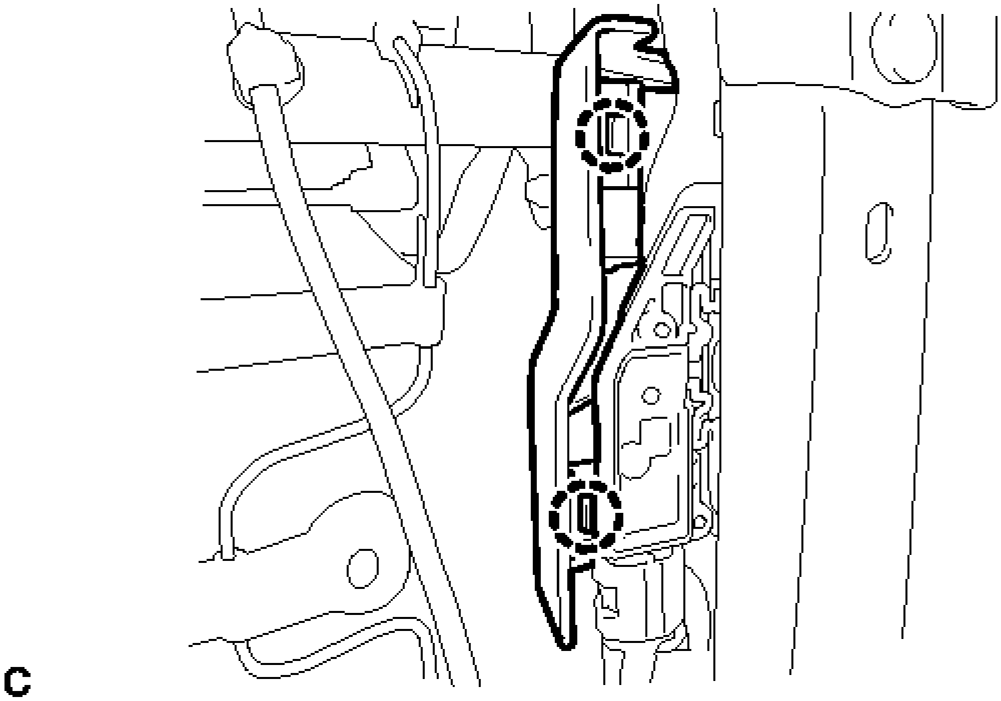

Fig. 92: Locating Front Seat Lower Cushion Shield Claws RH (For Front Passenger Side)

Courtesy of TOYOTA MOTOR SALES, U.S.A., INC.

22. **REMOVE SEAT HEATER CONTROL SUB-ASSEMBLY (w/ Seat Heater System)**
    a. Disconnect the connector.

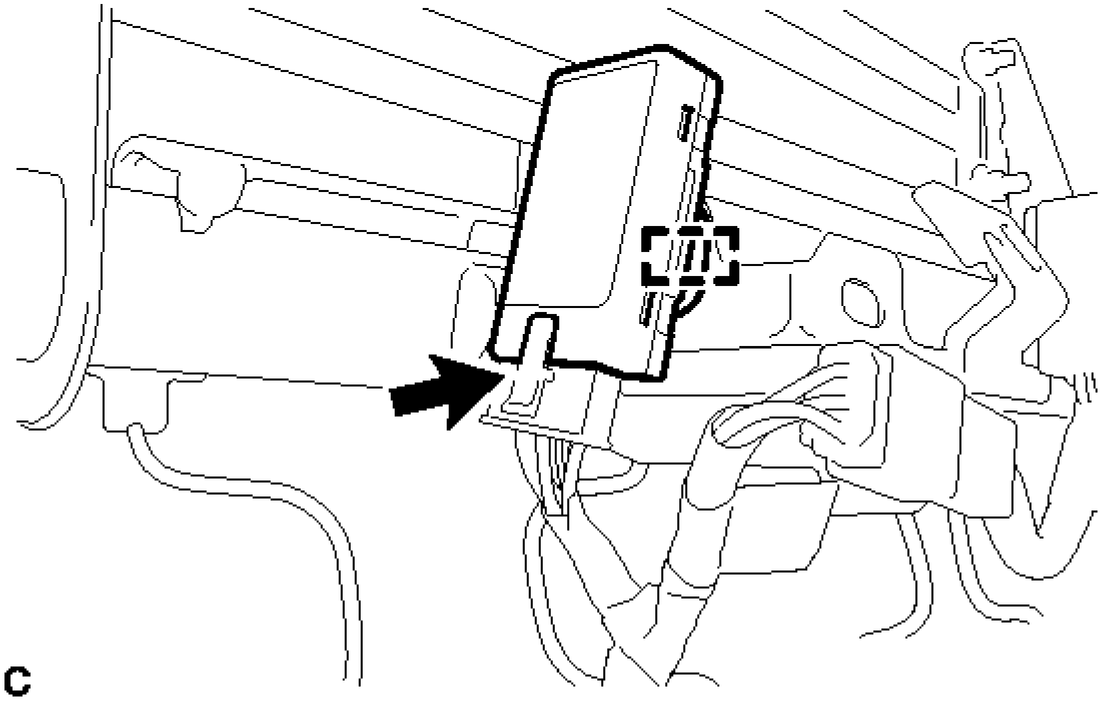

Fig. 93: Locating Seat Heater Control Sub-Assembly (W/ Seat Heater System)
Courtesy of TOYOTA MOTOR SALES, U.S.A., INC.

    b. Disengage the clamp and remove the seat heater control sub-assembly.

23. **REMOVE OCCUPANT DETECTION ECU (for Front Passenger Side)** . Refer to **REMOVAL - Step 3**
24. **REMOVE FRONT SEAT WIRE**
    a. Disconnect each connector and disengage each wire harness clamp to remove the front seat wire.
25. **REMOVE FRONT NO. 2 SEAT WIRE**
    a. Disconnect each connector and disengage each wire harness clamp to remove the front No. 2 seat wire.
26. **REMOVE FRONT UPPER SEAT TRACK COVER LH**
    a. Disengage the 2 claws to remove the front upper seat track cover LH.

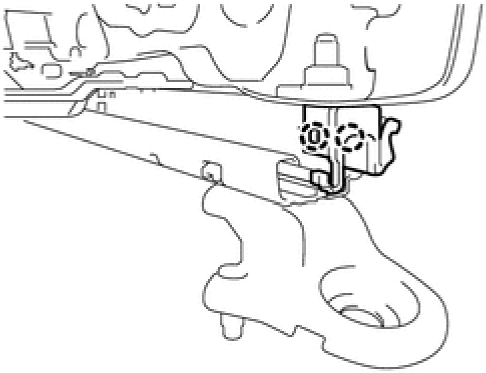

Fig. 94: Locating Front Upper Seat Track Cover Claws LH
Courtesy of TOYOTA MOTOR SALES, U.S.A., INC.

27. **REMOVE FRONT UPPER SEAT TRACK COVER RH**
    a. Disengage the 2 claws to remove the front upper seat track cover RH.

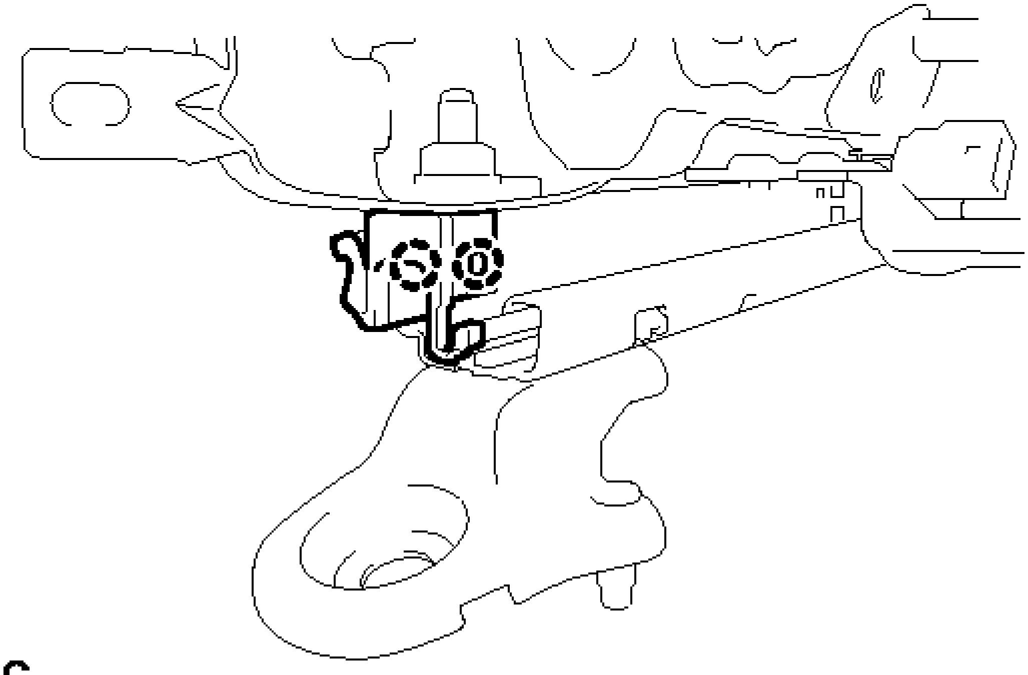

Fig. 95: Locating Front Upper Seat Track Cover Claws RH
Courtesy of TOYOTA MOTOR SALES, U.S.A., INC.

28. **REMOVE REAR UPPER SEAT TRACK COVER LH (for Front Passenger Side)**
    a. Disengage the 2 claws to remove the rear upper seat track cover LH.

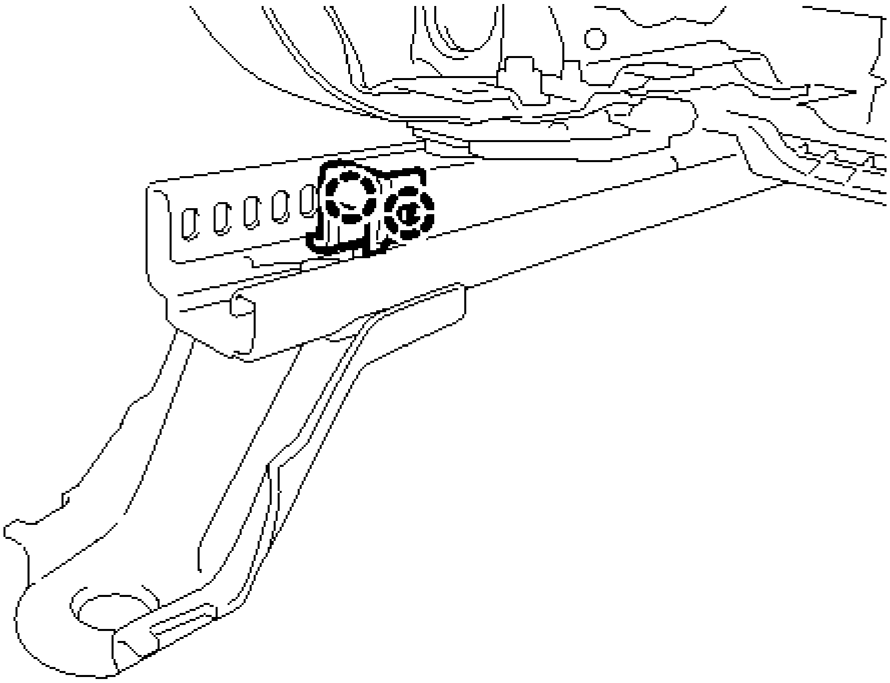

Fig. 96: Locating Rear Upper Seat Track Cover Claws LH (For Front Passenger Side)
Courtesy of TOYOTA MOTOR SALES, U.S.A., INC.

29. **REMOVE REAR UPPER SEAT TRACK COVER RH (for Front Passenger Side)**
    a. Disengage the 2 claws to remove the rear upper seat track cover RH.

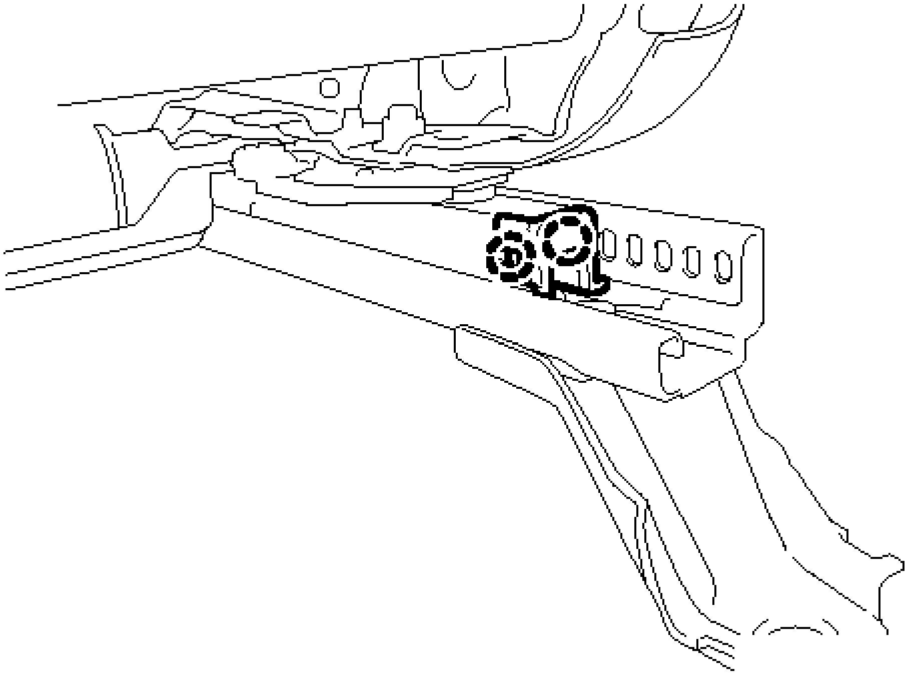

Fig. 97: Locating Rear Upper Seat Track Cover Claws RH (For Front Passenger Side)

Courtesy of TOYOTA MOTOR SALES, U.S.A., INC.

30. **REMOVE FRONT SEAT CUSHION PANEL SUB-ASSEMBLY (for Driver Side)**
    a. Remove the 4 bolts and front seat cushion panel sub-assembly.

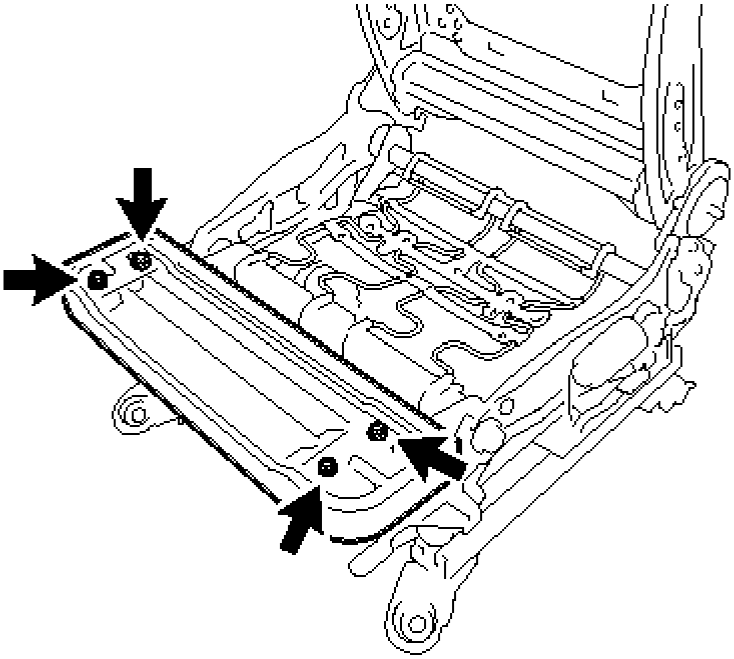

Fig. 98: Locating Front Seat Cushion Panel Sub-Assembly Bolts (For Driver Side)
Courtesy of TOYOTA MOTOR SALES, U.S.A., INC.

31. **REMOVE FRONT SEATBACK FRAME SUB-ASSEMBLY**
    a. Remove the 4 bolts and the front seatback frame sub-assembly.

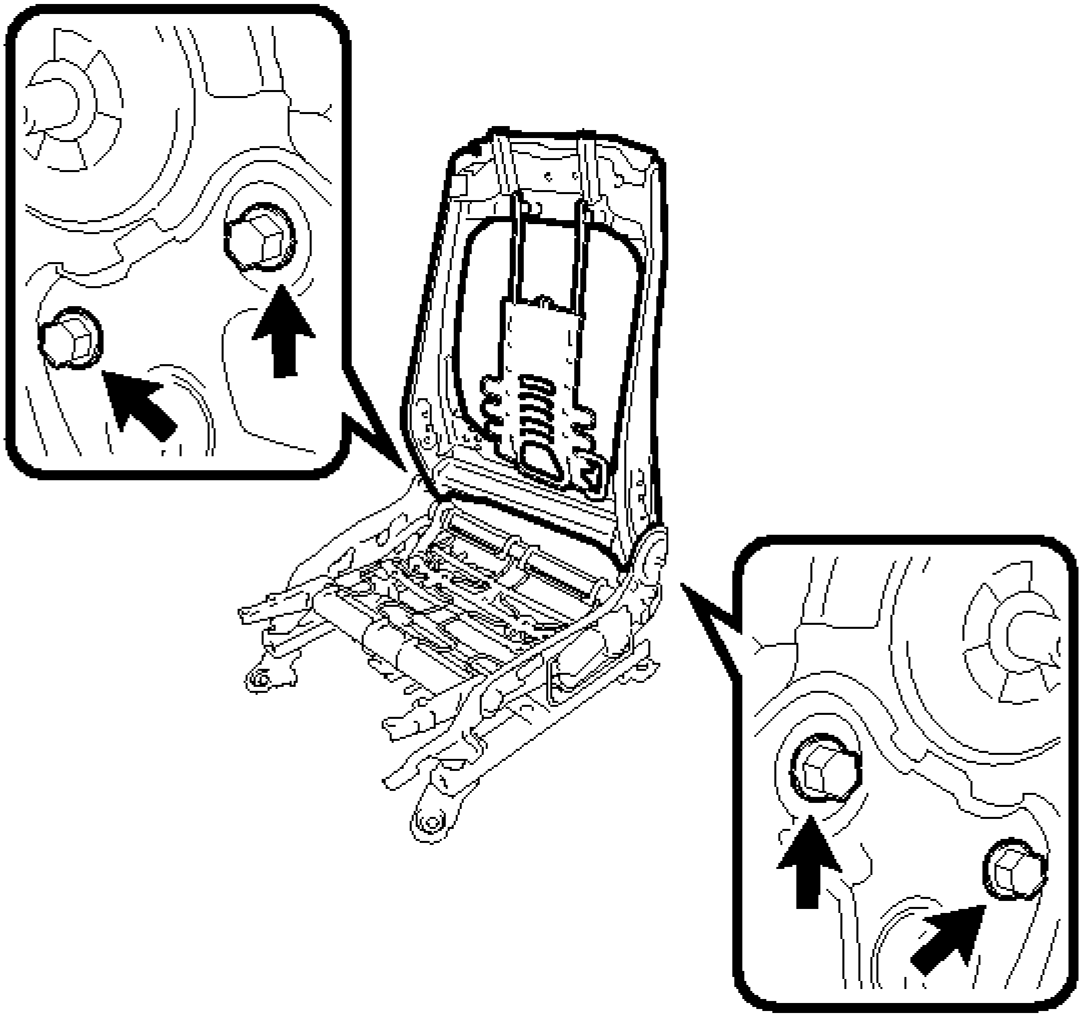

C

Fig. 99: Locating Front Seatback Frame Sub-Assembly Bolts
Courtesy of TOYOTA MOTOR SALES, U.S.A., INC.

32. **REMOVE LUMBAR SUPPORT ADJUSTER ASSEMBLY (for Driver Side)** See step 5
33. **REMOVE SEPARATE TYPE FRONT SEATBACK SPRING ASSEMBLY (for Front Passenger Side)**
    a. Disengage the 4 claws.

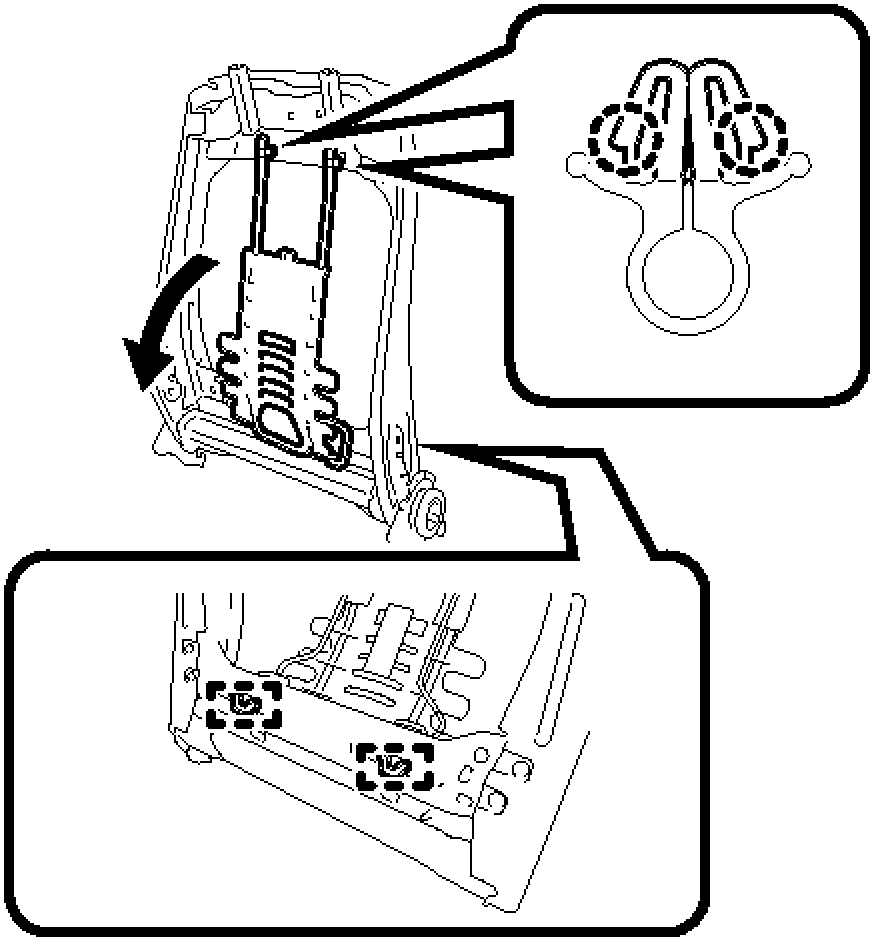

C

Fig. 100: Removing Front Seatback Spring Assembly
Courtesy of TOYOTA MOTOR SALES, U.S.A., INC.

b. Disengage the 2 guides to remove the separate type front seatback spring assembly.
c. Remove the 2 front seatback hooks from the separate type front seatback spring assembly.

34. **REMOVE SEPARATE TYPE FRONT SEAT CUSHION SPRING ASSEMBLY**
    a. Remove the separate type front seat cushion spring assembly.

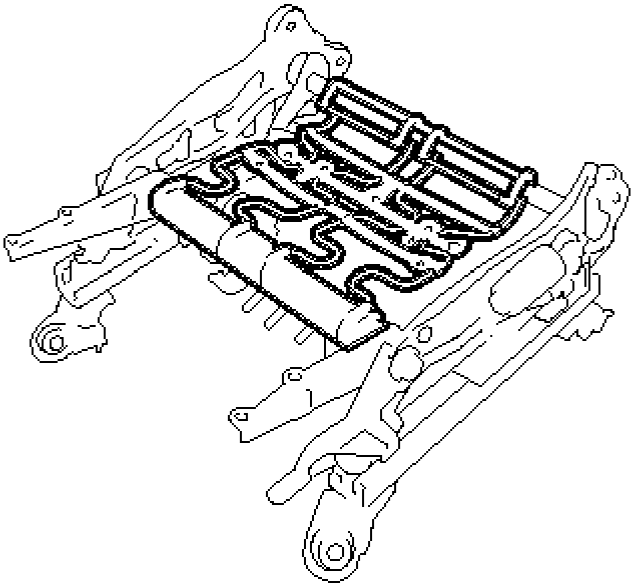

C

Fig. 101: Identifying Front Seat Cushion Spring Assembly
Courtesy of TOYOTA MOTOR SALES, U.S.A., INC.

INSPECTION

INSPECTION

1. **INSPECT FRONT SEAT FRAME WITH ADJUSTER ASSEMBLY LH**
    a. Check the operation of the slide motor.

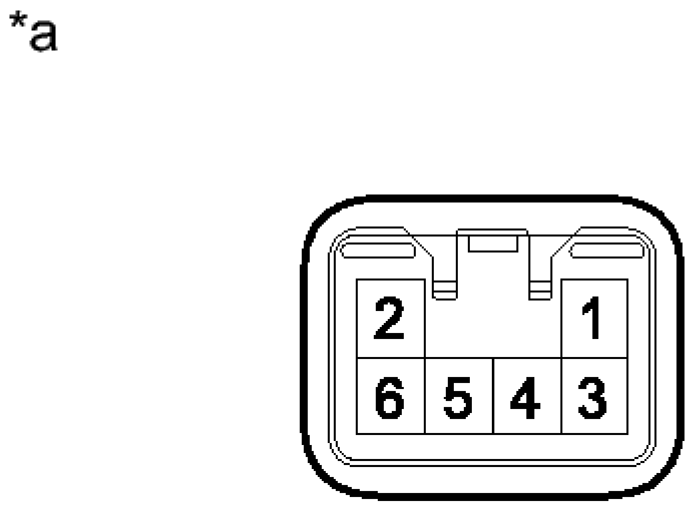

Fig. 102: Identifying Slide Motor Connector Terminal Identification
Courtesy of TOYOTA MOTOR SALES, U.S.A., INC.

1. Check if the front seat cushion moves smoothly when the auxiliary battery is connected to the slide motor connector terminals.

TEXT IN ILLUSTRATION

*a	Component without harness connected (Slide Motor (Front Seat Frame with Adjuster Assembly LH))

OK

Measurement Condition	Operational Direction
Auxiliary battery positive (+) --> Terminal 3	

Auxiliary battery negative (-) --> Terminal 4	Forward
Auxiliary battery positive (+) --> Terminal 4 Auxiliary battery negative (-) --> Terminal 3	Backward

If the result is not as specified, replace the front seat frame with adjuster assembly LH.

b. Check the operation of the lifter motor.

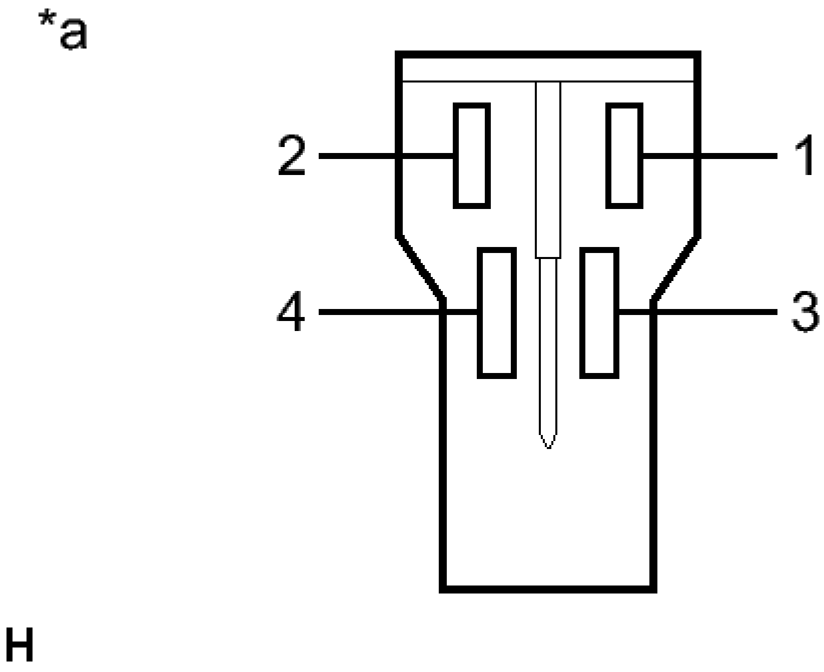

Fig. 103: Identifying Lifter/Reclining Motor Connector Terminals
Courtesy of TOYOTA MOTOR SALES, U.S.A., INC.

1. Check if the front seat cushion moves smoothly when the auxiliary battery is connected to the lifter motor connector terminals.

TEXT IN ILLUSTRATION

	Component without harness

*a	connected (Lifter Motor (Front Seat Frame with Adjuster Assembly LH))

OK

Measurement Condition	**Operational Direction**
Auxiliary battery positive (+) --> Terminal 2 Auxiliary battery negative (-) --> Terminal 1	Upward
Auxiliary battery positive (+) --> Terminal 1 Auxiliary battery negative (-) --> Terminal 2	Downward

If the result is not as specified, replace the front seat frame with adjuster assembly LH.

c. Check the operation of the front vertical motor.

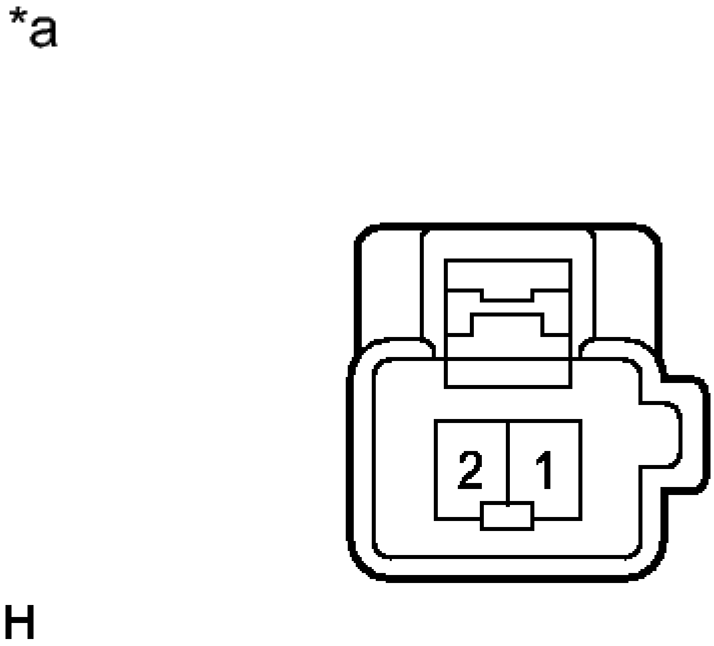

Fig. 104: Identifying Separate Type Front Seatback Assembly Connector Terminal Identification
Courtesy of TOYOTA MOTOR SALES, U.S.A., INC.

1. Check if the front seat cushion moves smoothly when the auxiliary battery is connected to the front vertical motor connector terminals.

TEXT IN ILLUSTRATION

*a	Component without harness connected (Front Vertical Motor (Front Seat Frame with Adjuster Assembly LH))

OK

Measurement Condition	Operational Direction
Auxiliary battery	

positive (+) --> Terminal 1 Auxiliary battery negative (-) --> Terminal 2	Upward
Auxiliary battery positive (+) --> Terminal 2 Auxiliary battery negative (-) --> Terminal 1	Downward

If the result is not as specified, replace the front seat frame with adjuster assembly LH.

2. **INSPECT FRONT SEAT FRAME WITH ADJUSTER ASSEMBLY RH**
   a. Check the operation of the slide motor.

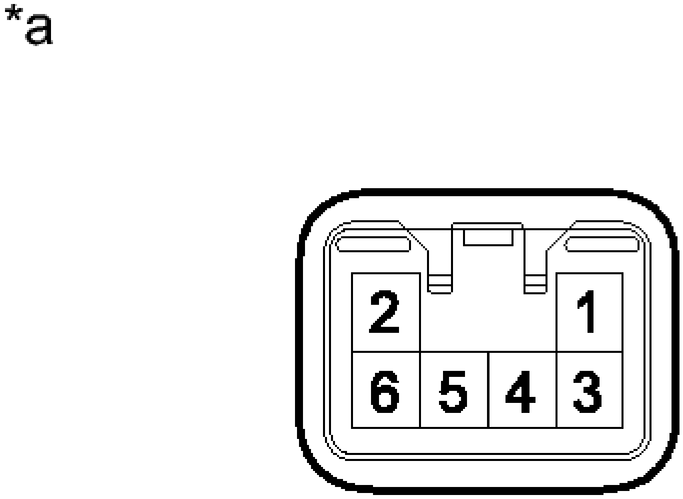

Fig. 105: Identifying Slide Motor Connector Terminal Identification
Courtesy of TOYOTA MOTOR SALES, U.S.A., INC.

1. Check if the front seat cushion moves smoothly when the auxiliary battery is connected to the slide motor connector terminals.

TEXT IN ILLUSTRATION

*a	Component without harness connected (Slide Motor (Front Seat Frame with Adjuster Assembly RH))

OK

Measurement Condition	Operational Direction
Auxiliary battery positive (+) --> Terminal 3 Auxiliary battery negative (-) --> Terminal 4	Forward
Auxiliary battery positive (+) --> Terminal 4 Auxiliary battery negative (-) --> Terminal 3	Backward

If the result is not as specified, replace the front seat frame with adjuster assembly RH.

3. **INSPECT FRONT SEATBACK FRAME SUB-ASSEMBLY LH**
    a. Check the operation of the reclining motor.

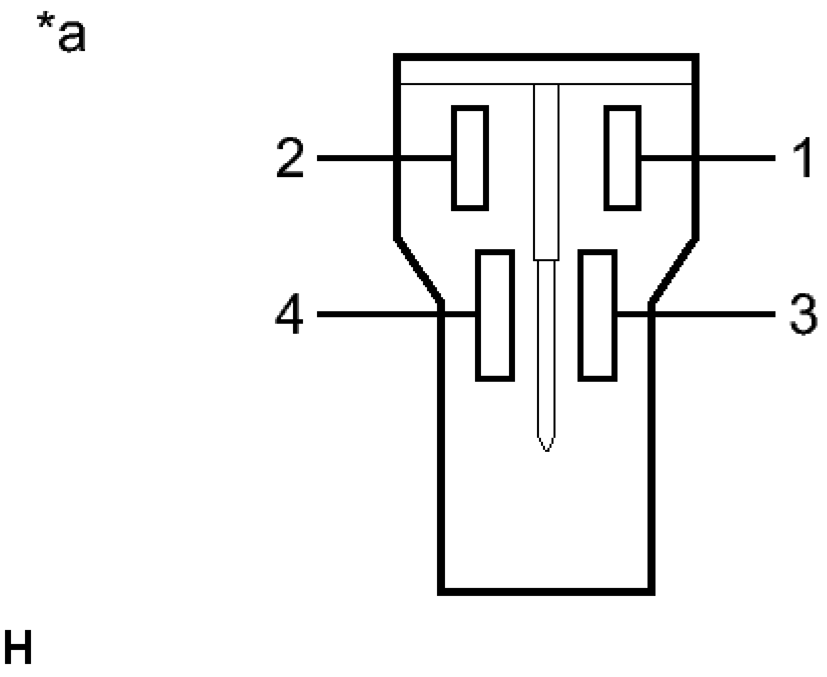

Fig. 106: Identifying Lifter/Reclining Motor Connector Terminals
Courtesy of TOYOTA MOTOR SALES, U.S.A., INC.

1. Check if the front seatback moves smoothly when the auxiliary battery is connected to the reclining motor connector terminals.

TEXT IN ILLUSTRATION

*a	Component without harness connected (Reclining Motor (Front Seatback Frame Sub-assembly LH))

OK

Measurement Condition	Operational Direction
Auxiliary battery positive (+) --	

> Terminal 2 Auxiliary battery negative (-) --> Terminal 1	Forward
Auxiliary battery negative (+) --> Terminal 1 Auxiliary battery positive (-) --> Terminal 2	Rearward

If the result is not as specified, replace the front seatback frame sub-assembly LH.

4. **INSPECT FRONT SEATBACK FRAME SUB-ASSEMBLY RH**
    a. Check the operation of the reclining motor.

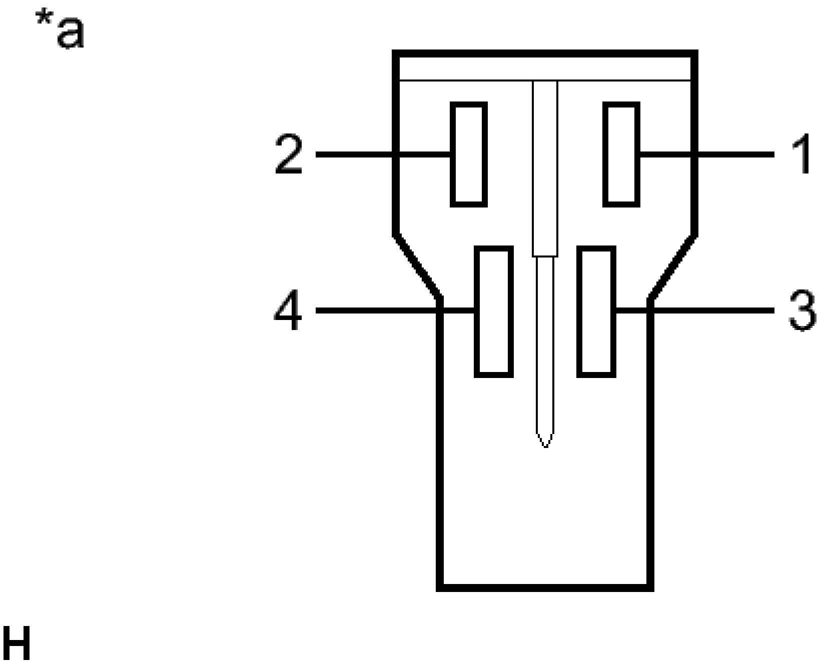

Fig. 107: Identifying Lifter/Reclining Motor Connector Terminals
Courtesy of TOYOTA MOTOR SALES, U.S.A., INC.

1. Check if the front seatback moves smoothly when the auxiliary battery is connected to the reclining motor connector terminals.

TEXT IN ILLUSTRATION

*a	Component without harness connected (Reclining Motor (Front Seatback Frame Sub-assembly RH))

OK

Measurement Condition	Operational Direction
Auxiliary battery positive (+) --> Terminal 2 Auxiliary battery negative (-) --> Terminal 1	Forward
Auxiliary battery negative (+) --> Terminal 1 Auxiliary battery positive (-) --> Terminal 2	Rearward

If the result is not as specified, replace the front seatback frame sub-assembly RH.

REASSEMBLY

REASSEMBLY

1. **INSTALL SEPARATE TYPE FRONT SEAT CUSHION SPRING ASSEMBLY**
    a. Install the separate type front seat cushion spring assembly.
2. **INSTALL LUMBAR SUPPORT ADJUSTER ASSEMBLY (for Driver Side)** See step 1
3. **INSTALL SEPARATE TYPE FRONT SEATBACK SPRING ASSEMBLY (for Front Passenger Side)**
    a. Install the 2 front seatback hooks to the separate type front seatback spring assembly.

b. Engage the 2 guides.

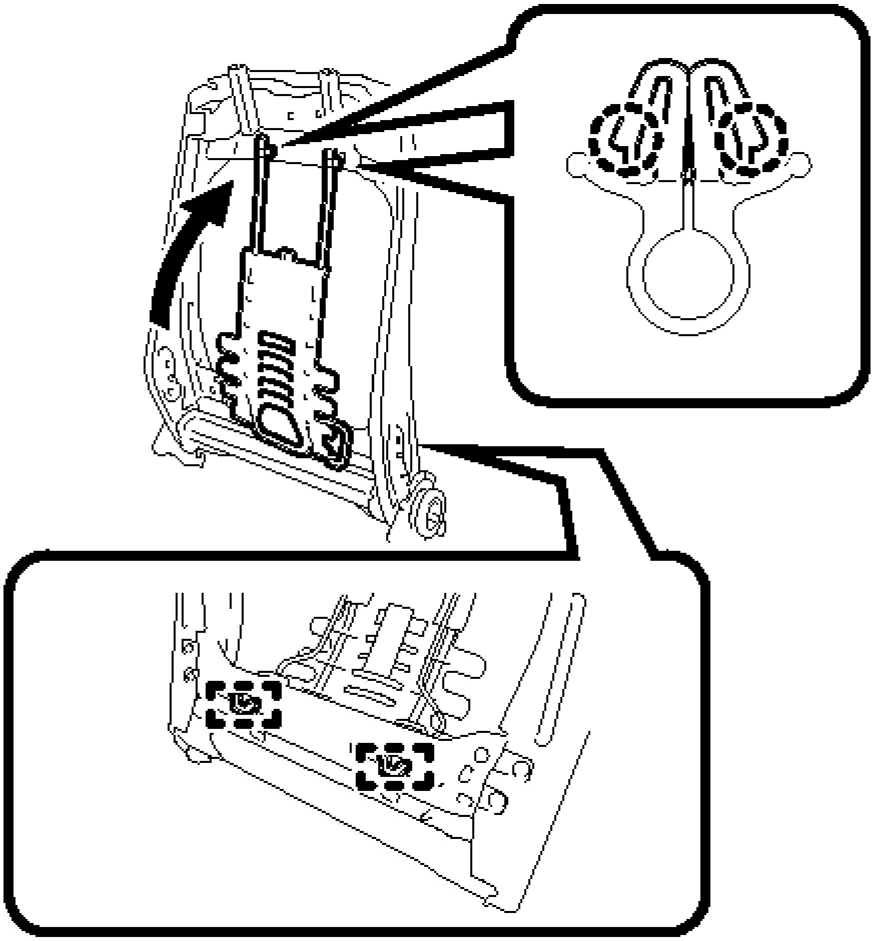

C

Fig. 108: Installing Front Seatback Spring Assembly
Courtesy of TOYOTA MOTOR SALES, U.S.A., INC.

c. Engage the 4 claws to install the separate type front seatback spring assembly.

4. **INSTALL FRONT SEATBACK FRAME SUB-ASSEMBLY**
   a. Install the front seatback frame sub-assembly with the 4 bolts.

   Torque: 45 N*m (459 kgf*cm, 33 ft.*lbf)

5. **INSTALL FRONT SEAT CUSHION PANEL SUB-ASSEMBLY (for Driver Side)**
   a. Install the front seat cushion panel sub-assembly with the 4 bolts.

   Torque: 10 N*m (102 kgf*cm, 7 ft.*lbf)

6. **INSTALL FRONT UPPER SEAT TRACK COVER LH**
    1. Engage the 2 claws to install the front upper seat track cover LH.
7. **INSTALL FRONT UPPER SEAT TRACK COVER RH**
    1. Engage the 2 claws to install the front upper seat track cover RH.
8. **INSTALL REAR UPPER SEAT TRACK COVER LH (for Front Passenger Side)**
    1. Engage the 2 claws to install the rear upper seat track cover LH.
9. **INSTALL REAR UPPER SEAT TRACK COVER RH (for Front Passenger Side)**
    1. Engage the 2 claws to install the rear upper seat track cover RH.
10. **INSTALL FRONT NO. 2 SEAT WIRE**
    1. Connect each connector and engage each wire harness clamp to install the front No. 2 seat wire.
11. **INSTALL FRONT SEAT WIRE**
    1. Connect each connector and engage each wire harness clamp to install the front seat wire.
12. **INSTALL OCCUPANT DETECTION ECU (for Front Passenger Side)** . Refer to **INSTALLATION - Step 1**
13. **INSTALL SEAT HEATER CONTROL SUB-ASSEMBLY (w/ Seat Heater System)**
    1. Engage the clamp to install the seat heater control sub-assembly.
    2. Connect the connector.
14. **INSTALL FRONT SEAT LOWER CUSHION SHIELD LH (for Driver Side)**
    1. Engage the 2 claws to install the front seat lower cushion shield LH.

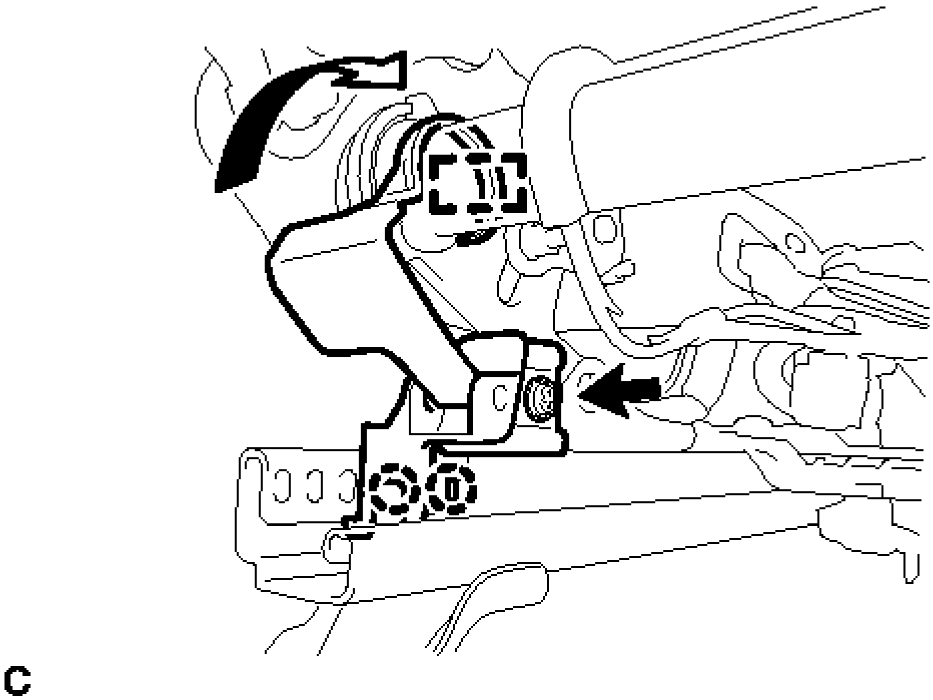

Fig. 109: Installing Front Seat Lower Cushion Shield LH (For Driver Side)
Courtesy of TOYOTA MOTOR SALES, U.S.A., INC.

b. Engage the hook as shown in the illustration.

c. Install the screw.

Torque: 0.6 N*m (6 kgf*cm, 5 in.*lbf)

15. **INSTALL FRONT SEAT LOWER CUSHION SHIELD RH (for Driver Side)**

    a. Engage the 2 claws to install the front seat lower cushion shield RH.

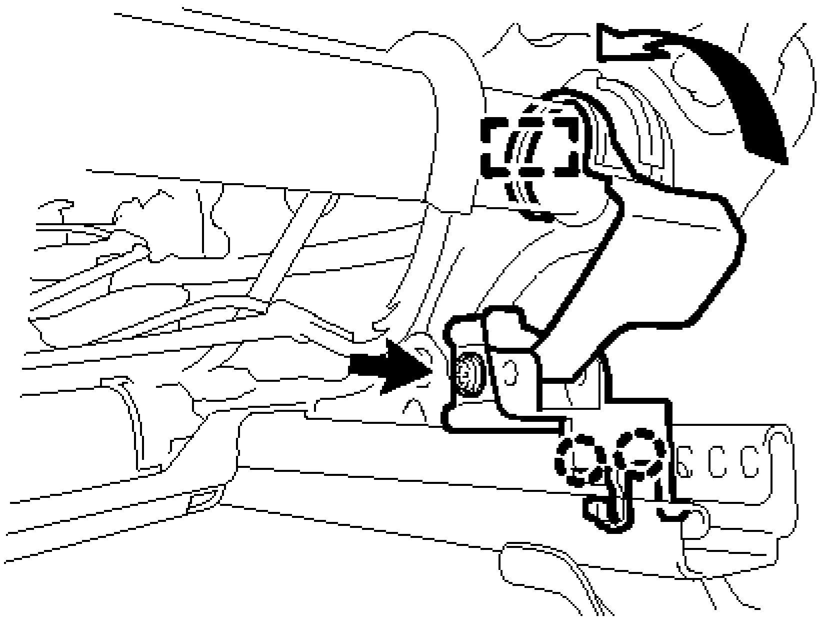

C

Fig. 110: Installing Front Seat Lower Cushion Shield RH (For Driver Side)
Courtesy of TOYOTA MOTOR SALES, U.S.A., INC.

b. Engage the hook as shown in the illustration.

c. Install the screw.

Torque: 0.6 N*m (6 kgf*cm, 5 in.*lbf)

16. **INSTALL FRONT SEAT LOWER CUSHION SHIELD LH (for Front Passenger Side)**

    a. Engage the 2 claws to install the front seat lower cushion shield LH.

17. **INSTALL FRONT SEAT LOWER CUSHION SHIELD RH (for Front Passenger Side)**

    a. Engage the 2 claws to install the front seat lower cushion shield RH.

18. **INSTALL FRONT SEATBACK HEATER ASSEMBLY (w/ Seat Heater System)** See step 1

19. **INSTALL SEPARATE TYPE FRONT SEATBACK COVER**

    a. Using hog ring pliers, install the separate type front seatback cover to the separate type front seatback pad with 2 new hog rings.

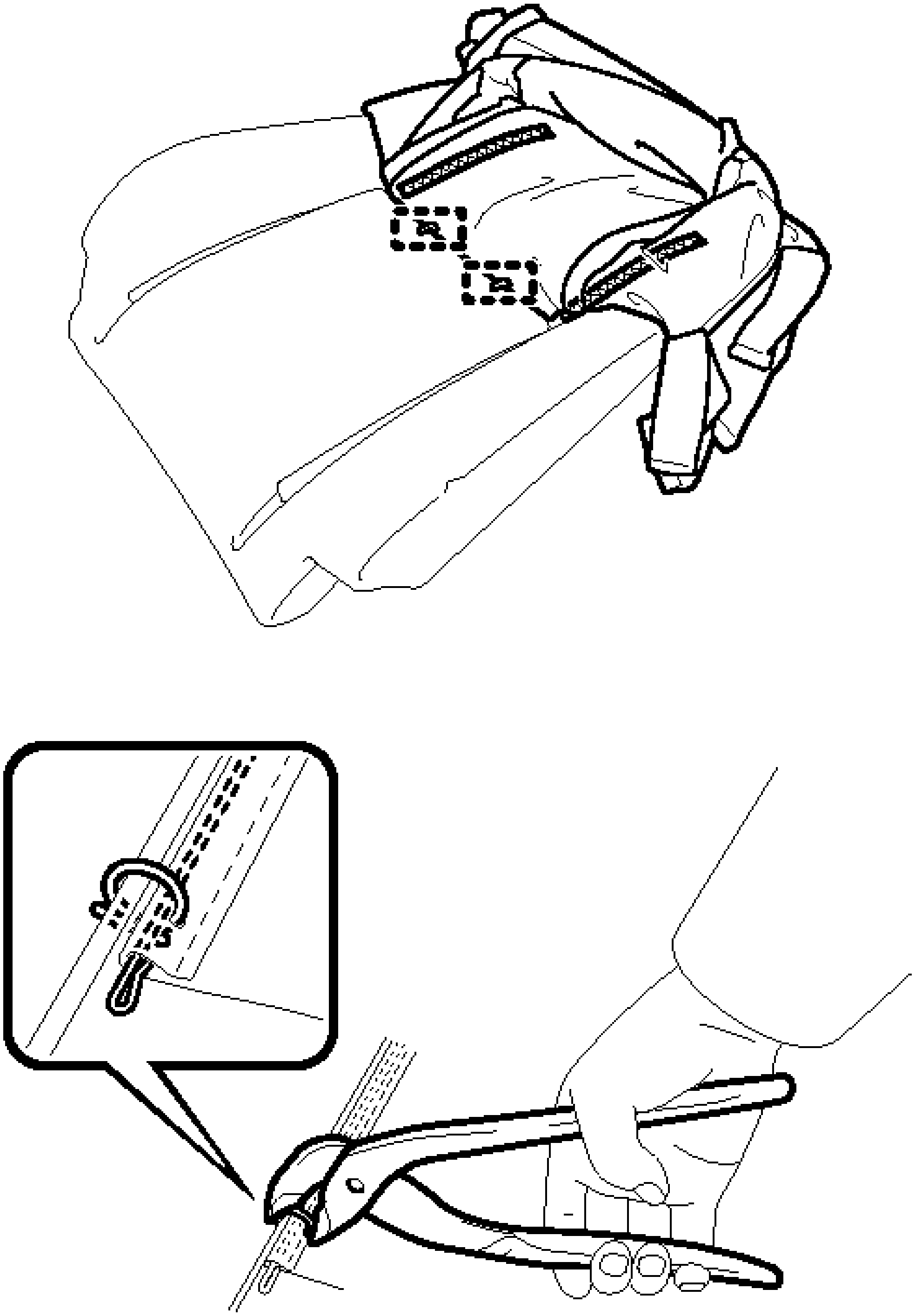

Fig. 111: Installing Front Seatback Cover Hog Rings
Courtesy of TOYOTA MOTOR SALES, U.S.A., INC.

NOTE:

- **Be careful not to damage the separate type front seatback cover.**

- **When installing the hog rings, take care to minimize wrinkles as much as possible.**

b. Engage the 2 fasteners.

20. **INSTALL FRONT SEAT AIRBAG ASSEMBLY** . Refer to **INSTALLATION - Step 1**
21. **INSTALL SEPARATE TYPE FRONT SEATBACK COVER WITH PAD**
    a. Temporarily install the separate type front seatback cover with pad.
    b. Engage the 4 claws to install the 2 front seat headrest supports.
    c. Engage the 2 hooks.

WARNING:

- **For vehicles with a front seat airbag assembly, the separate type front seatback cover must be securely installed. Otherwise, the front seat airbag assembly may not deploy properly.**
- **Make sure that the strap is not twisted after engage the 2 hooks.**
- **Engage the 2 hooks securely.**

        1. Slide each hook to engage them.
        2. Install the 4 clips.
    d. Engage the 2 fasteners.
    e. Engage the hook.
22. **INSTALL FRONT SEAT CUSHION HEATER ASSEMBLY (w/ Seat Heater System)** See step 1
23. **INSTALL SEPARATE TYPE FRONT SEAT CUSHION COVER**
    a. Using hog ring pliers, install the separate type front seat cushion cover to the separate type front seat cushion pad with 12 new hog rings.

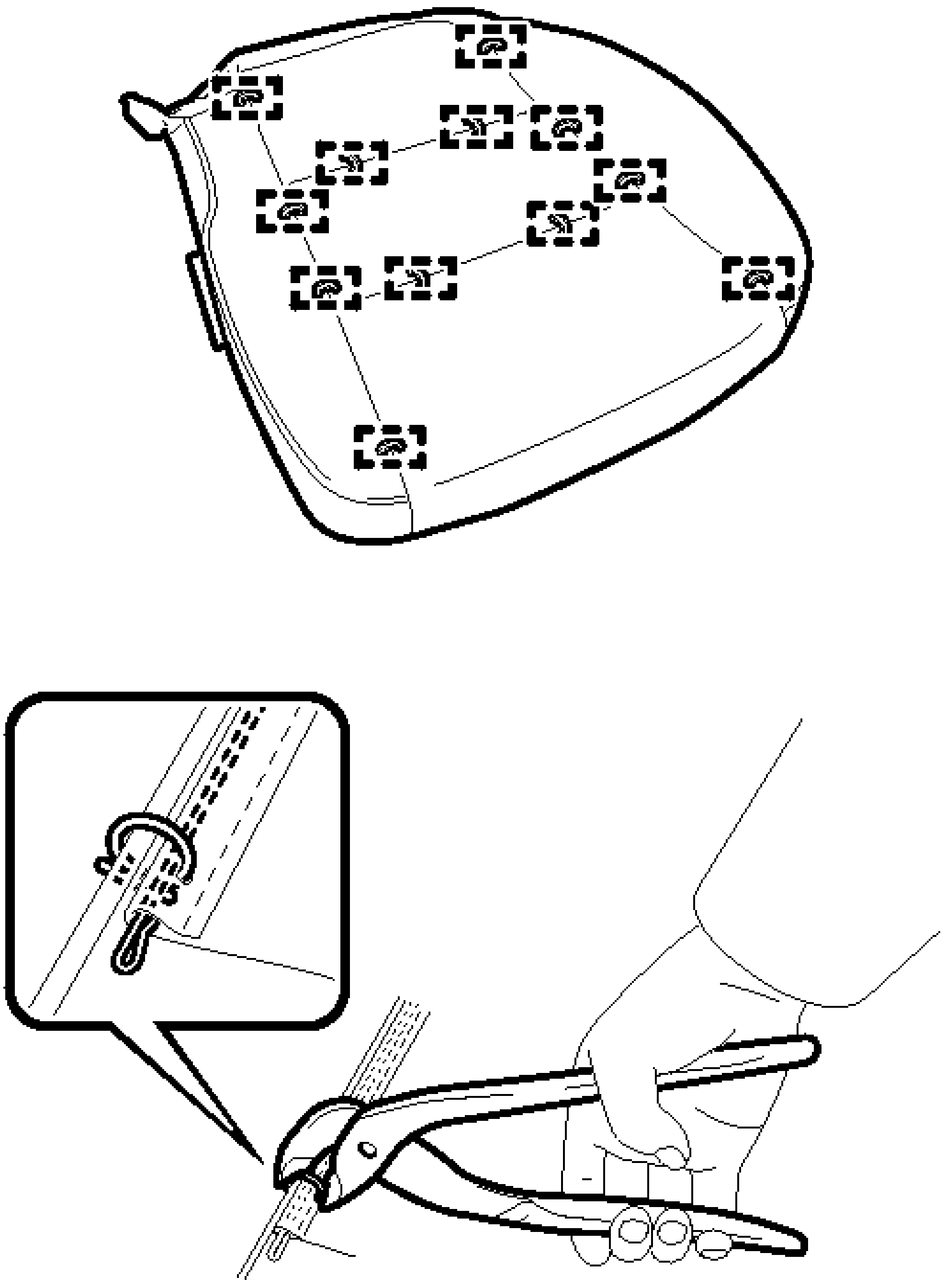

Fig. 112: Installing Front Seat Cushion Cover Hog Rings
Courtesy of TOYOTA MOTOR SALES, U.S.A., INC.

NOTE:

- **Be careful not to damage the separate type front seat cushion cover.**

- **When installing the hog rings, take care to minimize wrinkles as much as possible.**

24. **INSTALL SEPARATE TYPE FRONT SEAT CUSHION COVER WITH PAD**
    a. Temporarily install the separate type front seat cushion cover with pad.
    b. Engage each hook.
    c. for Driver Side:
        1. Install the separate type front seat cushion cover.

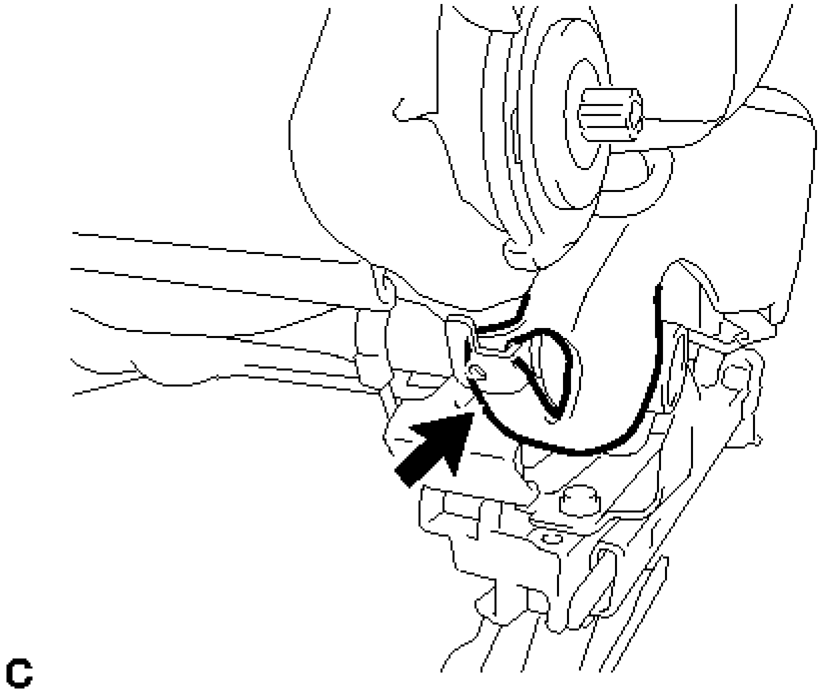

Fig. 113: Identifying Driver Side Front Seat Cushion Cover
Courtesy of TOYOTA MOTOR SALES, U.S.A., INC.

    d. for Front Passenger Side:
        1. Install the separate type front seat cushion cover.

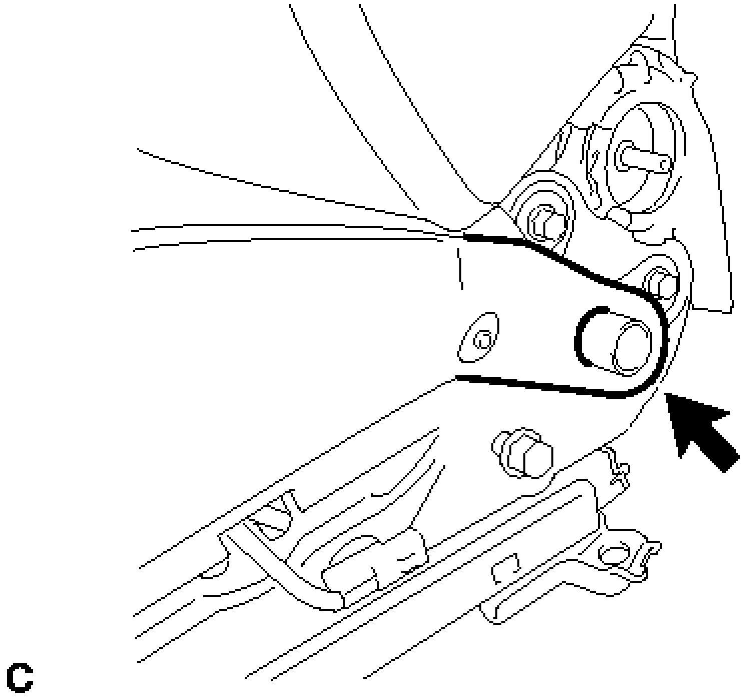

Fig. 114: Identifying Passenger Side Front Seat Cushion Cover
Courtesy of TOYOTA MOTOR SALES, U.S.A., INC.

e. Engage the claw (D) and 3 clamps (C) to install the front seat airbag assembly wire harness.

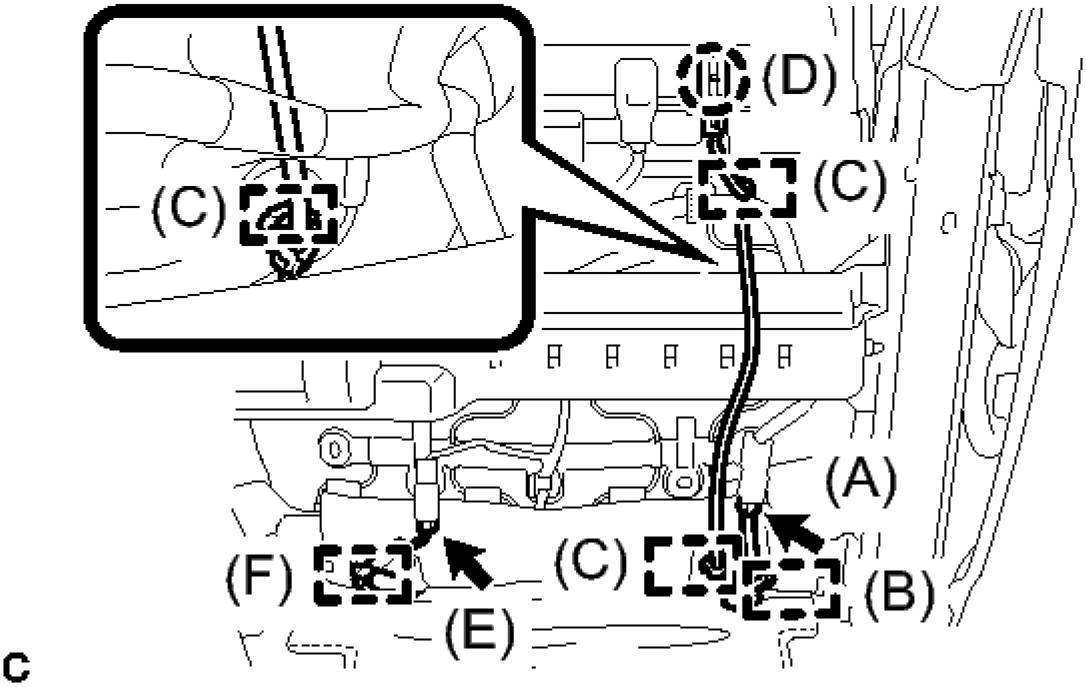

Fig. 115: Identifying Front Seatback Cover Connectors, Claw And Clamps (For Power Seat)
Courtesy of TOYOTA MOTOR SALES, U.S.A., INC.

   f. Engage the clamp (B).
   g. Connect the connector (A).
   h. w/ Seat Heater System:
      1. Connect the connector (E).
      2. Engage the clamp (F).

25. **INSTALL FRONT SEAT INNER BELT ASSEMBLY (for Driver Side)** . Refer to **INSTALLATION - Step 1**
26. **INSTALL FRONT SEAT INNER BELT ASSEMBLY (for Front Passenger Side)** . Refer to **INSTALLATION - Step 2**
27. **INSTALL FRONT SEAT INNER CUSHION SHIELD**
   a. Install the front seat inner cushion shield with the 2 screws.

      Torque: 0.6 N*m (6 kgf*cm, 5 in.*lbf)

28. **INSTALL FRONT LUMBAR POWER SEAT SWITCH (for Driver Side)** See step 1
29. **INSTALL FRONT POWER SEAT SWITCH** See step 1
30. **INSTALL FRONT SEAT CUSHION SHIELD**
   a. for Driver Side:
      1. Engage the 4 claws to install the front lumbar power seat switch to the front seat cushion shield.
   b. Connect the front power seat switch connector.
   c. Engage the wire harness clamp.
   d. Engage the 2 claws to install the front seat cushion shield.
   e. Install the screw.

      Torque: 0.6 N*m (6 kgf*cm, 5 in.*lbf)

31. **CONNECT SEPARATE TYPE FRONT SEATBACK COVER**
   a. Connect the 2 rubber bands of the separate type front seatback cover.
32. **INSTALL RECLINING POWER SEAT SWITCH KNOB**
   a. Engage the 4 claws to install the reclining power seat switch knob.
33. **INSTALL SLIDE AND VERTICAL POWER SEAT SWITCH KNOB**
   a. Engage the 4 claws to install the slide and vertical power seat switch knob.
34. **INSTALL SEAT ADJUSTER COVER CAP**
   a. Install the 2 seat adjuster cover caps.

INSTALLATION

INSTALLATION

1. **INSTALL FRONT SEAT ASSEMBLY**

a. Place the front seat assembly in the cabin.

NOTE: Be careful not to damage the vehicle body.

b. Connect each connector and clamp under the seat.
c. Connect the cable to the negative (-) auxiliary battery terminal.

NOTE: When disconnecting the cable, some systems need to be initialized after the cable is reconnected. Refer to INITIALIZATION .

d. Temporarily install the front seat assembly with the 4 bolts.
e. Operate the slide and vertical power seat switch knob and move the seat to the rearmost position.
f. Tighten the 2 bolts on the front side of the seat.

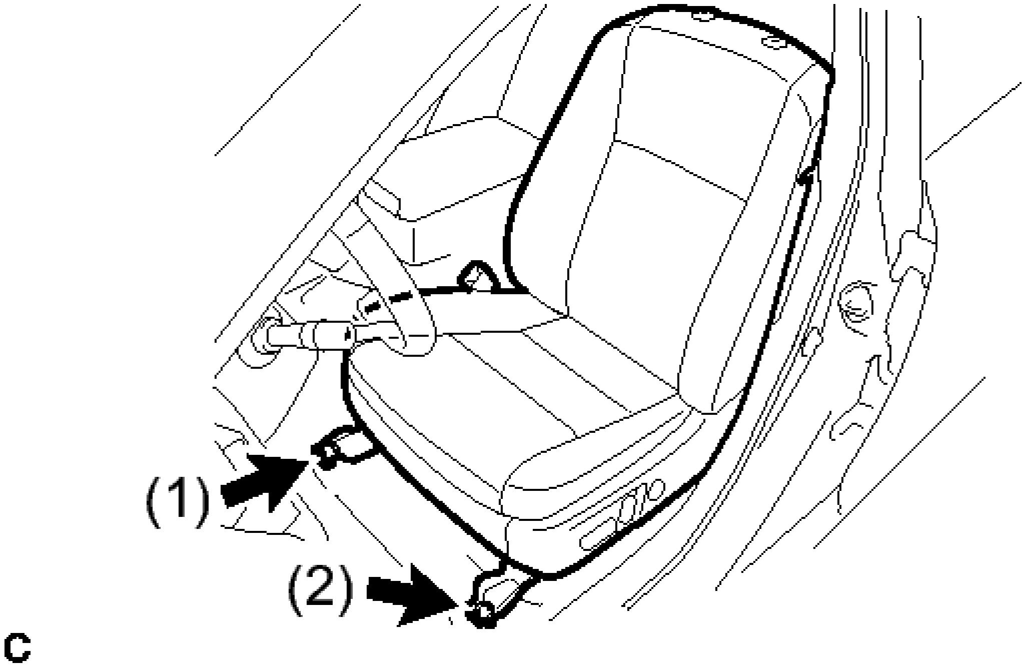

Fig. 116: Tightening Front Seat Assembly Front Bolts In Sequence
Courtesy of TOYOTA MOTOR SALES, U.S.A., INC.

Torque: 37 N*m (377 kgf*cm, 27 ft.*lbf)

NOTE: Tighten the bolts in the order indicated in the illustration.

g. Operate the slide and vertical power seat switch knob and move the seat to the foremost position.
h. Tighten the 2 bolts on the rear side of the seat.

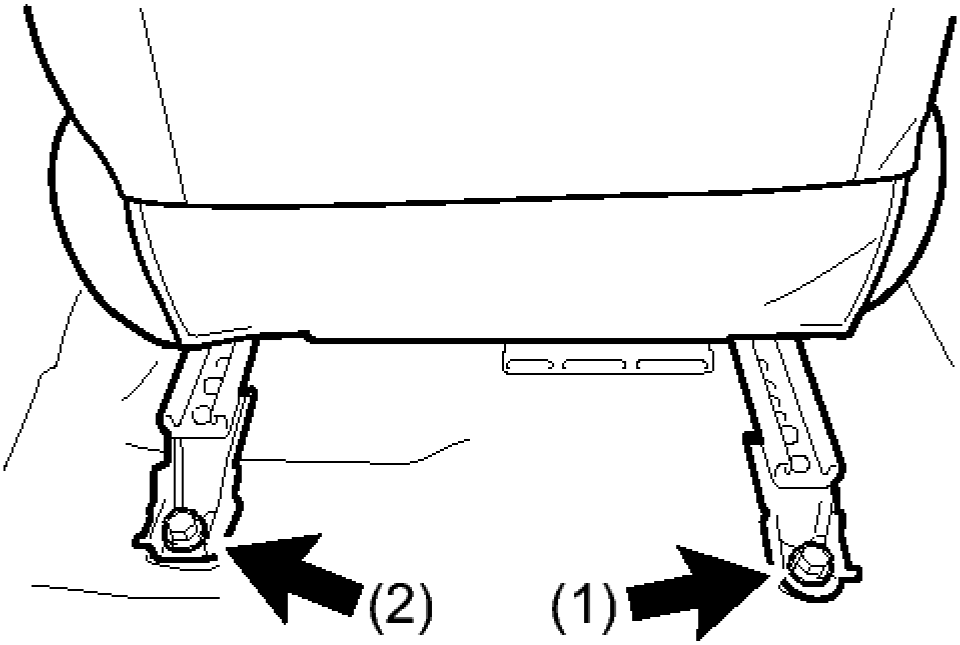

C

Fig. 117: Tightening Rear Side Of Seat In Sequence
Courtesy of TOYOTA MOTOR SALES, U.S.A., INC.

Torque: 37 N*m (377 kgf*cm, 27 ft.*lbf)

NOTE: Tighten the bolts in the order indicated in the illustration.

2. **INSTALL REAR INNER SEAT TRACK BRACKET COVER**
    a. Engage the 2 claws to install the rear inner seat track bracket cover.
3. **INSTALL REAR OUTER SEAT TRACK BRACKET COVER**
    a. Engage the 2 claws to install the rear outer seat track bracket cover.
4. **INSTALL FRONT SEAT HEADREST ASSEMBLY**
5. **INSTALL LUGGAGE TRIM SERVICE HOLE COVER** . Refer to **INSTALLATION - Step 3**
6. **PERFORM ZERO POINT CALIBRATION AND SENSITIVITY CHECK (for Front Passenger Side)**

    Refer to **INITIALIZATION**

7. **INSPECT FRONT SEAT ASSEMBLY**
    a. Check the power seat operation. Refer to **OPERATION CHECK** .
    b. w/ Seat Heater System:

        Check the seat heater operation.

        1. Turn the power switch on (IG).

2. Turn the seat heater switch on.
3. Wait 5 minutes or more and confirm that the seat surface becomes warm.

8. **INSPECT SRS WARNING LIGHT**

for Separate Type Yaw Rate Sensor: Refer to **DIAGNOSIS SYSTEM**

for Built-in Type Yaw Rate Sensor: Refer to **DIAGNOSIS SYSTEM**

REAR SEAT ASSEMBLY

COMPONENTS

ILLUSTRATION

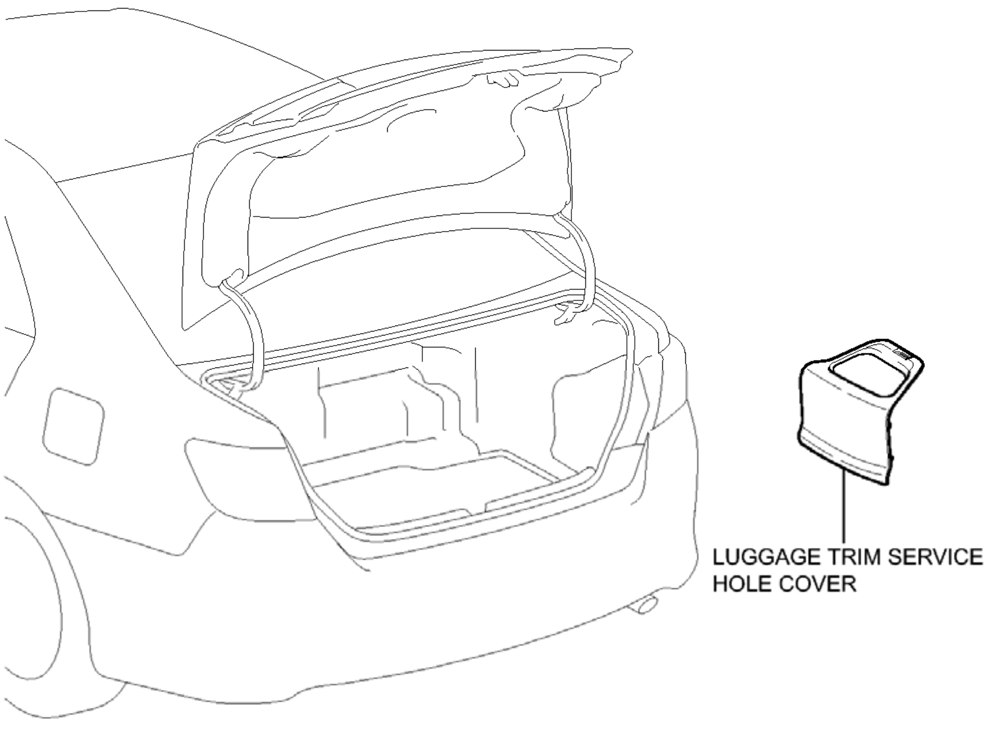

Fig. 118: Identifying Rear Seat Assembly Replacement Components With Torque Specifications (1 Of 5)
Courtesy of TOYOTA MOTOR SALES, U.S.A., INC.

ILLUSTRATION

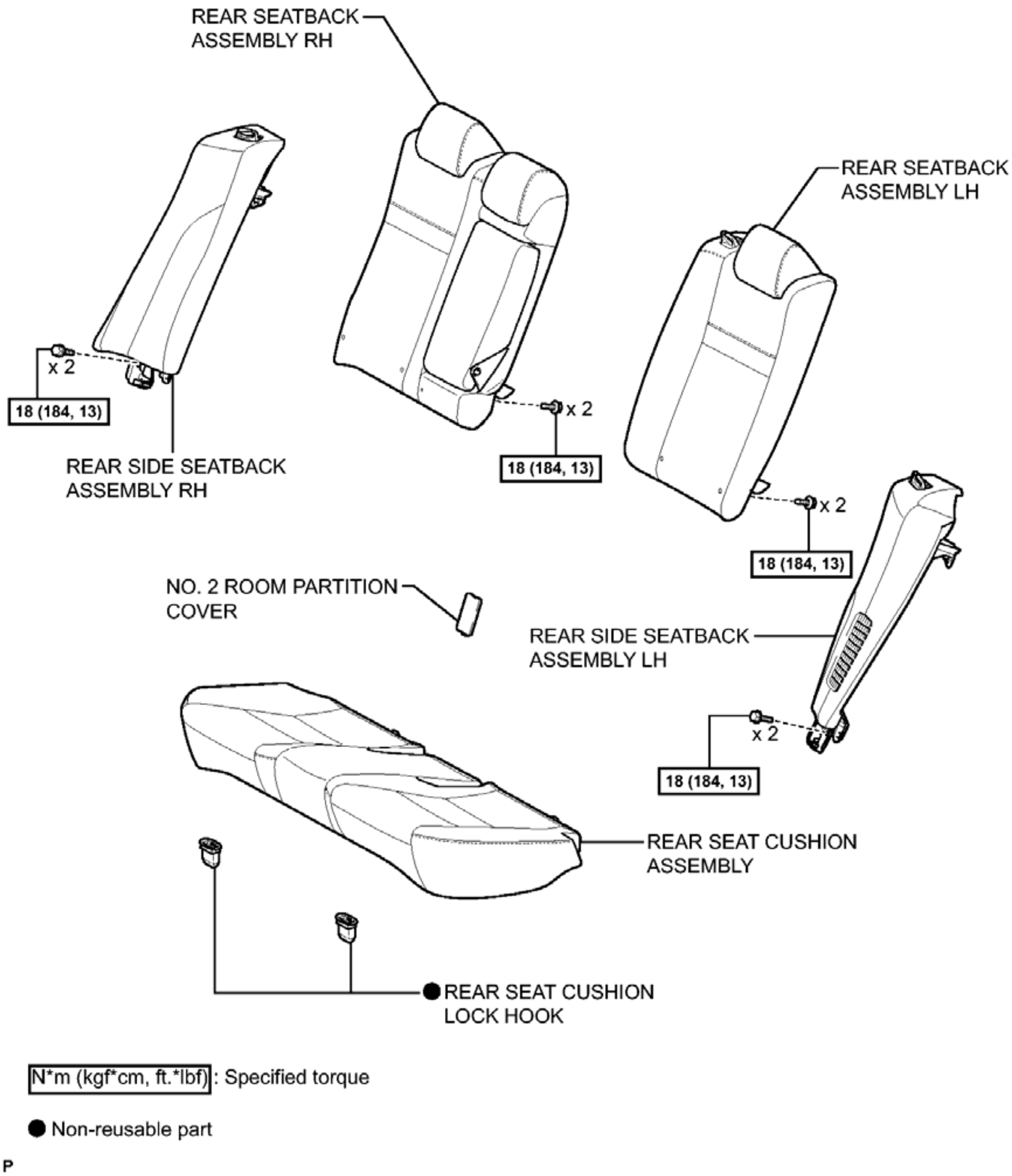
REAR SEATBACK ASSEMBLY RH
REAR SEATBACK ASSEMBLY LH
x 2
18 (184, 13)
REAR SIDE SEATBACK ASSEMBLY RH
x 2
18 (184, 13)
x 2
18 (184, 13)
NO. 2 ROOM PARTITION COVER
REAR SIDE SEATBACK ASSEMBLY LH
x 2
18 (184, 13)
REAR SEAT CUSHION ASSEMBLY
● REAR SEAT CUSHION LOCK HOOK
N*m (kgf*cm, ft.*lbf) : Specified torque
● Non-reusable part
P

Fig. 119: Identifying Rear Seat Assembly Replacement Components With Torque Specifications (2 Of 5)
Courtesy of TOYOTA MOTOR SALES, U.S.A., INC.

ILLUSTRATION

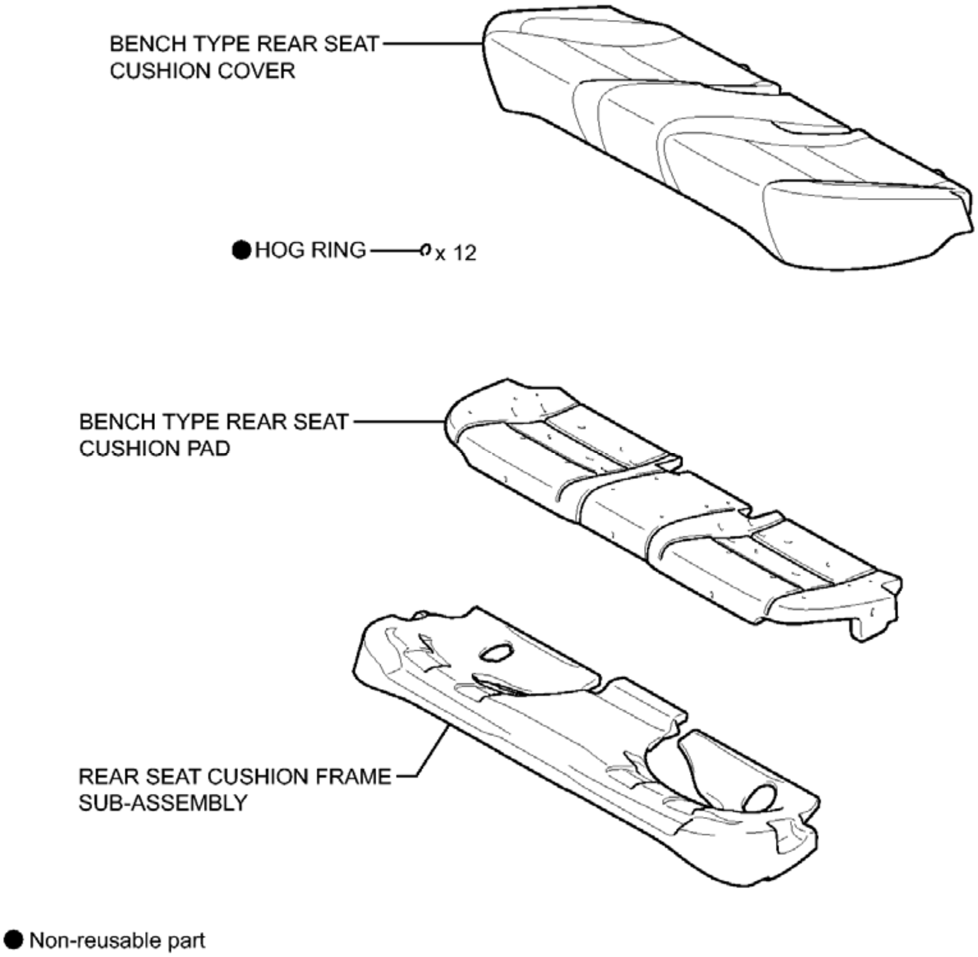
BENCH TYPE REAR SEAT CUSHION COVER
● HOG RING x 12
BENCH TYPE REAR SEAT CUSHION PAD
REAR SEAT CUSHION FRAME SUB-ASSEMBLY
● Non-reusable part
P

Fig. 120: Identifying Rear Seat Assembly Replacement Components With Torque Specifications (3 Of 5)
Courtesy of TOYOTA MOTOR SALES, U.S.A., INC.

ILLUSTRATION

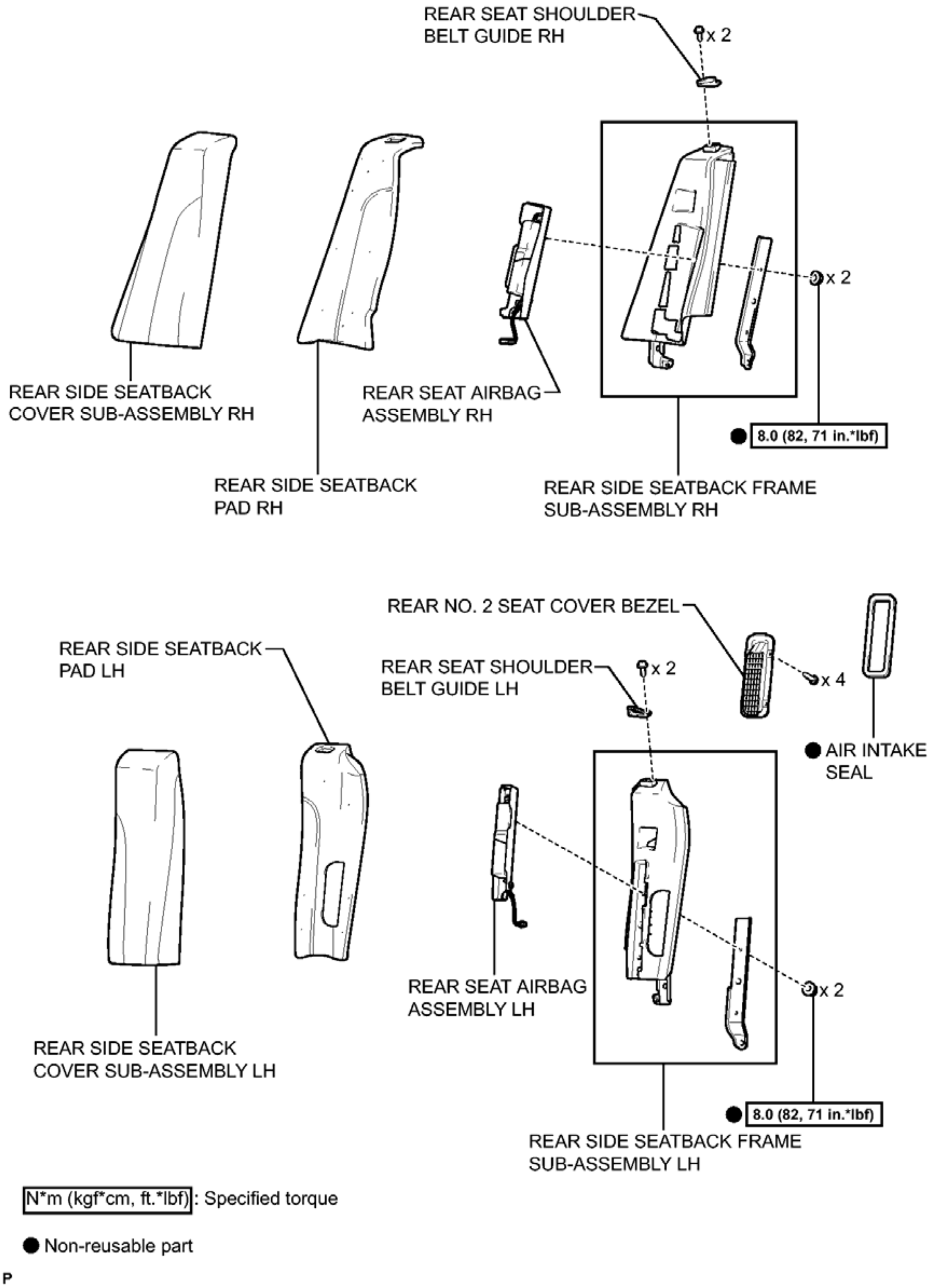
REAR SEAT SHOULDER BELT GUIDE RH
x 2
REAR SIDE SEATBACK COVER SUB-ASSEMBLY RH
REAR SIDE SEATBACK PAD RH
REAR SEAT AIRBAG ASSEMBLY RH
x 2
● 8.0 (82, 71 in.*lbf)
REAR SIDE SEATBACK FRAME SUB-ASSEMBLY RH
REAR NO. 2 SEAT COVER BEZEL
REAR SIDE SEATBACK PAD LH
REAR SEAT SHOULDER BELT GUIDE LH
x 2
x 4
● AIR INTAKE SEAL
REAR SEAT AIRBAG ASSEMBLY LH
REAR SIDE SEATBACK COVER SUB-ASSEMBLY LH
x 2
● 8.0 (82, 71 in.*lbf)
REAR SIDE SEATBACK FRAME SUB-ASSEMBLY LH
N*m (kgf*cm, ft.*lbf) : Specified torque
● Non-reusable part
P

Fig. 121: Identifying Rear Seat Assembly Replacement Components With Torque Specifications (4 Of 5)
Courtesy of TOYOTA MOTOR SALES, U.S.A., INC.

ILLUSTRATION

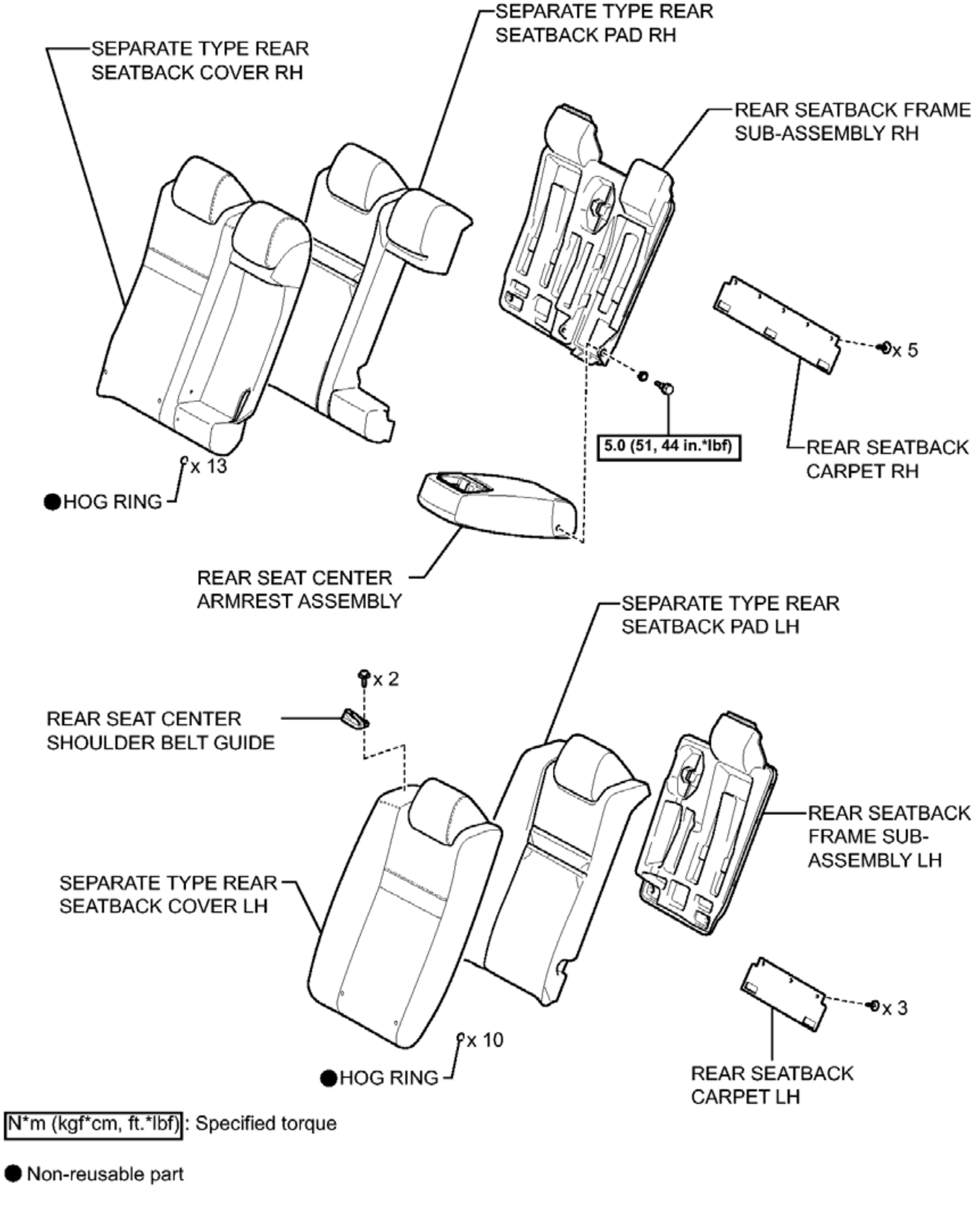
SEPARATE TYPE REAR SEATBACK PAD RH
SEPARATE TYPE REAR SEATBACK COVER RH
REAR SEATBACK FRAME SUB-ASSEMBLY RH
x 5
5.0 (51, 44 in.*lbf)
REAR SEATBACK CARPET RH
x 13
● HOG RING
REAR SEAT CENTER ARMREST ASSEMBLY
SEPARATE TYPE REAR SEATBACK PAD LH
x 2
REAR SEAT CENTER SHOULDER BELT GUIDE
REAR SEATBACK FRAME SUB-ASSEMBLY LH
SEPARATE TYPE REAR SEATBACK COVER LH
x 3
x 10
● HOG RING
REAR SEATBACK CARPET LH
N*m (kgf*cm, ft.*lbf): Specified torque
● Non-reusable part
P

Fig. 122: Identifying Rear Seat Assembly Replacement Components With Torque Specifications (5 Of 5)
Courtesy of TOYOTA MOTOR SALES, U.S.A., INC.

REMOVAL

REMOVAL

1. **PRECAUTION**

WARNING:

- **Be sure to read Precaution thoroughly before servicing.**

  for Separate Type Yaw Rate Sensor: Refer to PRECAUTION

  for Built-in Type Yaw Rate Sensor: Refer to PRECAUTION

- **If the side airbag was deployed, replace the rear seat airbag assembly, rear side seatback frame sub-assembly, rear side seatback cover sub-assembly and rear side seatback pad with the necessary parts in accordance with the extent of the collision damage.**

NOTE: **After turning the power switch off, waiting time may be required before disconnecting the cable from the negative (-) auxiliary battery terminal. Therefore, make sure to read the disconnecting the cable from the negative (-) auxiliary battery terminal notices before proceeding with work. Refer to PRECAUTION .**

2. **REMOVE LUGGAGE TRIM SERVICE HOLE COVER** . Refer to **REMOVAL - Step 2**
3. **DISCONNECT CABLE FROM AUXILIARY BATTERY NEGATIVE TERMINAL**

WARNING: **Wait at least 90 seconds after disconnecting the cable from the negative (-) auxiliary battery terminal to disable the SRS system.**

NOTE: **When disconnecting the cable, some systems need to be initialized after the cable is reconnected. Refer to INITIALIZATION .**

4. **REMOVE REAR SEAT CUSHION ASSEMBLY**
   a. Disengage the hook of the seat cushion from the vehicle body as shown in the illustration.

   NOTE: **Follow the instructions below carefully as the cushion frame can be deformed easily.**

      1. Choose a hook to disengage first. Place your hands near the hook as shown in the illustration. Then lift the seat cushion to disengage the hook.

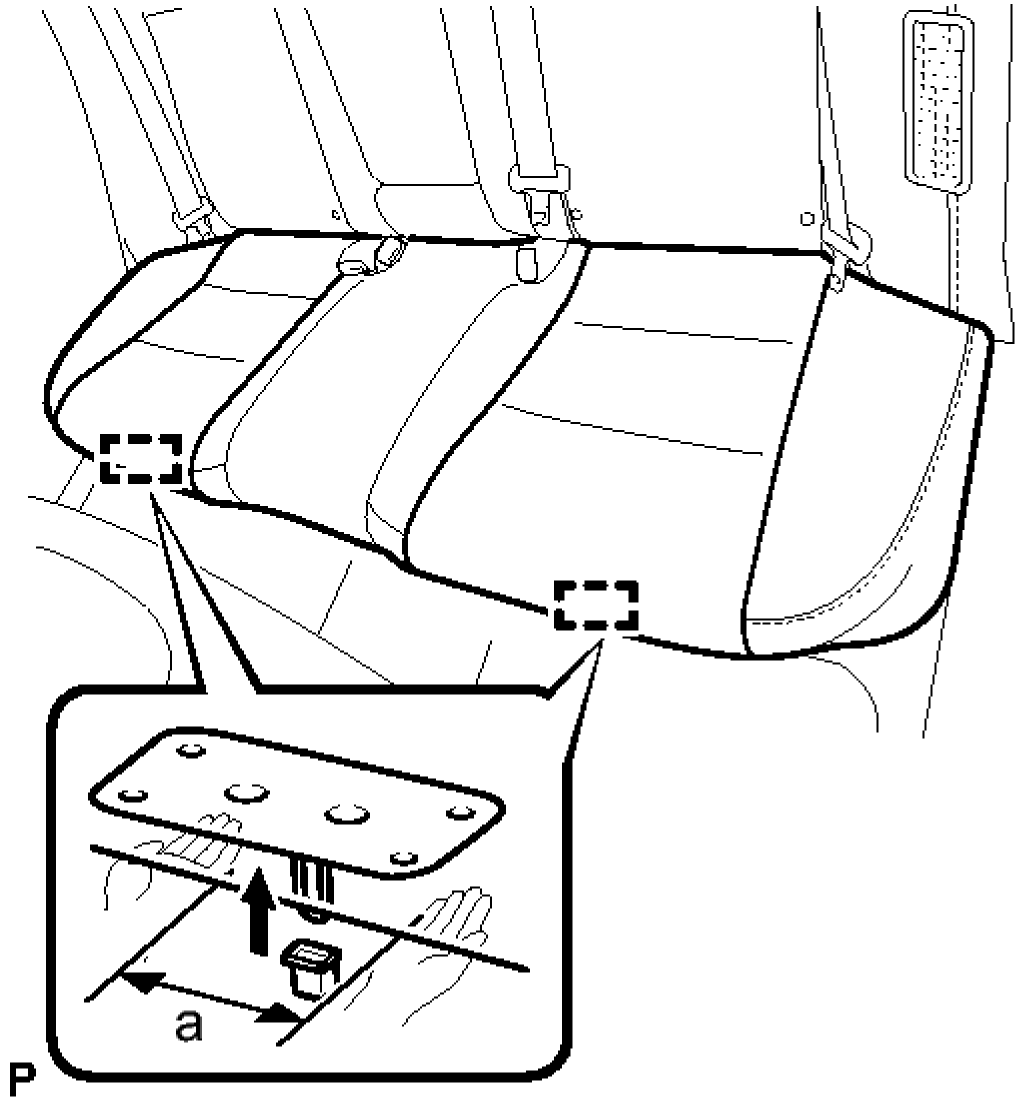

Fig. 123: Removing Rear Seat Cushion Assembly
Courtesy of TOYOTA MOTOR SALES, U.S.A., INC.

STANDARD MEASUREMENT

a	100 mm (3.94 in.) or less

        2. Repeat the step above for the other hook.
    b. Remove the rear seat cushion assembly.

5. **REMOVE REAR SEAT CUSHION LOCK HOOK**
    a. Disengage the claw and remove the rear seat cushion lock hook.

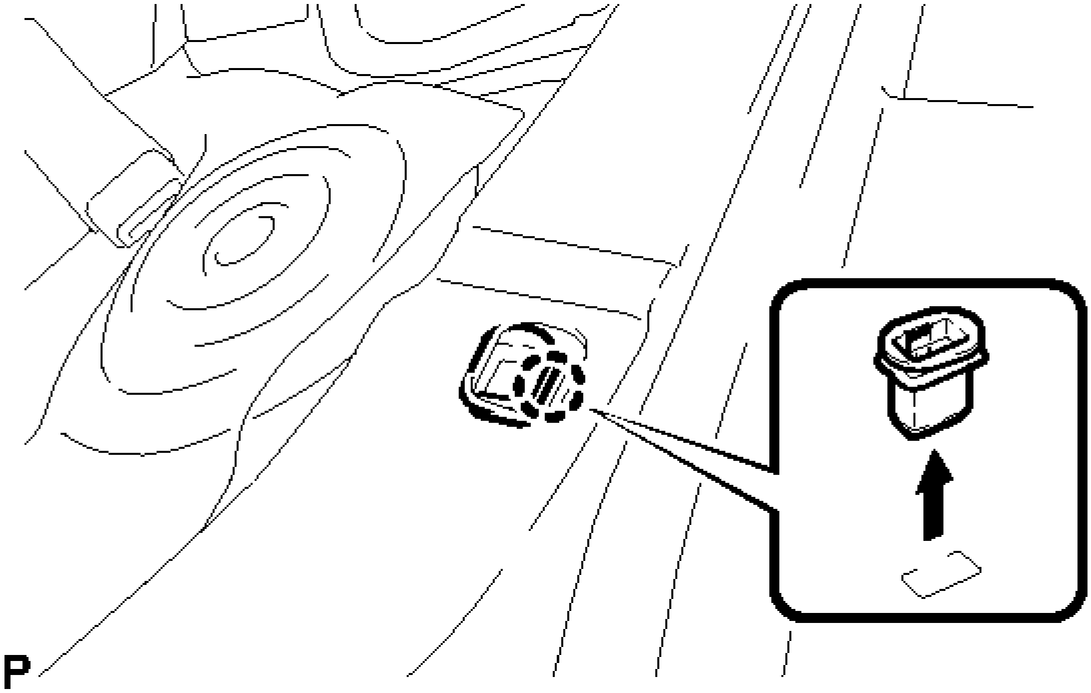

Fig. 124: Removing Rear Seat Cushion Lock Hook
Courtesy of TOYOTA MOTOR SALES, U.S.A., INC.

NOTE: **Rear seat cushion lock hooks must not be reused.**

HINT:

Use the same procedure for the RH side and the LH side.

6. **REMOVE REAR SEATBACK ASSEMBLY RH**
   a. Fold down the rear seatback assembly RH.
   b. Disengage the 3 fasteners as shown in the illustration.

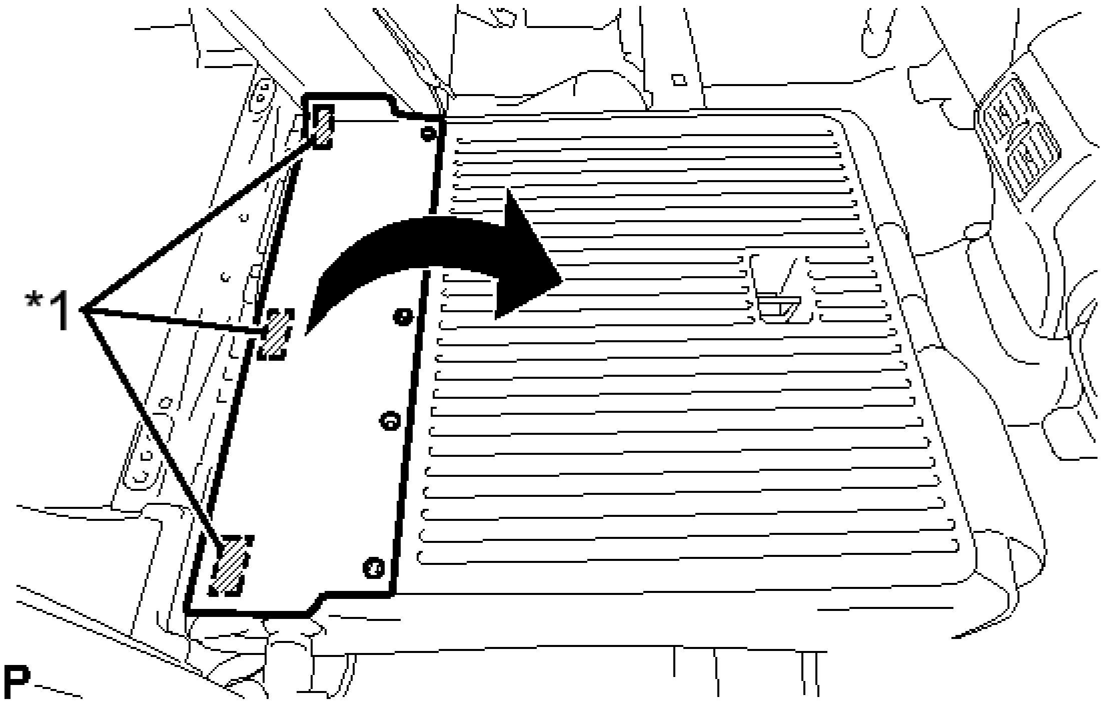

Fig. 125: Locating Rear Seatback Assembly Fasteners RH
Courtesy of TOYOTA MOTOR SALES, U.S.A., INC.

TEXT IN ILLUSTRATION

*1	Fastener

c. Remove the 2 bolts and rear seatback assembly RH.

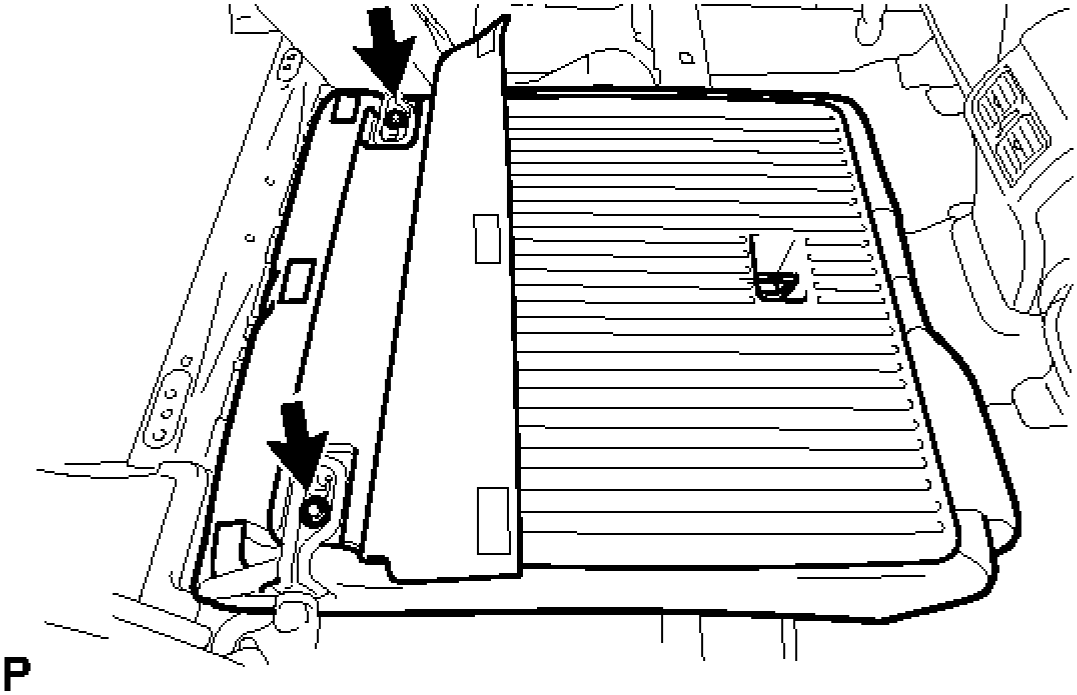

Fig. 126: Identifying Rear Seatback Assembly RH Fasteners
Courtesy of TOYOTA MOTOR SALES, U.S.A., INC.

NOTE: **Be careful not to damage the vehicle body.**

7. **REMOVE NO. 2 ROOM PARTITION COVER**
    a. Using a moulding remover, disengage the claw and guide, and remove the No. 2 room partition cover.

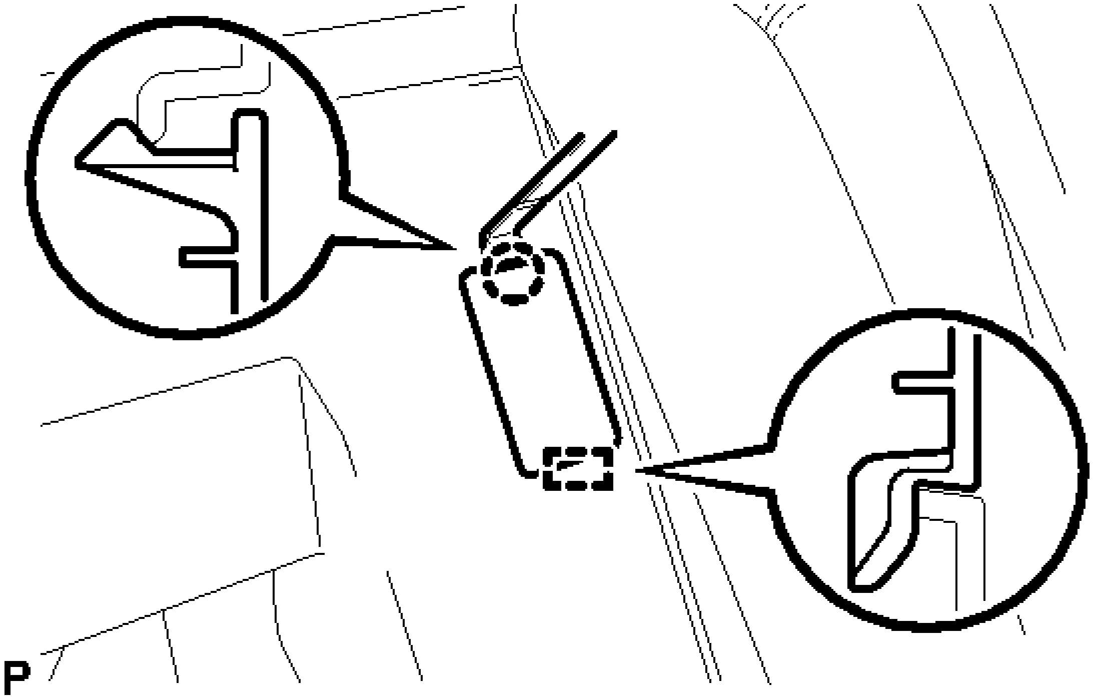

Fig. 127: Identifying No. 2 Room Partition Cover Claw And Guide
Courtesy of TOYOTA MOTOR SALES, U.S.A., INC.

8. **REMOVE REAR SEATBACK ASSEMBLY LH**
    a. Disconnect the rear seat inner with center belt assembly LH from the rear seat center shoulder belt guide.
    b. Pull the cable in the direction shown in the illustration to release the rear seatback lock and then fold the rear seatback assembly LH forward.

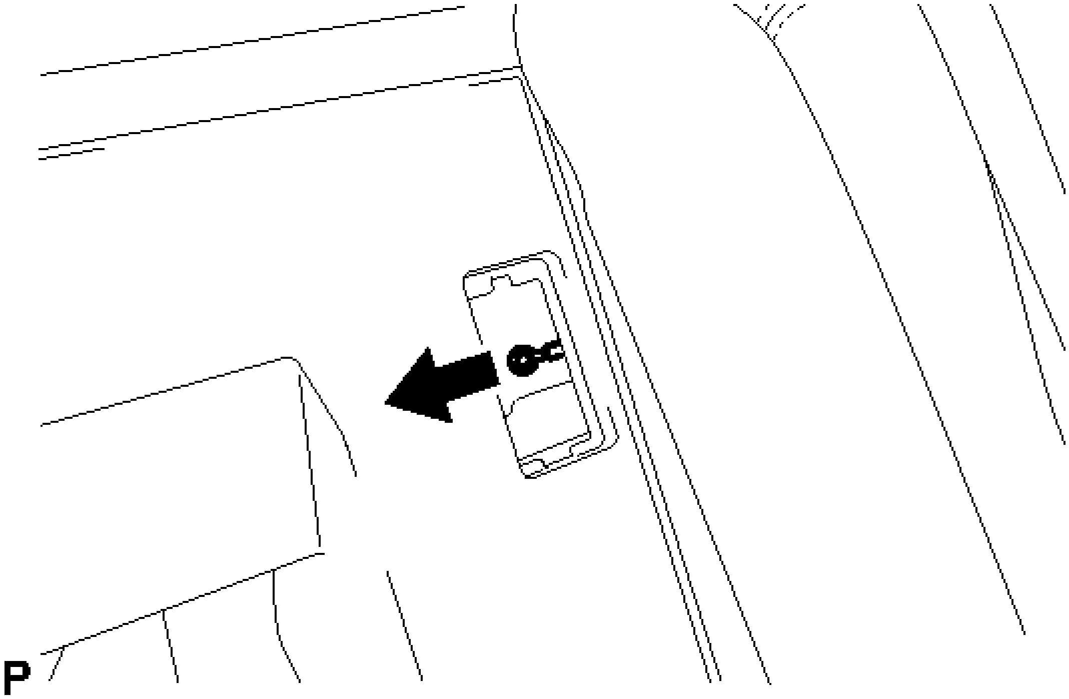

Fig. 128: Pulling Cable To Release The Rear Seatback Lock
Courtesy of TOYOTA MOTOR SALES, U.S.A., INC.

c. Disengage the 2 fasteners as shown in the illustration.

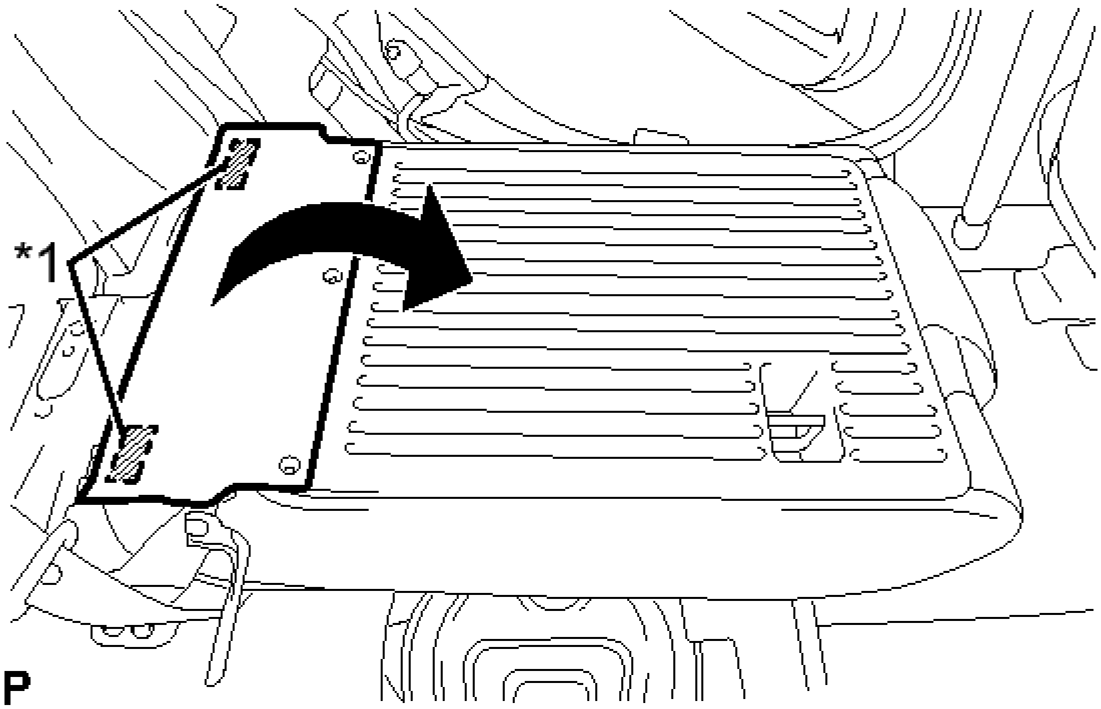

Fig. 129: Locating Rear Seatback Assembly Fasteners LH
Courtesy of TOYOTA MOTOR SALES, U.S.A., INC.

TEXT IN ILLUSTRATION

*1	Fastener

d. Remove the 2 bolts and rear seatback assembly LH.

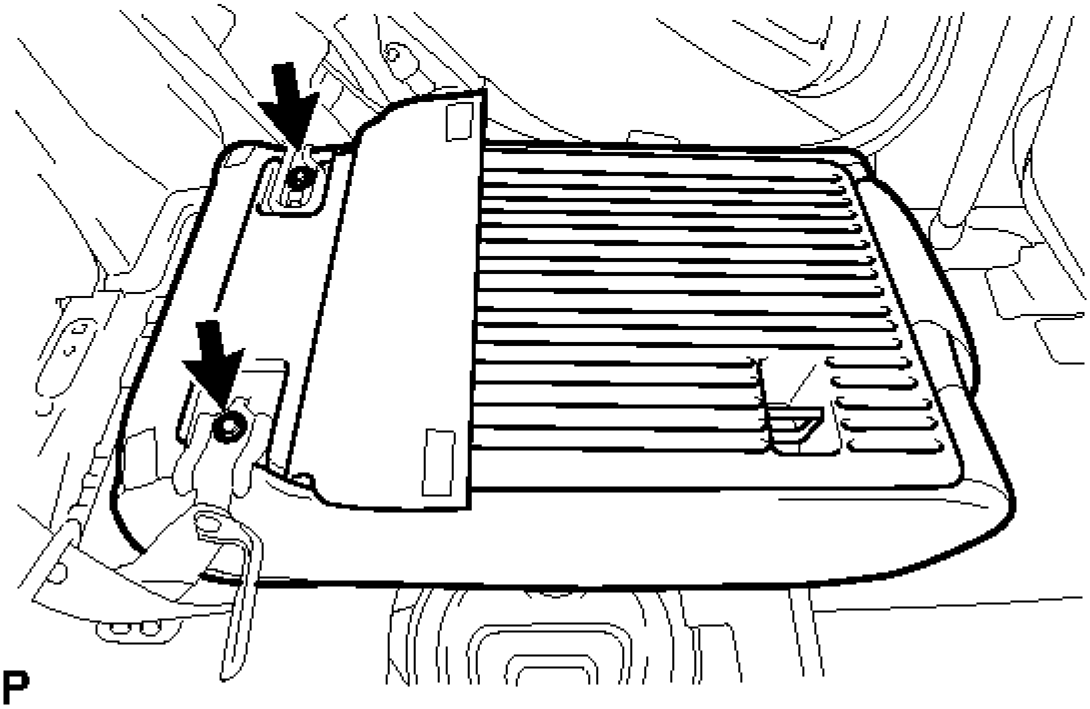

Fig. 130: Identifying Rear Seatback Assembly Fasteners LH
Courtesy of TOYOTA MOTOR SALES, U.S.A., INC.

NOTE: Be careful not to damage the vehicle body.

9. **REMOVE REAR SIDE SEATBACK ASSEMBLY LH**
   a. Disconnect the rear seat outer belt from the rear seat shoulder belt guide LH.
   b. Disconnect the connector.
   c. Remove the 2 bolts.

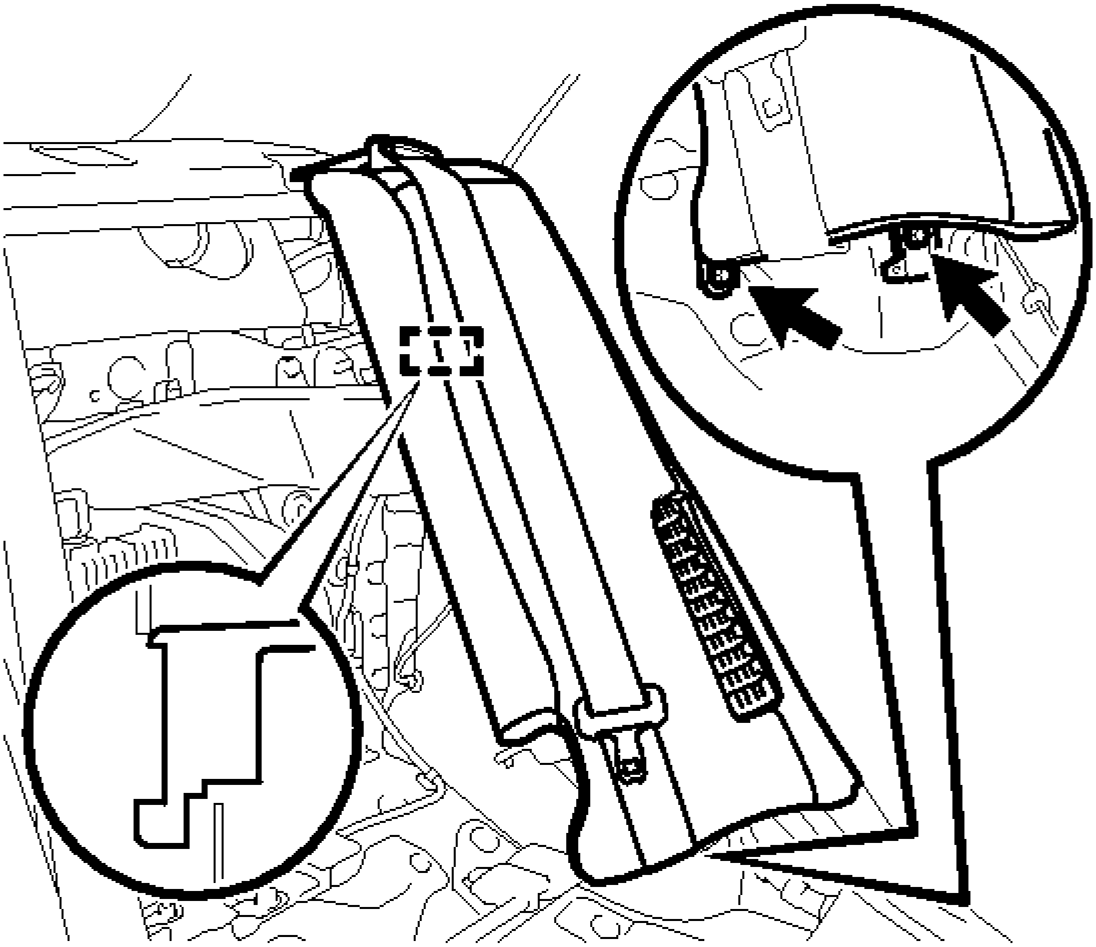

Fig. 131: Identifying Rear Side Seatback Assembly Connector, Bolts And Hook LH
Courtesy of TOYOTA MOTOR SALES, U.S.A., INC.

d. Disengage the hook and remove the rear side seatback assembly LH.

10. **REMOVE REAR SIDE SEATBACK ASSEMBLY RH**
    a. Disconnect the rear seat outer belt from the rear seat shoulder belt guide RH.
    b. Disconnect the connector.
    c. Remove the 2 bolts.

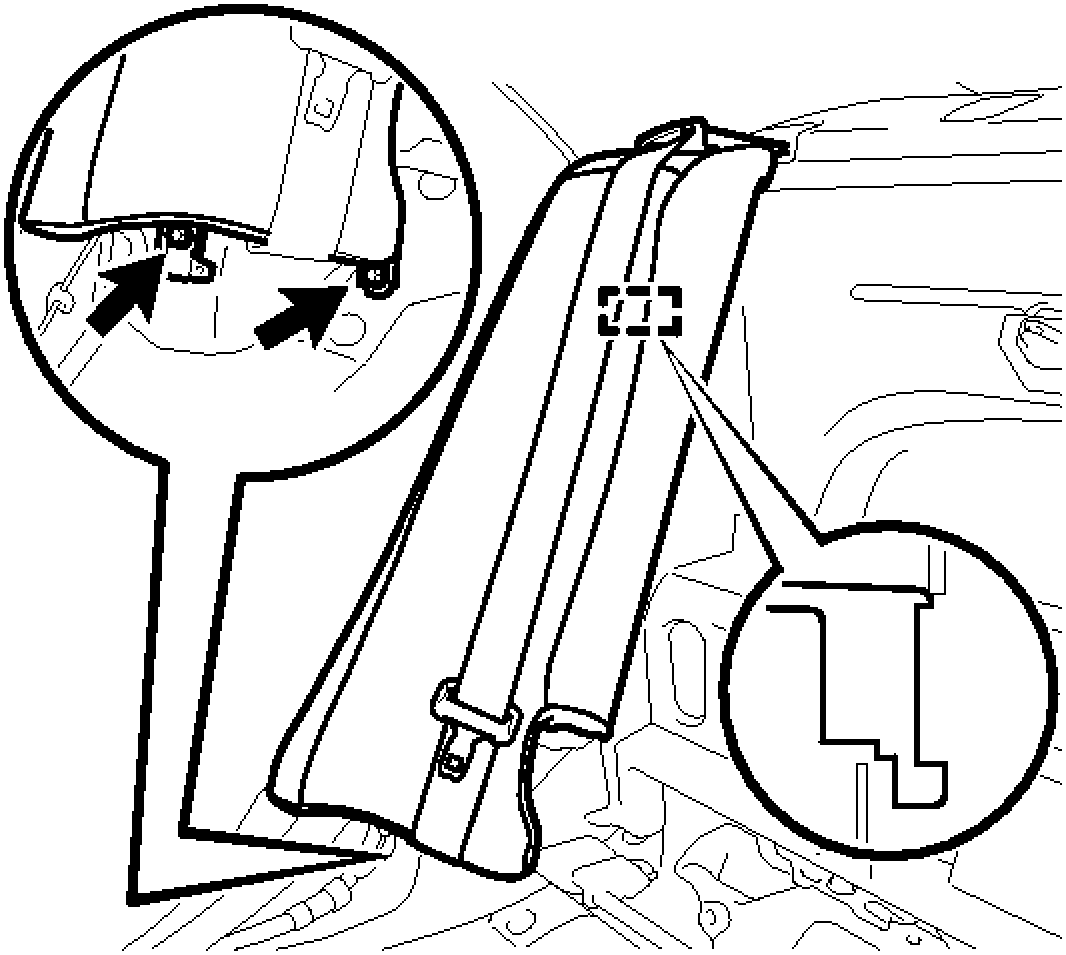

Fig. 132: Identifying Rear Side Seatback Assembly Connector, Bolts And Hook RH
Courtesy of TOYOTA MOTOR SALES, U.S.A., INC.

d. Disengage the hook and remove the rear side seatback assembly RH.

DISASSEMBLY

DISASSEMBLY

1. **REMOVE REAR SEAT CUSHION FRAME SUB-ASSEMBLY**
    a. Disengage the 16 hooks and remove the rear seat cushion frame sub-assembly.

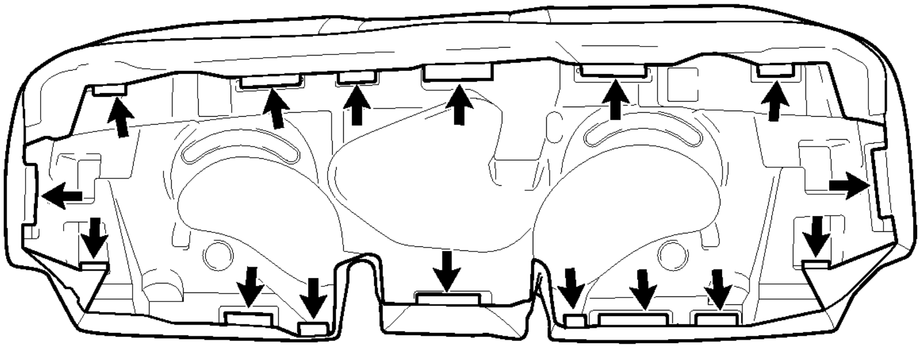

P

Fig. 133: Identifying Rear Seat Cushion Frame Sub-Assembly Hooks
Courtesy of TOYOTA MOTOR SALES, U.S.A., INC.

2. **REMOVE BENCH TYPE REAR SEAT CUSHION COVER**
    a. Remove the 12 hog rings and disengage the 4 fasteners, and remove the bench type rear seat cushion cover from the bench type rear seat cushion pad.

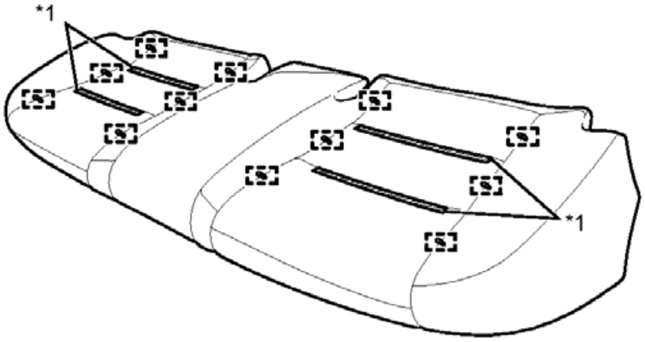

P

Fig. 134: Identifying Bench Type Rear Seat Cushion Cover Fasteners And Hog Rings
Courtesy of TOYOTA MOTOR SALES, U.S.A., INC.

TEXT IN ILLUSTRATION

*1	Fastener	-	-

3. **REMOVE REAR SEAT SHOULDER BELT GUIDE LH**
    a. Remove the 2 screws.

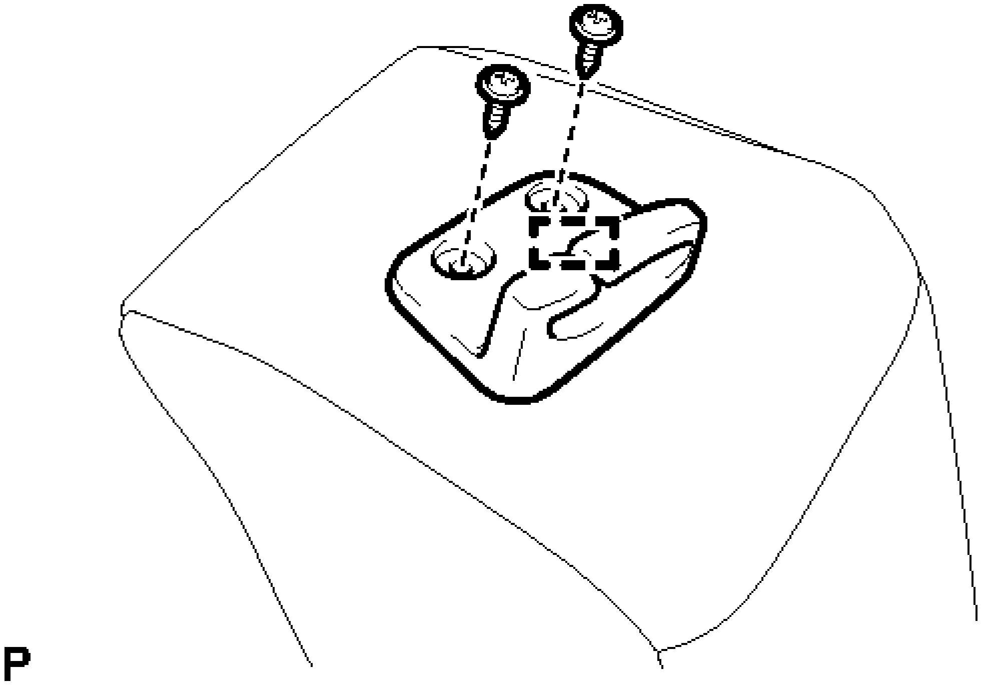

Fig. 135: Identifying Rear Seat Shoulder Belt Guide Fasteners LH
Courtesy of TOYOTA MOTOR SALES, U.S.A., INC.

b. Disengage the guide and remove the rear seat shoulder belt guide LH from the rear side seatback assembly LH.

4. **REMOVE REAR SEAT AIRBAG ASSEMBLY LH** . Refer to **REMOVAL - Step 9**
5. **REMOVE REAR NO. 2 SEAT COVER BEZEL**
   a. Remove the 4 screws and rear No. 2 seat cover bezel from the rear side seatback frame sub-assembly LH.

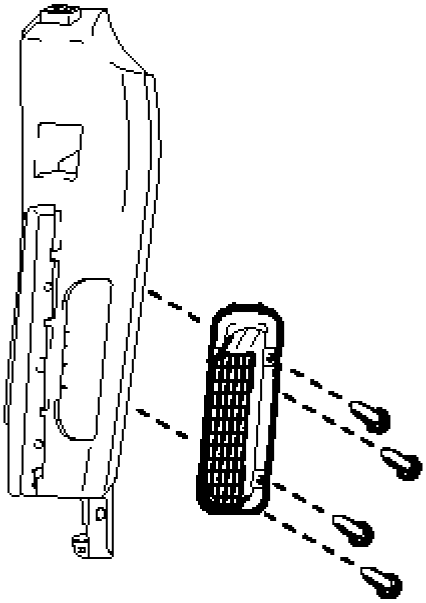

P

Fig. 136: Identifying Rear No. 2 Seat Cover Bezel Screws
Courtesy of TOYOTA MOTOR SALES, U.S.A., INC.

6. **REMOVE AIR INTAKE SEAL**
    a. Remove the air intake seal from the rear No. 2 seat cover bezel.

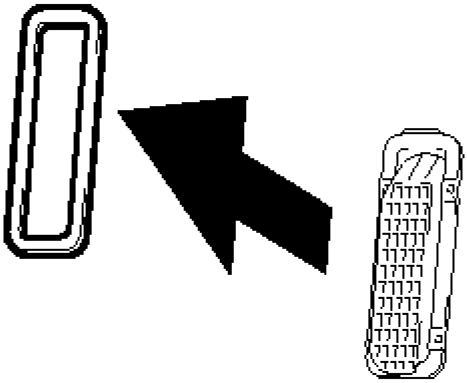

P

Fig. 137: Removing Air Intake Seal

Courtesy of TOYOTA MOTOR SALES, U.S.A., INC.

7. **REMOVE REAR SIDE SEATBACK COVER SUB-ASSEMBLY LH**
    a. Remove the rear side seatback cover sub-assembly LH from the rear side seatback pad LH.

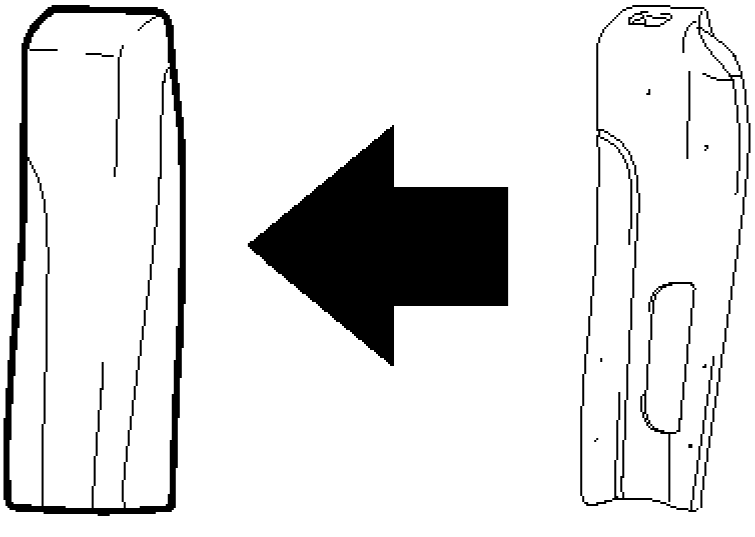

Fig. 138: Removing Rear Side Seatback Cover Sub-Assembly LH
Courtesy of TOYOTA MOTOR SALES, U.S.A., INC.

8. **REMOVE REAR SEAT SHOULDER BELT GUIDE RH**

    HINT:

    Use the same procedure as for the LH side.

9. **REMOVE REAR SEAT AIRBAG ASSEMBLY RH**

    HINT:

    Use the same procedure as for the LH side. Refer to **REMOVAL - Step 9** .

10. **REMOVE REAR SIDE SEATBACK COVER SUB-ASSEMBLY RH**
    a. Remove the rear side seatback cover sub-assembly RH from the rear side seatback pad RH.

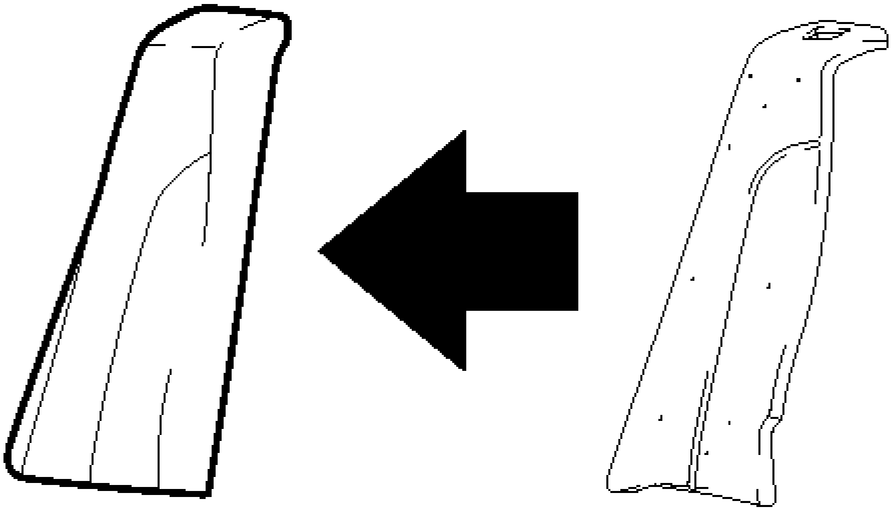

Fig. 139: Removing Rear Side Seatback Cover Sub-Assembly RH
Courtesy of TOYOTA MOTOR SALES, U.S.A., INC.

11. **REMOVE REAR SEAT CENTER SHOULDER BELT GUIDE**
    a. Remove the 2 screws.

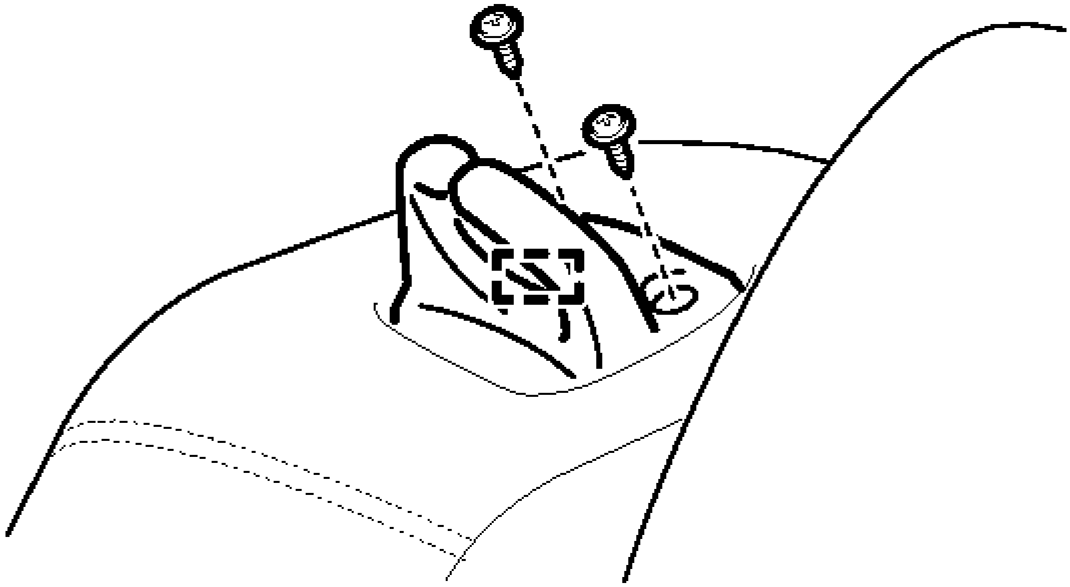

Fig. 140: Identifying Rear Seat Center Shoulder Belt Guide Fasteners

Courtesy of TOYOTA MOTOR SALES, U.S.A., INC.

b. Disengage the guide and remove the rear seat center shoulder belt guide from the rear seatback assembly LH.

12. **REMOVE REAR SEATBACK CARPET LH**

    a. Using a clip remover, remove the 3 clips.

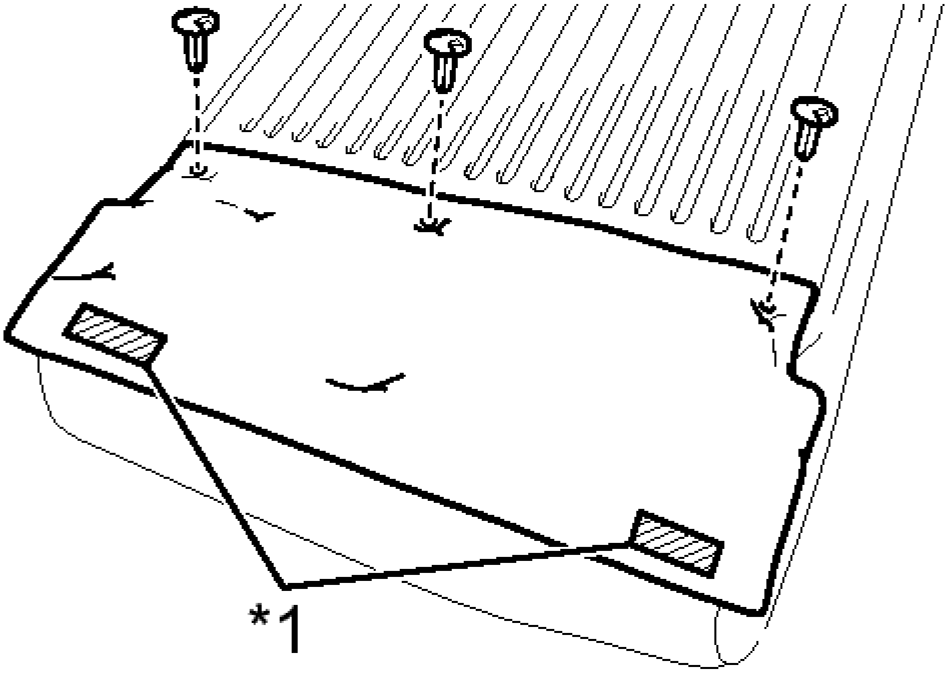

Fig. 141: Locating Rear Seatback Carpet Clips And Fasteners LH
Courtesy of TOYOTA MOTOR SALES, U.S.A., INC.

b. Disengage the 2 fasteners and remove the rear seatback carpet LH.

TEXT IN ILLUSTRATION

*1	Fastener

13. **REMOVE REAR SEATBACK FRAME SUB-ASSEMBLY LH**

    a. Disengage the 20 claws and remove the rear seatback frame sub-assembly LH from the separate type rear seatback cover with pad LH.

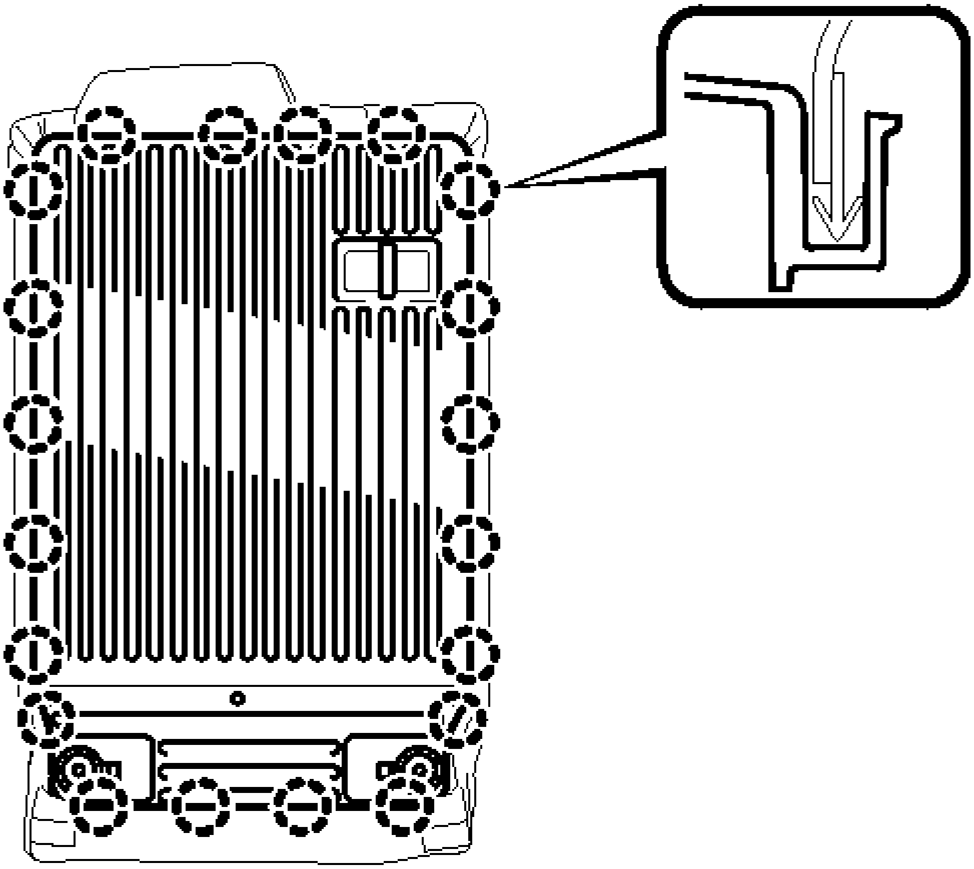

P

Fig. 142: Identifying Rear Seatback Frame Sub-Assembly Claws LH
Courtesy of TOYOTA MOTOR SALES, U.S.A., INC.

14. **REMOVE SEPARATE TYPE REAR SEATBACK COVER LH**
    a. Remove the 10 hog rings and the separate type rear seatback cover LH from the separate type rear seatback pad LH.

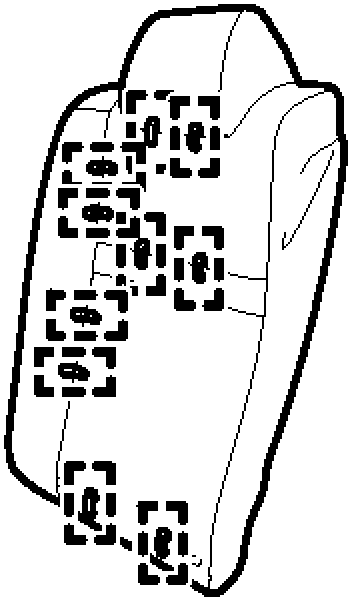

Fig. 143: Identifying Separate Type Rear Seatback Cover Hog Rings LH
Courtesy of TOYOTA MOTOR SALES, U.S.A., INC.

15. **REMOVE REAR SEAT CENTER ARMREST ASSEMBLY**
    a. Remove the bolt and washer.

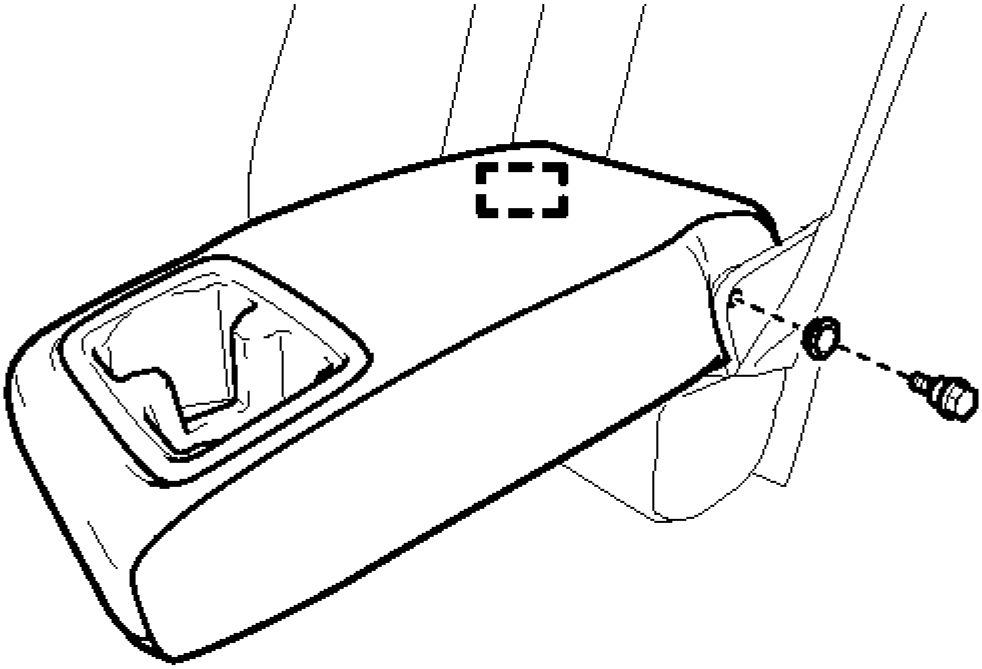

Fig. 144: Identifying Rear Seat Center Armrest Assembly With Fastener

Courtesy of TOYOTA MOTOR SALES, U.S.A., INC.

b. Disengage the guide and remove the rear seat center armrest assembly.

16. **REMOVE REAR SEATBACK CARPET RH**

a. Using a clip remover, remove the 5 clips.

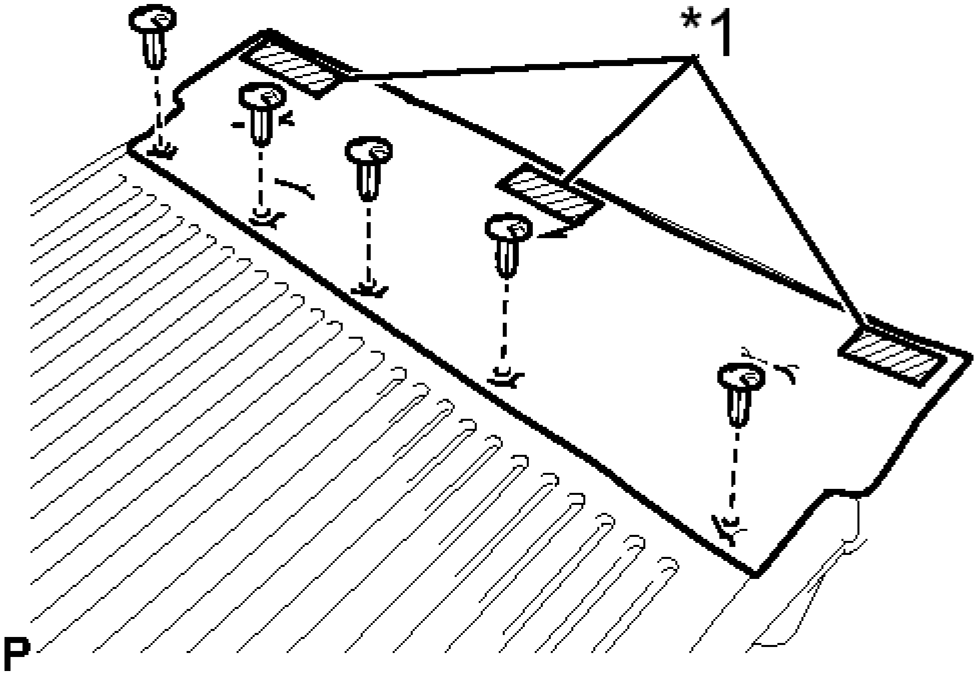

Fig. 145: Identifying Rear Seatback Carpet Fasteners RH
Courtesy of TOYOTA MOTOR SALES, U.S.A., INC.

b. Disengage the 3 fasteners and remove the rear seatback carpet RH.

TEXT IN ILLUSTRATION

*1	Fastener

17. **REMOVE REAR SEATBACK FRAME SUB-ASSEMBLY RH**

a. Disengage the 20 claws and remove the rear seatback frame sub-assembly RH from the separate type rear seatback cover with pad RH.

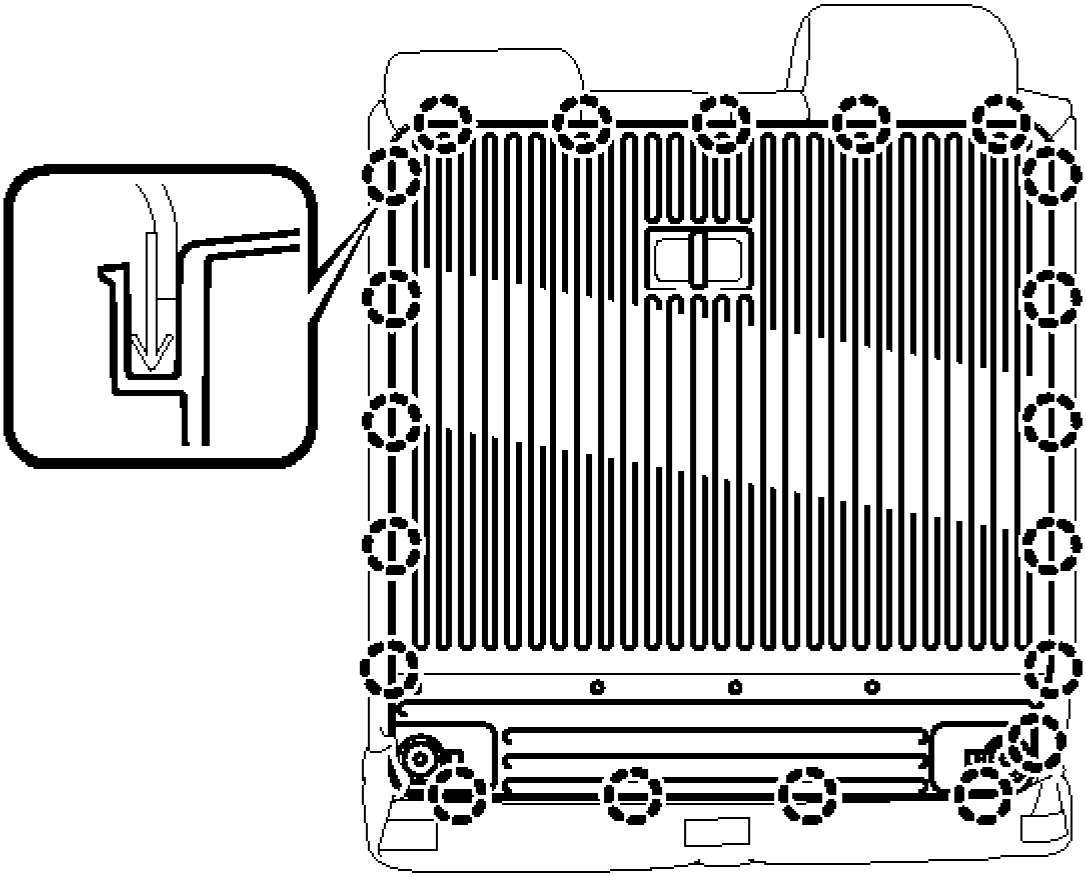

Fig. 146: Locating Rear Seatback Frame Sub-Assembly Claws RH
Courtesy of TOYOTA MOTOR SALES, U.S.A., INC.

18. **REMOVE SEPARATE TYPE REAR SEATBACK COVER RH**
    a. Remove the 13 hog rings and separate type rear seatback cover RH from the separate type rear seatback pad RH.

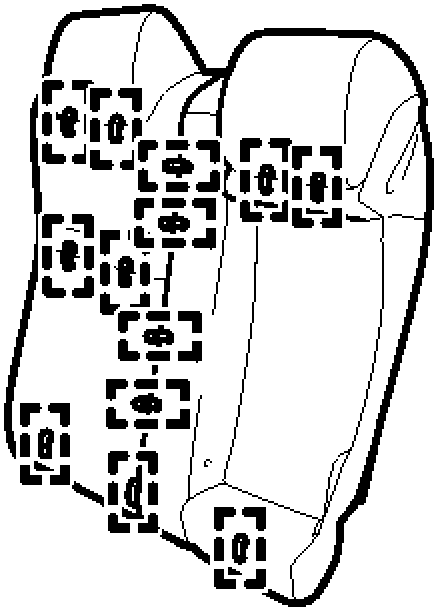

Fig. 147: Identifying Separate Type Rear Seatback Cover Hog Rings RH
Courtesy of TOYOTA MOTOR SALES, U.S.A., INC.

REASSEMBLY

REASSEMBLY

1. **INSTALL SEPARATE TYPE REAR SEATBACK COVER LH**
    a. Using hog ring pliers, install the separate type rear seatback cover LH to the separate type rear seatback pad LH with 10 new hog rings.

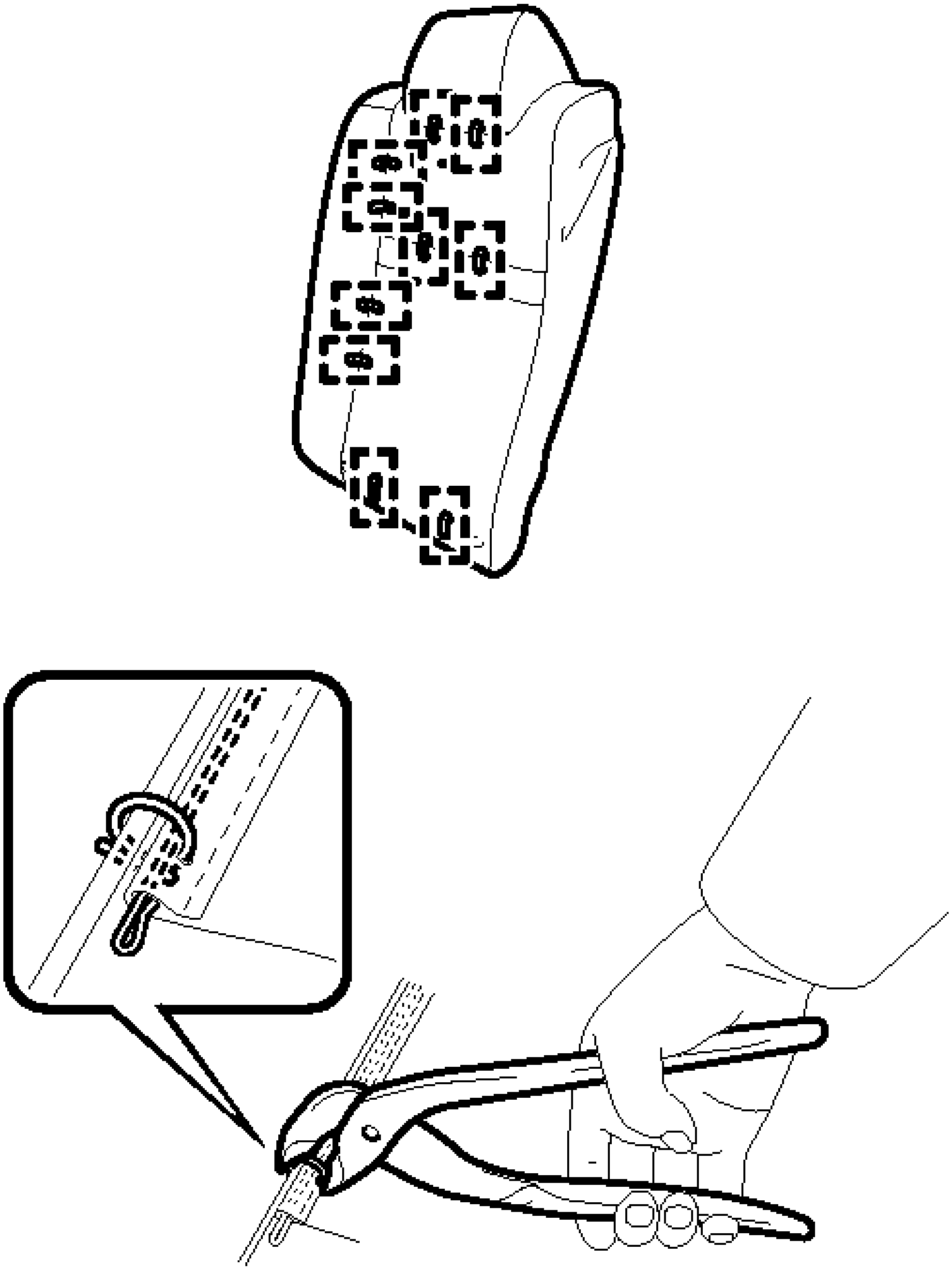

Fig. 148: Installing Separate Type Rear Seatback Cover LH
Courtesy of TOYOTA MOTOR SALES, U.S.A., INC.

NOTE:

- **Be careful not to damage the cover.**

- **When installing the hog rings, take care to minimize wrinkles as much as possible.**

2. **INSTALL REAR SEATBACK FRAME SUB-ASSEMBLY LH**
    a. Engage the 20 claws to install the rear seatback frame sub-assembly LH to the separate type rear seatback cover with pad LH.

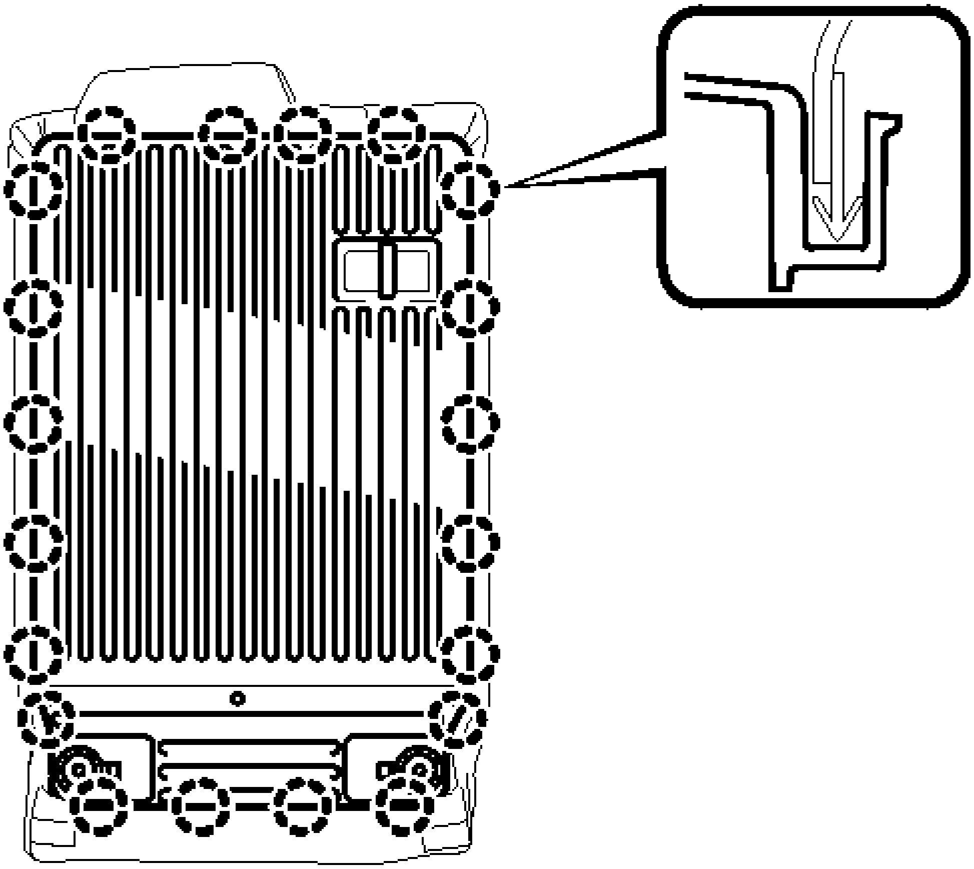

Fig. 149: Identifying Rear Seatback Frame Sub-Assembly Claws LH
Courtesy of TOYOTA MOTOR SALES, U.S.A., INC.

3. **INSTALL REAR SEATBACK CARPET LH**
    a. Engage the 2 fasteners.

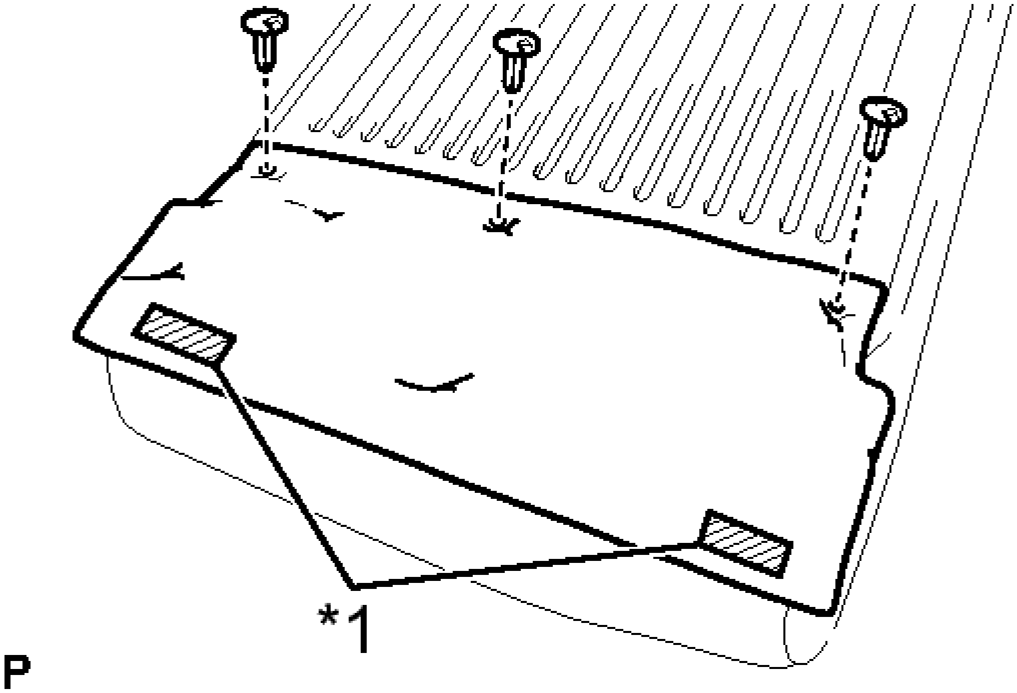

Fig. 150: Locating Rear Seatback Carpet Clips And Fasteners LH
Courtesy of TOYOTA MOTOR SALES, U.S.A., INC.

TEXT IN ILLUSTRATION

*1	Fastener

b. Install the rear seatback carpet with the 3 clips.

4. **INSTALL REAR SEAT CENTER SHOULDER BELT GUIDE**

   a. Engage the guide.

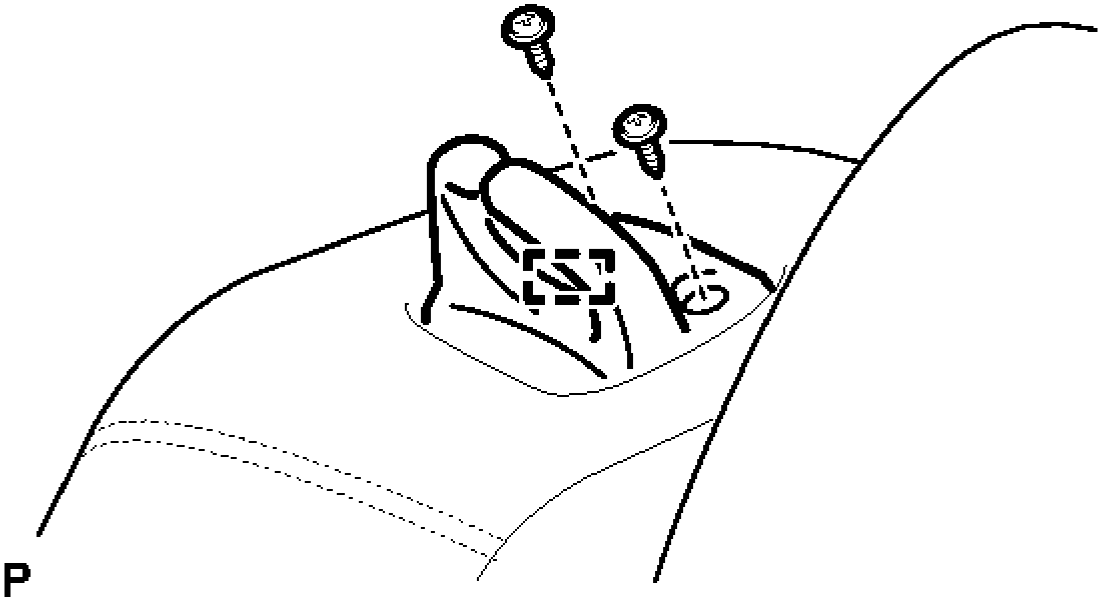

Fig. 151: Identifying Rear Seat Center Shoulder Belt Guide Fasteners
Courtesy of TOYOTA MOTOR SALES, U.S.A., INC.

b. Install the rear seat center shoulder belt guide to the rear seatback assembly LH with the 2 screws.

5. **INSTALL SEPARATE TYPE REAR SEATBACK COVER RH**

   a. Using hog ring pliers, install the separate type rear seatback cover RH to the separate type rear seatback pad RH with 13 new hog rings.

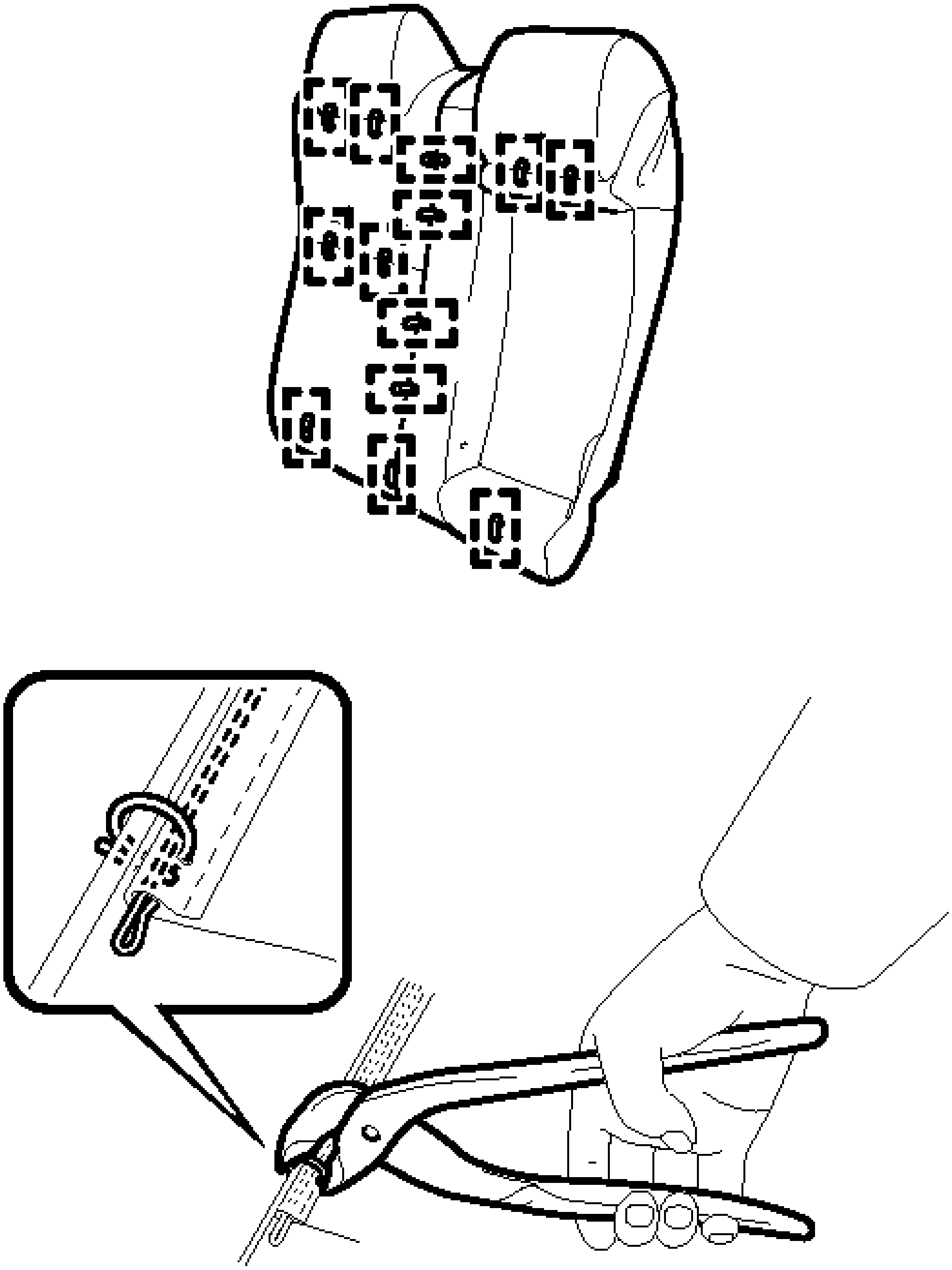

P

Fig. 152: Installing Separate Type Rear Seatback Cover RH
Courtesy of TOYOTA MOTOR SALES, U.S.A., INC.

NOTE:

- Be careful not to damage the cover.

- **When installing the hog rings, take care to minimize wrinkles as much as possible.**

6. **INSTALL REAR SEATBACK FRAME SUB-ASSEMBLY RH**
   a. Engage the 20 claws to install the rear seatback frame sub-assembly RH to the separate type rear seatback cover with pad RH.

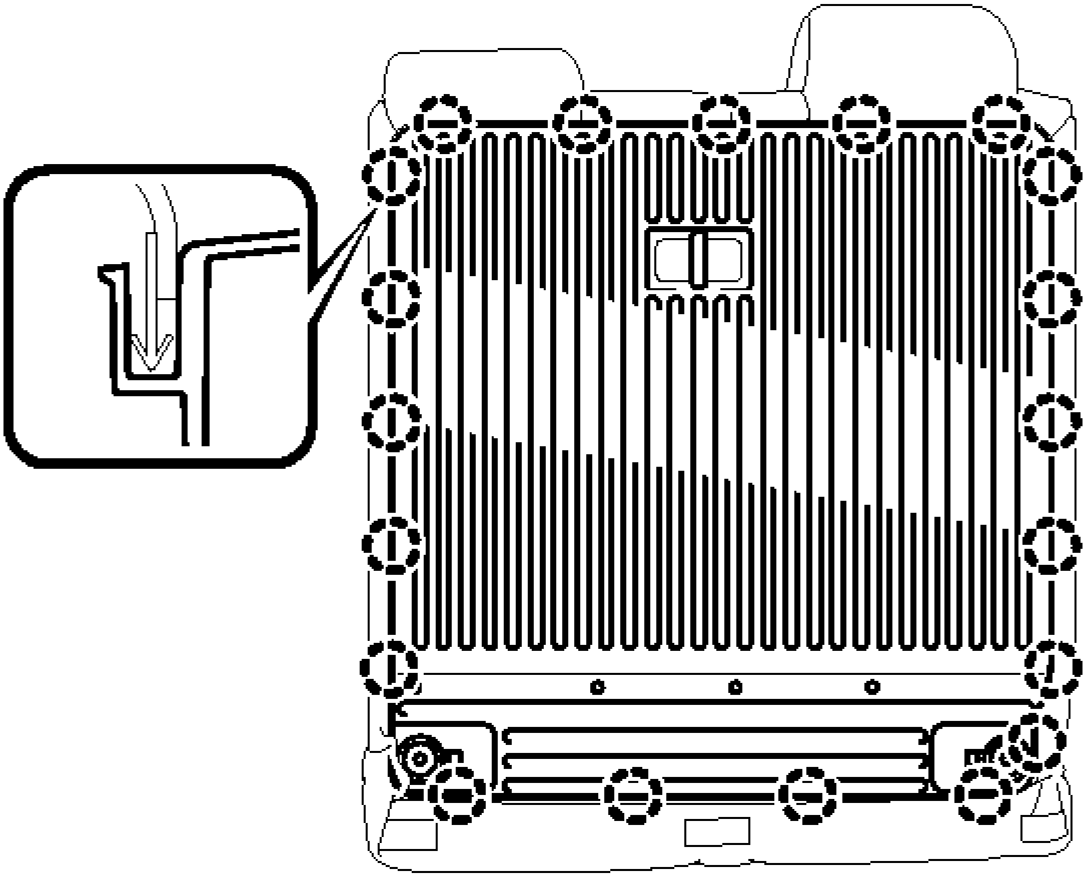

P

Fig. 153: Locating Rear Seatback Frame Sub-Assembly Claws RH
Courtesy of TOYOTA MOTOR SALES, U.S.A., INC.

7. **INSTALL REAR SEATBACK CARPET RH**
   a. Engage the 3 fasteners.

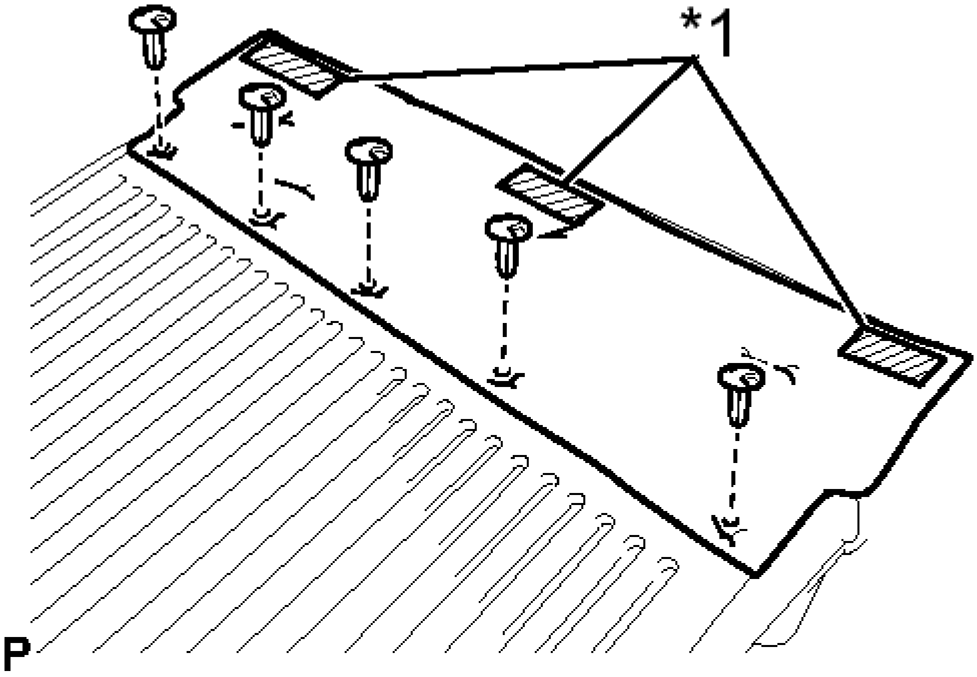

Fig. 154: Identifying Rear Seatback Carpet Fasteners RH
Courtesy of TOYOTA MOTOR SALES, U.S.A., INC.

TEXT IN ILLUSTRATION

*1	Fastener

b. Install the rear seatback carpet RH with the 5 clips.

8. **INSTALL REAR SEAT CENTER ARMREST ASSEMBLY**
    a. Engage the guide.

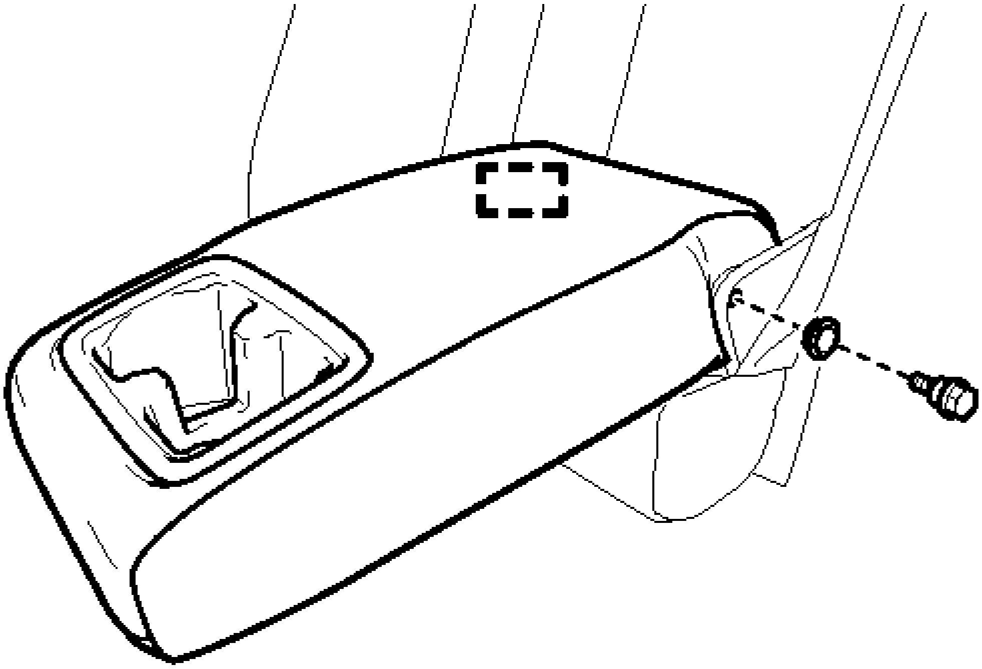

Fig. 155: Identifying Rear Seat Center Armrest Assembly With Fastener
Courtesy of TOYOTA MOTOR SALES, U.S.A., INC.

b. Install the rear seat center armrest assembly with the bolt and washer.

9. **INSTALL REAR SIDE SEATBACK COVER SUB-ASSEMBLY LH**
    a. Install the rear side seatback cover sub-assembly LH to the rear side seatback pad LH.

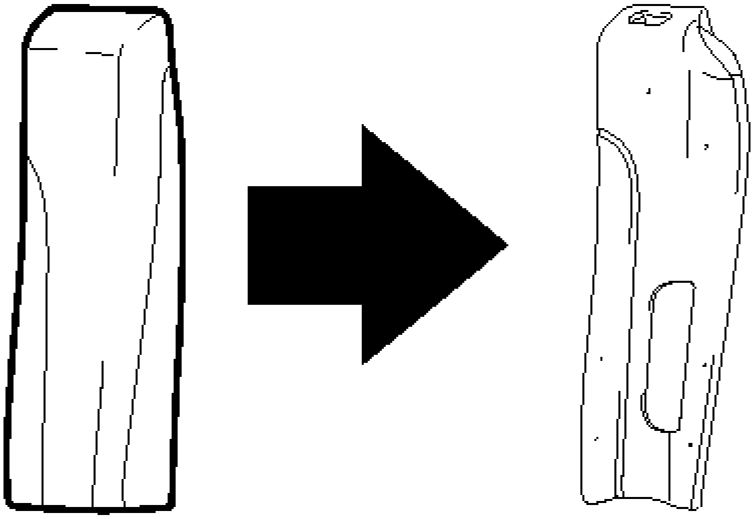

Fig. 156: Installing Rear Side Seatback Cover Sub-Assembly LH
Courtesy of TOYOTA MOTOR SALES, U.S.A., INC.

10. **INSTALL AIR INTAKE SEAL**
    a. Clean the installation surface of the rear No. 2 seat cover bezel.
    b. Install a new air intake seal to the rear No. 2 seat cover bezel.

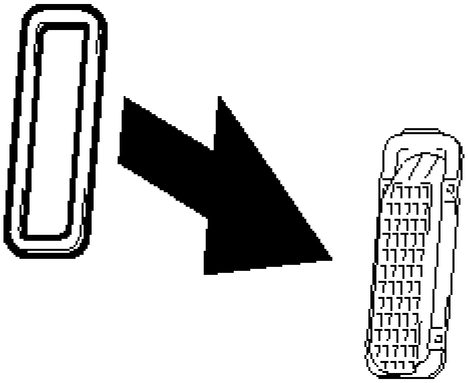

P

Fig. 157: Installing Air Intake Seal
Courtesy of TOYOTA MOTOR SALES, U.S.A., INC.

11. **INSTALL REAR NO. 2 SEAT COVER BEZEL**
    a. Install the rear No. 2 seat cover bezel to the rear side seatback frame sub-assembly LH with the 4 screws.

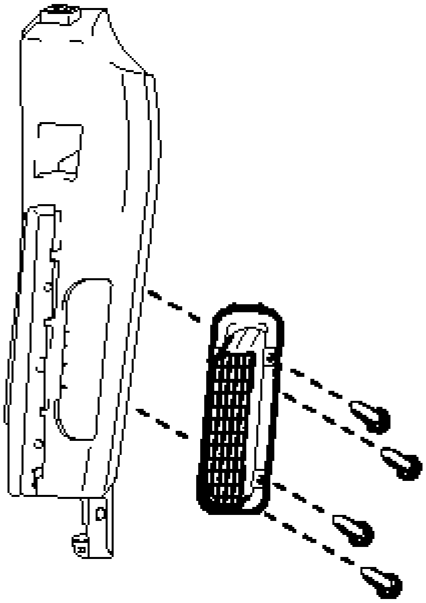

Fig. 158: Identifying Rear No. 2 Seat Cover Bezel Screws
Courtesy of TOYOTA MOTOR SALES, U.S.A., INC.

12. **INSTALL REAR SEAT AIRBAG ASSEMBLY LH** . Refer to **INSTALLATION - Step 1**
13. **INSTALL REAR SEAT SHOULDER BELT GUIDE LH**
    a. Engage the guide.

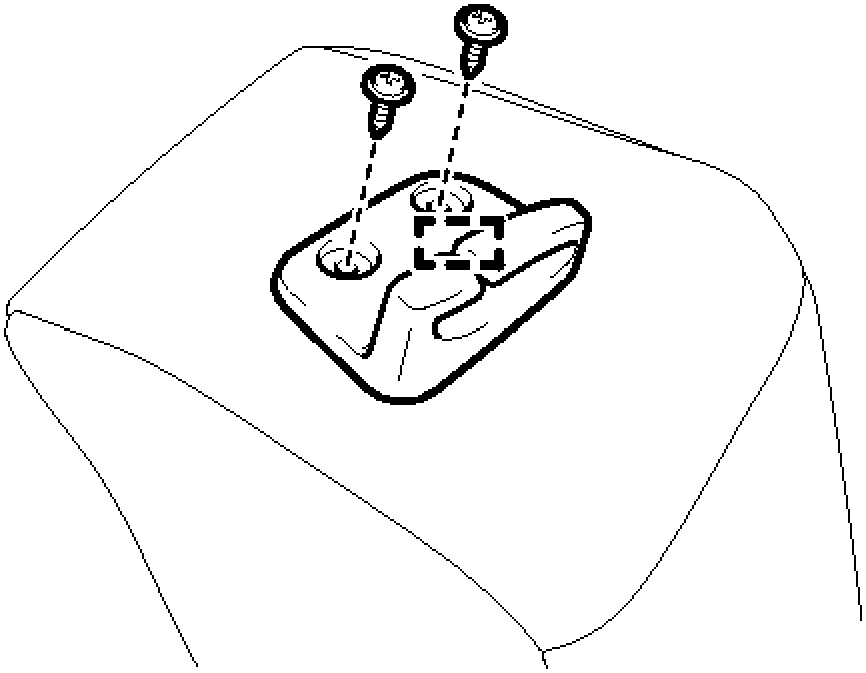

Fig. 159: Identifying Rear Seat Shoulder Belt Guide Fasteners LH
Courtesy of TOYOTA MOTOR SALES, U.S.A., INC.

b. Install the rear seat shoulder belt guide LH to the rear side seatback assembly LH with the 2 screws.

14. **INSTALL REAR SIDE SEATBACK COVER SUB-ASSEMBLY RH**
    a. Install the rear side seatback cover sub-assembly RH to the rear side seatback pad RH.

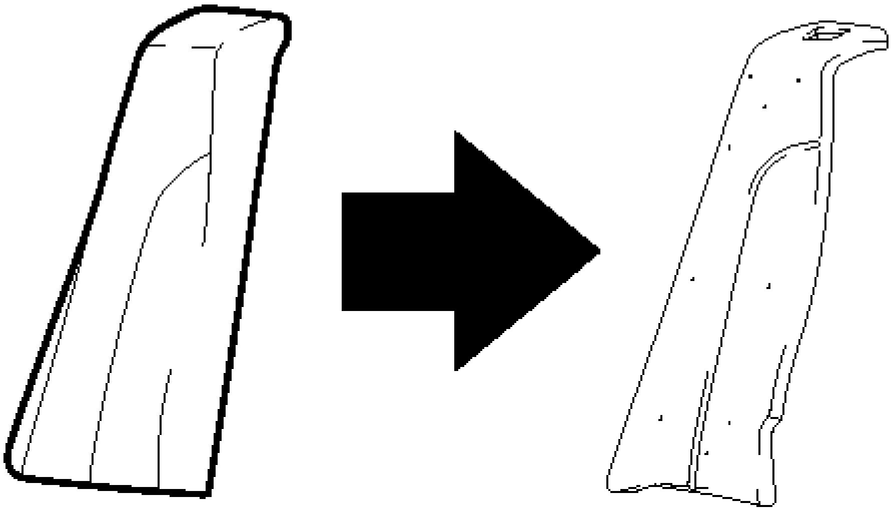

Fig. 160: Installing Rear Side Seatback Cover Sub-Assembly RH
Courtesy of TOYOTA MOTOR SALES, U.S.A., INC.

15. **INSTALL REAR SEAT AIRBAG ASSEMBLY RH**

    HINT:

    Use the same procedure as for the LH side. Refer to **INSTALLATION - Step 1** .

16. **INSTALL REAR SEAT SHOULDER BELT GUIDE RH**

    HINT:

    Use the same procedure as for the LH side.

17. **INSTALL BENCH TYPE REAR SEAT CUSHION COVER**
    a. Engage the 4 fasteners to install the bench type rear seat cushion cover to the bench type rear seat cushion pad.
    b. Using hog ring pliers, install 12 new hog rings.

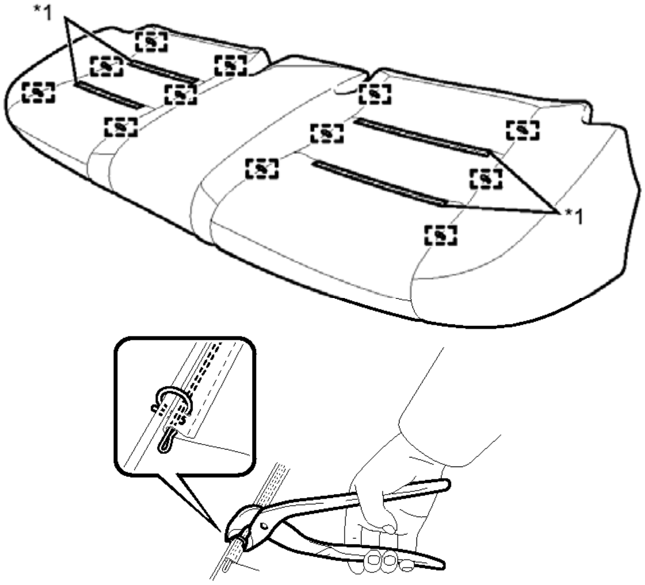

P

Fig. 161: Installing Bench Type Rear Seat Cushion Cover Fasteners And Hog Rings
Courtesy of TOYOTA MOTOR SALES, U.S.A., INC.

TEXT IN ILLUSTRATION

*1	Fastener	-	-

18. **INSTALL REAR SEAT CUSHION FRAME SUB-ASSEMBLY**
    a. Engage the 16 hooks to install the rear seat cushion frame sub-assembly.

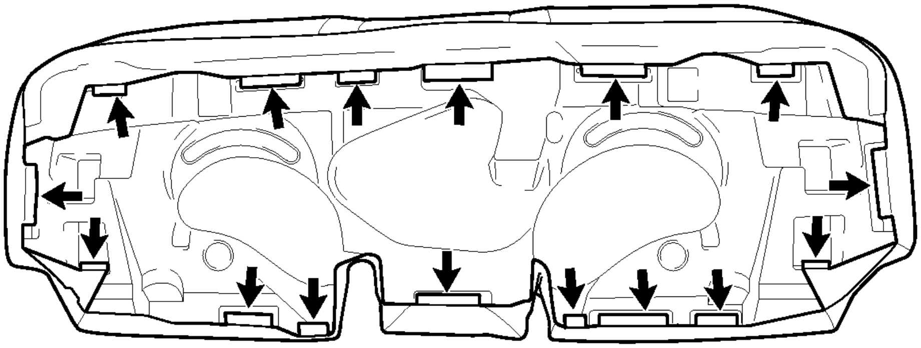

P

Fig. 162: Identifying Rear Seat Cushion Frame Sub-Assembly Hooks
Courtesy of TOYOTA MOTOR SALES, U.S.A., INC.

INSTALLATION

INSTALLATION

1. **INSTALL REAR SIDE SEATBACK ASSEMBLY LH**

   a. Engage the hook to install the rear side seatback assembly LH.
   b. Install the 2 bolts.

      Torque: 18 N*m (184 kgf*cm, 13 ft.*lbf)

   c. Connect the connector.
   d. Connect the rear seat outer belt to the rear seat shoulder belt guide LH.

2. **INSTALL REAR SIDE SEATBACK ASSEMBLY RH**
   a. Engage the hook to install the rear side seatback assembly RH.
   b. Install the 2 bolts.

      Torque: 18 N*m (184 kgf*cm, 13 ft.*lbf)

   c. Connect the connector.
   d. Connect the rear seat outer belt to the rear seat shoulder belt guide RH.
3. **INSTALL REAR SEATBACK ASSEMBLY LH**
   a. Place the rear seatback assembly LH in the cabin.

      NOTE: Be careful not to damage the vehicle body.

   b. Install the rear seatback assembly LH with the 2 bolts.

      Torque: 18 N*m (184 kgf*cm, 13 ft.*lbf)

   c. Connect the rear seat inner with center belt assembly LH to the rear seat center shoulder belt guide.
4. **INSTALL NO. 2 ROOM PARTITION COVER**
   a. Engage the guide and claw to install the No. 2 room partition cover.

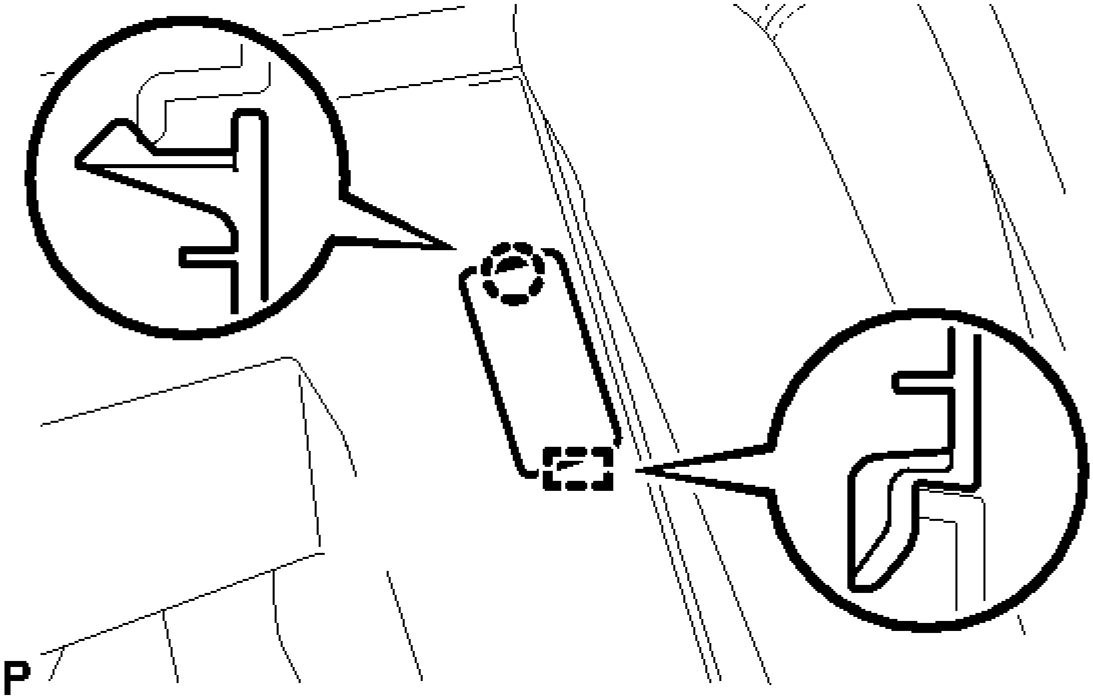

Fig. 163: Identifying No. 2 Room Partition Cover Claw And Guide
Courtesy of TOYOTA MOTOR SALES, U.S.A., INC.

5. **INSTALL REAR SEATBACK ASSEMBLY RH**
   a. Place the rear seatback assembly RH in the cabin.

      NOTE: Be careful not to damage the vehicle body.

   b. Install the rear seatback assembly RH with the 2 bolts.

      Torque: 18 N*m (184 kgf*cm, 13 ft.*lbf)

6. **INSTALL REAR SEAT CUSHION LOCK HOOK**
   a. Engage the claw to install a new rear seat cushion lock hook.

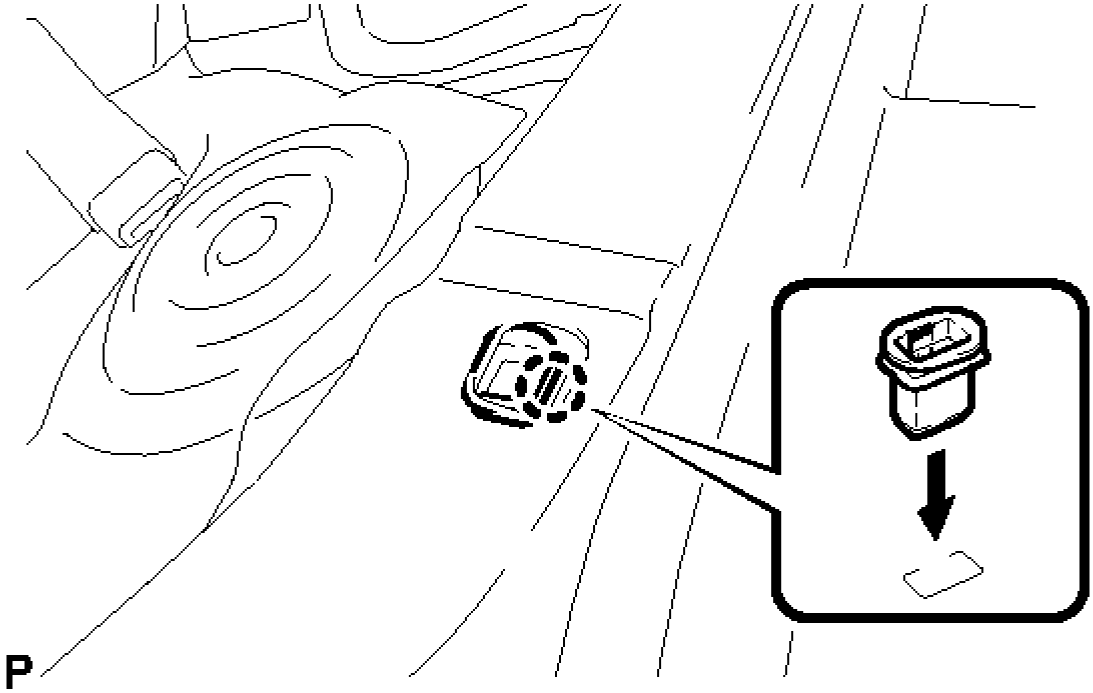

Fig. 164: Installing Rear Seat Cushion Lock Hook
Courtesy of TOYOTA MOTOR SALES, U.S.A., INC.

NOTE: Rear seat cushion lock hooks must not be reused.

HINT:

Use the same procedure for the RH side and the LH side.

7. **INSTALL REAR SEAT CUSHION ASSEMBLY**
   1. Place the rear seat cushion assembly in the cabin.

      NOTE: Be careful not to damage the vehicle body.

   2. Engage the 2 hooks of the seat cushion to the vehicle body as shown in the illustration.

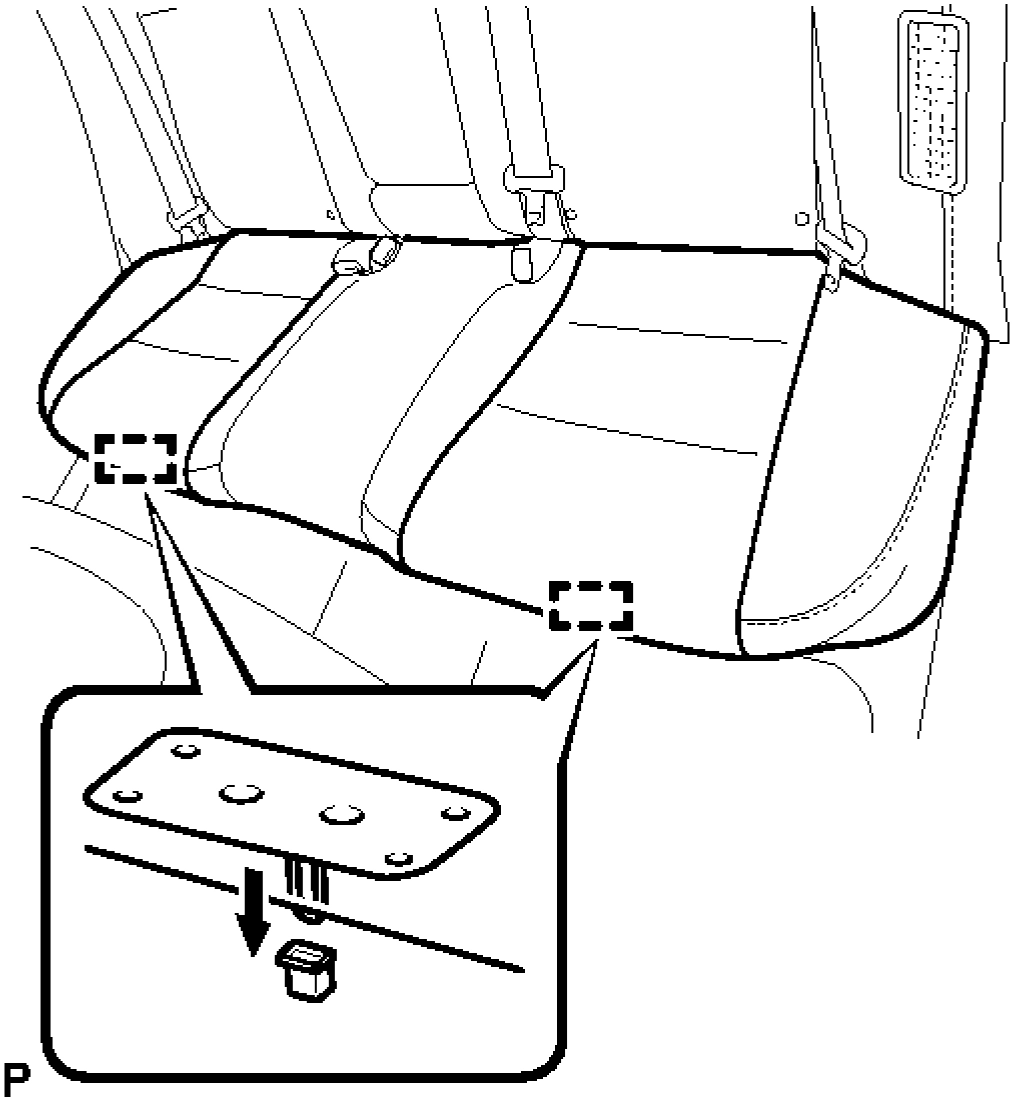

Fig. 165: Installing Rear Seat Cushion Assembly
Courtesy of TOYOTA MOTOR SALES, U.S.A., INC.

c. Confirm that the seat cushion is firmly installed.

NOTE: **When installing the seat cushion, make sure that the seat belt buckles are not under the seat cushion.**

8. **CONNECT CABLE TO AUXILIARY BATTERY NEGATIVE TERMINAL**

NOTE: **When disconnecting the cable, some systems need to be initialized after the cable is reconnected. Refer to INITIALIZATION .**

9. **INSTALL LUGGAGE TRIM SERVICE HOLE COVER** . Refer to **INSTALLATION - Step 3**
10. **INSPECT SRS WARNING LIGHT**

for Separate Type Yaw Rate Sensor: Refer to **DIAGNOSIS SYSTEM**

for Built-in Type Yaw Rate Sensor: Refer to **DIAGNOSIS SYSTEM**

POWER SEAT SWITCH

COMPONENTS

ILLUSTRATION

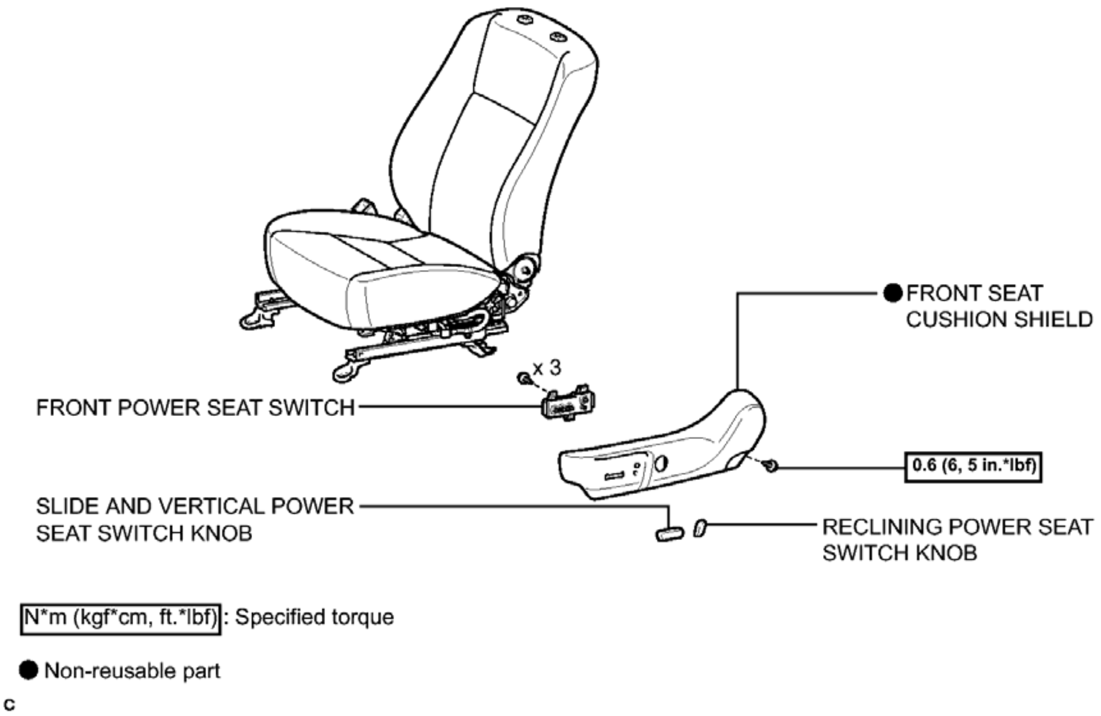
● FRONT SEAT
CUSHION SHIELD
x 3
FRONT POWER SEAT SWITCH
0.6 (6, 5 in.*lbf)
SLIDE AND VERTICAL POWER
SEAT SWITCH KNOB
RECLINING POWER SEAT
SWITCH KNOB
N*m (kgf*cm, ft.*lbf): Specified torque
● Non-reusable part
c

Fig. 166: Identifying Power Seat Switch Replacement Components With Torque Specifications
Courtesy of TOYOTA MOTOR SALES, U.S.A., INC.

REMOVAL

REMOVAL

1. **REMOVE FRONT SEAT ASSEMBLY**

   Refer to **REMOVAL**

2. **REMOVE SLIDE AND VERTICAL POWER SEAT SWITCH KNOB** See step 2
3. **REMOVE RECLINING POWER SEAT SWITCH KNOB** See step 3
4. **DISCONNECT SEPARATE TYPE FRONT SEATBACK COVER** See step 4
5. **REMOVE FRONT SEAT CUSHION SHIELD** See step 5

6. **REMOVE FRONT POWER SEAT SWITCH**
    a. Remove the 3 screws and front power seat switch from the front seat cushion shield.

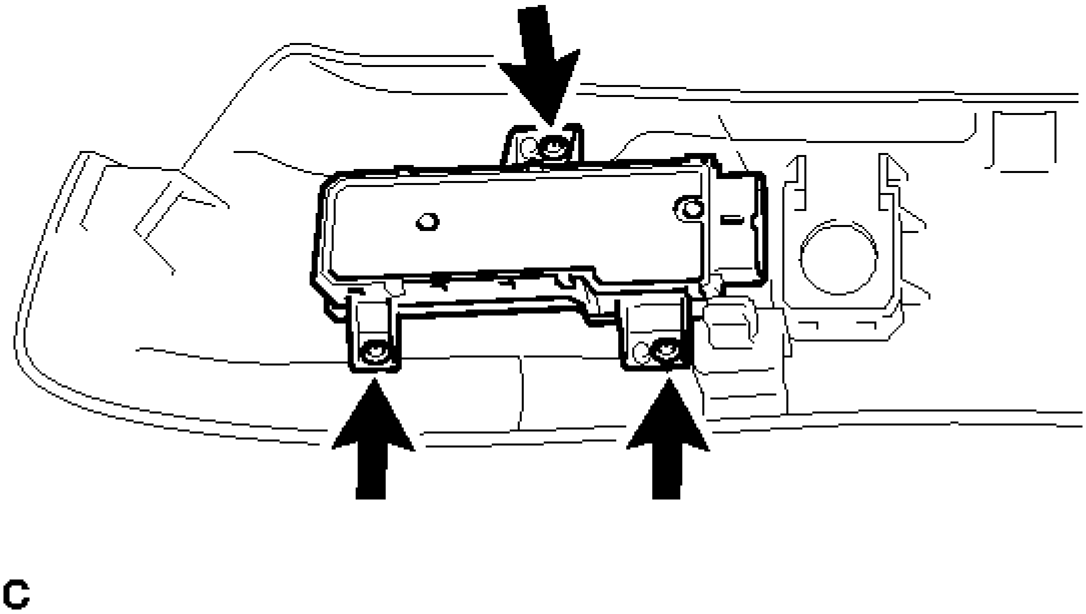

Fig. 167: Identifying Front Power Seat Switch Fasteners
Courtesy of TOYOTA MOTOR SALES, U.S.A., INC.

INSPECTION

INSPECTION

1. **INSPECT FRONT POWER SEAT SWITCH LH**

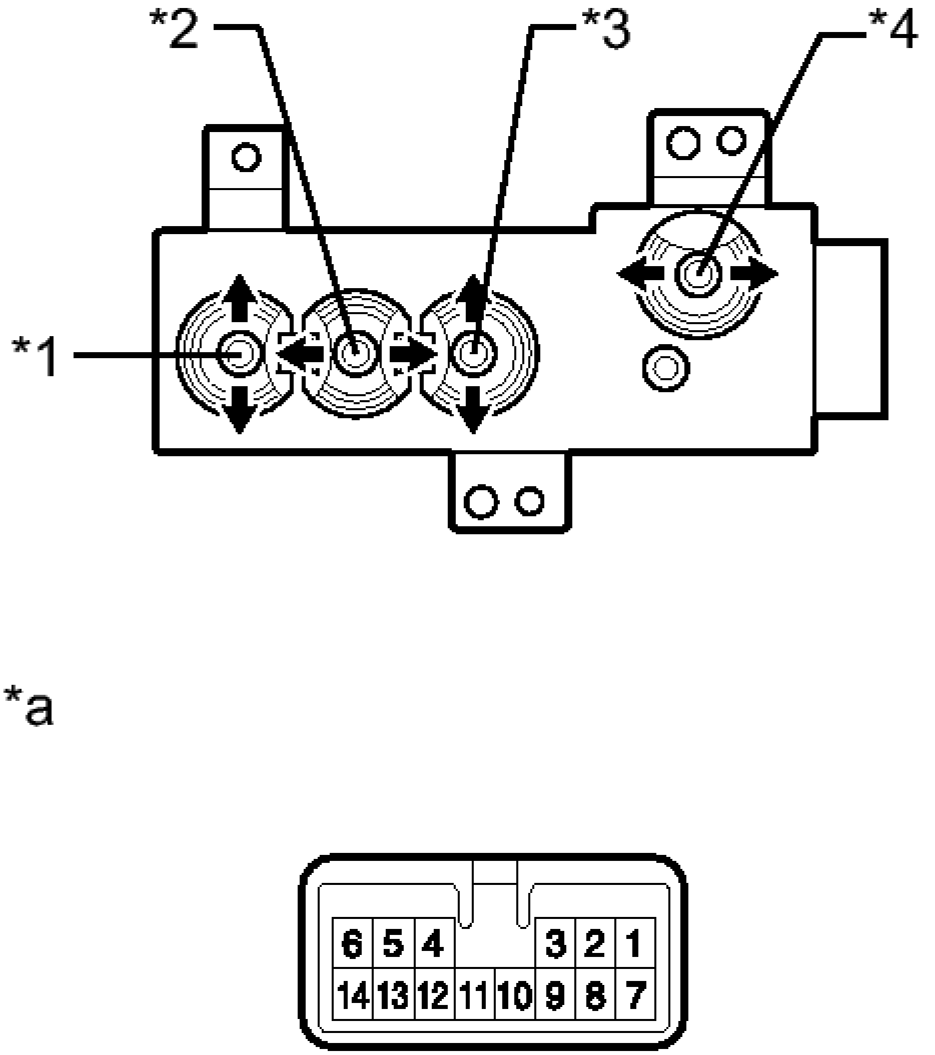
*2
*3
*4
*1
*a
6 5 4 3 2 1
14 13 12 11 10 9 8 7

T

Fig. 168: Inspecting Front Power Seat Switch LH
Courtesy of TOYOTA MOTOR SALES, U.S.A., INC.

a. Measure the resistance according to the value(s) in the table below.

TEXT IN ILLUSTRATION

*1	Front Vertical Switch
*2	Slide Switch
*3	Lifter Switch
*4	Reclining Switch
*a	Component without harness connected (Front Power Seat Switch LH)

Standard Resistance

SLIDE SWITCH

Tester Connection	Switch Condition	Specified Condition
5 - 7 5 - 8	Front	Below 1 ohms
2 - 11 2 - 12		
5 - 11 5 - 12	Off	
2 - 11 2 - 12		
5 - 11 5 - 12	Rear	
2 - 7 2 - 8		

FRONT VERTICAL SWITCH

Tester Connection	Switch Condition	Specified Condition
1 - 7 1 - 8	Up	
6 - 11 6 - 12		
1 - 11		

1 - 12	Off	Below 1 ohms
6 - 11 6 - 12		
1 - 11 1 - 12	Down	
6 - 7 6 - 8		

LIFTER SWITCH

Tester Connection	Switch Condition	Specified Condition
3 - 7 3 - 8	Up	Below 1 ohms
4 - 11 4 - 12		
3 - 11 3 - 12	Off	
4 - 11 4 - 12		
3 - 11 3 - 12	Down	
4 - 7 4 - 8		

RECLINING SWITCH

Tester Connection	Switch Condition	Specified Condition
10 - 7 10 - 8	Front	Below 1 ohms
9 - 11 9 - 12		
10 - 11 10 - 12	Off	
9 - 11 9 - 12		
10 - 11 10 - 12	Rear	
9 - 7 9 - 8		

If the result is not as specified, replace the front power seat switch LH.

2. **INSPECT FRONT POWER SEAT SWITCH RH**

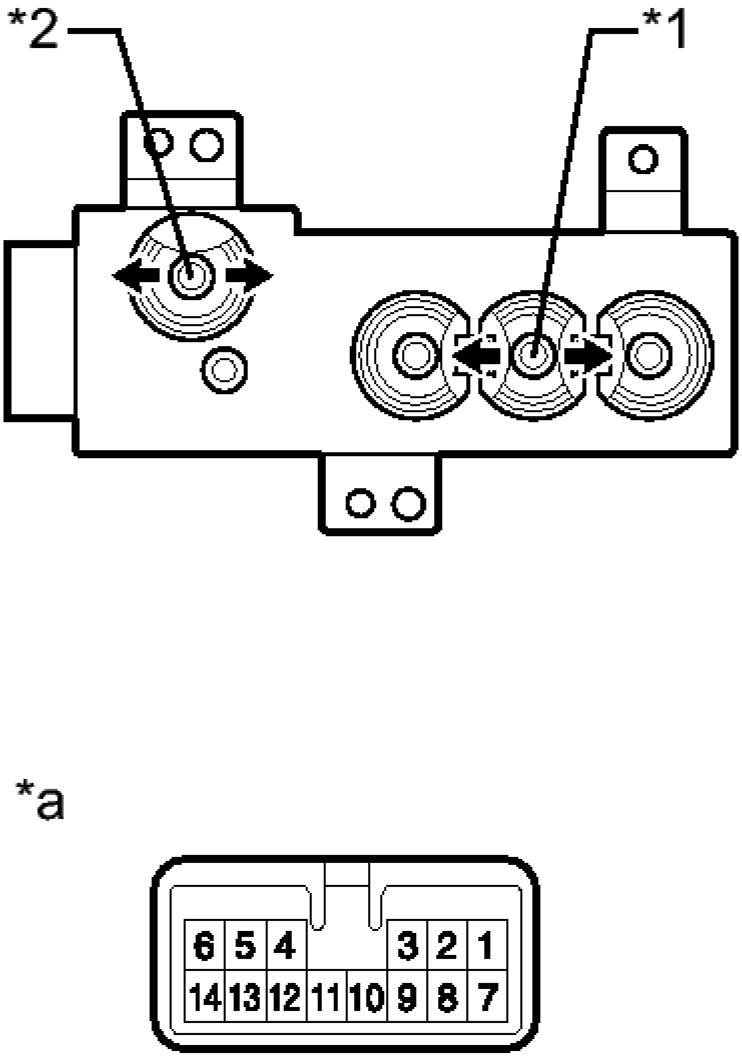
*2
*1
*a
6 5 4 3 2 1
14 13 12 11 10 9 8 7

T

Fig. 169: Inspecting Front Power Seat Switch RH
Courtesy of TOYOTA MOTOR SALES, U.S.A., INC.

a. Measure the resistance according to the value(s) in the table below.

TEXT IN ILLUSTRATION

*1	Slide Switch
*2	Reclining Switch
*a	Component without harness connected (Front Power Seat Switch RH)

Standard Resistance

SLIDE SWITCH

Tester Connection	Switch Condition	Specified Condition
2 - 13	Front	Below 1 ohms
5 - 10		
2 - 10	Off	
5 - 10		
2 - 10	Rear	
5 - 13		

RECLINING SWITCH

Tester Connection	Switch Condition	Specified Condition
11 - 13	Front	Below 1 ohms
12 - 10		
11 - 10	Off	
12 - 10		
11 - 10	Rear	
12 - 13		

If the result is not as specified, replace the front power seat switch RH.

INSTALLATION

INSTALLATION

1. **INSTALL FRONT POWER SEAT SWITCH**
    a. Install the front power seat switch to a new front seat cushion shield with the 3 screws.

2. **INSTALL FRONT SEAT CUSHION SHIELD** See step 30
3. **CONNECT SEPARATE TYPE FRONT SEATBACK COVER** See step 31
4. **INSTALL RECLINING POWER SEAT SWITCH KNOB** See step 32
5. **INSTALL SLIDE AND VERTICAL POWER SEAT SWITCH KNOB** See step 33
6. **INSTALL FRONT SEAT ASSEMBLY**

   Refer to **INSTALLATION**

LUMBAR SWITCH

COMPONENTS

ILLUSTRATION

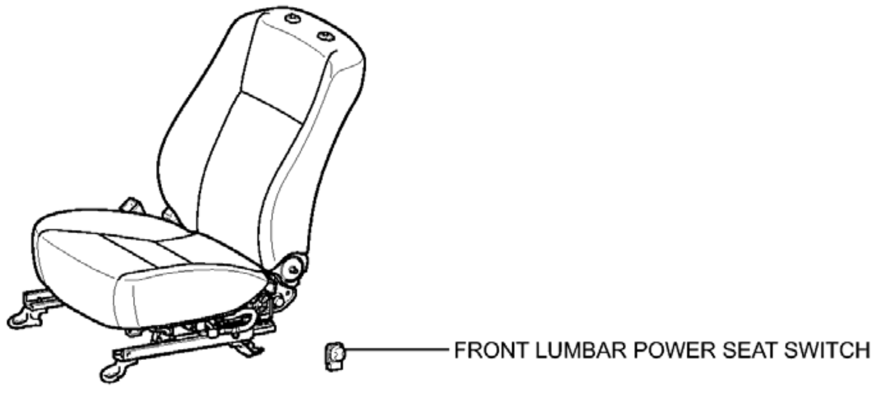

Fig. 170: Identifying Lumbar Switch Replacement Components
Courtesy of TOYOTA MOTOR SALES, U.S.A., INC.

REMOVAL

REMOVAL

1. **REMOVE FRONT POWER SEAT SWITCH**

   Refer to **REMOVAL**

2. **REMOVE FRONT LUMBAR POWER SEAT SWITCH**
   a. Disconnect the connector to remove the front lumbar power seat switch.

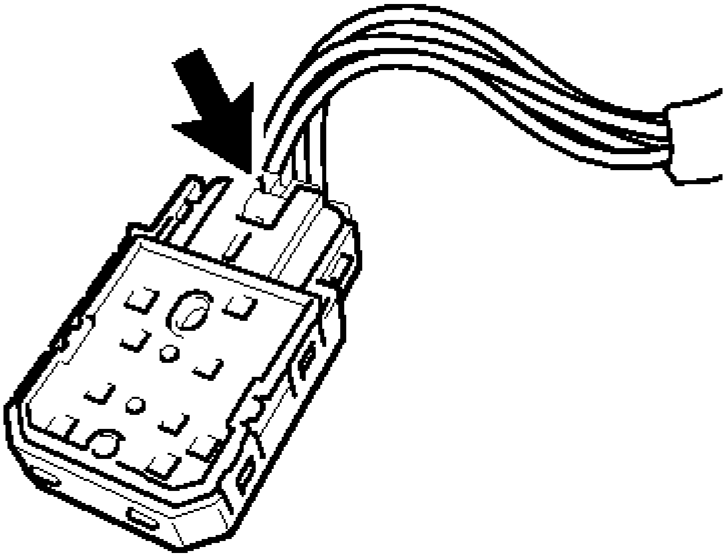

Fig. 171: Identifying Front Lumbar Power Seat Switch
Courtesy of TOYOTA MOTOR SALES, U.S.A., INC.

INSPECTION

INSPECTION

1. **INSPECT LUMBAR FRONT POWER SEAT SWITCH**

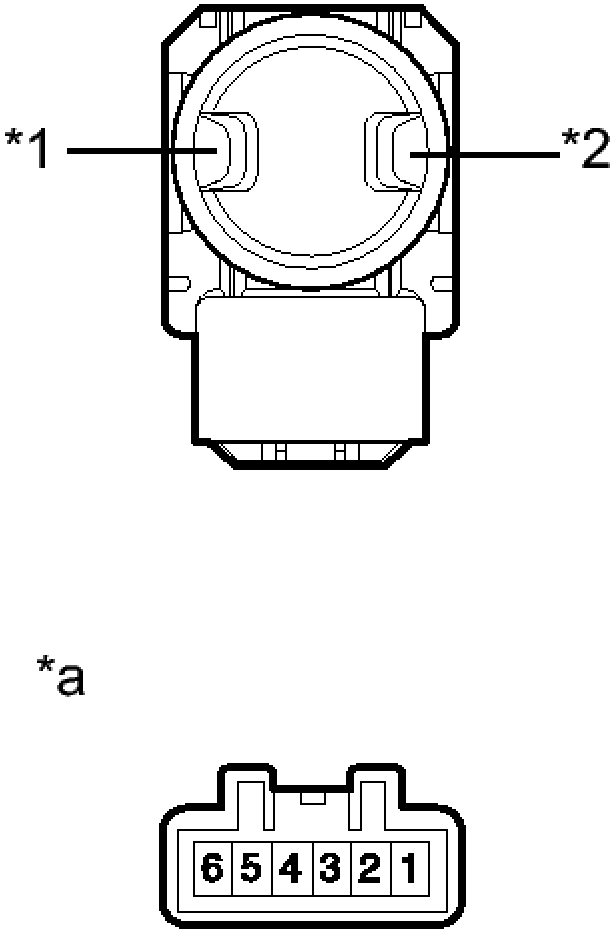

T

Fig. 172: Inspecting Lumbar Front Power Seat Switch
Courtesy of TOYOTA MOTOR SALES, U.S.A., INC.

a. Measure the resistance according to the value(s) in the table below.

TEXT IN ILLUSTRATION

*1	Hold Switch
*2	Release Switch
*a	Component without harness connected (Lumbar Front Power Seat Switch)

Standard Resistance

Tester Connection	Switch Condition	Specified Condition
3 - 5	Hold	Below 1 ohms
1 - 2		
3 - 2	Off	
1 - 2		
3 - 2	Release	
1 - 5		

If the result is not as specified, replace the lumbar front power seat switch.

INSTALLATION

INSTALLATION

1. **INSTALL FRONT LUMBAR POWER SEAT SWITCH**
    a. Connect the connector to install the front lumbar power seat switch.
2. **INSTALL FRONT POWER SEAT SWITCH**

    Refer to **INSTALLATION**

LUMBAR SUPPORT ADJUSTER ASSEMBLY (FOR POWER SEAT)

COMPONENTS

ILLUSTRATION

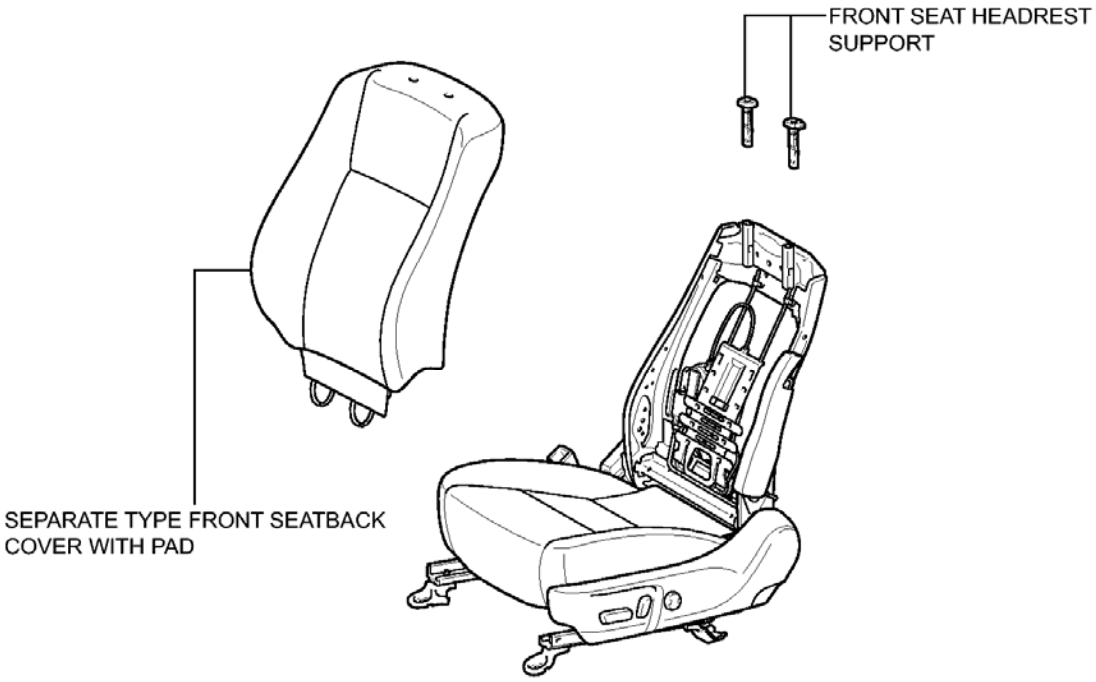
FRONT SEAT HEADREST SUPPORT
SEPARATE TYPE FRONT SEATBACK COVER WITH PAD
c

Fig. 173: Identifying Lumbar Support Adjuster Assembly Replacement Components (For Power Seat) (1 Of 2)
Courtesy of TOYOTA MOTOR SALES, U.S.A., INC.

ILLUSTRATION

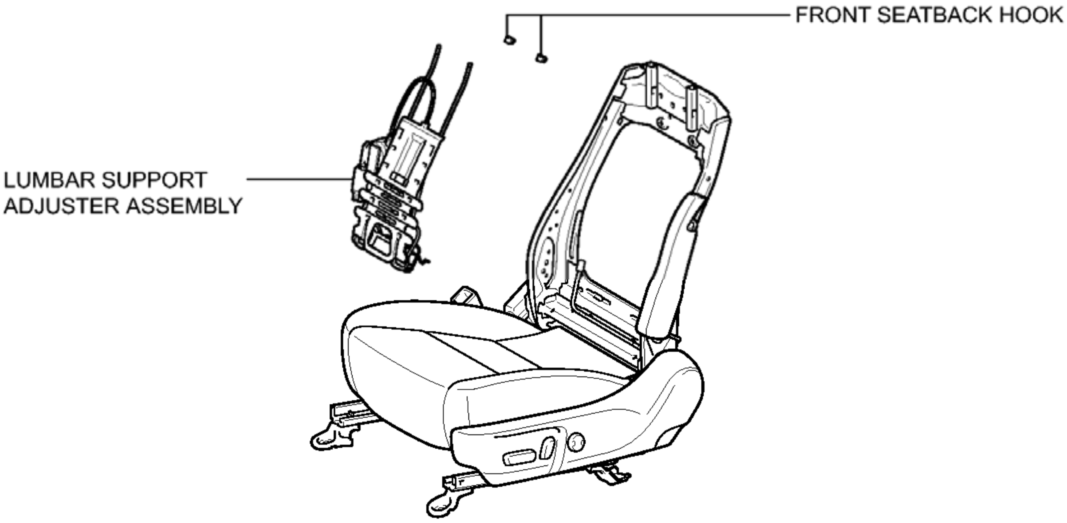
FRONT SEATBACK HOOK
LUMBAR SUPPORT ADJUSTER ASSEMBLY
c

Fig. 174: Identifying Lumbar Support Adjuster Assembly Replacement Components (For Power Seat) (2 Of 2)
Courtesy of TOYOTA MOTOR SALES, U.S.A., INC.

REMOVAL

REMOVAL

1. **REMOVE FRONT SEAT ASSEMBLY LH**

   Refer to **REMOVAL**

2. **DISCONNECT SEPARATE TYPE FRONT SEATBACK COVER** See step 4
3. **DISCONNECT CONNECTORS** See step 3
4. **REMOVE SEPARATE TYPE FRONT SEATBACK COVER WITH PAD** See step 14
5. **REMOVE LUMBAR SUPPORT ADJUSTER ASSEMBLY**
   a. Disconnect the connector.

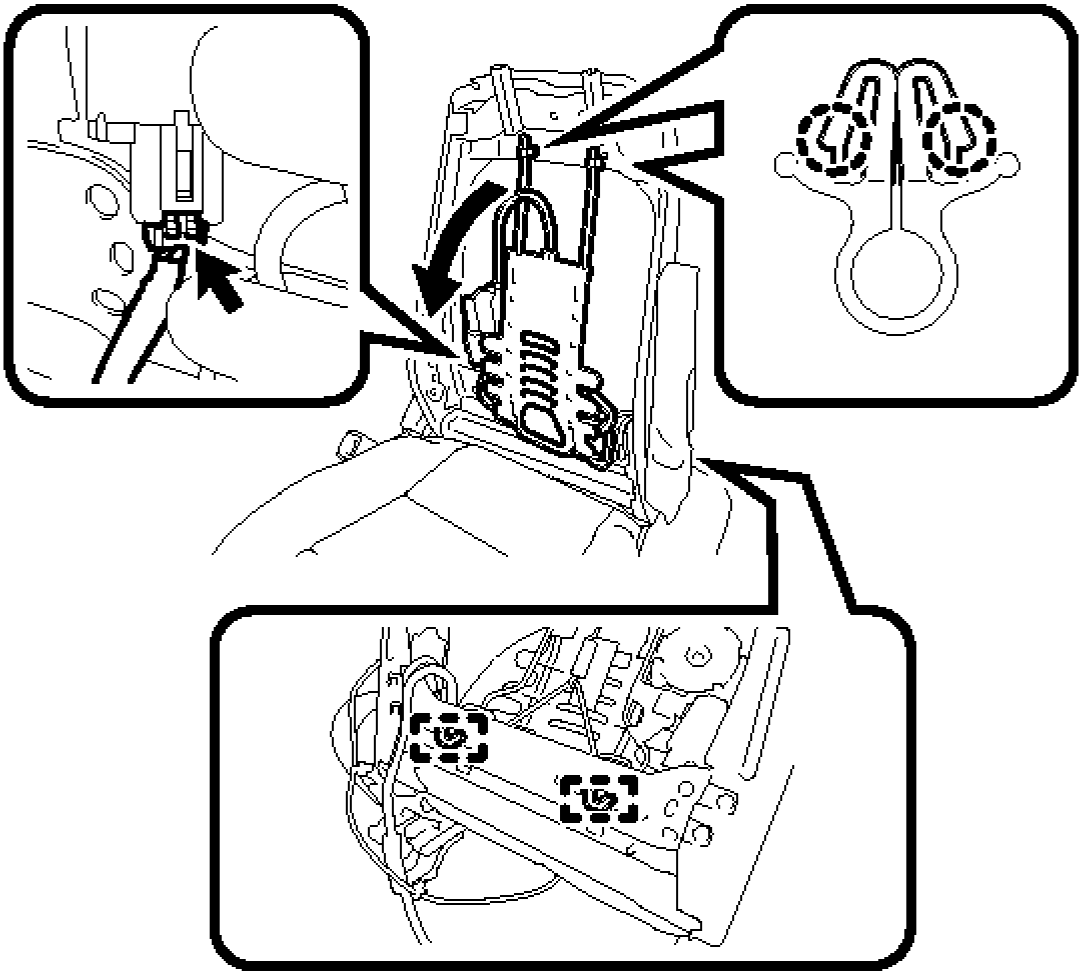

C

Fig. 175: Removing Lumbar Support Adjuster Assembly

Courtesy of TOYOTA MOTOR SALES, U.S.A., INC.

b. Disengage the 4 claws.
c. Disengage the 2 guides to remove the lumbar support adjuster assembly.
d. Remove the 2 front seatback hooks from the lumbar support adjuster assembly.

INSPECTION

INSPECTION

1. **INSPECT LUMBAR SUPPORT ADJUSTER ASSEMBLY LH**
   a. Check the operation of the lumbar support adjuster assembly.

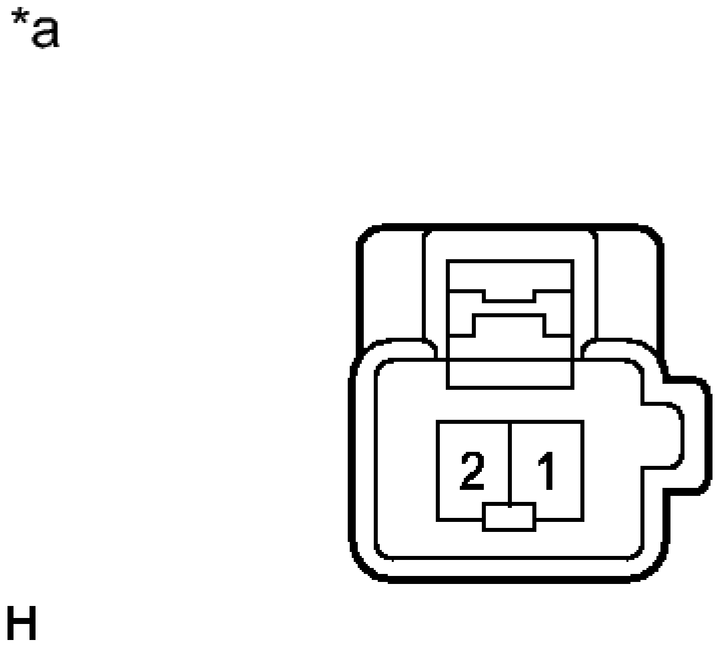

Fig. 176: Identifying Separate Type Front Seatback Assembly Connector Terminal Identification
Courtesy of TOYOTA MOTOR SALES, U.S.A., INC.

1. Check that the front seatback moves smoothly when the auxiliary battery is connected to the lumbar support adjuster assembly connector terminals.

   OK

Measurement Condition	Operational Direction
Auxiliary battery	

positive (+) --> Terminal 1 Auxiliary battery negative (-) --> Terminal 2	Seatback moves forward
Auxiliary battery positive (+) --> Terminal 2 Auxiliary battery negative (-) --> Terminal 1	Seatback moves backward

TEXT IN ILLUSTRATION

*a	Component without harness connected (Lumbar Support Adjuster Assembly LH)

If the result is not as specified, replace the lumbar support adjuster assembly LH.

INSTALLATION

INSTALLATION

1. **INSTALL LUMBAR SUPPORT ADJUSTER ASSEMBLY**
    a. Install the 2 front seatback hooks to the lumbar support adjuster assembly.
    b. Engage the 2 guides.

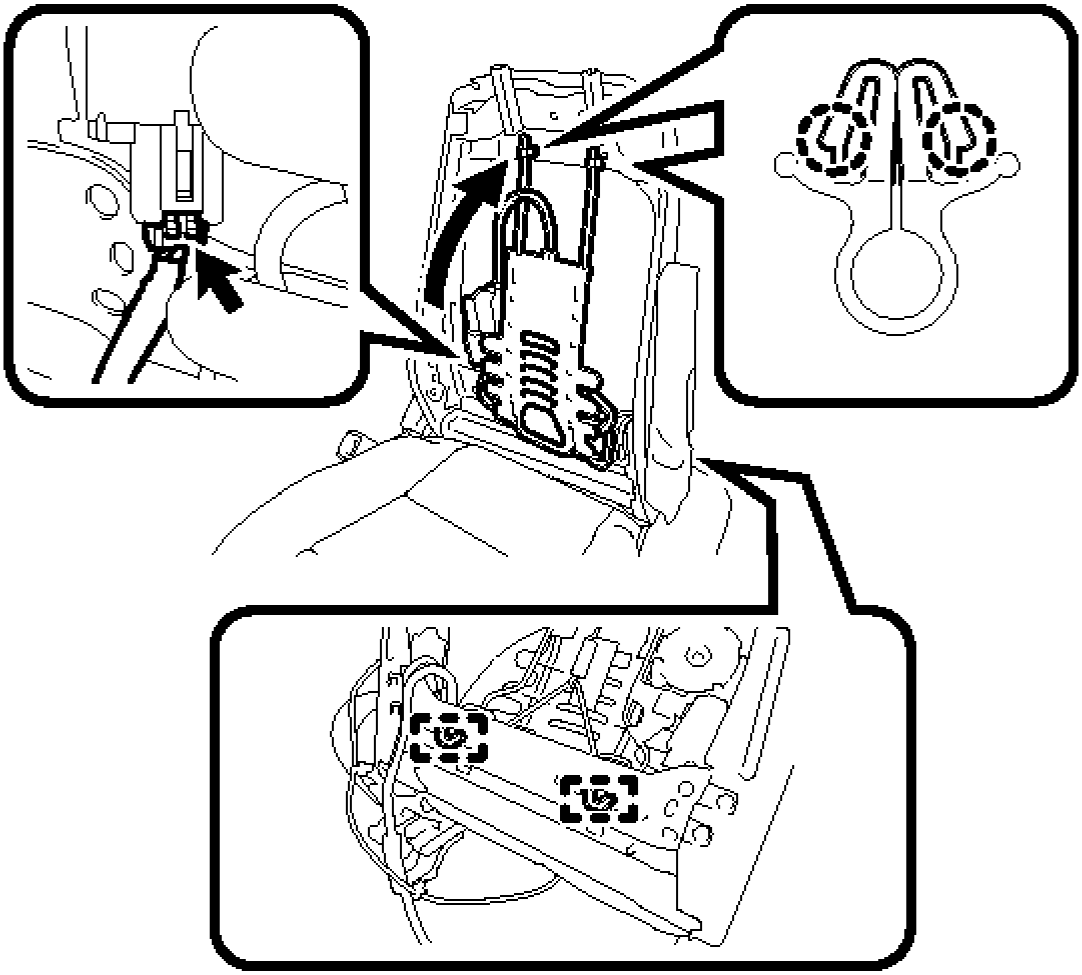

Fig. 177: Installing Lumbar Support Adjuster Assembly
Courtesy of TOYOTA MOTOR SALES, U.S.A., INC.

c. Engage the 4 claws to install the lumbar support adjuster assembly.
d. Connect the connector.

2. **INSTALL SEPARATE TYPE FRONT SEATBACK COVER WITH PAD** See step 21
3. **CONNECT CONNECTORS** See step 4
4. **CONNECT SEPARATE TYPE FRONT SEATBACK COVER** See step 31
5. **INSTALL FRONT SEAT ASSEMBLY LH**

   Refer to **INSTALLATION**

SEAT HEATER SWITCH

COMPONENTS

ILLUSTRATION

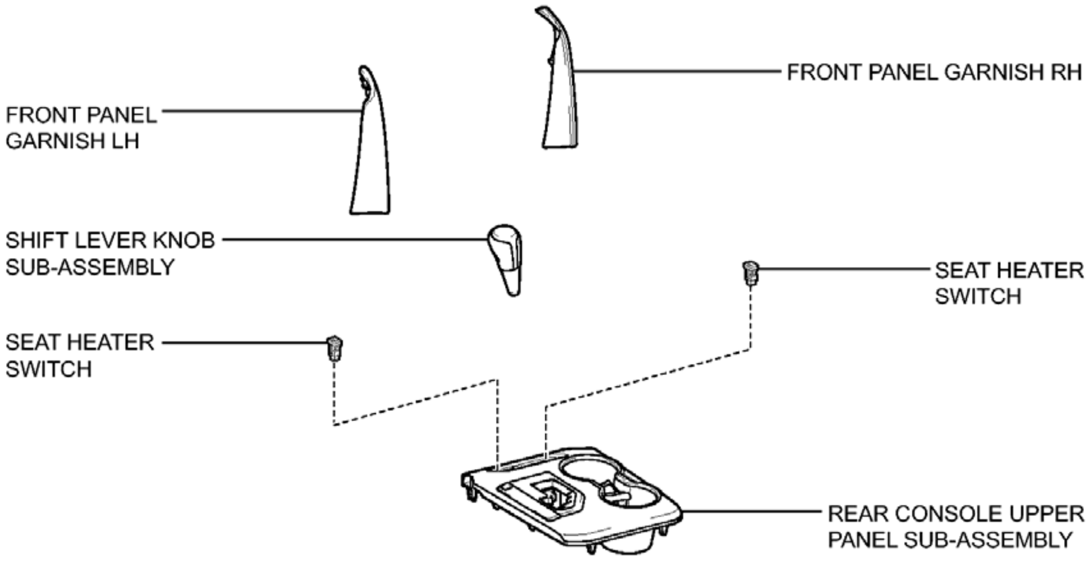
FRONT PANEL GARNISH RH
FRONT PANEL GARNISH LH
SHIFT LEVER KNOB SUB-ASSEMBLY
SEAT HEATER SWITCH
SEAT HEATER SWITCH
REAR CONSOLE UPPER PANEL SUB-ASSEMBLY

c

Fig. 178: Identifying Seat Heater Switch Replacement Components
Courtesy of TOYOTA MOTOR SALES, U.S.A., INC.

REMOVAL

REMOVAL

1. **REMOVE FRONT PANEL GARNISH LH** . Refer to **REMOVAL - Step 12**
2. **REMOVE FRONT PANEL GARNISH RH** . Refer to **REMOVAL - Step 15**
3. **REMOVE SHIFT LEVER KNOB SUB-ASSEMBLY** . Refer to **REMOVAL - Step 16**
4. **REMOVE REAR CONSOLE UPPER PANEL SUB-ASSEMBLY** . Refer to **REMOVAL - Step 17**
5. **REMOVE SEAT HEATER SWITCH**
    a. Disengage the 4 claws to remove the 2 seat heater switches.

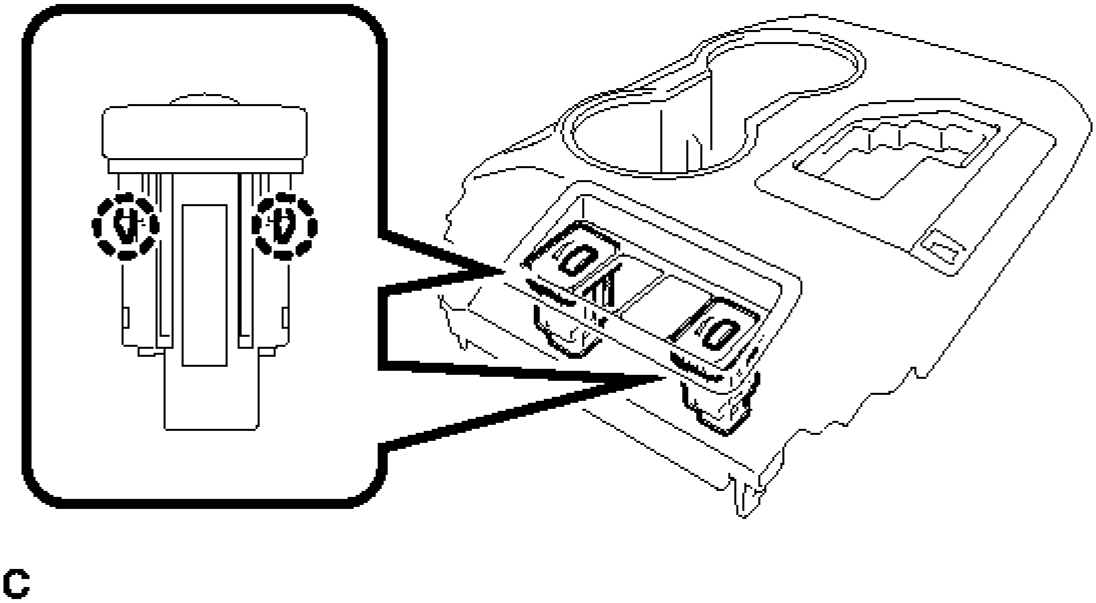

Fig. 179: Identifying Seat Heater Switch Claws
Courtesy of TOYOTA MOTOR SALES, U.S.A., INC.

INSPECTION

INSPECTION

1. **INSPECT SEAT HEATER SWITCH (for LH)**
    a. Check the seat heater switch.
        1. Measure the resistance according to the value(s) in the table below.

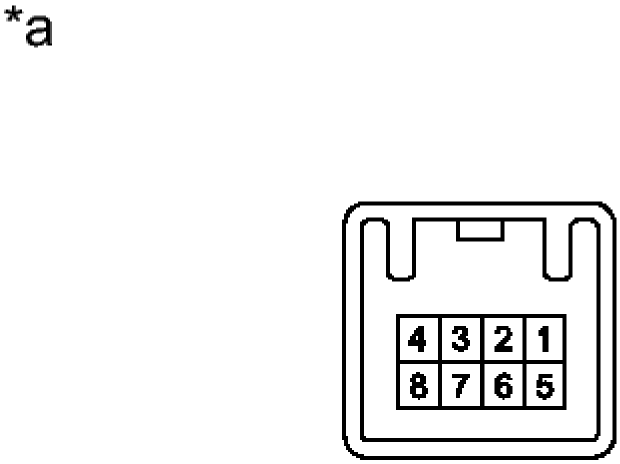

Fig. 180: Identifying Seat Heater Switch Connector Terminal Identification
Courtesy of TOYOTA MOTOR SALES, U.S.A., INC.

TEXT IN ILLUSTRATION

*a	Component without harness connected (Seat Heater Switch (for LH))

Standard Resistance

Tester Connection	Switch Condition	Specified Condition
8 - 6	OFF	10 kohms or higher
8 - 6	ON	350 ohms to 3.4 kohms
8 - 3	ON	Below 1 ohms

If the result is not as specified, replace the seat heater switch (for LH).

b. Check that the LED illuminates.

  1. Apply auxiliary battery voltage to the seat heater switch (for LH) and check that the LED illuminates.

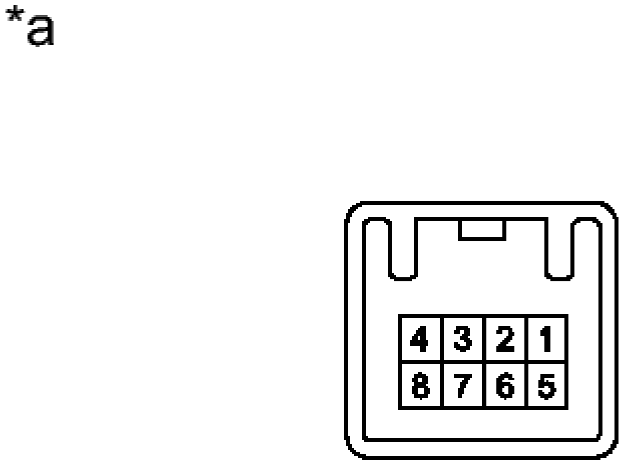

Fig. 181: Identifying Seat Heater Switch Connector Terminal Identification
Courtesy of TOYOTA MOTOR SALES, U.S.A., INC.

TEXT IN ILLUSTRATION

*a	Component without harness connected (Seat Heater Switch (for LH))

OK

Measurement Condition	Switch Condition	Specified Condition
Auxiliary battery positive (+) --> Terminal 7 Auxiliary	-	

battery negative (-) --> Terminal 2		LED illuminates
Auxiliary battery positive (+) --> Terminal 8 Auxiliary battery negative (-) --> Terminal 4	ON	

If the result is not as specified, replace the seat heater switch (for LH).

2. **INSPECT SEAT HEATER SWITCH (for RH)**
   a. Check the seat heater switch.
      1. Measure the resistance according to the value(s) in the table below.

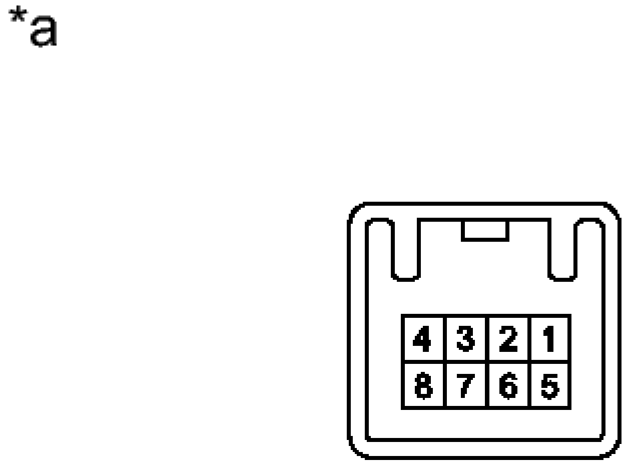

Fig. 182: Identifying Seat Heater Switch Connector Terminal Identification
Courtesy of TOYOTA MOTOR SALES, U.S.A., INC.

TEXT IN ILLUSTRATION

*a	Component without harness connected

	(Seat Heater Switch (for RH))

Standard Resistance

Tester Connection	Switch Condition	Specified Condition
7 - 5	OFF	10 kohms or higher
7 - 5	ON	350 ohms to 3.4 kohms
7 - 2	ON	Below 1 ohms

If the result is not as specified, replace the seat heater switch (for RH).

b. Check that the LED illuminates.
   1. Apply auxiliary battery voltage to the seat heater switch (for RH) and check that the LED illuminates.

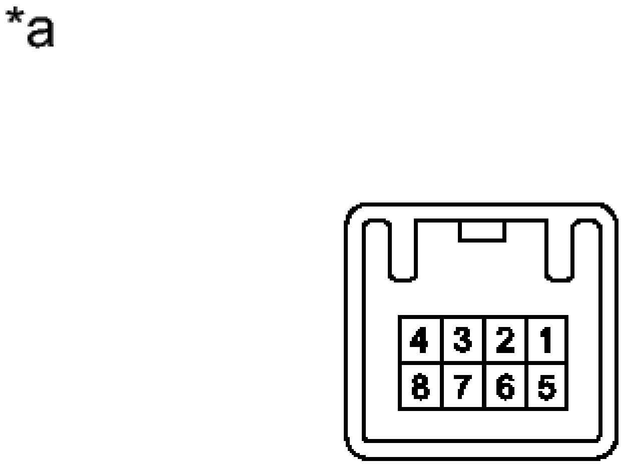

Fig. 183: Identifying Seat Heater Switch Connector Terminal Identification
Courtesy of TOYOTA MOTOR SALES, U.S.A., INC.

TEXT IN ILLUSTRATION

*a	Component without harness connected (Seat Heater Switch (for RH))

OK

Measurement Condition	Switch Condition	Specified Condition
Auxiliary battery positive (+) --> Terminal 6 Auxiliary battery negative (-) --> Terminal 1	-	LED illuminates
Auxiliary battery positive (+) --> Terminal 7 Auxiliary battery negative (-) --> Terminal 3	ON	

If the result is not as specified, replace the seat heater switch (for RH).

INSTALLATION

INSTALLATION

1. **INSTALL SEAT HEATER SWITCH**
    a. Engage the 4 claws to install the 2 seat heater switches.
2. **INSTALL REAR CONSOLE UPPER PANEL SUB-ASSEMBLY** . Refer to **INSTALLATION - Step 35**
3. **INSTALL SHIFT LEVER KNOB SUB-ASSEMBLY** . Refer to **INSTALLATION - Step 36**
4. **INSTALL FRONT PANEL GARNISH LH** . Refer to **INSTALLATION - Step 40**
5. **INSTALL FRONT PANEL GARNISH RH** . Refer to **INSTALLATION - Step 37**

FRONT SEATBACK HEATER

COMPONENTS

ILLUSTRATION

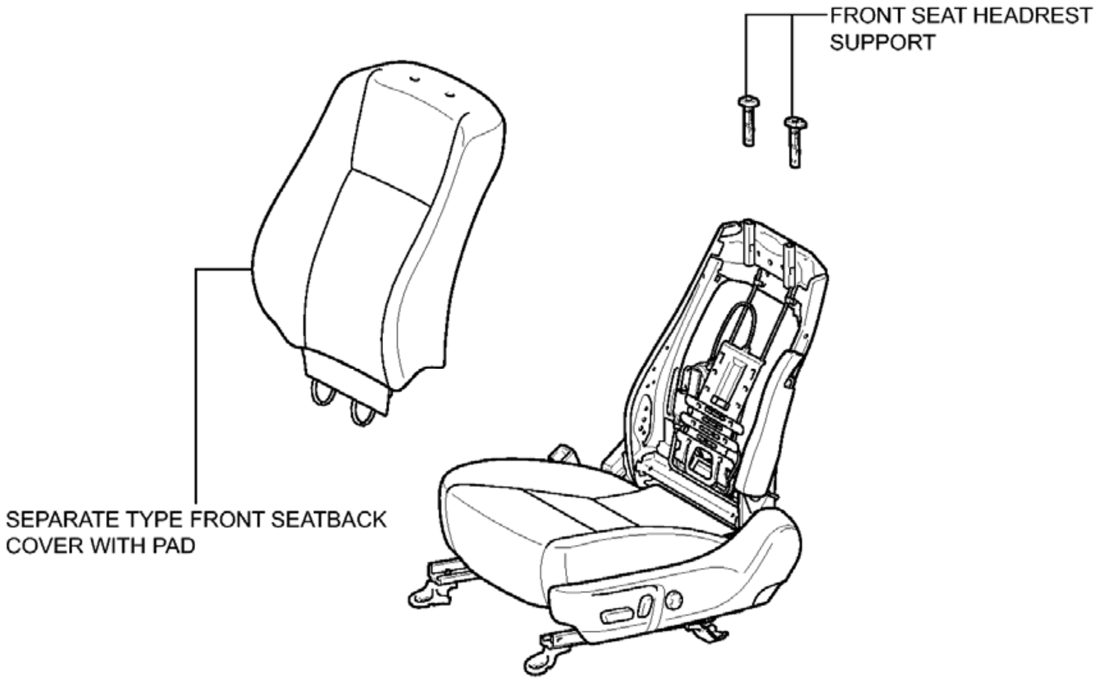
FRONT SEAT HEADREST SUPPORT
SEPARATE TYPE FRONT SEATBACK COVER WITH PAD
c

Fig. 184: Identifying Front Seatback Heater Replacement Components (1 Of 2)
Courtesy of TOYOTA MOTOR SALES, U.S.A., INC.

ILLUSTRATION

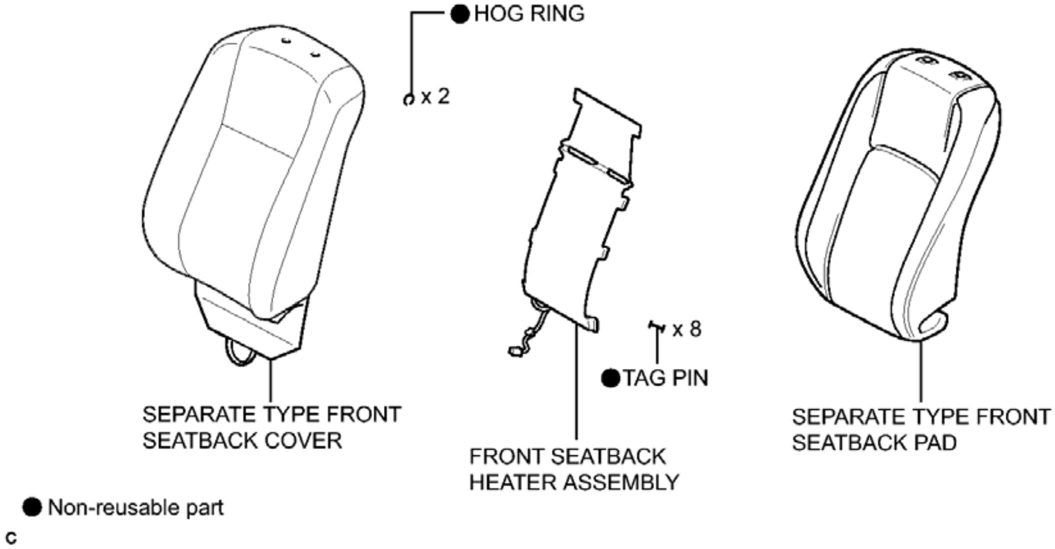
● HOG RING
x 2
x 8
● TAG PIN
SEPARATE TYPE FRONT SEATBACK COVER
FRONT SEATBACK HEATER ASSEMBLY
SEPARATE TYPE FRONT SEATBACK PAD
● Non-reusable part
c

Fig. 185: Identifying Front Seatback Heater Replacement Components (2 Of 2)
Courtesy of TOYOTA MOTOR SALES, U.S.A., INC.

REMOVAL

REMOVAL

1. **REMOVE FRONT SEAT ASSEMBLY**

   Refer to **REMOVAL**

2. **DISCONNECT SEPARATE TYPE FRONT SEATBACK COVER** See step 4
3. **DISCONNECT CONNECTORS**
   a. Disconnect the connector (A).

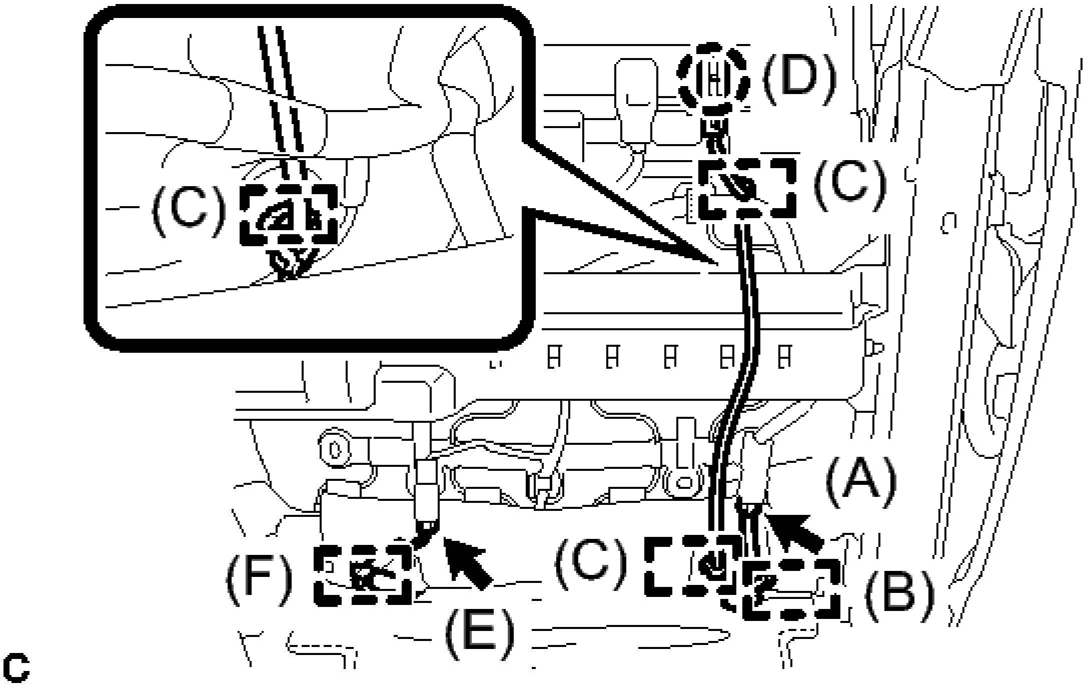

Fig. 186: Identifying Front Seatback Cover Connectors, Claw And Clamps (For Power Seat)
Courtesy of TOYOTA MOTOR SALES, U.S.A., INC.

b. Disengage the clamp (B).
c. Disengage the claw (D) and 3 clamps (C) to separate the front seat airbag assembly wire harness.
d. Disconnect the connector (E).
e. Disengage the clamp (F).

4. **REMOVE SEPARATE TYPE FRONT SEATBACK COVER WITH PAD** See step 14
5. **REMOVE SEPARATE TYPE FRONT SEATBACK COVER** See step 16
6. **REMOVE FRONT SEATBACK HEATER ASSEMBLY**
    a. Remove the 8 tag pins and the front seatback heater assembly from the separate type front seatback cover.

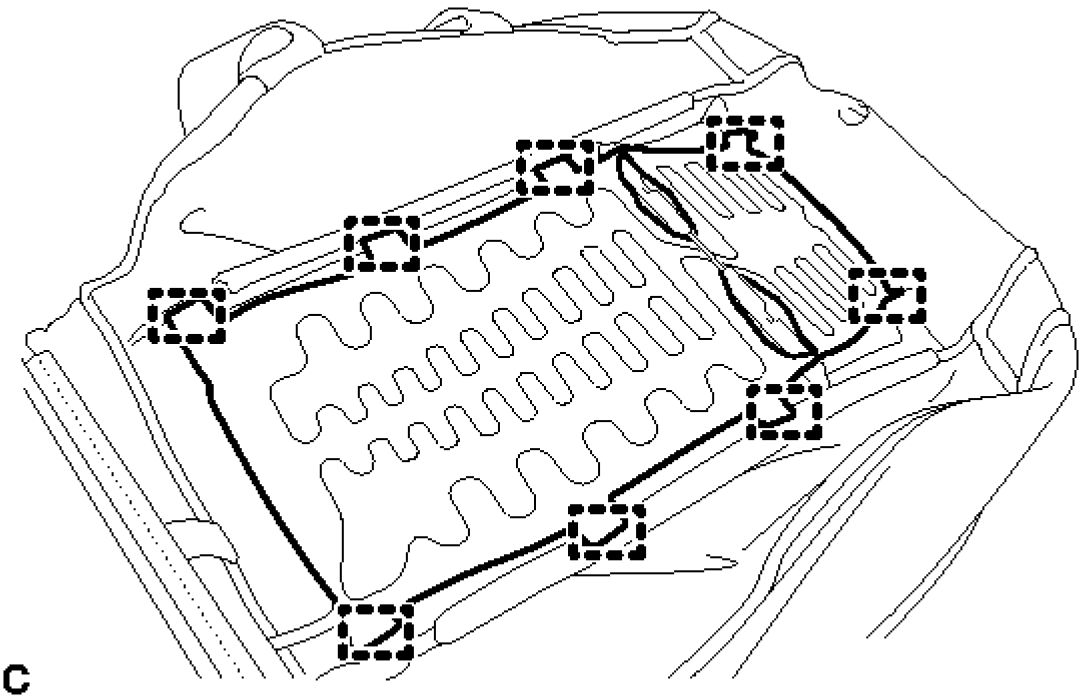

Fig. 187: Identifying Front Seatback Heater Assembly Tag Pins
Courtesy of TOYOTA MOTOR SALES, U.S.A., INC.

INSPECTION

INSPECTION

1. **INSPECT FRONT SEATBACK HEATER ASSEMBLY LH**
    a. Measure the resistance according to the value(s) in the table below.

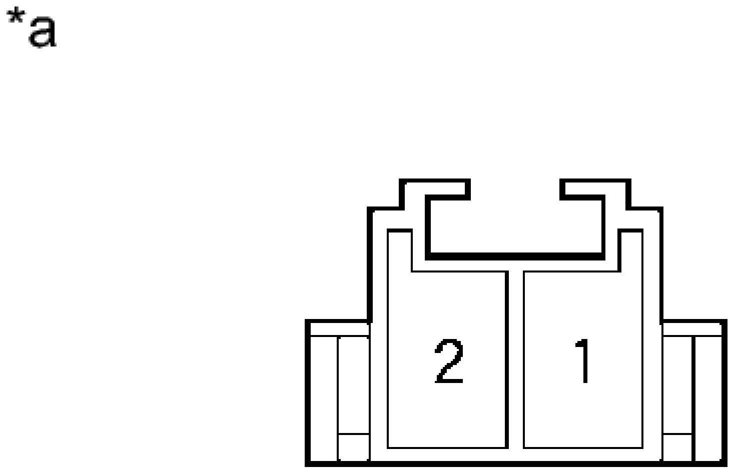

Fig. 188: Identifying Front Seat Back Heater Assembly Connector Terminal Identification
Courtesy of TOYOTA MOTOR SALES, U.S.A., INC.

TEXT IN ILLUSTRATION

*a	Component without harness connected (Front Seatback Heater Assembly LH)

Standard Resistance

Tester Connection	Condition	Specified Condition
1 - 2	Always	3.26 to 4 ohms

If the result is not as specified, replace the front seatback heater assembly LH.

2. **INSPECT FRONT SEATBACK HEATER ASSEMBLY RH**
    a. Measure the resistance according to the value(s) in the table below.

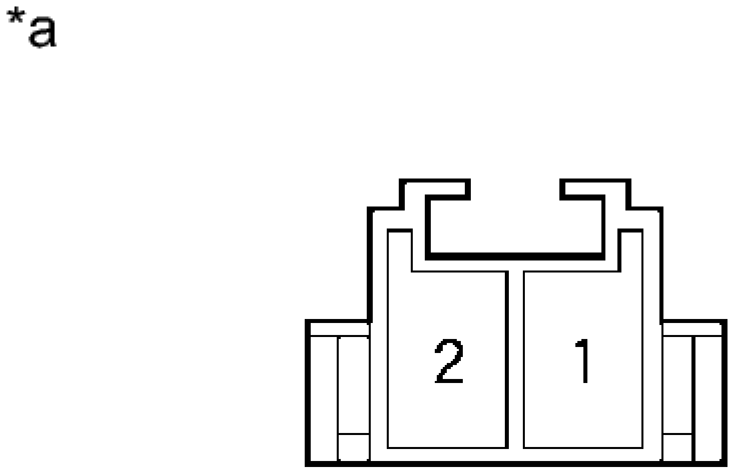

Fig. 189: Identifying Front Seat Back Heater Assembly Connector Terminal Identification
Courtesy of TOYOTA MOTOR SALES, U.S.A., INC.

TEXT IN ILLUSTRATION

*a	Component without harness connected (Front Seatback Heater Assembly RH)

Standard Resistance

Tester Connection	Condition	Specified Condition
1 - 2	Always	3.26 to 4 ohms

If the result is not as specified, replace the front seatback heater assembly RH.

INSTALLATION

INSTALLATION

1. **INSTALL FRONT SEATBACK HEATER ASSEMBLY**
    1. Using a tacker, install the front seatback heater assembly to the separate type front seatback cover with 8 new tag pins.
2. **INSTALL SEPARATE TYPE FRONT SEATBACK COVER** See step 19
3. **INSTALL SEPARATE TYPE FRONT SEATBACK COVER WITH PAD** See step 21
4. **CONNECT CONNECTORS**
    1. Engage the claw (D) and 3 clamps (C) to install the front seat airbag assembly wire harness.

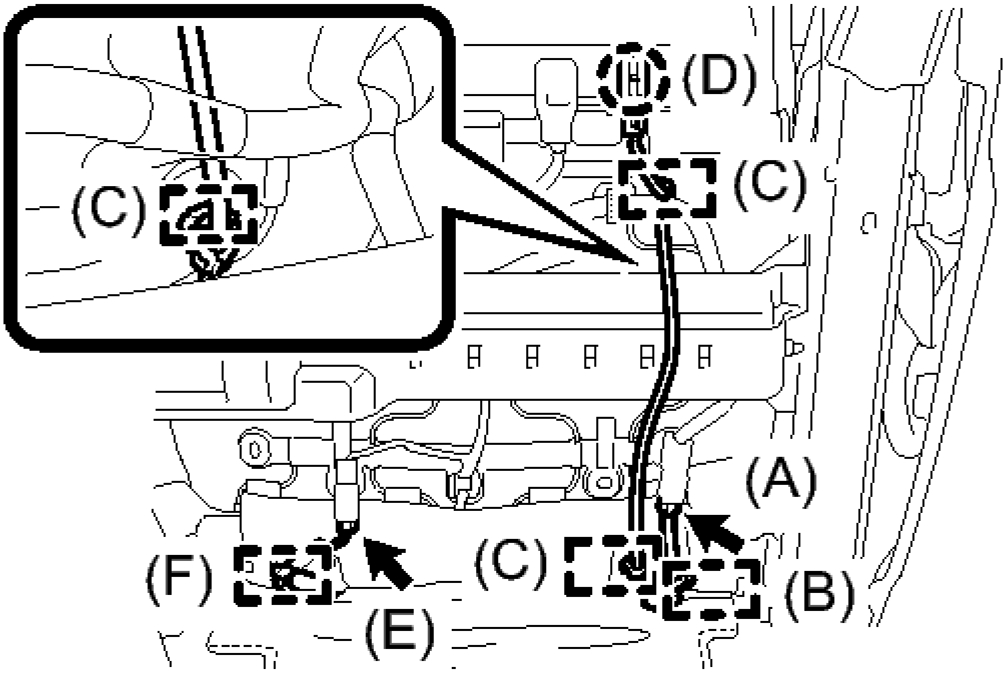

Fig. 190: Identifying Front Seatback Cover Connectors, Claw And Clamps (For Power Seat)
Courtesy of TOYOTA MOTOR SALES, U.S.A., INC.

    2. Engage the clamp (B).
    3. Connect the connector (A).
    4. Connect the connector (E).
    5. Engage the clamp (F).
5. **CONNECT SEPARATE TYPE FRONT SEATBACK COVER** See step 31
6. **INSTALL FRONT SEAT ASSEMBLY**

    Refer to **INSTALLATION**

FRONT SEAT CUSHION HEATER

COMPONENTS

ILLUSTRATION

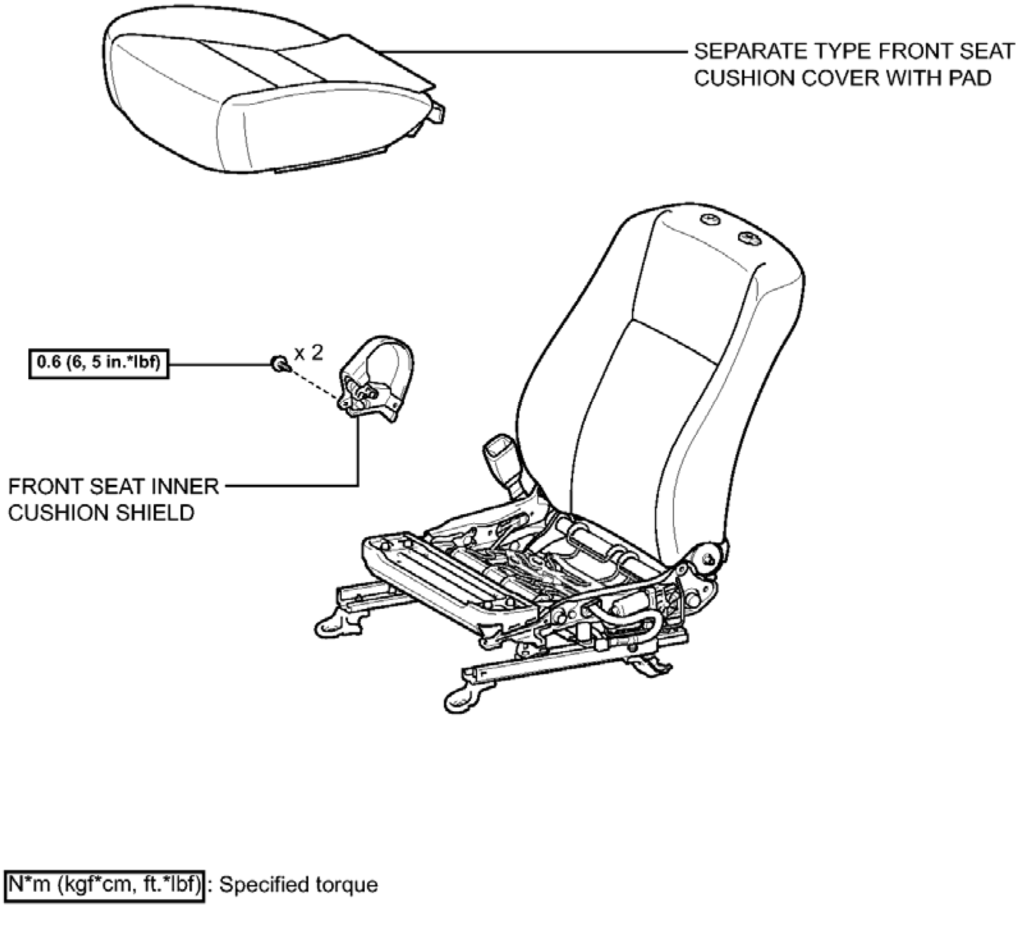
SEPARATE TYPE FRONT SEAT CUSHION COVER WITH PAD
0.6 (6, 5 in.*lbf)
x 2
FRONT SEAT INNER CUSHION SHIELD
N*m (kgf*cm, ft.*lbf): Specified torque
c

Fig. 191: Identifying Front Seat Cushion Heater Replacement Components With Torque Specifications (1 Of 2)
Courtesy of TOYOTA MOTOR SALES, U.S.A., INC.

ILLUSTRATION

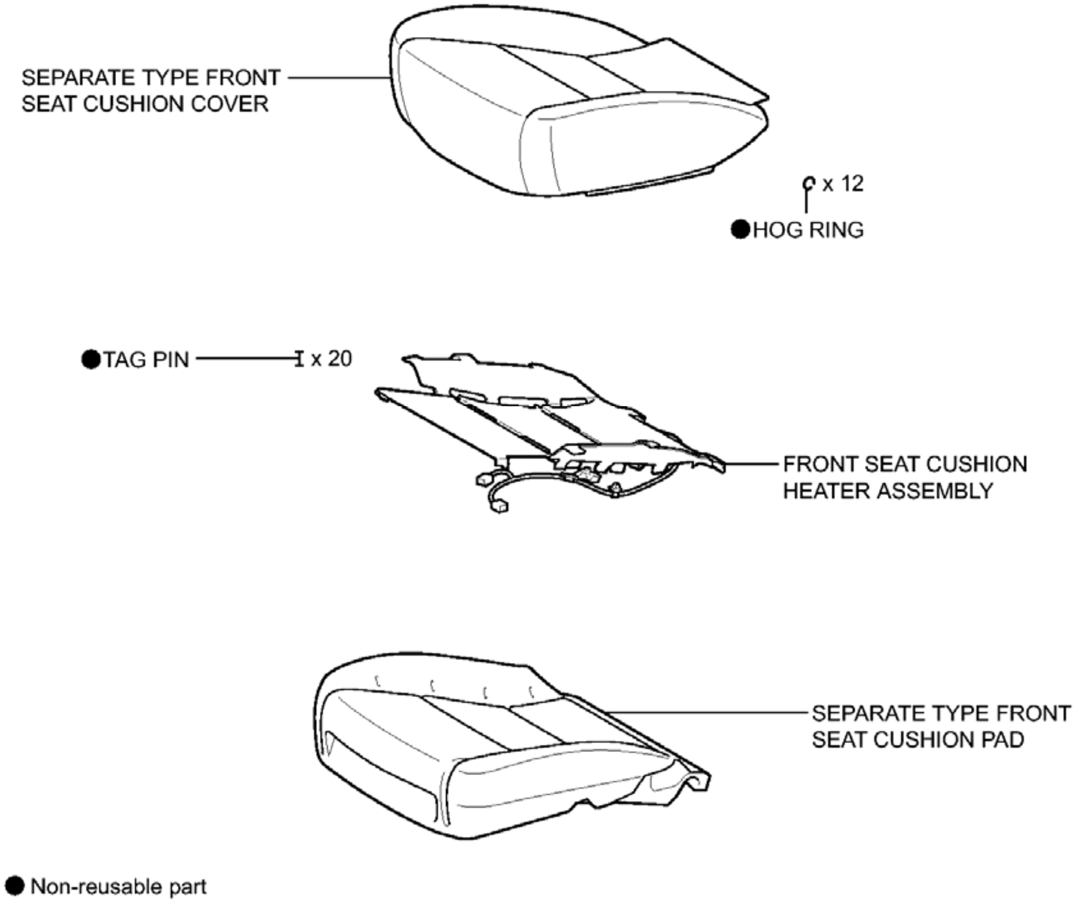
SEPARATE TYPE FRONT SEAT CUSHION COVER
x 12
● HOG RING
● TAG PIN
x 20
FRONT SEAT CUSHION HEATER ASSEMBLY
SEPARATE TYPE FRONT SEAT CUSHION PAD
● Non-reusable part

c

Fig. 192: Identifying Front Seat Cushion Heater Replacement Components With Torque Specifications (2 Of 2)
Courtesy of TOYOTA MOTOR SALES, U.S.A., INC.

REMOVAL

REMOVAL

1. **REMOVE FRONT POWER SEAT SWITCH**

   Refer to **REMOVAL**

2. **REMOVE FRONT SEAT INNER CUSHION SHIELD** See step 8
3. **REMOVE SEPARATE TYPE FRONT SEAT CUSHION COVER WITH PAD** See step 11
4. **REMOVE SEPARATE TYPE FRONT SEAT CUSHION COVER** See step 12
5. **REMOVE FRONT SEAT CUSHION HEATER ASSEMBLY**

a. Remove the 20 tag pins and the front seat cushion heater assembly from the separate type front seat cushion cover.

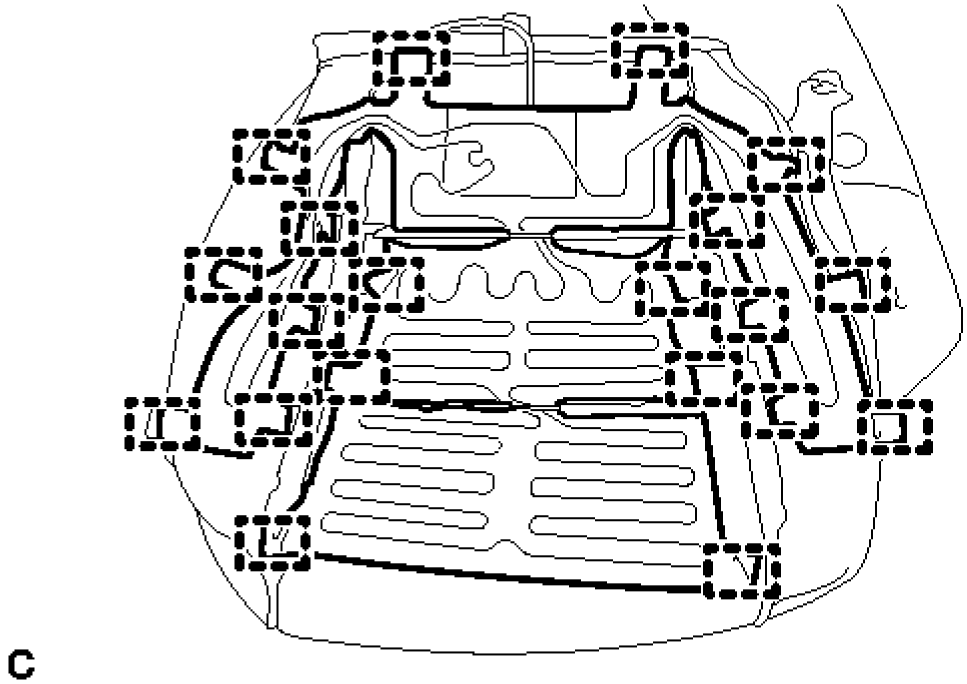

Fig. 193: Identifying Front Seat Cushion Heater Assembly Tag Pins
Courtesy of TOYOTA MOTOR SALES, U.S.A., INC.

INSPECTION

INSPECTION

1. **INSPECT FRONT SEAT CUSHION HEATER ASSEMBLY LH (for TMMK Made)**
    a. Measure the resistance according to the value(s) in the table below.

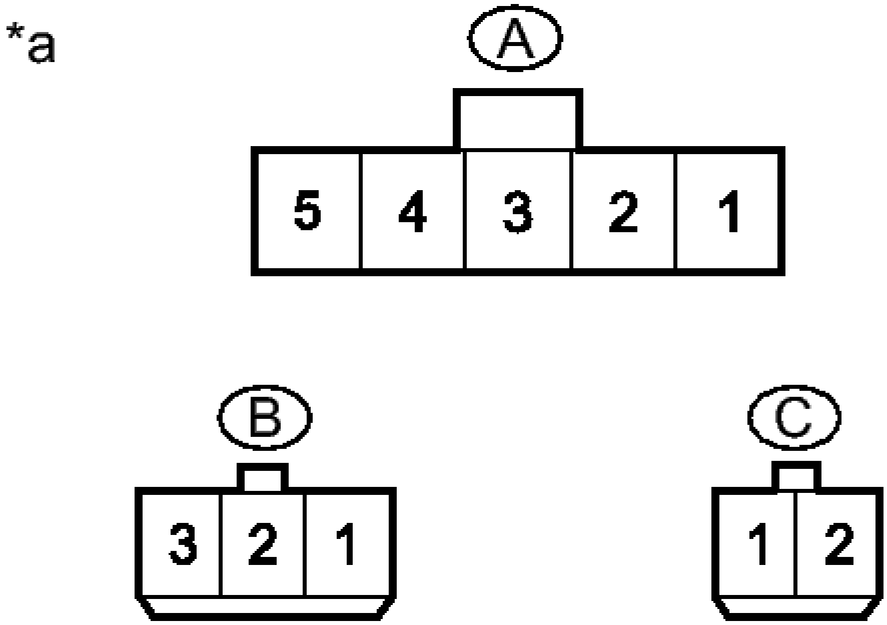

Fig. 194: Identifying Front Seat Cushion Heater Assembly Connector Terminals (For TMMK Made)
Courtesy of TOYOTA MOTOR SALES, U.S.A., INC.

TEXT IN ILLUSTRATION

*a	Component without harness connected (Front Seat Cushion Heater Assembly LH)

Standard Resistance

Tester Connection	Condition	Specified Condition
A-1 - B-3	Always	Below 1 ohms
A-2 - A-5	20°C (68°F) to 25°C (77°F)	9 to 13.8 kohms
A-2 - B-1	20°C (68°F) to 25°C (77°F)	9 to 13.8 kohms

A-2 - C-1	20°C (68°F) to 25°C (77°F)	9 to 13.8 kohms
A-2 - C-1	20°C (68°F) to 25°C (77°F)	9 to 13.8 kohms
A-2 - C-2	20°C (68°F) to 25°C (77°F)	9 to 13.8 kohms
A-2 - A-3	20°C (68°F) to 25°C (77°F)	9 to 13.8 kohms
A-3 - C-1	Always	Below 1 ohms
A-3 - B-1	20°C (68°F) to 25°C (77°F)	3.2 to 4.1 ohms
A-3 - A-5	20°C (68°F) to 25°C (77°F)	3.2 to 4.1 ohms
A-3 - C-2	20°C (68°F) to 25°C (77°F)	3.2 to 4.1 ohms
A-4 - B-2	Always	Below 1 ohms
A-5 - B-1	Always	Below 1 ohms
A-5 - C-2	Always	Below 1 ohms
A-5 - C-1	20°C (68°F) to 25°C (77°F)	3.2 to 4.1 ohms

If the result is not as specified, replace the front seat cushion heater assembly LH.

2. **INSPECT FRONT SEAT CUSHION HEATER ASSEMBLY RH (for TMMK Made)**
    a. Measure the resistance according to the value(s) in the table below.

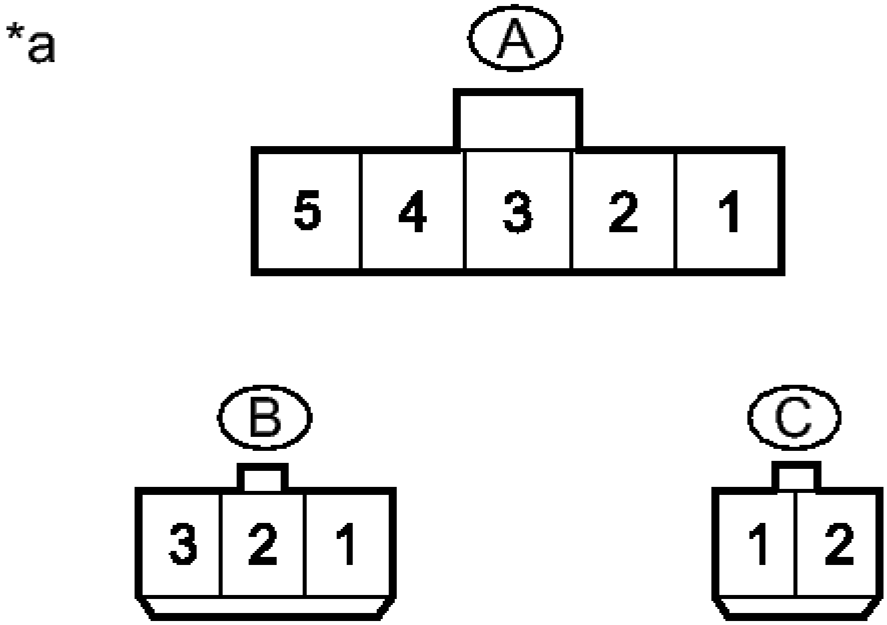

Fig. 195: Identifying Front Seat Cushion Heater Assembly Connector Terminals (For TMMK Made)
Courtesy of TOYOTA MOTOR SALES, U.S.A., INC.

TEXT IN ILLUSTRATION

*a	Component without harness connected (Front Seat Cushion Heater Assembly RH)

Standard Resistance

Tester Connection	Condition	Specified Condition
A-1 - B-3	Always	Below 1 ohms
A-2 - A-5	20°C (68°F) to 25°C (77°F)	9 to 13.8 kohms
A-2 - B-1	20°C (68°F) to 25°C (77°F)	9 to 13.8 kohms

A-2 - C-1	20°C (68°F) to 25°C (77°F)	9 to 13.8 kohms
A-2 - C-1	20°C (68°F) to 25°C (77°F)	9 to 13.8 kohms
A-2 - C-2	20°C (68°F) to 25°C (77°F)	9 to 13.8 kohms
A-2 - A-3	20°C (68°F) to 25°C (77°F)	9 to 13.8 kohms
A-3 - C-1	Always	Below 1 ohms
A-3 - B-1	20°C (68°F) to 25°C (77°F)	3.2 to 4.1 ohms
A-3 - A-5	20°C (68°F) to 25°C (77°F)	3.2 to 4.1 ohms
A-3 - C-2	20°C (68°F) to 25°C (77°F)	3.2 to 4.1 ohms
A-4 - B-2	Always	Below 1 ohms
A-5 - B-1	Always	Below 1 ohms
A-5 - C-2	Always	Below 1 ohms
A-5 - C-1	20°C (68°F) to 25°C (77°F)	3.2 to 4.1 ohms

If the result is not as specified, replace the front seat cushion heater assembly RH.

INSTALLATION

INSTALLATION

1. **INSTALL FRONT SEAT CUSHION HEATER ASSEMBLY**
    a. Using a tacker, install the front seat cushion heater assembly to the separate type front seat cushion cover with 20 new tag pins.
2. **INSTALL SEPARATE TYPE FRONT SEAT CUSHION COVER** See step 23
3. **INSTALL SEPARATE TYPE FRONT SEAT CUSHION COVER WITH PAD** See step 24
4. **INSTALL FRONT SEAT INNER CUSHION SHIELD** See step 27

5. **INSTALL FRONT POWER SEAT SWITCH**

   Refer to **INSTALLATION**

REAR SEAT RECLINING CONTROL CABLE

COMPONENTS

ILLUSTRATION

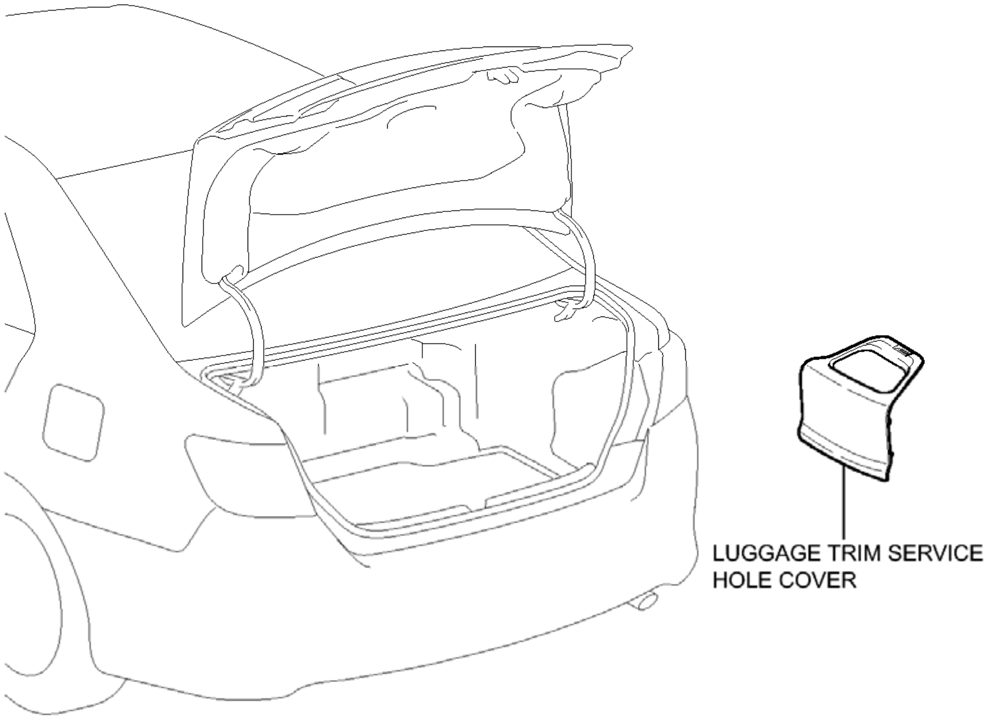
LUGGAGE TRIM SERVICE HOLE COVER

P

Fig. 196: Identifying Rear Seat Reclining Control Cable Replacement Components With Torque Specifications (1 Of 4)
Courtesy of TOYOTA MOTOR SALES, U.S.A., INC.

ILLUSTRATION

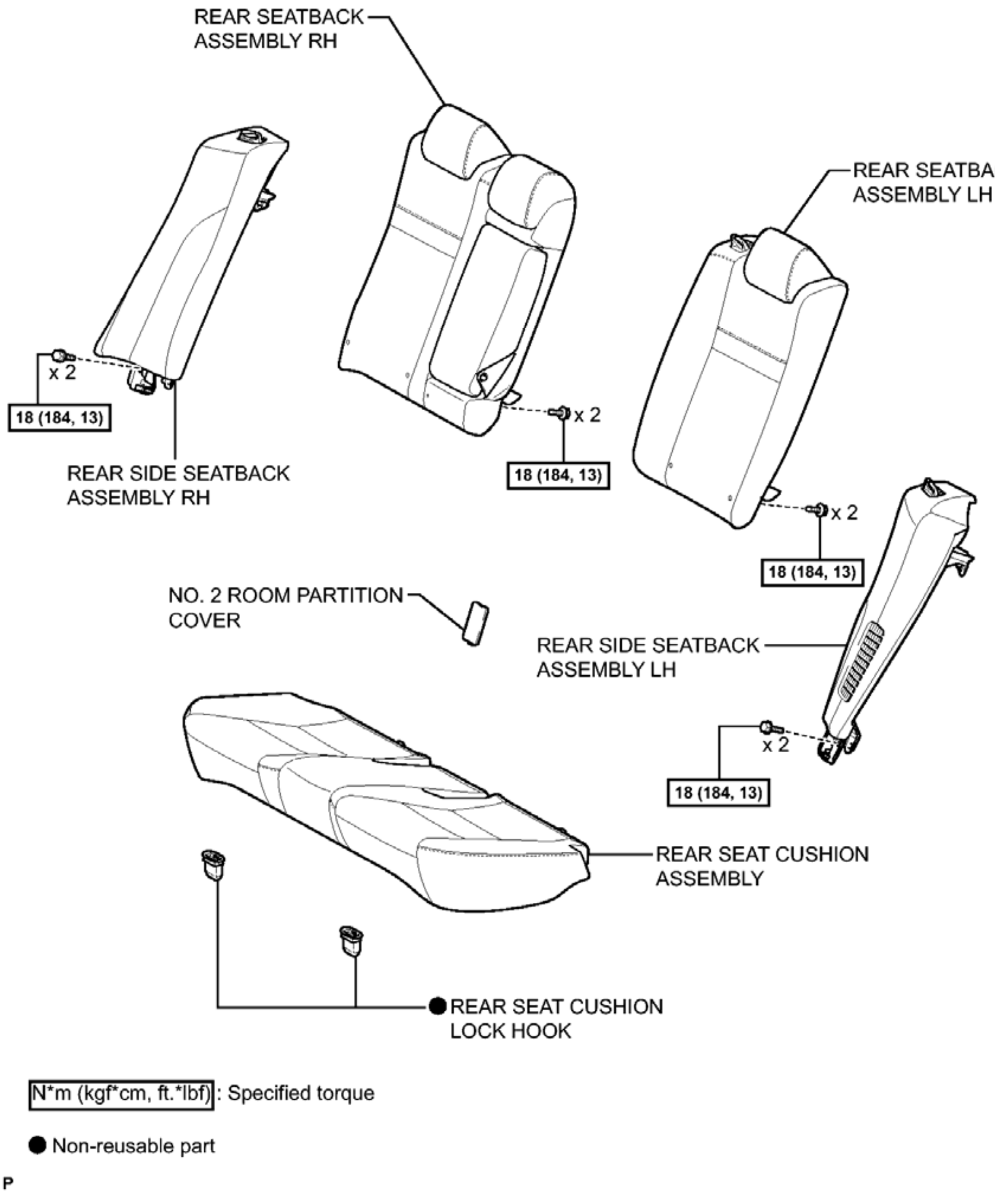
REAR SEATBACK ASSEMBLY RH
REAR SEATBACK ASSEMBLY LH
x 2
18 (184, 13)
REAR SIDE SEATBACK ASSEMBLY RH
x 2
18 (184, 13)
x 2
18 (184, 13)
NO. 2 ROOM PARTITION COVER
REAR SIDE SEATBACK ASSEMBLY LH
x 2
18 (184, 13)
REAR SEAT CUSHION ASSEMBLY
● REAR SEAT CUSHION LOCK HOOK
N*m (kgf*cm, ft.*lbf) : Specified torque
● Non-reusable part
P

Fig. 197: Identifying Rear Seat Reclining Control Cable Replacement Components With Torque Specifications (2 Of 4)
Courtesy of TOYOTA MOTOR SALES, U.S.A., INC.

ILLUSTRATION

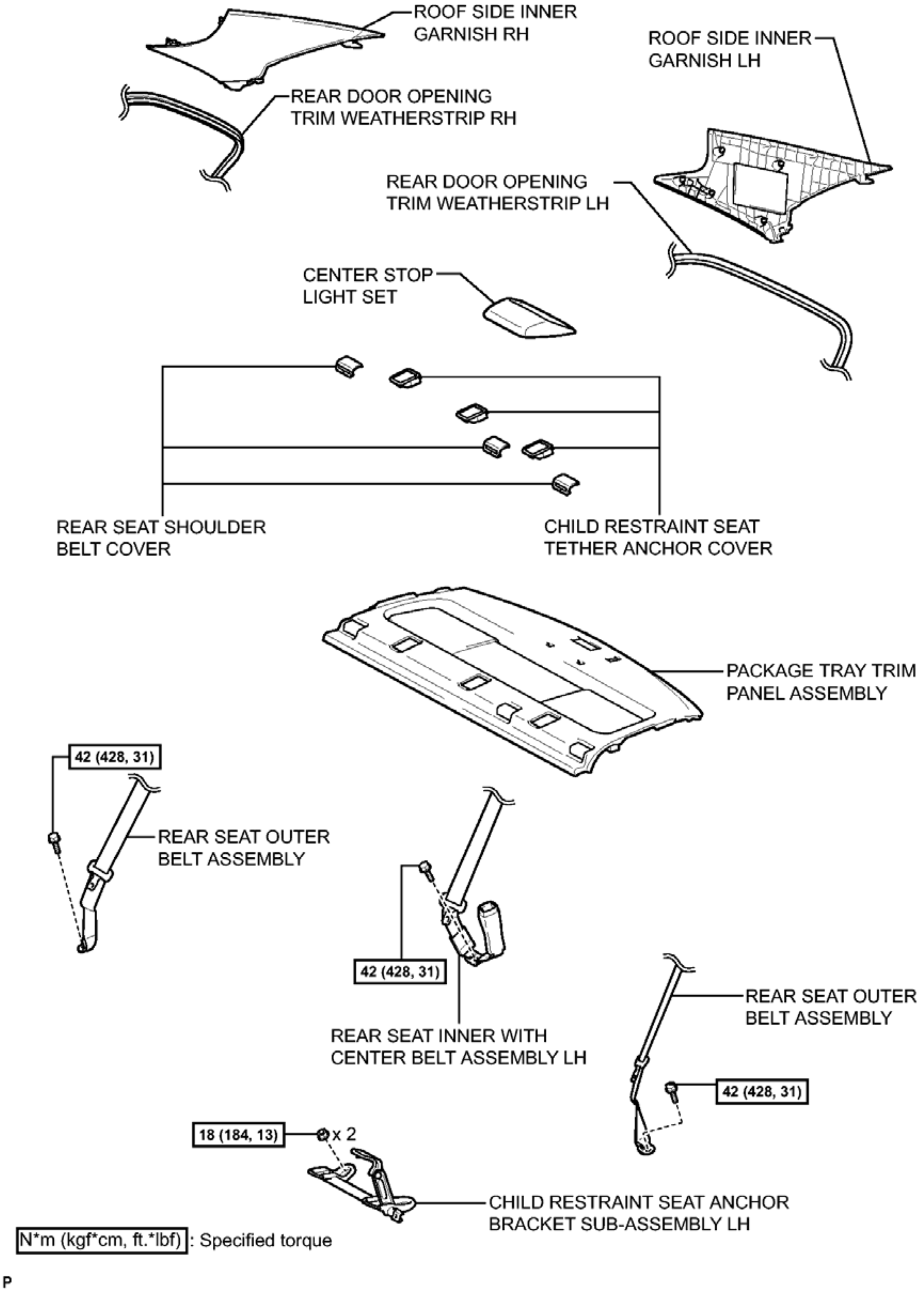
ROOF SIDE INNER GARNISH RH
ROOF SIDE INNER GARNISH LH
REAR DOOR OPENING TRIM WEATHERSTRIP RH
REAR DOOR OPENING TRIM WEATHERSTRIP LH
CENTER STOP LIGHT SET
REAR SEAT SHOULDER BELT COVER
CHILD RESTRAINT SEAT TETHER ANCHOR COVER
PACKAGE TRAY TRIM PANEL ASSEMBLY
42 (428, 31)
REAR SEAT OUTER BELT ASSEMBLY
42 (428, 31)
REAR SEAT INNER WITH CENTER BELT ASSEMBLY LH
REAR SEAT OUTER BELT ASSEMBLY
42 (428, 31)
18 (184, 13)
x 2
CHILD RESTRAINT SEAT ANCHOR BRACKET SUB-ASSEMBLY LH
N*m (kgf*cm, ft.*lbf) : Specified torque
P

Fig. 198: Identifying Rear Seat Reclining Control Cable Replacement Components With Torque Specifications (3 Of 4)

Courtesy of TOYOTA MOTOR SALES, U.S.A., INC.

ILLUSTRATION

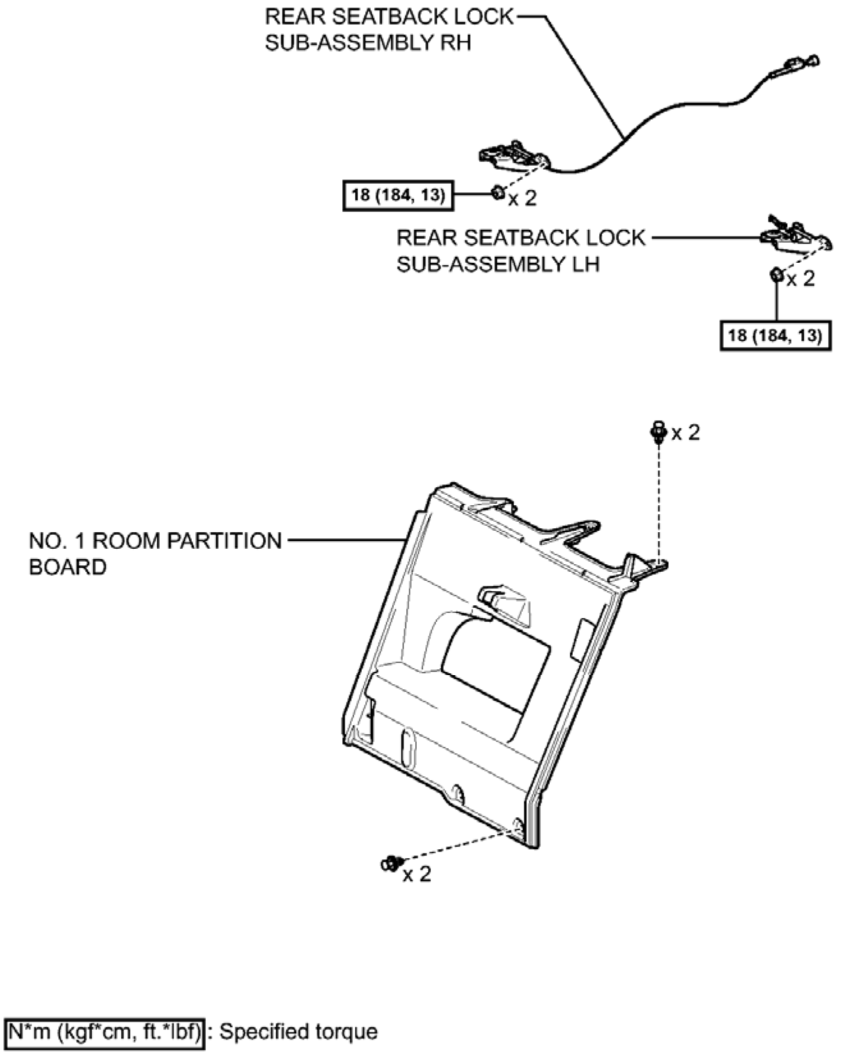
REAR SEATBACK LOCK SUB-ASSEMBLY RH
18 (184, 13)
x 2
REAR SEATBACK LOCK SUB-ASSEMBLY LH
x 2
18 (184, 13)
x 2
NO. 1 ROOM PARTITION BOARD
x 2
N*m (kgf*cm, ft.*lbf): Specified torque
P

Fig. 199: Identifying Rear Seat Reclining Control Cable Replacement Components With Torque Specifications (4 Of 4)
Courtesy of TOYOTA MOTOR SALES, U.S.A., INC.

REMOVAL

REMOVAL

1. **PRECAUTION**

WARNING: Be sure to read Precaution thoroughly before servicing.

for Separate Type Yaw Rate Sensor: Refer to PRECAUTION

for Built-in Type Yaw Rate Sensor: Refer to PRECAUTION

NOTE: **After turning the power switch off, waiting time may be required before disconnecting the cable from the negative (-) auxiliary battery terminal. Therefore, make sure to read the disconnecting the cable from the negative (-) auxiliary battery terminal notices before proceeding with work. Refer to PRECAUTION .**

2. **REMOVE LUGGAGE TRIM SERVICE HOLE COVER** . Refer to **REMOVAL - Step 2**
3. **DISCONNECT CABLE FROM AUXILIARY BATTERY NEGATIVE TERMINAL**

   WARNING: **Wait at least 90 seconds after disconnecting the cable from the negative (-) auxiliary battery terminal to disable the SRS system.**

   NOTE: **When disconnecting the cable, some systems need to be initialized after the cable is reconnected. Refer to INITIALIZATION .**

4. **REMOVE REAR SEAT CUSHION ASSEMBLY** See step 4
5. **REMOVE REAR SEAT CUSHION LOCK HOOK** See step 5
6. **REMOVE REAR SEATBACK ASSEMBLY RH** See step 6
7. **REMOVE NO. 2 ROOM PARTITION COVER** See step 7
8. **REMOVE REAR SEATBACK ASSEMBLY LH** See step 8
9. **REMOVE REAR SIDE SEATBACK ASSEMBLY LH** See step 9
10. **REMOVE REAR SIDE SEATBACK ASSEMBLY RH** See step 10
11. **DISCONNECT REAR DOOR OPENING TRIM WEATHERSTRIP LH** . Refer to **REMOVAL - Step 13**
12. **DISCONNECT REAR DOOR OPENING TRIM WEATHERSTRIP RH** . Refer to **REMOVAL - Step 14**
13. **REMOVE ROOF SIDE INNER GARNISH LH** . Refer to **REMOVAL - Step 25**
14. **REMOVE ROOF SIDE INNER GARNISH RH**

    HINT:

    Use the same procedure as for the LH side. Refer to **REMOVAL - Step 25** .

15. **DISCONNECT REAR SEAT OUTER BELT ASSEMBLY (for LH Side)** . Refer to **REMOVAL - Step 14**
16. **DISCONNECT REAR SEAT OUTER BELT ASSEMBLY (for RH Side)** . Refer to **REMOVAL - Step 15**
17. **REMOVE CHILD RESTRAINT SEAT ANCHOR BRACKET SUB-ASSEMBLY LH** . Refer to

REMOVAL - Step 11

18. **DISCONNECT REAR SEAT INNER WITH CENTER BELT ASSEMBLY LH** . Refer to **REMOVAL - Step 20**
19. **REMOVE CENTER STOP LIGHT SET** . Refer to **REMOVAL - Step 1**
20. **REMOVE CHILD RESTRAINT SEAT TETHER ANCHOR COVER** . Refer to **REMOVAL - Step 19**
21. **REMOVE REAR SEAT SHOULDER BELT COVER** . Refer to **REMOVAL - Step 20**
22. **REMOVE PACKAGE TRAY TRIM PANEL ASSEMBLY** . Refer to **REMOVAL - Step 21**
23. **REMOVE NO. 1 ROOM PARTITION BOARD**
    a. Using a clip remover, remove the 4 clips.

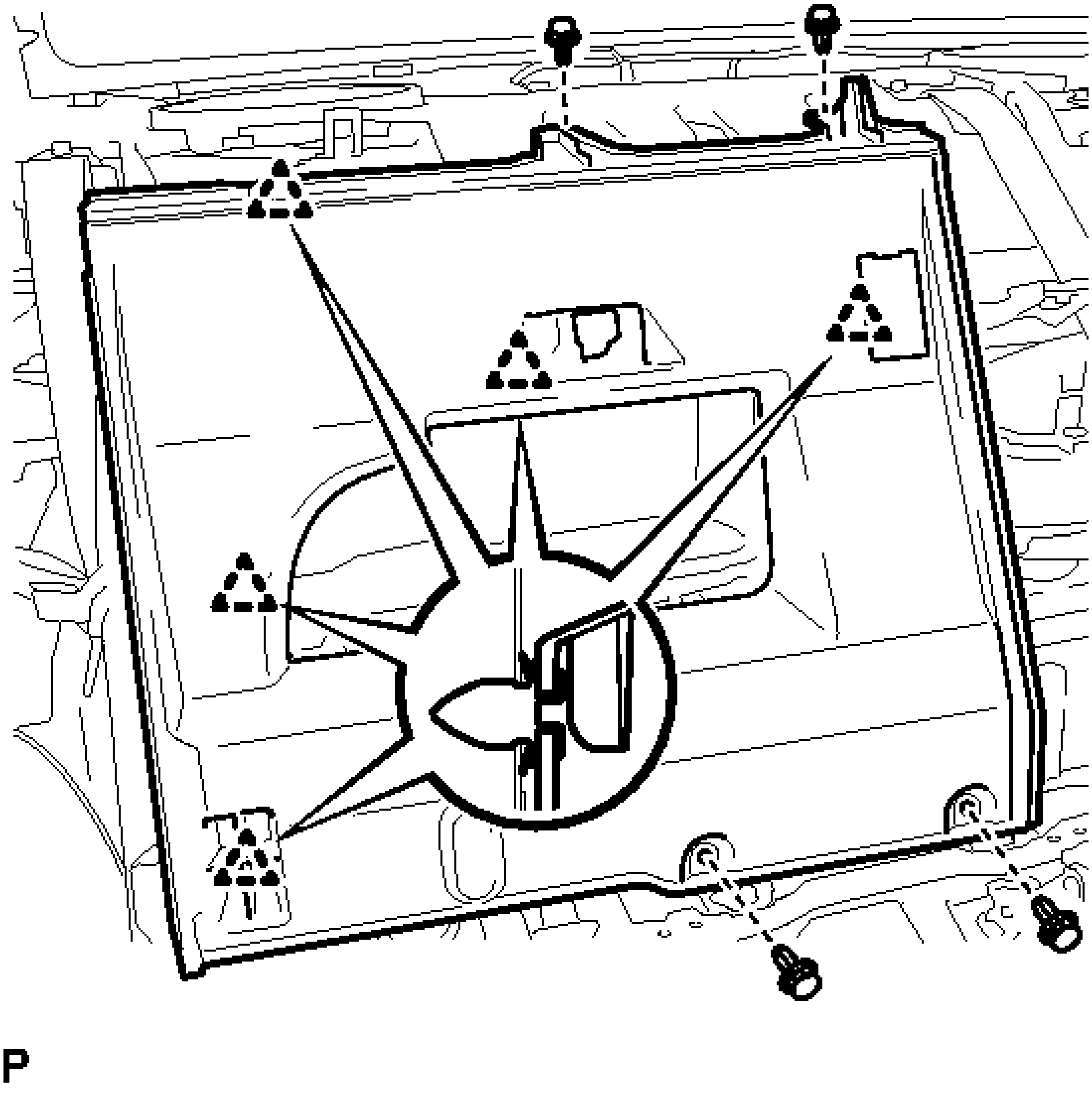

Fig. 200: Identifying No. 1 Room Partition Board Clips
Courtesy of TOYOTA MOTOR SALES, U.S.A., INC.

b. Disengage the 5 clips and remove the No. 1 room partition board.

24. **REMOVE REAR SEATBACK LOCK SUB-ASSEMBLY LH**

    a. Remove the 2 nuts and rear seatback lock sub-assembly LH.

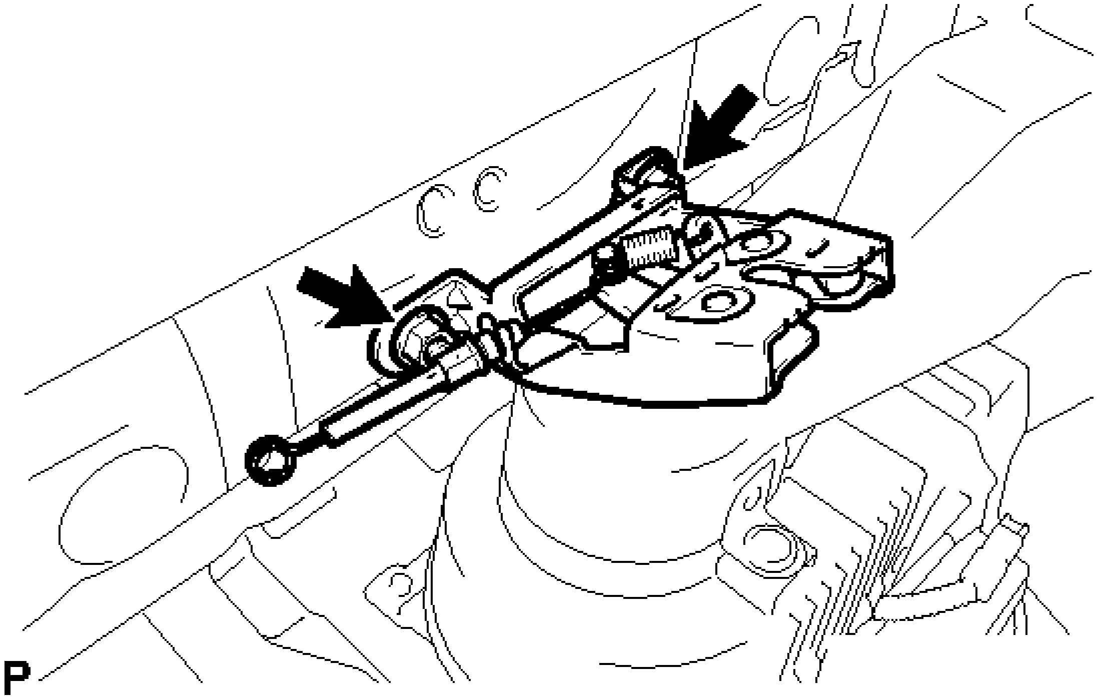

Fig. 201: Identifying Rear Seatback Lock Sub-Assembly Nuts LH
Courtesy of TOYOTA MOTOR SALES, U.S.A., INC.

25. **REMOVE REAR SEATBACK LOCK SUB-ASSEMBLY RH**

    a. Disengage the hook as shown in the illustration.

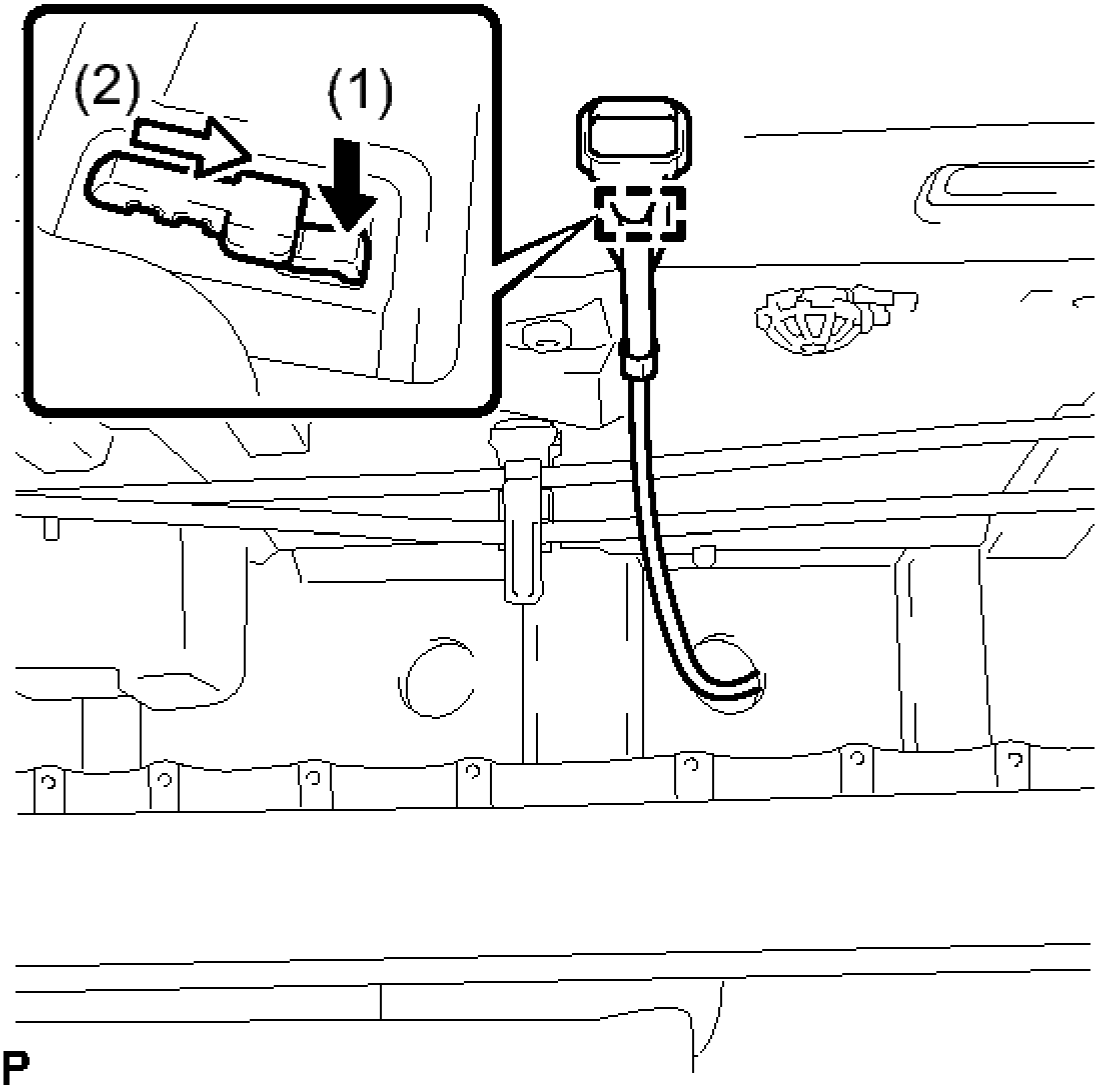

Fig. 202: Identifying Rear Seatback Lock Sub-Assembly Hook RH
Courtesy of TOYOTA MOTOR SALES, U.S.A., INC.

b. Remove the 2 nuts and rear seatback lock sub-assembly RH.

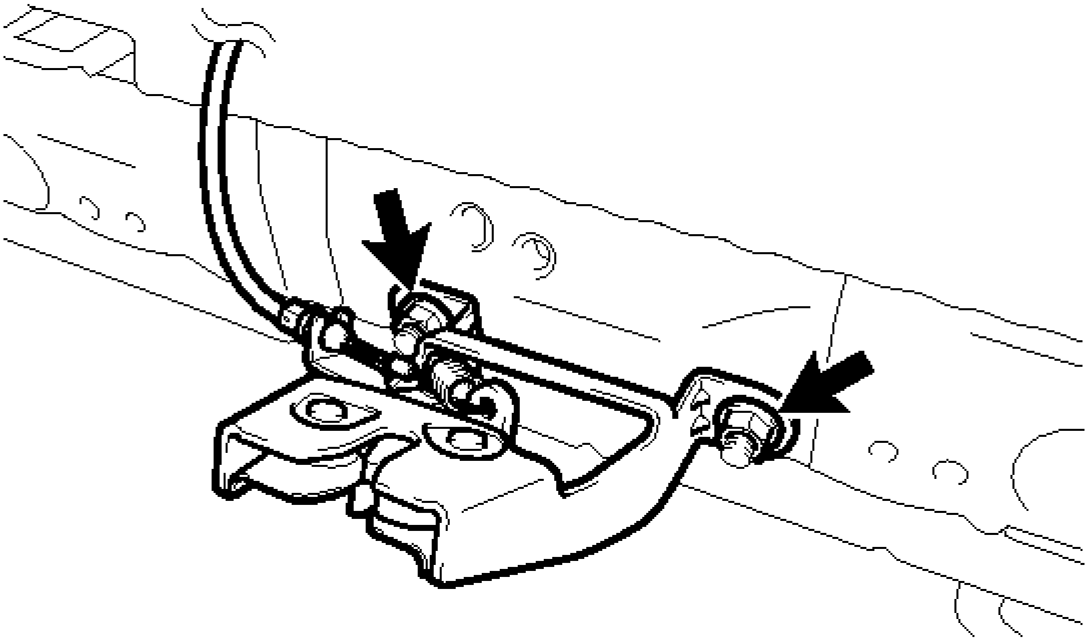

Fig. 203: Identifying Rear Seatback Lock Sub-Assembly Nuts
Courtesy of TOYOTA MOTOR SALES, U.S.A., INC.

INSTALLATION

INSTALLATION

1. **INSTALL REAR SEATBACK LOCK SUB-ASSEMBLY LH**
    a. Install the rear seatback lock sub-assembly LH with the 2 nuts.

       Torque: 18 N*m (184 kgf*cm, 13 ft.*lbf)

2. **INSTALL REAR SEATBACK LOCK SUB-ASSEMBLY RH**
    a. Install the rear seatback lock sub-assembly RH with the 2 nuts.

       Torque: 18 N*m (184 kgf*cm, 13 ft.*lbf)

    b. Engage the hook as shown in the illustration.

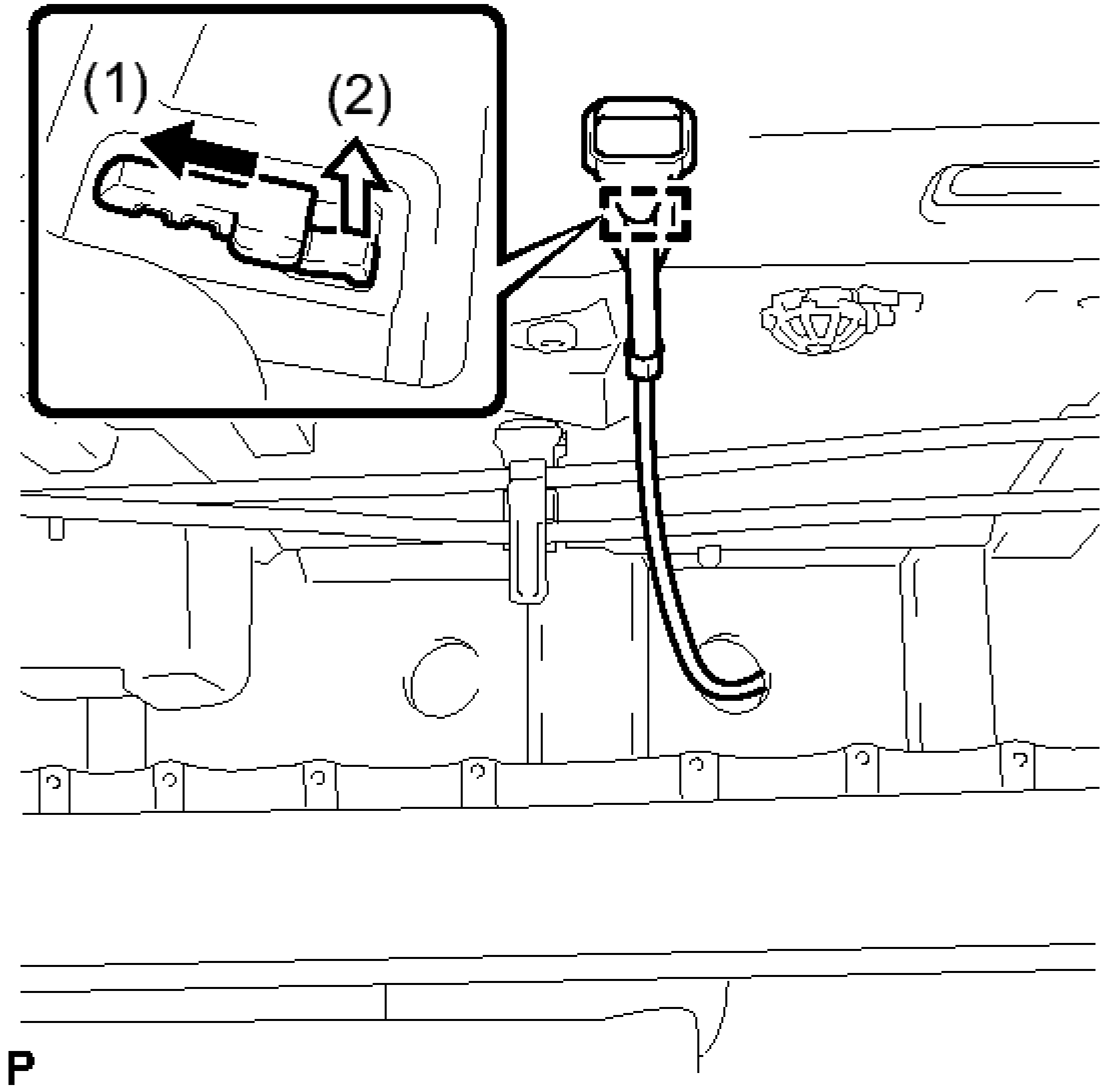

Fig. 204: Identifying Rear Seatback Lock Sub-Assembly Hook And Nuts
Courtesy of TOYOTA MOTOR SALES, U.S.A., INC.

3. **INSTALL NO. 1 ROOM PARTITION BOARD**
    a. Engage the 5 clips to install the No. 1 room partition board.
    b. Install the 4 clips.
4. **INSTALL PACKAGE TRAY TRIM PANEL ASSEMBLY** . Refer to **INSTALLATION - Step 3**
5. **INSTALL REAR SEAT SHOULDER BELT COVER** . Refer to **INSTALLATION - Step 4**
6. **INSTALL CHILD RESTRAINT SEAT TETHER ANCHOR COVER** . Refer to **INSTALLATION - Step 5**
7. **INSTALL CENTER STOP LIGHT SET** . Refer to **INSTALLATION - Step 1**
8. **CONNECT REAR SEAT INNER WITH CENTER BELT ASSEMBLY LH** . Refer to **INSTALLATION - Step 7**
9. **INSTALL CHILD RESTRAINT SEAT ANCHOR BRACKET SUB-ASSEMBLY LH** . Refer to

INSTALLATION - Step 1

10. **CONNECT REAR SEAT OUTER BELT ASSEMBLY (for LH Side)** . Refer to **INSTALLATION - Step 9**
11. **CONNECT REAR SEAT OUTER BELT ASSEMBLY (for RH Side)** . Refer to **INSTALLATION - Step 10**
12. **INSTALL ROOF SIDE INNER GARNISH LH** . Refer to **INSTALLATION - Step 21**
13. **INSTALL ROOF SIDE INNER GARNISH RH**

    HINT:

    Use the same procedure as for the LH side. Refer to **INSTALLATION - Step 21** .

14. **INSTALL REAR DOOR OPENING TRIM WEATHERSTRIP LH** . Refer to **INSTALLATION - Step 26**
15. **INSTALL REAR DOOR OPENING TRIM WEATHERSTRIP RH** . Refer to **INSTALLATION - Step 33**
16. **INSTALL REAR SIDE SEATBACK ASSEMBLY LH** See step 1
17. **INSTALL REAR SIDE SEATBACK ASSEMBLY RH** See step 2
18. **INSTALL REAR SEATBACK ASSEMBLY LH** See step 3
19. **INSTALL NO. 2 ROOM PARTITION COVER** See step 4
20. **INSTALL REAR SEATBACK ASSEMBLY RH** See step 5
21. **INSTALL REAR SEAT CUSHION LOCK HOOK** See step 6
22. **INSTALL REAR SEAT CUSHION ASSEMBLY** See step 7
23. **CONNECT CABLE TO AUXILIARY BATTERY NEGATIVE TERMINAL**

    NOTE: **When disconnecting the cable, some systems need to be initialized after the cable is reconnected. Refer to INITIALIZATION .**

24. **INSTALL LUGGAGE TRIM SERVICE HOLE COVER** . Refer to **INSTALLATION - Step 3**
25. **INSPECT SRS WARNING LIGHT**

    for Separate Type Yaw Rate Sensor: Refer to **DIAGNOSIS SYSTEM**

    for Built-in Type Yaw Rate Sensor: Refer to **DIAGNOSIS SYSTEM**

FRONT SEAT ASSEMBLY (FOR TMMK MADE MANUAL SEAT)

COMPONENTS

ILLUSTRATION

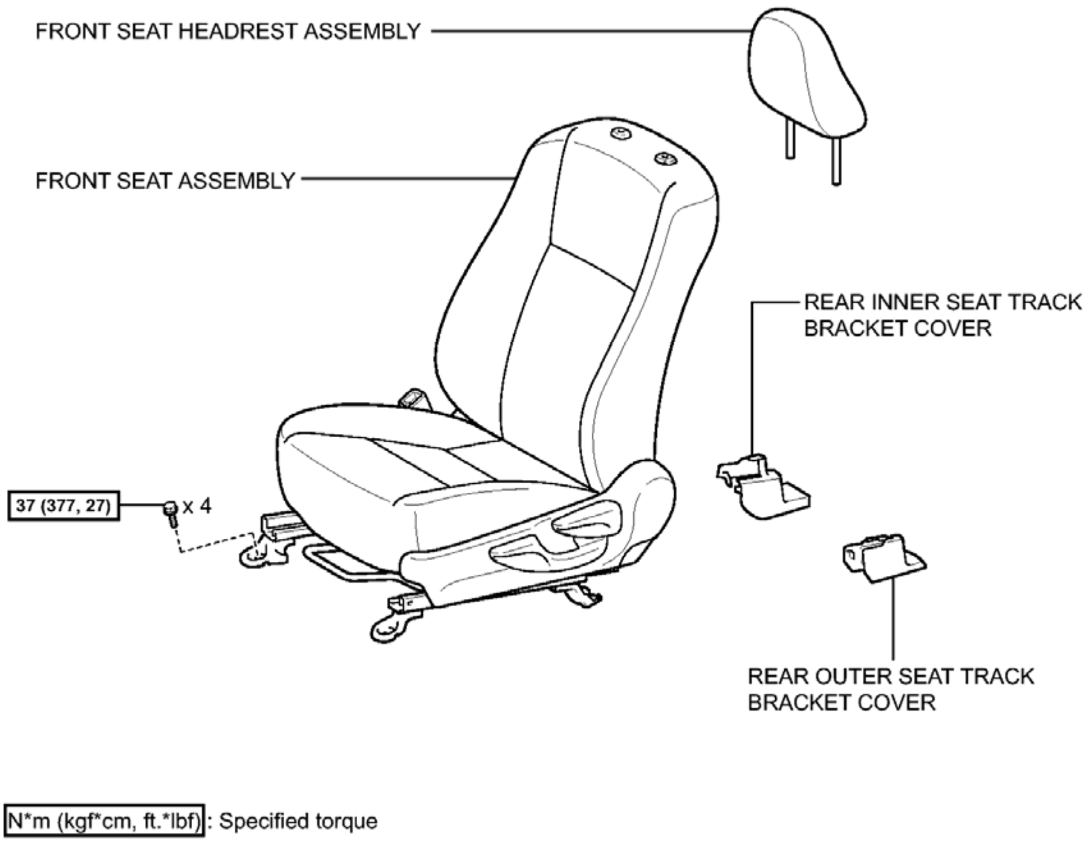
FRONT SEAT HEADREST ASSEMBLY
FRONT SEAT ASSEMBLY
REAR INNER SEAT TRACK BRACKET COVER
37 (377, 27)
x 4
REAR OUTER SEAT TRACK BRACKET COVER
N*m (kgf*cm, ft.*lbf) : Specified torque

c

Fig. 1: Identifying Front Seat Assembly (For TMMK Made Manual Seat) Replacement Components With Torque Specifications (1 Of 9)
Courtesy of TOYOTA MOTOR SALES, U.S.A., INC.

ILLUSTRATION

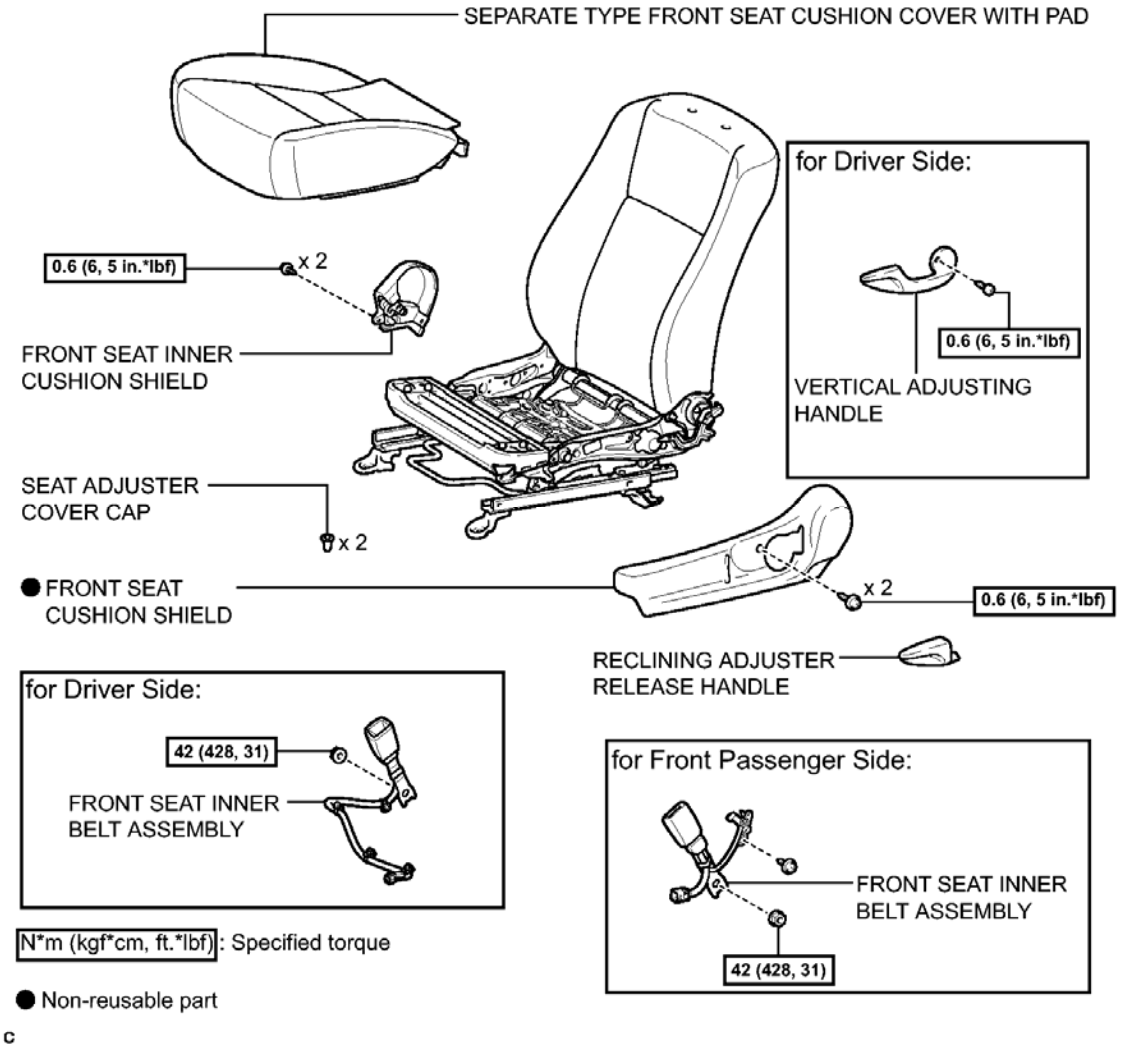
SEPARATE TYPE FRONT SEAT CUSHION COVER WITH PAD
0.6 (6, 5 in.*lbf)
x 2
FRONT SEAT INNER
CUSHION SHIELD
for Driver Side:
0.6 (6, 5 in.*lbf)
VERTICAL ADJUSTING
HANDLE
SEAT ADJUSTER
COVER CAP
x 2
● FRONT SEAT
CUSHION SHIELD
x 2
0.6 (6, 5 in.*lbf)
RECLINING ADJUSTER
RELEASE HANDLE
for Driver Side:
42 (428, 31)
FRONT SEAT INNER
BELT ASSEMBLY
for Front Passenger Side:
FRONT SEAT INNER
BELT ASSEMBLY
42 (428, 31)
N*m (kgf*cm, ft.*lbf): Specified torque
● Non-reusable part
c

Fig. 2: Identifying Front Seat Assembly (For TMMK Made Manual Seat) Replacement Components With Torque Specifications (2 Of 9)

Courtesy of TOYOTA MOTOR SALES, U.S.A., INC.

ILLUSTRATION

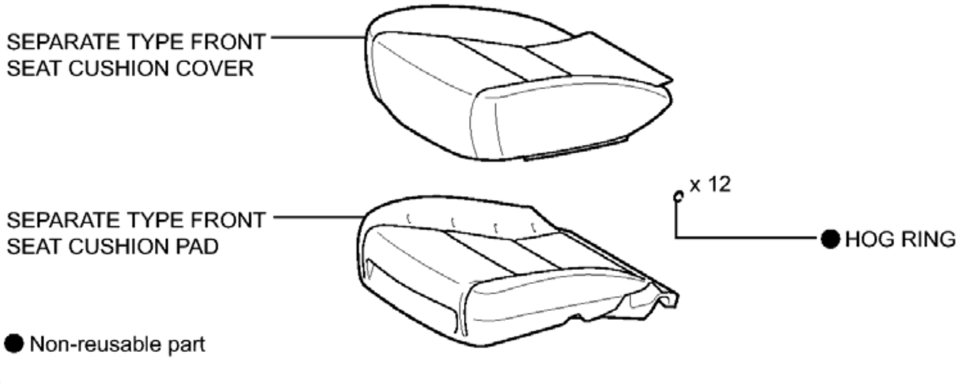
SEPARATE TYPE FRONT SEAT CUSHION COVER
SEPARATE TYPE FRONT SEAT CUSHION PAD
x 12
● HOG RING
● Non-reusable part
c

Fig. 3: Identifying Front Seat Assembly (For TMMK Made Manual Seat) Replacement Components (3 Of 9)

Courtesy of TOYOTA MOTOR SALES, U.S.A., INC.

ILLUSTRATION

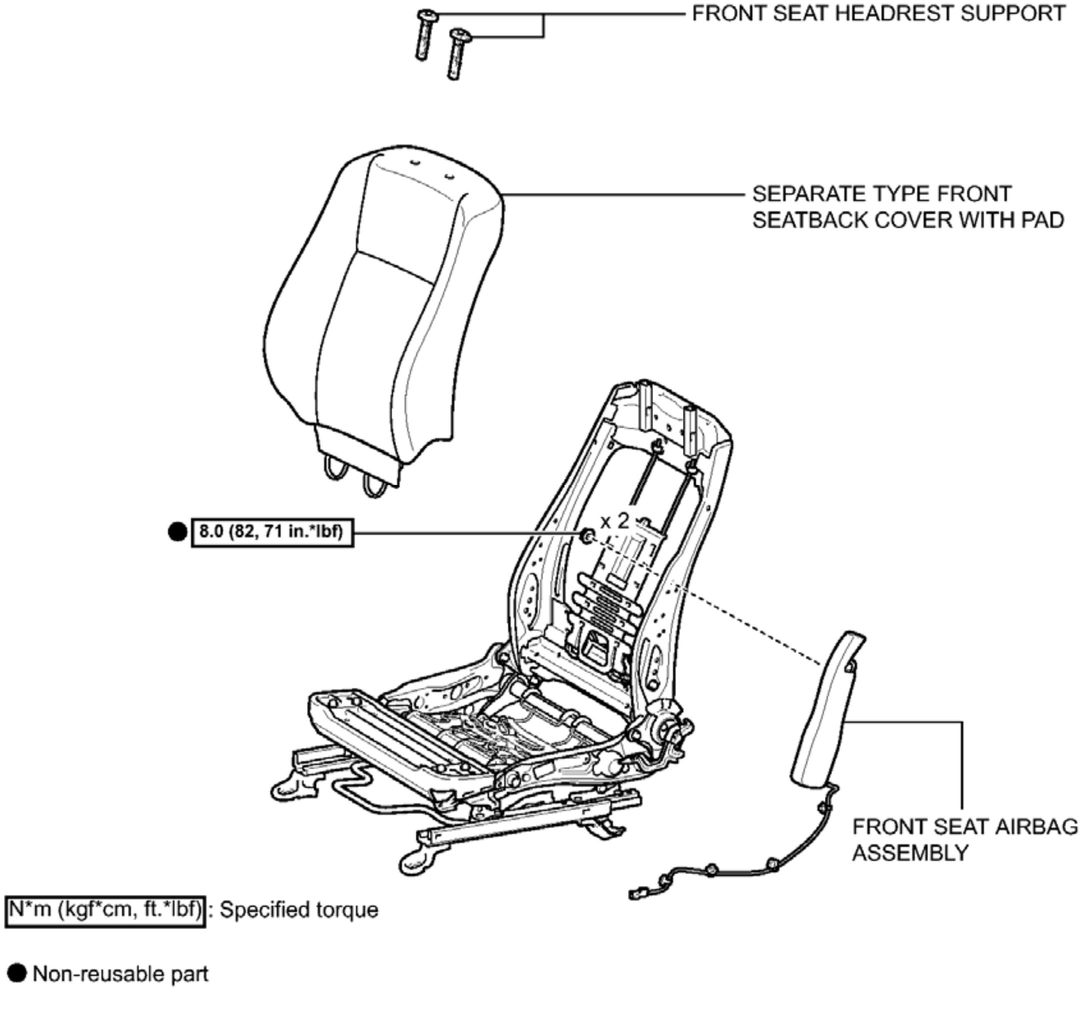
FRONT SEAT HEADREST SUPPORT
SEPARATE TYPE FRONT SEATBACK COVER WITH PAD
● 8.0 (82, 71 in.*lbf)
x 2
FRONT SEAT AIRBAG ASSEMBLY
N*m (kgf*cm, ft.*lbf): Specified torque
● Non-reusable part
c

Fig. 4: Identifying Front Seat Assembly (For TMMK Made Manual Seat) Replacement Components With Torque Specifications (4 Of 9)
Courtesy of TOYOTA MOTOR SALES, U.S.A., INC.

ILLUSTRATION

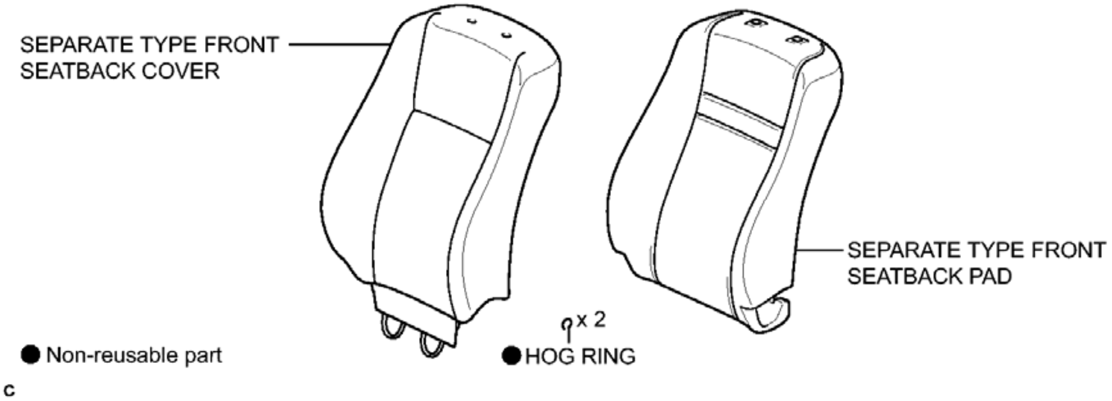
SEPARATE TYPE FRONT SEATBACK COVER
SEPARATE TYPE FRONT SEATBACK PAD
x 2
● Non-reusable part
● HOG RING
c

Fig. 5: Identifying Front Seat Assembly (For TMMK Made Manual Seat) Replacement Components (5 Of 9)
Courtesy of TOYOTA MOTOR SALES, U.S.A., INC.

ILLUSTRATION

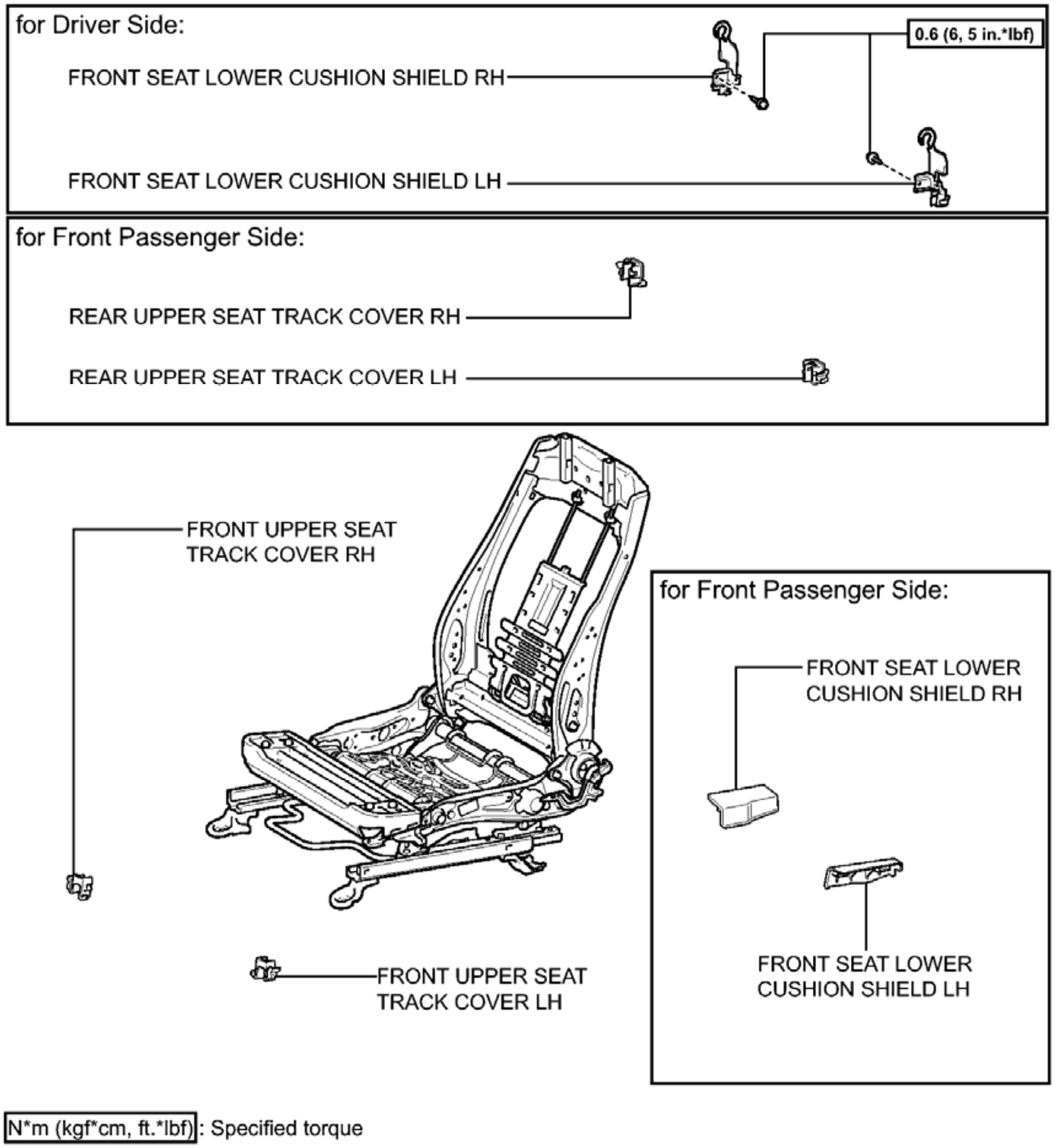
for Driver Side:
FRONT SEAT LOWER CUSHION SHIELD RH
0.6 (6, 5 in.*lbf)
FRONT SEAT LOWER CUSHION SHIELD LH
for Front Passenger Side:
REAR UPPER SEAT TRACK COVER RH
REAR UPPER SEAT TRACK COVER LH
FRONT UPPER SEAT TRACK COVER RH
for Front Passenger Side:
FRONT SEAT LOWER CUSHION SHIELD RH
FRONT SEAT LOWER CUSHION SHIELD LH
FRONT UPPER SEAT TRACK COVER LH
N*m (kgf*cm, ft.*lbf): Specified torque
c

Fig. 6: Identifying Front Seat Assembly (For TMMK Made Manual Seat) Replacement Components With Torque Specifications (6 Of 9)
Courtesy of TOYOTA MOTOR SALES, U.S.A., INC.

ILLUSTRATION

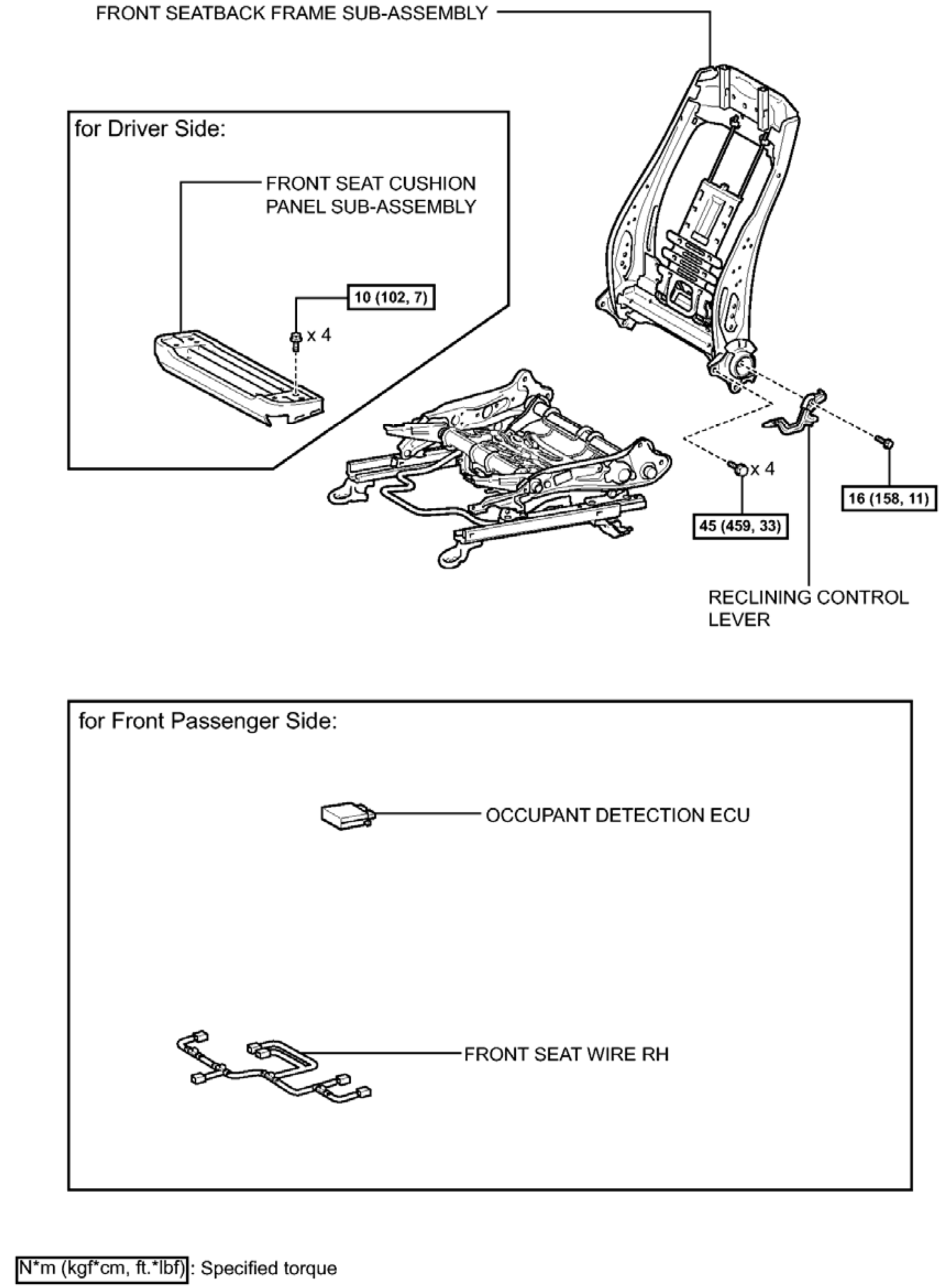
FRONT SEATBACK FRAME SUB-ASSEMBLY
for Driver Side:
FRONT SEAT CUSHION PANEL SUB-ASSEMBLY
10 (102, 7)
x 4
x 4
16 (158, 11)
45 (459, 33)
RECLINING CONTROL LEVER
for Front Passenger Side:
OCCUPANT DETECTION ECU
FRONT SEAT WIRE RH
N*m (kgf*cm, ft.*lbf): Specified torque

c

Fig. 7: Identifying Front Seat Assembly (For TMMK Made Manual Seat) Replacement Components With Torque Specifications (7 Of 9)
Courtesy of TOYOTA MOTOR SALES, U.S.A., INC.

ILLUSTRATION

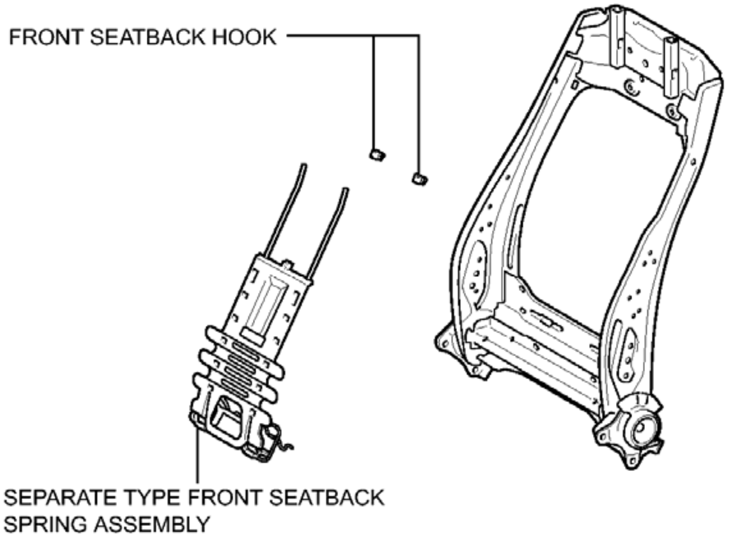
FRONT SEATBACK HOOK
SEPARATE TYPE FRONT SEATBACK
SPRING ASSEMBLY

c

Fig. 8: Identifying Front Seat Assembly (For TMMK Made Manual Seat) Replacement Components (8 Of 9)
Courtesy of TOYOTA MOTOR SALES, U.S.A., INC.

ILLUSTRATION

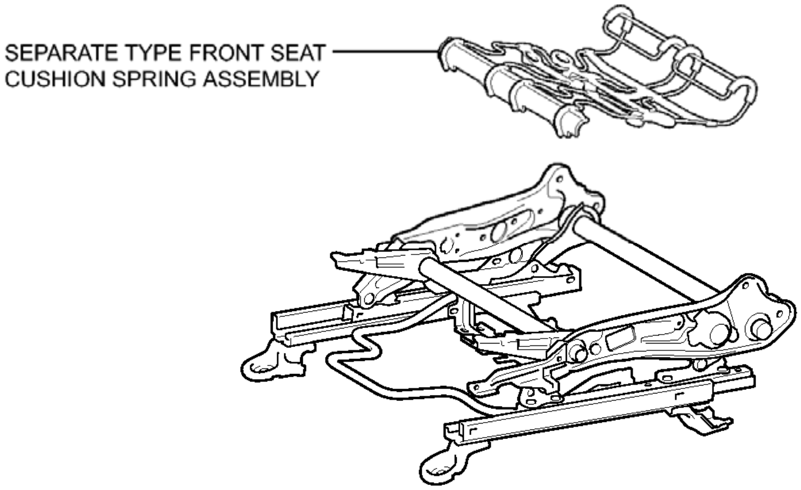

c

Fig. 9: Identifying Front Seat Assembly (For TMMK Made Manual Seat) Replacement Components (9 Of 9)
Courtesy of TOYOTA MOTOR SALES, U.S.A., INC.

REMOVAL

REMOVAL

1. **PRECAUTION**

WARNING:

- **Be sure to read Precaution thoroughly before servicing.**

  For Separate Type Yaw Rate Sensor: Refer to PRECAUTION .

  For Built-in Type Yaw Rate Sensor: Refer to PRECAUTION .

- **If the side airbag was deployed, replace the front seat airbag assembly, front seatback frame sub-assembly, separate type front seatback pad and separate type front seatback cover with the necessary parts in accordance with the extent of the collision damage.**

NOTE: **After turning the ignition switch off, waiting time may be required before disconnecting the cable from the negative (-) battery terminal. Therefore, make sure to read the disconnecting the cable from the negative (-) battery**

terminal notices before proceeding with work. Refer to PRECAUTION .

2. **DISCONNECT CABLE FROM NEGATIVE BATTERY TERMINAL**

WARNING: **Wait at least 90 seconds after disconnecting the cable from the negative (-) battery terminal to disable the SRS system.**

NOTE: **When disconnecting the cable, some systems need to be initialized after the cable is reconnected. Refer to INITIALIZATION .**

3. **REMOVE FRONT SEAT HEADREST ASSEMBLY**
4. **REMOVE REAR OUTER SEAT TRACK BRACKET COVER**
   a. Lift up the seat track adjusting handle and move the seat to the foremost position.
   b. Disengage the 2 claws and remove the rear outer seat track bracket cover.

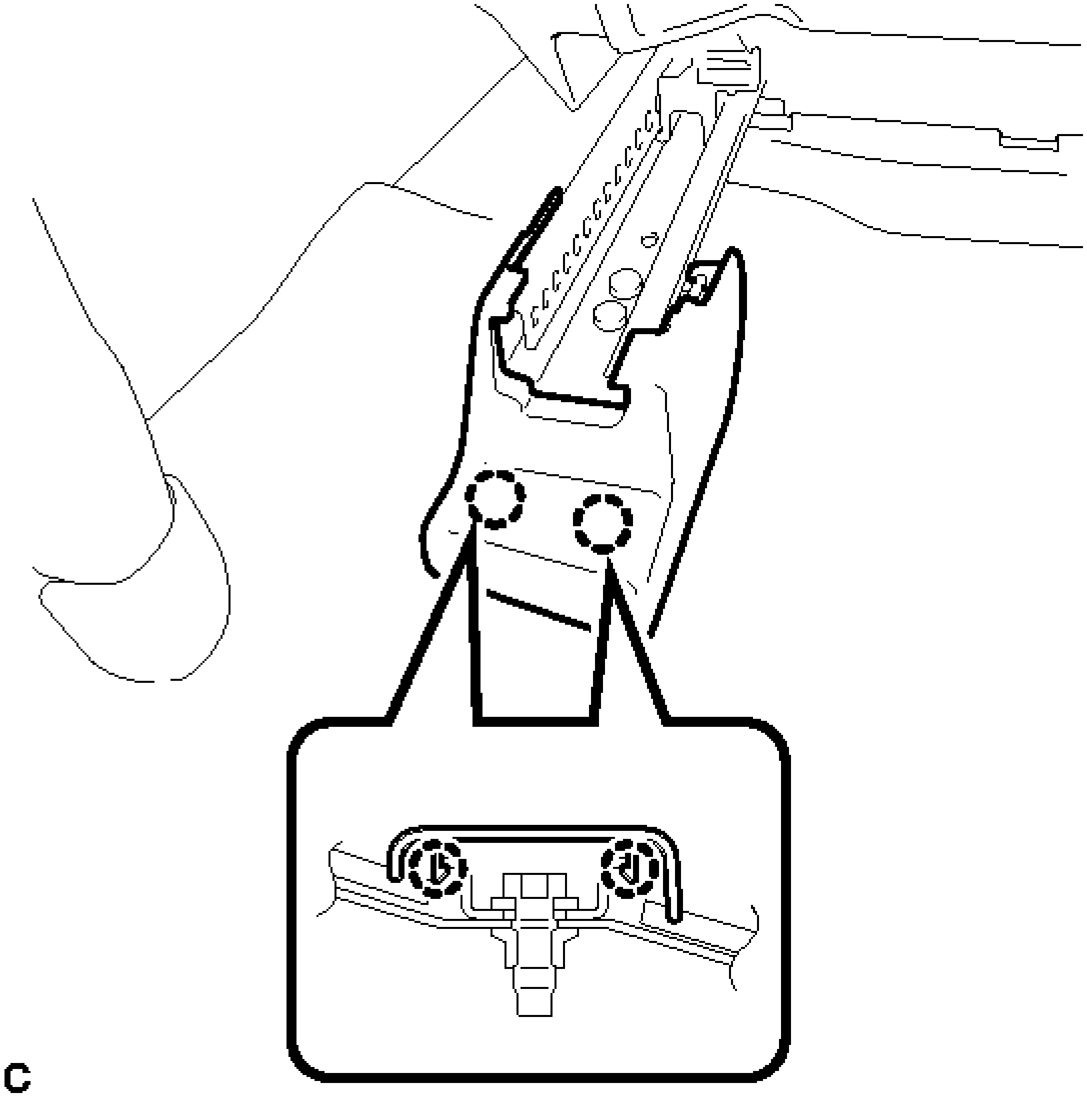

Fig. 10: Locating Rear Outer Seat Track Bracket Cover Claws
Courtesy of TOYOTA MOTOR SALES, U.S.A., INC.

5. **REMOVE REAR INNER SEAT TRACK BRACKET COVER**
    a. Disengage the 2 claws and remove the rear inner seat track bracket cover.

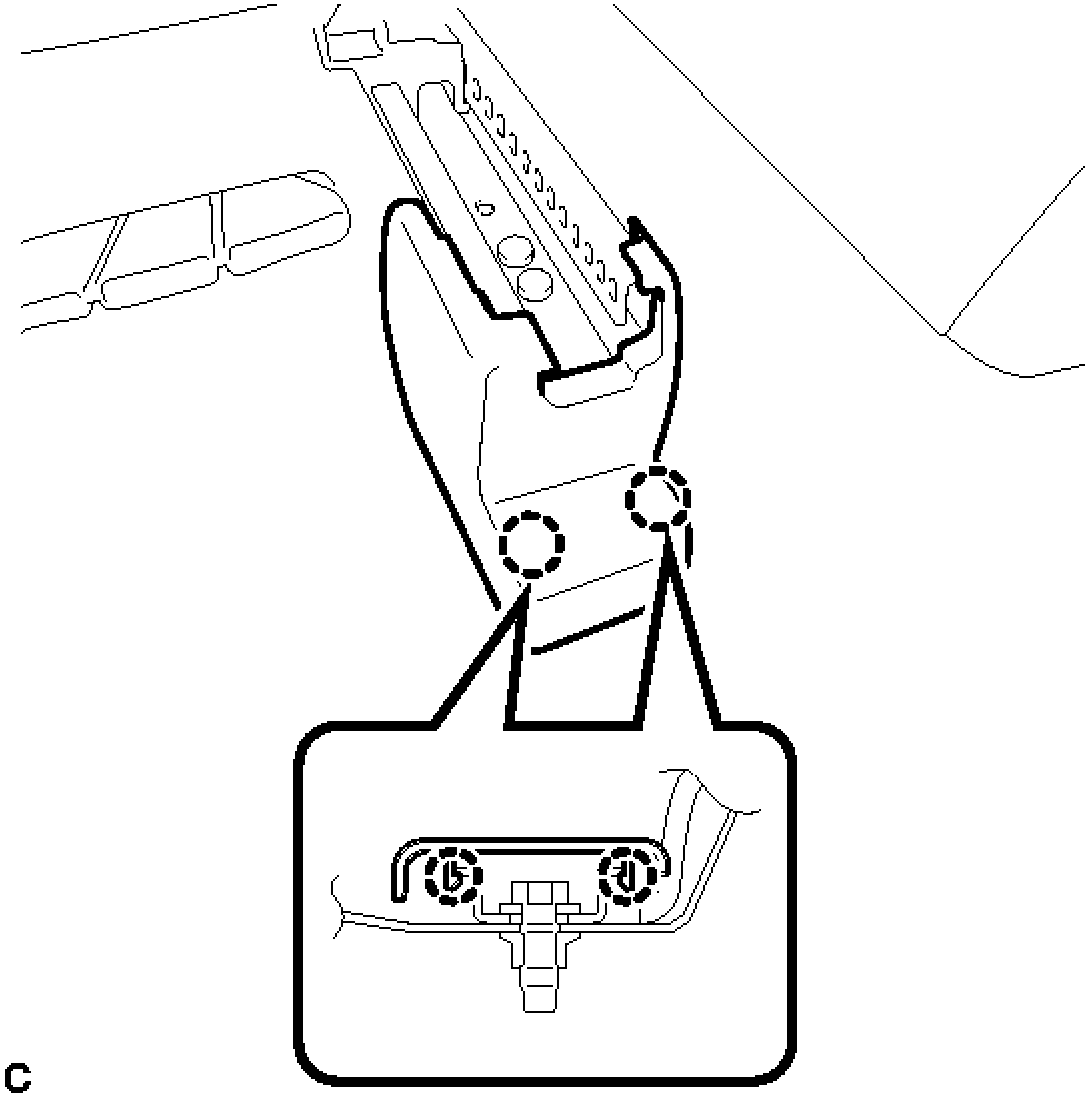

Fig. 11: Locating Rear Inner Seat Track Bracket Cover Claws
Courtesy of TOYOTA MOTOR SALES, U.S.A., INC.

6. **REMOVE FRONT SEAT ASSEMBLY**
   a. Remove the 2 bolts on the rear side of the seat.

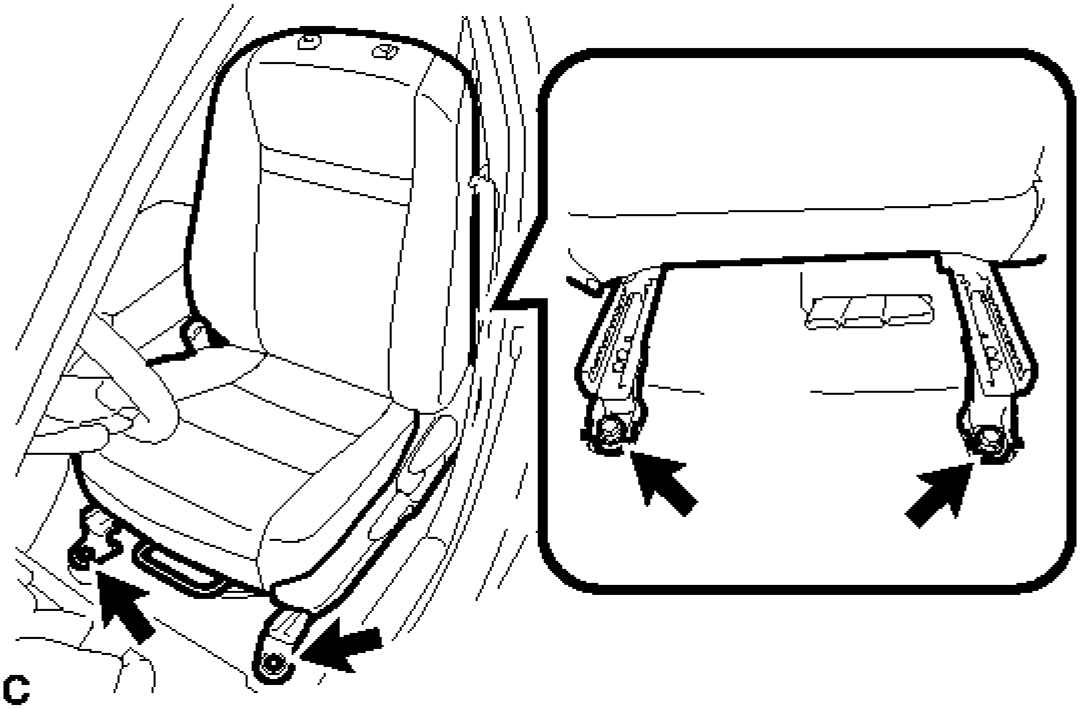

Fig. 12: Locating Front Seat Assembly Bolts
Courtesy of TOYOTA MOTOR SALES, U.S.A., INC.

b. Lift up the seat track adjusting handle and move the seat to the rearmost position.
c. Remove the 2 bolts on the front side of the seat.
d. Disconnect each connector and clamp under the seat.
e. Lift up the seat track adjusting handle and move the seat to the center position. Then, operate the reclining adjuster release handle and move the seatback to the upright position.
f. Remove the front seat assembly.

NOTE: Be careful not to damage the vehicle body.

DISASSEMBLY

DISASSEMBLY

1. **REMOVE SEAT ADJUSTER COVER CAP**
    a. Remove the 2 seat adjuster cover caps.

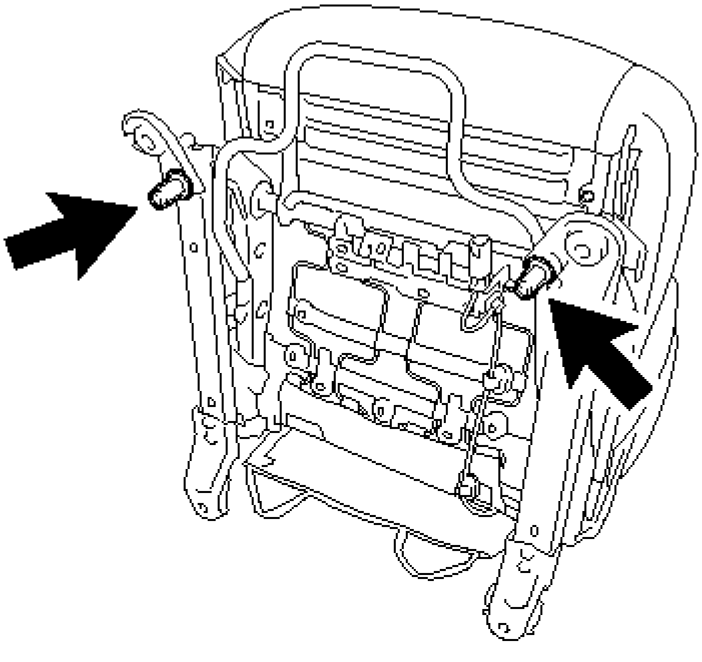

Fig. 13: Locating Seat Adjuster Cover Caps
Courtesy of TOYOTA MOTOR SALES, U.S.A., INC.

2. **REMOVE RECLINING ADJUSTER RELEASE HANDLE**
   a. Using a screwdriver with its tip wrapped with protective tape, disengage the claw and remove the reclining adjuster release handle.

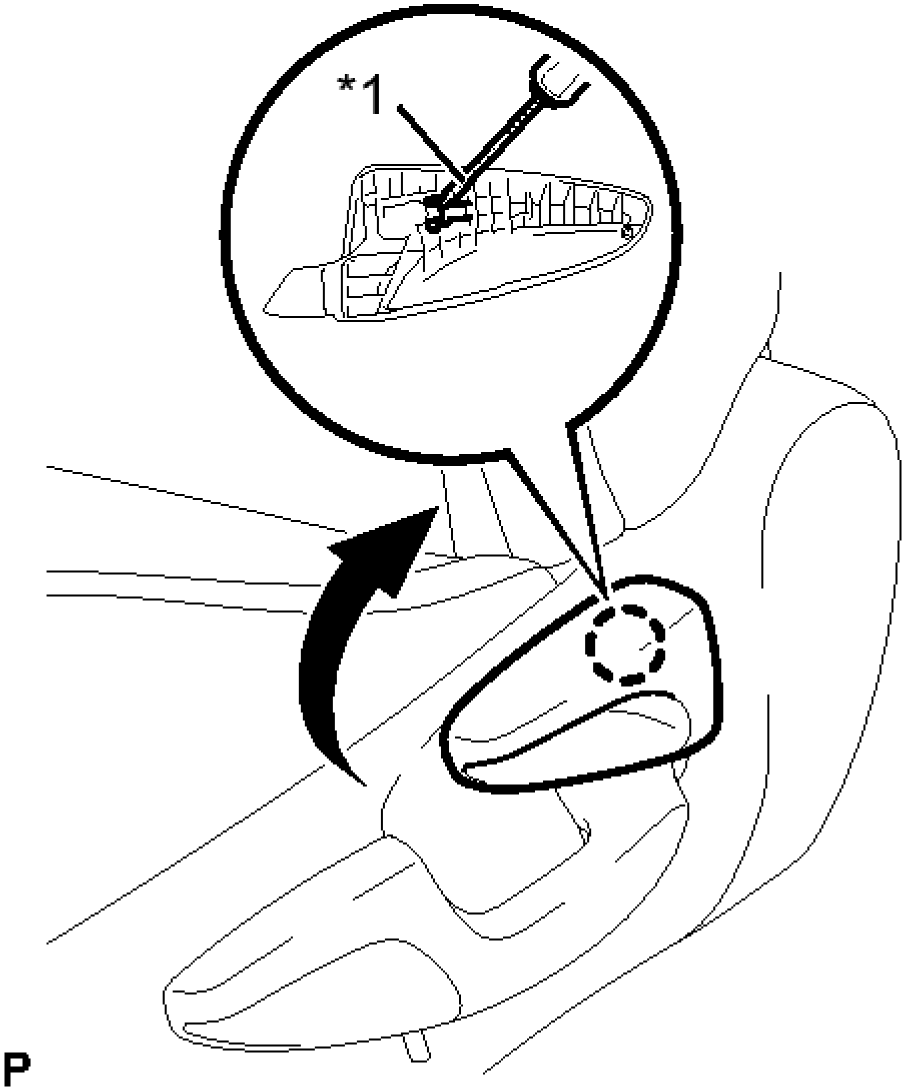

Fig. 14: Removing Reclining Adjuster Release Handle
Courtesy of TOYOTA MOTOR SALES, U.S.A., INC.

TEXT IN ILLUSTRATION

*1	Protective Tape

3. **REMOVE VERTICAL ADJUSTING HANDLE (for Driver Side)**
    a. Remove the screw and vertical adjusting handle.

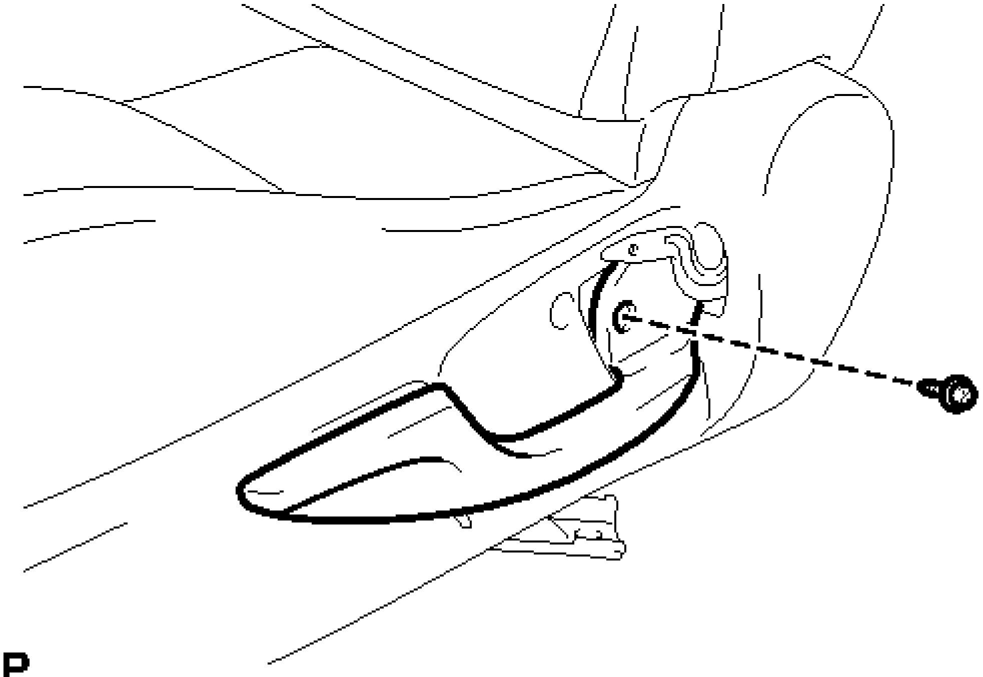

Fig. 15: Identifying Vertical Adjusting Handle (For Driver Side) And Fastener
Courtesy of TOYOTA MOTOR SALES, U.S.A., INC.

4. **DISCONNECT SEPARATE TYPE FRONT SEATBACK COVER**
    a. Disconnect the 2 rubber bands of the separate type front seatback cover.

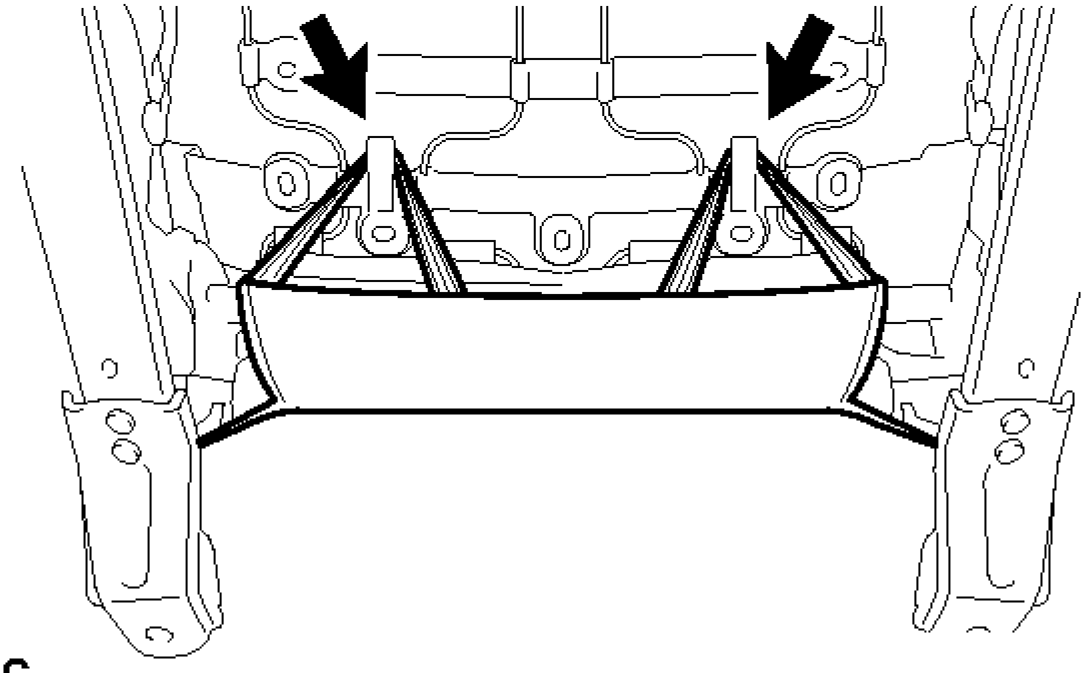

Fig. 16: Identifying Rubber Bands Of Front Seatback Cover (For TMMK Made Manual

Seat)
Courtesy of TOYOTA MOTOR SALES, U.S.A., INC.

5. **REMOVE FRONT SEAT CUSHION SHIELD**
   a. Remove the 2 screws.

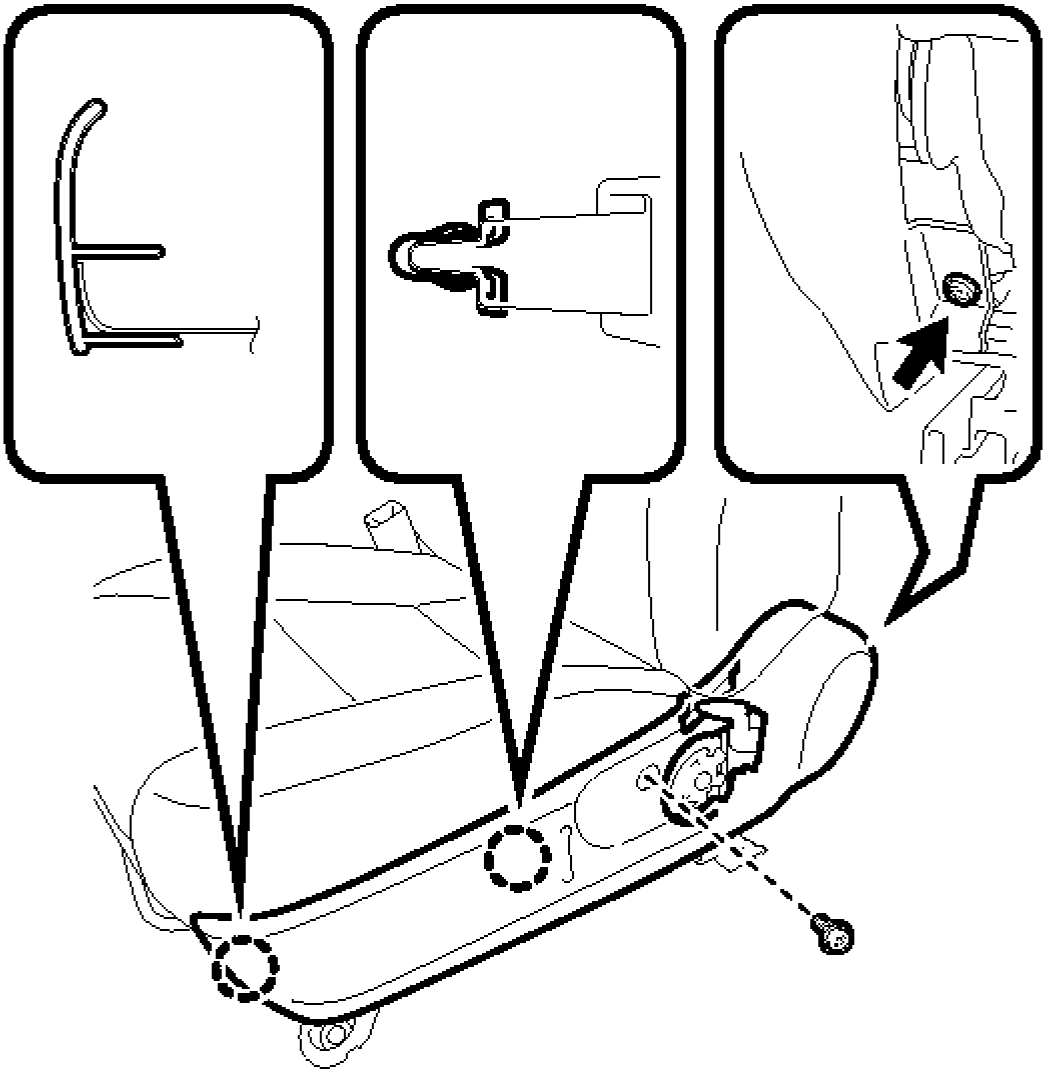

Fig. 17: Locating Front Seat Cushion Shield Claws And Fasteners
Courtesy of TOYOTA MOTOR SALES, U.S.A., INC.

   b. Disengage the 2 claws to remove the front seat cushion shield.

6. **REMOVE FRONT SEAT INNER CUSHION SHIELD**
   a. Remove the 2 screws and front seat inner cushion shield.

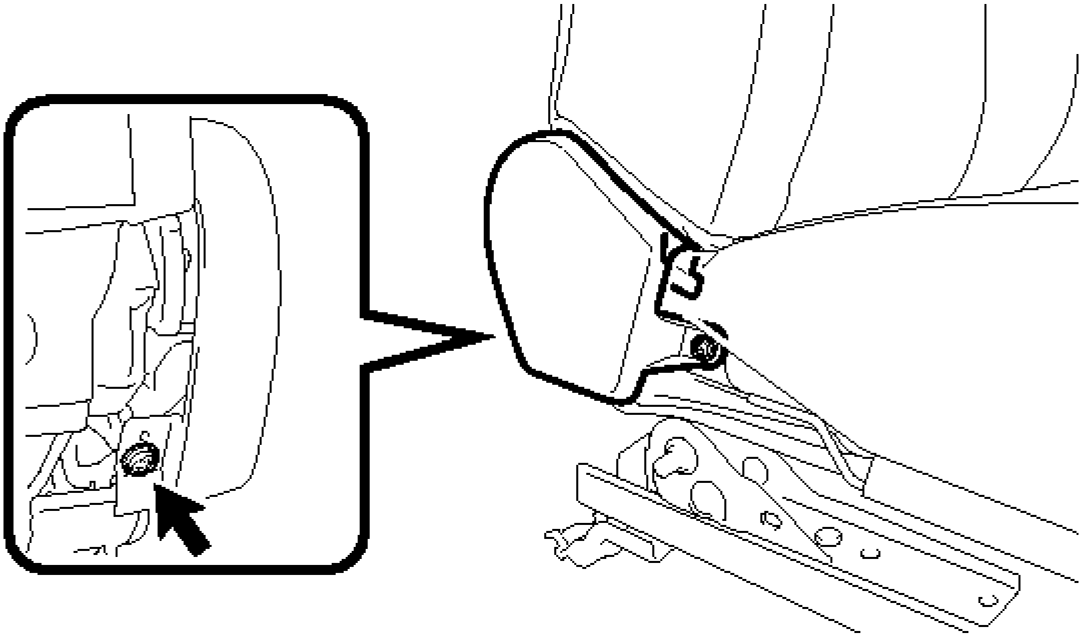

Fig. 18: Locating Front Seat Inner Cushion Shield Fasteners
Courtesy of TOYOTA MOTOR SALES, U.S.A., INC.

7. **REMOVE FRONT SEAT INNER BELT ASSEMBLY (for Driver Side)** . Refer to **REMOVAL - Step 2** .
8. **REMOVE FRONT SEAT INNER BELT ASSEMBLY (for Front Passenger Side)** . Refer to **REMOVAL - Step 4** .
9. **REMOVE SEPARATE TYPE FRONT SEAT CUSHION COVER WITH PAD**
    a. Disengage the claw and 3 clamps to separate the front seat airbag assembly wire harness.

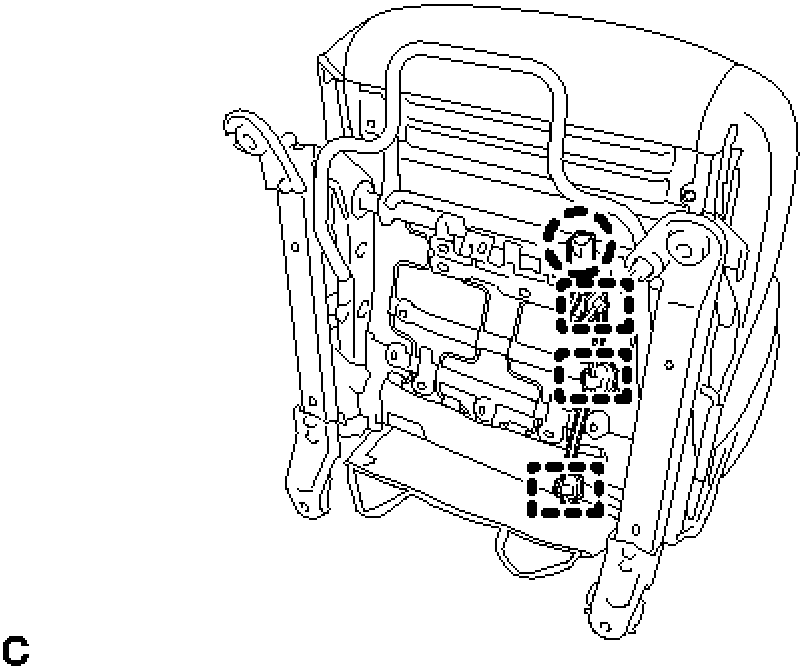

Fig. 19: Identifying Front Seatback Cover Claw And Clamps (For TMMK Made Manual Seat)
Courtesy of TOYOTA MOTOR SALES, U.S.A., INC.

b. for Driver Side:
   1. Separate the separate type front seat cushion cover.

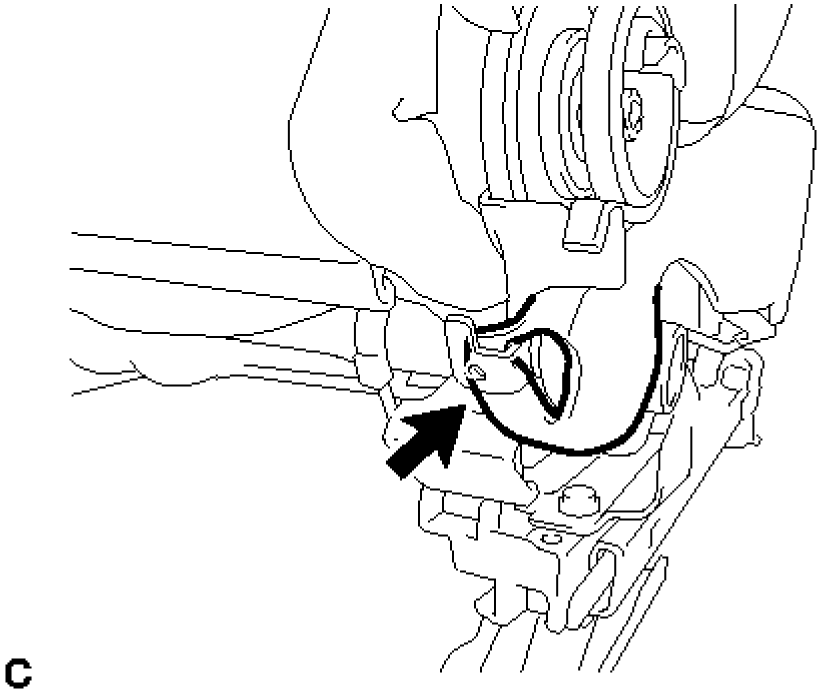

Fig. 20: Identifying Driver Side Front Seat Cushion Cover
Courtesy of TOYOTA MOTOR SALES, U.S.A., INC.

c. for Front Passenger Side:
   1. Separate the separate type front seat cushion cover.

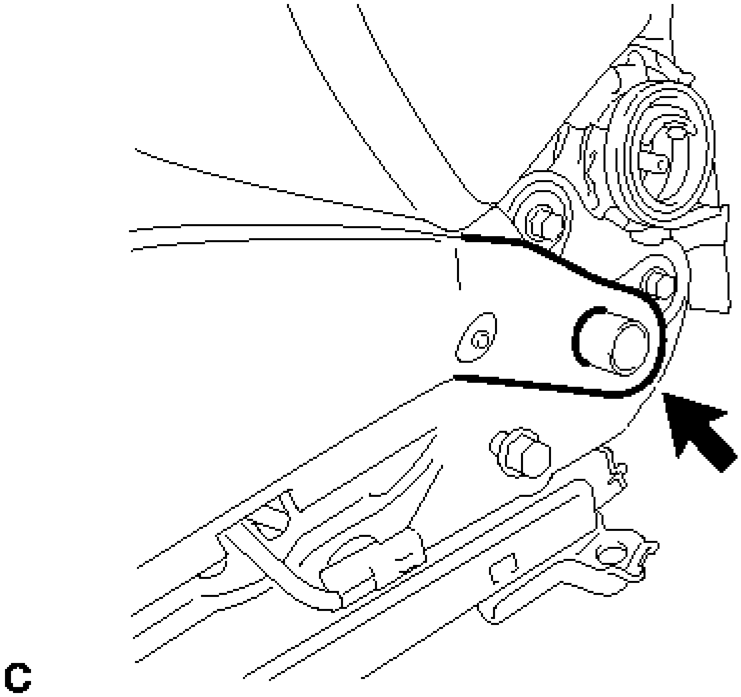

Fig. 21: Identifying Passenger Side Front Seat Cushion Cover
Courtesy of TOYOTA MOTOR SALES, U.S.A., INC.

d. Disengage each hook and remove the separate type front seat cushion cover with pad.

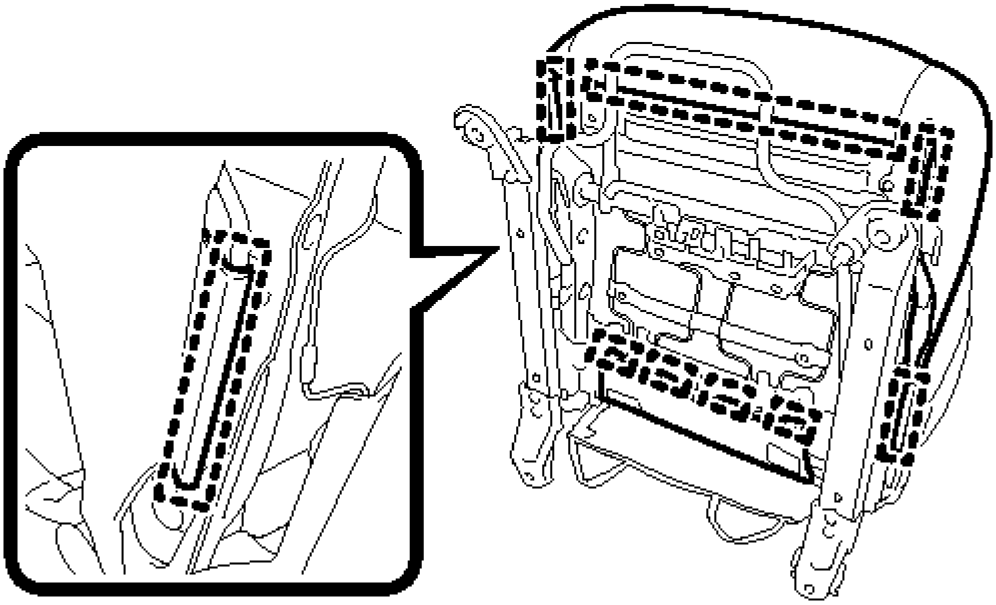

Fig. 22: Identifying Front Seat Cushion Cover Hooks
Courtesy of TOYOTA MOTOR SALES, U.S.A., INC.

10. **REMOVE SEPARATE TYPE FRONT SEAT CUSHION COVER**
    a. Remove the 12 hog rings and the separate type front seat cushion cover from the separate type front seat cushion pad.

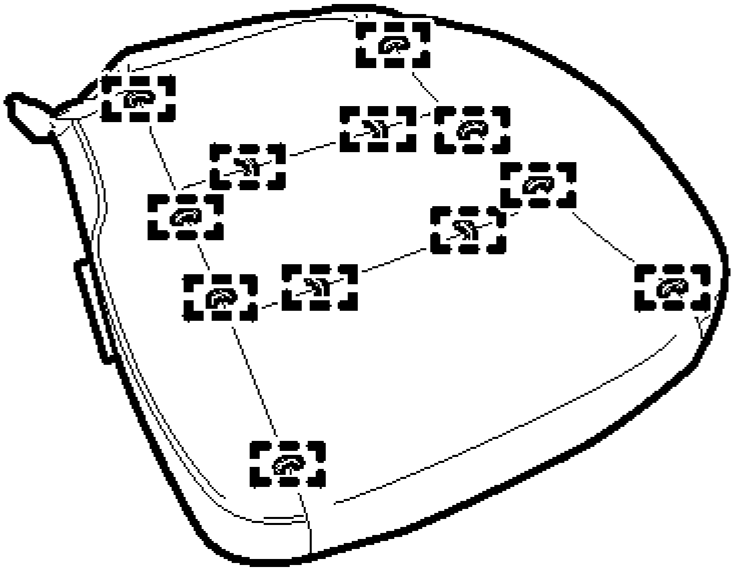

Fig. 23: Locating Front Seat Cushion Cover Hog Rings
Courtesy of TOYOTA MOTOR SALES, U.S.A., INC.

11. **REMOVE SEPARATE TYPE FRONT SEATBACK COVER WITH PAD**

    a. Disengage the hook.

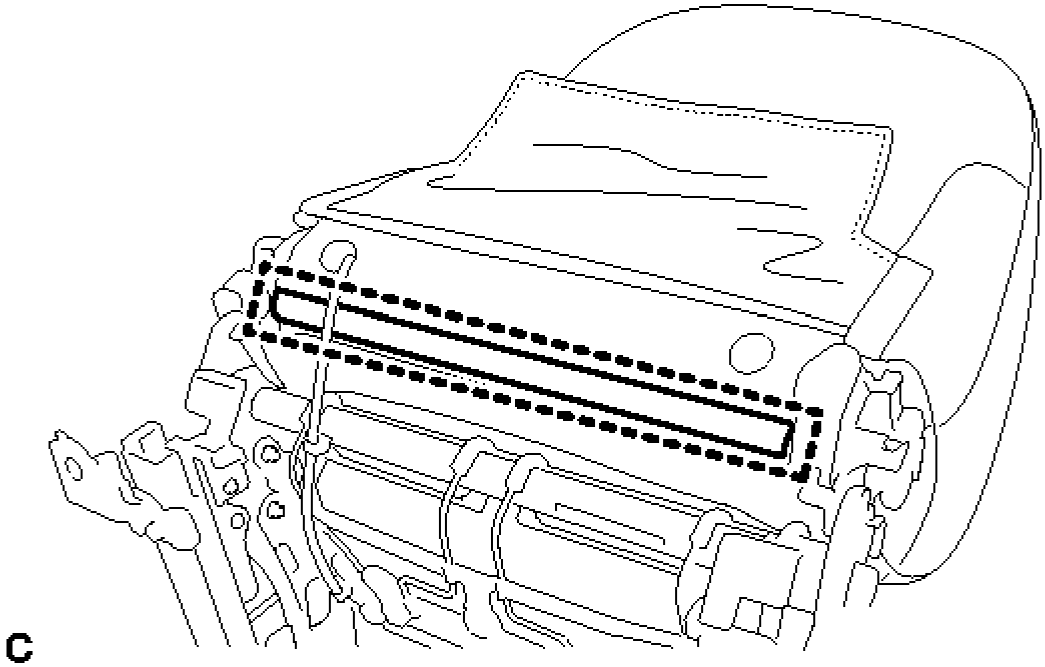

Fig. 24: Locating Front Seatback Cover Hook
Courtesy of TOYOTA MOTOR SALES, U.S.A., INC.

    b. Disengage the 2 fasteners.

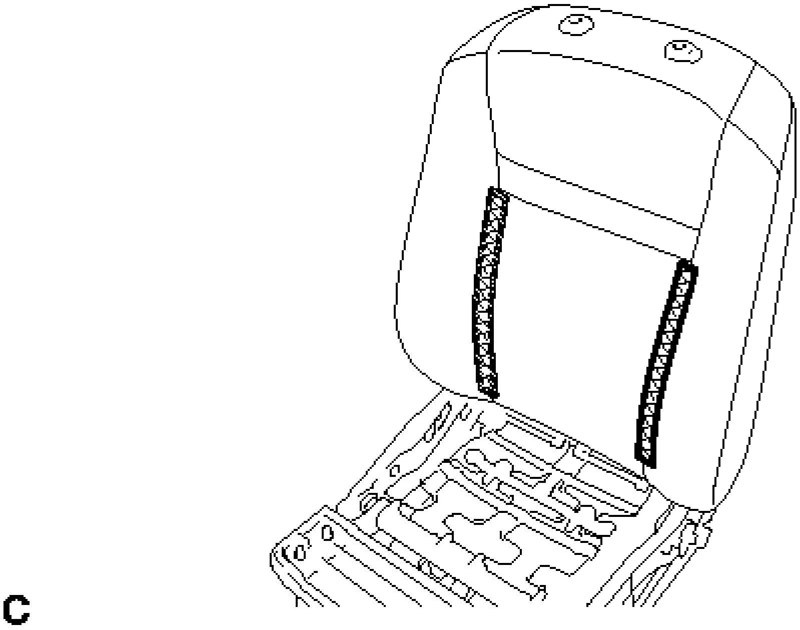

Fig. 25: Identifying Front Seatback Cover Fasteners
Courtesy of TOYOTA MOTOR SALES, U.S.A., INC.

c. Turn back the separate type front seatback cover.

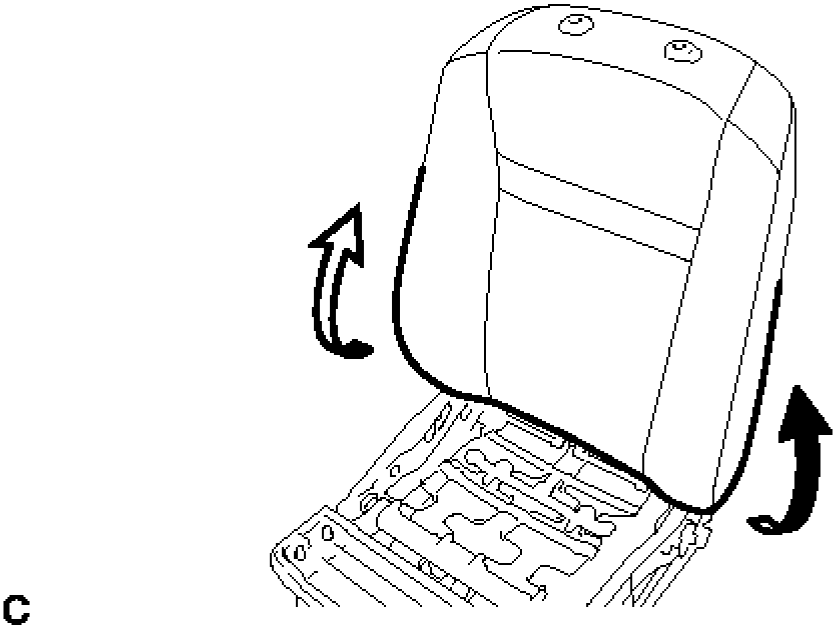

Fig. 26: Turning Back Front Seatback Cover
Courtesy of TOYOTA MOTOR SALES, U.S.A., INC.

d. Disengage the 2 hooks.

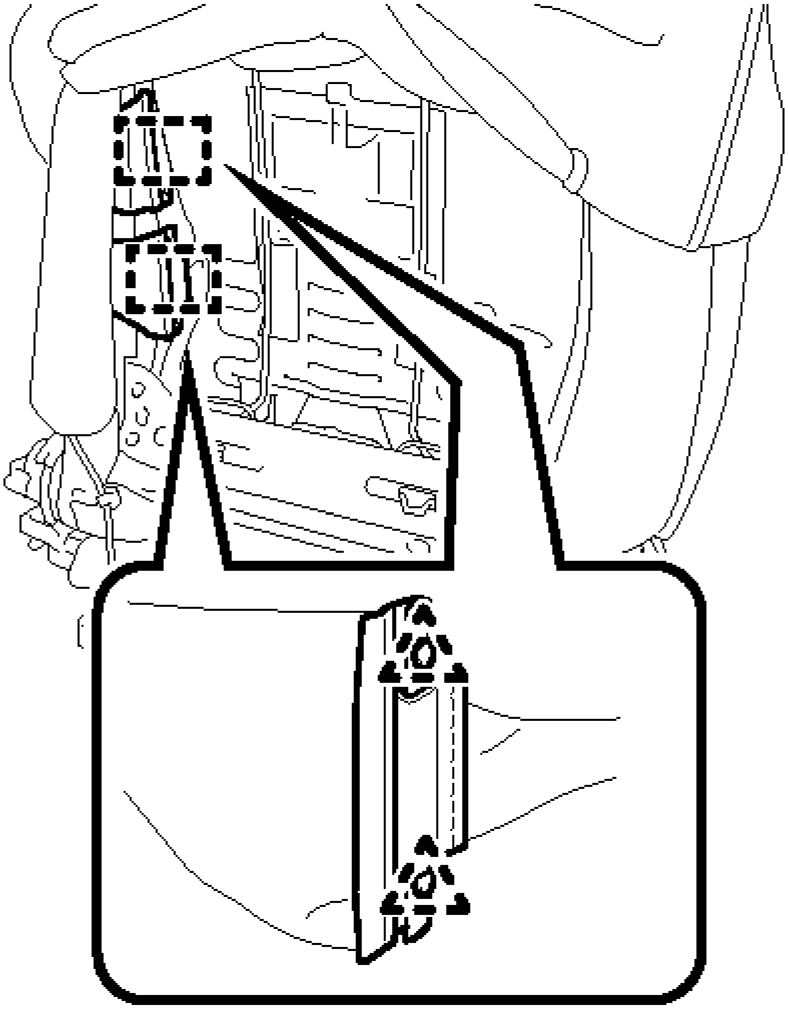

Fig. 27: Identifying Front Seatback Cover Hooks
Courtesy of TOYOTA MOTOR SALES, U.S.A., INC.

1. Remove the 4 clips.
2. Slide each hook to disengage them.

e. Disengage the 4 claws and remove the 2 front seat headrest supports.

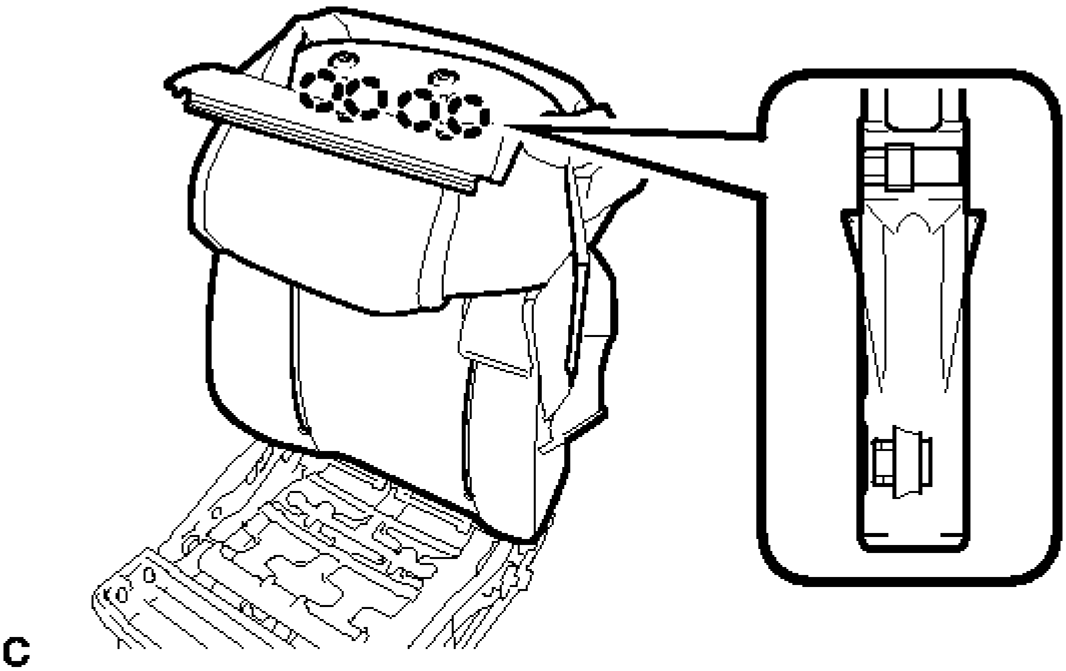

Fig. 28: Identifying Front Seatback Cover Headrest Support Claws
Courtesy of TOYOTA MOTOR SALES, U.S.A., INC.

f. Remove the separate type front seatback cover with pad.

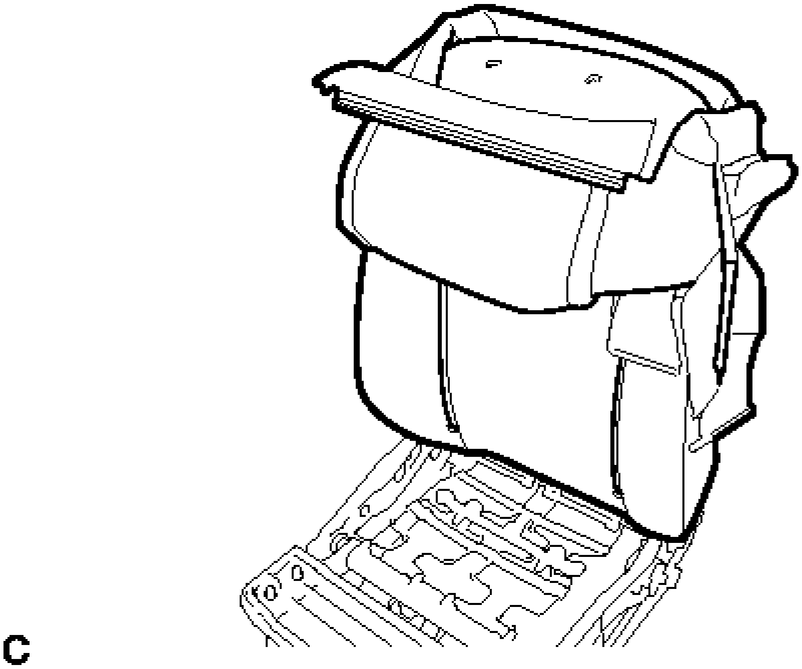

Fig. 29: Identifying Front Seatback Cover
Courtesy of TOYOTA MOTOR SALES, U.S.A., INC.

12. **REMOVE FRONT SEAT AIRBAG ASSEMBLY** . Refer to **REMOVAL - Step 13** .
13. **REMOVE SEPARATE TYPE FRONT SEATBACK COVER**
    a. Remove the 2 hog rings.

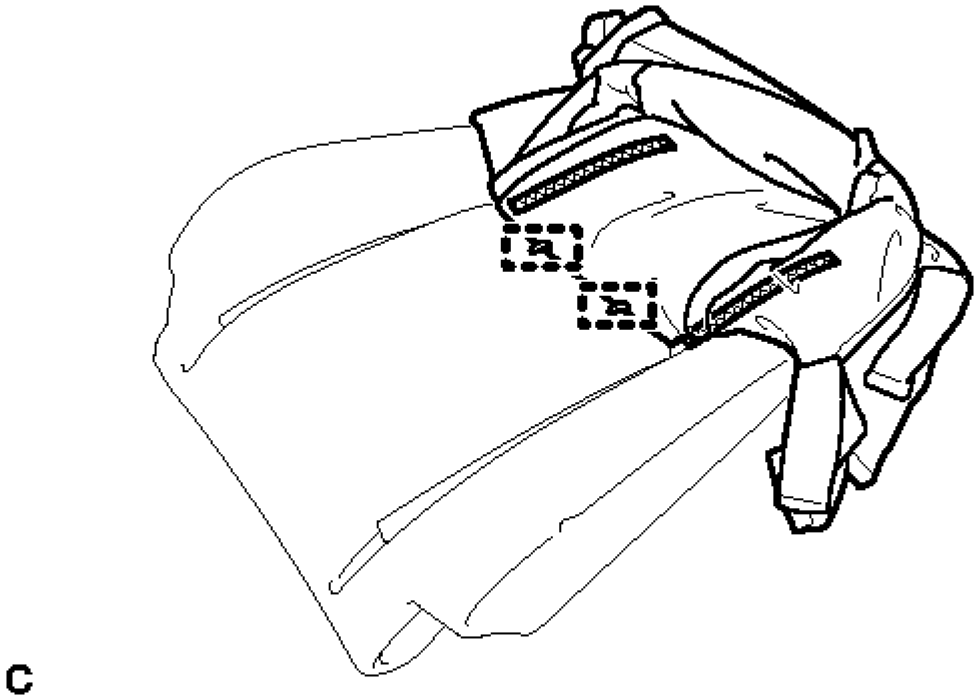

Fig. 30: Locating Front Seatback Cover Hog Rings
Courtesy of TOYOTA MOTOR SALES, U.S.A., INC.

    b. Disengage the 2 fasteners to remove the separate type front seatback cover from the separate type front seatback pad.
14. **REMOVE FRONT SEAT LOWER CUSHION SHIELD LH (for Driver Side)**
    a. Remove the screw.

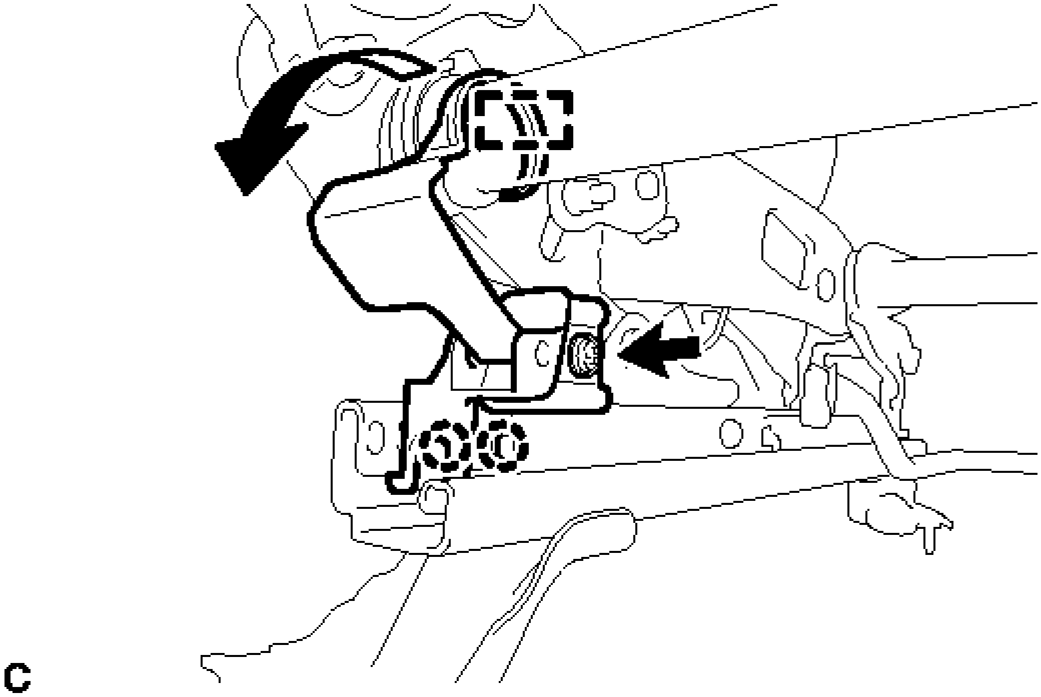

Fig. 31: Removing Front Seat Lower Cushion Shield LH (For Driver Side)
Courtesy of TOYOTA MOTOR SALES, U.S.A., INC.

b. Disengage the hook as shown in the illustration.

c. Disengage the 2 claws to remove the front seat lower cushion shield LH.

15. **REMOVE FRONT SEAT LOWER CUSHION SHIELD RH (for Driver Side)**

a. Remove the screw.

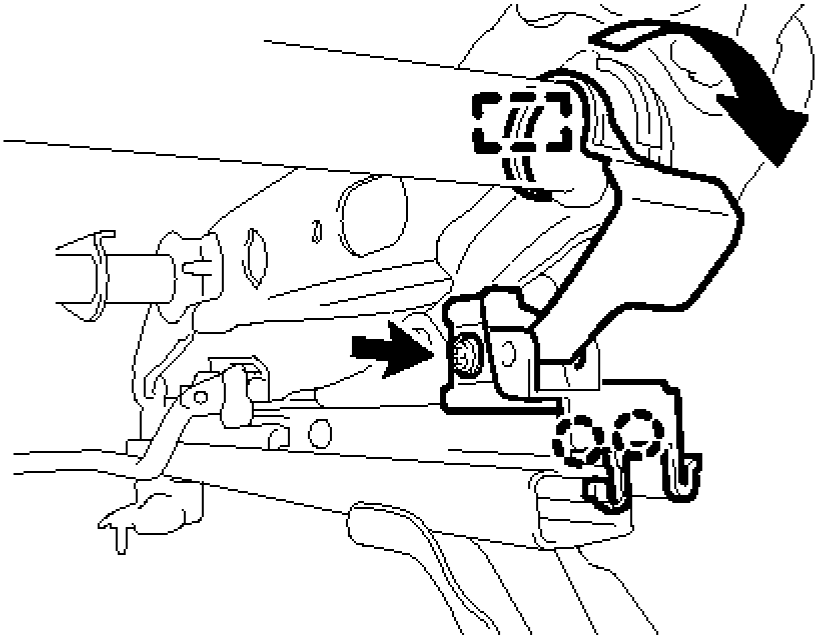

Fig. 32: Removing Front Seat Lower Cushion Shield RH (For Driver Side)
Courtesy of TOYOTA MOTOR SALES, U.S.A., INC.

b. Disengage the hook as shown in the illustration.

c. Disengage the 2 claws to remove the front seat lower cushion shield RH.

16. **REMOVE FRONT SEAT LOWER CUSHION SHIELD LH (for Front Passenger Side)**

    a. Disengage the 2 claws to remove the front seat lower cushion shield LH.

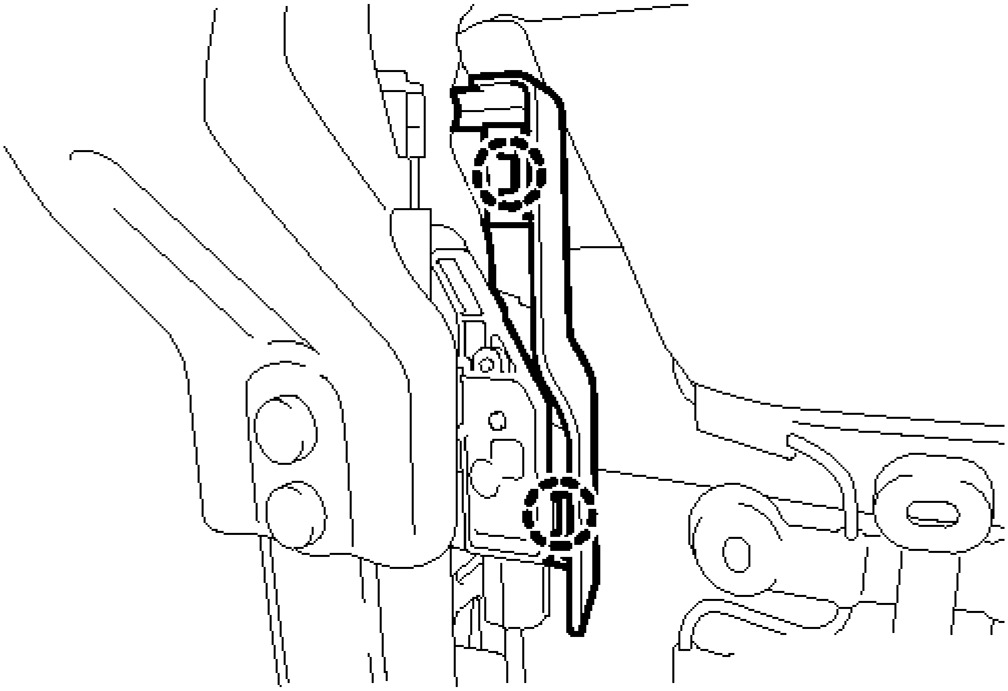

Fig. 33: Locating Front Seat Lower Cushion Shield LH (For Front Passenger Side) Claws
Courtesy of TOYOTA MOTOR SALES, U.S.A., INC.

17. **REMOVE FRONT SEAT LOWER CUSHION SHIELD RH (for Front Passenger Side)**
    a. Disengage the 2 claws to remove the front seat lower cushion shield RH.

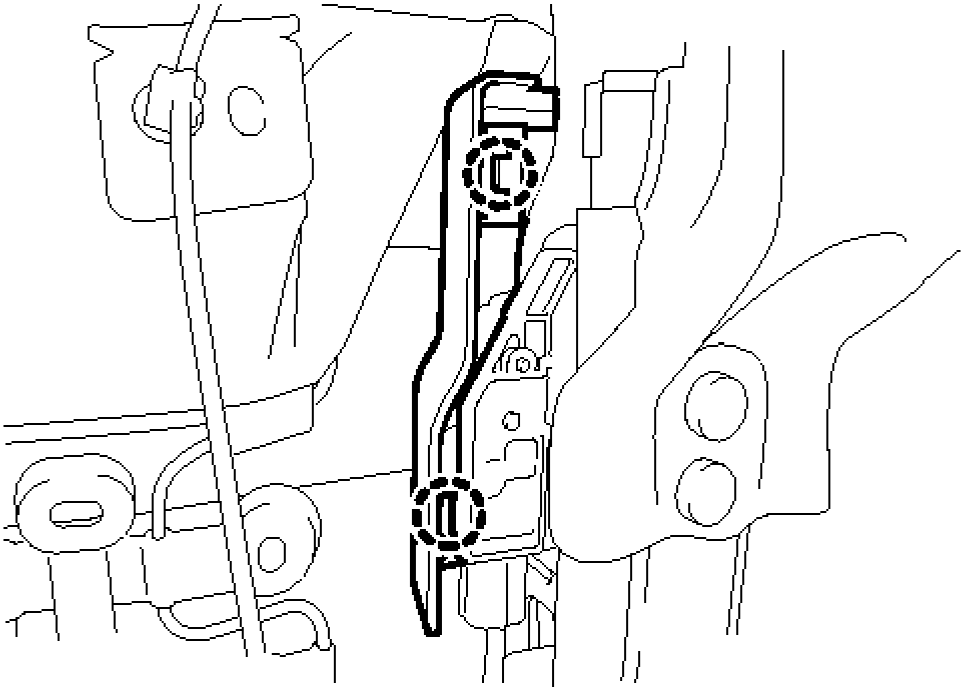

Fig. 34: Locating Front Seat Lower Cushion Shield RH (For Front Passenger Side) Claws

Courtesy of TOYOTA MOTOR SALES, U.S.A., INC.

18. **REMOVE FRONT UPPER SEAT TRACK COVER LH**
    a. Disengage the 2 claws to remove the front upper seat track cover LH.

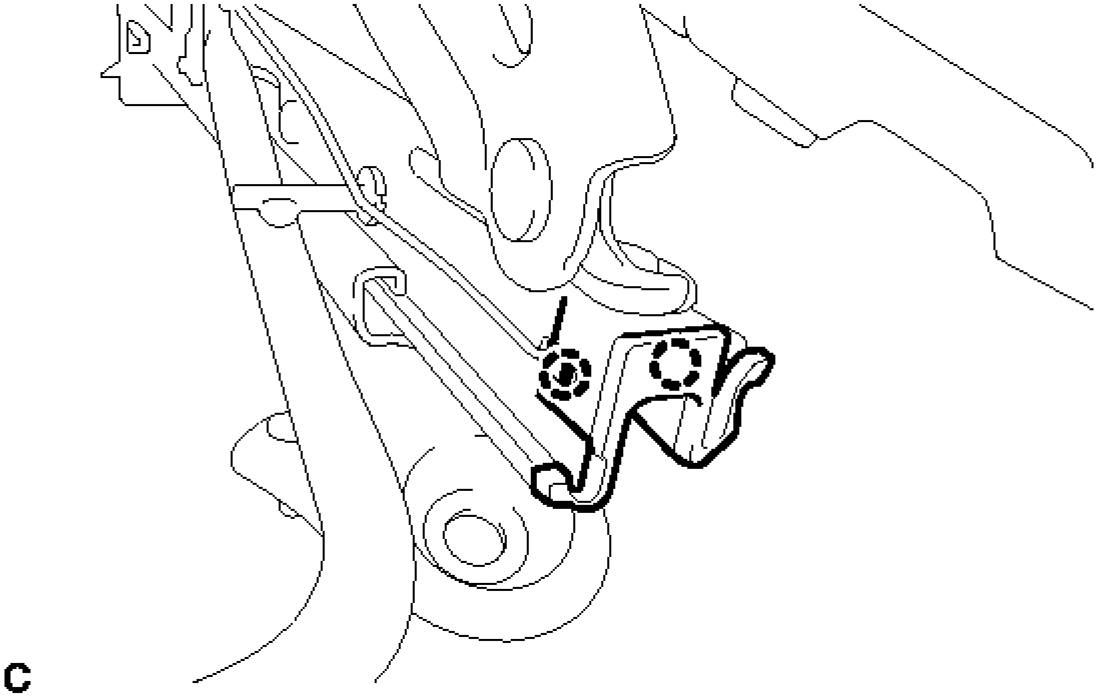

Fig. 35: Locating Front Upper Seat Track Cover LH Claws
Courtesy of TOYOTA MOTOR SALES, U.S.A., INC.

19. **REMOVE FRONT UPPER SEAT TRACK COVER RH**
    a. Disengage the 2 claws to remove the front upper seat track cover RH.

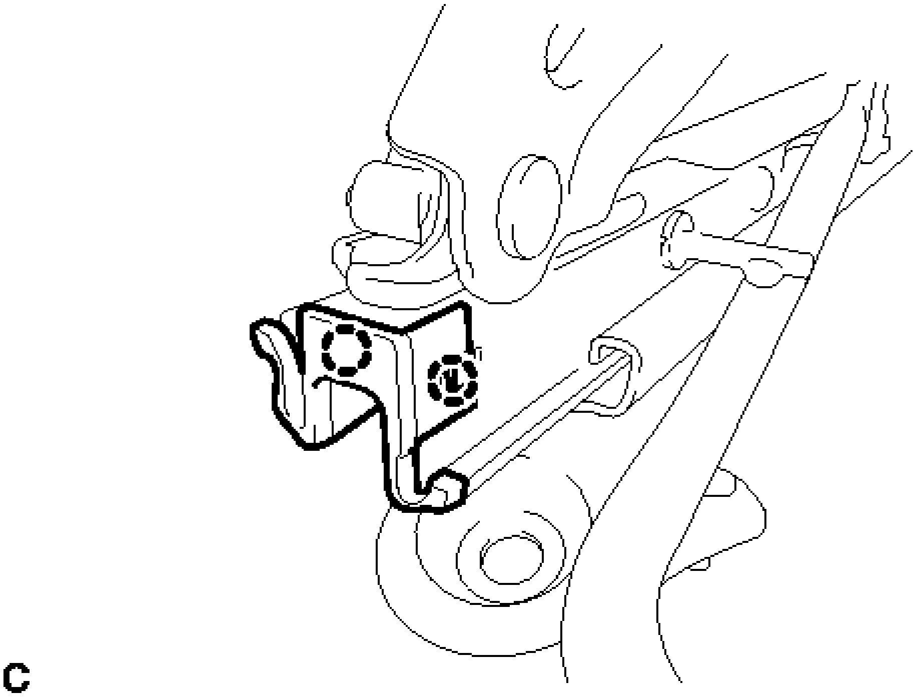

Fig. 36: Locating Front Upper Seat Track Cover RH Claws
Courtesy of TOYOTA MOTOR SALES, U.S.A., INC.

20. **REMOVE REAR UPPER SEAT TRACK COVER LH (for Front Passenger Side)**
    a. Disengage the 2 claws to remove the rear upper seat track cover LH.

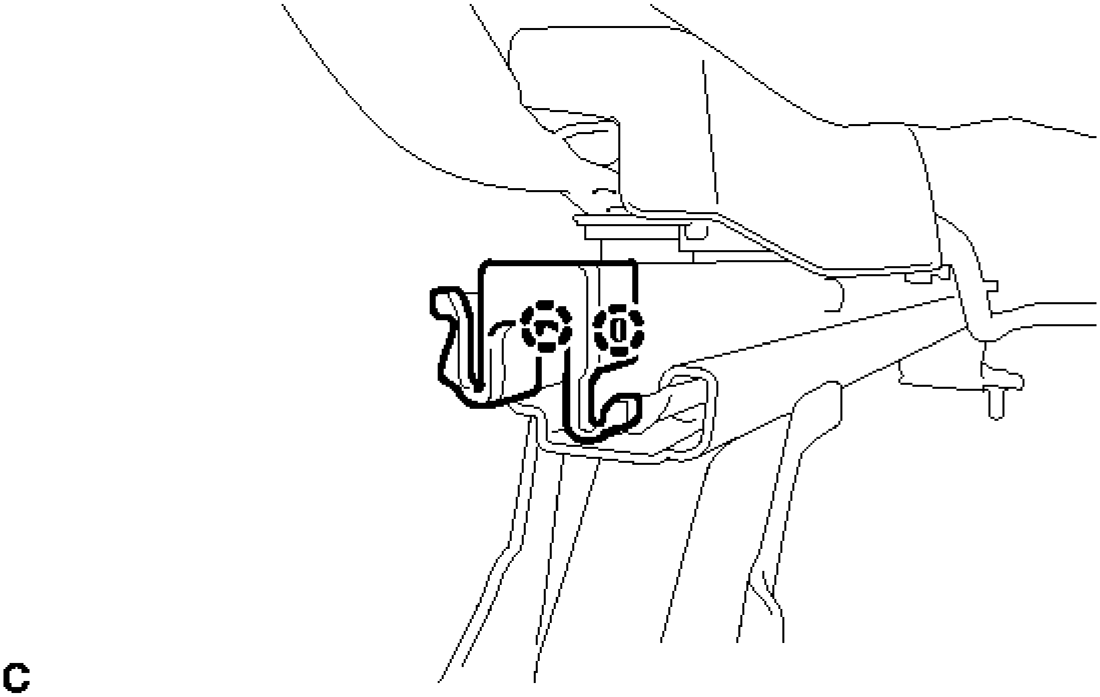

Fig. 37: Locating Rear Upper Seat Track Cover LH (For Front Passenger Side) Claws

Courtesy of TOYOTA MOTOR SALES, U.S.A., INC.

21. **REMOVE REAR UPPER SEAT TRACK COVER RH (for Front Passenger Side)**
    a. Disengage the 2 claws to remove the rear upper seat track cover RH.

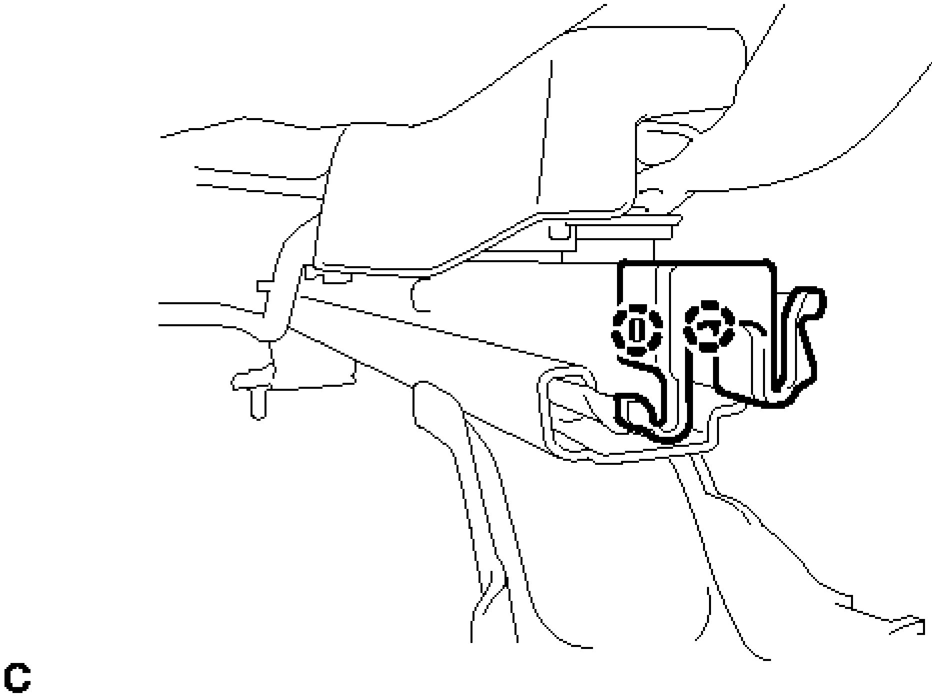

Fig. 38: Locating Rear Upper Seat Track Cover RH (For Front Passenger Side) Claws
Courtesy of TOYOTA MOTOR SALES, U.S.A., INC.

22. **REMOVE OCCUPANT DETECTION ECU (for Front Passenger Side)** . Refer to **REMOVAL - Step 3** .
23. **REMOVE FRONT SEAT WIRE RH (for Front Passenger Side)**
    a. Disconnect the connectors and disengage the wire harness clamps to remove the front seat wire RH.
24. **REMOVE RECLINING CONTROL LEVER**
    a. Remove the bolt and reclining control lever.

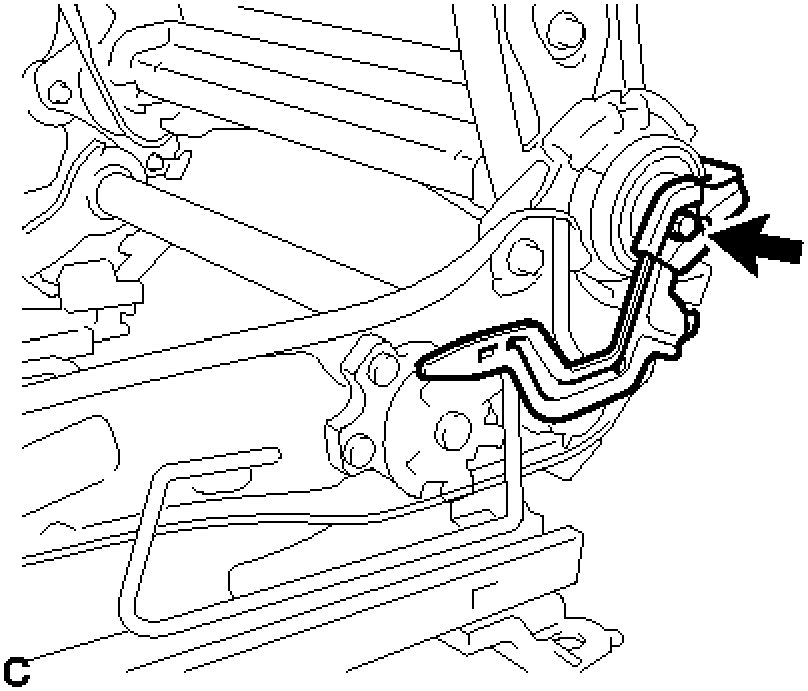

Fig. 39: Identifying Reclining Control Lever Bolt
Courtesy of TOYOTA MOTOR SALES, U.S.A., INC.

25. **REMOVE FRONT SEAT CUSHION PANEL SUB-ASSEMBLY (for Driver Side)**
    a. Remove the 4 bolts and front seat cushion panel sub-assembly.

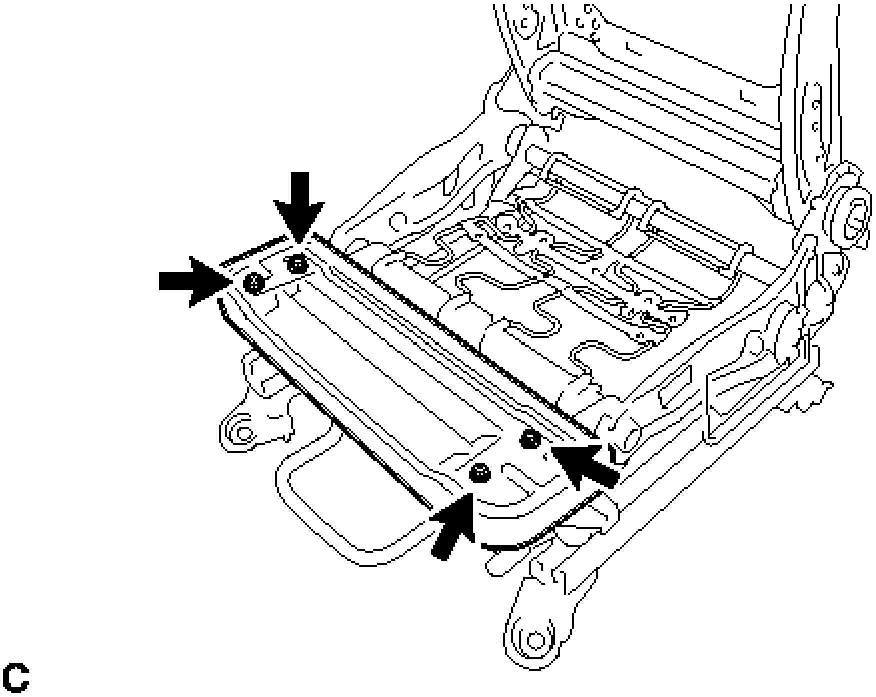

Fig. 40: Locating Front Seat Cushion Panel Sub-Assembly (For Driver Side) Bolts

Courtesy of TOYOTA MOTOR SALES, U.S.A., INC.

26. **REMOVE FRONT SEATBACK FRAME SUB-ASSEMBLY**
    a. Remove the 4 bolts and the front seatback frame sub-assembly.

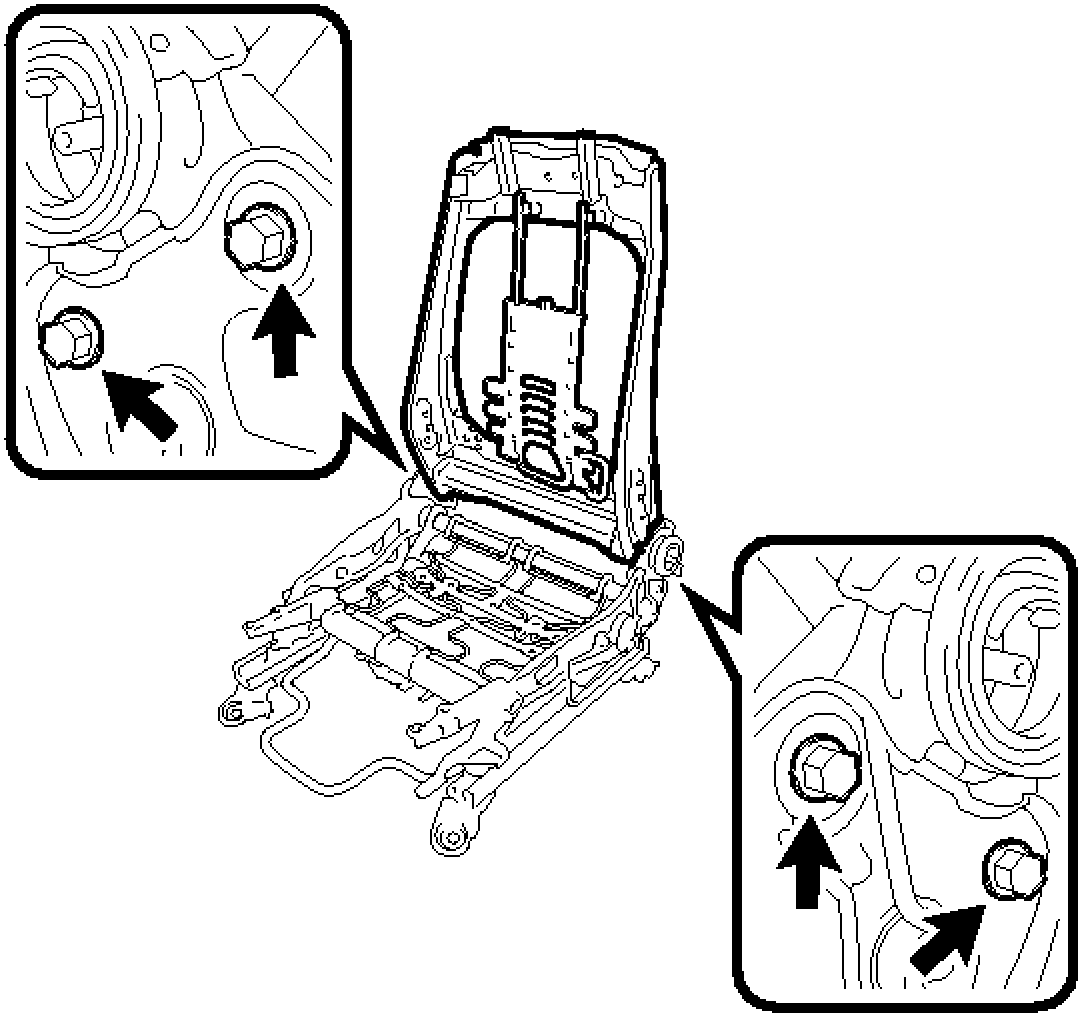

Fig. 41: Locating Front Seatback Frame Sub-Assembly Bolts
Courtesy of TOYOTA MOTOR SALES, U.S.A., INC.

27. **REMOVE SEPARATE TYPE FRONT SEATBACK SPRING ASSEMBLY**
    a. Disengage the 4 claws.

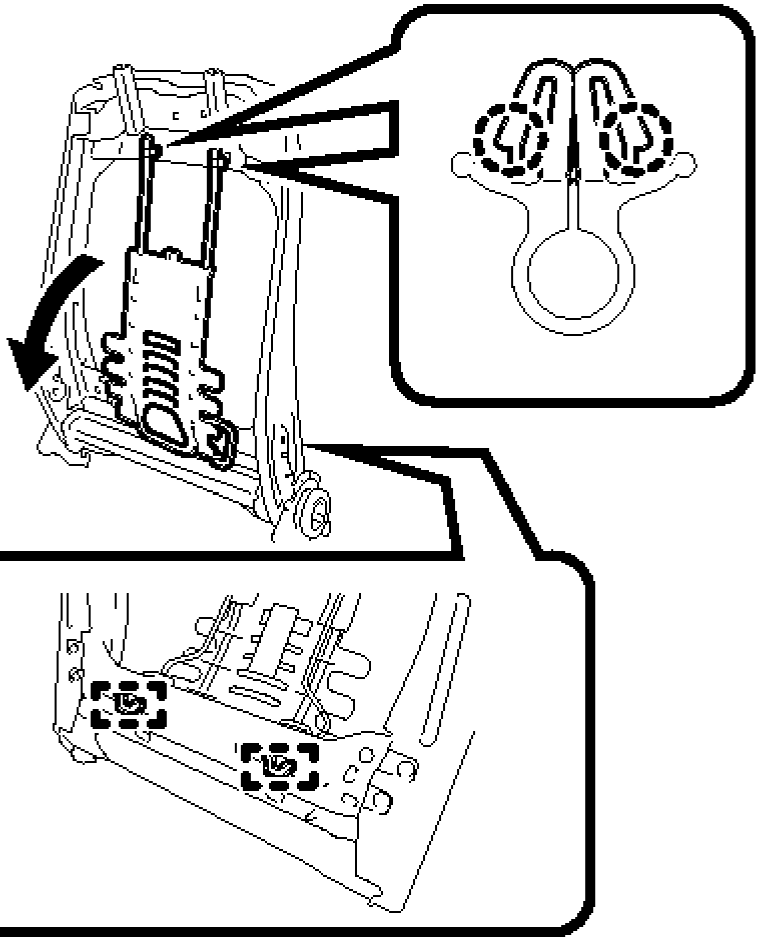

Fig. 42: Removing Front Seatback Spring Assembly
Courtesy of TOYOTA MOTOR SALES, U.S.A., INC.

b. Disengage the 2 guides to remove the separate type front seatback spring assembly.
c. Remove the 2 front seatback hooks from the separate type front seatback spring assembly.

28. **REMOVE SEPARATE TYPE FRONT SEAT CUSHION SPRING ASSEMBLY**
    a. Remove the separate type front seat cushion spring assembly.

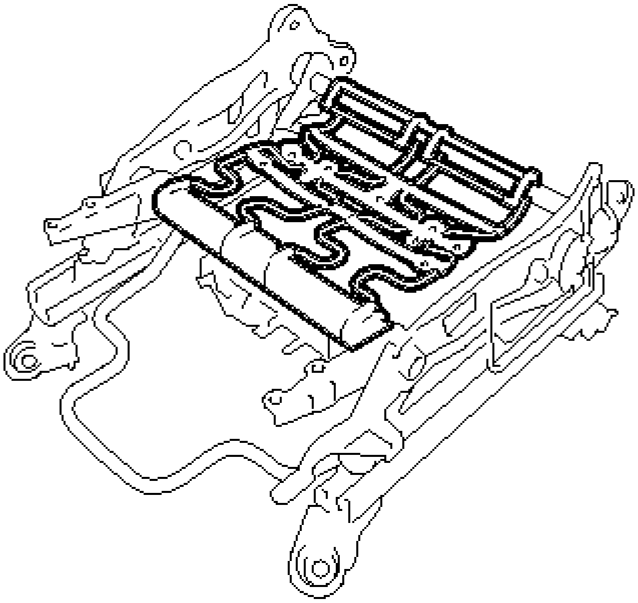

Fig. 43: Identifying Front Seat Cushion Spring Assembly
Courtesy of TOYOTA MOTOR SALES, U.S.A., INC.

REASSEMBLY

REASSEMBLY

1. **INSTALL SEPARATE TYPE FRONT SEAT CUSHION SPRING ASSEMBLY**
    a. Install the separate type front seat cushion spring assembly.
2. **INSTALL SEPARATE TYPE FRONT SEATBACK SPRING ASSEMBLY**
    a. Install the 2 front seatback hooks to the separate type front seatback spring assembly.
    b. Engage the 2 guides.

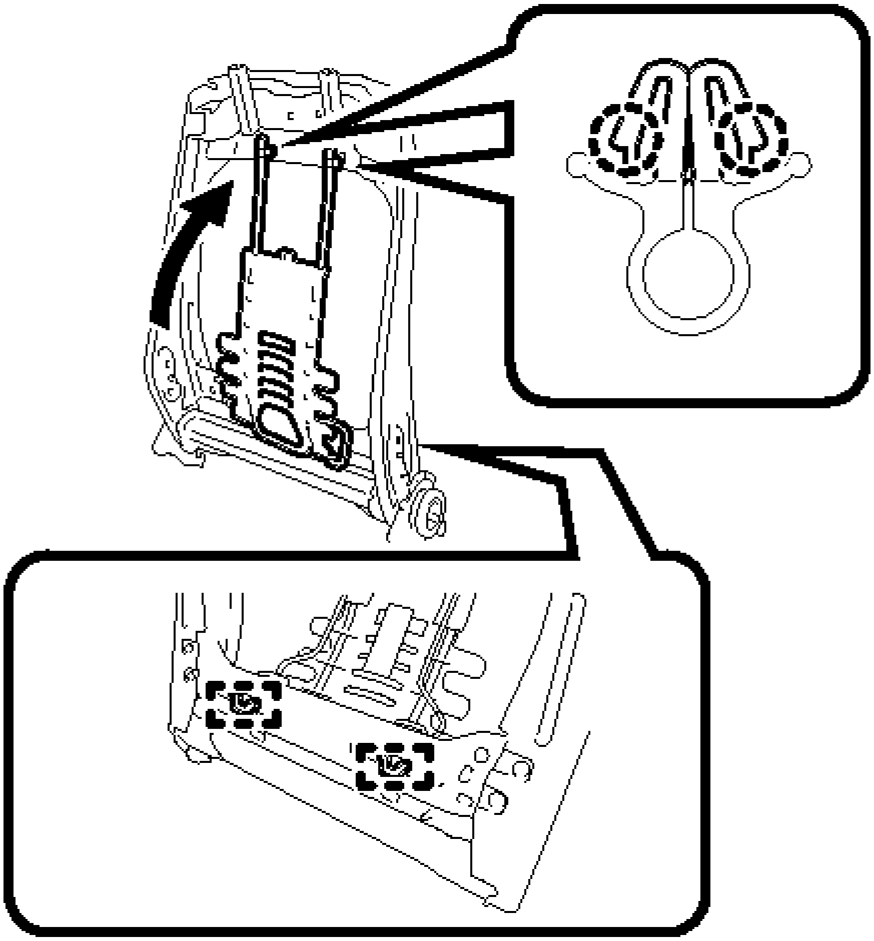

C

Fig. 44: Installing Front Seatback Spring Assembly
Courtesy of TOYOTA MOTOR SALES, U.S.A., INC.

c. Engage the 4 claws to install the separate type front seatback spring assembly.

3. **INSTALL FRONT SEATBACK FRAME SUB-ASSEMBLY**
   a. Install the front seatback frame sub-assembly with the 4 bolts.

      Torque: 45 N*m (459 kgf*cm, 33 ft.*lbf)

4. **INSTALL FRONT SEAT CUSHION PANEL SUB-ASSEMBLY (for Driver Side)**
   a. Install the front seat cushion panel sub-assembly with the 4 bolts.

      Torque: 10 N*m (102 kgf*cm, 7 ft.*lbf)

5. **INSTALL RECLINING CONTROL LEVER**

a. Install the reclining control lever with the bolt.

Torque: 16 N*m (158 kgf*cm, 11 ft.*lbf)

6. **INSTALL FRONT SEAT WIRE RH (for Front Passenger Side)**
    a. Connect the connectors and engage the wire harness clamps to install the front seat wire RH.
7. **INSTALL OCCUPANT DETECTION ECU (for Front Passenger Side)** . Refer to **INSTALLATION - Step 1** .
8. **INSTALL REAR UPPER SEAT TRACK COVER LH (for Front Passenger Side)**
    a. Engage the 2 claws to install the rear upper seat track cover LH.
9. **INSTALL REAR UPPER SEAT TRACK COVER RH (for Front Passenger Side)**
    a. Engage the 2 claws to install the rear upper seat track cover RH.
10. **INSTALL FRONT UPPER SEAT TRACK COVER LH**
    a. Engage the 2 claws to install the front upper seat track cover LH.
11. **INSTALL FRONT UPPER SEAT TRACK COVER RH**
    a. Engage the 2 claws to install the front upper seat track cover RH.
12. **INSTALL FRONT SEAT LOWER CUSHION SHIELD LH (for Driver Side)**
    a. Engage the 2 claws to install the front seat lower cushion shield LH.

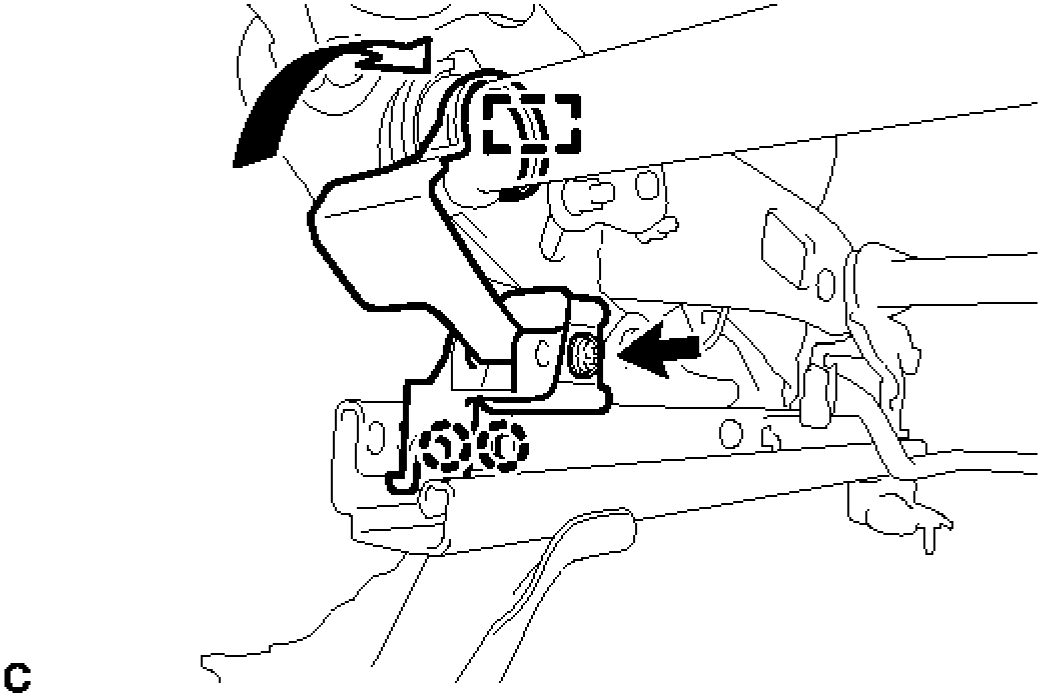

Fig. 45: Installing Front Seat Lower Cushion Shield LH (For Driver Side)
Courtesy of TOYOTA MOTOR SALES, U.S.A., INC.

b. Engage the hook as shown in the illustration.

c. Install the screw.

Torque: 0.6 N*m (6 kgf*cm, 5 in.*lbf)

13. **INSTALL FRONT SEAT LOWER CUSHION SHIELD RH (for Driver Side)**
    a. Engage the 2 claws to install the front seat lower cushion shield RH.

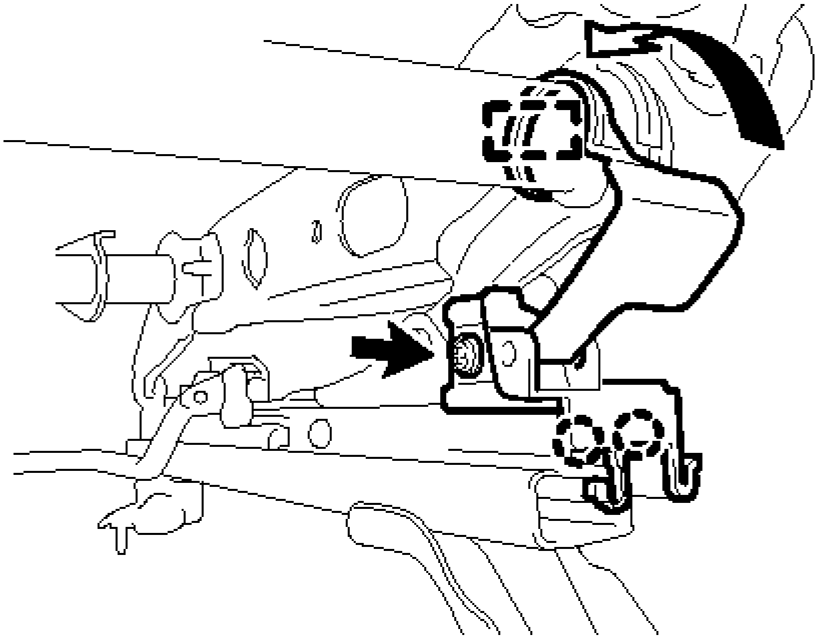

Fig. 46: Installing Front Seat Lower Cushion Shield RH (For Driver Side)
Courtesy of TOYOTA MOTOR SALES, U.S.A., INC.

    b. Engage the hook as shown in the illustration.
    c. Install the screw.

Torque: 0.6 N*m (6 kgf*cm, 5 in.*lbf)

14. **INSTALL FRONT SEAT LOWER CUSHION SHIELD LH (for Front Passenger Side)**
    a. Engage the 2 claws to install the front seat lower cushion shield LH.
15. **INSTALL FRONT SEAT LOWER CUSHION SHIELD RH (for Front Passenger Side)**
    a. Engage the 2 claws to install the front seat lower cushion shield RH.
16. **INSTALL SEPARATE TYPE FRONT SEATBACK COVER**
    a. Using hog ring pliers, install the separate type front seatback cover to the separate type front seatback pad with 2 new hog rings.

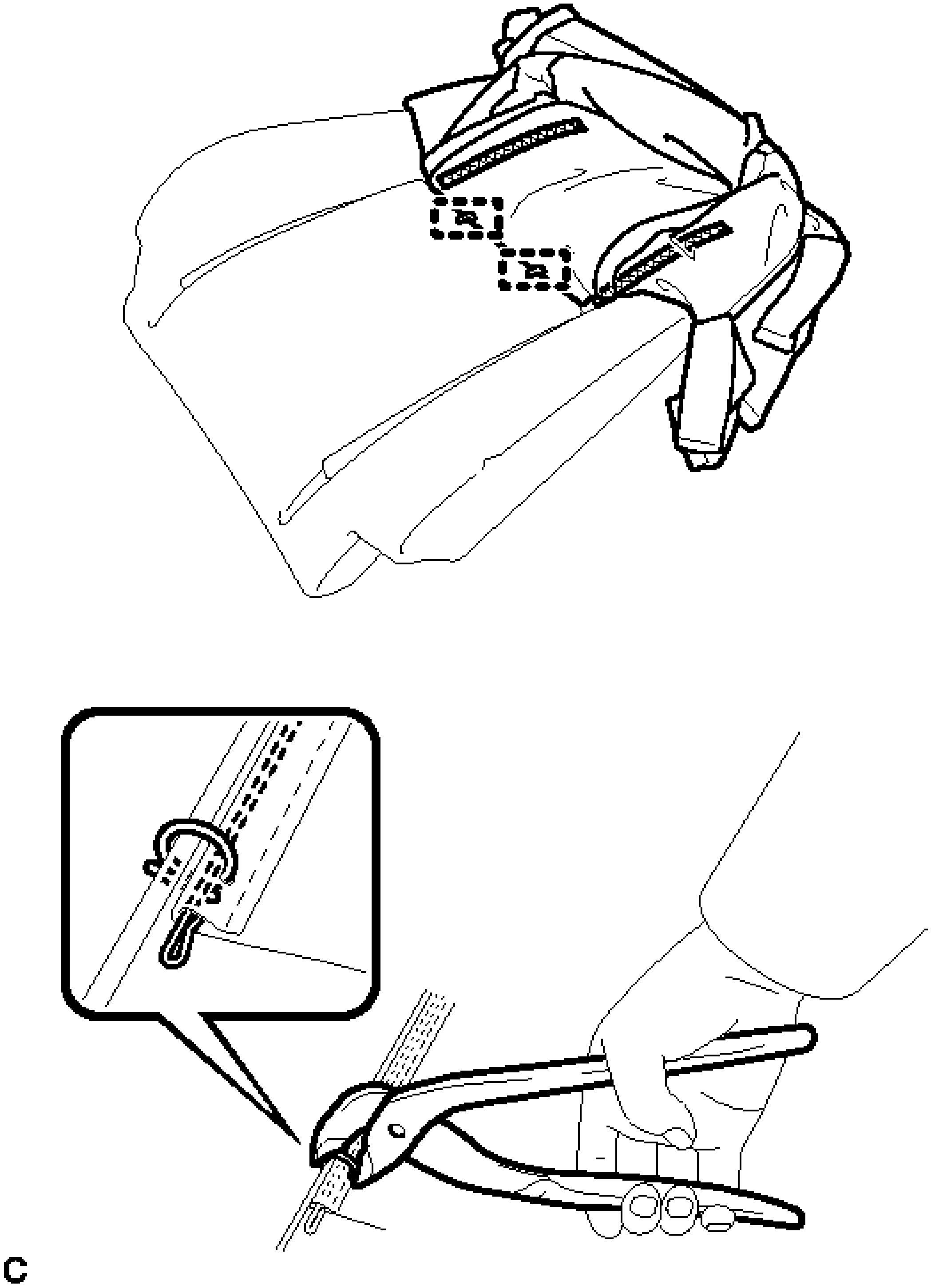

Fig. 47: Installing Front Seatback Cover Hog Rings
Courtesy of TOYOTA MOTOR SALES, U.S.A., INC.

NOTE:	- Be careful not to damage the separate type front seatback cover.

- **When installing the hog rings, take care to minimize wrinkles as much as possible.**

   b. Engage the 2 fasteners.

17. **INSTALL FRONT SEAT AIRBAG ASSEMBLY** . Refer to **INSTALLATION - Step 1** .
18. **INSTALL SEPARATE TYPE FRONT SEATBACK COVER WITH PAD**
    a. Temporarily install the separate type front seatback cover with pad.
    b. Engage the 4 claws to install the 2 front seat headrest supports.
    c. Engage the 2 hooks.

WARNING:

- **For vehicles with a front seat airbag assembly, the separate type front seatback cover must be securely installed. Otherwise, the front seat airbag assembly may not deploy properly.**
- **Make sure that the strap is not twisted after engaging the 2 hooks.**
- **Engage the 2 hooks securely.**

        1. Slide each hook to engage them.
        2. Install the 4 clips.

    d. Engage the 2 fasteners.
    e. Engage the hook.

19. **INSTALL SEPARATE TYPE FRONT SEAT CUSHION COVER**
    a. Using hog ring pliers, install the separate type front seat cushion cover to the separate type front seat cushion pad with 12 new hog rings.

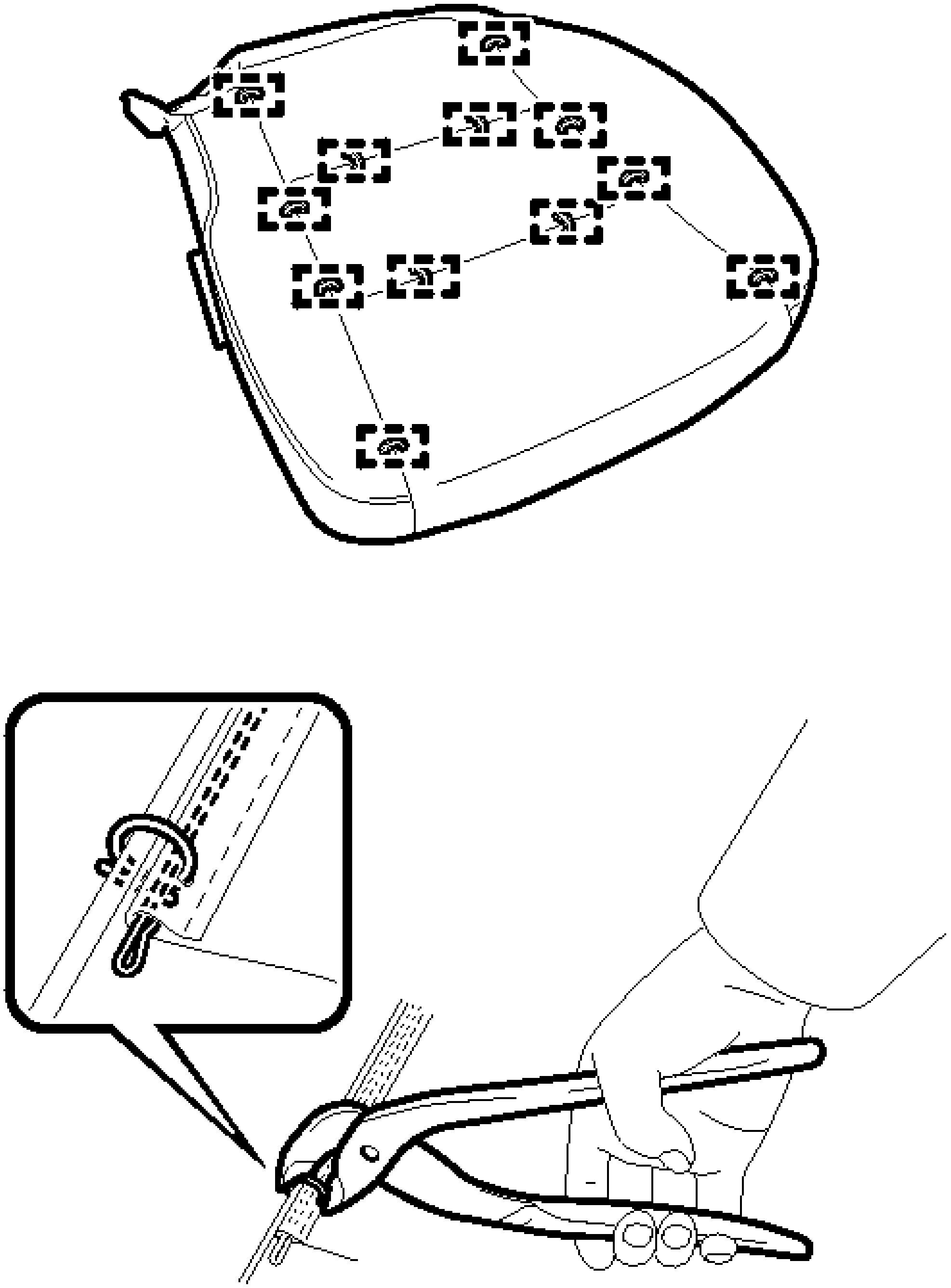

C

Fig. 48: Installing Front Seat Cushion Cover Hog Rings
Courtesy of TOYOTA MOTOR SALES, U.S.A., INC.

NOTE:

- **Be careful not to damage the separate type front seat cushion cover.**

- **When installing the hog rings, take care to minimize wrinkles as much as possible.**

20. **INSTALL SEPARATE TYPE FRONT SEAT CUSHION COVER WITH PAD**
    a. Temporarily install the separate type front seat cushion cover with pad.
    b. Engage each hook.
    c. for Driver Side:
        1. Install the separate type front seat cushion cover.

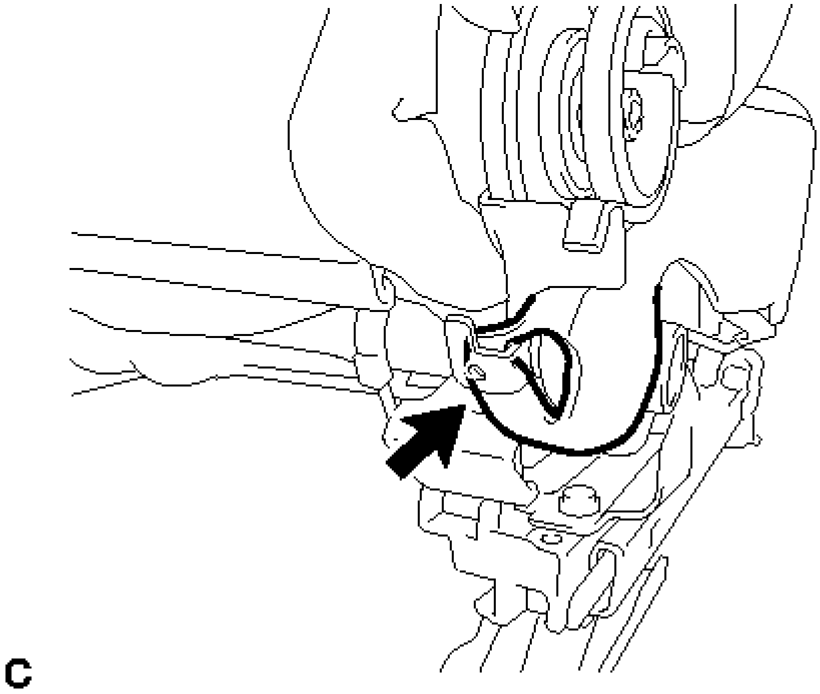

Fig. 49: Identifying Driver Side Front Seat Cushion Cover
Courtesy of TOYOTA MOTOR SALES, U.S.A., INC.

    d. for Front Passenger Side:
        1. Install the separate type front seat cushion cover.

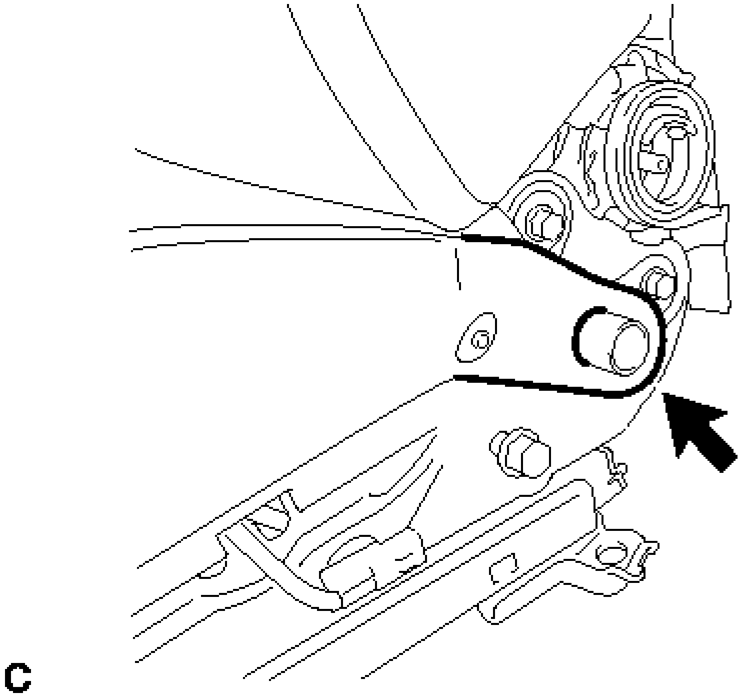

Fig. 50: Identifying Passenger Side Front Seat Cushion Cover
Courtesy of TOYOTA MOTOR SALES, U.S.A., INC.

   e. Engage the claw and 3 clamps to install the front seat airbag assembly wire harness.

21. **INSTALL FRONT SEAT INNER BELT ASSEMBLY (for Driver Side)** . Refer to **INSTALLATION - Step 1** .
22. **INSTALL FRONT SEAT INNER BELT ASSEMBLY (for Front Passenger Side)** . Refer to **INSTALLATION - Step 2** .
23. **INSTALL FRONT SEAT INNER CUSHION SHIELD**
    a. Install front seat inner cushion shield with the 2 screws.

       Torque: 0.6 N*m (6 kgf*cm, 5 in.*lbf)

24. **INSTALL FRONT SEAT CUSHION SHIELD**
    a. Engage the 2 claws to install a new front seat cushion shield.
    b. Install the 2 screws.

       Torque: 0.6 N*m (6 kgf*cm, 5 in.*lbf)

25. **CONNECT SEPARATE TYPE FRONT SEATBACK COVER**
    a. Connect the 2 rubber bands of the separate type front seatback cover.
26. **INSTALL VERTICAL ADJUSTING HANDLE (for Driver Side)**
    a. Install the vertical adjusting handle with the screw.

       Torque: 0.6 N*m (6 kgf*cm, 5 in.*lbf)

27. **INSTALL RECLINING ADJUSTER RELEASE HANDLE**
    a. Engage the claw to install the reclining adjuster release handle.

28. **INSTALL SEAT ADJUSTER COVER CAP**
    a. Install the 2 seat adjuster cover caps.

INSTALLATION

INSTALLATION

1. **INSTALL FRONT SEAT ASSEMBLY**
    a. Place the front seat assembly in the cabin.

NOTE: Be careful not to damage the vehicle body.

b. Connect each connector and clamp under the seat.
c. Temporarily install the front seat assembly with the 4 bolts.
d. Lift up the seat track adjusting handle and move the seat to the rearmost position.
e. Tighten the 2 bolts on the front side of the seat.

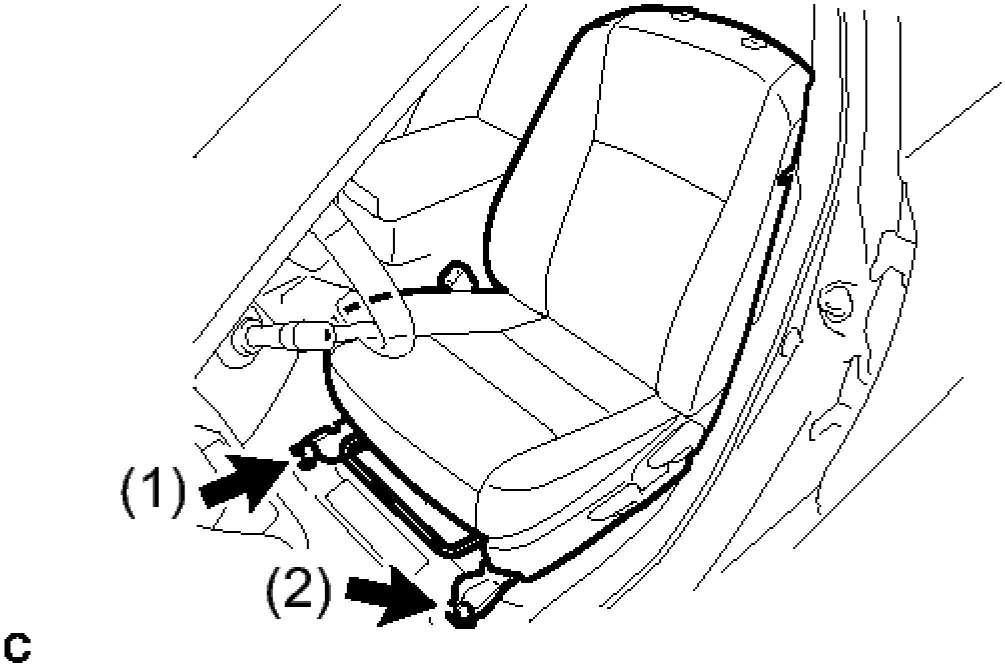

Fig. 51: Locating Front Seat Assembly Front Bolts With Tightening Sequence
Courtesy of TOYOTA MOTOR SALES, U.S.A., INC.

Torque: 37 N*m (377 kgf*cm, 27 ft.*lbf)

NOTE: Tighten the bolts in the order indicated in the illustration.

f. Lift up the seat track adjusting handle and move the seat to the foremost position.

g. Tighten the 2 bolts on the rear side of the seat.

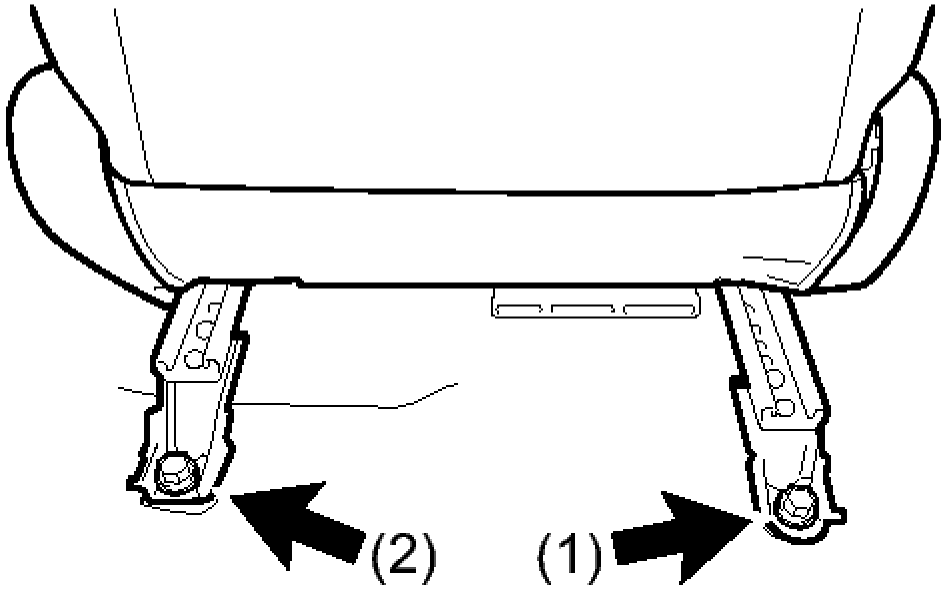

Fig. 52: Locating Front Seat Assembly Rear Bolts With Tightening Sequence
Courtesy of TOYOTA MOTOR SALES, U.S.A., INC.

Torque: 37 N*m (377 kgf*cm, 27 ft.*lbf)

NOTE: **Tighten the bolts in the order indicated in the illustration.**

2. **INSPECT SEAT SLIDE ADJUSTER LOCKS**
    a. During the sliding operation of the front seat, check that the left and right adjusters move together smoothly and lock simultaneously. If the seat adjusters do not lock simultaneously, loosen the seat installation bolts to adjust the adjuster position.
3. **INSTALL REAR INNER SEAT TRACK BRACKET COVER**
    a. Lift up the seat track adjusting handle and move the seat to the foremost position.
    b. Engage the 2 claws to install the rear inner seat track bracket cover.
4. **INSTALL REAR OUTER SEAT TRACK BRACKET COVER**
    a. Engage the 2 claws to install the rear outer seat track bracket cover.
5. **INSTALL FRONT SEAT HEADREST ASSEMBLY**
6. **CONNECT CABLE TO NEGATIVE BATTERY TERMINAL**

NOTE: **When disconnecting the cable, some systems need to be initialized after the cable is reconnected. Refer to INITIALIZATION .**

7. **PERFORM ZERO POINT CALIBRATION AND SENSITIVITY CHECK (for Front Passenger Side)**

   Refer to **INITIALIZATION** .

8. **INSPECT SRS WARNING LIGHT**

   For Separate Type Yaw Rate Sensor: Refer to **DIAGNOSIS SYSTEM** .

   For Built-in Type Yaw Rate Sensor: Refer to **DIAGNOSIS SYSTEM** .

FRONT SEAT ASSEMBLY (FOR TMMK MADE POWER SEAT)

COMPONENTS

ILLUSTRATION

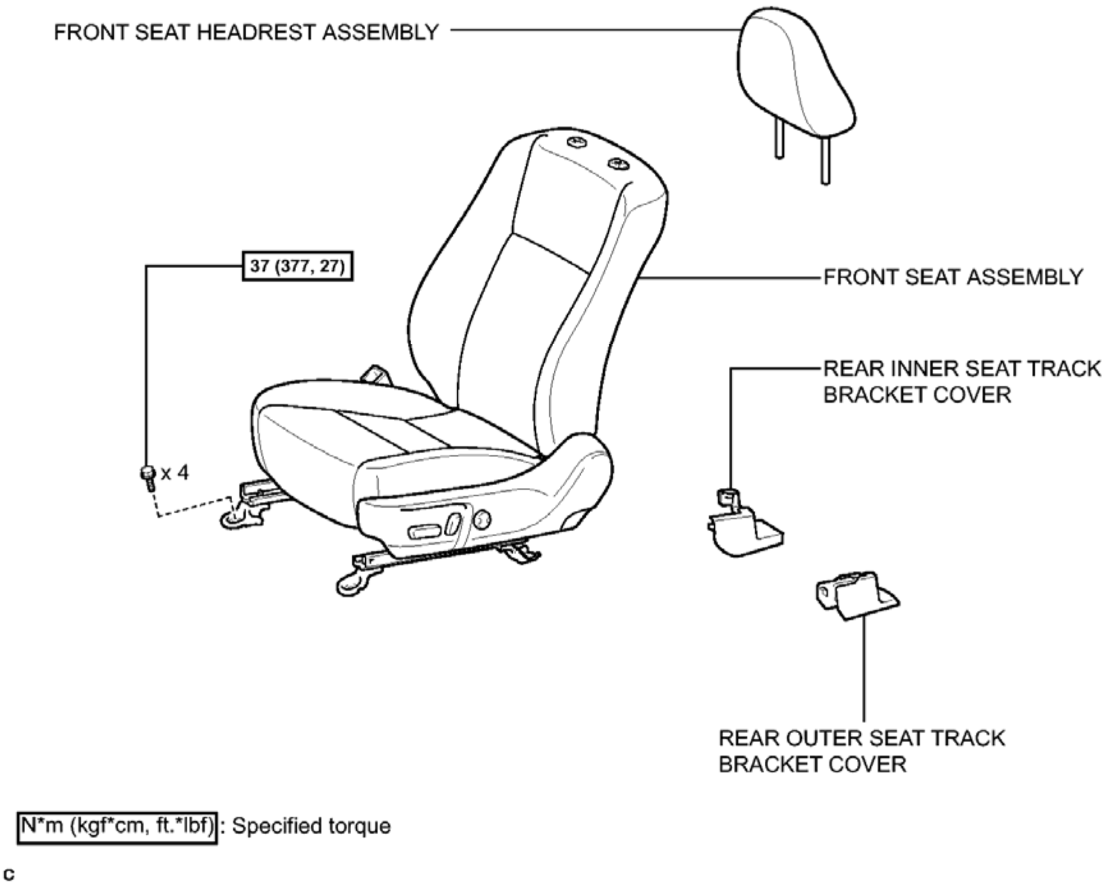
FRONT SEAT HEADREST ASSEMBLY
37 (377, 27)
FRONT SEAT ASSEMBLY
REAR INNER SEAT TRACK BRACKET COVER
x 4
REAR OUTER SEAT TRACK BRACKET COVER
N*m (kgf*cm, ft.*lbf) : Specified torque
c

Fig. 53: Identifying Front Seat Assembly (For TMMK Made Power Seat) Replacement Components With Torque Specifications (1 Of 10)
Courtesy of TOYOTA MOTOR SALES, U.S.A., INC.

ILLUSTRATION

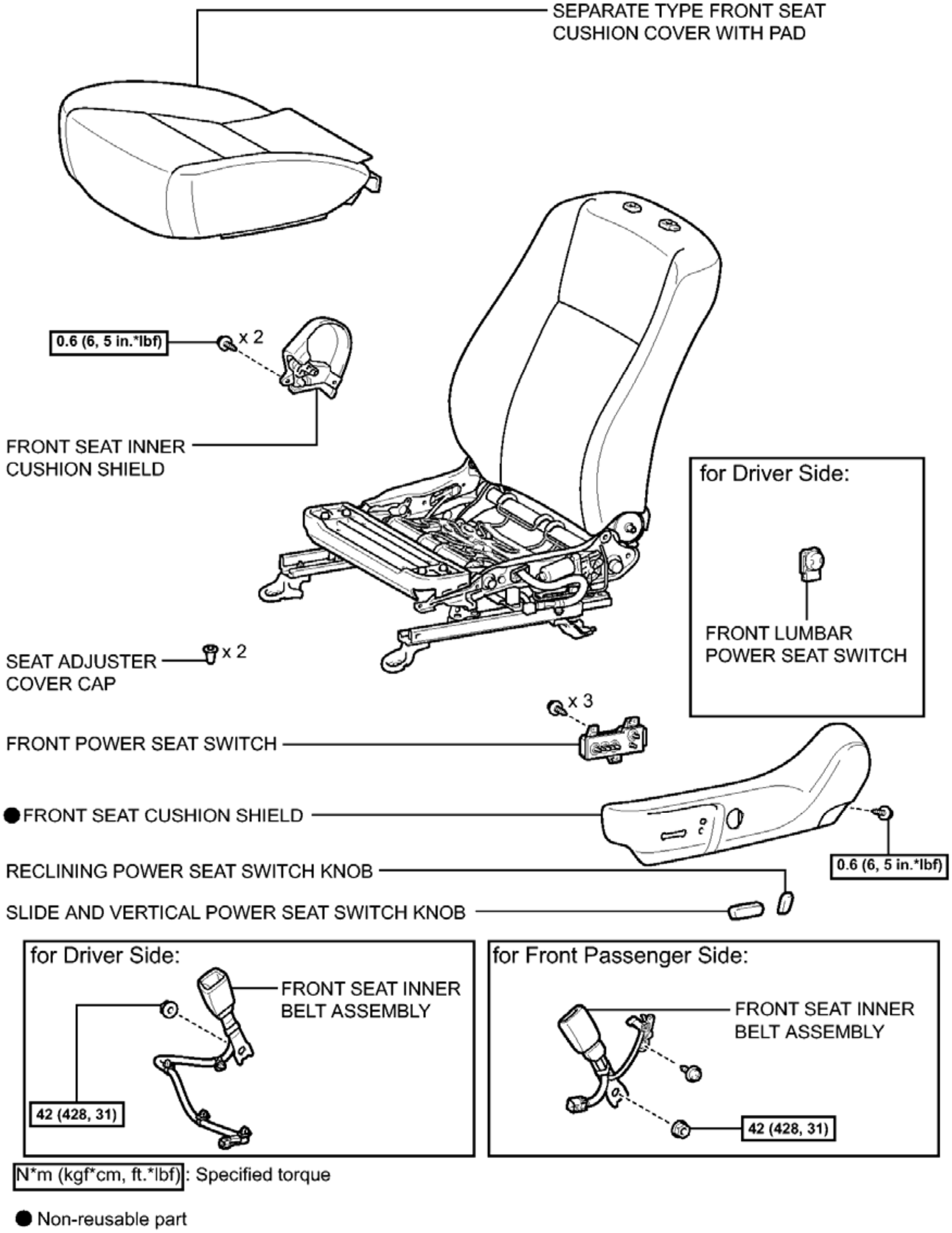
SEPARATE TYPE FRONT SEAT CUSHION COVER WITH PAD
0.6 (6, 5 in.*lbf)
x 2
FRONT SEAT INNER CUSHION SHIELD
for Driver Side:
FRONT LUMBAR POWER SEAT SWITCH
SEAT ADJUSTER COVER CAP
x 2
x 3
FRONT POWER SEAT SWITCH
● FRONT SEAT CUSHION SHIELD
0.6 (6, 5 in.*lbf)
RECLINING POWER SEAT SWITCH KNOB
SLIDE AND VERTICAL POWER SEAT SWITCH KNOB
for Driver Side:
FRONT SEAT INNER BELT ASSEMBLY
42 (428, 31)
for Front Passenger Side:
FRONT SEAT INNER BELT ASSEMBLY
42 (428, 31)
N*m (kgf*cm, ft.*lbf): Specified torque
● Non-reusable part
c

Fig. 54: Identifying Front Seat Assembly (For TMMK Made Power Seat) Replacement Components With Torque Specifications (2 Of 10)

Courtesy of TOYOTA MOTOR SALES, U.S.A., INC.

ILLUSTRATION

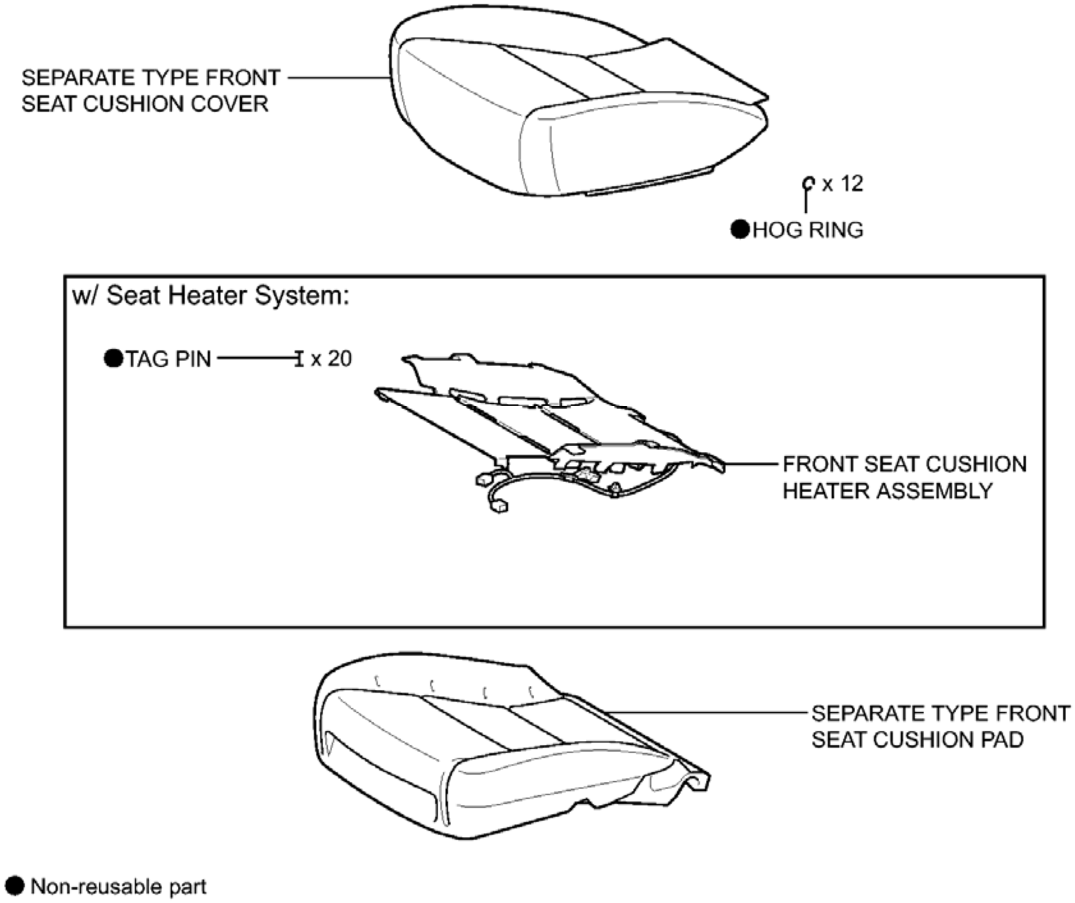
SEPARATE TYPE FRONT SEAT CUSHION COVER
x 12
●HOG RING
w/ Seat Heater System:
●TAG PIN
x 20
FRONT SEAT CUSHION HEATER ASSEMBLY
SEPARATE TYPE FRONT SEAT CUSHION PAD
● Non-reusable part
c

Fig. 55: Identifying Front Seat Assembly (For TMMK Made Power Seat) Replacement Components (3 Of 10)

Courtesy of TOYOTA MOTOR SALES, U.S.A., INC.

ILLUSTRATION

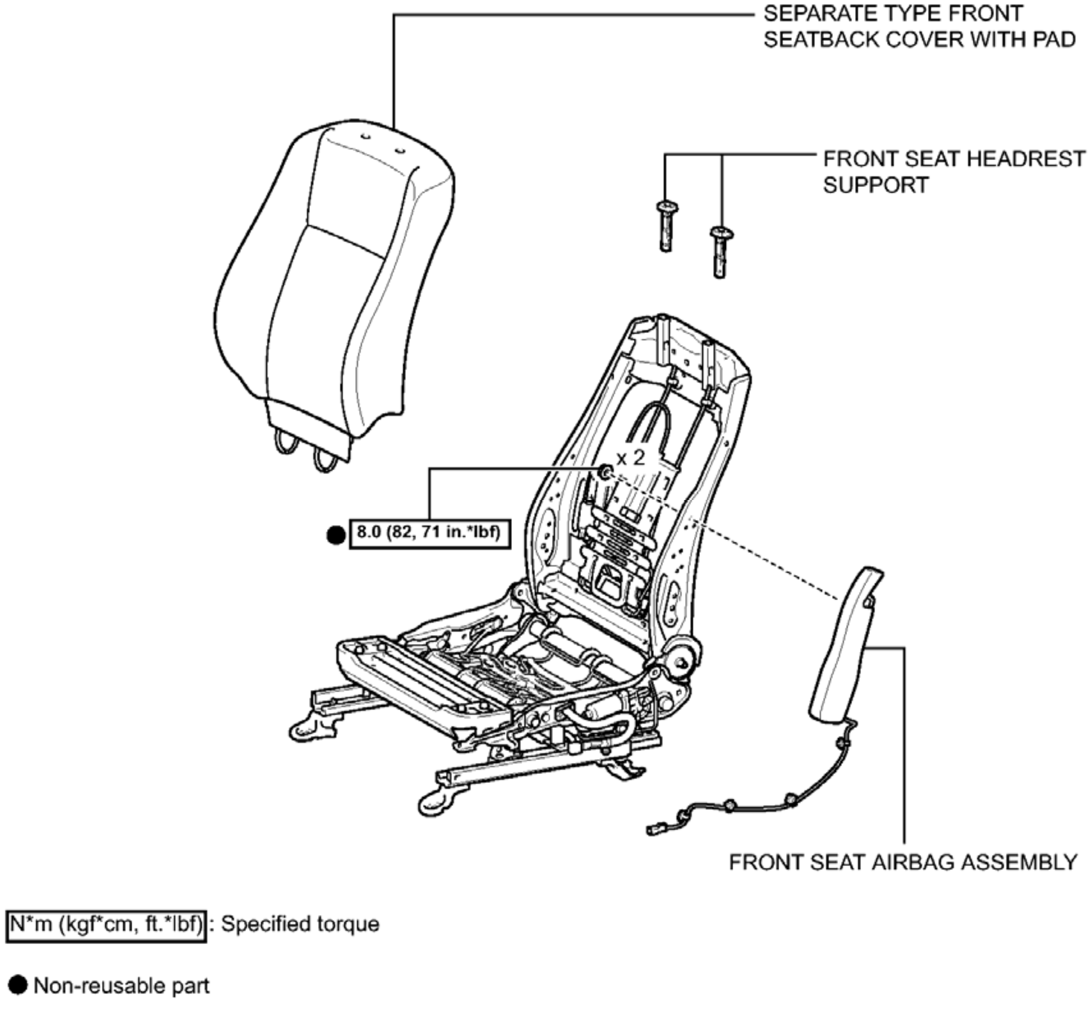
SEPARATE TYPE FRONT SEATBACK COVER WITH PAD
FRONT SEAT HEADREST SUPPORT
x 2
● 8.0 (82, 71 in.*lbf)
FRONT SEAT AIRBAG ASSEMBLY
N*m (kgf*cm, ft.*lbf): Specified torque
● Non-reusable part
c

Fig. 56: Identifying Front Seat Assembly (For TMMK Made Power Seat) Replacement Components With Torque Specifications (4 Of 10)
Courtesy of TOYOTA MOTOR SALES, U.S.A., INC.

ILLUSTRATION

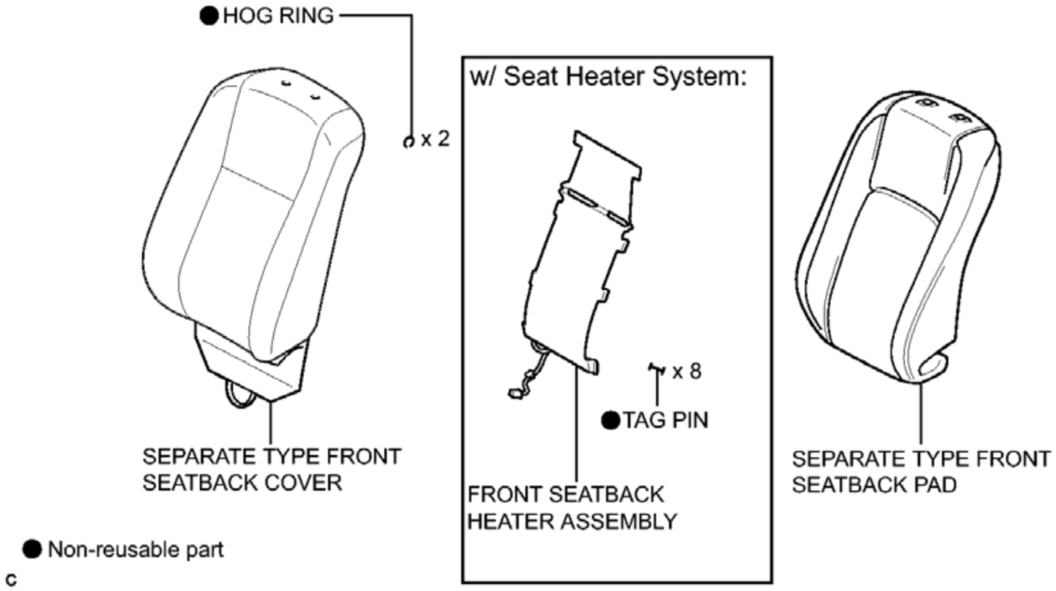
● HOG RING
x 2
w/ Seat Heater System:
x 8
● TAG PIN
SEPARATE TYPE FRONT SEATBACK COVER
FRONT SEATBACK HEATER ASSEMBLY
SEPARATE TYPE FRONT SEATBACK PAD
● Non-reusable part
c

Fig. 57: Identifying Front Seat Assembly (For TMMK Made Power Seat) Replacement Components (5 Of 10)
Courtesy of TOYOTA MOTOR SALES, U.S.A., INC.

ILLUSTRATION

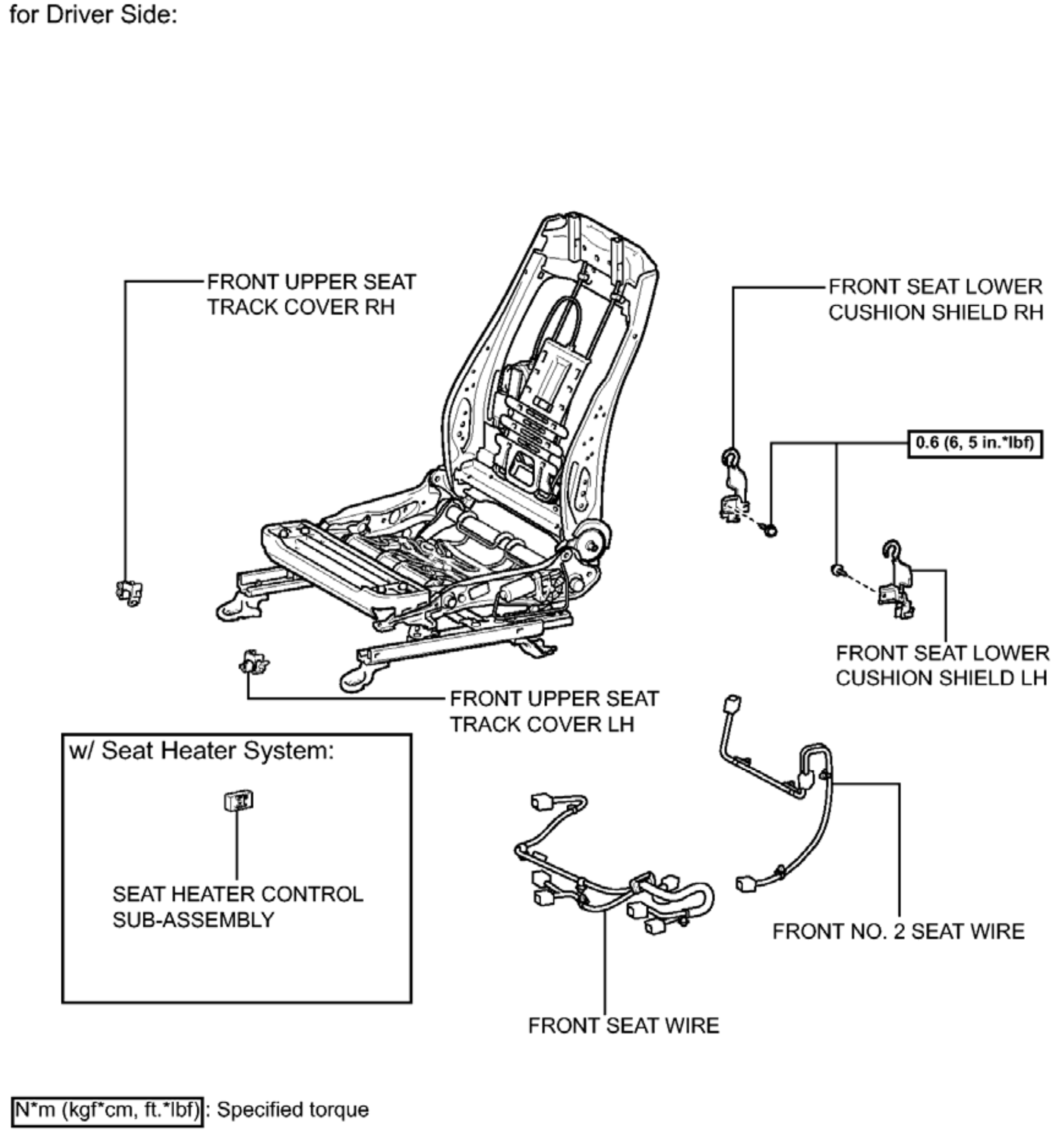
for Driver Side:
FRONT UPPER SEAT TRACK COVER RH
FRONT SEAT LOWER CUSHION SHIELD RH
0.6 (6, 5 in.*lbf)
FRONT SEAT LOWER CUSHION SHIELD LH
FRONT UPPER SEAT TRACK COVER LH
w/ Seat Heater System:
SEAT HEATER CONTROL SUB-ASSEMBLY
FRONT NO. 2 SEAT WIRE
FRONT SEAT WIRE
N*m (kgf*cm, ft.*lbf): Specified torque

c

Fig. 58: Identifying Front Seat Assembly (For TMMK Made Power Seat) Replacement Components With Torque Specifications (6 Of 10)

Courtesy of TOYOTA MOTOR SALES, U.S.A., INC.

ILLUSTRATION

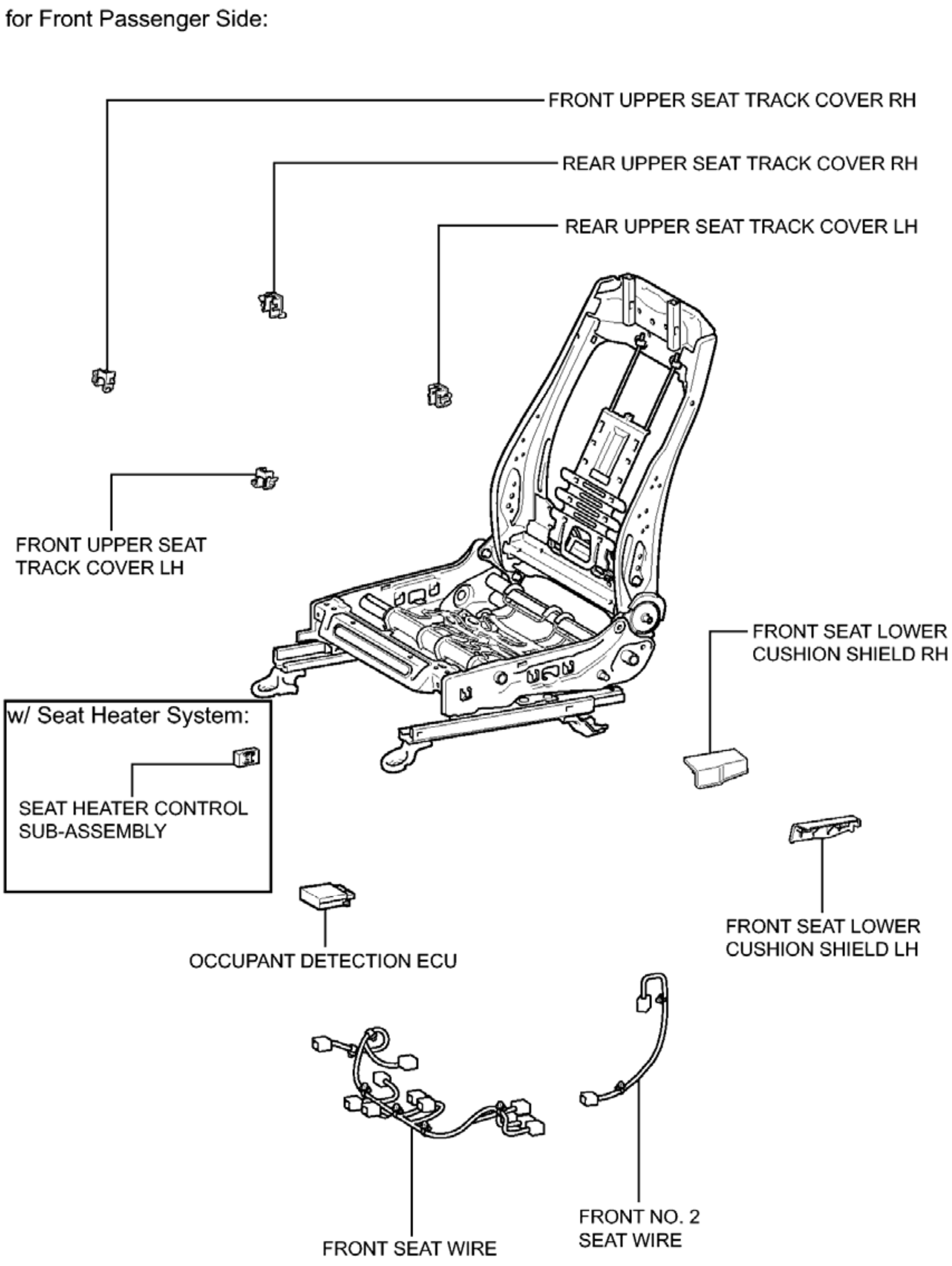
for Front Passenger Side:
FRONT UPPER SEAT TRACK COVER RH
REAR UPPER SEAT TRACK COVER RH
REAR UPPER SEAT TRACK COVER LH
FRONT UPPER SEAT TRACK COVER LH
FRONT SEAT LOWER CUSHION SHIELD RH
w/ Seat Heater System:
SEAT HEATER CONTROL SUB-ASSEMBLY
OCCUPANT DETECTION ECU
FRONT SEAT LOWER CUSHION SHIELD LH
FRONT SEAT WIRE
FRONT NO. 2 SEAT WIRE
c

Fig. 59: Identifying Front Seat Assembly (For TMMK Made Power Seat) Replacement Components (7 Of 10)
Courtesy of TOYOTA MOTOR SALES, U.S.A., INC.

ILLUSTRATION

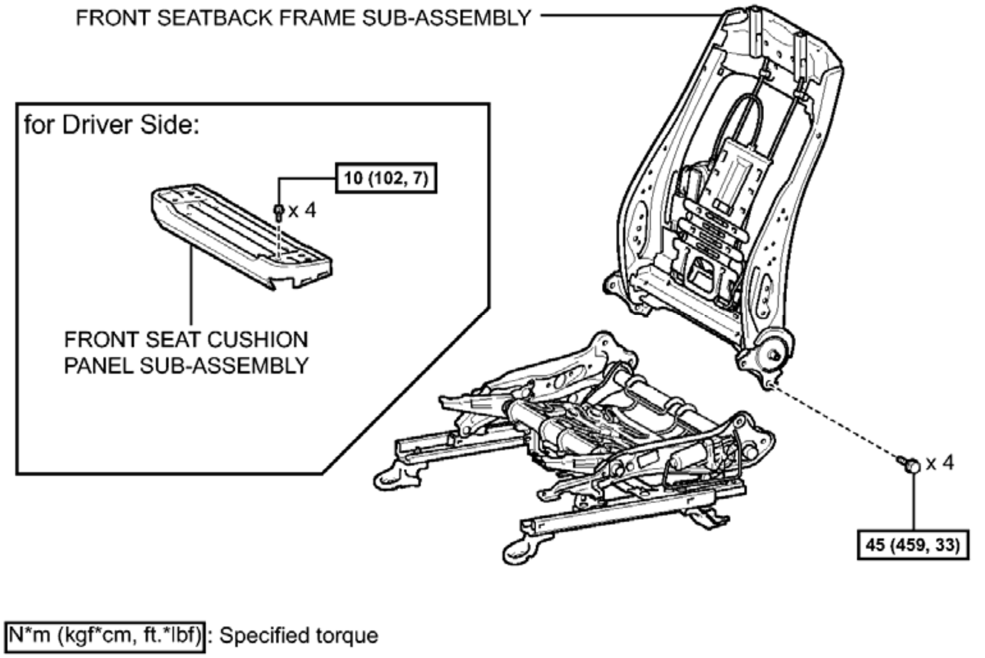
FRONT SEATBACK FRAME SUB-ASSEMBLY
for Driver Side:
10 (102, 7)
x 4
FRONT SEAT CUSHION PANEL SUB-ASSEMBLY
x 4
45 (459, 33)
N*m (kgf*cm, ft.*lbf): Specified torque
c

Fig. 60: Identifying Front Seat Assembly (For TMMK Made Power Seat) Replacement Components With Torque Specifications (8 Of 10)
Courtesy of TOYOTA MOTOR SALES, U.S.A., INC.

ILLUSTRATION

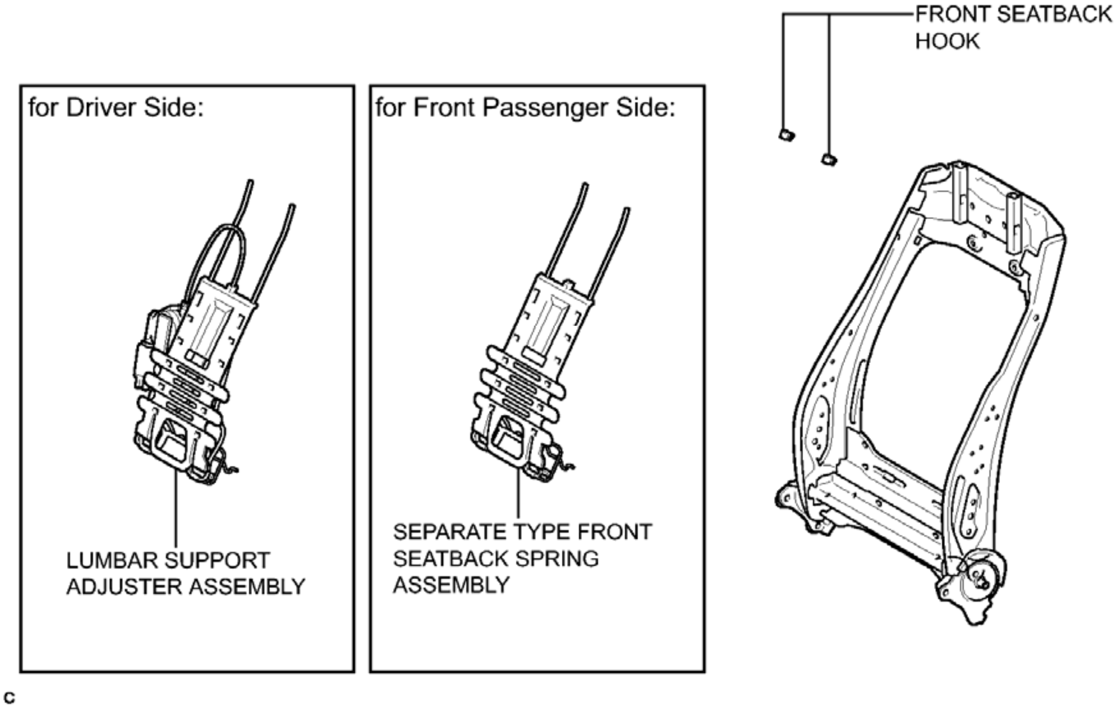
FRONT SEATBACK HOOK
for Driver Side:
LUMBAR SUPPORT ADJUSTER ASSEMBLY
for Front Passenger Side:
SEPARATE TYPE FRONT SEATBACK SPRING ASSEMBLY
c

Fig. 61: Identifying Front Seat Assembly (For TMMK Made Power Seat) Replacement Components (9 Of 10)
Courtesy of TOYOTA MOTOR SALES, U.S.A., INC.

ILLUSTRATION

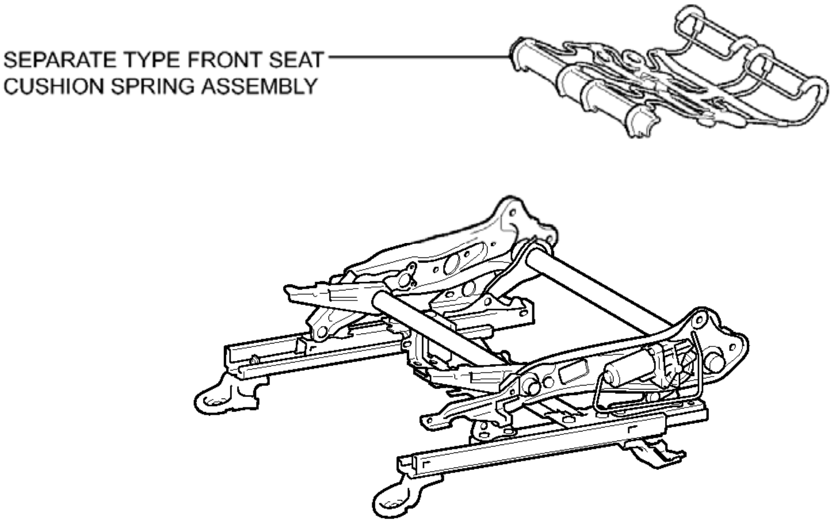

Fig. 62: Identifying Front Seat Assembly (For TMMK Made Power Seat) Replacement Components (10 Of 10)
Courtesy of TOYOTA MOTOR SALES, U.S.A., INC.

REMOVAL

REMOVAL

1. **PRECAUTION**

WARNING:

- **Be sure to read Precaution thoroughly before servicing.**

  For Separate Type Yaw Rate Sensor: Refer to PRECAUTION .

  For Built-in Type Yaw Rate Sensor: Refer to PRECAUTION .

- **If the side airbag has deployed, replace the front seat airbag assembly, front seatback frame sub-assembly, separate type front seatback pad and separate type front seatback cover with the necessary parts in accordance with the extent of the collision damage.**

NOTE:

- **After turning the ignition switch off, waiting time may be required before disconnecting the cable from the negative (-) battery terminal. Therefore, make sure to read the disconnecting the cable from the**

negative (-) battery terminal notices before proceeding with work. Refer to PRECAUTION .

2. **REMOVE FRONT SEAT HEADREST ASSEMBLY**
3. **REMOVE REAR OUTER SEAT TRACK BRACKET COVER**
   a. Operate the slide and vertical power seat switch knob and move the seat to the foremost position.
   b. Disengage the 2 claws and remove the rear outer seat track bracket cover.

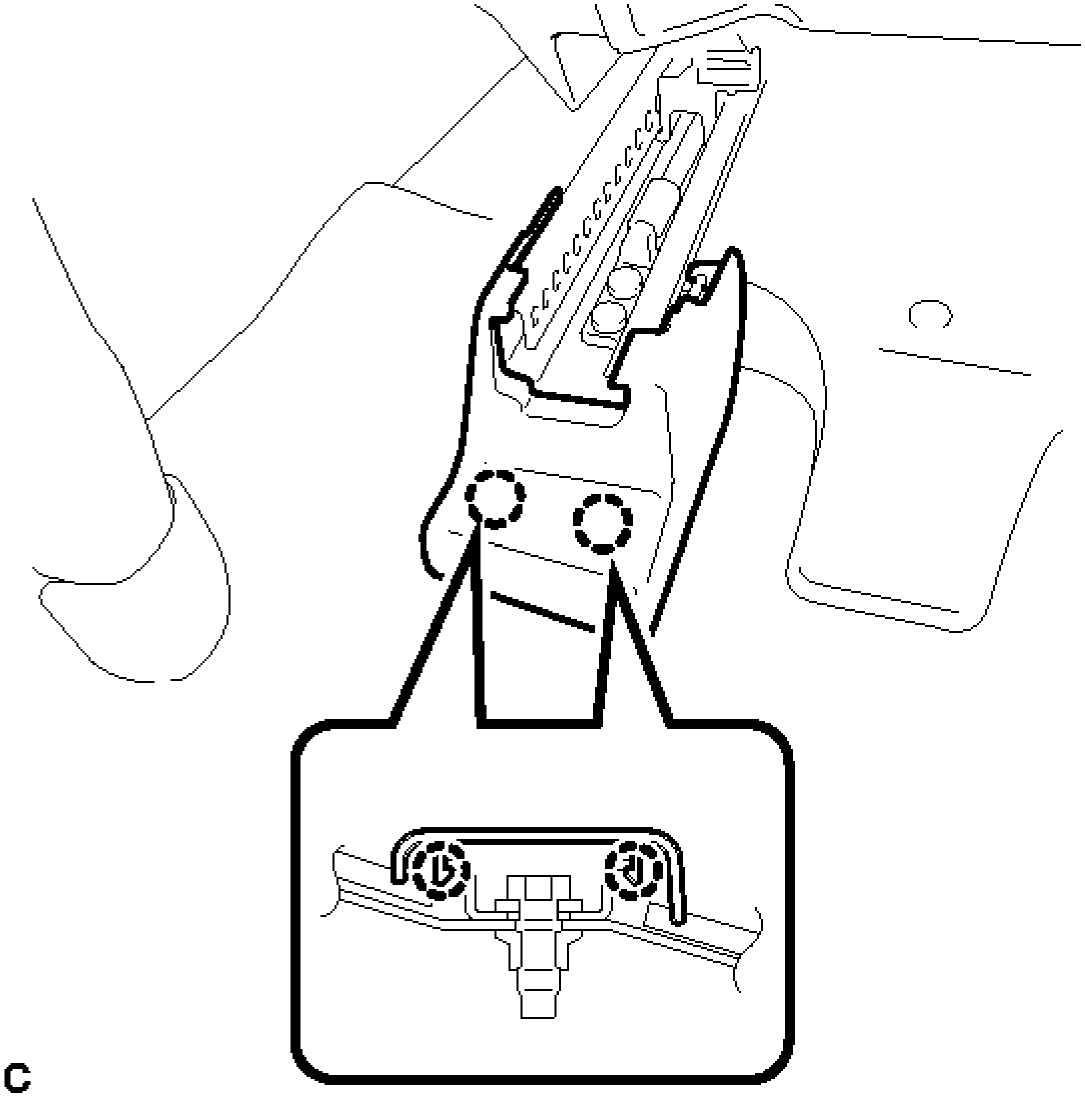

Fig. 63: Locating Rear Outer Seat Track Bracket Cover Claws
Courtesy of TOYOTA MOTOR SALES, U.S.A., INC.

4. **REMOVE REAR INNER SEAT TRACK BRACKET COVER**
   a. Disengage the 2 claws and remove the rear inner seat track bracket cover.

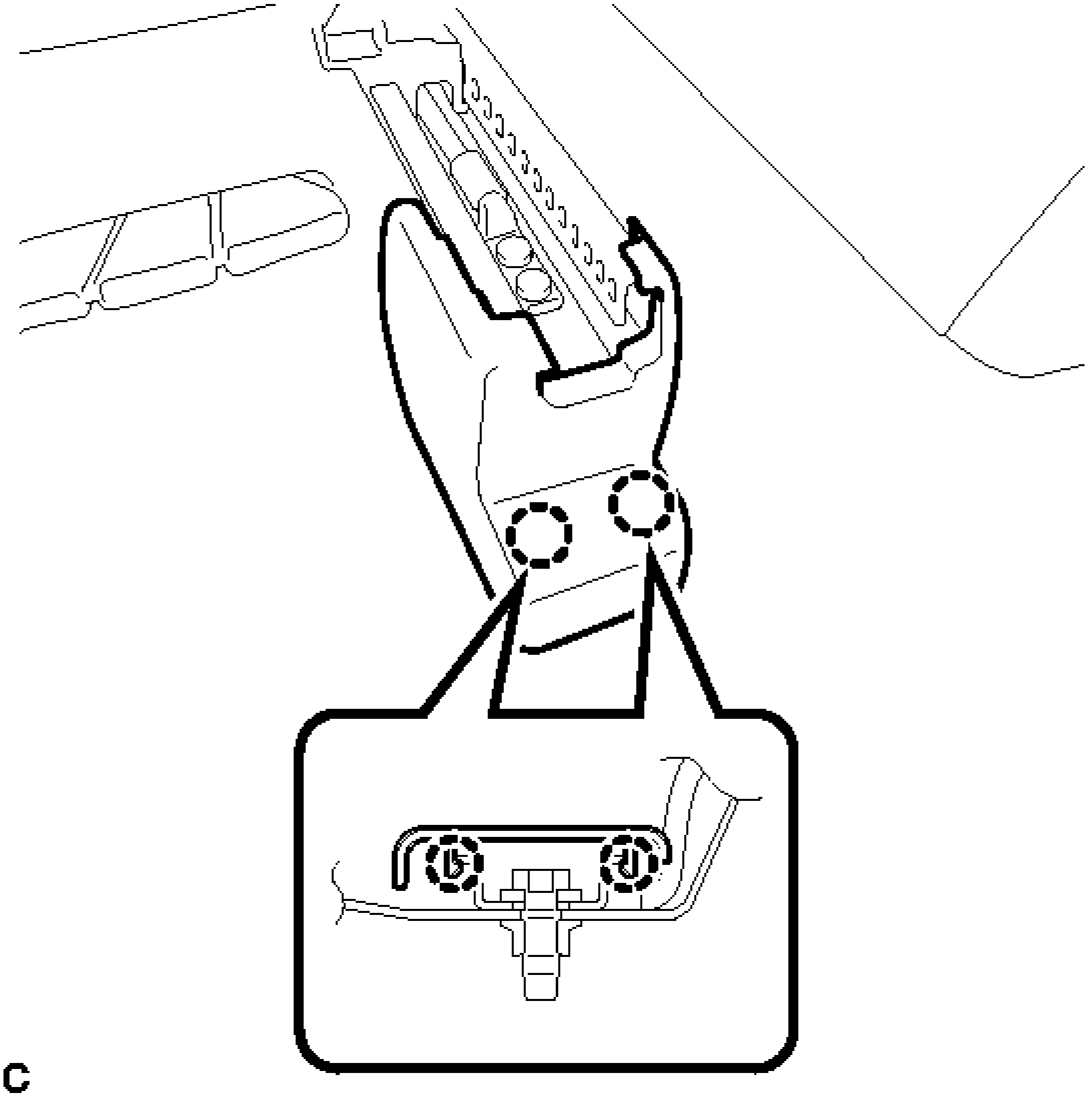

Fig. 64: Locating Rear Inner Seat Track Bracket Cover Claws
Courtesy of TOYOTA MOTOR SALES, U.S.A., INC.

5. **REMOVE FRONT SEAT ASSEMBLY**
    a. Remove the 2 bolts on the rear side of the seat.

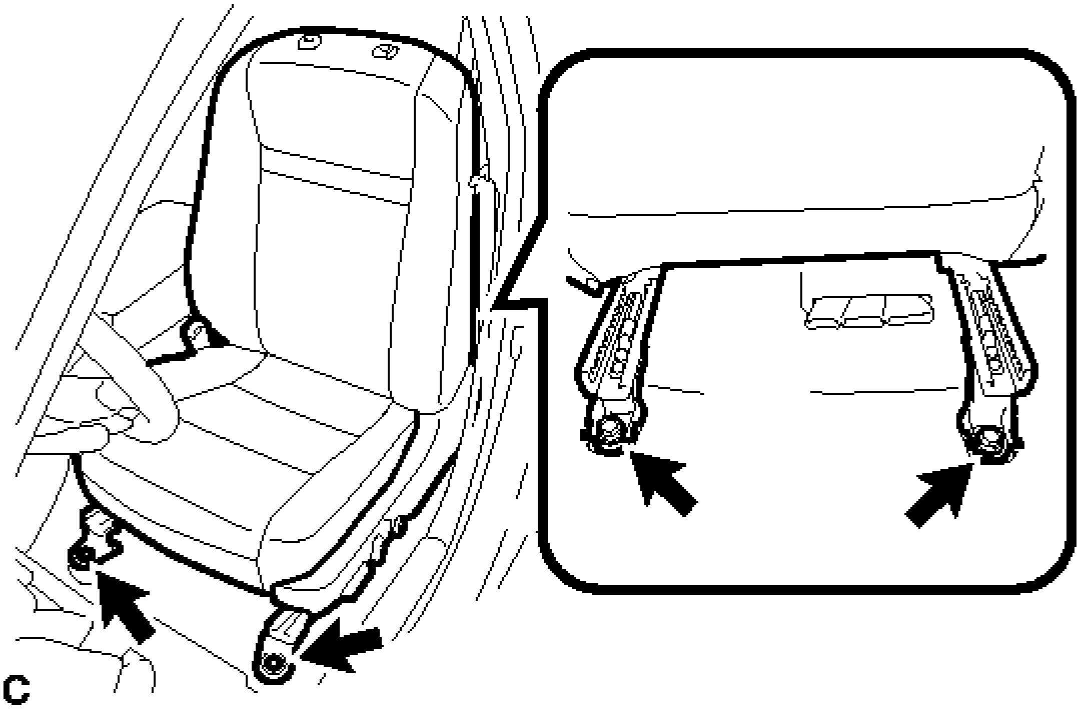

Fig. 65: Locating Front Seat Assembly Bolts
Courtesy of TOYOTA MOTOR SALES, U.S.A., INC.

b. Operate the slide and vertical power seat switch knob and move the seat to the rearmost position.
c. Remove the 2 bolts on the front side of the seat.
d. Operate the slide and vertical power seat switch knob and move the seat to the center position. Then, operate the reclining power seat switch knob and move the seatback to the upright position.
e. Disconnect the cable from the negative (-) battery terminal.

WARNING: **Wait at least 90 seconds after disconnecting the cable from the negative (-) battery terminal to disable the SRS system.**

NOTE: **When disconnecting the cable, some systems need to be initialized after the cable is reconnected. Refer to INITIALIZATION .**

f. Disconnect each connector and clamp under the seat.
g. Remove the front seat assembly.

NOTE: **Be careful not to damage the vehicle body.**

DISASSEMBLY

DISASSEMBLY

1. **REMOVE SEAT ADJUSTER COVER CAP**

a. Remove the 2 seat adjuster cover caps.

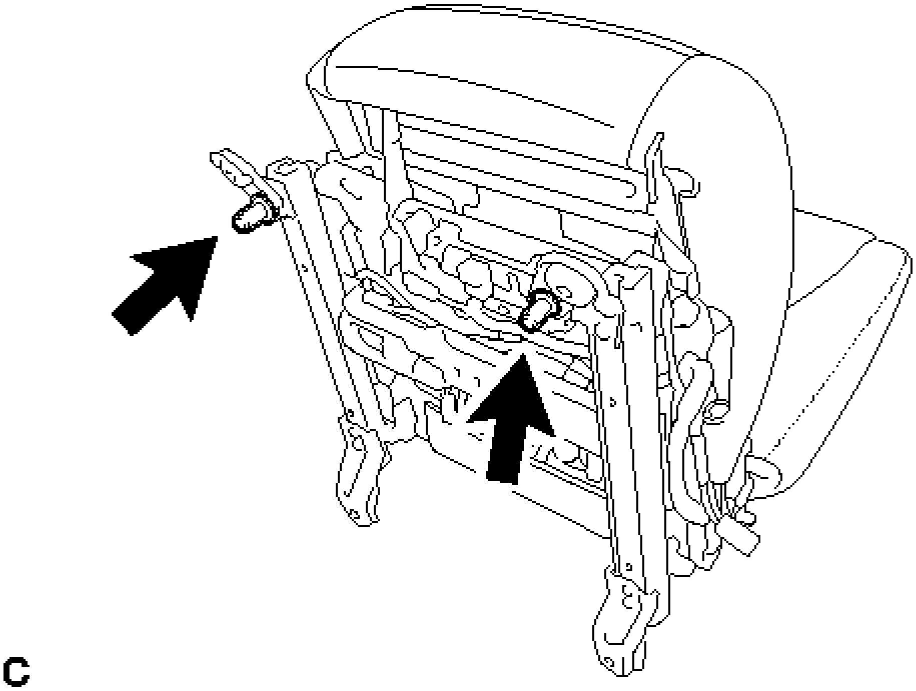

Fig. 66: Locating Seat Adjuster Cover Caps
Courtesy of TOYOTA MOTOR SALES, U.S.A., INC.

2. **REMOVE SLIDE AND VERTICAL POWER SEAT SWITCH KNOB**
    a. Using a moulding remover, disengage the 4 claws to remove the slide and vertical power seat switch knob.

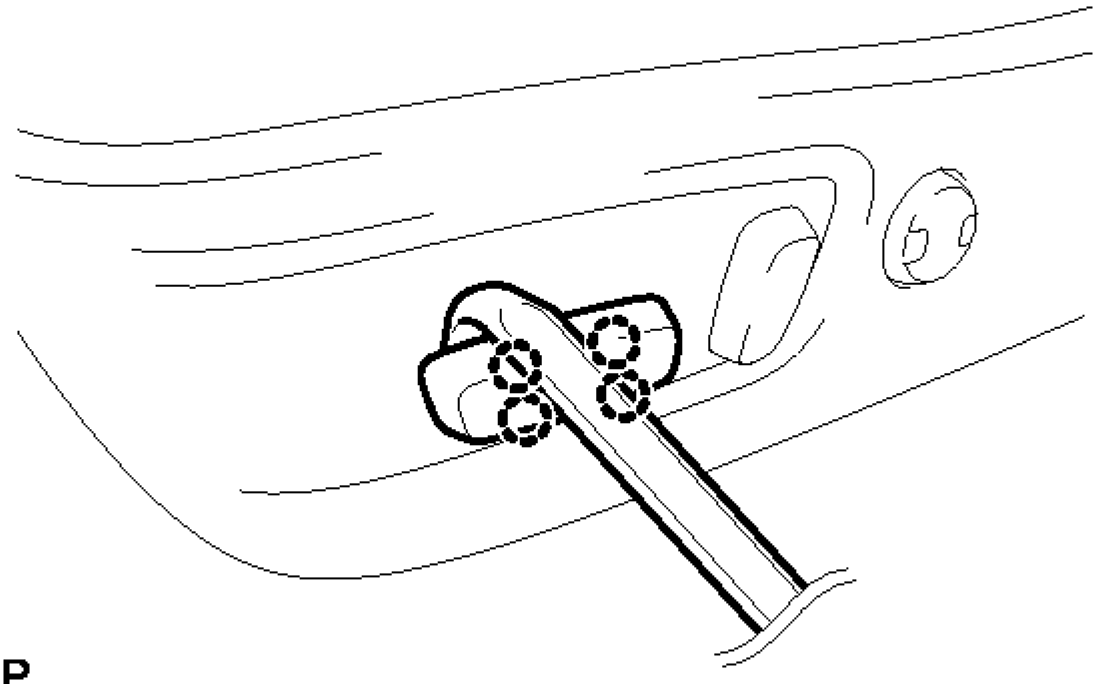

Fig. 67: Removing Slide And Vertical Power Seat Switch Knob
Courtesy of TOYOTA MOTOR SALES, U.S.A., INC.

3. **REMOVE RECLINING POWER SEAT SWITCH KNOB**
   a. Using a moulding remover, disengage the 4 claws to remove the reclining power seat switch knob.

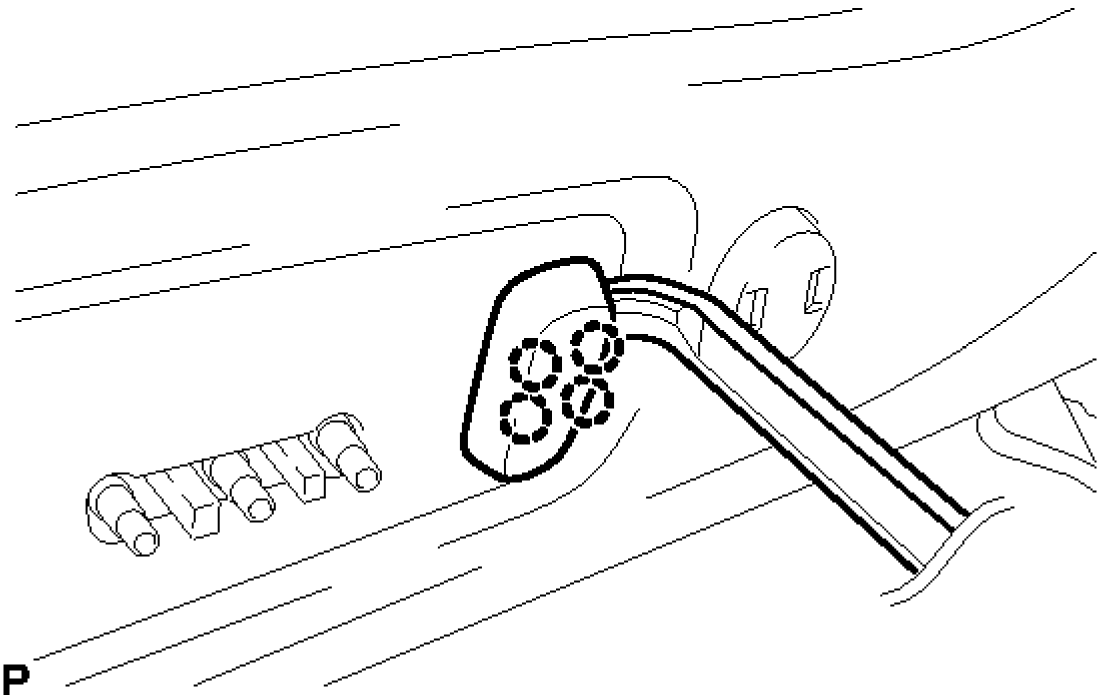

Fig. 68: Removing Reclining Power Seat Switch Knob

Courtesy of TOYOTA MOTOR SALES, U.S.A., INC.

4. **DISCONNECT SEPARATE TYPE FRONT SEATBACK COVER**
    a. Disconnect the 2 rubber bands of the separate type front seatback cover.

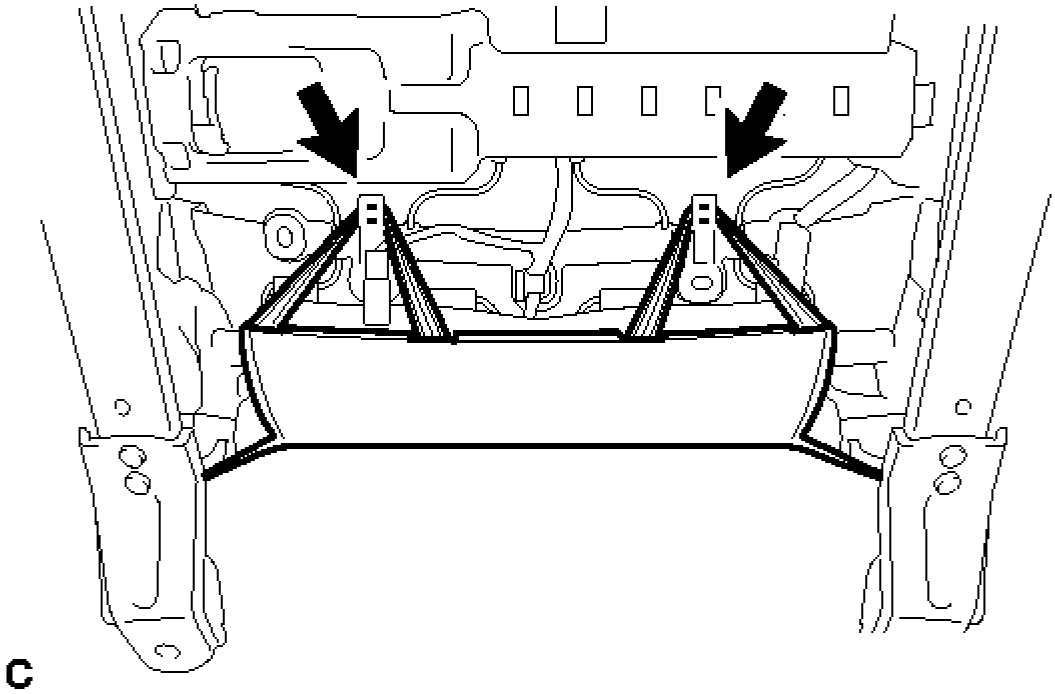

Fig. 69: Identifying Rubber Bands Of Front Seatback Cover (For TMMK Made Power Seat)
Courtesy of TOYOTA MOTOR SALES, U.S.A., INC.

5. **REMOVE FRONT SEAT CUSHION SHIELD**
    a. Remove the screw.

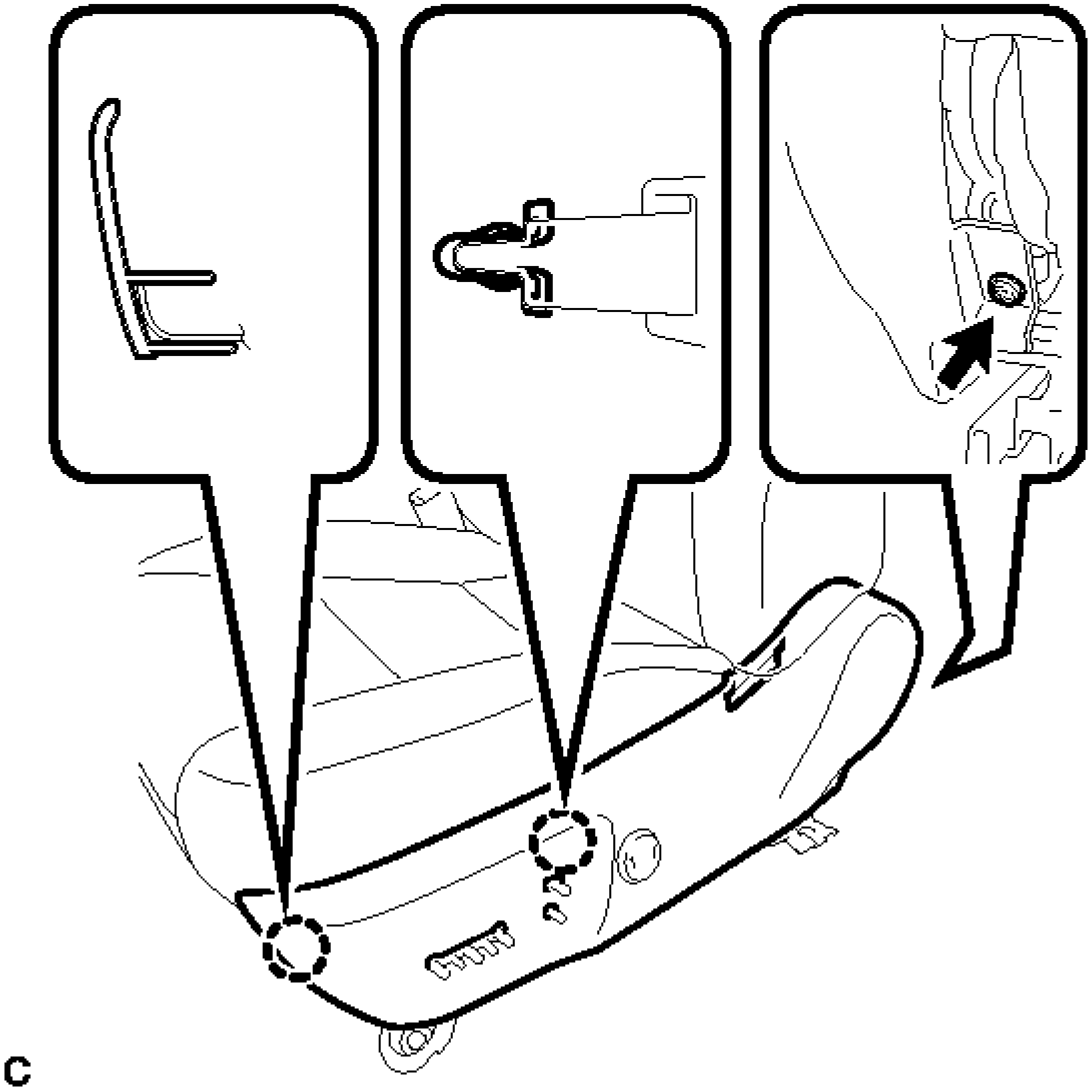

Fig. 70: Locating Front Seat Cushion Shield Claws And Fasteners
Courtesy of TOYOTA MOTOR SALES, U.S.A., INC.

b. Disengage the 2 claws to remove the front seat cushion shield.
c. Disengage the wire harness clamp.

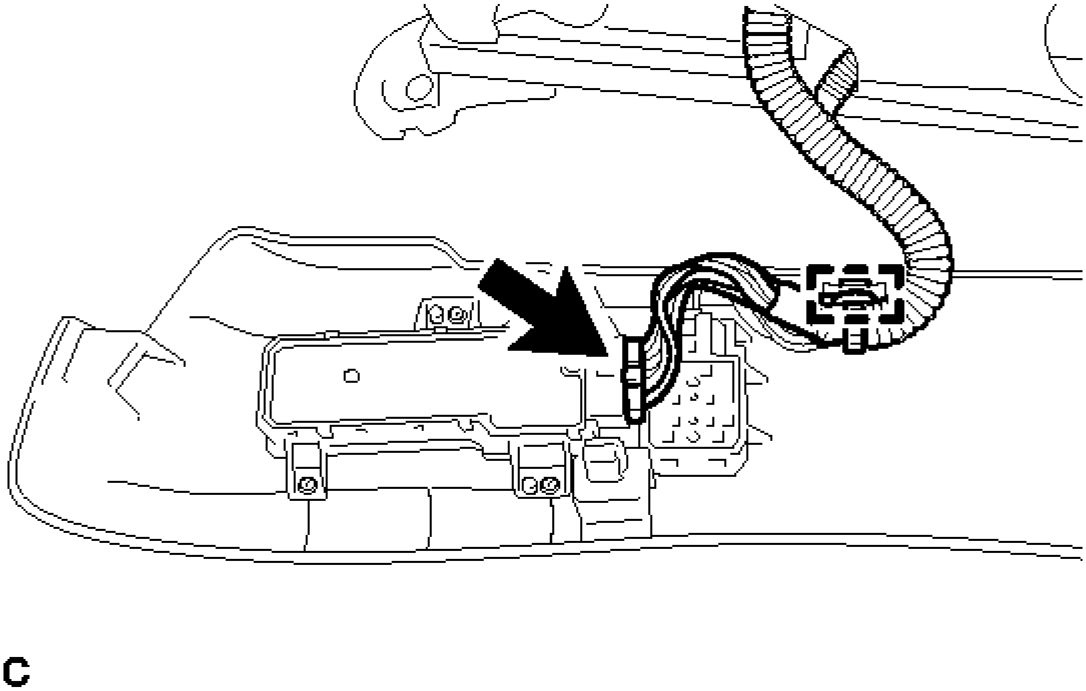

Fig. 71: Locating Front Power Seat Shield Switch Connector
Courtesy of TOYOTA MOTOR SALES, U.S.A., INC.

d. Disconnect the front power seat switch connector.

e. for Driver Side:

   1. Disengage 4 claws to remove the front lumbar power seat switch from the front seat cushion shield.

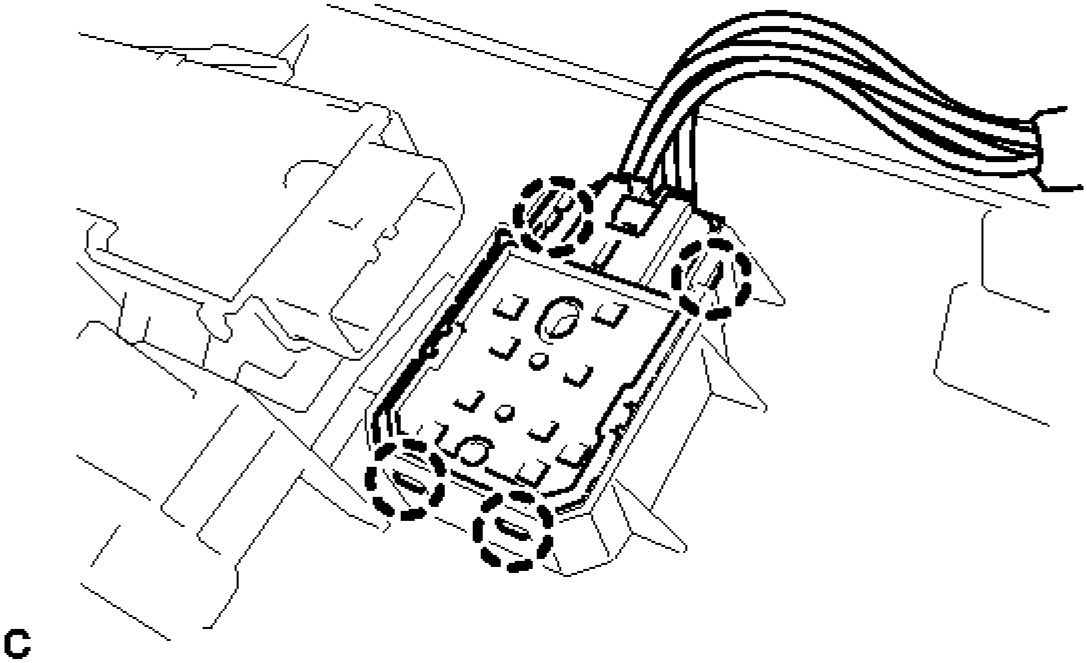

Fig. 72: Locating Front Lumbar Power Seat Switch Claws
Courtesy of TOYOTA MOTOR SALES, U.S.A., INC.

6. **REMOVE FRONT POWER SEAT SWITCH** . See step 6.
7. **REMOVE FRONT LUMBAR POWER SEAT SWITCH (for Driver Side)** . See step 2.
8. **REMOVE FRONT SEAT INNER CUSHION SHIELD**
    a. Remove the 2 screws and front seat inner cushion shield.

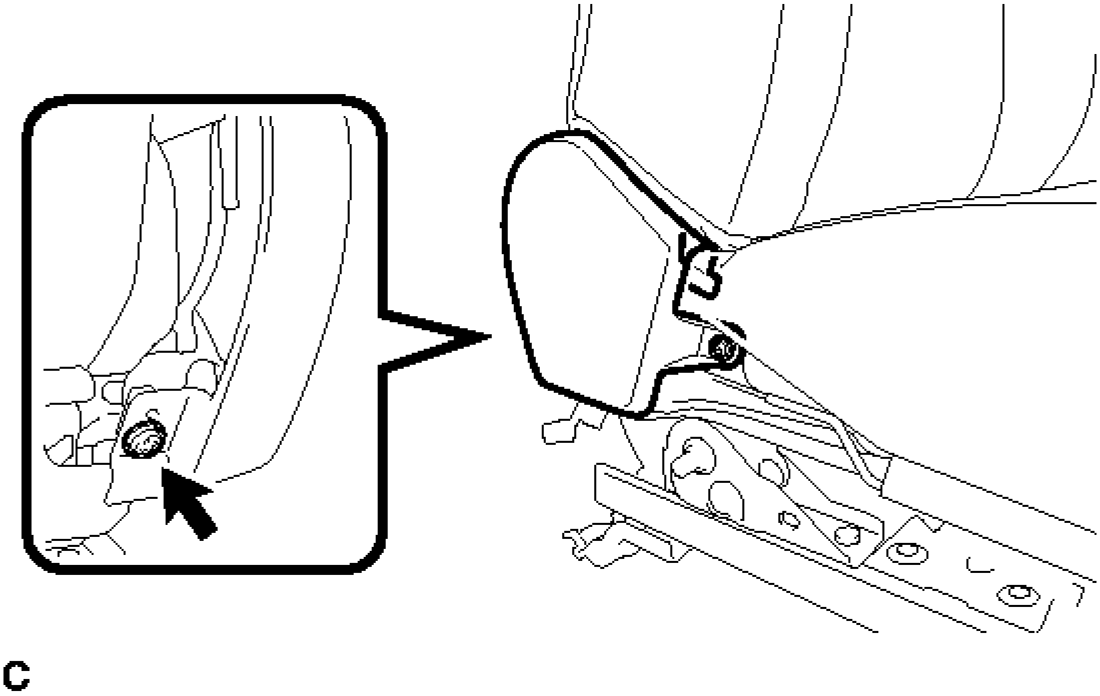

Fig. 73: Locating Front Seat Inner Cushion Shield Fasteners
Courtesy of TOYOTA MOTOR SALES, U.S.A., INC.

9. **REMOVE FRONT SEAT INNER BELT ASSEMBLY (for Driver Side)** . Refer to **REMOVAL - Step 2** .
10. **REMOVE FRONT SEAT INNER BELT ASSEMBLY (for Front Passenger Side)** . Refer to **REMOVAL - Step 4** .
11. **REMOVE SEPARATE TYPE FRONT SEAT CUSHION COVER WITH PAD**
    a. Disconnect the connector (A).

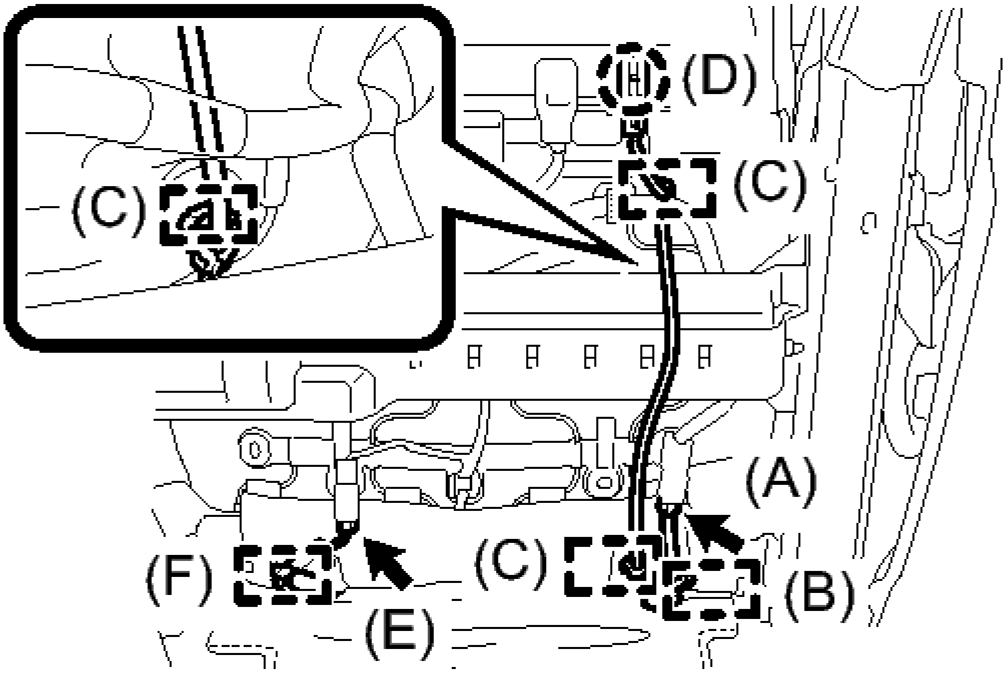

Fig. 74: Identifying Front Seatback Cover Connectors, Claw And Clamps (For TMMK Made Power Seat)
Courtesy of TOYOTA MOTOR SALES, U.S.A., INC.

b. Disengage the clamp (B).
c. Disengage the claw (D) and 3 clamps (C) to separate the front seat airbag assembly wire harness.
d. w/ Seat Heater System:
    1. Disconnect the connector (E).
    2. Disengage the clamp (F).
e. for Driver Side:
    1. Separate the separate type front seat cushion cover.

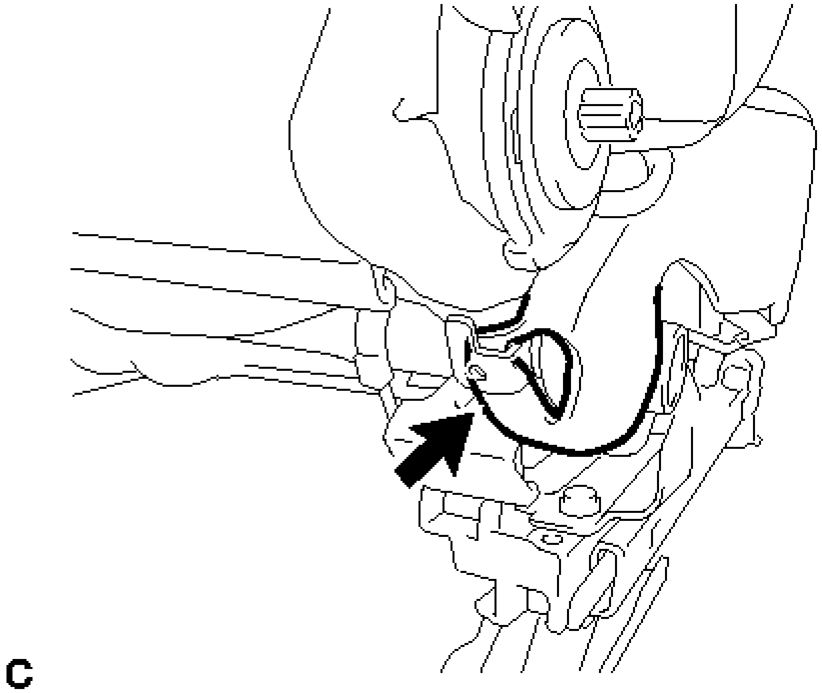

Fig. 75: Identifying Driver Side Front Seat Cushion Cover
Courtesy of TOYOTA MOTOR SALES, U.S.A., INC.

f. for Front Passenger Side:

  1. Separate the separate type front seat cushion cover.

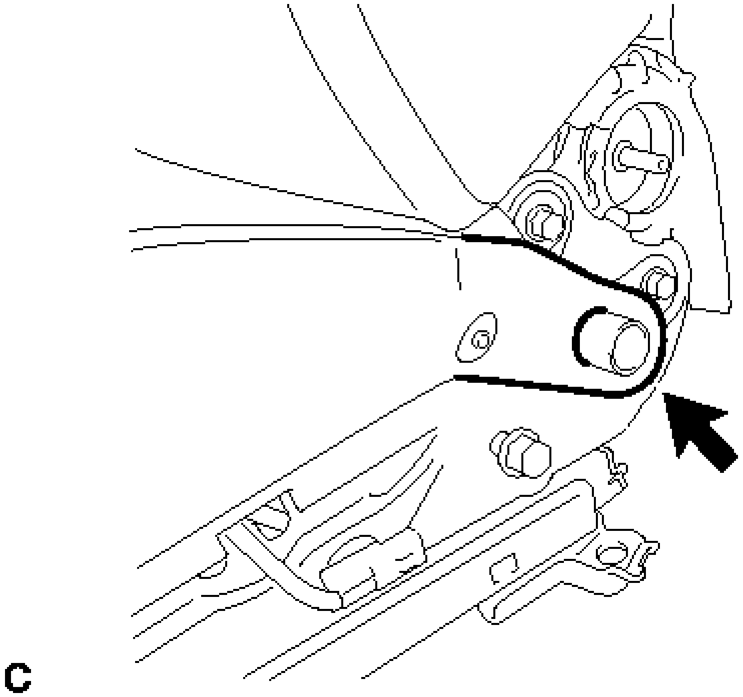

Fig. 76: Identifying Passenger Side Front Seat Cushion Cover

Courtesy of TOYOTA MOTOR SALES, U.S.A., INC.

g. Disengage the 4 hooks.

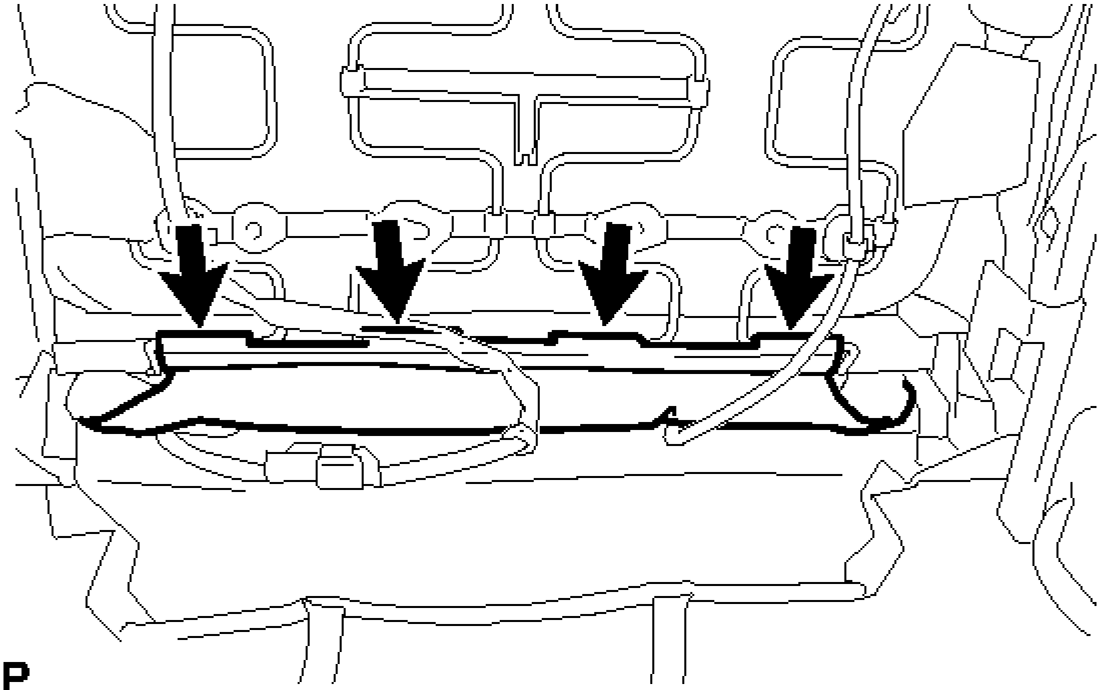

P

Fig. 77: Identifying Front Seat Cushion Cover Hooks
Courtesy of TOYOTA MOTOR SALES, U.S.A., INC.

h. Disengage each hook and remove the separate type front seat cushion cover with pad.

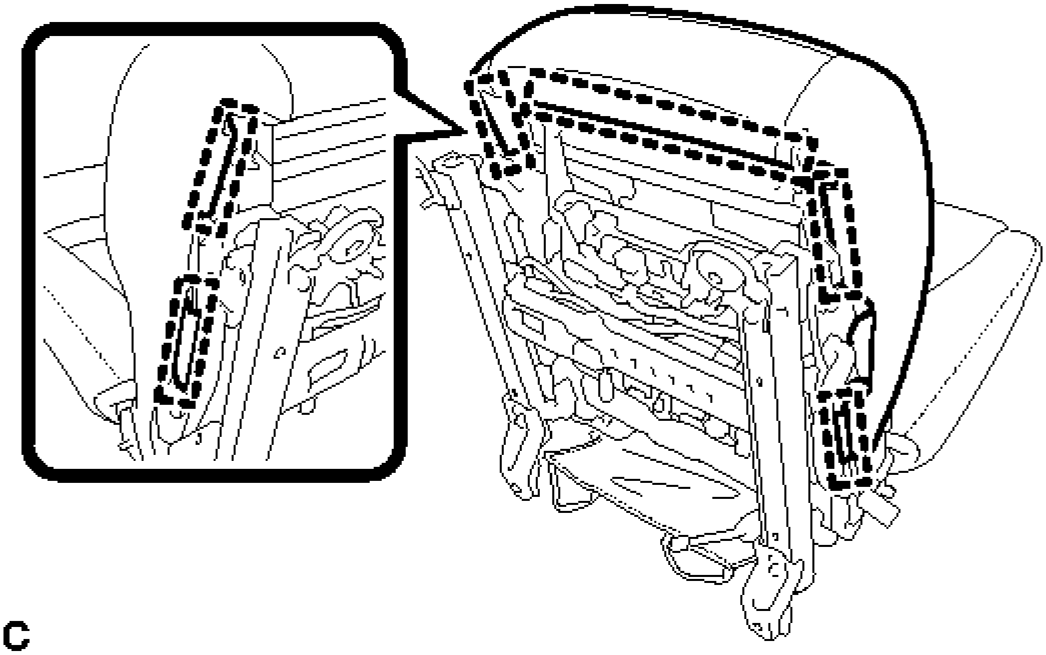

Fig. 78: Identifying Front Seat Cushion Cover Hooks
Courtesy of TOYOTA MOTOR SALES, U.S.A., INC.

12. **REMOVE SEPARATE TYPE FRONT SEAT CUSHION COVER**
    a. Remove the 12 hog rings and the separate type front seat cushion cover from the separate type front seat cushion pad.

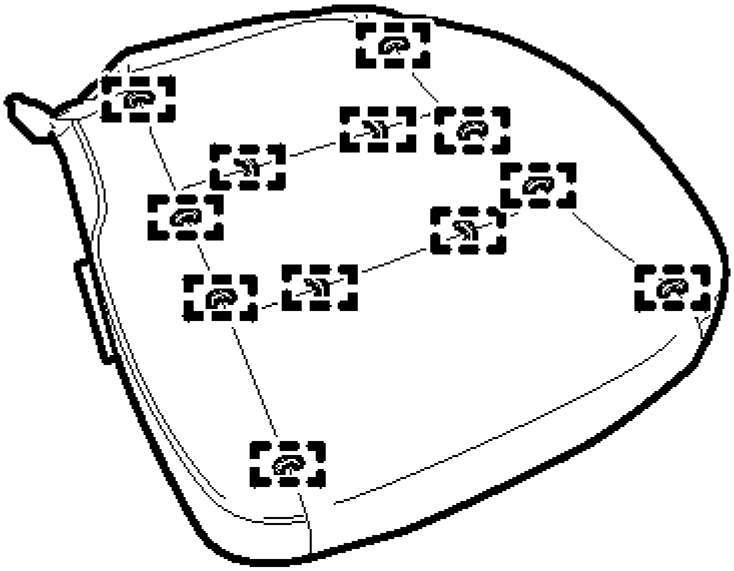

Fig. 79: Locating Front Seat Cushion Cover Hog Rings
Courtesy of TOYOTA MOTOR SALES, U.S.A., INC.

13. **REMOVE FRONT SEAT CUSHION HEATER ASSEMBLY (w/ Seat Heater System)** . See step 5.
14. **REMOVE SEPARATE TYPE FRONT SEATBACK COVER WITH PAD**
    a. Disengage the hook.

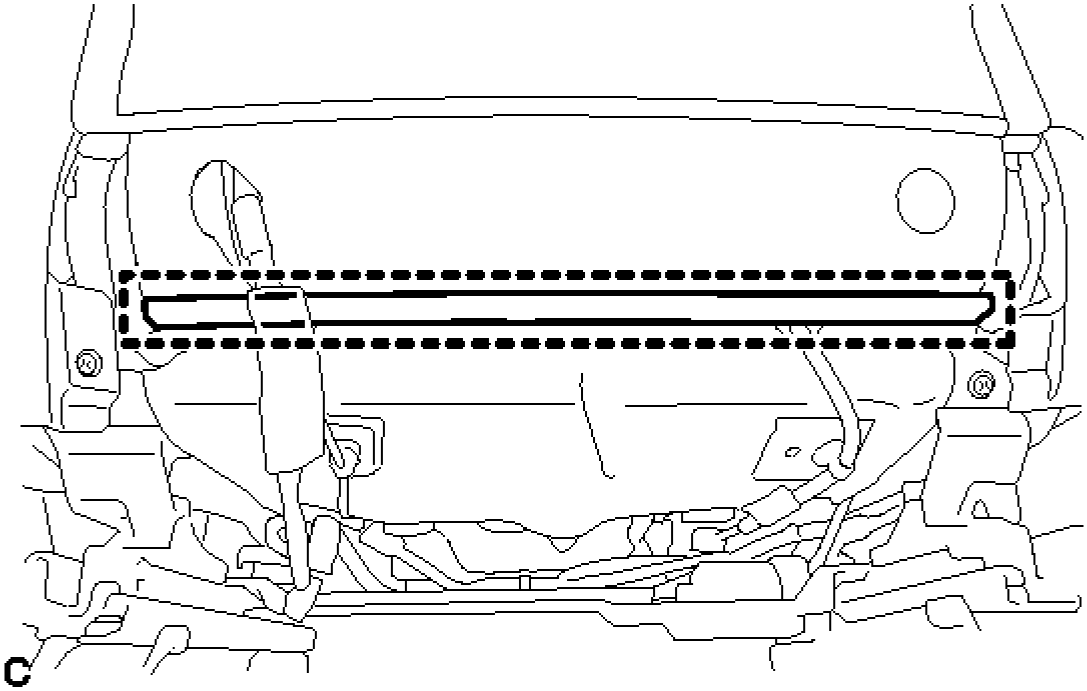

Fig. 80: Locating Front Seatback Cover Hook
Courtesy of TOYOTA MOTOR SALES, U.S.A., INC.

b. Disengage the 2 fasteners.

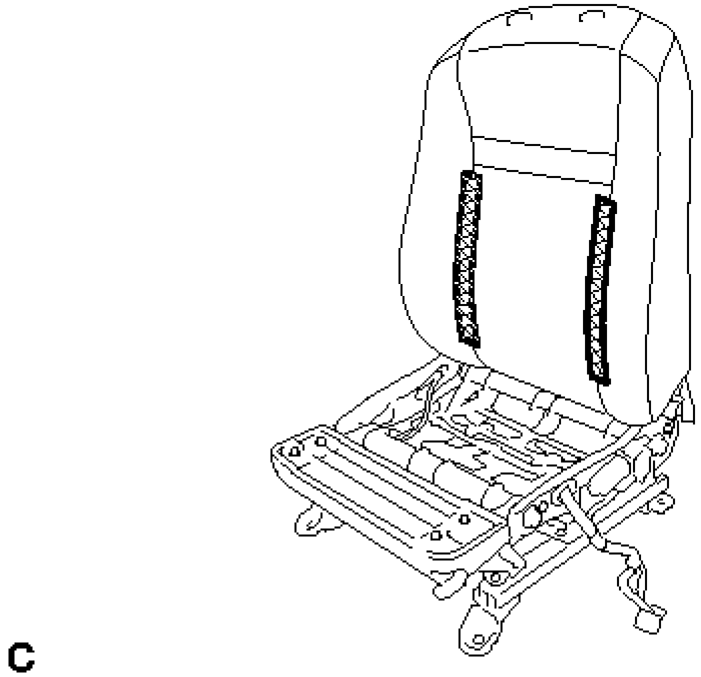

Fig. 81: Identifying Front Seatback Cover Fasteners
Courtesy of TOYOTA MOTOR SALES, U.S.A., INC.

c. Turn back the separate type front seatback cover.

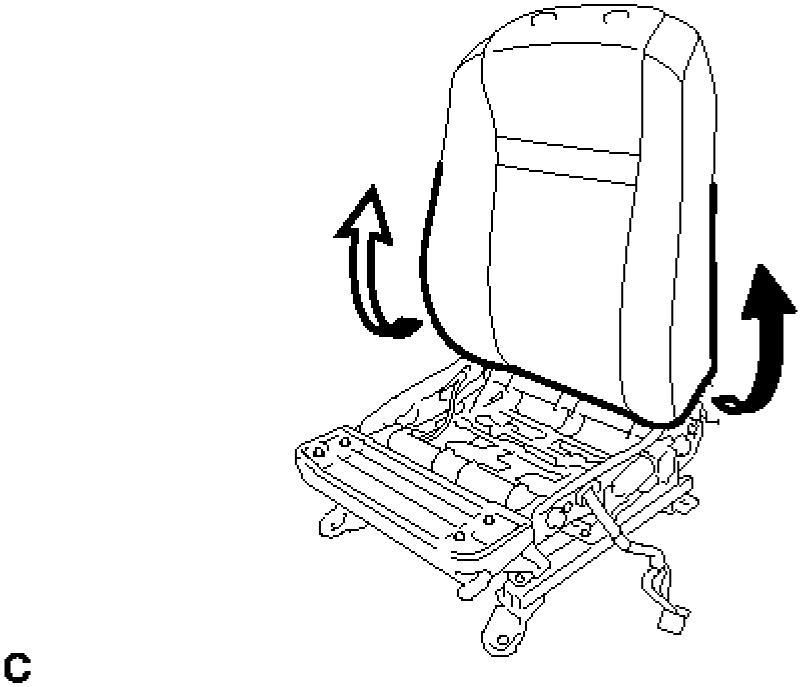

Fig. 82: Turning Back Front Seatback Cover
Courtesy of TOYOTA MOTOR SALES, U.S.A., INC.

d. Disengage the 2 hooks.

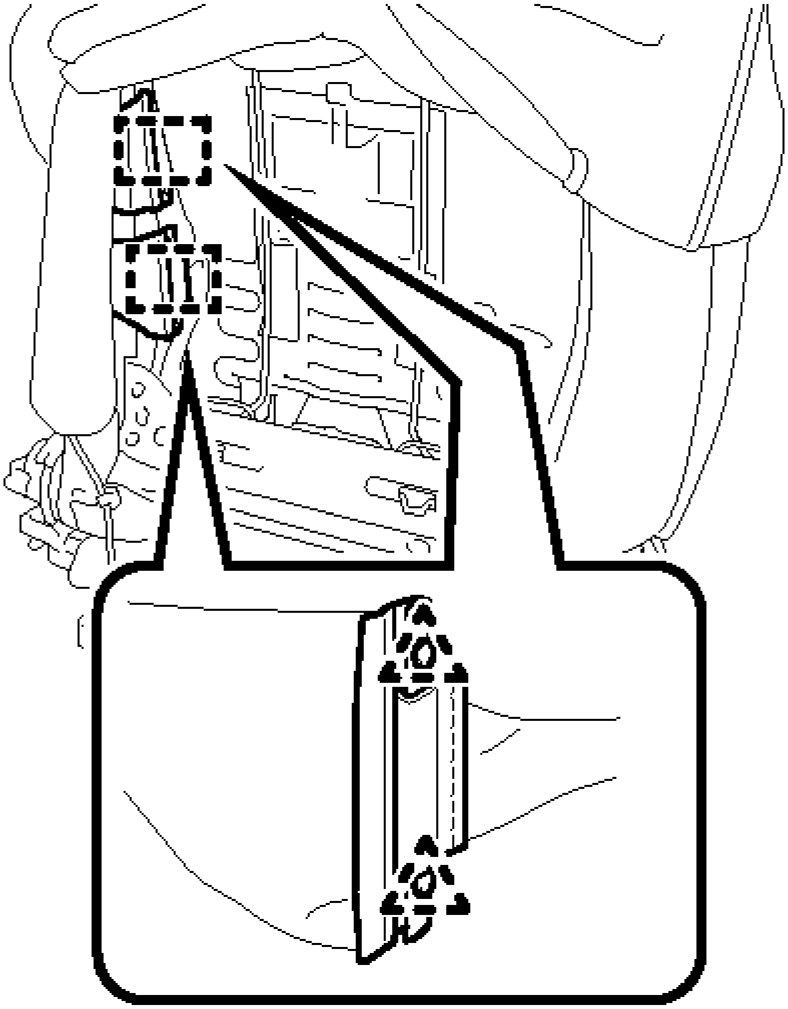

Fig. 83: Identifying Front Seatback Cover Hooks
Courtesy of TOYOTA MOTOR SALES, U.S.A., INC.

1. Remove the 4 clips.
2. Slide each hook to disengage them.

e. Disengage the 4 claws and remove the 2 front seat headrest supports.

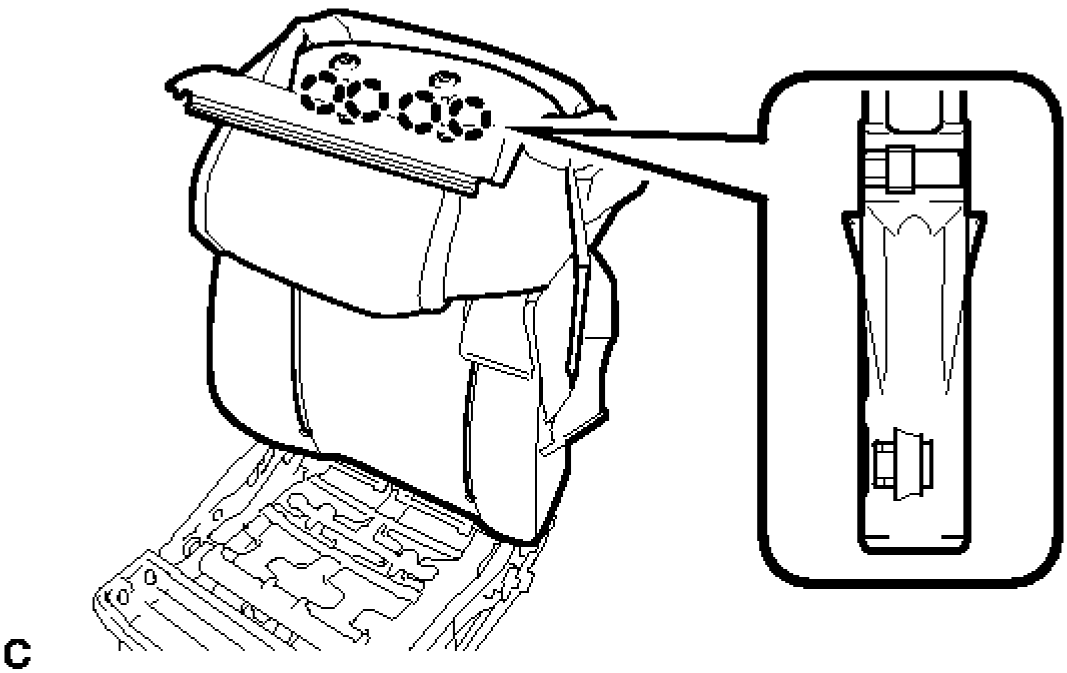

Fig. 84: Identifying Front Seatback Cover Headrest Support Claws
Courtesy of TOYOTA MOTOR SALES, U.S.A., INC.

f. Remove the separate type front seatback cover with pad.

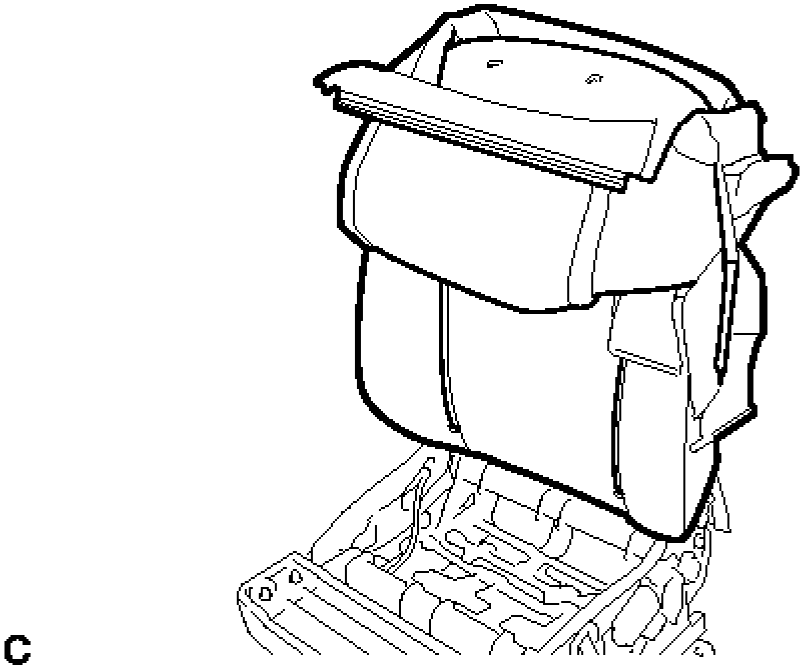

Fig. 85: Identifying Front Seatback Cover
Courtesy of TOYOTA MOTOR SALES, U.S.A., INC.

15. **REMOVE FRONT SEAT AIRBAG ASSEMBLY** . Refer to **REMOVAL - Step 13** .
16. **REMOVE SEPARATE TYPE FRONT SEATBACK COVER**
    a. Remove the 2 hog rings.

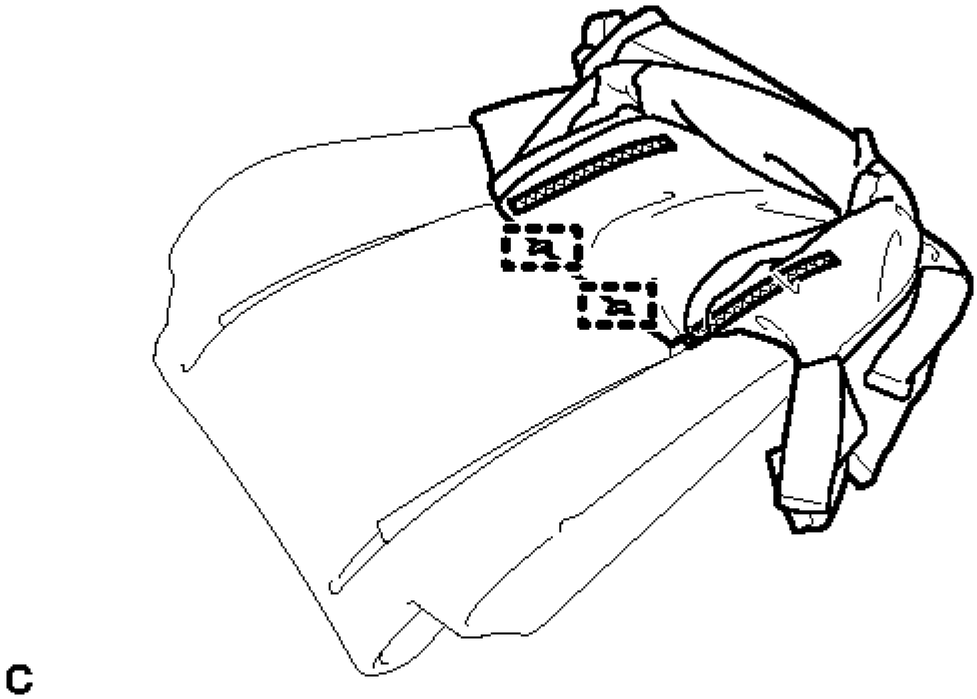

Fig. 86: Locating Front Seatback Cover Hog Rings
Courtesy of TOYOTA MOTOR SALES, U.S.A., INC.

    b. Disengage the 2 fasteners to remove the separate type front seatback cover from the separate type front seatback pad.

17. **REMOVE FRONT SEATBACK HEATER ASSEMBLY (w/ Seat Heater System)** . See step 6.
18. **REMOVE FRONT SEAT LOWER CUSHION SHIELD LH (for Driver Side)**
    a. Remove the screw.

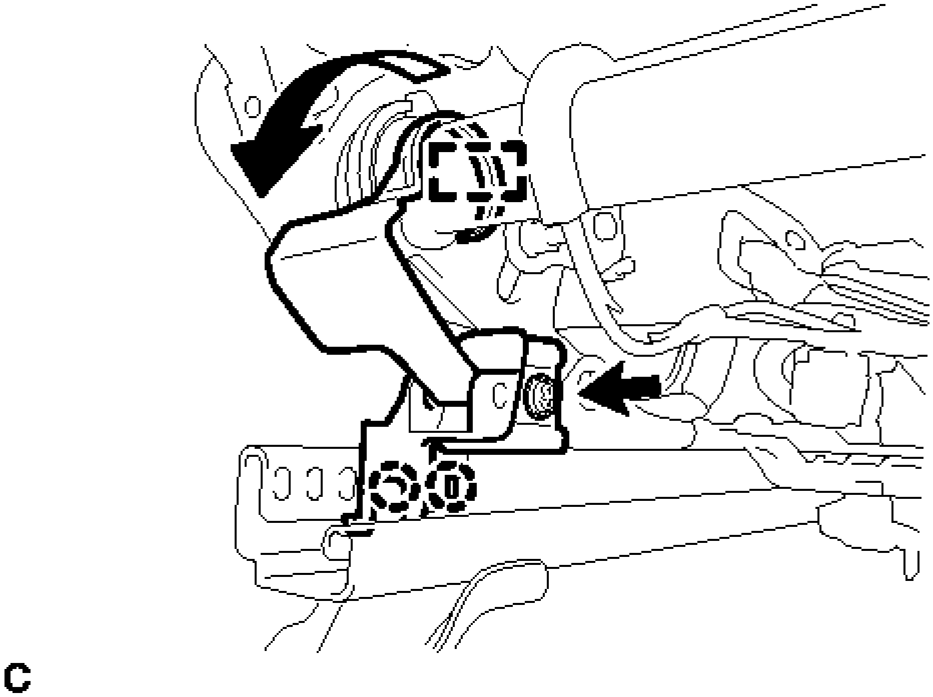

Fig. 87: Removing Front Seat Lower Cushion Shield LH (For Driver Side)
Courtesy of TOYOTA MOTOR SALES, U.S.A., INC.

b. Disengage the hook as shown in the illustration.

c. Disengage the 2 claws to remove the front seat lower cushion shield LH.

19. **REMOVE FRONT SEAT LOWER CUSHION SHIELD RH (for Driver Side)**

a. Remove the screw.

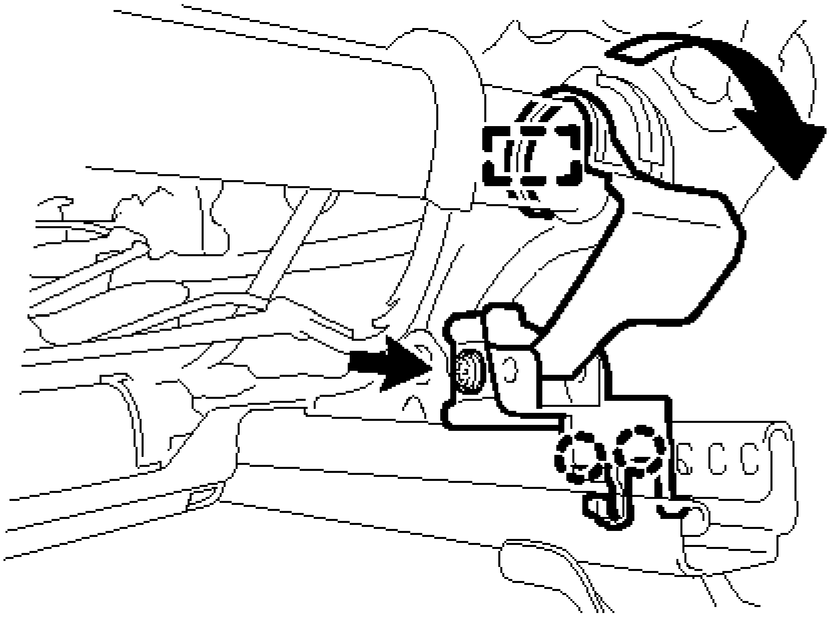

Fig. 88: Removing Front Seat Lower Cushion Shield RH (For Driver Side)
Courtesy of TOYOTA MOTOR SALES, U.S.A., INC.

b. Disengage the hook as shown in the illustration.

c. Disengage the 2 claws to remove the front seat lower cushion shield RH.

20. **REMOVE FRONT SEAT LOWER CUSHION SHIELD LH (for Front Passenger Side)**

 a. Disengage the 2 claws to remove the front seat lower cushion shield LH.

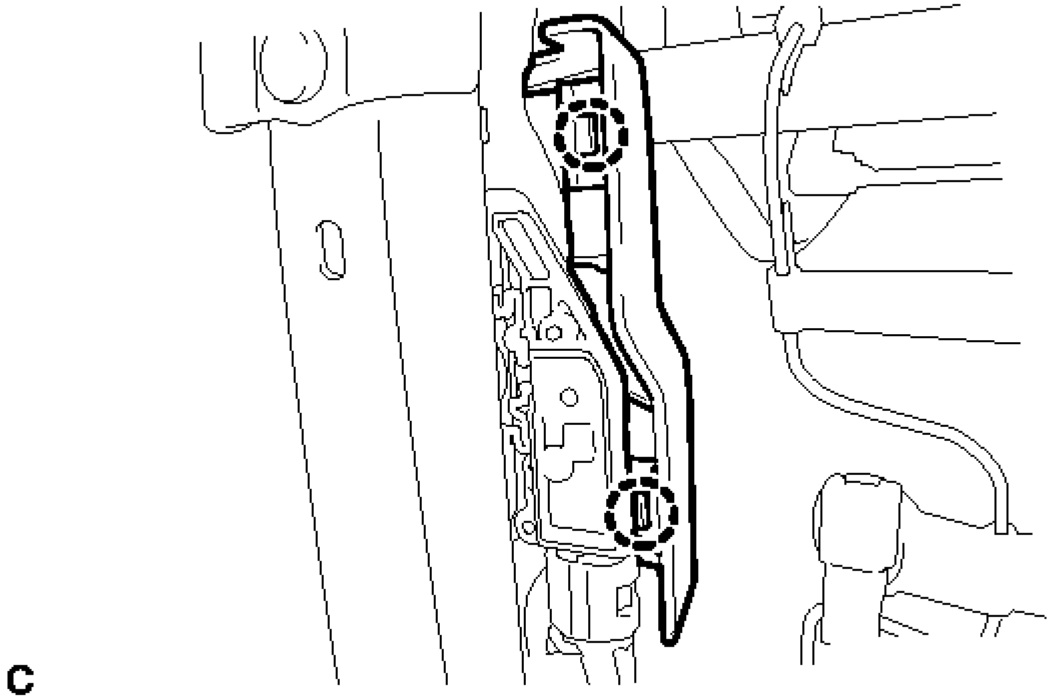

Fig. 89: Locating Front Seat Lower Cushion Shield LH (For Front Passenger Side) Claws
Courtesy of TOYOTA MOTOR SALES, U.S.A., INC.

21. **REMOVE FRONT SEAT LOWER CUSHION SHIELD RH (for Front Passenger Side)**
    a. Disengage the 2 claws to remove the front seat lower cushion shield RH.

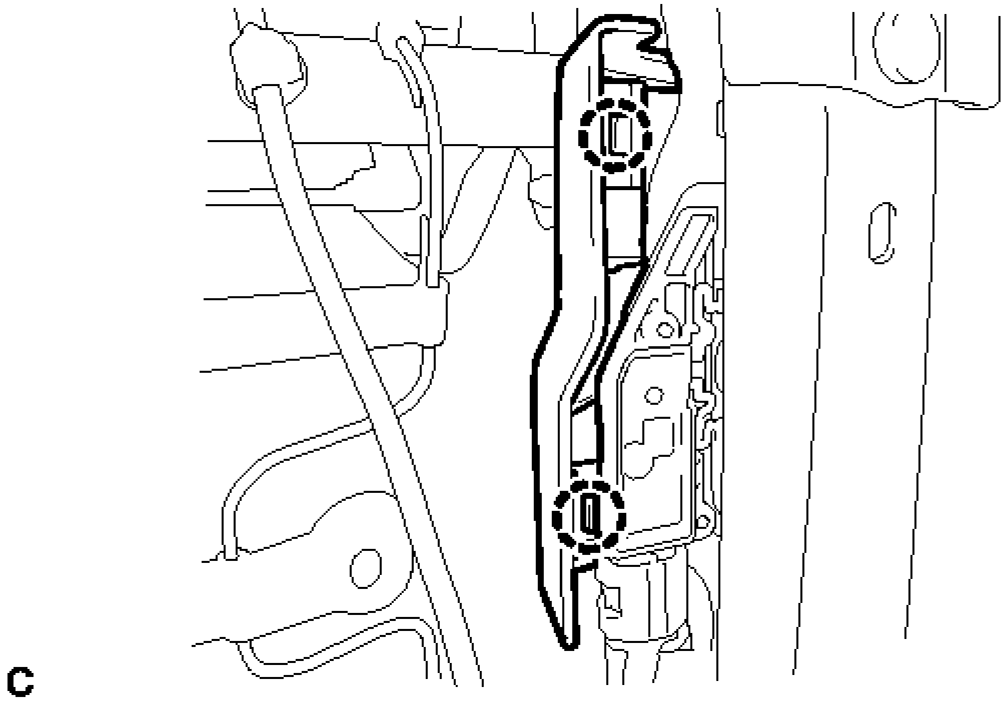

Fig. 90: Locating Front Seat Lower Cushion Shield RH (For Front Passenger Side) Claws

Courtesy of TOYOTA MOTOR SALES, U.S.A., INC.

22. **REMOVE SEAT HEATER CONTROL SUB-ASSEMBLY (w/ Seat Heater System)**
    a. Disconnect the connector.

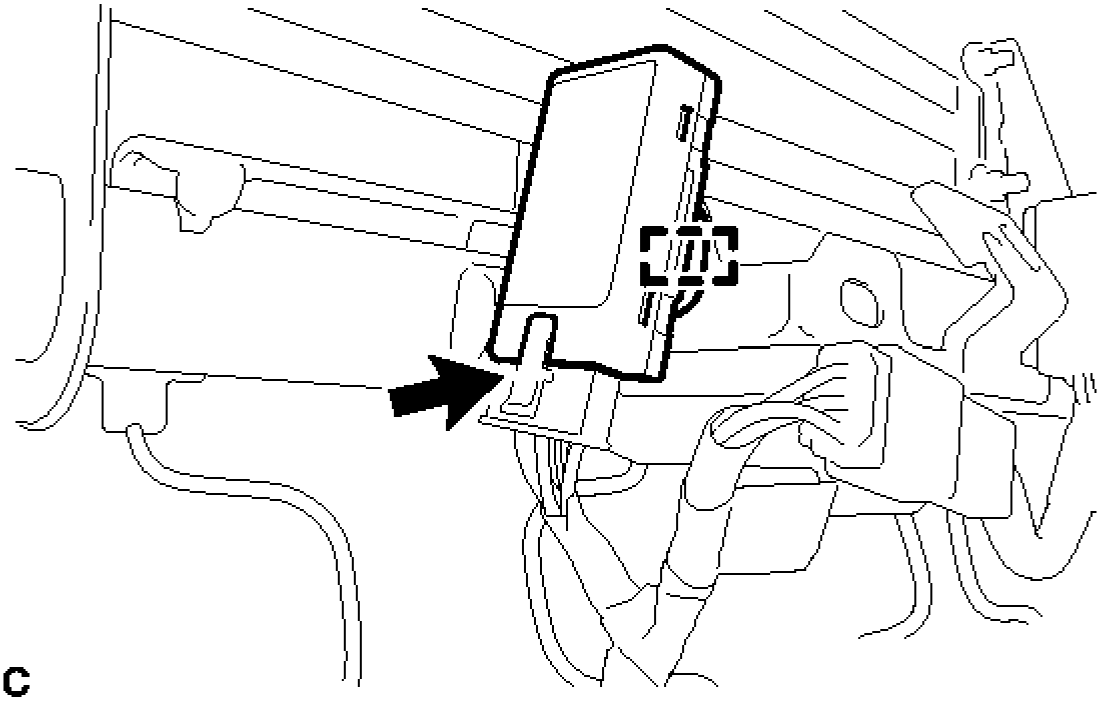

Fig. 91: Locating Seat Heater Control Sub-Assembly (w/ Seat Heater System)
Courtesy of TOYOTA MOTOR SALES, U.S.A., INC.

    b. Disengage the clamp and remove the seat heater control sub-assembly.

23. **REMOVE OCCUPANT DETECTION ECU (for Front Passenger Side)** . Refer to **REMOVAL - Step 3** .
24. **REMOVE FRONT SEAT WIRE**
    a. Disconnect the connectors and disengage the wire harness clamps to remove the front seat wire.
25. **REMOVE FRONT NO. 2 SEAT WIRE**
    a. Disconnect the connectors and disengage the wire harness clamps to remove the front No. 2 seat wire.
26. **REMOVE FRONT UPPER SEAT TRACK COVER LH**
    a. Disengage the 2 claws to remove the front upper seat track cover LH.

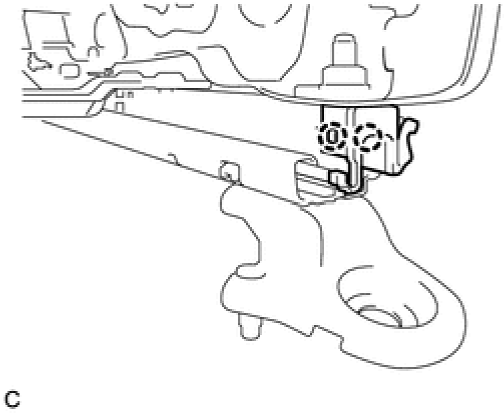

Fig. 92: Locating Front Upper Seat Track Cover LH Claws
Courtesy of TOYOTA MOTOR SALES, U.S.A., INC.

27. **REMOVE FRONT UPPER SEAT TRACK COVER RH**
    a. Disengage the 2 claws to remove the front upper seat track cover RH.

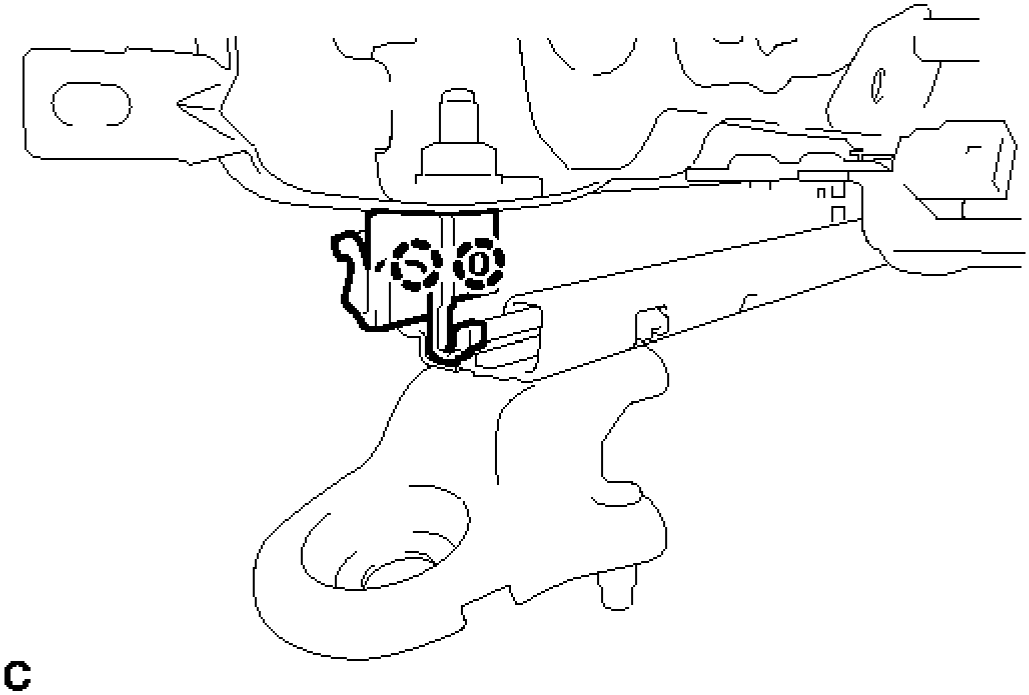

Fig. 93: Locating Front Upper Seat Track Cover RH Claws
Courtesy of TOYOTA MOTOR SALES, U.S.A., INC.

28. **REMOVE REAR UPPER SEAT TRACK COVER LH (for Front Passenger Side)**
    a. Disengage the 2 claws to remove the rear upper seat track cover LH.

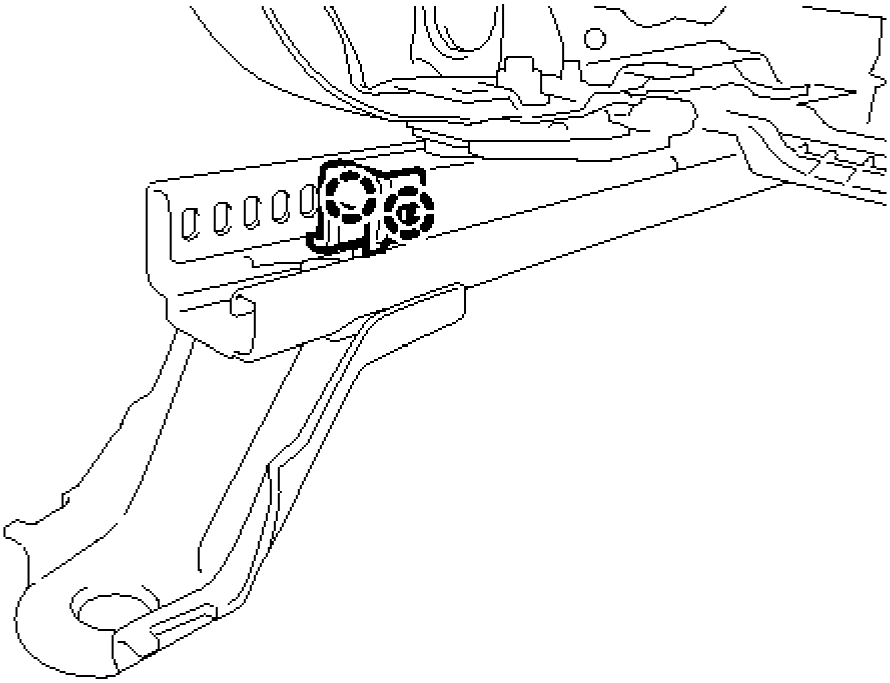

Fig. 94: Locating Rear Upper Seat Track Cover LH (For Front Passenger Side) Claws
Courtesy of TOYOTA MOTOR SALES, U.S.A., INC.

29. **REMOVE REAR UPPER SEAT TRACK COVER RH (for Front Passenger Side)**
    a. Disengage the 2 claws to remove the rear upper seat track cover RH.

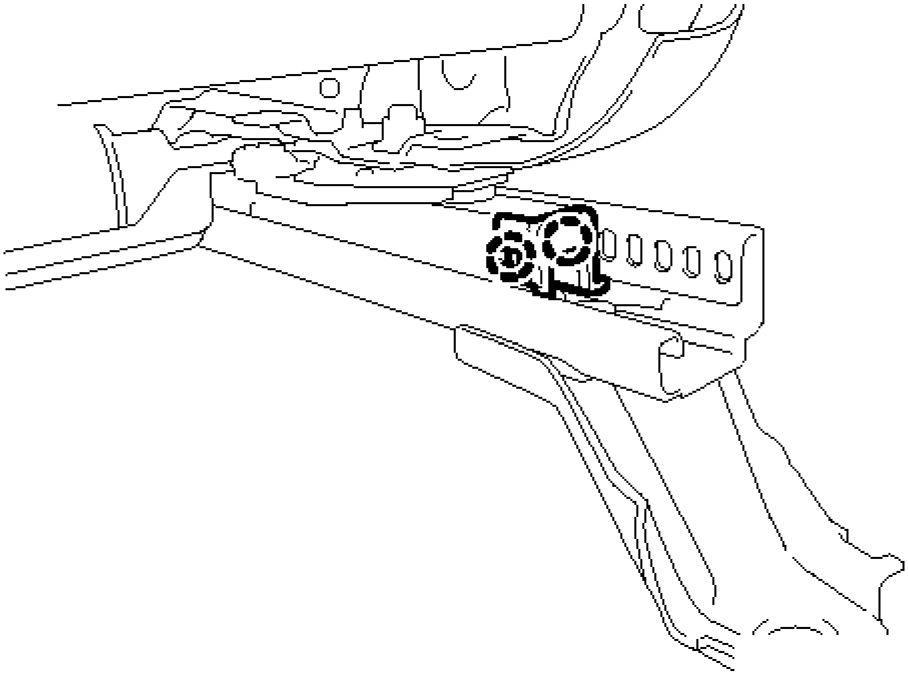

Fig. 95: Locating Rear Upper Seat Track Cover RH (For Front Passenger Side) Claws

Courtesy of TOYOTA MOTOR SALES, U.S.A., INC.

30. **REMOVE FRONT SEAT CUSHION PANEL SUB-ASSEMBLY (for Driver Side)**
    a. Remove the 4 bolts and front seat cushion panel sub-assembly.

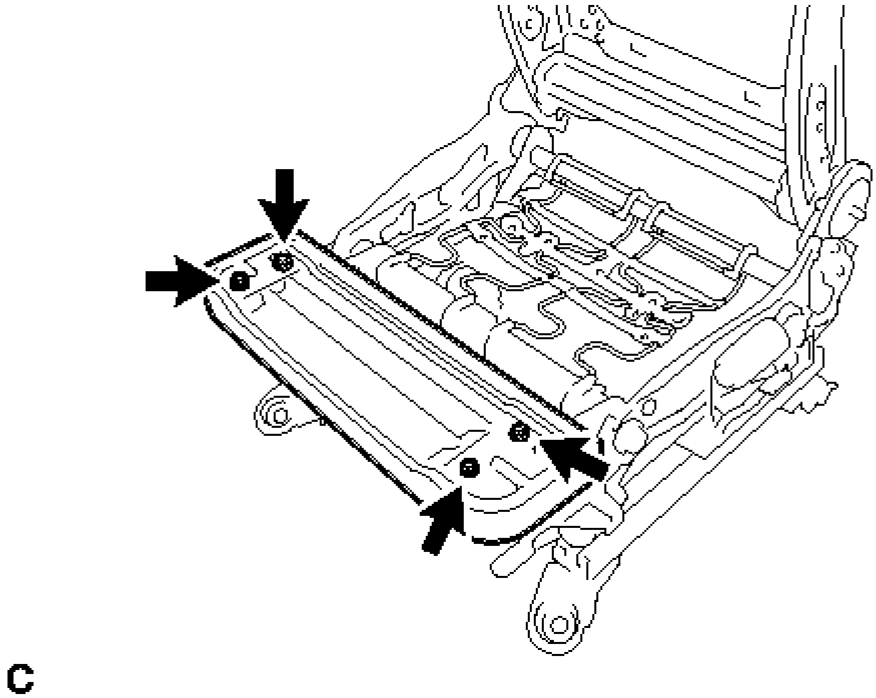

Fig. 96: Locating Front Seat Cushion Panel Sub-Assembly (For Driver Side) Bolts
Courtesy of TOYOTA MOTOR SALES, U.S.A., INC.

31. **REMOVE FRONT SEATBACK FRAME SUB-ASSEMBLY**
    a. Remove the 4 bolts and the front seatback frame sub-assembly.

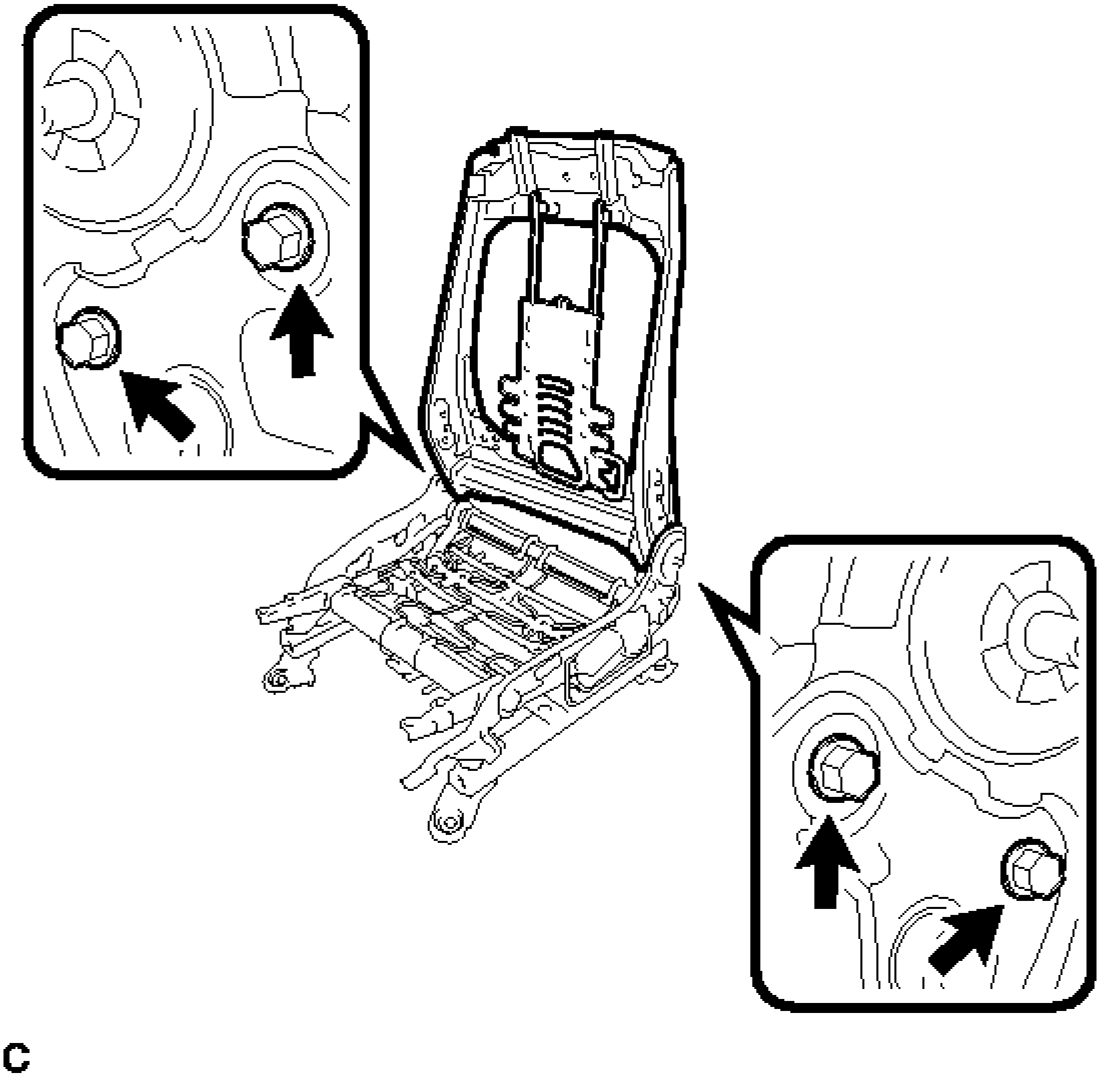

Fig. 97: Locating Front Seatback Frame Sub-Assembly Bolts
Courtesy of TOYOTA MOTOR SALES, U.S.A., INC.

32. **REMOVE LUMBAR SUPPORT ADJUSTER ASSEMBLY (for Driver Side)** . See step 5.
33. **REMOVE SEPARATE TYPE FRONT SEATBACK SPRING ASSEMBLY (for Front Passenger Side)**
    a. Disengage the 4 claws.

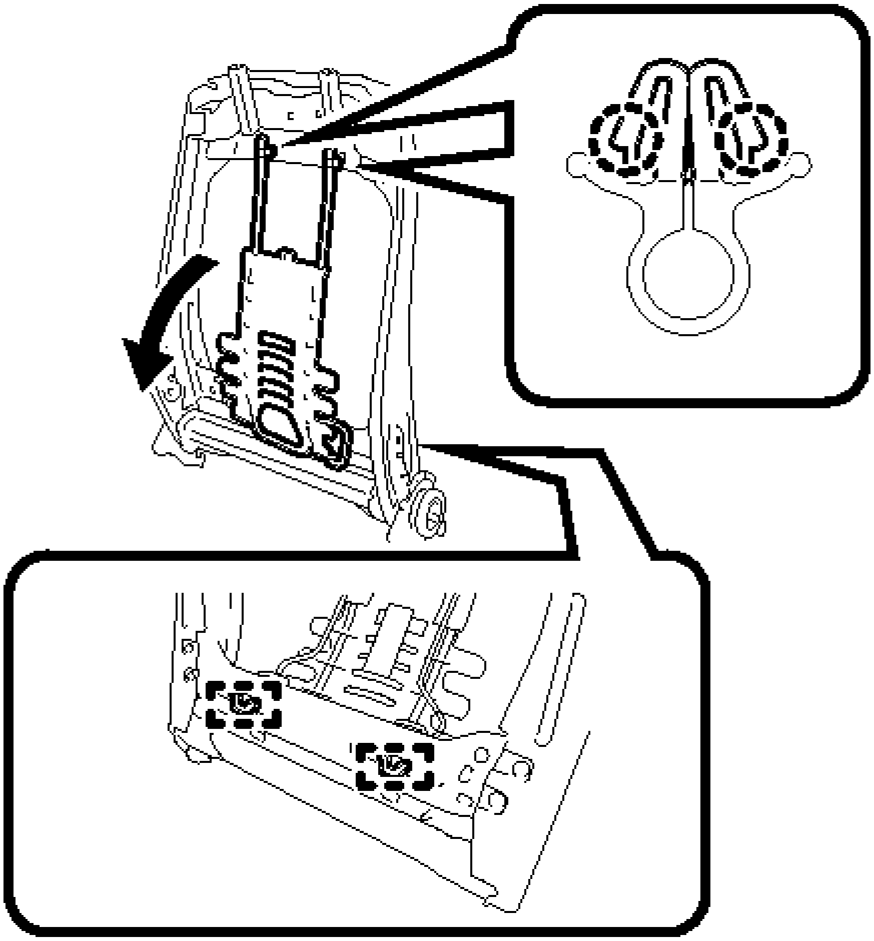

Fig. 98: Removing Front Seatback Spring Assembly
Courtesy of TOYOTA MOTOR SALES, U.S.A., INC.

b. Disengage the 2 guides to remove the separate type front seatback spring assembly.
c. Remove the 2 front seatback hooks from the separate type front seatback spring assembly.

34. **REMOVE SEPARATE TYPE FRONT SEAT CUSHION SPRING ASSEMBLY**
    a. Remove the separate type front seat cushion spring assembly.

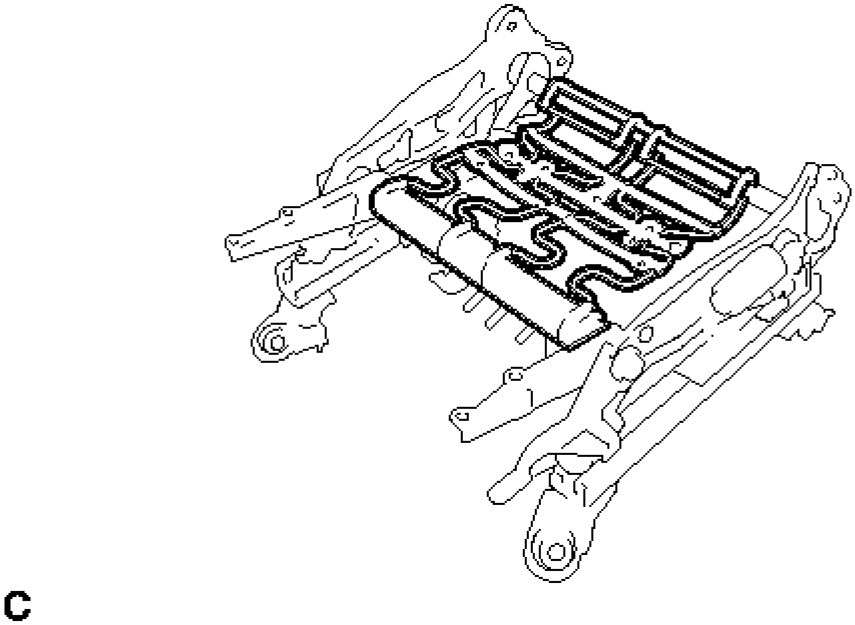

Fig. 99: Identifying Front Seat Cushion Spring Assembly
Courtesy of TOYOTA MOTOR SALES, U.S.A., INC.

INSPECTION

INSPECTION

1. **INSPECT FRONT SEAT FRAME WITH ADJUSTER ASSEMBLY LH**
    a. Check the operation of the slide motor.

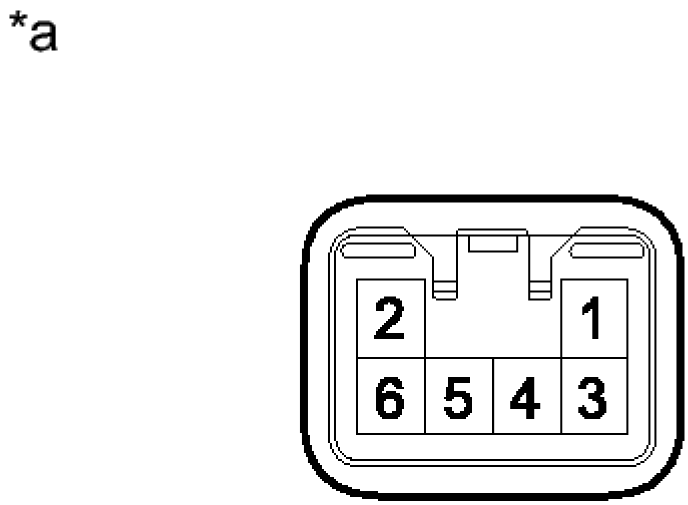

Fig. 100: Identifying Slide Motor Connector Terminals
Courtesy of TOYOTA MOTOR SALES, U.S.A., INC.

1. Check if the front seat cushion moves smoothly when the battery is connected to the slide motor connector terminals.

TEXT IN ILLUSTRATION

*a	Component without harness connected (Slide Motor (Front Seat Frame with Adjuster Assembly LH))

OK

Measurement Condition	Operational Direction
Battery positive (+) --> Terminal 3 Battery	Forward

negative (-) --> Terminal 4	
Battery positive (+) --> Terminal 4 Battery negative (-) --> Terminal 3	Backward

If the result is not as specified, replace the front seat frame with adjuster assembly LH.

b. Check the operation of the lifter motor.

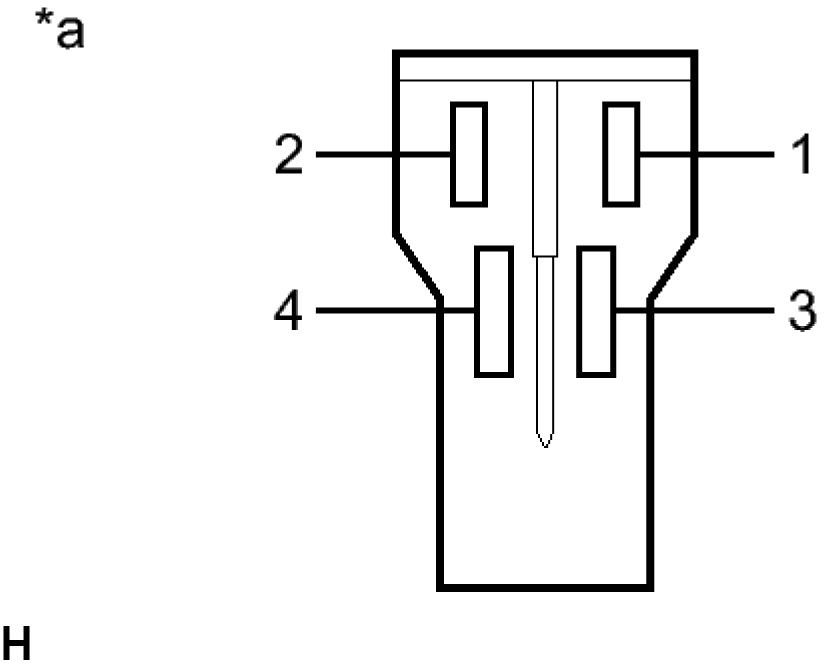

Fig. 101: Identifying Lifter/Reclining Motor Connector Terminals
Courtesy of TOYOTA MOTOR SALES, U.S.A., INC.

1. Check if the front seat cushion moves smoothly when the battery is connected to the lifter motor connector terminals.

TEXT IN ILLUSTRATION

*a	Component without harness connected (Lifter Motor (Front Seat

	Frame with Adjuster Assembly LH))

OK

Measurement Condition	**Operational Direction**
Battery positive (+) --> Terminal 2 Battery negative (-) --> Terminal 1	Upward
Battery positive (+) --> Terminal 1 Battery negative (-) --> Terminal 2	Downward

If the result is not as specified, replace the front seat frame with adjuster assembly LH.

c. Check the operation of the front vertical motor.

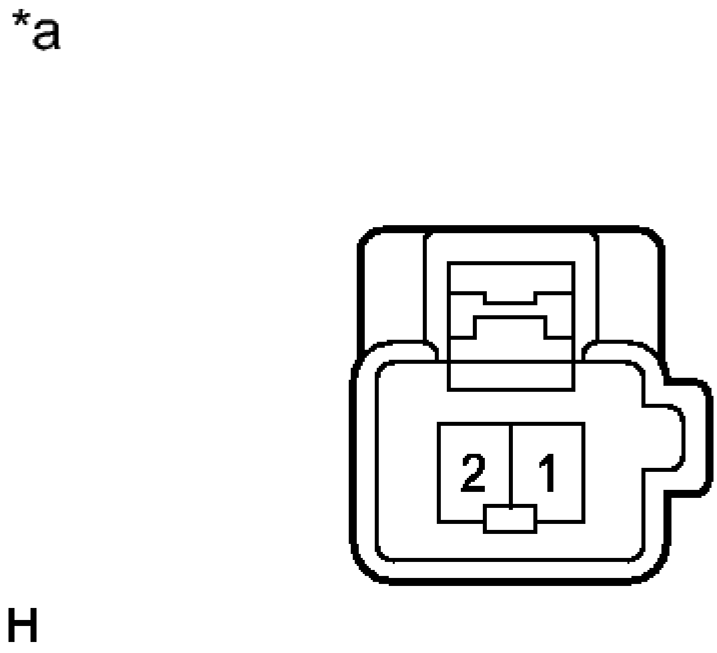

Fig. 102: Identifying Motor Connector Terminals

Courtesy of TOYOTA MOTOR SALES, U.S.A., INC.

1. Check if the front seat cushion moves smoothly when the battery is connected to the front vertical motor connector terminals.

   TEXT IN ILLUSTRATION

*a	Component without harness connected (Front Vertical Motor (Front Seat Frame with Adjuster Assembly LH))

   OK

Measurement Condition	Operational Direction
Battery positive (+) --> Terminal 1 Battery negative (-) --> Terminal 2	Upward
Battery positive (+) --> Terminal 2 Battery negative (-) --> Terminal 1	Downward

   If the result is not as specified, replace the front seat frame with adjuster assembly LH.

2. **INSPECT FRONT SEAT FRAME WITH ADJUSTER ASSEMBLY RH**
   a. Check the operation of the slide motor.

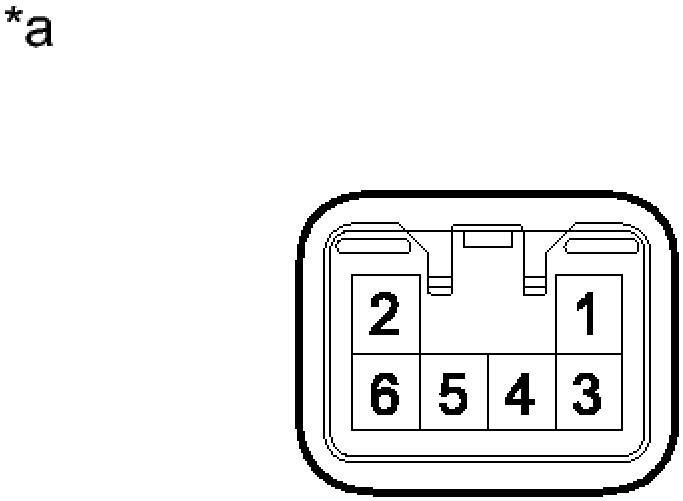

Fig. 103: Identifying Slide Motor Connector Terminals
Courtesy of TOYOTA MOTOR SALES, U.S.A., INC.

1. Check if the front seat cushion moves smoothly when the battery is connected to the slide motor connector terminals.

TEXT IN ILLUSTRATION

*a	Component without harness connected (Slide Motor (Front Seat Frame with Adjuster Assembly RH))

OK

Measurement Condition	Operational Direction
Battery positive (+) --> Terminal 3 Battery	Forward

negative (-) --> Terminal 4	
Battery positive (+) --> Terminal 4 Battery negative (-) --> Terminal 3	Backward

If the result is not as specified, replace the front seat frame with adjuster assembly RH.

3. INSPECT FRONT SEAT BACK FRAME SUB-ASSEMBLY LH

a. Check the operation of the reclining motor.

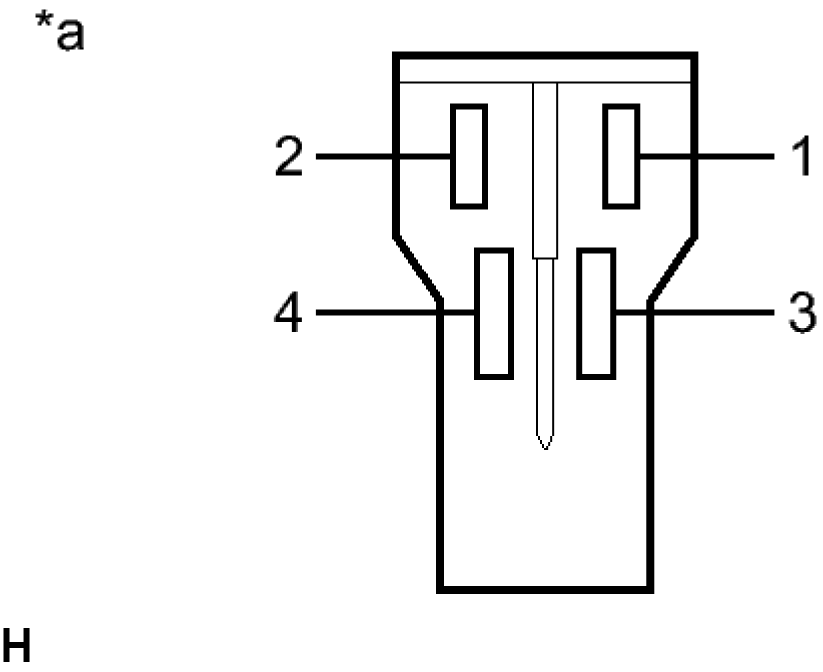

Fig. 104: Identifying Lifter/Reclining Motor Connector Terminals
Courtesy of TOYOTA MOTOR SALES, U.S.A., INC.

1. Check if the front seat back moves smoothly when the battery is connected to the reclining motor connector terminals.

TEXT IN ILLUSTRATION

	Component without harness connected (Reclining

*a	Motor (Front Seat Back Frame Sub-assembly LH))

OK

Measurement Condition	**Operational Direction**
Battery positive (+) --> Terminal 2 Battery negative (-) --> Terminal 1	Forward
Battery negative (+) --> Terminal 1 Battery positive (-) --> Terminal 2	Rearward

If the result is not as specified, replace the front seat back frame sub-assembly LH.

4. **INSPECT FRONT SEAT BACK FRAME SUB-ASSEMBLY RH**
    a. Check the operation of the reclining motor.

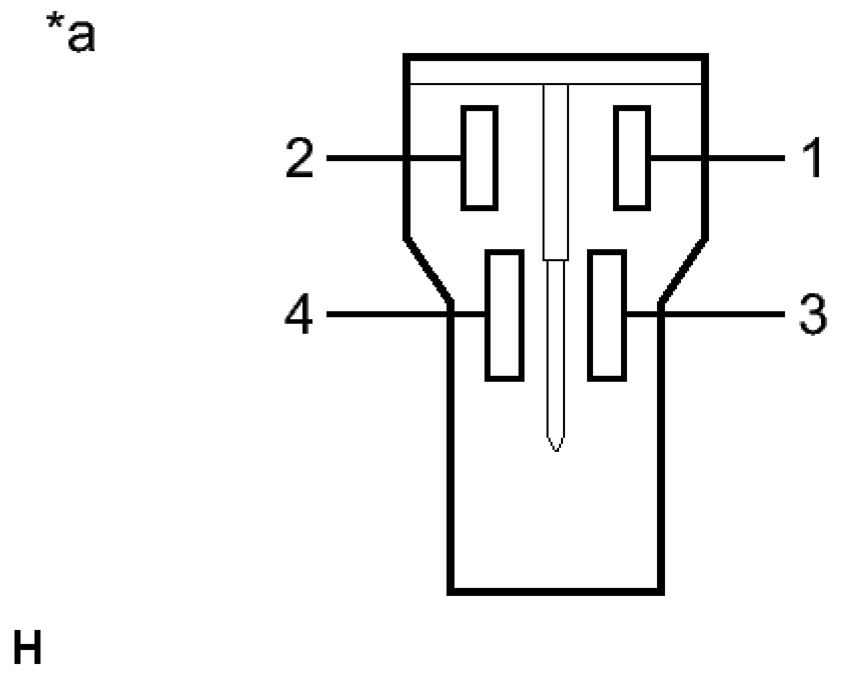

Fig. 105: Identifying Lifter/Reclining Motor Connector Terminals
Courtesy of TOYOTA MOTOR SALES, U.S.A., INC.

1. Check if the front seat back moves smoothly when the battery is connected to the reclining motor connector terminals.

TEXT IN ILLUSTRATION

*a	Component without harness connected (Reclining Motor (Front Seat Back Frame Sub-assembly RH))

OK

Measurement Condition	Operational Direction
Battery positive (+) --> Terminal 2	

Battery negative (-) --> Terminal 1	Forward
Battery negative (+) --> Terminal 1 Battery positive (-) --> Terminal 2	Rearward

If the result is not as specified, replace the front seat back frame sub-assembly RH.

REASSEMBLY

REASSEMBLY

1. **INSTALL SEPARATE TYPE FRONT SEAT CUSHION SPRING ASSEMBLY**
    a. Install the separate type front seat cushion spring assembly.
2. **INSTALL LUMBAR SUPPORT ADJUSTER ASSEMBLY (for Driver Side)** . See step 1.
3. **INSTALL SEPARATE TYPE FRONT SEATBACK SPRING ASSEMBLY (for Front Passenger Side)**
    a. Install the 2 front seatback hooks to the separate type front seatback spring assembly.
    b. Engage the 2 guides.

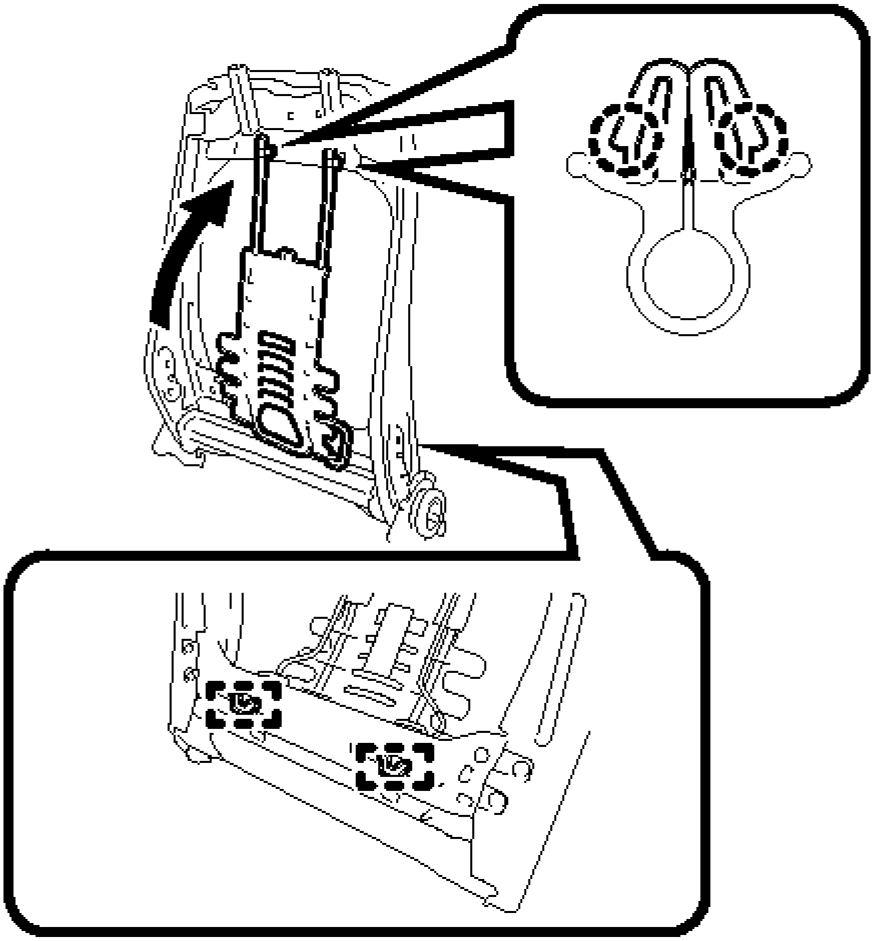

Fig. 106: Installing Front Seatback Spring Assembly
Courtesy of TOYOTA MOTOR SALES, U.S.A., INC.

c. Engage the 4 claws to install the separate type front seatback spring assembly.

4. **INSTALL FRONT SEATBACK FRAME SUB-ASSEMBLY**
    a. Install the front seatback frame sub-assembly with the 4 bolts.

       Torque: 45 N*m (459 kgf*cm, 33 ft.*lbf)

5. **INSTALL FRONT SEAT CUSHION PANEL SUB-ASSEMBLY (for Driver Side)**
    a. Install the front seat cushion panel sub-assembly with the 4 bolts.

       Torque: 10 N*m (102 kgf*cm, 7 ft.*lbf)

6. **INSTALL FRONT UPPER SEAT TRACK COVER LH**

   a. Engage the 2 claws to install the front upper seat track cover LH.

7. **INSTALL FRONT UPPER SEAT TRACK COVER RH**
   a. Engage the 2 claws to install the front upper seat track cover RH.
8. **INSTALL REAR UPPER SEAT TRACK COVER LH (for Front Passenger Side)**
   a. Engage the 2 claws to install the rear upper seat track cover LH.
9. **INSTALL REAR UPPER SEAT TRACK COVER RH (for Front Passenger Side)**
   a. Engage the 2 claws to install the rear upper seat track cover RH.
10. **INSTALL FRONT NO. 2 SEAT WIRE**
    a. Connect the connectors and engage the wire harness clamps to install the front No. 2 seat wire.
11. **INSTALL FRONT SEAT WIRE**
    a. Connect the connectors and engage the wire harness clamps to install the front seat wire.
12. **INSTALL OCCUPANT DETECTION ECU (for Front Passenger Side)** . Refer to **INSTALLATION - Step 1** .
13. **INSTALL SEAT HEATER CONTROL SUB-ASSEMBLY (w/ Seat Heater System)**
    a. Engage the clamp to install the seat heater control sub-assembly.
    b. Connect the connector.
14. **INSTALL FRONT SEAT LOWER CUSHION SHIELD LH (for Driver Side)**
    a. Engage the 2 claws to install the front seat lower cushion shield LH.

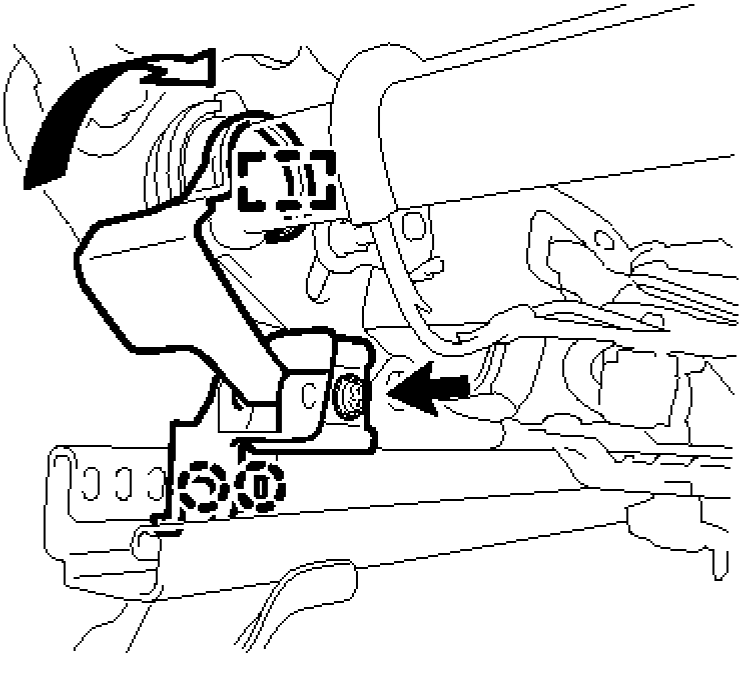

Fig. 107: Installing Front Seat Lower Cushion Shield LH (For Driver Side)
Courtesy of TOYOTA MOTOR SALES, U.S.A., INC.

   b. Engage the hook as shown in the illustration.

c. Install the screw.

Torque: 0.6 N*m (6 kgf*cm, 5 in.*lbf)

15. **INSTALL FRONT SEAT LOWER CUSHION SHIELD RH (for Driver Side)**
    a. Engage the 2 claws to install the front seat lower cushion shield RH.

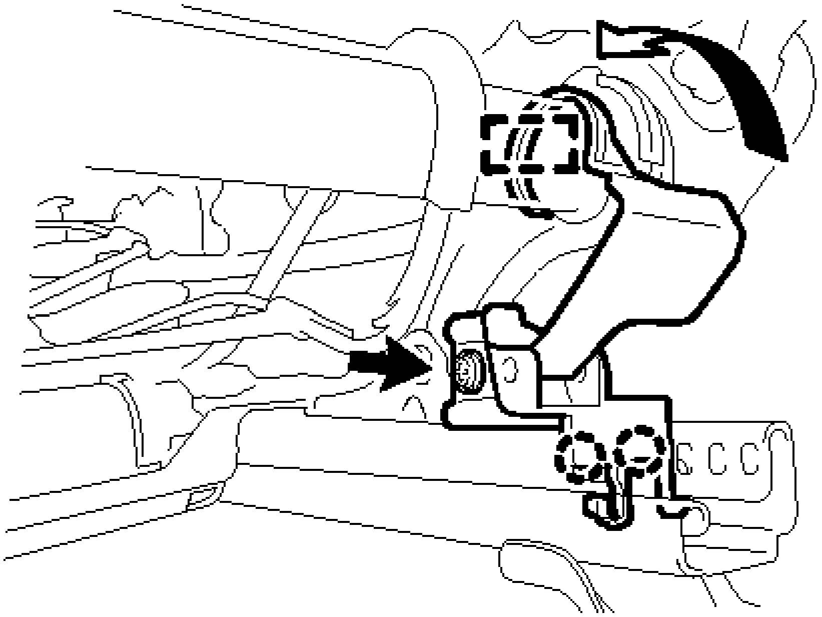

Fig. 108: Installing Front Seat Lower Cushion Shield RH (For Driver Side)
Courtesy of TOYOTA MOTOR SALES, U.S.A., INC.

    b. Engage the hook as shown in the illustration.
    c. Install the screw.

Torque: 0.6 N*m (6 kgf*cm, 5 in.*lbf)

16. **INSTALL FRONT SEAT LOWER CUSHION SHIELD LH (for Front Passenger Side)**
    a. Engage the 2 claws to install the front seat lower cushion shield LH.
17. **INSTALL FRONT SEAT LOWER CUSHION SHIELD RH (for Front Passenger Side)**
    a. Engage the 2 claws to install the front seat lower cushion shield RH.
18. **INSTALL FRONT SEATBACK HEATER ASSEMBLY (w/ Seat Heater System)** . See step 1.
19. **INSTALL SEPARATE TYPE FRONT SEATBACK COVER**
    a. Using hog ring pliers, install the separate type front seatback cover to the separate type front seatback pad with 2 new hog rings.

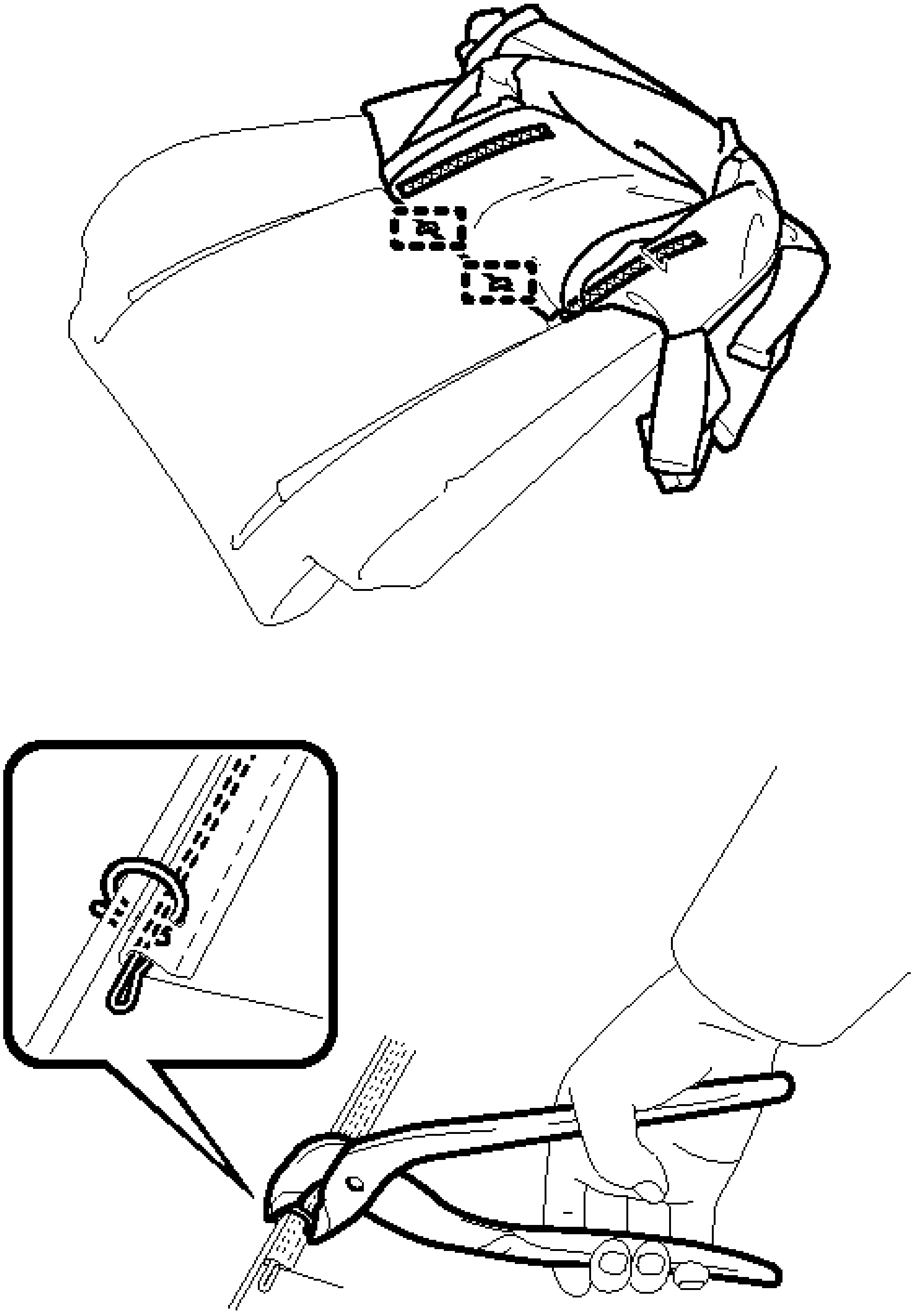

Fig. 109: Installing Front Seatback Cover Hog Rings
Courtesy of TOYOTA MOTOR SALES, U.S.A., INC.

NOTE:

- **Be careful not to damage the separate type front seatback cover.**

- **When installing the hog rings, take care to minimize wrinkles as much as possible.**

   b. Engage the 2 fasteners.

20. **INSTALL FRONT SEAT AIRBAG ASSEMBLY** . Refer to **INSTALLATION - Step 1** .
21. **INSTALL SEPARATE TYPE FRONT SEATBACK COVER WITH PAD**
    a. Temporarily install the separate type front seatback cover with pad.
    b. Engage the 4 claws to install the 2 front seat headrest supports.
    c. Engage the 2 hooks.

WARNING:

- **For vehicles with a front seat airbag assembly, the separate type front seatback cover must be securely installed. Otherwise, the front seat airbag assembly may not deploy properly.**
- **Make sure that the strap is not twisted after engage the 2 hooks.**
- **Engage the 2 hooks securely.**

    1. Slide each hook to engage them.
    2. Install the 4 clips.

    d. Engage the 2 fasteners.
    e. Engage the hook.
22. **INSTALL FRONT SEAT CUSHION HEATER ASSEMBLY (w/ Seat Heater System)** . See step 1.
23. **INSTALL SEPARATE TYPE FRONT SEAT CUSHION COVER**
    a. Using hog ring pliers, install the separate type front seat cushion cover to the separate type front seat cushion pad with 12 new hog rings.

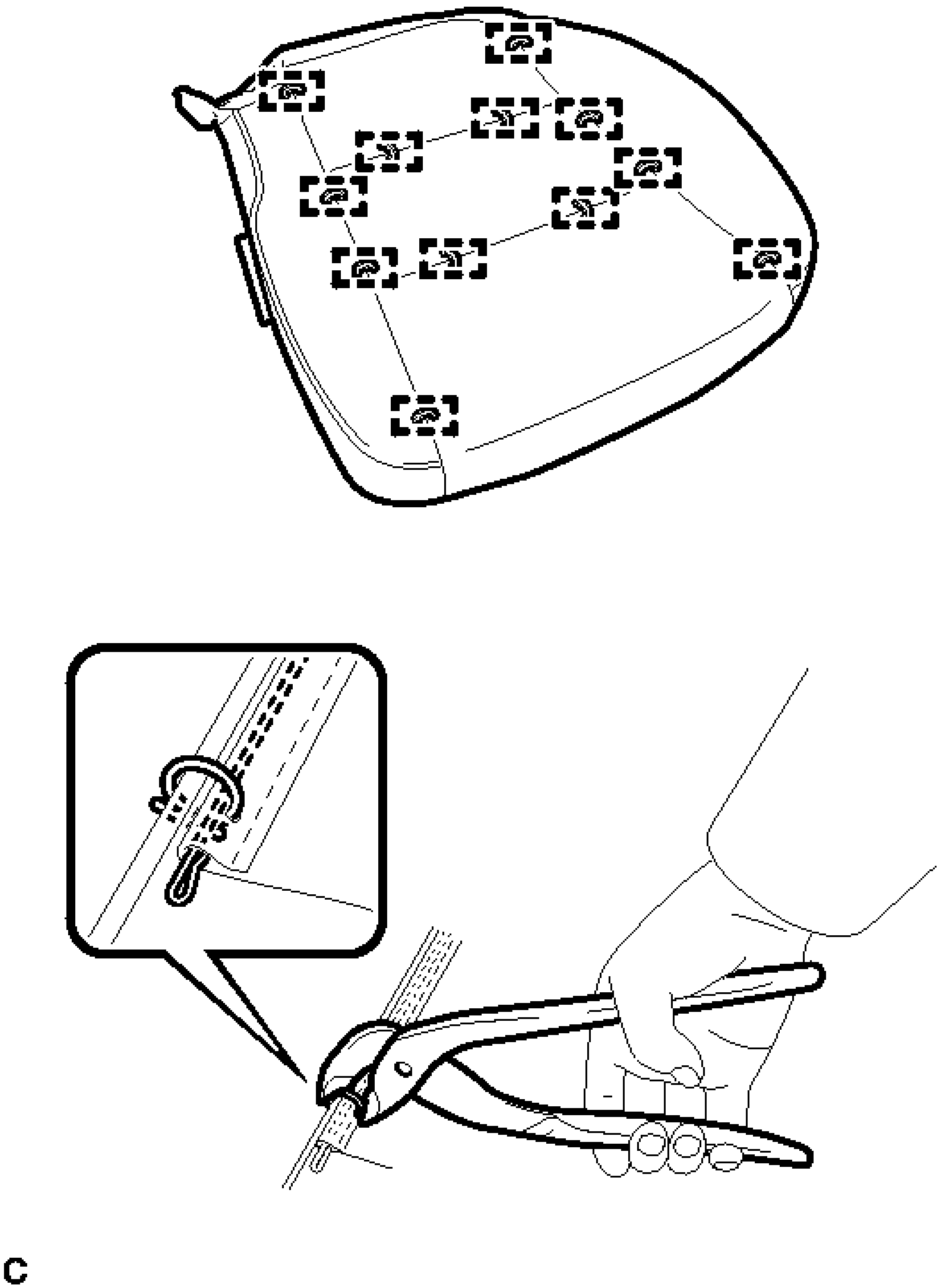

Fig. 110: Installing Front Seat Cushion Cover Hog Rings
Courtesy of TOYOTA MOTOR SALES, U.S.A., INC.

NOTE:	
NOTE:	• **Be careful not to damage the separate type front seat cushion cover.**

- **When installing the hog rings, take care to minimize wrinkles as much as possible.**

24. INSTALL SEPARATE TYPE FRONT SEAT CUSHION COVER WITH PAD

a. Temporarily install the separate type front seat cushion cover with pad.

b. Engage each hook.

c. for Driver Side:

   1. Install the separate type front seat cushion cover.

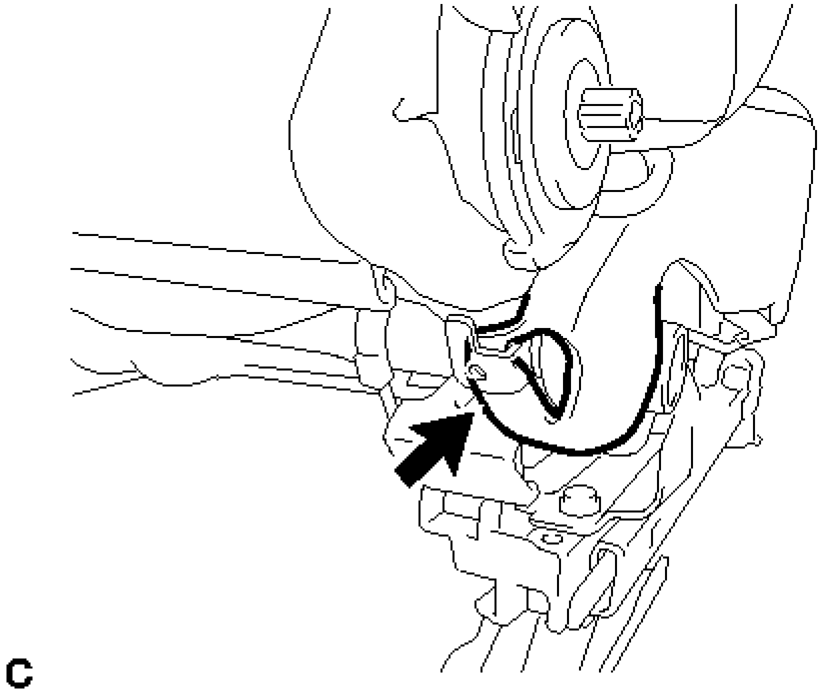

Fig. 111: Identifying Driver Side Front Seat Cushion Cover
Courtesy of TOYOTA MOTOR SALES, U.S.A., INC.

d. for Front Passenger Side:

   1. Install the separate type front seat cushion cover.

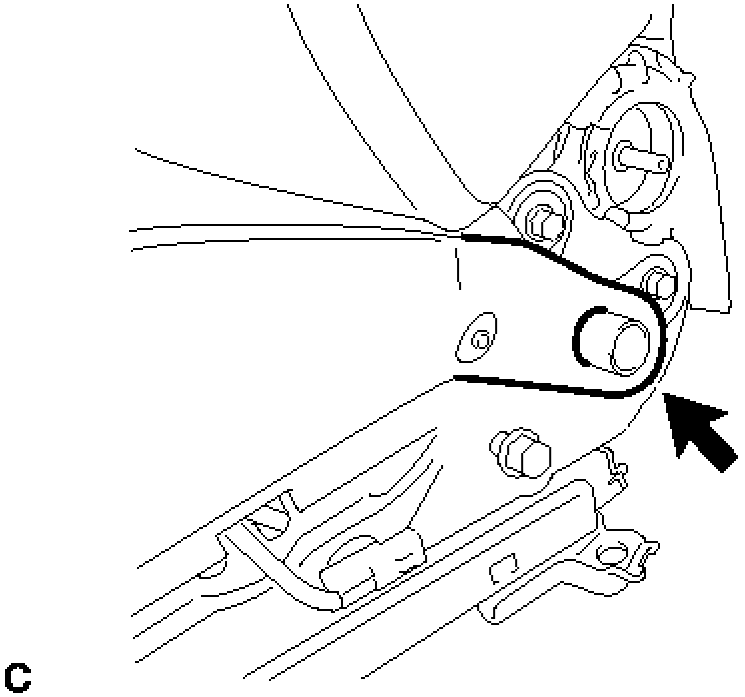

Fig. 112: Identifying Passenger Side Front Seat Cushion Cover
Courtesy of TOYOTA MOTOR SALES, U.S.A., INC.

e. Engage the claw (D) and 3 clamps (C) to install the front seat airbag assembly wire harness.

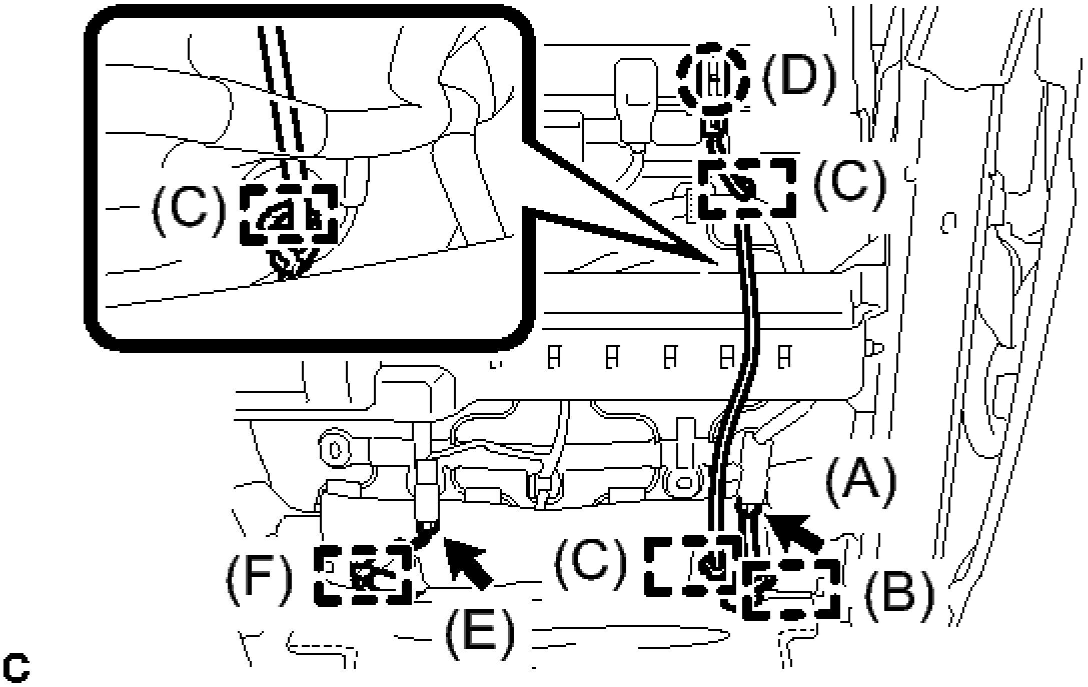

Fig. 113: Identifying Front Seatback Cover Connectors, Claw And Clamps (For TMMK Made Power Seat)

Courtesy of TOYOTA MOTOR SALES, U.S.A., INC.

- f. Engage the clamp (B).
- g. Connect the connector (A).
- h. w/ Seat Heater System:
  1. Connect the connector (E).
  2. Engage the clamp (F).

25. **INSTALL FRONT SEAT INNER BELT ASSEMBLY (for Driver Side)** . Refer to **INSTALLATION - Step 1** .
26. **INSTALL FRONT SEAT INNER BELT ASSEMBLY (for Front Passenger Side)** . Refer to **INSTALLATION - Step 2** .
27. **INSTALL FRONT SEAT INNER CUSHION SHIELD**
    - a. Install the front seat inner cushion shield with the 2 screws.

      Torque: 0.6 N*m (6 kgf*cm, 5 in.*lbf)

28. **INSTALL FRONT LUMBAR POWER SEAT SWITCH (for Driver Side)** . See step 1.
29. **INSTALL FRONT POWER SEAT SWITCH** . See step 1.
30. **INSTALL FRONT SEAT CUSHION SHIELD**
    - a. for Driver Side:
      1. Engage the 4 claws to install the front lumbar power seat switch to the front seat cushion shield.
    - b. Connect the front power seat switch connector.
    - c. Engage the wire harness clamp.
    - d. Engage the 2 claws to install the front seat cushion shield.
    - e. Install the screw.

      Torque: 0.6 N*m (6 kgf*cm, 5 in.*lbf)

31. **CONNECT SEPARATE TYPE FRONT SEATBACK COVER**
    - a. Connect the 2 rubber bands of the separate type front seatback cover.
32. **INSTALL RECLINING POWER SEAT SWITCH KNOB**
    - a. Engage the 4 claws to install the reclining power seat switch knob.
33. **INSTALL SLIDE AND VERTICAL POWER SEAT SWITCH KNOB**
    - a. Engage the 4 claws to install the slide and vertical power seat switch knob.
34. **INSTALL SEAT ADJUSTER COVER CAP**
    - a. Install the 2 seat adjuster cover caps.

INSTALLATION

INSTALLATION

1. **INSTALL FRONT SEAT ASSEMBLY**
    a. Place the front seat assembly in the cabin.

    NOTE: Be careful not to damage the vehicle body.

    b. Connect each connector and clamp under the seat.
    c. Connect the cable to the negative (-) battery terminal.

    NOTE: When disconnecting the cable, some systems need to be initialized after the cable is reconnected. Refer to INITIALIZATION .

    d. Temporarily install the front seat assembly with the 4 bolts.
    e. Operate the slide and vertical power seat switch knob and move the seat to the rearmost position.
    f. Tighten the 2 bolts on the front side of the seat.

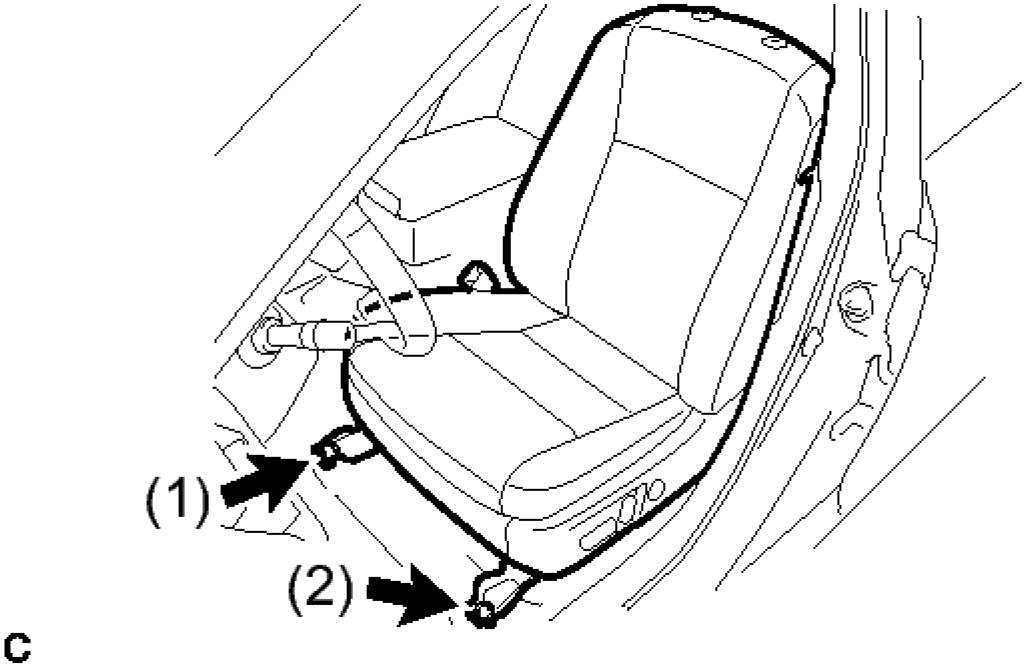

Fig. 114: Locating Front Seat Assembly Front Bolts With Tightening Sequence
Courtesy of TOYOTA MOTOR SALES, U.S.A., INC.

Torque: 37 N*m (377 kgf*cm, 27 ft.*lbf)

NOTE: Tighten the bolts in the order indicated in the illustration.

    g. Operate the slide and vertical power seat switch knob and move the seat to the foremost position.
    h. Tighten the 2 bolts on the rear side of the seat.

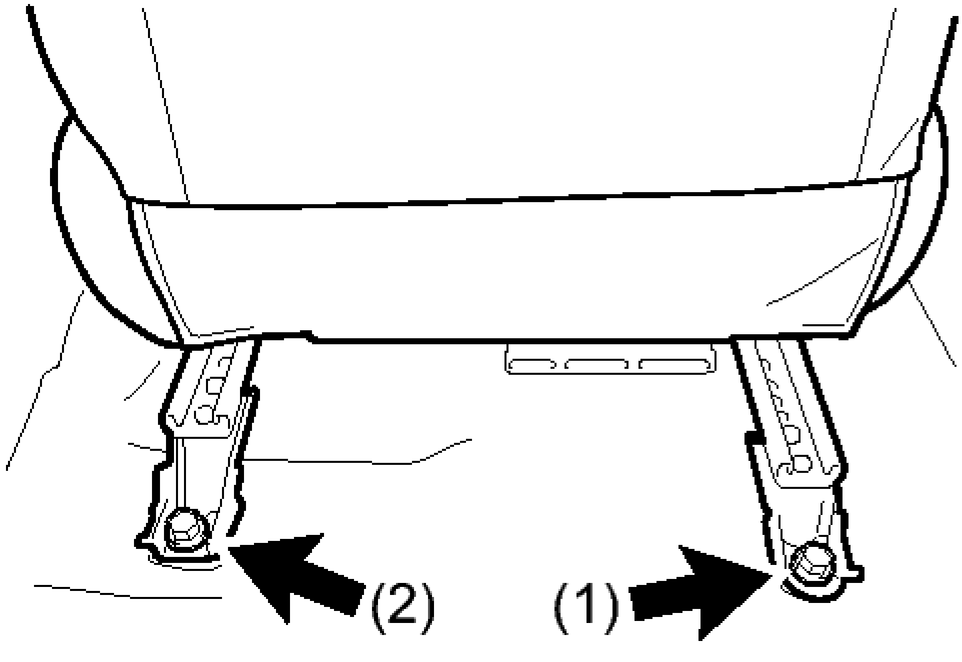

Fig. 115: Locating Front Seat Assembly Rear Bolts With Tightening Sequence
Courtesy of TOYOTA MOTOR SALES, U.S.A., INC.

Torque: 37 N*m (377 kgf*cm, 27 ft.*lbf)

NOTE: **Tighten the bolts in the order indicated in the illustration.**

2. **INSTALL REAR INNER SEAT TRACK BRACKET COVER**
    a. Engage the 2 claws to install the rear inner seat track bracket cover.
3. **INSTALL REAR OUTER SEAT TRACK BRACKET COVER**
    a. Engage the 2 claws to install the rear outer seat track bracket cover.
4. **INSTALL FRONT SEAT HEADREST ASSEMBLY**
5. **PERFORM ZERO POINT CALIBRATION AND SENSITIVITY CHECK (for Front Passenger Side)**

    Refer to **INITIALIZATION** .

6. **INSPECT FRONT SEAT ASSEMBLY**
    a. Check the power seat operation. Refer to **OPERATION CHECK** .
    b. w/ Seat Heater System:

        Check the seat heater operation.

        1. Turn the ignition switch to ON.
        2. Turn the seat heater switch on.

3. Wait 5 minutes or more and confirm that the seat surface becomes warm.

7. **INSPECT SRS WARNING LIGHT**

   For Separate Type Yaw Rate Sensor: Refer to **DIAGNOSIS SYSTEM** .

   For Built-in Type Yaw Rate Sensor: Refer to **DIAGNOSIS SYSTEM** .

FRONT SEAT ASSEMBLY (FOR SIA MADE MANUAL SEAT)

COMPONENTS

ILLUSTRATION

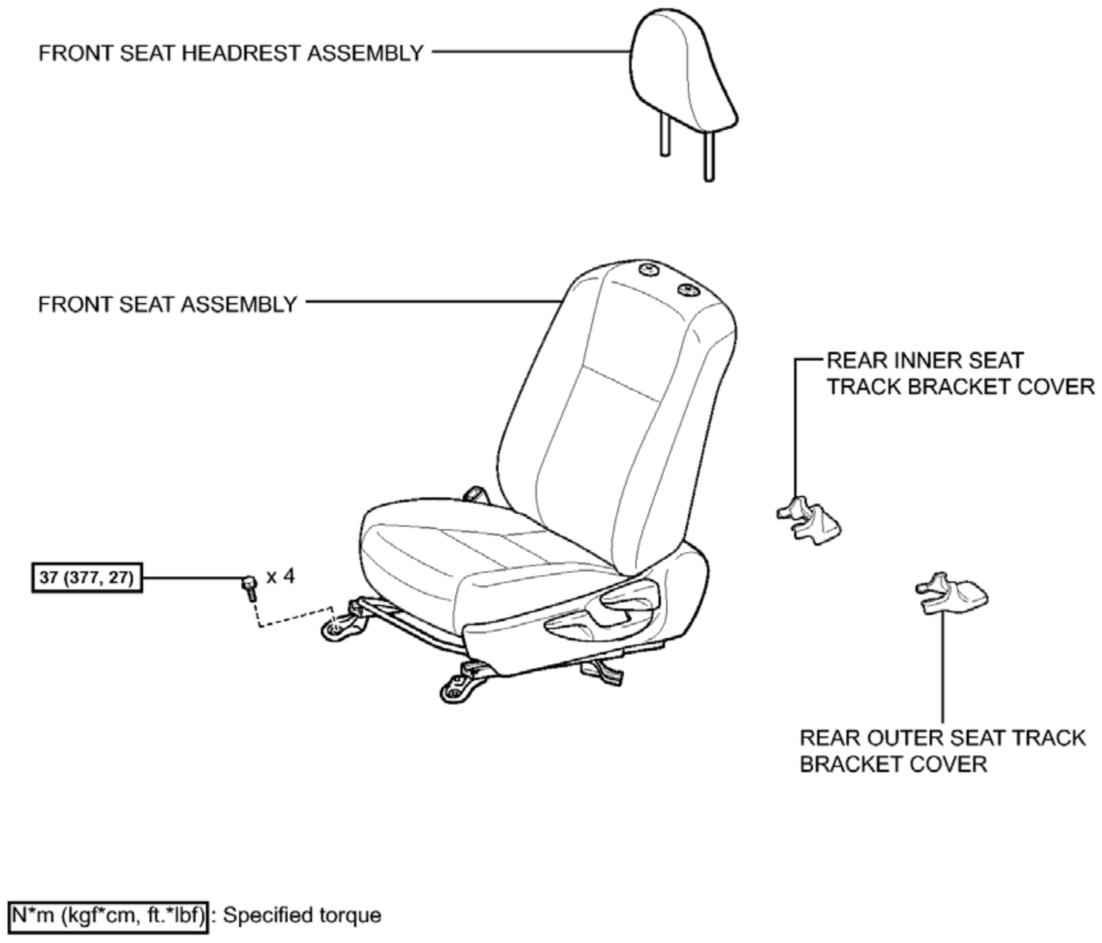
FRONT SEAT HEADREST ASSEMBLY
FRONT SEAT ASSEMBLY
REAR INNER SEAT TRACK BRACKET COVER
37 (377, 27)
x 4
REAR OUTER SEAT TRACK BRACKET COVER
N*m (kgf*cm, ft.*lbf) : Specified torque
c

Fig. 116: Identifying Front Seat Assembly (For SIA Made Manual Seat) Replacement Components With Torque Specifications (1 Of 7)
Courtesy of TOYOTA MOTOR SALES, U.S.A., INC.

ILLUSTRATION

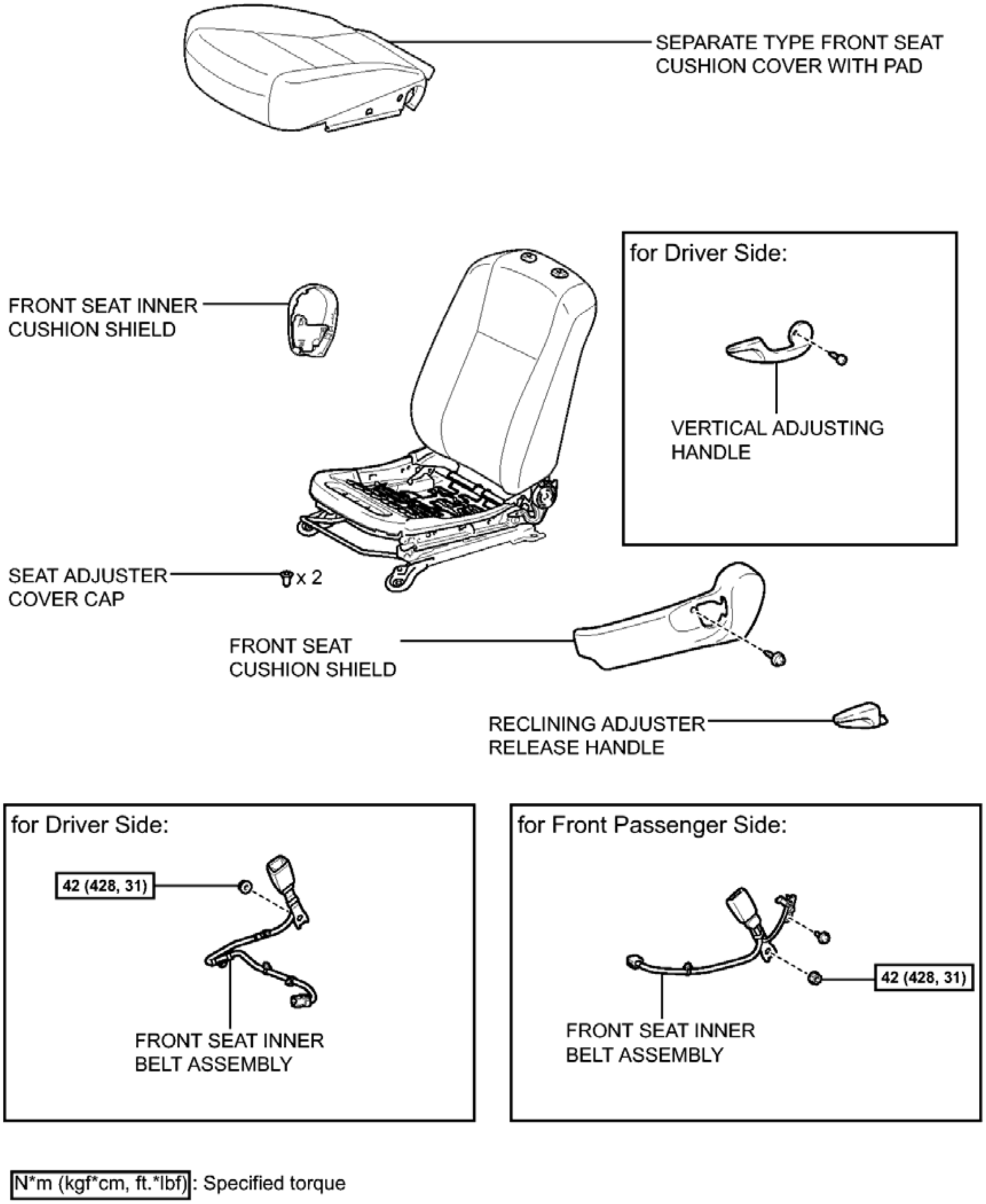
SEPARATE TYPE FRONT SEAT
CUSHION COVER WITH PAD
FRONT SEAT INNER
CUSHION SHIELD
for Driver Side:
VERTICAL ADJUSTING
HANDLE
SEAT ADJUSTER
COVER CAP
x 2
FRONT SEAT
CUSHION SHIELD
RECLINING ADJUSTER
RELEASE HANDLE
for Driver Side:
42 (428, 31)
FRONT SEAT INNER
BELT ASSEMBLY
for Front Passenger Side:
42 (428, 31)
FRONT SEAT INNER
BELT ASSEMBLY
N*m (kgf*cm, ft.*lbf): Specified torque

c

Fig. 117: Identifying Front Seat Assembly (For SIA Made Manual Seat) Replacement Components With Torque Specifications (2 Of 7)

Courtesy of TOYOTA MOTOR SALES, U.S.A., INC.

ILLUSTRATION

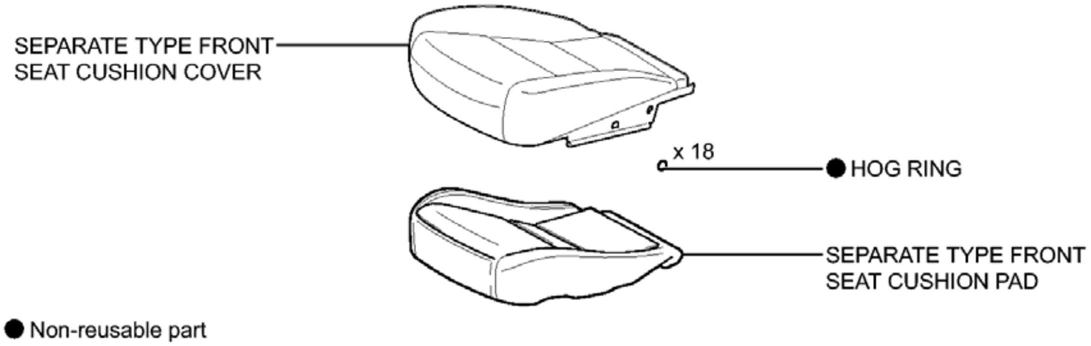
SEPARATE TYPE FRONT SEAT CUSHION COVER
x 18
● HOG RING
SEPARATE TYPE FRONT SEAT CUSHION PAD
● Non-reusable part

c

Fig. 118: Identifying Front Seat Assembly (For SIA Made Manual Seat) Replacement Components (3 Of 7)
Courtesy of TOYOTA MOTOR SALES, U.S.A., INC.

ILLUSTRATION

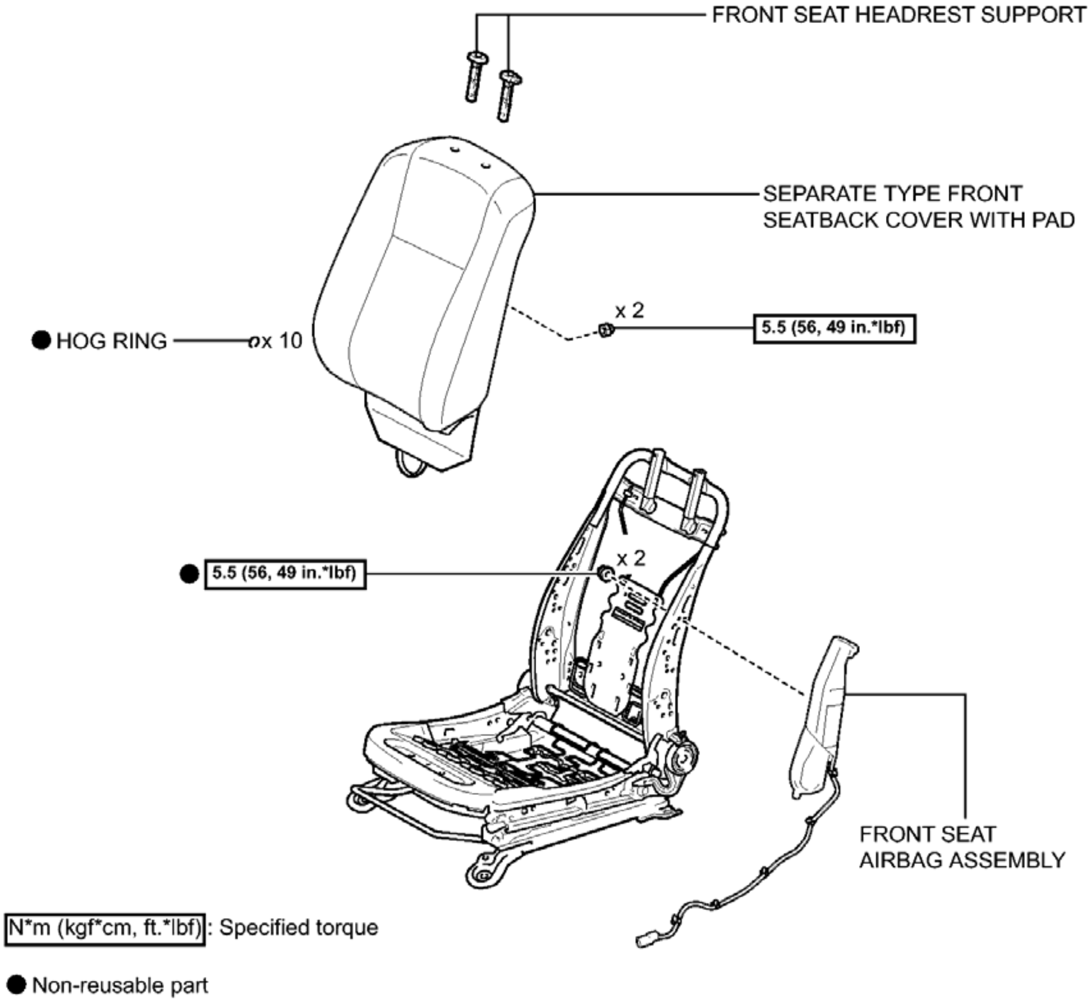
FRONT SEAT HEADREST SUPPORT
SEPARATE TYPE FRONT SEATBACK COVER WITH PAD
● HOG RING
x 10
x 2
5.5 (56, 49 in.*lbf)
● 5.5 (56, 49 in.*lbf)
x 2
FRONT SEAT AIRBAG ASSEMBLY
N*m (kgf*cm, ft.*lbf) : Specified torque
● Non-reusable part

c

Fig. 119: Identifying Front Seat Assembly (For SIA Made Manual Seat) Replacement Components With Torque Specifications (4 Of 7)
Courtesy of TOYOTA MOTOR SALES, U.S.A., INC.

ILLUSTRATION

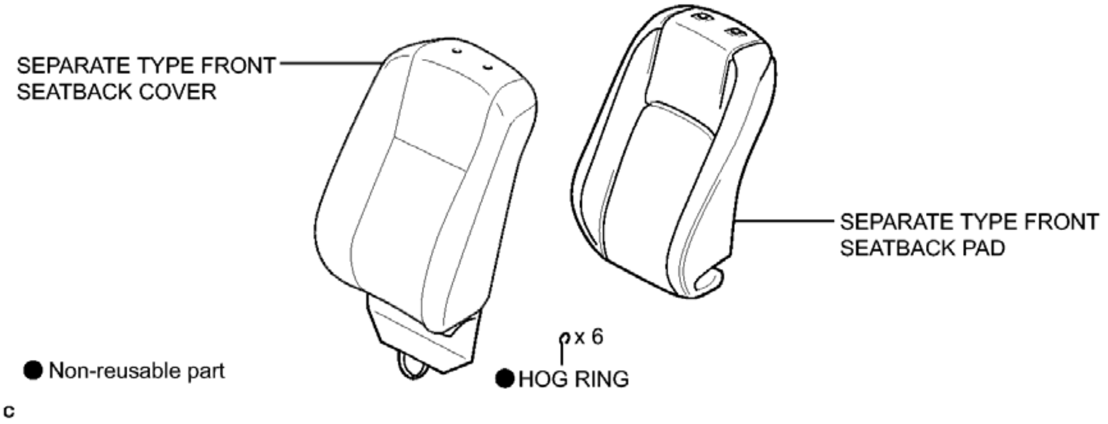
SEPARATE TYPE FRONT SEATBACK COVER
SEPARATE TYPE FRONT SEATBACK PAD
x 6
● HOG RING
● Non-reusable part
c

Fig. 120: Identifying Front Seat Assembly (For SIA Made Manual Seat) Replacement Components (5 Of 7)
Courtesy of TOYOTA MOTOR SALES, U.S.A., INC.

ILLUSTRATION

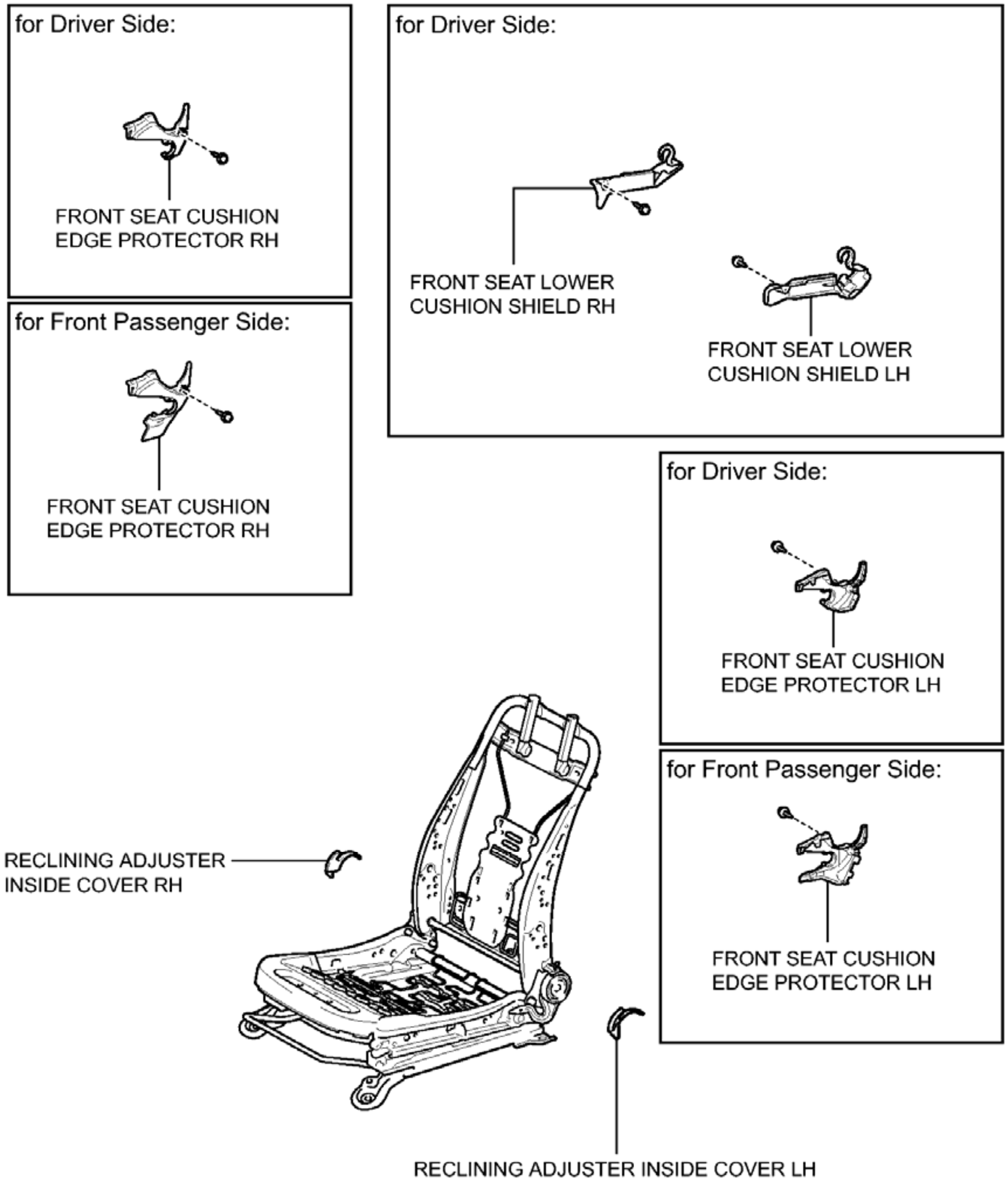
for Driver Side:
FRONT SEAT CUSHION EDGE PROTECTOR RH
for Front Passenger Side:
FRONT SEAT CUSHION EDGE PROTECTOR RH
for Driver Side:
FRONT SEAT LOWER CUSHION SHIELD RH
FRONT SEAT LOWER CUSHION SHIELD LH
for Driver Side:
FRONT SEAT CUSHION EDGE PROTECTOR LH
for Front Passenger Side:
FRONT SEAT CUSHION EDGE PROTECTOR LH
RECLINING ADJUSTER INSIDE COVER RH
RECLINING ADJUSTER INSIDE COVER LH

c

Fig. 121: Identifying Front Seat Assembly (For SIA Made Manual Seat) Replacement Components (6 Of 7)
Courtesy of TOYOTA MOTOR SALES, U.S.A., INC.

ILLUSTRATION

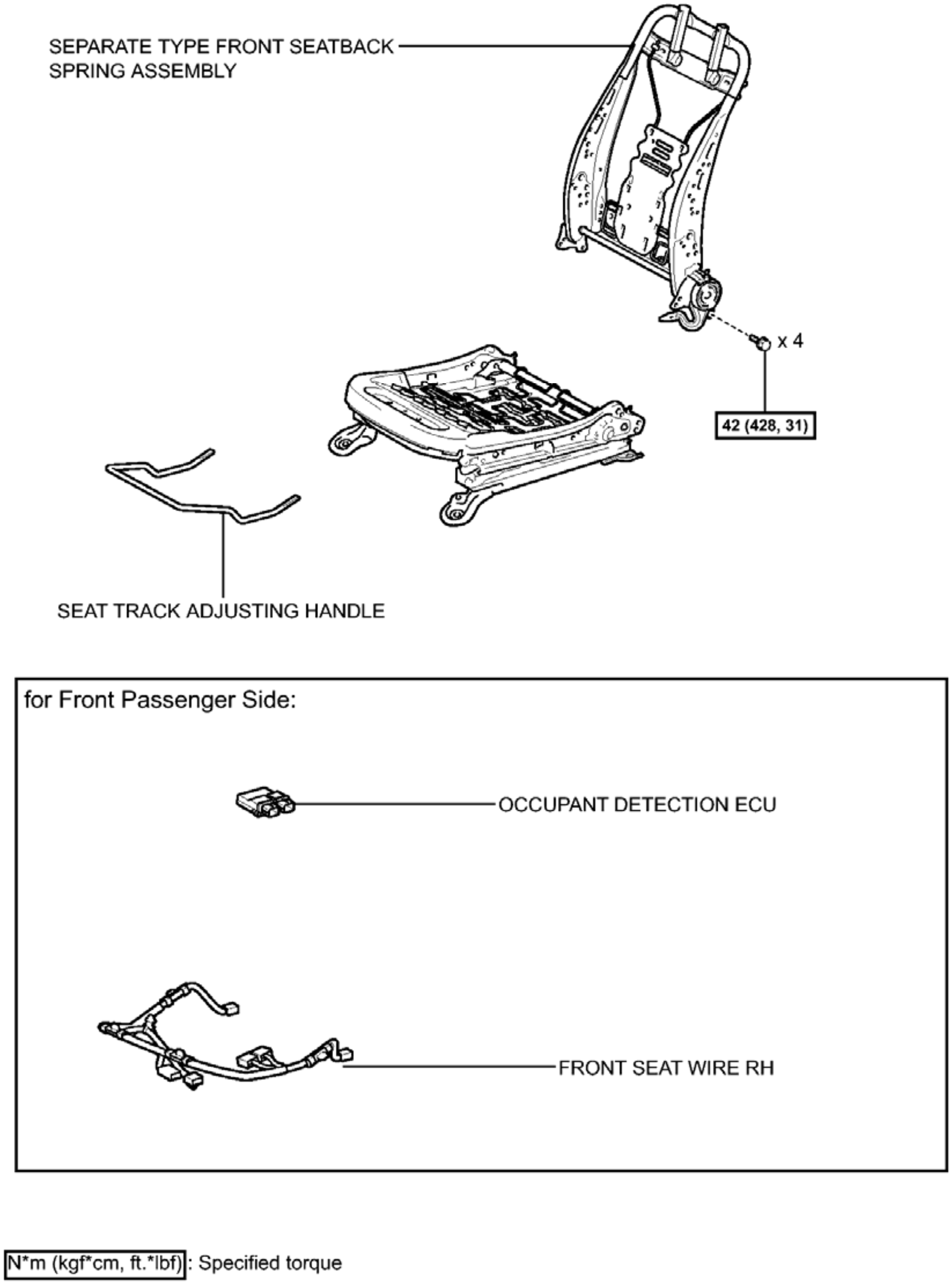
SEPARATE TYPE FRONT SEATBACK SPRING ASSEMBLY
x 4
42 (428, 31)
SEAT TRACK ADJUSTING HANDLE
for Front Passenger Side:
OCCUPANT DETECTION ECU
FRONT SEAT WIRE RH
N*m (kgf*cm, ft.*lbf): Specified torque

c

Fig. 122: Identifying Front Seat Assembly (For SIA Made Manual Seat) Replacement Components With Torque Specifications (7 Of 7)

Courtesy of TOYOTA MOTOR SALES, U.S.A., INC.

REMOVAL

REMOVAL

1. **PRECAUTION**

WARNING:

- **Be sure to read Precaution thoroughly before servicing.**

  For Separate Type Yaw Rate Sensor: Refer to PRECAUTION .

  For Built-in Type Yaw Rate Sensor: Refer to PRECAUTION .

- **If the side airbag was deployed, replace the front seat airbag assembly, separate type front seatback spring assembly, separate type front seatback pad and separate type front seatback cover with the necessary parts in accordance with the extent of the collision damage.**

NOTE: **After turning the ignition switch off, waiting time may be required before disconnecting the cable from the negative (-) battery terminal. Therefore, make sure to read the disconnecting the cable from the negative (-) battery terminal notices before proceeding with work. Refer to PRECAUTION .**

2. **DISCONNECT CABLE FROM NEGATIVE BATTERY TERMINAL**

WARNING: **Wait at least 90 seconds after disconnecting the cable from the negative (-) battery terminal to disable the SRS system.**

NOTE: **When disconnecting the cable, some systems need to be initialized after the cable is reconnected. Refer to INITIALIZATION .**

3. **REMOVE FRONT SEAT HEADREST ASSEMBLY**
4. **REMOVE REAR OUTER SEAT TRACK BRACKET COVER**
   a. Lift up the seat track adjusting handle and move the seat to the foremost position.
   b. Disengage the 2 claws to remove the rear outer seat track bracket cover.

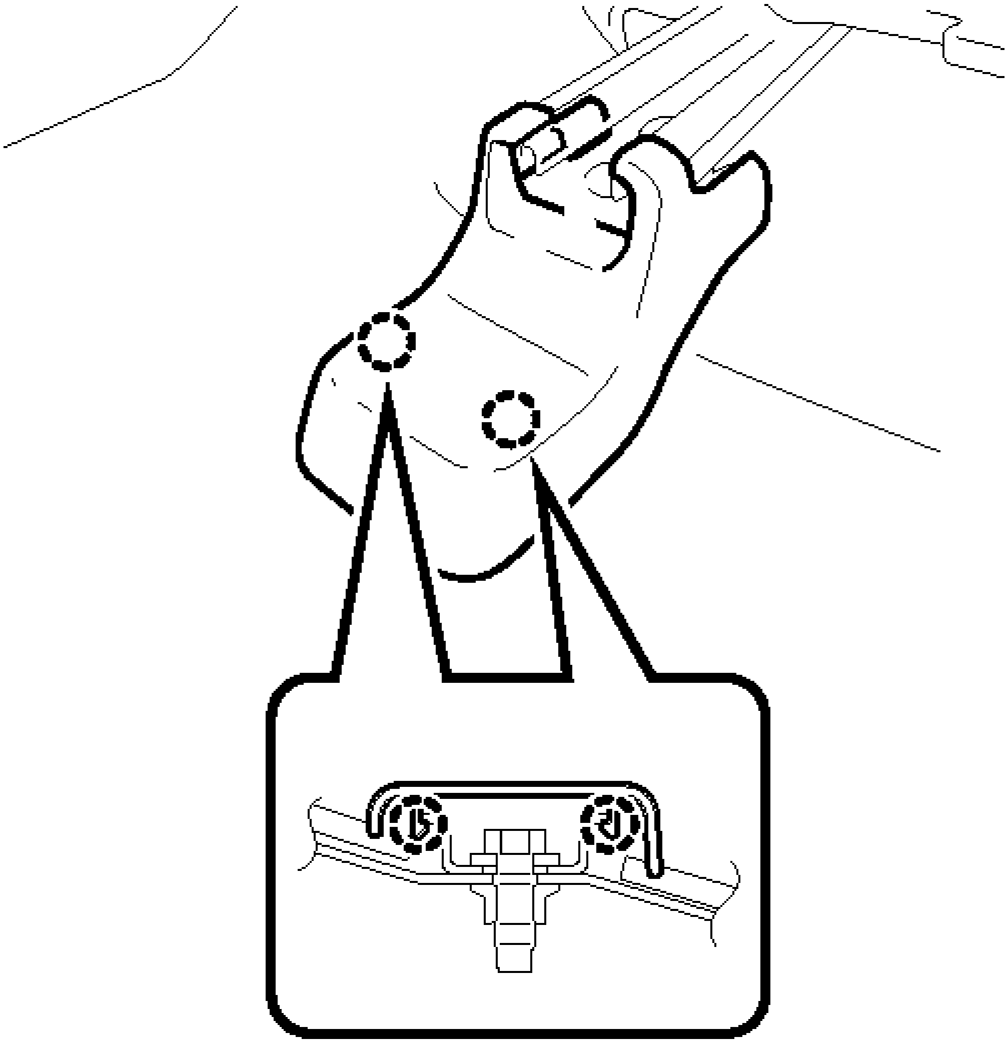

Fig. 123: Locating Rear Outer Seat Track Bracket Cover Claws
Courtesy of TOYOTA MOTOR SALES, U.S.A., INC.

5. **REMOVE REAR INNER SEAT TRACK BRACKET COVER**
    a. Disengage the 2 claws to remove the rear inner seat track bracket cover.

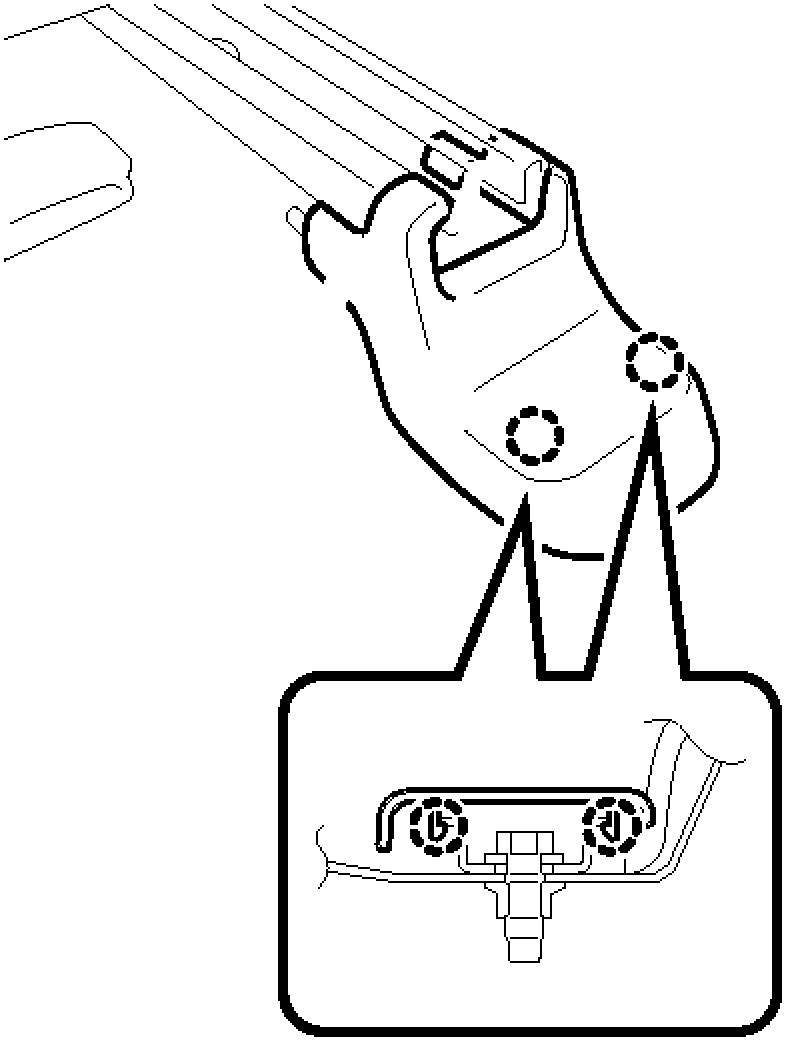

Fig. 124: Locating Rear Inner Seat Track Bracket Cover Claws
Courtesy of TOYOTA MOTOR SALES, U.S.A., INC.

6. **REMOVE FRONT SEAT ASSEMBLY**
   a. Remove the 2 bolts on the rear side of the seat.

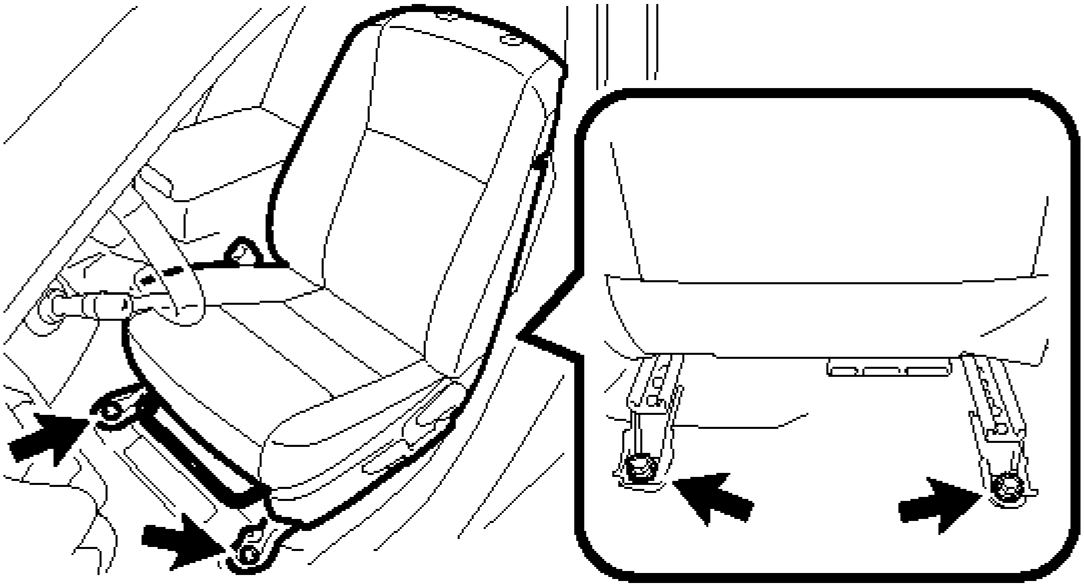

Fig. 125: Locating Front Seat Assembly Bolts
Courtesy of TOYOTA MOTOR SALES, U.S.A., INC.

b. Lift up the seat track adjusting handle and move the seat to the rearmost position.
c. Remove the 2 bolts on the front side of the seat.
d. Disconnect each connector and clamp under the seat.
e. Lift up the seat track adjusting handle and move the seat to the center position. Then, operate the reclining adjuster release handle and move the seatback to the upright position.
f. Remove the front seat assembly.

NOTE: Be careful not to damage the vehicle body.

DISASSEMBLY

DISASSEMBLY

1. **REMOVE SEAT ADJUSTER COVER CAP**
    a. Remove the 2 seat adjuster cover caps.

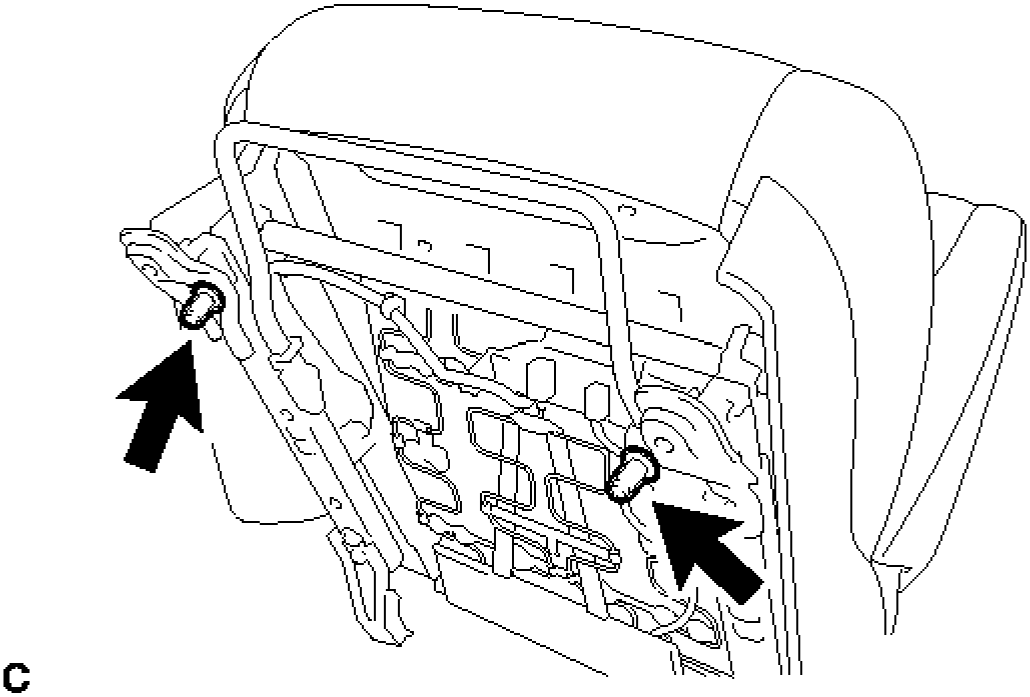

Fig. 126: Locating Seat Adjuster Cover Caps
Courtesy of TOYOTA MOTOR SALES, U.S.A., INC.

2. **REMOVE RECLINING ADJUSTER RELEASE HANDLE**
   a. Using a screwdriver with its tip wrapped with protective tape, disengage the claw and remove the reclining adjuster release handle.

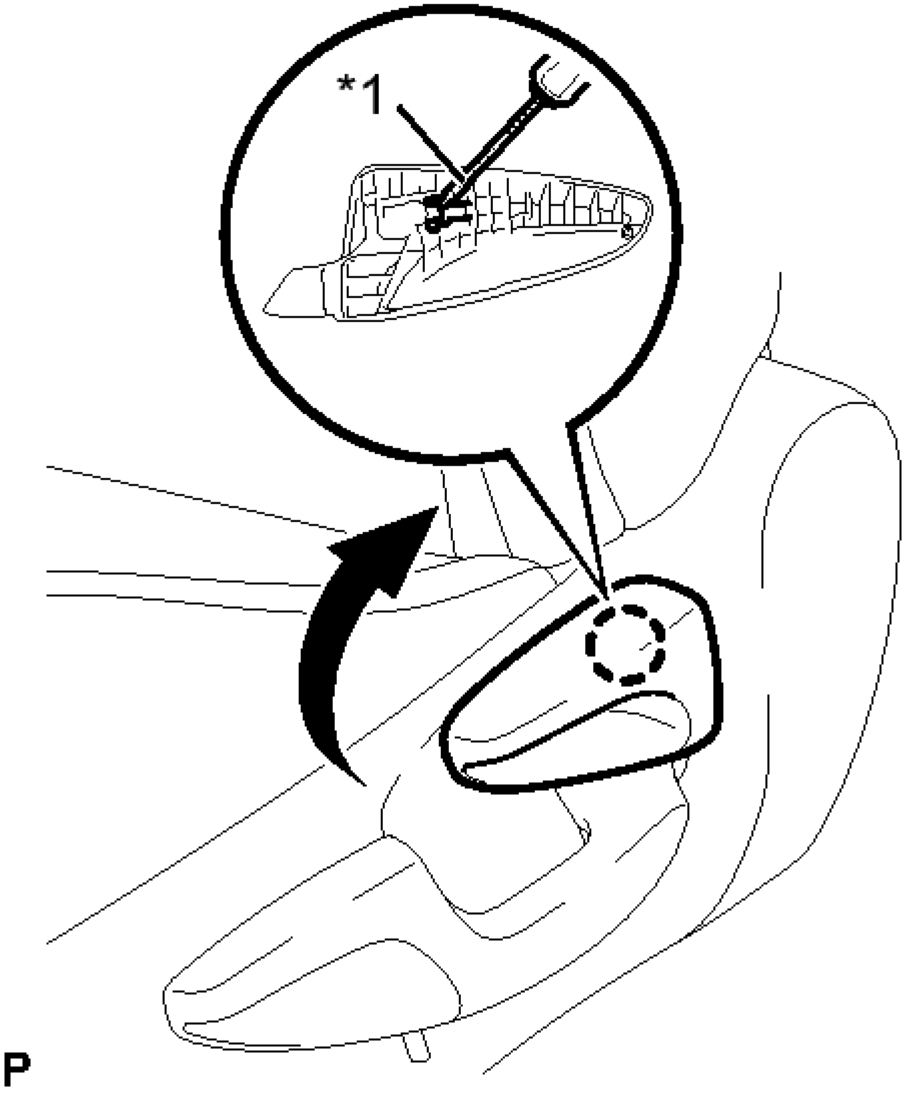

Fig. 127: Removing Reclining Adjuster Release Handle
Courtesy of TOYOTA MOTOR SALES, U.S.A., INC.

TEXT IN ILLUSTRATION

*1	Protective Tape

3. **REMOVE VERTICAL ADJUSTING HANDLE (for Driver Side)**
    a. Remove the screw and vertical adjusting handle.

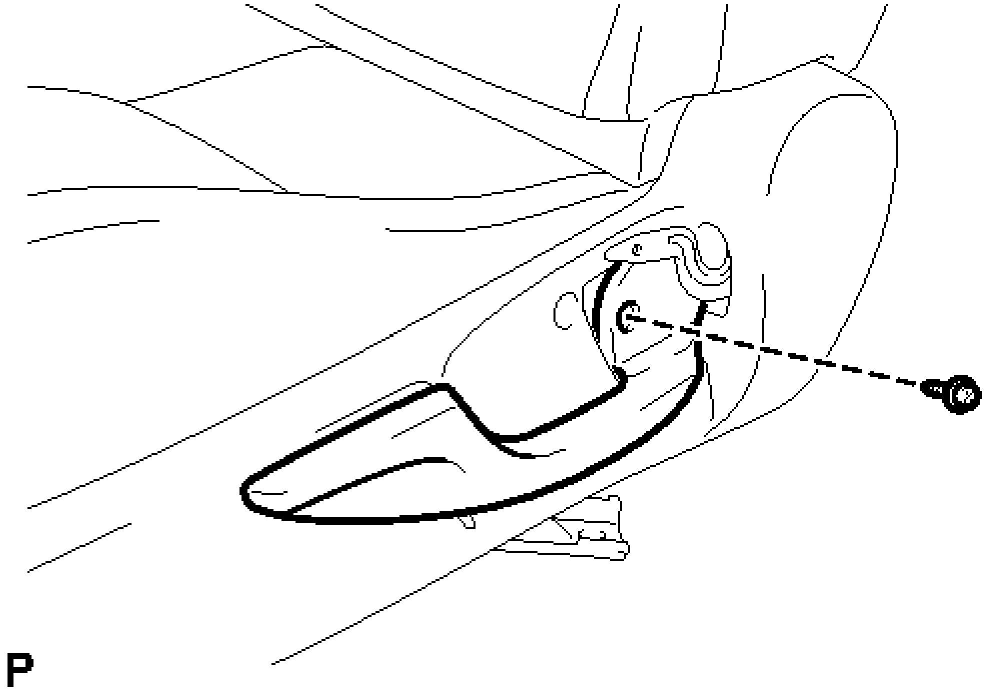

Fig. 128: Identifying Vertical Adjusting Handle (For Driver Side) And Fastener
Courtesy of TOYOTA MOTOR SALES, U.S.A., INC.

4. **DISCONNECT SEPARATE TYPE FRONT SEATBACK COVER**
    a. Disconnect the rubber band of the separate type front seatback cover.

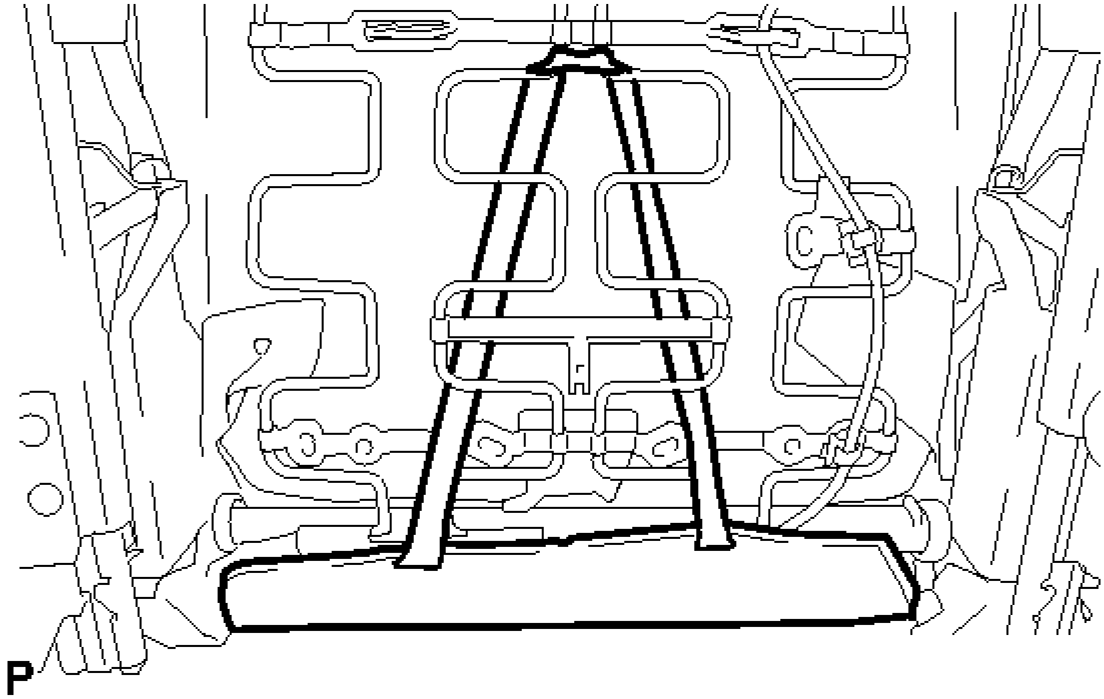

Fig. 129: Identifying Rubber Band Of Front Seatback Cover (For SIA Made Manual Seat)

Courtesy of TOYOTA MOTOR SALES, U.S.A., INC.

5. **REMOVE FRONT SEAT CUSHION SHIELD (for Driver Side)**
   a. Remove the screw.

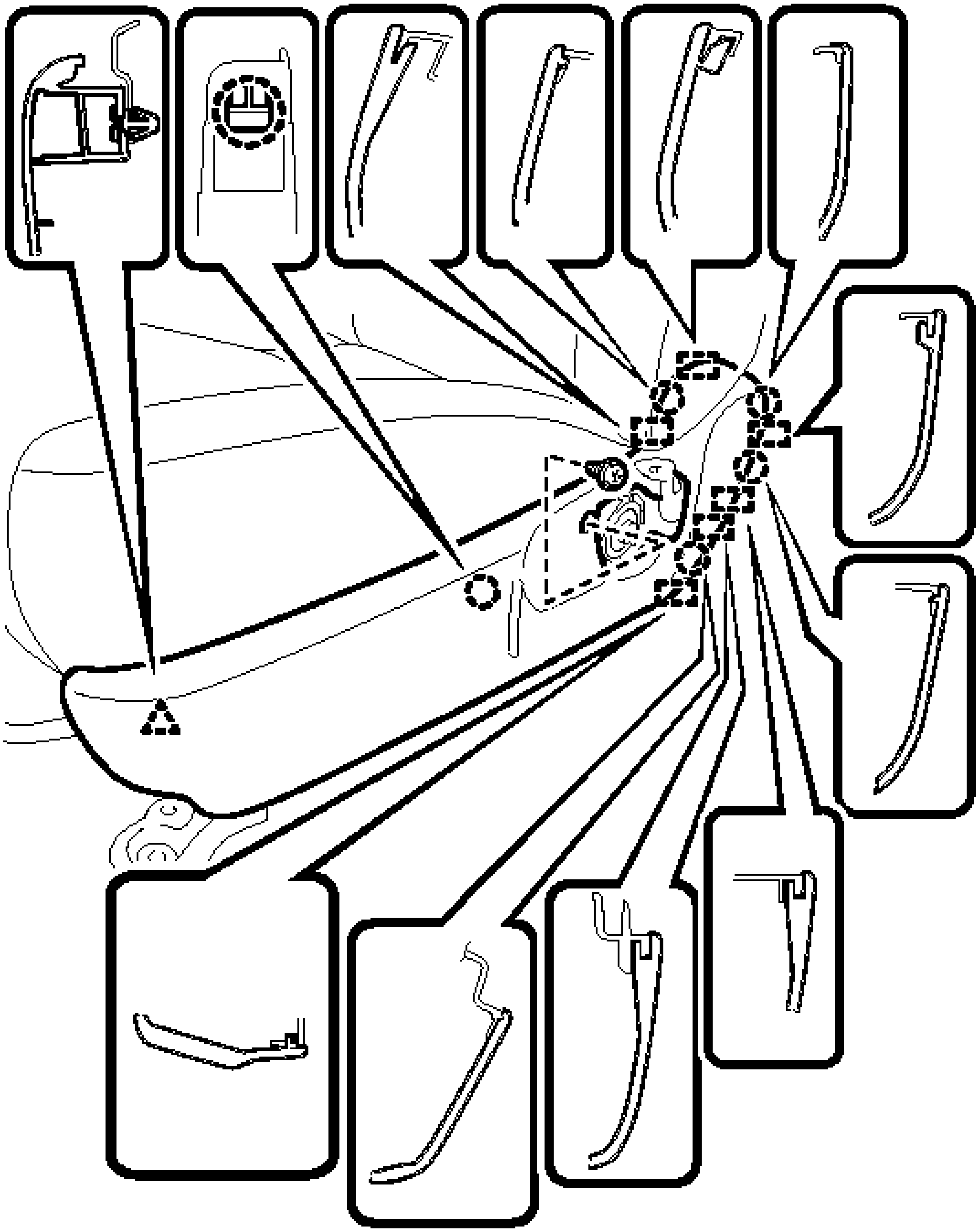

C

Fig. 130: Identifying Front Seat Cushion Shield (For Driver Side) Fasteners
Courtesy of TOYOTA MOTOR SALES, U.S.A., INC.

b. Disengage the 5 claws, 6 guides and clip to remove the front seat cushion shield.

6. **REMOVE FRONT SEAT CUSHION SHIELD (for Front Passenger Side)**

   a. Remove the screw.

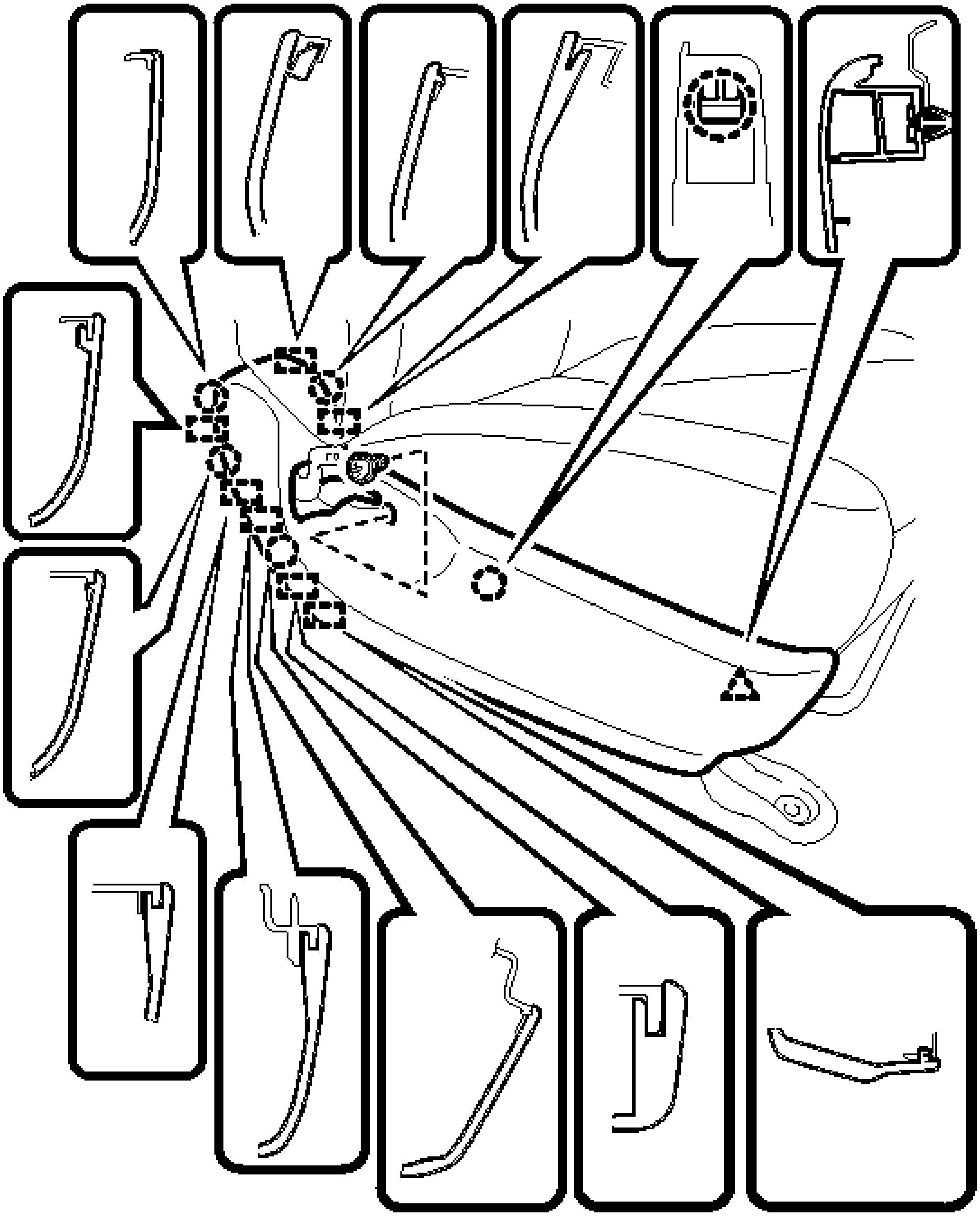

Fig. 131: Identifying Front Seat Cushion Shield (For Front Passenger Side) Fasteners
Courtesy of TOYOTA MOTOR SALES, U.S.A., INC.

b. Disengage the 5 claws, 7 guides and clip to remove the front seat cushion shield.

7. **REMOVE FRONT SEAT INNER CUSHION SHIELD (for Driver Side)**

a. Disengage the 5 claws and 6 guides to remove the front seat inner cushion shield.

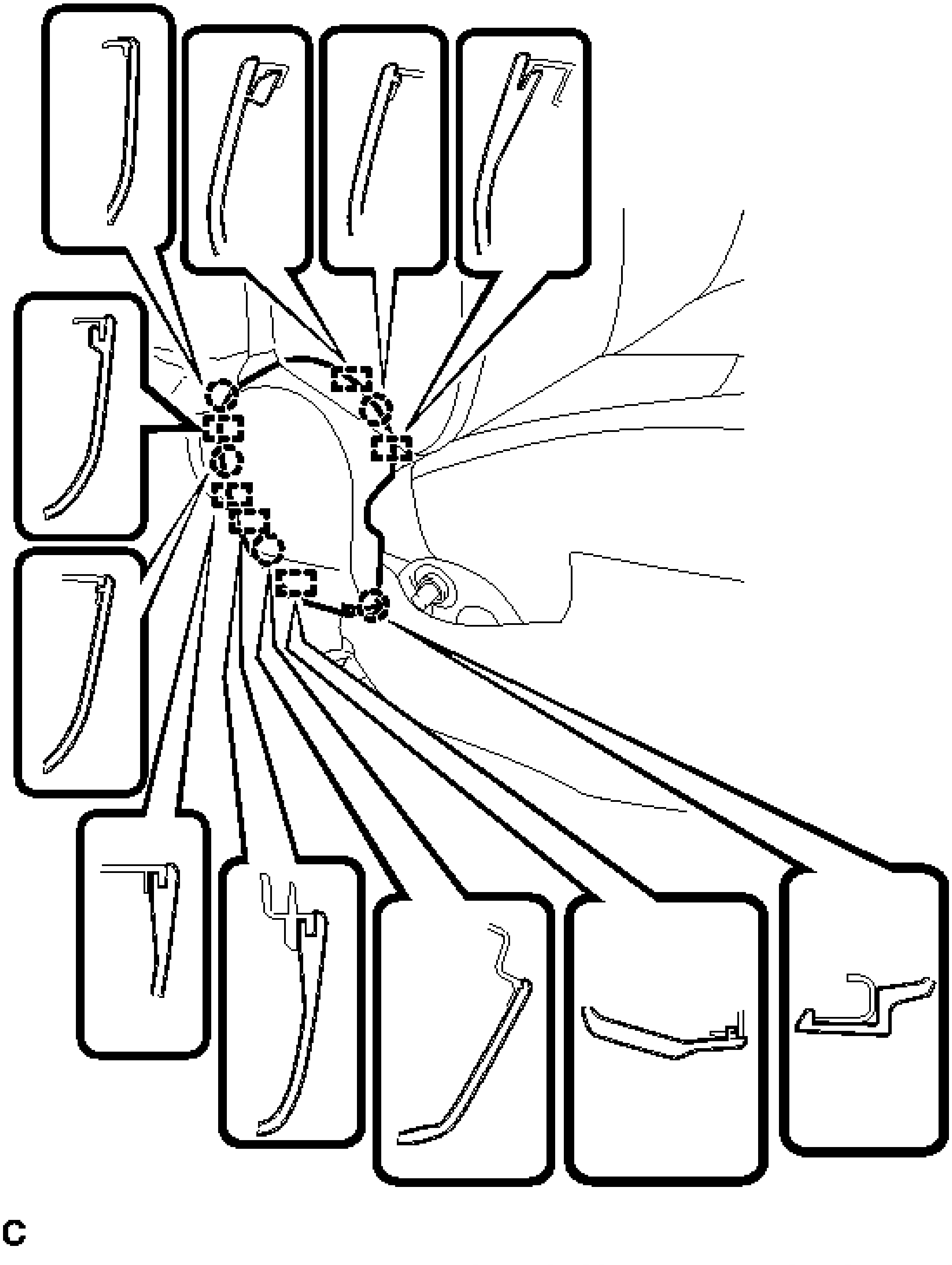

Fig. 132: Locating Front Seat Inner Cushion Shield (For Driver Side) Claws And Guides
Courtesy of TOYOTA MOTOR SALES, U.S.A., INC.

8. **REMOVE FRONT SEAT INNER CUSHION SHIELD (for Front Passenger Side)**
    a. Disengage the 5 claws and 7 guides to remove the front seat inner cushion shield.

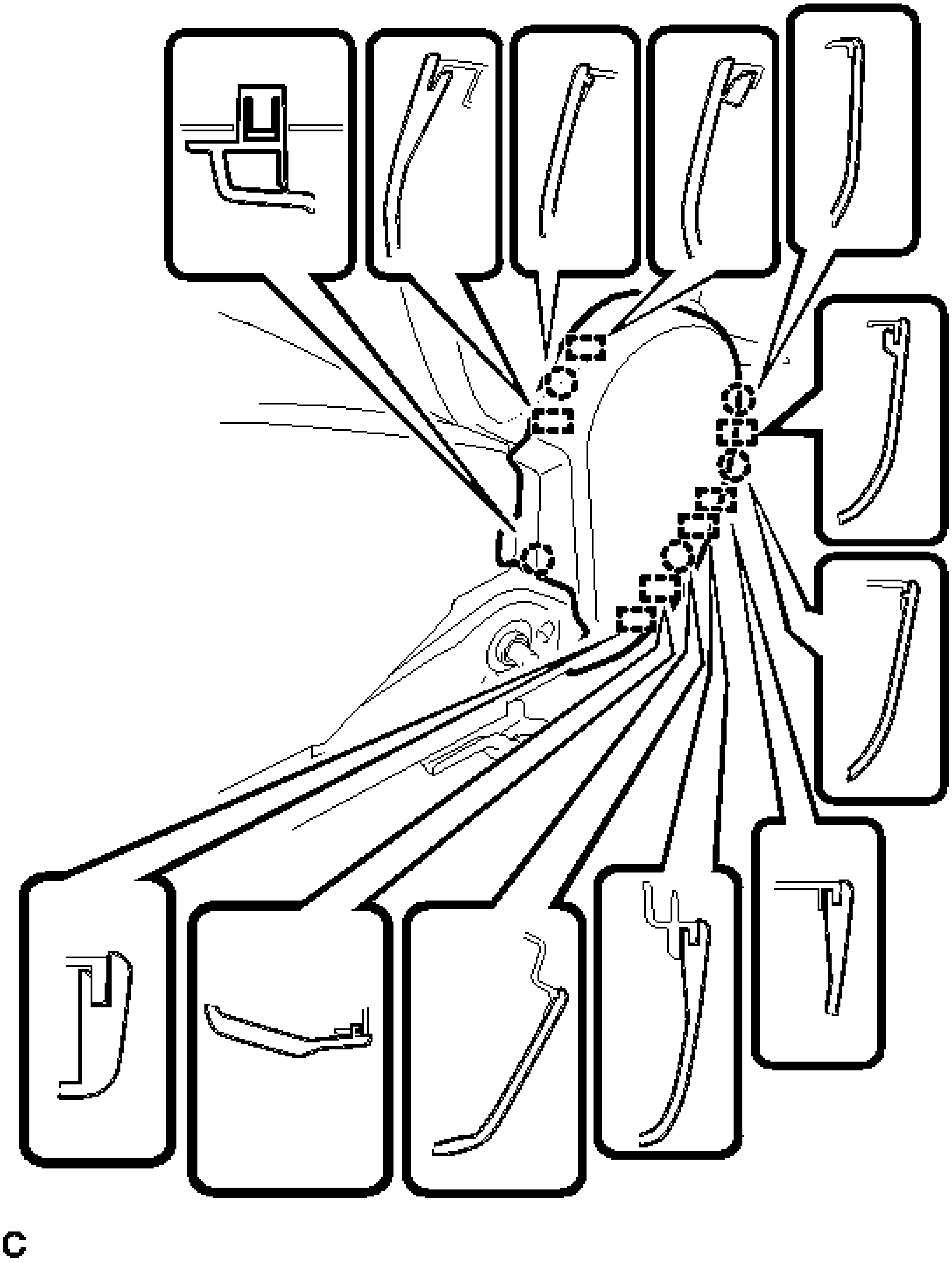

Fig. 133: Locating Front Seat Inner Cushion Shield (For Passenger Side) Claws And Guides
Courtesy of TOYOTA MOTOR SALES, U.S.A., INC.

9. **REMOVE FRONT SEAT INNER BELT ASSEMBLY (for Driver Side)** . Refer to **REMOVAL - Step 2** .
10. **REMOVE FRONT SEAT INNER BELT ASSEMBLY (for Front Passenger Side)** . Refer to **REMOVAL - Step 4** .
11. **REMOVE SEPARATE TYPE FRONT SEAT CUSHION COVER WITH PAD**
    a. Disengage the fastener and separate the front seat airbag assembly wire harness.

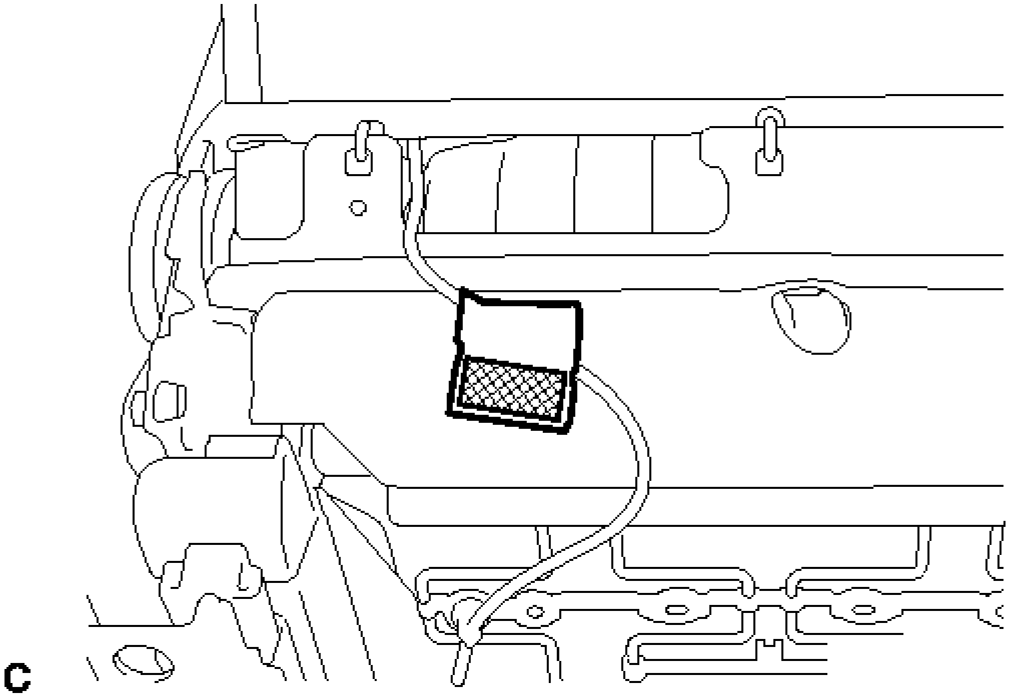

Fig. 134: Identifying Front Seatback Cover Airbag Wire Harness (For SIA Made Manual Seat)
Courtesy of TOYOTA MOTOR SALES, U.S.A., INC.

    b. Disengage the claw and 3 clamps to separate the front seat airbag assembly wire harness.

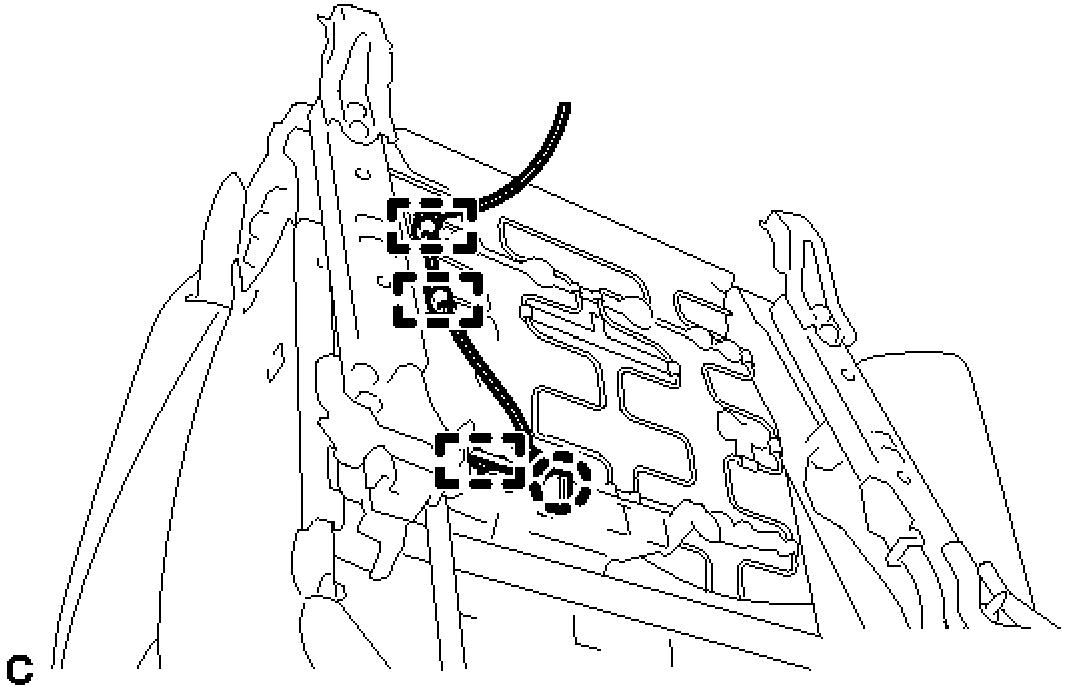

Fig. 135: Identifying Front Seatback Cover Claw And Clamps (For SIA Made Manual Seat)
Courtesy of TOYOTA MOTOR SALES, U.S.A., INC.

c. Disengage the hook.

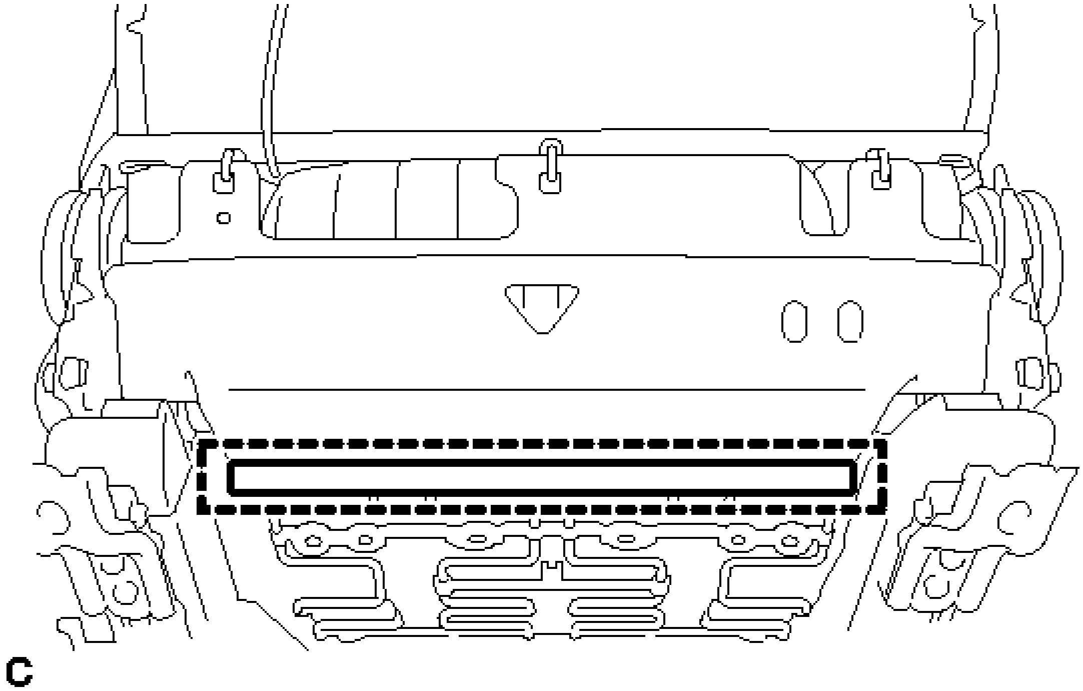

Fig. 136: Identifying Front Seatback Cover Hook (For SIA Made Manual Seat)
Courtesy of TOYOTA MOTOR SALES, U.S.A., INC.

d. Disengage each hook and remove the separate type front seat cushion cover with pad.

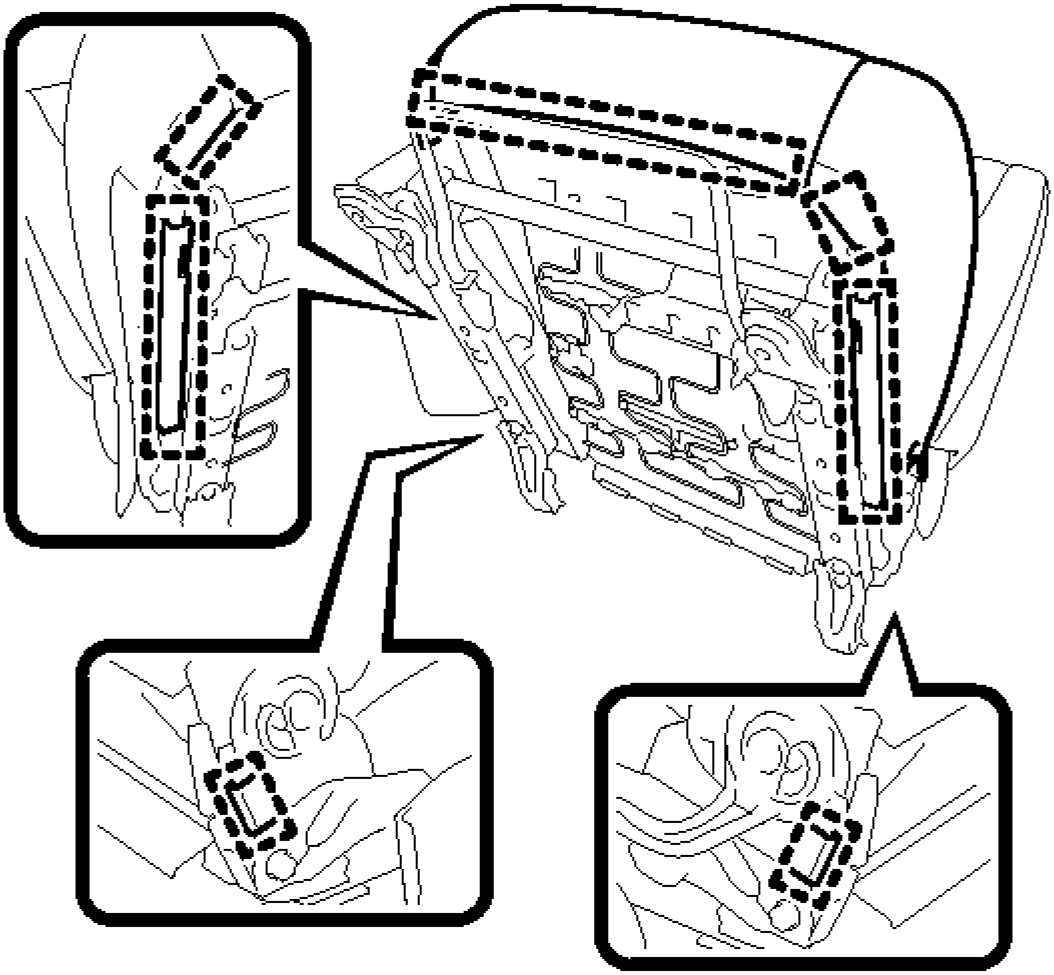

Fig. 137: Identifying Front Seatback Cover Hooks (For SIA Made Manual Seat)
Courtesy of TOYOTA MOTOR SALES, U.S.A., INC.

12. **REMOVE SEPARATE TYPE FRONT SEAT CUSHION COVER**
    a. Remove the 2 hog rings.

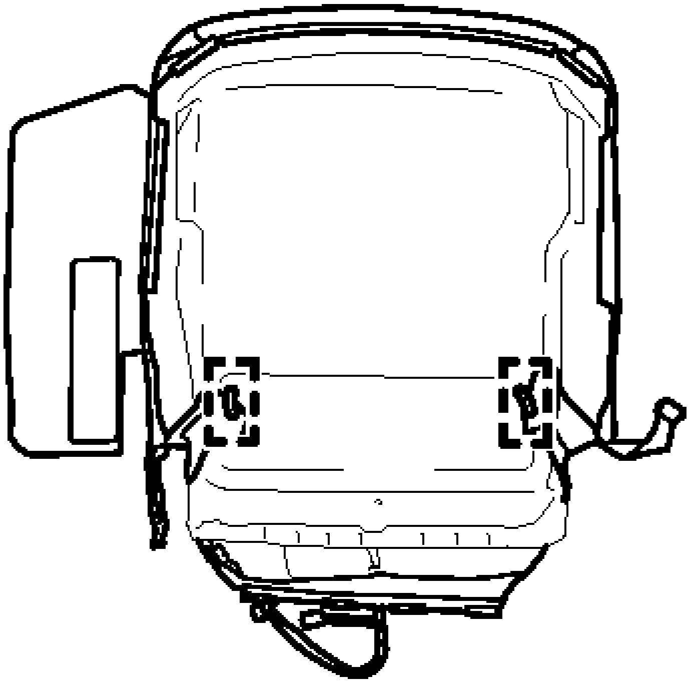

Fig. 138: Locating Front Seat Cushion Cover Hog Rings
Courtesy of TOYOTA MOTOR SALES, U.S.A., INC.

b. Remove the 16 hog rings and the separate type front seat cushion cover from the separate type front seat cushion pad.

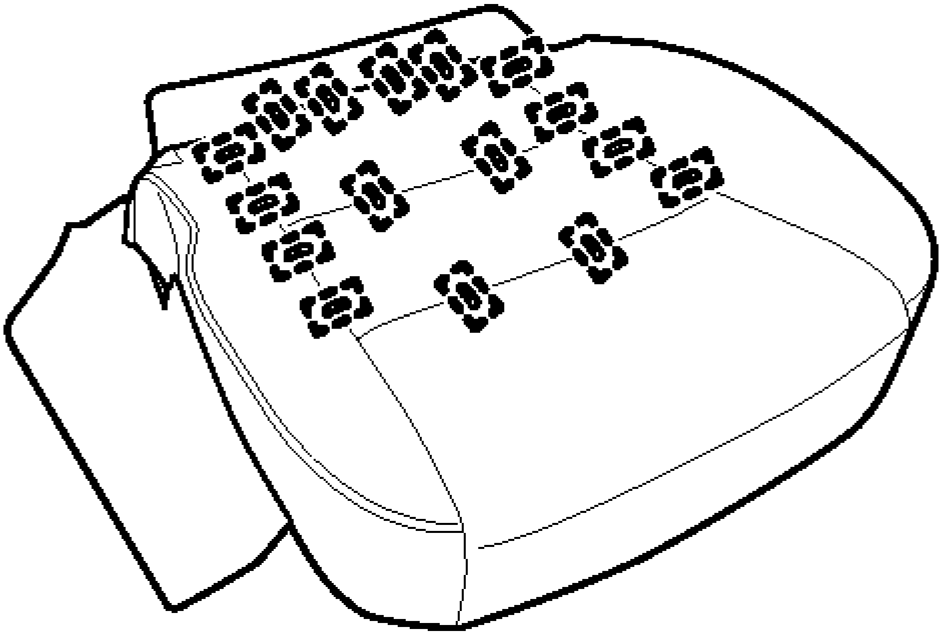

Fig. 139: Locating Front Seat Cushion Cover Hog Rings

Courtesy of TOYOTA MOTOR SALES, U.S.A., INC.

13. **REMOVE SEPARATE TYPE FRONT SEATBACK COVER WITH PAD**
    a. Remove the 5 hog rings.

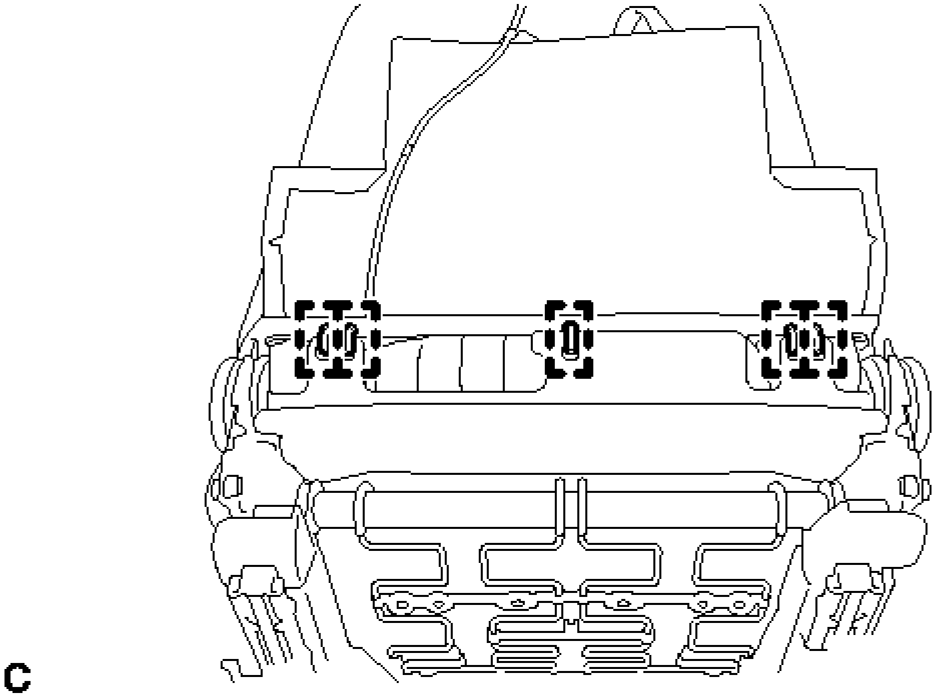

Fig. 140: Locating Front Seatback Cover Hog Rings
Courtesy of TOYOTA MOTOR SALES, U.S.A., INC.

    b. Remove the 3 hog rings.

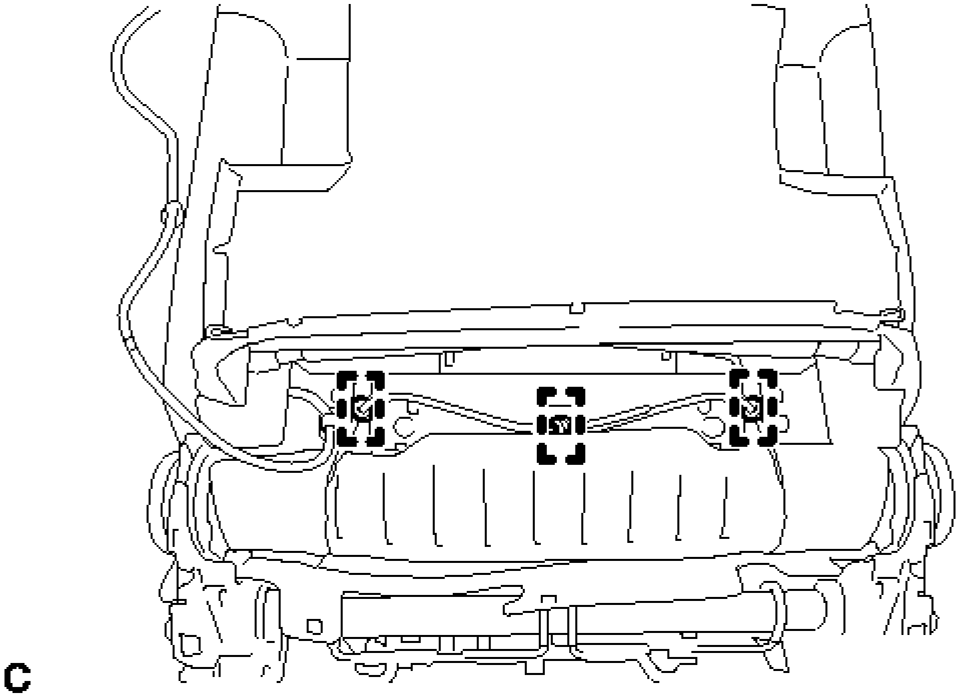

Fig. 141: Locating Front Seatback Cover Hog Rings
Courtesy of TOYOTA MOTOR SALES, U.S.A., INC.

c. Remove the 2 hog rings.

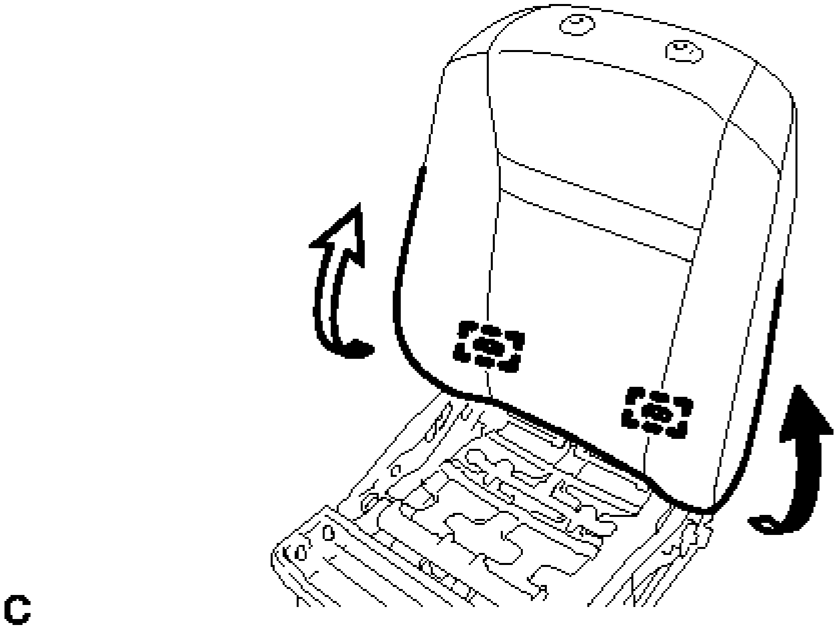

Fig. 142: Turning Back Front Seatback Cover
Courtesy of TOYOTA MOTOR SALES, U.S.A., INC.

d. Turn back the separate type front seatback cover.
e. Remove the 2 nuts and the 3 brackets.

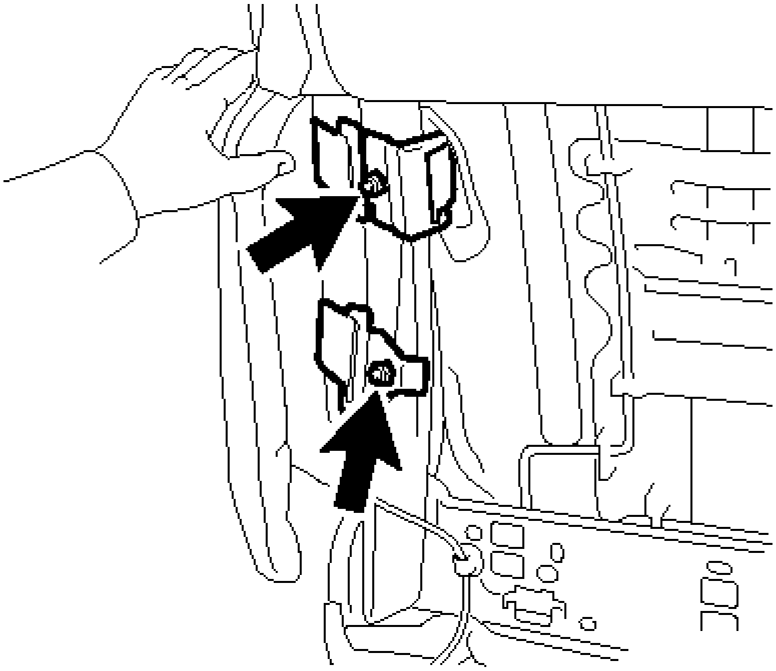

Fig. 143: Locating Front Seatback Cover Fasteners
Courtesy of TOYOTA MOTOR SALES, U.S.A., INC.

f. Disengage the 4 claws and remove the 2 front seat headrest supports.

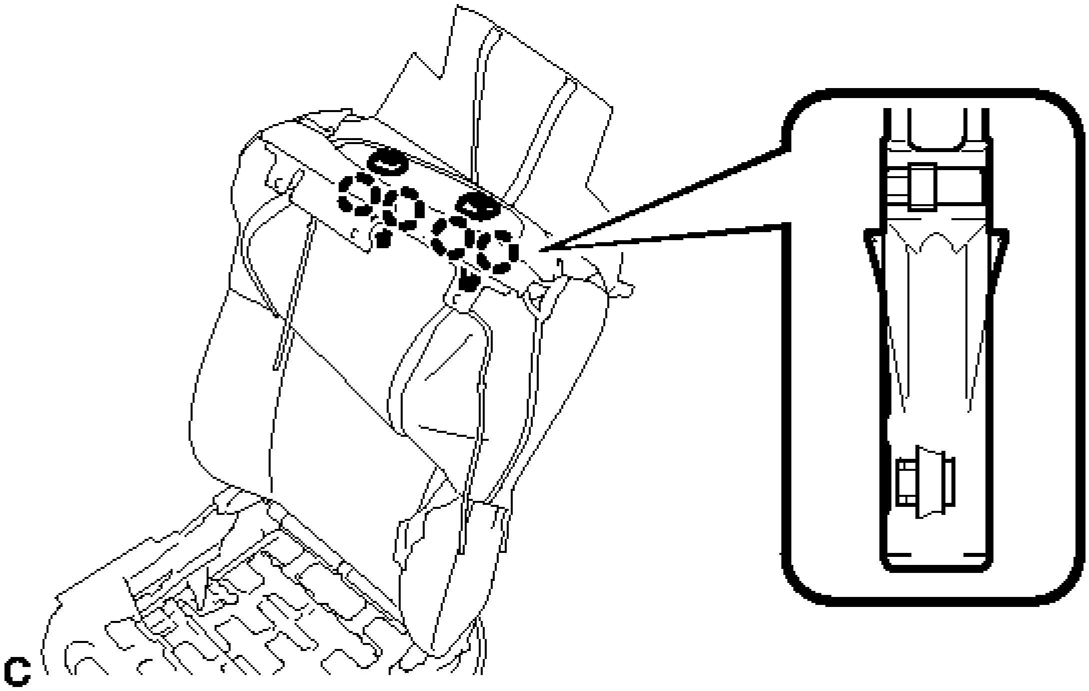

Fig. 144: Identifying Front Seatback Cover Headrest Support Claws
Courtesy of TOYOTA MOTOR SALES, U.S.A., INC.

g. Remove the separate type front seatback cover with pad.

14. **REMOVE FRONT SEAT AIRBAG ASSEMBLY** . Refer to **REMOVAL - Step 13** .
15. **REMOVE SEPARATE TYPE FRONT SEATBACK COVER**
    a. Remove the 6 hog rings and separate type front seatback cover from the separate type front seatback pad.

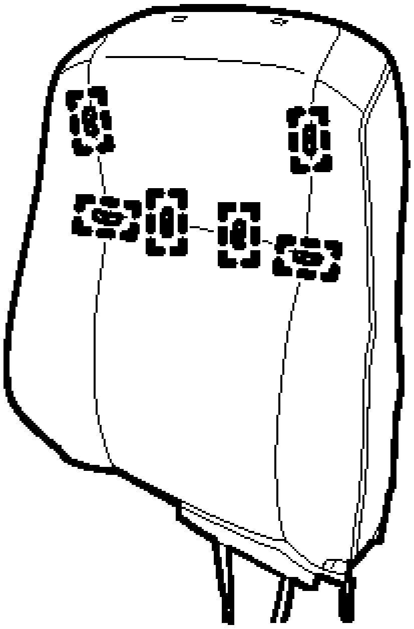

Fig. 145: Locating Front Seatback Cover Hog Rings
Courtesy of TOYOTA MOTOR SALES, U.S.A., INC.

16. **REMOVE FRONT SEAT LOWER CUSHION SHIELD LH (for Driver Side)**
    a. Remove the screw.

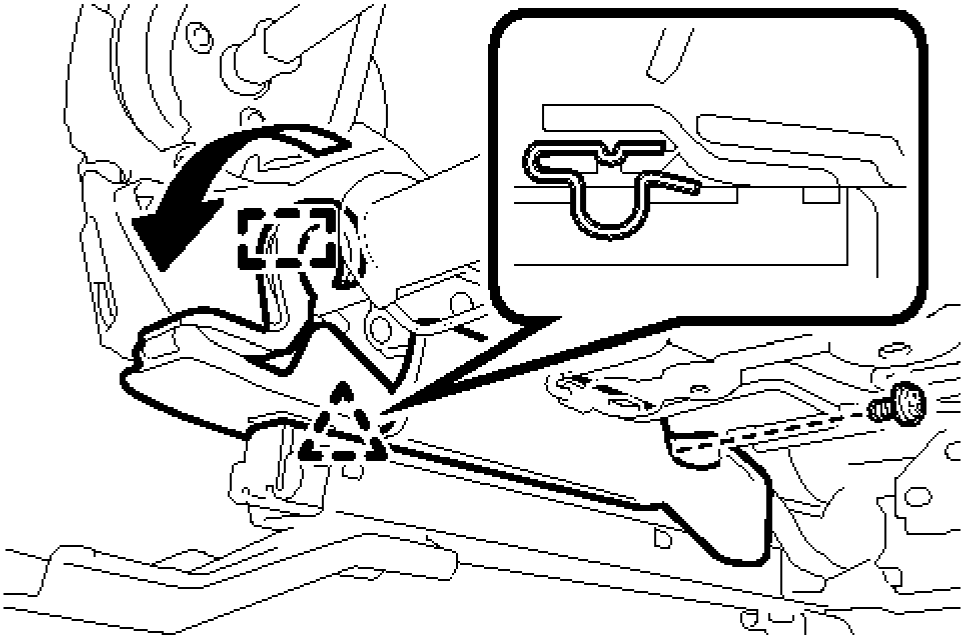

Fig. 146: Removing Front Seat Lower Cushion Shield LH (For Driver Side)

Courtesy of TOYOTA MOTOR SALES, U.S.A., INC.

b. Disengage the hook as shown in the illustration.
c. Disengage the clip and remove the front seat lower cushion shield LH.

17. **REMOVE FRONT SEAT LOWER CUSHION SHIELD RH (for Driver Side)**

a. Remove the screw.

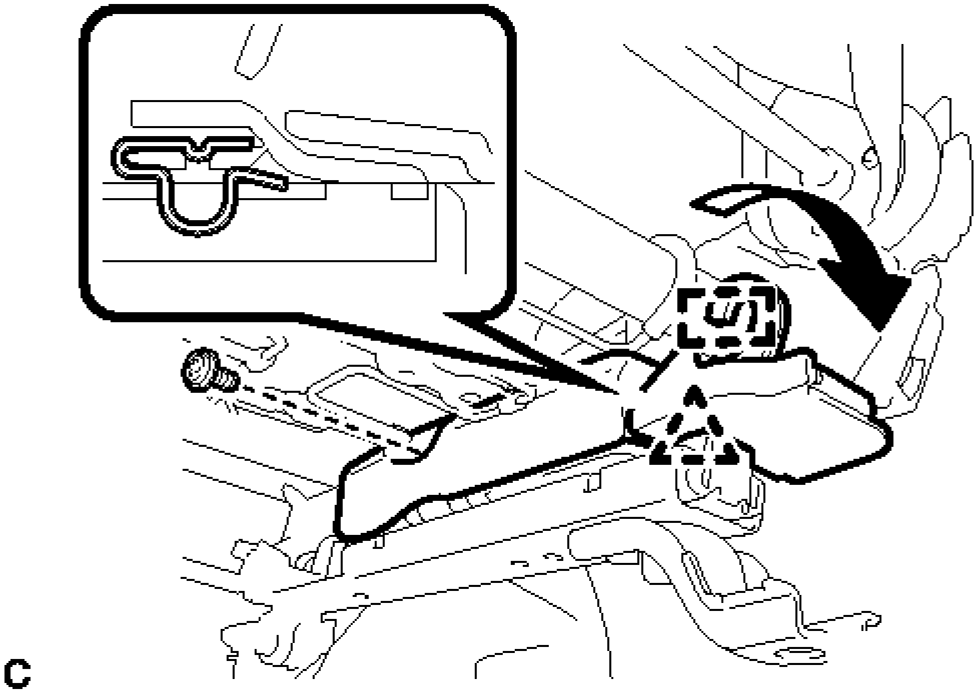

Fig. 147: Removing Front Seat Lower Cushion Shield RH (For Driver Side)
Courtesy of TOYOTA MOTOR SALES, U.S.A., INC.

b. Disengage the hook as shown in the illustration.
c. Disengage the clip and remove the front seat lower cushion shield RH.

18. **REMOVE RECLINING ADJUSTER INSIDE COVER LH**

a. Disengage the guide and remove the reclining adjuster inside cover LH.

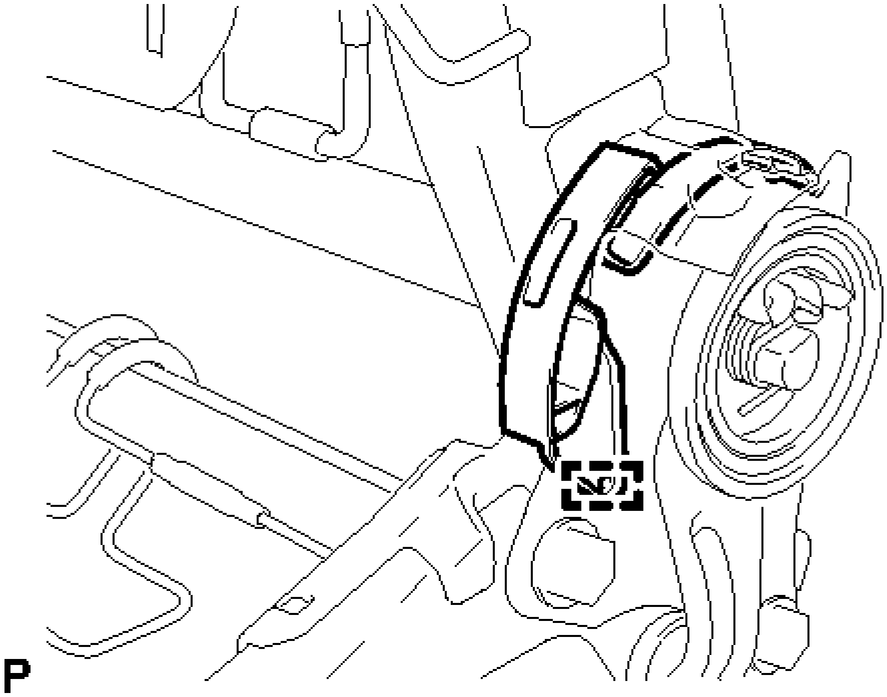

Fig. 148: Locating Reclining Adjuster Guide Inside Cover LH
Courtesy of TOYOTA MOTOR SALES, U.S.A., INC.

19. **REMOVE RECLINING ADJUSTER INSIDE COVER RH**
    a. Disengage the guide and remove the reclining adjuster inside cover RH.

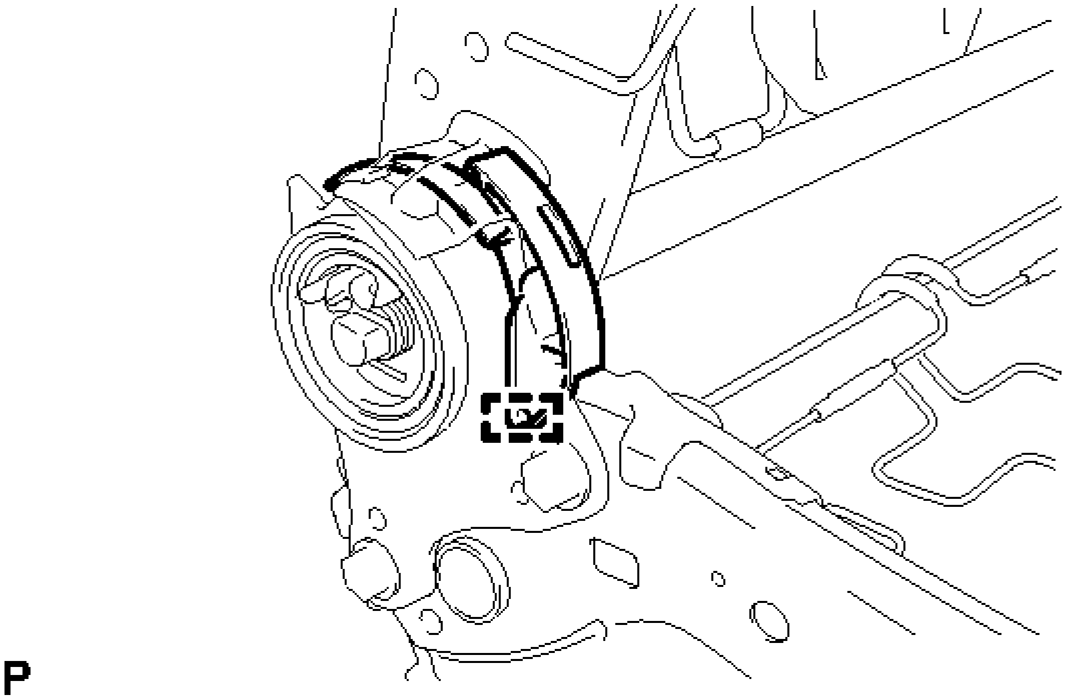

Fig. 149: Locating Reclining Adjuster Guide Inside Cover RH

Courtesy of TOYOTA MOTOR SALES, U.S.A., INC.

20. **REMOVE FRONT SEAT CUSHION EDGE PROTECTOR LH (for Driver Side)**
    a. Remove the screw.

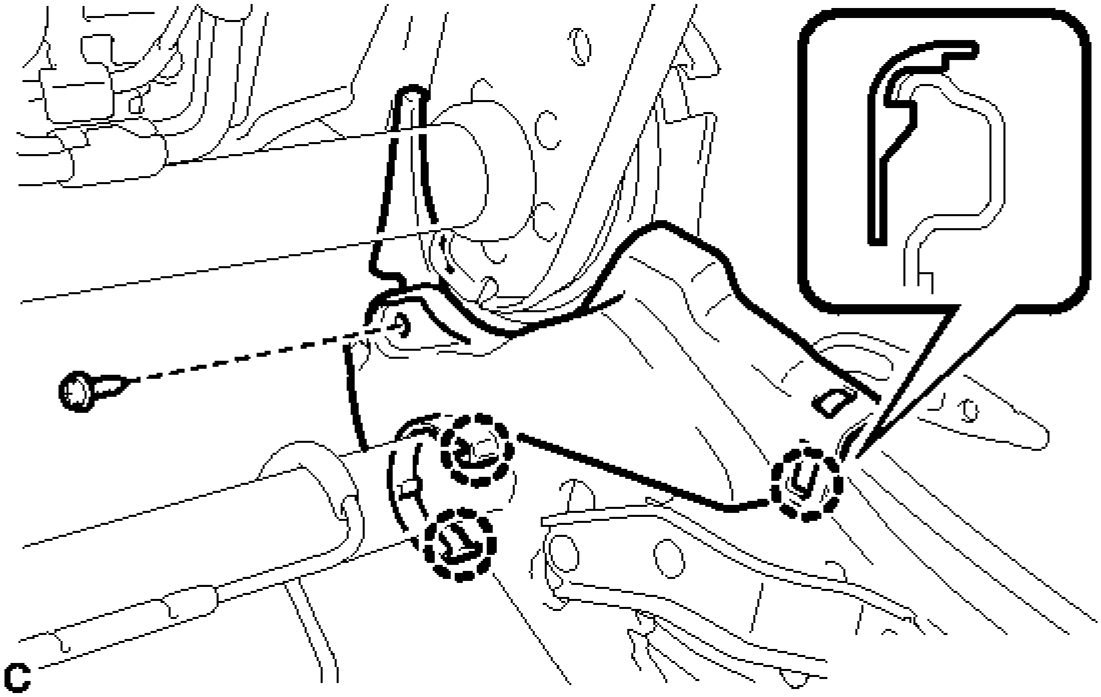

Fig. 150: Locating Front Seat Cushion Edge Protector LH (For Driver Side) Fasteners
Courtesy of TOYOTA MOTOR SALES, U.S.A., INC.

    b. Disengage the 3 claws to remove the front seat cushion edge protector LH.

21. **REMOVE FRONT SEAT CUSHION EDGE PROTECTOR RH (for Driver Side)**
    a. Remove the screw.

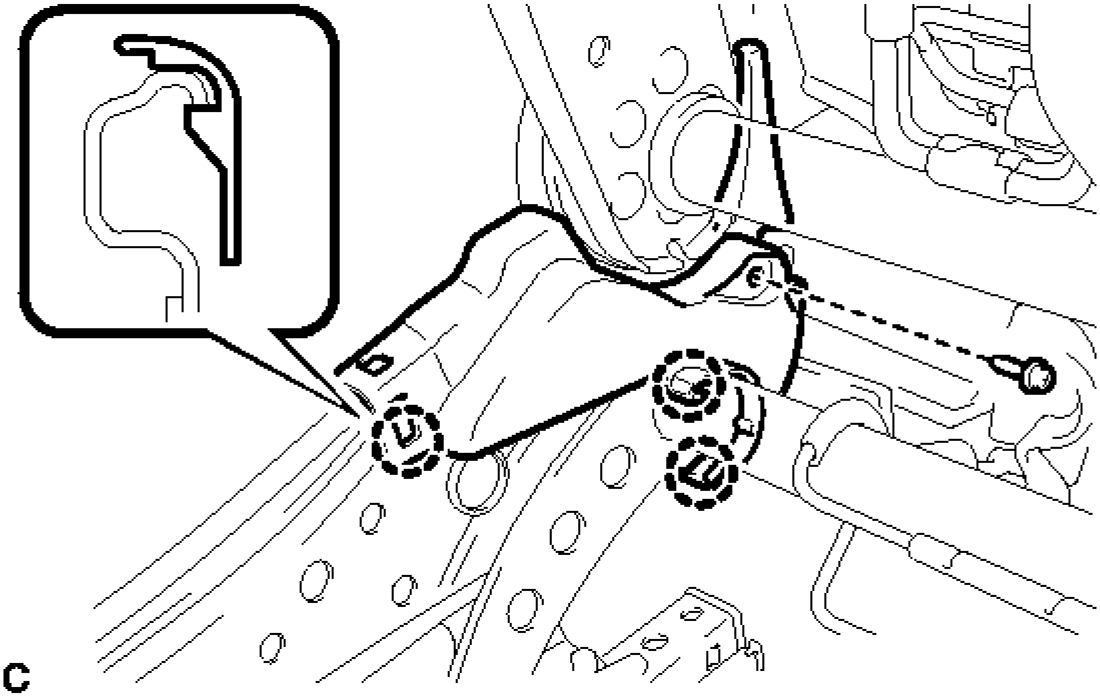

Fig. 151: Locating Front Seat Cushion Edge Protector RH (For Driver Side) Fasteners
Courtesy of TOYOTA MOTOR SALES, U.S.A., INC.

b. Disengage the 3 claws to remove the front seat cushion edge protector RH.

22. **REMOVE FRONT SEAT CUSHION EDGE PROTECTOR LH (for Front Passenger Side)**

a. Remove the screw.

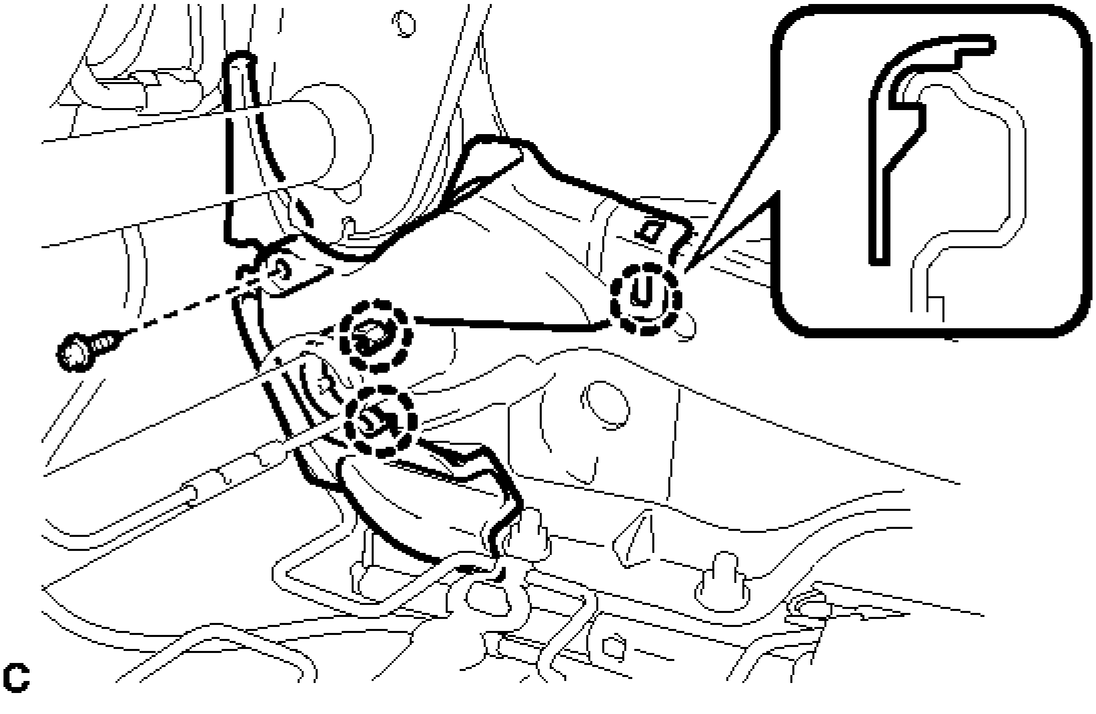

Fig. 152: Locating Front Seat Cushion Edge Protector LH (For Front Passenger Side) Fasteners
Courtesy of TOYOTA MOTOR SALES, U.S.A., INC.

b. Disengage the 3 claws to remove the front seat cushion edge protector LH.

23. **REMOVE FRONT SEAT CUSHION EDGE PROTECTOR RH (for Front Passenger Side)**
    a. Remove the screw.

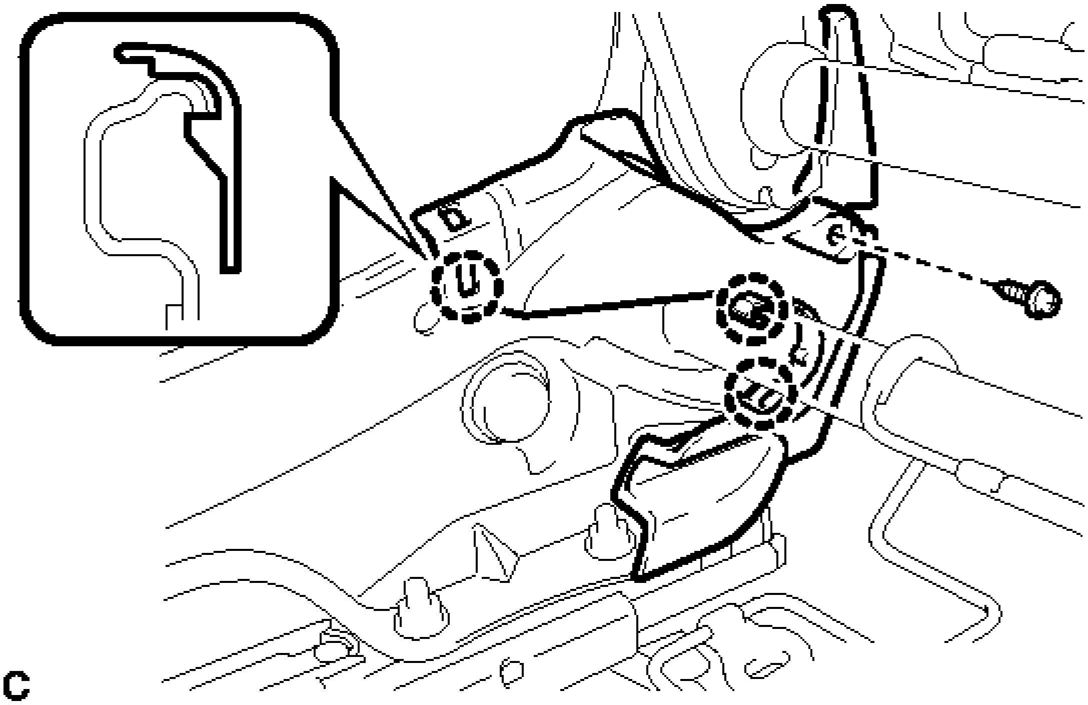

Fig. 153: Locating Front Seat Cushion Edge Protector RH (For Front Passenger Side) Fasteners
Courtesy of TOYOTA MOTOR SALES, U.S.A., INC.

b. Disengage the 3 claws to remove the front seat cushion edge protector RH.

24. **REMOVE OCCUPANT DETECTION ECU (for Front Passenger Side)** . Refer to **REMOVAL - Step 3** .
25. **REMOVE FRONT SEAT WIRE RH (for Front Passenger Side)**
    a. Disconnect the connectors and disengage the wire harness clamps to remove the front seat wire RH.
26. **REMOVE SEPARATE TYPE FRONT SEATBACK SPRING ASSEMBLY**
    a. Remove the 4 bolts.

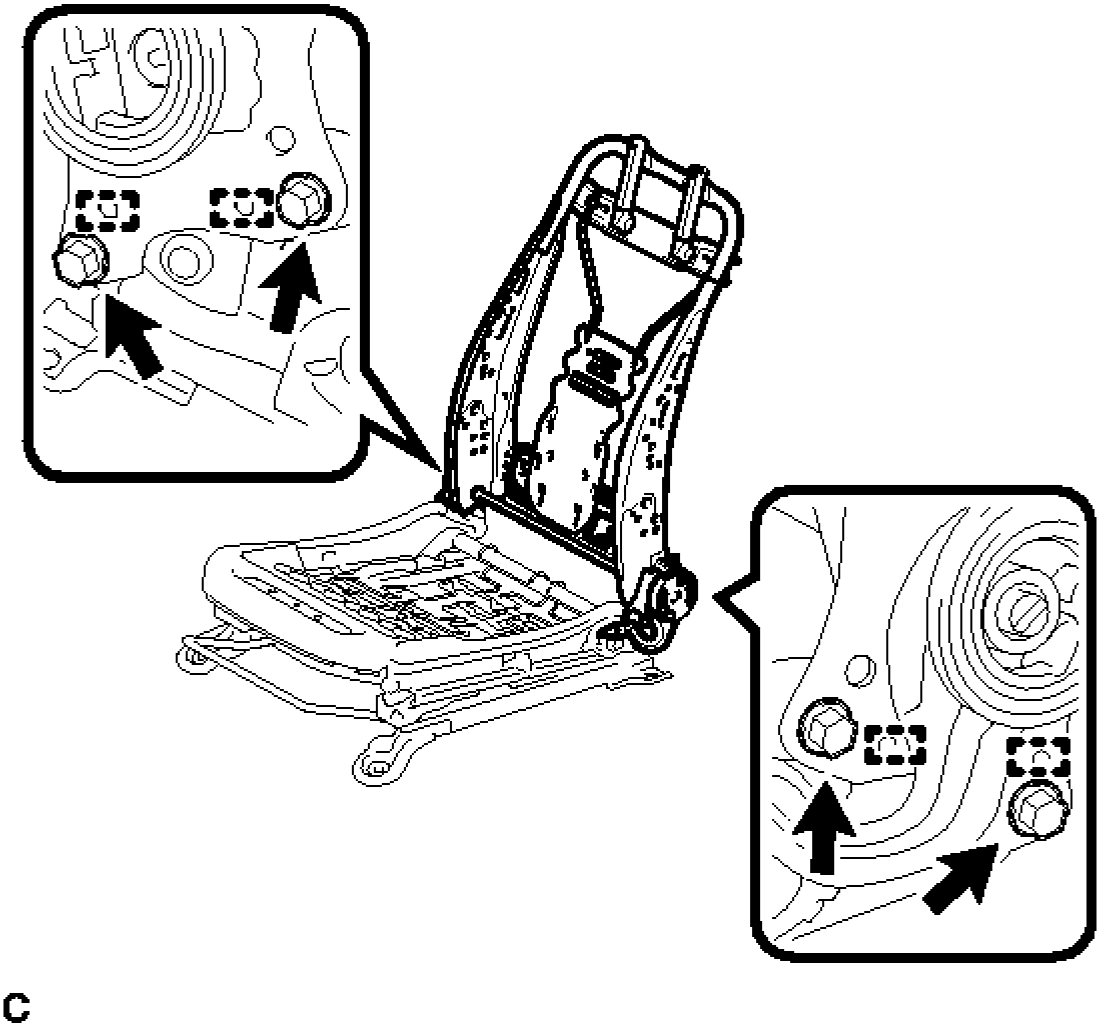

Fig. 154: Locating Front Seatback Spring Assembly Fasteners
Courtesy of TOYOTA MOTOR SALES, U.S.A., INC.

b. Disengage the 4 guides to remove the separate type front seatback spring assembly.

27. **REMOVE SEAT TRACK ADJUSTING HANDLE**

a. Disengage the 2 springs to remove the seat track adjusting handle.

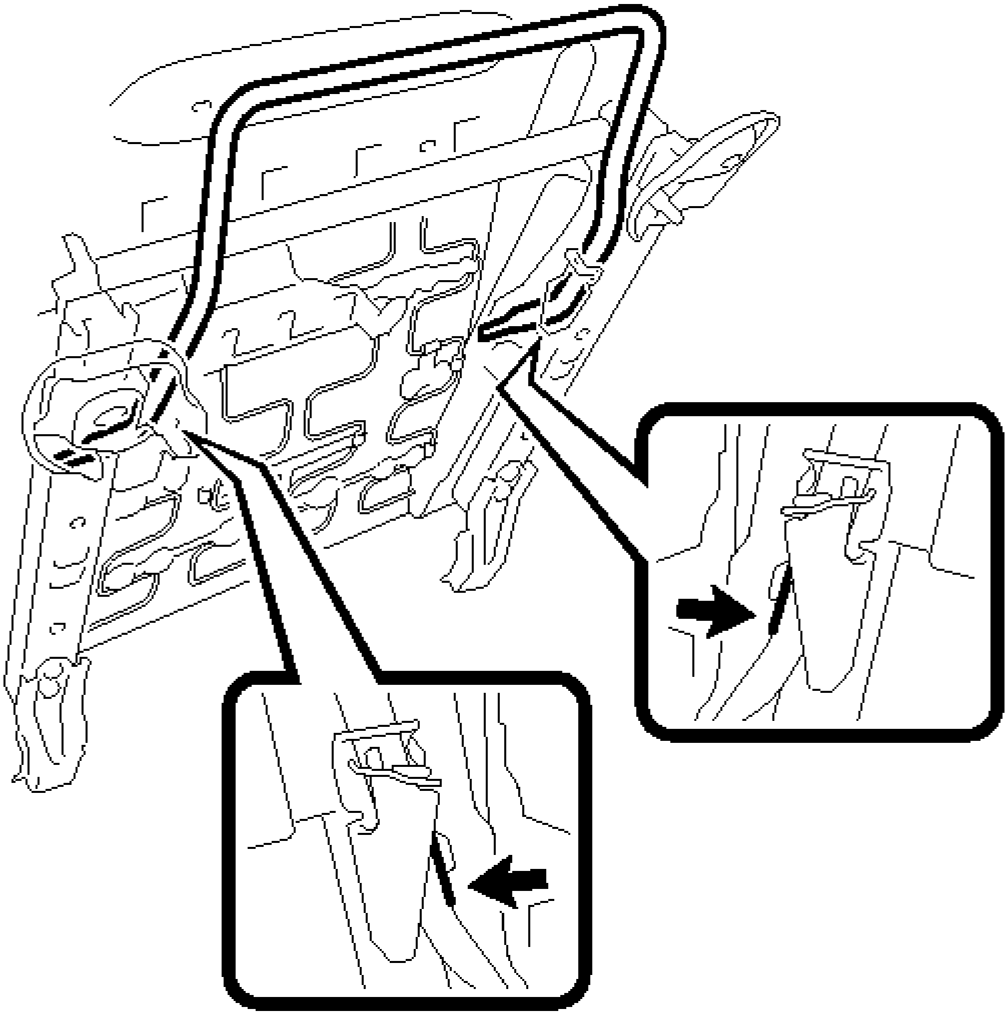

Fig. 155: Locating Seat Track Adjusting Handle Springs
Courtesy of TOYOTA MOTOR SALES, U.S.A., INC.

REASSEMBLY

REASSEMBLY

1. **INSTALL SEAT TRACK ADJUSTING HANDLE**
    a. Engage the 2 springs to install the seat track adjusting handle.
2. **INSTALL SEPARATE TYPE FRONT SEATBACK SPRING ASSEMBLY**
    a. Engage the 4 guides to install the separate type front seatback spring assembly.
    b. Install the 4 bolts.

Torque: 42 N*m (428 kgf*cm, 31 ft.*lbf)

3. **INSTALL FRONT SEAT WIRE RH (for Front Passenger Side)**
    a. Connect the connectors and engage the wire harness clamps to install the front seat wire RH.
4. **INSTALL OCCUPANT DETECTION ECU (for Front Passenger Side)** . Refer to **INSTALLATION - Step 1** .
5. **INSTALL FRONT SEAT CUSHION EDGE PROTECTOR LH (for Driver Side)**
    a. Engage the 3 claws to install the front seat cushion edge protector LH.
    b. Install the screw.
6. **INSTALL FRONT SEAT CUSHION EDGE PROTECTOR RH (for Driver Side)**
    a. Engage the 3 claws to install the front seat cushion edge protector RH.
    b. Install the screw.
7. **INSTALL FRONT SEAT CUSHION EDGE PROTECTOR LH (for Front Passenger Side)**
    a. Engage the 3 claws to install the front seat cushion edge protector LH.
    b. Install the screw.
8. **INSTALL FRONT SEAT CUSHION EDGE PROTECTOR RH (for Front Passenger Side)**
    a. Engage the 3 claws to install the front seat cushion edge protector RH.
    b. Install the screw.
9. **INSTALL RECLINING ADJUSTER INSIDE COVER LH**
    a. Engage the guide to install the reclining adjuster inside cover LH.
10. **INSTALL RECLINING ADJUSTER INSIDE COVER RH**
    a. Engage the guide to install the reclining adjuster inside cover RH.
11. **INSTALL FRONT SEAT LOWER CUSHION SHIELD LH (for Driver Side)**
    a. Engage the clip to install the front seat lower cushion shield LH.

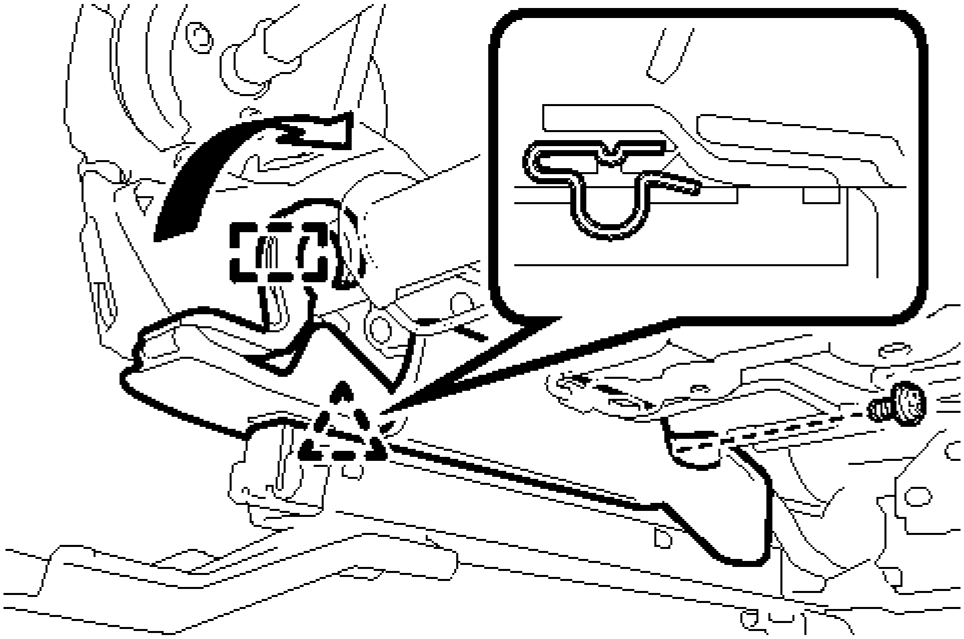

Fig. 156: Installing Front Seat Lower Cushion Shield LH (For Driver Side)
Courtesy of TOYOTA MOTOR SALES, U.S.A., INC.

b. Engage the hook as shown in the illustration.

c. Install the screw.

12. **INSTALL FRONT SEAT LOWER CUSHION SHIELD RH (for Driver Side)**

a. Engage the clip to install the front seat lower cushion shield RH.

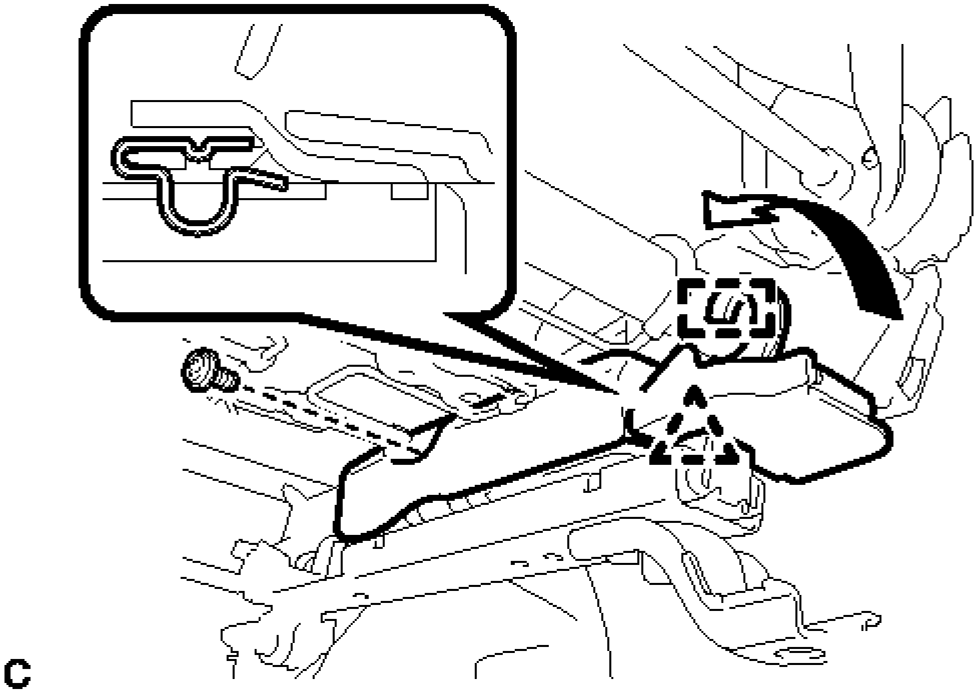

Fig. 157: Installing Front Seat Lower Cushion Shield RH (For Driver Side)
Courtesy of TOYOTA MOTOR SALES, U.S.A., INC.

b. Engage the hook as shown in the illustration.
c. Install the screw.

13. **INSTALL SEPARATE TYPE FRONT SEATBACK COVER**
    a. Using hog ring pliers, install the separate type front seatback cover to the separate type front seatback pad with 6 new hog rings.

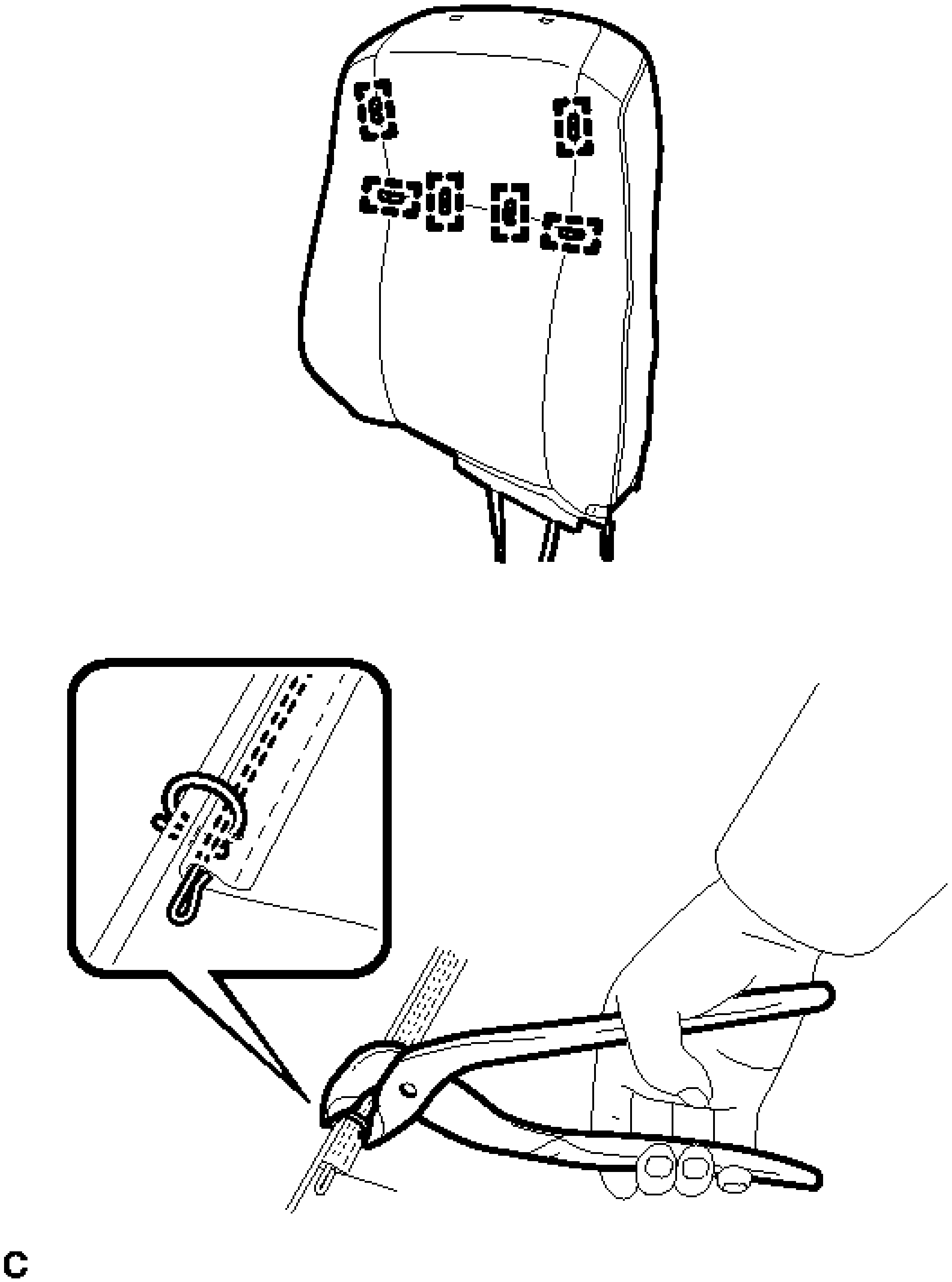

Fig. 158: Installing Front Seatback Cover Hog Rings
Courtesy of TOYOTA MOTOR SALES, U.S.A., INC.

NOTE:

- **Be careful not to damage the separate type front seatback cover.**

- **When installing the hog rings, take care to minimize wrinkles as much as possible.**

14. **INSTALL FRONT SEAT AIRBAG ASSEMBLY** . Refer to **INSTALLATION - Step 1** .
15. **INSTALL SEPARATE TYPE FRONT SEATBACK COVER WITH PAD**
    a. Temporarily install the separate type front seatback cover with pad.
    b. Engage the 4 claws to install the 2 front seat headrest supports.
    c. Install the 3 brackets with the 2 nuts.

    Torque: 5.5 N*m (56 kgf*cm, 49 in.*lbf)

    WARNING:

    - **For vehicles with a front seat airbag assembly, the separate type front seatback cover must be securely installed. Otherwise, the front seat airbag assembly may not deploy properly.**
    - **Make sure that the strap is not twisted after installing the nut.**
    - **Install the bracket securely.**

    d. Turn back the separate type front seatback cover.

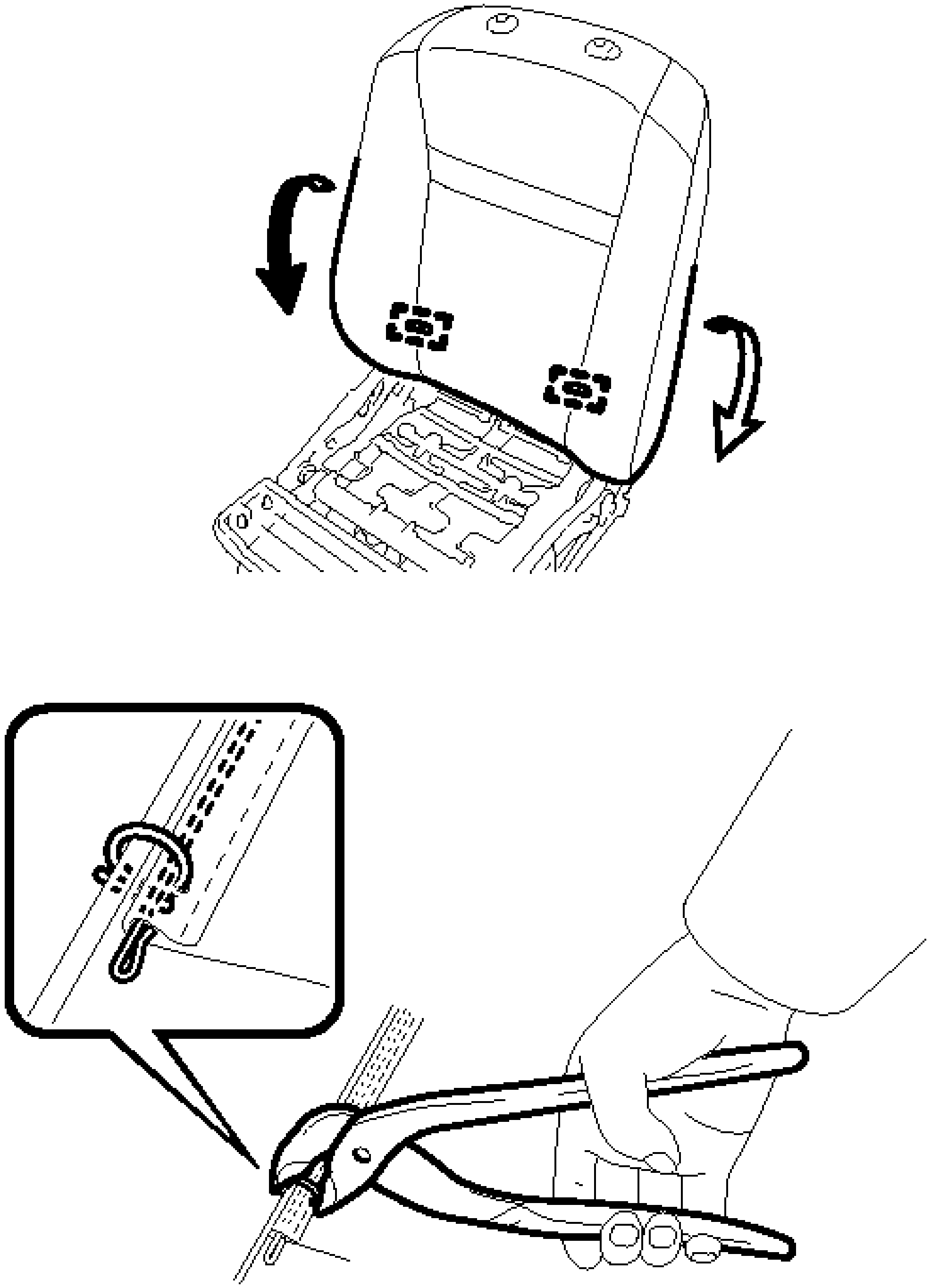

Fig. 159: Installing Hog Rings And Turning Back Front Seatback Cover
Courtesy of TOYOTA MOTOR SALES, U.S.A., INC.

e. Using hog ring pliers, install the 2 new hog rings.

NOTE:

- **Be careful not to damage the separate type front seatback cover.**
- **When installing the hog rings, take care to minimize wrinkles as much as possible.**

f. Using hog ring pliers, install 3 new hog rings.

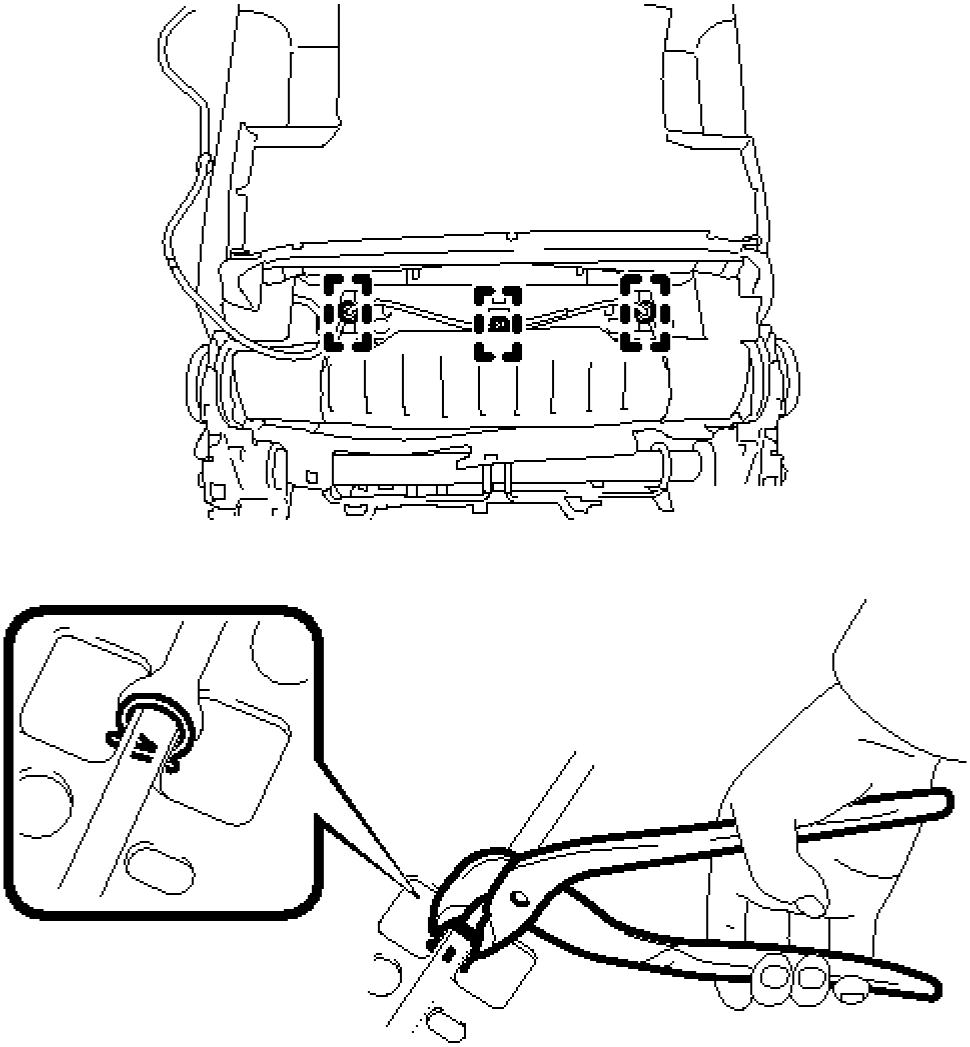

C

Fig. 160: Installing Front Seatback Cover Hog Rings
Courtesy of TOYOTA MOTOR SALES, U.S.A., INC.

g. Using hog ring pliers, install 5 new hog rings.

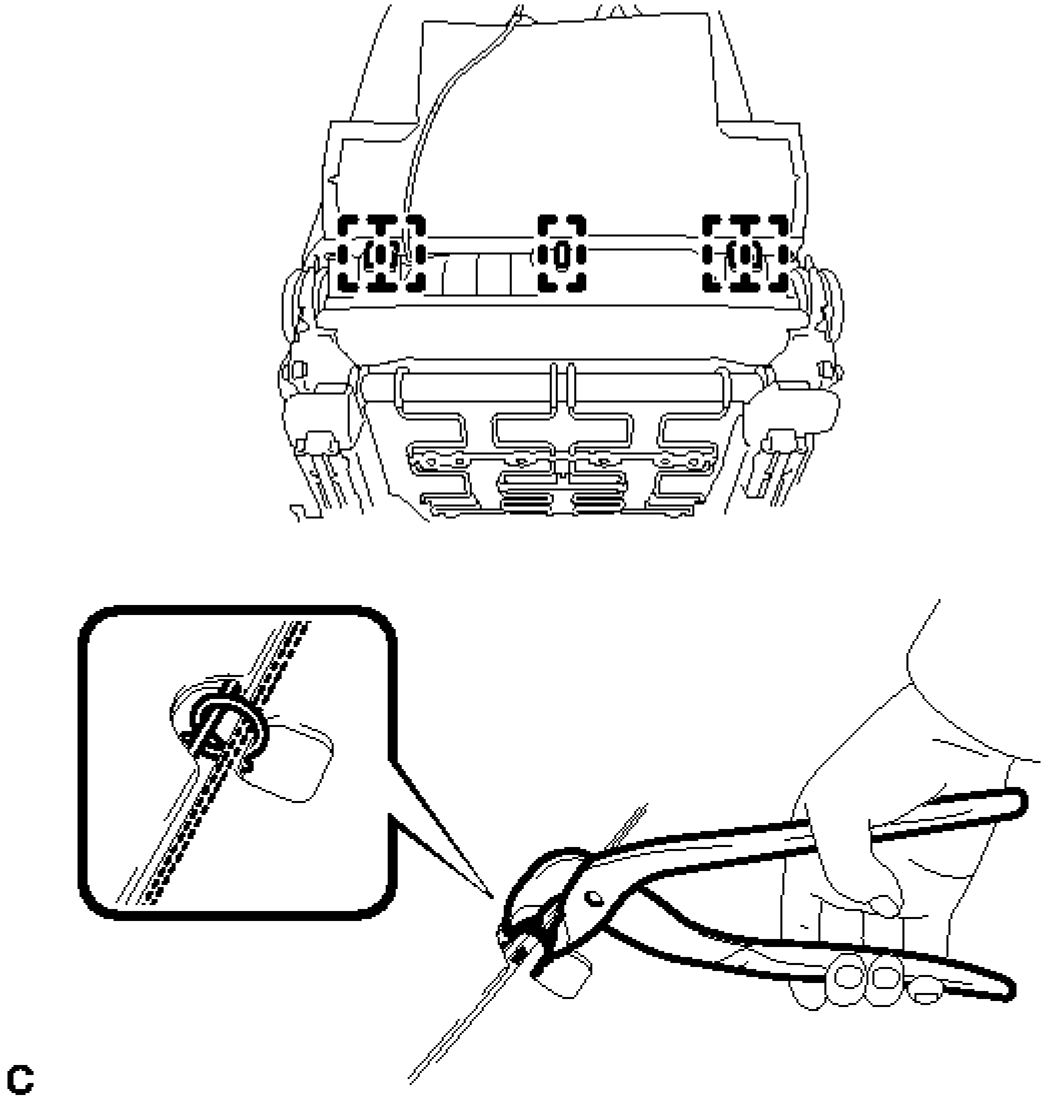

Fig. 161: Installing Front Seatback Cover Hog Rings
Courtesy of TOYOTA MOTOR SALES, U.S.A., INC.

NOTE:	- **Be careful not to damage the separate type front seatback cover.** - **When installing the hog rings, take care to minimize wrinkles as much as possible.**

16. **INSTALL SEPARATE TYPE FRONT SEAT CUSHION COVER**
    a. Using hog ring pliers, install the separate type front seat cushion cover to the separate type front seat cushion pad with 16 new hog rings.

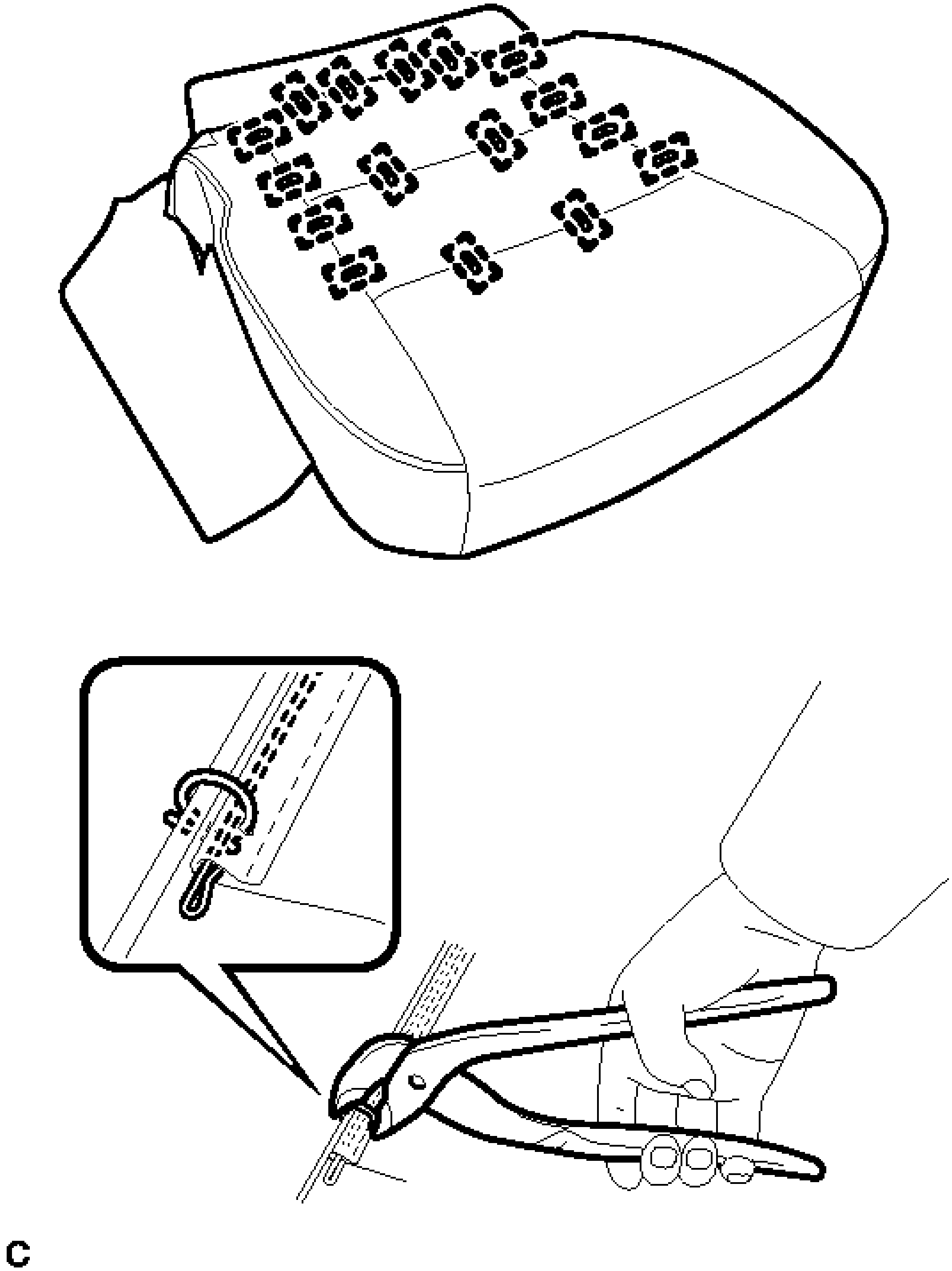

Fig. 162: Installing Front Seat Cushion Cover Hog Rings
Courtesy of TOYOTA MOTOR SALES, U.S.A., INC.

NOTE:

- **Be careful not to damage the separate type front seat cushion cover.**

- **When installing the hog rings, take care to minimize wrinkles as much as possible.**

b. Using hog ring pliers, install 2 new hog rings.

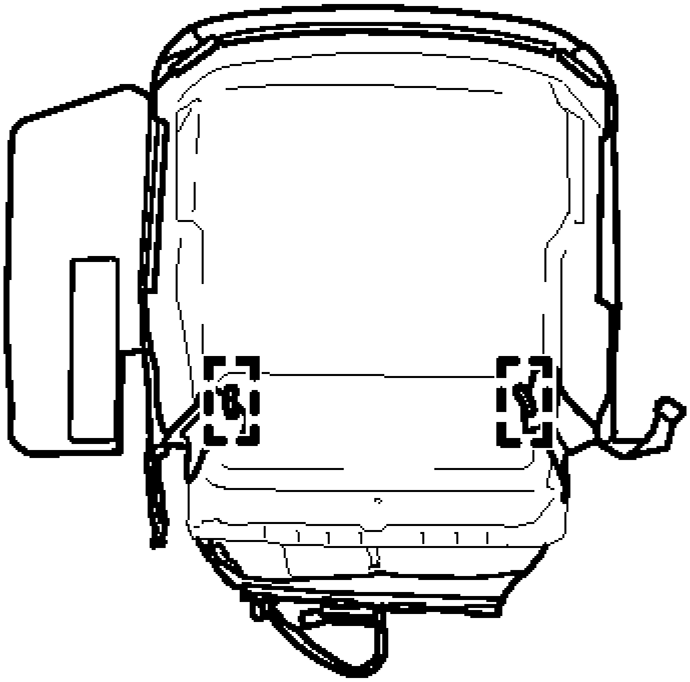

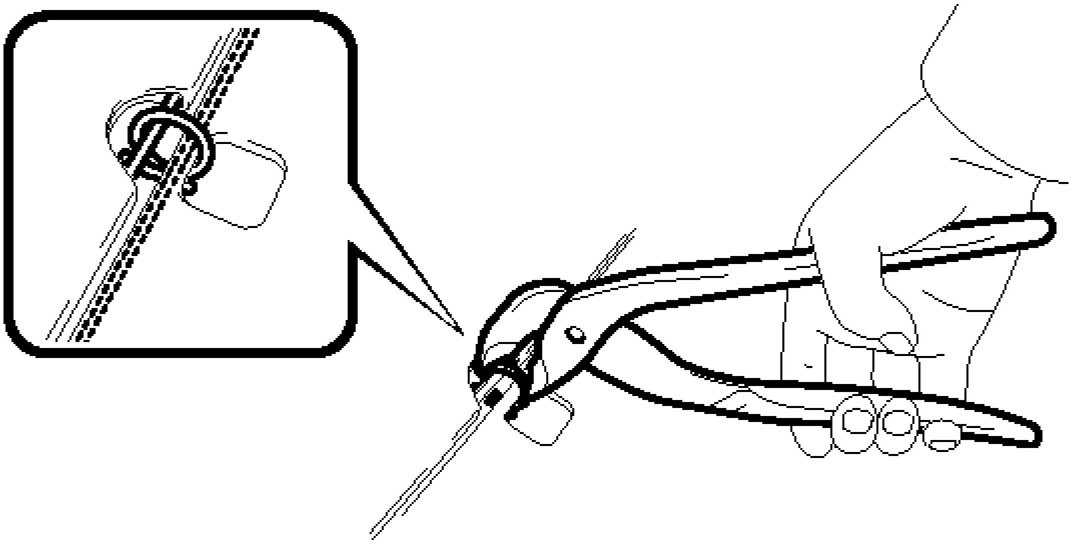

P

Fig. 163: Installing Front Seat Cushion Cover Hog Rings
Courtesy of TOYOTA MOTOR SALES, U.S.A., INC.

NOTE:

- **Be careful not to damage the separate type front seat cushion cover.**
- **When installing the hog rings, take care to minimize wrinkles as much as possible.**

17. **INSTALL SEPARATE TYPE FRONT SEAT CUSHION COVER WITH PAD**
    a. Temporarily install the separate type front seat cushion cover with pad.
    b. Engage each hook.
    c. Engage the claw and 3 clamps to install the front seat airbag assembly wire harness.
    d. Engage the fastener to secure the front seat airbag assembly wire harness.
18. **INSTALL FRONT SEAT INNER BELT ASSEMBLY (for Driver Side)** . Refer to **INSTALLATION - Step 1** .
19. **INSTALL FRONT SEAT INNER BELT ASSEMBLY (for Front Passenger Side)** . Refer to **INSTALLATION - Step 2** .
20. **INSTALL FRONT SEAT INNER CUSHION SHIELD (for Driver Side)**
    a. Engage the 5 claws and 6 guides to install the front seat inner cushion shield.
21. **INSTALL FRONT SEAT INNER CUSHION SHIELD (for Front Passenger Side)**
    a. Engage the 5 claws and 7 guides to install the front seat inner cushion shield.
22. **INSTALL FRONT SEAT CUSHION SHIELD (for Driver Side)**
    a. Engage the 5 claws, 6 guides and clip to install the front seat cushion shield.
    b. Install the screw.
23. **INSTALL FRONT SEAT CUSHION SHIELD (for Front Passenger Side)**
    a. Engage the 5 claws, 7 guides and clip to install the front seat cushion shield.
    b. Install the screw.
24. **CONNECT SEPARATE TYPE FRONT SEATBACK COVER**
    a. Connect the rubber band of the separate type front seatback cover.
25. **INSTALL VERTICAL ADJUSTING HANDLE (for Driver Side)**
    a. Install the vertical adjusting handle with the screw.
26. **INSTALL RECLINING ADJUSTER RELEASE HANDLE**
    a. Engage the claw to install the reclining adjuster release handle.
27. **INSTALL SEAT ADJUSTER COVER CAP**
    a. Install the 2 seat adjuster cover caps.

INSTALLATION

INSTALLATION

1. **INSTALL FRONT SEAT ASSEMBLY**
    a. Place the front seat assembly in the cabin.

    NOTE: Be careful not to damage the vehicle body.

    b. Connect each connector and clamp under the seat.
    c. Temporarily install the front seat assembly with the 4 bolts.
    d. Lift up the seat track adjusting handle and move the seat to the rearmost position.
    e. Tighten the 2 bolts on the front side of the seat.

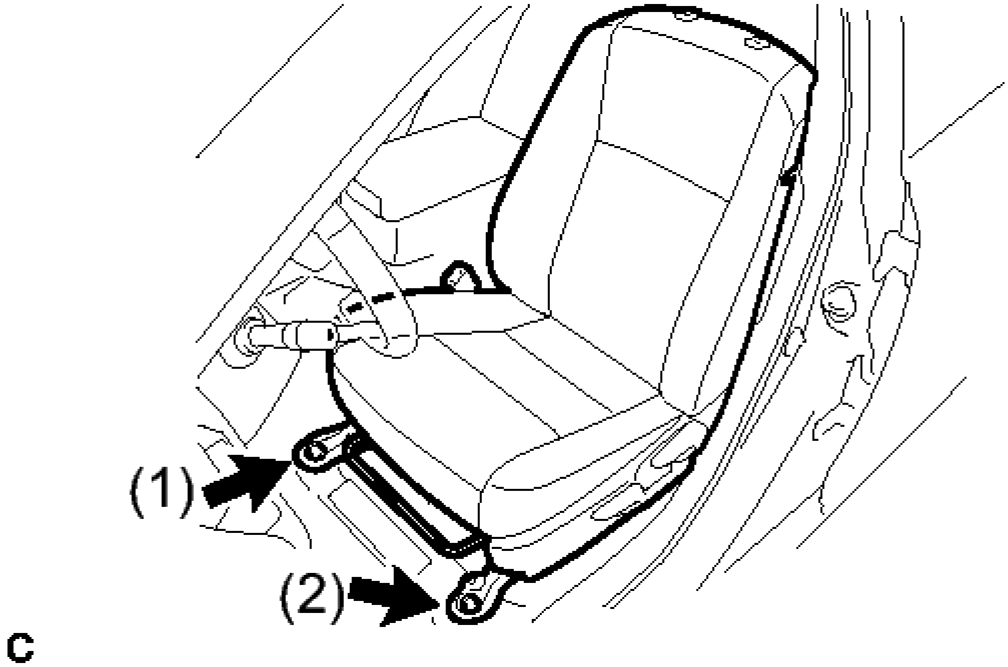

Fig. 164: Locating Front Seat Assembly Front Bolts With Tightening Sequence
Courtesy of TOYOTA MOTOR SALES, U.S.A., INC.

Torque: 37 N*m (377 kgf*cm, 27 ft.*lbf)

NOTE: Tighten the bolts in the order indicated in the illustration.

    f. Lift up the seat track adjusting handle and move the seat to the foremost position.
    g. Tighten the 2 bolts on the rear side of the seat.

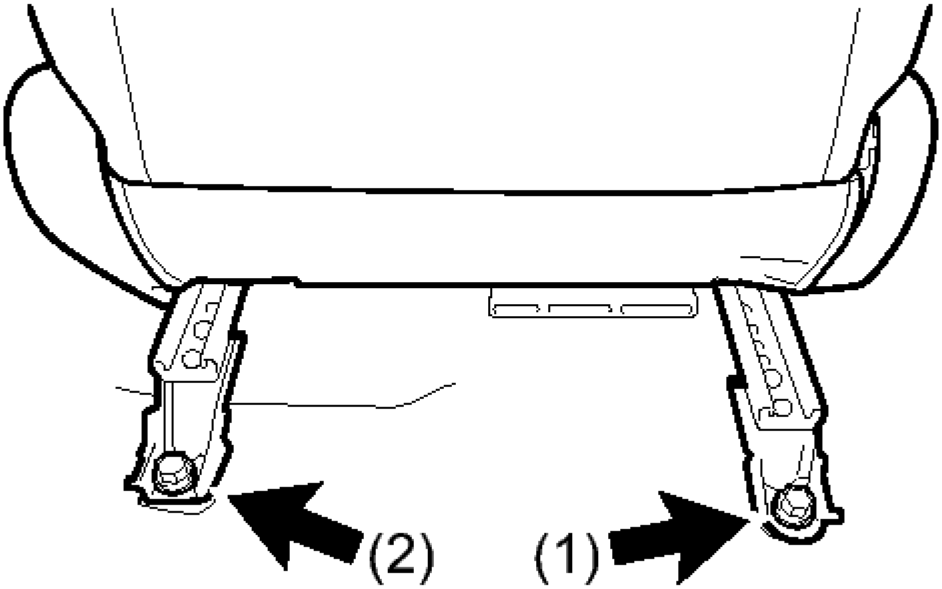

Fig. 165: Locating Front Seat Assembly Rear Bolts With Tightening Sequence
Courtesy of TOYOTA MOTOR SALES, U.S.A., INC.

Torque: 37 N*m (377 kgf*cm, 27 ft.*lbf)

NOTE: **Tighten the bolts in the order indicated in the illustration.**

2. **INSPECT SEAT SLIDE ADJUSTER LOCKS**
   1. During the sliding operation of the front seat, check that the left and right adjusters move together smoothly and lock simultaneously. If the seat adjusters do not lock simultaneously, loosen the seat installation bolts to adjust the adjuster position.
3. **INSTALL REAR INNER SEAT TRACK BRACKET COVER**
   1. Lift up the seat track adjusting handle and move the seat to the foremost position.
   2. Engage the 2 claws to install the rear inner seat track bracket cover.
4. **INSTALL REAR OUTER SEAT TRACK BRACKET COVER**
   1. Engage the 2 claws to install the rear outer seat track bracket cover.
5. **INSTALL FRONT SEAT HEADREST ASSEMBLY**
6. **CONNECT CABLE TO NEGATIVE BATTERY TERMINAL**

NOTE: **When disconnecting the cable, some systems need to be initialized after the cable is reconnected. Refer to INITIALIZATION .**

7. **PERFORM ZERO POINT CALIBRATION AND SENSITIVITY CHECK (for Front Passenger Side)**

Refer to **INITIALIZATION** .

8. **INSPECT SRS WARNING LIGHT**

   For Separate Type Yaw Rate Sensor: Refer to **DIAGNOSIS SYSTEM** .

   For Built-in Type Yaw Rate Sensor: Refer to **DIAGNOSIS SYSTEM** .

FRONT SEAT ASSEMBLY (FOR SIA MADE POWER SEAT)

COMPONENTS

ILLUSTRATION

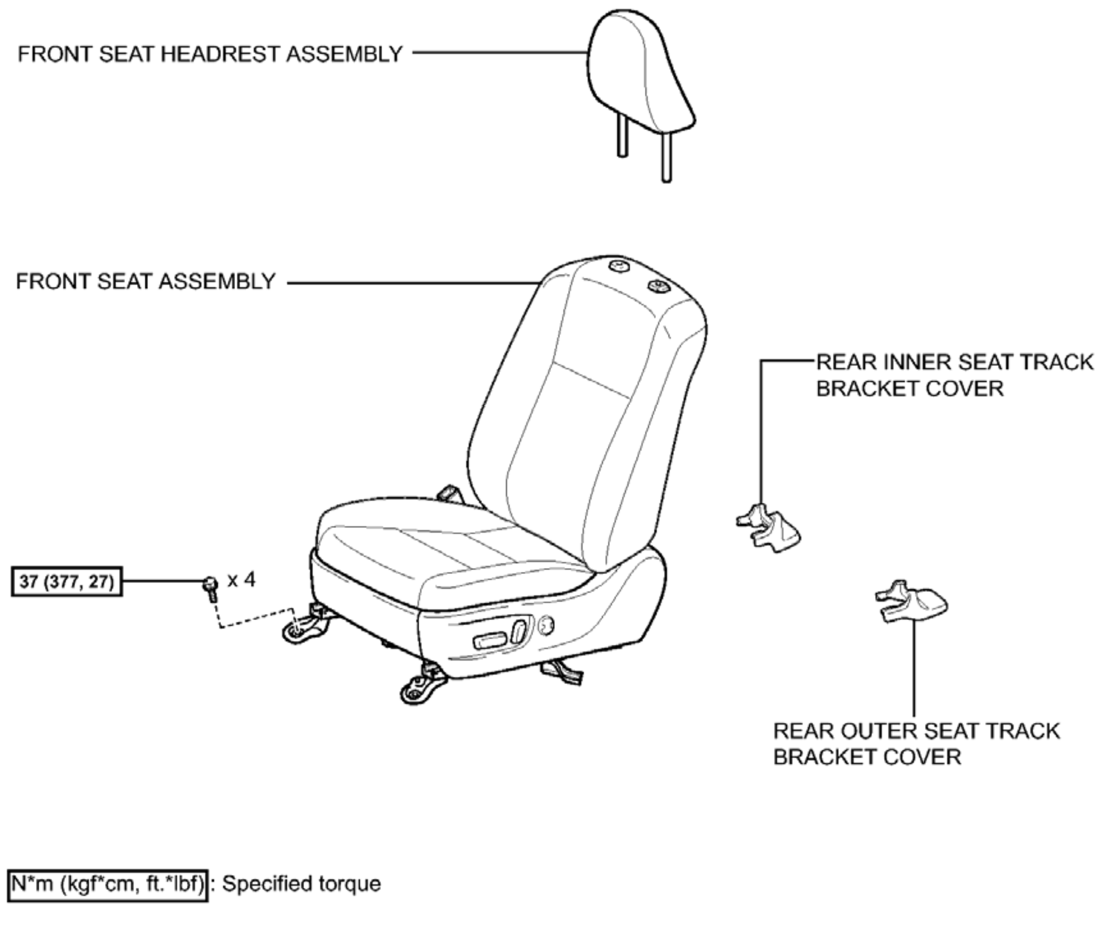
FRONT SEAT HEADREST ASSEMBLY
FRONT SEAT ASSEMBLY
REAR INNER SEAT TRACK BRACKET COVER
37 (377, 27)
x 4
REAR OUTER SEAT TRACK BRACKET COVER
N*m (kgf*cm, ft.*lbf): Specified torque
c

Fig. 166: Identifying Front Seat Assembly (For SIA Made Power Seat) Replacement Components With Torque Specifications (1 Of 7)
Courtesy of TOYOTA MOTOR SALES, U.S.A., INC.

ILLUSTRATION

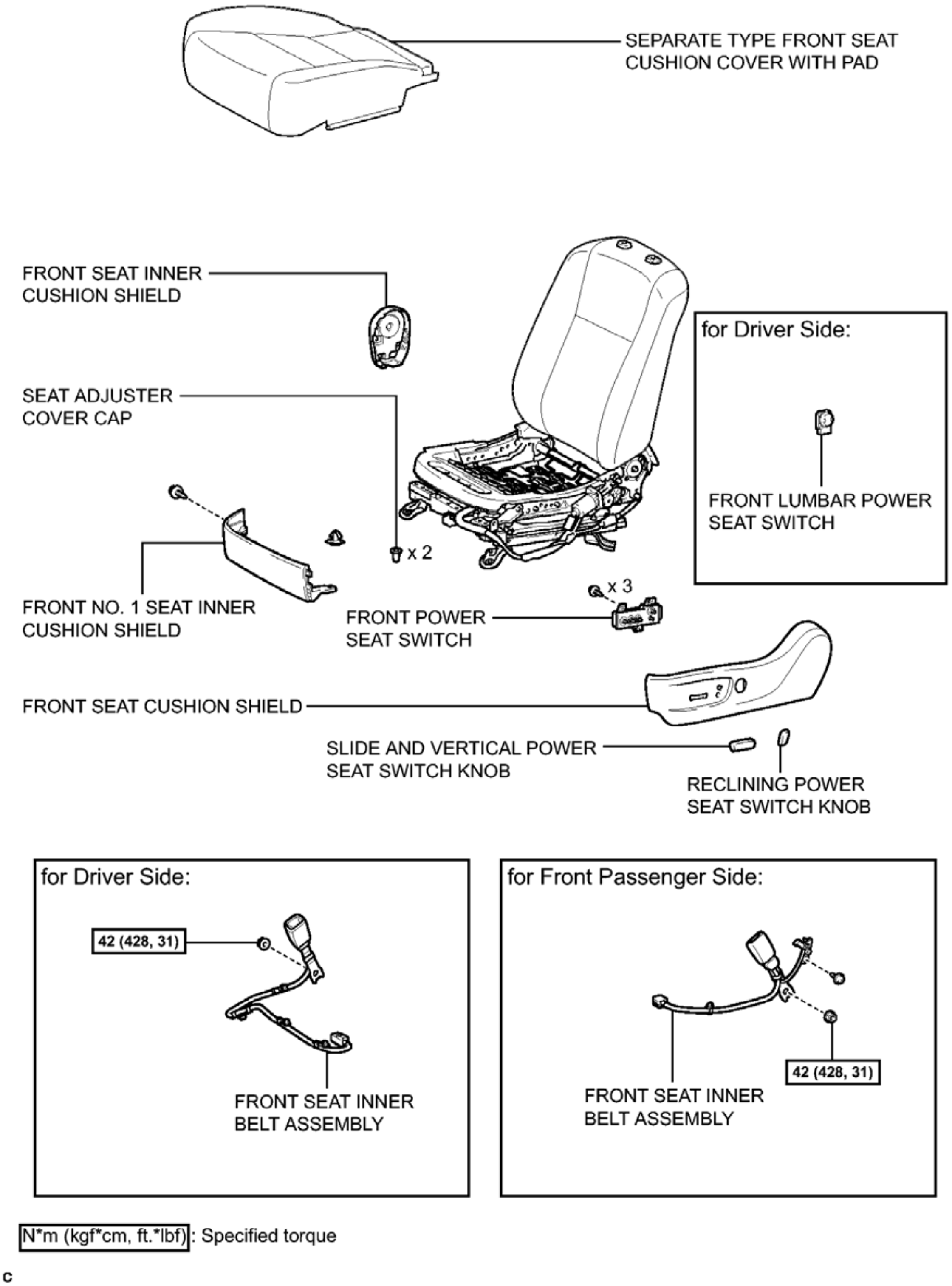
SEPARATE TYPE FRONT SEAT CUSHION COVER WITH PAD
FRONT SEAT INNER CUSHION SHIELD
for Driver Side:
FRONT LUMBAR POWER SEAT SWITCH
SEAT ADJUSTER COVER CAP
x 2
FRONT NO. 1 SEAT INNER CUSHION SHIELD
x 3
FRONT POWER SEAT SWITCH
FRONT SEAT CUSHION SHIELD
SLIDE AND VERTICAL POWER SEAT SWITCH KNOB
RECLINING POWER SEAT SWITCH KNOB
for Driver Side:
42 (428, 31)
FRONT SEAT INNER BELT ASSEMBLY
for Front Passenger Side:
42 (428, 31)
FRONT SEAT INNER BELT ASSEMBLY
N*m (kgf*cm, ft.*lbf): Specified torque
c

Fig. 167: Identifying Front Seat Assembly (For SIA Made Power Seat) Replacement Components With Torque Specifications (2 Of 7)

Courtesy of TOYOTA MOTOR SALES, U.S.A., INC.

ILLUSTRATION

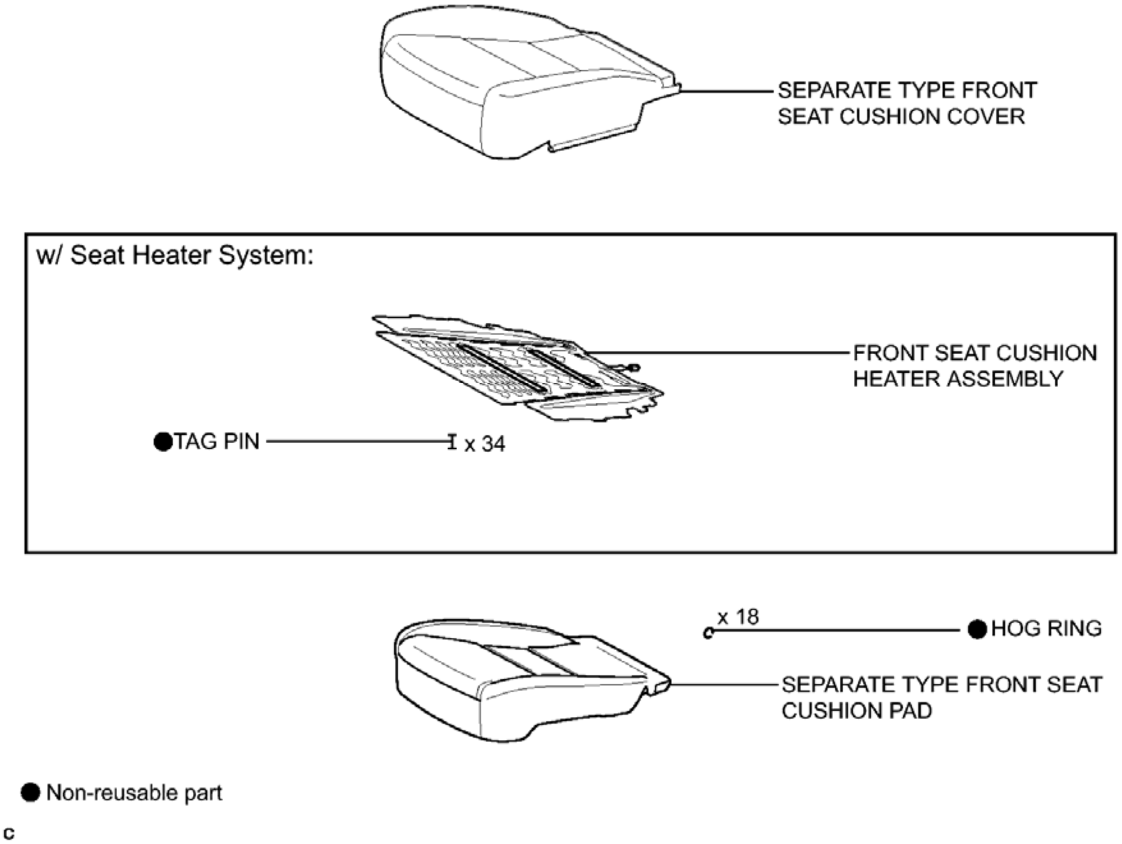
SEPARATE TYPE FRONT SEAT CUSHION COVER
w/ Seat Heater System:
FRONT SEAT CUSHION HEATER ASSEMBLY
●TAG PIN
x 34
x 18
●HOG RING
SEPARATE TYPE FRONT SEAT CUSHION PAD
● Non-reusable part
c

Fig. 168: Identifying Front Seat Assembly (For SIA Made Power Seat) Replacement Components (3 Of 7)
Courtesy of TOYOTA MOTOR SALES, U.S.A., INC.

ILLUSTRATION

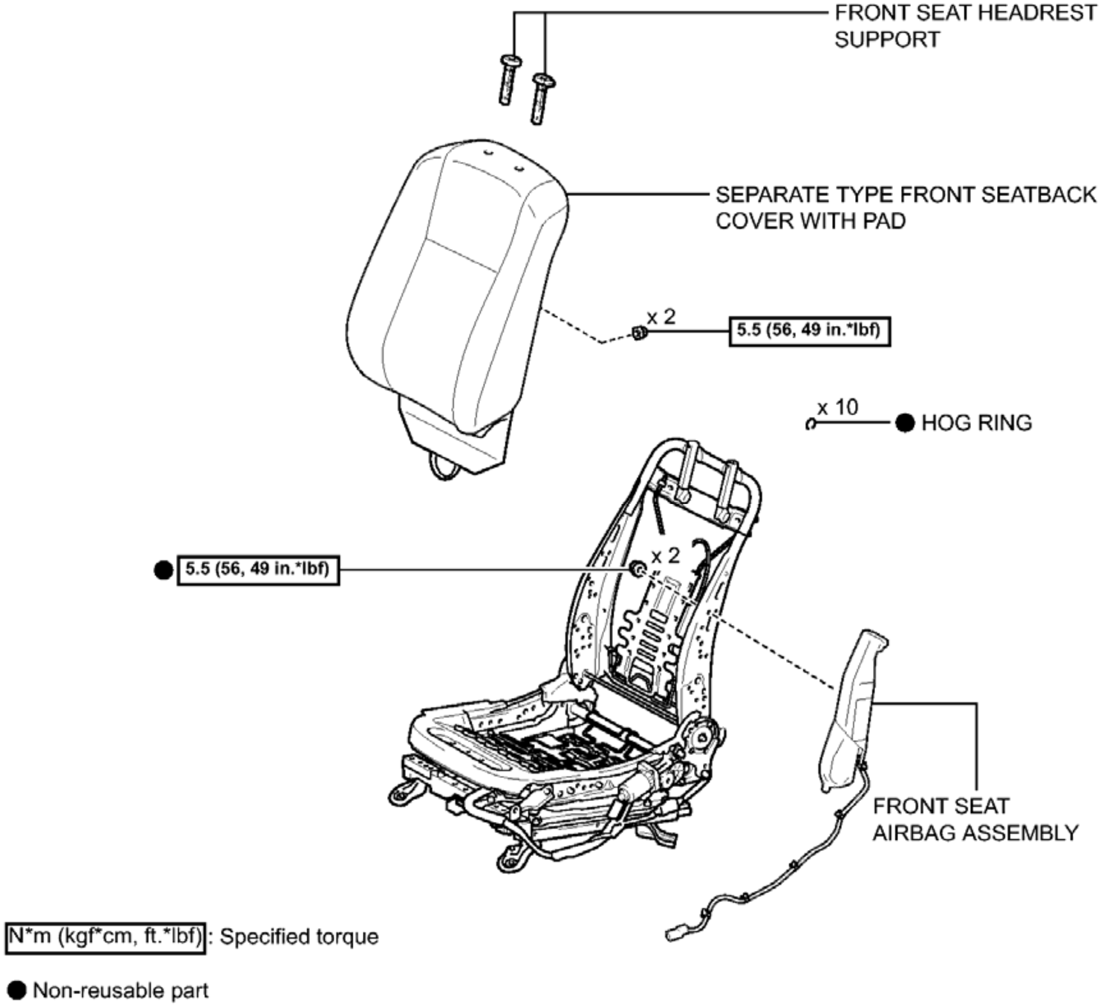
FRONT SEAT HEADREST SUPPORT
SEPARATE TYPE FRONT SEATBACK COVER WITH PAD
x 2
5.5 (56, 49 in.*lbf)
x 10
● HOG RING
● 5.5 (56, 49 in.*lbf)
x 2
FRONT SEAT AIRBAG ASSEMBLY
N*m (kgf*cm, ft.*lbf) : Specified torque
● Non-reusable part

c

Fig. 169: Identifying Front Seat Assembly (For SIA Made Power Seat) Replacement Components With Torque Specifications (4 Of 7)
Courtesy of TOYOTA MOTOR SALES, U.S.A., INC.

ILLUSTRATION

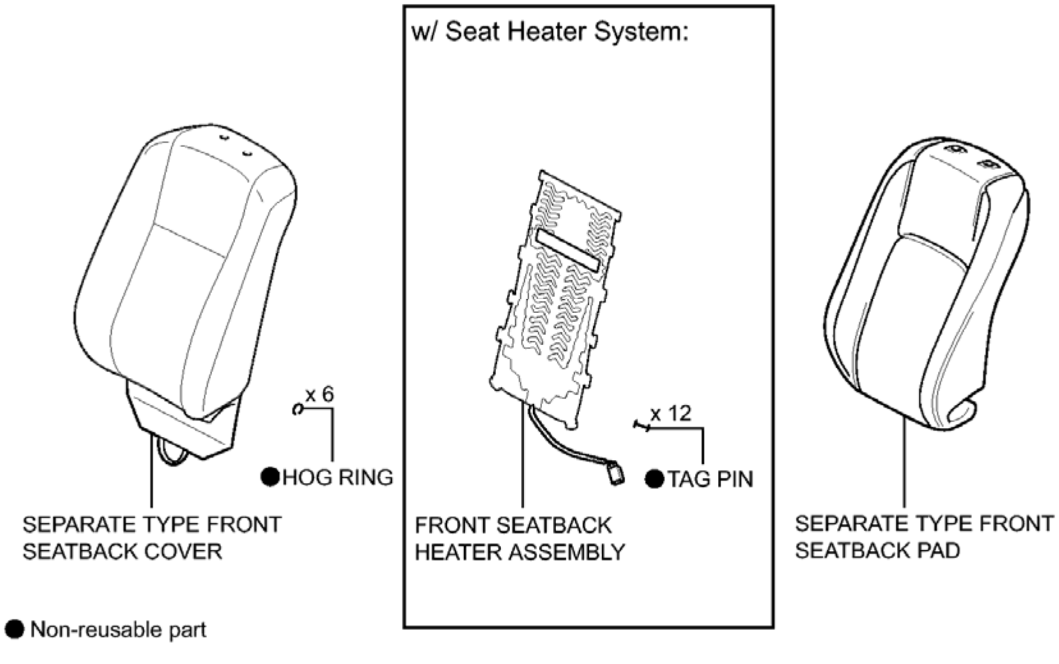
w/ Seat Heater System:
x 6
●HOG RING
SEPARATE TYPE FRONT SEATBACK COVER
FRONT SEATBACK HEATER ASSEMBLY
x 12
●TAG PIN
SEPARATE TYPE FRONT SEATBACK PAD
● Non-reusable part
c

Fig. 170: Identifying Front Seat Assembly (For SIA Made Power Seat) Replacement Components (5 Of 7)
Courtesy of TOYOTA MOTOR SALES, U.S.A., INC.

ILLUSTRATION

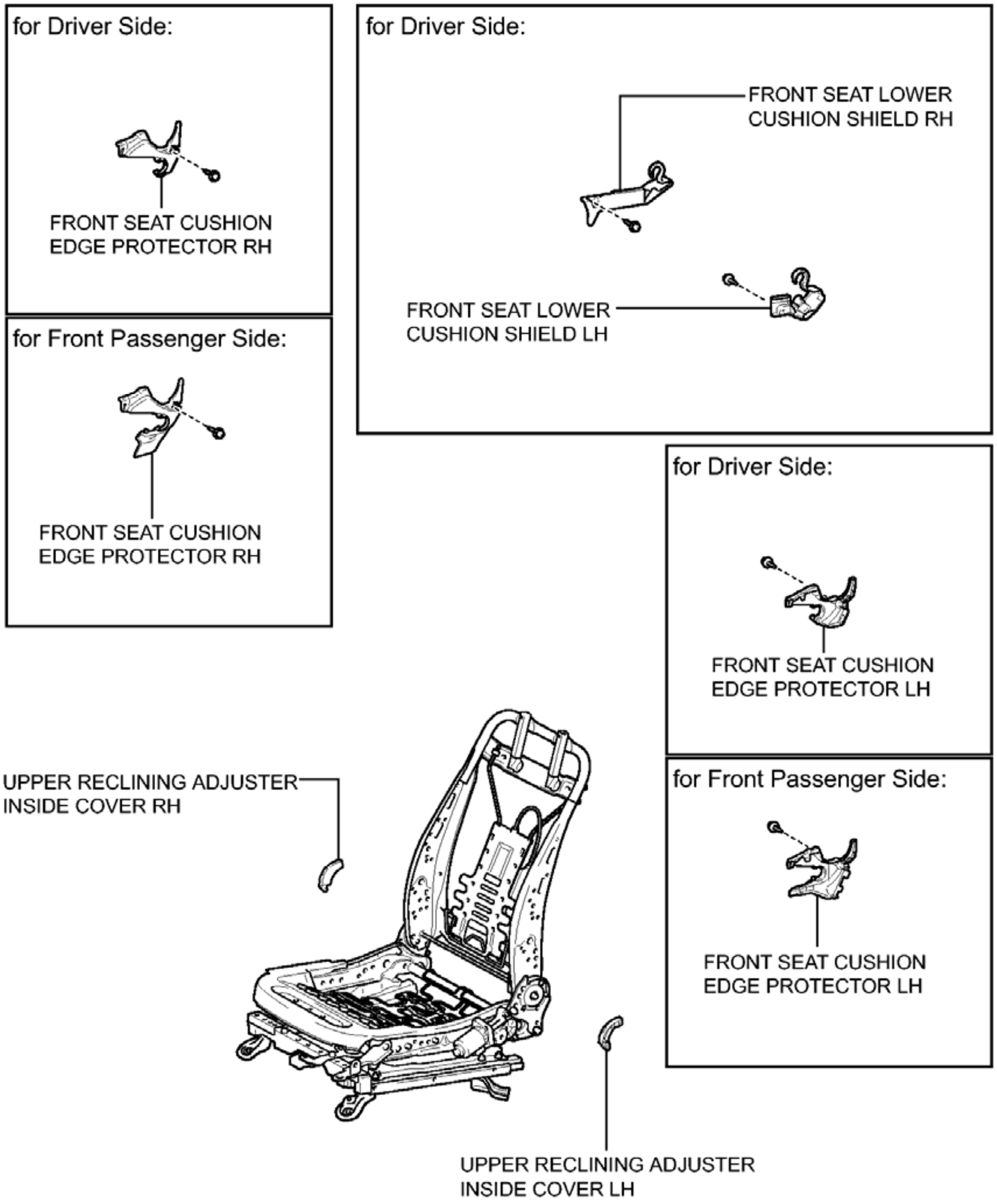
for Driver Side:
FRONT SEAT CUSHION
EDGE PROTECTOR RH
for Front Passenger Side:
FRONT SEAT CUSHION
EDGE PROTECTOR RH
for Driver Side:
FRONT SEAT LOWER
CUSHION SHIELD RH
FRONT SEAT LOWER
CUSHION SHIELD LH
for Driver Side:
FRONT SEAT CUSHION
EDGE PROTECTOR LH
for Front Passenger Side:
FRONT SEAT CUSHION
EDGE PROTECTOR LH
UPPER RECLINING ADJUSTER
INSIDE COVER RH
UPPER RECLINING ADJUSTER
INSIDE COVER LH

c

Fig. 171: Identifying Front Seat Assembly (For SIA Made Power Seat) Replacement Components (6 Of 7)
Courtesy of TOYOTA MOTOR SALES, U.S.A., INC.

ILLUSTRATION

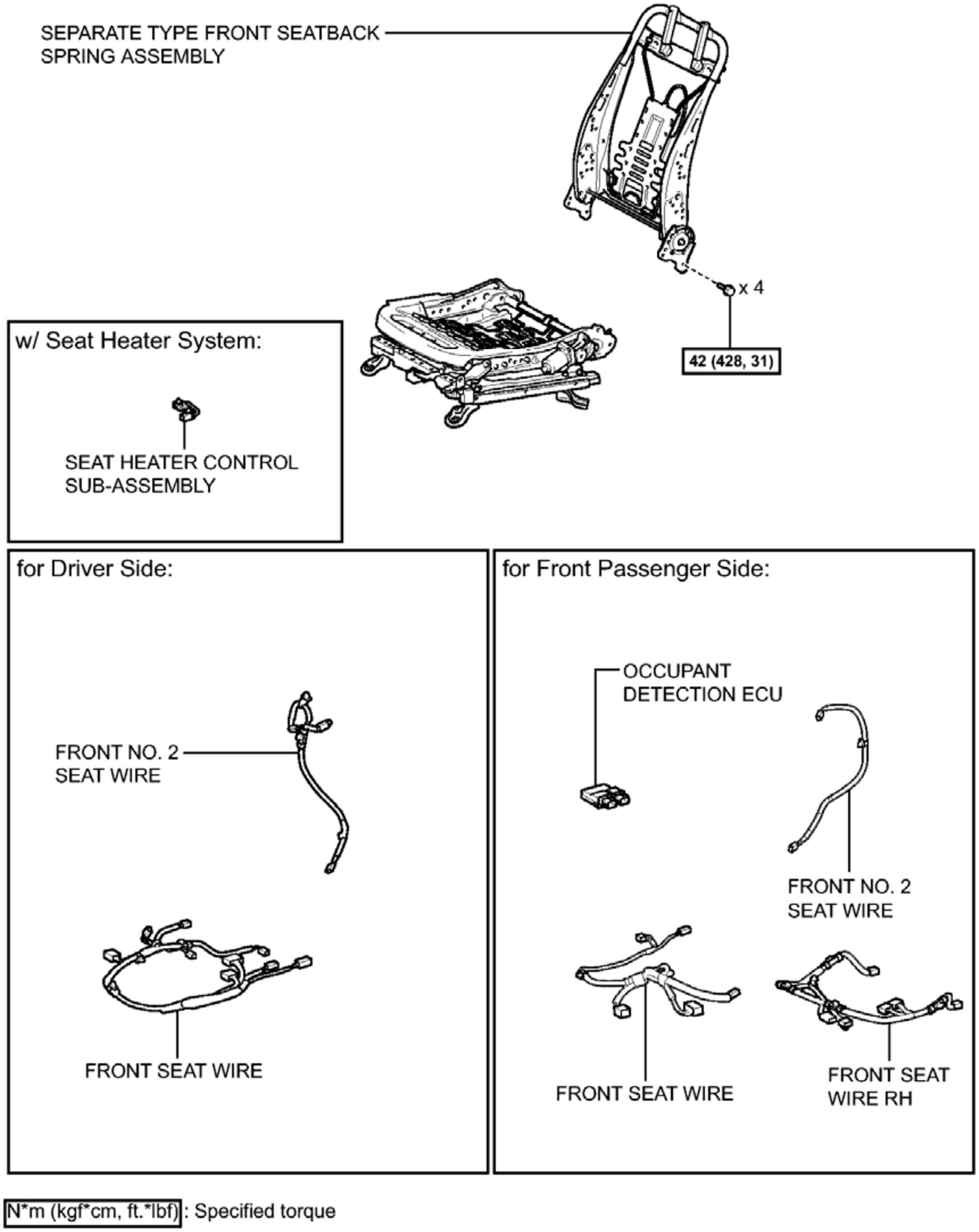
SEPARATE TYPE FRONT SEATBACK SPRING ASSEMBLY
x 4
42 (428, 31)
w/ Seat Heater System:
SEAT HEATER CONTROL SUB-ASSEMBLY
for Driver Side:
FRONT NO. 2 SEAT WIRE
FRONT SEAT WIRE
for Front Passenger Side:
OCCUPANT DETECTION ECU
FRONT NO. 2 SEAT WIRE
FRONT SEAT WIRE
FRONT SEAT WIRE RH
N*m (kgf*cm, ft.*lbf) : Specified torque

c

Fig. 172: Identifying Front Seat Assembly (For SIA Made Power Seat) Replacement Components With Torque Specifications (7 Of 7)

Courtesy of TOYOTA MOTOR SALES, U.S.A., INC.

REMOVAL

REMOVAL

1. **PRECAUTION**

WARNING:

- **Be sure to read Precaution thoroughly before servicing.**

  For Separate Type Yaw Rate Sensor: Refer to PRECAUTION .

  For Built-in Type Yaw Rate Sensor: Refer to PRECAUTION .

- **If the side airbag has deployed, replace the front seat airbag assembly, front seatback spring assembly, separate type front seatback pad and separate type front seatback cover with the necessary parts in accordance with the extent of the collision damage.**

NOTE:

- **After turning the ignition switch off, waiting time may be required before disconnecting the cable from the negative (-) battery terminal. Therefore, make sure to read the disconnecting the cable from the negative (-) battery terminal notices before proceeding with work. Refer to PRECAUTION .**

2. **REMOVE FRONT SEAT HEADREST ASSEMBLY**
3. **REMOVE REAR OUTER SEAT TRACK BRACKET COVER**
   a. Operate the slide and vertical power seat switch knob and move the seat to the foremost position.
   b. Disengage the 2 claws to remove the rear outer seat track bracket cover.

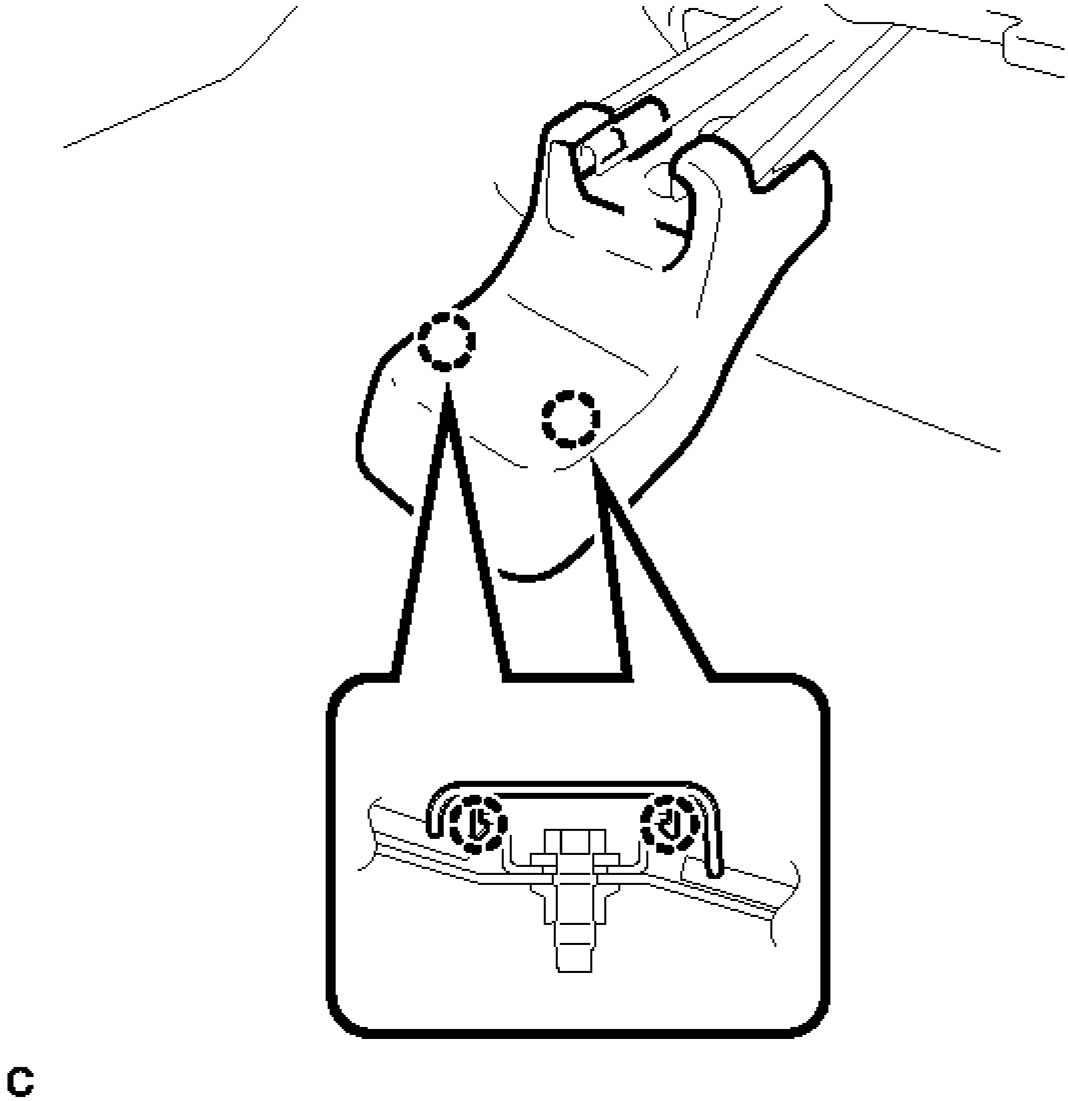

Fig. 173: Locating Rear Outer Seat Track Bracket Cover Claws
Courtesy of TOYOTA MOTOR SALES, U.S.A., INC.

4. **REMOVE REAR INNER SEAT TRACK BRACKET COVER**
    a. Disengage the 2 claws to remove the rear inner seat track bracket cover.

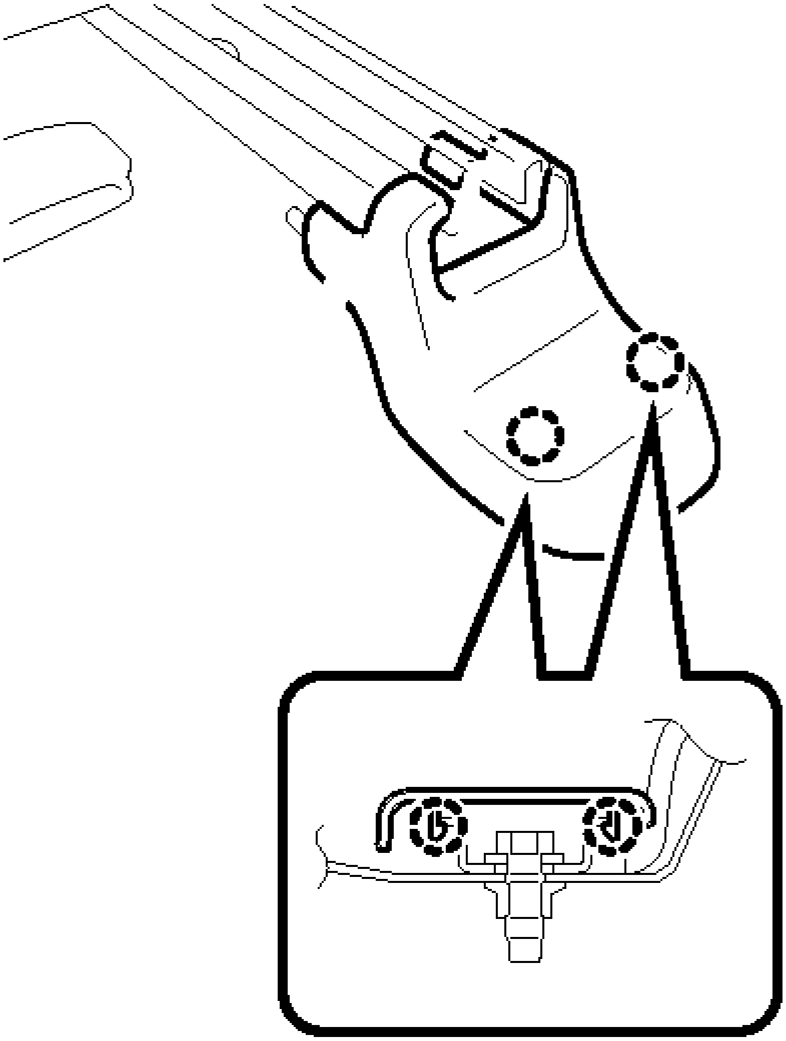

Fig. 174: Locating Rear Inner Seat Track Bracket Cover Claws
Courtesy of TOYOTA MOTOR SALES, U.S.A., INC.

5. **REMOVE FRONT SEAT ASSEMBLY**
    a. Remove the 2 bolts on the rear side of the seat.

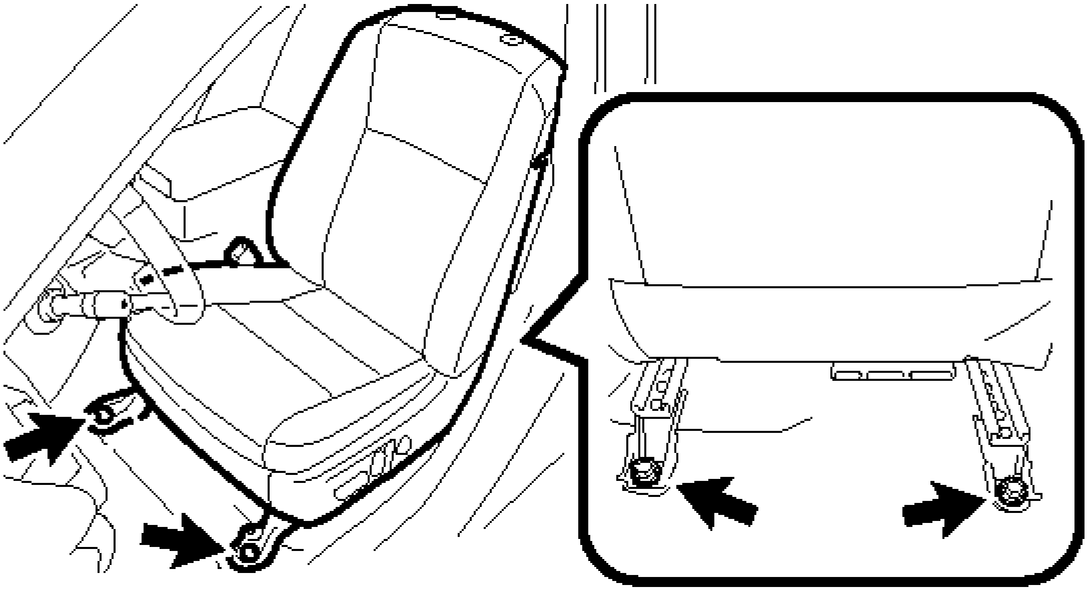

Fig. 175: Locating Front Seat Assembly Bolts
Courtesy of TOYOTA MOTOR SALES, U.S.A., INC.

b. Operate the slide and vertical power seat switch knob and move the seat to the rearmost position.
c. Remove the 2 bolts on the front side of the seat.
d. Operate the slide and vertical power seat switch knob and move the seat to the center position. Then, operate the reclining power seat switch knob and move the seatback to the upright position.
e. Disconnect the cable from the negative (-) battery terminal.

WARNING: **Wait at least 90 seconds after disconnecting the cable from the negative (-) battery terminal to disable the SRS system.**

NOTE: **When disconnecting the cable, some systems need to be initialized after the cable is reconnected. Refer to INITIALIZATION .**

f. Disconnect each connector and clamp under the seat.
g. Remove the front seat assembly.

NOTE: **Be careful not to damage the vehicle body.**

DISASSEMBLY

DISASSEMBLY

1. **REMOVE SEAT ADJUSTER COVER CAP**

a. Remove the 2 seat adjuster cover caps.

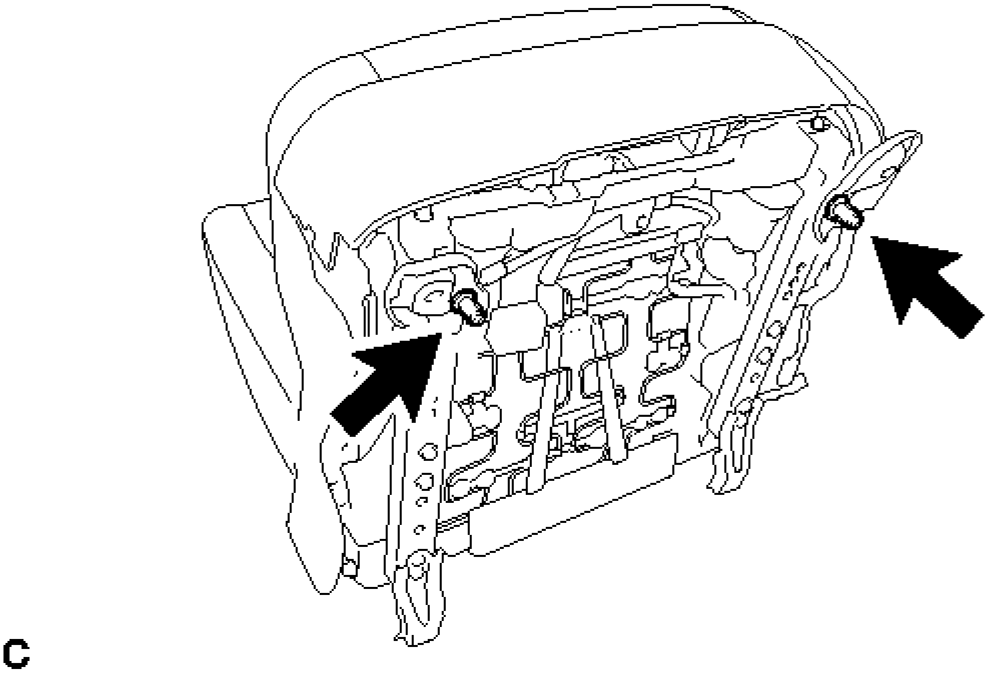

Fig. 176: Locating Seat Adjuster Cover Caps
Courtesy of TOYOTA MOTOR SALES, U.S.A., INC.

2. **REMOVE SLIDE AND VERTICAL POWER SEAT SWITCH KNOB**
    a. Using a moulding remover, disengage the 4 claws to remove the slide and vertical power seat switch knob.

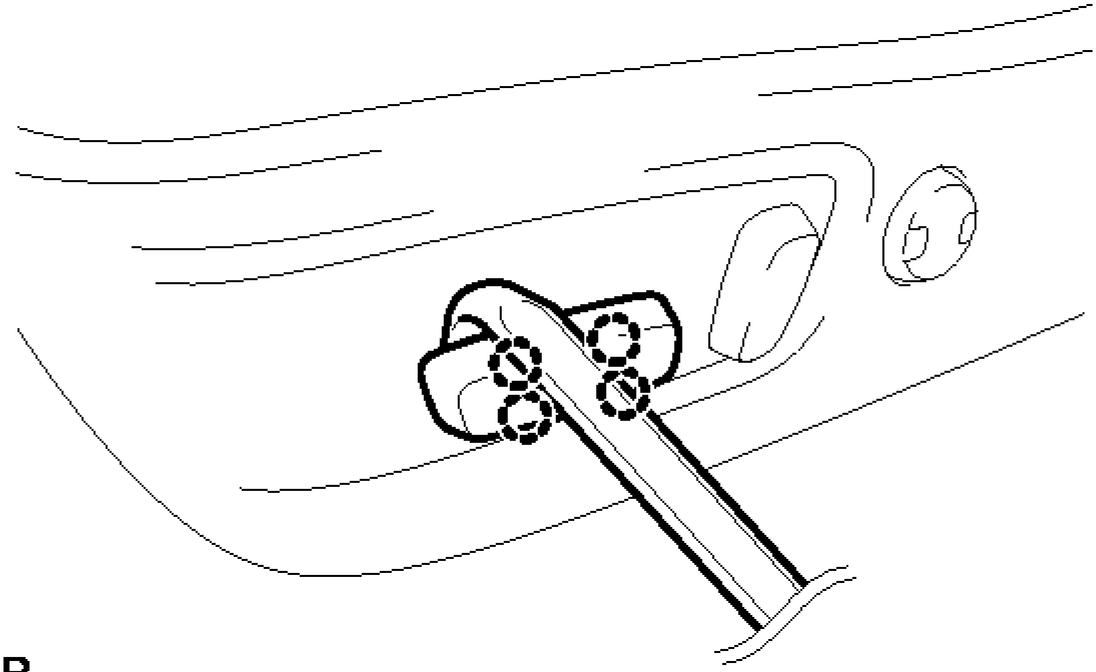

Fig. 177: Removing Slide And Vertical Power Seat Switch Knob
Courtesy of TOYOTA MOTOR SALES, U.S.A., INC.

3. **REMOVE RECLINING POWER SEAT SWITCH KNOB**
    a. Using a moulding remover, disengage the 4 claws to remove the reclining power seat switch knob.

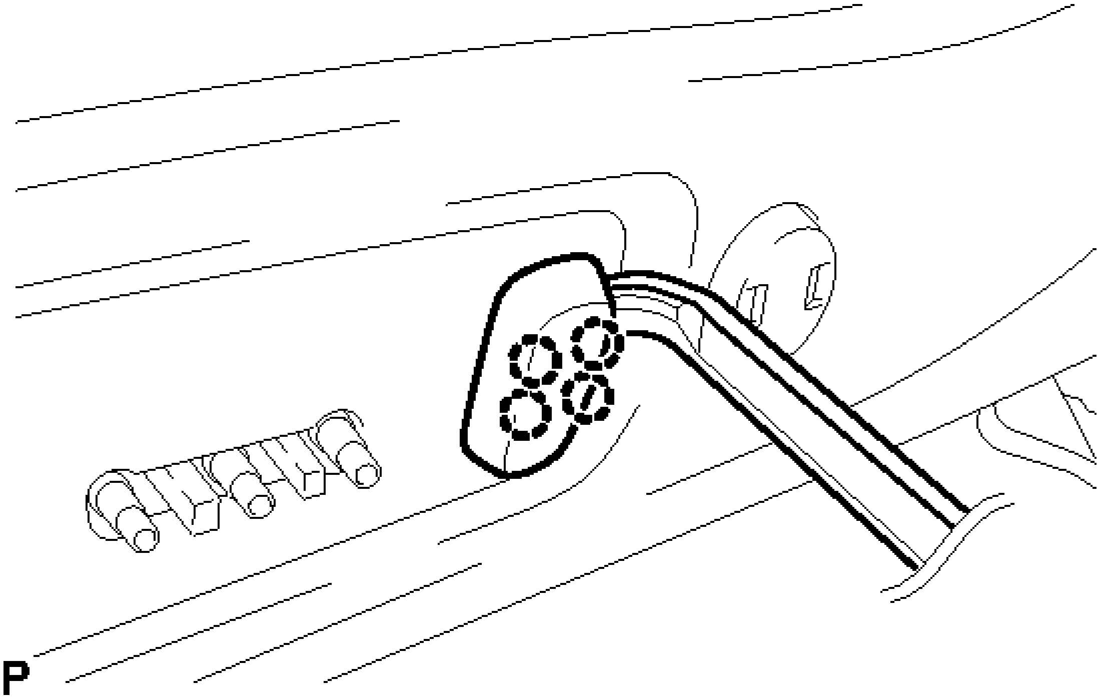

Fig. 178: Removing Reclining Power Seat Switch Knob

Courtesy of TOYOTA MOTOR SALES, U.S.A., INC.

4. **DISCONNECT SEPARATE TYPE FRONT SEATBACK COVER**
    a. Disconnect the rubber band of the separate type front seatback cover.

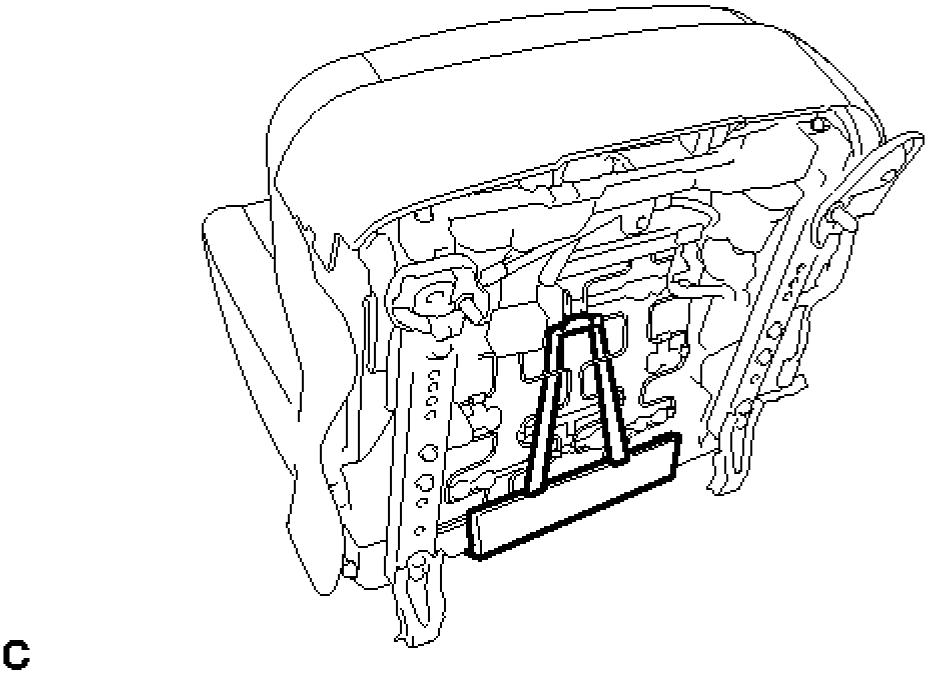

Fig. 179: Identifying Rubber Band Of Front Seatback Cover (For SIA Made Power Seat)
Courtesy of TOYOTA MOTOR SALES, U.S.A., INC.

5. **REMOVE FRONT NO. 1 SEAT INNER CUSHION SHIELD**
    a. Remove the screw.

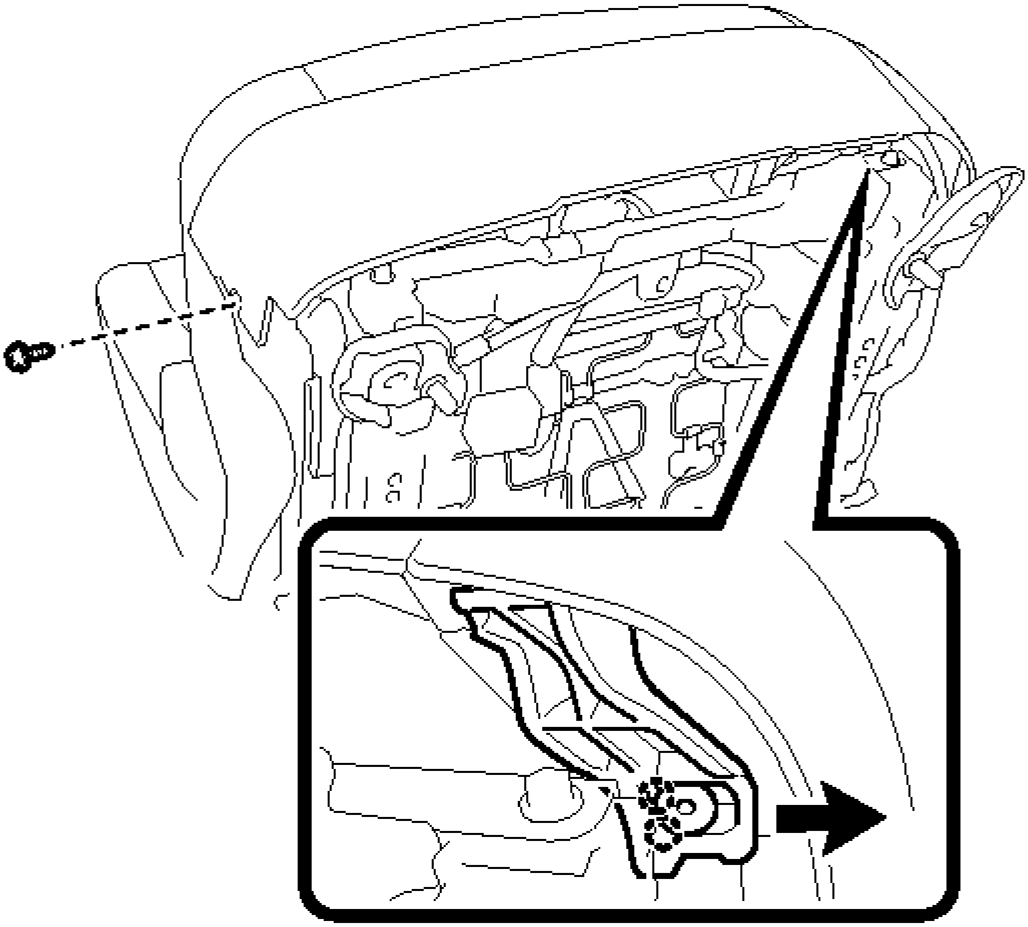

Fig. 180: Removing Front No. 1 Seat Inner Cushion Shield And Fasteners
Courtesy of TOYOTA MOTOR SALES, U.S.A., INC.

b. Disengage the 2 claws to remove the clip from the front No. 1 seat inner cushion shield as shown in the illustration.
c. Disengage the 3 claws and 3 guides to remove the front No. 1 seat inner cushion shield as shown in the illustration.

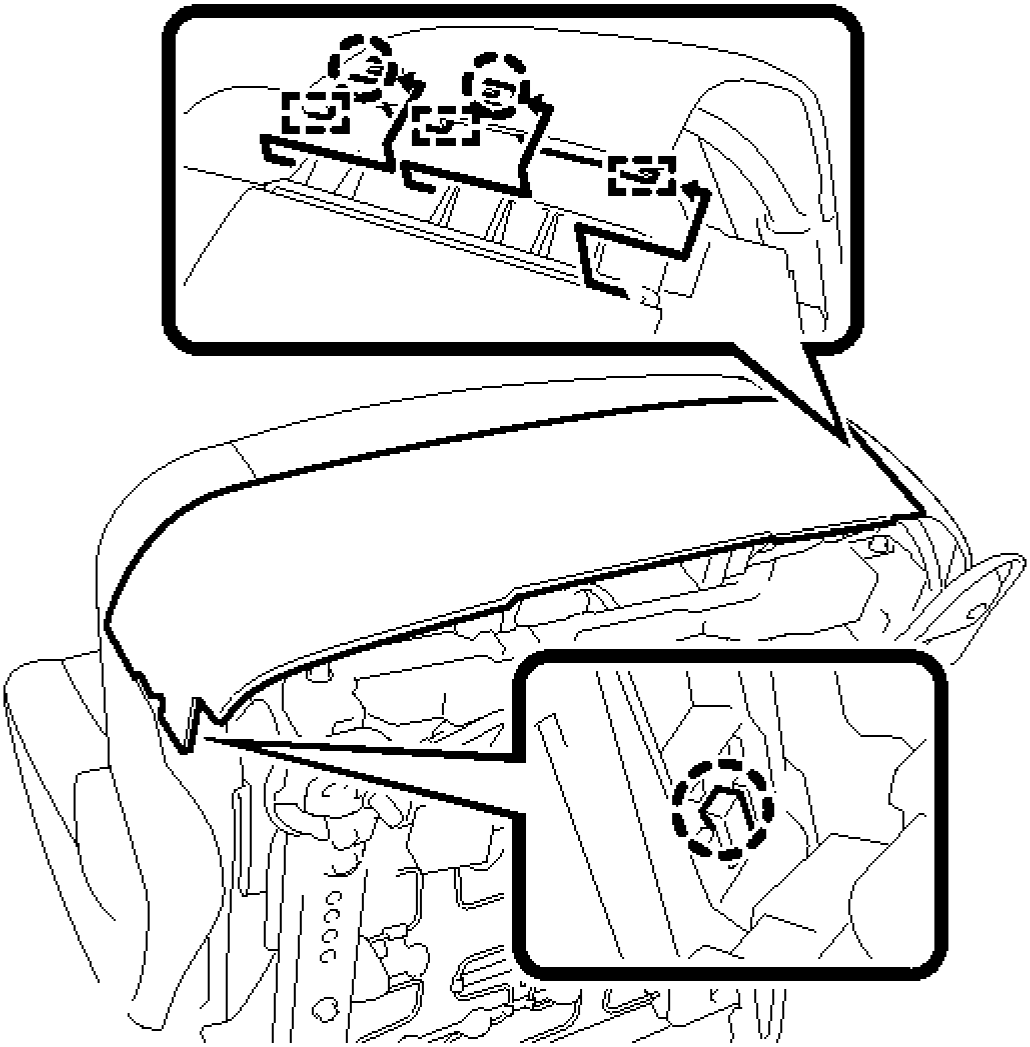

Fig. 181: Locating Front No. 1 Seat Inner Cushion Shield And Fasteners
Courtesy of TOYOTA MOTOR SALES, U.S.A., INC.

d. Using a clip remover, remove the clip.

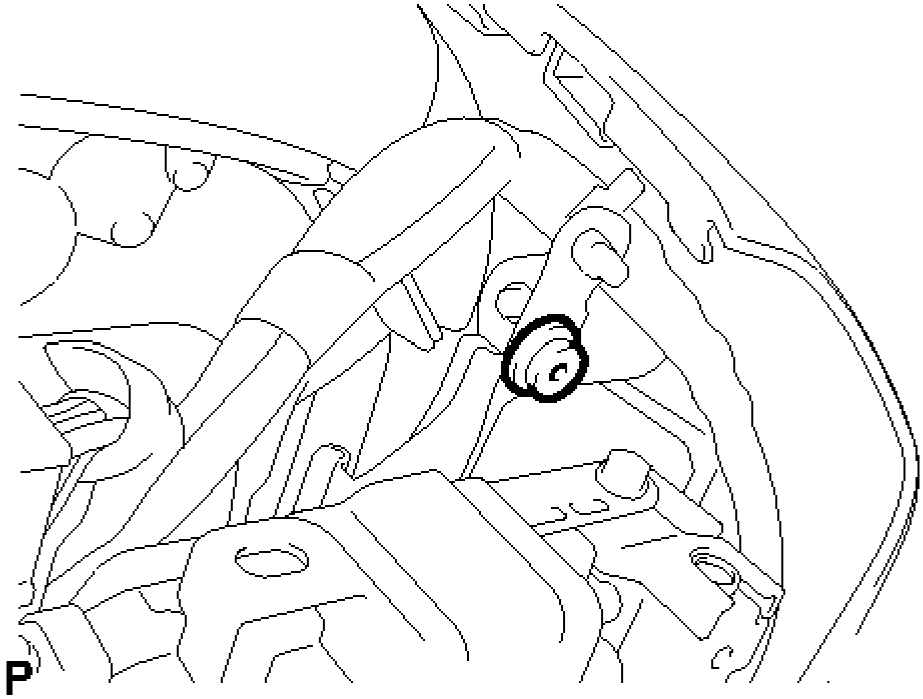

Fig. 182: Identifying Front No. 1 Seat Inner Cushion Shield Clip
Courtesy of TOYOTA MOTOR SALES, U.S.A., INC.

6. **REMOVE FRONT SEAT CUSHION SHIELD (for Driver Side)**
   a. Disengage the 4 claws, 7 guides and clip to remove the front seat cushion shield.

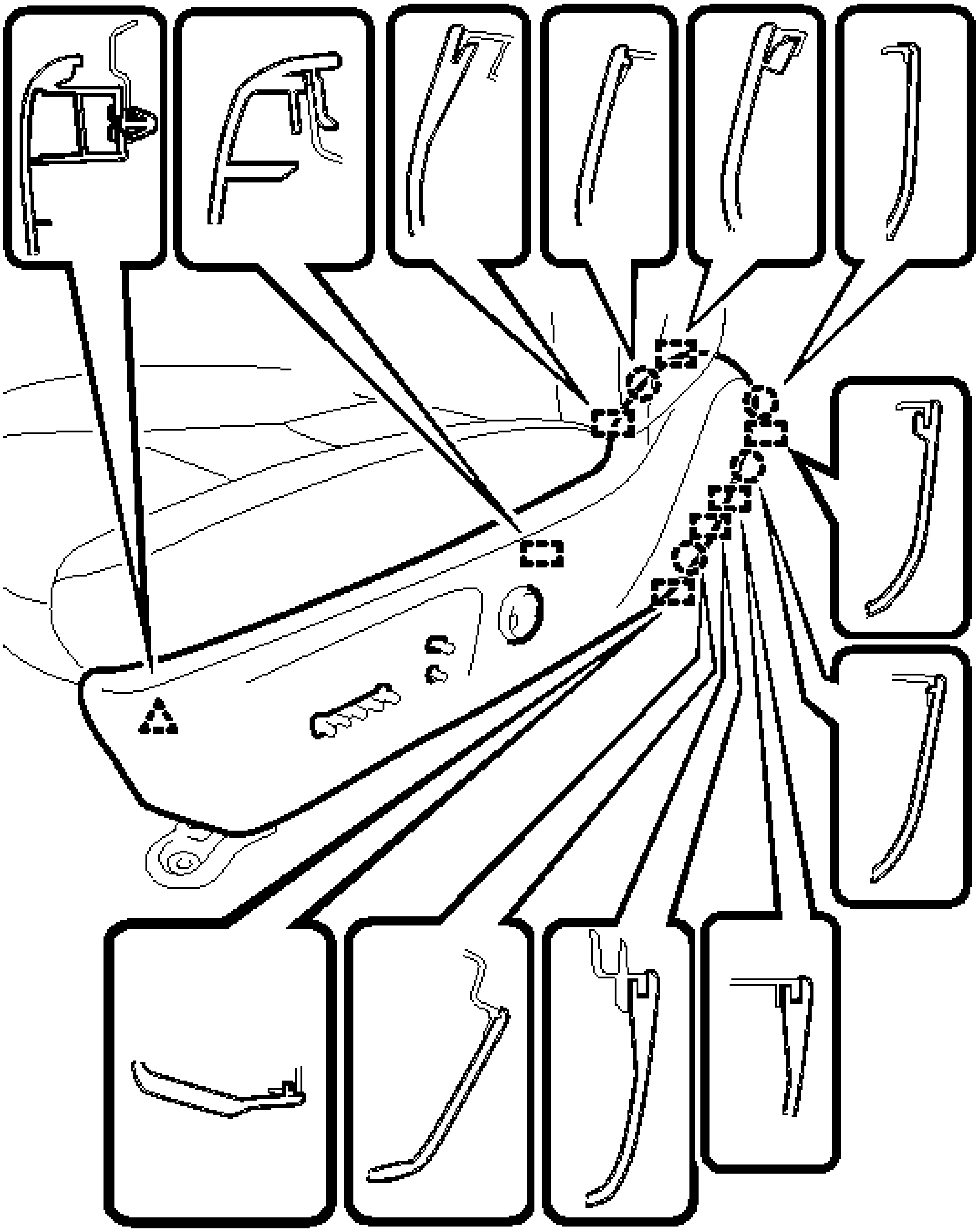

Fig. 183: Identifying Front Seat Cushion Shield (For Driver Side) Fasteners
Courtesy of TOYOTA MOTOR SALES, U.S.A., INC.

b. Disengage the 2 claws and open the wire harness cover.

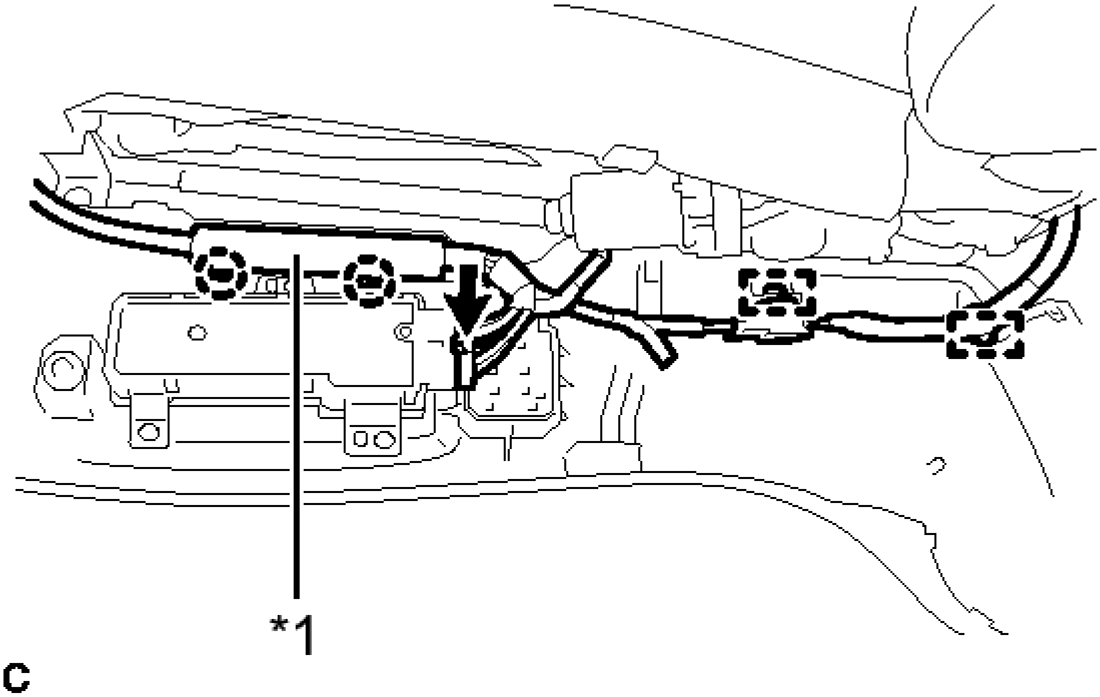

Fig. 184: Identifying Front Power Seat Switch Connector And Wire Harness Claws (For Driver Side)
Courtesy of TOYOTA MOTOR SALES, U.S.A., INC.

TEXT IN ILLUSTRATION

*1	Wire Harness Cover

c. Remove the wire harness from the wire harness cover.
d. Disengage the 2 wire harness clamps.
e. Disconnect the front power seat switch connector.
f. Disconnect the front lumbar power seat switch connector.

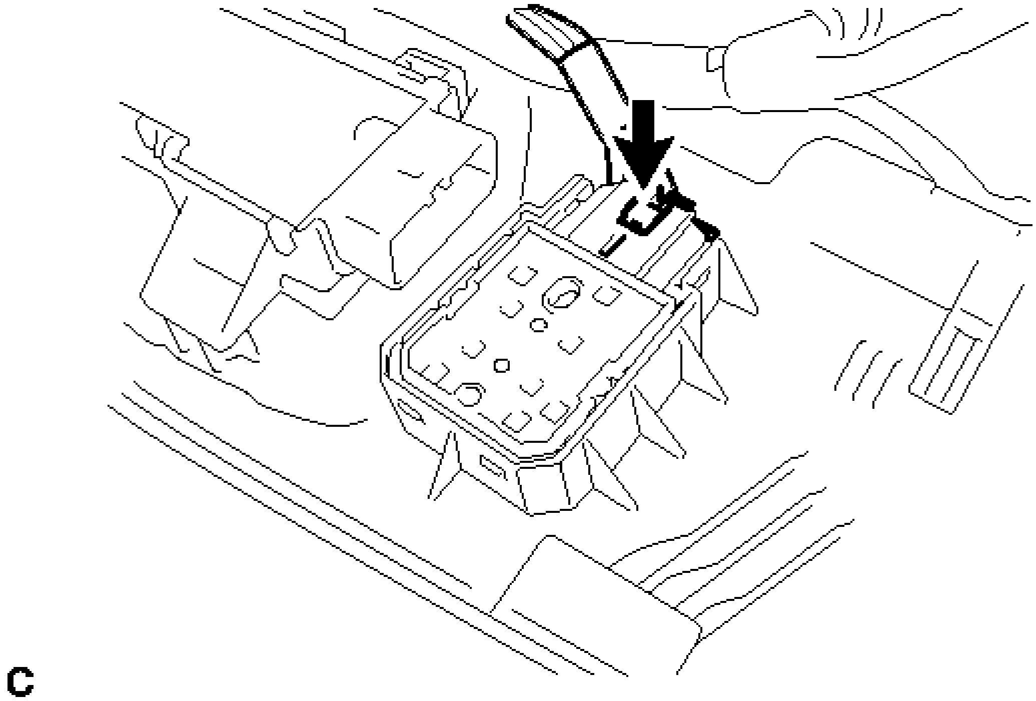

Fig. 185: Locating Front Lumbar Power Seat Switch Connector (For Driver Side)
Courtesy of TOYOTA MOTOR SALES, U.S.A., INC.

7. **REMOVE FRONT SEAT CUSHION SHIELD (for Front Passenger Side)**
    a. Disengage the 4 claws, 8 guides and clip to remove the front seat cushion shield.

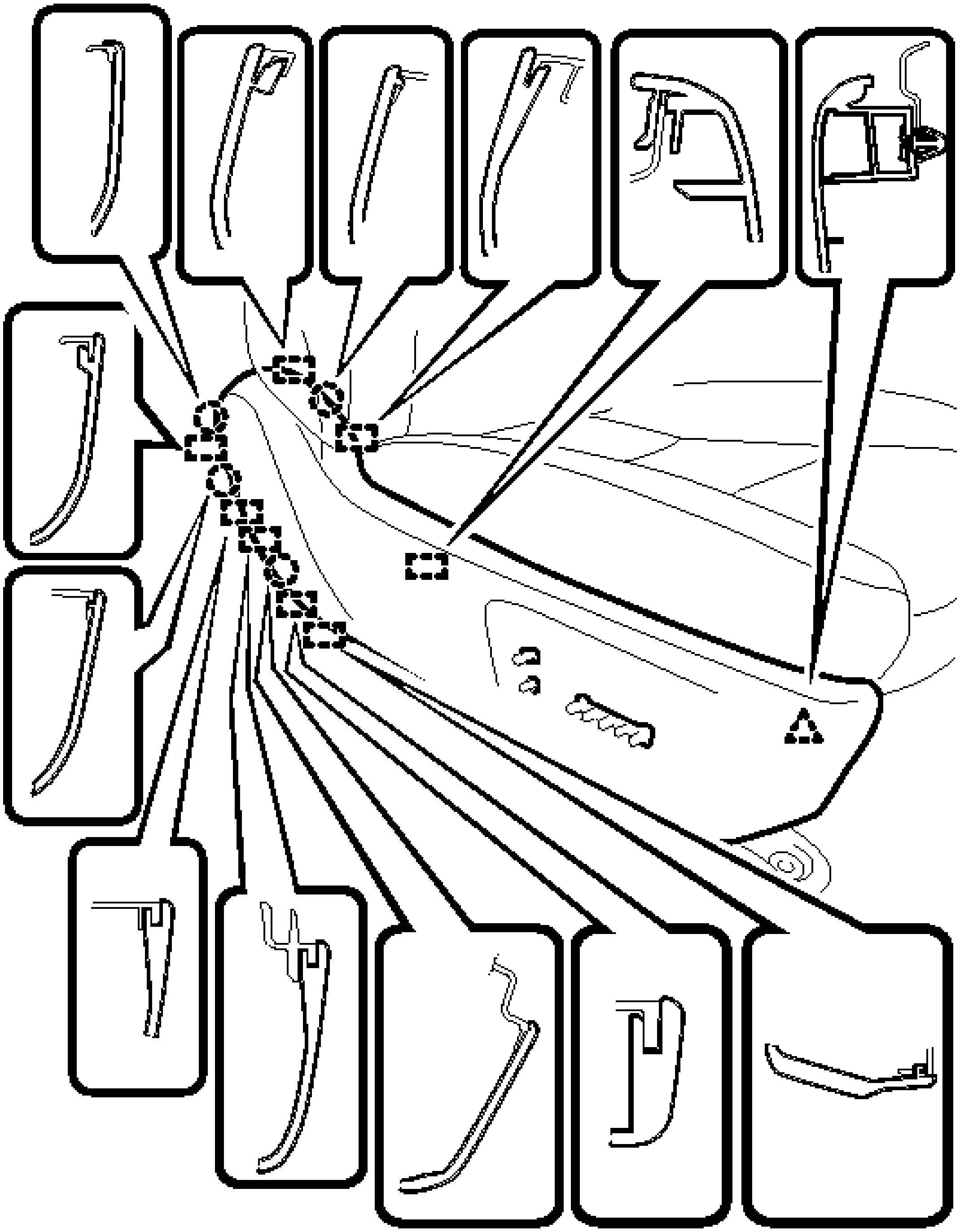

Fig. 186: Identifying Front Seat Cushion Shield (For Front Passenger Side) Fasteners
Courtesy of TOYOTA MOTOR SALES, U.S.A., INC.

b. Disengage the 3 claws and open the wire harness cover.

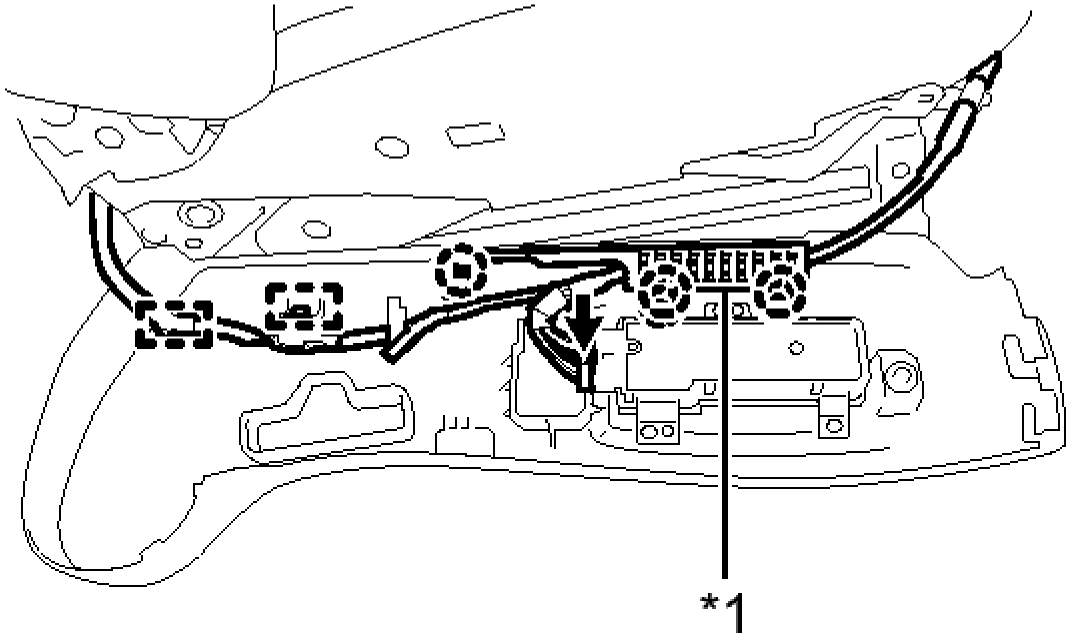

C

Fig. 187: Identifying Front Power Seat Switch Connector And Wire Harness Claws (For Front Passenger Side)
Courtesy of TOYOTA MOTOR SALES, U.S.A., INC.

TEXT IN ILLUSTRATION

*1	Wire Harness Cover

- c. Remove the wire harness from the wire harness cover.
- d. Disengage the 2 wire harness clamps.
- e. Disconnect the front power seat switch connector.

8. **REMOVE FRONT POWER SEAT SWITCH** . See step 14.
9. **REMOVE FRONT LUMBAR POWER SEAT SWITCH (for Driver Side)** . See step 7.
10. **REMOVE FRONT SEAT INNER CUSHION SHIELD (for Driver Side)**
    - a. Disengage the 5 claws and 6 guides to remove the front seat inner cushion shield.

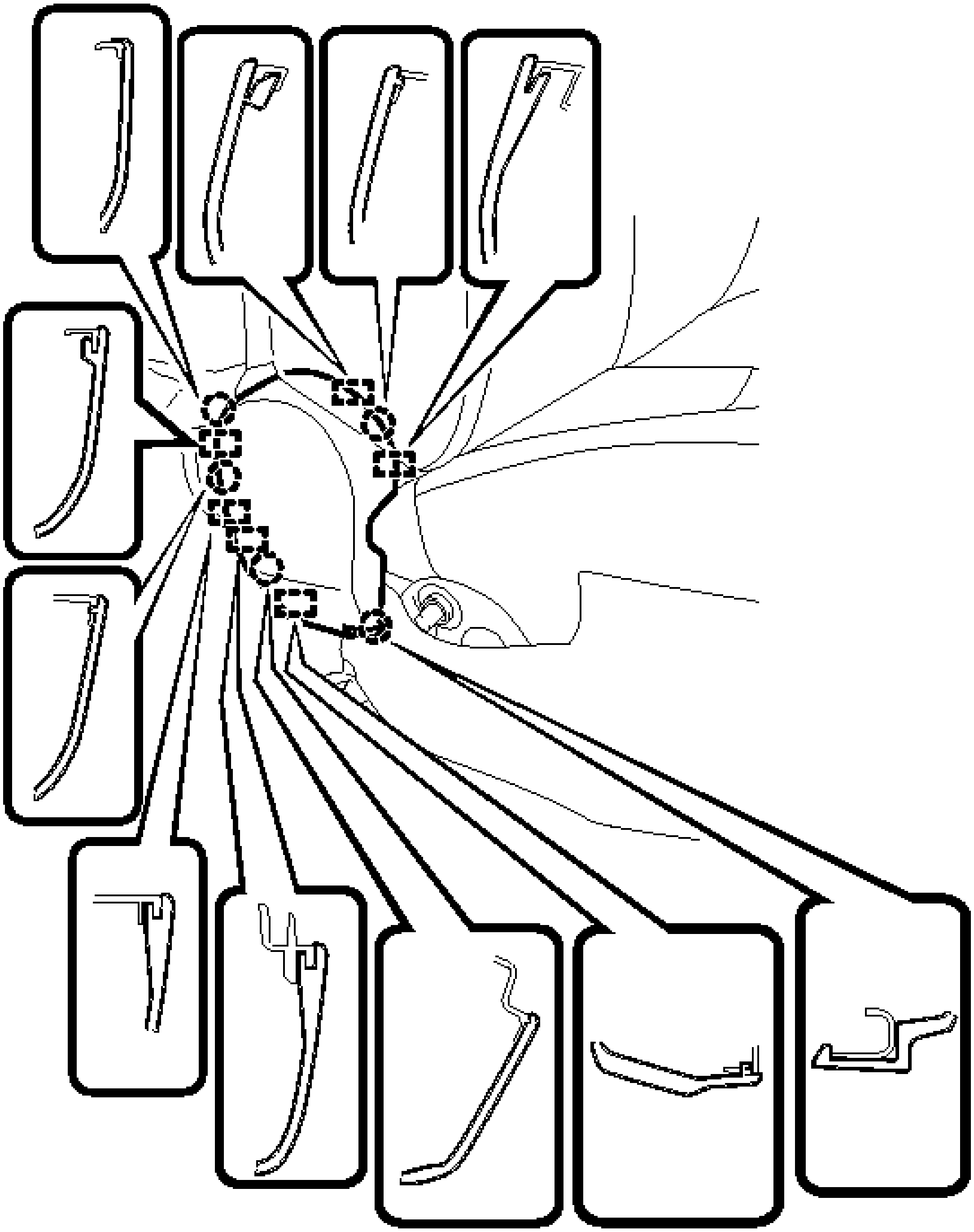

Fig. 188: Locating Front Seat Inner Cushion Shield (For Driver Side) Claws And Guides
Courtesy of TOYOTA MOTOR SALES, U.S.A., INC.

11. **REMOVE FRONT SEAT INNER CUSHION SHIELD (for Front Passenger Side)**
    a. Disengage the 5 claws and 7 guides to remove the front seat inner cushion shield.

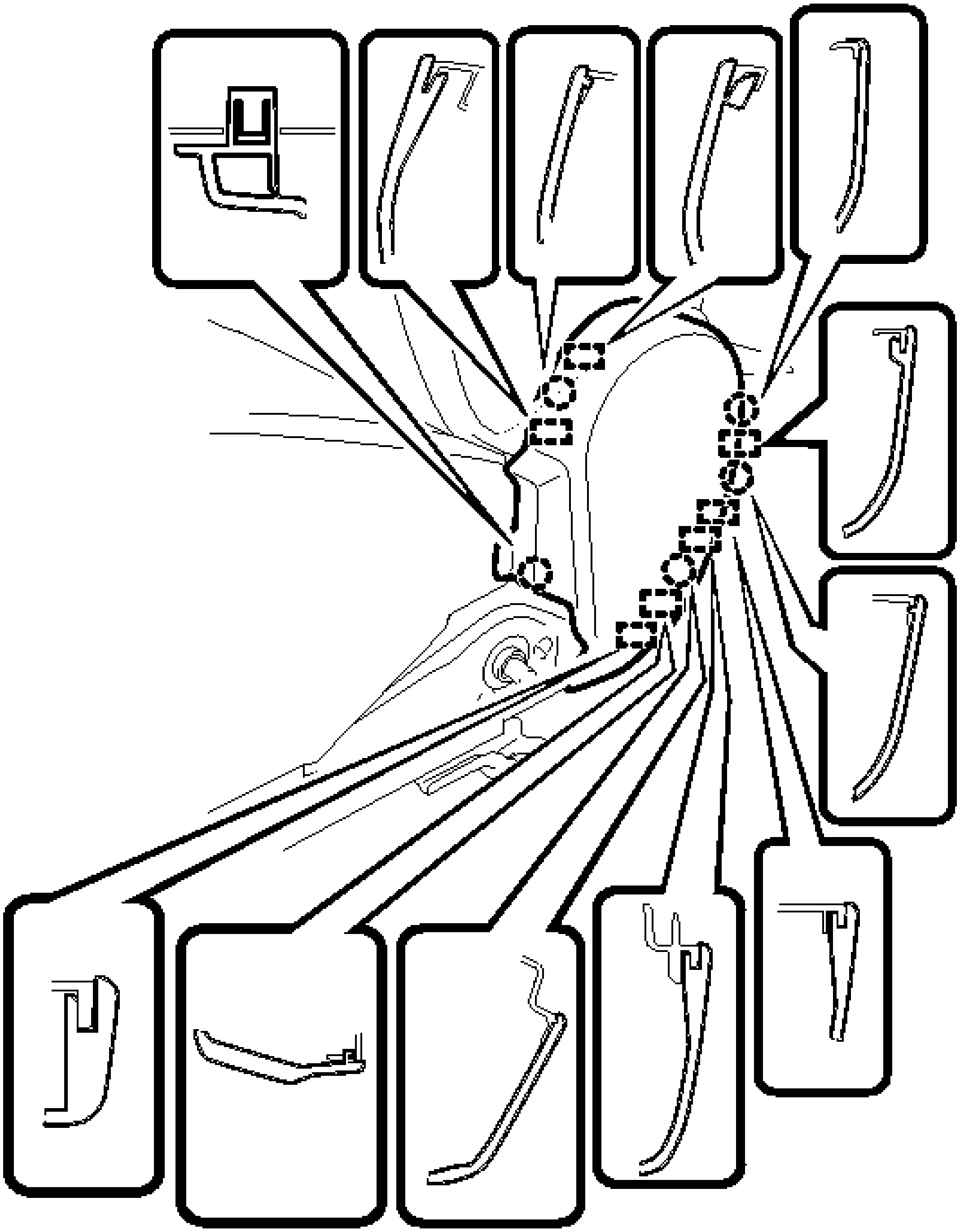

Fig. 189: Locating Front Seat Inner Cushion Shield (For Passenger Side) Claws And Guides
Courtesy of TOYOTA MOTOR SALES, U.S.A., INC.

12. **REMOVE FRONT SEAT INNER BELT ASSEMBLY (for Driver Side)** . Refer to **REMOVAL - Step 2** .

13. **REMOVE FRONT SEAT INNER BELT ASSEMBLY (for Front Passenger Side)** . Refer to **REMOVAL - Step 4** .
14. **REMOVE SEPARATE TYPE FRONT SEAT CUSHION COVER WITH PAD**
    a. Disengage the fastener and separate the front seat airbag assembly wire harness.

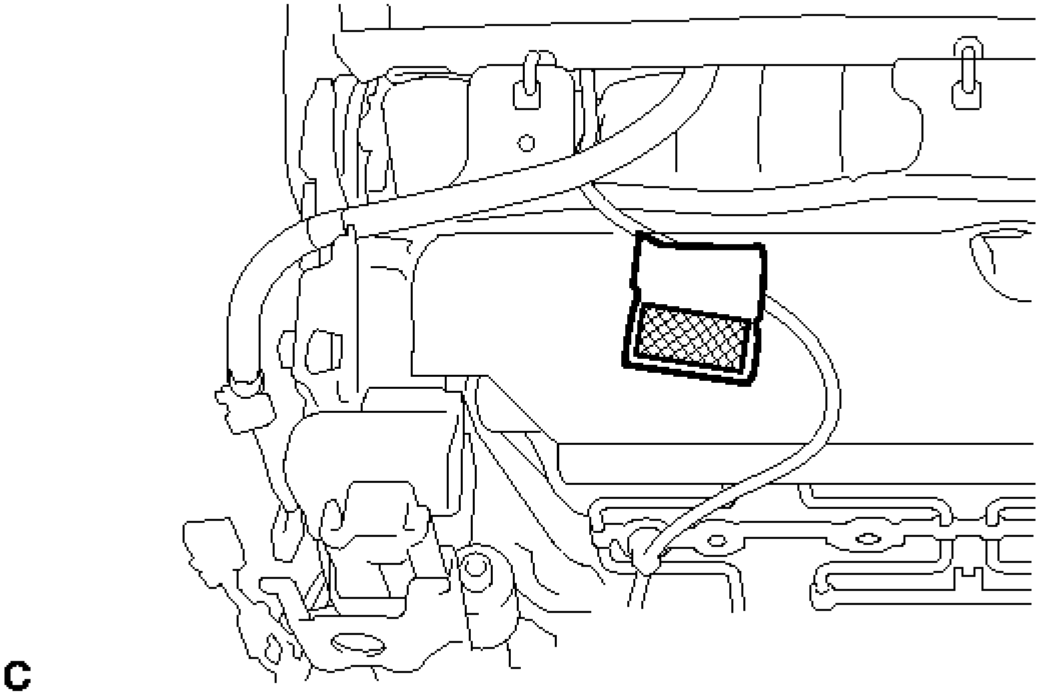

Fig. 190: Identifying Front Seatback Cover Airbag Wire Harness (For SIA Made Power Seat)
Courtesy of TOYOTA MOTOR SALES, U.S.A., INC.

b. Disengage the claw and 3 clamps to separate the front seat airbag assembly wire harness.

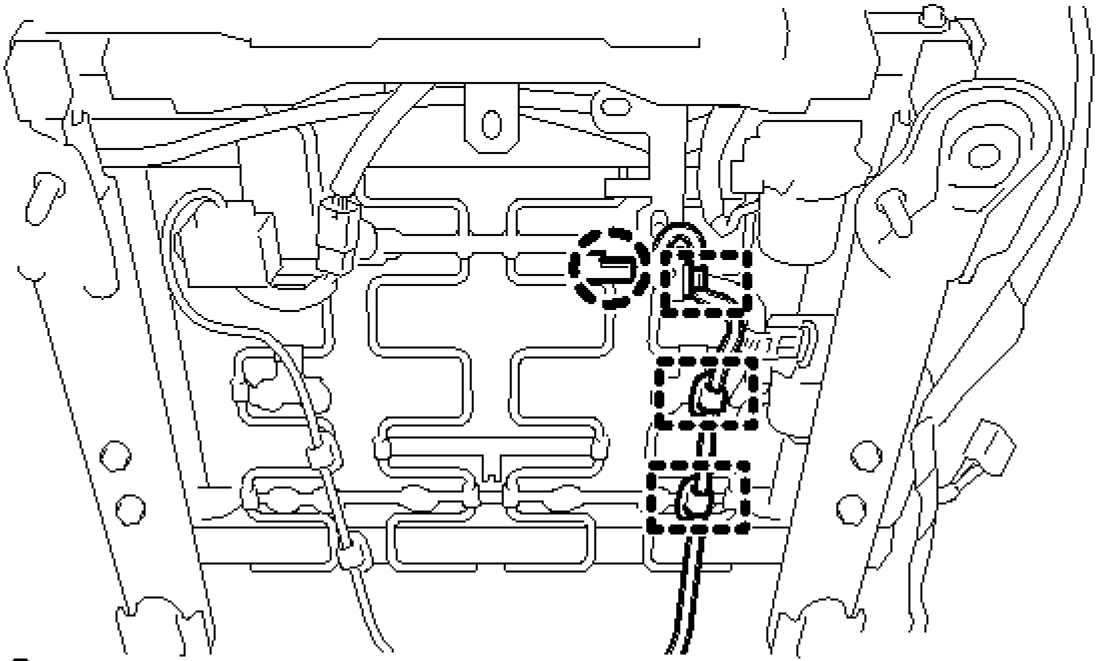

Fig. 191: Identifying Front Seatback Cover Claw And Clamps (For SIA Made Power Seat)
Courtesy of TOYOTA MOTOR SALES, U.S.A., INC.

c. w/ Seat Heater System:
    1. Disconnect the connector.

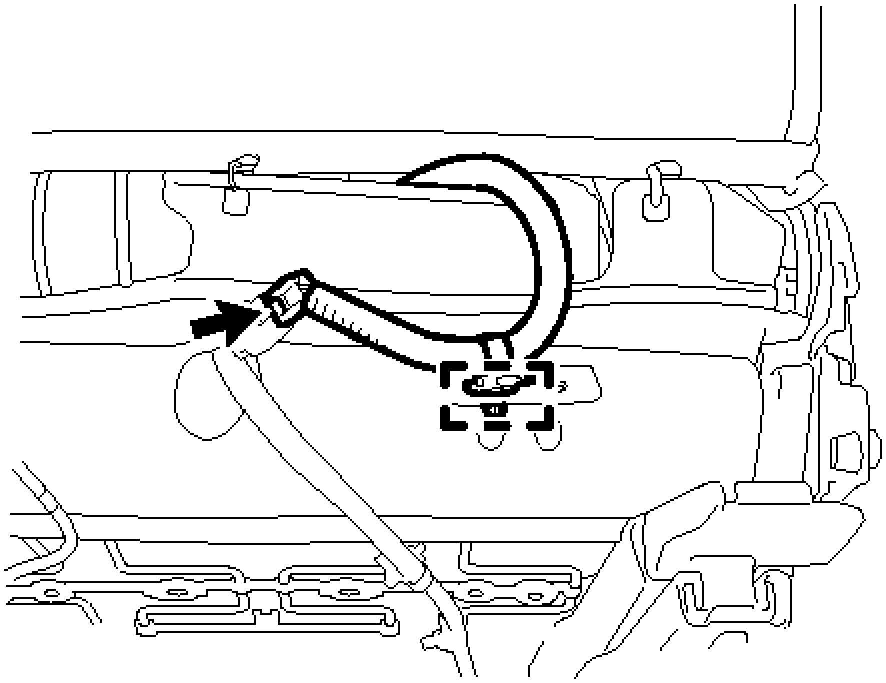

Fig. 192: Identifying Front Seatback Cover Connector And Clamp (For SIA Made

Power Seat)
Courtesy of TOYOTA MOTOR SALES, U.S.A., INC.

2. Disengage the clamp.
3. Disconnect the connector.

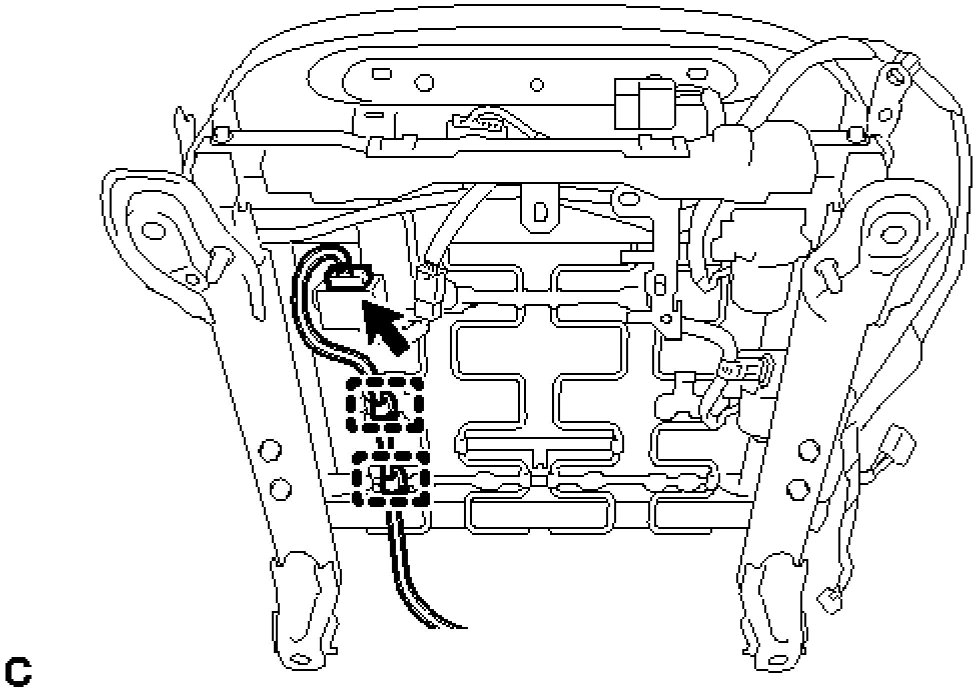

Fig. 193: Identifying Front Seatback Cover Connector And Clamps (For SIA Made Power Seat)
Courtesy of TOYOTA MOTOR SALES, U.S.A., INC.

4. Disengage the 2 clamps to separate the seat heater wire harness.

d. Disengage the hook.

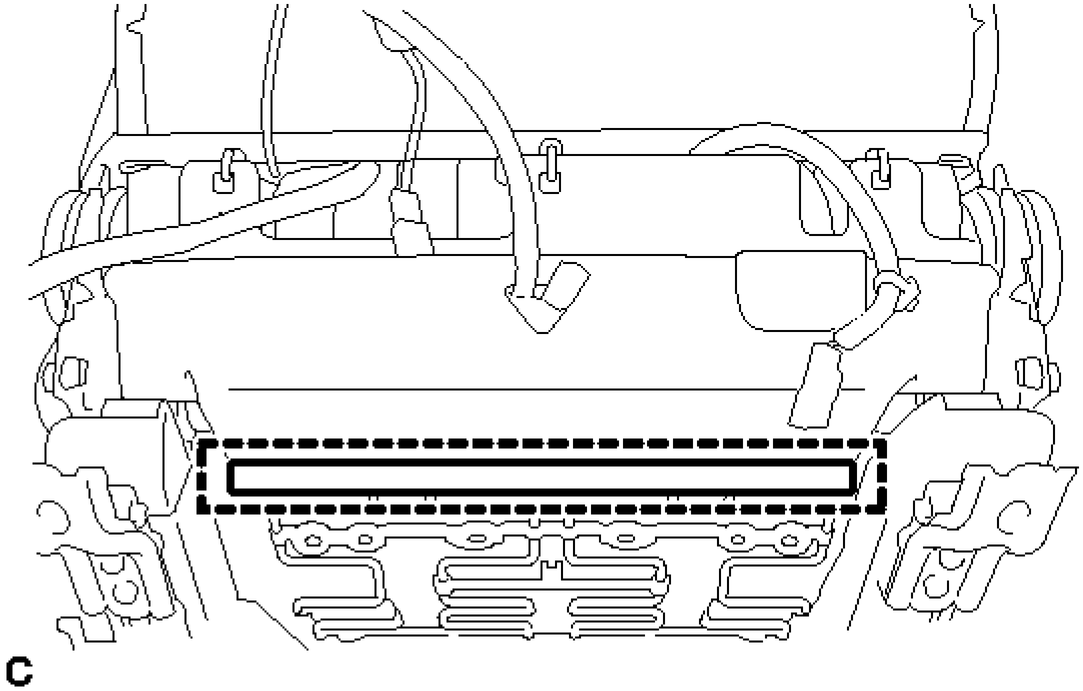

Fig. 194: Identifying Front Seatback Cover Hook (For SIA Made Power Seat)
Courtesy of TOYOTA MOTOR SALES, U.S.A., INC.

e. Disengage each hook and remove the separate type front seat cushion cover with pad.

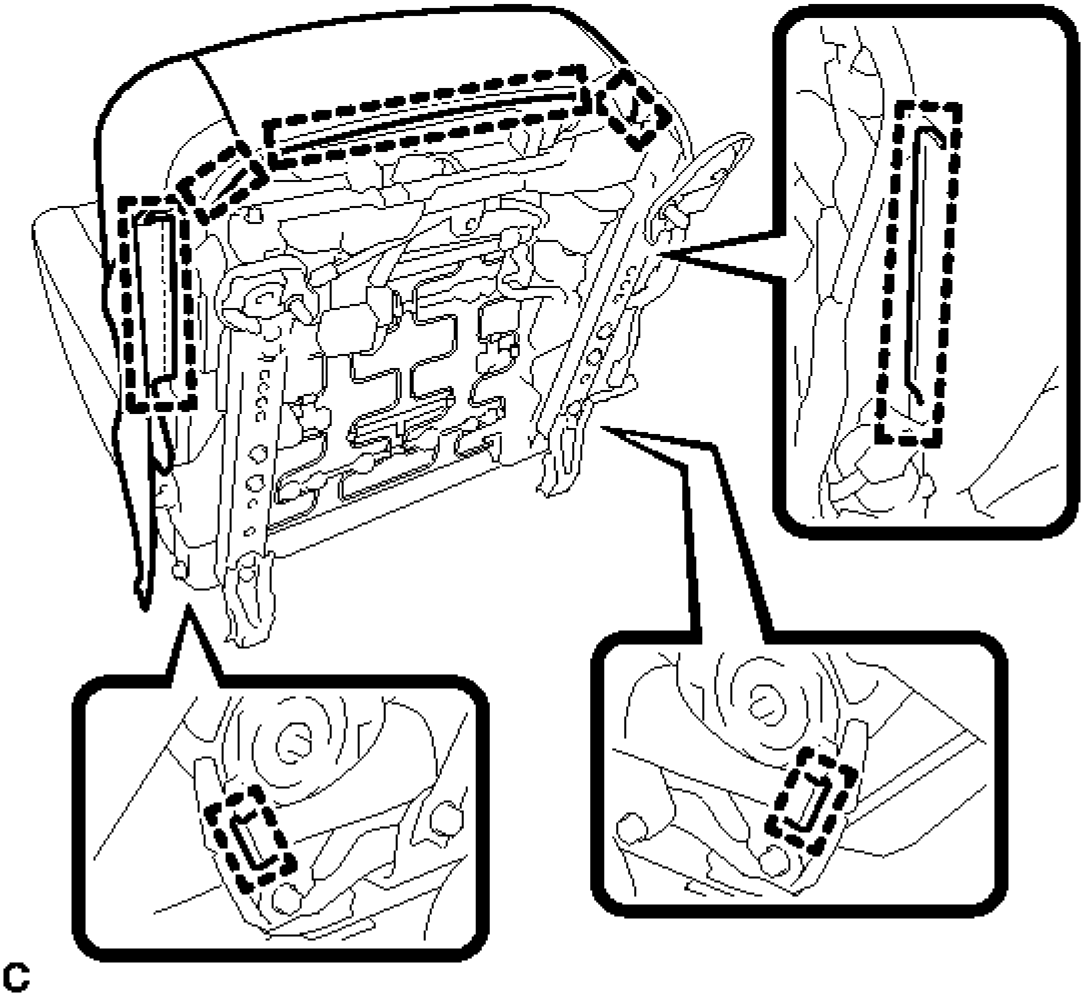

Fig. 195: Identifying Front Seatback Cover Hooks (For SIA Made Power Seat)
Courtesy of TOYOTA MOTOR SALES, U.S.A., INC.

15. **REMOVE SEPARATE TYPE FRONT SEAT CUSHION COVER**
    a. Remove the 2 hog rings.

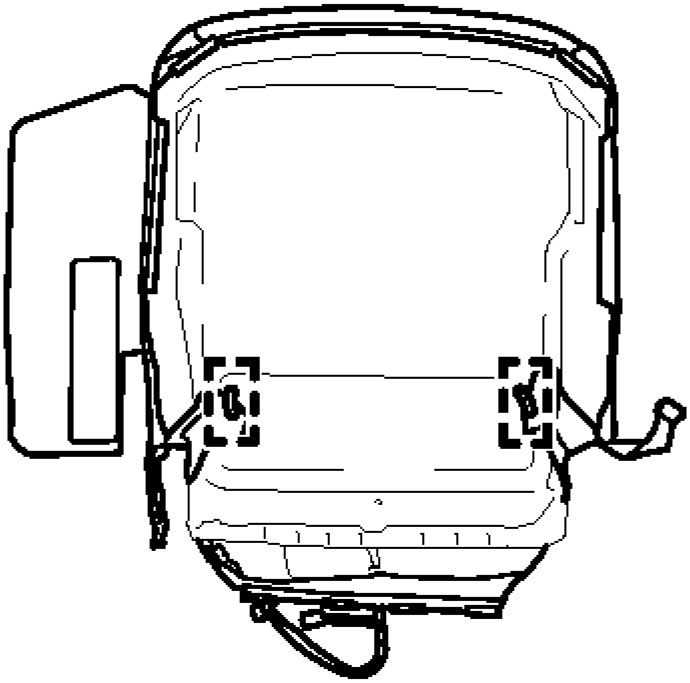

P

Fig. 196: Locating Front Seat Cushion Cover Hog Rings
Courtesy of TOYOTA MOTOR SALES, U.S.A., INC.

b. Remove the 16 hog rings and the separate type front seat cushion cover from the separate type front seat cushion pad.

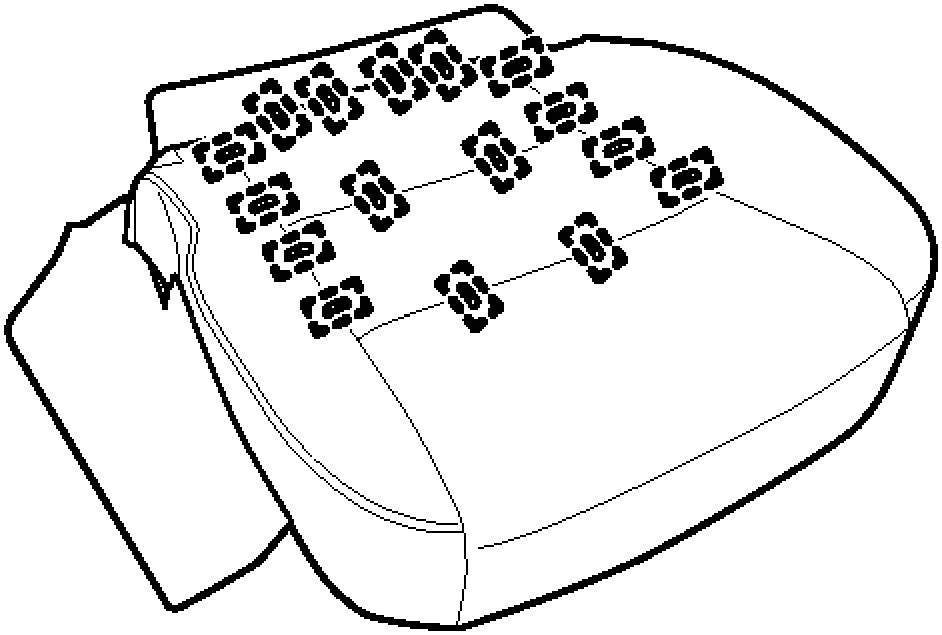

C

Fig. 197: Locating Front Seat Cushion Cover Hog Rings

Courtesy of TOYOTA MOTOR SALES, U.S.A., INC.

16. **REMOVE FRONT SEAT CUSHION HEATER ASSEMBLY (w/ Seat Heater System)** . See step 15.
17. **REMOVE SEPARATE TYPE FRONT SEATBACK COVER WITH PAD**
    a. Remove the 5 hog rings.

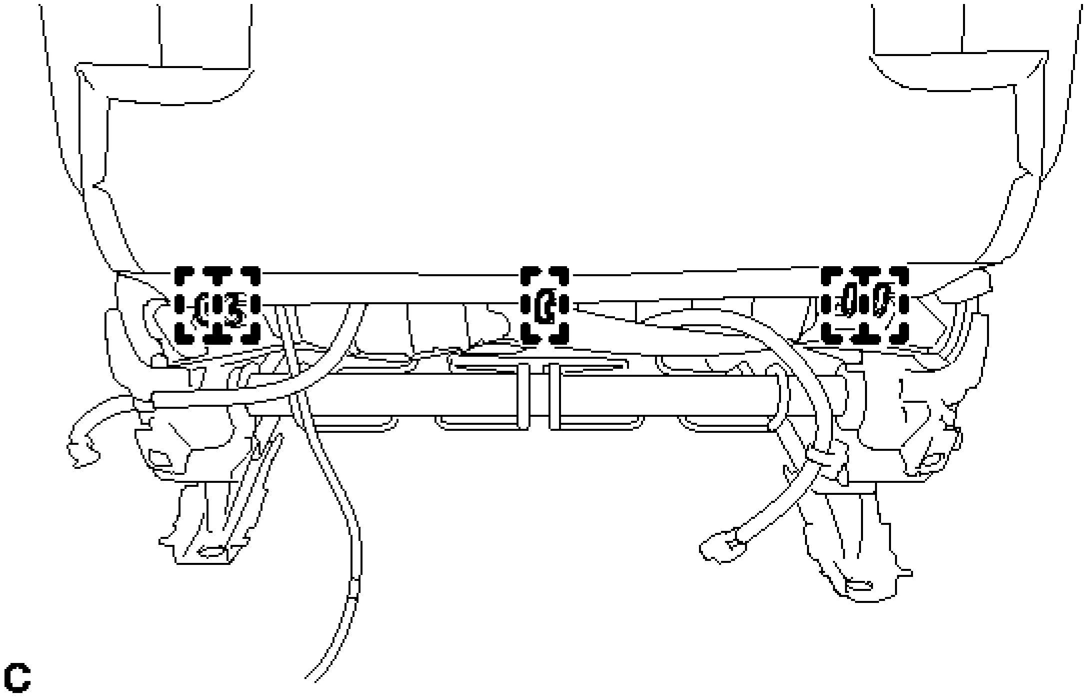

Fig. 198: Locating Front Seatback Cover Hog Rings
Courtesy of TOYOTA MOTOR SALES, U.S.A., INC.

b. Remove the 3 hog rings.

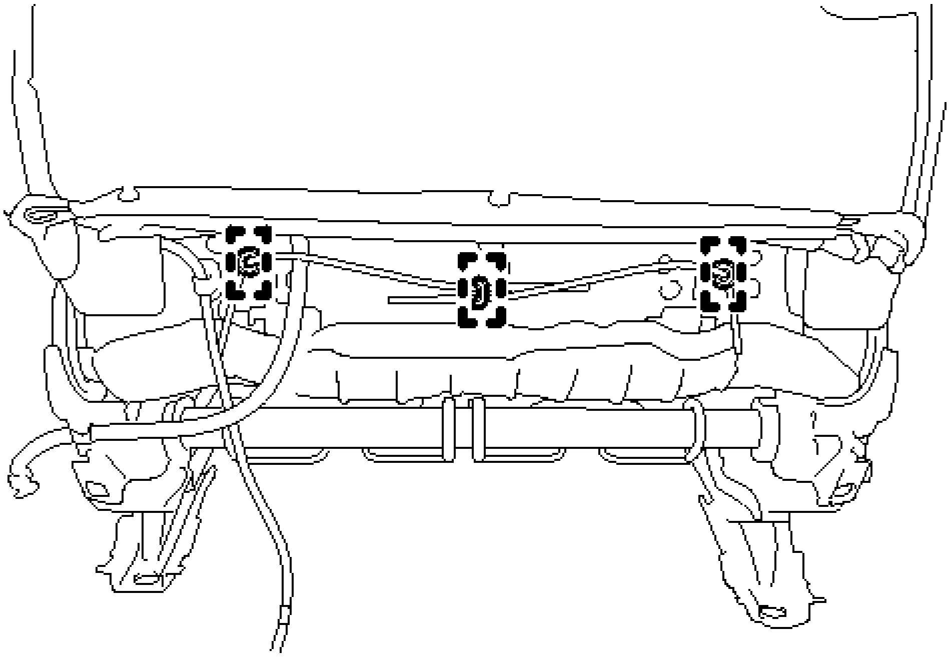

Fig. 199: Locating Front Seatback Cover Hog Rings
Courtesy of TOYOTA MOTOR SALES, U.S.A., INC.

c. Remove the 2 hog rings.

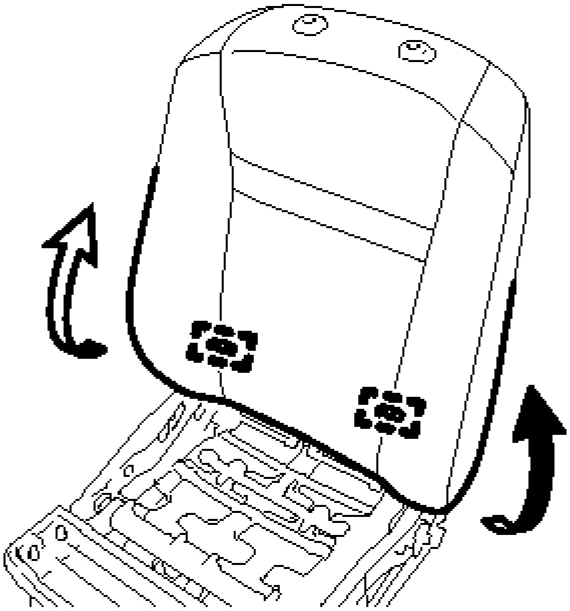

Fig. 200: Turning Back Front Seatback Cover
Courtesy of TOYOTA MOTOR SALES, U.S.A., INC.

d. Turn back the separate type front seatback cover.

e. Remove the 2 nuts and the 3 brackets.

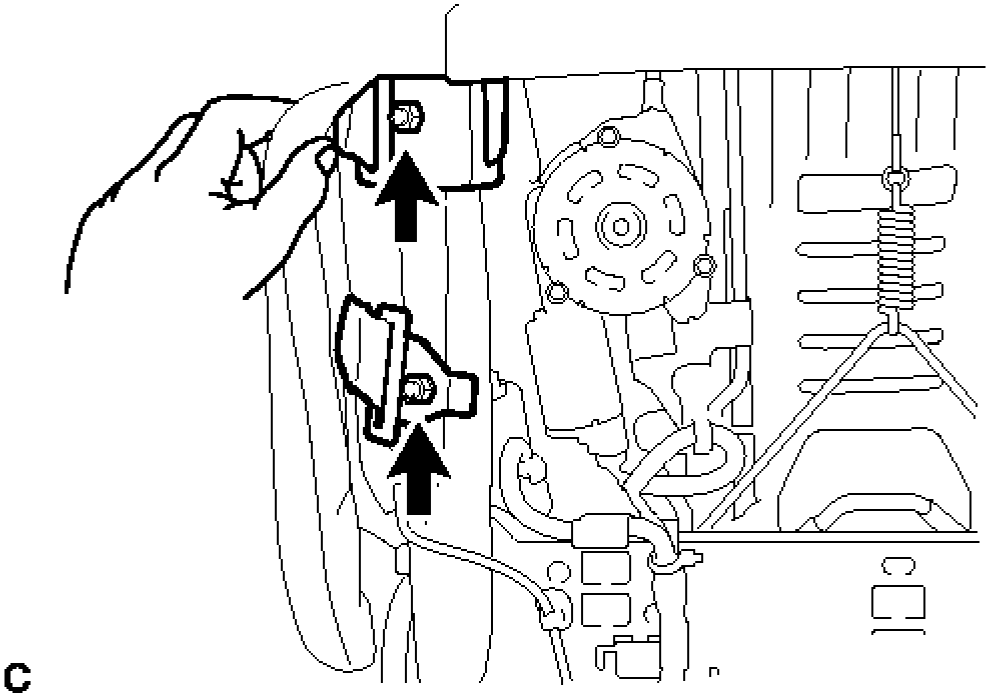

Fig. 201: Locating Front Seatback Cover Fasteners
Courtesy of TOYOTA MOTOR SALES, U.S.A., INC.

f. Disengage the 4 claws and remove the 2 front seat headrest supports.

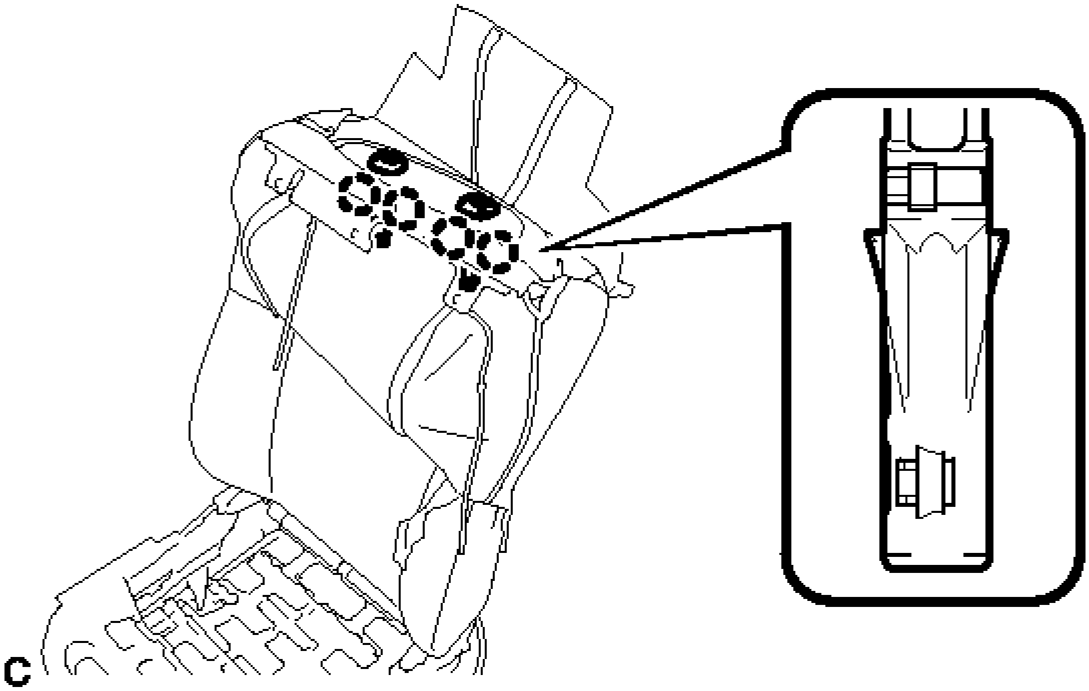

Fig. 202: Identifying Front Seatback Cover Headrest Support Claws
Courtesy of TOYOTA MOTOR SALES, U.S.A., INC.

g. Remove the separate type front seatback cover with pad.

18. **REMOVE FRONT SEAT AIRBAG ASSEMBLY** . Refer to **REMOVAL - Step 13** .
19. **REMOVE SEPARATE TYPE FRONT SEATBACK COVER**

a. Remove the 6 hog rings and separate type front seatback cover from the separate type front seatback pad.

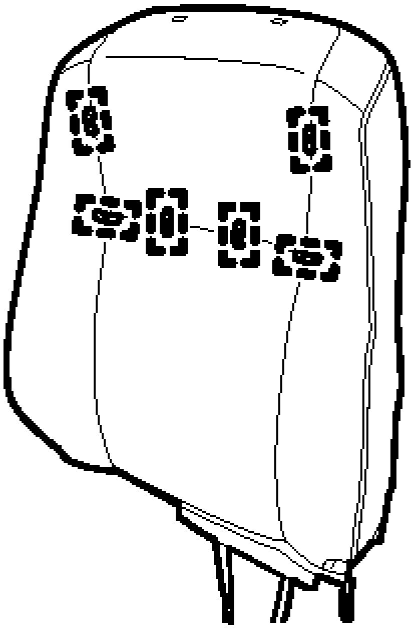

Fig. 203: Locating Front Seatback Cover Hog Rings
Courtesy of TOYOTA MOTOR SALES, U.S.A., INC.

20. **REMOVE FRONT SEATBACK HEATER ASSEMBLY (w/ Seat Heater System)** . See step 12.
21. **REMOVE FRONT SEAT LOWER CUSHION SHIELD LH (for Driver Side)**
    a. Remove the screw.

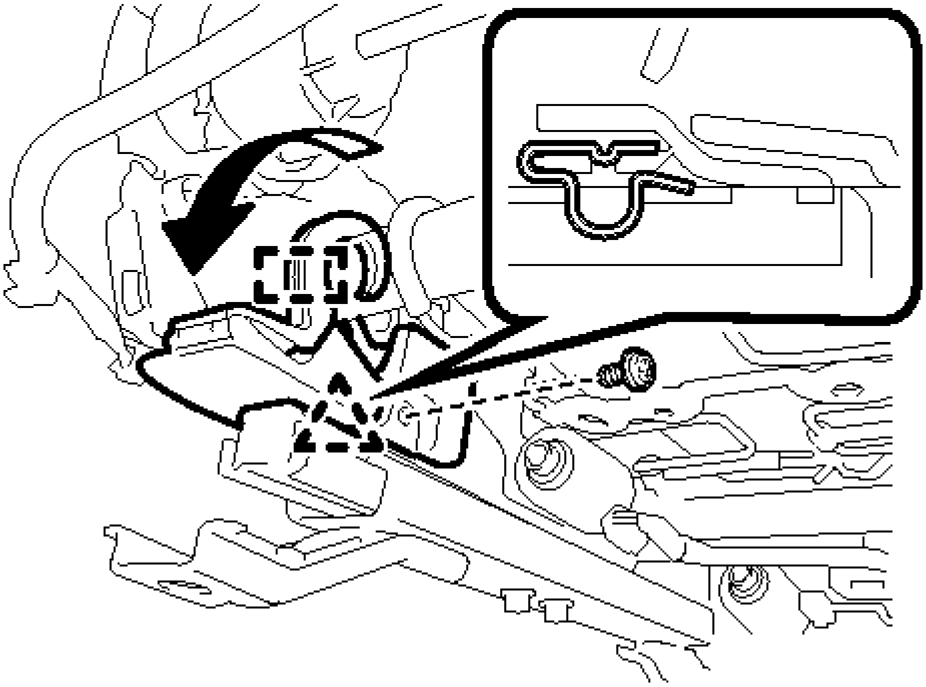

Fig. 204: Removing Front Seat Lower Cushion Shield LH (For Driver Side)
Courtesy of TOYOTA MOTOR SALES, U.S.A., INC.

b. Disengage the hook as shown in the illustration.
c. Disengage the clip and remove the front seat lower cushion shield LH.

22. **REMOVE FRONT SEAT LOWER CUSHION SHIELD RH (for Driver Side)**

a. Remove the screw.

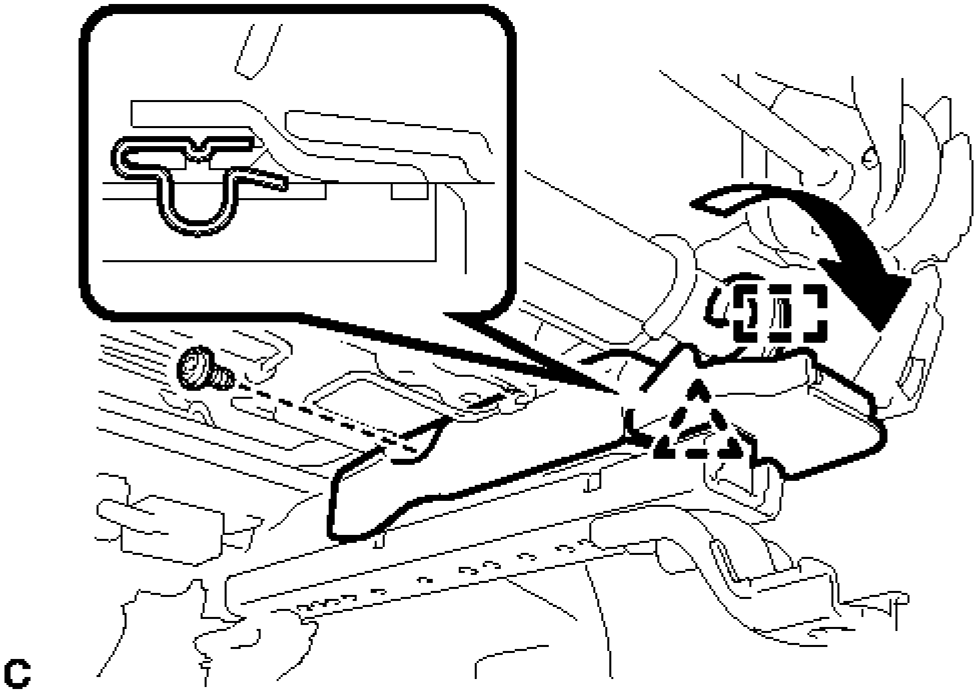

Fig. 205: Removing Front Seat Lower Cushion Shield RH (For Driver Side)
Courtesy of TOYOTA MOTOR SALES, U.S.A., INC.

b. Disengage the hook as shown in the illustration.
c. Disengage the clip and remove the front seat lower cushion shield RH.

23. **REMOVE UPPER RECLINING ADJUSTER INSIDE COVER LH**

a. Disengage the 2 guides to remove the upper reclining adjuster inside cover LH.

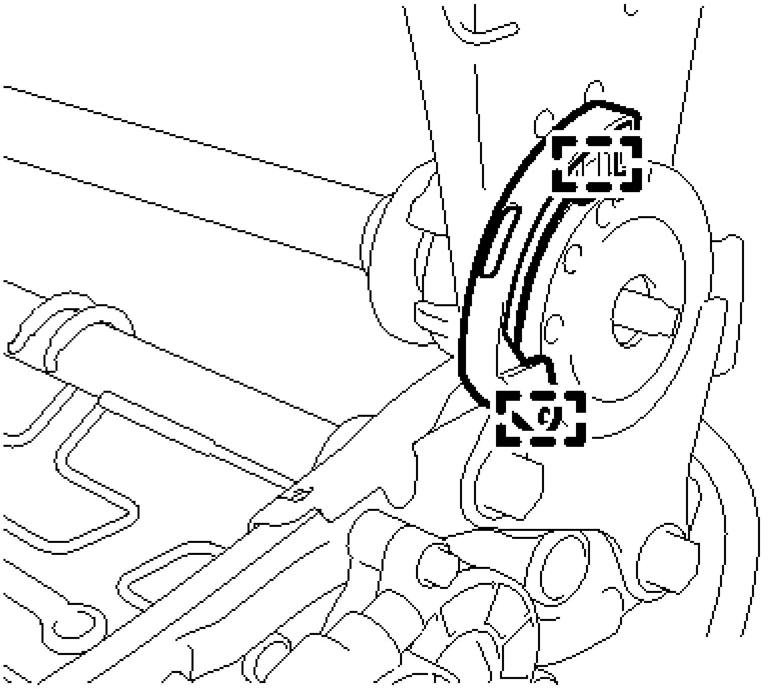

Fig. 206: Locating Upper Reclining Adjuster Guides Inside Cover LH
Courtesy of TOYOTA MOTOR SALES, U.S.A., INC.

24. **REMOVE UPPER RECLINING ADJUSTER INSIDE COVER RH**
    a. Disengage the 2 guides to remove the upper reclining adjuster inside cover RH.

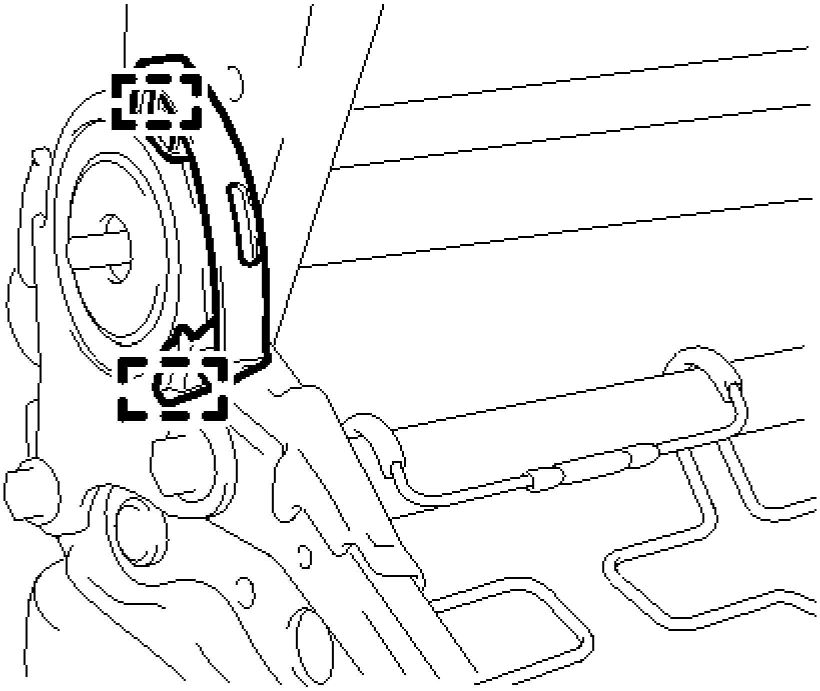

Fig. 207: Locating Upper Reclining Adjuster Guides Inside Cover RH

Courtesy of TOYOTA MOTOR SALES, U.S.A., INC.

25. **REMOVE FRONT SEAT CUSHION EDGE PROTECTOR LH (for Driver Side)**
    a. Remove the screw.

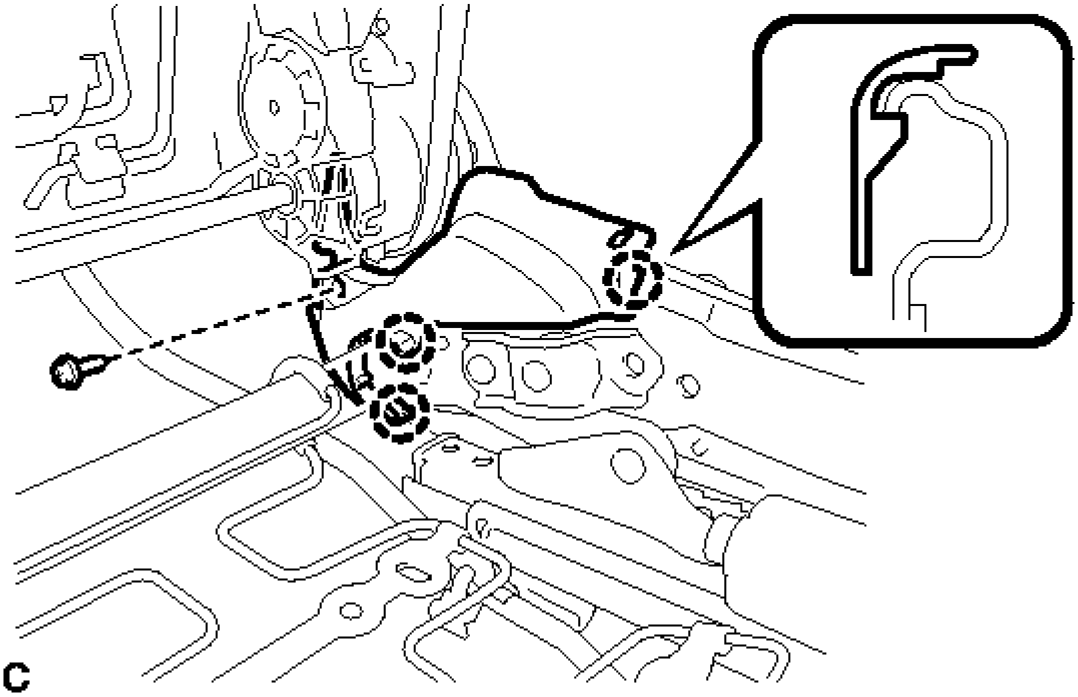

Fig. 208: Locating Front Seat Cushion Edge Protector LH (For Driver Side) Fasteners
Courtesy of TOYOTA MOTOR SALES, U.S.A., INC.

    b. Disengage the 3 claws to remove the front seat cushion edge protector LH.

26. **REMOVE FRONT SEAT CUSHION EDGE PROTECTOR RH (for Driver Side)**
    a. Remove the screw.

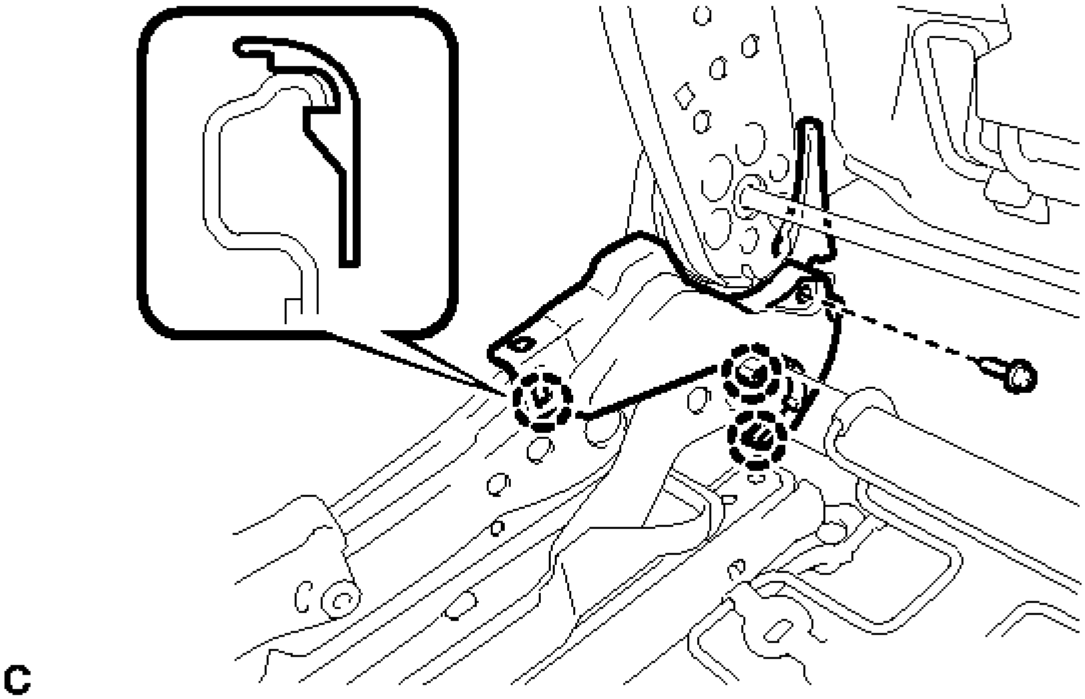

Fig. 209: Locating Front Seat Cushion Edge Protector RH (For Driver Side) Fasteners
Courtesy of TOYOTA MOTOR SALES, U.S.A., INC.

b. Disengage the 3 claws to remove the front seat cushion edge protector RH.

27. **REMOVE FRONT SEAT CUSHION EDGE PROTECTOR LH (for Front Passenger Side)**

a. Remove the screw.

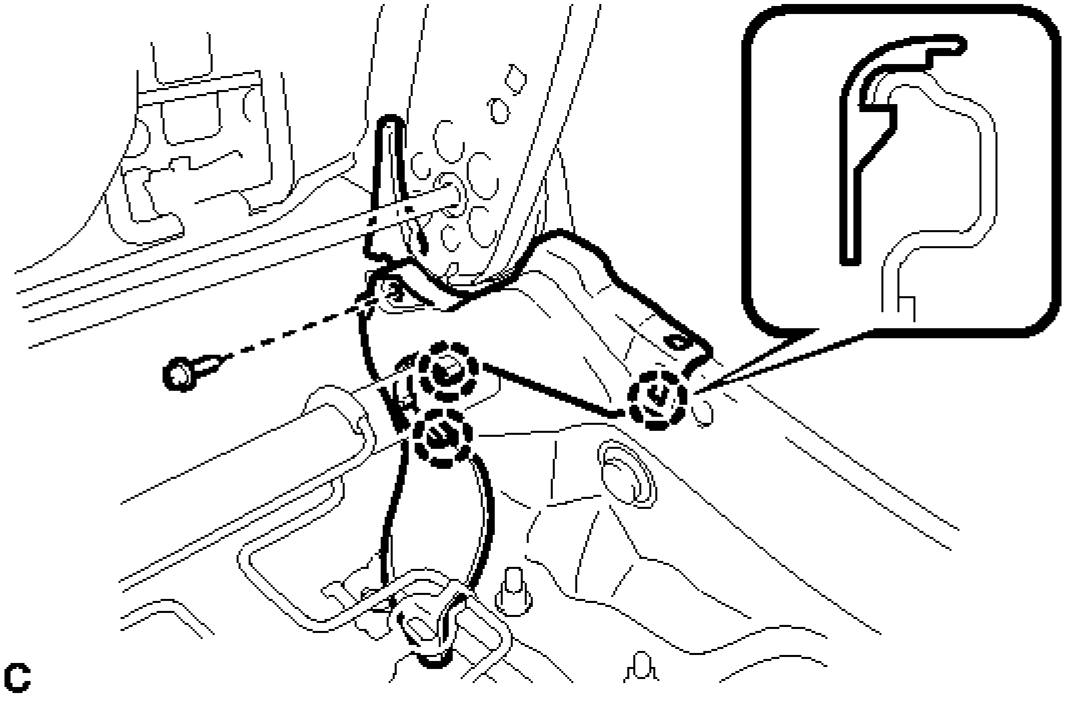

Fig. 210: Locating Front Seat Cushion Edge Protector LH (For Front Passenger Side) Fasteners
Courtesy of TOYOTA MOTOR SALES, U.S.A., INC.

b. Disengage the 3 claws to remove the front seat cushion edge protector LH.

28. **REMOVE FRONT SEAT CUSHION EDGE PROTECTOR RH (for Front Passenger Side)**
    a. Remove the screw.

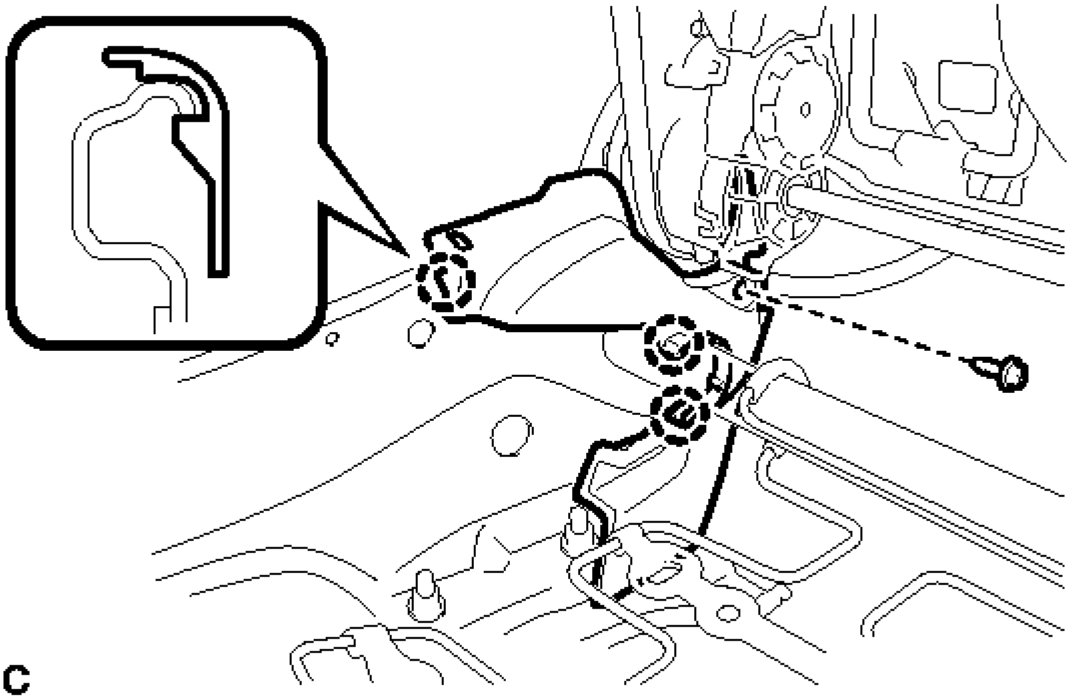

Fig. 211: Locating Front Seat Cushion Edge Protector RH (For Front Passenger Side) Fasteners
Courtesy of TOYOTA MOTOR SALES, U.S.A., INC.

b. Disengage the 3 claws to remove the front seat cushion edge protector RH.

29. **REMOVE SEAT HEATER CONTROL SUB-ASSEMBLY (w/ Seat Heater System)**
    a. Disconnect the connector.

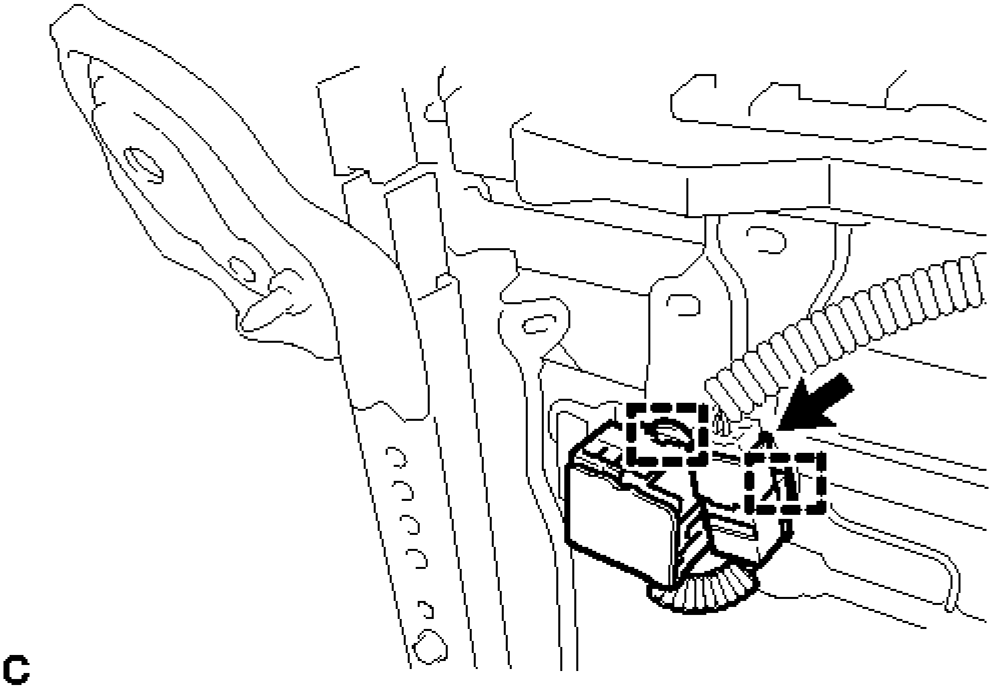

Fig. 212: Locating Seat Heater Control Sub-Assembly (w/ Seat Heater System)
Courtesy of TOYOTA MOTOR SALES, U.S.A., INC.

   b. Disengage the 2 clamps and remove the seat heater control sub-assembly.

30. **REMOVE OCCUPANT DETECTION ECU (for Front Passenger Side)** . Refer to **REMOVAL - Step 3** .
31. **REMOVE FRONT SEAT WIRE**
    a. Disconnect the connectors and disengage the wire harness clamps to remove the front seat wire.
32. **REMOVE FRONT NO. 2 SEAT WIRE**
    a. Disconnect the connectors and disengage the wire harness clamps to remove the front No. 2 seat wire.
33. **REMOVE FRONT SEAT WIRE RH (for Front Passenger Side)**
    a. Disconnect the connectors and disengage the wire harness clamps to remove the front seat wire RH.
34. **REMOVE SEPARATE TYPE FRONT SEATBACK SPRING ASSEMBLY**
    a. Remove the 4 bolts

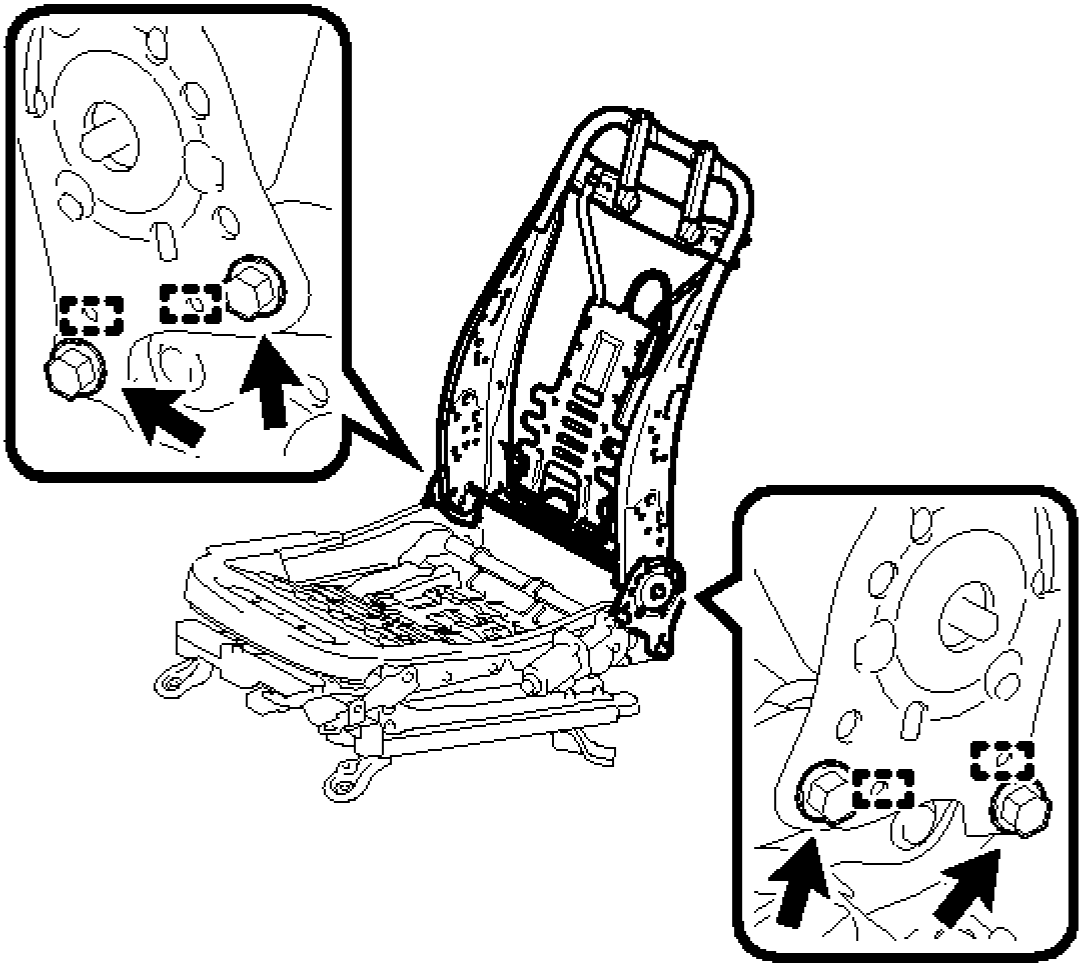

Fig. 213: Locating Front Seatback Spring Assembly Fasteners
Courtesy of TOYOTA MOTOR SALES, U.S.A., INC.

b. Disengage the 4 guides to remove the separate type front seatback spring assembly.

INSPECTION

INSPECTION

1. **INSPECT SEPARATE TYPE FRONT SEAT CUSHION SPRING ASSEMBLY**
   a. Check the operation of the slide motor.

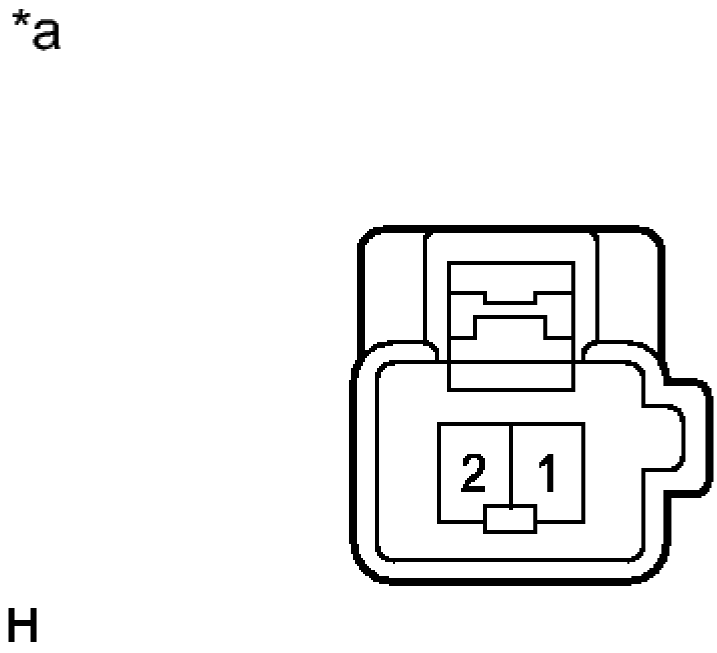

Fig. 214: Identifying Motor Connector Terminals
Courtesy of TOYOTA MOTOR SALES, U.S.A., INC.

1. Check if the front seat cushion moves smoothly when the battery is connected to the slide motor connector terminals.

TEXT IN ILLUSTRATION

*a	Component without harness connected (Slide Motor (Separate Type Front Seat Cushion Spring Assembly))

OK

Measurement Condition	Operational Direction
Battery positive (+) --> Terminal 1	

Battery negative (-) --> Terminal 2	Forward
Battery positive (+) --> Terminal 2 Battery negative (-) --> Terminal 1	Backward

If the result is not as specified, replace the separate type front seat cushion spring assembly.

b. Check the operation of the lifter motor. (for Driver)

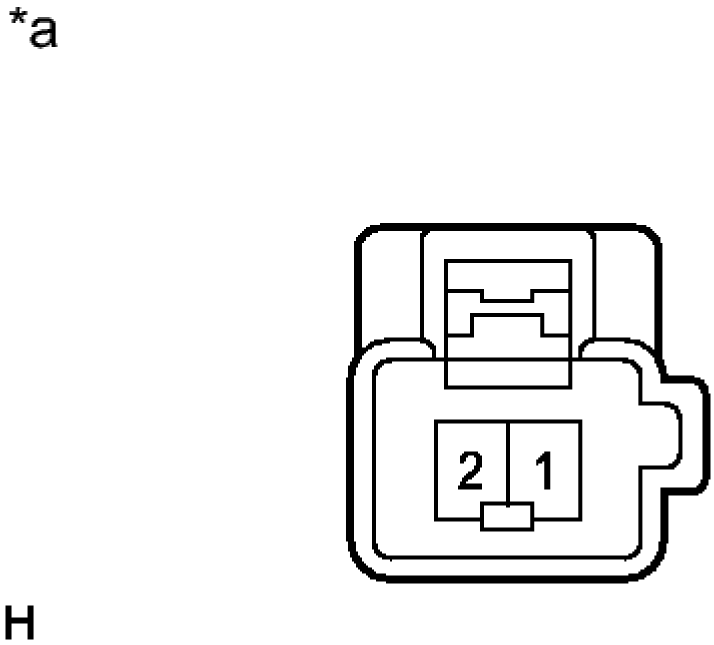

Fig. 215: Identifying Motor Connector Terminals
Courtesy of TOYOTA MOTOR SALES, U.S.A., INC.

1. Check if the front seat cushion moves smoothly when the battery is connected to the lifter motor connector terminals.

TEXT IN ILLUSTRATION

	Component without harness connected (Lifter Motor

*a	(Separate Type Front Seat Cushion Spring Assembly))

OK

Measurement Condition	**Operational Direction**
Battery positive (+) --> Terminal 1 Battery negative (-) --> Terminal 2	Upward
Battery positive (+) --> Terminal 2 Battery negative (-) --> Terminal 1	Downward

If the result is not as specified, replace the separate type front seat cushion spring assembly.

c. Check the operation of the front vertical motor. (for Driver)

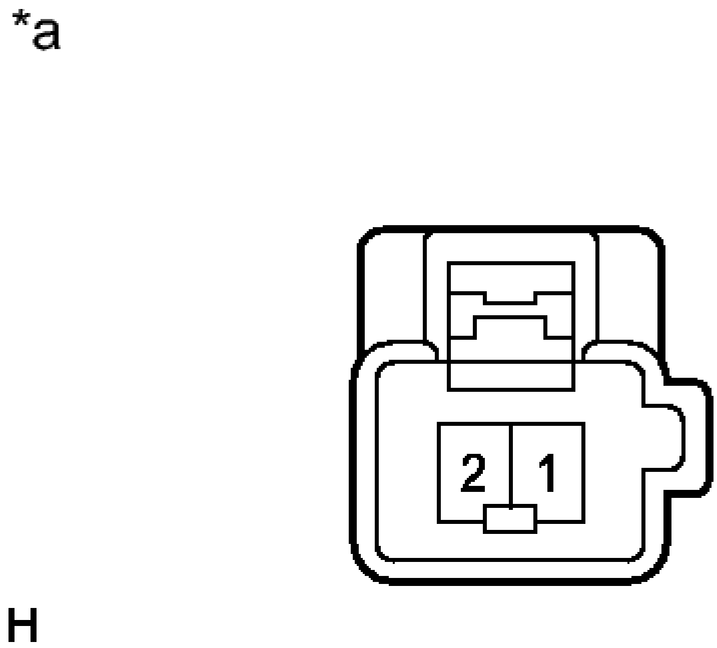

Fig. 216: Identifying Motor Connector Terminals
Courtesy of TOYOTA MOTOR SALES, U.S.A., INC.

1. Check if the front seat cushion moves smoothly when the battery is connected to the front vertical motor connector terminals.

   TEXT IN ILLUSTRATION

*a	Component without harness connected (Front Vertical Motor (Separate Type Front Seat Cushion Spring Assembly))

   OK

Measurement Condition	Operational Direction
Battery positive (+) --	

> Terminal 1 Battery negative (-) --> Terminal 2	Upward
Battery positive (+) --> Terminal 2 Battery negative (-) --> Terminal 1	Downward

If the result is not as specified, replace the separate type front seat cushion spring assembly.

2. **INSPECT SEPARATE TYPE FRONT SEAT BACK SPRING ASSEMBLY**
   a. Check the operation of the reclining motor.

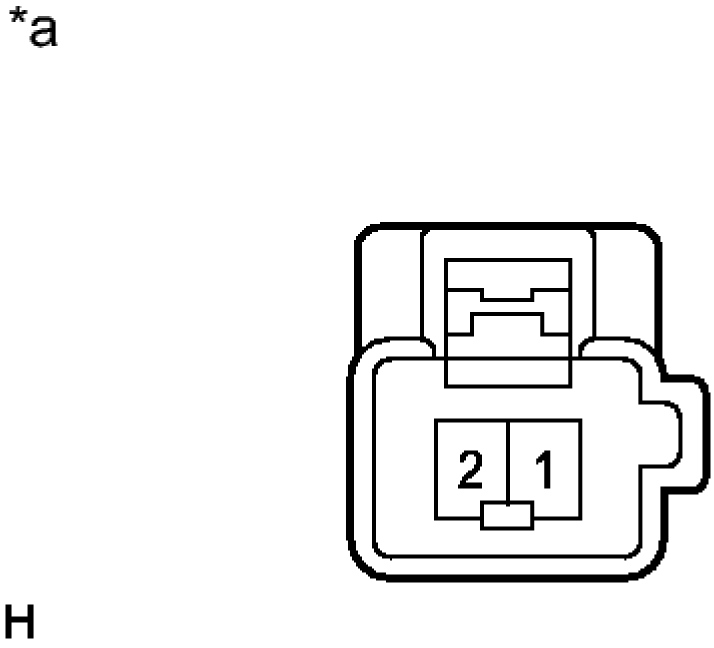

Fig. 217: Identifying Motor Connector Terminals
Courtesy of TOYOTA MOTOR SALES, U.S.A., INC.

1. Check if the front seat back moves smoothly when the battery is connected to the reclining motor connector terminals.

TEXT IN ILLUSTRATION

	Component without harness

*a	connected (Reclining Motor (Separate Type Front Seat Back Spring Assembly))

OK

Measurement Condition	**Operational Direction**
Battery positive (+) --> Terminal 1 Battery negative (-) --> Terminal 2	Forward
Battery negative (+) --> Terminal 2 Battery positive (-) --> Terminal 1	Rearward

If the result is not as specified, replace the separate type front seat back spring assembly.

b. Check the operation of the lumbar support adjuster assembly. (for Driver)

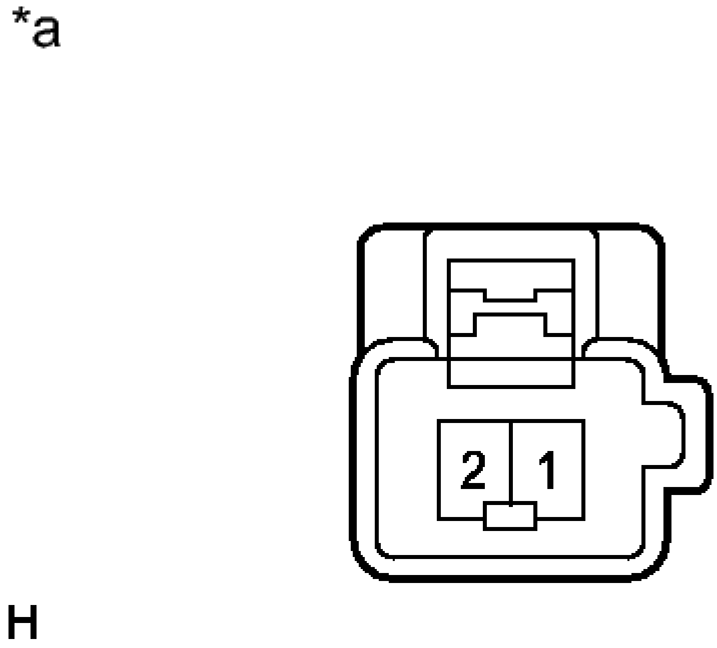

Fig. 218: Identifying Motor Connector Terminals
Courtesy of TOYOTA MOTOR SALES, U.S.A., INC.

1. Check that the front seat back moves smoothly when the battery is connected to the lumbar support adjuster assembly connector terminals.

TEXT IN ILLUSTRATION

*a	Component without harness connected (Lumbar Support Adjuster Assembly (Separate Type Front Seat Back Spring Assembly))

OK

Measurement Condition	Operational Direction
Battery positive (+) --	

> Terminal 1 Battery negative (-) --> Terminal 2	Seat back moves forward
Battery positive (+) --> Terminal 2 Battery negative (-) --> Terminal 1	Seat back moves backward

If the result is not as specified, replace the separate type front seat back spring assembly.

REASSEMBLY

REASSEMBLY

1. **INSTALL SEPARATE TYPE FRONT SEATBACK SPRING ASSEMBLY**
    a. Engage the 4 guides to install the separate type front seatback spring assembly.
    b. Install the 4 bolts.

    Torque: 42 N*m (428 kgf*cm, 31 ft.*lbf)

2. **REMOVE FRONT SEAT WIRE RH (for Front Passenger Side)**
    a. Connect the connectors and engage the wire harness clamps to install the front seat wire RH.
3. **INSTALL FRONT NO. 2 SEAT WIRE**
    a. Connect the connectors and engage the wire harness clamps to install the front No. 2 seat wire.
4. **INSTALL FRONT SEAT WIRE**
    a. Connect the connectors and engage the wire harness clamps to install the front seat wire.
5. **INSTALL OCCUPANT DETECTION ECU (for Front Passenger Side)** . Refer to **INSTALLATION - Step 1** .
6. **INSTALL SEAT HEATER CONTROL SUB-ASSEMBLY (w/ Seat Heater System)**
    a. Engage the 2 clamps to install the seat heater control sub-assembly.
    b. Connect the connector.
7. **INSTALL FRONT SEAT CUSHION EDGE PROTECTOR LH (for Driver Side)**
    a. Engage the 3 claws to install the front seat cushion edge protector LH.
    b. Install the screw.
8. **INSTALL FRONT SEAT CUSHION EDGE PROTECTOR RH (for Driver Side)**
    a. Engage the 3 claws to install the front seat cushion edge protector RH.
    b. Install the screw.
9. **INSTALL FRONT SEAT CUSHION EDGE PROTECTOR LH (for Front Passenger Side)**
    a. Engage the 3 claws to install the front seat cushion edge protector LH.

b. Install the screw.

10. **INSTALL FRONT SEAT CUSHION EDGE PROTECTOR RH (for Front Passenger Side)**

a. Engage the 3 claws to install the front seat cushion edge protector RH.

b. Install the screw.

11. **INSTALL UPPER RECLINING ADJUSTER INSIDE COVER LH**

a. Engage the 2 guides to install the upper reclining adjuster inside cover LH.

12. **INSTALL UPPER RECLINING ADJUSTER INSIDE COVER RH**

a. Engage the 2 guides to install the upper reclining adjuster inside cover RH.

13. **INSTALL FRONT SEAT LOWER CUSHION SHIELD LH (for Driver Side)**

a. Engage the clip to install the front seat lower cushion shield LH.

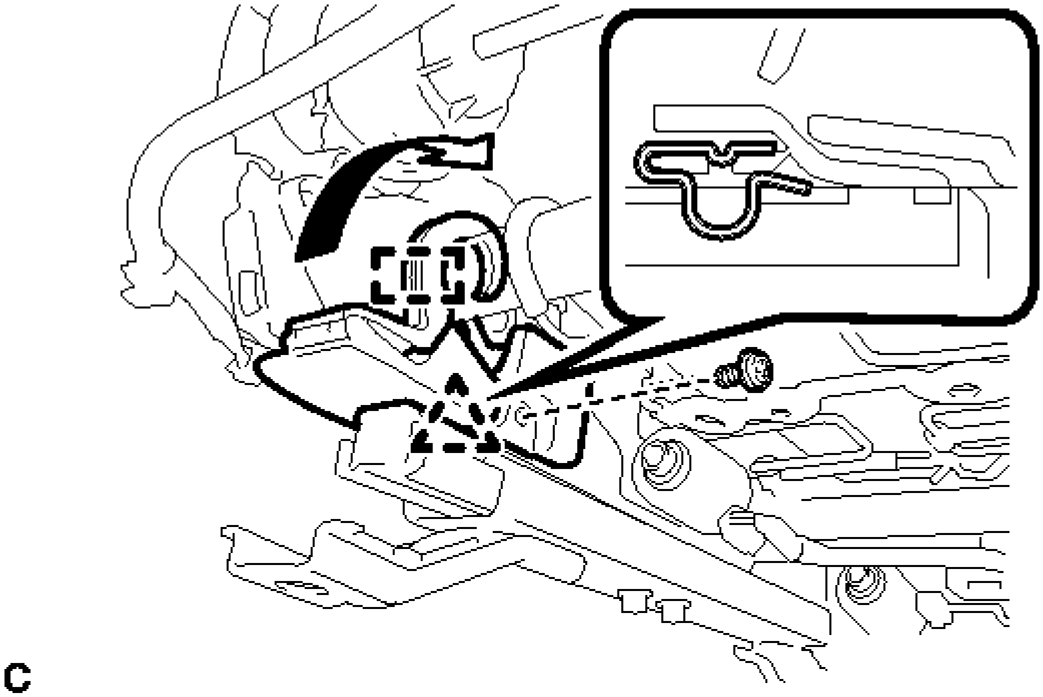

Fig. 219: Installing Front Seat Lower Cushion Shield LH (For Driver Side)
Courtesy of TOYOTA MOTOR SALES, U.S.A., INC.

b. Engage the hook as shown in the illustration.

c. Install the screw.

14. **INSTALL FRONT SEAT LOWER CUSHION SHIELD RH (for Driver Side)**

a. Engage the clip to install the front seat lower cushion shield RH.

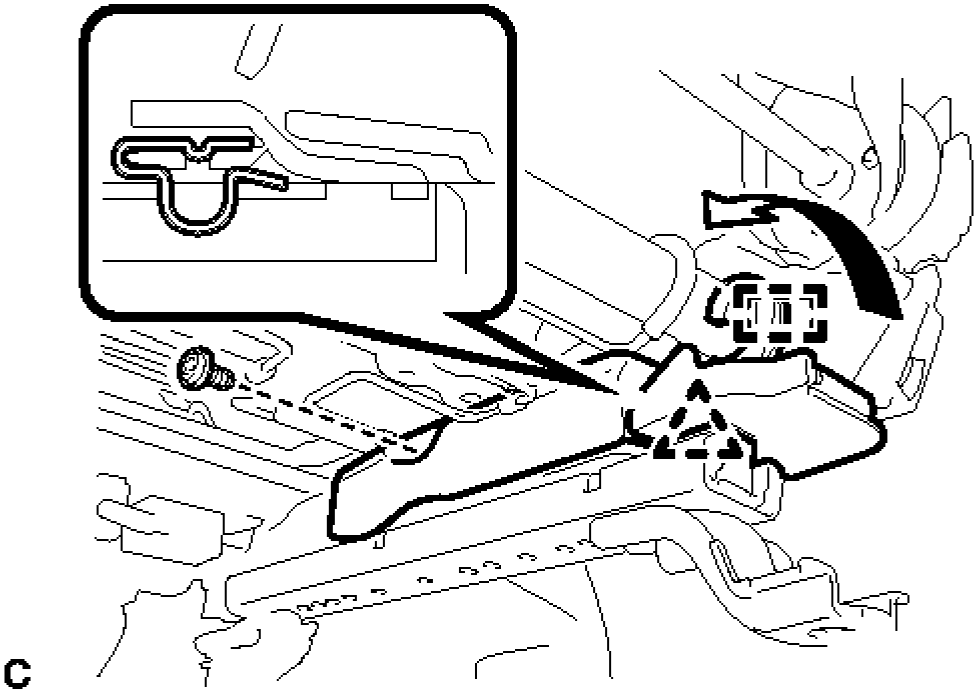

Fig. 220: Installing Front Seat Lower Cushion Shield RH (For Driver Side)
Courtesy of TOYOTA MOTOR SALES, U.S.A., INC.

   b. Engage the hook as shown in the illustration.
   c. Install the screw.

15. **INSTALL FRONT SEATBACK HEATER ASSEMBLY (w/ Seat Heater System)** . See step 7.
16. **INSTALL SEPARATE TYPE FRONT SEATBACK COVER**
    a. Using hog ring pliers, install the separate type front seatback cover to the separate type front seatback pad with 6 new hog rings.

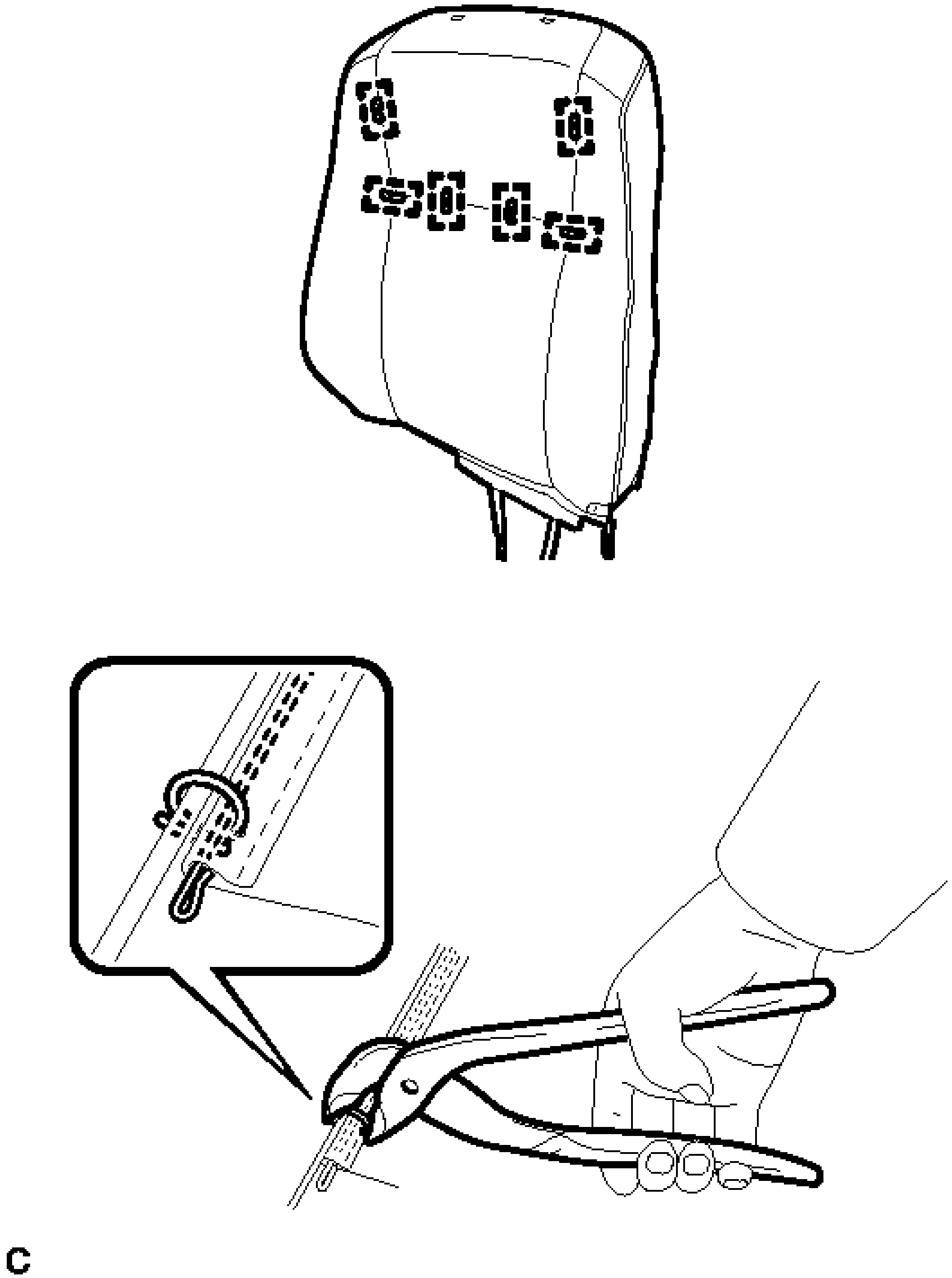

Fig. 221: Installing Front Seatback Cover Hog Rings
Courtesy of TOYOTA MOTOR SALES, U.S.A., INC.

NOTE:

- **Be careful not to damage the separate type front seatback cover.**

- **When installing the hog rings, take care to minimize wrinkles as much as possible.**

17. **INSTALL FRONT SEAT AIRBAG ASSEMBLY** . Refer to **INSTALLATION - Step 1** .
18. **INSTALL SEPARATE TYPE FRONT SEATBACK COVER WITH PAD**
    a. Temporarily install the separate type front seatback cover with pad.
    b. Engage the 4 claws to install the 2 front seat headrest supports.
    c. Install the 3 brackets with the 2 nuts.

    Torque: 5.5 N*m (56 kgf*cm, 49 in.*lbf)

    WARNING:

    - **For vehicles with side airbags, the separate type front seatback cover must be securely installed. Otherwise, the side airbags may not deploy properly.**
    - **Make sure that the strap is not twisted after installing the nut.**
    - **Install the bracket securely.**

    d. Turn back the separate type front seatback cover.

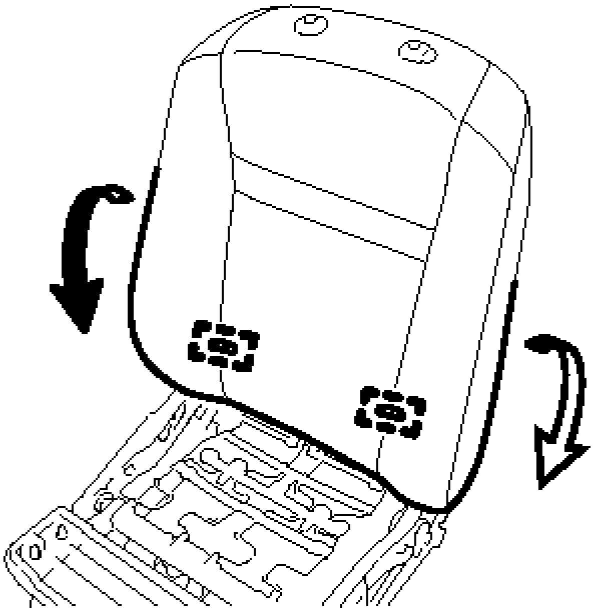

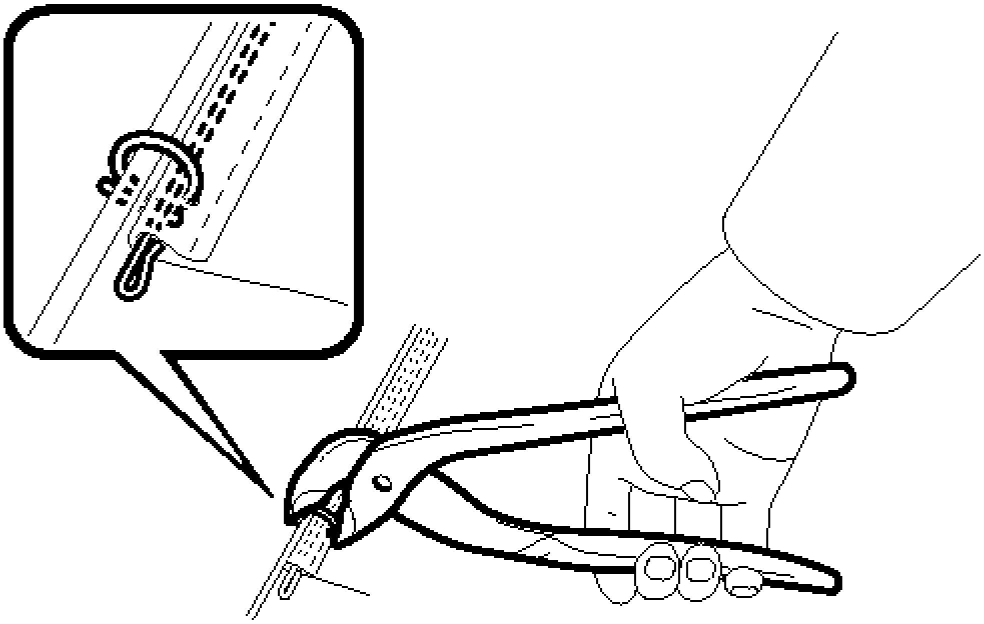

C

Fig. 222: Installing Hog Rings And Turning Back Front Seatback Cover
Courtesy of TOYOTA MOTOR SALES, U.S.A., INC.

e. Using hog ring pliers, install the 2 new hog rings.

NOTE:

- **Be careful not to damage the separate type front seatback cover.**
- **When installing the hog rings, take care to minimize wrinkles as much as possible.**

f. Using hog ring pliers, install 3 new hog rings.

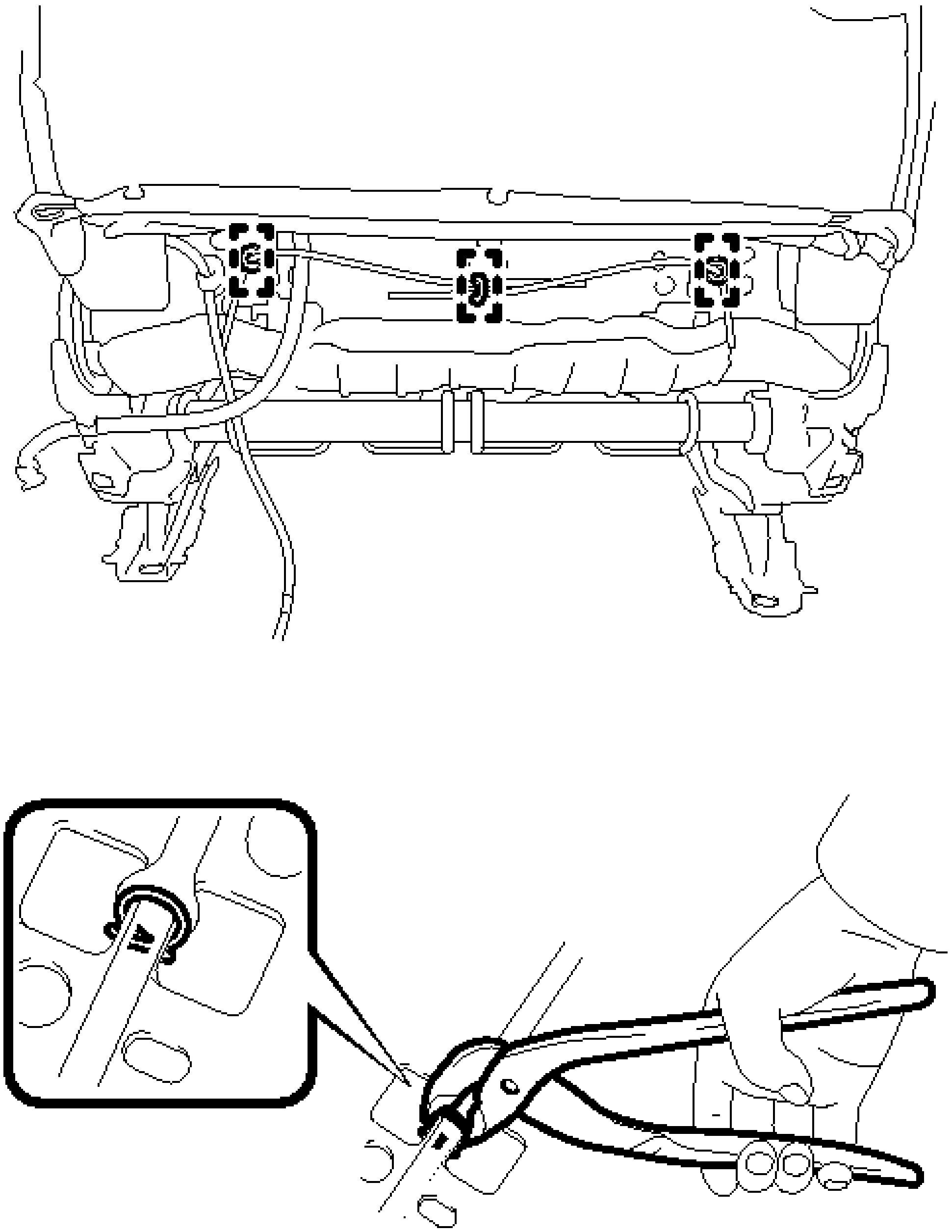

C

Fig. 223: Installing Front Seatback Cover Hog Rings
Courtesy of TOYOTA MOTOR SALES, U.S.A., INC.

NOTE:	**When installing the hog rings, take care to minimize wrinkles as much as possible.**

g. Using hog ring pliers, install 5 new hog rings.

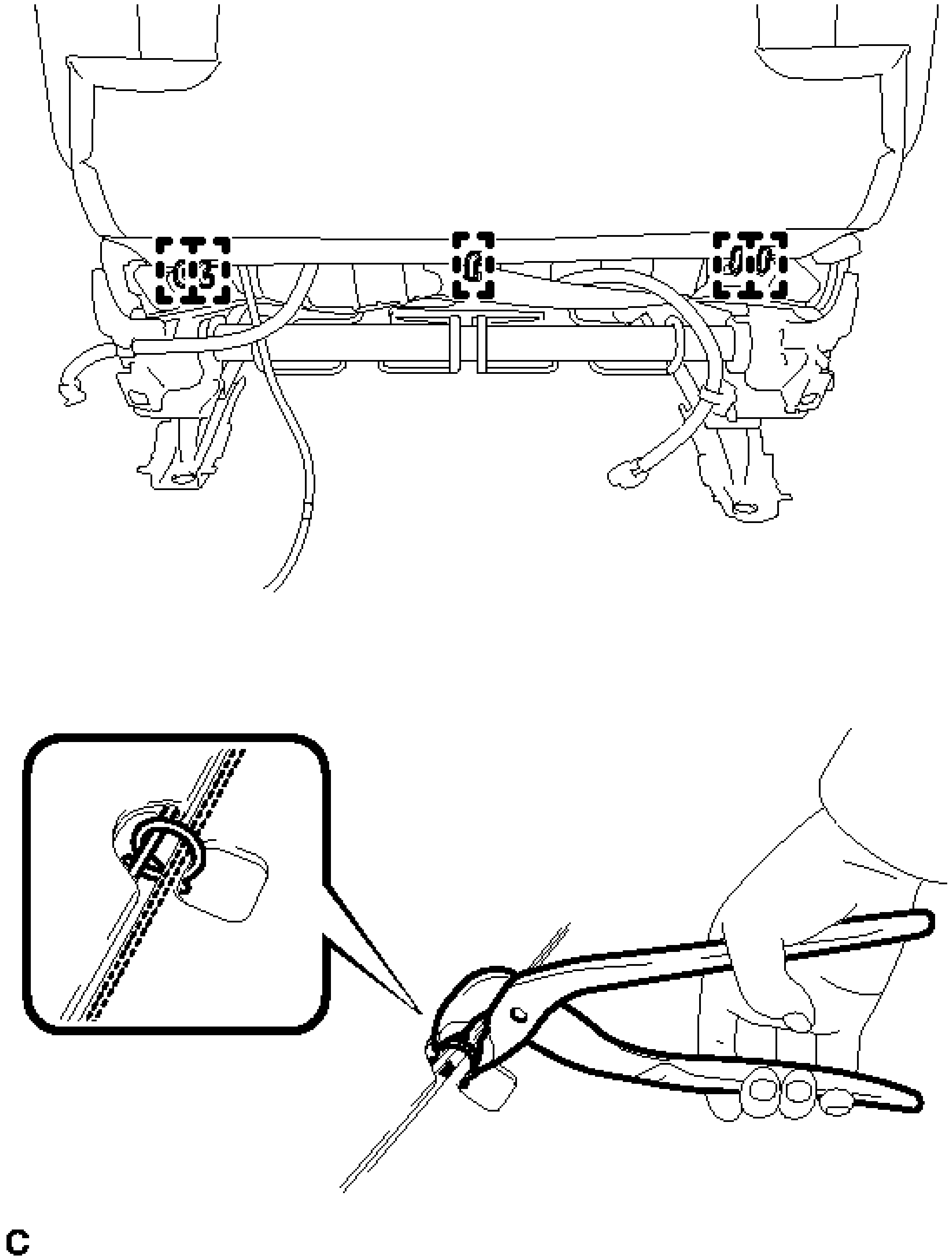

Fig. 224: Installing Front Seatback Cover Hog Rings
Courtesy of TOYOTA MOTOR SALES, U.S.A., INC.

NOTE:

- **Be careful not to damage the separate type front seatback cover.**
- **When installing the hog rings, take care to minimize wrinkles as much as possible.**

19. **INSTALL FRONT SEAT CUSHION HEATER ASSEMBLY (w/ Seat Heater System)** . See step 6.
20. **INSTALL SEPARATE TYPE FRONT SEAT CUSHION COVER**
    a. Using hog ring pliers, install the separate type front seat cushion cover to the separate type front seat cushion pad with 16 new hog rings.

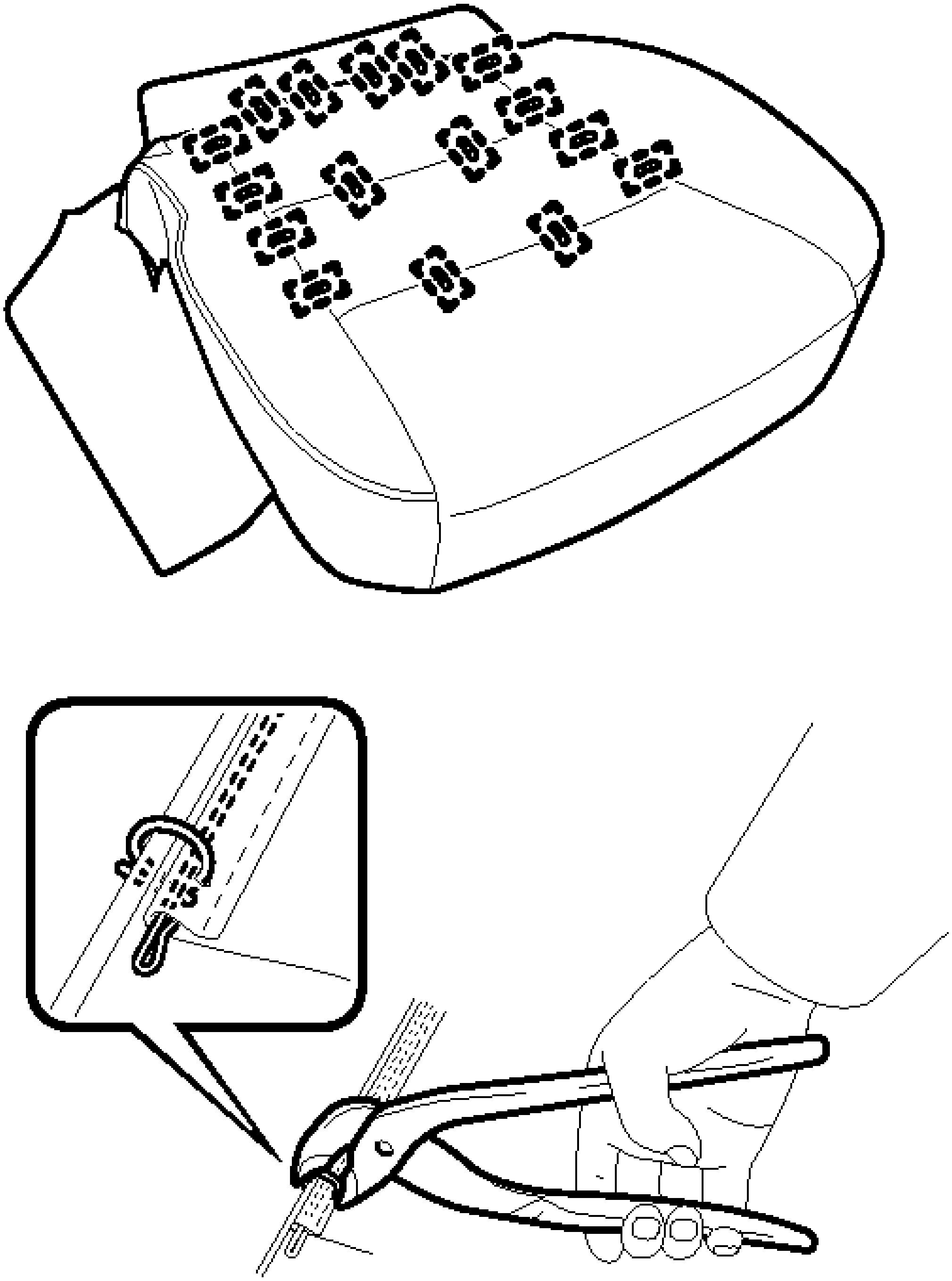

C

Fig. 225: Installing Front Seat Cushion Cover Hog Rings
Courtesy of TOYOTA MOTOR SALES, U.S.A., INC.

NOTE:

- **Be careful not to damage the separate type front seat cushion cover.**

- **When installing the hog rings, take care to minimize wrinkles as much as possible.**

b. Using hog ring pliers, install 2 new hog rings.

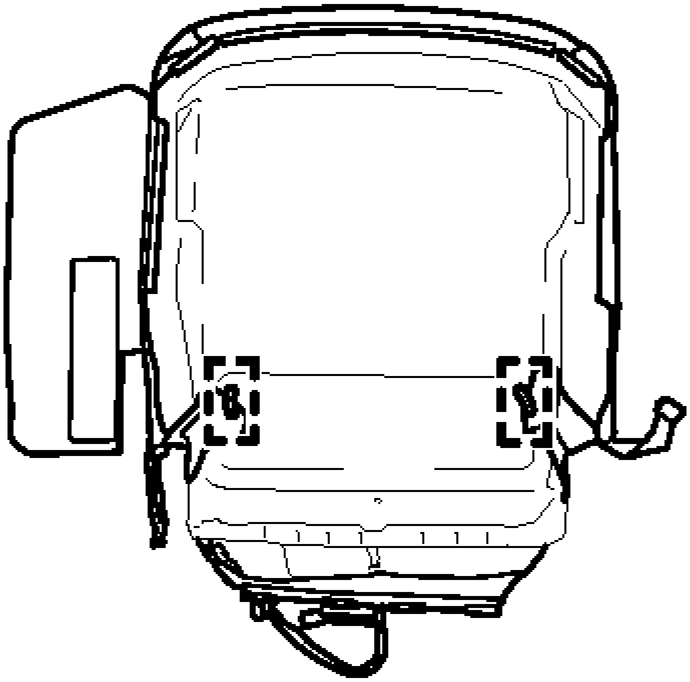

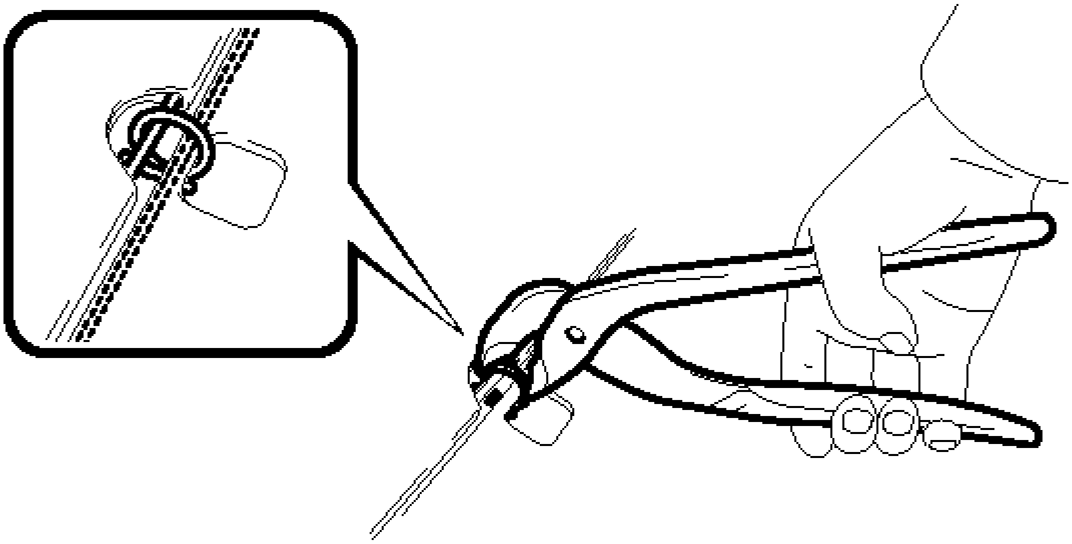

P

Fig. 226: Installing Front Seat Cushion Cover Hog Rings
Courtesy of TOYOTA MOTOR SALES, U.S.A., INC.

NOTE:

- **Be careful not to damage the separate type front seat cushion cover.**
- **When installing the hog rings, take care to minimize wrinkles as much as possible.**

21. **INSTALL SEPARATE TYPE FRONT SEAT CUSHION COVER WITH PAD**
    a. Temporarily install the separate type front seat cushion cover with pad.
    b. Engage each hook.
    c. w/ Seat Heater System:
        1. Engage the 2 clamps to install the seat heater wire harness.
        2. Connect the connector.
        3. Engage the clamp.
        4. Connect the connector.
    d. Engage the claw and 3 clamps to install the front seat airbag assembly wire harness.
    e. Engage the fastener to secure the front seat airbag assembly wire harness.
22. **INSTALL FRONT SEAT INNER BELT ASSEMBLY (for Driver Side)** . Refer to **INSTALLATION - Step 1** .
23. **INSTALL FRONT SEAT INNER BELT ASSEMBLY (for Front Passenger Side)** . Refer to **INSTALLATION - Step 2** .
24. **INSTALL FRONT SEAT INNER CUSHION SHIELD (for Driver Side)**
    a. Engage the 5 claws and 6 guides to install the front seat inner cushion shield.
25. **INSTALL FRONT SEAT INNER CUSHION SHIELD (for Front Passenger Side)**
    a. Engage the 5 claws and 7 guides to install the front seat inner cushion shield.
26. **INSTALL FRONT LUMBAR POWER SEAT SWITCH (for Driver Side)** . See step 3.
27. **INSTALL FRONT POWER SEAT SWITCH** . See step 7.
28. **INSTALL FRONT SEAT CUSHION SHIELD (for Driver Side)**
    a. Connect the front lumbar power seat switch connector.
    b. Connect the front power seat switch connector.
    c. Engage the 2 wire harness clamps.
    d. Install the wire harness to the wire harness cover.
    e. Engage the 2 claws to close the wire harness cover.
    f. Engage the 4 claws, 7 guides and clip to install the front seat cushion shield.
29. **INSTALL FRONT SEAT CUSHION SHIELD (for Front Passenger Side)**
    a. Connect the front power seat switch connector.
    b. Engage the 2 wire harness clamps.
    c. Install the wire harness to the wire harness cover.

d. Engage the 3 claws to close the wire harness cover.

e. Engage the 4 claws, 8 guides and clip to install the front seat cushion shield.

30. **INSTALL FRONT NO. 1 SEAT INNER CUSHION SHIELD**

a. Install the clip.

b. Engage the 3 claws and 3 guides to install the front No. 1 seat inner cushion shield as shown in the illustration.

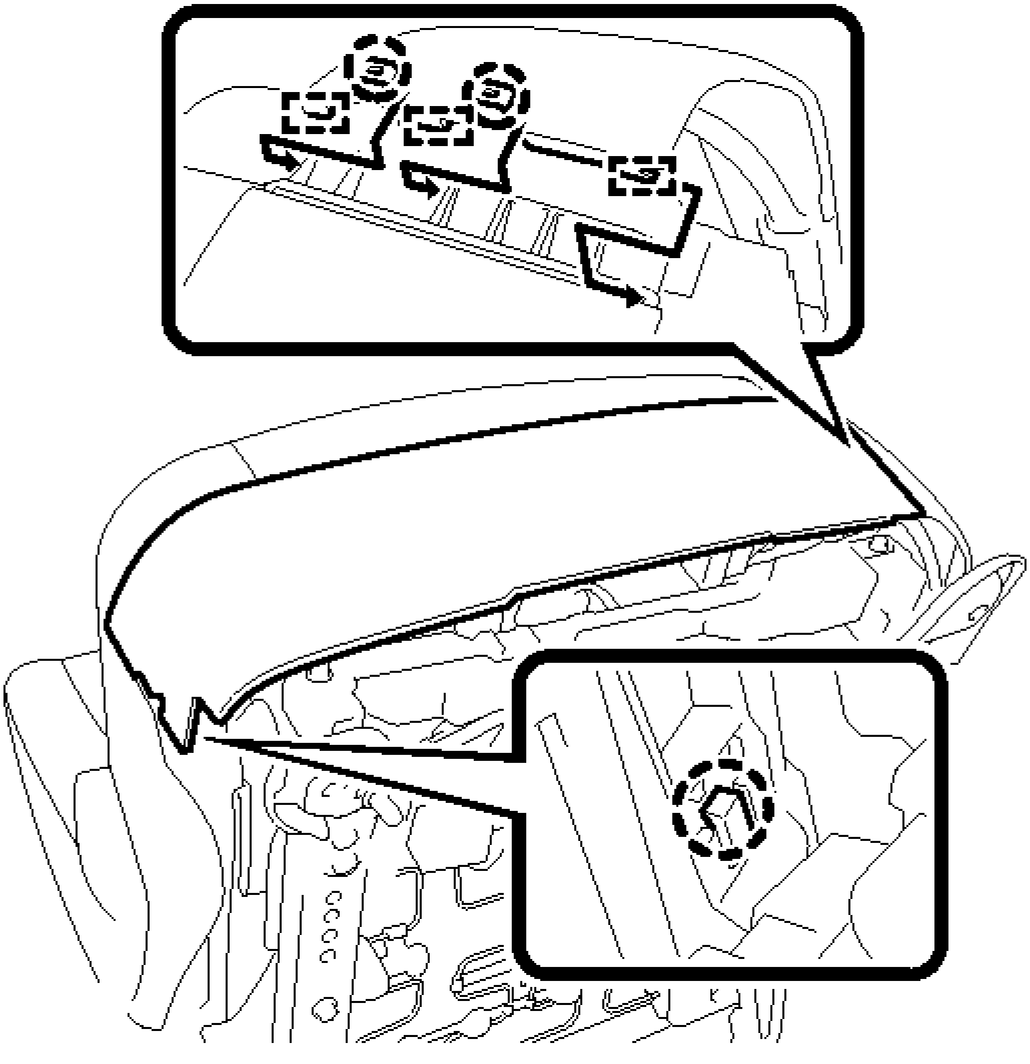

Fig. 227: Locating Front No. 1 Seat Inner Cushion Shield And Fasteners
Courtesy of TOYOTA MOTOR SALES, U.S.A., INC.

c. Engage the 2 claws to install the clip to the front No. 1 seat inner cushion shield as shown in the illustration.

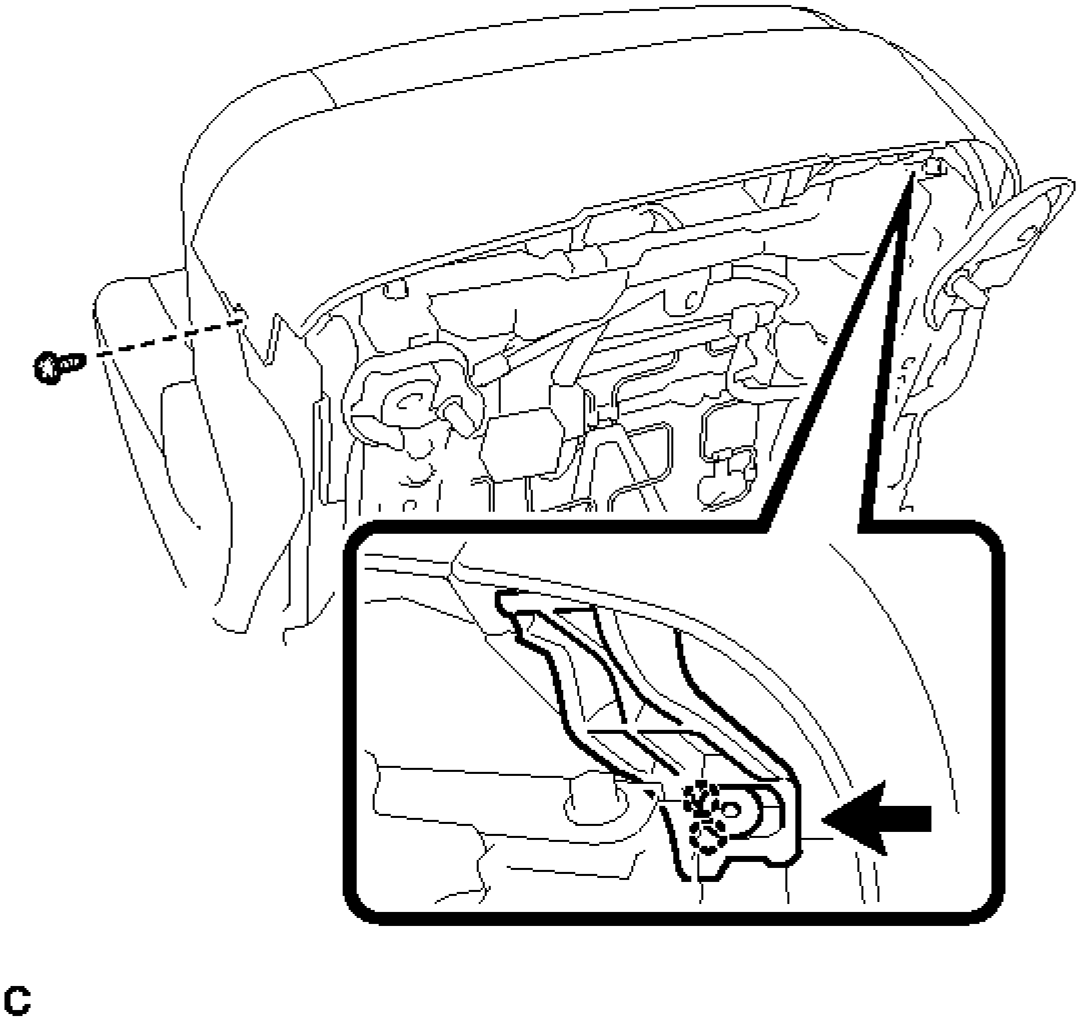

Fig. 228: Installing Front No. 1 Seat Inner Cushion Shield And Fasteners
Courtesy of TOYOTA MOTOR SALES, U.S.A., INC.

d. Install the screw.

31. **CONNECT SEPARATE TYPE FRONT SEATBACK COVER**
    a. Connect the rubber band of the separate type front seatback cover.
32. **INSTALL RECLINING POWER SEAT SWITCH KNOB**
    a. Engage the 4 claws to install the reclining power seat switch knob.
33. **INSTALL SLIDE AND VERTICAL POWER SEAT SWITCH KNOB**
    a. Engage the 4 claws to install the slide and vertical power seat switch knob.
34. **INSTALL SEAT ADJUSTER COVER CAP**
    a. Install the 2 seat adjuster cover caps.

INSTALLATION

INSTALLATION

1. **INSTALL FRONT SEAT ASSEMBLY**
   a. Place the front seat assembly in the cabin.

   NOTE: **Be careful not to damage the vehicle body.**

   b. Connect each connector and clamp under the seat.
   c. Connect the cable to the negative (-) battery terminal.

   NOTE: **When disconnecting the cable, some systems need to be initialized after the cable is reconnected. Refer to INITIALIZATION .**

   d. Temporarily install the front seat assembly with the 4 bolts.
   e. Operate the power seat switch knob and move the seat to the rearmost position.
   f. Tighten the 2 bolts on the front side of the seat.

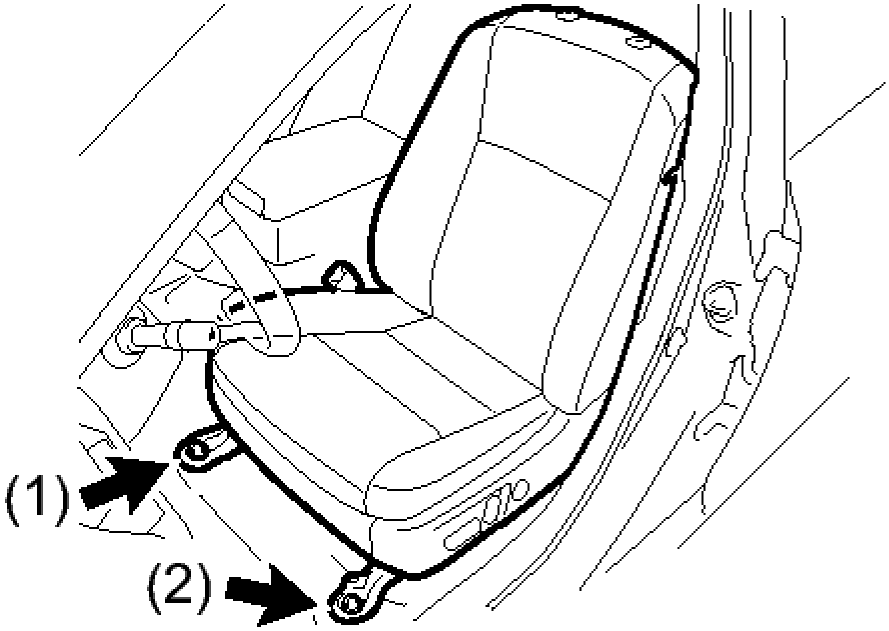

Fig. 229: Locating Front Seat Assembly Front Bolts With Tightening Sequence
Courtesy of TOYOTA MOTOR SALES, U.S.A., INC.

Torque: 37 N*m (377 kgf*cm, 27 ft.*lbf)

NOTE: **Tighten the bolts in the order indicated in the illustration.**

   g. Operate the power seat switch knob and move the seat to the foremost position.

h. Tighten the 2 bolts on the rear side of the seat.

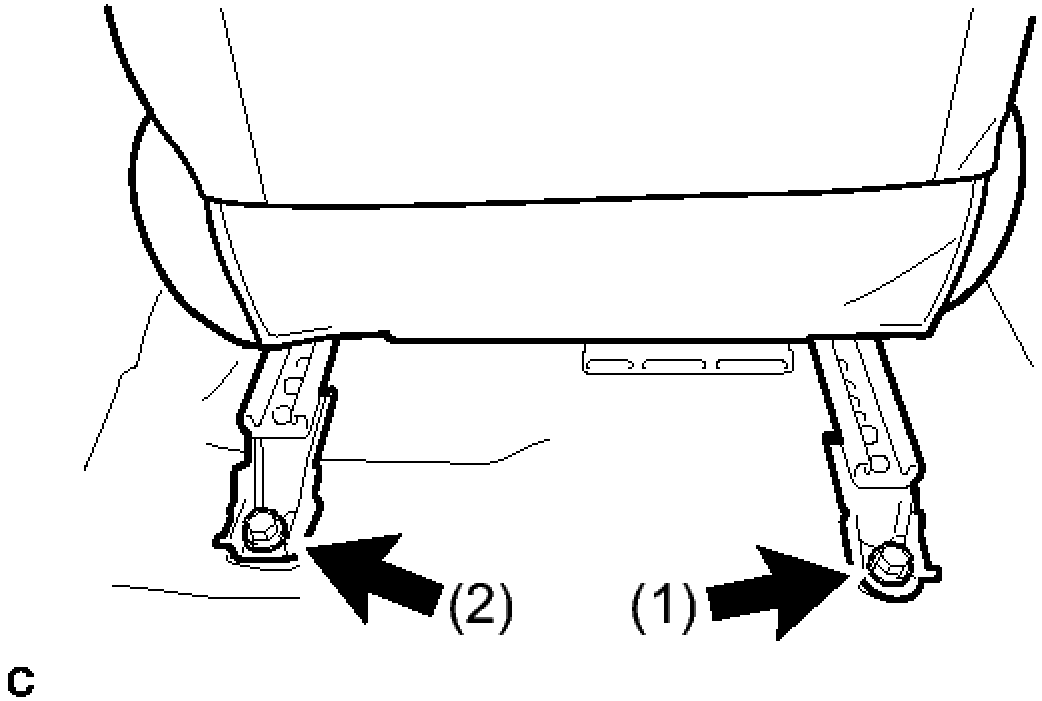

Fig. 230: Locating Front Seat Assembly Rear Bolts With Tightening Sequence
Courtesy of TOYOTA MOTOR SALES, U.S.A., INC.

Torque: 37 N*m (377 kgf*cm, 27 ft.*lbf)

NOTE: Tighten the bolts in the order indicated in the illustration.

2. **INSTALL REAR INNER SEAT TRACK BRACKET COVER**
   a. Engage the 2 claws to install the rear inner seat track bracket cover.
3. **INSTALL REAR OUTER SEAT TRACK BRACKET COVER**
   a. Engage the 2 claws to install the rear outer seat track bracket cover.
4. **INSTALL FRONT SEAT HEADREST ASSEMBLY**
5. **INSPECT FRONT SEAT ASSEMBLY**
   a. Check the power seat operation. Refer to **OPERATION CHECK** .
   b. w/ Seat Heater System:

      Check the seat heater operation.

      1. Turn the ignition switch to ON.
      2. Turn the seat heater switch on.
      3. Wait 5 minutes or more and confirm that the seat surface becomes warm.
6. **PERFORM ZERO POINT CALIBRATION AND SENSITIVITY CHECK**

Refer to **INITIALIZATION** .

7. **INSPECT SRS WARNING LIGHT**

   For Separate Type Yaw Rate Sensor: Refer to **DIAGNOSIS SYSTEM** .

   For Built-in Type Yaw Rate Sensor: Refer to **DIAGNOSIS SYSTEM** .

REAR SEAT ASSEMBLY

COMPONENTS

ILLUSTRATION

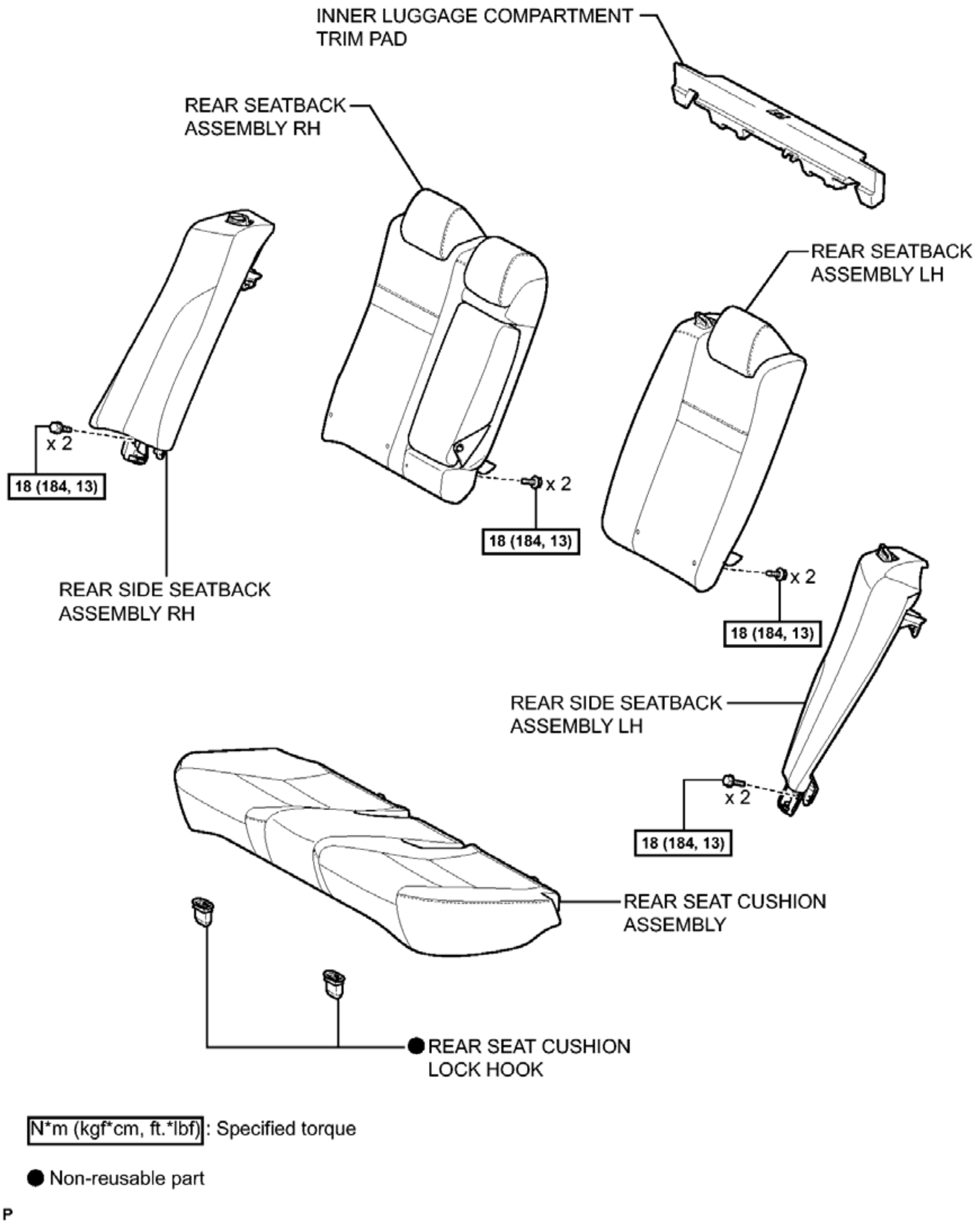
INNER LUGGAGE COMPARTMENT TRIM PAD
REAR SEATBACK ASSEMBLY RH
REAR SEATBACK ASSEMBLY LH
x 2
18 (184, 13)
x 2
18 (184, 13)
x 2
18 (184, 13)
REAR SIDE SEATBACK ASSEMBLY RH
REAR SIDE SEATBACK ASSEMBLY LH
x 2
18 (184, 13)
REAR SEAT CUSHION ASSEMBLY
● REAR SEAT CUSHION LOCK HOOK
N*m (kgf*cm, ft.*lbf) : Specified torque
● Non-reusable part
P

Fig. 231: Identifying Rear Seat Assembly Replacement Components With Torque Specifications (1 Of 4)
Courtesy of TOYOTA MOTOR SALES, U.S.A., INC.

ILLUSTRATION

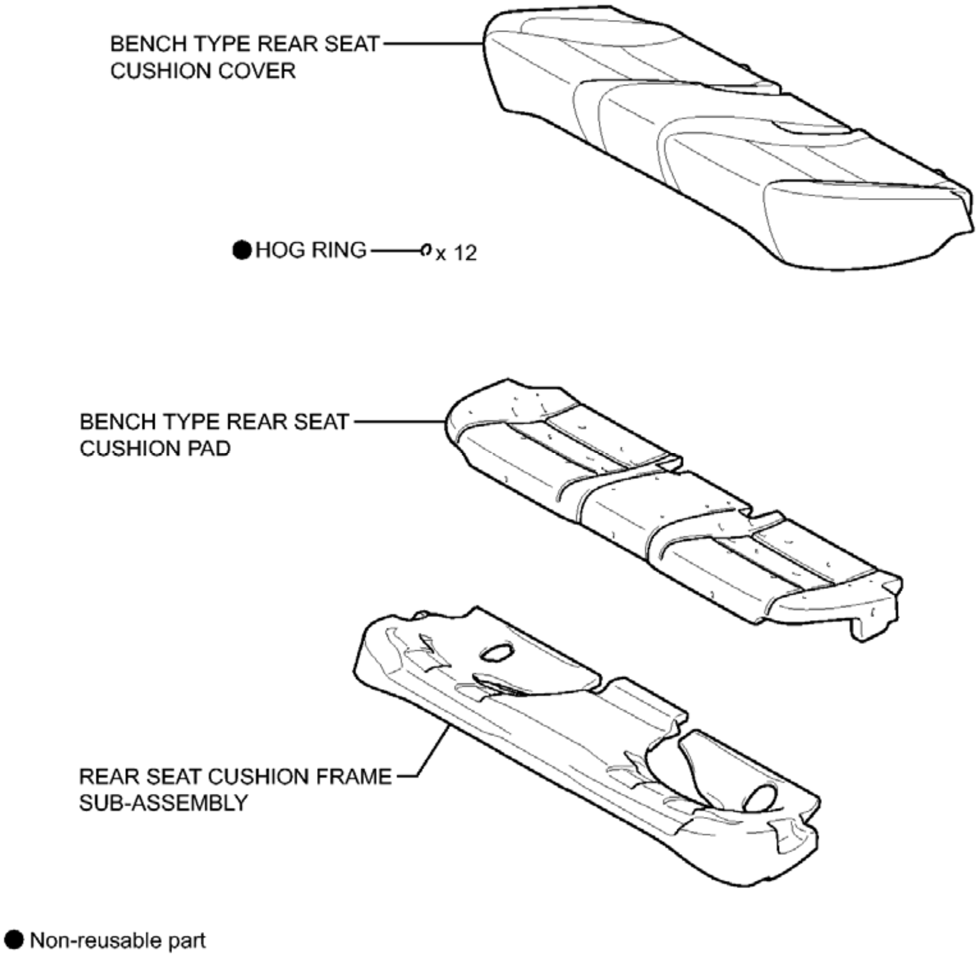
BENCH TYPE REAR SEAT CUSHION COVER
● HOG RING x 12
BENCH TYPE REAR SEAT CUSHION PAD
REAR SEAT CUSHION FRAME SUB-ASSEMBLY
● Non-reusable part
P

Fig. 232: Identifying Rear Seat Assembly Replacement Components (2 Of 4)
Courtesy of TOYOTA MOTOR SALES, U.S.A., INC.

ILLUSTRATION

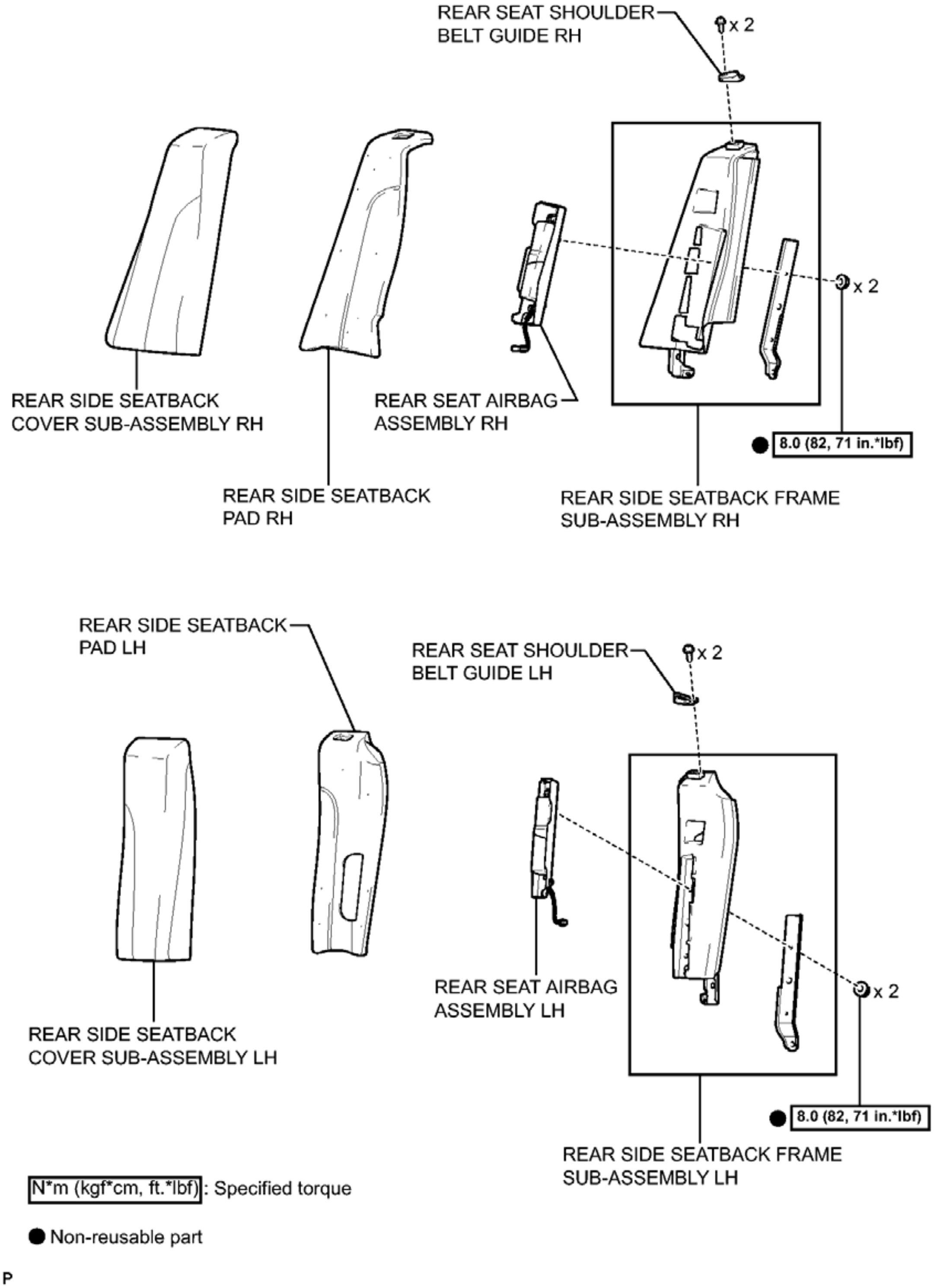
REAR SEAT SHOULDER BELT GUIDE RH
x 2
x 2
REAR SIDE SEATBACK COVER SUB-ASSEMBLY RH
REAR SEAT AIRBAG ASSEMBLY RH
● 8.0 (82, 71 in.*lbf)
REAR SIDE SEATBACK PAD RH
REAR SIDE SEATBACK FRAME SUB-ASSEMBLY RH
REAR SIDE SEATBACK PAD LH
REAR SEAT SHOULDER BELT GUIDE LH
x 2
x 2
REAR SEAT AIRBAG ASSEMBLY LH
REAR SIDE SEATBACK COVER SUB-ASSEMBLY LH
● 8.0 (82, 71 in.*lbf)
REAR SIDE SEATBACK FRAME SUB-ASSEMBLY LH
N*m (kgf*cm, ft.*lbf) : Specified torque
● Non-reusable part
P

Fig. 233: Identifying Rear Seat Assembly Replacement Components With Torque Specifications (3 Of 4)
Courtesy of TOYOTA MOTOR SALES, U.S.A., INC.

ILLUSTRATION

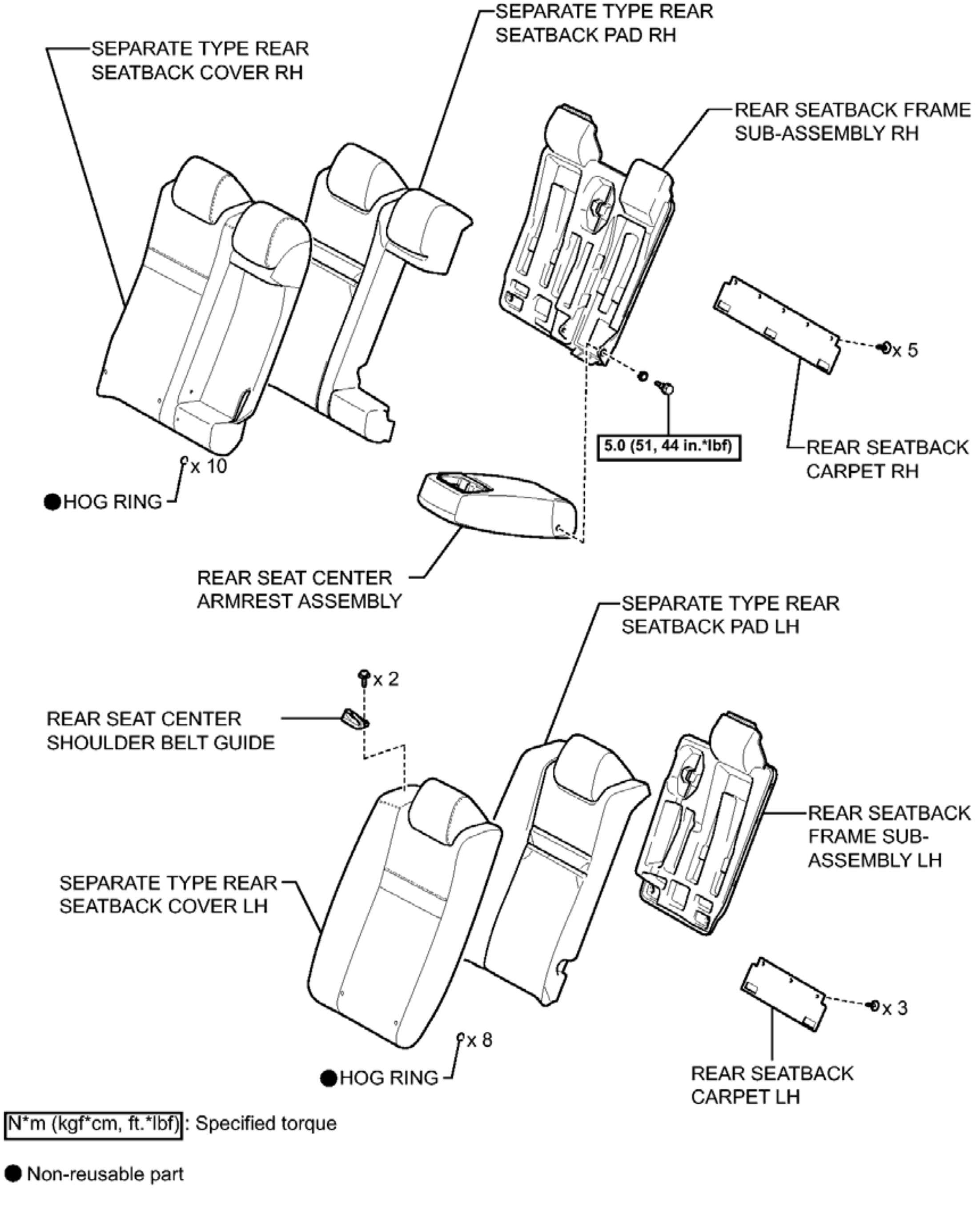
SEPARATE TYPE REAR SEATBACK PAD RH
SEPARATE TYPE REAR SEATBACK COVER RH
REAR SEATBACK FRAME SUB-ASSEMBLY RH
x 5
5.0 (51, 44 in.*lbf)
REAR SEATBACK CARPET RH
x 10
● HOG RING
REAR SEAT CENTER ARMREST ASSEMBLY
SEPARATE TYPE REAR SEATBACK PAD LH
x 2
REAR SEAT CENTER SHOULDER BELT GUIDE
REAR SEATBACK FRAME SUB-ASSEMBLY LH
SEPARATE TYPE REAR SEATBACK COVER LH
x 3
x 8
● HOG RING
REAR SEATBACK CARPET LH
N*m (kgf*cm, ft.*lbf) : Specified torque
● Non-reusable part
P

Fig. 234: Identifying Rear Seat Assembly Replacement Components With Torque Specifications (4 Of 4)
Courtesy of TOYOTA MOTOR SALES, U.S.A., INC.

REMOVAL

REMOVAL

1. **PRECAUTION**

WARNING:

- **Be sure to read Precaution thoroughly before servicing.**

  For Separate Type Yaw Rate Sensor: Refer to PRECAUTION .

  For Built-in Type Yaw Rate Sensor: Refer to PRECAUTION .

- **If the side airbag was deployed, replace the rear seat airbag assembly, rear side seatback frame sub-assembly, rear side seatback cover sub-assembly and rear side seatback pad with the necessary parts in accordance with the extent of the collision damage.**

NOTE: **After turning the ignition switch off, waiting time may be required before disconnecting the cable from the negative (-) battery terminal. Therefore, make sure to read the disconnecting the cable from the negative (-) battery terminal notices before proceeding with work. Refer to PRECAUTION .**

2. **DISCONNECT CABLE FROM NEGATIVE BATTERY TERMINAL**

WARNING: **Wait at least 90 seconds after disconnecting the cable from the negative (-) battery terminal to disable the SRS system.**

NOTE: **When disconnecting the cable, some systems need to be initialized after the cable is reconnected. Refer to INITIALIZATION .**

3. **REMOVE REAR SEAT CUSHION ASSEMBLY**
   a. Disengage the hook of the seat cushion from the vehicle body as shown in the illustration.

   NOTE: **Follow the instructions below carefully as the cushion frame can be deformed easily.**

   1. Choose a hook to disengage first. Place your hands near the hook as shown in the illustration. Then lift the seat cushion to disengage the hook.

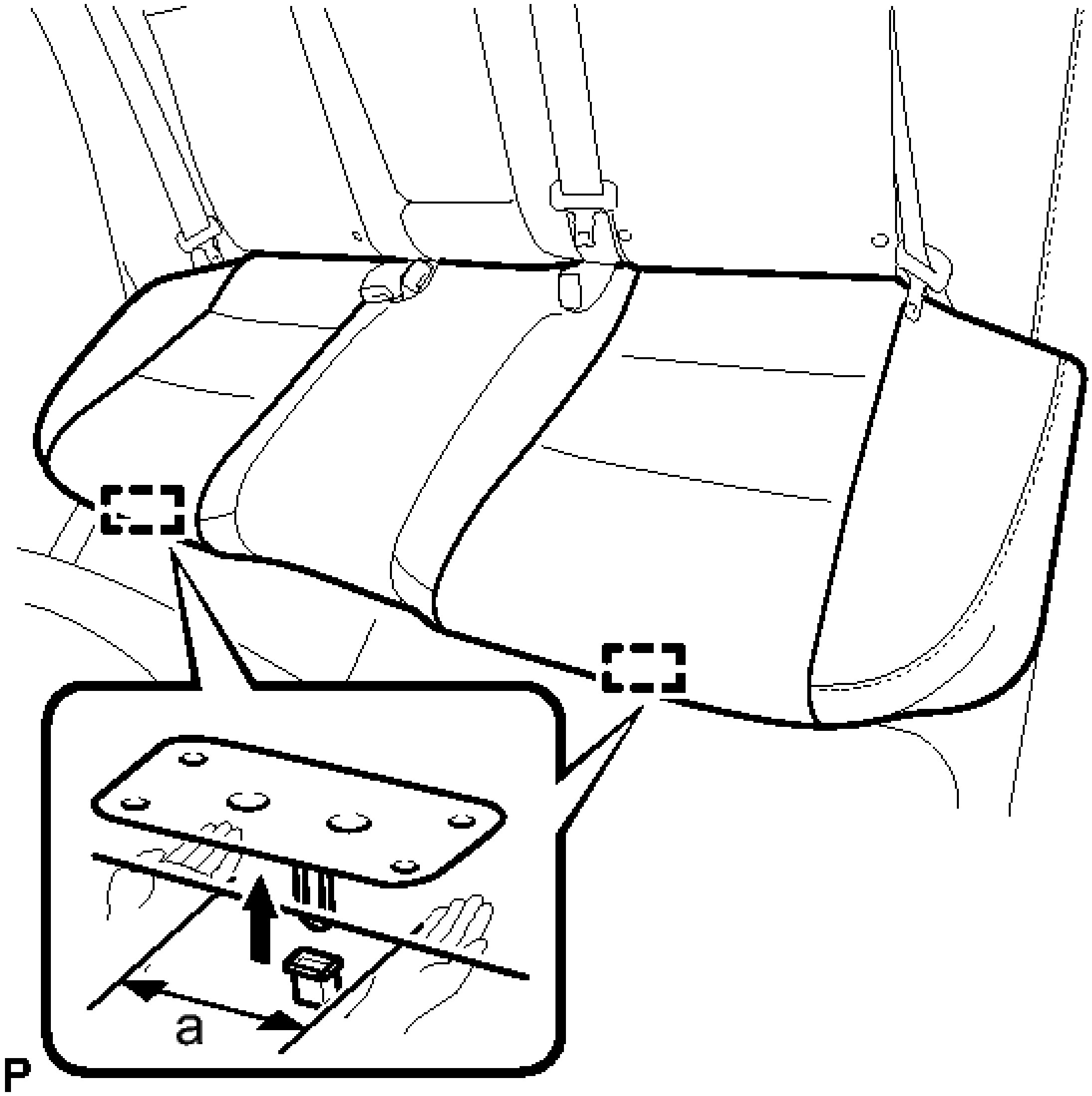

Fig. 235: Removing Rear Seat Cushion Assembly
Courtesy of TOYOTA MOTOR SALES, U.S.A., INC.

STANDARD MEASUREMENT

a	100 mm (3.94 in.) or less

    2. Repeat the step above for the other hook.

  b. Remove the rear seat cushion assembly.

4. **REMOVE REAR SEAT CUSHION LOCK HOOK**

  a. Disengage the claw and remove the rear seat cushion lock hook.

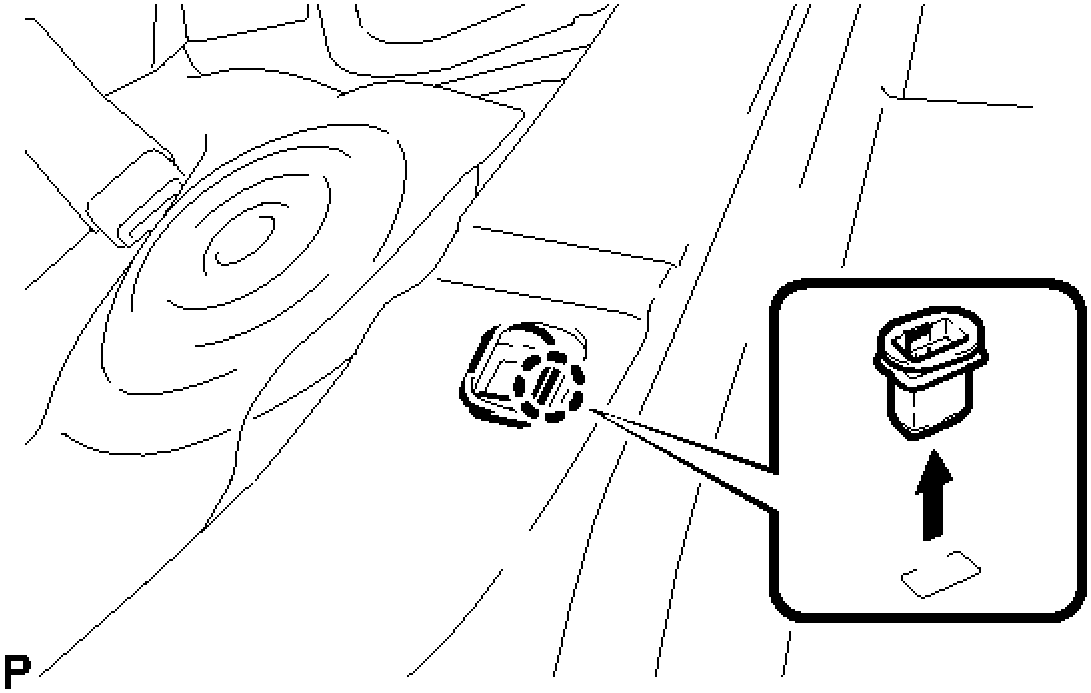

Fig. 236: Removing Rear Seat Cushion Lock Hook
Courtesy of TOYOTA MOTOR SALES, U.S.A., INC.

NOTE: Rear seat cushion lock hooks must not be reused.

HINT:

Use the same procedure for the RH side and the LH side.

5. **REMOVE INNER LUGGAGE COMPARTMENT TRIM PAD**
    a. Remove the inner luggage compartment trim pad.

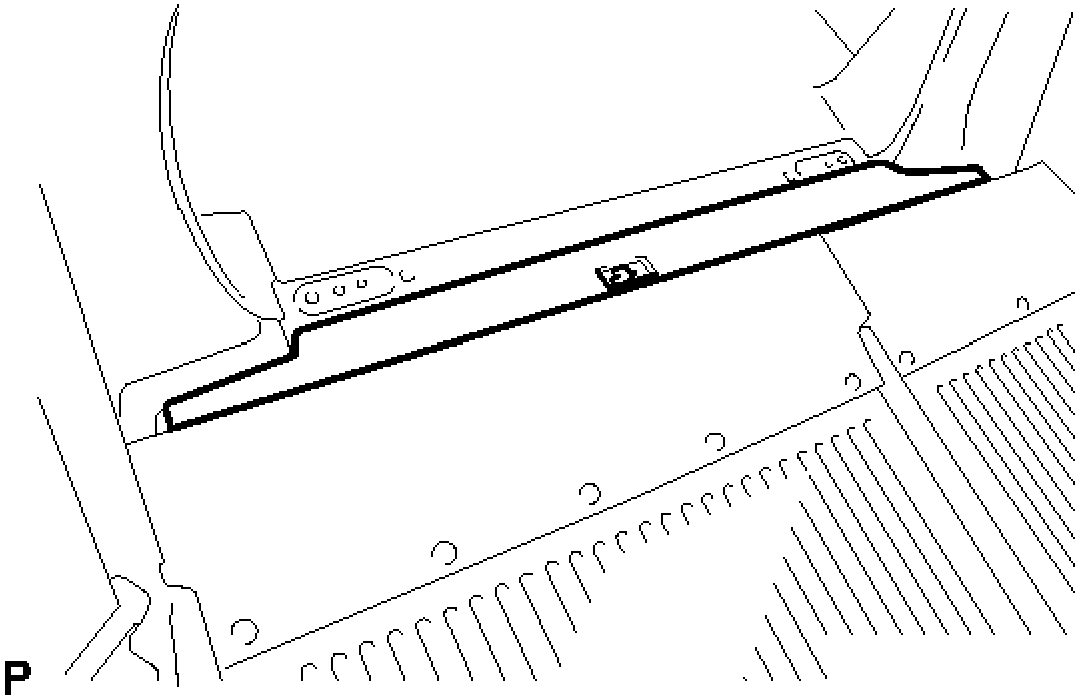

Fig. 237: Locating Inner Luggage Compartment Trim Pad
Courtesy of TOYOTA MOTOR SALES, U.S.A., INC.

6. **REMOVE REAR SEATBACK ASSEMBLY LH**
   a. Disengage the 2 fasteners as shown in the illustration.

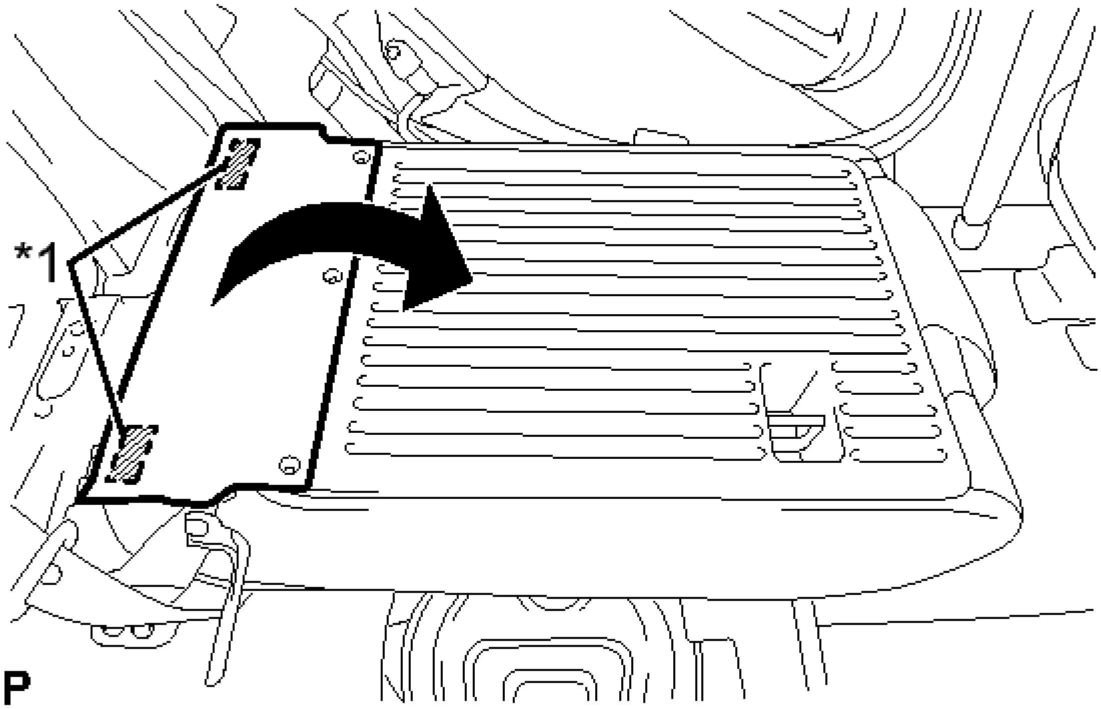

Fig. 238: Locating Rear Seatback Assembly LH Fasteners

Courtesy of TOYOTA MOTOR SALES, U.S.A., INC.

TEXT IN ILLUSTRATION

*1	Fastener

b. Remove the 2 bolts and rear seatback assembly LH.

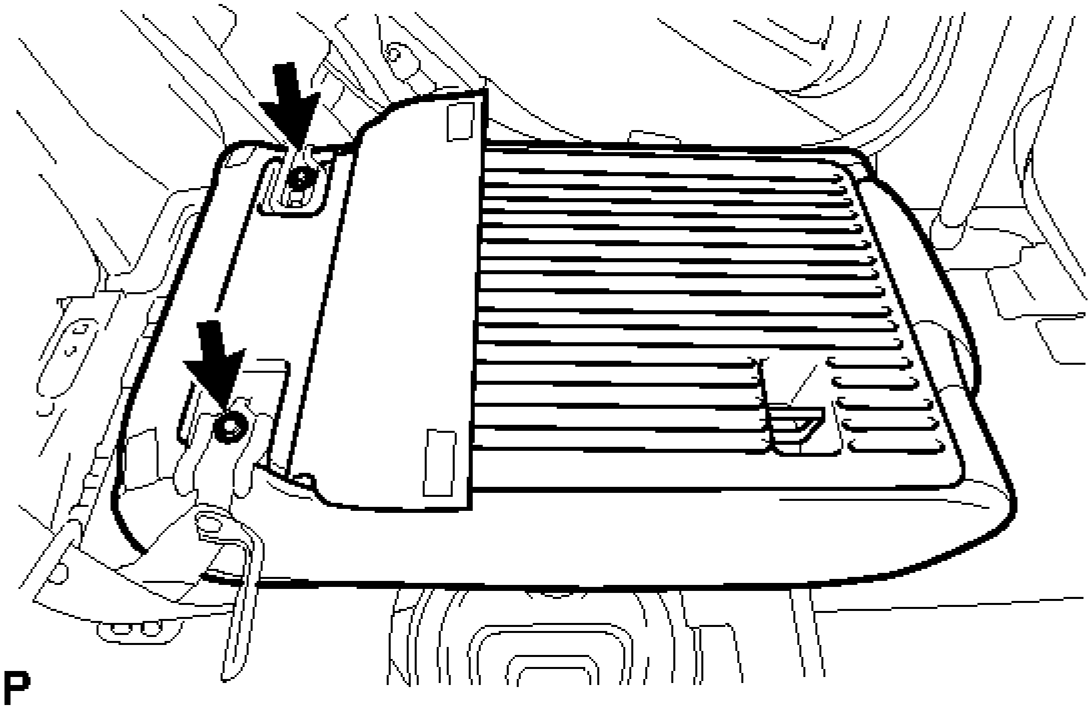

Fig. 239: Identifying Rear Seatback Assembly LH Fasteners
Courtesy of TOYOTA MOTOR SALES, U.S.A., INC.

NOTE: **Be careful not to damage the vehicle body.**

7. **REMOVE REAR SEATBACK ASSEMBLY RH**
    a. Disengage the 3 fasteners as shown in the illustration.

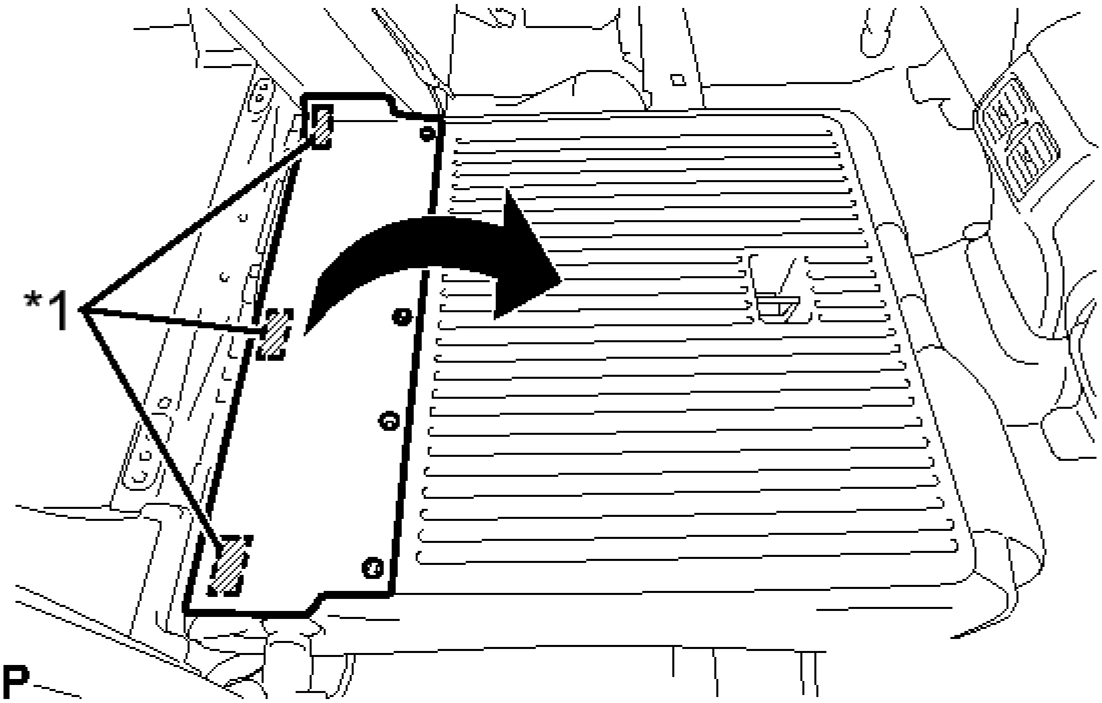

Fig. 240: Locating Rear Seatback Assembly RH Fasteners
Courtesy of TOYOTA MOTOR SALES, U.S.A., INC.

TEXT IN ILLUSTRATION

*1	Fastener

b. Remove the 2 bolts and rear seatback assembly RH.

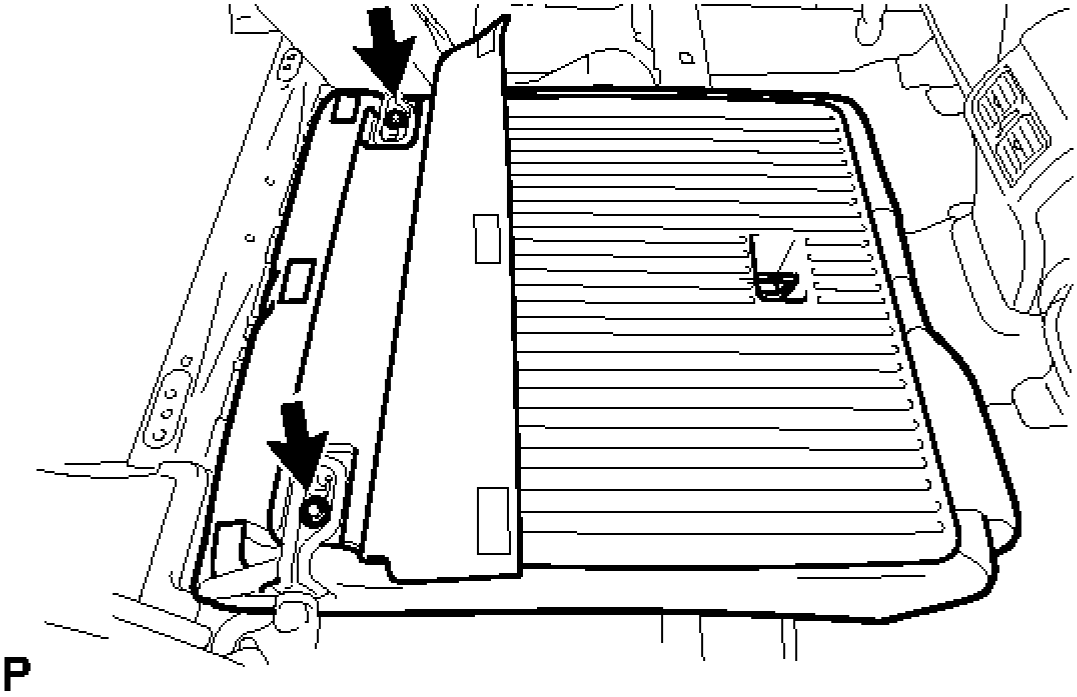

Fig. 241: Identifying Rear Seatback Assembly RH Fasteners
Courtesy of TOYOTA MOTOR SALES, U.S.A., INC.

NOTE: **Be careful not to damage the vehicle body.**

8. **REMOVE REAR SIDE SEATBACK ASSEMBLY LH**
    1. Disconnect the rear seat outer belt from the rear seat shoulder belt guide.
    2. Disconnect the connector.
    3. Remove the 2 bolts.

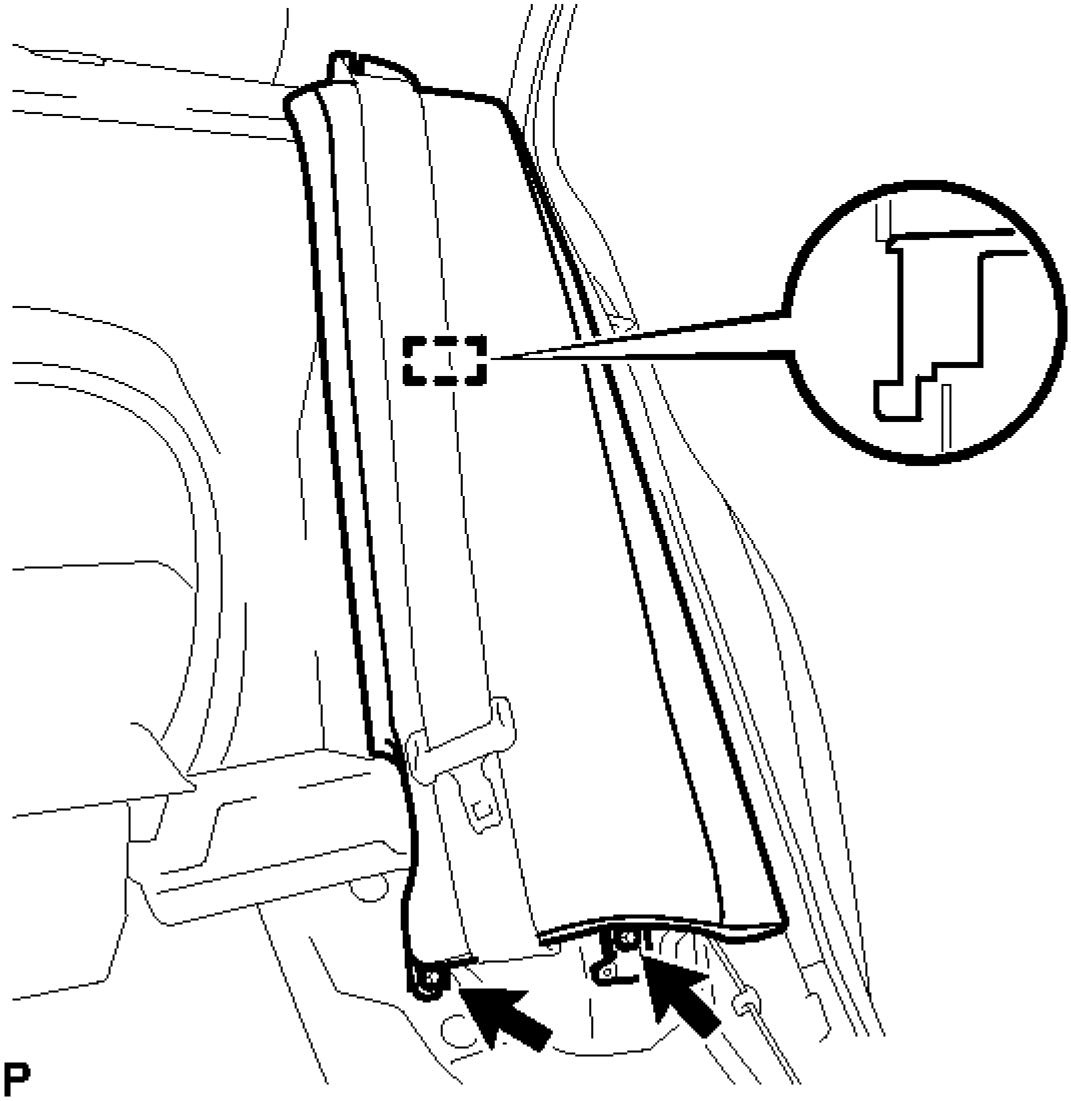

Fig. 242: Identifying Rear Side Seatback Assembly LH Connector And Bolts
Courtesy of TOYOTA MOTOR SALES, U.S.A., INC.

d. Disengage the hook and remove the rear side seatback assembly LH.

9. **REMOVE REAR SIDE SEATBACK ASSEMBLY RH**
   a. Disconnect the rear seat outer belt from the rear seat shoulder belt guide.
   b. Disconnect the connector.
   c. Remove the 2 bolts.

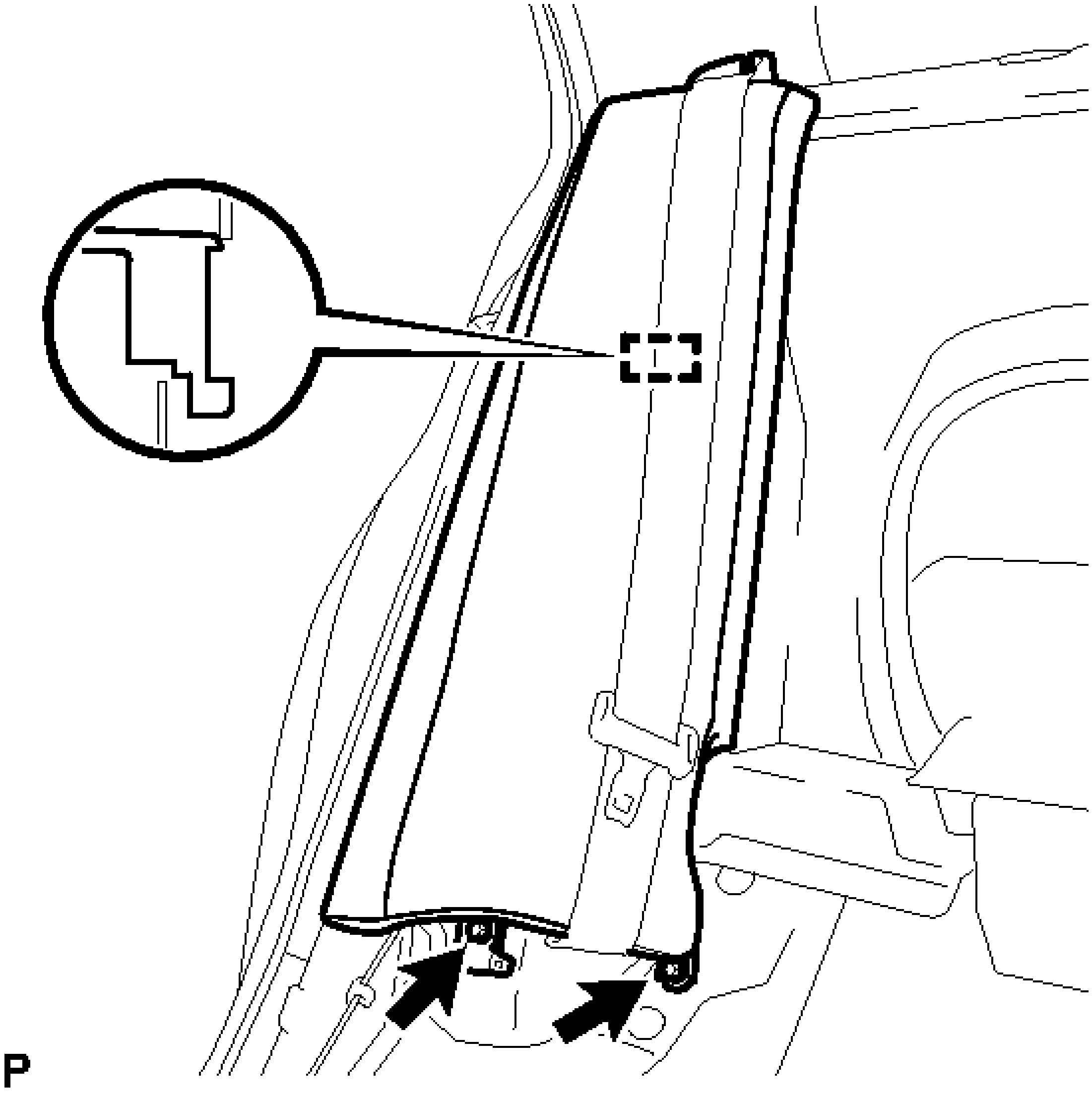

Fig. 243: Identifying Rear Side Seatback Assembly RH Connector And Bolts
Courtesy of TOYOTA MOTOR SALES, U.S.A., INC.

d. Disengage the hook and remove the rear side seatback assembly RH.

DISASSEMBLY

DISASSEMBLY

1. **REMOVE REAR SEAT CUSHION FRAME SUB-ASSEMBLY**
    a. Disengage the 13 hooks and remove the rear seat cushion frame sub-assembly.

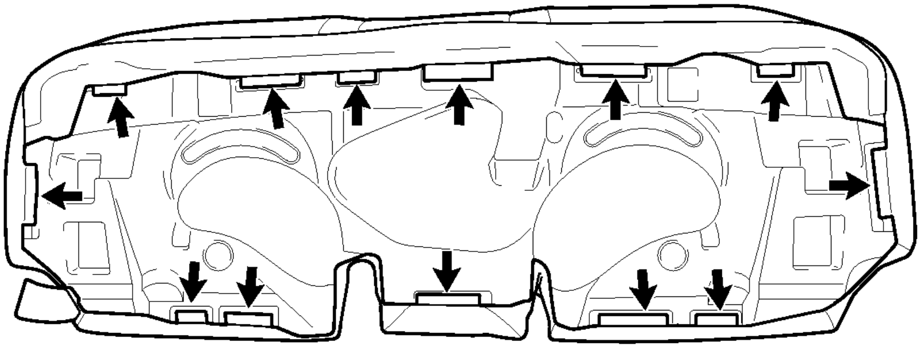

P

Fig. 244: Identifying Rear Seat Cushion Frame Hooks
Courtesy of TOYOTA MOTOR SALES, U.S.A., INC.

2. **REMOVE BENCH TYPE REAR SEAT CUSHION COVER**
    a. Remove the 12 hog rings and disengage the 4 fasteners, and remove the bench type rear seat cushion cover from the bench type rear seat cushion pad.

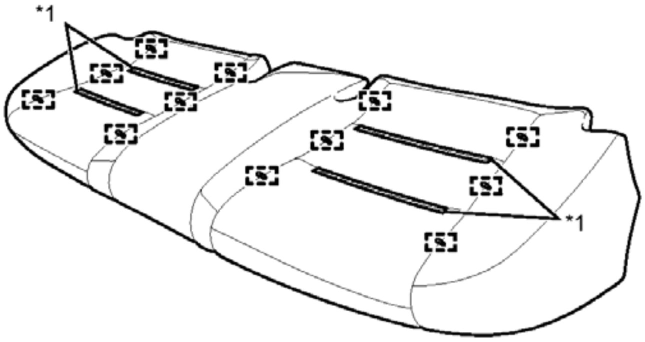

P

Fig. 245: Identifying Bench Type Rear Seat Cushion Cover Fasteners And Hog Rings
Courtesy of TOYOTA MOTOR SALES, U.S.A., INC.

TEXT IN ILLUSTRATION

*1	Fastener	-	-

3. **REMOVE REAR SEAT SHOULDER BELT GUIDE LH**
    a. Remove the 2 screws.

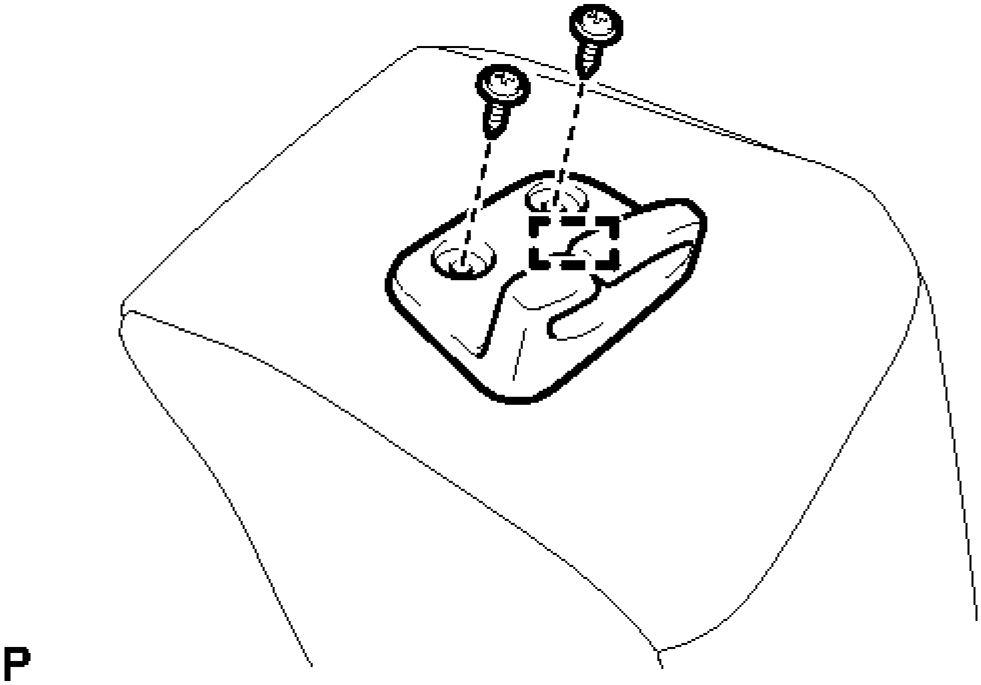

Fig. 246: Identifying Rear Seat Shoulder Belt Guide LH Fasteners
Courtesy of TOYOTA MOTOR SALES, U.S.A., INC.

   b. Disengage the guide and remove the rear seat shoulder belt guide LH.

4. **REMOVE REAR SEAT AIRBAG ASSEMBLY LH** . Refer to **REMOVAL - Step 7** .
5. **REMOVE REAR SIDE SEATBACK COVER SUB-ASSEMBLY LH**
   a. Remove the rear side seatback cover sub-assembly LH from the rear side seatback pad LH.

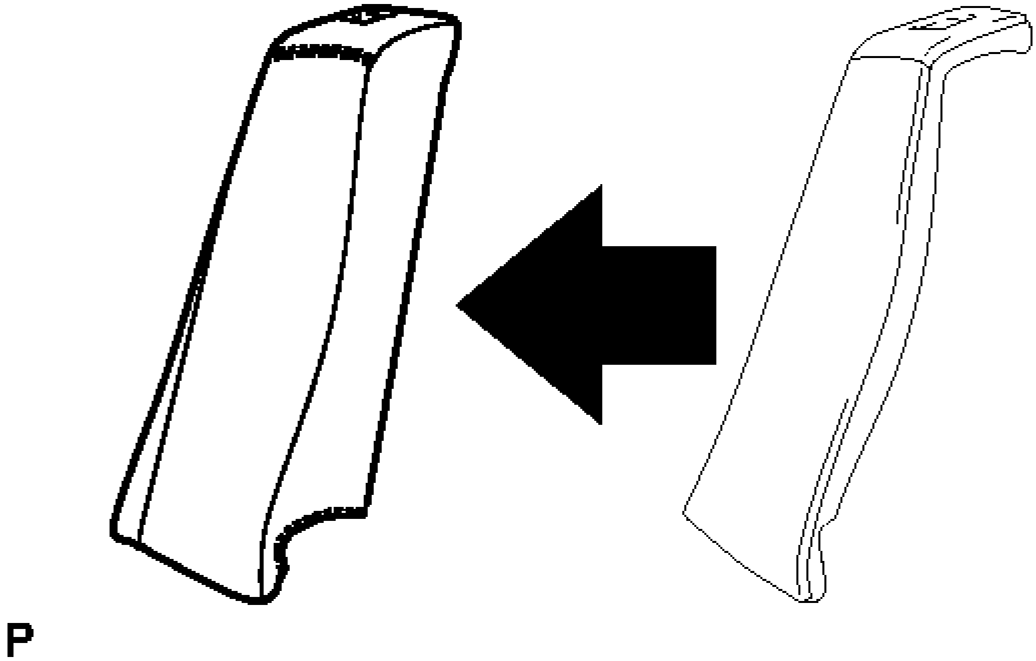

Fig. 247: Removing Rear Side Seatback Cover Sub-Assembly LH
Courtesy of TOYOTA MOTOR SALES, U.S.A., INC.

6. **REMOVE REAR SEAT SHOULDER BELT GUIDE RH**

   HINT:

   Use the same procedure as for the LH side.

7. **REMOVE REAR SEAT AIRBAG ASSEMBLY RH**

   HINT:

   Use the same procedure as for the LH side. Refer to **REMOVAL - Step 7** .

8. **REMOVE REAR SIDE SEATBACK COVER SUB-ASSEMBLY RH**

   HINT:

   Use the same procedure as for the LH side.

9. **REMOVE REAR SEAT CENTER SHOULDER BELT GUIDE**
   1. Remove the 2 screws.

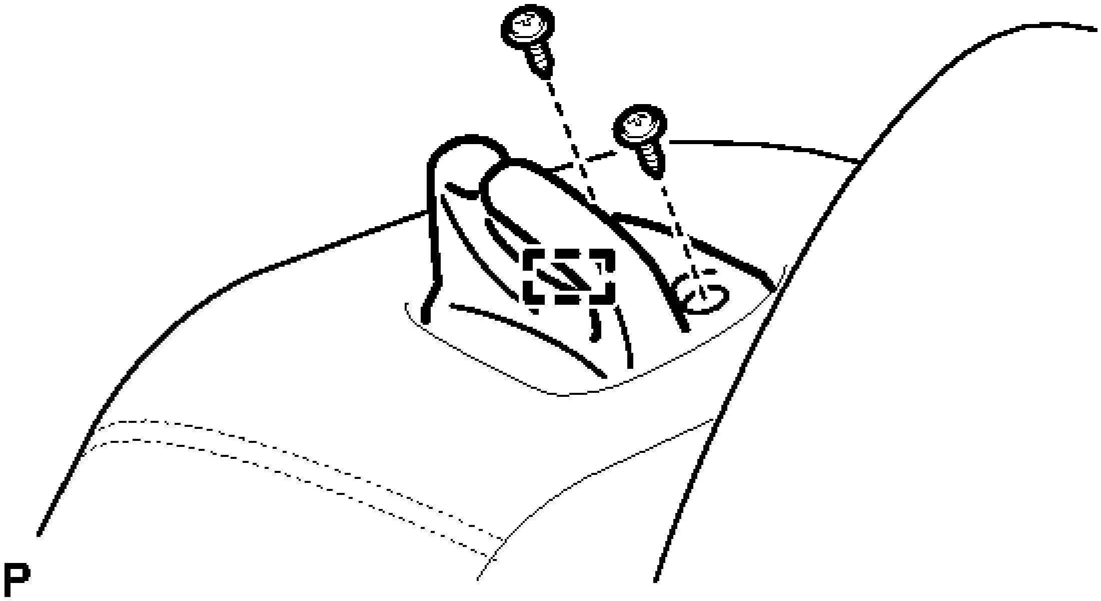

Fig. 248: Identifying Rear Seat Center Shoulder Belt Guide Fasteners
Courtesy of TOYOTA MOTOR SALES, U.S.A., INC.

b. Disengage the guide and remove the rear seat center shoulder belt guide.

10. **REMOVE REAR SEATBACK CARPET LH**

a. Using a clip remover, remove the 3 clips.

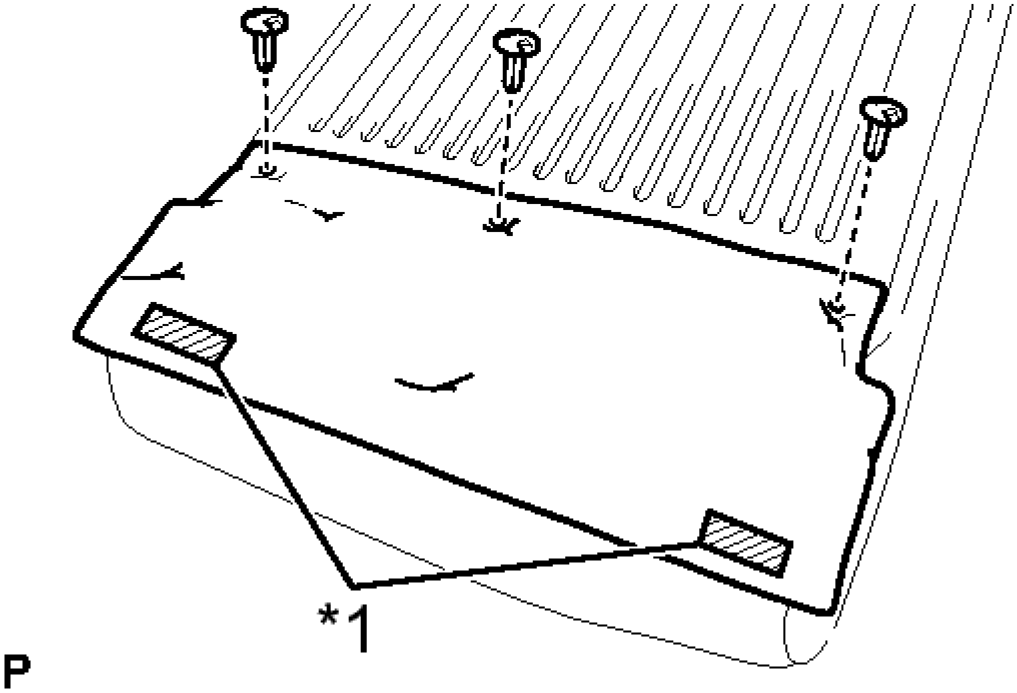

Fig. 249: Locating Rear Seatback Carpet LH Clips And Fasteners
Courtesy of TOYOTA MOTOR SALES, U.S.A., INC.

b. Disengage the 2 fasteners and remove the rear seatback carpet LH.

TEXT IN ILLUSTRATION

*1	Fastener

11. REMOVE REAR SEATBACK FRAME SUB-ASSEMBLY LH

a. Disengage the 20 claws and remove the rear seatback frame sub-assembly LH.

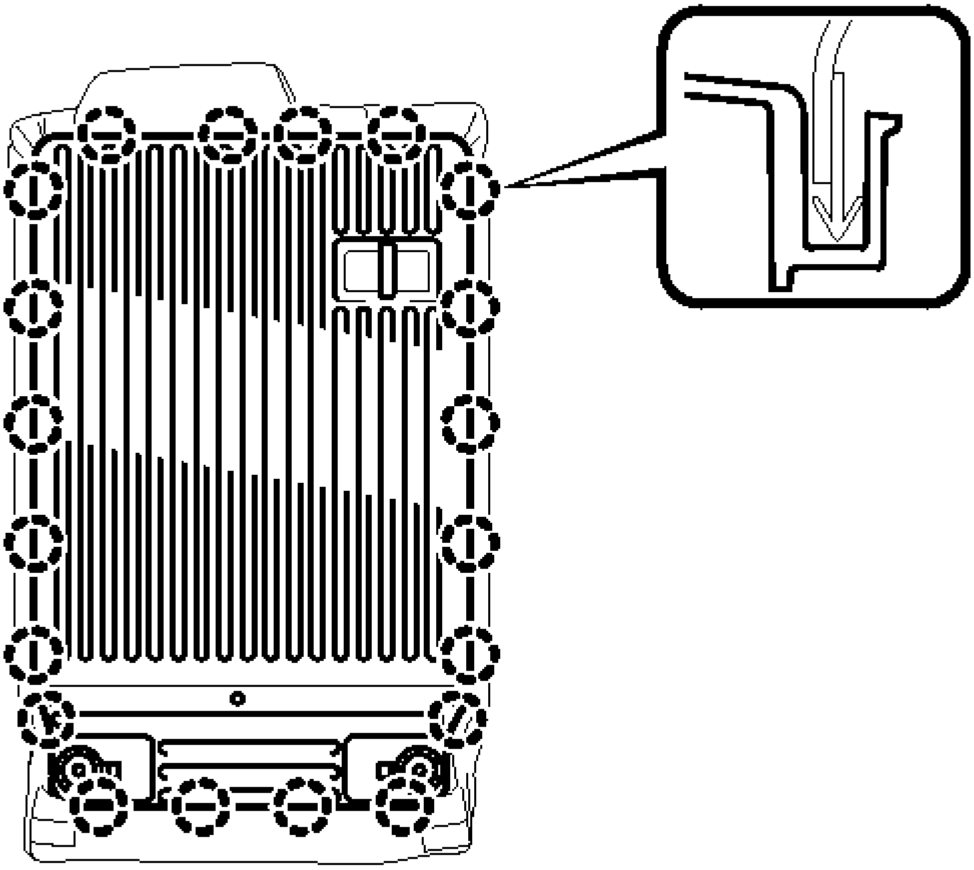

Fig. 250: Identifying Rear Seatback Frame Sub-Assembly LH Claws
Courtesy of TOYOTA MOTOR SALES, U.S.A., INC.

12. REMOVE SEPARATE TYPE REAR SEATBACK COVER LH

a. Remove the 8 hog rings and the separate type rear seatback cover LH from the separate type rear seatback pad LH.

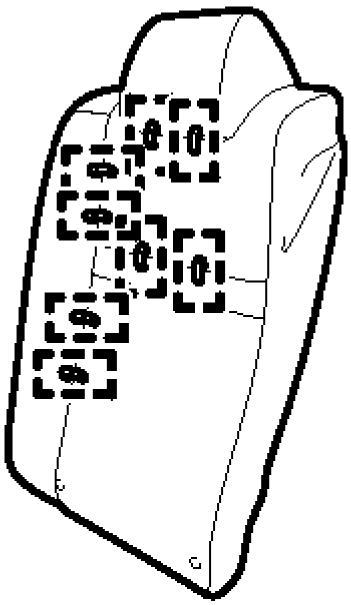

P

Fig. 251: Identifying Rear Seatback Cover LH Hog Rings
Courtesy of TOYOTA MOTOR SALES, U.S.A., INC.

13. **REMOVE REAR SEAT CENTER ARMREST ASSEMBLY**
    a. Remove the bolt and washer.

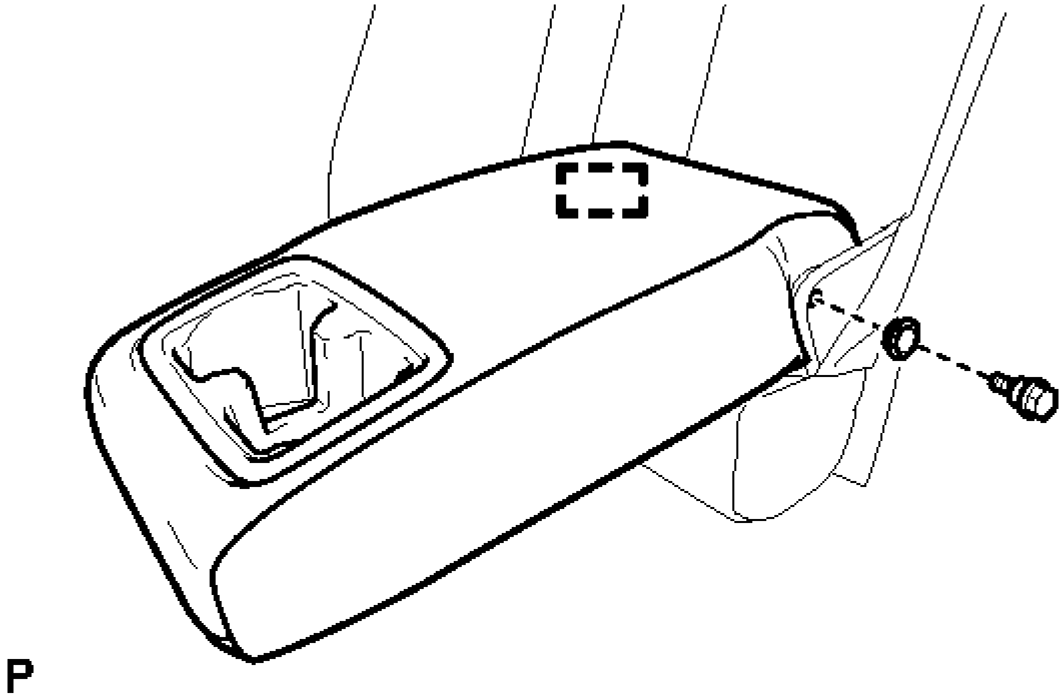

Fig. 252: Identifying Rear Seat Center Armrest Assembly With Fastener
Courtesy of TOYOTA MOTOR SALES, U.S.A., INC.

b. Disengage the guide and remove the rear seat center armrest assembly.

14. **REMOVE REAR SEATBACK CARPET RH**

a. Using a clip remover, remove the 5 clips.

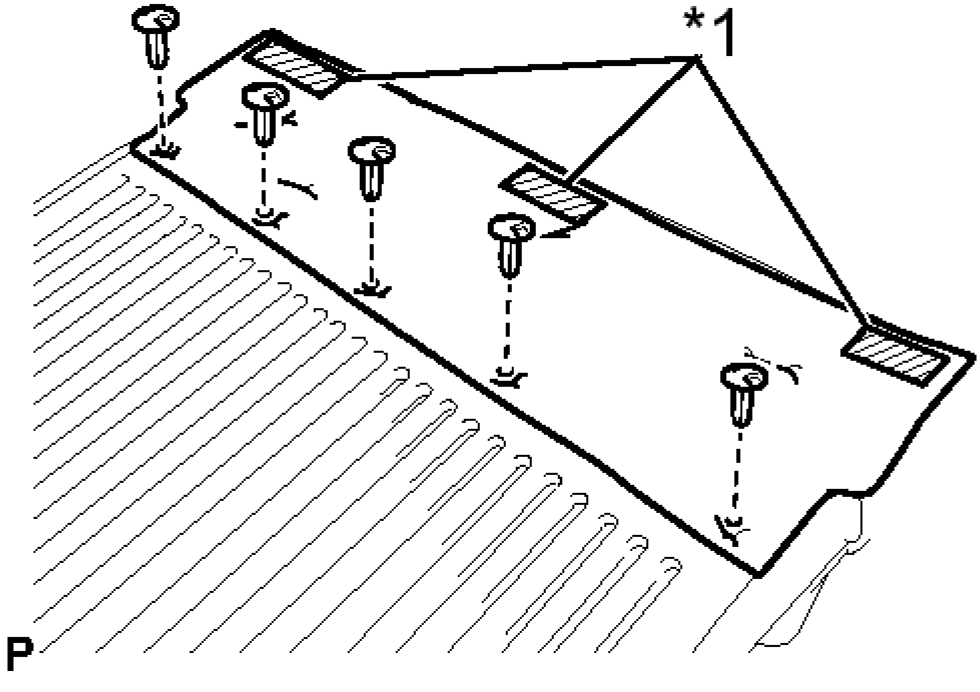

Fig. 253: Identifying Rear Seatback Carpet RH Fasteners
Courtesy of TOYOTA MOTOR SALES, U.S.A., INC.

b. Disengage the 3 fasteners and remove the rear seatback carpet RH.

TEXT IN ILLUSTRATION

*1	Fastener

15. **REMOVE REAR SEATBACK FRAME SUB-ASSEMBLY RH**

    a. Disengage the 20 claws and remove the rear seatback frame sub-assembly RH.

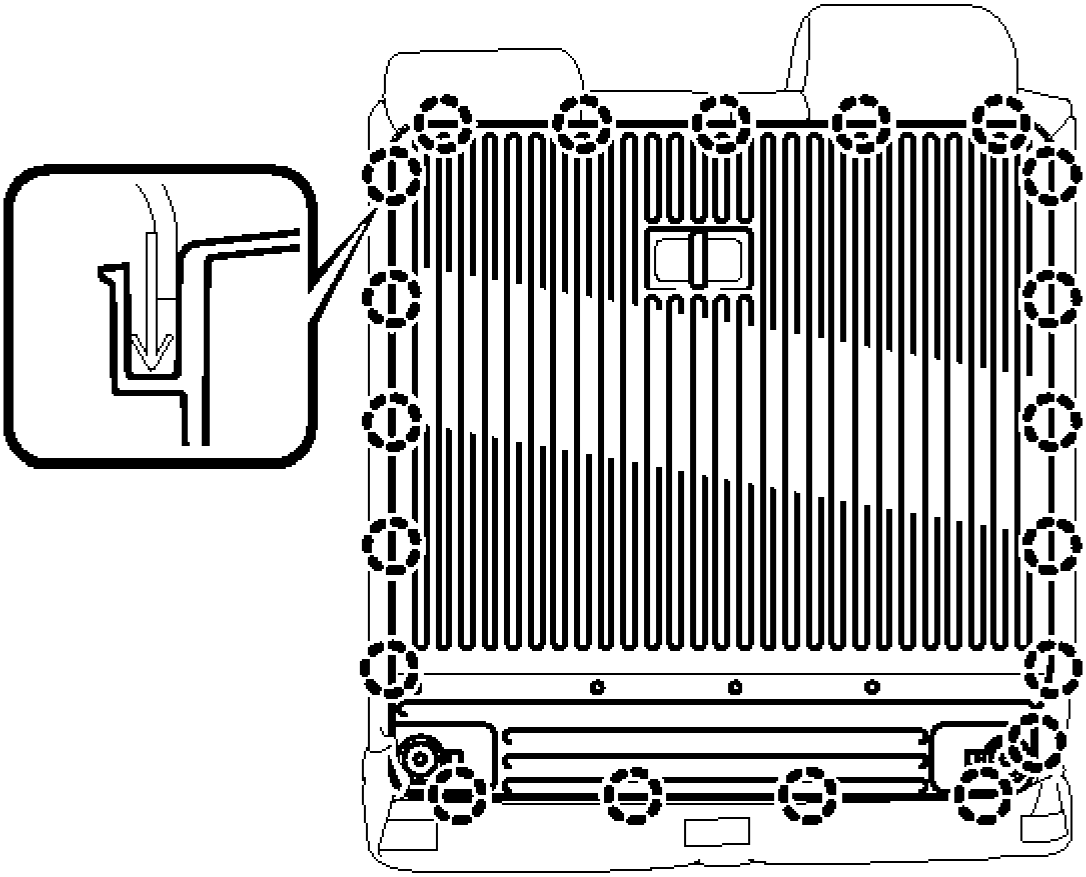

P

Fig. 254: Locating Rear Seatback Frame Sub-Assembly RH Claws
Courtesy of TOYOTA MOTOR SALES, U.S.A., INC.

16. **REMOVE SEPARATE TYPE REAR SEATBACK COVER RH**

a. Remove the 10 hog rings and separate type rear seatback cover RH from the separate type rear seatback pad RH.

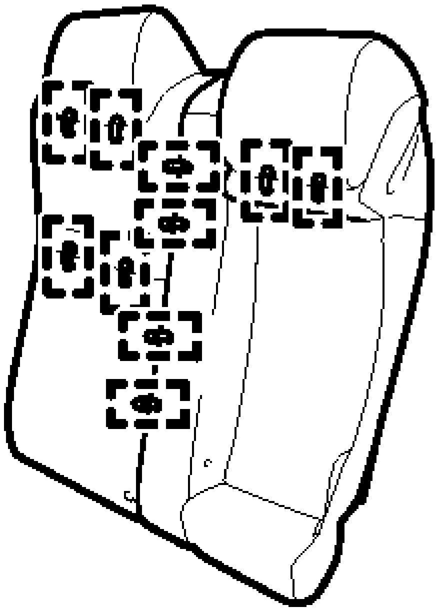

Fig. 255: Locating Rear Seatback Cover RH Hog Rings
Courtesy of TOYOTA MOTOR SALES, U.S.A., INC.

REASSEMBLY

REASSEMBLY

1. **INSTALL SEPARATE TYPE REAR SEATBACK COVER LH**
    a. Using hog ring pliers, install the separate type rear seatback cover LH to the separate type rear seatback pad LH with 8 new hog rings.

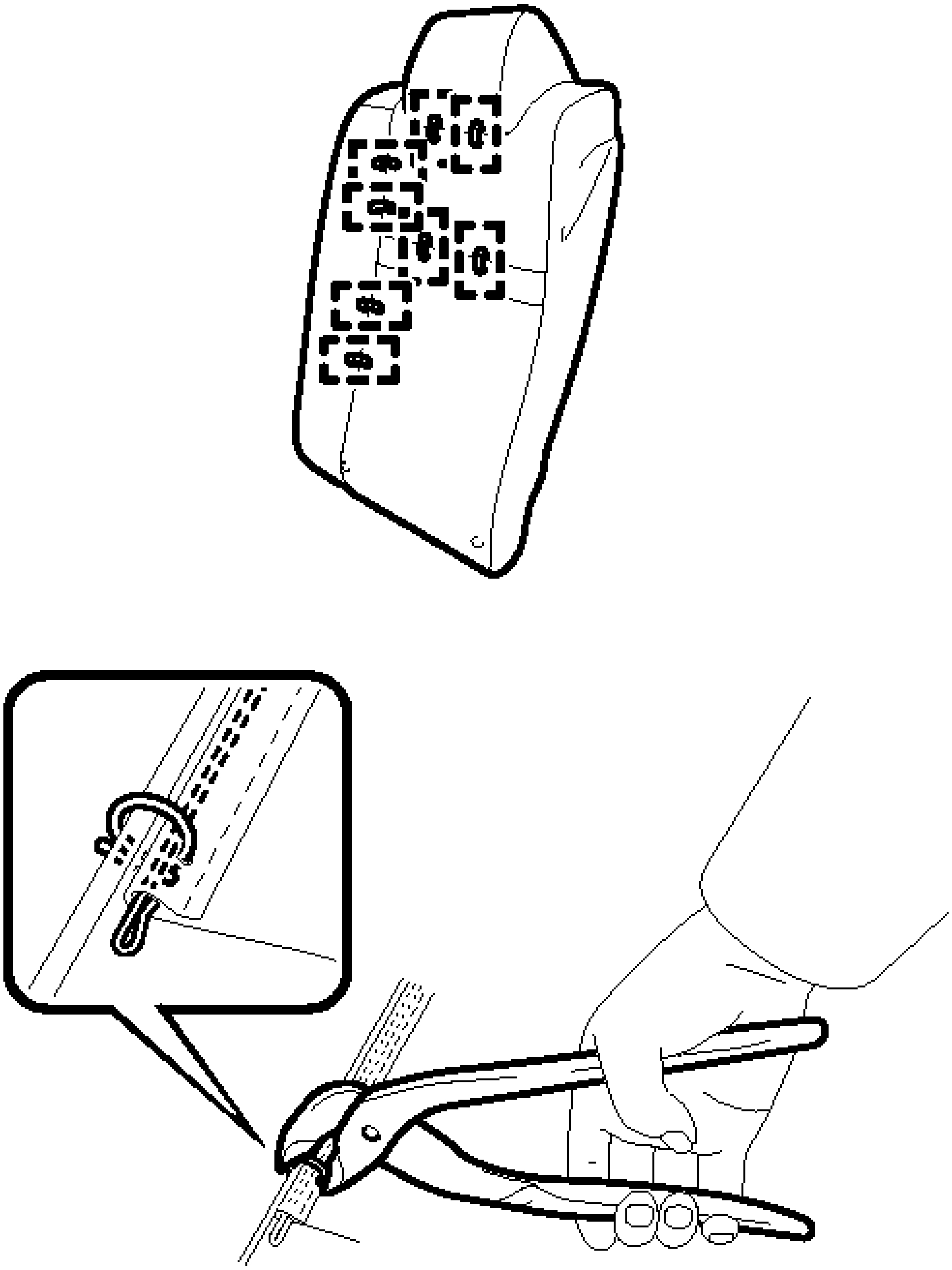

Fig. 256: Installing Rear Seatback Cover LH Hog Rings
Courtesy of TOYOTA MOTOR SALES, U.S.A., INC.

NOTE:	- Be careful not to damage the cover.

- **When installing the hog rings, take care to minimize wrinkles as much as possible.**

2. **INSTALL REAR SEATBACK FRAME SUB-ASSEMBLY LH**
    a. Engage the 20 claws to install the rear seatback frame sub-assembly LH to the separate type rear seatback cover with pad LH.

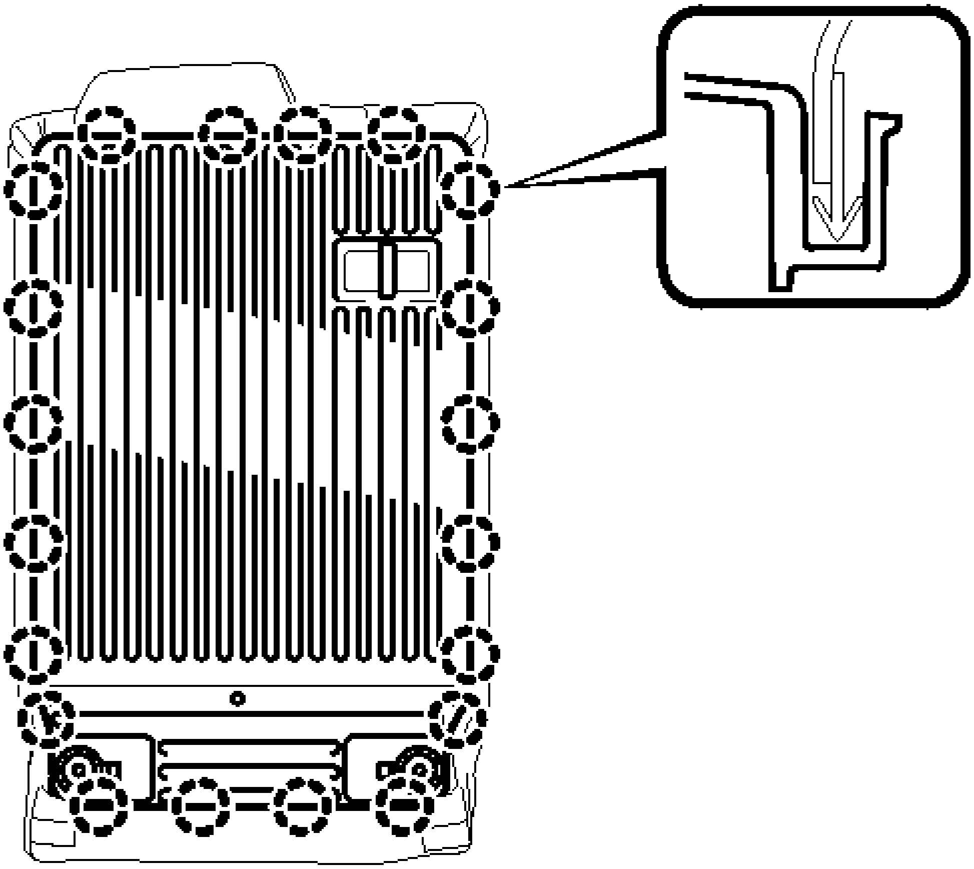

P

Fig. 257: Identifying Rear Seatback Frame Sub-Assembly LH Claws
Courtesy of TOYOTA MOTOR SALES, U.S.A., INC.

3. **INSTALL REAR SEATBACK CARPET LH**
    a. Engage the 2 fasteners.

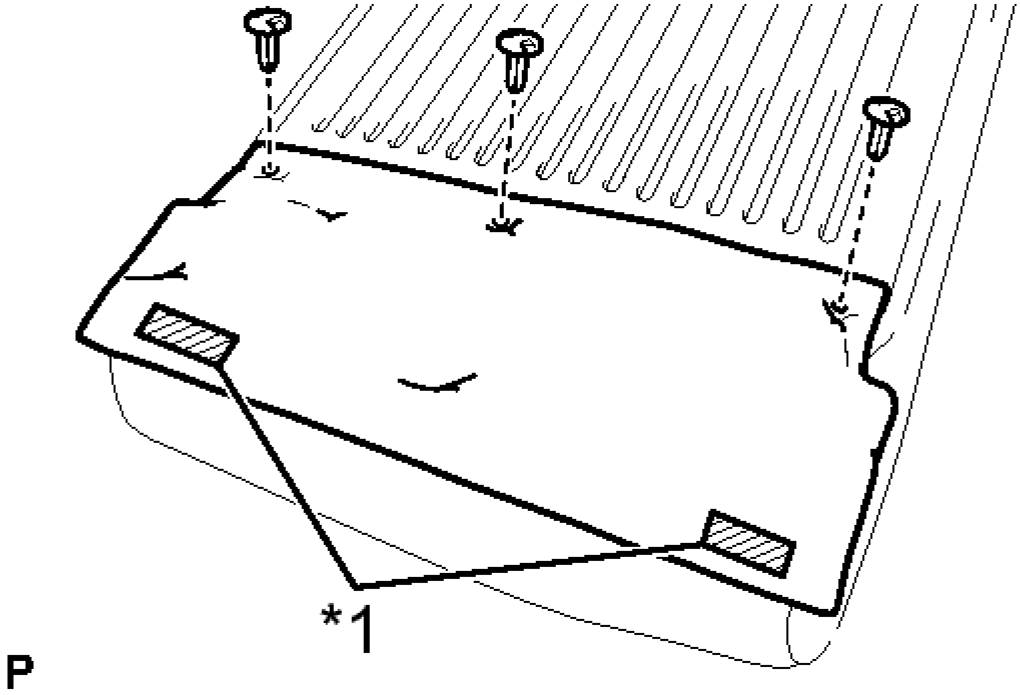

Fig. 258: Locating Rear Seatback Carpet LH Clips And Fasteners
Courtesy of TOYOTA MOTOR SALES, U.S.A., INC.

TEXT IN ILLUSTRATION

*1	Fastener

b. Install the rear seatback carpet with the 3 clips.

4. **INSTALL REAR SEAT CENTER SHOULDER BELT GUIDE**
   a. Engage the guide.

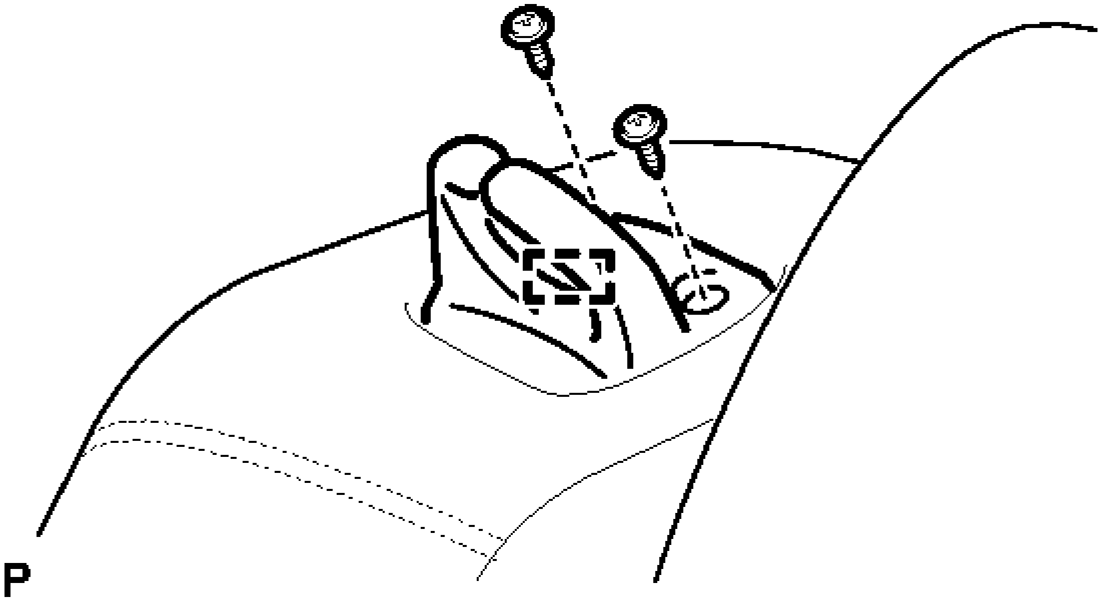

Fig. 259: Identifying Rear Seat Center Shoulder Belt Guide Fasteners
Courtesy of TOYOTA MOTOR SALES, U.S.A., INC.

   b. Install the rear seat center shoulder belt guide with the 2 screws.

5. **INSTALL SEPARATE TYPE REAR SEATBACK COVER RH**
   a. Using hog ring pliers, install the separate type rear seatback cover RH to the separate type rear seatback pad RH with 10 new hog rings.

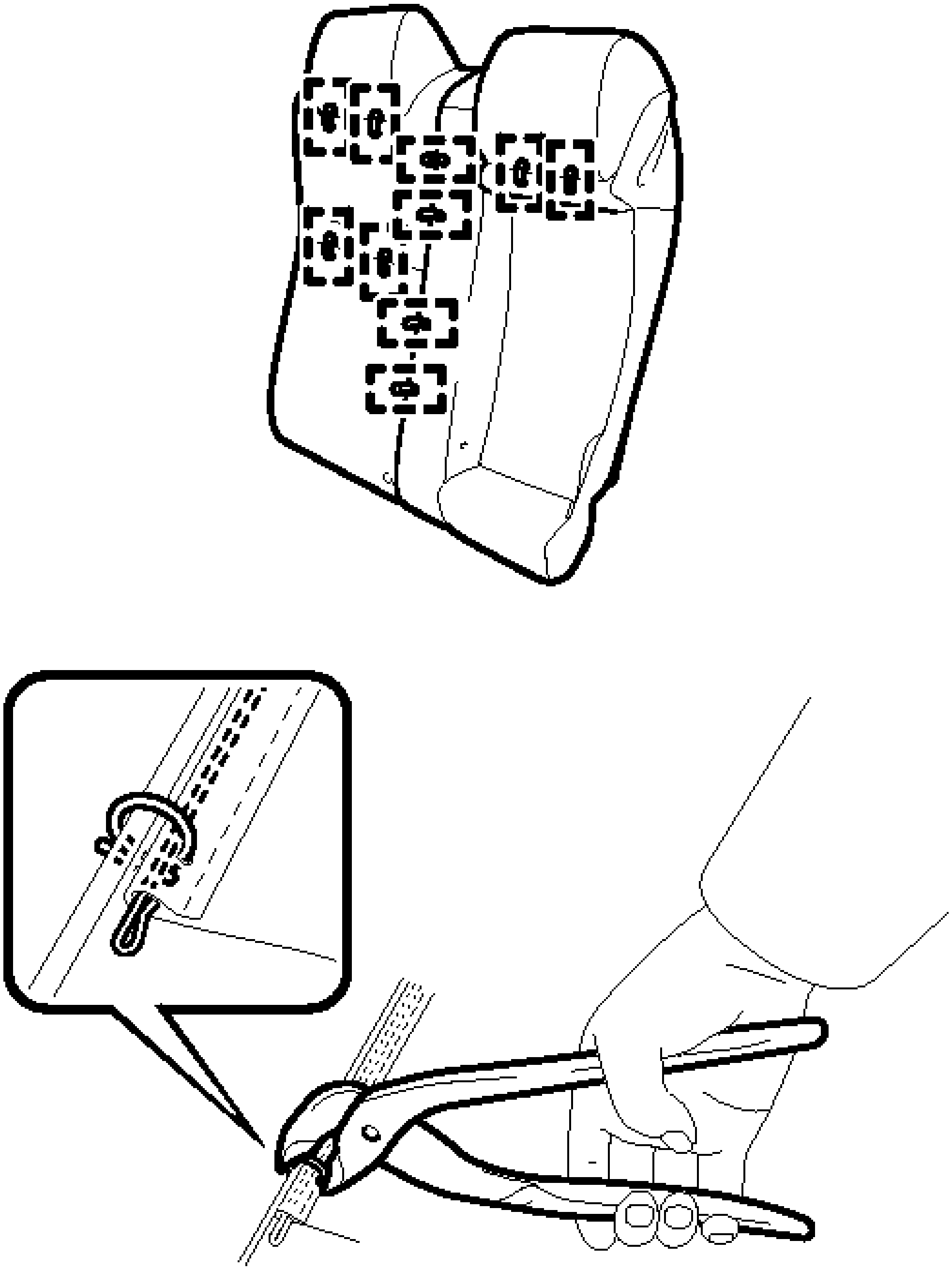

Fig. 260: Installing Rear Seatback Cover RH Hog Rings
Courtesy of TOYOTA MOTOR SALES, U.S.A., INC.

NOTE:

- **Be careful not to damage the cover.**

- **When installing the hog rings, take care to minimize wrinkles as much as possible.**

6. **INSTALL REAR SEATBACK FRAME SUB-ASSEMBLY RH**
    a. Engage the 20 claws to install the rear seatback frame sub-assembly RH to the separate type rear seatback cover with pad RH.

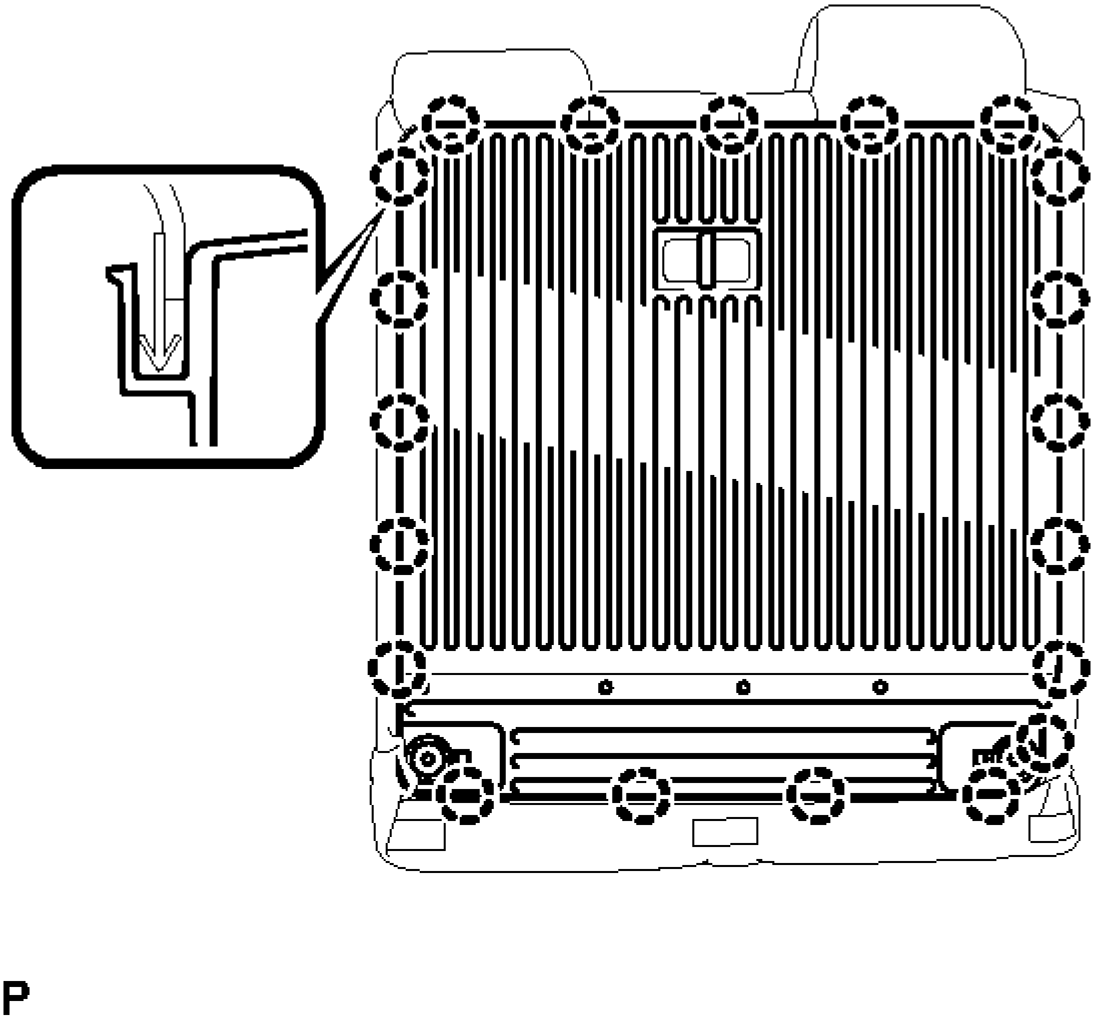

Fig. 261: Locating Rear Seatback Frame Sub-Assembly RH Claws
Courtesy of TOYOTA MOTOR SALES, U.S.A., INC.

7. **INSTALL REAR SEATBACK CARPET RH**
    a. Engage the 3 fasteners.

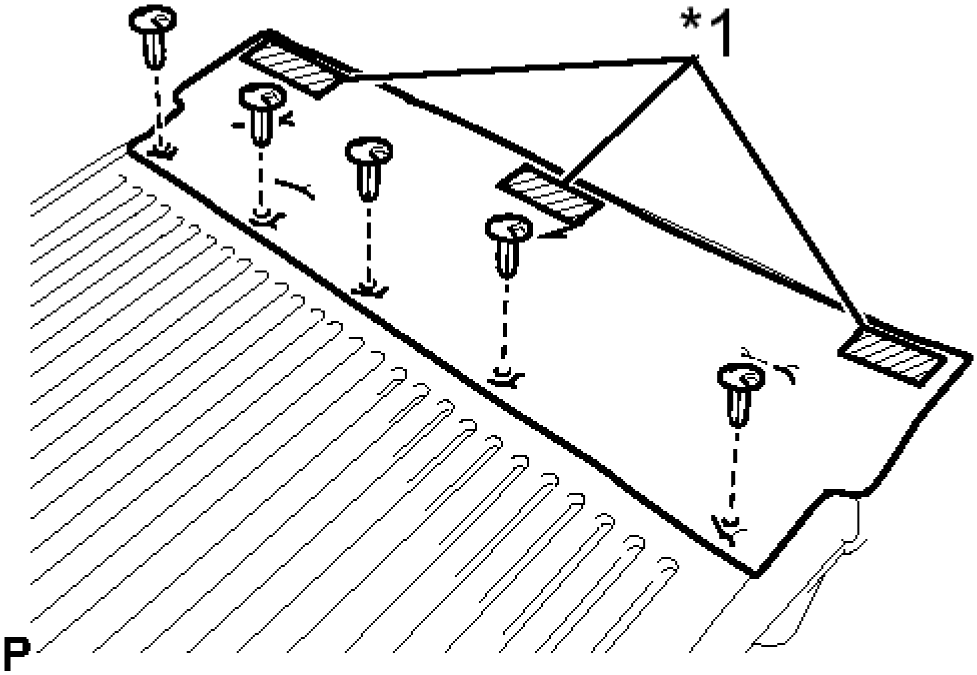

Fig. 262: Identifying Rear Seatback Carpet RH Fasteners
Courtesy of TOYOTA MOTOR SALES, U.S.A., INC.

TEXT IN ILLUSTRATION

*1	Fastener

b. Install the rear seatback carpet RH with the 5 clips.

8. **INSTALL REAR SEAT CENTER ARMREST ASSEMBLY**
    a. Engage the guide.

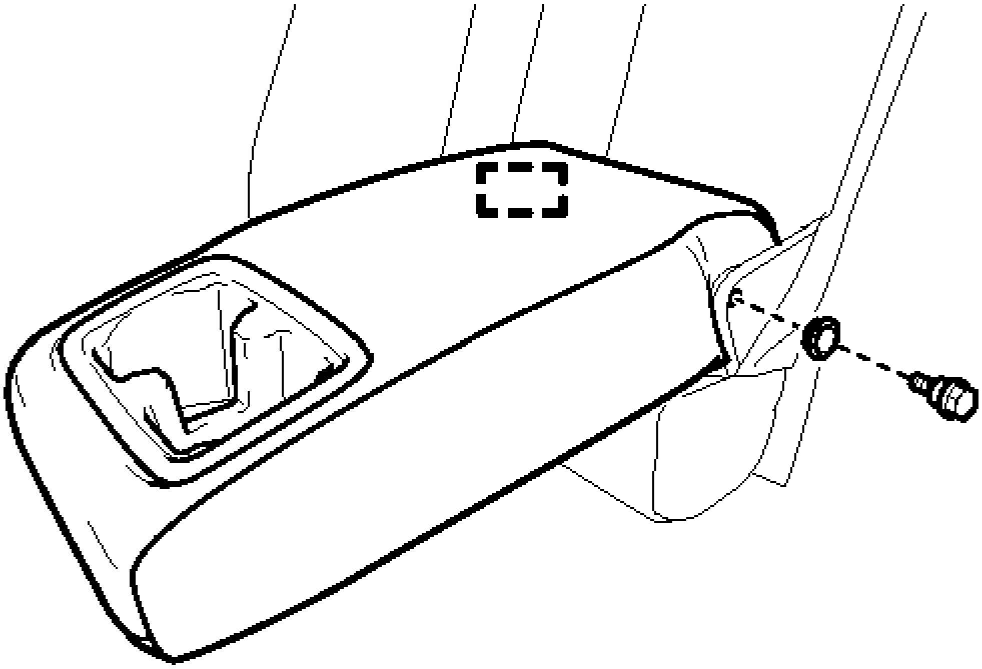

Fig. 263: Identifying Rear Seat Center Armrest Assembly With Fastener
Courtesy of TOYOTA MOTOR SALES, U.S.A., INC.

b. Install the rear seat center armrest assembly with the bolt and washer.

9. **INSTALL REAR SIDE SEATBACK COVER SUB-ASSEMBLY LH**
   a. Install the rear side seatback cover sub-assembly LH to the rear side seatback pad LH.

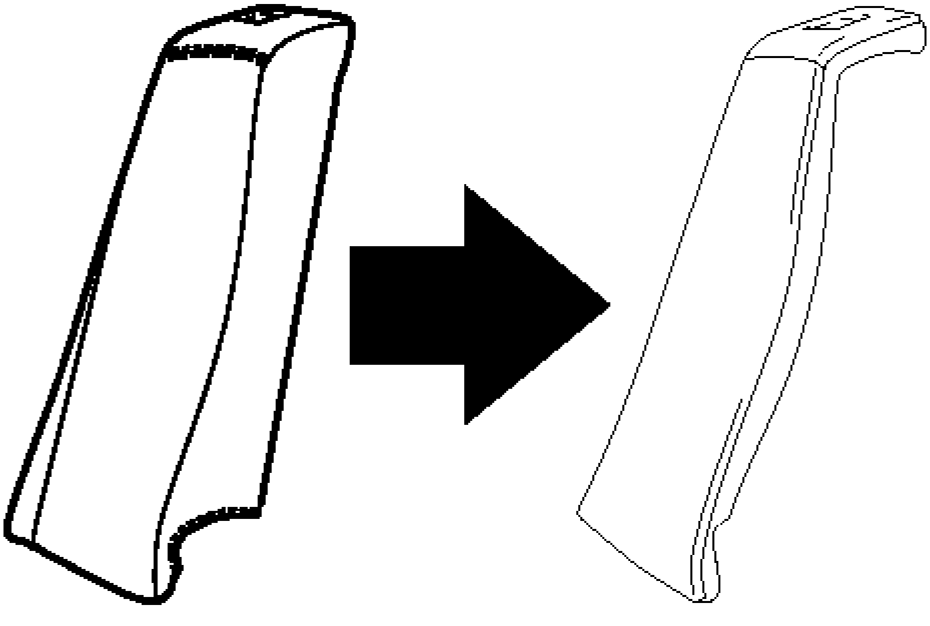

Fig. 264: Installing Rear Side Seatback Cover Sub-Assembly LH
Courtesy of TOYOTA MOTOR SALES, U.S.A., INC.

10. **INSTALL REAR SEAT AIRBAG ASSEMBLY LH** . Refer to **INSTALLATION - Step 1** .
11. **INSTALL REAR SEAT SHOULDER BELT GUIDE LH**
    a. Engage the guide.

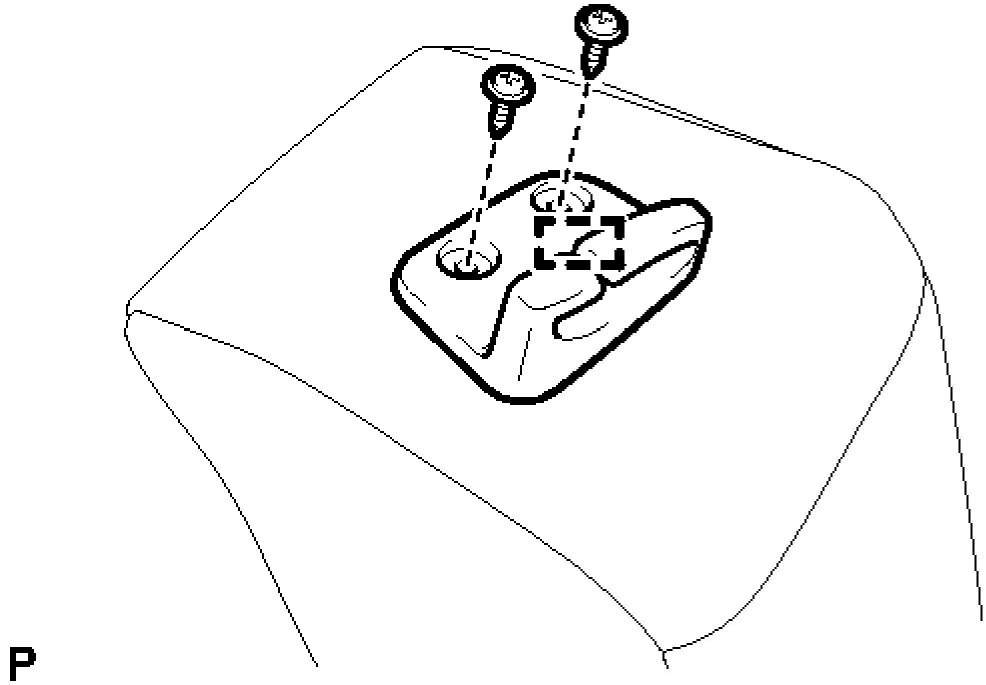

Fig. 265: Identifying Rear Seat Shoulder Belt Guide LH Fasteners
Courtesy of TOYOTA MOTOR SALES, U.S.A., INC.

    b. Install the rear seat shoulder belt guide LH with the 2 screws.

12. **INSTALL REAR SIDE SEATBACK COVER SUB-ASSEMBLY RH**

    HINT:

    Use the same procedure as for the LH side.

13. **INSTALL REAR SEAT AIRBAG ASSEMBLY RH**

    HINT:

    Use the same procedure as for the LH side. Refer to **INSTALLATION - Step 1** .

14. **INSTALL REAR SEAT SHOULDER BELT GUIDE RH**

    HINT:

Use the same procedure as for the LH side.

15. **INSTALL BENCH TYPE REAR SEAT CUSHION COVER**
    1. Engage the 4 fasteners.
    2. Using hog ring pliers, install the bench type rear seat cushion cover to the bench type rear seat cushion pad with 12 new hog rings.

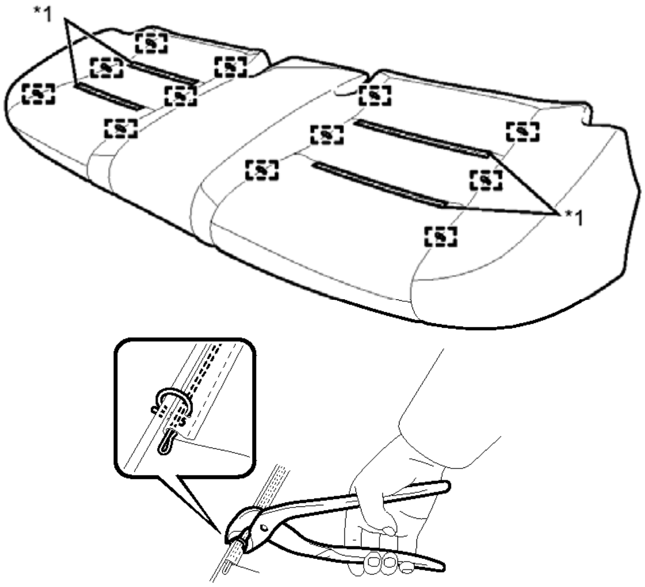

P

Fig. 266: Installing Bench Type Rear Seat Cushion Cover Fasteners And Hog Rings
Courtesy of TOYOTA MOTOR SALES, U.S.A., INC.

TEXT IN ILLUSTRATION

*1	Fastener	-	-

16. **INSTALL REAR SEAT CUSHION FRAME SUB-ASSEMBLY**
    1. Engage the 13 hooks to install the rear seat cushion frame sub-assembly.

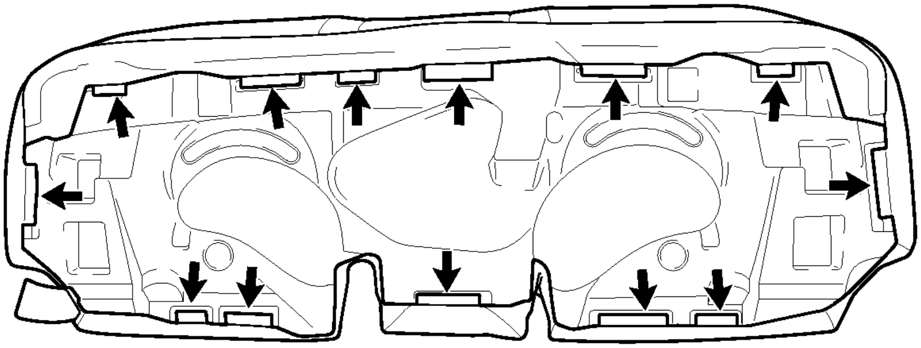

P

Fig. 267: Identifying Rear Seat Cushion Frame Hooks

INSTALLATION

INSTALLATION

1. **INSTALL REAR SIDE SEATBACK ASSEMBLY RH**
    1. Engage the hook.
    2. Install the rear side seatback assembly RH with the 2 bolts.

       Torque: 18 N*m (184 kgf*cm, 13 ft.*lbf)

    3. Connect the connector.
    4. Connect the rear seat outer belt to the rear seat shoulder belt guide.
2. **INSTALL REAR SIDE SEATBACK ASSEMBLY LH**
    1. Engage the hook.
    2. Install the rear side seatback assembly LH with the 2 bolts.

       Torque: 18 N*m (184 kgf*cm, 13 ft.*lbf)

    3. Connect the connector.
    4. Connect the rear seat outer belt to the rear seat shoulder belt guide.
3. **INSTALL REAR SEATBACK ASSEMBLY RH**
    1. Place the rear seatback assembly RH in the cabin.

       NOTE: Be careful not to damage the vehicle body.

    2. Install the rear seatback assembly RH with the 2 bolts.

       Torque: 18 N*m (184 kgf*cm, 13 ft.*lbf)

4. **INSTALL REAR SEATBACK ASSEMBLY LH**
    1. Place the rear seatback assembly LH in the cabin.

       NOTE: Be careful not to damage the vehicle body.

    2. Install the rear seatback assembly LH with the 2 bolts.

       Torque: 18 N*m (184 kgf*cm, 13 ft.*lbf)

5. **INSTALL INNER LUGGAGE COMPARTMENT TRIM PAD**
    1. Install the inner luggage compartment trim pad.
6. **INSTALL REAR SEAT CUSHION LOCK HOOK**

a. Engage the claw to install a new rear seat cushion lock hook.

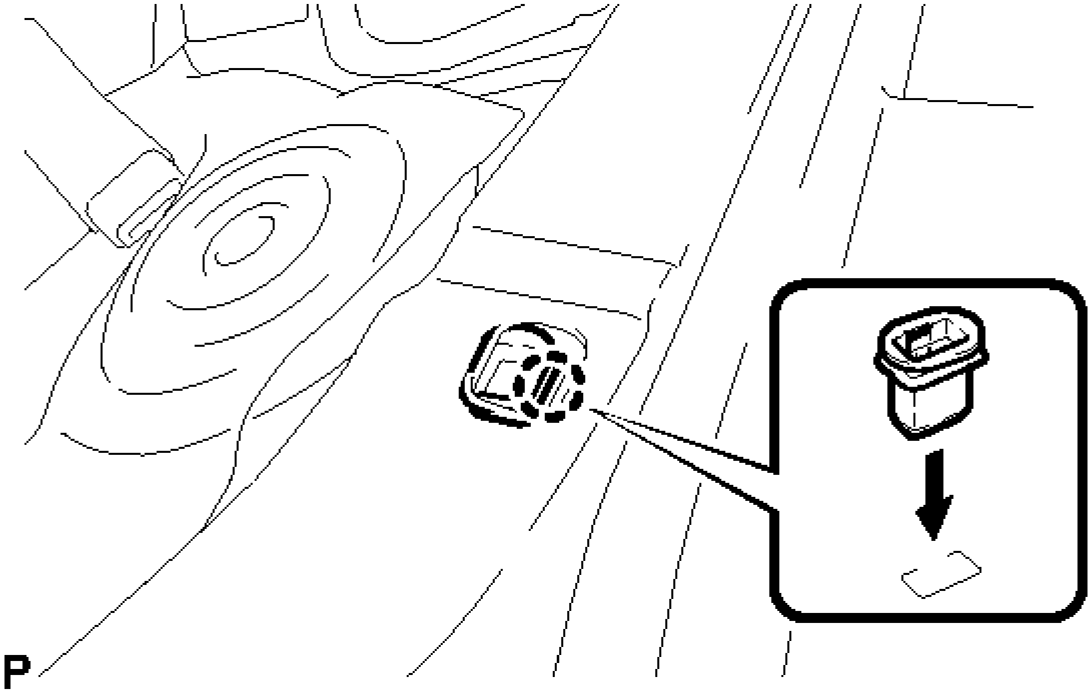

Fig. 268: Installing Rear Seat Cushion Lock Hook
Courtesy of TOYOTA MOTOR SALES, U.S.A., INC.

NOTE: Rear seat cushion lock hooks must not be reused.

HINT:

Use the same procedure for the RH side and the LH side.

7. **INSTALL REAR SEAT CUSHION ASSEMBLY**
   a. Place the rear seat cushion assembly in the cabin.

   NOTE: Be careful not to damage the vehicle body.

   b. Engage the 2 hooks of the seat cushion to the vehicle body as shown in the illustration.

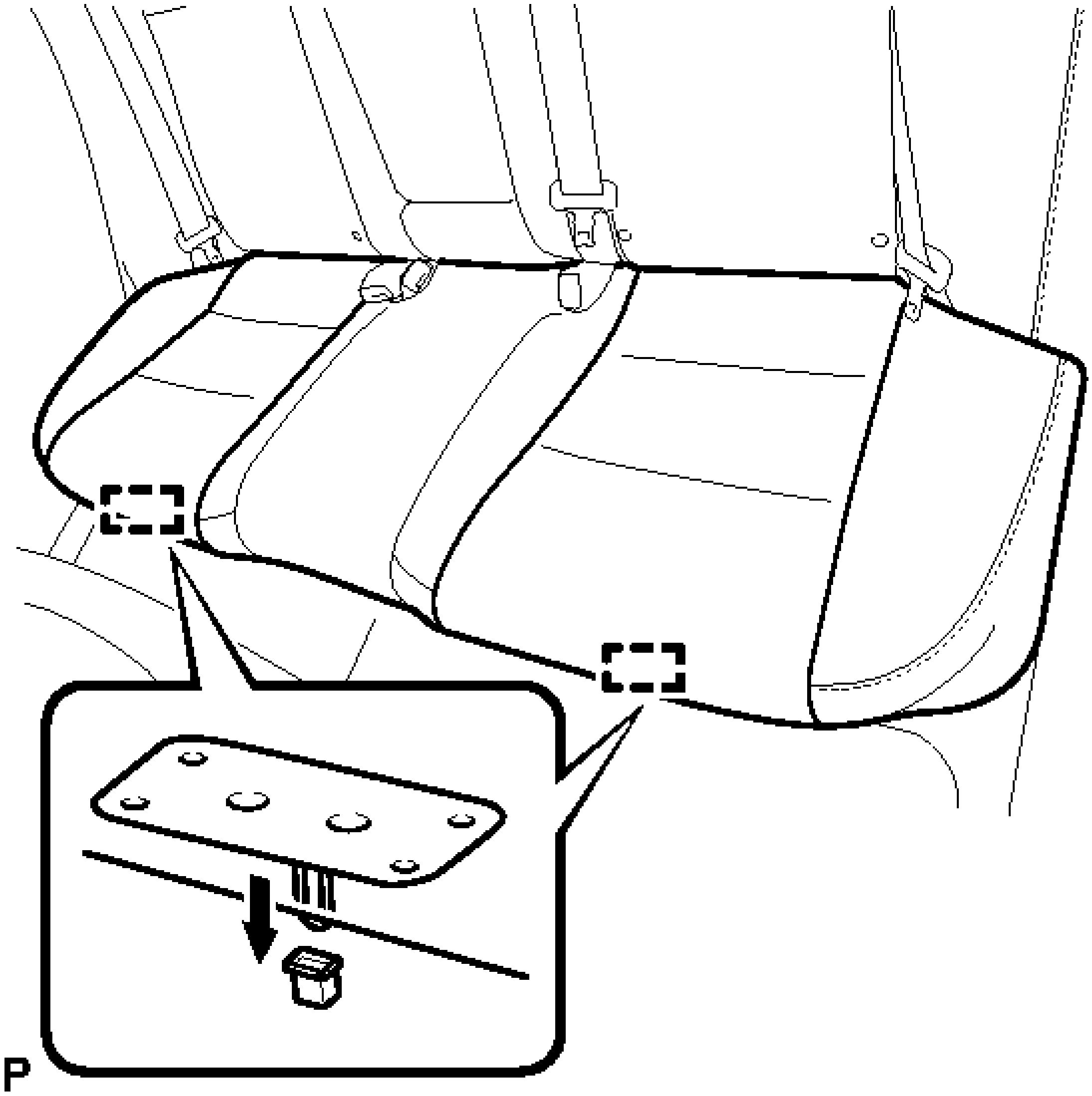

Fig. 269: Installing Rear Seat Cushion Assembly
Courtesy of TOYOTA MOTOR SALES, U.S.A., INC.

c. Confirm that the seat cushion is firmly installed.

NOTE: **When installing the seat cushion, make sure that the seat belt buckles are not under the seat cushion.**

8. **CONNECT CABLE TO NEGATIVE BATTERY TERMINAL**

NOTE: **When disconnecting the cable, some systems need to be initialized after the cable is reconnected. Refer to INITIALIZATION .**

9. **INSPECT SRS WARNING LIGHT**

For Separate Type Yaw Rate Sensor: Refer to **DIAGNOSIS SYSTEM** .

For Built-in Type Yaw Rate Sensor: Refer to **DIAGNOSIS SYSTEM** .

POWER SEAT SWITCH

COMPONENTS

ILLUSTRATION

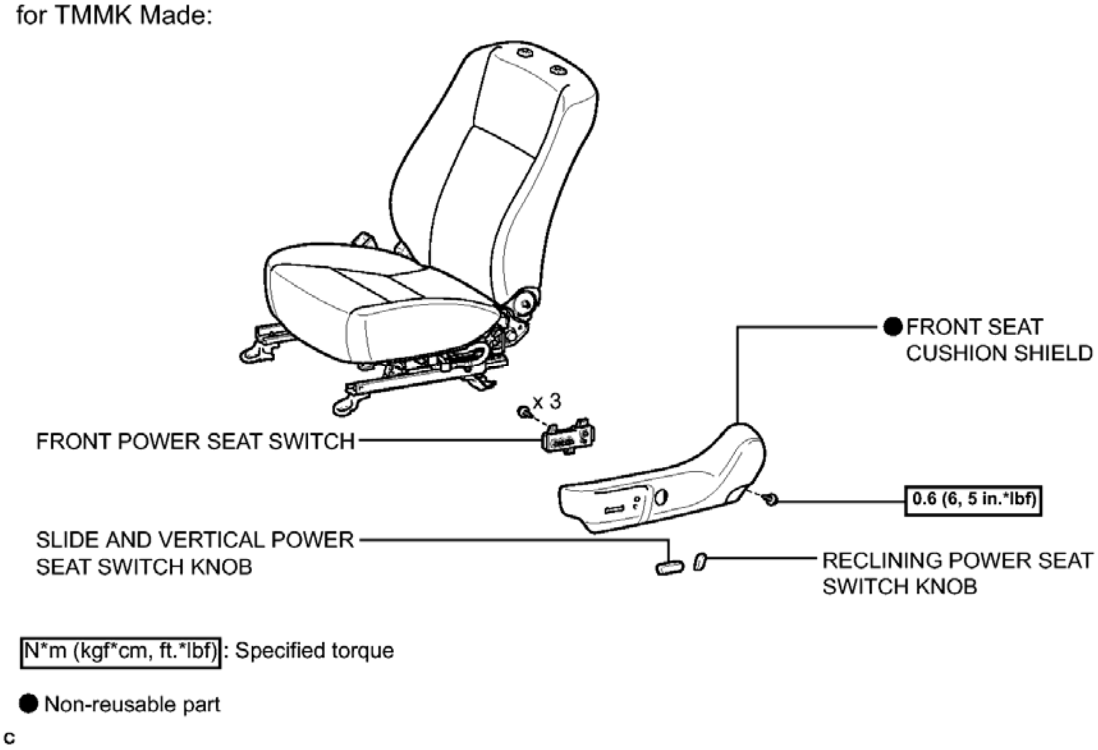
for TMMK Made:
● FRONT SEAT CUSHION SHIELD
x 3
FRONT POWER SEAT SWITCH
0.6 (6, 5 in.*lbf)
SLIDE AND VERTICAL POWER SEAT SWITCH KNOB
RECLINING POWER SEAT SWITCH KNOB
N*m (kgf*cm, ft.*lbf) : Specified torque
● Non-reusable part
c

Fig. 270: Identifying Power Seat Switch (For TMMK Made) Replacement Components With Torque Specifications (1 Of 2)
Courtesy of TOYOTA MOTOR SALES, U.S.A., INC.

ILLUSTRATION

for SIA Made:

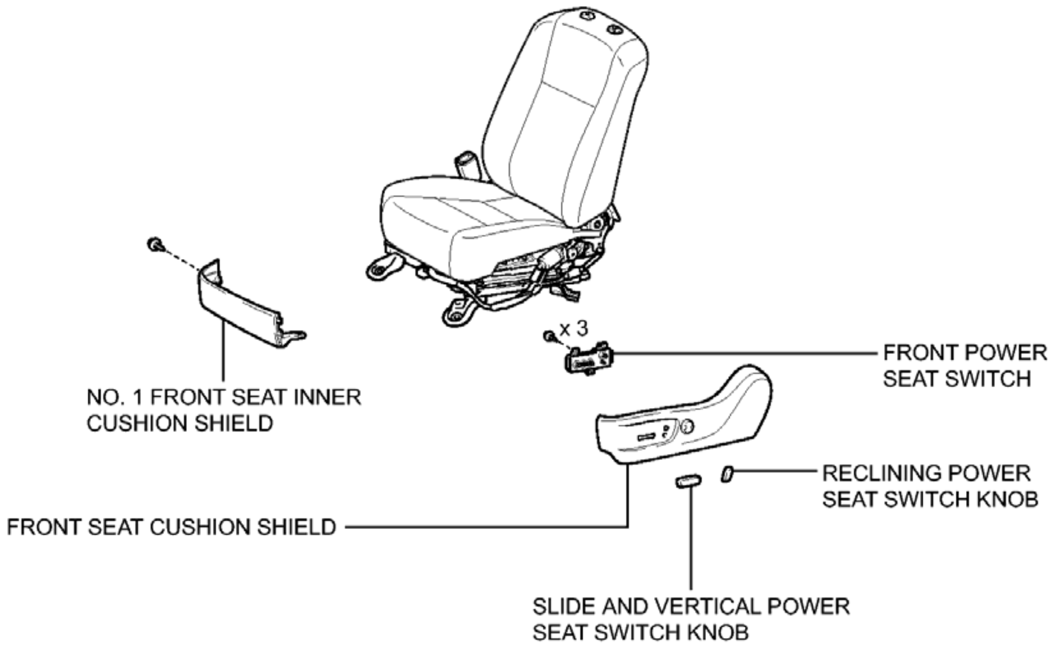
x 3
FRONT POWER SEAT SWITCH
NO. 1 FRONT SEAT INNER CUSHION SHIELD
RECLINING POWER SEAT SWITCH KNOB
FRONT SEAT CUSHION SHIELD
SLIDE AND VERTICAL POWER SEAT SWITCH KNOB

c

Fig. 271: Identifying Power Seat Switch (For SIA Made) Replacement Components (2 Of 2)
Courtesy of TOYOTA MOTOR SALES, U.S.A., INC.

REMOVAL

REMOVAL

1. **REMOVE FRONT SEAT ASSEMBLY (for TMMK Made)**

   Refer to **REMOVAL**.

2. **REMOVE SLIDE AND VERTICAL POWER SEAT SWITCH KNOB (for TMMK Made)** . See step 2.
3. **REMOVE RECLINING POWER SEAT SWITCH KNOB (for TMMK Made)** . See step 3.
4. **DISCONNECT SEPARATE TYPE FRONT SEATBACK COVER (for TMMK Made)** . See step 4.
5. **REMOVE FRONT SEAT CUSHION SHIELD (for TMMK Made)** . See step 5.
6. **REMOVE FRONT POWER SEAT SWITCH (for TMMK Made)**
   a. Remove the 3 screws and front power seat switch from the front seat cushion shield.

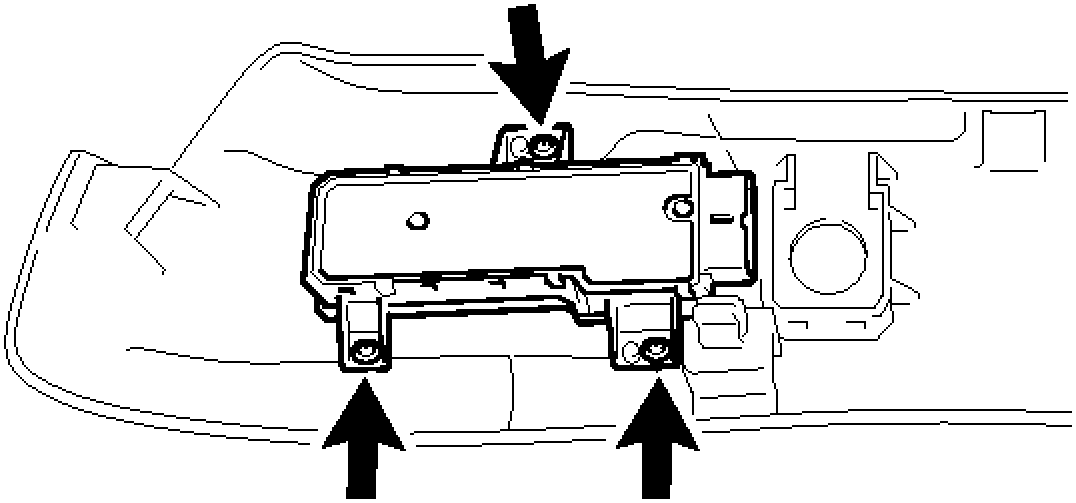

Fig. 272: Identifying Front Power Seat Switch (For TMMK Made) Fasteners
Courtesy of TOYOTA MOTOR SALES, U.S.A., INC.

7. **REMOVE FRONT SEAT ASSEMBLY (for SIA Made)**

   Refer to **REMOVAL**.

8. **REMOVE SLIDE AND VERTICAL POWER SEAT SWITCH KNOB (for SIA Made)** . See step 2.
9. **REMOVE RECLINING POWER SEAT SWITCH KNOB (for SIA Made)** . See step 3.
10. **DISCONNECT SEPARATE TYPE FRONT SEATBACK COVER (for SIA Made)** . See step 4.
11. **REMOVE NO. 1 FRONT SEAT INNER CUSHION SHIELD (for SIA Made)**
    a. Remove the screw.

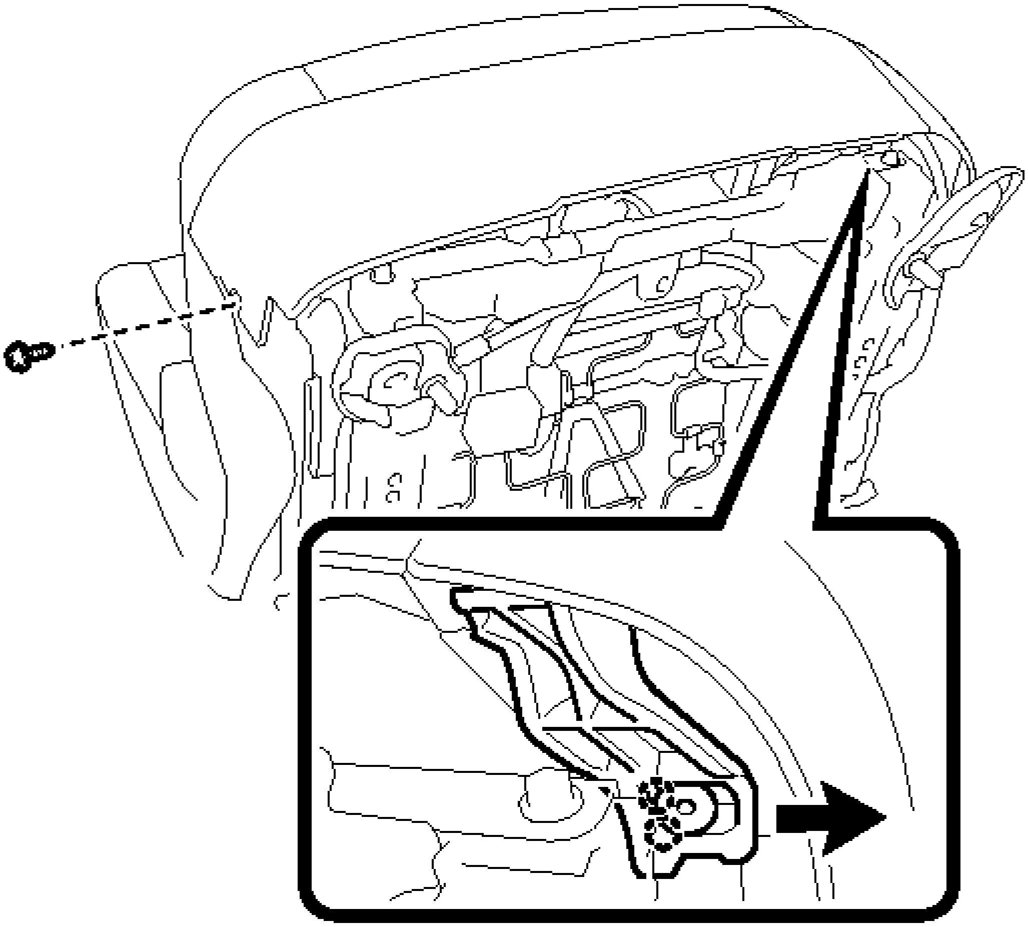

Fig. 273: Removing Front No. 1 Seat Inner Cushion Shield And Fasteners
Courtesy of TOYOTA MOTOR SALES, U.S.A., INC.

b. Disengage the 2 claws to remove the clip from the front No. 1 seat inner cushion shield as shown in the illustration.
c. Disengage the 3 claws and 3 guides to remove the front No. 1 seat inner cushion shield as shown in the illustration.

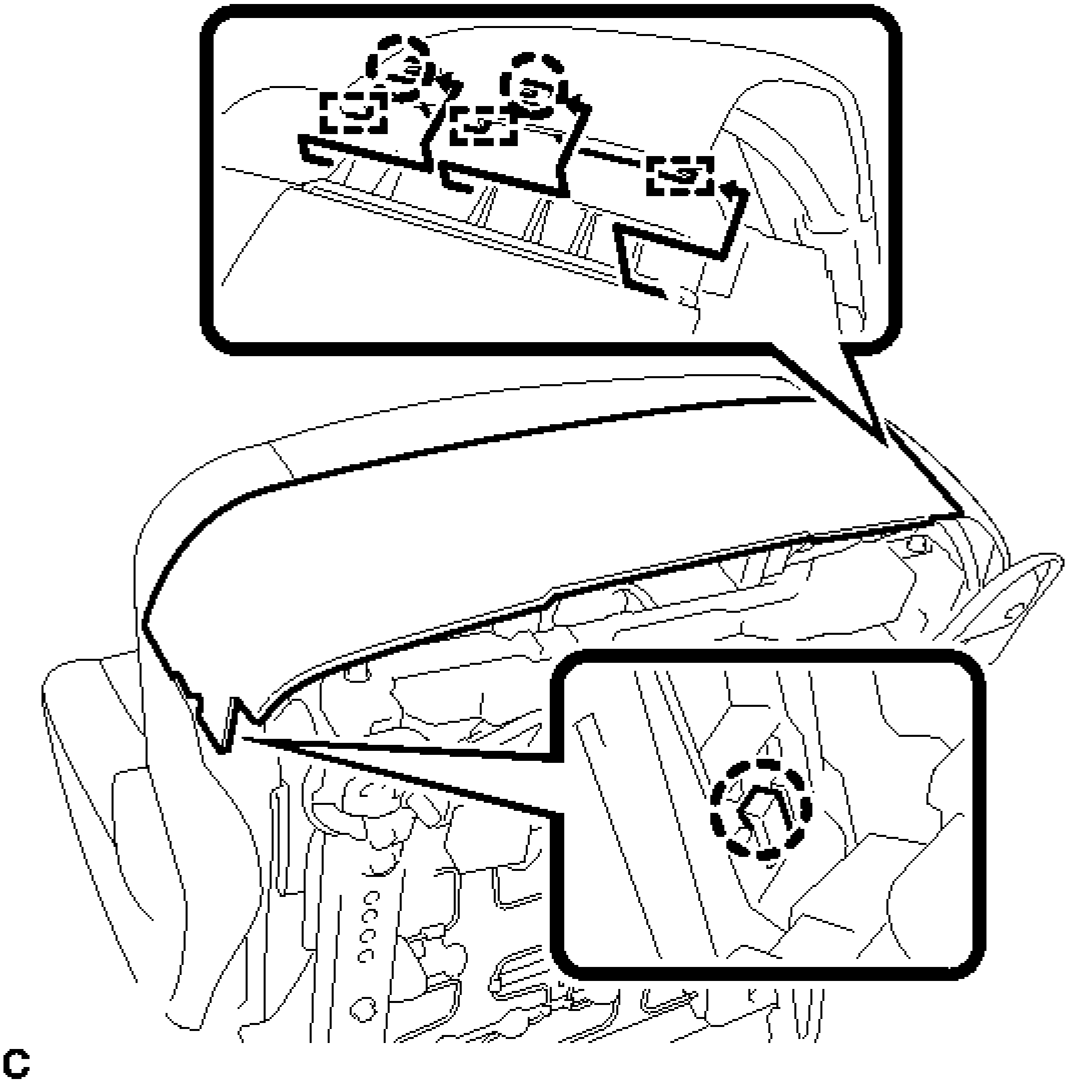

Fig. 274: Locating Front No. 1 Seat Inner Cushion Shield And Fasteners
Courtesy of TOYOTA MOTOR SALES, U.S.A., INC.

12. **REMOVE FRONT SEAT CUSHION SHIELD (for SIA Made Driver Side)** . See step 6.
13. **REMOVE FRONT SEAT CUSHION SHIELD (for SIA Made Front Passenger Side)** . See step 7.
14. **REMOVE FRONT POWER SEAT SWITCH (for SIA Made)**
    a. Remove the 3 screws and front power seat switch from the front seat cushion shield.

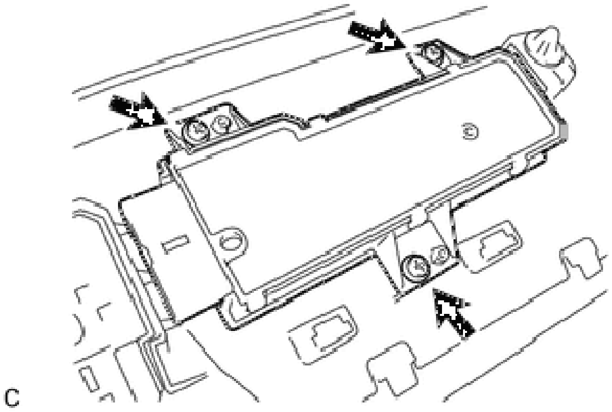

Fig. 275: Identifying Front Power Seat Switch (For SIA Made) Fasteners
Courtesy of TOYOTA MOTOR SALES, U.S.A., INC.

INSPECTION

INSPECTION

1. **INSPECT FRONT POWER SEAT SWITCH LH**

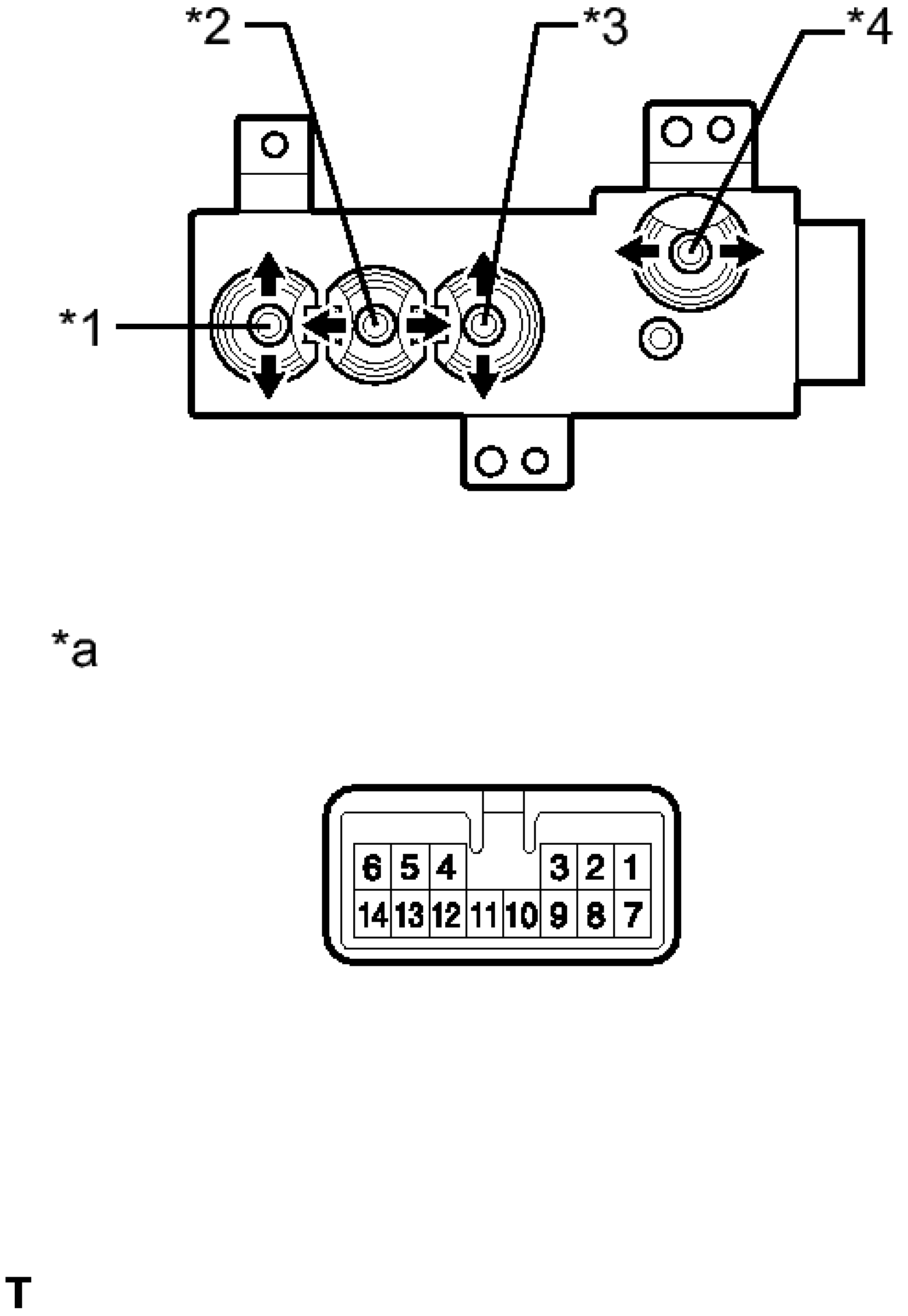
*2
*3
*4
*1
*a
6 5 4 3 2 1
14 13 12 11 10 9 8 7
T

Fig. 276: Inspecting Front Power Seat Switch LH
Courtesy of TOYOTA MOTOR SALES, U.S.A., INC.

a. Measure the resistance according to the value(s) in the table below.

TEXT IN ILLUSTRATION

*1	Front Vertical Switch
*2	Slide Switch
*3	Lifter Switch
*4	Reclining Switch
*a	Component without harness connected (Front Power Seat Switch LH)

Standard Resistance

SLIDE SWITCH

Tester Connection	Switch Condition	Specified Condition
5 - 7 5 - 8	Front	Below 1 ohms
2 - 11 2 - 12		
5 - 11 5 - 12	Off	
2 - 11 2 - 12		
5 - 11 5 - 12	Rear	
2 - 7 2 - 8		

FRONT VERTICAL SWITCH

Tester Connection	Switch Condition	Specified Condition
1 - 7 1 - 8	Up	
6 - 11 6 - 12		
1 - 11		

1 - 12	Off	Below 1 ohms
6 - 11 6 - 12		
1 - 11 1 - 12	Down	
6 - 7 6 - 8		

LIFTER SWITCH

Tester Connection	Switch Condition	Specified Condition
3 - 7 3 - 8	Up	Below 1 ohms
4 - 11 4 - 12		
3 - 11 3 - 12	Off	
4 - 11 4 - 12		
3 - 11 3 - 12	Down	
4 - 7 4 - 8		

RECLINING SWITCH

Tester Connection	Switch Condition	Specified Condition
10 - 7 10 - 8	Front	Below 1 ohms
9 - 11 9 - 12		
10 - 11 10 - 12	Off	
9 - 11 9 - 12		
10 - 11 10 - 12	Rear	
9 - 7 9 - 8		

If the result is not as specified, replace the front power seat switch LH.

2. **INSPECT FRONT POWER SEAT SWITCH RH**

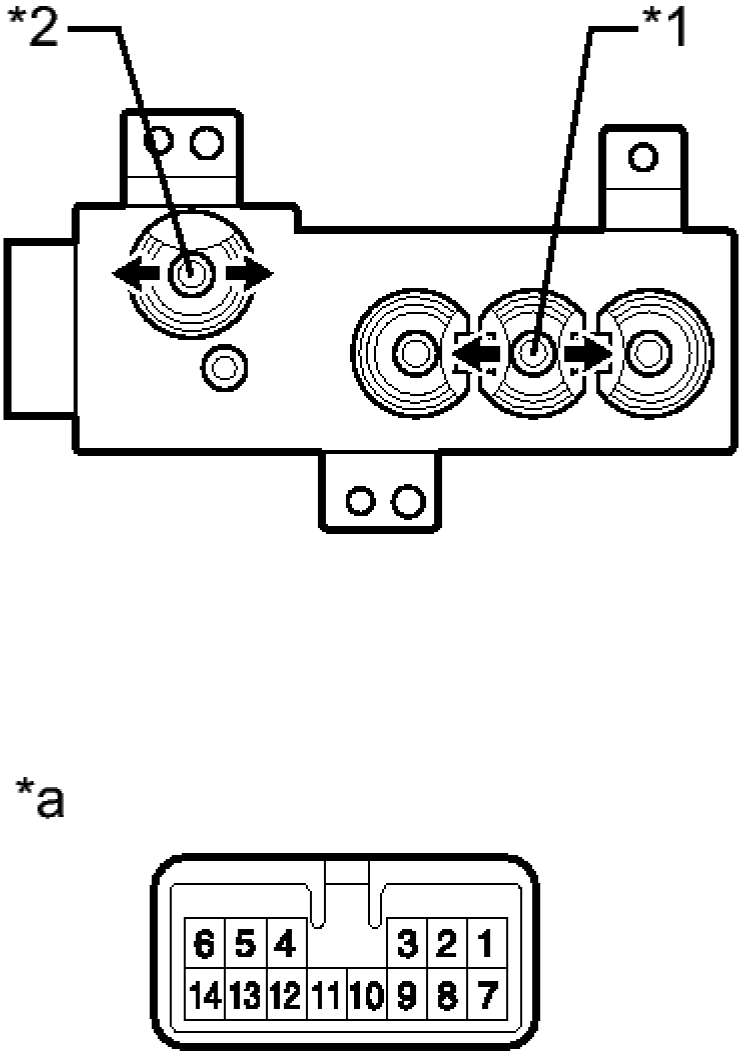
*2
*1
*a
6 5 4 3 2 1
14 13 12 11 10 9 8 7

T

Fig. 277: Inspecting Front Power Seat Switch RH
Courtesy of TOYOTA MOTOR SALES, U.S.A., INC.

a. Measure the resistance according to the value(s) in the table below.

TEXT IN ILLUSTRATION

*1	Slide Switch
*2	Reclining Switch
*a	Component without harness connected (Front Power Seat Switch RH)

Standard Resistance

SLIDE SWITCH

Tester Connection	Switch Condition	Specified Condition
2 - 13	Front	Below 1 ohms
5 - 10		
2 - 10	Off	
5 - 10		
2 - 10	Rear	
5 - 13		

RECLINING SWITCH

Tester Connection	Switch Condition	Specified Condition
11 - 13	Front	Below 1 ohms
12 - 10		
11 - 10	Off	
12 - 10		
11 - 10	Rear	
12 - 13		

If the result is not as specified, replace the front power seat switch RH.

INSTALLATION

INSTALLATION

1. **INSTALL FRONT POWER SEAT SWITCH (for TMMK Made)**
    a. Install the front power seat switch to a new front seat cushion shield with the 3 screws.

2. **INSTALL FRONT SEAT CUSHION SHIELD (for TMMK Made)** . See step 30.
3. **CONNECT SEPARATE TYPE FRONT SEATBACK COVER (for TMMK Made)** . See step 31.
4. **INSTALL RECLINING POWER SEAT SWITCH KNOB (for TMMK Made)** . See step 32.
5. **INSTALL SLIDE AND VERTICAL POWER SEAT SWITCH KNOB (for TMMK Made)** . See step 33.
6. **INSTALL FRONT SEAT ASSEMBLY (for TMMK Made)**

   Refer to **INSTALLATION**.

7. **INSTALL FRONT POWER SEAT SWITCH (for SIA Made)**
   a. Install the front power seat switch to the front seat cushion shield with the 3 screws.
8. **INSTALL FRONT SEAT CUSHION SHIELD (for SIA Made Driver Side)** . See step 28.
9. **INSTALL FRONT SEAT CUSHION SHIELD (for SIA Made Front Passenger Side)** . See step 29.
10. **INSTALL NO. 1 FRONT SEAT INNER CUSHION SHIELD (for SIA Made)**
    a. Engage the 3 claws and 3 guides to install the front No. 1 seat inner cushion shield as shown in the illustration.

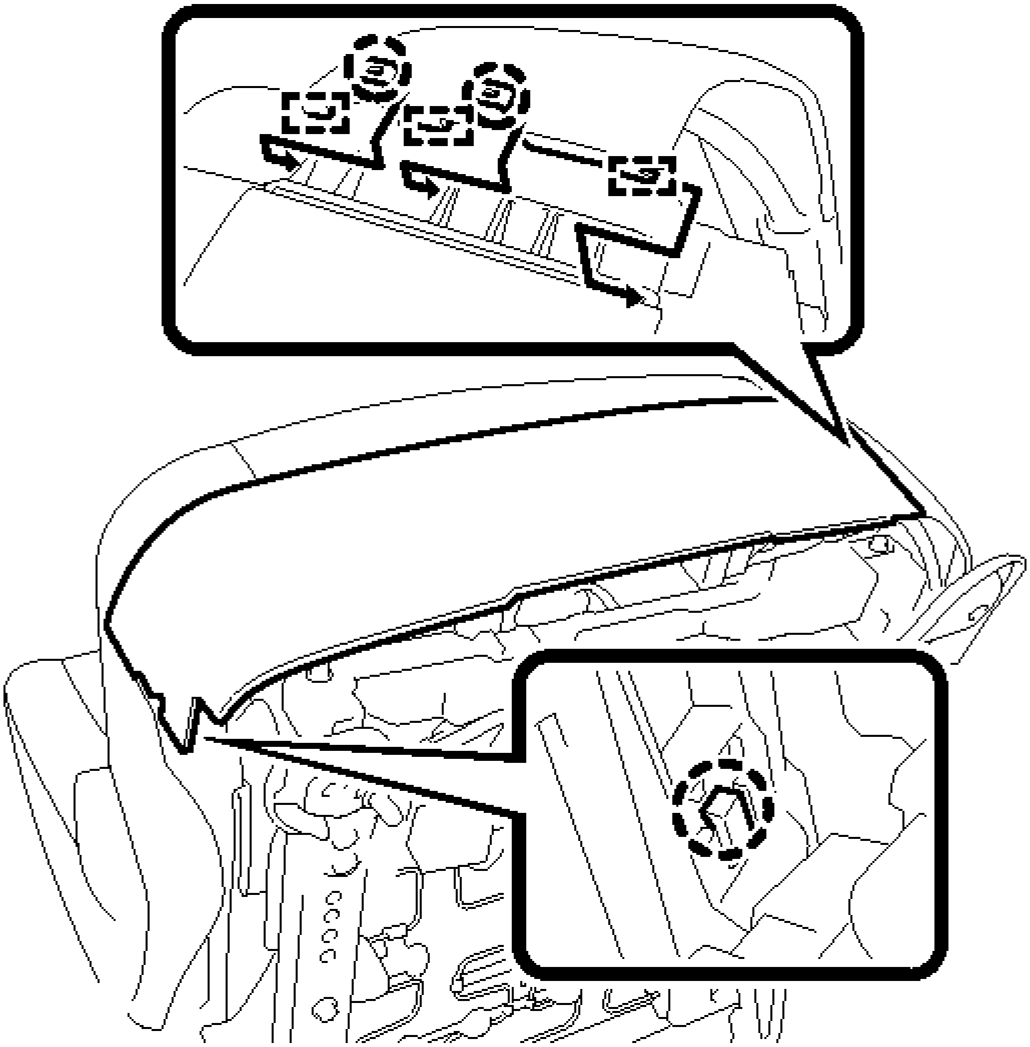

Fig. 278: Locating Front No. 1 Seat Inner Cushion Shield And Fasteners
Courtesy of TOYOTA MOTOR SALES, U.S.A., INC.

b. Engage the 2 claws to install the clip to the front No. 1 seat inner cushion shield as shown in the illustration.

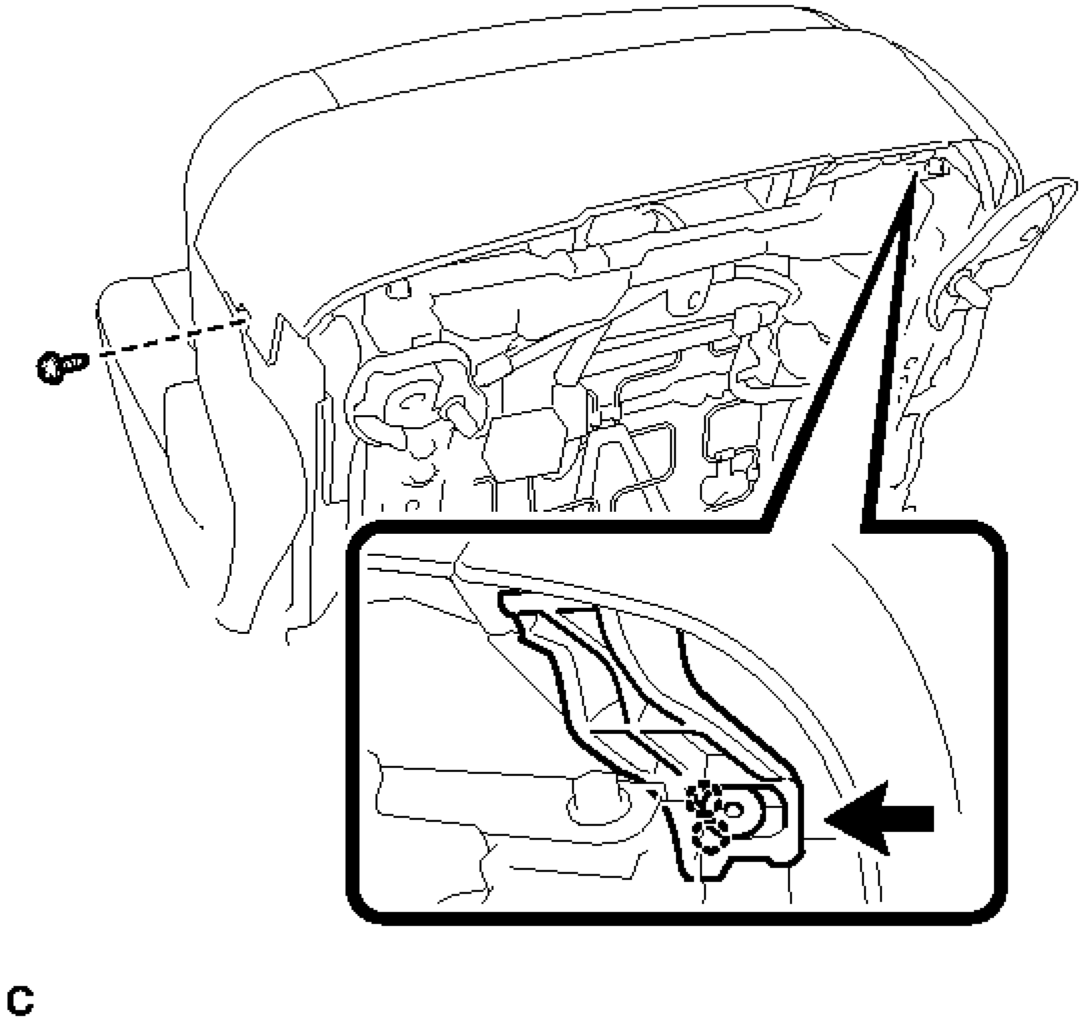

Fig. 279: Installing Front No. 1 Seat Inner Cushion Shield And Fasteners
Courtesy of TOYOTA MOTOR SALES, U.S.A., INC.

c. Install the screw.

11. **CONNECT SEPARATE TYPE FRONT SEATBACK COVER (for SIA Made)** . See step 31.
12. **INSTALL RECLINING POWER SEAT SWITCH KNOB (for SIA Made)** . See step 32.
13. **INSTALL SLIDE AND VERTICAL POWER SEAT SWITCH KNOB (for SIA Made)** . See step 33.
14. **INSTALL FRONT SEAT ASSEMBLY (for SIA Made)**

    Refer to **INSTALLATION**.

LUMBAR SWITCH

COMPONENTS

ILLUSTRATION

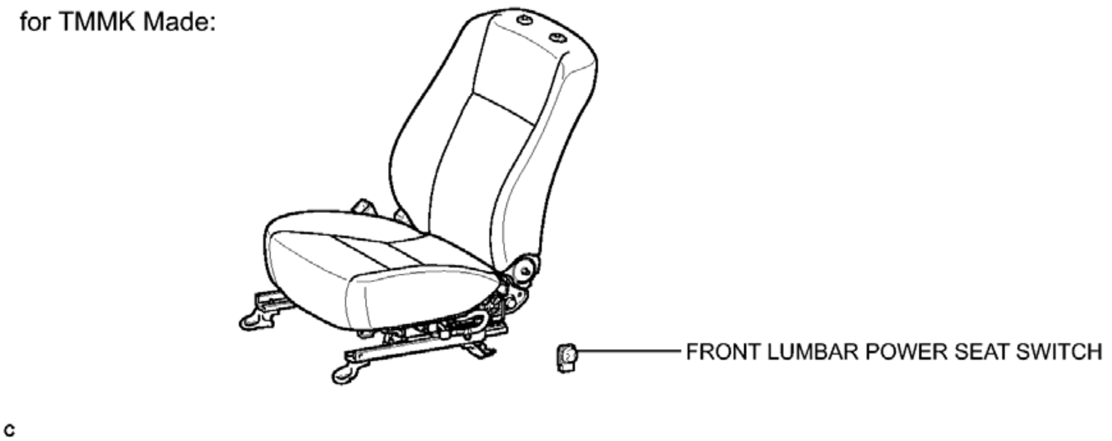
for TMMK Made:
FRONT LUMBAR POWER SEAT SWITCH
c

Fig. 280: Identifying Lumbar Switch (For TMMK Made) Replacement Components (1 Of 2)
Courtesy of TOYOTA MOTOR SALES, U.S.A., INC.

ILLUSTRATION

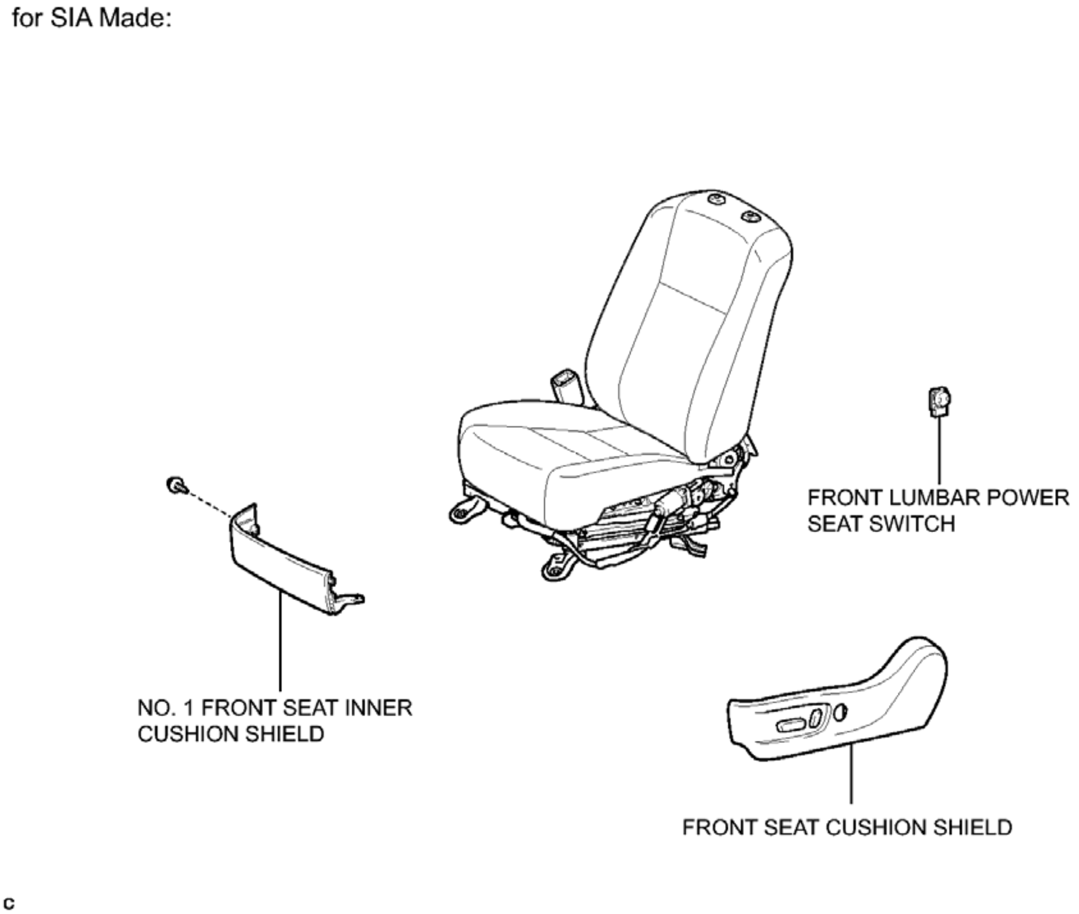
for SIA Made:
FRONT LUMBAR POWER SEAT SWITCH
NO. 1 FRONT SEAT INNER CUSHION SHIELD
FRONT SEAT CUSHION SHIELD
c

Fig. 281: Identifying Lumbar Switch (For SIA Made) Replacement Components (2 Of 2)
Courtesy of TOYOTA MOTOR SALES, U.S.A., INC.

REMOVAL

REMOVAL

1. **REMOVE FRONT POWER SEAT SWITCH (for TMMK Made)**

   Refer to **REMOVAL**.

2. **REMOVE FRONT LUMBAR POWER SEAT SWITCH (for TMMK Made)**
   a. Disconnect the connector to remove the front lumbar power seat switch.

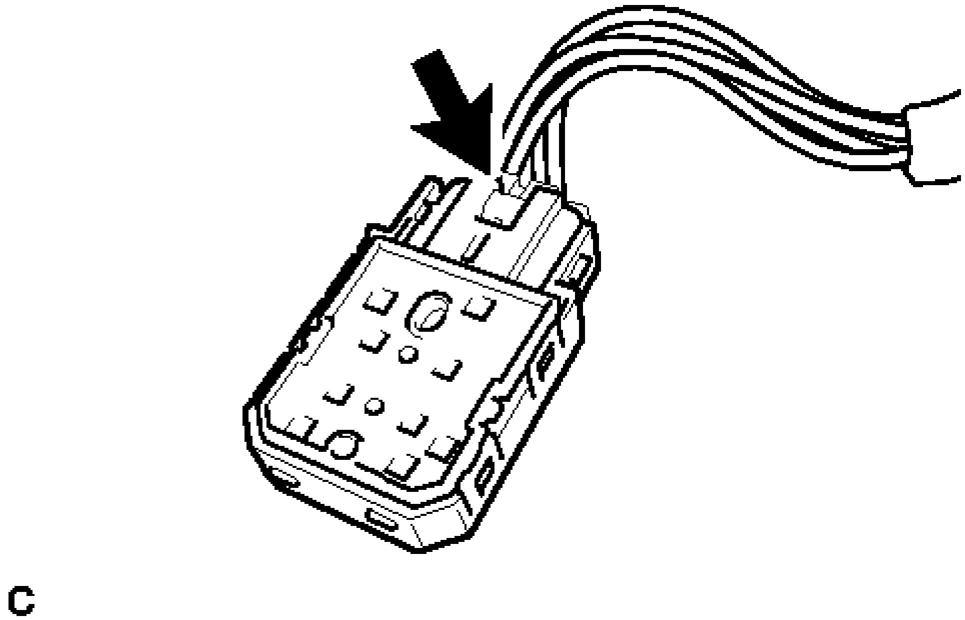

Fig. 282: Identifying Front Lumbar Power Seat Switch (For TMMK Made)
Courtesy of TOYOTA MOTOR SALES, U.S.A., INC.

3. **REMOVE FRONT SEAT ASSEMBLY (for SIA Made)**

   Refer to **REMOVAL**.

4. **DISCONNECT SEPARATE TYPE FRONT SEATBACK COVER (for SIA Made)** . See step 4.
5. **REMOVE NO. 1 FRONT SEAT INNER CUSHION SHIELD (for SIA Made)** . See step 11.
6. **REMOVE FRONT SEAT CUSHION SHIELD (for SIA Made)** . See step 6.
7. **REMOVE FRONT LUMBAR POWER SEAT SWITCH (for SIA Made)**
   a. Disengage the 4 claws to remove the front lumbar power seat switch from the front seat cushion shield.

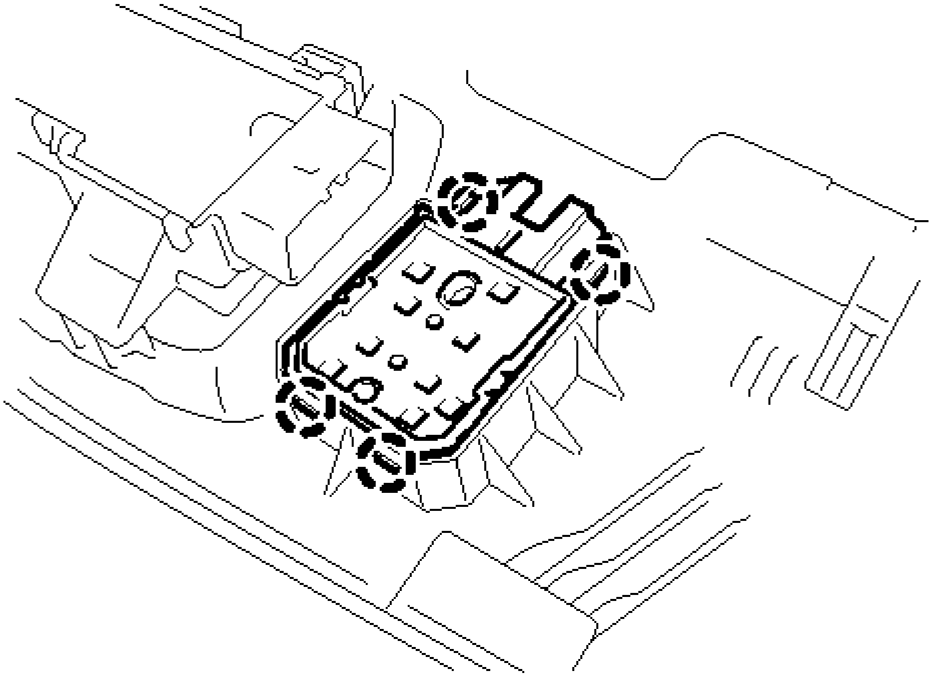

C

Fig. 283: Identifying Front Lumbar Power Seat Switch (For SIA Made)
Courtesy of TOYOTA MOTOR SALES, U.S.A., INC.

INSPECTION

INSPECTION

1. **INSPECT LUMBAR FRONT POWER SEAT SWITCH**

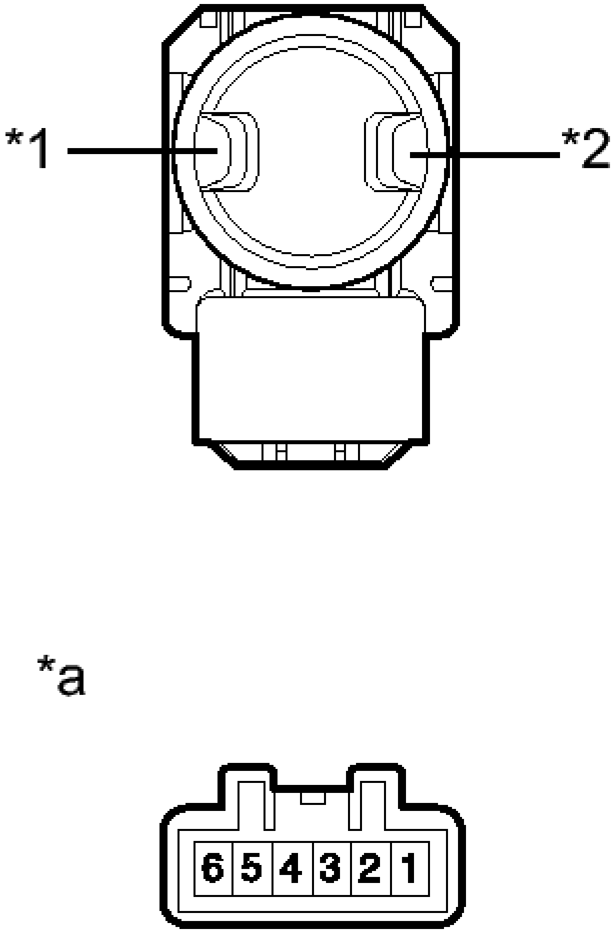

Fig. 284: Inspecting Lumbar Front Power Seat Switch
Courtesy of TOYOTA MOTOR SALES, U.S.A., INC.

a. Measure the resistance according to the value(s) in the table below.

TEXT IN ILLUSTRATION

*1	Hold Switch
*2	Release Switch
*a	Component without harness connected (Lumbar Front Power Seat Switch)

Standard Resistance

Tester Connection	Switch Condition	Specified Condition
3 - 5	Hold	Below 1 ohms
1 - 2		
3 - 2	Off	
1 - 2		
3 - 2	Release	
1 - 5		

If the result is not as specified, replace the lumbar front power seat switch.

INSTALLATION

INSTALLATION

1. **INSTALL FRONT LUMBAR POWER SEAT SWITCH (for TMMK Made)**
    a. Connect the connector to install the front lumbar power seat switch.
2. **INSTALL FRONT POWER SEAT SWITCH (for TMMK Made)**

    Refer to **INSTALLATION**.

3. **INSTALL FRONT LUMBAR POWER SEAT SWITCH (for SIA Made)**
    a. Engage the 4 claws to install the front lumbar power seat switch to the front seat cushion shield.
4. **INSTALL FRONT SEAT CUSHION SHIELD (for SIA Made)** . See step 28.
5. **INSTALL NO. 1 FRONT SEAT INNER CUSHION SHIELD (for SIA Made)** . See step 10.
6. **CONNECT SEPARATE TYPE FRONT SEATBACK COVER (for SIA Made)** . See step 31.
7. **INSTALL FRONT SEAT ASSEMBLY (for SIA Made)**

Refer to **INSTALLATION**.

LUMBAR SUPPORT ADJUSTER ASSEMBLY (FOR TMMK MADE POWER SEAT)

COMPONENTS

ILLUSTRATION

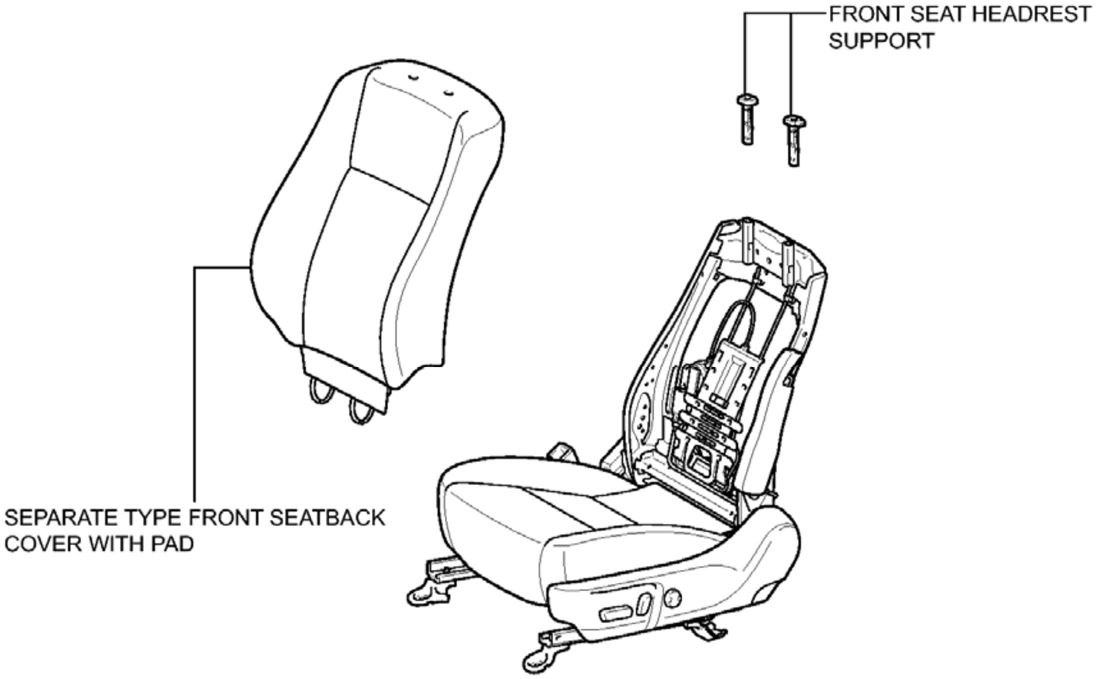
FRONT SEAT HEADREST SUPPORT
SEPARATE TYPE FRONT SEATBACK COVER WITH PAD
c

Fig. 285: Identifying Lumbar Support Adjuster Assembly (For TMMK Made Power Seat) Replacement Components (1 Of 2)
Courtesy of TOYOTA MOTOR SALES, U.S.A., INC.

ILLUSTRATION

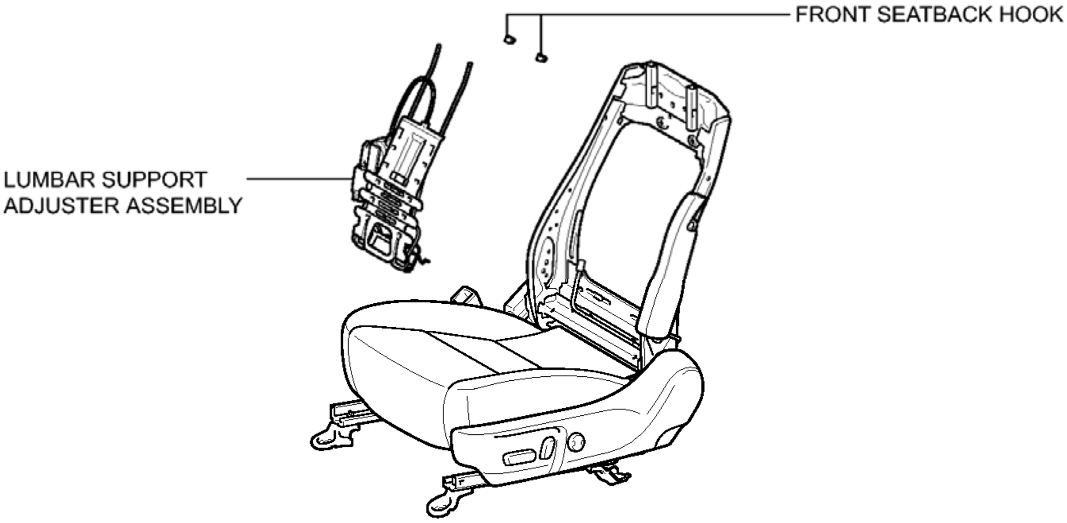
FRONT SEATBACK HOOK
LUMBAR SUPPORT ADJUSTER ASSEMBLY

c

Fig. 286: Identifying Lumbar Support Adjuster Assembly (For TMMK Made Power Seat) Replacement Components (2 Of 2)
Courtesy of TOYOTA MOTOR SALES, U.S.A., INC.

REMOVAL

REMOVAL

1. **REMOVE FRONT SEAT ASSEMBLY LH**

   Refer to **REMOVAL**.

2. **DISCONNECT SEPARATE TYPE FRONT SEATBACK COVER** . See step 4.
3. **DISCONNECT CONNECTORS** . See step 3.
4. **REMOVE SEPARATE TYPE FRONT SEATBACK COVER WITH PAD** . See step 14.
5. **REMOVE LUMBAR SUPPORT ADJUSTER ASSEMBLY**
   a. Disconnect the connector.

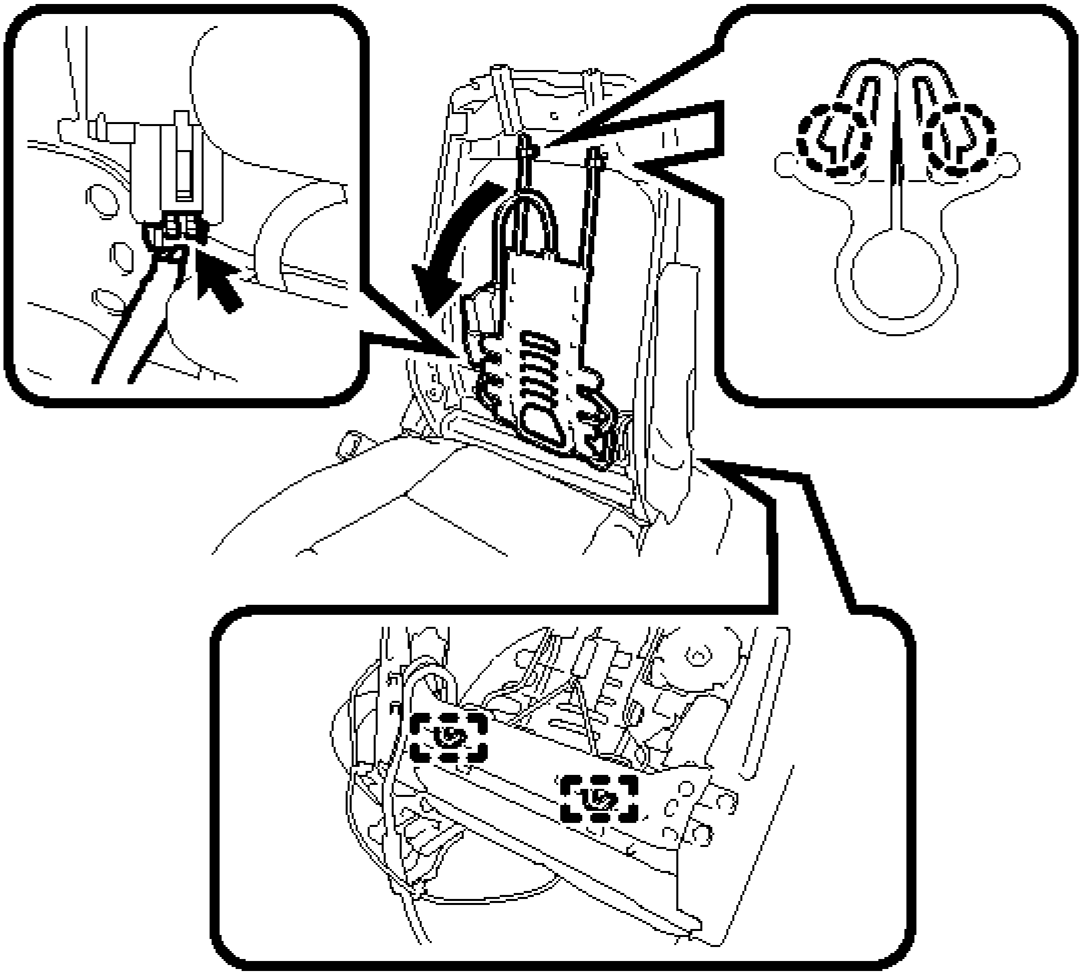

Fig. 287: Removing Lumbar Support Adjuster Assembly
Courtesy of TOYOTA MOTOR SALES, U.S.A., INC.

b. Disengage the 4 claws.
c. Disengage the 2 guides to remove the lumbar support adjuster assembly.
d. Remove the 2 front seatback hooks from the lumbar support adjuster assembly.

INSPECTION

INSPECTION

1. **INSPECT LUMBAR SUPPORT ADJUSTER ASSEMBLY LH**
   a. Check the operation of the lumbar support adjuster assembly.

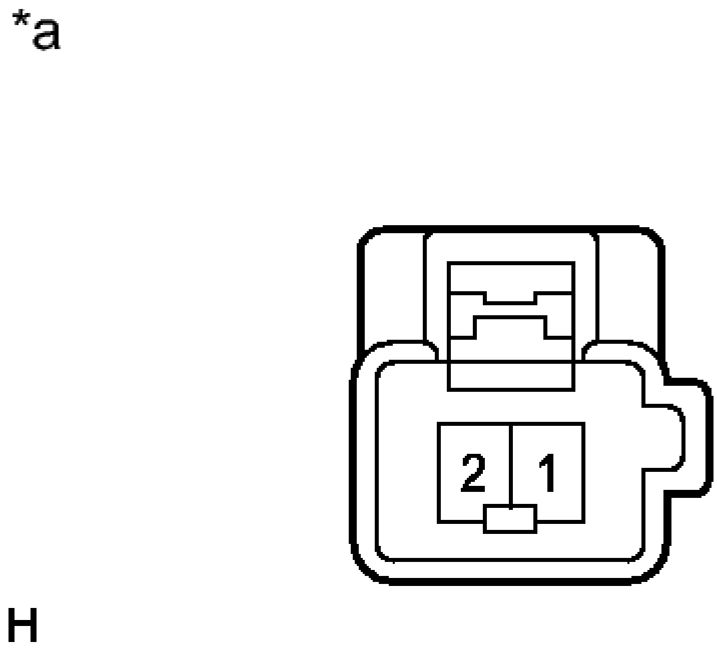

Fig. 288: Identifying Motor Connector Terminals
Courtesy of TOYOTA MOTOR SALES, U.S.A., INC.

1. Check that the front seat back moves smoothly when the battery is connected to the lumbar support adjuster assembly connector terminals.

   OK

Measurement Condition	Operational Direction
Battery positive (+) --> Terminal 1 Battery negative (-) --> Terminal 2	Seat back moves forward
Battery positive (+) --> Terminal 2 Battery negative (-) --> Terminal 1	Seat back moves backward

TEXT IN ILLUSTRATION

	Component without harness

*a	connected (Lumbar Support Adjuster Assembly LH)

If the result is not as specified, replace the lumbar support adjuster assembly LH.

INSTALLATION

INSTALLATION

1. **INSTALL LUMBAR SUPPORT ADJUSTER ASSEMBLY**
    a. Install the 2 front seatback hooks to the lumbar support adjuster assembly.
    b. Engage the 2 guides.

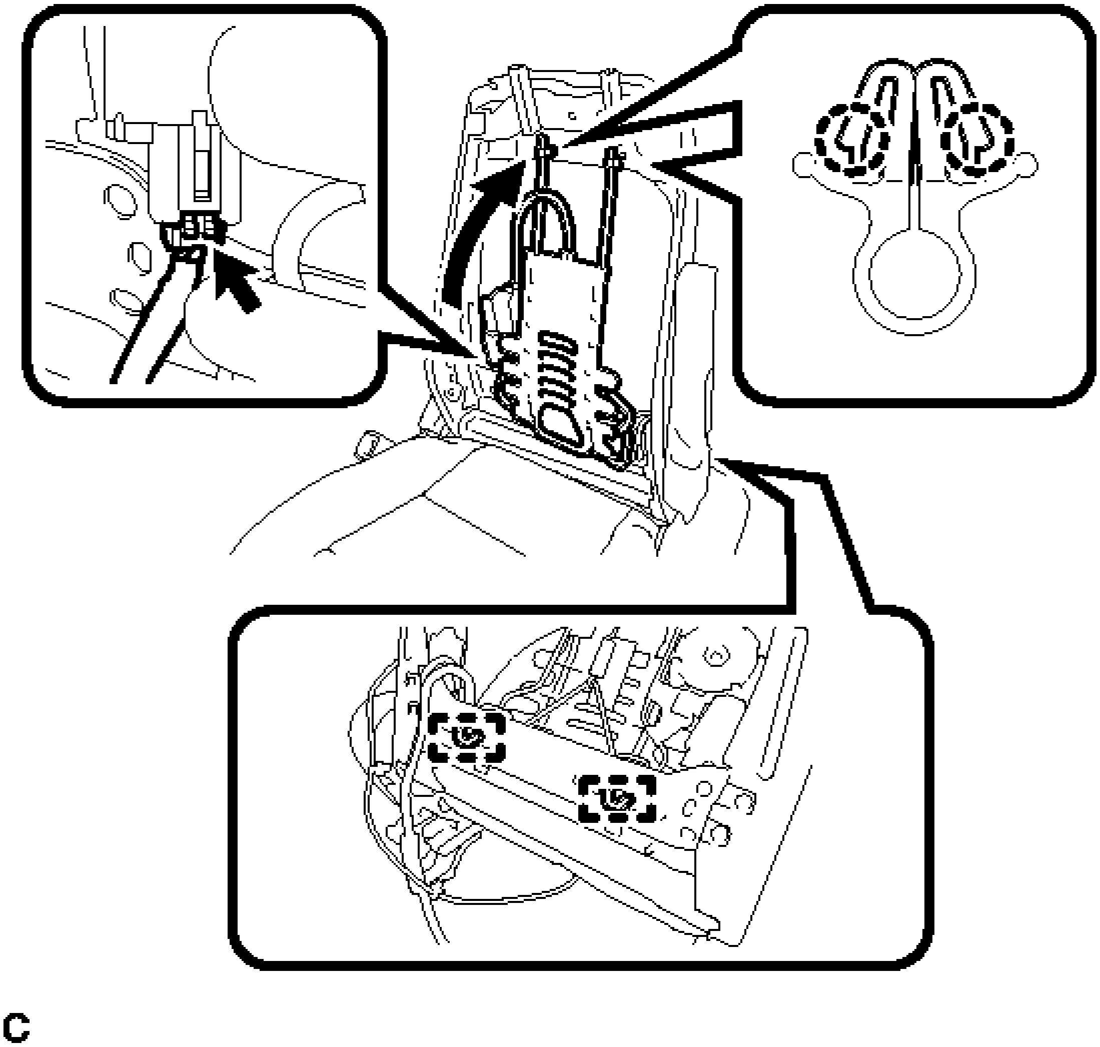

Fig. 289: Installing Lumbar Support Adjuster Assembly
Courtesy of TOYOTA MOTOR SALES, U.S.A., INC.

   c. Engage the 4 claws to install the lumbar support adjuster assembly.
   d. Connect the connector.

2. **INSTALL SEPARATE TYPE FRONT SEATBACK COVER WITH PAD** . See step 21.
3. **CONNECT CONNECTORS** . See step 4.
4. **CONNECT SEPARATE TYPE FRONT SEATBACK COVER** . See step 31.
5. **INSTALL FRONT SEAT ASSEMBLY LH**

   Refer to INSTALLATION.

SEAT HEATER SWITCH

COMPONENTS

ILLUSTRATION

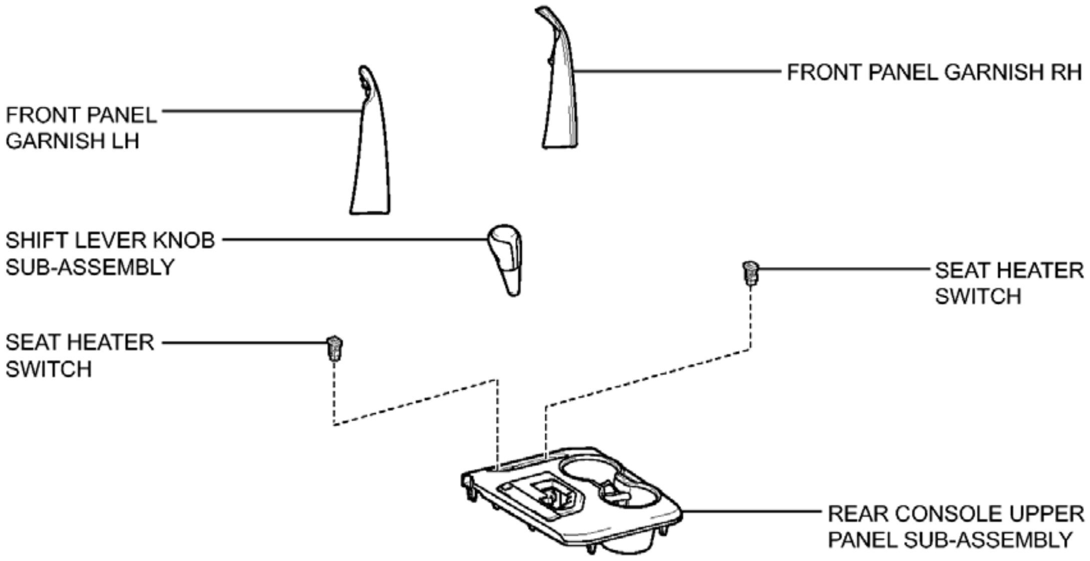
FRONT PANEL GARNISH RH
FRONT PANEL GARNISH LH
SHIFT LEVER KNOB SUB-ASSEMBLY
SEAT HEATER SWITCH
SEAT HEATER SWITCH
REAR CONSOLE UPPER PANEL SUB-ASSEMBLY

c

Fig. 290: Identifying Seat Heater Switch Replacement Components
Courtesy of TOYOTA MOTOR SALES, U.S.A., INC.

REMOVAL

REMOVAL

1. **REMOVE FRONT PANEL GARNISH LH** . Refer to **REMOVAL - Step 11** .
2. **REMOVE FRONT PANEL GARNISH RH** . Refer to **REMOVAL - Step 14** .
3. **REMOVE SHIFT LEVER KNOB SUB-ASSEMBLY** . Refer to **REMOVAL - Step 15** .
4. **REMOVE REAR CONSOLE UPPER PANEL SUB-ASSEMBLY** . Refer to **REMOVAL - Step 16** .
5. **REMOVE SEAT HEATER SWITCH**
    a. Disengage the 4 claws to remove the 2 seat heater switches.

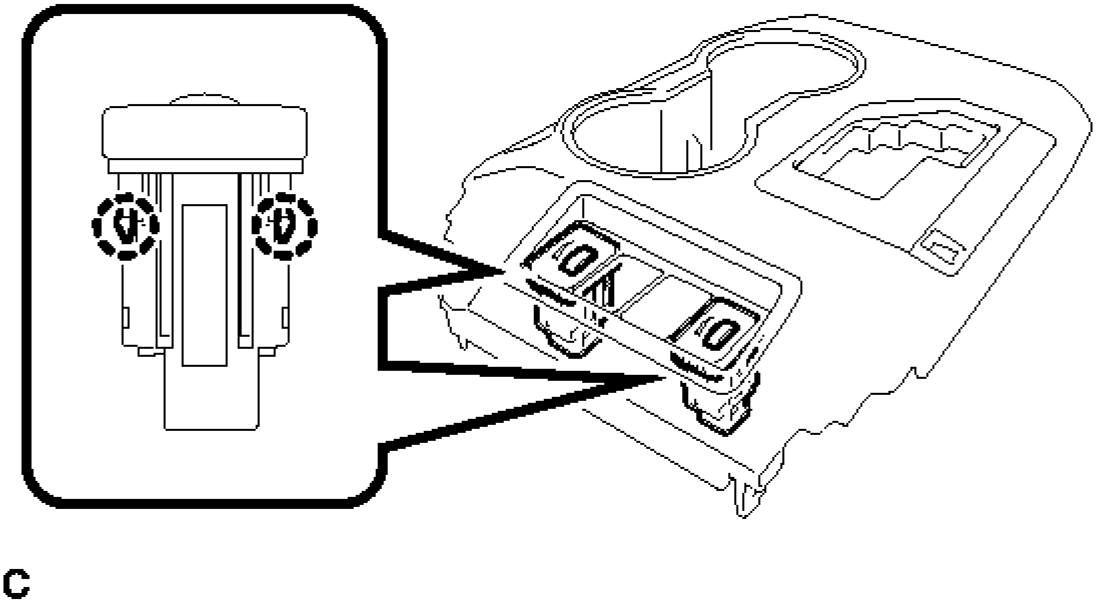

Fig. 291: Identifying Seat Heater Switch Claws
Courtesy of TOYOTA MOTOR SALES, U.S.A., INC.

INSPECTION

INSPECTION

1. **INSPECT SEAT HEATER SWITCH (for LH)**
    a. Check the seat heater switch.
        1. Measure the resistance according to the value(s) in the table below.

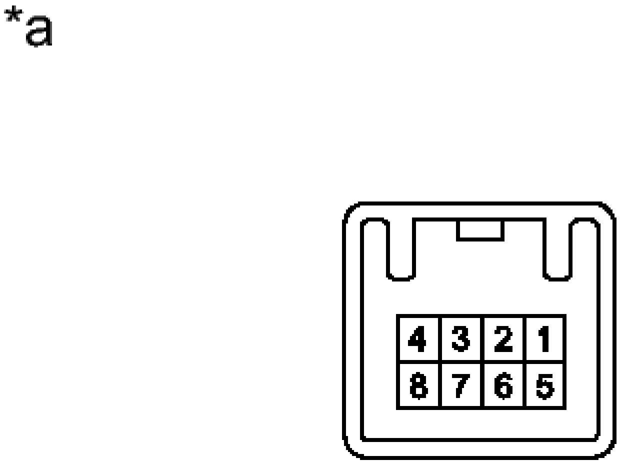

Fig. 292: Identifying Seat Heater Switch Connector Terminals
Courtesy of TOYOTA MOTOR SALES, U.S.A., INC.

TEXT IN ILLUSTRATION

*a	Component without harness connected (Seat Heater Switch (for LH))

Standard Resistance

Tester Connection	Switch Condition	Specified Condition
8 - 6	OFF	10 kohms or higher
8 - 6	ON	350 ohms to 3.4 kohms
8 - 3	ON	Below 1 ohms

If the result is not as specified, replace the seat heater switch (for LH).

b. Check that the LED illuminates.
    1. Apply battery voltage to the seat heater switch (for LH) and check that the LED illuminates.

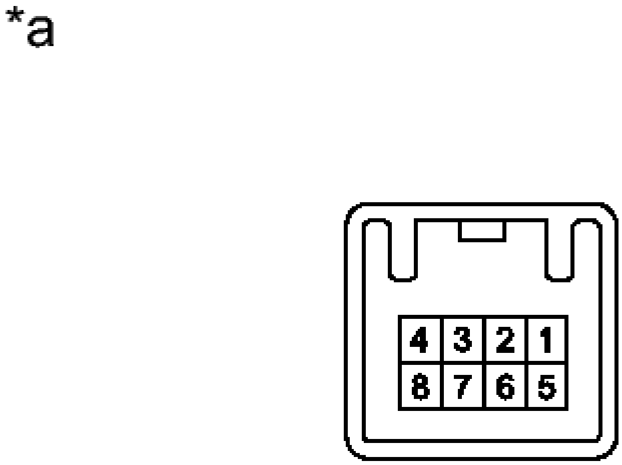

Fig. 293: Identifying Seat Heater Switch Connector Terminals
Courtesy of TOYOTA MOTOR SALES, U.S.A., INC.

TEXT IN ILLUSTRATION

*a	Component without harness connected (Seat Heater Switch (for LH))

OK

Measurement Condition	Switch Condition	Specified Condition
Battery positive (+) --> Terminal 7 Battery negative (-) --> Terminal 2	-	LED

Battery positive (+) --> Terminal 8 Battery negative (-) --> Terminal 4	ON	illuminates

If the result is not as specified, replace the seat heater switch (for LH).

2. **INSPECT SEAT HEATER SWITCH (for RH)**
    a. Check the seat heater switch.
        1. Measure the resistance according to the value(s) in the table below.

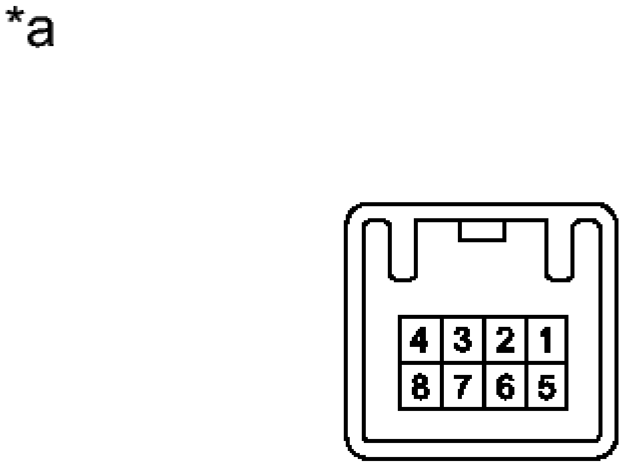

Fig. 294: Identifying Seat Heater Switch Connector Terminals
Courtesy of TOYOTA MOTOR SALES, U.S.A., INC.

TEXT IN ILLUSTRATION

*a	Component without harness connected (Seat Heater Switch (for RH))

Standard Resistance

Tester Connection	Switch Condition	Specified Condition
7 - 5	OFF	10 kohms or higher
7 - 5	ON	350 ohms to 3.4 kohms
7 - 2	ON	Below 1 ohms

If the result is not as specified, replace the seat heater switch (for RH).

b. Check that the LED illuminates.
   1. Apply battery voltage to the seat heater switch (for RH) and check that the LED illuminates.

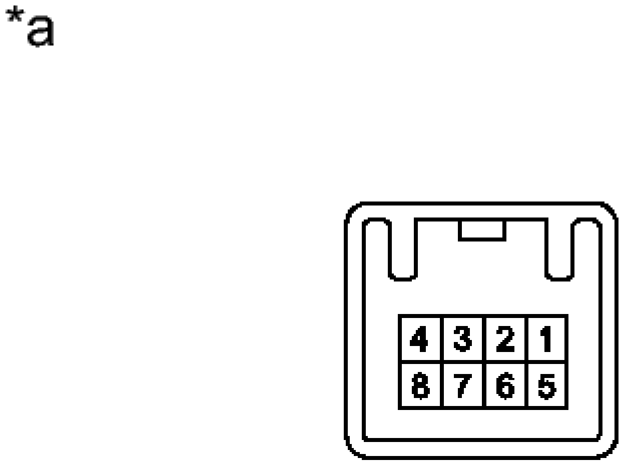

Fig. 295: Identifying Seat Heater Switch Connector Terminals
Courtesy of TOYOTA MOTOR SALES, U.S.A., INC.

TEXT IN ILLUSTRATION

*a	Component without harness connected (Seat

	Heater Switch (for RH))

OK

Measurement Condition	Switch Condition	Specified Condition
Battery positive (+) --> Terminal 6 Battery negative (-) --> Terminal 1	-	LED illuminates
Battery positive (+) --> Terminal 7 Battery negative (-) --> Terminal 3	ON	

If the result is not as specified, replace the seat heater switch (for RH).

INSTALLATION

INSTALLATION

1. **INSTALL SEAT HEATER SWITCH**
   a. Engage the 4 claws to install the 2 seat heater switches.
2. **INSTALL REAR CONSOLE UPPER PANEL SUB-ASSEMBLY** . Refer to **INSTALLATION - Step 37** .
3. **INSTALL SHIFT LEVER KNOB SUB-ASSEMBLY** . Refer to **INSTALLATION - Step 38** .
4. **INSTALL FRONT PANEL GARNISH LH** . Refer to **INSTALLATION - Step 42** .
5. **INSTALL FRONT PANEL GARNISH RH** . Refer to **INSTALLATION - Step 39** .

FRONT SEATBACK HEATER

COMPONENTS

ILLUSTRATION

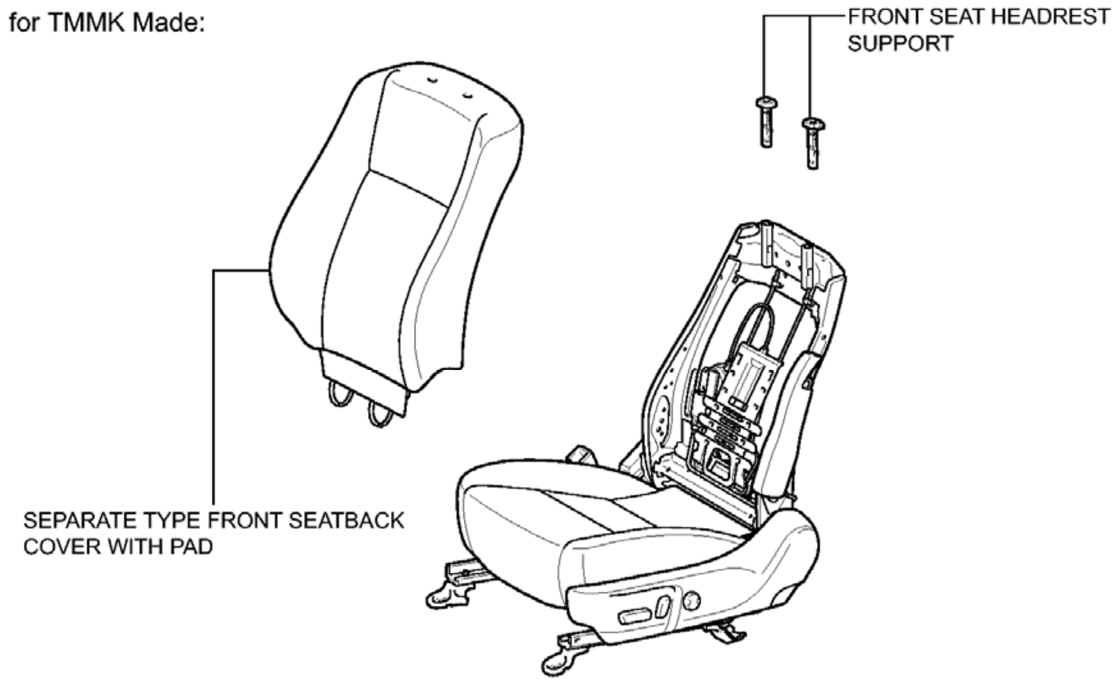
for TMMK Made:
FRONT SEAT HEADREST SUPPORT
SEPARATE TYPE FRONT SEATBACK COVER WITH PAD
c

Fig. 296: Identifying Front Seatback Heater (For TMMK Made) Replacement Components (1 Of 4)
Courtesy of TOYOTA MOTOR SALES, U.S.A., INC.

ILLUSTRATION

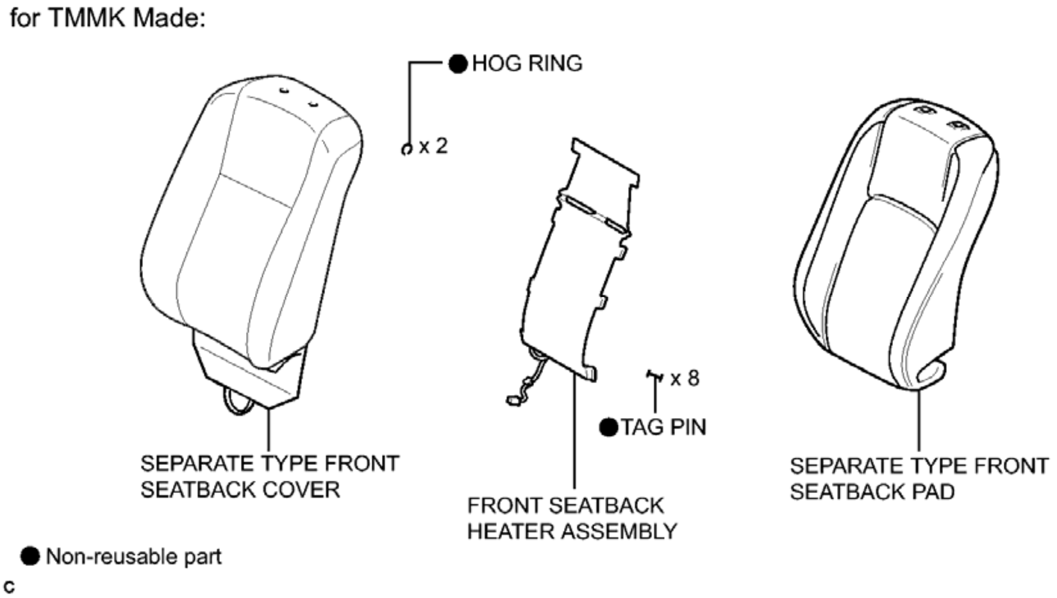
for TMMK Made:
● HOG RING
x 2
x 8
● TAG PIN
SEPARATE TYPE FRONT SEATBACK COVER
FRONT SEATBACK HEATER ASSEMBLY
SEPARATE TYPE FRONT SEATBACK PAD
● Non-reusable part
c

Fig. 297: Identifying Front Seatback Heater (For TMMK Made) Replacement Components (2 Of 4)
Courtesy of TOYOTA MOTOR SALES, U.S.A., INC.

ILLUSTRATION

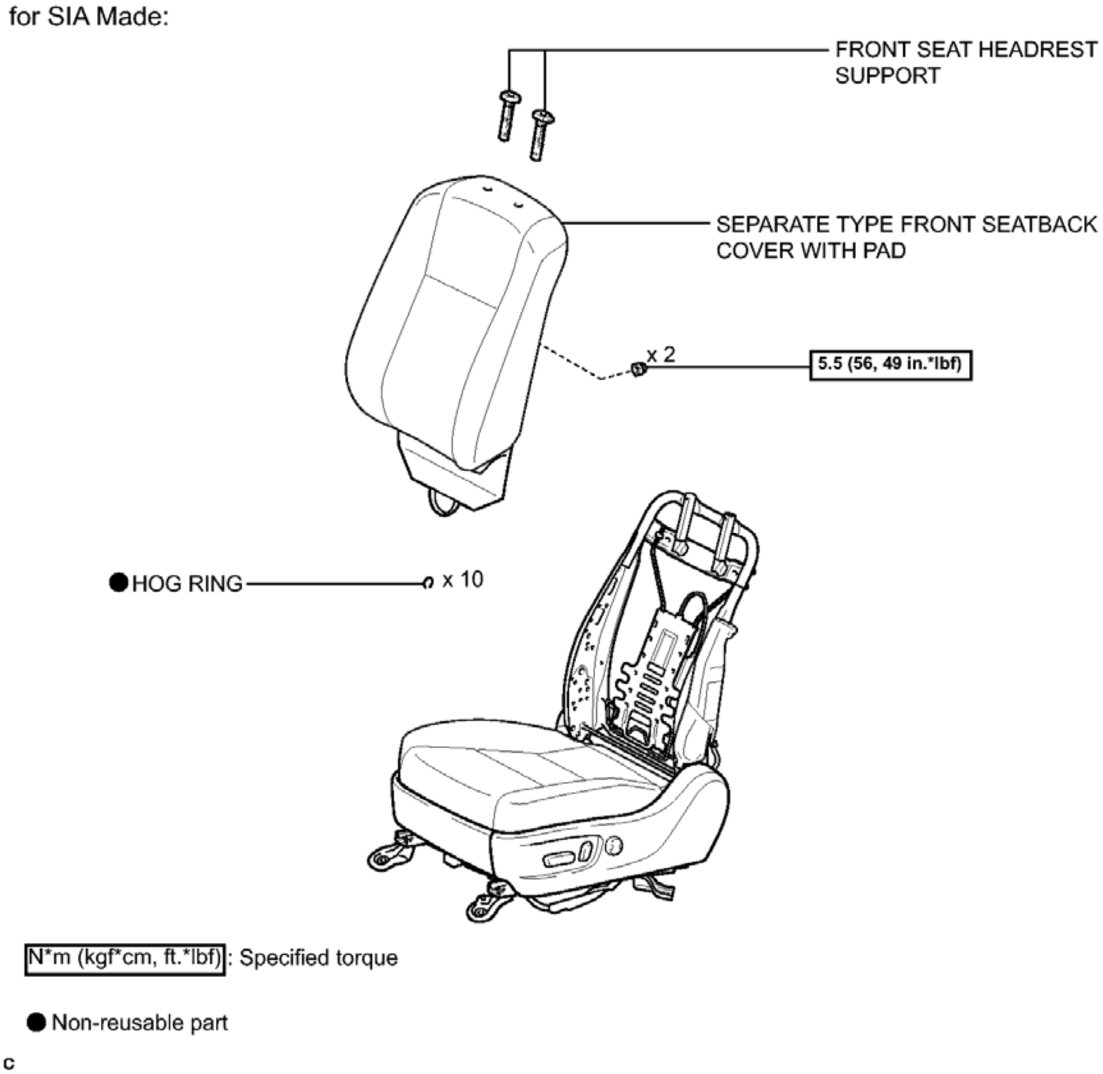
for SIA Made:
FRONT SEAT HEADREST SUPPORT
SEPARATE TYPE FRONT SEATBACK COVER WITH PAD
x 2
5.5 (56, 49 in.*lbf)
● HOG RING
x 10
N*m (kgf*cm, ft.*lbf): Specified torque
● Non-reusable part
c

Fig. 298: Identifying Front Seatback Heater (For SIA Made) Replacement Components With Torque Specifications (3 Of 4)
Courtesy of TOYOTA MOTOR SALES, U.S.A., INC.

ILLUSTRATION

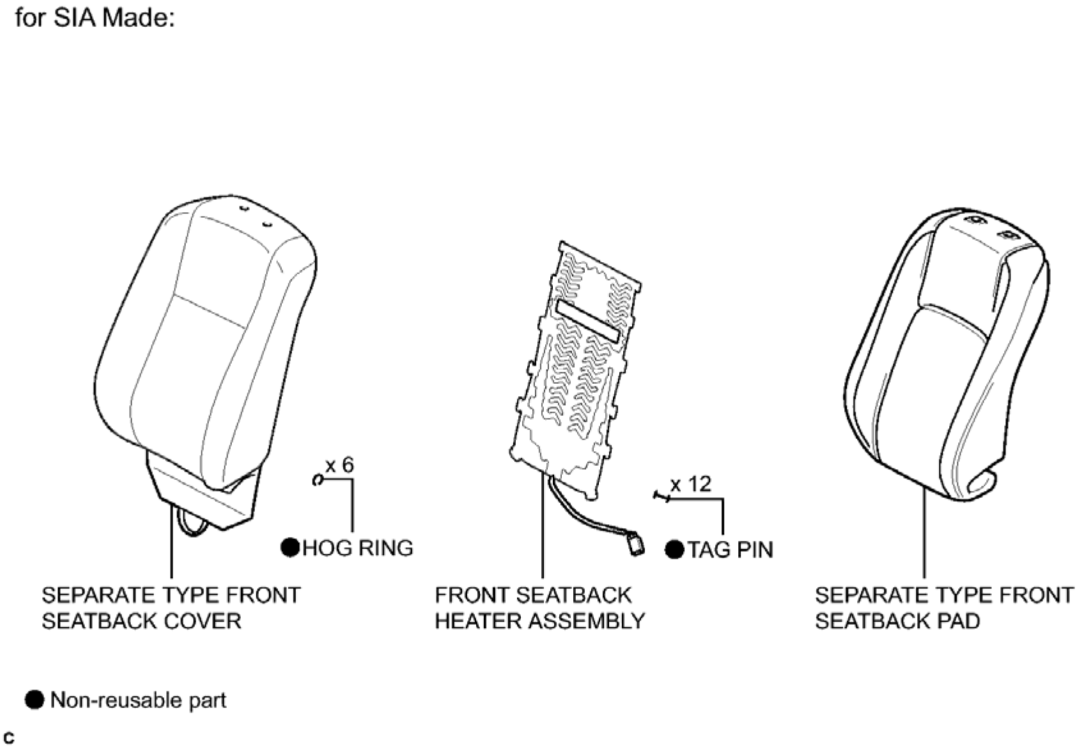
for SIA Made:
x 6
HOG RING
SEPARATE TYPE FRONT SEATBACK COVER
FRONT SEATBACK HEATER ASSEMBLY
x 12
TAG PIN
SEPARATE TYPE FRONT SEATBACK PAD
● Non-reusable part
c

Fig. 299: Identifying Front Seatback Heater (For SIA Made) Replacement Components (4 Of 4)
Courtesy of TOYOTA MOTOR SALES, U.S.A., INC.

REMOVAL

REMOVAL

1. **REMOVE FRONT SEAT ASSEMBLY (for TMMK Made)**

   Refer to **REMOVAL**.

2. **DISCONNECT SEPARATE TYPE FRONT SEATBACK COVER (for TMMK Made)** . See step 4.
3. **DISCONNECT CONNECTORS (for TMMK Made)**
   a. Disconnect the connector (A).

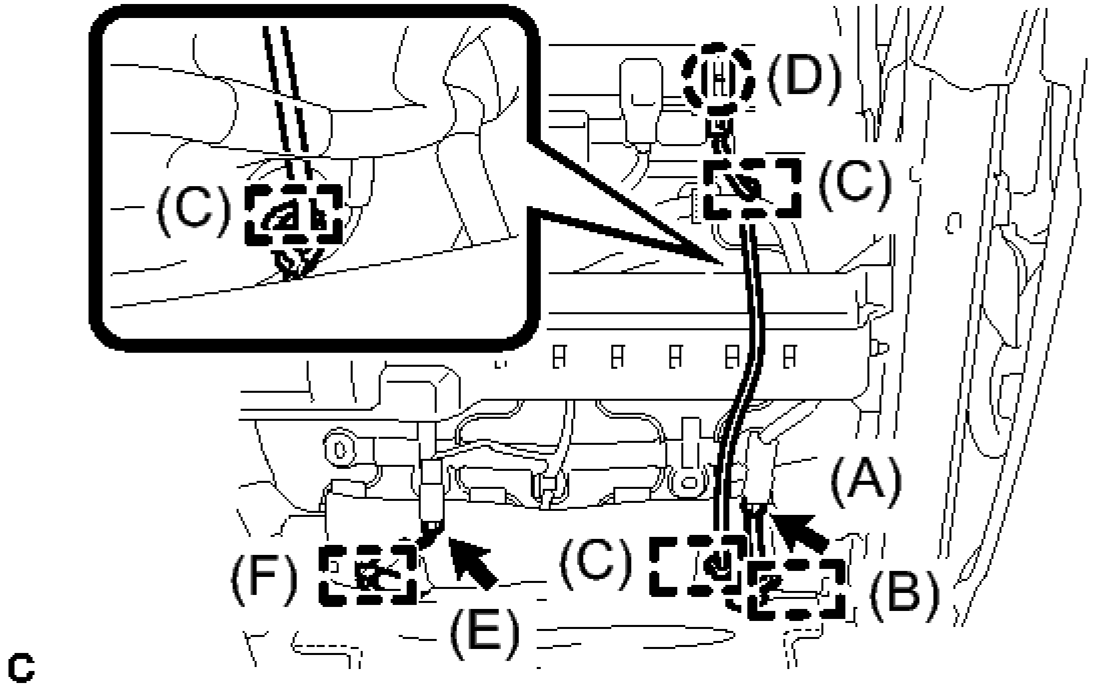

Fig. 300: Identifying Front Seatback Cover Connectors, Claw And Clamps (For TMMK Made Power Seat)
Courtesy of TOYOTA MOTOR SALES, U.S.A., INC.

    b. Disengage the clamp (B).
    c. Disengage the claw (D) and 3 clamps (C) to separate the front seat airbag assembly wire harness.
    d. Disconnect the connector (E).
    e. Disengage the clamp (F).

4. **REMOVE SEPARATE TYPE FRONT SEATBACK COVER WITH PAD (for TMMK Made)** . See step 14.
5. **REMOVE SEPARATE TYPE FRONT SEATBACK COVER (for TMMK Made)** . See step 16.
6. **REMOVE FRONT SEATBACK HEATER ASSEMBLY (for TMMK Made)**
    a. Remove the 8 tag pins and the front seatback heater assembly from the separate type front seatback cover.

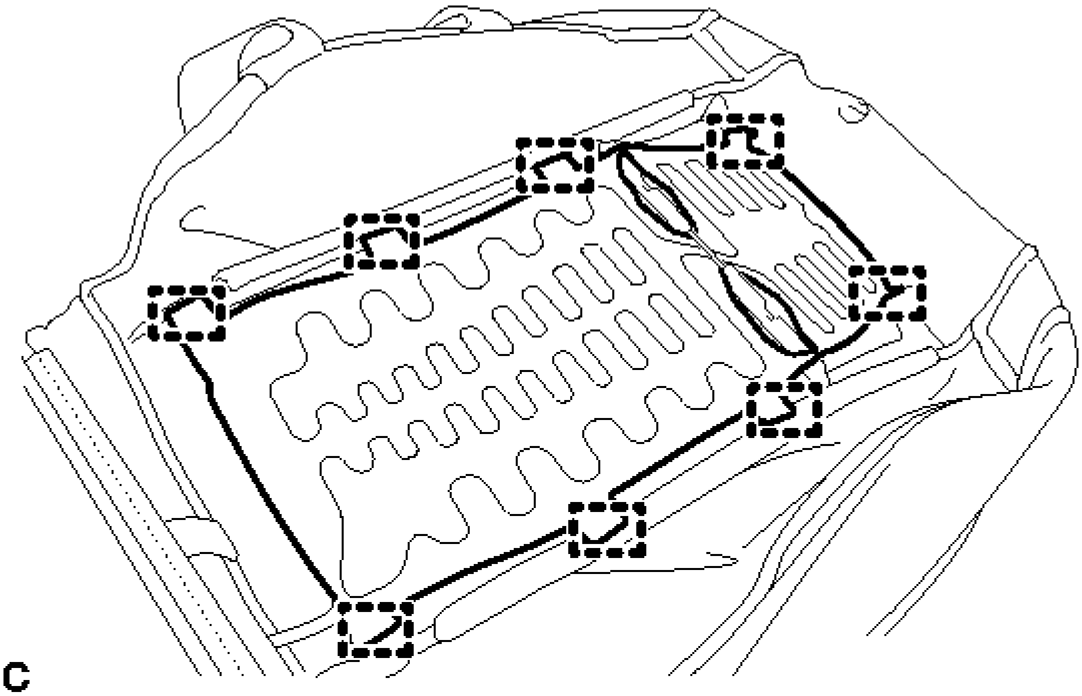

Fig. 301: Identifying Front Seatback Heater Assembly (For TMMK Made) Tag Pins
Courtesy of TOYOTA MOTOR SALES, U.S.A., INC.

7. **REMOVE FRONT SEAT ASSEMBLY (for SIA Made)**

   Refer to **REMOVAL**.

8. **DISCONNECT SEPARATE TYPE FRONT SEATBACK COVER (for SIA Made)** . See step 4.
9. **DISCONNECT CONNECTOR (for SIA Made)**
   a. Disconnect the connector.

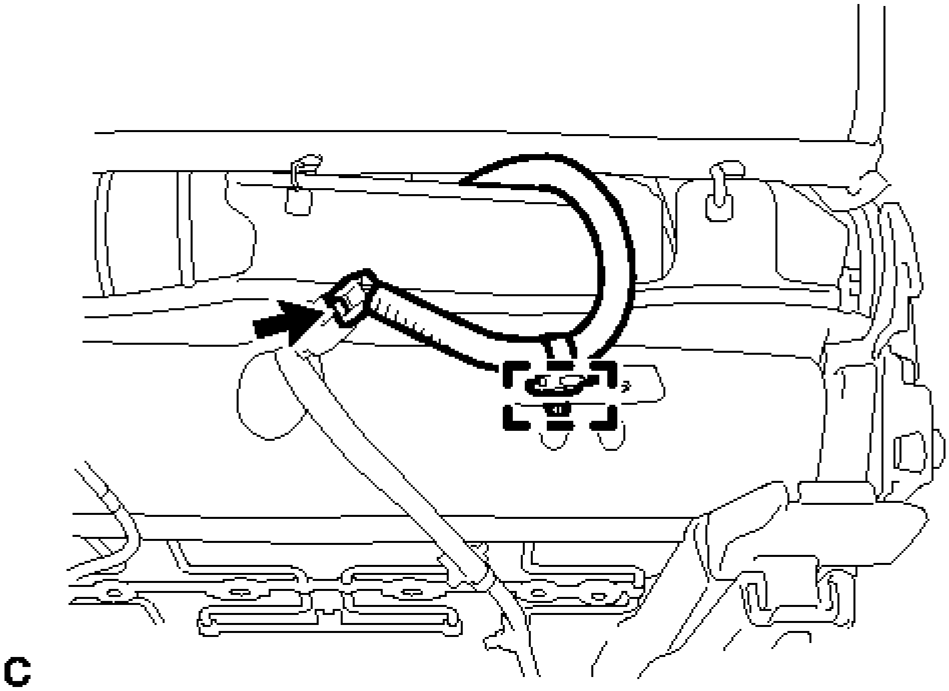

Fig. 302: Identifying Front Seatback Cover Connector And Clamp (For SIA Made Power Seat)
Courtesy of TOYOTA MOTOR SALES, U.S.A., INC.

b. Disengage the clamp.

10. **REMOVE SEPARATE TYPE FRONT SEATBACK COVER WITH PAD (for SIA Made)** . See step 17.
11. **REMOVE SEPARATE TYPE FRONT SEATBACK COVER (for SIA Made)** . See step 19.
12. **REMOVE FRONT SEATBACK HEATER ASSEMBLY (for SIA Made)**

    a. Remove the 12 tag pins and the front seatback heater assembly from the separate type front seatback cover.

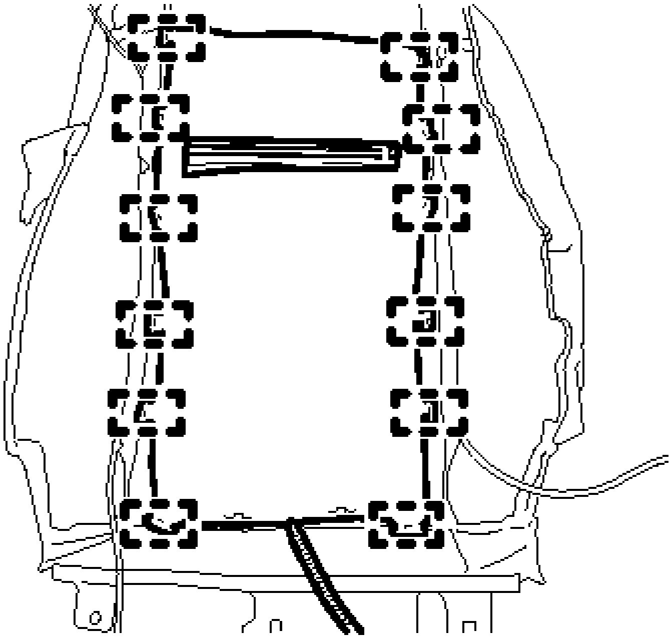

Fig. 303: Identifying Front Seatback Heater Assembly (For SIA Made) Tag Pins
Courtesy of TOYOTA MOTOR SALES, U.S.A., INC.

INSPECTION

INSPECTION

1. **INSPECT FRONT SEAT BACK HEATER ASSEMBLY LH**
    a. Measure the resistance according to the value(s) in the table below.

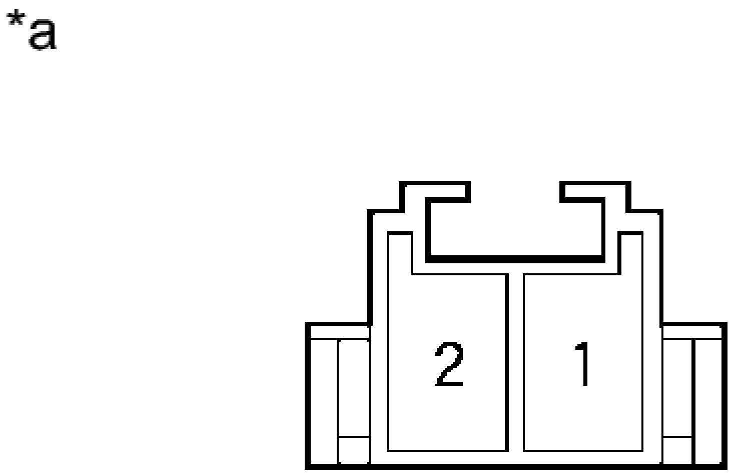

Fig. 304: Identifying Front Seat Back Heater Assembly
Courtesy of TOYOTA MOTOR SALES, U.S.A., INC.

TEXT IN ILLUSTRATION

*a	Component without harness connected (Front Seat Back Heater Assembly LH)

Standard Resistance

Tester Connection	Condition	Specified Condition
1 - 2	Always	3.26 to 4 ohms

If the result is not as specified, replace the front seat back heater assembly LH.

2. **INSPECT FRONT SEAT BACK HEATER ASSEMBLY RH**
    1. Measure the resistance according to the value(s) in the table below.

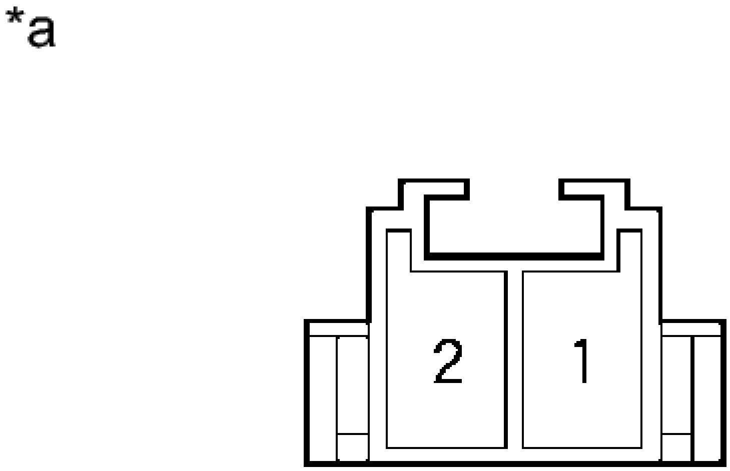

Fig. 305: Identifying Front Seat Back Heater Assembly
Courtesy of TOYOTA MOTOR SALES, U.S.A., INC.

TEXT IN ILLUSTRATION

*a	Component without harness connected (Front Seat Back Heater Assembly RH)

Standard Resistance

Tester Connection	Condition	Specified Condition
1 - 2	Always	3.26 to 4 ohms

If the result is not as specified, replace the front seat back heater assembly RH.

INSTALLATION

INSTALLATION

1. **INSTALL FRONT SEATBACK HEATER ASSEMBLY (for TMMK Made)**
    a. Using a tacker, install the front seatback heater assembly to the separate type front seatback cover with 8 new tag pins.
2. **INSTALL SEPARATE TYPE FRONT SEATBACK COVER (for TMMK Made)** . See step 19.
3. **INSTALL SEPARATE TYPE FRONT SEATBACK COVER WITH PAD (for TMMK Made)** . See step 21.
4. **CONNECT CONNECTORS (for TMMK Made)**
    a. Engage the claw (D) and 3 clamps (C) to install the front seat airbag assembly wire harness.

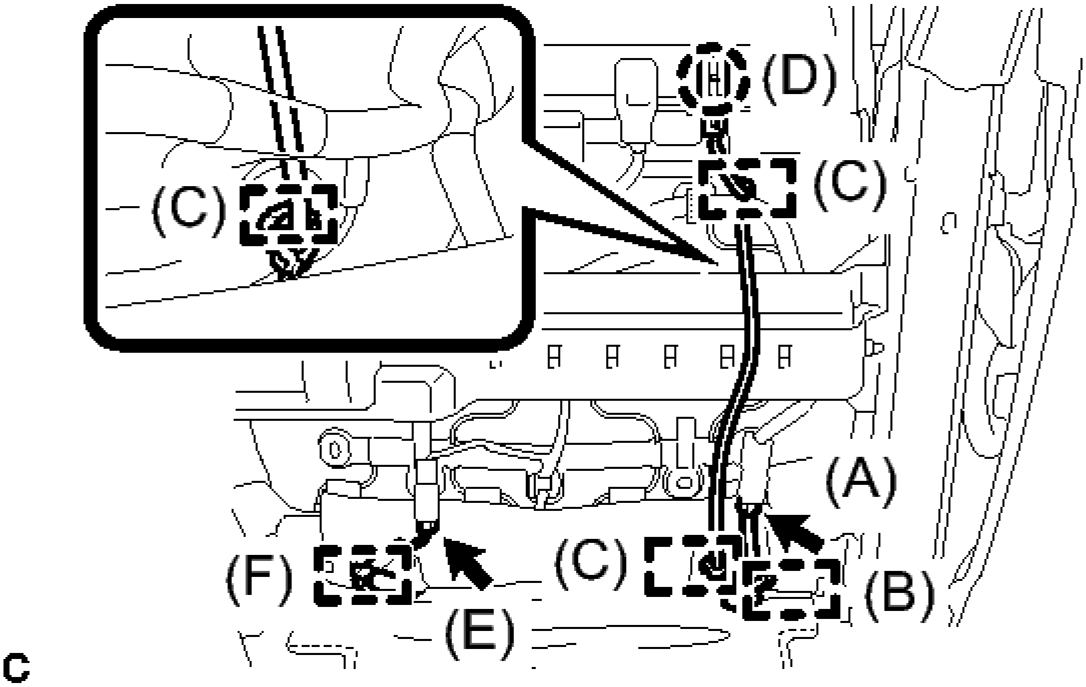

Fig. 306: Identifying Front Seatback Cover Connectors, Claw And Clamps (For TMMK Made Power Seat)
Courtesy of TOYOTA MOTOR SALES, U.S.A., INC.

    b. Engage the clamp (B).
    c. Connect the connector (A).
    d. Connect the connector (E).
    e. Engage the clamp (F).
5. **CONNECT SEPARATE TYPE FRONT SEATBACK COVER (for TMMK Made)** . See step 31.
6. **INSTALL FRONT SEAT ASSEMBLY (for TMMK Made)**

    Refer to **INSTALLATION**.

7. **INSTALL FRONT SEATBACK HEATER ASSEMBLY (for SIA Made)**
    a. Using a tacker, install the front seatback heater assembly to the separate type front seatback cover

with 12 new tag pins.

8. **INSTALL SEPARATE TYPE FRONT SEATBACK COVER (for SIA Made)** . See step 16.
9. **INSTALL SEPARATE TYPE FRONT SEATBACK COVER WITH PAD (for SIA Made)** . See step 18.
10. **CONNECT CONNECTOR (for SIA Made)**
    a. Engage the clamp.
    b. Connect the connector.
11. **CONNECT SEPARATE TYPE FRONT SEATBACK COVER (for SIA Made)** . See step 31.
12. **INSTALL FRONT SEAT ASSEMBLY (for SIA Made)**

    Refer to **INSTALLATION**.

FRONT SEAT CUSHION HEATER

COMPONENTS

ILLUSTRATION

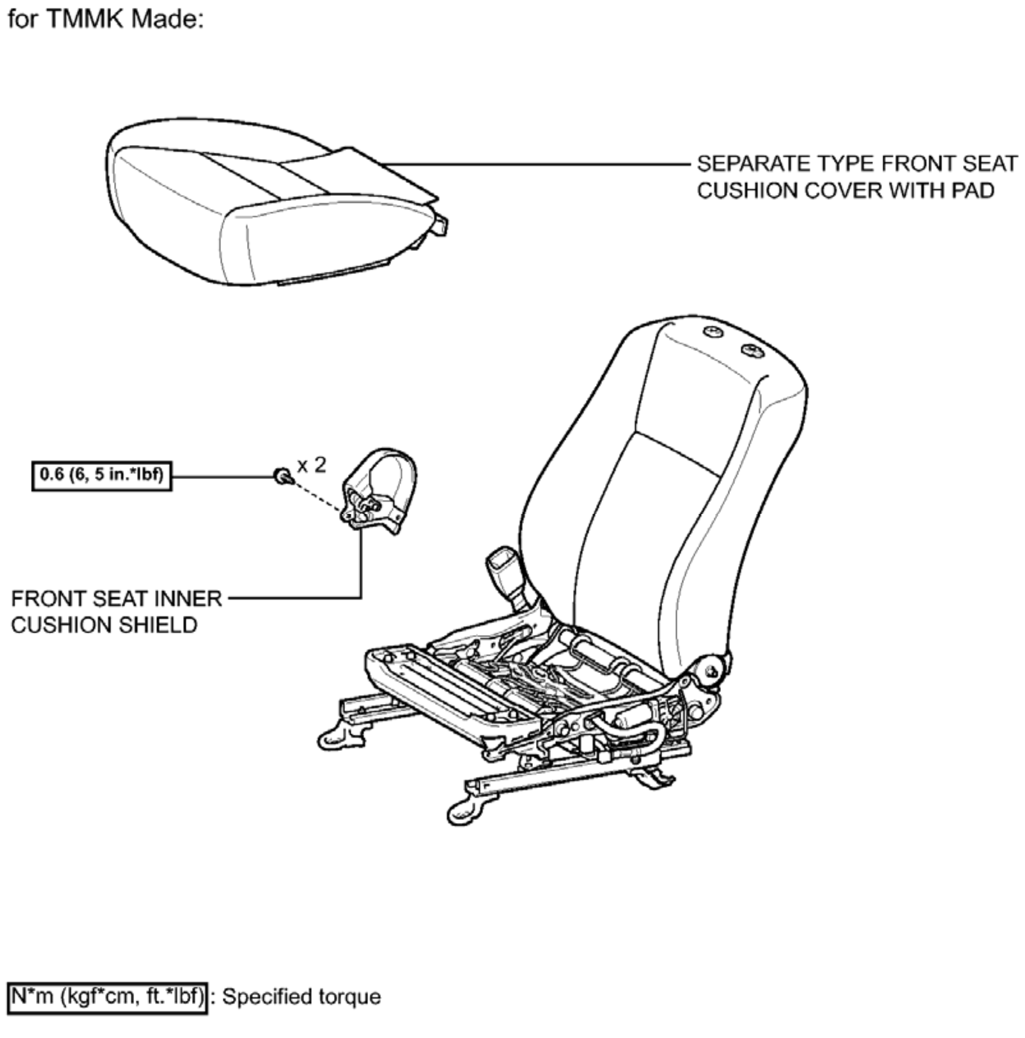
for TMMK Made:
SEPARATE TYPE FRONT SEAT CUSHION COVER WITH PAD
0.6 (6, 5 in.*lbf)
x 2
FRONT SEAT INNER CUSHION SHIELD
N*m (kgf*cm, ft.*lbf): Specified torque
c

Fig. 307: Identifying Front Seat Cushion Heater (For TMMK Made) Replacement Components With Torque Specifications (1 Of 4)
Courtesy of TOYOTA MOTOR SALES, U.S.A., INC.

ILLUSTRATION

for TMMT Made:

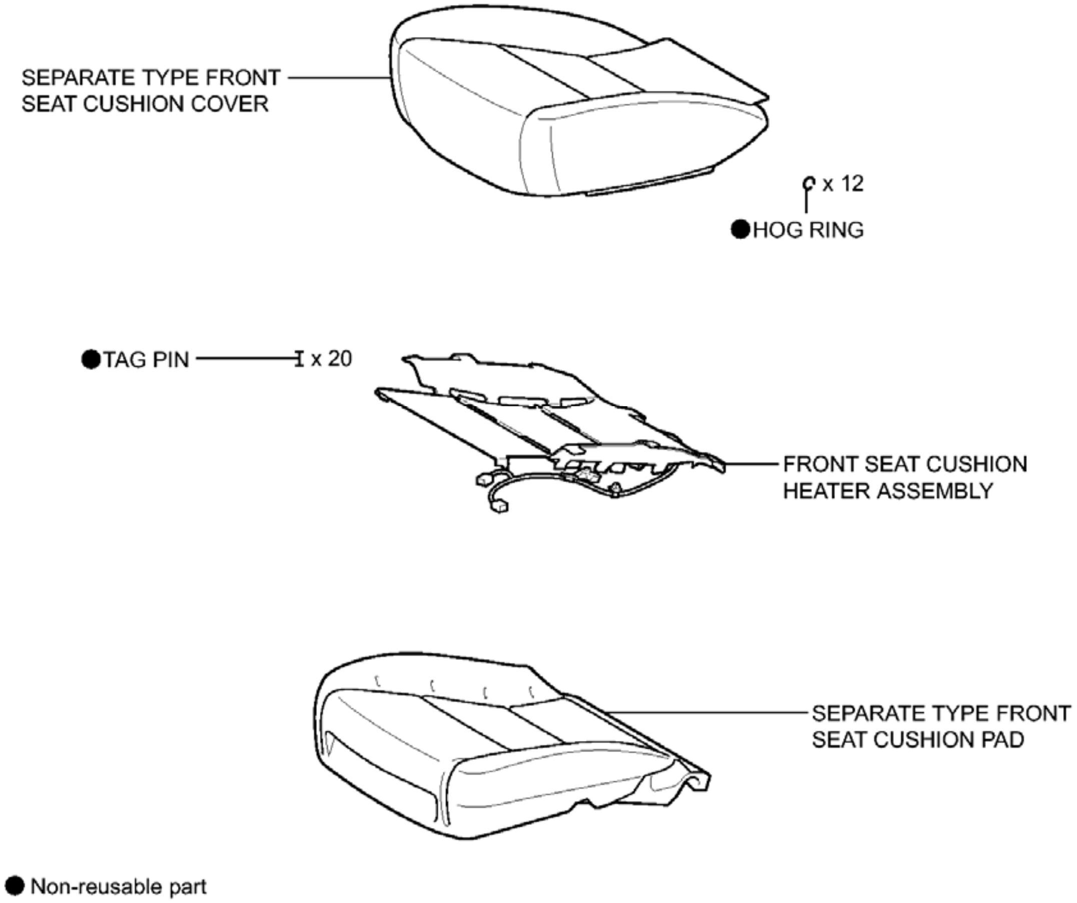
SEPARATE TYPE FRONT SEAT CUSHION COVER
x 12
● HOG RING
● TAG PIN
x 20
FRONT SEAT CUSHION HEATER ASSEMBLY
SEPARATE TYPE FRONT SEAT CUSHION PAD
● Non-reusable part

c

Fig. 308: Identifying Front Seat Cushion Heater (For TMMT Made) Replacement Components (2 Of 4)
Courtesy of TOYOTA MOTOR SALES, U.S.A., INC.

ILLUSTRATION

for SIA Made:

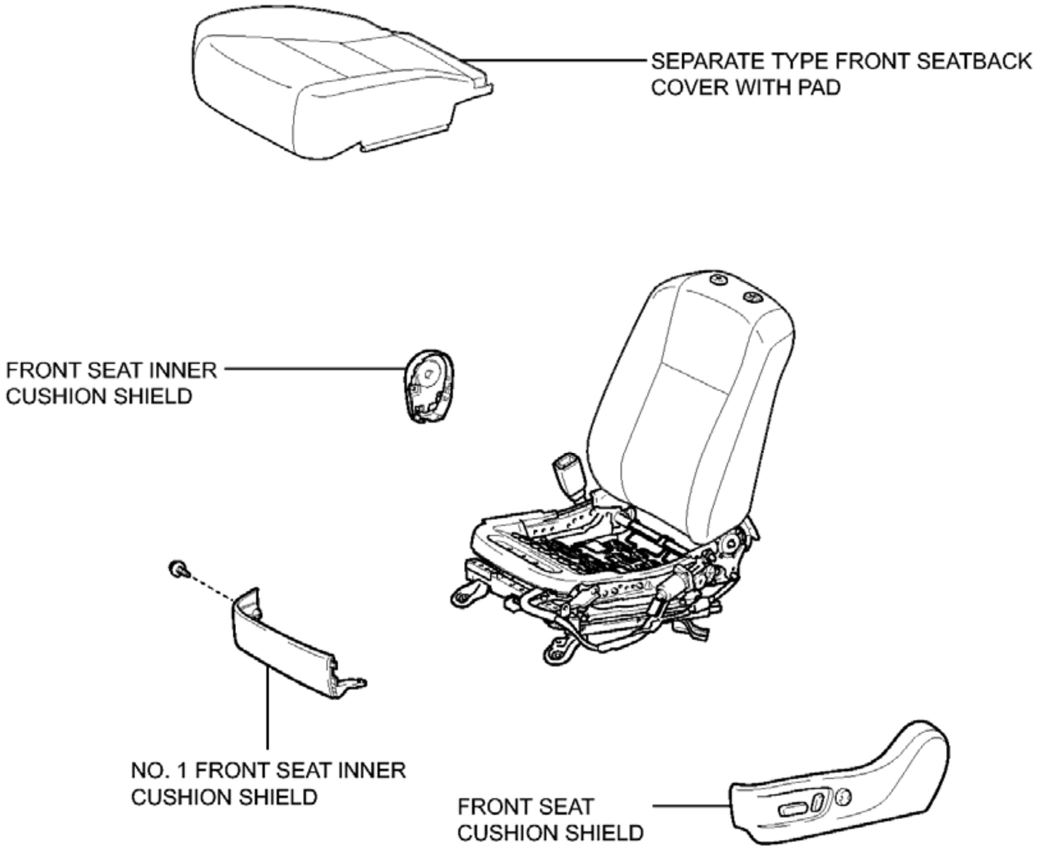
SEPARATE TYPE FRONT SEATBACK COVER WITH PAD
FRONT SEAT INNER CUSHION SHIELD
NO. 1 FRONT SEAT INNER CUSHION SHIELD
FRONT SEAT CUSHION SHIELD

c

Fig. 309: Identifying Front Seat Cushion Heater (For SIA Made) Replacement Components (3 Of 4)
Courtesy of TOYOTA MOTOR SALES, U.S.A., INC.

ILLUSTRATION

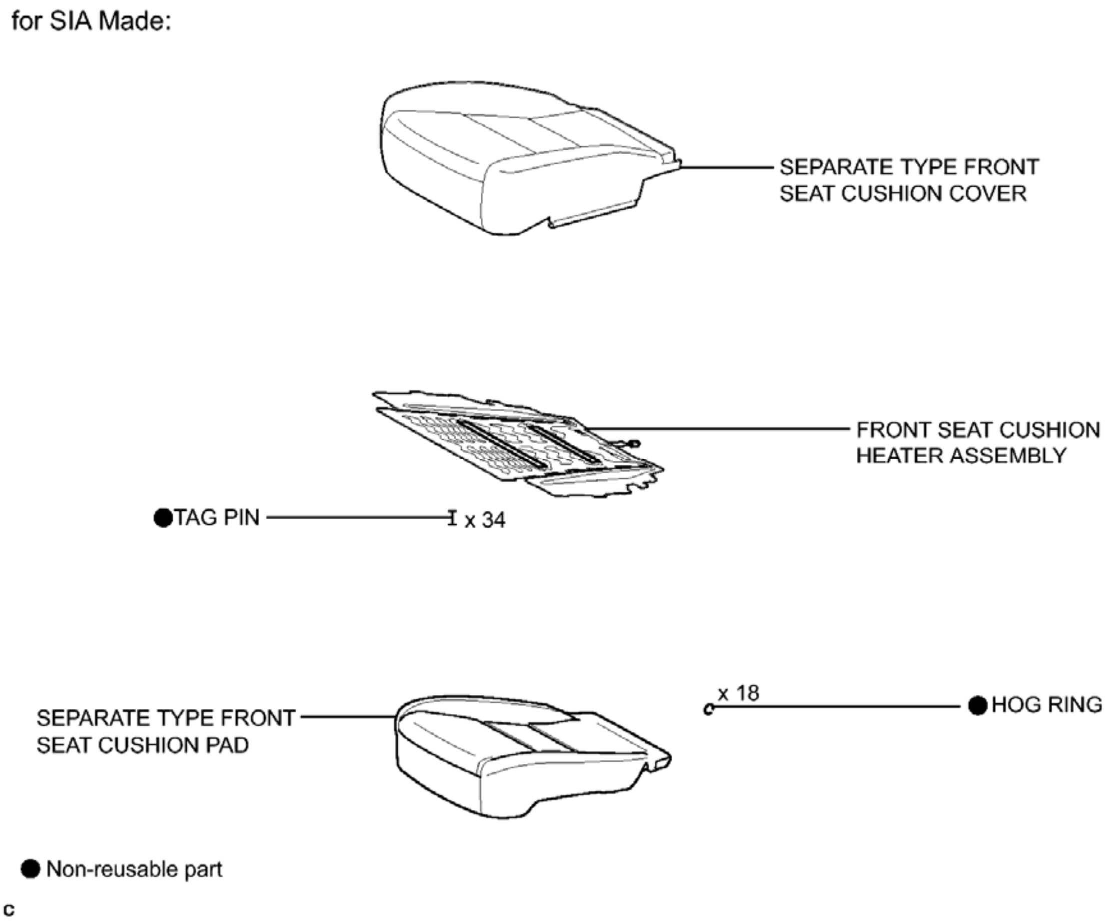
for SIA Made:
SEPARATE TYPE FRONT SEAT CUSHION COVER
FRONT SEAT CUSHION HEATER ASSEMBLY
●TAG PIN
x 34
x 18
●HOG RING
SEPARATE TYPE FRONT SEAT CUSHION PAD
● Non-reusable part
c

Fig. 310: Identifying Front Seat Cushion Heater (For SIA Made) Replacement Components (4 Of 4)
Courtesy of TOYOTA MOTOR SALES, U.S.A., INC.

REMOVAL

REMOVAL

1. **REMOVE FRONT POWER SEAT SWITCH (for TMMK Made)**

   Refer to **REMOVAL**.

2. **REMOVE FRONT SEAT INNER CUSHION SHIELD (for TMMK Made)** . See step 8.
3. **REMOVE SEPARATE TYPE FRONT SEAT CUSHION COVER WITH PAD (for TMMK Made)** . See step 11.
4. **REMOVE SEPARATE TYPE FRONT SEAT CUSHION COVER (for TMMK Made)** . See step 12.
5. **REMOVE FRONT SEAT CUSHION HEATER ASSEMBLY (for TMMK Made)**
   a. Remove the 20 tag pins and the front seat cushion heater assembly from the separate type front seat cushion cover.

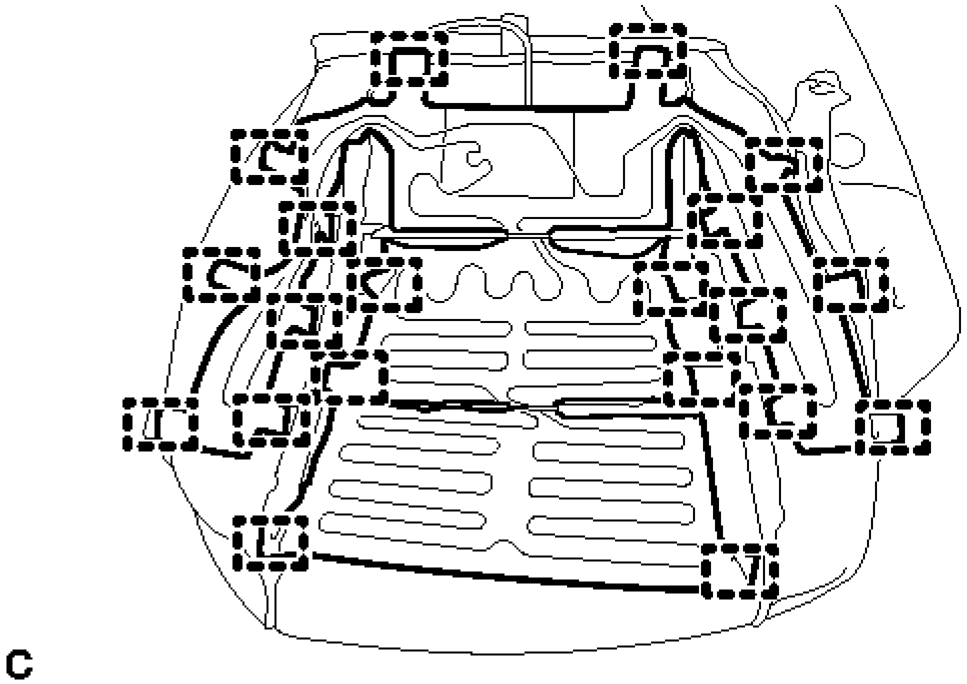

Fig. 311: Locating Front Seat Cushion Heater Assembly (For TMMK Made) Tag Pins
Courtesy of TOYOTA MOTOR SALES, U.S.A., INC.

6. **REMOVE FRONT SEAT ASSEMBLY (for SIA Made)**

   Refer to **REMOVAL**.

7. **DISCONNECT SEPARATE TYPE FRONT SEATBACK COVER (for SIA Made)** . See step 4.
8. **REMOVE NO. 1 FRONT SEAT INNER CUSHION SHIELD (for SIA Made)** . See step 11.
9. **REMOVE FRONT SEAT CUSHION SHIELD (for SIA Made Driver Side)** . See step 6.
10. **REMOVE FRONT SEAT CUSHION SHIELD (for SIA Made Front Passenger Side)** . See step 7.
11. **REMOVE FRONT SEAT INNER CUSHION SHIELD (for SIA Made Driver Side)** . See step 10.
12. **REMOVE FRONT SEAT INNER CUSHION SHIELD (for SIA Made Front Passenger Side)** . See step 11.
13. **REMOVE SEPARATE TYPE FRONT SEAT CUSHION COVER WITH PAD (for SIA Made)** . See step 14.
14. **REMOVE SEPARATE TYPE FRONT SEAT CUSHION COVER (for SIA Made)** . See step 15.
15. **REMOVE FRONT SEAT CUSHION HEATER ASSEMBLY (for SIA Made)**
    1. Remove the 34 tag pins and the front seat cushion heater assembly from the separate type front seat cushion cover.

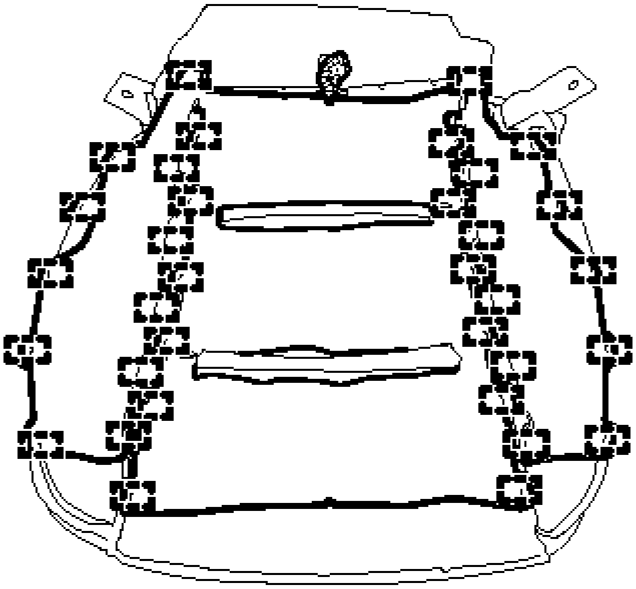

C

Fig. 312: Locating Front Seat Cushion Heater Assembly (For SIA Made) Tag Pins
Courtesy of TOYOTA MOTOR SALES, U.S.A., INC.

INSPECTION

INSPECTION

1. **INSPECT FRONT SEAT CUSHION HEATER ASSEMBLY LH (for TMMK Made)**
    a. Measure the resistance according to the value(s) in the table below.

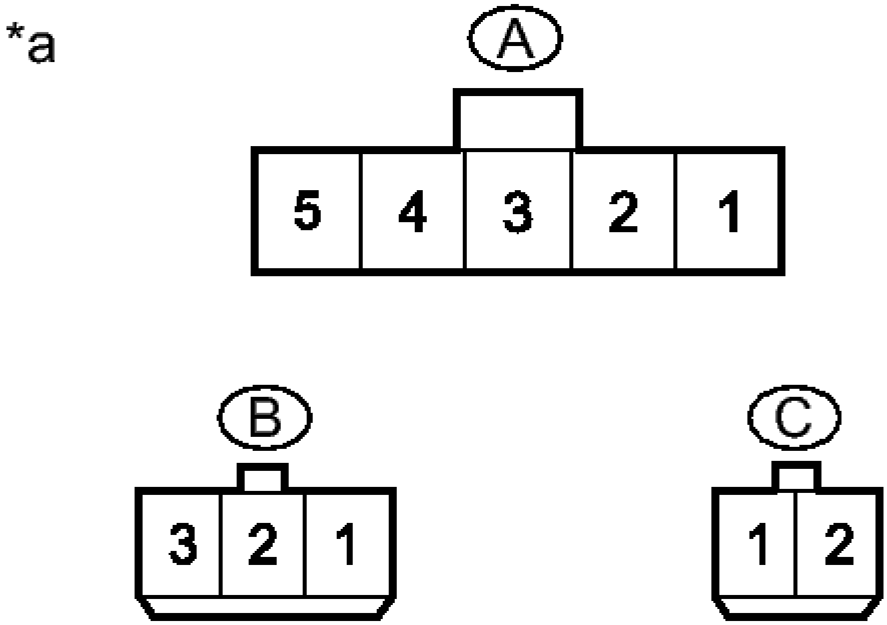

Fig. 313: Identifying Front Seat Cushion Heater Assembly Connector Terminals (For TMMK Made)
Courtesy of TOYOTA MOTOR SALES, U.S.A., INC.

TEXT IN ILLUSTRATION

*a	Component without harness connected (Front Seat Cushion Heater Assembly LH)

Standard Resistance

Tester Connection	Condition	Specified Condition
A-1 - B-3	Always	Below 1 ohms
A-2 - A-5	20°C (68°F) to 25°C (77°F)	9 to 13.8 kohms
A-2 - B-1	20°C (68°F) to 25°C (77°F)	9 to 13.8 kohms

A-2 - C-1	20°C (68°F) to 25°C (77°F)	9 to 13.8 kohms
A-2 - C-1	20°C (68°F) to 25°C (77°F)	9 to 13.8 kohms
A-2 - C-2	20°C (68°F) to 25°C (77°F)	9 to 13.8 kohms
A-2 - A-3	20°C (68°F) to 25°C (77°F)	9 to 13.8 kohms
A-3 - C-1	Always	Below 1 ohms
A-3 - B-1	20°C (68°F) to 25°C (77°F)	3.2 to 4.1 ohms
A-3 - A-5	20°C (68°F) to 25°C (77°F)	3.2 to 4.1 ohms
A-3 - C-2	20°C (68°F) to 25°C (77°F)	3.2 to 4.1 ohms
A-4 - B-2	Always	Below 1 ohms
A-5 - B-1	Always	Below 1 ohms
A-5 - C-2	Always	Below 1 ohms
A-5 - C-1	20°C (68°F) to 25°C (77°F)	3.2 to 4.1 ohms

If the result is not as specified, replace the front seat cushion heater assembly LH.

2. **INSPECT FRONT SEAT CUSHION HEATER ASSEMBLY RH (for TMMK Made)**
    a. Measure the resistance according to the value(s) in the table below.

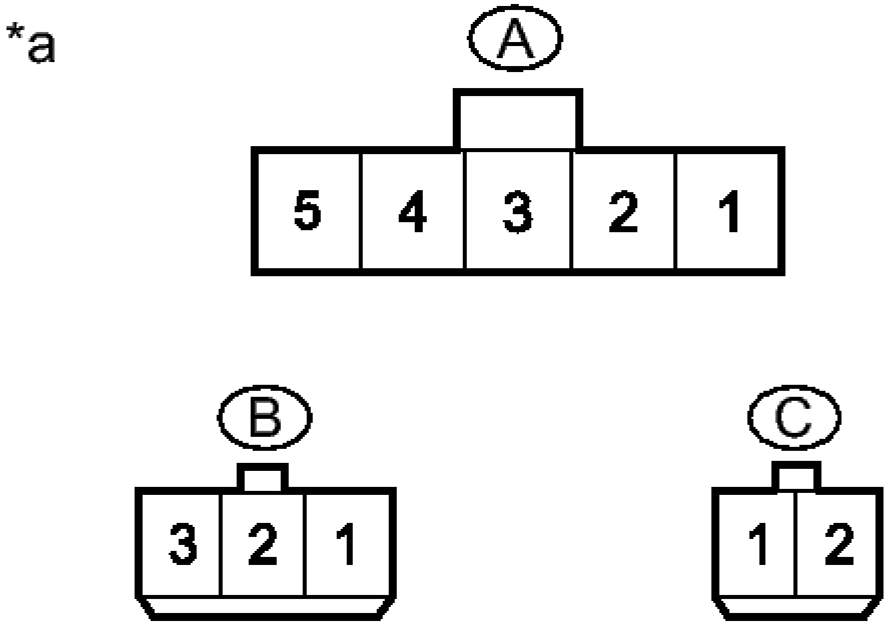

Fig. 314: Identifying Front Seat Cushion Heater Assembly Connector Terminals (For TMMK Made)
Courtesy of TOYOTA MOTOR SALES, U.S.A., INC.

TEXT IN ILLUSTRATION

*a	Component without harness connected (Front Seat Cushion Heater Assembly RH)

Standard Resistance

Tester Connection	Condition	Specified Condition
A-1 - B-3	Always	Below 1 ohms
A-2 - A-5	20°C (68°F) to 25°C (77°F)	9 to 13.8 kohms
A-2 - B-1	20°C (68°F) to 25°C (77°F)	9 to 13.8 kohms

A-2 - C-1	20°C (68°F) to 25°C (77°F)	9 to 13.8 kohms
A-2 - C-1	20°C (68°F) to 25°C (77°F)	9 to 13.8 kohms
A-2 - C-2	20°C (68°F) to 25°C (77°F)	9 to 13.8 kohms
A-2 - A-3	20°C (68°F) to 25°C (77°F)	9 to 13.8 kohms
A-3 - C-1	Always	Below 1 ohms
A-3 - B-1	20°C (68°F) to 25°C (77°F)	3.2 to 4.1 ohms
A-3 - A-5	20°C (68°F) to 25°C (77°F)	3.2 to 4.1 ohms
A-3 - C-2	20°C (68°F) to 25°C (77°F)	3.2 to 4.1 ohms
A-4 - B-2	Always	Below 1 ohms
A-5 - B-1	Always	Below 1 ohms
A-5 - C-2	Always	Below 1 ohms
A-5 - C-1	20°C (68°F) to 25°C (77°F)	3.2 to 4.1 ohms

If the result is not as specified, replace the front seat cushion heater assembly RH.

3. **INSPECT FRONT SEAT CUSHION HEATER ASSEMBLY LH (for SIA Made)**
    a. Measure the resistance according to the value(s) in the table below.

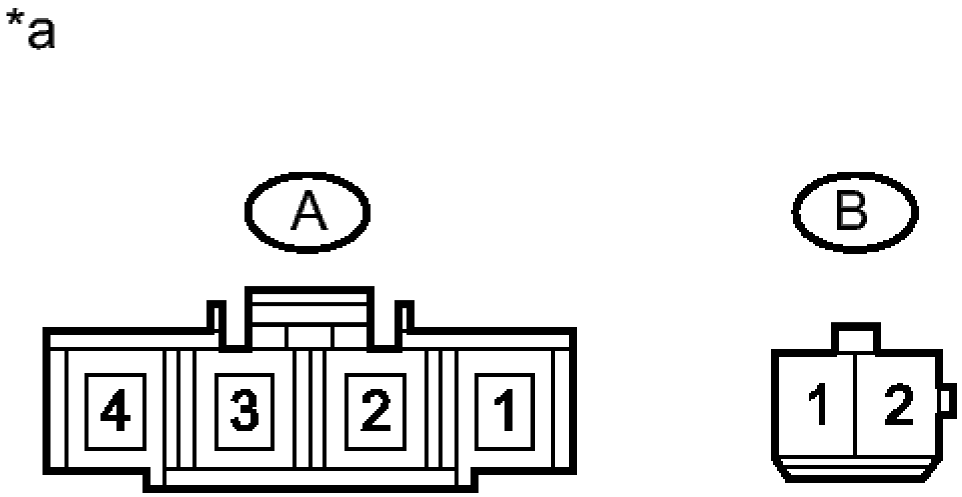

Fig. 315: Identifying Front Seat Cushion Heater Assembly Connector Terminals (For SIA Made)
Courtesy of TOYOTA MOTOR SALES, U.S.A., INC.

TEXT IN ILLUSTRATION

*a	Component without harness connected (Front Seat Cushion Heater Assembly LH)

Standard Resistance

Tester Connection	Condition	Specified Condition
A-1 - B-1	Always	Below 1 ohms
A-4 - B-2	Always	Below 1 ohms
A-1 - A-4	Always	3.21 to 3.85 ohms
B-1 - B-2	Always	3.39 to

		4.07 ohms
A-2 - A-3	15°C (59°F) to 30°C (86°F)	4.9 to 8.2 kohms

If the result is not as specified, replace the front seat cushion heater assembly LH.

4. **INSPECT FRONT SEAT CUSHION HEATER ASSEMBLY RH (for SIA Made)**
   a. Measure the resistance according to the value(s) in the table below.

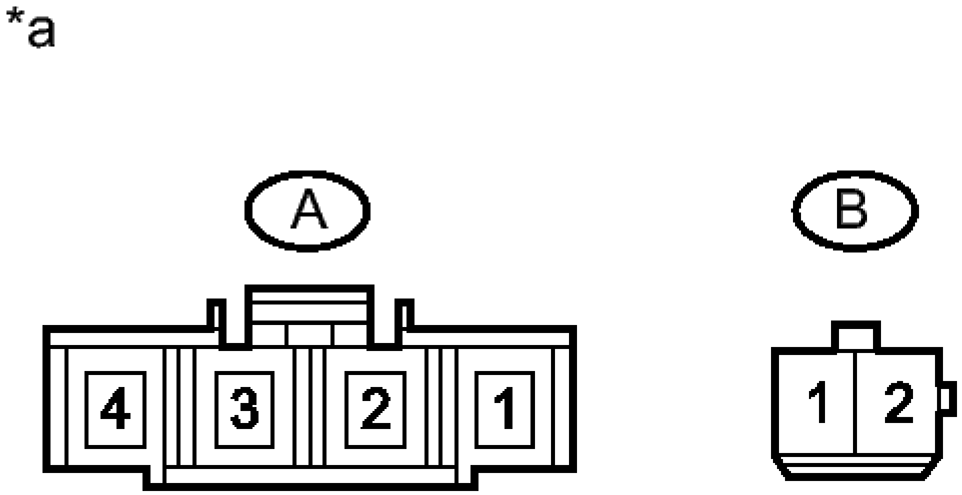

Fig. 316: Identifying Front Seat Cushion Heater Assembly Connector Terminals (For SIA Made)
Courtesy of TOYOTA MOTOR SALES, U.S.A., INC.

TEXT IN ILLUSTRATION

*a	Component without harness connected (Front Seat Cushion Heater Assembly RH)

Standard Resistance

Tester Connection	Condition	Specified Condition
A-1 - B-1	Always	Below 1 ohms
A-4 - B-2	Always	Below 1 ohms
A-1 - A-4	Always	3.21 to 3.85 ohms
B-1 - B-2	Always	3.39 to 4.07 ohms
A-2 - A-3	15°C (59°F) to 30°C (86°F)	4.9 to 8.2 kohms

If the result is not as specified, replace the front seat cushion heater assembly RH.

INSTALLATION

INSTALLATION

1. **INSTALL FRONT SEAT CUSHION HEATER ASSEMBLY (for TMMK Made)**
   a. Using a tacker, install the front seat cushion heater assembly to the separate type front seat cushion cover with 20 new tag pins.

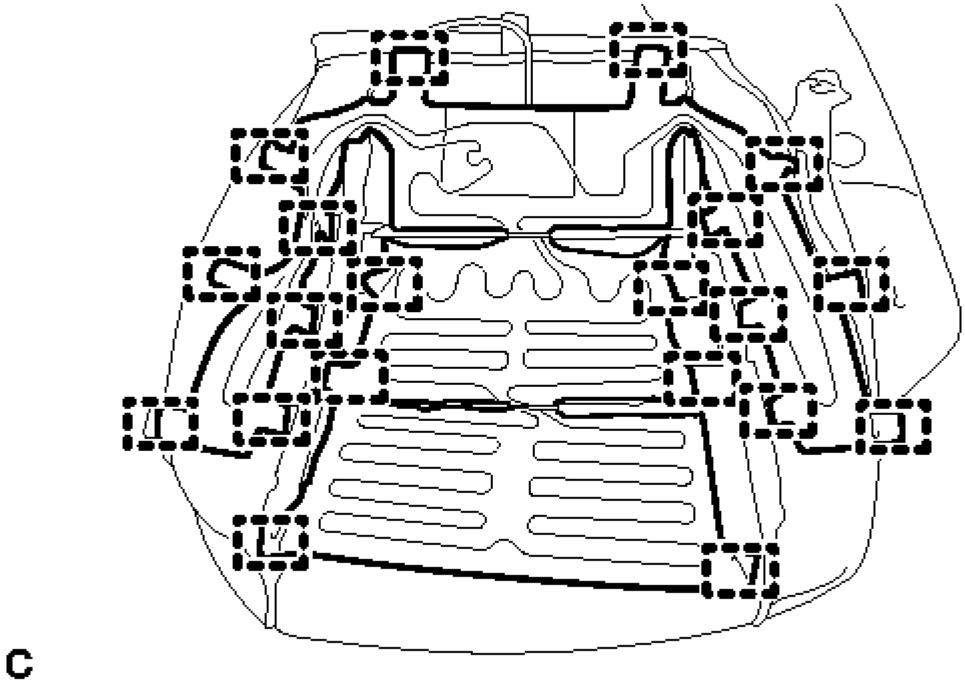

Fig. 317: Locating Front Seat Cushion Heater Assembly (For TMMK Made) Tag Pins
Courtesy of TOYOTA MOTOR SALES, U.S.A., INC.

2. **INSTALL SEPARATE TYPE FRONT SEAT CUSHION COVER (for TMMK Made)** . See step 23.
3. **INSTALL SEPARATE TYPE FRONT SEAT CUSHION COVER WITH PAD (for TMMK Made)** . See step 24.
4. **INSTALL FRONT SEAT INNER CUSHION SHIELD (for TMMK Made)** . See step 27.
5. **INSTALL FRONT POWER SEAT SWITCH (for TMMK Made)**

   Refer to **INSTALLATION**.

6. **INSTALL FRONT SEAT CUSHION HEATER ASSEMBLY (for SIA Made)**
   a. Using a tacker, install the front seat cushion heater assembly to the separate type front seat cushion cover with 34 new tag pins.
7. **INSTALL SEPARATE TYPE FRONT SEAT CUSHION COVER (for SIA Made)** . See step 20.
8. **INSTALL SEPARATE TYPE FRONT SEAT CUSHION COVER WITH PAD (for SIA Made)** . See step 21.
9. **INSTALL FRONT SEAT INNER CUSHION SHIELD (for SIA Made Driver Side)** . See step 24.
10. **INSTALL FRONT SEAT INNER CUSHION SHIELD (for SIA Made Front Passenger Side)** . See step 25.
11. **INSTALL FRONT SEAT CUSHION SHIELD (for SIA Made Driver Side)** . See step 28.
12. **INSTALL FRONT SEAT CUSHION SHIELD (for SIA Made Front Passenger Side)** . See step 29.
13. **INSTALL NO. 1 FRONT SEAT INNER CUSHION SHIELD (for SIA Made)** . See step 10.
14. **CONNECT SEPARATE TYPE FRONT SEATBACK COVER (for SIA Made)** . See step 31.
15. **INSTALL FRONT SEAT ASSEMBLY (for SIA Made)**

    Refer to **INSTALLATION**.

REAR SEAT RECLINING CONTROL CABLE

COMPONENTS

ILLUSTRATION

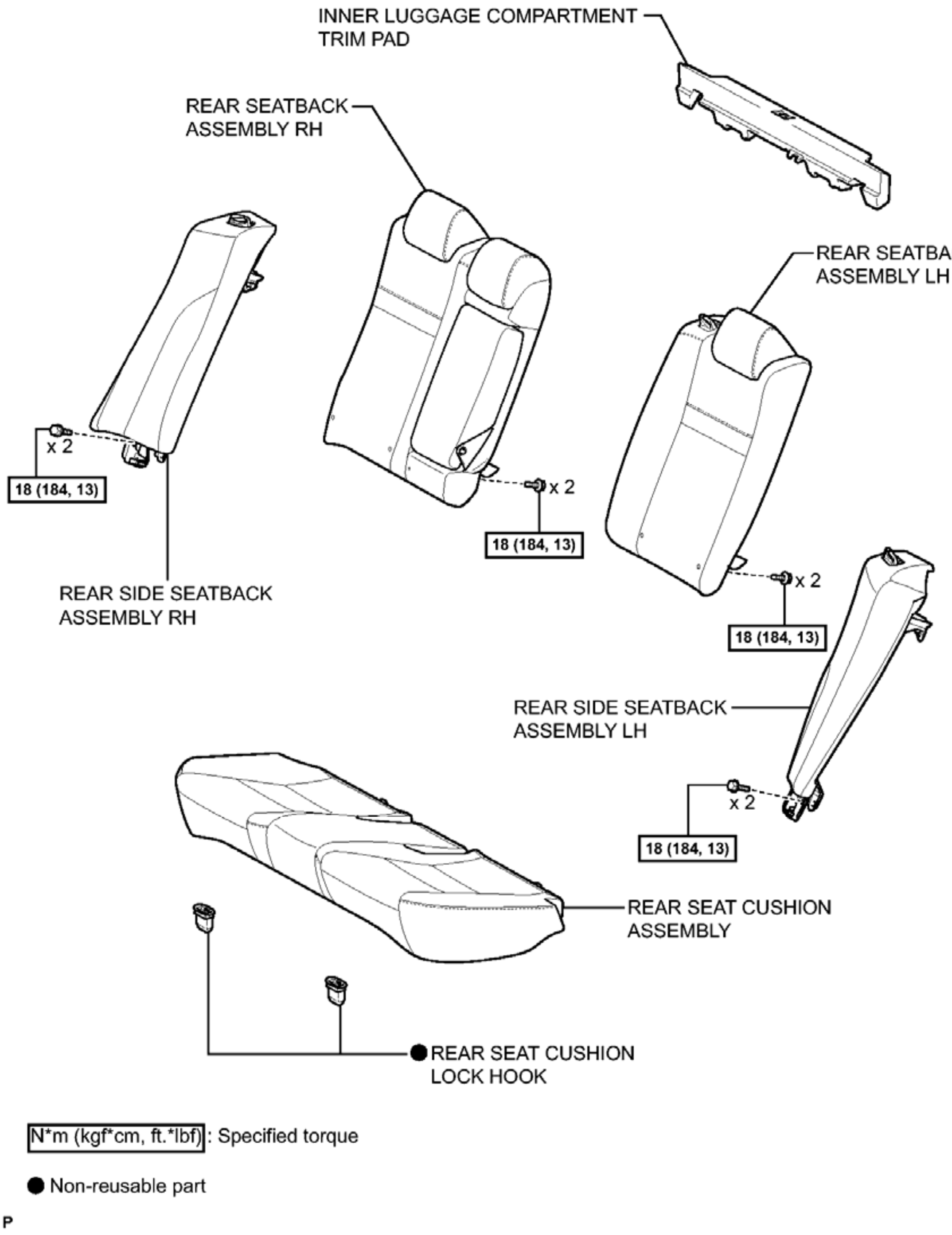
INNER LUGGAGE COMPARTMENT
TRIM PAD
REAR SEATBACK
ASSEMBLY RH
REAR SEATBACK
ASSEMBLY LH
x 2
18 (184, 13)
x 2
18 (184, 13)
REAR SIDE SEATBACK
ASSEMBLY RH
x 2
18 (184, 13)
REAR SIDE SEATBACK
ASSEMBLY LH
x 2
18 (184, 13)
REAR SEAT CUSHION
ASSEMBLY
● REAR SEAT CUSHION
LOCK HOOK
N*m (kgf*cm, ft.*lbf) : Specified torque
● Non-reusable part
P

Fig. 318: Identifying Rear Seat Reclining Control Cable Replacement Components With Torque Specifications (1 Of 3)

Courtesy of TOYOTA MOTOR SALES, U.S.A., INC.

ILLUSTRATION

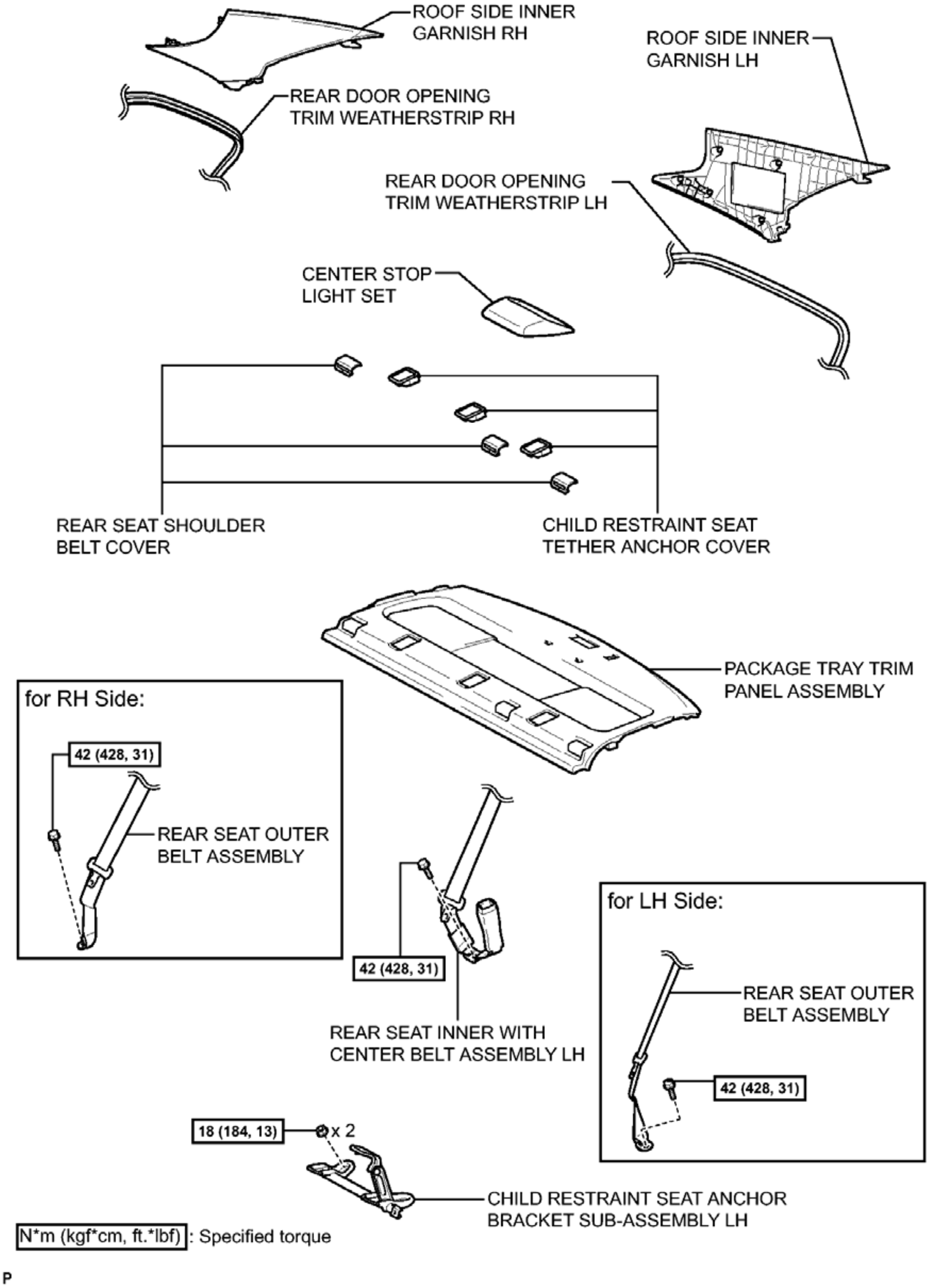
ROOF SIDE INNER GARNISH RH
ROOF SIDE INNER GARNISH LH
REAR DOOR OPENING TRIM WEATHERSTRIP RH
REAR DOOR OPENING TRIM WEATHERSTRIP LH
CENTER STOP LIGHT SET
REAR SEAT SHOULDER BELT COVER
CHILD RESTRAINT SEAT TETHER ANCHOR COVER
PACKAGE TRAY TRIM PANEL ASSEMBLY
for RH Side:
42 (428, 31)
REAR SEAT OUTER BELT ASSEMBLY
42 (428, 31)
REAR SEAT INNER WITH CENTER BELT ASSEMBLY LH
for LH Side:
REAR SEAT OUTER BELT ASSEMBLY
42 (428, 31)
18 (184, 13)
x 2
CHILD RESTRAINT SEAT ANCHOR BRACKET SUB-ASSEMBLY LH
N*m (kgf*cm, ft.*lbf) : Specified torque
P

Fig. 319: Identifying Rear Seat Reclining Control Cable Replacement Components With Torque Specifications (2 Of 3)

Courtesy of TOYOTA MOTOR SALES, U.S.A., INC.

ILLUSTRATION

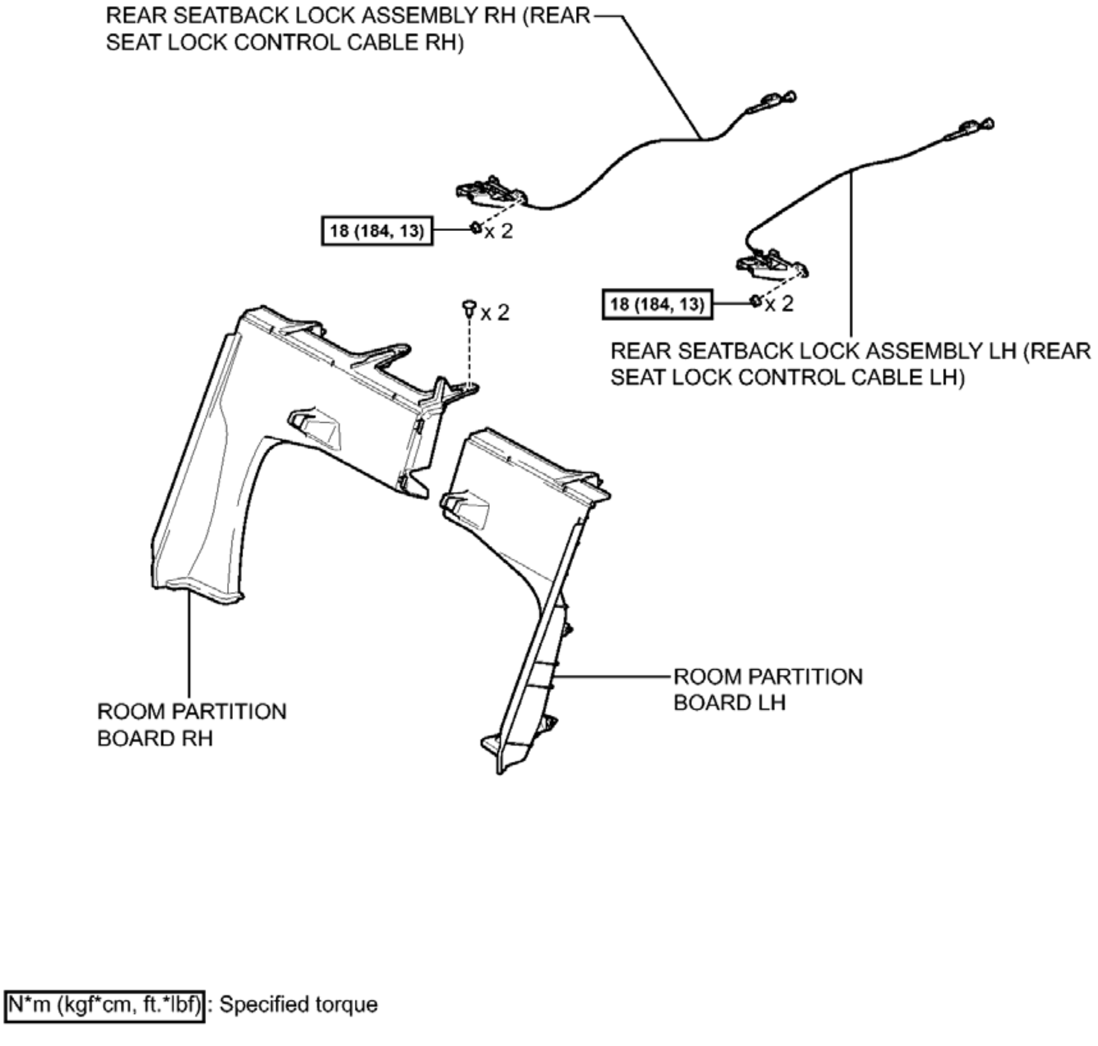
REAR SEATBACK LOCK ASSEMBLY RH (REAR SEAT LOCK CONTROL CABLE RH)
18 (184, 13)
x 2
x 2
18 (184, 13)
x 2
REAR SEATBACK LOCK ASSEMBLY LH (REAR SEAT LOCK CONTROL CABLE LH)
ROOM PARTITION BOARD LH
ROOM PARTITION BOARD RH
N*m (kgf*cm, ft.*lbf): Specified torque
P

Fig. 320: Identifying Rear Seat Reclining Control Cable Replacement Components With Torque Specifications (3 Of 3)
Courtesy of TOYOTA MOTOR SALES, U.S.A., INC.

REMOVAL

REMOVAL

1. **PRECAUTION**

WARNING: Be sure to read Precaution thoroughly before servicing.

For Separate Type Yaw Rate Sensor: Refer to PRECAUTION .

For Built-in Type Yaw Rate Sensor: Refer to PRECAUTION .

NOTE: **After turning the ignition switch off, waiting time may be required before disconnecting the cable from the negative (-) battery terminal. Therefore, make sure to read the disconnecting the cable from the negative (-) battery terminal notices before proceeding with work. Refer to PRECAUTION .**

2. **DISCONNECT CABLE FROM NEGATIVE BATTERY TERMINAL**

   WARNING: **Wait at least 90 seconds after disconnecting the cable from the negative (-) battery terminal to disable the SRS system.**

   NOTE: **When disconnecting the cable, some systems need to be initialized after the cable is reconnected. Refer to INITIALIZATION .**

3. **REMOVE REAR SEAT CUSHION ASSEMBLY** . See step 3.
4. **REMOVE REAR SEAT CUSHION LOCK HOOK** . See step 4.
5. **REMOVE INNER LUGGAGE COMPARTMENT TRIM PAD** . See step 5.
6. **REMOVE REAR SEATBACK ASSEMBLY LH** . See step 6.
7. **REMOVE REAR SEATBACK ASSEMBLY RH** . See step 7.
8. **REMOVE REAR SIDE SEATBACK ASSEMBLY LH** . See step 8.
9. **REMOVE REAR SIDE SEATBACK ASSEMBLY RH** . See step 9.
10. **DISCONNECT REAR DOOR OPENING TRIM WEATHERSTRIP LH** . Refer to **REMOVAL - Step 12** .
11. **DISCONNECT REAR DOOR OPENING TRIM WEATHERSTRIP RH** . Refer to **REMOVAL - Step 13** .
12. **DISCONNECT REAR SEAT OUTER BELT ASSEMBLY (for LH Side)** . Refer to **REMOVAL - Step 13** .
13. **DISCONNECT REAR SEAT OUTER BELT ASSEMBLY (for RH Side)** . Refer to **REMOVAL - Step 14** .
14. **REMOVE CHILD RESTRAINT SEAT ANCHOR BRACKET SUB-ASSEMBLY LH** . Refer to **REMOVAL - Step 10** .
15. **DISCONNECT REAR SEAT INNER WITH CENTER BELT ASSEMBLY LH** . Refer to **REMOVAL - Step 19** .
16. **REMOVE ROOF SIDE INNER GARNISH LH** . Refer to **REMOVAL - Step 24** .
17. **REMOVE ROOF SIDE INNER GARNISH RH**

    HINT:

Use the same procedure as for the LH side. Refer to **REMOVAL - Step 24** .

18. **REMOVE CENTER STOP LIGHT SET** . Refer to **REMOVAL - Step 1** .
19. **REMOVE CHILD RESTRAINT SEAT TETHER ANCHOR COVER** . Refer to **REMOVAL - Step 18** .
20. **REMOVE REAR SEAT SHOULDER BELT COVER** . Refer to **REMOVAL - Step 19** .
21. **REMOVE PACKAGE TRAY TRIM PANEL ASSEMBLY** . Refer to **REMOVAL - Step 20** .
22. **REMOVE ROOM PARTITION BOARD LH**
    a. Disengage the guide, 2 claws and 4 clips, and remove the room partition board LH.

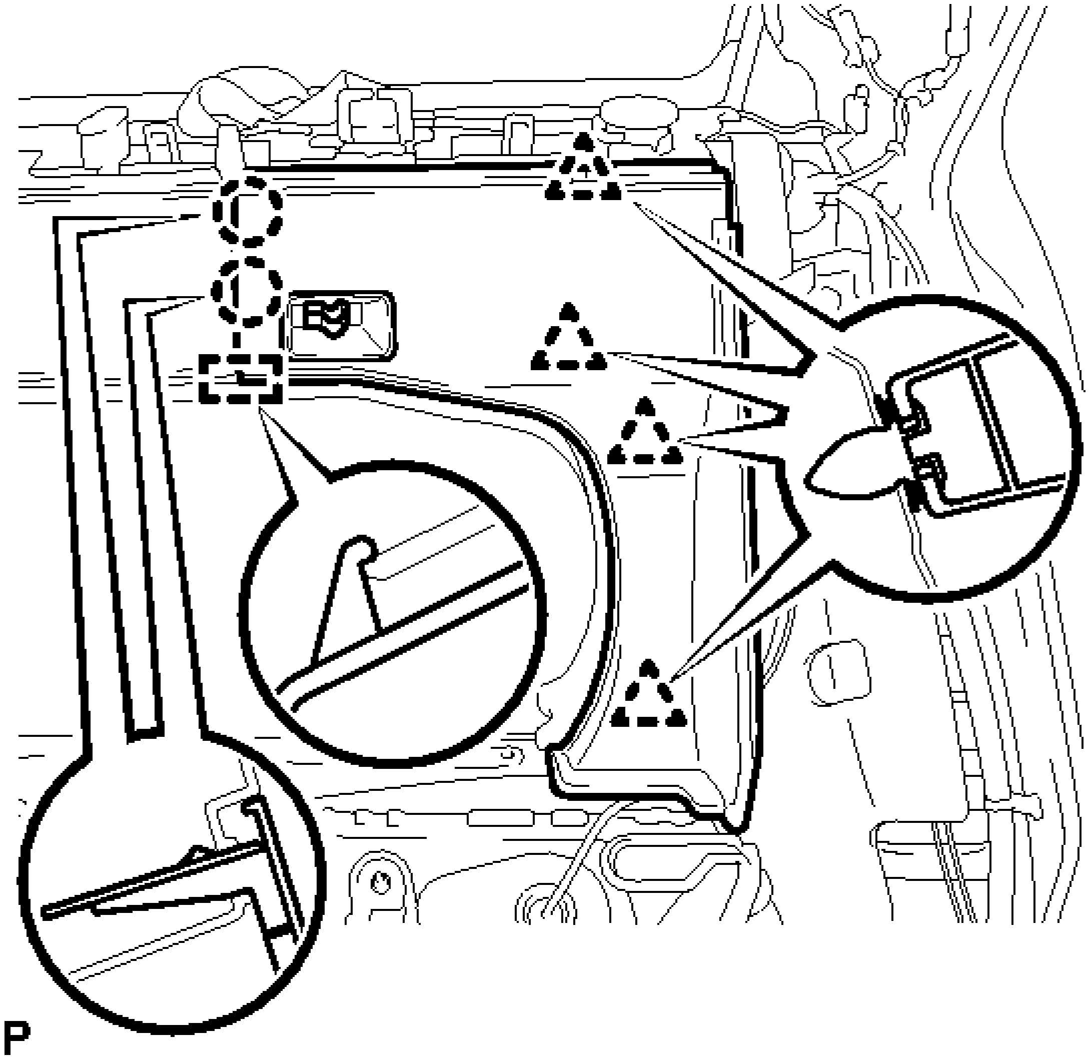

Fig. 321: Locating Room Partition Board LH Fasteners
Courtesy of TOYOTA MOTOR SALES, U.S.A., INC.

23. **REMOVE ROOM PARTITION BOARD RH**
    a. Using a clip remover, remove the 2 clips.

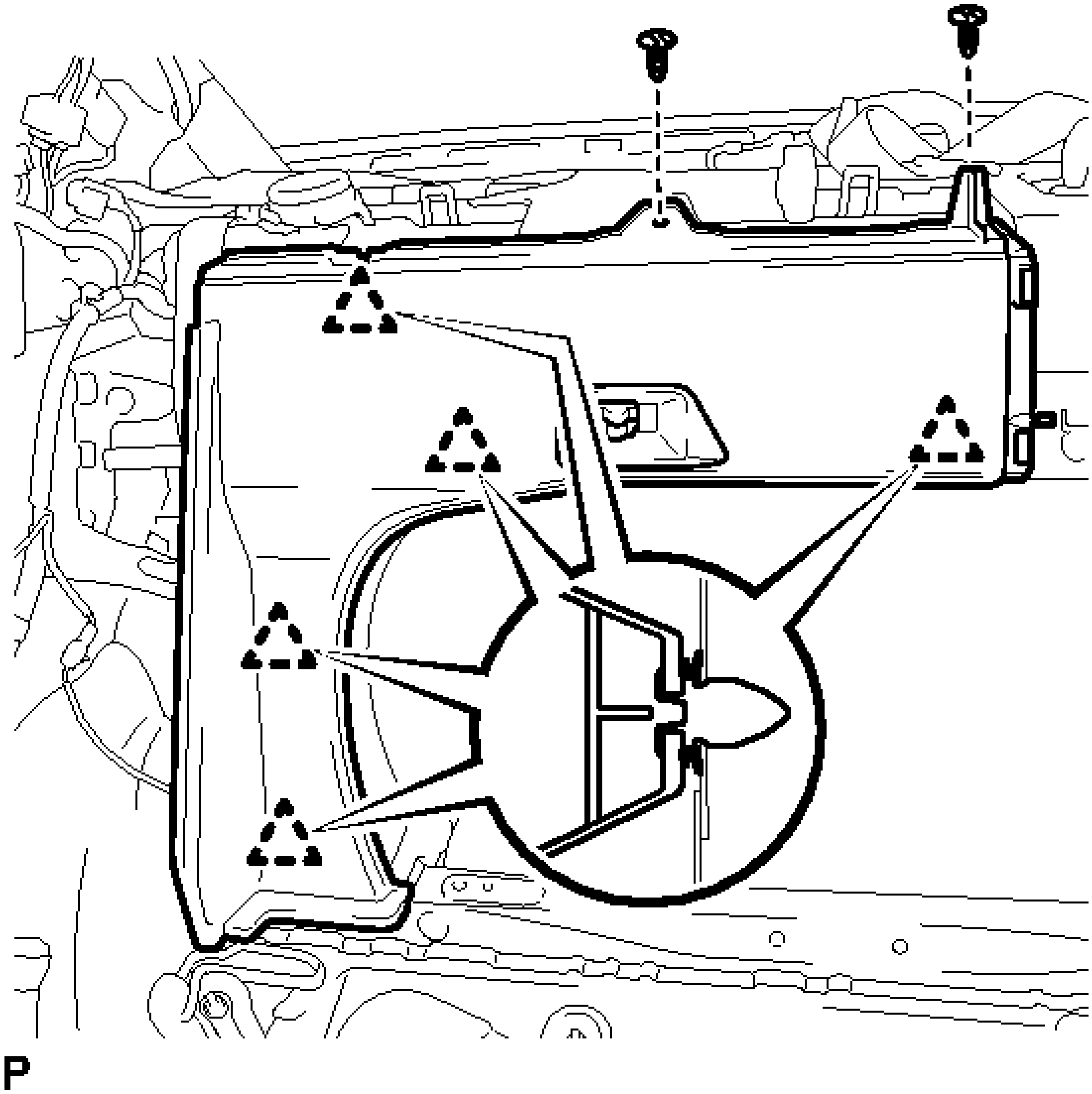

Fig. 322: Locating Room Partition Board RH Fasteners
Courtesy of TOYOTA MOTOR SALES, U.S.A., INC.

b. Disengage the 5 clips and remove the room partition board RH.

24. **REMOVE REAR SEATBACK LOCK ASSEMBLY LH (REAR SEAT LOCK CONTROL CABLE LH)**

a. Disengage the hook as shown in the illustration.

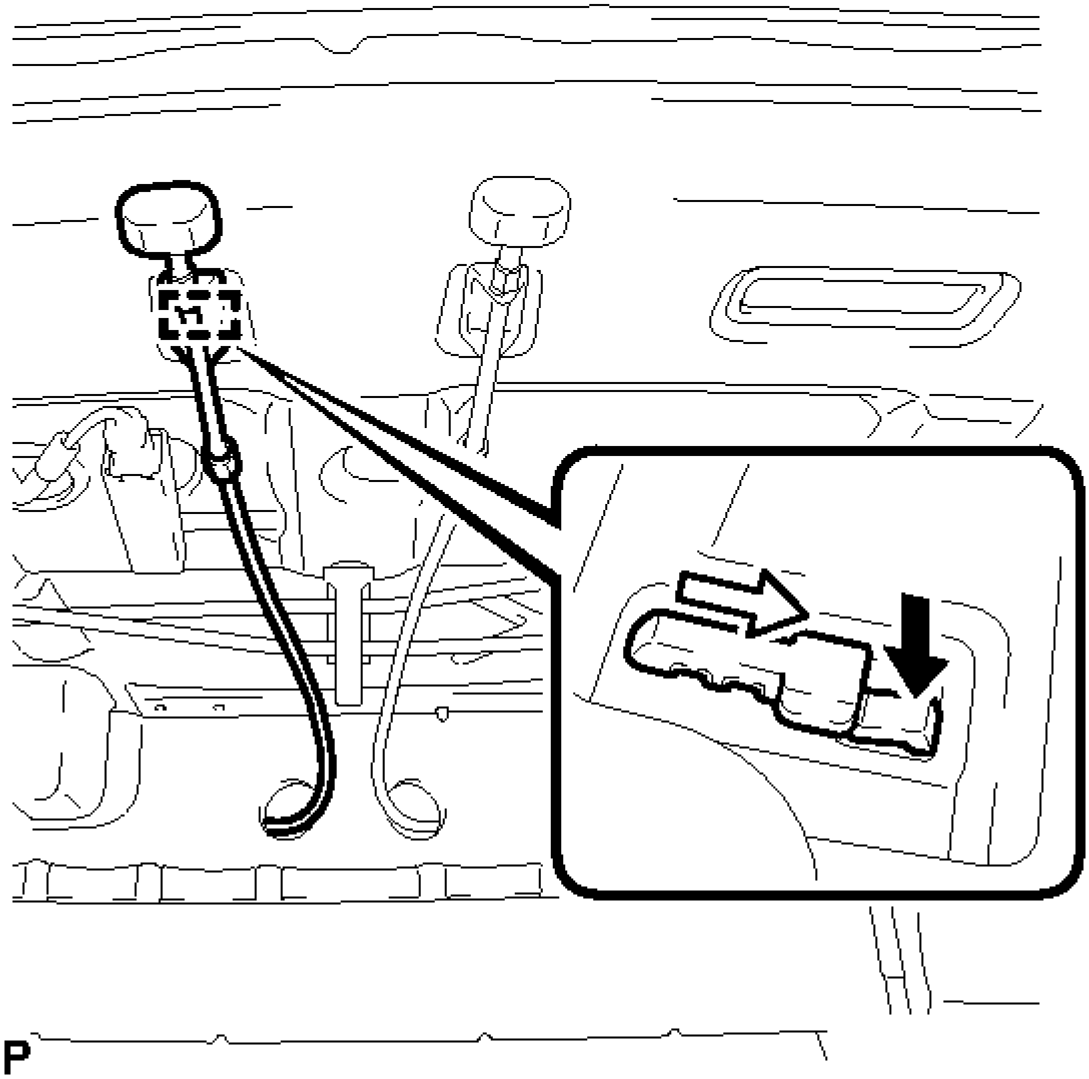

Fig. 323: Removing Rear Seatback Lock Assembly LH (Rear Seat Lock Control Cable LH)
Courtesy of TOYOTA MOTOR SALES, U.S.A., INC.

b. Remove the 2 nuts and rear seatback lock assembly LH (rear seat lock control cable LH).

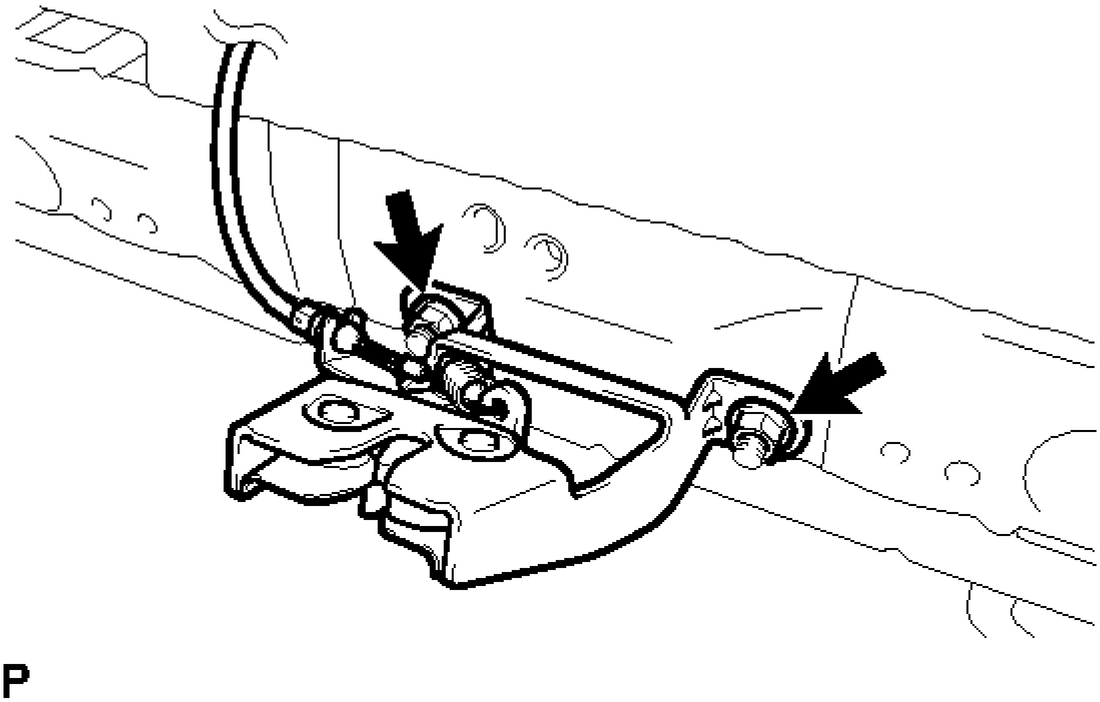

Fig. 324: Locating Rear Seatback Lock Assembly LH (Rear Seat Lock Control Cable LH) Fasteners
Courtesy of TOYOTA MOTOR SALES, U.S.A., INC.

25. **REMOVE REAR SEATBACK LOCK ASSEMBLY RH (REAR SEAT LOCK CONTROL CABLE RH)**

    HINT:

    Use the same procedure as for the LH side.

INSTALLATION

INSTALLATION

1. **INSTALL REAR SEATBACK LOCK ASSEMBLY LH (REAR SEAT LOCK CONTROL CABLE LH)**
    a. Install the rear seatback lock assembly LH (rear seat lock control cable LH) with the 2 nuts.

    Torque: 18 N*m (184 kgf*cm, 13 ft.*lbf)

    b. Engage the hook as shown in the illustration.

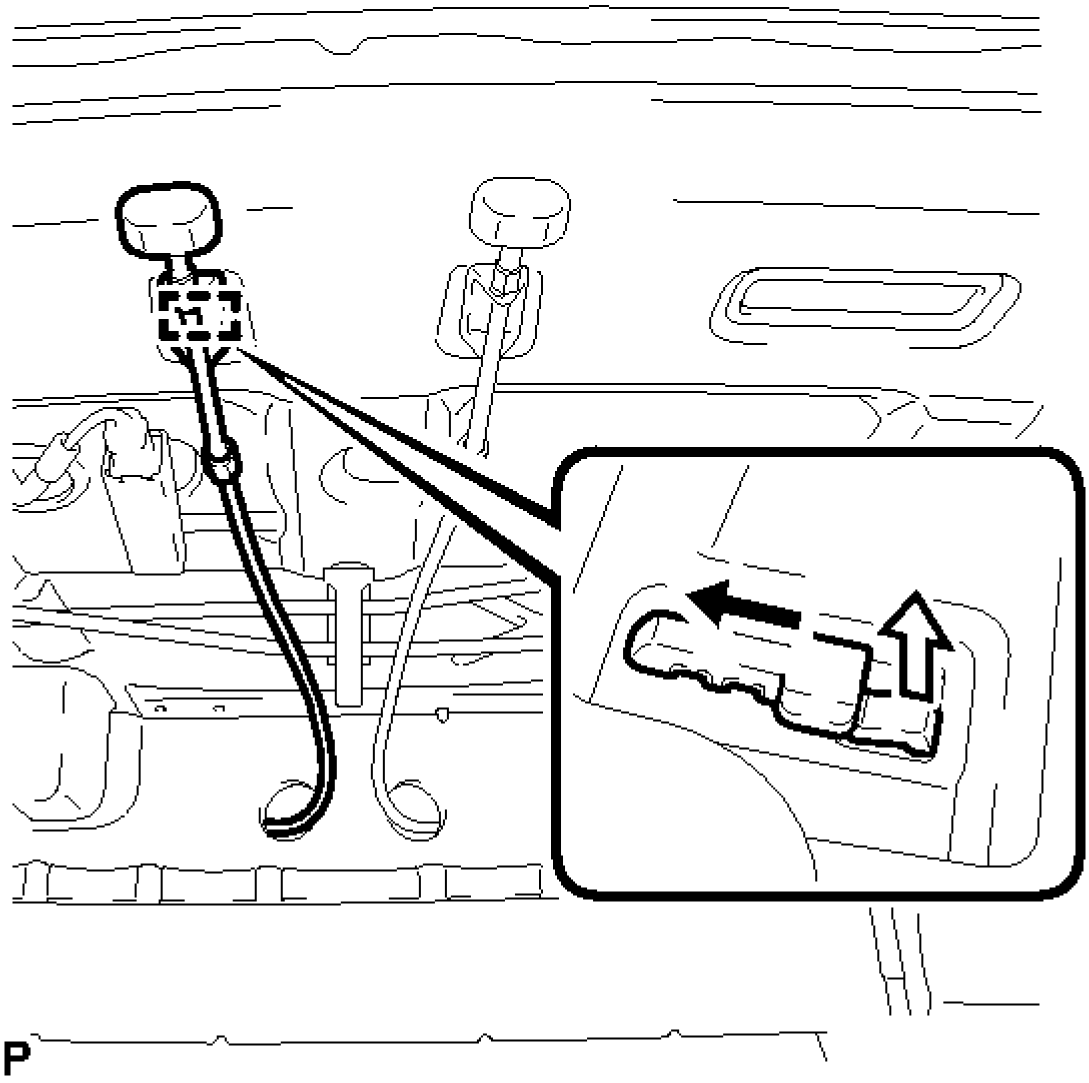

Fig. 325: Installing Rear Seatback Lock Assembly LH (Rear Seat Lock Control Cable LH)
Courtesy of TOYOTA MOTOR SALES, U.S.A., INC.

2. **INSTALL REAR SEATBACK LOCK ASSEMBLY RH (REAR SEAT LOCK CONTROL CABLE RH)**

   HINT:

   Use the same procedure as for the LH side.

3. **INSTALL ROOM PARTITION BOARD RH**
   1. Engage the 5 clips to install the room partition board RH.
   2. Install the 2 clips.
4. **INSTALL ROOM PARTITION BOARD LH**
   1. Engage the 4 clips, 2 claws and guide to install the room partition board LH.

5. **INSTALL PACKAGE TRAY TRIM PANEL ASSEMBLY** . Refer to **INSTALLATION - Step 3** .
6. **INSTALL REAR SEAT SHOULDER BELT COVER** . Refer to **INSTALLATION - Step 4** .
7. **INSTALL CHILD RESTRAINT SEAT TETHER ANCHOR COVER** . Refer to **INSTALLATION - Step 5** .
8. **INSTALL CENTER STOP LIGHT SET** . Refer to **INSTALLATION - Step 1** .
9. **INSTALL ROOF SIDE INNER GARNISH RH**

   HINT:

   Use the same procedure as for the LH side. Refer to **INSTALLATION - Step 20** .

10. **INSTALL ROOF SIDE INNER GARNISH LH** . Refer to **INSTALLATION - Step 20** .
11. **CONNECT REAR SEAT INNER WITH CENTER BELT ASSEMBLY LH** . Refer to **INSTALLATION - Step 7** .
12. **INSTALL CHILD RESTRAINT SEAT ANCHOR BRACKET SUB-ASSEMBLY LH** . Refer to **INSTALLATION - Step 1**
13. **CONNECT REAR SEAT OUTER BELT ASSEMBLY (for RH Side)** . Refer to **INSTALLATION - Step 10** .
14. **CONNECT REAR SEAT OUTER BELT ASSEMBLY (for LH Side)** . Refer to **INSTALLATION - Step 9** .
15. **INSTALL REAR DOOR OPENING TRIM WEATHERSTRIP RH** . Refer to **INSTALLATION - Step 32** .
16. **INSTALL REAR DOOR OPENING TRIM WEATHERSTRIP LH** . Refer to **INSTALLATION - Step 25** .
17. **INSTALL REAR SIDE SEATBACK ASSEMBLY RH** . See step 1.
18. **INSTALL REAR SIDE SEATBACK ASSEMBLY LH** . See step 2.
19. **INSTALL REAR SEATBACK ASSEMBLY RH** . See step 3.
20. **INSTALL REAR SEATBACK ASSEMBLY LH** . See step 4.
21. **INSTALL INNER LUGGAGE COMPARTMENT TRIM PAD** . See step 5.
22. **INSTALL REAR SEAT CUSHION LOCK HOOK** . See step 6.
23. **INSTALL REAR SEAT CUSHION ASSEMBLY** . See step 7.
24. **CONNECT CABLE TO NEGATIVE BATTERY TERMINAL**

    NOTE: **When disconnecting the cable, some systems need to be initialized after the cable is reconnected. Refer to INITIALIZATION .**

25. **INSPECT SRS WARNING LIGHT**

    For Separate Type Yaw Rate Sensor: Refer to **DIAGNOSIS SYSTEM** .

    For Built-in Type Yaw Rate Sensor: Refer to **DIAGNOSIS SYSTEM** .

SLIDING ROOF HOUSING

COMPONENTS

ILLUSTRATION

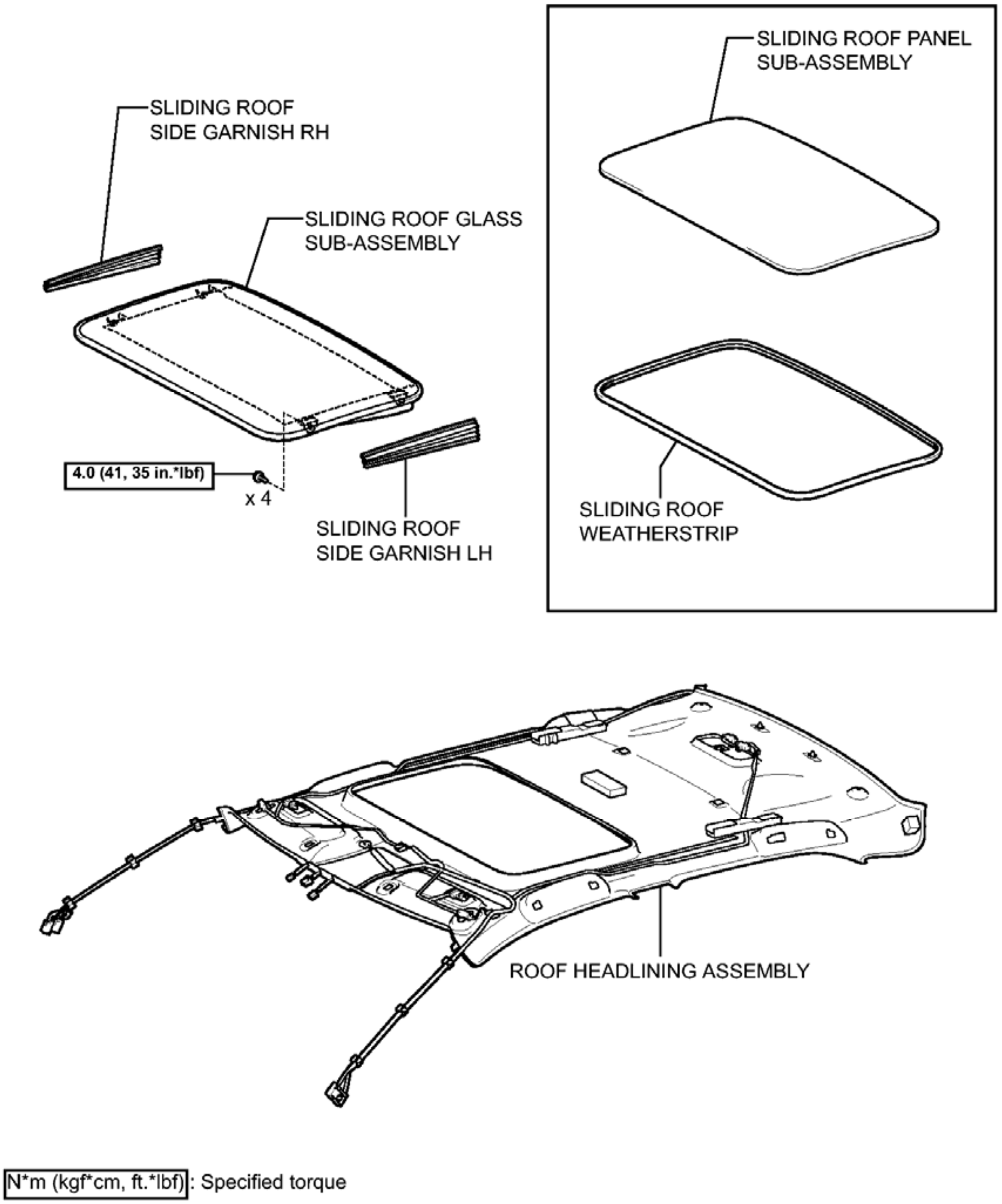
SLIDING ROOF PANEL SUB-ASSEMBLY
SLIDING ROOF SIDE GARNISH RH
SLIDING ROOF GLASS SUB-ASSEMBLY
4.0 (41, 35 in.*lbf)
x 4
SLIDING ROOF SIDE GARNISH LH
SLIDING ROOF WEATHERSTRIP
ROOF HEADLINING ASSEMBLY
N*m (kgf*cm, ft.*lbf): Specified torque

P

Fig. 1: Identifying Sliding Roof Housing Replacement Components With Torque Specifications (1 Of 3)
Courtesy of TOYOTA MOTOR SALES, U.S.A., INC.

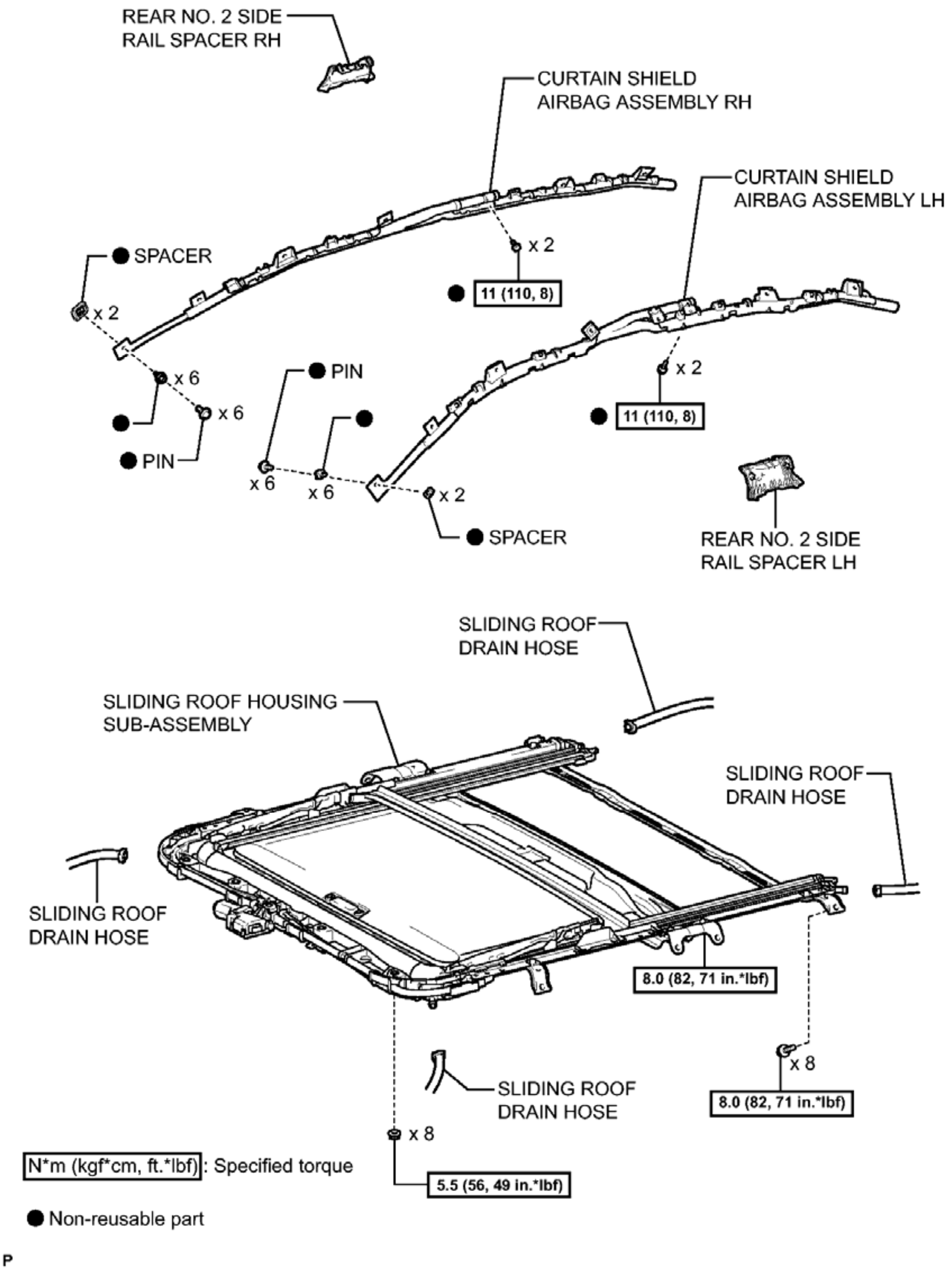
REAR NO. 2 SIDE RAIL SPACER RH
CURTAIN SHIELD AIRBAG ASSEMBLY RH
CURTAIN SHIELD AIRBAG ASSEMBLY LH
● SPACER
x 2
x 2
● 11 (110, 8)
x 6
x 6
●
● PIN
● PIN
●
x 6
x 6
x 2
● 11 (110, 8)
x 2
● SPACER
REAR NO. 2 SIDE RAIL SPACER LH
SLIDING ROOF DRAIN HOSE
SLIDING ROOF HOUSING SUB-ASSEMBLY
SLIDING ROOF DRAIN HOSE
SLIDING ROOF DRAIN HOSE
8.0 (82, 71 in.*lbf)
x 8
8.0 (82, 71 in.*lbf)
SLIDING ROOF DRAIN HOSE
x 8
5.5 (56, 49 in.*lbf)
N*m (kgf*cm, ft.*lbf) : Specified torque
● Non-reusable part
P

Fig. 2: Identifying Sliding Roof Housing Replacement Components With Torque Specifications (2 Of 3)
Courtesy of TOYOTA MOTOR SALES, U.S.A., INC.

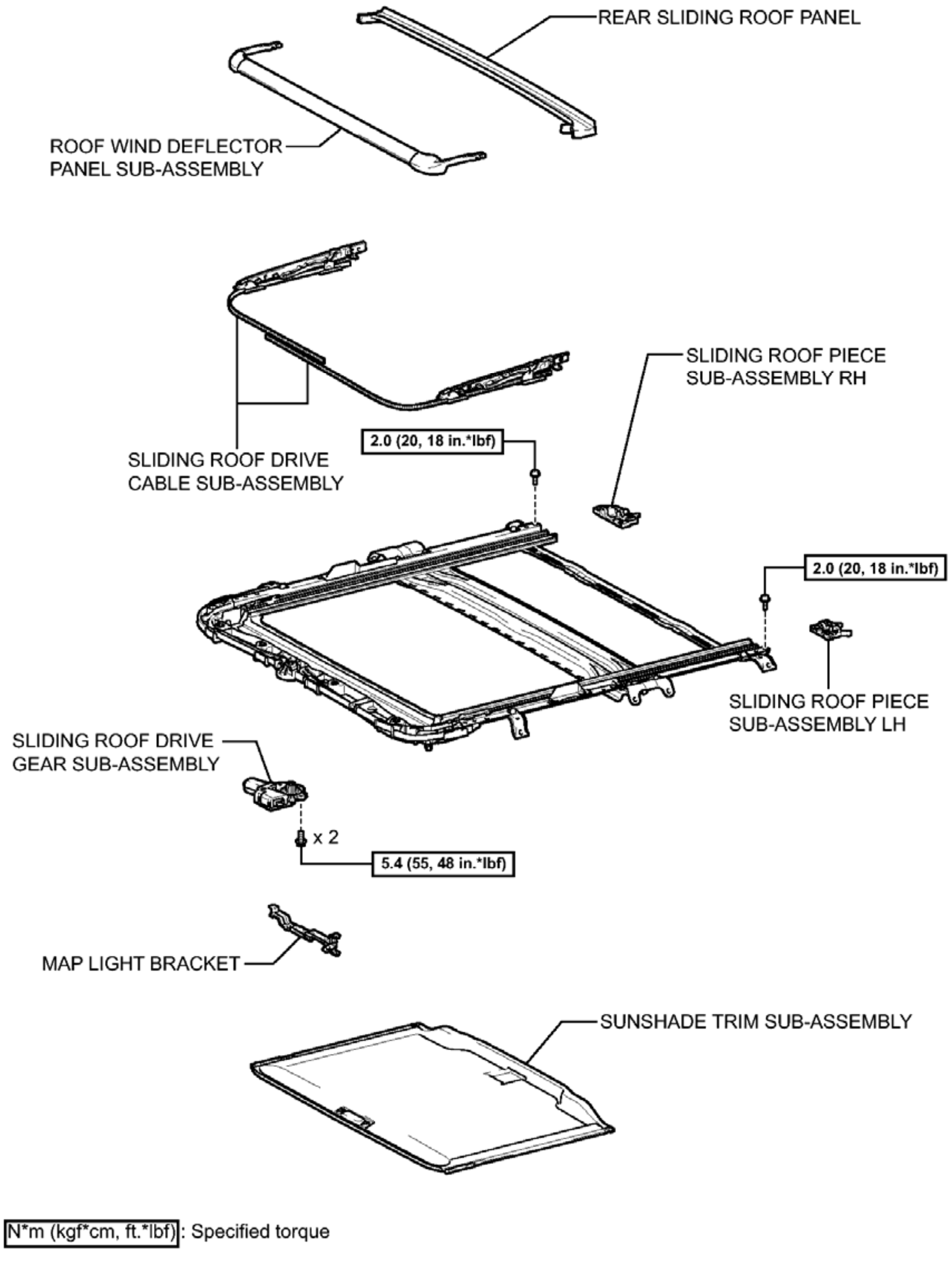
REAR SLIDING ROOF PANEL
ROOF WIND DEFLECTOR PANEL SUB-ASSEMBLY
SLIDING ROOF PIECE SUB-ASSEMBLY RH
SLIDING ROOF DRIVE CABLE SUB-ASSEMBLY
2.0 (20, 18 in.*lbf)
2.0 (20, 18 in.*lbf)
SLIDING ROOF PIECE SUB-ASSEMBLY LH
SLIDING ROOF DRIVE GEAR SUB-ASSEMBLY
x 2
5.4 (55, 48 in.*lbf)
MAP LIGHT BRACKET
SUNSHADE TRIM SUB-ASSEMBLY
N*m (kgf*cm, ft.*lbf): Specified torque
P

Fig. 3: Identifying Sliding Roof Housing Replacement Components With Torque Specifications (3 Of 3)
Courtesy of TOYOTA MOTOR SALES, U.S.A., INC.

REMOVAL

REMOVAL

1. **REMOVE ROOF HEADLINING ASSEMBLY**

   Refer to **REMOVAL**

2. **REMOVE SLIDING ROOF SIDE GARNISH LH**
   1. Disengage the 2 claws and remove the sliding roof side garnish LH.

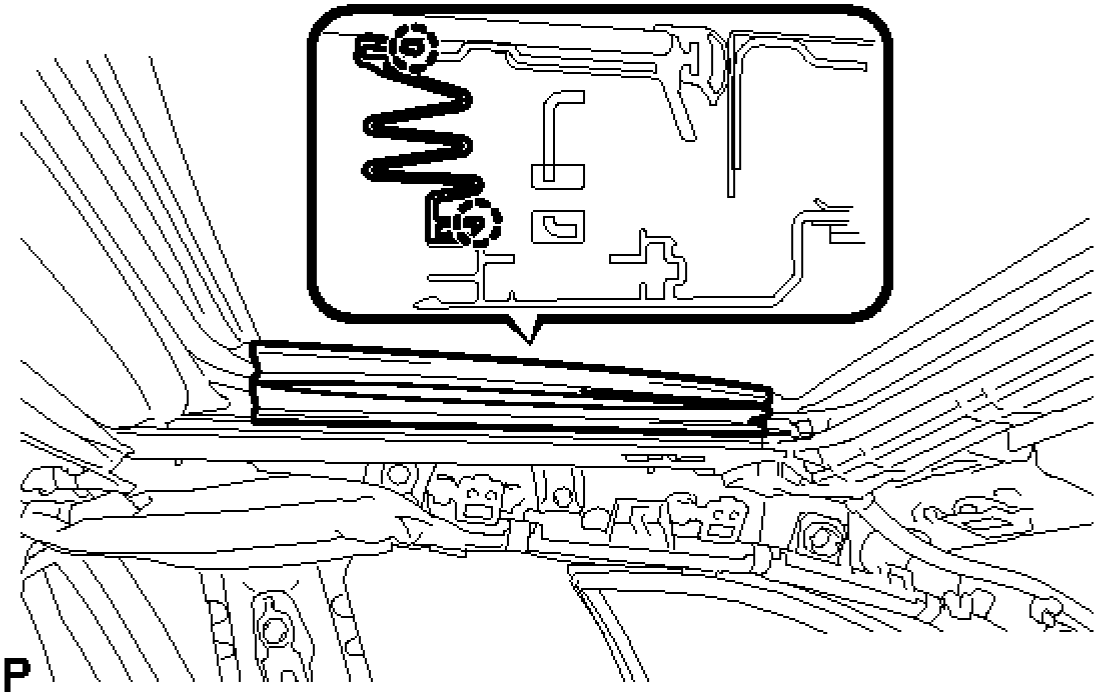

Fig. 4: Locating Sliding Roof Side Garnish LH Claws
Courtesy of TOYOTA MOTOR SALES, U.S.A., INC.

3. **REMOVE SLIDING ROOF SIDE GARNISH RH**

   HINT:

   Use the same procedure as for the LH side.

4. **REMOVE SLIDING ROOF GLASS SUB-ASSEMBLY**
   1. Using a T25 "TORX" socket wrench, remove the 4 screws and sliding roof glass sub-assembly.

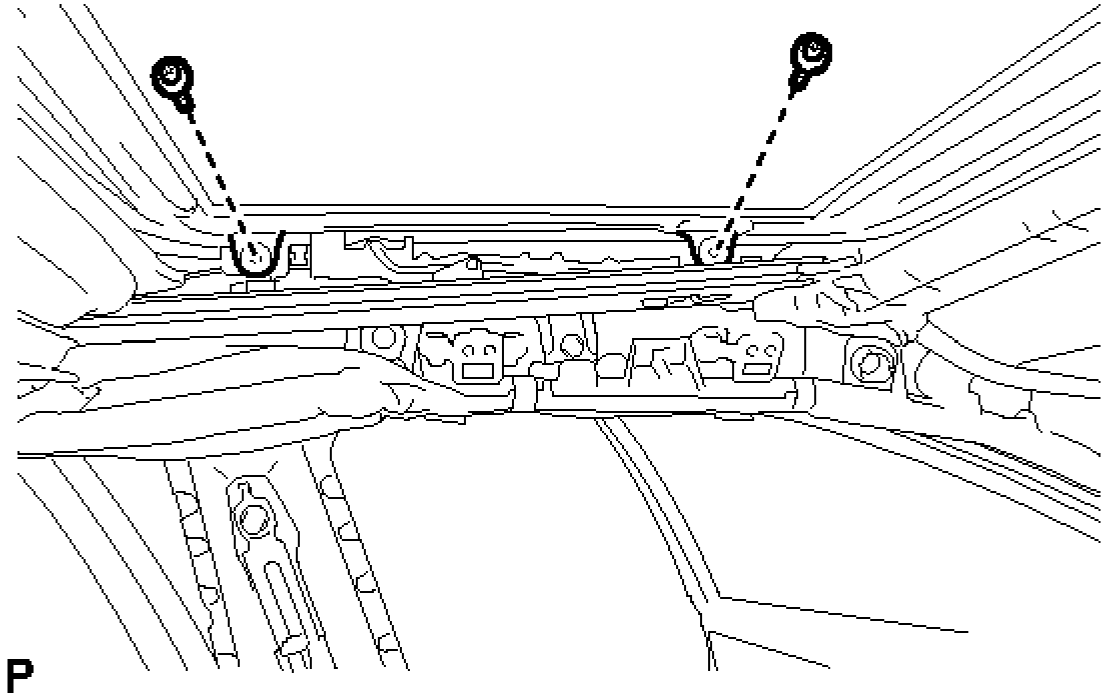

Fig. 5: Locating Sliding Roof Glass Sub-Assembly Fasteners
Courtesy of TOYOTA MOTOR SALES, U.S.A., INC.

NOTE: **To prevent the sliding roof glass and sliding roof drive gear from being displaced, fully close the sliding roof glass (sliding roof drive cable), and then remove the sliding roof glass sub-assembly.**

5. **REMOVE SLIDING ROOF WEATHERSTRIP**
    a. Remove the sliding roof weatherstrip from the sliding roof panel sub-assembly.
6. **REMOVE CURTAIN SHIELD AIRBAG ASSEMBLY LH** . Refer to **REMOVAL - Step 3**
7. **REMOVE CURTAIN SHIELD AIRBAG ASSEMBLY RH**

    HINT:

    Use the same procedure as for the LH side.

8. **REMOVE REAR NO. 2 SIDE RAIL SPACER LH**
    a. Using a screwdriver, disengage the 2 claws and remove the rear No. 2 side rail spacer LH.

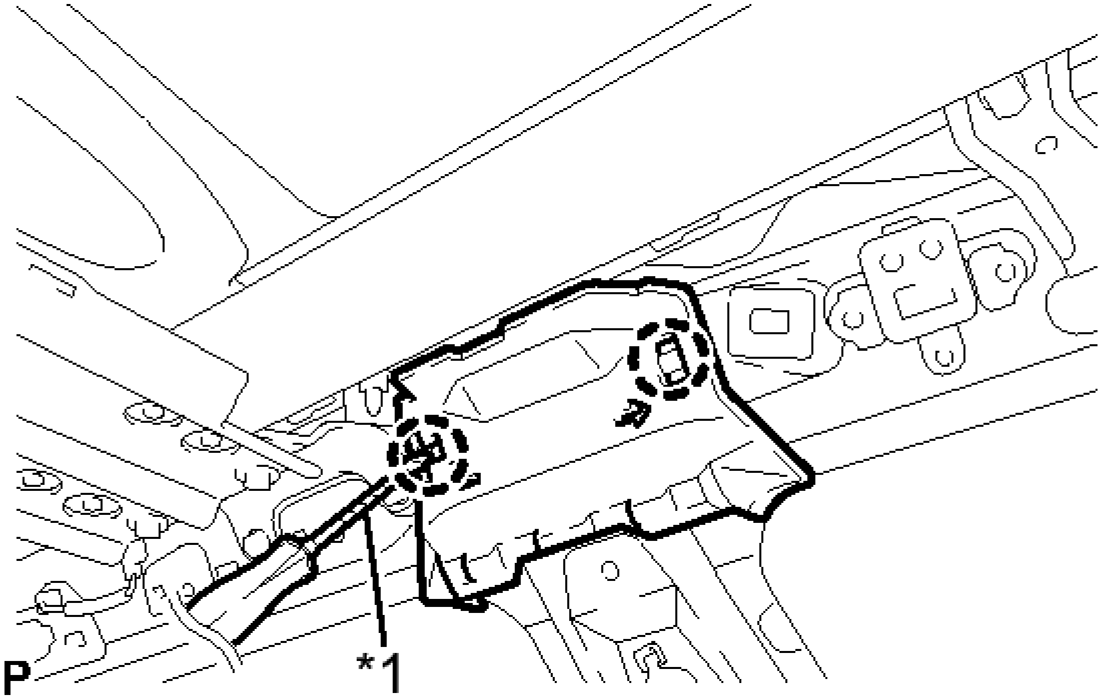

Fig. 6: Locating Rear No. 2 Side Rail Spacer LH Claws
Courtesy of TOYOTA MOTOR SALES, U.S.A., INC.

TEXT IN ILLUSTRATION

*1	Protective Tape

HINT:

Tape the screwdriver tip before use.

9. **REMOVE REAR NO. 2 SIDE RAIL SPACER RH**

   HINT:

   Use the same procedure as for the LH side.

10. **REMOVE SLIDING ROOF HOUSING SUB-ASSEMBLY**
    a. for Clamp Type:

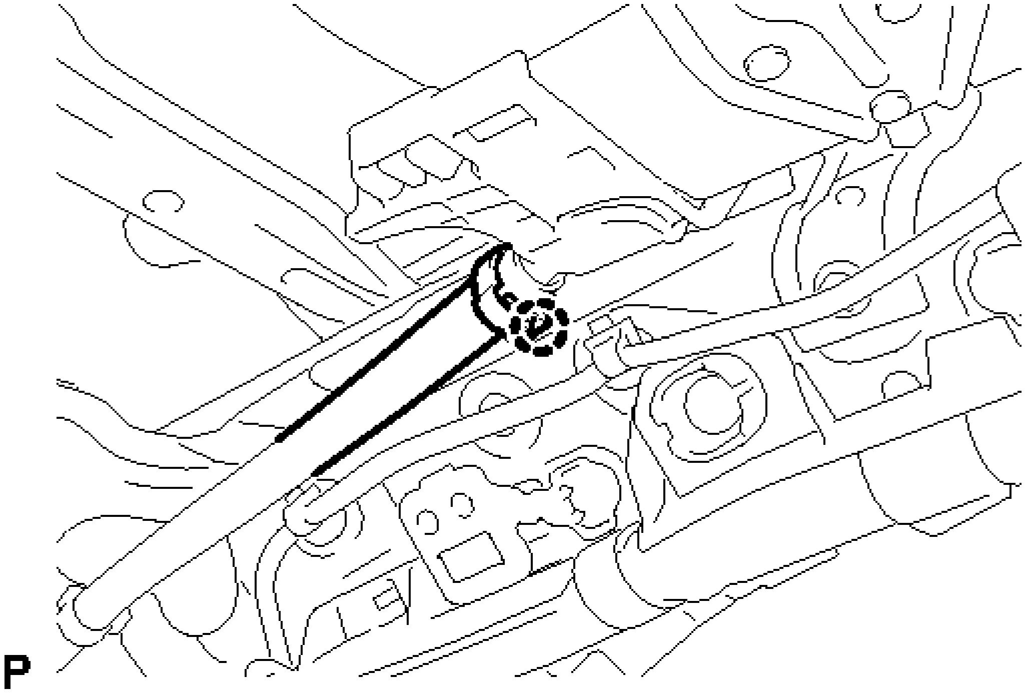

Fig. 7: Identifying Sliding Roof Housing Sub-Assembly Clamp
Courtesy of TOYOTA MOTOR SALES, U.S.A., INC.

1. Disengage the claw and disconnect the sliding roof drain hose.

   HINT:

   Use the same procedure for the other 3 sliding roof drain hoses.

b. for Clip Type:

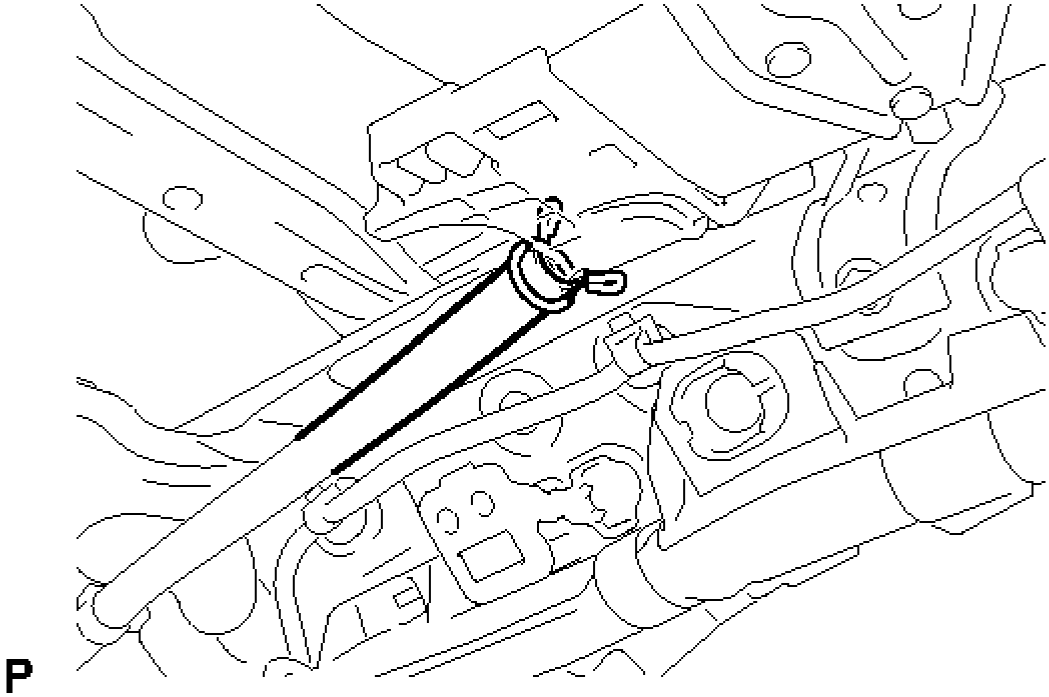

Fig. 8: Identifying Sliding Roof Housing Sub-Assembly Clip
Courtesy of TOYOTA MOTOR SALES, U.S.A., INC.

1. Expand the clip and disconnect the sliding roof drain hose.

   HINT:

   Use the same procedure for the other 3 sliding roof drain hoses.

c. Remove the 8 bolts, 8 nuts and sliding roof housing sub-assembly.

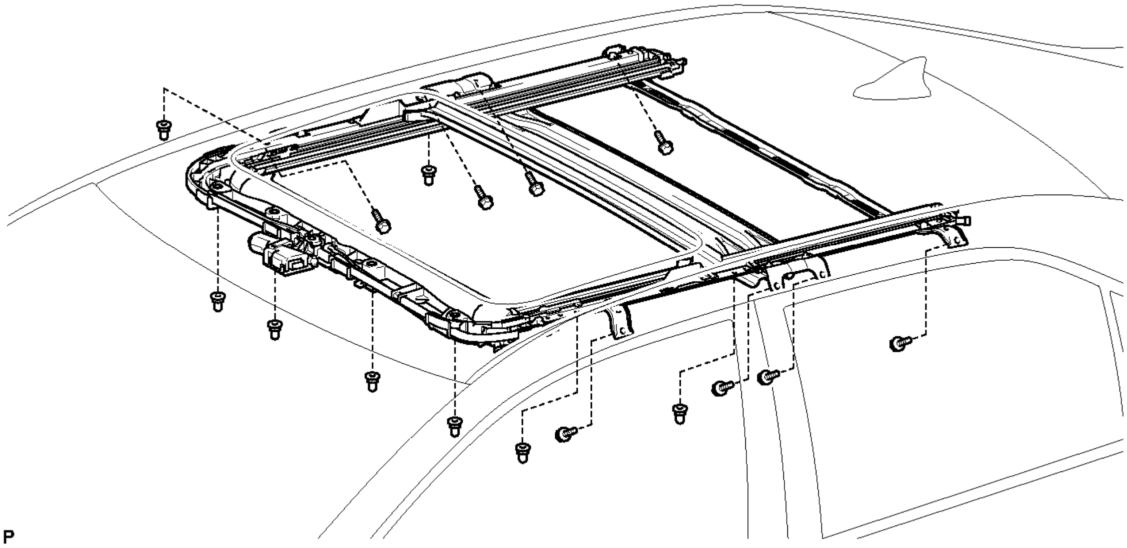

Fig. 9: Identifying Sliding Roof Housing Sub-Assembly Fasteners
Courtesy of TOYOTA MOTOR SALES, U.S.A., INC.

DISASSEMBLY

DISASSEMBLY

1. **REMOVE SLIDING ROOF DRIVE GEAR SUB-ASSEMBLY**
   a. Disengage the claw.

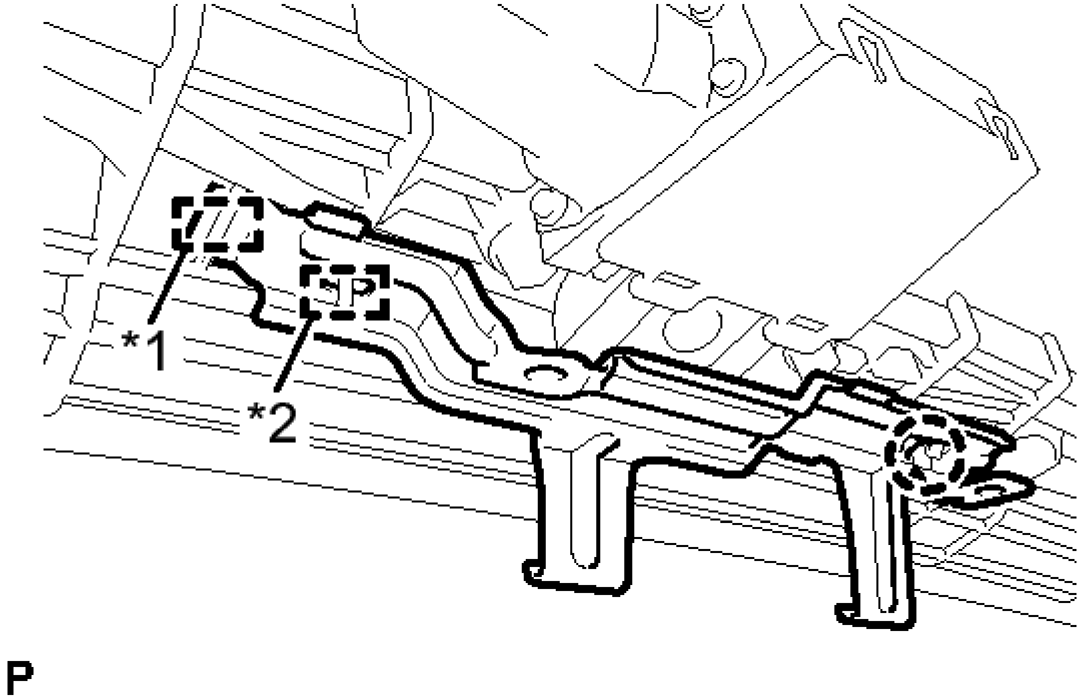

Fig. 10: Identifying Sliding Roof Drive Gear Sub-Assembly Guide And Pin
Courtesy of TOYOTA MOTOR SALES, U.S.A., INC.

TEXT IN ILLUSTRATION

*1	Guide
*2	Pin

   b. Disengage the guide and pin, and remove the map light bracket.
   c. Remove the 2 bolts and sliding roof drive gear sub-assembly.

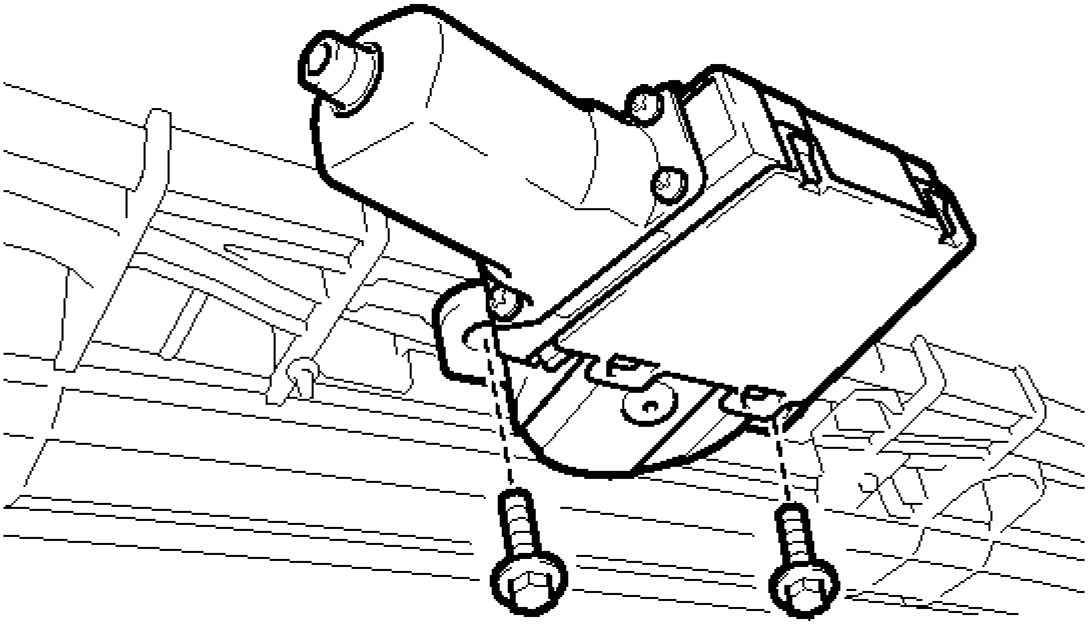

P

Fig. 11: Identifying Sliding Roof Drive Gear Sub-Assembly Bolts
Courtesy of TOYOTA MOTOR SALES, U.S.A., INC.

2. **REMOVE SUNSHADE TRIM SUB-ASSEMBLY**
    a. Remove the screw and the sliding roof piece sub-assembly LH.

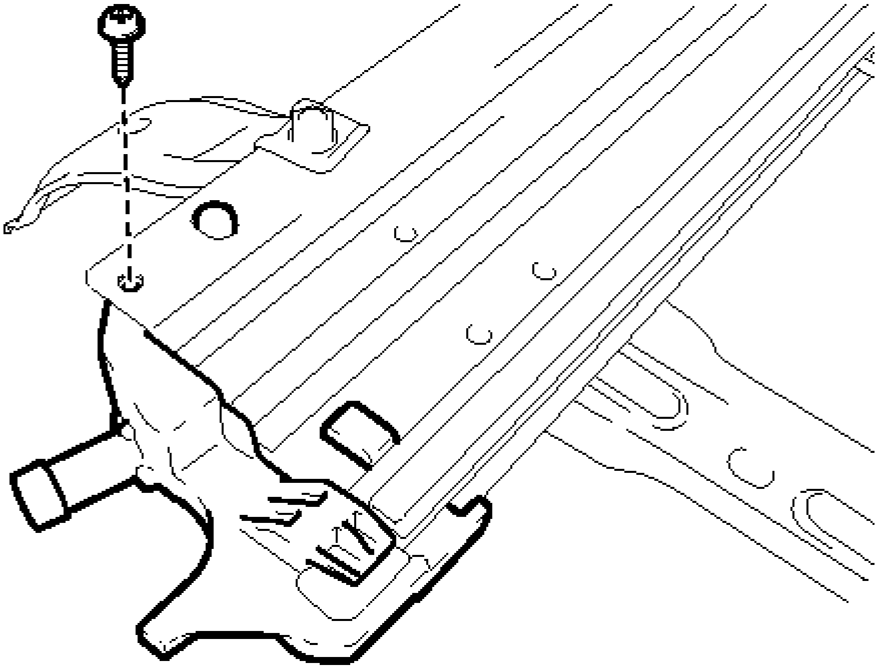

P

Fig. 12: Identifying Sunshade Trim Sub-Assembly Fastener

Courtesy of TOYOTA MOTOR SALES, U.S.A., INC.

HINT:

Use the same procedure for the RH side.

b. Slide and remove the sunshade trim sub-assembly.

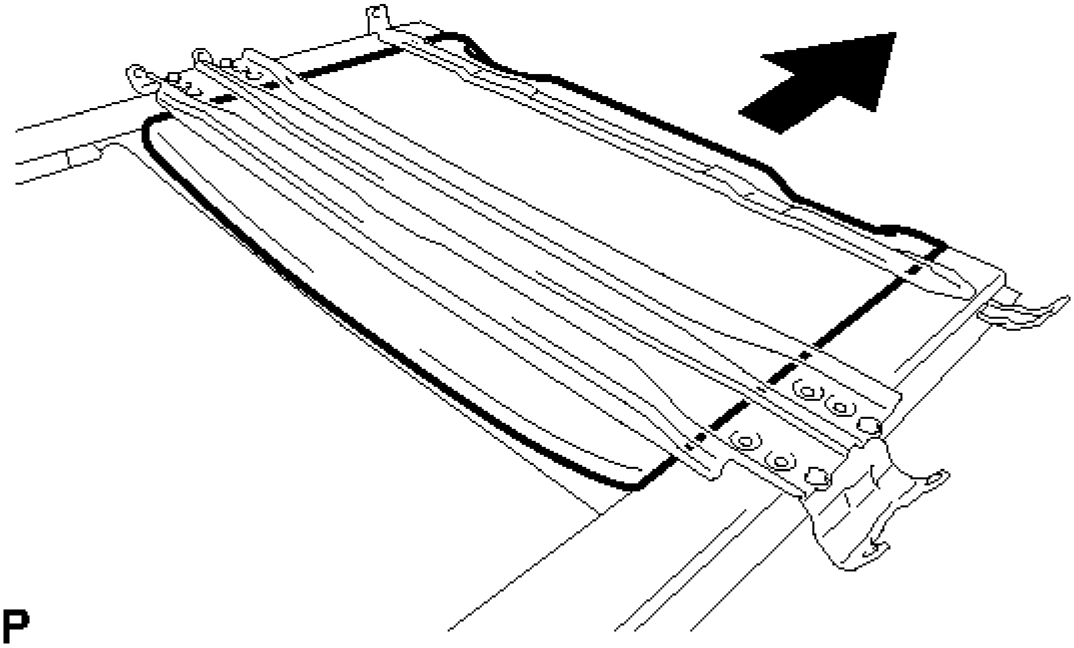

Fig. 13: Removing Sunshade Trim Sub-Assembly
Courtesy of TOYOTA MOTOR SALES, U.S.A., INC.

3. **REMOVE REAR SLIDING ROOF PANEL**
   a. Disengage the 2 claws. Then slide the rear sliding roof panel rearward to remove it.

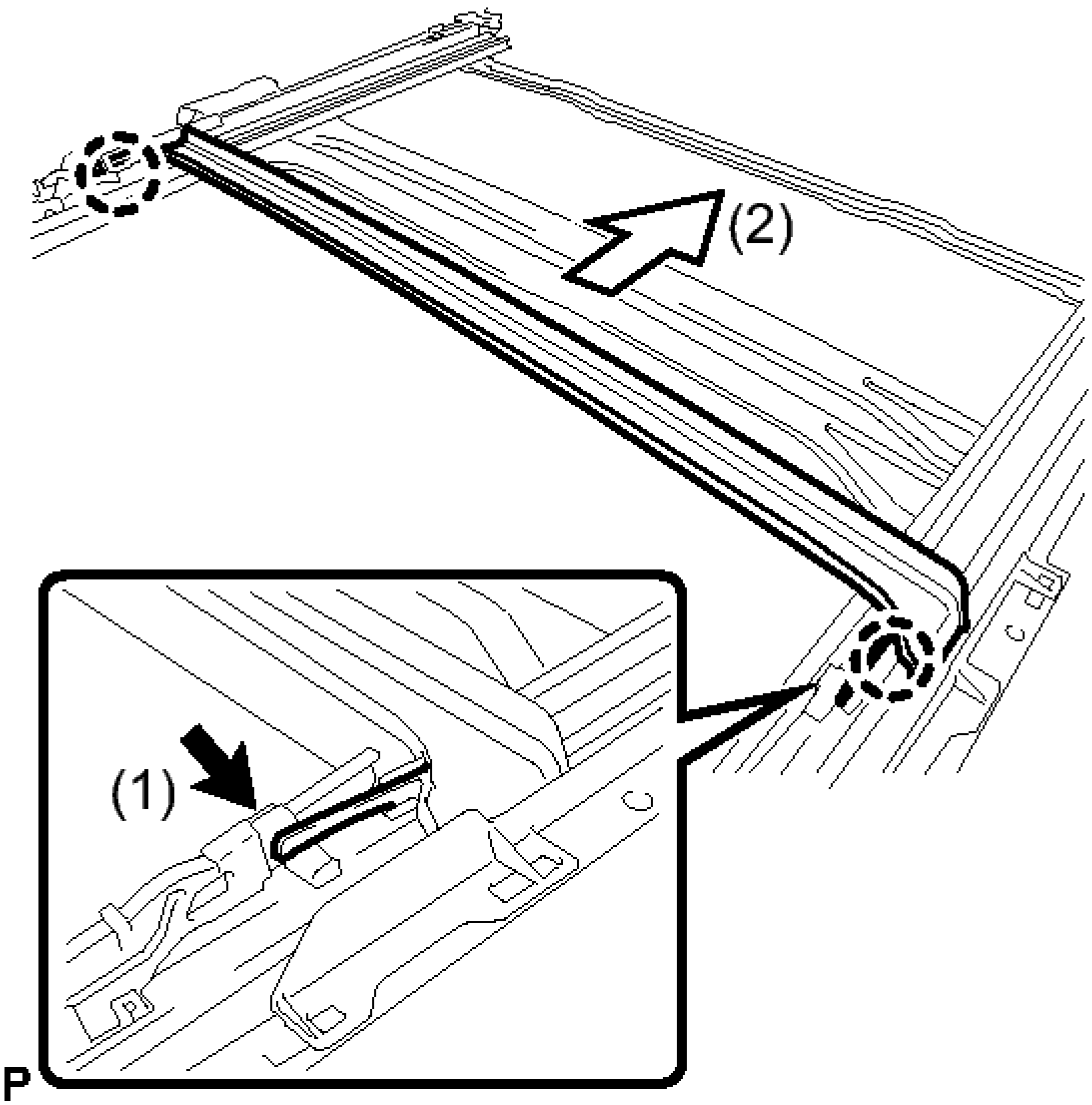

Fig. 14: Removing Rear Sliding Roof Panel
Courtesy of TOYOTA MOTOR SALES, U.S.A., INC.

4. **REMOVE SLIDING ROOF DRIVE CABLE SUB-ASSEMBLY**

NOTE: **Do not disassemble the sliding roof drive cable sub-assembly except when replacing it.**

a. Hold down the roof wind deflector panel sub-assembly.

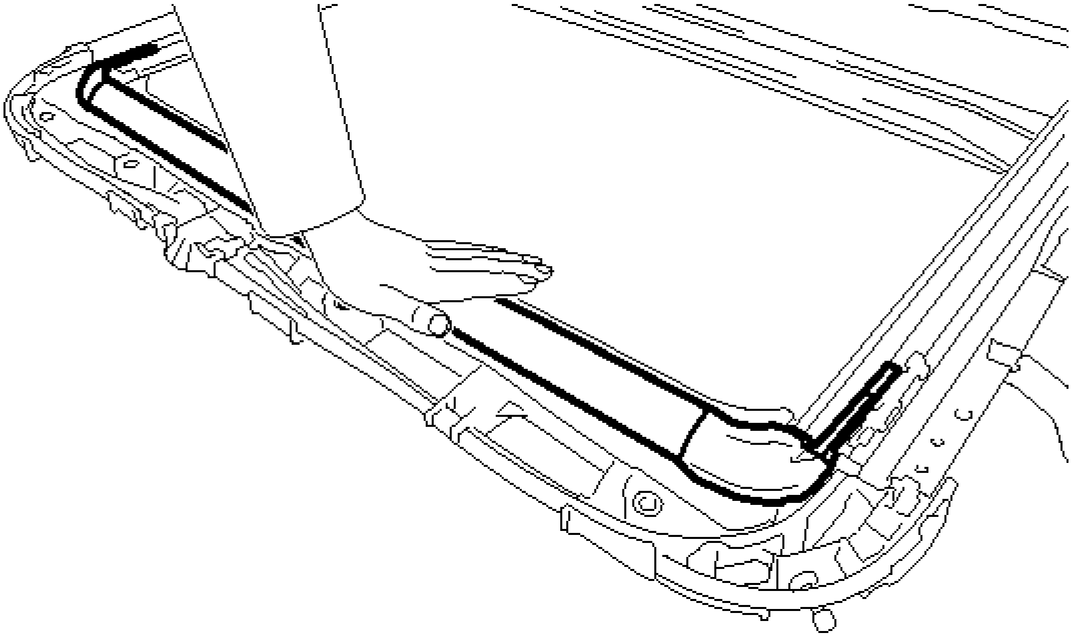

Fig. 15: Holding Down Roof Wind Deflector Panel Sub-Assembly
Courtesy of TOYOTA MOTOR SALES, U.S.A., INC.

b. Using a screwdriver, slide the sliding roof drive cable sub-assembly in the direction indicated by the arrow in the illustration to remove it.

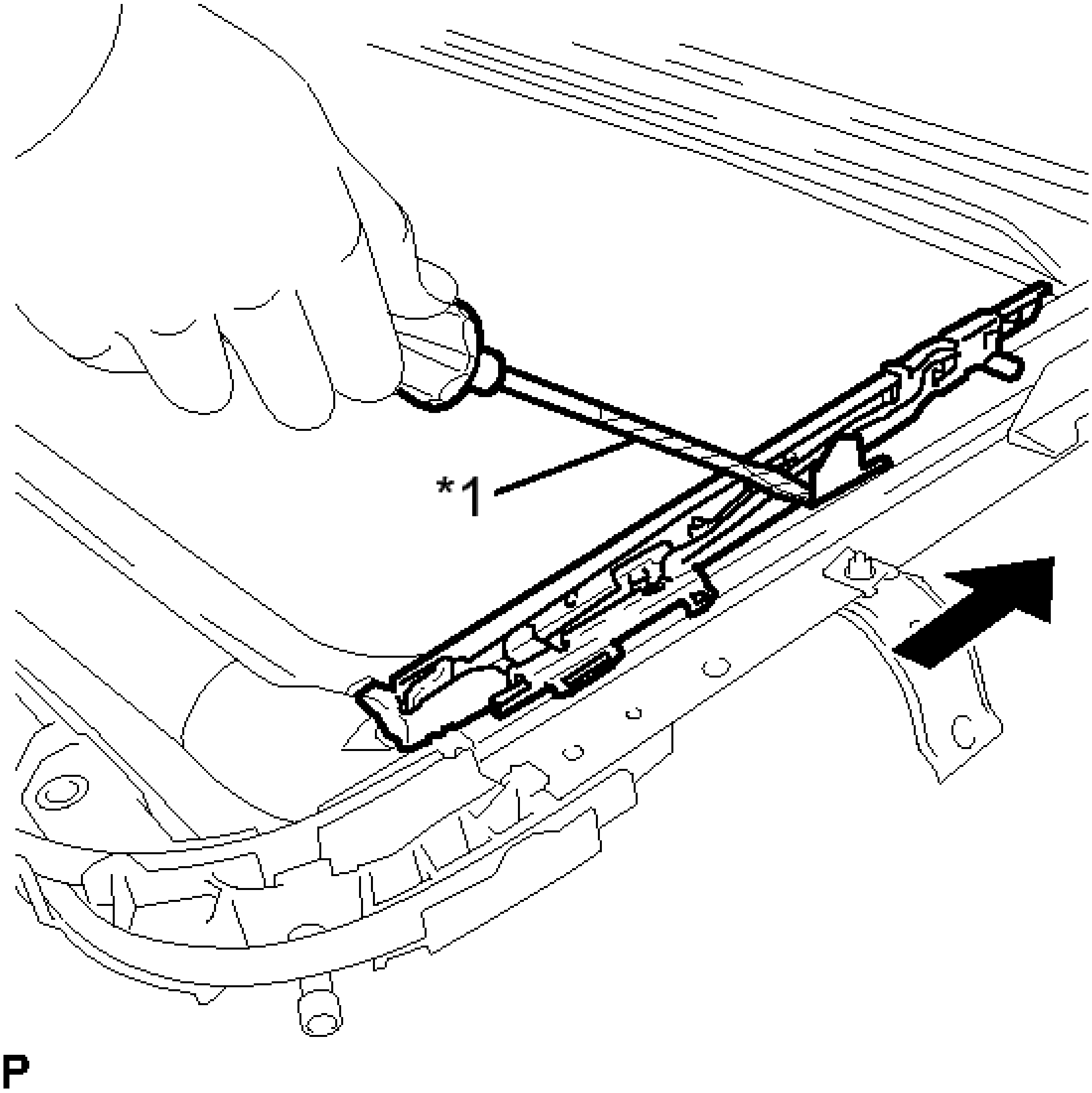

Fig. 16: Removing Sliding Roof Drive Cable Sub-Assembly
Courtesy of TOYOTA MOTOR SALES, U.S.A., INC.

TEXT IN ILLUSTRATION

*1	Protective Tape

HINT:

- Tape the screwdriver tip before use.
- Use the same procedure for the other sliding roof drive cable sub-assembly.

5. **REMOVE ROOF WIND DEFLECTOR PANEL SUB-ASSEMBLY**
    a. Pull the spring in the direction indicated by the arrow (1) in the illustration to disengage the 2 springs.

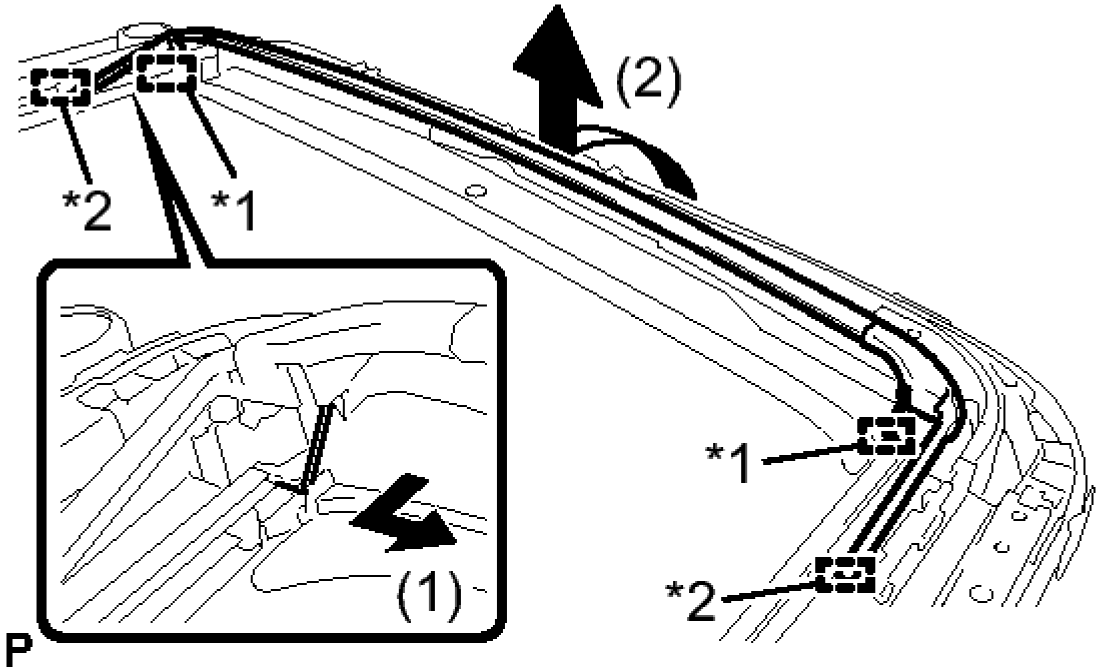

Fig. 17: Removing Roof Wind Deflector Panel Sub-Assembly
Courtesy of TOYOTA MOTOR SALES, U.S.A., INC.

TEXT IN ILLUSTRATION

*1	Spring
*2	Guide

b. Pull the roof wind deflector panel sub-assembly in the direction indicated by the arrow (2) in the illustration to disengage the 2 guides and remove it.

REASSEMBLY

REASSEMBLY

1. **INSTALL ROOF WIND DEFLECTOR PANEL SUB-ASSEMBLY**
    a. Engage the 2 guides in the direction indicated by the arrow (1) in the illustration to install the roof wind deflector panel sub-assembly.

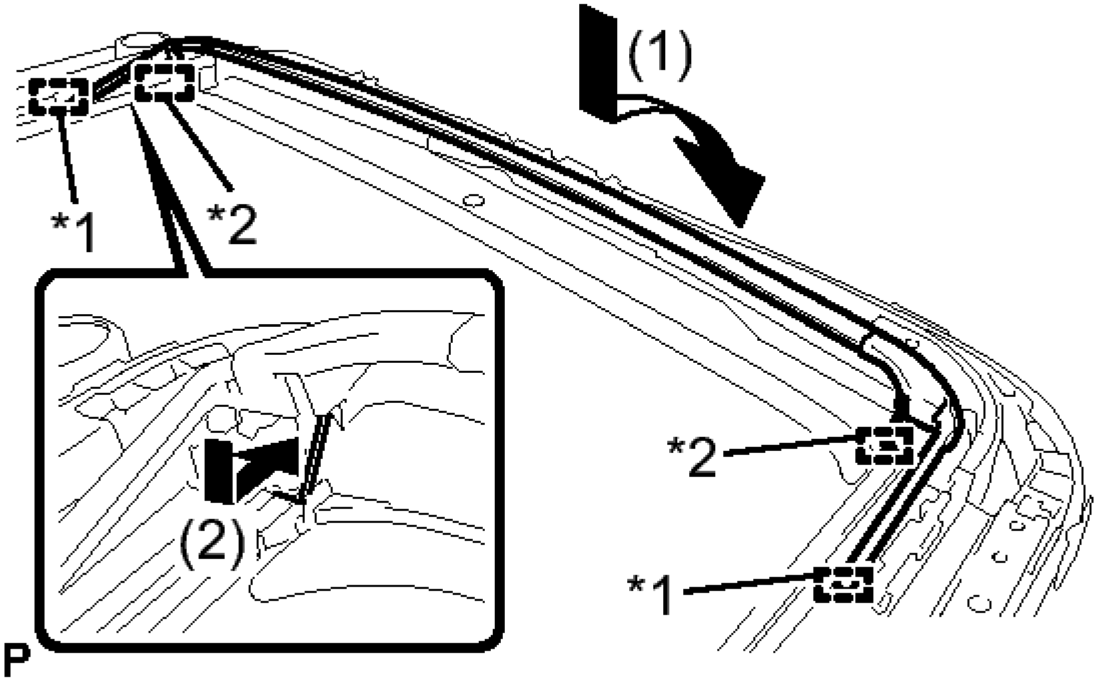

Fig. 18: Installing Roof Wind Deflector Panel Sub-Assembly
Courtesy of TOYOTA MOTOR SALES, U.S.A., INC.

TEXT IN ILLUSTRATION

*1	Guide
*2	Spring

b. Engage the 2 springs in the direction indicated by the arrow (2) in the illustration.

NOTE: **Make sure that the springs are securely installed.**

2. **INSTALL SLIDING ROOF DRIVE CABLE SUB-ASSEMBLY**
   a. Hold down the roof wind deflector panel sub-assembly.

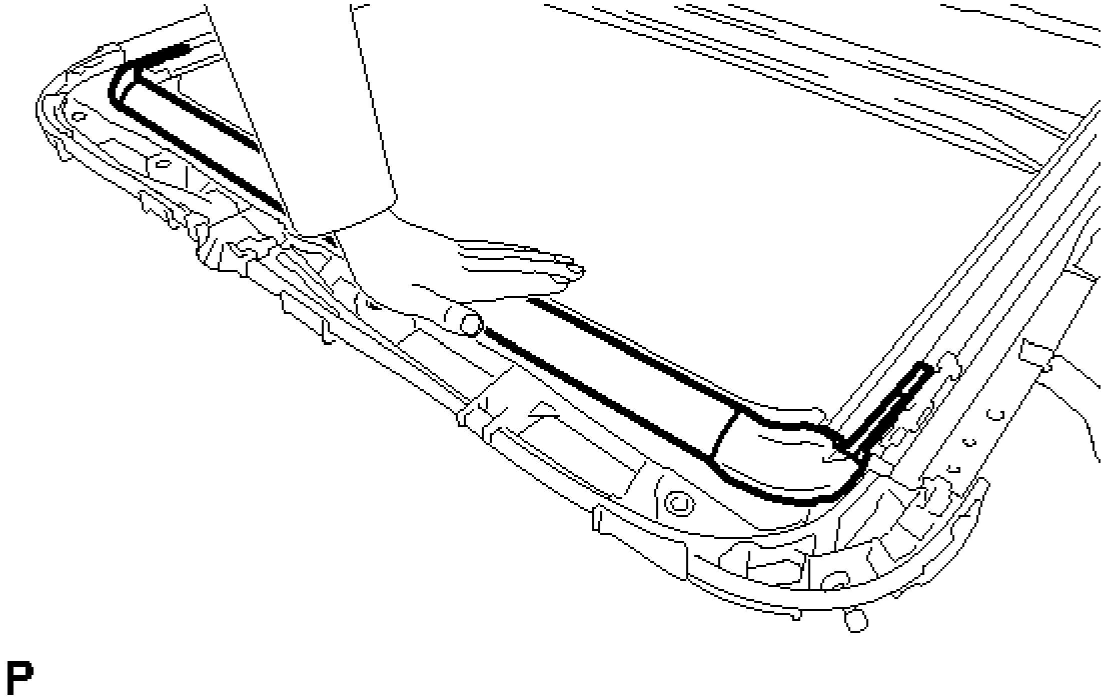

Fig. 19: Holding Down Roof Wind Deflector Panel Sub-Assembly
Courtesy of TOYOTA MOTOR SALES, U.S.A., INC.

b. Using a screwdriver, slide the sliding roof drive cable sub-assembly in the direction indicated by the arrow in the illustration to install it.

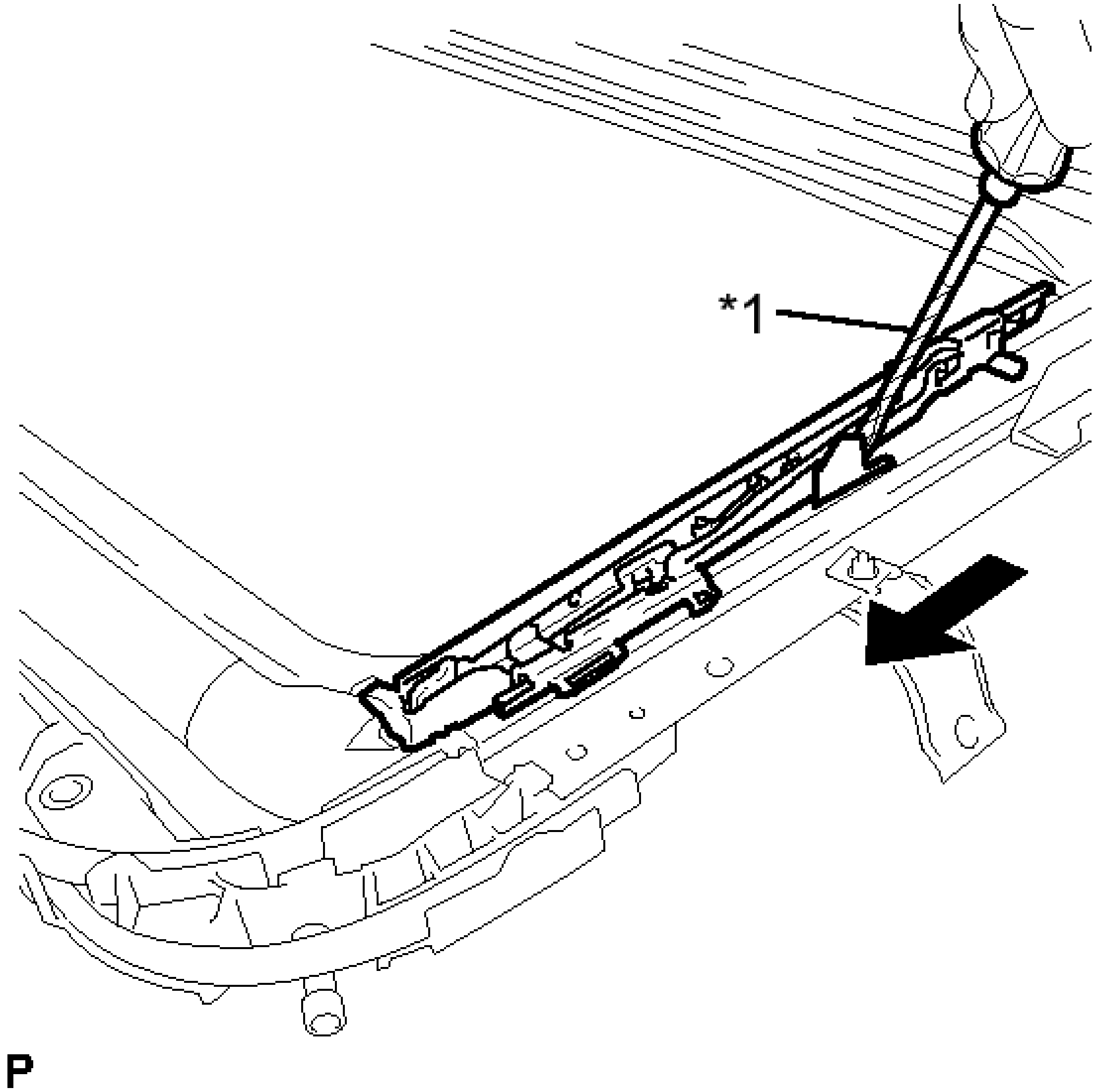

Fig. 20: Installing Sliding Roof Drive Cable Sub-Assembly
Courtesy of TOYOTA MOTOR SALES, U.S.A., INC.

TEXT IN ILLUSTRATION

*1	Protective Tape

HINT:

- Tape the screwdriver tip before use.
- Use the same procedure for the other sliding roof drive cable sub-assembly.

3. **INSTALL REAR SLIDING ROOF PANEL**
   a. Insert the rear sliding roof panel in the direction indicated by the arrow (1) in the illustration.

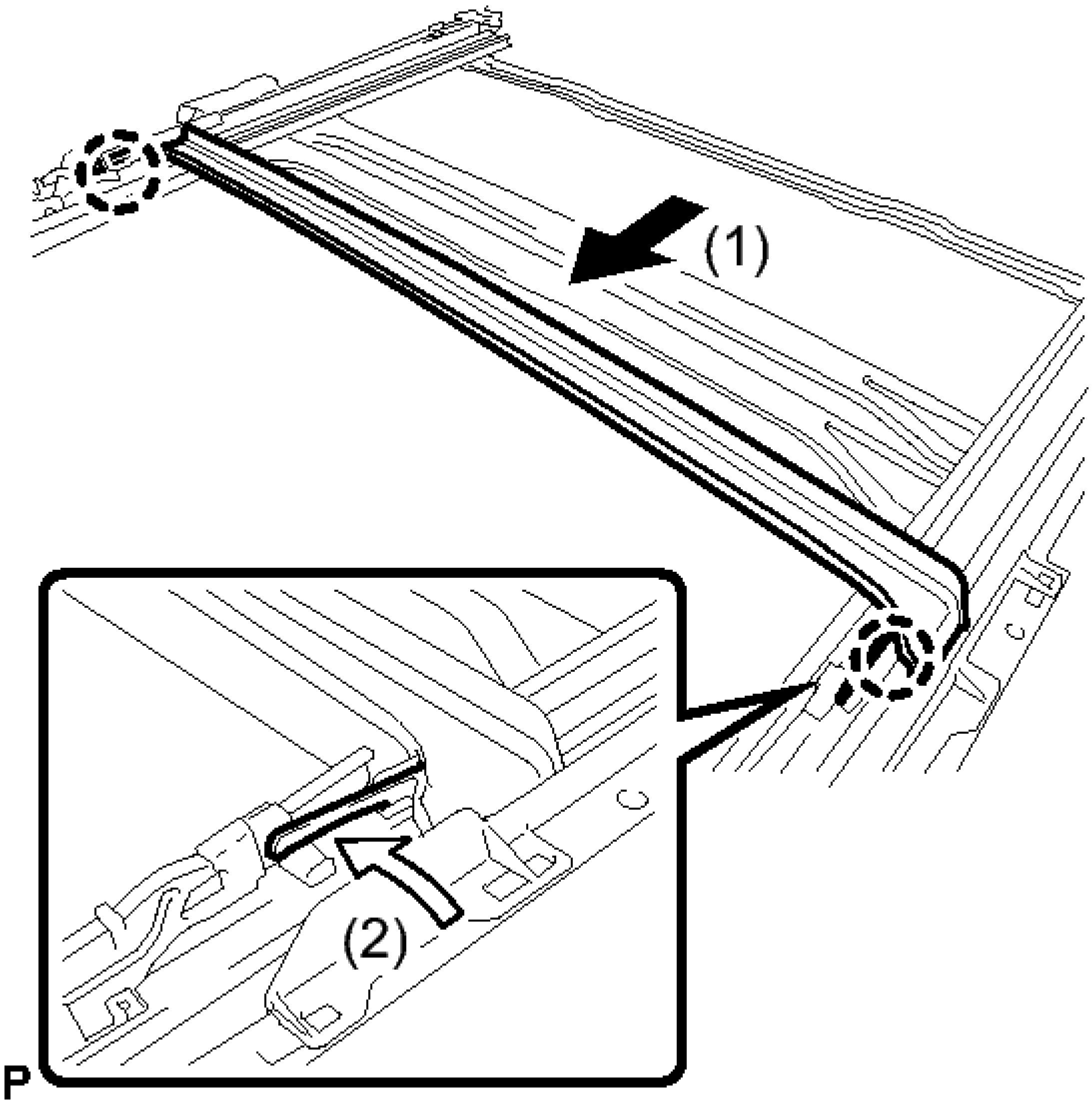

Fig. 21: Installing Rear Sliding Roof Panel
Courtesy of TOYOTA MOTOR SALES, U.S.A., INC.

b. Engage the 2 claws in the direction indicated by the arrow (2) in the illustration to install the rear sliding roof panel.

4. **ADJUST FULLY CLOSED POSITION**

   a. Using a screwdriver, slide the sliding roof drive cable sub-assembly in either direction indicated by the arrows in the illustration and alignment marks.

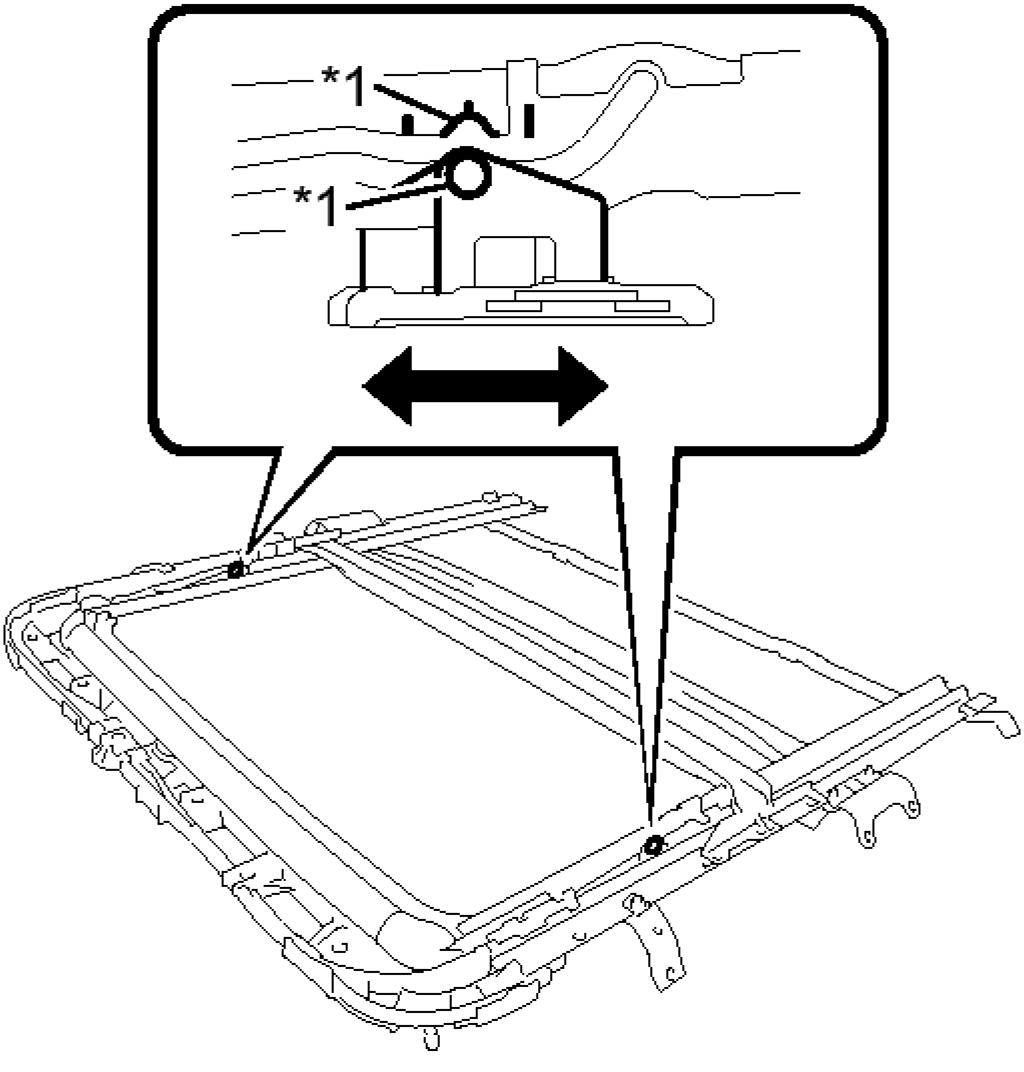

Fig. 22: Adjusting Roof Drive Cable Sub-Assembly
Courtesy of TOYOTA MOTOR SALES, U.S.A., INC.

TEXT IN ILLUSTRATION

*1	Alignment Mark

HINT:

Tape the screwdriver tip before use.

5. **INSTALL SUNSHADE TRIM SUB-ASSEMBLY**
    a. Insert the sunshade trim sub-assembly into the sliding roof housing sub-assembly.

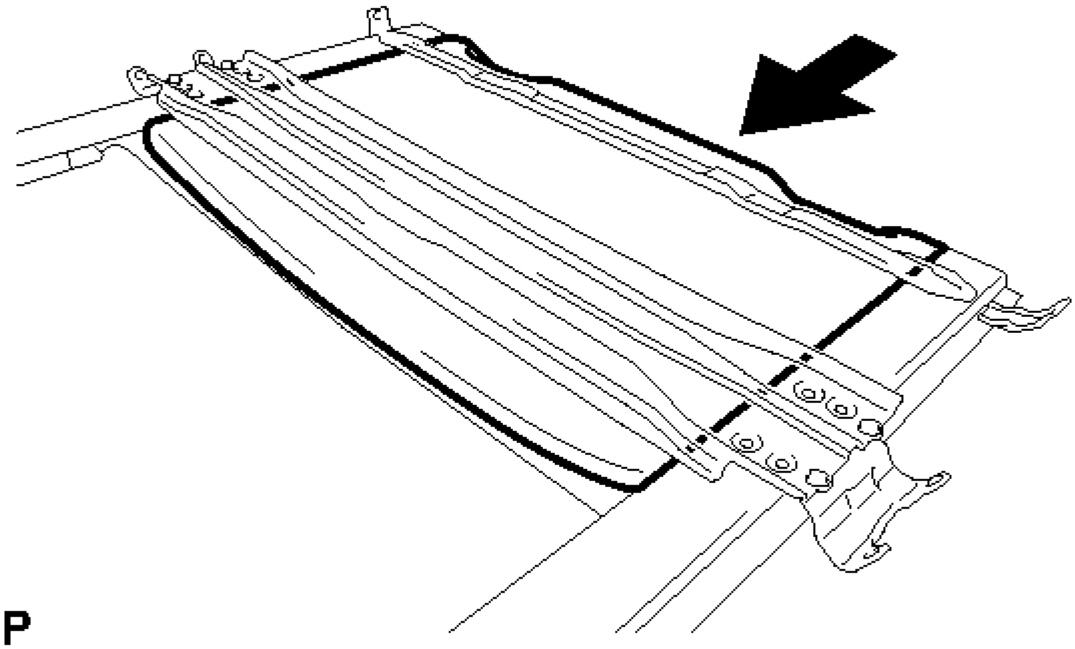

Fig. 23: Installing Sunshade Trim Sub-Assembly
Courtesy of TOYOTA MOTOR SALES, U.S.A., INC.

b. Install the sliding roof piece sub-assembly LH with the screw.

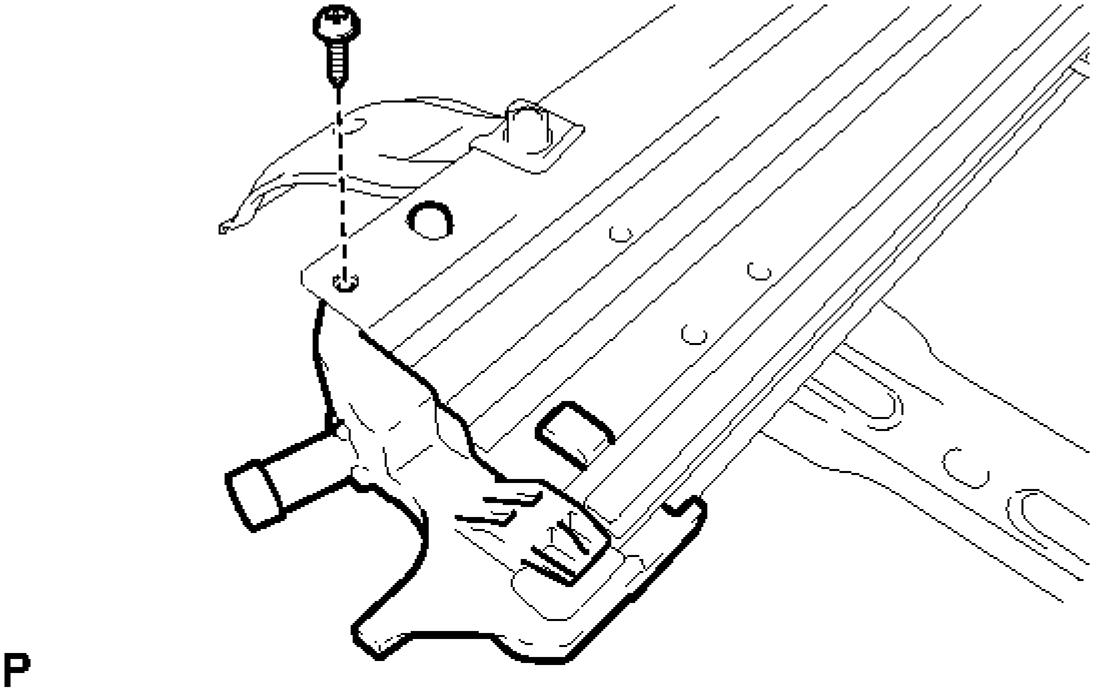

Fig. 24: Identifying Sunshade Trim Sub-Assembly Fastener
Courtesy of TOYOTA MOTOR SALES, U.S.A., INC.

Torque: 2.0 N*m (20 kgf*cm, 18 in.*lbf)

HINT:

Use the same procedure for the RH side.

6. **INSTALL SLIDING ROOF DRIVE GEAR SUB-ASSEMBLY**
    a. Install the sliding roof drive gear sub-assembly with the 2 bolts.

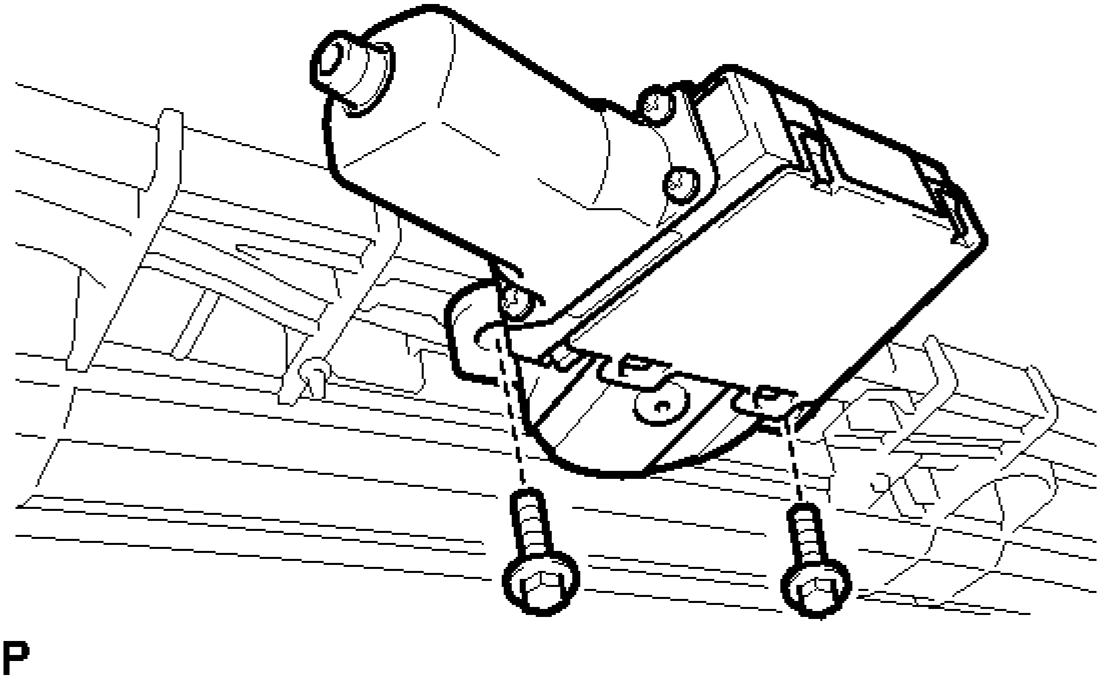

Fig. 25: Identifying Sliding Roof Drive Gear Sub-Assembly Bolts
Courtesy of TOYOTA MOTOR SALES, U.S.A., INC.

Torque: 5.4 N*m (55 kgf*cm, 48 in.*lbf)

    b. Engage the guide and pin.

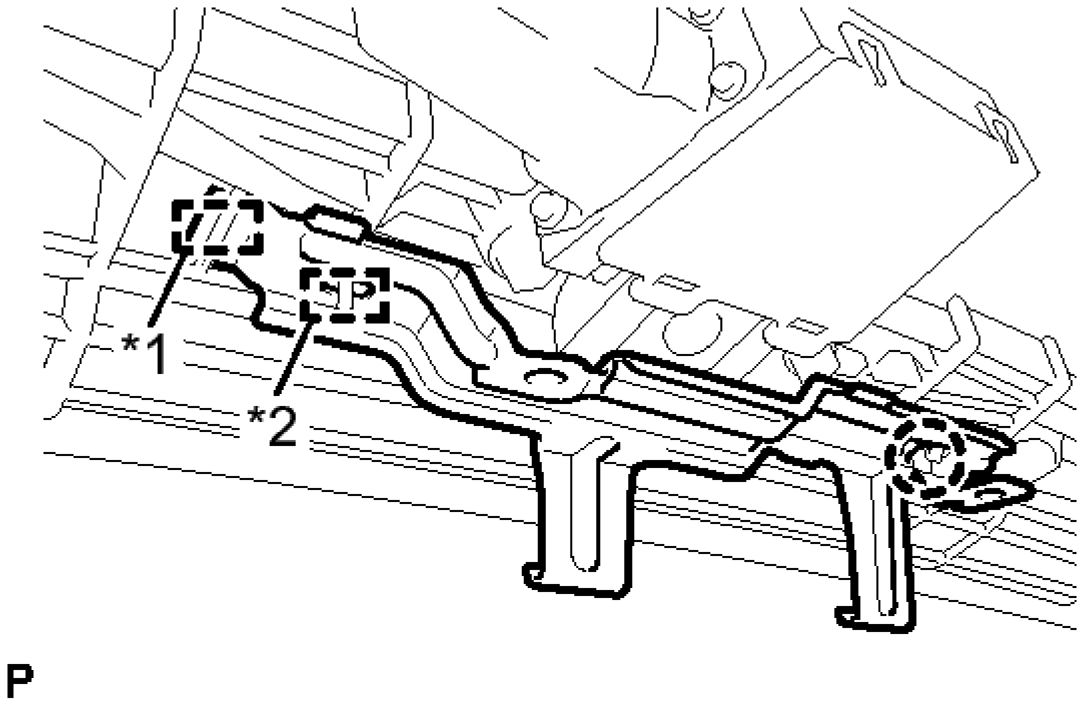

Fig. 26: Identifying Sliding Roof Drive Gear Sub-Assembly Guide And Pin
Courtesy of TOYOTA MOTOR SALES, U.S.A., INC.

TEXT IN ILLUSTRATION

*1	Guide
*2	Pin

c. Engage the claw and install the map light bracket.

INSTALLATION

INSTALLATION

1. **INSTALL SLIDING ROOF HOUSING SUB-ASSEMBLY**
    a. Loosen the 8 bolts from the sliding roof housing sub-assembly.
    b. Install the sliding roof housing sub-assembly with the 8 bolts and 8 nuts.

    Nut

    Torque: 5.5 N*m (56 kgf*cm, 49 in.*lbf)

    Bolt

    Torque: 8.0 N*m (82 kgf*cm, 71 in.*lbf)

    c. Tighten the 8 bolts to the sliding roof housing sub-assembly.

Torque: 5.5 N*m (56 kgf*cm, 49 in.*lbf)

d. for Clamp Type:

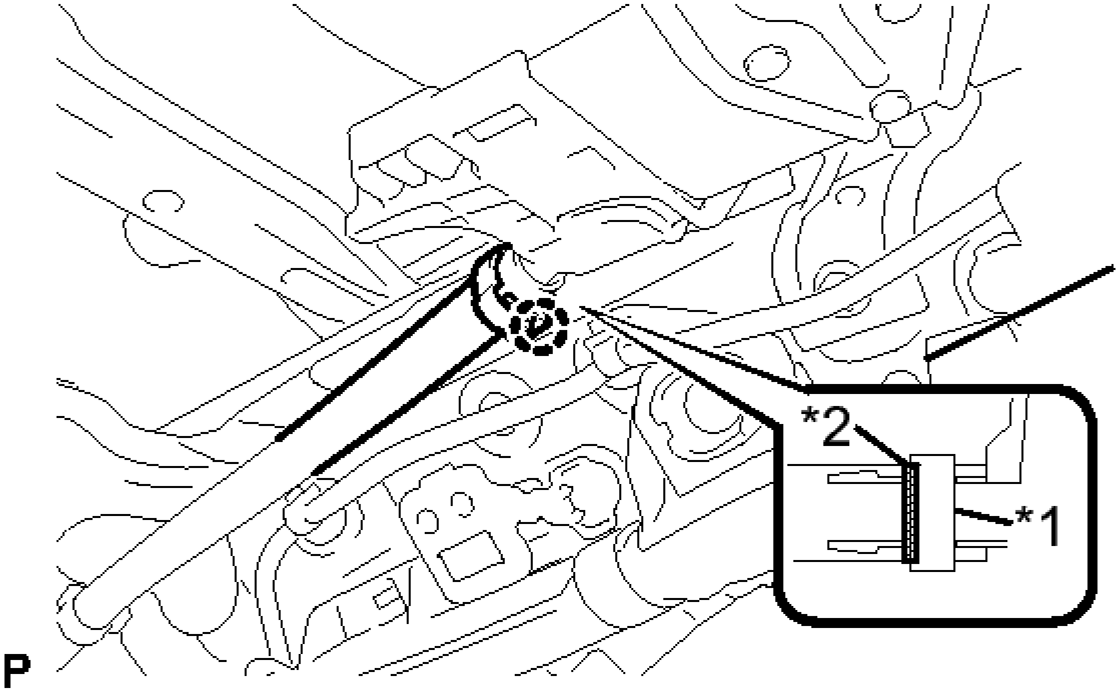

Fig. 27: Identifying Sliding Roof Housing Sub-Assembly Clamp
Courtesy of TOYOTA MOTOR SALES, U.S.A., INC.

TEXT IN ILLUSTRATION

*1	Clamp
*2	Marking

1. Insert the sliding roof drain hose.

   HINT:

   The hose should be inserted to the base of the drain pipe.

2. Engage the claw to connect the sliding roof drain hose.

   HINT:

   - Make sure that the clamp is on the marking or between the marking and hose end.
   - Use the same procedure for the other 3 sliding roof drain hoses.

e. for Clip Type:

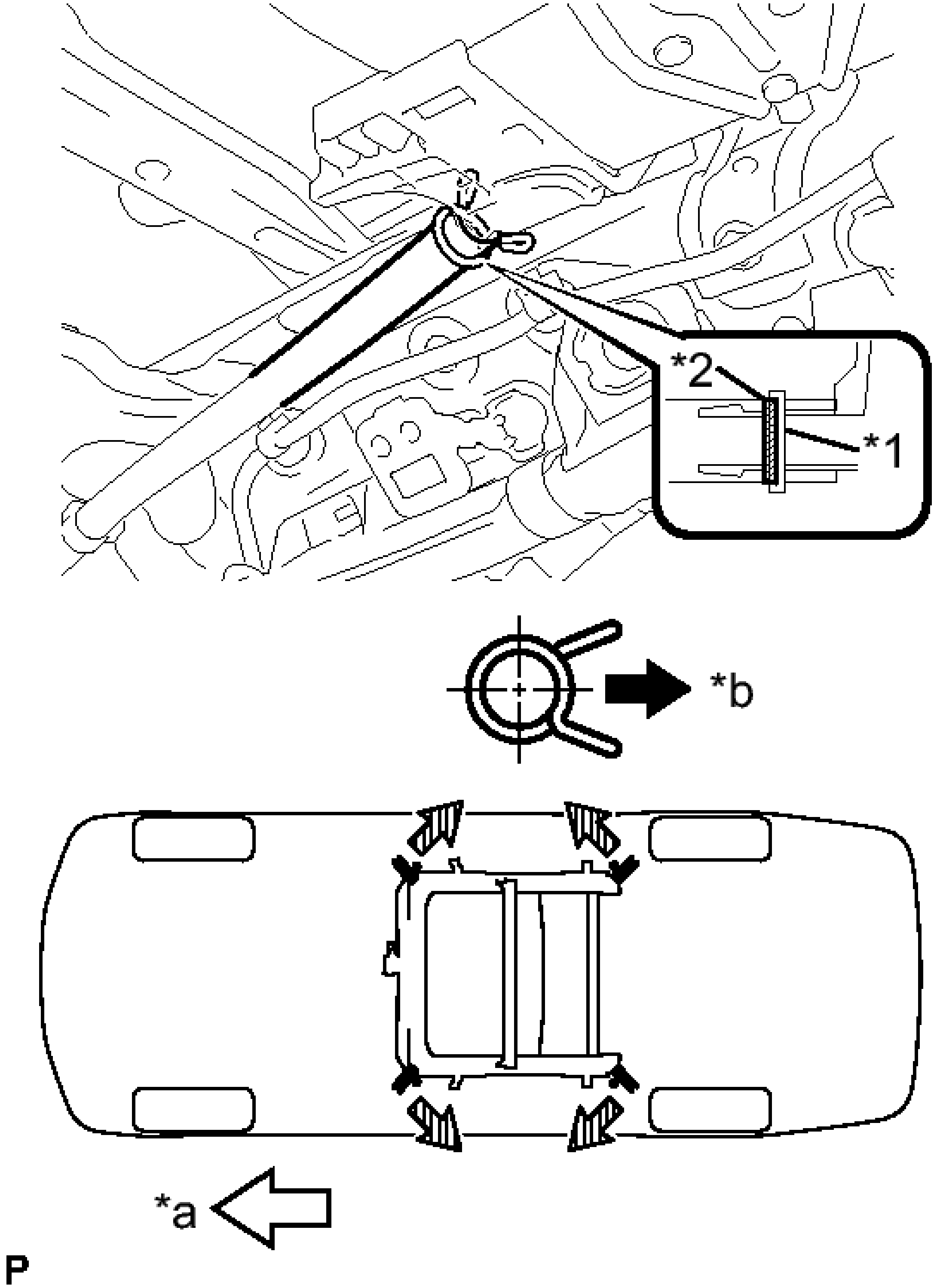

Fig. 28: Identifying Sliding Roof Housing Sub-Assembly Clip
Courtesy of TOYOTA MOTOR SALES, U.S.A., INC.

TEXT IN ILLUSTRATION

*1	Clip

*2	Marking
*a	Front Side
*b	Outside

1. Expand the clip to insert the sliding roof drain hose.

   HINT:

   The hose should be inserted to the base of the drain pipe.

2. Release the clip to connect the sliding roof drain hose.

   NOTE: **The clip must face toward the outside of the vehicle and also be above the lower surface of the sliding roof housing when installing the drain hoses.**

   HINT:

   - Make sure that the clip is on the marking or between the marking and hose end.
   - Use the same procedure for the other 3 sliding roof drain hoses.

2. **INSTALL REAR NO. 2 SIDE RAIL SPACER LH**
   a. Engage the 2 claws to install the rear No. 2 side rail spacer LH.

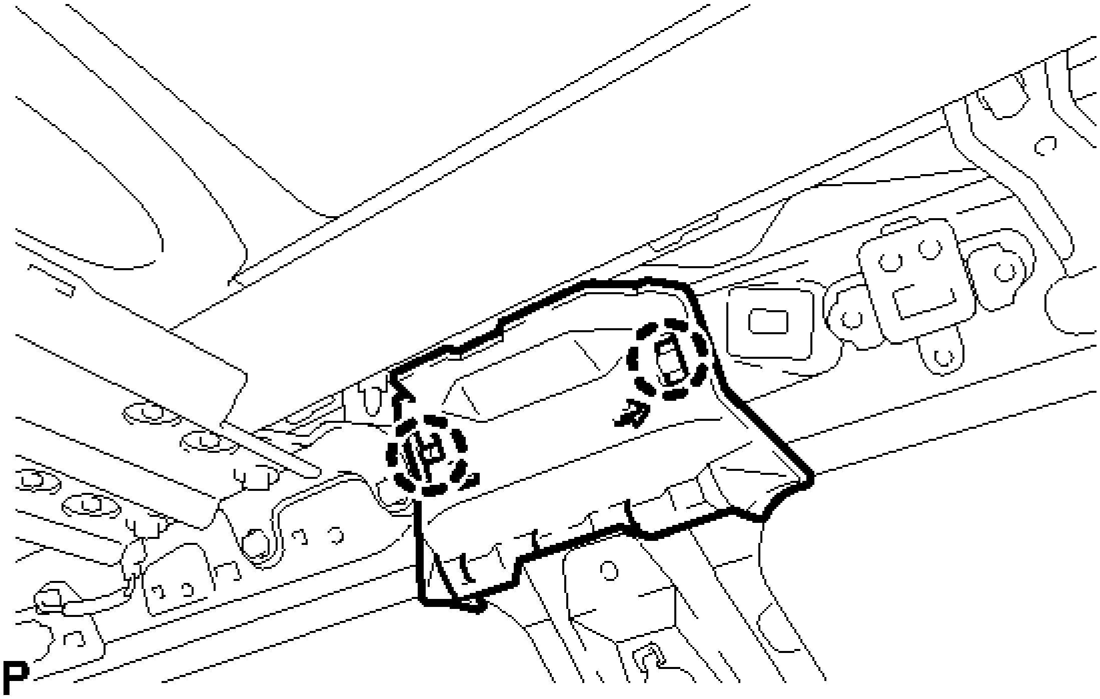

Fig. 29: Locating Rear No. 2 Side Rail Spacer LH Claws
Courtesy of TOYOTA MOTOR SALES, U.S.A., INC.

3. **INSTALL REAR NO. 2 SIDE RAIL SPACER RH**

   HINT:

   Use the same procedure as for the LH side.

4. **INSTALL CURTAIN SHIELD AIRBAG ASSEMBLY LH** . Refer to **INSTALLATION - Step 1**
5. **INSTALL CURTAIN SHIELD AIRBAG ASSEMBLY RH**

   HINT:

   Use the same procedure as for the LH side.

6. **INSTALL SLIDING ROOF WEATHERSTRIP**
   a. Install the sliding roof weatherstrip as follows:
      1. Position the joint of the weatherstrip at the rear center.
      2. Align the alignment mark (yellow) on the weatherstrip with the middle marks at the corners of the sliding roof panel sub-assembly and install the weatherstrip.
      3. Install the lip of the weatherstrip firmly.

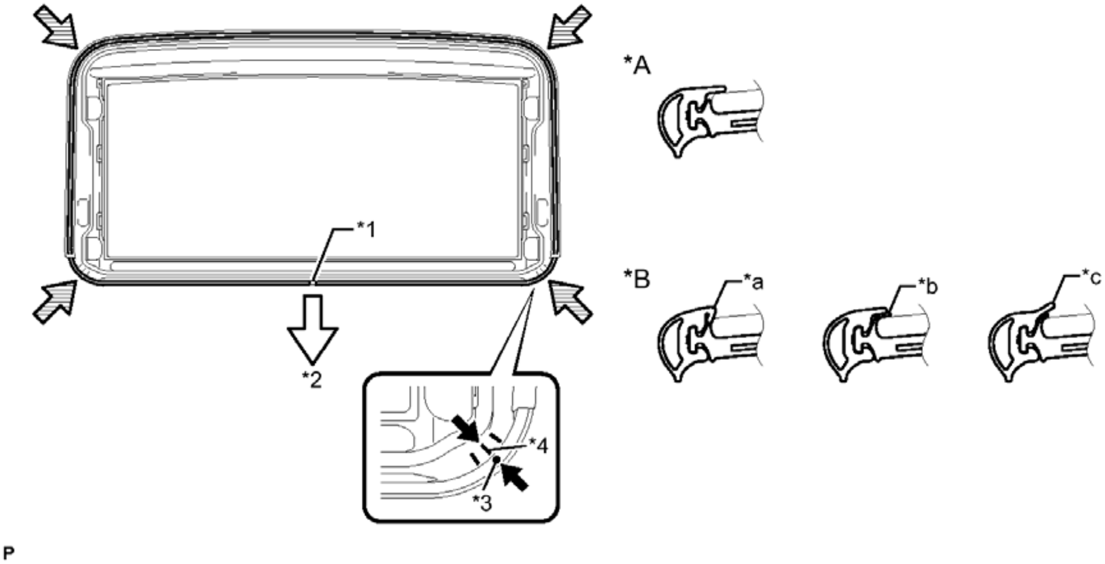

Fig. 30: Identifying Sliding Roof Weatherstrip
Courtesy of TOYOTA MOTOR SALES, U.S.A., INC.

TEXT IN ILLUSTRATION

*1	Joint	*2	Rear
*3	Alignment Mark (Yellow)	*4	Middle Mark

*A	Normal	*B	Abnormal
*a	Pinched	*b	Exposed
*c	Gap (raised, wavy, etc.)	-	-

7. **INSTALL SLIDING ROOF GLASS SUB-ASSEMBLY**
   1. Using a T25 "TORX" socket wrench, temporarily install the sliding roof glass sub-assembly with the 4 screws.
   2. Perform a level check.

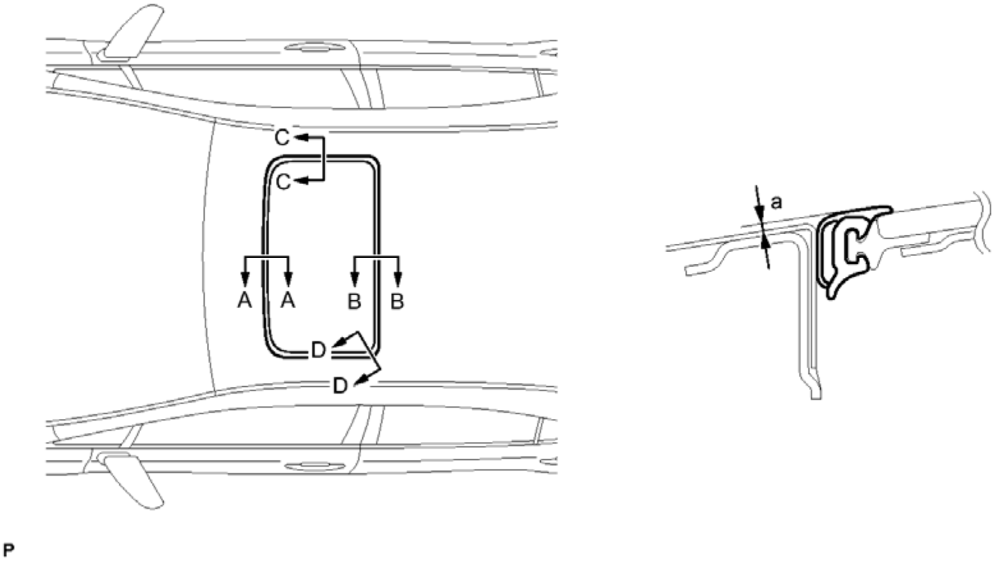

Fig. 31: Installing The Sliding Roof Glass Sub-Assembly
Courtesy of TOYOTA MOTOR SALES, U.S.A., INC.

1. Check the difference in level for "a" between the roof panel and the upper surface of the weatherstrip when the sliding roof glass is fully closed.

   Standard

Area	Measurement
A - A	0 + 1.0 mm (0 + 0.0394 in.) 0 - 2.0 mm (0 - 0.0787 in.)
B - B	0 + 2.0 mm (0 + 0.0787 in.) 0 - 1.0 mm (0 - 0.0394 in.)

C - C	0 + 1.5 mm (0 + 0.0591 in.) 0 - 1.5 mm (0 - 0.0591 in.)
D - D	0 + 1.5 mm (0 + 0.0591 in.) 0 - 1.0 mm (0 - 0.0394 in.)

HINT:

"+" represents the condition that the glass is above the panel level. "-" represents the condition that the glass is below the panel level.

c. Perform a gap check.

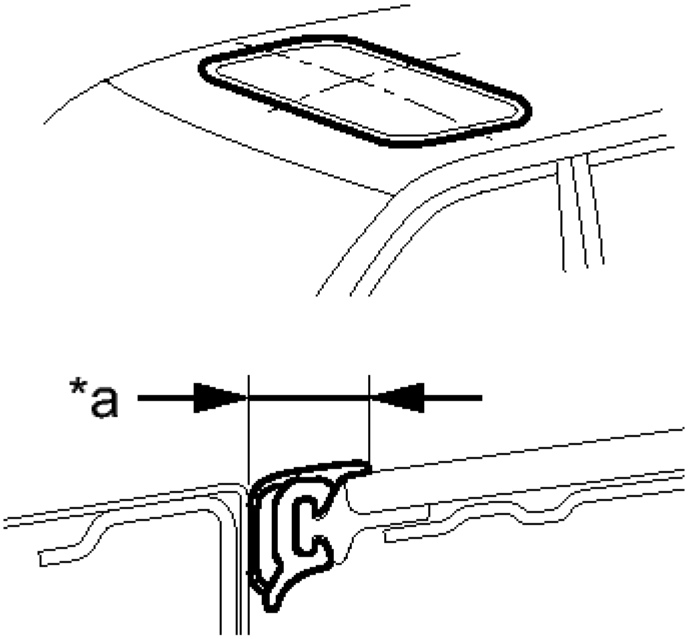

P

Fig. 32: Perform A Gap Check
Courtesy of TOYOTA MOTOR SALES, U.S.A., INC.

1. Check the gap between the roof panel and roof glass.

TEXT IN ILLUSTRATION

*a	Even

NOTE: **The gap must be even all around.**

d. After adjusting the sliding roof glass, using a T25 "TORX" socket wrench, install the sliding roof glass sub-assembly with the 4 screws.

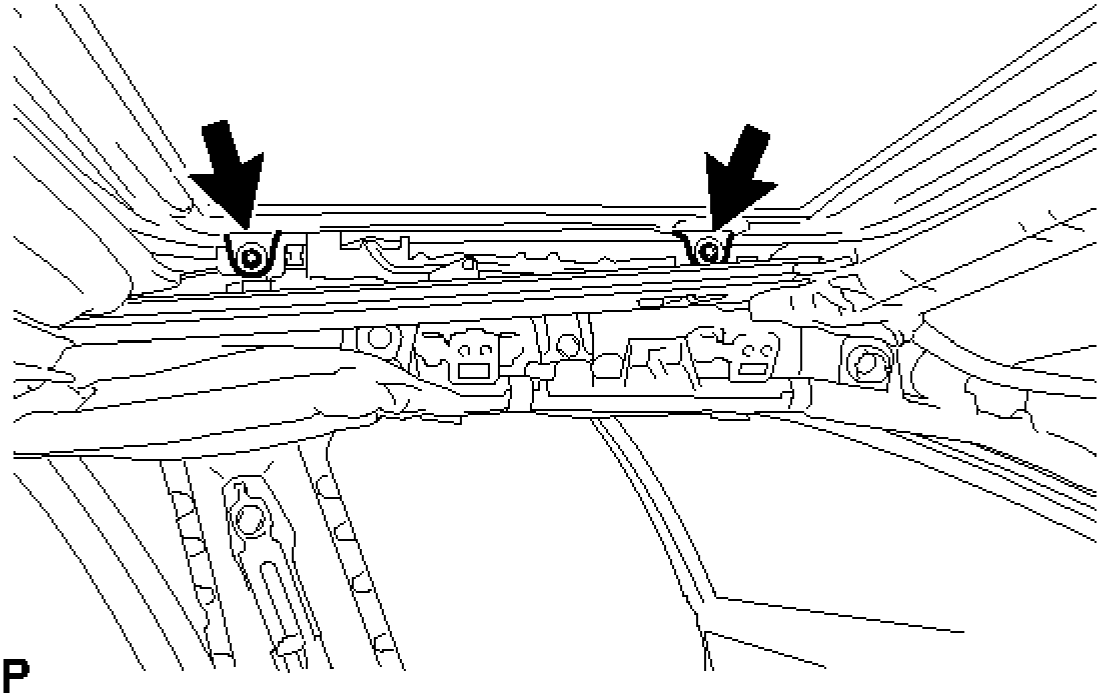

Fig. 33: Locating Sliding Roof Glass Sub-Assembly Fasteners
Courtesy of TOYOTA MOTOR SALES, U.S.A., INC.

Torque: 4.0 N*m (41 kgf*cm, 35 in.*lbf)

8. **CHECK FOR WATER LEAK**
    a. After adjusting the sliding roof glass sub-assembly, check for water leaks.
    b. If there are any leaks, readjust the sliding roof glass sub-assembly.
9. **INSTALL SLIDING ROOF SIDE GARNISH LH**
    a. Engage the 2 claws and install the sliding roof side garnish LH.
10. **INSTALL SLIDING ROOF SIDE GARNISH RH**

    HINT:

    Use the same procedure as for the LH side.

11. **INSTALL ROOF HEADLINING ASSEMBLY**

    Refer to **INSTALLATION**

12. **RESET SLIDING ROOF DRIVE GEAR SUB-ASSEMBLY**

    Refer to **INITIALIZATION**

13. **CHECK SLIDING ROOF SYSTEM**

    Refer to **OPERATION CHECK**

14. **INSPECT FOR WATER LEAK**
    1. After adjusting the sliding roof glass sub-assembly, inspect for water leaks.
    2. If there are any leaks, readjust the sliding roof glass sub-assembly.

SLIDING ROOF SWITCH ASSEMBLY

COMPONENTS

ILLUSTRATION

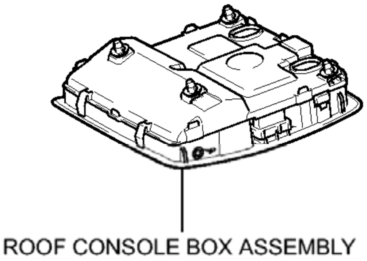

P

Fig. 34: Identifying Sliding Roof Switch Assembly Replacement Components
Courtesy of TOYOTA MOTOR SALES, U.S.A., INC.

REMOVAL

REMOVAL

1. **REMOVE ROOF CONSOLE BOX ASSEMBLY** . Refer to **REMOVAL - Step 2**

INSPECTION

INSPECTION

1. **INSPECT SLIDING ROOF SWITCH (ROOF CONSOLE BOX ASSEMBLY)**
    1. Measure the resistance according to the value(s) in the table below.

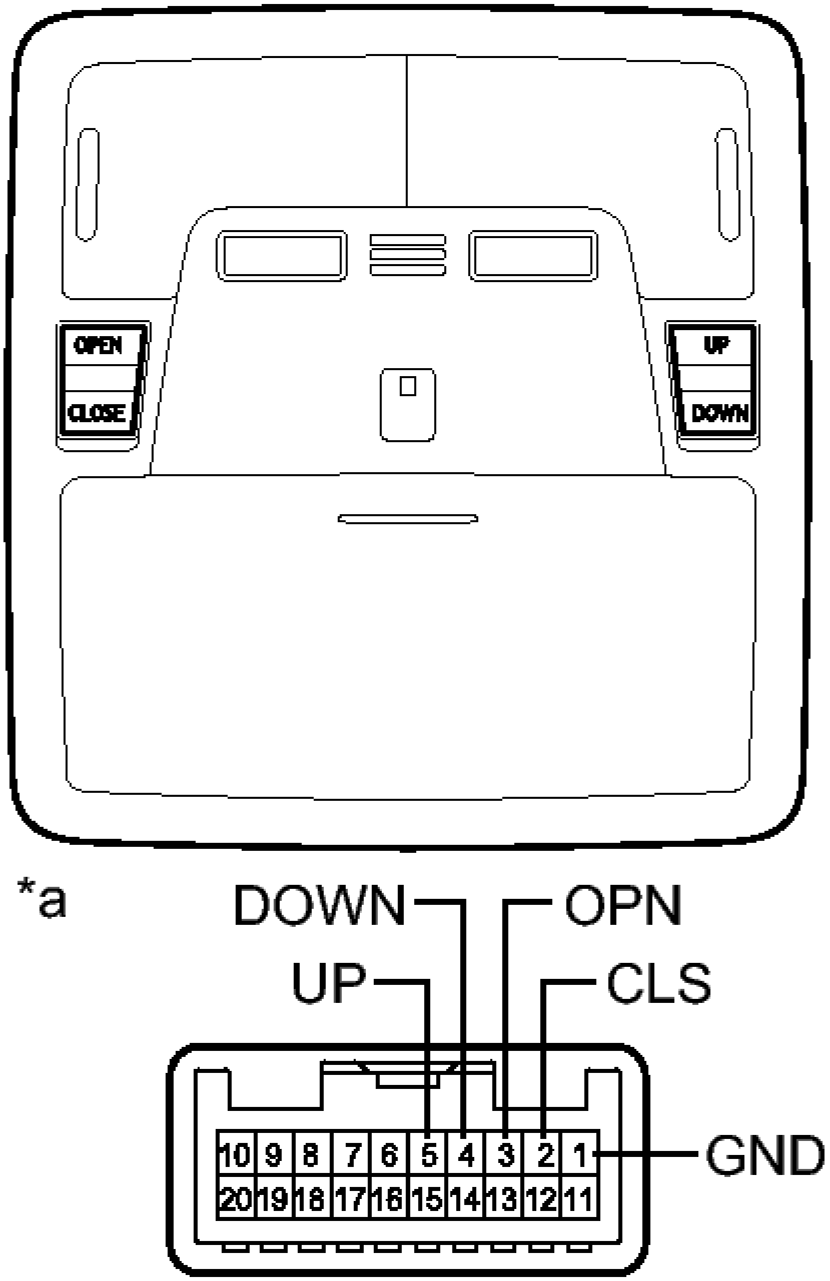
OPEN
CLOSE
UP
DOWN
*a
DOWN
OPN
UP
CLS
10
9
8
7
6
5
4
3
2
1
20
19
18
17
16
15
14
13
12
11
GND

Fig. 35: Inspecting Sliding Roof Switch (Roof Console Box Assembly)
Courtesy of TOYOTA MOTOR SALES, U.S.A., INC.

Standard Resistance

Tester Connection	Switch Condition	Specified Condition
6 (UP) - 10 (GND)	UP switch is pressed	Below 1 ohms
6 (UP) - 10 (GND)	UP switch is not pressed	10 kohms or higher
7 (DOWN) - 10 (GND)	DOWN switch is pressed	Below 1 ohms
7 (DOWN) - 10 (GND)	DOWN switch is not pressed	10 kohms or higher
8 (OPN) - 10 (GND)	OPEN switch is pressed	Below 1 ohms
8 (OPN) - 10 (GND)	OPEN switch is not pressed	10 kohms or higher
9 (CLS) - 10 (GND)	CLOSE switch is pressed	Below 1 ohms
9 (CLS) - 10 (GND)	CLOSE switch is not pressed	10 kohms or higher

TEXT IN ILLUSTRATION

*a	Component without harness connected (Sliding Roof Switch (Roof Console Box Assembly))

If the result is not as specified, replace the sliding roof switch (roof console box assembly).

INSTALLATION

INSTALLATION

1. **INSTALL ROOF CONSOLE BOX ASSEMBLY** . Refer to **INSTALLATION - Step 3**

SLIDING ROOF HOUSING

COMPONENTS

ILLUSTRATION

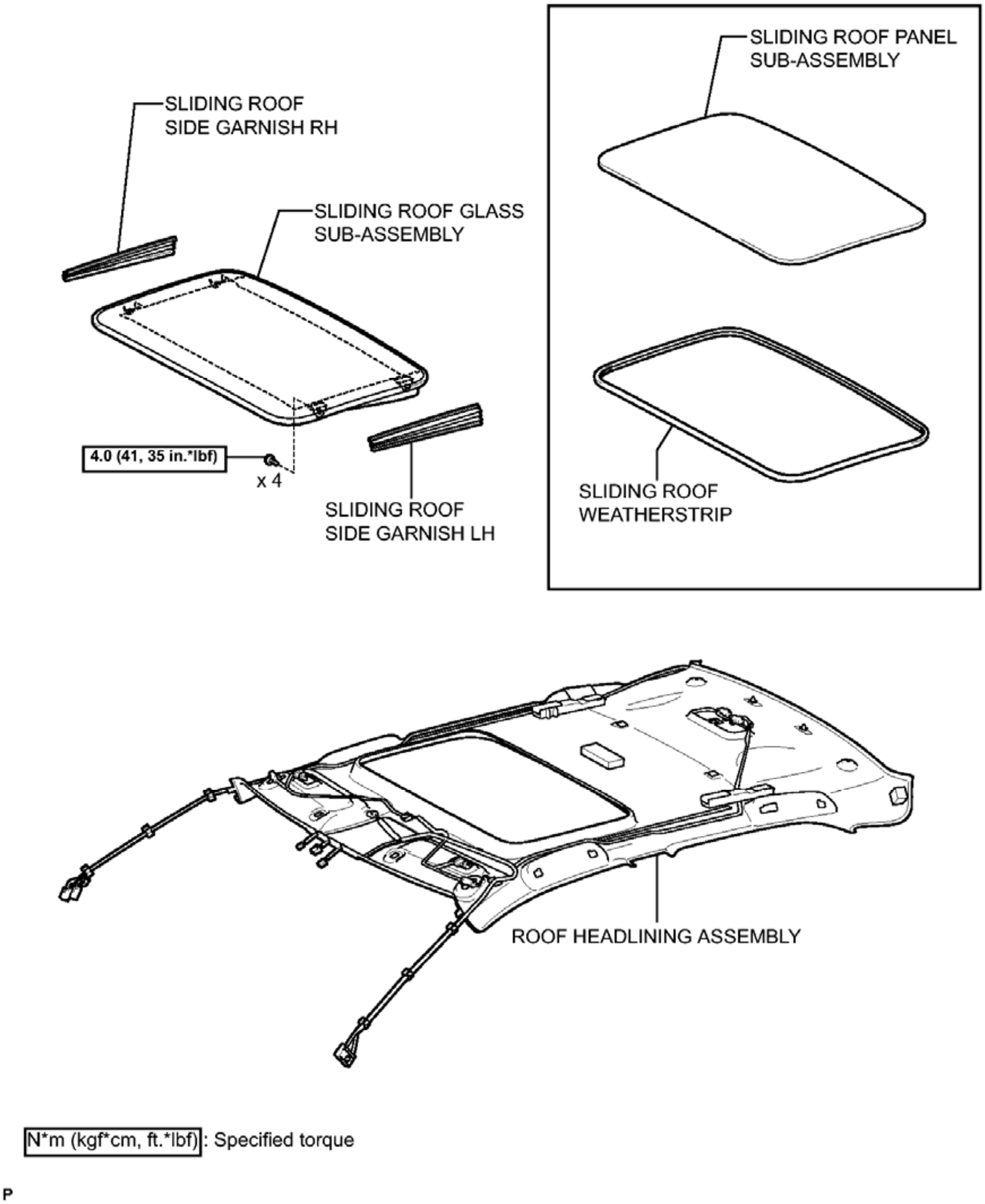
SLIDING ROOF SIDE GARNISH RH
SLIDING ROOF GLASS SUB-ASSEMBLY
4.0 (41, 35 in.*lbf)
x 4
SLIDING ROOF SIDE GARNISH LH
SLIDING ROOF PANEL SUB-ASSEMBLY
SLIDING ROOF WEATHERSTRIP
ROOF HEADLINING ASSEMBLY
N*m (kgf*cm, ft.*lbf): Specified torque
P

Fig. 1: Identifying Sliding Roof Housing Replacement Components With Torque Specifications (1 Of 3)
Courtesy of TOYOTA MOTOR SALES, U.S.A., INC.

ILLUSTRATION

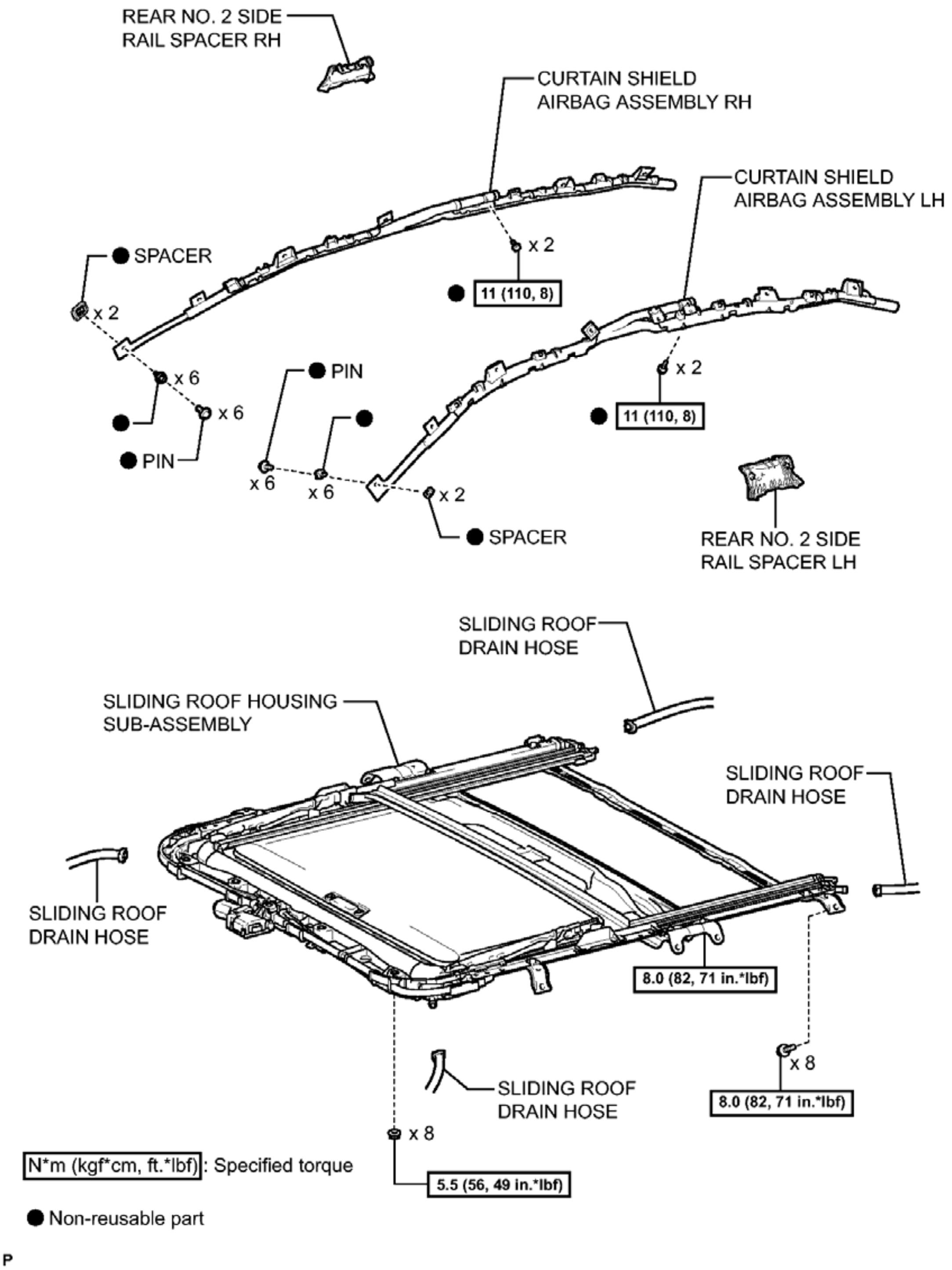
REAR NO. 2 SIDE RAIL SPACER RH
CURTAIN SHIELD AIRBAG ASSEMBLY RH
CURTAIN SHIELD AIRBAG ASSEMBLY LH
● SPACER
x 2
x 2
● 11 (110, 8)
x 6
x 6
● PIN
●
● PIN
●
x 6
x 6
x 2
● 11 (110, 8)
x 2
● SPACER
REAR NO. 2 SIDE RAIL SPACER LH
SLIDING ROOF DRAIN HOSE
SLIDING ROOF HOUSING SUB-ASSEMBLY
SLIDING ROOF DRAIN HOSE
SLIDING ROOF DRAIN HOSE
8.0 (82, 71 in.*lbf)
x 8
8.0 (82, 71 in.*lbf)
SLIDING ROOF DRAIN HOSE
x 8
N*m (kgf*cm, ft.*lbf): Specified torque
5.5 (56, 49 in.*lbf)
● Non-reusable part
P

Fig. 2: Identifying Sliding Roof Housing Replacement Components With Torque Specifications (2 Of 3)
Courtesy of TOYOTA MOTOR SALES, U.S.A., INC.

ILLUSTRATION

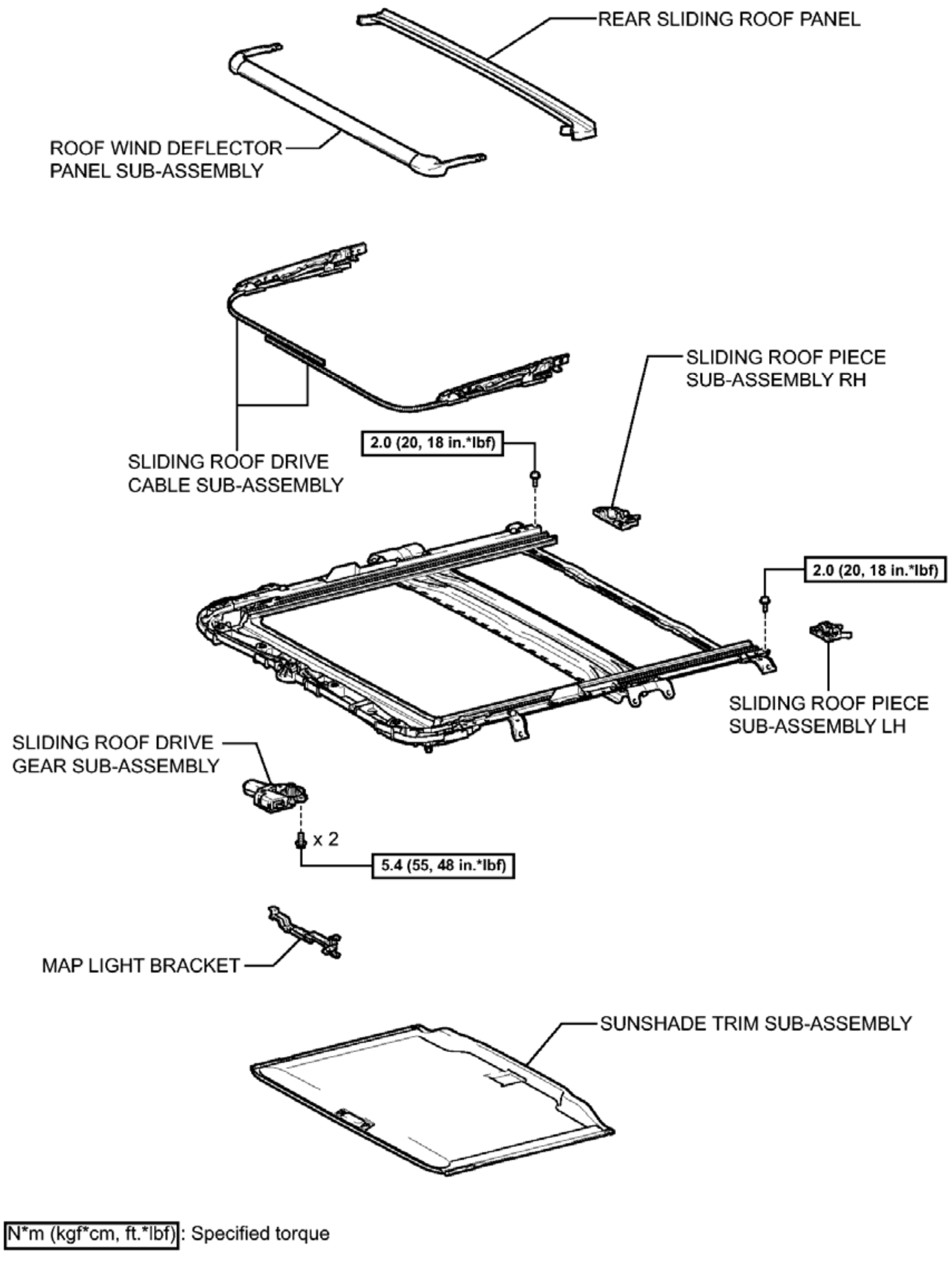
REAR SLIDING ROOF PANEL
ROOF WIND DEFLECTOR PANEL SUB-ASSEMBLY
SLIDING ROOF PIECE SUB-ASSEMBLY RH
SLIDING ROOF DRIVE CABLE SUB-ASSEMBLY
2.0 (20, 18 in.*lbf)
2.0 (20, 18 in.*lbf)
SLIDING ROOF PIECE SUB-ASSEMBLY LH
SLIDING ROOF DRIVE GEAR SUB-ASSEMBLY
x 2
5.4 (55, 48 in.*lbf)
MAP LIGHT BRACKET
SUNSHADE TRIM SUB-ASSEMBLY
N*m (kgf*cm, ft.*lbf): Specified torque
P

Fig. 3: Identifying Sliding Roof Housing Replacement Components With Torque Specifications (3 Of 3)

Courtesy of TOYOTA MOTOR SALES, U.S.A., INC.

REMOVAL

REMOVAL

1. **REMOVE ROOF HEADLINING ASSEMBLY**

   Refer to **REMOVAL** .

2. **REMOVE SLIDING ROOF SIDE GARNISH LH**
   1. Disengage the 2 claws and remove the sliding roof side garnish LH.

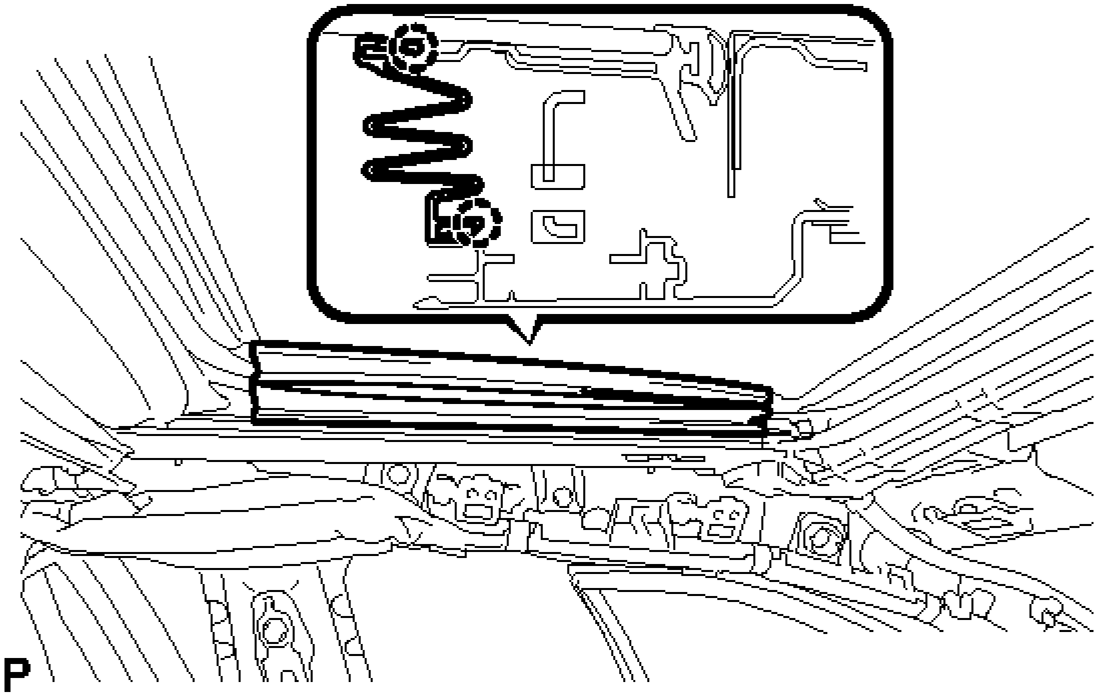

Fig. 4: Locating Sliding Roof Side Garnish LH Claws
Courtesy of TOYOTA MOTOR SALES, U.S.A., INC.

3. **REMOVE SLIDING ROOF SIDE GARNISH RH**

   HINT:

   Use the same procedure as for the LH side.

4. **REMOVE SLIDING ROOF GLASS SUB-ASSEMBLY**
   1. Using a T25 "TORX" socket wrench, remove the 4 screws and sliding roof glass sub-assembly.

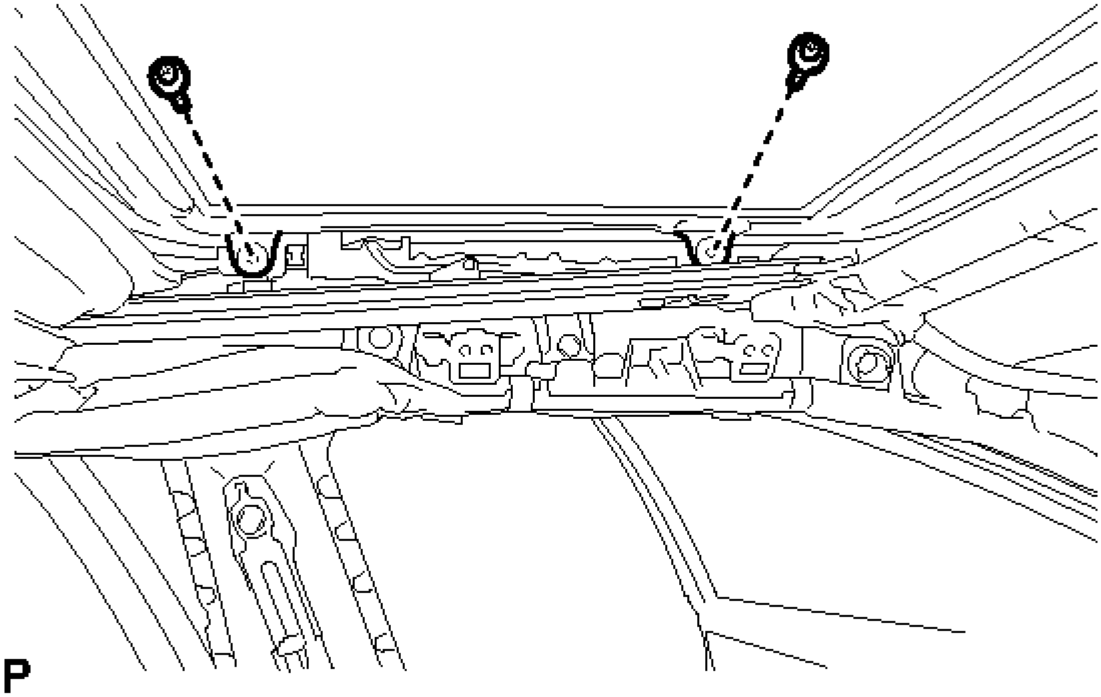

Fig. 5: Locating Sliding Roof Glass Sub-Assembly Fasteners
Courtesy of TOYOTA MOTOR SALES, U.S.A., INC.

NOTE: **To prevent the sliding roof glass and sliding roof drive gear from being displaced, fully close the sliding roof glass (sliding roof drive cable), and then remove the sliding roof glass sub-assembly.**

5. **REMOVE SLIDING ROOF WEATHERSTRIP**
    a. Remove the sliding roof weatherstrip from the sliding roof panel sub-assembly.
6. **REMOVE CURTAIN SHIELD AIRBAG ASSEMBLY LH** . Refer to **REMOVAL - Step 3** .
7. **REMOVE CURTAIN SHIELD AIRBAG ASSEMBLY RH**

    HINT:

    Use the same procedure as for the LH side.

8. **REMOVE REAR NO. 2 SIDE RAIL SPACER LH**
    a. Using a screwdriver, disengage the 2 claws and remove the rear No. 2 side rail spacer LH.

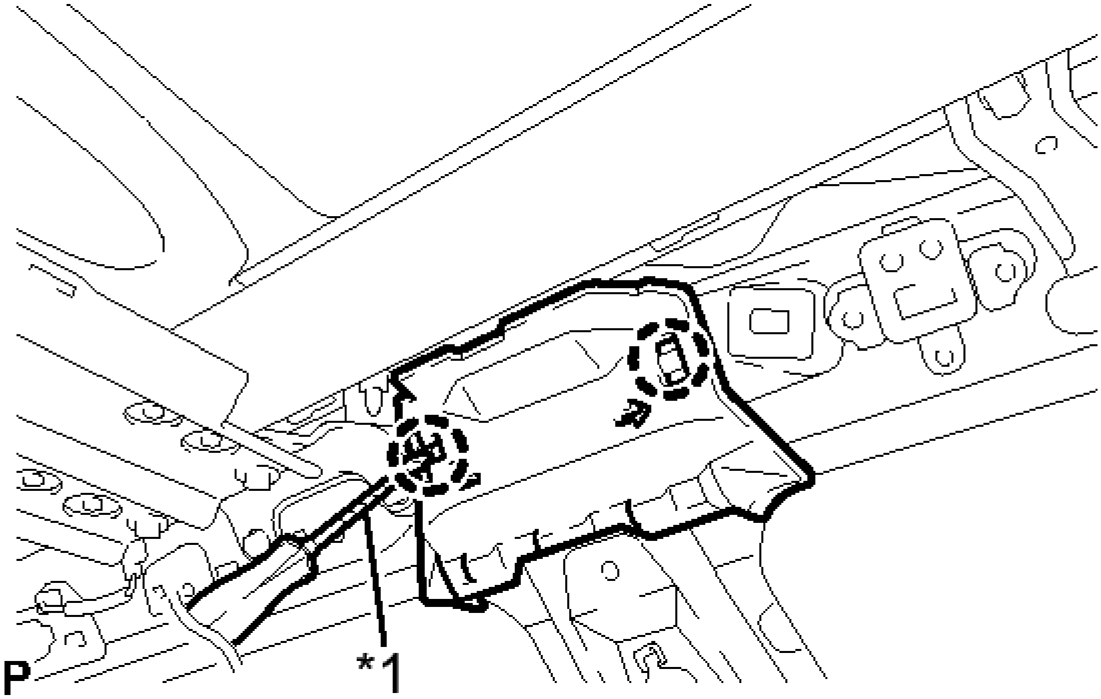

Fig. 6: Locating Rear No. 2 Side Rail Spacer LH Claws
Courtesy of TOYOTA MOTOR SALES, U.S.A., INC.

TEXT IN ILLUSTRATION

*1	Protective Tape

HINT:

Tape the screwdriver tip before use.

9. **REMOVE REAR NO. 2 SIDE RAIL SPACER RH**

   HINT:

   Use the same procedure as for the LH side.

10. **REMOVE SLIDING ROOF HOUSING SUB-ASSEMBLY**
    a. For Clamp Type:

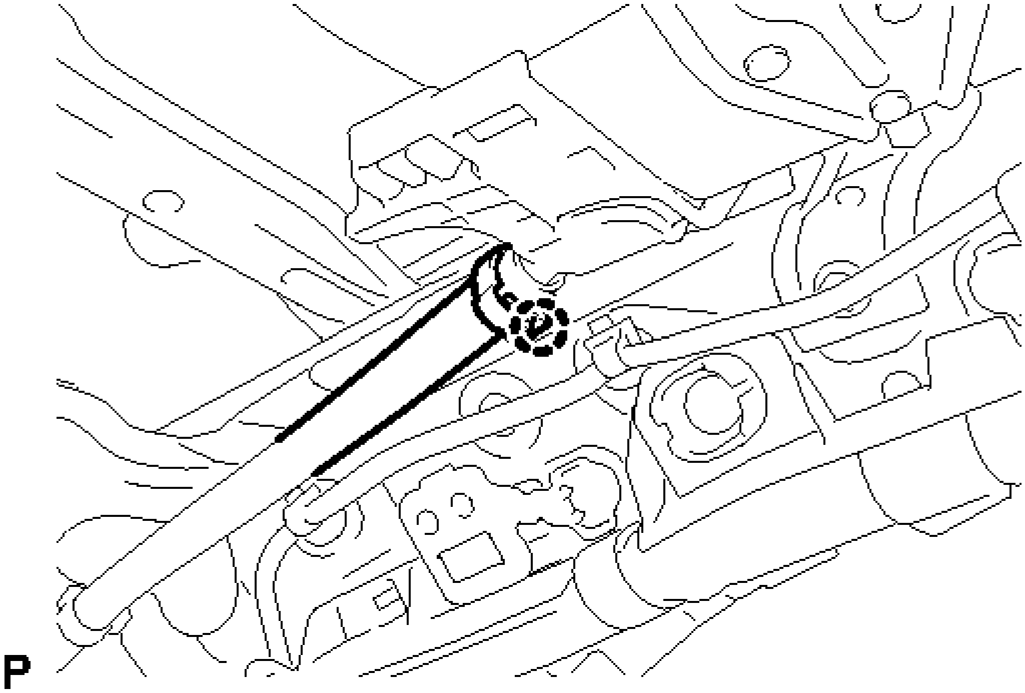

Fig. 7: Identifying Sliding Roof Housing Sub-Assembly Clamp
Courtesy of TOYOTA MOTOR SALES, U.S.A., INC.

1. Disengage the claw and disconnect the sliding roof drain hose.

   HINT:

   Use the same procedure for the other 3 sliding roof drain hoses.

b. For Clip Type:

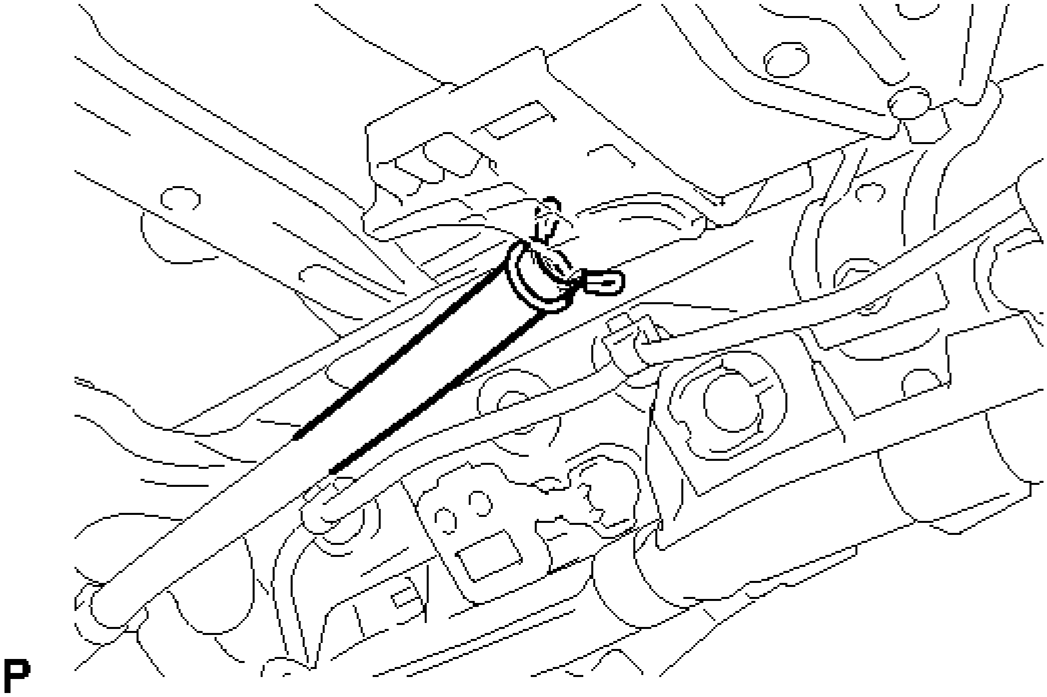

Fig. 8: Identifying Sliding Roof Housing Sub-Assembly Clip
Courtesy of TOYOTA MOTOR SALES, U.S.A., INC.

1. Expand the clip and disconnect the sliding roof drain hose.

   HINT:

   Use the same procedure for the other 3 sliding roof drain hoses.

c. Remove the 8 bolts, 8 nuts and sliding roof housing sub-assembly.

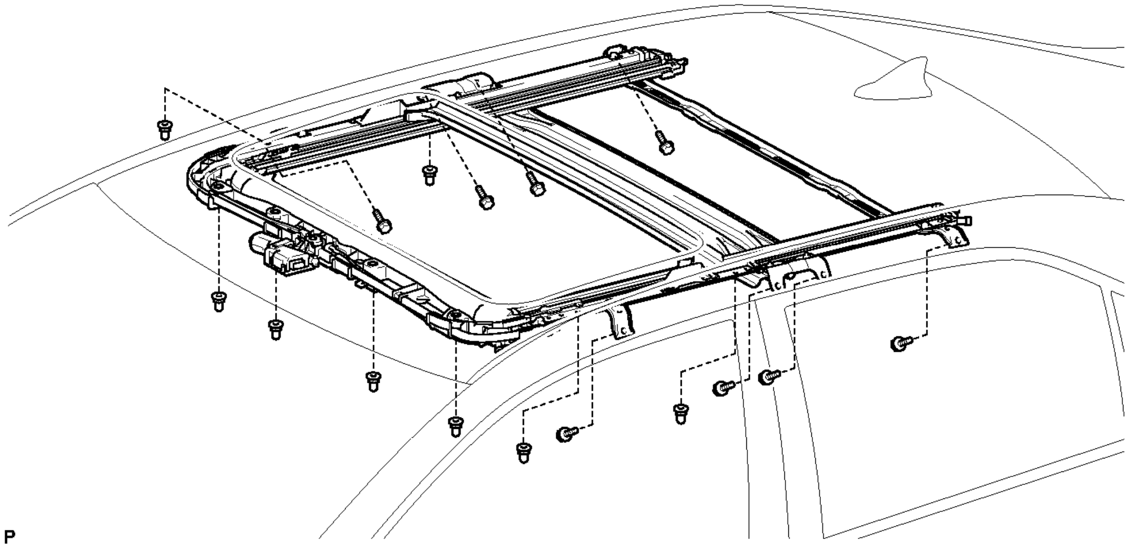

Fig. 9: Identifying Sliding Roof Housing Sub-Assembly Fasteners
Courtesy of TOYOTA MOTOR SALES, U.S.A., INC.

DISASSEMBLY

DISASSEMBLY

1. **REMOVE SLIDING ROOF DRIVE GEAR SUB-ASSEMBLY**
    a. Disengage the claw.

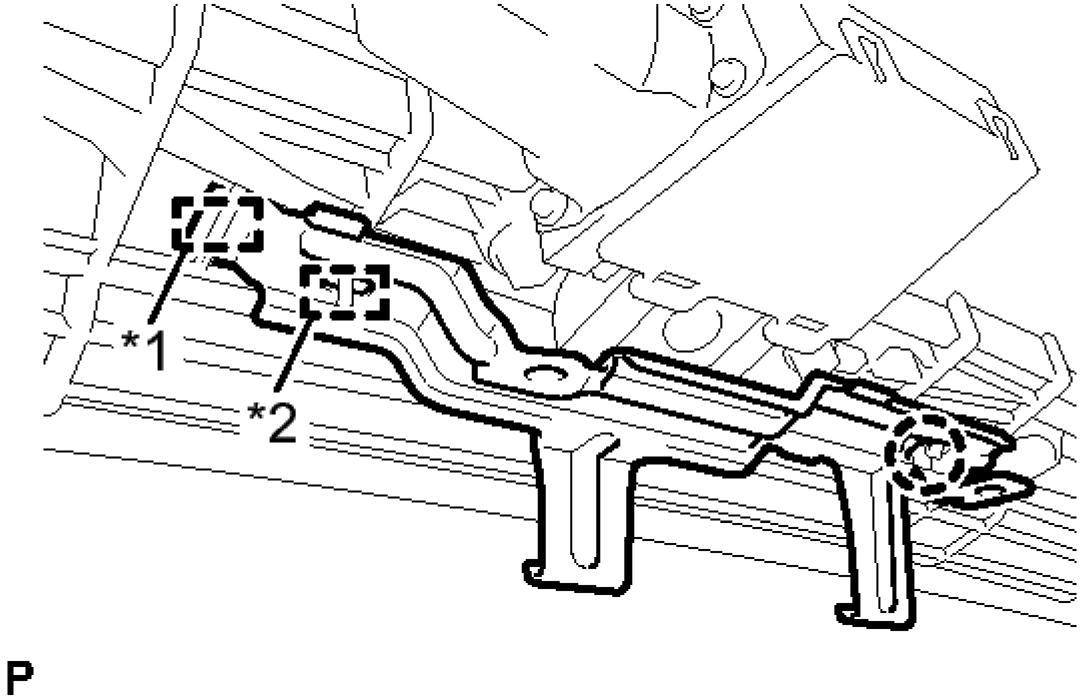

Fig. 10: Identifying Sliding Roof Drive Gear Sub-Assembly Guide And Pin
Courtesy of TOYOTA MOTOR SALES, U.S.A., INC.

TEXT IN ILLUSTRATION

*1	Guide
*2	Pin

    b. Disengage the guide and pin, and remove the map light bracket.
    c. Remove the 2 bolts and sliding roof drive gear sub-assembly.

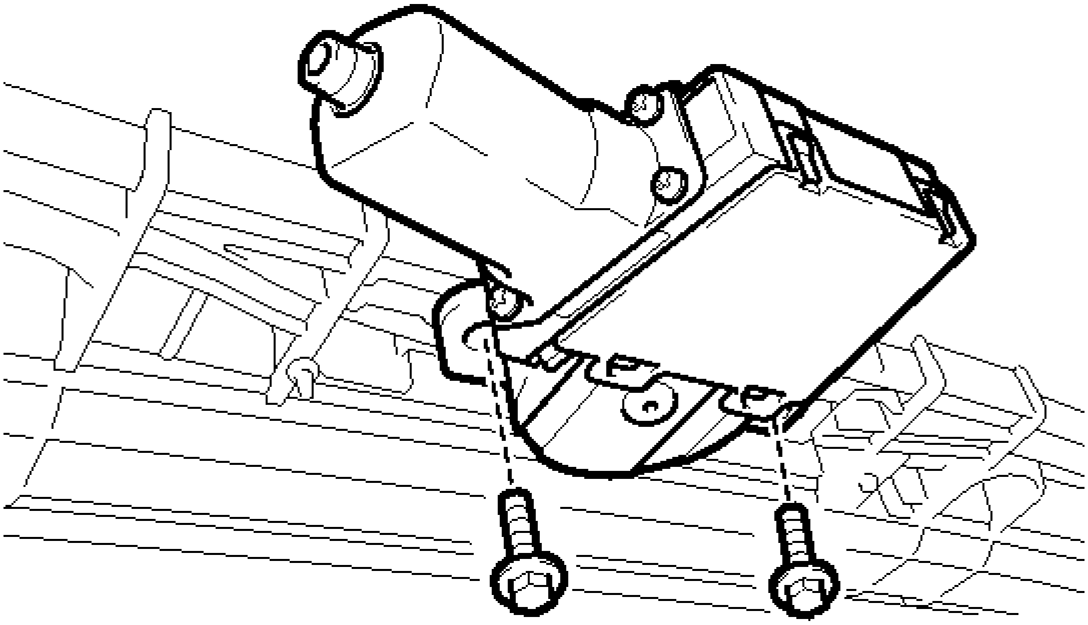

Fig. 11: Identifying Sliding Roof Drive Gear Sub-Assembly Bolts
Courtesy of TOYOTA MOTOR SALES, U.S.A., INC.

2. **REMOVE SUNSHADE TRIM SUB-ASSEMBLY**
    a. Remove the screw and the sliding roof piece sub-assembly LH.

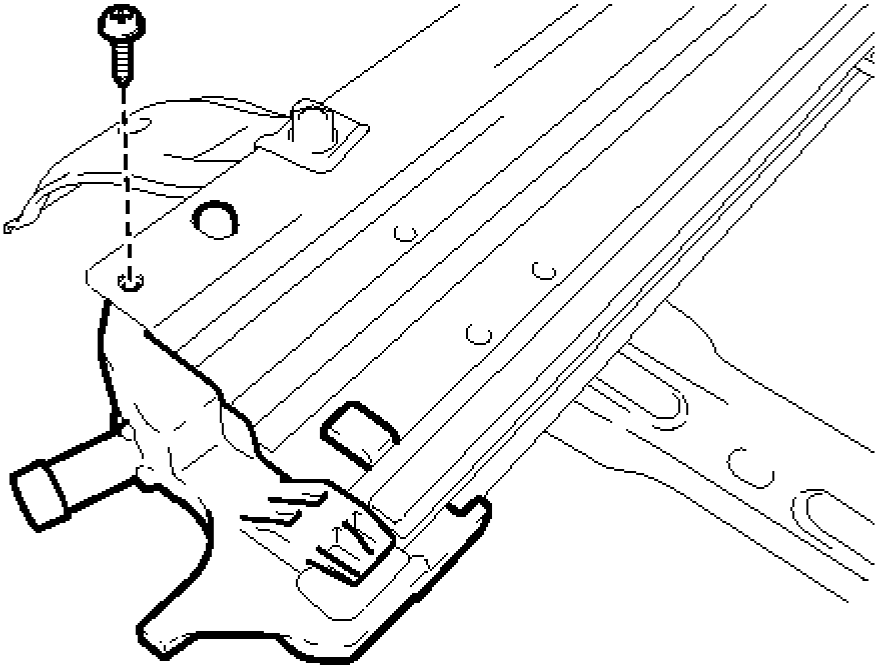

Fig. 12: Identifying Sunshade Trim Sub-Assembly Fastener

Courtesy of TOYOTA MOTOR SALES, U.S.A., INC.

HINT:

Use the same procedure for the RH side.

b. Slide and remove the sunshade trim sub-assembly.

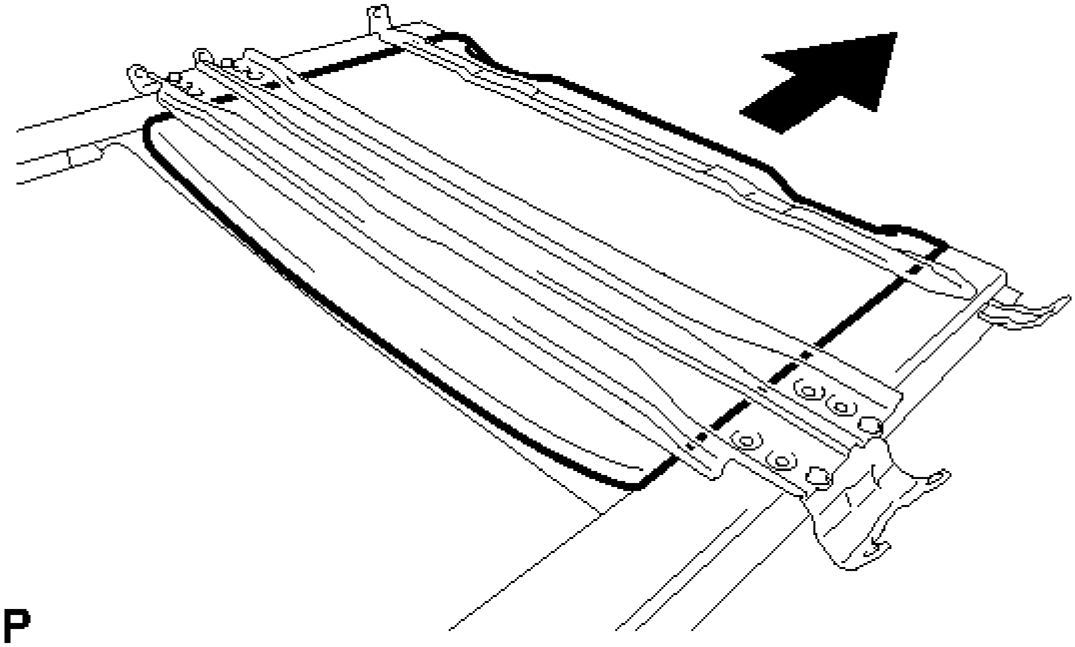

Fig. 13: Removing Sunshade Trim Sub-Assembly
Courtesy of TOYOTA MOTOR SALES, U.S.A., INC.

3. **REMOVE REAR SLIDING ROOF PANEL**
    a. Disengage the 2 claws. Then slide the rear sliding roof panel rearward to remove it.

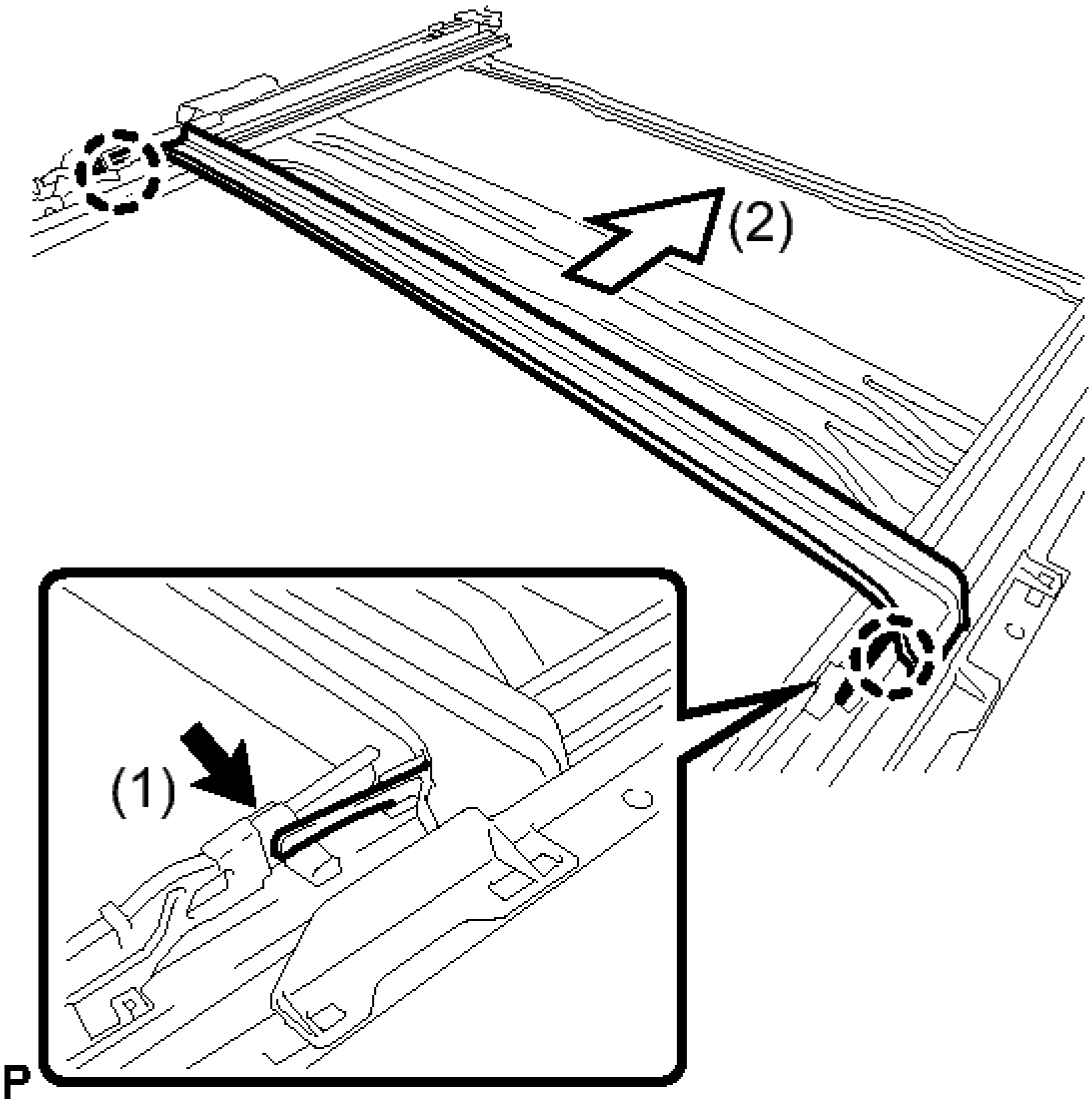

Fig. 14: Removing Rear Sliding Roof Panel
Courtesy of TOYOTA MOTOR SALES, U.S.A., INC.

4. **REMOVE SLIDING ROOF DRIVE CABLE SUB-ASSEMBLY**

NOTE: **Do not disassemble the sliding roof drive cable sub-assembly except when replacing it.**

a. Hold down the roof wind deflector panel sub-assembly.

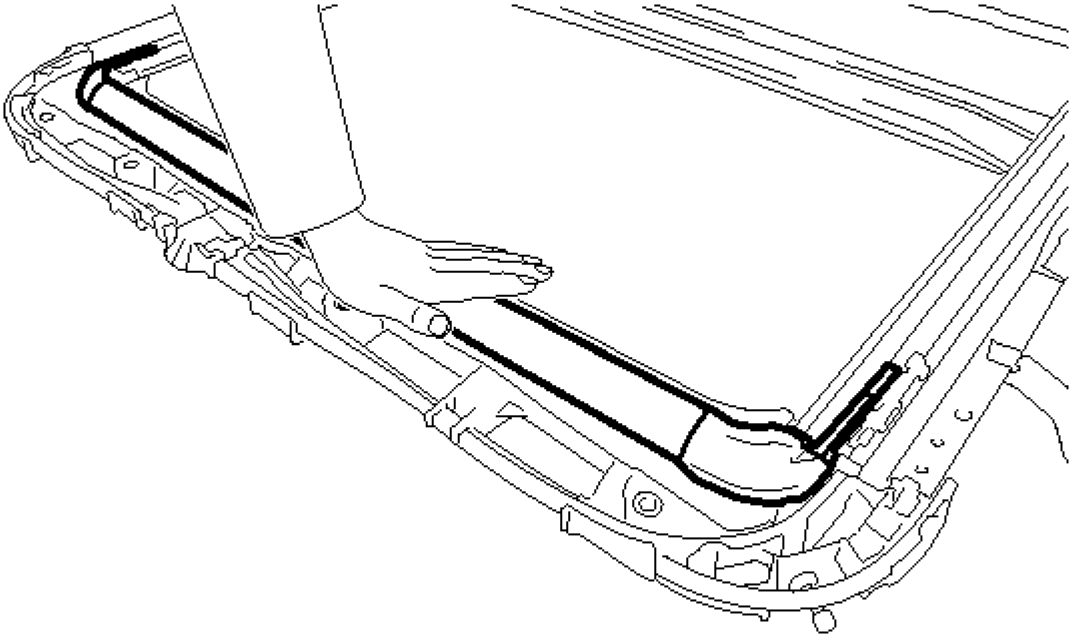

P

Fig. 15: Holding Down Roof Wind Deflector Panel Sub-Assembly
Courtesy of TOYOTA MOTOR SALES, U.S.A., INC.

b. Using a screwdriver, slide the sliding roof drive cable sub-assembly in the direction indicated by the arrow in the illustration to remove it.

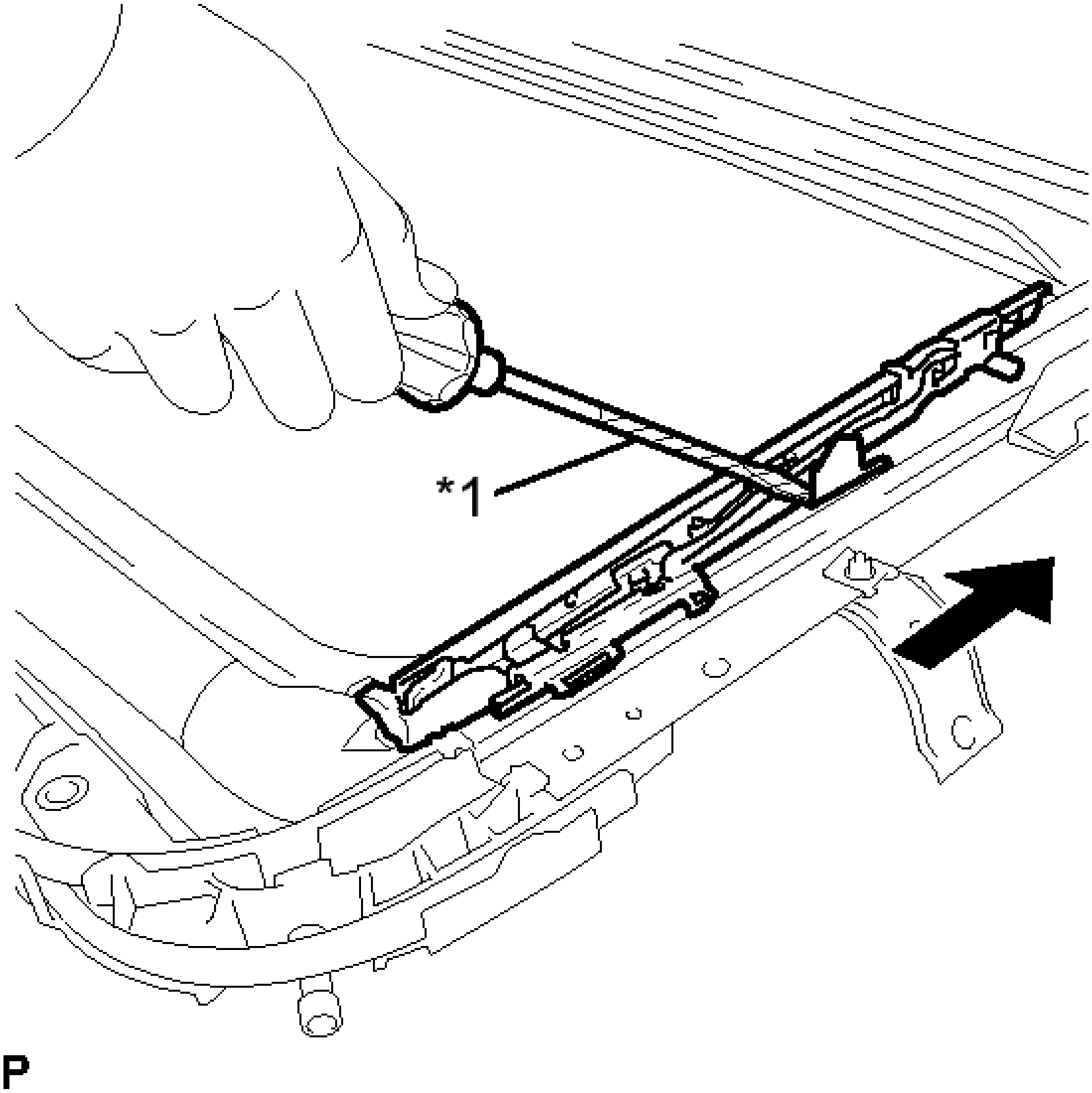

Fig. 16: Removing Sliding Roof Drive Cable Sub-Assembly

Courtesy of TOYOTA MOTOR SALES, U.S.A., INC.

TEXT IN ILLUSTRATION

*1	Protective Tape

HINT:

- Tape the screwdriver tip before use.
- Use the same procedure for the other sliding roof drive cable sub-assembly.

5. **REMOVE ROOF WIND DEFLECTOR PANEL SUB-ASSEMBLY**
    a. Pull the spring in the direction indicated by the arrow (1) in the illustration to disengage the 2 springs.

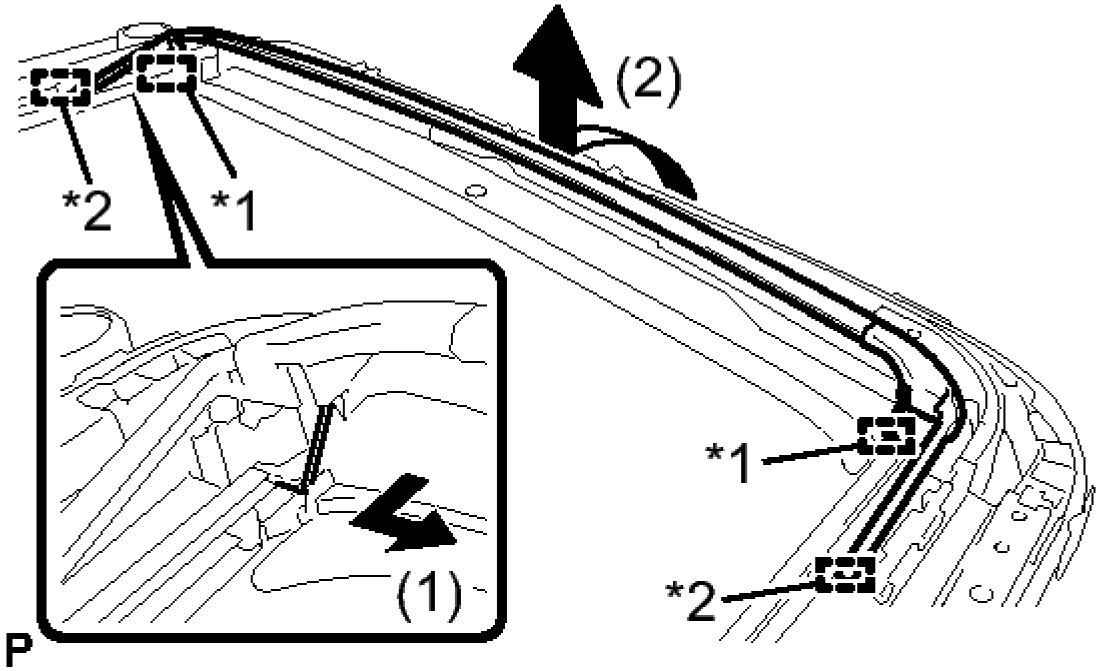

Fig. 17: Removing Roof Wind Deflector Panel Sub-Assembly
Courtesy of TOYOTA MOTOR SALES, U.S.A., INC.

TEXT IN ILLUSTRATION

*1	Spring
*2	Guide

b. Pull the roof wind deflector panel sub-assembly in the direction indicated by the arrow (2) in the illustration to disengage the 2 guides and remove it.

REASSEMBLY

REASSEMBLY

1. **INSTALL ROOF WIND DEFLECTOR PANEL SUB-ASSEMBLY**
    a. Engage the 2 guides in the direction indicated by the arrow (1) in the illustration to install the roof wind deflector panel sub-assembly.

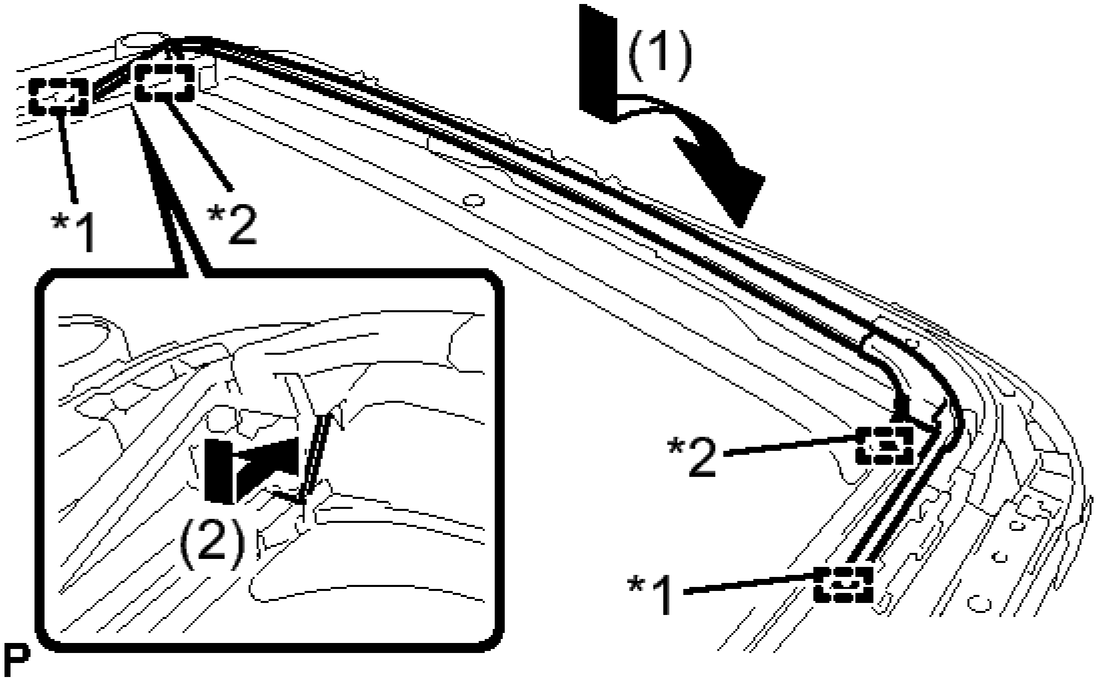

Fig. 18: Installing Roof Wind Deflector Panel Sub-Assembly
Courtesy of TOYOTA MOTOR SALES, U.S.A., INC.

TEXT IN ILLUSTRATION

*1	Guide
*2	Spring

b. Engage the 2 springs in the direction indicated by the arrow (2) in the illustration.

NOTE: **Make sure that the springs are securely installed.**

2. **INSTALL SLIDING ROOF DRIVE CABLE SUB-ASSEMBLY**
    a. Hold down the roof wind deflector panel sub-assembly.

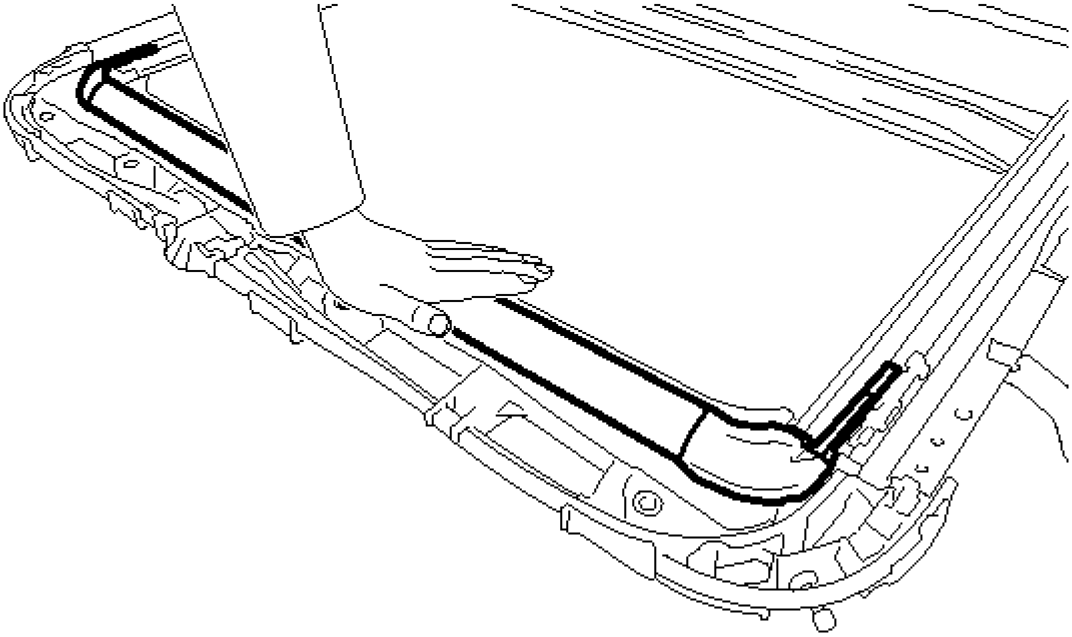

P

Fig. 19: Holding Down Roof Wind Deflector Panel Sub-Assembly
Courtesy of TOYOTA MOTOR SALES, U.S.A., INC.

b. Using a screwdriver, slide the sliding roof drive cable sub-assembly in the direction indicated by the arrow in the illustration to install it.

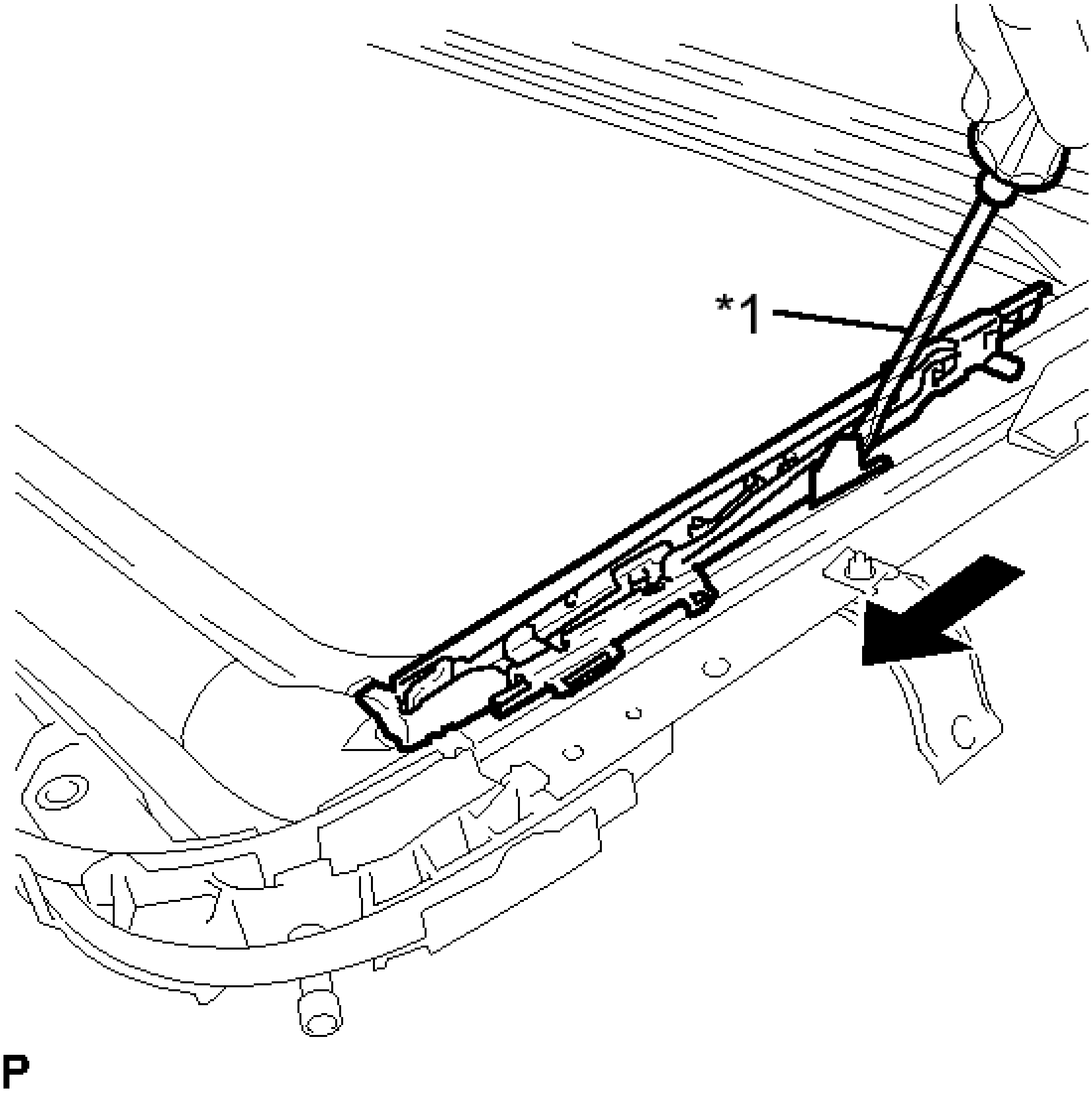

Fig. 20: Installing Sliding Roof Drive Cable Sub-Assembly
Courtesy of TOYOTA MOTOR SALES, U.S.A., INC.

TEXT IN ILLUSTRATION

*1	Protective Tape

HINT:

- Tape the screwdriver tip before use.
- Use the same procedure for the other sliding roof drive cable sub-assembly.

3. **INSTALL REAR SLIDING ROOF PANEL**
   a. Insert the rear sliding roof panel in the direction indicated by the arrow (1) in the illustration.

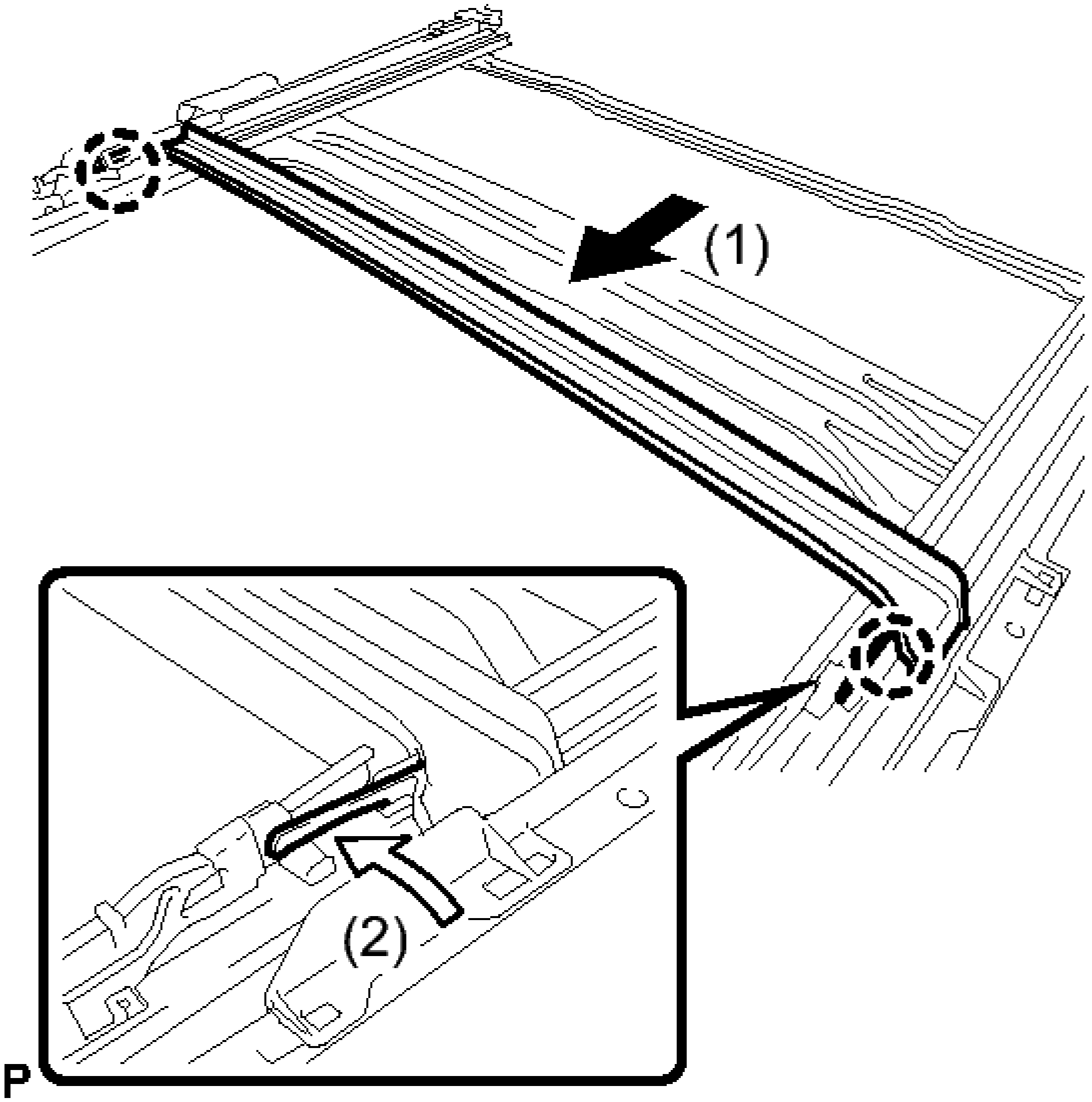

Fig. 21: Installing Rear Sliding Roof Panel
Courtesy of TOYOTA MOTOR SALES, U.S.A., INC.

b. Engage the 2 claws in the direction indicated by the arrow (2) in the illustration to install the rear sliding roof panel.

4. **ADJUST FULLY CLOSED POSITION**
   a. Using a screwdriver, slide the sliding roof drive cable sub-assembly in either direction indicated by the arrows in the illustration and alignment marks.

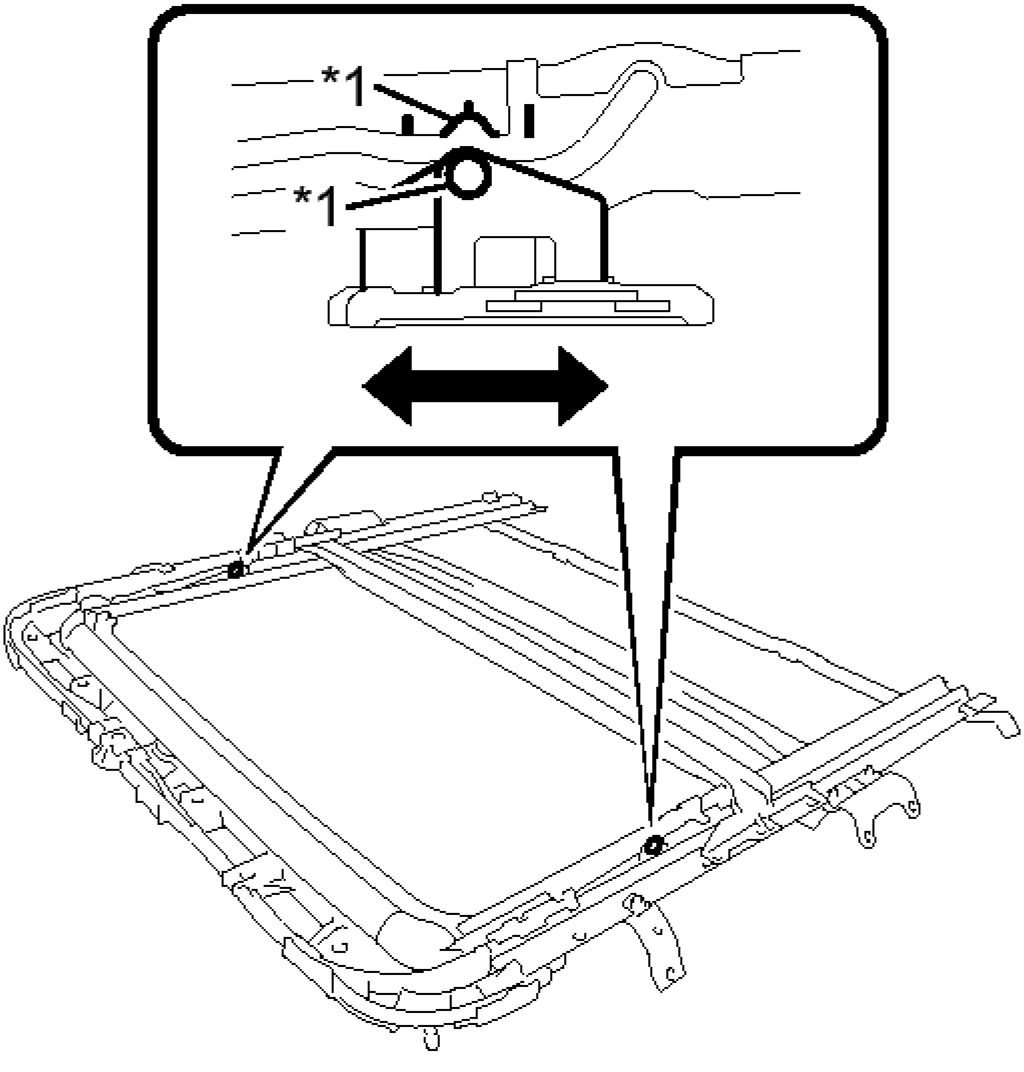

Fig. 22: Adjusting Roof Drive Cable Sub-Assembly
Courtesy of TOYOTA MOTOR SALES, U.S.A., INC.

TEXT IN ILLUSTRATION

*1	Alignment Mark

HINT:

Tape the screwdriver tip before use.

5. **INSTALL SUNSHADE TRIM SUB-ASSEMBLY**
   a. Insert the sunshade trim sub-assembly into the sliding roof housing sub-assembly.

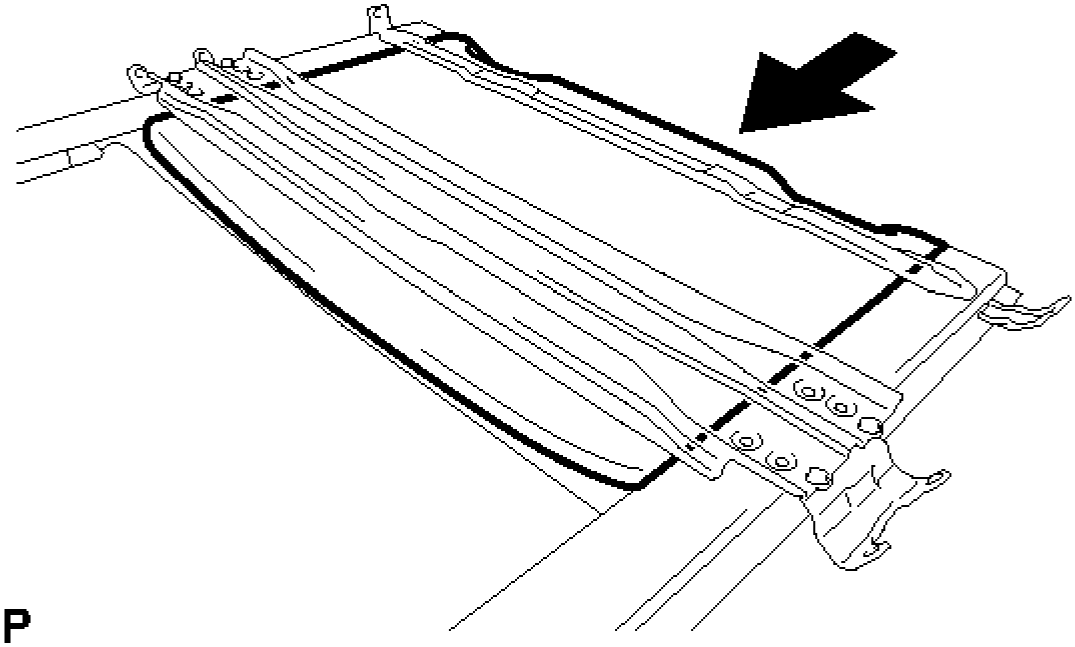

Fig. 23: Installing Sunshade Trim Sub-Assembly
Courtesy of TOYOTA MOTOR SALES, U.S.A., INC.

b. Install the sliding roof piece sub-assembly LH with the screw.

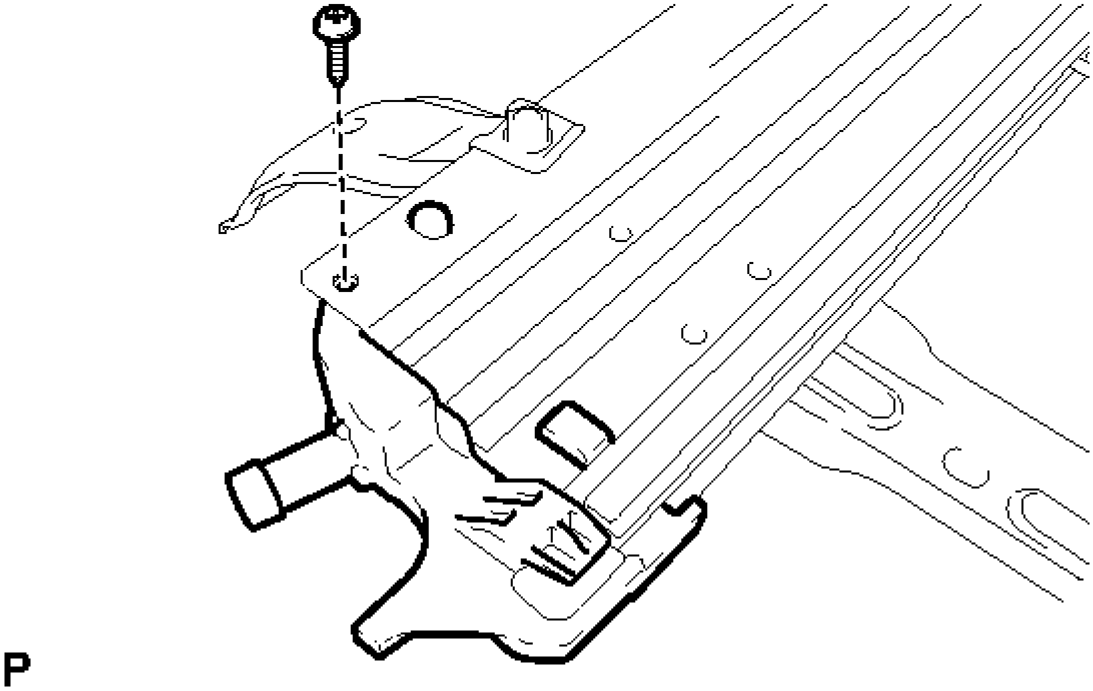

Fig. 24: Identifying Sunshade Trim Sub-Assembly Fastener
Courtesy of TOYOTA MOTOR SALES, U.S.A., INC.

Torque: 2.0 N*m (20 kgf*cm, 18 in.*lbf)

HINT:

Use the same procedure for the RH side.

6. **INSTALL SLIDING ROOF DRIVE GEAR SUB-ASSEMBLY**
    a. Install the sliding roof drive gear sub-assembly with the 2 bolts.

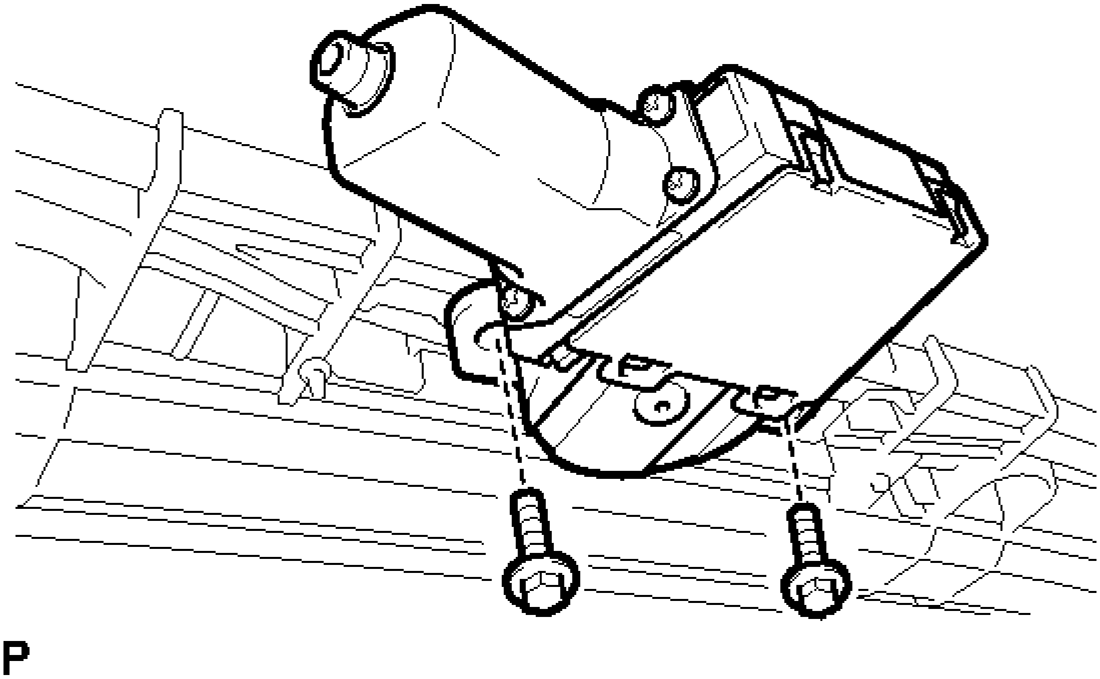

Fig. 25: Identifying Sliding Roof Drive Gear Sub-Assembly Bolts
Courtesy of TOYOTA MOTOR SALES, U.S.A., INC.

Torque: 5.4 N*m (55 kgf*cm, 48 in.*lbf)

    b. Engage the guide and pin.

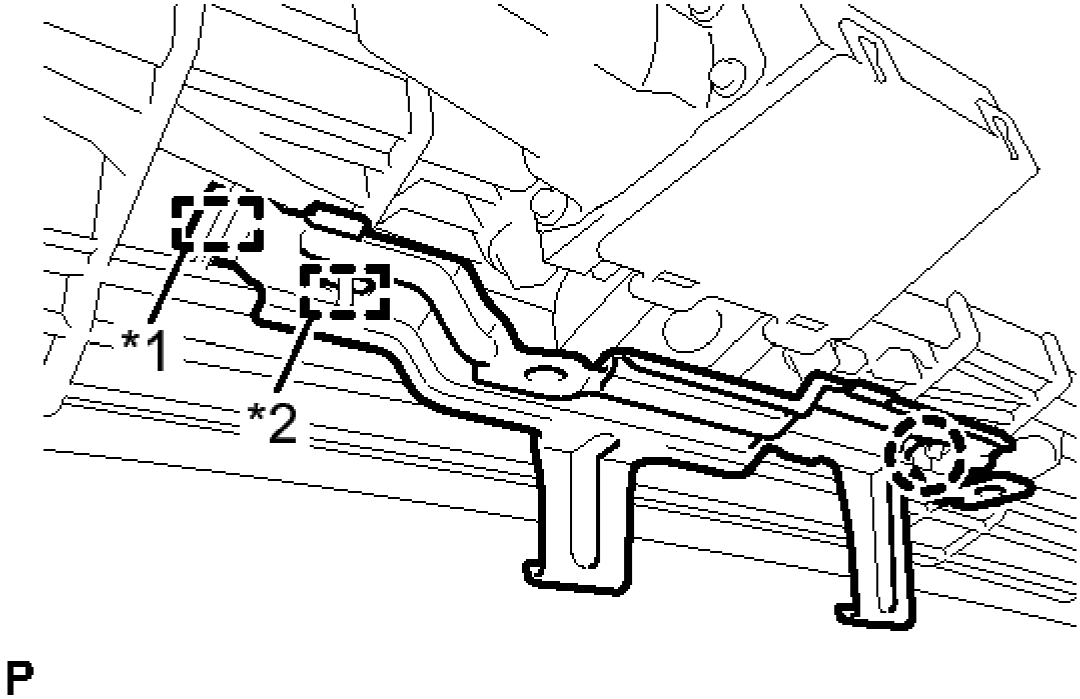

Fig. 26: Identifying Sliding Roof Drive Gear Sub-Assembly Guide And Pin
Courtesy of TOYOTA MOTOR SALES, U.S.A., INC.

TEXT IN ILLUSTRATION

*1	Guide
*2	Pin

c. Engage the claw and install the map light bracket.

INSTALLATION

INSTALLATION

1. **INSTALL SLIDING ROOF HOUSING SUB-ASSEMBLY**
    a. Loosen the 8 bolts from the sliding roof housing sub-assembly.
    b. Install the sliding roof housing sub-assembly with the 8 bolts and 8 nuts.

    Nut

    Torque: 5.5 N*m (56 kgf*cm, 49 in.*lbf)

    Bolt

    Torque: 8.0 N*m (82 kgf*cm, 71 in.*lbf)

    c. Tighten the 8 bolts to the sliding roof housing sub-assembly.

Torque: 5.5 N*m (56 kgf*cm, 49 in.*lbf)

d. For Clamp Type:

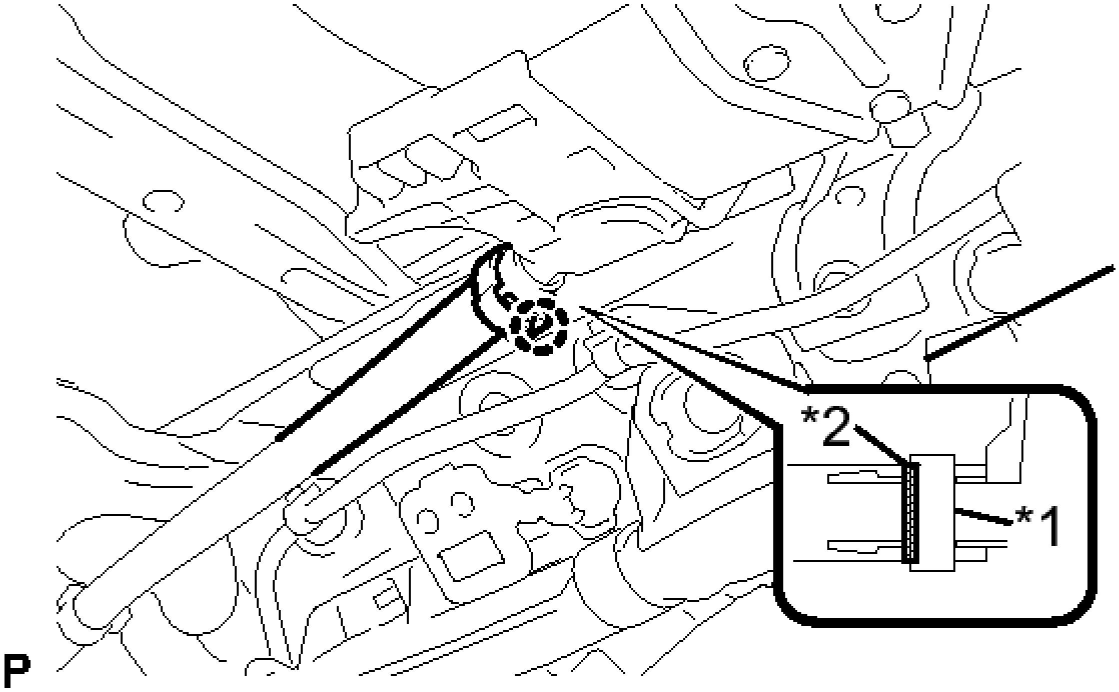

Fig. 27: Identifying Sliding Roof Housing Sub-Assembly Clamp
Courtesy of TOYOTA MOTOR SALES, U.S.A., INC.

TEXT IN ILLUSTRATION

*1	Clamp
*2	Marking

1. Insert the sliding roof drain hose.

   HINT:

   The hose should be inserted to the base of the drain pipe.

2. Engage the claw to connect the sliding roof drain hose.

   HINT:

   - Make sure that the clamp is on the marking or between the marking and hose end.
   - Use the same procedure for the other 3 sliding roof drain hoses.

e. For Clip Type:

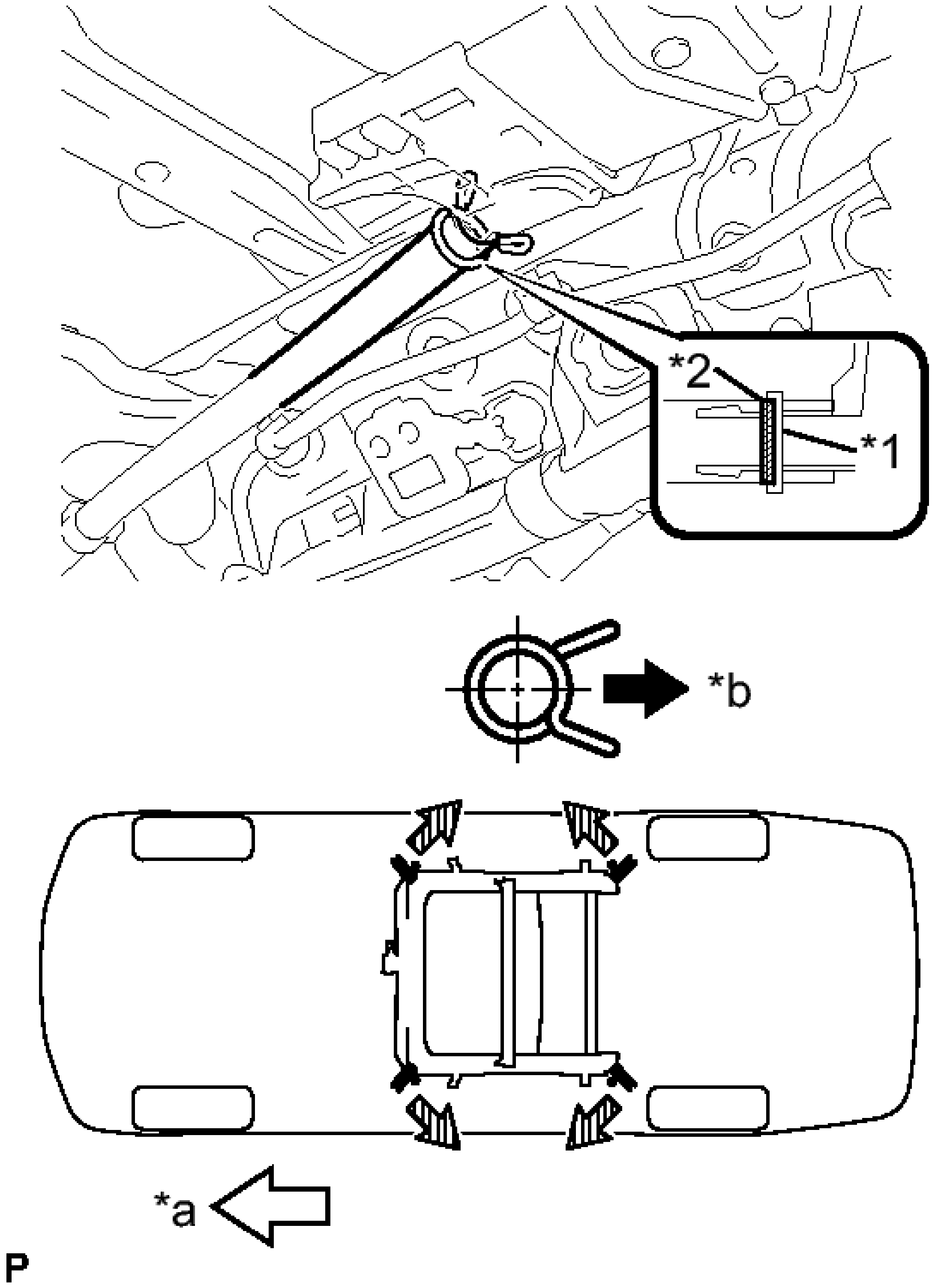

Fig. 28: Identifying Sliding Roof Housing Sub-Assembly Clip
Courtesy of TOYOTA MOTOR SALES, U.S.A., INC.

TEXT IN ILLUSTRATION

*1	Marking

*2	Clip
*a	Front Side
*b	Outside

1. Expand the clip to insert the sliding roof drain hose.

   HINT:

   The hose should be inserted to the base of the drain pipe.

2. Release the clip to connect the sliding roof drain hose.

   NOTE: **The clip must face toward the outside of the vehicle and also be above the lower surface of the sliding roof housing when installing the drain hoses.**

   HINT:

   - Make sure that the clip is on the marking or between the marking and hose end.
   - Use the same procedure for the other 3 sliding roof drain hoses.

2. **INSTALL REAR NO. 2 SIDE RAIL SPACER LH**
   a. Engage the 2 claws to install the rear No. 2 side rail spacer LH.

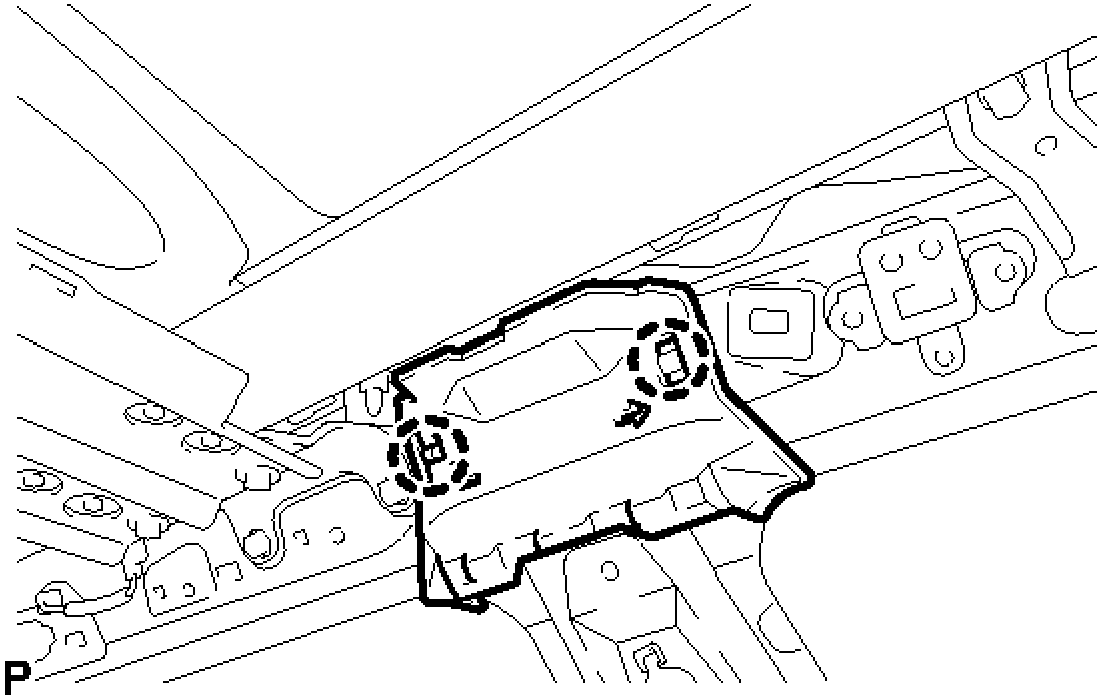

Fig. 29: Locating Rear No. 2 Side Rail Spacer LH Claws
Courtesy of TOYOTA MOTOR SALES, U.S.A., INC.

3. **INSTALL REAR NO. 2 SIDE RAIL SPACER RH**

   HINT:

   Use the same procedure as for the LH side.

4. **INSTALL CURTAIN SHIELD AIRBAG ASSEMBLY LH** . Refer to **INSTALLATION - Step 1** .
5. **INSTALL CURTAIN SHIELD AIRBAG ASSEMBLY RH**

   HINT:

   Use the same procedure as for the LH side.

6. **INSTALL SLIDING ROOF WEATHERSTRIP**
   1. Install the sliding roof weatherstrip as follows:
      1. Position the joint of the weatherstrip at the rear center.
      2. Align the alignment mark (yellow) on the weatherstrip with the middle marks at the corners of the sliding roof panel sub-assembly and install the weatherstrip.
      3. Install the lip of the weatherstrip firmly.

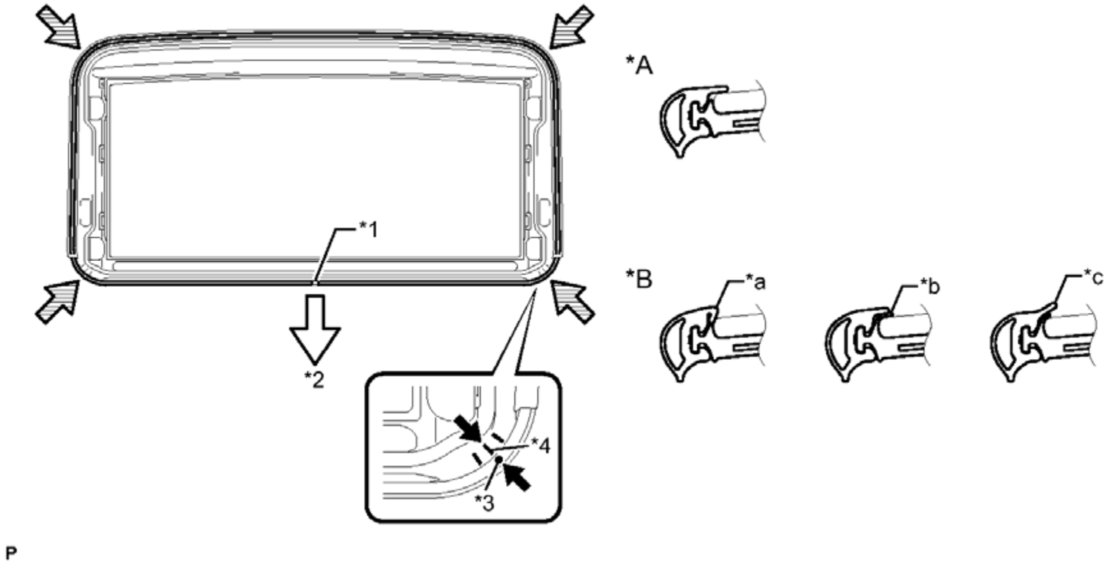

Fig. 30: Identifying Sliding Roof Weatherstrip
Courtesy of TOYOTA MOTOR SALES, U.S.A., INC.

TEXT IN ILLUSTRATION

*1	Joint	*2	Rear
*3	Alignment Mark (Yellow)	*4	Middle Mark

*A	Normal	*B	Abnormal
*a	Pinched	*b	Exposed
*c	Gap (raised, wavy, etc.)	-	-

7. **INSTALL SLIDING ROOF GLASS SUB-ASSEMBLY**
    a. Using a T25 "TORX" socket wrench, temporarily install the sliding roof glass sub-assembly with the 4 screws.
    b. Perform a level check.

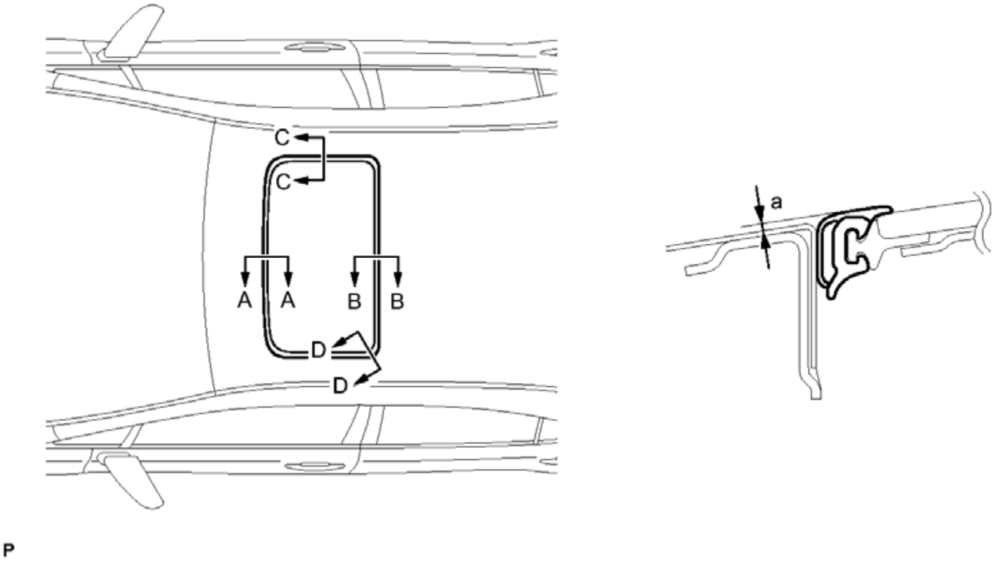

Fig. 31: Installing The Sliding Roof Glass Sub-Assembly
Courtesy of TOYOTA MOTOR SALES, U.S.A., INC.

1. Check the difference in level for "a" between the roof panel and the upper surface of the weatherstrip when the sliding roof glass is fully closed.

    Standard

Area	Measurement
A - A	0 + 1.0 mm (0 + 0.0394 in.) 0 - 2.0 mm (0 - 0.0787 in.)
B - B	0 + 2.0 mm (0 + 0.0787 in.) 0 - 1.0 mm (0 - 0.0394 in.)

C - C	0 + 1.5 mm (0 + 0.0591 in.) 0 - 1.5 mm (0 - 0.0591 in.)
D - D	0 + 1.5 mm (0 + 0.0591 in.) 0 - 1.0 mm (0 - 0.0394 in.)

HINT:

"+" represents the condition that the glass is above the panel level. "-" represents the condition that the glass is below the panel level.

c. Perform a gap check.

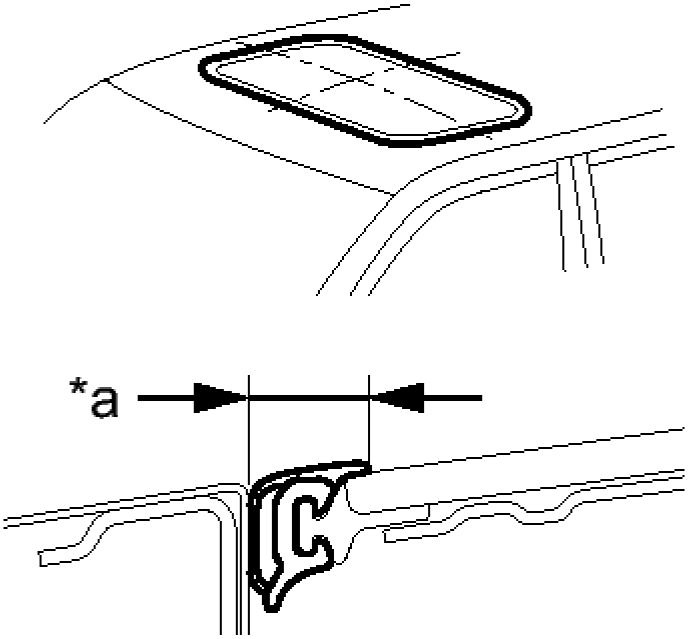

Fig. 32: Perform A Gap Check
Courtesy of TOYOTA MOTOR SALES, U.S.A., INC.

1. Check the gap between the roof panel and roof glass.

TEXT IN ILLUSTRATION

*a	Even

NOTE: **The gap must be even all around.**

d. After adjusting the sliding roof glass, using a T25 "TORX" socket wrench, install the sliding roof glass sub-assembly with the 4 screws.

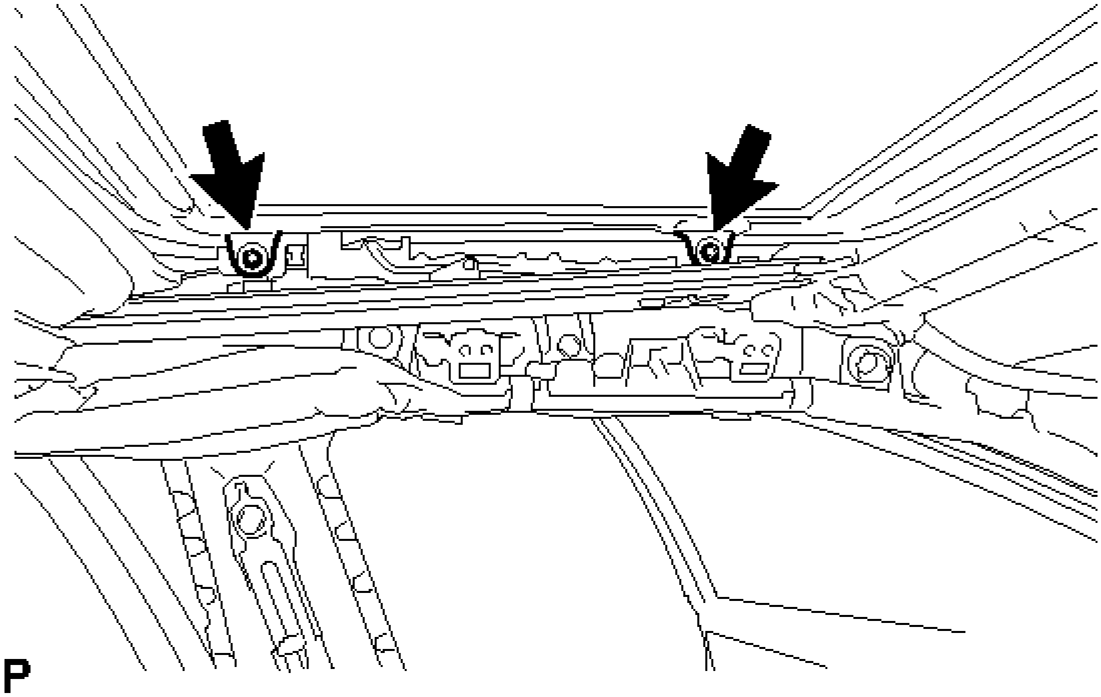

Fig. 33: Locating Sliding Roof Glass Sub-Assembly Fasteners
Courtesy of TOYOTA MOTOR SALES, U.S.A., INC.

Torque: 4.0 N*m (41 kgf*cm, 35 in.*lbf)

8. **CHECK FOR WATER LEAK**
    a. After adjusting the sliding roof glass sub-assembly, check for water leaks.
    b. If there are any leaks, readjust the sliding roof glass sub-assembly.
9. **INSTALL SLIDING ROOF SIDE GARNISH LH**
    a. Engage the 2 claws and install the sliding roof side garnish LH.
10. **INSTALL SLIDING ROOF SIDE GARNISH RH**

    HINT:

    Use the same procedure as for the LH side.

11. **INSTALL ROOF HEADLINING ASSEMBLY**

    Refer to **INSTALLATION** .

12. **RESET SLIDING ROOF DRIVE GEAR SUB-ASSEMBLY**

    Refer to **INITIALIZATION** .

13. **CHECK SLIDING ROOF SYSTEM**

    Refer to **OPERATION CHECK** .

14. **INSPECT FOR WATER LEAK**
    1. After adjusting the sliding roof glass sub-assembly, inspect for water leaks.
    2. If there are any leaks, readjust the sliding roof glass sub-assembly.

SLIDING ROOF SWITCH ASSEMBLY

COMPONENTS

ILLUSTRATION

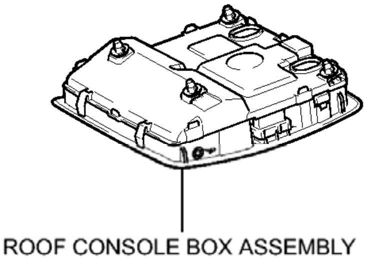

P

Fig. 34: Identifying Sliding Roof Switch Assembly Replacement Components
Courtesy of TOYOTA MOTOR SALES, U.S.A., INC.

REMOVAL

REMOVAL

1. **REMOVE ROOF CONSOLE BOX ASSEMBLY** . Refer to **REMOVAL - Step 2** .

INSPECTION

INSPECTION

1. **INSPECT SLIDING ROOF SWITCH (ROOF CONSOLE BOX ASSEMBLY)**
    1. Measure the resistance according to the value(s) in the table below.

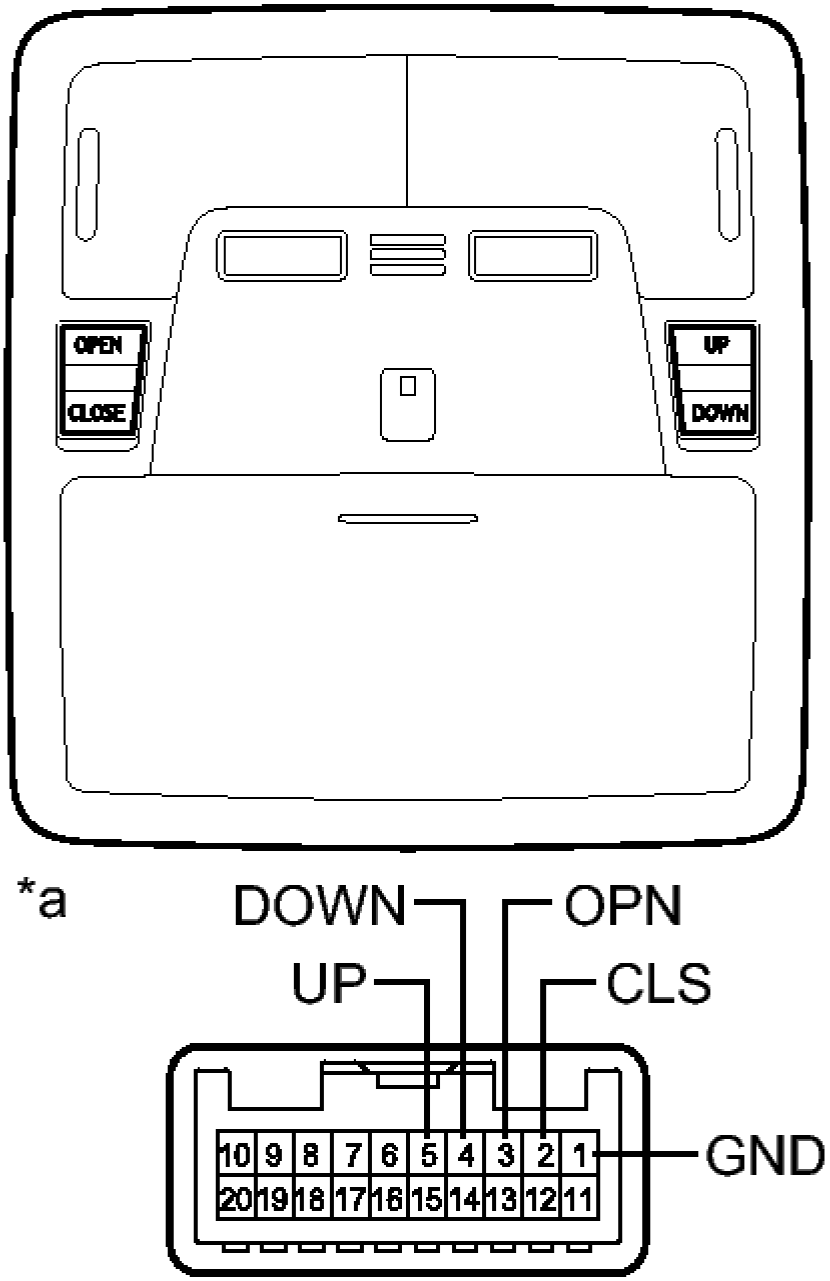
OPEN
CLOSE
UP
DOWN
*a
DOWN
OPN
UP
CLS
GND
10
9
8
7
6
5
4
3
2
1
20
19
18
17
16
15
14
13
12
11

Fig. 35: Inspecting Sliding Roof Switch (Roof Console Box Assembly)
Courtesy of TOYOTA MOTOR SALES, U.S.A., INC.

Standard Resistance

Tester Connection	Switch Condition	Specified Condition
6 (UP) - 10 (GND)	UP switch is pressed	Below 1 ohms
6 (UP) - 10 (GND)	UP switch is not pressed	10 kohms or higher
7 (DOWN) - 10 (GND)	DOWN switch is pressed	Below 1 ohms
7 (DOWN) - 10 (GND)	DOWN switch is not pressed	10 kohms or higher
8 (OPN) - 10 (GND)	OPEN switch is pressed	Below 1 ohms
8 (OPN) - 10 (GND)	OPEN switch is not pressed	10 kohms or higher
9 (CLS) - 10 (GND)	CLOSE switch is pressed	Below 1 ohms
9 (CLS) - 10 (GND)	CLOSE switch is not pressed	10 kohms or higher

TEXT IN ILLUSTRATION

*a	Component without harness connected (Sliding Roof Switch (Roof Console Box Assembly))

If the result is not as specified, replace the sliding roof switch (roof console box assembly).

INSTALLATION

INSTALLATION

1. **INSTALL ROOF CONSOLE BOX ASSEMBLY** . Refer to **INSTALLATION - Step 3** .

2012-2017 COMMON SPECS & PROCEDURES Camry (Hybrid)

COMMON SPECS & PROCEDURES

CAMRY HYBRID COMMON SPECS & PROCEDURES

System	**Specification/Procedure**
Air Conditioning	
Service	**SERVICE DATA**
Torque	**TORQUE SPECIFICATIONS**
Axle Nut/Hub Nut	
Front	294 N.m (217 ft lbs)
Rear Hub / Bearing	60 N.m (44 ft lbs)
Battery	**SERVICE DATA**
Brakes	
Bleeding Sequence	**BLEEDING**
Brakes	Front: **SERVICE DATA** Rear: **SERVICE DATA**
Torque	Front: **TORQUE SPECIFICATIONS** Rear: **TORQUE SPECIFICATIONS**
Charging	
Generator	N/A. Refer to: **ON-VEHICLE INSPECTION**
Torque	N/A
Drive Belts	
Adjustment	N/A
Belt Routing	N/A
Engine Cooling	
General Service Specifications	**SERVICE DATA**
Radiator Cap Pressure	93.3 to 122.7 kPa (1.0 to 1.3 kgf/cm^2 , 13.5 to 18 psi)
Standard Value	
Minimum Standard Value	78.5 kPa (0.8 kgf/cm^2 , 11.4 psi)
Thermostat R & I	**THERMOSTAT**
Water Pump R & I	**WATER PUMP**
Engine Mechanical	
Compression	**SERVICE DATA**
Oil Pressure	at 1000 RPM, 145 kPa (1.5 kgf.cm^2 , 21 psi) at 2, 500 RPM, 340 kPa (3.5 kgf.cm^2 , 49 psi)
Overhaul	**SERVICE DATA**
Torque	**TORQUE SPECIFICATIONS**
Flywheel/Flex plate (Drive Plate) Torque	

(A/T)	130 N.m (96 ft.lb.)
Fuel System	
Pressure Specification	304 to 343 kPa (3.1 to 3.5 kgf/cm^2 , 44 to 50 psi)
Fuel Pressure Test Procedure	**ON-VEHICLE INSPECTION**
Fuel Filter Location	**FUEL PUMP**
Ignition	
Firing Order & Cylinder Identification	**FIRING ORDER & CYLINDER IDENTIFICATION**
Spark Plug	
Type	DENSO SK20R11 NGK 1FR6A11
Gap	Standard electrode gap:1.0 - 1.1 mm (0.039 - 0.043 in.) Maximum standard gap:1.3 mm (0.051 in.)
Torque	19 N.m (194 kgf.cm, 14 ft. lbs)
Starting	
Starter	N/A. Refer to **SERVICE DATA**
Torque	N/A
Wheel Alignment	
Front	
Adjustment Specifications	**SERVICE DATA**
Torque	**TORQUE SPECIFICATIONS**
Rear	
Adjustment Specifications	**SERVICE DATA**
Torque	**TORQUE SPECIFICATIONS**
Wheel & Tire	
Wheel Lug Nut Torque	103 N.m (1, 149 kgf.cm, 76 ft lbs.)

SPECIFICATIONS INDEX

CAMRY SPECIFICATIONS INDEX

System	Specification/Procedure
Air Conditioning	
Service	**SERVICE DATA**
Torque	**TORQUE SPECIFICATIONS**
Axle Nut/Hub Nut	
Front	294 N.m (217 ft lbs)
Rear Hub / Bearing Assembly	60 N.m (44 ft lbs)
Battery	**SERVICE DATA** (2AR-FE) **SERVICE DATA** (2GR-FE)
Brakes	
Bleeding Sequence	**BLEEDING**
Disc/Drum Brakes	Front: **SERVICE DATA** Rear: **SERVICE DATA**
Torque	Front: **TORQUE SPECIFICATIONS** Rear: **TORQUE SPECIFICATIONS**
Charging	
2AR-FE	
Generator	**SERVICE DATA**
Torque	**TORQUE SPECIFICATIONS**
2GR-FE	
Generator	**SERVICE DATA**
Torque	**TORQUE SPECIFICATIONS**
Drive Belts	
2AR-FE	
Adjustment	**ON-VEHICLE INSPECTION**
Belt Routing	**INSTALLATION**
2GR-FE	
Adjustment	**ON-VEHICLE INSPECTION**
Belt Routing	**INSTALLATION**
Engine Cooling	
2AR-FE	
General Service Specifications	**SERVICE DATA**
Radiator Cap Pressure	Standard Value

	93.3 to 122.7 kPa (.95 to 1.25 kgf/cm^2 , 13.5 to 17.8 psi) Minimum Standard value 78.5 kPa (0.8 kgf/cm^2 , 11.4 psi)
Thermostat R & I	**THERMOSTAT**
Water Pump R & I	**WATER PUMP**
2GR-FE	
General Service Specifications	**SERVICE DATA**
Radiator Cap Pressure	Standard Value 93.3 to 122.7 kPa (0.95 to 1.25 kgf/cm^2 , 13.5 to 17.8 psi) Minimum Standard value 78.5 kPa (0.8 kgf/cm^2 , 11.4 psi)
Thermostat R & I	**THERMOSTAT**
Water Pump R & I	**WATER PUMP**
Engine Mechanical	
2AR-FE	
Compression	**SERVICE DATA**
Oil Pressure	30 kPa (0.3 kgf/cm^2 , 4.4 psi) or more at 4, 00 RPM, 260 kPa (2.7 kgf/cm^2 , 38 psi) or more
Overhaul	**SERVICE DATA**
Torque	**TORQUE SPECIFICATIONS**
2GR-FE	
Compression	**SERVICE DATA**
Oil Pressure	at idle, 30 kPa (0.3 kgf.cm^2 , 4.4 psi) or more at 3, 00 RPM, 200 (2.0 kgf.cm^2 , 29 psi) or more
Overhaul	**SERVICE DATA**
Torque	**TORQUE SPECIFICATIONS**
Fluid Specifications	See FLUIDS under MAINTENANCE tab.
Flywheel/Flex plate (Drive Plate) Torque	
2AR-FE	98 N.m (72 ft.lb.)
2GR-FE	83 N.m (61 ft.lb.)
Fuel System	
2AR-FE	
Pressure Specification	304 to 343 kPa (3.1 to 3.5 kgf/cm^2 , 44 to 50 psi)
Fuel Pressure Test Procedure	**ON-VEHICLE INSPECTION**
Fuel Filter Location	**FUEL PUMP**
2GR-FE	
Pressure Specification	380 to 420 kPa (3.9to 4.3kgf/cm^2 , 55 to 61 psi)
Fuel Pressure Test Procedure	**ON-VEHICLE INSPECTION**

Fuel Filter Location	**FUEL PUMP**
Ignition	
Firing Order & Cylinder Identification	
2AR-FE & 2GR-FE	**FIRING ORDER & CYLINDER IDENTIFICATION**
Spark Plug	
2AR-FE	
Type	DENSO SK16HR11
Gap	Standard electrode gap:1.0 - 1.1 mm (0.039 - 0.043 in.) Maximum electrode gap:1.3 mm (0.051 in.)
Torque	25 N.m (255 kgf*cm, 18 ft. lbs)
2GR-FE	
Type	DENSO FK20HR11
Gap	Standard electrode gap:1.0 - 1.1 mm (0.039 - 0.043 in.) Maximum electrode gap:1.4 mm (0.055 in.)
Torque	18 N.m (184 kgf.cm, 13 ft. lbs)
Starting	
2AR-FE	
Starter	**SERVICE DATA**
Torque	**TORQUE SPECIFICATIONS**
2GR-FE	
Starter	**SERVICE DATA**
Torque	**TORQUE SPECIFICATIONS**
Wheel Alignment	
Front & Rear	
Adjustment Specifications	**SERVICE DATA**
Torque	**TORQUE SPECIFICATIONS**
Wheel & Tire	
Wheel Lug Nut Torque	103 N.m (1, 50 kgf.cm, 76 ft lbs.)

STEERING PAD

COMPONENTS

ILLUSTRATION

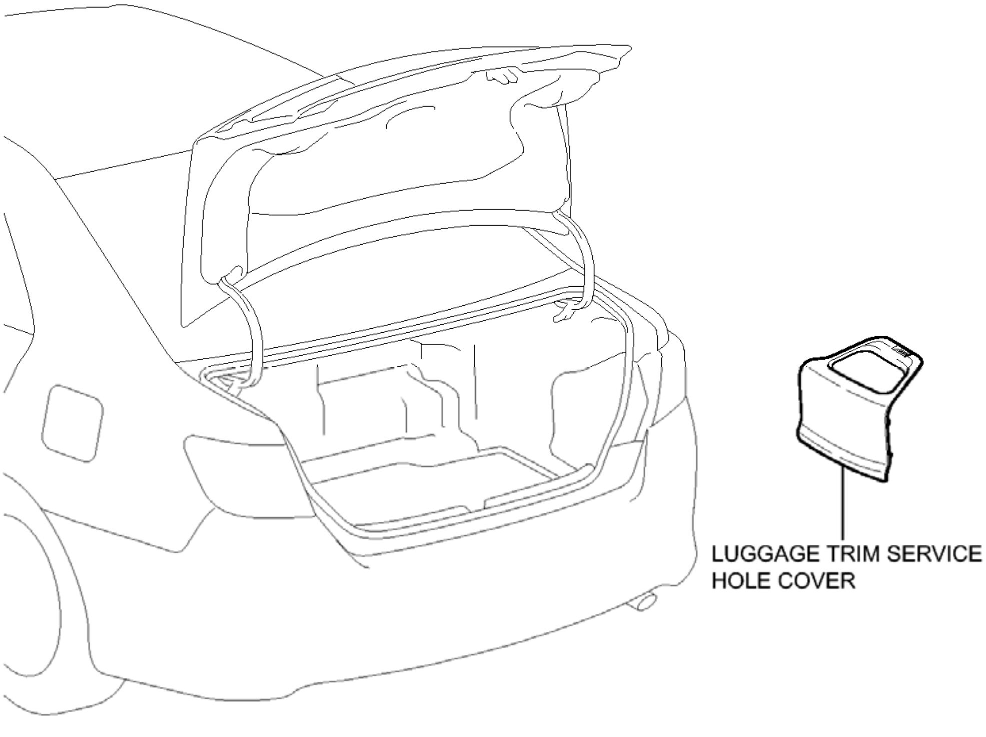
LUGGAGE TRIM SERVICE HOLE COVER
P

Fig. 1: Identifying Steering Pad Replacement Components (1 Of 2)
Courtesy of TOYOTA MOTOR SALES, U.S.A., INC.

ILLUSTRATION

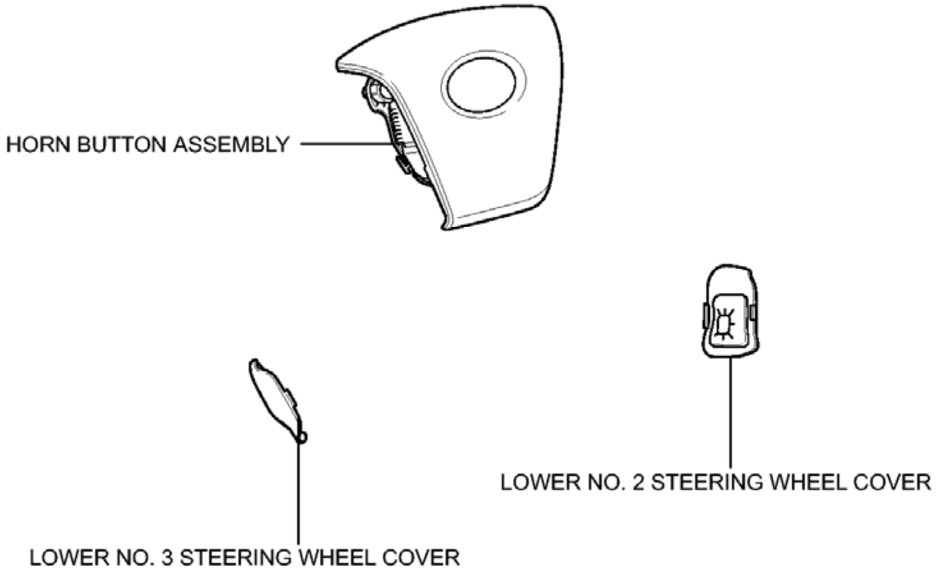
HORN BUTTON ASSEMBLY
LOWER NO. 2 STEERING WHEEL COVER
LOWER NO. 3 STEERING WHEEL COVER

c

Fig. 2: Identifying Steering Pad Replacement Components (2 Of 2)
Courtesy of TOYOTA MOTOR SALES, U.S.A., INC.

ON-VEHICLE INSPECTION

ON-VEHICLE INSPECTION

WARNING: **Be sure to correctly follow the removal and installation procedures for the horn button assembly.**

1. **INSPECT HORN BUTTON ASSEMBLY (for Vehicle not Involved in Collision)**
   a. Perform a diagnostic system check.

      for Separate Type Yaw Rate Sensor: Refer to **DTC CHECK / CLEAR**

      for Built-in Type Yaw Rate Sensor: Refer to **DTC CHECK / CLEAR**

   b. Visually check for defects with the horn button assembly installed on the vehicle.

      HINT:

The defects are as follows:

- Cuts on the surface or in the grooves
- Small cracks on the surface or in the grooves
- Significant discoloration on the surface or in the grooves

OK

No defects are found.

If any of the defects is found, replace the horn button assembly with a new one.

2. **INSPECT HORN BUTTON ASSEMBLY (for Vehicle Involved in Collision and Airbag not Deployed)**
    a. Perform a diagnostic system check.

       for Separate Type Yaw Rate Sensor: Refer to **DTC CHECK / CLEAR**

       for Built-in Type Yaw Rate Sensor: Refer to **DTC CHECK / CLEAR**

    b. Visually check for defects with the horn button assembly removed from the vehicle.

       HINT:

       The defects are as follows:

       - Cuts on the surface or in the grooves
       - Small cracks on the surface or in the grooves
       - Significant discoloration on the surface or in the grooves
       - Cracks or other damage to the connector
       - Deformation of the steering wheel assembly
       - Deformation of the horn button sub-assembly of the horn button assembly
       - Interference or uneven clearance between the horn button assembly and steering wheel assembly when the new horn button assembly is installed on the steering wheel assembly

       OK

       No defects are found.

       If any of the defects is found, replace the horn button assembly or steering wheel assembly with a new one.

REMOVAL

REMOVAL

REMOVAL

1. **PRECAUTION**

WARNING: Be sure to read Precaution thoroughly before servicing.

for Separate Type Yaw Rate Sensor: Refer to PRECAUTION

for Built-in Type Yaw Rate Sensor: Refer to PRECAUTION

NOTE: After turning the power switch off, waiting time may be required before disconnecting the cable from the negative (-) auxiliary battery terminal. Therefore, make sure to read the disconnecting the cable from the negative (-) auxiliary battery terminal notices before proceeding with work. Refer to PRECAUTION .

2. **REMOVE LUGGAGE TRIM SERVICE HOLE COVER** . Refer to **REMOVAL - Step 2**
3. **DISCONNECT CABLE FROM NEGATIVE AUXILIARY BATTERY TERMINAL**

WARNING: Wait at least 90 seconds after disconnecting the cable from the negative (-) auxiliary battery terminal to disable the SRS system.

NOTE: When disconnecting the cable, some systems need to be initialized after the cable is reconnected. Refer to INITIALIZATION .

4. **REMOVE LOWER NO. 3 STEERING WHEEL COVER**
   a. Disengage the claw and guide to remove the lower No. 3 steering wheel cover.

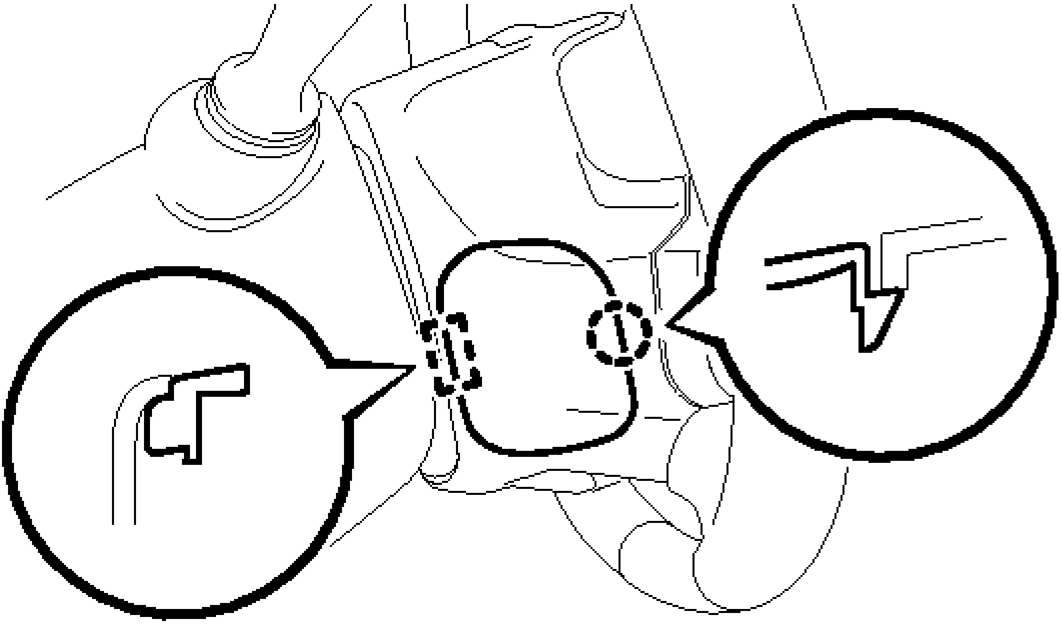

Fig. 3: Identifying Lower No. 3 Steering Wheel Cover Claws
Courtesy of TOYOTA MOTOR SALES, U.S.A., INC.

5. **REMOVE LOWER NO. 2 STEERING WHEEL COVER**
    a. Disengage the claw and guide to remove the lower No. 2 steering wheel cover.

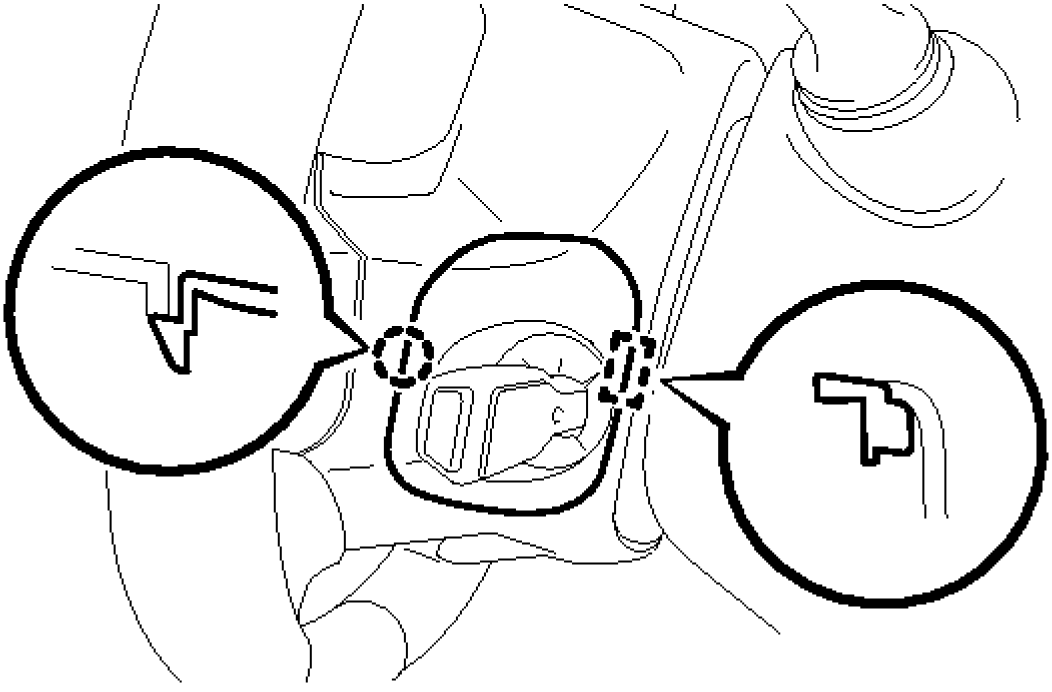

Fig. 4: Identifying Lower No. 2 Steering Wheel Cover Claws

Courtesy of TOYOTA MOTOR SALES, U.S.A., INC.

6. REMOVE HORN BUTTON ASSEMBLY

WARNING: **When storing the horn button assembly, keep the airbag deployment side facing upward.**

a. Check that the power switch is off.

b. Check that the cable is disconnected from the negative (-) auxiliary battery terminal.

WARNING: **Wait at least 90 seconds after disconnecting the cable from the negative (-) auxiliary battery terminal to disable the SRS system.**

c. Using a screwdriver, push up the torsion spring to disengage the pin.

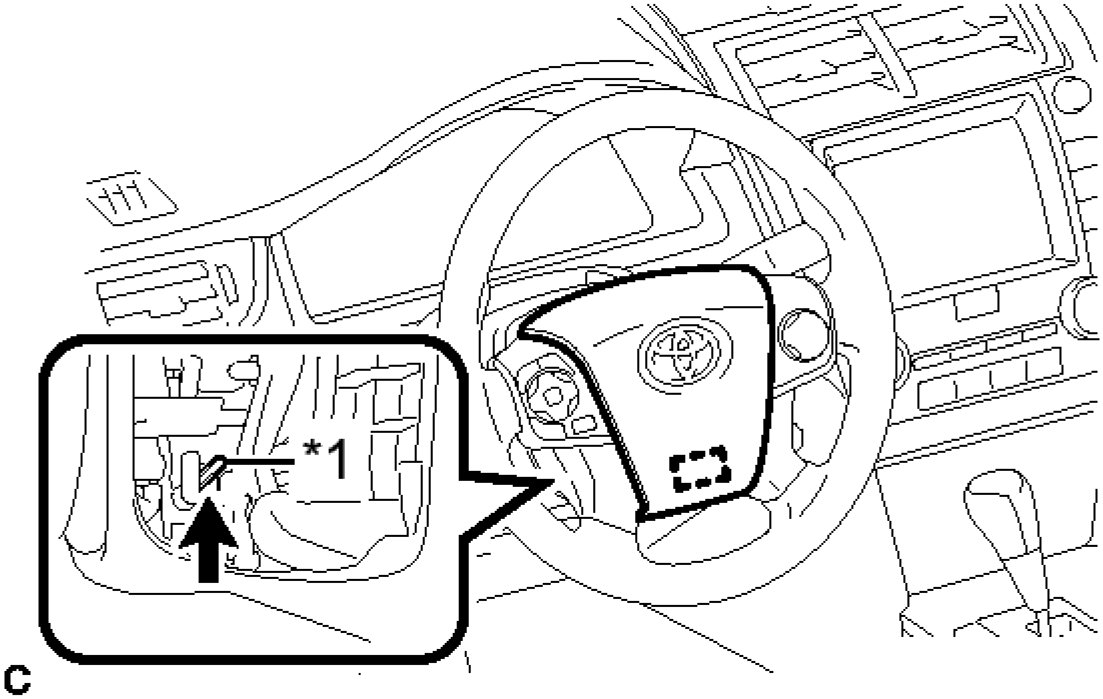

Fig. 5: Locating Horn Button Assembly Torsion Spring And Pin
Courtesy of TOYOTA MOTOR SALES, U.S.A., INC.

TEXT IN ILLUSTRATION

*1	Torsion Spring

HINT:

Insert the screwdriver from the installation hole of the lower No. 3 steering wheel cover.

d. Using a screwdriver, push in the 2 torsion springs to disengage the 2 pins.

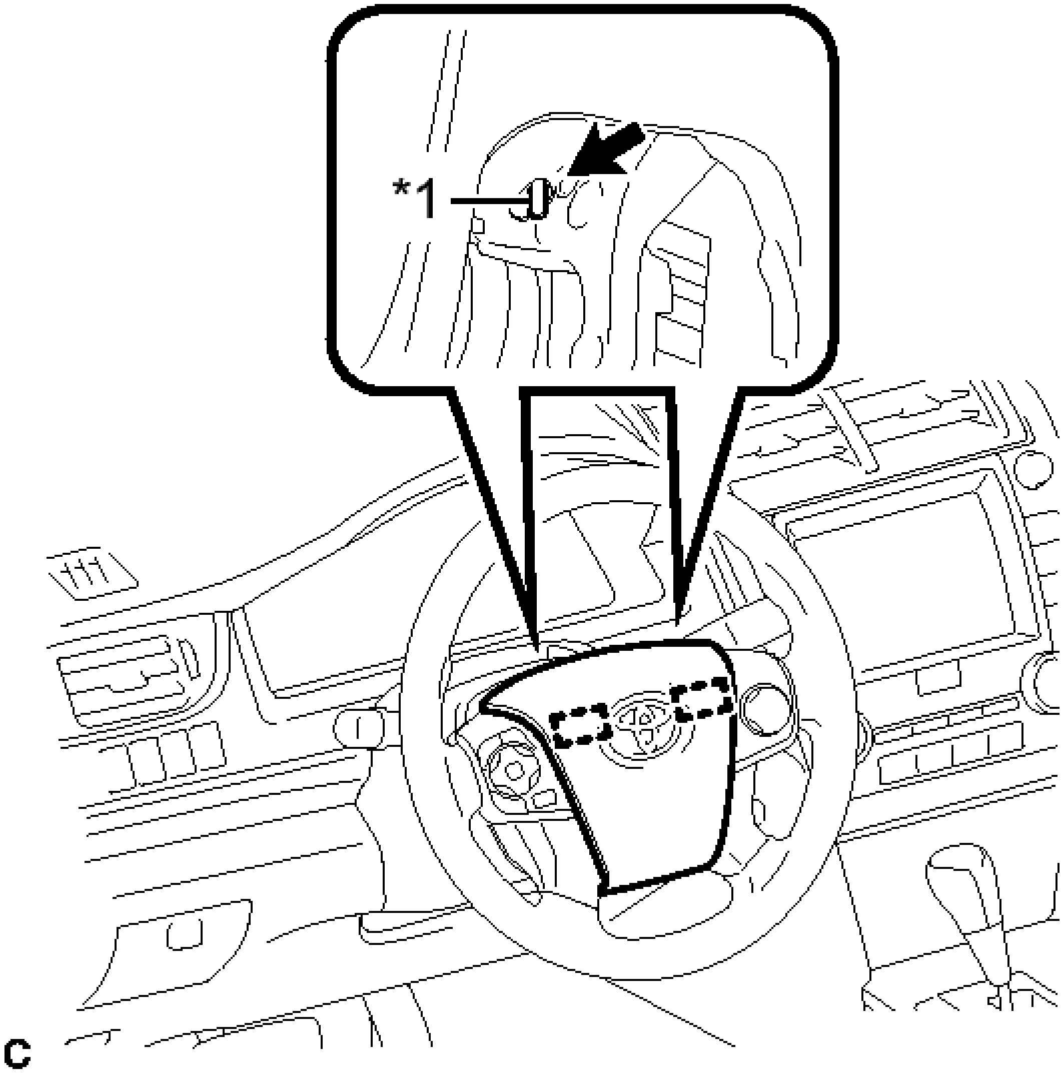

Fig. 6: Locating Horn Button Assembly Torsion Spring And Pins
Courtesy of TOYOTA MOTOR SALES, U.S.A., INC.

TEXT IN ILLUSTRATION

*1	Torsion Spring

NOTE: **Do not drop the horn button assembly.**

HINT:

Insert the screwdriver from the installation holes in the lower No. 3 steering wheel cover and lower No. 2 steering wheel cover.

e. Pull out the horn button assembly from the steering wheel assembly and support the horn button assembly with one hand.

NOTE: **When removing the horn button assembly, do not pull the airbag wire harness.**

f. Disconnect the horn connector from the horn button assembly.

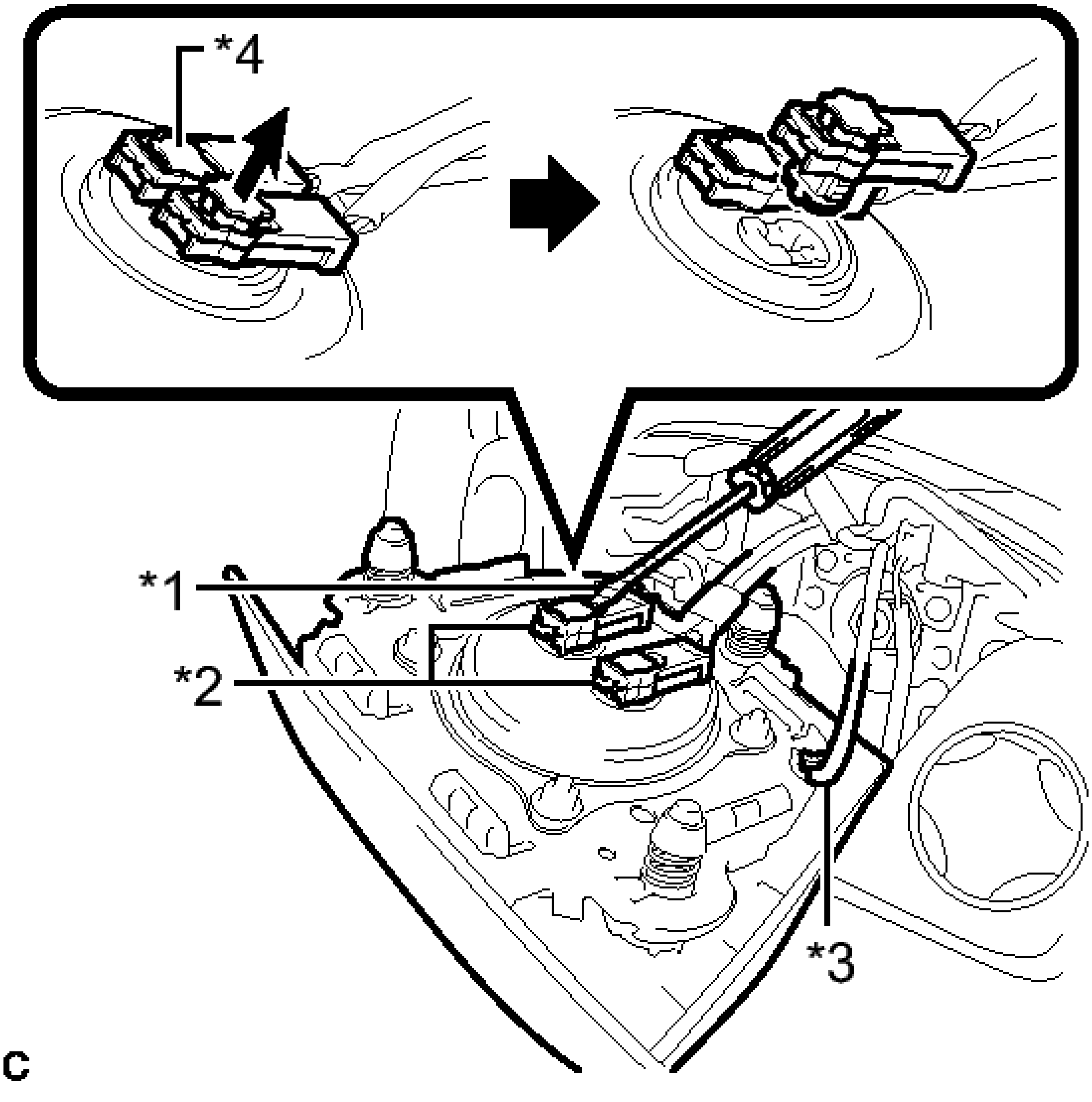

Fig. 7: Disconnecting Horn Connectors From Horn Button Assembly
Courtesy of TOYOTA MOTOR SALES, U.S.A., INC.

g. Using a screwdriver with its tip wrapped with protective tape, release the 2 airbag connector locks.

TEXT IN ILLUSTRATION

*1	Protective

	Tape
*2	Airbag Connector
*3	Horn Connector
*4	Airbag Connector Lock

h. Disconnect the 2 airbag connectors to remove the horn button assembly.

NOTE: **When disconnecting any airbag connector, take care not to damage the airbag wire harness.**

INSTALLATION

INSTALLATION

INSTALLATION

1. **INSTALL HORN BUTTON ASSEMBLY**
   a. Check that the power switch is off.
   b. Check that the cable is disconnected from the negative (-) auxiliary battery terminal.

WARNING: **Wait at least 90 seconds after disconnecting the cable from the negative (-) auxiliary battery terminal to disable the SRS system.**

c. Connect the 2 airbag connectors to the horn button assembly.

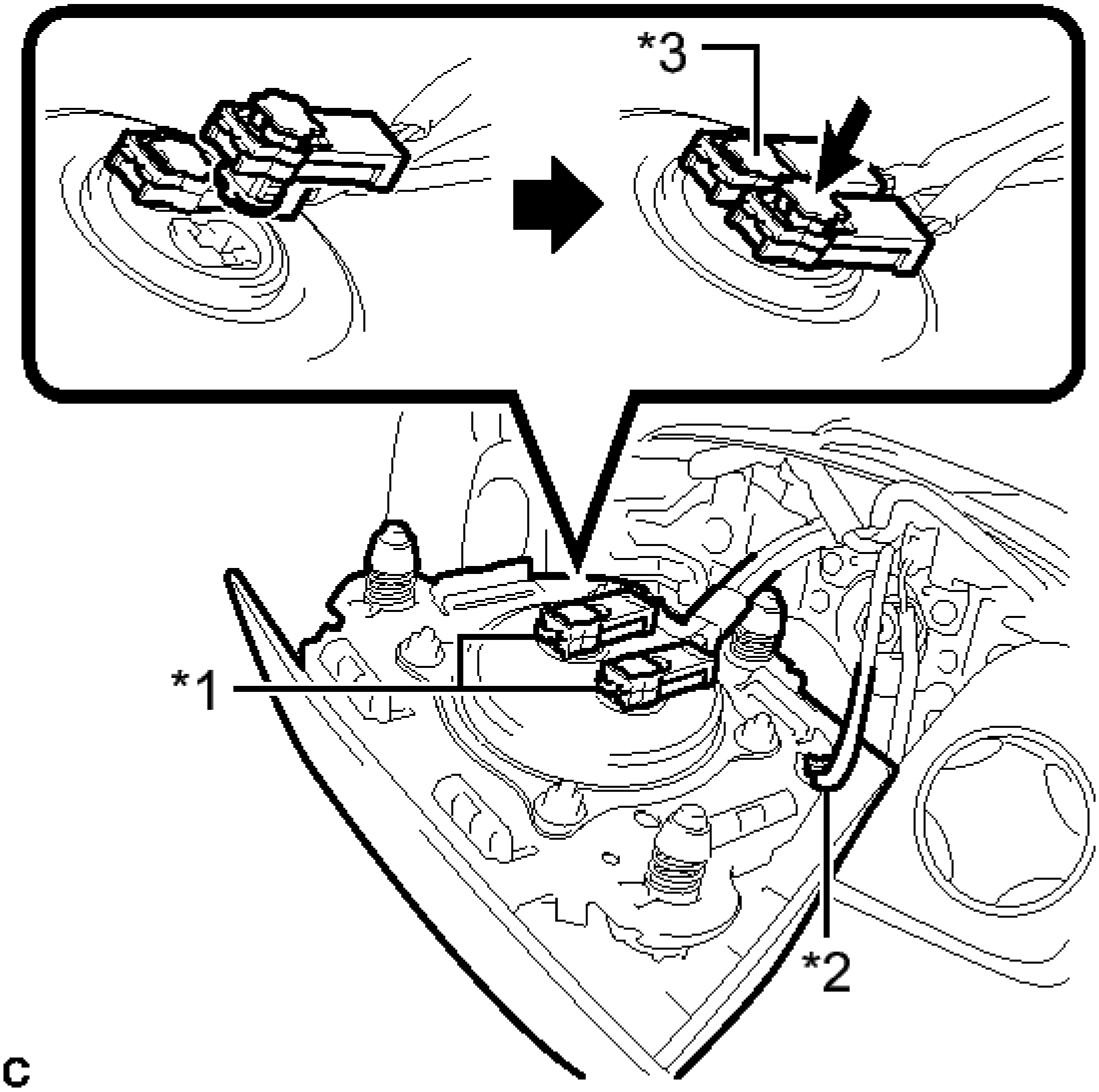

Fig. 8: Connecting Horn Connectors To Horn Button Assembly
Courtesy of TOYOTA MOTOR SALES, U.S.A., INC.

TEXT IN ILLUSTRATION

*1	Airbag Connector
*2	Horn Connector
*3	Airbag Connector Lock

NOTE:

- **When connecting any airbag connector, take care not to damage the airbag wire harness.**
- **Be sure to only connect the connectors to each corresponding**

color.

d. Push in the 2 locks to install the 2 airbag connectors.
e. Connect the horn connector to the horn button assembly.
f. Push the horn button assembly to engage the 3 pins carefully.

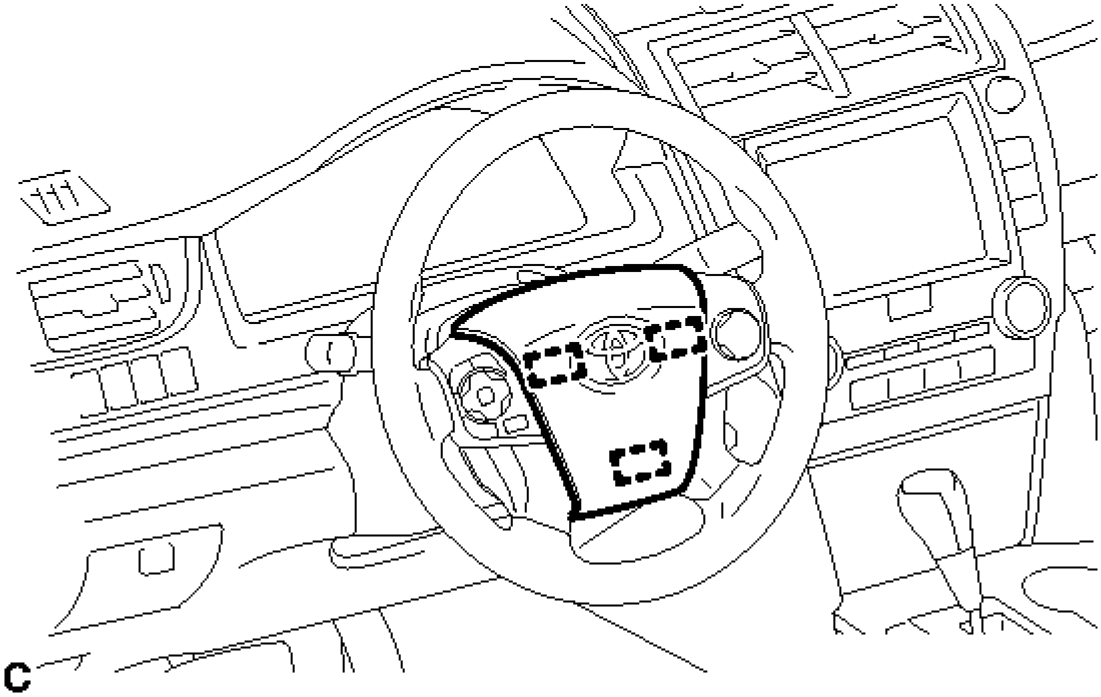

Fig. 9: Locating Horn Button Assembly Pins
Courtesy of TOYOTA MOTOR SALES, U.S.A., INC.

NOTE:

- **Make sure that the pins are securely inserted into the steering holes.**
- **Make sure to engage the 2 upper pins first.**
- **Make sure that the horn button assembly is securely installed.**

2. **INSTALL LOWER NO. 3 STEERING WHEEL COVER**
   a. Engage the claw and guide to install the lower No. 3 steering wheel cover.
3. **INSTALL LOWER NO. 2 STEERING WHEEL COVER**
   a. Engage the claw and guide to install the lower No. 2 steering wheel cover.
4. **CONNECT CABLE TO NEGATIVE AUXILIARY BATTERY TERMINAL**

NOTE: **When disconnecting the cable, some systems need to be initialized after the cable is reconnected. Refer to INITIALIZATION .**

5. **INSTALL LUGGAGE TRIM SERVICE HOLE COVER** . Refer to **INSTALLATION - Step 3**

6. **INSPECT HORN BUTTON ASSEMBLY**
    a. Make sure that the horn sounds.

       If the horn does not sound, inspect the horn system. Refer to **PROBLEM SYMPTOMS TABLE** .

7. **PERFORM DIAGNOSTIC SYSTEM CHECK**

   for Separate Type Yaw Rate Sensor: Refer to **DTC CHECK / CLEAR**

   for Built-in Type Yaw Rate Sensor: Refer to **DTC CHECK / CLEAR**

8. **INSPECT SRS WARNING LIGHT**

   for Separate Type Yaw Rate Sensor: Refer to **DIAGNOSIS SYSTEM**

   for Built-in Type Yaw Rate Sensor: Refer to **DIAGNOSIS SYSTEM**

DISPOSAL

DISPOSAL

WARNING: **Before performing pre-disposal deployment of any SRS part, review and closely follow all applicable environmental and hazardous material regulations. Pre-disposal deployment may be considered hazardous material treatment.**

1. **PRECAUTION**

WARNING:

- **An airbag or pretensioner may be activated by static electricity. To prevent this, be sure to touch a metal surface with your bare hands to discharge static electricity before performing this procedure.**
- **Never dispose of a horn button assembly with an undeployed airbag.**
- **The airbag produces an exploding sound when it is deployed, so perform the operation outdoors and where it will not create a nuisance to nearby residents.**
- **When deploying the airbag, always use the specified SST (SRS Airbag Deployment Tool). Perform the operation in a place away from electrical noise.**
- **When deploying the airbag, perform the operation at least 10 m (32.8 ft.) away from the horn button assembly.**
- **The horn button assembly becomes extremely hot when the airbag is deployed, so do not touch it for at least 30 minutes after deployment.**

- **Use gloves and safety glasses when handling a horn button assembly with a deployed airbag.**
- **Do not apply water etc. to a horn button assembly with a deployed airbag.**
- **Always wash your hands with water after completing the operation.**

HINT:

When scrapping a vehicle equipped with an SRS or disposing of the horn button assembly, be sure to deploy the airbag first in accordance with the procedure described below. If any abnormality occurs with the airbag deployment, contact the Service Dept. of TOYOTA MOTOR SALES, U.S.A., INC.

2. **DISPOSE OF HORN BUTTON ASSEMBLY (When Installed in Vehicle)**

NOTE:

- **When disposing of the horn button assembly, never use the customer's vehicle to deploy the airbag.**
- **Be sure to observe the following procedure when deploying the airbag.**

HINT:

Prepare a 12 V battery as the power source to deploy the airbag.

a. Check the function of SST.

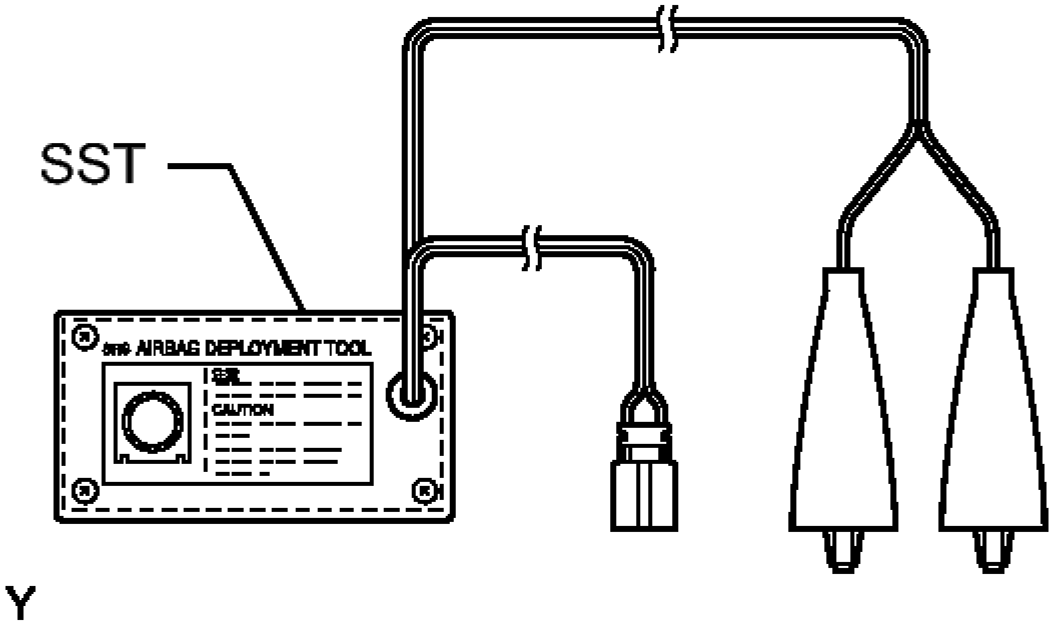

Fig. 10: Checking Function Of SST
Courtesy of TOYOTA MOTOR SALES, U.S.A., INC.

- **SST: 09082-00700**

WARNING: When deploying the airbag, always use the specified SST:

SRS Airbag Deployment Tool

1. Connect SST to the 12 V battery.

   Connect the red clip of SST to the positive (+) battery terminal and the black clip of SST to the negative (-) battery terminal.

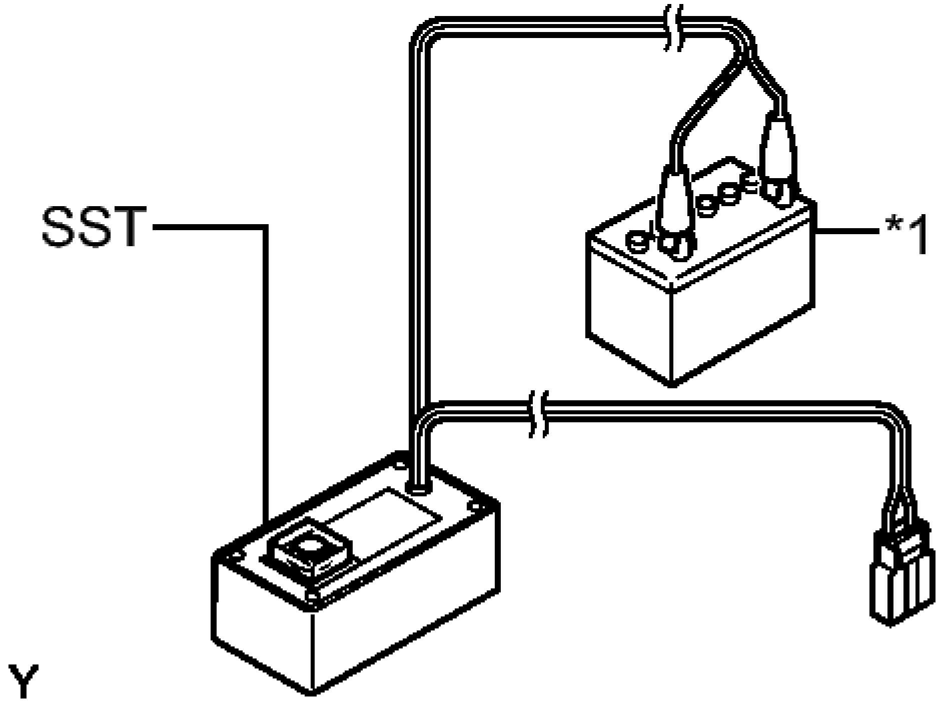

Fig. 11: Connecting SST To Battery
Courtesy of TOYOTA MOTOR SALES, U.S.A., INC.

TEXT IN ILLUSTRATION

*1	12 V Battery

2. Check the function of SST.

   Press the SST activation switch and check that the LED of the SST activation switch comes on.

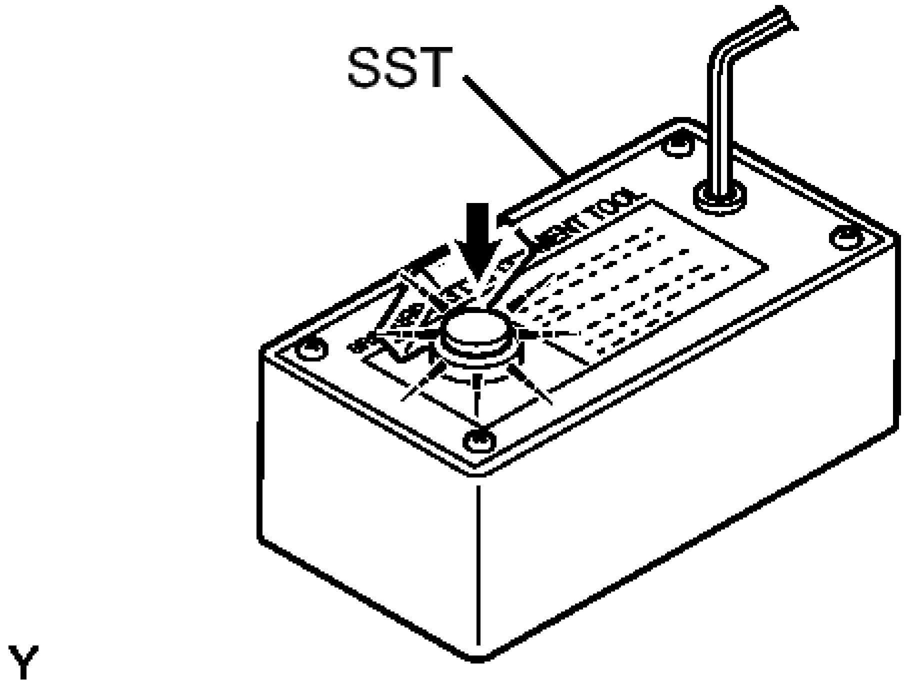

Fig. 12: Identifying SST Activation Switch
Courtesy of TOYOTA MOTOR SALES, U.S.A., INC.

WARNING:

- **Do not connect the yellow SST connector to the airbag.**
- **If the LED comes on when the activation switch is not being pressed, SST is malfunctioning. Replace SST.**

3. Disconnect SST from the 12 V battery.

b. Refer to Precaution.

for Separate Type Yaw Rate Sensor: Refer to **PRECAUTION**

for Built-in Type Yaw Rate Sensor: Refer to **PRECAUTION**

c. Remove the lower steering column cover. Refer to **REMOVAL - Step 7** .
d. Disconnect the cable from the negative (-) auxiliary battery terminal.

WARNING: **Wait at least 90 seconds after disconnecting the cable from the negative (-) auxiliary battery terminal to disable the SRS system.**

e. Disconnect the yellow airbag connector from the spiral cable.
    1. Slide the slider to release the lock, and then disconnect the connector.

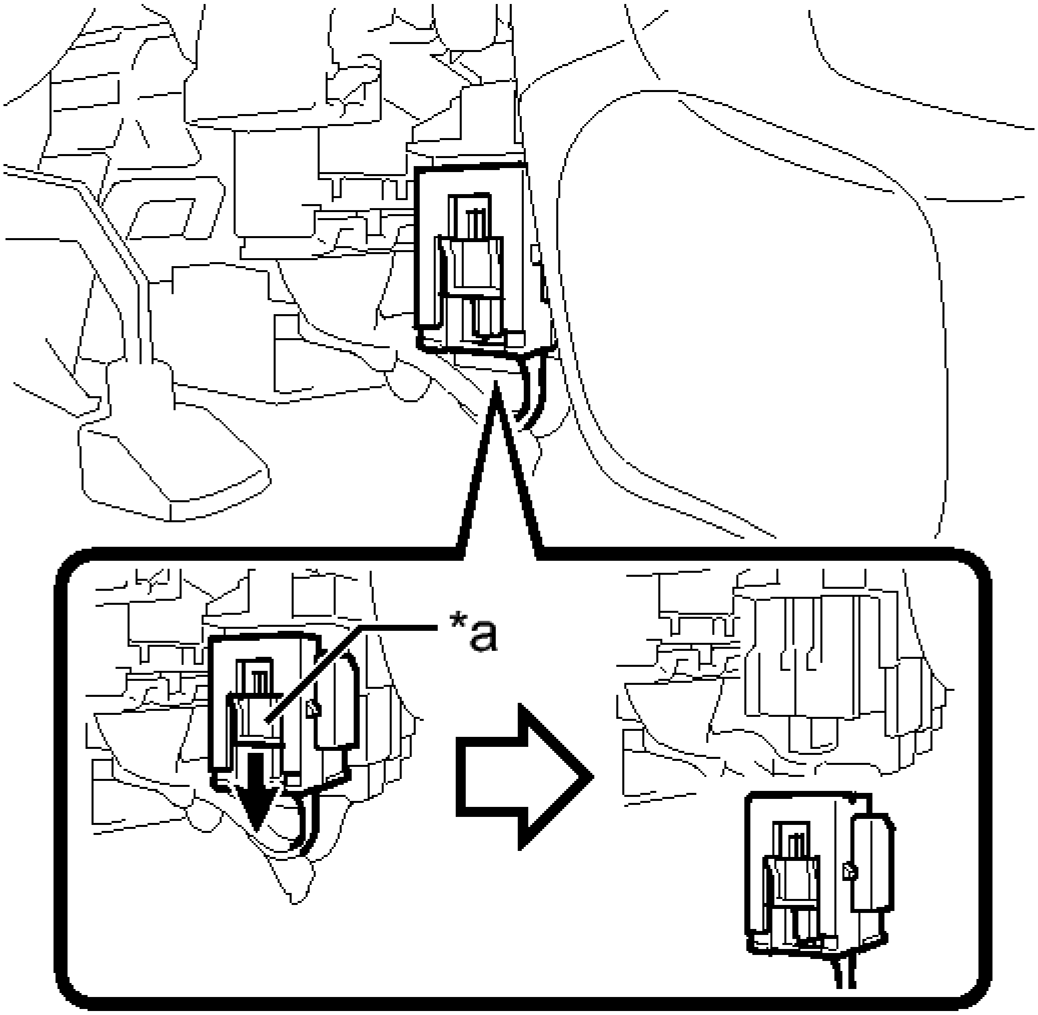

C

Fig. 13: Identifying Slider To Release Lock
Courtesy of TOYOTA MOTOR SALES, U.S.A., INC.

TEXT IN ILLUSTRATION

*a	Slider

NOTE: **When disconnecting any airbag connector, take care not to damage the airbag wire harness.**

f. Install SST.

WARNING: **Check that there is no looseness in the steering wheel assembly and horn button assembly.**

1. Connect the SST connector to the airbag connector of the spiral cable.

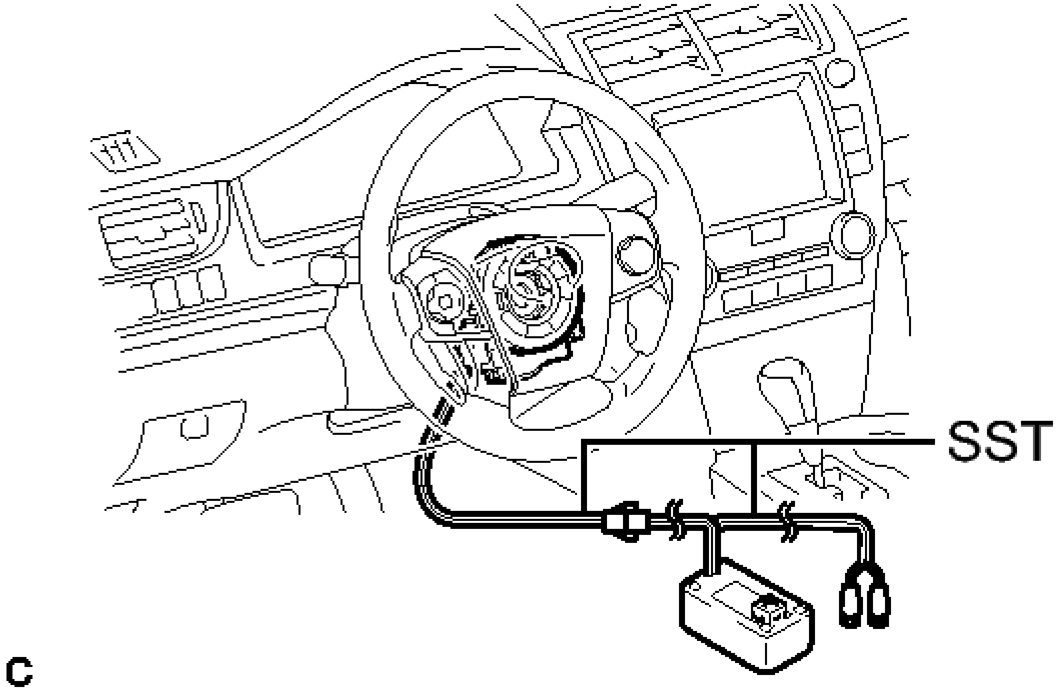

Fig. 14: Connecting SST Connector To Airbag Connector
Courtesy of TOYOTA MOTOR SALES, U.S.A., INC.

- **SST: 09082-00700**
- **SST: 09082-00780**

NOTE: **To avoid damaging the SST connector or wire harness, do not lock the secondary lock of the twin lock.**

2. Move SST at least 10 m (32.8 ft.) away from the front side window of the vehicle.

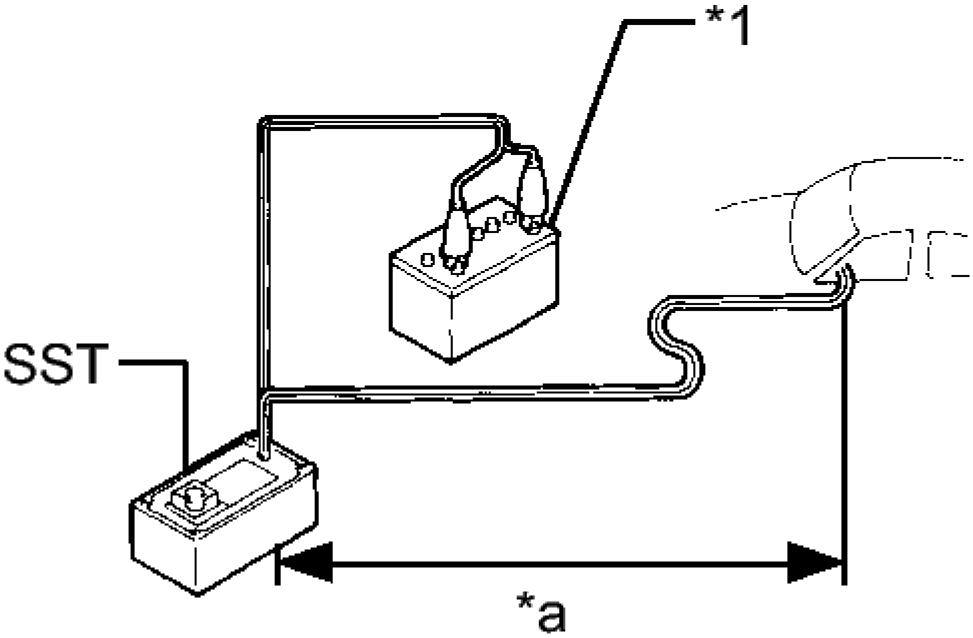

Fig. 15: Identifying Distance Between SST & Front Side Window
Courtesy of TOYOTA MOTOR SALES, U.S.A., INC.

TEXT IN ILLUSTRATION

*1	12 V Battery
*a	10 m (32.8 ft.) or more

3. Maintaining sufficient clearance for the SST wire harness in the front side window, close all doors and windows of the vehicle.

NOTE: **Take care not to damage the SST wire harness.**

4. Connect the red clip of SST to the positive (+) battery terminal and the black clip of SST to the negative (-) battery terminal.

g. Deploy the airbag.
  1. Check that no one is inside the vehicle or within a 10 m (32.8 ft.) radius of the vehicle.
  2. Press the SST activation switch to deploy the airbag.

WARNING:

- **Before deployment, make sure that no one is near the vehicle.**
- **The horn button assembly becomes extremely hot**

when the airbag is deployed, so do not touch it for at least 30 minutes after deployment.

- **Use gloves and safety glasses when handling a horn button assembly with a deployed airbag.**
- **Do not apply water etc. to a horn button assembly with a deployed airbag.**
- **Always wash your hands with water after completing the operation.**

HINT:

The airbag is deployed as the LED of the SST activation switch comes on.

3. **DISPOSE OF HORN BUTTON ASSEMBLY (When Not Installed in Vehicle)**

NOTE: **Be sure to observe the following procedure when deploying the airbag.**

HINT:

Prepare a 12 V battery as the power source to deploy the airbag.

a. Check the function of SST.

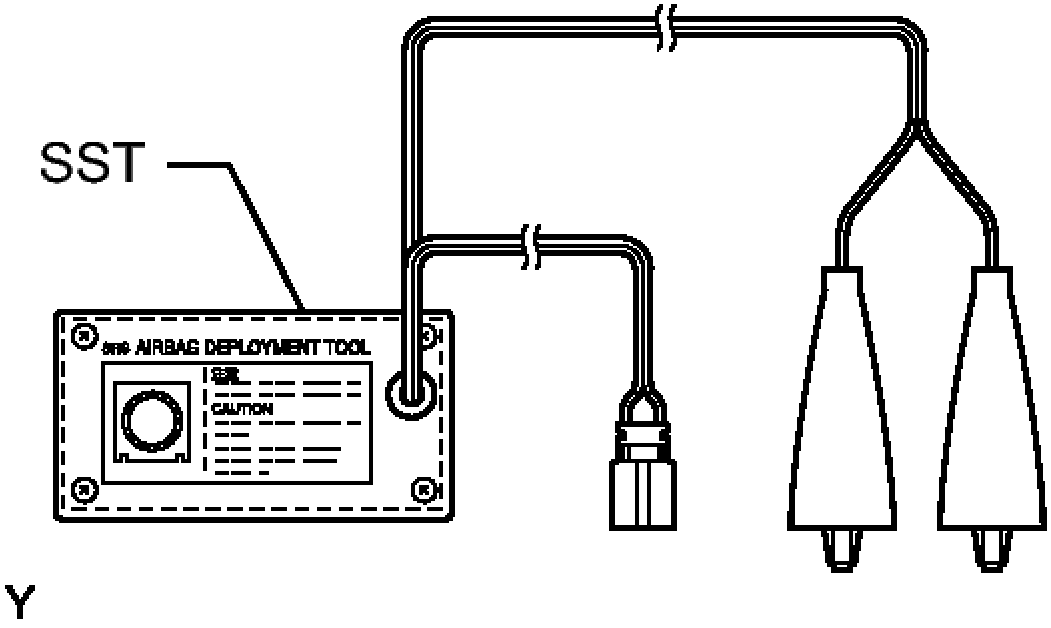

Fig. 16: Checking Function Of SST
Courtesy of TOYOTA MOTOR SALES, U.S.A., INC.

- **SST: 09082-00700**

WARNING: **When deploying the airbag, always use the specified SST:**

SRS Airbag Deployment Tool

1. Connect SST to the 12 V battery.

   Connect the red clip of SST to the positive (+) battery terminal and the black clip of SST to the negative (-) battery terminal.

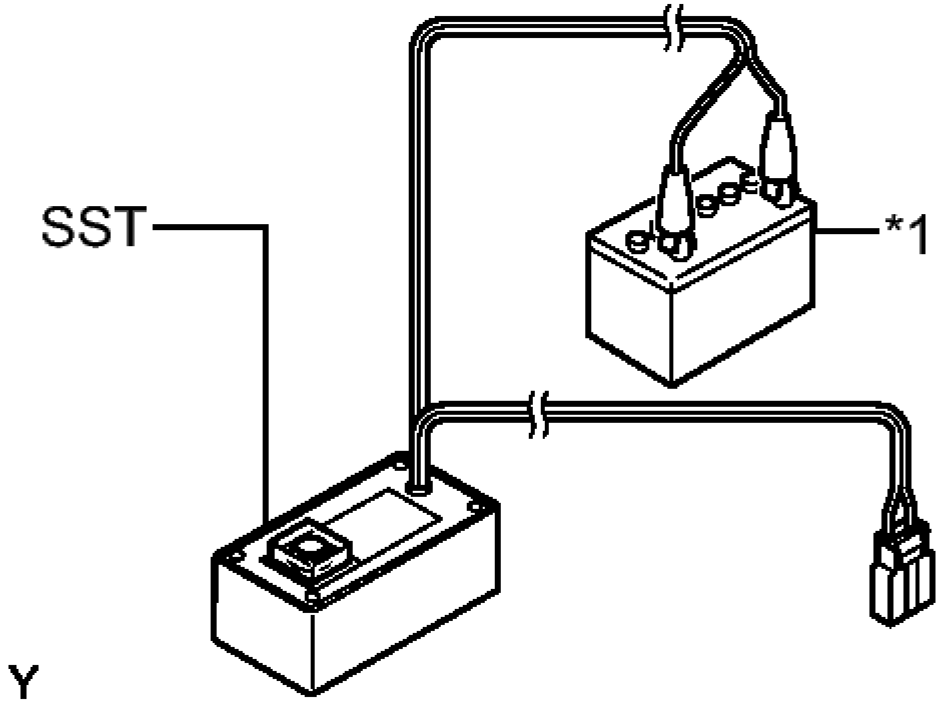

Fig. 17: Connecting SST To Battery
Courtesy of TOYOTA MOTOR SALES, U.S.A., INC.

TEXT IN ILLUSTRATION

*1	12 V Battery

2. Check the function of SST.

   Press the SST activation switch and check that the LED of the SST activation switch comes on.

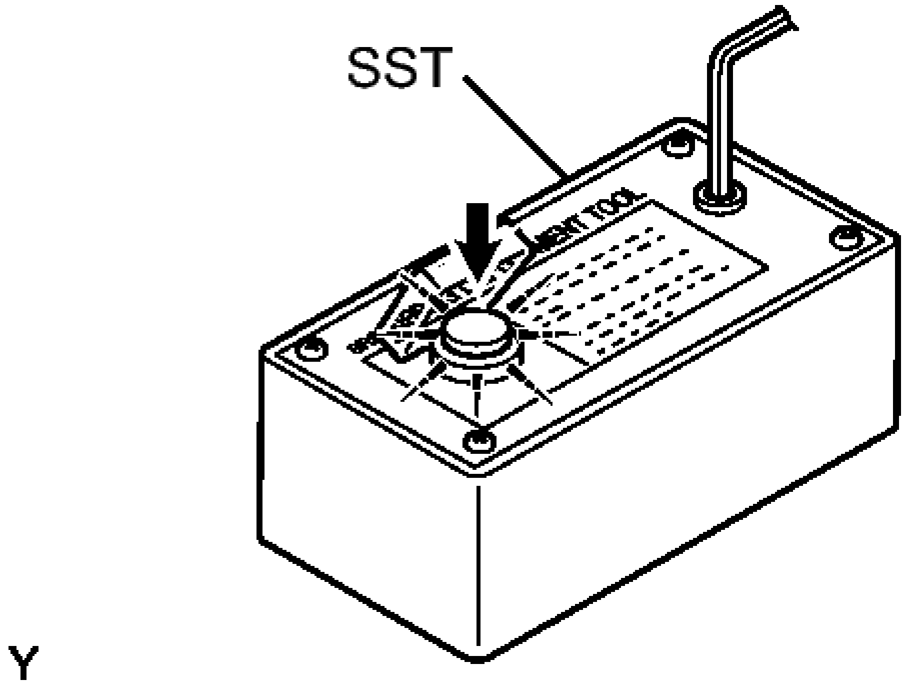

Fig. 18: Identifying SST Activation Switch
Courtesy of TOYOTA MOTOR SALES, U.S.A., INC.

WARNING:

- **Do not connect the yellow SST connector to the airbag.**
- **If the LED comes on when the activation switch is not being pressed, SST is malfunctioning. Replace SST.**

3. Disconnect SST from the 12 V battery.

b. Remove the horn button assembly. Refer to **REMOVAL**.

WARNING:

- **Before removing the horn button assembly, wait at least 90 seconds after turning the power switch off and disconnecting the cable from the negative (-) auxiliary battery terminal.**
- **When storing the horn button assembly, keep the airbag deployment side facing upward.**

c. Using braided wire, tie down the horn button assembly to an unneeded wheel.

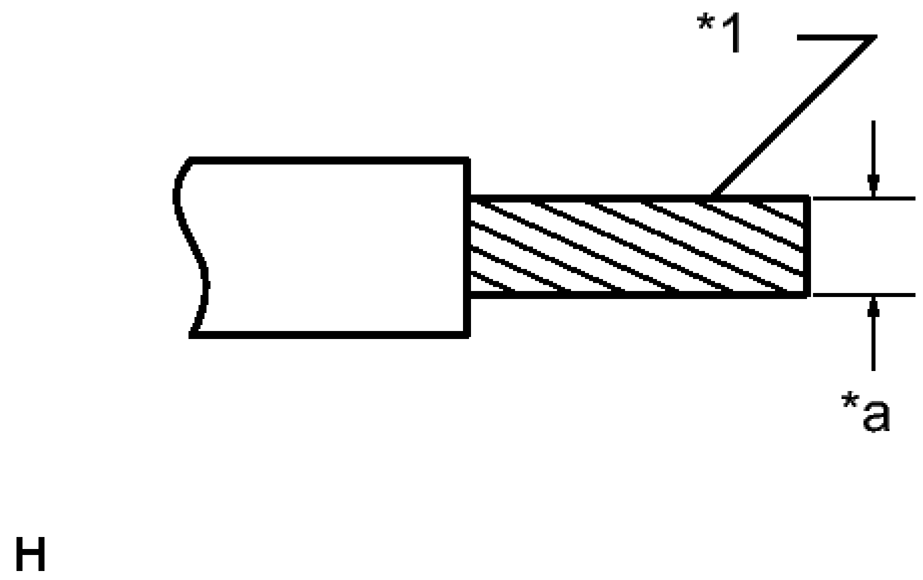

Fig. 19: Identifying Stripped Wire
Courtesy of TOYOTA MOTOR SALES, U.S.A., INC.

TEXT IN ILLUSTRATION

*1	Stripped Wire Section
*a	Wire Diameter

Wire

Stripped wire section

1.25 mm^2 (0.0019 in.^{2}) or more

WARNING: **If the wire harness is too thin or an alternative object is used to tie down the horn button assembly, it may snap when the airbag is deployed. Always use a wire for vehicle use with an area of at least 1.25 mm^2 (0.0019 in.^{2}).**

HINT:

To calculate the area of the stripped wire section:

Area = 3.14 x (Diameter)^2 / 4

1. After connecting the following SST to each other, connect them to the horn button assembly.

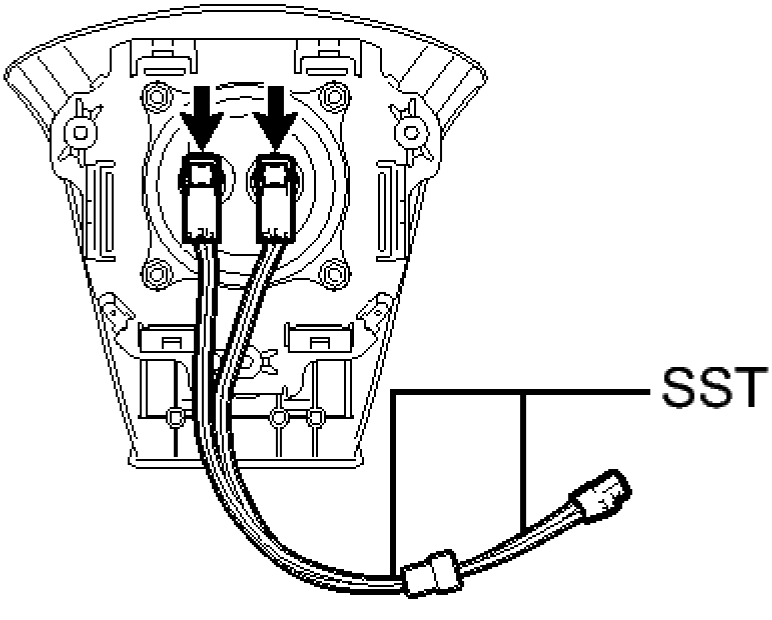

Fig. 20: Connecting SST To Horn Button Assembly
Courtesy of TOYOTA MOTOR SALES, U.S.A., INC.

- **SST: 09082-00802**
  09082-10801
  09082-30801

2. Wind 3 wires at least 2 times each around each of the snap pins.

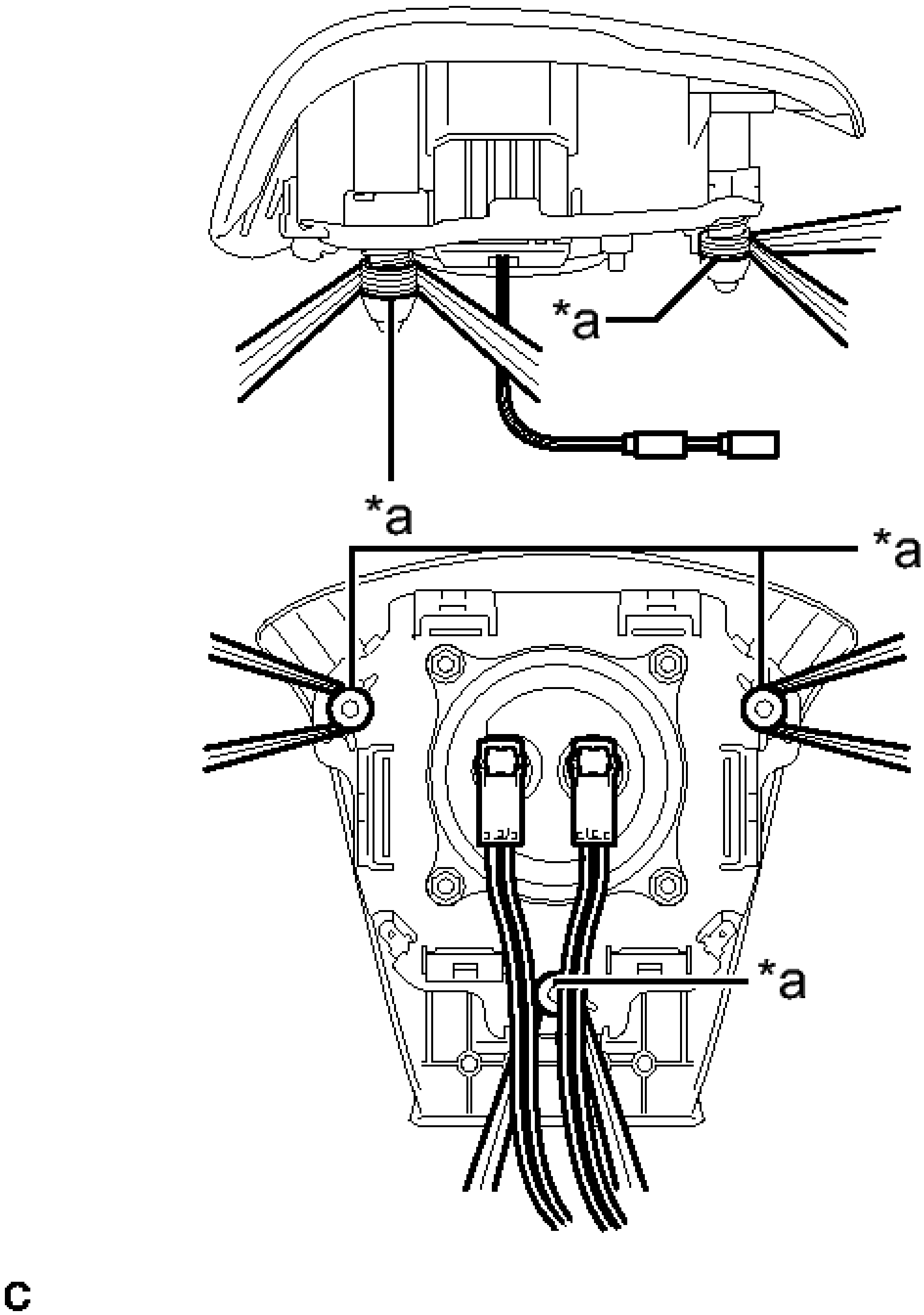

Fig. 21: Identifying Wires Wrapped Around Snap Pins
Courtesy of TOYOTA MOTOR SALES, U.S.A., INC.

TEXT IN ILLUSTRATION

	2

*a	times or more

WARNING:

- **Tightly wind the wires around the snap pins without any slack.**
- **Make sure that the wires are tight. If there is slack in the wires, the horn button assembly may break loose when the airbag is deployed.**

3. Face the airbag deployment side of the horn button assembly upward on top of an unneeded tire and wheel set. Separately tie the each sides of the horn button assembly to the wheel through the hub nut holes. Position the SST connector so that it hangs downward through the hub hole of the wheel.

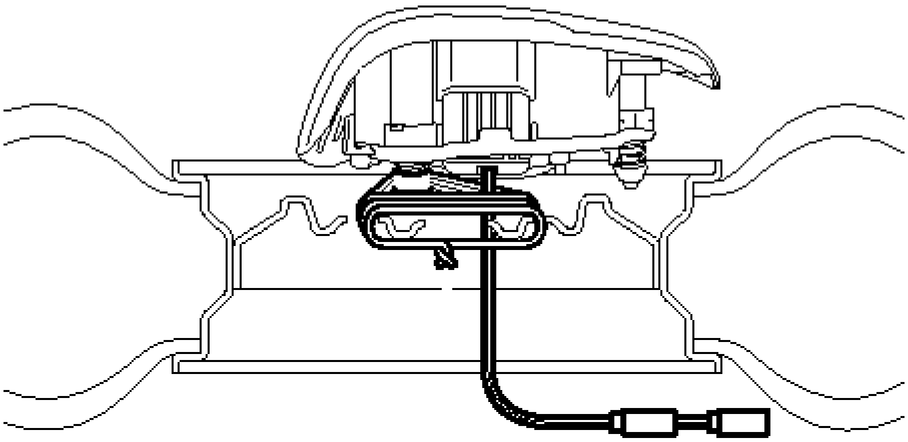

C

Fig. 22: Identifying Face Of Airbag Deployment Side Of Steering Pad Component Upward
Courtesy of TOYOTA MOTOR SALES, U.S.A., INC.

Minimum tire size

Width

185 mm (7.28 in.)

Inner diameter

360 mm (1.18 ft.)

WARNING:

- **Make sure that the wires are tight. If there is slack in the wires, the horn button assembly may break loose when the airbag is deployed.**
- **Always tie down the horn button assembly with the airbag deployment side facing upward.**

NOTE: **The wheel will be damaged by the airbag deployment, so use an unneeded wheel.**

d. Install SST.

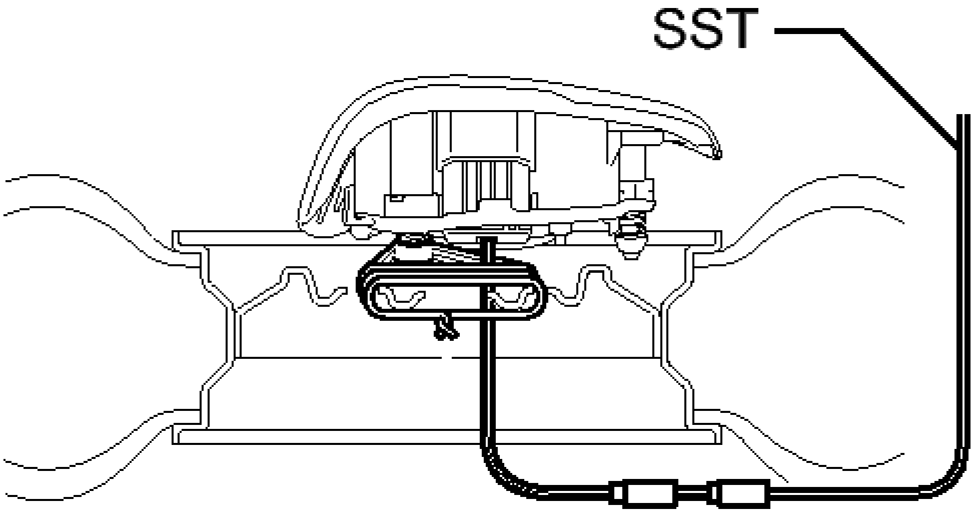

Fig. 23: Connect SST Connector
Courtesy of TOYOTA MOTOR SALES, U.S.A., INC.

WARNING: **Place the wheel on level ground.**

1. Connect the SST connector.
   - **SST: 09082-00700**

NOTE: **To avoid damaging the SST connector or wire harness, do not lock the secondary lock of the twin lock. Also, secure some slack for the SST wire harness inside the disc wheel.**

2. Move SST at least 10 m (32.8 ft.) away from the airbag tied down to the wheel.

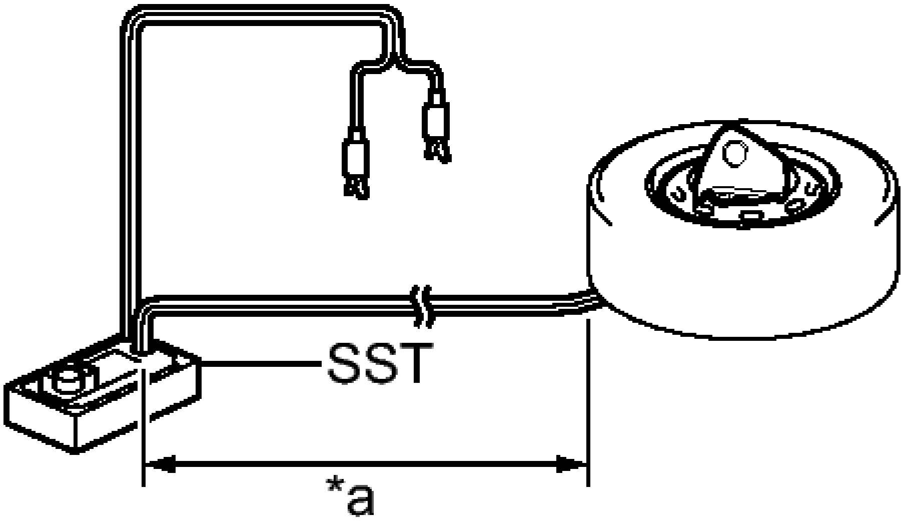

C

Fig. 24: Identifying SST & Airbag Distance
Courtesy of TOYOTA MOTOR SALES, U.S.A., INC.

TEXT IN ILLUSTRATION

*a	10 m (32.8 ft.) or more

e. Cover the horn button assembly (using a cardboard box).
    1. Cover the horn button assembly with a cardboard box.

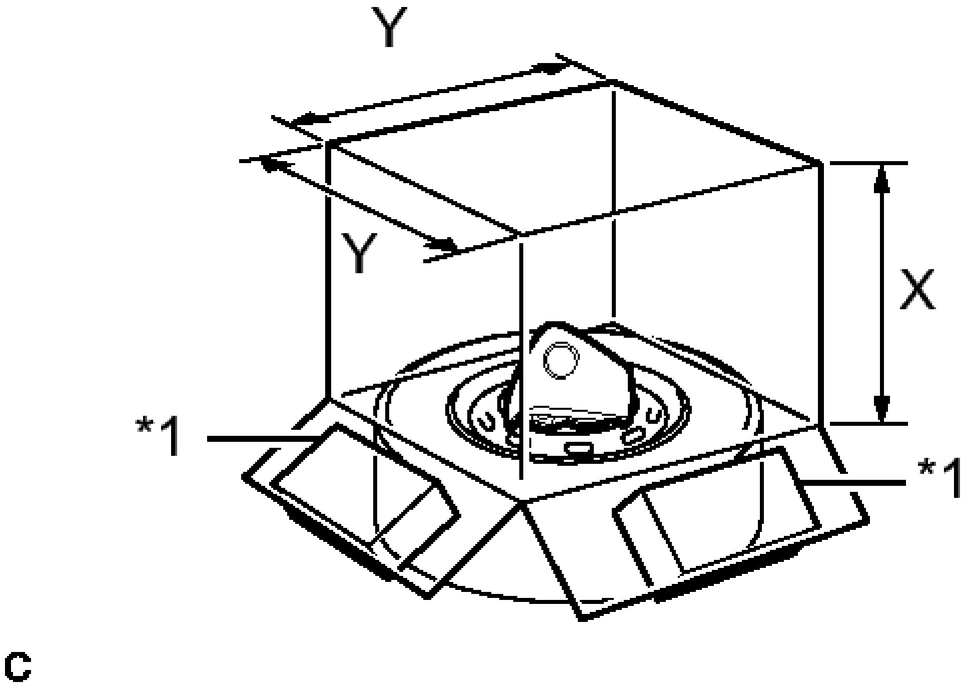

Fig. 25: Covering Steering Pad With Cardboard Box
Courtesy of TOYOTA MOTOR SALES, U.S.A., INC.

TEXT IN ILLUSTRATION

*1	Weight

2. Place weights on the cardboard box in 4 places totaling at least 190 N (19 kg, 42.7 lb).

   Minimum cardboard box size

   Must exceed the following dimensions

   X

   460 mm (1.51 ft.)

   Y

   650 mm (2.13 ft.)

NOTE:

- **When dimension Y of the cardboard box exceeds the diameter of the wheel and tire to which the horn button assembly is tied, X should be the following size.**

  X = 460 mm (1.51 ft.) + width of tire

- **If a cardboard box smaller than the specified size is used, it may be broken by the shock from the airbag deployment.**

f. Cover the horn button assembly (using tires).

   1. Place at least 3 tires without wheels onto the wheel and tire to which the horn button assembly is tied.

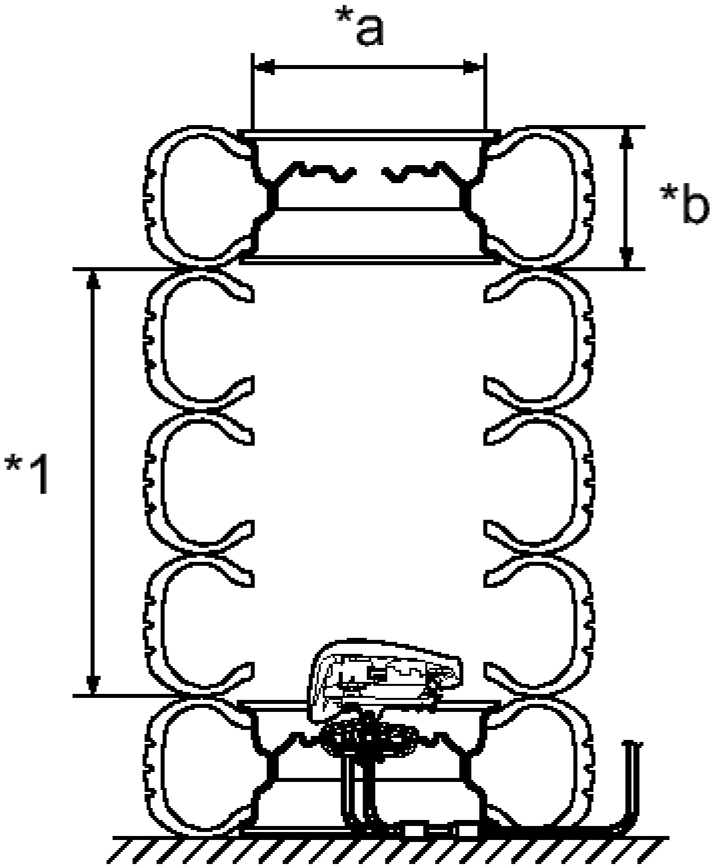

C

Fig. 26: Covering Horn Button Assembly (Using Tires)
Courtesy of TOYOTA MOTOR SALES, U.S.A., INC.

TEXT IN ILLUSTRATION

*1	Tires (3 or more)
*a	Inner Diameter

*b	Width

Minimum tire size

Width

185 mm (7.28 in.)

Inner diameter

360 mm (1.18 ft.)

2. Place a wheel and tire on top.

WARNING: Do not use tires with wheels except for on the top and bottom.

NOTE:

- **The tires may be damaged by the airbag deployment, so use unneeded tires.**
- **Do not place the SST connector under the tire because it could be damaged.**

3. Tie the tires together with the 2 wires.

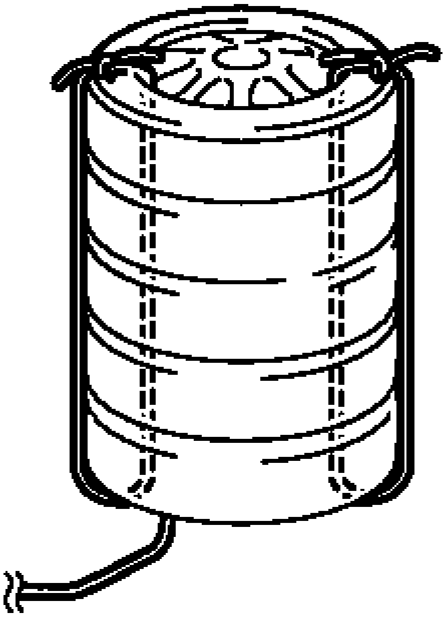

Fig. 27: Identifying Tires Tied Together With Wires

Courtesy of TOYOTA MOTOR SALES, U.S.A., INC.

WARNING: Make sure that the wires are tight. Looseness in the wires results in the tires breaking loose when the airbag is deployed.

g. Deploy the airbag.
   1. Connect the red clip of SST to the positive (+) battery terminal and the black clip of SST to the negative (-) battery terminal.

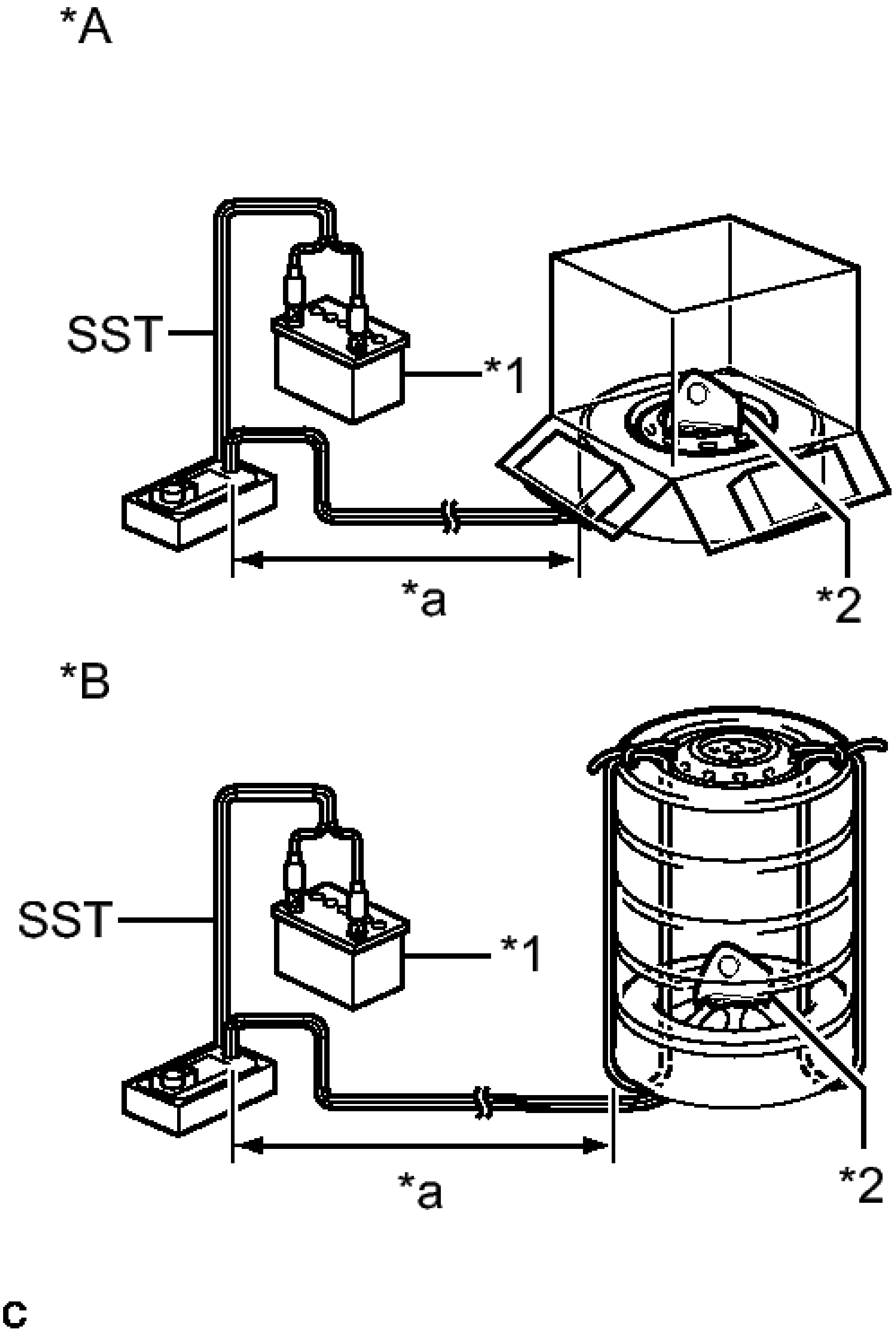
*A
SST
*1
*a
*2
*B
SST
*1
*a
*2
C

Fig. 28: Connecting SST To Battery
Courtesy of TOYOTA MOTOR SALES, U.S.A., INC.

TEXT IN ILLUSTRATION

	Using a

*A	Cardboard Box
*B	Using Tires
*1	12 V Battery
*2	Horn Button Assembly
*a	10 m (32.8 ft.) or more

2. Check that no one is within a 10 m (32.8 ft.) radius of the wheel to which the horn button assembly is tied.
3. Press the SST activation switch to deploy the airbag.

WARNING: **Before deployment, make sure that no one is near the airbag.**

HINT:

The airbag is deployed as the LED of the SST activation switch comes on.

h. Dispose of the horn button assembly.

WARNING:

- **The horn button assembly becomes extremely hot when the airbag is deployed, so do not touch it for at least 30 minutes after deployment.**
- **Use gloves and safety glasses when handling a horn button assembly with a deployed airbag.**
- **Do not apply water etc. to a horn button assembly with a deployed airbag.**
- **Always wash your hands with water after completing the operation.**

1. Remove the horn button assembly from the wheel.
2. Place the horn button assembly in a plastic bag, tie it tightly and dispose of it according to local regulations.

SPIRAL CABLE

COMPONENTS

ILLUSTRATION

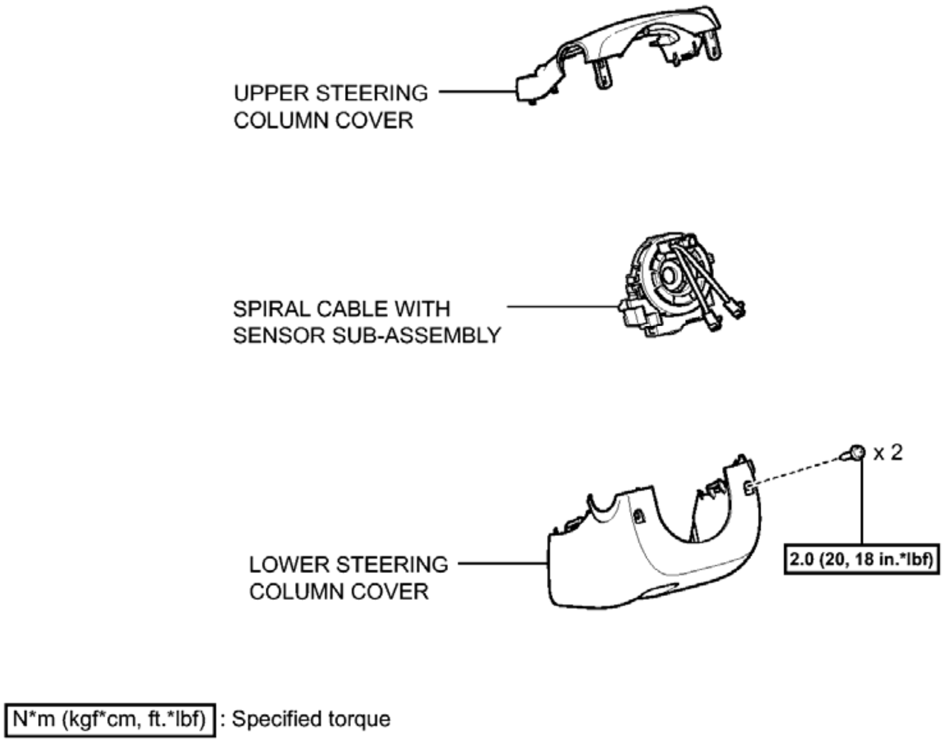
UPPER STEERING COLUMN COVER
SPIRAL CABLE WITH SENSOR SUB-ASSEMBLY
x 2
LOWER STEERING COLUMN COVER
2.0 (20, 18 in.*lbf)
N*m (kgf*cm, ft.*lbf) : Specified torque

c

Fig. 29: Identifying Spiral Cable Replacement Components With Torque Specifications (1 Of 2)
Courtesy of TOYOTA MOTOR SALES, U.S.A., INC.

ILLUSTRATION

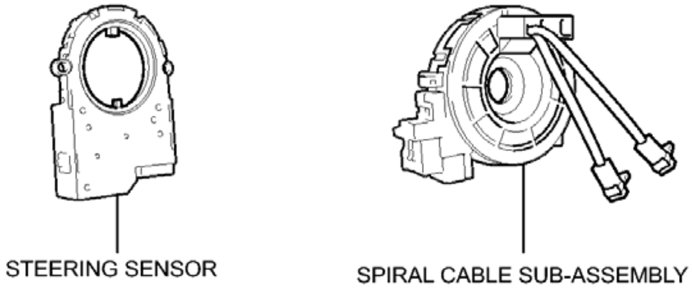
STEERING SENSOR
SPIRAL CABLE SUB-ASSEMBLY

c

Fig. 30: Identifying Spiral Cable Replacement Components With Torque Specifications (2 Of 2)
Courtesy of TOYOTA MOTOR SALES, U.S.A., INC.

REMOVAL

REMOVAL

1. **REMOVE STEERING WHEEL ASSEMBLY**

   Refer to **REMOVAL**

2. **ALIGN FRONT WHEELS FACING STRAIGHT AHEAD**
3. **INSPECT SPIRAL CABLE WITH SENSOR SUB-ASSEMBLY**
   a. Check the colored part as shown in the illustration.

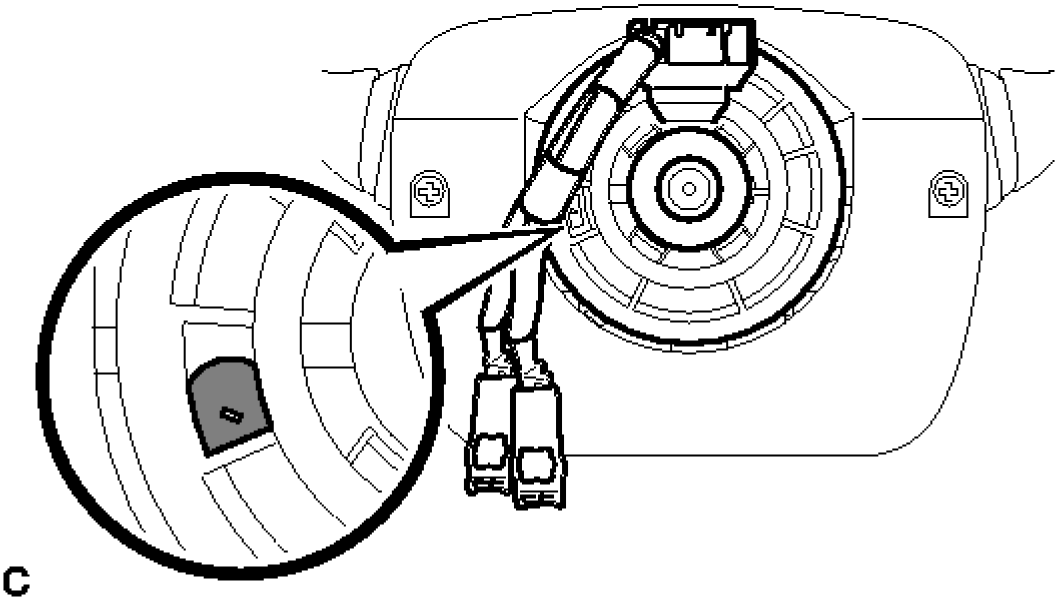

Fig. 31: Inspecting Spiral Cable Sub-Assembly
Courtesy of TOYOTA MOTOR SALES, U.S.A., INC.

TEXT IN ILLUSTRATION

▨	Colored Part

If the colored part shown in the illustration cannot be confirmed, it is possible that the spiral cable sub-assembly is broken. Replace the spiral cable with sensor sub-assembly with a new one.

4. **REMOVE LOWER STEERING COLUMN COVER** . Refer to **REMOVAL - Step 7**
5. **REMOVE UPPER STEERING COLUMN COVER** . Refer to **REMOVAL - Step 8**
6. **REMOVE SPIRAL CABLE WITH SENSOR SUB-ASSEMBLY**

NOTE:

- **Do not replace the spiral cable with sensor sub-assembly with the auxiliary battery connected and the power switch on (IG).**
- **Do not rotate the spiral cable with sensor sub-assembly without the steering wheel with the auxiliary battery connected and the power switch on (IG).**
- **Ensure that the steering wheel is installed and aligned straight when inspecting the steering sensor.**

a. Check that the power switch is off.
b. Check that the cable is disconnected from the negative (-) auxiliary battery terminal.
c. Check that the front wheels are facing straight ahead.
d. Slide the slider to release the lock, and then disconnect the yellow airbag connector from the spiral cable with sensor sub-assembly.

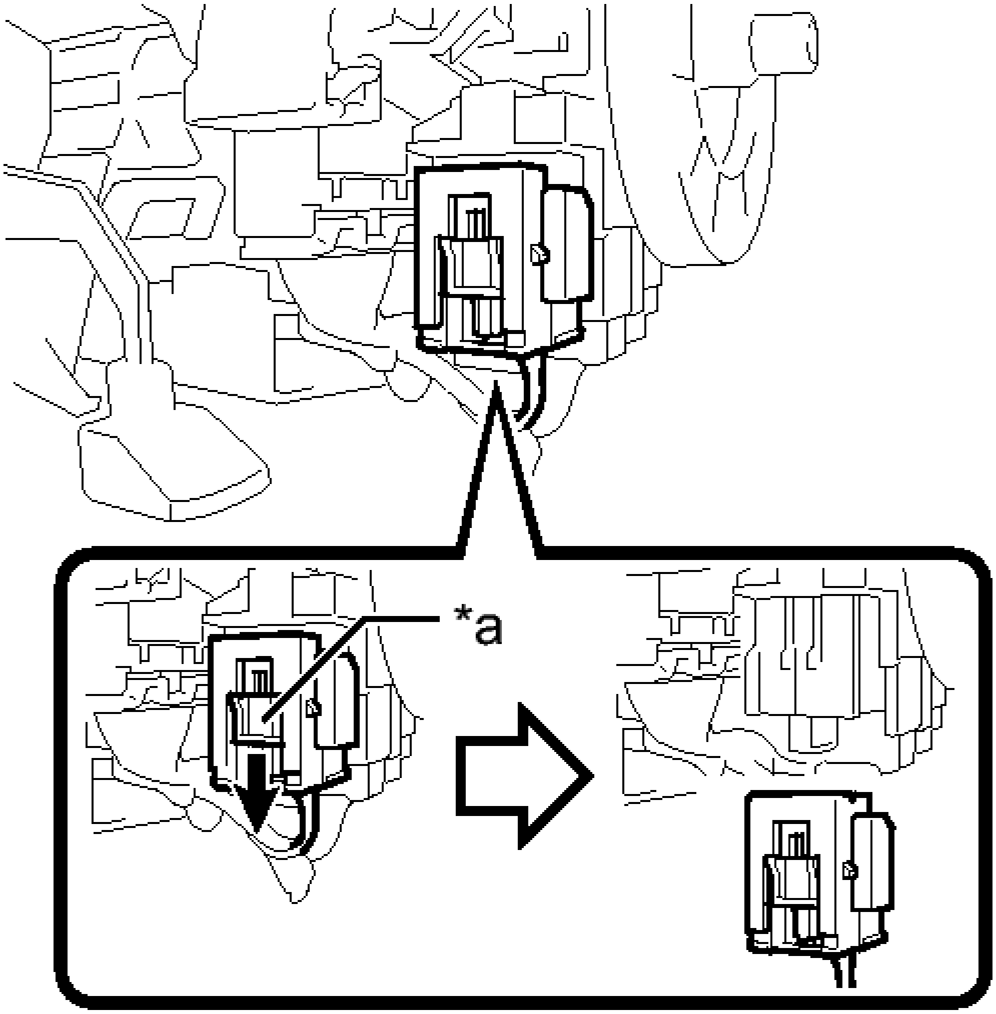

C

Fig. 32: Disconnecting Yellow Airbag Connector From Spiral Cable
Courtesy of TOYOTA MOTOR SALES, U.S.A., INC.

TEXT IN ILLUSTRATION

*a	Slider

NOTE: **When disconnecting any airbag connector, take care not to damage the airbag wire harness.**

e. Disconnect the other connector from the spiral cable with sensor sub-assembly.
f. Disengage the 3 claws to remove the spiral cable with sensor sub-assembly.

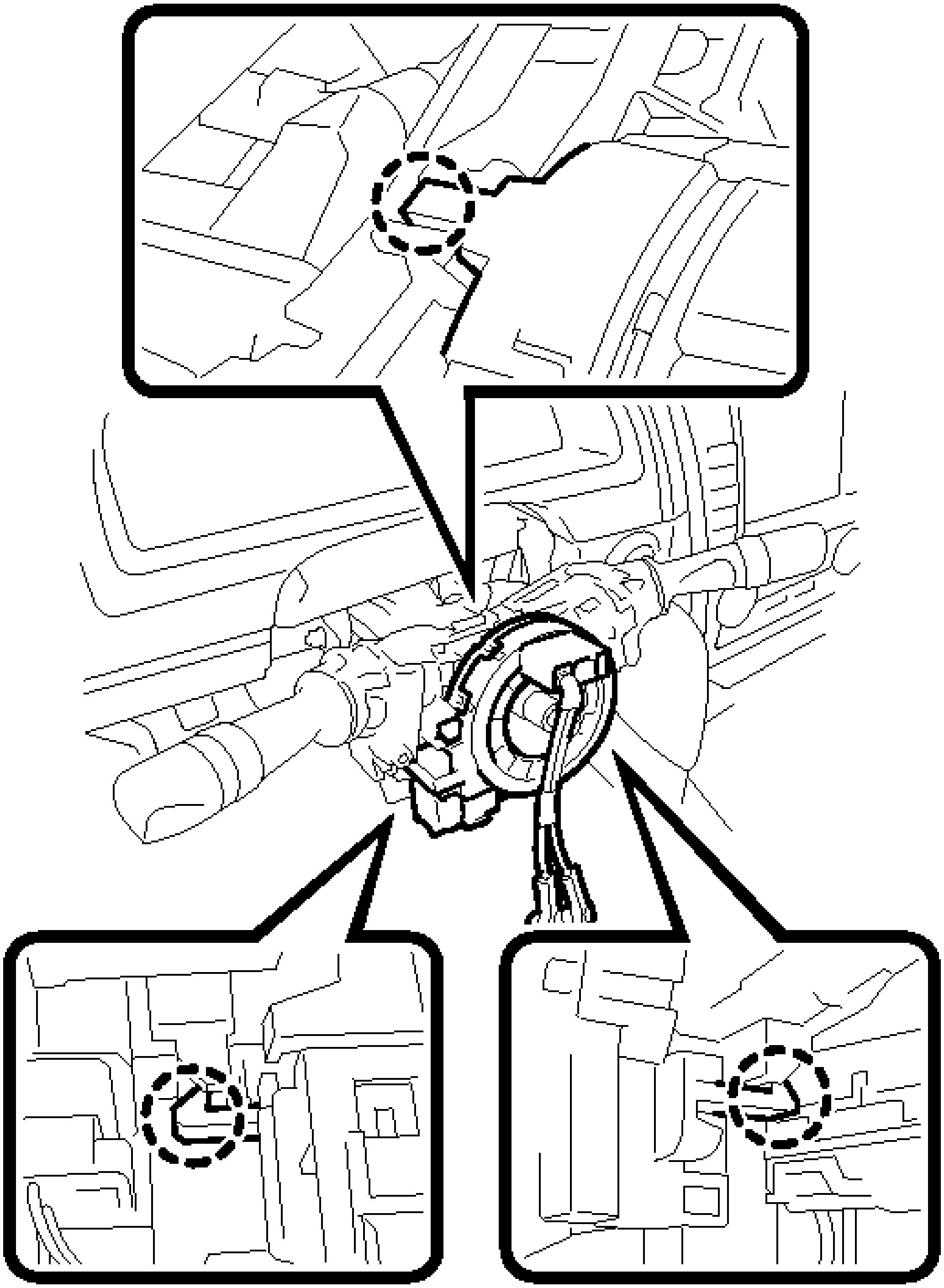

Fig. 33: Locating Spiral Cable Claws
Courtesy of TOYOTA MOTOR SALES, U.S.A., INC.

7. **REMOVE SPIRAL CABLE SUB-ASSEMBLY**

NOTE:

- **Remove the spiral cable sub-assembly from the steering sensor only when replacing it or the steering sensor.**
- **Removing the steering sensor from the spiral cable sub-assembly without using a lock pin may result in a misaligned center position of the steering sensor. Therefore, make sure to use the lock pin provided with a new spiral cable sub-assembly or steering sensor when removing the steering sensor from the spiral cable sub-assembly.**
- **When replacing the steering sensor: Refer to REMOVAL**

a. Install the lock pin to the steering sensor.

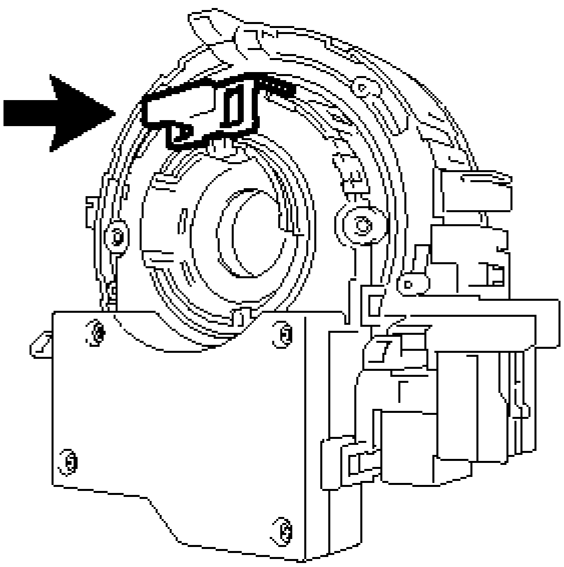

Fig. 34: Locating Steering Sensor Lock Pin
Courtesy of TOYOTA MOTOR SALES, U.S.A., INC.

NOTE:

- **Use the lock pin provided with a new spiral cable sub-assembly.**
- **Do not remove the lock pin before the spiral cable sub-assembly is installed to the steering sensor.**

b. Disengage the 6 claws and 2 pins to remove the spiral cable sub-assembly from the steering sensor.

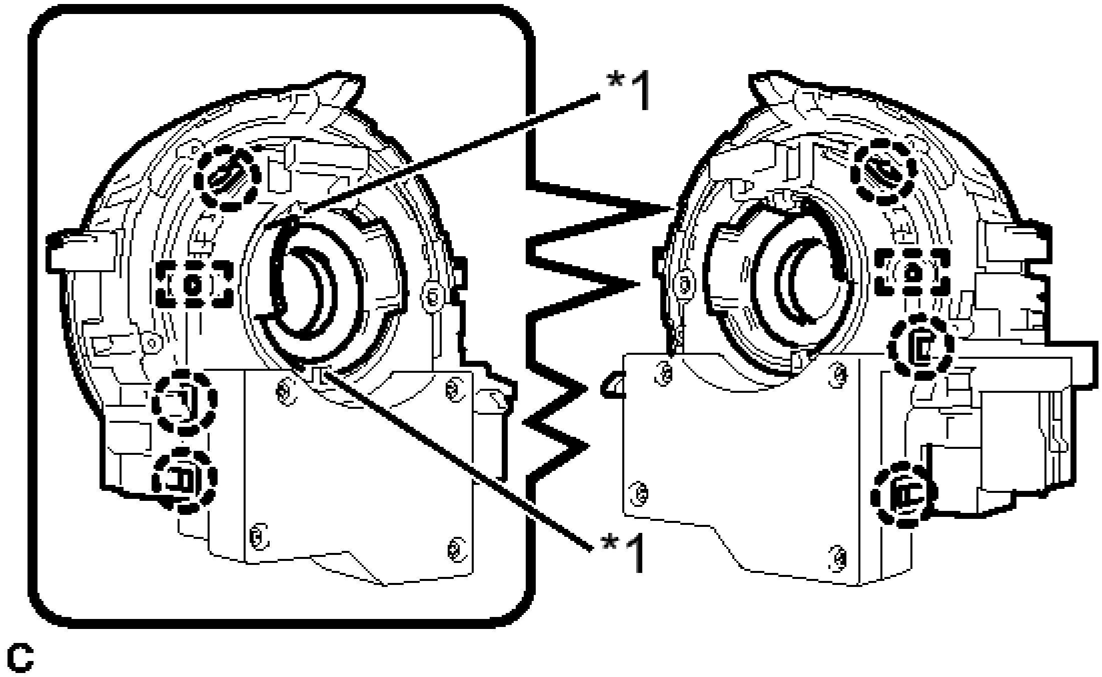

Fig. 35: Locating Spiral Cable Sub-Assembly Lock Pin, Guides, Pins & Claws
Courtesy of TOYOTA MOTOR SALES, U.S.A., INC.

NOTE:

- **Do not damage the claw of the steering sensor.**
- **Do not damage the guide.**

TEXT IN ILLUSTRATION

*1	Guide

INSPECTION

INSPECTION

1. **INSPECT SPIRAL CABLE SUB-ASSEMBLY**

NOTE:

- **Do not remove the steering sensor from the spiral cable sub-assembly.**
- **As the spiral cable sub-assembly may break, do not rotate the spiral cable sub-assembly more than the specified amount.**

a. Remove the spiral cable with sensor sub-assembly from the vehicle See step 6.
b. Visually check for defects with the spiral cable sub-assembly.
    1. The defects are as follows:
        - Scratches

- Small cracks
- Dents
- Chips
- Cracks or other damage to the connector

OK

No defects are found.

If any of the defects is found, replace the spiral cable sub-assembly with a new one.

c. Check the spiral cable sub-assembly.

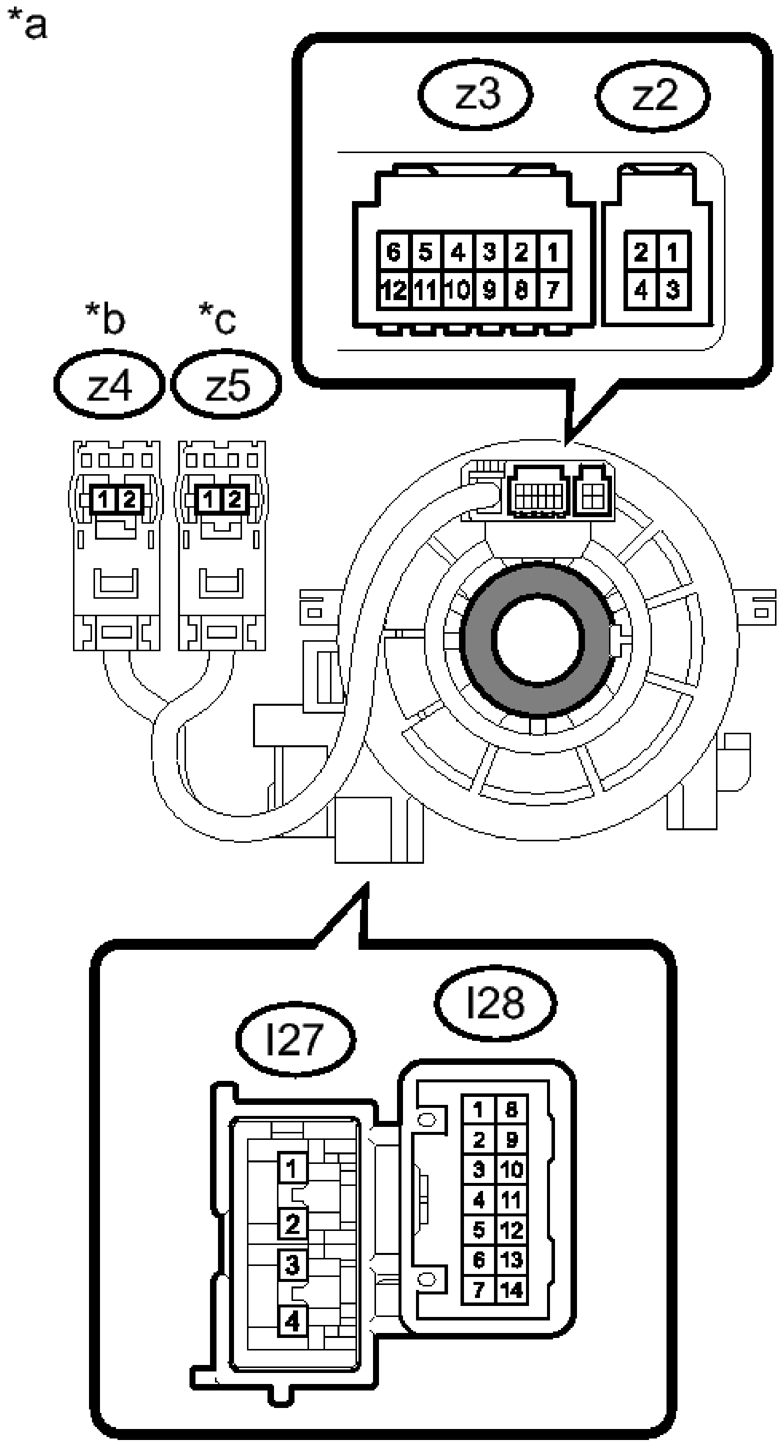
*a
z3
z2
6 5 4 3 2 1
12 11 10 9 8 7
2 1
4 3
*b
*c
z4
z5
1 2
1 2
I27
I28
1
2
3
4
1 8
2 9
3 10
4 11
5 12
6 13
7 14

C

Fig. 36: Identification Spiral Cable Sub-Assembly Connector Terminal Identification
Courtesy of TOYOTA MOTOR SALES, U.S.A., INC.

TEXT IN ILLUSTRATION

*a	Component without harness connected (Spiral Cable Sub-assembly)
*b	Color: Orange
*c	Color: Black
·	Interlock

NOTE: **When rotating the spiral cable, make sure to push on the interlock indicated in the illustration to release the interlock mechanism.**

1. Set the spiral cable sub-assembly to the center position See step 1.
2. Measure the resistance between each terminal of the spiral cable sub-assembly according to the table below.

   Standard Resistance

Tester Connection	Condition	Specified Condition
I28-1 (CCS) - z2-3	Always	3 ohms or less
I28-2 (ECC) - z2-4	Always	3 ohms or less
I28-3 (EAU) - z3-8	Always	3 ohms or less
I28-4 (AU3) - z3-9	Always	3 ohms or less
I28-5 (AU2) - z3-10	Always	3 ohms or less
I28-6 (AU1) - z3-11	Always	3 ohms or less
I28-9 (HO) - z3-1	Always	3 ohms or less
I28-10		

(+DP) - z3-2	Always	3 ohms or less
I28-11 (-DP) - z3-3	Always	3 ohms or less
I28-13 (IL+2) - z3-5	Always	3 ohms or less
I27-1 (D+) - z4-2 (D+)	Always	Below 1 ohms
I27-2 (D-) - z4-1 (D-)	Always	Below 1 ohms
I27-3 (D2-) - z5-1 (D2-)	Always	Below 1 ohms
I27-4 (D2+) - z5-2 (D2+)	Always	Below 1 ohms

3. After setting the spiral cable sub-assembly to the center position, rotate the spiral cable sub-assembly 2.5 times clockwise, and measure the resistance as shown in the table below. Then rotate the spiral cable sub-assembly 5 times counterclockwise, and measure the resistance as shown in the table below.

   Standard Resistance

Tester Connection	Condition	Specified Condition
I28-1 (CCS) - z2-3	Always	3 ohms or less
I28-2 (ECC) - z2-4	Always	3 ohms or less
I28-3 (EAU) - z3-8	Always	3 ohms or less
I28-4 (AU3) - z3-9	Always	3 ohms or less
I28-5 (AU2) - z3-10	Always	3 ohms or less
I28-6 (AU1) - z3-11	Always	3 ohms or less
I28-9 (HO)	Always	3 ohms or

- z3-1		less
I28-10 (+DP) - z3-2	Always	3 ohms or less
I28-11 (-DP) - z3-3	Always	3 ohms or less
I28-13 (IL+2) - z3-5	Always	3 ohms or less
I27-1 (D+) - z4-2 (D+)	Always	Below 1 ohms
I27-2 (D-) - z4-1 (D-)	Always	Below 1 ohms
I27-3 (D2-) - z5-1 (D2-)	Always	Below 1 ohms
I27-4 (D2+) - z5-2 (D2+)	Always	Below 1 ohms

4. After setting the spiral cable sub-assembly to the center position, rotate the spiral cable sub-assembly 2.5 times clockwise. Then while rotating the spiral cable sub-assembly 5 times counterclockwise, measure the resistance as shown in the table below.

   Standard Resistance

Tester Connection	**Condition**	**Specified Condition**
I28-1 (CCS) - z2-3	Always	3 ohms or less
I28-2 (ECC) - z2-4	Always	3 ohms or less
I28-3 (EAU) - z3-8	Always	3 ohms or less
I28-4 (AU3) - z3-9	Always	3 ohms or less
I28-5 (AU2) - z3-10	Always	3 ohms or less
I28-6 (AU1) - z3-11	Always	3 ohms or less

I28-9 (HO) - z3-1	Always	3 ohms or less
I28-10 (+DP) - z3-2	Always	3 ohms or less
I28-11 (-DP) - z3-3	Always	3 ohms or less
I28-13 (IL+2) - z3-5	Always	3 ohms or less
I27-1 (D+) - z4-2 (D+)	Always	Below 1 ohms
I27-2 (D-) - z4-1 (D-)	Always	Below 1 ohms
I27-3 (D2-) - z5-1 (D2-)	Always	Below 1 ohms
I27-4 (D2+) - z5-2 (D2+)	Always	Below 1 ohms

If the result is not as specified, replace the spiral cable with sensor sub-assembly.

INSTALLATION

INSTALLATION

1. **INSPECT SPIRAL CABLE SUB-ASSEMBLY**

NOTE: **If the steering sensor is installed to a misaligned spiral cable sub-assembly, DTCs for an abnormal steering sensor value such as DTC B1801, C1231 and DTC C1433 are stored and it is impossible to repair them. If this happens, replace the spiral cable with sensor sub-assembly with a new one.**

a. Check if the spiral cable sub-assembly is centered.

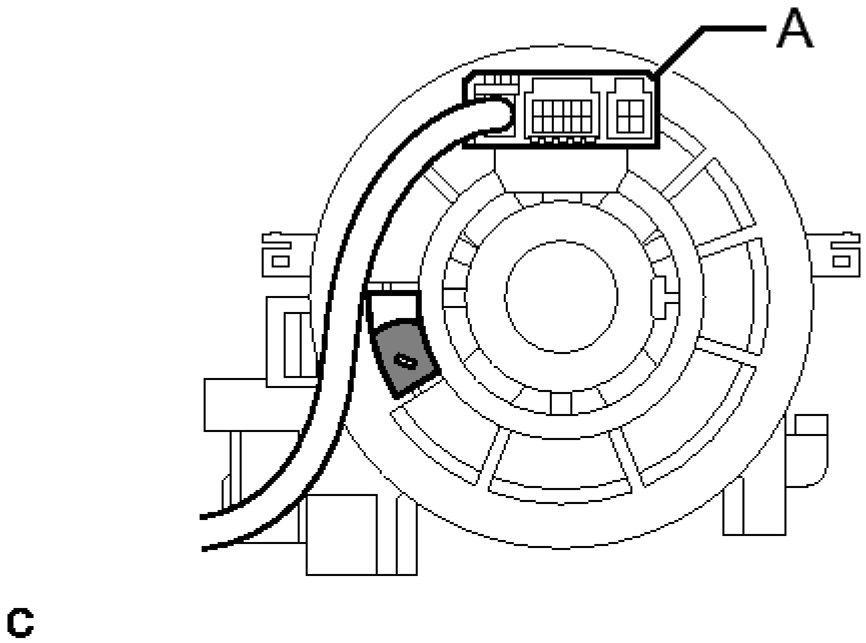

Fig. 37: Inspecting Spiral Cable Sub-Assembly
Courtesy of TOYOTA MOTOR SALES, U.S.A., INC.

TEXT IN ILLUSTRATION

▨	Colored Part

HINT:

When the spiral cable sub-assembly is centered, the part indicated by A is positioned at the top and the colored part shown in the illustration is visible.

b. If the spiral cable sub-assembly is not centered, center it.

If the cable cannot be centered, it is possible that the spiral cable sub-assembly is broken. Replace the spiral cable with sensor sub-assembly with a new one.

1. While pushing on the interlock indicated in the illustration, rotate the spiral cable sub-assembly counterclockwise slowly by hand until it stops.

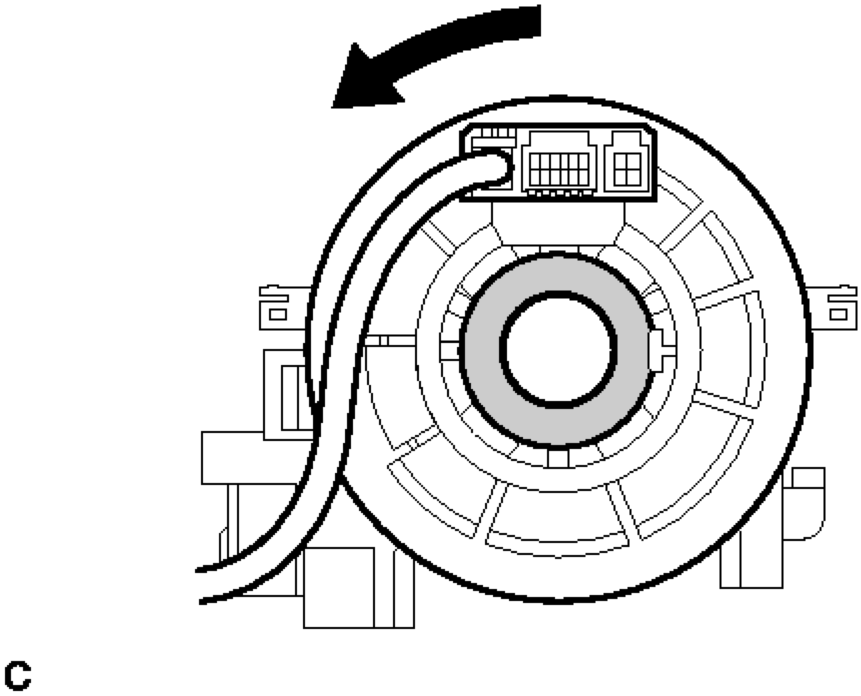

Fig. 38: Rotating Spiral Cable Sub-Assembly Counterclockwise
Courtesy of TOYOTA MOTOR SALES, U.S.A., INC.

TEXT IN ILLUSTRATION

Interlock

NOTE:

- **When rotating the spiral cable sub-assembly, make sure to push on the interlock indicated in the illustration to release the interlock mechanism.**
- **Do not turn the spiral cable sub-assembly using the airbag wire harness.**

2. Rotate the spiral cable sub-assembly clockwise approximately 2.5 turns to the position where the colored part shown in the illustration is visible.

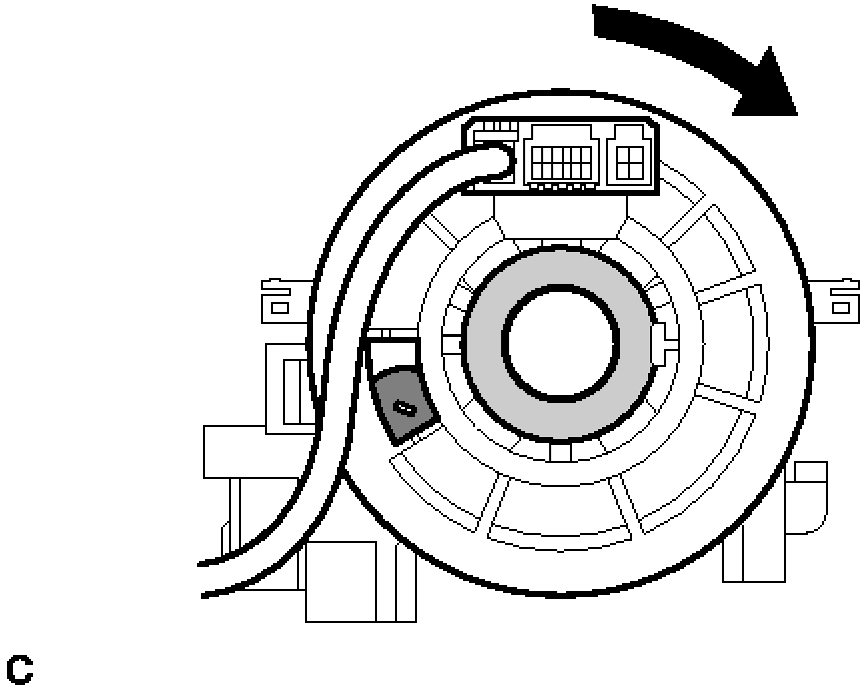

Fig. 39: Rotating Spiral Cable Sub-Assembly Clockwise
Courtesy of TOYOTA MOTOR SALES, U.S.A., INC.

TEXT IN ILLUSTRATION

	Colored Part
	Interlock

HINT:

The spiral cable sub-assembly will rotate approximately 2.5 turns to both the left and right from the center.

2. **INSTALL SPIRAL CABLE SUB-ASSEMBLY**
    a. Align the 2 pins and 2 guides, and engage the 6 claws to install the spiral cable sub-assembly to the steering sensor.

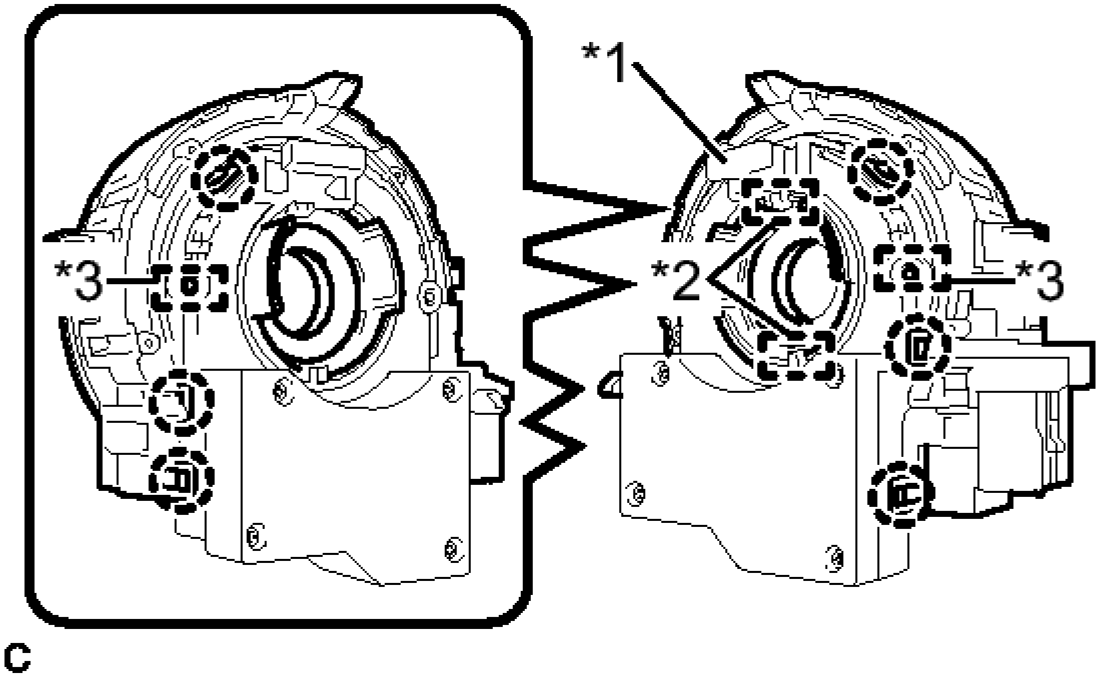

Fig. 40: Locating Spiral Cable Sub-Assembly Lock Pin, Guides, Pins & Claws
Courtesy of TOYOTA MOTOR SALES, U.S.A., INC.

TEXT IN ILLUSTRATION

*1	Lock Pin
*2	Guide
*3	Pin

NOTE:

- **The spiral cable sub-assembly can be rotated up to 30° even when the interlock is engaged. Therefore, make sure that both guides are aligned properly when installing the steering sensor to the spiral cable sub-assembly.**
- **Do not remove the lock pin before the spiral cable sub-assembly is installed to the steering sensor.**

b. Remove the lock pin from the steering sensor.

3. **ALIGN FRONT WHEELS TO FACE STRAIGHT AHEAD**
4. **INSTALL SPIRAL CABLE WITH SENSOR SUB-ASSEMBLY**

NOTE:

- **Do not replace the spiral cable with sensor sub-assembly with the auxiliary battery connected and the power switch on (IG).**
- **Do not rotate the spiral cable with sensor sub-assembly without the steering wheel with the auxiliary battery connected and the power switch on (IG).**

- **Ensure that the steering wheel is installed and aligned straight when inspecting the steering sensor.**

a. Check that the power switch is off.
b. Check that the cable is disconnected from the negative (-) auxiliary battery terminal.

WARNING: **Wait at least 90 seconds after disconnecting the cable from the negative (-) auxiliary battery terminal to disable the SRS system.**

c. Check that the front wheels are facing straight ahead.
d. Set the turn signal switch to the neutral position.

NOTE: **If it is not in the neutral position, the turn signal switch pin may snap.**

e. Engage the 3 claws to install the spiral cable with sensor sub-assembly.
f. Connect the each connector.

5. **INSTALL UPPER STEERING COLUMN COVER** . Refer to **INSTALLATION - Step 6**
6. **INSTALL LOWER STEERING COLUMN COVER** . Refer to **INSTALLATION - Step 7**
7. **INSPECT AND ADJUST SPIRAL CABLE WITH SENSOR SUB-ASSEMBLY**

NOTE: **Do not adjust the spiral cable with sensor sub-assembly with the auxiliary battery connected and the power switch on (IG).**

a. Check that the power switch is off.
b. Check that the cable is disconnected from the negative (-) auxiliary battery terminal.

WARNING: **Wait at least 90 seconds after disconnecting the cable from the negative (-) auxiliary battery terminal to disable the SRS system.**

c. Check if the spiral cable with sensor sub-assembly is centered.

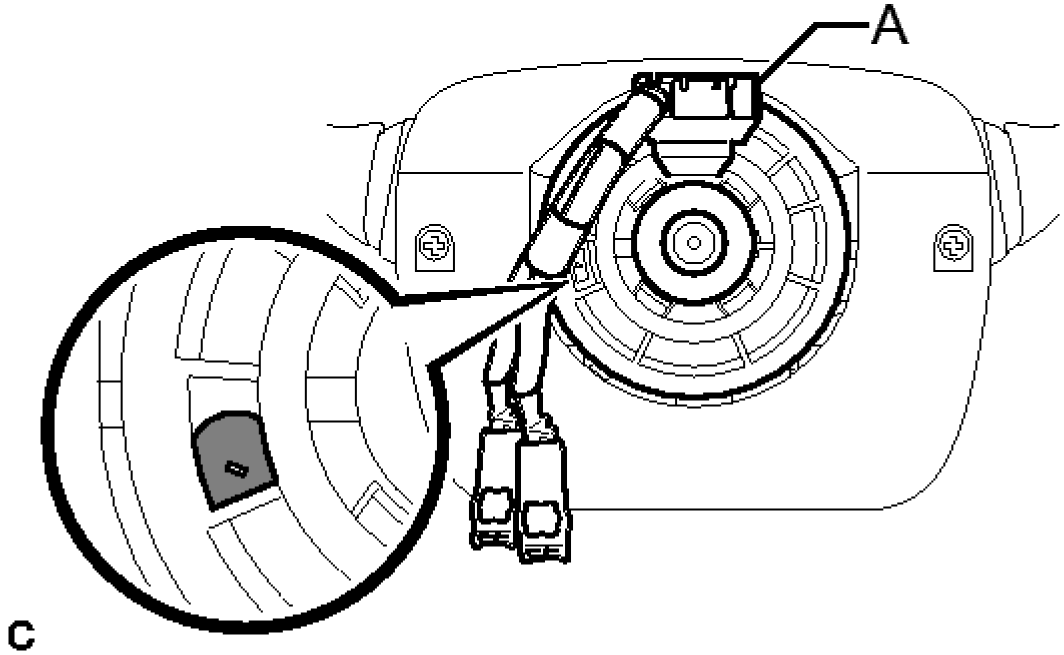

Fig. 41: Inspecting Spiral Cable Sub-Assembly
Courtesy of TOYOTA MOTOR SALES, U.S.A., INC.

TEXT IN ILLUSTRATION

	Colored Part

HINT:

When the spiral cable with sensor sub-assembly is centered, the part indicated by A is positioned at the top and the colored part shown in the illustration is visible.

d. If the spiral cable with sensor sub-assembly is not centered, center it.
    1. While pushing on the interlock indicated in the illustration, rotate the spiral cable with sensor sub-assembly counterclockwise slowly by hand until it stops.

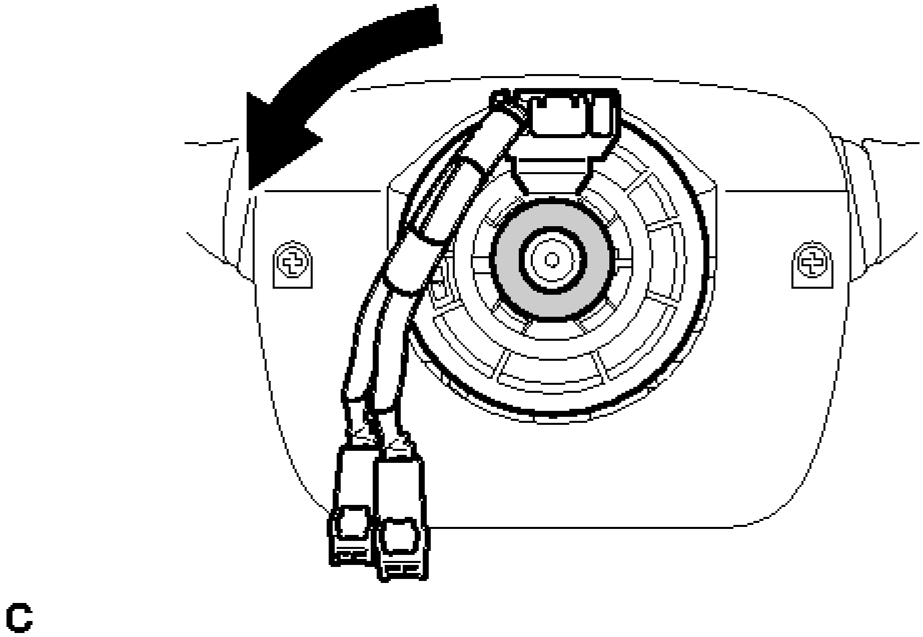

Fig. 42: Rotating Spiral Cable Sub-Assembly Counterclockwise
Courtesy of TOYOTA MOTOR SALES, U.S.A., INC.

TEXT IN ILLUSTRATION

Interlock

NOTE:

- **When rotating the spiral cable with sensor sub-assembly, make sure to push on the interlock indicated in the illustration to release the interlock mechanism.**
- **Do not turn the spiral cable with sensor sub-assembly using the airbag wire harness.**

2. Rotate the spiral cable with sensor sub-assembly clockwise approximately 2.5 turns to the position where the colored part shown in the illustration is visible.

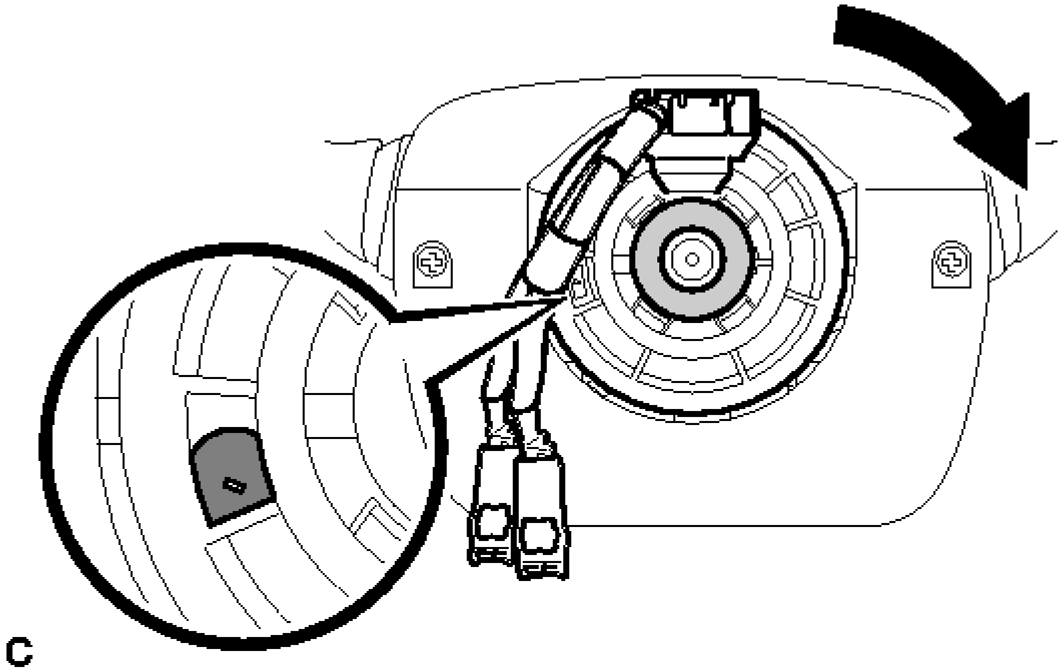

Fig. 43: Rotating Spiral Cable Sub-Assembly Clockwise
Courtesy of TOYOTA MOTOR SALES, U.S.A., INC.

TEXT IN ILLUSTRATION

	Colored Part
	Interlock

HINT:

The spiral cable sub-assembly will rotate approximately 2.5 turns to both the left and right from the center.

8. **INSTALL STEERING WHEEL ASSEMBLY**

   Refer to **INSTALLATION - Step 9**

9. **ADJUST PARKING ASSIST MONITOR SYSTEM (w/ Parking Assist Monitor System)**

   Refer to **CALIBRATION**

KNEE AIRBAG ASSEMBLY (FOR DRIVER SIDE)

COMPONENTS

ILLUSTRATION

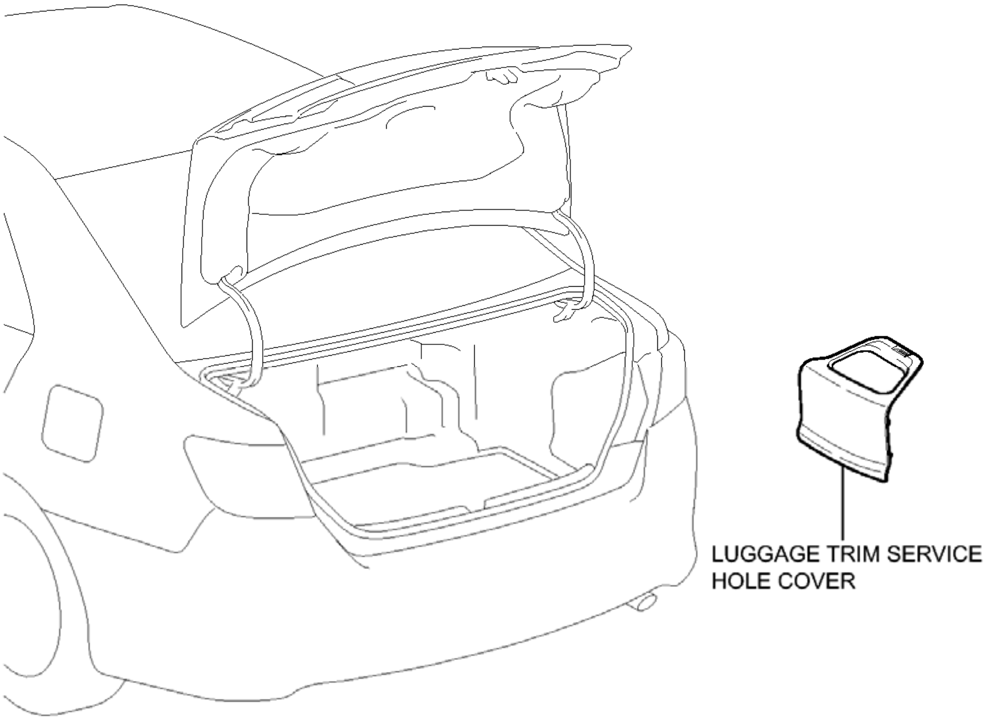
LUGGAGE TRIM SERVICE HOLE COVER
P

Fig. 44: Identifying Knee Airbag Assembly Replacement Components With Torque Specifications (For Driver Side) (1 Of 2)
Courtesy of TOYOTA MOTOR SALES, U.S.A., INC.

ILLUSTRATION

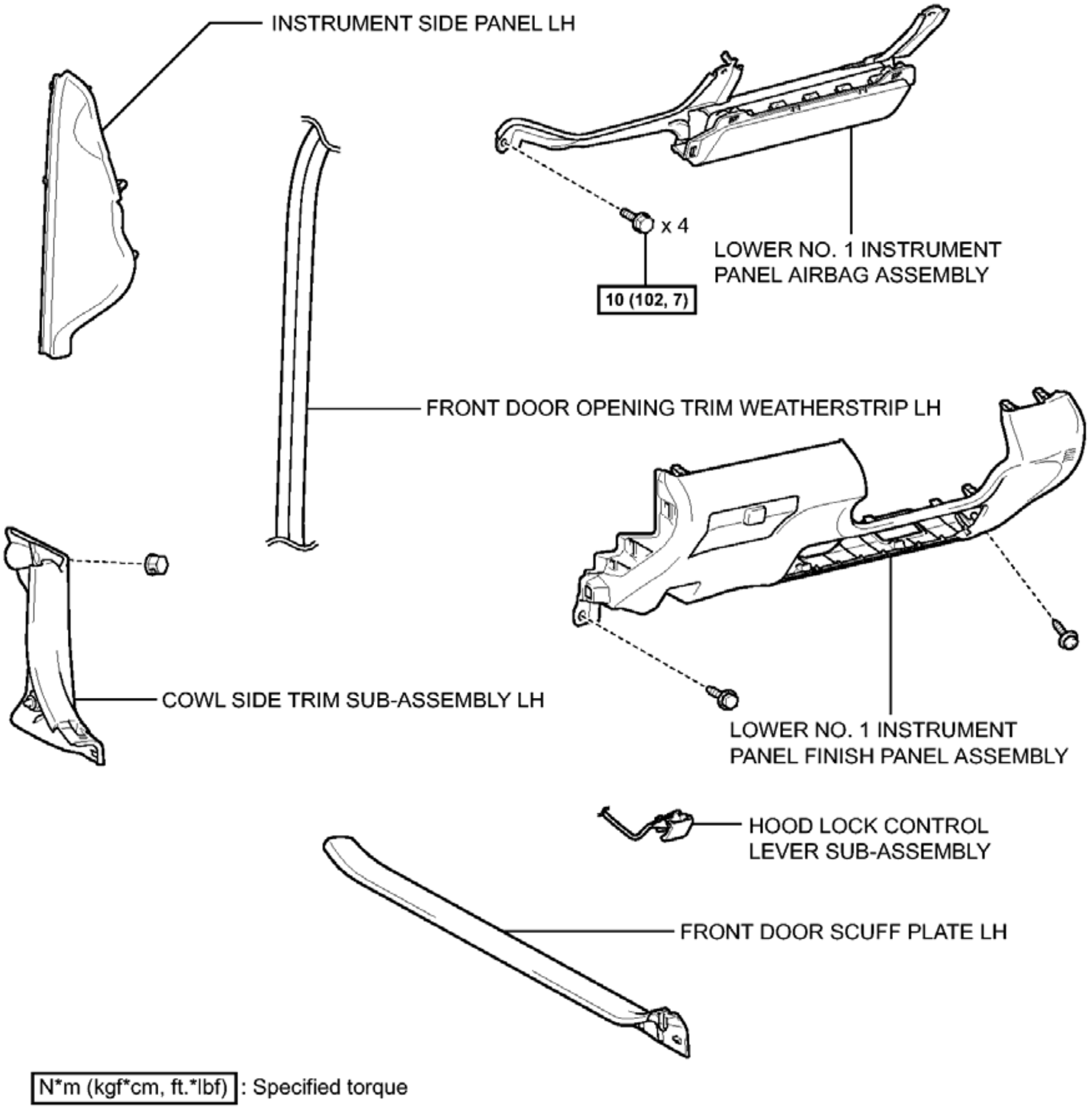

INSTRUMENT SIDE PANEL LH
x 4
LOWER NO. 1 INSTRUMENT PANEL AIRBAG ASSEMBLY
10 (102, 7)
FRONT DOOR OPENING TRIM WEATHERSTRIP LH
COWL SIDE TRIM SUB-ASSEMBLY LH
LOWER NO. 1 INSTRUMENT PANEL FINISH PANEL ASSEMBLY
HOOD LOCK CONTROL LEVER SUB-ASSEMBLY
FRONT DOOR SCUFF PLATE LH
N*m (kgf*cm, ft.*lbf) : Specified torque
c

Fig. 45: Identifying Knee Airbag Assembly Replacement Components With Torque Specifications (For Driver Side) (2 Of 2)
Courtesy of TOYOTA MOTOR SALES, U.S.A., INC.

ON-VEHICLE INSPECTION

ON-VEHICLE INSPECTION

WARNING: **Be sure to correctly follow the removal and installation procedures for the**

lower No. 1 instrument panel airbag assembly.

1. **INSPECT LOWER NO. 1 INSTRUMENT PANEL AIRBAG ASSEMBLY (for Vehicle not Involved in Collision)**
    1. Perform a diagnostic system check.

       for Separate Type Yaw Rate Sensor: Refer to **DTC CHECK / CLEAR**

       for Built-in Type Yaw Rate Sensor: Refer to **DTC CHECK / CLEAR**

    2. Visually check for defects with the lower No. 1 instrument panel airbag assembly installed on the vehicle.

       HINT:

       The defects are as follows:

       - Cuts
       - Small cracks
       - Significant discoloration

       OK

       No defects are found.

       If any of the defects is found, replace the lower No. 1 instrument panel airbag assembly with a new one.

2. **INSPECT LOWER NO. 1 INSTRUMENT PANEL AIRBAG ASSEMBLY (for Vehicle Involved in Collision and Airbag not Deployed)**
    1. Perform a diagnostic system check.

       for Separate Type Yaw Rate Sensor: Refer to **DTC CHECK / CLEAR**

       for Built-in Type Yaw Rate Sensor: Refer to **DTC CHECK / CLEAR**

    2. Visually check for defects with the lower No. 1 instrument panel airbag assembly removed from the vehicle.

       HINT:

       The defects are as follows:

       - Cuts
       - Small cracks

- Significant discoloration
- Cracks or other damage to the connector
- Deformation or cracks on the instrument panel sub-assembly or instrument panel reinforcement

OK

No defects are found.

If any of the defects is found, replace the lower No. 1 instrument panel airbag assembly, instrument panel sub-assembly or instrument panel reinforcement with a new one.

REMOVAL

REMOVAL

1. **PRECAUTION**

WARNING: Be sure to read Precaution thoroughly before servicing.

for Separate Type Yaw Rate Sensor: Refer to PRECAUTION

for Built-in Type Yaw Rate Sensor: Refer to PRECAUTION

NOTE: After turning the power switch off, waiting time may be required before disconnecting the cable from the negative (-) auxiliary battery terminal. Therefore, make sure to read the disconnecting the cable from the negative (-) auxiliary battery terminal notices before proceeding with work. Refer to PRECAUTION .

2. **REMOVE LUGGAGE TRIM SERVICE HOLE COVER** . Refer to **REMOVAL - Step 2**
3. **DISCONNECT CABLE FROM NEGATIVE AUXILIARY BATTERY TERMINAL**

WARNING: Wait at least 90 seconds after disconnecting the cable from the negative (-) auxiliary battery terminal to disable the SRS system.

NOTE: When disconnecting the cable, some systems need to be initialized after the cable is reconnected. Refer to INITIALIZATION .

4. **REMOVE FRONT DOOR SCUFF PLATE LH** . Refer to **REMOVAL - Step 4**
5. **REMOVE COWL SIDE TRIM SUB-ASSEMBLY LH** . Refer to **REMOVAL - Step 5**
6. **DISCONNECT FRONT DOOR OPENING TRIM WEATHERSTRIP LH** . Refer to **REMOVAL - Step 6**
7. **REMOVE INSTRUMENT SIDE PANEL LH** . Refer to **REMOVAL - Step 7**

8. **DISCONNECT HOOD LOCK CONTROL LEVER SUB-ASSEMBLY** . Refer to **REMOVAL - Step 13**
9. **REMOVE LOWER NO. 1 INSTRUMENT PANEL FINISH PANEL ASSEMBLY** . Refer to **REMOVAL - Step 14**
10. **REMOVE LOWER NO. 1 INSTRUMENT PANEL AIRBAG ASSEMBLY**

WARNING: **When storing the lower No. 1 instrument panel airbag assembly, keep the airbag deployment side facing upward.**

a. Check that the power switch is off.
b. Check that the cable is disconnected from the negative (-) auxiliary battery terminal.

WARNING: **Wait at least 90 seconds after disconnecting the cable from the negative (-) auxiliary battery terminal to disable the SRS system.**

c. Remove the 4 bolts.

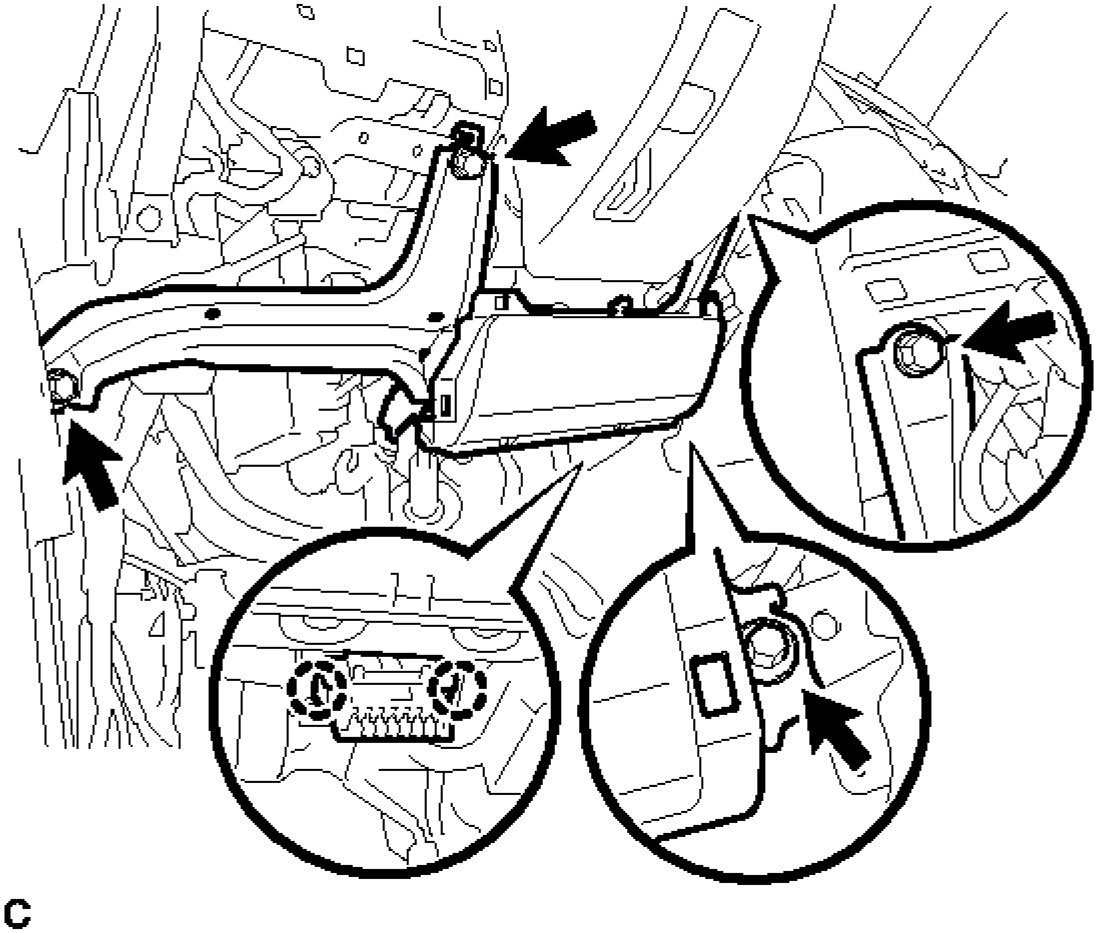

Fig. 46: Locating Lower No. 1 Instrument Panel Airbag Assembly Bolts And DLC3 Claws
Courtesy of TOYOTA MOTOR SALES, U.S.A., INC.

d. Disengage the 2 claws to disconnect the DLC3.
e. Disengage the 2 hooks to remove the lower No. 1 instrument panel airbag assembly.

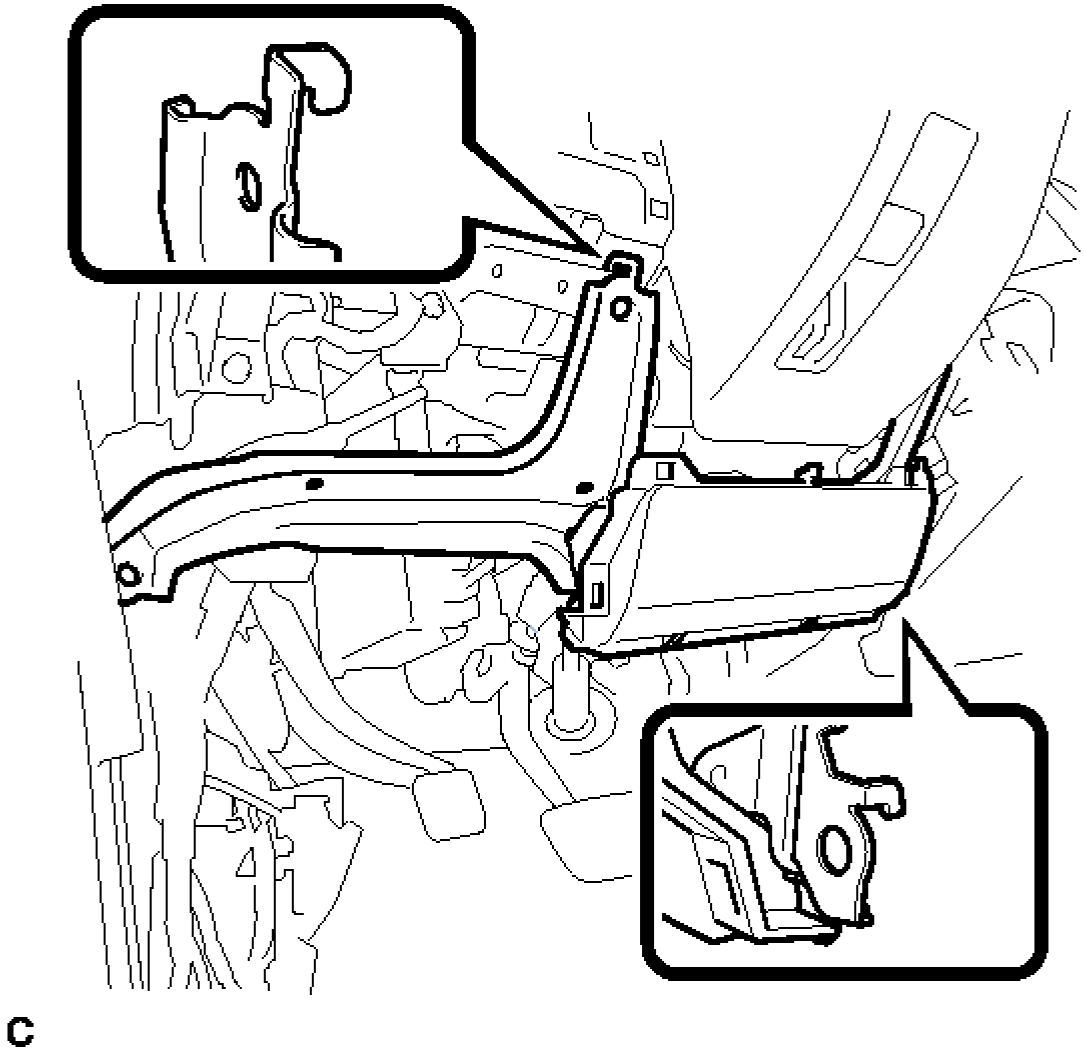

Fig. 47: Locating Lower No. 1 Instrument Panel Airbag Assembly Hooks
Courtesy of TOYOTA MOTOR SALES, U.S.A., INC.

NOTE: **When removing the lower No. 1 instrument panel airbag assembly, do not pull the airbag wire harness.**

f. Using a screwdriver with the tip wrapped with protective tape, release the airbag connector lock.

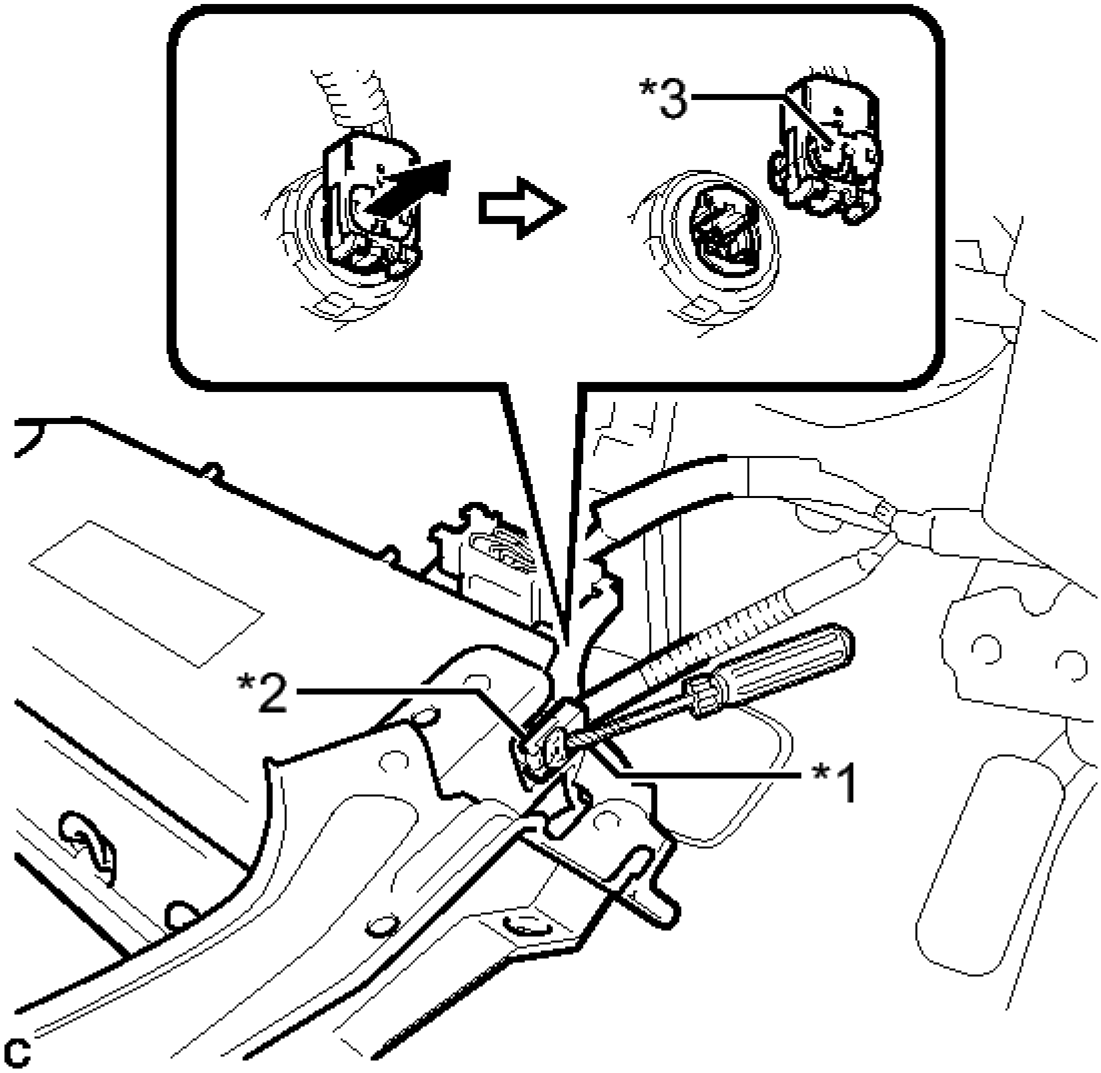

Fig. 48: Identifying Airbag Connector
Courtesy of TOYOTA MOTOR SALES, U.S.A., INC.

TEXT IN ILLUSTRATION

*1	Protective Tape
*2	Airbag Connector
*3	Airbag Connector Lock

g. Disconnect the airbag connector to remove the lower No. 1 instrument panel airbag assembly.

NOTE: **When disconnecting any airbag connector, take care not to damage**

the airbag wire harness.

INSTALLATION

INSTALLATION

1. **INSTALL LOWER NO. 1 INSTRUMENT PANEL AIRBAG ASSEMBLY**
    a. Check that the power switch is off.
    b. Check that the cable is disconnected from the negative (-) auxiliary battery terminal.

    WARNING: **Wait at least 90 seconds after disconnecting the cable from the negative (-) auxiliary battery terminal to disable the SRS system.**

    c. Connect the airbag connector to the lower No. 1 instrument panel airbag assembly.

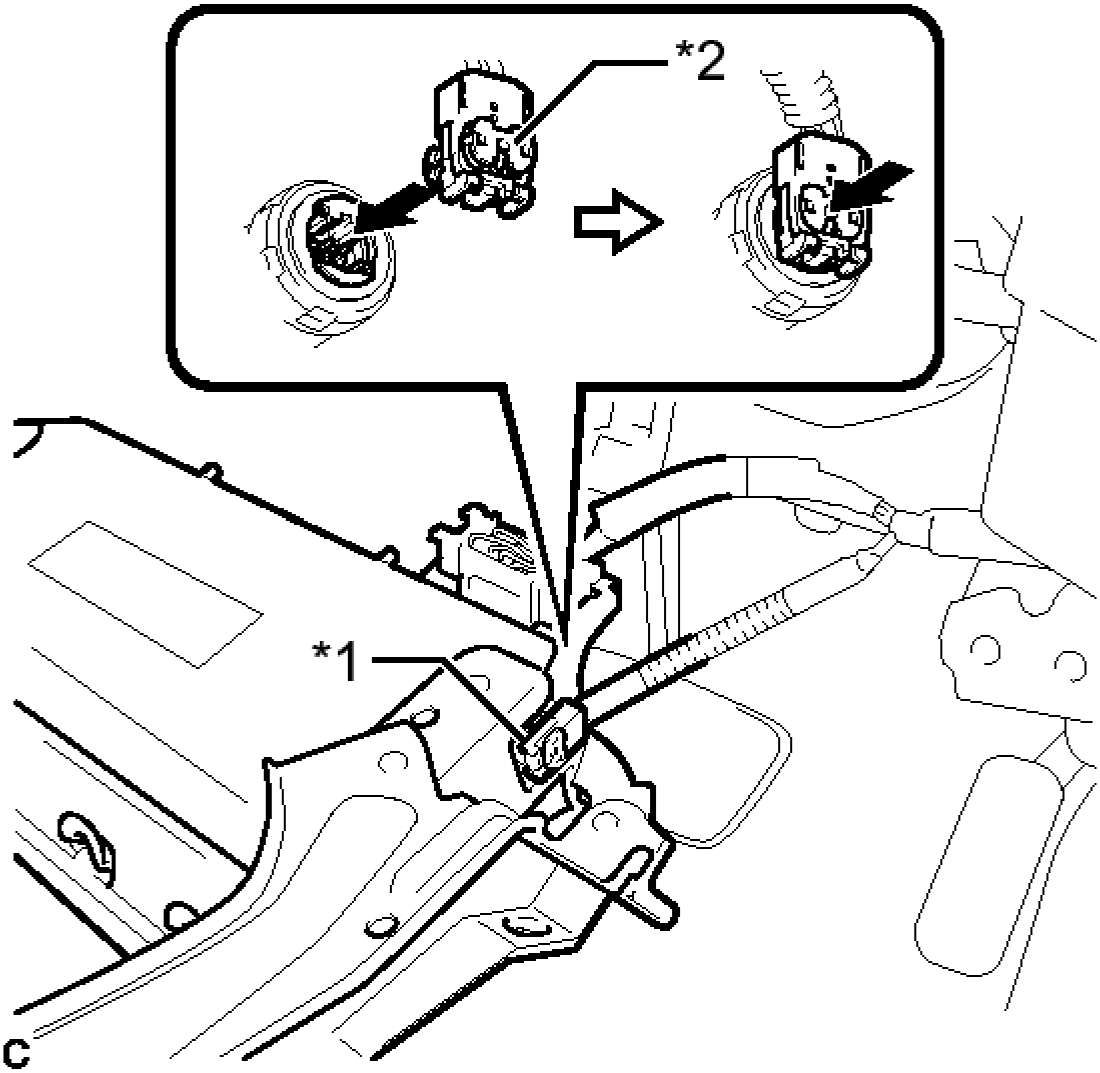

Fig. 49: Connecting Airbag Connector To Lower No. 1 Instrument Panel Airbag Assembly
Courtesy of TOYOTA MOTOR SALES, U.S.A., INC.

TEXT IN ILLUSTRATION

*1	Airbag Connector
*2	Airbag Connector Lock

NOTE: **When connecting any airbag connector, take care not to damage the airbag wire harness.**

d. Push in the lock to install the airbag connector.

e. Temporarily install the lower No. 1 instrument panel airbag assembly with the 2 hooks.

f. Engage the 2 claws to install the DLC3.

g. Install the 4 bolts.

Torque: 10 N*m (102 kgf*cm, 7 ft.*lbf)

NOTE: **Confirm that the lower No. 1 instrument panel airbag assembly is installed securely without any excessive gaps and is not protruding outward.**

2. **INSTALL LOWER NO. 1 INSTRUMENT PANEL FINISH PANEL ASSEMBLY** . Refer to **INSTALLATION - Step 38**
3. **CONNECT HOOD LOCK CONTROL LEVER SUB-ASSEMBLY** . Refer to **INSTALLATION - Step 39**
4. **INSTALL INSTRUMENT SIDE PANEL LH** . Refer to **INSTALLATION - Step 45**
5. **CONNECT FRONT DOOR OPENING TRIM WEATHERSTRIP LH**
6. **INSTALL COWL SIDE TRIM SUB-ASSEMBLY LH** . Refer to **INSTALLATION - Step 44**
7. **INSTALL FRONT DOOR SCUFF PLATE LH** . Refer to **INSTALLATION - Step 45**
8. **CONNECT CABLE TO NEGATIVE AUXILIARY BATTERY TERMINAL**

   NOTE: **When disconnecting the cable, some systems need to be initialized after the cable is reconnected. Refer to INITIALIZATION .**

9. **INSTALL LUGGAGE TRIM SERVICE HOLE COVER** . Refer to **INSTALLATION - Step 3**
10. **PERFORM DIAGNOSTIC SYSTEM CHECK**

    for Separate Type Yaw Rate Sensor: Refer to **DTC CHECK / CLEAR**

    for Built-in Type Yaw Rate Sensor: Refer to **DTC CHECK / CLEAR**

11. **INSPECT SRS WARNING LIGHT**

    for Separate Type Yaw Rate Sensor: Refer to **DIAGNOSIS SYSTEM**

    for Built-in Type Yaw Rate Sensor: Refer to **DIAGNOSIS SYSTEM**

DISPOSAL

DISPOSAL

WARNING: **Before performing pre-disposal deployment of any SRS part, review and closely follow all applicable environmental and hazardous material regulations. Pre-disposal deployment may be considered hazardous material treatment.**

1. **PRECAUTION**

WARNING:

- **An airbag or pretensioner may be activated by static electricity. To prevent this, be sure to touch a metal surface with your bare hands to discharge static electricity before performing this procedure.**
- **Never dispose of a lower No. 1 instrument panel airbag assembly with an undeployed airbag.**
- **The airbag produces an exploding sound when it is deployed, so perform the operation outdoors and where it will not create a nuisance to nearby residents.**
- **When deploying the airbag, always use the specified SST (SRS Airbag Deployment Tool). Perform the operation in a place away from electrical noise.**
- **When deploying the airbag, perform the operation at least 10 m (32.8 ft.) away from the lower No. 1 instrument panel airbag assembly.**
- **The lower No. 1 instrument panel airbag assembly becomes extremely hot when the airbag is deployed, so do not touch it for at least 30 minutes after deployment.**
- **Use gloves and safety glasses when handling a lower No. 1 instrument panel airbag assembly with a deployed airbag.**
- **Do not apply water etc. to a lower No. 1 instrument panel airbag assembly with a deployed airbag.**
- **Always wash your hands with water after completing the operation.**

HINT:

When scrapping a vehicle equipped with an SRS or disposing of the lower No. 1 instrument panel airbag assembly, be sure to deploy the airbag first in accordance with the procedure described below. If any abnormality occurs with the airbag deployment, contact the Service Dept. of TOYOTA MOTOR SALES, U.S.A., INC.

2. **DISPOSE OF LOWER NO. 1 INSTRUMENT PANEL AIRBAG ASSEMBLY (When Installed in Vehicle)**

NOTE:

- **When disposing of the lower No. 1 instrument panel airbag assembly, never use the customer's vehicle to deploy the airbag.**
- **Be sure to observe the following procedure when deploying the airbag.**

HINT:

Prepare a 12 V battery as the power source to deploy the airbag.

a. Check the function of SST See step 2.

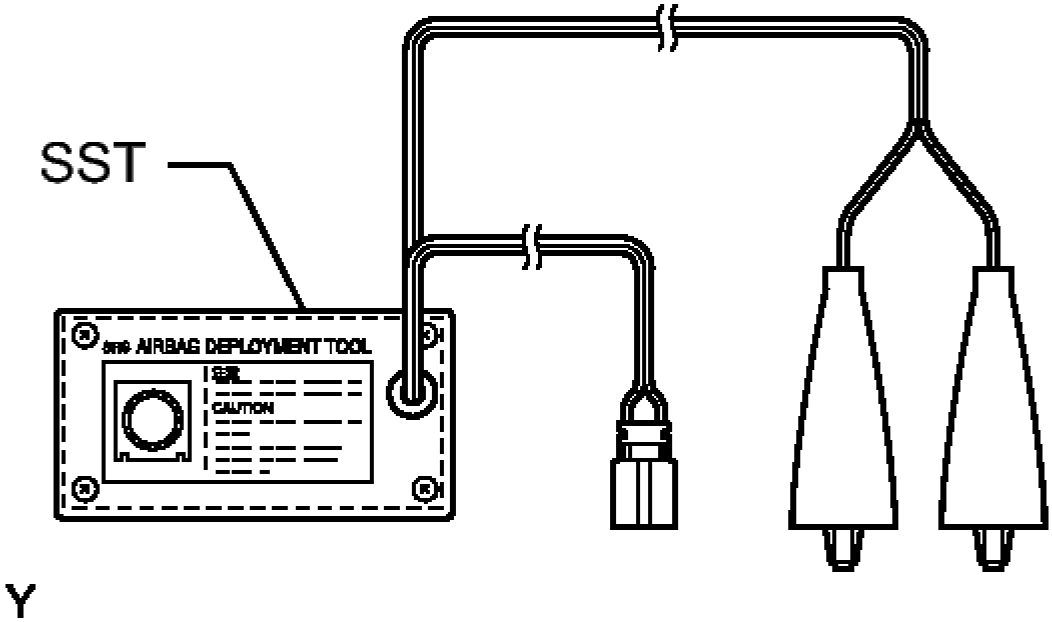

Fig. 50: Checking Function Of SST
Courtesy of TOYOTA MOTOR SALES, U.S.A., INC.

- **SST: 09082-00700**

b. Refer to Precaution.

for Separate Type Yaw Rate Sensor: Refer to **PRECAUTION**

for Built-in Type Yaw Rate Sensor: Refer to **PRECAUTION**

c. Disconnect the cable from the negative (-) auxiliary battery terminal.

WARNING: **Wait at least 90 seconds after disconnecting the cable from the negative (-) auxiliary battery terminal to disable the SRS system.**

d. Disconnect the lower No. 1 instrument panel airbag connector.
   1. Using a screwdriver with the tip wrapped with protective tape, disconnect the airbag connector.

NOTE: **When disconnecting any airbag connector, take care not to damage the airbag wire harness.**

e. Install SST.

WARNING: Check that there is no looseness in the lower No. 1 instrument panel airbag assembly.

1. Connect the SST connector to the lower No. 1 instrument panel airbag assembly.

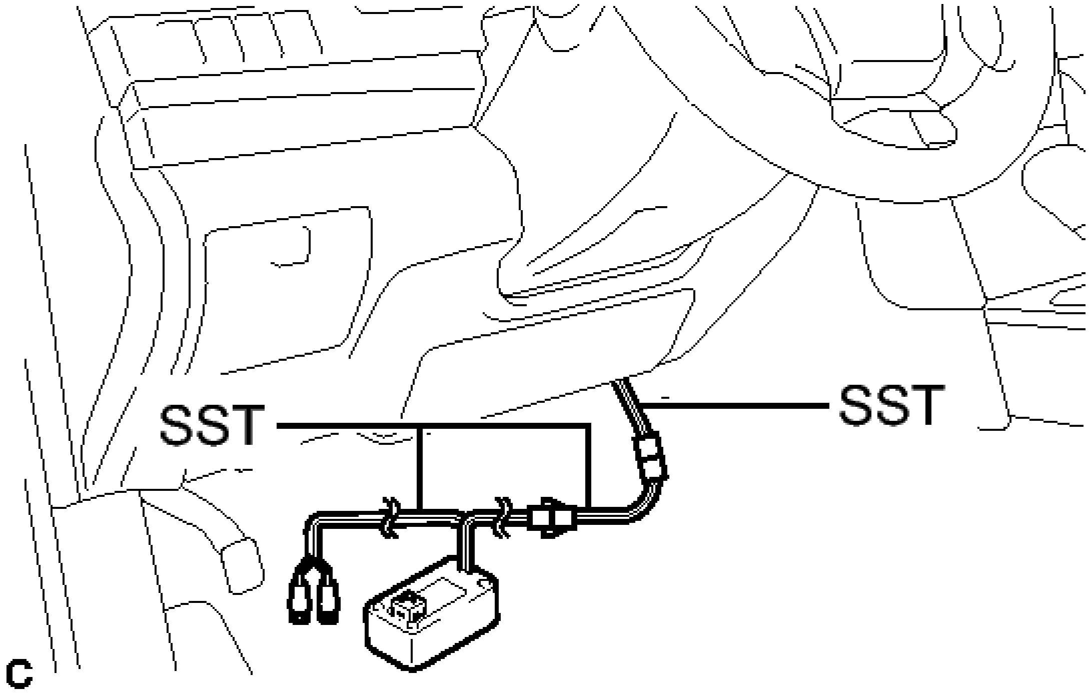

Fig. 51: Connecting SST Connector To Lower No. 1 Instrument Panel Airbag Assembly
Courtesy of TOYOTA MOTOR SALES, U.S.A., INC.

- **SST: 09082-00700**
- **SST: 09082-00802**
  09082-10801
  09082-20801

NOTE: To avoid damaging the SST connector or wire harness, do not lock the secondary lock of the twin lock.

2. Move SST at least 10 m (32.8 ft.) away from the front side window of the vehicle.

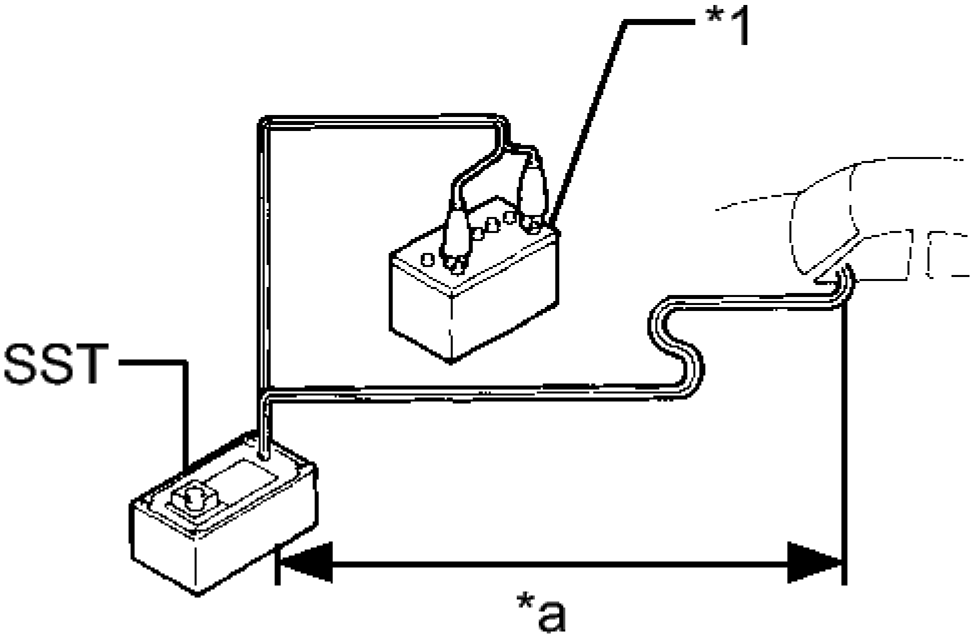

Fig. 52: Identifying Distance Between SST & Front Side Window
Courtesy of TOYOTA MOTOR SALES, U.S.A., INC.

TEXT IN ILLUSTRATION

*1	12 V Battery
*a	10 m (32.8 ft.) or more

3. Maintaining sufficient clearance for the SST wire harness in the front side window, close all doors and windows of the vehicle.

NOTE: **Take care not to damage the SST wire harness.**

4. Connect the red clip of SST to the positive (+) battery terminal and the black clip of SST to the negative (-) battery terminal.

f. Deploy the airbag.
   1. Check that no one is inside the vehicle or within a 10 m (32.8 ft.) radius of the vehicle.
   2. Press the SST activation switch to deploy the airbag.

WARNING:

- **Before deployment, make sure that no one is near the vehicle.**
- **The lower No. 1 instrument panel airbag assembly**

becomes extremely hot when the airbag is deployed, so do not touch it for at least 30 minutes after deployment.

- **Use gloves and safety glasses when handling a lower No. 1 instrument panel airbag assembly with a deployed airbag.**
- **Do not apply water etc. to a lower No. 1 instrument panel airbag assembly with a deployed airbag.**
- **Always wash your hands with water after completing the operation.**

HINT:

The airbag is deployed as the LED of the SST activation switch comes on.

3. **DISPOSE OF LOWER NO. 1 INSTRUMENT PANEL AIRBAG ASSEMBLY (When Not Installed in Vehicle)**

NOTE: **Be sure to observe the following procedure when deploying the airbag.**

HINT:

Prepare a 12 V battery as the power source to deploy the airbag.

a. Check the function of SST See step 3.

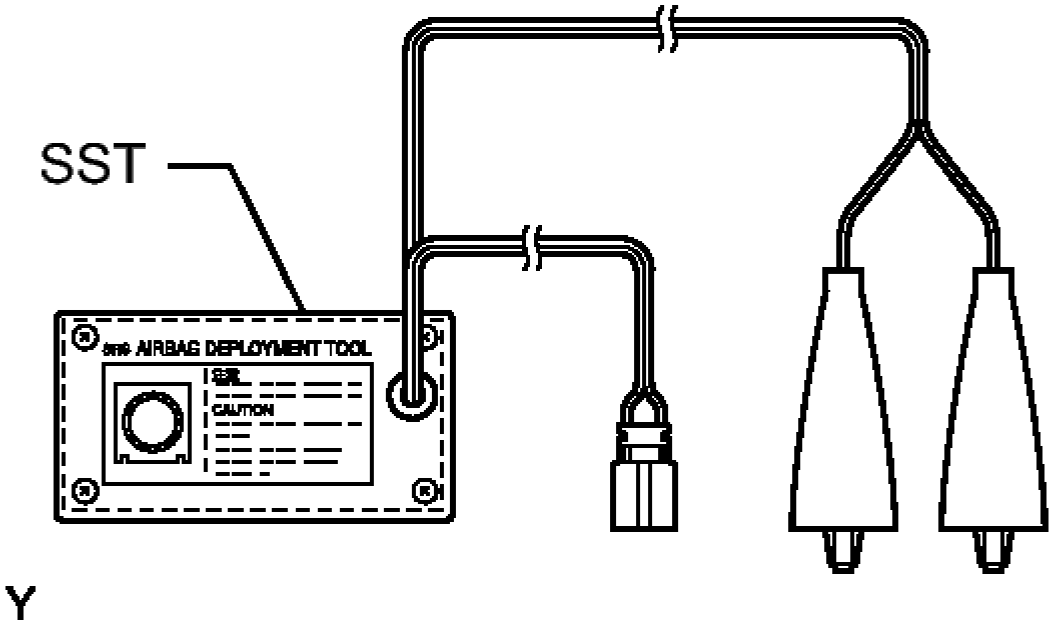

Fig. 53: Checking Function Of SST
Courtesy of TOYOTA MOTOR SALES, U.S.A., INC.

- **SST: 09082-00700**

b. Remove the lower No. 1 instrument panel airbag assembly. Refer to **REMOVAL**.

WARNING:

- **Before removing the lower No. 1 instrument panel airbag assembly, wait at least 90 seconds after turning the power switch off and disconnecting the cable from the negative (-) auxiliary battery terminal.**
- **When storing the lower No. 1 instrument panel airbag assembly, keep the airbag deployment side facing upward.**

c. Using braided wire, tie down the lower No. 1 instrument panel airbag assembly to an unneeded tire.

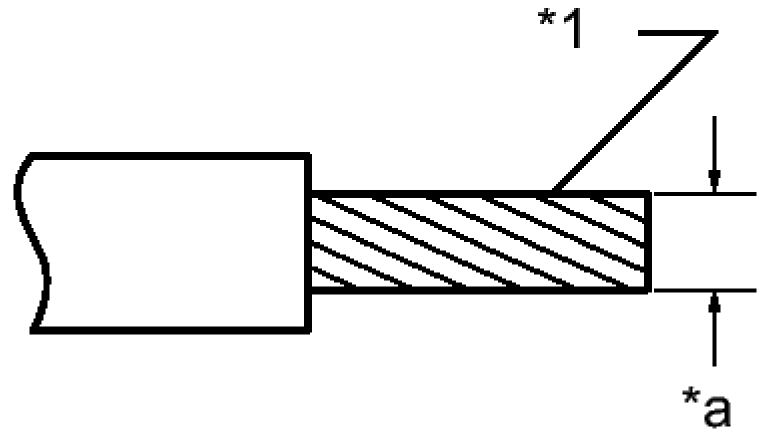

H

Fig. 54: Identifying Stripped Wire
Courtesy of TOYOTA MOTOR SALES, U.S.A., INC.

TEXT IN ILLUSTRATION

*1	Stripped Wire Section
*a	Wire Diameter

Wire

Stripped wire section

1.25 mm^2 (0.0019 in.^{2}) or more

WARNING: If the wire is too thin or an alternative object is used to tie down the lower No. 1 instrument panel airbag assembly, it may snap when the airbag is deployed. Always use a wire for vehicle use with an area of at least 1.25 mm^2 (0.0019 in.^{2}).

HINT:

To calculate the area of the stripped wire section:

Area = 3.14 x (Diameter)^2 / 4

1. Position the lower No. 1 instrument panel airbag assembly inside the tire with the airbag deployment side facing inside.

   Minimum tire size

   Width

   185 mm (7.28 in.)

   Inner diameter

   360 mm (1.18 ft.)

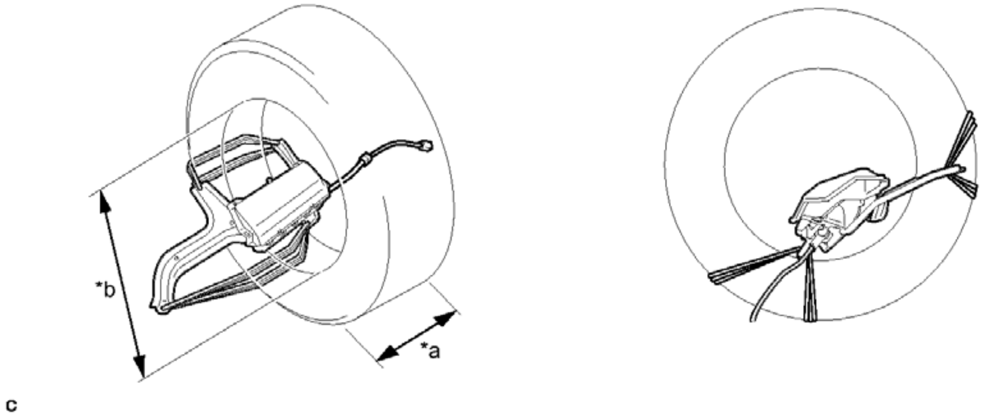

Fig. 55: View Of Lower No. 1 Instrument Panel Airbag Assembly Positioned Inside The Tire
Courtesy of TOYOTA MOTOR SALES, U.S.A., INC.

TEXT IN ILLUSTRATION

*a	Width	*b	Inner Diameter

WARNING:

- **Make sure that the wires are tight. If there is slack in the wires, the lower No. 1 instrument panel airbag assembly may break loose when the airbag is deployed.**
- **Always tie down the lower No. 1 instrument panel airbag assembly with the airbag deployment side facing inside the tire as shown in the illustration.**

NOTE: **The tires may be damaged by the airbag deployment, so use an unneeded tire.**

d. Install SST.

1. After connecting the following SST to each other, connect them to the lower No. 1 instrument panel airbag assembly.

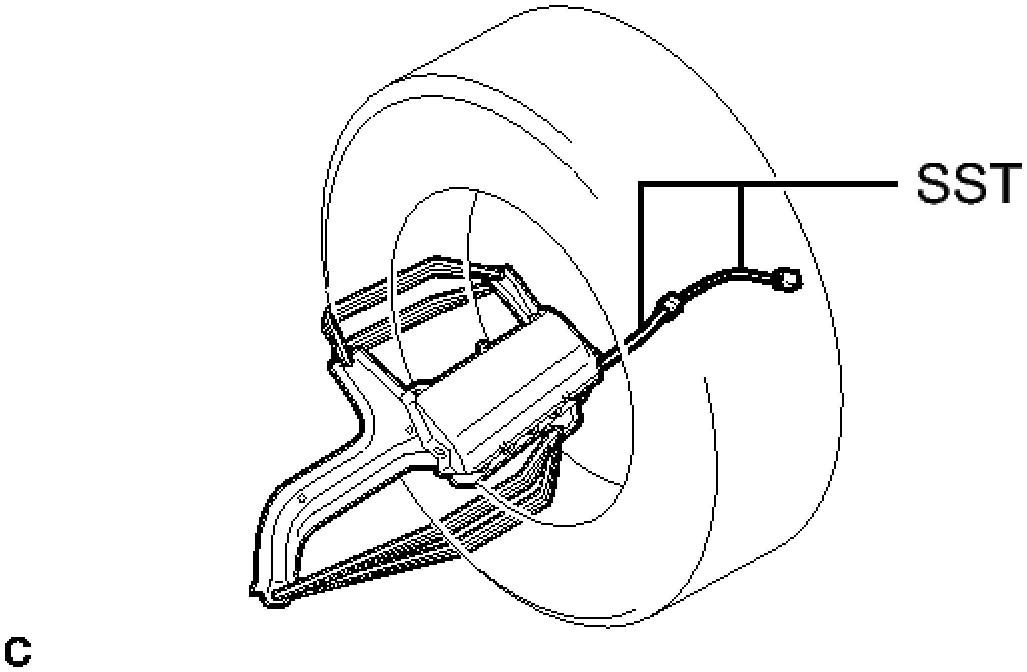

Fig. 56: View Of SST Connected To Lower No. 1 Instrument Panel Airbag Assembly In Tire
Courtesy of TOYOTA MOTOR SALES, U.S.A., INC.

- **SST: 09082-00802**
  09082-10801

09082-20801

e. Place the tires.

   1. Place at least 2 tires under the tire to which the lower No. 1 instrument panel airbag assembly is tied.

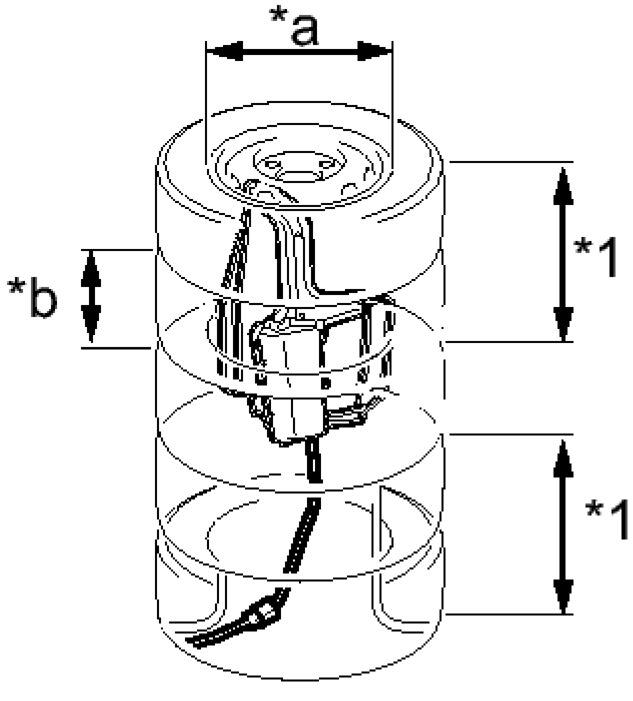

Fig. 57: Placing No. 1 Instrument Panel Airbag Assembly Under Tires
Courtesy of TOYOTA MOTOR SALES, U.S.A., INC.

TEXT IN ILLUSTRATION

*1	Tires (2 or more)
*a	Inner Diameter
*b	Width

Minimum tire size

Width

185 mm (7.28 in.)

Inner diameter

360 mm (1.18 ft.)

NOTE:

- **The tires may be damaged by the airbag deployment, so use unneeded tires.**
- **Do not place the SST connector under the tire because it could be damaged.**

2. Place at least 2 tires onto the tire to which the lower No. 1 instrument panel airbag assembly is tied. The top tire should have a wheel installed.
3. Tie the tires together with the 2 wires.

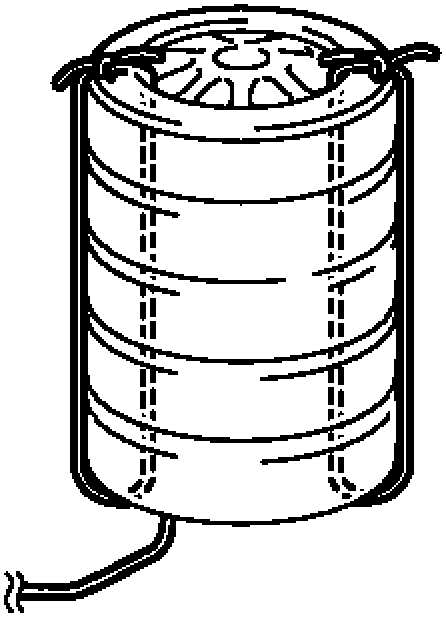

Fig. 58: Identifying Tires Tied Together With Wires
Courtesy of TOYOTA MOTOR SALES, U.S.A., INC.

WARNING: Make sure that the wires are tight. Looseness in the wires results in the tires breaking loose when the airbag is deployed.

f. Install SST.

1. Connect the SST connector.

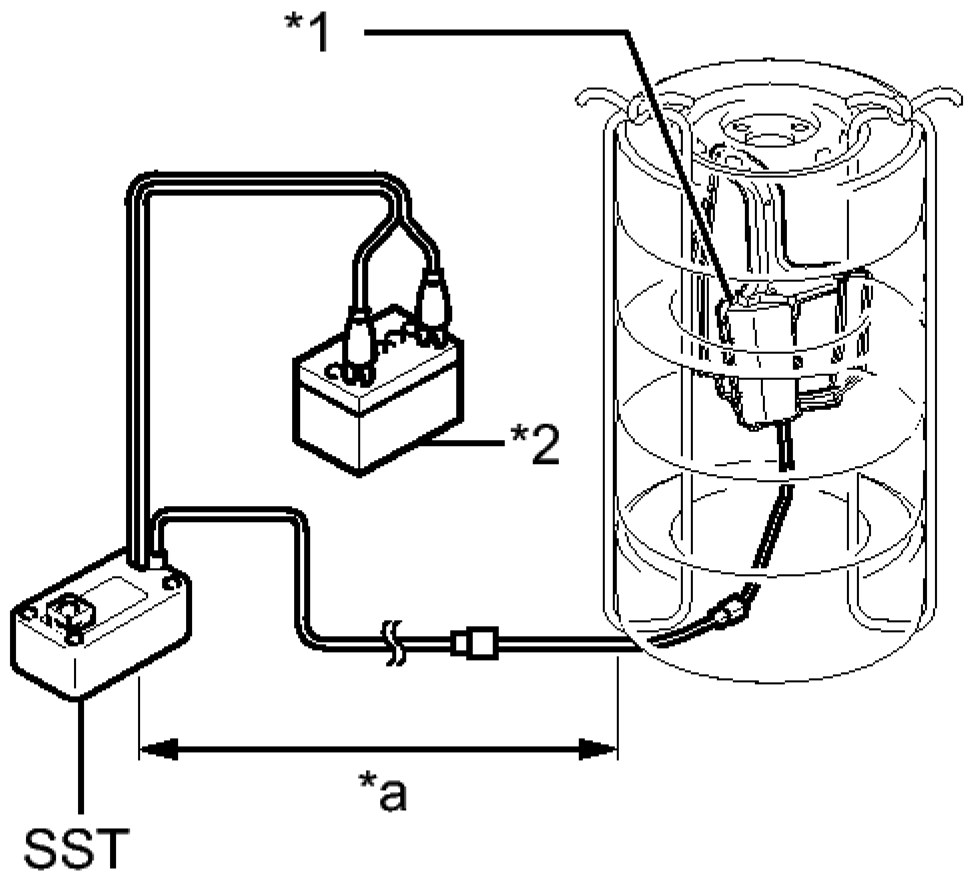

C

Fig. 59: Identifying SST Distance From Lower No. 1 Instrument Panel Airbag Assembly In Tires
Courtesy of TOYOTA MOTOR SALES, U.S.A., INC.

TEXT IN ILLUSTRATION

*1	Lower No. 1 Instrument Panel Airbag Assembly
*2	12 V Battery
*a	10 m (32.8 ft.) or more

- **SST: 09082-00700**

NOTE: **To avoid damaging the SST connector or wire harness, do not lock the secondary lock of the twin lock. Also, secure some slack for the SST wire harness inside the tire.**

2. Move SST at least 10 m (32.8 ft.) away from the airbag tied down to the tire.

g. Deploy the airbag.
   1. Connect the red clip of SST to the positive (+) battery terminal and the black clip of SST to the negative (-) battery terminal.
   2. Check that no one is within a 10 m (32.8 ft.) radius of the tire to which the lower No. 1 instrument panel airbag assembly is tied.
   3. Press the SST activation switch to deploy the airbag.

WARNING: **Before deployment, make sure that no one is near the airbag.**

HINT:

The airbag is deployed as the LED of the SST activation switch comes on.

h. Dispose of the lower No. 1 instrument panel airbag assembly.

WARNING:

- **The lower No. 1 instrument panel airbag assembly becomes extremely hot when the airbag is deployed, so do not touch it for at least 30 minutes after deployment.**
- **Use gloves and safety glasses when handling a lower No. 1 instrument panel airbag assembly with a deployed airbag.**
- **Do not apply water etc. to a lower No. 1 instrument panel airbag assembly with a deployed airbag.**
- **Always wash your hands with water after completing the operation.**

1. Remove the lower No. 1 instrument panel airbag assembly from the tire.
2. Place the lower No. 1 instrument panel airbag assembly in a plastic bag, tie it tightly, and dispose of it according to local regulations.

KNEE AIRBAG ASSEMBLY (FOR FRONT PASSENGER SIDE)

COMPONENTS

ILLUSTRATION

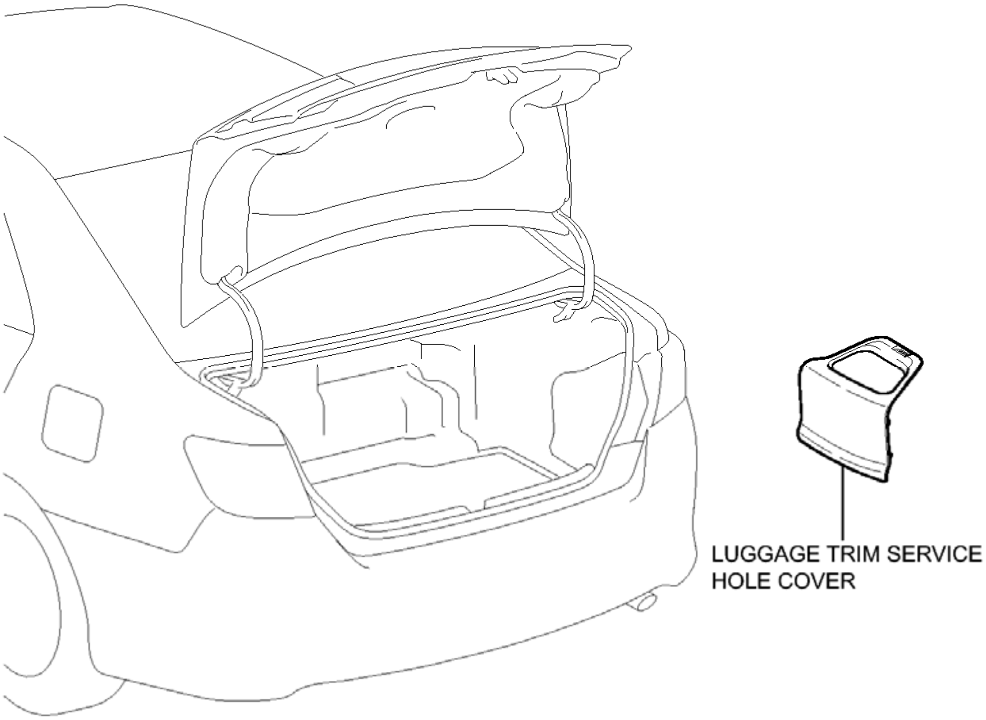
LUGGAGE TRIM SERVICE HOLE COVER
P

Fig. 60: Identifying Knee Airbag Assembly Replacement Components With Torque Specifications (1 Of 2)
Courtesy of TOYOTA MOTOR SALES, U.S.A., INC.

ILLUSTRATION

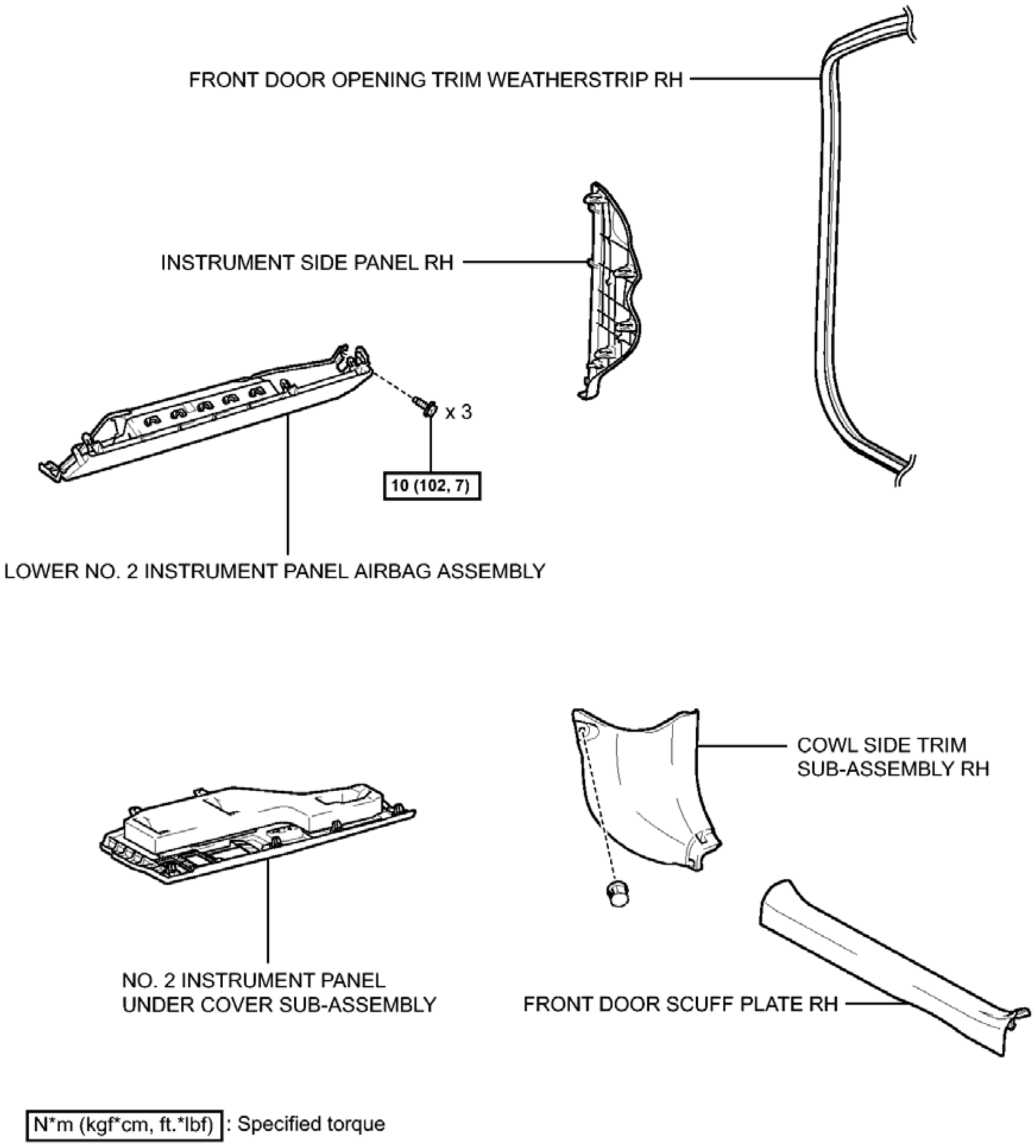
FRONT DOOR OPENING TRIM WEATHERSTRIP RH
INSTRUMENT SIDE PANEL RH
x 3
10 (102, 7)
LOWER NO. 2 INSTRUMENT PANEL AIRBAG ASSEMBLY
COWL SIDE TRIM SUB-ASSEMBLY RH
NO. 2 INSTRUMENT PANEL UNDER COVER SUB-ASSEMBLY
FRONT DOOR SCUFF PLATE RH
N*m (kgf*cm, ft.*lbf) : Specified torque

Fig. 61: Identifying Knee Airbag Assembly Replacement Components With Torque Specifications (2 Of 2)
Courtesy of TOYOTA MOTOR SALES, U.S.A., INC.

ON-VEHICLE INSPECTION

ON-VEHICLE INSPECTION

WARNING: **Be sure to correctly follow the removal and installation procedures for the lower No. 2 instrument panel airbag assembly.**

1. **INSPECT LOWER NO. 2 INSTRUMENT PANEL AIRBAG ASSEMBLY (for Vehicle not Involved in Collision)**
    a. Perform a diagnostic system check.

       for Separate Type Yaw Rate Sensor: Refer to **DTC CHECK / CLEAR**

       for Built-in Type Yaw Rate Sensor: Refer to **DTC CHECK / CLEAR**

    b. Visually check for defects with the lower No. 2 instrument panel airbag assembly installed on the vehicle.

       HINT:

       The defects are as follows:

       - Cuts
       - Small cracks
       - Significant discoloration

       OK

       No defects are found.

       If any of the defects is found, replace the lower No. 2 instrument panel airbag assembly with a new one.

2. **INSPECT LOWER NO. 2 INSTRUMENT PANEL AIRBAG ASSEMBLY (for Vehicle Involved in Collision and Airbag not Deployed)**
    a. Perform a diagnostic system check.

       for Separate Type Yaw Rate Sensor: Refer to **DTC CHECK / CLEAR**

       for Built-in Type Yaw Rate Sensor: Refer to **DTC CHECK / CLEAR**

    b. Visually check for defects with the lower No. 2 instrument panel airbag assembly removed from the vehicle.

       HINT:

       The defects are as follows:

       - Cuts
       - Small cracks

- Significant discoloration
- Cracks or other damage to the connector
- Deformation or cracks on the instrument panel sub-assembly or instrument panel reinforcement

OK

No defects are found.

If any of the defects is found, replace the lower No. 2 instrument panel airbag assembly, instrument panel sub-assembly or instrument panel reinforcement with a new one.

REMOVAL

REMOVAL

1. **PRECAUTION**

   WARNING: **Be sure to read Precaution thoroughly before servicing.**

   for Separate Type Yaw Rate Sensor: Refer to PRECAUTION

   for Built-in Type Yaw Rate Sensor: Refer to PRECAUTION

   NOTE: **After turning the power switch off, waiting time may be required before disconnecting the cable from the negative (-) auxiliary battery terminal. Therefore, make sure to read the disconnecting the cable from the negative (-) auxiliary battery terminal notices before proceeding with work. Refer to PRECAUTION .**

2. **REMOVE LUGGAGE TRIM SERVICE HOLE COVER** . Refer to **REMOVAL - Step 2**
3. **DISCONNECT CABLE FROM NEGATIVE AUXILIARY BATTERY TERMINAL**

   WARNING: **Wait at least 90 seconds after disconnecting the cable from the negative (-) auxiliary battery terminal to disable the SRS system.**

   NOTE: **When disconnecting the cable, some systems need to be initialized after the cable is reconnected. Refer to INITIALIZATION .**

4. **REMOVE FRONT DOOR SCUFF PLATE RH**

   HINT:

   Use the same procedure for the RH side and LH side. Refer to **REMOVAL - Step 4** .

5. **REMOVE COWL SIDE TRIM SUB-ASSEMBLY RH**

   HINT:

   Use the same procedure for the RH side and LH side. Refer to **REMOVAL - Step 5** .

6. **DISCONNECT FRONT DOOR OPENING TRIM WEATHERSTRIP RH**

   HINT:

   Use the same procedure for the RH side and LH side. Refer to **REMOVAL - Step 6** .

7. **REMOVE INSTRUMENT SIDE PANEL RH** . Refer to **REMOVAL - Step 34**
8. **REMOVE NO. 2 INSTRUMENT PANEL UNDER COVER SUB-ASSEMBLY** . Refer to **REMOVAL - Step 35**
9. **REMOVE LOWER NO. 2 INSTRUMENT PANEL AIRBAG ASSEMBLY**

   WARNING: **When storing the lower No. 2 instrument panel airbag assembly, keep the airbag deployment side facing upward.**

   a. Check that the power switch is off.
   b. Check that the cable is disconnected from the negative (-) auxiliary battery terminal.

      WARNING: **Wait at least 90 seconds after disconnecting the cable from the negative (-) auxiliary battery terminal to disable the SRS system.**

   c. Remove the 3 bolts.

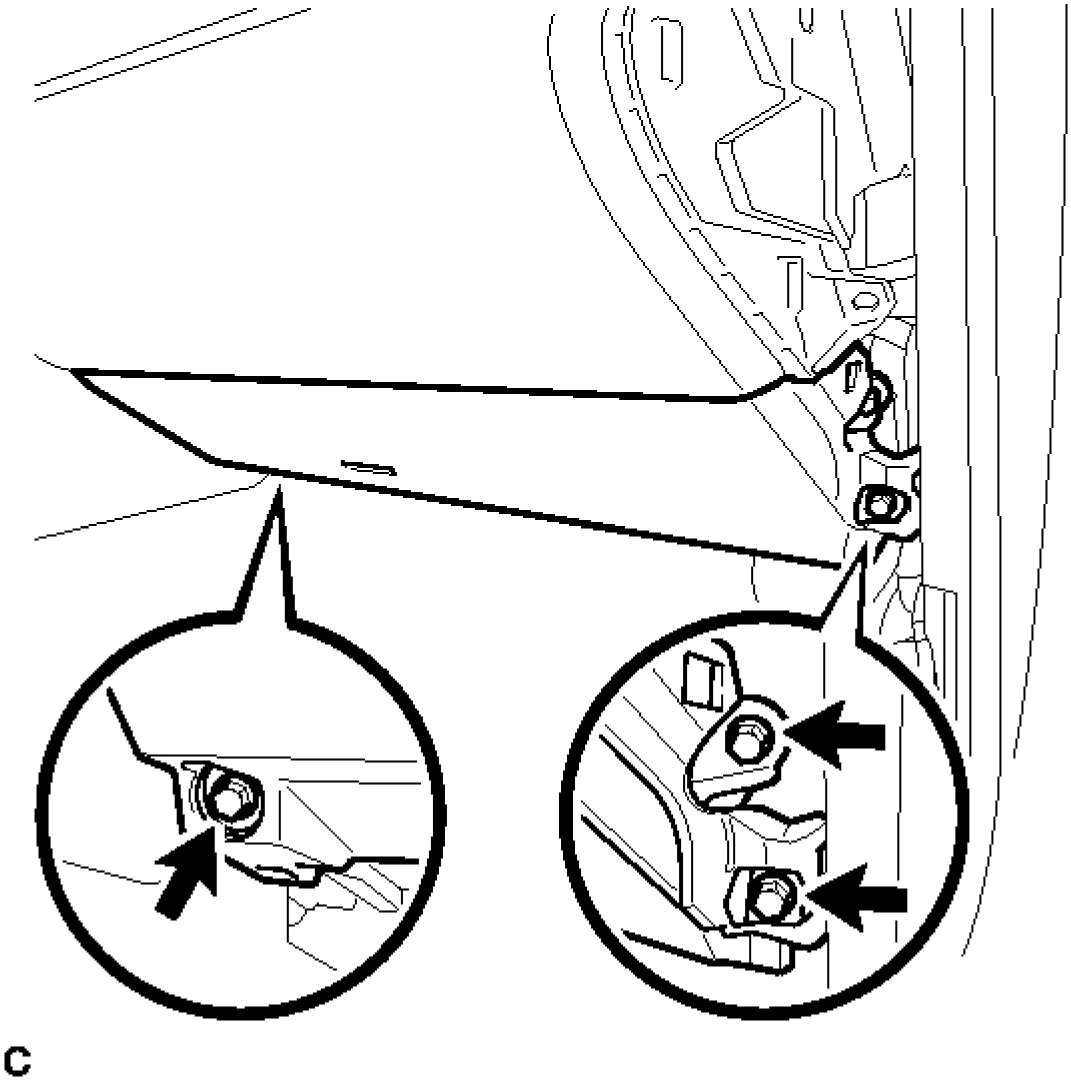

Fig. 62: Locating Lower No. 2 Instrument Panel Airbag Assembly Bolts
Courtesy of TOYOTA MOTOR SALES, U.S.A., INC.

d. Disengage the 3 claws to remove the lower No. 2 instrument panel airbag assembly.

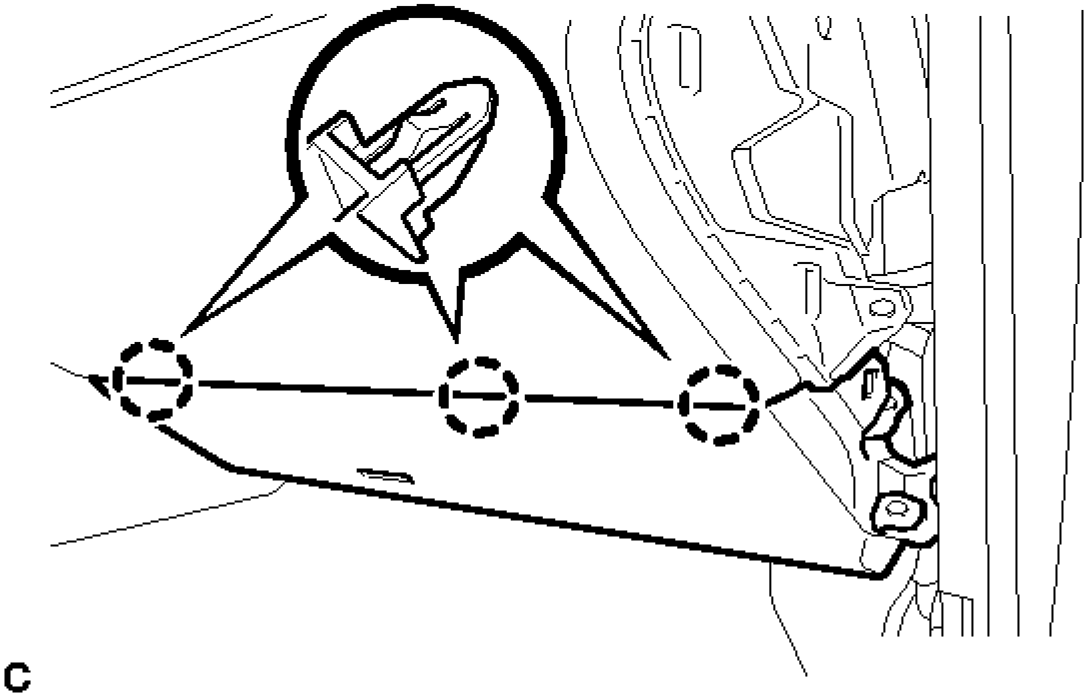

Fig. 63: Locating Lower No. 2 Instrument Panel Airbag Assembly Claws
Courtesy of TOYOTA MOTOR SALES, U.S.A., INC.

NOTE: When removing the lower No. 2 instrument panel airbag assembly, do not pull the airbag wire harness.

e. Using a screwdriver with the tip wrapped with protective tape, release the airbag connector lock.

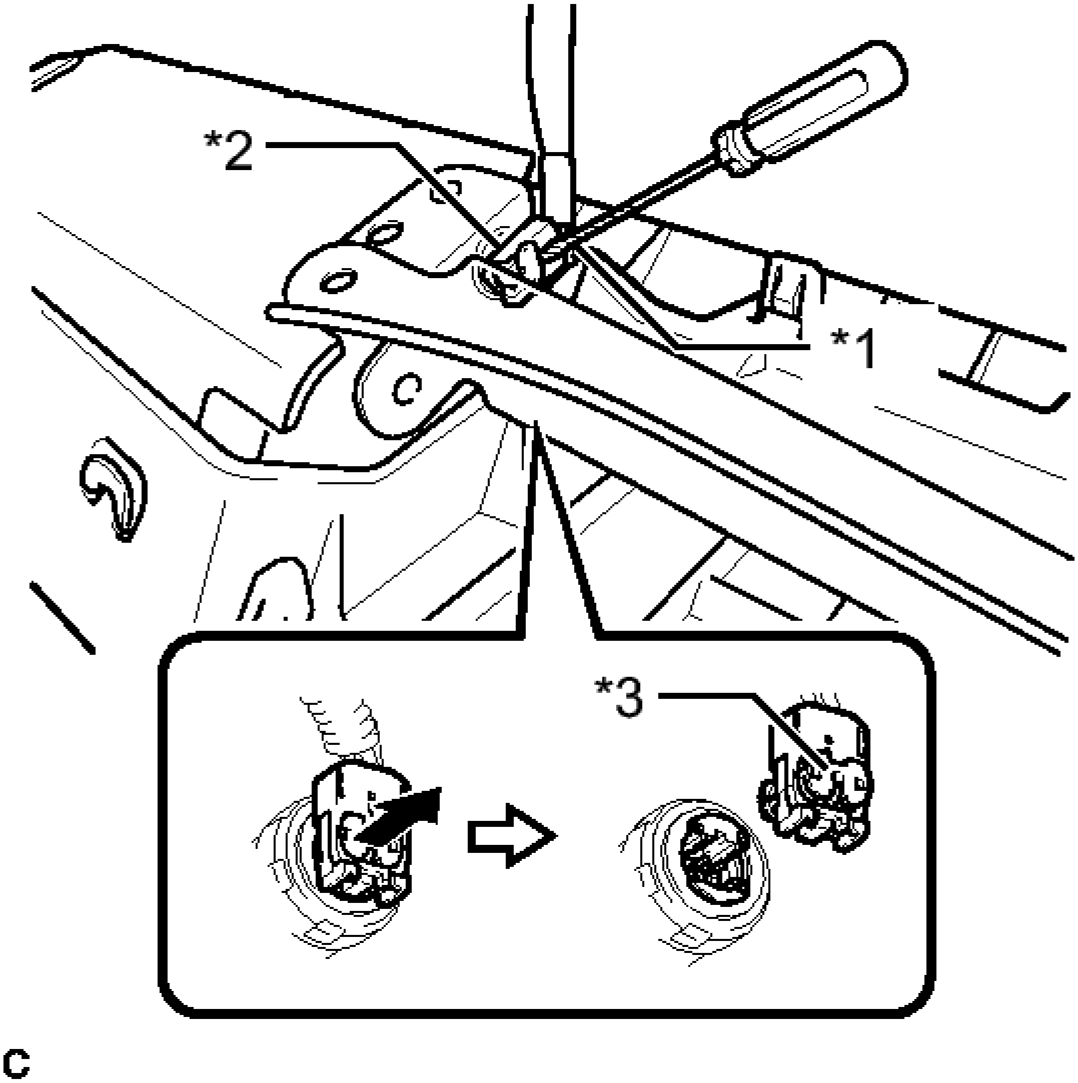

Fig. 64: Disconnecting No. 2 Instrument Panel Airbag Assembly Connector
Courtesy of TOYOTA MOTOR SALES, U.S.A., INC.

TEXT IN ILLUSTRATION

*1	Protective Tape
*2	Airbag Connector
*3	Airbag Connector Lock

f. Disconnect the airbag connector to remove the lower No. 2 instrument panel airbag assembly.

NOTE: When disconnecting any airbag connector, take care not to damage

the airbag wire harness.

INSTALLATION

INSTALLATION

1. **INSTALL LOWER NO. 2 INSTRUMENT PANEL AIRBAG ASSEMBLY**
   a. Check that the power switch is off.
   b. Check that the cable is disconnected from the negative (-) auxiliary battery terminal.

   WARNING: **Wait at least 90 seconds after disconnecting the cable from the negative (-) auxiliary battery terminal to disable the SRS system.**

   c. Connect the airbag connector to the lower No. 2 instrument panel airbag assembly.

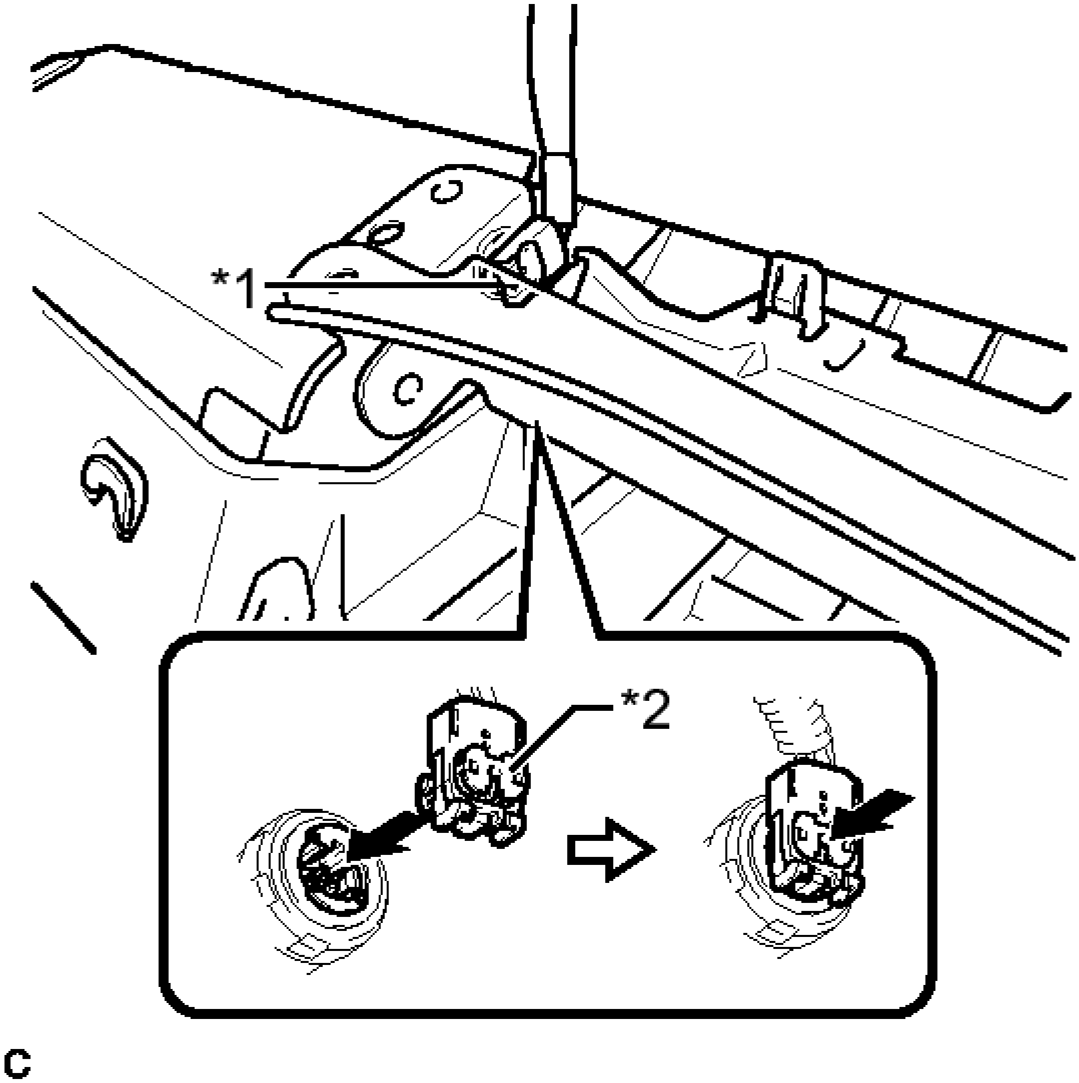

Fig. 65: Connecting No. 2 Instrument Panel Airbag Assembly Connector
Courtesy of TOYOTA MOTOR SALES, U.S.A., INC.

NOTE: When connecting any airbag connector, take care not to damage the airbag wire harness.

TEXT IN ILLUSTRATION

*1	Airbag Connector
*2	Airbag Connector Lock

d. Push in the lock to install the airbag connector.

e. Temporarily install the lower No. 2 instrument panel airbag assembly with the 3 claws.

f. Install the 3 bolts.

Torque: 10 N*m (102 kgf*cm, 7 ft.*lbf)

NOTE: **Confirm that the lower No. 2 instrument panel airbag assembly is installed securely without any excessive gaps and is not protruding outward.**

2. **INSTALL NO. 2 INSTRUMENT PANEL UNDER COVER SUB-ASSEMBLY** . Refer to **INSTALLATION - Step 17**
3. **INSTALL INSTRUMENT SIDE PANEL RH** . Refer to **INSTALLATION - Step 18**
4. **CONNECT FRONT DOOR OPENING TRIM WEATHERSTRIP RH**
5. **INSTALL COWL SIDE TRIM SUB-ASSEMBLY RH**

   HINT:

   Use the same procedure for the RH side and LH side. Refer to **INSTALLATION - Step 44** .

6. **INSTALL FRONT DOOR SCUFF PLATE RH**

   HINT:

   Use the same procedure for the RH side and LH side. Refer to **INSTALLATION - Step 45** .

7. **CONNECT CABLE TO NEGATIVE AUXILIARY BATTERY TERMINAL**

   NOTE: **When disconnecting the cable, some systems need to be initialized after the cable is reconnected. Refer to INITIALIZATION .**

8. **INSTALL LUGGAGE TRIM SERVICE HOLE COVER** . Refer to **INSTALLATION - Step 3**
9. **PERFORM DIAGNOSTIC SYSTEM CHECK**

   for Separate Type Yaw Rate Sensor: Refer to **DTC CHECK / CLEAR**

   for Built-in Type Yaw Rate Sensor: Refer to **DTC CHECK / CLEAR**

10. **INSPECT SRS WARNING LIGHT**

    for Separate Type Yaw Rate Sensor: Refer to **DIAGNOSIS SYSTEM**

    for Built-in Type Yaw Rate Sensor: Refer to **DIAGNOSIS SYSTEM**

DISPOSAL

DISPOSAL

WARNING: **Before performing pre-disposal deployment of any SRS part, review and closely follow all applicable environmental and hazardous material regulations. Pre-disposal deployment may be considered hazardous material treatment.**

1. **PRECAUTION**

WARNING:

- **An airbag or pretensioner may be activated by static electricity. To prevent this, be sure to touch a metal surface with your bare hands to discharge static electricity before performing this procedure.**
- **Never dispose of a lower No. 2 instrument panel airbag assembly with an undeployed airbag.**
- **The airbag produces an exploding sound when it is deployed, so perform the operation outdoors and where it will not create a nuisance to nearby residents.**
- **When deploying the airbag, always use the specified SST (SRS Airbag Deployment Tool). Perform the operation in a place away from electrical noise.**
- **When deploying the airbag, perform the operation at least 10 m (32.8 ft.) away from the lower No. 2 instrument panel airbag assembly.**
- **The lower No. 2 instrument panel airbag assembly becomes extremely hot when the airbag is deployed, so do not touch it for at least 30 minutes after deployment.**
- **Use gloves and safety glasses when handling a lower No. 2 instrument panel airbag assembly with a deployed airbag.**
- **Do not apply water etc. to a lower No. 2 instrument panel airbag assembly with a deployed airbag.**
- **Always wash your hands with water after completing the operation.**

HINT:

When scrapping a vehicle equipped with an SRS or disposing of the lower No. 2 instrument panel airbag assembly, be sure to deploy the airbag first in accordance with the procedure described below. If any abnormality occurs with the airbag deployment, contact the Service Dept. of TOYOTA MOTOR SALES, U.S.A., INC.

2. **DISPOSE OF LOWER NO. 2 INSTRUMENT PANEL AIRBAG ASSEMBLY (When Installed in Vehicle)**

NOTE:

- **When disposing of the lower No. 2 instrument panel airbag assembly, never use the customer's vehicle to deploy the airbag.**

- **Be sure to observe the following procedure when deploying the airbag.**

HINT:

Prepare a 12 V battery as the power source to deploy the airbag.

a. Check the function of SST See step 2.

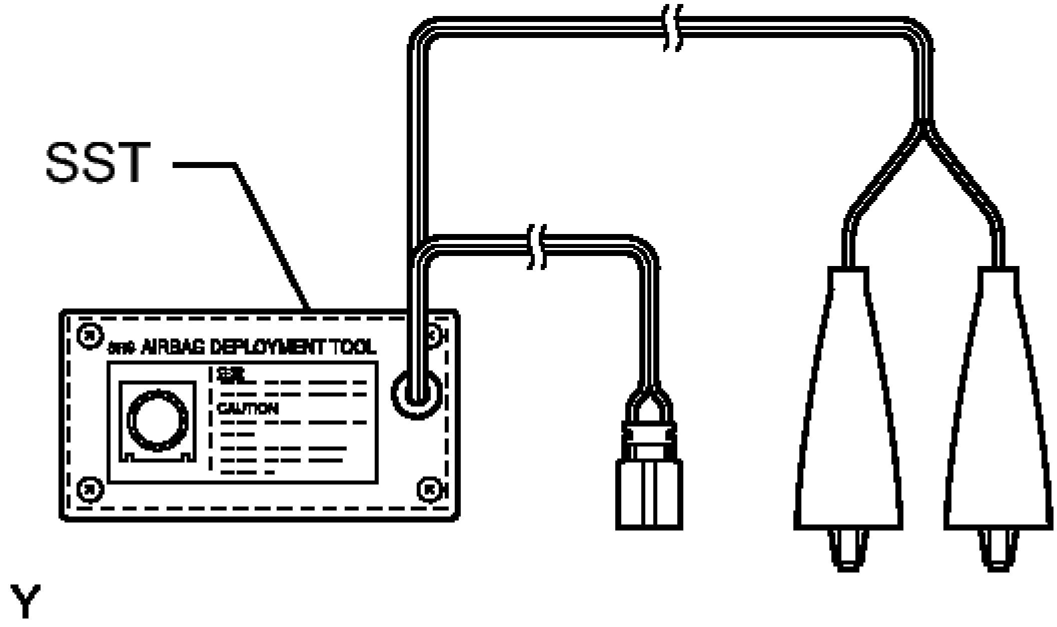

Fig. 66: Checking Function Of SST
Courtesy of TOYOTA MOTOR SALES, U.S.A., INC.

- **SST: 09082-00700**

b. Refer to Precaution.

for Separate Type Yaw Rate Sensor: Refer to **PRECAUTION**

for Built-in Type Yaw Rate Sensor: Refer to **PRECAUTION**

c. Disconnect the cable from the negative (-) auxiliary battery terminal.

WARNING: **Wait at least 90 seconds after disconnecting the cable from the negative (-) auxiliary battery terminal to disable the SRS system.**

d. Remove the No. 2 instrument panel under cover sub-assembly. Refer to **REMOVAL - Step 35** .

e. Disconnect the lower No. 2 instrument panel airbag connector.
   1. Using a screwdriver with the tip wrapped with protective tape, disconnect the airbag connector.

NOTE: **When disconnecting any airbag connector, take care not to damage the airbag wire harness.**

f. Install SST.

WARNING: **Check that there is no looseness in the lower No. 2 instrument panel airbag assembly.**

   1. Connect the SST connector to the lower No. 2 instrument panel airbag assembly.

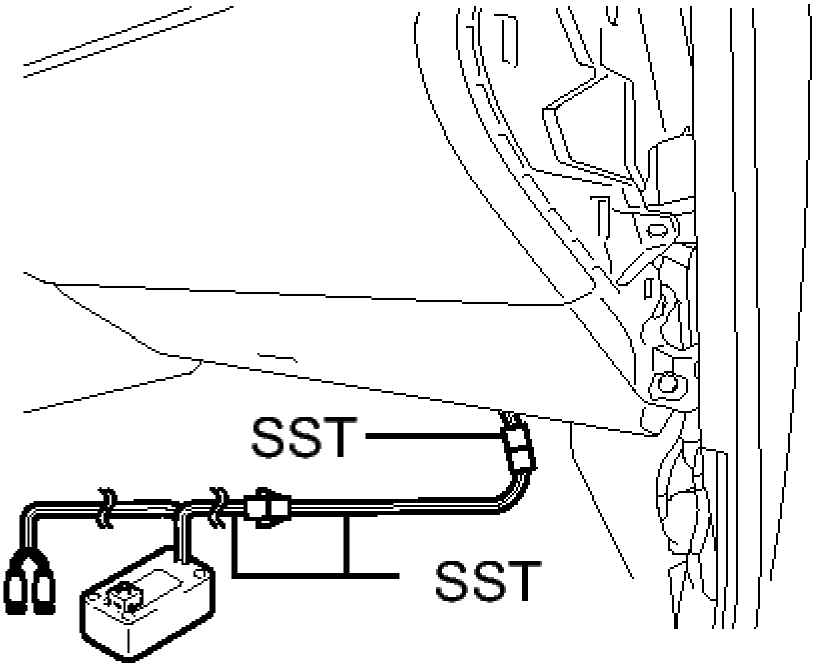

Fig. 67: Connecting SST Connector To Lower No. 2 Instrument Panel Airbag Assembly
Courtesy of TOYOTA MOTOR SALES, U.S.A., INC.

- **SST: 09082-00700**
- **SST: 09082-00802**
  09082-10801
  09082-20801

NOTE: **To avoid damaging the SST connector or wire harness, do not lock the secondary lock of the twin lock.**

2. Move SST at least 10 m (32.8 ft.) away from the front side window of the vehicle.

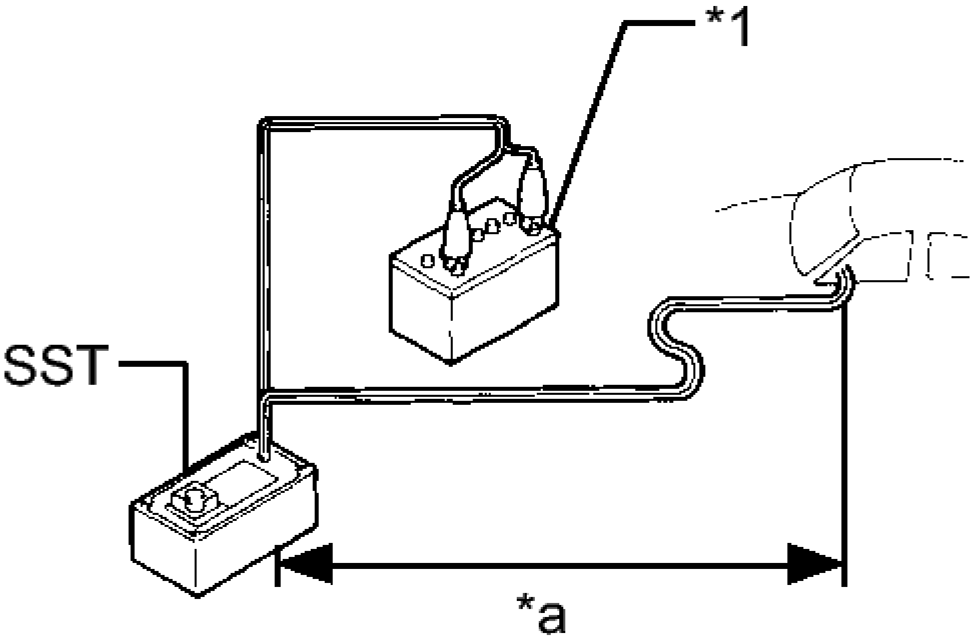

Fig. 68: Identifying Distance Between SST & Front Side Window
Courtesy of TOYOTA MOTOR SALES, U.S.A., INC.

TEXT IN ILLUSTRATION

*1	12 V Battery
*a	10 m (32.8 ft.) or more

3. Maintaining sufficient clearance for the SST wire harness in the front side window, close all doors and windows of the vehicle.

NOTE: **Take care not to damage the SST wire harness.**

4. Connect the red clip of SST to the positive (+) battery terminal and the black clip of SST to the negative (-) battery terminal.

g. Deploy the airbag.
   1. Check that no one is inside the vehicle or within a 10 m (32.8 ft.) radius of the vehicle.
   2. Press the SST activation switch to deploy the airbag.

WARNING:

- **Before deployment, make sure that no one is near**

the vehicle.

- **The lower No. 2 instrument panel airbag assembly becomes extremely hot when the airbag is deployed, so do not touch it for at least 30 minutes after deployment.**
- **Use gloves and safety glasses when handling a lower No. 2 instrument panel airbag assembly with a deployed airbag.**
- **Do not apply water etc. to a lower No. 2 instrument panel airbag assembly with a deployed airbag.**
- **Always wash your hands with water after completing the operation.**

HINT:

The airbag is deployed as the LED of the SST activation switch comes on.

3. **DISPOSE OF LOWER NO. 2 INSTRUMENT PANEL AIRBAG ASSEMBLY (When Not Installed in Vehicle)**

NOTE: **Be sure to observe the following procedure when deploying the airbag.**

HINT:

Prepare a 12 V battery as the power source to deploy the airbag.

a. Check the function of SST See step 3.

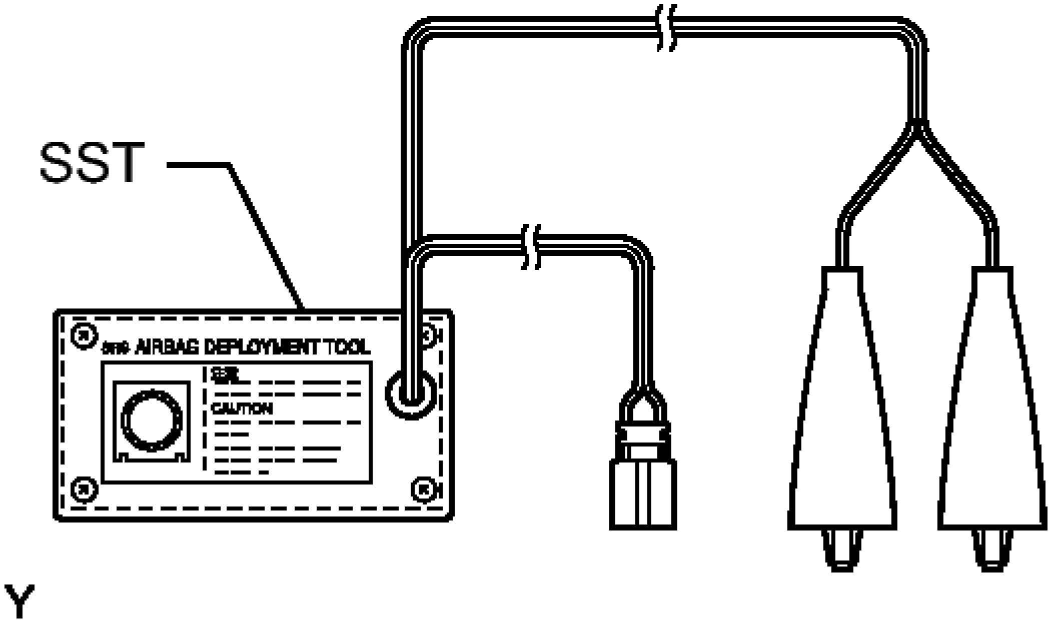

Fig. 69: Checking Function Of SST
Courtesy of TOYOTA MOTOR SALES, U.S.A., INC.

- **SST: 09082-00700**

b. Remove the lower No. 2 instrument panel airbag assembly. Refer to **REMOVAL**.

WARNING:

- **Before removing the lower No. 2 instrument panel airbag assembly, wait at least 90 seconds after turning the power switch off and disconnecting the cable from the negative (-) auxiliary battery terminal.**
- **When storing the lower No. 2 instrument panel airbag assembly, keep the airbag deployment side facing upward.**

c. Using braided wire, tie down the lower No. 2 instrument panel airbag assembly to an unneeded tire.

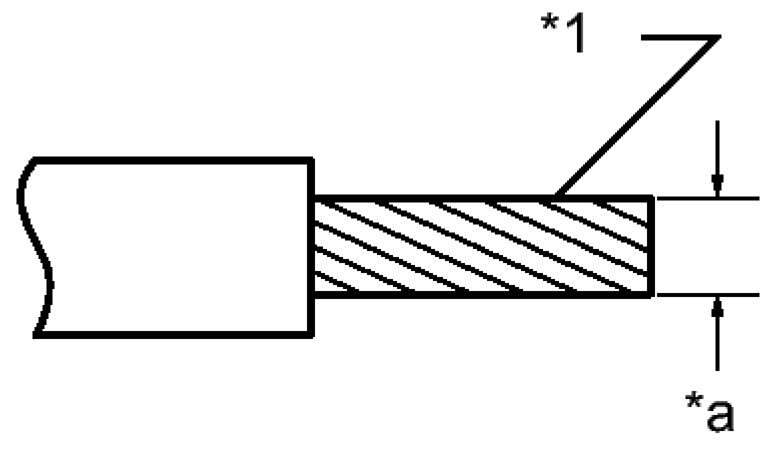

Fig. 70: Identifying Stripped Wire
Courtesy of TOYOTA MOTOR SALES, U.S.A., INC.

TEXT IN ILLUSTRATION

*1	Stripped Wire Section
*a	Wire Diameter

Wire

Stripped wire section

1.25 mm^2 (0.0019 $in.^2$) or more

WARNING: **If the wire is too thin or an alternative object is used to tie down the lower No. 2 instrument panel airbag assembly, it may snap when the airbag is deployed. Always use a wire for vehicle use with an area of at least 1.25 mm^2 (0.0019 $in.^2$).**

HINT:

To calculate the area of the stripped wire section:

Area = 3.14 x $(\text{Diameter})^2$ / 4

1. Position the lower No. 2 instrument panel airbag assembly inside the tire with the airbag deployment side facing inside.

   Minimum tire size

   Width

   185 mm (7.28 in.)

   Inner diameter

   360 mm (1.18 ft.)

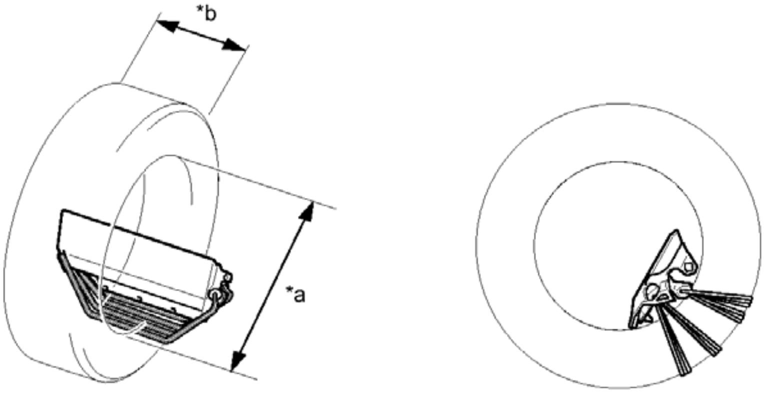

Fig. 71: Identifying Lower No. 2 Instrument Panel Airbag Assembly Positioned Inside Tire
Courtesy of TOYOTA MOTOR SALES, U.S.A., INC.

TEXT IN ILLUSTRATION

*a	Inner Diameter	*b	Width

WARNING:

- **Make sure that the wires are tight. If there is slack in the wires, the lower No. 2 instrument panel airbag assembly may break loose when the airbag is deployed.**
- **Always tie down the lower No. 2 instrument panel airbag assembly with the airbag deployment side facing inside the tire as shown in the illustration.**

NOTE: **The tires may be damaged by the airbag deployment, so use an unneeded tire.**

d. Install SST.

1. After connecting the following SST to each other, connect them to the lower No. 2 instrument panel airbag assembly.

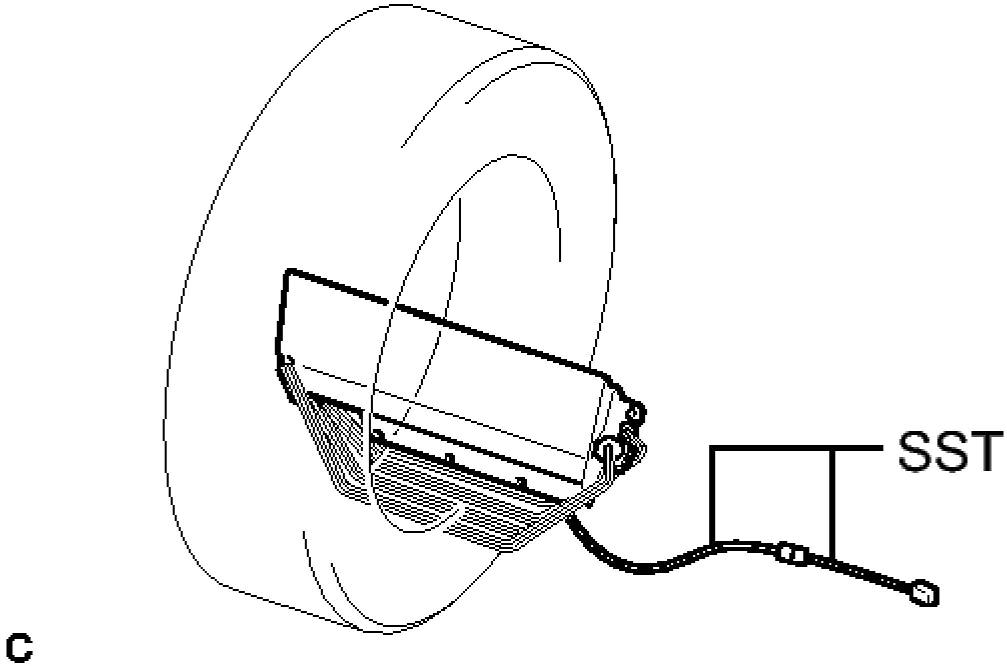

Fig. 72: Connecting SST To Lower No. 2 Instrument Panel Airbag Assembly In Tire
Courtesy of TOYOTA MOTOR SALES, U.S.A., INC.

- **SST: 09082-00802**
  09082-10801
  09082-20801

e. Place the tires.

1. Place at least 2 tires under the tire to which the lower No. 2 instrument panel airbag assembly is tied.

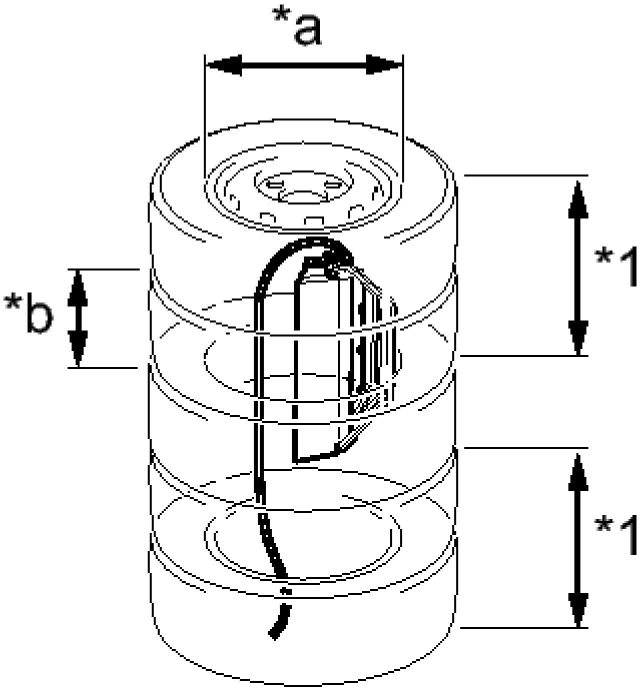

Fig. 73: Placing No. 2 Instrument Panel Airbag Assembly Under Tires
Courtesy of TOYOTA MOTOR SALES, U.S.A., INC.

TEXT IN ILLUSTRATION

*1	Tires (2 or more)
*a	Inner Diameter
*b	Width

Minimum tire size

Width

185 mm (7.28 in.)

Inner diameter

360 mm (1.18 ft.)

NOTE:

- **The tires may be damaged by the airbag deployment, so use unneeded tires.**
- **Do not place the SST connector under the tire because it could be damaged.**

2. Place at least 2 tires onto the tire to which the lower No. 2 instrument panel airbag assembly

is tied. The top tire should have a wheel installed.

3. Tie the tires together with the 2 wires.

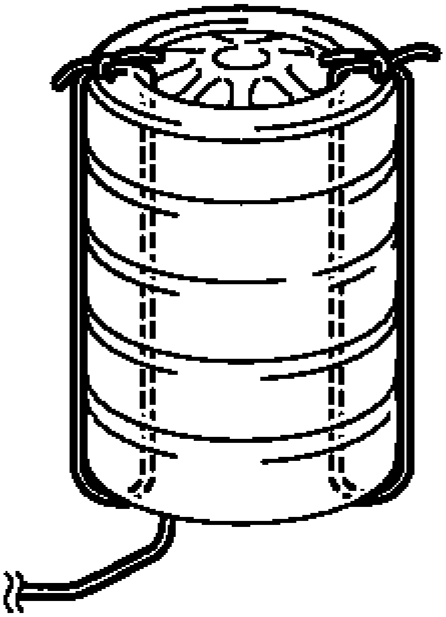

Fig. 74: Identifying Tires Tied Together With Wires
Courtesy of TOYOTA MOTOR SALES, U.S.A., INC.

WARNING: **Make sure that the wires are tight. Looseness in the wires results in the tires breaking loose when the airbag is deployed.**

f. Install SST.

1. Connect the SST connector.

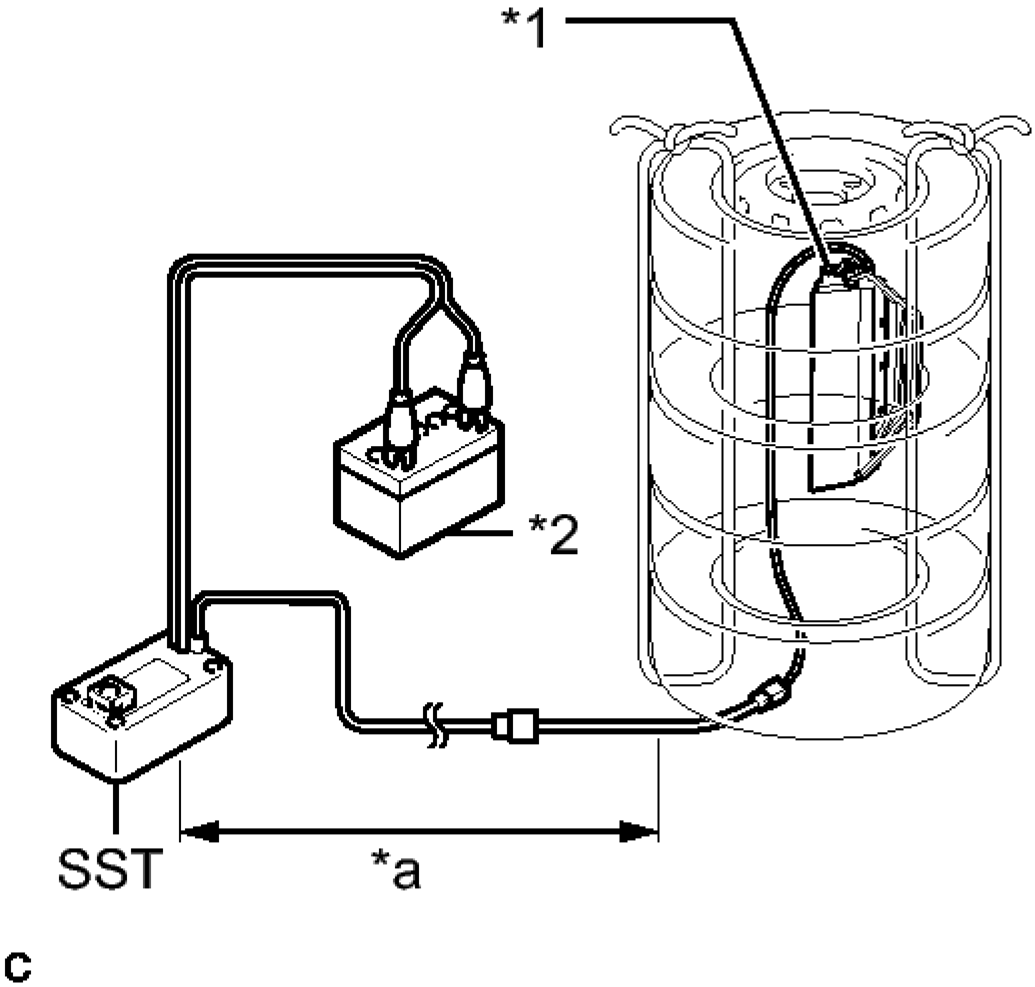

Fig. 75: Identifying SST Distance From Lower No. 2 Instrument Panel Airbag Assembly In Tires
Courtesy of TOYOTA MOTOR SALES, U.S.A., INC.

TEXT IN ILLUSTRATION

*1	Lower No. 2 Instrument Panel Airbag Assembly
*2	12 V Battery
*a	10 m (32.8 ft.) or more

- **SST: 09082-00700**

NOTE: **To avoid damaging the SST connector or wire harness, do not lock the secondary lock of the twin lock. Also, secure some slack for the SST wire harness inside the tire.**

2. Move SST at least 10 m (32.8 ft.) away from the airbag tied down to the tire.

g. Deploy the airbag.
   1. Connect the red clip of SST to the positive (+) battery terminal and the black clip of SST to the negative (-) battery terminal.
   2. Check that no one is within a 10 m (32.8 ft.) radius of the tire to which the lower No. 2 instrument panel airbag assembly is tied.
   3. Press the SST activation switch to deploy the airbag.

WARNING: **Before deployment, make sure that no one is near the airbag.**

HINT:

The airbag is deployed as the LED of the SST activation switch comes on.

h. Dispose of the lower No. 2 instrument panel airbag assembly.

WARNING:

- **The lower No. 2 instrument panel airbag assembly becomes extremely hot when the airbag is deployed, so do not touch it for at least 30 minutes after deployment.**
- **Use gloves and safety glasses when handling a lower No. 2 instrument panel airbag assembly with a deployed airbag.**
- **Do not apply water etc. to a lower No. 2 instrument panel airbag assembly with a deployed airbag.**
- **Always wash your hands with water after completing the operation.**

1. Remove the lower No. 2 instrument panel airbag assembly from the tire.
2. Place the lower No. 2 instrument panel airbag assembly in a plastic bag, tie it tightly, and dispose of it according to local regulations.

FRONT PASSENGER AIRBAG ASSEMBLY

COMPONENTS

ILLUSTRATION

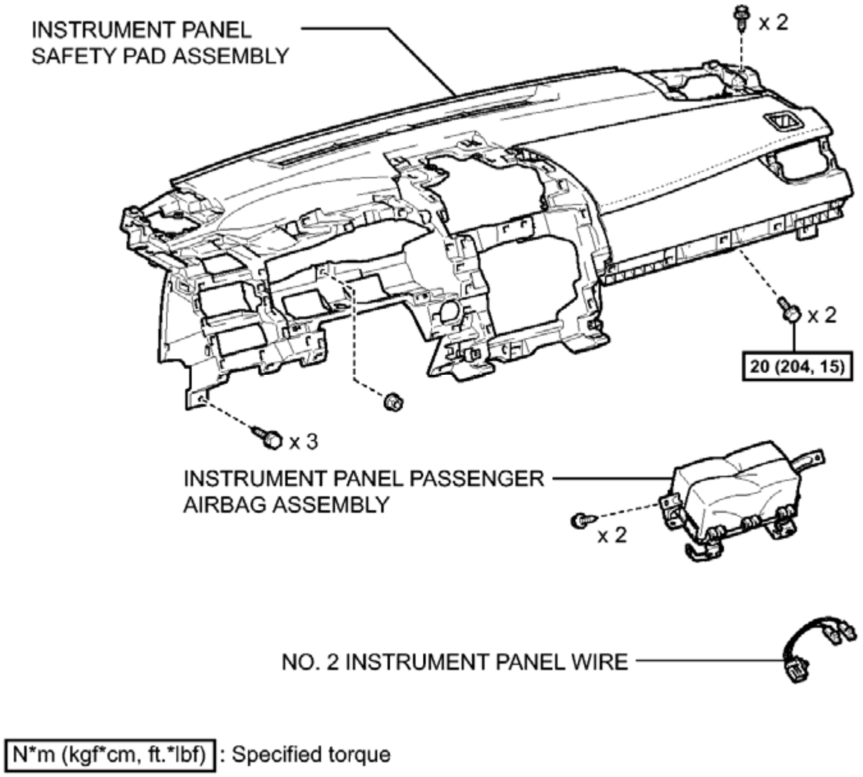
INSTRUMENT PANEL
SAFETY PAD ASSEMBLY
x 2
x 2
20 (204, 15)
x 3
INSTRUMENT PANEL PASSENGER
AIRBAG ASSEMBLY
x 2
NO. 2 INSTRUMENT PANEL WIRE
N*m (kgf*cm, ft.*lbf) : Specified torque

c

Fig. 76: Identifying Front Passenger Airbag Assembly Replacement Components With Torque Specifications
Courtesy of TOYOTA MOTOR SALES, U.S.A., INC.

ON-VEHICLE INSPECTION

ON-VEHICLE INSPECTION

WARNING: **Be sure to correctly follow the removal and installation procedures for the instrument panel passenger airbag assembly.**

1. **INSPECT INSTRUMENT PANEL PASSENGER AIRBAG ASSEMBLY (for Vehicle not Involved in Collision)**
   a. Perform a diagnostic system check.

      for Separate Type Yaw Rate Sensor: Refer to **DTC CHECK / CLEAR**

      for Built-in Type Yaw Rate Sensor: Refer to **DTC CHECK / CLEAR**

   b. Visually check for defects with the instrument panel passenger airbag assembly installed on the vehicle.

HINT:

The defects are as follows:

- Cuts on the instrument panel sub-assembly around the instrument panel passenger airbag assembly
- Small cracks on the instrument panel sub-assembly around the instrument panel passenger airbag assembly
- Significant discoloration on the instrument panel sub-assembly around the instrument panel passenger airbag assembly

OK

No defects are found.

If any of the defects is found, replace the instrument panel sub-assembly with a new one.

2. **INSPECT INSTRUMENT PANEL PASSENGER AIRBAG ASSEMBLY (for Vehicle Involved in Collision and Airbag not Deployed)**
   a. Perform a diagnostic system check.

      for Separate Type Yaw Rate Sensor: Refer to **DTC CHECK / CLEAR**

      for Built-in Type Yaw Rate Sensor: Refer to **DTC CHECK / CLEAR**

   b. Visually check for defects with the instrument panel passenger airbag assembly removed from the vehicle.

      HINT:

      - Cuts
      - Small cracks
      - Significant discoloration
      - Cracks or other damage to the connector
      - Deformation or cracks on the instrument panel sub-assembly or instrument panel reinforcement

      OK

      No defects are found.

      If any of the defects is found, replace the instrument panel passenger airbag assembly, instrument panel sub-assembly or instrument panel reinforcement with a new one.

REMOVAL

REMOVAL

1. **PRECAUTION**

WARNING: **Be sure to read Precaution thoroughly before servicing.**

for Separate Type Yaw Rate Sensor: Refer to PRECAUTION

for Built-in Type Yaw Rate Sensor: Refer to PRECAUTION

NOTE: **After turning the power switch off, waiting time may be required before disconnecting the cable from the negative (-) auxiliary battery terminal. Therefore, make sure to read the disconnecting the cable from the negative (-) auxiliary battery terminal notices before proceeding with work. Refer to PRECAUTION .**

2. **REMOVE NO. 1 INSTRUMENT PANEL GARNISH SUB-ASSEMBLY**

   Refer to **REMOVAL**

3. **DISCONNECT NO. 2 INSTRUMENT PANEL WIRE**
   1. Check that the power switch is off.
   2. Check that the cable is disconnected from the negative (-) auxiliary battery terminal.

   WARNING: **Wait at least 90 seconds after disconnecting the cable from the negative (-) auxiliary battery terminal to disable the SRS system.**

   3. Slide the slider to release the lock, and then disconnect the connector.

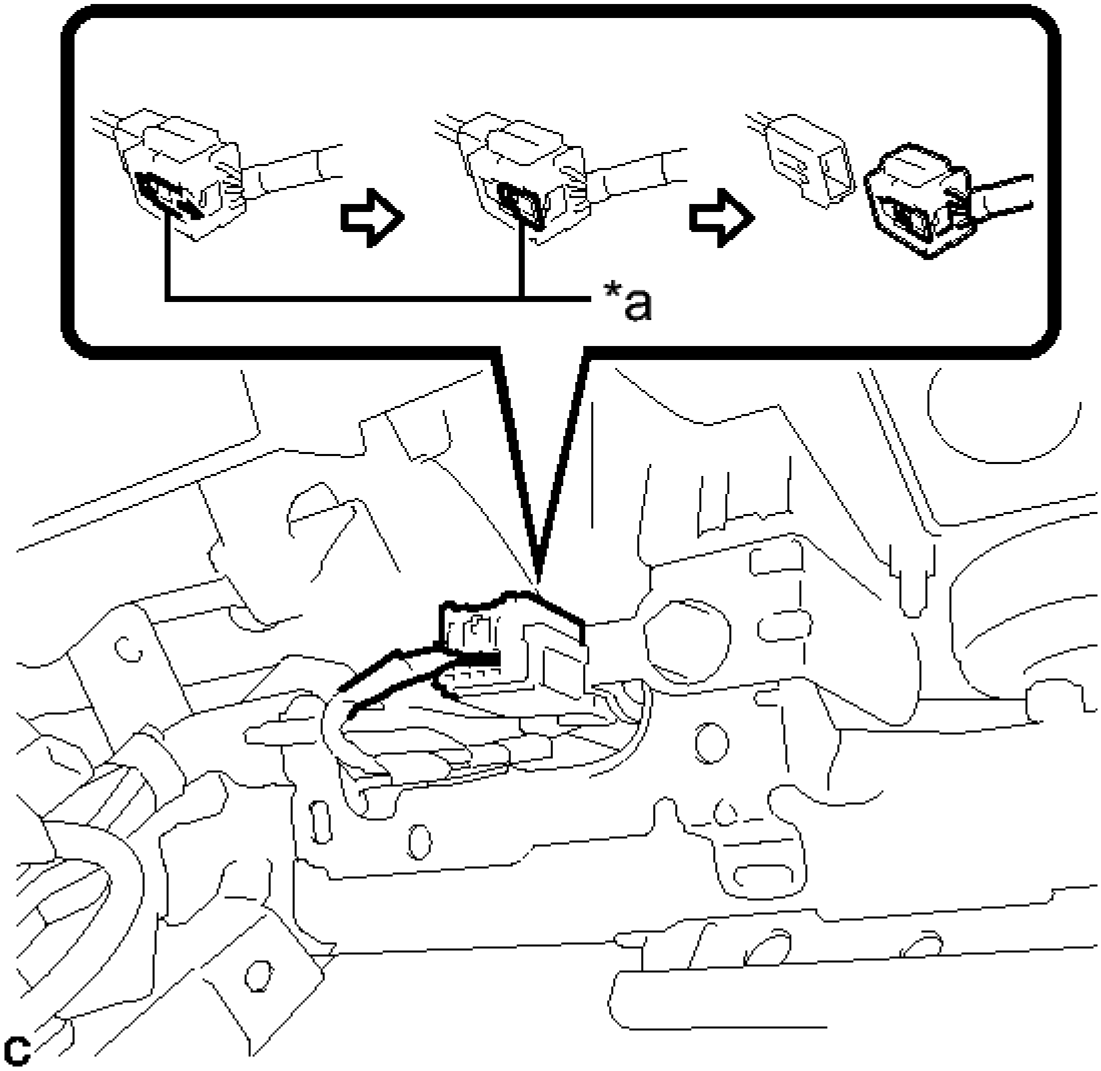

Fig. 77: Disconnecting Airbag Connector
Courtesy of TOYOTA MOTOR SALES, U.S.A., INC.

TEXT IN ILLUSTRATION

*a	Slider

NOTE: **When disconnecting any airbag connector, take care not to damage the airbag wire harness.**

4. **REMOVE INSTRUMENT PANEL SAFETY PAD ASSEMBLY** . Refer to **REMOVAL - Step 51**
5. **REMOVE INSTRUMENT PANEL PASSENGER AIRBAG ASSEMBLY**

WARNING: **When storing the instrument panel passenger airbag assembly, keep the airbag deployment side facing upward.**

a. Remove the 2 screws.

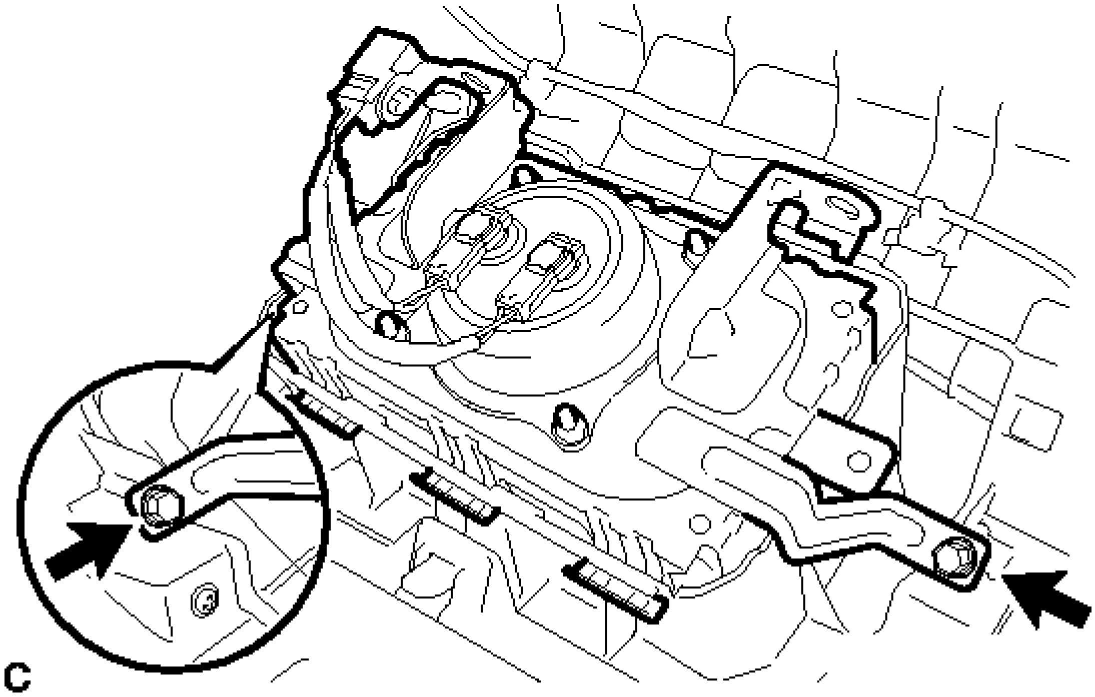

Fig. 78: Locating Instrument Panel Passenger Airbag Assembly Fasteners
Courtesy of TOYOTA MOTOR SALES, U.S.A., INC.

b. Lean the instrument panel safety pad assembly and disengage the 3 hooks.

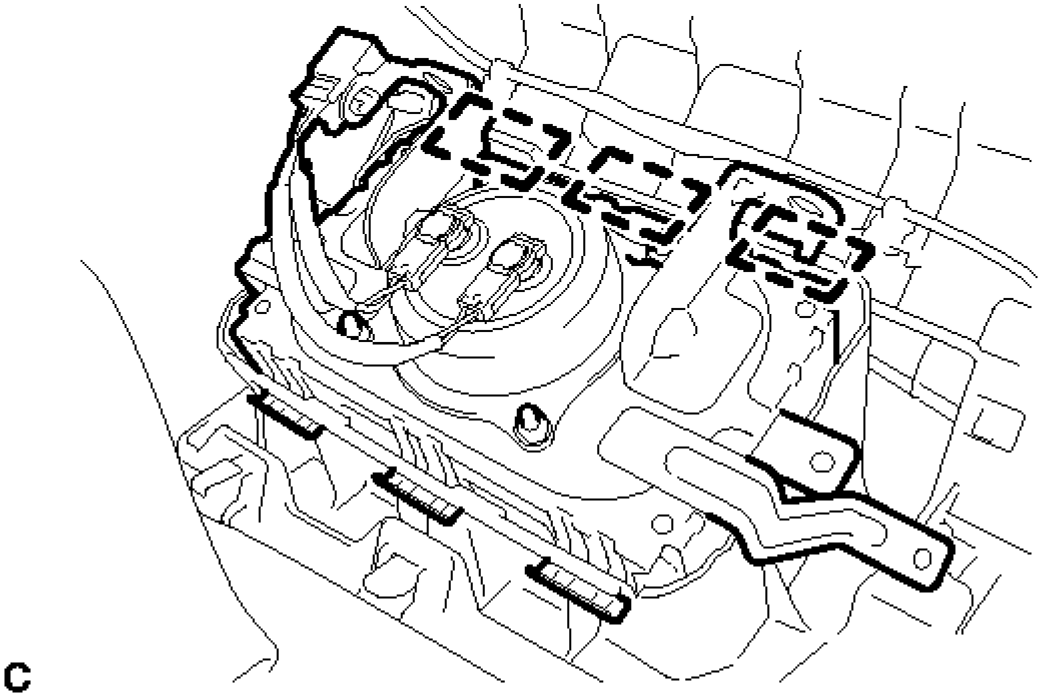

Fig. 79: Locating Instrument Panel Passenger Airbag Assembly Hooks
Courtesy of TOYOTA MOTOR SALES, U.S.A., INC.

c. Disengage the 3 hooks to remove the instrument panel passenger airbag assembly from the instrument panel safety pad assembly.

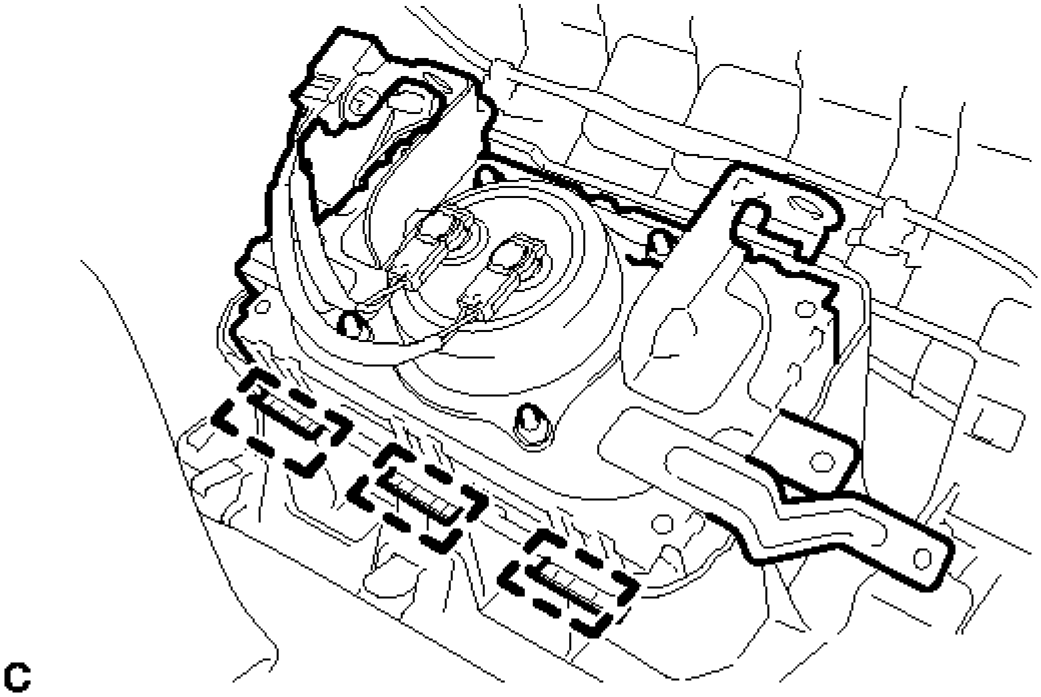

Fig. 80: Locating Instrument Panel Passenger Airbag Assembly Hooks
Courtesy of TOYOTA MOTOR SALES, U.S.A., INC.

6. **REMOVE NO. 2 INSTRUMENT PANEL WIRE**
   a. Disengage the clamp.

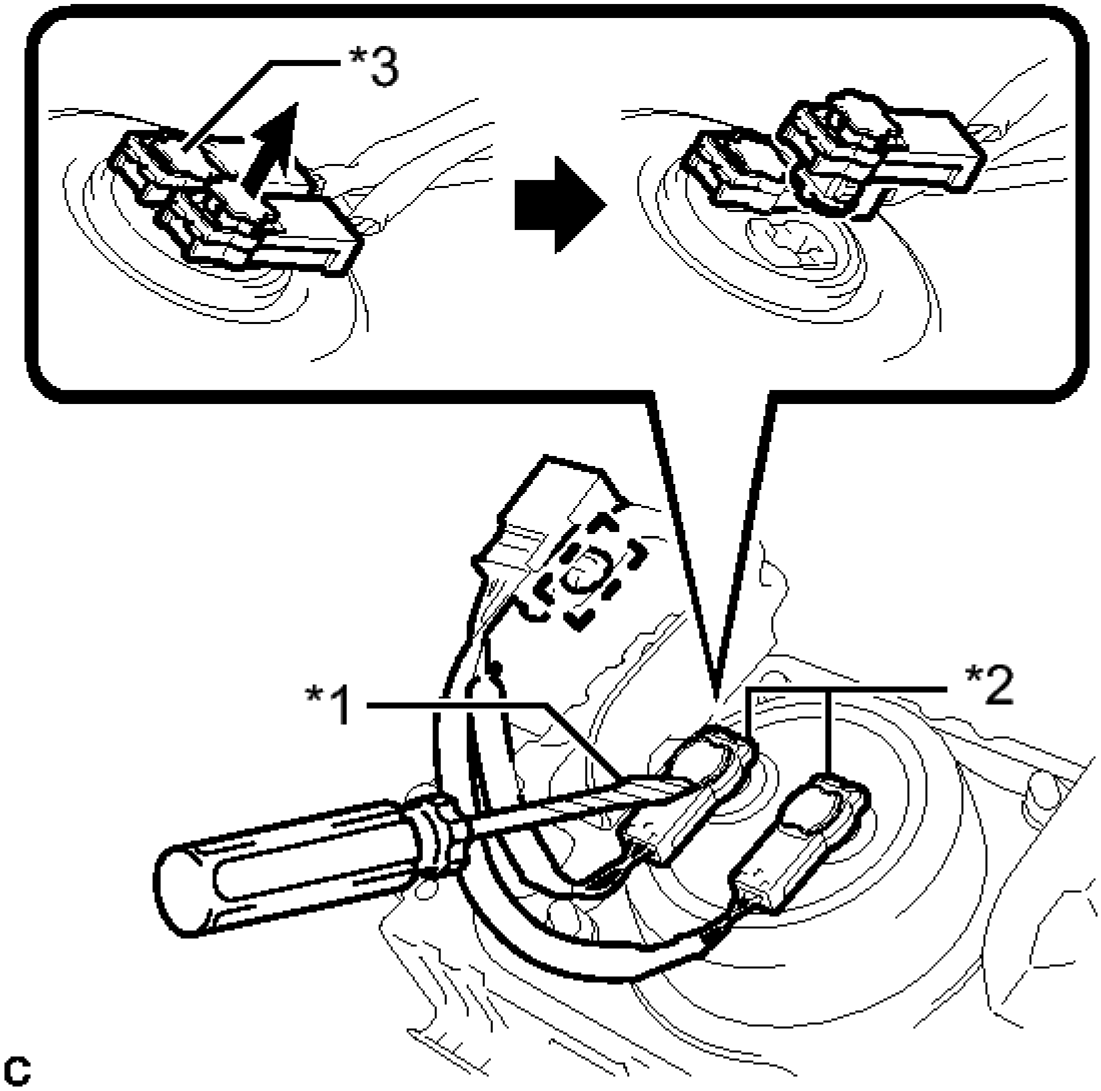

Fig. 81: Identifying Airbag Connector Lock
Courtesy of TOYOTA MOTOR SALES, U.S.A., INC.

b. Using a screwdriver with the tip wrapped with protective tape, release the 2 airbag connector locks.

TEXT IN ILLUSTRATION

*1	Protective Tape
*2	Airbag Connector
*3	Airbag Connector Lock

c. Disconnect the 2 airbag connectors to remove the No. 2 instrument panel wire from the instrument panel passenger airbag assembly.

NOTE: **When disconnecting any airbag connector, take care not to damage the airbag wire harness.**

INSTALLATION

INSTALLATION

1. **INSTALL NO. 2 INSTRUMENT PANEL WIRE**
    a. Connect the 2 airbag connectors of the No. 2 instrument panel wire to the instrument panel passenger airbag assembly.

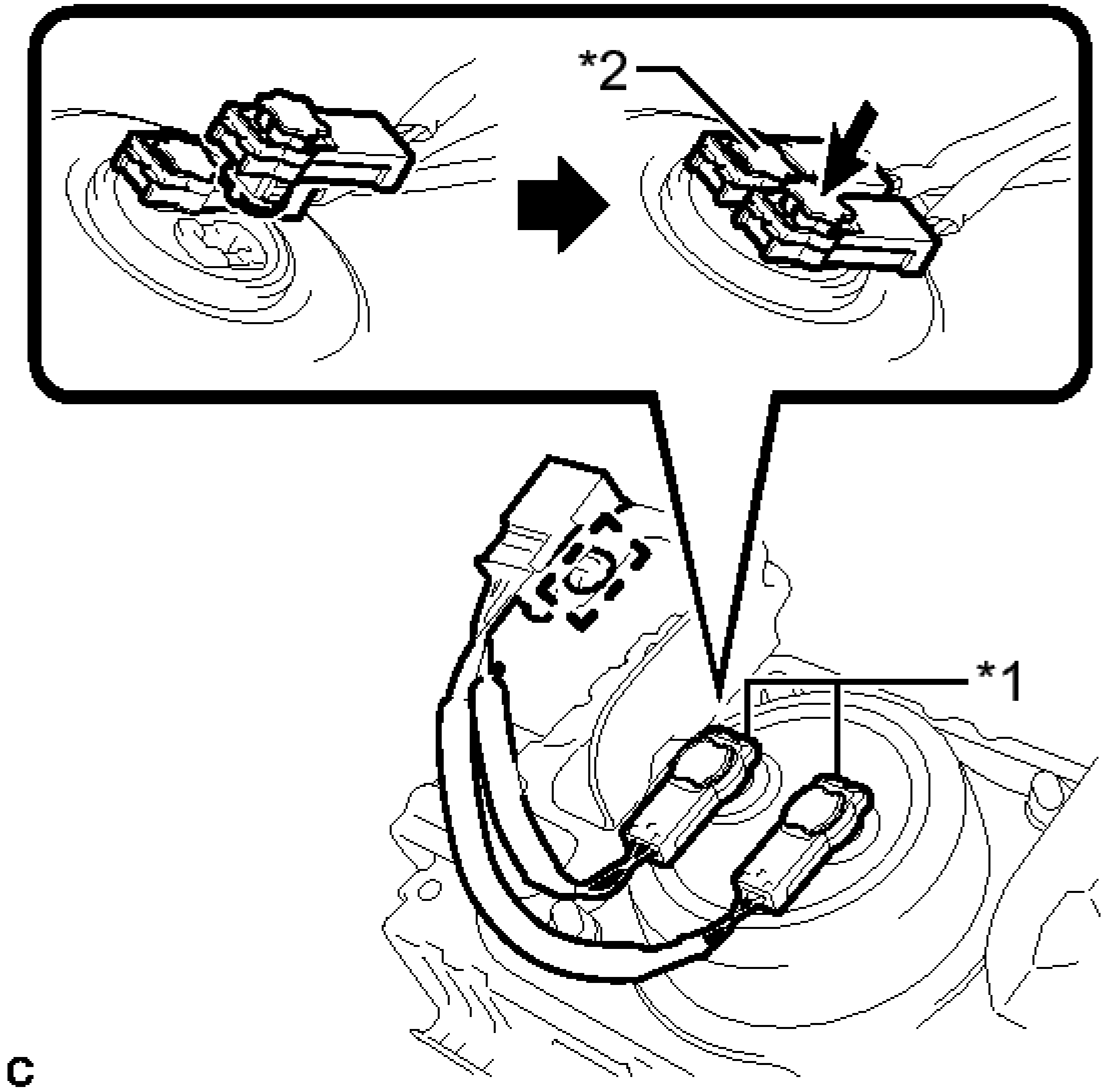

Fig. 82: Identifying Airbag Connector And Airbag Connector Lock
Courtesy of TOYOTA MOTOR SALES, U.S.A., INC.

TEXT IN ILLUSTRATION

*1	Airbag Connector
*2	Airbag Connector Lock

NOTE:

- **When connecting any airbag connector, take care not to damage the airbag wire harness.**
- **Be sure to only connect the connectors to each corresponding color.**

b. Push in the 2 locks to install the 2 airbag connectors to the instrument panel passenger airbag assembly.

c. Engage the clamp.

2. INSTALL INSTRUMENT PANEL PASSENGER AIRBAG ASSEMBLY

NOTE: **If the hooks are not engaged in the correct order, the deployment part of the instrument panel passenger airbag assembly may be damaged.**

a. Engage the 3 hooks as shown in the illustration.

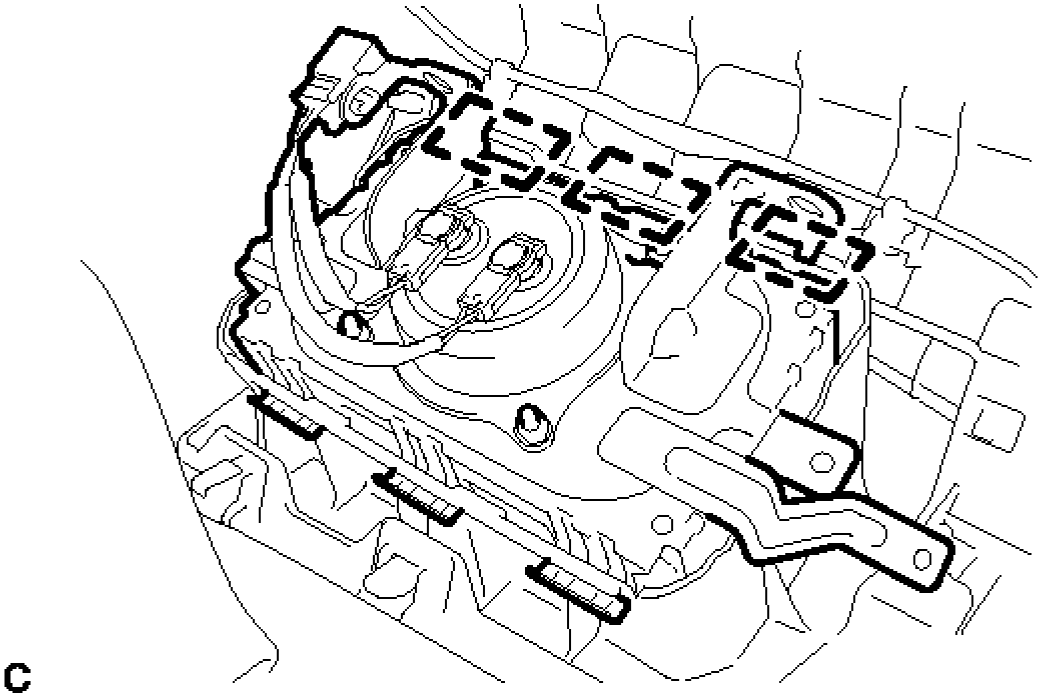

Fig. 83: Locating Instrument Panel Passenger Airbag Assembly Hooks
Courtesy of TOYOTA MOTOR SALES, U.S.A., INC.

b. Push the instrument panel passenger airbag assembly to engage the 3 hooks.

   c. Install the 2 screws to install the instrument panel passenger airbag assembly.

3. **INSTALL INSTRUMENT PANEL SAFETY PAD ASSEMBLY** . Refer to **INSTALLATION - Step 1**
4. **CONNECT NO. 2 INSTRUMENT PANEL WIRE**
   a. Check that the power switch is off.
   b. Check that the cable is disconnected from the negative (-) auxiliary battery terminal.

WARNING: Wait at least 90 seconds after disconnecting the cable from the negative (-) auxiliary battery terminal to disable the SRS system.

   c. Connect the connector.

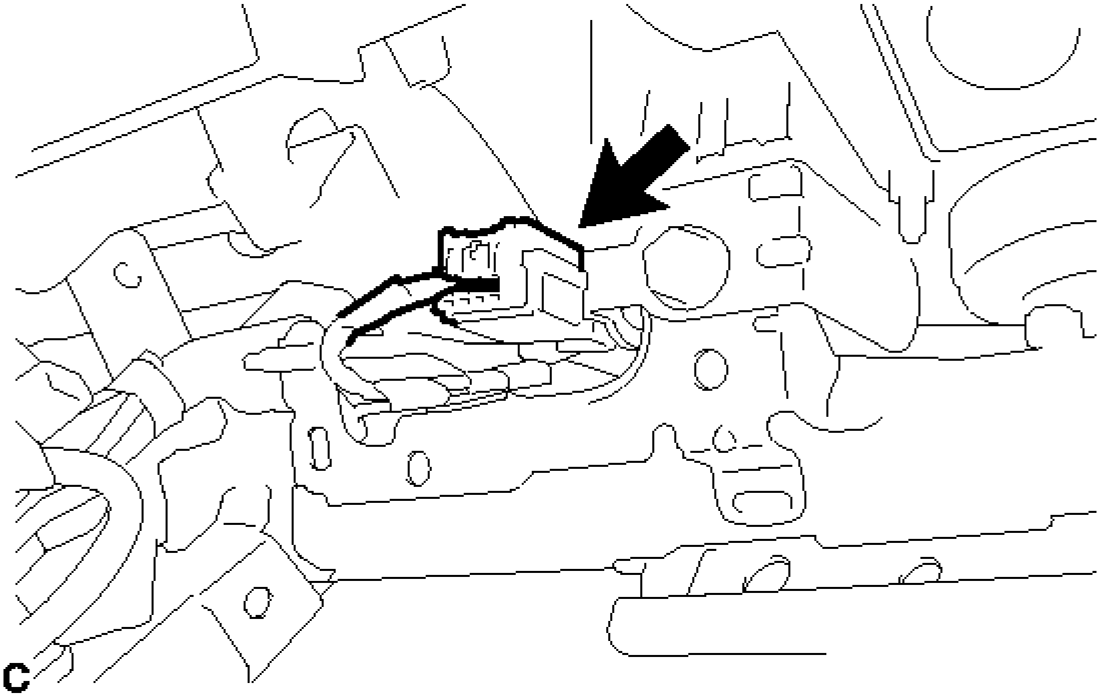

Fig. 84: Identifying Airbag Connector
Courtesy of TOYOTA MOTOR SALES, U.S.A., INC.

NOTE: When connecting any airbag connector, take care not to damage the airbag wire harness.

5. **INSTALL NO. 1 INSTRUMENT PANEL GARNISH SUB-ASSEMBLY**

   Refer to **INSTALLATION - Step 3**

6. **PERFORM DIAGNOSTIC SYSTEM CHECK**

for Separate Type Yaw Rate Sensor: Refer to **DTC CHECK / CLEAR**

for Built-in Type Yaw Rate Sensor: Refer to **DTC CHECK / CLEAR**

DISPOSAL

DISPOSAL

WARNING: **Before performing pre-disposal deployment of any SRS part, review and closely follow all applicable environmental and hazardous material regulations. Pre-disposal deployment may be considered hazardous material treatment.**

1. **PRECAUTION**

WARNING:

- **An airbag or pretensioner may be activated by static electricity. To prevent this, be sure to touch a metal surface with bare hands to discharge static electricity before performing this procedure.**
- **Never dispose of a instrument panel passenger airbag assembly with an undeployed airbag.**
- **The airbag produces an exploding sound when it is deployed, so perform the operation outdoors and where it will not create a nuisance to nearby residents.**
- **When deploying the airbag, always use the specified SST (SRS Airbag Deployment Tool). Perform the operation in a place away from electrical noise.**
- **When deploying the airbag, perform the operation at least 10 m (32.8 ft.) away from the instrument panel passenger airbag assembly.**
- **The instrument panel passenger airbag assembly becomes extremely hot when the airbag is deployed, so do not touch it for at least 30 minutes after deployment.**
- **Use gloves and safety glasses when handling a instrument panel passenger airbag assembly with a deployed airbag.**
- **Do not apply water etc. to a instrument panel passenger airbag assembly with a deployed airbag.**
- **Always wash your hands with water after completing the operation.**

HINT:

When scrapping a vehicle equipped with an SRS or disposing of the instrument panel passenger airbag assembly, be sure to deploy the airbag first in accordance with the procedure described below. If any abnormality occurs with the airbag deployment, contact the Service Dept. of TOYOTA MOTOR SALES, U.S.A., INC.

2. **DISPOSE OF INSTRUMENT PANEL PASSENGER AIRBAG ASSEMBLY (When Installed in Vehicle)**

NOTE:

- **When disposing of the instrument panel passenger airbag assembly, never use the customer's vehicle to deploy the airbag.**
- **Be sure to observe the following procedure when deploying the airbag.**

HINT:

Prepare a 12 V battery as the power source to deploy the airbag.

a. Check the function of SST See step 2.

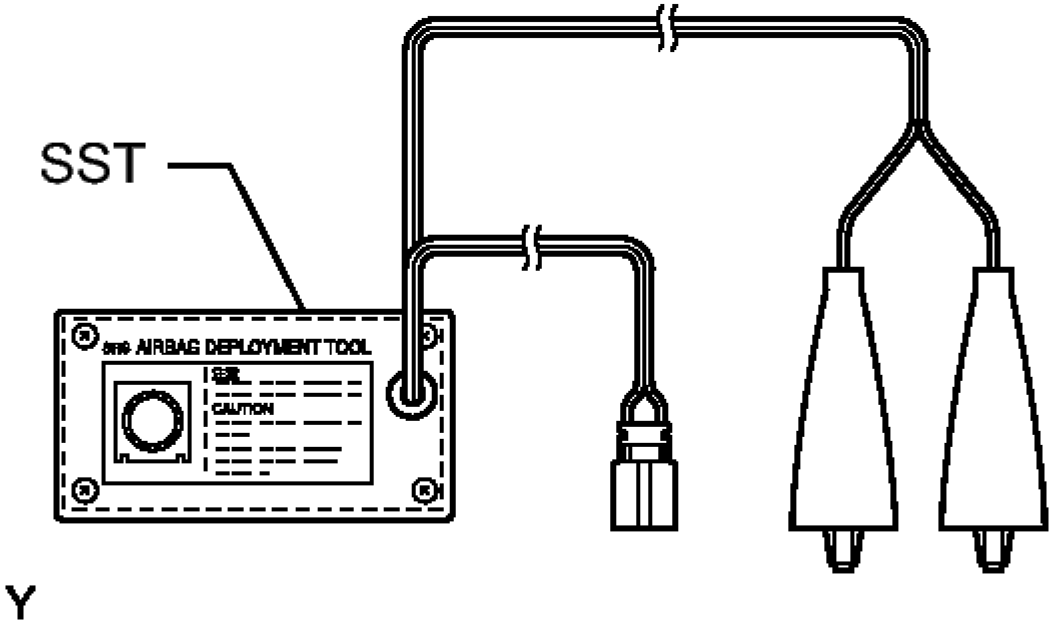

Fig. 85: Checking Function Of SST
Courtesy of TOYOTA MOTOR SALES, U.S.A., INC.

- **SST: 09082-00700**

b. Refer to Precaution.

for Separate Type Yaw Rate Sensor: Refer to **PRECAUTION**

for Built-in Type Yaw Rate Sensor: Refer to **PRECAUTION**

c. Disconnect the cable from the negative (-) auxiliary battery terminal.

WARNING: **Wait at least 90 seconds after disconnecting the cable from the negative (-) auxiliary battery terminal to disable the SRS system.**

d. Remove the lower instrument panel sub-assembly. Refer to **REMOVAL - Step 37** .

e. Disconnect the No. 2 instrument panel wire.

NOTE: **When disconnecting any airbag connector, take care not to damage the airbag wire harness.**

1. Slide the slider to release the lock, and then disconnect the connector.

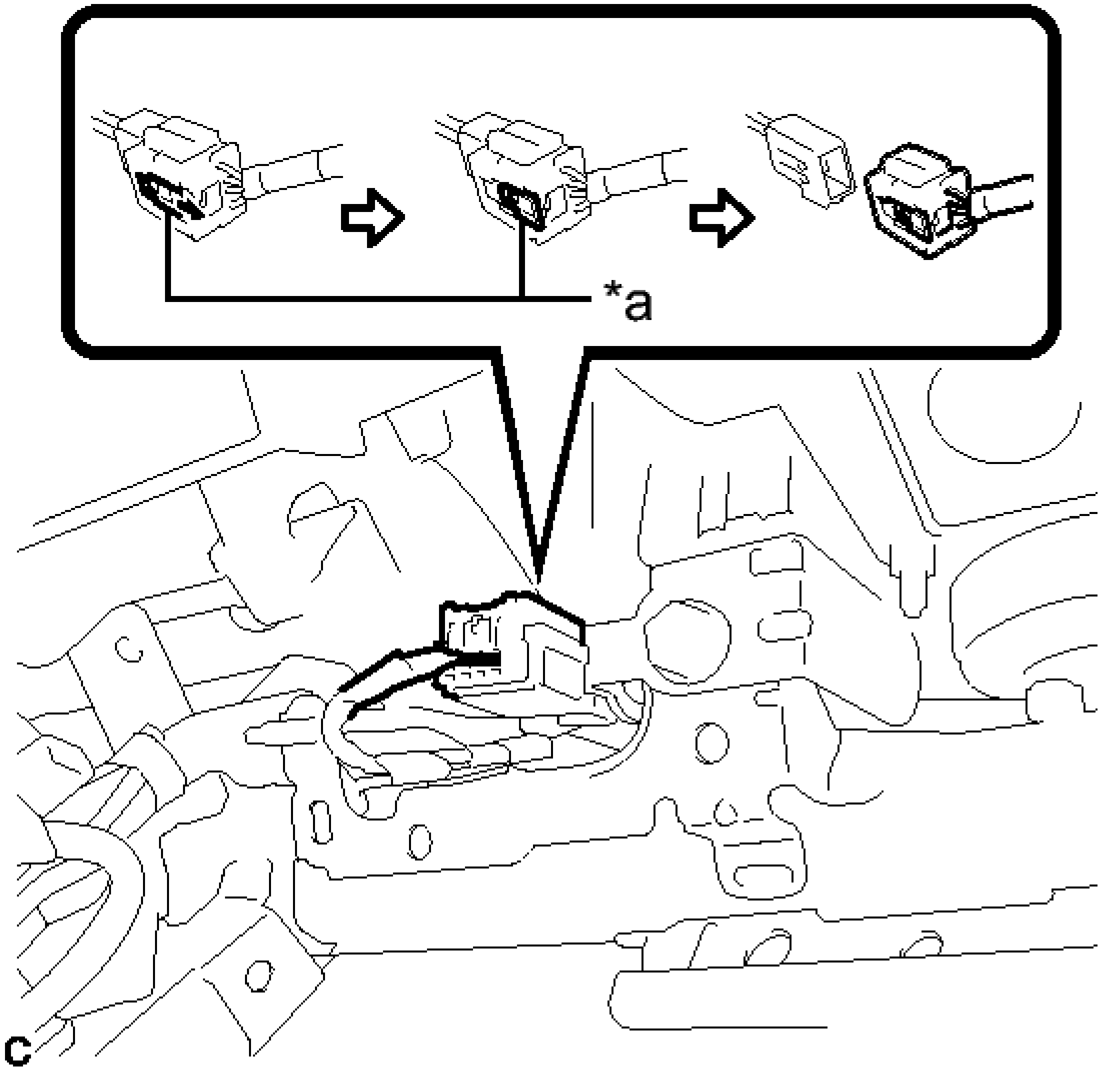

Fig. 86: Disconnecting Airbag Connector

Courtesy of TOYOTA MOTOR SALES, U.S.A., INC.

TEXT IN ILLUSTRATION

*a	Slider

f. Install SST.

WARNING: **Check that there is no looseness in the instrument panel passenger airbag assembly and instrument panel safety pad.**

1. Connect the SST connector to the No. 2 instrument panel wire.

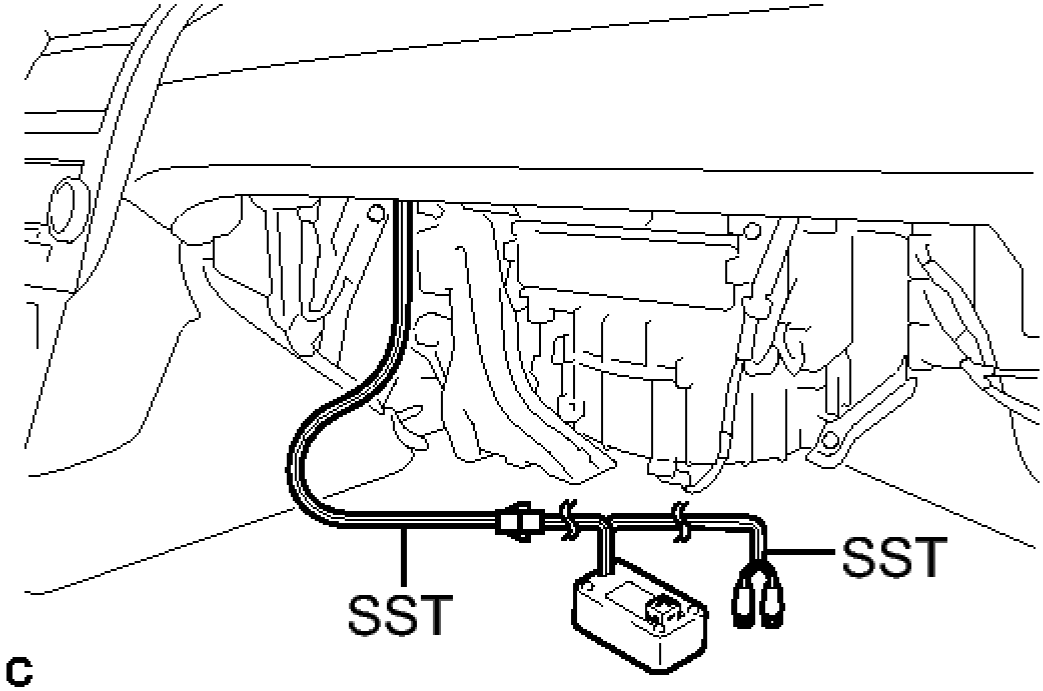

Fig. 87: Connecting SST To No. 2 Instrument Panel Wire
Courtesy of TOYOTA MOTOR SALES, U.S.A., INC.

- **SST: 09082-00700**
- **SST: 09082-00780**

NOTE: **To avoid damaging the SST connector or wire harness, do not lock the secondary lock of the twin lock.**

2. Move SST at least 10 m (32.8 ft.) away from the front side window of the vehicle.

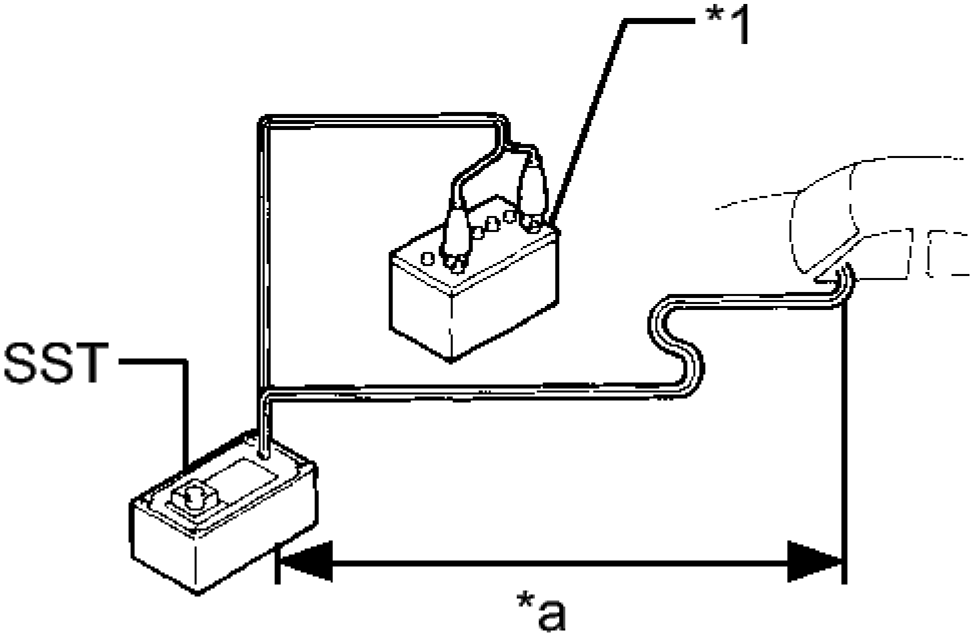

Fig. 88: Identifying Distance Between SST & Front Side Window
Courtesy of TOYOTA MOTOR SALES, U.S.A., INC.

TEXT IN ILLUSTRATION

*1	12 V Battery
*a	10 m (32.8 ft.) or more

3. Maintaining sufficient clearance for the SST wire harness in the front side window, close all doors and windows of the vehicle.

NOTE: **Take care not to damage the SST wire harness.**

4. Connect the red clip of SST to the positive (+) battery terminal and the black clip of SST to the negative (-) battery terminal.

g. Deploy the airbag.
   1. Check that no one is inside the vehicle or within a 10 m (32.8 ft.) radius of the vehicle.
   2. Press the SST activation switch to deploy the airbag.

WARNING:

- **Before deployment, make sure that no one is near the vehicle.**
- **The instrument panel passenger airbag assembly**

becomes extremely hot when the airbag is deployed, so do not touch it for at least 30 minutes after deployment.

- **Use gloves and safety glasses when handling a instrument panel passenger airbag assembly with a deployed airbag.**
- **Do not apply water etc. to a instrument panel passenger airbag assembly with a deployed airbag.**
- **Always wash your hands with water after completing the operation.**

HINT:

The airbag is deployed as the LED of the SST activation switch comes on.

3. **DISPOSE OF INSTRUMENT PANEL PASSENGER AIRBAG ASSEMBLY (When Not Installed in Vehicle)**

NOTE: **Be sure to observe the following procedure when deploying the airbag.**

HINT:

Prepare a 12 V battery as the power source to deploy the airbag.

a. Check the function of SST See step 3.

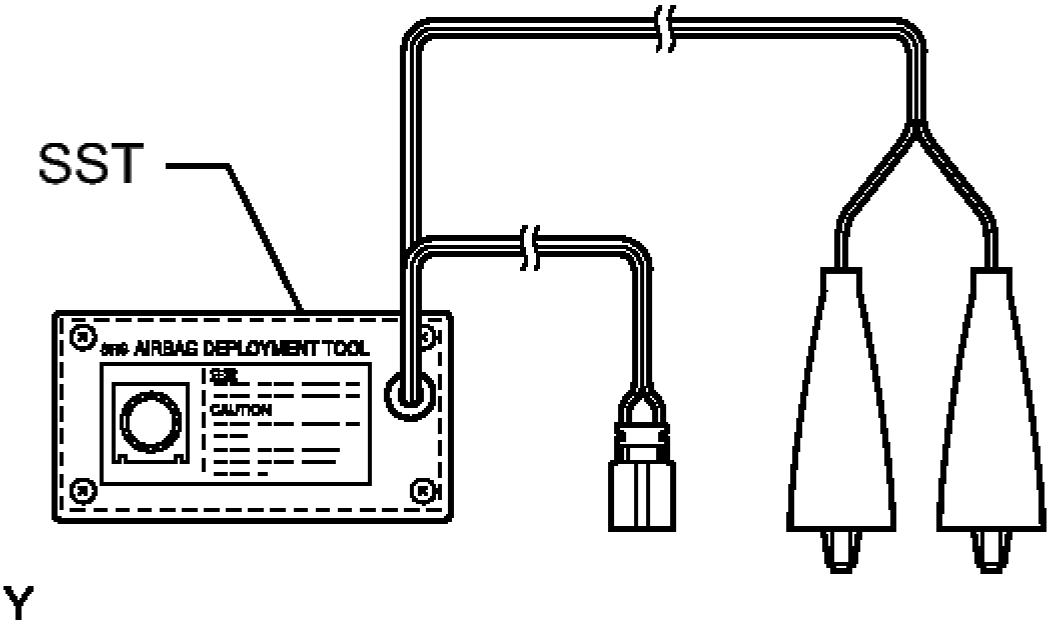

Fig. 89: Checking Function Of SST
Courtesy of TOYOTA MOTOR SALES, U.S.A., INC.

- **SST: 09082-00700**

b. Remove the instrument panel passenger airbag assembly. Refer to **REMOVAL**.

WARNING:

- **Before removing the instrument panel passenger airbag assembly, wait at least 90 seconds after turning the power switch off and disconnecting the cable from the negative (-) auxiliary battery terminal.**
- **When storing the instrument panel passenger airbag assembly, keep the airbag deployment side facing upward.**

c. Install SST.

1. After connecting the following SST to each other, connect them to the instrument panel passenger airbag assembly.

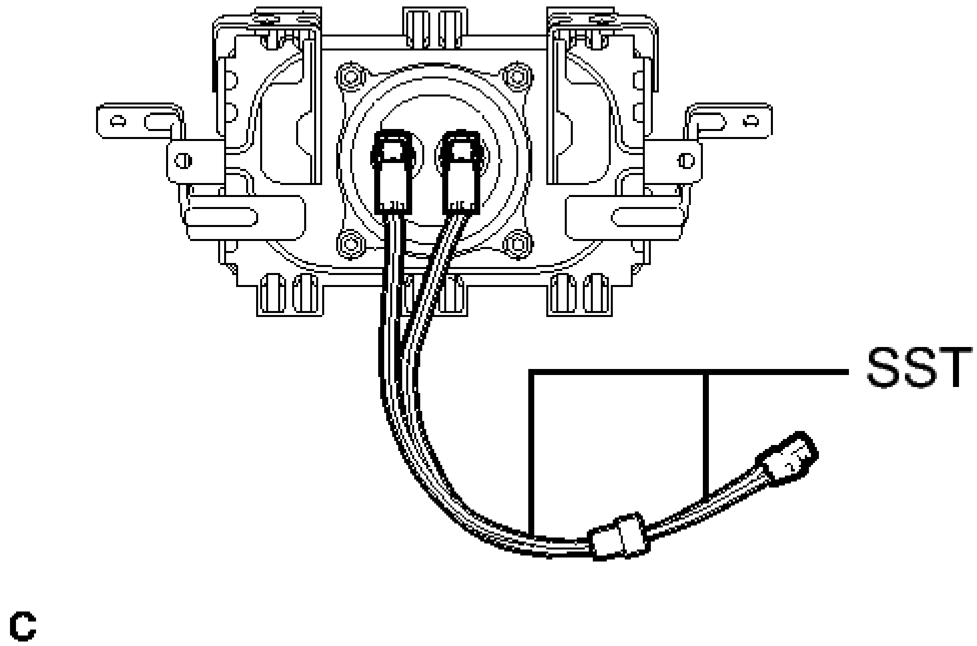

Fig. 90: Connecting SST To Instrument Panel Passenger Airbag Assembly
Courtesy of TOYOTA MOTOR SALES, U.S.A., INC.

- **SST: 09082-00802**
  09082-10801
  09082-30801

d. Using braided wire, tie down the instrument panel passenger airbag assembly to an unneeded tire.

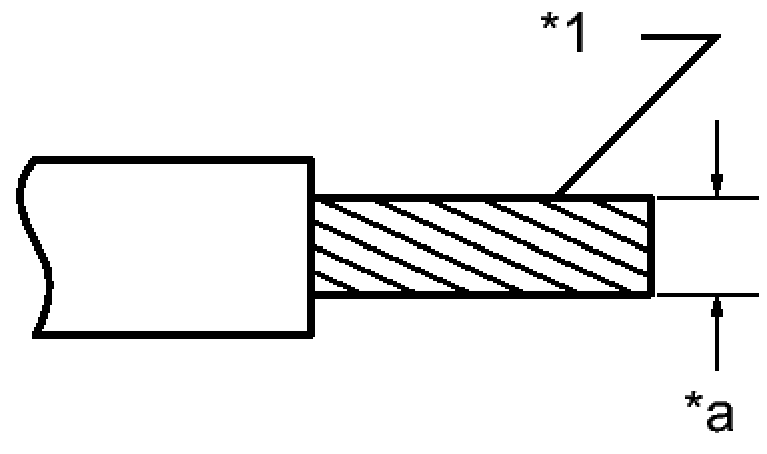

Fig. 91: Identifying Stripped Wire
Courtesy of TOYOTA MOTOR SALES, U.S.A., INC.

TEXT IN ILLUSTRATION

*1	Stripped Wire Section
*a	Wire Diameter

Wire

Stripped wire section

1.25 mm^2 (0.0019 $in.^2$) or more

WARNING: **If the wire is too thin or an alternative object is used to tie down the instrument panel passenger airbag assembly, it may snap when the airbag is deployed. Always use a wire for vehicle use with an area of at least 1.25 mm^2 (0.0019 $in.^2$).**

HINT:

To calculate the area of the stripped wire section:

Area = 3.14 x $(\text{Diameter})^2$ / 4

1. Position the instrument panel passenger airbag assembly inside the tire with the airbag deployment side facing inside.

   Minimum tire size

   Width

   185 mm (7.28 in.)

   Inner diameter

   360 mm (1.18 ft.)

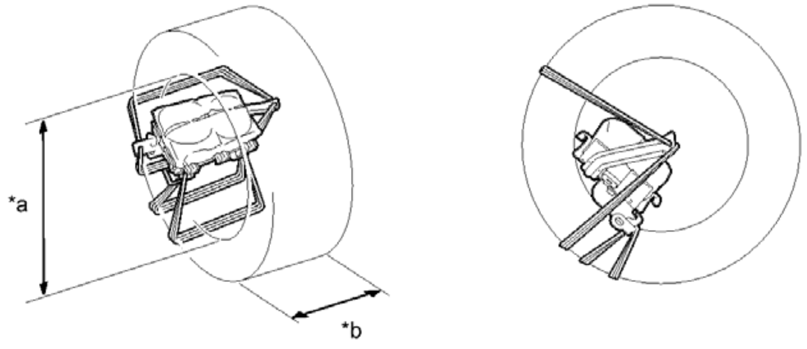

c

Fig. 92: Identifying Instrument Panel Passenger Airbag Assembly Positioned Inside Tire
Courtesy of TOYOTA MOTOR SALES, U.S.A., INC.

TEXT IN ILLUSTRATION

*a	Inner Diameter	*b	Width

WARNING:

- **Make sure that the wires are tight. If there is slack in the wires, the instrument panel passenger airbag assembly may break loose when the airbag is deployed.**
- **Always tie down the instrument panel passenger airbag assembly with the airbag deployment side facing inside the tire as shown in the illustration.**

NOTE: **The tires may be damaged by the airbag deployment, so use an unneeded tire.**

e. Place the tires.

1. Place at least 2 tires under the tire to which the instrument panel passenger airbag assembly is tied.

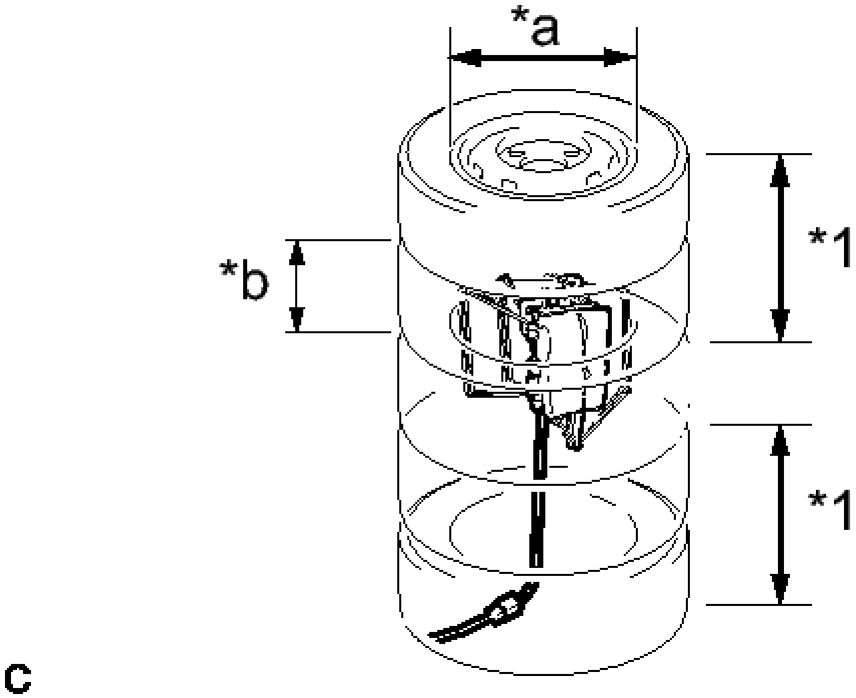

Fig. 93: Identifying Tire Placement
Courtesy of TOYOTA MOTOR SALES, U.S.A., INC.

TEXT IN ILLUSTRATION

*1	Tires (2 or more)
*a	Inner Diameter
*b	Width

Minimum tire size

Width

185 mm (7.28 in.)

Inner diameter

360 mm (1.18 ft.)

NOTE:

- **The tires may be damaged by the airbag deployment, so use unneeded tires.**
- **Do not place the SST connector under the tire because it**

could be damaged.

2. Place at least 2 tires onto the tire to which the instrument panel passenger airbag assembly is tied. The top tire should have a wheel installed.
3. Tie the tires together with the 2 wires.

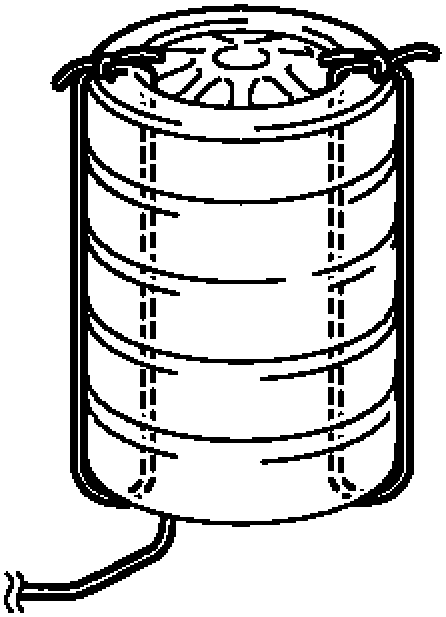

Fig. 94: Identifying Tires Tied Together With Wires
Courtesy of TOYOTA MOTOR SALES, U.S.A., INC.

WARNING: **Make sure that the wires are tight. Looseness in the wires results in the tires breaking loose when the airbag is deployed.**

f. Install SST.
   1. Connect the SST connector.

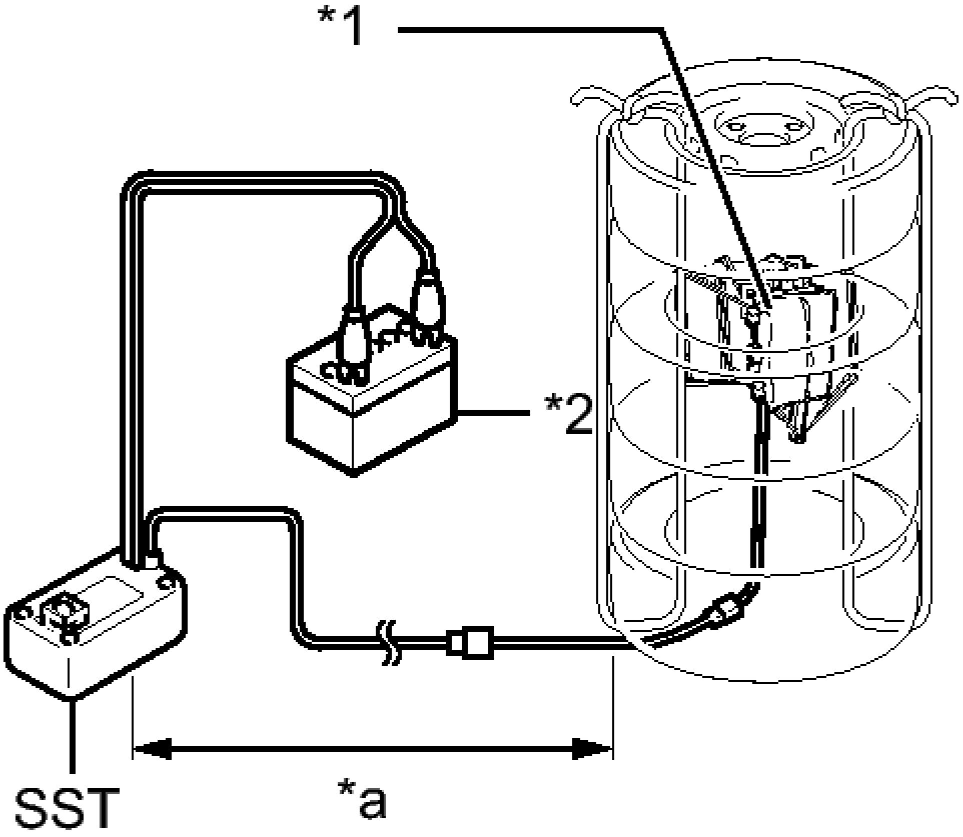

C

Fig. 95: Identifying SST Distance From Instrument Panel Passenger Airbag Assembly In Tires
Courtesy of TOYOTA MOTOR SALES, U.S.A., INC.

TEXT IN ILLUSTRATION

*1	Instrument Panel Passenger Airbag Assembly
*2	12 V Battery
*a	10 m (32.8 ft.) or more

- **SST: 09082-00700**

NOTE: **To avoid damaging the SST connector or wire harness, do not lock the secondary lock of the twin lock. Also, secure some slack for the SST wire harness inside the tire.**

2. Move SST at least 10 m (32.8 ft.) away from the airbag tied down to the tire.

g. Deploy the airbag.
   1. Connect the red clip of SST to the positive (+) battery terminal and the black clip of SST to the negative (-) battery terminal.
   2. Check that no one is within a 10 m (32.8 ft.) radius of the tire to which the instrument panel passenger airbag assembly is tied.
   3. Press the SST activation switch to deploy the airbag.

WARNING: **Before deployment, make sure that no one is near the airbag.**

HINT:

The airbag is deployed as the LED of the SST activation switch comes on.

h. Dispose of the instrument panel passenger airbag assembly.

WARNING:

- **The instrument panel passenger airbag assembly becomes extremely hot when the airbag is deployed, so do not touch it for at least 30 minutes after deployment.**
- **Use gloves and safety glasses when handling a instrument panel passenger airbag assembly with a deployed airbag.**
- **Do not apply water etc. to a instrument panel passenger airbag assembly with a deployed airbag.**
- **Always wash your hands with water after completing the operation.**

1. Remove the instrument panel passenger airbag assembly from the tire.
2. Place the instrument panel passenger airbag assembly in a plastic bag, tie it tightly, and dispose of it according to local regulations.

CURTAIN SHIELD AIRBAG ASSEMBLY

COMPONENTS

ILLUSTRATION

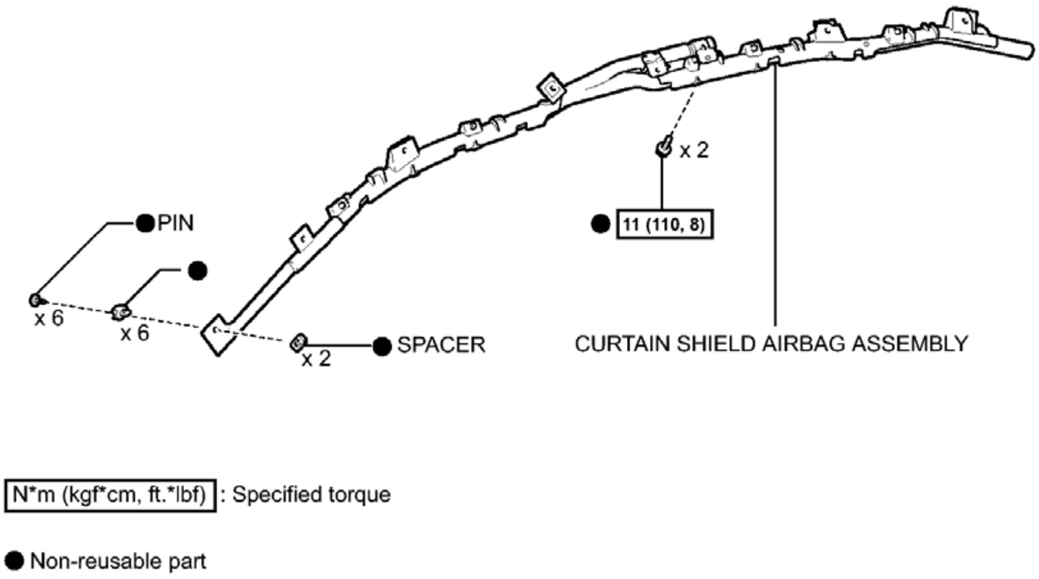
PIN
x 6
x 6
x 2
SPACER
x 2
11 (110, 8)
CURTAIN SHIELD AIRBAG ASSEMBLY
N*m (kgf*cm, ft.*lbf) : Specified torque
● Non-reusable part

Fig. 96: Identifying Curtain Shield Airbag Assembly Replacement Components With Torque Specifications
Courtesy of TOYOTA MOTOR SALES, U.S.A., INC.

ON-VEHICLE INSPECTION

ON-VEHICLE INSPECTION

WARNING: Be sure to correctly follow the removal and installation procedures for the curtain shield airbag assemblies.

1. **INSPECT CURTAIN SHIELD AIRBAG ASSEMBLY (for Vehicle not Involved in Collision)**
    a. Perform a diagnostic system check.

    for Separate Type Yaw Rate Sensor: Refer to **DTC CHECK / CLEAR**

    for Built-in Type Yaw Rate Sensor: Refer to **DTC CHECK / CLEAR**

    b. Visually check for defects with the curtain shield airbag assemblies installed on the vehicle.

    HINT:

    The defects are as follows:

    - Cuts on each pillar garnish or the roof headlining assembly around the curtain shield airbag

  assemblies
  - Small cracks on each pillar garnish or the roof headlining assembly around the curtain shield airbag assemblies
  - Significant discoloration on each pillar garnish or the roof headlining assembly around the curtain shield airbag assemblies

  OK

  No defects are found.

  If any of the defects is found, replace each pillar garnish or the roof headlining assembly with a new one.

2. **INSPECT CURTAIN SHIELD AIRBAG ASSEMBLY (for Vehicle Involved in Collision and Airbag not Deployed)**
   a. Perform a diagnostic system check.

      for Separate Type Yaw Rate Sensor: Refer to **DTC CHECK / CLEAR**

      for Built-in Type Yaw Rate Sensor: Refer to **DTC CHECK / CLEAR**

   b. Visually check for defects with the curtain shield airbag assemblies removed from the vehicle.

      HINT:

      The defects are as follows:

      - Cuts
      - Small cracks
      - Significant discoloration
      - Cracks or other damage to the connector

      OK

      No defects are found.

      If any of the defects is found, replace the curtain shield airbag assembly with a new one.

REMOVAL

REMOVAL

HINT:

- Use the same procedure for the RH side and LH side.
- The procedure listed below is for the LH side.

1. **PRECAUTION**

   WARNING: **Be sure to read Precaution thoroughly before servicing.**

   for Separate Type Yaw Rate Sensor: Refer to PRECAUTION

   for Built-in Type Yaw Rate Sensor: Refer to PRECAUTION

   NOTE: **After turning the power switch off, waiting time may be required before disconnecting the cable from the negative (-) auxiliary battery terminal. Therefore, make sure to read the disconnecting the cable from the negative (-) auxiliary battery terminal notices before proceeding with work. Refer to PRECAUTION .**

2. **REMOVE ROOF HEADLINING ASSEMBLY**

   Refer to **REMOVAL**

3. **REMOVE CURTAIN SHIELD AIRBAG ASSEMBLY**

   WARNING: **When storing the curtain shield airbag assembly, keep the airbag deployment side facing upward.**

   a. Check that the power switch is off.
   b. Check that the cable is disconnected from the negative (-) auxiliary battery terminal.

      WARNING: **Wait at least 90 seconds after disconnecting the cable from the negative (-) auxiliary battery terminal to disable the SRS system.**

   c. Using a screwdriver with the tip wrapped with protective tape, release the airbag connector lock and disconnect the curtain shield airbag connector.

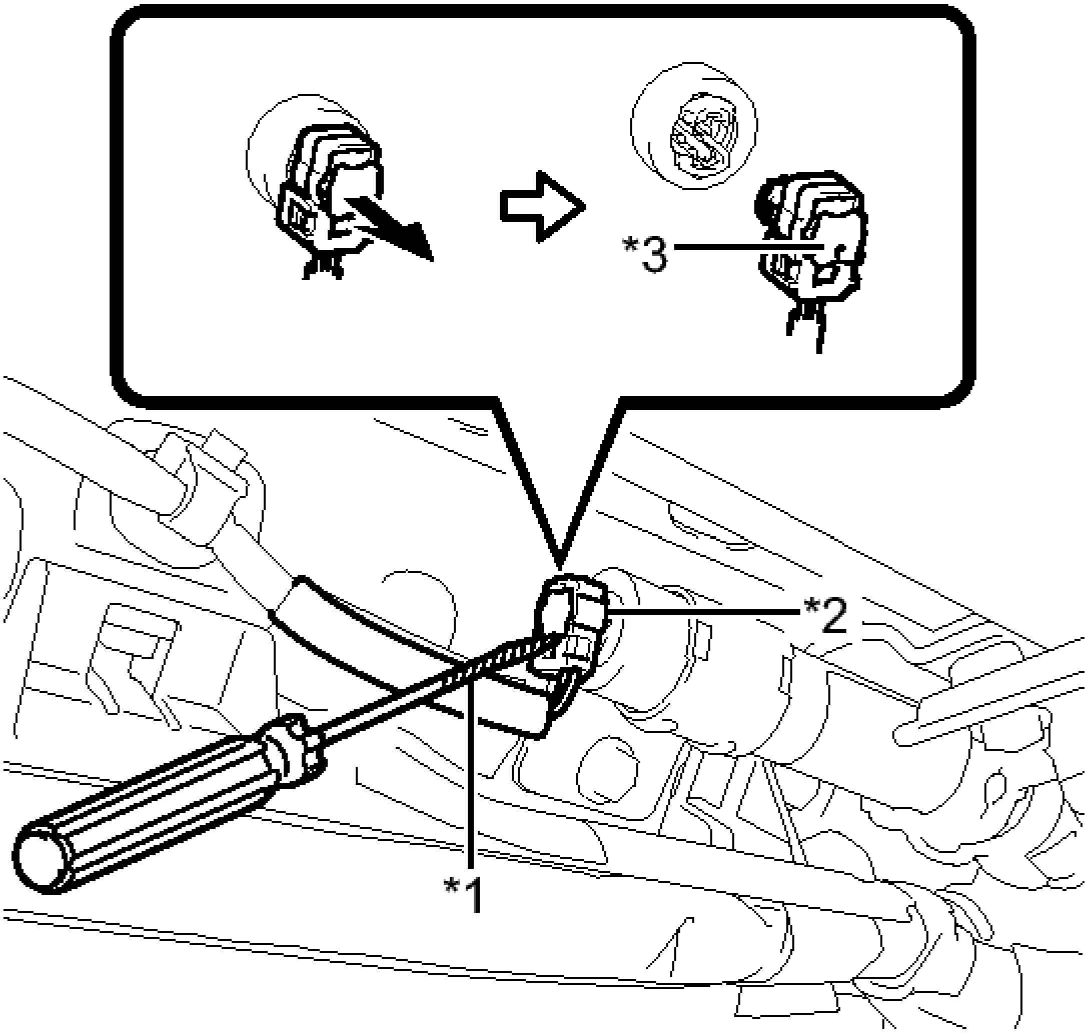

C

Fig. 97: Identifying Airbag Connector
Courtesy of TOYOTA MOTOR SALES, U.S.A., INC.

TEXT IN ILLUSTRATION

*1	Protective Tape
*2	Airbag Connector
*3	Airbag Connector Lock

NOTE: **When disconnecting any airbag connector, take care not to damage the airbag wire harness.**

d. Using a clip remover, remove the pin.

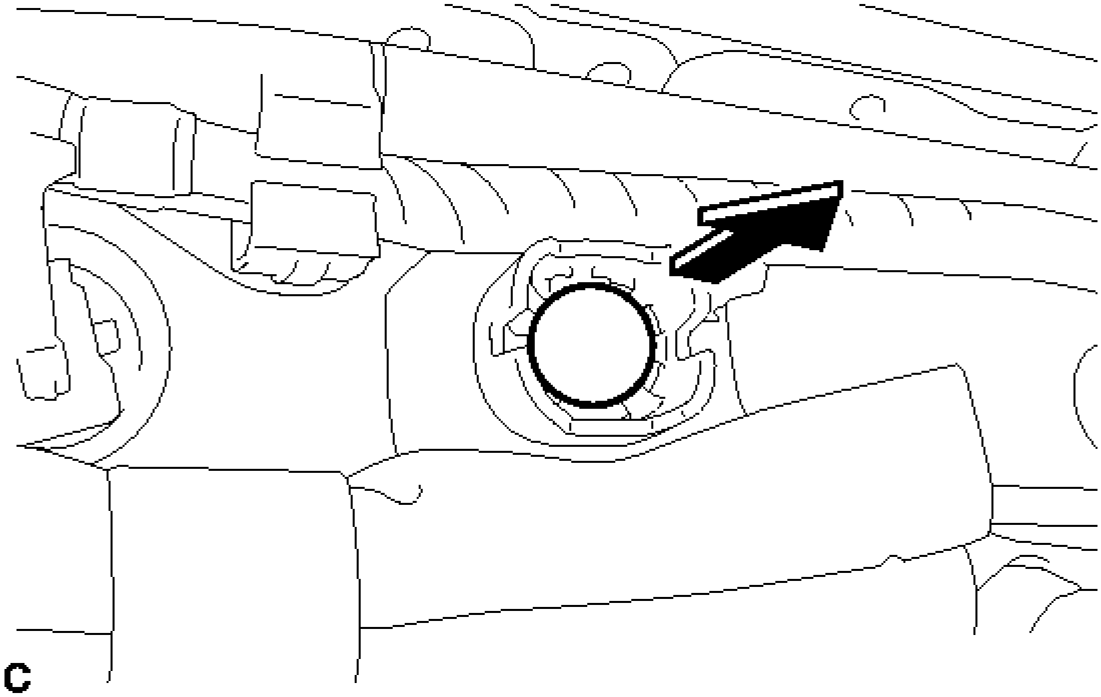

Fig. 98: Removing Curtain Shield Airbag Assembly Connector Pin
Courtesy of TOYOTA MOTOR SALES, U.S.A., INC.

HINT:

Perform the same procedure for the other pins.

e. Using 2 screw drivers, disengage the 2 claws and remove the clip from the body panel as shown in the illustration.

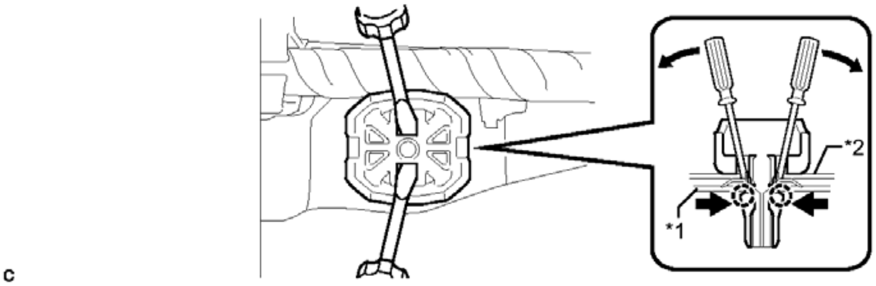

Fig. 99: Removing Clips From Body Panel
Courtesy of TOYOTA MOTOR SALES, U.S.A., INC.

TEXT IN ILLUSTRATION

*1	Body Panel	*2	Curtain Shield Airbag

			Assembly

HINT:

Perform the same procedure for the other clips.

f. While holding the curtain shield airbag assembly, disengage the 5 claws.

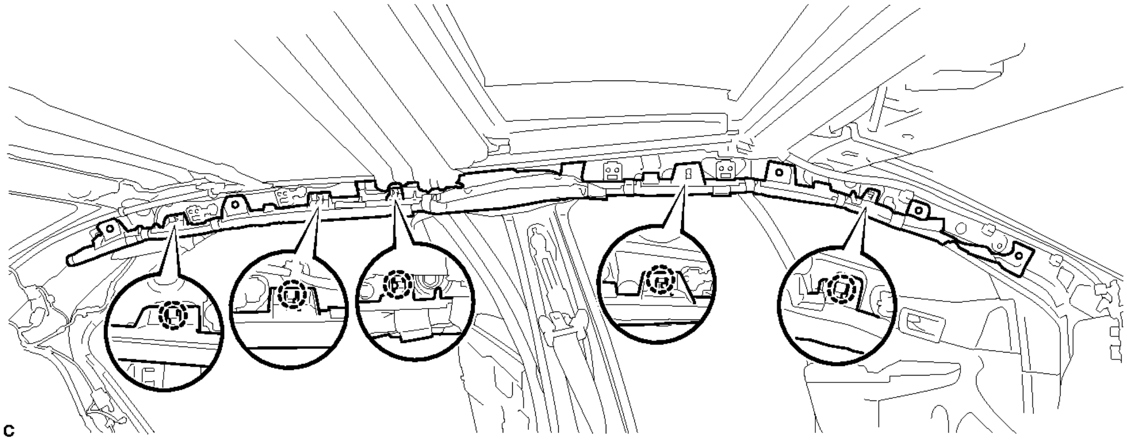

Fig. 100: Locating Curtain Shield Airbag Assembly Claws
Courtesy of TOYOTA MOTOR SALES, U.S.A., INC.

NOTE: When removing the curtain shield airbag assembly, have assistants hold it to prevent it from bending.

g. Remove the 2 bolts.

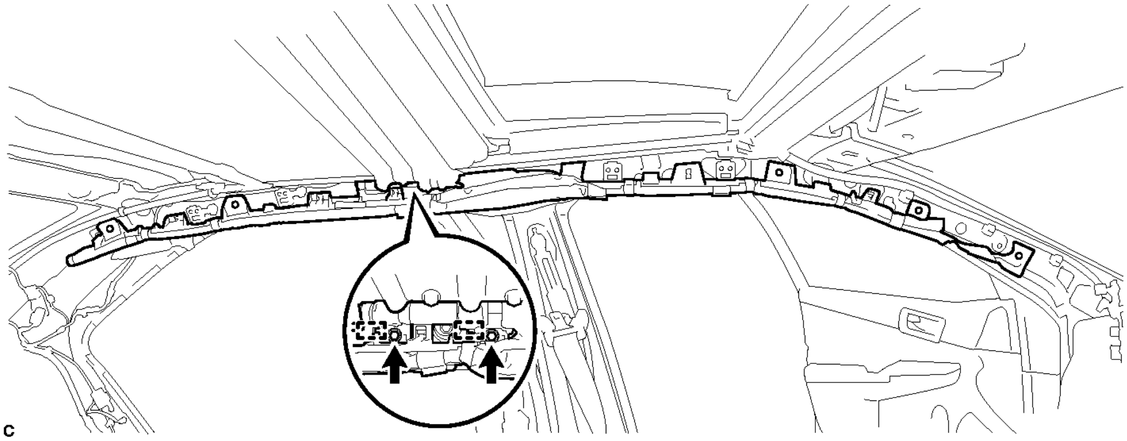

Fig. 101: Locating Curtain Shield Airbag Assembly Bolts
Courtesy of TOYOTA MOTOR SALES, U.S.A., INC.

h. Disengage the 2 hooks to remove the curtain shield airbag assembly.

i. Remove the 2 spacers from the curtain shield airbag assembly.

INSTALLATION

INSTALLATION

HINT:

- Use the same procedure for the RH side and LH side.
- The procedure listed below is for the LH side.

1. **INSTALL CURTAIN SHIELD AIRBAG ASSEMBLY**
    a. Check that the power switch is off.
    b. Check that the cable is disconnected from the negative (-) auxiliary battery terminal.

WARNING: **Wait at least 90 seconds after disconnecting the cable from the negative (-) auxiliary battery terminal to disable the SRS system.**

c. Temporarily install the curtain shield airbag assembly with the 2 hooks.

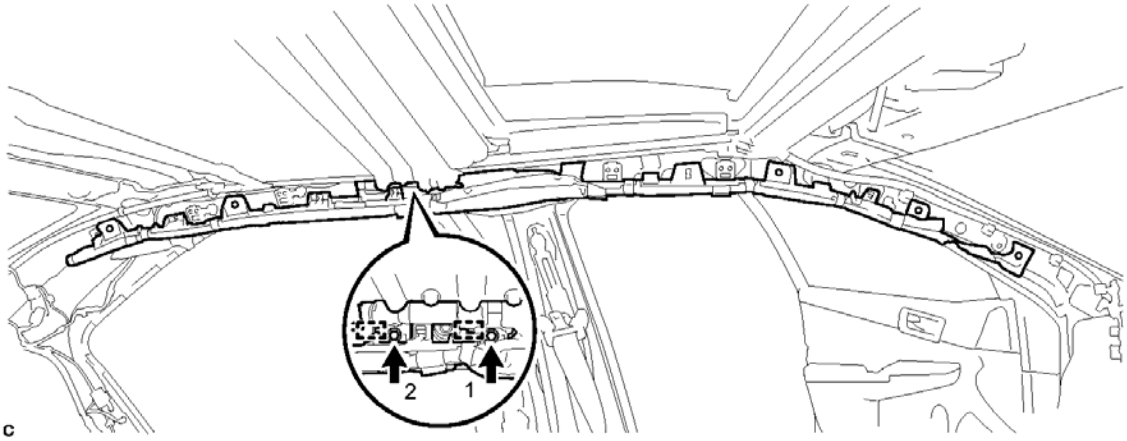

Fig. 102: Locating Curtain Shield Airbag Assembly Bolts With Tightening Sequence
Courtesy of TOYOTA MOTOR SALES, U.S.A., INC.

NOTE:

- **When installing the curtain shield airbag assembly, have assistants hold it to prevent it from bending.**
- **Do not twist the curtain shield airbag assembly when installing it.**

d. Install 2 new bolts in the order shown in the illustration.

Torque: 11 N*m (110 kgf*cm, 8 ft.*lbf)

e. Install the curtain shield airbag assembly to the body panel with 5 claws, 6 new clips and 2 new spacers in the order shown in the illustration.

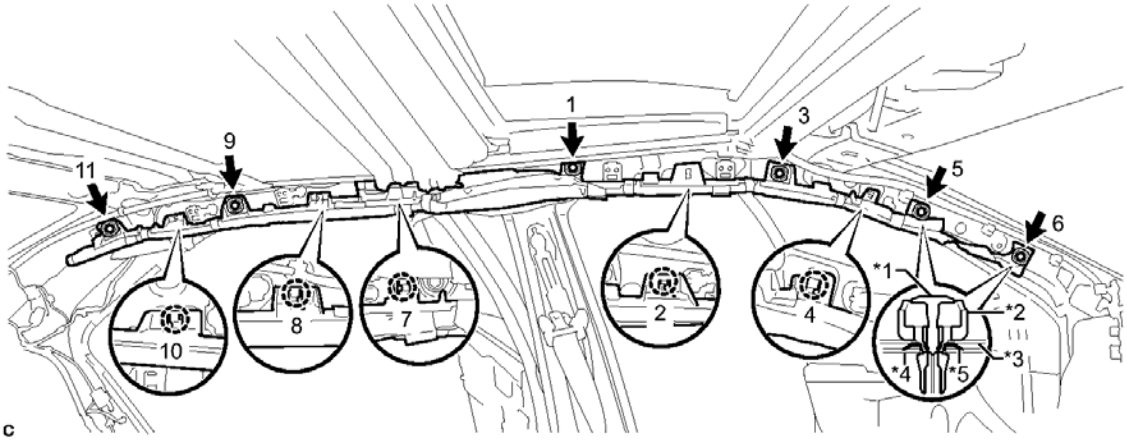

Fig. 103: Locating Curtain Shield Airbag Assembly Fasteners With Tightening Sequence
Courtesy of TOYOTA MOTOR SALES, U.S.A., INC.

TEXT IN ILLUSTRATION

*1	Pin	*2	Clip
*3	Curtain Shield Airbag Assembly	*4	Body Panel
*5	Spacer	-	-

f. Push in a new pin to each clip.

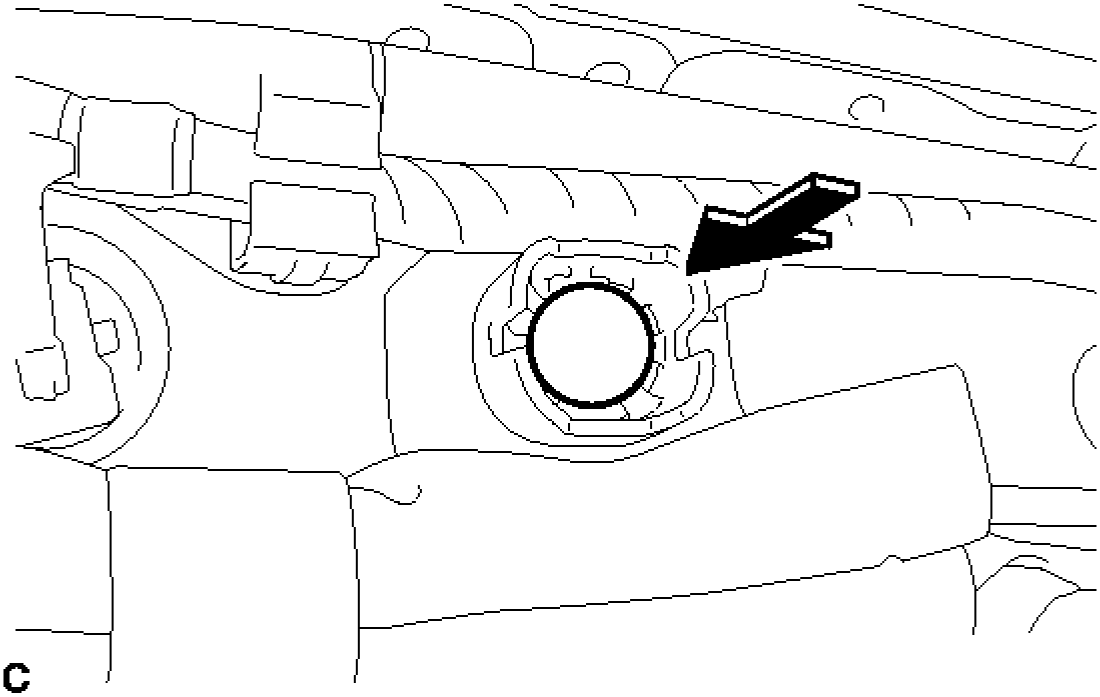

Fig. 104: Installing Curtain Shield Airbag Assembly Connector Pin

Courtesy of TOYOTA MOTOR SALES, U.S.A., INC.

NOTE: **Make sure that the pins of the clips are pushed in firmly.**

g. Connect the curtain shield airbag connector.

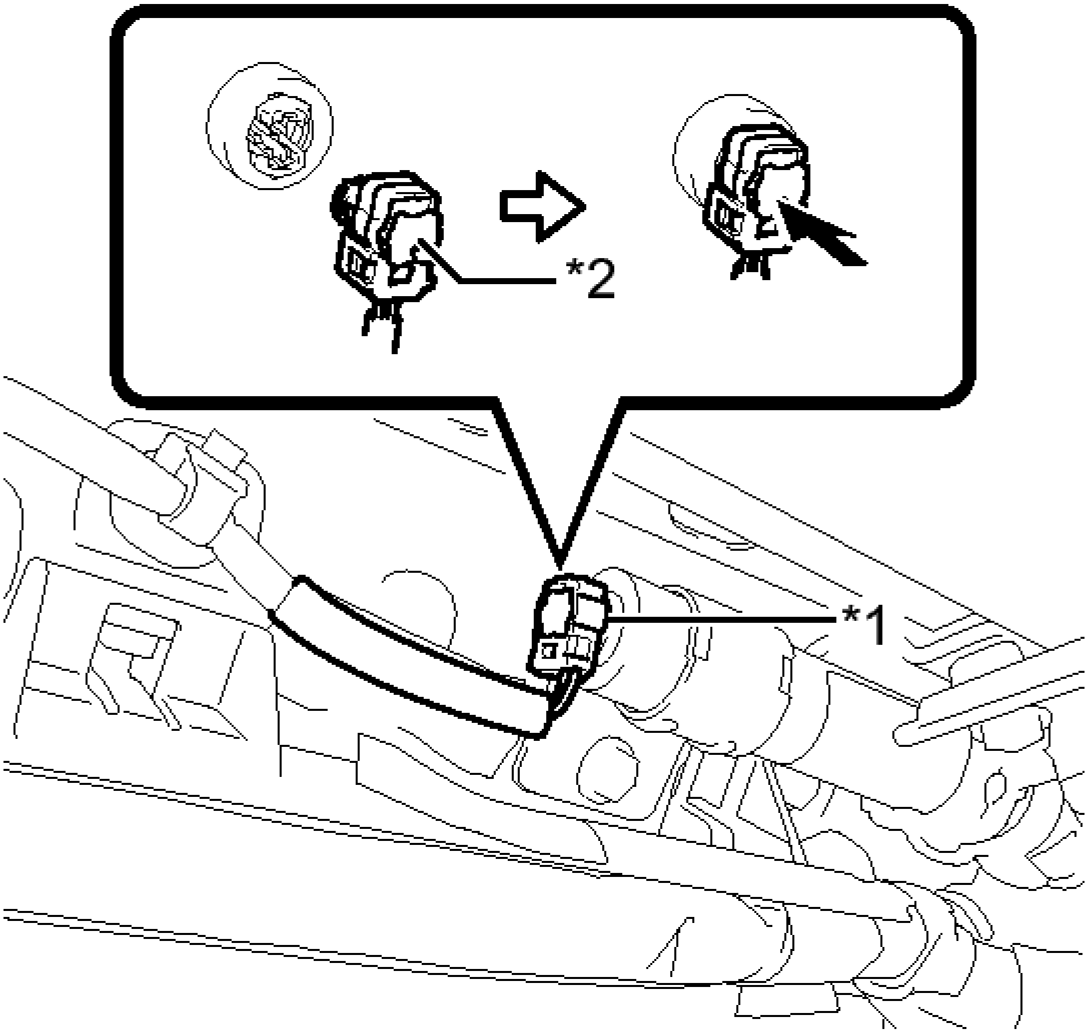

Fig. 105: Connect Curtain Shield Airbag Assembly Connector
Courtesy of TOYOTA MOTOR SALES, U.S.A., INC.

TEXT IN ILLUSTRATION

*1	Airbag Connector
*2	Airbag Connector Lock

NOTE: **When connecting any airbag connector, take care not to damage the airbag wire harness.**

h. Push in the lock to install the curtain shield airbag connector.

2. **INSTALL ROOF HEADLINING ASSEMBLY**

   Refer to **INSTALLATION**

3. **PERFORM DIAGNOSTIC SYSTEM CHECK**

   for Separate Type Yaw Rate Sensor: Refer to **DTC CHECK / CLEAR**

   for Built-in Type Yaw Rate Sensor: Refer to **DTC CHECK / CLEAR**

DISPOSAL

DISPOSAL

WARNING: **Before performing pre-disposal deployment of any SRS part, review and closely follow all applicable environmental and hazardous material regulations. Pre-disposal deployment may be considered hazardous material treatment.**

1. **PRECAUTION**

WARNING:

- **An airbag or pretensioner may be activated by static electricity. To prevent this, be sure to touch a metal surface with your bare hands to discharge static electricity before performing this procedure.**
- **Never dispose of a curtain shield airbag assembly with an undeployed airbag.**
- **The airbag produces an exploding sound when it is deployed, so perform the operation outdoors and where it will not create a nuisance to nearby residents.**
- **When deploying the airbag, always use the specified SST (SRS Airbag Deployment Tool). Perform the operation in a place away from electrical noise.**
- **When deploying the airbag, perform the operation at least 10 m (32.8 ft.) away from the curtain shield airbag assembly.**
- **The curtain shield airbag assembly becomes extremely hot when the airbag is deployed, so do not touch it for at least 30 minutes after deployment.**
- **Use gloves and safety glasses when handling a curtain shield airbag assembly with a deployed airbag.**

- **Do not apply water etc. to a curtain shield airbag assembly with a deployed airbag.**
- **Always wash your hands with water after completing the operation.**

HINT:

When scrapping a vehicle equipped with an SRS or disposing of the curtain shield airbag assembly, be sure to deploy the airbag first in accordance with the procedure described below. If any abnormality occurs with the airbag deployment, contact the Service Dept. of TOYOTA MOTOR SALES, U.S.A., INC.

2. **DISPOSE OF CURTAIN SHIELD AIRBAG ASSEMBLY (When Installed in Vehicle)**

NOTE:

- **When disposing of the curtain shield airbag assembly, never use the customer's vehicle to deploy the airbag.**
- **Be sure to observe the following procedure when deploying the airbag.**

HINT:

Prepare a 12 V battery as the power source to deploy the airbag.

a. Check the function of SST See step 2.

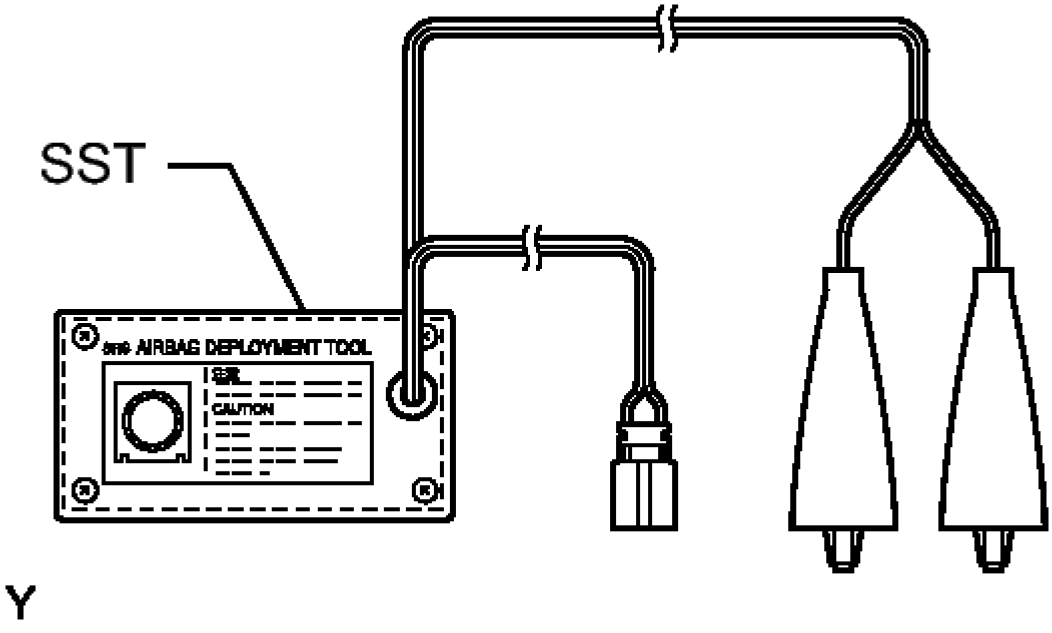

Fig. 106: Checking Function Of SST

Courtesy of TOYOTA MOTOR SALES, U.S.A., INC.

- **SST: 09082-00700**

b. Refer to Precaution.

for Separate Type Yaw Rate Sensor: Refer to **PRECAUTION**

for Built-in Type Yaw Rate Sensor: Refer to **PRECAUTION**

c. Disconnect the cable from the negative (-) auxiliary battery terminal.

WARNING: **Wait at least 90 seconds after disconnecting the cable from the negative (-) auxiliary battery terminal to disable the SRS system.**

d. Remove the roof headlining assembly. Refer to **REMOVAL** .

e. Install SST.

WARNING: **Check that there is no looseness in the curtain shield airbag assembly.**

1. Disconnect the connector from the curtain shield airbag assembly.

NOTE: **When disconnecting the airbag connector, take care not to damage the airbag wire harness.**

2. After connecting the following SST to each other, connect them to the curtain shield airbag assembly.

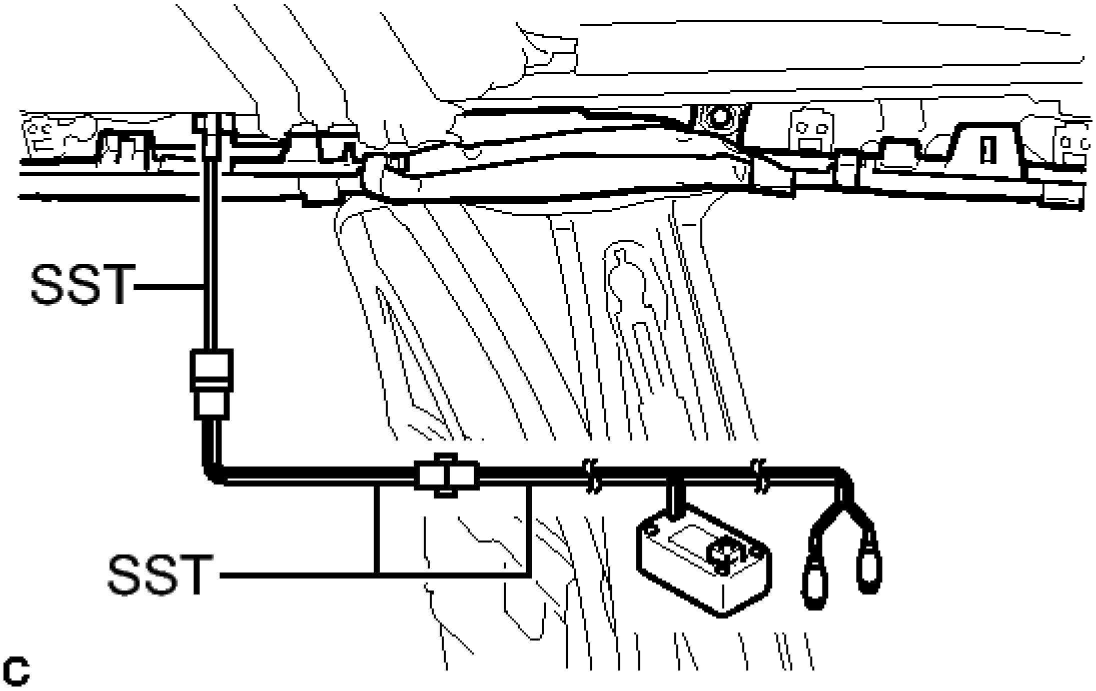

Fig. 107: Connecting SST To Curtain Shield Airbag Assembly
Courtesy of TOYOTA MOTOR SALES, U.S.A., INC.

- **SST: 09082-00700**
- **SST: 09082-00802**
  09082-10801
  09082-20801

NOTE: To avoid damaging the SST connector or wire harness, do not lock the secondary lock of the twin lock.

3. Move SST at least 10 m (32.8 ft.) away from the rear side window.

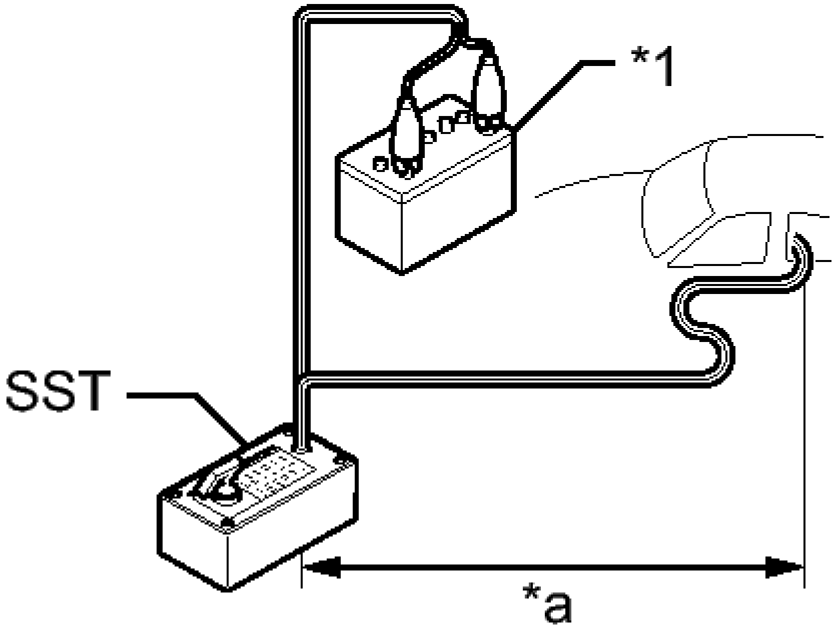

Fig. 108: Moving SST Away From Rear Side Window
Courtesy of TOYOTA MOTOR SALES, U.S.A., INC.

TEXT IN ILLUSTRATION

*1	12 V Battery
*a	10 m (32.8 ft.) or more

4. Maintaining sufficient clearance for the SST wire harness in the rear side window, close all doors and windows of the vehicle.

NOTE: **Take care not to damage the SST wire harness.**

5. Connect the red clip of SST to the positive (+) battery terminal and the black clip of SST to the negative (-) battery terminal.

f. Deploy the airbag.
   1. Check that no one is inside the vehicle or within a 10 m (32.8 ft.) radius of the vehicle.
   2. Press the SST activation switch to deploy the airbag.

WARNING:

- **Before deployment, make sure that no one is near the vehicle.**
- **The curtain shield airbag assembly becomes**

extremely hot when the airbag is deployed, so do not touch it for at least 30 minutes after deployment.

- **Use gloves and safety glasses when handling a curtain shield airbag assembly with a deployed airbag.**
- **Do not apply water etc. to a curtain shield airbag assembly with a deployed airbag.**
- **Always wash your hands with water after completing the operation.**

HINT:

The airbag is deployed as the LED of the SST activation switch comes on.

3. **DISPOSE OF CURTAIN SHIELD AIRBAG ASSEMBLY (When Not Installed in Vehicle)**

NOTE: **Be sure to observe the following procedure when deploying the airbag.**

HINT:

Prepare a 12 V battery as the power source to deploy the airbag.

a. Check the function of SST See step 3.

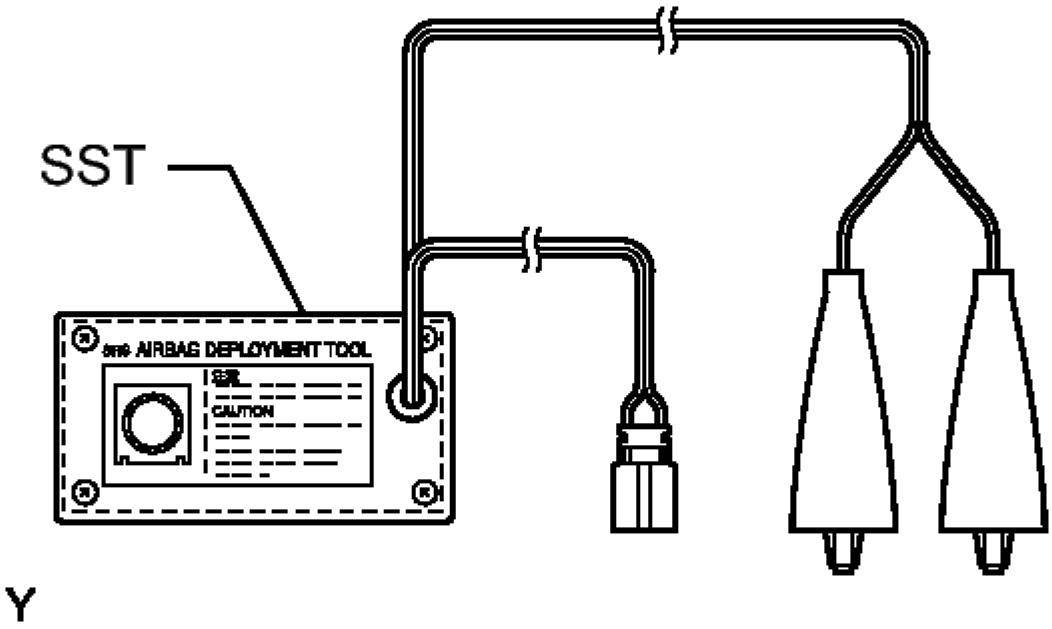

Fig. 109: Checking Function Of SST
Courtesy of TOYOTA MOTOR SALES, U.S.A., INC.

- **SST: 09082-00700**

b. Remove the curtain shield airbag assembly. Refer to **REMOVAL**.

WARNING:

- **Before removing the curtain shield airbag assembly, wait at least 90 seconds after turning the power switch off and disconnecting the cable from the negative (-) auxiliary battery terminal.**
- **When storing the curtain shield airbag assembly, keep the airbag deployment side facing upward.**

c. Cut off the deployment section of the curtain shield airbag assembly.

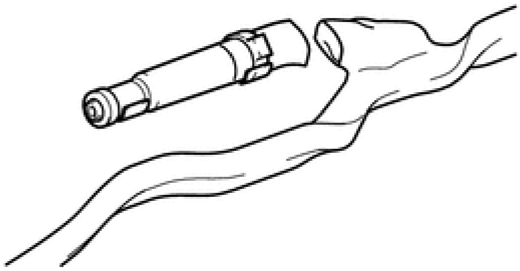

Fig. 110: Identifying Cut Off Deployment Section Of Curtain Shield Airbag Assembly
Courtesy of TOYOTA MOTOR SALES, U.S.A., INC.

d. Using braided wire, tie down the curtain shield airbag assembly to an unneeded tire.

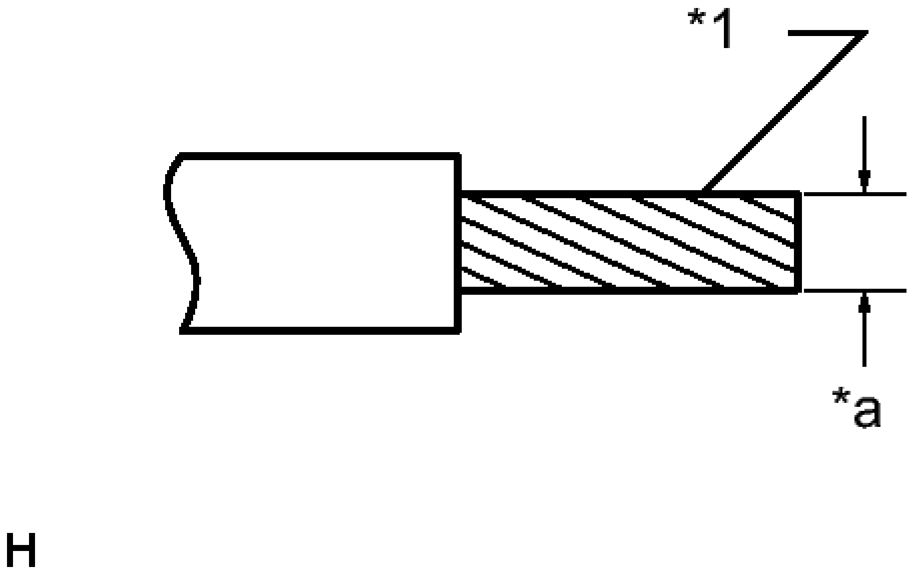

Fig. 111: Identifying Stripped Wire
Courtesy of TOYOTA MOTOR SALES, U.S.A., INC.

TEXT IN ILLUSTRATION

*1	Stripped Wire Section
*a	Wire Diameter

Wire

Stripped wire section

1.25 mm^2 (0.0019 in.^{2}) or more

WARNING: **If the wire is too thin or an alternative object is used to tie down the curtain shield airbag assembly, it may snap when the airbag is deployed. Always use a wire for vehicle use with an area of at least 1.25 mm^2 (0.0019 in.^{2}).**

HINT:

To calculate the area of the stripped wire section:

Area = 3.14 x (Diameter)^2 / 4

1. Position the curtain shield airbag assembly inside the tire as shown in the illustration.

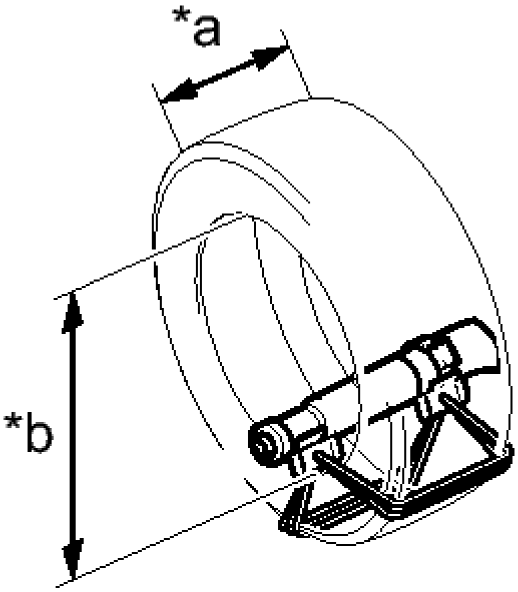

Fig. 112: Identifying Inner Diameter Of Tire
Courtesy of TOYOTA MOTOR SALES, U.S.A., INC.

TEXT IN ILLUSTRATION

*a	Width
*b	Inner Diameter

Minimum tire size

Width

185 mm (7.28 in.)

Inner diameter

360 mm (1.18 ft.)

WARNING: **Make sure that the wires are tight. If there is slack in the wires, the curtain shield airbag assembly may break loose when the airbag is deployed.**

NOTE: **The tire may be damaged by the airbag deployment, so use an unneeded tire.**

e. Install SST.

   1. After connecting the following SST to each other, connect them to the curtain shield airbag assembly.

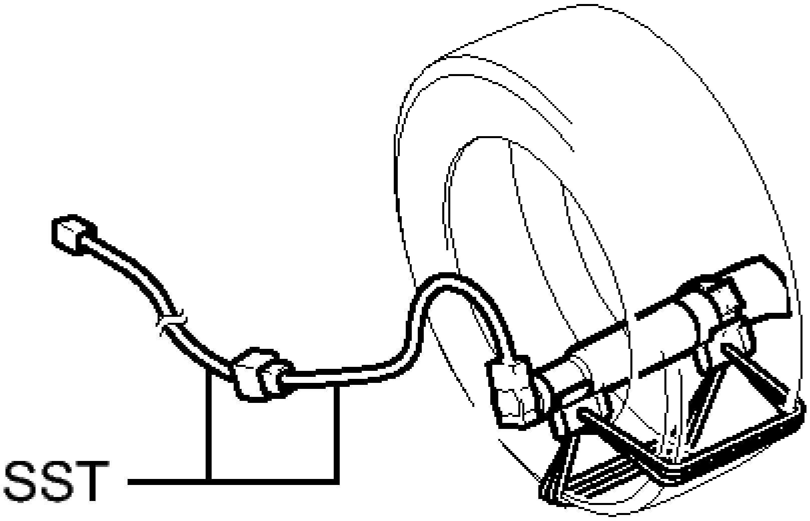

Fig. 113: Connecting SST To Curtain Shield Airbag Assembly In Tire
Courtesy of TOYOTA MOTOR SALES, U.S.A., INC.

- **SST: 09082-00802**
  09082-10801
  09082-20801

f. Place the tires.

WARNING: **Do not face the deployment side of the curtain shield airbag assembly toward the ground.**

   1. Place at least 2 tires under the tire to which the curtain shield airbag assembly is tied.

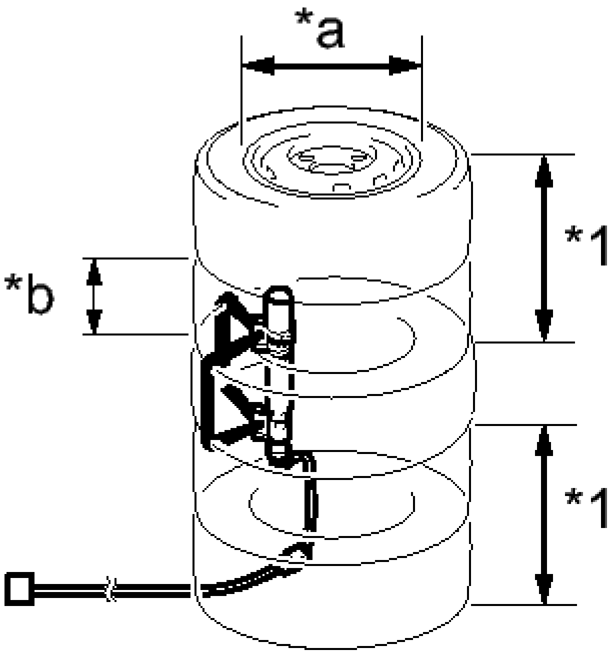

Fig. 114: Identifying Tire Placement
Courtesy of TOYOTA MOTOR SALES, U.S.A., INC.

TEXT IN ILLUSTRATION

*1	Tires (2 or more)
*a	Inner Diameter
*b	Width

Minimum tire size

Width

185 mm (7.28 in.)

Inner diameter

360 mm (1.18 ft.)

NOTE:

- **The tires may be damaged by the airbag deployment, so use unneeded tires.**
- **Do not place the SST connector under the tire because it could be damaged.**

2. Place at least 2 tires onto the tire to which the curtain shield airbag assembly is tied. The top

tire should have a wheel installed.

3. Tie the tires together with the 2 wires.

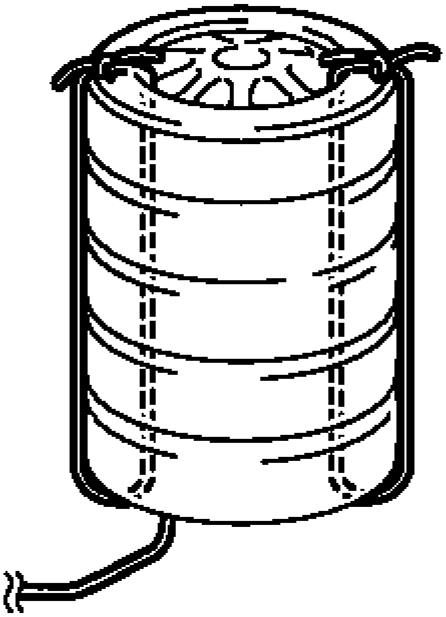

Fig. 115: Identifying Tires Tied Together With Wires
Courtesy of TOYOTA MOTOR SALES, U.S.A., INC.

WARNING: **Make sure that the wires are tight. Looseness in the wires results in the tires breaking loose when the airbag is deployed.**

g. Install SST.

1. Connect the SST connector.

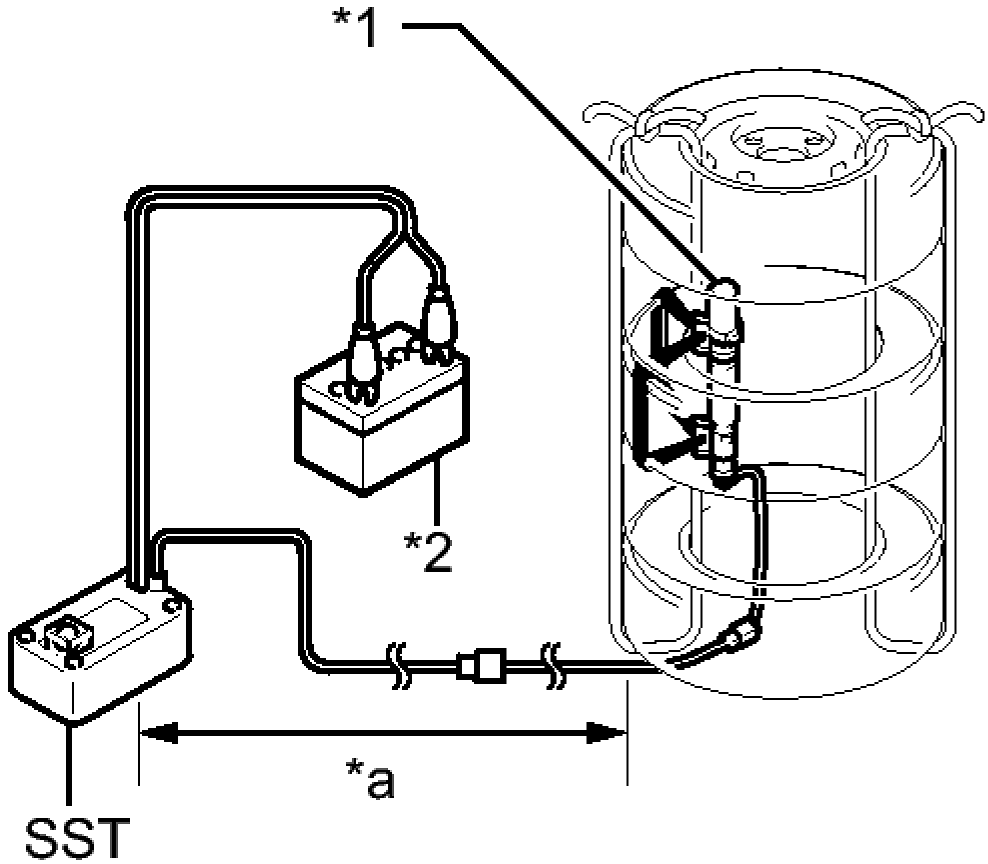

Fig. 116: Identifying SST Distance From Curtain Shield Airbag Assembly In Tires
Courtesy of TOYOTA MOTOR SALES, U.S.A., INC.

TEXT IN ILLUSTRATION

*1	Curtain Shield Airbag Assembly
*2	12 V Battery
*a	10 m (32.8 ft.) or more

- **SST: 09082-00700**

NOTE: **To avoid damaging the SST connector or wire harness, do not lock the secondary lock of the twin lock. Also, secure some slack for the SST wire harness inside the tire.**

2. Move SST at least 10 m (32.8 ft.) away from the airbag tied down to the tire.

h. Deploy the airbag.
    1. Connect the red clip of SST to the positive (+) battery terminal and the black clip of SST to the negative (-) battery terminal.
    2. Check that no one is within a 10 m (32.8 ft.) radius of the tire to which the curtain shield airbag assembly is tied.
    3. Press the SST activation switch to deploy the airbag.

WARNING: **Before deployment, make sure that no one is near the airbag.**

HINT:

The airbag is deployed as the LED of the SST activation switch comes on.

i. Dispose of the curtain shield airbag assembly.

WARNING:

- **The curtain shield airbag assembly becomes extremely hot when the airbag is deployed, so do not touch it for at least 30 minutes after deployment.**
- **Use gloves and safety glasses when handling a curtain shield airbag assembly with a deployed airbag.**
- **Do not apply water etc. to a curtain shield airbag assembly with a deployed airbag.**
- **Always wash your hands with water after completing the operation.**

1. Remove the curtain shield airbag assembly from the tire.
2. Place the curtain shield airbag assembly in a plastic bag, tie it tightly, and dispose of it according to local regulations.

FRONT SEAT SIDE AIRBAG ASSEMBLY

COMPONENTS

ILLUSTRATION

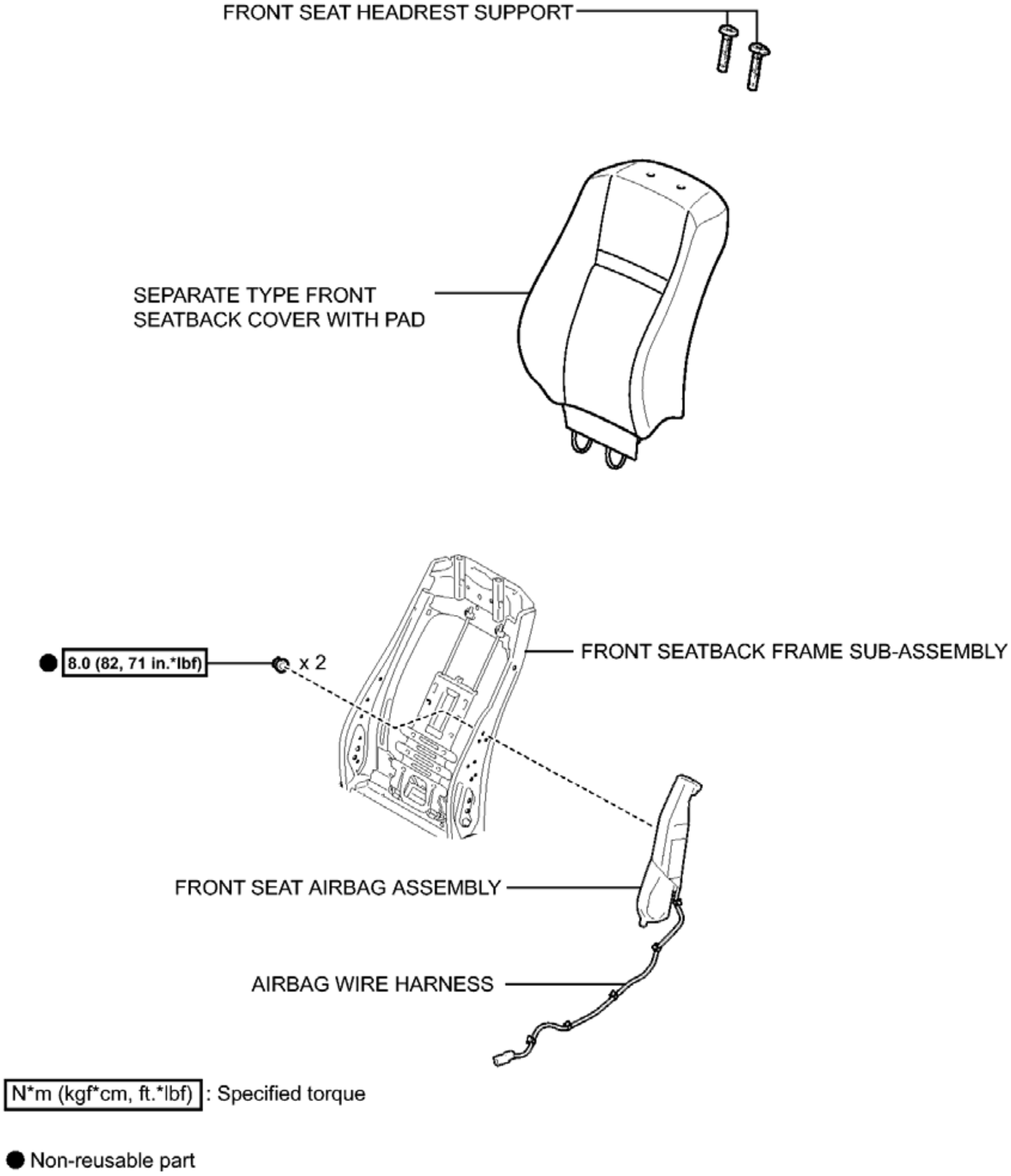
FRONT SEAT HEADREST SUPPORT
SEPARATE TYPE FRONT SEATBACK COVER WITH PAD
● 8.0 (82, 71 in.*lbf)
x 2
FRONT SEATBACK FRAME SUB-ASSEMBLY
FRONT SEAT AIRBAG ASSEMBLY
AIRBAG WIRE HARNESS
N*m (kgf*cm, ft.*lbf) : Specified torque
● Non-reusable part

Fig. 117: Identifying Front Seat Side Airbag Assembly Replacement Components With Torque Specifications
Courtesy of TOYOTA MOTOR SALES, U.S.A., INC.

ON-VEHICLE INSPECTION

ON-VEHICLE INSPECTION

WARNING: **Be sure to correctly follow the removal and installation procedures for the front seat airbag assemblies.**

1. **INSPECT FRONT SEAT AIRBAG ASSEMBLY (for Vehicle not Involved in Collision)**
    1. Perform a diagnostic system check.

       for Separate Type Yaw Rate Sensor: Refer to **DTC CHECK / CLEAR**

       for Built-in Type Yaw Rate Sensor: Refer to **DTC CHECK / CLEAR**

    2. Visually check for defects with the front seat airbag assemblies installed on the vehicle.

       HINT:

       The defects are as follows:

       - Cuts on the front seatback assembly around the front seat airbag assemblies
       - Small cracks on the front seatback assembly around the front seat airbag assemblies
       - Significant discoloration on the front seatback assembly around the front seat airbag assemblies

       OK

       No defects are found.

       If any of the defects is found, replace the separate type front seatback pad or separate type front seatback cover with a new one.

2. **INSPECT FRONT SEAT AIRBAG ASSEMBLY (for Vehicle Involved in Collision and Airbag not Deployed)**
    1. Perform a diagnostic system check.

       for Separate Type Yaw Rate Sensor: Refer to **DTC CHECK / CLEAR**

       for Built-in Type Yaw Rate Sensor: Refer to **DTC CHECK / CLEAR**

    2. Visually check for defects with the front seat airbag assemblies removed from the vehicle.

       HINT:

       The defects are as follows:

       - Make sure that there are no scratches, broken or frayed threads on the surface of the front seat airbag assemblies base fabric
       - Marks from being dropped

- Deformation on the installation part of the front seat airbag assemblies
- Cracks or other damage to the wire harness or connector

OK

No defects are found.

If any of the defects is found, replace the front seat airbag assembly with a new one.

REMOVAL

REMOVAL

WARNING:

- **Be sure to read Precaution thoroughly before servicing.**

  for Separate Type Yaw Rate Sensor: Refer to PRECAUTION

  for Built-in Type Yaw Rate Sensor: Refer to PRECAUTION

- **Wear protective gloves. Sharp areas on the seat frame and adjuster may injure your hands.**
- **If the side airbag was deployed, replace the front seat airbag assembly, front seatback frame sub-assembly or separate type front seatback spring assembly, separate type front seatback cover and separate type front seatback pad with the necessary parts in accordance with the extent of the collision damage.**

  for Manual Seat: Refer to DISASSEMBLY

  for Power Seat: Refer to DISASSEMBLY

HINT:

- Use the same procedure for the LH side and RH side.
- The procedure listed below is for the LH side.

REMOVAL

1. **REMOVE FRONT SEAT ASSEMBLY (for Manual Seat)**

   Refer to **REMOVAL**

2. **REMOVE FRONT SEAT ASSEMBLY (for Power Seat)**

   Refer to **REMOVAL**

3. **DISCONNECT AIRBAG WIRE HARNESS (for Manual Seat)**
    a. Disconnect the 2 rubber bands of the separate type front seatback cover.

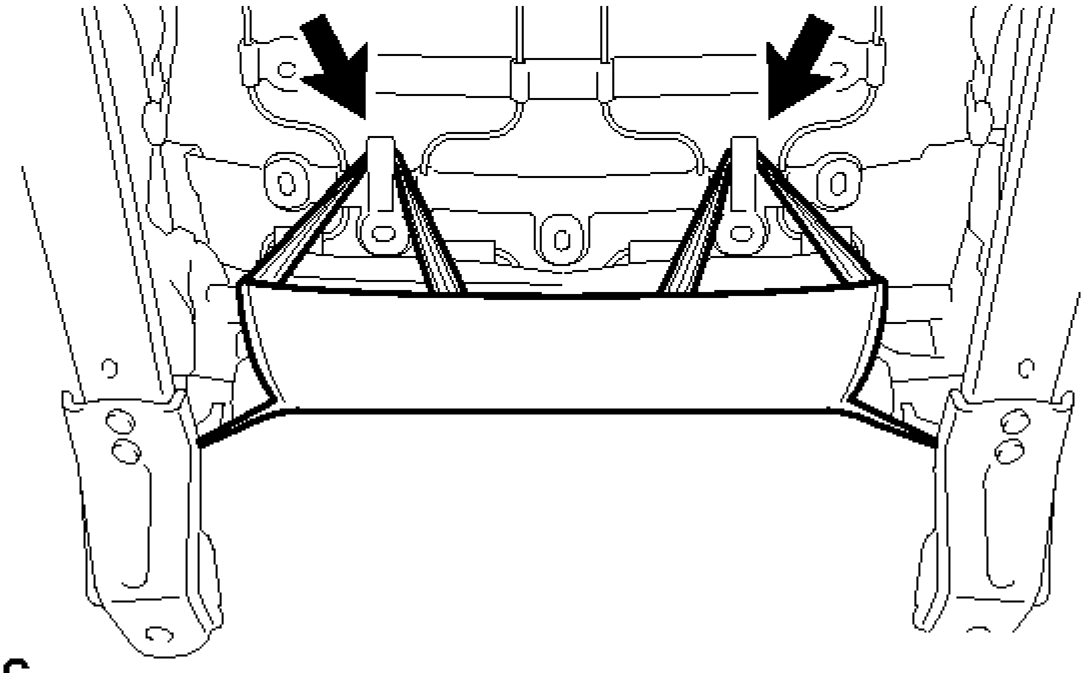

Fig. 118: Identifying Rubber Bands Of Front Seatback Cover (For TMMK Made Manual Seat)
Courtesy of TOYOTA MOTOR SALES, U.S.A., INC.

    b. Disengage the claw and 3 clamps to disconnect the airbag wire harness.

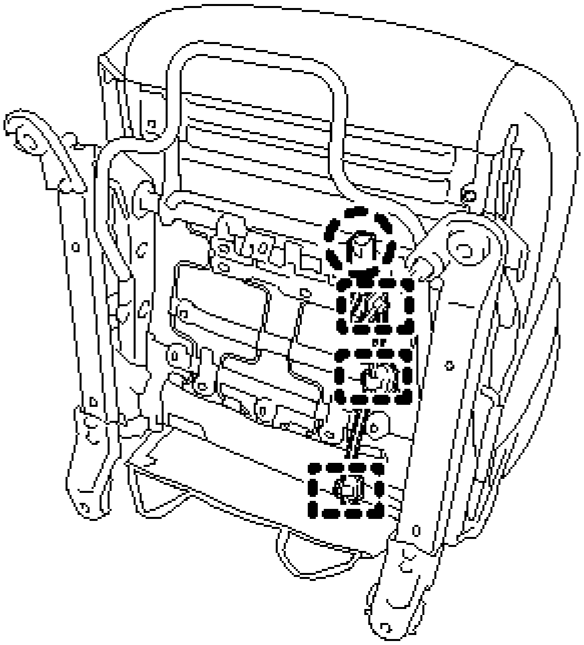

Fig. 119: Identifying Front Seatback Cover Claw And Clamps (For TMMK Made Manual Seat)
Courtesy of TOYOTA MOTOR SALES, U.S.A., INC.

4. **DISCONNECT AIRBAG WIRE HARNESS (for Power Seat)**
   a. Disconnect the 2 rubber bands of the separate type front seatback cover.

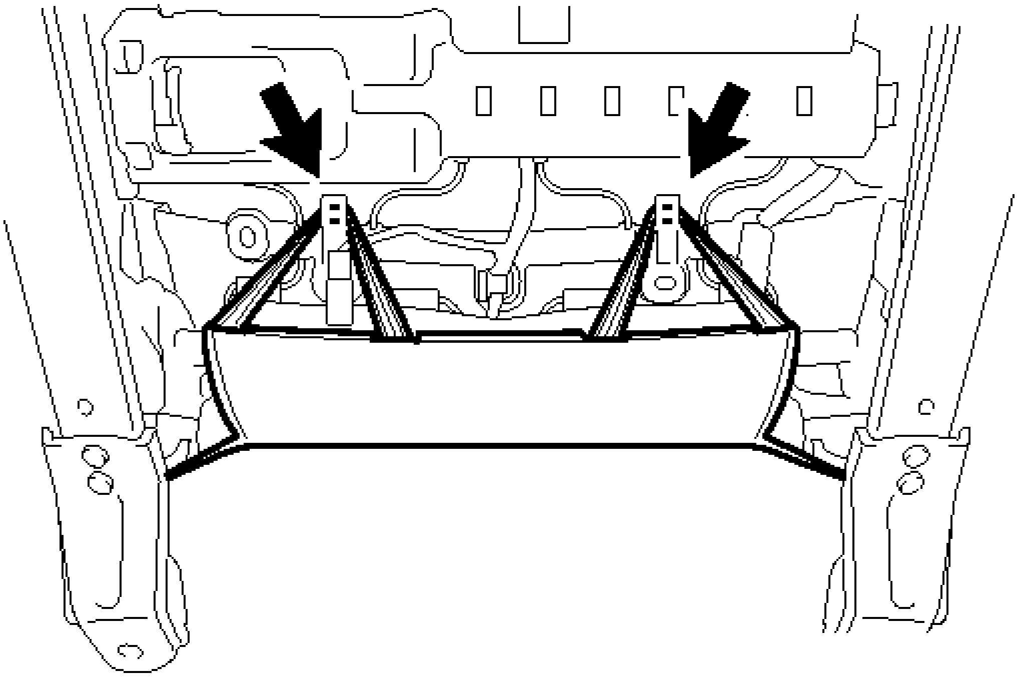

Fig. 120: Identifying Rubber Bands Of Front Seatback Cover (For TMMK Made Power Seat)
Courtesy of TOYOTA MOTOR SALES, U.S.A., INC.

b. Disconnect the connector (A).

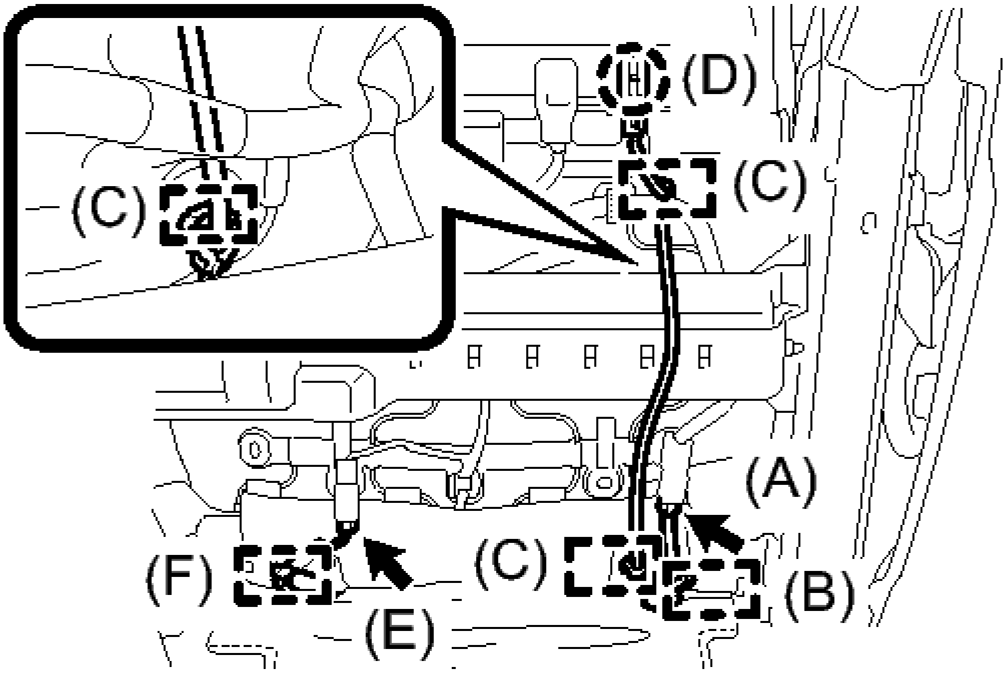

Fig. 121: Identifying Front Seatback Cover Connectors, Claw And Clamps (For TMMK Made Power Seat)
Courtesy of TOYOTA MOTOR SALES, U.S.A., INC.

c. Disengage the clamp (B).
d. Disengage the claw (D) and 3 clamps (C) to disconnect the airbag wire harness.
e. w/ Seat Heater System:
    1. Disconnect the connector (E).
    2. Disengage the clamp (F).

5. **REMOVE SEPARATE TYPE FRONT SEATBACK COVER WITH PAD (for Manual Seat)** . Refer to **DISASSEMBLY - Step 11**
6. **REMOVE SEPARATE TYPE FRONT SEATBACK COVER WITH PAD (for Power Seat)** . Refer to **DISASSEMBLY - Step 14**
7. **REMOVE FRONT SEAT AIRBAG ASSEMBLY**
    a. Disengage the 2 clamps.

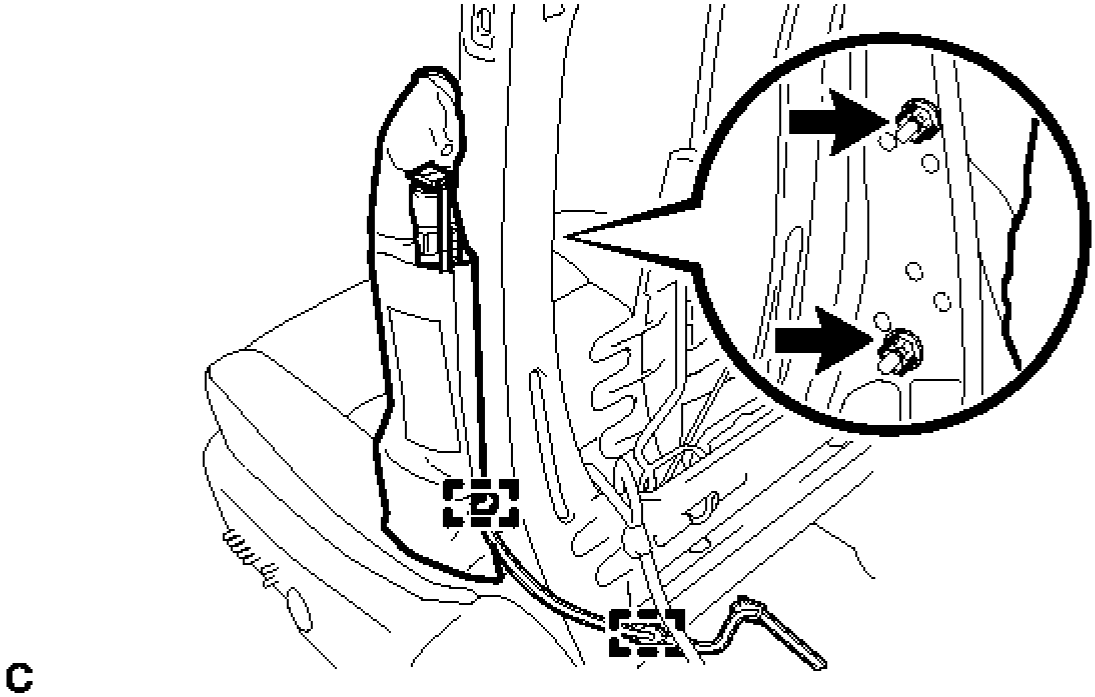

Fig. 122: Locating Front Seat Airbag Assembly Clamps And Fasteners
Courtesy of TOYOTA MOTOR SALES, U.S.A., INC.

b. Remove the 2 nuts and the front seat airbag assembly.

WARNING:

- **The nuts must not be reused.**
- **Make sure that the front seatback frame sub-assembly or separate type front seatback spring assembly is not deformed. If it is, replace it with a new one.**

INSTALLATION

INSTALLATION

HINT:

- Use the same procedure for the LH side and RH side.
- The procedure listed below is for the LH side.

1. **INSTALL FRONT SEAT AIRBAG ASSEMBLY**

WARNING:

- **The nuts must not be reused.**
- **Make sure that the front seatback frame sub-assembly or separate type front seatback spring assembly is not deformed. If it is, replace it with a new one.**

a. Install the front seat airbag assembly with 2 new nuts.

   Torque: 8.0 N*m (82 kgf*cm, 71 in.*lbf)

b. Engage the 2 clamps.

2. **INSTALL SEPARATE TYPE FRONT SEATBACK COVER WITH PAD (for Manual Seat)** . Refer to **REASSEMBLY - Step 18**
3. **INSTALL SEPARATE TYPE FRONT SEATBACK COVER WITH PAD (for Power Seat)** . Refer to **REASSEMBLY - Step 21**
4. **CONNECT AIRBAG WIRE HARNESS (for Manual Seat)**
   a. Engage the claw and 3 clamps to connect the airbag wire harness.
   b. Connect the 2 rubber bands of the separate type front seatback cover.
5. **CONNECT AIRBAG WIRE HARNESS (for Power Seat)**
   a. Engage the claw (D) and 3 clamps (C) to Connect the airbag wire harness.

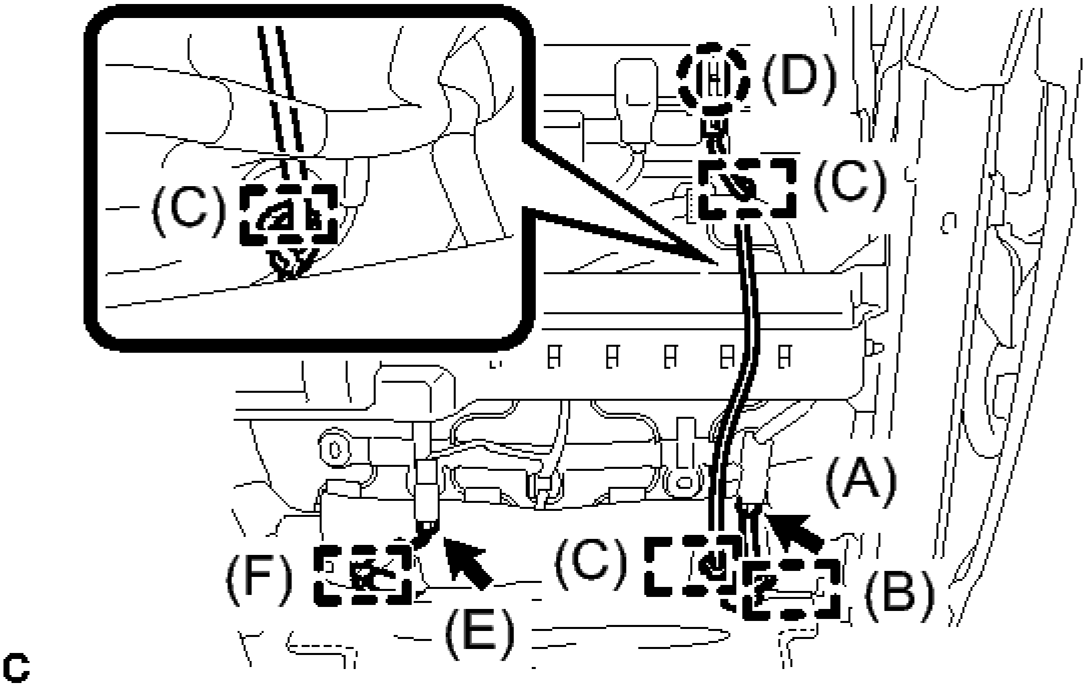

Fig. 123: Identifying Front Seatback Cover Connectors, Claw And Clamps (For TMMK Made Power Seat)
Courtesy of TOYOTA MOTOR SALES, U.S.A., INC.

   b. Engage the clamp (B).
   c. Connect the connector (A).
   d. w/ Seat Heater System:
      1. Connect the connector (E).
      2. Engage the clamp (F).

e. Connect the 2 rubber bands of the separate type front seatback cover.

6. **INSTALL FRONT SEAT ASSEMBLY (for Manual Seat)**

   Refer to **INSTALLATION**

7. **INSTALL FRONT SEAT ASSEMBLY (for Power Seat)**

   Refer to **INSTALLATION**

8. **PERFORM DIAGNOSTIC SYSTEM CHECK**

   for Separate Type Yaw Rate Sensor: Refer to **DTC CHECK / CLEAR**

   for Built-in Type Yaw Rate Sensor: Refer to **DTC CHECK / CLEAR**

DISPOSAL

DISPOSAL

WARNING: **Before performing pre-disposal deployment of any SRS part, review and closely follow all applicable environmental and hazardous material regulations. Pre-disposal deployment may be considered hazardous material treatment.**

1. **PRECAUTION**

WARNING:

- **An airbag or pretensioner may be activated by static electricity. To prevent this, be sure to touch a metal surface with your bare hands to discharge static electricity before performing this procedure.**
- **Never dispose of a front seat airbag assembly with an undeployed airbag.**
- **The airbag produces an exploding sound when it is deployed, so perform the operation outdoors and where it will not create a nuisance to nearby residents.**
- **When deploying the airbag, always use the specified SST (SRS Airbag Deployment Tool). Perform the operation in a place away from electrical noise.**
- **When deploying the airbag, perform the operation at least 10 m (32.8 ft.) away from the front seat airbag assembly.**
- **The front seat airbag assembly becomes extremely hot when the airbag is deployed, so do not touch it for at least 30 minutes after deployment.**
- **Use gloves and safety glasses when handling a front seat**

airbag assembly with a deployed airbag.

- **Do not apply water etc. to a front seat airbag assembly with a deployed airbag.**
- **Always wash your hands with water after completing the operation.**

HINT:

When scrapping a vehicle equipped with an SRS or disposing of the front seat airbag assembly, be sure to deploy the airbag first in accordance with the procedure described below. If any abnormality occurs with the airbag deployment, contact the Service Dept. of TOYOTA MOTOR SALES, U.S.A., INC.

2. **DISPOSE OF FRONT SEAT AIRBAG ASSEMBLY (When Installed in Vehicle)**

NOTE:

- **When disposing of the front seat airbag assembly, never use the customer's vehicle to deploy the airbag.**
- **Be sure to observe the following procedure when deploying the airbag.**

HINT:

Prepare a 12 V battery as the power source to deploy the airbag.

a. Check the function of SST See step 2.

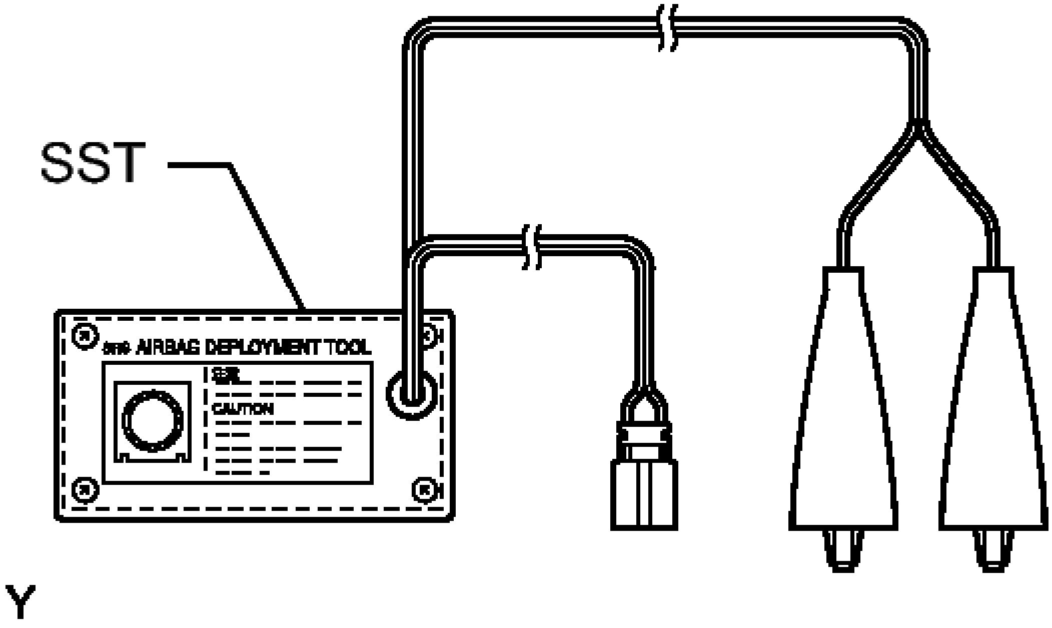

Fig. 124: Checking Function Of SST

Courtesy of TOYOTA MOTOR SALES, U.S.A., INC.

- **SST: 09082-00700**

b. Refer to Precaution.

for Separate Type Yaw Rate Sensor: Refer to **PRECAUTION**

for Built-in Type Yaw Rate Sensor: Refer to **PRECAUTION**

c. Disconnect the cable from the negative (-) auxiliary battery terminal.

WARNING: **Wait at least 90 seconds after disconnecting the cable from the negative (-) auxiliary battery terminal to disable the SRS system.**

d. Disconnect the connector from the front seat airbag assembly under the front seat assembly.

NOTE: When disconnecting any airbag connector, take care not to damage the airbag wire harness.

1. Slide the slider to release the lock, and then disconnect the yellow airbag connector as shown in the illustration.

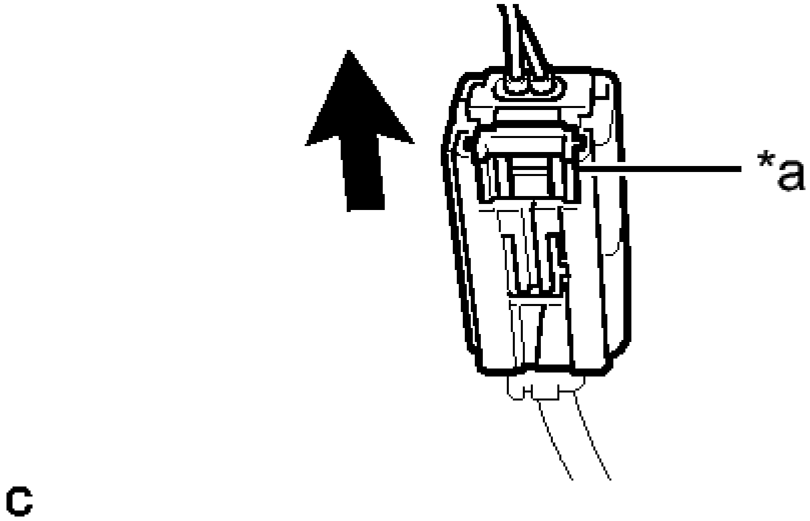

Fig. 125: Identifying Harness Connector Lock
Courtesy of TOYOTA MOTOR SALES, U.S.A., INC.

TEXT IN ILLUSTRATION

*a	Slider

e. Install SST.

WARNING: **Check that there is no looseness in the front seat assembly.**

1. Connect the SST connector to the front seat airbag assembly connector.

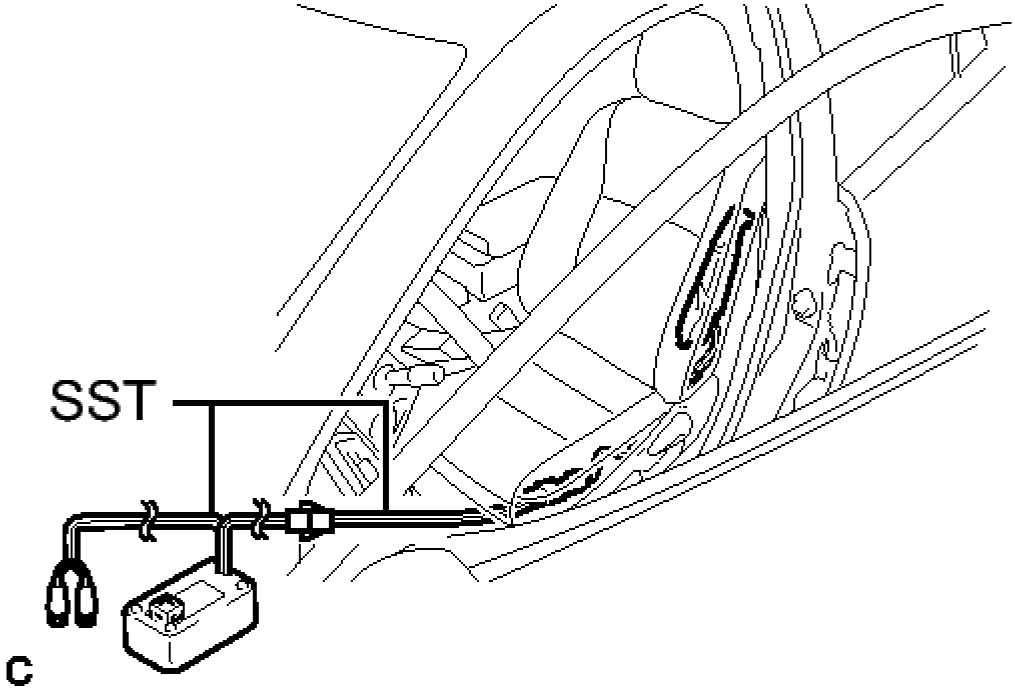

Fig. 126: Connecting SST To Front Seat Airbag Connector
Courtesy of TOYOTA MOTOR SALES, U.S.A., INC.

- **SST: 09082-00700**
- **SST: 09082-00820**

NOTE: **To avoid damaging the SST connector or wire harness, do not lock the secondary lock of the twin lock.**

2. Move SST at least 10 m (32.8 ft.) away from the front side window.

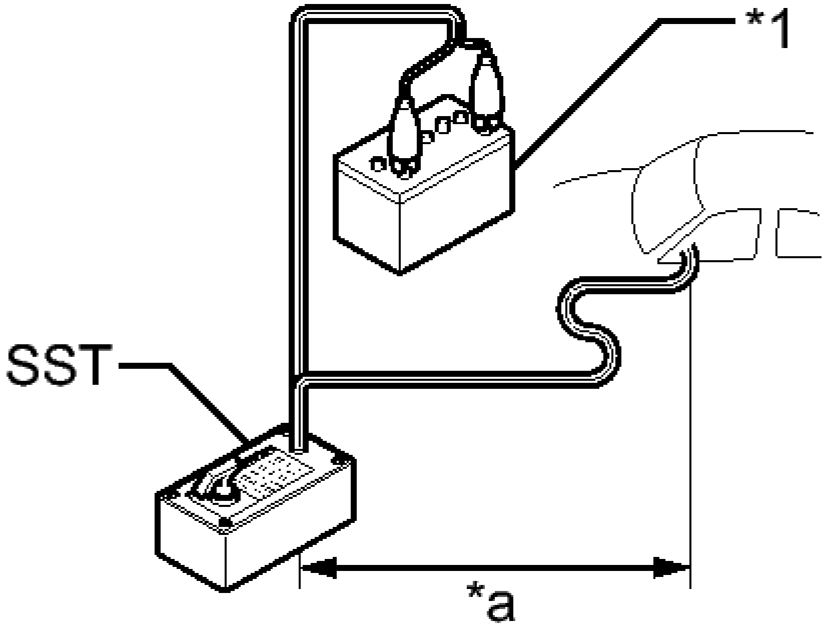

C

Fig. 127: Moving SST Away From Front Side Window
Courtesy of TOYOTA MOTOR SALES, U.S.A., INC.

TEXT IN ILLUSTRATION

*1	12 V Battery
*a	10 m (32.8 ft.) or more

3. Maintaining sufficient clearance for the SST wire harness in the front side window, close all doors and windows of the vehicle.

NOTE: **Take care not to damage the SST wire harness.**

4. Connect the red clip of SST to the positive (+) battery terminal and the black clip of SST to the negative (-) battery terminal.

f. Deploy the airbag.
   1. Check that no one is inside the vehicle or within a 10 m (32.8 ft.) radius of the vehicle.
   2. Press the SST activation switch to deploy the airbag.

WARNING:

- **Before deployment, make sure that no one is near the vehicle.**
- **The front seat airbag assembly becomes extremely**

hot when the airbag is deployed, so do not touch it for at least 30 minutes after deployment.

- **Use gloves and safety glasses when handling a front seat airbag assembly with a deployed airbag.**
- **Do not apply water etc. to a front seat airbag assembly with a deployed airbag.**
- **Always wash your hands with water after completing the operation.**

HINT:

The airbag is deployed as the LED of the SST activation switch comes on.

3. **DISPOSE OF FRONT SEAT AIRBAG ASSEMBLY (When Not Installed in Vehicle)**

NOTE: **Be sure to observe the following procedure when deploying the airbag.**

HINT:

Prepare a 12 V battery as the power source to deploy the airbag.

a. Check the function of SST See step 3.

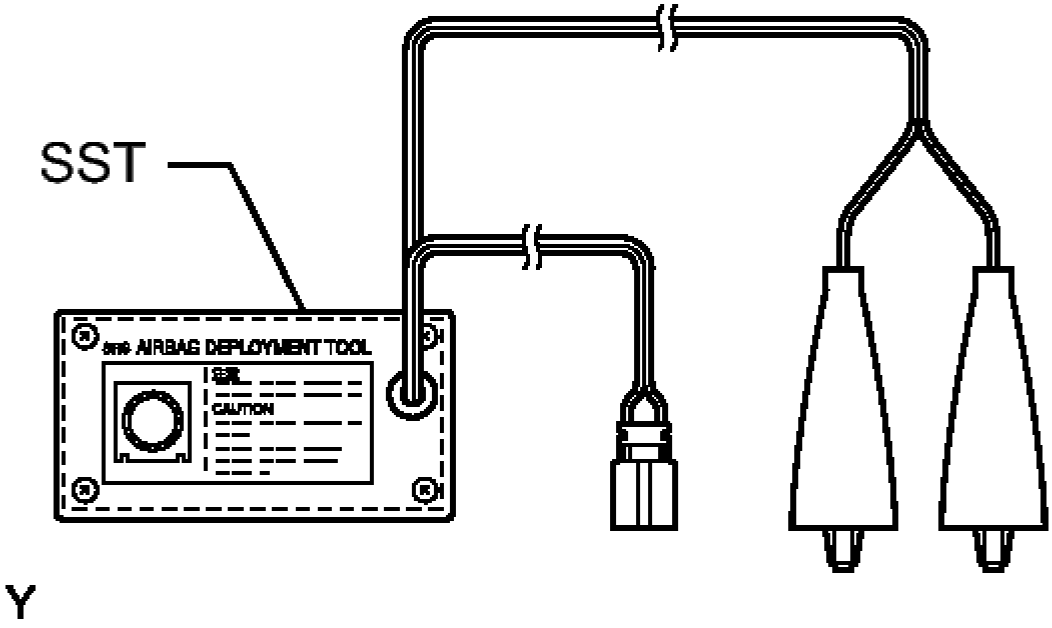

Fig. 128: Checking Function Of SST
Courtesy of TOYOTA MOTOR SALES, U.S.A., INC.

- **SST: 09082-00700**

b. Remove the front seat airbag assembly. Refer to **REMOVAL**.

WARNING:

- **Before removing the front seat assembly, wait at least 90 seconds after turning the power switch off and disconnecting the cable from the negative (-) auxiliary battery terminal.**
- **When storing the front seat airbag assembly, keep the airbag deployment side facing upward.**

c. Using braided wire, tie down the front seat airbag assembly to an unneeded tire.

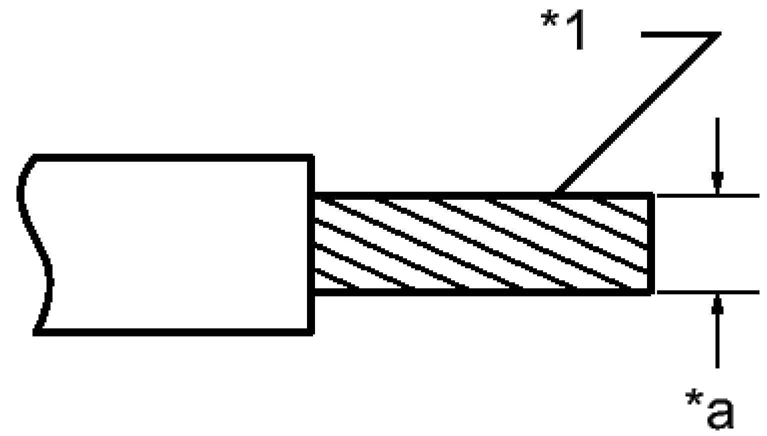

Fig. 129: Identifying Stripped Wire
Courtesy of TOYOTA MOTOR SALES, U.S.A., INC.

TEXT IN ILLUSTRATION

*1	Stripped Wire Section
*a	Wire Diameter

Wire

Stripped wire section

1.25 mm^2 (0.0019 in.^{2}) or more

> **WARNING:** **If the wire is too thin or an alternative object is used to tie down the front seat airbag assembly, it may snap when the airbag is deployed. Always use a wire for vehicle use with an area of at least 1.25 mm^2 (0.0019 in.^{2}).**

HINT:

To calculate the area of the stripped wire section:

Area = 3.14 x (Diameter)^2 / 4

1. Install the 2 nuts to the front seat airbag assembly.

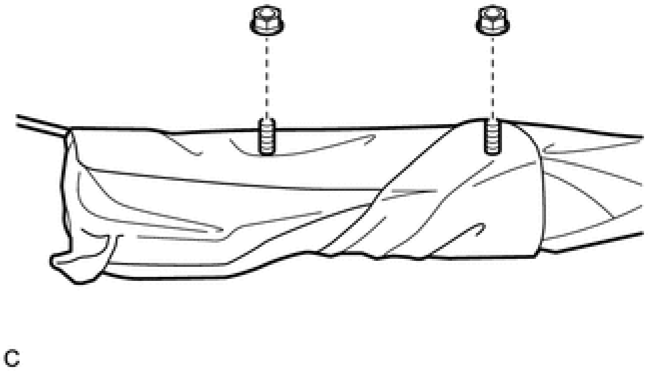

Fig. 130: Identifying Front Seat Airbag Assembly Nuts
Courtesy of TOYOTA MOTOR SALES, U.S.A., INC.

2. Wind the wires around the stud bolts of the front seat airbag assembly as shown in the illustration.

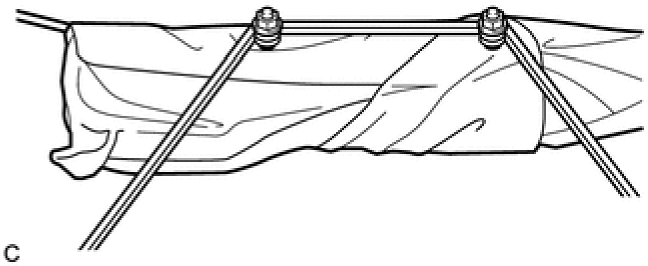

Fig. 131: Wires Around Stud Bolts
Courtesy of TOYOTA MOTOR SALES, U.S.A., INC.

3. Position the front seat airbag assembly inside the tire.

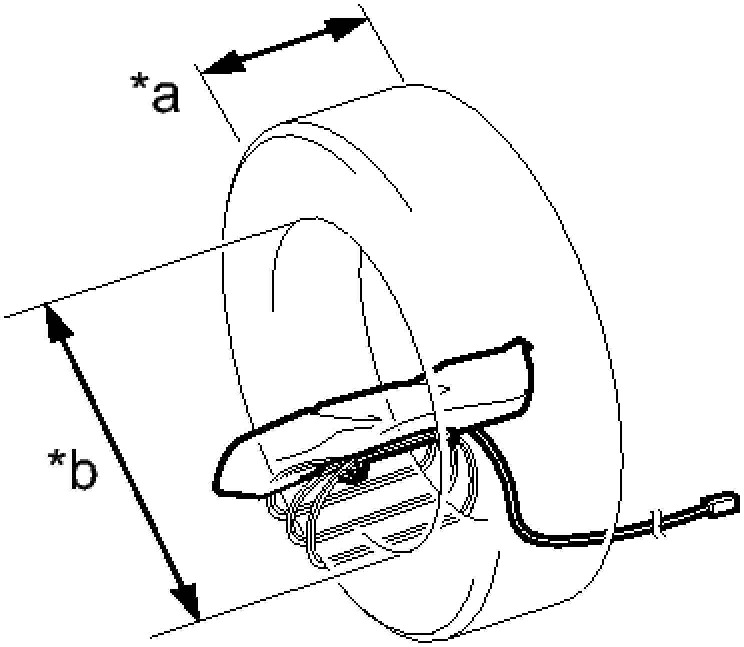

C

Fig. 132: Front Seat Airbag Assembly Inside Tire
Courtesy of TOYOTA MOTOR SALES, U.S.A., INC.

TEXT IN ILLUSTRATION

*a	Width
*b	Inner Diameter

Minimum tire size

Width

185 mm (7.28 in.)

Inner diameter

360 mm (1.18 ft.)

WARNING:

- **Make sure that the wires are tight. If there is slack in the wires, the front seat airbag assembly may break loose when the airbag is deployed.**
- **Face the front seat airbag assembly deployment surface toward the inside the tire to evenly distribute the force of deployment.**

NOTE: **The tire may be damaged by the airbag deployment, so use an unneeded tire.**

d. Install SST.
  1. Connect the SST connector to the front seat airbag assembly connector.

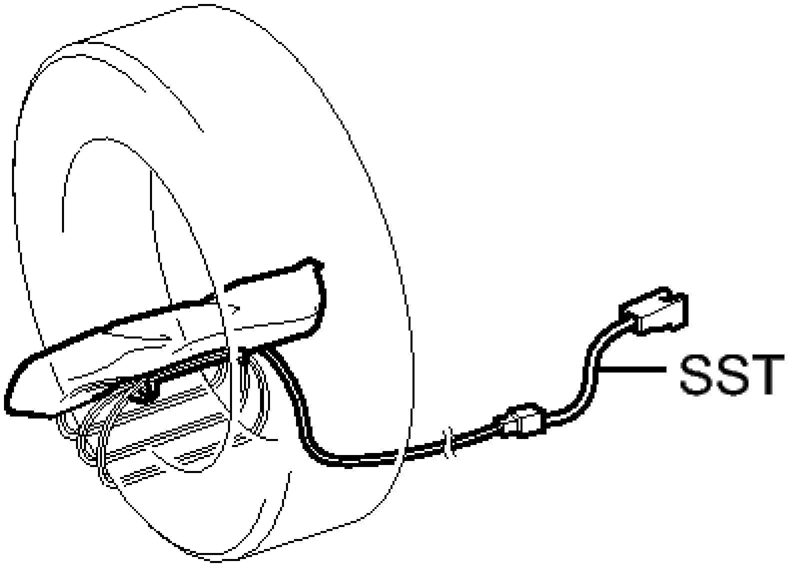

Fig. 133: SST Connector To The Front Seat Airbag Assembly Connector
Courtesy of TOYOTA MOTOR SALES, U.S.A., INC.

- **SST: 09082-00820**

e. Place the tires.
  1. Place at least 2 tires under the tire to which the front seat airbag assembly is tied.

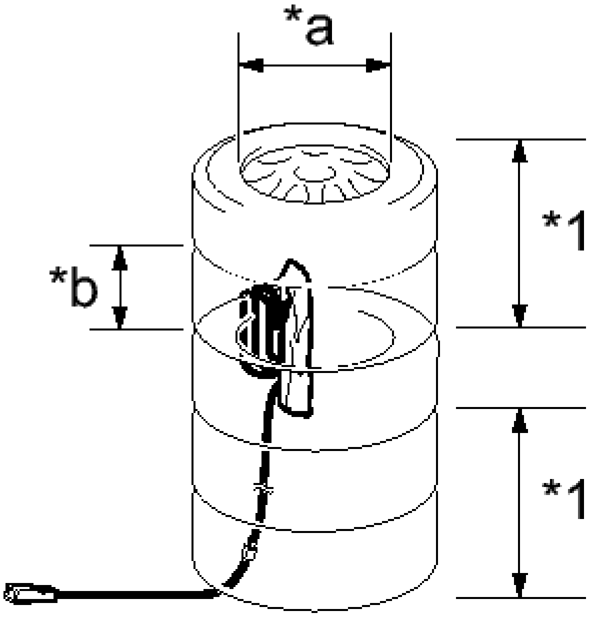

Fig. 134: Placing Front Seat Airbag Assembly Under Tires
Courtesy of TOYOTA MOTOR SALES, U.S.A., INC.

TEXT IN ILLUSTRATION

*1	Tires (2 or more)
*a	Inner Diameter
*b	Width

Minimum tire size

Width

185 mm (7.28 in.)

Inner diameter

360 mm (1.18 ft.)

NOTE:

- **The tires may be damaged by the airbag deployment, so use unneeded tires.**
- **Do not place the SST connector under the tire because it could be damaged.**

2. Place at least 2 tires onto the tire to which the front seat airbag assembly is tied. The top tire

should have a wheel installed.

3. Tie the tires together with the 2 wires.

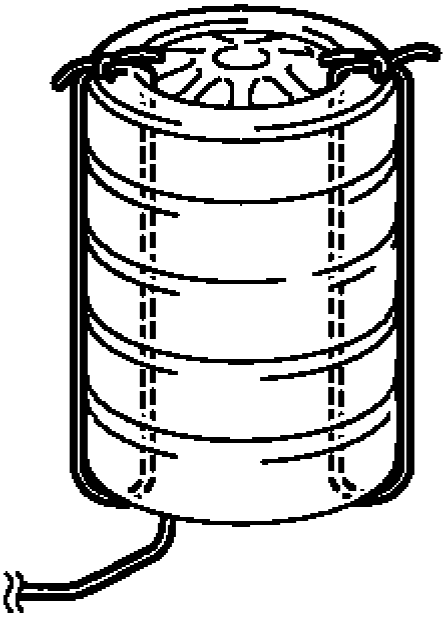

Fig. 135: Identifying Tires Tied Together With Wires
Courtesy of TOYOTA MOTOR SALES, U.S.A., INC.

WARNING: **Make sure that the wires are tight. Looseness in the wires results in the tires breaking loose when the airbag is deployed.**

f. Install SST.

1. Connect the SST connector.

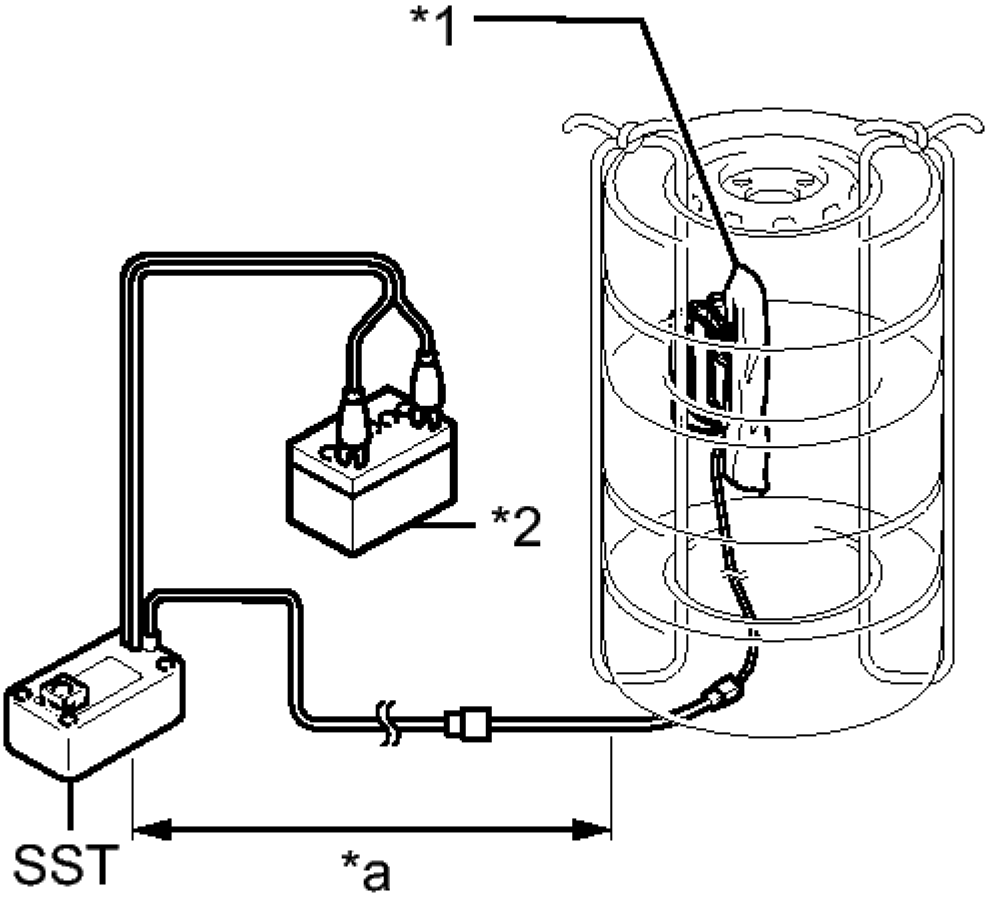

C

Fig. 136: Identifying SST Distance From Front Seat Airbag Assembly In Tires
Courtesy of TOYOTA MOTOR SALES, U.S.A., INC.

TEXT IN ILLUSTRATION

*1	Front Seat Airbag Assembly
*2	12 V Battery
*a	10 m (32.8 ft.) or more

- **SST: 09082-00700**

NOTE: **To avoid damaging the SST connector or wire harness, do not lock the secondary lock of the twin lock. Also, secure some slack for the SST wire harness inside the tire.**

2. Move SST at least 10 m (32.8 ft.) away from the airbag tied down to the tire.

g. Deploy the airbag.
   1. Connect the red clip of SST to the positive (+) battery terminal and the black clip of SST to the negative (-) battery terminal.
   2. Check that no one is within a 10 m (32.8 ft.) radius of the tire to which the front seat airbag assembly is tied.
   3. Press the SST activation switch to deploy the airbag.

WARNING: **Before deployment, make sure that no one is near the airbag.**

HINT:

The airbag is deployed as the LED of the SST activation switch comes on.

h. Dispose of the front seat airbag assembly.

WARNING:

- **The front seat airbag assembly becomes extremely hot when the airbag is deployed, so do not touch it for at least 30 minutes after deployment.**
- **Use gloves and safety glasses when handling a front seat airbag assembly with a deployed airbag.**
- **Do not apply water etc. to a front seat airbag assembly with a deployed airbag.**
- **Always wash your hands with water after completing the operation.**

1. Remove the front seat airbag assembly from the tire.
2. Place the front seat airbag assembly in a plastic bag, tie it tightly, and dispose of it according to local regulations.

REAR SEAT SIDE AIRBAG ASSEMBLY

COMPONENTS

ILLUSTRATION

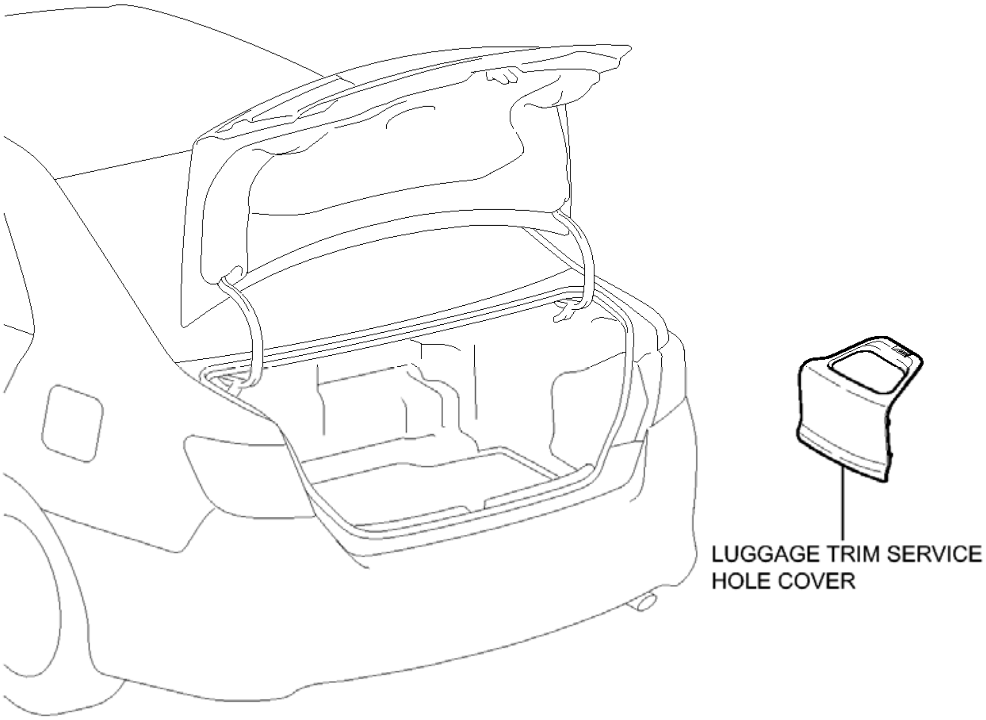
LUGGAGE TRIM SERVICE HOLE COVER

P

Fig. 137: Identifying Rear Seat Side Airbag Assembly Replacement Components With Torque Specifications (1 Of 3)
Courtesy of TOYOTA MOTOR SALES, U.S.A., INC.

ILLUSTRATION

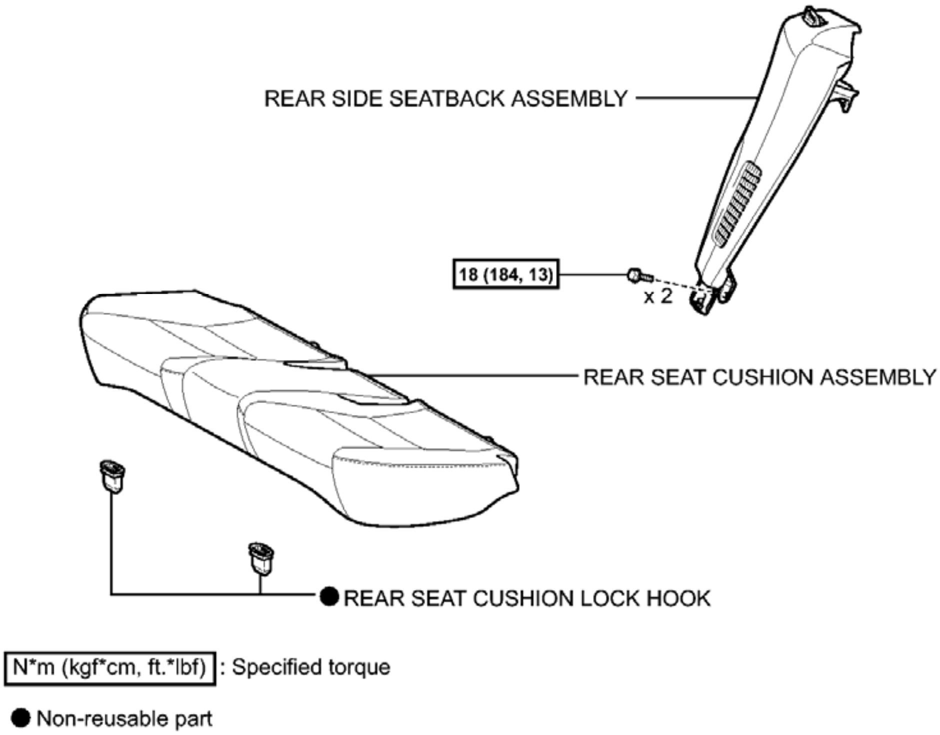
REAR SIDE SEATBACK ASSEMBLY
18 (184, 13)
x 2
REAR SEAT CUSHION ASSEMBLY
● REAR SEAT CUSHION LOCK HOOK
N*m (kgf*cm, ft.*lbf) : Specified torque
● Non-reusable part

Fig. 138: Identifying Rear Seat Side Airbag Assembly Replacement Components With Torque Specifications (2 Of 3)
Courtesy of TOYOTA MOTOR SALES, U.S.A., INC.

ILLUSTRATION

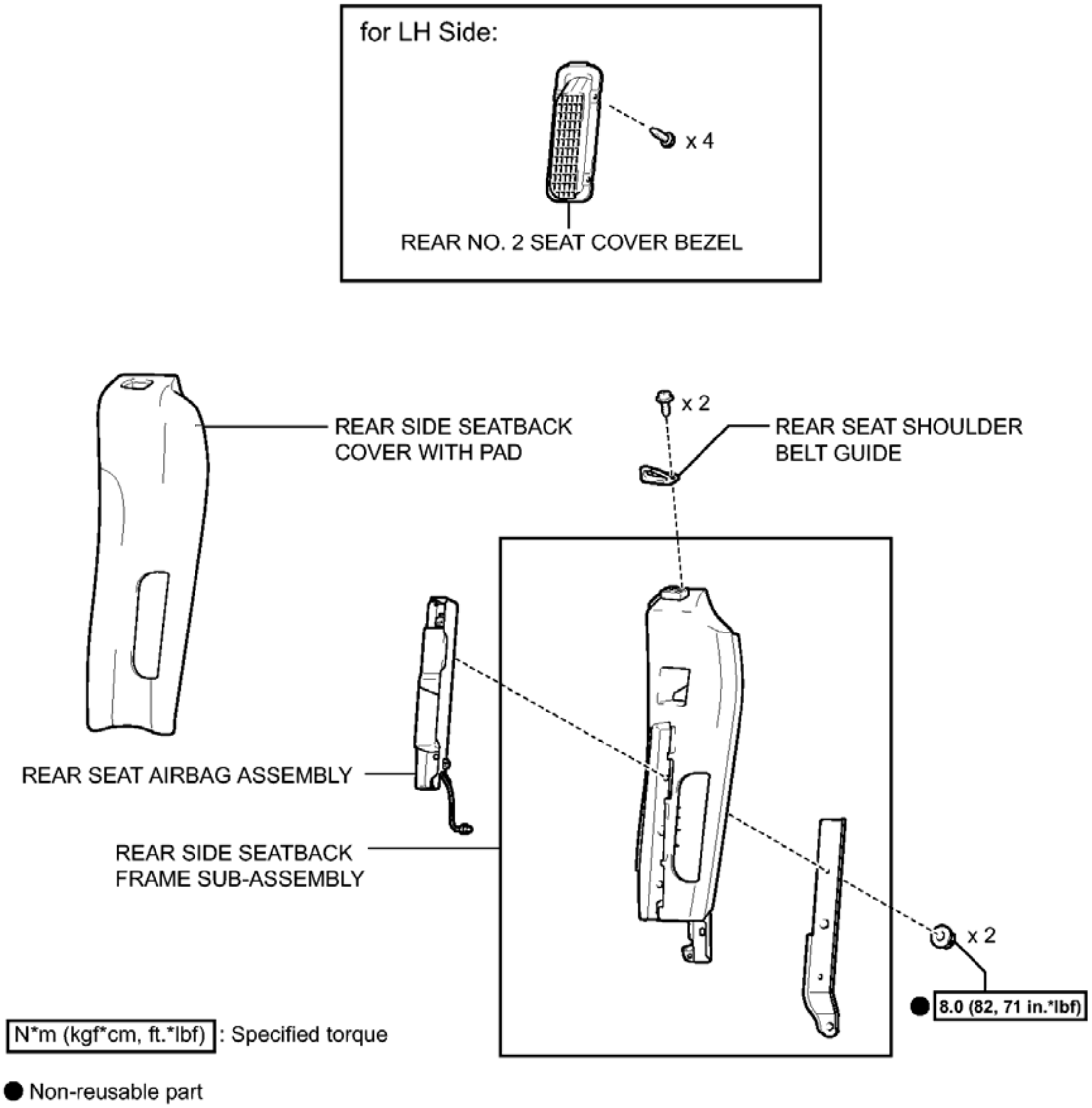
for LH Side:
x 4
REAR NO. 2 SEAT COVER BEZEL
REAR SIDE SEATBACK COVER WITH PAD
x 2
REAR SEAT SHOULDER BELT GUIDE
REAR SEAT AIRBAG ASSEMBLY
REAR SIDE SEATBACK FRAME SUB-ASSEMBLY
x 2
● 8.0 (82, 71 in.*lbf)
N*m (kgf*cm, ft.*lbf) : Specified torque
● Non-reusable part

Fig. 139: Identifying Rear Seat Side Airbag Assembly Replacement Components With Torque Specifications (3 Of 3)
Courtesy of TOYOTA MOTOR SALES, U.S.A., INC.

ON-VEHICLE INSPECTION

ON-VEHICLE INSPECTION

WARNING: **Be sure to correctly follow the removal and installation procedures for the rear seat airbag assemblies.**

1. **INSPECT REAR SEAT AIRBAG ASSEMBLY (for Vehicle not Involved in Collision)**

a. Perform a diagnostic system check.

for Separate Type Yaw Rate Sensor: Refer to **DTC CHECK / CLEAR**

for Built-in Type Yaw Rate Sensor: Refer to **DTC CHECK / CLEAR**

b. Visually check for defects with the rear seat airbag assemblies installed on the vehicle.

HINT:

The defects are as follows:

- Cuts on the rear side seatback assembly around the rear seat airbag assemblies
- Small cracks on the rear side seatback assembly around the rear seat airbag assemblies
- Significant discoloration on the rear side seatback assembly around the rear seat airbag assemblies

OK

No defects are found.

If any of the defects is found, replace the rear side seatback pad or rear side seatback cover sub-assembly with a new one.

2. **INSPECT REAR SEAT AIRBAG ASSEMBLY (for Vehicle Involved in Collision and Airbag not Deployed)**

a. Perform a diagnostic system check.

for Separate Type Yaw Rate Sensor: Refer to **DTC CHECK / CLEAR**

for Built-in Type Yaw Rate Sensor: Refer to **DTC CHECK / CLEAR**

b. Visually check for defects with the rear seat airbag assemblies removed from the vehicle.

HINT:

The defects are as follows:

- Make sure that there are no scratches, broken or frayed threads on the surface of the rear seat airbag assemblies base fabric
- Marks from being dropped
- Deformation on the installation part of the rear seat airbag assemblies
- Cracks or other damage to the wire harness or connector

OK

No defects are found.

If any of the defects is found, replace the rear seat airbag assembly with a new one.

REMOVAL

REMOVAL

WARNING: **If the side airbag was deployed, replace the rear seat airbag assembly, rear side seatback frame sub-assembly, rear side seatback cover sub-assembly and rear side seatback pad with the necessary parts in accordance with the extent of the collision damage.**

HINT:

- Use the same procedure for the LH side and RH side.
- The procedure listed below is for the LH side.

REMOVAL

1. **PRECAUTION**

   WARNING: **Be sure to read Precaution thoroughly before servicing.**

   for Separate Type Yaw Rate Sensor: Refer to PRECAUTION

   for Built-in Type Yaw Rate Sensor: Refer to PRECAUTION

   NOTE: **After turning the power switch off, waiting time may be required before disconnecting the cable from the negative (-) auxiliary battery terminal. Therefore, make sure to read the disconnecting the cable from the negative (-) auxiliary battery terminal notices before proceeding with work. Refer to PRECAUTION .**

2. **REMOVE LUGGAGE TRIM SERVICE HOLE COVER** . Refer to **REMOVAL - Step 2**
3. **DISCONNECT CABLE FROM NEGATIVE AUXILIARY BATTERY TERMINAL**

   WARNING: **Wait at least 90 seconds after disconnecting the cable from the negative (-) auxiliary battery terminal to disable the SRS system.**

   NOTE: **When disconnecting the cable, some systems need to be initialized after the cable is reconnected. Refer to INITIALIZATION .**

4. **REMOVE REAR SEAT CUSHION ASSEMBLY** . Refer to **REMOVAL - Step 4**
5. **REMOVE REAR SEAT CUSHION LOCK HOOK** . Refer to **REMOVAL - Step 5**

6. **REMOVE REAR SIDE SEATBACK ASSEMBLY** . Refer to **REMOVAL - Step 9**
7. **REMOVE REAR SEAT SHOULDER BELT GUIDE** . Refer to **DISASSEMBLY - Step 3**
8. **REMOVE REAR NO. 2 SEAT COVER BEZEL (for LH Side)** . Refer to **DISASSEMBLY - Step 5**
9. **REMOVE REAR SEAT AIRBAG ASSEMBLY**
    a. for LH Side:
        1. Disengage the 7 hooks.

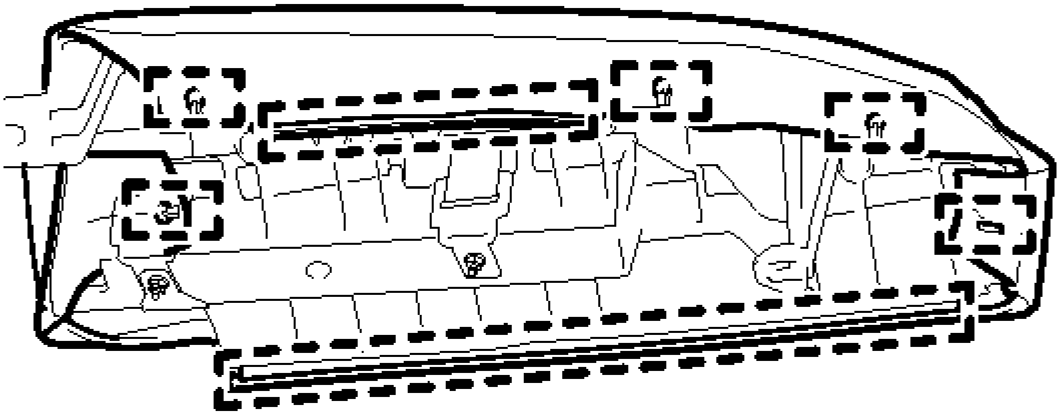

Fig. 140: Identifying Rear Seat Airbag Assembly Hooks LH
Courtesy of TOYOTA MOTOR SALES, U.S.A., INC.

    b. for RH Side:
        1. Disengage the 8 hooks.

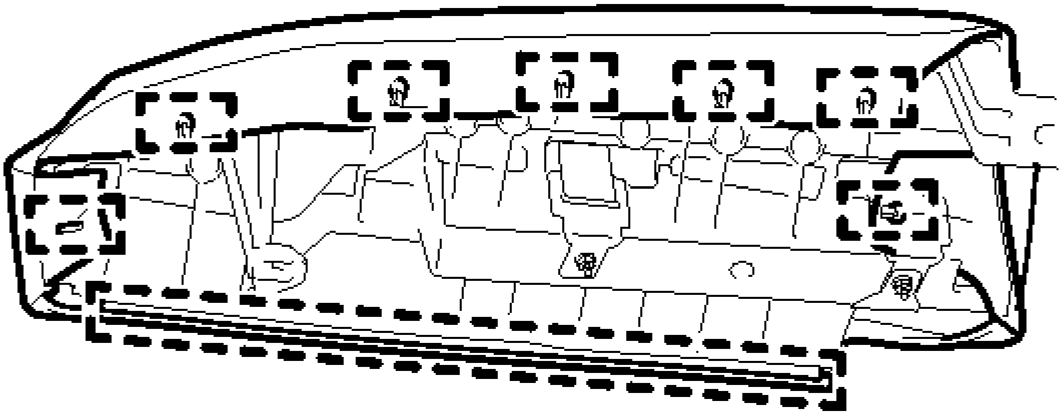

Fig. 141: Identifying Rear Seat Airbag Assembly Hooks RH
Courtesy of TOYOTA MOTOR SALES, U.S.A., INC.

c. Disengage the clamp and remove the 2 nuts.

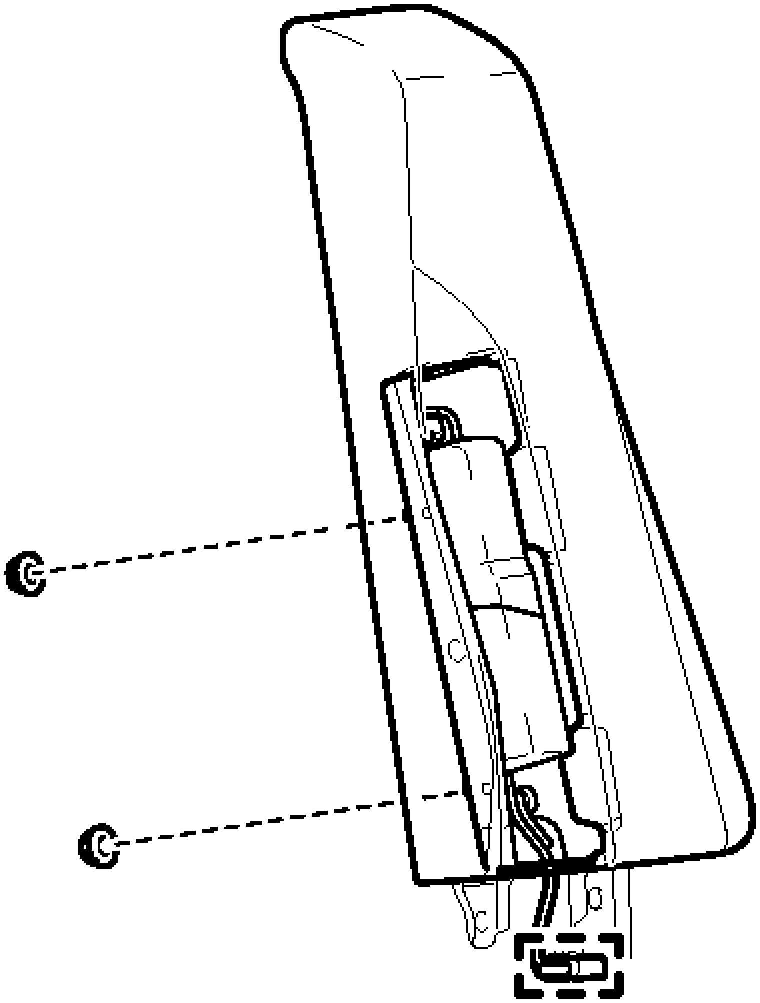

Fig. 142: Locating Rear Seat Airbag Assembly Clamp And Fasteners
Courtesy of TOYOTA MOTOR SALES, U.S.A., INC.

d. Remove the rear side seatback frame sub-assembly and rear seat airbag assembly from the rear side seatback cover with pad.

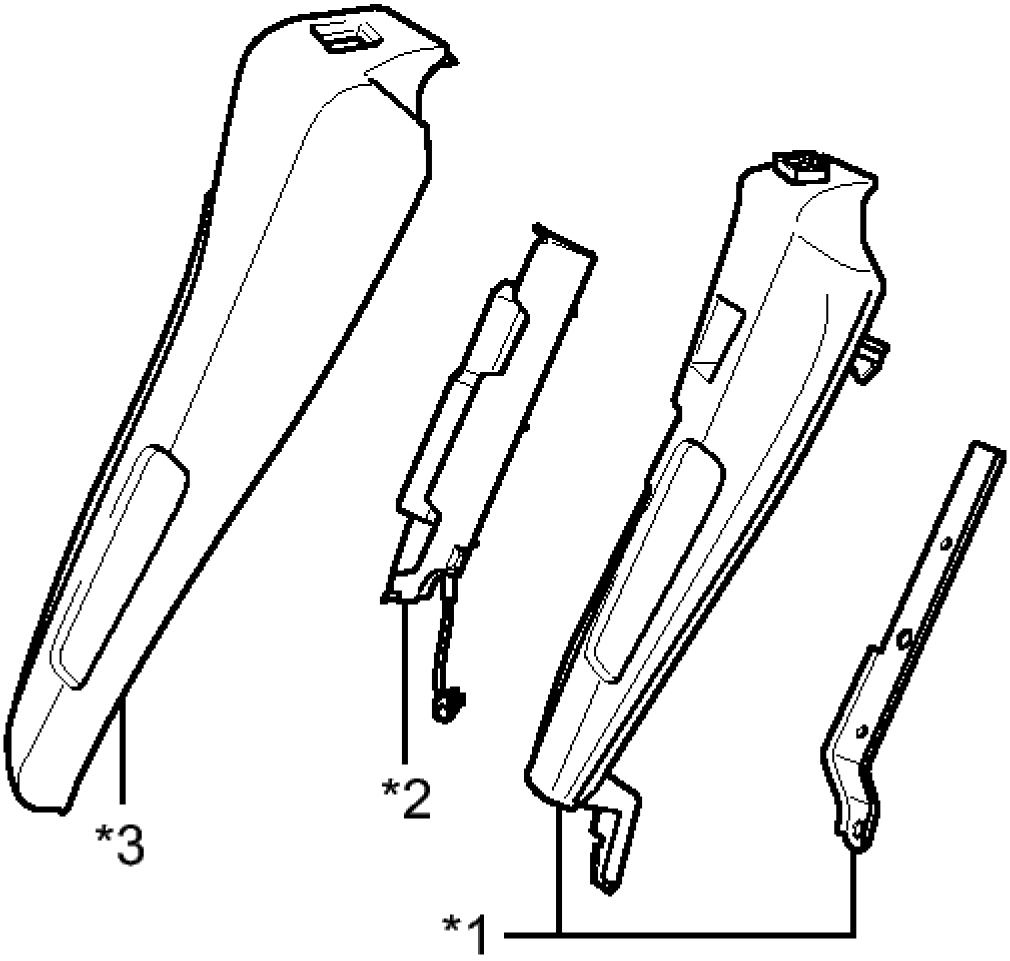

Fig. 143: Identifying Rear Side Seatback Frame Sub-Assembly And Rear Seat Airbag Assembly
Courtesy of TOYOTA MOTOR SALES, U.S.A., INC.

TEXT IN ILLUSTRATION

*1	Rear Side Seatback Frame Sub-assembly
*2	Rear Seat Airbag Assembly
*3	Rear Side Seatback Cover

	with Pad

WARNING:

- **The nuts must not be reused.**
- **Make sure that the rear side seatback frame sub-assembly is not deformed. If it is, replace it with a new one.**

INSTALLATION

INSTALLATION

HINT:

- Use the same procedure for the LH side and RH side.
- The procedure listed below is for the LH side.

1. **INSTALL REAR SEAT AIRBAG ASSEMBLY**

   WARNING:

   - **The nuts must not be reused.**
   - **Make sure that the rear side seatback frame sub-assembly is not deformed. If it is, replace it with a new one.**

   a. Install the rear seat airbag assembly to the rear side seatback frame sub-assembly with 2 new nuts.

      Torque: 8.0 N*m (82 kgf*cm, 71 in.*lbf)

   b. Engage the clamp to connect the airbag wire harness.
   c. for LH Side:
      1. Engage the 7 hooks to install the rear side seatback cover with pad.
   d. for RH Side:
      1. Engage the 8 hooks to install the rear side seatback cover with pad.
2. **INSTALL REAR NO. 2 SEAT COVER BEZEL (for LH Side)** . Refer to **REASSEMBLY - Step 11**
3. **INSTALL REAR SEAT SHOULDER BELT GUIDE** . Refer to **REASSEMBLY - Step 13**
4. **INSTALL REAR SIDE SEATBACK ASSEMBLY** . Refer to **INSTALLATION - Step 1**
5. **INSTALL REAR SEAT CUSHION LOCK HOOK** . Refer to **INSTALLATION - Step 6**
6. **INSTALL REAR SEAT CUSHION ASSEMBLY** . Refer to **INSTALLATION - Step 7**
7. **CONNECT CABLE TO NEGATIVE AUXILIARY BATTERY TERMINAL**

   NOTE: **When disconnecting the cable, some systems need to be initialized after the cable is reconnected. Refer to INITIALIZATION .**

8. **INSTALL LUGGAGE TRIM SERVICE HOLE COVER** . Refer to **INSTALLATION - Step 3**
9. **PERFORM DIAGNOSTIC SYSTEM CHECK**

for Separate Type Yaw Rate Sensor: Refer to **DTC CHECK / CLEAR**

for Built-in Type Yaw Rate Sensor: Refer to **DTC CHECK / CLEAR**

10. **INSPECT SRS WARNING LIGHT**

for Separate Type Yaw Rate Sensor: Refer to **DIAGNOSIS SYSTEM**

for Built-in Type Yaw Rate Sensor: Refer to **DIAGNOSIS SYSTEM**

DISPOSAL

DISPOSAL

WARNING: **Before performing pre-disposal deployment of any SRS part, review and closely follow all applicable environmental and hazardous material regulations. Pre-disposal deployment may be considered hazardous material treatment.**

1. **PRECAUTION**

WARNING:

- **An airbag or pretensioner may be activated by static electricity. To prevent this, be sure to touch a metal surface with your bare hands to discharge static electricity before performing this procedure.**
- **Never dispose of a rear seat airbag assembly with an undeployed airbag.**
- **The airbag produces an exploding sound when it is deployed, so perform the operation outdoors and where it will not create a nuisance to nearby residents.**
- **When deploying the airbag, always use the specified SST (SRS Airbag Deployment Tool). Perform the operation in a place away from electrical noise.**
- **When deploying the airbag, perform the operation at least 10 m (32.8 ft.) away from the rear seat airbag assembly.**
- **The rear seat airbag assembly becomes extremely hot when the airbag is deployed, so do not touch it for at least 30 minutes after deployment.**
- **Use gloves and safety glasses when handling a rear seat airbag assembly with a deployed airbag.**
- **Do not apply water etc. to a rear seat airbag assembly with a deployed airbag.**
- **Always wash your hands with water after completing the operation.**

HINT:

When scrapping a vehicle equipped with an SRS or disposing of the rear seat airbag assembly, be sure to deploy the airbag first in accordance with the procedure described below. If any abnormality occurs with the airbag deployment, contact the Service Dept. of TOYOTA MOTOR SALES, U.S.A., INC.

2. **DISPOSE OF REAR SEAT AIRBAG ASSEMBLY (When Installed in Vehicle)**

NOTE:

- **When disposing of the rear seat airbag assembly, never use the customer's vehicle to deploy the airbag.**
- **Be sure to observe the following procedure when deploying the airbag.**

HINT:

Prepare a 12 V battery as the power source to deploy the airbag.

a. Check the function of SST See step 2.
    - **SST: 09082-00700**

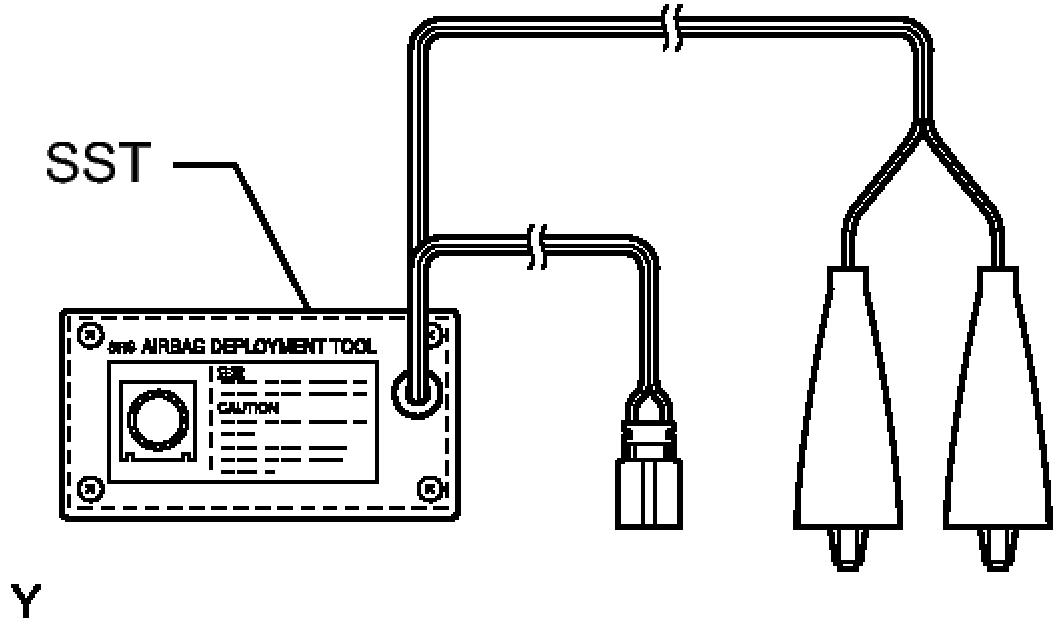

Fig. 144: Checking Function Of SST
Courtesy of TOYOTA MOTOR SALES, U.S.A., INC.

b. Refer to Precaution.

for Separate Type Yaw Rate Sensor: Refer to **PRECAUTION** for Built-in Type Yaw Rate Sensor: Refer to **PRECAUTION**

c. Disconnect the cable from the negative (-) auxiliary battery terminal.

WARNING: **Wait at least 90 seconds after disconnecting the cable from the negative (-) auxiliary battery terminal to disable the SRS system.**

d. Remove the rear seat cushion assembly. Refer to **REMOVAL - Step 4** .
e. Disconnect the connector from the rear seat airbag assembly.

NOTE: When disconnecting any airbag connector, take care not to damage the airbag wire harness.

1. Slide the slider to release the lock, and then disconnect the yellow airbag connector.

f. Install SST.

WARNING: **Check that there is no looseness in the rear side seatback assembly.**

1. Connect the SST connector to the rear seat airbag assembly connector.
    - **SST: 09082-00700**
    - **SST: 09082-00820**

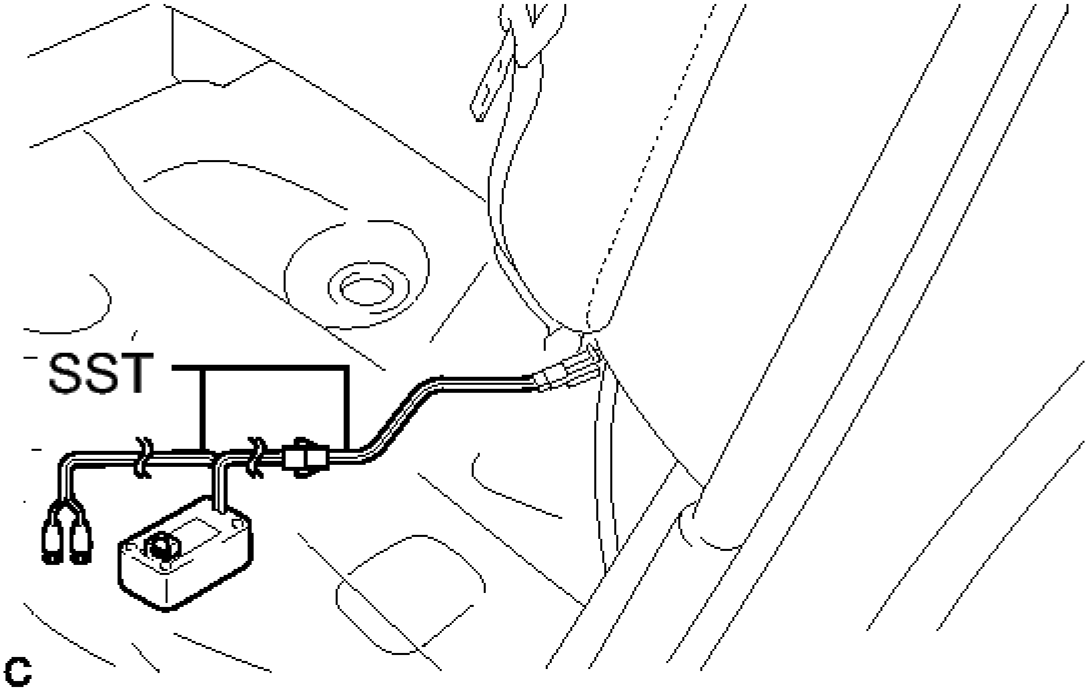

Fig. 145: Connecting SST To Rear Seat Airbag Assembly Connector

Courtesy of TOYOTA MOTOR SALES, U.S.A., INC.

NOTE: **To avoid damaging the SST connector or wire harness, do not lock the secondary lock of the twin lock.**

2. Move SST at least 10 m (32.8 ft.) away from the rear side window.

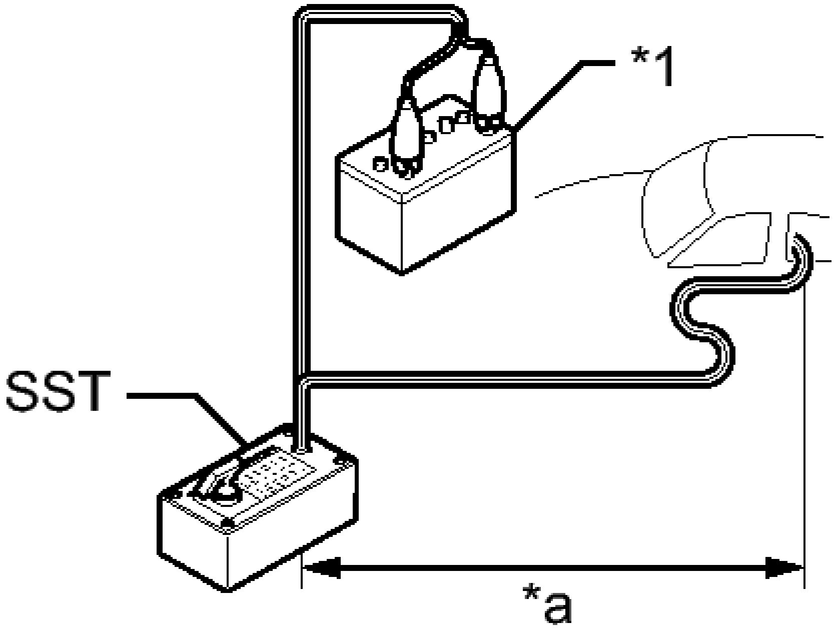

Fig. 146: Moving SST Away From Rear Side Window
Courtesy of TOYOTA MOTOR SALES, U.S.A., INC.

TEXT IN ILLUSTRATION

*1	12 V Battery
*a	10 m (32.8 ft.) or more

3. Maintaining sufficient clearance for the SST wire harness in the rear side window, close all doors and windows of the vehicle.

NOTE: **Take care not to damage the SST wire harness.**

4. Connect the red clip of SST to the positive (+) battery terminal and the black clip of SST to the negative (-) battery terminal.

g. Deploy the airbag.

1. Check that no one is inside the vehicle or within a 10 m (32.8 ft.) radius of the vehicle.
2. Press the SST activation switch to deploy the airbag.

WARNING:

- **Before deployment, make sure that no one is near the vehicle.**
- **The rear seat airbag assembly becomes extremely hot when the airbag is deployed, so do not touch it for at least 30 minutes after deployment.**
- **Use gloves and safety glasses when handling a rear seat airbag assembly with a deployed airbag.**
- **Do not apply water etc. to a rear seat airbag assembly with a deployed airbag.**
- **Always wash your hands with water after completing the operation.**

HINT:

The airbag is deployed as the LED of the SST activation switch comes on.

3. **DISPOSE OF REAR SEAT AIRBAG ASSEMBLY (When Not Installed in Vehicle)**

NOTE: **Be sure to observe the following procedure when deploying the airbag.**

HINT:

Prepare a 12 V battery as the power source to deploy the airbag.

a. Check the function of SST See step 3.
    - **SST: 09082-00700**

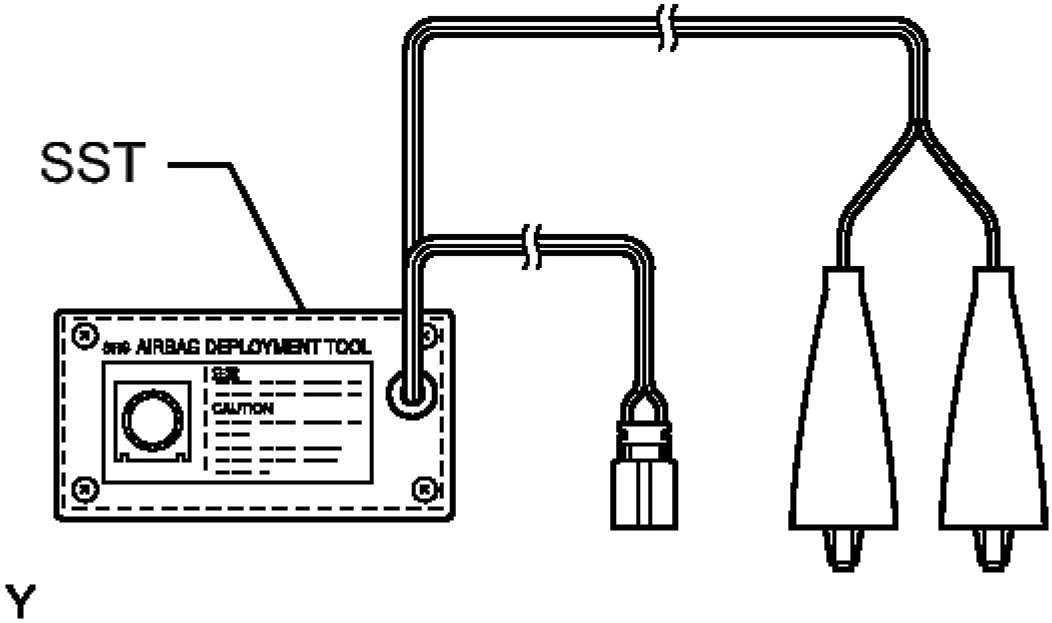

Fig. 147: Checking Function Of SST
Courtesy of TOYOTA MOTOR SALES, U.S.A., INC.

b. Remove the rear seat airbag assembly. Refer to **REMOVAL**.

WARNING:

- **Before removing the rear side seatback assembly, wait at least 90 seconds after turning the power switch off and disconnecting the cable from the negative (-) auxiliary battery terminal.**
- **When storing the rear seat airbag assembly, keep the airbag deployment side facing upward.**

c. Using braided wire, tie down the rear seat airbag assembly to an unneeded tire.

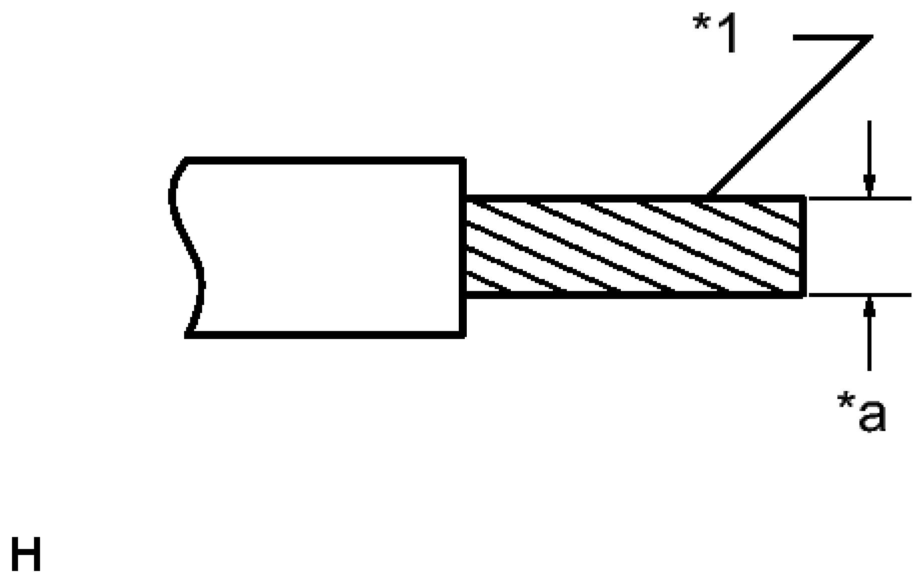

Fig. 148: Identifying Stripped Wire
Courtesy of TOYOTA MOTOR SALES, U.S.A., INC.

TEXT IN ILLUSTRATION

*1	Stripped Wire Section
*a	Wire Diameter

Wire

Stripped wire section

1.25 mm^2 (0.0019 $in.^2$) or more

WARNING: **If the wire is too thin or an alternative object is used to tie down the rear seat airbag assembly, it may snap when the airbag is deployed. Always use a wire for vehicle use with an area of at least 1.25 mm^2 (0.0019 $in.^2$).**

HINT:

To calculate the area of the stripped wire section:

Area = 3.14 x $(\text{Diameter})^2$ / 4

1. Install the 2 nuts to the rear seat airbag assembly.

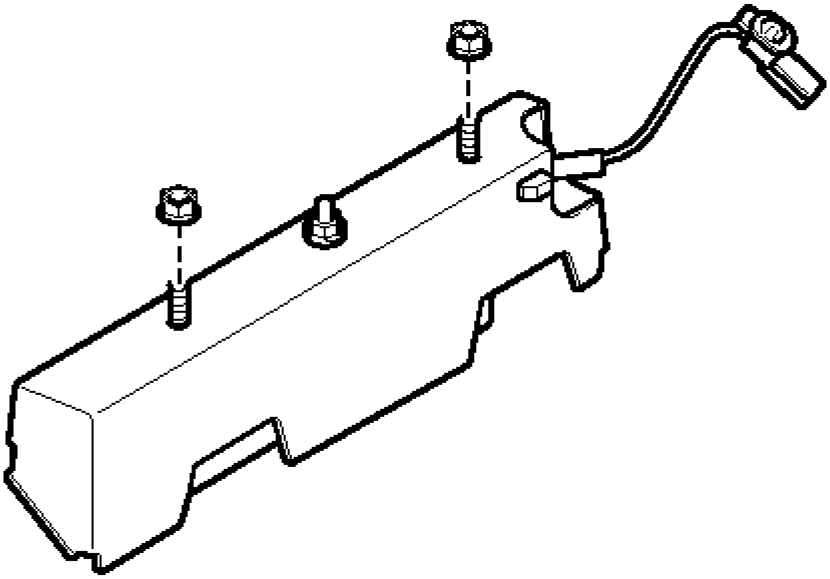

Fig. 149: Locating Rear Seat Airbag Assembly Fasteners
Courtesy of TOYOTA MOTOR SALES, U.S.A., INC.

2. Wind the wires around the stud bolts of the rear seat airbag assembly as shown in the illustration.

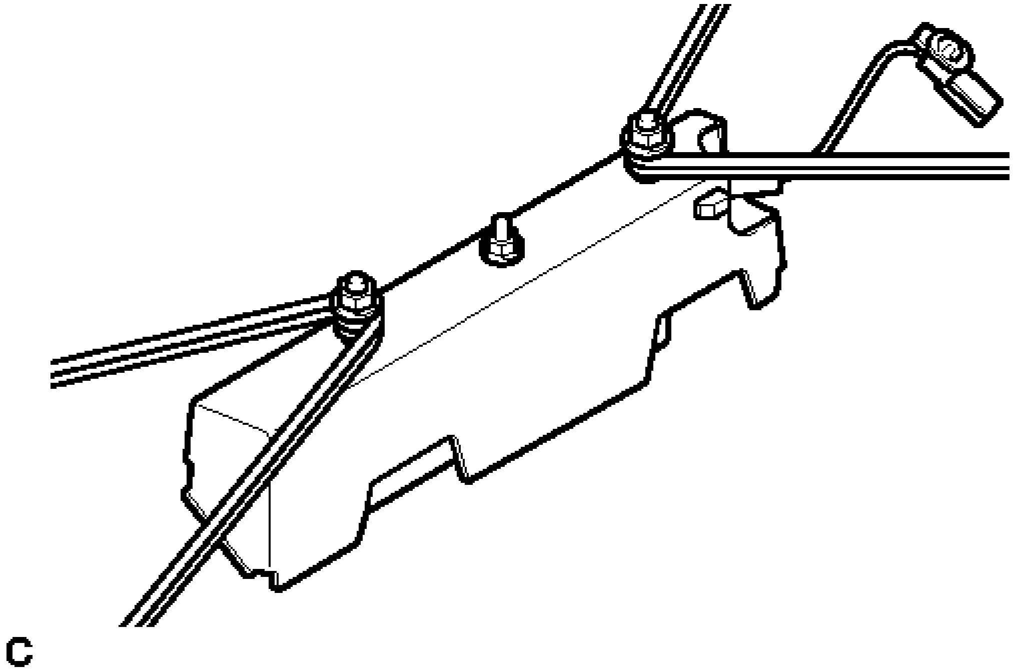

Fig. 150: Identifying Wires Around Stud Bolts
Courtesy of TOYOTA MOTOR SALES, U.S.A., INC.

3. Position the rear seat airbag assembly inside the tire.

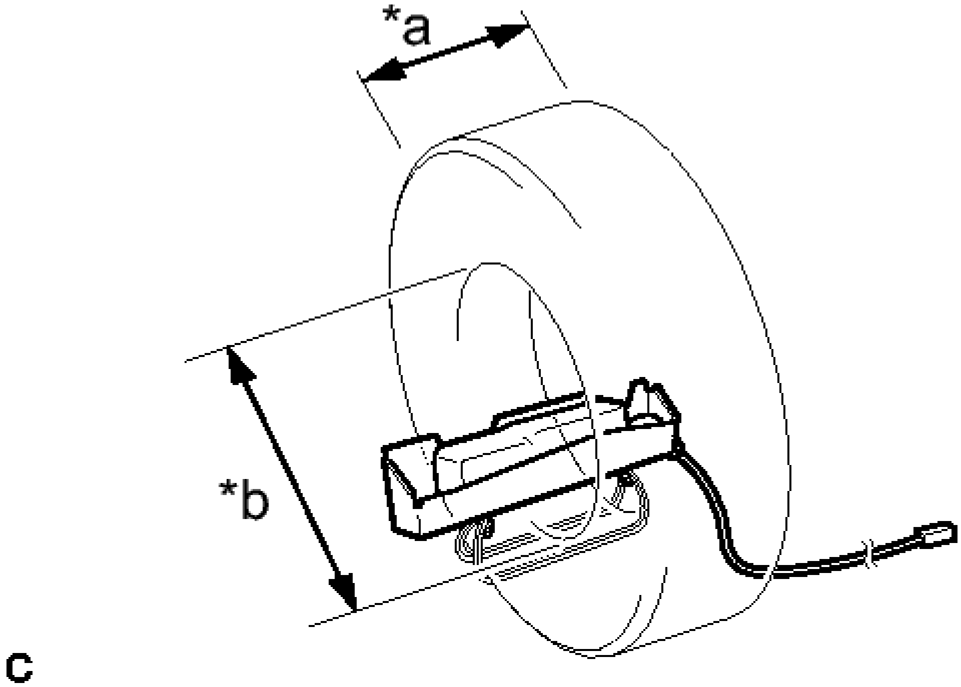

Fig. 151: Identifying Width And Inner Diameter Of Inside Tire For Rear Seat Airbag Assembly

Courtesy of TOYOTA MOTOR SALES, U.S.A., INC.

TEXT IN ILLUSTRATION

*a	Width
*b	Inner Diameter

Minimum tire size

Width

185 mm (7.28 in.)

Inner diameter

360 mm (1.18 ft.)

WARNING:

- **Make sure that the wires are tight. If there is slack in the wires, the rear seat airbag assembly may break loose when the airbag is deployed.**
- **Face the rear seat airbag assembly deployment surface toward the inside the tire to evenly distribute the force of deployment.**

NOTE: **The tire may be damaged by the airbag deployment, so use an unneeded tire.**

d. Install SST.
   1. Connect the SST connector to the rear seat airbag assembly connector.
      - **SST: 09082-00820**

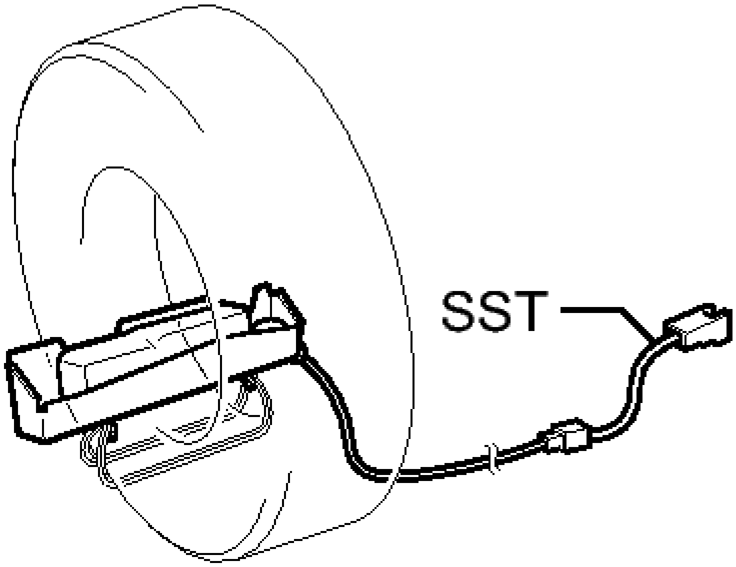

Fig. 152: Connecting SST To Rear Seat Airbag Assembly
Courtesy of TOYOTA MOTOR SALES, U.S.A., INC.

e. Place the tires.
    1. Place at least 2 tires under the tire to which the rear seat airbag assembly is tied.

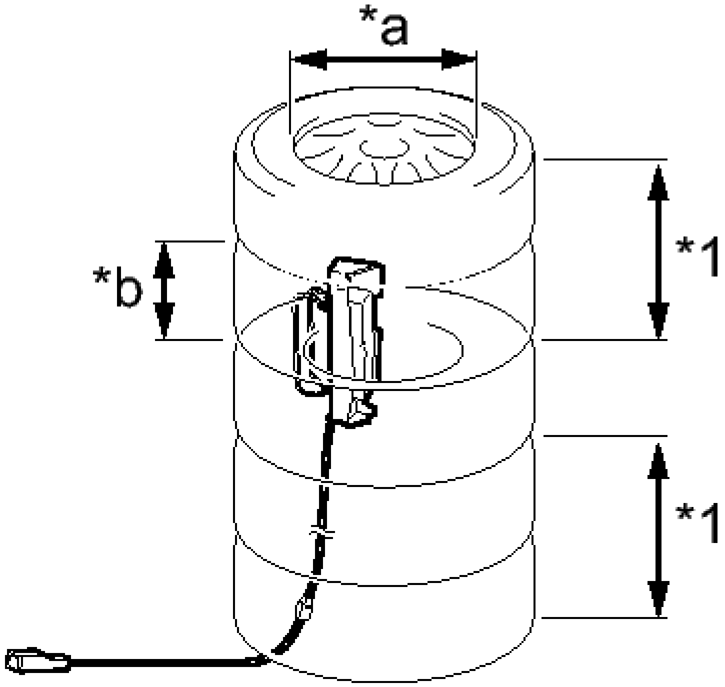

Fig. 153: Placing Rear Seat Airbag Assembly Under Tires

Courtesy of TOYOTA MOTOR SALES, U.S.A., INC.

TEXT IN ILLUSTRATION

*1	Tires (2 or more)
*a	Inner Diameter
*b	Width

Minimum tire size

Width

185 mm (7.28 in.)

Inner diameter

360 mm (1.18 ft.)

NOTE:

- **The tires may be damaged by the airbag deployment, so use unneeded tires.**
- **Do not place the SST connector under the tire because it could be damaged.**

2. Place at least 2 tires onto the tire to which the rear seat airbag assembly is tied. The top tire should have a wheel installed.
3. Tie the tires together with the 2 wires.

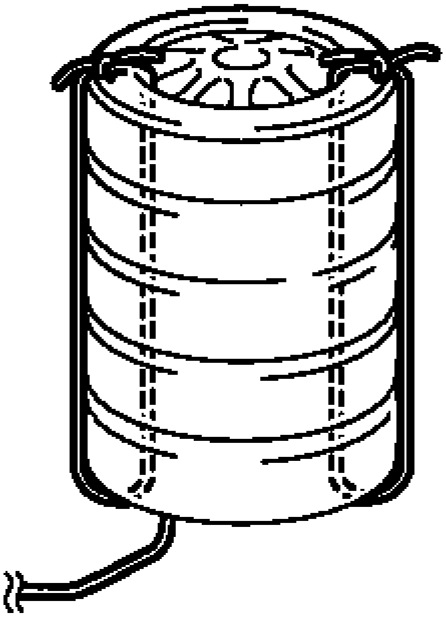

Fig. 154: Identifying Tires Tied Together With Wires
Courtesy of TOYOTA MOTOR SALES, U.S.A., INC.

WARNING: **Make sure that the wires are tight. Looseness in the wires results in the tires breaking loose when the airbag is deployed.**

f. Install SST.
   1. Connect the SST connector.
      - **SST: 09082-00700**

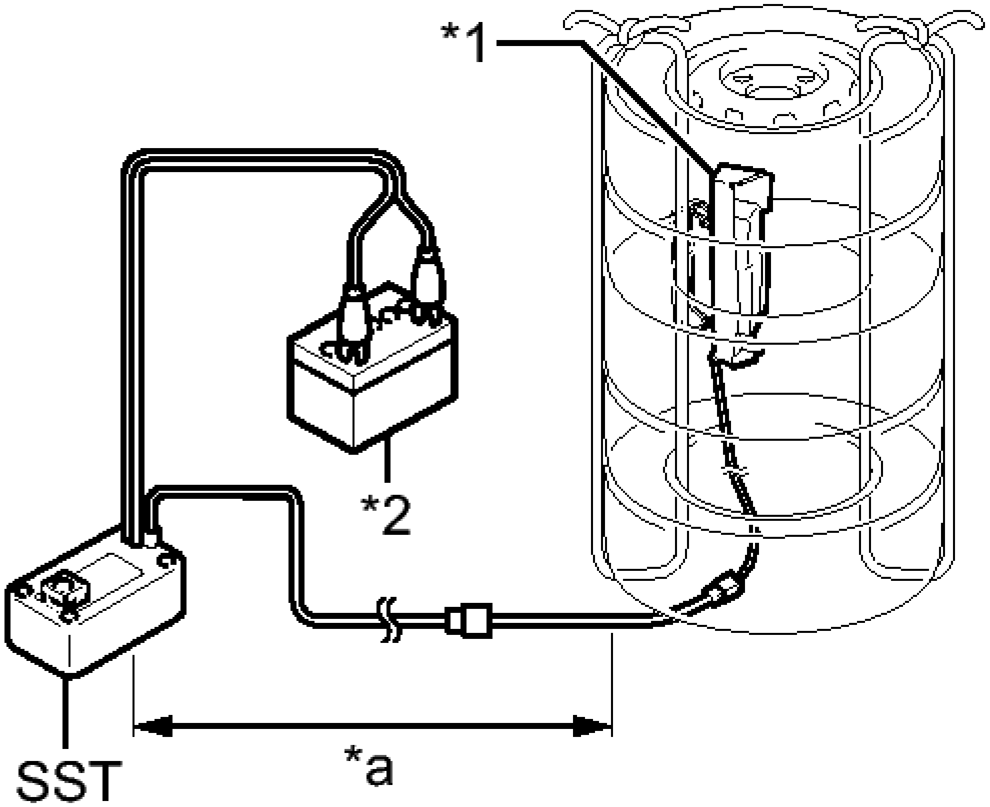

C

Fig. 155: Identifying SST Distance From Rear Seat Airbag Assembly In Tires
Courtesy of TOYOTA MOTOR SALES, U.S.A., INC.

TEXT IN ILLUSTRATION

*1	Rear Seat Airbag Assembly
*2	12 V Battery
*a	10 m (32.8 ft.) or more

NOTE: **To avoid damaging the SST connector or wire harness, do not lock the secondary lock of the twin lock. Also, secure some**

slack for the SST wire harness inside the tire.

2. Move SST at least 10 m (32.8 ft.) away from the airbag tied down to the tire.

g. Deploy the airbag.
    1. Connect the red clip of SST to the positive (+) battery terminal and the black clip of SST to the negative (-) battery terminal.
    2. Check that no one is within a 10 m (32.8 ft.) radius of the tire to which the rear seat airbag assembly is tied.
    3. Press the SST activation switch to deploy the airbag.

WARNING: **Before deployment, make sure that no one is near the airbag.**

HINT:

The airbag is deployed as the LED of the SST activation switch comes on.

h. Dispose of the rear seat airbag assembly.

WARNING:

- **The rear seat airbag assembly becomes extremely hot when the airbag is deployed, so do not touch it for at least 30 minutes after deployment.**
- **Use gloves and safety glasses when handling a rear seat airbag assembly with a deployed airbag.**
- **Do not apply water etc. to a rear seat airbag assembly with a deployed airbag.**
- **Always wash your hands with water after completing the operation.**

1. Remove the rear seat airbag assembly from the tire.
2. Place the rear seat airbag assembly in a plastic bag, tie it tightly, and dispose of it according to local regulations.

CENTER AIRBAG SENSOR ASSEMBLY

COMPONENTS

ILLUSTRATION

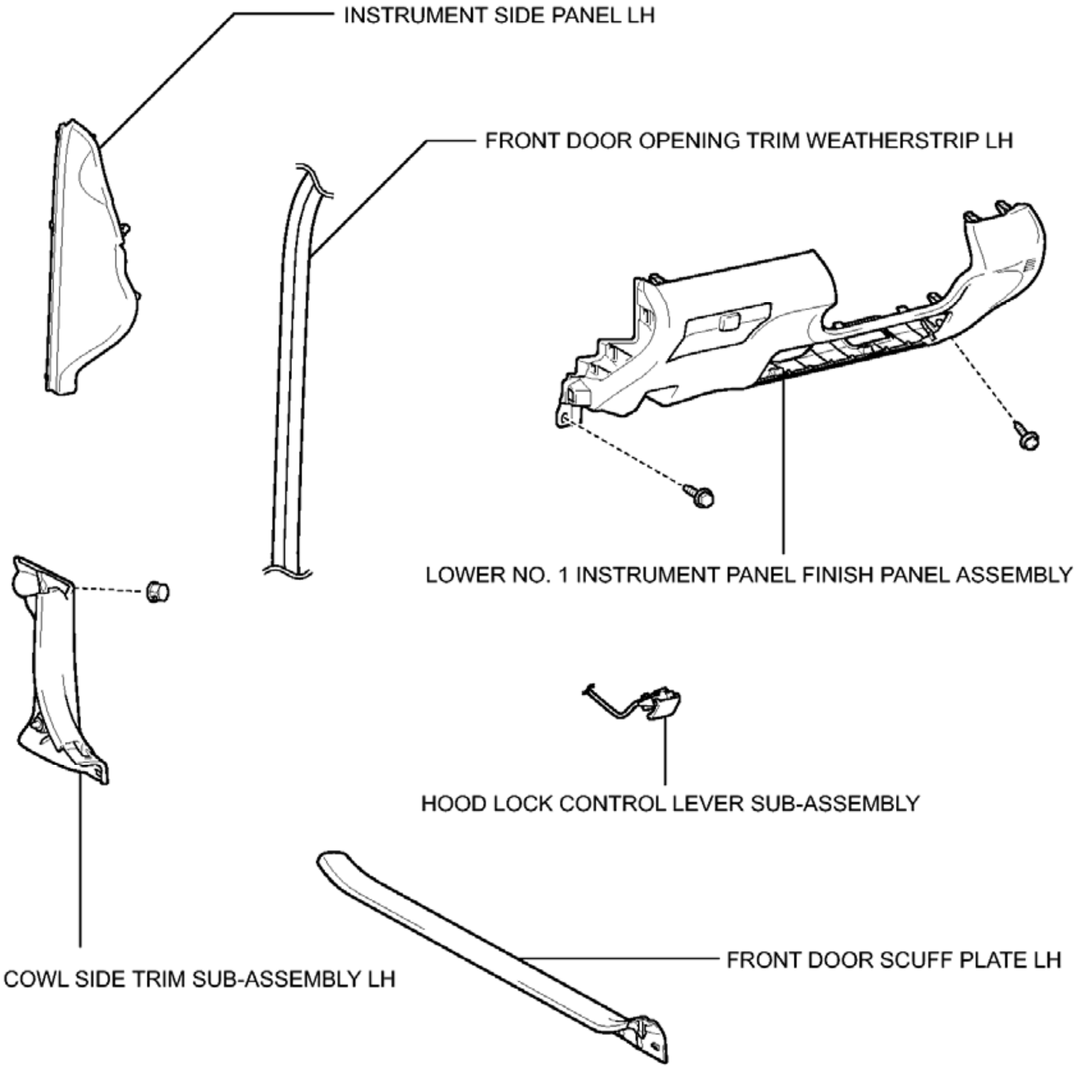
INSTRUMENT SIDE PANEL LH
FRONT DOOR OPENING TRIM WEATHERSTRIP LH
LOWER NO. 1 INSTRUMENT PANEL FINISH PANEL ASSEMBLY
HOOD LOCK CONTROL LEVER SUB-ASSEMBLY
COWL SIDE TRIM SUB-ASSEMBLY LH
FRONT DOOR SCUFF PLATE LH
c

Fig. 156: Identifying Center Airbag Sensor Assembly Replacement Components With Torque Specifications (1 Of 2)

Courtesy of TOYOTA MOTOR SALES, U.S.A., INC.

ILLUSTRATION

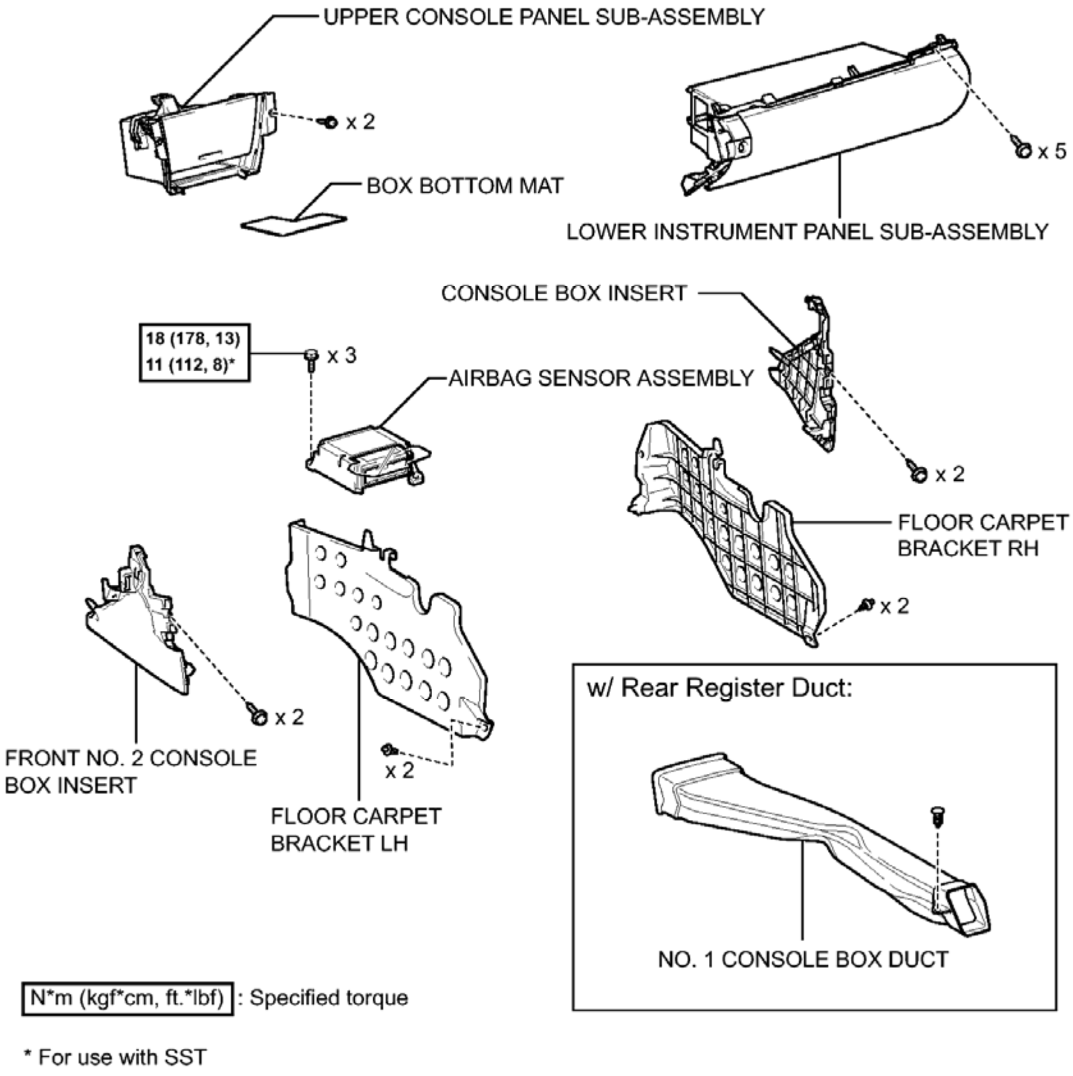
UPPER CONSOLE PANEL SUB-ASSEMBLY
x 2
BOX BOTTOM MAT
x 5
LOWER INSTRUMENT PANEL SUB-ASSEMBLY
CONSOLE BOX INSERT
18 (178, 13)
11 (112, 8)*
x 3
AIRBAG SENSOR ASSEMBLY
x 2
FLOOR CARPET BRACKET RH
x 2
x 2
FRONT NO. 2 CONSOLE BOX INSERT
x 2
FLOOR CARPET BRACKET LH
w/ Rear Register Duct:
NO. 1 CONSOLE BOX DUCT
N*m (kgf*cm, ft.*lbf) : Specified torque
* For use with SST

Fig. 157: Identifying Center Airbag Sensor Assembly Replacement Components With Torque Specifications (2 Of 2)
Courtesy of TOYOTA MOTOR SALES, U.S.A., INC.

ON-VEHICLE INSPECTION

ON-VEHICLE INSPECTION

WARNING: **Be sure to correctly follow the removal and installation procedures for the airbag sensor assembly.**

1. **INSPECT AIRBAG SENSOR ASSEMBLY (for Vehicle not Involved in Collision)**

a. Perform a diagnostic system check.

   for Separate Type Yaw Rate Sensor: Refer to **DTC CHECK / CLEAR**

   for Built-in Type Yaw Rate Sensor: Refer to **DTC CHECK / CLEAR**

2. **INSPECT AIRBAG SENSOR ASSEMBLY (for Vehicle Involved in Collision and Airbag not Deployed)**
   a. Perform a diagnostic system check.

      for Separate Type Yaw Rate Sensor: Refer to **DTC CHECK / CLEAR**

      for Built-in Type Yaw Rate Sensor: Refer to **DTC CHECK / CLEAR**

   b. Visually check for defects with the airbag sensor assembly installed on the vehicle.
      1. The defects are as follows:
         - Cracks on the sensor housing
         - Dents on the sensor housing
         - Chips on the sensor housing
         - Cracks or other damage to the connector
         - Peeling of the label

         OK

         No defects are found.

         If any of the defects is found, replace the airbag sensor assembly with a new one.

3. **INSPECT AIRBAG SENSOR ASSEMBLY (for Vehicle Involved in Collision and Airbag is Deployed)**
   a. Replace the airbag sensor assembly.

      HINT:

      The airbag sensor assembly should be replaced after any of the airbags has deployed, as it has been subjected to an impact.

REMOVAL

REMOVAL

1. **REMOVE LOWER NO. 2 INSTRUMENT PANEL AIRBAG ASSEMBLY**

   Refer to **REMOVAL**

2. **REMOVE REAR CONSOLE BOX ASSEMBLY**

   Refer to **REMOVAL**

3. **REMOVE FRONT DOOR SCUFF PLATE LH** . Refer to **REMOVAL - Step 4**
4. **REMOVE COWL SIDE TRIM SUB-ASSEMBLY LH** . Refer to **REMOVAL - Step 5**
5. **DISCONNECT FRONT DOOR OPENING TRIM WEATHERSTRIP LH** . Refer to **REMOVAL - Step 6**
6. **REMOVE INSTRUMENT SIDE PANEL LH** . Refer to **REMOVAL - Step 7**
7. **DISCONNECT HOOD LOCK CONTROL LEVER SUB-ASSEMBLY** . Refer to **REMOVAL - Step 13**
8. **REMOVE LOWER NO. 1 INSTRUMENT PANEL FINISH PANEL ASSEMBLY** . Refer to **REMOVAL - Step 14**
9. **REMOVE LOWER INSTRUMENT PANEL SUB-ASSEMBLY** . Refer to **REMOVAL - Step 37**
10. **REMOVE BOX BOTTOM MAT** . Refer to **REMOVAL - Step 24**
11. **REMOVE UPPER CONSOLE PANEL SUB-ASSEMBLY** . Refer to **REMOVAL - Step 25**
12. **REMOVE FRONT NO. 2 CONSOLE BOX INSERT** . Refer to **REMOVAL - Step 47**
13. **REMOVE CONSOLE BOX INSERT** . Refer to **REMOVAL - Step 48**
14. **REMOVE FLOOR CARPET BRACKET LH** . Refer to **REMOVAL - Step 26**
15. **REMOVE FLOOR CARPET BRACKET RH** . Refer to **REMOVAL - Step 29**
16. **REMOVE NO. 1 CONSOLE BOX DUCT (w/ Rear Register Duct)** . Refer to **REMOVAL - Step 32**
17. **REMOVE AIRBAG SENSOR ASSEMBLY**
    a. Check that the power switch is off.
    b. Check that the cable is disconnected from the negative (-) auxiliary battery terminal.

    WARNING: **Wait at least 90 seconds after disconnecting the cable from the negative (-) auxiliary battery terminal to disable the SRS system.**

    c. Turn back the carpet.
    d. Disconnect the connectors from the airbag sensor assembly as shown in the illustration.

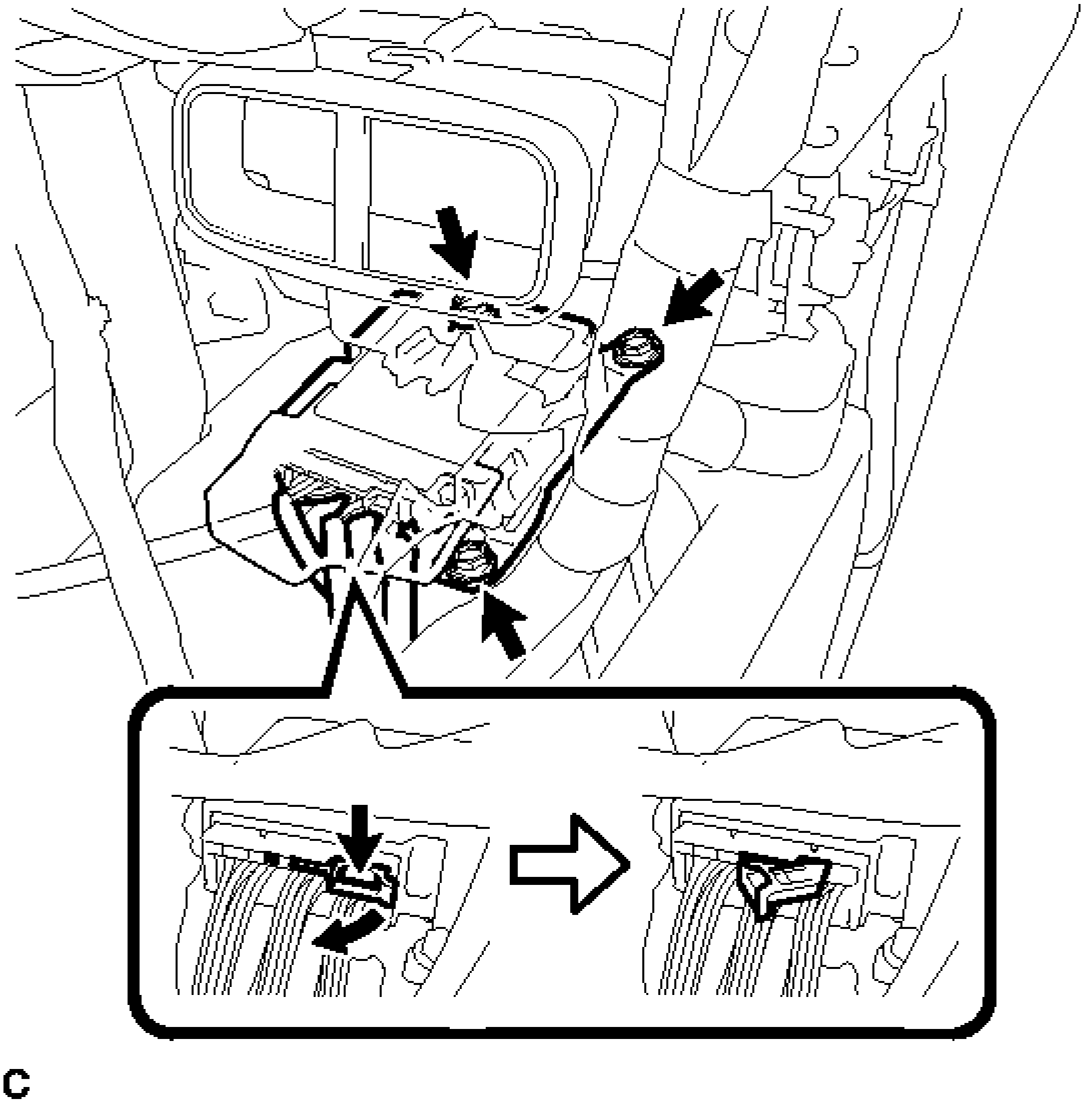

Fig. 158: Disconnecting Airbag Sensor Assembly Connectors And Fasteners
Courtesy of TOYOTA MOTOR SALES, U.S.A., INC.

NOTE: **When disconnecting any airbag connector, take care not to damage the airbag wire harness.**

e. Remove the 3 bolts and airbag sensor assembly.

INSTALLATION

INSTALLATION

1. **INSTALL AIRBAG SENSOR ASSEMBLY**
    a. Check that the power switch is off.
    b. Check that the cable is disconnected from the negative (-) auxiliary battery terminal.

WARNING: **Wait at least 90 seconds after disconnecting the cable from the negative (-) auxiliary battery terminal to disable the SRS system.**

c. Using SST, install the airbag sensor assembly with the 3 bolts.

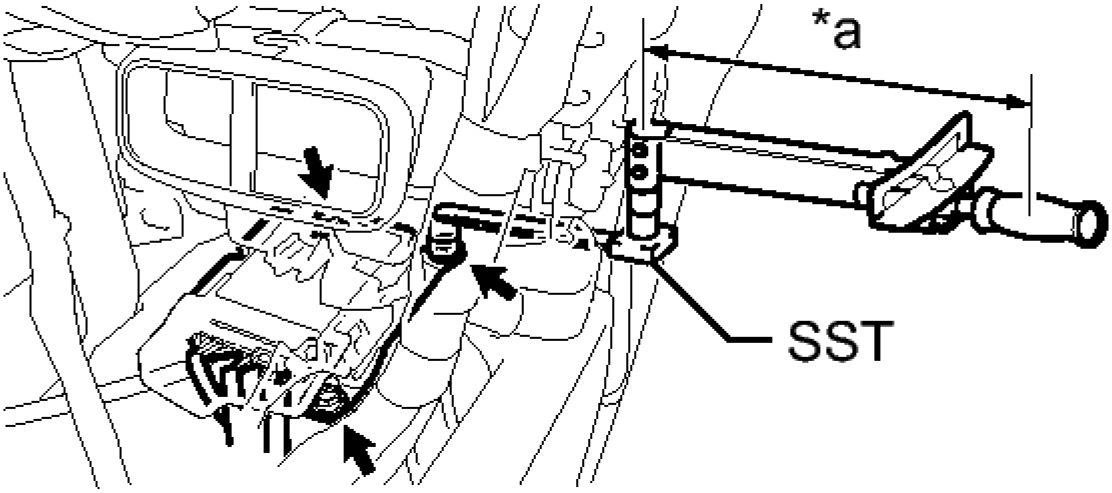

C

Fig. 159: Identifying Airbag Sensor Assembly Fulcrum Length
Courtesy of TOYOTA MOTOR SALES, U.S.A., INC.

TEXT IN ILLUSTRATION

*a	Fulcrum Length

- **SST: 09961-00950**

without SST

Torque: 18 N*m (178 kgf*cm, 13 ft.*lbf)

with SST

Torque: 11 N*m (112 kgf*cm, 8 ft.*lbf)

NOTE:

- **Use a torque wrench with a fulcrum length of 250 mm (9.84 in.).**
- **This torque value is effective when SST is parallel to a torque wrench.**

- **If the airbag sensor assembly has been dropped, or there are any cracks, dents or other defects in the case or connector, replace it with a new one.**
- **When installing the airbag sensor assembly, be careful that the SRS wiring does not interfere with or is not pinched between other parts.**
- **When the power switch is first turned on (IG) after the airbag sensor assembly has been replaced, make sure that no one is in the vehicle.**

d. Connect the connectors to the airbag sensor assembly as shown in the illustration.

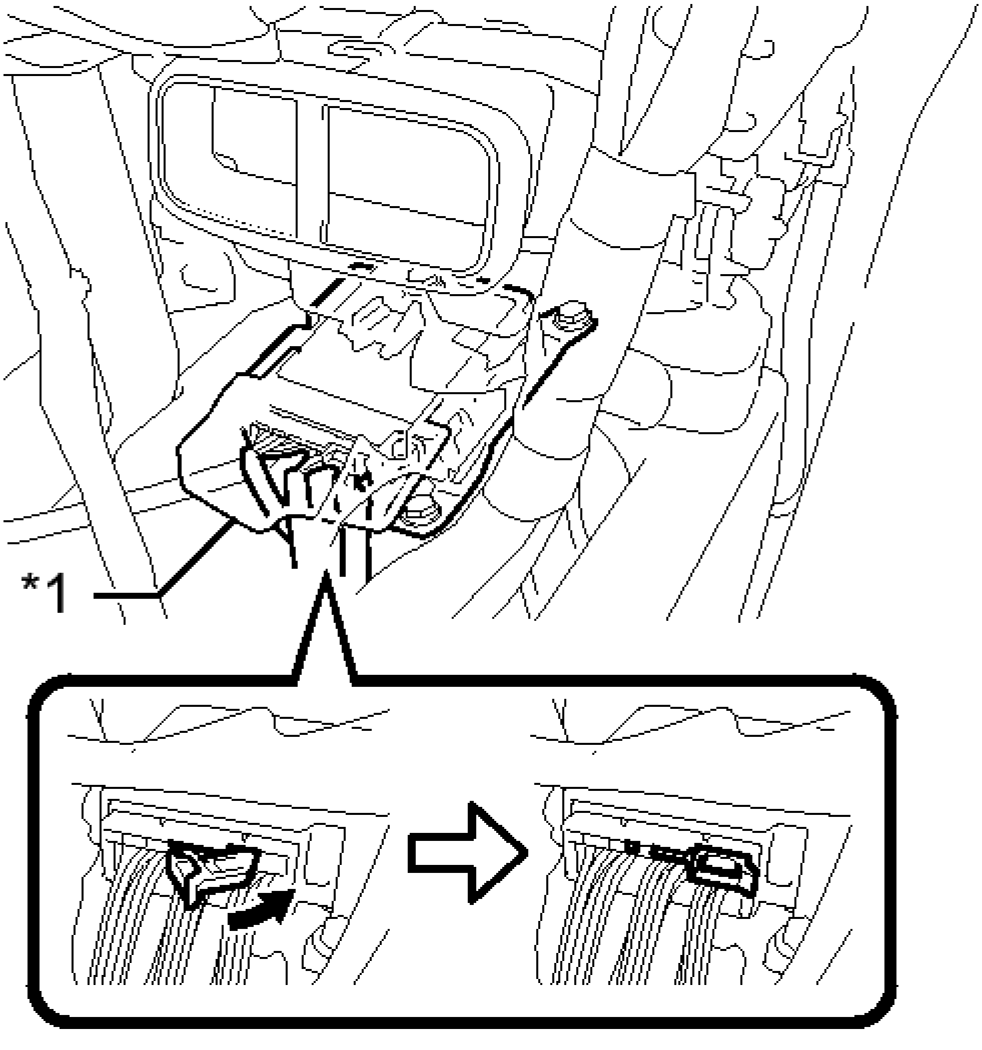

Fig. 160: Connecting Connectors to Airbag Sensor Assembly
Courtesy of TOYOTA MOTOR SALES, U.S.A., INC.

NOTE: **When connecting any airbag connector, take care not to damage the airbag wire harness.**

e. Check that the waterproof sheet is properly set.

TEXT IN ILLUSTRATION

*1	Waterproof Sheet

f. Check that there is no looseness in the installation parts of the airbag sensor assembly.

2. **INSTALL NO. 1 CONSOLE BOX DUCT (w/ Rear Register Duct)** . Refer to **INSTALLATION - Step 7**
3. **INSTALL FLOOR CARPET BRACKET LH** . Refer to **INSTALLATION - Step 10**
4. **INSTALL FLOOR CARPET BRACKET RH** . Refer to **INSTALLATION - Step 14**
5. **INSTALL FRONT NO. 2 CONSOLE BOX INSERT** . Refer to **INSTALLATION - Step 5**
6. **INSTALL CONSOLE BOX INSERT** . Refer to **INSTALLATION - Step 4**
7. **INSTALL UPPER CONSOLE PANEL SUB-ASSEMBLY** . Refer to **INSTALLATION - Step 27**
8. **INSTALL BOX BOTTOM MAT** . Refer to **INSTALLATION - Step 28**
9. **INSTALL LOWER INSTRUMENT PANEL SUB-ASSEMBLY** . Refer to **INSTALLATION - Step 15**
10. **INSTALL LOWER NO. 1 INSTRUMENT PANEL FINISH PANEL ASSEMBLY** . Refer to **INSTALLATION - Step 38**
11. **CONNECT HOOD LOCK CONTROL LEVER SUB-ASSEMBLY** . Refer to **INSTALLATION - Step 39**
12. **INSTALL INSTRUMENT SIDE PANEL LH** . Refer to **INSTALLATION - Step 45**
13. **CONNECT FRONT DOOR OPENING TRIM WEATHERSTRIP LH**
14. **INSTALL COWL SIDE TRIM SUB-ASSEMBLY LH** . Refer to **INSTALLATION - Step 44**
15. **INSTALL FRONT DOOR SCUFF PLATE LH** . Refer to **INSTALLATION - Step 45**
16. **INSTALL REAR CONSOLE BOX ASSEMBLY**

    Refer to **INSTALLATION**

17. **INSTALL LOWER NO. 2 INSTRUMENT PANEL AIRBAG ASSEMBLY**

    Refer to **INSTALLATION**

18. **PERFORM YAW RATE AND ACCELERATION SENSOR ZERO POINT CALIBRATION (for Built-in Type Yaw Rate Sensor)**

    HINT:

    - When the airbag sensor assembly is replaced, perform zero point learning for the yaw rate and acceleration sensor. Refer to **CALIBRATION** .

- The yaw rate and acceleration sensor is built into the airbag sensor assembly.

FRONT AIRBAG SENSOR

COMPONENTS

ILLUSTRATION

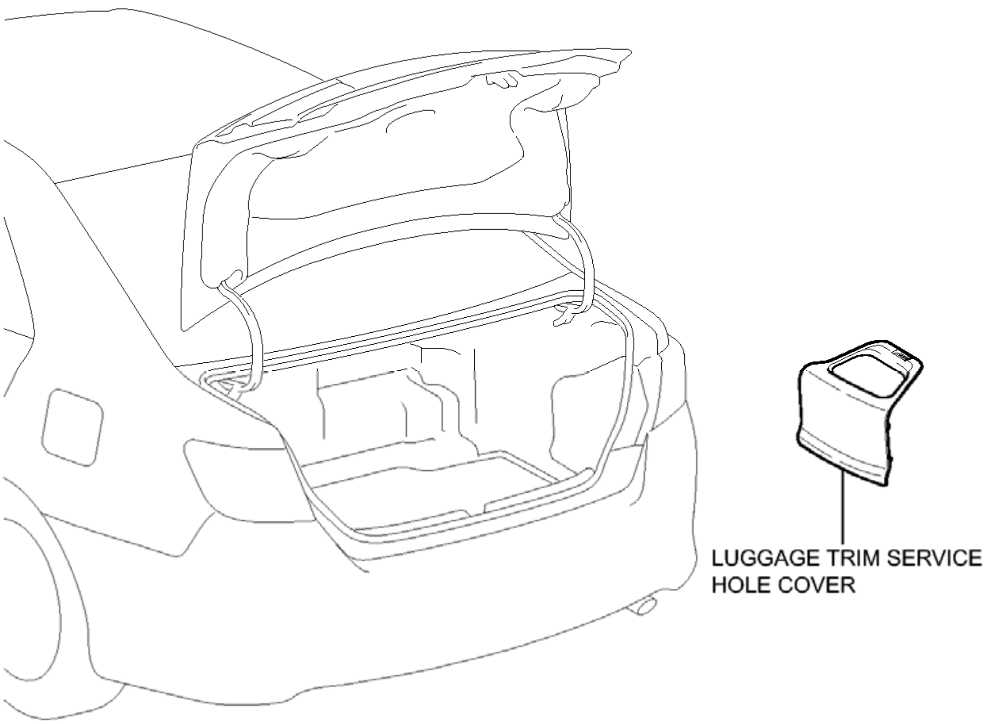
LUGGAGE TRIM SERVICE HOLE COVER
P

Fig. 161: Identifying Front Airbag Sensor Replacement Components With Torque Specifications (1 Of 2)
Courtesy of TOYOTA MOTOR SALES, U.S.A., INC.

ILLUSTRATION

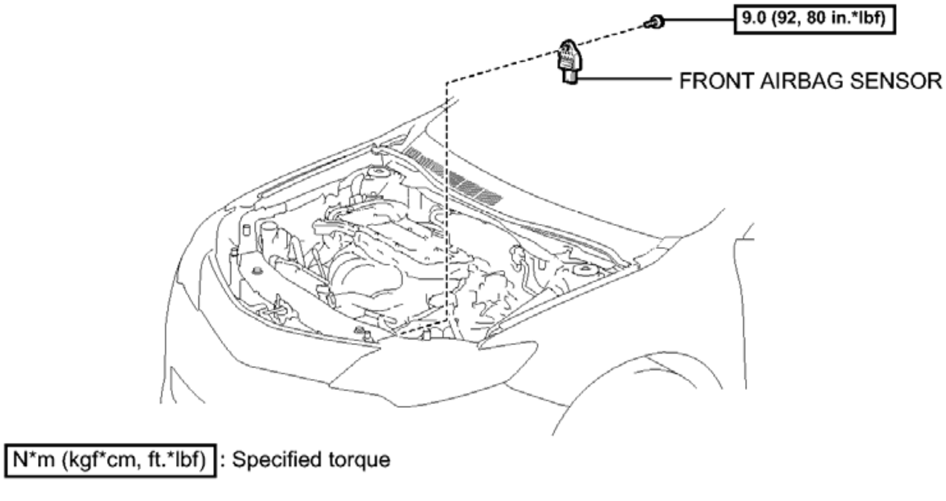

Fig. 162: Identifying Front Airbag Sensor Replacement Components With Torque Specifications (2 Of 2)
Courtesy of TOYOTA MOTOR SALES, U.S.A., INC.

ON-VEHICLE INSPECTION

ON-VEHICLE INSPECTION

> **WARNING:** **Be sure to correctly follow the removal and installation procedures for the front airbag sensors.**

1. **INSPECT FRONT AIRBAG SENSOR (for Vehicle not Involved in Collision)**
   a. Perform a diagnostic system check.

      for Separate Type Yaw Rate Sensor: Refer to **DTC CHECK / CLEAR**

      for Built-in Type Yaw Rate Sensor: Refer to **DTC CHECK / CLEAR**

2. **INSPECT FRONT AIRBAG SENSOR (for Vehicle Involved in Collision and Airbag not Deployed)**
   a. Perform a diagnostic system check.

      for Separate Type Yaw Rate Sensor: Refer to **DTC CHECK / CLEAR**

      for Built-in Type Yaw Rate Sensor: Refer to **DTC CHECK / CLEAR**

   b. Visually check the front airbag sensors for defects if the front bumper of the vehicle or the area around the bumper is damaged.

      HINT:

The defects are as follows:

- Cracks on the sensor housing
- Dents on the sensor housing
- Chips on the sensor housing
- Cracks or other damage to the connector
- Damage to the serial number

OK

No defects are found.

If any of the defects is found, replace the front airbag sensor with a new one.

3. **INSPECT FRONT AIRBAG SENSOR (for Vehicle Involved in Collision and Airbag is Deployed)**
   a. When airbags have deployed as the result of a collision, be sure to replace all front airbag sensors in the damaged areas (anywhere in need of repair).
   b. Visually check the front airbag sensors in undamaged areas for defects.

   HINT:

   The defects are as follows:

   - Cracks on the sensor housing
   - Dents on the sensor housing
   - Chips on the sensor housing
   - Cracks or other damage to the connector
   - Damage to the serial number

   OK

   No defects are found.

   If any of the defects is found or a front airbag sensor has detected a major collision, replace the front airbag sensor with a new one.

REMOVAL

REMOVAL

HINT:

- Use the same procedure for the RH side and LH side.
- The procedure listed below is for the LH side.

1. **PRECAUTION**

   WARNING: **Be sure to read Precaution thoroughly before servicing.**

   for Separate Type Yaw Rate Sensor: Refer to PRECAUTION

   for Built-in Type Yaw Rate Sensor: Refer to PRECAUTION

   NOTE: **After turning the power switch off, waiting time may be required before disconnecting the cable from the negative (-) auxiliary battery terminal. Therefore, make sure to read the disconnecting the cable from the negative (-) auxiliary battery terminal notices before proceeding with work. Refer to PRECAUTION .**

2. **REMOVE LUGGAGE TRIM SERVICE HOLE COVER** . Refer to **REMOVAL - Step 2**
3. **DISCONNECT CABLE FROM NEGATIVE AUXILIARY BATTERY TERMINAL**

   WARNING: **Wait at least 90 seconds after disconnecting the cable from the negative (-) auxiliary battery terminal to disable the SRS system.**

   NOTE: **When disconnecting the cable, some systems need to be initialized after the cable is reconnected. Refer to INITIALIZATION .**

4. **REMOVE FRONT AIRBAG SENSOR**
   a. Check that the power switch is off.
   b. Check that the cable is disconnected from the negative (-) auxiliary battery terminal.

      WARNING: **Wait at least 90 seconds after disconnecting the cable from the negative (-) auxiliary battery terminal to disable the SRS system.**

   c. Disconnect the connector from the front airbag sensor.

      NOTE: **When disconnecting any airbag connector, take care not to damage the airbag wire harness.**

      1. Push down the white housing lock and slide the yellow CPA. (At this time, the connector cannot be disconnected yet.)

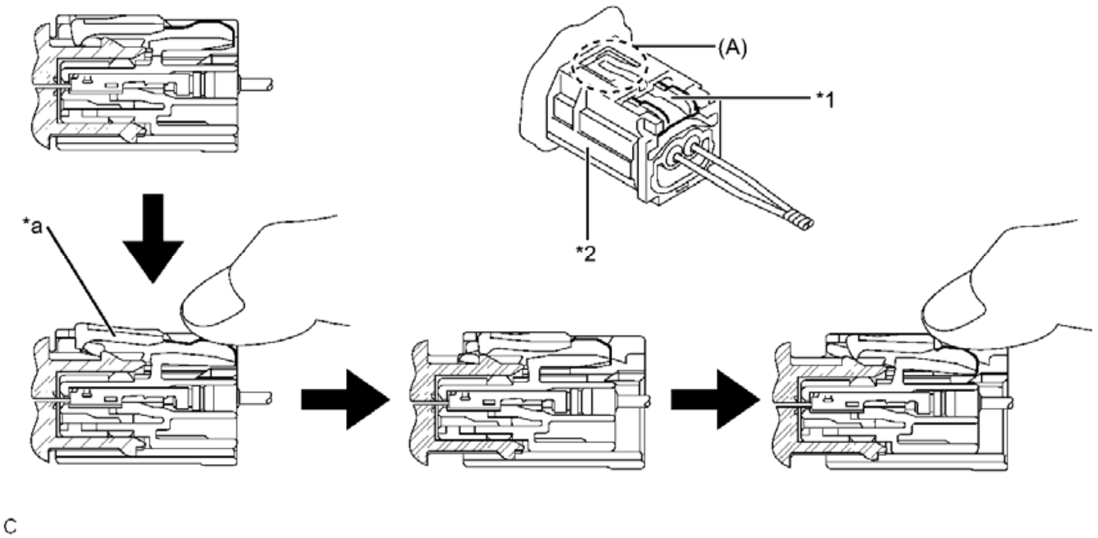

Fig. 163: Sliding Yellow CPA
Courtesy of TOYOTA MOTOR SALES, U.S.A., INC.

TEXT IN ILLUSTRATION

*1	White Housing Lock	*2	Yellow CPA
*a	Connector Lock is Released	-	-

2. Push down the white housing lock again and disconnect the connector.

NOTE: Do not push down the part (A) shown in the illustration when disconnecting the connector.

d. Remove the bolt and front airbag sensor from the vehicle body.

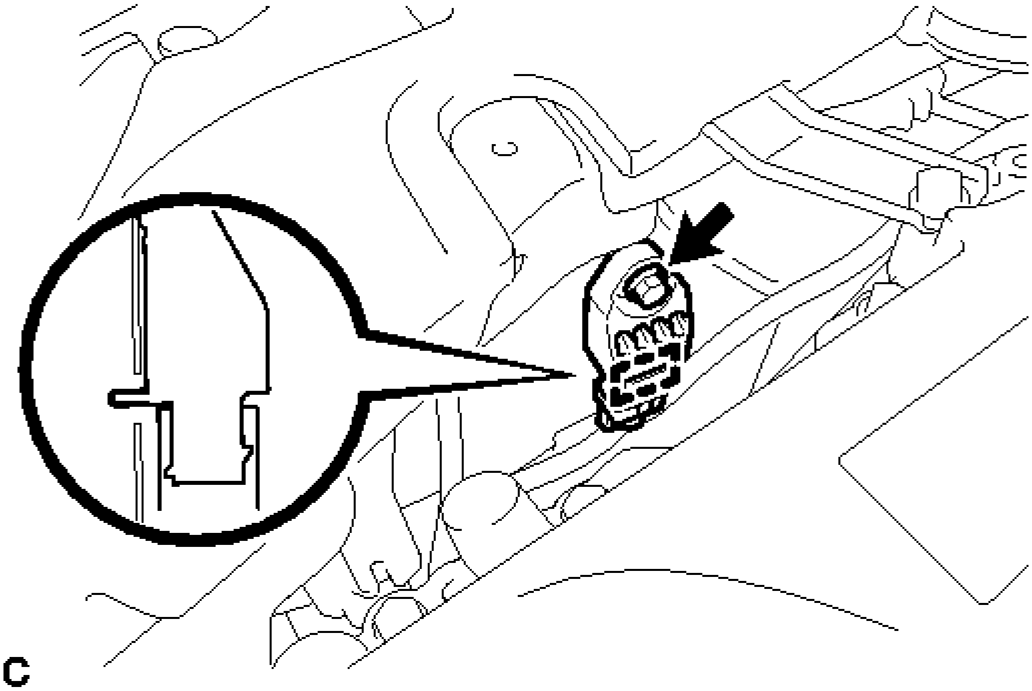

Fig. 164: Identifying Front Airbag Sensor Bolt
Courtesy of TOYOTA MOTOR SALES, U.S.A., INC.

NOTE: **Loosen the bolt while holding the front airbag sensor because the front airbag sensor pin (stopper) is easily damaged.**

e. After disconnecting the connector, check that the position of the white housing lock is correct as shown in the illustration.

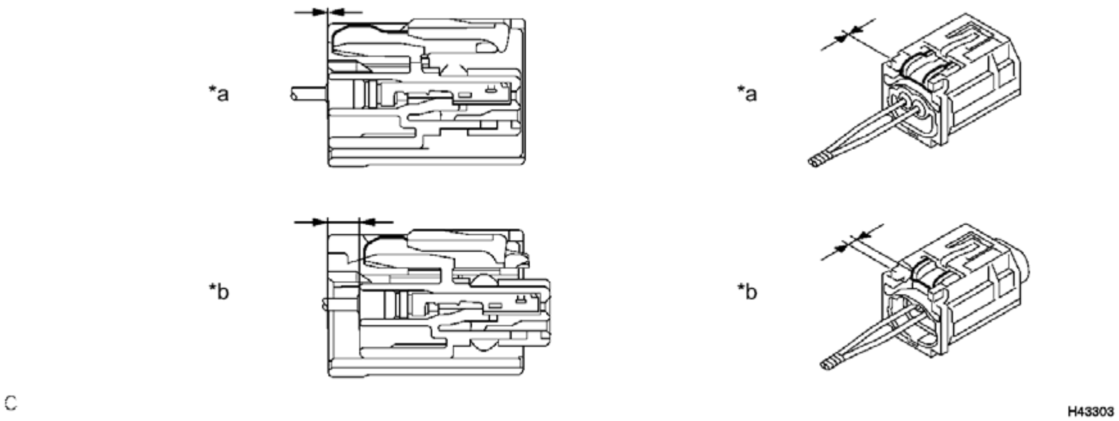

Fig. 165: Identifying Correct Housing Lock Position
Courtesy of TOYOTA MOTOR SALES, U.S.A., INC.

TEXT IN ILLUSTRATION

*a	Incorrect	*b	Correct

INSTALLATION

INSTALLATION

HINT:

- Use the same procedure for the RH side and LH side.
- The procedure listed below is for the LH side.

1. **INSTALL FRONT AIRBAG SENSOR**
    a. Check that the power switch is off.
    b. Check that the cable is disconnected from the negative (-) auxiliary battery terminal.

    WARNING: **Wait at least 90 seconds after disconnecting the cable from the negative (-) auxiliary battery terminal to disable the SRS system.**

    c. Before connecting the connector, check that the position of the white housing lock is correct as shown in the illustration.

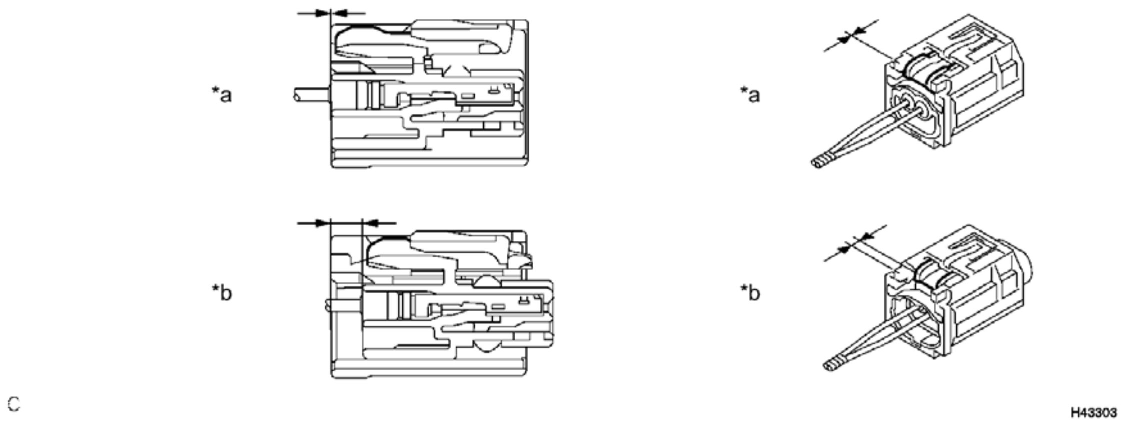

Fig. 166: Identifying Correct Housing Lock Position
Courtesy of TOYOTA MOTOR SALES, U.S.A., INC.

TEXT IN ILLUSTRATION

*a	Incorrect	*b	Correct

    d. Insert the pin (stopper) into the body hole and install the front airbag sensor to the vehicle body with the bolt.

Torque: 9.0 N*m (92 kgf*cm, 80 in.*lbf)

NOTE:

- **If the front airbag sensor has been dropped, or there are any cracks, dents or other defects in the case or connector, replace**

it with a new one.

- **When installing the front airbag sensor, be careful that the SRS wiring does not interfere with or is not pinched between other parts.**
- **Make sure that the pin (stopper) is securely inserted into the body hole.**
- **Tighten the bolt while holding the front airbag sensor because the front airbag sensor pin (stopper) is easily damaged.**

e. Connect the connector to the front airbag sensor.

NOTE: **When connecting any airbag connector, take care not to damage the airbag wire harness.**

1. Be sure to engage the connectors until they are locked (when locking, make sure that a click sound can be heard).

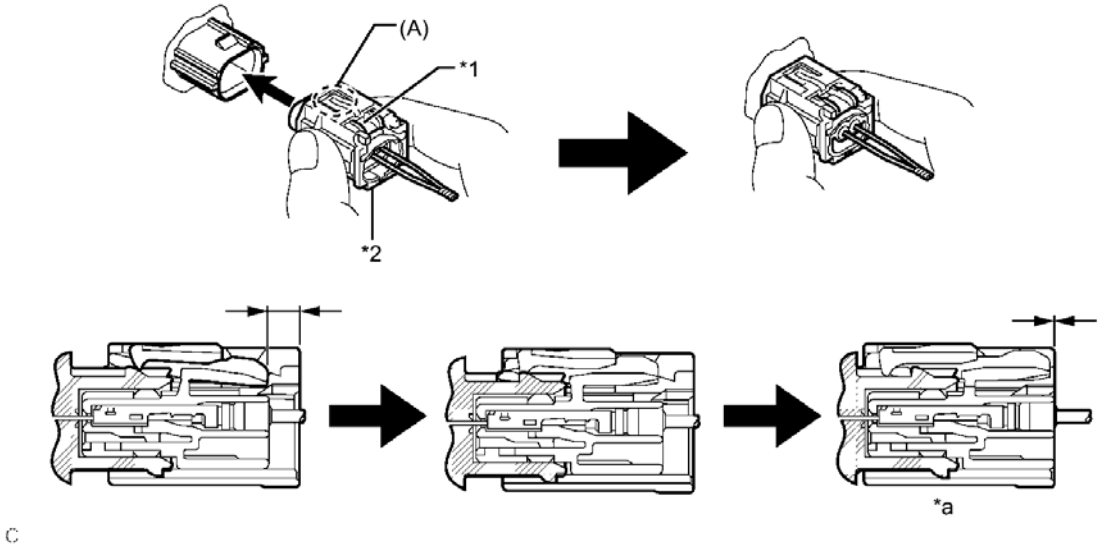

Fig. 167: Connector Connectors To Lock
Courtesy of TOYOTA MOTOR SALES, U.S.A., INC.

TEXT IN ILLUSTRATION

*1	White Housing Lock	*2	Yellow CPA
*a	Connection is Completed	-	-

HINT:

When engaged, the white housing lock will slide. Be sure not to hold the white housing lock or part (A), as it may result in an insecure fit.

f. Check that there is no looseness in the installation parts of the front airbag sensor.

2. **CONNECT CABLE TO NEGATIVE AUXILIARY BATTERY TERMINAL**

NOTE: **When disconnecting the cable, some systems need to be initialized after the cable is reconnected. Refer to INITIALIZATION .**

3. **INSTALL LUGGAGE TRIM SERVICE HOLE COVER** . Refer to **REMOVAL - Step 2**
4. **PERFORM DIAGNOSTIC SYSTEM CHECK**

   for Separate Type Yaw Rate Sensor: Refer to **DTC CHECK / CLEAR**

   for Built-in Type Yaw Rate Sensor: Refer to **DTC CHECK / CLEAR**

5. **INSPECT SRS WARNING LIGHT**

   for Separate Type Yaw Rate Sensor: Refer to **DIAGNOSIS SYSTEM**

   for Built-in Type Yaw Rate Sensor: Refer to **DIAGNOSIS SYSTEM**

SIDE AIRBAG SENSOR (FOR FRONT SIDE)

COMPONENTS

ILLUSTRATION

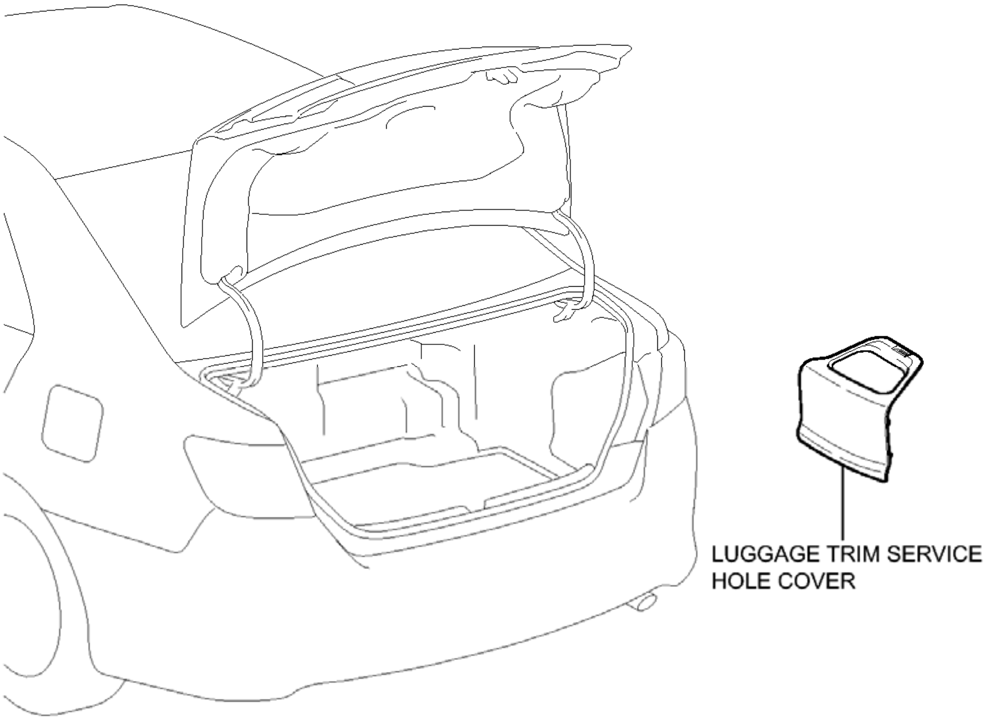
LUGGAGE TRIM SERVICE HOLE COVER
P

Fig. 168: Identifying Side Airbag Sensor Replacement Components With Torque Specifications (For Front Side) (1 Of 2)
Courtesy of TOYOTA MOTOR SALES, U.S.A., INC.

ILLUSTRATION

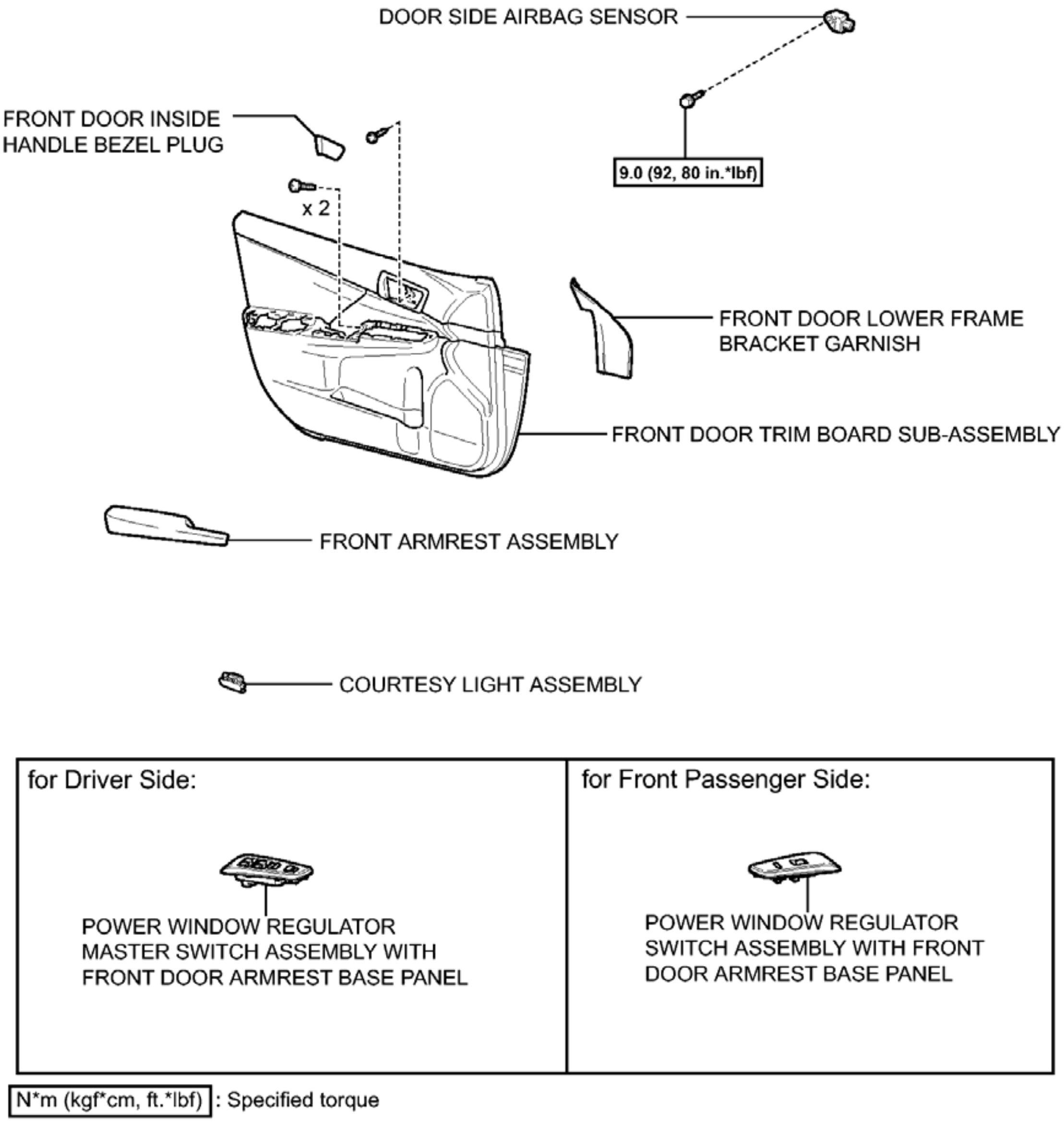
DOOR SIDE AIRBAG SENSOR
FRONT DOOR INSIDE HANDLE BEZEL PLUG
9.0 (92, 80 in.*lbf)
x 2
FRONT DOOR LOWER FRAME BRACKET GARNISH
FRONT DOOR TRIM BOARD SUB-ASSEMBLY
FRONT ARMREST ASSEMBLY
COURTESY LIGHT ASSEMBLY
for Driver Side:
POWER WINDOW REGULATOR MASTER SWITCH ASSEMBLY WITH FRONT DOOR ARMREST BASE PANEL
for Front Passenger Side:
POWER WINDOW REGULATOR SWITCH ASSEMBLY WITH FRONT DOOR ARMREST BASE PANEL
N*m (kgf*cm, ft.*lbf) : Specified torque

Fig. 169: Identifying Side Airbag Sensor Replacement Components With Torque Specifications (For Front Side) (2 Of 2)
Courtesy of TOYOTA MOTOR SALES, U.S.A., INC.

ON-VEHICLE INSPECTION

ON-VEHICLE INSPECTION

WARNING: **Be sure to correctly follow the removal and installation procedures for the door side airbag sensors.**

1. **INSPECT DOOR SIDE AIRBAG SENSOR (for Vehicle not Involved in Collision)**
   1. Perform a diagnostic system check.

      for Separate Type Yaw Rate Sensor: Refer to **DTC CHECK / CLEAR**

      for Built-in Type Yaw Rate Sensor: Refer to **DTC CHECK / CLEAR**
2. **INSPECT DOOR SIDE AIRBAG SENSOR (for Vehicle Involved in Collision and Airbag not Deployed)**
   1. Perform a diagnostic system check.

      for Separate Type Yaw Rate Sensor: Refer to **DTC CHECK / CLEAR**

      for Built-in Type Yaw Rate Sensor: Refer to **DTC CHECK / CLEAR**

   2. Visually check the door side airbag sensors for defects if a front door of the vehicle or the area around a front door is damaged.

      HINT:

      The defects are as follows:

      - Cracks on the sensor housing
      - Dents on the sensor housing
      - Chips on the sensor housing
      - Cracks or other damage to the connector
      - Damage to the serial number

      OK

      No defects are found.

      If any of the defects is found, replace the door side airbag sensor with a new one.
3. **INSPECT DOOR SIDE AIRBAG SENSOR (for Vehicle Involved in Collision and Airbag is Deployed)**
   1. When airbags have deployed as the result of a collision, be sure to replace all door side airbag sensors in the damaged areas (anywhere in need of repair).
   2. Visually check the door side airbag sensors in undamaged areas for defects.

      HINT:

The defects are as follows:

- Cracks on the sensor housing
- Dents on the sensor housing
- Chips on the sensor housing
- Cracks or other damage to the connector
- Damage to the serial number

OK

No defects are found.

If any of the defects is found or a door side airbag sensor has detected a major collision, replace the door side airbag sensor with a new one.

REMOVAL

REMOVAL

HINT:

- Use the same procedure for the RH side and LH side.
- The procedure listed below is for the LH side.

1. **PRECAUTION**

WARNING: **Be sure to read Precaution thoroughly before servicing.**

for Separate Type Yaw Rate Sensor: Refer to PRECAUTION

for Built-in Type Yaw Rate Sensor: Refer to PRECAUTION

NOTE: **After turning the power switch off, waiting time may be required before disconnecting the cable from the negative (-) auxiliary battery terminal. Therefore, make sure to read the disconnecting the cable from the negative (-) auxiliary battery terminal notices before proceeding with work. Refer to PRECAUTION .**

2. **REMOVE LUGGAGE TRIM SERVICE HOLE COVER** . Refer to **REMOVAL - Step 2**
3. **DISCONNECT CABLE FROM NEGATIVE AUXILIARY BATTERY TERMINAL**

WARNING: **Wait at least 90 seconds after disconnecting the cable from the negative (-) auxiliary battery terminal to disable the SRS system.**

NOTE: **When disconnecting the cable, some systems need to be initialized after the cable is reconnected. Refer to INITIALIZATION .**

4. **REMOVE FRONT DOOR INSIDE HANDLE BEZEL PLUG** . Refer to **DISASSEMBLY - Step 4**
5. **REMOVE FRONT DOOR LOWER FRAME BRACKET GARNISH** . Refer to **DISASSEMBLY - Step 5**
6. **REMOVE POWER WINDOW REGULATOR MASTER SWITCH ASSEMBLY WITH FRONT DOOR ARMREST BASE PANEL (for Driver Side)** . Refer to **DISASSEMBLY - Step 6**
7. **REMOVE POWER WINDOW REGULATOR SWITCH ASSEMBLY WITH FRONT DOOR ARMREST BASE PANEL (for Front Passenger Side)** . Refer to **DISASSEMBLY - Step 7**
8. **REMOVE FRONT ARMREST ASSEMBLY** . Refer to **DISASSEMBLY - Step 8**
9. **REMOVE COURTESY LIGHT ASSEMBLY** . Refer to **REMOVAL - Step 1**
10. **REMOVE FRONT DOOR TRIM BOARD SUB-ASSEMBLY** . Refer to **DISASSEMBLY - Step 10**
11. **REMOVE DOOR SIDE AIRBAG SENSOR**
    - a. Check that the power switch is off.
    - b. Check that the cable is disconnected from the negative (-) auxiliary battery terminal.

WARNING: **Wait at least 90 seconds after disconnecting the cable from the negative (-) auxiliary battery terminal to disable the SRS system.**

    - c. Disconnect the connector from the door side airbag sensor.

NOTE: **When disconnecting any airbag connector, take care not to damage the airbag wire harness.**

1. Push down the white housing lock and slide the yellow CPA. (At this time, the connector cannot be disconnected yet.)

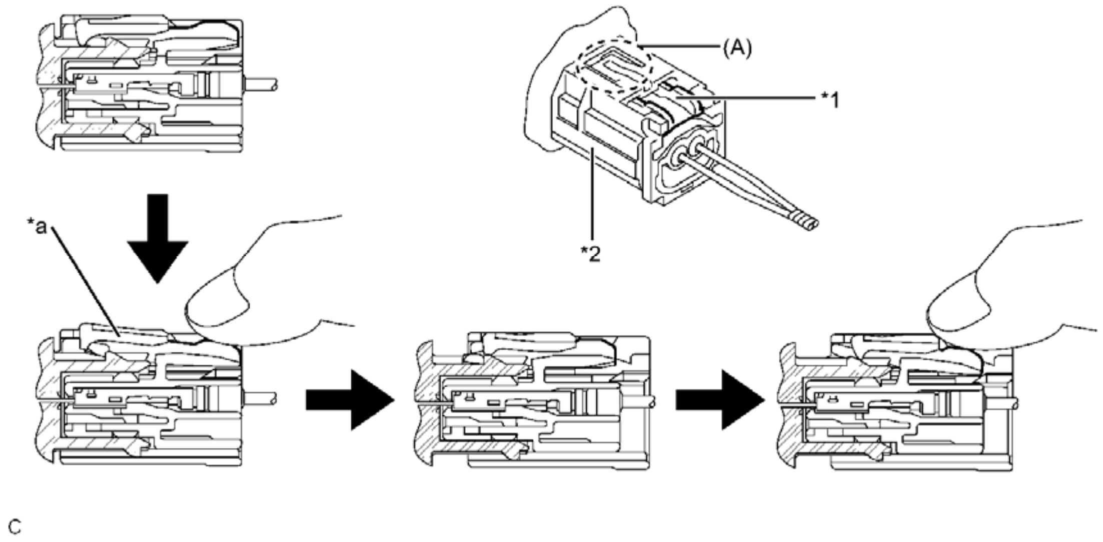

Fig. 170: Sliding Yellow CPA
Courtesy of TOYOTA MOTOR SALES, U.S.A., INC.

TEXT IN ILLUSTRATION

*1	White Housing Lock	*2	Yellow CPA
*a	Connector Lock is Released	-	-

2. Push down the white housing lock again and disconnect the connector.

NOTE: **Do not push down the part (A) shown in the illustration when disconnecting the connector.**

d. Remove the bolt and door side airbag sensor from the front door panel.

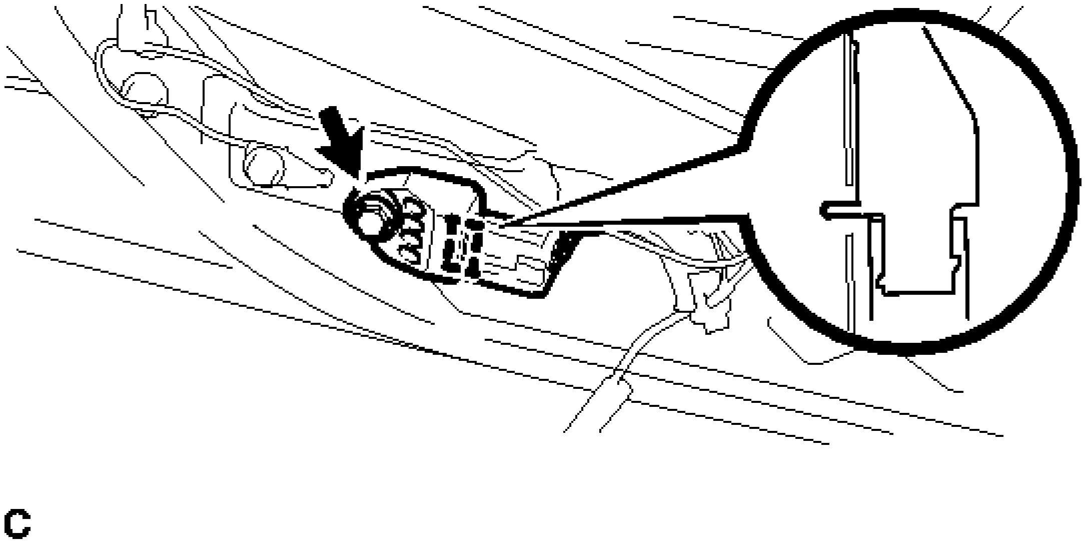

Fig. 171: Identifying Door Side Airbag Sensor Clip And Bolt
Courtesy of TOYOTA MOTOR SALES, U.S.A., INC.

NOTE: **Loosen the bolt while holding the door side airbag sensor because the door side airbag sensor pin (stopper) is easily damaged.**

e. After disconnecting the connector, check that the position of the white housing lock is correct as shown in the illustration.

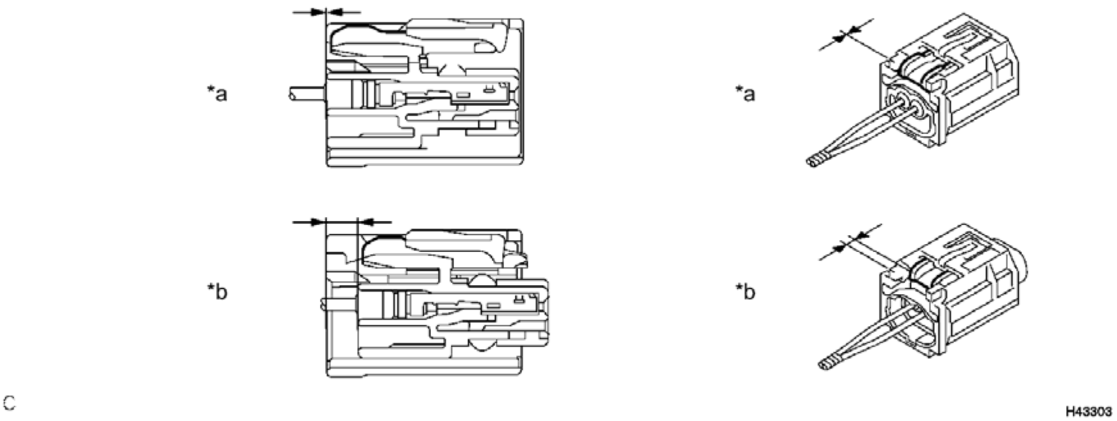

Fig. 172: Identifying Correct Housing Lock Position
Courtesy of TOYOTA MOTOR SALES, U.S.A., INC.

TEXT IN ILLUSTRATION

*a	Incorrect	*b	Correct

INSTALLATION

INSTALLATION

HINT:

- Use the same procedure for the RH side and LH side.
- The procedure listed below is for the LH side.

1. **INSTALL DOOR SIDE AIRBAG SENSOR**
    a. Check that the power switch is off.
    b. Check that the cable is disconnected from the negative (-) auxiliary battery terminal.

WARNING: **Wait at least 90 seconds after disconnecting the cable from the negative (-) auxiliary battery terminal to disable the SRS system.**

    c. Before connecting the connector, check that the position of the white housing lock is correct as shown in the illustration.

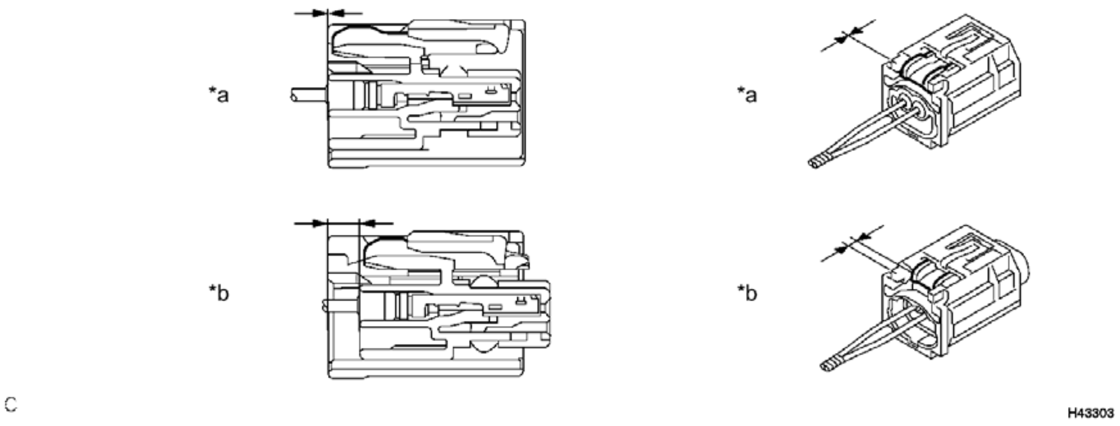

Fig. 173: Identifying Correct Housing Lock Position
Courtesy of TOYOTA MOTOR SALES, U.S.A., INC.

TEXT IN ILLUSTRATION

*a	Incorrect	*b	Correct

    d. Insert the pin (stopper) into the door hole and install the door side airbag sensor to the front door panel with the bolt.

Torque: 9.0 N*m (92 kgf*cm, 80 in.*lbf)

NOTE:

- **If the door side airbag sensor has been dropped, or there are any cracks, dents or other defects in the case or connector,**

replace it with a new one.

- **When installing the door side airbag sensor, be careful that the SRS wiring does not interfere with or is not pinched between other parts.**
- **Make sure that the pin (stopper) is securely inserted into the door hole.**
- **Tighten the bolt while holding the door side airbag sensor because the door side airbag sensor pin (stopper) is easily damaged.**

e. Connect the connector to the door side airbag sensor.

NOTE: When connecting any airbag connector, take care not to damage the airbag wire harness.

1. Be sure to engage the connectors until they are locked (when locking, make sure that a click sound can be heard).

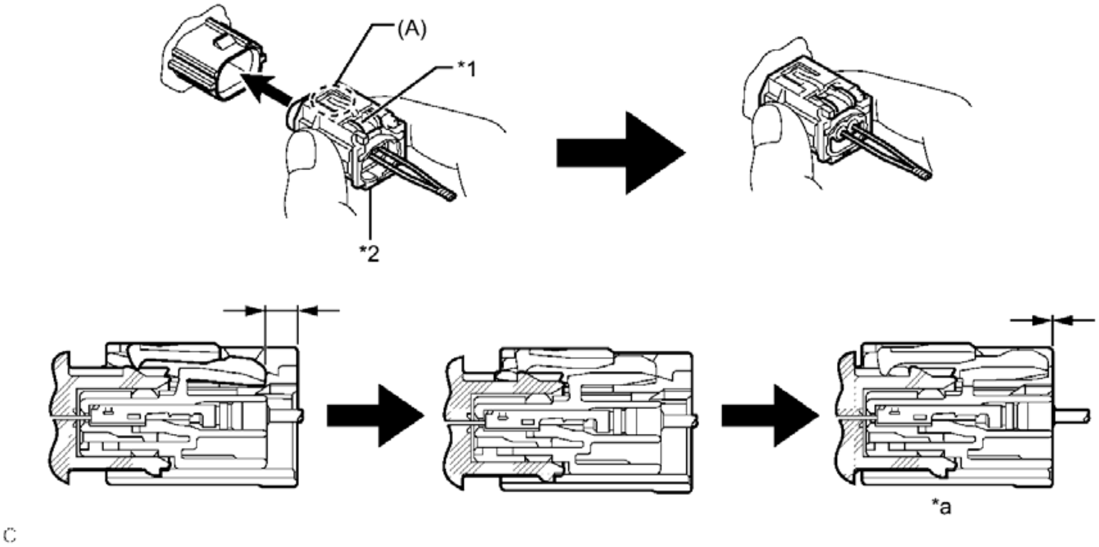

Fig. 174: Identifying Housing Lock, CPA & Completed Connection
Courtesy of TOYOTA MOTOR SALES, U.S.A., INC.

TEXT IN ILLUSTRATION

*1	White Housing Lock	*2	Yellow CPA
*a	Connection is Completed	-	-

HINT:

When engaged, the white housing lock will slide. Be sure not to hold the white housing lock or part (A), as it may result in an insecure fit.

f. Check that there is no looseness in the installation parts of the door side airbag sensor.

2. **INSTALL FRONT DOOR TRIM BOARD SUB-ASSEMBLY** . Refer to **REASSEMBLY - Step 39**
3. **INSTALL COURTESY LIGHT ASSEMBLY** . Refer to **INSTALLATION - Step 1**
4. **INSTALL FRONT ARMREST ASSEMBLY** . Refer to **REASSEMBLY - Step 41**
5. **INSTALL POWER WINDOW REGULATOR MASTER SWITCH ASSEMBLY WITH FRONT DOOR ARMREST BASE PANEL (for Driver Side)** . Refer to **REASSEMBLY - Step 42**
6. **INSTALL POWER WINDOW REGULATOR SWITCH ASSEMBLY WITH FRONT DOOR ARMREST BASE PANEL (for Front Passenger Side)** . Refer to **REASSEMBLY - Step 43**
7. **INSTALL FRONT DOOR LOWER FRAME BRACKET GARNISH** . Refer to **REASSEMBLY - Step 44**
8. **INSTALL FRONT DOOR INSIDE HANDLE BEZEL PLUG** . Refer to **REASSEMBLY - Step 45**
9. **CONNECT CABLE TO NEGATIVE AUXILIARY BATTERY TERMINAL**

NOTE: **When disconnecting the cable, some systems need to be initialized after the cable is reconnected. Refer to INITIALIZATION .**

10. **INSTALL LUGGAGE TRIM SERVICE HOLE COVER** . Refer to **INSTALLATION - Step 3**
11. **PERFORM DIAGNOSTIC SYSTEM CHECK**

for Separate Type Yaw Rate Sensor: Refer to **DTC CHECK / CLEAR**

for Built-in Type Yaw Rate Sensor: Refer to **DTC CHECK / CLEAR**

12. **INSPECT SRS WARNING LIGHT**

for Separate Type Yaw Rate Sensor: Refer to **DIAGNOSIS SYSTEM**

for Built-in Type Yaw Rate Sensor: Refer to **DIAGNOSIS SYSTEM**

SIDE AIRBAG SENSOR (FOR REAR SIDE)

COMPONENTS

ILLUSTRATION

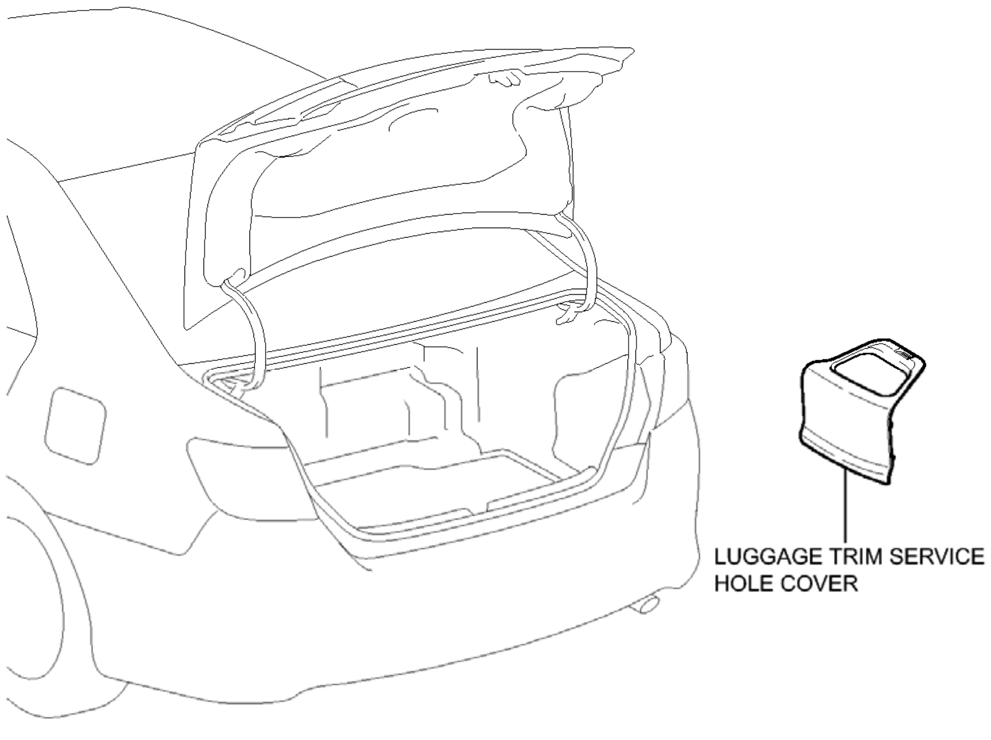
LUGGAGE TRIM SERVICE HOLE COVER
P

Fig. 175: Identifying Side Airbag Sensor Replacement Components With Torque Specifications (For Rear Side) (1 Of 2)
Courtesy of TOYOTA MOTOR SALES, U.S.A., INC.

ILLUSTRATION

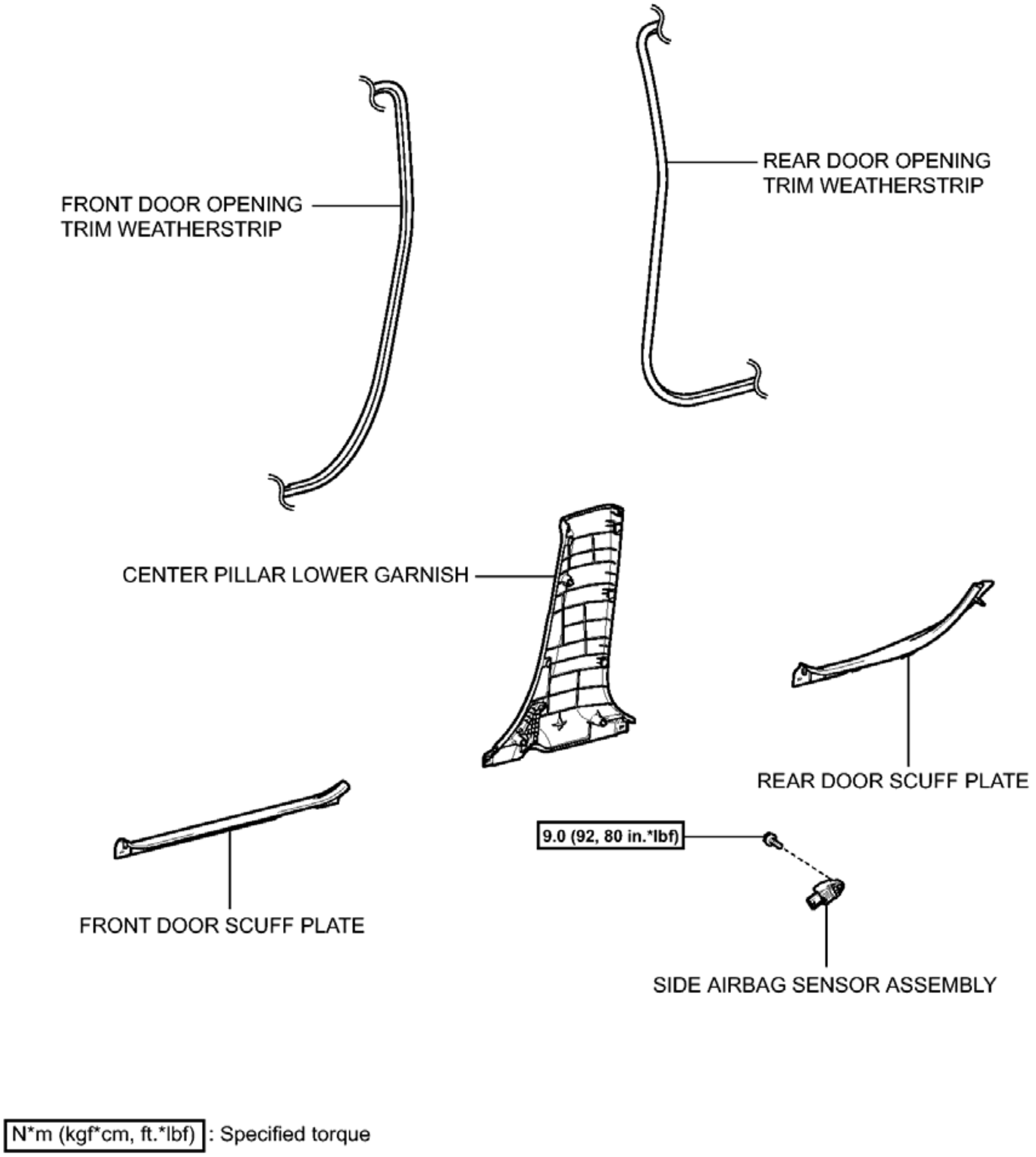
REAR DOOR OPENING TRIM WEATHERSTRIP
FRONT DOOR OPENING TRIM WEATHERSTRIP
CENTER PILLAR LOWER GARNISH
REAR DOOR SCUFF PLATE
9.0 (92, 80 in.*lbf)
FRONT DOOR SCUFF PLATE
SIDE AIRBAG SENSOR ASSEMBLY
N*m (kgf*cm, ft.*lbf) : Specified torque

Fig. 176: Identifying Side Airbag Sensor Replacement Components With Torque Specifications (For Rear Side) (2 Of 2)
Courtesy of TOYOTA MOTOR SALES, U.S.A., INC.

ON-VEHICLE INSPECTION

ON-VEHICLE INSPECTION

WARNING: **Be sure to correctly follow the removal and installation procedures for the side airbag sensor assemblies.**

1. **INSPECT SIDE AIRBAG SENSOR ASSEMBLY (for Vehicle not Involved in Collision)**
    a. Perform a diagnostic system check.

       for Separate Type Yaw Rate Sensor: Refer to **DTC CHECK / CLEAR**

       for Built-in Type Yaw Rate Sensor: Refer to **DTC CHECK / CLEAR**

2. **INSPECT SIDE AIRBAG SENSOR ASSEMBLY (for Vehicle Involved in Collision and Airbag not Deployed)**
    a. Perform a diagnostic system check.

       for Separate Type Yaw Rate Sensor: Refer to **DTC CHECK / CLEAR**

       for Built-in Type Yaw Rate Sensor: Refer to **DTC CHECK / CLEAR**

    b. Visually check the side airbag sensor assemblies for defects if a center pillar of the vehicle or the area around a center pillar is damaged.

       HINT:

       The defects are as follows:

       - Cracks on the sensor housing
       - Dents on the sensor housing
       - Chips on the sensor housing
       - Cracks or other damage to the connector
       - Damage to the serial number

       OK

       No defects are found.

       If any of the defects is found, replace the side airbag sensor assembly with a new one.

3. **INSPECT SIDE AIRBAG SENSOR ASSEMBLY (for Vehicle Involved in Collision and Airbag is Deployed)**
    a. When airbags have deployed as the result of a collision, be sure to replace all side airbag sensor assemblies in the damaged areas (anywhere in need of repair).
    b. Visually check the side airbag sensor assemblies in undamaged areas for defects.

       HINT:

The defects are as follows:

- Cracks on the sensor housing
- Dents on the sensor housing
- Chips on the sensor housing
- Cracks or other damage to the connector
- Damage to the serial number

OK

No defects are found.

If any of the defects is found or a side airbag sensor assembly has detected a major collision, replace the side airbag sensor assembly with a new one.

REMOVAL

REMOVAL

HINT:

- Use the same procedure for the RH side and LH side.
- The procedure listed below is for the LH side.

1. **PRECAUTION**

   WARNING: **Be sure to read Precaution thoroughly before servicing.**

   for Separate Type Yaw Rate Sensor: Refer to PRECAUTION

   for Built-in Type Yaw Rate Sensor: Refer to PRECAUTION

   NOTE: **After turning the power switch off, waiting time may be required before disconnecting the cable from the negative (-) auxiliary battery terminal. Therefore, make sure to read the disconnecting the cable from the negative (-) auxiliary battery terminal notices before proceeding with work. Refer to PRECAUTION .**

2. **REMOVE LUGGAGE TRIM SERVICE HOLE COVER** . Refer to **REMOVAL - Step 2**
3. **DISCONNECT CABLE FROM NEGATIVE AUXILIARY BATTERY TERMINAL**

   WARNING: **Wait at least 90 seconds after disconnecting the cable from the negative (-) auxiliary battery terminal to disable the SRS system.**

NOTE: **When disconnecting the cable, some systems need to be initialized after the cable is reconnected. Refer to INITIALIZATION .**

4. **REMOVE FRONT DOOR SCUFF PLATE** . Refer to **REMOVAL - Step 4**
5. **DISCONNECT FRONT DOOR OPENING TRIM WEATHERSTRIP**

   HINT:

   Disconnect the front door opening trim weatherstrip to the extent that allows the removal of the center pillar lower garnish.

6. **REMOVE REAR DOOR SCUFF PLATE** . Refer to **REMOVAL - Step 19**
7. **DISCONNECT REAR DOOR OPENING TRIM WEATHERSTRIP**

   HINT:

   Disconnect the rear door opening trim weatherstrip to the extent that allows the removal of the center pillar lower garnish.

8. **REMOVE CENTER PILLAR LOWER GARNISH** . Refer to **REMOVAL - Step 23**
9. **REMOVE SIDE AIRBAG SENSOR ASSEMBLY**
   a. Check that the power switch is off.
   b. Check that the cable is disconnected from the negative (-) auxiliary battery terminal.

      WARNING: **Wait at least 90 seconds after disconnecting the cable from the negative (-) auxiliary battery terminal to disable the SRS system.**

   c. Disconnect the connector from the side airbag sensor assembly.

      NOTE: **When disconnecting any airbag connector, take care not to damage the airbag wire harness.**

      1. Push down the white housing lock and slide the yellow CPA. (At this time, the connector cannot be disconnected yet.)

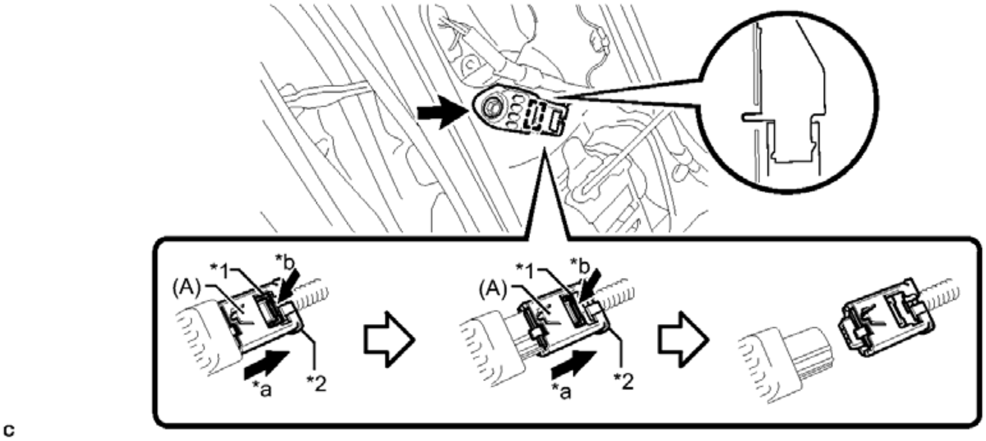

Fig. 177: Disconnecting Connector From Side Airbag Sensor Assembly
Courtesy of TOYOTA MOTOR SALES, U.S.A., INC.

TEXT IN ILLUSTRATION

*1	White Housing Lock	*2	Yellow CPA
*a	Slide	*b	Push

2. Push down the white housing lock again and disconnect the connector.

NOTE: Do not push down the part (A) shown in the illustration when disconnecting the connector.

d. Remove the bolt and side airbag sensor assembly from the vehicle body.

NOTE: Loosen the bolt while holding the side airbag sensor assembly because the side airbag sensor assembly pin (stopper) is easily damaged.

e. After disconnecting the connector, check that the position of the white housing lock is correct as shown in the illustration.

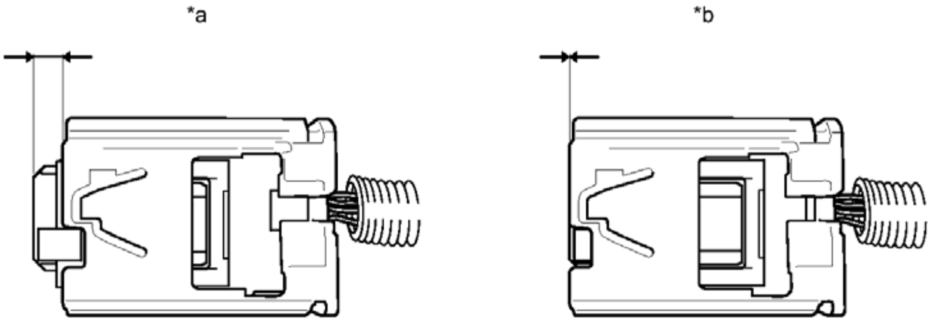

c

Fig. 178: Identifying White Housing Lock Is Correct
Courtesy of TOYOTA MOTOR SALES, U.S.A., INC.

TEXT IN ILLUSTRATION

*a	Correct	*b	Incorrect

INSTALLATION

INSTALLATION

HINT:

- Use the same procedure for the RH side and LH side.
- The procedure listed below is for the LH side.

1. **INSTALL SIDE AIRBAG SENSOR ASSEMBLY**
    a. Check that the power switch is off.
    b. Check that the cable is disconnected from the negative (-) auxiliary battery terminal.

    WARNING: **Wait at least 90 seconds after disconnecting the cable from the negative (-) auxiliary battery terminal to disable the SRS system.**

    c. Before connecting the connector, check that the position of the white housing lock is correct as shown in the illustration.

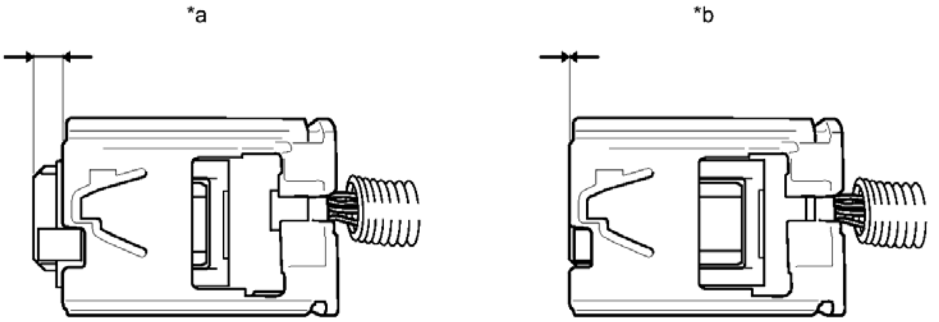

c

Fig. 179: Identifying White Housing Lock Is Correct
Courtesy of TOYOTA MOTOR SALES, U.S.A., INC.

TEXT IN ILLUSTRATION

*a	Correct	*b	Incorrect

d. Insert the pin (stopper) into the body hole and install the side airbag sensor assembly to the vehicle body with the bolt.

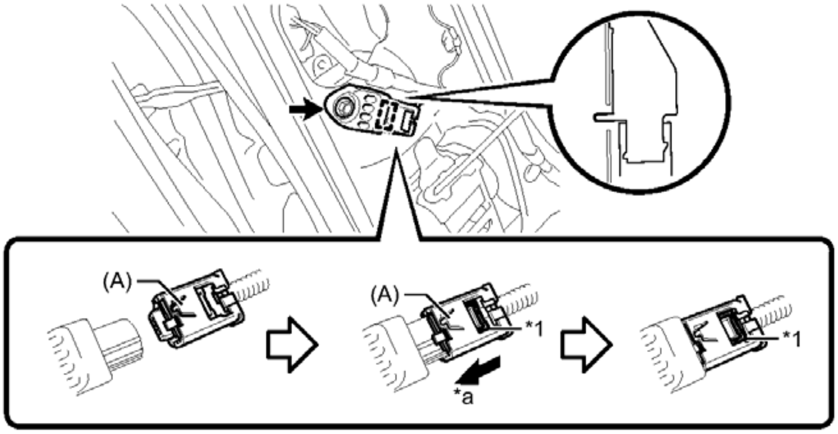

c

Fig. 180: Identifying White Housing Lock And Slide
Courtesy of TOYOTA MOTOR SALES, U.S.A., INC.

TEXT IN ILLUSTRATION

*1	White Housing Lock	-	-
*a	Slide	-	-

Torque: 9.0 N*m (92 kgf*cm, 80 in.*lbf)

NOTE:

- **If the side airbag sensor assembly has been dropped, or there**

are any cracks, dents or other defects in the case or connector, replace it with a new one.

- **When installing the side airbag sensor assembly, be careful that the SRS wiring does not interfere with or is not pinched between other parts.**
- **Make sure that the pin (stopper) is securely inserted into the body hole.**
- **Tighten the bolt while holding the side airbag sensor assembly because the side airbag sensor assembly pin (stopper) is easily damaged.**

e. Connect the connector to the side airbag sensor assembly.

NOTE: **When connecting any airbag connector, take care not to damage the airbag wire harness.**

1. Be sure to engage the connectors until they are locked (when locking, make sure that a click sound can be heard).

   HINT:

   When engaged, the white housing lock will slide. Be sure not to hold the white housing lock or part (A), as it may result in an insecure fit.

f. Check that there is no looseness in the installation parts of the side airbag sensor assembly.

2. **INSTALL CENTER PILLAR LOWER GARNISH** . Refer to **INSTALLATION - Step 23**
3. **CONNECT REAR DOOR OPENING TRIM WEATHERSTRIP**
4. **INSTALL REAR DOOR SCUFF PLATE** . Refer to **INSTALLATION - Step 27**
5. **CONNECT FRONT DOOR OPENING TRIM WEATHERSTRIP**
6. **INSTALL FRONT DOOR SCUFF PLATE** . Refer to **INSTALLATION - Step 45**
7. **CONNECT CABLE TO NEGATIVE AUXILIARY BATTERY TERMINAL**

   NOTE: **When disconnecting the cable, some systems need to be initialized after the cable is reconnected. Refer to INITIALIZATION .**

8. **INSTALL LUGGAGE TRIM SERVICE HOLE COVER** . Refer to **INSTALLATION - Step 3**
9. **PERFORM DIAGNOSTIC SYSTEM CHECK**

   for Separate Type Yaw Rate Sensor: Refer to **DTC CHECK / CLEAR**

   for Built-in Type Yaw Rate Sensor: Refer to **DTC CHECK / CLEAR**

10. **INSPECT SRS WARNING LIGHT**

for Separate Type Yaw Rate Sensor: Refer to **DIAGNOSIS SYSTEM**

for Built-in Type Yaw Rate Sensor: Refer to **DIAGNOSIS SYSTEM**

REAR AIRBAG SENSOR

COMPONENTS

ILLUSTRATION

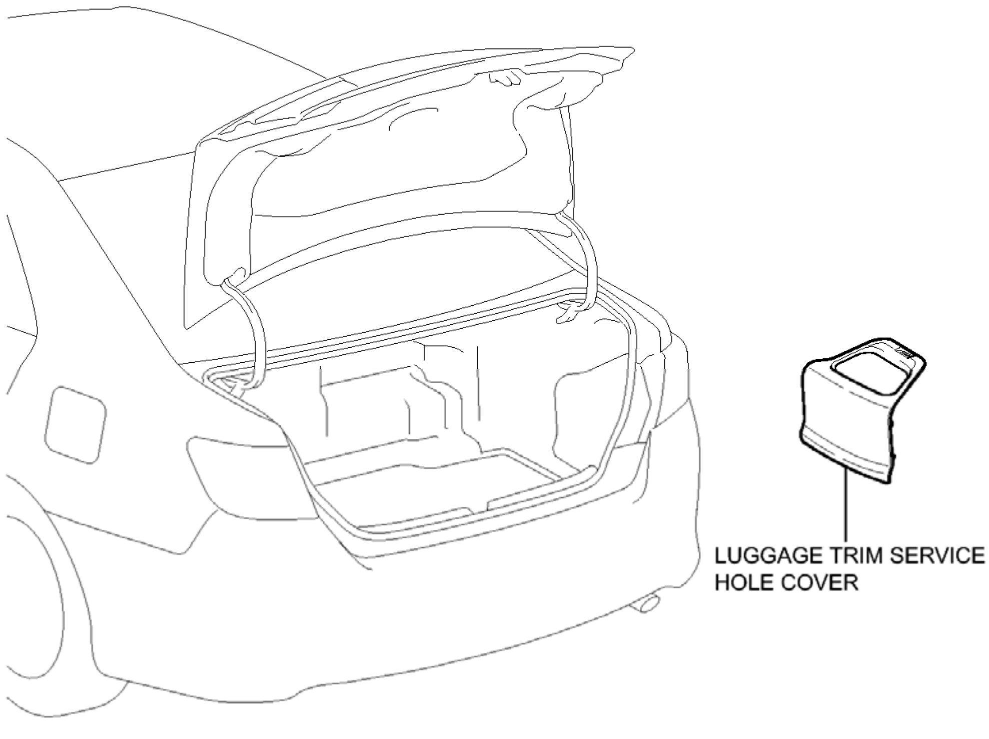

Fig. 181: Identifying Rear Airbag Sensor Replacement Components With Torque Specifications (1 Of 2)
Courtesy of TOYOTA MOTOR SALES, U.S.A., INC.

ILLUSTRATION

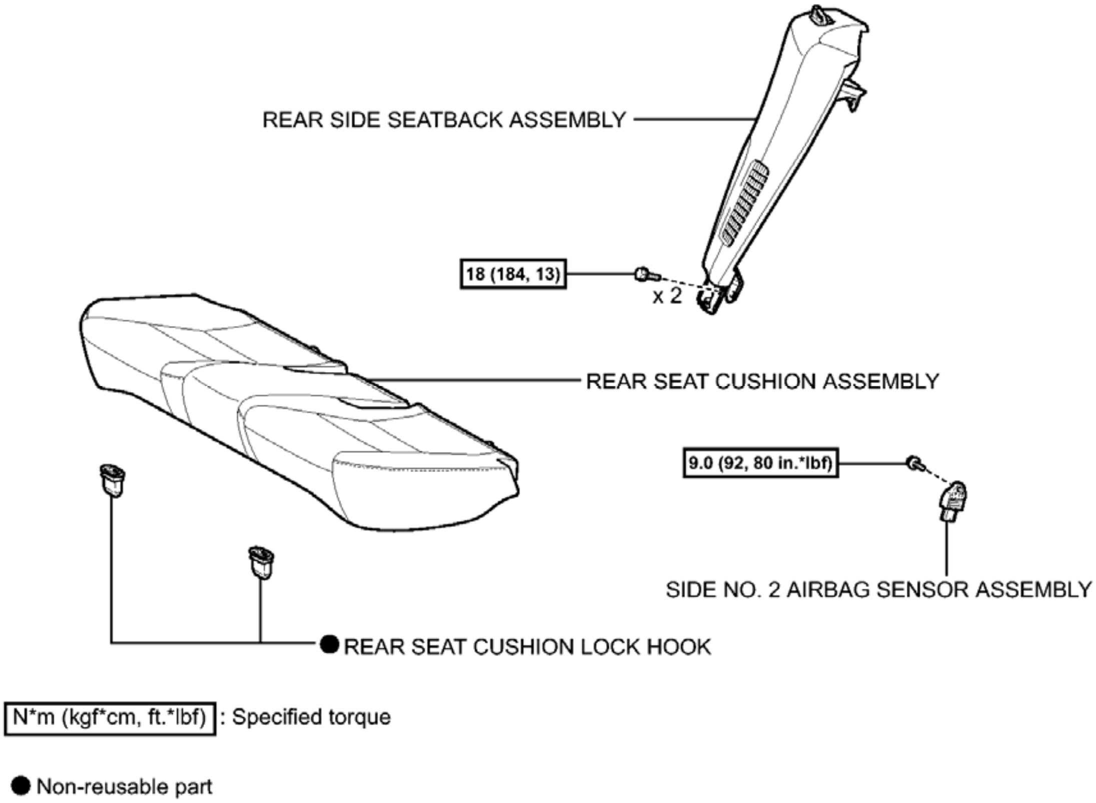
REAR SIDE SEATBACK ASSEMBLY
18 (184, 13)
x 2
REAR SEAT CUSHION ASSEMBLY
9.0 (92, 80 in.*lbf)
SIDE NO. 2 AIRBAG SENSOR ASSEMBLY
● REAR SEAT CUSHION LOCK HOOK
N*m (kgf*cm, ft.*lbf) : Specified torque
● Non-reusable part

Fig. 182: Identifying Rear Airbag Sensor Replacement Components With Torque Specifications (2 Of 2)
Courtesy of TOYOTA MOTOR SALES, U.S.A., INC.

ON-VEHICLE INSPECTION

ON-VEHICLE INSPECTION

WARNING: **Be sure to correctly follow the removal and installation procedures for the side No. 2 airbag sensor assemblies.**

1. **INSPECT SIDE NO. 2 AIRBAG SENSOR ASSEMBLY (for Vehicle not Involved in Collision)**
   a. Perform a diagnostic system check.

      for Separate Type Yaw Rate Sensor: Refer to **DTC CHECK / CLEAR**

      for Built-in Type Yaw Rate Sensor: Refer to **DTC CHECK / CLEAR**

2. **INSPECT SIDE NO. 2 AIRBAG SENSOR ASSEMBLY (for Vehicle Involved in Collision and Airbag not Deployed)**
   a. Perform a diagnostic system check.

for Separate Type Yaw Rate Sensor: Refer to **DTC CHECK / CLEAR**

for Built-in Type Yaw Rate Sensor: Refer to **DTC CHECK / CLEAR**

b. Visually check the side No. 2 airbag sensor assemblies for defects if a quarter panel of the vehicle or the area around a quarter panel is damaged.

HINT:

The defects are as follows:

- Cracks on the sensor housing
- Dents on the sensor housing
- Chips on the sensor housing
- Cracks or other damage to the connector
- Damage to the serial number

OK

No defects are found.

If any of the defects is found, replace the side No. 2 airbag sensor assembly with a new one.

3. **INSPECT SIDE NO. 2 AIRBAG SENSOR ASSEMBLY (for Vehicle Involved in Collision and Airbag is Deployed)**

a. When airbags have deployed as the result of a collision, be sure to replace all side No. 2 airbag sensor assemblies in the damaged areas (anywhere in need of repair).

b. Visually check the side No. 2 airbag sensor assemblies in undamaged areas for defects.

HINT:

The defects are as follows:

- Cracks on the sensor housing
- Dents on the sensor housing
- Chips on the sensor housing
- Cracks or other damage to the connector
- Damage to the serial number

OK

No defects are found.

If any of the defects is found or a side No. 2 airbag sensor assembly has detected a major collision, replace the side No. 2 airbag sensor assembly with a new one.

REMOVAL

REMOVAL

HINT:

- Use the same procedure for the RH side and LH side.
- The procedure listed below is for the LH side.

1. **PRECAUTION**

   WARNING: **Be sure to read Precaution thoroughly before servicing.**

   for Separate Type Yaw Rate Sensor: Refer to PRECAUTION

   for Built-in Type Yaw Rate Sensor: Refer to PRECAUTION

   NOTE: **After turning the power switch off, waiting time may be required before disconnecting the cable from the negative (-) auxiliary battery terminal. Therefore, make sure to read the disconnecting the cable from the negative (-) auxiliary battery terminal notices before proceeding with work. Refer to PRECAUTION .**

2. **REMOVE LUGGAGE TRIM SERVICE HOLE COVER** . Refer to **REMOVAL - Step 2**
3. **DISCONNECT CABLE FROM NEGATIVE AUXILIARY BATTERY TERMINAL**

   WARNING: **Wait at least 90 seconds after disconnecting the cable from the negative (-) auxiliary battery terminal to disable the SRS system.**

   NOTE: **When disconnecting the cable, some systems need to be initialized after the cable is reconnected. Refer to INITIALIZATION .**

4. **REMOVE REAR SEAT CUSHION ASSEMBLY** . Refer to **REMOVAL - Step 4**
5. **REMOVE REAR SEAT CUSHION LOCK HOOK** . Refer to **REMOVAL - Step 5**
6. **REMOVE REAR SIDE SEATBACK ASSEMBLY** . Refer to **REMOVAL - Step 9**
7. **REMOVE SIDE NO. 2 AIRBAG SENSOR ASSEMBLY**
   a. Check that the power switch is off.
   b. Check that the cable is disconnected from the negative (-) auxiliary battery terminal.

      WARNING: **Wait at least 90 seconds after disconnecting the cable from the negative (-) auxiliary battery terminal to disable the SRS system.**

c. Disconnect the connector from the side No. 2 airbag sensor assembly.

NOTE: **When disconnecting any airbag connector, take care not to damage the airbag wire harness.**

1. Push down the white housing lock and slide the yellow CPA. (At this time, the connector cannot be disconnected yet.)

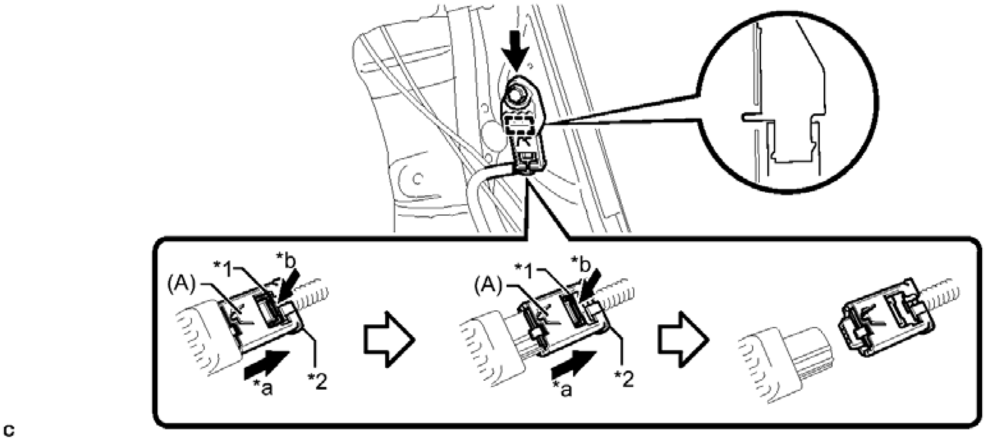

Fig. 183: Disconnecting Connector From Side No. 2 Airbag Sensor Assembly
Courtesy of TOYOTA MOTOR SALES, U.S.A., INC.

TEXT IN ILLUSTRATION

*1	White Housing Lock	*2	Yellow CPA
*a	Slide	*b	Push

2. Push down the white housing lock again and disconnect the connector.

NOTE: **Do not push down the part (A) shown in the illustration when disconnecting the connector.**

d. Remove the bolt and side No. 2 airbag sensor assembly from the vehicle body.

NOTE: **Loosen the bolt while holding the side No. 2 airbag sensor assembly because the side No. 2 airbag sensor assembly pin (stopper) is easily damaged.**

e. After disconnecting the connector, check that the position of the white housing lock is correct as shown in the illustration.

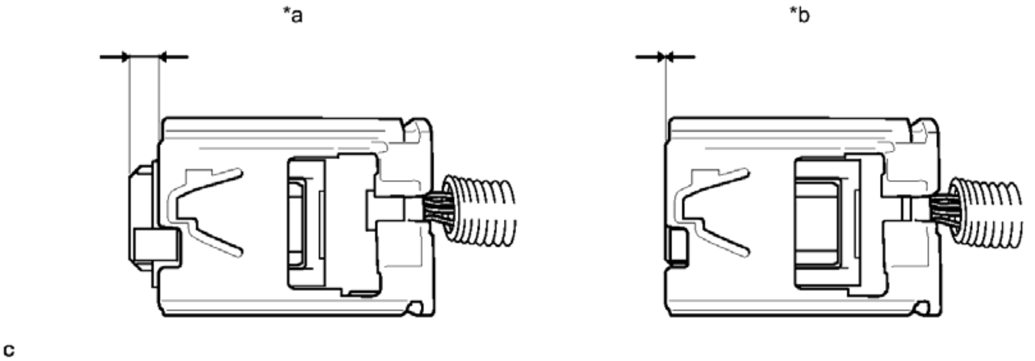

Fig. 184: Identifying White Housing Lock Is Correct
Courtesy of TOYOTA MOTOR SALES, U.S.A., INC.

TEXT IN ILLUSTRATION

*a	Correct	*b	Incorrect

INSTALLATION

INSTALLATION

HINT:

- Use the same procedure for the RH side and LH side.
- The procedure listed below is for the LH side.

1. **INSTALL SIDE NO. 2 AIRBAG SENSOR ASSEMBLY**
    a. Check that the power switch is off.
    b. Check that the cable is disconnected from the negative (-) auxiliary battery terminal.

    WARNING: **Wait at least 90 seconds after disconnecting the cable from the negative (-) auxiliary battery terminal to disable the SRS system.**

    c. Before connecting the connector, check that the position of the white housing lock is correct as shown in the illustration.

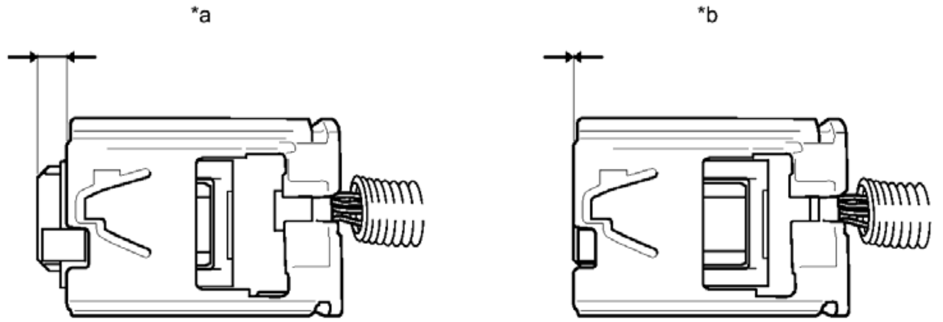

c

Fig. 185: Identifying White Housing Lock Is Correct
Courtesy of TOYOTA MOTOR SALES, U.S.A., INC.

TEXT IN ILLUSTRATION

*a	Correct	*b	Incorrect

d. Insert the pin (stopper) into the body hole and install the side No. 2 airbag sensor assembly to the vehicle body with the bolt.

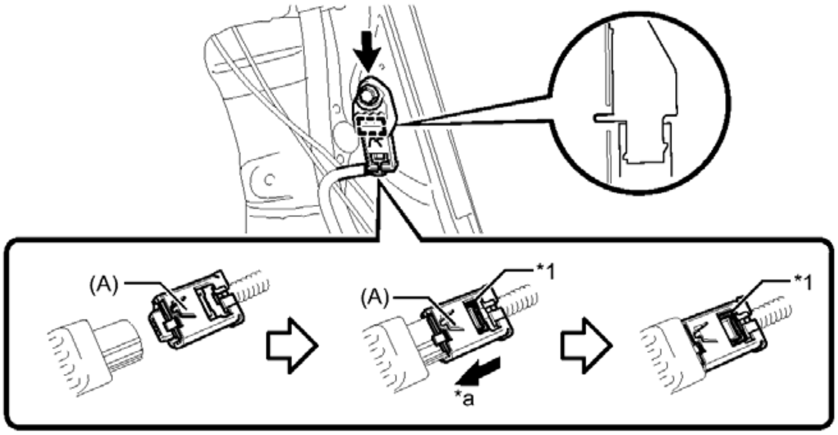

c

Fig. 186: Identifying White Housing Lock And Slide
Courtesy of TOYOTA MOTOR SALES, U.S.A., INC.

TEXT IN ILLUSTRATION

*1	White Housing Lock	-	-
*a	Slide	-	-

Torque: 9.0 N*m (92 kgf*cm, 80 in.*lbf)

NOTE:

- **If the side No. 2 airbag sensor assembly has been dropped, or**

there are any cracks, dents or other defects in the case or connector, replace it with a new one.

- **When installing the side No. 2 airbag sensor assembly, be careful that the SRS wiring does not interfere with or is not pinched between other parts.**
- **Make sure that the pin (stopper) is securely inserted into the body hole.**
- **Tighten the bolt while holding the side No. 2 airbag sensor assembly because the side No. 2 airbag sensor assembly pin (stopper) is easily damaged.**

e. Connect the connector to the side No. 2 airbag sensor assembly.

NOTE: **When connecting any airbag connector, take care not to damage the airbag wire harness.**

1. Be sure to engage the connectors until they are locked (when locking, make sure that a click sound can be heard).

   HINT:

   When engaged, the white housing lock will slide. Be sure not to hold the white housing lock or part (A), as it may result in an insecure fit.

f. Check that there is no looseness in the installation parts of the side No. 2 airbag sensor assembly.

2. **INSTALL REAR SIDE SEATBACK ASSEMBLY** . Refer to **INSTALLATION - Step 1**
3. **INSTALL REAR SEAT CUSHION LOCK HOOK** . Refer to **INSTALLATION - Step 6**
4. **INSTALL REAR SEAT CUSHION ASSEMBLY** . Refer to **INSTALLATION - Step 7**
5. **CONNECT CABLE TO NEGATIVE AUXILIARY BATTERY TERMINAL**

   NOTE: **When disconnecting the cable, some systems need to be initialized after the cable is reconnected. Refer to INITIALIZATION .**

6. **INSTALL LUGGAGE TRIM SERVICE HOLE COVER** . Refer to **INSTALLATION - Step 3**
7. **PERFORM DIAGNOSTIC SYSTEM CHECK**

   for Separate Type Yaw Rate Sensor: Refer to **DTC CHECK / CLEAR**

   for Built-in Type Yaw Rate Sensor: Refer to **DTC CHECK / CLEAR**

8. **INSPECT SRS WARNING LIGHT**

   for Separate Type Yaw Rate Sensor: Refer to **DIAGNOSIS SYSTEM**

for Built-in Type Yaw Rate Sensor: Refer to **DIAGNOSIS SYSTEM**

OCCUPANT CLASSIFICATION ECU

COMPONENTS

ILLUSTRATION

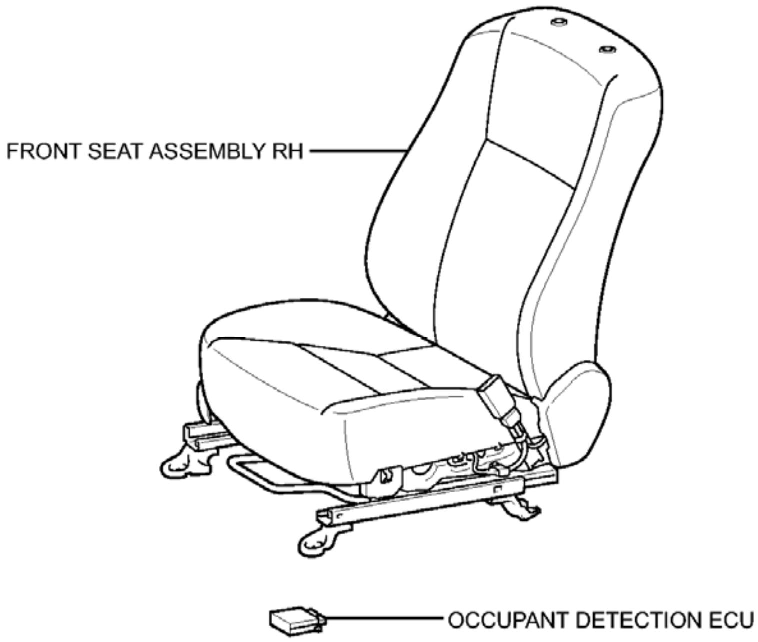

c

Fig. 187: Identifying Occupant Classification ECU Replacement Components
Courtesy of TOYOTA MOTOR SALES, U.S.A., INC.

ON-VEHICLE INSPECTION

ON-VEHICLE INSPECTION

WARNING: **Be sure to correctly follow the removal and installation procedures for the occupant detection ECU.**

1. **INSPECT OCCUPANT DETECTION ECU (for Vehicle not Involved in Collision)**
    a. Perform a diagnostic system check. Refer to **DTC CHECK / CLEAR** .
2. **INSPECT OCCUPANT DETECTION ECU (for Vehicle Involved in Collision and Airbag not Deployed)**
    a. Perform a diagnostic system check. Refer to **DTC CHECK / CLEAR** .
    b. Visually check for defects with the occupant detection ECU.

1. The defects are as follows:
   - Cracks on the ECU housing
   - Dents on the ECU housing
   - Chips on the ECU housing
   - Cracks or other damage to the connector
   - Damage to the serial number

   OK

   No defects are found.

   If any of the defects is found, replace the occupant detection ECU with a new one.

3. **INSPECT OCCUPANT DETECTION ECU (for Vehicle Involved in Collision and Airbag is Deployed)**
   a. Perform a diagnostic system check. Refer to **DTC CHECK / CLEAR** .
   b. Visually check for defects with the occupant detection ECU.
      1. The defects are as follows:
         - Cracks on the ECU housing
         - Dents on the ECU housing
         - Chips on the ECU housing
         - Cracks or other damage to the connector
         - Damage to the serial number

         OK

         No defects are found.

         If any of the defects is found, replace the occupant detection ECU with a new one.

REMOVAL

REMOVAL

1. **PRECAUTION**

   WARNING: **Be sure to read Precaution thoroughly before servicing.**

   for Separate Type Yaw Rate Sensor: Refer to PRECAUTION

   for Built-in Type Yaw Rate Sensor: Refer to PRECAUTION

2. **REMOVE FRONT SEAT ASSEMBLY RH**

HINT:

Use the same procedure for the RH side and LH side.

- for Manual Seat: Refer to **REMOVAL**
- for Power Seat: Refer to **REMOVAL**

3. **REMOVE OCCUPANT DETECTION ECU**
    a. Disconnect the 2 connectors.

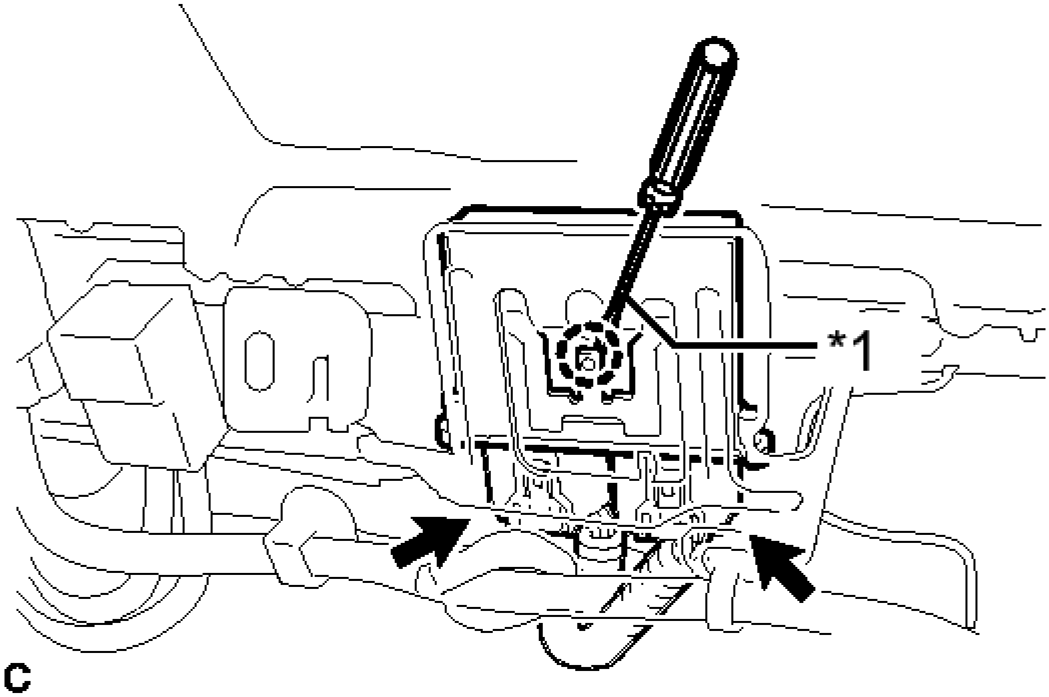

Fig. 188: Removing Occupant Detection ECU
Courtesy of TOYOTA MOTOR SALES, U.S.A., INC.

    b. Using a screwdriver with the tip wrapped with protective tape, disengage the claw and remove the occupant detection ECU.

TEXT IN ILLUSTRATION

*1	Protective Tape

INSTALLATION

INSTALLATION

1. **INSTALL OCCUPANT DETECTION ECU**
    a. Engage the claw to install the occupant detection ECU.

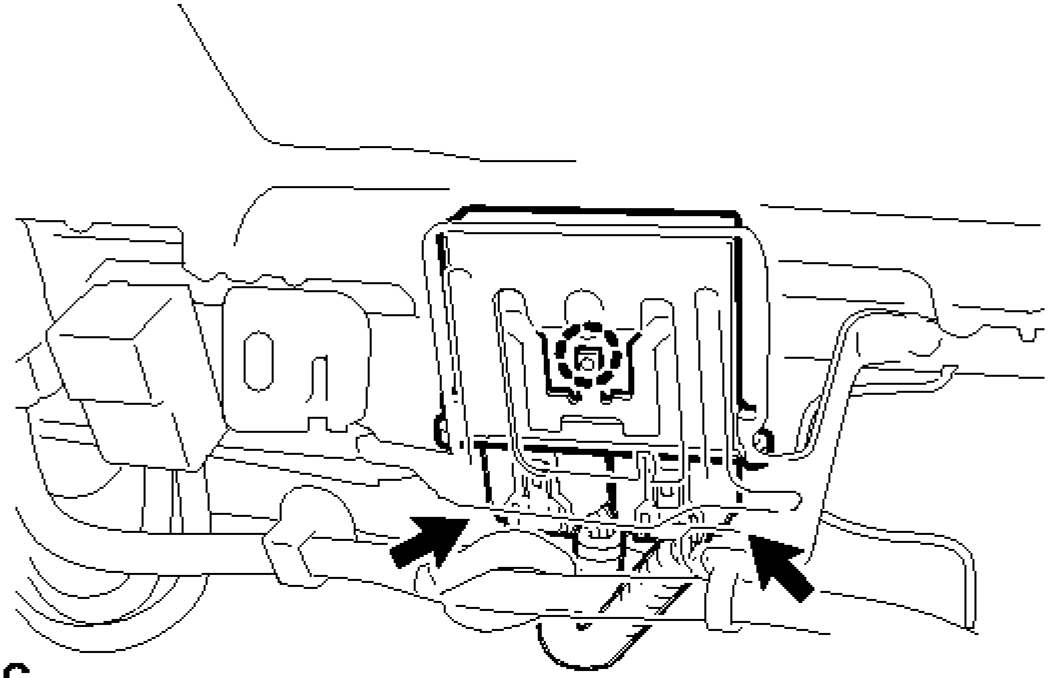

Fig. 189: Identifying Occupant Detection ECU
Courtesy of TOYOTA MOTOR SALES, U.S.A., INC.

NOTE: If the occupant detection ECU has been dropped, or there are any cracks, dents or other defects in the case or connector, replace the occupant detection ECU with a new one.

b. Connect the 2 connectors.

NOTE: When installing the occupant detection ECU, be careful that the SRS wiring does not interfere with or is pinched between other parts.

2. **INSTALL FRONT SEAT ASSEMBLY RH**

   HINT:

   Use the same procedure for the RH side and LH side.

   - for Manual Seat: Refer to **INSTALLATION**
   - for Power Seat: Refer to **INSTALLATION**

3. **PERFORM DIAGNOSTIC SYSTEM CHECK**

   for Separate Type Yaw Rate Sensor: Refer to **DTC CHECK / CLEAR**

   for Built-in Type Yaw Rate Sensor: Refer to **DTC CHECK / CLEAR**

4. **PERFORM ZERO POINT CALIBRATION AND SENSITIVITY CHECK**

Refer to **INITIALIZATION**

STEERING PAD

COMPONENTS

ILLUSTRATION

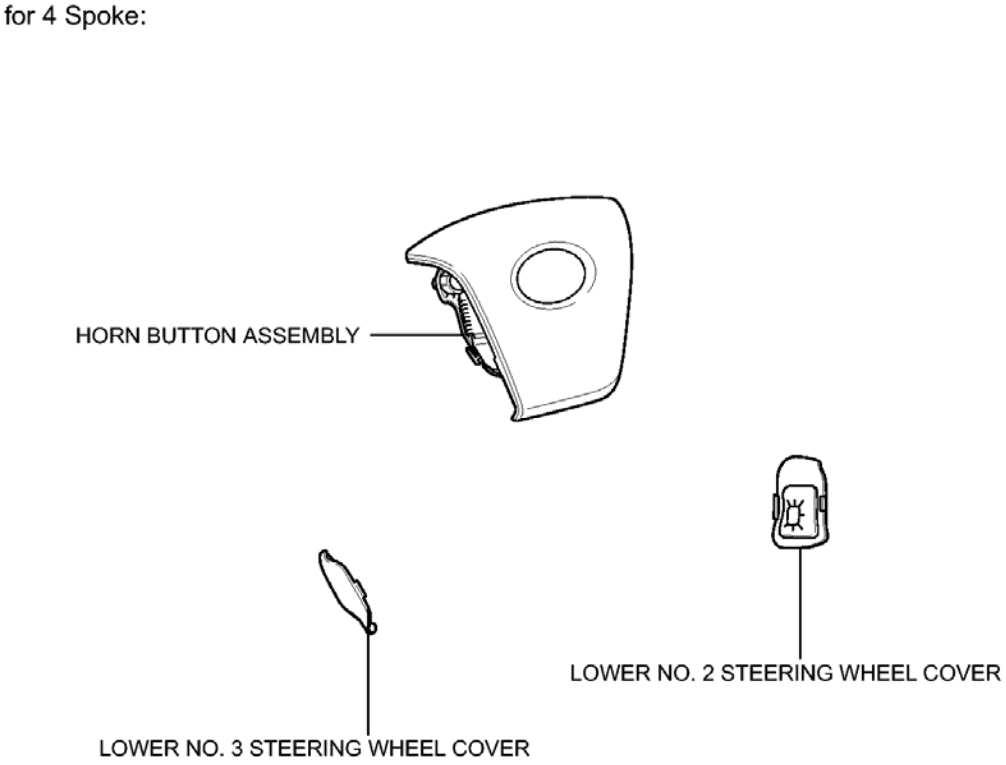
for 4 Spoke:
HORN BUTTON ASSEMBLY
LOWER NO. 2 STEERING WHEEL COVER
LOWER NO. 3 STEERING WHEEL COVER

c

Fig. 1: Identifying Steering Pad Replacement Components (For 4 Spoke)
Courtesy of TOYOTA MOTOR SALES, U.S.A., INC.

ILLUSTRATION

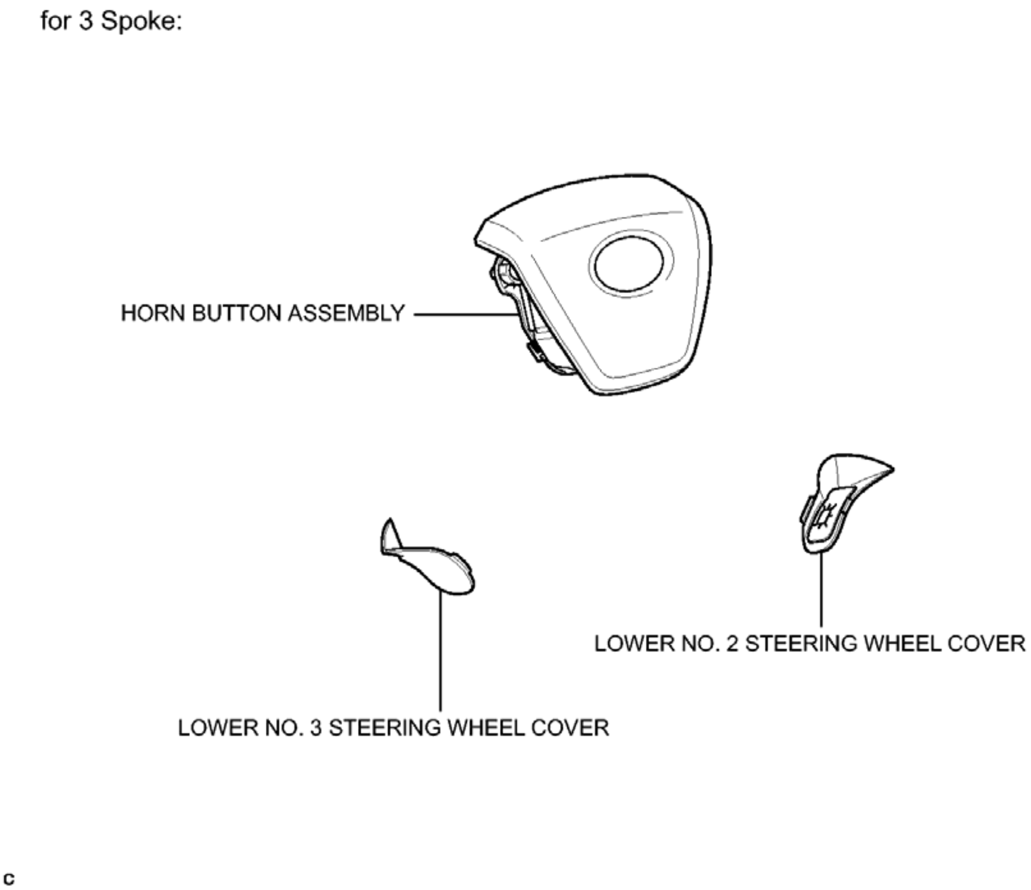
for 3 Spoke:
HORN BUTTON ASSEMBLY
LOWER NO. 2 STEERING WHEEL COVER
LOWER NO. 3 STEERING WHEEL COVER
c

Fig. 2: Identifying Steering Pad Replacement Components (For 3 Spoke)
Courtesy of TOYOTA MOTOR SALES, U.S.A., INC.

ON-VEHICLE INSPECTION

ON-VEHICLE INSPECTION

WARNING: **Be sure to correctly follow the removal and installation procedures for the horn button assembly.**

1. **INSPECT HORN BUTTON ASSEMBLY (for Vehicle not Involved in Collision)**
    a. Perform a diagnostic system check.

    For Separate Type Yaw Rate Sensor: Refer to **DTC CHECK / CLEAR** .

    For Built-In Type Yaw Rate Sensor: Refer to **DTC CHECK / CLEAR** .

    b. Visually check for defects with the horn button assembly installed on the vehicle.

    HINT:

The defects are as follows:

- Cuts on the surface or in the grooves
- Small cracks on the surface or in the grooves
- Significant discoloration on the surface or in the grooves

OK

No defects are found.

If any of the defects is found, replace the horn button assembly with a new one.

2. **INSPECT HORN BUTTON ASSEMBLY (for Vehicle Involved in Collision and Airbag not Deployed)**
    a. Perform a diagnostic system check.

    For Separate Type Yaw Rate Sensor: Refer to **DTC CHECK / CLEAR** .

    For Built-in Type Yaw Rate Sensor: Refer to **DTC CHECK / CLEAR** .

    b. Visually check for defects with the horn button assembly removed from the vehicle.

    HINT:

    The defects are as follows:

    - Cuts on the surface or in the grooves
    - Small cracks on the surface or in the grooves
    - Significant discoloration on the surface or in the grooves
    - Cracks or other damage to the connector
    - Deformation of the steering wheel assembly
    - Deformation of the horn button sub-assembly of the horn button assembly
    - Interference or uneven clearance between the horn button assembly and steering wheel assembly when the new horn button assembly is installed on the steering wheel assembly

    OK

    No defects are found.

    If any of the defects is found, replace the horn button assembly or steering wheel assembly with a new one.

REMOVAL

REMOVAL

HINT:

- Use the same procedure for the 4 spoke and 3 spoke.
- The procedure listed below is for the 4 spoke.

1. **PRECAUTION**

WARNING: **Be sure to read Precaution thoroughly before servicing.**

For Separate Type Yaw Rate Sensor: Refer to PRECAUTION .

For Built-in Type Yaw Rate Sensor: Refer to PRECAUTION .

NOTE: **After turning the ignition switch off, waiting time may be required before disconnecting the cable from the negative (-) battery terminal. Therefore, make sure to read the disconnecting the cable from the negative (-) battery terminal notices before proceeding with work. Refer to PRECAUTION .**

2. **DISCONNECT CABLE FROM NEGATIVE BATTERY TERMINAL**

WARNING: **Wait at least 90 seconds after disconnecting the cable from the negative (-) battery terminal to disable the SRS system.**

NOTE: **When disconnecting the cable, some systems need to be initialized after the cable is reconnected. Refer to INITIALIZATION .**

3. **REMOVE LOWER NO. 3 STEERING WHEEL COVER**
    a. Disengage the claw and guide to remove the lower No. 3 steering wheel cover.

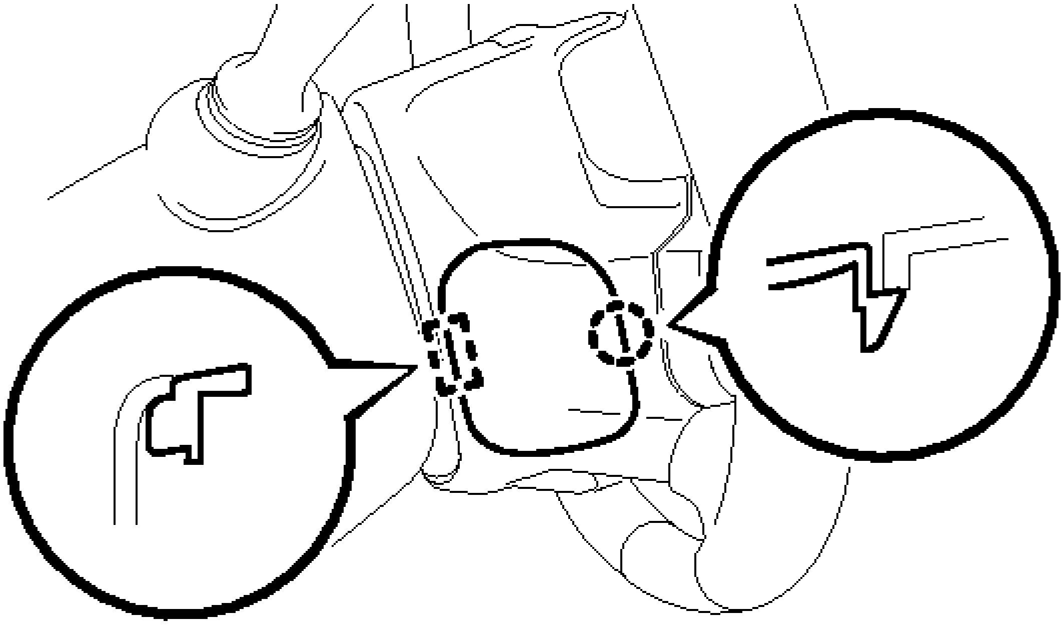

Fig. 3: Identifying Lower No. 3 Steering Wheel Cover Claws
Courtesy of TOYOTA MOTOR SALES, U.S.A., INC.

4. **REMOVE LOWER NO. 2 STEERING WHEEL COVER**
    a. Disengage the claw and guide to remove the lower No. 2 steering wheel cover.

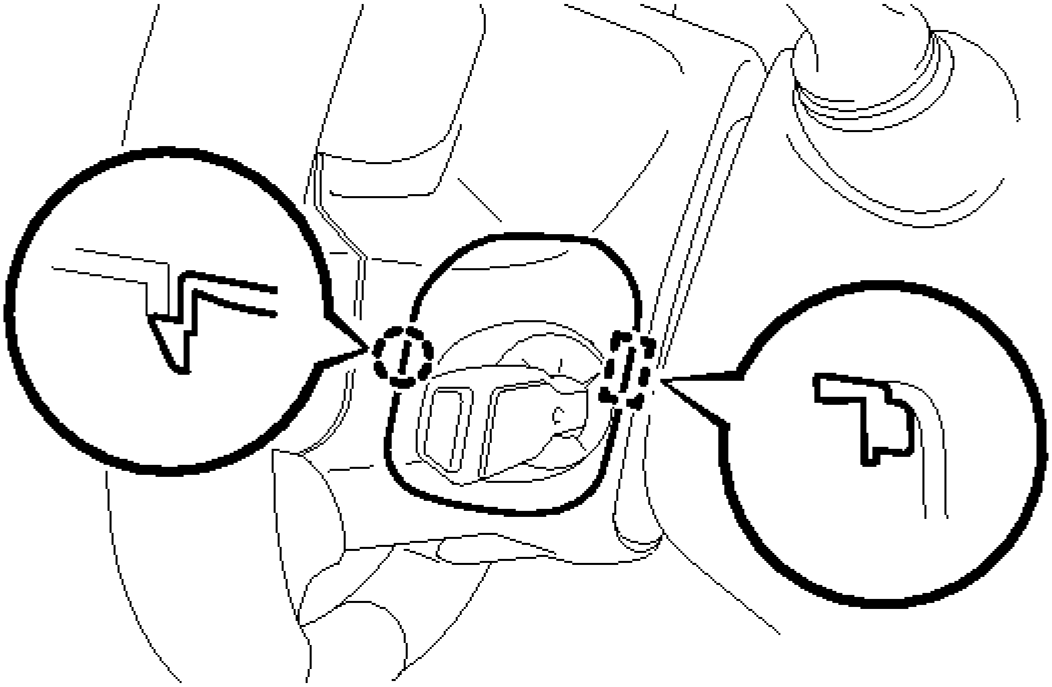

Fig. 4: Identifying Lower No. 2 Steering Wheel Cover Claws

Courtesy of TOYOTA MOTOR SALES, U.S.A., INC.

5. **REMOVE HORN BUTTON ASSEMBLY**

WARNING: **When storing the horn button assembly, keep the airbag deployment side facing upward.**

a. Check that the ignition switch is off.
b. Check that the cable is disconnected from the negative (-) battery terminal.

WARNING: **Wait at least 90 seconds after disconnecting the cable from the negative (-) battery terminal to disable the SRS system.**

c. Using a screwdriver, push up the torsion spring to disengage the pin.

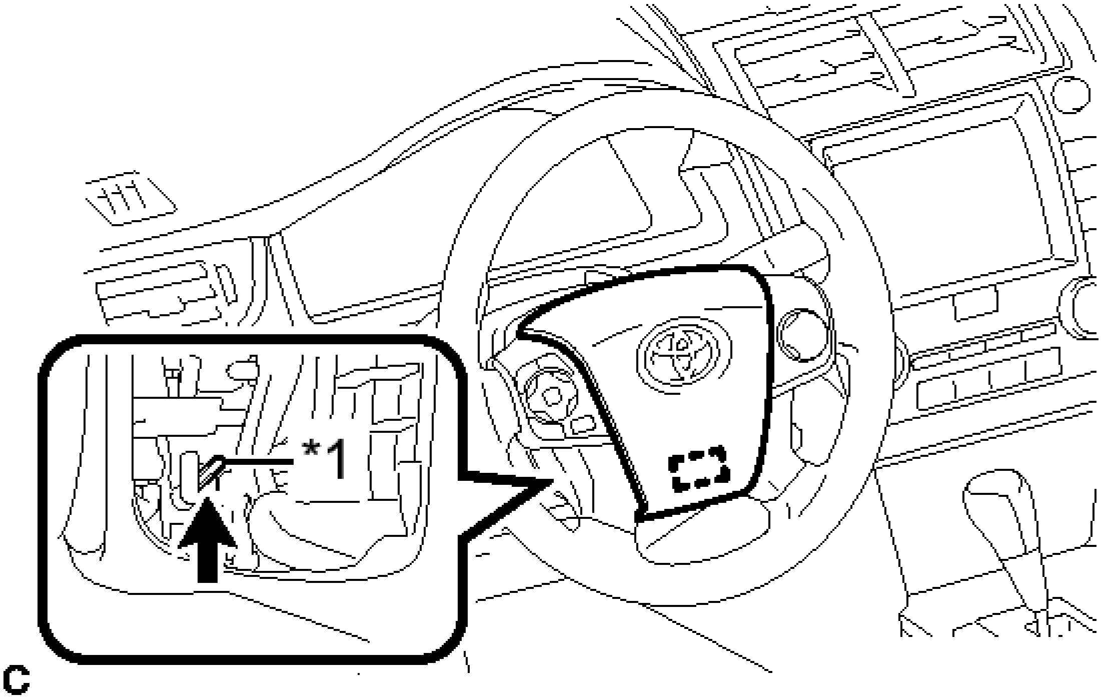

Fig. 5: Locating Horn Button Assembly Torsion Spring And Pin
Courtesy of TOYOTA MOTOR SALES, U.S.A., INC.

TEXT IN ILLUSTRATION

*1	Torsion Spring

HINT:

Insert the screwdriver from the installation hole of the lower No. 3 steering wheel cover.

d. Using a screwdriver, push in the 2 torsion springs to disengage the 2 pins.

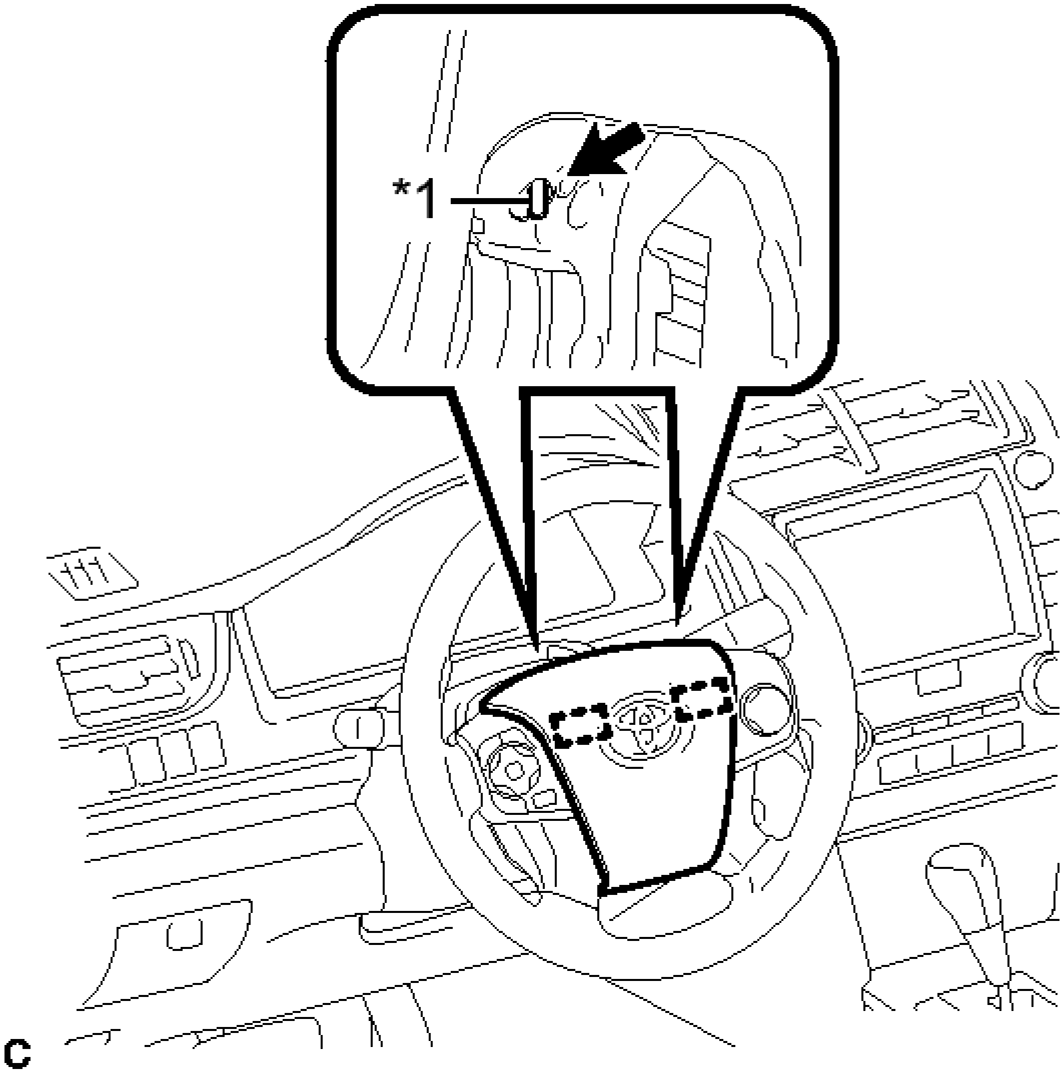

Fig. 6: Locating Horn Button Assembly Torsion Spring And Pins
Courtesy of TOYOTA MOTOR SALES, U.S.A., INC.

TEXT IN ILLUSTRATION

*1	Torsion Spring

NOTE: **Do not drop the horn button assembly.**

HINT:

Insert the screwdriver from the installation holes in the lower No. 3 steering wheel cover and lower No. 2 steering wheel cover.

e. Pull out the horn button assembly from the steering wheel assembly and support the horn button assembly with one hand.

NOTE: When removing the horn button assembly, do not pull the airbag wire harness.

f. Disconnect the horn connector from the horn button assembly.

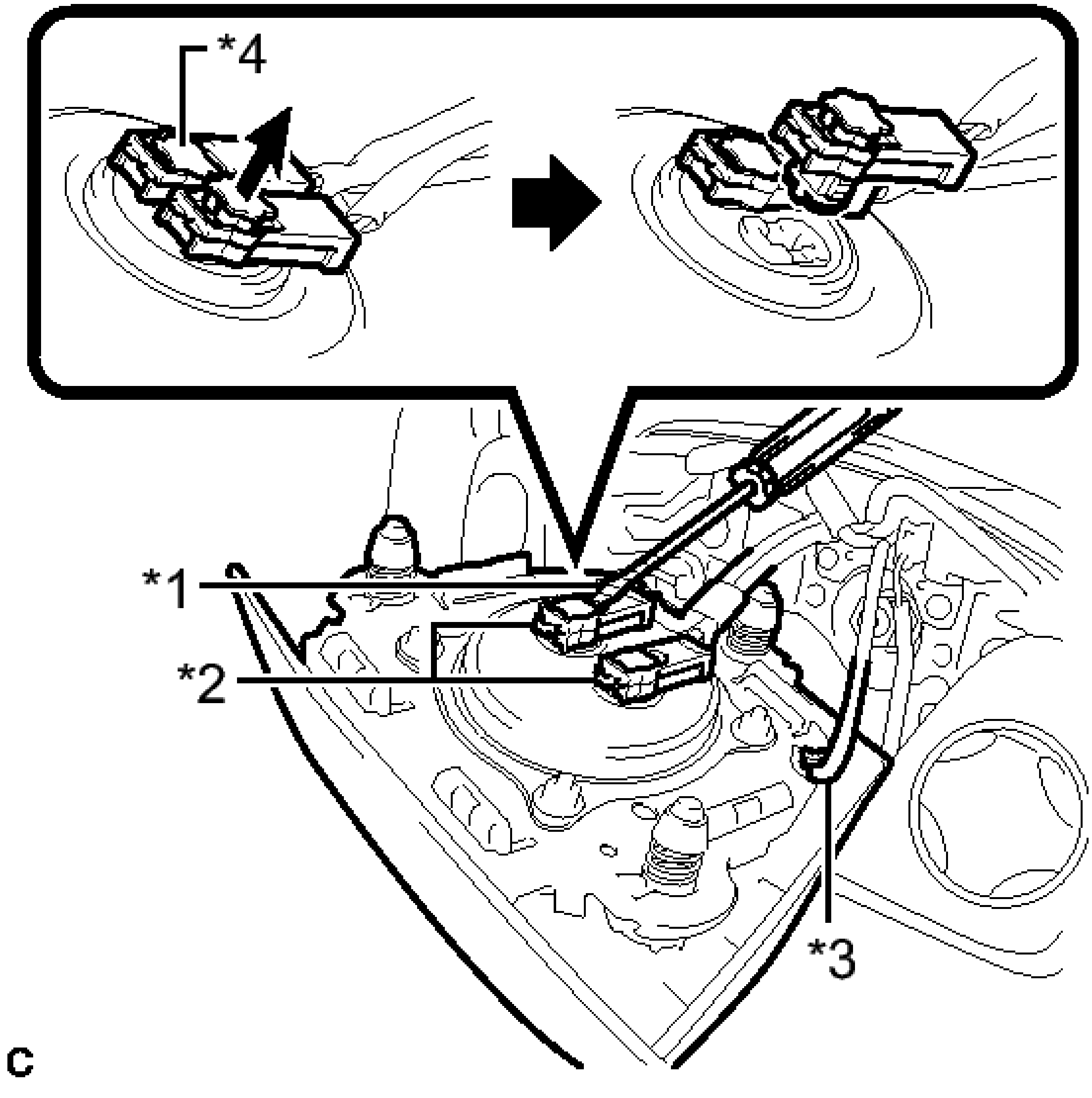

Fig. 7: Disconnecting Horn Connectors From Horn Button Assembly
Courtesy of TOYOTA MOTOR SALES, U.S.A., INC.

g. Using a screwdriver with its tip wrapped with protective tape, release the 2 airbag connector locks.

TEXT IN ILLUSTRATION

*1	Protective

	Tape
*2	Airbag Connector
*3	Horn Connector
*4	Airbag Connector Lock

h. Disconnect the 2 airbag connectors to remove the horn button assembly.

NOTE: **When disconnecting any airbag connector, take care not to damage the airbag wire harness.**

INSTALLATION

INSTALLATION

HINT:

- Use the same procedure for the 4 spoke and 3 spoke.
- The procedure listed below is for the 4 spoke.

1. **INSTALL HORN BUTTON ASSEMBLY**
    a. Check that the ignition switch is off.
    b. Check that the cable is disconnected from the negative (-) battery terminal.

WARNING: **Wait at least 90 seconds after disconnecting the cable from the negative (-) battery terminal to disable the SRS system.**

    c. Connect the 2 airbag connectors to the horn button assembly.

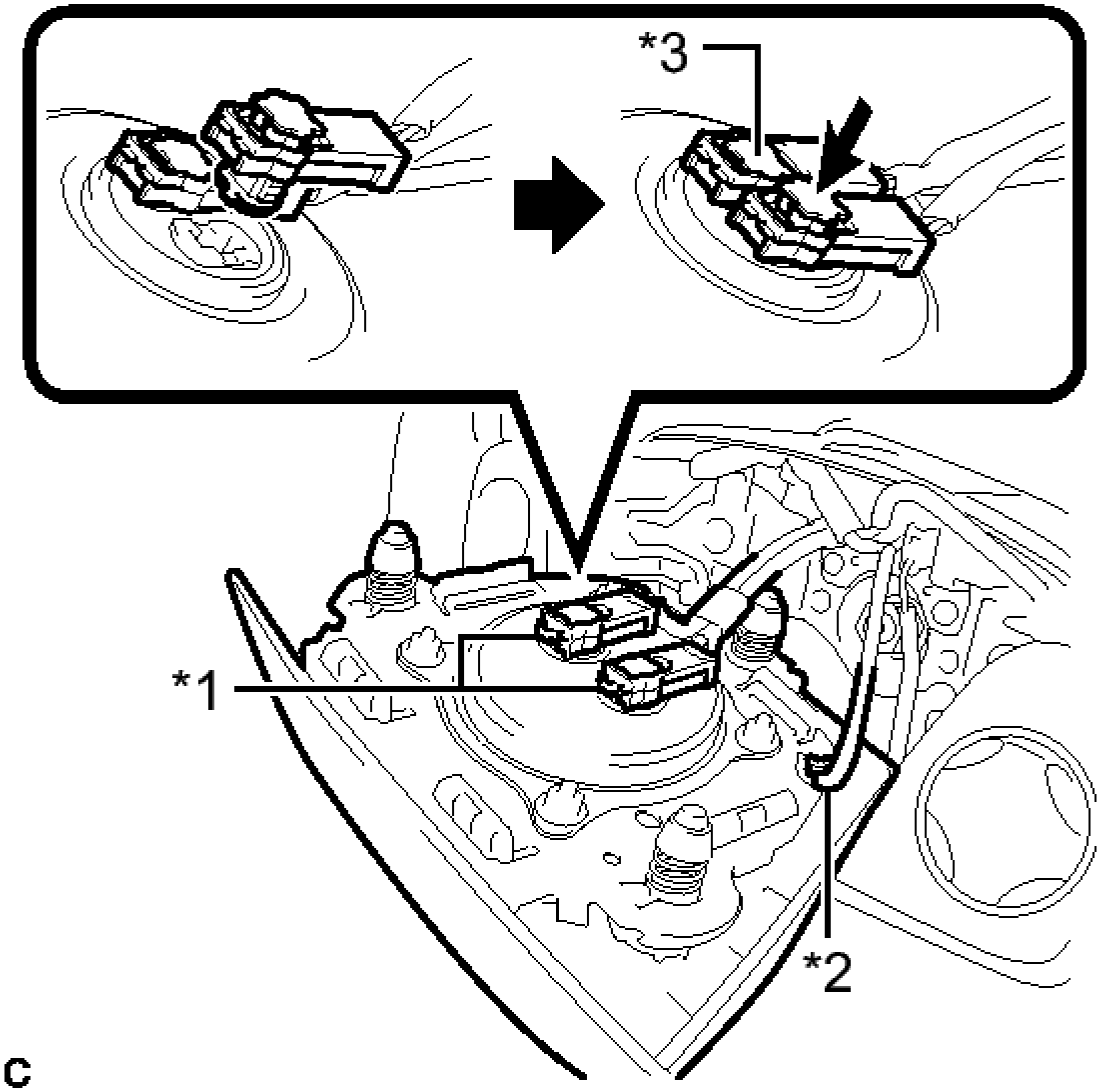

Fig. 8: Connecting Horn Connectors From Horn Button Assembly
Courtesy of TOYOTA MOTOR SALES, U.S.A., INC.

TEXT IN ILLUSTRATION

*1	Airbag Connector
*2	Horn Connector
*3	Airbag Connector Lock

NOTE:

- **When connecting any airbag connector, take care not to damage the airbag wire harness.**
- **Be sure to only connect the connectors to each corresponding**

color.

d. Push in the 2 locks to install the 2 airbag connectors.
e. Connect the horn connector to the horn button assembly.
f. Push the horn button assembly to engage the 3 pins carefully.

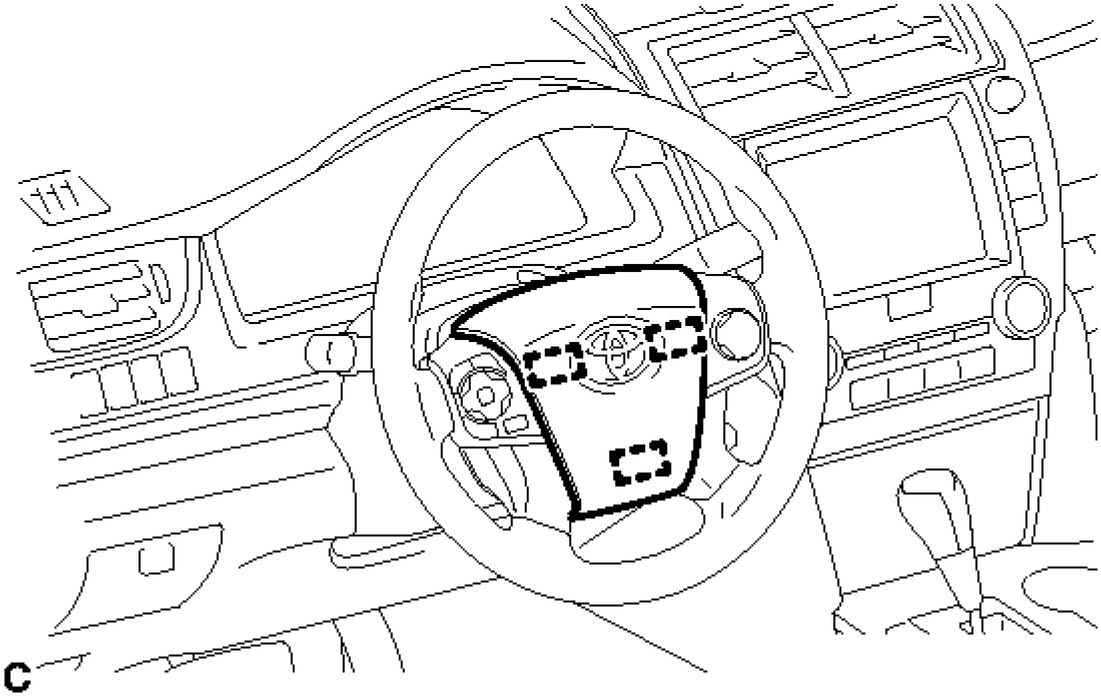

Fig. 9: Locating Horn Button Assembly Pins
Courtesy of TOYOTA MOTOR SALES, U.S.A., INC.

NOTE:

- **Make sure that the pins are securely inserted into the steering holes.**
- **Make sure to engage the 2 upper pins first.**
- **Make sure that the horn button assembly is securely installed.**

2. **INSTALL LOWER NO. 3 STEERING WHEEL COVER**
   a. Engage the claw and guide to install the lower No. 3 steering wheel cover.
3. **INSTALL LOWER NO. 2 STEERING WHEEL COVER**
   a. Engage the claw and guide to install the lower No. 2 steering wheel cover.
4. **CONNECT CABLE TO NEGATIVE BATTERY TERMINAL**

NOTE: **When disconnecting the cable, some systems need to be initialized after the cable is reconnected. Refer to INITIALIZATION .**

5. **INSPECT HORN BUTTON ASSEMBLY**

   a. Make sure that the horn sounds.

      If the horn does not sound, inspect the horn system. Refer to **PROBLEM SYMPTOMS TABLE** .

6. **PERFORM DIAGNOSTIC SYSTEM CHECK**

   For Separate Type Yaw Rate Sensor: Refer to **DTC CHECK / CLEAR** .

   For Built-In Type Yaw Rate Sensor: Refer to **DTC CHECK / CLEAR** .

7. **INSPECT SRS WARNING LIGHT**

   For Separate Type Yaw Rate Sensor: Refer to **DIAGNOSIS SYSTEM** .

   For Built-In Type Yaw Rate Sensor: Refer to **DIAGNOSIS SYSTEM** .

DISPOSAL

DISPOSAL

WARNING: **Before performing pre-disposal deployment of any SRS part, review and closely follow all applicable environmental and hazardous material regulations. Pre-disposal deployment may be considered hazardous material treatment.**

1. **PRECAUTION**

WARNING:

- **An airbag or pretensioner may be activated by static electricity. To prevent this, be sure to touch a metal surface with your bare hands to discharge static electricity before performing this procedure.**
- **Never dispose of a horn button assembly with an undeployed airbag.**
- **The airbag produces an exploding sound when it is deployed, so perform the operation outdoors and where it will not create a nuisance to nearby residents.**
- **When deploying the airbag, always use the specified SST (SRS Airbag Deployment Tool). Perform the operation in a place away from electrical noise.**
- **When deploying the airbag, perform the operation at least 10 m (32.8 ft.) away from the horn button assembly.**
- **The horn button assembly becomes extremely hot when the airbag is deployed, so do not touch it for at least 30 minutes after deployment.**
- **Use gloves and safety glasses when handling a horn button**

assembly with a deployed airbag.

- **Do not apply water etc. to a horn button assembly with a deployed airbag.**
- **Always wash your hands with water after completing the operation.**

HINT:

When scrapping a vehicle equipped with an SRS or disposing of the horn button assembly, be sure to deploy the airbag first in accordance with the procedure described below. If any abnormality occurs with the airbag deployment, contact the Service Dept. of TOYOTA MOTOR SALES, U.S.A., INC.

2. **DISPOSE OF HORN BUTTON ASSEMBLY (When Installed in Vehicle)**

NOTE:

- **When disposing of the horn button assembly, never use the customer's vehicle to deploy the airbag.**
- **Be sure to observe the following procedure when deploying the airbag.**

HINT:

Prepare a battery as the power source to deploy the airbag.

a. Check the function of SST.

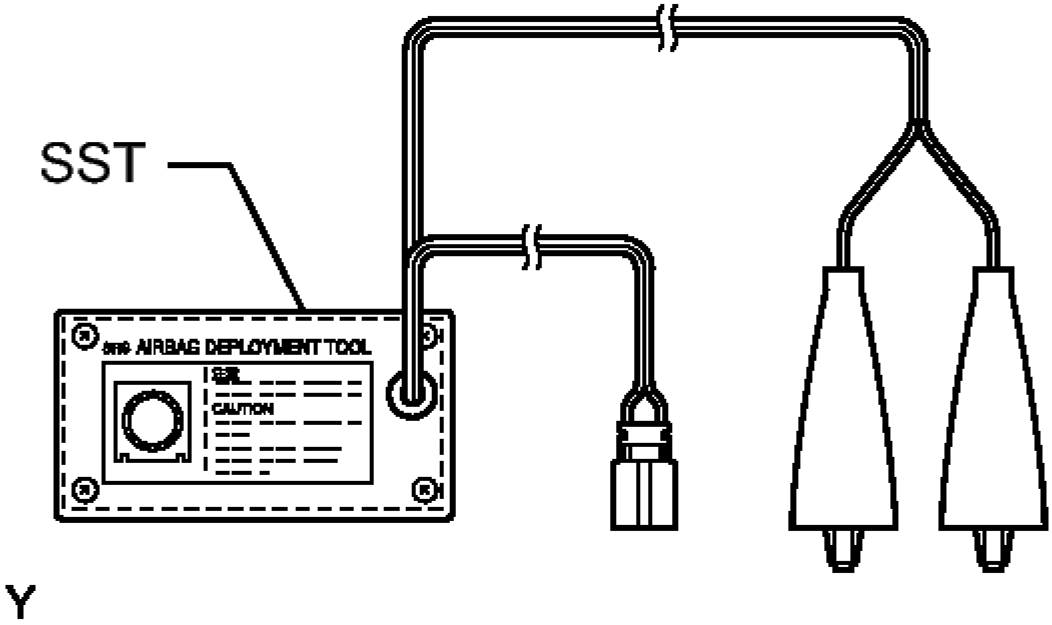

Fig. 10: Checking Function Of SST

Courtesy of TOYOTA MOTOR SALES, U.S.A., INC.

- **SST: 09082-00700**

WARNING: **When deploying the airbag, always use the specified SST:**

SRS Airbag Deployment Tool

1. Connect SST to the battery.

   Connect the red clip of SST to the positive (+) battery terminal and the black clip of SST to the negative (-) battery terminal.

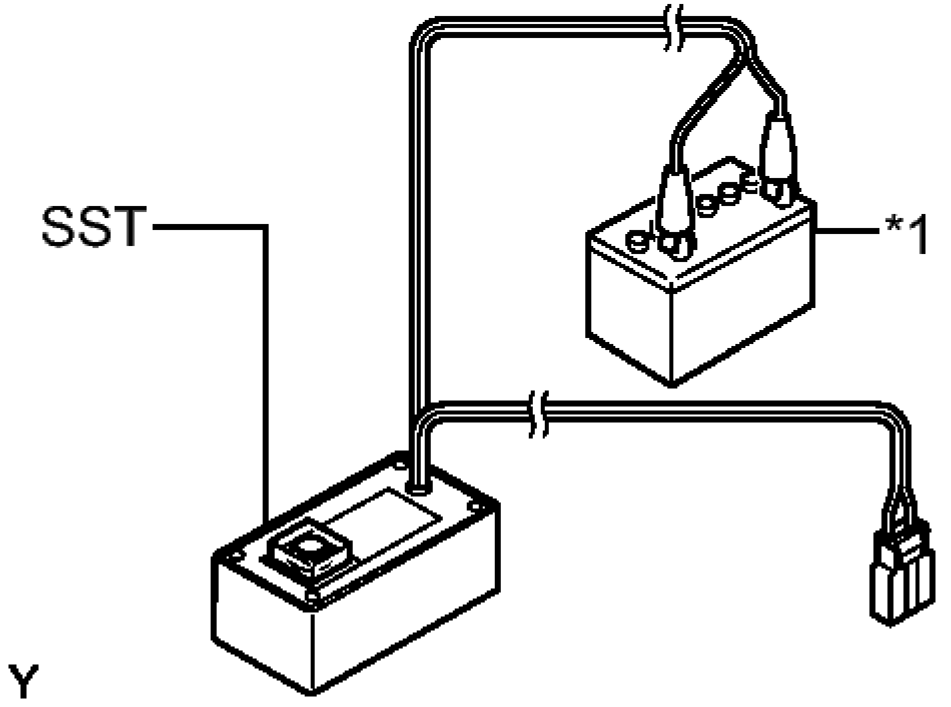

Fig. 11: Connecting SST To Battery
Courtesy of TOYOTA MOTOR SALES, U.S.A., INC.

TEXT IN ILLUSTRATION

*1	Battery

2. Check the function of SST.

   Press the SST activation switch and check that the LED of the SST activation switch comes on.

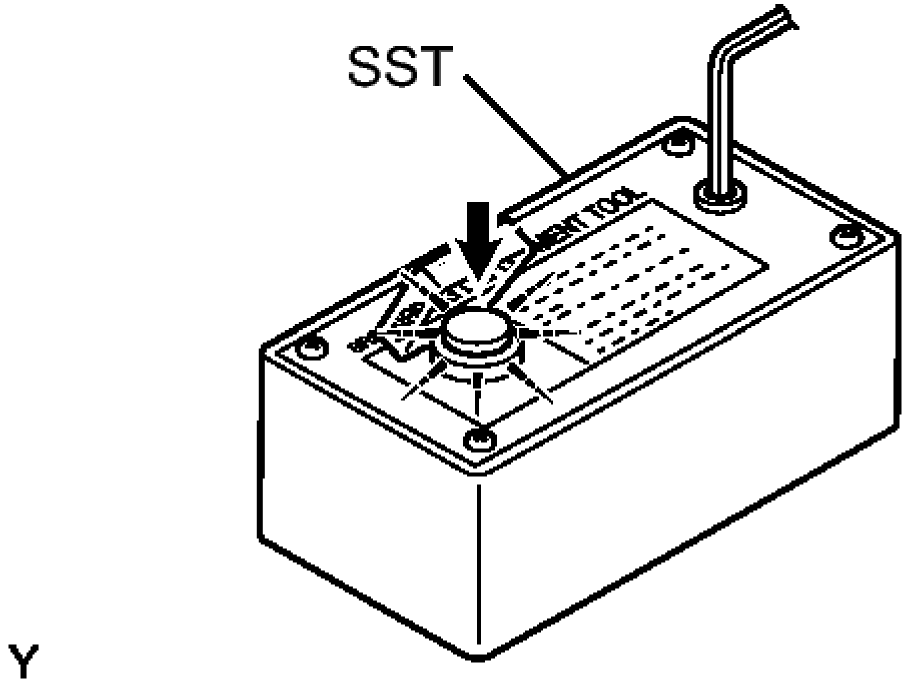

Fig. 12: Identifying SST Activation Switch
Courtesy of TOYOTA MOTOR SALES, U.S.A., INC.

WARNING:

- **Do not connect the yellow SST connector to the airbag.**
- **If the LED comes on when the activation switch is not being pressed, SST is malfunctioning. Replace SST.**

    3. Disconnect SST from the battery.

b. Refer to Precaution.

For Separate Type Yaw Rate Sensor: Refer to **PRECAUTION** .

For Built-In Type Yaw Rate Sensor: Refer to **PRECAUTION** .

c. Remove the lower steering column cover. Refer to **REMOVAL - Step 8** .
d. Disconnect the cable from the negative (-) battery terminal.

WARNING: **Wait at least 90 seconds after disconnecting the cable from the negative (-) battery terminal to disable the SRS system.**

e. Disconnect the yellow airbag connector from the spiral cable.
    1. Slide the slider to release the lock, and then disconnect the connector.

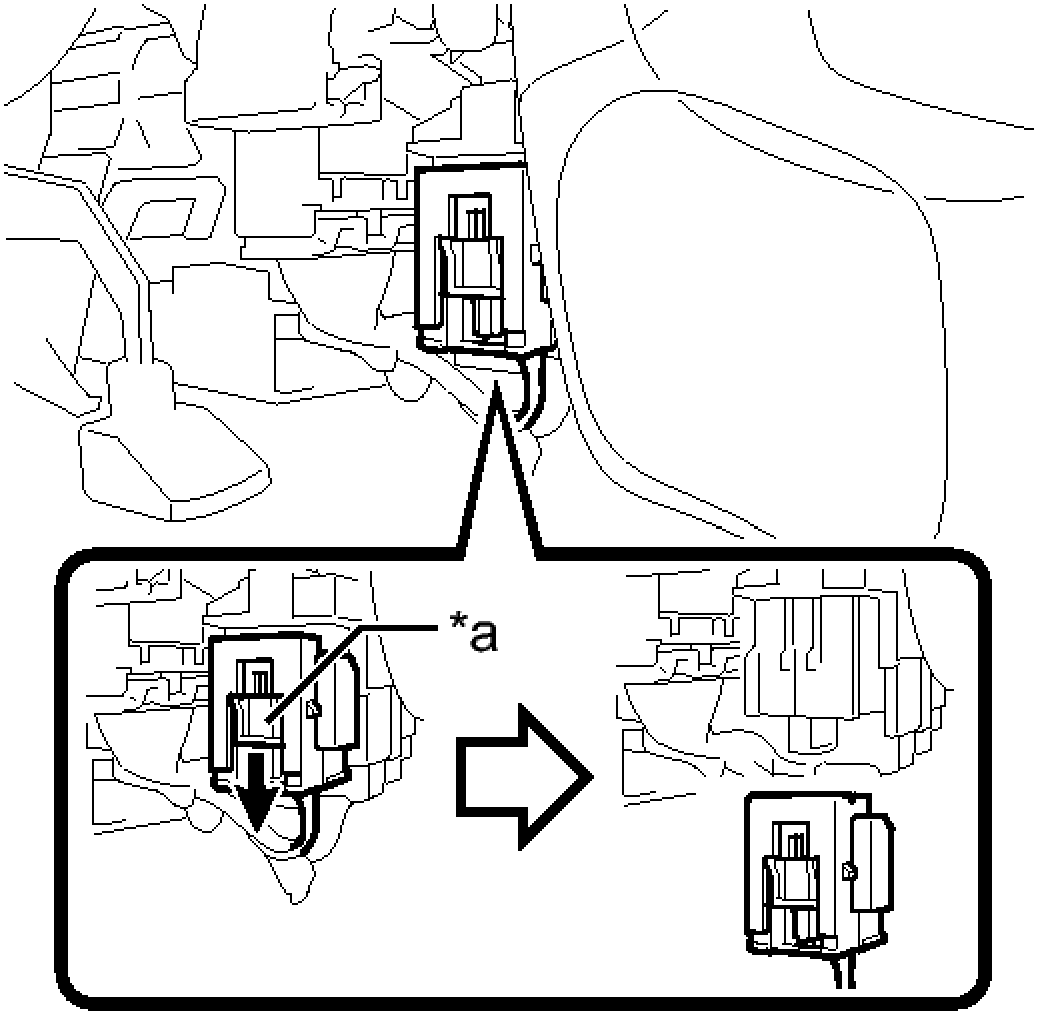

C

Fig. 13: Disconnecting Yellow Airbag Connector From Spiral Cable
Courtesy of TOYOTA MOTOR SALES, U.S.A., INC.

TEXT IN ILLUSTRATION

*a	Slider

NOTE: **When disconnecting any airbag connector, take care not to damage the airbag wire harness.**

f. Install SST.

WARNING: **Check that there is no looseness in the steering wheel assembly and horn button assembly.**

1. Connect the SST connector to the airbag connector of the spiral cable.

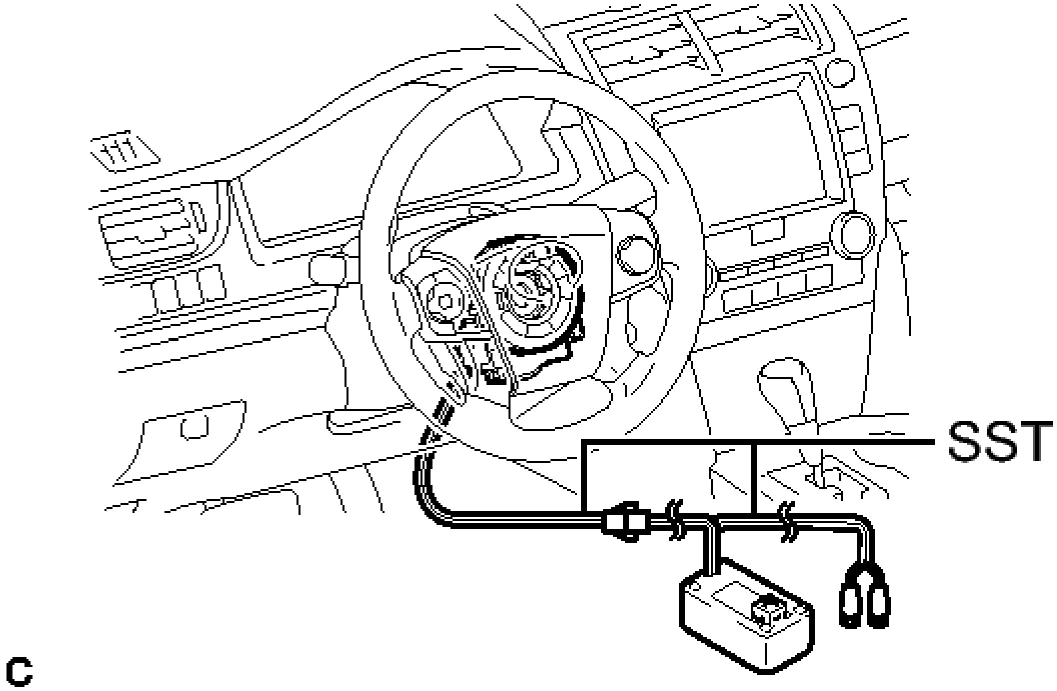

Fig. 14: View Of Connected SST Connector To Airbag Connector Of Spiral Cable
Courtesy of TOYOTA MOTOR SALES, U.S.A., INC.

- **SST: 09082-00700**
- **SST: 09082-00780**

NOTE: **To avoid damaging the SST connector or wire harness, do not lock the secondary lock of the twin lock.**

2. Move SST at least 10 m (32.8 ft.) away from the front side window of the vehicle.

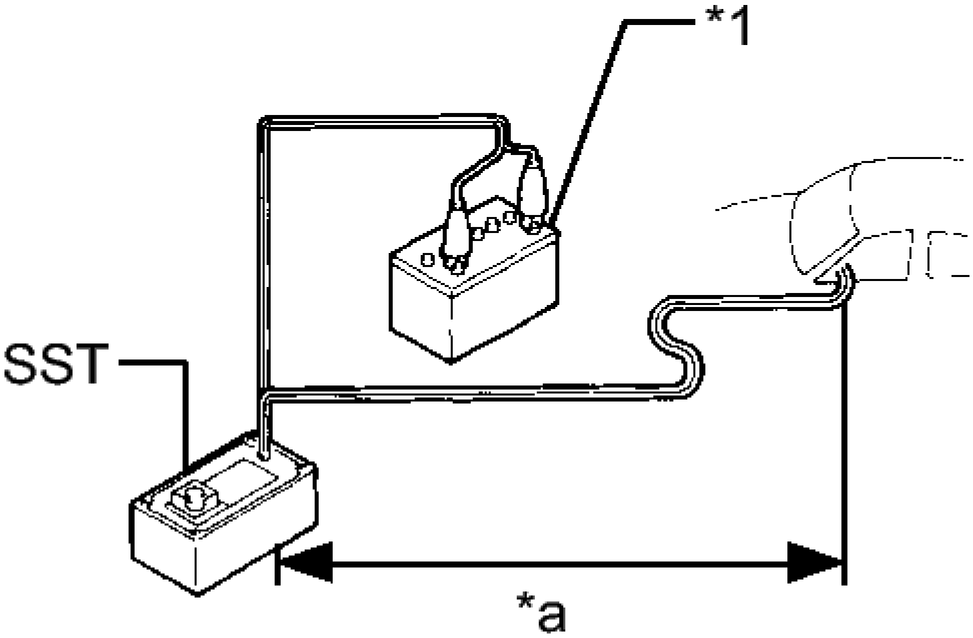

Fig. 15: Identifying SST Distance From Front Side Window
Courtesy of TOYOTA MOTOR SALES, U.S.A., INC.

TEXT IN ILLUSTRATION

*1	Battery
*a	10 m (32.8 ft.) or more

3. Maintaining sufficient clearance for the SST wire harness in the front side window, close all doors and windows of the vehicle.

NOTE: **Take care not to damage the SST wire harness.**

4. Connect the red clip of SST to the positive (+) battery terminal and the black clip of SST to the negative (-) battery terminal.

g. Deploy the airbag.
   1. Check that no one is inside the vehicle or within a 10 m (32.8 ft.) radius of the vehicle.
   2. Press the SST activation switch and deploy the airbag.

WARNING:

- **Before deployment, make sure that no one is near the vehicle.**
- **The horn button assembly becomes extremely hot when the airbag is deployed, so do not touch it for at**

least 30 minutes after deployment.

- **Use gloves and safety glasses when handling a horn button assembly with a deployed airbag.**
- **Do not apply water etc. to a horn button assembly with a deployed airbag.**
- **Always wash your hands with water after completing the operation.**

HINT:

The airbag is deployed as the LED of the SST activation switch comes on.

3. **DISPOSE OF HORN BUTTON ASSEMBLY (When Not Installed in Vehicle)**

NOTE: **Be sure to observe the following procedure when deploying the airbag.**

HINT:

Prepare a battery as the power source to deploy the airbag.

a. Check the function of SST.

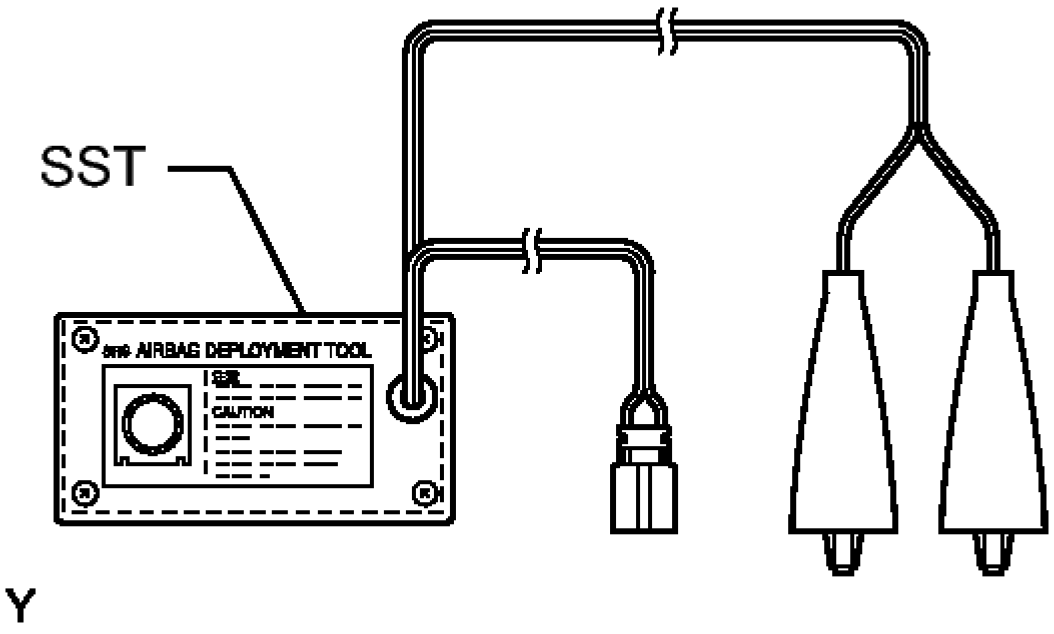

Fig. 16: Checking Function Of SST
Courtesy of TOYOTA MOTOR SALES, U.S.A., INC.

- **SST: 09082-00700**

WARNING: **When deploying the airbag, always use the specified SST:**

SRS Airbag Deployment Tool

1. Connect SST to the battery.

   Connect the red clip of SST to the positive (+) battery terminal and the black clip of SST to the negative (-) battery terminal.

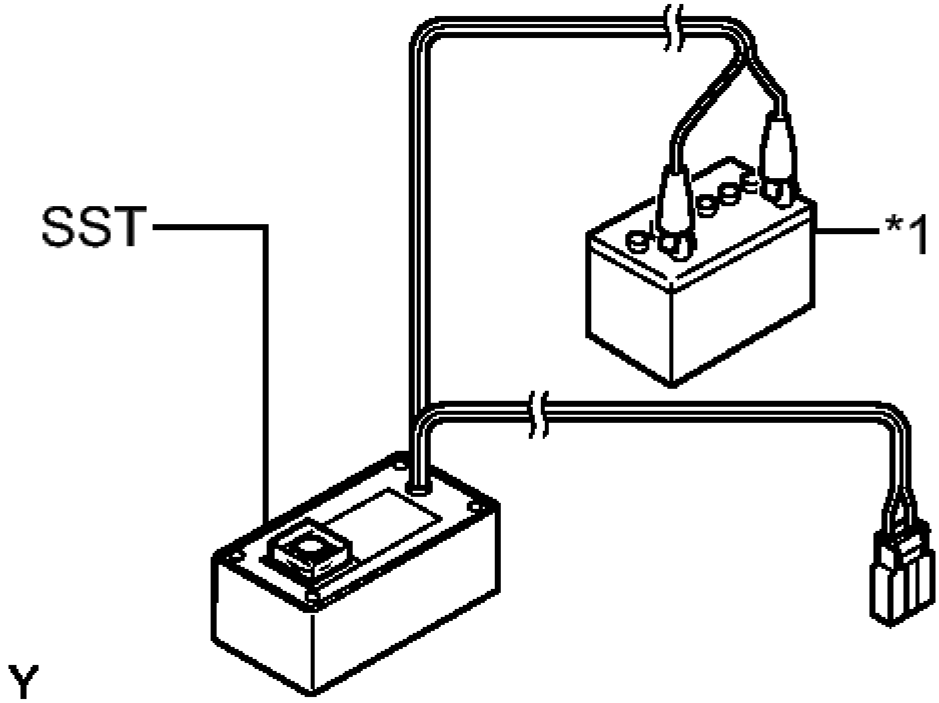

Fig. 17: Connecting SST To Battery
Courtesy of TOYOTA MOTOR SALES, U.S.A., INC.

TEXT IN ILLUSTRATION

*1	Battery

2. Check the function of SST.

   Press the SST activation switch and check that the LED of the SST activation switch comes on.

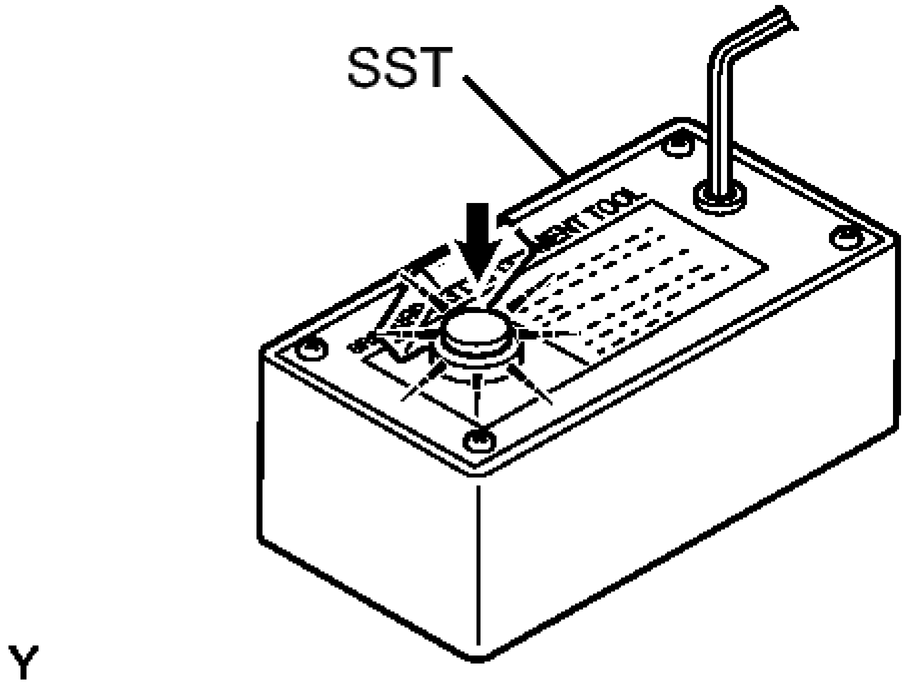

Fig. 18: Identifying SST Activation Switch
Courtesy of TOYOTA MOTOR SALES, U.S.A., INC.

WARNING:

- **Do not connect the yellow SST connector to the airbag.**
- **If the LED comes on when the activation switch is not being pressed, SST is malfunctioning. Replace SST.**

3. Disconnect SST from the battery.

b. Remove the horn button assembly. Refer to **REMOVAL**.

WARNING:

- **Before removing the horn button assembly, wait at least 90 seconds after turning the ignition switch off and disconnecting the cable from the negative (-) battery terminal.**
- **When storing the horn button assembly, keep the airbag deployment side facing upward.**

c. Using braided wire, tie down the horn button assembly to an unneeded wheel.

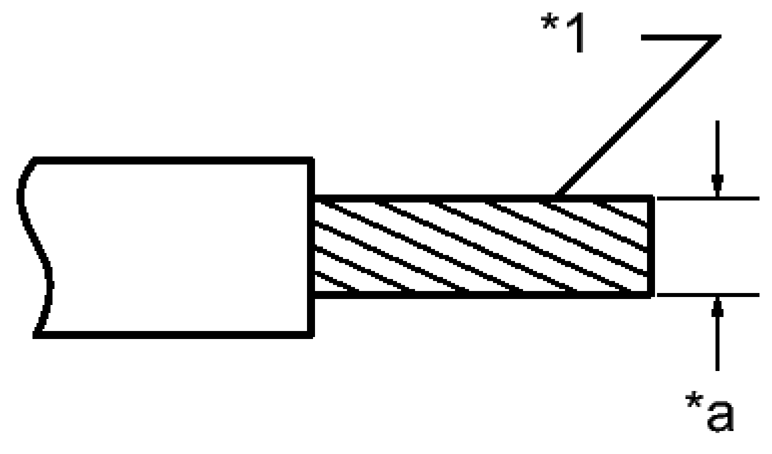

Fig. 19: Identifying Stripped Wire
Courtesy of TOYOTA MOTOR SALES, U.S.A., INC.

TEXT IN ILLUSTRATION

*1	Stripped Wire Section
*a	Wire Diameter

Wire

Stripped wire section

1.25 mm^2 (0.0019 $in.^2$) or more

WARNING: **If the wire harness is too thin or an alternative object is used to tie down the horn button assembly, it may snap when the airbag is deployed. Always use a wire for vehicle use with an area of at least 1.25 mm^2 (0.0019 $in.^2$).**

HINT:

To calculate the area of the stripped wire section:

Area = 3.14 x $(Diameter)^2$ / 4

1. After connecting the following SST to each other, connect them to the horn button assembly.

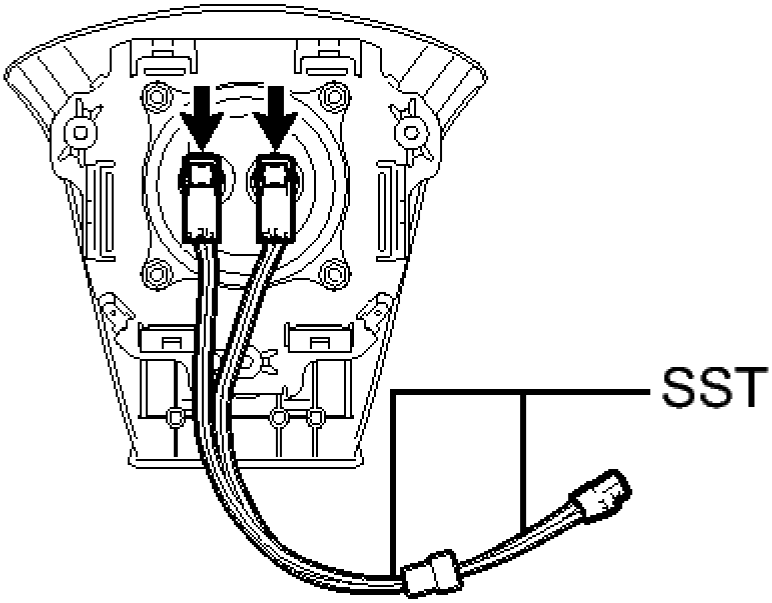

Fig. 20: View Of SST Connected To Horn Button Assembly
Courtesy of TOYOTA MOTOR SALES, U.S.A., INC.

- **SST: 09082-00802**
  09082-10801
  09082-30801

2. Wind 3 wires at least 2 times each around each of the snap pins.

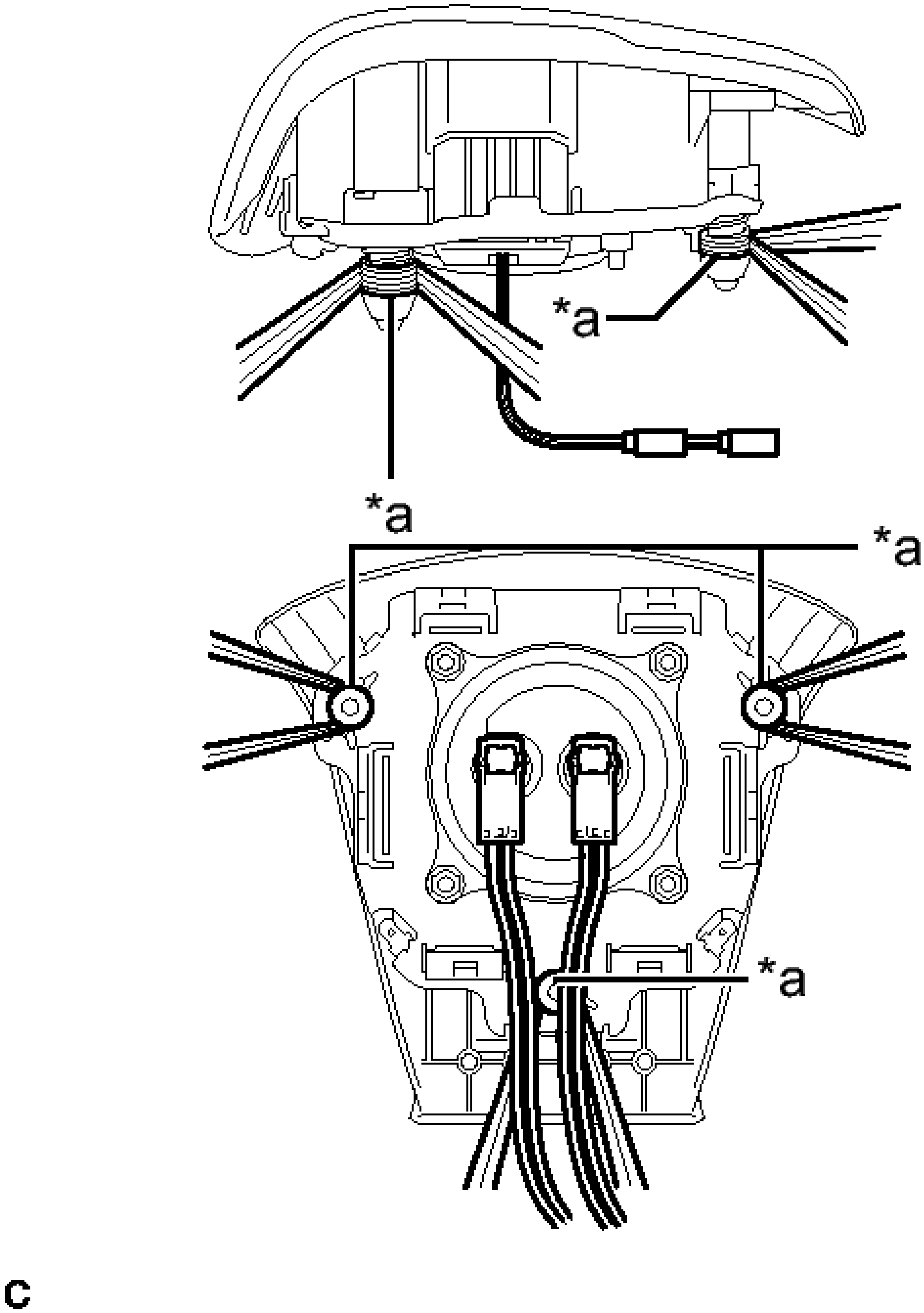

Fig. 21: Identifying Wires Wrapped Around Snap Pins
Courtesy of TOYOTA MOTOR SALES, U.S.A., INC.

TEXT IN ILLUSTRATION

	2

*a	times or more

WARNING:

- **Tightly wind the wires around the snap pins without any slack.**
- **Make sure that the wires are tight. If there is slack in the wires, the horn button assembly may break loose when the airbag is deployed.**

3. Face the airbag deployment side of the horn button assembly upward on top of an unneeded tire and wheel set. Separately tie the each sides of the horn button assembly to the wheel through the hub nut holes. Position the SST connector so that it hangs downward through the hub hole of the wheel.

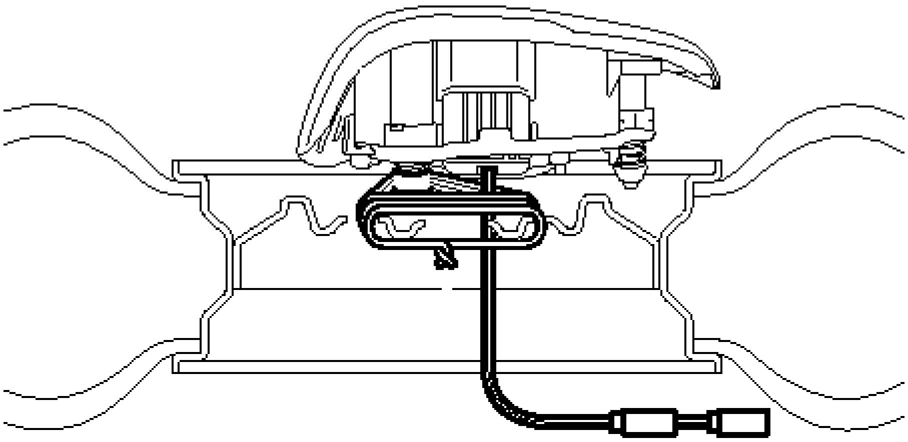

C

Fig. 22: View Of SST Connector Positioned Downward Through Hub Hole Of Wheel
Courtesy of TOYOTA MOTOR SALES, U.S.A., INC.

Minimum tire size

Width

185 mm (7.28 in.)

Inner diameter

360 mm (1.18 ft.)

WARNING:

- **Make sure that the wires are tight. If there is slack in the wires, the horn button assembly may break loose when the airbag is deployed.**
- **Always tie down the horn button assembly with the airbag deployment side facing upward.**

NOTE: **The wheel will be damaged by the airbag deployment, so use an unneeded wheel.**

d. Install SST.

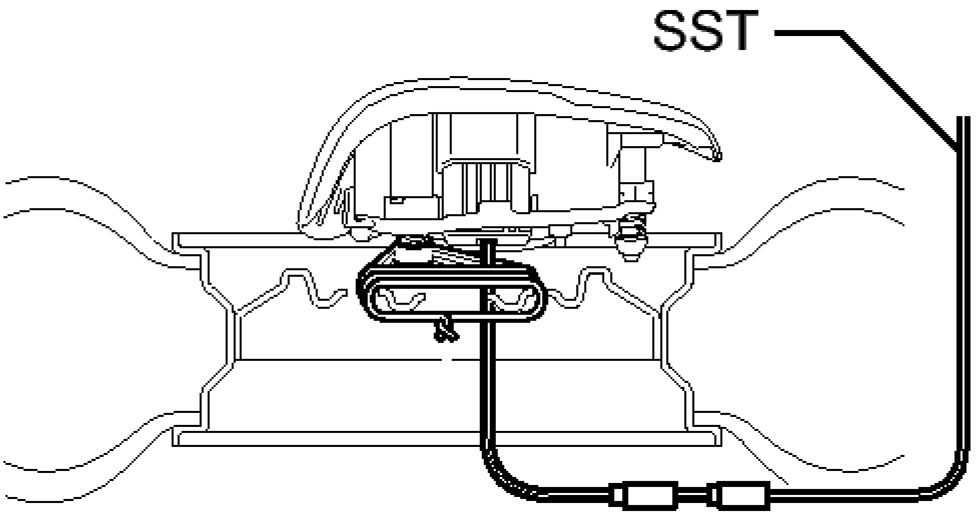

C

Fig. 23: View Of Connected SST Connector
Courtesy of TOYOTA MOTOR SALES, U.S.A., INC.

WARNING: **Place the wheel on level ground.**

1. Connect the SST connector.
    - **SST: 09082-00700**

NOTE: **To avoid damaging the SST connector or wire harness, do not lock the secondary lock of the twin lock. Also, secure some slack for the SST wire harness inside the disc wheel.**

    2. Move SST at least 10 m (32.8 ft.) away from the airbag tied down to the wheel.

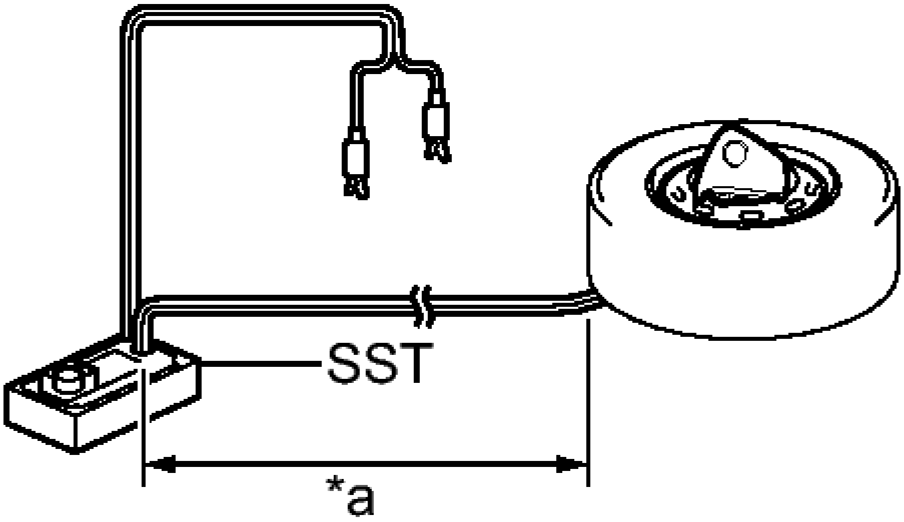

C

Fig. 24: Identifying SST & Airbag Distance
Courtesy of TOYOTA MOTOR SALES, U.S.A., INC.

TEXT IN ILLUSTRATION

*a	10 m (32.8 ft.) or more

e. Cover the horn button assembly (using a cardboard box).
    1. Cover the horn button assembly with a cardboard box.

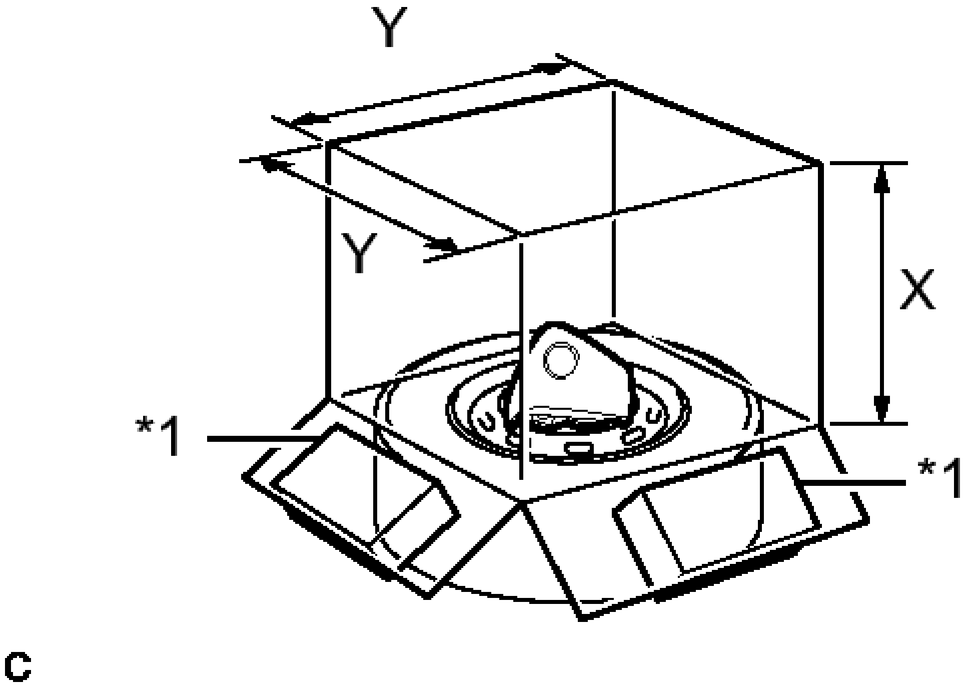

Fig. 25: Covering Steering Pad With Cardboard Box
Courtesy of TOYOTA MOTOR SALES, U.S.A., INC.

TEXT IN ILLUSTRATION

*1	Weight

2. Place weights on the cardboard box in 4 places totaling at least 190 N (19 kg, 42.7 lb).

   Minimum cardboard box size

   Must exceed the following dimensions

   X

   460 mm (1.51 ft.)

   Y

   650 mm (2.13 ft.)

NOTE:

- **When dimension Y of the cardboard box exceeds the diameter of the wheel and tire to which the horn button assembly is tied, X should be the following size.**

  X = 460 mm (1.51 ft.) + width of tire

- **If a cardboard box smaller than the specified size is used, it may be broken by the shock from the airbag deployment.**

f. Cover the horn button assembly (using tires).

   1. Place at least 3 tires without wheels onto the wheel and tire to which the horn button assembly is tied.

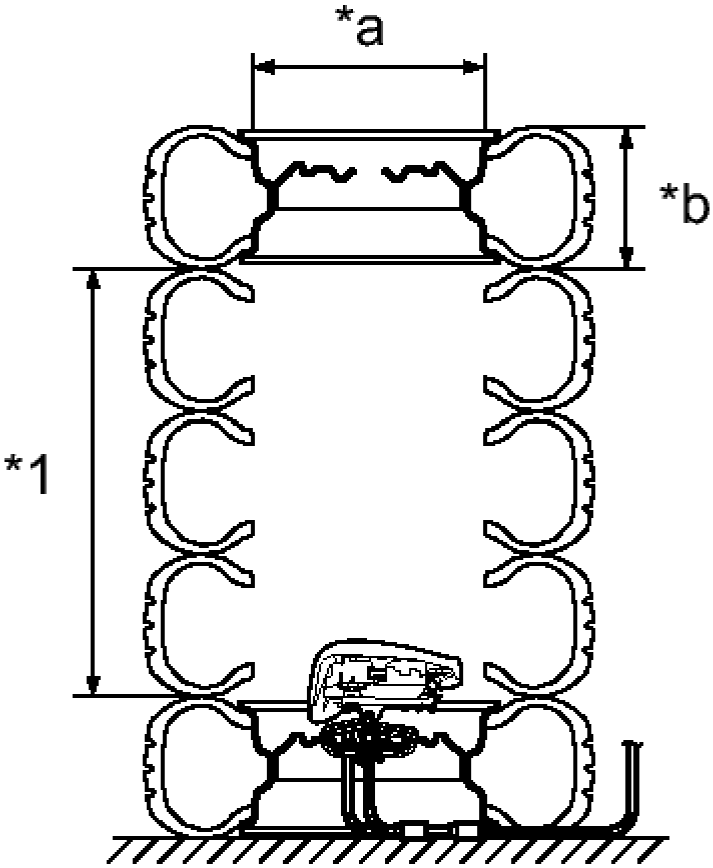

C

Fig. 26: Identifying Horn Button Assembly Inside Tires
Courtesy of TOYOTA MOTOR SALES, U.S.A., INC.

TEXT IN ILLUSTRATION

*1	Tires (3 or more)
*a	Inner Diameter

*b	Width

2. Place a wheel and tire on top.

   Minimum tire size

   Width

   185 mm (7.28 in.)

   Inner diameter

   360 mm (1.18 ft.)

WARNING: **Do not use tires with wheels except for on the top and bottom.**

NOTE:

- **The tires may be damaged by the airbag deployment, so use unneeded tires.**
- **Do not place the SST connector under the tire because it could be damaged.**

3. Tie the tires together with the 2 wires.

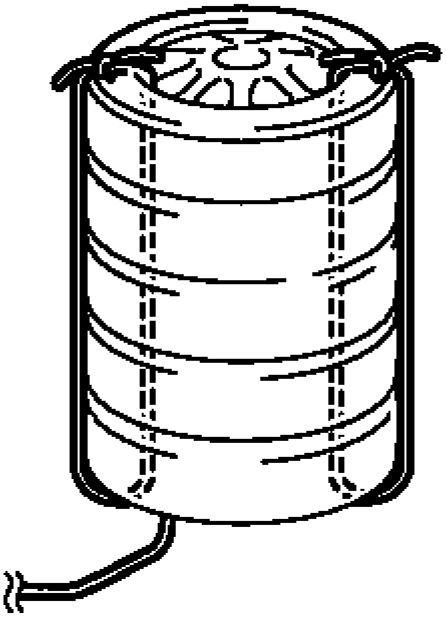

Fig. 27: Identifying Tires Tied Together With Wires

Courtesy of TOYOTA MOTOR SALES, U.S.A., INC.

WARNING: **Make sure that the wires are tight. Looseness in the wires results in the tires breaking loose when the airbag is deployed.**

g. Deploy the airbag.
    1. Connect the red clip of SST to the positive (+) battery terminal and the black clip of SST to the negative (-) battery terminal.

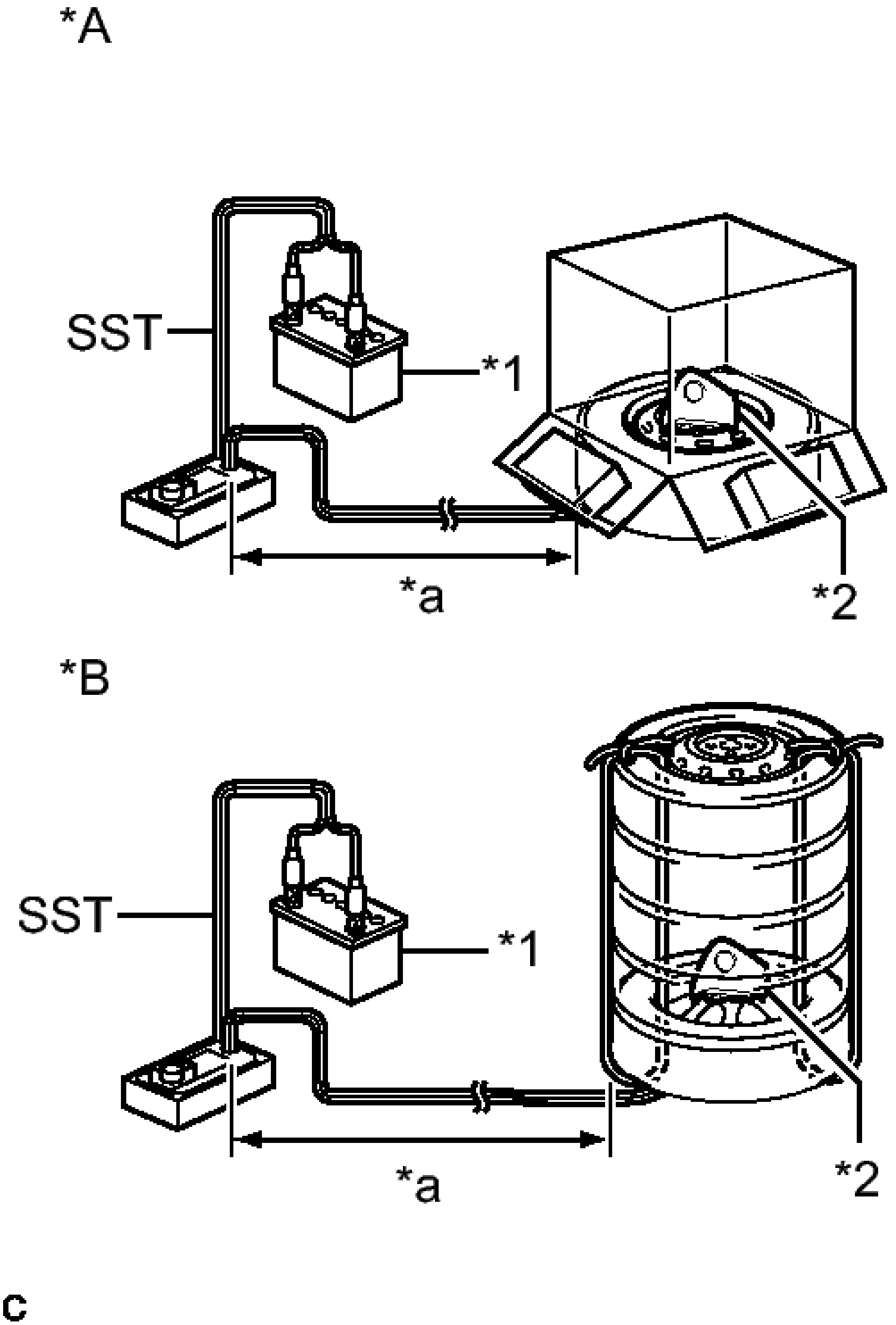
*A
SST
*1
*a
*2
*B
SST
*1
*a
*2
C

Fig. 28: View Of SST Deployment Examples
Courtesy of TOYOTA MOTOR SALES, U.S.A., INC.

TEXT IN ILLUSTRATION

	Using a

*A	Cardboard Box
*B	Using Tires
*1	Battery
*2	Horn Button Assembly
*a	10 m (32.8 ft.) or more

2. Check that no one is within a 10 m (32.8 ft.) radius of the wheel to which the horn button assembly is tied.
3. Press the SST activation switch and deploy the airbag.

WARNING: **Before deployment, make sure that no one is near the airbag.**

HINT:

The airbag is deployed as the LED of the SST activation switch comes on.

h. Dispose of the horn button assembly.

WARNING:

- **The horn button assembly becomes extremely hot when the airbag is deployed, so do not touch it for at least 30 minutes after deployment.**
- **Use gloves and safety glasses when handling a horn button assembly with a deployed airbag.**
- **Do not apply water etc. to a horn button assembly with a deployed airbag.**
- **Always wash your hands with water after completing the operation.**

1. Remove the horn button assembly from the wheel.
2. Place the horn button assembly in a plastic bag, tie it tightly and dispose of it according to local regulations.

SPIRAL CABLE

COMPONENTS

ILLUSTRATION

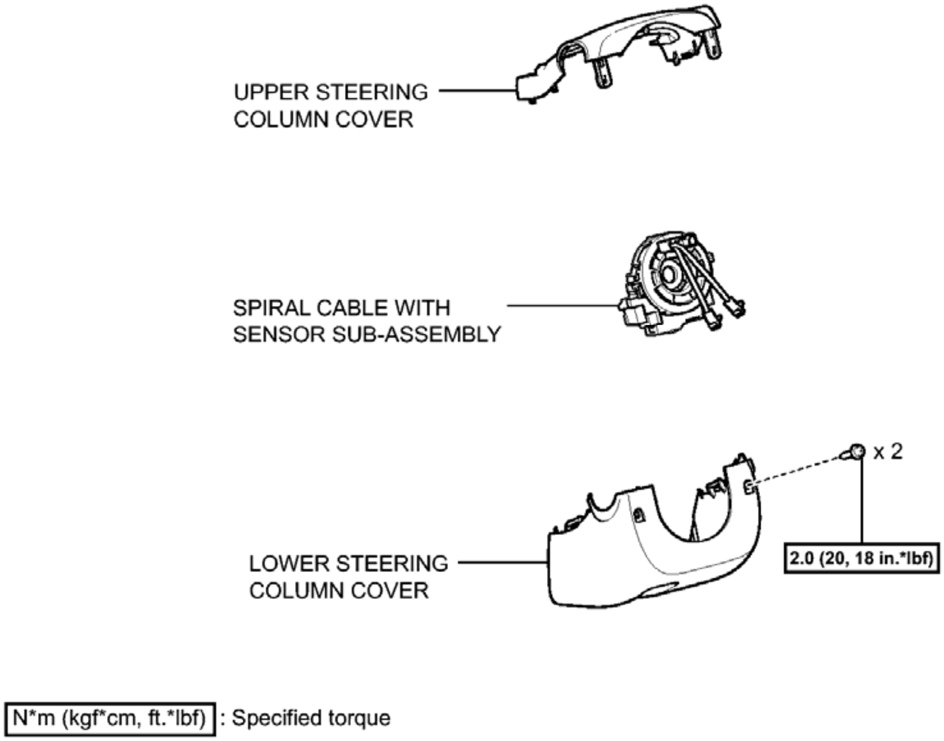
UPPER STEERING COLUMN COVER
SPIRAL CABLE WITH SENSOR SUB-ASSEMBLY
x 2
LOWER STEERING COLUMN COVER
2.0 (20, 18 in.*lbf)
N*m (kgf*cm, ft.*lbf) : Specified torque

c

Fig. 29: Identifying Spiral Cable Replacement Components With Torque Specifications (1 Of 2)
Courtesy of TOYOTA MOTOR SALES, U.S.A., INC.

ILLUSTRATION

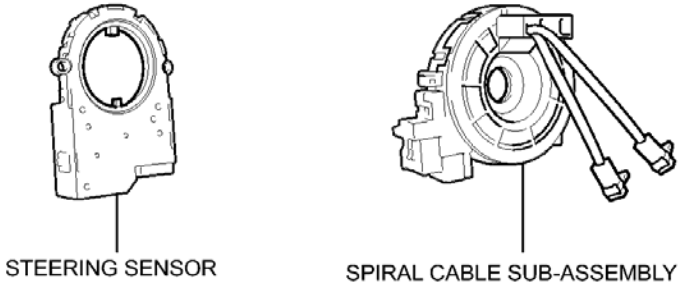
STEERING SENSOR
SPIRAL CABLE SUB-ASSEMBLY

c

Fig. 30: Identifying Spiral Cable Replacement Components (2 Of 2)
Courtesy of TOYOTA MOTOR SALES, U.S.A., INC.

REMOVAL

REMOVAL

1. **REMOVE STEERING WHEEL ASSEMBLY**
    - For 4 Spoke: Refer to **REMOVAL** .
    - For 3 Spoke: Refer to **REMOVAL** .
2. **ALIGN FRONT WHEELS FACING STRAIGHT AHEAD**
3. **INSPECT SPIRAL CABLE SUB-ASSEMBLY**
    a. Check the colored part as shown in the illustration.

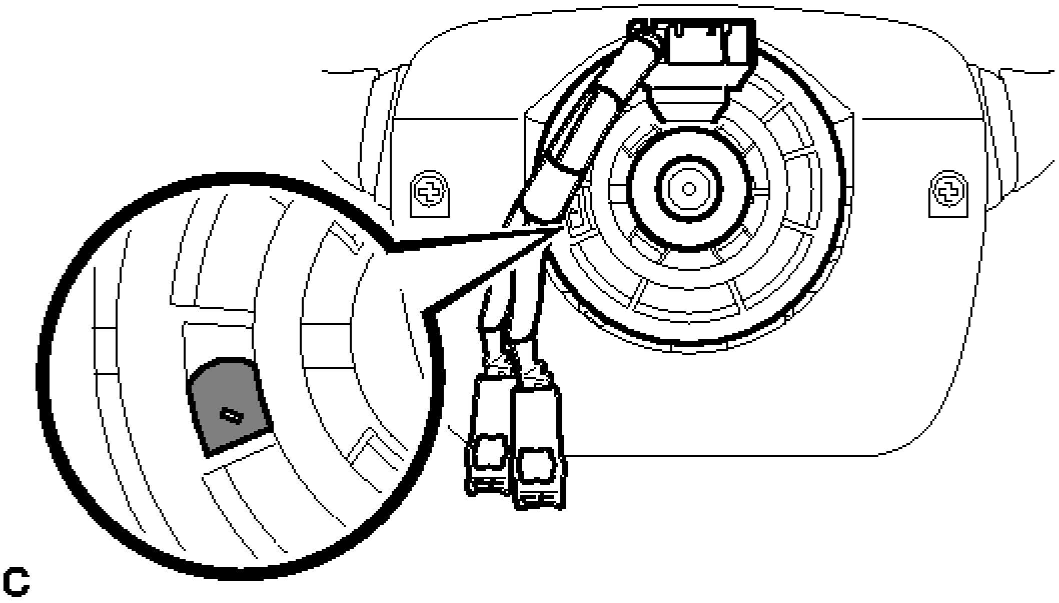

Fig. 31: Inspecting Spiral Cable Sub-Assembly
Courtesy of TOYOTA MOTOR SALES, U.S.A., INC.

TEXT IN ILLUSTRATION

▨	Colored Part

If the colored part shown in the illustration cannot be confirmed, it is possible that the spiral cable sub-assembly is broken. Replace the spiral cable with sensor sub-assembly with a new one.

4. **REMOVE LOWER STEERING COLUMN COVER** . Refer to **REMOVAL - Step 8** .
5. **REMOVE UPPER STEERING COLUMN COVER** . Refer to **REMOVAL - Step 9** .
6. **REMOVE SPIRAL CABLE WITH SENSOR SUB-ASSEMBLY**

NOTE:

- **Do not replace the spiral cable sub-assembly with the battery connected and the ignition switch on (IG).**

- **Do not rotate the spiral cable sub-assembly without the steering wheel with the battery connected and the ignition switch on (IG).**
- **Ensure that the steering wheel is installed and aligned straight when inspecting the steering sensor.**

a. Check that the ignition switch is off.
b. Check that the cable is disconnected from the negative (-) battery terminal.
c. Check that the front wheels are facing straight ahead.
d. Slide the slider to release the lock, and then disconnect the yellow airbag connector from the spiral cable with sensor sub-assembly.

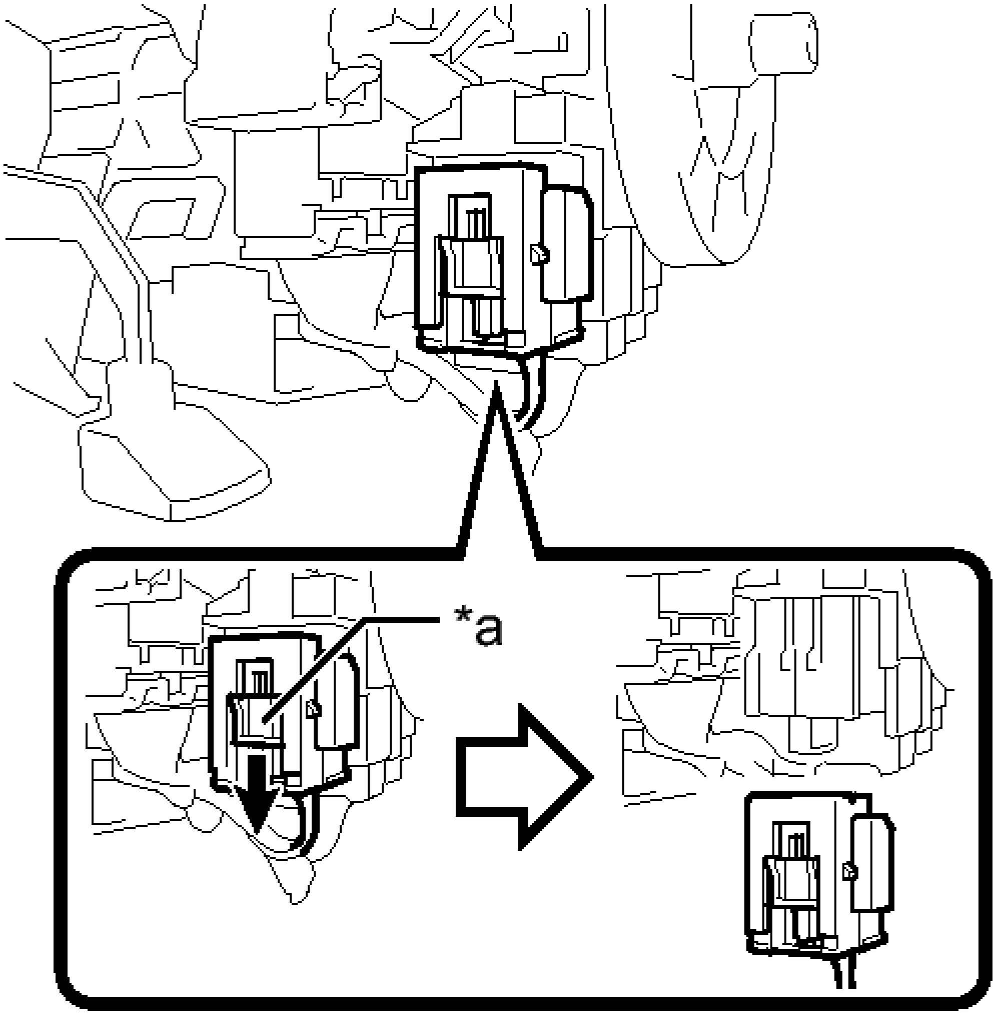

Fig. 32: Disconnecting Yellow Airbag Connector From Spiral Cable
Courtesy of TOYOTA MOTOR SALES, U.S.A., INC.

TEXT IN ILLUSTRATION

*a	Slider

NOTE: **When disconnecting any airbag connector, take care not to damage the airbag wire harness.**

e. Disconnect the other connector from the spiral cable with sensor sub-assembly.

f. Disengage the 3 claws to remove the spiral cable with sensor sub-assembly.

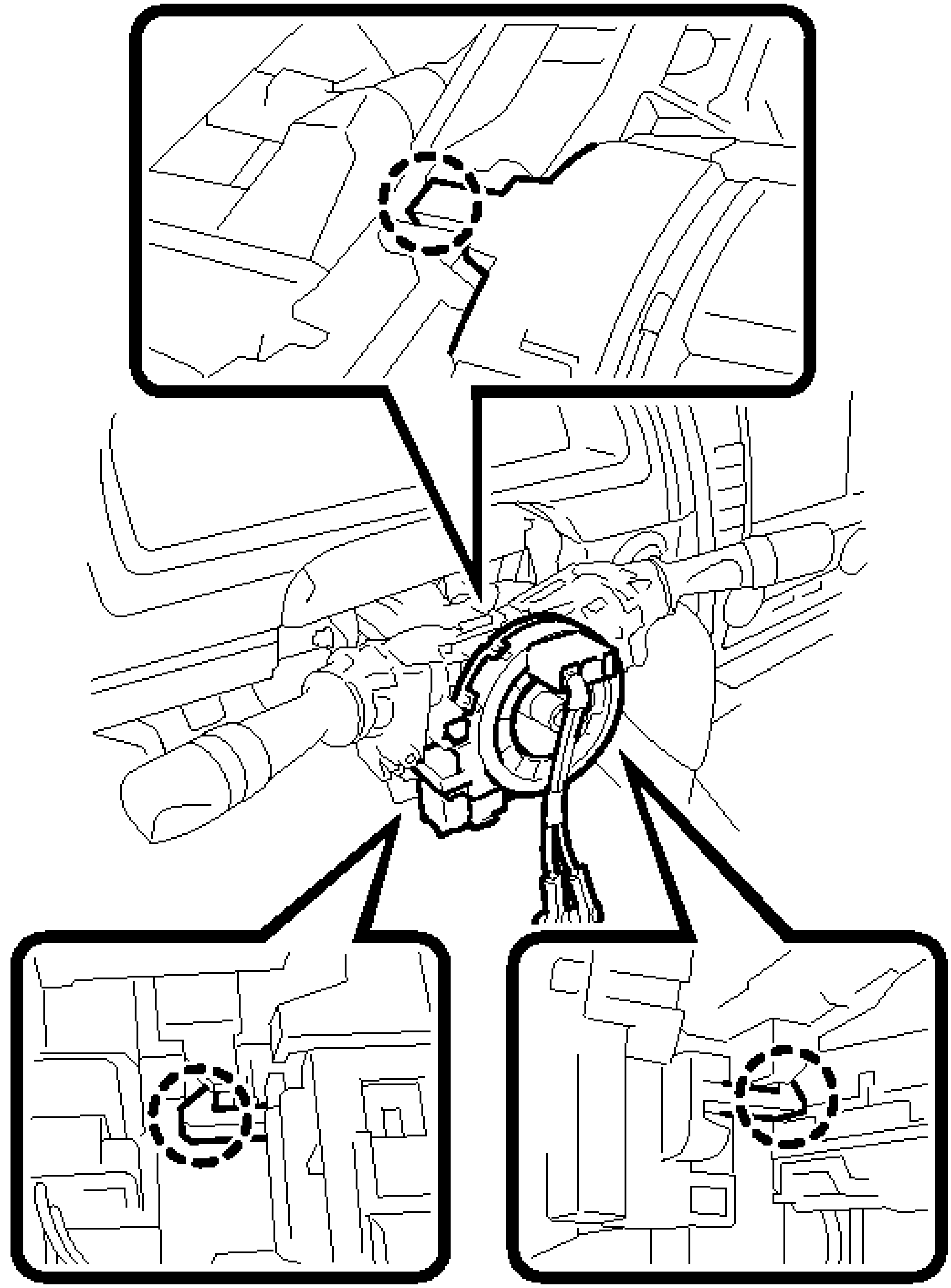

Fig. 33: Locating Spiral Cable Claws
Courtesy of TOYOTA MOTOR SALES, U.S.A., INC.

7. **REMOVE SPIRAL CABLE SUB-ASSEMBLY**

NOTE:

- **Remove the spiral cable sub-assembly from the steering sensor only when replacing it or the steering sensor.**
- **Removing the steering sensor from the spiral cable sub-assembly without using a lock pin may result in a misaligned center position of the steering sensor. Therefore, make sure to use the lock pin provided with a new spiral cable sub-assembly or steering sensor when removing the steering sensor from the spiral cable sub-assembly.**
- **When replacing the steering sensor: Refer to REMOVAL .**

a. Install the lock pin to the steering sensor.

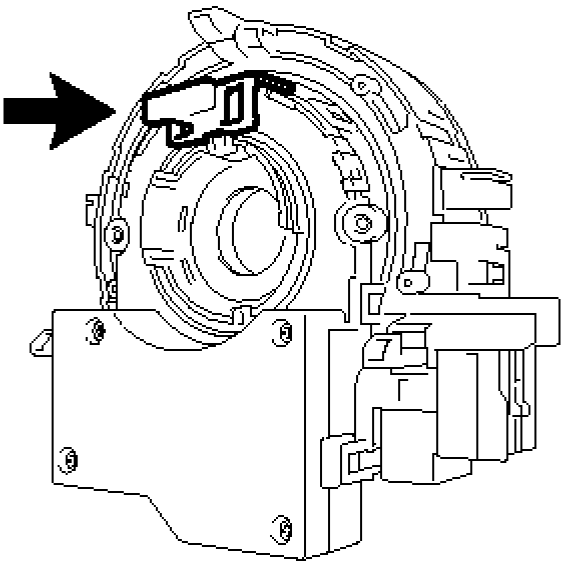

Fig. 34: Locating Steering Sensor Lock Pin
Courtesy of TOYOTA MOTOR SALES, U.S.A., INC.

NOTE:

- **Use the lock pin provided with a new spiral cable sub-assembly.**
- **Do not remove the lock pin before the spiral cable sub-assembly is installed to the steering sensor.**

b. Disengage the 6 claws and 2 pins to remove the spiral cable sub-assembly from the steering sensor.

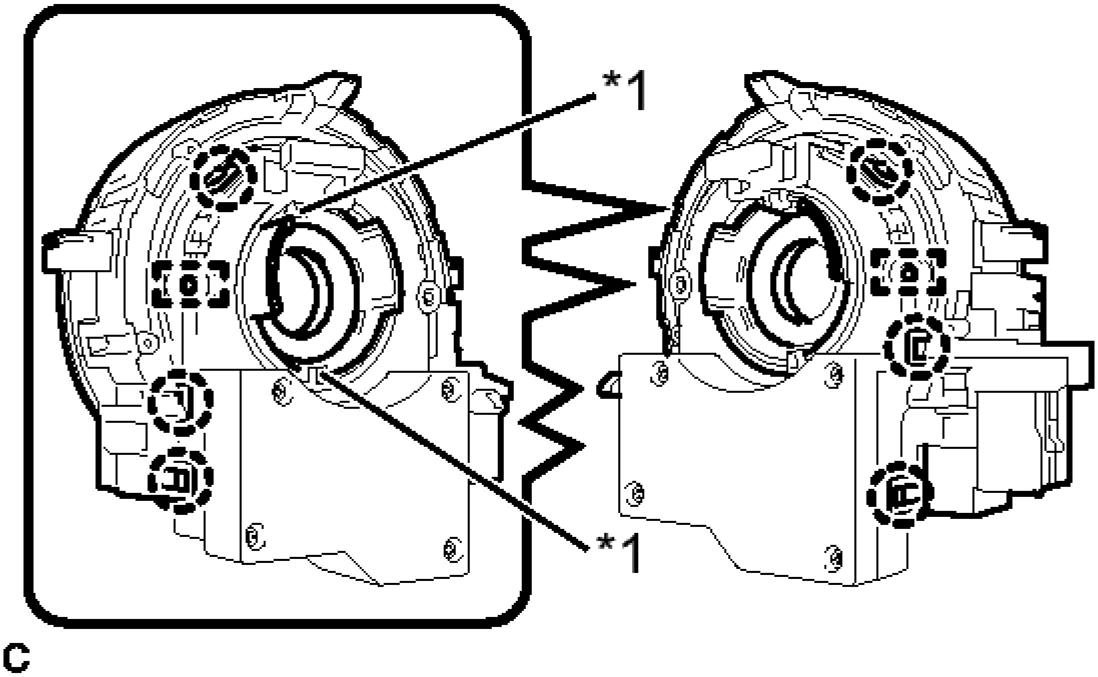

Fig. 35: Locating Spiral Cable Sub-Assembly Lock Pin, Guides, Pins & Claws
Courtesy of TOYOTA MOTOR SALES, U.S.A., INC.

NOTE:	**Do not damage the guide.**

TEXT IN ILLUSTRATION

*1	Guide

INSPECTION

INSPECTION

1. **INSPECT SPIRAL CABLE SUB-ASSEMBLY**

NOTE:	- **Do not remove the steering sensor from the spiral cable sub-assembly.** - **As the spiral cable sub-assembly may break, do not rotate the spiral cable sub-assembly more than the specified amount.**

   a. Remove the spiral cable with sensor sub-assembly from the vehicle See step 6.
   b. Visually check for defects with the spiral cable sub-assembly.
      1. The defects are as follows:
         - Scratches
         - Small cracks
         - Dents

- Chips
- Cracks or other damage to the connector

OK

No defects are found.

If any of the defects is found, replace the spiral cable sub-assembly with a new one.

c. Check the spiral cable sub-assembly.

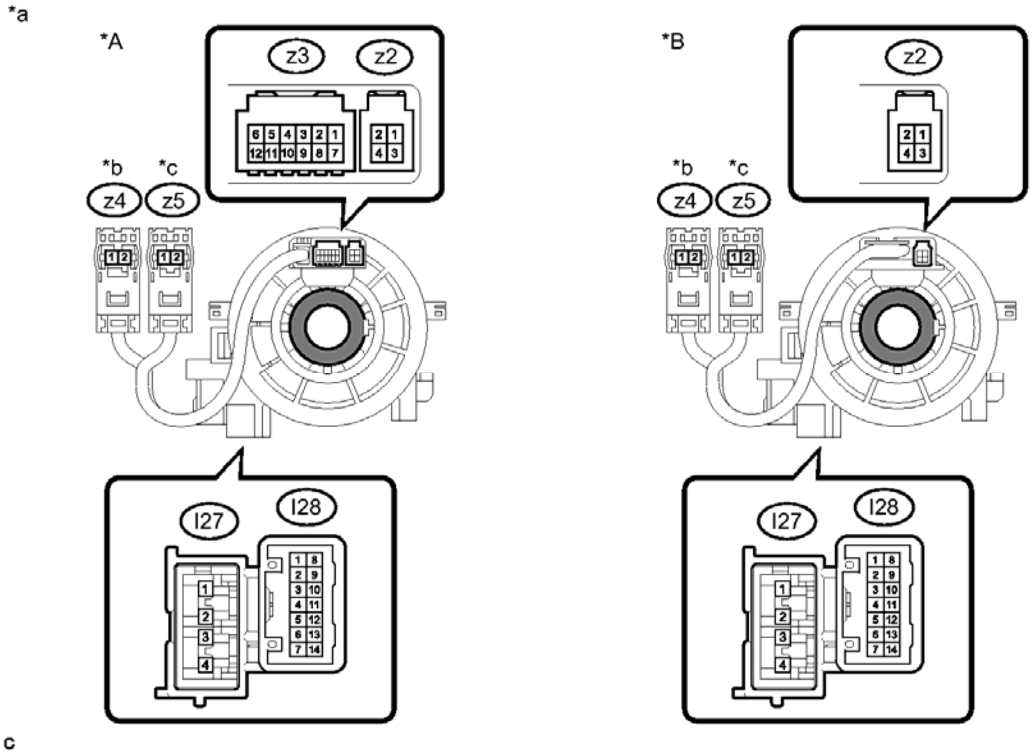

Fig. 36: Checking Spiral Cable Sub-Assembly Connectors
Courtesy of TOYOTA MOTOR SALES, U.S.A., INC.

TEXT IN ILLUSTRATION

*A	w/ Steering Pad Switch	*B	w/o Steering Pad Switch
*a	Component without harness connected (Spiral Cable Sub-	*b	Color: Orange

	assembly)		
*c	Color: Black	-	-
	Interlock	-	-

NOTE: When rotating the spiral cable, make sure to push on the interlock indicated in the illustration to release the interlock mechanism.

1. Set the spiral cable sub-assembly to the center position See step 1.
2. Measure the resistance between each terminal of the spiral cable sub-assembly according to the table below.

   Standard Resistance

   W/ STEERING PAD SWITCH:

Tester Connection	Condition	Specified Condition
I28-1 (CCS) - z2-3	Always	3 ohms or less
I28-2 (ECC) - z2-4	Always	3 ohms or less
I28-2 (ECC) - z3-7	Always	3 ohms or less
I28-3 (EAU) - z3-8	Always	3 ohms or less
I28-4 (AU3) - z3-9	Always	3 ohms or less
I28-5 (AU2) - z3-10	Always	3 ohms or less
I28-6 (AU1) - z3-11	Always	3 ohms or less
I28-7 (SDN) - z3-12	Always	3 ohms or less
I28-9 (HO) - z3-1	Always	3 ohms or less
I28-10 (+DP) - z3-	Always	3 ohms or

2		less
I28-11 (-DP) - z3-3	Always	3 ohms or less
I28-13 (IL+2) - z3-5	Always	3 ohms or less
I28-14 (SUP) - z3-6	Always	3 ohms or less
I27-1 (D+) - z4-2 (D+)	Always	Below 1 ohms
I27-2 (D-) - z4-1 (D-)	Always	Below 1 ohms
I27-3 (D2-) - z5-1 (D2-)	Always	Below 1 ohms
I27-4 (D2+) - z5-2 (D2+)	Always	Below 1 ohms

W/O STEERING PAD SWITCH:

Tester Connection	Condition	Specified Condition
I28-1 (CCS) - z2-3	Always	3 ohms or less
I28-2 (ECC) - z2-4	Always	3 ohms or less
I28-9 (HO) - z2-2	Always	3 ohms or less
I27-1 (D+) - z4-2 (D+)	Always	Below 1 ohms
I27-2 (D-) - z4-1 (D-)	Always	Below 1 ohms
I27-3 (D2-) - z5-1 (D2-)	Always	Below 1 ohms
I27-4 (D2+) - z5-2 (D2+)	Always	Below 1 ohms

3. After setting the spiral cable sub-assembly to the center position, rotate the spiral cable sub-assembly 2.5 times clockwise, and measure the resistance as shown in the table below. Then rotate the spiral cable sub-assembly 5 times counterclockwise, and measure the resistance as shown in the table below.

Standard Resistance

W/ STEERING PAD SWITCH:

Tester Connection	Condition	Specified Condition
I28-1 (CCS) - z2-3	Always	3 ohms or less
I28-2 (ECC) - z2-4	Always	3 ohms or less
I28-2 (ECC) - z3-7	Always	3 ohms or less
I28-3 (EAU) - z3-8	Always	3 ohms or less
I28-4 (AU3) - z3-9	Always	3 ohms or less
I28-5 (AU2) - z3-10	Always	3 ohms or less
I28-6 (AU1) - z3-11	Always	3 ohms or less
I28-7 (SDN) - z3-12	Always	3 ohms or less
I28-9 (HO) - z3-1	Always	3 ohms or less
I28-10 (+DP) - z3-2	Always	3 ohms or less
I28-11 (-DP) - z3-3	Always	3 ohms or less
I28-13 (IL+2) - z3-5	Always	3 ohms or less
I28-14 (SUP) - z3-6	Always	3 ohms or less
I27-1 (D+) - z4-2 (D+)	Always	Below 1 ohms
I27-2 (D-) -	Always	Below 1

z4-1 (D-)		ohms
I27-3 (D2-) - z5-1 (D2-)	Always	Below 1 ohms
I27-4 (D2+) - z5-2 (D2+)	Always	Below 1 ohms

W/O STEERING PAD SWITCH:

Tester Connection	Condition	Specified Condition
I28-1 (CCS) - z2-3	Always	3 ohms or less
I28-2 (ECC) - z2-4	Always	3 ohms or less
I28-9 (HO) - z2-2	Always	3 ohms or less
I27-1 (D+) - z4-2 (D+)	Always	Below 1 ohms
I27-2 (D-) - z4-1 (D-)	Always	Below 1 ohms
I27-3 (D2-) - z5-1 (D2-)	Always	Below 1 ohms
I27-4 (D2+) - z5-2 (D2+)	Always	Below 1 ohms

4. After setting the spiral cable sub-assembly to the center position, rotate the spiral cable sub-assembly 2.5 times clockwise. Then while rotating the spiral cable sub-assembly 5 times counterclockwise, measure the resistance as shown in the table below.

   Standard Resistance

   W/ STEERING PAD SWITCH:

Tester Connection	Condition	Specified Condition
I28-1 (CCS) - z2-3	Always	3 ohms or less
I28-2 (ECC) - z2-4	Always	3 ohms or less
I28-2 (ECC) - z3-	Always	3 ohms or less

7		
I28-3 (EAU) - z3-8	Always	3 ohms or less
I28-4 (AU3) - z3-9	Always	3 ohms or less
I28-5 (AU2) - z3-10	Always	3 ohms or less
I28-6 (AU1) - z3-11	Always	3 ohms or less
I28-7 (SDN) - z3-12	Always	3 ohms or less
I28-9 (HO) - z3-1	Always	3 ohms or less
I28-10 (+DP) - z3-2	Always	3 ohms or less
I28-11 (-DP) - z3-3	Always	3 ohms or less
I28-13 (IL+2) - z3-5	Always	3 ohms or less
I28-14 (SUP) - z3-6	Always	3 ohms or less
I27-1 (D+) - z4-2 (D+)	Always	Below 1 ohms
I27-2 (D-) - z4-1 (D-)	Always	Below 1 ohms
I27-3 (D2-) - z5-1 (D2-)	Always	Below 1 ohms
I27-4 (D2+) - z5-2 (D2+)	Always	Below 1 ohms

W/O STEERING PAD SWITCH:

Tester Connection	Condition	Specified Condition
I28-1 (CCS) - z2-3	Always	3 ohms or less

I28-2 (ECC) - z2-4	Always	3 ohms or less
I28-9 (HO) - z2-2	Always	3 ohms or less
I27-1 (D+) - z4-2 (D+)	Always	Below 1 ohms
I27-2 (D-) - z4-1 (D-)	Always	Below 1 ohms
I27-3 (D2-) - z5-1 (D2-)	Always	Below 1 ohms
I27-4 (D2+) - z5-2 (D2+)	Always	Below 1 ohms

If the result is not as specified, replace the spiral cable with sensor sub-assembly.

INSTALLATION

INSTALLATION

1. **INSPECT SPIRAL CABLE SUB-ASSEMBLY**

NOTE: **If the steering sensor is installed to a misaligned spiral cable sub-assembly, DTCs for an abnormal steering sensor value such as DTC B1801, C1231 and DTC C1433 are stored and it is impossible to repair them. If this happens, replace the spiral cable with sensor sub-assembly with a new one.**

a. Check if the spiral cable sub-assembly is centered.

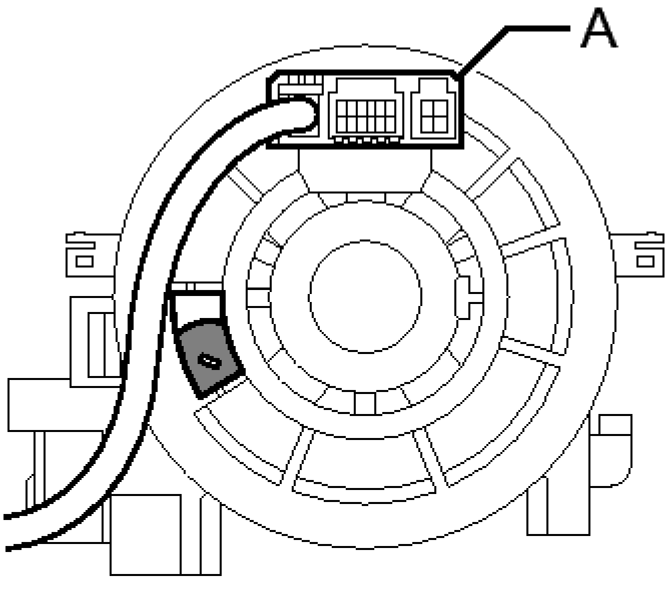

Fig. 37: Inspecting Spiral Cable Sub-Assembly
Courtesy of TOYOTA MOTOR SALES, U.S.A., INC.

TEXT IN ILLUSTRATION

	Colored Part

HINT:

When the spiral cable sub-assembly is centered, the part indicated by A is positioned at the top and the colored part shown in the illustration is visible.

b. If the spiral cable sub-assembly is not centered, center it.

If the cable cannot be centered, it is possible that the spiral cable sub-assembly is broken. Replace the spiral cable with sensor sub-assembly with a new one.

1. While pushing on the interlock indicated in the illustration, rotate the spiral cable sub-assembly counterclockwise slowly by hand until it stops.

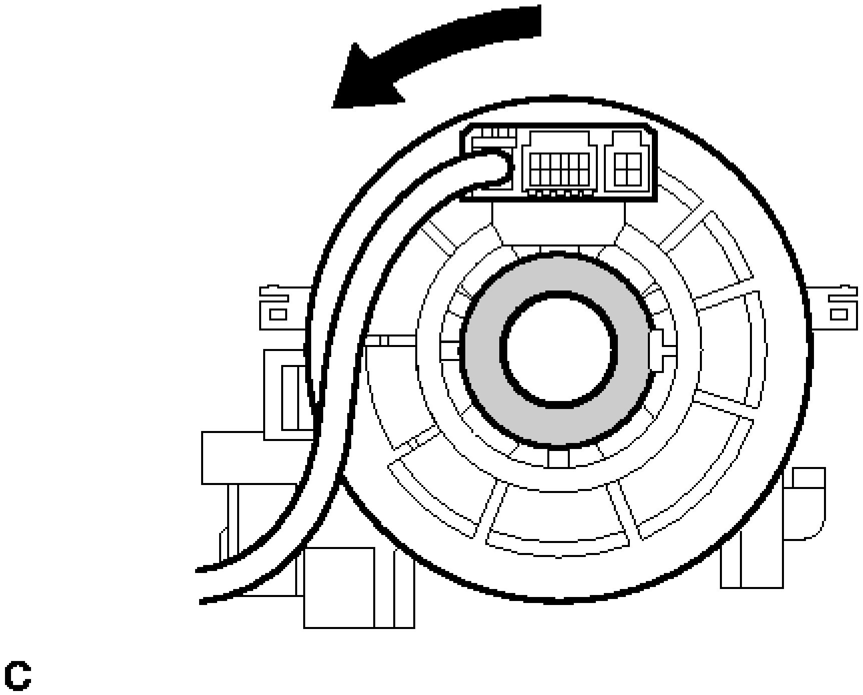

Fig. 38: Rotating Spiral Cable Sub-Assembly Counterclockwise
Courtesy of TOYOTA MOTOR SALES, U.S.A., INC.

NOTE:

- **When rotating the spiral cable sub-assembly, make sure to push on the interlock indicated in the illustration to release the interlock mechanism.**
- **Do not turn the spiral cable sub-assembly using the airbag wire harness.**

TEXT IN ILLUSTRATION

Interlock

2. Rotate the spiral cable sub-assembly clockwise approximately 2.5 turns to the position where the colored part shown in the illustration is visible.

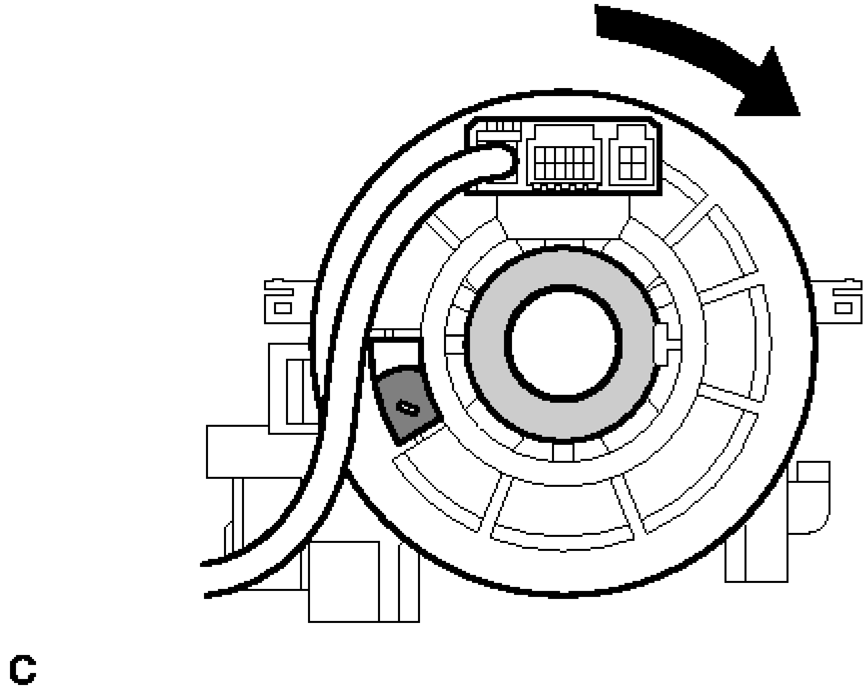

Fig. 39: Rotating Spiral Cable Sub-Assembly Clockwise
Courtesy of TOYOTA MOTOR SALES, U.S.A., INC.

TEXT IN ILLUSTRATION

■	Colored Part
▨	Interlock

HINT:

The spiral cable sub-assembly will rotate approximately 2.5 turns to both the left and right from the center.

2. **INSTALL SPIRAL CABLE SUB-ASSEMBLY**
    a. Align the 2 pins and 2 guides, and engage the 6 claws to install the spiral cable sub-assembly to the steering sensor.

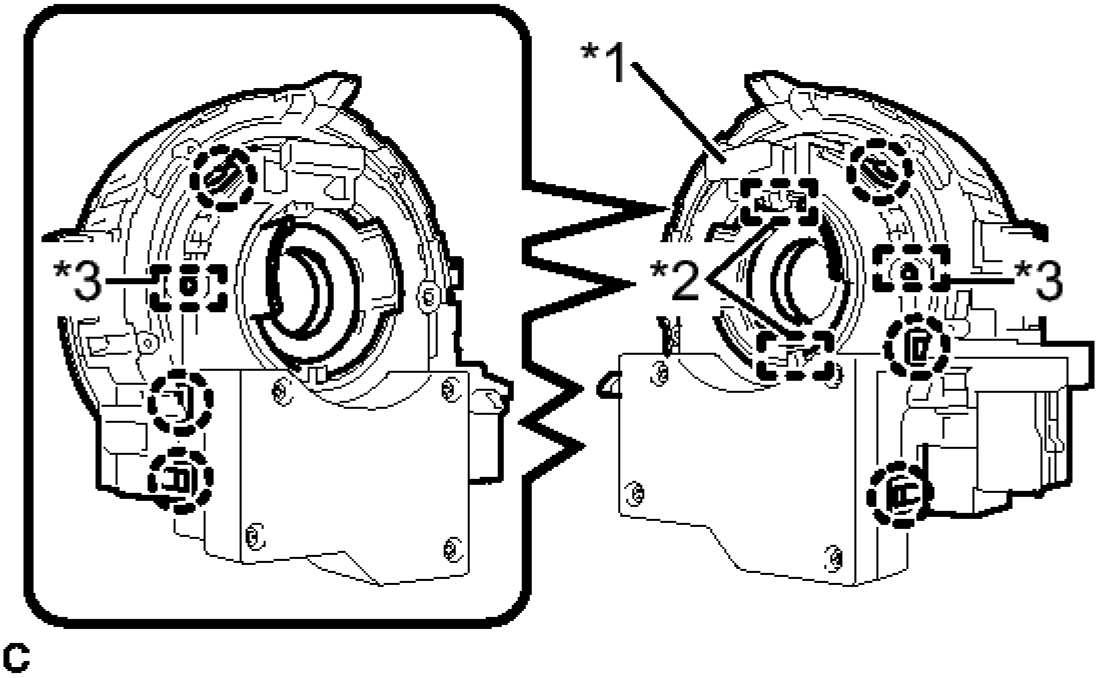

Fig. 40: Locating Spiral Cable Sub-Assembly Lock Pin, Guides, Pins & Claws
Courtesy of TOYOTA MOTOR SALES, U.S.A., INC.

TEXT IN ILLUSTRATION

*1	Lock Pin
*2	Guide
*3	Pin

NOTE:

- **The spiral cable sub-assembly can be rotate up to 30° even when the interlock is engaged. Therefore, make sure that both guides are aligned properly when installing the steering sensor to the spiral cable sub-assembly.**
- **Do not remove the lock pin before the spiral cable sub-assembly is installed to the steering sensor.**

b. Remove the lock pin from the steering sensor.

3. **ALIGN FRONT WHEELS TO FACE STRAIGHT AHEAD**
4. **INSTALL SPIRAL CABLE WITH SENSOR SUB-ASSEMBLY**

NOTE:

- **Do not replace the spiral cable sub-assembly with the battery connected and the ignition switch on (IG).**
- **Do not rotate the spiral cable sub-assembly without the steering wheel with the battery connected and the ignition switch on (IG).**

- **Ensure that the steering wheel is installed and aligned straight when inspecting the steering sensor.**

a. Check that the ignition switch is off.
b. Check that the cable is disconnected from the negative (-) battery terminal.

WARNING: **Wait at least 90 seconds after disconnecting the cable from the negative (-) battery terminal to disable the SRS system.**

c. Check that the front wheels are facing straight ahead.
d. Set the turn signal switch to the neutral position.

NOTE: **If it is not in the neutral position, the turn signal switch pin may snap.**

e. Engage the 3 claws to install the spiral cable with sensor sub-assembly.
f. Connect the each connector.

5. **INSTALL UPPER STEERING COLUMN COVER** . Refer to **INSTALLATION - Step 7** .
6. **INSTALL LOWER STEERING COLUMN COVER** . Refer to **INSTALLATION - Step 8** .
7. **INSPECT AND ADJUST SPIRAL CABLE WITH SENSOR SUB-ASSEMBLY**

NOTE: **Do not adjust the spiral cable sub-assembly with the battery connected and the ignition switch on (IG).**

a. Check that the ignition switch is off.
b. Check that the cable is disconnected from the negative (-) battery terminal.

WARNING: **Wait at least 90 seconds after disconnecting the cable from the negative (-) battery terminal to disable the SRS system.**

c. Check if the spiral cable sub-assembly is centered.

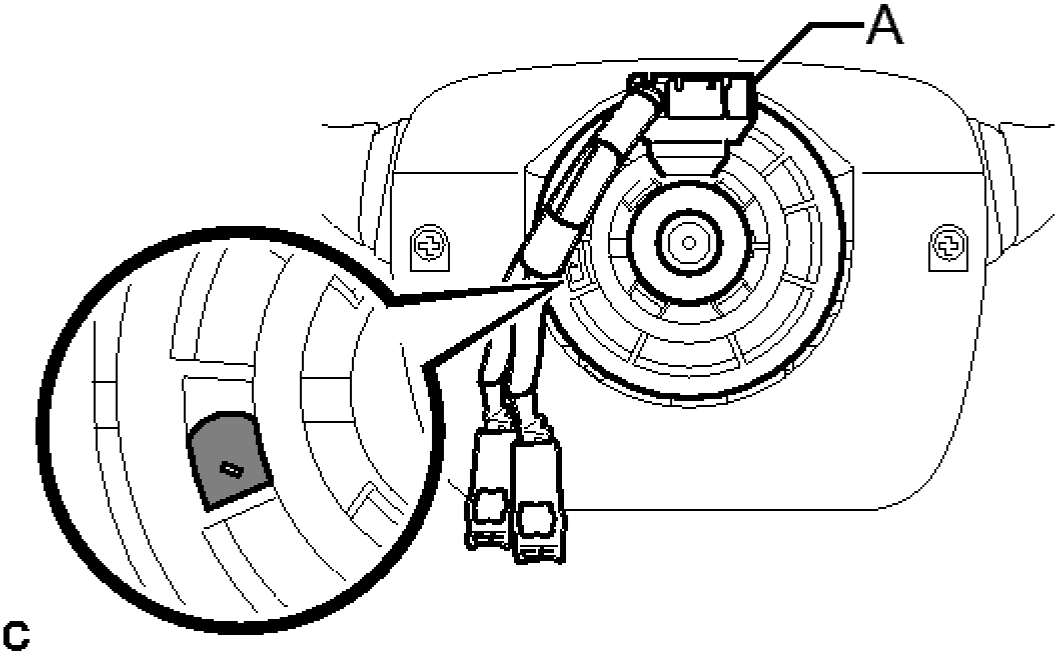

Fig. 41: Inspecting Spiral Cable Sub-Assembly
Courtesy of TOYOTA MOTOR SALES, U.S.A., INC.

TEXT IN ILLUSTRATION

▨	Colored Part

HINT:

When the spiral cable sub-assembly is centered, the part indicated by A is positioned at the top and the colored part shown in the illustration is visible.

d. If the spiral cable sub-assembly is not centered, center it.

NOTE:

- **When rotating the spiral cable sub-assembly, make sure to push on the interlock indicated in the illustration to release the interlock mechanism.**
- **Do not turn the spiral cable sub-assembly using the airbag wire harness.**

1. While pushing on the interlock indicated in the illustration, rotate the spiral cable sub-assembly counterclockwise slowly by hand until it stops.

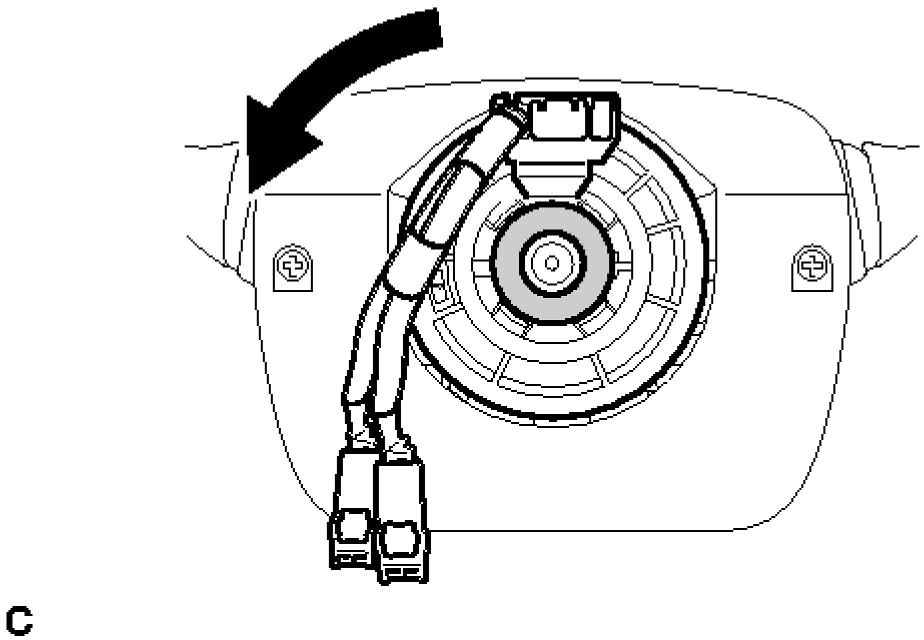

Fig. 42: Rotating Spiral Cable Sub-Assembly Counterclockwise
Courtesy of TOYOTA MOTOR SALES, U.S.A., INC.

TEXT IN ILLUSTRATION

Interlock

2. Rotate the spiral cable sub-assembly clockwise approximately 2.5 turns to the position where the colored part shown in the illustration is visible.

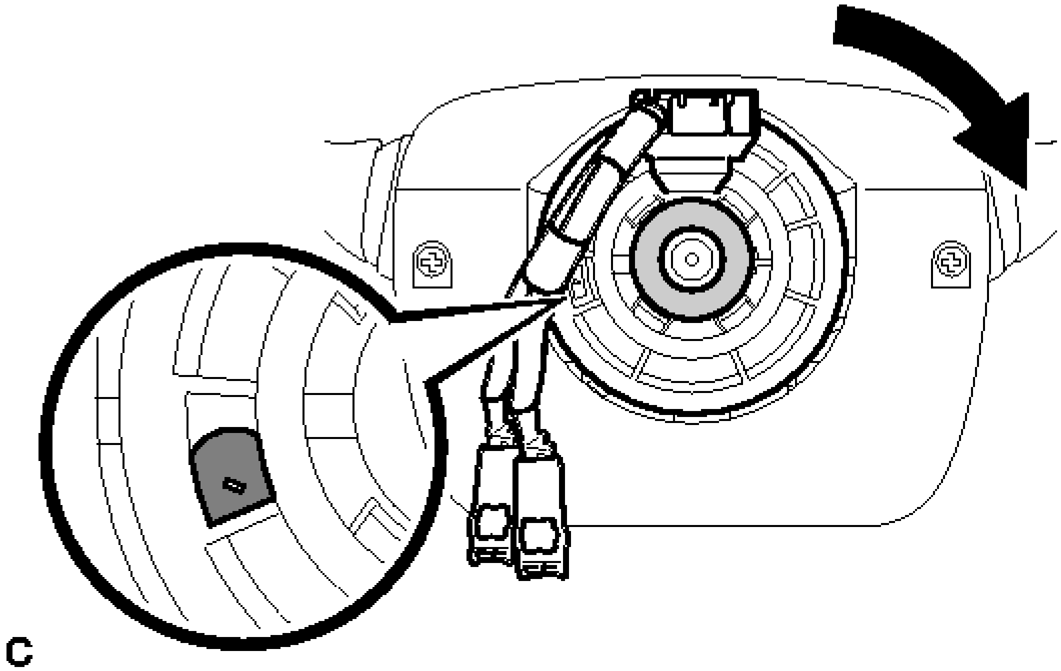

Fig. 43: Rotating Spiral Cable Sub-Assembly Clockwise
Courtesy of TOYOTA MOTOR SALES, U.S.A., INC.

TEXT IN ILLUSTRATION

·	Colored Part
·	Interlock

HINT:

The spiral cable sub-assembly will rotate approximately 2.5 turns to both the left and right from the center.

8. **INSTALL STEERING WHEEL ASSEMBLY**
    - For 4 Spoke: Refer to **INSTALLATION - Step 9** .
    - For 3 Spoke: Refer to **INSTALLATION - Step 11** .
9. **ADJUST PARKING ASSIST MONITOR SYSTEM (w/ Parking Assist Monitor System)**

    Refer to **CALIBRATION** .

KNEE AIRBAG ASSEMBLY (FOR DRIVER SIDE)

COMPONENTS

ILLUSTRATION

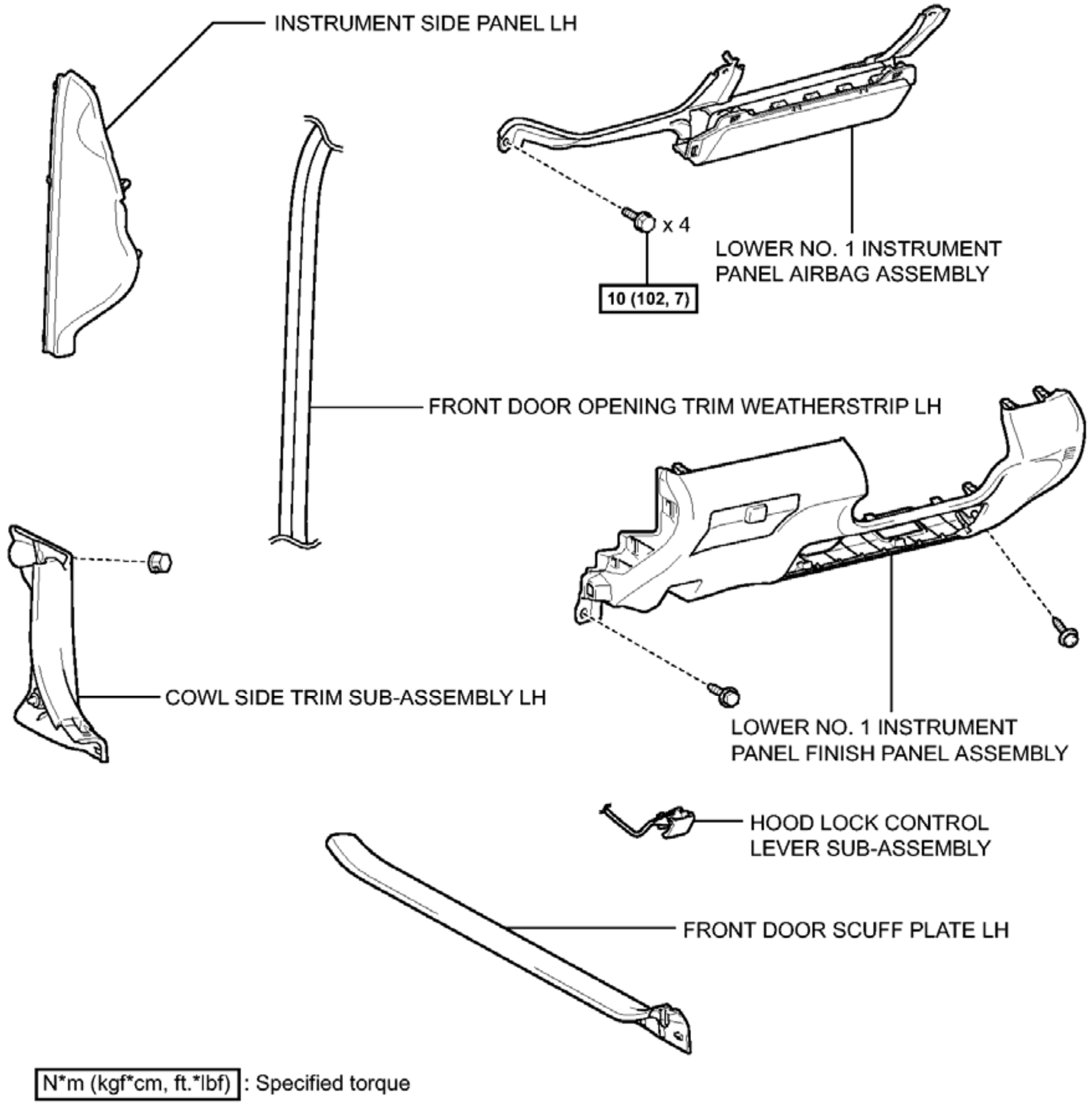
INSTRUMENT SIDE PANEL LH
x 4
LOWER NO. 1 INSTRUMENT PANEL AIRBAG ASSEMBLY
10 (102, 7)
FRONT DOOR OPENING TRIM WEATHERSTRIP LH
COWL SIDE TRIM SUB-ASSEMBLY LH
LOWER NO. 1 INSTRUMENT PANEL FINISH PANEL ASSEMBLY
HOOD LOCK CONTROL LEVER SUB-ASSEMBLY
FRONT DOOR SCUFF PLATE LH
N*m (kgf*cm, ft.*lbf) : Specified torque
c

Fig. 44: Identifying Knee Airbag Assembly (For Driver Side) Replacement Components With Torque Specifications

Courtesy of TOYOTA MOTOR SALES, U.S.A., INC.

ON-VEHICLE INSPECTION

ON-VEHICLE INSPECTION

WARNING: Be sure to correctly follow the removal and installation procedures for the

lower No. 1 instrument panel airbag assembly.

1. **INSPECT LOWER NO. 1 INSTRUMENT PANEL AIRBAG ASSEMBLY (for Vehicle not Involved in Collision)**
    a. Perform a diagnostic system check.

        For Separate Type Yaw Rate Sensor: Refer to **DTC CHECK / CLEAR** .

        For Built-In Type Yaw Rate Sensor: Refer to **DTC CHECK / CLEAR** .

    b. Visually check for defects with the lower No. 1 instrument panel airbag assembly installed on the vehicle.

        HINT:

        The defects are as follows:

        - Cuts
        - Small cracks
        - Significant discoloration

        OK

        No defects are found.

        If any of the defects is found, replace the lower No. 1 instrument panel airbag assembly with a new one.

2. **INSPECT LOWER NO. 1 INSTRUMENT PANEL AIRBAG ASSEMBLY (for Vehicle Involved in Collision and Airbag not Deployed)**
    a. Perform a diagnostic system check.

        For Separate Type Yaw Rate Sensor: Refer to **DTC CHECK / CLEAR** .

        For Built-In Type Yaw Rate Sensor: Refer to **DTC CHECK / CLEAR** .

    b. Visually check for defects with the lower No. 1 instrument panel airbag assembly removed from the vehicle.

        HINT:

        The defects are as follows:

        - Cuts
        - Small cracks

- Significant discoloration
- Cracks or other damage to the connector
- Deformation or cracks on the instrument panel sub-assembly or instrument panel reinforcement

OK

No defects are found.

If any of the defects is found, replace the lower No. 1 instrument panel airbag assembly, instrument panel sub-assembly or instrument panel reinforcement with a new one.

REMOVAL

REMOVAL

1. **PRECAUTION**

   WARNING: **Be sure to read Precaution thoroughly before servicing.**

   For Separate Type Yaw Rate Sensor: Refer to PRECAUTION .

   For Built-In Type Yaw Rate Sensor: Refer to PRECAUTION .

   NOTE: **After turning the ignition switch off, waiting time may be required before disconnecting the cable from the negative (-) battery terminal. Therefore, make sure to read the disconnecting the cable from the negative (-) battery terminal notices before proceeding with work. Refer to PRECAUTION .**

2. **DISCONNECT CABLE FROM NEGATIVE BATTERY TERMINAL**

   WARNING: **Wait at least 90 seconds after disconnecting the cable from the negative (-) battery terminal to disable the SRS system.**

   NOTE: **When disconnecting the cable, some systems need to be initialized after the cable is reconnected. Refer to INITIALIZATION .**

3. **REMOVE FRONT DOOR SCUFF PLATE LH** . Refer to **REMOVAL - Step 3** .
4. **REMOVE COWL SIDE TRIM SUB-ASSEMBLY LH** . Refer to **REMOVAL - Step 4** .
5. **DISCONNECT FRONT DOOR OPENING TRIM WEATHERSTRIP LH**

   HINT:

   Disconnect the front door opening trim weatherstrip LH to the extent that allows the removal of the instrument side panel LH.

6. **REMOVE INSTRUMENT SIDE PANEL LH** . Refer to **REMOVAL - Step 6** .
7. **DISCONNECT HOOD LOCK CONTROL LEVER SUB-ASSEMBLY** . Refer to **REMOVAL - Step 12** .
8. **REMOVE LOWER NO. 1 INSTRUMENT PANEL FINISH PANEL ASSEMBLY** . Refer to **REMOVAL - Step 13** .
9. **REMOVE LOWER NO. 1 INSTRUMENT PANEL AIRBAG ASSEMBLY**

WARNING: **When storing the lower No. 1 instrument panel airbag assembly, keep the airbag deployment side facing upward.**

   a. Check that the ignition switch is off.
   b. Check that the cable is disconnected from the negative (-) battery terminal.

WARNING: **Wait at least 90 seconds after disconnecting the cable from the negative (-) battery terminal to disable the SRS system.**

   c. Remove the 4 bolts.

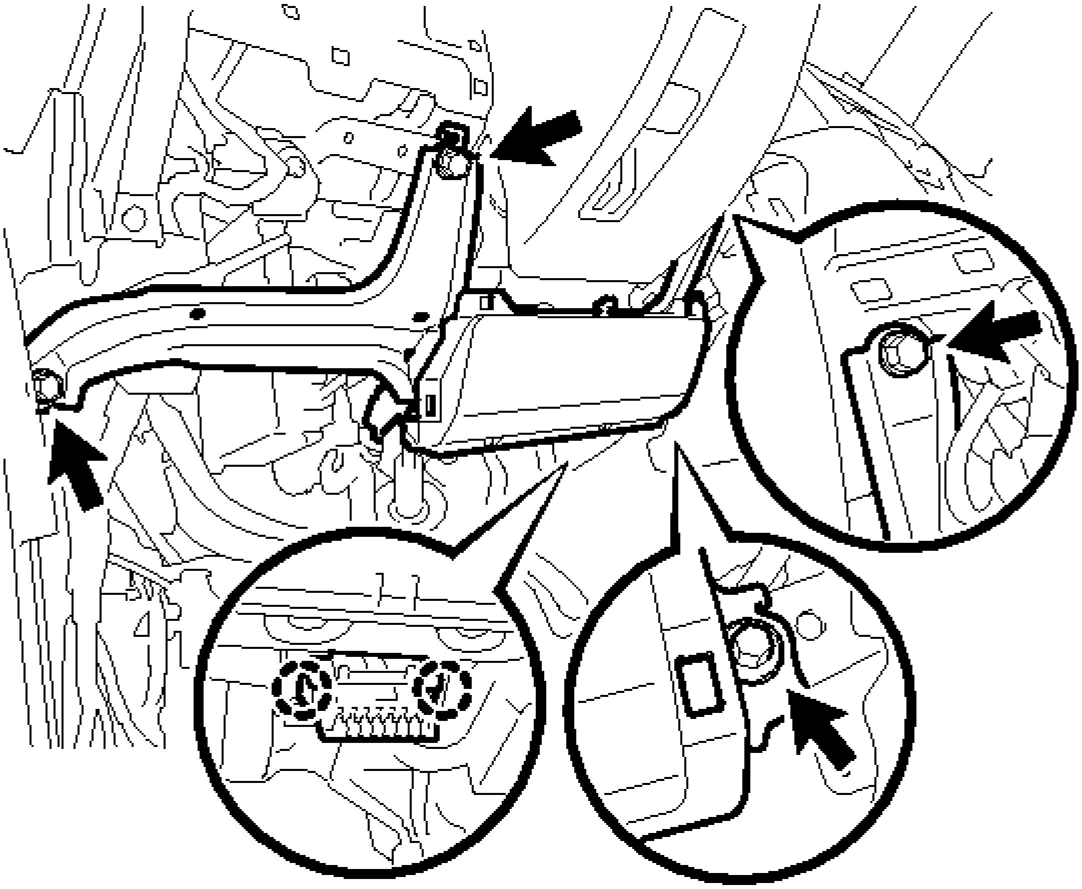

Fig. 45: Locating Lower No. 1 Instrument Panel Airbag Assembly Bolts And DLC3 Claws
Courtesy of TOYOTA MOTOR SALES, U.S.A., INC.

d. Disengage the 2 claws to disconnect the DLC3.
e. Disengage the 2 hooks to remove the lower No. 1 instrument panel airbag assembly.

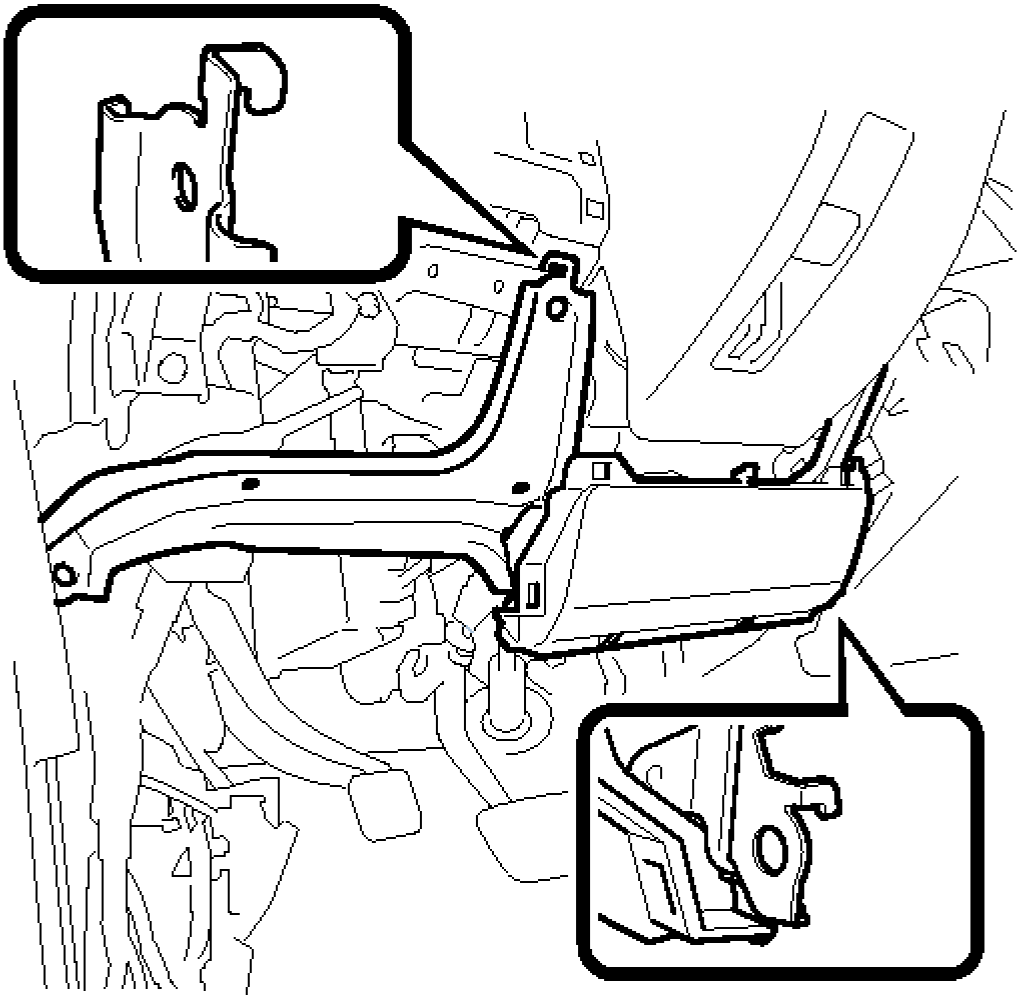

Fig. 46: Locating Lower No. 1 Instrument Panel Airbag Assembly Hooks
Courtesy of TOYOTA MOTOR SALES, U.S.A., INC.

NOTE: When removing the lower No. 1 instrument panel airbag assembly, do not pull the airbag wire harness.

f. Using a screwdriver with the tip wrapped with protective tape, release the airbag connector lock.

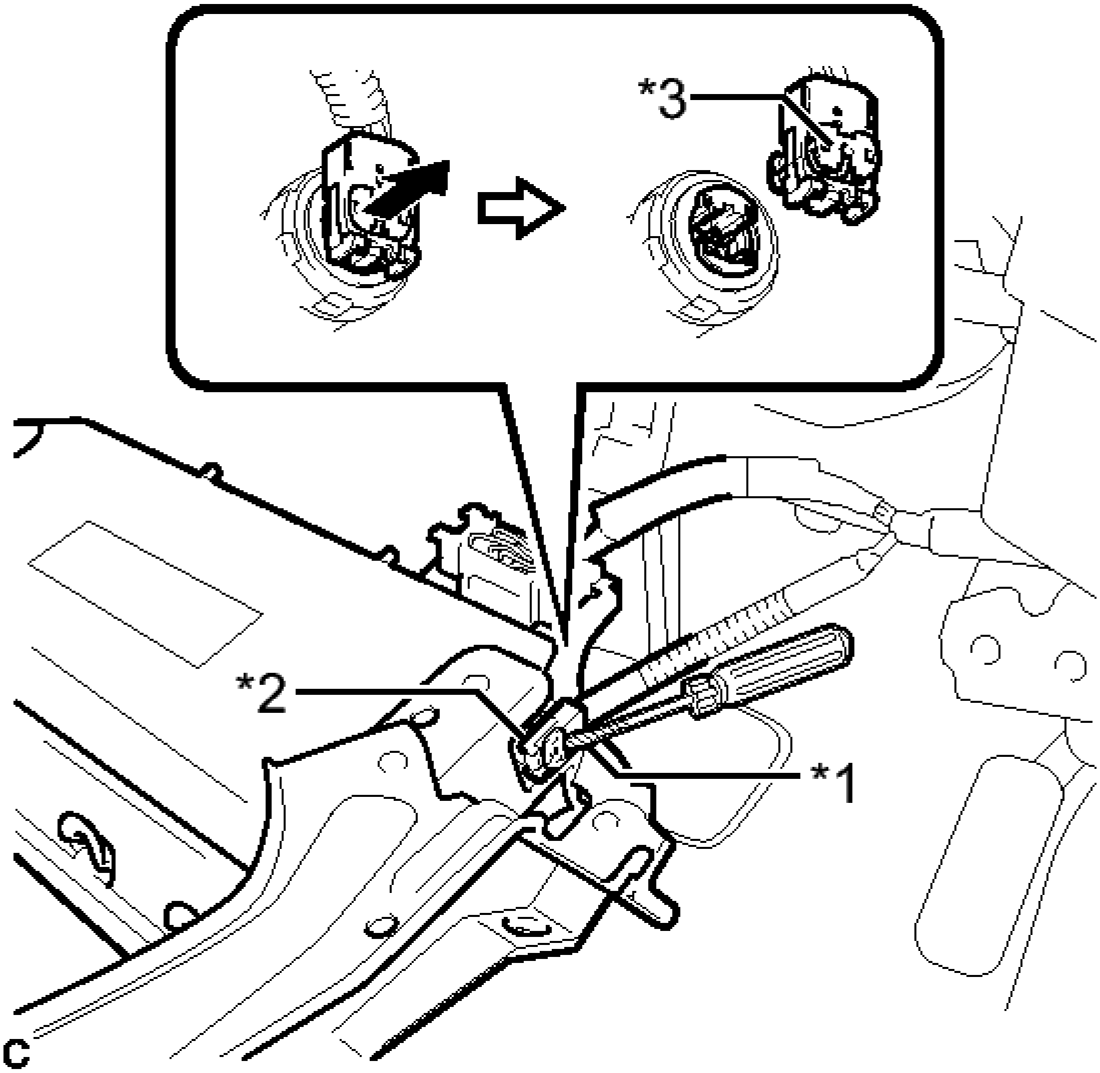

Fig. 47: Disconnecting Airbag Connector
Courtesy of TOYOTA MOTOR SALES, U.S.A., INC.

TEXT IN ILLUSTRATION

*1	Protective Tape
*2	Airbag Connector
*3	Airbag Connector Lock

g. Disconnect the airbag connector to remove the lower No. 1 instrument panel airbag assembly.

NOTE: When disconnecting any airbag connector, take care not to damage

the airbag wire harness.

INSTALLATION

INSTALLATION

1. **INSTALL LOWER NO. 1 INSTRUMENT PANEL AIRBAG ASSEMBLY**
   a. Check that the ignition switch is off.
   b. Check that the cable is disconnected from the negative (-) battery terminal.

   WARNING: **Wait at least 90 seconds after disconnecting the cable from the negative (-) battery terminal to disable the SRS system.**

   c. Connect the airbag connector to the lower No. 1 instrument panel airbag assembly.

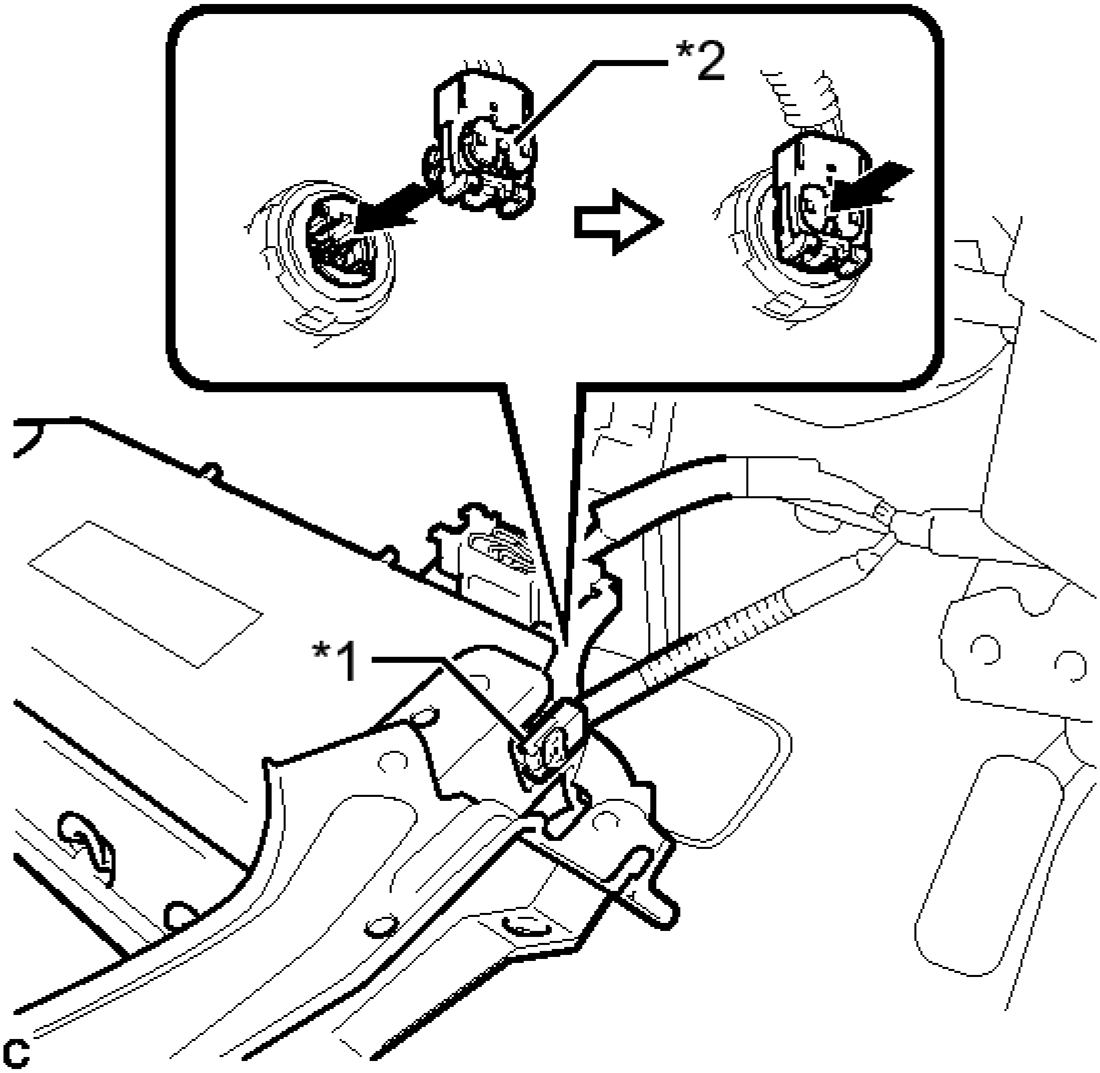

Fig. 48: Connecting Airbag Connector
Courtesy of TOYOTA MOTOR SALES, U.S.A., INC.

TEXT IN ILLUSTRATION

*1	Airbag Connector
*2	Airbag Connector Lock

NOTE: When connecting any airbag connector, take care not to damage the airbag wire harness.

d. Push in the lock to install the airbag connector.
e. Temporarily install the lower No. 1 instrument panel airbag assembly with the 2 hooks.
f. Engage the 2 claws to install the DLC3.
g. Install the 4 bolts.

Torque: 10 N*m (102 kgf*cm, 7 ft.*lbf)

NOTE: Confirm that the lower No. 1 instrument panel airbag assembly is installed securely without any excessive gaps and is not protruding outward.

2. **INSTALL LOWER NO. 1 INSTRUMENT PANEL FINISH PANEL ASSEMBLY** . Refer to **INSTALLATION - Step 40** .
3. **CONNECT HOOD LOCK CONTROL LEVER SUB-ASSEMBLY** . Refer to **INSTALLATION - Step 41** .
4. **INSTALL INSTRUMENT SIDE PANEL LH** . Refer to **INSTALLATION - Step 47** .
5. **INSTALL FRONT DOOR OPENING TRIM WEATHERSTRIP LH**
6. **INSTALL COWL SIDE TRIM SUB-ASSEMBLY LH** . Refer to **INSTALLATION - Step 43** .
7. **INSTALL FRONT DOOR SCUFF PLATE LH** . Refer to **INSTALLATION - Step 44** .
8. **CONNECT CABLE TO NEGATIVE BATTERY TERMINAL**

   NOTE: When disconnecting the cable, some systems need to be initialized after the cable is reconnected. Refer to INITIALIZATION .

9. **PERFORM DIAGNOSTIC SYSTEM CHECK**

   For Separate Type Yaw Rate Sensor: Refer to **DTC CHECK / CLEAR** .

   For Built-In Type Yaw Rate Sensor: Refer to **DTC CHECK / CLEAR** .

10. **INSPECT SRS WARNING LIGHT**

For Separate Type Yaw Rate Sensor: Refer to **DIAGNOSIS SYSTEM** .

For Built-In Type Yaw Rate Sensor: Refer to **DIAGNOSIS SYSTEM** .

DISPOSAL

DISPOSAL

WARNING: **Before performing pre-disposal deployment of any SRS part, review and closely follow all applicable environmental and hazardous material regulations. Pre-disposal deployment may be considered hazardous material treatment.**

1. **PRECAUTION**

WARNING:

- **An airbag or pretensioner may be activated by static electricity. To prevent this, be sure to touch a metal surface with your bare hands to discharge static electricity before performing this procedure.**
- **Never dispose of a lower No. 1 instrument panel airbag assembly with an undeployed airbag.**
- **The airbag produces an exploding sound when it is deployed, so perform the operation outdoors and where it will not create a nuisance to nearby residents.**
- **When deploying the airbag, always use the specified SST (SRS Airbag Deployment Tool). Perform the operation in a place away from electrical noise.**
- **When deploying the airbag, perform the operation at least 10 m (32.8 ft.) away from the lower No. 1 instrument panel airbag assembly.**
- **The lower No. 1 instrument panel airbag assembly becomes extremely hot when the airbag is deployed, so do not touch it for at least 30 minutes after deployment.**
- **Use gloves and safety glasses when handling a lower No. 1 instrument panel airbag assembly with a deployed airbag.**
- **Do not apply water etc. to a lower No. 1 instrument panel airbag assembly with a deployed airbag.**
- **Always wash your hands with water after completing the operation.**

HINT:

When scrapping a vehicle equipped with an SRS or disposing of the lower No. 1 instrument panel airbag assembly, be sure to deploy the airbag first in accordance with the procedure described below. If any abnormality occurs with the airbag deployment, contact the Service Dept. of TOYOTA MOTOR SALES, U.S.A., INC.

2. **DISPOSE OF LOWER NO. 1 INSTRUMENT PANEL AIRBAG ASSEMBLY (When Installed in Vehicle)**

NOTE:

- **When disposing of the lower No. 1 instrument panel airbag assembly, never use the customer's vehicle to deploy the airbag.**
- **Be sure to observe the following procedure when deploying the airbag.**

HINT:

Prepare a battery as the power source to deploy the airbag.

a. Check the function of SST. See step 2.

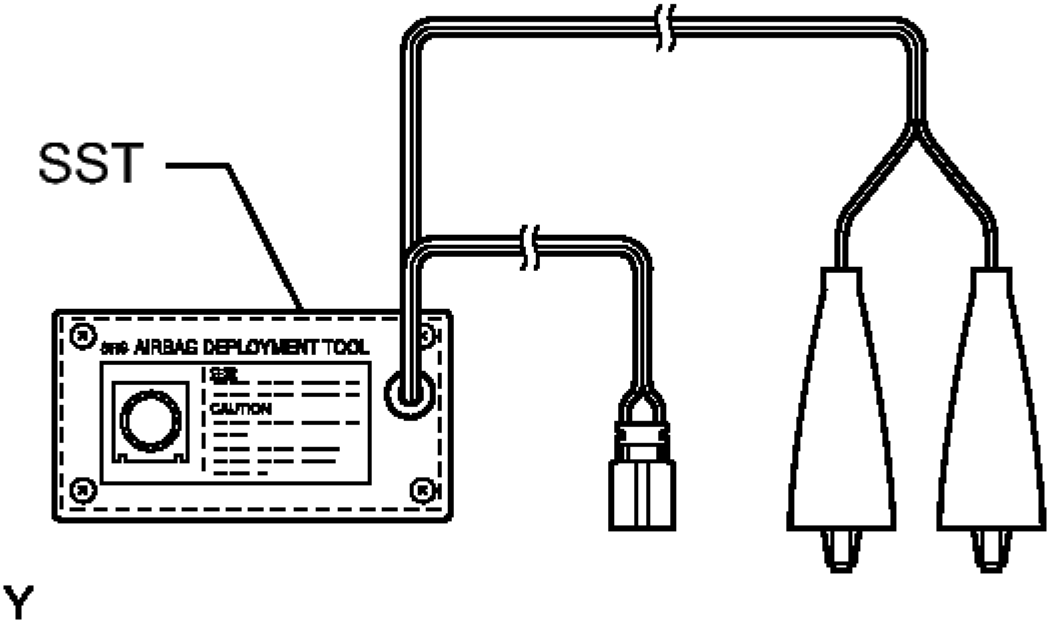

Fig. 49: Checking Function Of SST
Courtesy of TOYOTA MOTOR SALES, U.S.A., INC.

- **SST: 09082-00700**

b. Refer to Precaution.

For Separate Type Yaw Rate Sensor: Refer to **PRECAUTION** .

For Built-In Type Yaw Rate Sensor: Refer to **PRECAUTION** .

c. Disconnect the cable from the negative (-) battery terminal.

WARNING: **Wait at least 90 seconds after disconnecting the cable from the negative (-) battery terminal to disable the SRS system.**

d. Disconnect the lower No. 1 instrument panel airbag connector.

  1. Using a screwdriver with the tip wrapped with protective tape, disconnect the airbag connector.

NOTE: **When disconnecting any airbag connector, take care not to damage the airbag wire harness.**

e. Install SST.

WARNING: **Check that there is no looseness in the lower No. 1 instrument panel airbag assembly.**

  1. Connect the SST connector to the lower No. 1 instrument panel airbag assembly.

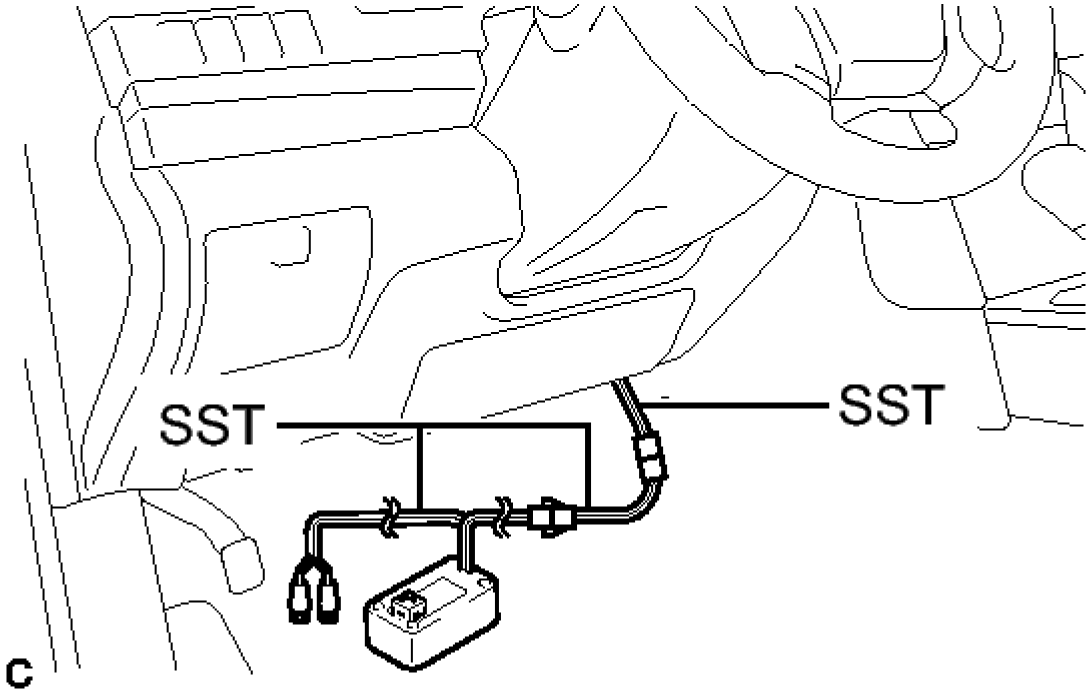

Fig. 50: View Of Connected SST Connector To Lower No. 1 Instrument Panel Airbag Assembly
Courtesy of TOYOTA MOTOR SALES, U.S.A., INC.

- **SST: 09082-00700**
- **SST: 09082-00802**

09082-10801

09082-20801

NOTE: **To avoid damaging the SST connector or wire harness, do not lock the secondary lock of the twin lock.**

2. Move SST at least 10 m (32.8 ft.) away from the front side window of the vehicle.

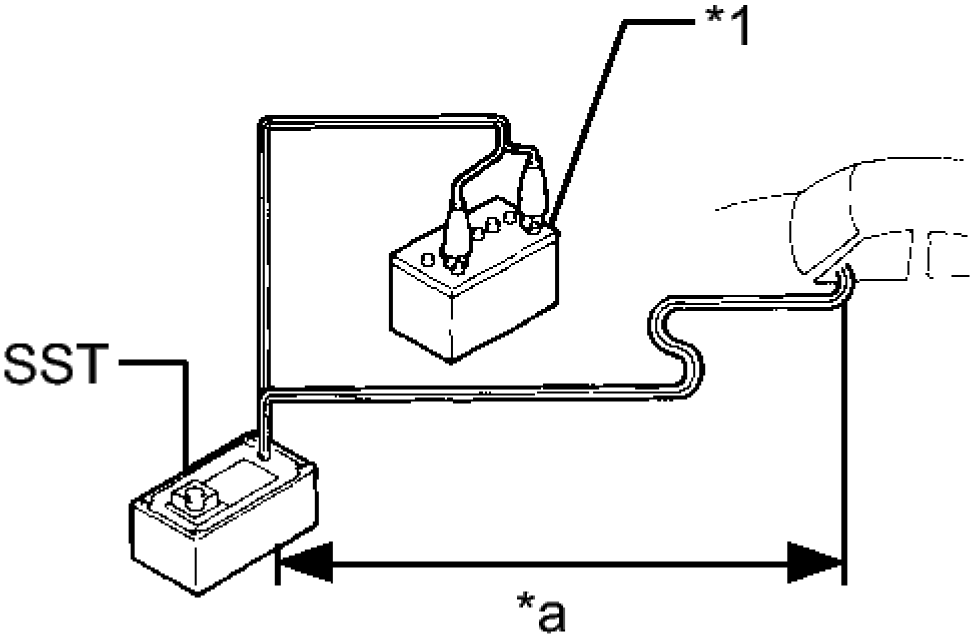

Fig. 51: Identifying SST Distance From Front Side Window
Courtesy of TOYOTA MOTOR SALES, U.S.A., INC.

TEXT IN ILLUSTRATION

*1	Battery
*a	10 m (32.8 ft.) or more

3. Maintaining sufficient clearance for the SST wire harness in the front side window, close all doors and windows of the vehicle.

NOTE: **Take care not to damage the SST wire harness.**

4. Connect the red clip of SST to the positive (+) battery terminal and the black clip of SST to the negative (-) battery terminal.

f. Deploy the airbag.

1. Check that no one is inside the vehicle or within a 10 m (32.8 ft.) radius of the vehicle.
2. Press the SST activation switch and deploy the airbag.

WARNING:

- **Before deployment, make sure that no one is near the vehicle.**
- **The lower No. 1 instrument panel airbag assembly becomes extremely hot when the airbag is deployed, so do not touch it for at least 30 minutes after deployment.**
- **Use gloves and safety glasses when handling a lower No. 1 instrument panel airbag assembly with a deployed airbag.**
- **Do not apply water etc. to a lower No. 1 instrument panel airbag assembly with a deployed airbag.**
- **Always wash your hands with water after completing the operation.**

HINT:

The airbag is deployed as the LED of the SST activation switch comes on.

3. **DISPOSE OF LOWER NO. 1 INSTRUMENT PANEL AIRBAG ASSEMBLY (When Not Installed in Vehicle)**

NOTE: **Be sure to observe the following procedure when deploying the airbag.**

HINT:

Prepare a battery as the power source to deploy the airbag.

a. Check the function of SST. See step 3.

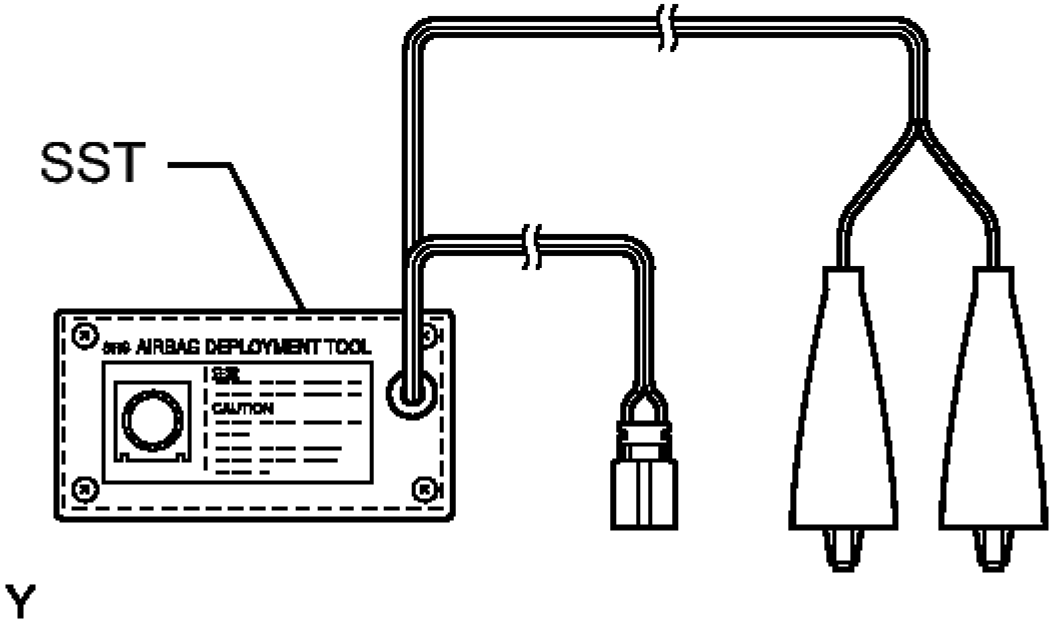

Fig. 52: Checking Function Of SST
Courtesy of TOYOTA MOTOR SALES, U.S.A., INC.

- **SST: 09082-00700**

b. Remove the lower No. 1 instrument panel airbag assembly. Refer to **REMOVAL**.

WARNING:

- **Before removing the lower No. 1 instrument panel airbag assembly, wait at least 90 seconds after turning the ignition switch off and disconnecting the cable from the negative (-) battery terminal.**
- **When storing the lower No. 1 instrument panel airbag assembly, keep the airbag deployment side facing upward.**

c. Using braided wire, tie down the lower No. 1 instrument panel airbag assembly to an unneeded tire.

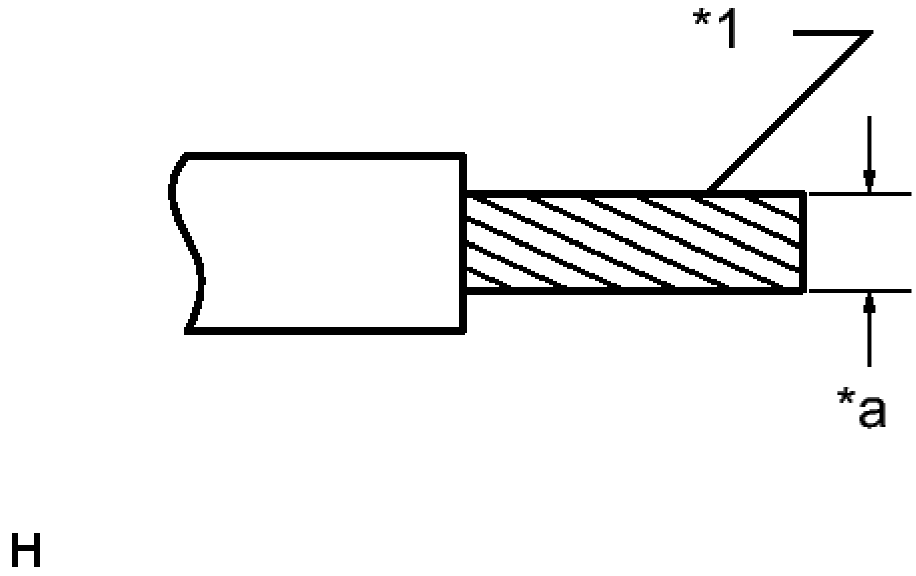

Fig. 53: Identifying Stripped Wire
Courtesy of TOYOTA MOTOR SALES, U.S.A., INC.

TEXT IN ILLUSTRATION

*1	Stripped Wire Section
*a	Wire Diameter

Wire

Stripped wire section

1.25 mm^2 (0.0019 in.^{2}) or more

WARNING: **If the wire is too thin or an alternative object is used to tie down the lower No. 1 instrument panel airbag assembly, it may snap when the airbag is deployed. Always use a wire for vehicle use with an area of at least 1.25 mm^2 (0.0019 in.^{2}).**

HINT:

To calculate the area of the stripped wire section:

Area = 3.14 x (Diameter)^2 / 4

1. Position the lower No. 1 instrument panel airbag assembly inside the tire with the airbag deployment side facing inside.

   Minimum tire size

   Width

   185 mm (7.28 in.)

   Inner diameter

   360 mm (1.18 ft.)

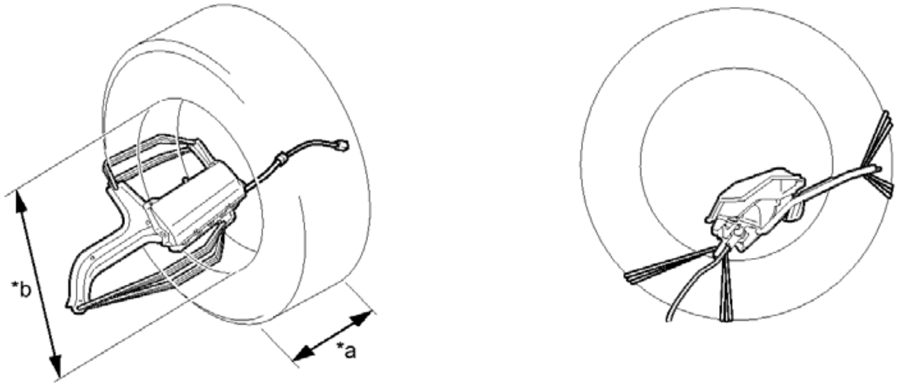

c

Fig. 54: View Of Lower No. 1 Instrument Panel Airbag Assembly Positioned Inside The Tire
Courtesy of TOYOTA MOTOR SALES, U.S.A., INC.

TEXT IN ILLUSTRATION

*a	Width	*b	Inner Diameter

WARNING:

- **Make sure that the wires are tight. If there is slack in the wires, the lower No. 1 instrument panel airbag assembly may break loose when the airbag is deployed.**
- **Always tie down the lower No. 1 instrument panel airbag assembly with the airbag deployment side facing inside the tire as shown in the illustration.**

NOTE: **The tires may be damaged by the airbag deployment, so use an unneeded tire.**

d. Install SST.

1. After connecting the following SST to each other, connect them to the lower No. 1 instrument panel airbag assembly.

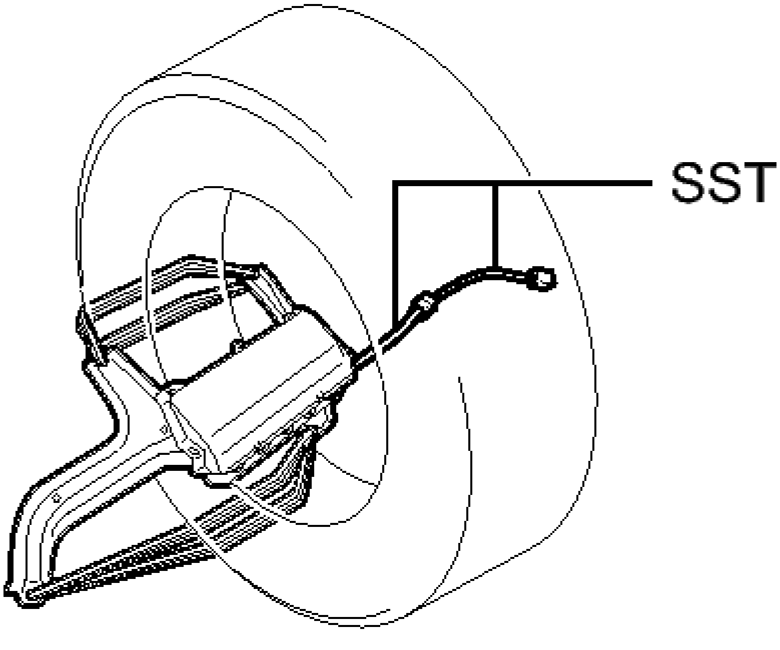

Fig. 55: View Of SST Connected To Lower No. 1 Instrument Panel Airbag Assembly In Tire
Courtesy of TOYOTA MOTOR SALES, U.S.A., INC.

- **SST: 09082-00802**
  09082-10801
  09082-20801

e. Place the tires.
   1. Place at least 2 tires under the tire to which the lower No. 1 instrument panel airbag assembly is tied.

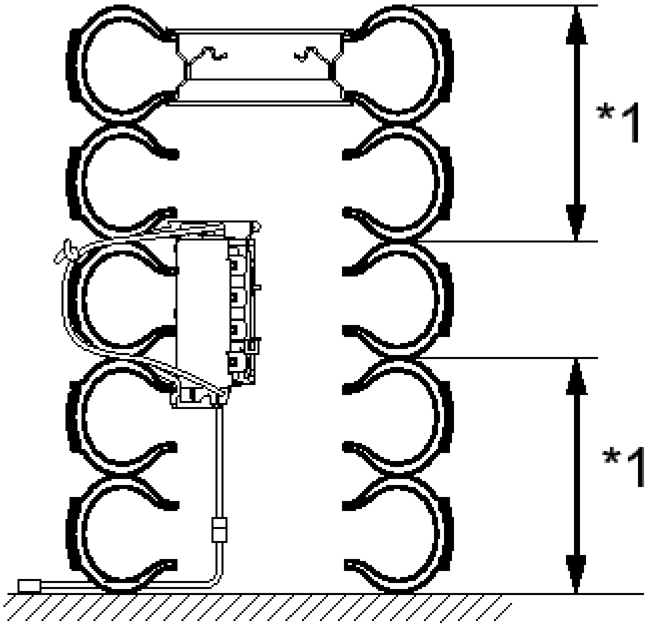

Fig. 56: Identifying Lower No. 1 Instrument Panel Airbag Assembly Inside Tires
Courtesy of TOYOTA MOTOR SALES, U.S.A., INC.

TEXT IN ILLUSTRATION

*1	Tires (2 or more)

NOTE: **Do not place the SST connector under the tire because it could be damaged.**

2. Place at least 2 tires onto the tire to which the lower No. 1 instrument panel airbag assembly is tied. The top tire should have a wheel installed.
3. Tie the tires together with the 2 wires.

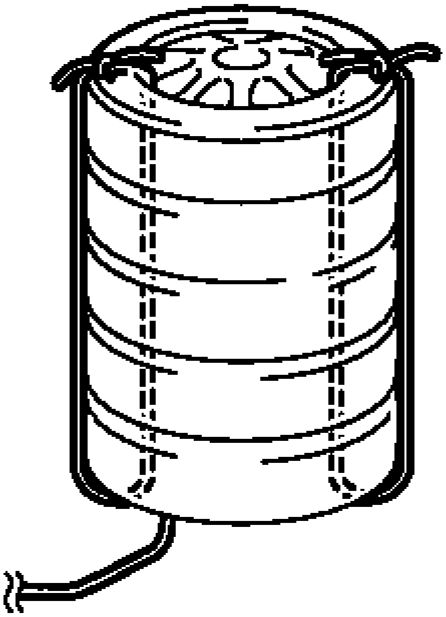

Fig. 57: Identifying Tires Tied Together With Wires
Courtesy of TOYOTA MOTOR SALES, U.S.A., INC.

WARNING: **Make sure that the wires are tight. Looseness in the wires results in the tires breaking loose when the airbag is deployed.**

f. Install SST.
   1. Connect the SST connector.

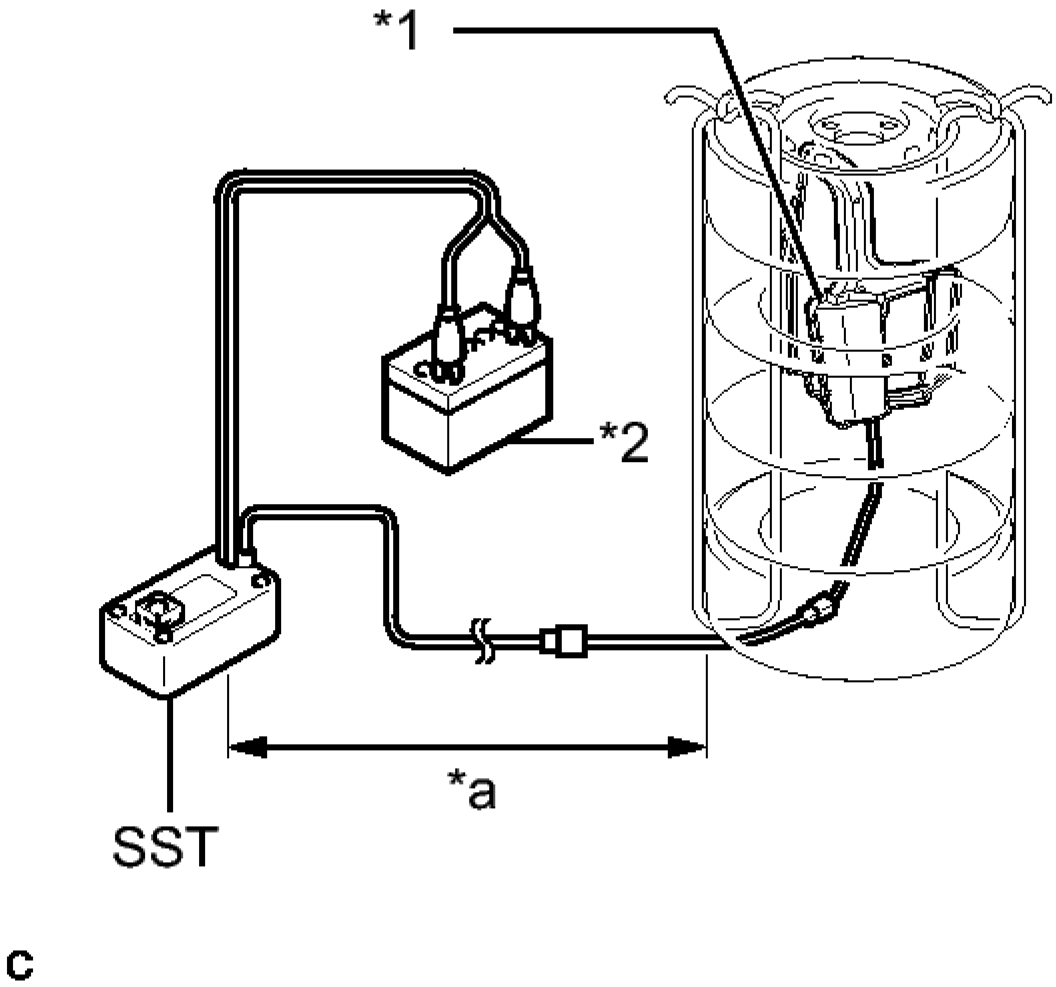

Fig. 58: Identifying SST Distance From Lower No. 1 Instrument Panel Airbag Assembly In Tires
Courtesy of TOYOTA MOTOR SALES, U.S.A., INC.

TEXT IN ILLUSTRATION

*1	Lower No. 1 Instrument Panel Airbag Assembly
*2	Battery
*a	10 m (32.8 ft.) or more

- **SST: 09082-00700**

NOTE: **To avoid damaging the SST connector or wire harness, do not lock the secondary lock of the twin lock. Also, secure some slack for the SST wire harness inside the tire.**

2. Move SST at least 10 m (32.8 ft.) away from the airbag tied down to the tire.

g. Deploy the airbag.
   1. Connect the red clip of SST to the positive (+) battery terminal and the black clip of SST to the negative (-) battery terminal.
   2. Check that no one is within a 10 m (32.8 ft.) radius of the tire to which the lower No. 1 instrument panel airbag assembly is tied.
   3. Press the SST activation switch and deploy the airbag.

WARNING: **Before deployment, make sure that no one is near the airbag.**

HINT:

The airbag is deployed as the LED of the SST activation switch comes on.

h. Dispose of the lower No. 1 instrument panel airbag assembly.

WARNING:

- **The lower No. 1 instrument panel airbag assembly becomes extremely hot when the airbag is deployed, so do not touch it for at least 30 minutes after deployment.**
- **Use gloves and safety glasses when handling a lower No. 1 instrument panel airbag assembly with a deployed airbag.**
- **Do not apply water etc. to a lower No. 1 instrument panel airbag assembly with a deployed airbag.**
- **Always wash your hands with water after completing the operation.**

1. Remove the lower No. 1 instrument panel airbag assembly from the tire.
2. Place the lower No. 1 instrument panel airbag assembly in a plastic bag, tie it tightly, and dispose of it according to local regulations.

KNEE AIRBAG ASSEMBLY (FOR FRONT PASSENGER SIDE)

COMPONENTS

ILLUSTRATION

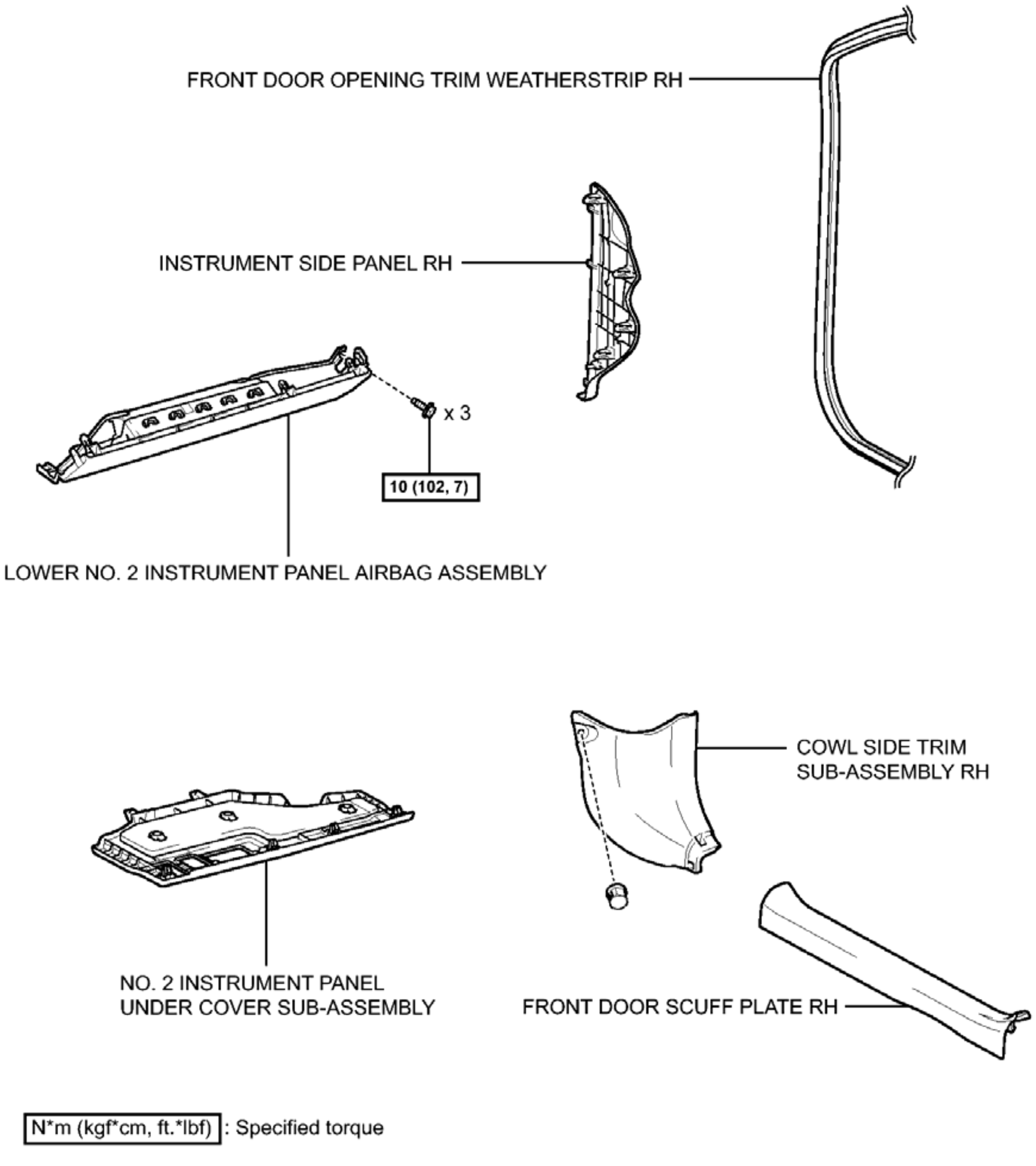
FRONT DOOR OPENING TRIM WEATHERSTRIP RH
INSTRUMENT SIDE PANEL RH
x 3
10 (102, 7)
LOWER NO. 2 INSTRUMENT PANEL AIRBAG ASSEMBLY
COWL SIDE TRIM SUB-ASSEMBLY RH
NO. 2 INSTRUMENT PANEL UNDER COVER SUB-ASSEMBLY
FRONT DOOR SCUFF PLATE RH
N*m (kgf*cm, ft.*lbf) : Specified torque

Fig. 59: Identifying Knee Airbag Assembly (For Front Passenger Side) Replacement Components With Torque Specifications
Courtesy of TOYOTA MOTOR SALES, U.S.A., INC.

ON-VEHICLE INSPECTION

ON-VEHICLE INSPECTION

WARNING: **Be sure to correctly follow the removal and installation procedures for the lower No. 2 instrument panel airbag assembly.**

1. **INSPECT LOWER NO. 2 INSTRUMENT PANEL AIRBAG ASSEMBLY (for Vehicle not Involved in Collision)**
    a. Perform a diagnostic system check.

    For Separate Type Yaw Rate Sensor: Refer to **DTC CHECK / CLEAR** .

    For Built-In Type Yaw Rate Sensor: Refer to **DTC CHECK / CLEAR** .

    b. Visually check for defects with the lower No. 2 instrument panel airbag assembly installed on the vehicle.

    HINT:

    The defects are as follows:

    - Cuts
    - Small cracks
    - Significant discoloration

    OK

    No defects are found.

    If any of the defects is found, replace the lower No. 2 instrument panel airbag assembly with a new one.

2. **INSPECT LOWER NO. 2 INSTRUMENT PANEL AIRBAG ASSEMBLY (for Vehicle Involved in Collision and Airbag not Deployed)**
    a. Perform a diagnostic system check.

    For Separate Type Yaw Rate Sensor: Refer to **DTC CHECK / CLEAR** .

    For Built-In Type Yaw Rate Sensor: Refer to **DTC CHECK / CLEAR** .

    b. Visually check for defects with the lower No. 2 instrument panel airbag assembly removed from the vehicle.

    HINT:

    The defects are as follows:

    - Cuts
    - Small cracks

- Significant discoloration
- Cracks or other damage to the connector
- Deformation or cracks on the instrument panel sub-assembly or instrument panel reinforcement

OK

No defects are found.

If any of the defects is found, replace the lower No. 2 instrument panel airbag assembly, instrument panel sub-assembly or instrument panel reinforcement with a new one.

REMOVAL

REMOVAL

1. **PRECAUTION**

   WARNING: **Be sure to read Precaution thoroughly before servicing.**

   For Separate Type Yaw Rate Sensor: Refer to PRECAUTION .

   For Built-In Type Yaw Rate Sensor: Refer to PRECAUTION .

   NOTE: **After turning the ignition switch off, waiting time may be required before disconnecting the cable from the negative (-) battery terminal. Therefore, make sure to read the disconnecting the cable from the negative (-) battery terminal notices before proceeding with work. Refer to PRECAUTION .**

2. **DISCONNECT CABLE FROM NEGATIVE BATTERY TERMINAL**

   WARNING: **Wait at least 90 seconds after disconnecting the cable from the negative (-) battery terminal to disable the SRS system.**

   NOTE: **When disconnecting the cable, some systems need to be initialized after the cable is reconnected. Refer to INITIALIZATION .**

3. **REMOVE FRONT DOOR SCUFF PLATE RH**

   HINT:

   Use the same procedure for the RH side and LH side. Refer to **REMOVAL - Step 3** .

4. **REMOVE COWL SIDE TRIM SUB-ASSEMBLY RH**

HINT:

Use the same procedure for the RH side and LH side. Refer to **REMOVAL - Step 4** .

5. **DISCONNECT FRONT DOOR OPENING TRIM WEATHERSTRIP RH**

   HINT:

   Disconnect the front door opening trim weatherstrip RH to the extent that allows the removal of the instrument side panel RH.

6. **REMOVE INSTRUMENT SIDE PANEL RH** . Refer to **REMOVAL - Step 35** .
7. **REMOVE NO. 2 INSTRUMENT PANEL UNDER COVER SUB-ASSEMBLY** . Refer to **REMOVAL - Step 36** .
8. **REMOVE LOWER NO. 2 INSTRUMENT PANEL AIRBAG ASSEMBLY**

   WARNING: When storing the lower No. 2 instrument panel airbag assembly, keep the airbag deployment side facing upward.

   a. Check that the ignition switch is off.
   b. Check that the cable is disconnected from the negative (-) battery terminal.

   WARNING: Wait at least 90 seconds after disconnecting the cable from the negative (-) battery terminal to disable the SRS system.

   c. Remove the 3 bolts.

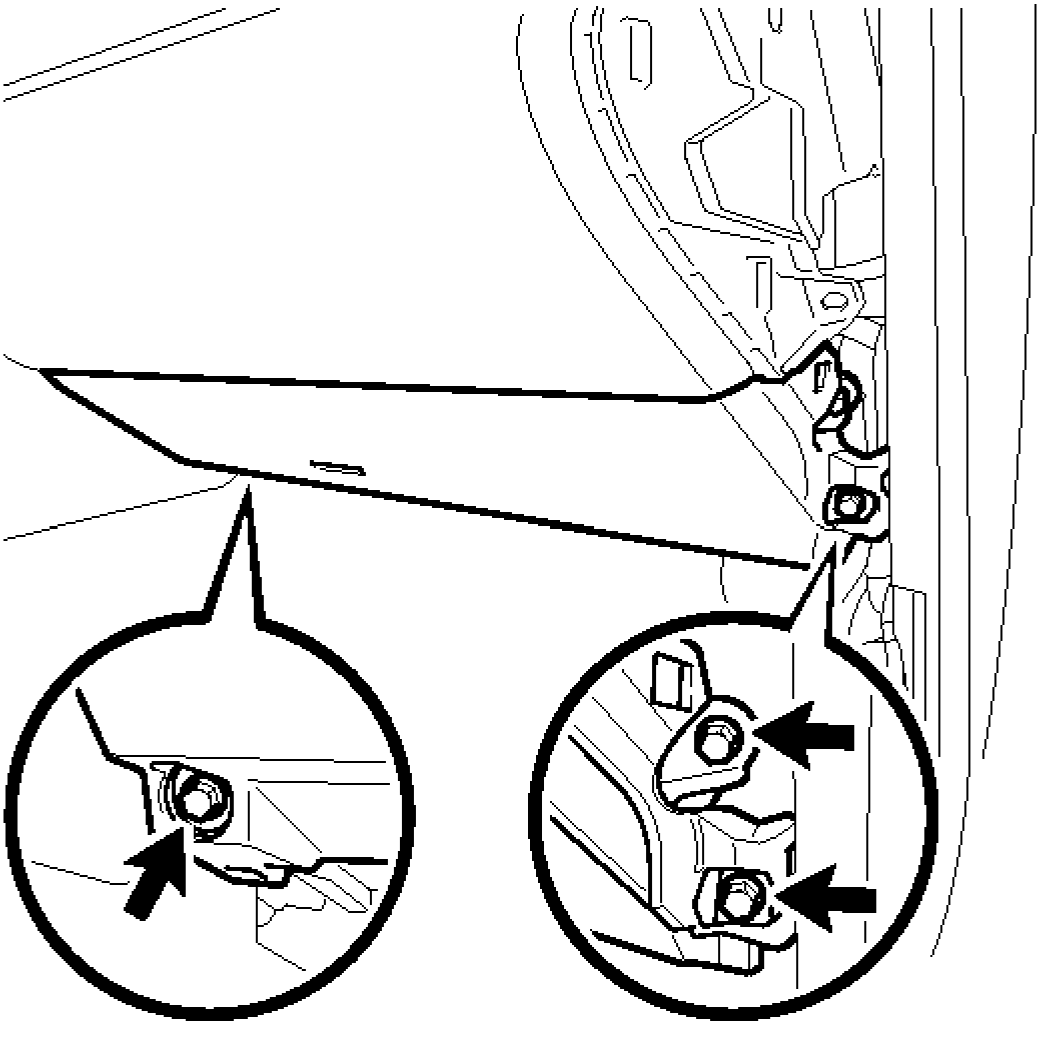

Fig. 60: Locating Lower No. 2 Instrument Panel Airbag Assembly Bolts
Courtesy of TOYOTA MOTOR SALES, U.S.A., INC.

d. Disengage the 3 claws to remove the lower No. 2 instrument panel airbag assembly.

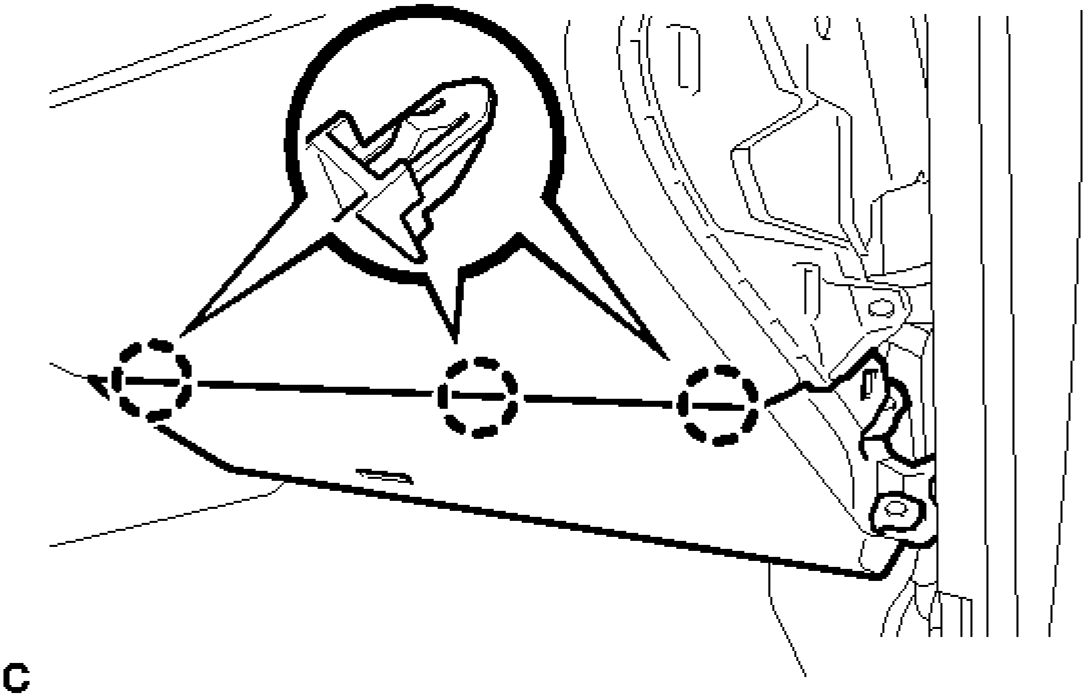

Fig. 61: Locating Lower No. 2 Instrument Panel Airbag Assembly Claws
Courtesy of TOYOTA MOTOR SALES, U.S.A., INC.

NOTE: **When removing the lower No. 2 instrument panel airbag assembly, do not pull the airbag wire harness.**

e. Using a screwdriver with the tip wrapped with protective tape, release the airbag connector lock.

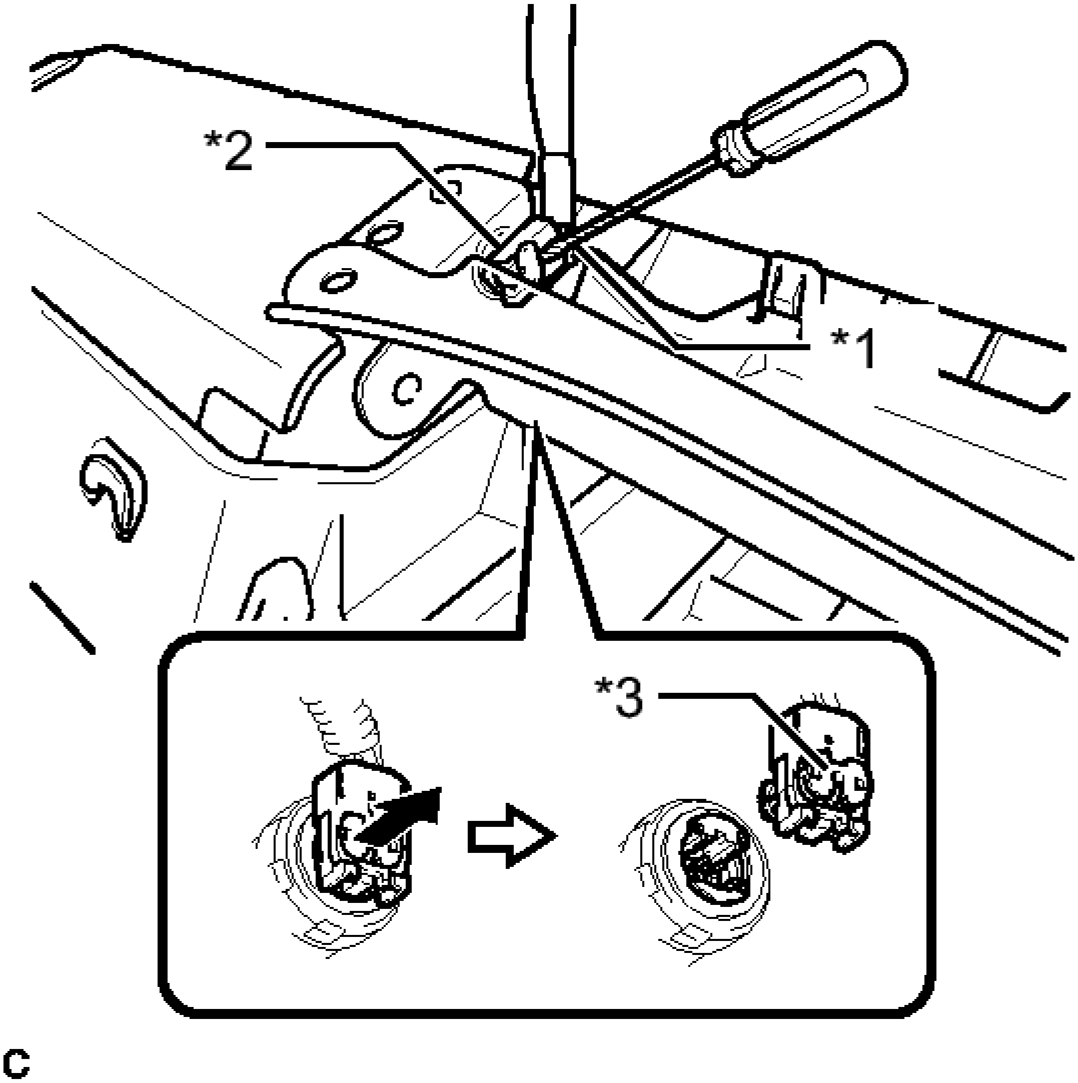

Fig. 62: Disconnecting No. 2 Instrument Panel Airbag Assembly Connector
Courtesy of TOYOTA MOTOR SALES, U.S.A., INC.

TEXT IN ILLUSTRATION

*1	Protective Tape
*2	Airbag Connector
*3	Airbag Connector Lock

f. Disconnect the airbag connector to remove the lower No. 2 instrument panel airbag assembly.

NOTE: When disconnecting any airbag connector, take care not to damage

the airbag wire harness.

INSTALLATION

INSTALLATION

1. **INSTALL LOWER NO. 2 INSTRUMENT PANEL AIRBAG ASSEMBLY**
    a. Check that the ignition switch is off.
    b. Check that the cable is disconnected from the negative (-) battery terminal.

WARNING: **Wait at least 90 seconds after disconnecting the cable from the negative (-) battery terminal to disable the SRS system.**

    c. Connect the airbag connector to the lower No. 2 instrument panel airbag assembly.

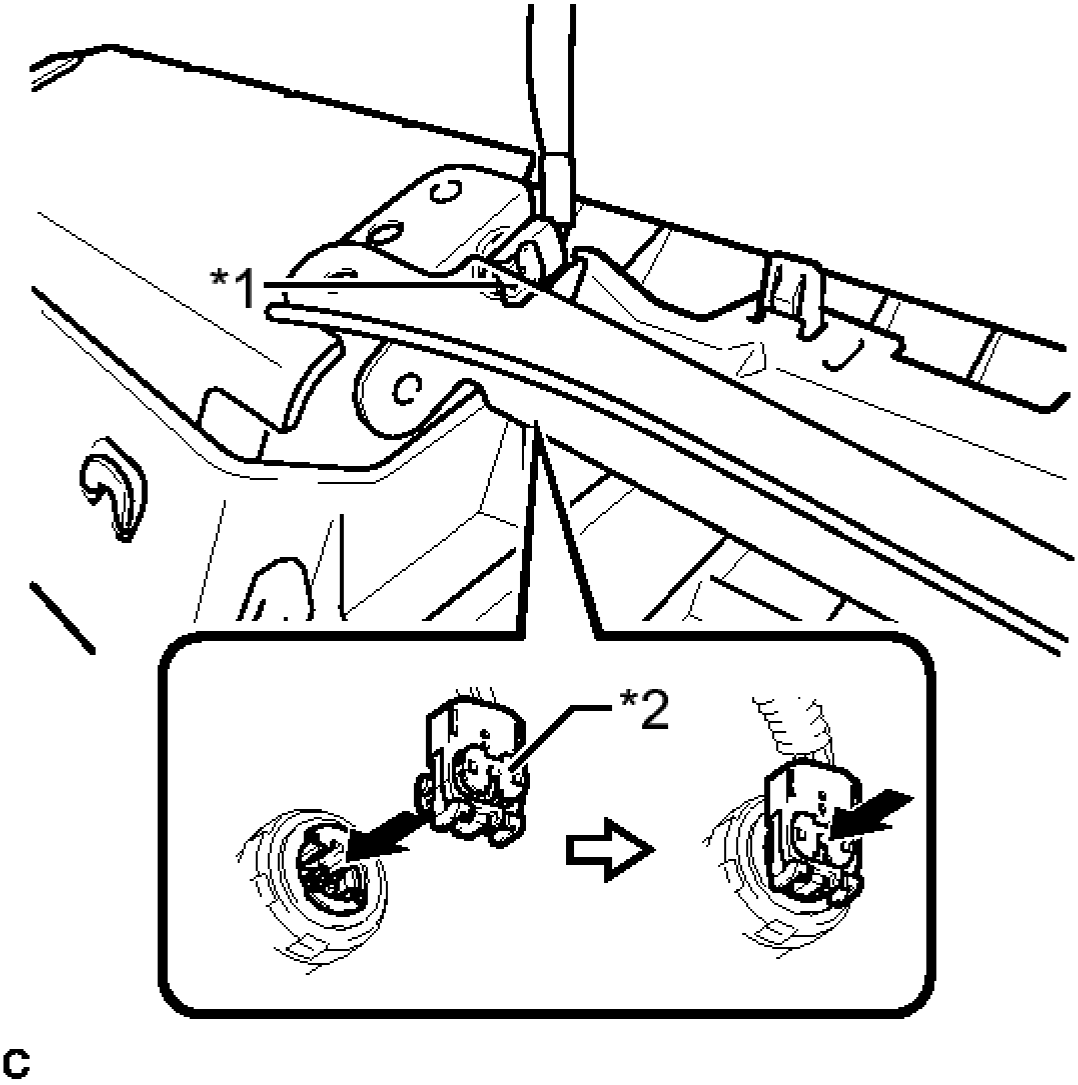

Fig. 63: Connecting No. 2 Instrument Panel Airbag Assembly Connector
Courtesy of TOYOTA MOTOR SALES, U.S.A., INC.

NOTE: When connecting any airbag connector, take care not to damage the airbag wire harness.

TEXT IN ILLUSTRATION

*1	Airbag Connector
*2	Airbag Connector Lock

d. Push in the lock to install the airbag connector.
e. Temporarily install the lower No. 2 instrument panel airbag assembly with the 3 claws.
f. Install the 3 bolts.

Torque: 10 N*m (102 kgf*cm, 7 ft.*lbf)

NOTE: Confirm that the lower No. 2 instrument panel airbag assembly is installed securely without any excessive gaps and is not protruding outward.

2. **INSTALL NO. 2 INSTRUMENT PANEL UNDER COVER SUB-ASSEMBLY** . Refer to **INSTALLATION - Step 17** .
3. **INSTALL INSTRUMENT SIDE PANEL RH** . Refer to **INSTALLATION - Step 18** .
4. **INSTALL FRONT DOOR OPENING TRIM WEATHERSTRIP RH**
5. **INSTALL COWL SIDE TRIM SUB-ASSEMBLY RH**

   HINT:

   Use the same procedure for the RH side and LH side. Refer to **INSTALLATION - Step 43** .

6. **INSTALL FRONT DOOR SCUFF PLATE RH**

   HINT:

   Use the same procedure for the RH side and LH side. Refer to **INSTALLATION - Step 44** .

7. **CONNECT CABLE TO NEGATIVE BATTERY TERMINAL**

   NOTE: When disconnecting the cable, some systems need to be initialized after the cable is reconnected. Refer to INITIALIZATION .

8. **PERFORM DIAGNOSTIC SYSTEM CHECK**

For Separate Type Yaw Rate Sensor: Refer to **DTC CHECK / CLEAR** .

For Built-In Type Yaw Rate Sensor: Refer to **DTC CHECK / CLEAR** .

9. **INSPECT SRS WARNING LIGHT**

For Separate Type Yaw Rate Sensor: Refer to **DIAGNOSIS SYSTEM** .

For Built-In Type Yaw Rate Sensor: Refer to **DIAGNOSIS SYSTEM** .

DISPOSAL

DISPOSAL

WARNING: **Before performing pre-disposal deployment of any SRS part, review and closely follow all applicable environmental and hazardous material regulations. Pre-disposal deployment may be considered hazardous material treatment.**

1. **PRECAUTION**

WARNING:

- **An airbag or pretensioner may be activated by static electricity. To prevent this, be sure to touch a metal surface with your bare hands to discharge static electricity before performing this procedure.**
- **Never dispose of a lower No. 2 instrument panel airbag assembly with an undeployed airbag.**
- **The airbag produces an exploding sound when it is deployed, so perform the operation outdoors and where it will not create a nuisance to nearby residents.**
- **When deploying the airbag, always use the specified SST (SRS Airbag Deployment Tool). Perform the operation in a place away from electrical noise.**
- **When deploying the airbag, perform the operation at least 10 m (32.8 ft.) away from the lower No. 2 instrument panel airbag assembly.**
- **The lower No. 2 instrument panel airbag assembly becomes extremely hot when the airbag is deployed, so do not touch it for at least 30 minutes after deployment.**
- **Use gloves and safety glasses when handling a lower No. 2 instrument panel airbag assembly with a deployed airbag.**
- **Do not apply water etc. to a lower No. 2 instrument panel airbag assembly with a deployed airbag.**
- **Always wash your hands with water after completing the**

operation.

HINT:

When scrapping a vehicle equipped with an SRS or disposing of the lower No. 2 instrument panel airbag assembly, be sure to deploy the airbag first in accordance with the procedure described below. If any abnormality occurs with the airbag deployment, contact the Service Dept. of TOYOTA MOTOR SALES, U.S.A., INC.

2. **DISPOSE OF LOWER NO. 2 INSTRUMENT PANEL AIRBAG ASSEMBLY (When Installed in Vehicle)**

NOTE:

- **When disposing of the lower No. 2 instrument panel airbag assembly, never use the customer's vehicle to deploy the airbag.**
- **Be sure to observe the following procedure when deploying the airbag.**

HINT:

Prepare a battery as the power source to deploy the airbag.

a. Check the function of SST. See step 2.

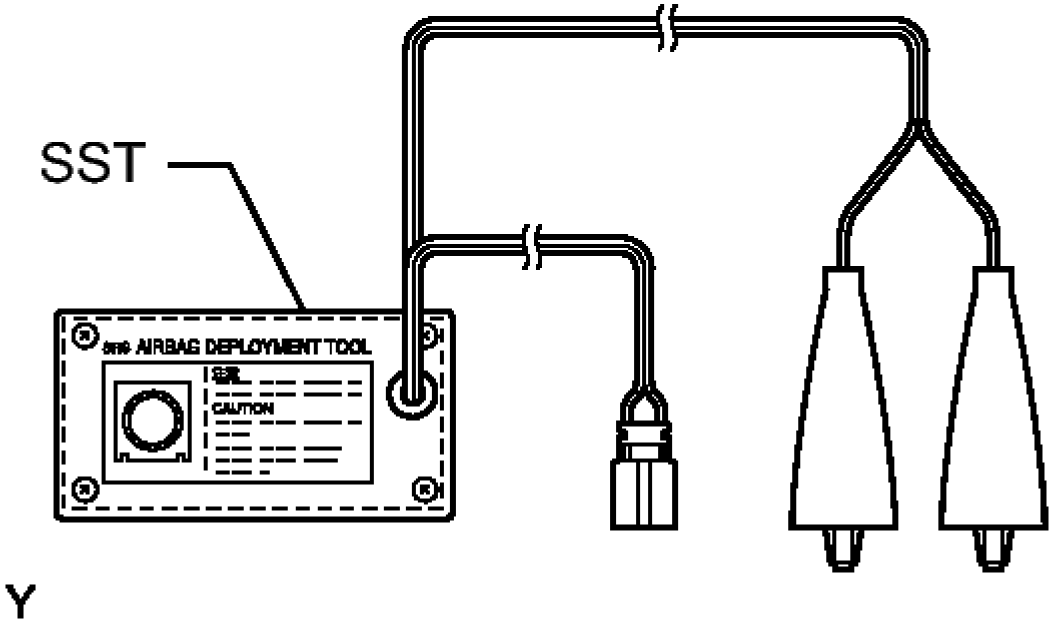

Fig. 64: Checking Function Of SST
Courtesy of TOYOTA MOTOR SALES, U.S.A., INC.

- **SST: 09082-00700**

b. Refer to Precaution.

   For Separate Type Yaw Rate Sensor: Refer to **PRECAUTION** .

   For Built-In Type Yaw Rate Sensor: Refer to **PRECAUTION** .

c. Disconnect the cable from the negative (-) battery terminal.

   WARNING: **Wait at least 90 seconds after disconnecting the cable from the negative (-) battery terminal to disable the SRS system.**

d. Remove the No. 2 instrument panel under cover sub-assembly. Refer to **REMOVAL - Step 36** .
e. Disconnect the lower No. 2 instrument panel airbag connector.
   1. Using a screwdriver with the tip wrapped with protective tape, disconnect the airbag connector.

      NOTE: **When disconnecting any airbag connector, take care not to damage the airbag wire harness.**

f. Install SST.

   WARNING: **Check that there is no looseness in the lower No. 2 instrument panel airbag assembly.**

   1. Connect the SST connector to the lower No. 2 instrument panel airbag assembly.

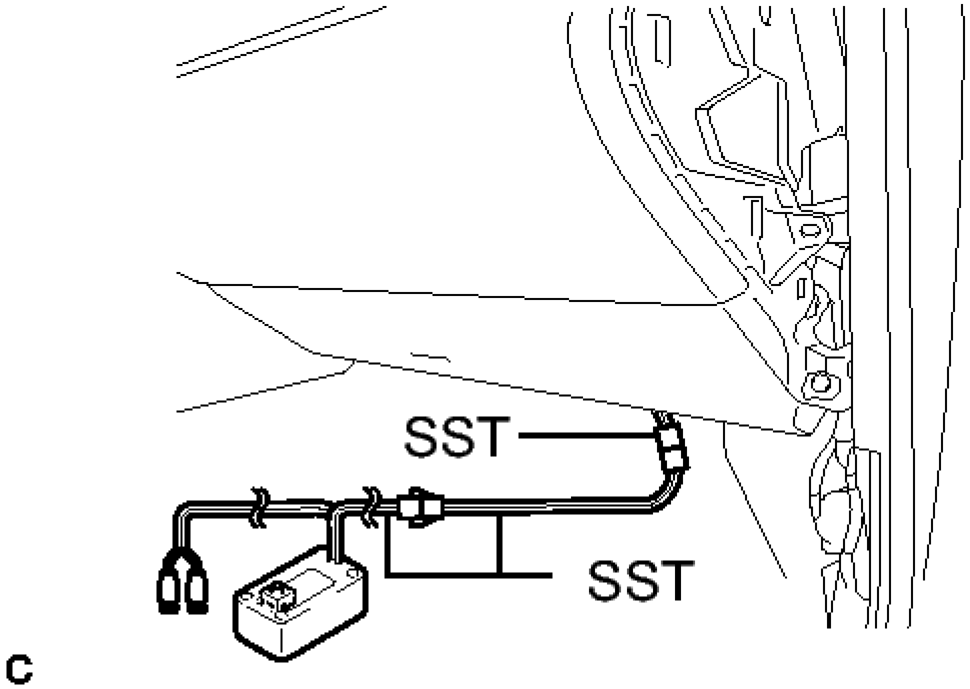

Fig. 65: View Of SST Connected To No. 2 Instrument Panel Airbag Assembly
Courtesy of TOYOTA MOTOR SALES, U.S.A., INC.

- **SST: 09082-00700**
- **SST: 09082-00802**
  09082-10801
  09082-20801

NOTE: **To avoid damaging the SST connector or wire harness, do not lock the secondary lock of the twin lock.**

2. Move SST at least 10 m (32.8 ft.) away from the front side window of the vehicle.

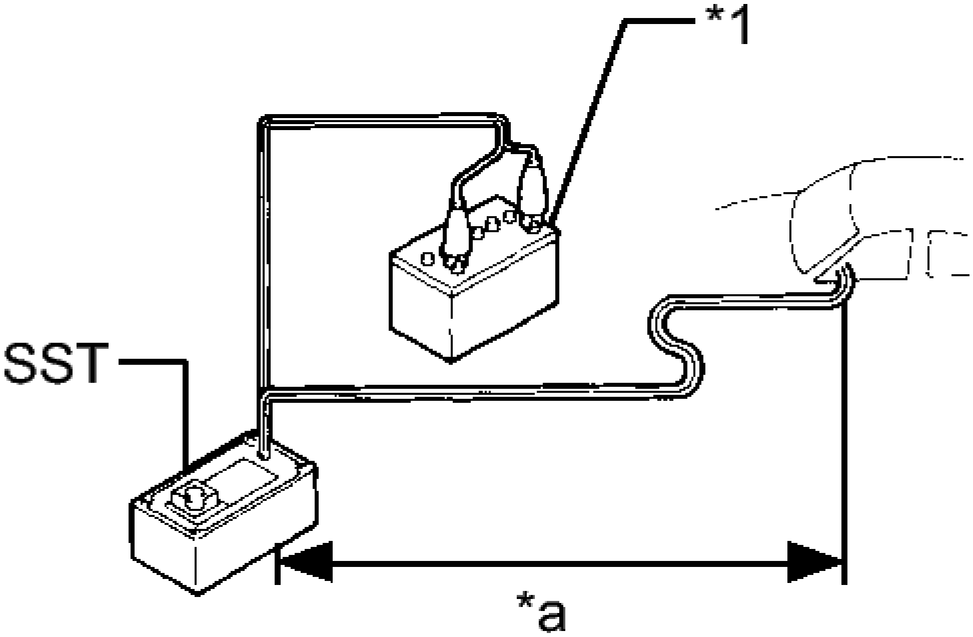

Fig. 66: Identifying SST Distance From Front Side Window
Courtesy of TOYOTA MOTOR SALES, U.S.A., INC.

TEXT IN ILLUSTRATION

*1	Battery
*a	10 m (32.8 ft.) or more

3. Maintaining sufficient clearance for the SST wire harness in the front side window, close all doors and windows of the vehicle.

NOTE: **Take care not to damage the SST wire harness.**

4. Connect the red clip of SST to the positive (+) battery terminal and the black clip of SST to the negative (-) battery terminal.

g. Deploy the airbag.
   1. Check that no one is inside the vehicle or within a 10 m (32.8 ft.) radius of the vehicle.
   2. Press the SST activation switch and deploy the airbag.

WARNING:

- **Before deployment, make sure that no one is near the vehicle.**
- **The lower No. 2 instrument panel airbag assembly becomes extremely hot when the airbag is deployed,**

so do not touch it for at least 30 minutes after deployment.

- **Use gloves and safety glasses when handling a lower No. 2 instrument panel airbag assembly with a deployed airbag.**
- **Do not apply water etc. to a lower No. 2 instrument panel airbag assembly with a deployed airbag.**
- **Always wash your hands with water after completing the operation.**

HINT:

The airbag is deployed as the LED of the SST activation switch comes on.

3. **DISPOSE OF LOWER NO. 2 INSTRUMENT PANEL AIRBAG ASSEMBLY (When Not Installed in Vehicle)**

NOTE: **Be sure to observe the following procedure when deploying the airbag.**

HINT:

Prepare a battery as the power source to deploy the airbag.

a. Check the function of SST. See step 3.

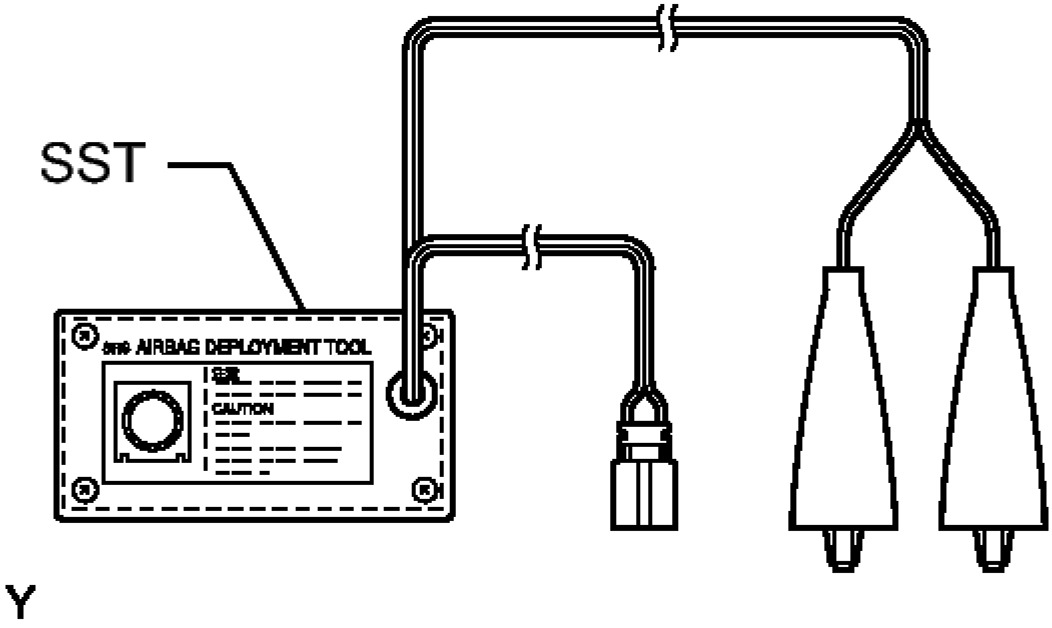

Fig. 67: Checking Function Of SST

Courtesy of TOYOTA MOTOR SALES, U.S.A., INC.

- **SST: 09082-00700**

b. Remove the lower No. 2 instrument panel airbag assembly. Refer to **REMOVAL**.

WARNING:

- **Before removing the lower No. 2 instrument panel airbag assembly, wait at least 90 seconds after turning the ignition switch off and disconnecting the cable from the negative (-) battery terminal.**
- **When storing the lower No. 2 instrument panel airbag assembly, keep the airbag deployment side facing upward.**

c. Using braided wire, tie down the lower No. 2 instrument panel airbag assembly to an unneeded tire.

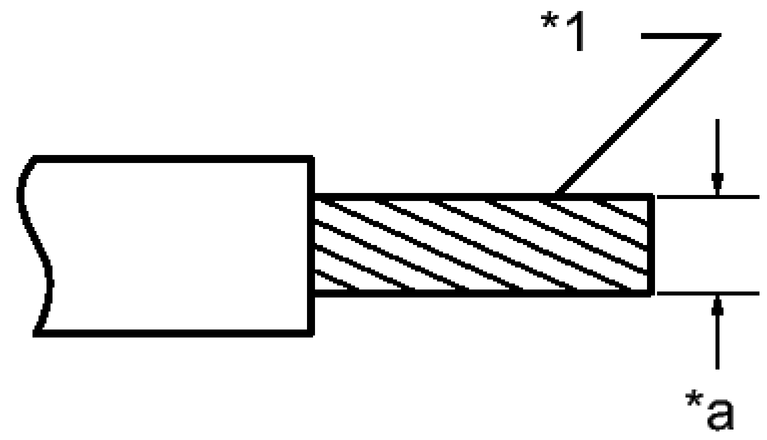

H

Fig. 68: Identifying Stripped Wire
Courtesy of TOYOTA MOTOR SALES, U.S.A., INC.

TEXT IN ILLUSTRATION

*1	Stripped Wire Section
*a	Wire Diameter

Wire

Stripped wire section

1.25 mm^2 (0.0019 $in.^2$) or more

> WARNING: **If the wire is too thin or an alternative object is used to tie down the lower No. 2 instrument panel airbag assembly, it may snap when the airbag is deployed. Always use a wire for vehicle use with an area of at least 1.25 mm^2 (0.0019 $in.^2$).**

HINT:

To calculate the area of the stripped wire section:

Area = 3.14 x $(\text{Diameter})^2$ / 4

1. Position the lower No. 2 instrument panel airbag assembly inside the tire with the airbag deployment side facing inside.

   Minimum tire size

   Width

   185 mm (7.28 in.)

   Inner diameter

   360 mm (1.18 ft.)

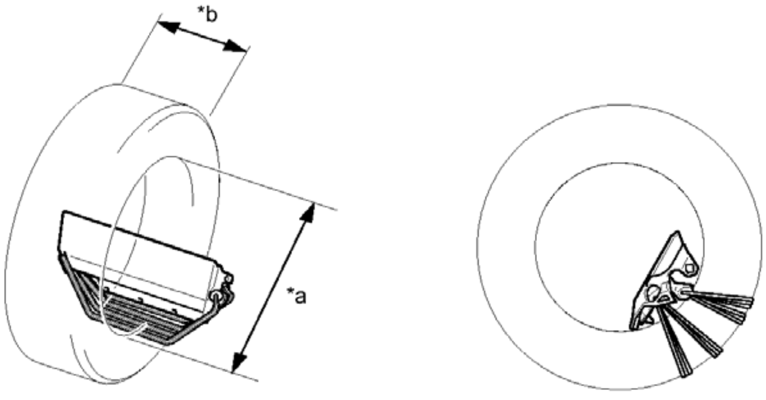

Fig. 69: View Of Lower No. 2 Instrument Panel Airbag Assembly Positioned Inside The Tire
Courtesy of TOYOTA MOTOR SALES, U.S.A., INC.

TEXT IN ILLUSTRATION

*a	Inner Diameter	*b	Width

WARNING:

- **Make sure that the wires are tight. If there is slack in the wires, the lower No. 2 instrument panel airbag assembly may break loose when the airbag is deployed.**
- **Always tie down the lower No. 2 instrument panel airbag assembly with the airbag deployment side facing inside the tire as shown in the illustration.**

NOTE: **The tires may be damaged by the airbag deployment, so use an unneeded tire.**

d. Install SST.

1. After connecting the following SST to each other, connect them to the lower No. 2 instrument panel airbag assembly.

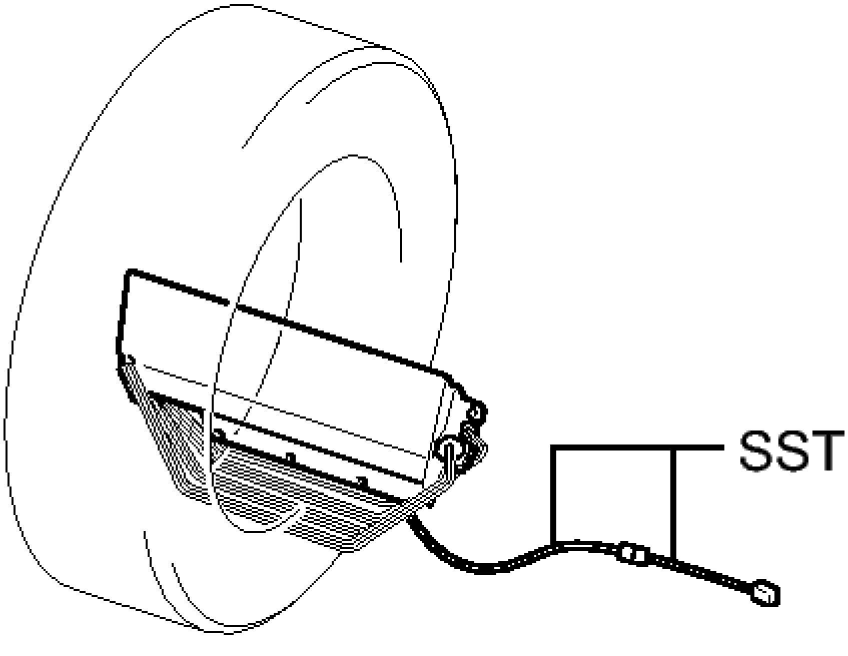

Fig. 70: View Of SST Connected To Lower No. 2 Instrument Panel Airbag Assembly In Tire
Courtesy of TOYOTA MOTOR SALES, U.S.A., INC.

- **SST: 09082-00802**
  09082-10801
  09082-20801

e. Place the tires.

   1. Place at least 2 tires under the tire to which the lower No. 2 instrument panel airbag assembly is tied.

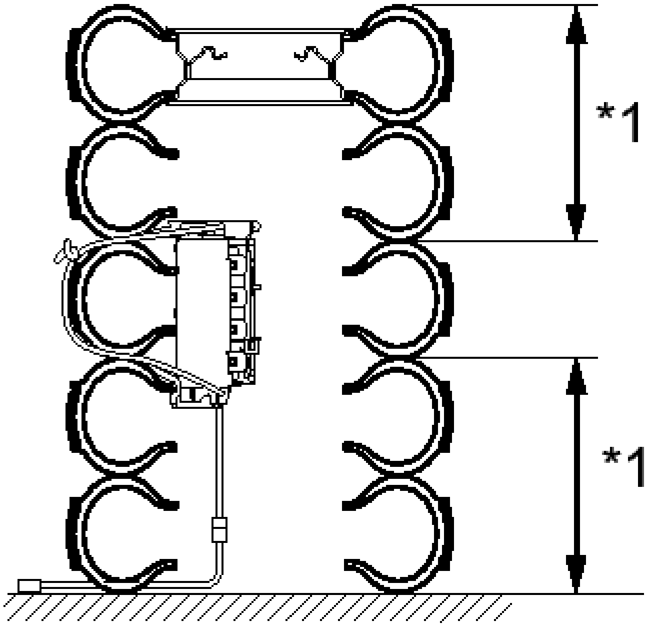

C

Fig. 71: Identifying Lower No. 2 Instrument Panel Airbag Assembly Inside Tires
Courtesy of TOYOTA MOTOR SALES, U.S.A., INC.

TEXT IN ILLUSTRATION

*1	Tires (2 or more)

NOTE: Do not place the SST connector under the tire because it could be damaged.

   2. Place at least 2 tires onto the tire to which the lower No. 2 instrument panel airbag assembly is tied. The top tire should have a wheel installed.
   3. Tie the tires together with the 2 wires.

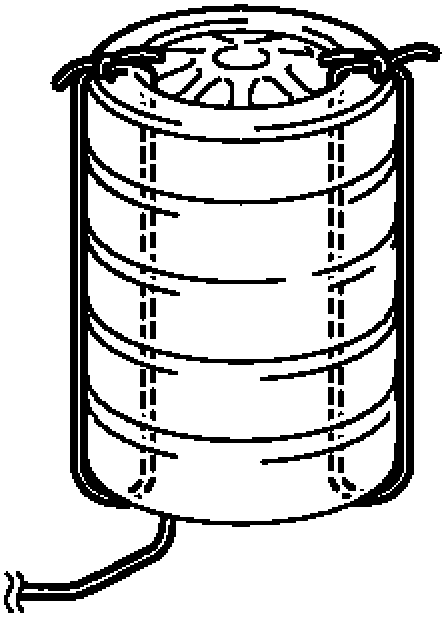

Fig. 72: Identifying Tires Tied Together With Wires
Courtesy of TOYOTA MOTOR SALES, U.S.A., INC.

WARNING: **Make sure that the wires are tight. Looseness in the wires results in the tires breaking loose when the airbag is deployed.**

f. Install SST.
   1. Connect the SST connector.

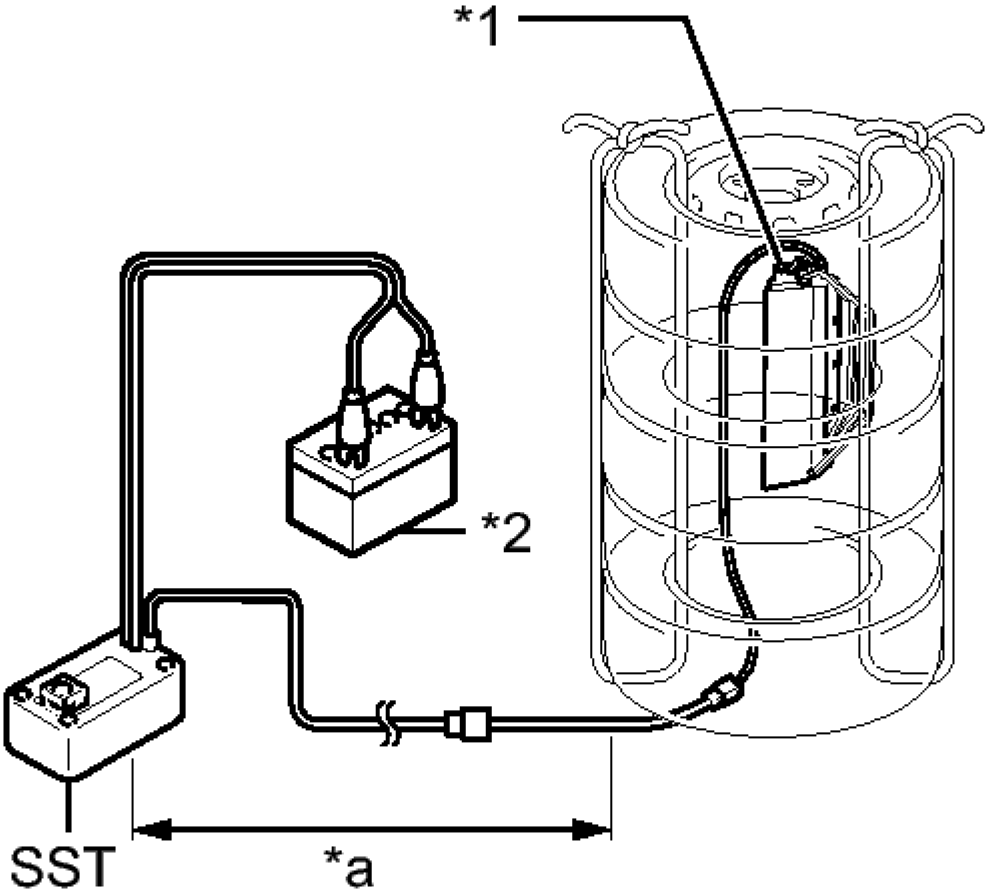

C

Fig. 73: Identifying SST Distance From Lower No. 2 Instrument Panel Airbag Assembly In Tires

Courtesy of TOYOTA MOTOR SALES, U.S.A., INC.

TEXT IN ILLUSTRATION

*1	Lower No. 2 Instrument Panel Airbag Assembly
*2	Battery
*a	10 m (32.8 ft.) or more

- **SST: 09082-00700**

NOTE: **To avoid damaging the SST connector or wire harness, do not lock the secondary lock of the twin lock. Also, secure some slack for the SST wire harness inside the tire.**

2. Move SST at least 10 m (32.8 ft.) away from the airbag tied down to the tire.

g. Deploy the airbag.
   1. Connect the red clip of SST to the positive (+) battery terminal and the black clip of SST to the negative (-) battery terminal.
   2. Check that no one is within a 10 m (32.8 ft.) radius of the tire to which the lower No. 2 instrument panel airbag assembly is tied.
   3. Press the SST activation switch and deploy the airbag.

WARNING: **Before deployment, make sure that no one is near the airbag.**

HINT:

The airbag is deployed as the LED of the SST activation switch comes on.

h. Dispose of the lower No. 2 instrument panel airbag assembly.

WARNING:

- **The lower No. 2 instrument panel airbag assembly becomes extremely hot when the airbag is deployed, so do not touch it for at least 30 minutes after deployment.**
- **Use gloves and safety glasses when handling a lower No. 2 instrument panel airbag assembly with a deployed airbag.**
- **Do not apply water etc. to a lower No. 2 instrument panel airbag assembly with a deployed airbag.**
- **Always wash your hands with water after completing the operation.**

1. Remove the lower No. 2 instrument panel airbag assembly from the tire.
2. Place the lower No. 2 instrument panel airbag assembly in a plastic bag, tie it tightly, and dispose of it according to local regulations.

FRONT PASSENGER AIRBAG ASSEMBLY

COMPONENTS

ILLUSTRATION

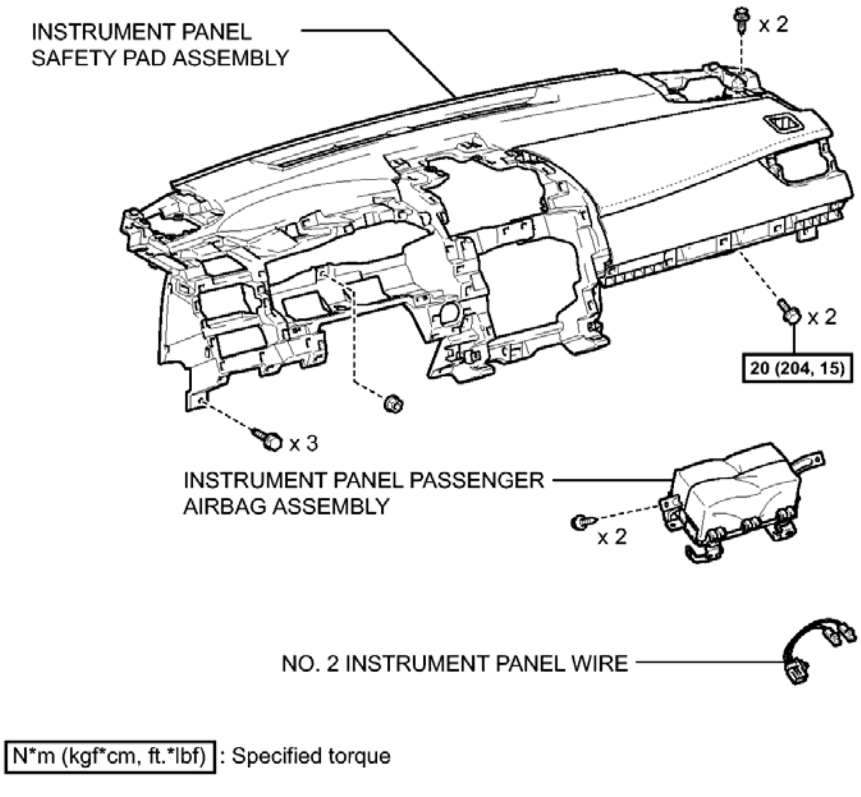
INSTRUMENT PANEL SAFETY PAD ASSEMBLY
x 2
x 2
20 (204, 15)
x 3
INSTRUMENT PANEL PASSENGER AIRBAG ASSEMBLY
x 2
NO. 2 INSTRUMENT PANEL WIRE
N*m (kgf*cm, ft.*lbf) : Specified torque
c

Fig. 74: Identifying Front Passenger Airbag Assembly Replacement Components With Torque Specifications
Courtesy of TOYOTA MOTOR SALES, U.S.A., INC.

ON-VEHICLE INSPECTION

ON-VEHICLE INSPECTION

WARNING: Be sure to correctly follow the removal and installation procedures for the instrument panel passenger airbag assembly.

1. **INSPECT INSTRUMENT PANEL PASSENGER AIRBAG ASSEMBLY (for Vehicle not Involved in Collision)**
    a. Perform a diagnostic system check.

       For Separate Type Yaw Rate Sensor: Refer to **DTC CHECK / CLEAR** .

       For Built-In Type Yaw Rate Sensor: Refer to **DTC CHECK / CLEAR** .

    b. Visually check for defects with the instrument panel passenger airbag assembly installed on the vehicle.

HINT:

The defects are as follows:

- Cuts on the instrument panel sub-assembly around the instrument panel passenger airbag assembly
- Small cracks on the instrument panel sub-assembly around the instrument panel passenger airbag assembly
- Significant discoloration on the instrument panel sub-assembly around the instrument panel passenger airbag assembly

OK

No defects are found.

If any of the defects is found, replace the instrument panel sub-assembly with a new one.

2. **INSPECT INSTRUMENT PANEL PASSENGER AIRBAG ASSEMBLY (for Vehicle Involved in Collision and Airbag not Deployed)**
   1. Perform a diagnostic system check.

      For Separate Type Yaw Rate Sensor: Refer to **DTC CHECK / CLEAR** .

      For Built-In Type Yaw Rate Sensor: Refer to **DTC CHECK / CLEAR** .

   2. Visually check for defects with the instrument panel passenger airbag assembly removed from the vehicle.

      HINT:

      - Cuts
      - Small cracks
      - Significant discoloration
      - Cracks or other damage to the connector
      - Deformation or cracks on the instrument panel sub-assembly or instrument panel reinforcement

      OK

      No defects are found.

      If any of the defects is found, replace the instrument panel passenger airbag assembly, instrument panel sub-assembly or instrument panel reinforcement with a new one.

REMOVAL

REMOVAL

1. **PRECAUTION**

WARNING: **Be sure to read Precaution thoroughly before servicing.**

For Separate Type Yaw Rate Sensor: Refer to PRECAUTION .

For Built-In Type Yaw Rate Sensor: Refer to PRECAUTION .

NOTE: **After turning the ignition switch off, waiting time may be required before disconnecting the cable from the negative (-) battery terminal. Therefore, make sure to read the disconnecting the cable from the negative (-) battery terminal notices before proceeding with work. Refer to PRECAUTION .**

2. **REMOVE NO. 1 INSTRUMENT PANEL GARNISH SUB-ASSEMBLY**

   Refer to **REMOVAL** .

3. **DISCONNECT NO. 2 INSTRUMENT PANEL WIRE**
   a. Check that the ignition switch is off.
   b. Check that the cable is disconnected from the negative (-) battery terminal.

   WARNING: **Wait at least 90 seconds after disconnecting the cable from the negative (-) battery terminal to disable the SRS system.**

   c. Slide the slider to release the lock, and then disconnect the connector.

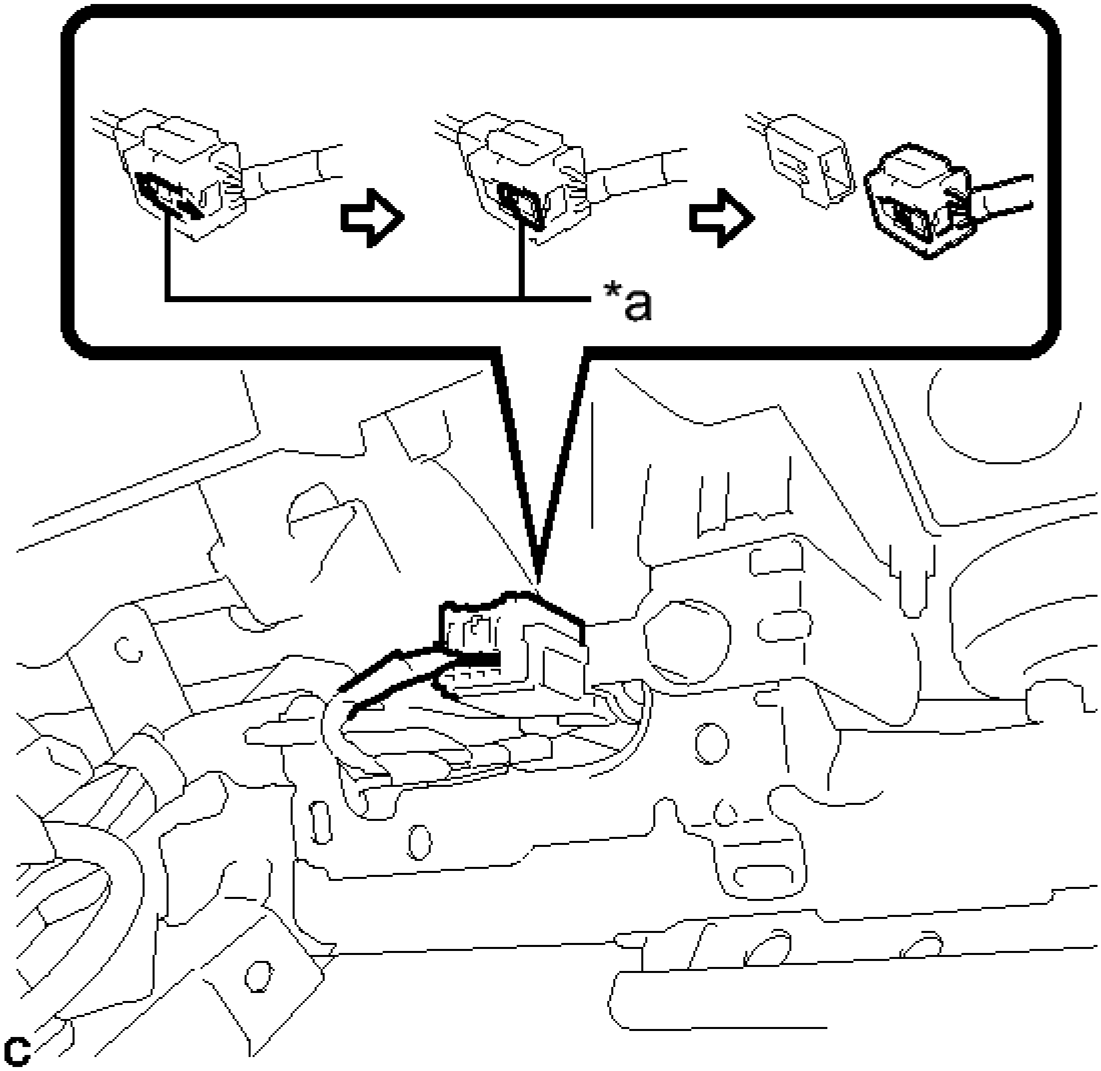

Fig. 75: Disconnecting Airbag Connector
Courtesy of TOYOTA MOTOR SALES, U.S.A., INC.

TEXT IN ILLUSTRATION

*a	Slider

NOTE: **When disconnecting any airbag connector, take care not to damage the airbag wire harness.**

4. **REMOVE INSTRUMENT PANEL SAFETY PAD ASSEMBLY** . Refer to **REMOVAL - Step 52** .
5. **REMOVE INSTRUMENT PANEL PASSENGER AIRBAG ASSEMBLY**

WARNING: **When storing the instrument panel passenger airbag assembly, keep the airbag deployment side facing upward.**

a. Remove the 2 screws.

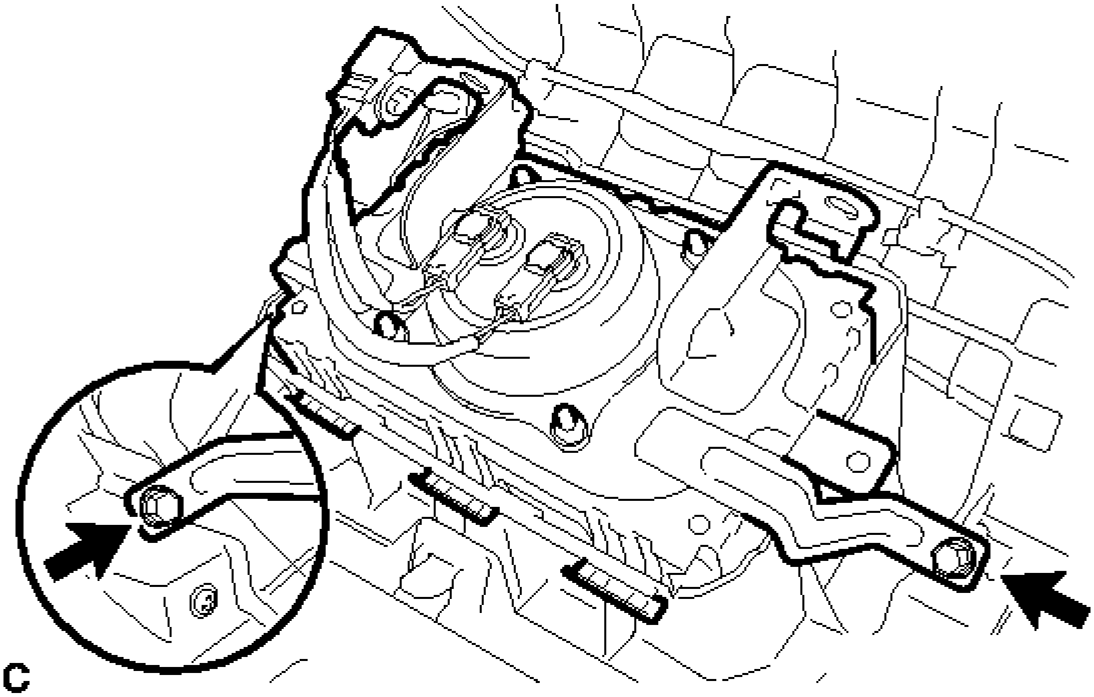

Fig. 76: Locating Instrument Panel Passenger Airbag Assembly Fasteners
Courtesy of TOYOTA MOTOR SALES, U.S.A., INC.

b. Lean the instrument panel safety pad assembly and disengage the 3 hooks.

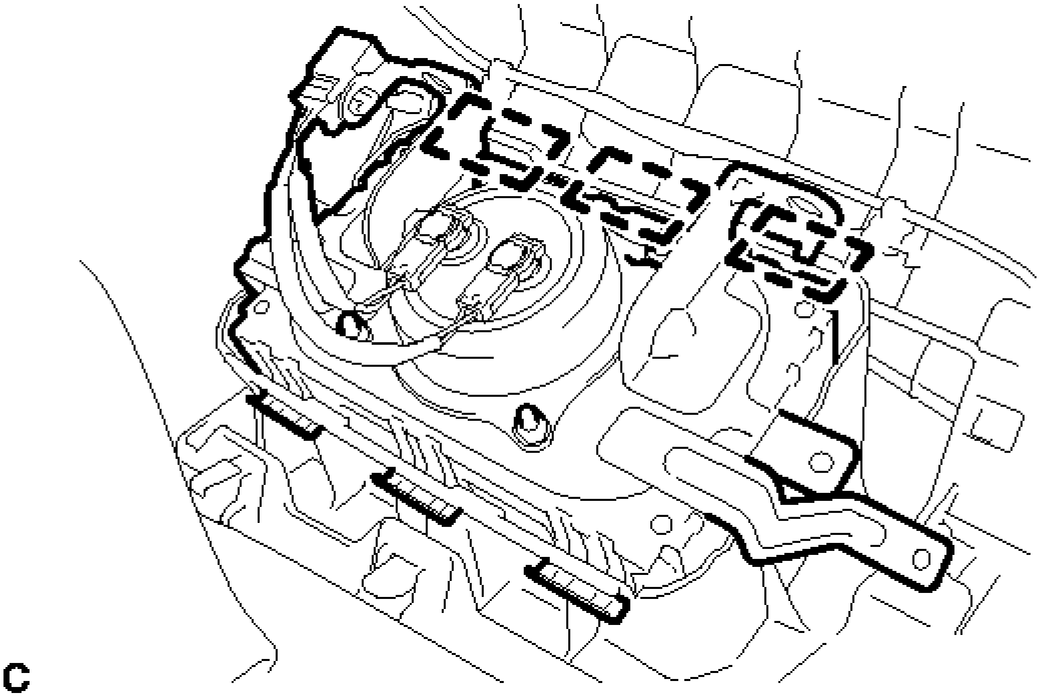

Fig. 77: Locating Instrument Panel Passenger Airbag Assembly Hooks
Courtesy of TOYOTA MOTOR SALES, U.S.A., INC.

c. Disengage the 3 hooks to remove the instrument panel passenger airbag assembly from the instrument panel safety pad assembly.

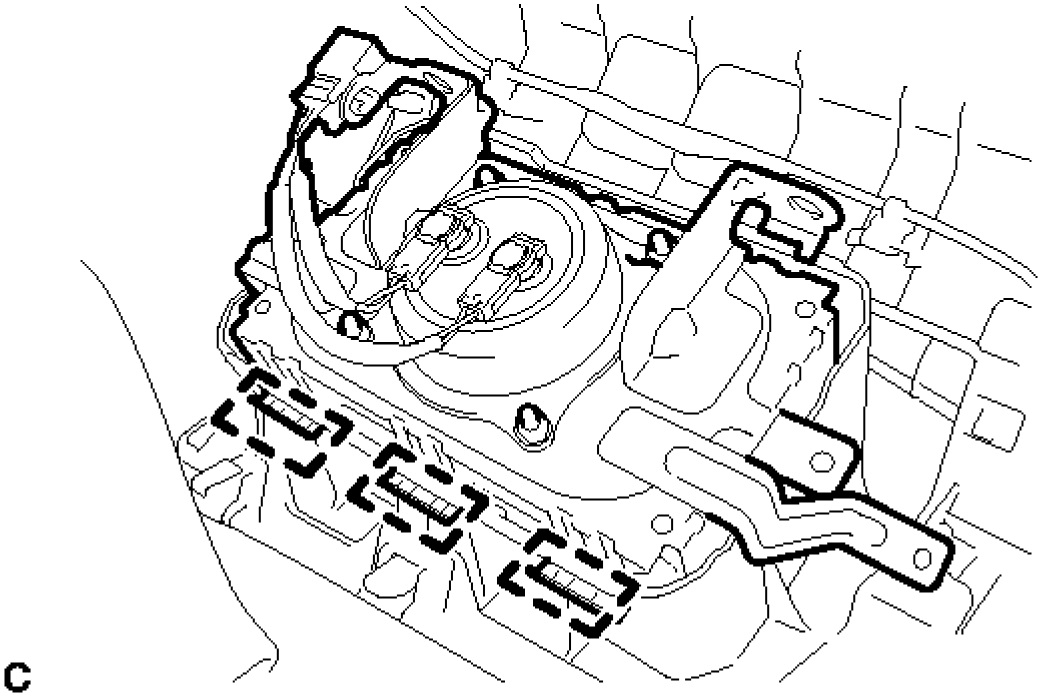

Fig. 78: Locating Instrument Panel Passenger Airbag Assembly Hooks
Courtesy of TOYOTA MOTOR SALES, U.S.A., INC.

6. **REMOVE NO. 2 INSTRUMENT PANEL WIRE**
   a. Disengage the clamp.

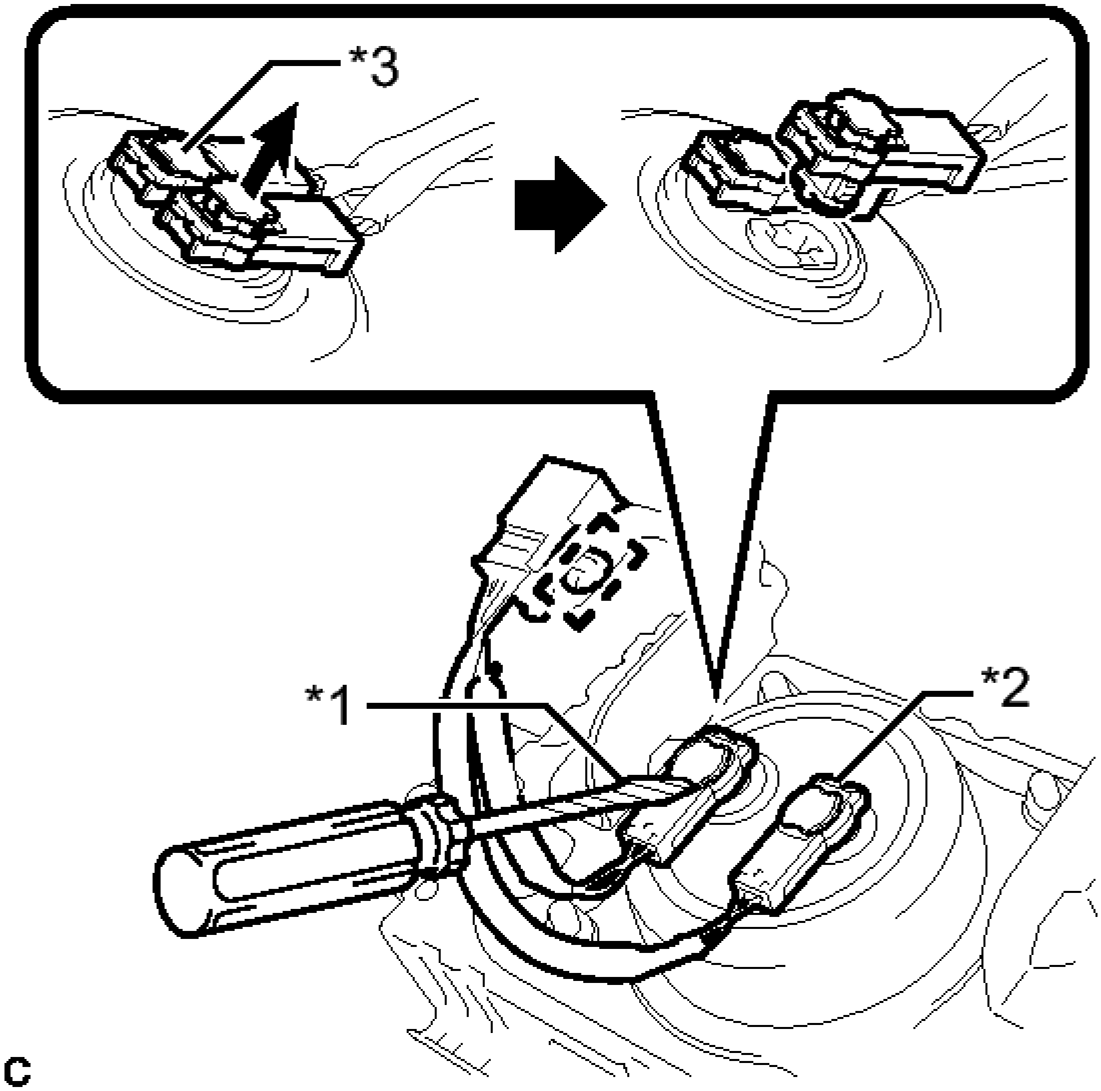

Fig. 79: Disconnecting Airbag Connectors
Courtesy of TOYOTA MOTOR SALES, U.S.A., INC.

b. Using a screwdriver with the tip wrapped with protective tape, release the 2 airbag connector locks.

TEXT IN ILLUSTRATION

*1	Protective Tape
*2	Airbag Connector
*3	Airbag Connector Lock

c. Disconnect the 2 airbag connectors to remove the No. 2 instrument panel wire from the instrument panel passenger airbag assembly.

NOTE: **When disconnecting any airbag connector, take care not to damage the airbag wire harness.**

INSTALLATION

INSTALLATION

1. **INSTALL NO. 2 INSTRUMENT PANEL WIRE**
   1. Connect the 2 airbag connectors of the No. 2 instrument panel wire to the instrument panel passenger airbag assembly.

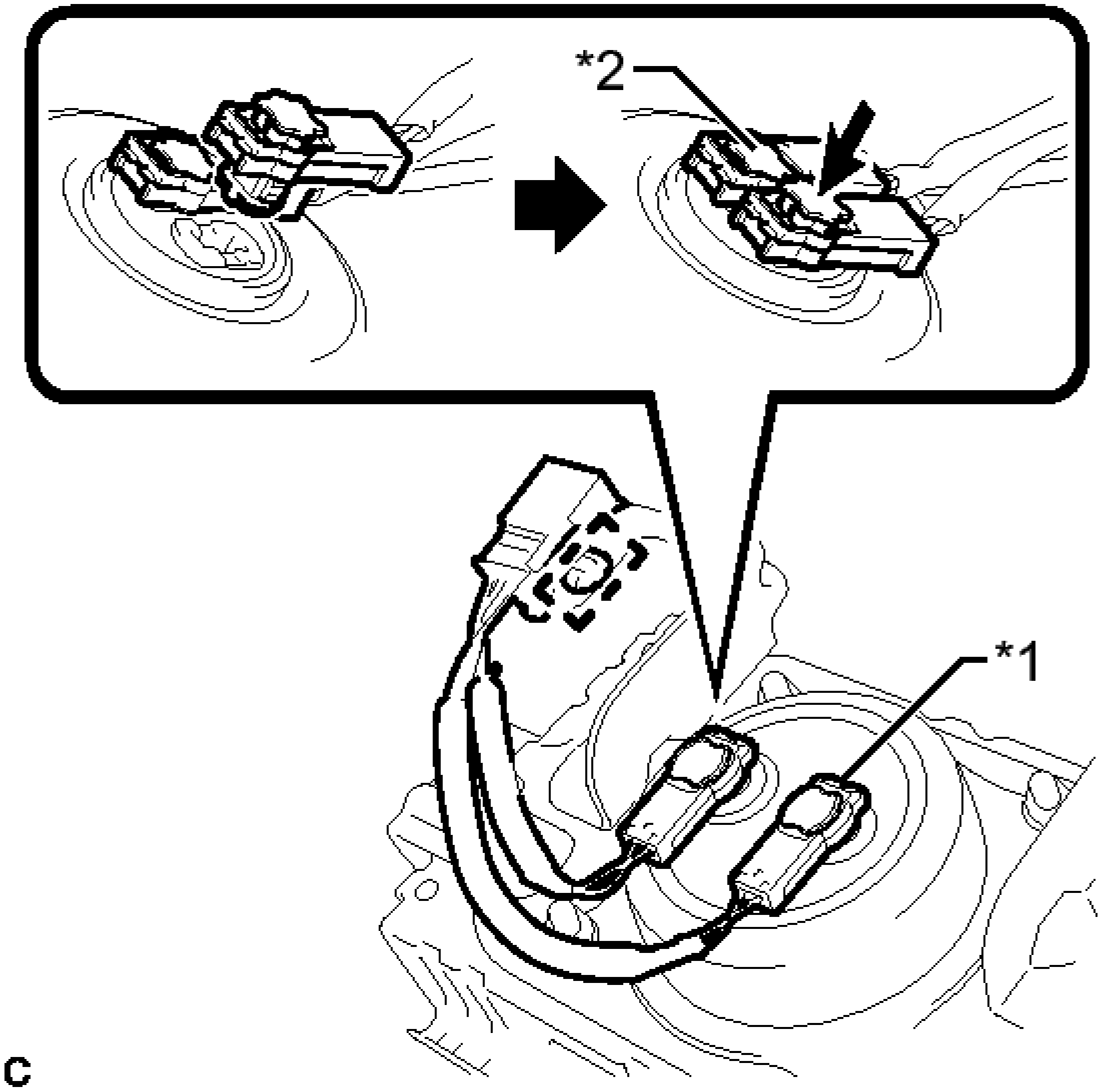

Fig. 80: Connecting Airbag Connectors
Courtesy of TOYOTA MOTOR SALES, U.S.A., INC.

TEXT IN ILLUSTRATION

*1	Airbag Connector
*2	Airbag Connector Lock

NOTE:

- **When connecting any airbag connector, take care not to damage the airbag wire harness.**
- **Be sure to only connect the connectors to each corresponding color.**

b. Push in the 2 locks to install the 2 airbag connectors to the instrument panel passenger airbag assembly.

c. Engage the clamp.

2. **INSTALL INSTRUMENT PANEL PASSENGER AIRBAG ASSEMBLY**

NOTE: **If the hooks are not engaged in the correct order, the deployment part of the instrument panel passenger airbag assembly may be damaged.**

a. Engage the 3 hooks as shown in the illustration.

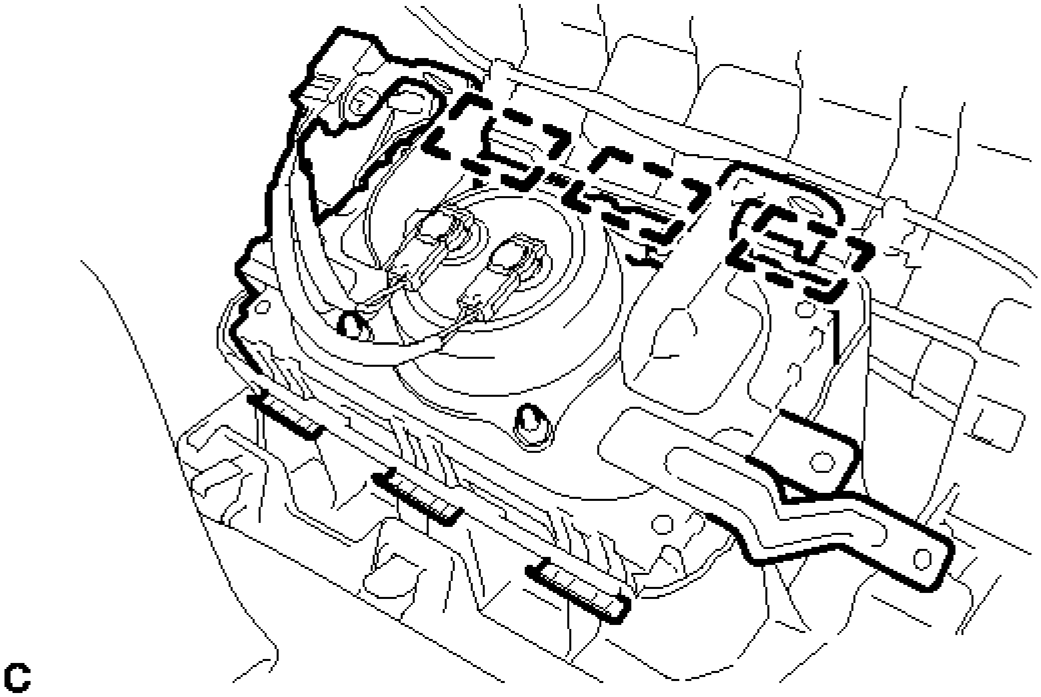

Fig. 81: Locating Instrument Panel Passenger Airbag Assembly Hooks
Courtesy of TOYOTA MOTOR SALES, U.S.A., INC.

b. Push the instrument panel passenger airbag assembly to engage the 3 hooks.

c. Install the 2 screws to install the instrument panel passenger airbag assembly.

3. **INSTALL INSTRUMENT PANEL SAFETY PAD ASSEMBLY** . Refer to **INSTALLATION - Step 1** .
4. **CONNECT NO. 2 INSTRUMENT PANEL WIRE**
   a. Check that the ignition switch is off.
   b. Check that the cable is disconnected from the negative (-) battery terminal.

   WARNING: **Wait at least 90 seconds after disconnecting the cable from the negative (-) battery terminal to disable the SRS system.**

   c. Connect the connector.

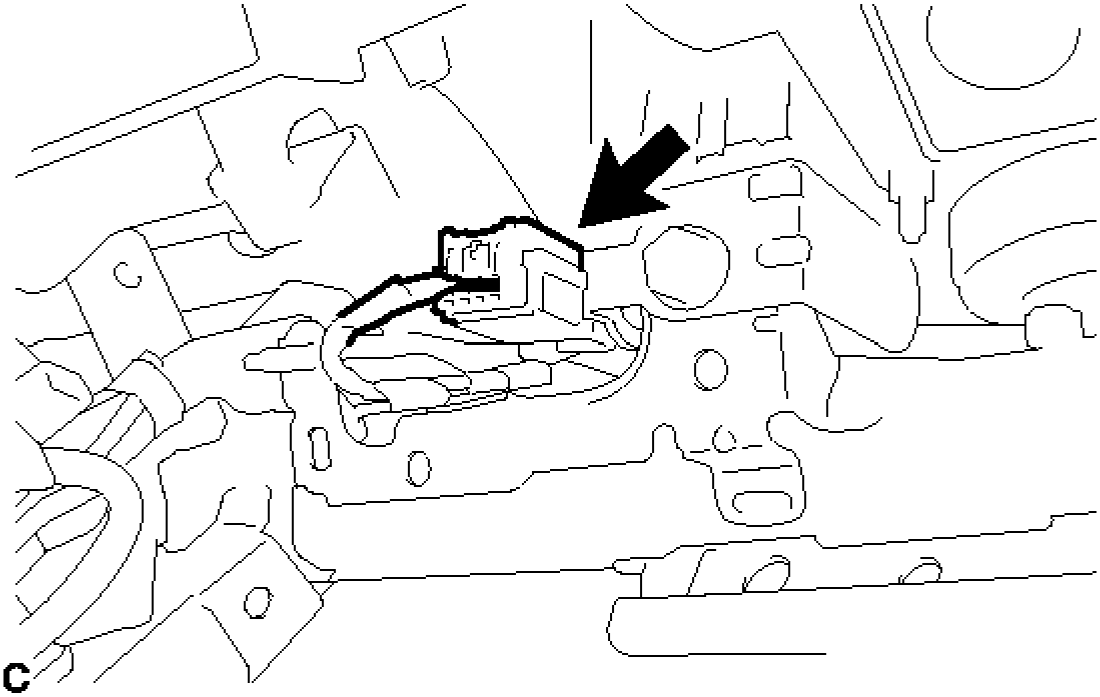

Fig. 82: Identifying Airbag Connector
Courtesy of TOYOTA MOTOR SALES, U.S.A., INC.

NOTE: **When connecting any airbag connector, take care not to damage the airbag wire harness.**

5. **INSTALL NO. 1 INSTRUMENT PANEL GARNISH SUB-ASSEMBLY**

   Refer to **INSTALLATION - Step 3** .

6. **PERFORM DIAGNOSTIC SYSTEM CHECK**

   For Separate Type Yaw Rate Sensor: Refer to **DTC CHECK / CLEAR** .

For Built-In Type Yaw Rate Sensor: Refer to **DTC CHECK / CLEAR** .

DISPOSAL

DISPOSAL

WARNING: **Before performing pre-disposal deployment of any SRS part, review and closely follow all applicable environmental and hazardous material regulations. Pre-disposal deployment may be considered hazardous material treatment.**

1. **PRECAUTION**

WARNING:

- **An airbag or pretensioner may be activated by static electricity. To prevent this, be sure to touch a metal surface with bare hands to discharge static electricity before performing this procedure.**
- **Never dispose of a instrument panel passenger airbag assembly with an undeployed airbag.**
- **The airbag produces an exploding sound when it is deployed, so perform the operation outdoors and where it will not create a nuisance to nearby residents.**
- **When deploying the airbag, always use the specified SST (SRS Airbag Deployment Tool). Perform the operation in a place away from electrical noise.**
- **When deploying the airbag, perform the operation at least 10 m (32.8 ft.) away from the instrument panel passenger airbag assembly.**
- **The instrument panel passenger airbag assembly becomes extremely hot when the airbag is deployed, so do not touch it for at least 30 minutes after deployment.**
- **Use gloves and safety glasses when handling a instrument panel passenger airbag assembly with a deployed airbag.**
- **Do not apply water etc. to a instrument panel passenger airbag assembly with a deployed airbag.**
- **Always wash your hands with water after completing the operation.**

HINT:

When scrapping a vehicle equipped with an SRS or disposing of the instrument panel passenger airbag assembly, be sure to deploy the airbag first in accordance with the procedure described below. If any abnormality occurs with the airbag deployment, contact the Service Dept. of TOYOTA MOTOR SALES, U.S.A., INC.

2. **DISPOSE OF INSTRUMENT PANEL PASSENGER AIRBAG ASSEMBLY (When Installed in Vehicle)**

NOTE:

- **When disposing of the instrument panel passenger airbag assembly, never use the customer's vehicle to deploy the airbag.**
- **Be sure to observe the following procedure when deploying the airbag.**

HINT:

Prepare a battery as the power source to deploy the airbag.

a. Check the function of SST. See step 2.

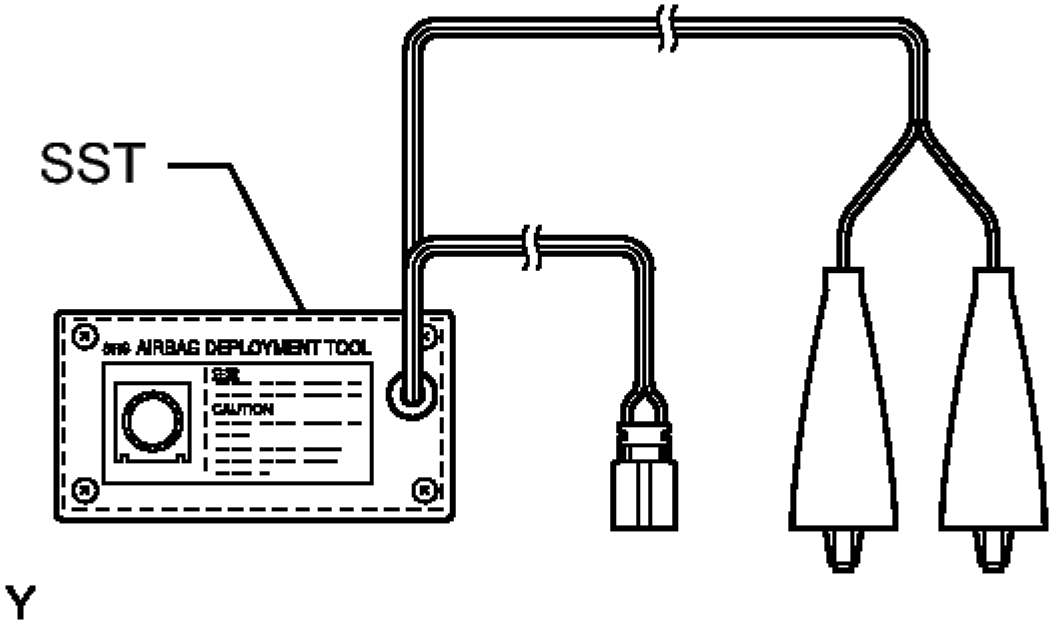

Fig. 83: Checking Function Of SST
Courtesy of TOYOTA MOTOR SALES, U.S.A., INC.

- **SST: 09082-00700**

b. Refer to Precaution.

For Separate Type Yaw Rate Sensor: Refer to **PRECAUTION** .

For Built-In Type Yaw Rate Sensor: Refer to **PRECAUTION** .

c. Disconnect the cable from the negative (-) battery terminal.

WARNING: **Wait at least 90 seconds after disconnecting the cable from the negative (-) battery terminal to disable the SRS system.**

d. Remove the lower instrument panel sub-assembly. Refer to **REMOVAL - Step 38** .
e. Disconnect the No. 2 instrument panel wire.

NOTE: **When disconnecting any airbag connector, take care not to damage the airbag wire harness.**

1. Slide the slider to release the lock, and then disconnect the connector.

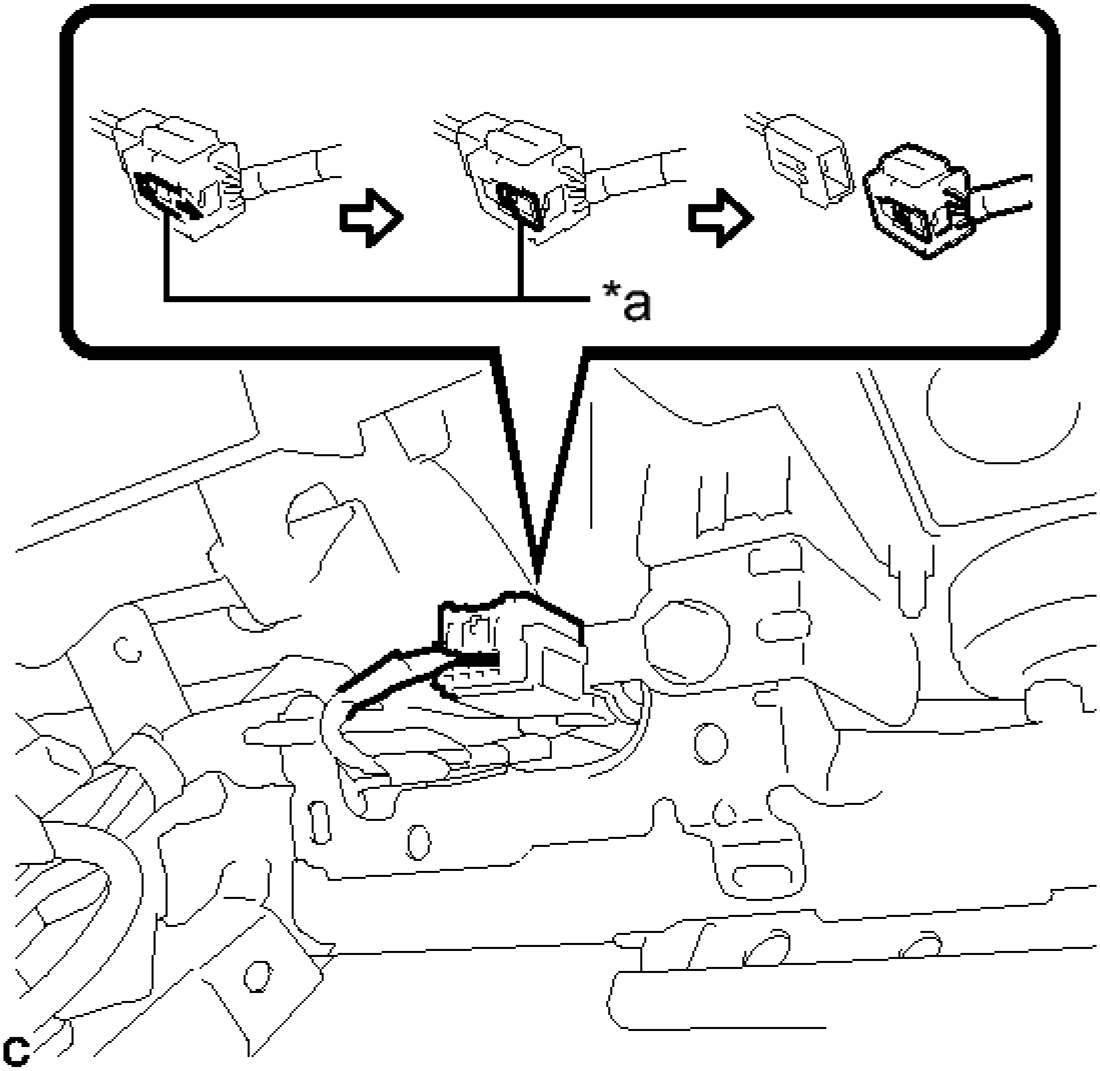

Fig. 84: Disconnecting Airbag Connector
Courtesy of TOYOTA MOTOR SALES, U.S.A., INC.

TEXT IN ILLUSTRATION

*a	Slider

f. Install SST.

WARNING: **Check that there is no looseness in the instrument panel passenger airbag assembly and instrument panel safety pad.**

1. Connect the SST connector to the No. 2 instrument panel wire.

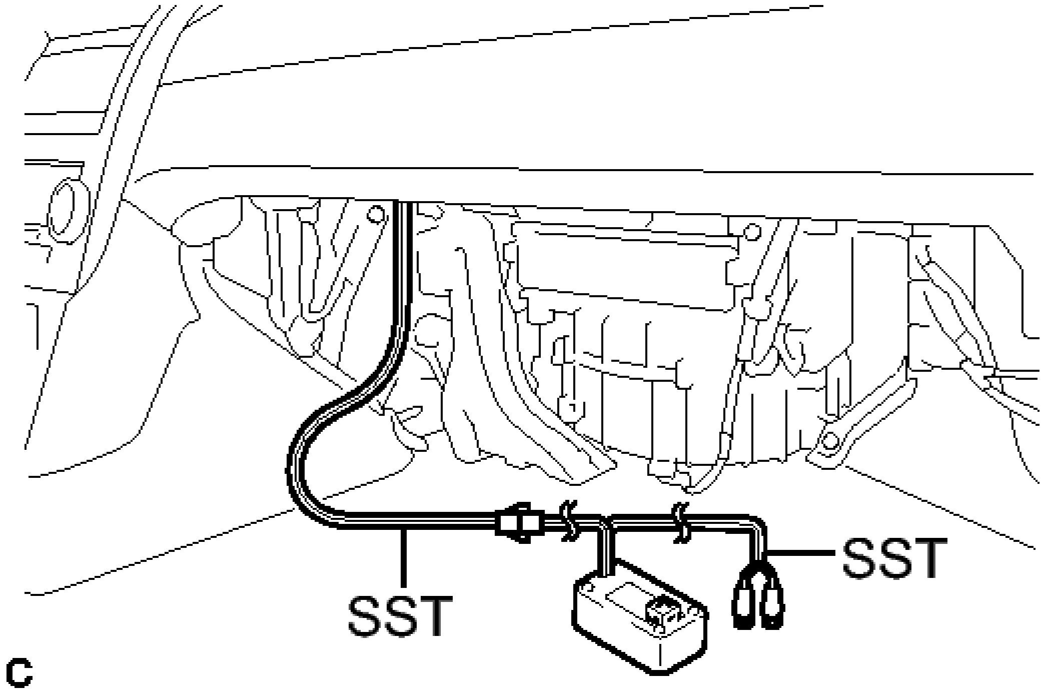

Fig. 85: View Of SST Connected To The No. 2 Instrument Panel Wire
Courtesy of TOYOTA MOTOR SALES, U.S.A., INC.

- **SST: 09082-00700**
- **SST: 09082-00780**

NOTE: **To avoid damaging the SST connector or wire harness, do not lock the secondary lock of the twin lock.**

2. Move SST at least 10 m (32.8 ft.) away from the front side window of the vehicle.

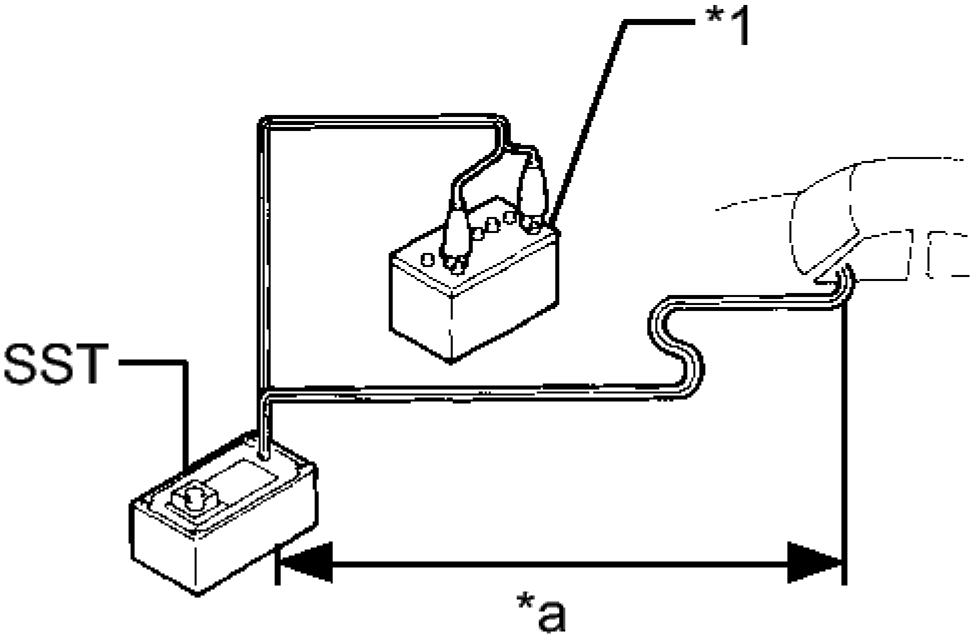

Fig. 86: Identifying SST Distance From Front Side Window
Courtesy of TOYOTA MOTOR SALES, U.S.A., INC.

TEXT IN ILLUSTRATION

*1	Battery
*a	10 m (32.8 ft.) or more

3. Maintaining sufficient clearance for the SST wire harness in the front side window, close all doors and windows of the vehicle.

   NOTE: **Take care not to damage the SST wire harness.**

4. Connect the red clip of SST to the positive (+) battery terminal and the black clip of SST to the negative (-) battery terminal.

g. Deploy the airbag.

   1. Check that no one is inside the vehicle or within a 10 m (32.8 ft.) radius of the vehicle.
   2. Press the SST activation switch and deploy the airbag.

   WARNING:
   - **Before deployment, make sure that no one is near the vehicle.**
   - **The instrument panel passenger airbag assembly becomes extremely hot when the airbag is deployed,**

so do not touch it for at least 30 minutes after deployment.

- **Use gloves and safety glasses when handling a instrument panel passenger airbag assembly with a deployed airbag.**
- **Do not apply water etc. to a instrument panel passenger airbag assembly with a deployed airbag.**
- **Always wash your hands with water after completing the operation.**

HINT:

The airbag is deployed as the LED of the SST activation switch comes on.

3. **DISPOSE OF INSTRUMENT PANEL PASSENGER AIRBAG ASSEMBLY (When Not Installed in Vehicle)**

NOTE: **Be sure to observe the following procedure when deploying the airbag.**

HINT:

Prepare a battery as the power source to deploy the airbag.

a. Check the function of SST. See step 3.

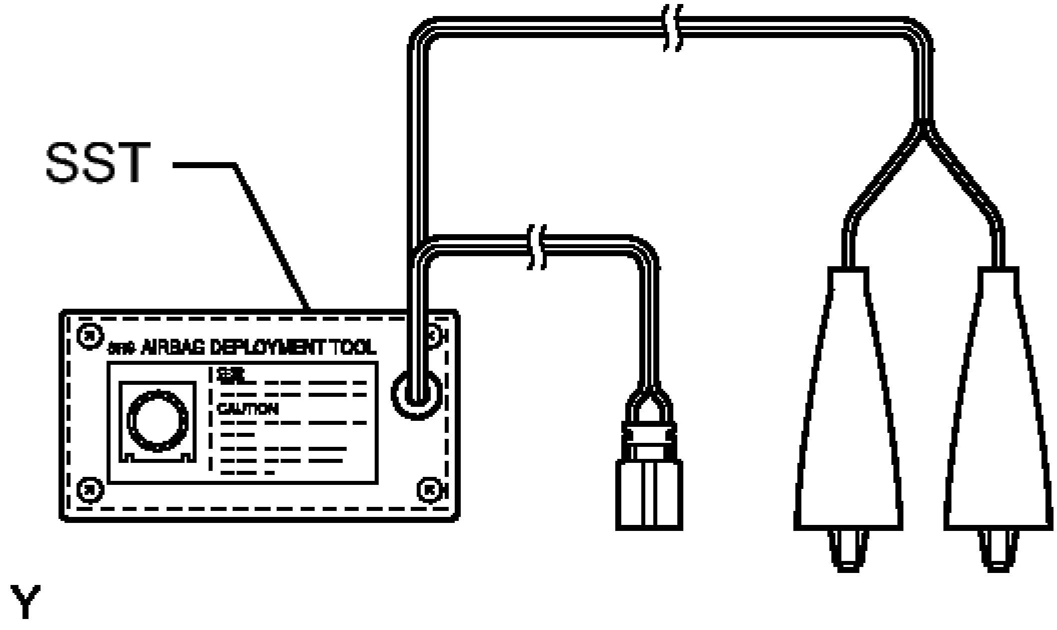

Fig. 87: Checking Function Of SST

Courtesy of TOYOTA MOTOR SALES, U.S.A., INC.

- **SST: 09082-00700**

b. Remove the instrument panel passenger airbag assembly. Refer to **REMOVAL**.

WARNING:

- **Before removing the instrument panel passenger airbag assembly, wait at least 90 seconds after turning the ignition switch off and disconnecting the cable from the negative (-) battery terminal.**
- **When storing the instrument panel passenger airbag assembly, keep the airbag deployment side facing upward.**

c. Install SST.

1. After connecting the following SST to each other, connect them to the instrument panel passenger airbag assembly.

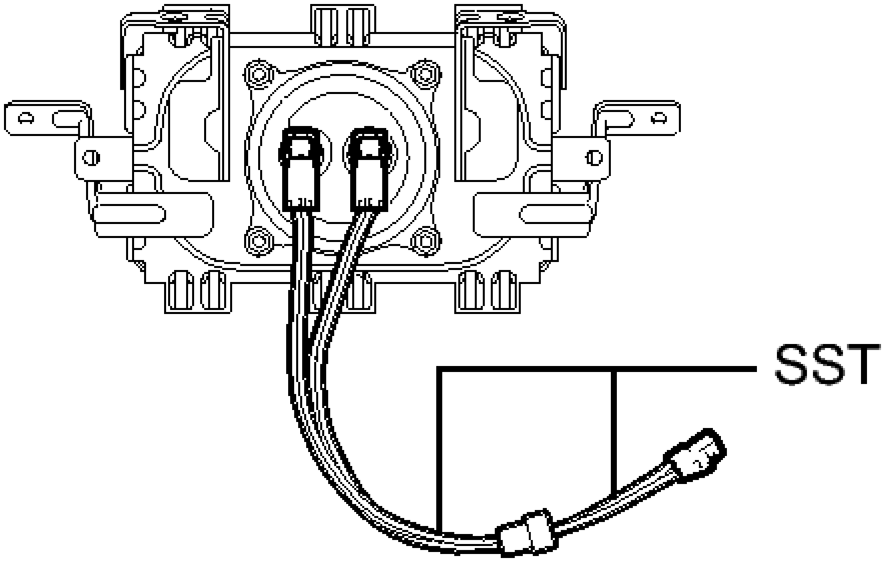

Fig. 88: View Of SST Connected To Instrument Panel Passenger Airbag Assembly
Courtesy of TOYOTA MOTOR SALES, U.S.A., INC.

- **SST: 09082-00802**
  09082-10801
  09082-30801

d. Using braided wire, tie down the instrument panel passenger airbag assembly to an unneeded tire.

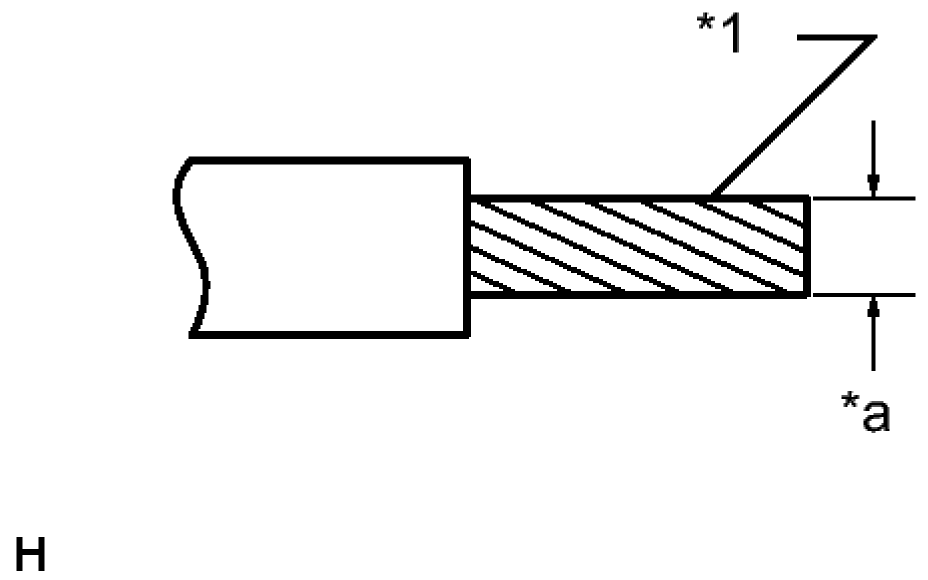

Fig. 89: Identifying Stripped Wire
Courtesy of TOYOTA MOTOR SALES, U.S.A., INC.

TEXT IN ILLUSTRATION

*1	Stripped Wire Section
*a	Wire Diameter

Wire

Stripped wire section

1.25 mm^2 (0.0019 in.^{2}) or more

WARNING: **If the wire is too thin or an alternative object is used to tie down the instrument panel passenger airbag assembly, it may snap when the airbag is deployed. Always use a wire for vehicle use with an area of at least 1.25 mm^2 (0.0019 in.^{2}).**

HINT:

To calculate the area of the stripped wire section:

Area = 3.14 x (Diameter)^2 / 4

1. Position the instrument panel passenger airbag assembly inside the tire with the airbag deployment side facing inside.

   Minimum tire size

   Width

   185 mm (7.28 in.)

   Inner diameter

   360 mm (1.18 ft.)

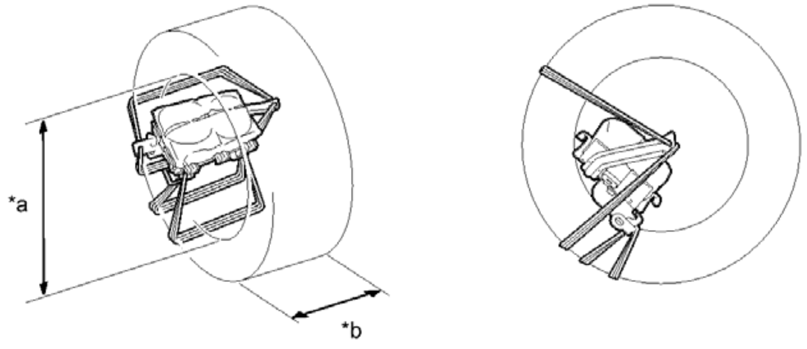

c

Fig. 90: View Of Instrument Panel Passenger Airbag Assembly Positioned Inside The Tire
Courtesy of TOYOTA MOTOR SALES, U.S.A., INC.

TEXT IN ILLUSTRATION

*a	Inner Diameter	*b	Width

WARNING:

- **Make sure that the wires are tight. If there is slack in the wires, the instrument panel passenger airbag assembly may break loose when the airbag is deployed.**
- **Always tie down the instrument panel passenger airbag assembly with the airbag deployment side facing inside the tire as shown in the illustration.**

NOTE: **The tires may be damaged by the airbag deployment, so use an unneeded tire.**

e. Place the tires.

1. Place at least 2 tires under the tire to which the instrument panel passenger airbag assembly is tied.

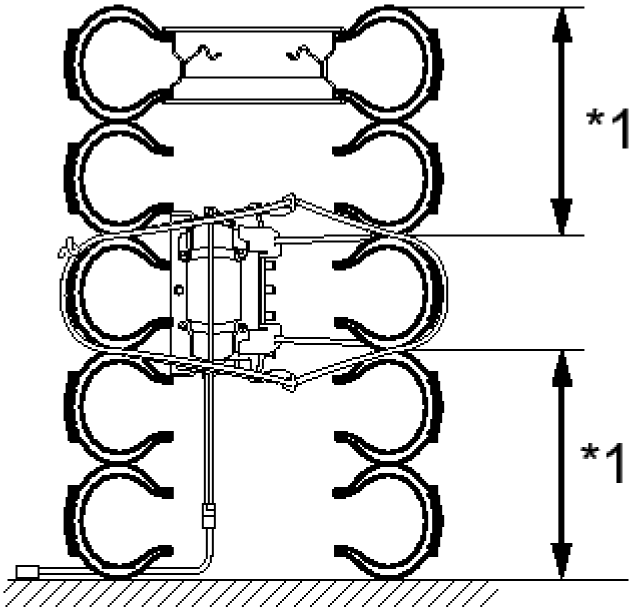

C

Fig. 91: Identifying Instrument Panel Passenger Airbag Assembly Inside Tires
Courtesy of TOYOTA MOTOR SALES, U.S.A., INC.

TEXT IN ILLUSTRATION

*1	Tires (2 or more)

NOTE: Do not place the SST connector under the tire because it could be damaged.

2. Place at least 2 tires onto the tire to which the instrument panel passenger airbag assembly is tied. The top tire should have a wheel installed.
3. Tie the tires together with the 2 wires.

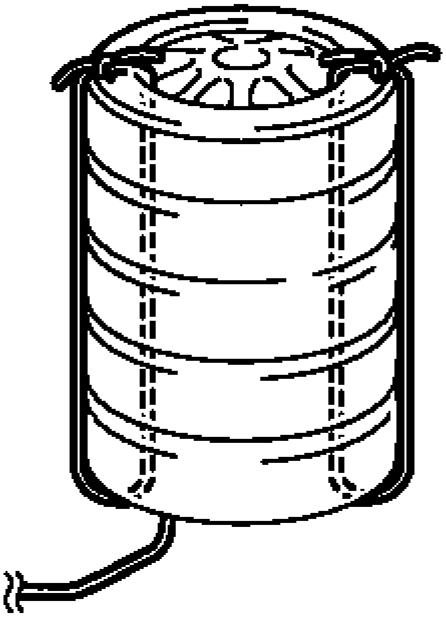

Fig. 92: Identifying Tires Tied Together With Wires
Courtesy of TOYOTA MOTOR SALES, U.S.A., INC.

WARNING: **Make sure that the wires are tight. Looseness in the wires results in the tires breaking loose when the airbag is deployed.**

f. Install SST.
   1. Connect the SST connector.

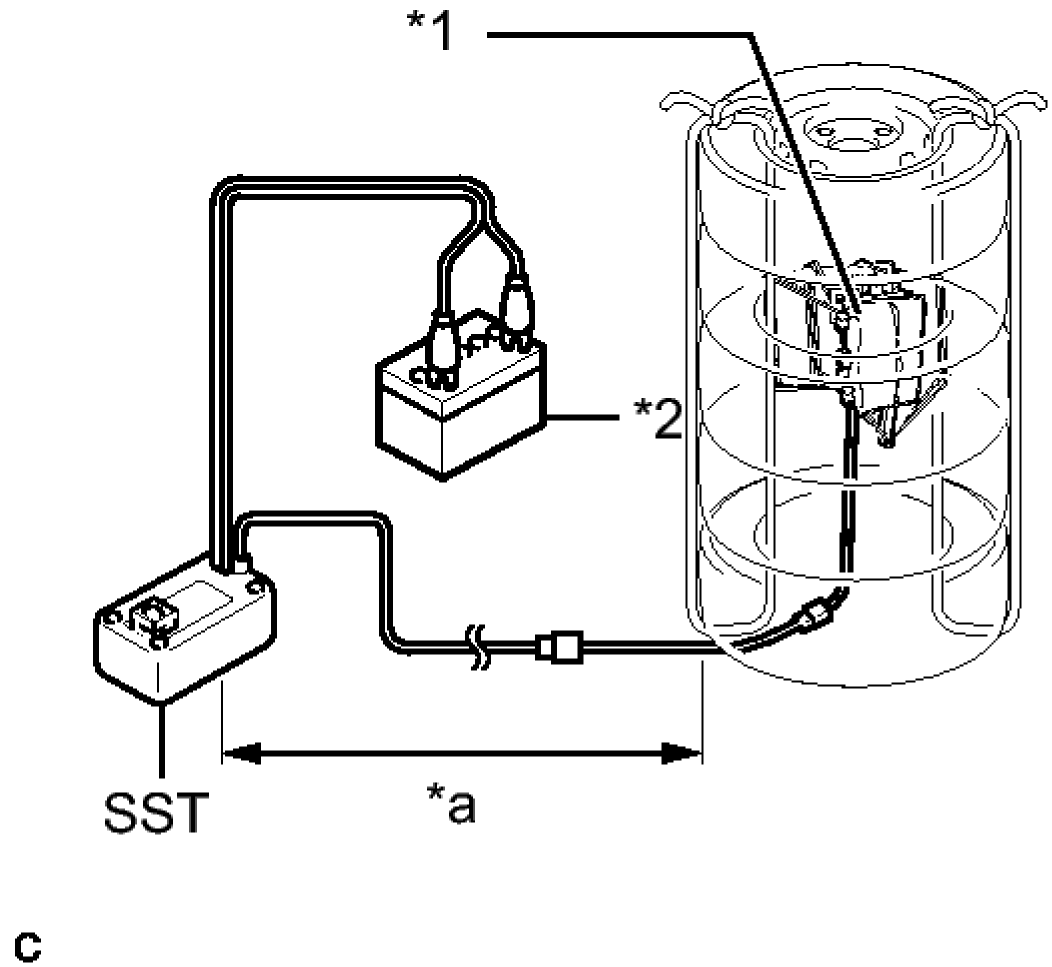

Fig. 93: Identifying SST Distance From Instrument Panel Passenger Airbag Assembly In Tires
Courtesy of TOYOTA MOTOR SALES, U.S.A., INC.

TEXT IN ILLUSTRATION

*1	Instrument Panel Passenger Airbag Assembly
*2	Battery
*a	10 m (32.8 ft.) or more

- **SST: 09082-00700**

NOTE: **To avoid damaging the SST connector or wire harness, do not lock the secondary lock of the twin lock. Also, secure some slack for the SST wire harness inside the tire.**

2. Move SST at least 10 m (32.8 ft.) away from the airbag tied down to the tire.

g. Deploy the airbag.
   1. Connect the red clip of SST to the positive (+) battery terminal and the black clip of SST to the negative (-) battery terminal.
   2. Check that no one is within a 10 m (32.8 ft.) radius of the tire to which the instrument panel passenger airbag assembly is tied.
   3. Press the SST activation switch and deploy the airbag.

WARNING: **Before deployment, make sure that no one is near the airbag.**

HINT:

The airbag is deployed as the LED of the SST activation switch comes on.

h. Dispose of the instrument panel passenger airbag assembly.

WARNING:

- **The instrument panel passenger airbag assembly becomes extremely hot when the airbag is deployed, so do not touch it for at least 30 minutes after deployment.**
- **Use gloves and safety glasses when handling a instrument panel passenger airbag assembly with a deployed airbag.**
- **Do not apply water etc. to a instrument panel passenger airbag assembly with a deployed airbag.**
- **Always wash your hands with water after completing the operation.**

1. Remove the instrument panel passenger airbag assembly from the tire.
2. Place the instrument panel passenger airbag assembly in a plastic bag, tie it tightly, and dispose of it according to local regulations.

CURTAIN SHIELD AIRBAG ASSEMBLY

COMPONENTS

ILLUSTRATION

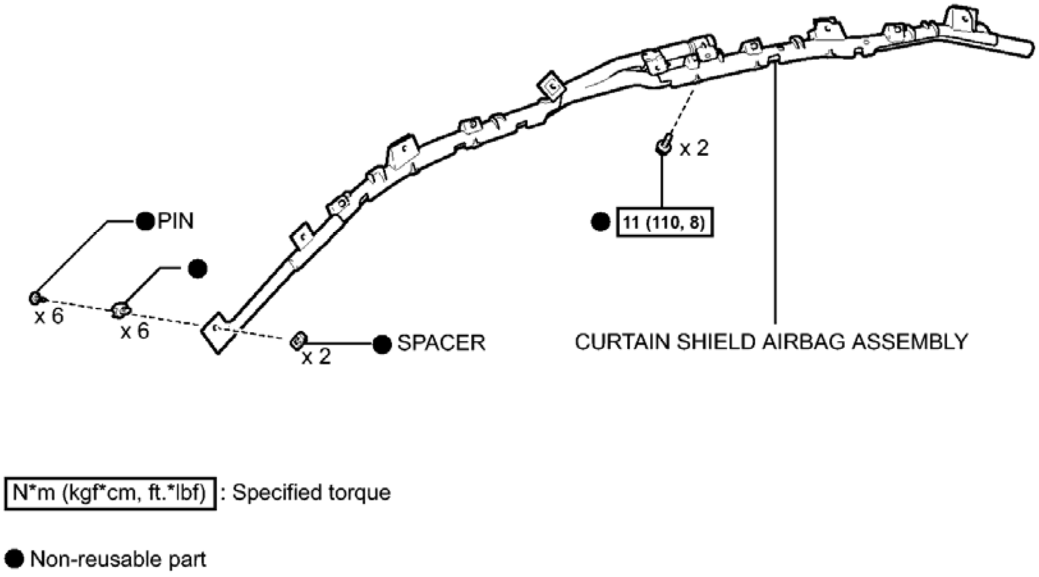

PIN
x 6
x 6
x 2
SPACER
x 2
11 (110, 8)
CURTAIN SHIELD AIRBAG ASSEMBLY
N*m (kgf*cm, ft.*lbf) : Specified torque
● Non-reusable part

Fig. 94: Identifying Curtain Shield Airbag Assembly Replacement Components With Torque Specifications
Courtesy of TOYOTA MOTOR SALES, U.S.A., INC.

ON-VEHICLE INSPECTION

ON-VEHICLE INSPECTION

> WARNING: **Be sure to correctly follow the removal and installation procedures for the curtain shield airbag assemblies.**

1. **INSPECT CURTAIN SHIELD AIRBAG ASSEMBLY (for Vehicle not Involved in Collision)**
   a. Perform a diagnostic system check.

      For Separate Type Yaw Rate Sensor: Refer to **DTC CHECK / CLEAR** .

      For Built-In Type Yaw Rate Sensor: Refer to **DTC CHECK / CLEAR** .

   b. Visually check for defects with the curtain shield airbag assemblies installed on the vehicle.

      HINT:

      The defects are as follows:

      - Cuts on each pillar garnish or the roof headlining assembly around the curtain shield airbag

    assemblies
  - Small cracks on each pillar garnish or the roof headlining assembly around the curtain shield airbag assemblies
  - Significant discoloration on each pillar garnish or the roof headlining assembly around the curtain shield airbag assemblies

  OK

  No defects are found.

  If any of the defects is found, replace each pillar garnish or the roof headlining assembly with a new one.

2. **INSPECT CURTAIN SHIELD AIRBAG ASSEMBLY (for Vehicle Involved in Collision and Airbag not Deployed)**
   a. Perform a diagnostic system check.

      For Separate Type Yaw Rate Sensor: Refer to **DTC CHECK / CLEAR** .

      For Built-In Type Yaw Rate Sensor: Refer to **DTC CHECK / CLEAR** .

   b. Visually check for defects with the curtain shield airbag assemblies removed from the vehicle.

      HINT:

      The defects are as follows:

      - Cuts
      - Small cracks
      - Significant discoloration
      - Cracks or other damage to the connector

      OK

      No defects are found.

      If any of the defects is found, replace the curtain shield airbag assembly with a new one.

REMOVAL

REMOVAL

HINT:

- Use the same procedure for the RH side and LH side.
- The procedure listed below is for the LH side.

1. **PRECAUTION**

   WARNING: **Be sure to read Precaution thoroughly before servicing.**

   For Separate Type Yaw Rate Sensor: Refer to PRECAUTION .

   For Built-In Type Yaw Rate Sensor: Refer to PRECAUTION .

   NOTE: **After turning the ignition switch off, waiting time may be required before disconnecting the cable from the negative (-) battery terminal. Therefore, make sure to read the disconnecting the cable from the negative (-) battery terminal notices before proceeding with work. Refer to PRECAUTION .**

2. **REMOVE ROOF HEADLINING ASSEMBLY**

   Refer to **REMOVAL** .

3. **REMOVE CURTAIN SHIELD AIRBAG ASSEMBLY**

   WARNING: **When storing the curtain shield airbag assembly, keep the airbag deployment side facing upward.**

   a. Check that the ignition switch is off.
   b. Check that the cable is disconnected from the negative (-) battery terminal.

      WARNING: **Wait at least 90 seconds after disconnecting the cable from the negative (-) battery terminal to disable the SRS system.**

   c. Using a screwdriver with the tip wrapped with protective tape, release the airbag connector lock and disconnect the curtain shield airbag connector.

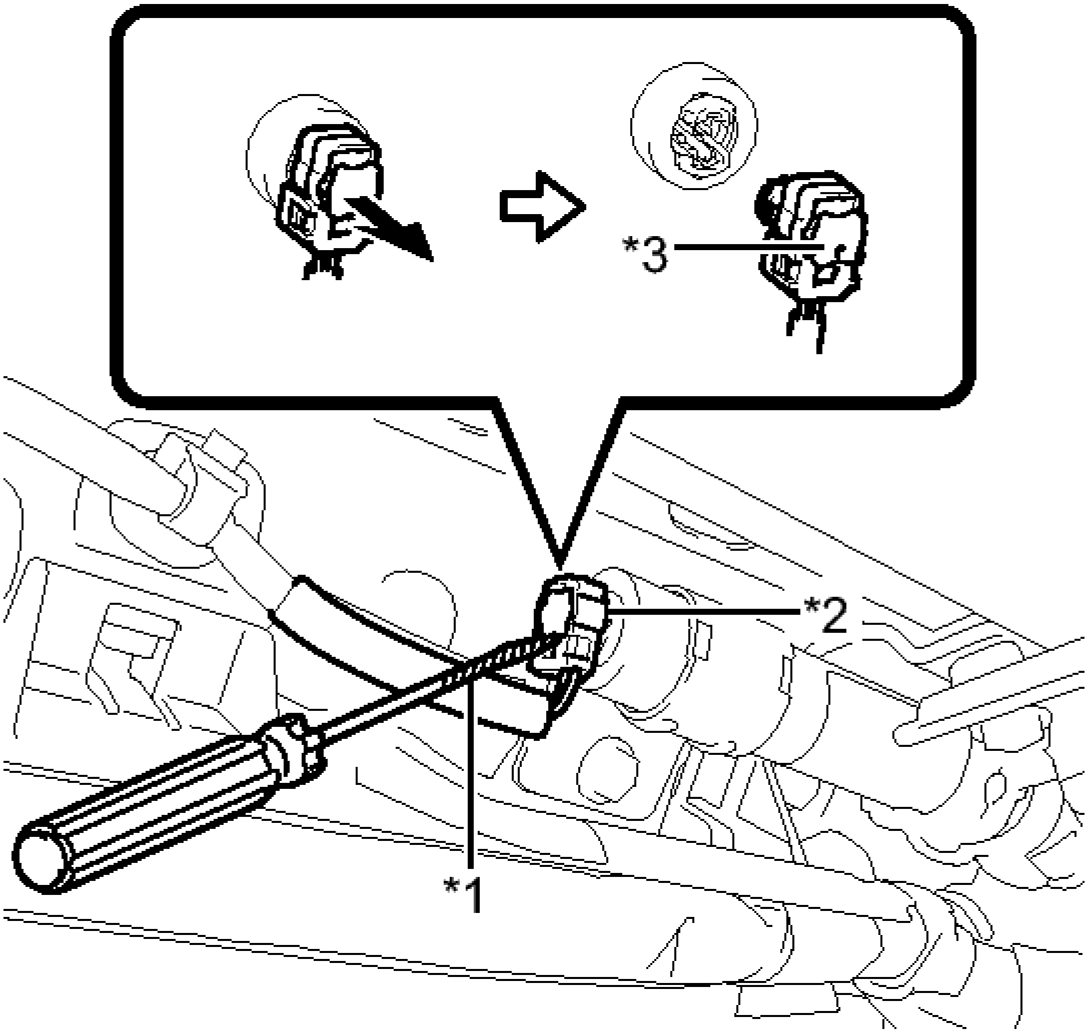

C

Fig. 95: Disconnecting Curtain Shield Airbag Assembly Connector
Courtesy of TOYOTA MOTOR SALES, U.S.A., INC.

TEXT IN ILLUSTRATION

*1	Protective Tape
*2	Airbag Connector
*3	Airbag Connector Lock

NOTE: **When disconnecting any airbag connector, take care not to damage the airbag wire harness.**

d. Using a clip remover, remove the pin.

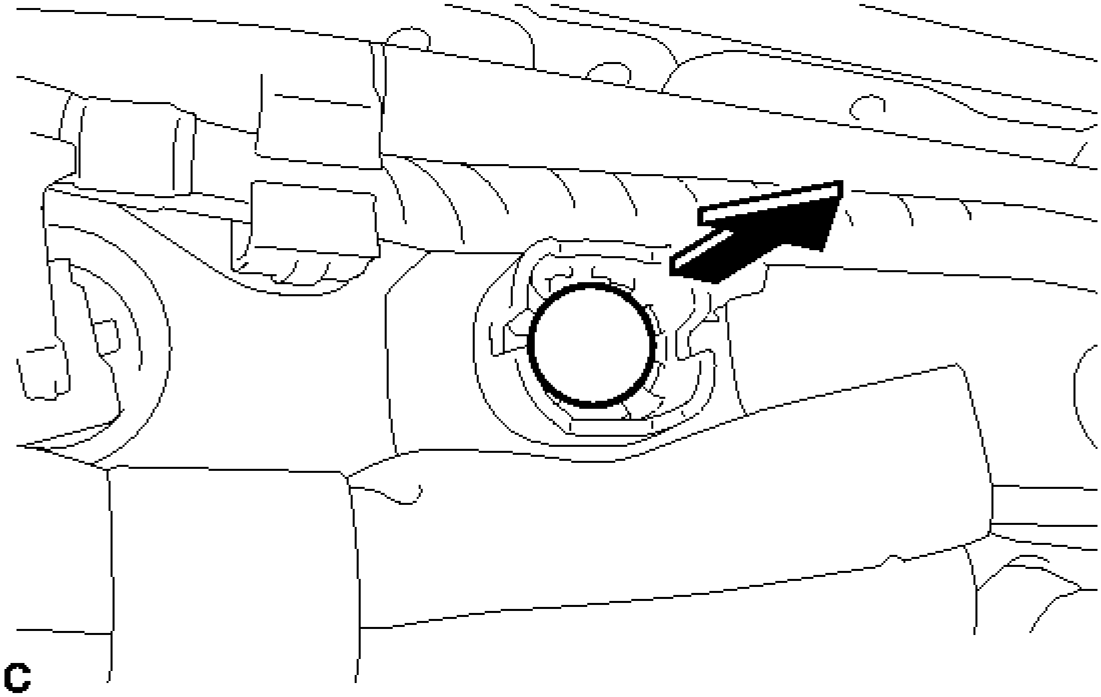

Fig. 96: Removing Curtain Shield Airbag Assembly Connector Pin
Courtesy of TOYOTA MOTOR SALES, U.S.A., INC.

HINT:

Perform the same procedure for the other pins.

e. Using 2 screw drivers, disengage the 2 claws and remove the clip from the body panel as shown in the illustration.

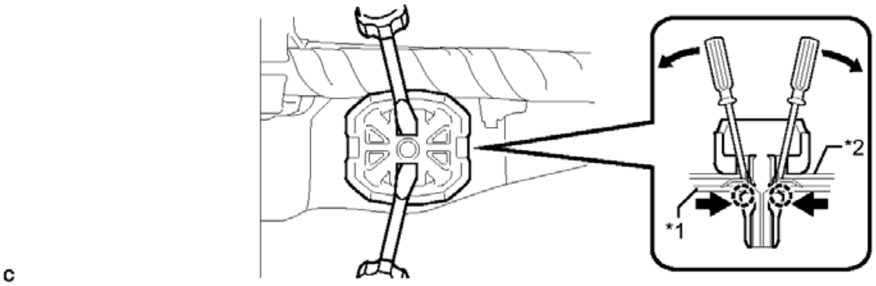

Fig. 97: Removing Clips From Body Panel
Courtesy of TOYOTA MOTOR SALES, U.S.A., INC.

TEXT IN ILLUSTRATION

*1	Body Panel	*2	Curtain Shield Airbag

			Assembly

HINT:

Perform the same procedure for the other clips.

f. While holding the curtain shield airbag assembly, disengage the 5 claws.

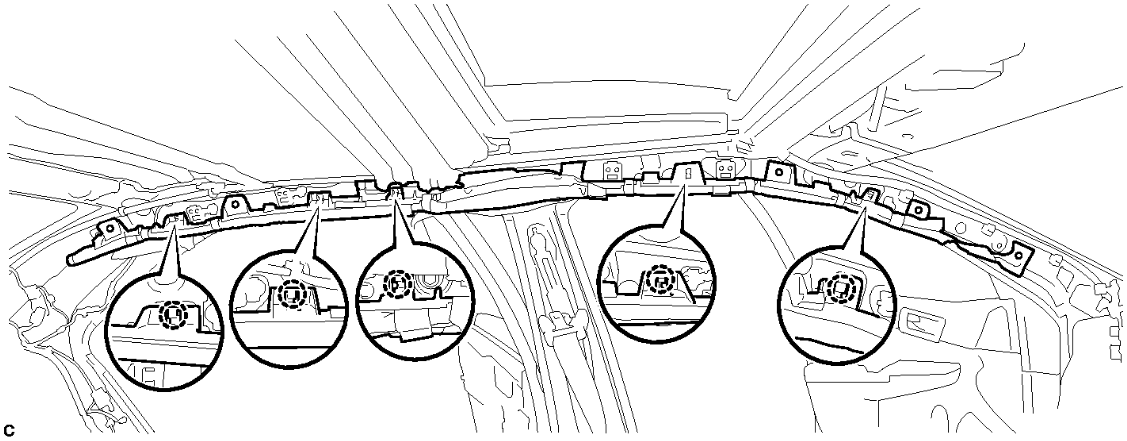

Fig. 98: Locating Curtain Shield Airbag Assembly Claws
Courtesy of TOYOTA MOTOR SALES, U.S.A., INC.

NOTE: **When removing the curtain shield airbag assembly, have assistants hold it to prevent it from bending.**

g. Remove the 2 bolts.

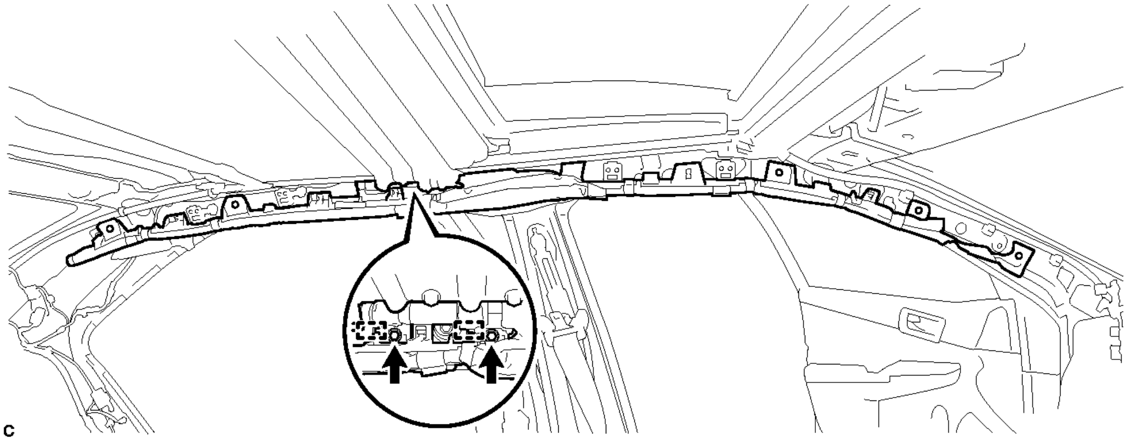

Fig. 99: Locating Curtain Shield Airbag Assembly Bolts
Courtesy of TOYOTA MOTOR SALES, U.S.A., INC.

h. Disengage the 2 hooks to remove the curtain shield airbag assembly.

i. Remove the 2 spacers from the curtain shield airbag assembly.

INSTALLATION

INSTALLATION

HINT:

- Use the same procedure for the RH side and LH side.
- The procedure listed below is for the LH side.

1. **INSTALL CURTAIN SHIELD AIRBAG ASSEMBLY**
    a. Check that the ignition switch is off.
    b. Check that the cable is disconnected from the negative (-) battery terminal.

    WARNING: **Wait at least 90 seconds after disconnecting the cable from the negative (-) battery terminal to disable the SRS system.**

    c. Temporarily install the curtain shield airbag assembly with the 2 hooks.

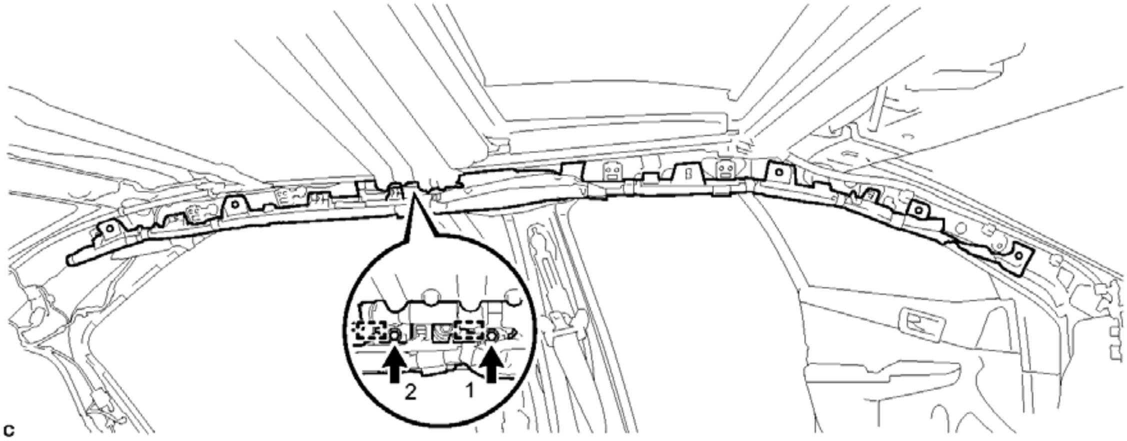

Fig. 100: Locating Curtain Shield Airbag Assembly Bolts With Tightening Sequence
Courtesy of TOYOTA MOTOR SALES, U.S.A., INC.

NOTE:

- **When installing the curtain shield airbag assembly, have assistants hold it to prevent it from bending.**
- **Do not twist the curtain shield airbag assembly when installing it.**

    d. Install 2 new bolts in the order shown in the illustration.

    Torque: 11 N*m (110 kgf*cm, 8 ft.*lbf)

    e. Install the curtain shield airbag assembly to the body panel with 5 claws, 6 new clips and 2 new spacers in the order shown in the illustration.

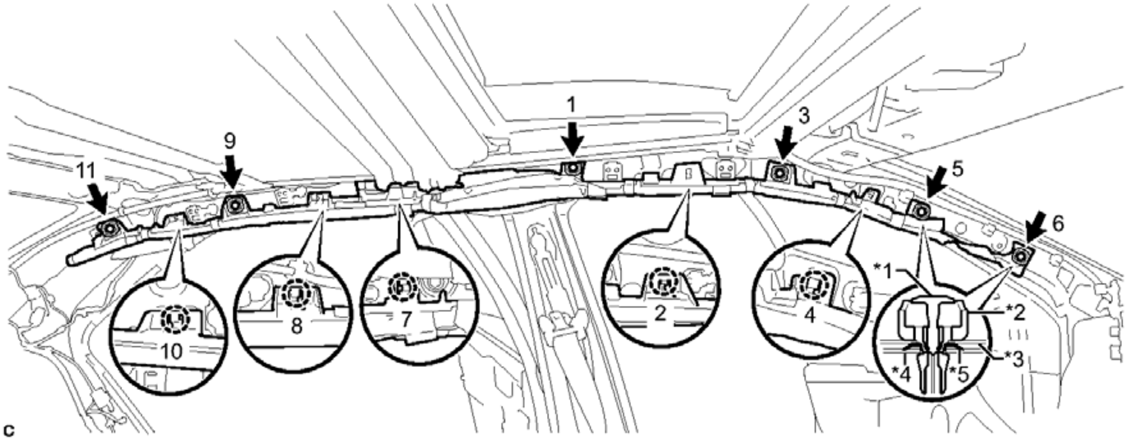

Fig. 101: Locating Curtain Shield Airbag Assembly Fasteners With Tightening Sequence
Courtesy of TOYOTA MOTOR SALES, U.S.A., INC.

TEXT IN ILLUSTRATION

*1	Pin	*2	Clip
*3	Curtain Shield Airbag Assembly	*4	Body Panel
*5	Spacer	-	-

f. Push in new pin to each clip.

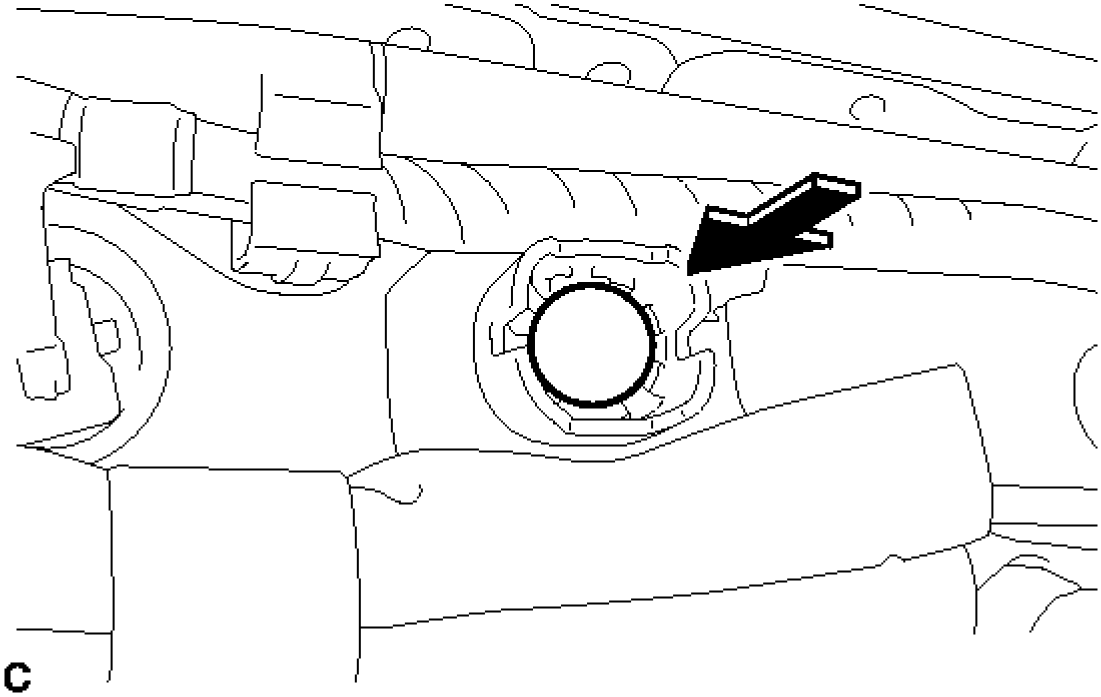

Fig. 102: Installing Curtain Shield Airbag Assembly Connector Pin

Courtesy of TOYOTA MOTOR SALES, U.S.A., INC.

NOTE: **Make sure that the pins of the clips are pushed in firmly.**

g. Connect the curtain shield airbag connector.

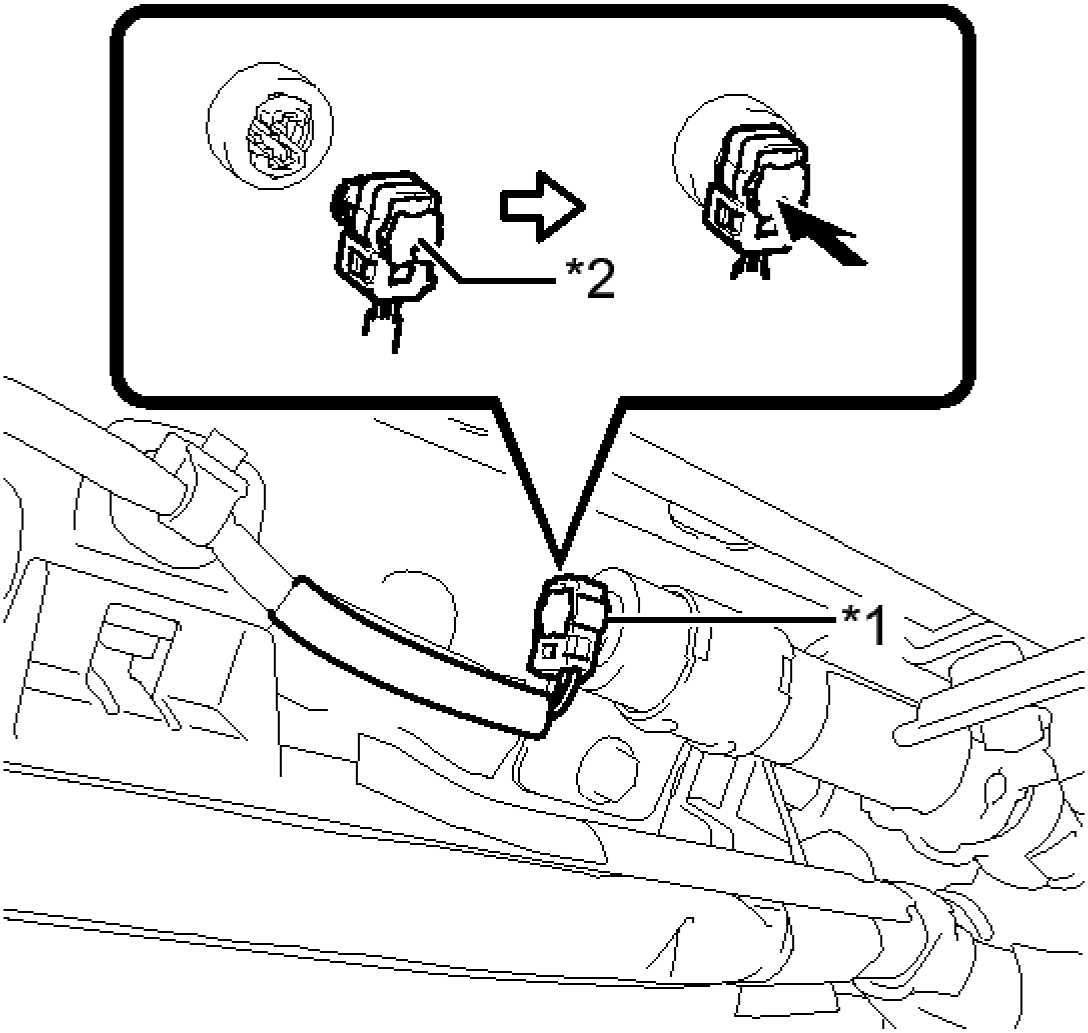

C

Fig. 103: Connect Curtain Shield Airbag Assembly Connector
Courtesy of TOYOTA MOTOR SALES, U.S.A., INC.

TEXT IN ILLUSTRATION

*1	Airbag Connector
*2	Airbag Connector Lock

NOTE: **When connecting any airbag connector, take care not to damage the airbag wire harness.**

h. Push in the lock to install the curtain shield airbag connector.

2. **INSTALL ROOF HEADLINING ASSEMBLY**

   Refer to **INSTALLATION** .

3. **PERFORM DIAGNOSTIC SYSTEM CHECK**

   For Separate Type Yaw Rate Sensor: Refer to **DTC CHECK / CLEAR** .

   For Built-In Type Yaw Rate Sensor: Refer to **DTC CHECK / CLEAR** .

DISPOSAL

DISPOSAL

WARNING: **Before performing pre-disposal deployment of any SRS part, review and closely follow all applicable environmental and hazardous material regulations. Pre-disposal deployment may be considered hazardous material treatment.**

1. **PRECAUTION**

WARNING:

- **An airbag or pretensioner may be activated by static electricity. To prevent this, be sure to touch a metal surface with your bare hands to discharge static electricity before performing this procedure.**
- **Never dispose of a curtain shield airbag assembly with an undeployed airbag.**
- **The airbag produces an exploding sound when it is deployed, so perform the operation outdoors and where it will not create a nuisance to nearby residents.**
- **When deploying the airbag, always use the specified SST (SRS Airbag Deployment Tool). Perform the operation in a place away from electrical noise.**
- **When deploying the airbag, perform the operation at least 10 m (32.8 ft.) away from the curtain shield airbag assembly.**
- **The curtain shield airbag assembly becomes extremely hot when the airbag is deployed, so do not touch it for at least 30 minutes after deployment.**
- **Use gloves and safety glasses when handling a curtain shield airbag assembly with a deployed airbag.**

- **Do not apply water etc. to a curtain shield airbag assembly with a deployed airbag.**
- **Always wash your hands with water after completing the operation.**

HINT:

When scrapping a vehicle equipped with an SRS or disposing of the curtain shield airbag assembly, be sure to deploy the airbag first in accordance with the procedure described below. If any abnormality occurs with the airbag deployment, contact the Service Dept. of TOYOTA MOTOR SALES, U.S.A., INC.

2. **DISPOSE OF CURTAIN SHIELD AIRBAG ASSEMBLY (When Installed in Vehicle)**

NOTE:

- **When disposing of the curtain shield airbag assembly, never use the customer's vehicle to deploy the airbag.**
- **Be sure to observe the following procedure when deploying the airbag.**

HINT:

Prepare a battery as the power source to deploy the airbag.

a. Check the function of SST. See step 2.

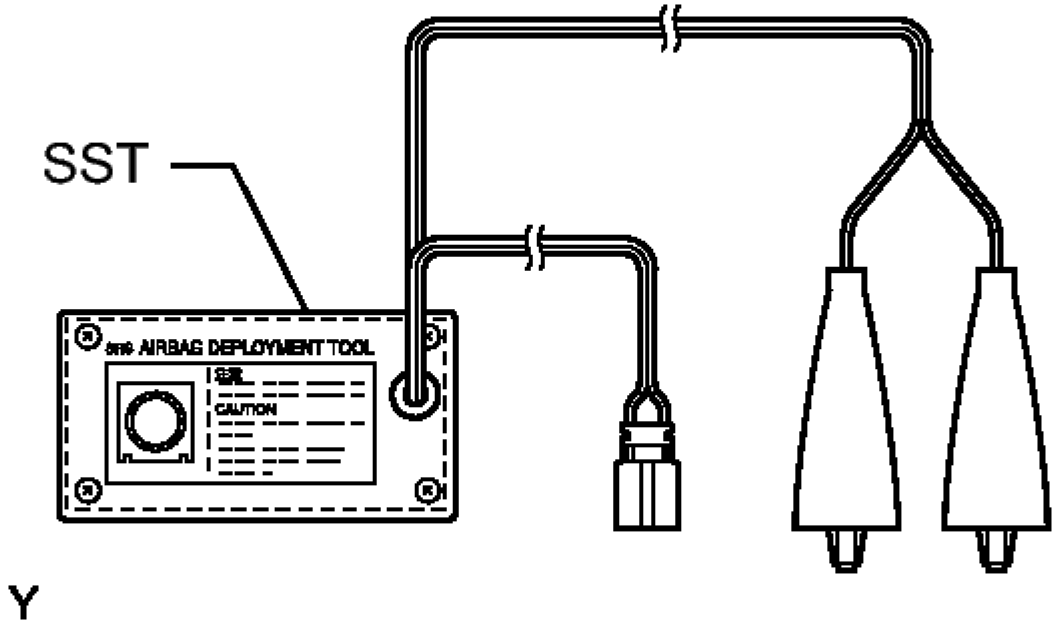

Fig. 104: Checking Function Of SST

Courtesy of TOYOTA MOTOR SALES, U.S.A., INC.

- **SST: 09082-00700**

b. Refer to Precaution.

For Separate Type Yaw Rate Sensor: Refer to **PRECAUTION** .

For Built-In Type Yaw Rate Sensor: Refer to **PRECAUTION** .

c. Disconnect the cable from the negative (-) battery terminal.

WARNING: Wait at least 90 seconds after disconnecting the cable from the negative (-) battery terminal to disable the SRS system.

d. Remove the roof headlining assembly. Refer to **REMOVAL** .

e. Install SST.

WARNING: Check that there is no looseness in the curtain shield airbag assembly.

1. Disconnect the connector from the curtain shield airbag assembly.

NOTE: When disconnecting the airbag connector, take care not to damage the airbag wire harness.

2. After connecting the following SST to each other, connect them to the curtain shield airbag assembly.

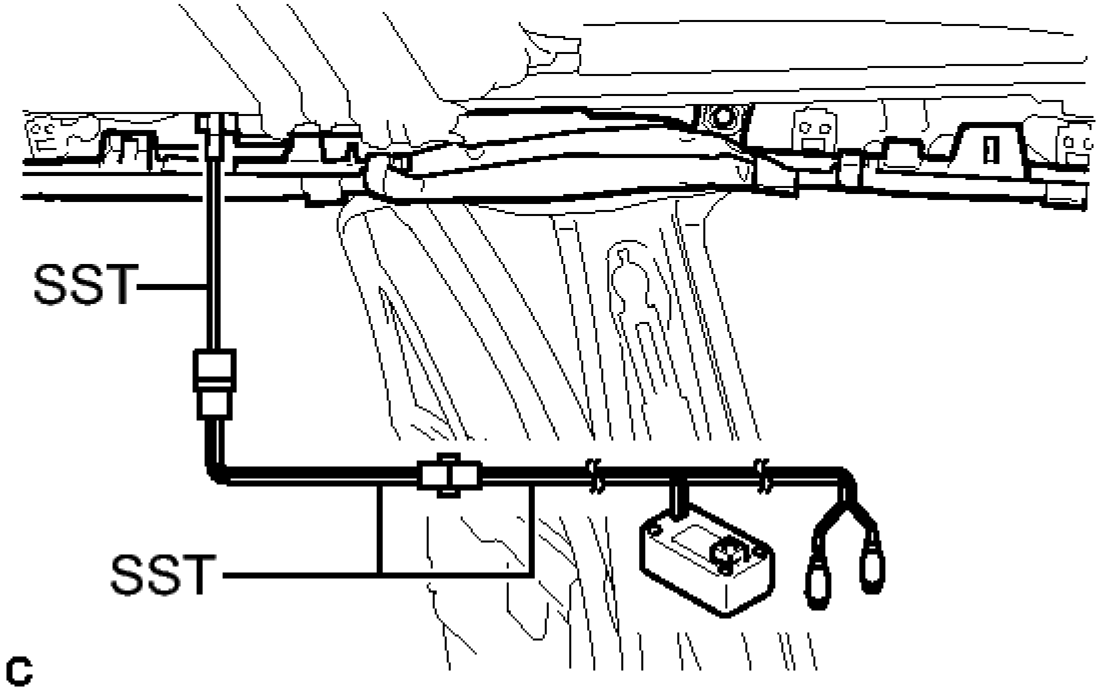

Fig. 105: View Of SST Connected To Curtain Shield Airbag Assembly
Courtesy of TOYOTA MOTOR SALES, U.S.A., INC.

- **SST: 09082-00700**
- **SST: 09082-00802**
  09082-10801
  09082-20801

NOTE: To avoid damaging the SST connector or wire harness, do not lock the secondary lock of the twin lock.

3. Move SST at least 10 m (32.8 ft.) away from the rear side window.

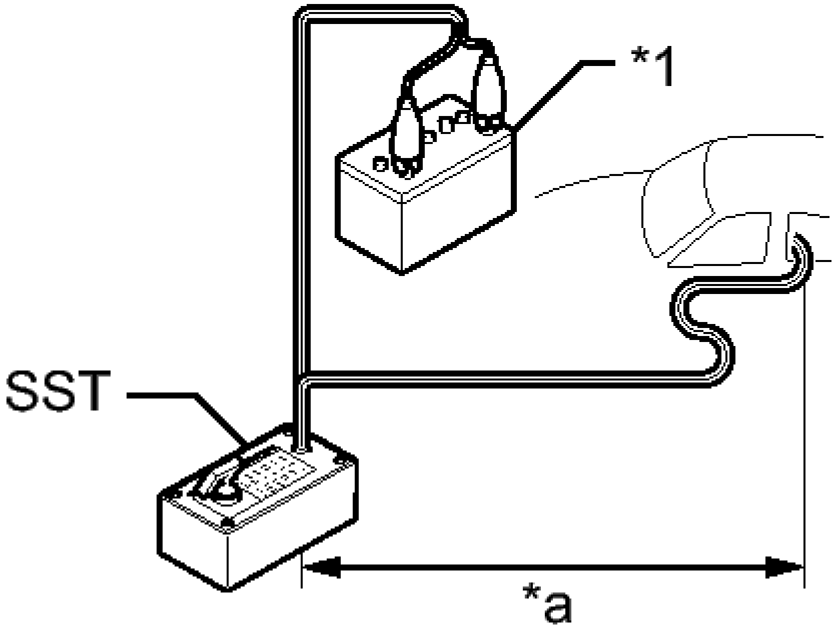

Fig. 106: Identifying SST, Battery & Distance From Rear Side Window
Courtesy of TOYOTA MOTOR SALES, U.S.A., INC.

TEXT IN ILLUSTRATION

*1	Battery
*a	10 m (32.8 ft.) or more

4. Maintaining sufficient clearance for the SST wire harness in the rear side window, close all doors and windows of the vehicle.

NOTE: **Take care not to damage the SST wire harness.**

5. Connect the red clip of SST to the positive (+) battery terminal and the black clip of SST to the negative (-) battery terminal.

f. Deploy the airbag.

1. Check that no one is inside the vehicle or within a 10 m (32.8 ft.) radius of the vehicle.
2. Press the SST activation switch and deploy the airbag.

WARNING:

- **Before deployment, make sure that no one is near the vehicle.**
- **The curtain shield airbag assembly becomes extremely hot when the airbag is deployed, so do not**

touch it for at least 30 minutes after deployment.

- **Use gloves and safety glasses when handling a curtain shield airbag assembly with a deployed airbag.**
- **Do not apply water etc. to a curtain shield airbag assembly with a deployed airbag.**
- **Always wash your hands with water after completing the operation.**

HINT:

The airbag is deployed as the LED of the SST activation switch comes on.

3. **DISPOSE OF CURTAIN SHIELD AIRBAG ASSEMBLY (When Not Installed in Vehicle)**

NOTE: **Be sure to observe the following procedure when deploying the airbag.**

HINT:

Prepare a battery as the power source to deploy the airbag.

a. Check the function of SST. See step 3.

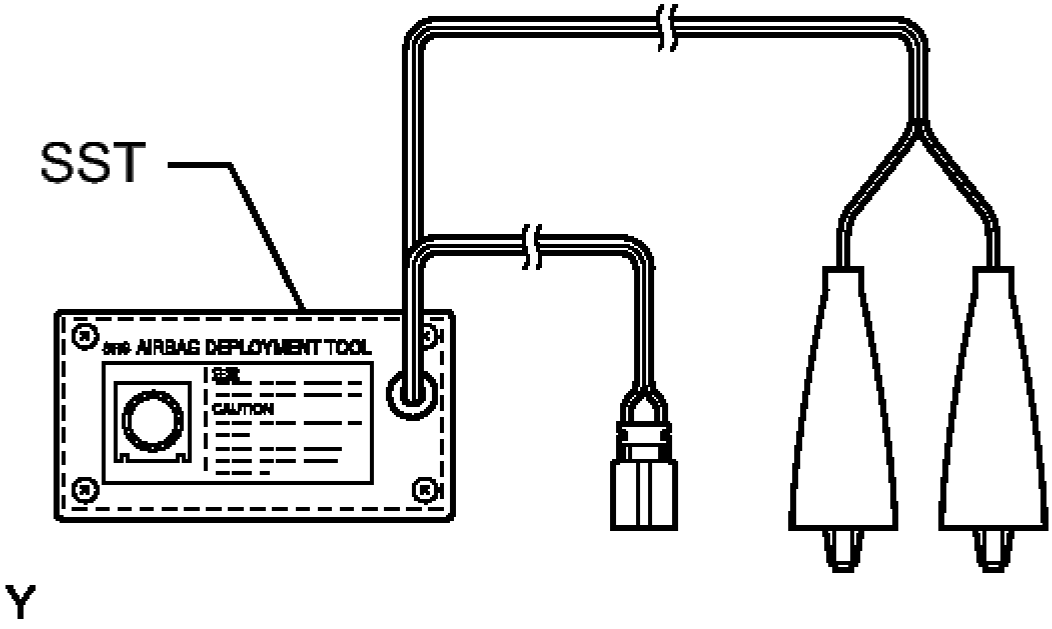

Fig. 107: Checking Function Of SST
Courtesy of TOYOTA MOTOR SALES, U.S.A., INC.

- **SST: 09082-00700**

b. Remove the curtain shield airbag assembly. Refer to **REMOVAL**.

WARNING:

- **Before removing the curtain shield airbag assembly, wait at least 90 seconds after turning the ignition switch off and disconnecting the cable from the negative (-) battery terminal.**
- **When storing the curtain shield airbag assembly, keep the airbag deployment side facing upward.**

c. Cut off the deployment section of the curtain shield airbag assembly.

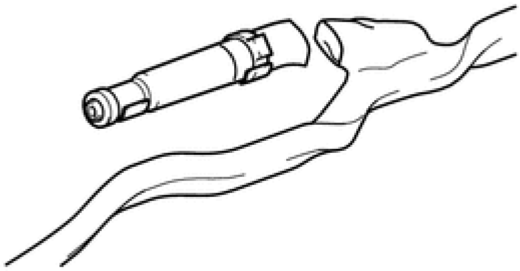

Fig. 108: Identifying Cut Off Deployment Section Of Curtain Shield Airbag Assembly
Courtesy of TOYOTA MOTOR SALES, U.S.A., INC.

d. Using braided wire, tie down the curtain shield airbag assembly to an unneeded tire.

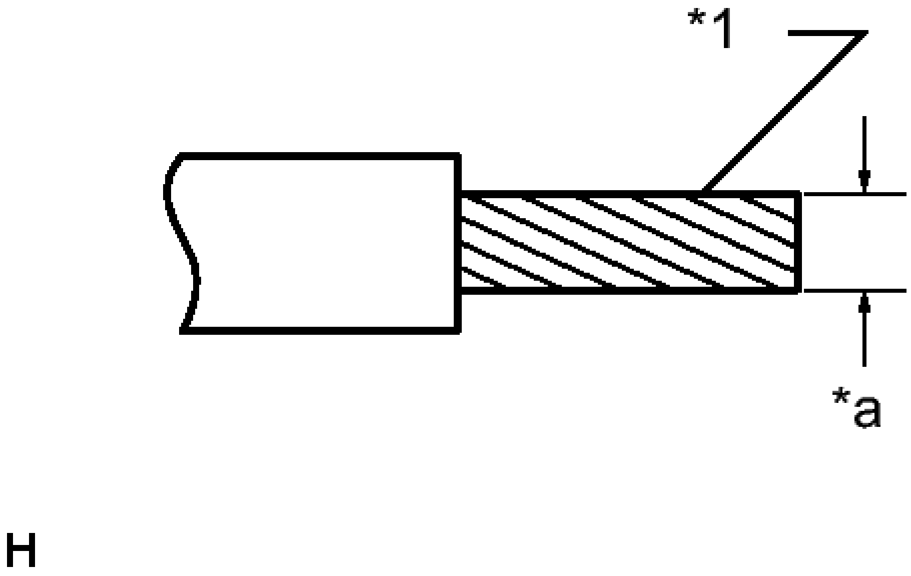

Fig. 109: Identifying Stripped Wire
Courtesy of TOYOTA MOTOR SALES, U.S.A., INC.

TEXT IN ILLUSTRATION

*1	Stripped Wire Section
*a	Wire Diameter

Wire

Stripped wire section

1.25 mm^2 (0.0019 in.^{2}) or more

WARNING: **If the wire is too thin or an alternative object is used to tie down the curtain shield airbag assembly, it may snap when the airbag is deployed. Always use a wire for vehicle use with an area of at least 1.25 mm^2 (0.0019 in.^{2}).**

HINT:

To calculate the area of the stripped wire section:

Area = 3.14 x (Diameter)^2 / 4

1. Position the curtain shield airbag assembly inside the tire as shown in the illustration.

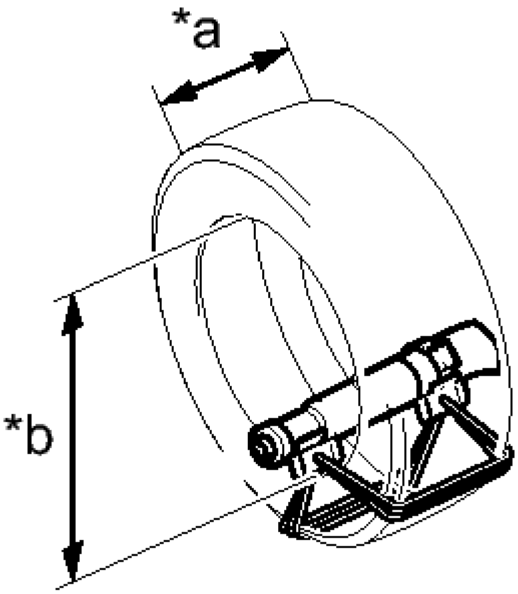

Fig. 110: View Of Curtain Shield Airbag Assembly Positioned Inside The Tire
Courtesy of TOYOTA MOTOR SALES, U.S.A., INC.

TEXT IN ILLUSTRATION

*a	Width
*b	Inner Diameter

Minimum tire size

Width

185 mm (7.28 in.)

Inner diameter

360 mm (1.18 ft.)

WARNING: **Make sure that the wires are tight. If there is slack in the wires, the curtain shield airbag assembly may break loose when the airbag is deployed.**

NOTE: The tire may be marked by the airbag deployment, so use an unneeded tire.

e. Install SST.

   1. After connecting the following SST to each other, connect them to the curtain shield airbag assembly.

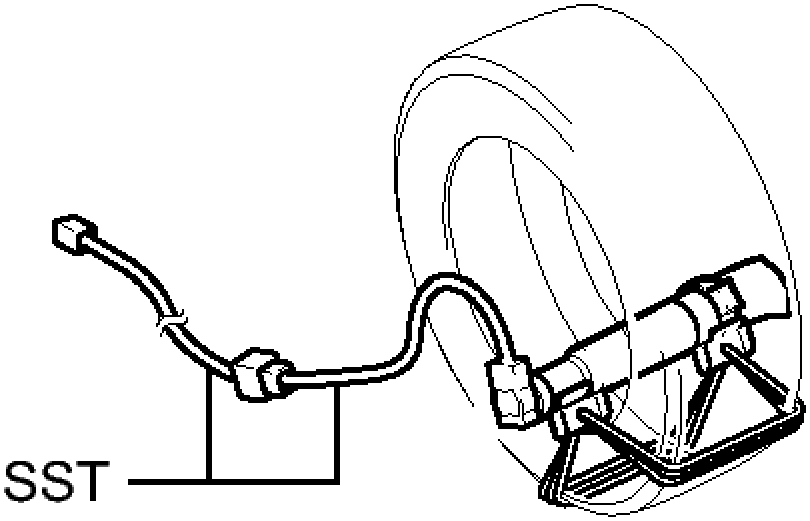

Fig. 111: View Of SST Connected To Curtain Shield Airbag Assembly In Tire
Courtesy of TOYOTA MOTOR SALES, U.S.A., INC.

- **SST: 09082-00802**
  09082-10801
  09082-20801

f. Place the tires.

WARNING: Do not face the deployment side of the curtain shield airbag assembly toward the ground.

   1. Place at least 2 tires under the tire to which the curtain shield airbag assembly is tied.

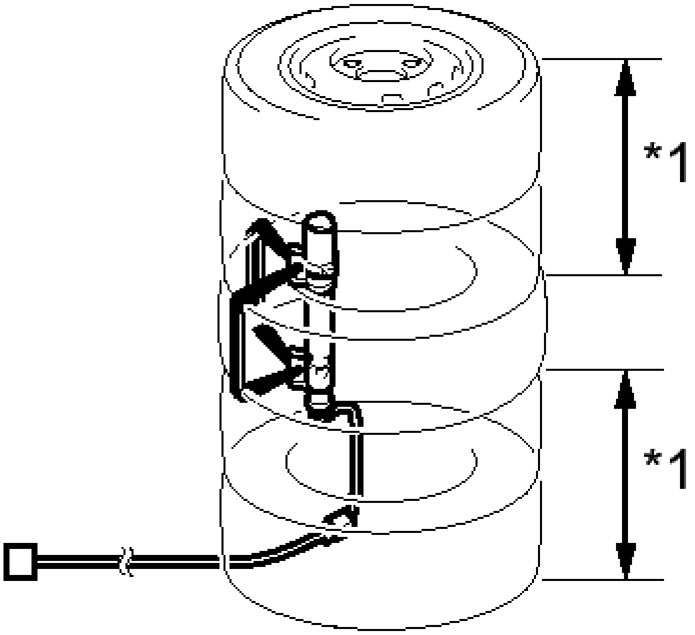

Fig. 112: Identifying Curtain Shield Airbag Assembly Inside Tires
Courtesy of TOYOTA MOTOR SALES, U.S.A., INC.

TEXT IN ILLUSTRATION

*1	Tires (2 or more)

NOTE: **Do not place the SST connector under the tire because it could be damaged.**

2. Place at least 2 tires onto the tire to which the curtain shield airbag assembly is tied. The top tire should have a wheel installed.
3. Tie the tires together with the 2 wires.

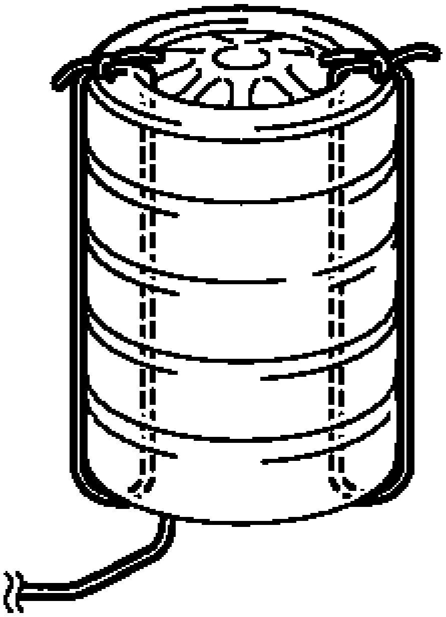

Fig. 113: Identifying Tires Tied Together With Wires
Courtesy of TOYOTA MOTOR SALES, U.S.A., INC.

WARNING: **Make sure that the wires are tight. Looseness in the wires results in the tires breaking loose when the airbag is deployed.**

g. Install SST.
   1. Connect the SST connector.

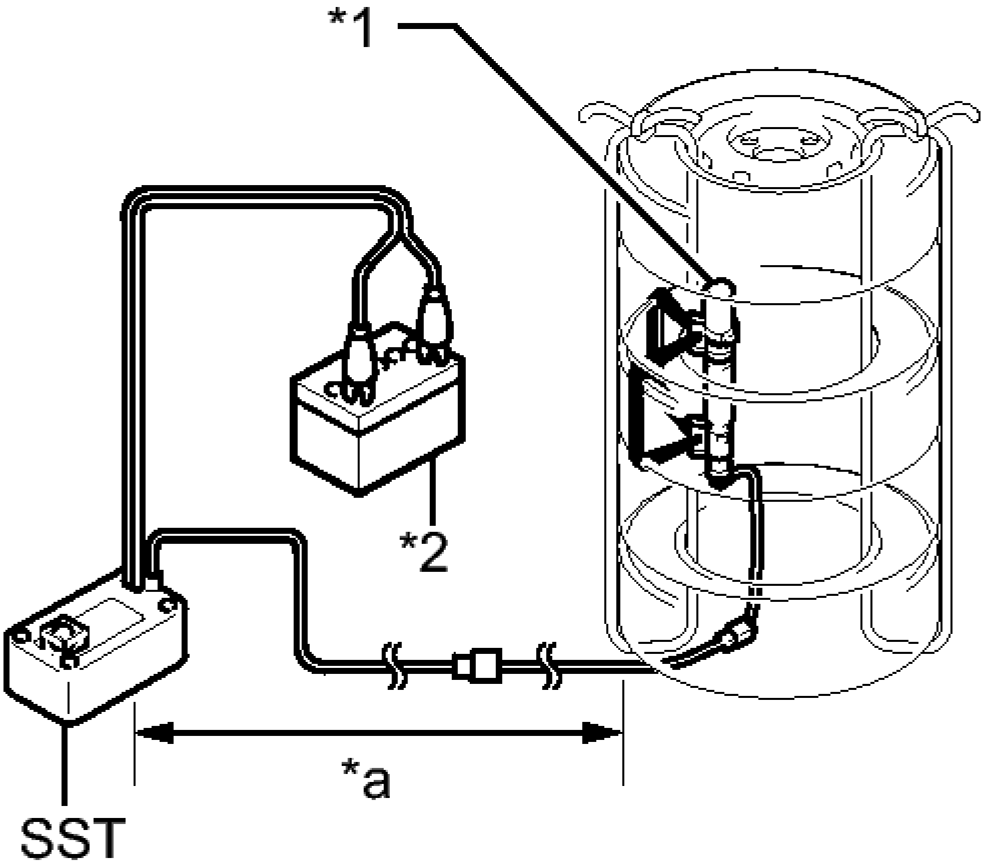

Fig. 114: Identifying SST Distance From Curtain Shield Airbag Assembly In Tires
Courtesy of TOYOTA MOTOR SALES, U.S.A., INC.

TEXT IN ILLUSTRATION

*1	Curtain Shield Airbag Assembly
*2	Battery
*a	10 m (32.8 ft.) or more

- **SST: 09082-00700**

NOTE: **To avoid damaging the SST connector or wire harness, do not lock the secondary lock of the twin lock. Also, secure some slack for the SST wire harness inside the tire.**

2. Move SST at least 10 m (32.8 ft.) away from the airbag tied down to the tire.

h. Deploy the airbag.
   1. Connect the red clip of SST to the positive (+) battery terminal and the black clip of SST to the negative (-) battery terminal.
   2. Check that no one is within a 10 m (32.8 ft.) radius of the tire to which the curtain shield airbag assembly is tied.
   3. Press the SST activation switch and deploy the airbag.

WARNING: **Before deployment, make sure that no one is near the airbag.**

HINT:

The airbag is deployed as the LED of the SST activation switch comes on.

i. Dispose of the curtain shield airbag assembly.

WARNING:

- **The curtain shield airbag assembly becomes extremely hot when the airbag is deployed, so do not touch it for at least 30 minutes after deployment.**
- **Use gloves and safety glasses when handling a curtain shield airbag assembly with a deployed airbag.**
- **Do not apply water etc. to a curtain shield airbag assembly with a deployed airbag.**
- **Always wash your hands with water after completing the operation.**

1. Remove the curtain shield airbag assembly from the tire.
2. Place the curtain shield airbag assembly in a plastic bag, tie it tightly, and dispose of it according to local regulations.

FRONT SEAT SIDE AIRBAG ASSEMBLY

COMPONENTS

ILLUSTRATION

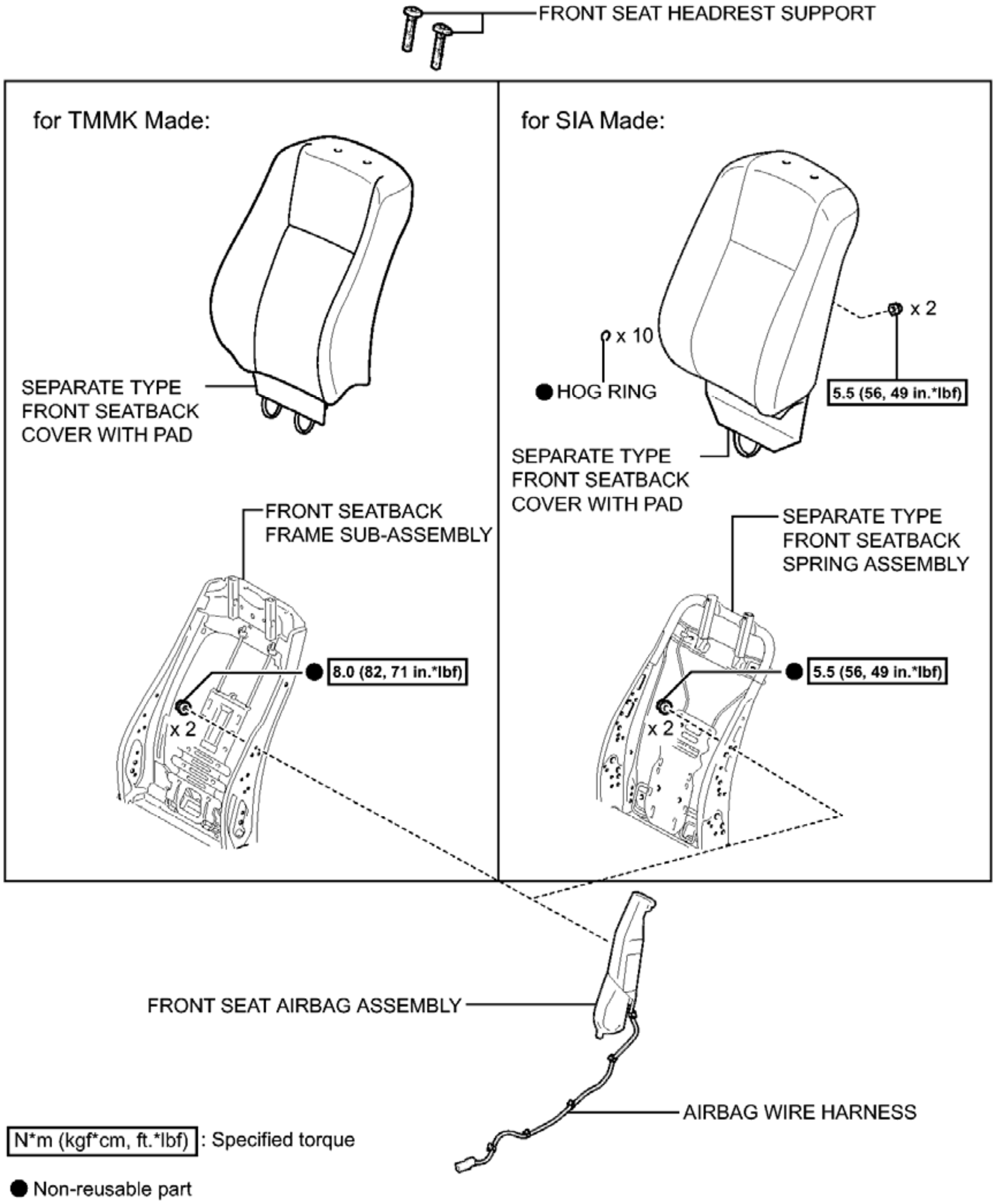
FRONT SEAT HEADREST SUPPORT
for TMMK Made:
SEPARATE TYPE FRONT SEATBACK COVER WITH PAD
FRONT SEATBACK FRAME SUB-ASSEMBLY
8.0 (82, 71 in.*lbf)
x 2
for SIA Made:
x 2
x 10
HOG RING
5.5 (56, 49 in.*lbf)
SEPARATE TYPE FRONT SEATBACK COVER WITH PAD
SEPARATE TYPE FRONT SEATBACK SPRING ASSEMBLY
5.5 (56, 49 in.*lbf)
x 2
FRONT SEAT AIRBAG ASSEMBLY
AIRBAG WIRE HARNESS
N*m (kgf*cm, ft.*lbf) : Specified torque
● Non-reusable part

Fig. 115: Identifying Front Seat Side Airbag Assembly Replacement Components With Torque Specifications
Courtesy of TOYOTA MOTOR SALES, U.S.A., INC.

ON-VEHICLE INSPECTION

ON-VEHICLE INSPECTION

WARNING: Be sure to correctly follow the removal and installation procedures for the front seat airbag assemblies.

1. **INSPECT FRONT SEAT AIRBAG ASSEMBLY (for Vehicle not Involved in Collision)**
    a. Perform a diagnostic system check.

        For Separate Type Yaw Rate Sensor: Refer to **DTC CHECK / CLEAR** .

        For Built-In Type Yaw Rate Sensor: Refer to **DTC CHECK / CLEAR** .

    b. Visually check for defects with the front seat airbag assemblies installed on the vehicle.

        HINT:

        The defects are as follows:

        - Cuts on the front seatback assembly around the front seat airbag assemblies
        - Small cracks on the front seatback assembly around the front seat airbag assemblies
        - Significant discoloration on the front seatback assembly around the front seat airbag assemblies

        OK

        No defects are found.

        If any of the defects is found, replace the separate type front seatback pad or separate type front seatback cover with a new one.

2. **INSPECT FRONT SEAT AIRBAG ASSEMBLY (for Vehicle Involved in Collision and Airbag not Deployed)**
    a. Perform a diagnostic system check.

        For Separate Type Yaw Rate Sensor: Refer to **DTC CHECK / CLEAR** .

        For Built-In Type Yaw Rate Sensor: Refer to **DTC CHECK / CLEAR** .

    b. Visually check for defects with the front seat airbag assemblies removed from the vehicle.

        HINT:

        The defects are as follows:

        - Make sure that there are no scratches, broken or frayed threads on the surface of the front seat airbag assemblies base fabric
        - Marks from being dropped

- Deformation on the installation part of the front seat airbag assemblies
- Cracks or other damage to the wire harness or connector

OK

No defects are found.

If any of the defects is found, replace the front seat airbag assembly with a new one.

REMOVAL

REMOVAL

WARNING:

- **Be sure to read Precaution thoroughly before servicing.**

  For Separate Type Yaw Rate Sensor: Refer to PRECAUTION .

  For Built-In Type Yaw Rate Sensor: Refer to PRECAUTION .

- **Wear protective gloves. Sharp areas on the seat frame and adjuster may injure your hands.**
- **If the side airbag was deployed, replace the front seat airbag assembly, front seatback frame sub-assembly or separate type front seatback spring assembly, separate type front seatback cover and separate type front seatback pad with the necessary parts in accordance with the extent of the collision damage.**

  For TMMI Made Manual Seat: Refer to DISASSEMBLY .

  For SIA Made Manual Seat: Refer to DISASSEMBLY .

  For TMMI Made Power Seat: Refer to DISASSEMBLY .

  For SIA Made Power Seat: Refer to DISASSEMBLY .

HINT:

Use the same procedure for the LH side and RH side.

1. **REMOVE FRONT SEAT ASSEMBLY (for TMMK Made Manual Seat)**

   Refer to **REMOVAL** .

2. **REMOVE FRONT SEAT ASSEMBLY (for SIA Made Manual Seat)**

   Refer to **REMOVAL** .

3. **REMOVE FRONT SEAT ASSEMBLY (for TMMK Made Power Seat)**

   Refer to **REMOVAL** .

4. **REMOVE FRONT SEAT ASSEMBLY (for SIA Made Power Seat)**

   Refer to **REMOVAL** .

5. **DISCONNECT AIRBAG WIRE HARNESS (for TMMK Made Manual Seat)**
   a. Disconnect the 2 rubber bands of the separate type front seatback cover with pad.

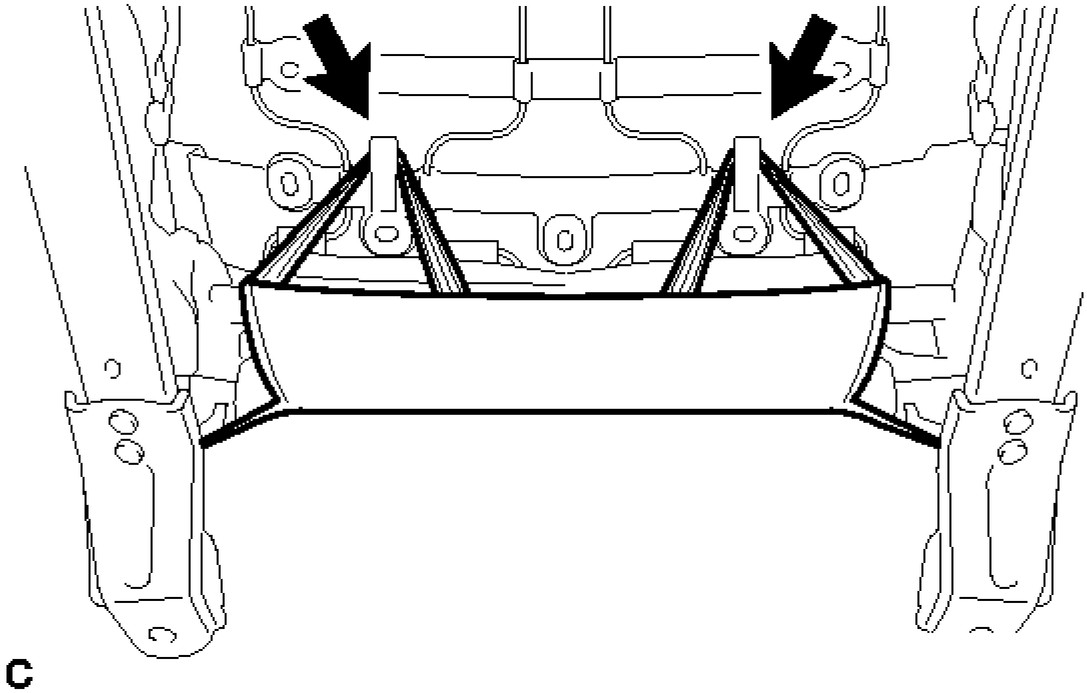

Fig. 116: Identifying Rubber Bands Of Front Seatback Cover (For TMMK Made Manual Seat)
Courtesy of TOYOTA MOTOR SALES, U.S.A., INC.

   b. Disengage the claw and 3 clamps to disconnect the airbag wire harness.

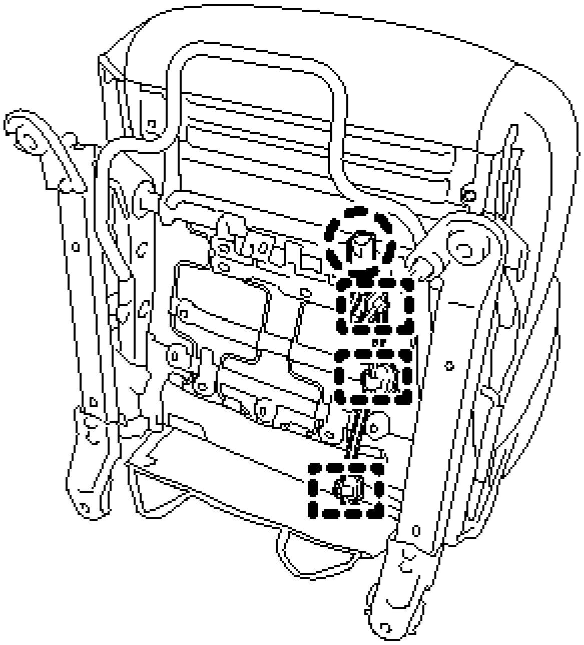

Fig. 117: Identifying Front Seatback Cover Claw And Clamps (For TMMK Made Manual Seat)
Courtesy of TOYOTA MOTOR SALES, U.S.A., INC.

6. **DISCONNECT AIRBAG WIRE HARNESS (for SIA Made Manual Seat)**
   a. Disconnect the rubber band of the separate type front seatback cover with pad.

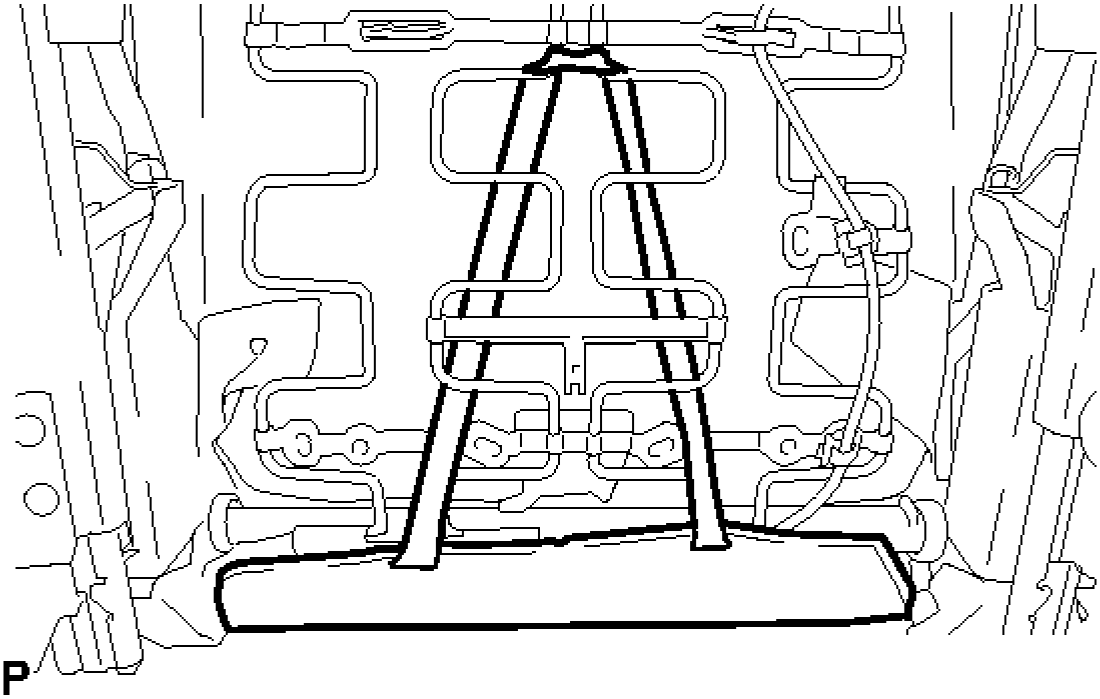

Fig. 118: Identifying Rubber Band Of Front Seatback Cover (For SIA Made Manual Seat)
Courtesy of TOYOTA MOTOR SALES, U.S.A., INC.

b. Disengage the fastener and separate the airbag wire harness.

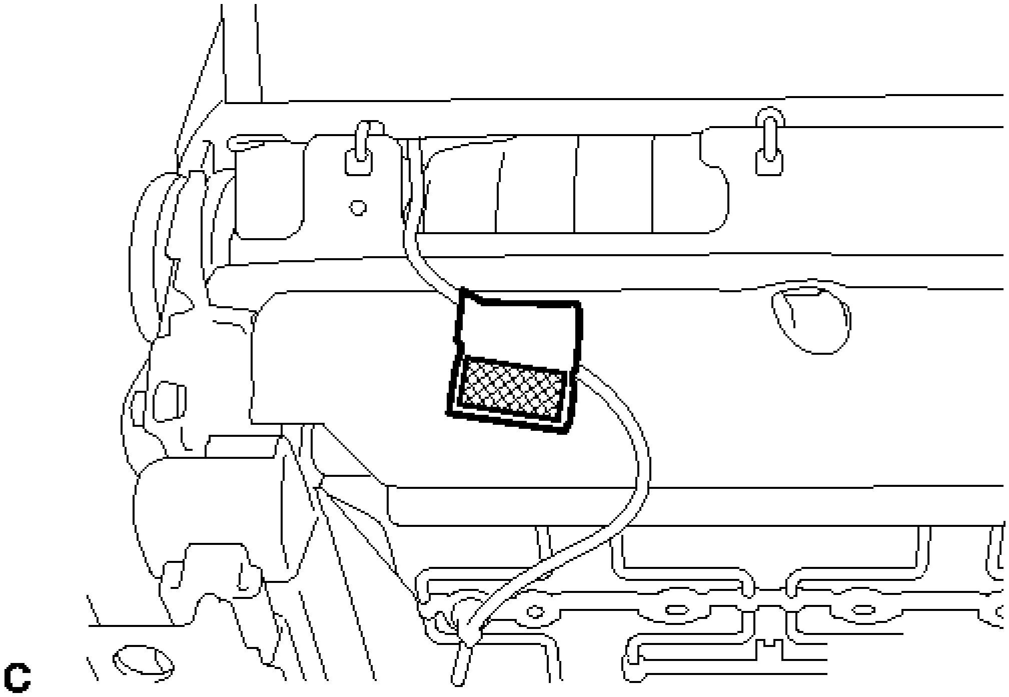

Fig. 119: Identifying Front Seatback Cover Airbag Wire Harness (For SIA Made Manual Seat)
Courtesy of TOYOTA MOTOR SALES, U.S.A., INC.

c. Disengage the claw and 3 clamps to disconnect the airbag wire harness.

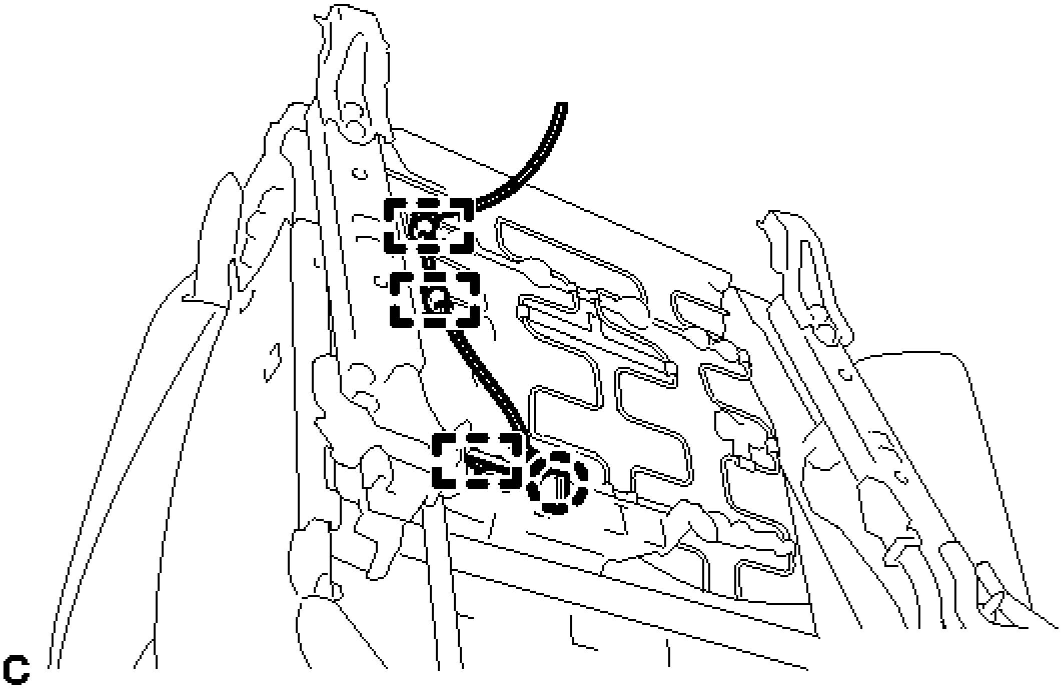

Fig. 120: Identifying Front Seatback Cover Claw And Clamps (For SIA Made Manual Seat)
Courtesy of TOYOTA MOTOR SALES, U.S.A., INC.

7. **DISCONNECT AIRBAG WIRE HARNESS (for TMMK Made Power Seat)**
    a. Disconnect the 2 rubber bands of the separate type front seatback cover with pad.

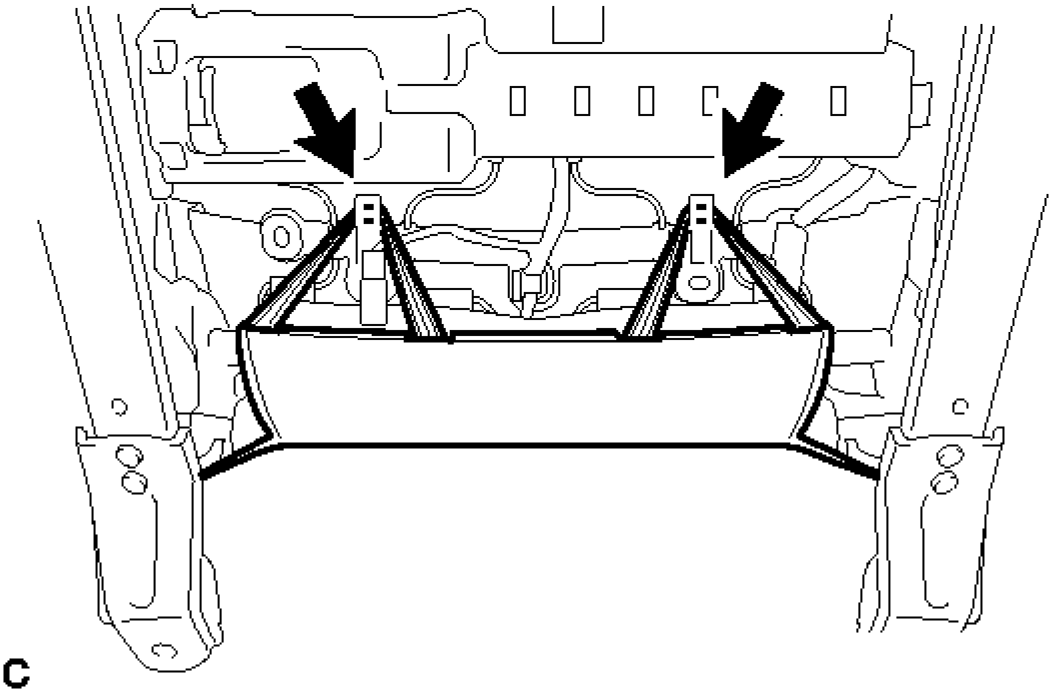

Fig. 121: Identifying Rubber Bands Of Front Seatback Cover (For TMMK Made Power Seat)

Courtesy of TOYOTA MOTOR SALES, U.S.A., INC.

b. Disconnect the connector (A).

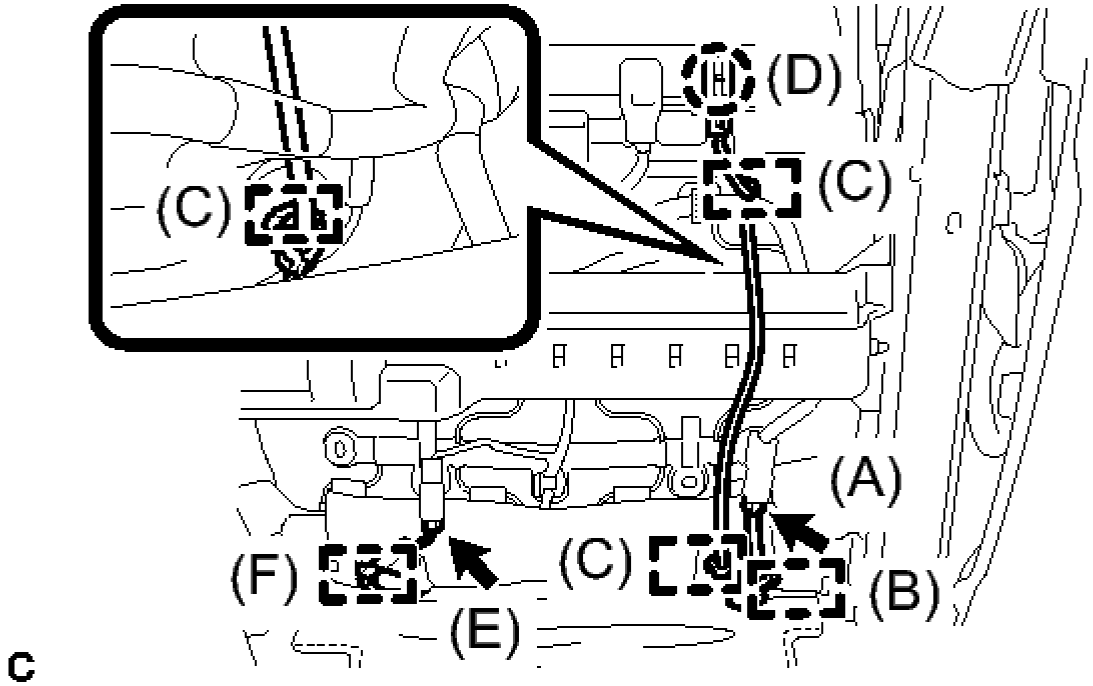

Fig. 122: Identifying Front Seatback Cover Connectors, Claw And Clamps (For TMMK Made Power Seat)
Courtesy of TOYOTA MOTOR SALES, U.S.A., INC.

c. Disengage the clamp (B).
d. Disengage the claw (D) and 3 clamps (C) to disconnect the airbag wire harness.
e. w/ Seat Heater System:
    1. Disconnect the connector (E).
    2. Disengage the clamp (F).

8. **DISCONNECT AIRBAG WIRE HARNESS (for SIA Made Power Seat)**
    a. Disconnect the rubber band of the separate type front seatback cover with pad.

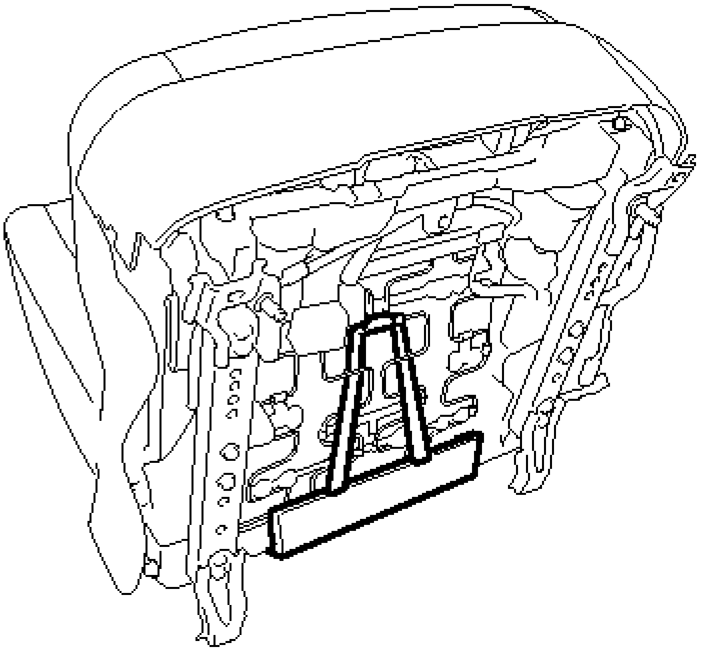

Fig. 123: Identifying Rubber Band Of Front Seatback Cover (For SIA Made Power Seat)
Courtesy of TOYOTA MOTOR SALES, U.S.A., INC.

b. Disengage the fastener and separate the airbag wire harness.

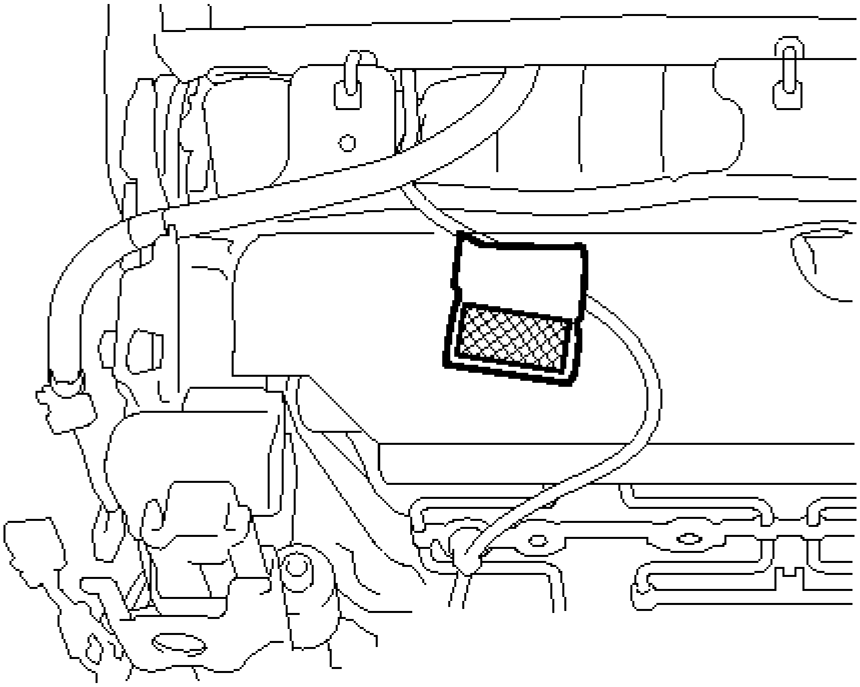

Fig. 124: Identifying Front Seatback Cover Airbag Wire Harness (For SIA Made Power Seat)
Courtesy of TOYOTA MOTOR SALES, U.S.A., INC.

c. Disengage the claw and 3 clamps to disconnect the airbag wire harness.

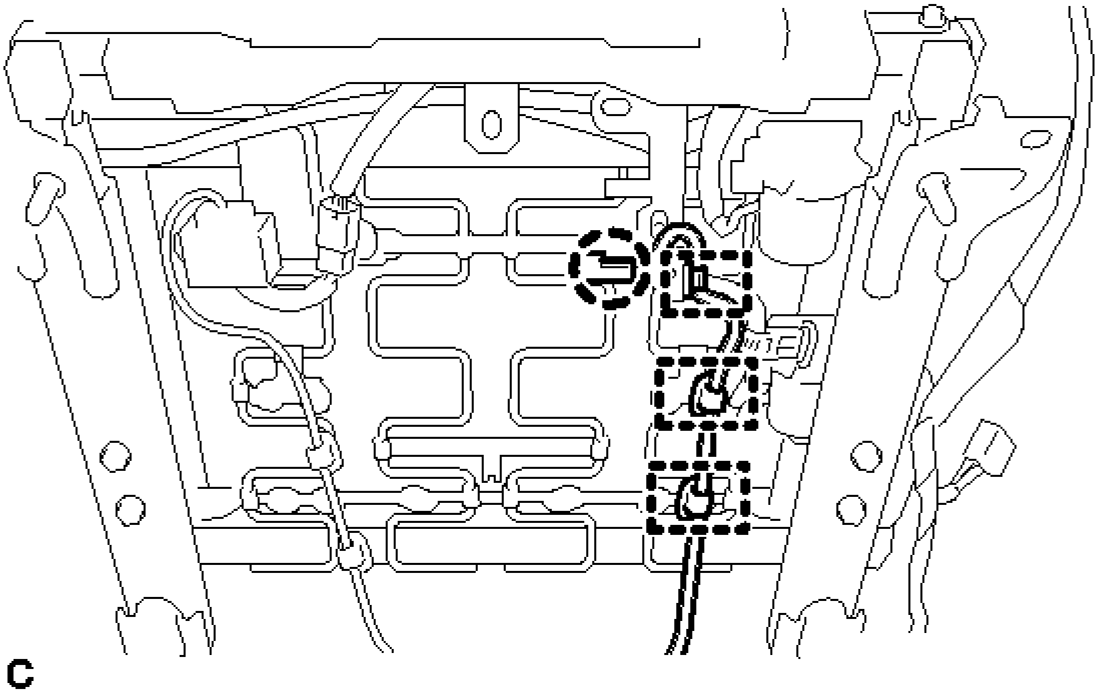

Fig. 125: Identifying Front Seatback Cover Claw And Clamps (For SIA Made Power Seat)
Courtesy of TOYOTA MOTOR SALES, U.S.A., INC.

d. w/ Seat Heater System:
    1. Disconnect the connector.

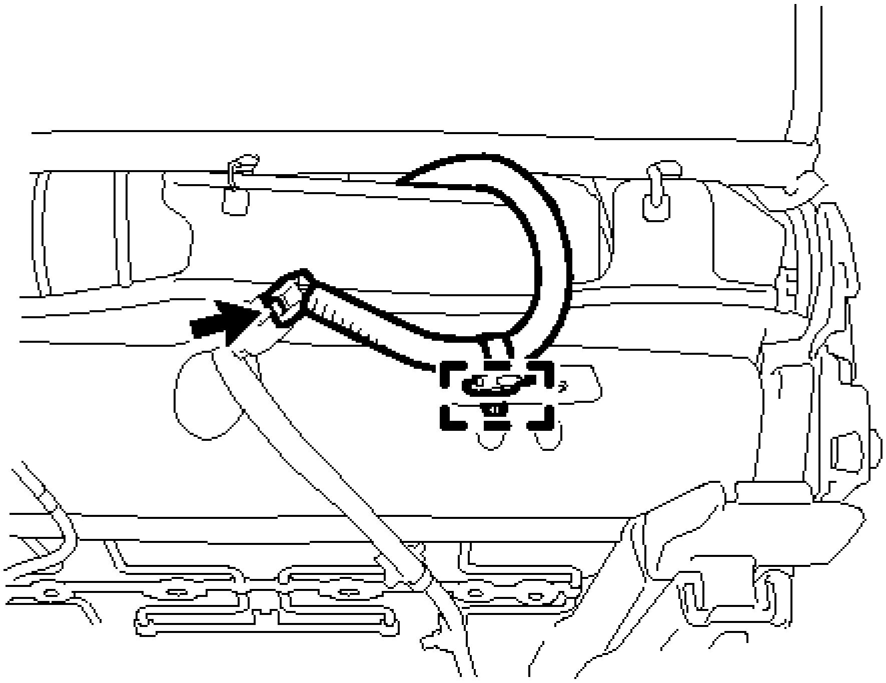

Fig. 126: Identifying Front Seatback Cover Connector And Clamp (For SIA Made Power Seat)
Courtesy of TOYOTA MOTOR SALES, U.S.A., INC.

2. Disengage the clamp.

9. **REMOVE SEPARATE TYPE FRONT SEATBACK COVER WITH PAD (for TMMK Made Manual Seat)** . Refer to **DISASSEMBLY - Step 11** .
10. **REMOVE SEPARATE TYPE FRONT SEATBACK COVER WITH PAD (for SIA Made Manual Seat)** . Refer to **DISASSEMBLY - Step 13** .
11. **REMOVE SEPARATE TYPE FRONT SEATBACK COVER WITH PAD (for TMMK Made Power Seat)** . Refer to **DISASSEMBLY - Step 14** .
12. **REMOVE SEPARATE TYPE FRONT SEATBACK COVER WITH PAD (for SIA Made Power Seat)** . Refer to **DISASSEMBLY - Step 17** .
13. **REMOVE FRONT SEAT AIRBAG ASSEMBLY**
    a. Disengage the 2 clamps.

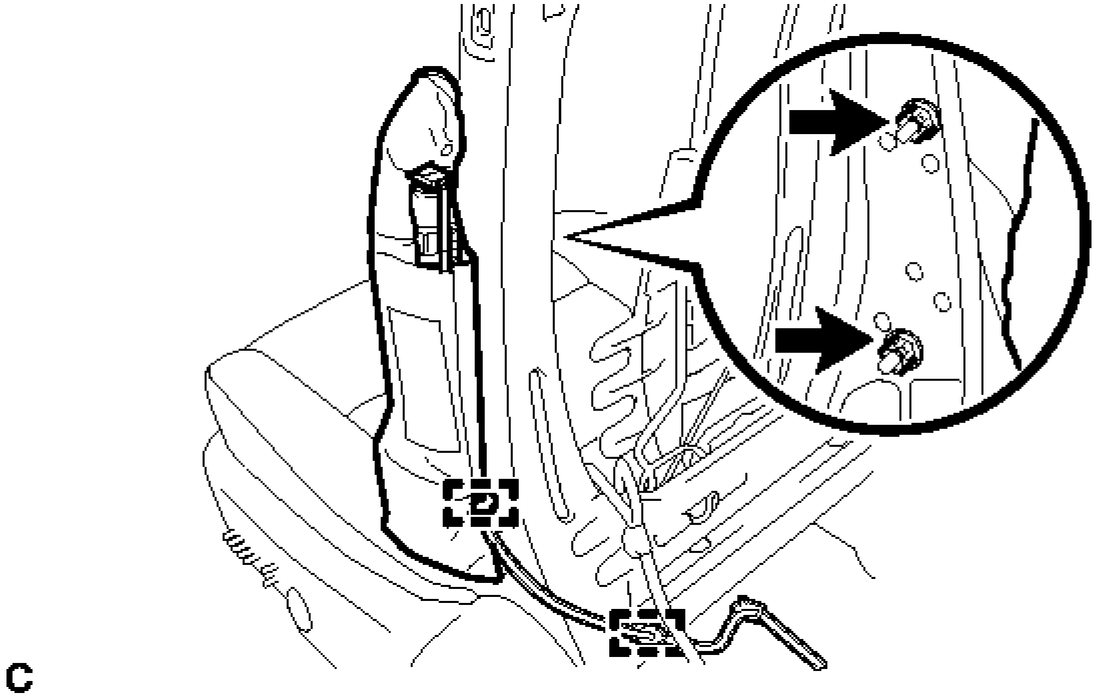

Fig. 127: Locating Front Seat Airbag Assembly Clamps And Fasteners
Courtesy of TOYOTA MOTOR SALES, U.S.A., INC.

b. Remove the 2 nuts and the front seat airbag assembly.

WARNING:

- **The nuts must not be reused.**
- **Make sure that the front seatback frame sub-assembly or separate type front seatback spring assembly is not deformed. If it is, replace it with a new one.**

INSTALLATION

INSTALLATION

1. **INSTALL FRONT SEAT AIRBAG ASSEMBLY**

WARNING:

- **The nuts must not be reused.**
- **Make sure that the front seatback frame sub-assembly or separate type front seatback spring assembly is not deformed. If it is, replace it with a new one.**

a. Install the front seat airbag assembly with 2 new nuts.

for TMMK Made

Torque: 8.0 N*m (82 kgf*cm, 71 in.*lbf)

    for SIA Made

    Torque: 5.5 N*m (56 kgf*cm, 49 in.*lbf)

   b. Engage the 2 clamps.

2. **INSTALL SEPARATE TYPE FRONT SEATBACK COVER WITH PAD (for TMMK Made Manual Seat)** . Refer to **REASSEMBLY - Step 18** .
3. **INSTALL SEPARATE TYPE FRONT SEATBACK COVER WITH PAD (for SIA Made Manual Seat)** . Refer to **REASSEMBLY - Step 15** .
4. **INSTALL SEPARATE TYPE FRONT SEATBACK COVER WITH PAD (for TMMK Made Power Seat)** . Refer to **REASSEMBLY - Step 21** .
5. **INSTALL SEPARATE TYPE FRONT SEATBACK COVER WITH PAD (for SIA Made Power Seat)** . Refer to **REASSEMBLY - Step 18** .
6. **CONNECT AIRBAG WIRE HARNESS (for TMMK Made Manual Seat)**
   a. Engage the claw and 3 clamps to connect the airbag wire harness.
   b. Connect the 2 rubber bands of the separate type front seatback cover with pad.
7. **CONNECT AIRBAG WIRE HARNESS (for SIA Made Manual Seat)**
   a. Engage the claw and 3 clamps to connect the airbag wire harness.
   b. Engage the fastener to connect the airbag wire harness.
   c. Connect the rubber band of the separate type front seatback cover with pad.
8. **CONNECT AIRBAG WIRE HARNESS (for TMMK Made Power Seat)**
   a. w/ Seat Heater System:
      1. Connect the connector (E).

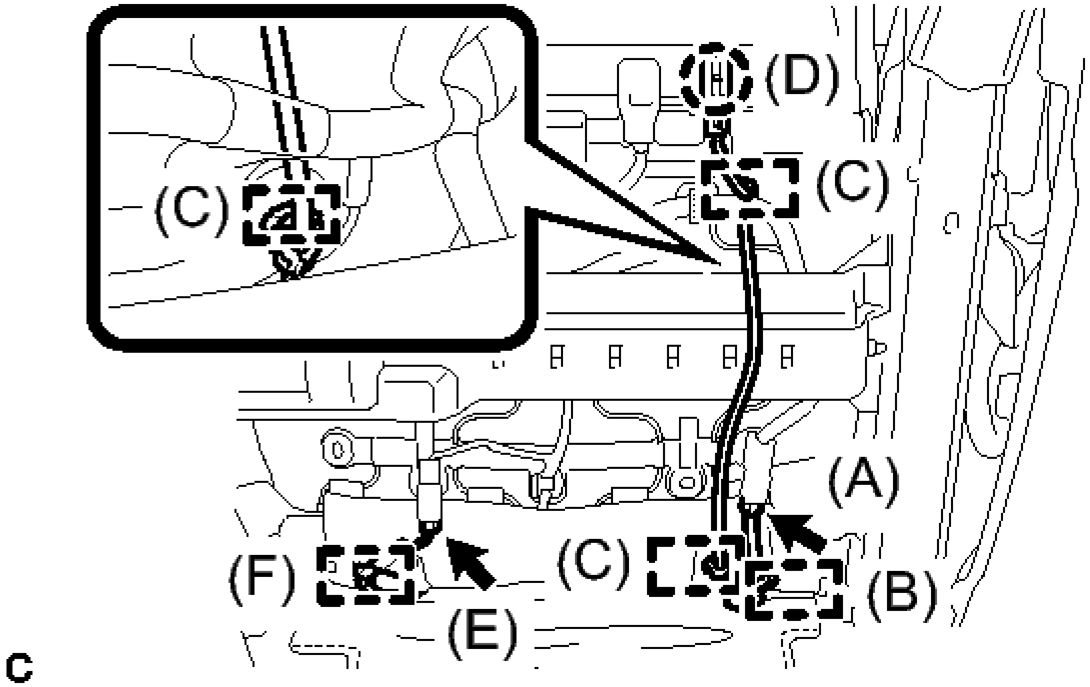

Fig. 128: Identifying Front Seatback Cover Connectors, Claw And Clamps (For TMMK Made Power Seat)
Courtesy of TOYOTA MOTOR SALES, U.S.A., INC.

    2. Engage the clamp (F).
  - b. Engage the claw (D) and 3 clamps (C) to Connect the airbag wire harness.
  - c. Engage the clamp (B).
  - d. Connect the connector (A).
  - e. Connect the 2 rubber bands of the separate type front seatback cover with pad.

9. **CONNECT AIRBAG WIRE HARNESS (for SIA Made Power Seat)**
   - a. w/ Seat Heater System:
     1. Connect the connector.
     2. Engage the clamp.
   - b. Engage the claw and 3 clamps to Connect the airbag wire harness.
   - c. Engage the fastener to connect the airbag wire harness.
   - d. Connect the rubber band of the separate type front seatback cover with pad.
10. **INSTALL FRONT SEAT ASSEMBLY (for TMMK Made Manual Seat)**

    Refer to **INSTALLATION** .

11. **INSTALL FRONT SEAT ASSEMBLY (for SIA Made Manual Seat)**

    Refer to **INSTALLATION** .

12. **INSTALL FRONT SEAT ASSEMBLY (for TMMK Made Power Seat)**

    Refer to **INSTALLATION** .

13. **INSTALL FRONT SEAT ASSEMBLY (for SIA Made Power Seat)**

    Refer to **INSTALLATION** .

14. **PERFORM DIAGNOSTIC SYSTEM CHECK**

    For Separate Type Yaw Rate Sensor: Refer to **DTC CHECK / CLEAR** .

    For Built-In Type Yaw Rate Sensor: Refer to **DTC CHECK / CLEAR** .

DISPOSAL

DISPOSAL

WARNING: **Before performing pre-disposal deployment of any SRS part, review and closely follow all applicable environmental and hazardous material**

regulations. Pre-disposal deployment may be considered hazardous material treatment.

1. **PRECAUTION**

WARNING:

- **An airbag or pretensioner may be activated by static electricity. To prevent this, be sure to touch a metal surface with your bare hands to discharge static electricity before performing this procedure.**
- **Never dispose of a front seat airbag assembly with an undeployed airbag.**
- **The airbag produces an exploding sound when it is deployed, so perform the operation outdoors and where it will not create a nuisance to nearby residents.**
- **When deploying the airbag, always use the specified SST (SRS Airbag Deployment Tool). Perform the operation in a place away from electrical noise.**
- **When deploying the airbag, perform the operation at least 10 m (32.8 ft.) away from the front seat airbag assembly.**
- **The front seat airbag assembly becomes extremely hot when the airbag is deployed, so do not touch it for at least 30 minutes after deployment.**
- **Use gloves and safety glasses when handling a front seat airbag assembly with a deployed airbag.**
- **Do not apply water etc. to a front seat airbag assembly with a deployed airbag.**
- **Always wash your hands with water after completing the operation.**

HINT:

When scrapping a vehicle equipped with an SRS or disposing of the front seat airbag assembly, be sure to deploy the airbag first in accordance with the procedure described below. If any abnormality occurs with the airbag deployment, contact the Service Dept. of TOYOTA MOTOR SALES, U.S.A., INC.

2. **DISPOSE OF FRONT SEAT AIRBAG ASSEMBLY (When Installed in Vehicle)**

NOTE:

- **When disposing of the front seat airbag assembly, never use the customer's vehicle to deploy the airbag.**
- **Be sure to observe the following procedure when deploying the airbag.**

HINT:

Prepare a battery as the power source to deploy the airbag.

a. Check the function of SST. See step 2.

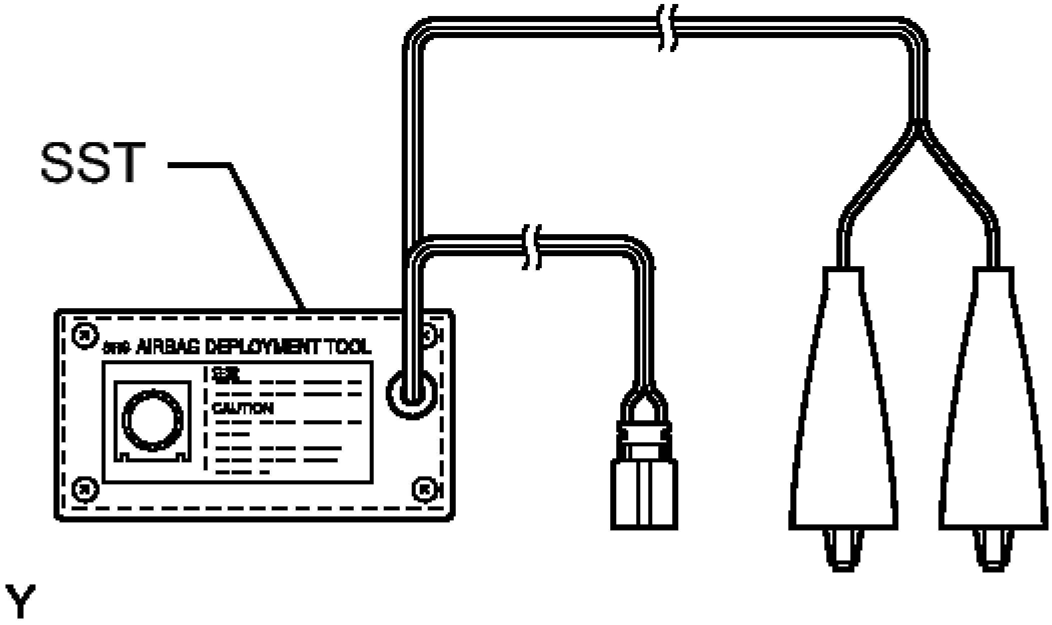

Fig. 129: Checking Function Of SST
Courtesy of TOYOTA MOTOR SALES, U.S.A., INC.

- **SST: 09082-00700**

b. Refer to Precaution.

For Separate Type Yaw Rate Sensor: Refer to **PRECAUTION** .

For Built-In Type Yaw Rate Sensor: Refer to **PRECAUTION** .

c. Disconnect the cable from the negative (-) battery terminal.

WARNING: **Wait at least 90 seconds after disconnecting the cable from the negative (-) battery terminal to disable the SRS system.**

d. Disconnect the connector from the front seat airbag assembly under the front seat assembly.

NOTE: When disconnecting any airbag connector, take care not to damage the airbag wire harness.

1. Slide the slider to release the lock, and then disconnect the yellow airbag connector as shown in the illustration.

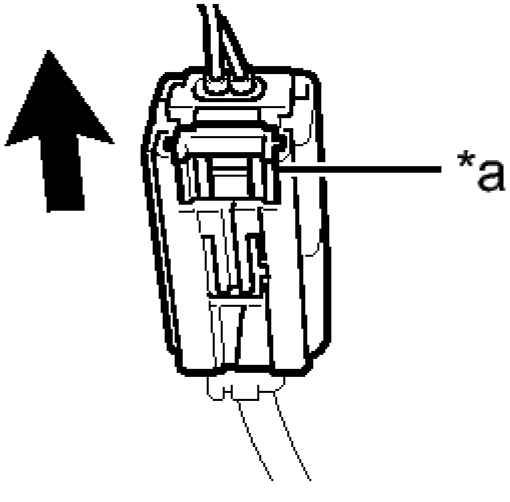

Fig. 130: Identifying Harness Connector Lock
Courtesy of TOYOTA MOTOR SALES, U.S.A., INC.

TEXT IN ILLUSTRATION

*a	Slider

e. Install SST.

WARNING: **Check that there is no looseness in the front seat assembly.**

1. Connect the SST connector to the front seat airbag assembly connector.

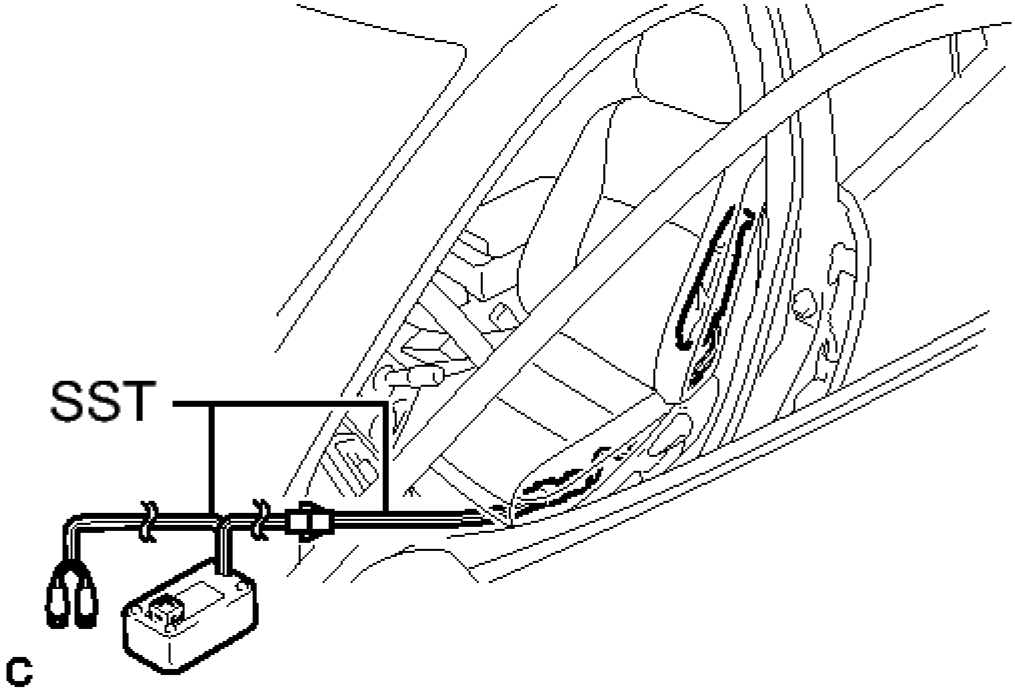

Fig. 131: View Of SST Connected To Front Seat Airbag Connector
Courtesy of TOYOTA MOTOR SALES, U.S.A., INC.

- **SST: 09082-00700**
- **SST: 09082-00820**

NOTE: **To avoid damaging the SST connector or wire harness, do not lock the secondary lock of the twin lock.**

2. Move SST at least 10 m (32.8 ft.) away from the front side window.

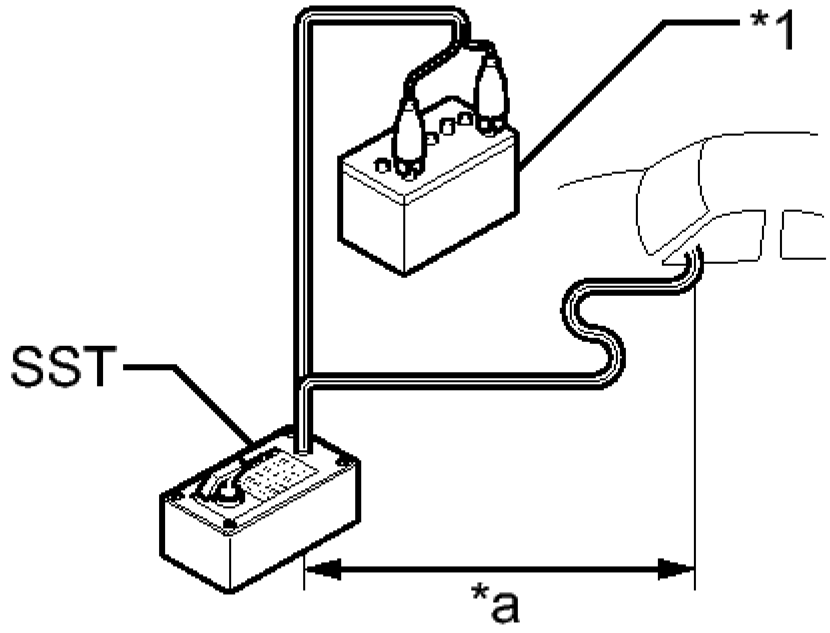

C

Fig. 132: Identifying SST Distance From Front Side Window
Courtesy of TOYOTA MOTOR SALES, U.S.A., INC.

TEXT IN ILLUSTRATION

*1	Battery
*a	10 m (32.8 ft.) or more

3. Maintaining sufficient clearance for the SST wire harness in the front side window, close all doors and windows of the vehicle.

NOTE: **Take care not to damage the SST wire harness.**

4. Connect the red clip of SST to the positive (+) battery terminal and the black clip of SST to the negative (-) battery terminal.

f. Deploy the airbag.

1. Check that no one is inside the vehicle or within a 10 m (32.8 ft.) radius of the vehicle.
2. Press the SST activation switch and deploy the airbag.

WARNING:

- **Before deployment, make sure that no one is near the vehicle.**
- **The front seat airbag assembly becomes extremely hot when the airbag is deployed, so do not touch it**

for at least 30 minutes after deployment.

- **Use gloves and safety glasses when handling a front seat airbag assembly with a deployed airbag.**
- **Do not apply water etc. to a front seat airbag assembly with a deployed airbag.**
- **Always wash your hands with water after completing the operation.**

HINT:

The airbag is deployed as the LED of the SST activation switch comes on.

3. **DISPOSE OF FRONT SEAT AIRBAG ASSEMBLY (When Not Installed in Vehicle)**

NOTE: **Be sure to observe the following procedure when deploying the airbag.**

HINT:

Prepare a battery as the power source to deploy the airbag.

a. Check the function of SST. See step 3.

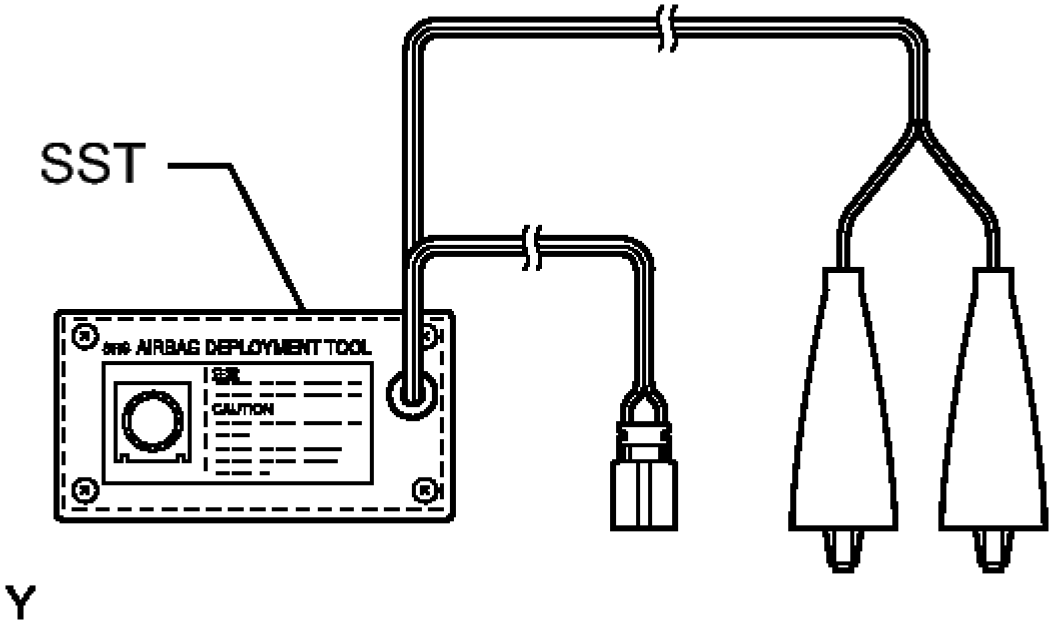

Fig. 133: Checking Function Of SST
Courtesy of TOYOTA MOTOR SALES, U.S.A., INC.

- **SST: 09082-00700**

b. Remove the front seat airbag assembly. Refer to **REMOVAL**.

WARNING:

- **Before removing the front seat assembly, wait at least 90 seconds after turning the ignition switch off and disconnecting the cable from the negative (-) battery terminal.**
- **When storing the front seat airbag assembly, keep the airbag deployment side facing upward.**

c. Using braided wire, tie down the front seat airbag assembly to an unneeded tire.

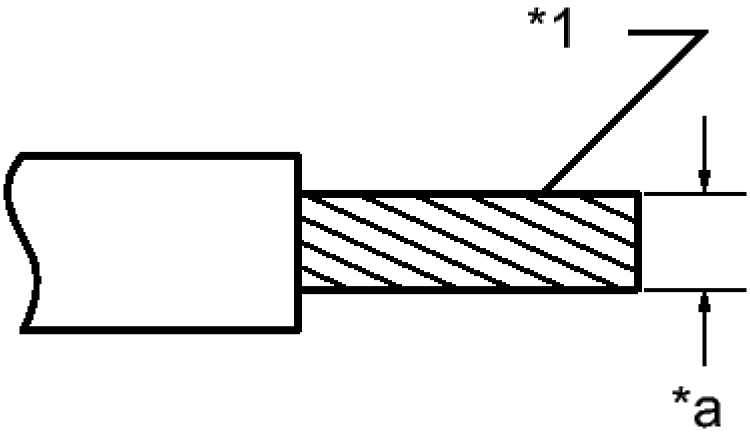

H

Fig. 134: Identifying Stripped Wire
Courtesy of TOYOTA MOTOR SALES, U.S.A., INC.

TEXT IN ILLUSTRATION

*1	Stripped Wire Section
*a	Wire Diameter

Wire

Stripped wire section

1.25 mm^2 (0.0019 in.^{2}) or more

WARNING: **If the wire is too thin or an alternative object is used to tie down the front seat airbag assembly, it may snap when the airbag is deployed. Always use a wire for vehicle use with an area of at least 1.25 mm^2 (0.0019 in.^{2}).**

HINT:

To calculate the area of the stripped wire section:

Area = 3.14 x (Diameter)^2 / 4

1. Install the 2 nuts to the front seat airbag assembly.

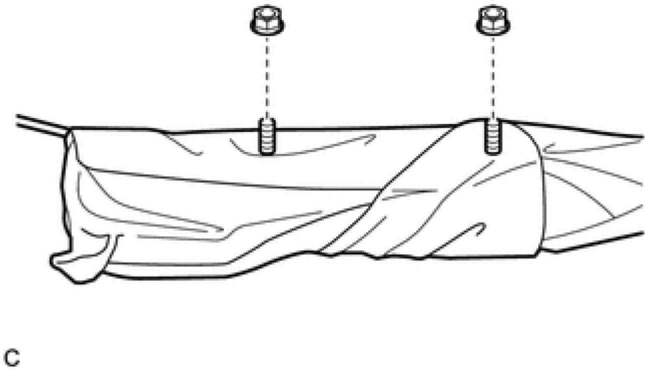

Fig. 135: Identifying Front Seat Airbag Assembly Fasteners
Courtesy of TOYOTA MOTOR SALES, U.S.A., INC.

2. Wind the wires around the stud bolts of the front seat airbag assembly as shown in the illustration.

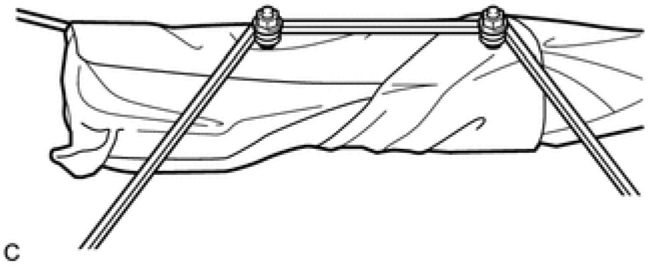

Fig. 136: Identifying Wires Around Stud Bolts
Courtesy of TOYOTA MOTOR SALES, U.S.A., INC.

3. Position the front seat airbag assembly inside the tire.

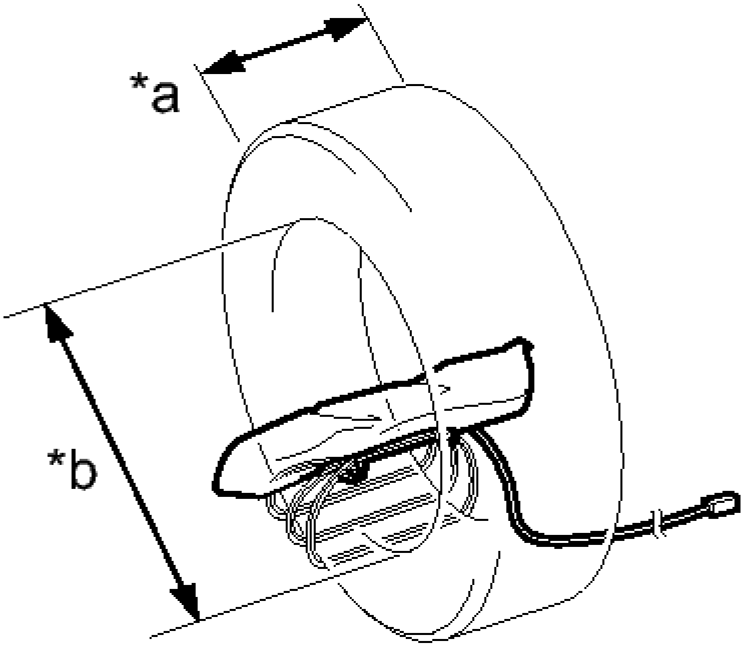

Fig. 137: View Of Front Seat Airbag Assembly Positioned Inside The Tire
Courtesy of TOYOTA MOTOR SALES, U.S.A., INC.

TEXT IN ILLUSTRATION

*a	Width
*b	Inner Diameter

Minimum tire size

Width

185 mm (7.28 in.)

Inner diameter

360 mm (1.18 ft.)

WARNING:

- **Make sure that the wires are tight. If there is slack in the wires, the front seat airbag assembly may break loose when the airbag is deployed.**
- **Face the front seat airbag assembly deployment surface toward the inside the tire to evenly distribute the force of deployment.**

NOTE: **The tire may be marked by the airbag deployment, so use an**

unneeded tire.

d. Install SST.
    1. Connect the SST connector to the front seat airbag assembly connector.

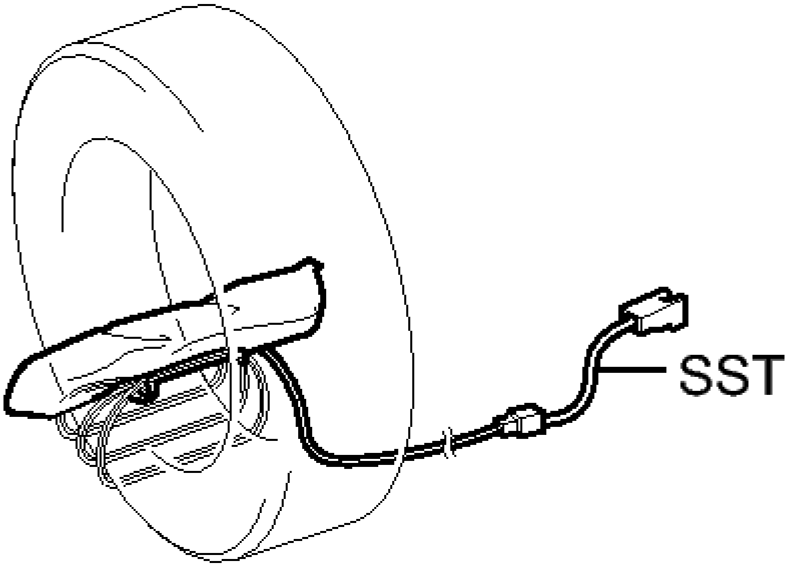

C

Fig. 138: View Of SST Connected To Front Seat Airbag Assembly In Tire
Courtesy of TOYOTA MOTOR SALES, U.S.A., INC.

- **SST: 09082-00820**

e. Place the tires.
    1. Place at least 2 tires under the tire to which the front seat airbag assembly is tied.

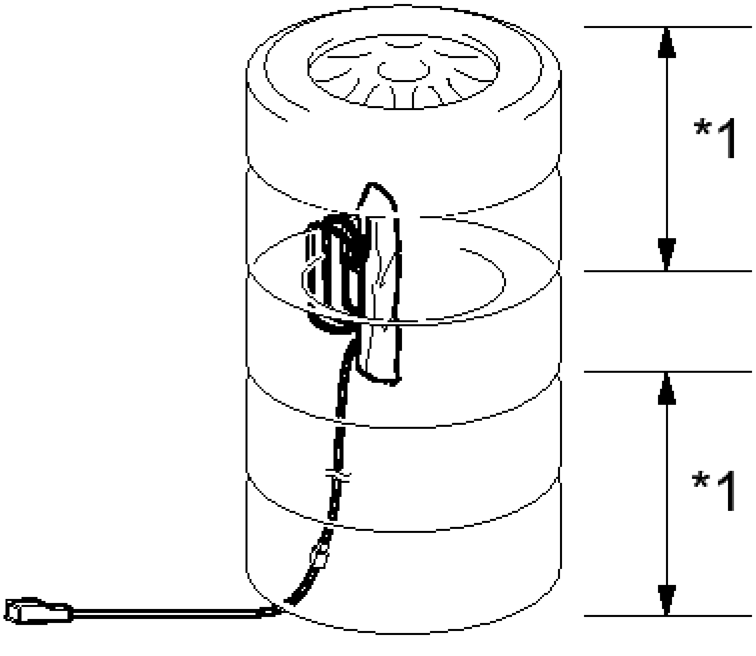

Fig. 139: Identifying Front Seat Airbag Assembly Inside Tires
Courtesy of TOYOTA MOTOR SALES, U.S.A., INC.

TEXT IN ILLUSTRATION

*1	Tires (2 or more)

NOTE: **Do not place the SST connector under the tire because it could be damaged.**

2. Place at least 2 tires onto the tire to which the front seat airbag assembly is tied. The top tire should have a wheel installed.
3. Tie the tires together with the 2 wires.

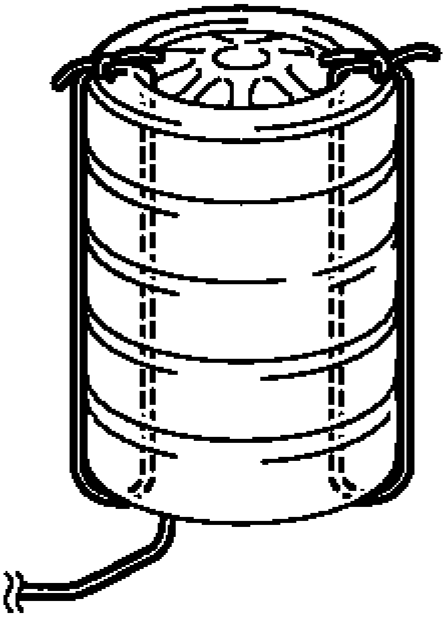

Fig. 140: Identifying Tires Tied Together With Wires
Courtesy of TOYOTA MOTOR SALES, U.S.A., INC.

WARNING: Make sure that the wires are tight. Looseness in the wires results in the tires breaking loose when the airbag is deployed.

f. Install SST.
   1. Connect the SST connector.

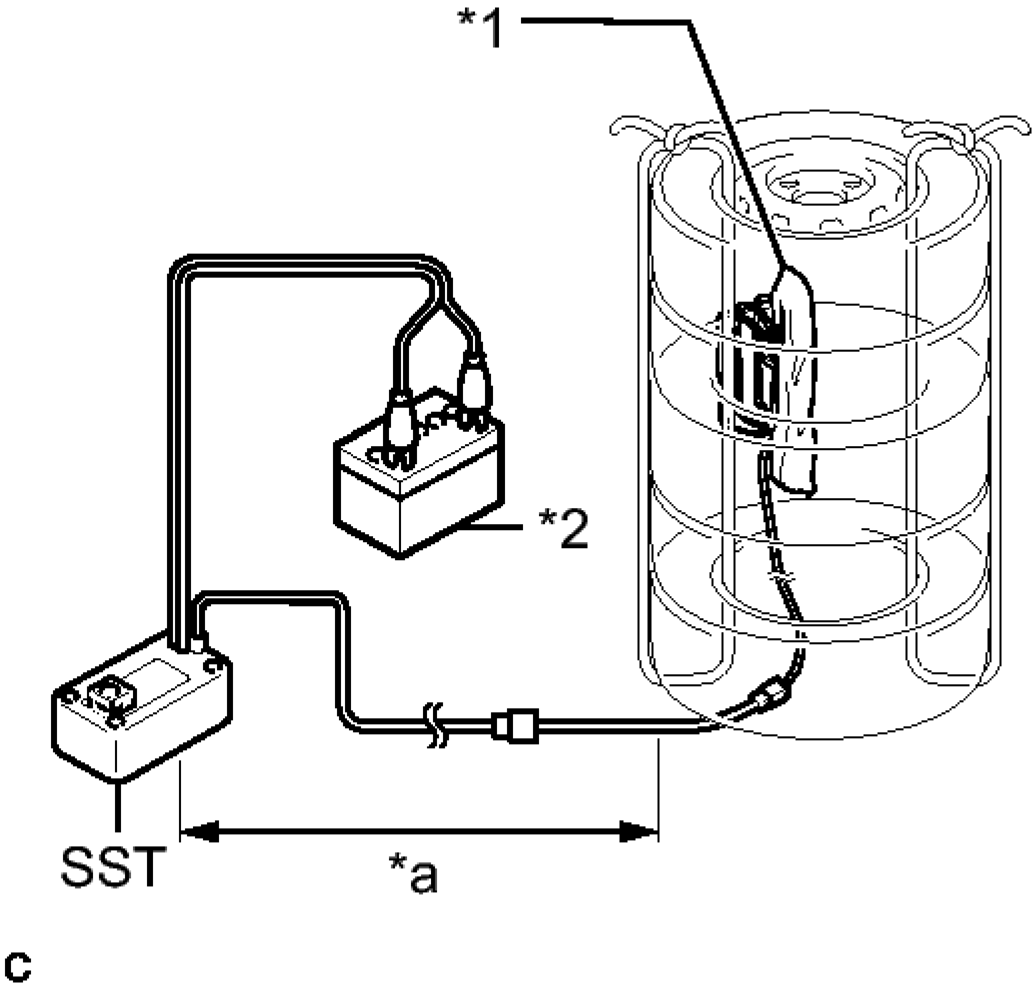

Fig. 141: Identifying SST Distance From Front Seat Airbag Assembly In Tires
Courtesy of TOYOTA MOTOR SALES, U.S.A., INC.

TEXT IN ILLUSTRATION

*1	Front Seat Airbag Assembly
*2	Battery
*a	10 m (32.8 ft.) or more

- **SST: 09082-00700**

NOTE: **To avoid damaging the SST connector or wire harness, do not lock the secondary lock of the twin lock. Also, secure some slack for the SST wire harness inside the tire.**

2. Move SST at least 10 m (32.8 ft.) away from the airbag tied down to the tire.

g. Deploy the airbag.
   1. Connect the red clip of SST to the positive (+) battery terminal and the black clip of SST to the negative (-) battery terminal.
   2. Check that no one is within a 10 m (32.8 ft.) radius of the tire to which the front seat airbag assembly is tied.
   3. Press the SST activation switch and deploy the airbag.

WARNING: **Before deployment, make sure that no one is near the airbag.**

HINT:

The airbag is deployed as the LED of the SST activation switch comes on.

h. Dispose of the front seat airbag assembly.

WARNING:

- **The front seat airbag assembly becomes extremely hot when the airbag is deployed, so do not touch it for at least 30 minutes after deployment.**
- **Use gloves and safety glasses when handling a front seat airbag assembly with a deployed airbag.**
- **Do not apply water etc. to a front seat airbag assembly with a deployed airbag.**
- **Always wash your hands with water after completing the operation.**

1. Remove the front seat airbag assembly from the tire.
2. Place the front seat airbag assembly in a plastic bag, tie it tightly, and dispose of it according to local regulations.

REAR SEAT SIDE AIRBAG ASSEMBLY

COMPONENTS

ILLUSTRATION

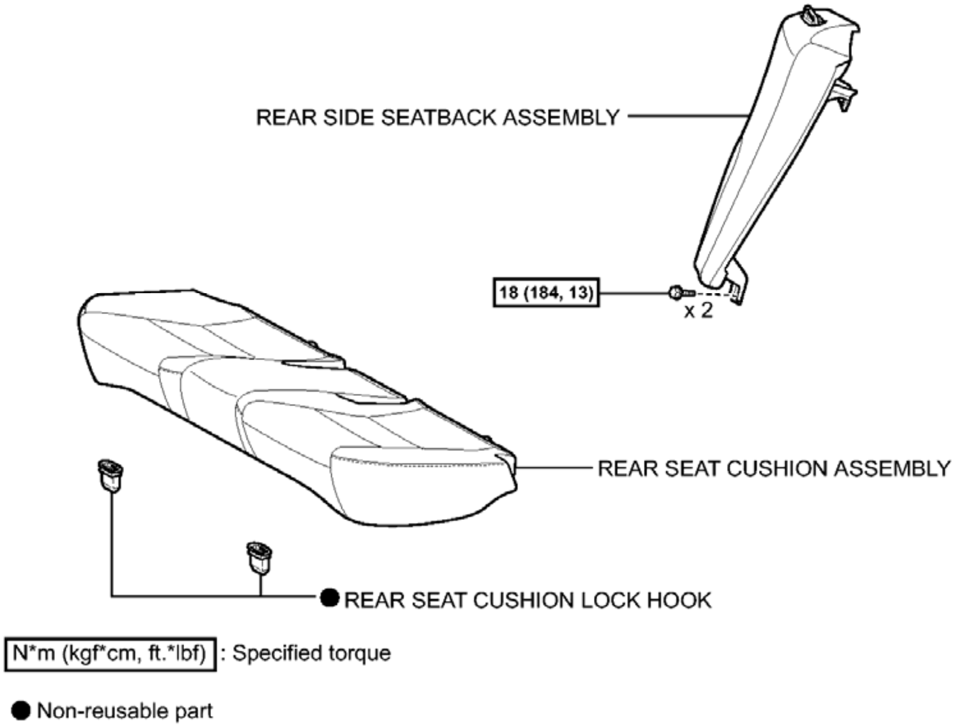
REAR SIDE SEATBACK ASSEMBLY
18 (184, 13)
x 2
REAR SEAT CUSHION ASSEMBLY
● REAR SEAT CUSHION LOCK HOOK
N*m (kgf*cm, ft.*lbf) : Specified torque
● Non-reusable part

Fig. 142: Identifying Rear Seat Side Airbag Assembly Replacement Components With Torque Specifications (1 Of 2)

Courtesy of TOYOTA MOTOR SALES, U.S.A., INC.

ILLUSTRATION

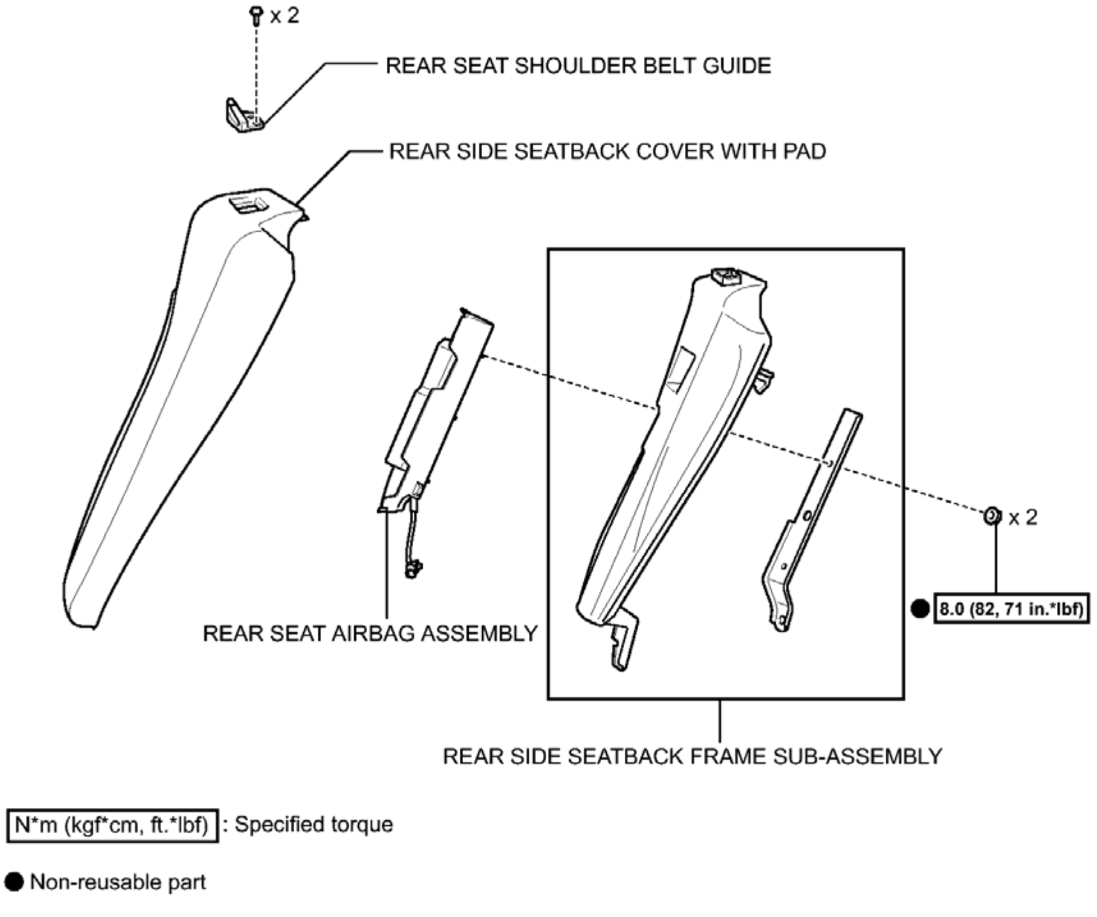
x 2
REAR SEAT SHOULDER BELT GUIDE
REAR SIDE SEATBACK COVER WITH PAD
x 2
● 8.0 (82, 71 in.*lbf)
REAR SEAT AIRBAG ASSEMBLY
REAR SIDE SEATBACK FRAME SUB-ASSEMBLY
N*m (kgf*cm, ft.*lbf) : Specified torque
● Non-reusable part
c

Fig. 143: Identifying Rear Seat Side Airbag Assembly Replacement Components With Torque Specifications (2 Of 2)
Courtesy of TOYOTA MOTOR SALES, U.S.A., INC.

ON-VEHICLE INSPECTION

ON-VEHICLE INSPECTION

WARNING: **Be sure to correctly follow the removal and installation procedures for the rear seat airbag assemblies.**

1. **INSPECT REAR SEAT AIRBAG ASSEMBLY (for Vehicle not Involved in Collision)**
    a. Perform a diagnostic system check.

       For Separate Type Yaw Rate Sensor: Refer to **DTC CHECK / CLEAR** .

For Built-In Type Yaw Rate Sensor: Refer to **DTC CHECK / CLEAR** .

b. Visually check for defects with the rear seat airbag assemblies installed on the vehicle.

HINT:

The defects are as follows:

- Cuts on the rear side seatback assembly around the rear seat airbag assemblies
- Small cracks on the rear side seatback assembly around the rear seat airbag assemblies
- Significant discoloration on the rear side seatback assembly around the rear seat airbag assemblies

OK

No defects are found.

If any of the defects is found, replace the rear side seatback pad or rear side seatback cover sub-assembly with a new one.

2. **INSPECT REAR SEAT AIRBAG ASSEMBLY (for Vehicle Involved in Collision and Airbag not Deployed)**

a. Perform a diagnostic system check.

For Separate Type Yaw Rate Sensor: Refer to **DTC CHECK / CLEAR** .

For Built-In Type Yaw Rate Sensor: Refer to **DTC CHECK / CLEAR** .

b. Visually check for defects with the rear seat airbag assemblies removed from the vehicle.

HINT:

The defects are as follows:

- Make sure that there are no scratches, broken or frayed threads on the surface of the rear seat airbag assemblies base fabric
- Marks from being dropped
- Deformation on the installation part of the rear seat airbag assemblies
- Cracks or other damage to the wire harness or connector

OK

No defects are found.

If any of the defects is found, replace the rear seat airbag assembly with a new one.

REMOVAL

REMOVAL

WARNING: **If the side airbag was deployed, replace the rear seat airbag assembly, rear side seatback frame sub-assembly, rear side seatback cover sub-assembly and rear side seatback pad with the necessary parts in accordance with the extent of the collision damage.**

HINT:

Use the same procedure for the LH side and RH side.

1. **PRECAUTION**

   WARNING: **Be sure to read Precaution thoroughly before servicing.**

   For Separate Type Yaw Rate Sensor: Refer to PRECAUTION .

   For Built-In Type Yaw Rate Sensor: Refer to PRECAUTION .

   NOTE: **After turning the ignition switch off, waiting time may be required before disconnecting the cable from the negative (-) battery terminal. Therefore, make sure to read the disconnecting the cable from the negative (-) battery terminal notices before proceeding with work. Refer to PRECAUTION .**

2. **DISCONNECT CABLE FROM NEGATIVE BATTERY TERMINAL**

   WARNING: **Wait at least 90 seconds after disconnecting the cable from the negative (-) battery terminal to disable the SRS system.**

   NOTE: **When disconnecting the cable, some systems need to be initialized after the cable is reconnected. Refer to INITIALIZATION .**

3. **REMOVE REAR SEAT CUSHION ASSEMBLY** . Refer to **REMOVAL - Step 3** .
4. **REMOVE REAR SEAT CUSHION LOCK HOOK** . Refer to **REMOVAL - Step 4** .
5. **REMOVE REAR SIDE SEATBACK ASSEMBLY** . Refer to **REMOVAL - Step 8** .
6. **REMOVE REAR SEAT SHOULDER BELT GUIDE** . Refer to **DISASSEMBLY - Step 3** .
7. **REMOVE REAR SEAT AIRBAG ASSEMBLY**
   1. Disengage the 8 hooks.

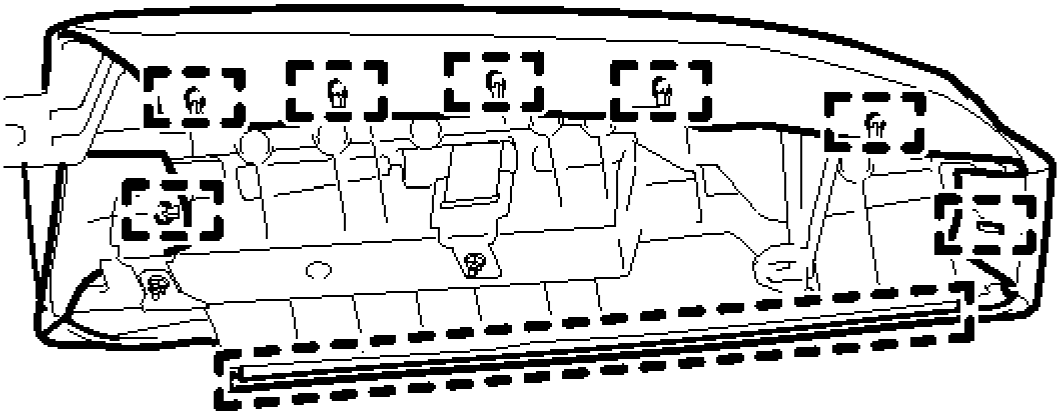

Fig. 144: Locating Rear Seat Airbag Assembly Hooks
Courtesy of TOYOTA MOTOR SALES, U.S.A., INC.

b. Disengage the clamp and remove the 2 nuts.

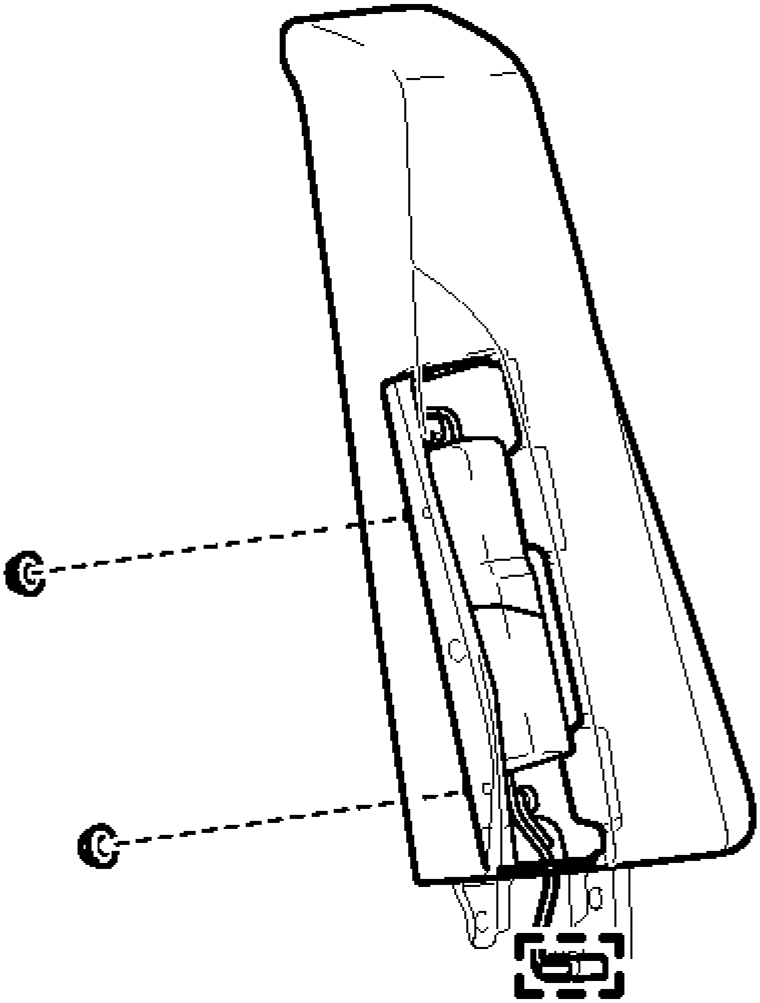

Fig. 145: Locating Rear Seat Airbag Assembly Clamp And Fasteners
Courtesy of TOYOTA MOTOR SALES, U.S.A., INC.

c. Remove the rear side seatback frame sub-assembly and rear seat airbag assembly from the rear side seatback cover with pad.

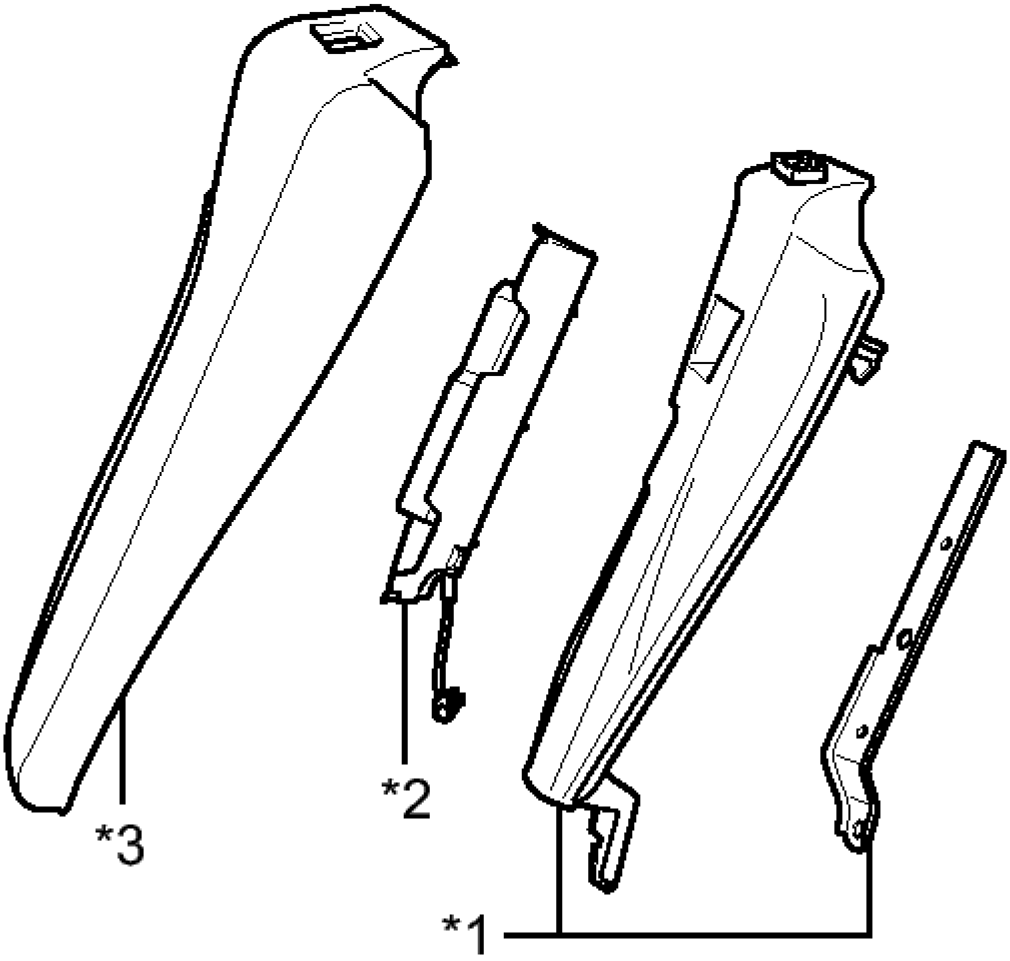

Fig. 146: Identifying Rear Side Seatback Frame Sub-Assembly, Rear Seat Airbag Assembly And Rear Side Seatback Cover
Courtesy of TOYOTA MOTOR SALES, U.S.A., INC.

TEXT IN ILLUSTRATION

*1	Rear Side Seatback Frame Sub-assembly
*2	Rear Seat Airbag Assembly
*3	Rear Side Seatback Cover

	with Pad

WARNING:

- **The nuts must not be reused.**
- **Make sure that the rear side seatback frame sub-assembly is not deformed. If it is, replace it with a new one.**

INSTALLATION

INSTALLATION

1. **INSTALL REAR SEAT AIRBAG ASSEMBLY**

   WARNING:

   - **The nuts must not be reused.**
   - **Make sure that the rear side seatback frame sub-assembly is not deformed. If it is, replace it with a new one.**

   a. Install the rear seat airbag assembly to the rear side seatback frame sub-assembly with 2 new nuts.

      Torque: 8.0 N*m (82 kgf*cm, 71 in.*lbf)

   b. Engage the clamp to connect the airbag wire harness.
   c. Engage the 8 hooks to install the rear side seatback cover with pad.
2. **INSTALL REAR SEAT SHOULDER BELT GUIDE** . Refer to **REASSEMBLY - Step 11** .
3. **INSTALL REAR SIDE SEATBACK ASSEMBLY** . Refer to **INSTALLATION - Step 2** .
4. **INSTALL REAR SEAT CUSHION LOCK HOOK** . Refer to **INSTALLATION - Step 6** .
5. **INSTALL REAR SEAT CUSHION ASSEMBLY** . Refer to **INSTALLATION - Step 7** .
6. **CONNECT CABLE TO NEGATIVE BATTERY TERMINAL**

   NOTE: **When disconnecting the cable, some systems need to be initialized after the cable is reconnected. Refer to INITIALIZATION .**

7. **PERFORM DIAGNOSTIC SYSTEM CHECK**

   For Separate Type Yaw Rate Sensor: Refer to **DTC CHECK / CLEAR** .

   For Built-In Type Yaw Rate Sensor: Refer to **DTC CHECK / CLEAR** .

8. **INSPECT SRS WARNING LIGHT**

   For Separate Type Yaw Rate Sensor: Refer to **DIAGNOSIS SYSTEM** .

   For Built-In Type Yaw Rate Sensor: Refer to **DIAGNOSIS SYSTEM** .

DISPOSAL

DISPOSAL

WARNING: **Before performing pre-disposal deployment of any SRS part, review and closely follow all applicable environmental and hazardous material regulations. Pre-disposal deployment may be considered hazardous material treatment.**

1. **PRECAUTION**

WARNING:

- **An airbag or pretensioner may be activated by static electricity. To prevent this, be sure to touch a metal surface with your bare hands to discharge static electricity before performing this procedure.**
- **Never dispose of a rear seat airbag assembly with an undeployed airbag.**
- **The airbag produces an exploding sound when it is deployed, so perform the operation outdoors and where it will not create a nuisance to nearby residents.**
- **When deploying the airbag, always use the specified SST (SRS Airbag Deployment Tool). Perform the operation in a place away from electrical noise.**
- **When deploying the airbag, perform the operation at least 10 m (32.8 ft.) away from the rear seat airbag assembly.**
- **The rear seat airbag assembly becomes extremely hot when the airbag is deployed, so do not touch it for at least 30 minutes after deployment.**
- **Use gloves and safety glasses when handling a rear seat airbag assembly with a deployed airbag.**
- **Do not apply water etc. to a rear seat airbag assembly with a deployed airbag.**
- **Always wash your hands with water after completing the operation.**

HINT:

When scrapping a vehicle equipped with an SRS or disposing of the rear seat airbag assembly, be sure to deploy the airbag first in accordance with the procedure described below. If any abnormality occurs with the airbag deployment, contact the Service Dept. of TOYOTA MOTOR SALES, U.S.A., INC.

2. **DISPOSE OF REAR SEAT AIRBAG ASSEMBLY (When Installed in Vehicle)**

NOTE:

- **When disposing of the rear seat airbag assembly, never use the**

customer's vehicle to deploy the airbag.

- **Be sure to observe the following procedure when deploying the airbag.**

HINT:

Prepare a battery as the power source to deploy the airbag.

a. Check the function of SST. See step 2.
   - **SST: 09082-00700**

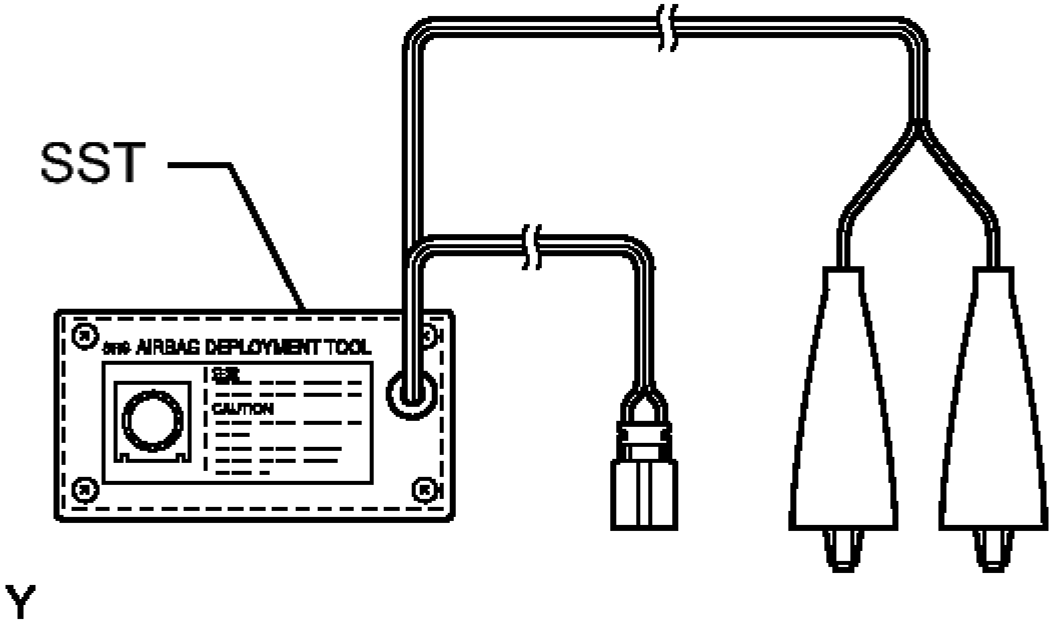

Fig. 147: Checking Function Of SST
Courtesy of TOYOTA MOTOR SALES, U.S.A., INC.

b. Refer to Precaution.

   For Separate Type Yaw Rate Sensor: Refer to **PRECAUTION** .

   For Built-In Type Yaw Rate Sensor: Refer to **PRECAUTION** .

c. Disconnect the cable from the negative (-) battery terminal.

   WARNING: **Wait at least 90 seconds after disconnecting the cable from the negative (-) battery terminal to disable the SRS system.**

d. Remove the rear seat cushion assembly. Refer to **REMOVAL - Step 3** .

e. Disconnect the connector from the rear seat airbag assembly.

NOTE: **When disconnecting any airbag connector, take care not to damage the airbag wire harness.**

1. Slide the slider to release the lock, and then disconnect the yellow airbag connector.

f. Install SST.

WARNING: **Check that there is no looseness in the rear side seatback assembly.**

1. Connect the SST connector to the rear seat airbag assembly connector.
   - **SST: 09082-00700**
   - **SST: 09082-00820**

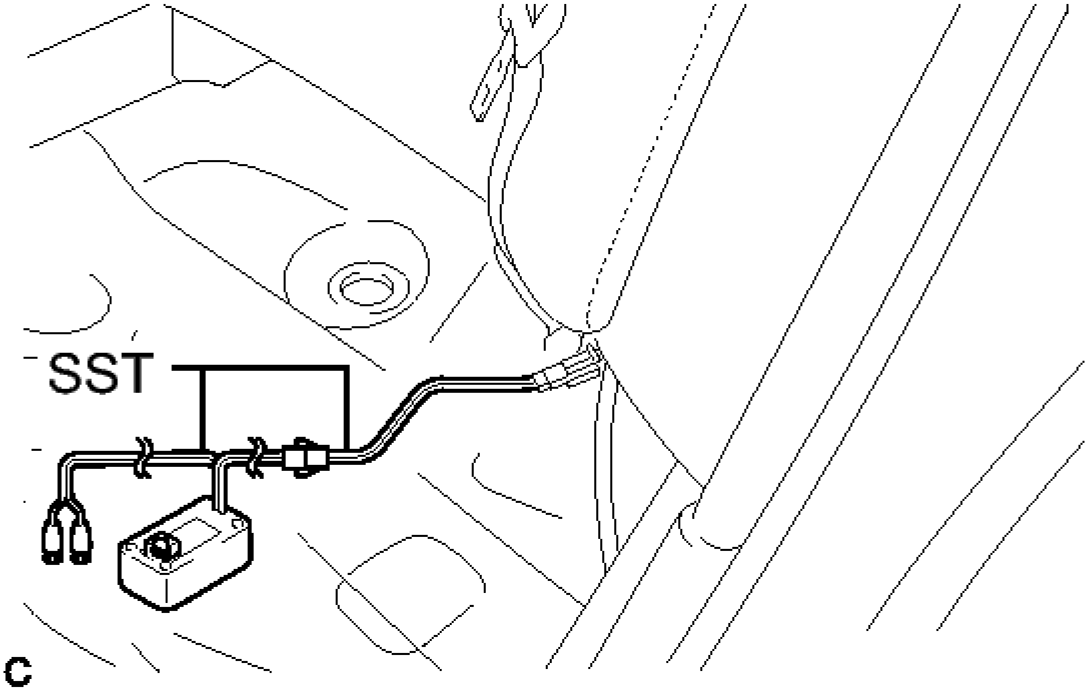

Fig. 148: View Of SST Connected To Rear Seat Airbag Assembly Connector
Courtesy of TOYOTA MOTOR SALES, U.S.A., INC.

NOTE: **To avoid damaging the SST connector or wire harness, do not lock the secondary lock of the twin lock.**

2. Move SST at least 10 m (32.8 ft.) away from the rear side window.

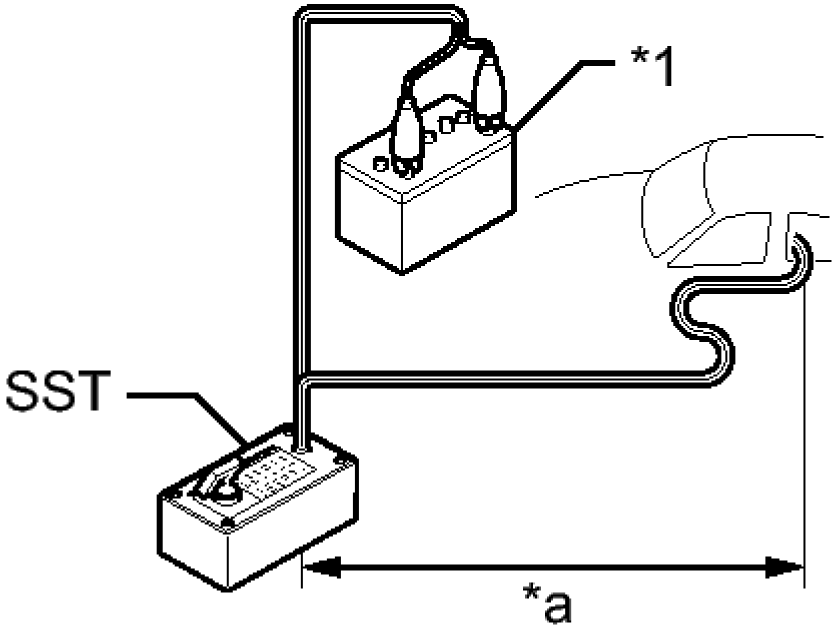

Fig. 149: Identifying SST, Battery & Distance From Rear Side Window
Courtesy of TOYOTA MOTOR SALES, U.S.A., INC.

TEXT IN ILLUSTRATION

*1	Battery
*a	10 m (32.8 ft.) or more

3. Maintaining sufficient clearance for the SST wire harness in the rear side window, close all doors and windows of the vehicle.

NOTE: **Take care not to damage the SST wire harness.**

4. Connect the red clip of SST to the positive (+) battery terminal and the black clip of SST to the negative (-) battery terminal.

g. Deploy the airbag.

1. Check that no one is inside the vehicle or within a 10 m (32.8 ft.) radius of the vehicle.
2. Press the SST activation switch and deploy the airbag.

WARNING:

- **Before deployment, make sure that no one is near the vehicle.**
- **The rear seat airbag assembly becomes extremely hot when the airbag is deployed, so do not touch it**

for at least 30 minutes after deployment.

- **Use gloves and safety glasses when handling a rear seat airbag assembly with a deployed airbag.**
- **Do not apply water etc. to a rear seat airbag assembly with a deployed airbag.**
- **Always wash your hands with water after completing the operation.**

HINT:

The airbag is deployed as the LED of the SST activation switch comes on.

3. **DISPOSE OF REAR SEAT AIRBAG ASSEMBLY (When Not Installed in Vehicle)**

NOTE: **Be sure to observe the following procedure when deploying the airbag.**

HINT:

Prepare a battery as the power source to deploy the airbag.

a. Check the function of SST. See step 3.
    - **SST: 09082-00700**

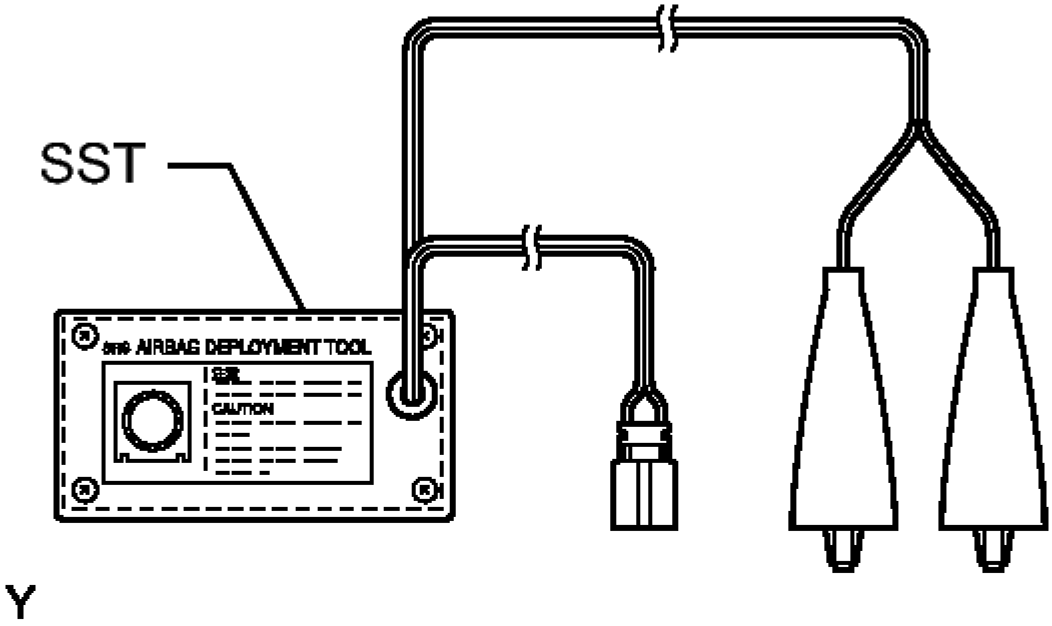

Fig. 150: Checking Function Of SST
Courtesy of TOYOTA MOTOR SALES, U.S.A., INC.

b. Remove the rear seat airbag assembly. Refer to **REMOVAL**.

WARNING:

- **Before removing the rear side seatback assembly, wait at least 90 seconds after turning the ignition switch off and disconnecting the cable from the negative (-) battery terminal.**
- **When storing the rear seat airbag assembly, keep the airbag deployment side facing upward.**

c. Using braided wire, tie down the rear seat airbag assembly to an unneeded tire.

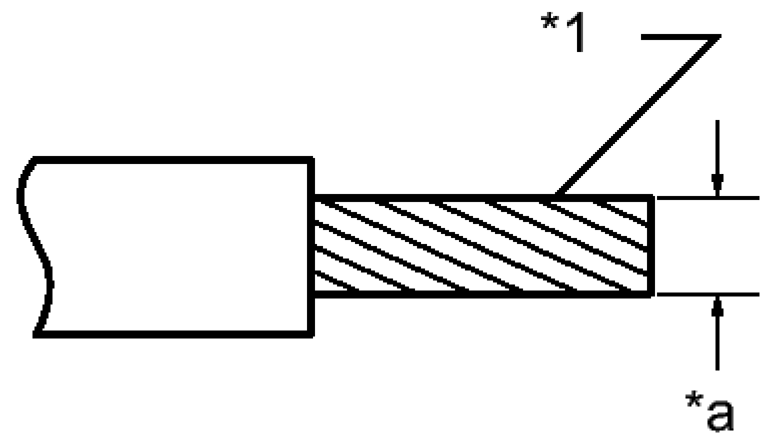

H

Fig. 151: Identifying Stripped Wire
Courtesy of TOYOTA MOTOR SALES, U.S.A., INC.

TEXT IN ILLUSTRATION

*1	Stripped Wire Section
*a	Wire Diameter

Wire

Stripped wire section

1.25 mm^2 (0.0019 in.^{2}) or more

WARNING: If the wire is too thin or an alternative object is used to tie down the rear seat airbag assembly, it may snap when the airbag is deployed. Always use a wire for vehicle use with an area of at least 1.25 mm^2 (0.0019 in.^{2}).

HINT:

To calculate the area of the stripped wire section:

Area = 3.14 x (Diameter)^2 / 4

1. Install the 2 nuts to the rear seat airbag assembly.

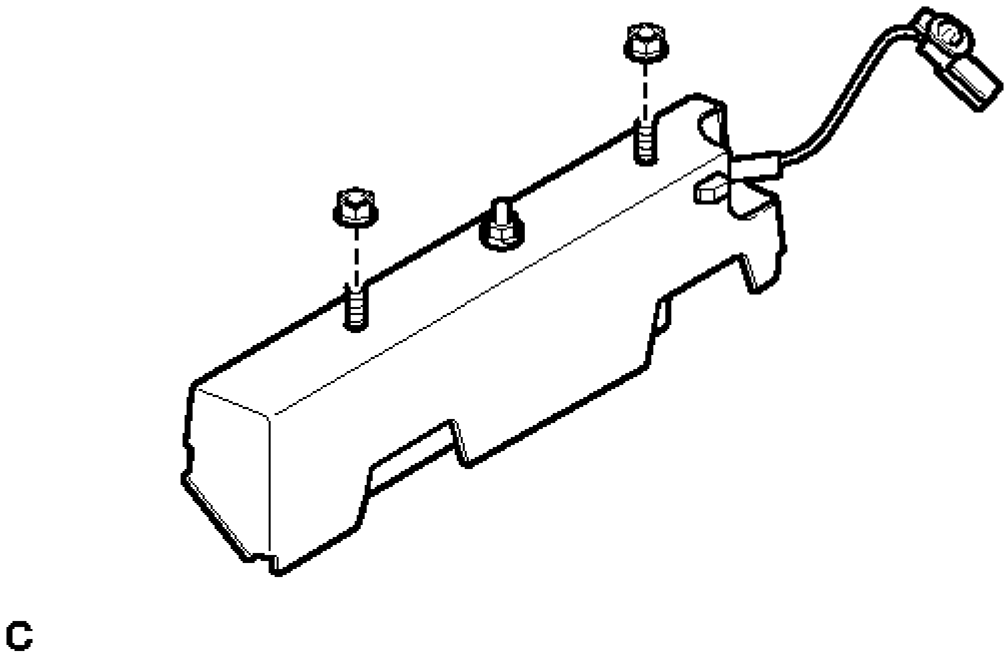

Fig. 152: Locating Rear Seat Airbag Assembly Fasteners
Courtesy of TOYOTA MOTOR SALES, U.S.A., INC.

2. Wind the wires around the stud bolts of the rear seat airbag assembly as shown in the illustration.

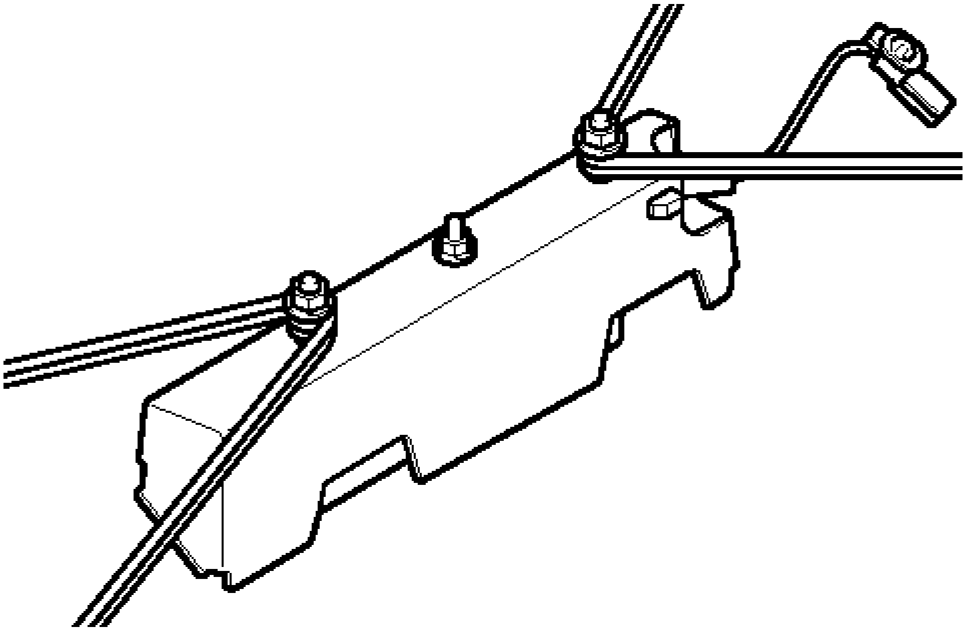

Fig. 153: Identifying Wires Around Stud Bolts
Courtesy of TOYOTA MOTOR SALES, U.S.A., INC.

3. Position the rear seat airbag assembly inside the tire.

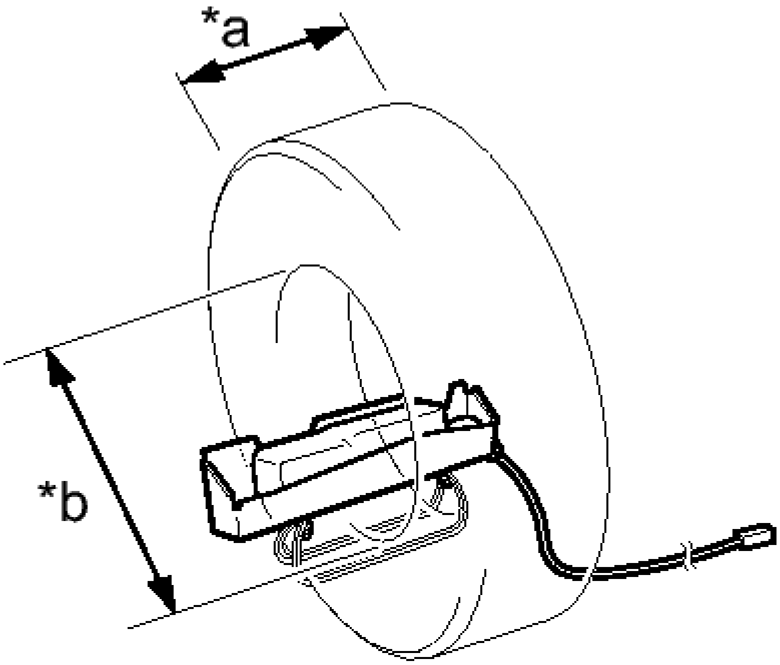

Fig. 154: View Of Rear Seat Airbag Assembly Positioned Inside The Tire
Courtesy of TOYOTA MOTOR SALES, U.S.A., INC.

TEXT IN ILLUSTRATION

*a	Width
*b	Inner Diameter

Minimum tire size

Width

185 mm (7.28 in.)

Inner diameter

360 mm (1.18 ft.)

WARNING:

- **Make sure that the wires are tight. If there is slack in the wires, the rear seat airbag assembly may break loose when the airbag is deployed.**
- **Face the rear seat airbag assembly deployment surface toward the inside the tire to evenly distribute the force of deployment.**

NOTE: **The tire may be marked by the airbag deployment, so use an unneeded tire.**

d. Install SST.
    1. Connect the SST connector to the rear seat airbag assembly connector.
        - **SST: 09082-00820**

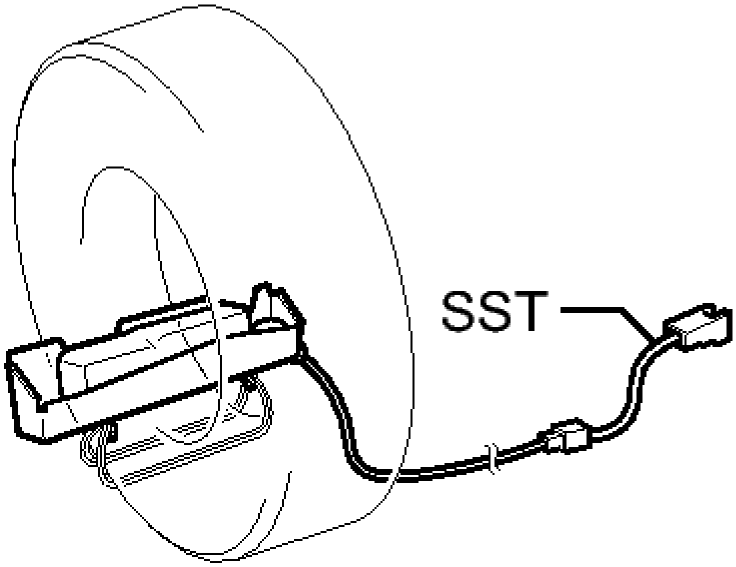

Fig. 155: View Of SST Connected To Rear Seat Airbag Assembly In Tire
Courtesy of TOYOTA MOTOR SALES, U.S.A., INC.

e. Place the tires.
    1. Place at least 2 tires under the tire to which the rear seat airbag assembly is tied.

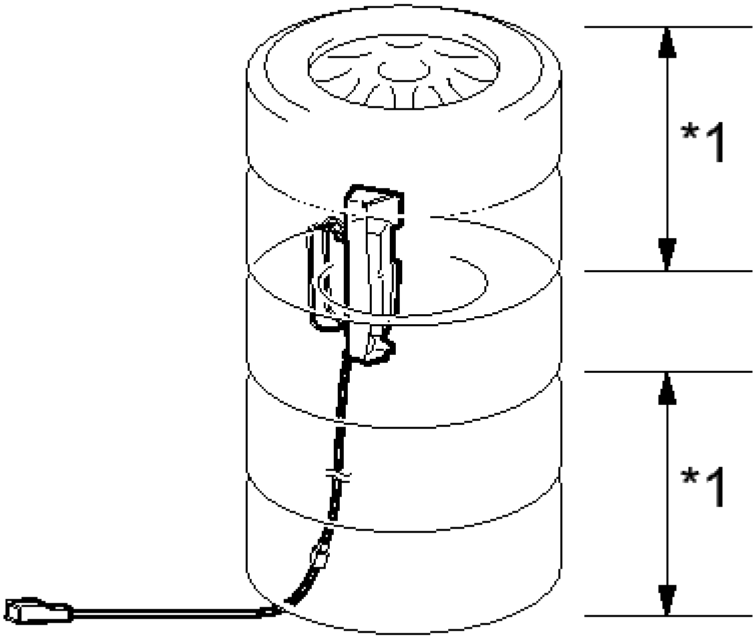

Fig. 156: Identifying Rear Seat Airbag Assembly Inside Tires

Courtesy of TOYOTA MOTOR SALES, U.S.A., INC.

TEXT IN ILLUSTRATION

*1	Tires (2 or more)

NOTE: **Do not place the SST connector under the tire because it could be damaged.**

2. Place at least 2 tires onto the tire to which the rear seat airbag assembly is tied. The top tire should have a wheel installed.
3. Tie the tires together with the 2 wires.

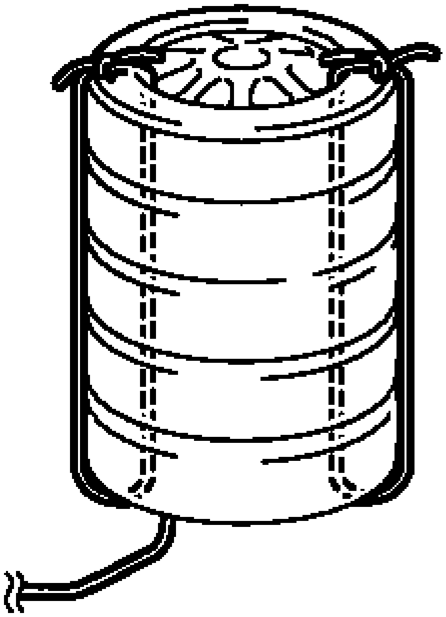

Fig. 157: Identifying Tires Tied Together With Wires
Courtesy of TOYOTA MOTOR SALES, U.S.A., INC.

WARNING: **Make sure that the wires are tight. Looseness in the wires results in the tires breaking loose when the airbag is deployed.**

f. Install SST.
    1. Connect the SST connector.
        - **SST: 09082-00700**

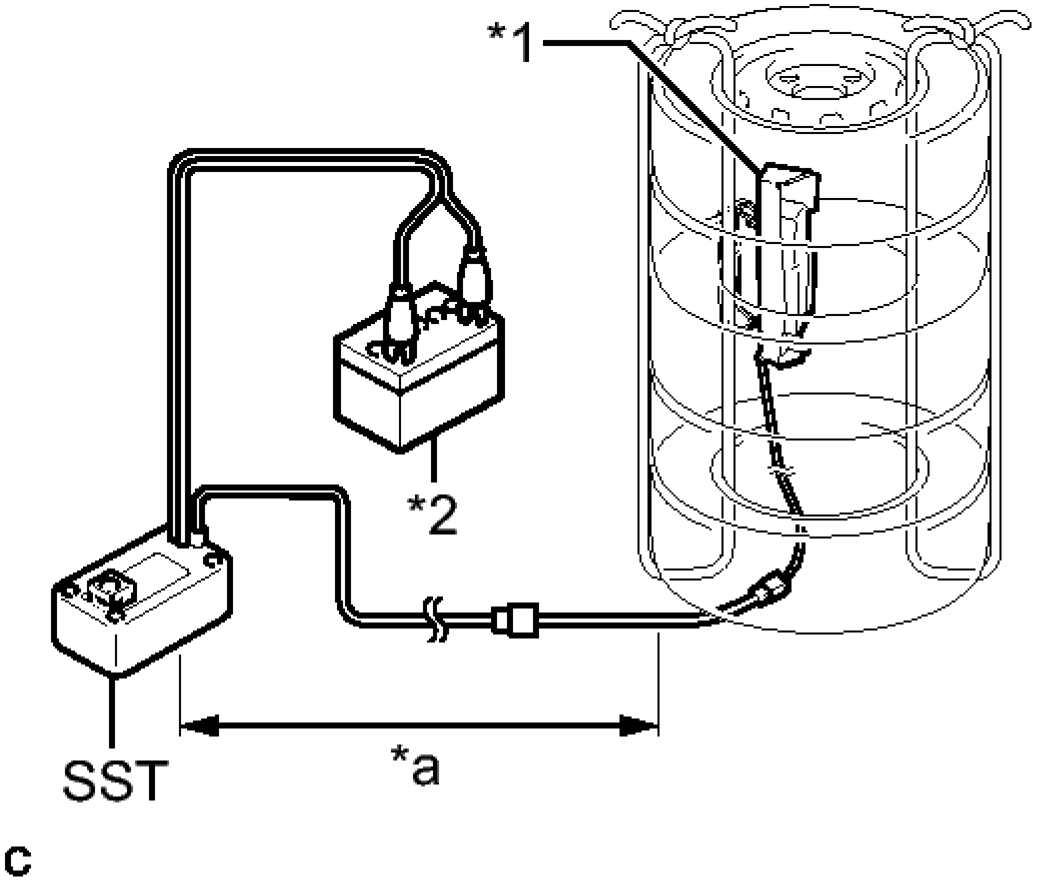

Fig. 158: Identifying SST Distance From Rear Seat Airbag Assembly In Tires
Courtesy of TOYOTA MOTOR SALES, U.S.A., INC.

TEXT IN ILLUSTRATION

*1	Rear Seat Airbag Assembly
*2	Battery
*a	10 m (32.8 ft.) or more

NOTE: To avoid damaging the SST connector or wire harness, do not lock the secondary lock of the twin lock. Also, secure some slack for the SST wire harness inside the tire.

    2. Move SST at least 10 m (32.8 ft.) away from the airbag tied down to the tire.

g. Deploy the airbag.
    1. Connect the red clip of SST to the positive (+) battery terminal and the black clip of SST to the negative (-) battery terminal.
    2. Check that no one is within a 10 m (32.8 ft.) radius of the tire to which the rear seat airbag assembly is tied.
    3. Press the SST activation switch and deploy the airbag.

WARNING: **Before deployment, make sure that no one is near the airbag.**

HINT:

The airbag is deployed as the LED of the SST activation switch comes on.

h. Dispose of the rear seat airbag assembly.

WARNING:

- **The rear seat airbag assembly becomes extremely hot when the airbag is deployed, so do not touch it for at least 30 minutes after deployment.**
- **Use gloves and safety glasses when handling a rear seat airbag assembly with a deployed airbag.**
- **Do not apply water etc. to a rear seat airbag assembly with a deployed airbag.**
- **Always wash your hands with water after completing the operation.**

    1. Remove the rear seat airbag assembly from the tire.
    2. Place the rear seat airbag assembly in a plastic bag, tie it tightly, and dispose of it according to local regulations.

CENTER AIRBAG SENSOR ASSEMBLY

COMPONENTS

ILLUSTRATION

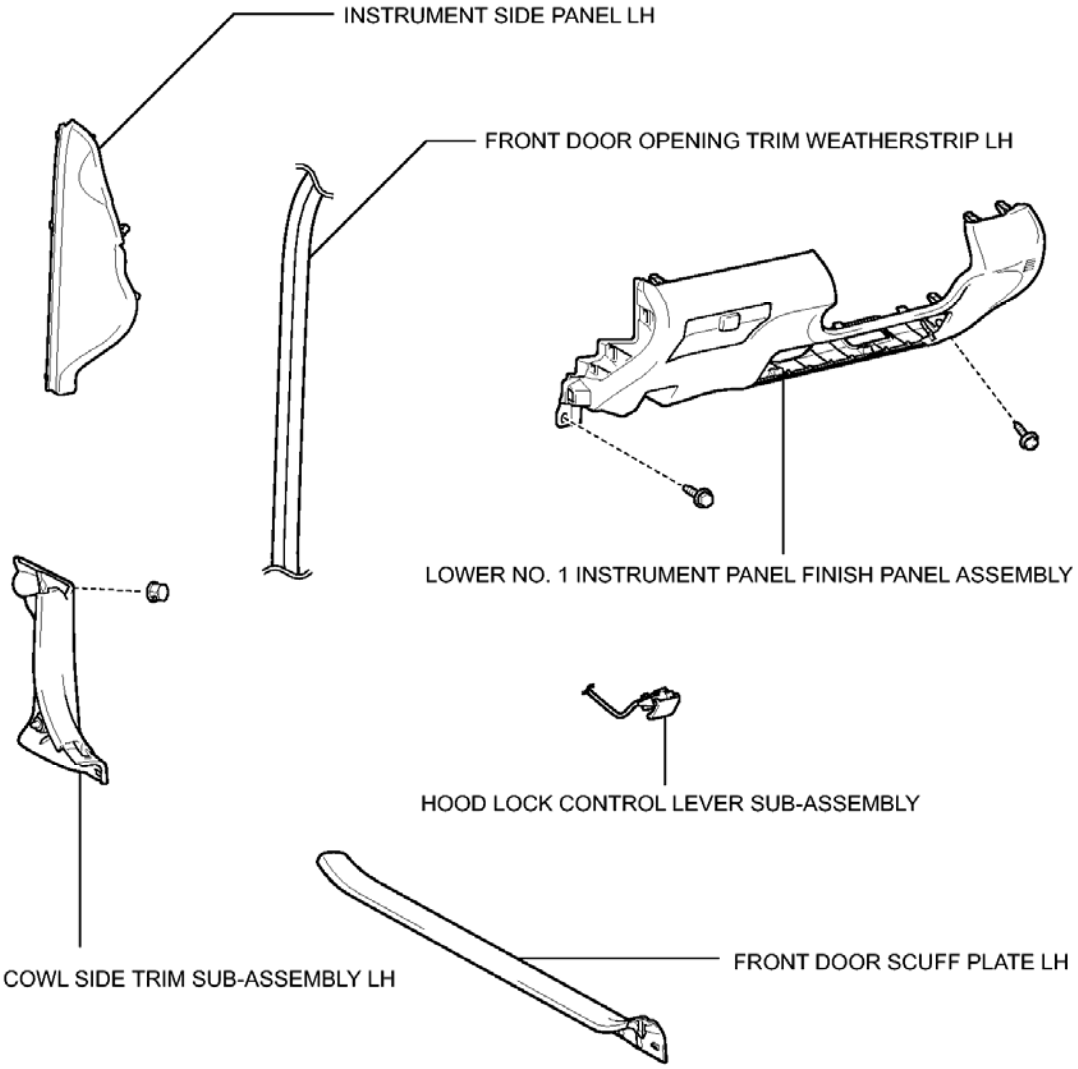
INSTRUMENT SIDE PANEL LH
FRONT DOOR OPENING TRIM WEATHERSTRIP LH
LOWER NO. 1 INSTRUMENT PANEL FINISH PANEL ASSEMBLY
HOOD LOCK CONTROL LEVER SUB-ASSEMBLY
COWL SIDE TRIM SUB-ASSEMBLY LH
FRONT DOOR SCUFF PLATE LH
c

Fig. 159: Identifying Center Airbag Sensor Assembly Replacement Components (1 Of 2)
Courtesy of TOYOTA MOTOR SALES, U.S.A., INC.

ILLUSTRATION

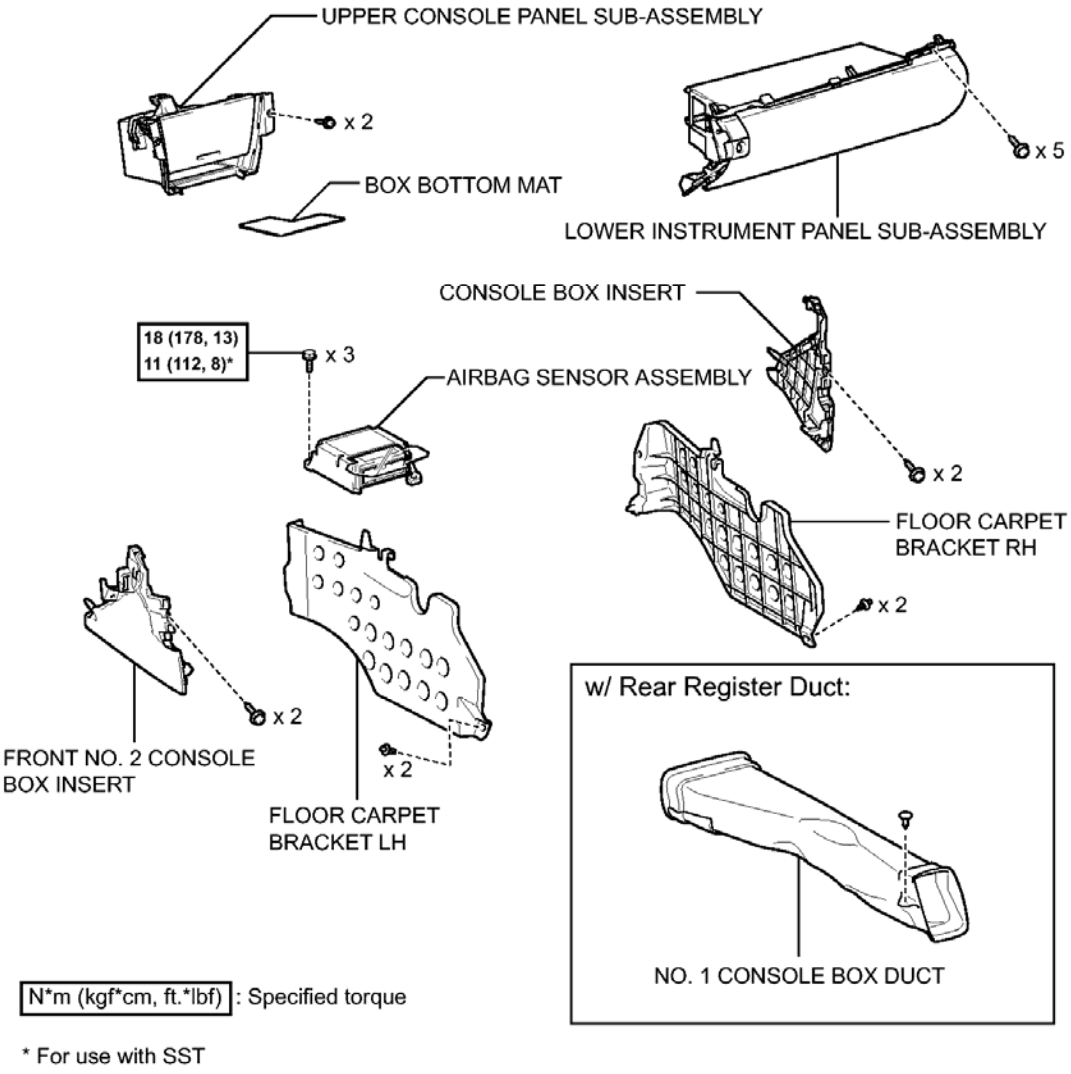
UPPER CONSOLE PANEL SUB-ASSEMBLY
x 2
BOX BOTTOM MAT
x 5
LOWER INSTRUMENT PANEL SUB-ASSEMBLY
CONSOLE BOX INSERT
18 (178, 13)
11 (112, 8)*
x 3
AIRBAG SENSOR ASSEMBLY
x 2
FLOOR CARPET BRACKET RH
x 2
w/ Rear Register Duct:
x 2
FRONT NO. 2 CONSOLE BOX INSERT
x 2
FLOOR CARPET BRACKET LH
NO. 1 CONSOLE BOX DUCT
N*m (kgf*cm, ft.*lbf) : Specified torque
* For use with SST

Fig. 160: Identifying Center Airbag Sensor Assembly Replacement Components With Torque Specifications (2 Of 2)
Courtesy of TOYOTA MOTOR SALES, U.S.A., INC.

ON-VEHICLE INSPECTION

ON-VEHICLE INSPECTION

WARNING: **Be sure to correctly follow the removal and installation procedures for the airbag sensor assembly.**

1. **INSPECT AIRBAG SENSOR ASSEMBLY (for Vehicle not Involved in Collision)**

a. Perform a diagnostic system check.

   For Separate Type Yaw Rate Sensor: Refer to **DTC CHECK / CLEAR** .

   For Built-In Type Yaw Rate Sensor: Refer to **DTC CHECK / CLEAR** .

2. **INSPECT AIRBAG SENSOR ASSEMBLY (for Vehicle Involved in Collision and Airbag not Deployed)**
   a. Perform a diagnostic system check.

      For Separate Type Yaw Rate Sensor: Refer to **DTC CHECK / CLEAR** .

      For Built-In Type Yaw Rate Sensor: Refer to **DTC CHECK / CLEAR** .

   b. Visually check for defects with the airbag sensor assembly installed on the vehicle.
      1. The defects are as follows:
         - Cracks on the sensor housing
         - Dents on the sensor housing
         - Chips on the sensor housing
         - Cracks or other damage to the connector
         - Peeling of the label

         OK

         No defects are found.

         If any of the defects is found, replace the airbag sensor assembly with a new one.

3. **INSPECT AIRBAG SENSOR ASSEMBLY (for Vehicle Involved in Collision and Airbag is Deployed)**
   a. Replace the airbag sensor assembly.

      HINT:

      The airbag sensor assembly should be replaced after any of the airbags has deployed, as it has been subjected to an impact.

REMOVAL

REMOVAL

1. **REMOVE LOWER NO. 2 INSTRUMENT PANEL AIRBAG ASSEMBLY**

   Refer to **REMOVAL**.

2. **REMOVE REAR CONSOLE BOX ASSEMBLY**

   Refer to **REMOVAL** .

3. **REMOVE FRONT DOOR SCUFF PLATE LH** . Refer to **REMOVAL - Step 3** .
4. **REMOVE COWL SIDE TRIM SUB-ASSEMBLY LH** . Refer to **REMOVAL - Step 4** .
5. **DISCONNECT FRONT DOOR OPENING TRIM WEATHERSTRIP LH**

   HINT:

   Disconnect the front door opening trim weatherstrip LH to the extent that allows the removal of the instrument side panel LH.

6. **REMOVE INSTRUMENT SIDE PANEL LH** . Refer to **REMOVAL - Step 6** .
7. **DISCONNECT HOOD LOCK CONTROL LEVER SUB-ASSEMBLY** . Refer to **REMOVAL - Step 12** .
8. **REMOVE LOWER NO. 1 INSTRUMENT PANEL FINISH PANEL ASSEMBLY** . Refer to **REMOVAL - Step 13** .
9. **REMOVE LOWER INSTRUMENT PANEL SUB-ASSEMBLY** . Refer to **REMOVAL - Step 38** .
10. **REMOVE BOX BOTTOM MAT** . Refer to **REMOVAL - Step 25** .
11. **REMOVE UPPER CONSOLE PANEL SUB-ASSEMBLY** . Refer to **REMOVAL - Step 26** .
12. **REMOVE FRONT NO. 2 CONSOLE BOX INSERT** . Refer to **REMOVAL - Step 48** .
13. **REMOVE CONSOLE BOX INSERT** . Refer to **REMOVAL - Step 49** .
14. **REMOVE FLOOR CARPET BRACKET LH** . Refer to **REMOVAL - Step 31** .
15. **REMOVE FLOOR CARPET BRACKET RH** . Refer to **REMOVAL - Step 34** .
16. **REMOVE NO. 1 CONSOLE BOX DUCT (w/ Rear Register Duct)** . Refer to **REMOVAL - Step 36** .
17. **REMOVE AIRBAG SENSOR ASSEMBLY**
    a. Check that the ignition switch is off.
    b. Check that the cable is disconnected from the negative (-) battery terminal.

    WARNING: **Wait at least 90 seconds after disconnecting the cable from the negative (-) battery terminal to disable the SRS system.**

    c. Turn back the carpet.
    d. Disconnect the connectors from the airbag sensor assembly as shown in the illustration.

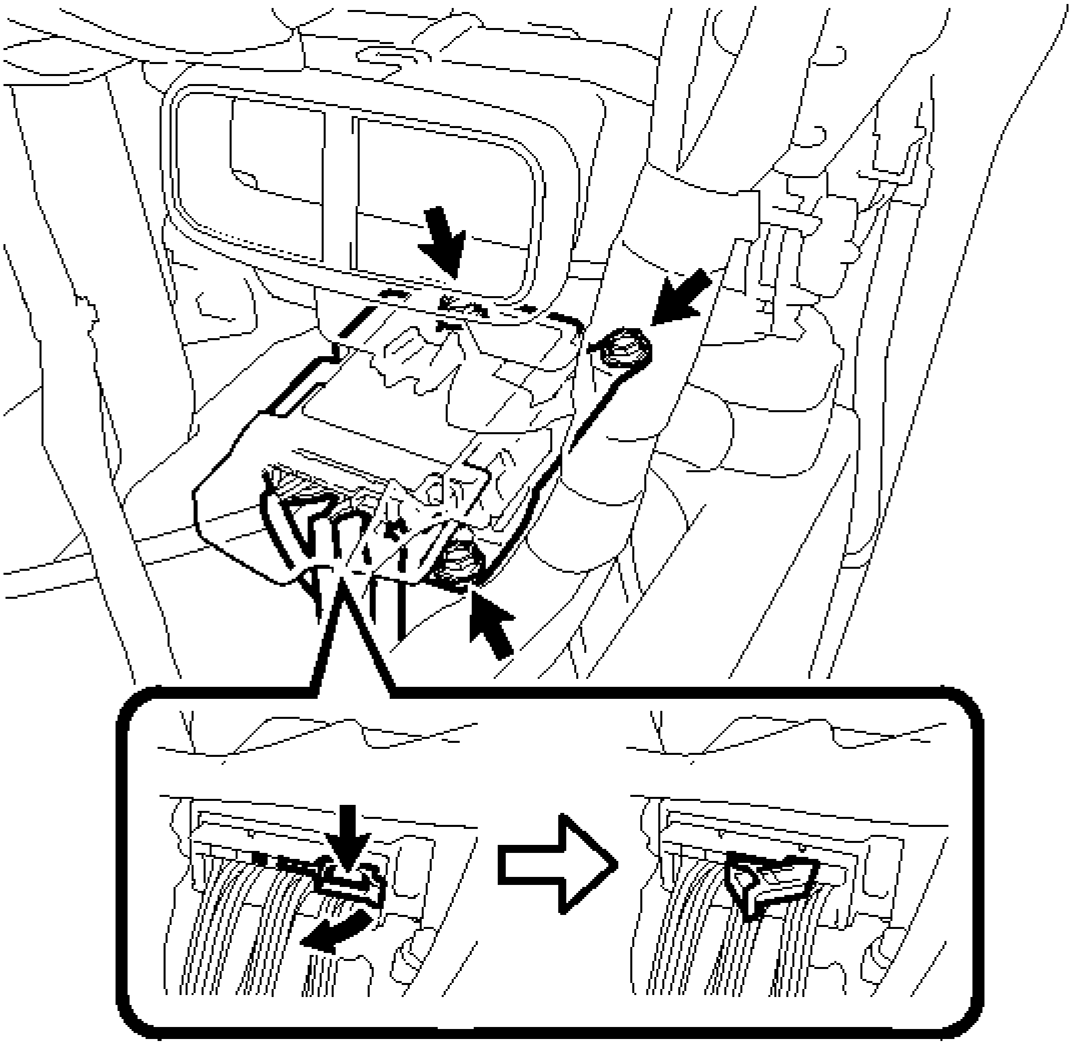

Fig. 161: Disconnecting Airbag Sensor Assembly Connectors And Fasteners
Courtesy of TOYOTA MOTOR SALES, U.S.A., INC.

NOTE: **When disconnecting any airbag connector, take care not to damage the airbag wire harness.**

e. Remove the 3 bolts and airbag sensor assembly.

INSTALLATION

INSTALLATION

1. **INSTALL AIRBAG SENSOR ASSEMBLY**
    a. Check that the ignition switch is off.
    b. Check that the cable is disconnected from the negative (-) battery terminal.

WARNING: **Wait at least 90 seconds after disconnecting the cable from the negative (-) battery terminal to disable the SRS system.**

c. Using SST, install the airbag sensor assembly with the 3 bolts.

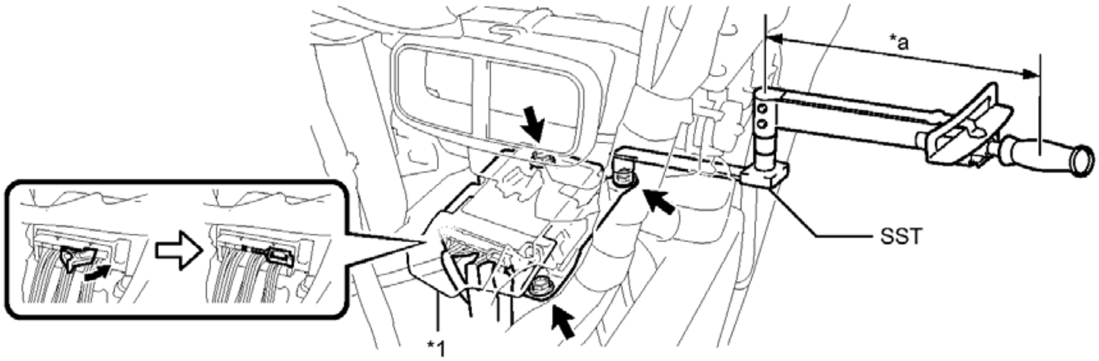

c

Fig. 162: Connecting Airbag Sensor Assembly Connectors And Fasteners Using SST
Courtesy of TOYOTA MOTOR SALES, U.S.A., INC.

- **SST: 09961-00950**

TEXT IN ILLUSTRATION

*1	Waterproof Sheet	-	-
*a	Fulcrum Length	-	-

without SST

Torque: 18 N*m (178 kgf*cm, 13 ft.*lbf)

with SST

Torque: 11 N*m (112 kgf*cm, 8 ft.*lbf)

NOTE:

- **Use a torque wrench with a fulcrum length of 250 mm (9.84 in.).**
- **This torque value is effective when SST is parallel to a torque wrench.**
- **If the airbag sensor assembly has been dropped, or there are any cracks, dents or other defects in the case or connector, replace it with a new one.**
- **When installing the airbag sensor assembly, be careful that the SRS wiring does not interfere with or is not pinched between**

other parts.

- **When the ignition switch is first turned on (IG) after the airbag sensor assembly has been replaced, make sure that no one is in the vehicle.**

d. Connect the connectors to the airbag sensor assembly as shown in the illustration.

NOTE: **When connecting any airbag connector, take care not to damage the airbag wire harness.**

e. Check that the waterproof sheet is properly set.

f. Check that there is no looseness in the installation parts of the airbag sensor assembly.

2. **INSTALL NO. 1 CONSOLE BOX DUCT (w/ Rear Register Duct)** . Refer to **INSTALLATION - Step 8** .
3. **INSTALL FLOOR CARPET BRACKET LH** . Refer to **INSTALLATION - Step 10** .
4. **INSTALL FLOOR CARPET BRACKET RH** . Refer to **INSTALLATION - Step 14** .
5. **INSTALL FRONT NO. 2 CONSOLE BOX INSERT** . Refer to **INSTALLATION - Step 5** .
6. **INSTALL CONSOLE BOX INSERT** . Refer to **INSTALLATION - Step 4** .
7. **INSTALL UPPER CONSOLE PANEL SUB-ASSEMBLY** . Refer to **INSTALLATION - Step 27** .
8. **INSTALL BOX BOTTOM MAT** . Refer to **INSTALLATION - Step 28** .
9. **INSTALL LOWER INSTRUMENT PANEL SUB-ASSEMBLY** . Refer to **INSTALLATION - Step 15** .
10. **INSTALL LOWER NO. 1 INSTRUMENT PANEL FINISH PANEL ASSEMBLY** . Refer to **INSTALLATION - Step 40** .
11. **CONNECT HOOD LOCK CONTROL LEVER SUB-ASSEMBLY** . Refer to **INSTALLATION - Step 41** .
12. **INSTALL INSTRUMENT SIDE PANEL LH** . Refer to **INSTALLATION - Step 47** .
13. **INSTALL FRONT DOOR OPENING TRIM WEATHERSTRIP LH**
14. **INSTALL COWL SIDE TRIM SUB-ASSEMBLY LH** . Refer to **INSTALLATION - Step 43** .
15. **INSTALL FRONT DOOR SCUFF PLATE LH** . Refer to **INSTALLATION - Step 44** .
16. **INSTALL REAR CONSOLE BOX ASSEMBLY**

    Refer to **INSTALLATION** .

17. **INSTALL LOWER NO. 2 INSTRUMENT PANEL AIRBAG ASSEMBLY**

    Refer to **INSTALLATION**.

FRONT AIRBAG SENSOR

COMPONENTS

ILLUSTRATION

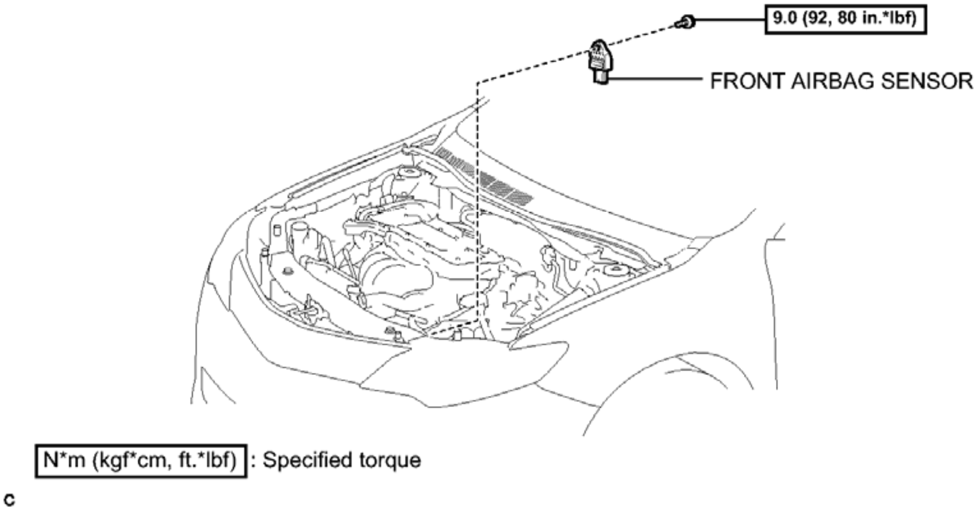

Fig. 163: Identifying Front Airbag Sensor Replacement Components With Torque Specifications
Courtesy of TOYOTA MOTOR SALES, U.S.A., INC.

ON-VEHICLE INSPECTION

ON-VEHICLE INSPECTION

WARNING: **Be sure to correctly follow the removal and installation procedures for the front airbag sensors.**

1. **INSPECT FRONT AIRBAG SENSOR (for Vehicle not Involved in Collision)**
   a. Perform a diagnostic system check.

      For Separate Type Yaw Rate Sensor: Refer to **DTC CHECK / CLEAR** .

      For Built-In Type Yaw Rate Sensor: Refer to **DTC CHECK / CLEAR** .

2. **INSPECT FRONT AIRBAG SENSOR (for Vehicle Involved in Collision and Airbag not Deployed)**
   a. Perform a diagnostic system check.

      For Separate Type Yaw Rate Sensor: Refer to **DTC CHECK / CLEAR** .

      For Built-In Type Yaw Rate Sensor: Refer to **DTC CHECK / CLEAR** .

   b. Visually check the front airbag sensors for defects if the front bumper of the vehicle or the area around the bumper is damaged.

HINT:

The defects are as follows:

- Cracks on the sensor housing
- Dents on the sensor housing
- Chips on the sensor housing
- Cracks or other damage to the connector
- Damage to the serial number

OK

No defects are found.

If any of the defects is found, replace the front airbag sensor with a new one.

3. **INSPECT FRONT AIRBAG SENSOR (for Vehicle Involved in Collision and Airbag is Deployed)**
   a. When airbags have deployed as the result of a collision, be sure to replace all front airbag sensors in the damaged areas (anywhere in need of repair).
   b. Visually check the front airbag sensors in undamaged areas for defects.

HINT:

The defects are as follows:

- Cracks on the sensor housing
- Dents on the sensor housing
- Chips on the sensor housing
- Cracks or other damage to the connector
- Damage to the serial number

OK

No defects are found.

If any of the defects is found or a front airbag sensor has detected a major collision, replace the front airbag sensor with a new one.

REMOVAL

REMOVAL

HINT:

- Use the same procedure for the RH side and LH side.

- The procedure listed below is for the LH side.

1. **PRECAUTION**

WARNING: Be sure to read Precaution thoroughly before servicing.

For Separate Type Yaw Rate Sensor: Refer to PRECAUTION .

For Built-In Type Yaw Rate Sensor: Refer to PRECAUTION .

NOTE: After turning the ignition switch off, waiting time may be required before disconnecting the cable from the negative (-) battery terminal. Therefore, make sure to read the disconnecting the cable from the negative (-) battery terminal notices before proceeding with work. Refer to PRECAUTION .

2. **DISCONNECT CABLE FROM NEGATIVE BATTERY TERMINAL**

WARNING: Wait at least 90 seconds after disconnecting the cable from the negative (-) battery terminal to disable the SRS system.

NOTE: When disconnecting the cable, some systems need to be initialized after the cable is reconnected. Refer to INITIALIZATION .

3. **REMOVE FRONT AIRBAG SENSOR**
   a. Check that the ignition switch is off.
   b. Check that the cable is disconnected from the negative (-) battery terminal.

   WARNING: Wait at least 90 seconds after disconnecting the cable from the negative (-) battery terminal to disable the SRS system.

   c. Disconnect the connector from the front airbag sensor.

   NOTE: When disconnecting any airbag connector, take care not to damage the airbag wire harness.

      1. Push down the white housing lock and slide the yellow CPA. (At this time, the connector cannot be disconnected yet.)

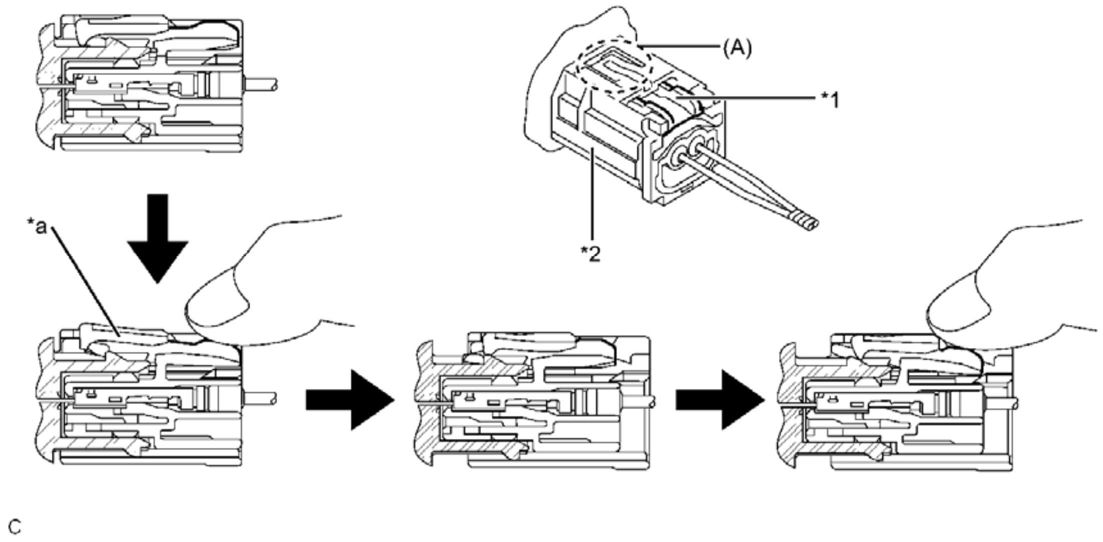

Fig. 164: Sliding Yellow CPA
Courtesy of TOYOTA MOTOR SALES, U.S.A., INC.

TEXT IN ILLUSTRATION

*1	White Housing Lock	*2	Yellow CPA
*a	Connector Lock is Released	-	-

2. Push down the white housing lock again and disconnect the connector.

NOTE: **Do not push down the part (A) shown in the illustration when disconnecting.**

d. Remove the bolt and front airbag sensor from the vehicle body.

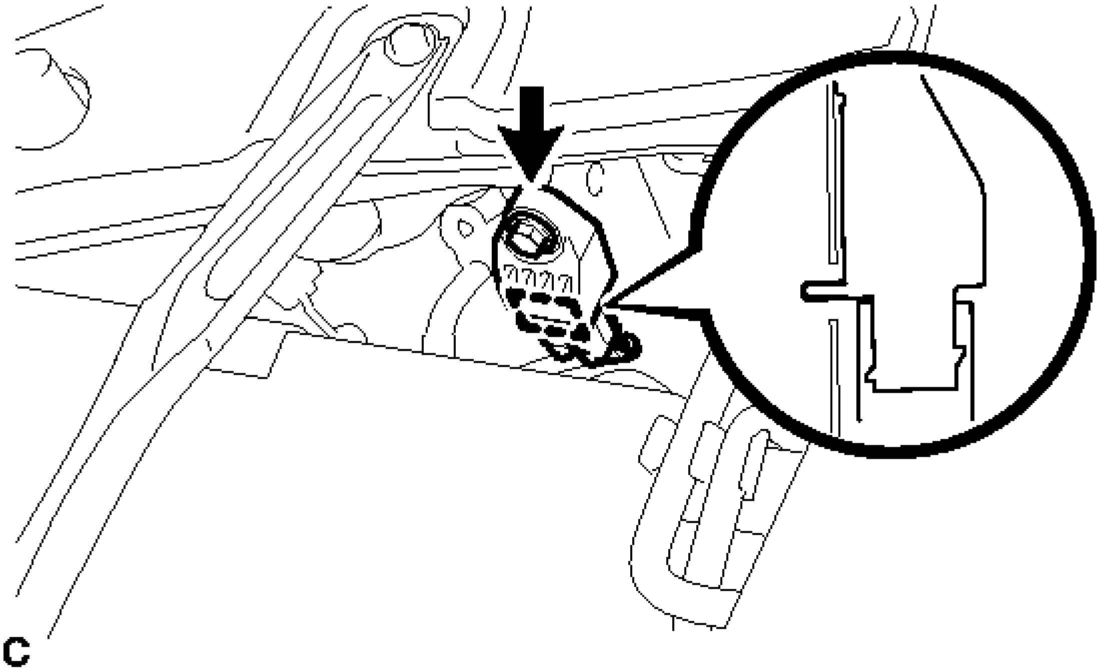

Fig. 165: Identifying Front Airbag Sensor Clip And Bolt
Courtesy of TOYOTA MOTOR SALES, U.S.A., INC.

NOTE: **Loosen the bolt while holding the front airbag sensor because the front airbag sensor pin (stopper) is easily damaged.**

e. After disconnecting the connector, check that the position of the white housing lock is correct as shown in the illustration.

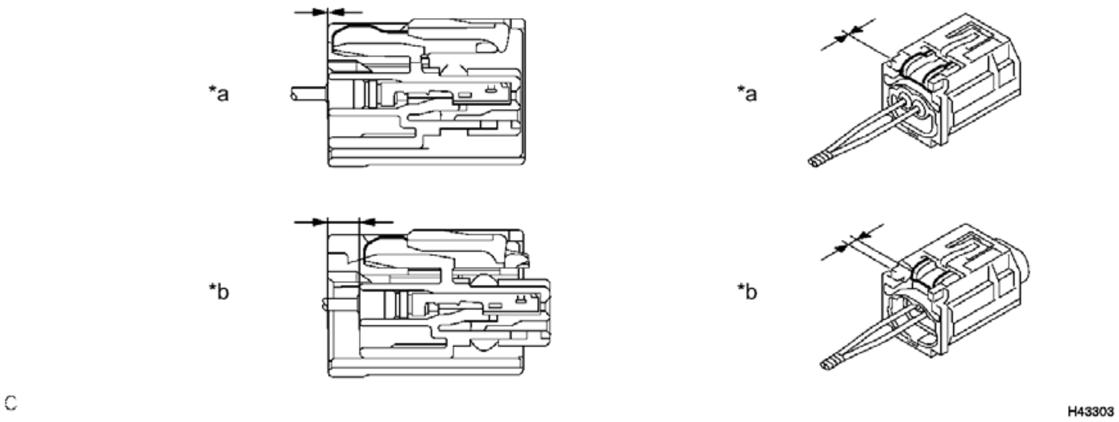

Fig. 166: Identifying Correct Housing Lock Position
Courtesy of TOYOTA MOTOR SALES, U.S.A., INC.

TEXT IN ILLUSTRATION

*a	Incorrect	*b	Correct

INSTALLATION

INSTALLATION

HINT:

- Use the same procedure for the RH side and LH side.
- The procedure listed below is for the LH side.

1. **INSTALL FRONT AIRBAG SENSOR**
   a. Check that the ignition switch is off.
   b. Check that the cable is disconnected from the negative (-) battery terminal.

   WARNING: **Wait at least 90 seconds after disconnecting the cable from the negative (-) battery terminal to disable the SRS system.**

   c. Before connecting the connector, check that the position of the white housing lock is correct as shown in the illustration.

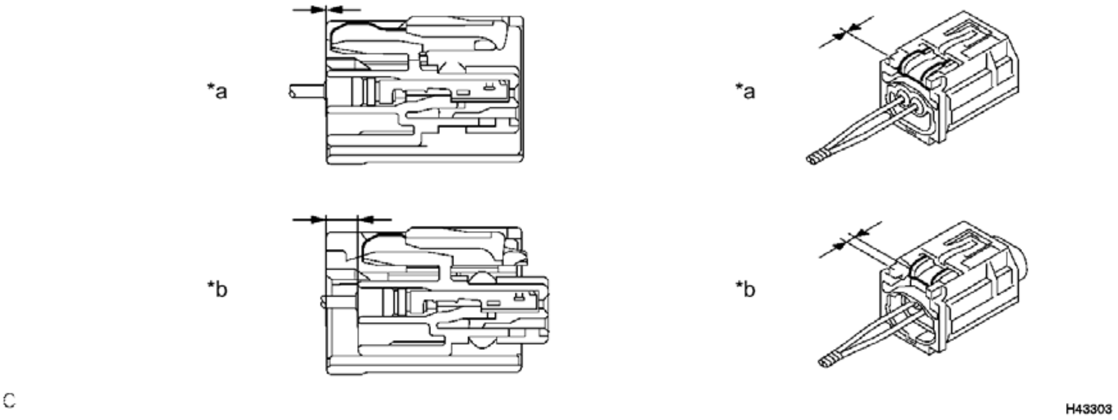

Fig. 167: Identifying Correct Housing Lock Position
Courtesy of TOYOTA MOTOR SALES, U.S.A., INC.

TEXT IN ILLUSTRATION

*a	Incorrect	*b	Correct

   d. Insert the pin (stopper) into the body hole and install the front airbag sensor to the vehicle body with the bolt.

Torque: 9.0 N*m (92 kgf*cm, 80 in.*lbf)

NOTE:

- **If the front airbag sensor has been dropped, or there are any cracks, dents or other defects in the case or connector, replace it with a new one.**

- **When installing the front airbag sensor, be careful that the SRS wiring does not interfere with or is not pinched between other parts.**
- **Make sure that the pin (stopper) is securely inserted into the body hole.**
- **Tighten the bolt while holding the front airbag sensor because the front airbag sensor pin (stopper) is easily damaged.**

e. Connect the connector to the front airbag sensor.

NOTE: **When connecting any airbag connector, take care not to damage the airbag wire harness.**

1. Be sure to engage the connectors until they are locked (when locking, make sure that a click sound can be heard).

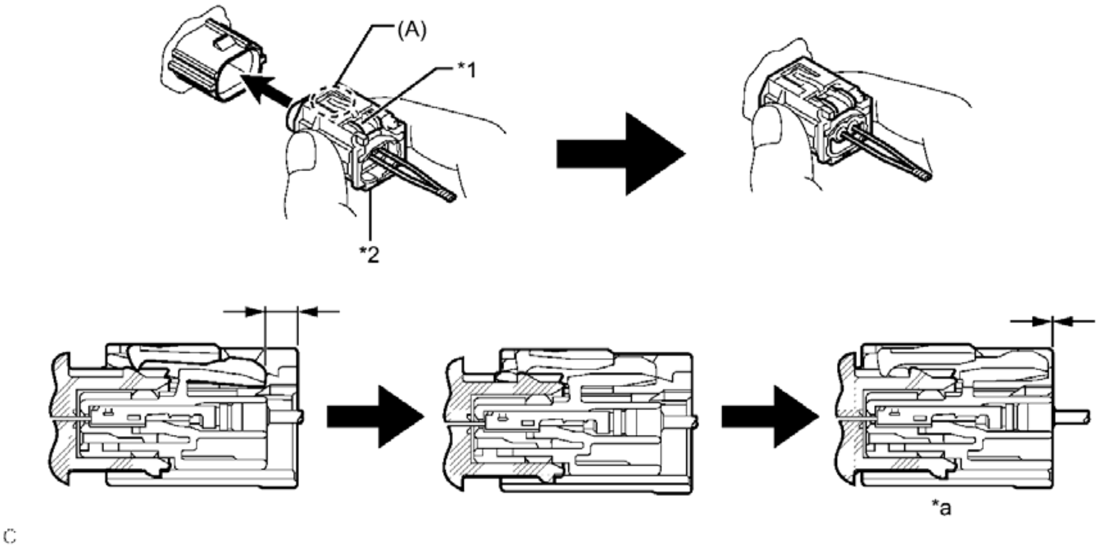

Fig. 168: Identifying Housing Lock, CPA & Completed Connection
Courtesy of TOYOTA MOTOR SALES, U.S.A., INC.

TEXT IN ILLUSTRATION

*1	White Housing Lock	*2	Yellow CPA
*a	Connection is Completed	-	-

HINT:

When engaged, the white housing lock will slide. Be sure not to hold the white housing lock and part (A), as it may result in an insecure fit.

f. Check that there is no looseness in the installation parts of the front airbag sensor.

2. **CONNECT CABLE TO NEGATIVE BATTERY TERMINAL**

NOTE: **When disconnecting the cable, some systems need to be initialized after the cable is reconnected. Refer to INITIALIZATION .**

3. **PERFORM DIAGNOSTIC SYSTEM CHECK**

For Separate Type Yaw Rate Sensor: Refer to **DTC CHECK / CLEAR** .

For Built-In Type Yaw Rate Sensor: Refer to **DTC CHECK / CLEAR** .

4. **INSPECT SRS WARNING LIGHT**

For Separate Type Yaw Rate Sensor: Refer to **DIAGNOSIS SYSTEM** .

For Built-In Type Yaw Rate Sensor: Refer to **DIAGNOSIS SYSTEM** .

SIDE AIRBAG SENSOR (FOR FRONT SIDE)

COMPONENTS

ILLUSTRATION

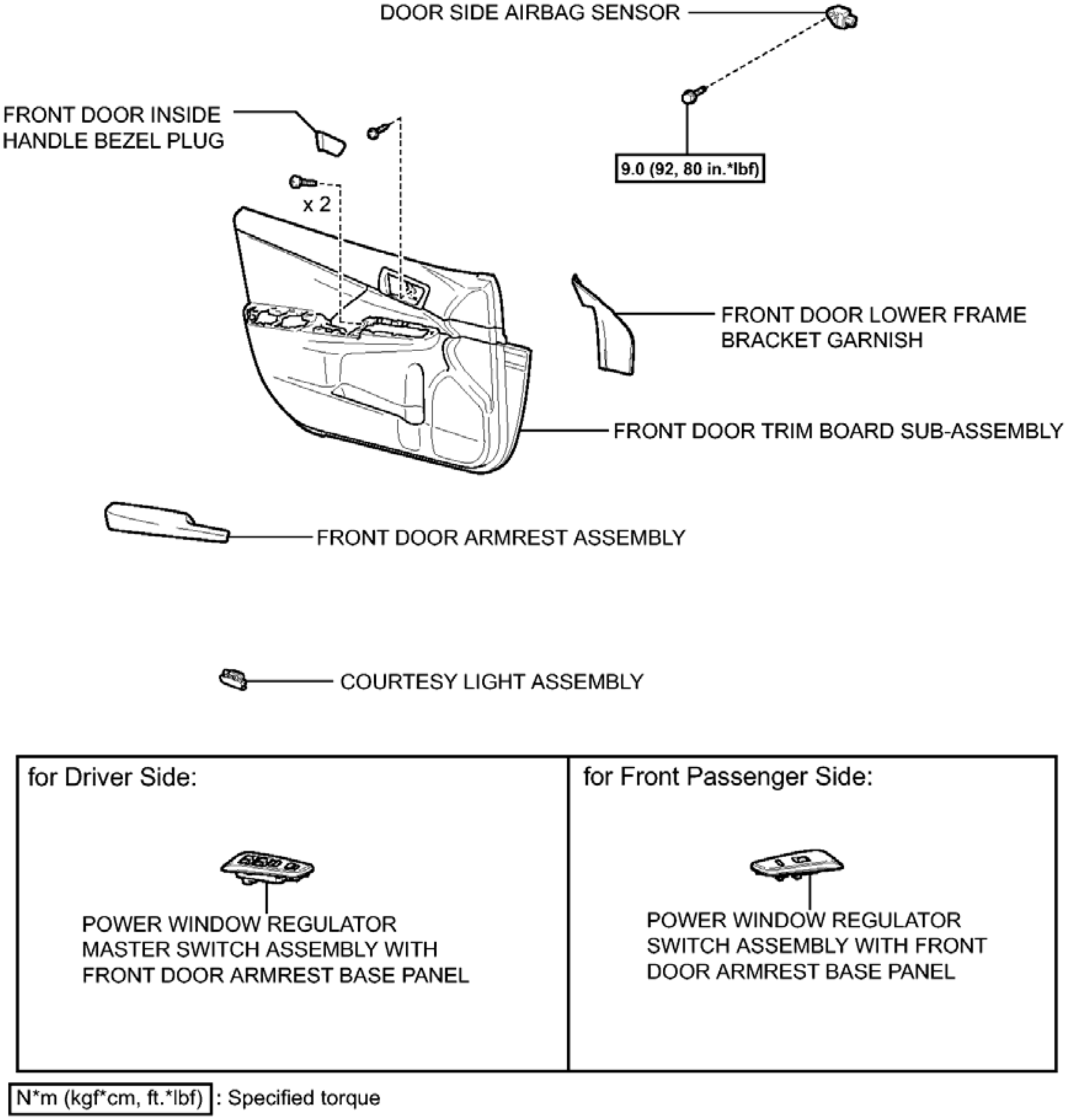
DOOR SIDE AIRBAG SENSOR
FRONT DOOR INSIDE HANDLE BEZEL PLUG
9.0 (92, 80 in.*lbf)
x 2
FRONT DOOR LOWER FRAME BRACKET GARNISH
FRONT DOOR TRIM BOARD SUB-ASSEMBLY
FRONT DOOR ARMREST ASSEMBLY
COURTESY LIGHT ASSEMBLY
for Driver Side:
POWER WINDOW REGULATOR MASTER SWITCH ASSEMBLY WITH FRONT DOOR ARMREST BASE PANEL
for Front Passenger Side:
POWER WINDOW REGULATOR SWITCH ASSEMBLY WITH FRONT DOOR ARMREST BASE PANEL
N*m (kgf*cm, ft.*lbf) : Specified torque

Fig. 169: Identifying Side Airbag Sensor (For Front Side) Replacement Components With Torque Specifications
Courtesy of TOYOTA MOTOR SALES, U.S.A., INC.

ON-VEHICLE INSPECTION

ON-VEHICLE INSPECTION

WARNING: Be sure to correctly follow the removal and installation procedures for the door side airbag sensors.

1. **INSPECT DOOR SIDE AIRBAG SENSOR (for Vehicle not Involved in Collision)**
    1. Perform a diagnostic system check.

       For Separate Type Yaw Rate Sensor: Refer to **DTC CHECK / CLEAR** .

       For Built-In Type Yaw Rate Sensor: Refer to **DTC CHECK / CLEAR** .

2. **INSPECT DOOR SIDE AIRBAG SENSOR (for Vehicle Involved in Collision and Airbag not Deployed)**
    1. Perform a diagnostic system check.

       For Separate Type Yaw Rate Sensor: Refer to **DTC CHECK / CLEAR** .

       For Built-In Type Yaw Rate Sensor: Refer to **DTC CHECK / CLEAR** .

    2. Visually check the door side airbag sensors for defects if a front door of the vehicle or the area around a front door is damaged.

       HINT:

       The defects are as follows:

       - Cracks on the sensor housing
       - Dents on the sensor housing
       - Chips on the sensor housing
       - Cracks or other damage to the connector
       - Damage to the serial number

       OK

       No defects are found.

       If any of the defects is found, replace the door side airbag sensor with a new one.

3. **INSPECT DOOR SIDE AIRBAG SENSOR (for Vehicle Involved in Collision and Airbag is Deployed)**
    1. When airbags have deployed as the result of a collision, be sure to replace all door side airbag sensors in the damaged areas (anywhere in need of repair).
    2. Visually check the door side airbag sensors in undamaged areas for defects.

       HINT:

The defects are as follows:

- Cracks on the sensor housing
- Dents on the sensor housing
- Chips on the sensor housing
- Cracks or other damage to the connector
- Damage to the serial number

OK

No defects are found.

If any of the defects is found or a door side airbag sensor has detected a major collision, replace the door side airbag sensor with a new one.

REMOVAL

REMOVAL

HINT:

- Use the same procedure for the RH side and LH side.
- The procedure listed below is for the LH side.

1. **PRECAUTION**

WARNING: **Be sure to read Precaution thoroughly before servicing.**

For Separate Type Yaw Rate Sensor: Refer to PRECAUTION .

For Built-In Type Yaw Rate Sensor: Refer to PRECAUTION .

NOTE: **After turning the ignition switch off, waiting time may be required before disconnecting the cable from the negative (-) battery terminal. Therefore, make sure to read the disconnecting the cable from the negative (-) battery terminal notices before proceeding with work. Refer to PRECAUTION .**

2. **DISCONNECT CABLE FROM NEGATIVE BATTERY TERMINAL**

WARNING: **Wait at least 90 seconds after disconnecting the cable from the negative (-) battery terminal to disable the SRS system.**

NOTE: **When disconnecting the cable, some systems need to be initialized after the cable is reconnected. Refer to INITIALIZATION .**

3. **REMOVE FRONT DOOR INSIDE HANDLE BEZEL PLUG** . Refer to **DISASSEMBLY - Step 3** .
4. **REMOVE FRONT DOOR LOWER FRAME BRACKET GARNISH** . Refer to **DISASSEMBLY - Step 4** .
5. **REMOVE POWER WINDOW REGULATOR MASTER SWITCH ASSEMBLY WITH FRONT DOOR ARMREST BASE PANEL (for Driver Side)** . Refer to **DISASSEMBLY - Step 5** .
6. **REMOVE POWER WINDOW REGULATOR SWITCH ASSEMBLY WITH FRONT DOOR ARMREST BASE PANEL (for Front Passenger Side)** . Refer to **DISASSEMBLY - Step 6** .
7. **REMOVE FRONT DOOR ARMREST ASSEMBLY** . Refer to **DISASSEMBLY - Step 7** .
8. **REMOVE COURTESY LIGHT ASSEMBLY** . Refer to **REMOVAL - Step 1** .
9. **REMOVE FRONT DOOR TRIM BOARD SUB-ASSEMBLY** . Refer to **DISASSEMBLY - Step 9** .
10. **REMOVE DOOR SIDE AIRBAG SENSOR**
    a. Check that the ignition switch is off.
    b. Check that the cable is disconnected from the negative (-) battery terminal.

WARNING: **Wait at least 90 seconds after disconnecting the cable from the negative (-) battery terminal to disable the SRS system.**

c. Disconnect the connector from the door side airbag sensor.

NOTE: When disconnecting any airbag connector, take care not to damage the airbag wire harness.

1. Push down the white housing lock and slide the yellow CPA. (At this time, the connector cannot be disconnected yet.)

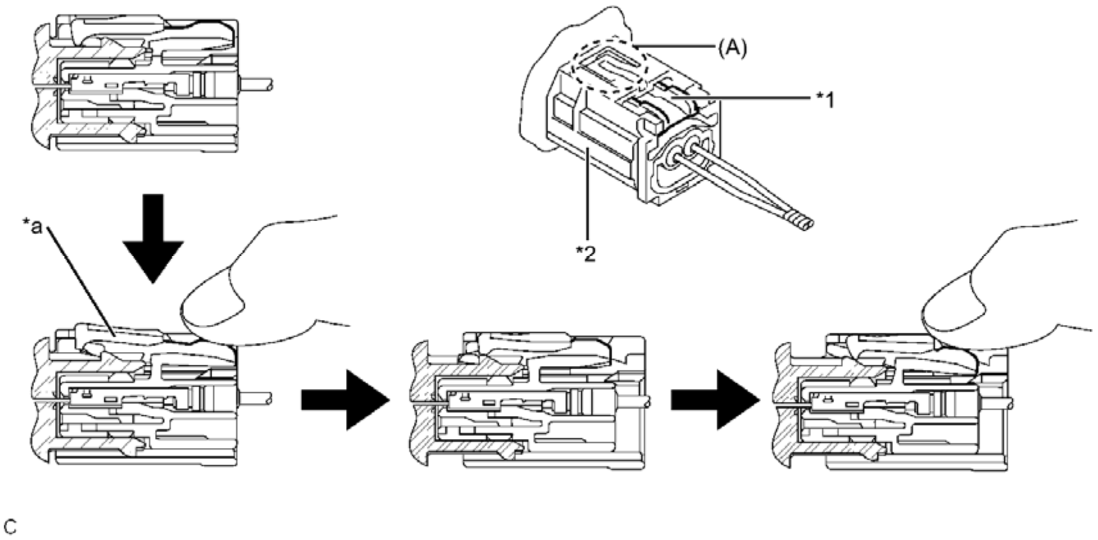

Fig. 170: Sliding Yellow CPA
Courtesy of TOYOTA MOTOR SALES, U.S.A., INC.

TEXT IN ILLUSTRATION

*1	White Housing Lock	*2	Yellow CPA
*a	Connector Lock is Released	-	-

2. Push down the white housing lock again and disconnect the connector.

NOTE: **Do not push down the part (A) shown in the illustration when disconnecting.**

d. Remove the bolt and door side airbag sensor from the front door panel.

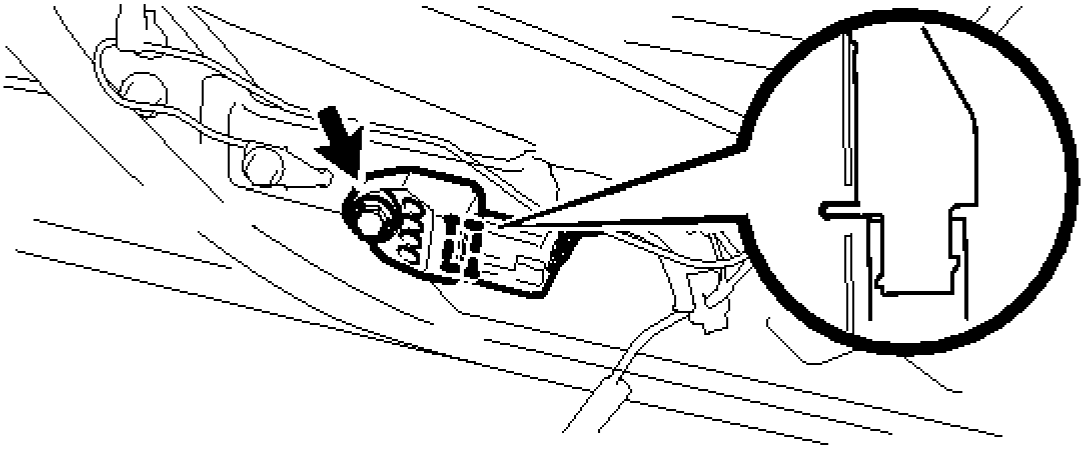

C

Fig. 171: Identifying Door Side Airbag Sensor Clip And Bolt
Courtesy of TOYOTA MOTOR SALES, U.S.A., INC.

NOTE: **Loosen the bolt while holding the door side airbag sensor because the door side airbag sensor pin (stopper) is easily damaged.**

e. After disconnecting the connector, check that the position of the white housing lock is correct as shown in the illustration.

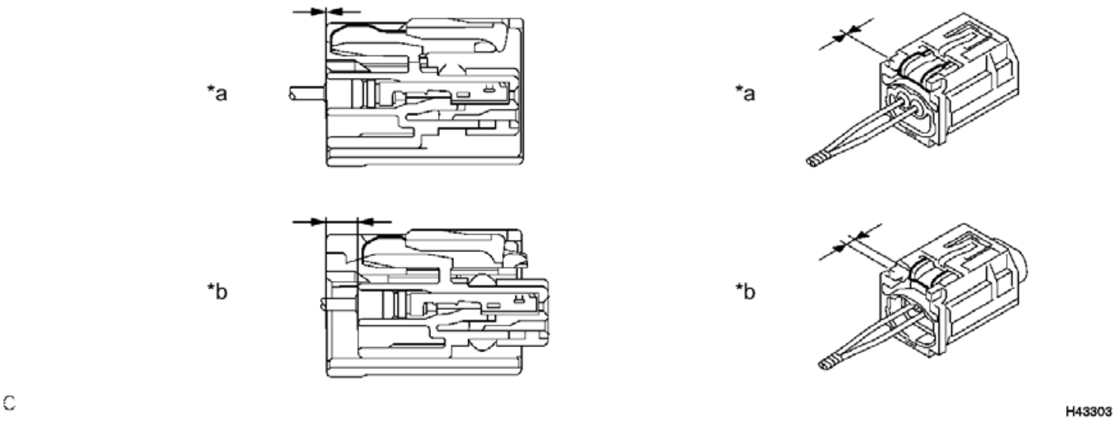

Fig. 172: Identifying Correct Housing Lock Position
Courtesy of TOYOTA MOTOR SALES, U.S.A., INC.

TEXT IN ILLUSTRATION

*a	Incorrect	*b	Correct

INSTALLATION

INSTALLATION

HINT:

- Use the same procedure for the RH side and LH side.
- The procedure listed below is for the LH side.

1. **INSTALL DOOR SIDE AIRBAG SENSOR**
    a. Check that the ignition switch is off.
    b. Check that the cable is disconnected from the negative (-) battery terminal.

WARNING: **Wait at least 90 seconds after disconnecting the cable from the negative (-) battery terminal to disable the SRS system.**

    c. Before connecting the connector, check that the position of the white housing lock is correct as shown in the illustration.

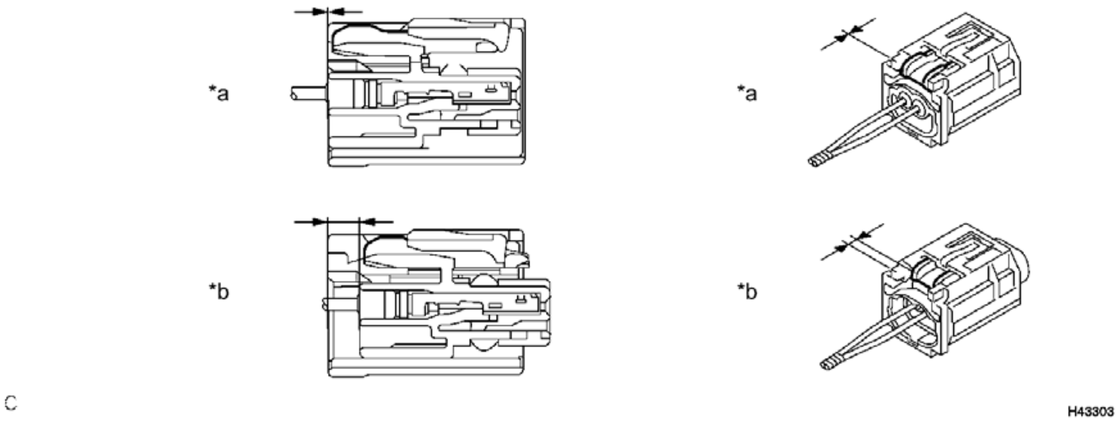

Fig. 173: Identifying Correct Housing Lock Position
Courtesy of TOYOTA MOTOR SALES, U.S.A., INC.

TEXT IN ILLUSTRATION

*a	Incorrect	*b	Correct

d. Insert the pin (stopper) into the door hole and install the door side airbag sensor to the front door panel with the bolt.

Torque: 9.0 N*m (92 kgf*cm, 80 in.*lbf)

NOTE:

- **If the door side airbag sensor has been dropped, or there are any cracks, dents or other defects in the case or connector, replace it with a new one.**
- **When installing the door side airbag sensor, be careful that the SRS wiring does not interfere with or is not pinched between other parts.**
- **Make sure that the pin (stopper) is securely inserted into the body hole.**
- **Tighten the bolt while holding the door side airbag sensor because the door side airbag sensor pin (stopper) is easily damaged.**

e. Connect the connector to the door side airbag sensor.

NOTE: **When connecting any airbag connector, take care not to damage the airbag wire harness.**

1. Be sure to engage the connectors until they are locked (when locking, make sure that a click sound can be heard).

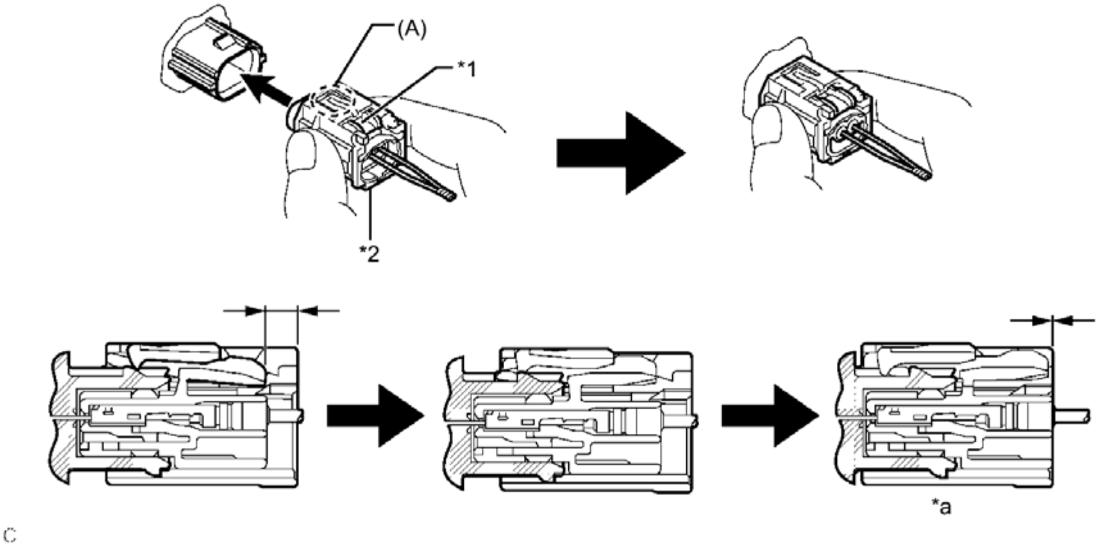

Fig. 174: Identifying Housing Lock, CPA & Completed Connection
Courtesy of TOYOTA MOTOR SALES, U.S.A., INC.

TEXT IN ILLUSTRATION

*1	White Housing Lock	*2	Yellow CPA
*a	Connection is Completed	-	-

HINT:

When engaged, the white housing lock will slide. Be sure not to hold the white housing lock and part (A), as it may result in an insecure fit.

f. Check that there is no looseness in the installation parts of the door side airbag sensor.

2. **INSTALL FRONT DOOR TRIM BOARD SUB-ASSEMBLY** . Refer to **REASSEMBLY - Step 40** .
3. **INSTALL COURTESY LIGHT ASSEMBLY** . Refer to **INSTALLATION - Step 1** .
4. **INSTALL FRONT DOOR ARMREST ASSEMBLY** . Refer to **REASSEMBLY - Step 42** .
5. **INSTALL POWER WINDOW REGULATOR MASTER SWITCH ASSEMBLY WITH FRONT DOOR ARMREST BASE PANEL (for Driver Side)** . Refer to **REASSEMBLY - Step 43** .
6. **INSTALL POWER WINDOW REGULATOR SWITCH ASSEMBLY WITH FRONT DOOR ARMREST BASE PANEL (for Front Passenger Side)** . Refer to **REASSEMBLY - Step 44** .
7. **INSTALL FRONT DOOR LOWER FRAME BRACKET GARNISH** . Refer to **REASSEMBLY - Step 45** .
8. **INSTALL FRONT DOOR INSIDE HANDLE BEZEL PLUG** . Refer to **REASSEMBLY - Step 46** .
9. **CONNECT CABLE TO NEGATIVE BATTERY TERMINAL**

NOTE: **When disconnecting the cable, some systems need to be initialized after the cable is reconnected. Refer to INITIALIZATION .**

10. **PERFORM DIAGNOSTIC SYSTEM CHECK**

    For Separate Type Yaw Rate Sensor: Refer to **DTC CHECK / CLEAR** .

    For Built-In Type Yaw Rate Sensor: Refer to **DTC CHECK / CLEAR** .

11. **INSPECT SRS WARNING LIGHT**

    For Separate Type Yaw Rate Sensor: Refer to **DIAGNOSIS SYSTEM** .

    For Built-In Type Yaw Rate Sensor: Refer to **DIAGNOSIS SYSTEM** .

SIDE AIRBAG SENSOR (FOR REAR SIDE)

COMPONENTS

ILLUSTRATION

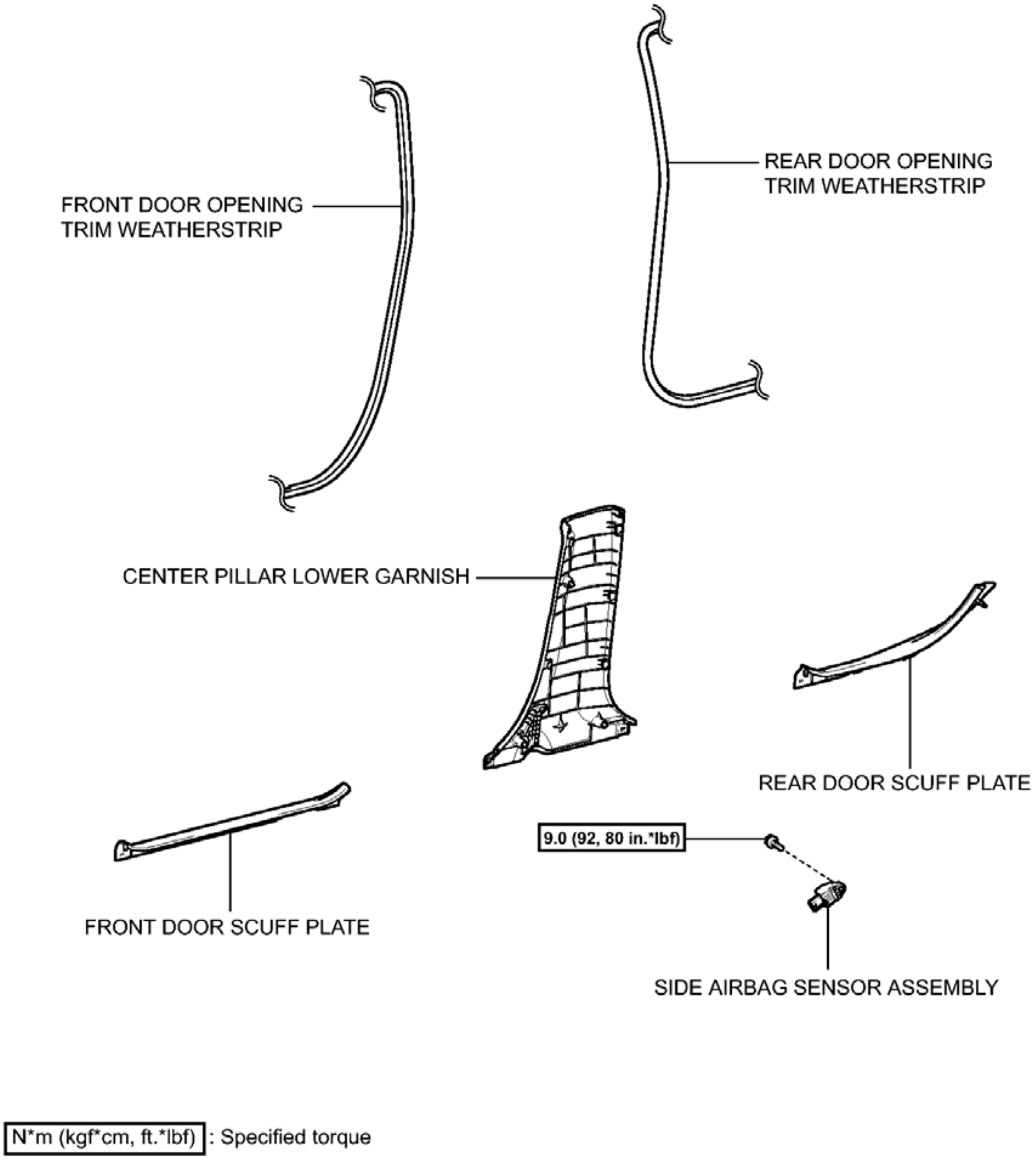
FRONT DOOR OPENING TRIM WEATHERSTRIP
REAR DOOR OPENING TRIM WEATHERSTRIP
CENTER PILLAR LOWER GARNISH
REAR DOOR SCUFF PLATE
9.0 (92, 80 in.*lbf)
FRONT DOOR SCUFF PLATE
SIDE AIRBAG SENSOR ASSEMBLY
N*m (kgf*cm, ft.*lbf) : Specified torque

Fig. 175: Identifying Side Airbag Sensor (For Rear Side) Replacement Components With Torque Specifications
Courtesy of TOYOTA MOTOR SALES, U.S.A., INC.

ON-VEHICLE INSPECTION

ON-VEHICLE INSPECTION

WARNING: **Be sure to correctly follow the removal and installation procedures for the side airbag sensor assemblies.**

1. **INSPECT SIDE AIRBAG SENSOR ASSEMBLY (for Vehicle not Involved in Collision)**
    1. Perform a diagnostic system check.

        For Separate Type Yaw Rate Sensor: Refer to **DTC CHECK / CLEAR** .

        For Built-In Type Yaw Rate Sensor: Refer to **DTC CHECK / CLEAR** .

2. **INSPECT SIDE AIRBAG SENSOR ASSEMBLY (for Vehicle Involved in Collision and Airbag not Deployed)**
    1. Perform a diagnostic system check.

        For Separate Type Yaw Rate Sensor: Refer to **DTC CHECK / CLEAR** .

        For Built-In Type Yaw Rate Sensor: Refer to **DTC CHECK / CLEAR** .

    2. Visually check the side airbag sensor assemblies for defects if a center pillar of the vehicle or the area around a center pillar is damaged.

        HINT:

        The defects are as follows:

        - Cracks on the sensor housing
        - Dents on the sensor housing
        - Chips on the sensor housing
        - Cracks or other damage to the connector
        - Damage to the serial number

        OK

        No defects are found.

        If any of the defects is found, replace the side airbag sensor assembly with a new one.

3. **INSPECT SIDE AIRBAG SENSOR ASSEMBLY (for Vehicle Involved in Collision and Airbag is Deployed)**
    1. When airbags have deployed as the result of a collision, be sure to replace all side airbag sensor assemblies in the damaged areas (anywhere in need of repair).
    2. Visually check the side airbag sensor assemblies in undamaged areas for defects.

        HINT:

The defects are as follows:

- Cracks on the sensor housing
- Dents on the sensor housing
- Chips on the sensor housing
- Cracks or other damage to the connector
- Damage to the serial number

OK

No defects are found.

If any of the defects is found or a side airbag sensor assembly has detected a major collision, replace the side airbag sensor assembly with a new one.

REMOVAL

REMOVAL

HINT:

- Use the same procedure for the RH side and LH side.
- The procedure listed below is for the LH side.

1. **PRECAUTION**

WARNING: **Be sure to read Precaution thoroughly before servicing.**

For Separate Type Yaw Rate Sensor: Refer to PRECAUTION .

For Built-In Type Yaw Rate Sensor: Refer to PRECAUTION .

NOTE: **After turning the ignition switch off, waiting time may be required before disconnecting the cable from the negative (-) battery terminal. Therefore, make sure to read the disconnecting the cable from the negative (-) battery terminal notices before proceeding with work. Refer to PRECAUTION .**

2. **DISCONNECT CABLE FROM NEGATIVE BATTERY TERMINAL**

WARNING: **Wait at least 90 seconds after disconnecting the cable from the negative (-) battery terminal to disable the SRS system.**

NOTE: **When disconnecting the cable, some systems need to be initialized after the cable is reconnected. Refer to INITIALIZATION .**

3. **REMOVE FRONT DOOR SCUFF PLATE** . Refer to **REMOVAL - Step 3** .
4. **DISCONNECT FRONT DOOR OPENING TRIM WEATHERSTRIP**

   HINT:

   Disconnect the front door opening trim weatherstrip to the extent that allows the removal of the center pillar lower garnish.

5. **REMOVE REAR DOOR SCUFF PLATE** . Refer to **REMOVAL - Step 18** .
6. **DISCONNECT REAR DOOR OPENING TRIM WEATHERSTRIP**

   HINT:

   Disconnect the rear door opening trim weatherstrip to the extent that allows the removal of the center pillar lower garnish.

7. **REMOVE CENTER PILLAR LOWER GARNISH** . Refer to **REMOVAL - Step 22** .
8. **REMOVE SIDE AIRBAG SENSOR ASSEMBLY**
   a. Check that the ignition switch is off.
   b. Check that the cable is disconnected from the negative (-) battery terminal.

   WARNING: **Wait at least 90 seconds after disconnecting the cable from the negative (-) battery terminal to disable the SRS system.**

   c. Disconnect the connector from the side airbag sensor assembly.

   NOTE: **When disconnecting any airbag connector, take care not to damage the airbag wire harness.**

   1. Push down the white housing lock and slide the yellow CPA. (At this time, the connector cannot be disconnected yet.)

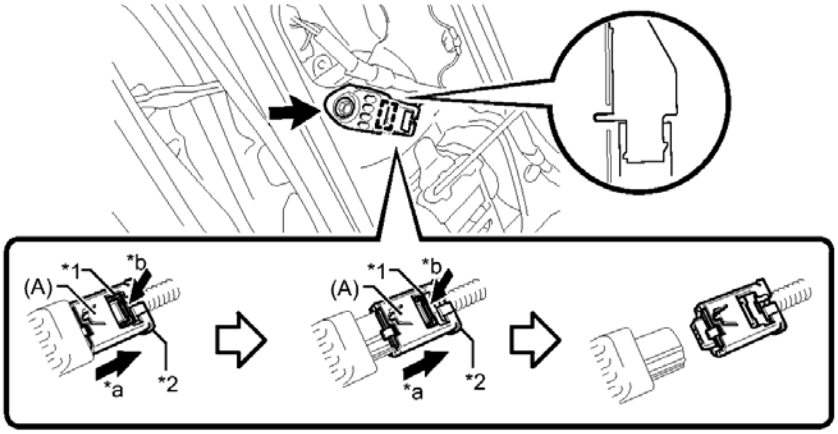

c

Fig. 176: Disconnecting Connector From Side Airbag Sensor Assembly
Courtesy of TOYOTA MOTOR SALES, U.S.A., INC.

TEXT IN ILLUSTRATION

*1	White Housing Lock	*2	Yellow CPA
*a	Slide	*b	Push

2. Push down the white housing lock again and disconnect the connector.

NOTE: Do not push down the part (A) shown in the illustration when disconnecting.

d. Remove the bolt and side airbag sensor assembly from the vehicle body.

NOTE: Loosen the bolt while holding the side airbag sensor assembly because the side airbag sensor assembly pin (stopper) is easily damaged.

e. After disconnecting the connector, check that the position of the white housing lock is correct as shown in the illustration.

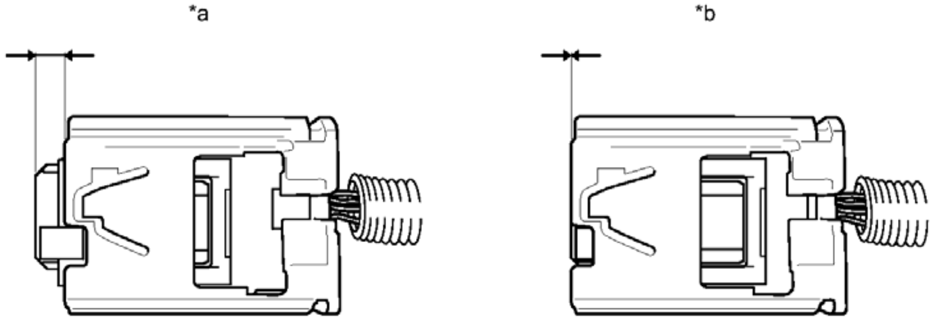

Fig. 177: Identifying Correct White Housing Lock Position
Courtesy of TOYOTA MOTOR SALES, U.S.A., INC.

TEXT IN ILLUSTRATION

*a	Correct	*b	Incorrect

INSTALLATION

INSTALLATION

HINT:

- Use the same procedure for the RH side and LH side.
- The procedure listed below is for the LH side.

1. **INSTALL SIDE AIRBAG SENSOR ASSEMBLY**
    a. Check that the ignition switch is off.
    b. Check that the cable is disconnected from the negative (-) battery terminal.

WARNING: **Wait at least 90 seconds after disconnecting the cable from the negative (-) battery terminal to disable the SRS system.**

    c. Before connecting the connector, check that the position of the white housing lock is correct as shown in the illustration.

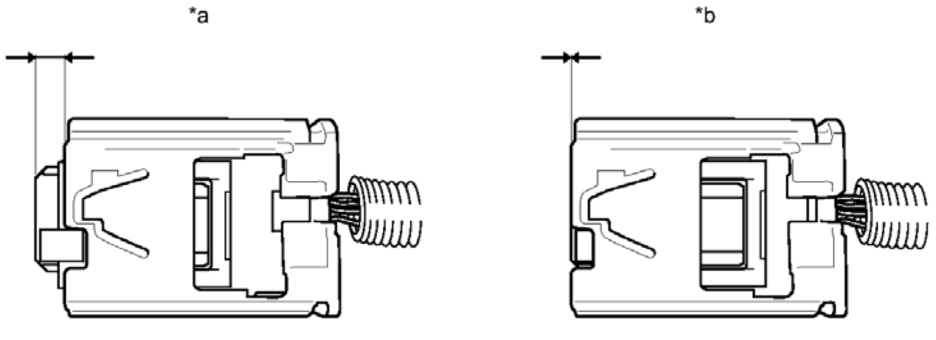

Fig. 178: Identifying Correct White Housing Lock Position
Courtesy of TOYOTA MOTOR SALES, U.S.A., INC.

TEXT IN ILLUSTRATION

*a	Correct	*b	Incorrect

    d. Insert the pin (stopper) into the body hole and install the side airbag sensor assembly to the vehicle body with the bolt.

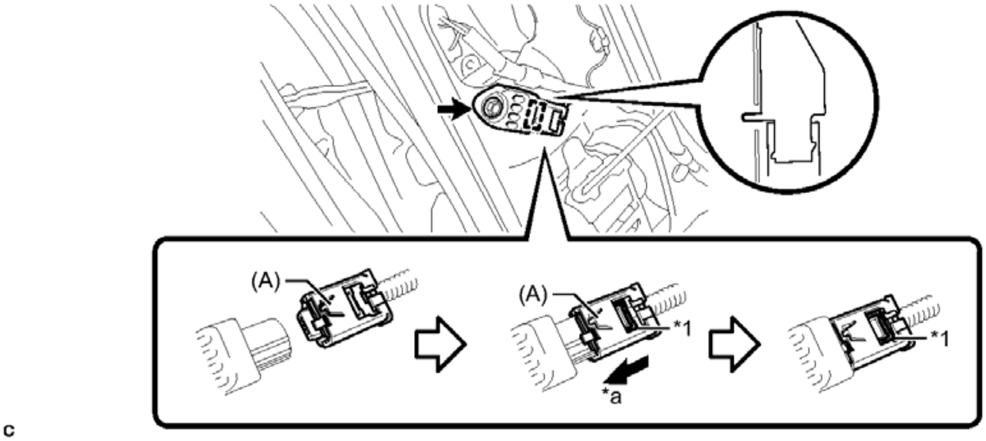

Fig. 179: Connecting Connector From Side Airbag Sensor Assembly
Courtesy of TOYOTA MOTOR SALES, U.S.A., INC.

TEXT IN ILLUSTRATION

*1	White housing lock	-	-
*a	Slide	-	-

Torque: 9.0 N*m (92 kgf*cm, 80 in.*lbf)

NOTE:

- **If the side airbag sensor assembly has been dropped, or there are any cracks, dents or other defects in the case or connector, replace it with a new one.**
- **When installing the side airbag sensor assembly, be careful that the SRS wiring does not interfere with or is not pinched between other parts.**
- **Make sure that the pin (stopper) is securely inserted into the body hole.**
- **Tighten the bolt while holding the side airbag sensor assembly because the side airbag sensor assembly pin (stopper) is easily damaged.**

e. Connect the connector to the side airbag sensor assembly.

NOTE: **When connecting any airbag connector, take care not to damage the airbag wire harness.**

1. Be sure to engage the connectors until they are locked (when locking, make sure that a click sound can be heard).

   HINT:

When engaged, the white housing lock will slide. Be sure not to hold the white housing lock and part (A), as it may result in an insecure fit.

f. Check that there is no looseness in the installation parts of the side airbag sensor assembly.

2. **INSTALL CENTER PILLAR LOWER GARNISH** . Refer to **INSTALLATION - Step 22** .
3. **INSTALL REAR DOOR OPENING TRIM WEATHERSTRIP**
4. **INSTALL REAR DOOR SCUFF PLATE** . Refer to **INSTALLATION - Step 26** .
5. **INSTALL FRONT DOOR OPENING TRIM WEATHERSTRIP**
6. **INSTALL FRONT DOOR SCUFF PLATE** . Refer to **INSTALLATION - Step 44** .
7. **CONNECT CABLE TO NEGATIVE BATTERY TERMINAL**

NOTE: **When disconnecting the cable, some systems need to be initialized after the cable is reconnected. Refer to INITIALIZATION .**

8. **PERFORM DIAGNOSTIC SYSTEM CHECK**

For Separate Type Yaw Rate Sensor: Refer to **DTC CHECK / CLEAR** .

For Built-In Type Yaw Rate Sensor: Refer to **DTC CHECK / CLEAR** .

9. **INSPECT SRS WARNING LIGHT**

For Separate Type Yaw Rate Sensor: Refer to **DIAGNOSIS SYSTEM** .

For Built-In Type Yaw Rate Sensor: Refer to **DIAGNOSIS SYSTEM** .

REAR AIRBAG SENSOR

COMPONENTS

ILLUSTRATION

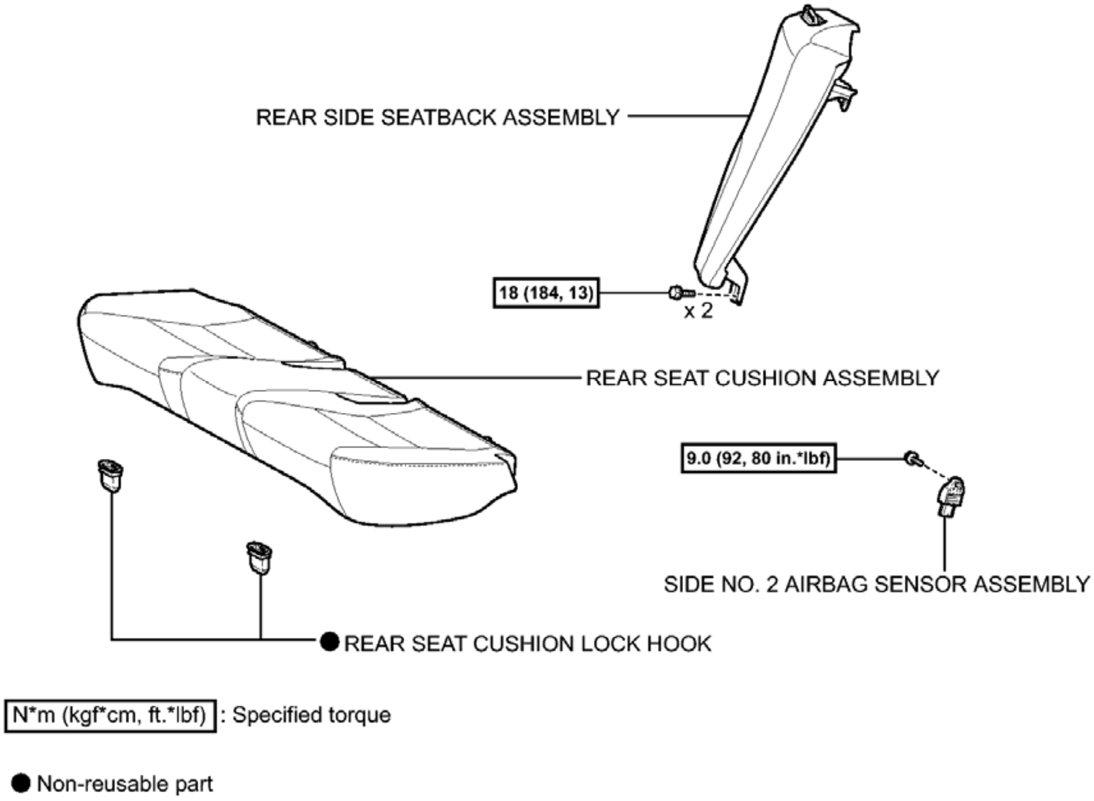
REAR SIDE SEATBACK ASSEMBLY
18 (184, 13)
x 2
REAR SEAT CUSHION ASSEMBLY
9.0 (92, 80 in.*lbf)
SIDE NO. 2 AIRBAG SENSOR ASSEMBLY
● REAR SEAT CUSHION LOCK HOOK
N*m (kgf*cm, ft.*lbf) : Specified torque
● Non-reusable part

Fig. 180: Identifying Rear Airbag Sensor Replacement Components With Torque Specifications
Courtesy of TOYOTA MOTOR SALES, U.S.A., INC.

ON-VEHICLE INSPECTION

ON-VEHICLE INSPECTION

> WARNING: **Be sure to correctly follow the removal and installation procedures for the side No. 2 airbag sensor assemblies.**

1. **INSPECT SIDE NO. 2 AIRBAG SENSOR ASSEMBLY (for Vehicle not Involved in Collision)**
    a. Perform a diagnostic system check.

       For Separate Type Yaw Rate Sensor: Refer to **DTC CHECK / CLEAR** .

       For Built-In Type Yaw Rate Sensor: Refer to **DTC CHECK / CLEAR** .

2. **INSPECT SIDE NO. 2 AIRBAG SENSOR ASSEMBLY (for Vehicle Involved in Collision and Airbag not Deployed)**
    a. Perform a diagnostic system check.

For Separate Type Yaw Rate Sensor: Refer to **DTC CHECK / CLEAR** .

For Built-In Type Yaw Rate Sensor: Refer to **DTC CHECK / CLEAR** .

b. Visually check the side No. 2 airbag sensor assemblies for defects if a quarter panel of the vehicle or the area around a quarter panel is damaged.

HINT:

The defects are as follows:

- Cracks on the sensor housing
- Dents on the sensor housing
- Chips on the sensor housing
- Cracks or other damage to the connector
- Damage to the serial number

OK

No defects are found.

If any of the defects is found, replace the side No. 2 airbag sensor assembly with a new one.

3. **INSPECT SIDE NO. 2 AIRBAG SENSOR ASSEMBLY (for Vehicle Involved in Collision and Airbag is Deployed)**
   a. When airbags have deployed as the result of a collision, be sure to replace all side No. 2 airbag sensor assemblies in the damaged areas (anywhere in need of repair).
   b. Visually check the side No. 2 airbag sensor assemblies in undamaged areas for defects.

HINT:

The defects are as follows:

- Cracks on the sensor housing
- Dents on the sensor housing
- Chips on the sensor housing
- Cracks or other damage to the connector
- Damage to the serial number

OK

No defects are found.

If any of the defects is found or a side No. 2 airbag sensor assembly has detected a major collision, replace the side No. 2 airbag sensor assembly with a new one.

REMOVAL

REMOVAL

HINT:

- Use the same procedure for the RH side and LH side.
- The procedure listed below is for the LH side.

1. **PRECAUTION**

   WARNING: **Be sure to read Precaution thoroughly before servicing.**

   For Separate Type Yaw Rate Sensor: Refer to PRECAUTION .

   For Built-In Type Yaw Rate Sensor: Refer to PRECAUTION .

   NOTE: **After turning the ignition switch off, waiting time may be required before disconnecting the cable from the negative (-) battery terminal. Therefore, make sure to read the disconnecting the cable from the negative (-) battery terminal notices before proceeding with work. Refer to PRECAUTION .**

2. **DISCONNECT CABLE FROM NEGATIVE BATTERY TERMINAL**

   WARNING: **Wait at least 90 seconds after disconnecting the cable from the negative (-) battery terminal to disable the SRS system.**

   NOTE: **When disconnecting the cable, some systems need to be initialized after the cable is reconnected. Refer to INITIALIZATION .**

3. **REMOVE REAR SEAT CUSHION ASSEMBLY** . Refer to **REMOVAL - Step 3** .
4. **REMOVE REAR SEAT CUSHION LOCK HOOK** . Refer to **REMOVAL - Step 4** .
5. **REMOVE REAR SIDE SEATBACK ASSEMBLY** . Refer to **REMOVAL - Step 8** .
6. **REMOVE SIDE NO. 2 AIRBAG SENSOR ASSEMBLY**
   1. Check that the ignition switch is off.
   2. Check that the cable is disconnected from the negative (-) battery terminal.

      WARNING: **Wait at least 90 seconds after disconnecting the cable from the negative (-) battery terminal to disable the SRS system.**

   3. Disconnect the connector from the side No. 2 airbag sensor assembly.

      NOTE: **When disconnecting any airbag connector, take care not to damage**

the airbag wire harness.

1. Push down the white housing lock and slide the yellow CPA. (At this time, the connector cannot be disconnected yet.)

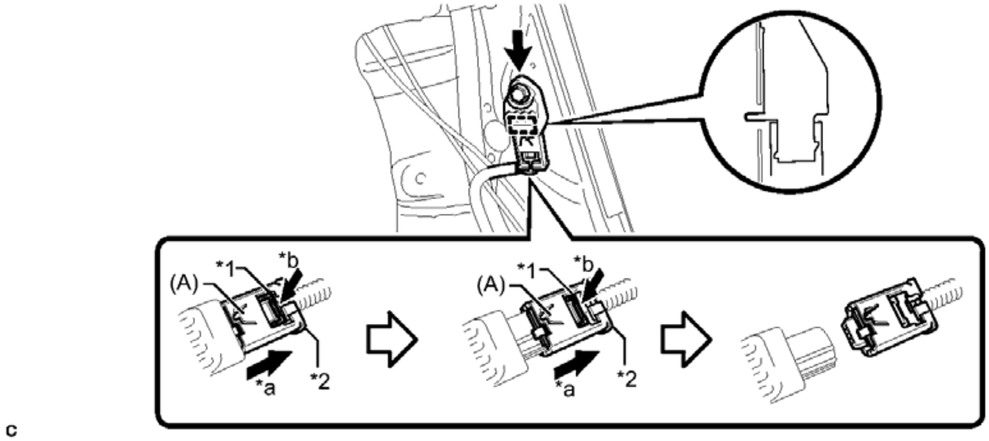

Fig. 181: Disconnecting Connector From Side No. 2 Airbag Sensor Assembly
Courtesy of TOYOTA MOTOR SALES, U.S.A., INC.

TEXT IN ILLUSTRATION

*1	White Housing Lock	*2	Yellow CPA
*a	Slide	*b	Push

2. Push down the white housing lock again and disconnect the connector.

NOTE: **Do not push down the part (A) shown in the illustration when disconnecting.**

d. Remove the bolt and side No. 2 airbag sensor assembly from the vehicle body.

NOTE: **Loosen the bolt while holding the side No. 2 airbag sensor assembly because the side No. 2 airbag sensor assembly pin (stopper) is easily damaged.**

e. After disconnecting the connector, check that the position of the white housing lock is correct as shown in the illustration.

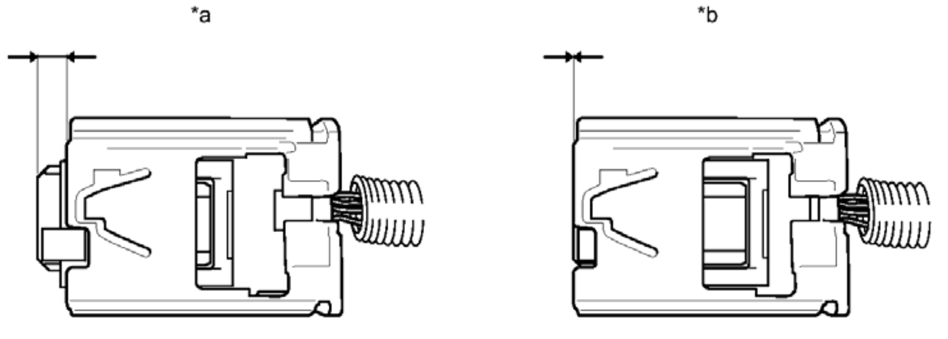

Fig. 182: Identifying Correct White Housing Lock Position
Courtesy of TOYOTA MOTOR SALES, U.S.A., INC.

TEXT IN ILLUSTRATION

*a	Correct	*b	Incorrect

INSTALLATION

INSTALLATION

HINT:

- Use the same procedure for the RH side and LH side.
- The procedure listed below is for the LH side.

1. **INSTALL SIDE NO. 2 AIRBAG SENSOR ASSEMBLY**
   a. Check that the ignition switch is off.
   b. Check that the cable is disconnected from the negative (-) battery terminal.

   WARNING: **Wait at least 90 seconds after disconnecting the cable from the negative (-) battery terminal to disable the SRS system.**

   c. Before connecting the connector, check that the position of the white housing lock is correct as shown in the illustration.

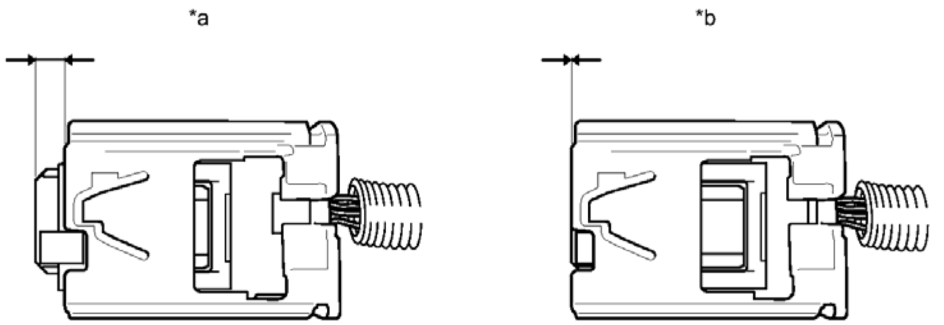

Fig. 183: Identifying Correct White Housing Lock Position
Courtesy of TOYOTA MOTOR SALES, U.S.A., INC.

TEXT IN ILLUSTRATION

*a	Correct	*b	Incorrect

d. Insert the pin (stopper) into the body hole and install the side No. 2 airbag sensor assembly to the vehicle body with the bolt.

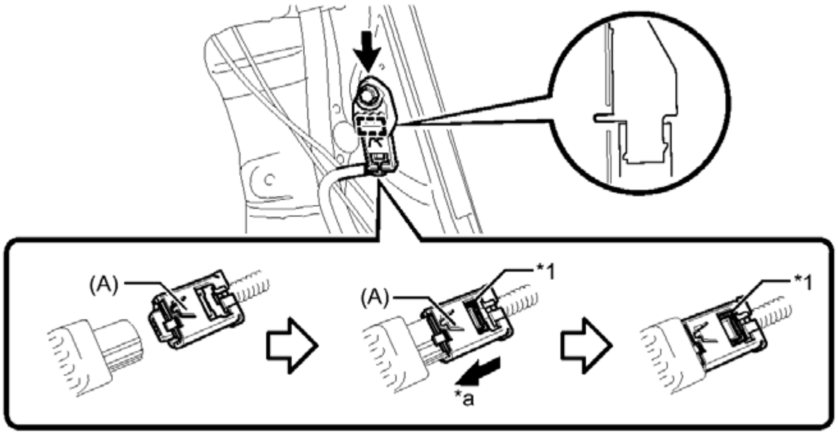

Fig. 184: Connecting Connector From Side No. 2 Airbag Sensor Assembly
Courtesy of TOYOTA MOTOR SALES, U.S.A., INC.

TEXT IN ILLUSTRATION

*1	White housing lock	-	-
*a	Slide	-	-

Torque: 9.0 N*m (92 kgf*cm, 80 in.*lbf)

NOTE:

- **If the side No. 2 airbag sensor assembly has been dropped, or**

there are any cracks, dents or other defects in the case or connector, replace it with a new one.

- **When installing the side No. 2 airbag sensor assembly, be careful that the SRS wiring does not interfere with or is not pinched between other parts.**
- **Make sure that the pin (stopper) is securely inserted into the body hole.**
- **Tighten the bolt while holding the side No. 2 airbag sensor assembly because the side No. 2 airbag sensor assembly pin (stopper) is easily damaged.**

e. Connect the connector to the side No. 2 airbag sensor assembly.

NOTE: **When connecting any airbag connector, take care not to damage the airbag wire harness.**

1. Be sure to engage the connectors until they are locked (when locking, make sure that a click sound can be heard).

   HINT:

   When engaged, the white housing lock will slide. Be sure not to hold the white housing lock and part (A), as it may result in an insecure fit.

f. Check that there is no looseness in the installation parts of the side No. 2 airbag sensor assembly.

2. **INSTALL REAR SIDE SEATBACK ASSEMBLY** . Refer to **INSTALLATION - Step 2** .
3. **INSTALL REAR SEAT CUSHION LOCK HOOK** . Refer to **INSTALLATION - Step 6** .
4. **INSTALL REAR SEAT CUSHION ASSEMBLY** . Refer to **INSTALLATION - Step 7** .
5. **CONNECT CABLE TO NEGATIVE BATTERY TERMINAL**

   NOTE: **When disconnecting the cable, some systems need to be initialized after the cable is reconnected. Refer to INITIALIZATION .**

6. **PERFORM DIAGNOSTIC SYSTEM CHECK**

   For Separate Type Yaw Rate Sensor: Refer to **DTC CHECK / CLEAR** .

   For Built-In Type Yaw Rate Sensor: Refer to **DTC CHECK / CLEAR** .

7. **INSPECT SRS WARNING LIGHT**

   For Separate Type Yaw Rate Sensor: Refer to **DIAGNOSIS SYSTEM** .

   For Built-In Type Yaw Rate Sensor: Refer to **DIAGNOSIS SYSTEM** .

OCCUPANT CLASSIFICATION ECU

COMPONENTS

ILLUSTRATION

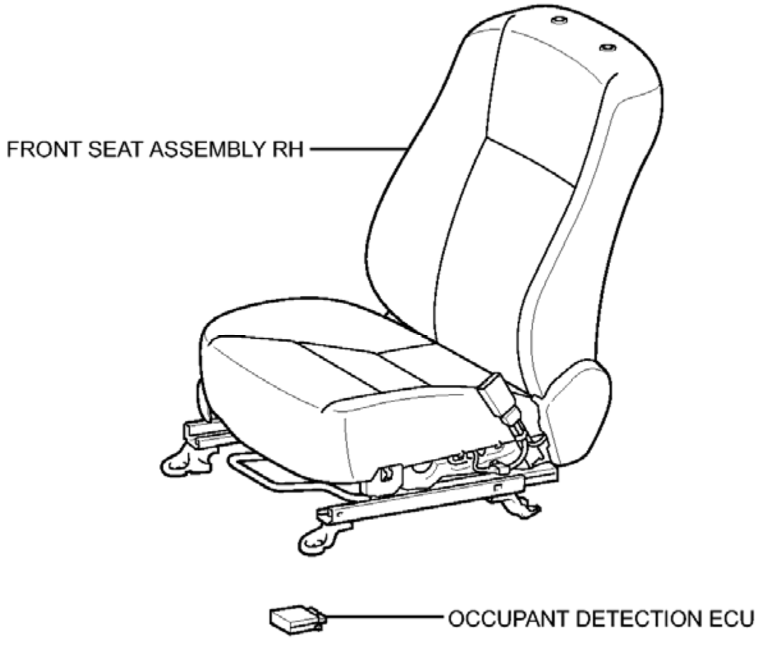

Fig. 185: Identifying Occupant Classification ECU Replacement Components
Courtesy of TOYOTA MOTOR SALES, U.S.A., INC.

ON-VEHICLE INSPECTION

ON-VEHICLE INSPECTION

WARNING: **Be sure to correctly follow the removal and installation procedures for the occupant detection ECU.**

1. **INSPECT OCCUPANT DETECTION ECU (for Vehicle not Involved in Collision)**
    a. Perform a diagnostic system check. Refer to **DTC CHECK / CLEAR** .
2. **INSPECT OCCUPANT DETECTION ECU (for Vehicle Involved in Collision and Airbag not Deployed)**
    a. Perform a diagnostic system check. Refer to **DTC CHECK / CLEAR** .
    b. Visually check for defects with the occupant detection ECU.
        1. The defects are as follows:
            - Cracks on the ECU housing

    - Dents on the ECU housing
    - Chips on the ECU housing
    - Cracks or other damage to the connector
    - Damage to the serial number

    OK

    No defects are found.

    If any of the defects is found, replace the occupant detection ECU with a new one.

3. **INSPECT OCCUPANT DETECTION ECU (for Vehicle Involved in Collision and Airbag is Deployed)**
    a. Perform a diagnostic system check. Refer to **DTC CHECK / CLEAR** .
    b. Visually check for defects with the occupant detection ECU.
        1. The defects are as follows:
            - Cracks on the ECU housing
            - Dents on the ECU housing
            - Chips on the ECU housing
            - Cracks or other damage to the connector
            - Damage to the serial number

        OK

        No defects are found.

        If any of the defects is found, replace the occupant detection ECU with a new one.

REMOVAL

REMOVAL

1. **PRECAUTION**

    WARNING: **Be sure to read Precaution thoroughly before servicing.**

    For Separate Type Yaw Rate Sensor: Refer to PRECAUTION .

    For Built-In Type Yaw Rate Sensor: Refer to PRECAUTION .

2. **REMOVE FRONT SEAT ASSEMBLY RH**

    HINT:

Use the same procedure for the RH side and LH side.

- for TMMK Made Manual Seat: Refer to **REMOVAL** .
- for SIA Made Manual Seat: Refer to **REMOVAL** .
- for TMMK Made Power Seat: Refer to **REMOVAL** .
- for SIA Made Power Seat: Refer to **REMOVAL** .

3. **REMOVE OCCUPANT DETECTION ECU**
    a. Disconnect the 2 connectors.

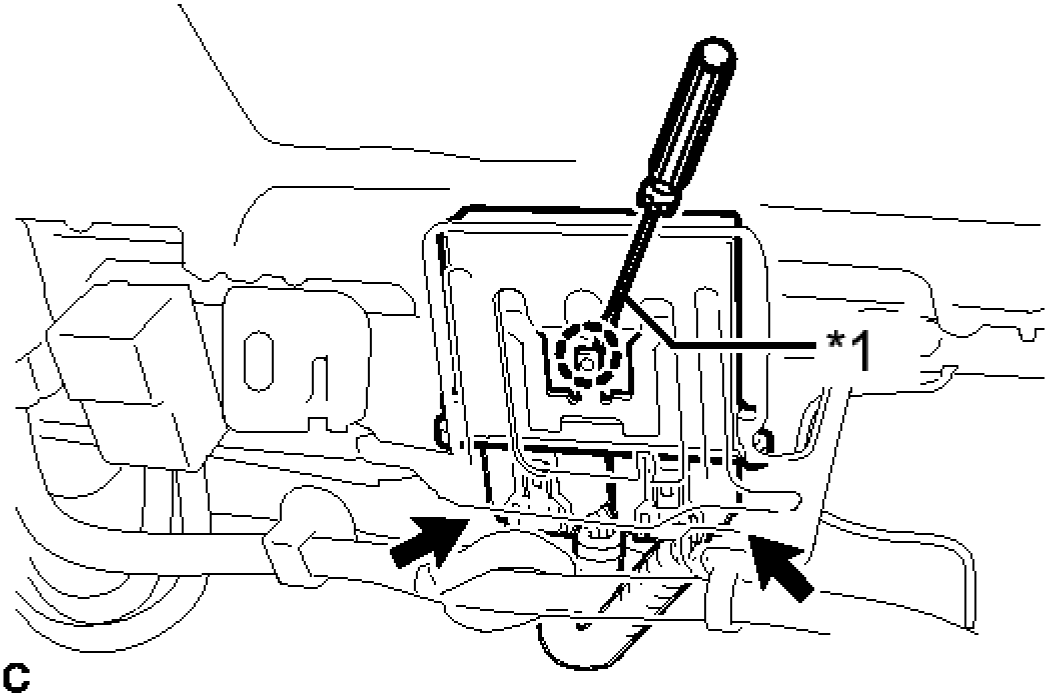

Fig. 186: Removing Occupant Detection ECU
Courtesy of TOYOTA MOTOR SALES, U.S.A., INC.

    b. Using a screwdriver with the tip wrapped with protective tape, disengage the claw and remove the occupant detection ECU.

TEXT IN ILLUSTRATION

*1	Protective Tape

INSTALLATION

INSTALLATION

1. **INSTALL OCCUPANT DETECTION ECU**
    a. Engage the claw to install the occupant detection ECU.

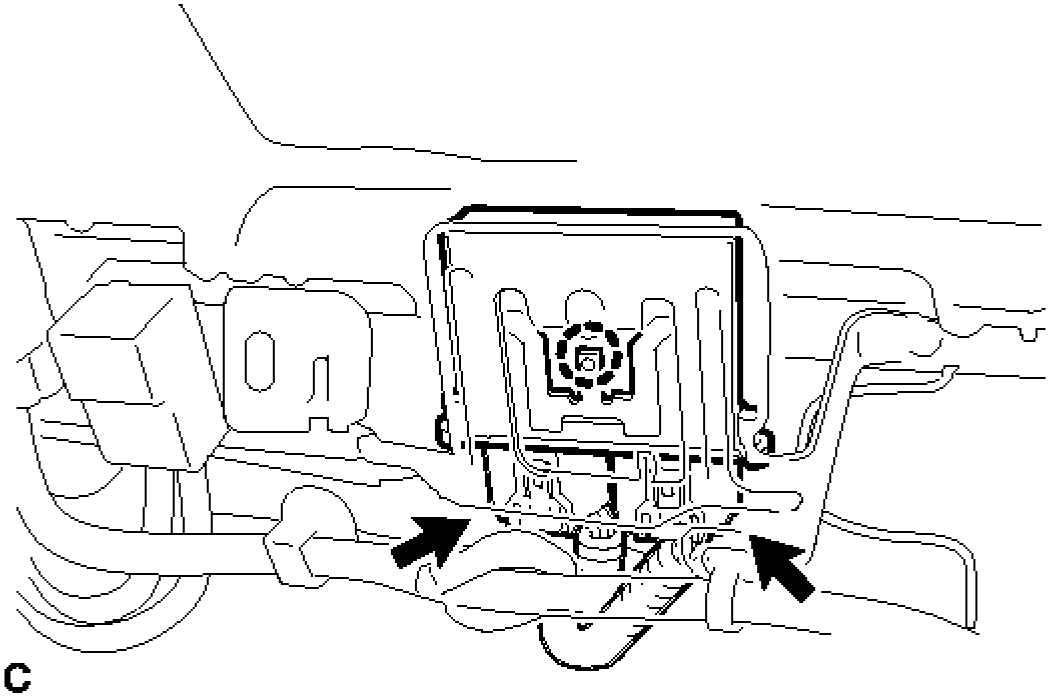

Fig. 187: Identifying Occupant Detection ECU
Courtesy of TOYOTA MOTOR SALES, U.S.A., INC.

NOTE: **If the occupant detection ECU has been dropped, or there are any cracks, dents or other defects in the case or connector, replace the occupant detection ECU with a new one.**

b. Connect the 2 connectors.

NOTE: **When installing the occupant detection ECU, be careful that the SRS wiring does not interfere with or is pinched between other parts.**

2. **INSTALL FRONT SEAT ASSEMBLY RH**

   HINT:

   Use the same procedure for the RH side and LH side.

   - For TMMK Made Manual Seat: Refer to **INSTALLATION** .
   - For SIA Made Manual Seat: Refer to **INSTALLATION** .
   - For TMMK Made Power Seat: Refer to **INSTALLATION** .
   - For SIA Made Power Seat: Refer to **INSTALLATION** .

3. **PERFORM DIAGNOSTIC SYSTEM CHECK**

   For Separate Type Yaw Rate Sensor: Refer to **DTC CHECK / CLEAR** .

For Built-In Type Yaw Rate Sensor: Refer to **DTC CHECK / CLEAR** .

4. **PERFORM ZERO POINT CALIBRATION AND SENSITIVITY CHECK**

   Refer to **INITIALIZATION** .

2012-2017 ENGINE

Starting System (Service Information) - Camry (2AR-FE)

STARTER

COMPONENTS

ILLUSTRATION

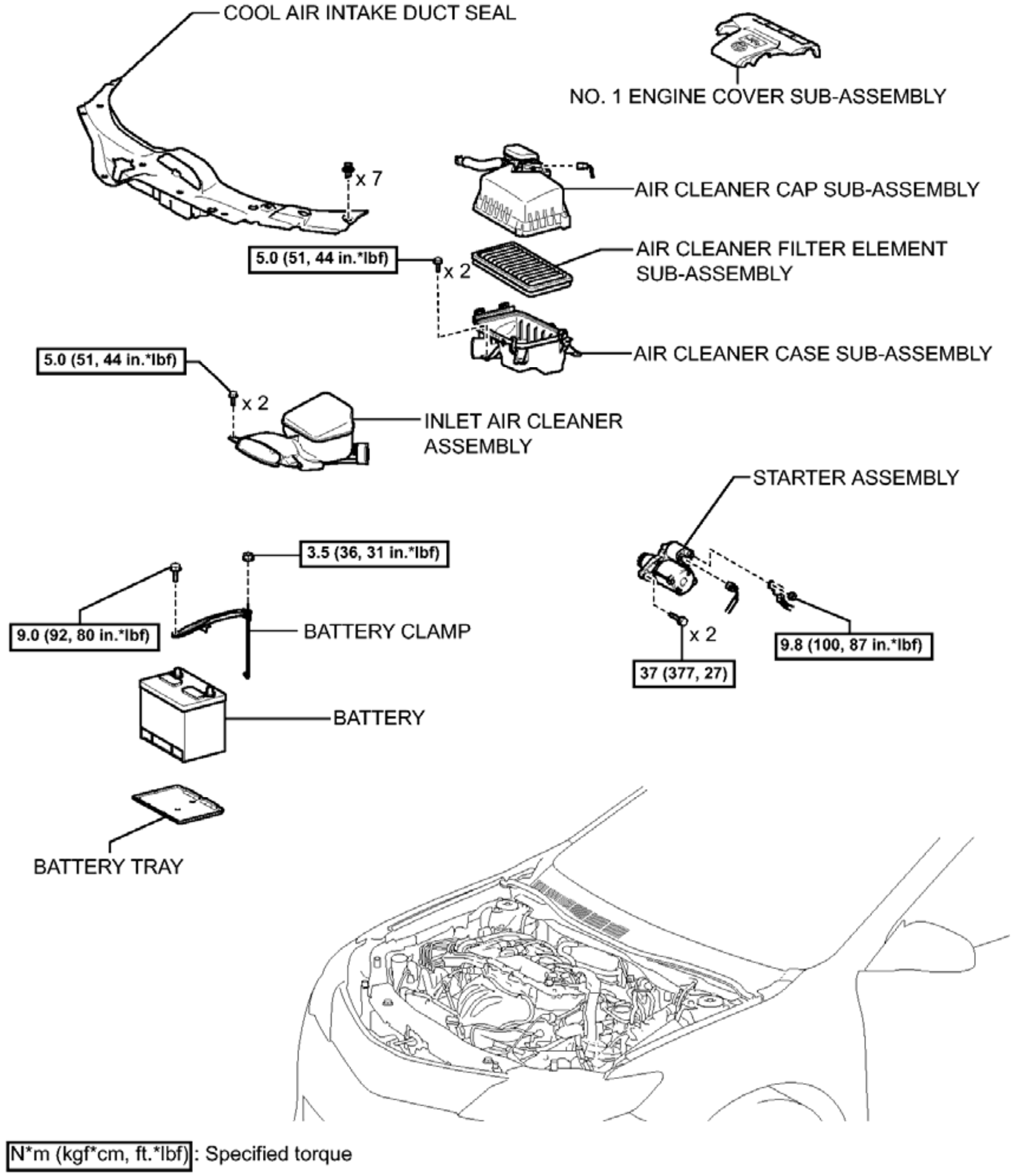
COOL AIR INTAKE DUCT SEAL
NO. 1 ENGINE COVER SUB-ASSEMBLY
x 7
AIR CLEANER CAP SUB-ASSEMBLY
5.0 (51, 44 in.*lbf)
x 2
AIR CLEANER FILTER ELEMENT SUB-ASSEMBLY
AIR CLEANER CASE SUB-ASSEMBLY
5.0 (51, 44 in.*lbf)
x 2
INLET AIR CLEANER ASSEMBLY
STARTER ASSEMBLY
3.5 (36, 31 in.*lbf)
9.0 (92, 80 in.*lbf)
BATTERY CLAMP
x 2
9.8 (100, 87 in.*lbf)
37 (377, 27)
BATTERY
BATTERY TRAY
N*m (kgf*cm, ft.*lbf): Specified torque
C

Fig. 1: Identifying Starter Replacement Components With Torque Specifications (1 Of 2)
Courtesy of TOYOTA MOTOR SALES, U.S.A., INC.

ILLUSTRATION

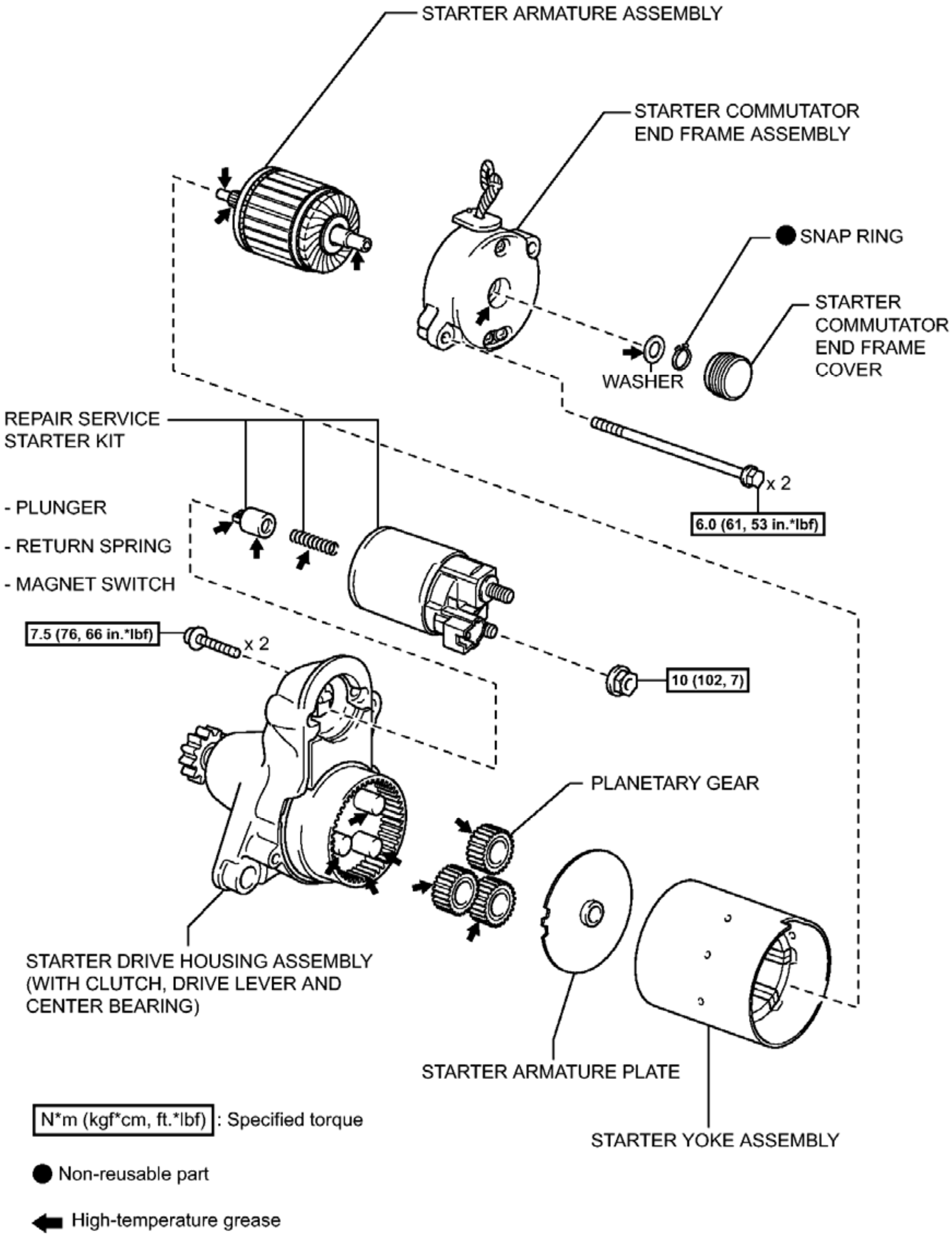
STARTER ARMATURE ASSEMBLY
STARTER COMMUTATOR END FRAME ASSEMBLY
SNAP RING
STARTER COMMUTATOR END FRAME COVER
WASHER
REPAIR SERVICE STARTER KIT
- PLUNGER
- RETURN SPRING
- MAGNET SWITCH
x 2
6.0 (61, 53 in.*lbf)
7.5 (76, 66 in.*lbf)
x 2
10 (102, 7)
PLANETARY GEAR
STARTER DRIVE HOUSING ASSEMBLY (WITH CLUTCH, DRIVE LEVER AND CENTER BEARING)
STARTER ARMATURE PLATE
STARTER YOKE ASSEMBLY
N*m (kgf*cm, ft.*lbf) : Specified torque
Non-reusable part
High-temperature grease

Fig. 2: Identifying Starter Replacement Components With Torque Specifications (2 Of 2)
Courtesy of TOYOTA MOTOR SALES, U.S.A., INC.

REMOVAL

REMOVAL

1. **PRECAUTION**

   NOTE: **After turning the engine switch off, waiting time may be required before disconnecting the cable from the negative (-) battery terminal. Therefore, make sure to read the disconnecting the cable from the negative (-) battery terminal notices before proceeding with work. Refer to PRECAUTION .**

2. **DISCONNECT CABLE FROM NEGATIVE BATTERY TERMINAL**

   NOTE: **When disconnecting the cable, some systems need to be initialized after the cable is reconnected. Refer to INITIALIZATION .**

3. **REMOVE COOL AIR INTAKE DUCT SEAL** . Refer to **REMOVAL - Step 1**
4. **REMOVE NO. 1 ENGINE COVER SUB-ASSEMBLY** . Refer to **REMOVAL - Step 18**
5. **REMOVE INLET AIR CLEANER ASSEMBLY** . Refer to **REMOVAL - Step 19**
6. **REMOVE AIR CLEANER CAP SUB-ASSEMBLY** . Refer to **REMOVAL - Step 7**
7. **REMOVE AIR CLEANER FILTER ELEMENT SUB-ASSEMBLY**
8. **REMOVE AIR CLEANER CASE SUB-ASSEMBLY** . Refer to **REMOVAL - Step 21**
9. **REMOVE BATTERY** . Refer to **REMOVAL - Step 23**
10. **REMOVE STARTER ASSEMBLY**
    1. Disconnect the starter connector.

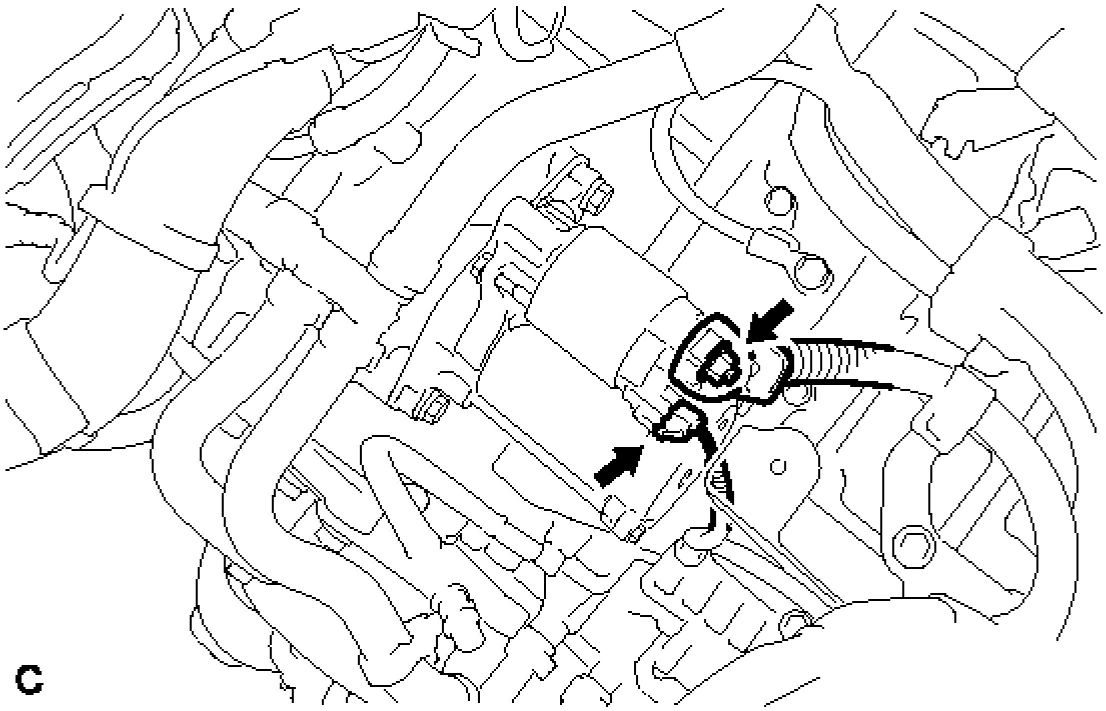

Fig. 3: Identifying Starter Connector

Courtesy of TOYOTA MOTOR SALES, U.S.A., INC.

b. Open the terminal cap, remove the nut and disconnect the starter wire.
c. Remove the 2 bolts and starter.

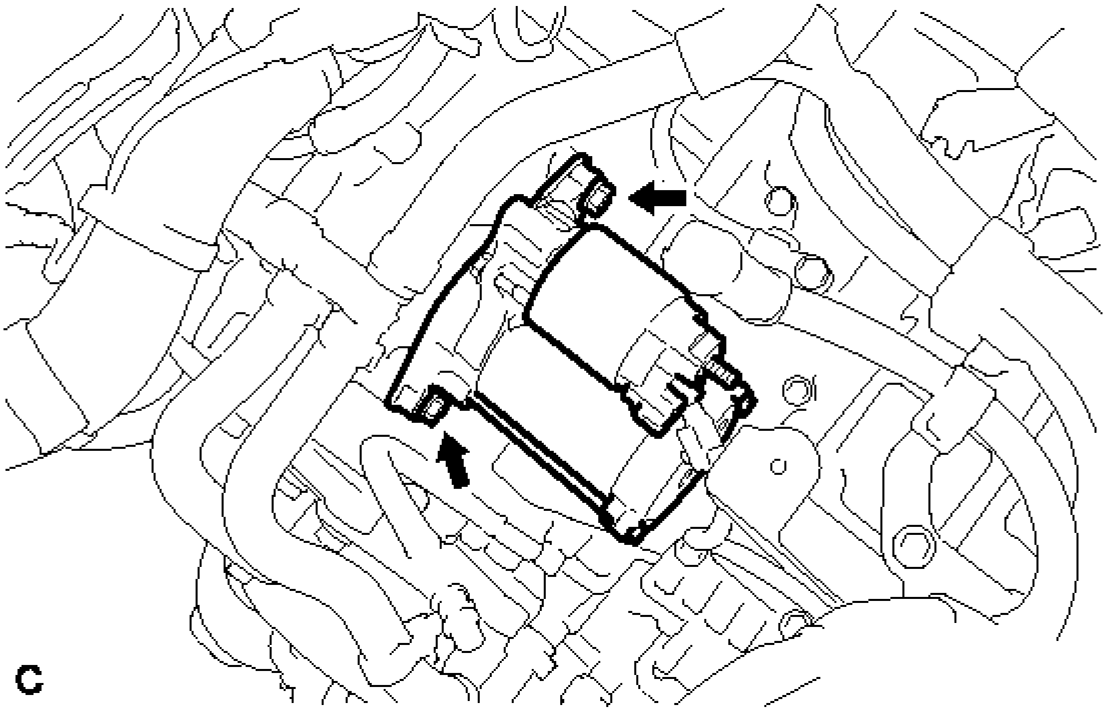

Fig. 4: Identifying Starter Bolts
Courtesy of TOYOTA MOTOR SALES, U.S.A., INC.

DISASSEMBLY

DISASSEMBLY

1. **REMOVE REPAIR SERVICE STARTER KIT**
    a. Remove the nut and disconnect the lead wire from the magnetic switch.

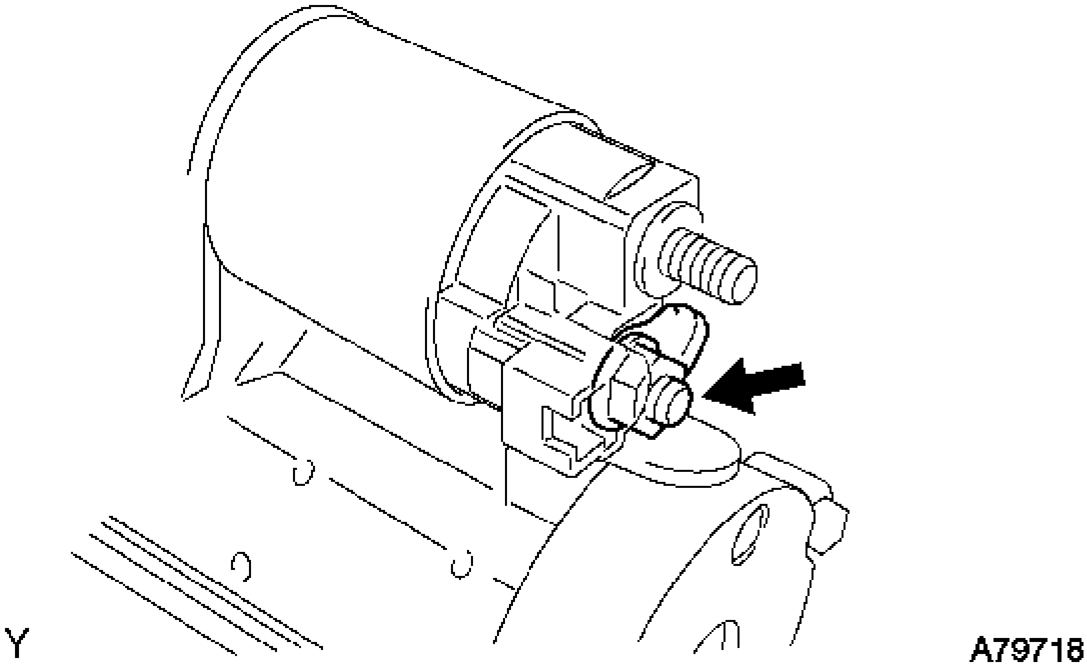

Fig. 5: Locating Magnetic Switch Nut
Courtesy of TOYOTA MOTOR SALES, U.S.A., INC.

b. Holding the magnetic switch to the starter drive housing, remove the 2 screws.

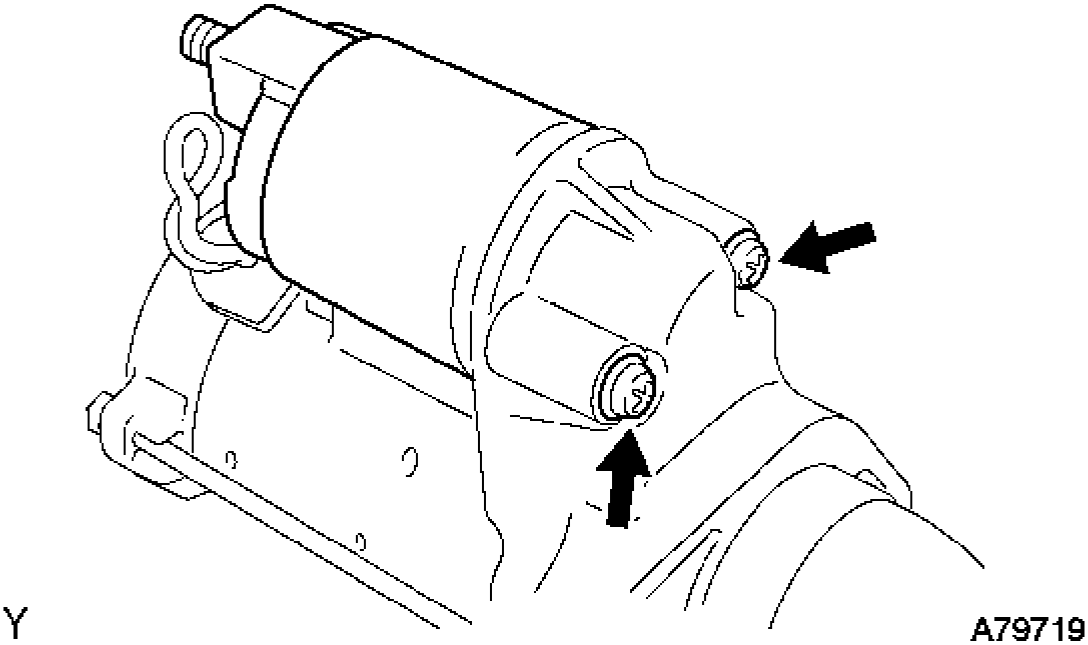

Fig. 6: Locating Magnetic Switch Screws
Courtesy of TOYOTA MOTOR SALES, U.S.A., INC.

c. Remove the magnetic switch.
d. Remove the return spring and plunger from the starter drive housing.

2. **REMOVE STARTER YOKE ASSEMBLY**
   a. Remove the 2 through-bolts, and pull out the starter yoke together with the commutator end frame.

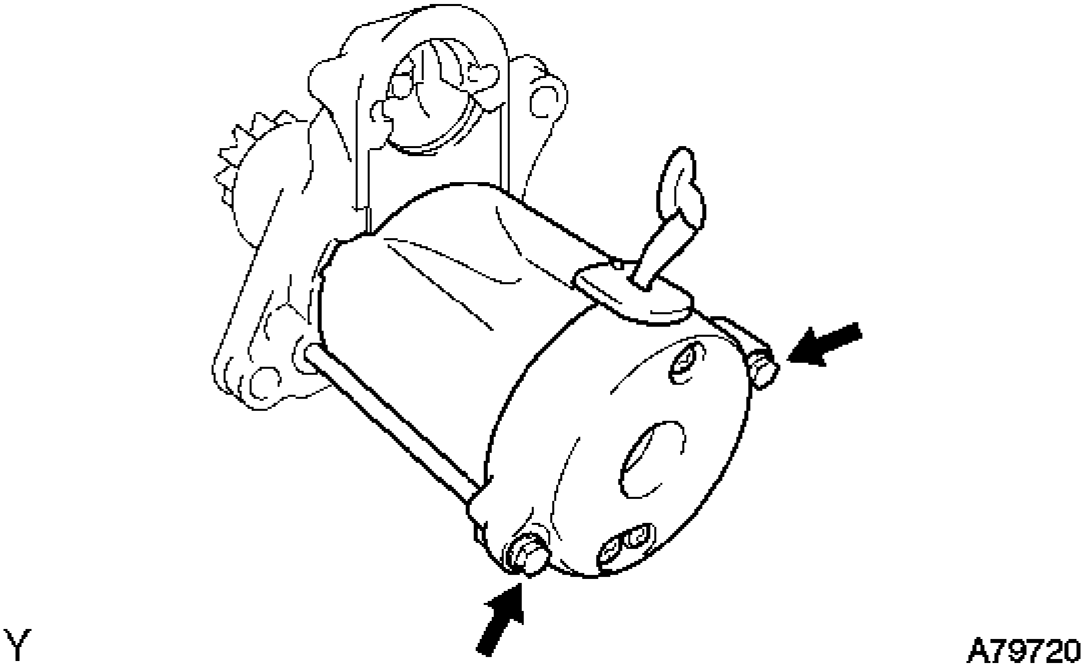

Fig. 7: Locating Field Frame With Through Bolts
Courtesy of TOYOTA MOTOR SALES, U.S.A., INC.

   b. Remove the starter yoke from the commutator end frame.

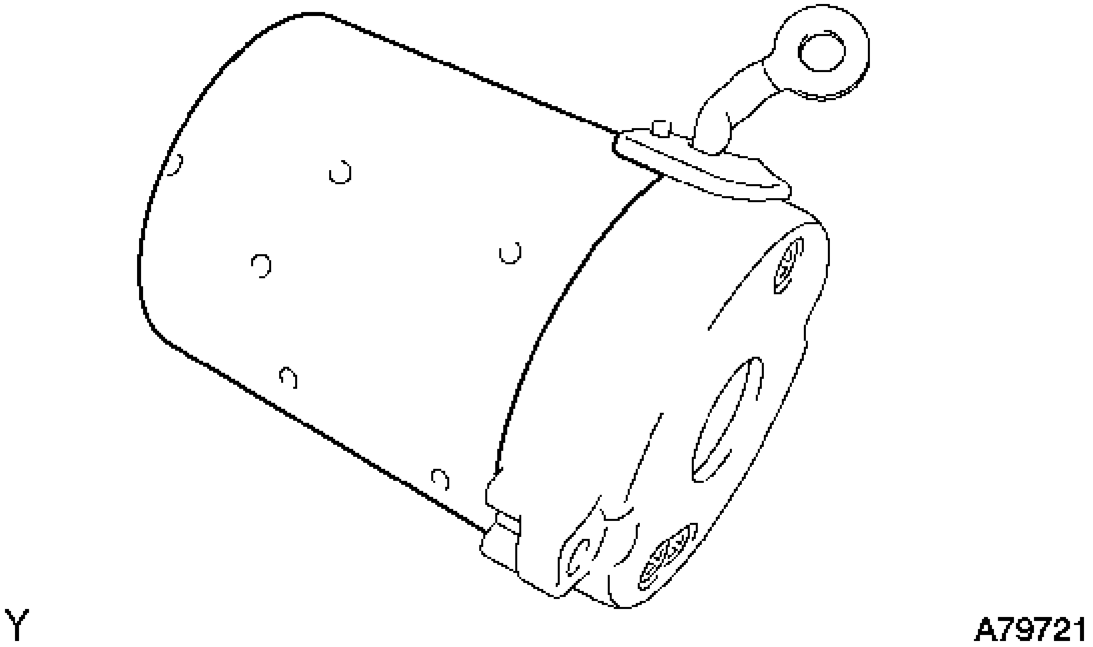

Fig. 8: Identifying Starter Commutator End Frame
Courtesy of TOYOTA MOTOR SALES, U.S.A., INC.

3. **REMOVE STARTER ARMATURE PLATE**
    a. Remove the armature plate from the starter yoke.

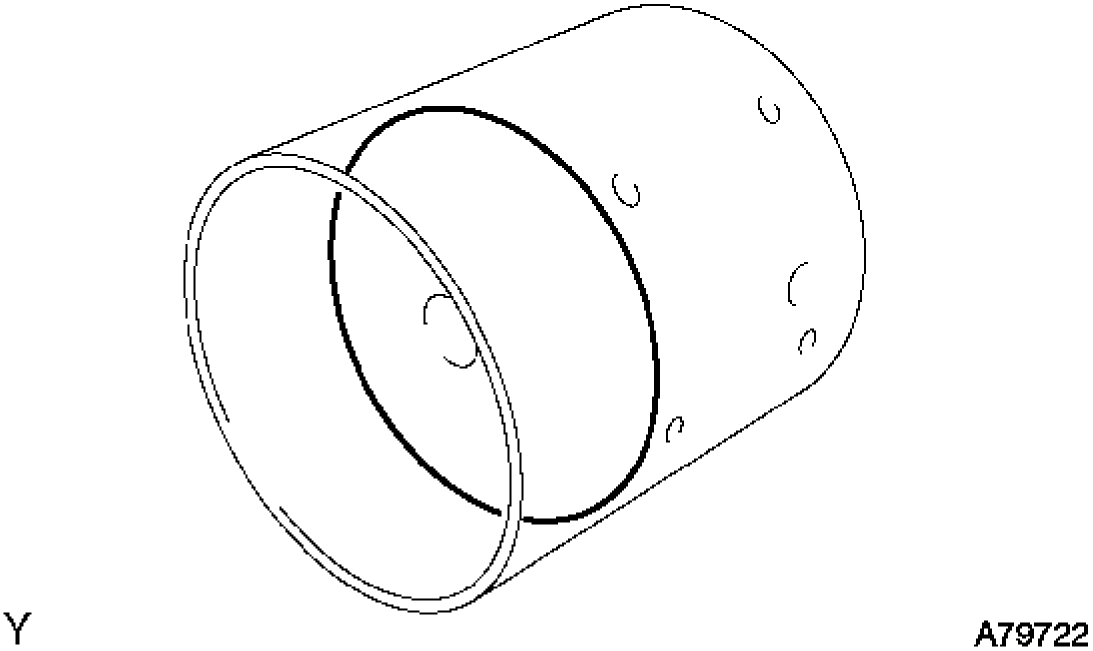

Fig. 9: Identifying Starter Armature Plate
Courtesy of TOYOTA MOTOR SALES, U.S.A., INC.

4. **REMOVE STARTER COMMUTATOR END FRAME COVER**
    a. Using a screwdriver, pry out the commutator end frame cover.

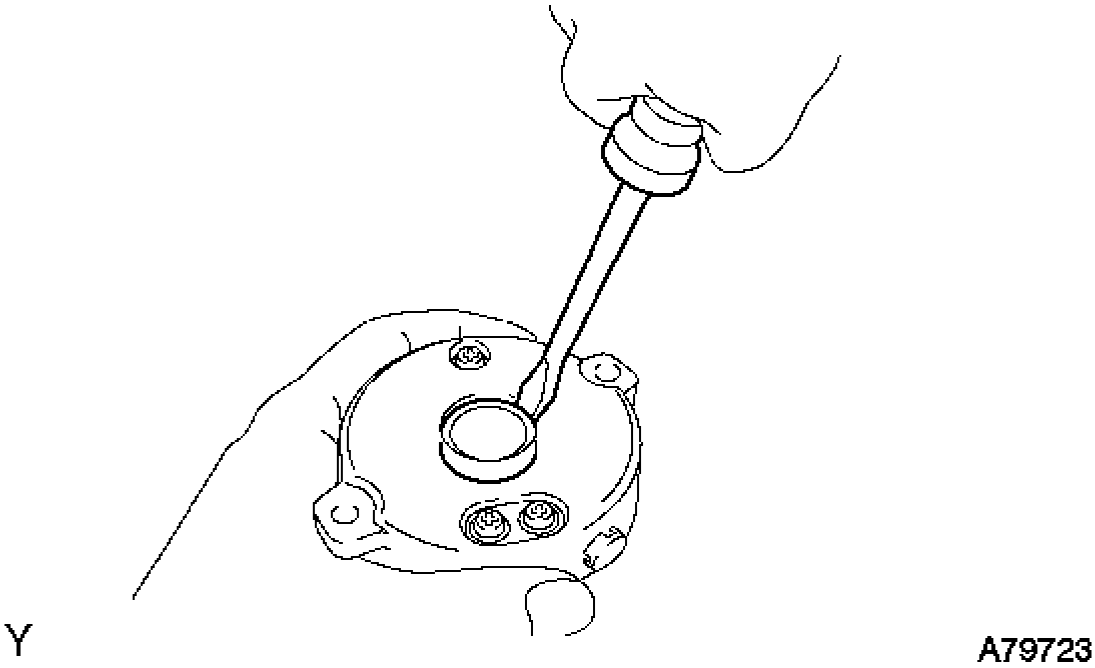

Fig. 10: Prying Out Commutator End Frame Cover
Courtesy of TOYOTA MOTOR SALES, U.S.A., INC.

5. **REMOVE STARTER ARMATURE ASSEMBLY**
    a. Using snap ring pliers, remove the snap ring and plate washer.

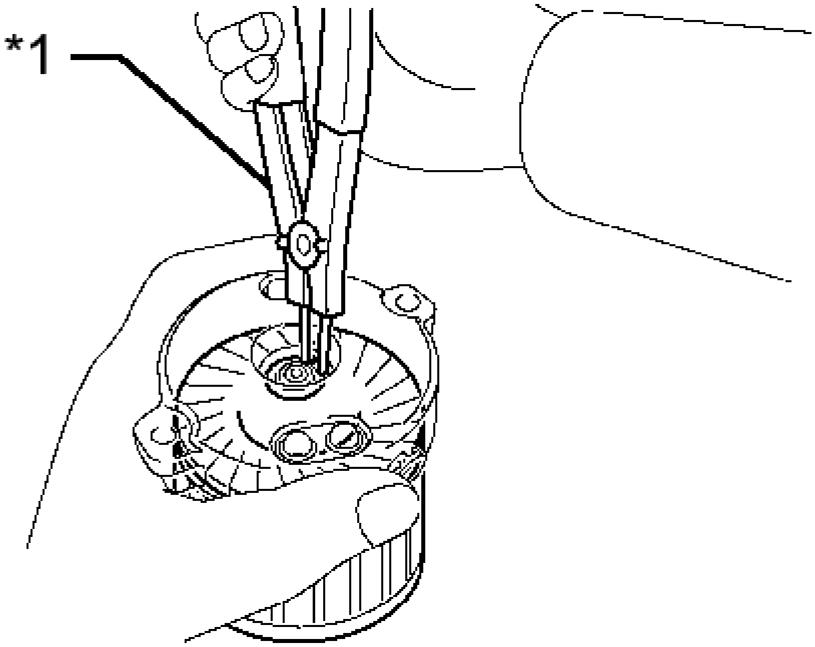

Fig. 11: Removing/Installing Snap Ring And Plate Washer
Courtesy of TOYOTA MOTOR SALES, U.S.A., INC.

NOTE: **Do not drop the starter armature assembly.**

TEXT IN ILLUSTRATION

*1	Snap Ring Pliers

b. Remove the armature from the commutator end frame.

6. **REMOVE PLANETARY GEAR**
    a. Remove the 3 planetary gears from the starter drive housing.

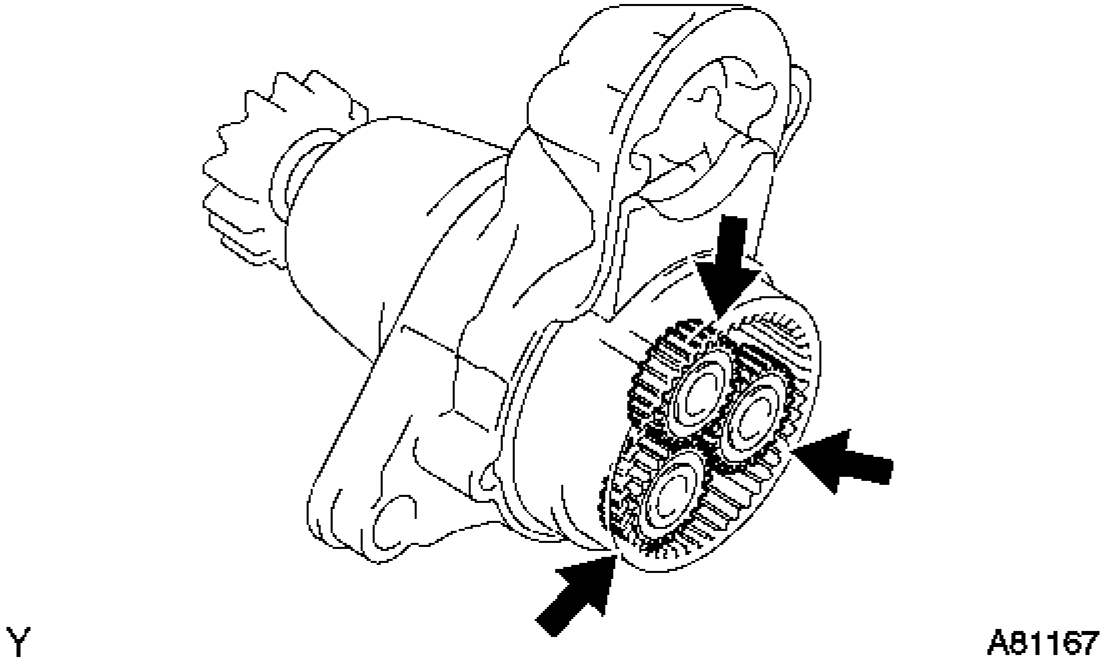

Fig. 12: Removing Planetary Gears From Starter Drive Housing
Courtesy of TOYOTA MOTOR SALES, U.S.A., INC.

INSPECTION

INSPECTION

1. **INSPECT STARTER ASSEMBLY**

WARNING: **As a large electric current passes through the cable during this inspection, a thick cable must be used. If not, the cable may became hot and cause injury.**

NOTE: These tests must be performed within 3 to 5 seconds to avoid burning out the coil.

a. Perform a pull-in test.
   1. Remove the nut and disconnect the lead wire from terminal C.
   2. Connect the battery to the magnetic switch as shown in the illustration. Check that the clutch pinion gear extends.

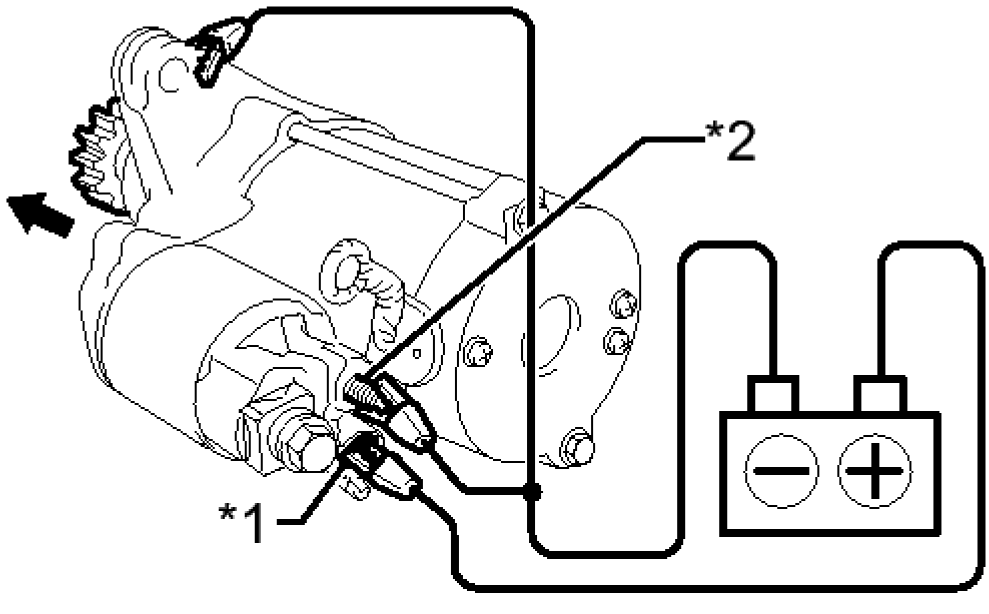

Fig. 13: Checking Clutch Pinion Gear Extends
Courtesy of TOYOTA MOTOR SALES, U.S.A., INC.

TEXT IN ILLUSTRATION

*1	Terminal 50
*2	Terminal C

If the clutch pinion gear does not move, replace the magnetic switch assembly.

b. Perform a hold-in test.

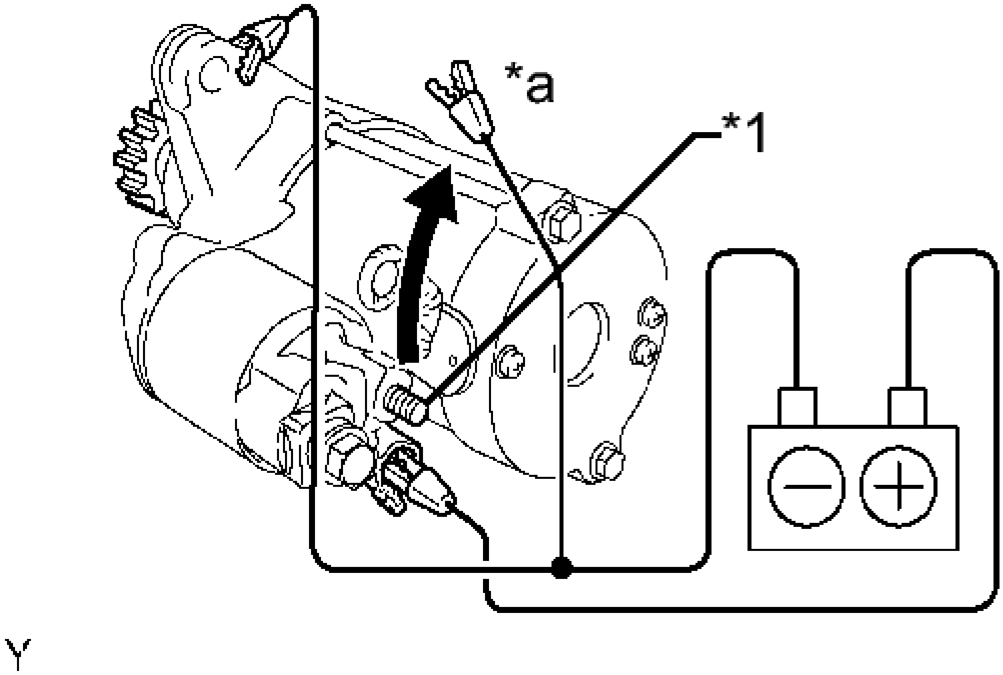

Fig. 14: Hold-In Test
Courtesy of TOYOTA MOTOR SALES, U.S.A., INC.

1. While maintaining the battery connections of the pull-in test above, disconnect the negative (-) lead from terminal C. Check that the pinion gear remains extended.

   TEXT IN ILLUSTRATION

*1	Terminal C
*a	Disconnect

   If the clutch pinion gear returns inward, replace the magnetic switch assembly.

c. Perform a clutch pinion gear return test.

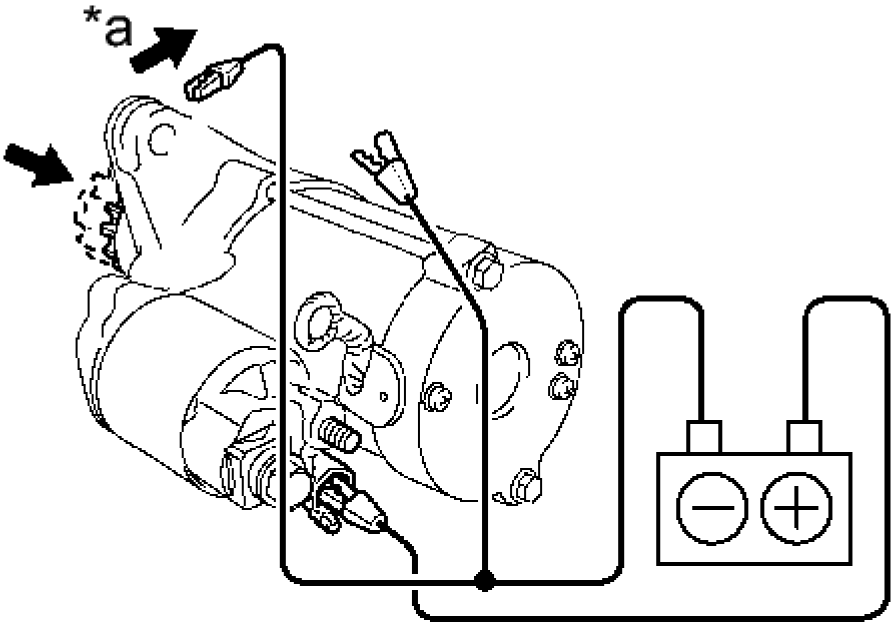

Fig. 15: Clutch Pinion Gear Return Test
Courtesy of TOYOTA MOTOR SALES, U.S.A., INC.

1. Disconnect the negative (-) lead from the starter body. Check that the clutch pinion gear returns.

   If the clutch pinion gear does not return, replace the magnetic switch assembly.

   TEXT IN ILLUSTRATION

*a	Disconnect

d. Perform a no-load performance test.

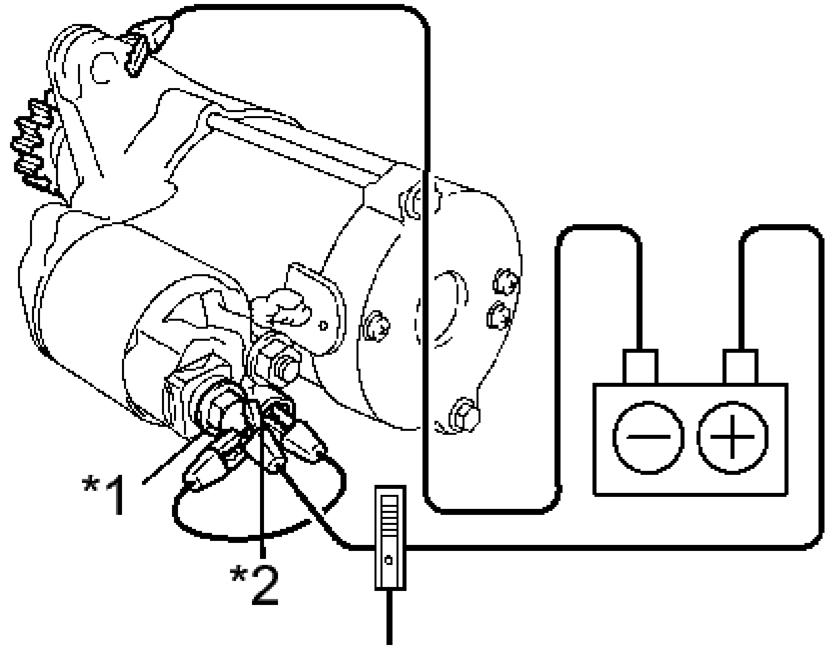

Fig. 16: Checking Starter Assembly No-Load Performance Test
Courtesy of TOYOTA MOTOR SALES, U.S.A., INC.

TEXT IN ILLUSTRATION

*1	Terminal 30
*2	Terminal 50

1. Connect the lead wire to terminal C with the nut. Make sure that the lead is not grounded.

   Torque: 10 N*m (102 kgf*cm, 7 ft.*lbf)

2. Clamp the starter in a vise.
3. Connect the battery and an ammeter to the starter as shown in the illustration.
4. Check that the starter rotates smoothly and steadily while the pinion gear is moving out. Then measure the current.

   Standard current

   90 A or less at 11.5 V

   If the result is not as specified, repair or replace the starter assembly.

2. **INSPECT REPAIR SERVICE STARTER KIT**
   a. Check the plunger.

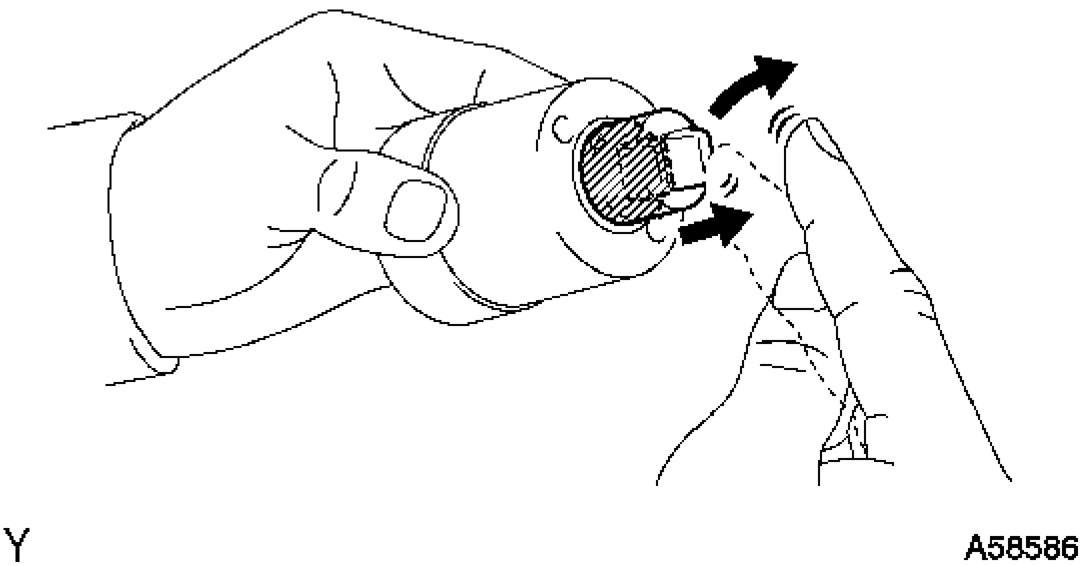

Fig. 17: Checking Plunger
Courtesy of TOYOTA MOTOR SALES, U.S.A., INC.

1. Push in the plunger and check that it returns quickly to its original position.

   If necessary, replace the repair service starter kit.

b. Check if the pull-in coil has an open circuit.

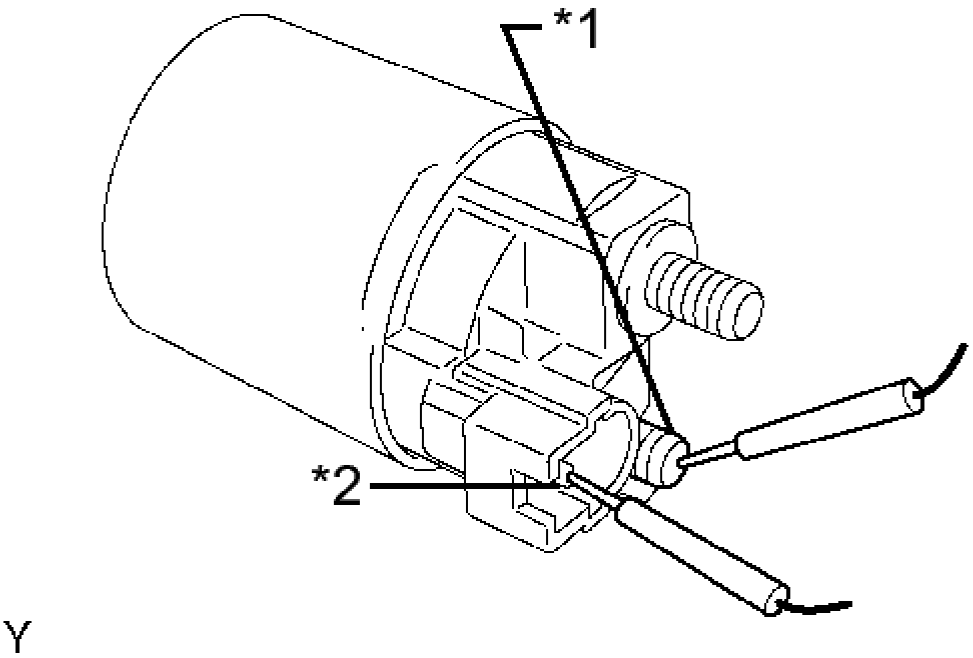

Fig. 18: Checking Pull-In Coil
Courtesy of TOYOTA MOTOR SALES, U.S.A., INC.

TEXT IN ILLUSTRATION

*1	Terminal C
*2	Terminal 50

1. Measure the resistance between terminals 50 and C.

   Standard resistance

   Below 1 ohms

   If the result is not as specified, replace the repair service starter kit.

c. Check if the hold-in coil has an open circuit.

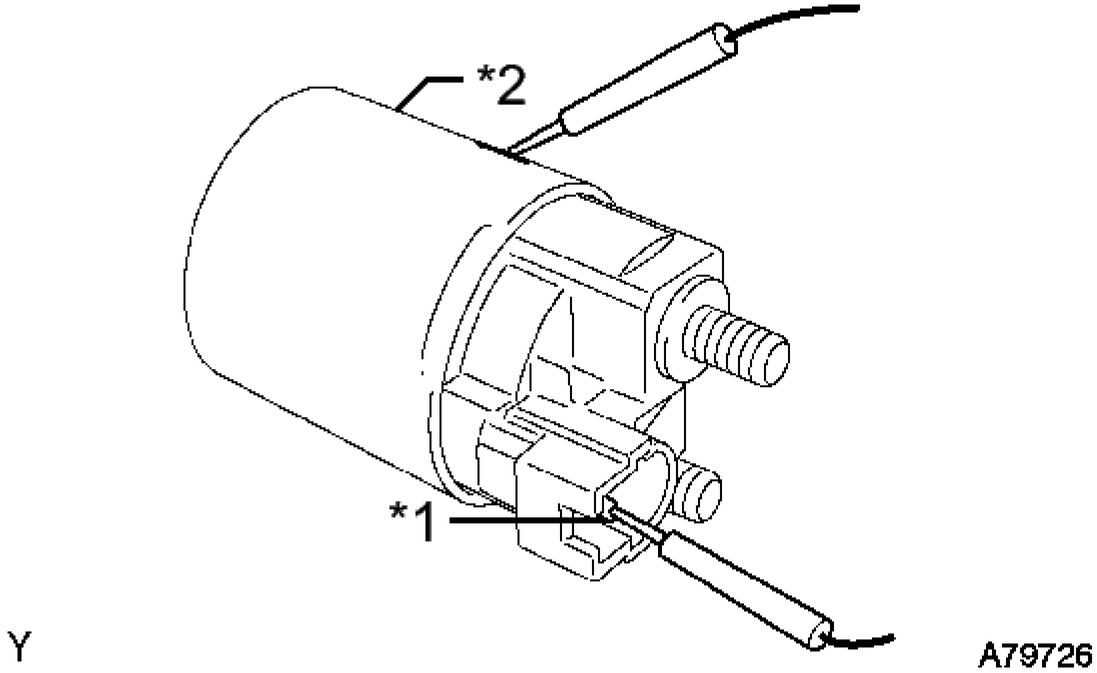

Fig. 19: Checking Hold-In Coil
Courtesy of TOYOTA MOTOR SALES, U.S.A., INC.

TEXT IN ILLUSTRATION

*1	Terminal 50
*2	Body

        1. Measure the resistance between terminal 50 and the switch body.

           Standard resistance

           Below 2 ohms

           If the result is not as specified, replace the repair service starter kit.

3. **INSPECT STARTER ARMATURE ASSEMBLY**

   HINT:

   If these is no continuity between any segments, replace the starter armature assembly.

    a. Check the commutator for contamination and burns on its surface.

       If the surface is dirty or burnt, correct it with sandpaper (No. 400) or a lathe.

    b. Check if the commutator has an open circuit.

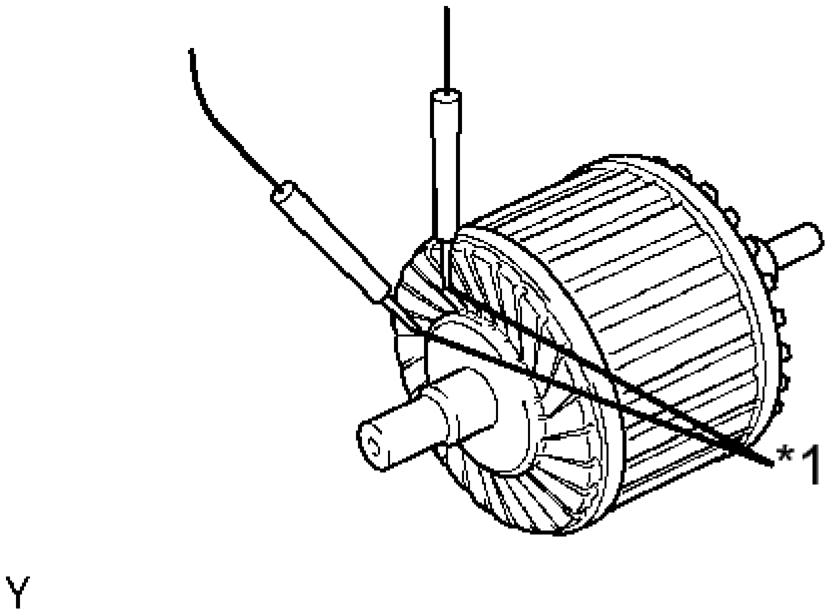

Fig. 20: Checking Commutator (Open Circuit)
Courtesy of TOYOTA MOTOR SALES, U.S.A., INC.

TEXT IN ILLUSTRATION

*1	Segment

        1. Measure the resistance between the segments of the commutator.

Standard resistance

Below 1 ohms

If the result is not as specified, replace the armature assembly.

c. Check if the commutator is grounded.

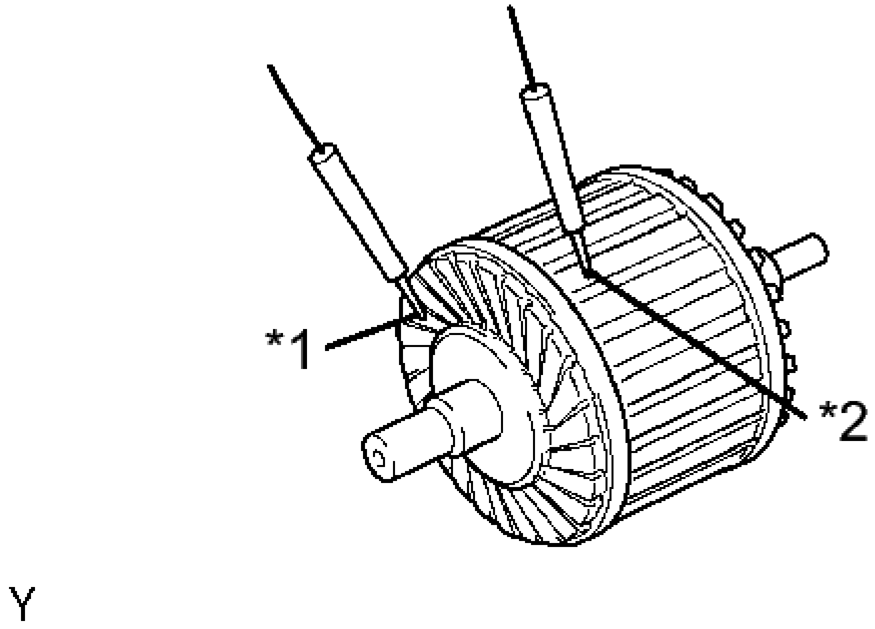

Fig. 21: Checking Commutator (Grounded)
Courtesy of TOYOTA MOTOR SALES, U.S.A., INC.

TEXT IN ILLUSTRATION

*1	Commutator
*2	Coil Core

1. Measure the resistance between the commutator and armature coil core.

   Standard resistance

   10 kohms or higher

   If the result is not as specified, replace the armature assembly.

d. Using a vernier caliper, measure the commutator length.

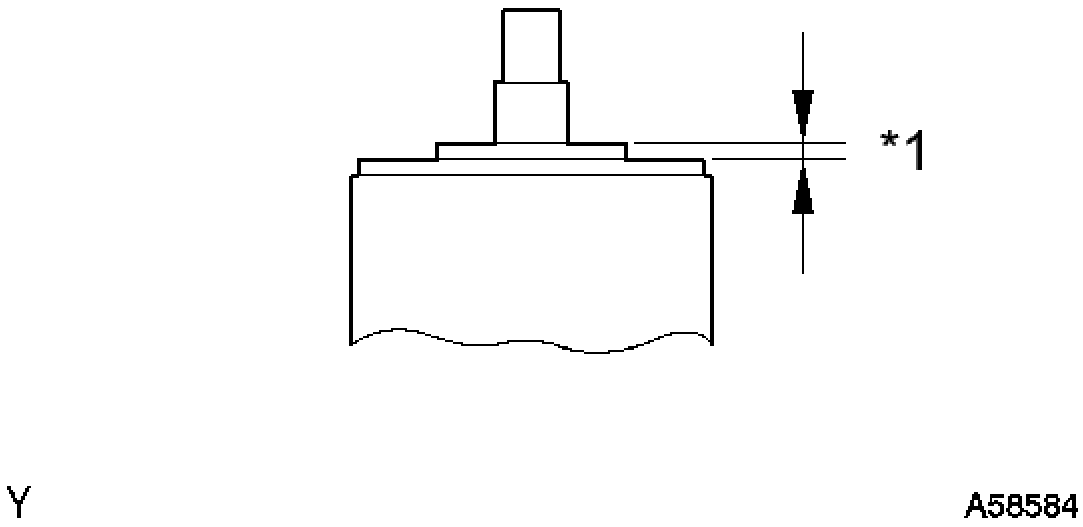

Fig. 22: Identifying Commutator Length
Courtesy of TOYOTA MOTOR SALES, U.S.A., INC.

TEXT IN ILLUSTRATION

*1	Length

Standard length

3.1 to 3.8 mm (0.122 to 0.149 in.)

Maximum length

3.8 mm (0.149 in.)

If the length is greater than the maximum, replace the starter armature assembly.

4. **INSPECT STARTER COMMUTATOR END FRAME ASSEMBLY**
   a. Using a vernier caliper, measure the brush length.

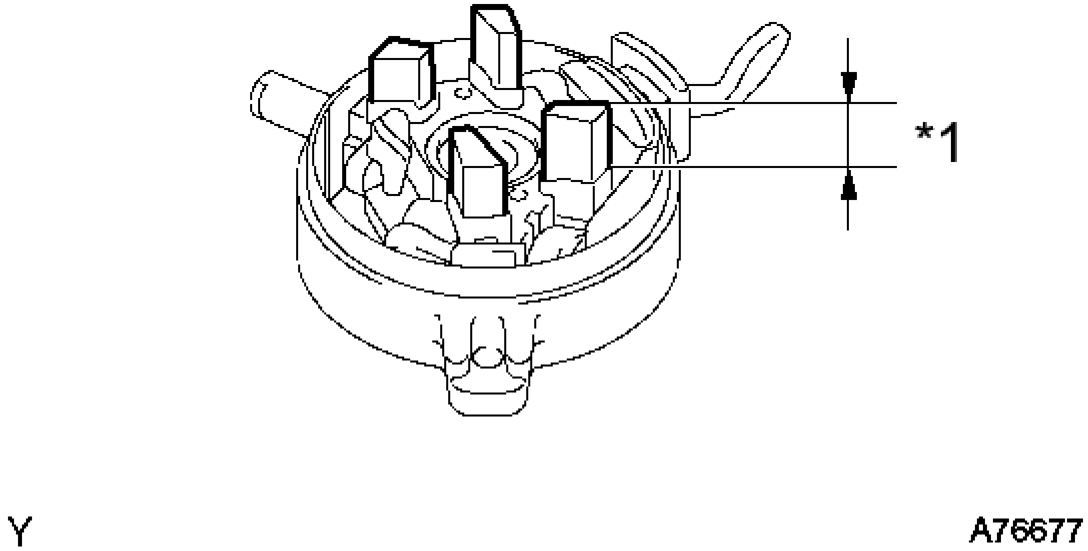

Fig. 23: Identifying Brush Length
Courtesy of TOYOTA MOTOR SALES, U.S.A., INC.

TEXT IN ILLUSTRATION

*1	Length

Standard length

4.0 to 9.0 mm (0.158 to 0.354 in.)

Minimum length

4.0 mm (0.158 in.)

If the length is less than the minimum, replace the end frame assembly.

b. Check the brush insulation.

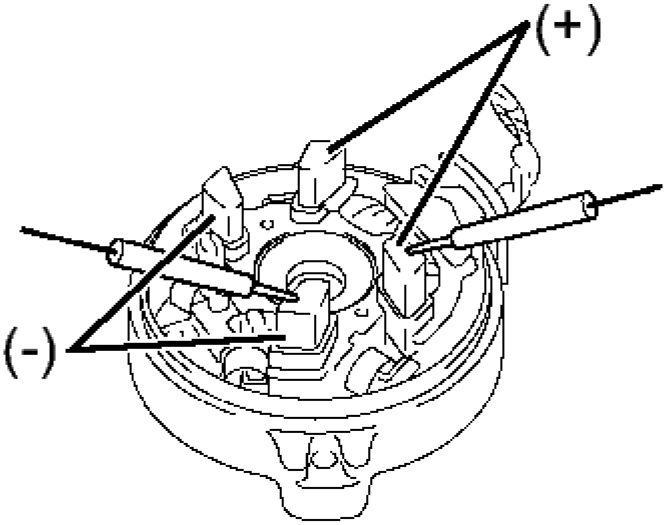

Fig. 24: Checking Brush Insulation
Courtesy of TOYOTA MOTOR SALES, U.S.A., INC.

1. Measure the resistance between the positive (+) and negative (-) brushes.

   Standard resistance

   10 kohms or higher

   If the result is not as specified, replace the end frame assembly.

5. **INSPECT STARTER CLUTCH**
   a. Rotate the clutch pinion gear counterclockwise and check that it turns freely. Try to rotate the clutch pinion gear clockwise and check that it locks.

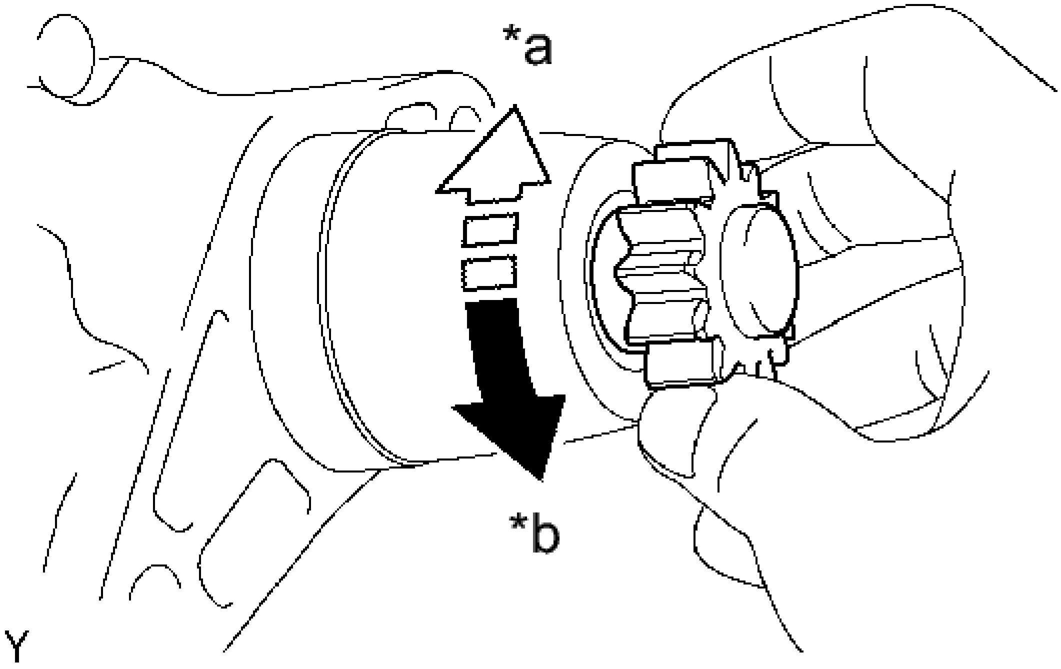

Fig. 25: Checking Clutch Pinion Gear Turns Freely
Courtesy of TOYOTA MOTOR SALES, U.S.A., INC.

TEXT IN ILLUSTRATION

*a	Lock
*b	Free

If necessary, replace the starter drive housing assembly.

REASSEMBLY

REASSEMBLY

HINT:

Use high-temperature grease to lubricate the bearings, gears and return spring when assembling the starter.

1. **INSTALL PLANETARY GEAR**
    a. Apply grease to the planetary gears and pin parts of the planetary shaft.

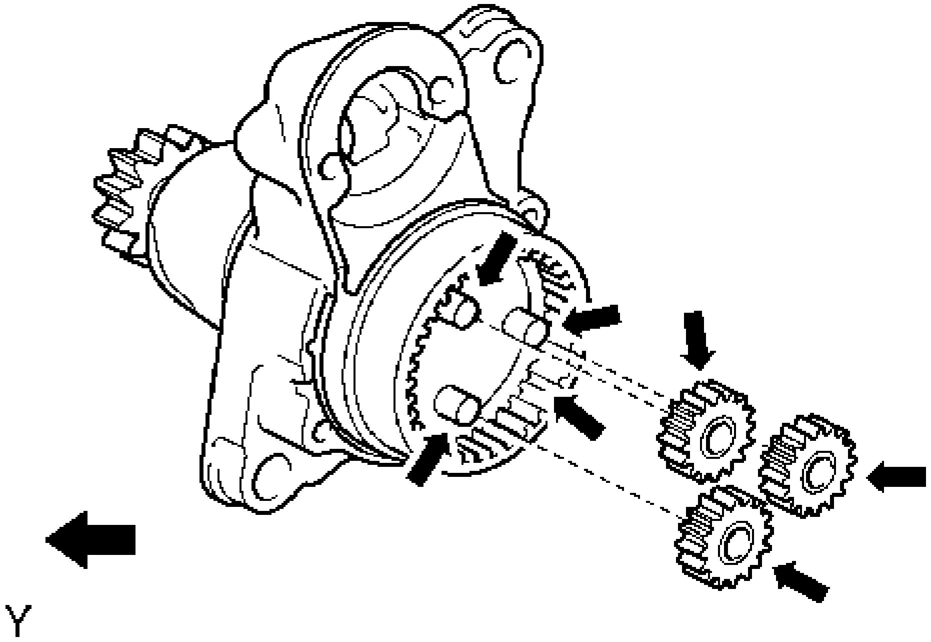

Fig. 26: Applying Grease To Planetary Gear
Courtesy of TOYOTA MOTOR SALES, U.S.A., INC.

TEXT IN ILLUSTRATION

	High-temperature grease

b. Install the 3 planetary gears.

2. **INSTALL STARTER ARMATURE ASSEMBLY**
    a. Apply grease to the armature shaft.

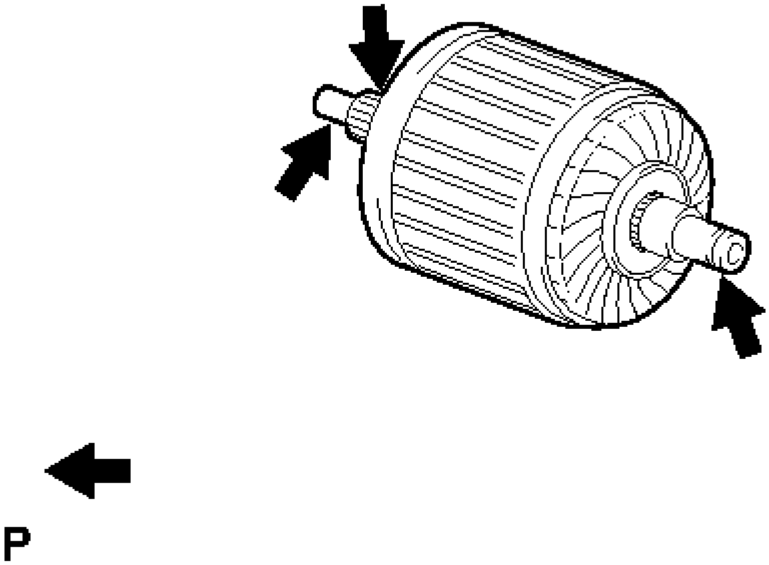

Fig. 27: Applying Grease To Armature Shaft
Courtesy of TOYOTA MOTOR SALES, U.S.A., INC.

TEXT IN ILLUSTRATION

·	High-temperature grease

b. Apply high-temperature grease to the plate washer and bearing, as shown in the illustration.

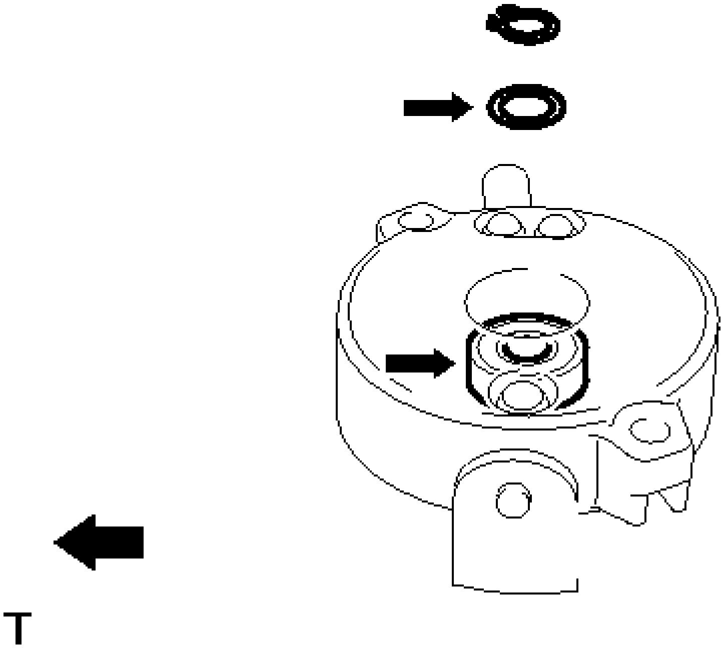

Fig. 28: Identifying Plate Washer And Bearing
Courtesy of TOYOTA MOTOR SALES, U.S.A., INC.

TEXT IN ILLUSTRATION

	High-temperature grease

c. Install the starter armature to the starter commutator end frame.
d. Using snap ring pliers, install the plate washer and a new snap ring.

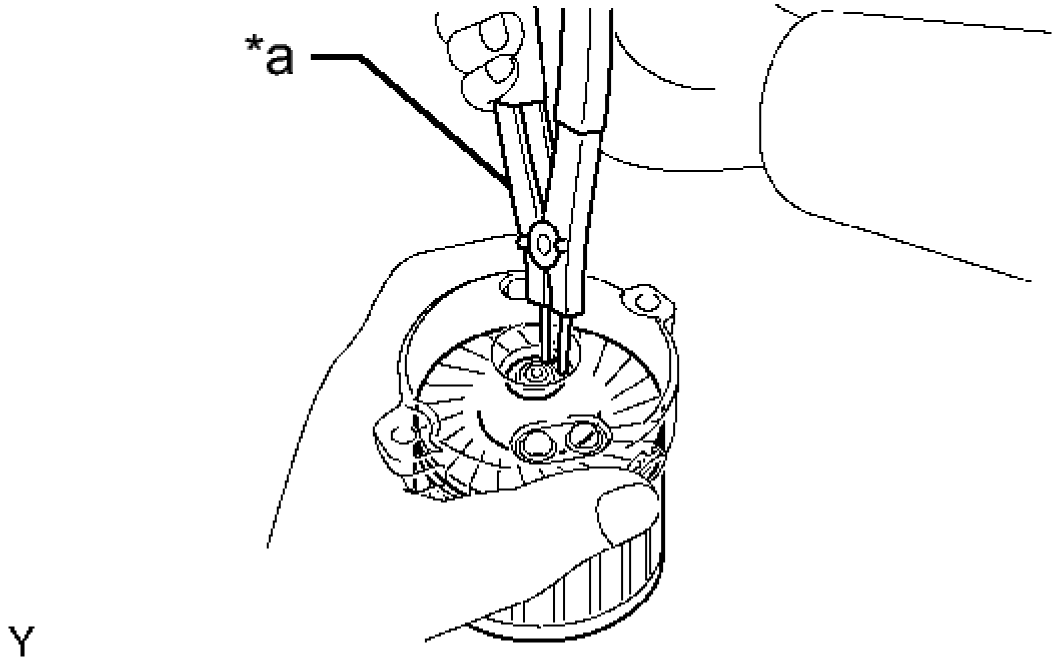

Fig. 29: Installing Plate Washer And Snap Ring
Courtesy of TOYOTA MOTOR SALES, U.S.A., INC.

TEXT IN ILLUSTRATION

*a	Snap Ring Pliers

NOTE:

- **Be sure to install the snap ring in the armature shaft groove securely.**
- **Be sure to properly install the snap ring because it expands easily.**

e. Using a vernier caliper, measure the length of the snap ring.

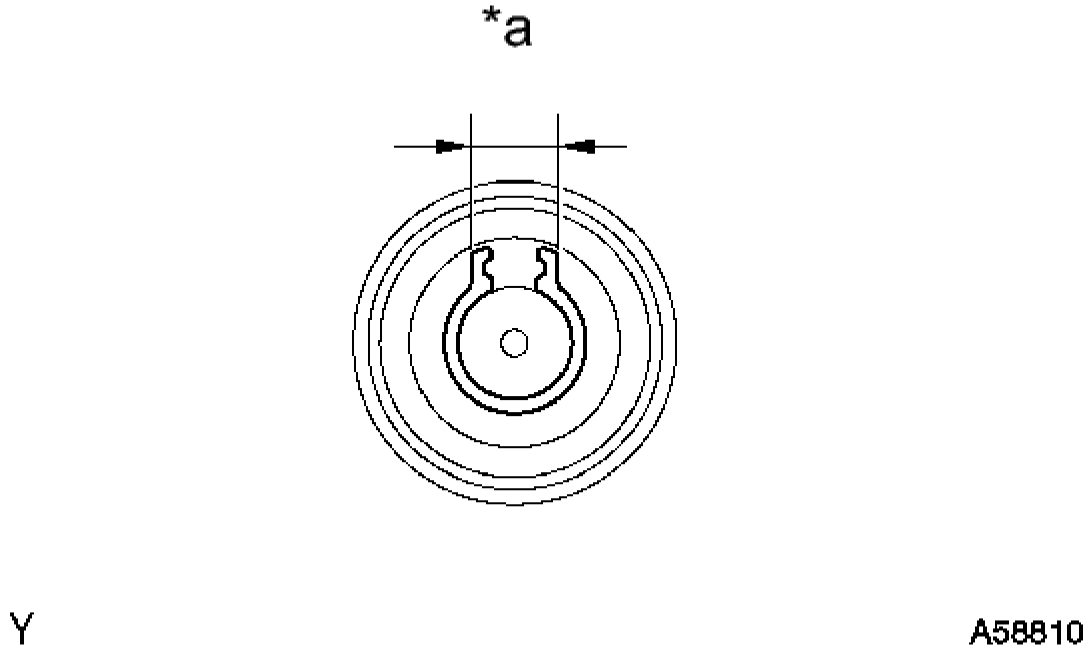

Fig. 30: Identifying Length Of Snap Ring
Courtesy of TOYOTA MOTOR SALES, U.S.A., INC.

TEXT IN ILLUSTRATION

*a	Length

Maximum length

5.0 mm (0.196 in.)

If the length is greater than the maximum, replace it with a new snap ring.

3. **INSTALL STARTER COMMUTATOR END FRAME COVER**
    a. Install the end frame cover to the commutator end frame.

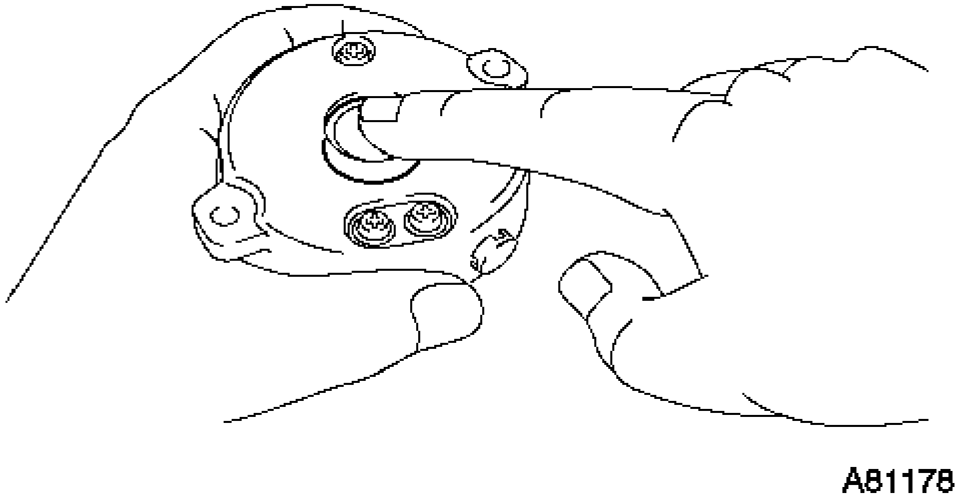

Fig. 31: Installing End Frame Cover
Courtesy of TOYOTA MOTOR SALES, U.S.A., INC.

4. **INSTALL STARTER ARMATURE PLATE**
    a. Insert the starter armature plate to the starter yoke.

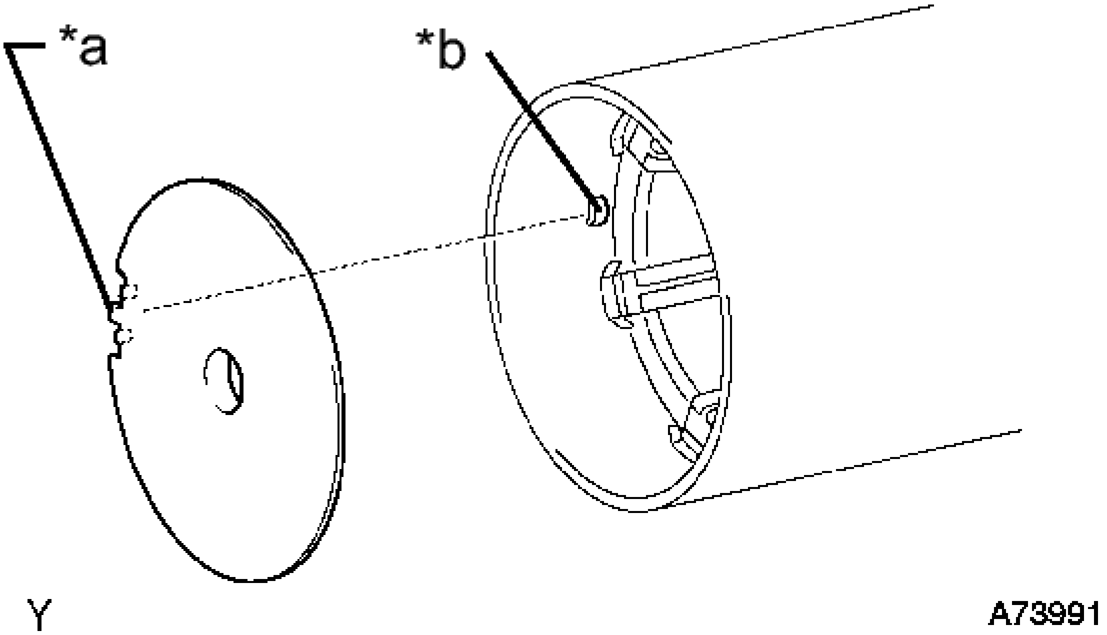

Fig. 32: Identifying Starter Armature Plate
Courtesy of TOYOTA MOTOR SALES, U.S.A., INC.

TEXT IN ILLUSTRATION

*a	Keyway
*b	Key

b. Align the keyway of the starter armature plate with the key inside the starter yoke, and install the starter armature plate.

5. **INSTALL STARTER COMMUTATOR END FRAME ASSEMBLY**

a. Align the rubber of the end frame with the cutout of the starter yoke.

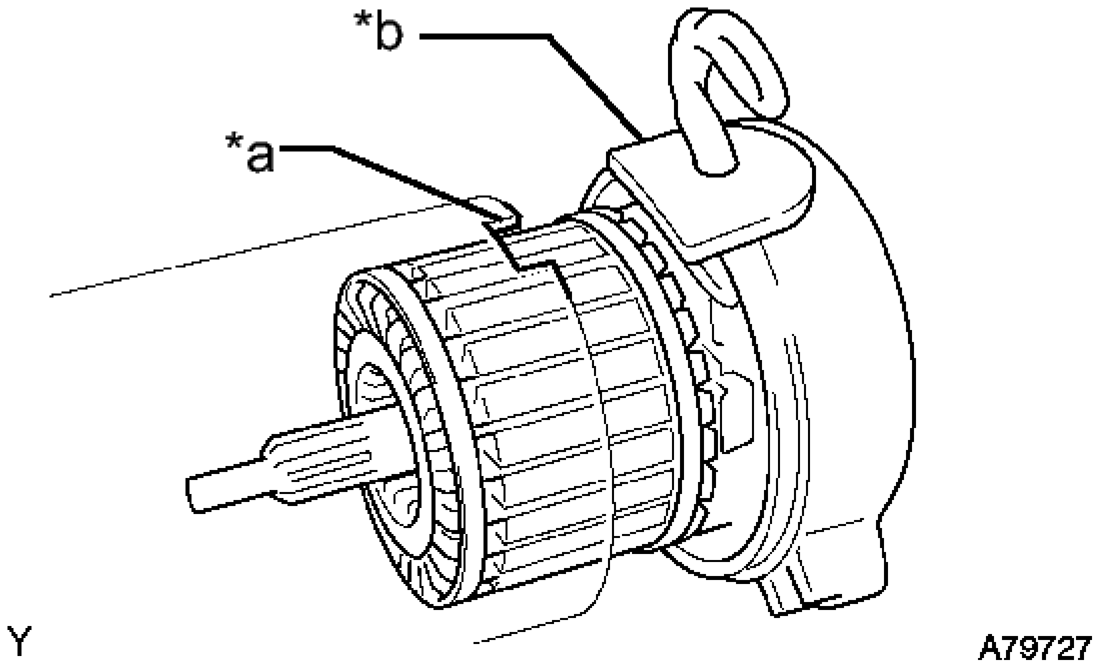

Fig. 33: Aligning End Frame Rubber And Starter Yoke Cutout
Courtesy of TOYOTA MOTOR SALES, U.S.A., INC.

TEXT IN ILLUSTRATION

*a	Cutout
*b	Rubber

b. Install the end frame to the starter yoke.

NOTE: **The magnet of the starter yoke may attract the starter armature when the starter commutator end frame is installed, causing the magnet to break.**

6. **INSTALL STARTER YOKE ASSEMBLY**

a. Align the protrusion of the starter yoke with the cutout of the starter drive housing.

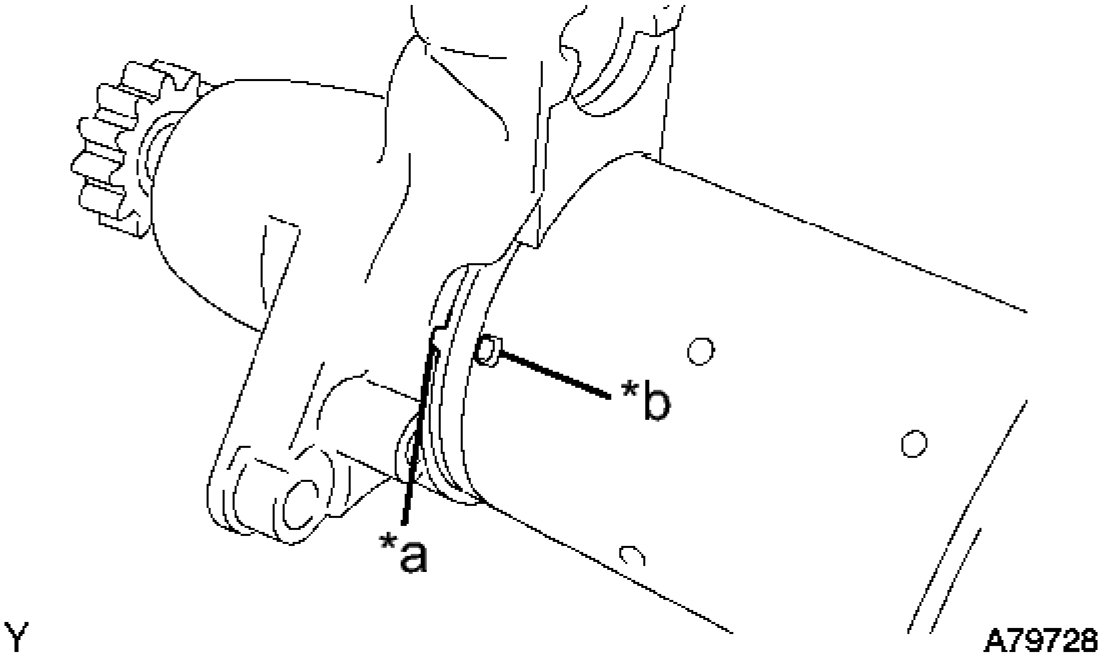

Fig. 34: Aligning Starter Yoke Protrusion And Starter Drive Housing Cutout
Courtesy of TOYOTA MOTOR SALES, U.S.A., INC.

TEXT IN ILLUSTRATION

*a	Cutout
*b	Protrusion

b. Install the starter yoke with the 2 through-bolts.

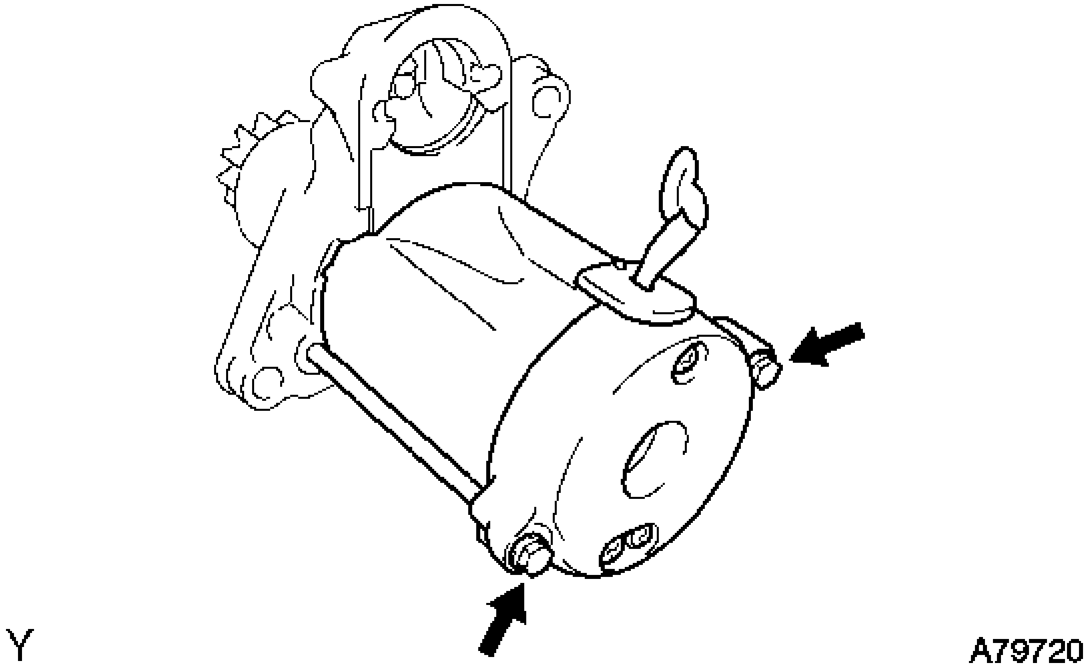

Fig. 35: Locating Field Frame With Through Bolts
Courtesy of TOYOTA MOTOR SALES, U.S.A., INC.

Torque: 6.0 N*m (61 kgf*cm, 53 in.*lbf)

7. **INSTALL REPAIR SERVICE STARTER KIT**
    a. Apply grease to the plunger and the hook.

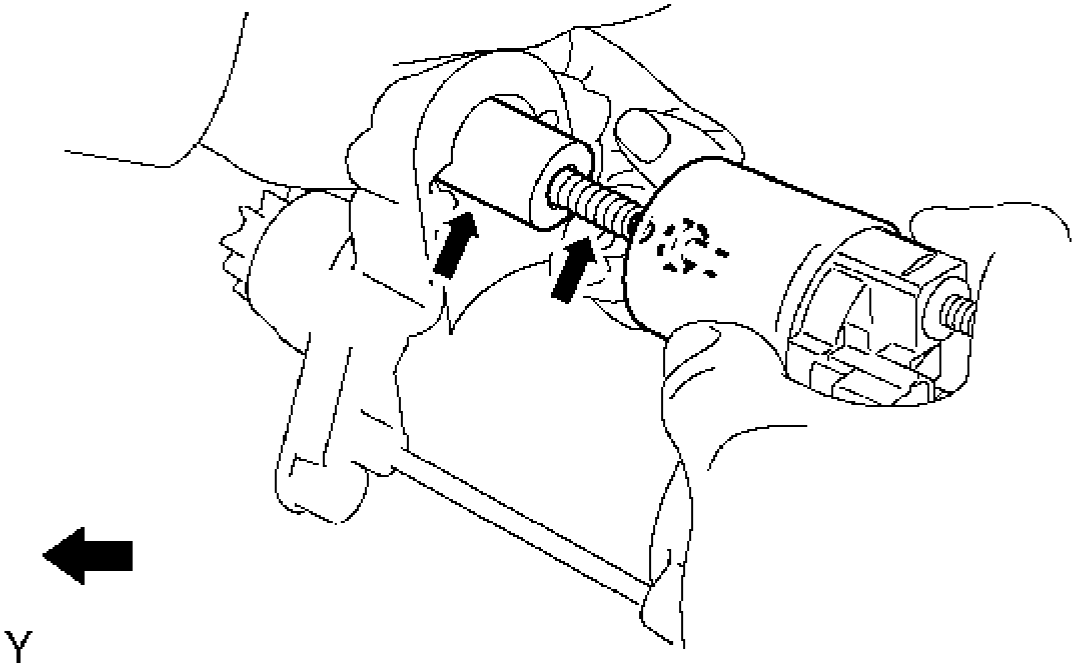

Fig. 36: Applying Grease To Plunger And Hook
Courtesy of TOYOTA MOTOR SALES, U.S.A., INC.

TEXT IN ILLUSTRATION

·	High-temperature grease

b. Hang the plunger hook of the magnetic switch to the drive lever.
c. Install the plunger and return spring.
d. Install the magnetic switch with the 2 screws.

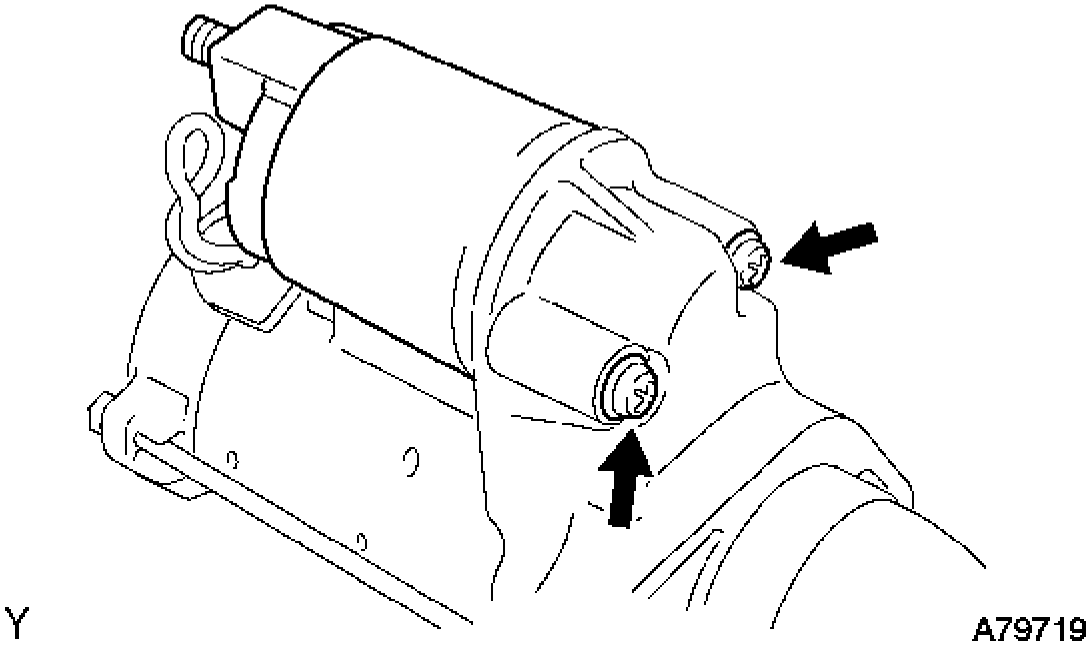

Fig. 37: Locating Magnetic Switch Screws
Courtesy of TOYOTA MOTOR SALES, U.S.A., INC.

Torque: 7.5 N*m (76 kgf*cm, 66 in.*lbf)

e. Connect the lead wire to the magnetic switch with the nut.

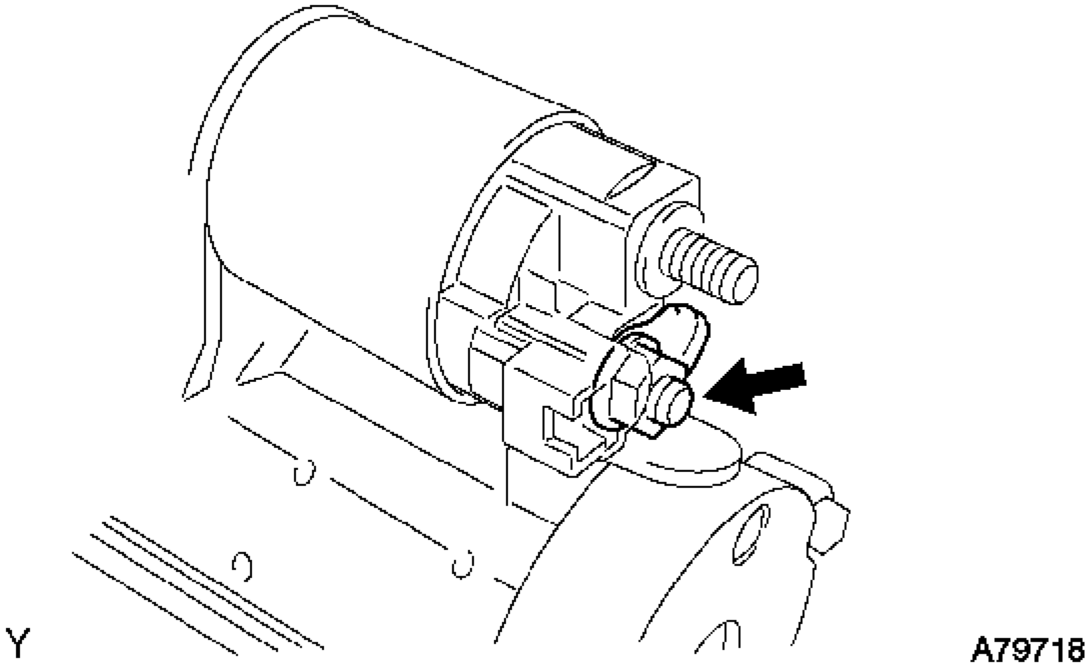

Fig. 38: Locating Magnetic Switch Nut
Courtesy of TOYOTA MOTOR SALES, U.S.A., INC.

Torque: 10 N*m (102 kgf*cm, 7 ft.*lbf)

INSTALLATION

INSTALLATION

1. **INSTALL STARTER ASSEMBLY**
    a. Install the starter with the 2 bolts.

       Torque: 37 N*m (377 kgf*cm, 27 ft.*lbf)

    b. Connect the starter connector.
    c. Install the terminal nut and cover the nut with the cap.

       Torque: 9.8 N*m (100 kgf*cm, 87 in.*lbf)

2. **INSTALL BATTERY** . Refer to **INSTALLATION - Step 49**
3. **INSTALL AIR CLEANER CASE SUB-ASSEMBLY** . Refer to **INSTALLATION - Step 50**
4. **INSTALL AIR CLEANER FILTER ELEMENT SUB-ASSEMBLY**
5. **INSTALL AIR CLEANER CAP SUB-ASSEMBLY** . Refer to **INSTALLATION - Step 2**
6. **INSTALL INLET AIR CLEANER ASSEMBLY** . Refer to **INSTALLATION - Step 53**
7. **INSTALL NO. 1 ENGINE COVER SUB-ASSEMBLY** . Refer to **INSTALLATION - Step 68**
8. **INSTALL COOL AIR INTAKE DUCT SEAL** . Refer to **INSTALLATION - Step 4**

9. **CONNECT CABLE TO NEGATIVE BATTERY TERMINAL**

NOTE: **When disconnecting the cable, some systems need to be initialized after the cable is reconnected. Refer to INITIALIZATION .**

ENGINE SWITCH

COMPONENTS

ILLUSTRATION

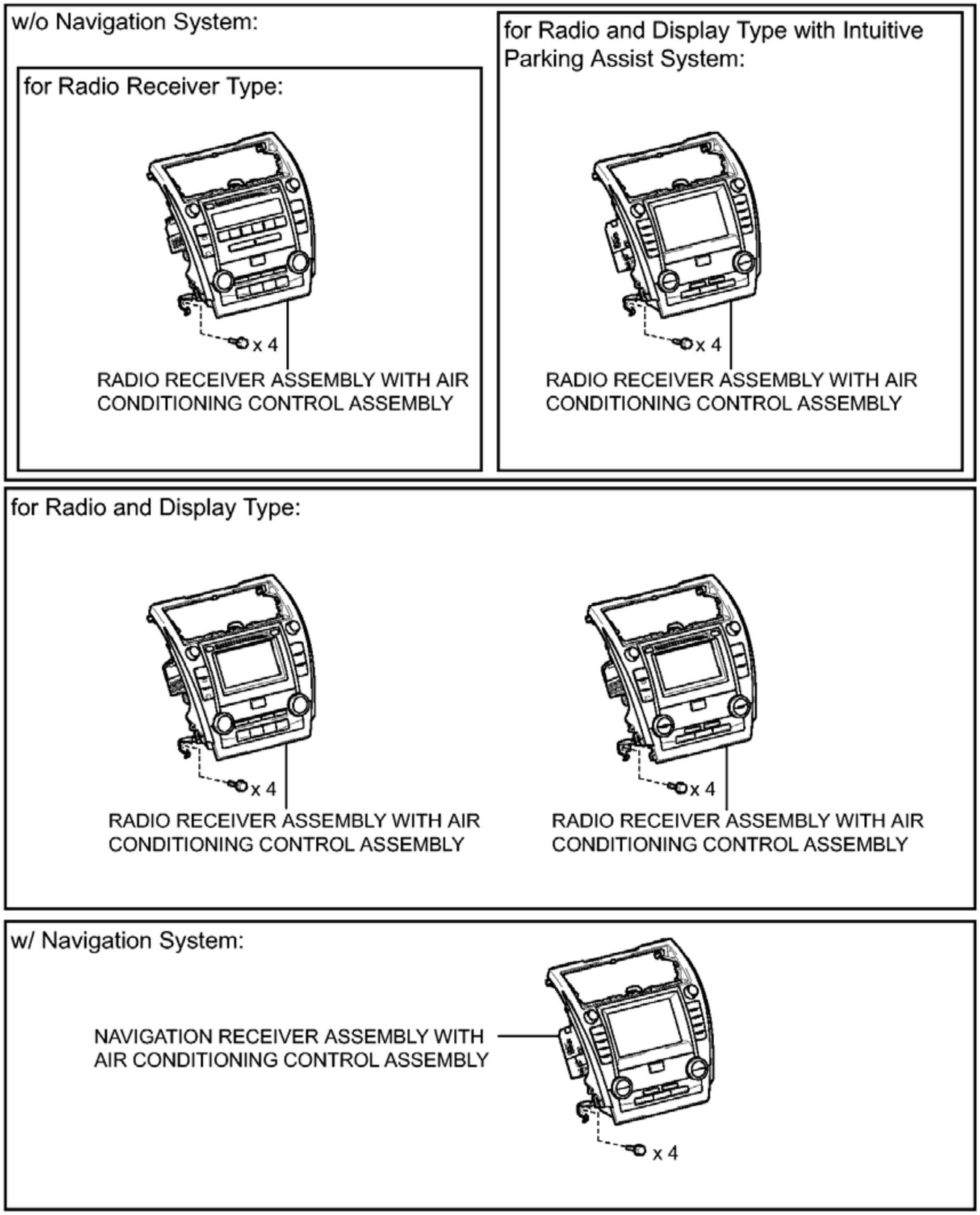
w/o Navigation System:
for Radio Receiver Type:
x 4
RADIO RECEIVER ASSEMBLY WITH AIR CONDITIONING CONTROL ASSEMBLY
for Radio and Display Type with Intuitive Parking Assist System:
x 4
RADIO RECEIVER ASSEMBLY WITH AIR CONDITIONING CONTROL ASSEMBLY
for Radio and Display Type:
x 4
RADIO RECEIVER ASSEMBLY WITH AIR CONDITIONING CONTROL ASSEMBLY
x 4
RADIO RECEIVER ASSEMBLY WITH AIR CONDITIONING CONTROL ASSEMBLY
w/ Navigation System:
NAVIGATION RECEIVER ASSEMBLY WITH AIR CONDITIONING CONTROL ASSEMBLY
x 4

Fig. 39: Identifying Engine Switch Replacement Components (1 Of 2)
Courtesy of TOYOTA MOTOR SALES, U.S.A., INC.

ILLUSTRATION

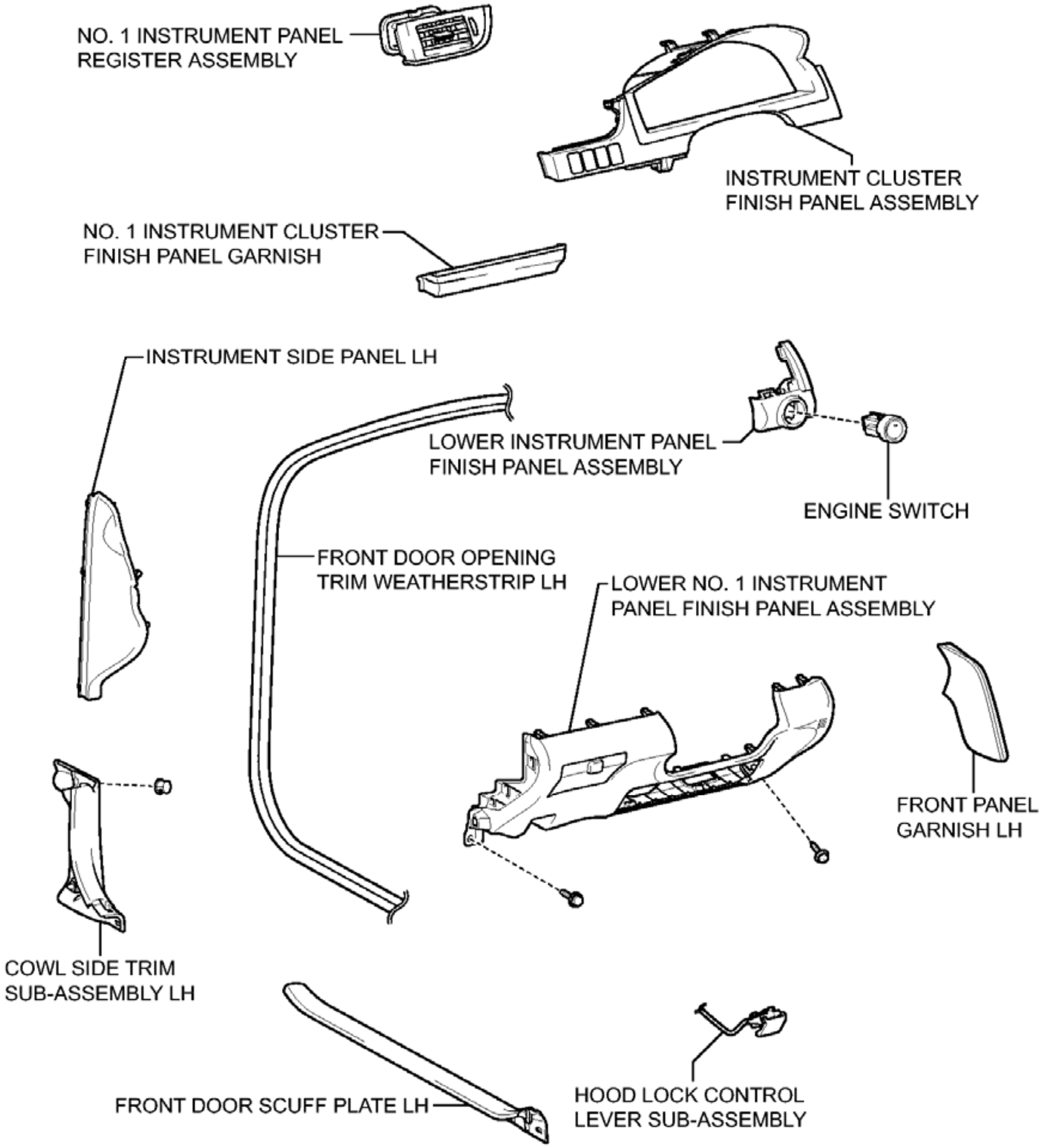
NO. 1 INSTRUMENT PANEL REGISTER ASSEMBLY
INSTRUMENT CLUSTER FINISH PANEL ASSEMBLY
NO. 1 INSTRUMENT CLUSTER FINISH PANEL GARNISH
INSTRUMENT SIDE PANEL LH
LOWER INSTRUMENT PANEL FINISH PANEL ASSEMBLY
ENGINE SWITCH
FRONT DOOR OPENING TRIM WEATHERSTRIP LH
LOWER NO. 1 INSTRUMENT PANEL FINISH PANEL ASSEMBLY
FRONT PANEL GARNISH LH
COWL SIDE TRIM SUB-ASSEMBLY LH
FRONT DOOR SCUFF PLATE LH
HOOD LOCK CONTROL LEVER SUB-ASSEMBLY

Fig. 40: Identifying Engine Switch Replacement Components (2 Of 2)
Courtesy of TOYOTA MOTOR SALES, U.S.A., INC.

REMOVAL

REMOVAL

1. **PRECAUTION**

NOTE: **After turning the engine switch off, waiting time may be required before disconnecting the cable from the negative (-) battery terminal. Therefore, make sure to read the disconnecting the cable from the negative (-) battery terminal notices before proceeding with work. Refer to PRECAUTION .**

2. **DISCONNECT CABLE FROM NEGATIVE BATTERY TERMINAL**

   NOTE: **When disconnecting the cable, some systems need to be initialized after the cable is reconnected. Refer to INITIALIZATION .**

3. **REMOVE RADIO RECEIVER ASSEMBLY WITH AIR CONDITIONING CONTROL ASSEMBLY (w/o Navigation System)**

   Refer to **REMOVAL** .

4. **REMOVE NAVIGATION RECEIVER ASSEMBLY WITH AIR CONDITIONING CONTROL ASSEMBLY (w/ Navigation System)**

   Refer to **REMOVAL** .

5. **REMOVE FRONT DOOR SCUFF PLATE LH** . Refer to **REMOVAL - Step 3**
6. **REMOVE COWL SIDE TRIM SUB-ASSEMBLY LH** . Refer to **REMOVAL - Step 4**
7. **DISCONNECT FRONT DOOR OPENING TRIM WEATHERSTRIP LH** . Refer to **REMOVAL - Step 5**
8. **REMOVE INSTRUMENT SIDE PANEL LH** . Refer to **REMOVAL - Step 6**
9. **REMOVE NO. 1 INSTRUMENT CLUSTER FINISH PANEL GARNISH** . Refer to **REMOVAL - Step 7**
10. **REMOVE NO. 1 INSTRUMENT PANEL REGISTER ASSEMBLY** . Refer to **REMOVAL - Step 8**
11. **REMOVE INSTRUMENT CLUSTER FINISH PANEL ASSEMBLY** . Refer to **REMOVAL - Step 9**
12. **REMOVE FRONT PANEL GARNISH LH** . Refer to **REMOVAL - Step 11**
13. **DISCONNECT HOOD LOCK CONTROL LEVER SUB-ASSEMBLY** . Refer to **REMOVAL - Step 12**
14. **REMOVE LOWER NO. 1 INSTRUMENT PANEL FINISH PANEL ASSEMBLY** . Refer to **REMOVAL - Step 13**
15. **REMOVE LOWER INSTRUMENT PANEL FINISH PANEL ASSEMBLY** . Refer to **REMOVAL - Step 47**
16. **REMOVE ENGINE SWITCH**
    a. Disengage the 2 claws and remove the engine switch.

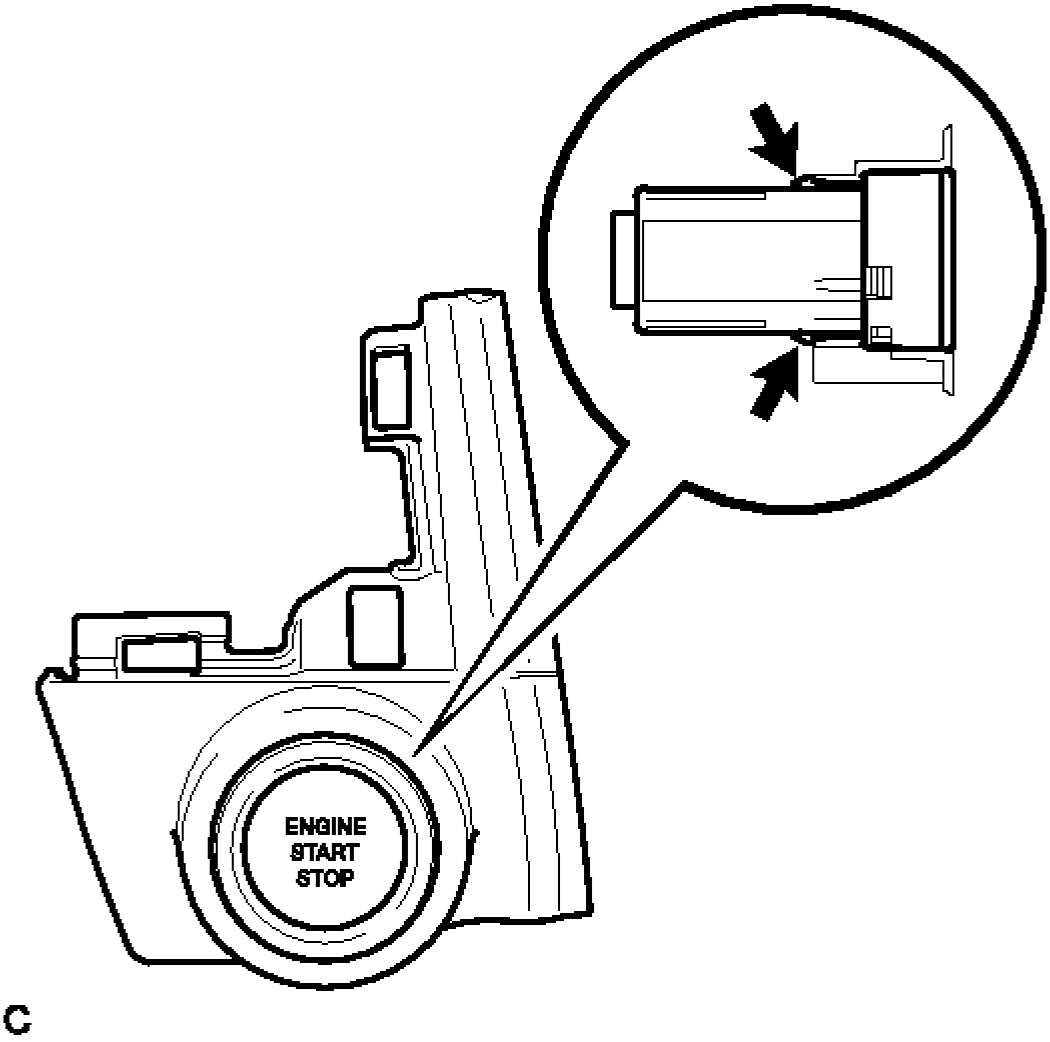
ENGINE
START
STOP
C

Fig. 41: Identifying Engine Switch
Courtesy of TOYOTA MOTOR SALES, U.S.A., INC.

INSPECTION

INSPECTION

1. **INSPECT ENGINE SWITCH**

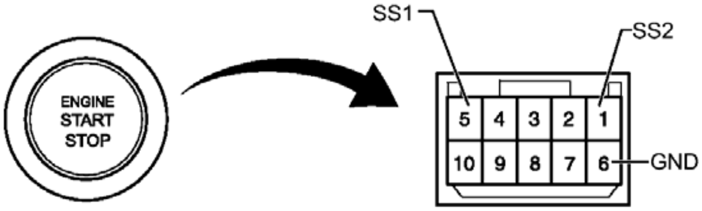

Fig. 42: Identifying Engine Switch Connector Terminal Identification
Courtesy of TOYOTA MOTOR SALES, U.S.A., INC.

a. Measure the resistance according to the value(s) in the table below.

Standard Resistance

Tester Connection	Switch Condition	Specified Condition
5 (SS1) - 6 (GND)	Not pushed	10 kohms or higher
1 (SS2) - 6 (GND)		
5 (SS1) - 6 (GND)	Pushed	Below 1 ohms
1 (SS2) - 6 (GND)		

If the result is not as specified, replace the engine switch.

b. Apply battery voltage between the terminals of the switch, and check the illumination condition of the engine switch.

HINT:

- If a positive (+) battery lead and a negative (-) battery lead are incorrectly connected, the engine switch indicator light will not illuminate.
- If the voltage is too low, the indicator light will not illuminate.

OK

Measurement Condition	Specified Condition
Battery positive (+) --> Terminal 9 (SWIL) Battery	Illuminates

negative (-) --> Terminal 6 (GND)	

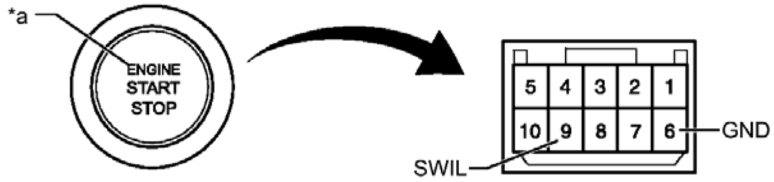

Fig. 43: Identifying Engine Switch Connector Terminal Identification
Courtesy of TOYOTA MOTOR SALES, U.S.A., INC.

TEXT IN ILLUSTRATION

*a	Indicator Light

If the result is not as specified, replace the engine switch.

INSTALLATION

INSTALLATION

1. **INSTALL ENGINE SWITCH**
   a. Engage the 2 claws to install the engine switch.
2. **INSTALL LOWER INSTRUMENT PANEL FINISH PANEL ASSEMBLY** . Refer to **INSTALLATION - Step 6**
3. **INSTALL LOWER NO. 1 INSTRUMENT PANEL FINISH PANEL ASSEMBLY** . Refer to **INSTALLATION - Step 40**
4. **CONNECT HOOD LOCK CONTROL LEVER SUB-ASSEMBLY** . Refer to **INSTALLATION - Step 41**
5. **INSTALL FRONT PANEL GARNISH LH** . Refer to **INSTALLATION - Step 42**
6. **INSTALL INSTRUMENT CLUSTER FINISH PANEL ASSEMBLY** . Refer to **INSTALLATION - Step 44**
7. **INSTALL NO. 1 INSTRUMENT PANEL REGISTER ASSEMBLY** . Refer to **INSTALLATION - Step 45**
8. **INSTALL NO. 1 INSTRUMENT CLUSTER FINISH PANEL GARNISH** . Refer to **INSTALLATION - Step 46**
9. **INSTALL INSTRUMENT SIDE PANEL LH** . Refer to **INSTALLATION - Step 47**
10. **CONNECT FRONT DOOR OPENING TRIM WEATHERSTRIP LH** . Refer to **INSTALLATION - Step 42**
11. **INSTALL COWL SIDE TRIM SUB-ASSEMBLY LH** . Refer to **INSTALLATION - Step 43**

12. **INSTALL FRONT DOOR SCUFF PLATE LH** . Refer to **INSTALLATION - Step 44**
13. **INSTALL RADIO RECEIVER ASSEMBLY WITH AIR CONDITIONING CONTROL ASSEMBLY (w/o Navigation System)**

    Refer to **INSTALLATION** .

14. **INSTALL NAVIGATION RECEIVER ASSEMBLY WITH AIR CONDITIONING CONTROL ASSEMBLY (w/ Navigation System)**

    Refer to **INSTALLATION** .

15. **CONNECT CABLE TO NEGATIVE BATTERY TERMINAL**

    NOTE: **When disconnecting the cable, some systems need to be initialized after the cable is reconnected. Refer to INITIALIZATION .**

IGNITION SWITCH

COMPONENTS

ILLUSTRATION

for with Wireless Door Lock:

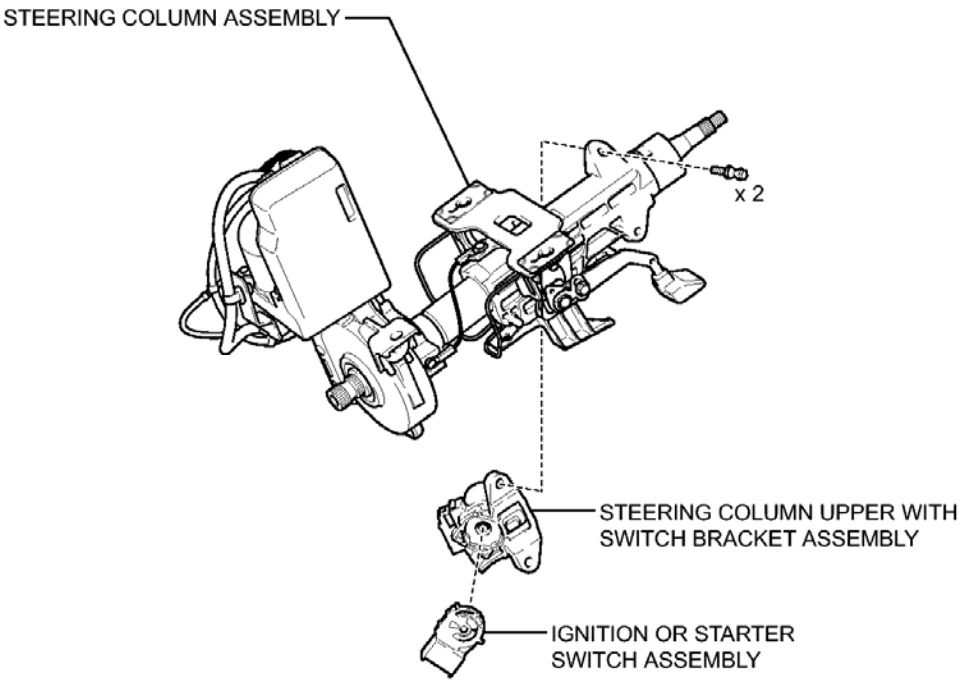
STEERING COLUMN ASSEMBLY
x 2
STEERING COLUMN UPPER WITH SWITCH BRACKET ASSEMBLY
IGNITION OR STARTER SWITCH ASSEMBLY
c

Fig. 44: Identifying Ignition Switch Replacement Components (With Wireless Door Lock)
Courtesy of TOYOTA MOTOR SALES, U.S.A., INC.

ILLUSTRATION

for without Wireless Door Lock:

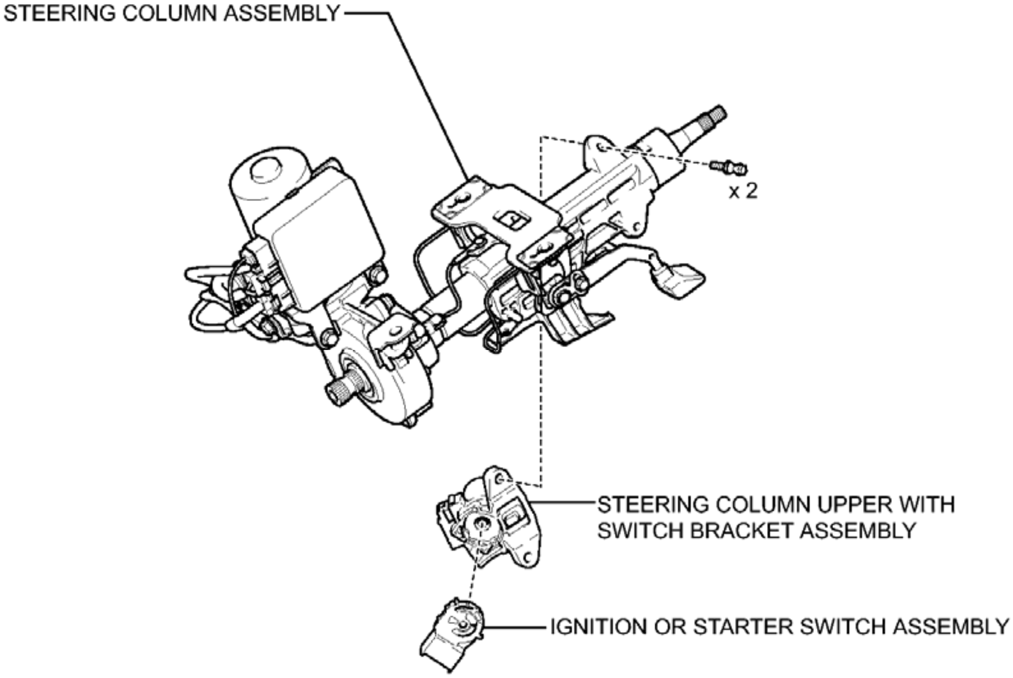
STEERING COLUMN ASSEMBLY
x 2
STEERING COLUMN UPPER WITH SWITCH BRACKET ASSEMBLY
IGNITION OR STARTER SWITCH ASSEMBLY

c

Fig. 45: Identifying Ignition Switch Replacement Components (Without Wireless Door Lock)
Courtesy of TOYOTA MOTOR SALES, U.S.A., INC.

REMOVAL

REMOVAL

1. **REMOVE STEERING COLUMN ASSEMBLY**

   Refer to **REMOVAL** .

2. **REMOVE STEERING COLUMN UPPER WITH SWITCH BRACKET ASSEMBLY** . Refer to **DISASSEMBLY - Step 1**
3. **REMOVE IGNITION OR STARTER SWITCH ASSEMBLY**
   a. Disengage the 2 claws and remove the ignition or starter switch assembly.

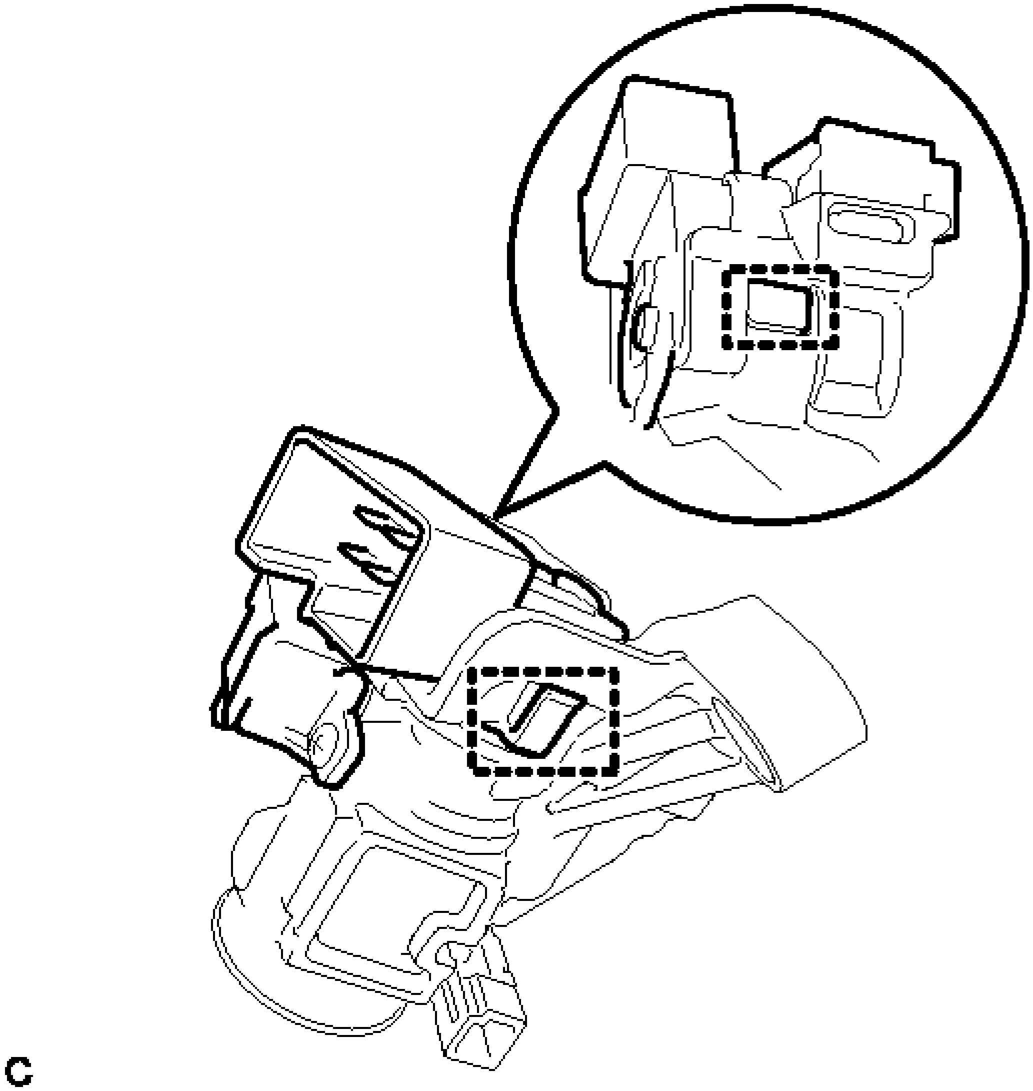

Fig. 46: Identifying Ignition Or Starter Switch Assembly Claws
Courtesy of TOYOTA MOTOR SALES, U.S.A., INC.

INSPECTION

INSPECTION

1. **INSPECT IGNITION OR STARTER SWITCH ASSEMBLY**
   a. Measure the switch resistance.

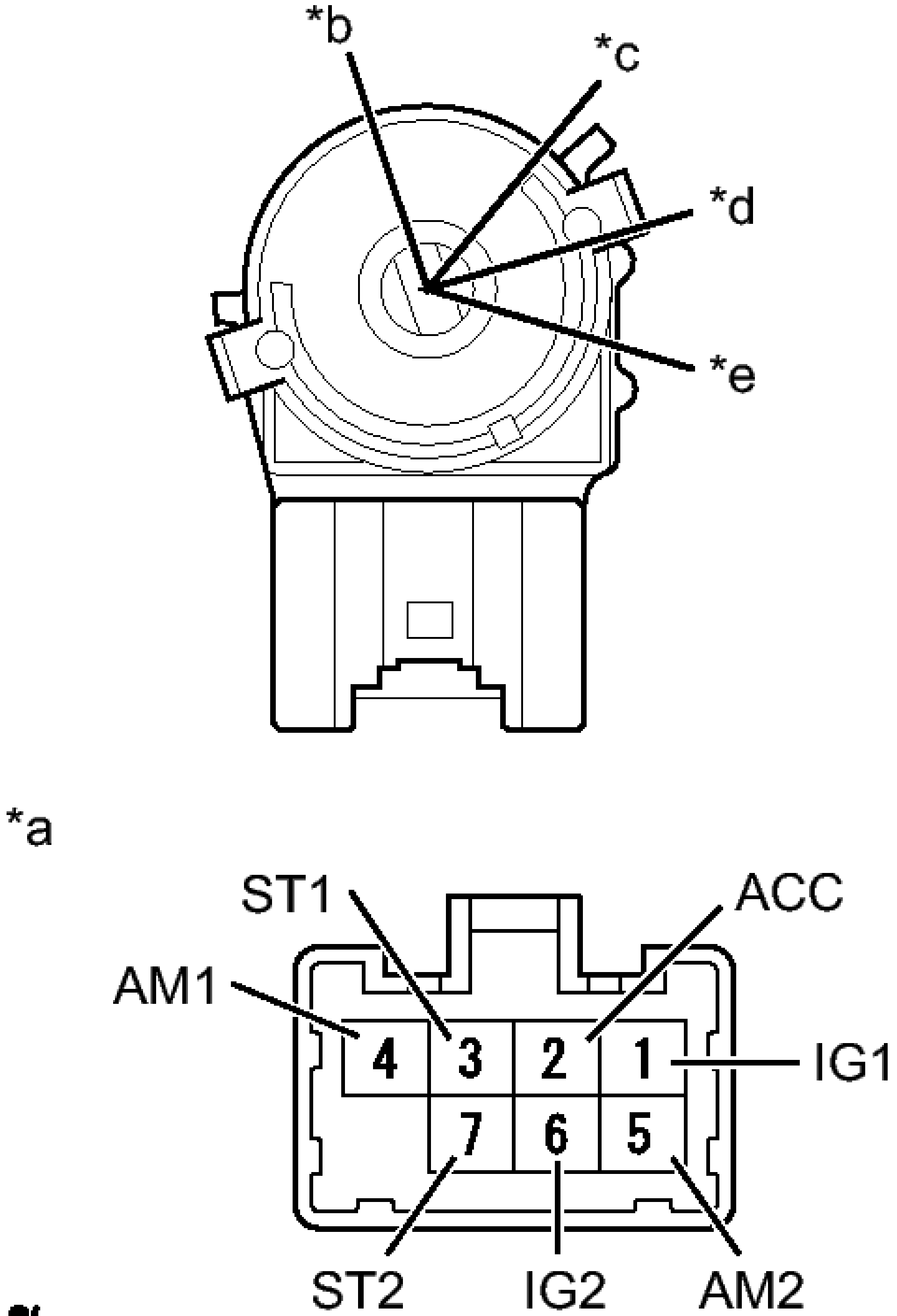
*b
*c
*d
*e
*a
ST1
ACC
AM1
4
3
2
1
IG1
7
6
5
ST2
IG2
AM2

Fig. 47: Identifying Ignition Or Starter Switch Assembly Connector Terminal Identification
Courtesy of TOYOTA MOTOR SALES, U.S.A., INC.

TEXT IN ILLUSTRATION

	Component

*a	without harness connected (Ignition or Starter Switch Assembly)
*b	LOCK
*c	ACC
*d	ON
*e	START

Standard Resistance

Tester Connection	**Switch Position**	**Specified Condition**
Between all terminals	LOCK	10 kohms or higher
2 (ACC) - 4 (AM1)	ACC	Below 1 ohms
2 (ACC) - 4 (AM1)	ON	
1 (IG1) - 4 (AM1)		
5 (AM2) - 6 (IG2)		
3 (ST1) - 4 (AM1)	START	
1 (IG1) - 4 (AM1)		
5 (AM2) - 6 (IG2)		
5 (AM2) - 7 (ST2)		

If the result is not as specified, replace the ignition or starter switch assembly.

INSTALLATION

INSTALLATION

1. **INSTALL IGNITION OR STARTER SWITCH ASSEMBLY**
    a. Engage the 2 claws to install the ignition or starter switch assembly.
2. **INSTALL STEERING COLUMN UPPER WITH SWITCH BRACKET ASSEMBLY** . Refer to **REASSEMBLY - Step 17**

3. **INSTALL STEERING COLUMN ASSEMBLY**

   Refer to **INSTALLATION** .

RELAY

ON-VEHICLE INSPECTION

ON-VEHICLE INSPECTION

1. **INSPECT STARTER RELAY**
   a. Measure the resistance according to the value(s) in the table below.

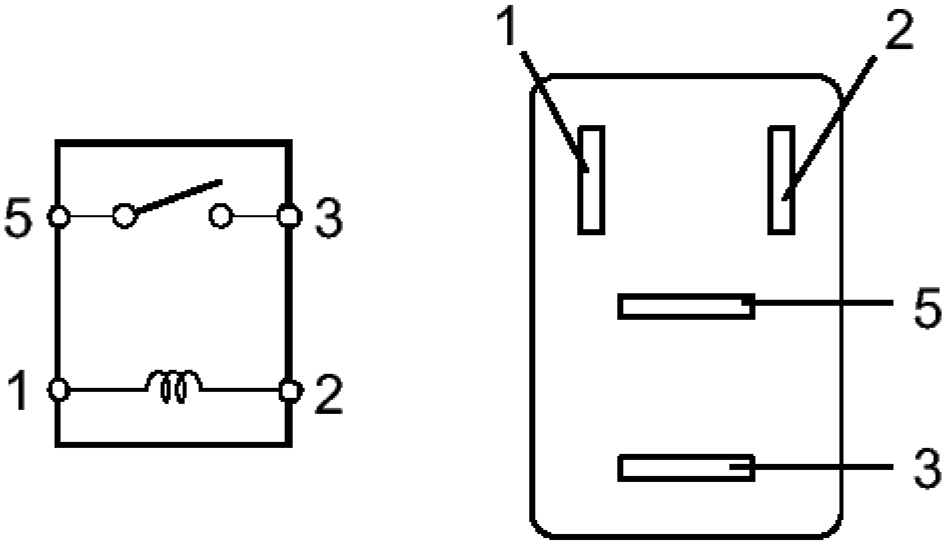

Fig. 48: Identifying Starter Relay
Courtesy of TOYOTA MOTOR SALES, U.S.A., INC.

Standard Resistance

Tester Connection	Condition	Specified Condition
3 - 5	Battery voltage not applied between terminals 1 and 2	10 kohms or higher

3 - 5	Battery voltage applied between terminals 1 and 2	Below 1 ohms

If the resistance is not as specified, replace the relay.

2012-2017 ENGINE

Starting System (Service Information) - Camry (2GR-FE)

STARTER

COMPONENTS

ILLUSTRATION

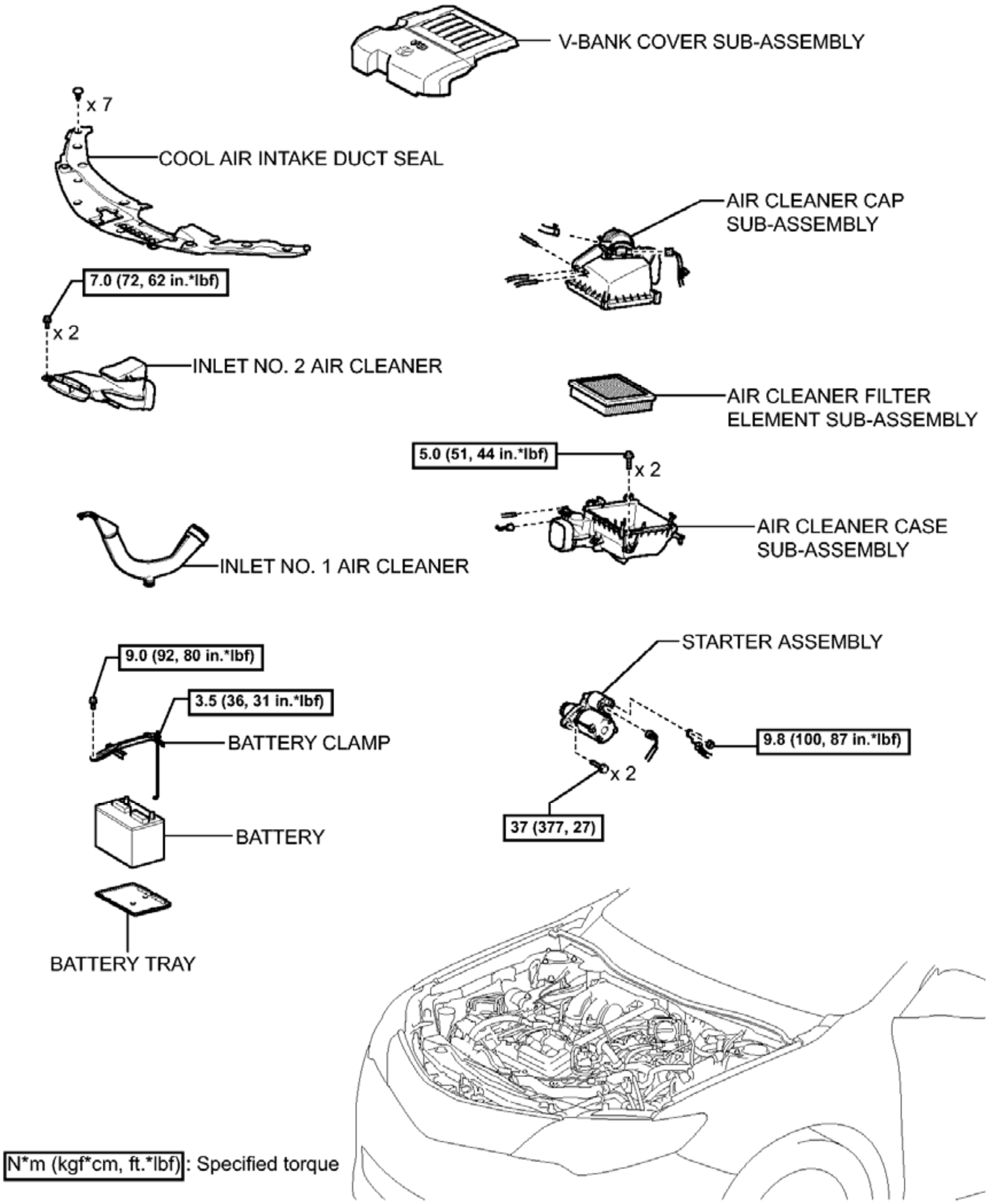
V-BANK COVER SUB-ASSEMBLY
x 7
COOL AIR INTAKE DUCT SEAL
AIR CLEANER CAP SUB-ASSEMBLY
7.0 (72, 62 in.*lbf)
x 2
INLET NO. 2 AIR CLEANER
AIR CLEANER FILTER ELEMENT SUB-ASSEMBLY
5.0 (51, 44 in.*lbf)
x 2
AIR CLEANER CASE SUB-ASSEMBLY
INLET NO. 1 AIR CLEANER
STARTER ASSEMBLY
9.0 (92, 80 in.*lbf)
3.5 (36, 31 in.*lbf)
BATTERY CLAMP
9.8 (100, 87 in.*lbf)
x 2
37 (377, 27)
BATTERY
BATTERY TRAY
N*m (kgf*cm, ft.*lbf) : Specified torque

Fig. 1: Identifying Starter Replacement Components With Torque Specifications (1 Of 2)
Courtesy of TOYOTA MOTOR SALES, U.S.A., INC.

ILLUSTRATION

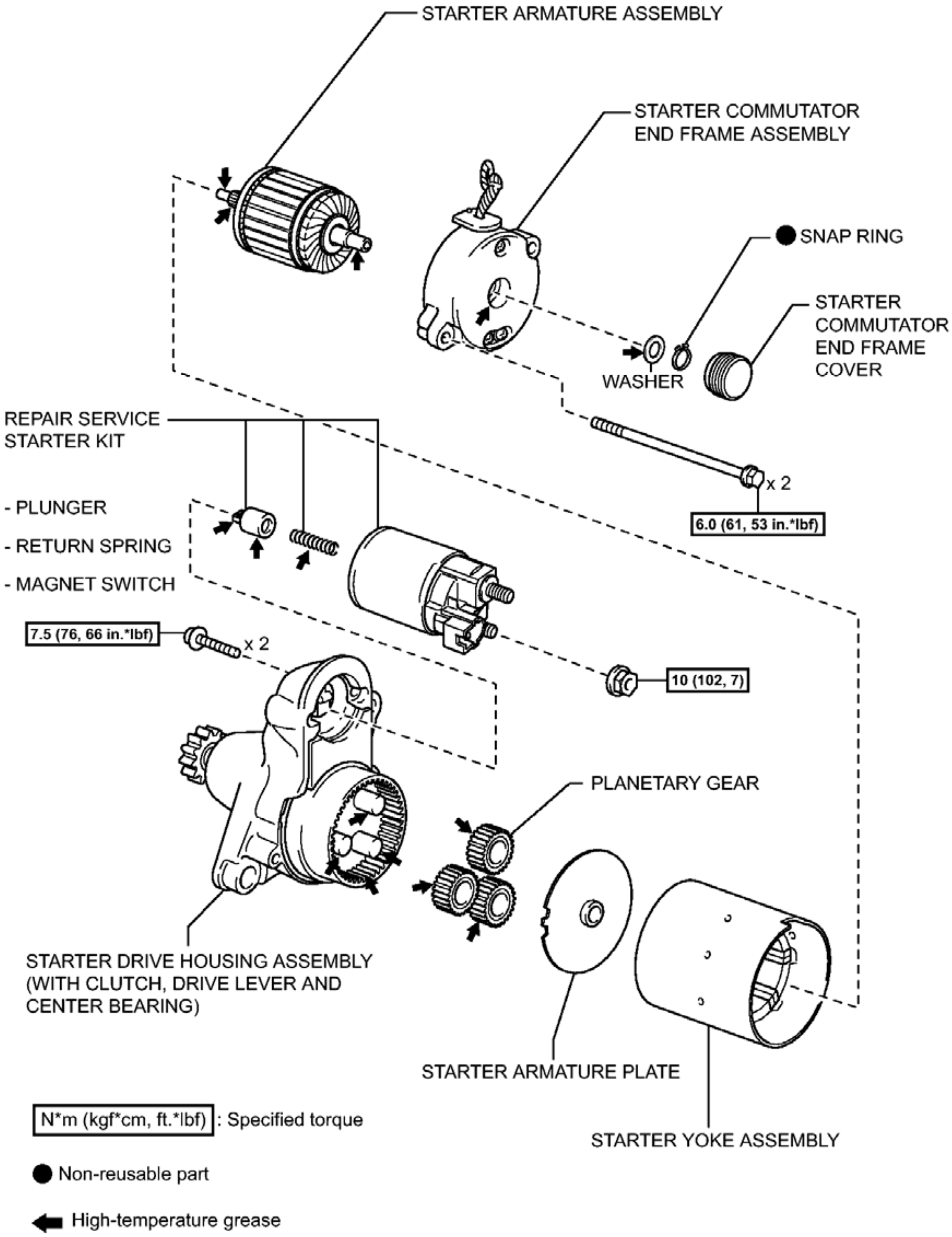
STARTER ARMATURE ASSEMBLY
STARTER COMMUTATOR END FRAME ASSEMBLY
● SNAP RING
STARTER COMMUTATOR END FRAME COVER
WASHER
REPAIR SERVICE STARTER KIT
- PLUNGER
- RETURN SPRING
- MAGNET SWITCH
x 2
6.0 (61, 53 in.*lbf)
7.5 (76, 66 in.*lbf)
x 2
10 (102, 7)
PLANETARY GEAR
STARTER DRIVE HOUSING ASSEMBLY (WITH CLUTCH, DRIVE LEVER AND CENTER BEARING)
STARTER ARMATURE PLATE
STARTER YOKE ASSEMBLY
N*m (kgf*cm, ft.*lbf) : Specified torque
● Non-reusable part
⬅ High-temperature grease

Fig. 2: Identifying Starter Replacement Components With Torque Specifications (2 Of 2)
Courtesy of TOYOTA MOTOR SALES, U.S.A., INC.

REMOVAL

REMOVAL

1. **PRECAUTION**

    NOTE: After turning the engine switch off, waiting time may be required before disconnecting the cable from the negative (-) battery terminal. Therefore, make sure to read the disconnecting the cable from the negative (-) battery terminal notices before proceeding with work. Refer to PRECAUTION .

2. **REMOVE COOL AIR INTAKE DUCT SEAL** . Refer to **REMOVAL - Step 1**
3. **DISCONNECT CABLE FROM NEGATIVE BATTERY TERMINAL**

    NOTE: When disconnecting the cable, some systems need to be initialized after the cable is reconnected. Refer to INITIALIZATION .

4. **REMOVE V-BANK COVER SUB-ASSEMBLY** . Refer to **REMOVAL - Step 17**
5. **REMOVE INLET NO. 2 AIR CLEANER** . Refer to **REMOVAL - Step 18**
6. **REMOVE BATTERY** . Refer to **REMOVAL - Step 22**
7. **REMOVE INLET NO. 1 AIR CLEANER** . Refer to **REMOVAL - Step 23**
8. **REMOVE AIR CLEANER CAP SUB-ASSEMBLY** . Refer to **REMOVAL - Step 7**
9. **REMOVE AIR CLEANER FILTER ELEMENT SUB-ASSEMBLY**
10. **REMOVE AIR CLEANER CASE SUB-ASSEMBLY** . Refer to **REMOVAL - Step 21**
11. **REMOVE STARTER ASSEMBLY**
    a. Disconnect the starter connector.

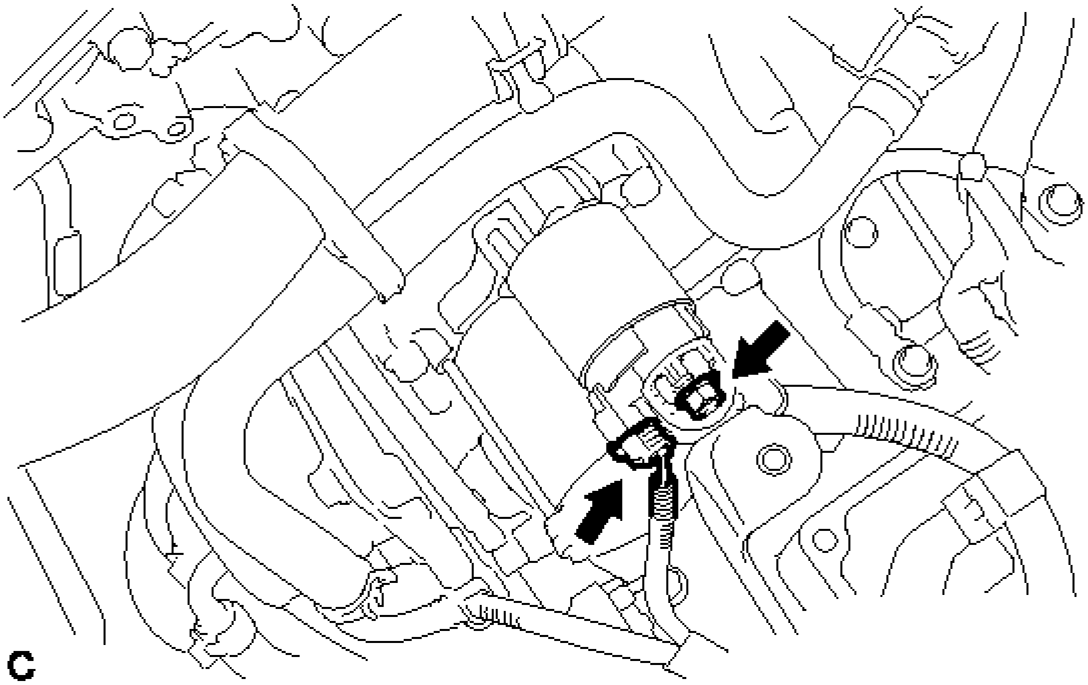

Fig. 3: Identifying Starter Connector
Courtesy of TOYOTA MOTOR SALES, U.S.A., INC.

b. Remove the terminal cap.
c. Remove the nut and disconnect the starter wire.
d. Remove the 2 bolts and starter.

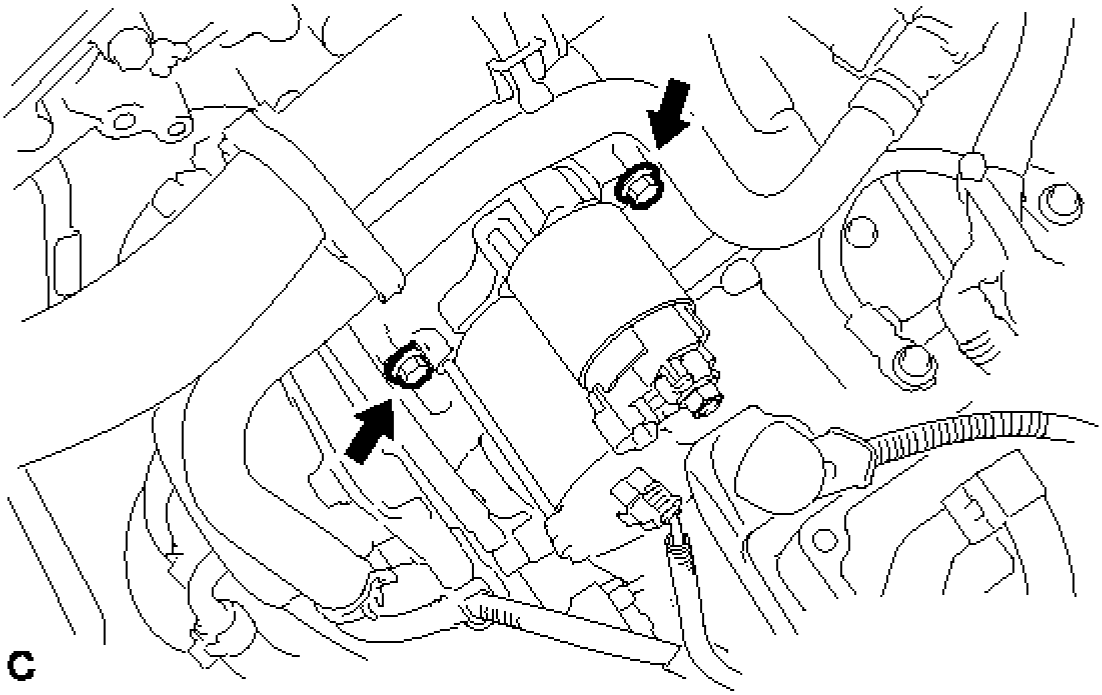

Fig. 4: Identifying Starter Bolts
Courtesy of TOYOTA MOTOR SALES, U.S.A., INC.

DISASSEMBLY

DISASSEMBLY

1. **REMOVE REPAIR SERVICE STARTER KIT**
    a. Remove the nut and disconnect the lead wire from the magnetic switch.

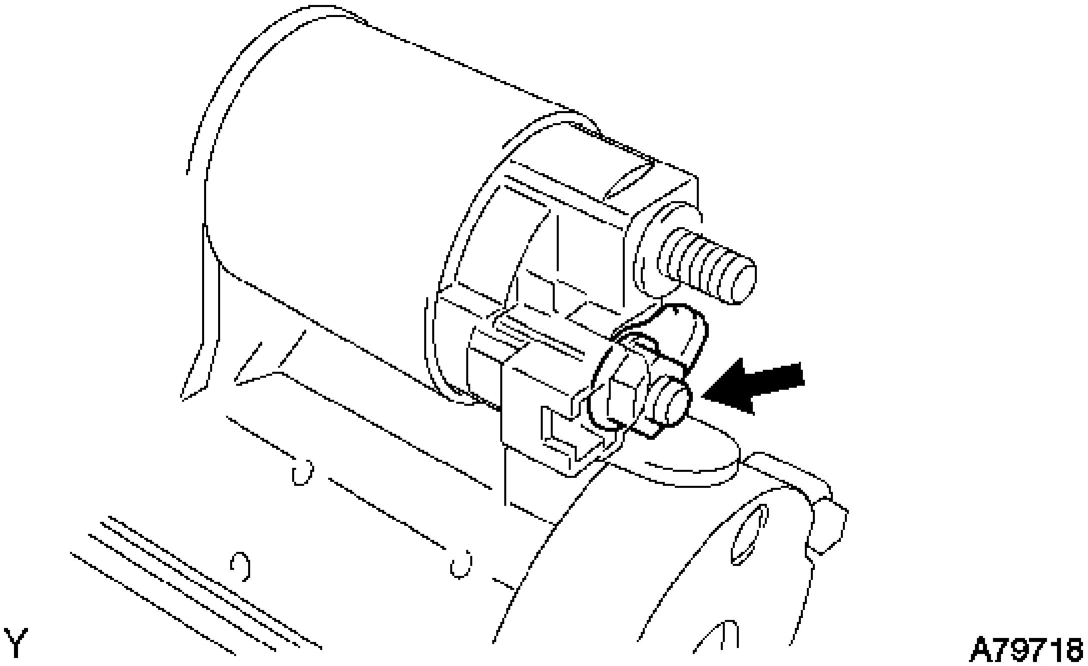

Fig. 5: Locating Magnetic Switch Nut
Courtesy of TOYOTA MOTOR SALES, U.S.A., INC.

b. Holding the magnetic switch to the starter drive housing, remove the 2 screws.

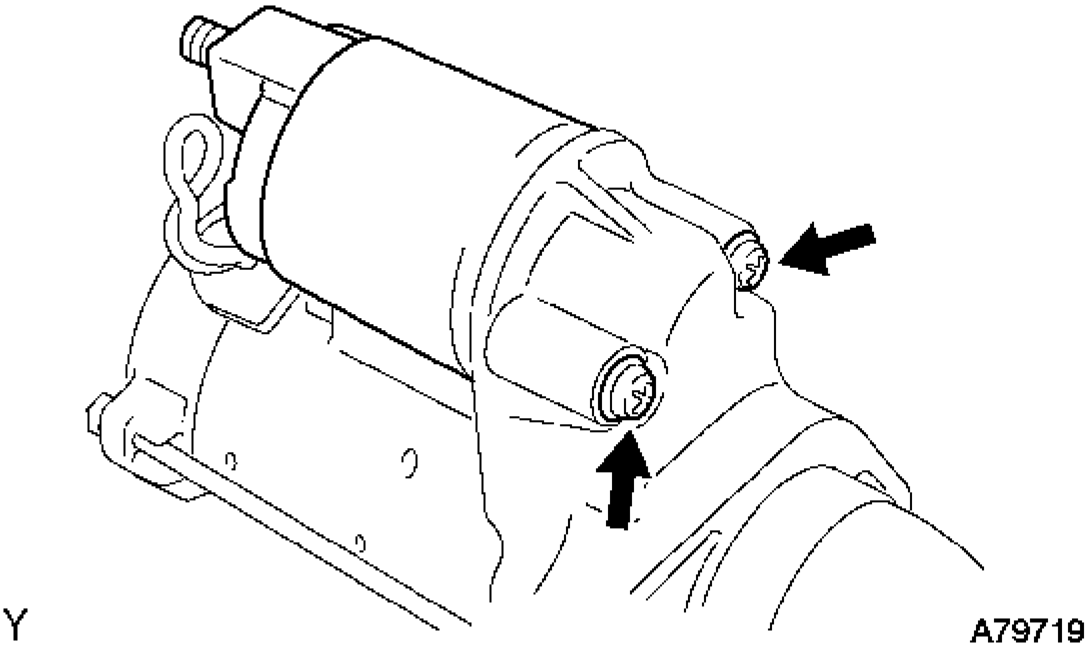

Fig. 6: Locating Magnetic Switch Screws
Courtesy of TOYOTA MOTOR SALES, U.S.A., INC.

c. Remove the magnetic switch.

d. Remove the return spring and plunger from the starter drive housing.

2. **REMOVE STARTER YOKE ASSEMBLY**

a. Remove the 2 through-bolts, and pull out the starter yoke together with the commutator end frame.

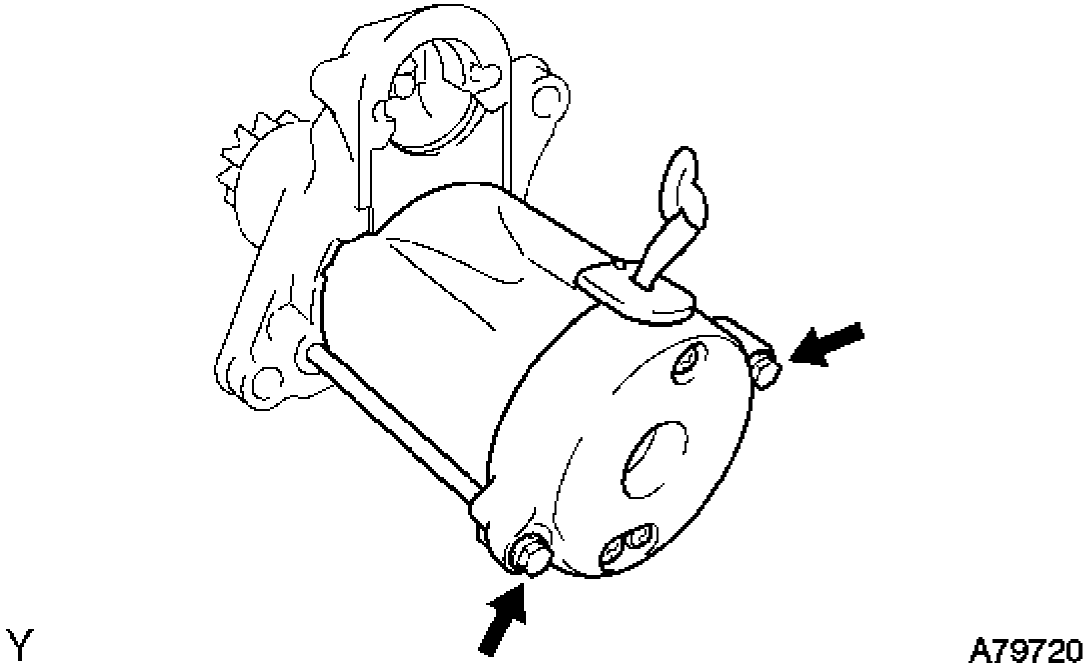

Fig. 7: Locating Field Frame With Through Bolts
Courtesy of TOYOTA MOTOR SALES, U.S.A., INC.

b. Remove the starter yoke from the commutator end frame.

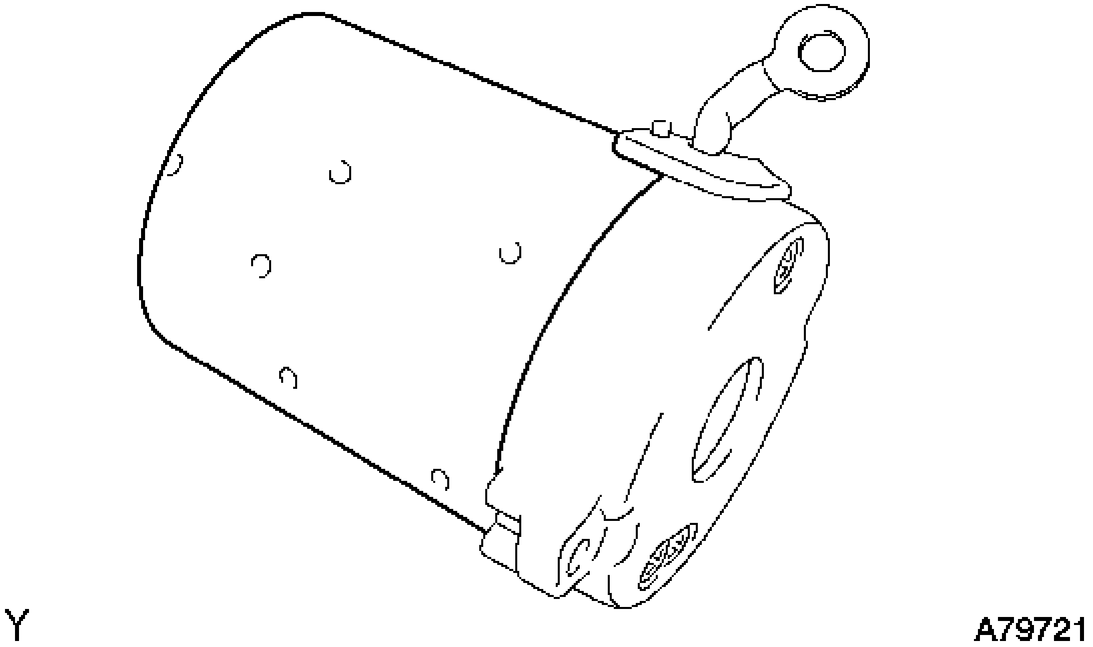

Fig. 8: Identifying Starter Commutator End Frame
Courtesy of TOYOTA MOTOR SALES, U.S.A., INC.

3. **REMOVE STARTER ARMATURE PLATE**
   a. Remove the armature plate from the starter yoke.

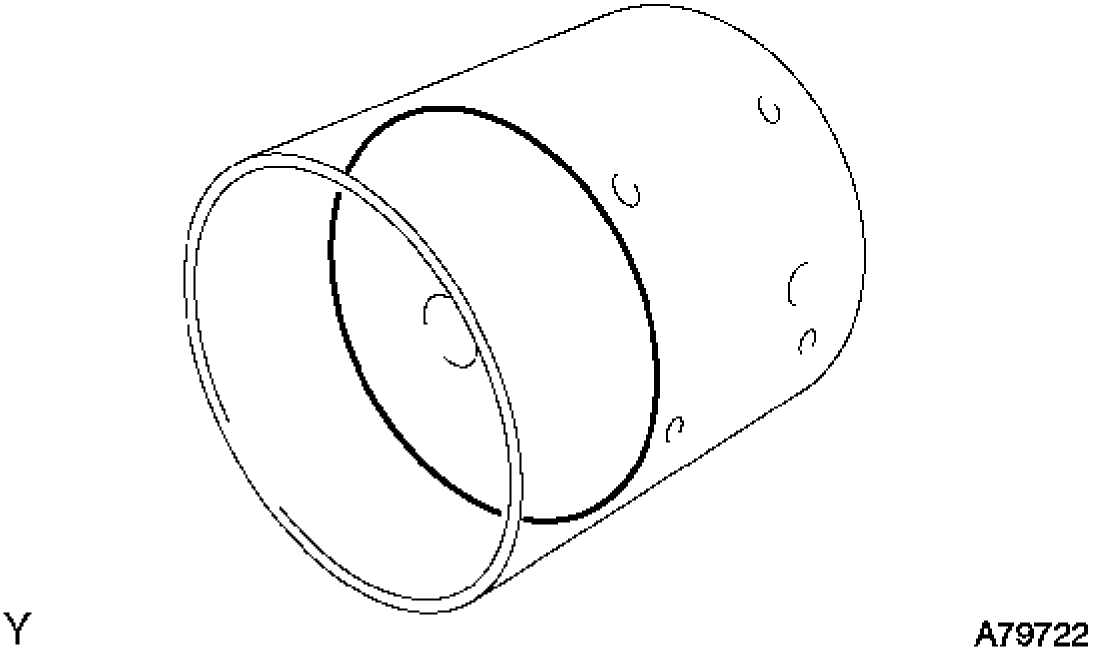

Fig. 9: Identifying Starter Armature Plate
Courtesy of TOYOTA MOTOR SALES, U.S.A., INC.

4. **REMOVE STARTER COMMUTATOR END FRAME COVER**
    a. Using a screwdriver, pry out the commutator end frame cover.

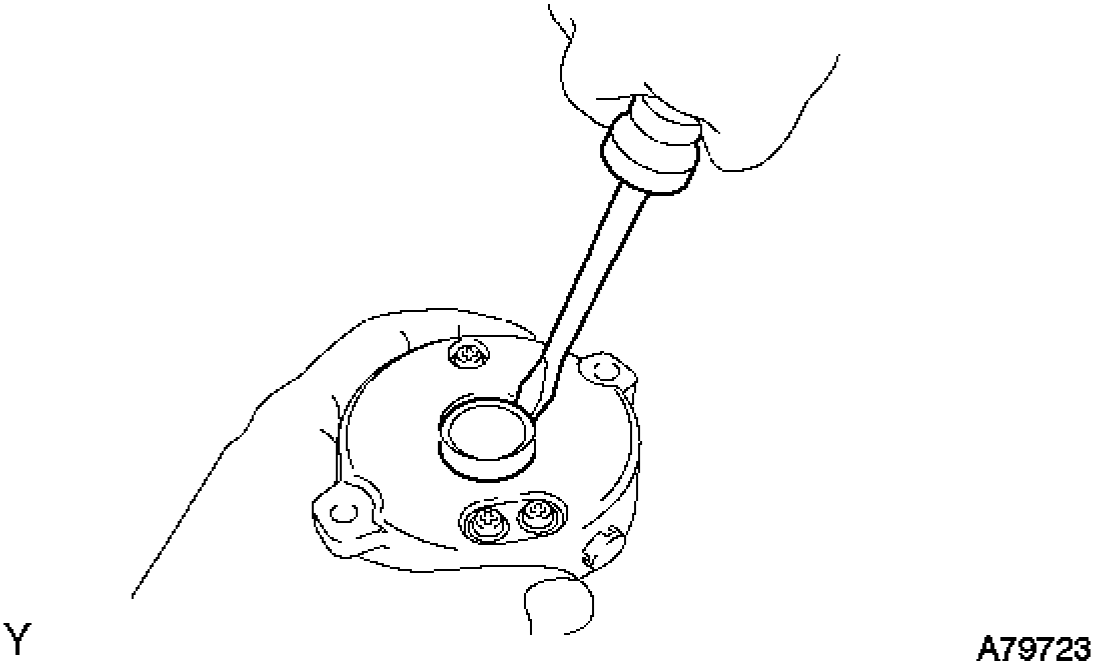

Fig. 10: Prying Out Commutator End Frame Cover
Courtesy of TOYOTA MOTOR SALES, U.S.A., INC.

5. **REMOVE STARTER ARMATURE ASSEMBLY**
    a. Using snap ring pliers, remove the snap ring and plate washer.

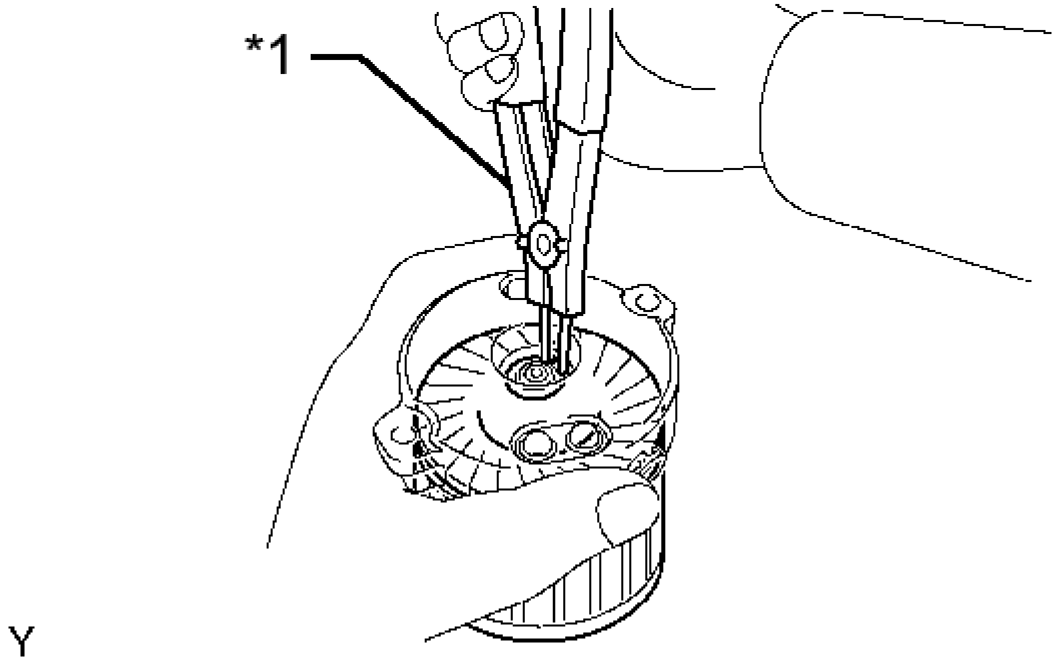

Fig. 11: Removing/Installing Snap Ring And Plate Washer
Courtesy of TOYOTA MOTOR SALES, U.S.A., INC.

NOTE: **Do not drop the starter armature assembly.**

TEXT IN ILLUSTRATION

*1	Snap Ring Pliers

b. Remove the armature from the commutator end frame.

6. **REMOVE PLANETARY GEAR**

   a. Remove the 3 planetary gears from the starter drive housing.

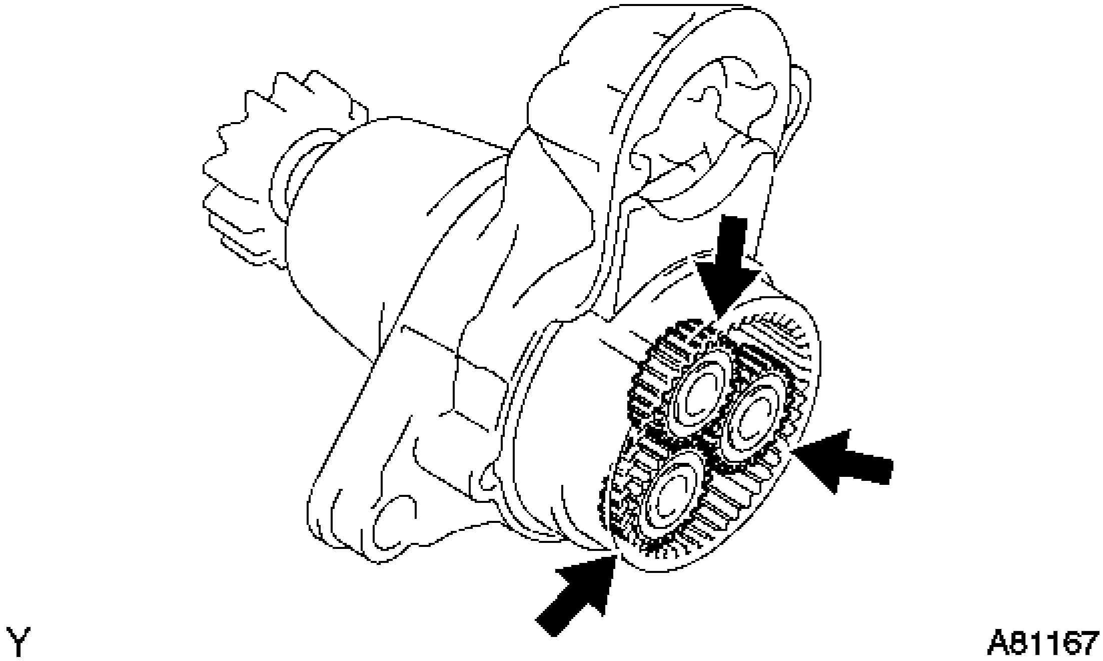

Fig. 12: Identifying Planetary Gears
Courtesy of TOYOTA MOTOR SALES, U.S.A., INC.

INSPECTION

INSPECTION

1. **INSPECT STARTER ASSEMBLY**

WARNING: **As a large electric current passes through the cable during this inspection, a thick cable must be used. If not, the cable may became hot and cause injury.**

NOTE: **These tests must be performed within 3 to 5 seconds to avoid burning out the coil.**

a. Perform a pull-in test.
    1. Remove the nut and disconnect the lead wire from terminal C.
    2. Connect the battery to the magnetic switch as shown in the illustration. Check that the clutch pinion gear extends.

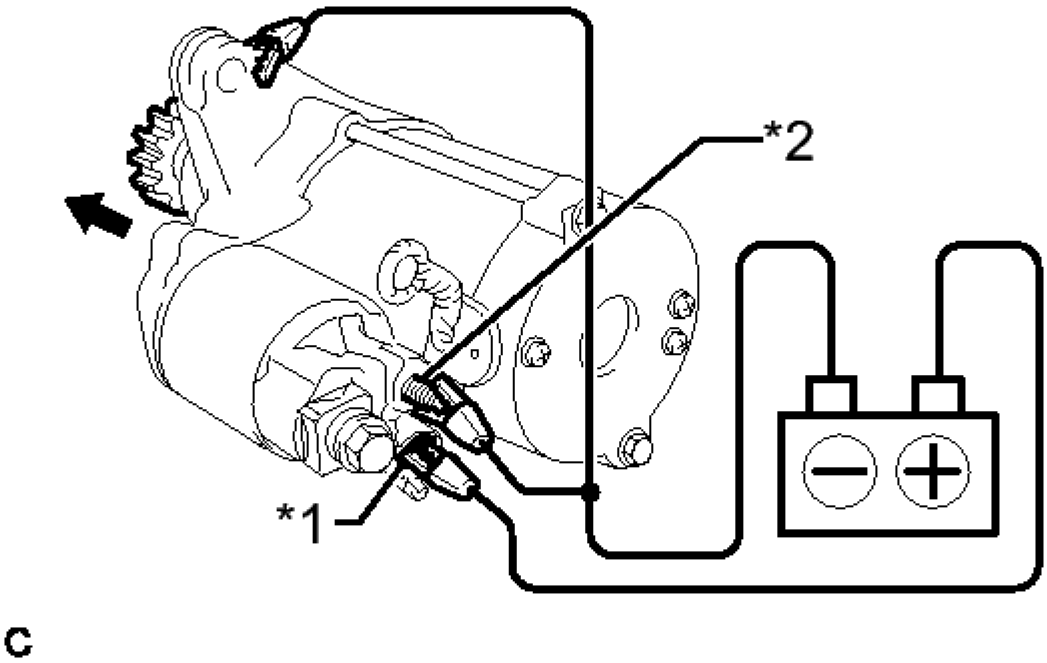

Fig. 13: Performing Pull-In Test
Courtesy of TOYOTA MOTOR SALES, U.S.A., INC.

TEXT IN ILLUSTRATION

*1	Terminal 50
*2	Terminal C

If the clutch pinion gear does not move, replace the magnetic switch assembly.

b. Perform a hold-in test.

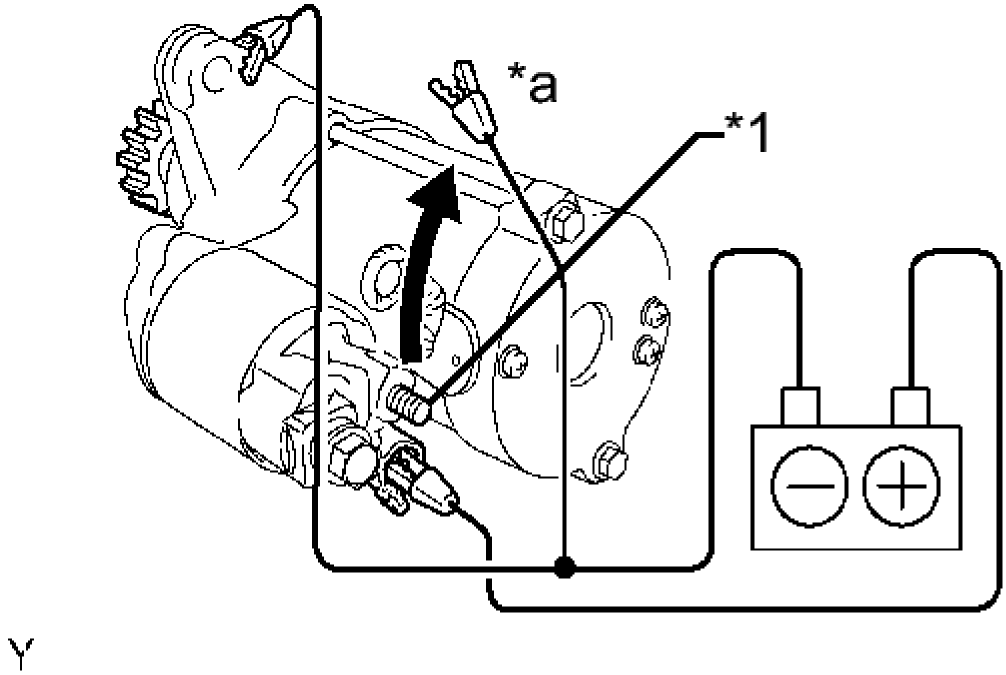

Fig. 14: Perform Hold-In Test
Courtesy of TOYOTA MOTOR SALES, U.S.A., INC.

1. While maintaining the battery connections of the pull-in test above, disconnect the negative (-) lead from terminal C. Check that the pinion gear remains extended.

   TEXT IN ILLUSTRATION

*1	Terminal C
*a	Disconnect

   If the clutch pinion gear returns inward, replace the magnetic switch assembly.

c. Perform a clutch pinion gear return test.

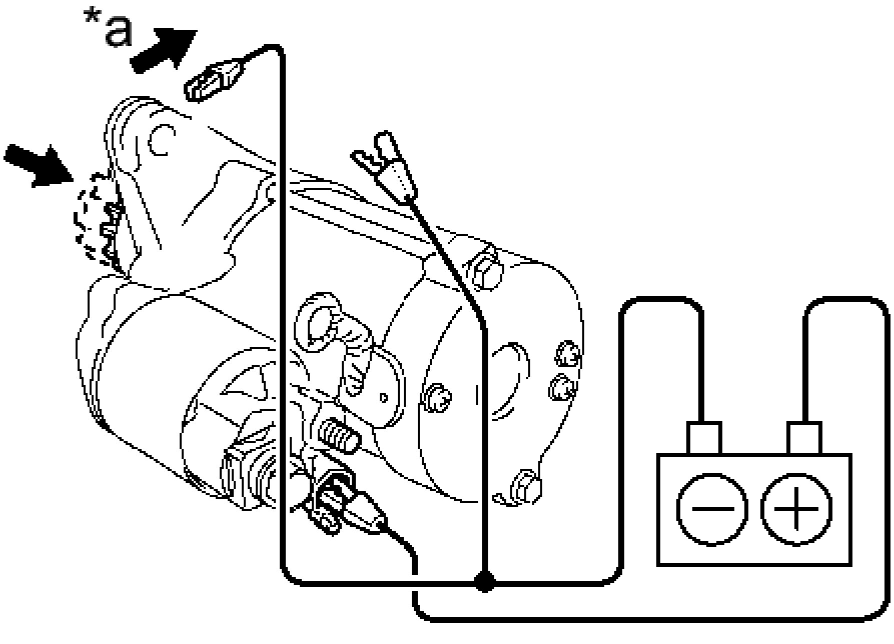

Fig. 15: Perform Clutch Pinion Gear Return Test
Courtesy of TOYOTA MOTOR SALES, U.S.A., INC.

1. Disconnect the negative (-) lead from the starter body. Check that the clutch pinion gear returns.

   If the clutch pinion gear does not return, replace the magnetic switch assembly.

   TEXT IN ILLUSTRATION

*a	Disconnect

d. Perform a no-load performance test.

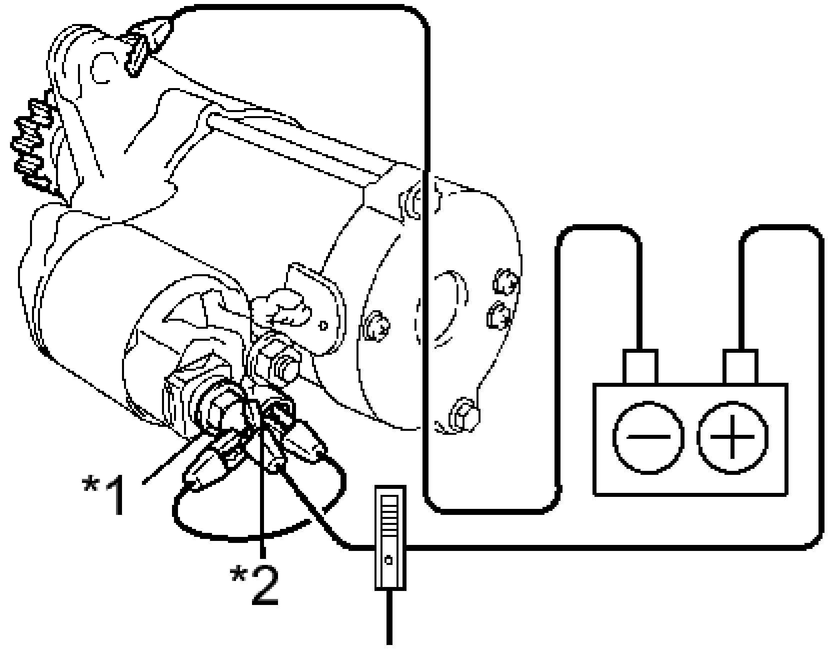

Fig. 16: Checking Starter Assembly No-Load Performance Test
Courtesy of TOYOTA MOTOR SALES, U.S.A., INC.

TEXT IN ILLUSTRATION

*1	Terminal 30
*2	Terminal 50

1. Connect the lead wire to terminal C with the nut. Make sure that the lead is not grounded.

   Torque: 10 N*m (102 kgf*cm, 7 ft.*lbf)

2. Clamp the starter in a vise.
3. Connect the battery and an ammeter to the starter as shown in the illustration.
4. Check that the starter rotates smoothly and steadily while the pinion gear is moving out. Then measure the current.

   Standard current

   90 A or less at 11.5 V

   If the result is not as specified, repair or replace the starter assembly.

2. **INSPECT REPAIR SERVICE STARTER KIT**
   a. Check the plunger.

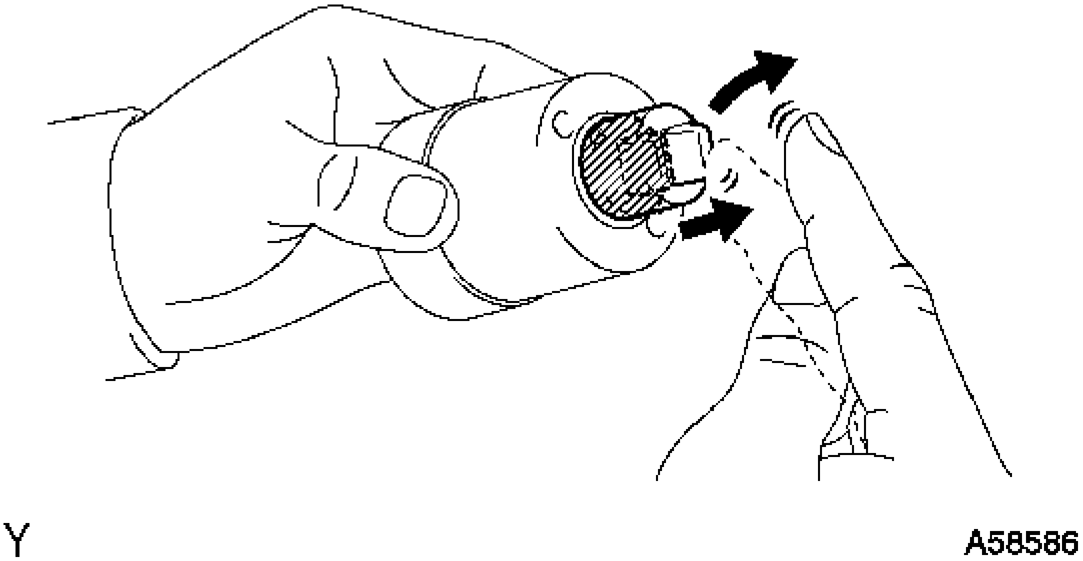

Fig. 17: Checking Plunger
Courtesy of TOYOTA MOTOR SALES, U.S.A., INC.

1. Push in the plunger and check that it returns quickly to its original position.

   If necessary, replace the repair service starter kit.

b. Check if the pull-in coil has an open circuit.

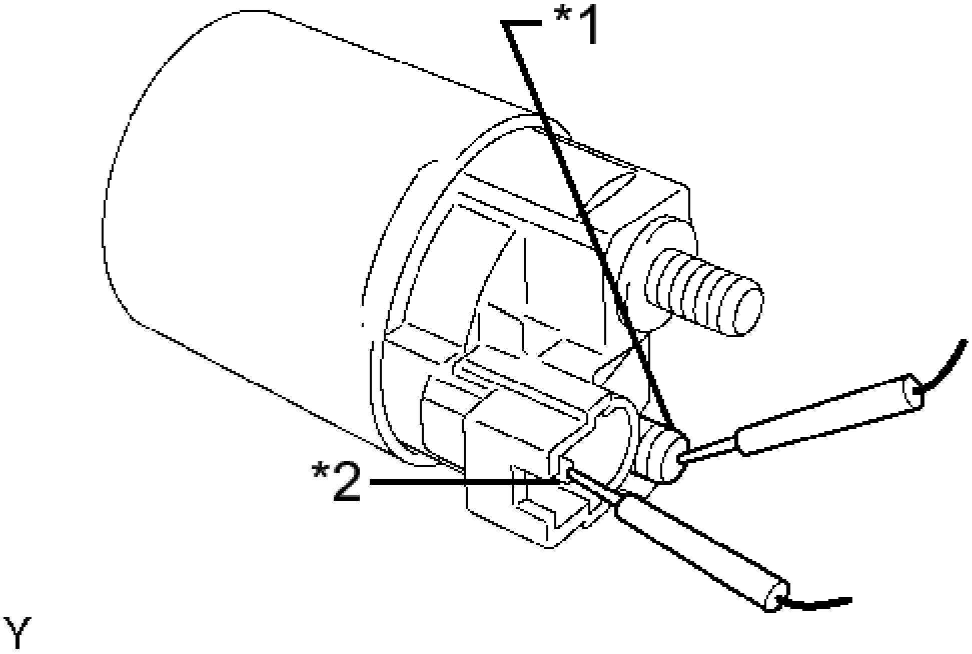

Fig. 18: Checking Pull-In Coil
Courtesy of TOYOTA MOTOR SALES, U.S.A., INC.

TEXT IN ILLUSTRATION

*1	Terminal C
*2	Terminal 50

1. Measure the resistance between terminals 50 and C.

   Standard resistance

   Below 1 ohms

   If the result is not as specified, replace the repair service starter kit.

c. Check if the hold-in coil has an open circuit.

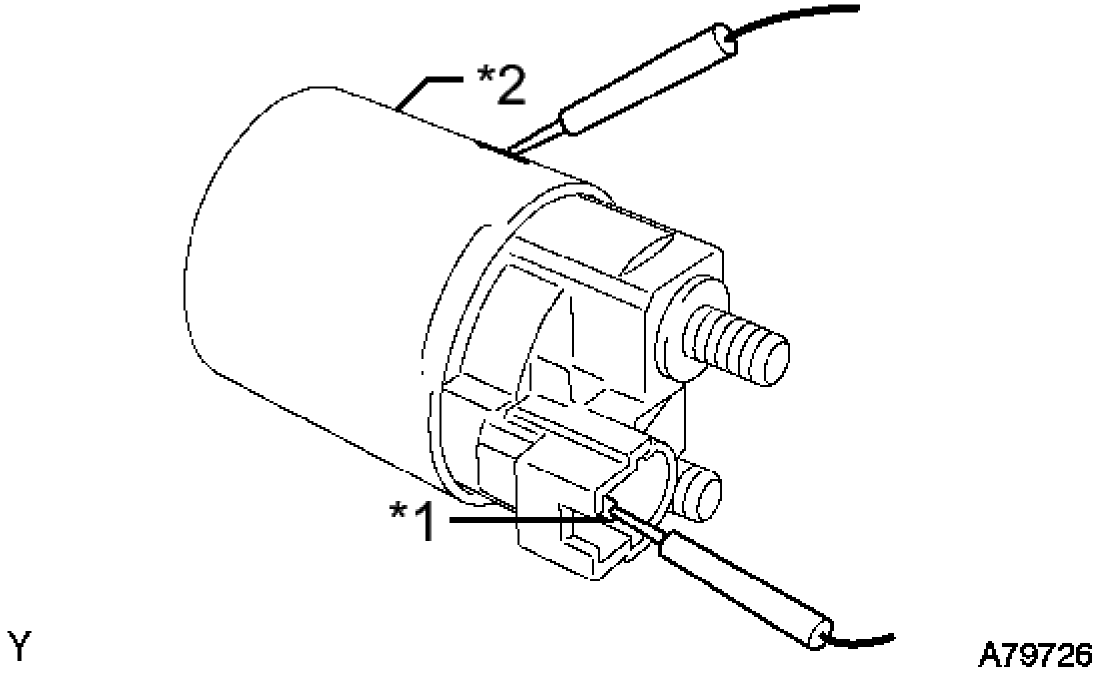

Fig. 19: Checking Hold-In Coil
Courtesy of TOYOTA MOTOR SALES, U.S.A., INC.

TEXT IN ILLUSTRATION

*1	Terminal 50
*2	Body

1. Measure the resistance between terminal 50 and the switch body.

   Standard resistance

   Below 2 ohms

   If the result is not as specified, replace the repair service starter kit.

3. **INSPECT STARTER ARMATURE ASSEMBLY**

   HINT:

   If these is no continuity between any segments, replace the starter armature assembly.

   a. Check the commutator for contamination and burns on its surface.

      If the surface is dirty or burnt, correct it with sandpaper (No. 400) or a lathe.

   b. Check if the commutator has an open circuit.

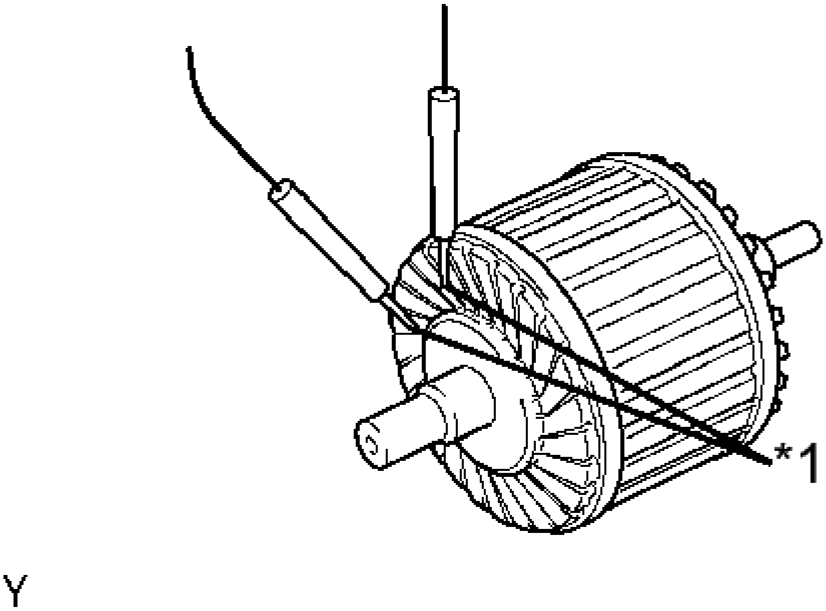

Fig. 20: Checking Commutator (Open Circuit)
Courtesy of TOYOTA MOTOR SALES, U.S.A., INC.

TEXT IN ILLUSTRATION

*1	Segment

1. Measure the resistance between the segments of the commutator.

Standard resistance

Below 1 ohms

If the result is not as specified, replace the armature assembly.

c. Check if the commutator is grounded.

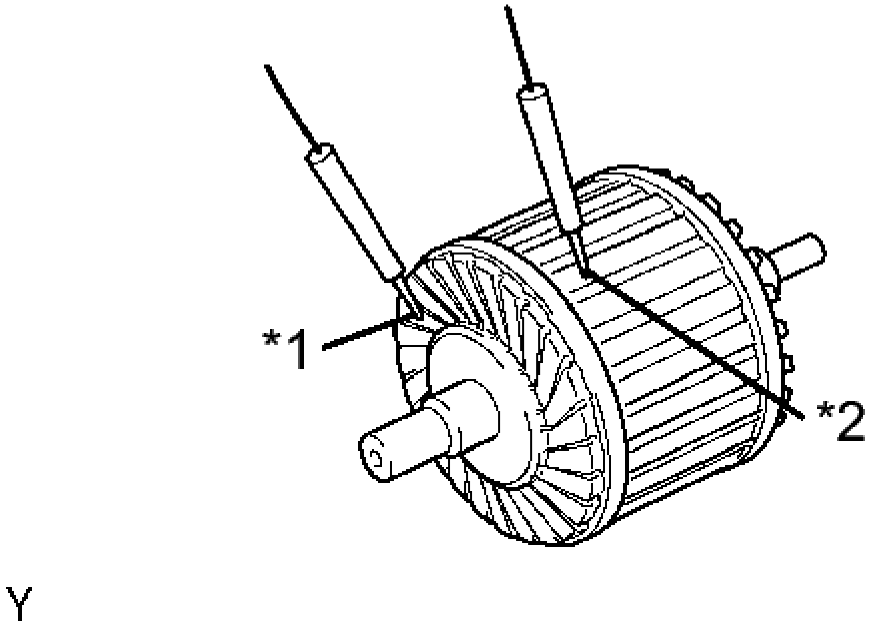

Fig. 21: Checking Commutator (Grounded)
Courtesy of TOYOTA MOTOR SALES, U.S.A., INC.

TEXT IN ILLUSTRATION

*1	Commutator
*2	Coil Core

1. Measure the resistance between the commutator and armature coil core.

   Standard resistance

   10 kohms or higher

   If the result is not as specified, replace the armature assembly.

d. Using a vernier caliper, measure the commutator length.

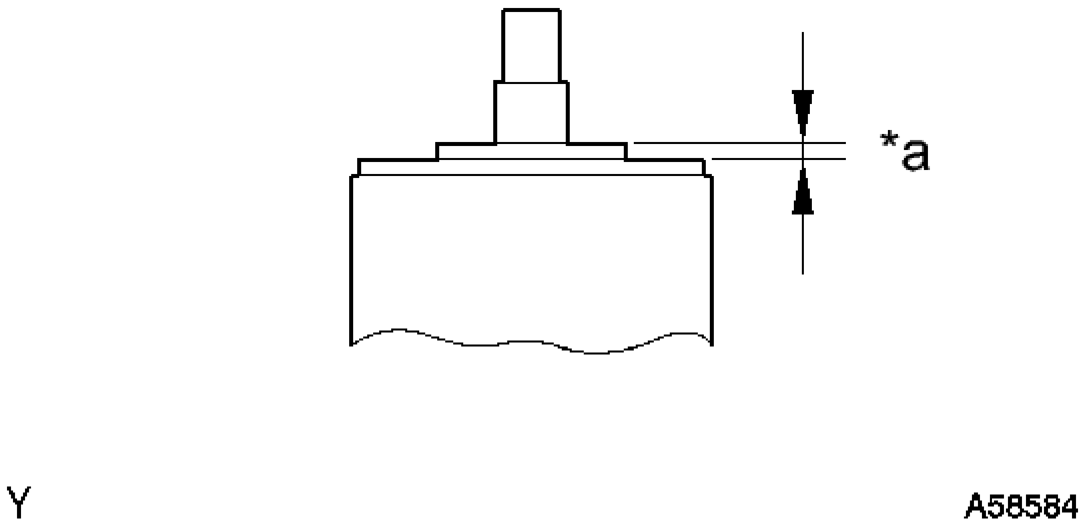

Fig. 22: Measuring Commutator Length
Courtesy of TOYOTA MOTOR SALES, U.S.A., INC.

TEXT IN ILLUSTRATION

*a	Length

Standard length

3.1 to 3.8 mm (0.122 to 0.149 in.)

Maximum length

3.8 mm (0.149 in.)

If the length is greater than the maximum, replace the starter armature assembly.

4. **INSPECT STARTER COMMUTATOR END FRAME ASSEMBLY**
    a. Using a vernier caliper, measure the brush length.

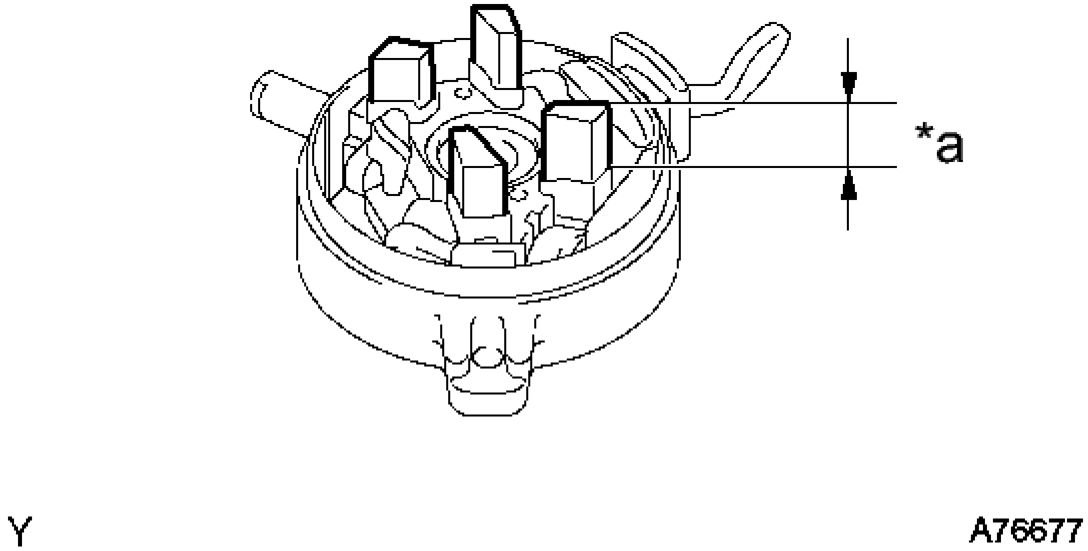

Fig. 23: Measuring Brush Length
Courtesy of TOYOTA MOTOR SALES, U.S.A., INC.

TEXT IN ILLUSTRATION

*a	Length

Standard length

4.0 to 9.0 mm (0.158 to 0.354 in.)

Minimum length

4.0 mm (0.158 in.)

If the length is less than the minimum, replace the end frame assembly.

b. Check the brush insulation.

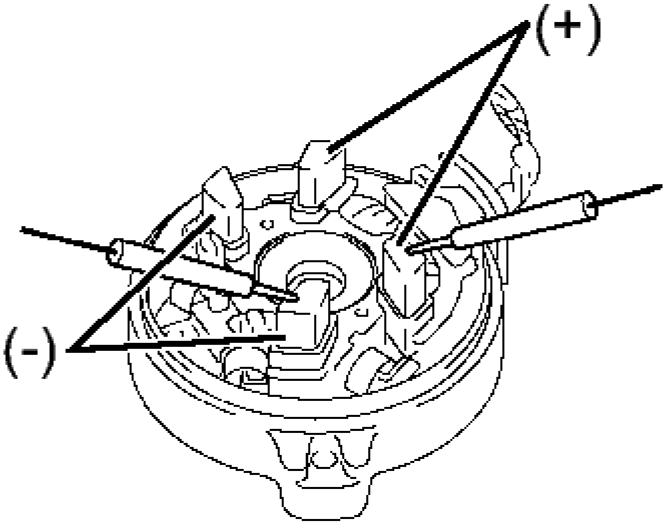

Fig. 24: Checking Brush Insulation
Courtesy of TOYOTA MOTOR SALES, U.S.A., INC.

1. Measure the resistance between the positive (+) and negative (-) brushes.

   Standard resistance

   10 kohms or higher

   If the result is not as specified, replace the end frame assembly.

5. **INSPECT STARTER CLUTCH**
   a. Rotate the clutch pinion gear counterclockwise and check that it turns freely. Try to rotate the clutch pinion gear clockwise and check that it locks.

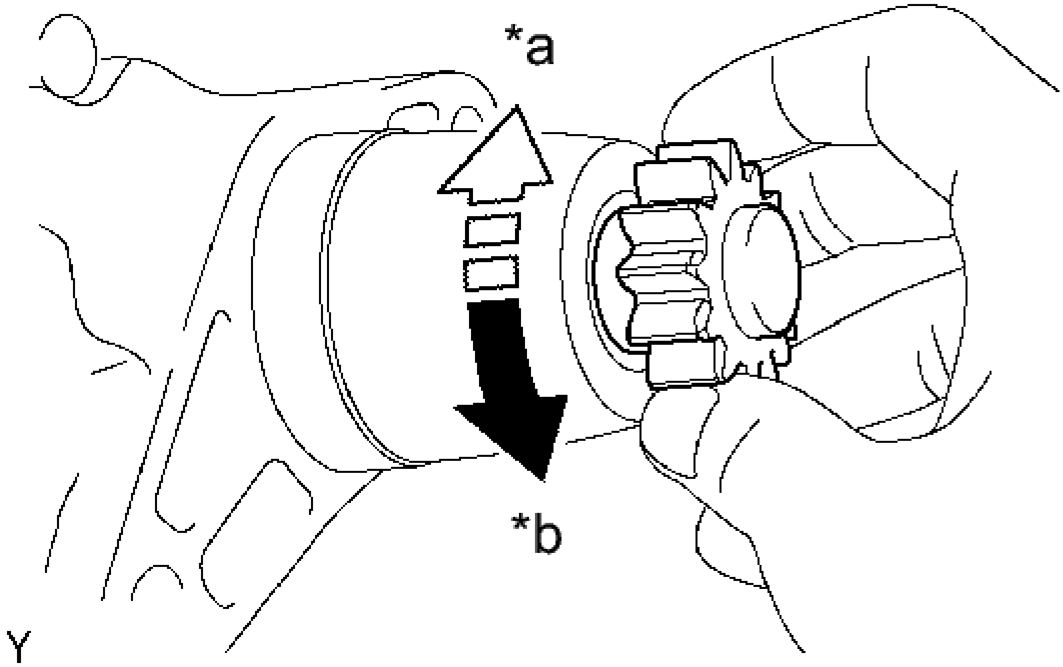

Fig. 25: Inspecting Starter Clutch
Courtesy of TOYOTA MOTOR SALES, U.S.A., INC.

TEXT IN ILLUSTRATION

*a	Lock
*b	Free

If necessary, replace the starter drive housing assembly.

REASSEMBLY

REASSEMBLY

HINT:

Use high-temperature grease to lubricate the bearings, gears and return spring when assembling the starter.

1. **INSTALL PLANETARY GEAR**
    a. Apply grease to the planetary gears and pin parts of the planetary shaft.

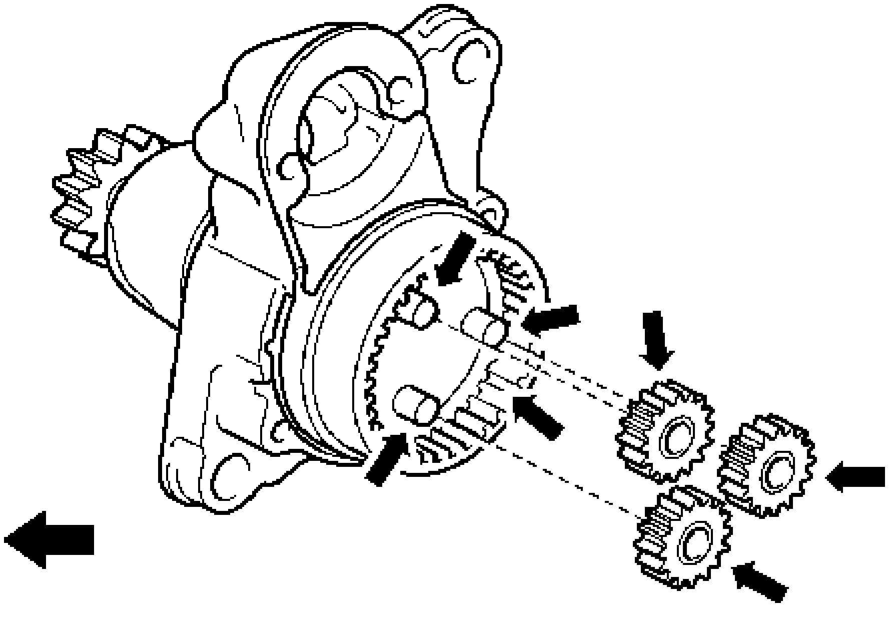

Fig. 26: Applying High-Temperature Grease To Planetary Gears
Courtesy of TOYOTA MOTOR SALES, U.S.A., INC.

TEXT IN ILLUSTRATION

	High-temperature grease

b. Install the 3 planetary gears.

2. **INSTALL STARTER ARMATURE ASSEMBLY**
    a. Apply grease to the armature shaft.

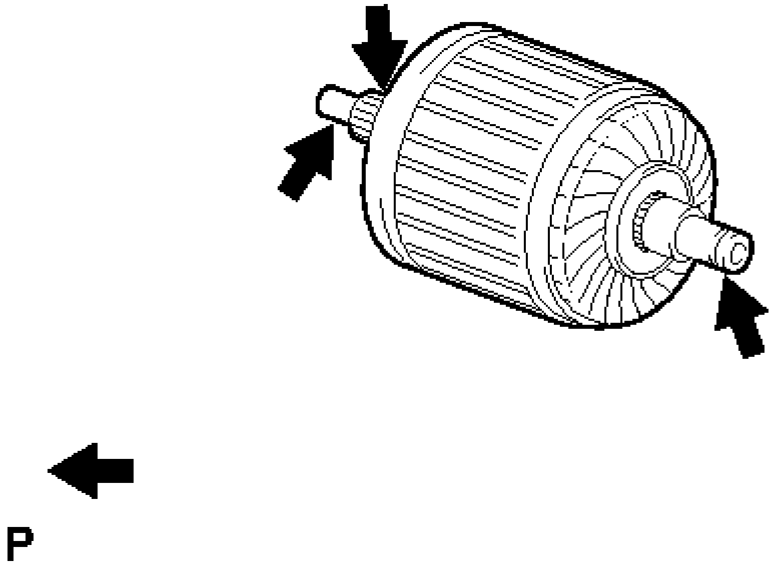

Fig. 27: Apply High-Temperature Grease To Armature Shaft
Courtesy of TOYOTA MOTOR SALES, U.S.A., INC.

TEXT IN ILLUSTRATION

	High-temperature grease

b. Apply high-temperature grease to the plate washer and bearing, as shown in the illustration.

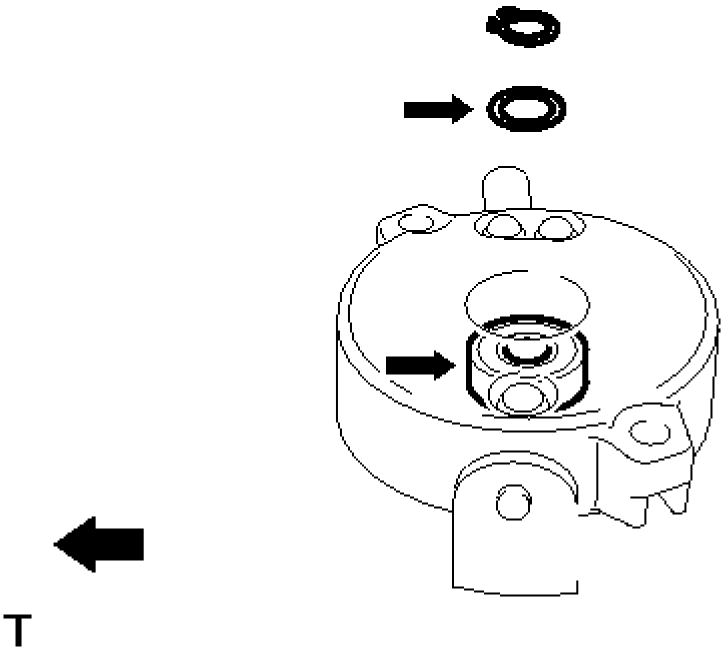

Fig. 28: Apply High-Temperature Grease To Plate Washer And Bearing
Courtesy of TOYOTA MOTOR SALES, U.S.A., INC.

TEXT IN ILLUSTRATION

	High-temperature grease

c. Install the starter armature to the starter commutator end frame.
d. Using snap ring pliers, install the plate washer and a new snap ring.

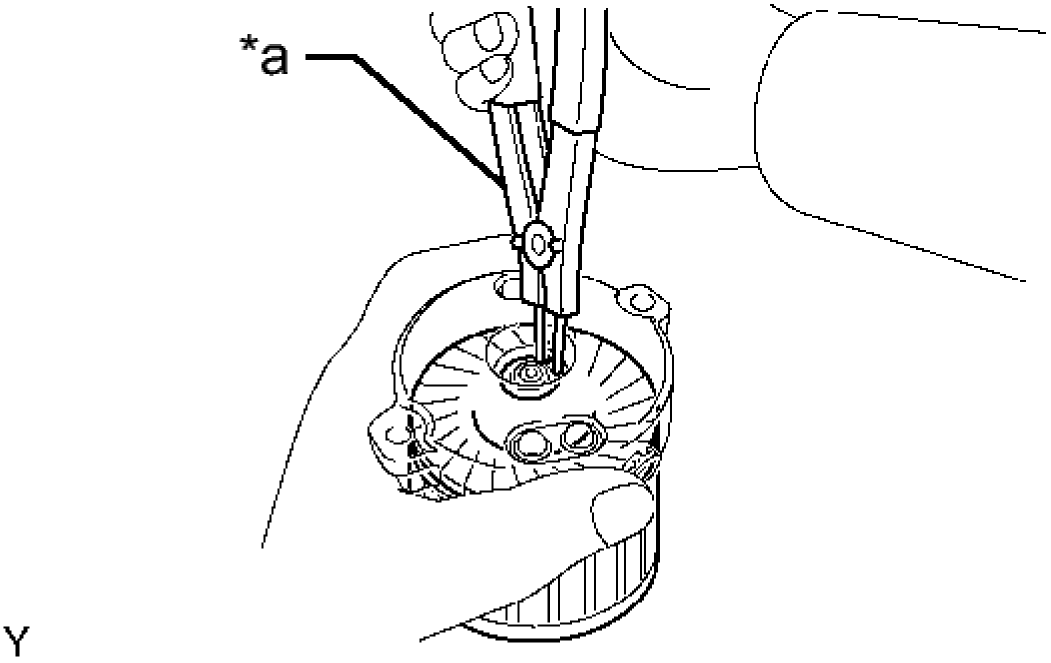

Fig. 29: Identifying Snap Ring Pliers
Courtesy of TOYOTA MOTOR SALES, U.S.A., INC.

TEXT IN ILLUSTRATION

*a	Snap Ring Pliers

NOTE:

- **Be sure to install the snap ring in the armature shaft groove securely.**
- **Be sure to properly install the snap ring because it expands easily.**

e. Using a vernier caliper, measure the length of the snap ring.

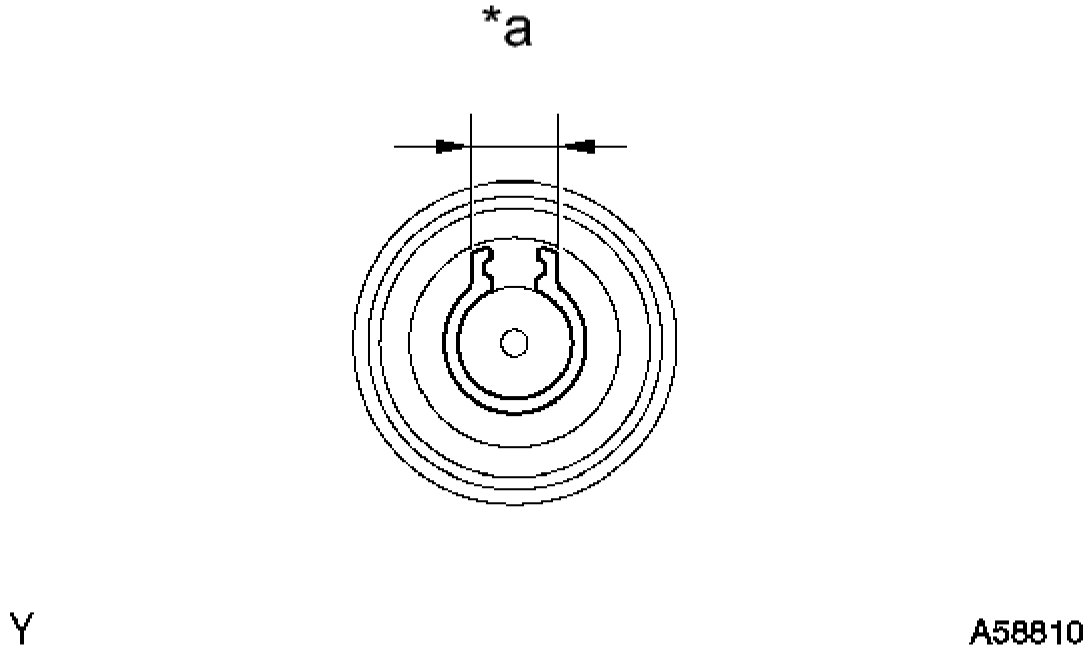

Fig. 30: Measuring Length Of Snap Ring
Courtesy of TOYOTA MOTOR SALES, U.S.A., INC.

TEXT IN ILLUSTRATION

*a	Length

Maximum length

5.0 mm (0.196 in.)

If the length is greater than the maximum, replace it with a new snap ring.

3. **INSTALL STARTER COMMUTATOR END FRAME COVER**
    a. Install the end frame cover to the commutator end frame.

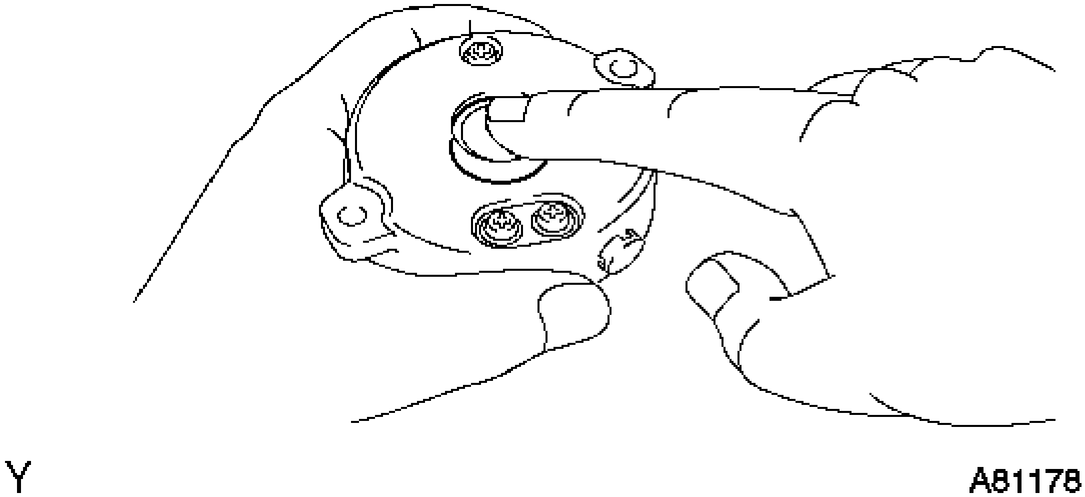

Fig. 31: Installing End Frame Cover
Courtesy of TOYOTA MOTOR SALES, U.S.A., INC.

4. **INSTALL STARTER ARMATURE PLATE**
   a. Insert the starter armature plate to the starter yoke.

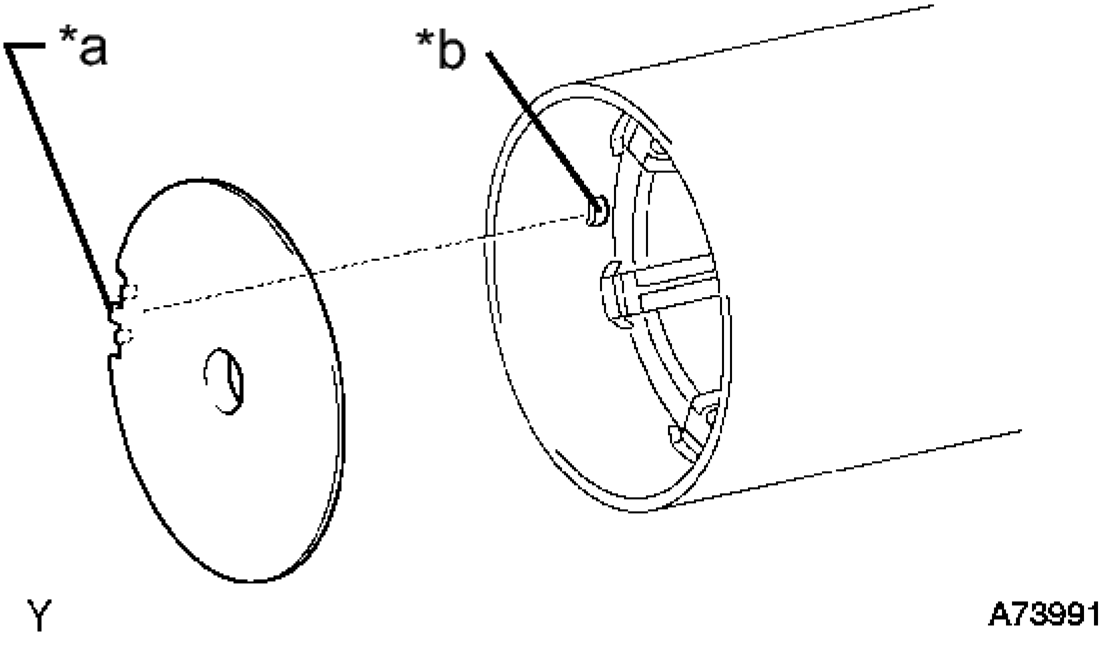

Fig. 32: Identifying Starter Armature Plate
Courtesy of TOYOTA MOTOR SALES, U.S.A., INC.

TEXT IN ILLUSTRATION

*a	Keyway
*b	Key

b. Align the keyway of the starter armature plate with the key inside the starter yoke, and install the starter armature plate.

5. **INSTALL STARTER COMMUTATOR END FRAME ASSEMBLY**

a. Align the rubber of the end frame with the cutout of the starter yoke.

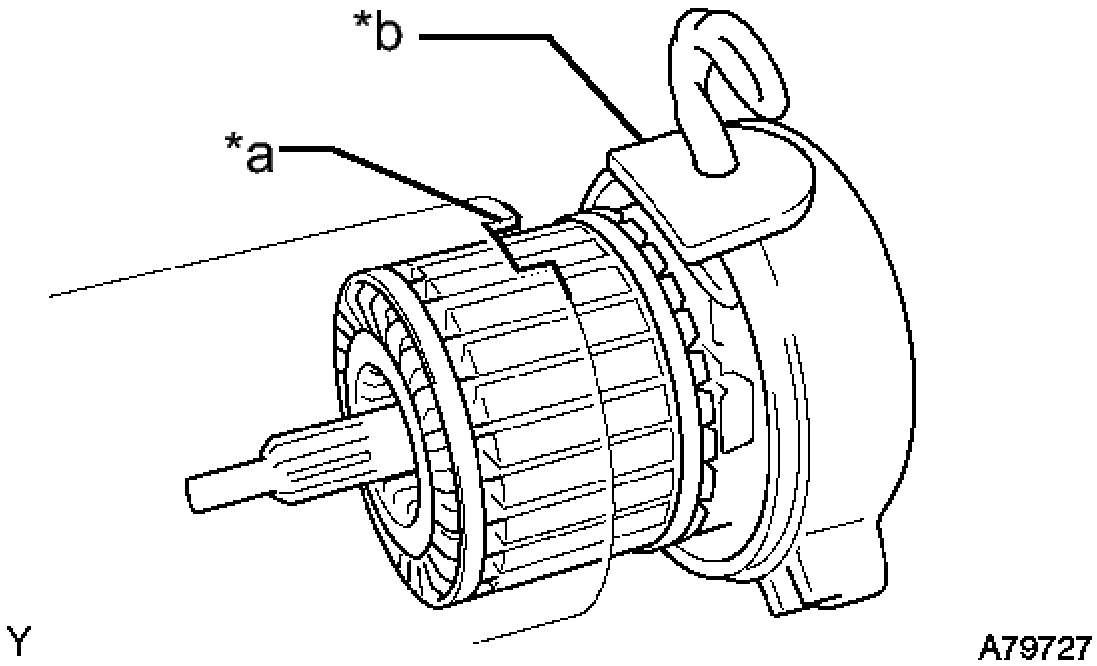

Fig. 33: Align Rubber And Cutout
Courtesy of TOYOTA MOTOR SALES, U.S.A., INC.

TEXT IN ILLUSTRATION

*a	Cutout
*b	Rubber

b. Install the end frame to the starter yoke.

NOTE: **The magnet of the starter yoke may attract the starter armature when the starter commutator end frame is installed, causing the magnet to break.**

6. **INSTALL STARTER YOKE ASSEMBLY**

a. Align the protrusion of the starter yoke with the cutout of the starter drive housing.

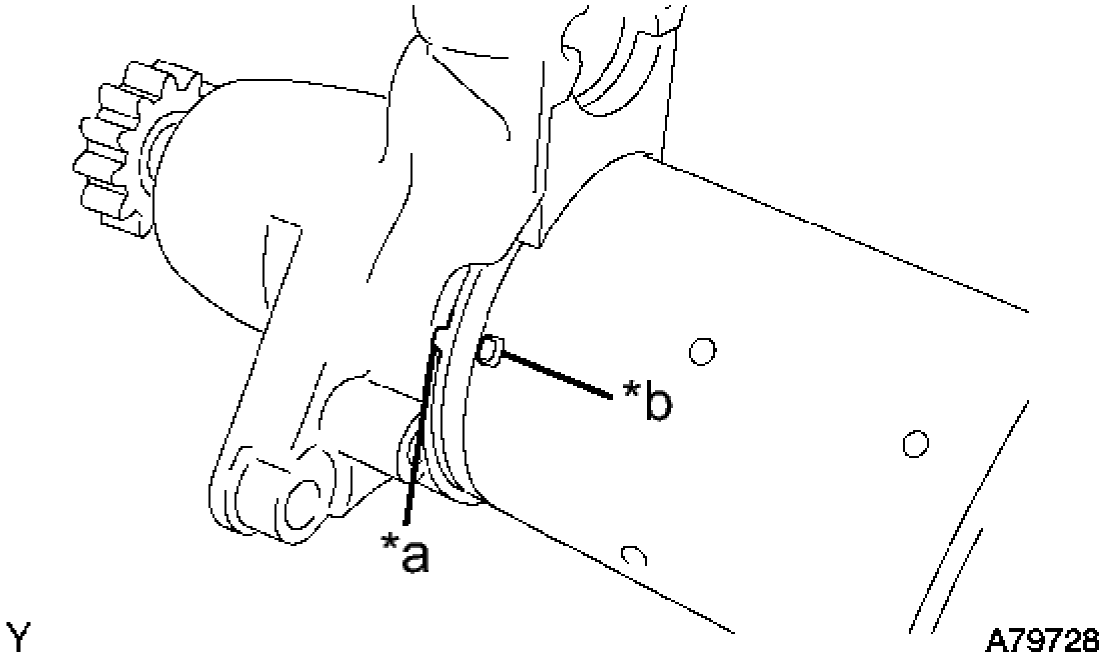

Fig. 34: Align Protrusion And Cutout
Courtesy of TOYOTA MOTOR SALES, U.S.A., INC.

TEXT IN ILLUSTRATION

*a	Cutout
*b	Protrusion

b. Install the starter yoke with the 2 through-bolts.

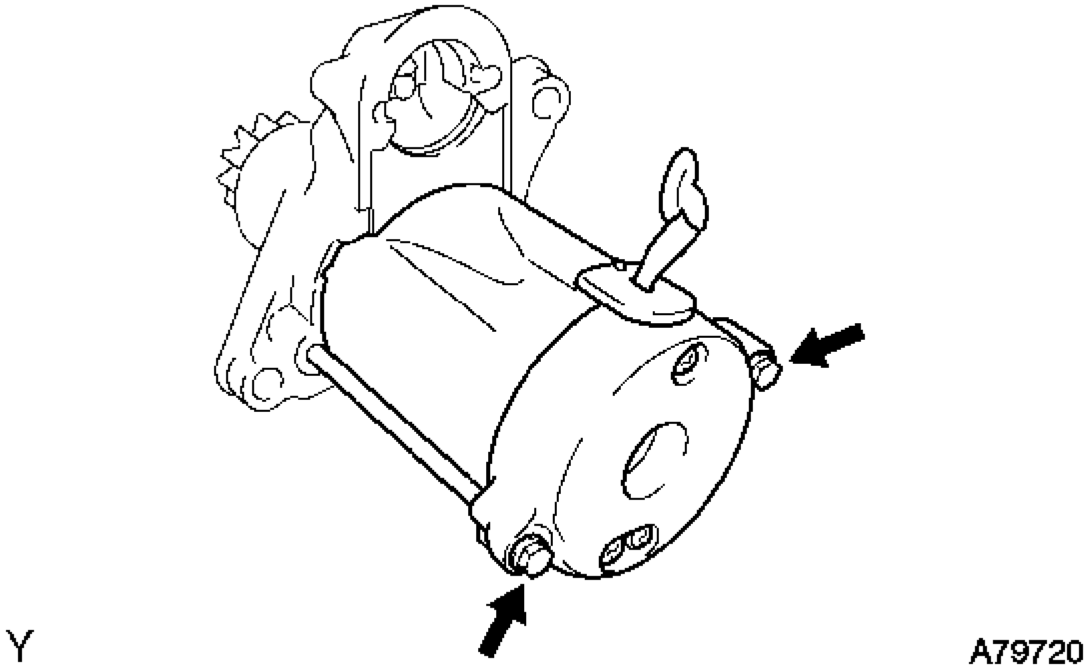

Fig. 35: Locating Field Frame With Through Bolts
Courtesy of TOYOTA MOTOR SALES, U.S.A., INC.

Torque: 6.0 N*m (61 kgf*cm, 53 in.*lbf)

7. **INSTALL REPAIR SERVICE STARTER KIT**
   a. Apply grease to the plunger and the hook.

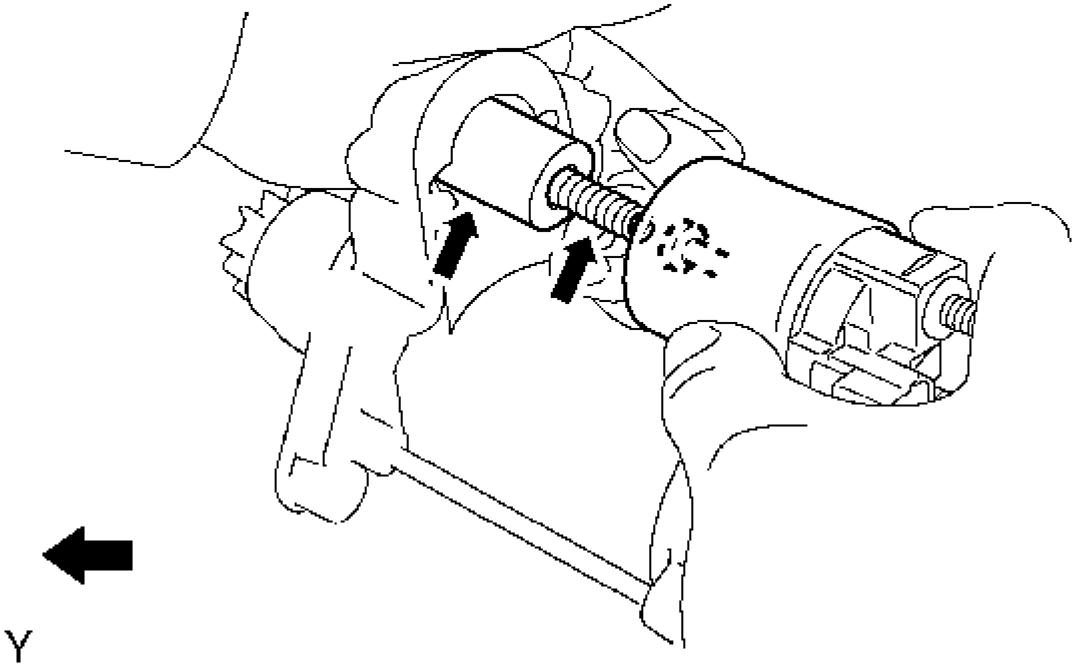

Fig. 36: Apply High-Temperature Grease To Plunger And Hook
Courtesy of TOYOTA MOTOR SALES, U.S.A., INC.

TEXT IN ILLUSTRATION

	High-temperature grease

b. Hang the plunger hook of the magnetic switch to the drive lever.
c. Install the plunger and return spring.
d. Install the magnetic switch with the 2 screws.

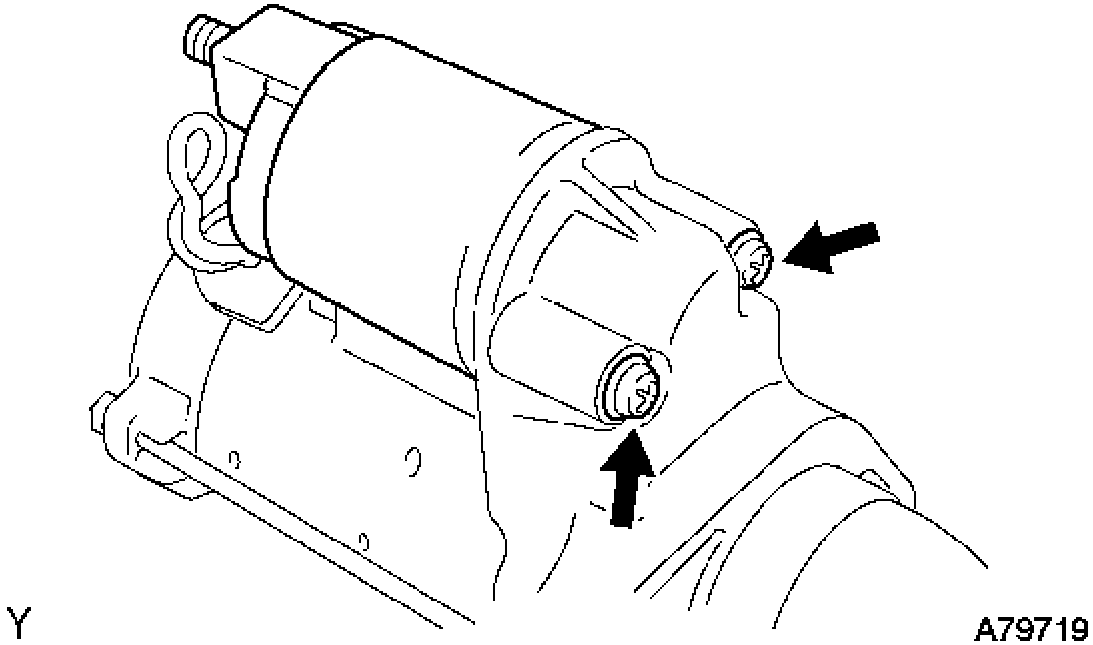

Fig. 37: Locating Magnetic Switch Screws
Courtesy of TOYOTA MOTOR SALES, U.S.A., INC.

Torque: 7.5 N*m (76 kgf*cm, 66 in.*lbf)

e. Connect the lead wire to the magnetic switch with the nut.

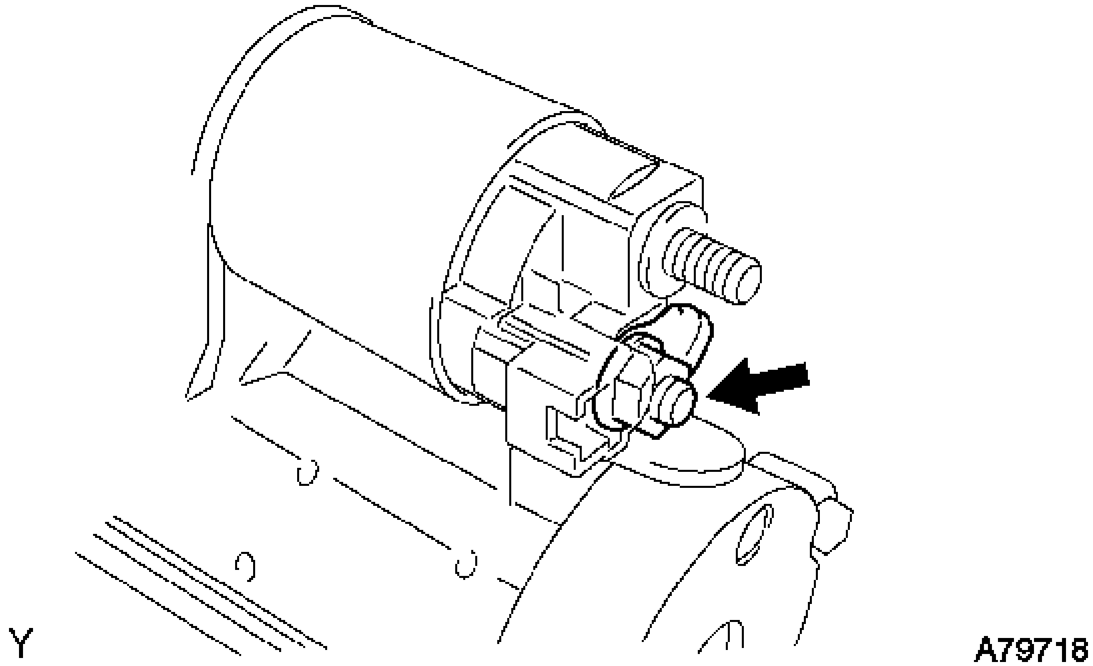

Fig. 38: Locating Magnetic Switch Nut
Courtesy of TOYOTA MOTOR SALES, U.S.A., INC.

Torque: 10 N*m (102 kgf*cm, 7 ft.*lbf)

INSTALLATION

INSTALLATION

1. **INSTALL STARTER ASSEMBLY**
    a. Install the starter with the 2 bolts.

       Torque: 37 N*m (377 kgf*cm, 27 ft.*lbf)

    b. Connect the starter connector.
    c. Install the terminal nut and cover the nut with the cap.

       Torque: 9.8 N*m (100 kgf*cm, 87 in.*lbf)

2. **INSTALL AIR CLEANER CASE SUB-ASSEMBLY** . Refer to **INSTALLATION - Step 56**
3. **INSTALL AIR CLEANER FILTER ELEMENT SUB-ASSEMBLY**
4. **INSTALL AIR CLEANER CAP SUB-ASSEMBLY** . Refer to **INSTALLATION - Step 2**
5. **INSTALL INLET NO. 1 AIR CLEANER** . Refer to **INSTALLATION - Step 54**
6. **INSTALL BATTERY** . Refer to **INSTALLATION - Step 55**
7. **INSTALL INLET NO. 2 AIR CLEANER** . Refer to **INSTALLATION - Step 59**
8. **INSTALL V-BANK COVER SUB-ASSEMBLY** . Refer to **INSTALLATION - Step 82**

9. **CONNECT CABLE TO NEGATIVE BATTERY TERMINAL**

NOTE: **When disconnecting the cable, some systems need to be initialized after the cable is reconnected. Refer to INITIALIZATION .**

10. **INSTALL COOL AIR INTAKE DUCT SEAL** . Refer to **INSTALLATION - Step 4**

ENGINE SWITCH

COMPONENTS

ILLUSTRATION

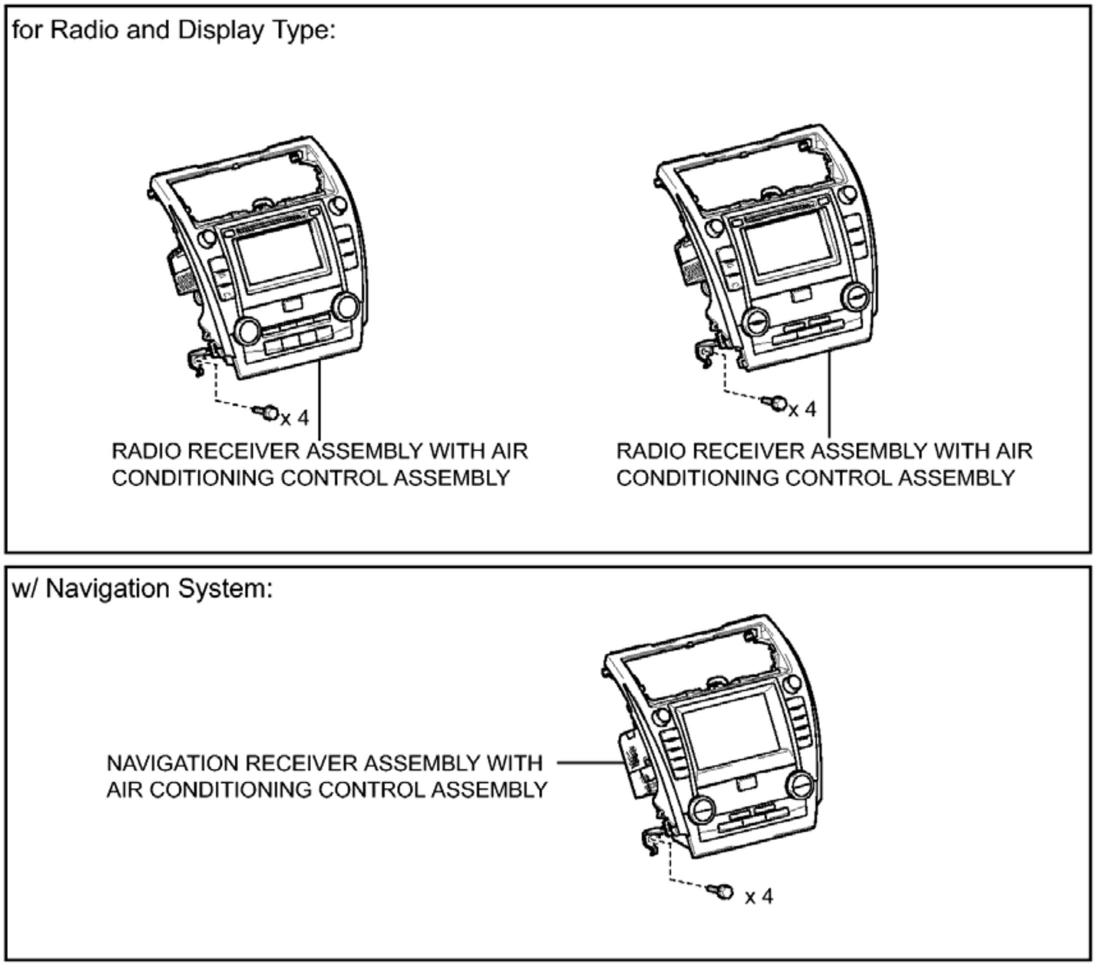
for Radio and Display Type:
x 4
RADIO RECEIVER ASSEMBLY WITH AIR CONDITIONING CONTROL ASSEMBLY
x 4
RADIO RECEIVER ASSEMBLY WITH AIR CONDITIONING CONTROL ASSEMBLY
w/ Navigation System:
NAVIGATION RECEIVER ASSEMBLY WITH AIR CONDITIONING CONTROL ASSEMBLY
x 4

Fig. 39: Identifying Engine Switch Replacement Components (1 Of 2)
Courtesy of TOYOTA MOTOR SALES, U.S.A., INC.

ILLUSTRATION

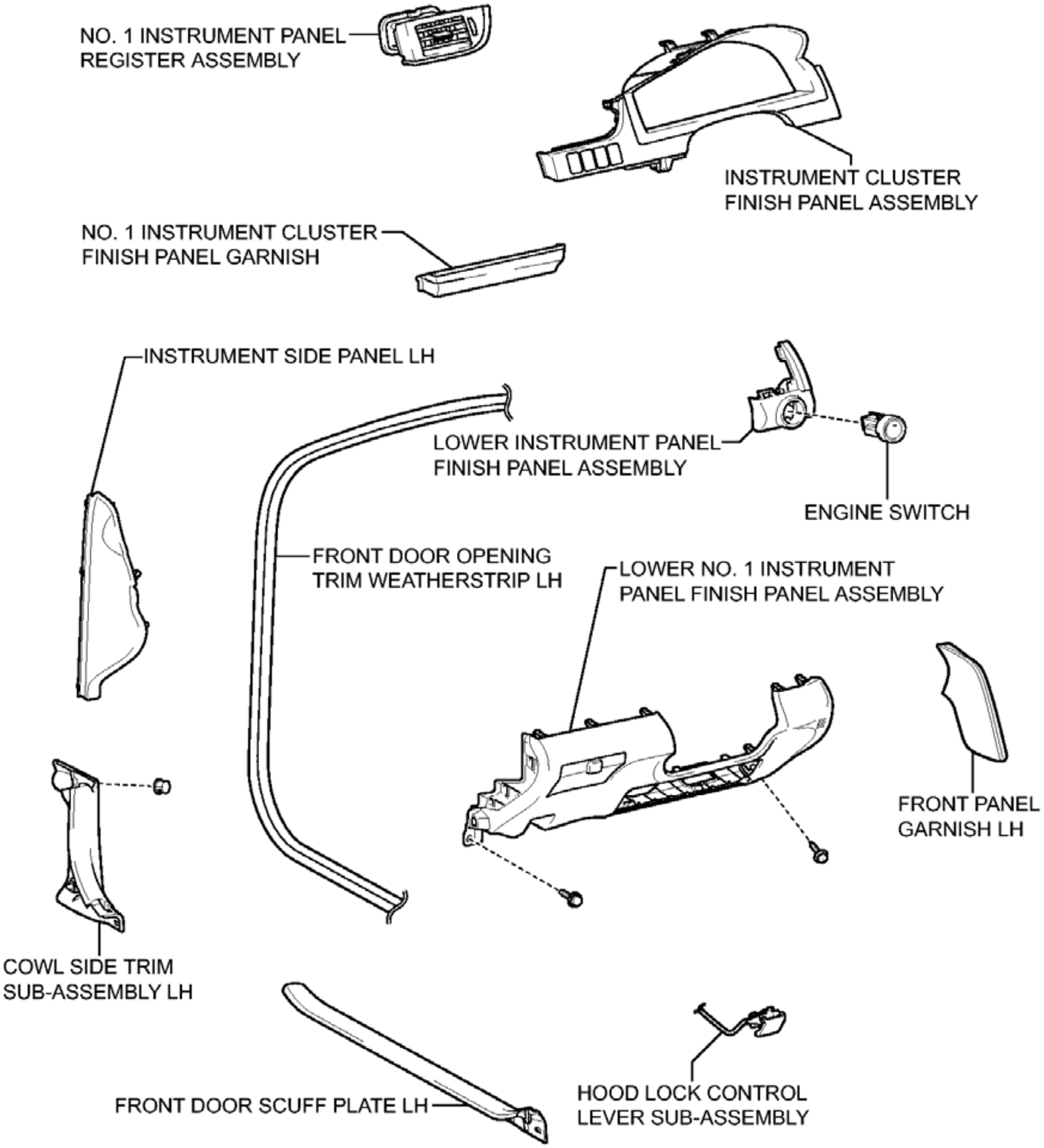
NO. 1 INSTRUMENT PANEL REGISTER ASSEMBLY
INSTRUMENT CLUSTER FINISH PANEL ASSEMBLY
NO. 1 INSTRUMENT CLUSTER FINISH PANEL GARNISH
INSTRUMENT SIDE PANEL LH
LOWER INSTRUMENT PANEL FINISH PANEL ASSEMBLY
ENGINE SWITCH
FRONT DOOR OPENING TRIM WEATHERSTRIP LH
LOWER NO. 1 INSTRUMENT PANEL FINISH PANEL ASSEMBLY
FRONT PANEL GARNISH LH
COWL SIDE TRIM SUB-ASSEMBLY LH
HOOD LOCK CONTROL LEVER SUB-ASSEMBLY
FRONT DOOR SCUFF PLATE LH

Fig. 40: Identifying Engine Switch Replacement Components (2 Of 2)
Courtesy of TOYOTA MOTOR SALES, U.S.A., INC.

REMOVAL

REMOVAL

1. **PRECAUTION**

NOTE: **After turning the engine switch off, waiting time may be required before disconnecting the cable from the negative (-) battery terminal. Therefore, make sure to read the disconnecting the cable from the negative (-) battery terminal notices before proceeding with work. Refer to PRECAUTION .**

2. **DISCONNECT CABLE FROM NEGATIVE BATTERY TERMINAL**

   NOTE: **When disconnecting the cable, some systems need to be initialized after the cable is reconnected. Refer to INITIALIZATION .**

3. **REMOVE RADIO RECEIVER ASSEMBLY WITH AIR CONDITIONING CONTROL ASSEMBLY (w/o Navigation System)**

   Refer to **REMOVAL** .

4. **REMOVE NAVIGATION RECEIVER ASSEMBLY WITH AIR CONDITIONING CONTROL ASSEMBLY (w/ Navigation System)**

   Refer to **REMOVAL** .

5. **REMOVE FRONT DOOR SCUFF PLATE LH** . Refer to **REMOVAL - Step 3**
6. **REMOVE COWL SIDE TRIM SUB-ASSEMBLY LH** . Refer to **REMOVAL - Step 4**
7. **DISCONNECT FRONT DOOR OPENING TRIM WEATHERSTRIP LH** . Refer to **REMOVAL - Step 5**
8. **REMOVE INSTRUMENT SIDE PANEL LH** . Refer to **REMOVAL - Step 6**
9. **REMOVE NO. 1 INSTRUMENT CLUSTER FINISH PANEL GARNISH** . Refer to **REMOVAL - Step 7**
10. **REMOVE NO. 1 INSTRUMENT PANEL REGISTER ASSEMBLY** . Refer to **REMOVAL - Step 8**
11. **REMOVE INSTRUMENT CLUSTER FINISH PANEL ASSEMBLY** . Refer to **REMOVAL - Step 9**
12. **REMOVE FRONT PANEL GARNISH LH** . Refer to **REMOVAL - Step 11**
13. **DISCONNECT HOOD LOCK CONTROL LEVER SUB-ASSEMBLY** . Refer to **REMOVAL - Step 12**
14. **REMOVE LOWER NO. 1 INSTRUMENT PANEL FINISH PANEL ASSEMBLY** . Refer to **REMOVAL - Step 13**
15. **REMOVE LOWER INSTRUMENT PANEL FINISH PANEL ASSEMBLY** . Refer to **REMOVAL - Step 47**
16. **REMOVE ENGINE SWITCH**
    a. Disengage the 2 claws and remove the engine switch.

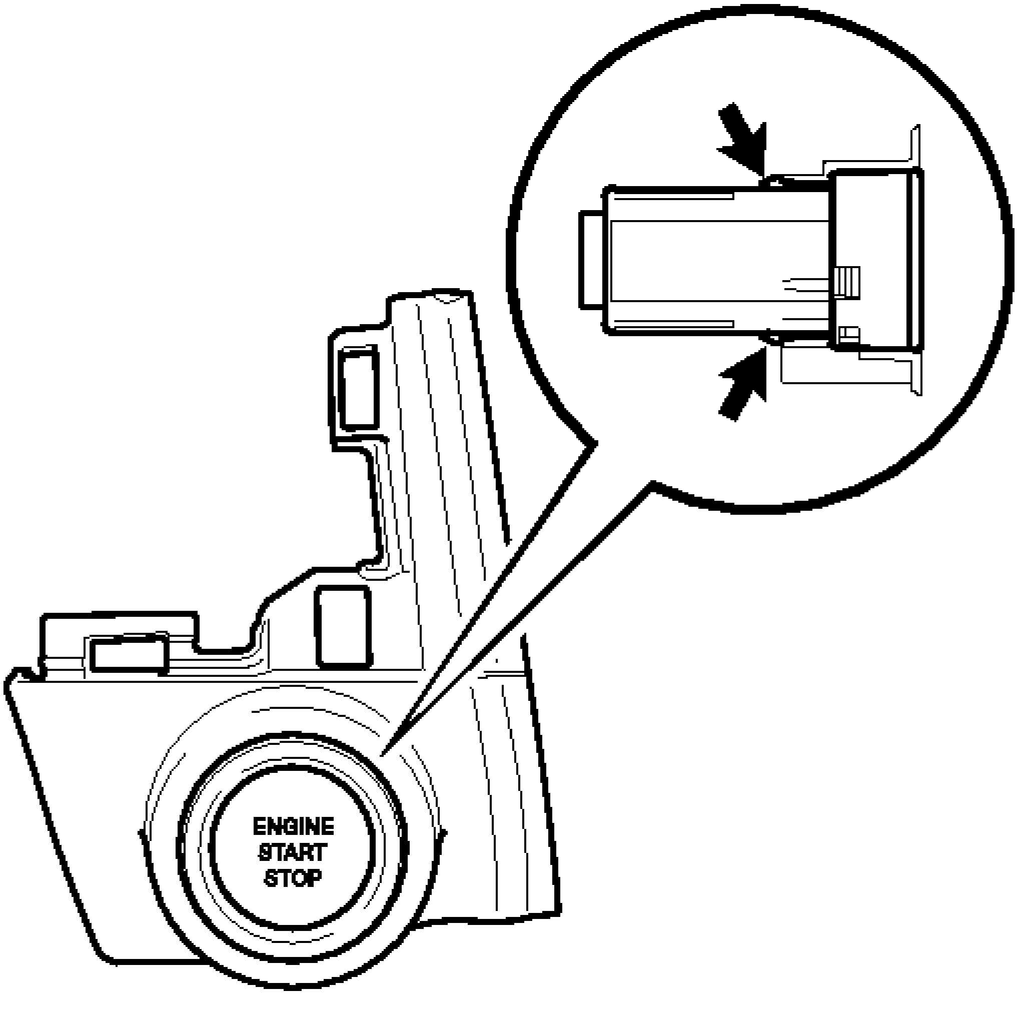
ENGINE
START
STOP
C

Fig. 41: Identifying Engine Switch Claws
Courtesy of TOYOTA MOTOR SALES, U.S.A., INC.

INSPECTION

INSPECTION

1. **INSPECT ENGINE SWITCH**

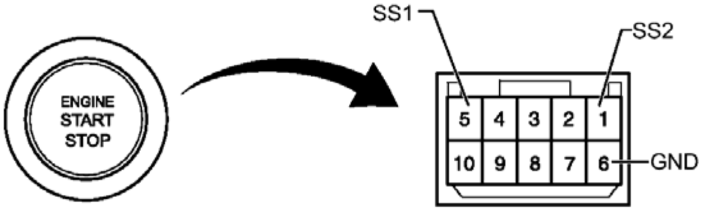

Fig. 42: Identifying Engine Switch Connector Terminal Identification
Courtesy of TOYOTA MOTOR SALES, U.S.A., INC.

a. Measure the resistance according to the value(s) in the table below.

Standard Resistance

Tester Connection	Switch Condition	Specified Condition
5 (SS1) - 6 (GND)	Not pushed	10 kohms or higher
1 (SS2) - 6 (GND)		
5 (SS1) - 6 (GND)	Pushed	Below 1 ohms
1 (SS2) - 6 (GND)		

If the result is not as specified, replace the engine switch.

b. Apply battery voltage between the terminals of the switch, and check the illumination condition of the engine switch.

HINT:

- If a positive (+) battery lead and a negative (-) battery lead are incorrectly connected, the engine switch indicator light will not illuminate.
- If the voltage is too low, the indicator light will not illuminate.

OK

Measurement Condition	Specified Condition
Battery positive (+) --> Terminal 9 (SWIL) Battery	Illuminates

negative (-) --> Terminal 6 (GND)	

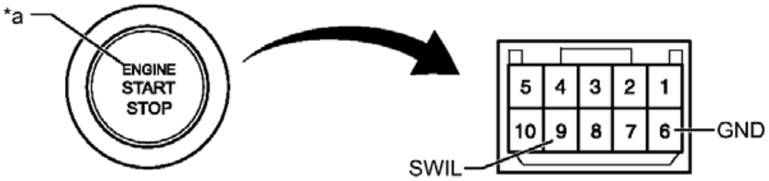

Fig. 43: Identification Engine Switch Indicator Light
Courtesy of TOYOTA MOTOR SALES, U.S.A., INC.

TEXT IN ILLUSTRATION

*a	Indicator Light

If the result is not as specified, replace the engine switch.

INSTALLATION

INSTALLATION

1. **INSTALL ENGINE SWITCH**
   a. Engage the 2 claws to install the engine switch.
2. **INSTALL LOWER INSTRUMENT PANEL FINISH PANEL ASSEMBLY** . Refer to **INSTALLATION - Step 6**
3. **INSTALL LOWER NO. 1 INSTRUMENT PANEL FINISH PANEL ASSEMBLY** . Refer to **INSTALLATION - Step 40**
4. **CONNECT HOOD LOCK CONTROL LEVER SUB-ASSEMBLY** . Refer to **INSTALLATION - Step 41**
5. **INSTALL FRONT PANEL GARNISH LH** . Refer to **INSTALLATION - Step 42**
6. **INSTALL INSTRUMENT CLUSTER FINISH PANEL ASSEMBLY** . Refer to **INSTALLATION - Step 44**
7. **INSTALL NO. 1 INSTRUMENT PANEL REGISTER ASSEMBLY** . Refer to **INSTALLATION - Step 45**
8. **INSTALL NO. 1 INSTRUMENT CLUSTER FINISH PANEL GARNISH** . Refer to **INSTALLATION - Step 46**
9. **INSTALL INSTRUMENT SIDE PANEL LH** . Refer to **INSTALLATION - Step 47**
10. **CONNECT FRONT DOOR OPENING TRIM WEATHERSTRIP LH** . Refer to **INSTALLATION - Step 42**
11. **INSTALL COWL SIDE TRIM SUB-ASSEMBLY LH** . Refer to **INSTALLATION - Step 43**

12. **INSTALL FRONT DOOR SCUFF PLATE LH** . Refer to **INSTALLATION - Step 44**
13. **INSTALL RADIO RECEIVER ASSEMBLY WITH AIR CONDITIONING CONTROL ASSEMBLY (w/o Navigation System)**

    Refer to **INSTALLATION** .

14. **INSTALL NAVIGATION RECEIVER ASSEMBLY WITH AIR CONDITIONING CONTROL ASSEMBLY (w/ Navigation System)**

    Refer to **INSTALLATION** .

15. **CONNECT CABLE TO NEGATIVE BATTERY TERMINAL**

NOTE: **When disconnecting the cable, some systems need to be initialized after the cable is reconnected. Refer to INITIALIZATION .**

RELAY

ON-VEHICLE INSPECTION

ON-VEHICLE INSPECTION

1. **INSPECT STARTER RELAY**
   a. Measure the resistance according to the value(s) in the table below.

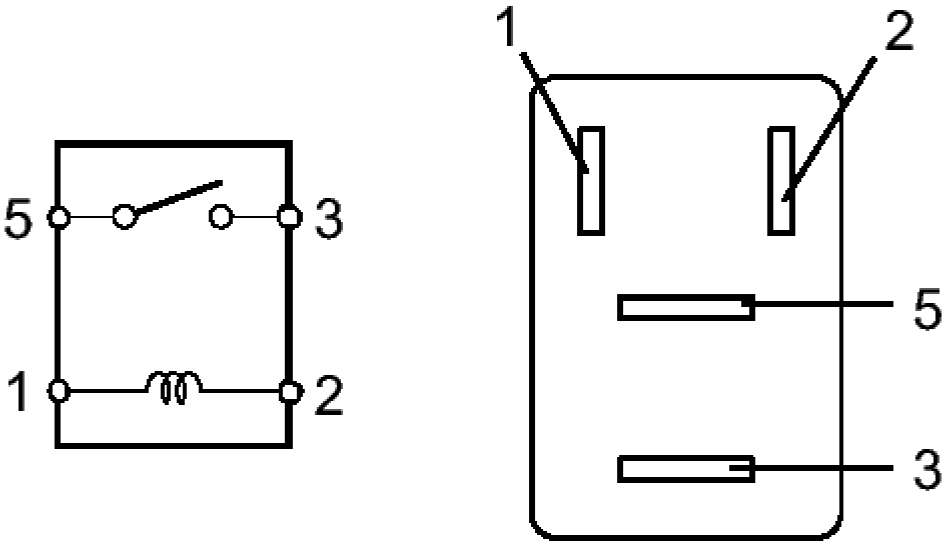

Fig. 44: Identifying Starter Relay Terminals
Courtesy of TOYOTA MOTOR SALES, U.S.A., INC.

Standard Resistance

Tester Connection	**Condition**	**Specified Condition**
3 - 5	Battery voltage not applied between terminals 1 and 2	10 kohms or higher
3 - 5	Battery voltage applied between terminals 1 and 2	Below 1 ohms

If the resistance is not as specified, replace the relay.

POWER SWITCH

COMPONENTS

ILLUSTRATION

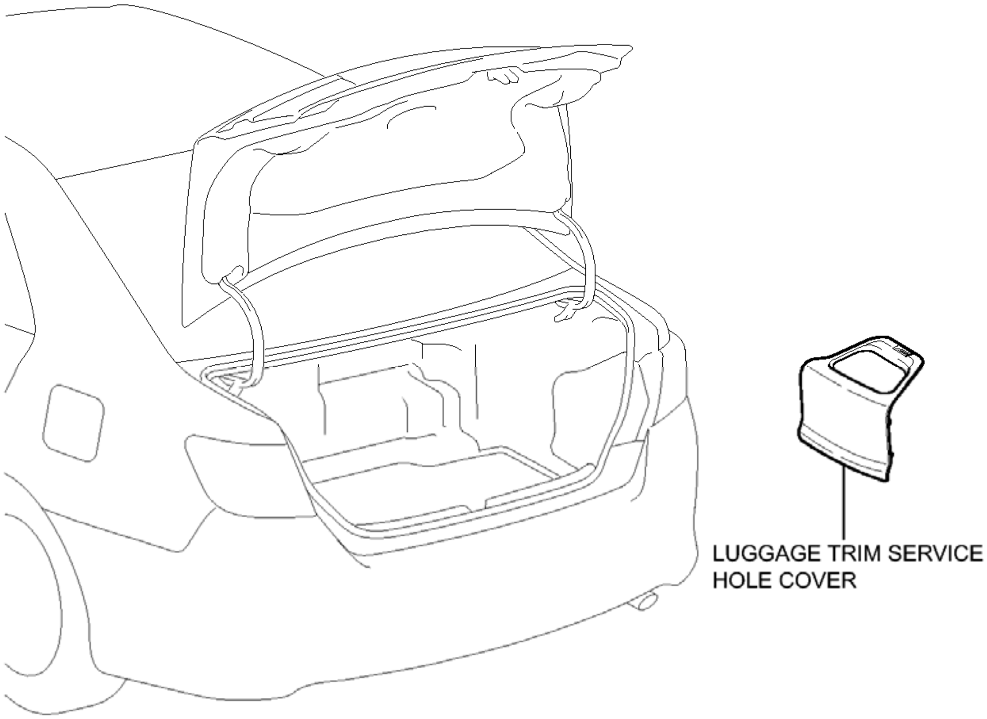
LUGGAGE TRIM SERVICE HOLE COVER

P

Fig. 1: Identifying Power Switch Replacement Components (1 Of 3)
Courtesy of TOYOTA MOTOR SALES, U.S.A., INC.

ILLUSTRATION

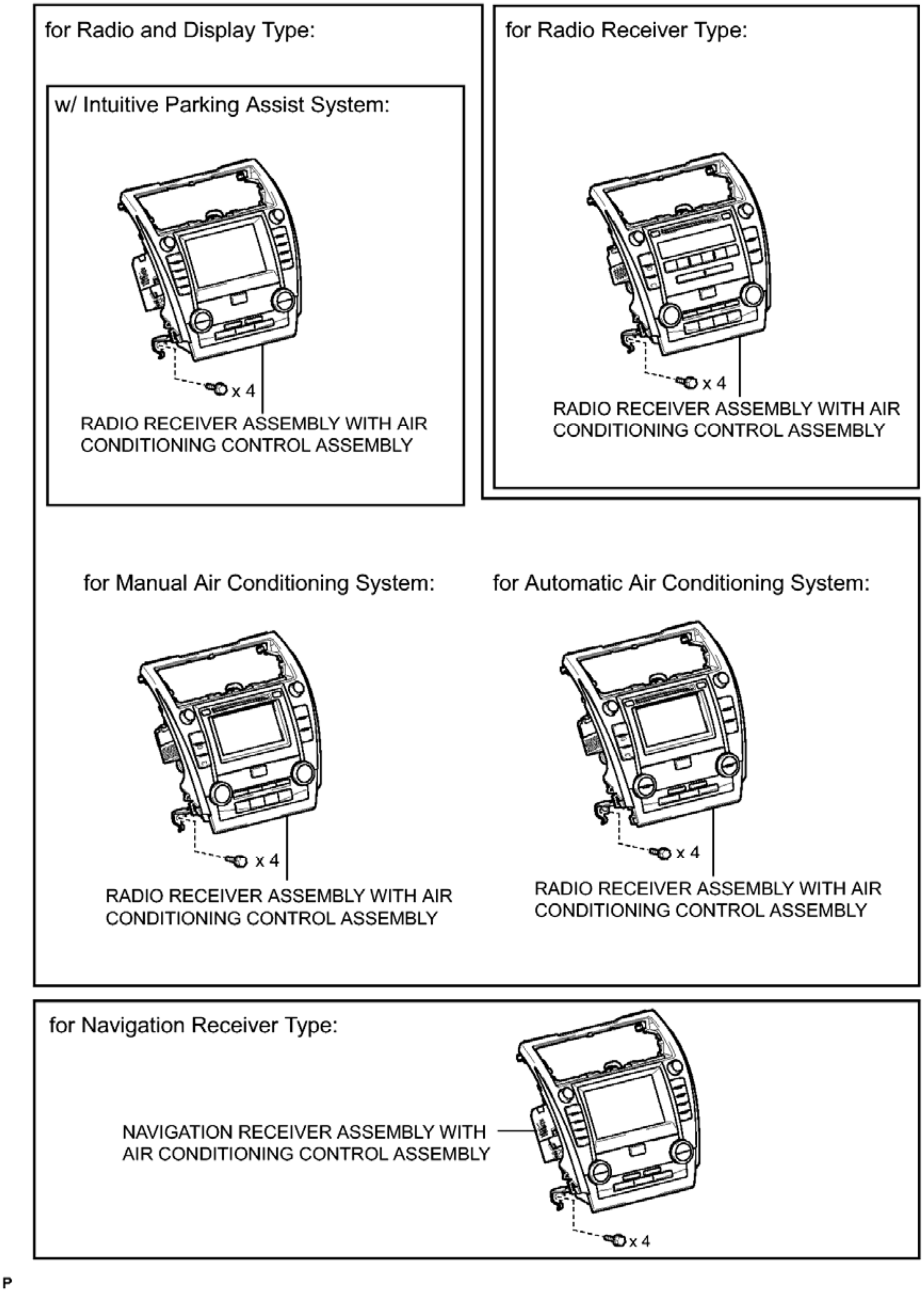
for Radio and Display Type:
w/ Intuitive Parking Assist System:
x 4
RADIO RECEIVER ASSEMBLY WITH AIR CONDITIONING CONTROL ASSEMBLY
for Radio Receiver Type:
x 4
RADIO RECEIVER ASSEMBLY WITH AIR CONDITIONING CONTROL ASSEMBLY
for Manual Air Conditioning System:
x 4
RADIO RECEIVER ASSEMBLY WITH AIR CONDITIONING CONTROL ASSEMBLY
for Automatic Air Conditioning System:
x 4
RADIO RECEIVER ASSEMBLY WITH AIR CONDITIONING CONTROL ASSEMBLY
for Navigation Receiver Type:
NAVIGATION RECEIVER ASSEMBLY WITH AIR CONDITIONING CONTROL ASSEMBLY
x 4
P

Fig. 2: Identifying Power Switch Replacement Components (2 Of 3)
Courtesy of TOYOTA MOTOR SALES, U.S.A., INC.

ILLUSTRATION

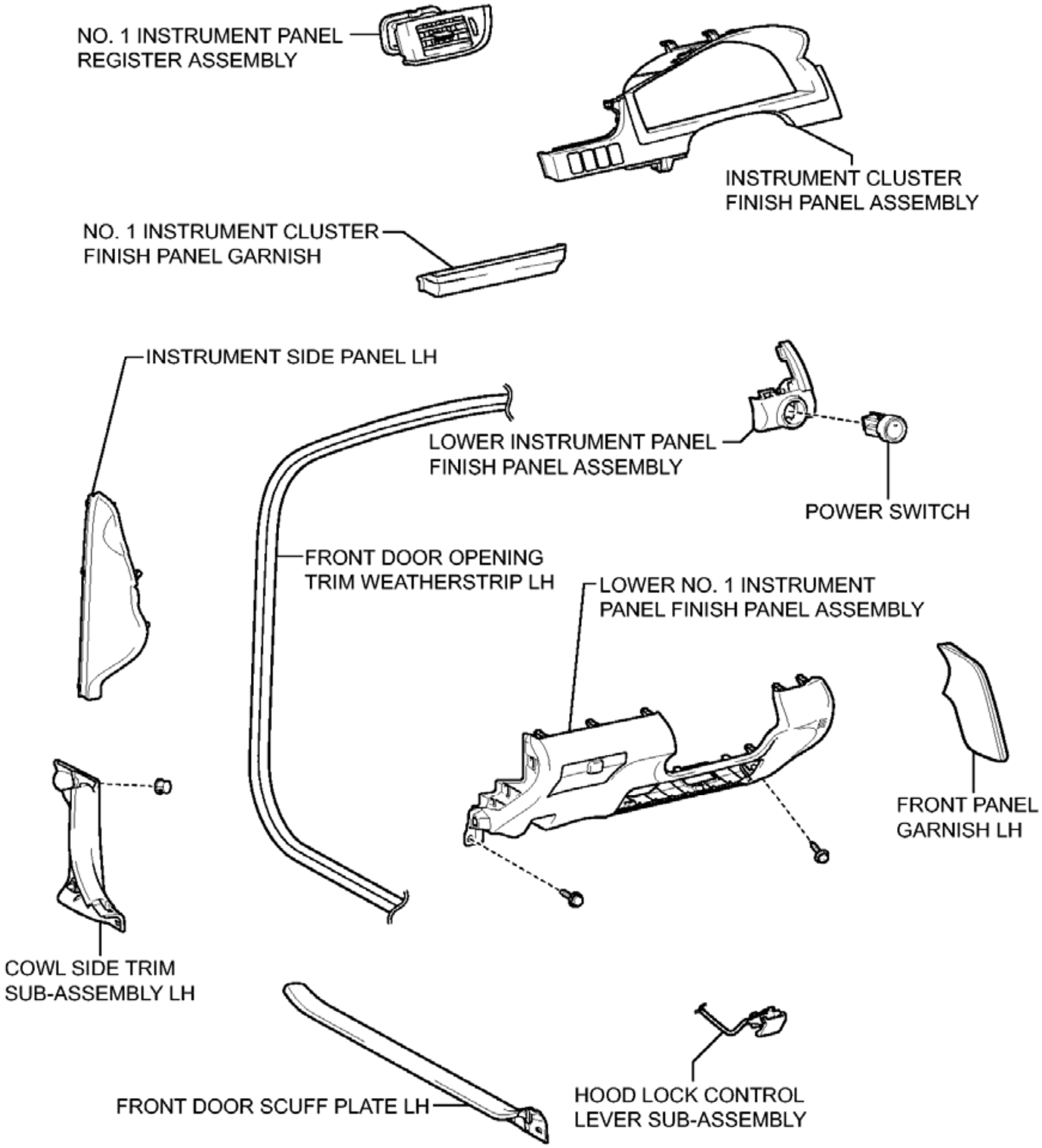
NO. 1 INSTRUMENT PANEL REGISTER ASSEMBLY
INSTRUMENT CLUSTER FINISH PANEL ASSEMBLY
NO. 1 INSTRUMENT CLUSTER FINISH PANEL GARNISH
INSTRUMENT SIDE PANEL LH
LOWER INSTRUMENT PANEL FINISH PANEL ASSEMBLY
POWER SWITCH
FRONT DOOR OPENING TRIM WEATHERSTRIP LH
LOWER NO. 1 INSTRUMENT PANEL FINISH PANEL ASSEMBLY
FRONT PANEL GARNISH LH
COWL SIDE TRIM SUB-ASSEMBLY LH
FRONT DOOR SCUFF PLATE LH
HOOD LOCK CONTROL LEVER SUB-ASSEMBLY

Fig. 3: Identifying Power Switch Replacement Components (3 Of 3)
Courtesy of TOYOTA MOTOR SALES, U.S.A., INC.

REMOVAL

REMOVAL

1. **PRECAUTION**

NOTE: **After turning the power switch off, waiting time may be required before disconnecting the cable from the negative (-) auxiliary battery terminal. Therefore, make sure to read the disconnecting the cable from the negative (-) auxiliary battery terminal notices before proceeding with work. Refer to PRECAUTION .**

2. **REMOVE LUGGAGE TRIM SERVICE HOLE COVER** . Refer to **REMOVAL - Step 2**
3. **DISCONNECT CABLE FROM AUXILIARY BATTERY NEGATIVE TERMINAL**

   NOTE: **When disconnecting the cable, some systems need to be initialized after the cable is reconnected. Refer to INITIALIZATION .**

4. **REMOVE RADIO RECEIVER ASSEMBLY WITH AIR CONDITIONING CONTROL ASSEMBLY**

   Refer to **REMOVAL**

5. **REMOVE NAVIGATION RECEIVER ASSEMBLY WITH AIR CONDITIONING CONTROL ASSEMBLY**

   Refer to **REMOVAL**

6. **REMOVE FRONT DOOR SCUFF PLATE LH** . Refer to **REMOVAL - Step 4**
7. **REMOVE COWL SIDE TRIM SUB-ASSEMBLY LH** . Refer to **REMOVAL - Step 5**
8. **DISCONNECT FRONT DOOR OPENING TRIM WEATHERSTRIP LH** . Refer to **REMOVAL - Step 6**
9. **REMOVE INSTRUMENT SIDE PANEL LH** . Refer to **REMOVAL - Step 7**
10. **REMOVE NO. 1 INSTRUMENT CLUSTER FINISH PANEL GARNISH** . Refer to **REMOVAL - Step 8**
11. **REMOVE NO. 1 INSTRUMENT PANEL REGISTER ASSEMBLY** . Refer to **REMOVAL - Step 9**
12. **REMOVE INSTRUMENT CLUSTER FINISH PANEL ASSEMBLY** . Refer to **REMOVAL - Step 10**
13. **REMOVE FRONT PANEL GARNISH LH** . Refer to **REMOVAL - Step 12**
14. **DISCONNECT HOOD LOCK CONTROL LEVER SUB-ASSEMBLY** . Refer to **REMOVAL - Step 13**
15. **REMOVE LOWER NO. 1 INSTRUMENT PANEL FINISH PANEL ASSEMBLY** . Refer to **REMOVAL - Step 14**
16. **REMOVE LOWER INSTRUMENT PANEL FINISH PANEL ASSEMBLY** . Refer to **REMOVAL - Step 46**
17. **REMOVE POWER SWITCH**
    a. Disengage the 2 claws and remove the power switch.

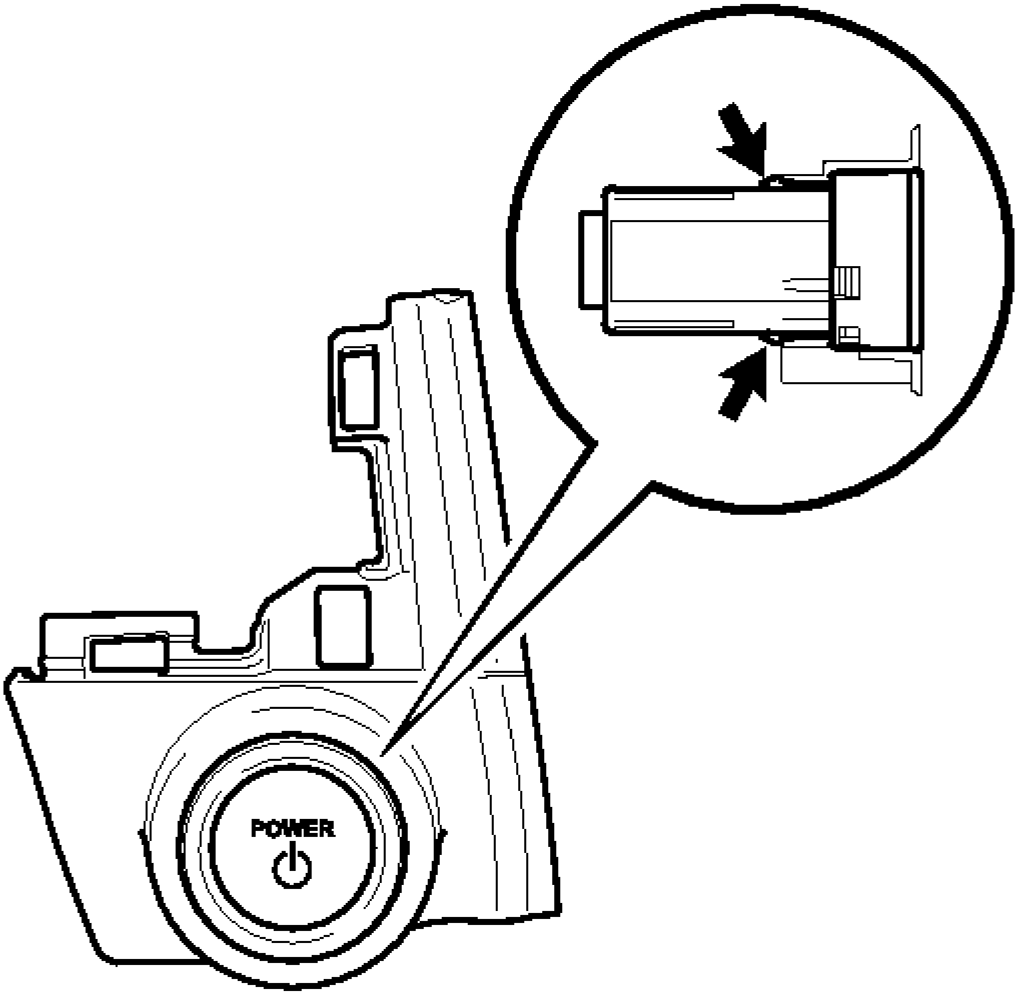

Fig. 4: Identifying Power Switch Claws
Courtesy of TOYOTA MOTOR SALES, U.S.A., INC.

INSPECTION

INSPECTION

1. **INSPECT POWER SWITCH**
    a. Measure the resistance according to the value(s) in the table below.

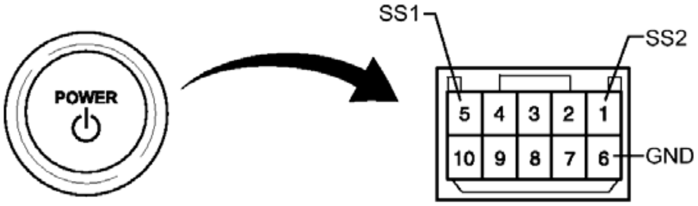

Fig. 5: Identifying Power Switch Connector Terminal Identification
Courtesy of TOYOTA MOTOR SALES, U.S.A., INC.

Standard Resistance

Tester Connection	Switch Condition	Specified Condition
5 (SS1) - 6 (GND)	Not pushed	10 kohms or higher
1 (SS2) - 6 (GND)		
5 (SS1) - 6 (GND)	Pushed	Below 1 ohms
1 (SS2) - 6 (GND)		

If the result is not as specified, replace the power switch.

b. Apply battery voltage between the terminals of the switch, and check the illumination condition of the power switch.

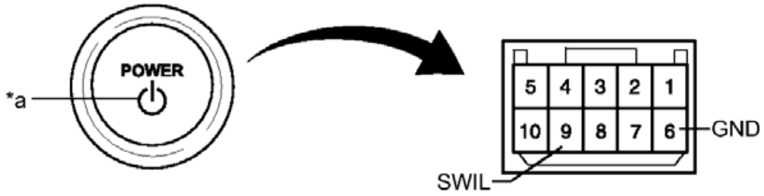

Fig. 6: Identifying Power Switch Connector Terminal Identification
Courtesy of TOYOTA MOTOR SALES, U.S.A., INC.

TEXT IN ILLUSTRATION

*a	Indicator Light

HINT:

- If a positive (+) battery lead and a negative (-) battery lead are incorrectly connected, the power switch indicator light will not illuminate.
- If the voltage is too low, the indicator light will not illuminate.

OK

Measurement Condition	Specified Condition
Battery positive (+) --> Terminal 9 (SWIL) Battery negative (-) --> Terminal 6 (GND)	Illuminates

If the result is not as specified, replace the power switch.

INSTALLATION

INSTALLATION

1. **INSTALL POWER SWITCH**
    a. Engage the 2 claws to install the power switch.
2. **INSTALL LOWER INSTRUMENT PANEL FINISH PANEL ASSEMBLY** . Refer to **INSTALLATION - Step 6**
3. **INSTALL LOWER NO. 1 INSTRUMENT PANEL FINISH PANEL ASSEMBLY** . Refer to **INSTALLATION - Step 38**
4. **INSTALL FRONT PANEL GARNISH LH** . Refer to **INSTALLATION - Step 40**
5. **CONNECT HOOD LOCK CONTROL LEVER SUB-ASSEMBLY** . Refer to **INSTALLATION - Step 39**
6. **INSTALL INSTRUMENT CLUSTER FINISH PANEL ASSEMBLY** . Refer to **INSTALLATION - Step 42**
7. **INSTALL NO. 1 INSTRUMENT PANEL REGISTER ASSEMBLY** . Refer to **INSTALLATION - Step 43**
8. **INSTALL NO. 1 INSTRUMENT CLUSTER FINISH PANEL GARNISH** . Refer to **INSTALLATION - Step 44**
9. **INSTALL INSTRUMENT SIDE PANEL LH** . Refer to **INSTALLATION - Step 45**
10. **INSTALL FRONT DOOR OPENING TRIM WEATHERSTRIP LH** . Refer to **INSTALLATION - Step 43**
11. **INSTALL COWL SIDE TRIM SUB-ASSEMBLY LH** . Refer to **INSTALLATION - Step 44**
12. **INSTALL FRONT DOOR SCUFF PLATE LH** . Refer to **INSTALLATION - Step 45**

13. **INSTALL NAVIGATION RECEIVER ASSEMBLY WITH AIR CONDITIONING CONTROL ASSEMBLY**

    Refer to **INSTALLATION**

14. **INSTALL RADIO RECEIVER ASSEMBLY WITH AIR CONDITIONING CONTROL ASSEMBLY**

    Refer to **INSTALLATION**

15. **CONNECT CABLE TO AUXILIARY BATTERY NEGATIVE TERMINAL**

    NOTE: **When disconnecting the cable, some systems need to be initialized after the cable is reconnected. Refer to INITIALIZATION .**

16. **INSTALL LUGGAGE TRIM SERVICE HOLE COVER** . Refer to **INSTALLATION - Step 3**

STEERING COLUMN ASSEMBLY

COMPONENTS

ILLUSTRATION

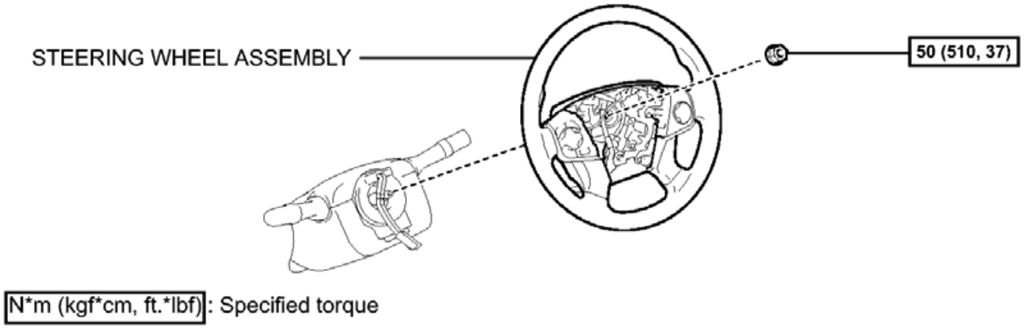
STEERING WHEEL ASSEMBLY
50 (510, 37)
N*m (kgf*cm, ft.*lbf): Specified torque

c

Fig. 1: Identifying Steering Column Assembly Replacement Components With Torque Specifications (1 Of 6)
Courtesy of TOYOTA MOTOR SALES, U.S.A., INC.

ILLUSTRATION

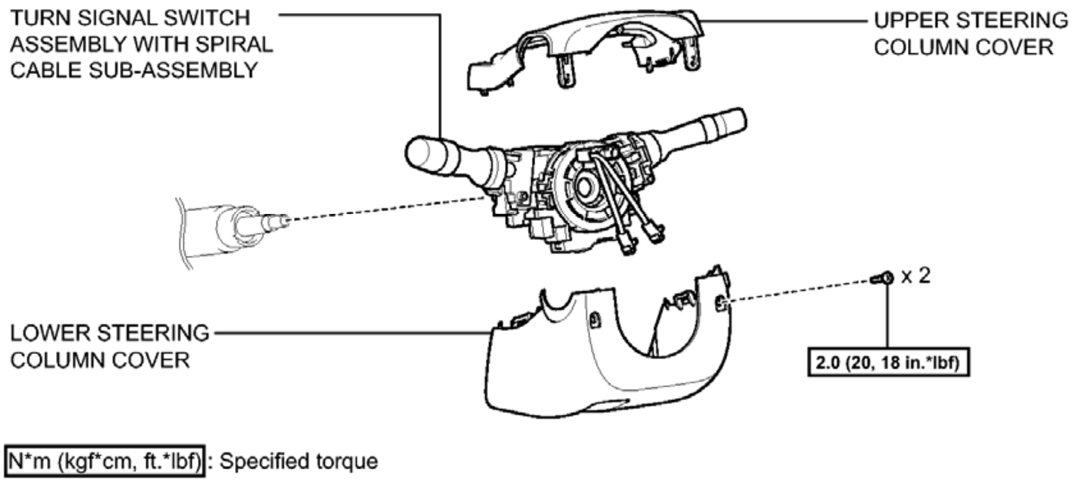
TURN SIGNAL SWITCH ASSEMBLY WITH SPIRAL CABLE SUB-ASSEMBLY
UPPER STEERING COLUMN COVER
x 2
LOWER STEERING COLUMN COVER
2.0 (20, 18 in.*lbf)
N*m (kgf*cm, ft.*lbf): Specified torque

c

Fig. 2: Identifying Steering Column Assembly Replacement Components With Torque Specifications (2 Of 6)

Courtesy of TOYOTA MOTOR SALES, U.S.A., INC.

ILLUSTRATION

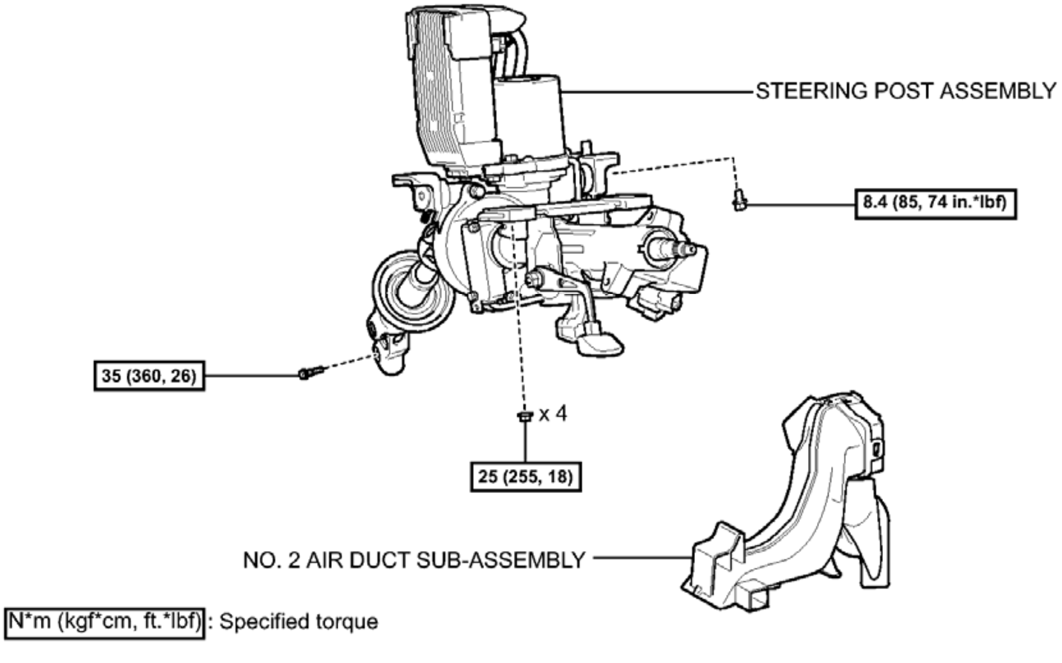
STEERING POST ASSEMBLY
8.4 (85, 74 in.*lbf)
35 (360, 26)
x 4
25 (255, 18)
NO. 2 AIR DUCT SUB-ASSEMBLY
N*m (kgf*cm, ft.*lbf) : Specified torque
c

Fig. 3: Identifying Steering Column Assembly Replacement Components With Torque Specifications (3 Of 6)

Courtesy of TOYOTA MOTOR SALES, U.S.A., INC.

ILLUSTRATION

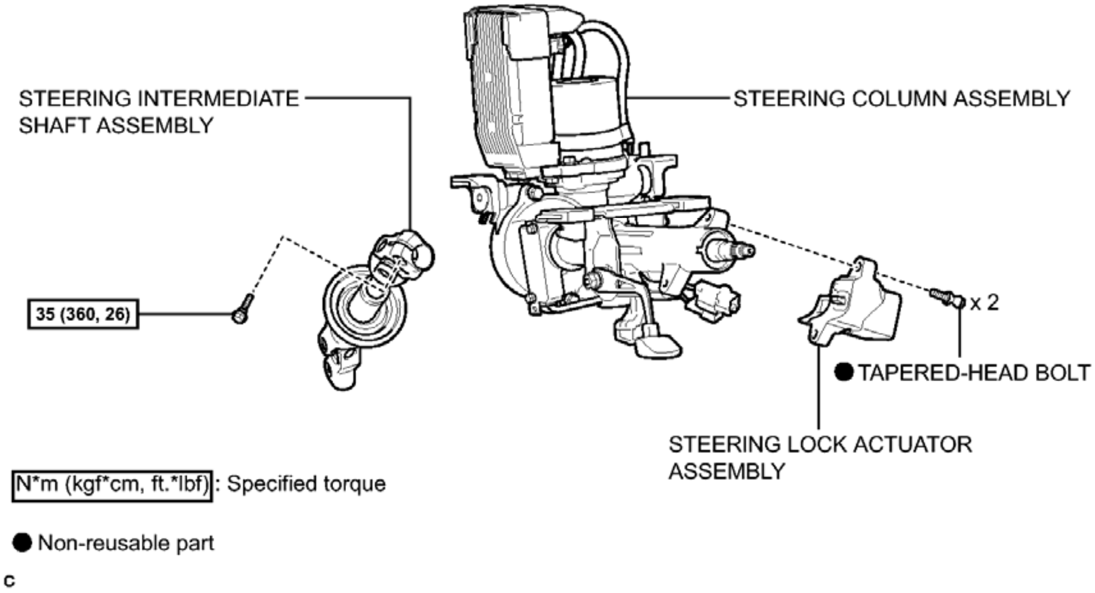
STEERING INTERMEDIATE SHAFT ASSEMBLY
STEERING COLUMN ASSEMBLY
35 (360, 26)
x 2
● TAPERED-HEAD BOLT
STEERING LOCK ACTUATOR ASSEMBLY
N*m (kgf*cm, ft.*lbf): Specified torque
● Non-reusable part
C

Fig. 4: Identifying Steering Column Assembly Replacement Components With Torque Specifications (4 Of 6)
Courtesy of TOYOTA MOTOR SALES, U.S.A., INC.

ILLUSTRATION

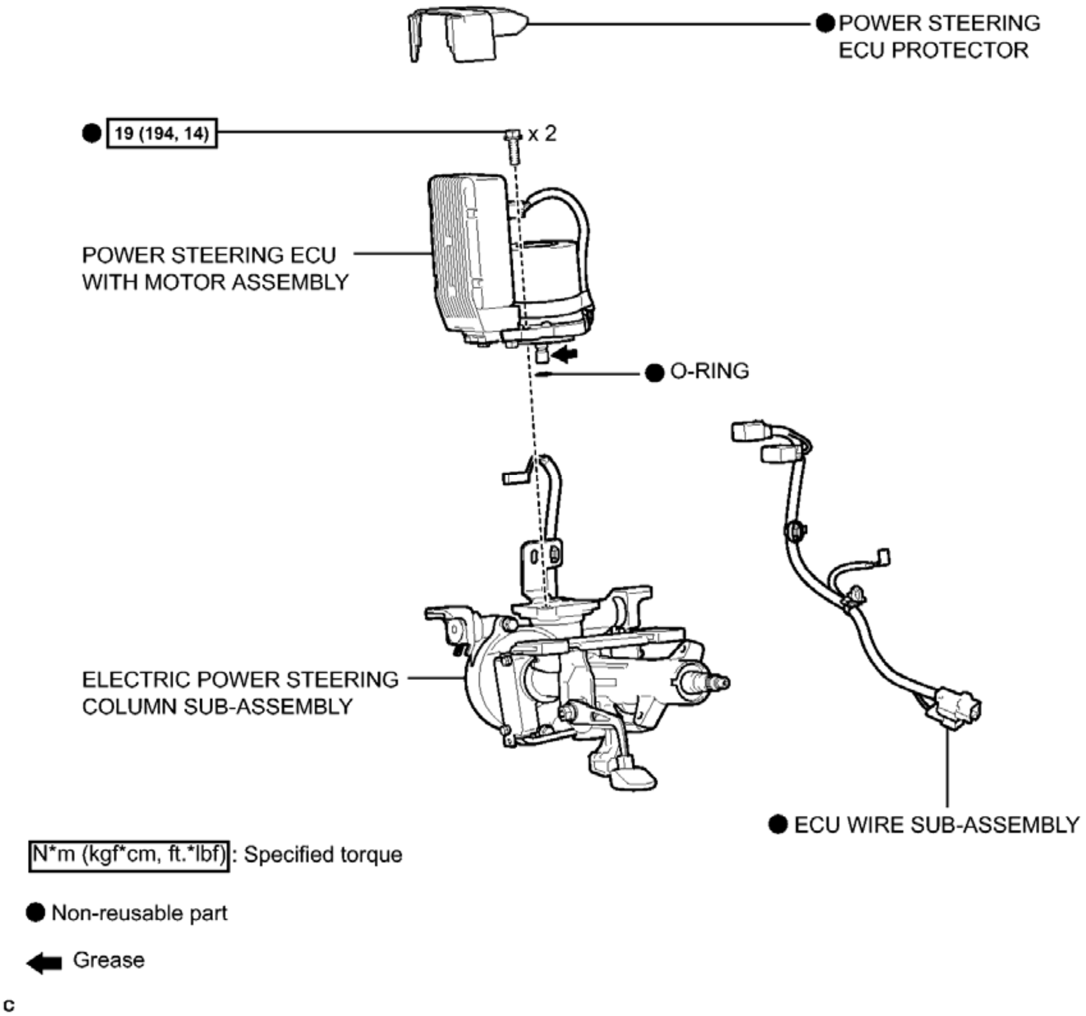
● POWER STEERING ECU PROTECTOR
● 19 (194, 14)
x 2
POWER STEERING ECU WITH MOTOR ASSEMBLY
● O-RING
ELECTRIC POWER STEERING COLUMN SUB-ASSEMBLY
● ECU WIRE SUB-ASSEMBLY
N*m (kgf*cm, ft.*lbf): Specified torque
● Non-reusable part
Grease
c

Fig. 5: Identifying Steering Column Assembly Replacement Components With Torque Specifications (5 Of 6)

Courtesy of TOYOTA MOTOR SALES, U.S.A., INC.

ILLUSTRATION

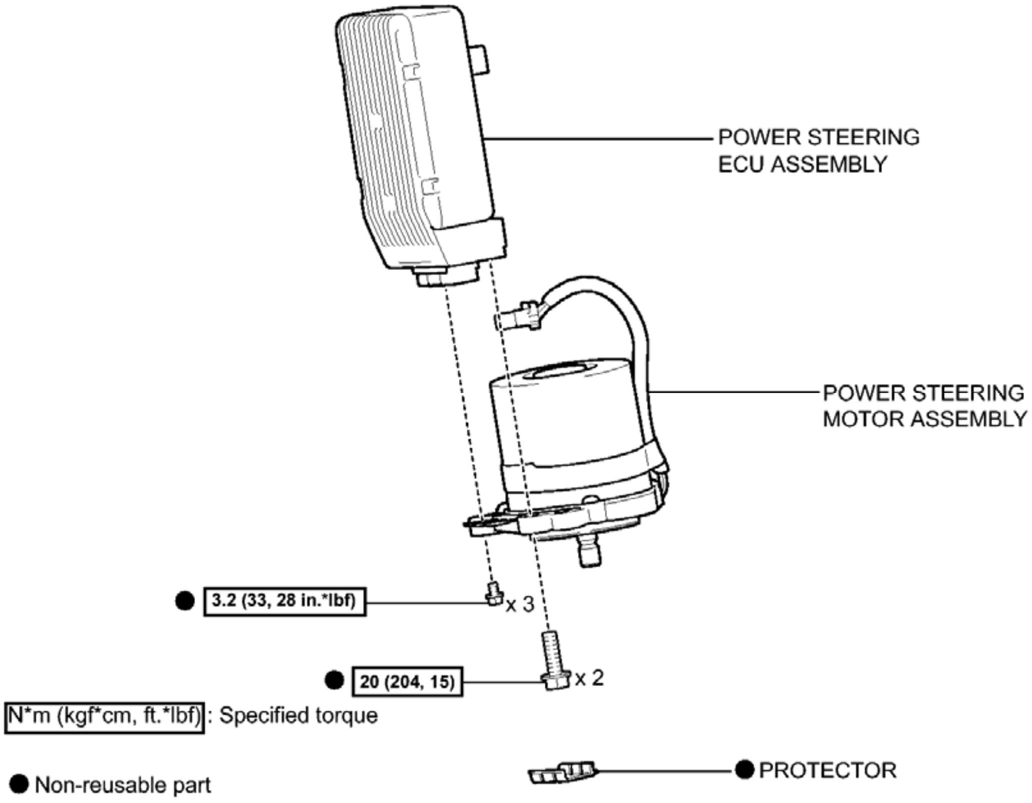
POWER STEERING
ECU ASSEMBLY
POWER STEERING
MOTOR ASSEMBLY
● 3.2 (33, 28 in.*lbf)
x 3
● 20 (204, 15)
x 2
N*m (kgf*cm, ft.*lbf) : Specified torque
● Non-reusable part
● PROTECTOR

c

Fig. 6: Identifying Steering Column Assembly Replacement Components With Torque Specifications (6 Of 6)
Courtesy of TOYOTA MOTOR SALES, U.S.A., INC.

REMOVAL

REMOVAL

1. **PRECAUTION**

   Refer to **PRECAUTION**

2. **TURN FRONT WHEELS TO FACE STRAIGHT AHEAD**
3. **REMOVE FRONT WHEEL LH**
4. **REMOVE HORN BUTTON ASSEMBLY**

   Refer to **REMOVAL**

5. **REMOVE STEERING WHEEL ASSEMBLY** See step 3
6. **REMOVE LOWER NO. 1 INSTRUMENT PANEL AIRBAG ASSEMBLY**

Refer to **REMOVAL**

7. **REMOVE LOWER STEERING COLUMN COVER**
   a. Remove the 2 screws.

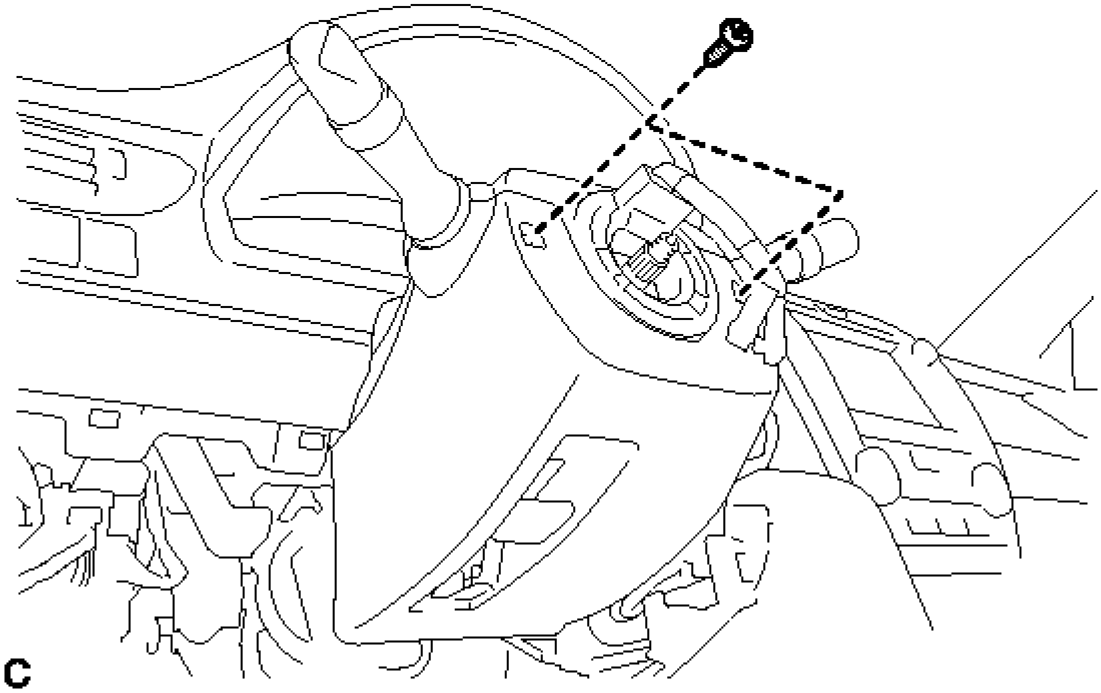

Fig. 7: Identifying Lower Steering Column Cover Screws
Courtesy of TOYOTA MOTOR SALES, U.S.A., INC.

   b. Push the right and left sides of the lower steering column cover, and disengage the 2 claws.

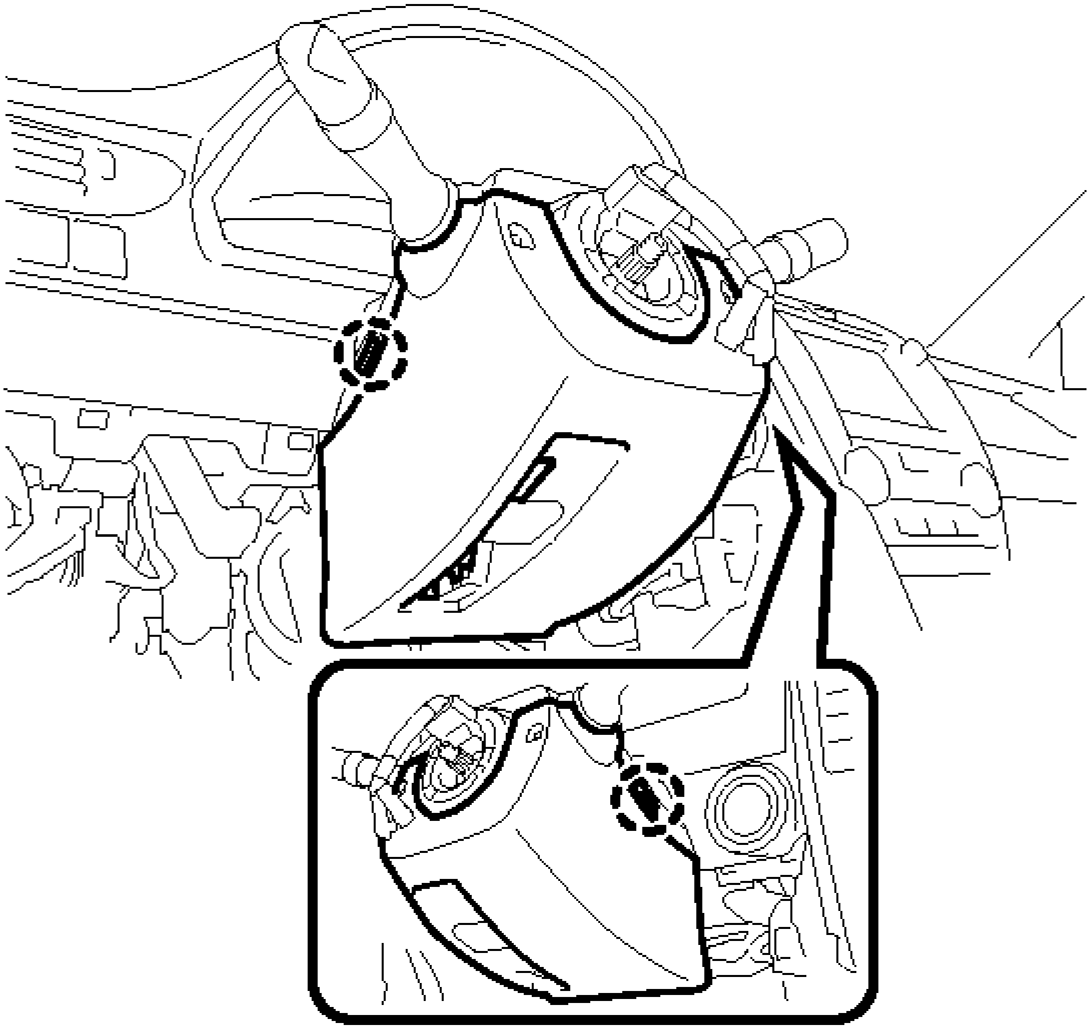

Fig. 8: Identifying Lower Steering Column Cover Claws
Courtesy of TOYOTA MOTOR SALES, U.S.A., INC.

c. Insert a finger into the opening of the tilt lever of the lower steering column cover to disengage the claw and remove the lower steering column cover.

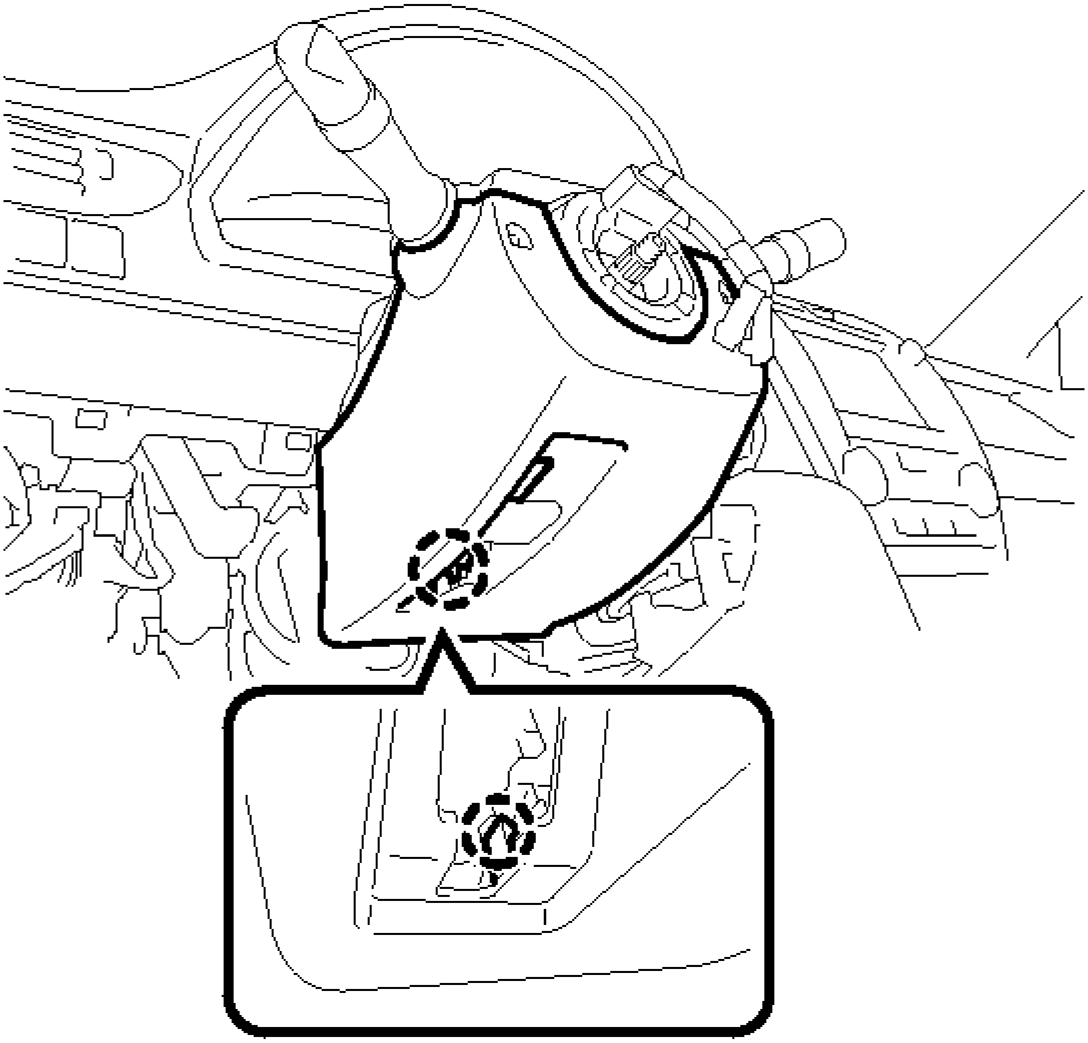

Fig. 9: Identifying Lower Steering Column Cover Claw
Courtesy of TOYOTA MOTOR SALES, U.S.A., INC.

8. **REMOVE UPPER STEERING COLUMN COVER**
    a. Disengage the 4 clips and 2 guides from the upper steering column cover.

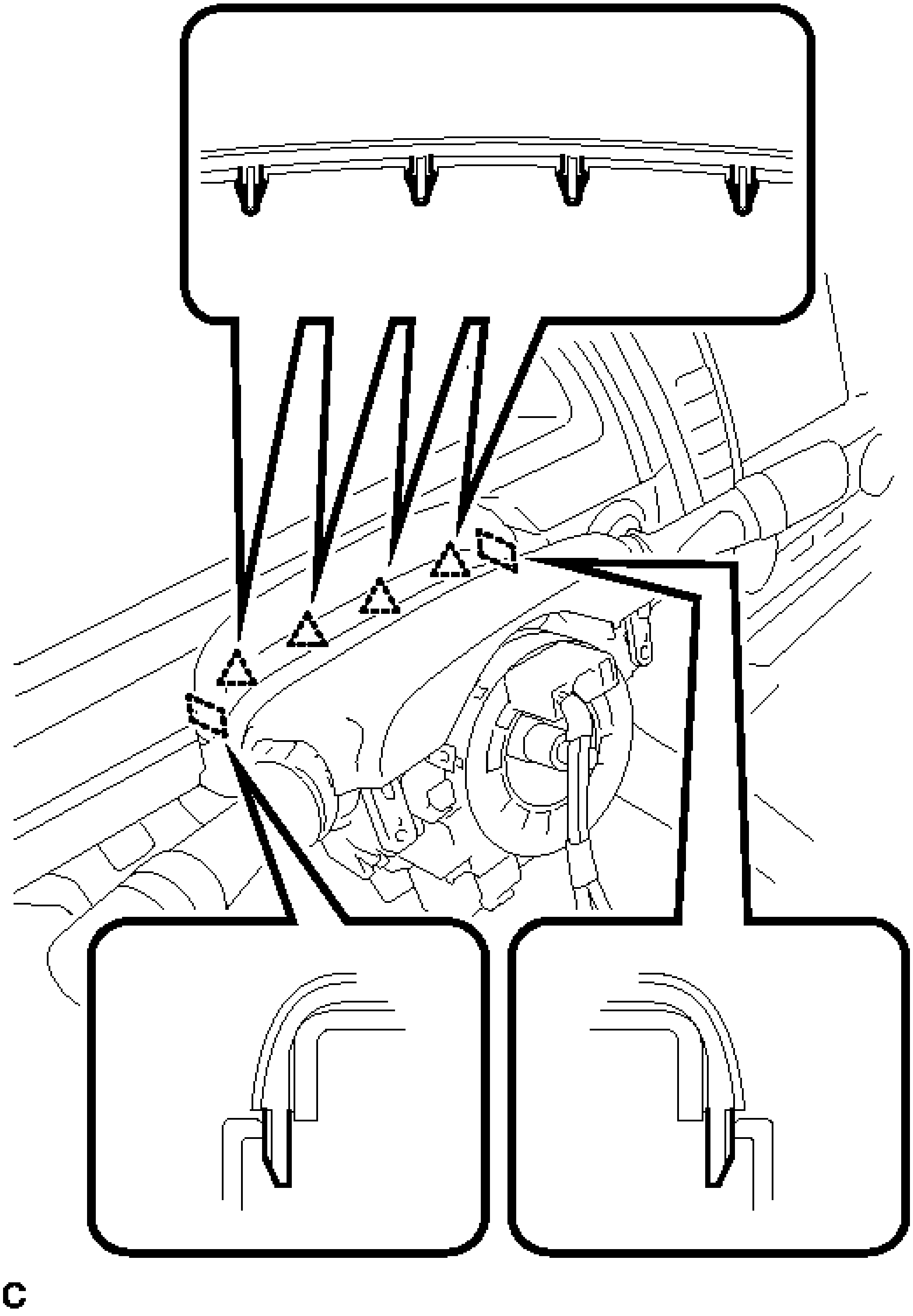

Fig. 10: Identifying Upper Steering Column Cover Clips And Guides
Courtesy of TOYOTA MOTOR SALES, U.S.A., INC.

b. Disengage the 2 claws to remove the upper steering column cover.

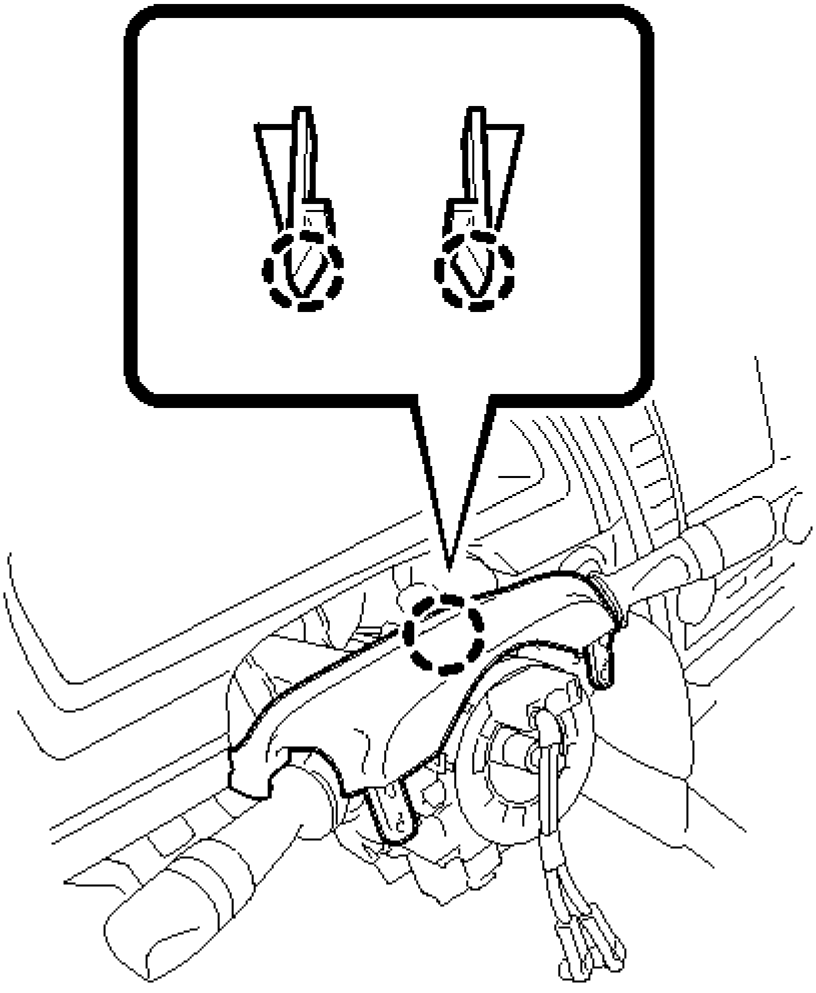

Fig. 11: Identifying Upper Steering Column Cover Claws
Courtesy of TOYOTA MOTOR SALES, U.S.A., INC.

9. **REMOVE TURN SIGNAL SWITCH ASSEMBLY WITH SPIRAL CABLE SUB-ASSEMBLY**
   a. Disconnect the connectors from the turn signal switch assembly with spiral cable sub-assembly.
   b. Disengage the 3 claws to remove the turn signal switch assembly with spiral cable sub-assembly from the steering post assembly.

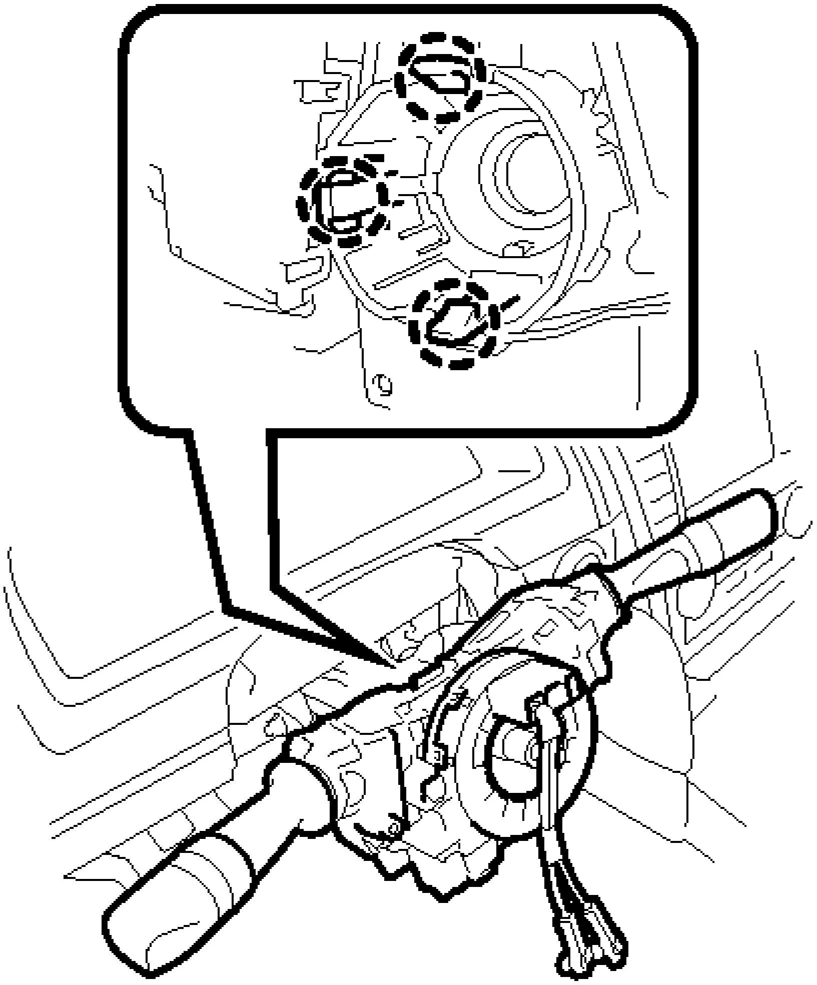

Fig. 12: Identifying Turn Signal Switch Assembly With Spiral Cable Sub-Assembly Connectors And Claws
Courtesy of TOYOTA MOTOR SALES, U.S.A., INC.

NOTE:

- **Do not replace the spiral cable with the auxiliary battery connected and the power switch on (IG).**
- **Do not rotate the spiral cable with the auxiliary battery connected and the power switch on (IG).**
- **Ensure that the steering wheel is installed and aligned straight when inspecting the steering sensor.**

10. **SEPARATE STEERING INTERMEDIATE SHAFT ASSEMBLY**
    a. Using a screwdriver, loosen the clamp as shown in the illustration.

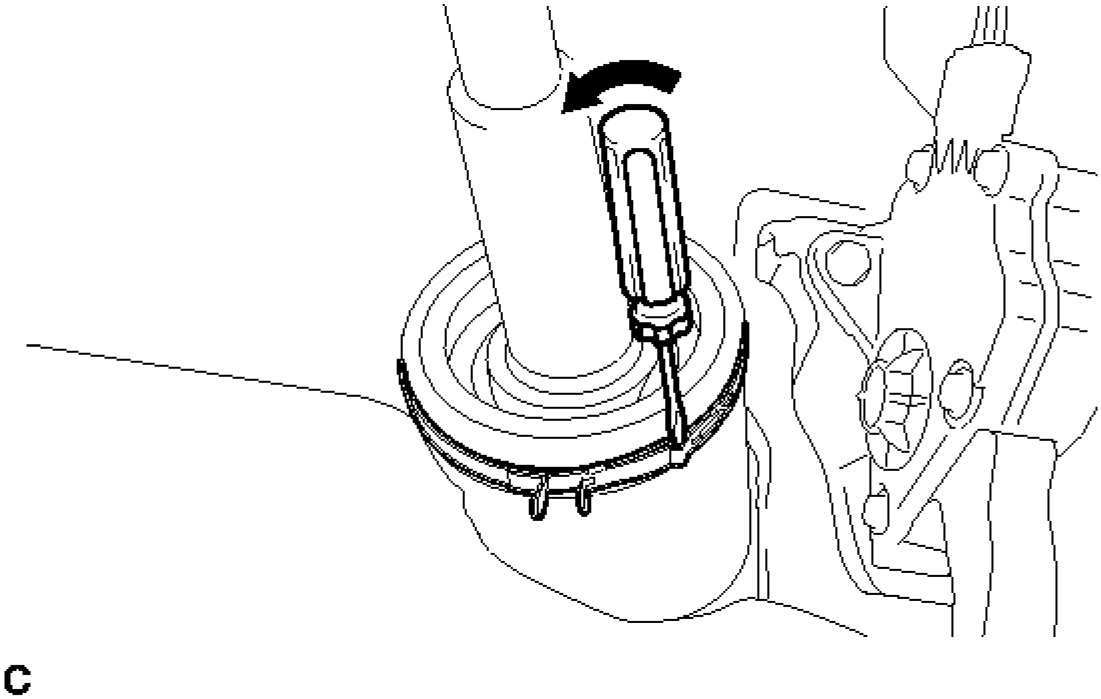

Fig. 13: Identifying Steering Intermediate Shaft Assembly Clamp
Courtesy of TOYOTA MOTOR SALES, U.S.A., INC.

b. Put matchmarks on the steering intermediate shaft assembly and the steering link assembly.

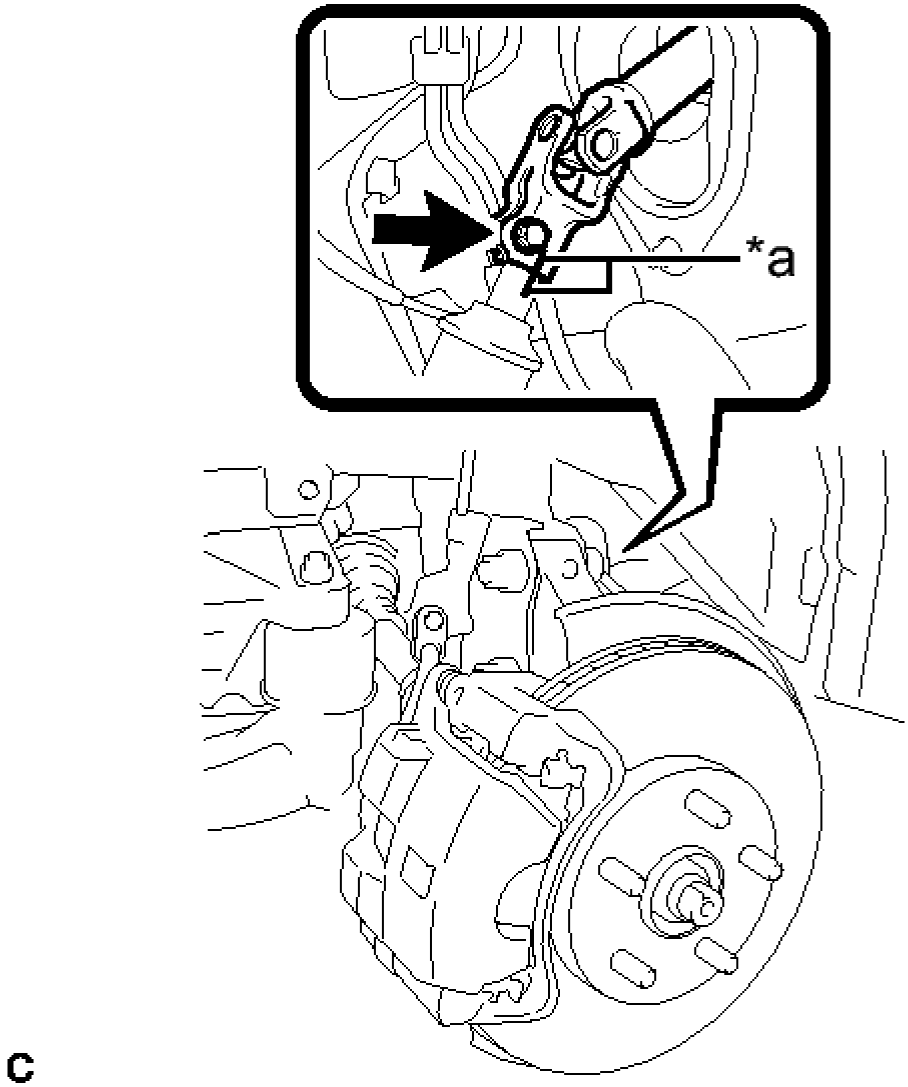

Fig. 14: Identifying Steering Intermediate Shaft Assembly And Steering Link Assembly Matchmarks
Courtesy of TOYOTA MOTOR SALES, U.S.A., INC.

TEXT IN ILLUSTRATION

*a	Matchmark

c. Remove the bolt and separate the steering intermediate shaft assembly from the steering link assembly.

11. **REMOVE NO. 2 AIR DUCT SUB-ASSEMBLY**

a. Using a screwdriver, Disengage the 2 claws and guide to remove the No. 2 air duct sub-assembly.

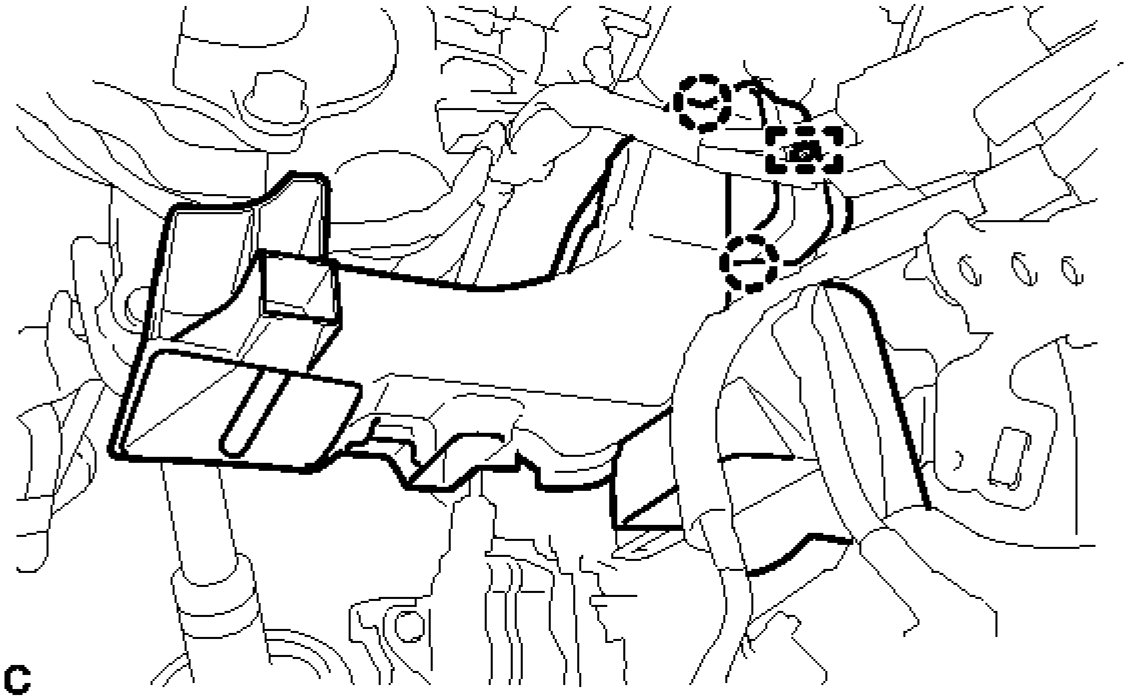

Fig. 15: Identifying No. 2 Air Duct Sub-Assembly Claws And Guide
Courtesy of TOYOTA MOTOR SALES, U.S.A., INC.

NOTE: **Do not lift the claw excessively.**

HINT:

When disengaging the claw, insert a screwdriver under the end of the claw and lift it gently.

12. **REMOVE STEERING POST ASSEMBLY**
    a. Disconnect the connectors and disengage the wire harness clamps from the steering post assembly.
    b. Disconnect the 2 connectors.

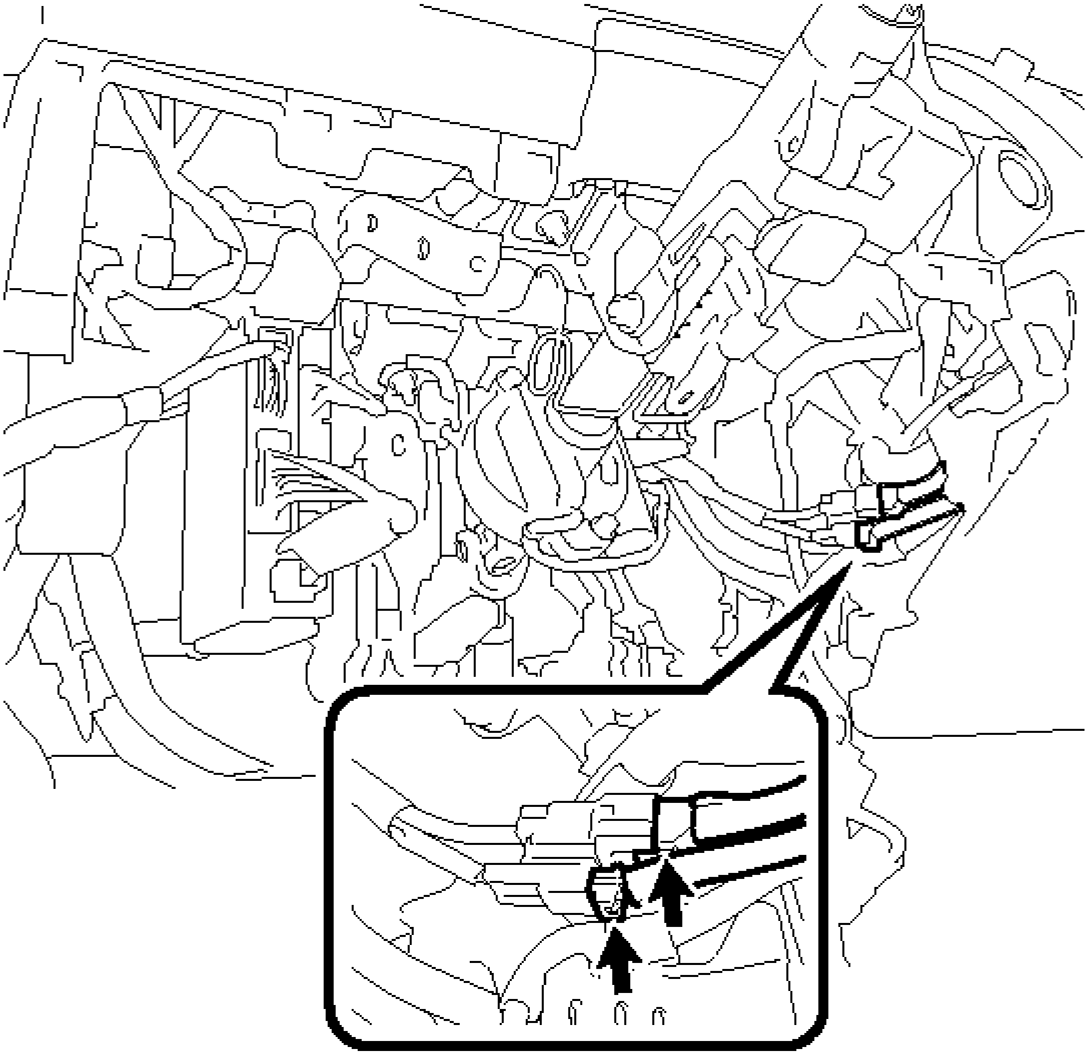

Fig. 16: Identifying Steering Post Assembly Connectors
Courtesy of TOYOTA MOTOR SALES, U.S.A., INC.

c. Disengage the clamp.

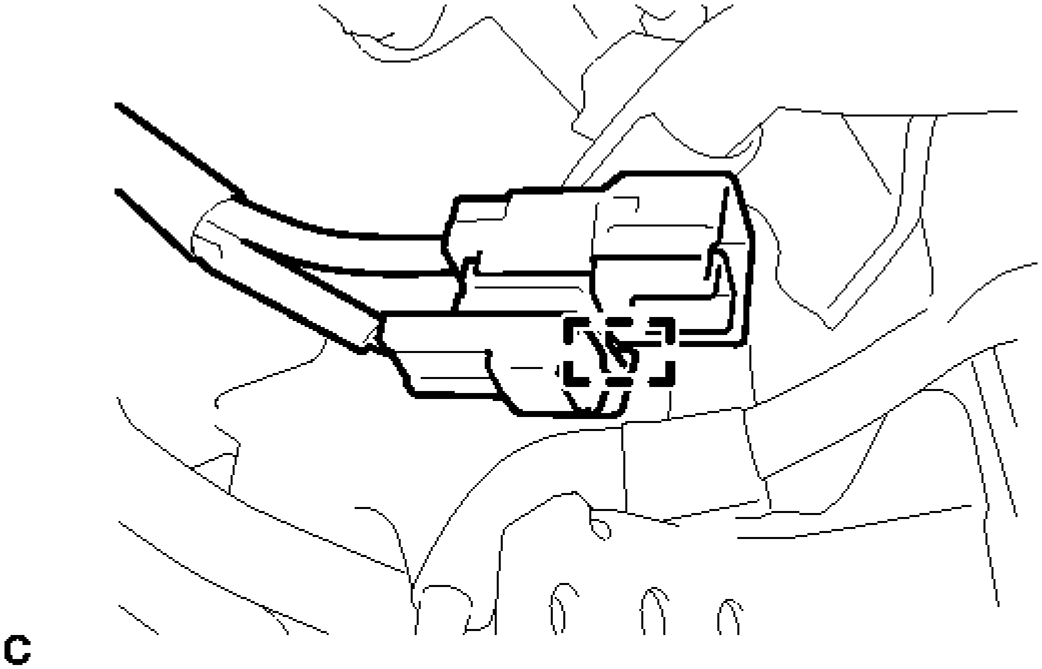

Fig. 17: Identifying Steering Post Assembly Clamp
Courtesy of TOYOTA MOTOR SALES, U.S.A., INC.

d. Remove the bolt to separate the ground wire.

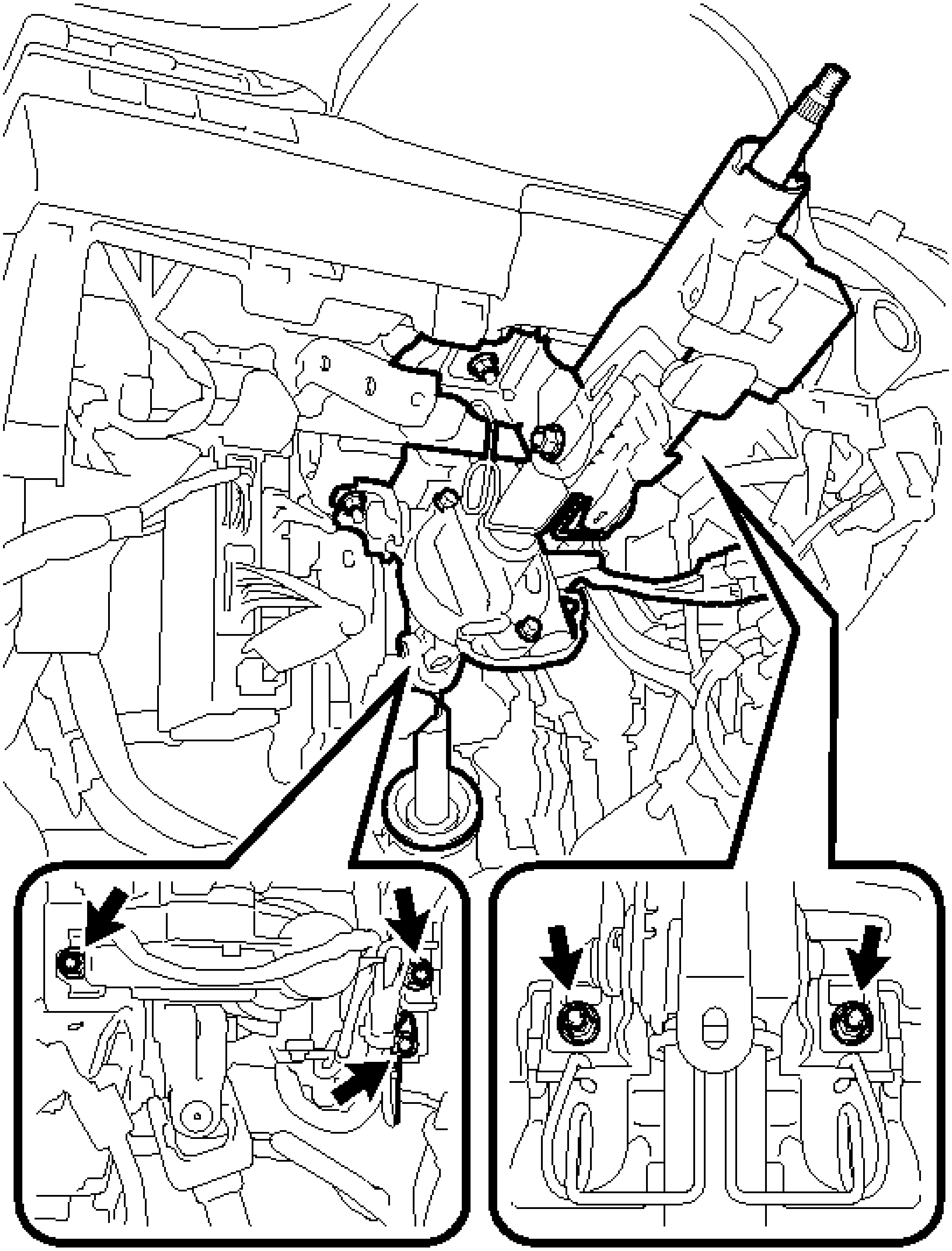

Fig. 18: Identifying Steering Post Assembly Nuts
Courtesy of TOYOTA MOTOR SALES, U.S.A., INC.

e. Remove the 4 nuts and the steering post assembly.

13. **REMOVE STEERING INTERMEDIATE SHAFT ASSEMBLY**

a. Remove the bolt and slide the steering intermediate shaft assembly.

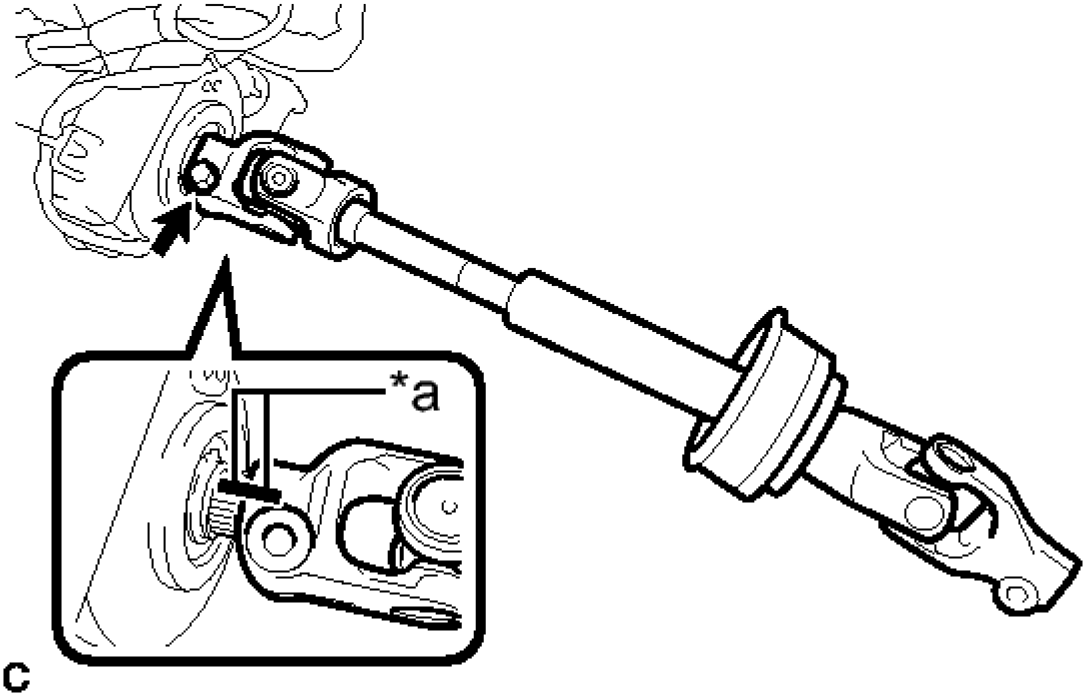

Fig. 19: Identifying Steering Intermediate Shaft Assembly Matchmark
Courtesy of TOYOTA MOTOR SALES, U.S.A., INC.

TEXT IN ILLUSTRATION

*a	Matchmark

NOTE: **Do not separate the steering intermediate shaft assembly from the steering column assembly.**

b. Put matchmarks on the steering intermediate shaft assembly and the steering column assembly.
c. Remove the steering intermediate shaft assembly from the steering column assembly.

DISASSEMBLY

DISASSEMBLY

NOTE:

- **When using a vise, do not overtighten it.**
- **Do not drop the power steering motor assembly, strike it with tools or subject it to impacts.**
- **If the power steering motor assembly is subjected to an impact, replace it with a new one.**
- **Do not pull the wire harness of the electric power steering column sub-assembly.**

- **Do not allow any moisture to come into contact with the power steering motor assembly.**
- **Do not loosen any bolts not mentioned in the procedure.**

1. **REMOVE STEERING LOCK ACTUATOR ASSEMBLY**
    1. Using a center punch, mark the center of the 2 tapered-head bolts.
    2. Using a 3 to 4 mm (0.118 to 0.157 in.) diameter drill bit, drill a hole in each tapered-head bolt.
    3. Using a screw extractor, remove each tapered-head bolt, and then remove the steering lock actuator assembly from the steering column assembly.

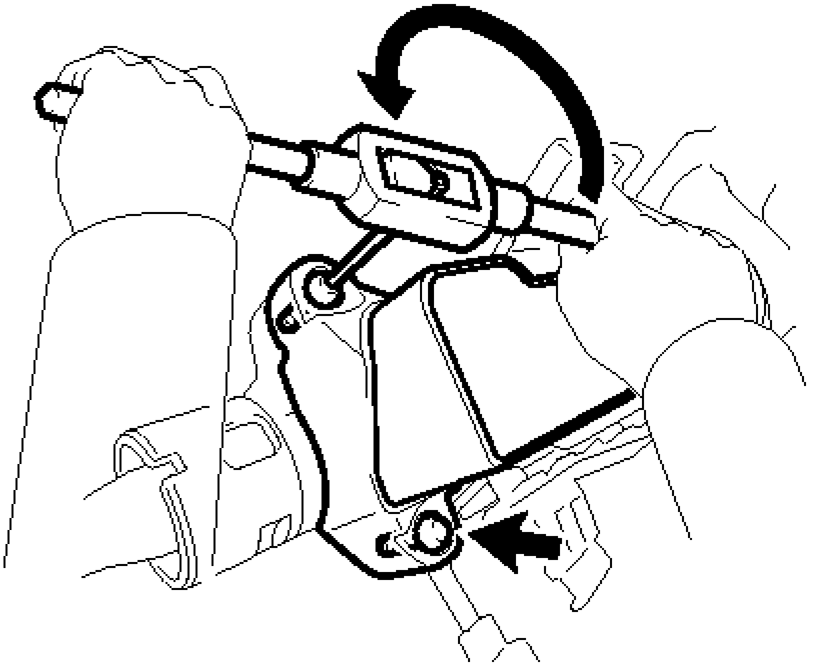

Fig. 20: Removing Steering Lock Actuator Assembly
Courtesy of TOYOTA MOTOR SALES, U.S.A., INC.

2. **REMOVE POWER STEERING ECU PROTECTOR**
    1. Disengage the 2 claws to remove the power steering ECU protector from the power steering ECU with motor assembly.

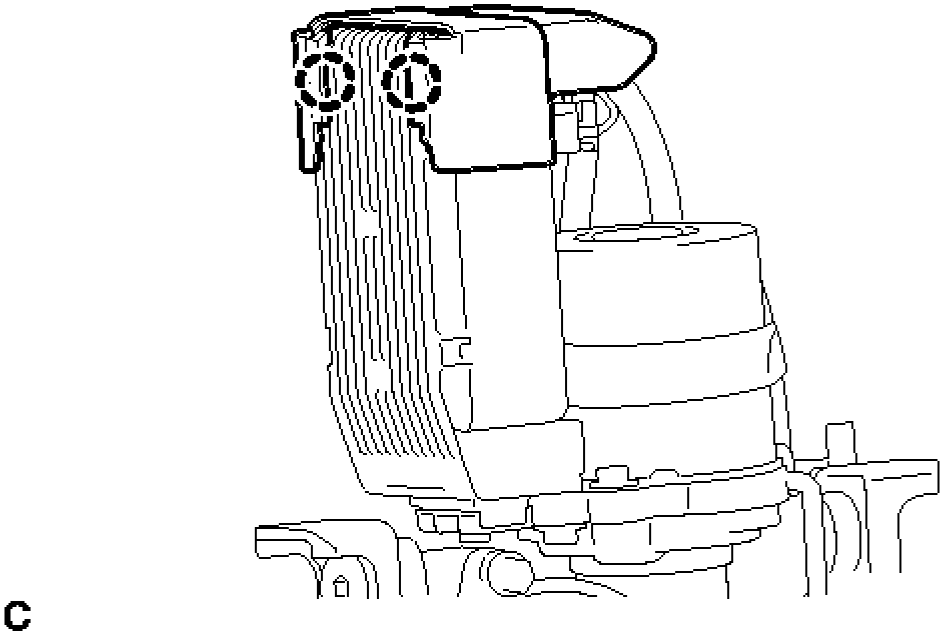

Fig. 21: Identifying Power Steering ECU Protector Claws
Courtesy of TOYOTA MOTOR SALES, U.S.A., INC.

3. **REMOVE ECU WIRE SUB-ASSEMBLY**
    a. Disconnect the 2 connectors from the power steering ECU with motor assembly.

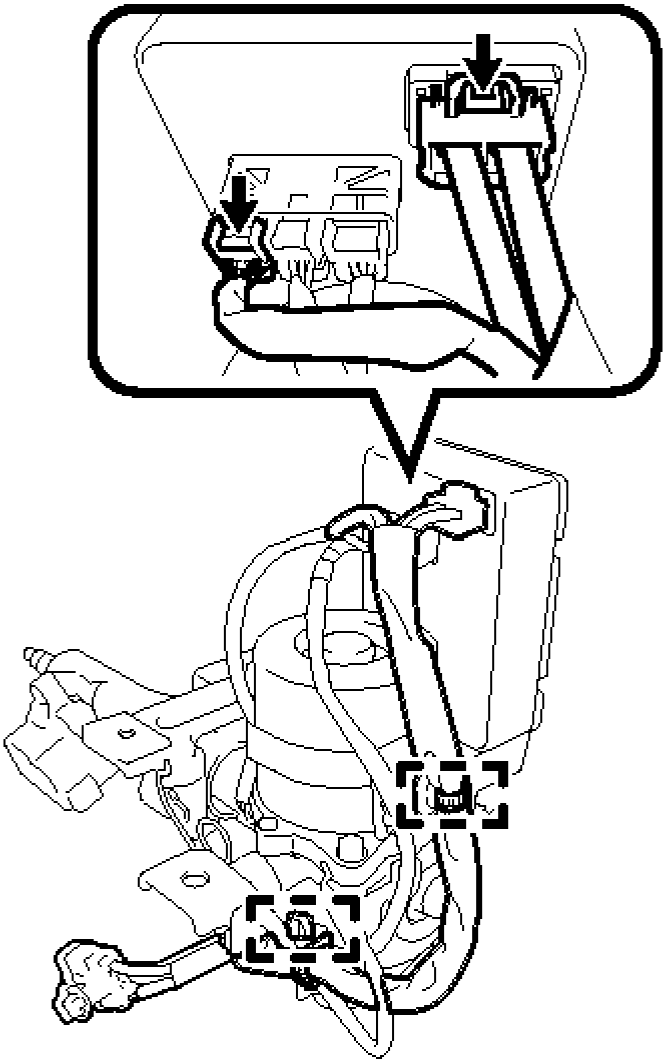

Fig. 22: Identifying ECU Wire Sub-Assembly Connectors And Wire Harness Clamps
Courtesy of TOYOTA MOTOR SALES, U.S.A., INC.

b. Disengage the 2 wire harness clamps to remove the ECU wire sub-assembly.

4. **REMOVE POWER STEERING ECU WITH MOTOR ASSEMBLY**
    a. Secure the steering column assembly in a vice using aluminum plates as shown in the illustration.

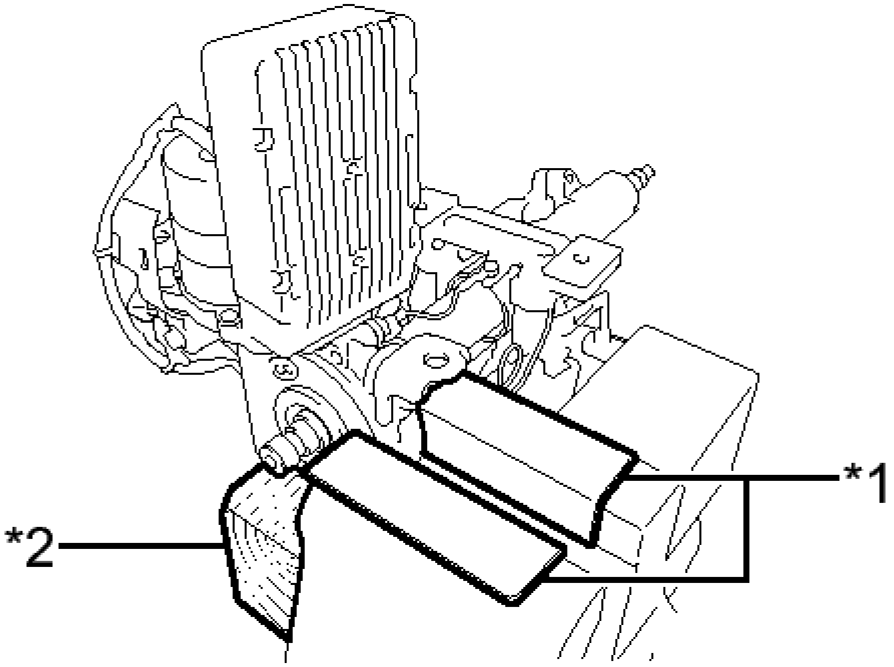

Fig. 23: Identifying Aluminum Plate And Wooden Block
Courtesy of TOYOTA MOTOR SALES, U.S.A., INC.

TEXT IN ILLUSTRATION

*1	Aluminum Plate
*2	Wooden Block

NOTE:

- **Do not overtighten the vice, as the steering column assembly may become deformed.**
- **Support the steering column assembly with a wooden block or similar item to ensure that it does not fall.**

b. Disconnect the 2 connectors from the power steering ECU with motor assembly.

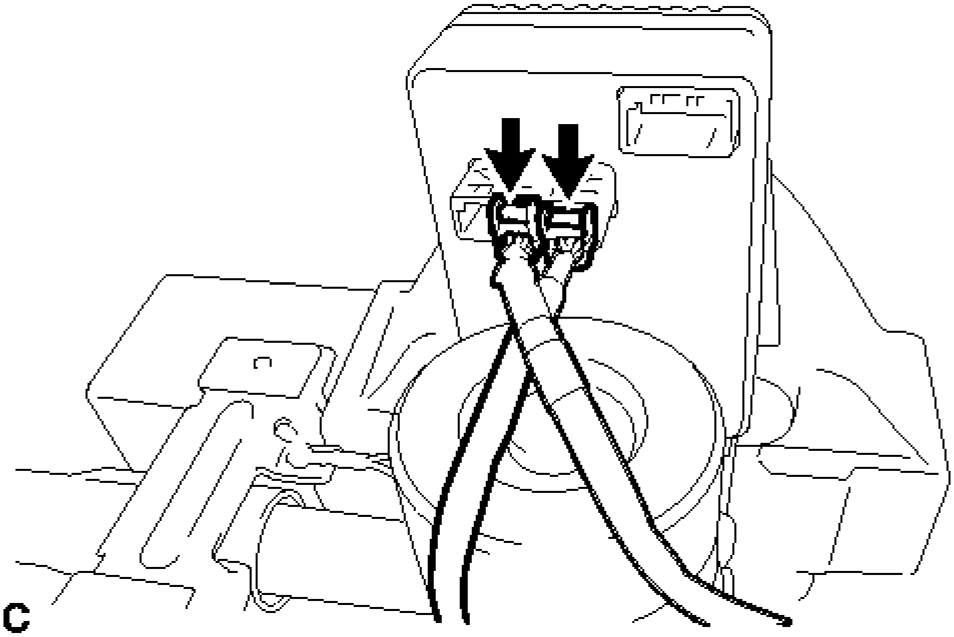

Fig. 24: Identifying Power Steering ECU With Motor Assembly Connectors
Courtesy of TOYOTA MOTOR SALES, U.S.A., INC.

c. Remove the 2 bolts and power steering ECU with motor assembly from the electric power steering column sub-assembly.

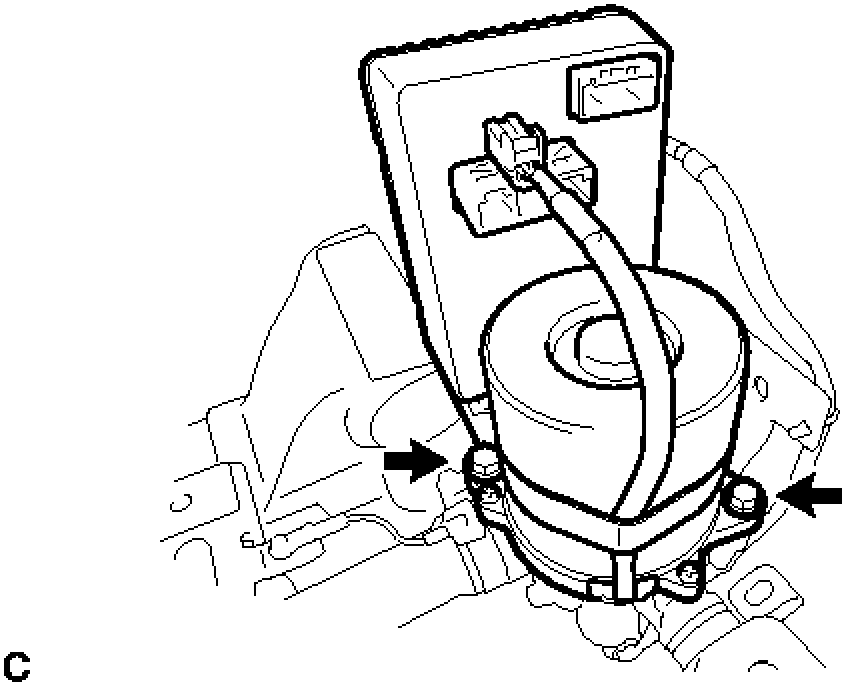

Fig. 25: Identifying Power Steering ECU With Motor Assembly Bolts

Courtesy of TOYOTA MOTOR SALES, U.S.A., INC.

d. Remove the O-ring from the power steering ECU with motor assembly.

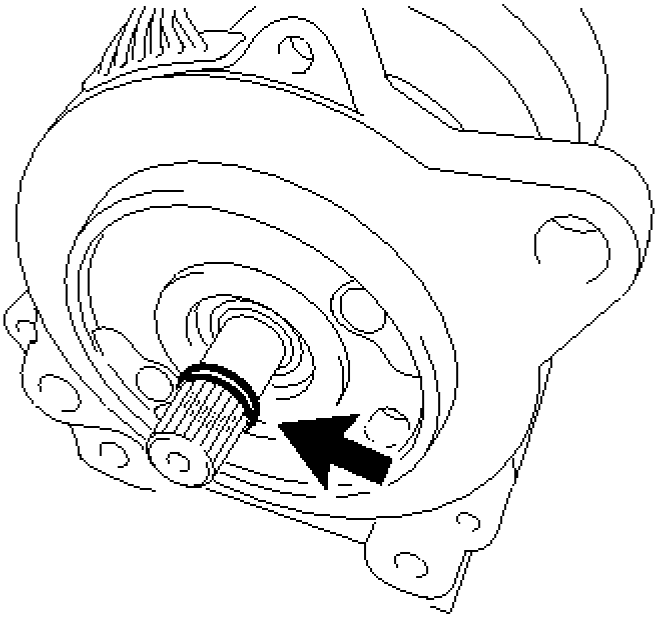

C

Fig. 26: Identifying Power Steering ECU With Motor Assembly O-Ring
Courtesy of TOYOTA MOTOR SALES, U.S.A., INC.

5. **REMOVE POWER STEERING ECU ASSEMBLY** . Refer to **REMOVAL - Step 6**

INSPECTION

INSPECTION

NOTE: **When using a vise, do not overtighten it.**

1. **INSPECT PRELOAD**
    a. Secure the steering column assembly in a vice using aluminum plates and wooden block as shown in the illustration.

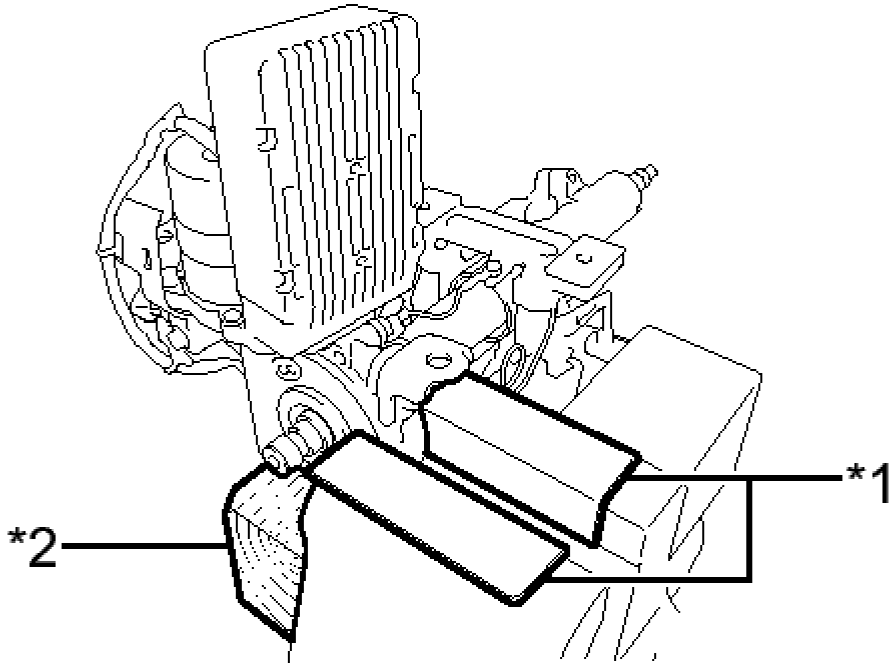

Fig. 27: Identifying Aluminum Plate And Wooden Block
Courtesy of TOYOTA MOTOR SALES, U.S.A., INC.

TEXT IN ILLUSTRATION

*1	Aluminum Plate
*2	Wooden Block

NOTE:

- **Do not overtighten the vice, as the steering column assembly may become deformed.**
- **Support the steering column assembly with a wooden block or similar item to ensure that it does not fall.**

b. Install the 2 service nuts to the steering main shaft.

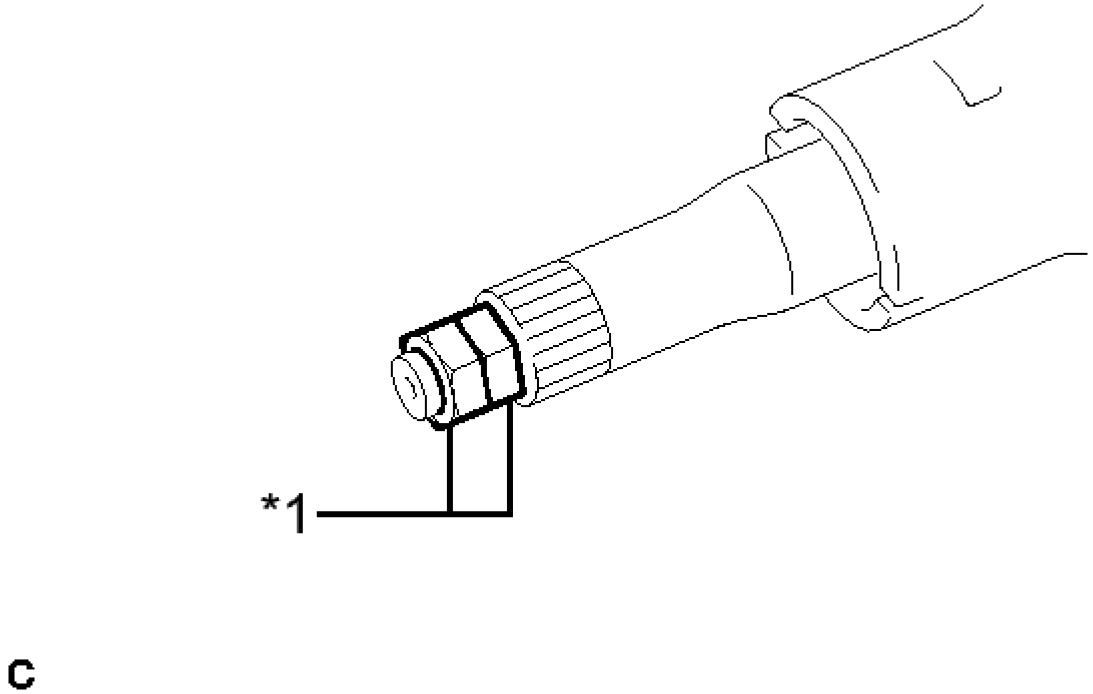

Fig. 28: Identifying Steering Main Shaft Service Nuts
Courtesy of TOYOTA MOTOR SALES, U.S.A., INC.

TEXT IN ILLUSTRATION

*1	Service Nut

Recommended service nut

Thread diameter

12.0 mm (0.472 in.)

Thread pitch

1.25 mm (0.0492 in.)

c. Simultaneously rotate the service nut that was installed first counterclockwise and rotate the service nut that was installed second clockwise to lock them.

NOTE: **Do not apply excess torque to the service nuts by using a tool such as an impact wrench.**

HINT:

These nuts are installed to turn the steering main shaft. They should be removed after inspecting the steering main shaft rotating torque.

d. Using a torque wrench, turn the main shaft and measure the preload.

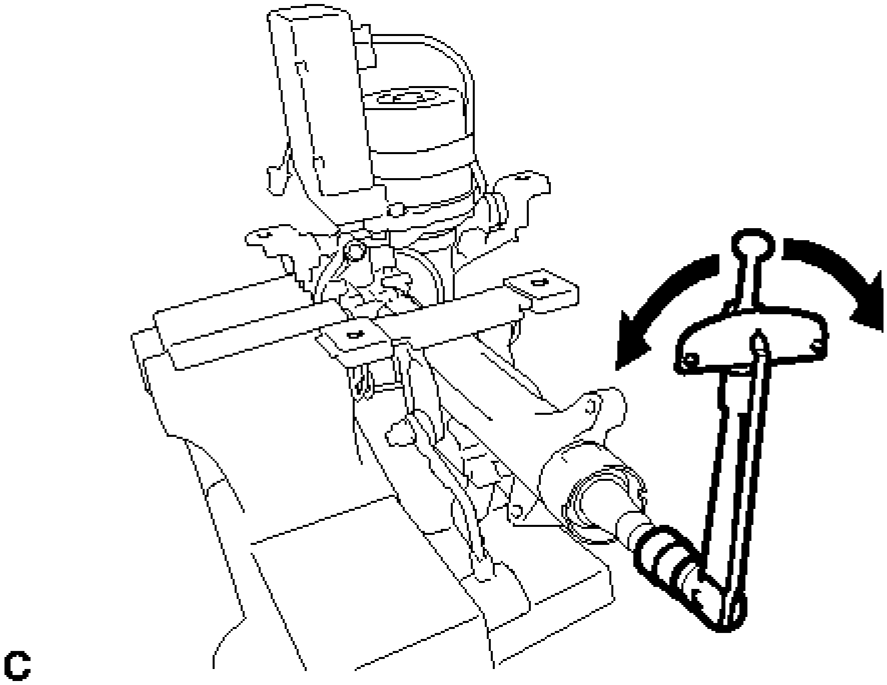

Fig. 29: Turning Main Shaft And Measure Preload
Courtesy of TOYOTA MOTOR SALES, U.S.A., INC.

Preload

1.2 to 1.7 N*m (12 to 17 kgf*cm, 10 to 15 in.*lbf)

If the preload is not as specified, replace the power steering motor assembly or electric power steering column sub-assembly with a new one.

REASSEMBLY

REASSEMBLY

NOTE:

- **When using a vise, do not overtighten it.**
- **Do not drop the power steering motor assembly, strike it with tools or subject it to impacts.**
- **If the power steering motor assembly is subjected to an impact, replace it with a new one.**
- **Do not pull the wire harness of the electric power steering column sub-assembly.**
- **Do not allow any moisture to come into contact with the power steering motor assembly.**

- **Do not loosen any bolts not mentioned in the procedure.**

1. **INSTALL POWER STEERING ECU ASSEMBLY** . Refer to **INSTALLATION - Step 1**
2. **INSTALL POWER STEERING ECU WITH MOTOR ASSEMBLY**
   a. Install the 2 service nuts to the steering main shaft.

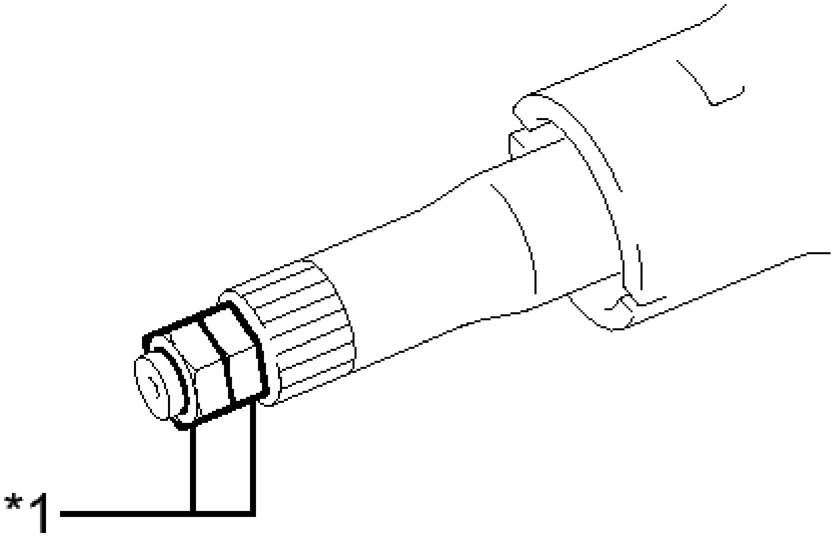

Fig. 30: Identifying Steering Main Shaft Service Nuts
Courtesy of TOYOTA MOTOR SALES, U.S.A., INC.

TEXT IN ILLUSTRATION

*1	Service Nut

Recommended service nut

Thread diameter

12.0 mm (0.472 in.)

Thread pitch

1.25 mm (0.0492 in.)

   b. Simultaneously to rotate the service nut that was installed first counterclockwise and rotate the service nut that was installed second clockwise to lock them.

NOTE: **Do not apply excess torque to the service nuts by using a tool such as an impact wrench.**

HINT:

These nuts are installed to turn the steering main shaft. They should be removed after inspecting the steering main shaft rotating torque.

c. Install a new O-ring to the power steering ECU with motor assembly.
d. Apply grease to the splines of the power steering ECU with motor assembly.

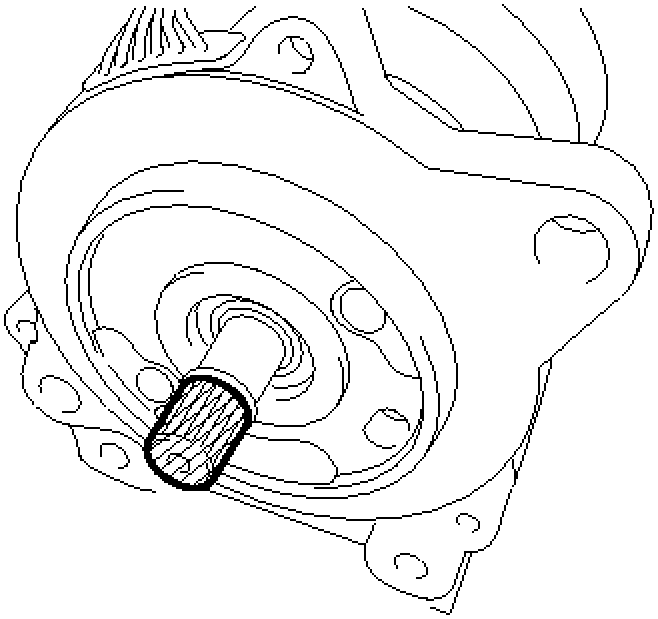

C

Fig. 31: Identifying Power Steering ECU With Motor Assembly Splines
Courtesy of TOYOTA MOTOR SALES, U.S.A., INC.

NOTE: **First wipe off the existing grease from the splines, and then apply the dedicated grease supplied with a new power steering motor assembly or electric power steering column sub-assembly.**

e. Insert the power steering ECU with motor assembly into the splines of the electric power steering column sub-assembly.

NOTE: **Do not damage the gears.**

f. Secure the steering column assembly in a vice using aluminum plates and wooden block as shown in the illustration.

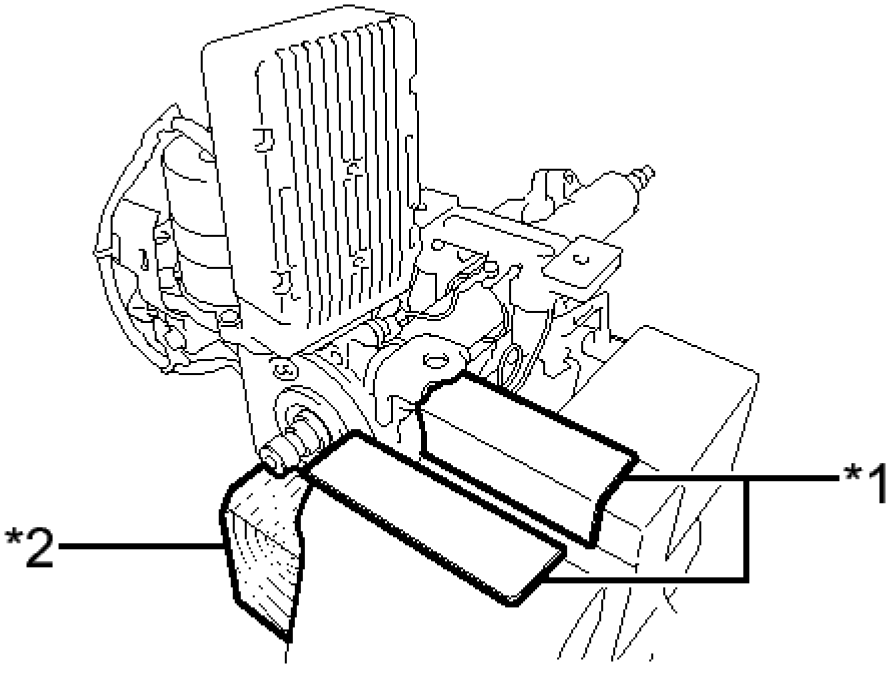

Fig. 32: Identifying Aluminum Plate And Wooden Block
Courtesy of TOYOTA MOTOR SALES, U.S.A., INC.

TEXT IN ILLUSTRATION

*1	Aluminum Plate
*2	Wooden Block

NOTE:

- **Do not overtighten the vice, as the steering column assembly may become deformed.**
- **Secure the steering column assembly so that power steering motor assembly is directly upright.**
- **Support the steering column assembly with a wooden block or similar item to ensure that it does not fall.**

g. Temporarily install the power steering ECU with motor assembly to the electric power steering column sub-assembly with 2 new bolts while rotating the steering main shaft at approximately 4 rpm.

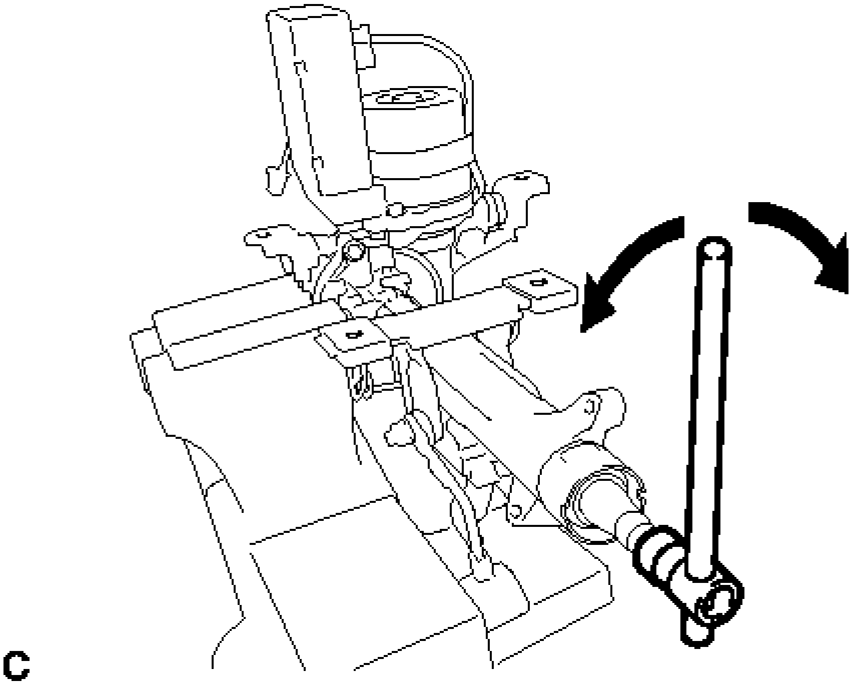

Fig. 33: Rotating Steering Main Shaft
Courtesy of TOYOTA MOTOR SALES, U.S.A., INC.

NOTE: When temporarily installing the 2 bolts to the power steering motor assembly, do not tighten them all the way down.

h. Rotate the steering main shaft 120 to 240 degrees at approximately 4 rpm.
i. Rotate the steering main shaft 180 degrees clockwise and counterclockwise at approximately 4 rpm and repeat this operation 2 or 3 times to align the power steering ECU with motor assembly.
j. Tighten the 2 bolts.

Torque: 19 N*m (194 kgf*cm, 14 ft.*lbf)

NOTE: Make sure not to move the power steering motor assembly after adjusting the axis.

k. Measure the turning torque of the steering main shaft.

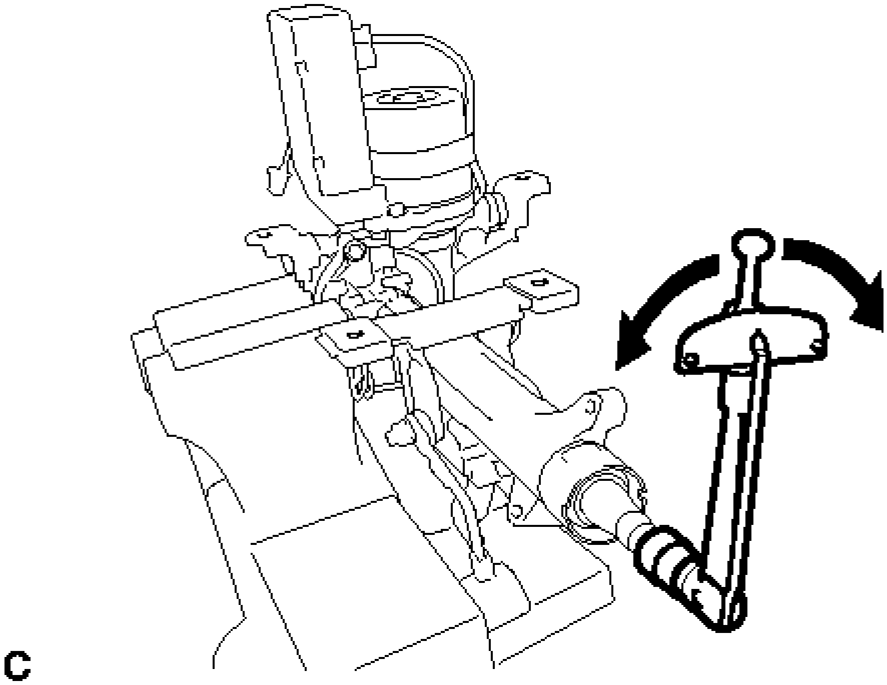

Fig. 34: Identifying Steering Main Shaft Turning Torque
Courtesy of TOYOTA MOTOR SALES, U.S.A., INC.

Turning torque

Torque: 1.2 to 1.7 N*m (12 to 17 kgf*cm, 10 to 15 in.*lbf)

NOTE: **Ensure that there is no abnormal resistance during rotation.**

If the torque is not as specified, readjust the axis of the power steering ECU with motor assembly.

l. Remove the 2 service nuts from the steering main shaft.
m. Connect the 2 connectors to the power steering ECU assembly.

3. **INSTALL ECU WIRE SUB-ASSEMBLY**
    a. Engage the 2 wire harness clamps to install a new ECU wire sub-assembly.
    b. Connect the 2 connectors to the power steering ECU with motor assembly.
4. **INSTALL POWER STEERING ECU PROTECTOR**
    a. Engage the 2 claws to install a new power steering ECU protector to the power steering ECU with motor assembly.
5. **INSTALL STEERING LOCK ACTUATOR ASSEMBLY**

HINT:

When replacing the steering lock actuator assembly, perform initialization. Refer to **REGISTRATION** .

a. Secure the steering column assembly in a vise.
b. Temporarily install the steering lock actuator assembly to the steering column assembly with 2 new tapered-head bolts.

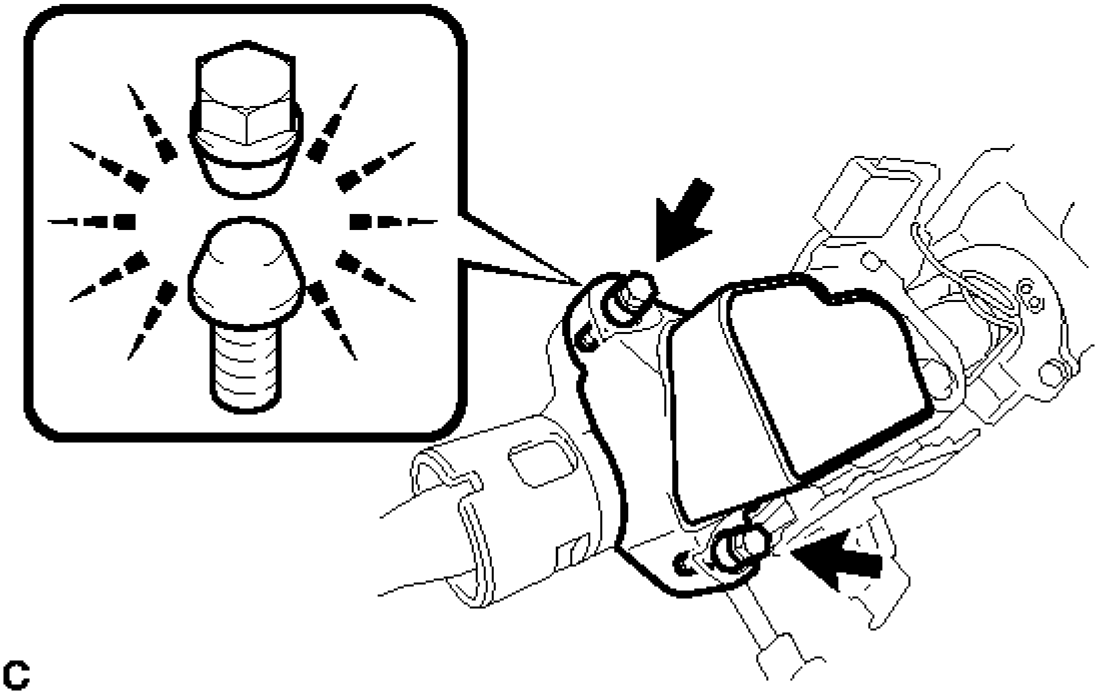

Fig. 35: Identifying Steering Lock Actuator Assembly
Courtesy of TOYOTA MOTOR SALES, U.S.A., INC.

c. Tighten the 2 tapered-head bolts until the bolt heads break off.

INSTALLATION

INSTALLATION

1. **INSTALL STEERING INTERMEDIATE SHAFT ASSEMBLY**
   a. Install the steering intermediate shaft assembly to the steering column assembly.

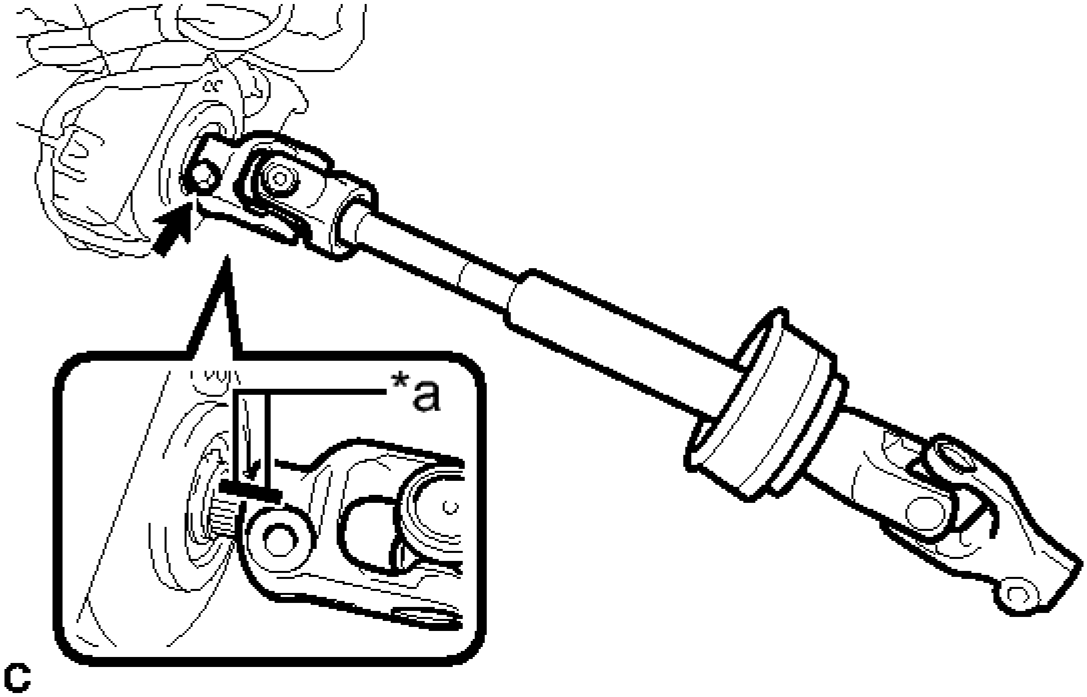

Fig. 36: Identifying Steering Shaft Assembly And Steering Column Assembly Matchmark
Courtesy of TOYOTA MOTOR SALES, U.S.A., INC.

TEXT IN ILLUSTRATION

*a	Matchmark

NOTE: **Align the matchmarks on the steering intermediate shaft assembly and the steering column assembly.**

b. Install the bolt.

Torque: 35 N*m (360 kgf*cm, 26 ft.*lbf)

2. **INSTALL STEERING POST ASSEMBLY**
    a. Install the steering post assembly with the 4 nuts.

    Torque: 25 N*m (255 kgf*cm, 18 ft.*lbf)

    b. Install the ground wire with the bolt.

    Torque: 8.4 N*m (85 kgf*cm, 74 in.*lbf)

    c. Engage the clamp.
    d. Connect the 2 connectors.
    e. Connect the connectors and engage the wire harness clamps to the steering post assembly.
3. **INSTALL NO. 2 AIR DUCT SUB-ASSEMBLY**

a. Engage the 2 claws and guide to install the No. 2 air duct sub-assembly.

4. **CONNECT STEERING INTERMEDIATE SHAFT ASSEMBLY**
   a. Connect the steering intermediate shaft assembly to the steering link assembly.

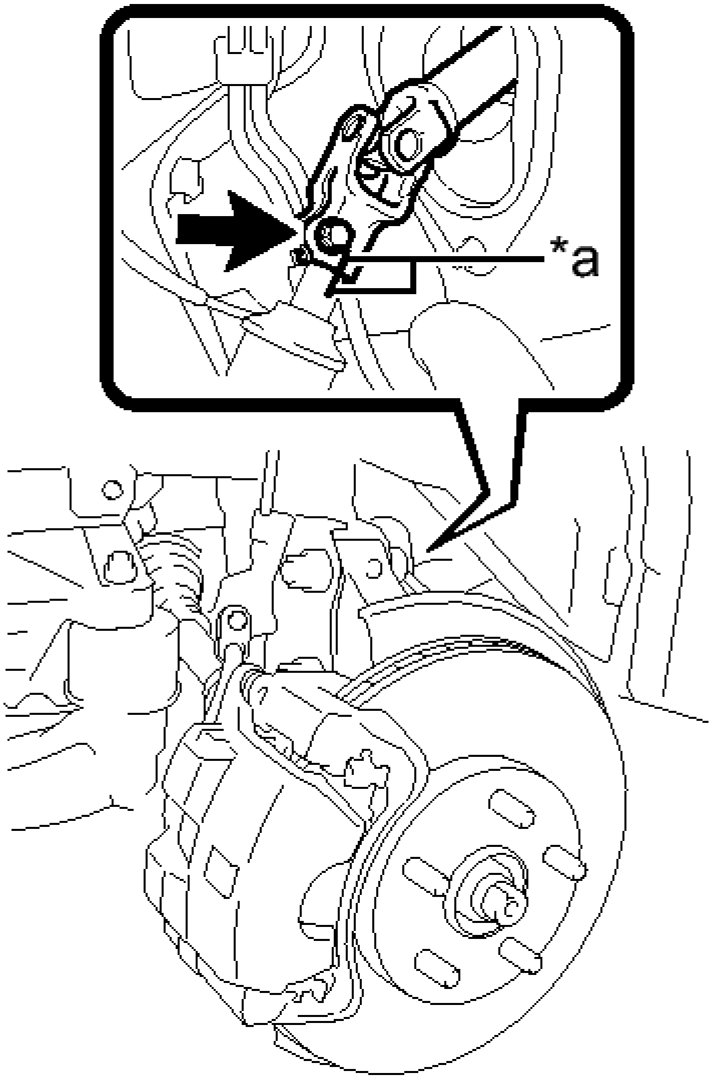

C

Fig. 37: Identifying Steering Intermediate Shaft Assembly And Steering Link Assembly Matchmark
Courtesy of TOYOTA MOTOR SALES, U.S.A., INC.

TEXT IN ILLUSTRATION

*a	Matchmark

NOTE: **Align the matchmarks on the steering intermediate shaft assembly and the steering link assembly.**

b. Install the bolt.

Torque: 35 N*m (360 kgf*cm, 26 ft.*lbf)

c. Tighten the clamp.

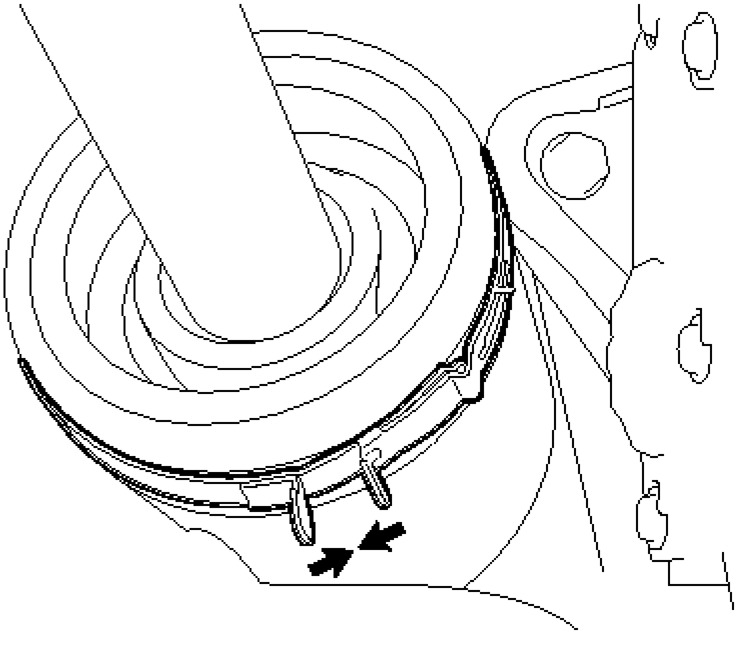

Fig. 38: Identifying Clamp Position
Courtesy of TOYOTA MOTOR SALES, U.S.A., INC.

5. **INSTALL TURN SIGNAL SWITCH ASSEMBLY WITH SPIRAL CABLE SUB-ASSEMBLY**

NOTE:

- **Do not replace the spiral cable with the auxiliary battery connected and the power switch on (IG).**
- **Do not rotate the spiral cable without the steering wheel with the auxiliary battery connected and the power switch on (IG).**
- **Ensure that the steering wheel is installed and aligned straight when inspecting the steering sensor.**

a. Engage the 3 claws to install the turn signal switch assembly with spiral cable sub-assembly to the steering post assembly.
b. Connect the connectors to the turn signal switch assembly with spiral cable sub-assembly.

6. **INSTALL UPPER STEERING COLUMN COVER**

a. Engage the 2 claws to install the upper steering column cover.
b. Engage the 4 clips and 2 guides to the upper steering column cover.

7. **INSTALL LOWER STEERING COLUMN COVER**

a. Engage the 2 claws to install the lower steering column cover.

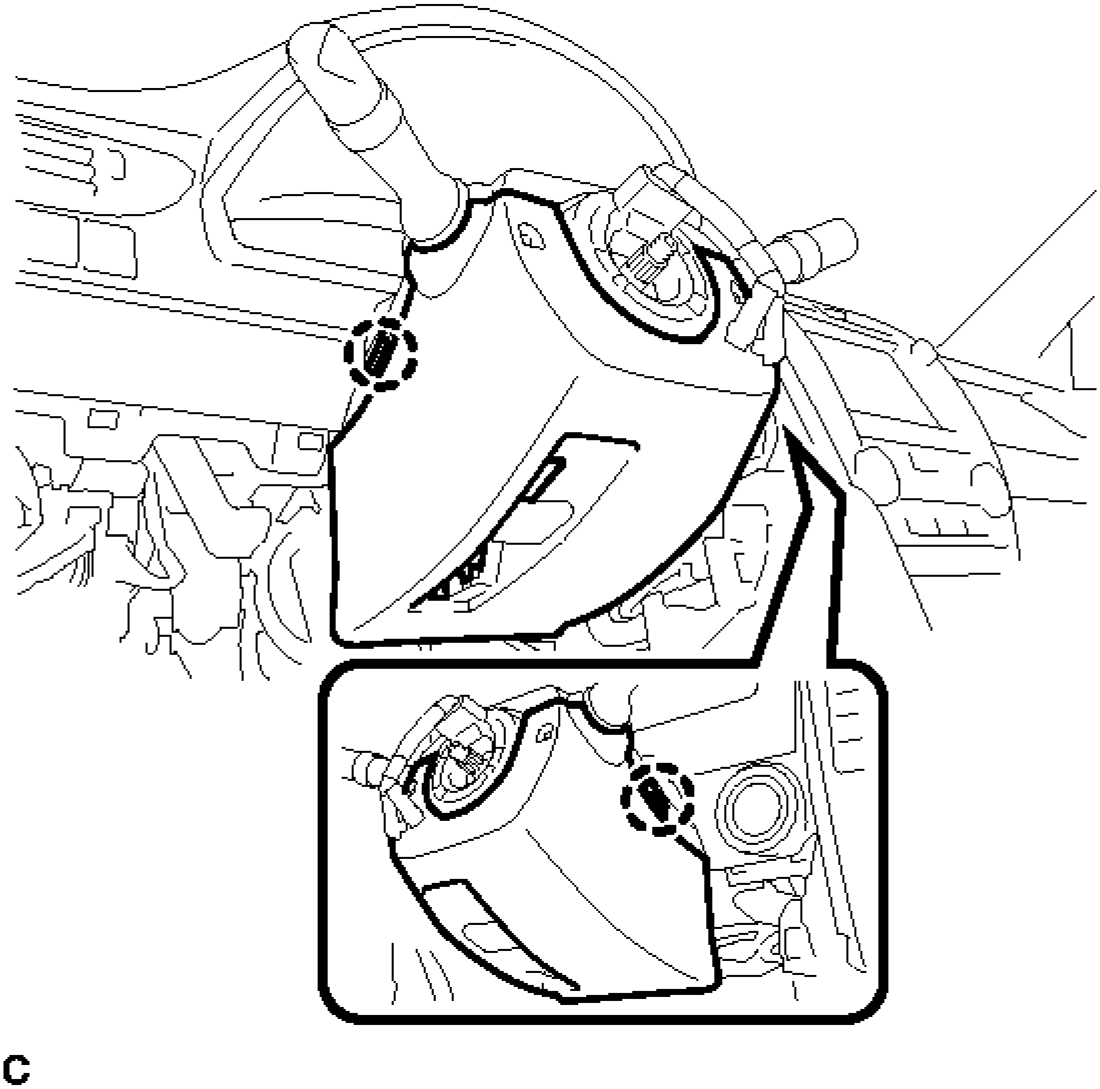

Fig. 39: Identifying Lower Steering Column Cover Claws
Courtesy of TOYOTA MOTOR SALES, U.S.A., INC.

b. Install the 2 screws.

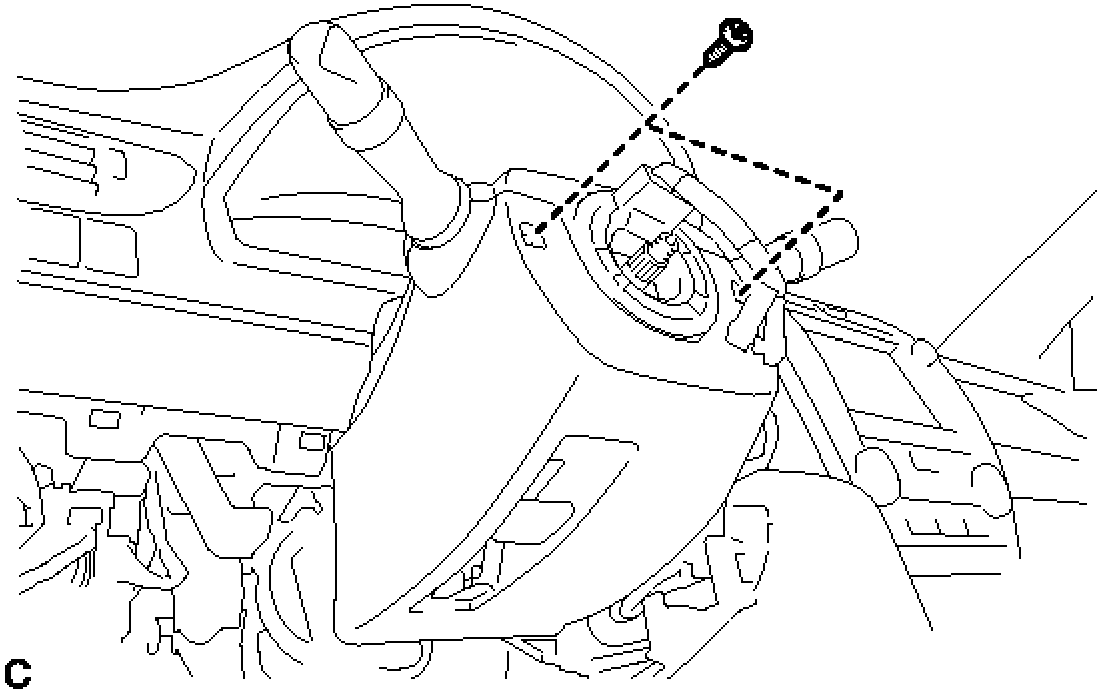

Fig. 40: Identifying Lower Steering Column Cover Screws
Courtesy of TOYOTA MOTOR SALES, U.S.A., INC.

Torque: 2.0 N*m (20 kgf*cm, 18 in.*lbf)

c. Engage the claw.

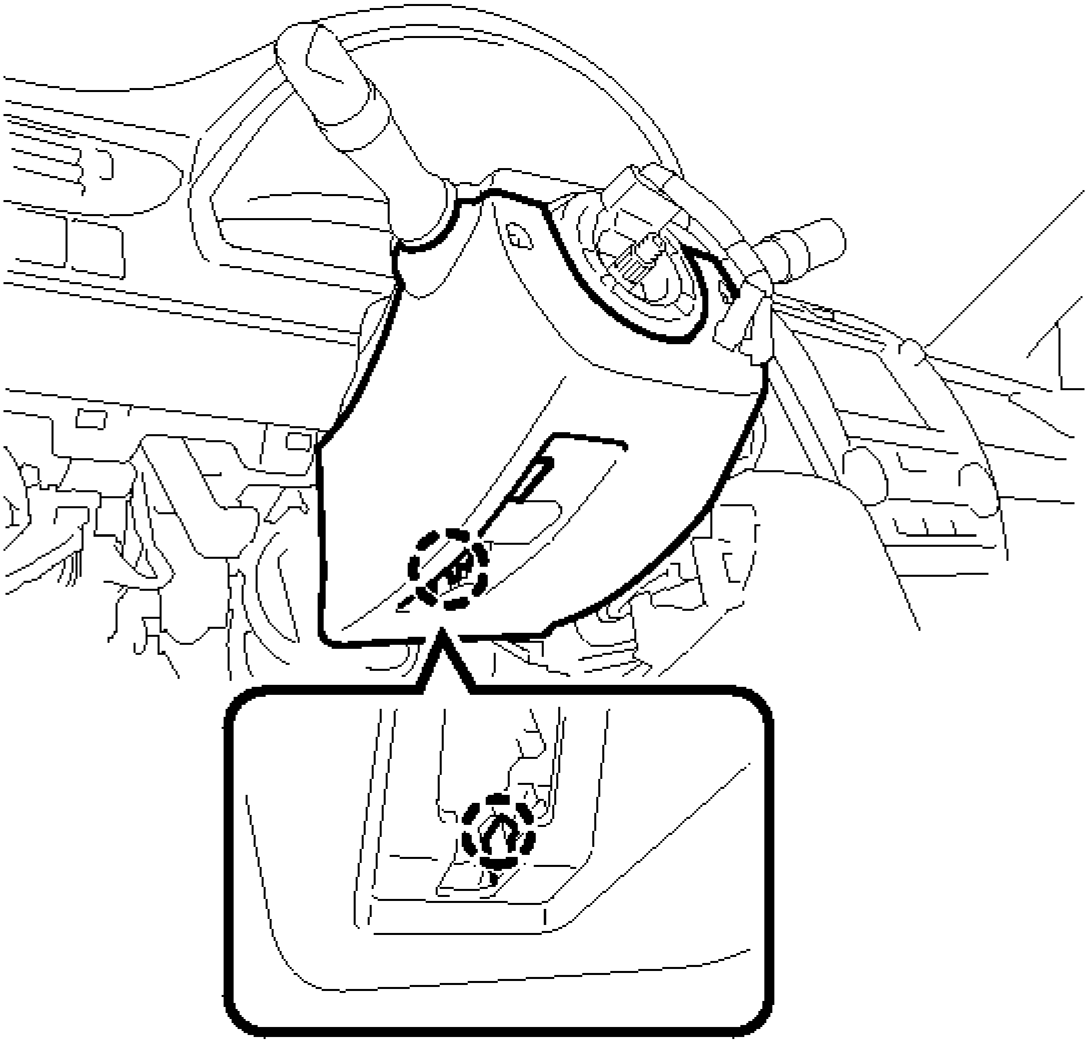

Fig. 41: Identifying Lower Steering Column Cover Claw
Courtesy of TOYOTA MOTOR SALES, U.S.A., INC.

8. **TURN FRONT WHEELS TO FACE STRAIGHT AHEAD**
9. **INSPECT AND ADJUST SPIRAL CABLE WITH SENSOR SUB-ASSEMBLY** . Refer to **INSTALLATION - Step 7**
10. **INSTALL STEERING WHEEL ASSEMBLY** See step 9
11. **INSPECT STEERING WHEEL CENTER POINT**
12. **INSTALL HORN BUTTON ASSEMBLY**

    Refer to **INSTALLATION**

13. **INSTALL LOWER NO. 1 INSTRUMENT PANEL AIRBAG ASSEMBLY**

    Refer to **INSTALLATION**

14. **INSTALL FRONT WHEEL LH**

    Torque: 103 N*m (1049 kgf*cm, 76 ft.*lbf)

15. **ADJUST PARKING ASSIST MONITOR SYSTEM**

    Refer to **CALIBRATION**

STEERING WHEEL

COMPONENTS

ILLUSTRATION

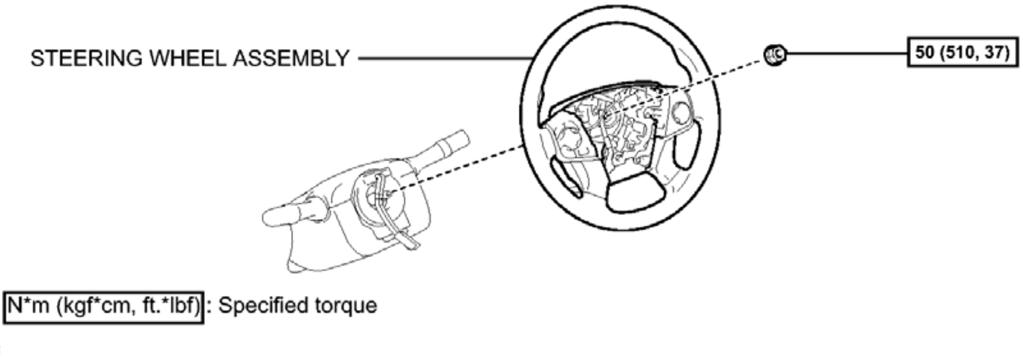
STEERING WHEEL ASSEMBLY
50 (510, 37)
N*m (kgf*cm, ft.*lbf) : Specified torque
c

Fig. 42: Identifying Steering Wheel Replacement Components With Torque Specifications (1 Of 2)
Courtesy of TOYOTA MOTOR SALES, U.S.A., INC.

ILLUSTRATION

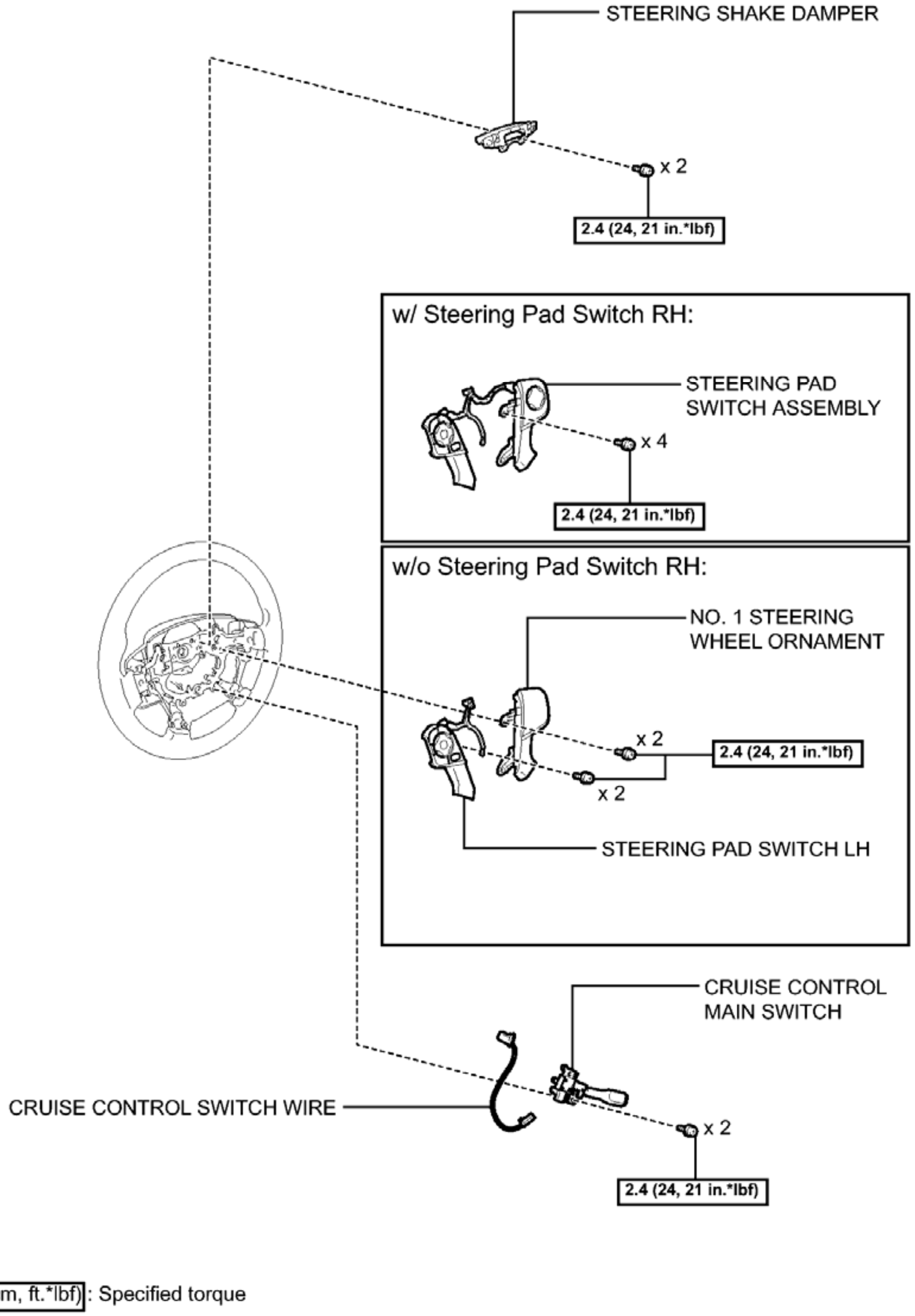
STEERING SHAKE DAMPER
x 2
2.4 (24, 21 in.*lbf)
w/ Steering Pad Switch RH:
STEERING PAD SWITCH ASSEMBLY
x 4
2.4 (24, 21 in.*lbf)
w/o Steering Pad Switch RH:
NO. 1 STEERING WHEEL ORNAMENT
x 2
2.4 (24, 21 in.*lbf)
x 2
STEERING PAD SWITCH LH
CRUISE CONTROL MAIN SWITCH
CRUISE CONTROL SWITCH WIRE
x 2
2.4 (24, 21 in.*lbf)
N*m (kgf*cm, ft.*lbf): Specified torque
c

Fig. 43: Identifying Steering Wheel Replacement Components With Torque Specifications (2 Of 2)
Courtesy of TOYOTA MOTOR SALES, U.S.A., INC.

REMOVAL

REMOVAL

NOTE:

- **Do not replace the spiral cable with the auxiliary battery connected and the power switch on (IG).**
- **Do not rotate the spiral cable without the steering wheel with the auxiliary battery connected and the power switch on (IG).**
- **Ensure that the steering wheel is installed and aligned straight when inspecting the steering sensor.**

1. **ALIGN FRONT WHEELS FACING STRAIGHT AHEAD**
2. **REMOVE HORN BUTTON ASSEMBLY**

   Refer to **REMOVAL**

3. **REMOVE STEERING WHEEL ASSEMBLY**
   a. Remove the steering wheel assembly set nut.

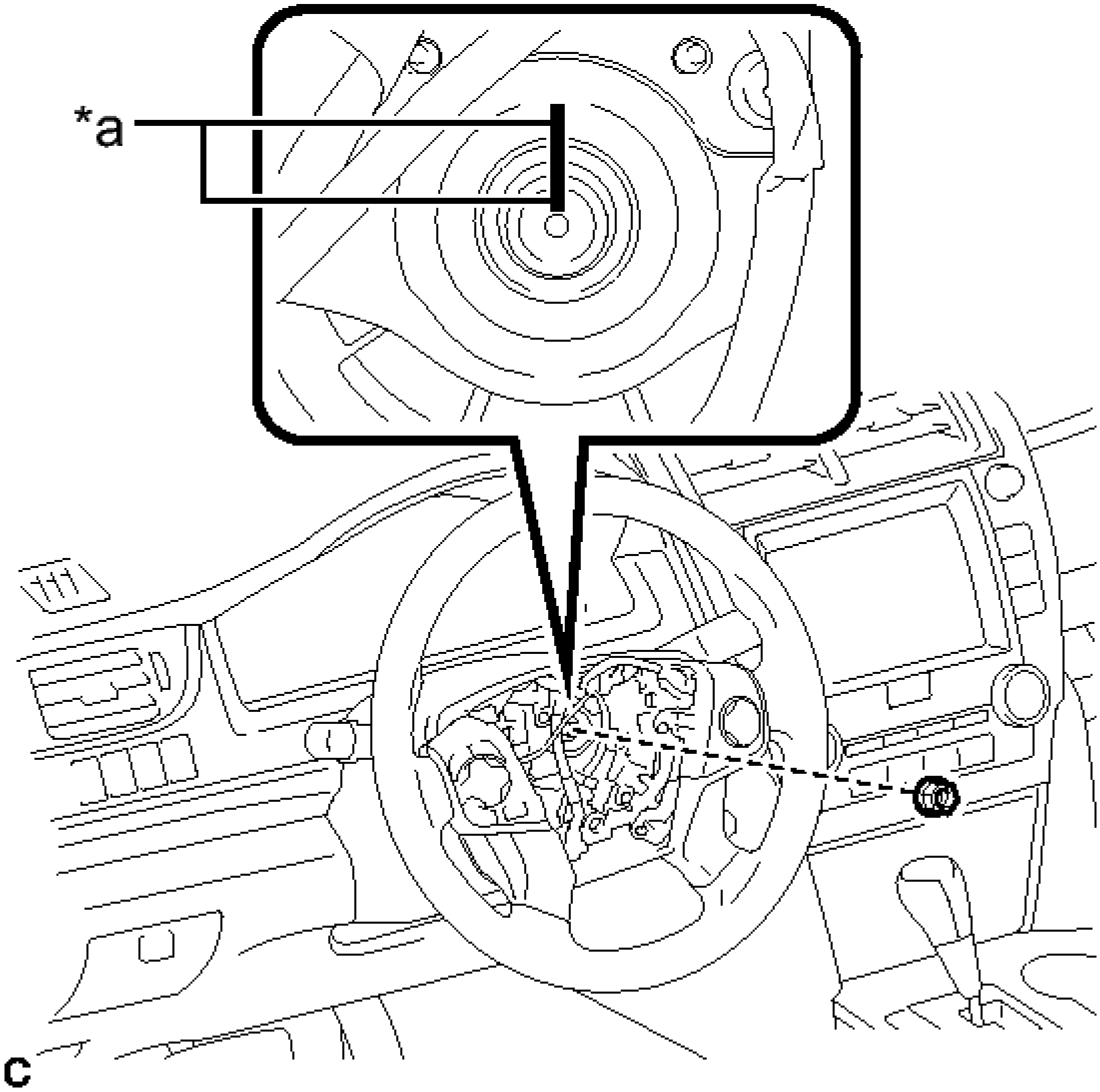

Fig. 44: Identifying Steering Wheel Assembly Matchmark
Courtesy of TOYOTA MOTOR SALES, U.S.A., INC.

TEXT IN ILLUSTRATION

*a	Matchmark

b. Put matchmarks on the steering wheel assembly and steering main shaft.
c. Disconnect the connectors from the spiral cable sub-assembly.
d. Using SST, remove the steering wheel assembly.

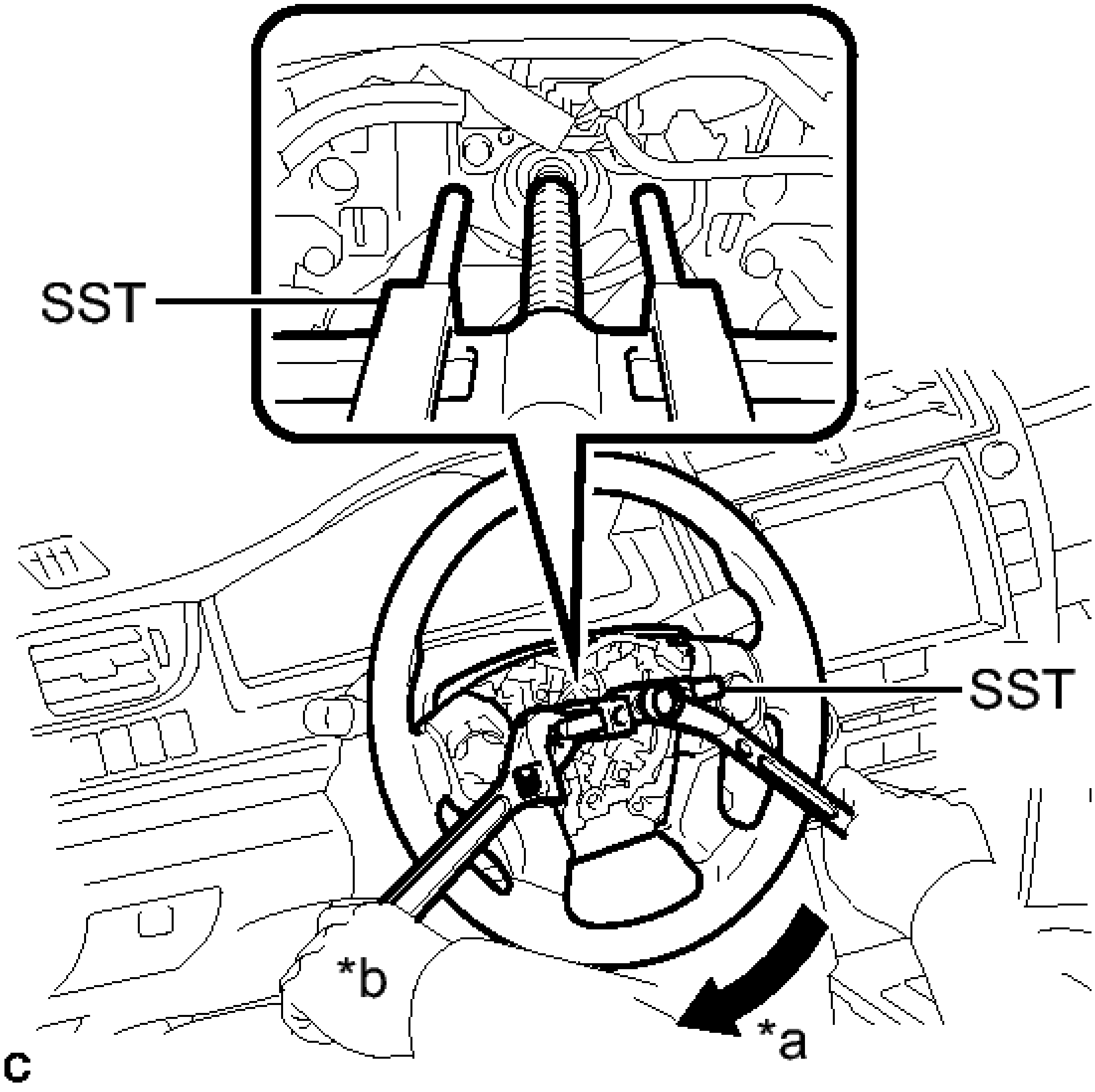

Fig. 45: Removing Steering Wheel Assembly
Courtesy of TOYOTA MOTOR SALES, U.S.A., INC.

TEXT IN ILLUSTRATION

*a	Turn
*b	Hold

- **SST: 09950-50013**
  09951-05010
  09952-05010
  09953-05020
  09954-05070

NOTE: **Apply a small amount of grease to the threads and tip of SST (09953-**

05020) before use.

4. **REMOVE NO. 1 STEERING WHEEL ORNAMENT (w/o Steering Pad Switch RH)**
    a. Remove the 2 screws.

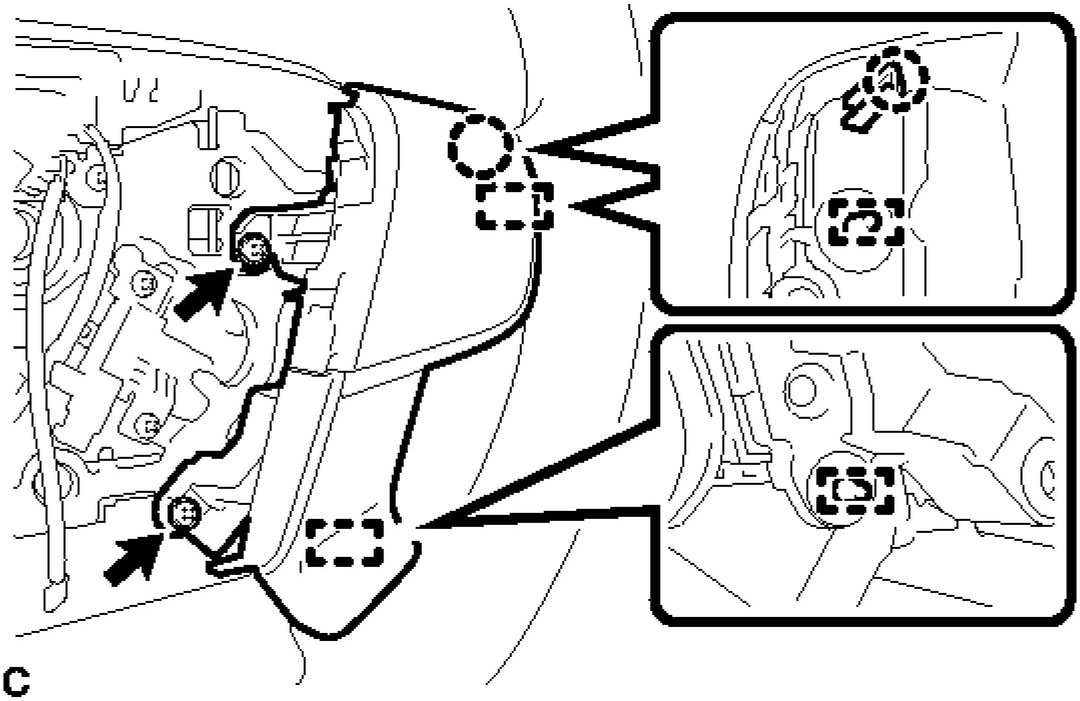

Fig. 46: Identifying No. 1 Steering Wheel Ornament Screws (W/O Steering Pad Switch RH)
Courtesy of TOYOTA MOTOR SALES, U.S.A., INC.

    b. Disengage the claw and 2 pins to remove the No. 1 steering wheel ornament from the steering wheel sub-assembly.

5. **REMOVE STEERING PAD SWITCH LH (w/o Steering Pad Switch RH)** See step 2
6. **REMOVE STEERING PAD SWITCH ASSEMBLY (w/ Steering Pad Switch RH)** See step 3
7. **REMOVE CRUISE CONTROL MAIN SWITCH** . Refer to **REMOVAL - Step 2**
8. **REMOVE CRUISE CONTROL SWITCH WIRE**
    a. Remove the cruise control switch wire.
9. **REMOVE STEERING SHAKE DAMPER**
    a. Remove the 2 screws and steering shake damper from the steering wheel sub-assembly.

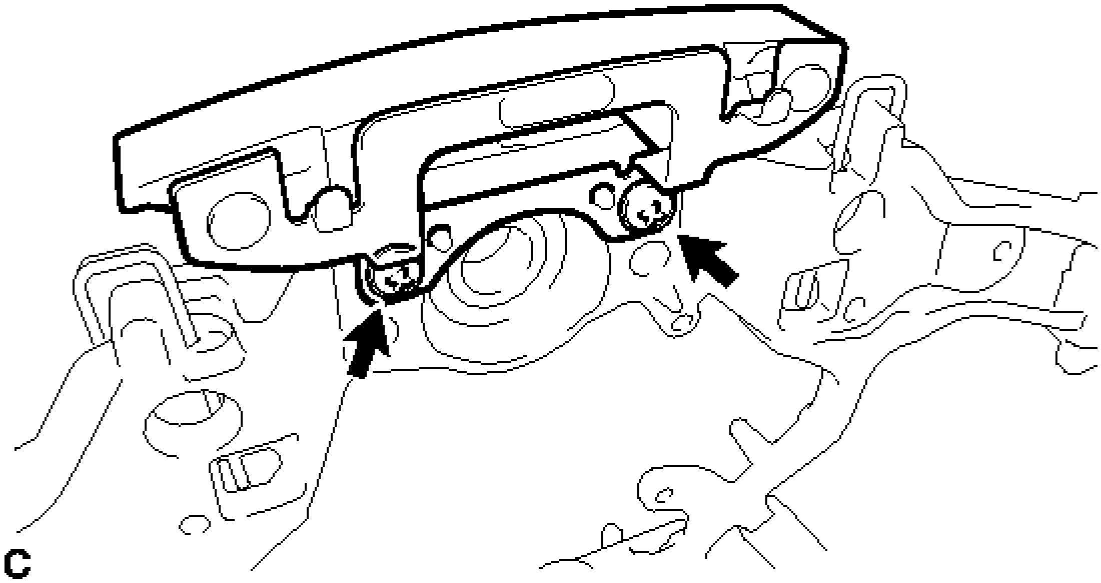

Fig. 47: Identifying Steering Shake Damper From Steering Wheel Sub-Assembly Screws
Courtesy of TOYOTA MOTOR SALES, U.S.A., INC.

INSTALLATION

INSTALLATION

NOTE:

- **Do not replace the spiral cable with the auxiliary battery connected and the power switch on (IG).**
- **Do not rotate the spiral cable without the steering wheel with the auxiliary battery connected and the power switch on (IG).**
- **Ensure that the steering wheel is installed and aligned straight when inspecting the steering sensor.**

1. **INSTALL STEERING SHAKE DAMPER**
   a. Install the steering shake damper to the steering wheel sub-assembly with the 2 screws.

      Torque: 2.4 N*m (24 kgf*cm, 21 in.*lbf)
2. **INSTALL CRUISE CONTROL SWITCH WIRE**
   a. Install the cruise control switch wire.
3. **INSTALL CRUISE CONTROL MAIN SWITCH** . Refer to **INSTALLATION - Step 1**
4. **INSTALL NO. 1 STEERING WHEEL ORNAMENT (w/o Steering Pad Switch RH)**
   a. Engage the claw and 2 pins to install the No. 1 steering wheel ornament to the steering wheel sub-assembly.

b. Install the 2 screws.

Torque: 2.4 N*m (24 kgf*cm, 21 in.*lbf)

5. **INSTALL STEERING PAD SWITCH LH (w/o Steering Pad Switch RH)** See step 1
6. **INSTALL STEERING PAD SWITCH ASSEMBLY (w/ Steering Pad Switch RH)** See step 2
7. **ALIGN FRONT WHEELS FACING STRAIGHT AHEAD**
8. **INSPECT AND ADJUST SPIRAL CABLE WITH SENSOR SUB-ASSEMBLY** . Refer to **INSTALLATION - Step 7**
9. **INSTALL STEERING WHEEL ASSEMBLY**
   a. Install the steering wheel assembly aligning the matchmarks on the steering wheel assembly and steering main shaft.

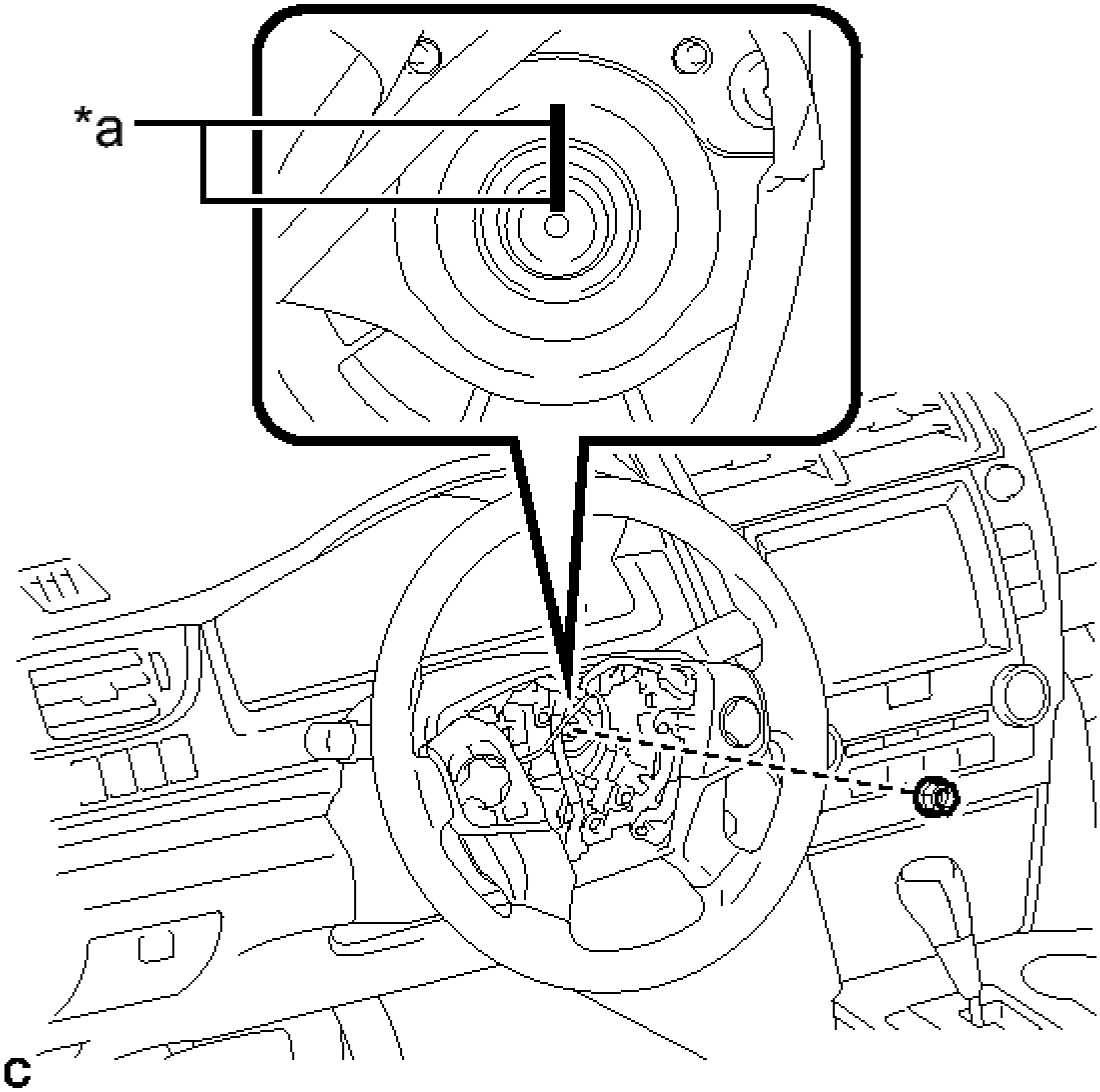

Fig. 48: Aligning Matchmarks With Steering Wheel Assembly And Steering Main Shaft
Courtesy of TOYOTA MOTOR SALES, U.S.A., INC.

TEXT IN ILLUSTRATION

*a	Matchmark

b. Install the steering wheel assembly set nut.

Torque: 50 N*m (510 kgf*cm, 37 ft.*lbf)

c. Connect the connectors to the spiral cable sub-assembly.

10. **CHECK STEERING WHEEL CENTER POINT**
11. **INSTALL HORN BUTTON ASSEMBLY**

Refer to **INSTALLATION**

STEERING PAD SWITCH

COMPONENTS

ILLUSTRATION

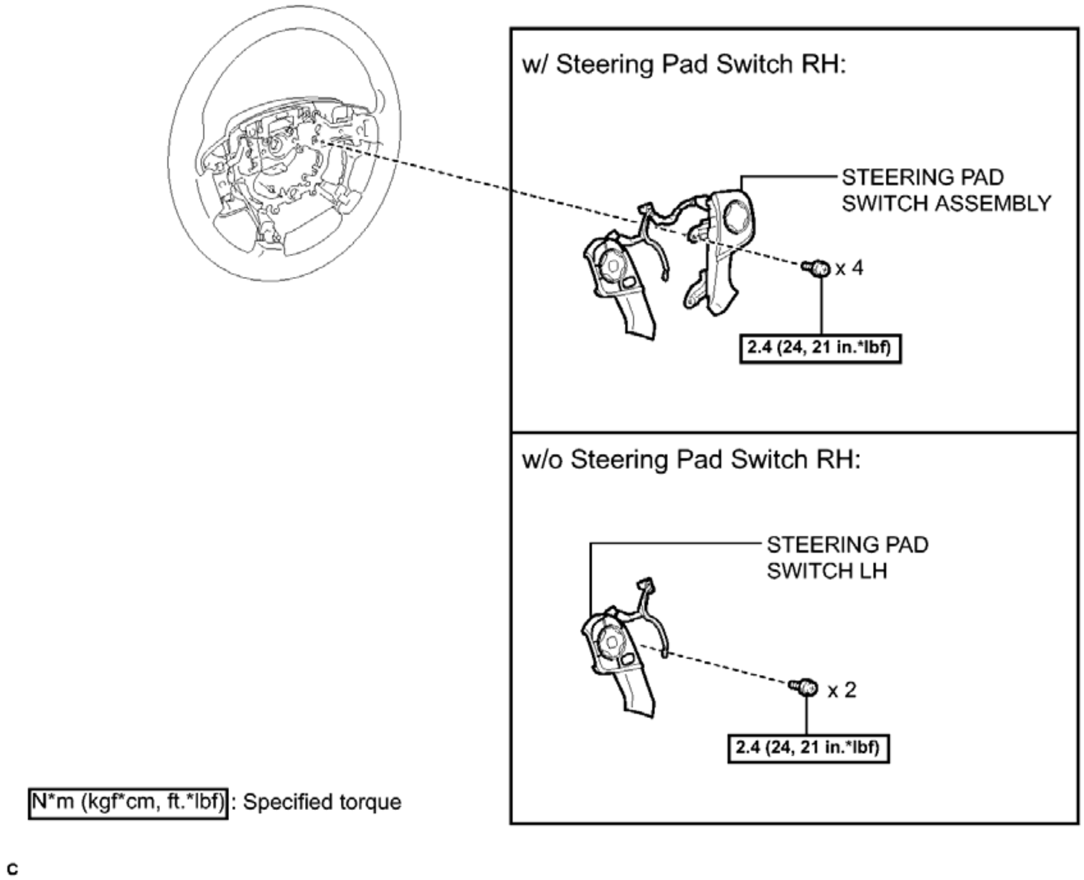
w/ Steering Pad Switch RH:
STEERING PAD SWITCH ASSEMBLY
x 4
2.4 (24, 21 in.*lbf)
w/o Steering Pad Switch RH:
STEERING PAD SWITCH LH
x 2
2.4 (24, 21 in.*lbf)
N*m (kgf*cm, ft.*lbf): Specified torque
c

Fig. 49: Identifying Steering Pad Switch Replacement Components With Torque Specifications
Courtesy of TOYOTA MOTOR SALES, U.S.A., INC.

REMOVAL

REMOVAL

1. **REMOVE HORN BUTTON ASSEMBLY**

   Refer to **REMOVAL**

2. **REMOVE STEERING PAD SWITCH LH (w/o Steering Pad Switch RH)**
   1. Disconnect the steering pad switch connector from the spiral cable sub-assembly.
   2. Remove the 2 screws.

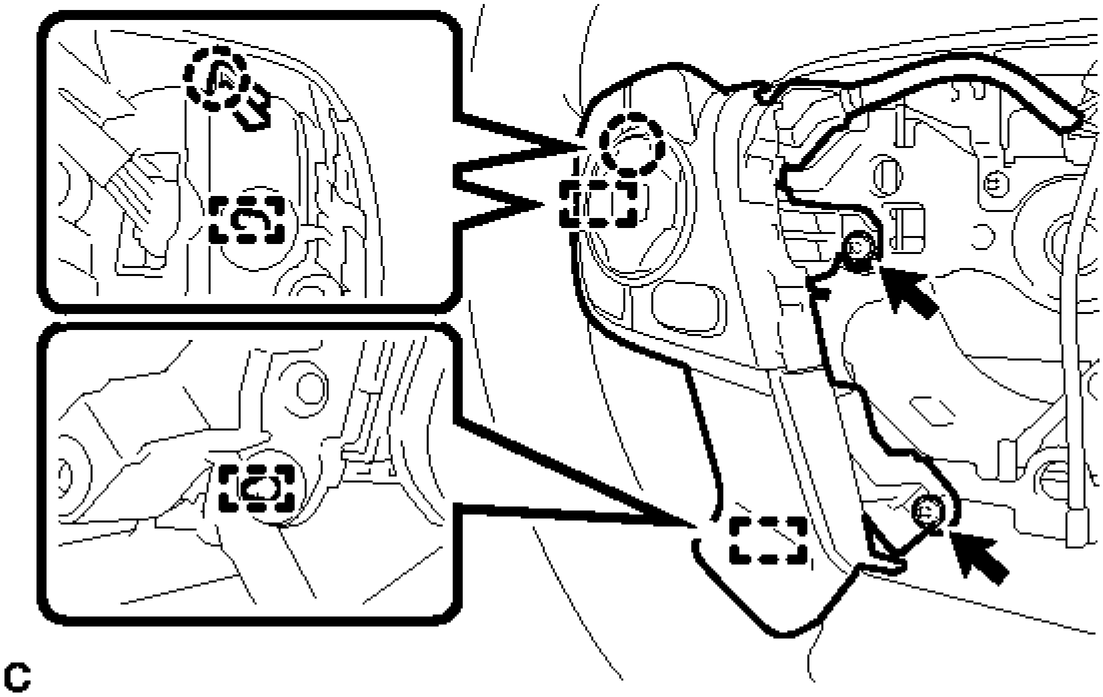

Fig. 50: Identifying Steering Pad Screw, Claw And Pins (W/O Steering Pad Switch RH)
Courtesy of TOYOTA MOTOR SALES, U.S.A., INC.

   3. Disengage the claw and 2 pins to remove the steering pad switch LH from the steering wheel sub-assembly.

3. **REMOVE STEERING PAD SWITCH ASSEMBLY (w/ Steering Pad Switch RH)**
   1. Disconnect the steering pad switch connector from the spiral cable sub-assembly.
   2. Remove the 2 screws.

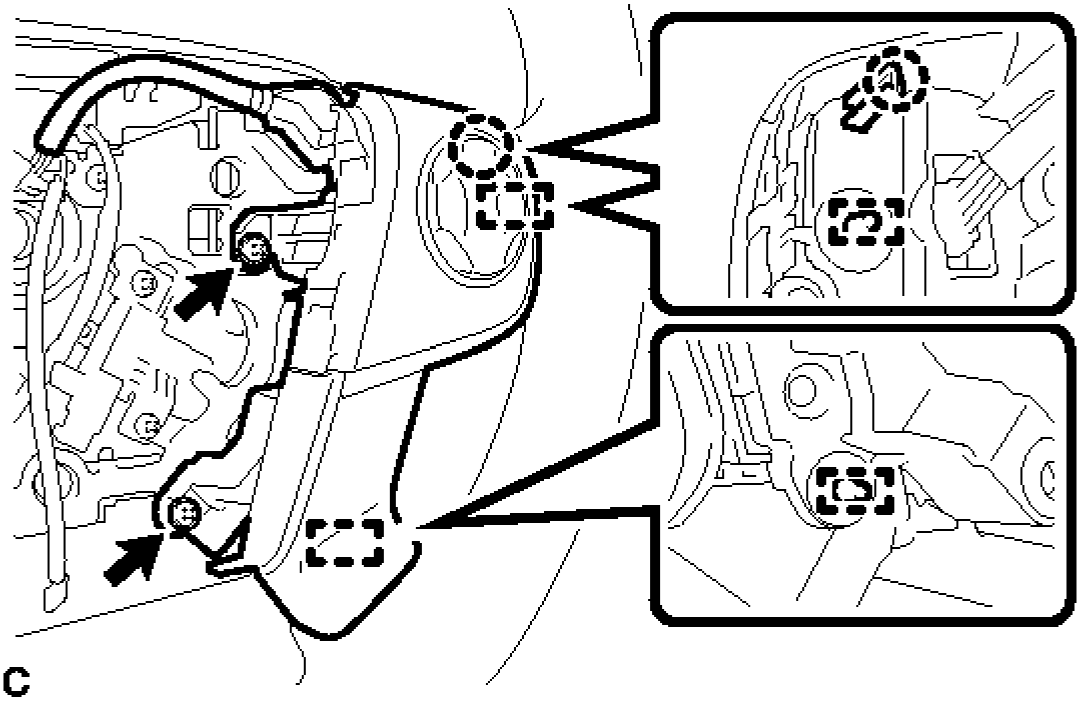

Fig. 51: Identifying Steering Pad Switch Connector And Screws
Courtesy of TOYOTA MOTOR SALES, U.S.A., INC.

c. Disengage the claw and 2 pins to remove the steering pad switch assembly (RH side) from the steering wheel sub-assembly.
d. Remove the 2 screws.

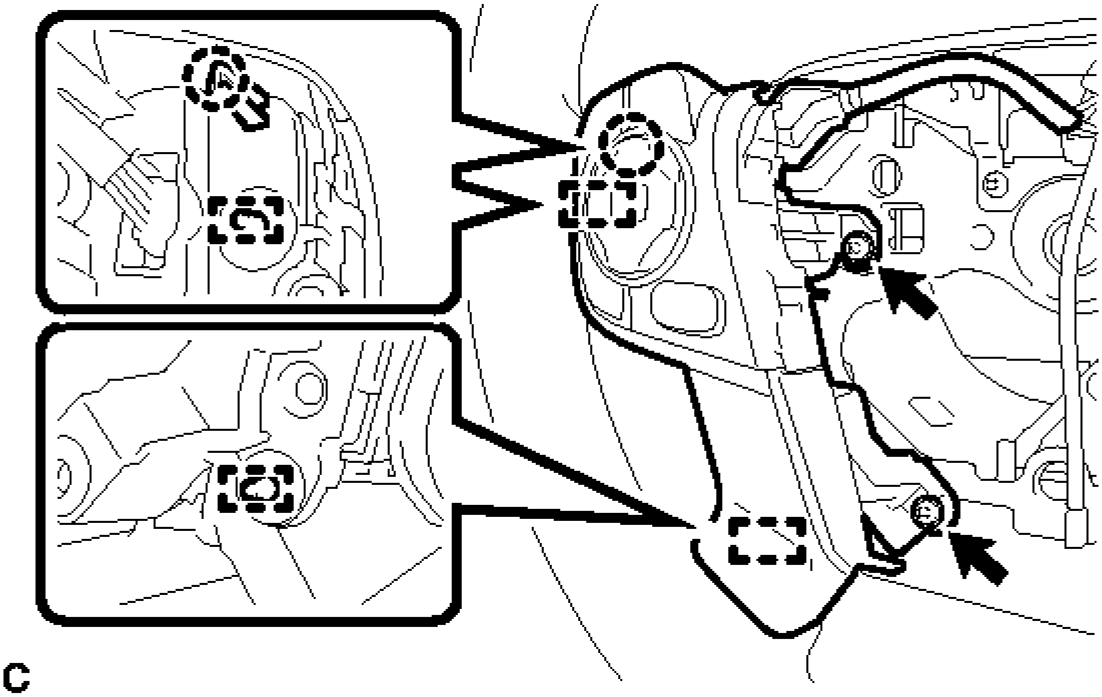

Fig. 52: Identifying Steerign Pad Switch Assembly Claw And Pins
Courtesy of TOYOTA MOTOR SALES, U.S.A., INC.

e. Disengage the claw and 2 pins to remove the steering pad switch assembly (LH side) from the steering wheel sub-assembly.

INSPECTION

INSPECTION

1. **INSPECT STEERING PAD SWITCH LH (for Audio and Visual System (for Radio Receiver Type))**
    a. Measure the resistance according to the value(s) in the table below.

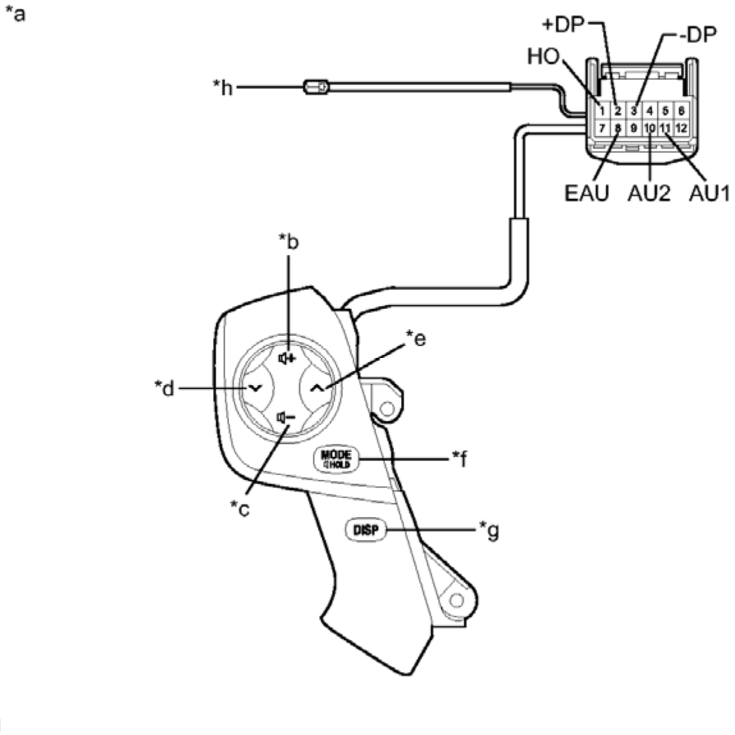

Fig. 53: Measuring Resistance Between Steering Pad Switch LH (For Audio And Visual (For Radio Receiver Type))
Courtesy of TOYOTA MOTOR SALES, U.S.A., INC.

Standard Resistance

Tester Connection	Switch Condition	Specified Condition
1 (HO) - Terminal-A	Always	Below 1 ohms
	No switch	95 to 105

2 (+DP) - 3 (-DP)	pushed	kohms
	DISP switch pushed	Below 2.5 ohms
11 (AU1) - 8 (EAU)	No switch pushed	95 to 105 kohms
	Seek+ switch pushed	Below 2.5 ohms
	Seek- switch pushed	313 to 345 ohms
	Volume+ switch pushed	950 to 1050 ohms
	Volume- switch pushed	2955 to 3265 ohms
10 (AU2) - 8 (EAU)	No switch pushed	95 to 105 kohms
	MODE/HOLD switch pushed	Below 2.5 ohms

HINT:

If the result is not as specified, replace the steering pad switch LH.

TEXT IN ILLUSTRATION

*a	Component without harness connected (Steering Pad Switch LH)	*b	Volume+
*c	Volume-	*d	Seek-
*e	Seek+	*f	MODE/HOLD
*g	DISP	*h	Terminal-A

b. Check the illumination.

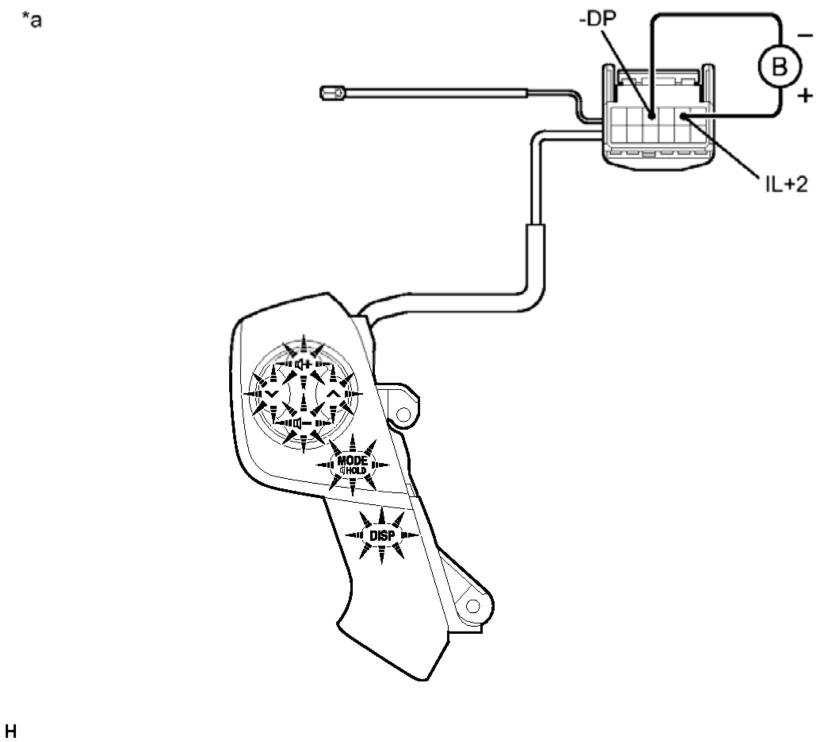

Fig. 54: Identifying Illumination
Courtesy of TOYOTA MOTOR SALES, U.S.A., INC.

1. Connect an auxiliary battery positive (+) lead to terminal IL+2 and a negative (-) lead to terminal -DP of the steering pad switch LH connector.
2. Check that the switch illumination comes on.

   OK

   Steering pad switch illumination comes on.

   HINT:

   If the result is not as specified, replace the steering pad switch LH.

   TEXT IN ILLUSTRATION

*a	Component without harness connected (Steering Pad Switch LH)	-	-

2. **INSPECT STEERING PAD SWITCH ASSEMBLY (except Audio and Visual System (for Radio Receiver Type))**

a. Measure the resistance according to the value(s) in the table below.

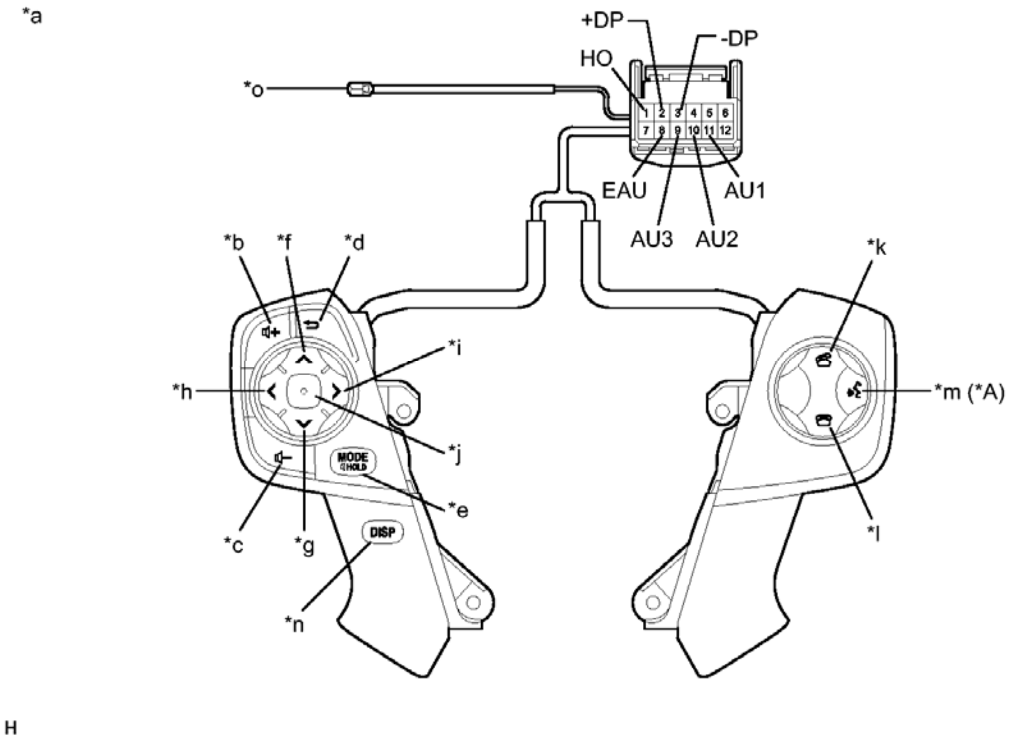
*a
+DP
-DP
HO
*o
1 2 3 4 5 6
7 8 9 10 11 12
EAU
AU1
AU3
AU2
*b
*f
*d
*k
*i
*h
*m (*A)
*j
MODE
HOLD
*e
*c
*g
*l
DISP
*n
H

Fig. 55: Measuring Resistance Steering Pad Switch Assembly (Except Audio And Visual System (For Radio Receiver Type))
Courtesy of TOYOTA MOTOR SALES, U.S.A., INC.

Standard Resistance

Tester Connection	Switch Condition	Specified Condition
1 (HO) - Terminal-A	Always	Below 1 ohms
2 (+DP) - 3 (-DP)	No switch pushed	95 to 105 kohms
	DISP switch pushed	Below 2.5 ohms
11 (AU1) - 8 (EAU)	No switch pushed	95 to 105 kohms
	Up switch pushed	Below 2.5 ohms
	Down switch pushed	313 to 345 ohms
	Volume+ switch pushed	950 to 1050 ohms

	Volume- switch pushed	2955 to 3265 ohms
10 (AU2) - 8 (EAU)	No switch pushed	95 to 105 kohms
	MODE/HOLD switch pushed	Below 2.5 ohms
	On hook switch pushed	313 to 345 ohms
	Off hook switch pushed	950 to 1050 ohms
	Voice switch pushed*1	2955 to 3265 ohms
9 (AU3) - 8 (EAU)	No switch pushed	95 to 105 kohms
	Enter switch pushed	Below 2.5 ohms
	Back switch pushed	313 to 345 ohms
	Right switch pushed	950 to 1050 ohms
	Left switch pushed	2955 to 3265 ohms

*1: w/ Voice Switch of Steering Pad Switch Assembly

HINT:

If the result is not as specified, replace the steering pad switch assembly.

TEXT IN ILLUSTRATION

*A	w/ Voice Switch of Steering Pad Switch Assembly	-	-
*a	Component without harness connected (Steering Pad Switch	*b	Volume+

	Assembly)		
*c	Volume-	*d	Back
*e	MODE/HOLD	*f	Up
*g	Down	*h	Left
*i	Right	*j	Enter
*k	Off hook	*l	On hook
*m	Voice	*n	DISP
*o	Terminal-A	-	-

b. Check the illumination.

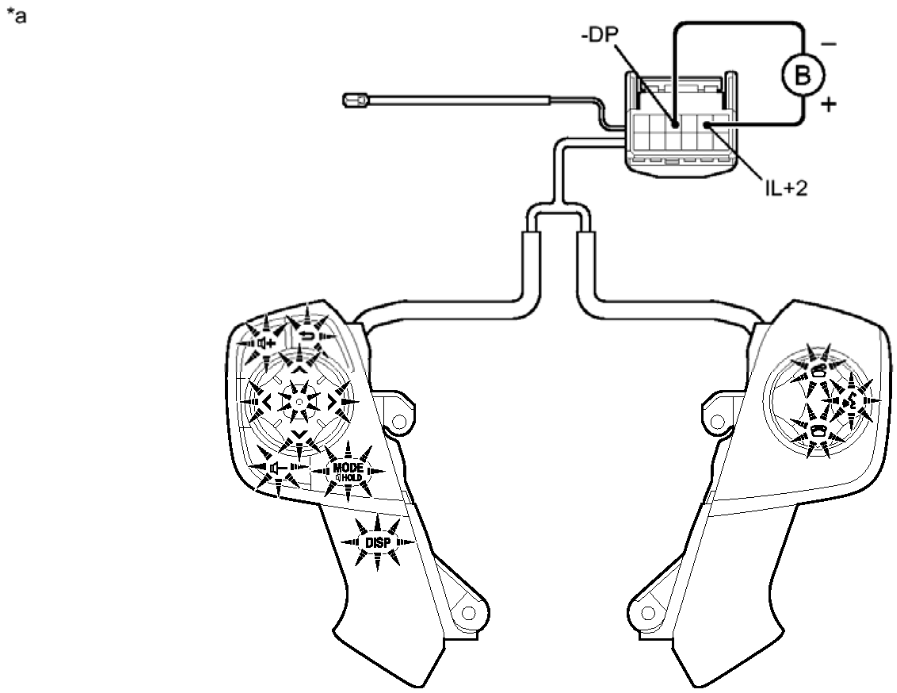

Fig. 56: Identifying Illumination
Courtesy of TOYOTA MOTOR SALES, U.S.A., INC.

1. Connect an auxiliary battery positive (+) lead to terminal IL+2 and a negative (-) lead to terminal -DP of the steering pad switch assembly connector.
2. Check that the switch illumination comes on.

   OK

   Steering pad switch illumination comes on.

   HINT:

If the result is not as specified, replace the steering pad switch assembly.

TEXT IN ILLUSTRATION

*a	Component without harness connected (Steering Pad Switch Assembly)	-	-

INSTALLATION

INSTALLATION

1. **INSTALL STEERING PAD SWITCH LH (w/o Steering Pad Switch RH)**
    a. Engage the claw and 2 pins to install the steering pad switch LH to the steering wheel sub-assembly.
    b. Install the 2 screws.

    Torque: 2.4 N*m (24 kgf*cm, 21 in.*lbf)

    c. Connect the steering pad switch connector to the spiral cable sub-assembly.
    d. Pass the wire harness over the guide.

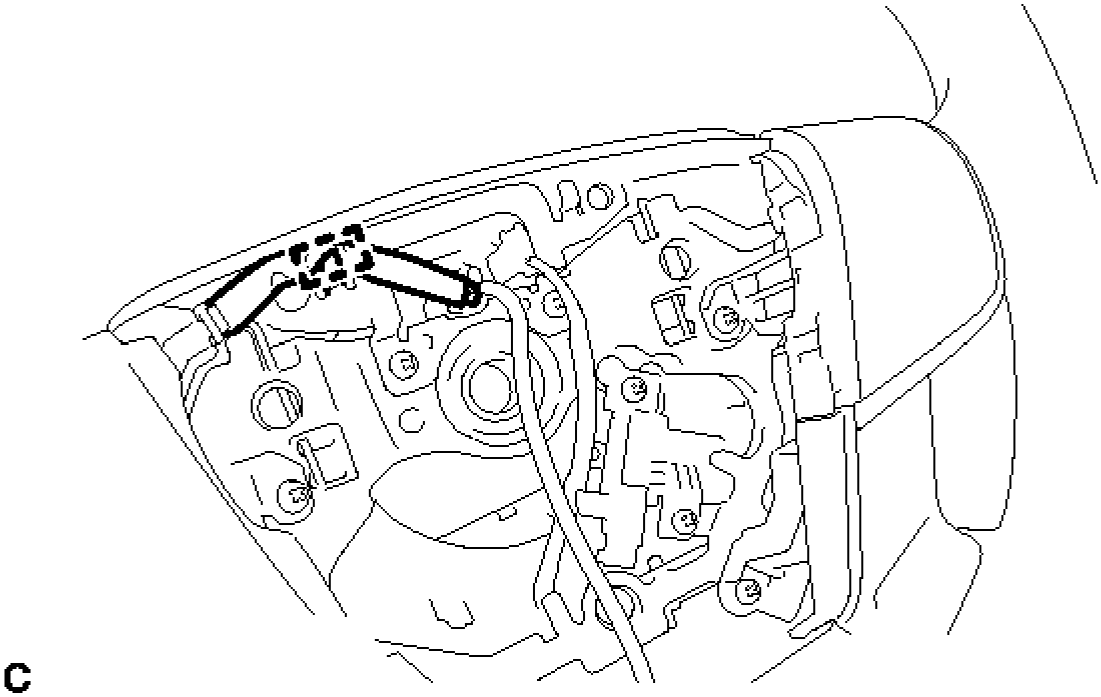

Fig. 57: Identifying Steering Pad Switch LH (W/O Steering Pad Switch RH)

Courtesy of TOYOTA MOTOR SALES, U.S.A., INC.

2. **INSTALL STEERING PAD SWITCH ASSEMBLY (w/ Steering Pad Switch RH)**
    1. Engage the claw and 2 pins to install the steering pad switch assembly (RH side) to the steering wheel sub-assembly.
    2. Install the 2 screws.

       Torque: 2.4 N*m (24 kgf*cm, 21 in.*lbf)

    3. Engage the claw and 2 pins to install the steering pad switch assembly (LH side) to the steering wheel sub-assembly.
    4. Install the 2 screws.

       Torque: 2.4 N*m (24 kgf*cm, 21 in.*lbf)

    5. Connect the steering pad switch connector to the spiral cable sub-assembly.
    6. Pass the wire harness over the 2 guides.

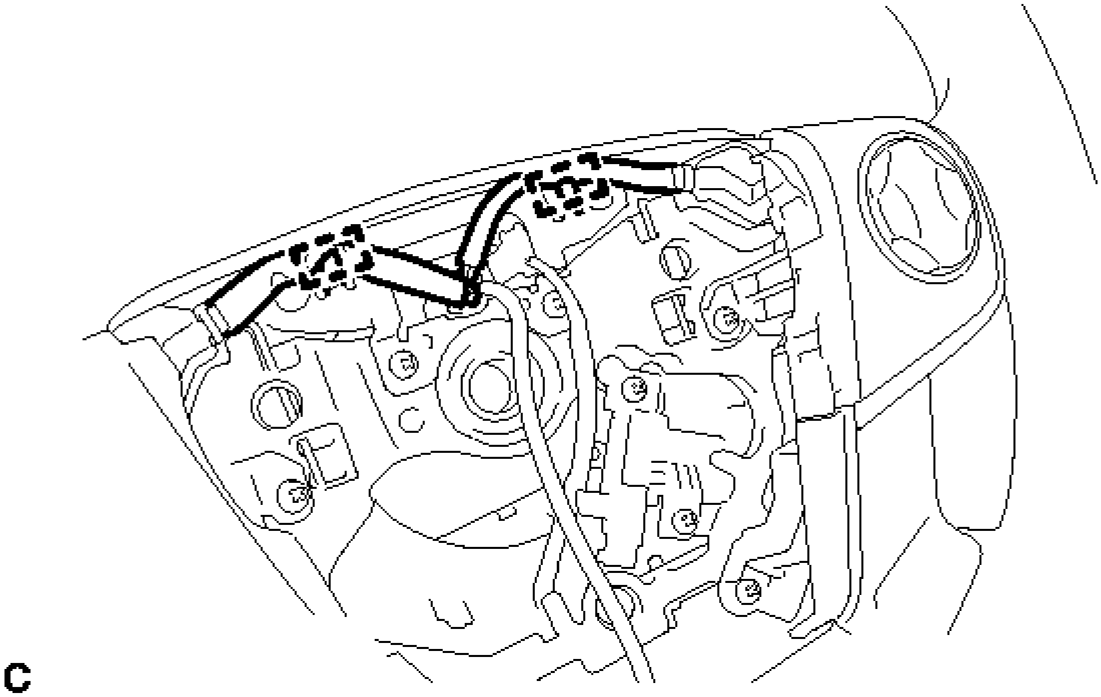

Fig. 58: Identifying Steering Pad Switch Assembly (W/Steering Pad Switch RH)
Courtesy of TOYOTA MOTOR SALES, U.S.A., INC.

3. **INSTALL HORN BUTTON ASSEMBLY**

Refer to **INSTALLATION**

2012-2017 STEERING

Steering Column (Service Information) (Except Hybrid) - Camry

STEERING COLUMN ASSEMBLY

COMPONENTS

ILLUSTRATION

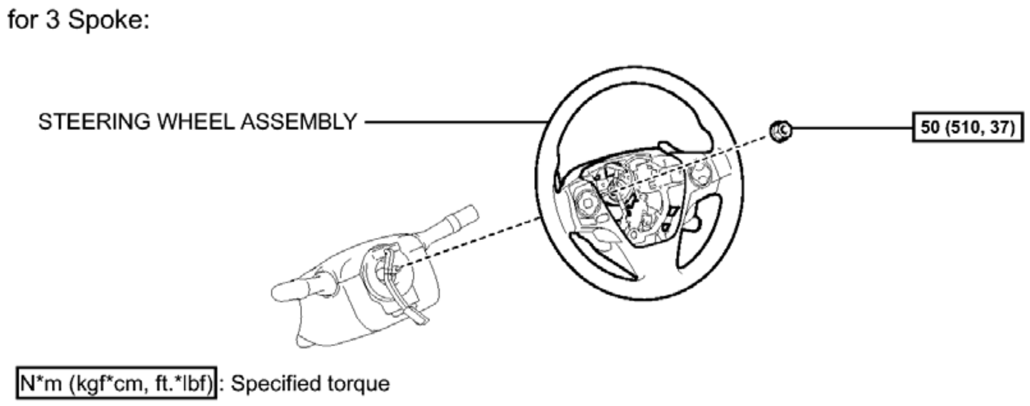
for 3 Spoke:
STEERING WHEEL ASSEMBLY
50 (510, 37)
N*m (kgf*cm, ft.*lbf): Specified torque

c

Fig. 1: Identifying Steering Column Assembly Replacement Components With Torque Specifications (1 Of 14)
Courtesy of TOYOTA MOTOR SALES, U.S.A., INC.

ILLUSTRATION

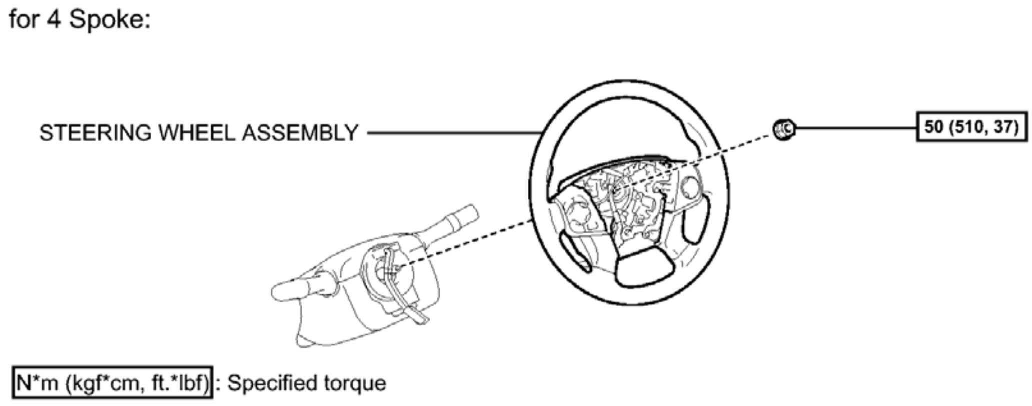
for 4 Spoke:
STEERING WHEEL ASSEMBLY
50 (510, 37)
N*m (kgf*cm, ft.*lbf): Specified torque

c

Fig. 2: Identifying Steering Column Assembly Replacement Components With Torque Specifications (2 Of 14)
Courtesy of TOYOTA MOTOR SALES, U.S.A., INC.

ILLUSTRATION

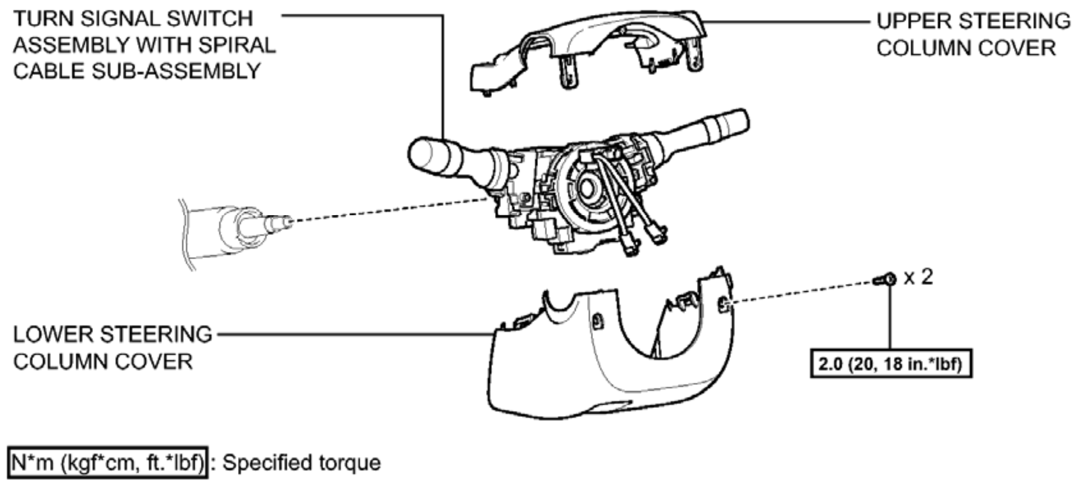
TURN SIGNAL SWITCH ASSEMBLY WITH SPIRAL CABLE SUB-ASSEMBLY
UPPER STEERING COLUMN COVER
x 2
LOWER STEERING COLUMN COVER
2.0 (20, 18 in.*lbf)
N*m (kgf*cm, ft.*lbf): Specified torque
c

Fig. 3: Identifying Steering Column Assembly Replacement Components With Torque Specifications (3 Of 14)
Courtesy of TOYOTA MOTOR SALES, U.S.A., INC.

ILLUSTRATION

for 2AR-FE without Wireless Door Lock:

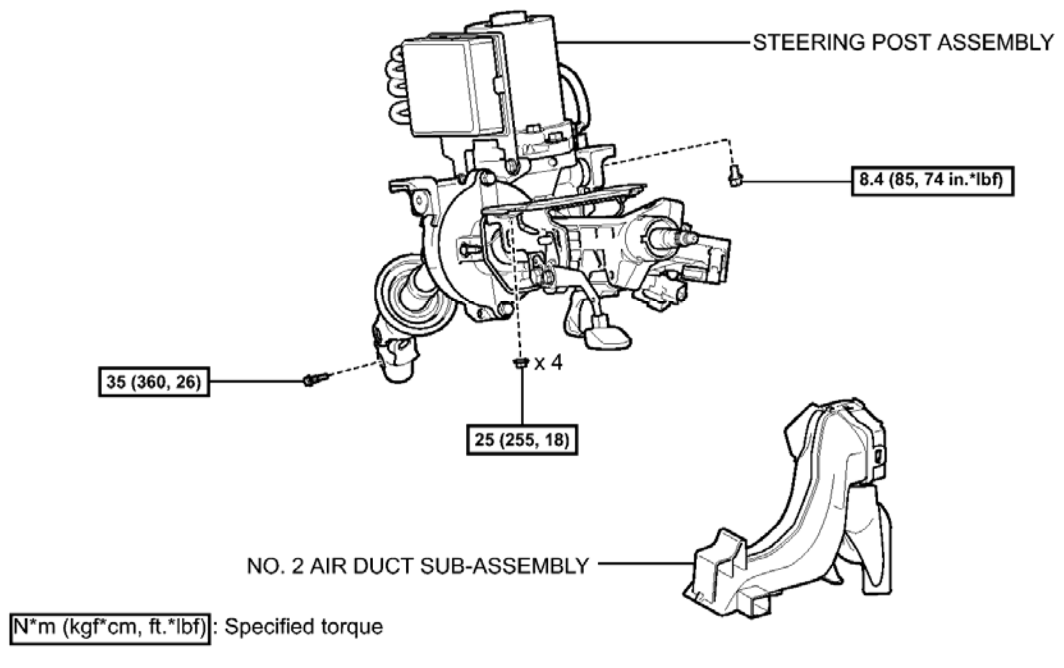
STEERING POST ASSEMBLY
8.4 (85, 74 in.*lbf)
x 4
35 (360, 26)
25 (255, 18)
NO. 2 AIR DUCT SUB-ASSEMBLY
N*m (kgf*cm, ft.*lbf): Specified torque
c

Fig. 4: Identifying Steering Column Assembly Replacement Components With Torque Specifications (4 Of 14)
Courtesy of TOYOTA MOTOR SALES, U.S.A., INC.

ILLUSTRATION

for 2AR-FE with Wireless Door Lock:

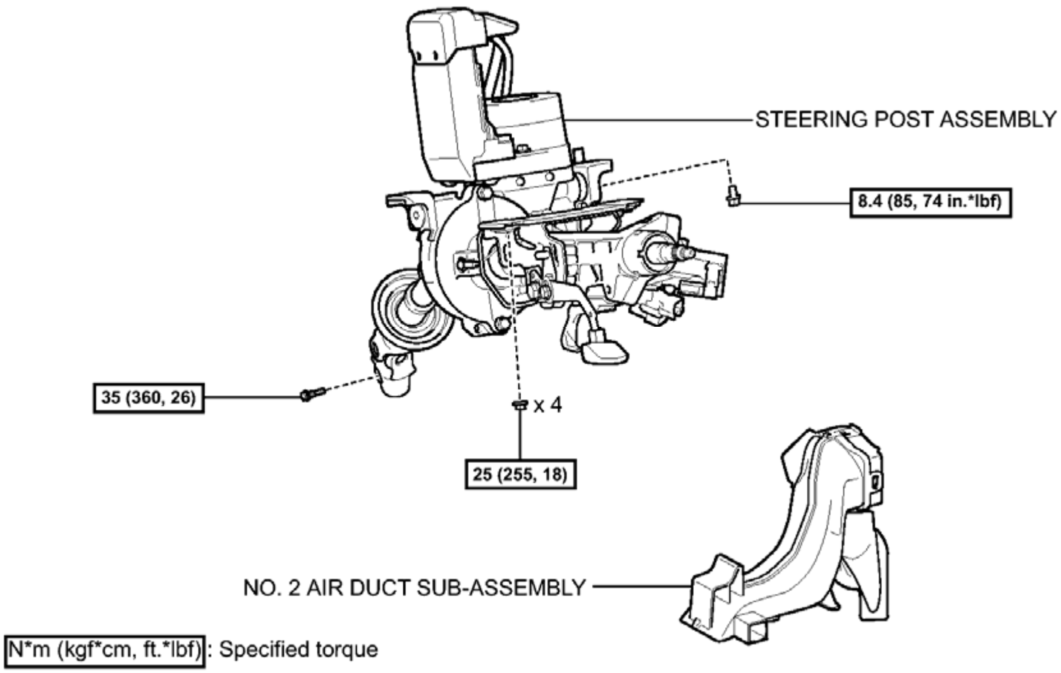
STEERING POST ASSEMBLY
8.4 (85, 74 in.*lbf)
35 (360, 26)
x 4
25 (255, 18)
NO. 2 AIR DUCT SUB-ASSEMBLY
N*m (kgf*cm, ft.*lbf): Specified torque
c

Fig. 5: Identifying Steering Column Assembly Replacement Components With Torque Specifications (5 Of 14)
Courtesy of TOYOTA MOTOR SALES, U.S.A., INC.

ILLUSTRATION

for 2GR-FE:

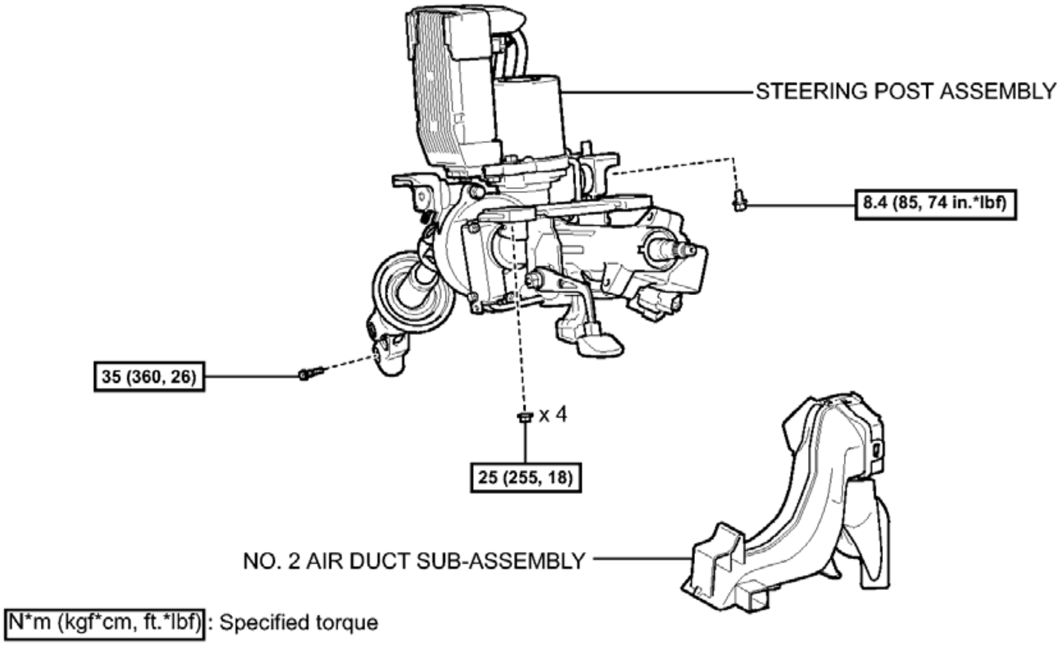
STEERING POST ASSEMBLY
8.4 (85, 74 in.*lbf)
35 (360, 26)
x 4
25 (255, 18)
NO. 2 AIR DUCT SUB-ASSEMBLY
N*m (kgf*cm, ft.*lbf): Specified torque
c

Fig. 6: Identifying Steering Column Assembly Replacement Components With Torque Specifications (6 Of 14)
Courtesy of TOYOTA MOTOR SALES, U.S.A., INC.

ILLUSTRATION

for 2AR-FE without Wireless Door Lock:

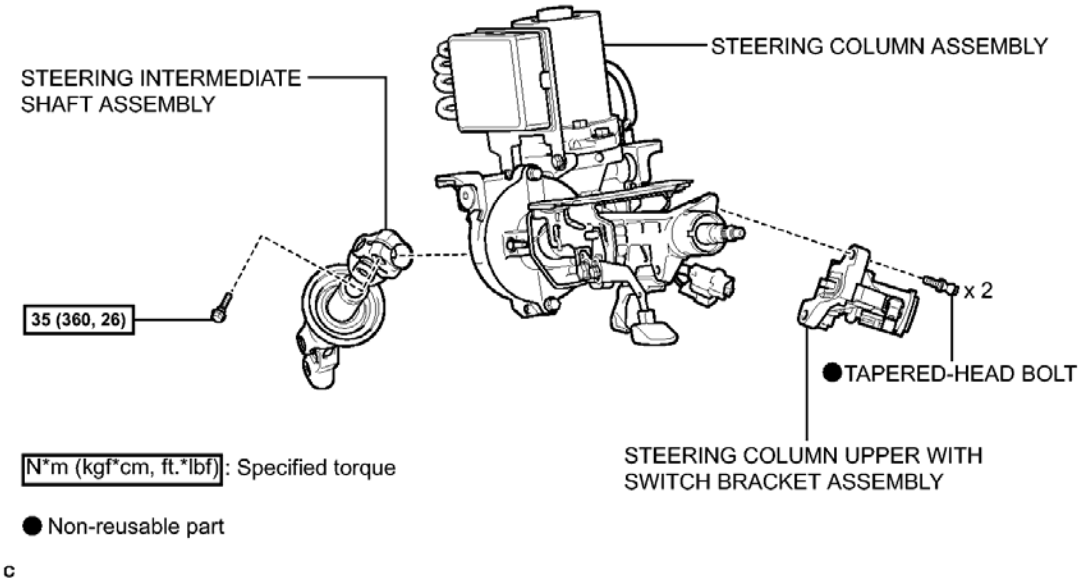
STEERING COLUMN ASSEMBLY
STEERING INTERMEDIATE SHAFT ASSEMBLY
35 (360, 26)
x 2
●TAPERED-HEAD BOLT
STEERING COLUMN UPPER WITH SWITCH BRACKET ASSEMBLY
N*m (kgf*cm, ft.*lbf) : Specified torque
● Non-reusable part
c

Fig. 7: Identifying Steering Column Assembly Replacement Components With Torque Specifications (7 Of 14)
Courtesy of TOYOTA MOTOR SALES, U.S.A., INC.

ILLUSTRATION

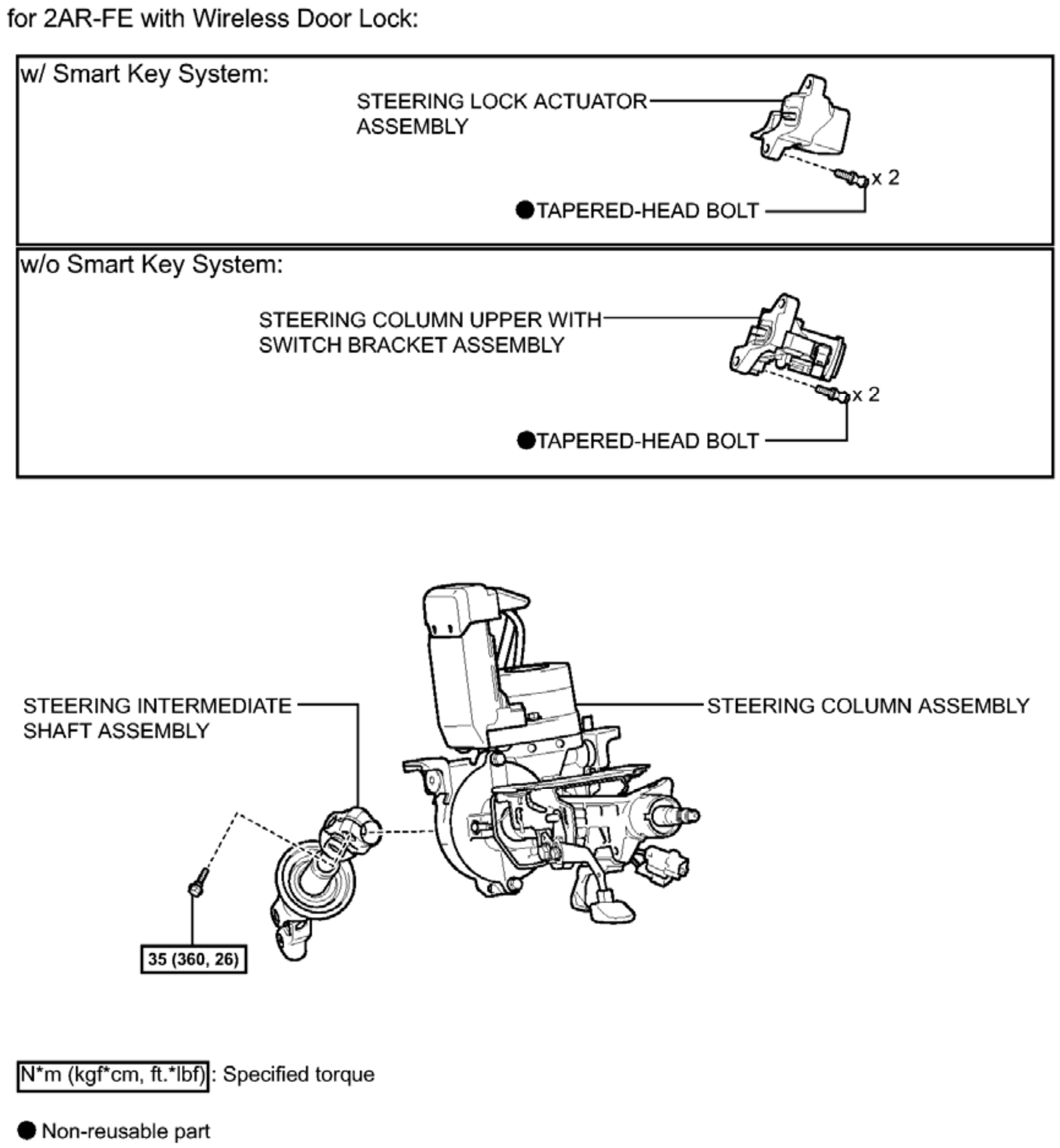
for 2AR-FE with Wireless Door Lock:
w/ Smart Key System:
STEERING LOCK ACTUATOR ASSEMBLY
x 2
● TAPERED-HEAD BOLT
w/o Smart Key System:
STEERING COLUMN UPPER WITH SWITCH BRACKET ASSEMBLY
x 2
● TAPERED-HEAD BOLT
STEERING INTERMEDIATE SHAFT ASSEMBLY
STEERING COLUMN ASSEMBLY
35 (360, 26)
N*m (kgf*cm, ft.*lbf): Specified torque
● Non-reusable part

c

Fig. 8: Identifying Steering Column Assembly Replacement Components With Torque Specifications (8 Of 14)

Courtesy of TOYOTA MOTOR SALES, U.S.A., INC.

ILLUSTRATION

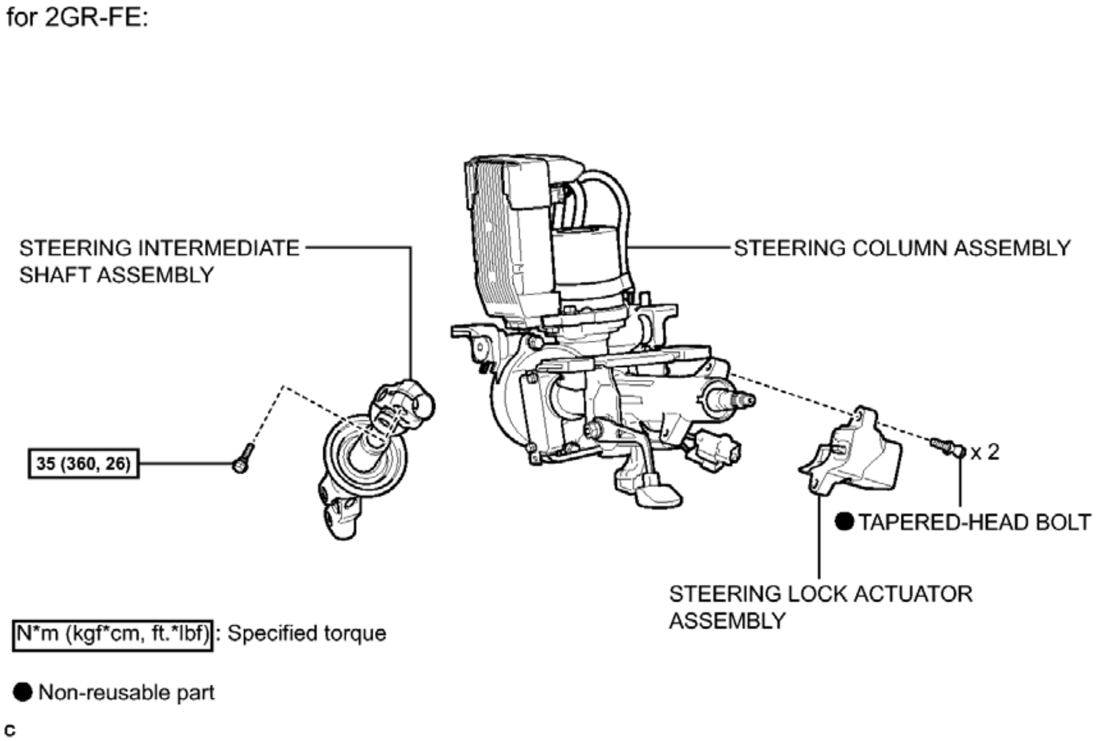
for 2GR-FE:
STEERING INTERMEDIATE SHAFT ASSEMBLY
STEERING COLUMN ASSEMBLY
35 (360, 26)
x 2
● TAPERED-HEAD BOLT
STEERING LOCK ACTUATOR ASSEMBLY
N*m (kgf*cm, ft.*lbf): Specified torque
● Non-reusable part
c

Fig. 9: Identifying Steering Column Assembly Replacement Components With Torque Specifications (9 Of 14)
Courtesy of TOYOTA MOTOR SALES, U.S.A., INC.

ILLUSTRATION

for 2AR-FE without Wireless Door Lock:

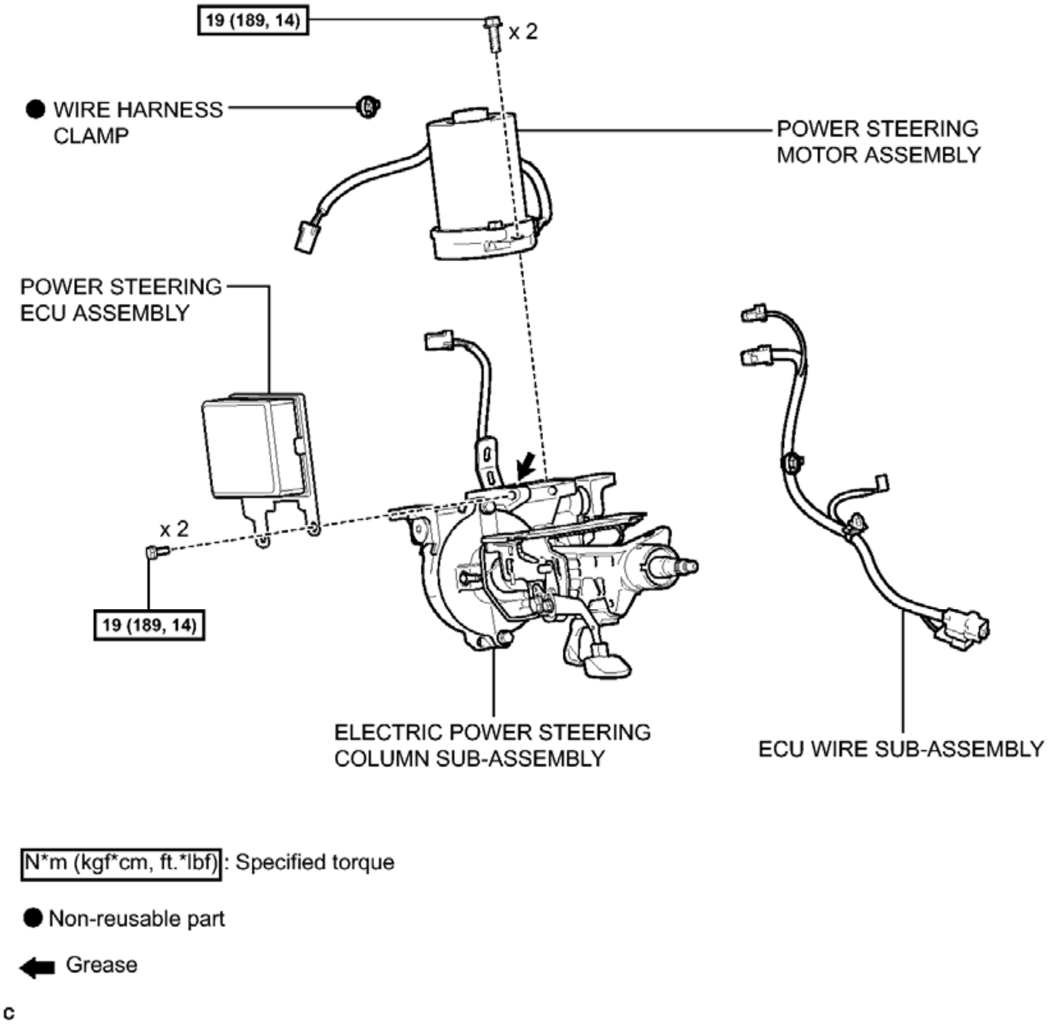
19 (189, 14)
x 2
● WIRE HARNESS CLAMP
POWER STEERING MOTOR ASSEMBLY
POWER STEERING ECU ASSEMBLY
x 2
19 (189, 14)
ELECTRIC POWER STEERING COLUMN SUB-ASSEMBLY
ECU WIRE SUB-ASSEMBLY
N*m (kgf*cm, ft.*lbf): Specified torque
● Non-reusable part
Grease
c

Fig. 10: Identifying Steering Column Assembly Replacement Components With Torque Specifications (10 Of 14)

Courtesy of TOYOTA MOTOR SALES, U.S.A., INC.

ILLUSTRATION

for 2AR-FE with Wireless Door Lock:

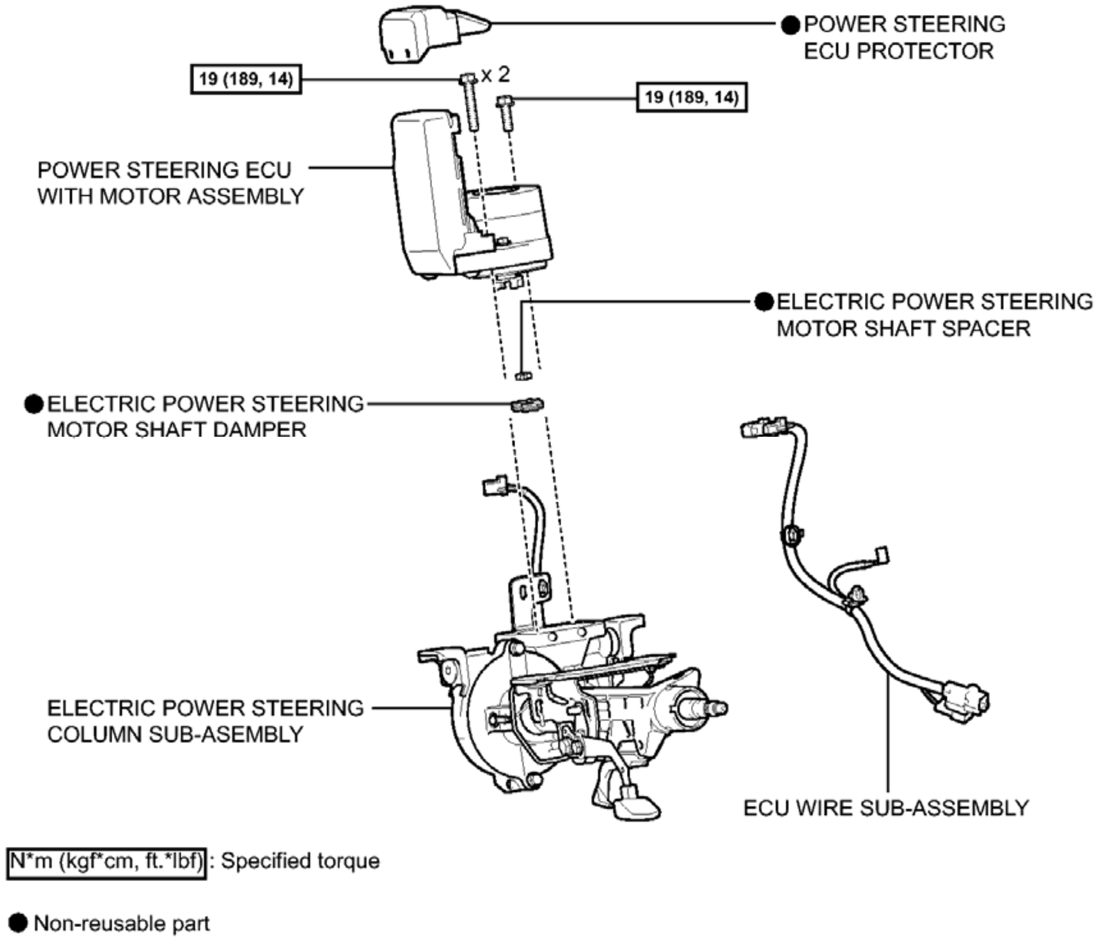
● POWER STEERING ECU PROTECTOR
19 (189, 14)
x 2
19 (189, 14)
POWER STEERING ECU WITH MOTOR ASSEMBLY
● ELECTRIC POWER STEERING MOTOR SHAFT SPACER
● ELECTRIC POWER STEERING MOTOR SHAFT DAMPER
ELECTRIC POWER STEERING COLUMN SUB-ASEMBLY
ECU WIRE SUB-ASSEMBLY
N*m (kgf*cm, ft.*lbf) : Specified torque
● Non-reusable part

c

Fig. 11: Identifying Steering Column Assembly Replacement Components With Torque Specifications (11 Of 14)

Courtesy of TOYOTA MOTOR SALES, U.S.A., INC.

ILLUSTRATION

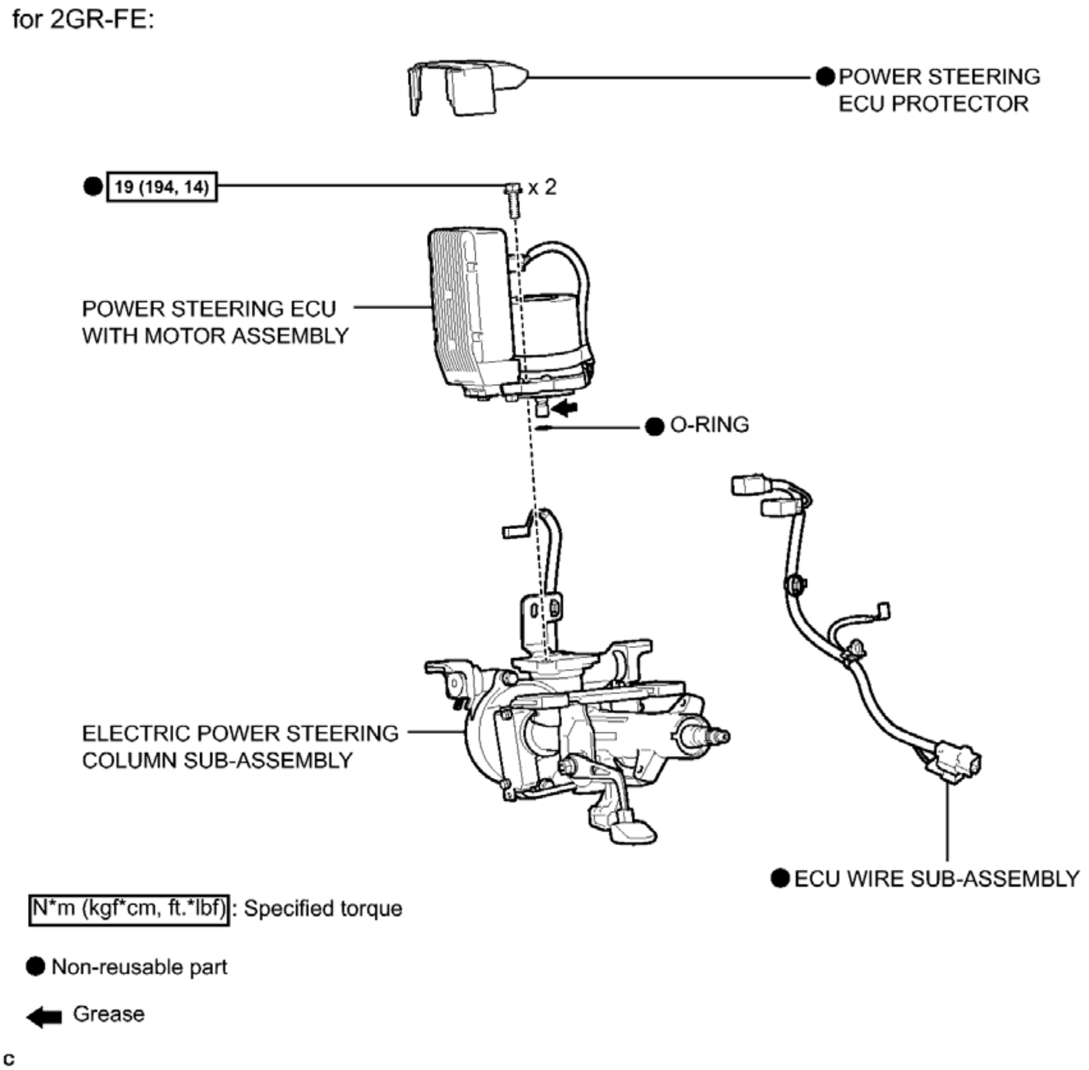
for 2GR-FE:
● POWER STEERING ECU PROTECTOR
● 19 (194, 14)
x 2
POWER STEERING ECU WITH MOTOR ASSEMBLY
● O-RING
ELECTRIC POWER STEERING COLUMN SUB-ASSEMBLY
● ECU WIRE SUB-ASSEMBLY
N*m (kgf*cm, ft.*lbf): Specified torque
● Non-reusable part
Grease
c

Fig. 12: Identifying Steering Column Assembly Replacement Components With Torque Specifications (12 Of 14)

Courtesy of TOYOTA MOTOR SALES, U.S.A., INC.

ILLUSTRATION

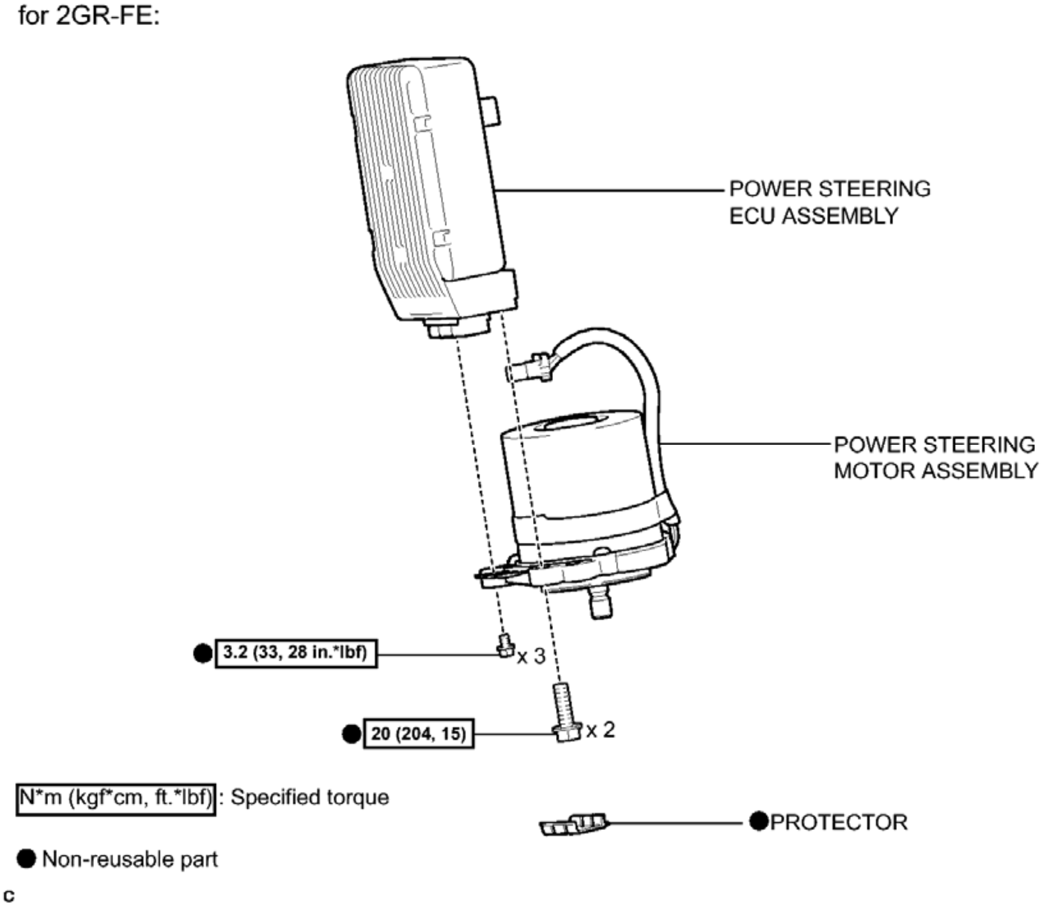
for 2GR-FE:
POWER STEERING ECU ASSEMBLY
POWER STEERING MOTOR ASSEMBLY
● 3.2 (33, 28 in.*lbf)
x 3
● 20 (204, 15)
x 2
N*m (kgf*cm, ft.*lbf) : Specified torque
●PROTECTOR
● Non-reusable part
c

Fig. 13: Identifying Steering Column Assembly Replacement Components With Torque Specifications (13 Of 14)
Courtesy of TOYOTA MOTOR SALES, U.S.A., INC.

ILLUSTRATION

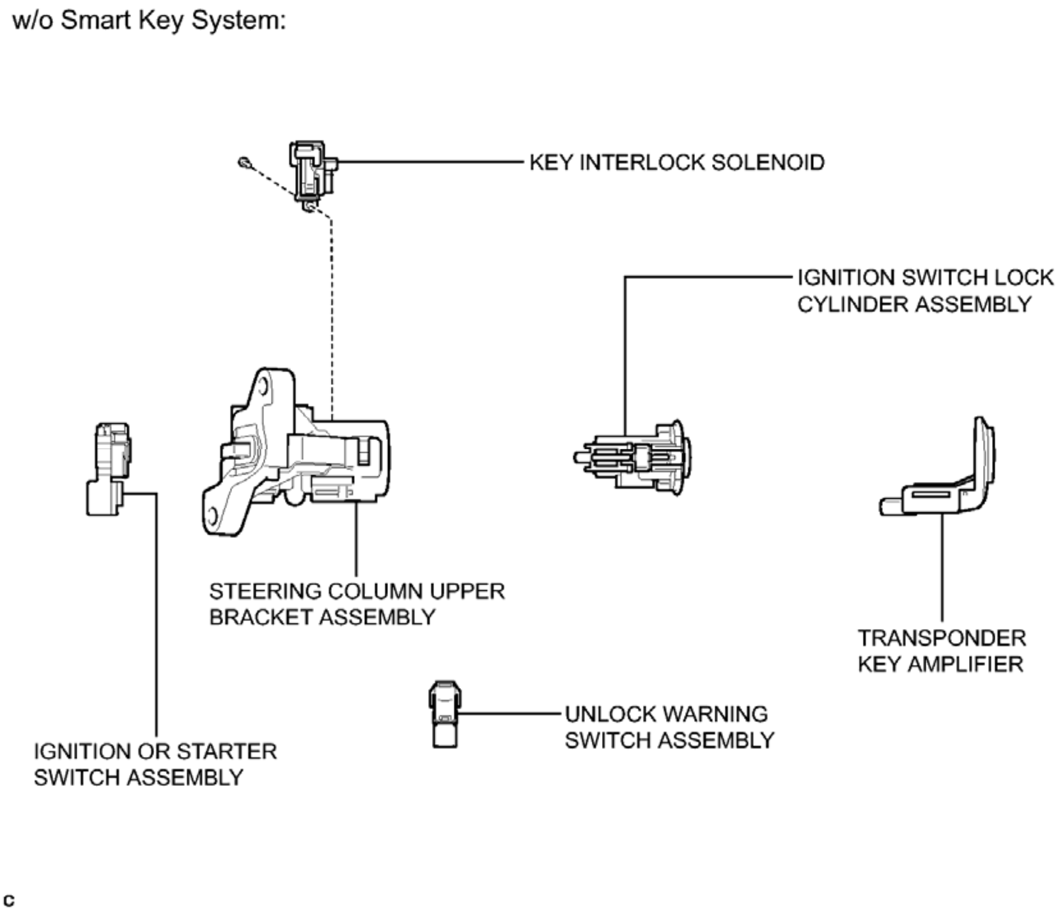
w/o Smart Key System:
KEY INTERLOCK SOLENOID
IGNITION SWITCH LOCK CYLINDER ASSEMBLY
STEERING COLUMN UPPER BRACKET ASSEMBLY
TRANSPONDER KEY AMPLIFIER
UNLOCK WARNING SWITCH ASSEMBLY
IGNITION OR STARTER SWITCH ASSEMBLY
c

Fig. 14: Identifying Steering Column Assembly Replacement Components (14 Of 14)
Courtesy of TOYOTA MOTOR SALES, U.S.A., INC.

REMOVAL

REMOVAL

WARNING: **Some of these service operations affect the SRS airbag system. Read the precautionary notices concerning the SRS airbag system before servicing the steering column.**

For Separate Type Yaw Rate Sensor: Refer to PRECAUTION .

For Built-in Type Yaw Rate Sensor: Refer to PRECAUTION .

1. **PRECAUTION**

   Refer to **PRECAUTION** .

2. **TURN FRONT WHEELS TO FACE STRAIGHT AHEAD**
3. **REMOVE FRONT WHEEL LH**

4. **REMOVE HORN BUTTON ASSEMBLY**

   Refer to **REMOVAL** .

5. **REMOVE STEERING WHEEL ASSEMBLY (for 3 Spoke)** . See step 3.
6. **REMOVE STEERING WHEEL ASSEMBLY (for 4 Spoke)** . See step 3.
7. **REMOVE LOWER NO. 1 INSTRUMENT PANEL AIRBAG ASSEMBLY**

   Refer to **REMOVAL** .

8. **REMOVE LOWER STEERING COLUMN COVER**
   a. Remove the 2 screws.

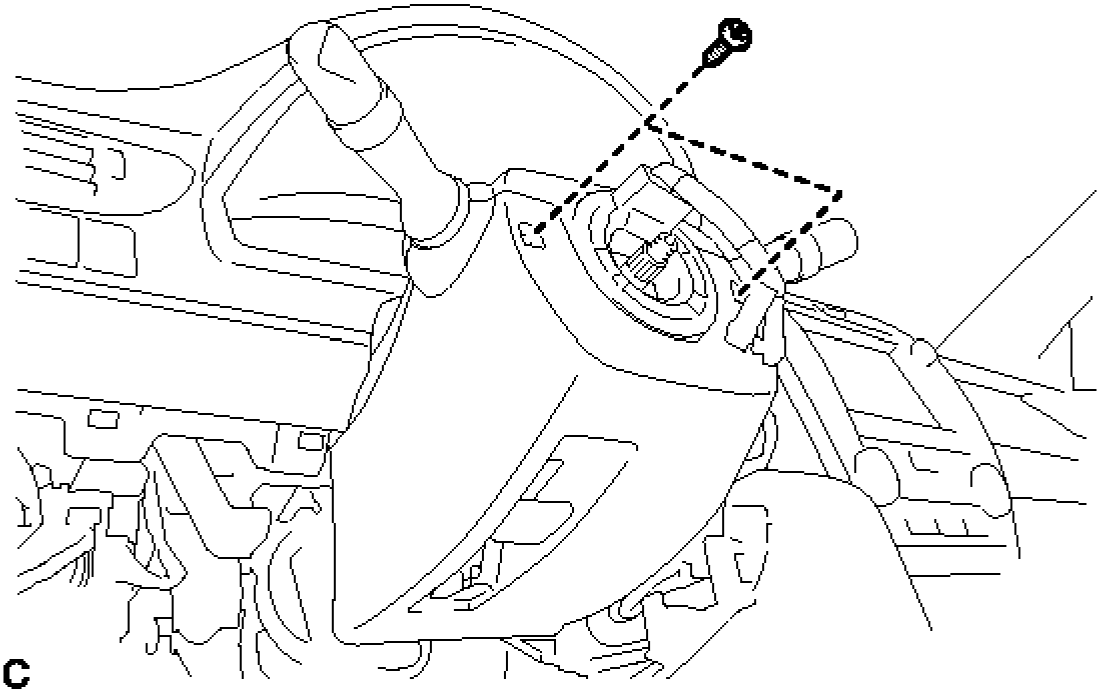

Fig. 15: Locating Lower Steering Column Cover Fasteners
Courtesy of TOYOTA MOTOR SALES, U.S.A., INC.

   b. Push the right and left sides of the lower steering column cover, and disengage the 2 claws.

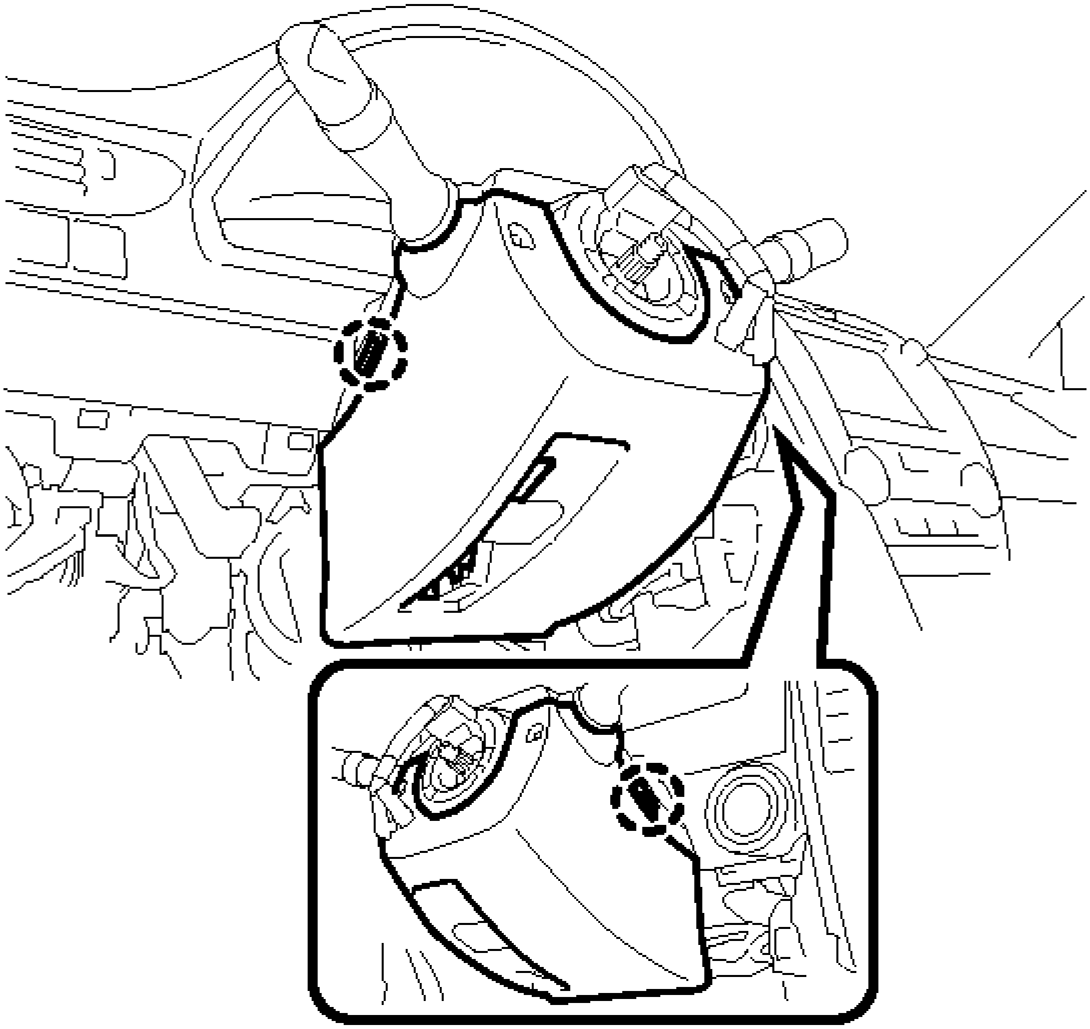

Fig. 16: Locating Lower Steering Column Cover Claws
Courtesy of TOYOTA MOTOR SALES, U.S.A., INC.

c. Insert a finger into the opening of the tilt lever of the lower steering column cover to disengage the claw and remove the lower steering column cover.

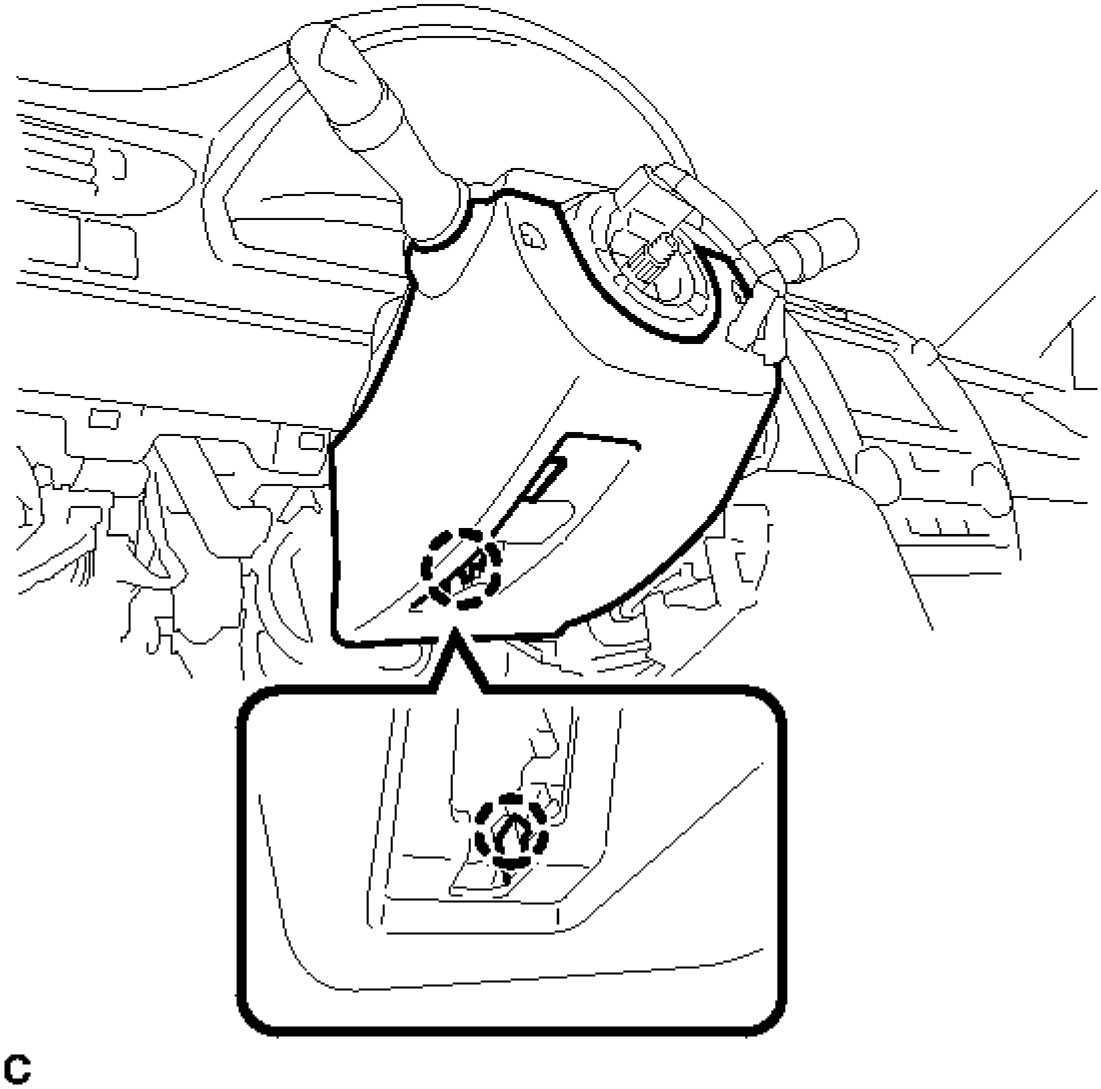

Fig. 17: Locating Lower Steering Column Cover Claw
Courtesy of TOYOTA MOTOR SALES, U.S.A., INC.

9. **REMOVE UPPER STEERING COLUMN COVER**
    a. Disengage the 4 clips and 2 guides from the upper steering column cover.

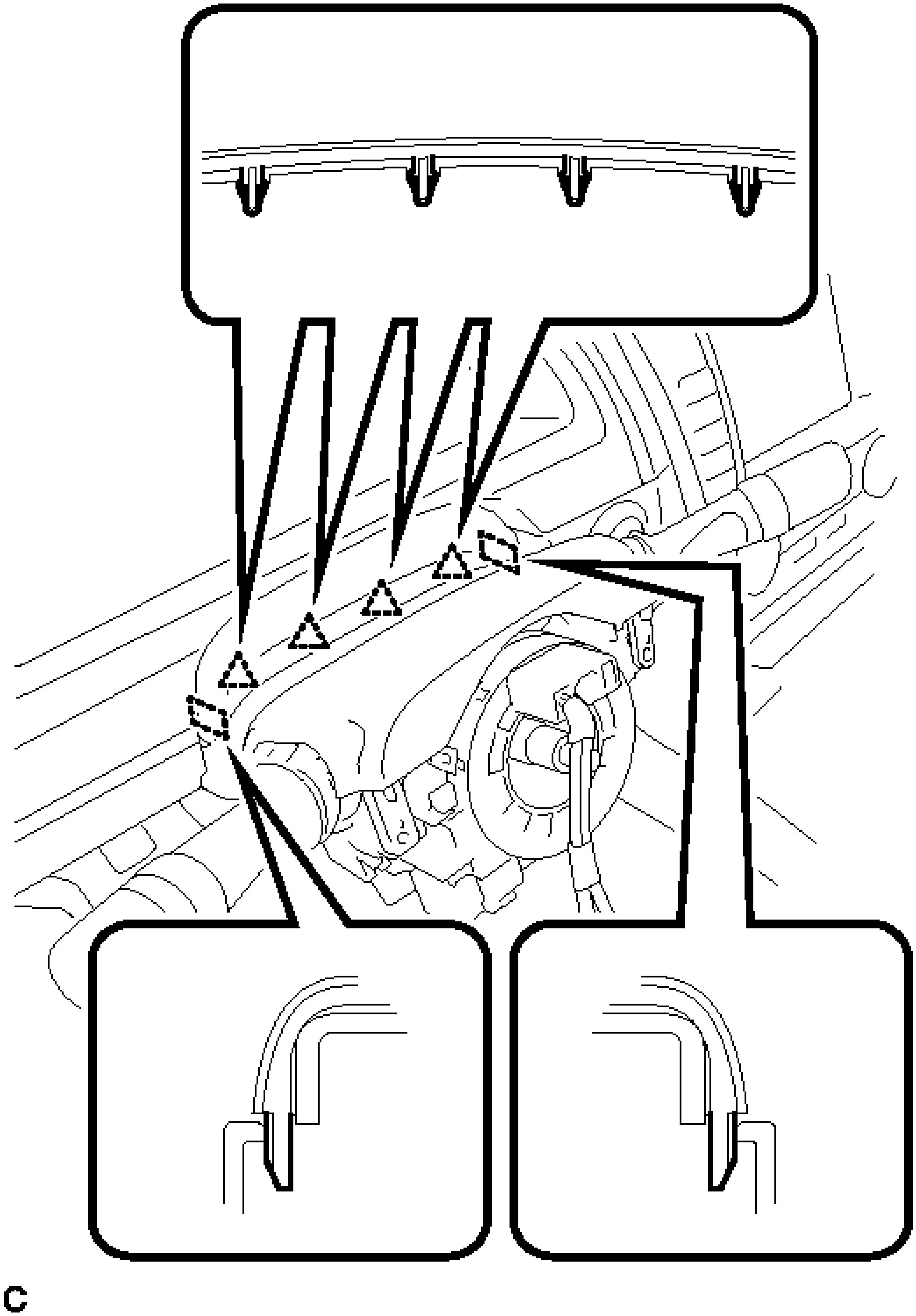

Fig. 18: Locating Upper Steering Column Cover Clips And Guides
Courtesy of TOYOTA MOTOR SALES, U.S.A., INC.

b. Disengage the 2 claws to remove the upper steering column cover.

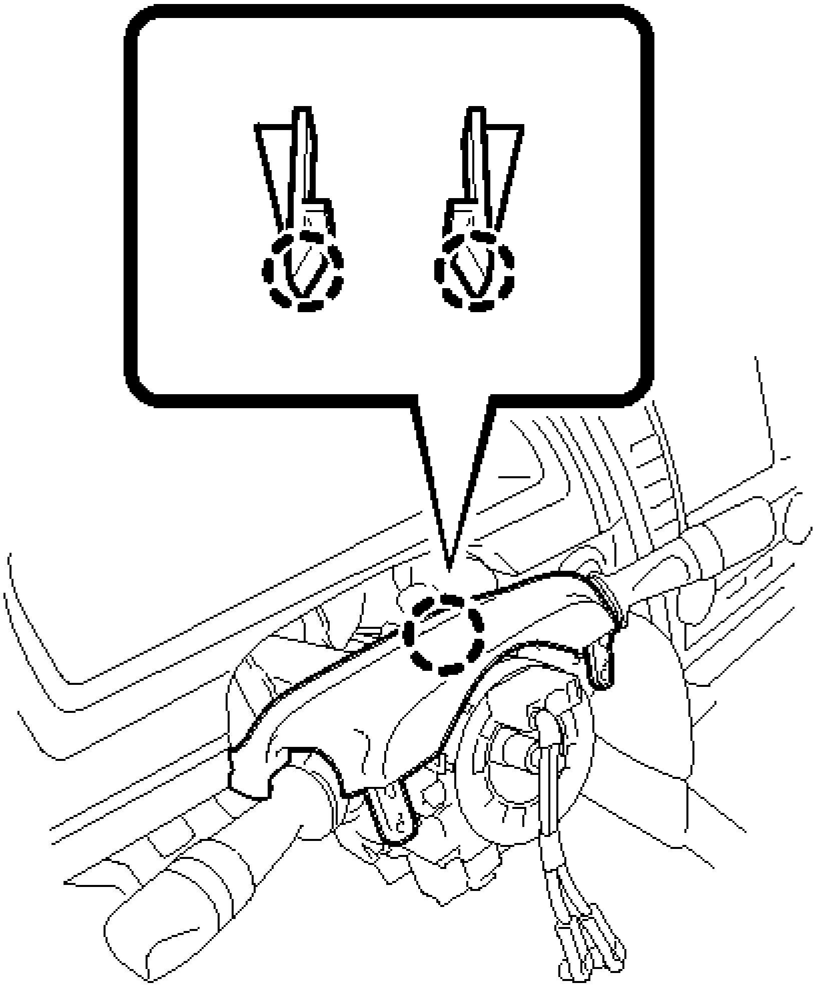

C

Fig. 19: Locating Upper Steering Column Cover Claws
Courtesy of TOYOTA MOTOR SALES, U.S.A., INC.

10. **REMOVE TURN SIGNAL SWITCH ASSEMBLY WITH SPIRAL CABLE SUB-ASSEMBLY**
    1. Disconnect the connectors from the turn signal switch assembly with spiral cable sub-assembly.
    2. Disengage the 3 claws to remove the turn signal switch assembly with spiral cable sub-assembly from the steering post assembly.

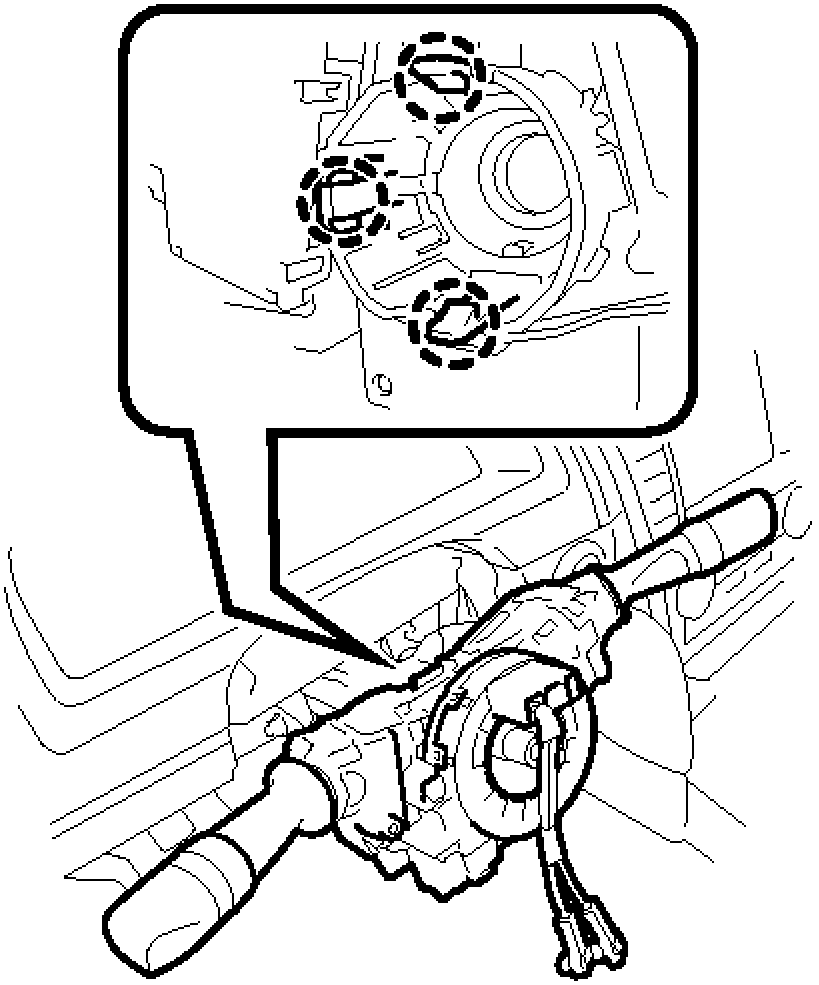

C

Fig. 20: Locating Turn Signal Switch Assembly Claws
Courtesy of TOYOTA MOTOR SALES, U.S.A., INC.

NOTE:

- **Do not replace the spiral cable with the battery connected and the ignition switch ON.**
- **Do not rotate the spiral cable with the battery connected and the ignition switch ON.**
- **Ensure that the steering wheel is installed and aligned straight when inspecting the steering sensor.**

11. **SEPARATE STEERING INTERMEDIATE SHAFT ASSEMBLY**
    a. Using a screwdriver, loosen the clamp as shown in the illustration.

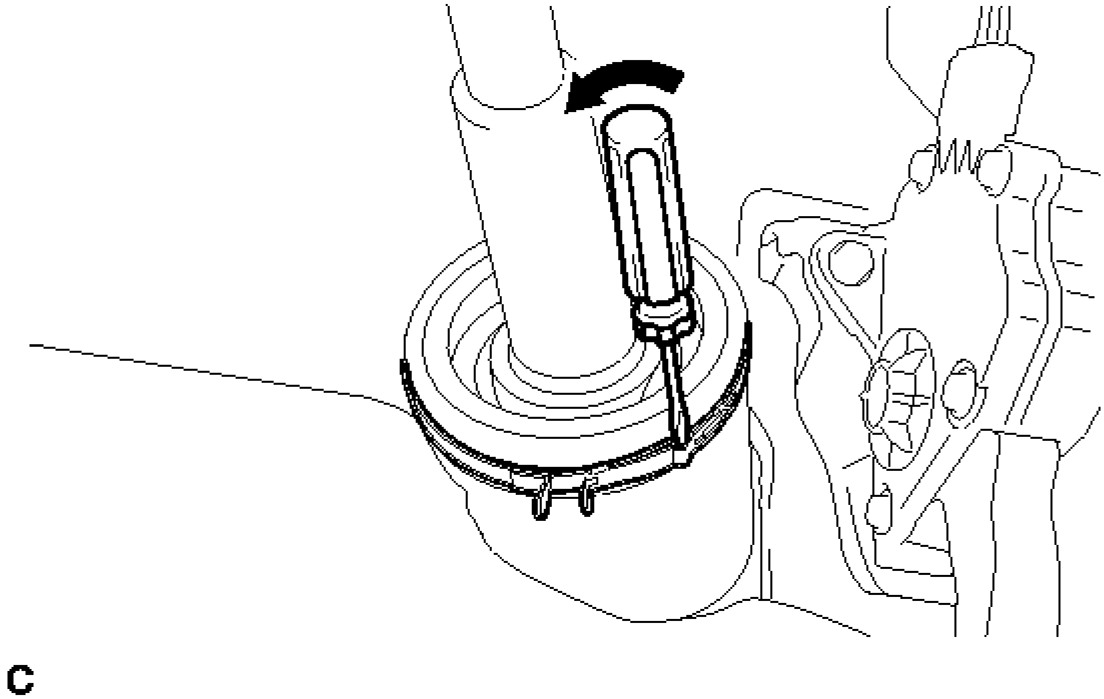

Fig. 21: Loosening Steering Intermediate Shaft Assembly Clamp
Courtesy of TOYOTA MOTOR SALES, U.S.A., INC.

b. Put matchmarks on the steering intermediate shaft assembly and the steering link assembly.

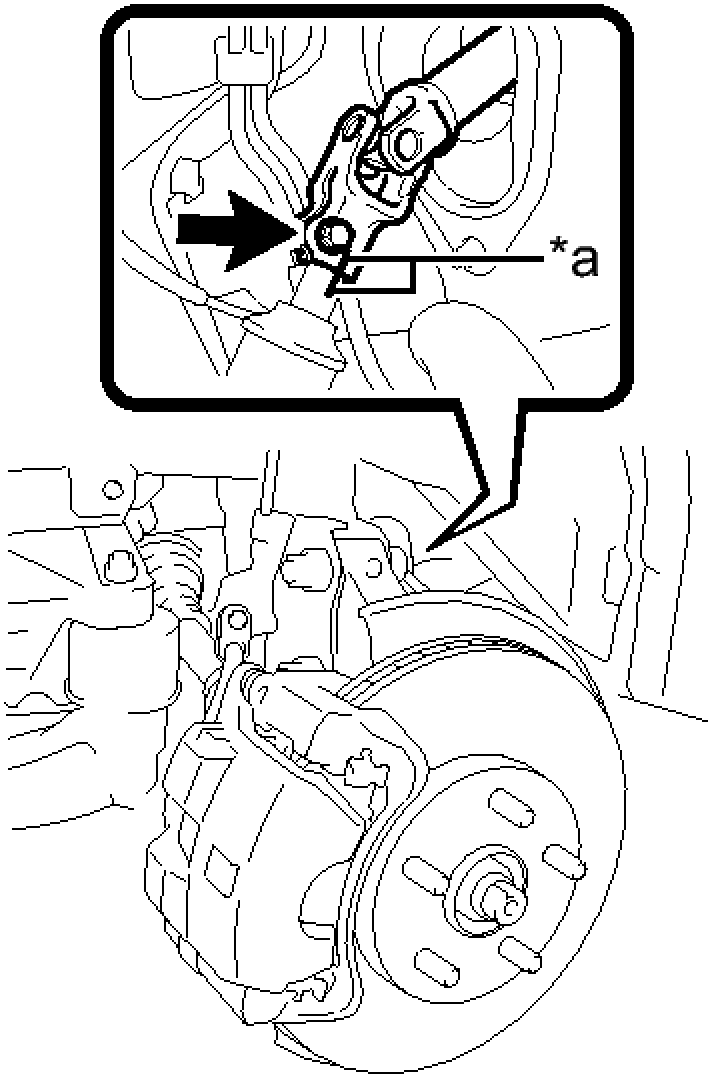

Fig. 22: Identifying Steering Intermediate Shaft Assembly Matchmark And Bolt
Courtesy of TOYOTA MOTOR SALES, U.S.A., INC.

TEXT IN ILLUSTRATION

*a	Matchmark

c. Remove the bolt and separate the steering intermediate shaft assembly from the steering link assembly.

12. **REMOVE NO. 2 AIR DUCT SUB-ASSEMBLY**
    a. Disengage the 2 claws and guide to remove the No. 2 air duct sub-assembly.

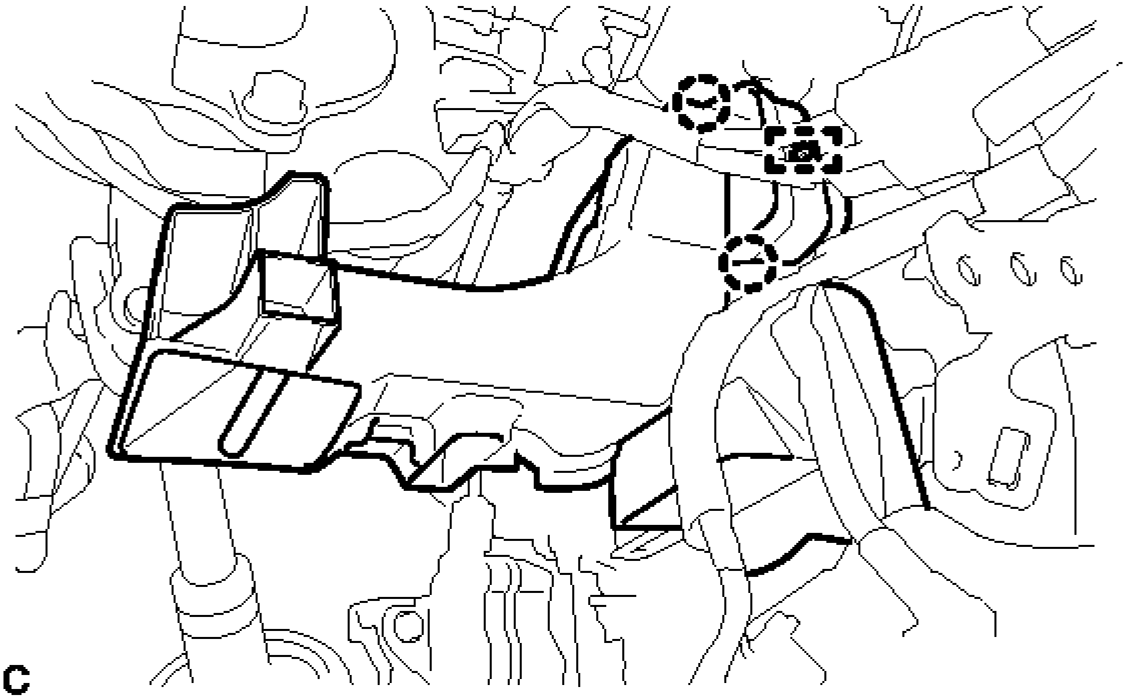

Fig. 23: Locating No. 2 Air Duct Sub-Assembly Claws And Guide
Courtesy of TOYOTA MOTOR SALES, U.S.A., INC.

13. **REMOVE STEERING POST ASSEMBLY**
    a. Disconnect the connectors and disengage the wire harness clamps from the steering post assembly.
    b. Disconnect the 2 connectors.

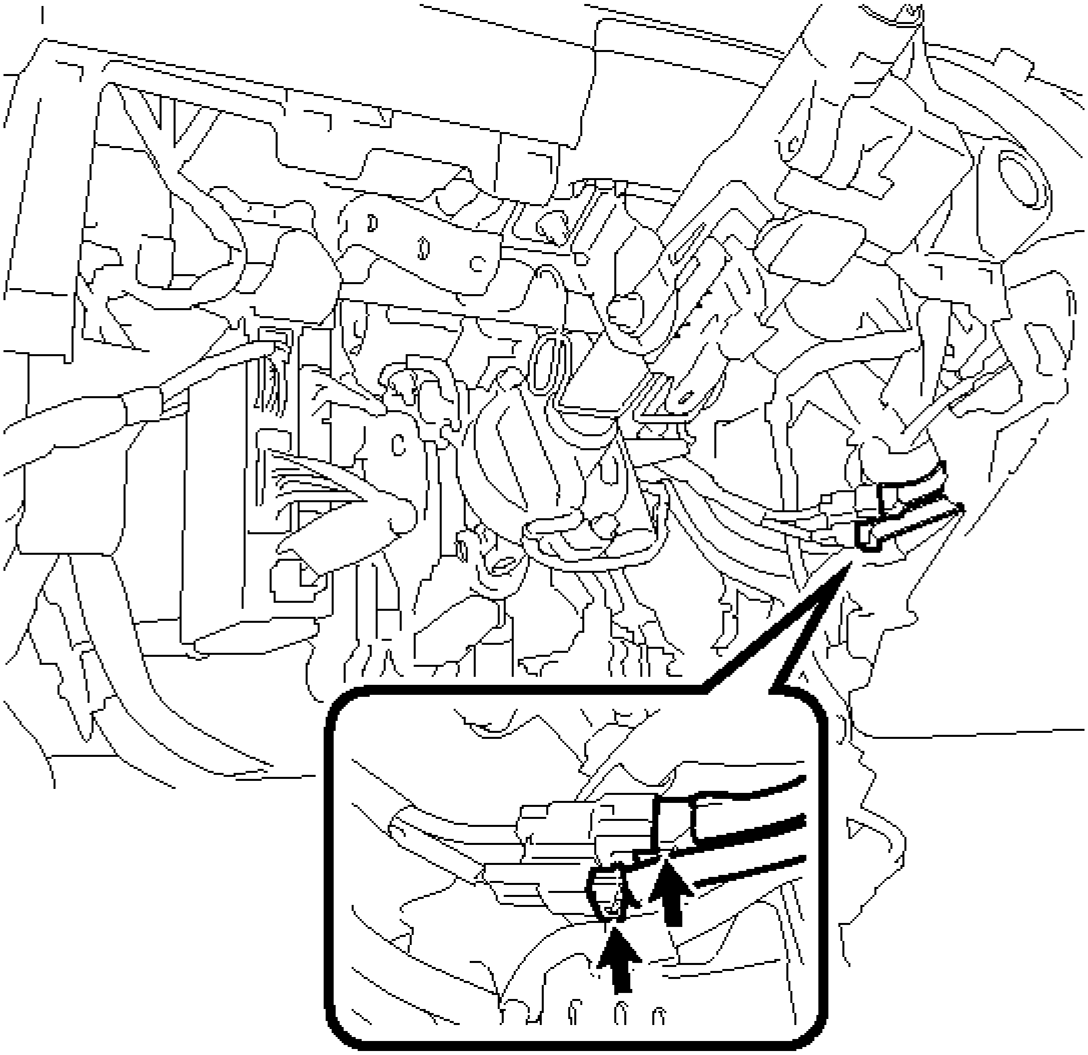

Fig. 24: Locating Steering Post Assembly Connectors
Courtesy of TOYOTA MOTOR SALES, U.S.A., INC.

c. Disengage the clamp.

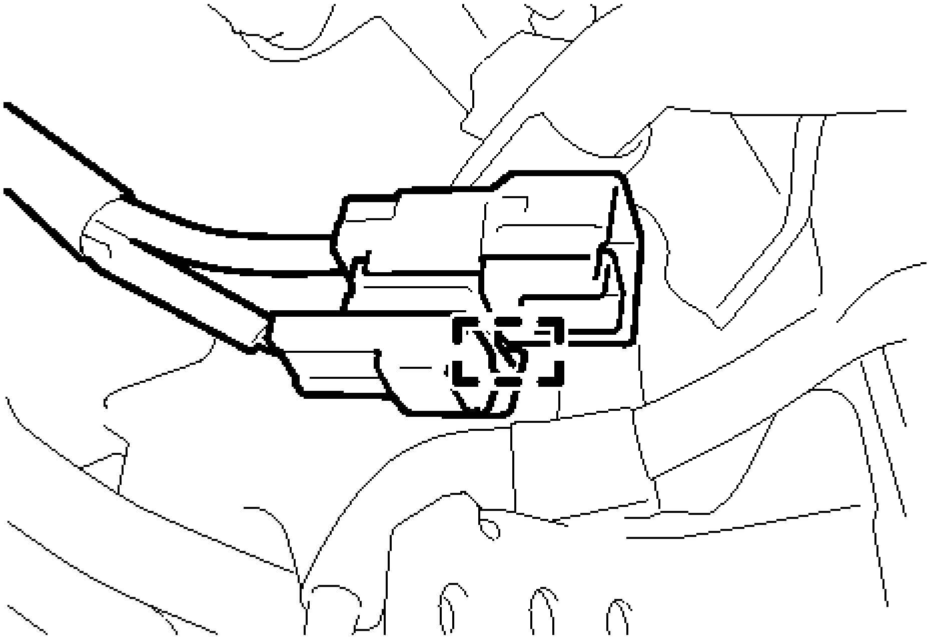

C

Fig. 25: Locating Steering Post Assembly Connector Clamp
Courtesy of TOYOTA MOTOR SALES, U.S.A., INC.

d. Remove the bolt to separate the ground wire.

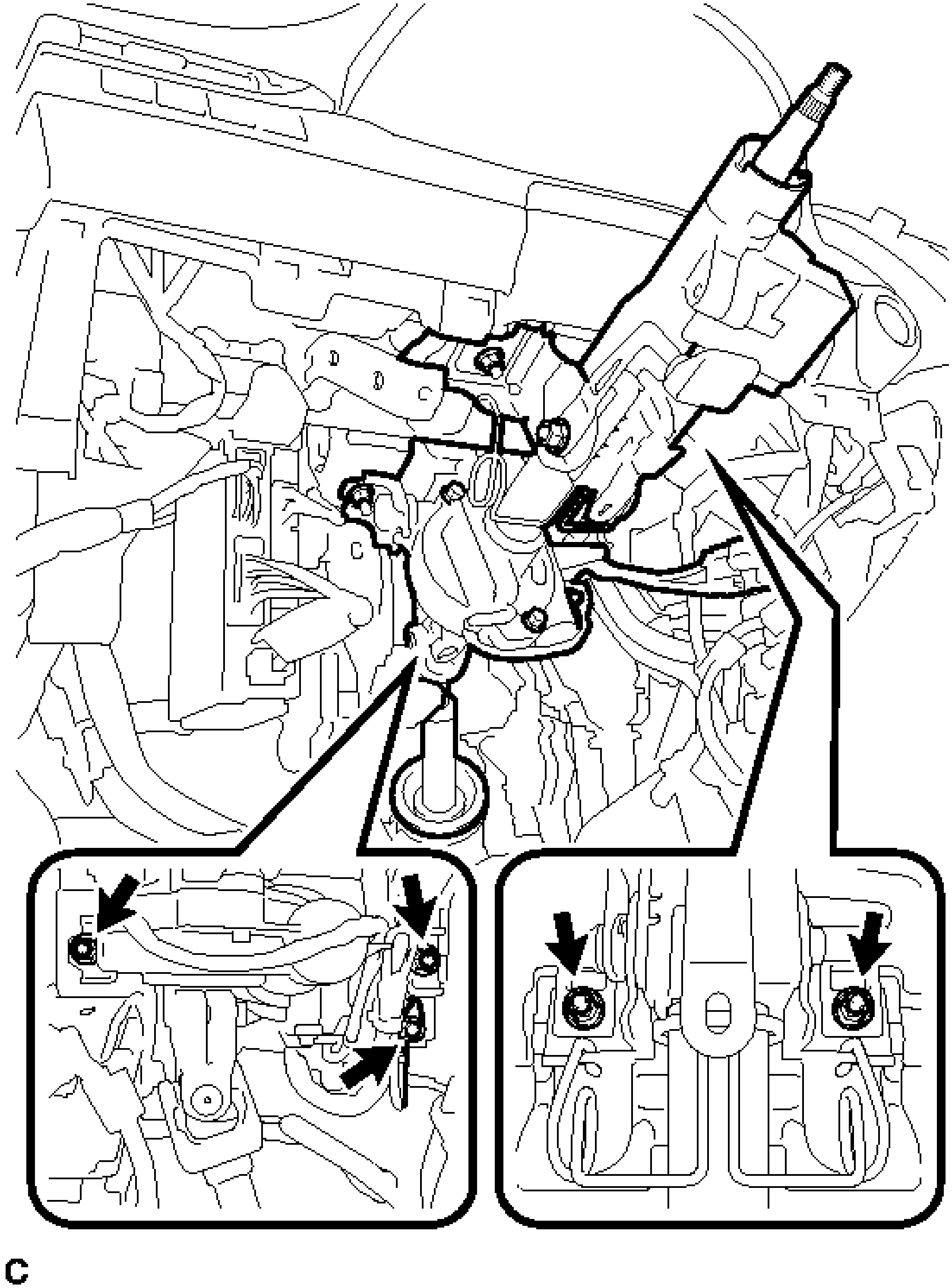

Fig. 26: Locating Steering Post Assembly Fasteners
Courtesy of TOYOTA MOTOR SALES, U.S.A., INC.

e. Remove the 4 nuts and the steering post assembly.

14. **REMOVE STEERING INTERMEDIATE SHAFT ASSEMBLY**

a. Remove the bolt and slide the steering intermediate shaft assembly.

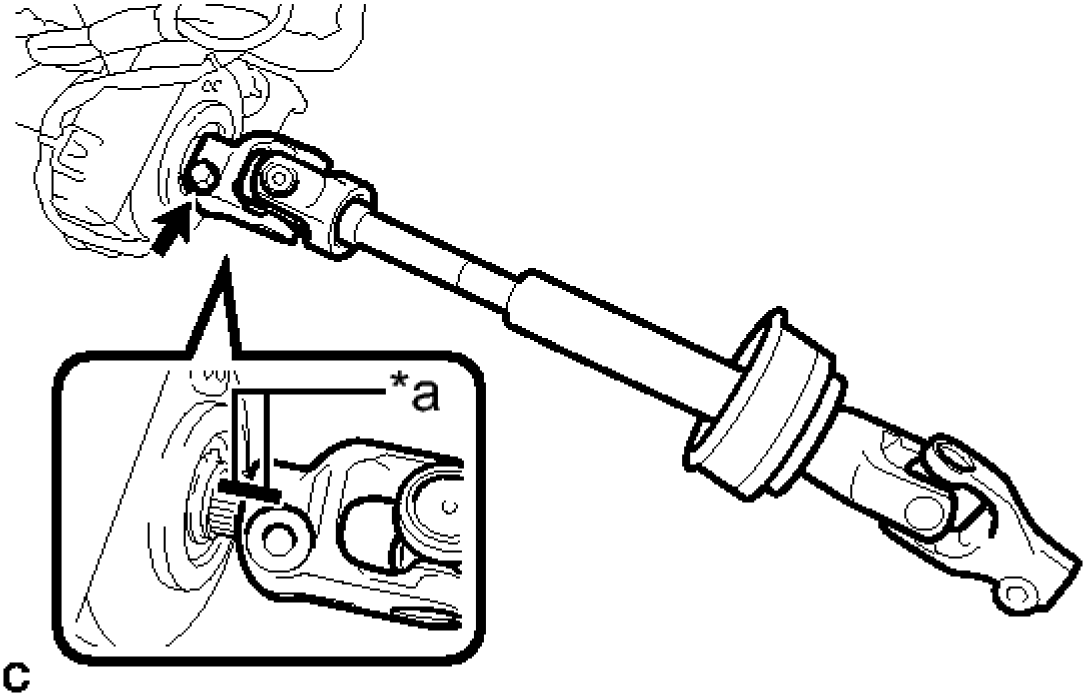

Fig. 27: Identifying Steering Intermediate Shaft Assembly Matchmarks And Bolt
Courtesy of TOYOTA MOTOR SALES, U.S.A., INC.

TEXT IN ILLUSTRATION

*a	Matchmark

NOTE: **Do not separate the steering intermediate shaft assembly from the steering column assembly.**

b. Put matchmarks on the steering intermediate shaft assembly and the steering post assembly.
c. Remove the steering intermediate shaft assembly from the steering column assembly.

DISASSEMBLY

DISASSEMBLY

NOTE:

- **When using a vise, do not overtighten it.**
- **Do not drop the power steering motor assembly, strike it with tools or subject it to impacts.**
- **If the power steering motor assembly is subjected to an impact, replace it with a new one.**
- **Do not pull the wire harness of the electric power steering column sub-assembly.**

- **Do not allow any moisture to come into contact with the power steering motor assembly.**
- **Do not loosen any bolts not mentioned in the procedure.**

1. **REMOVE STEERING COLUMN UPPER WITH SWITCH BRACKET ASSEMBLY (w/o Smart Key System)**
    1. Using a center punch, mark the center of the 2 tapered-head bolts.
    2. Using a 3 to 4 mm (0.118 to 0.157 in.) diameter drill bit, drill a hole in each tapered-head bolt.
    3. Using a screw extractor, remove each tapered-head bolt, and then remove the steering column upper with switch bracket assembly from the steering column assembly.

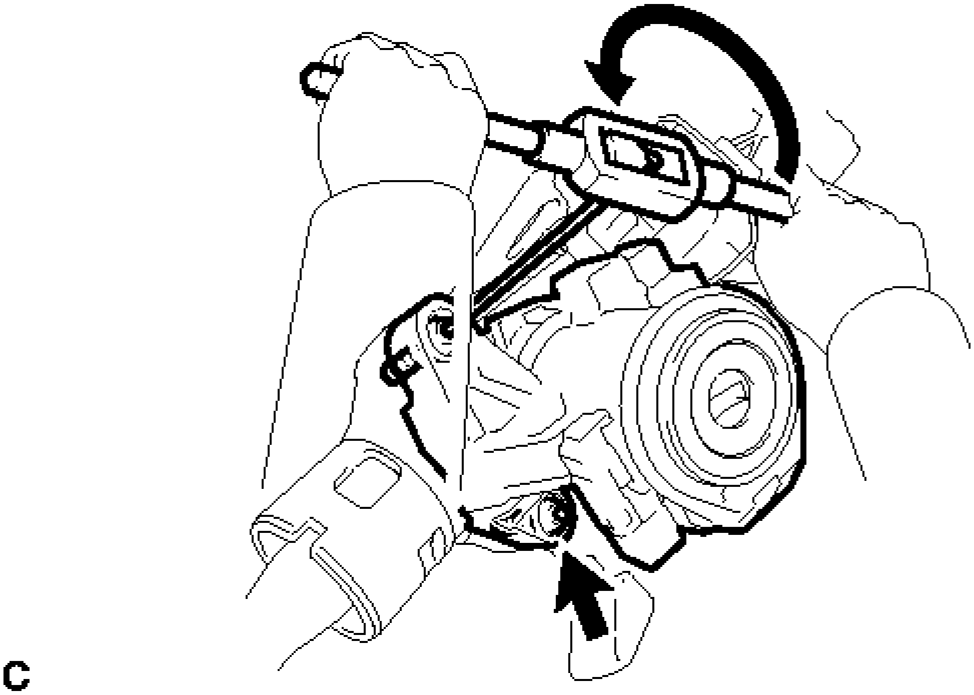

Fig. 28: Removing Steering Column Upper With Switch Bracket Assembly (w/o Smart Key System)
Courtesy of TOYOTA MOTOR SALES, U.S.A., INC.

2. **REMOVE STEERING LOCK ACTUATOR ASSEMBLY (w/ Smart Key System)**
    1. Using a center punch, mark the center of the 2 tapered-head bolts.
    2. Using a 3 to 4 mm (0.118 to 0.157 in.) diameter drill bit, drill a hole in each tapered-head bolt.
    3. Using a screw extractor, remove each tapered-head bolt, and then remove the steering lock actuator assembly from the steering column assembly.

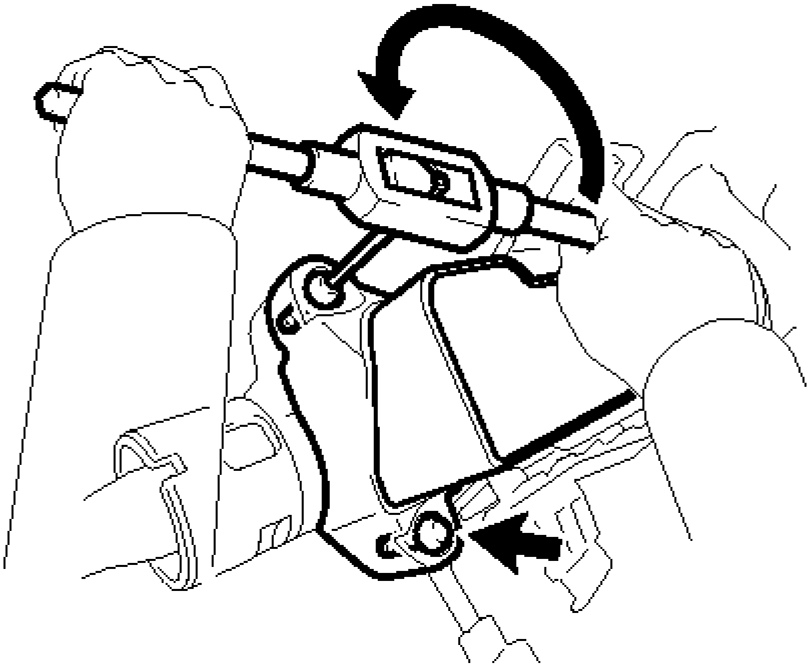

Fig. 29: Removing Steering Lock Actuator Assembly (w/ Smart Key System)
Courtesy of TOYOTA MOTOR SALES, U.S.A., INC.

3. **REMOVE ECU WIRE SUB-ASSEMBLY (for 2AR-FE without Wireless Door Lock)**
    a. Secure the steering column assembly in a vice using aluminum plates as shown in the illustration.

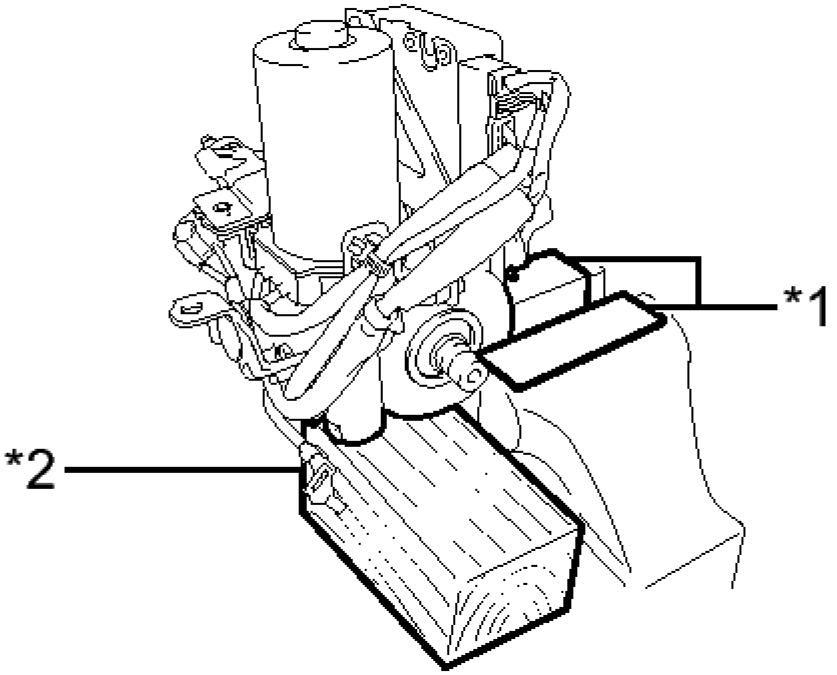

Fig. 30: Identifying ECU Wire Sub-Assembly (For 2AR-FE Without Wireless Door Lock)

Secured In Vice
Courtesy of TOYOTA MOTOR SALES, U.S.A., INC.

TEXT IN ILLUSTRATION

*1	Aluminum Plate
*2	Wooden Block

NOTE:

- **Do not overtighten the vice, as the steering column assembly may become deformed.**
- **Secure the power steering motor assembly so that it is directly upright.**
- **Support the steering column assembly with a wooden block or similar item to ensure that it does not fall.**

b. Disconnect the 2 connectors from the power steering ECU assembly.

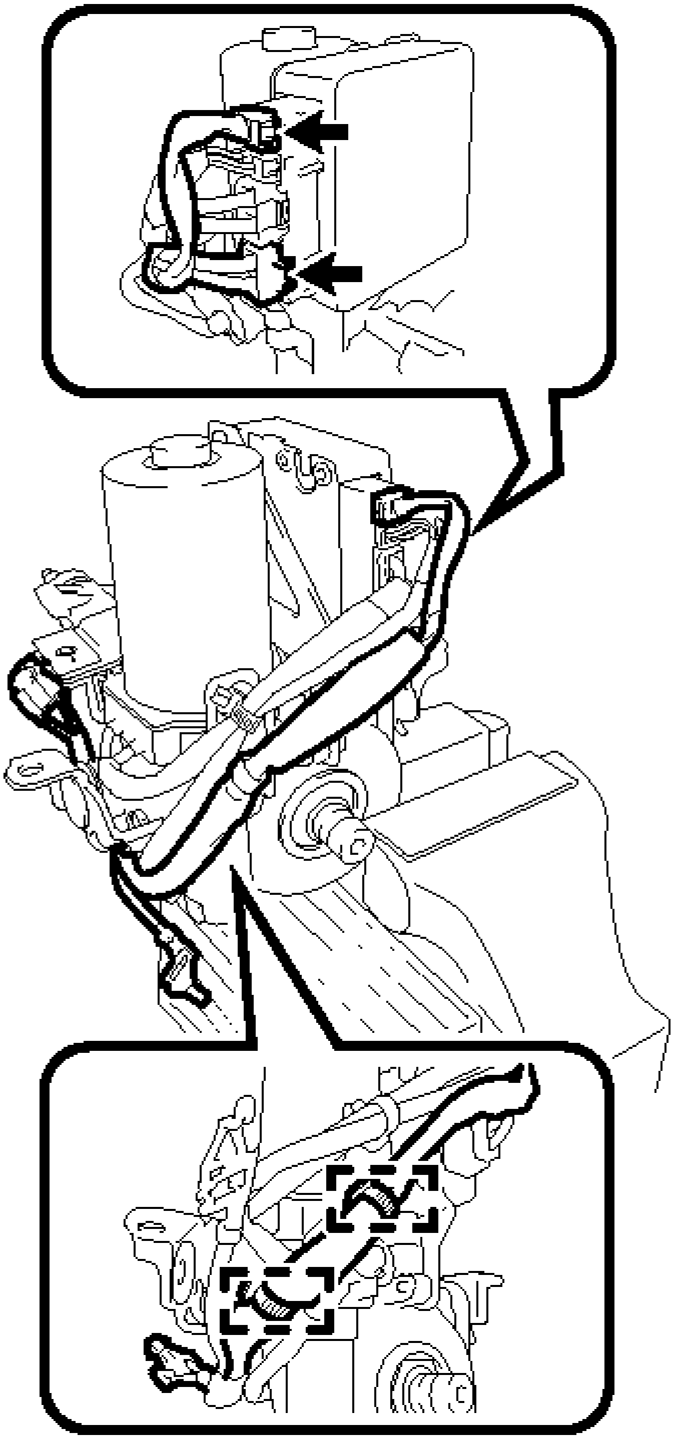

C

Fig. 31: Locating ECU Wire Sub-Assembly (For 2AR-FE Without Wireless Door Lock) Connectors And Clamps
Courtesy of TOYOTA MOTOR SALES, U.S.A., INC.

c. Disengage the 2 wire harness clamps to remove the ECU wire sub-assembly.

4. **REMOVE POWER STEERING MOTOR ASSEMBLY (for 2AR-FE without Wireless Door Lock)**
    a. Disconnect the 2 connectors from the power steering ECU assembly.

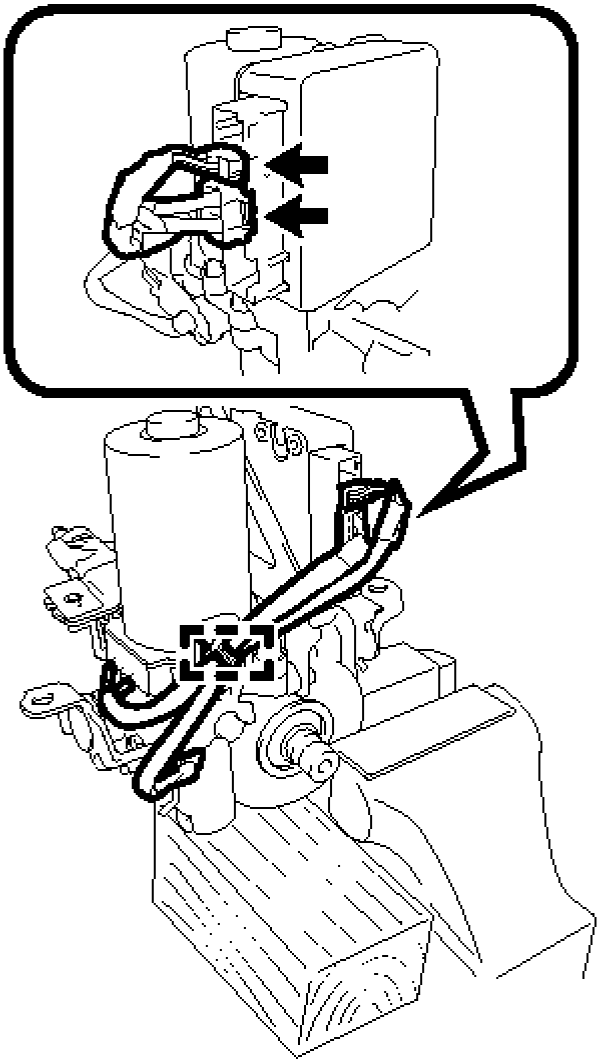

C

Fig. 32: Locating Power Steering Motor Assembly (For 2AR-FE Without Wireless Door Lock) Connectors And Clamp
Courtesy of TOYOTA MOTOR SALES, U.S.A., INC.

    b. Disengage the wire harness clamp from the electric power steering column sub-assembly.
    c. Remove the wire harness clamp.

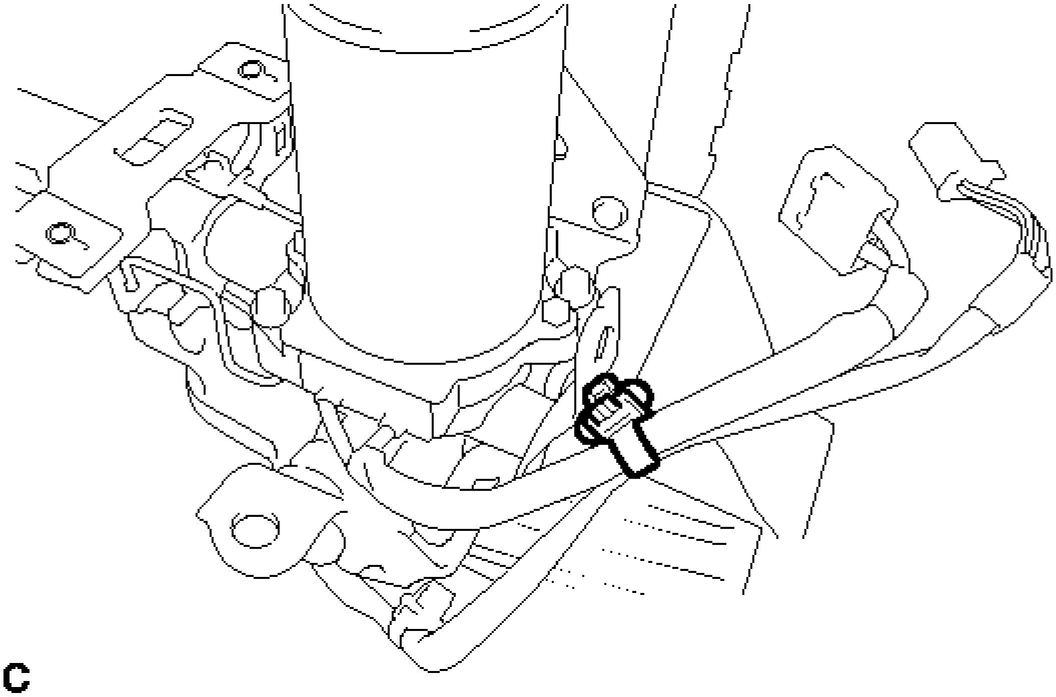

Fig. 33: Locating Power Steering Motor Assembly (For 2AR-FE Without Wireless Door Lock) Clamp
Courtesy of TOYOTA MOTOR SALES, U.S.A., INC.

d. Remove the 2 bolts and power steering motor assembly from the electric power steering column sub-assembly.

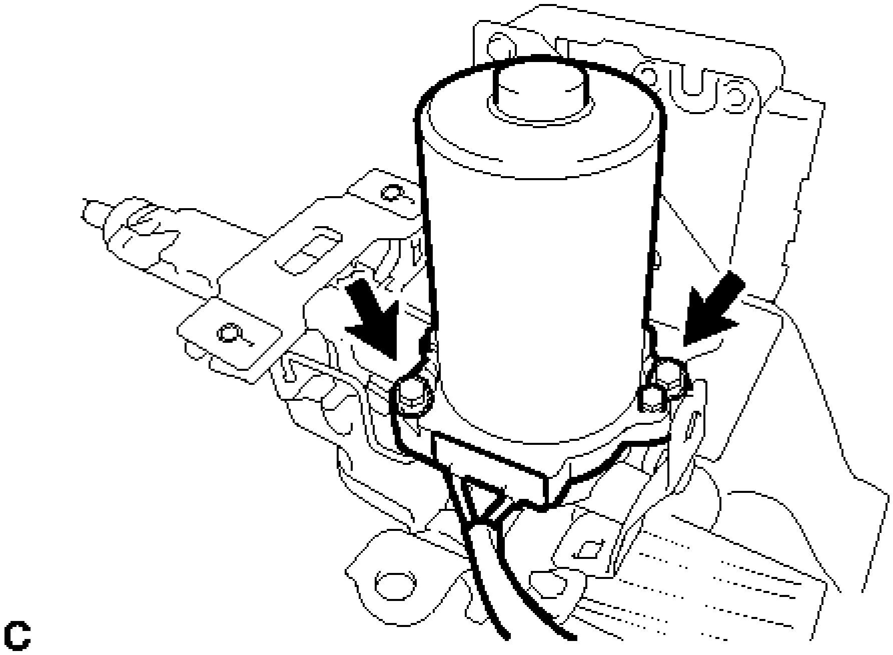

Fig. 34: Locating Power Steering Motor Assembly (For 2AR-FE Without Wireless Door Lock) Fasteners
Courtesy of TOYOTA MOTOR SALES, U.S.A., INC.

5. **REMOVE POWER STEERING ECU ASSEMBLY (for 2AR-FE without Wireless Door Lock)** . Refer to **REMOVAL - Step 2** .
6. **REMOVE POWER STEERING ECU PROTECTOR (for 2AR-FE with Wireless Door Lock)**
   a. Remove the power steering ECU protector from the power steering ECU with motor assembly.

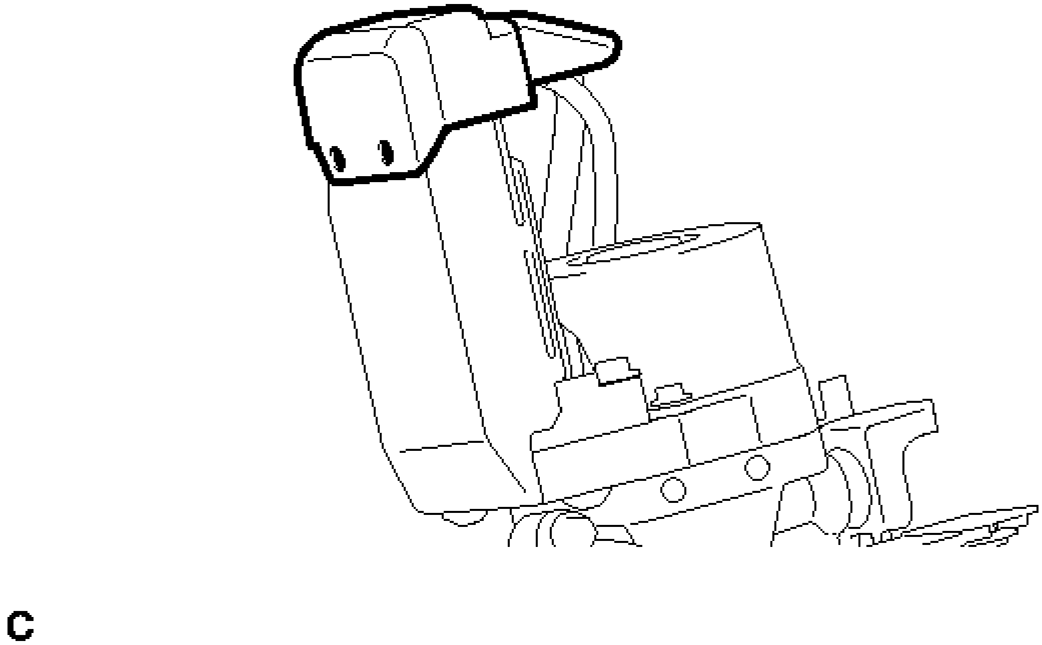

Fig. 35: Identifying Power Steering ECU Protector (For 2AR-FE With Wireless Door Lock)
Courtesy of TOYOTA MOTOR SALES, U.S.A., INC.

7. **REMOVE ECU WIRE SUB-ASSEMBLY (for 2AR-FE with Wireless Door Lock)**
   a. Disconnect the 2 connectors from the power steering ECU with motor assembly.

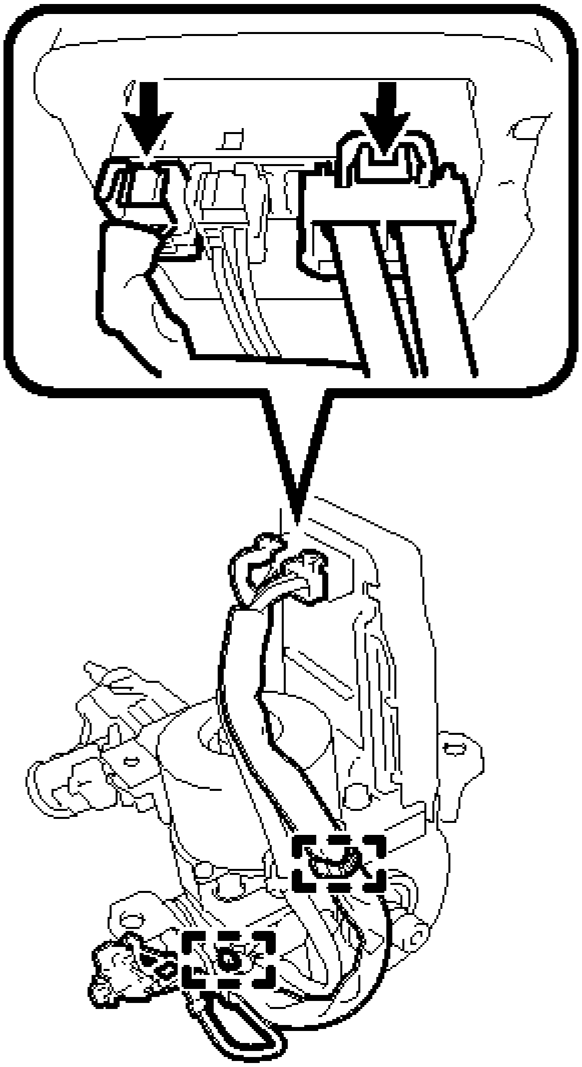

Fig. 36: Locating ECU Wire Sub-Assembly (For 2AR-FE With Wireless Door Lock) Connectors And Clamps
Courtesy of TOYOTA MOTOR SALES, U.S.A., INC.

   b. Disengage the 2 wire harness clamps to remove the ECU wire sub-assembly.

8. **REMOVE POWER STEERING ECU WITH MOTOR ASSEMBLY (for 2AR-FE with Wireless Door Lock)**
   a. Secure the steering column assembly in a vice using aluminum plates and wooden block as shown in the illustration.

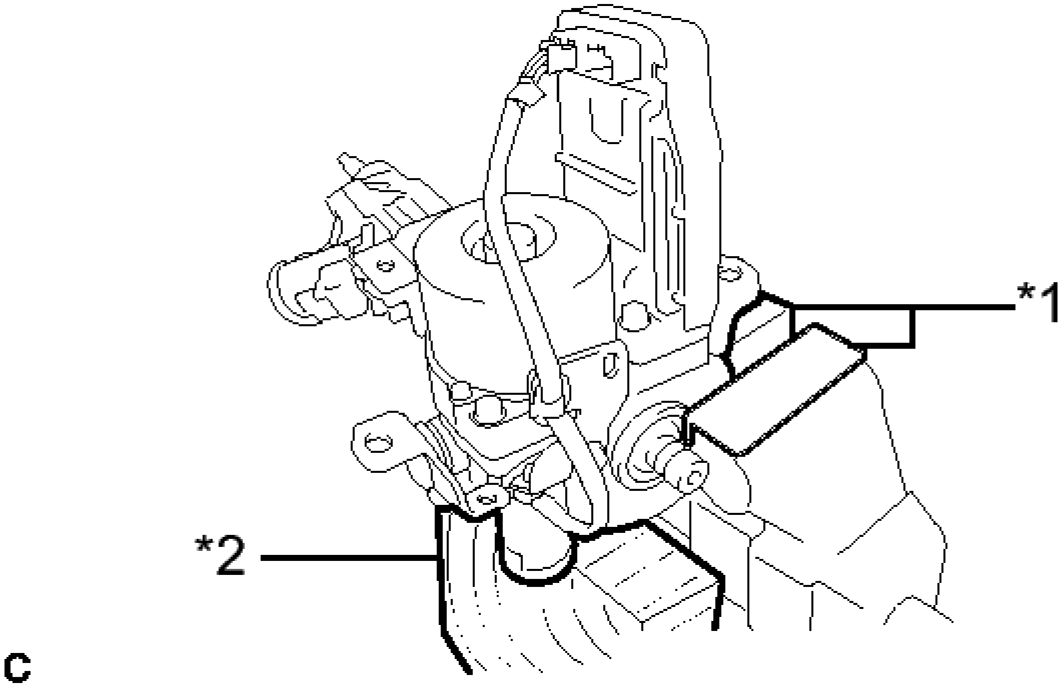

Fig. 37: Identifying Power Steering ECU With Motor Assembly (For 2AR-FE With Wireless Door Lock) Secured In Vice
Courtesy of TOYOTA MOTOR SALES, U.S.A., INC.

TEXT IN ILLUSTRATION

*1	Aluminum Plate
*2	Wooden Block

NOTE:

- **Do not overtighten the vice, as the steering column assembly may become deformed.**
- **Secure the power steering motor assembly so that it is directly upright.**
- **Support the steering column assembly with a wooden block or similar item to ensure that it does not fall.**

b. Disconnect the connector from the power steering ECU with motor assembly.

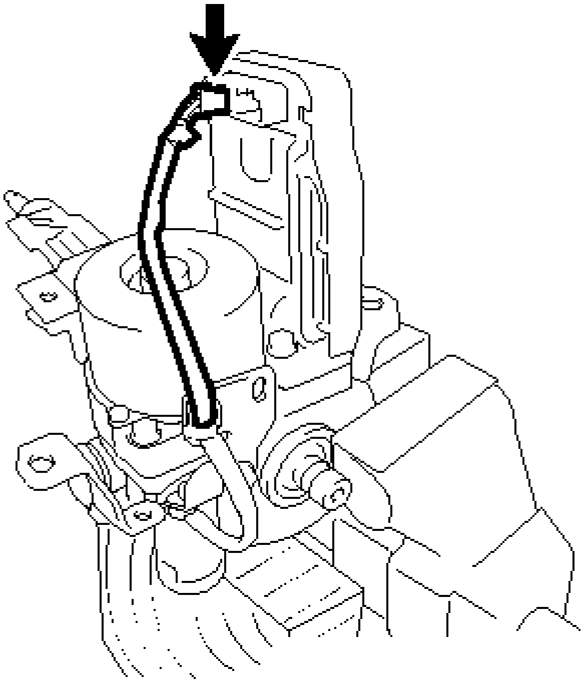

Fig. 38: Locating Power Steering ECU With Motor Assembly (For 2AR-FE With Wireless Door Lock) Connector
Courtesy of TOYOTA MOTOR SALES, U.S.A., INC.

c. Remove the 3 bolts and power steering ECU with motor assembly from the electric power steering column sub-assembly.

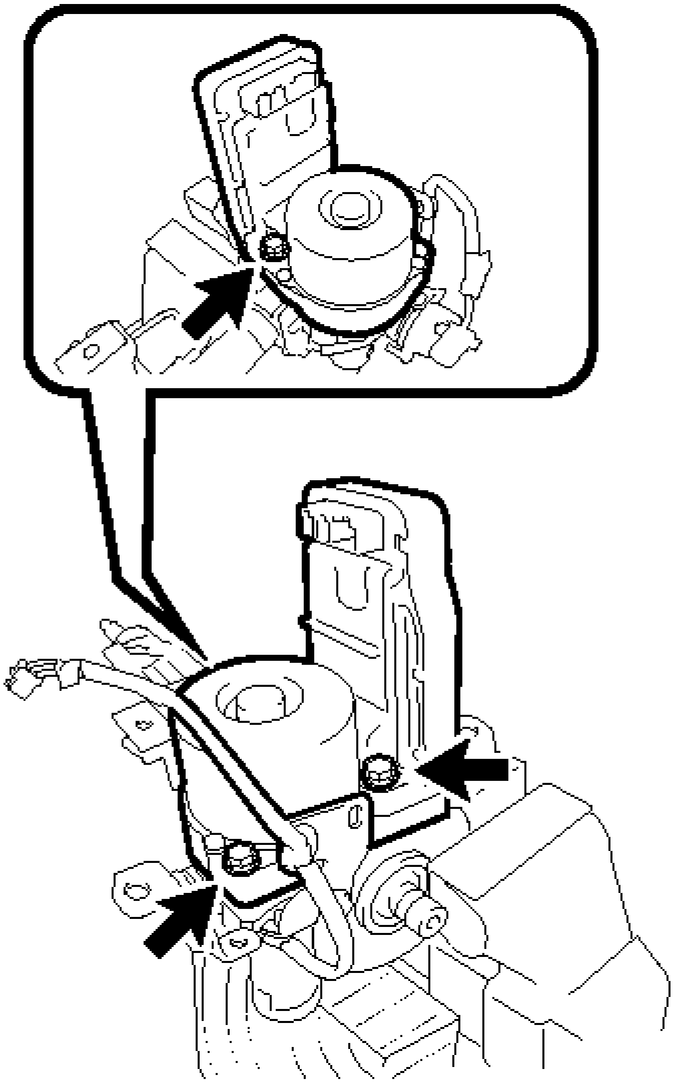

Fig. 39: Locating Power Steering ECU With Motor Assembly (For 2AR-FE With Wireless Door Lock) Fasteners
Courtesy of TOYOTA MOTOR SALES, U.S.A., INC.

d. Remove the electric power steering motor shaft spacer from the electric power steering column sub-assembly.

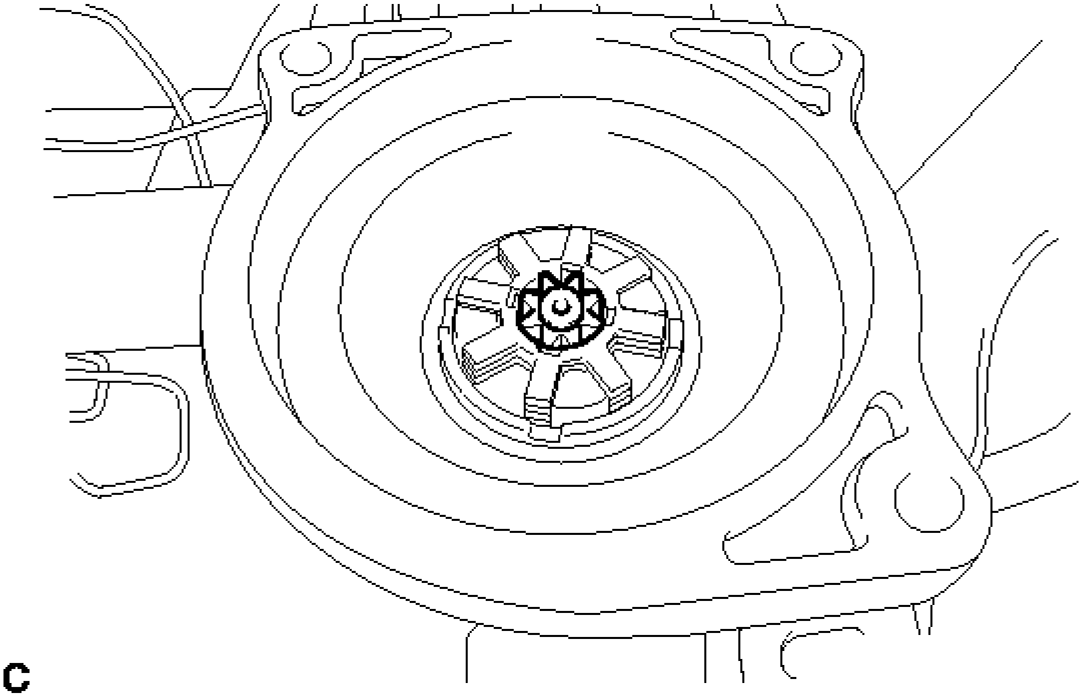

Fig. 40: Identifying Electric Power Steering Motor Shaft Spacer
Courtesy of TOYOTA MOTOR SALES, U.S.A., INC.

e. Remove the electric power steering motor shaft damper from the electric power steering column sub-assembly.

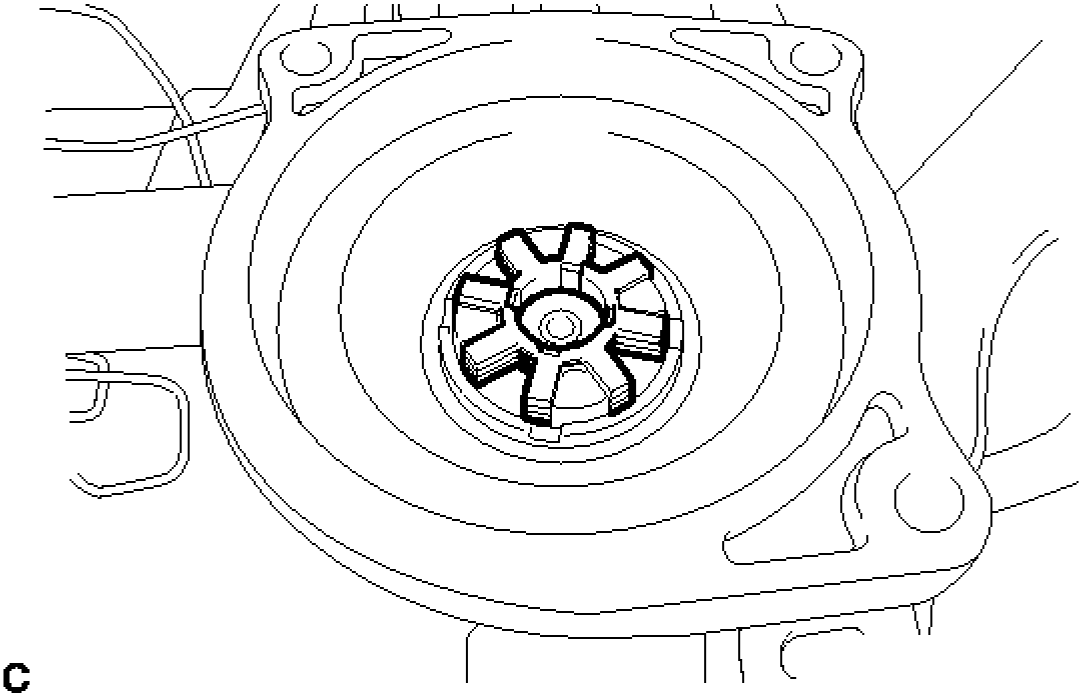

Fig. 41: Identifying Electric Power Steering Motor Shaft Damper

Courtesy of TOYOTA MOTOR SALES, U.S.A., INC.

9. **REMOVE POWER STEERING ECU PROTECTOR (for 2GR-FE)**
    a. Disengage the 2 claws to remove the power steering ECU protector from the power steering ECU with motor assembly.

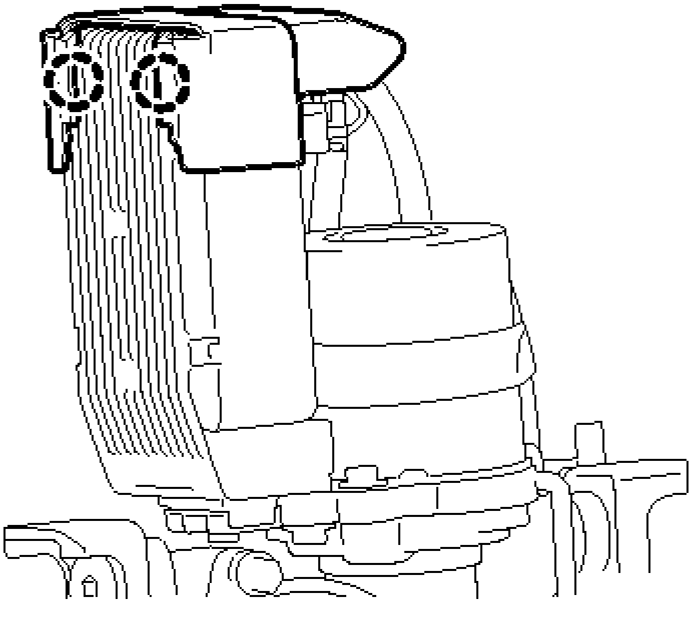

Fig. 42: Locating Power Steering ECU Protector (For 2GR-FE) Claws
Courtesy of TOYOTA MOTOR SALES, U.S.A., INC.

10. **REMOVE ECU WIRE SUB-ASSEMBLY (for 2GR-FE)**
    a. Disconnect the 2 connectors from the power steering ECU with motor assembly.

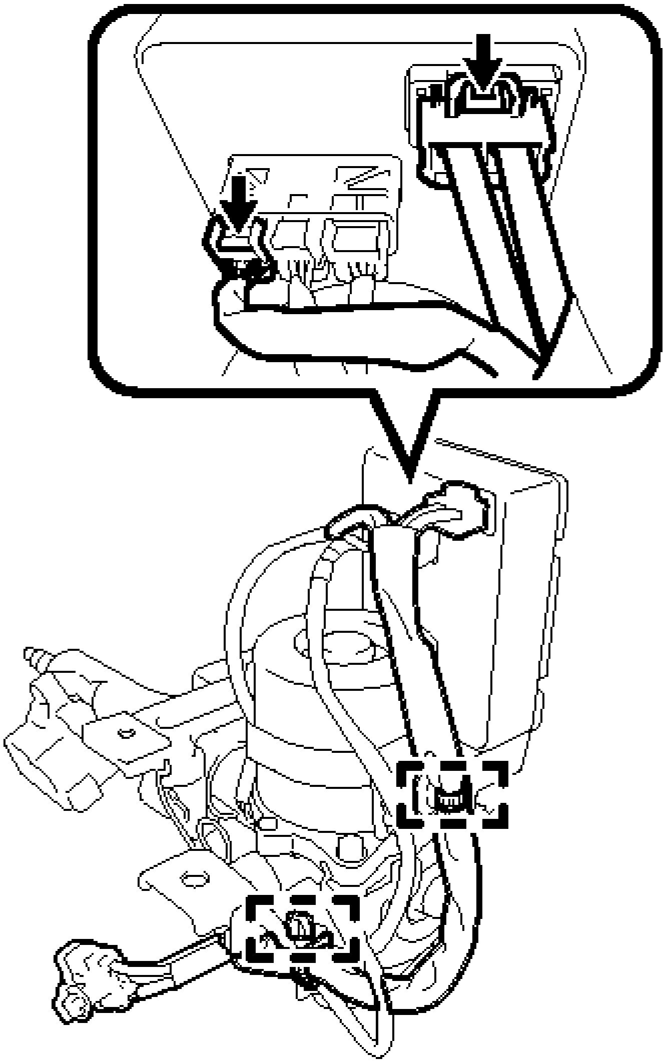

Fig. 43: Identifying ECU Wire Sub-Assembly (For 2GR-FE) Connectors And Clamps
Courtesy of TOYOTA MOTOR SALES, U.S.A., INC.

b. Disengage the 2 wire harness clamps to remove the ECU wire sub-assembly.

11. **REMOVE POWER STEERING ECU WITH MOTOR ASSEMBLY (for 2GR-FE)**

a. Secure the steering column assembly in a vice using aluminum plates as shown in the illustration.

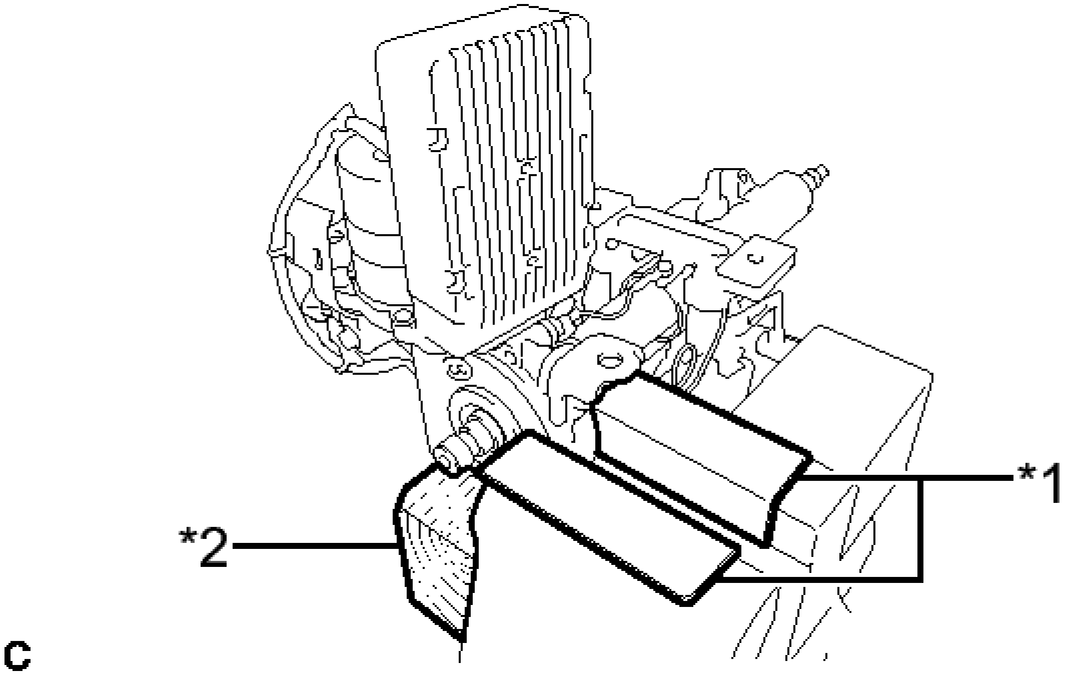

Fig. 44: Identifying Power Steering ECU With Motor Assembly (For 2GR-FE) Secured In Vice
Courtesy of TOYOTA MOTOR SALES, U.S.A., INC.

TEXT IN ILLUSTRATION

*1	Aluminum Plate
*2	Wooden Block

NOTE:

- **Do not overtighten the vice, as the steering column assembly may become deformed.**
- **Secure the power steering motor assembly so that it is directly upright.**
- **Support the steering column assembly with a wooden block or similar item to ensure that it does not fall.**

b. Disconnect the 2 connectors from the power steering ECU with motor assembly.

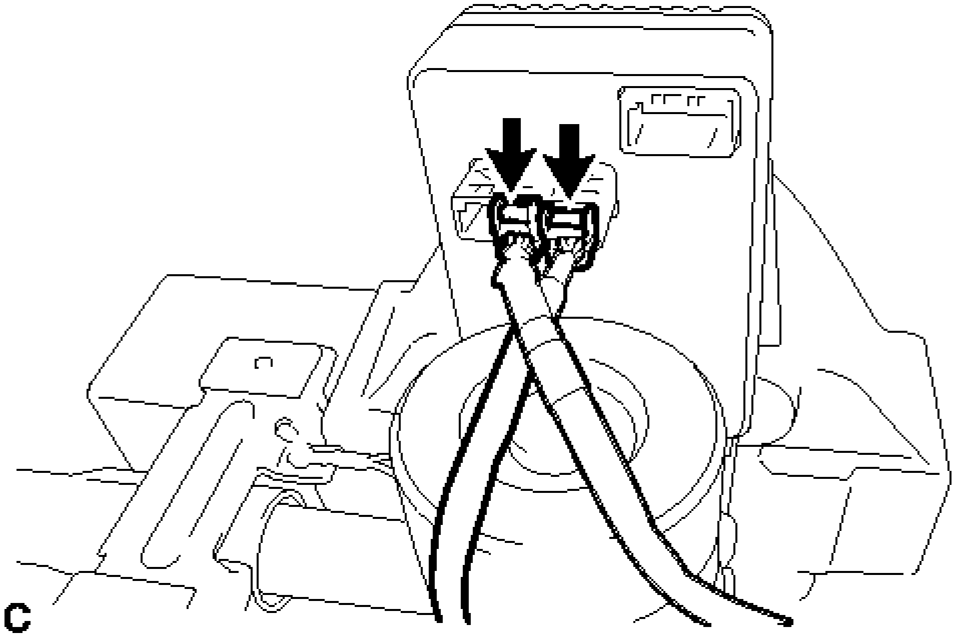

Fig. 45: Locating Power Steering ECU With Motor Assembly (For 2GR-FE) Connectors
Courtesy of TOYOTA MOTOR SALES, U.S.A., INC.

c. Remove the 2 bolts and power steering ECU with motor assembly from the electric power steering column sub-assembly.

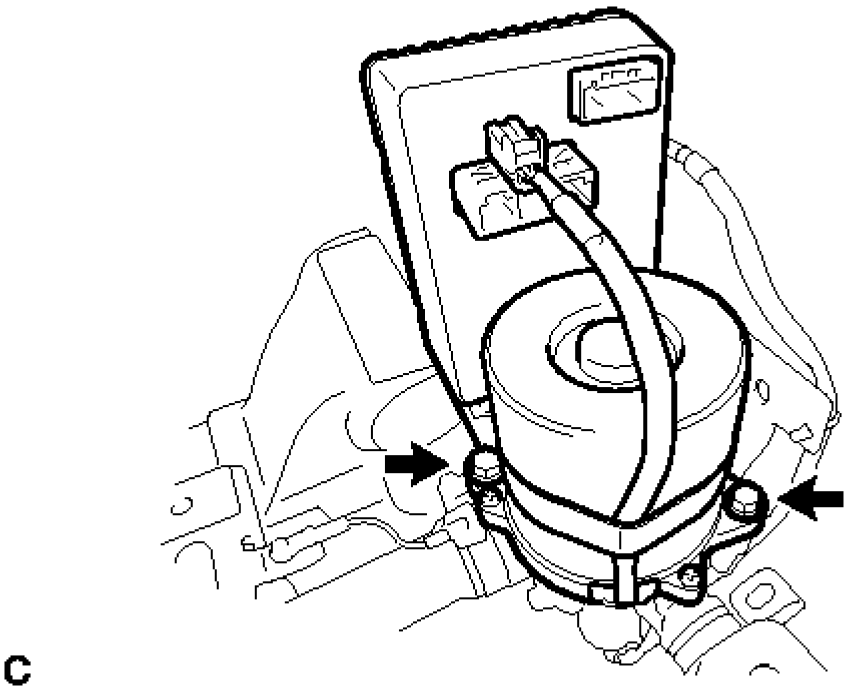

Fig. 46: Locating Power Steering ECU With Motor Assembly (For 2GR-FE) Fasteners

Courtesy of TOYOTA MOTOR SALES, U.S.A., INC.

d. Remove the O-ring from the power steering ECU with motor assembly.

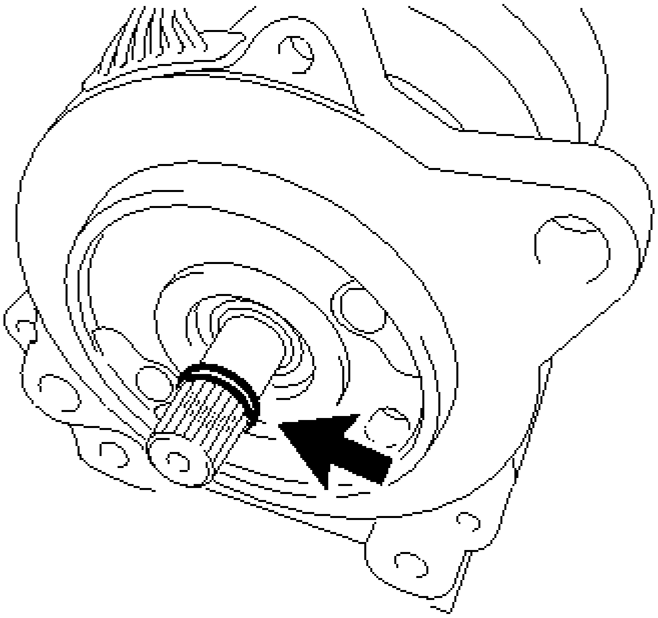

Fig. 47: Locating Power Steering ECU With Motor Assembly (For 2GR-FE) O-Ring
Courtesy of TOYOTA MOTOR SALES, U.S.A., INC.

12. **REMOVE POWER STEERING ECU ASSEMBLY (for 2GR-FE)** . Refer to **REMOVAL - Step 10** .
13. **REMOVE TRANSPONDER KEY AMPLIFIER (w/o Smart Key System)**
    a. Slide the transponder key amplifier, disengage the 2 claws and then remove the transponder key amplifier as shown in the illustration.

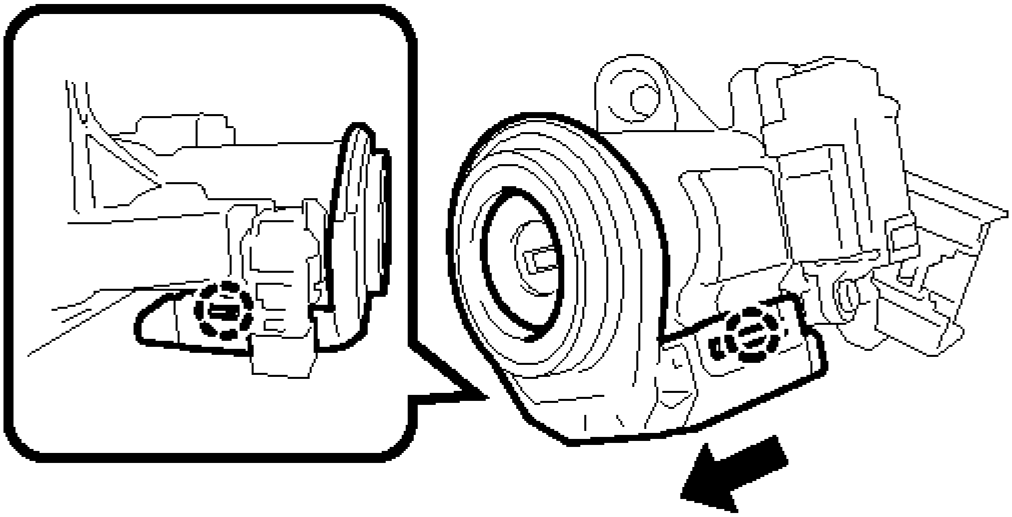

Fig. 48: Removing Transponder Key Amplifier (w/o Smart Key System)
Courtesy of TOYOTA MOTOR SALES, U.S.A., INC.

14. **REMOVE UNLOCK WARNING SWITCH ASSEMBLY (w/o Smart Key System)**
    a. Insert the key.
    b. Disengage the 2 claws and slide the unlock warning switch assembly to remove it as shown in the illustration.

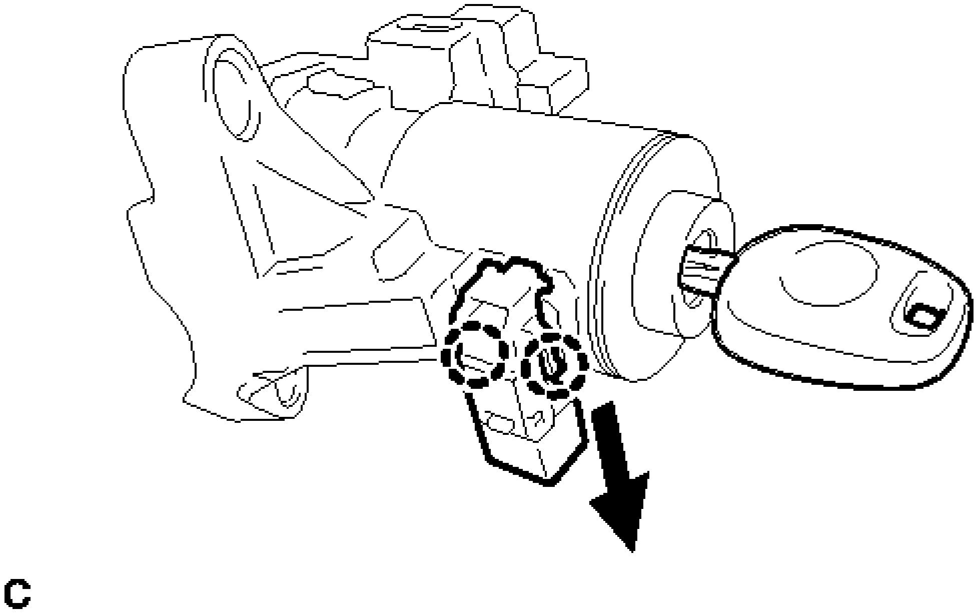

Fig. 49: Removing Unlock Warning Switch Assembly (w/o Smart Key System)
Courtesy of TOYOTA MOTOR SALES, U.S.A., INC.

15. **REMOVE KEY INTERLOCK SOLENOID (w/o Smart Key System)**
    a. Remove the screw.

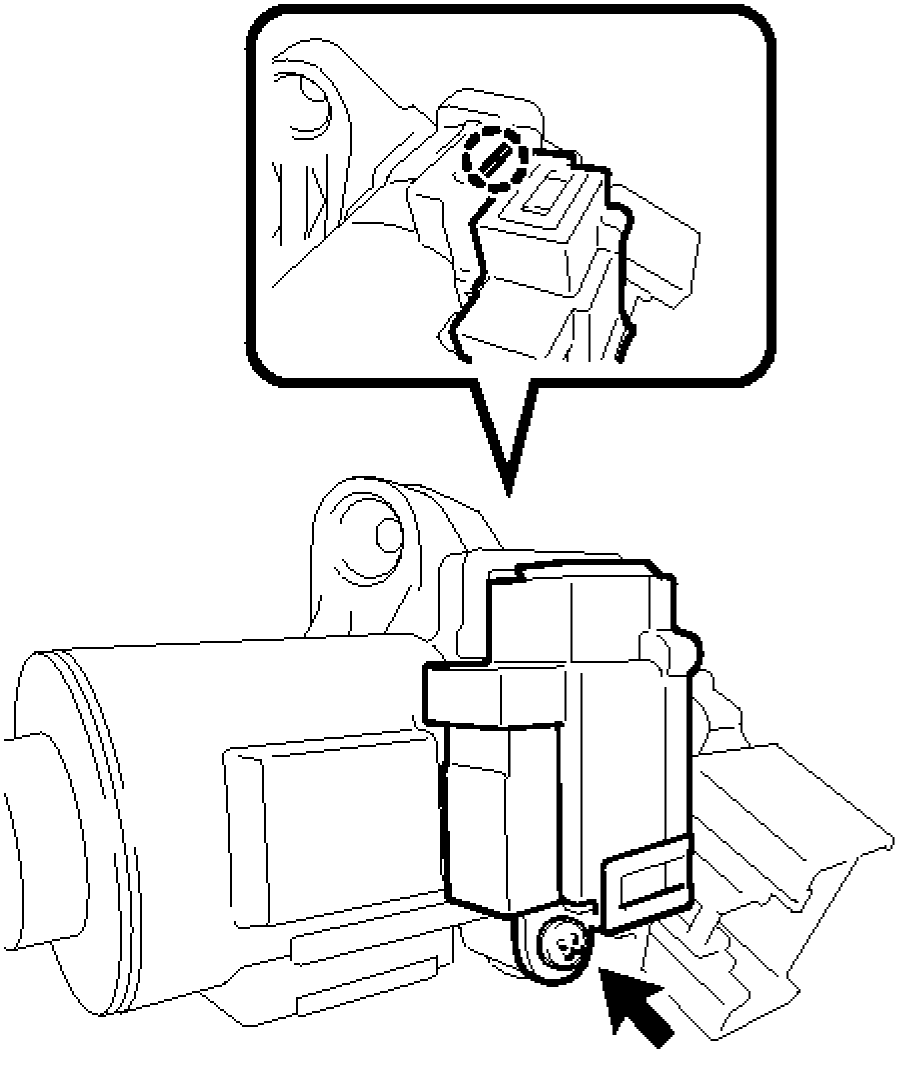

Fig. 50: Locating Key Interlock Solenoid (w/o Smart Key System) Fasteners
Courtesy of TOYOTA MOTOR SALES, U.S.A., INC.

b. Disengage the claw to remove the key interlock solenoid from the steering column upper bracket assembly.

16. **REMOVE IGNITION SWITCH LOCK CYLINDER ASSEMBLY (w/o Smart Key System)**

    a. Turn the ignition switch lock cylinder assembly to the ACC position.

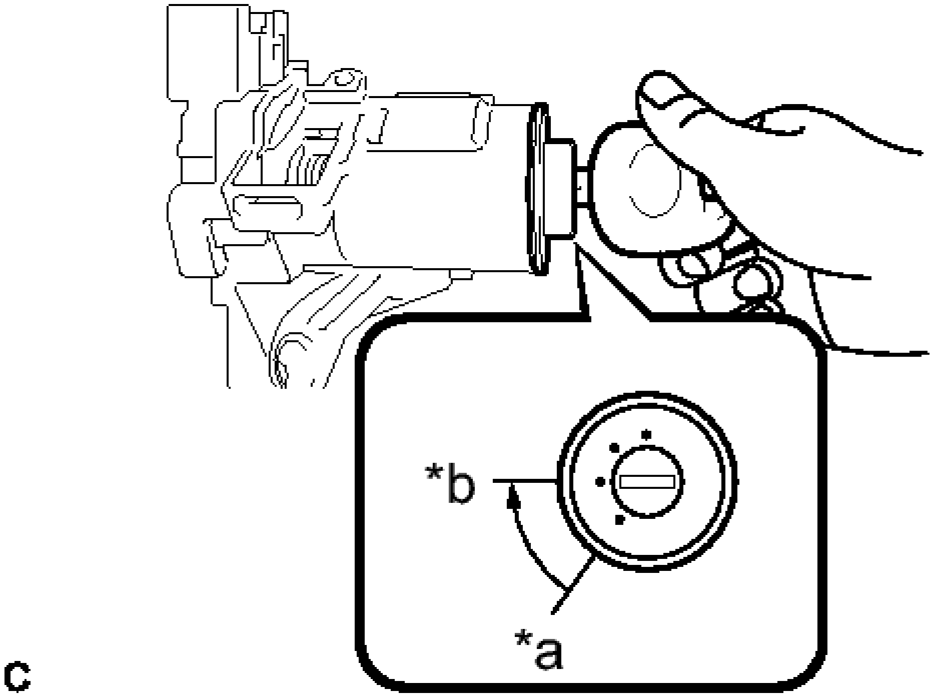

Fig. 51: Identifying Ignition Switch Lock Cylinder Assembly (w/o Smart Key System)
Courtesy of TOYOTA MOTOR SALES, U.S.A., INC.

TEXT IN ILLUSTRATION

*a	LOCK
*b	ACC

b. Insert a screwdriver into the hole of the steering column upper bracket assembly as shown in the illustration. Pull the ignition switch lock cylinder assembly until its claw contacts the stopper of the steering column upper bracket assembly.

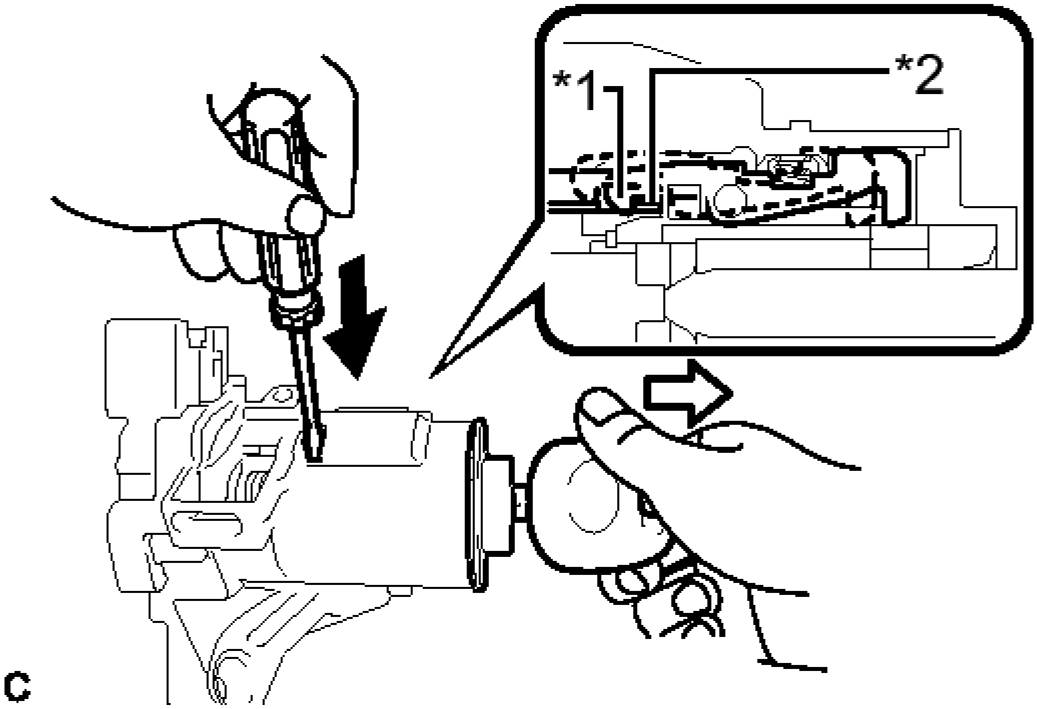

Fig. 52: Removing Ignition Switch Lock Cylinder Assembly (w/o Smart Key System)
Courtesy of TOYOTA MOTOR SALES, U.S.A., INC.

TEXT IN ILLUSTRATION

*1	Claw
*2	Stopper
·	Push
·	Pull

NOTE: **Make sure to pull the ignition switch lock cylinder assembly until its claw contacts the stopper of the steering column upper bracket assembly. Failure to do so will affect later work operations.**

c. Insert a screwdriver into the hole of the steering column upper bracket assembly. Tilt the screwdriver as shown in the illustration to disengage the claw of the ignition switch lock cylinder assembly, and pull out the ignition switch lock cylinder assembly from the steering column upper bracket assembly.

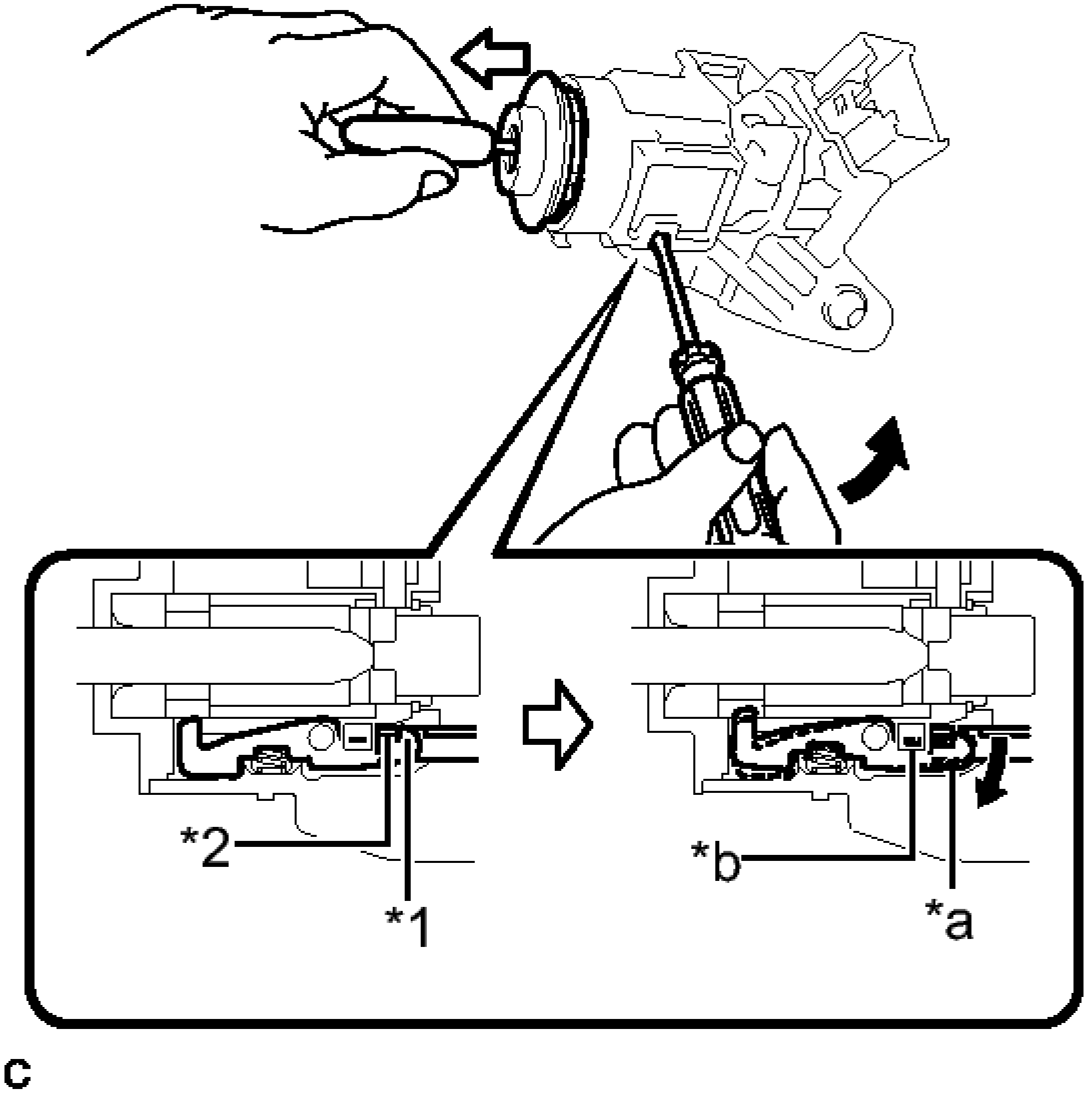

Fig. 53: Disengaging Ignition Switch Lock Cylinder Assembly (w/o Smart Key System) Claw
Courtesy of TOYOTA MOTOR SALES, U.S.A., INC.

TEXT IN ILLUSTRATION

*1	Claw
*2	Stopper
*a	Claw disengaged
*b	Driver Insertion Hole
·	Tilt
·	Pull out

17. **REMOVE IGNITION OR STARTER SWITCH ASSEMBLY (w/o Smart Key System)**

a. Disengage the 2 claws to remove the ignition or starter switch assembly from the steering column upper bracket assembly.

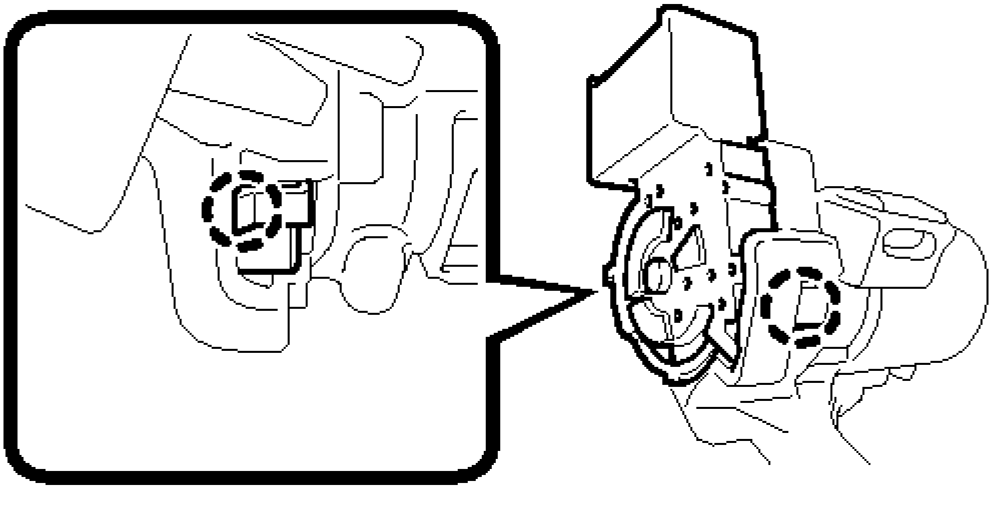

Fig. 54: Locating Ignition Or Starter Switch Assembly (w/o Smart Key System) Claws
Courtesy of TOYOTA MOTOR SALES, U.S.A., INC.

INSPECTION

INSPECTION

NOTE: **When using a vise, do not overtighten it.**

1. **INSPECT PRELOAD**
    a. Secure the steering column assembly in a vice using aluminum plates and wooden block as shown in the illustration.

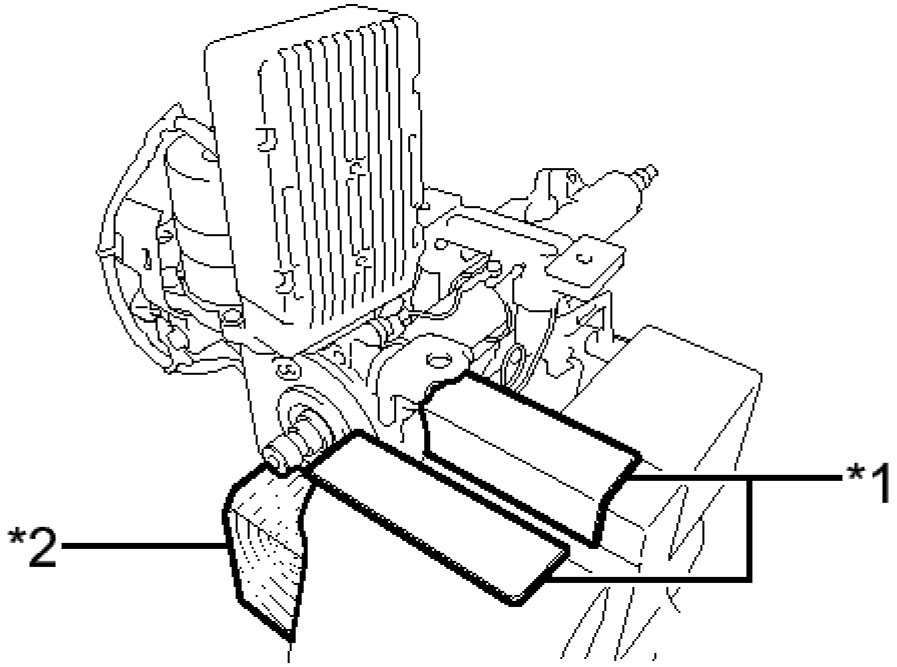

Fig. 55: Identifying Power Steering ECU With Motor Assembly (For 2GR-FE) Secured In Vice
Courtesy of TOYOTA MOTOR SALES, U.S.A., INC.

TEXT IN ILLUSTRATION

*1	Aluminum Plate
*2	Wooden Block

NOTE:

- **Do not overtighten the vice, as the steering column assembly may become deformed.**
- **Support the steering column assembly with a wooden block or similar item to ensure that it does not fall.**

b. Install the 2 service nuts to the steering main shaft.

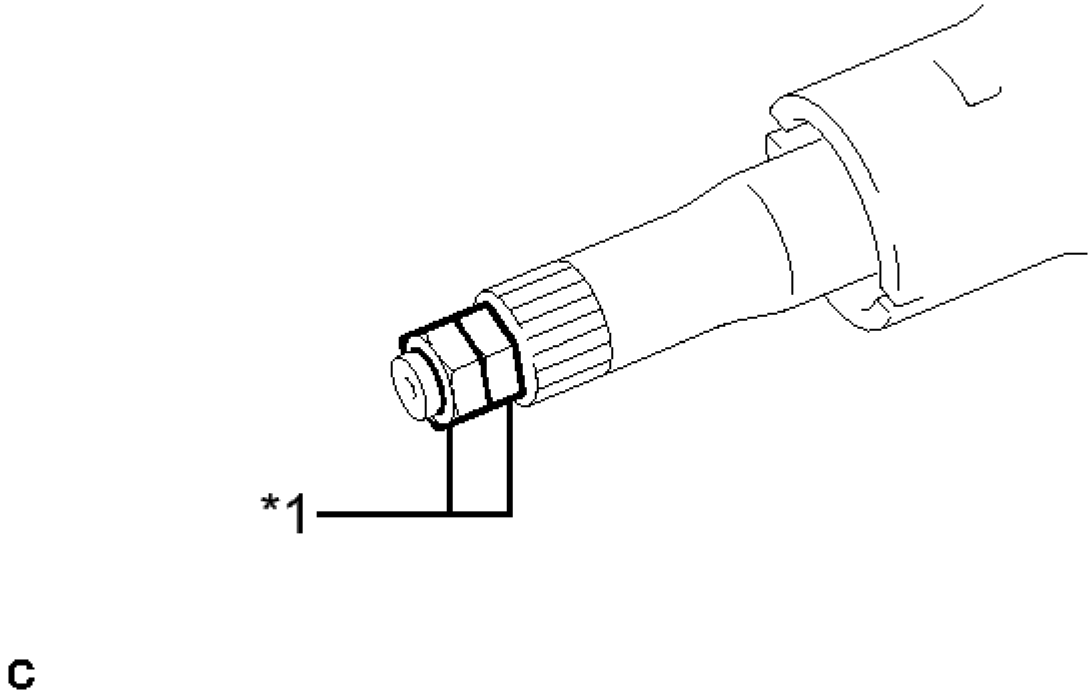

Fig. 56: Identifying Steering Main Shaft Fasteners
Courtesy of TOYOTA MOTOR SALES, U.S.A., INC.

TEXT IN ILLUSTRATION

*1	Service Nut

Recommended service nut

Thread diameter

12.0 mm (0.472 in.)

Thread pitch

1.25 mm (0.0492 in.)

c. Simultaneously rotate the service nut that was installed first counterclockwise and rotate the service nut that was installed second clockwise to lock them.

NOTE: **Do not apply excess torque to the service nuts by using a tool such as an impact wrench.**

HINT:

These nuts are installed to turn the steering main shaft. They should be removed after inspecting the steering main shaft rotating torque.

d. Using a torque wrench, turn the main shaft and measure the preload.

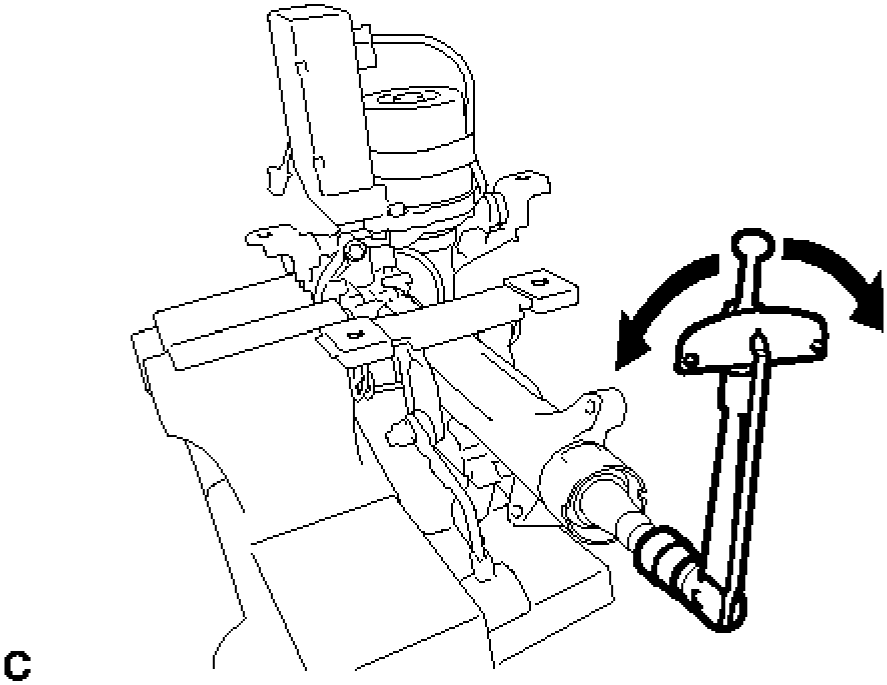

Fig. 57: Measuring Main Shaft Preload Using Torque Wrench
Courtesy of TOYOTA MOTOR SALES, U.S.A., INC.

Preload

Type	Preload
for 2AR-FE without Wireless Door Lock	0.9 to 1.7 N*m (10 to 17 kgf*cm, 8 to 15 in.*lbf)
for 2AR-FE with Wireless Door Lock	1.0 to 1.8 N*m (11 to 18 kgf*cm, 9 to 15 in.*lbf)
	1.2 to 1.7 N*m

for 2GR-FE	(12 to 17 kgf*cm, 10 to 15 in.*lbf)

If the preload is not as specified, replace the electric power steering column sub-assembly with a new one.

2. **INSPECT STEERING LOCK OPERATION (w/o Smart Key System)**
    a. Check that the steering lock mechanism is activated when the key is removed.

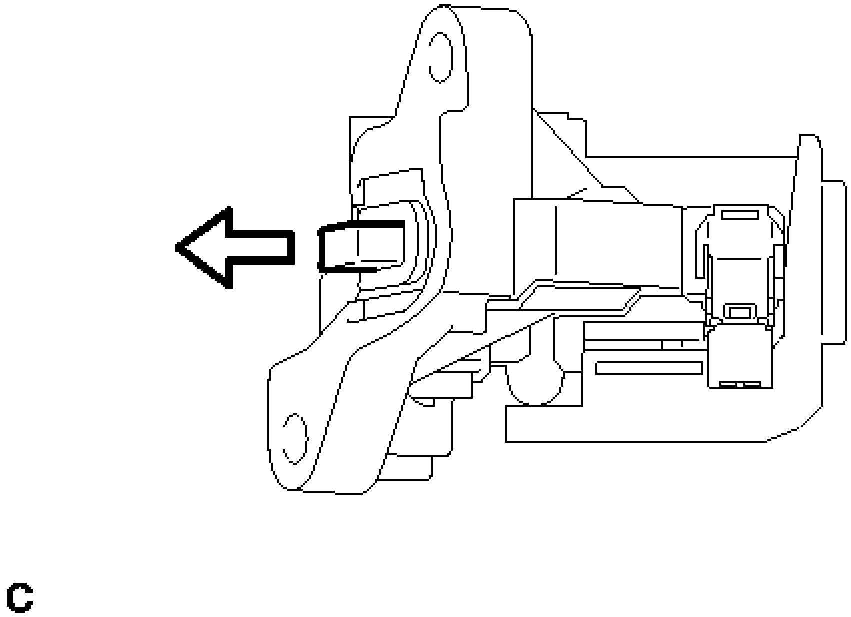

Fig. 58: Checking Steering Lock Operation (w/o Smart Key System) Activated
Courtesy of TOYOTA MOTOR SALES, U.S.A., INC.

    b. Check that the steering lock mechanism is deactivated when the key is inserted and turned to the ACC position.

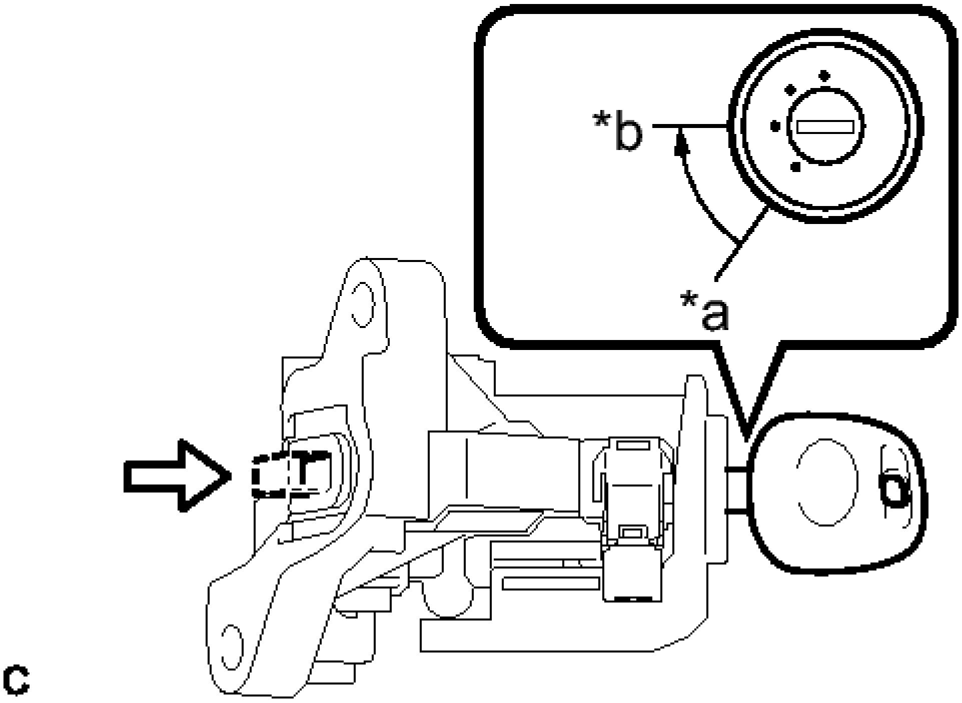

Fig. 59: Checking Steering Lock Operation (w/o Smart Key System) Deactivated
Courtesy of TOYOTA MOTOR SALES, U.S.A., INC.

TEXT IN ILLUSTRATION

*a	LOCK
*b	ACC

HINT:

If there is any abnormality, replace the ignition switch lock cylinder assembly or steering column upper bracket assembly.

3. **INSPECT STEERING COLUMN ASSEMBLY (for 2AR-FE)**
   a. Check that the 2 capsules are securely installed to the steering column assembly as shown in the illustration.

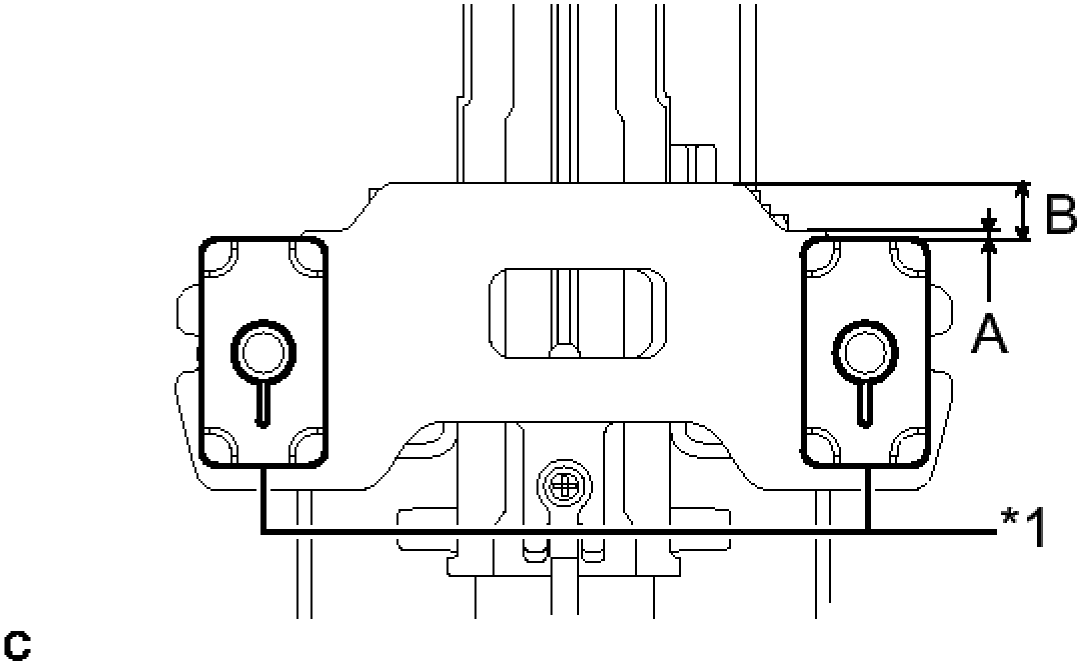

Fig. 60: Inspecting Steering Column Assembly (For 2AR-FE)
Courtesy of TOYOTA MOTOR SALES, U.S.A., INC.

Minimum Dimension

A	B
1 mm (0.0394 in.)	12 mm (0.473 in.)

TEXT IN ILLUSTRATION

*1	Capsule

If the preload is not as specified, replace the electric power steering column sub-assembly with a new one.

b. Check the 2 capsules for deformation and damage.

If either of the capsules is deformed, loose, missing or damaged, replace the electric power steering column sub-assembly with a new one.

REASSEMBLY

REASSEMBLY

NOTE:

- **When using a vise, do not overtighten it.**
- **Do not drop the power steering motor assembly, strike it with tools or subject it to impacts.**
- **If the power steering motor assembly is subjected to an impact, replace it with a new one.**
- **Do not pull the wire harness of the electric power steering column sub-assembly.**
- **Do not allow any moisture to come into contact with the power steering motor assembly.**
- **Do not loosen any bolts not mentioned in the procedure.**

1. **INSTALL IGNITION OR STARTER SWITCH ASSEMBLY (w/o Smart Key System)**
   a. Engage the 2 claws to install the ignition or starter switch assembly to the steering column upper bracket assembly.
2. **INSTALL IGNITION SWITCH LOCK CYLINDER ASSEMBLY (w/o Smart Key System)**
   a. Make sure that the ignition switch lock cylinder assembly is in the ACC position.

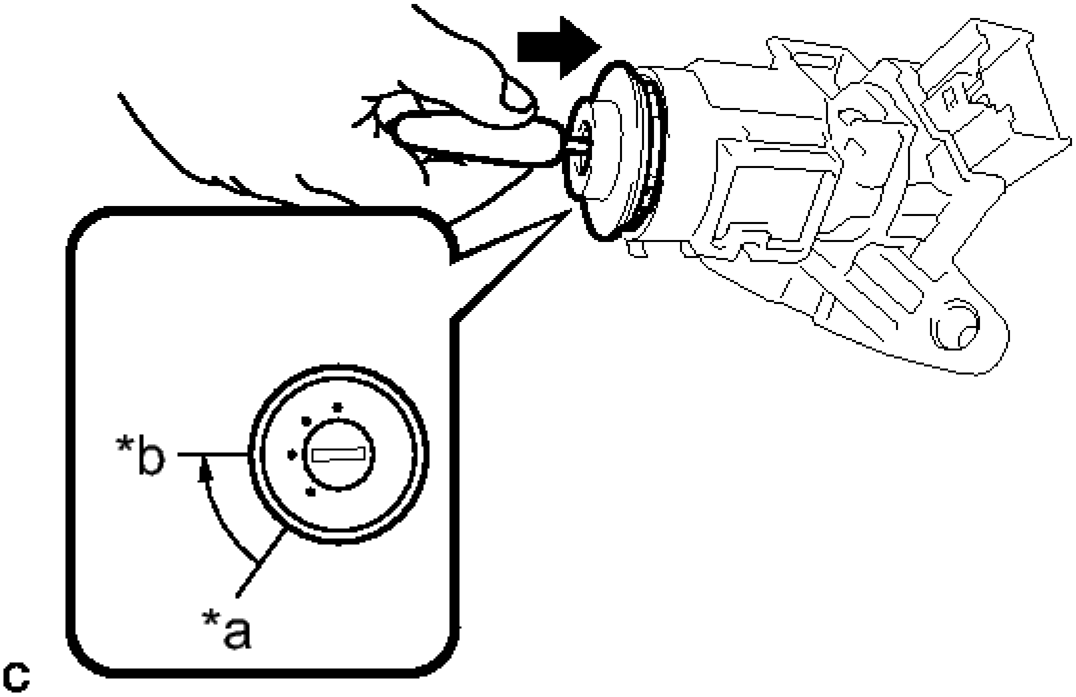

Fig. 61: Installing Ignition Switch Lock Cylinder Assembly (w/o Smart Key System)
Courtesy of TOYOTA MOTOR SALES, U.S.A., INC.

TEXT IN ILLUSTRATION

*a	LOCK
*b	ACC

   b. Install the ignition switch lock cylinder assembly to the steering column upper bracket assembly.
   c. Make sure that the ignition switch lock cylinder assembly is securely installed.

3. **INSTALL KEY INTERLOCK SOLENOID (w/o Smart Key System)**
   a. Engage the claw to install the key interlock solenoid to the steering column upper bracket assembly.
   b. Install the screw.

4. **INSTALL UNLOCK WARNING SWITCH ASSEMBLY (w/o Smart Key System)**
   a. Slide the unlock warning switch assembly and engage the 2 claws to install the unlock warning switch assembly to the steering column upper bracket assembly as shown in the illustration.

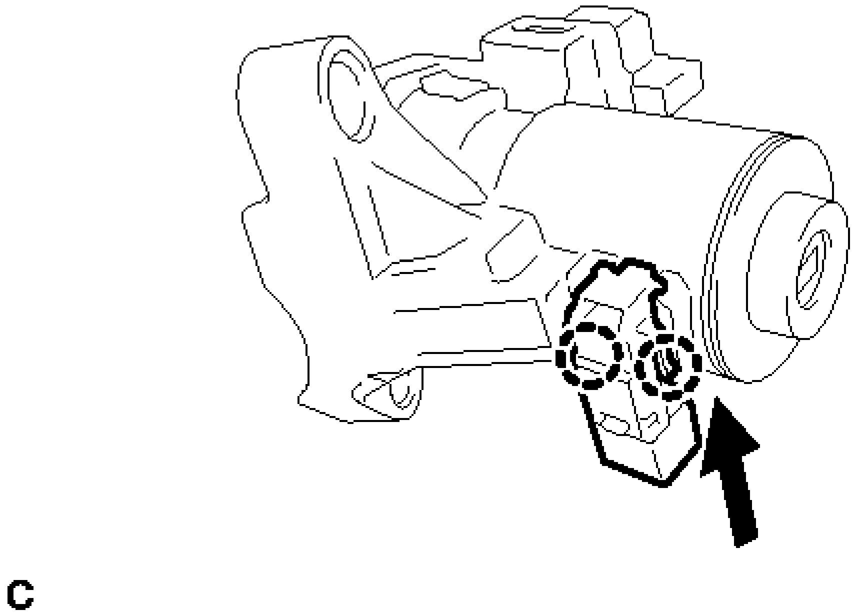

Fig. 62: Installing Unlock Warning Switch Assembly (w/o Smart Key System)
Courtesy of TOYOTA MOTOR SALES, U.S.A., INC.

5. **INSTALL TRANSPONDER KEY AMPLIFIER (w/o Smart Key System)**
   a. Align the transponder key amplifier with the steering column upper bracket assembly. Tilt the transponder key amplifier slightly and slide it into position.

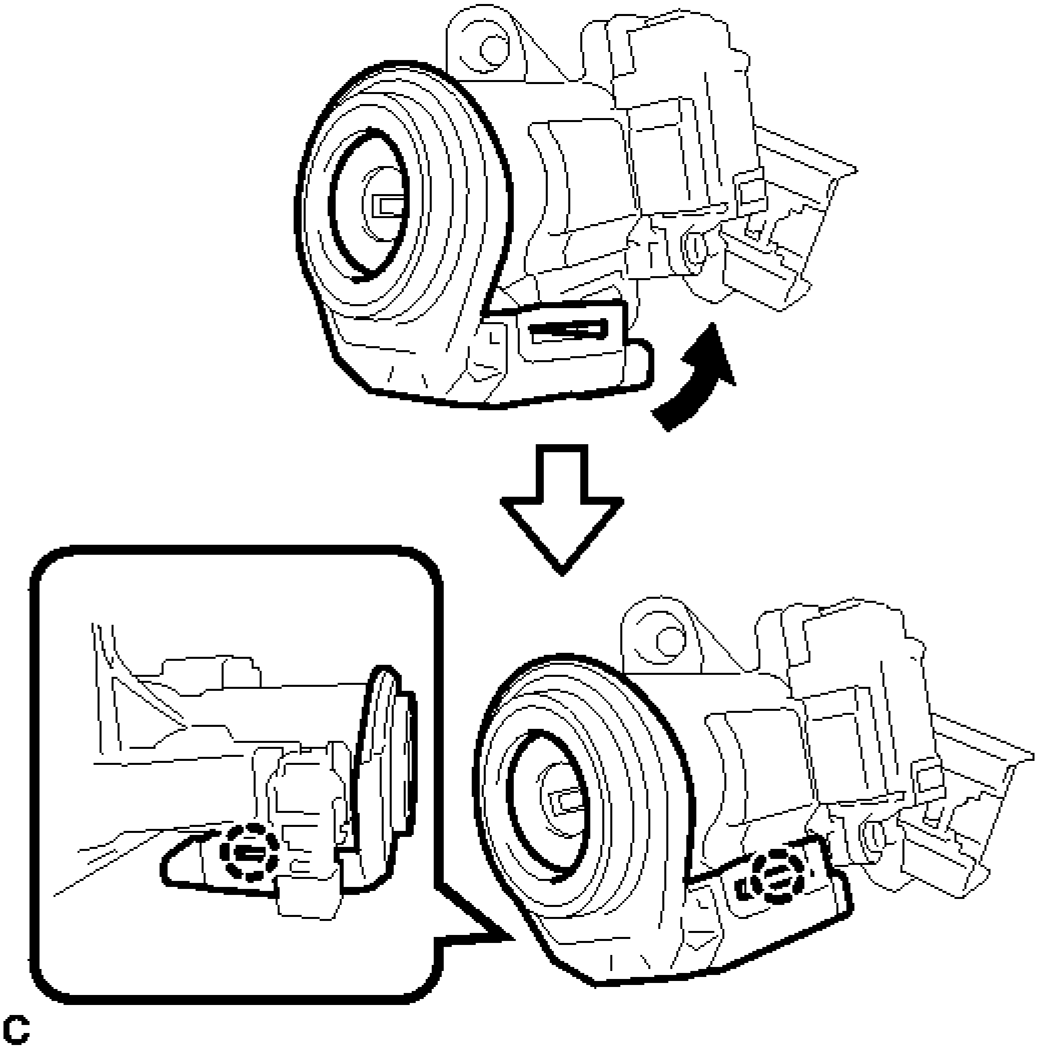

Fig. 63: Installing Transponder Key Amplifier (w/o Smart Key System)
Courtesy of TOYOTA MOTOR SALES, U.S.A., INC.

b. Push the transponder key amplifier, and engage the 2 claws to install the transponder key amplifier to the steering column upper bracket assembly.

6. **INSPECT STEERING LOCK OPERATION (w/o Smart Key System)** . See step 2.
7. **INSTALL POWER STEERING ECU ASSEMBLY (for 2AR-FE without Wireless Door Lock)** . Refer to **INSTALLATION - Step 1** .
8. **INSTALL POWER STEERING MOTOR ASSEMBLY (for 2AR-FE without Wireless Door Lock)**
   a. Apply grease to the serrated part of the electric power steering column sub-assembly.

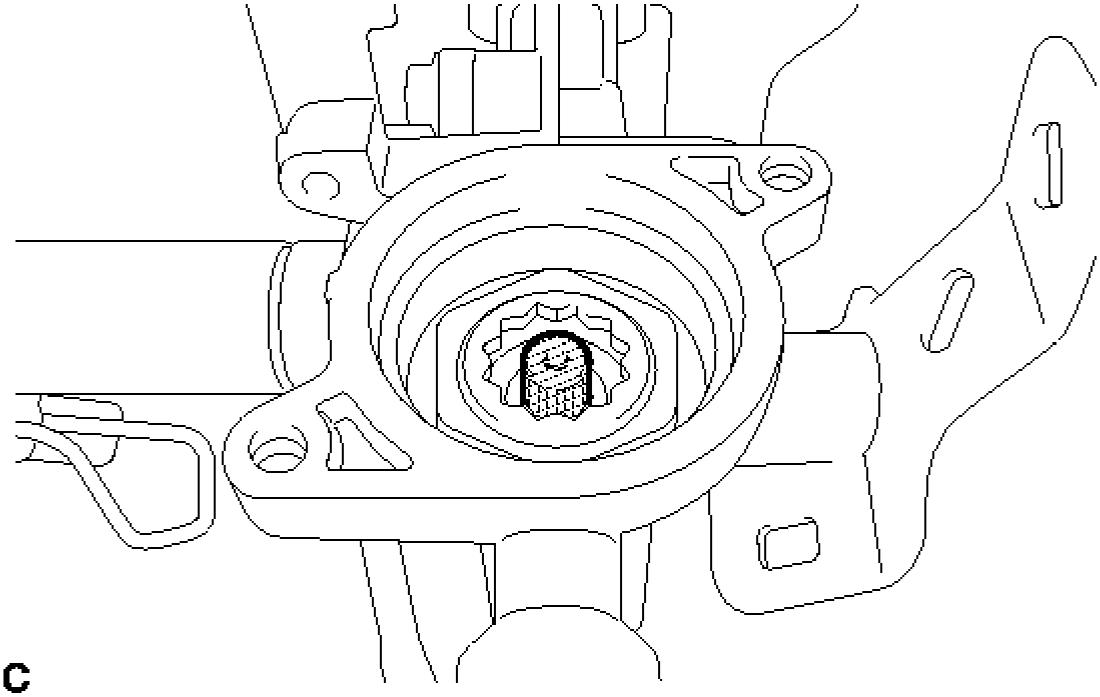

Fig. 64: Identifying Grease Application Area Of Power Steering Column Sub-Assembly
Courtesy of TOYOTA MOTOR SALES, U.S.A., INC.

NOTE: **First wipe off the existing grease from the serrated part, and then apply the dedicated grease supplied with a new power steering motor assembly or electric power steering column sub-assembly.**

b. Temporarily install the power steering motor assembly to the electric power steering column sub-assembly with the 2 bolts.

NOTE: **When temporarily installing the 2 bolts to the power steering motor assembly, do not tighten them all the way down.**

c. Install the 2 service nuts to the steering main shaft.

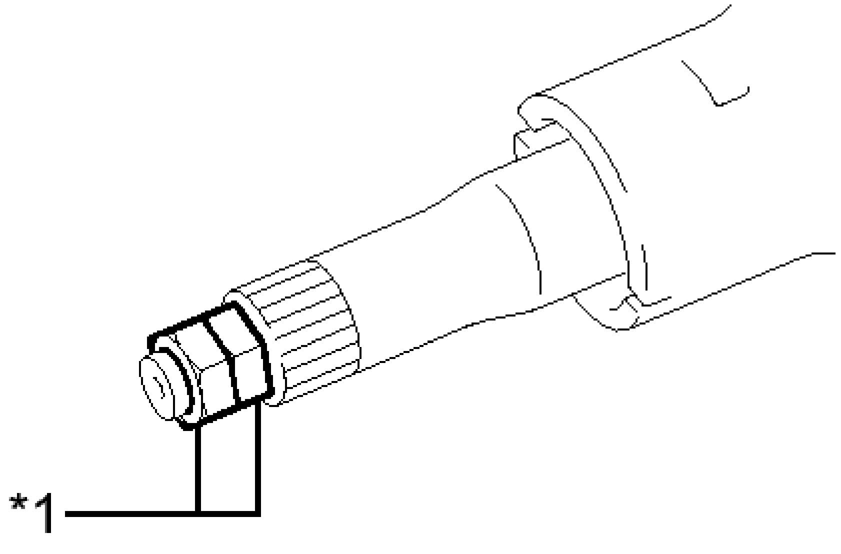

Fig. 65: Identifying Steering Main Shaft Fasteners
Courtesy of TOYOTA MOTOR SALES, U.S.A., INC.

TEXT IN ILLUSTRATION

*1	Service Nut

Recommended service nut

Thread diameter

12.0 mm (0.472 in.)

Thread pitch

1.25 mm (0.0492 in.)

d. Simultaneously to rotate the service nut that was installed first counterclockwise and rotate the service nut that was installed second clockwise to lock them.

NOTE: Do not apply excess torque to the service nuts by using a tool such as an impact wrench.

HINT:

These nuts are installed to turn the steering main shaft. They should be removed after inspecting the steering main shaft rotating torque.

e. Secure the steering column assembly in a vice using aluminum plates and wooden block as shown in the illustration.

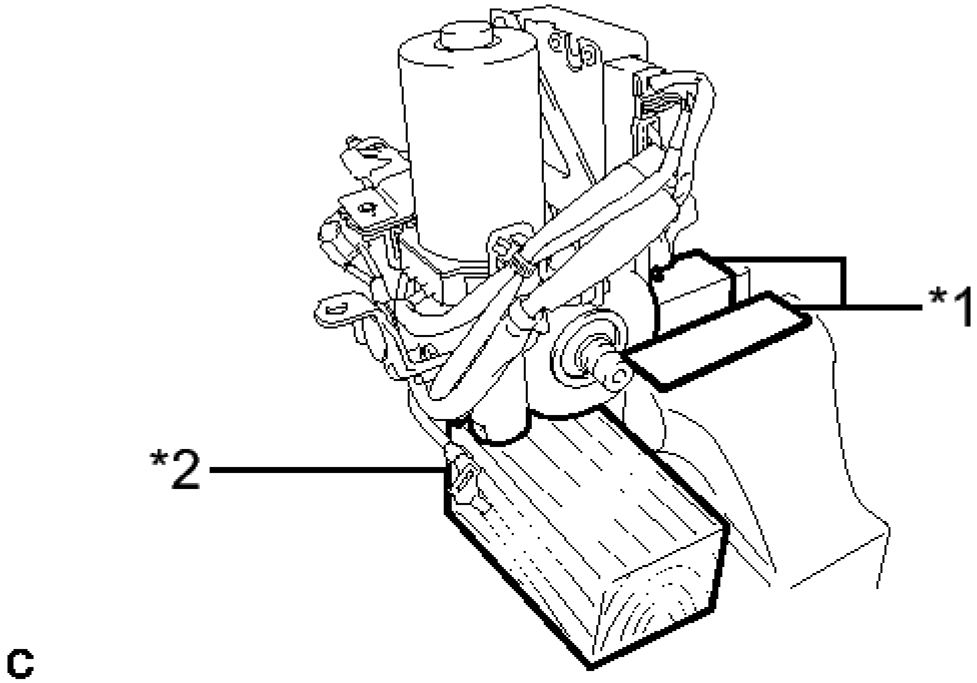

Fig. 66: Identifying ECU Wire Sub-Assembly (For 2AR-FE Without Wireless Door Lock) Secured In Vice
Courtesy of TOYOTA MOTOR SALES, U.S.A., INC.

TEXT IN ILLUSTRATION

*1	Aluminum Plate
*2	Wooden Block

NOTE:

- **Do not overtighten the vice, as the steering column assembly may become deformed.**
- **Secure the steering column assembly so that power steering motor assembly is directly upright.**
- **Support the steering column assembly with a wooden block or similar item to ensure that it does not fall.**

f. Turn the steering main shaft once 180 degrees to the left and then 180 degrees to the right at a speed of 60 rpm, and repeat 2 to 3 times to adjust the axis of the power steering motor assembly.

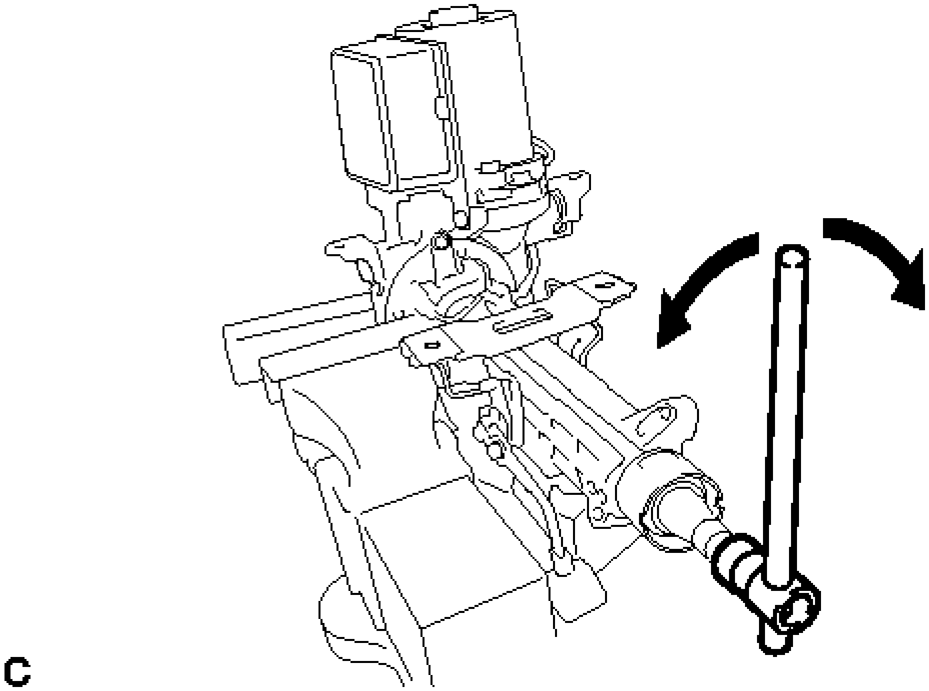

Fig. 67: Adjusting Axis Of Power Steering Motor Assembly
Courtesy of TOYOTA MOTOR SALES, U.S.A., INC.

g. Tighten the 2 bolts.

Torque: 19 N*m (189 kgf*cm, 14 ft.*lbf)

NOTE: **Make sure not to move the power steering motor assembly after adjusting the axis.**

h. Measure the turning torque of the steering main shaft.

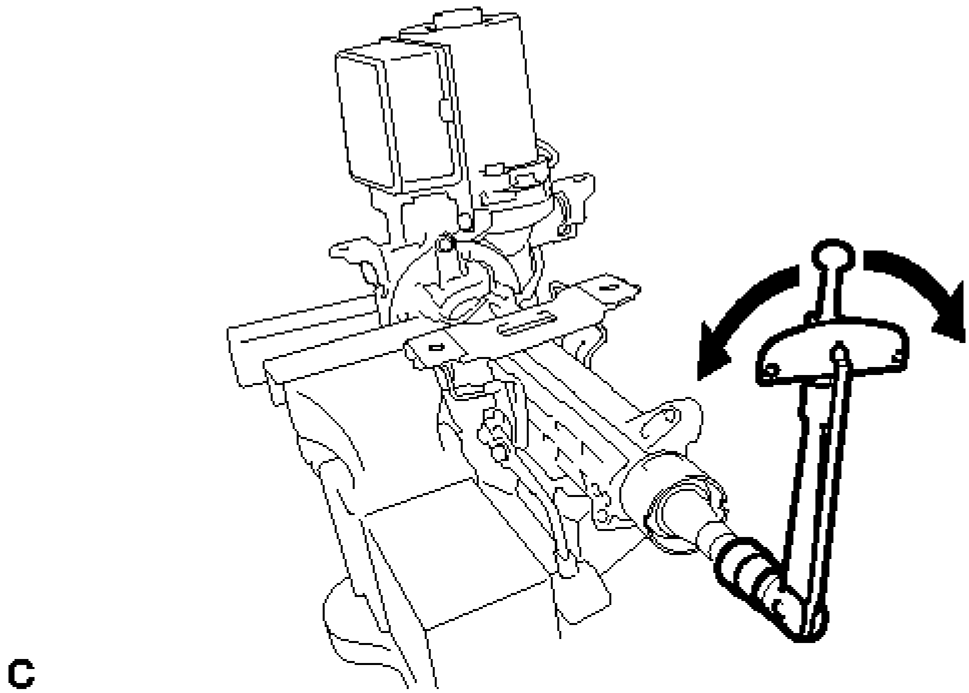

Fig. 68: Measuring Turning Torque Of Steering Main Shaft
Courtesy of TOYOTA MOTOR SALES, U.S.A., INC.

Turning torque

Torque: 0.9 to 1.7 N*m (10 to 17 kgf*cm, 8 to 15 in.*lbf)

NOTE: **Ensure that there is no abnormal resistance during rotation.**

If the torque is not as specified, readjust the axis of the power steering motor assembly.

i. Remove the 2 service nuts from the steering main shaft.
j. Connect the 2 connectors to the power steering ECU assembly.
k. Install a new wire harness clamp.

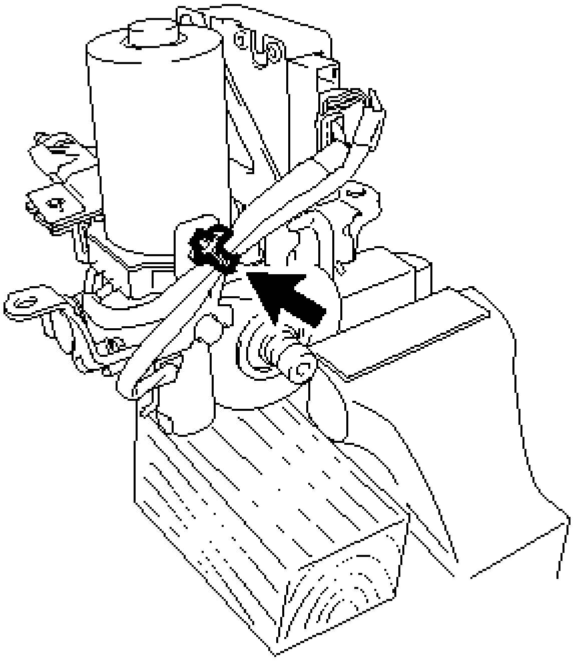

Fig. 69: Identifying ECU Wire Sub-Assembly (For 2AR-FE Without Wireless Door Lock) Clamp
Courtesy of TOYOTA MOTOR SALES, U.S.A., INC.

- l. Engage the wire harness clamp to the electric power steering column sub-assembly.

9. **INSTALL ECU WIRE SUB-ASSEMBLY (for 2AR-FE without Wireless Door Lock)**
    - a. Engage the 2 wire harness clamps to install the ECU wire sub-assembly.
    - b. Connect the 2 connectors to the power steering ECU assembly.
10. **INSTALL POWER STEERING ECU WITH MOTOR ASSEMBLY (for 2AR-FE with Wireless Door Lock)**
    - a. Install a new electric power steering motor shaft damper to the electric power steering column sub-assembly.
    - b. Install a new electric power steering motor shaft spacer to the electric power steering column sub-assembly.
    - c. Temporarily install the power steering ECU with motor assembly to the electric power steering column sub-assembly with 3 bolts.

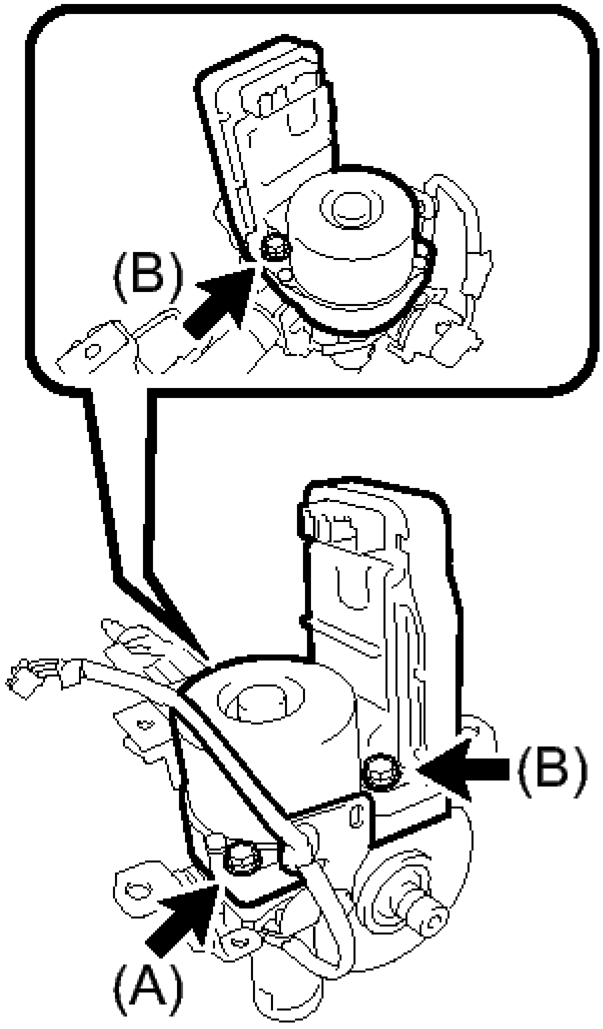

C

Fig. 70: Locating Power Steering ECU With Motor Assembly (For 2AR-FE With Wireless Door Lock) Fasteners
Courtesy of TOYOTA MOTOR SALES, U.S.A., INC.

NOTE:

- **Bolt (A) is shorter than bolt (B). Make sure to install them to the correct positions.**
- **When temporarily installing the 3 bolts to the power steering motor assembly, do not tighten them all the way down.**

d. Install the 2 service nuts to the steering main shaft.

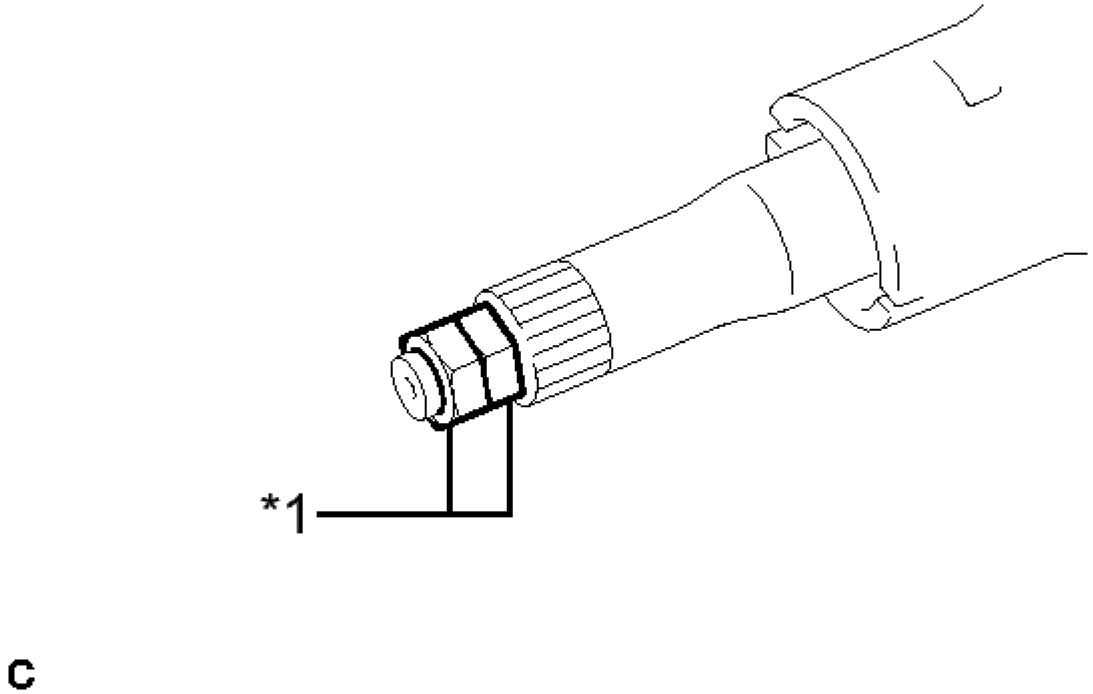

Fig. 71: Identifying Steering Main Shaft Fasteners
Courtesy of TOYOTA MOTOR SALES, U.S.A., INC.

TEXT IN ILLUSTRATION

*1	Service Nut

Recommended service nut

Thread diameter

12.0 mm (0.472 in.)

Thread pitch

1.25 mm (0.0492 in.)

e. Simultaneously to rotate the service nut that was installed first counterclockwise and rotate the service nut that was installed second clockwise to lock them.

NOTE: **Do not apply excess torque to the service nuts by using a tool such as an impact wrench.**

HINT:

These nuts are installed to turn the steering main shaft. They should be removed after inspecting the steering main shaft rotating torque.

f. Secure the steering column assembly in a vice using aluminum plates and wooden block as shown in the illustration.

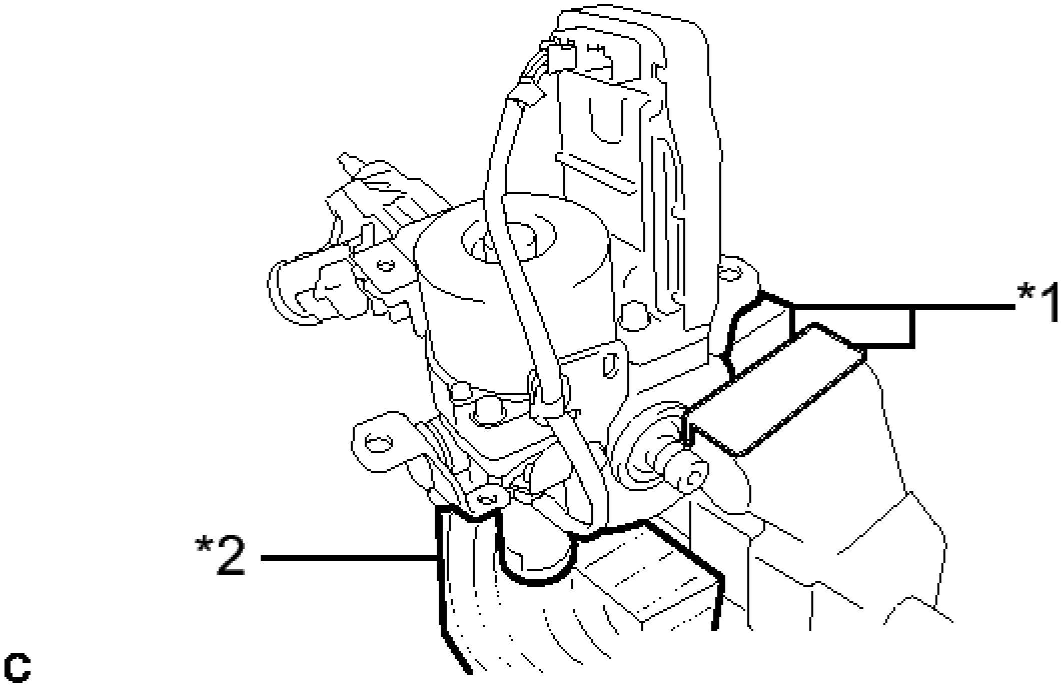

Fig. 72: Identifying Power Steering ECU With Motor Assembly (For 2AR-FE With Wireless Door Lock) Secured In Vice
Courtesy of TOYOTA MOTOR SALES, U.S.A., INC.

TEXT IN ILLUSTRATION

*1	Aluminum Plate
*2	Wooden Block

NOTE:

- **Do not overtighten the vice, as the steering column assembly may become deformed.**
- **Secure the steering column assembly so that power steering ECU assembly with motor is directly upright.**
- **Support the steering column assembly with a wooden block or similar item to ensure that it does not fall.**

g. Turn the steering main shaft once 180 degrees to the left and then 180 degrees to the right at a speed of 60 rpm, and repeat 2 to 3 times to adjust the axis of the power steering ECU with motor assembly.

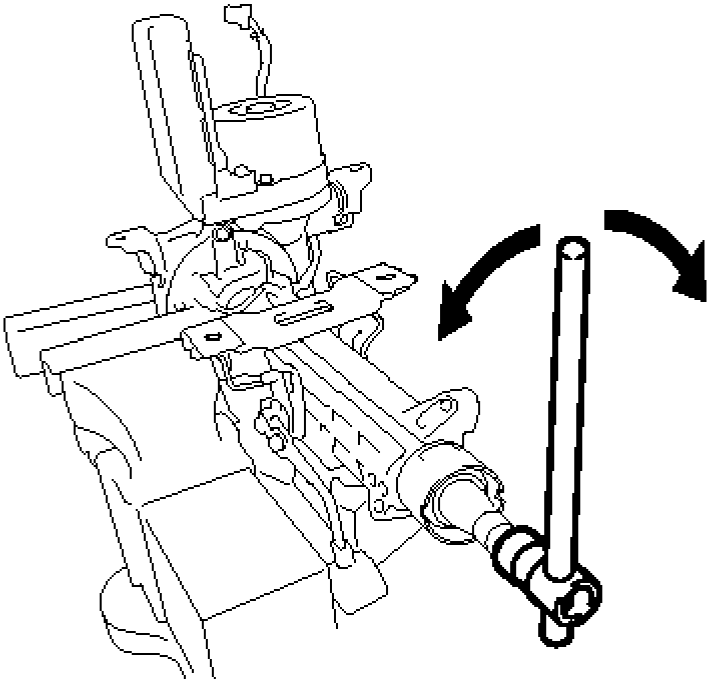

Fig. 73: Adjusting Axis Of Power Steering ECU With Motor Assembly
Courtesy of TOYOTA MOTOR SALES, U.S.A., INC.

h. Tighten the 3 bolts.

Torque: 19 N*m (189 kgf*cm, 14 ft.*lbf)

NOTE: **Make sure not to move the power steering motor assembly after adjusting the axis.**

i. Measure the turning torque of the steering main shaft.

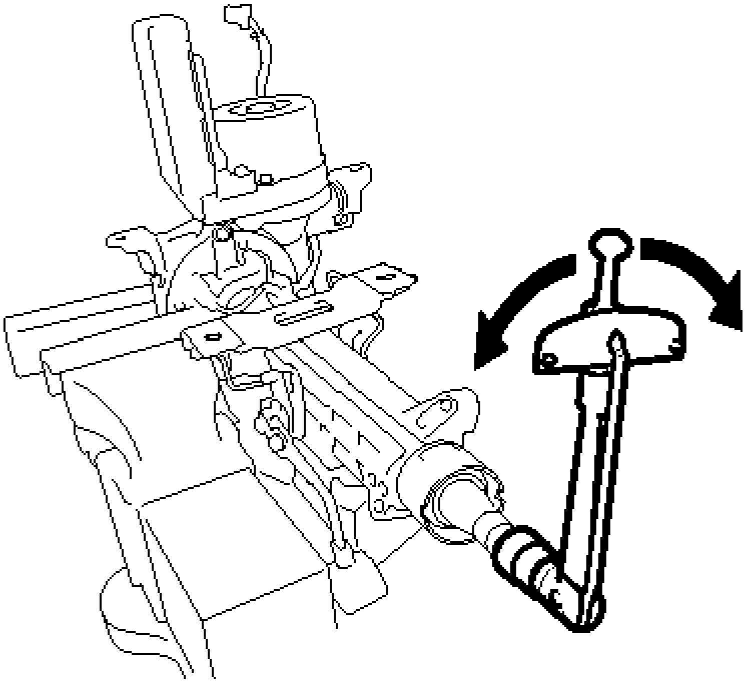

Fig. 74: Measuring Turning Torque Of Steering Main Shaft With Motor Assembly
Courtesy of TOYOTA MOTOR SALES, U.S.A., INC.

Turning torque

Torque: 1.0 to 1.8 N*m (10 to 18 kgf*cm, 9 to 15 in.*lbf)

NOTE: **Ensure that there is no abnormal resistance during rotation.**

If the torque is not as specified, readjust the axis of the power steering ECU with motor assembly.

   j. Remove the 2 service nuts from the steering main shaft.
   k. Connect the connector to the power steering ECU with motor assembly.

11. **INSTALL ECU WIRE SUB-ASSEMBLY (for 2AR-FE with Wireless Door Lock)**
    a. Engage the 2 wire harness clamps to install the ECU wire sub-assembly.
    b. Connect the 2 connectors to the power steering ECU with motor assembly.
12. **INSTALL POWER STEERING ECU PROTECTOR (for 2AR-FE with Wireless Door Lock)**
    a. Install a new power steering ECU protector to the power steering ECU with motor assembly.
13. **INSTALL POWER STEERING ECU ASSEMBLY (for 2GR-FE)** . Refer to **INSTALLATION - Step 4** .
14. **INSTALL POWER STEERING ECU WITH MOTOR ASSEMBLY (for 2GR-FE)**
    a. Install the 2 service nuts to the steering main shaft.

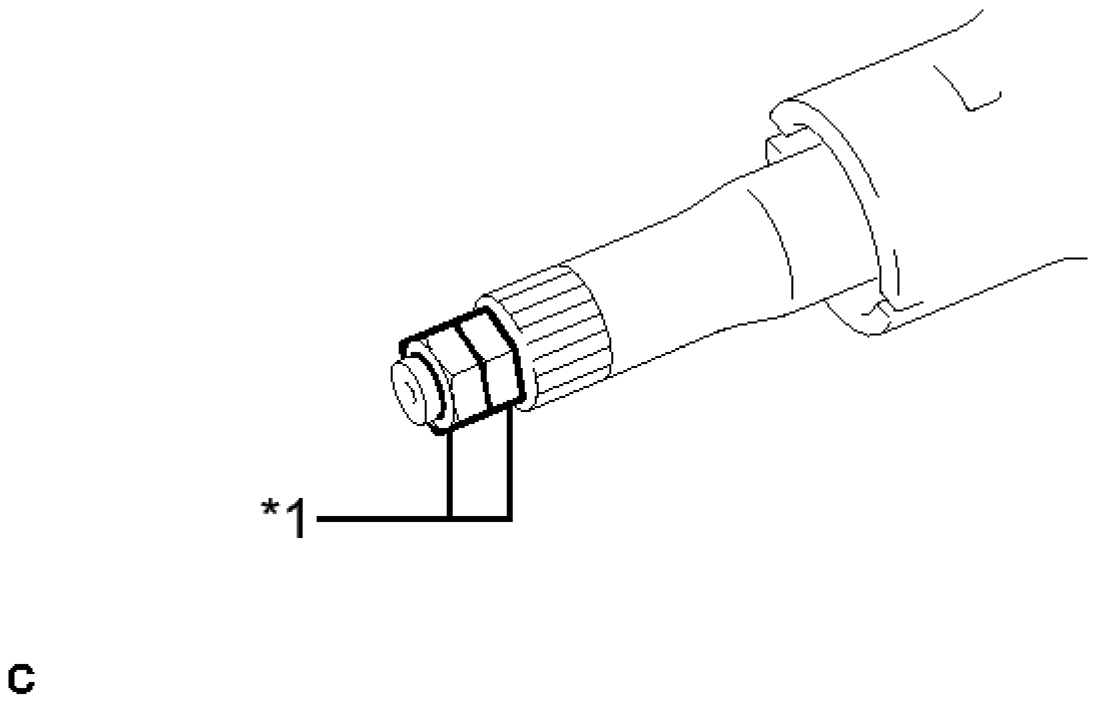

Fig. 75: Identifying Steering Main Shaft Fasteners
Courtesy of TOYOTA MOTOR SALES, U.S.A., INC.

TEXT IN ILLUSTRATION

*1	Service Nut

Recommended service nut

Thread diameter

12.0 mm (0.472 in.)

Thread pitch

1.25 mm (0.0492 in.)

b. Simultaneously to rotate the service nut that was installed first counterclockwise and rotate the service nut that was installed second clockwise to lock them.

NOTE: **Do not apply excess torque to the service nuts by using a tool such as an impact wrench.**

HINT:

These nuts are installed to turn the steering main shaft. They should be removed after inspecting the steering main shaft rotating torque.

c. Install a new O-ring to the power steering ECU with motor assembly.

d. Apply grease to the splines of the power steering ECU with motor assembly.

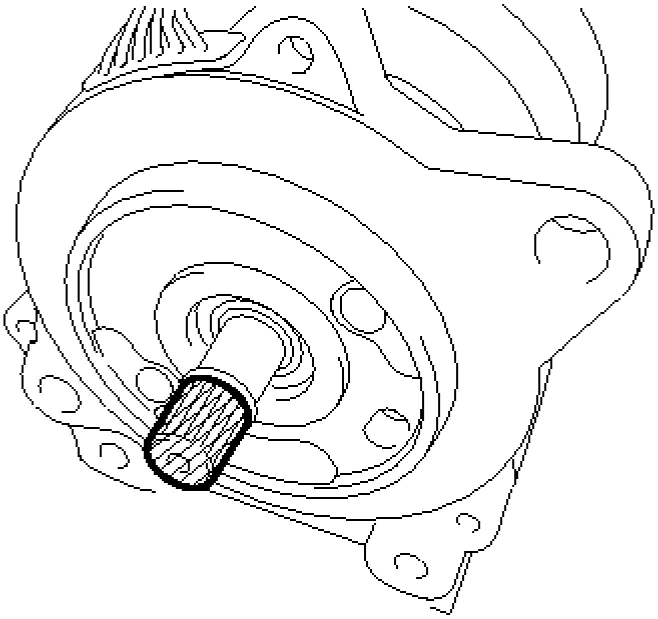

C

Fig. 76: Identifying Grease Application Area Of Power Steering ECU With Motor Assembly
Courtesy of TOYOTA MOTOR SALES, U.S.A., INC.

NOTE: **First wipe off the existing grease from the splines, and then apply the dedicated grease supplied with a new power steering motor assembly or electric power steering column sub-assembly.**

e. Insert the power steering ECU with motor assembly into the splines of the electric power steering column sub-assembly.

NOTE: **Do not damage the gears.**

f. Secure the steering column assembly in a vice using aluminum plates and wooden block as shown in the illustration.

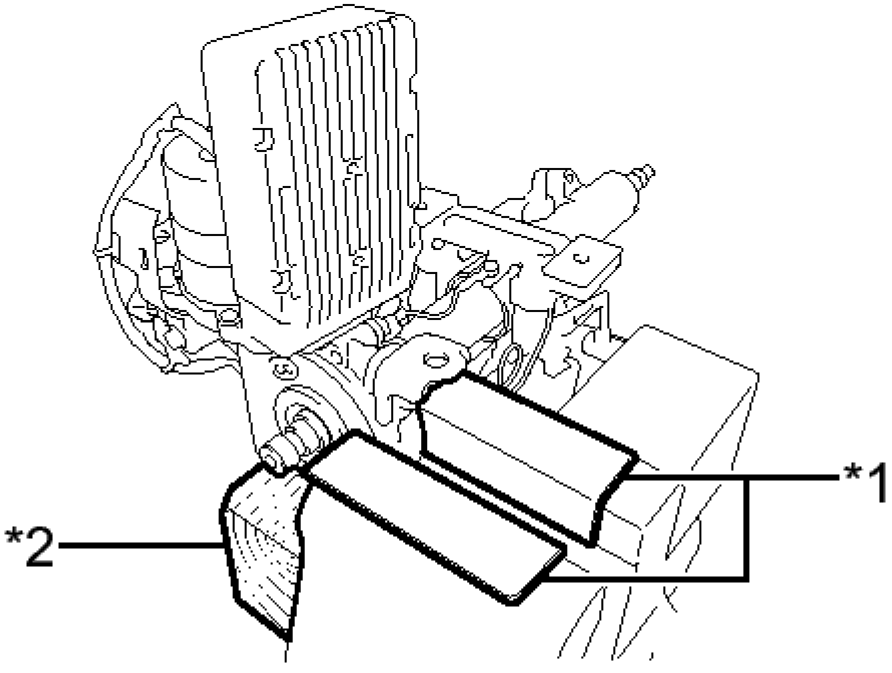

Fig. 77: Identifying Power Steering ECU With Motor Assembly (For 2GR-FE) Secured In Vice
Courtesy of TOYOTA MOTOR SALES, U.S.A., INC.

TEXT IN ILLUSTRATION

*1	Aluminum Plate
*2	Wooden Block

NOTE:

- **Do not overtighten the vice, as the steering column assembly may become deformed.**
- **Secure the steering column assembly so that power steering motor assembly is directly upright.**
- **Support the steering column assembly with a wooden block or similar item to ensure that it does not fall.**

g. Temporarily install the power steering ECU with motor assembly to the electric power steering column sub-assembly with 2 new bolts while rotating the steering main shaft at approximately 4 rpm.

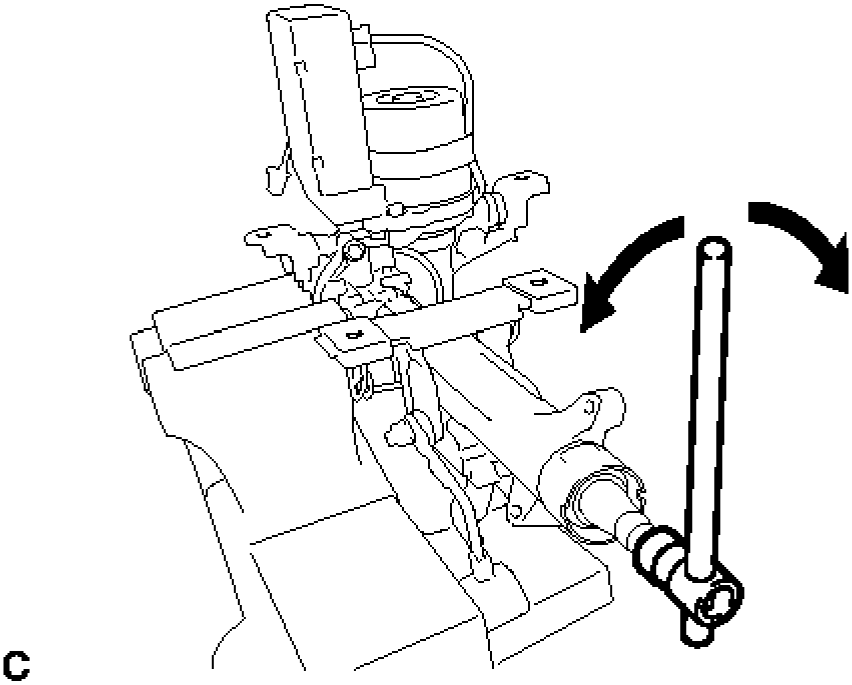

Fig. 78: Adjusting Axis Of Power Steering ECU With Motor Assembly
Courtesy of TOYOTA MOTOR SALES, U.S.A., INC.

NOTE: When temporarily installing the 2 bolts to the power steering motor assembly, do not tighten them all the way down.

h. Rotate the steering main shaft 120 to 240 degrees at approximately 4 rpm.
i. Rotate the steering main shaft 180 degrees clockwise and counterclockwise at approximately 4 rpm and repeat this operation 2 or 3 times to align the power steering ECU with motor assembly.
j. Tighten the 2 bolts.

Torque: 19 N*m (194 kgf*cm, 14 ft.*lbf)

NOTE: Make sure not to move the power steering motor assembly after adjusting the axis.

k. Measure the turning torque of the steering main shaft.

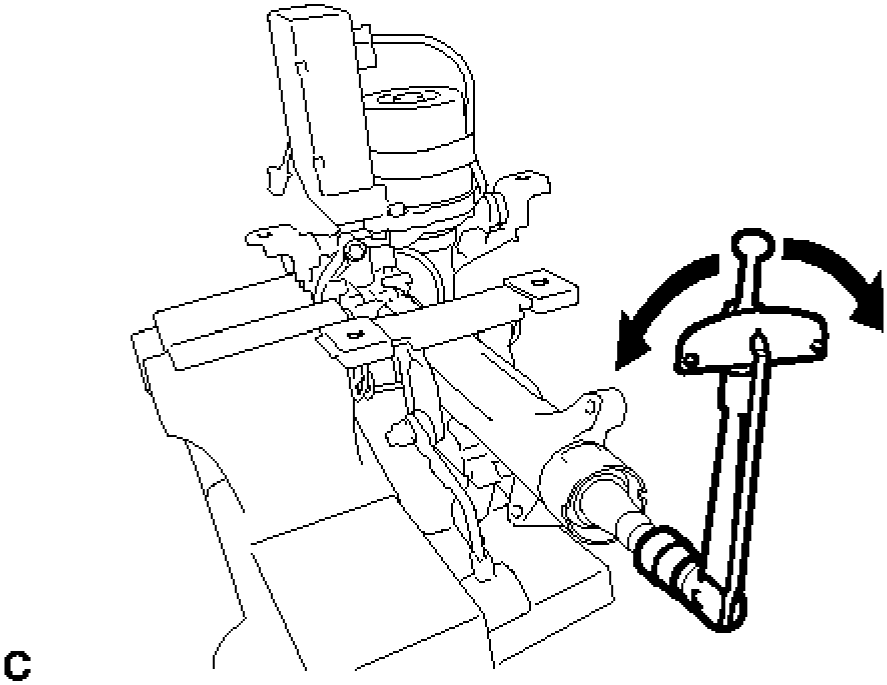

Fig. 79: Measuring Main Shaft Preload Using Torque Wrench
Courtesy of TOYOTA MOTOR SALES, U.S.A., INC.

Turning torque

Torque: 1.2 to 1.7 N*m (12 to 17 kgf*cm, 10 to 15 in.*lbf)

NOTE: **Ensure that there is no abnormal resistance during rotation.**

If the torque is not as specified, readjust the axis of the power steering ECU with motor assembly.

l. Remove the 2 service nuts from the steering main shaft.
m. Connect the 2 connectors to the power steering ECU assembly.

15. **INSTALL ECU WIRE SUB-ASSEMBLY (for 2GR-FE)**
    a. Engage the 2 wire harness clamps to install the new ECU wire sub-assembly.
    b. Connect the 2 connectors to the power steering ECU with motor assembly.
16. **INSTALL POWER STEERING ECU PROTECTOR (for 2GR-FE)**
    a. Engage the 2 claws to install a new power steering ECU protector to the power steering ECU with motor assembly.
17. **INSTALL STEERING COLUMN UPPER WITH SWITCH BRACKET ASSEMBLY (w/o Smart Key System)**
    a. Secure the steering column assembly in a vise.
    b. Temporarily install the steering column upper with switch bracket assembly to the steering column assembly with 2 new tapered-head bolts.

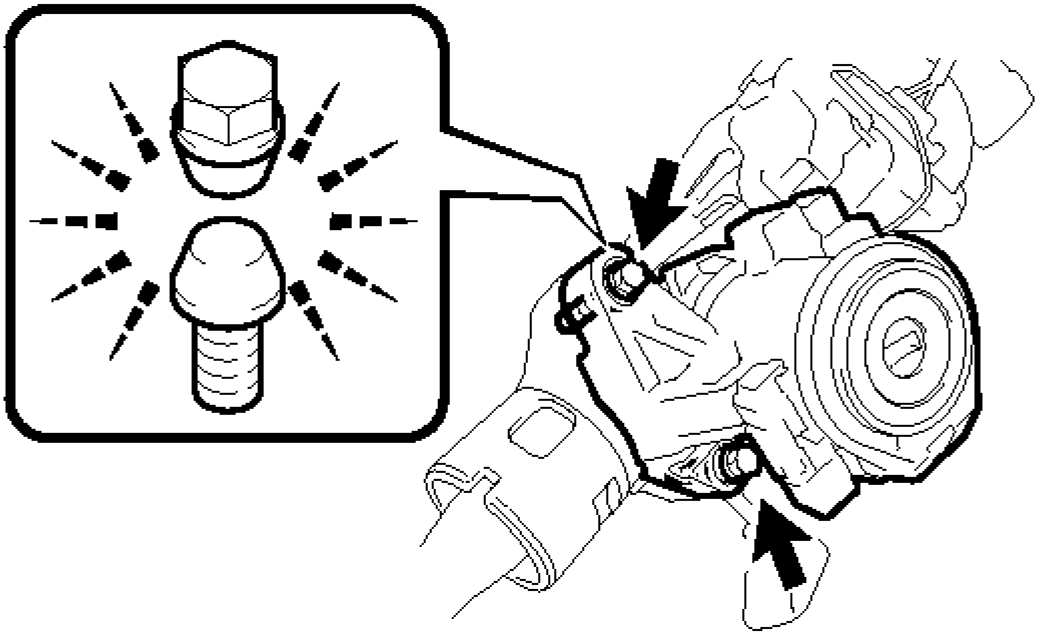

Fig. 80: Identifying Steering Column Upper With Switch Bracket Assembly (w/o Smart Key System) Bolts
Courtesy of TOYOTA MOTOR SALES, U.S.A., INC.

c. Tighten the 2 tapered-head bolts until the bolt heads break off.

18. **INSTALL STEERING LOCK ACTUATOR ASSEMBLY (w/ Smart Key System)**

HINT:

When replacing the steering lock actuator assembly, perform initialization. Refer to **REGISTRATION** .

a. Secure the steering column assembly in a vise.
b. Temporarily install the steering lock actuator assembly to the steering column assembly with 2 new tapered-head bolts.

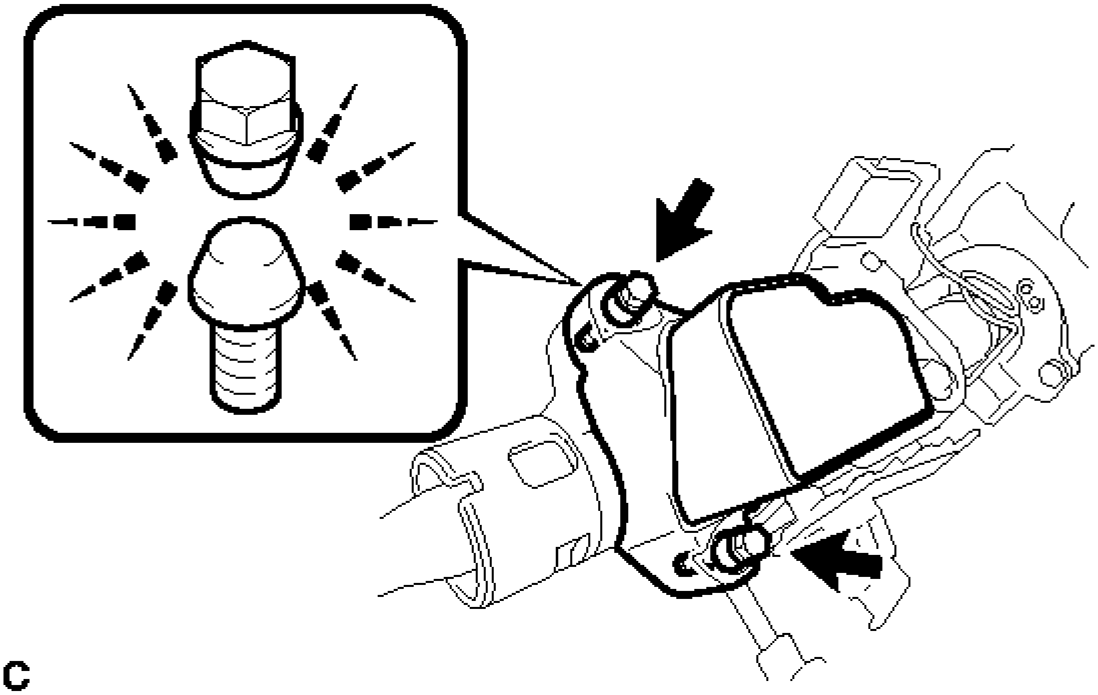

Fig. 81: Identifying Steering Lock Actuator Assembly (w/ Smart Key System) Bolts
Courtesy of TOYOTA MOTOR SALES, U.S.A., INC.

c. Tighten the 2 tapered-head bolts until the bolt heads break off.

INSTALLATION

INSTALLATION

1. **INSPECT STEERING COLUMN ASSEMBLY** . See step 3.
2. **INSTALL STEERING INTERMEDIATE SHAFT ASSEMBLY**
    a. Install the steering intermediate shaft assembly to the steering column assembly.

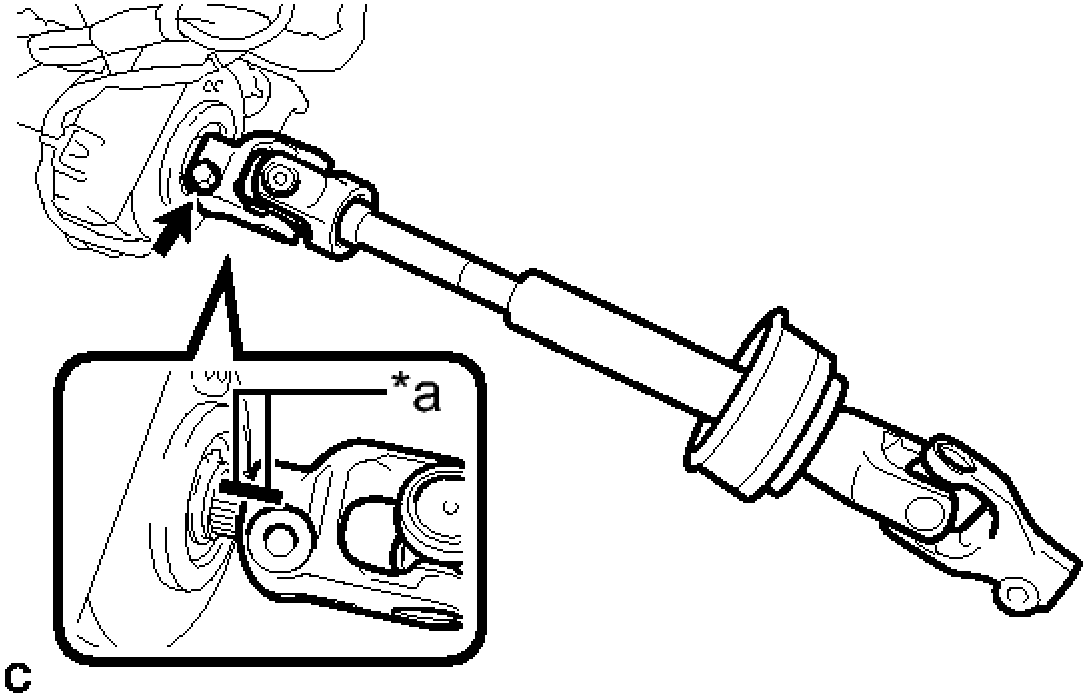

Fig. 82: Identifying Steering Intermediate Shaft Assembly Matchmarks And Bolt
Courtesy of TOYOTA MOTOR SALES, U.S.A., INC.

TEXT IN ILLUSTRATION

*a	Matchmark

NOTE: **Align the matchmarks on the steering intermediate shaft assembly and the steering column assembly.**

b. Install the bolt.

Torque: 35 N*m (360 kgf*cm, 26 ft.*lbf)

3. **INSTALL STEERING POST ASSEMBLY**
   a. Install the steering post assembly with the 4 nuts.

   Torque: 25 N*m (255 kgf*cm, 18 ft.*lbf)

   b. Install the ground wire with the bolt.

   Torque: 8.4 N*m (85 kgf*cm, 74 in.*lbf)

   c. Engage the clamp.
   d. Connect the 2 connectors.
   e. Connect the connectors and engage the wire harness clamps to the steering post assembly.
4. **INSTALL NO. 2 AIR DUCT SUB-ASSEMBLY**

  a. Engage the 2 claws and guide to install the No. 2 air duct sub-assembly.

5. **CONNECT STEERING INTERMEDIATE SHAFT ASSEMBLY**
  a. Connect the steering intermediate shaft assembly to the steering link assembly.

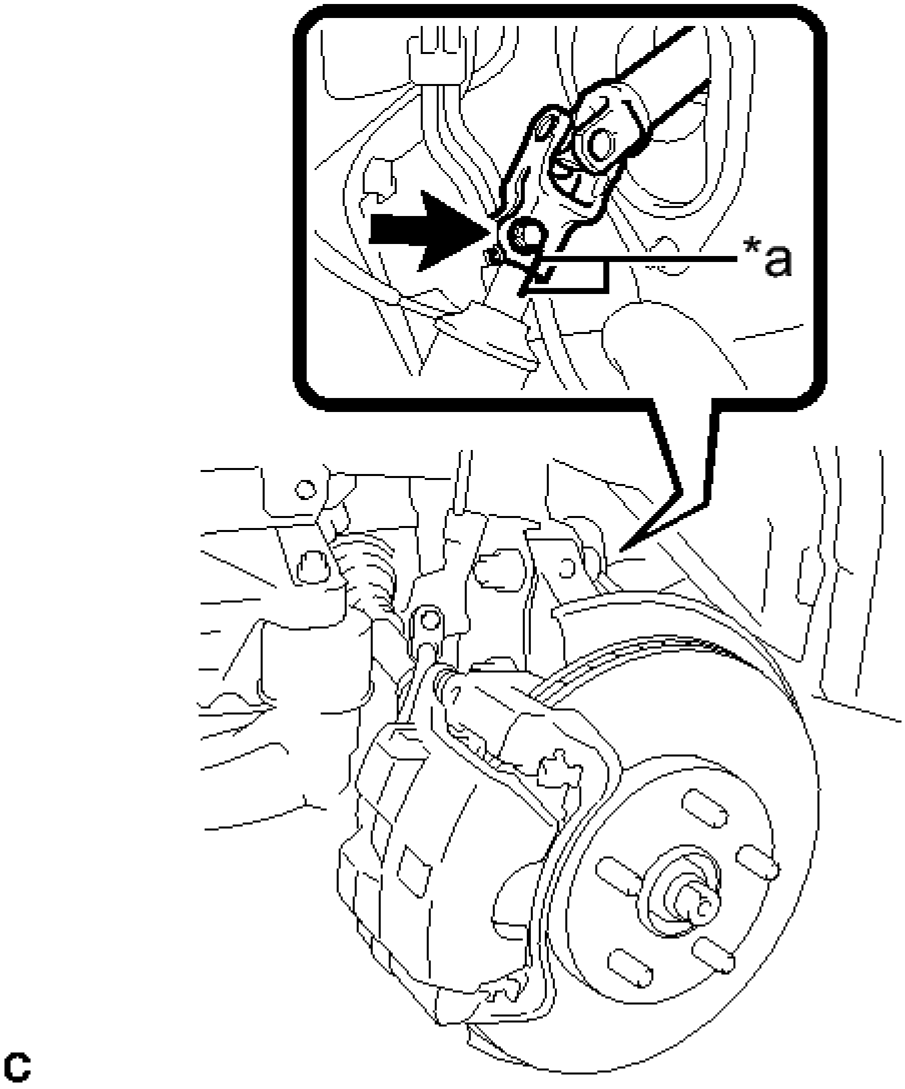

Fig. 83: Identifying Steering Intermediate Shaft Assembly Matchmark And Bolt
Courtesy of TOYOTA MOTOR SALES, U.S.A., INC.

TEXT IN ILLUSTRATION

*a	Matchmark

NOTE: **Align the matchmarks on the steering intermediate shaft assembly and the steering link assembly.**

  b. Install the bolt.

Torque: 35 N*m (360 kgf*cm, 26 ft.*lbf)

c. Tighten the clamp.

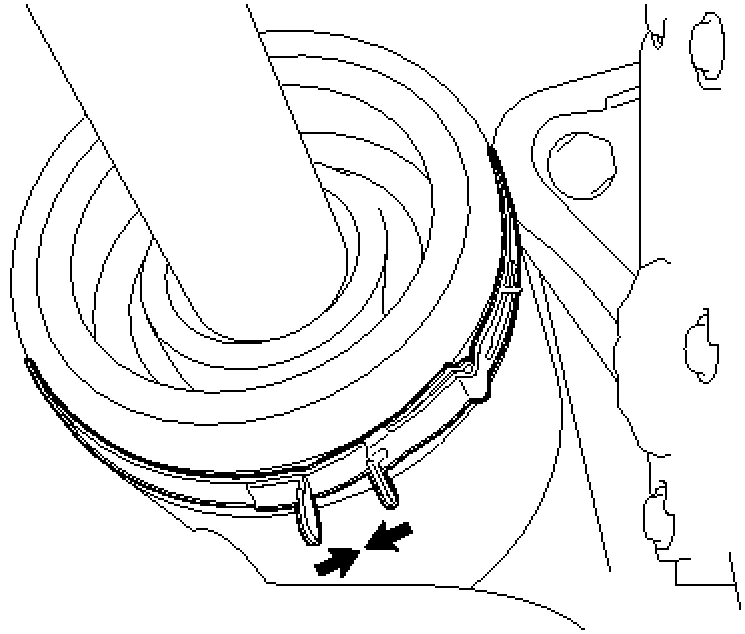

C

Fig. 84: Identifying Clamp Position
Courtesy of TOYOTA MOTOR SALES, U.S.A., INC.

6. **INSTALL TURN SIGNAL SWITCH ASSEMBLY WITH SPIRAL CABLE SUB-ASSEMBLY**

NOTE:

- **Do not replace the spiral cable with the battery connected and the ignition switch ON.**
- **Do not rotate the spiral cable without the steering wheel with the battery connected and the ignition switch ON.**
- **Ensure that the steering wheel is installed and aligned straight when inspecting the steering sensor.**

   a. Engage the 3 claws to install the turn signal switch assembly with spiral cable sub-assembly to the steering post assembly.
   b. Connect the connectors to the turn signal switch assembly with spiral cable sub-assembly.

7. **INSTALL UPPER STEERING COLUMN COVER**
   a. Engage the 2 claws to install the upper steering column cover.
   b. Engage the 4 clips and 2 guides to the upper steering column cover.

8. **INSTALL LOWER STEERING COLUMN COVER**
   a. Engage the 2 claws to install the lower steering column cover.

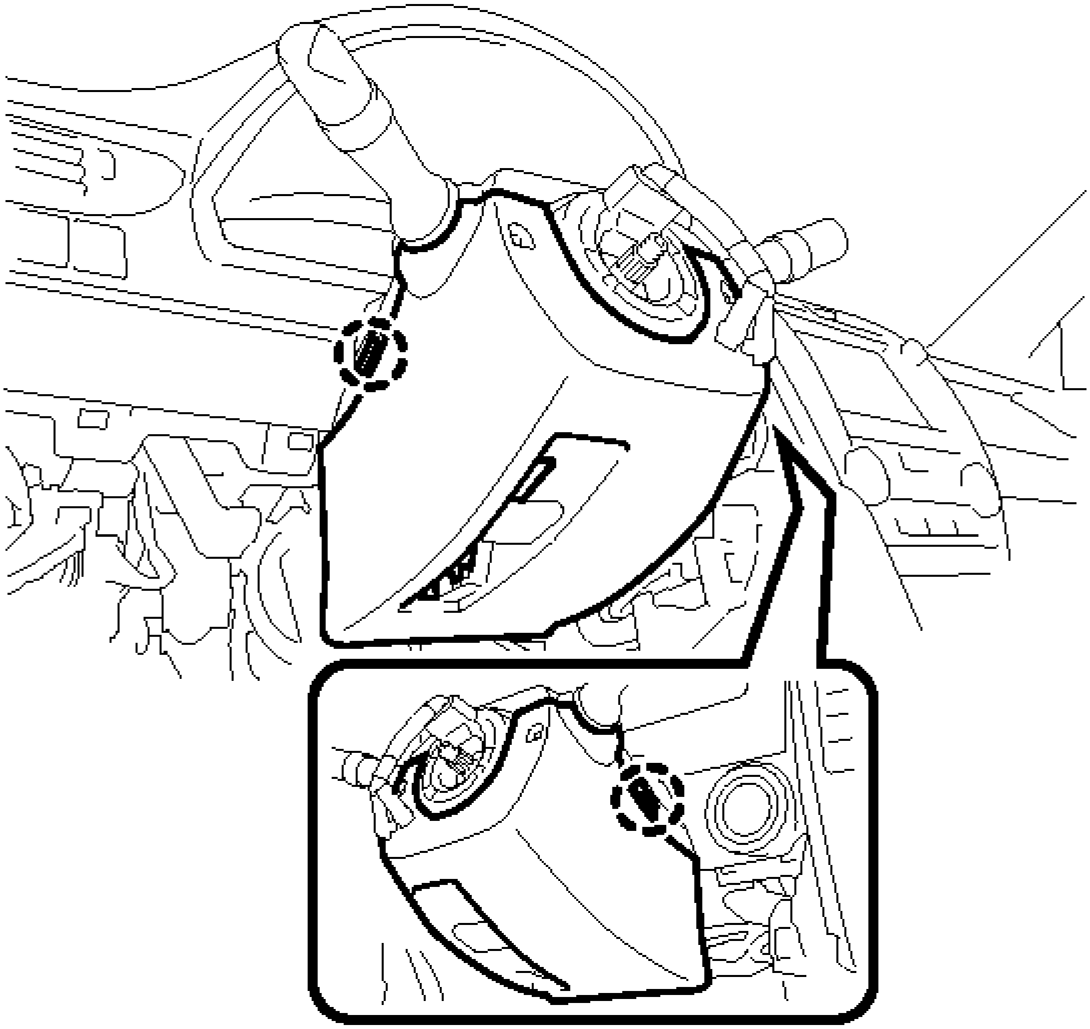

Fig. 85: Locating Lower Steering Column Cover Claws
Courtesy of TOYOTA MOTOR SALES, U.S.A., INC.

b. Install the 2 screws.

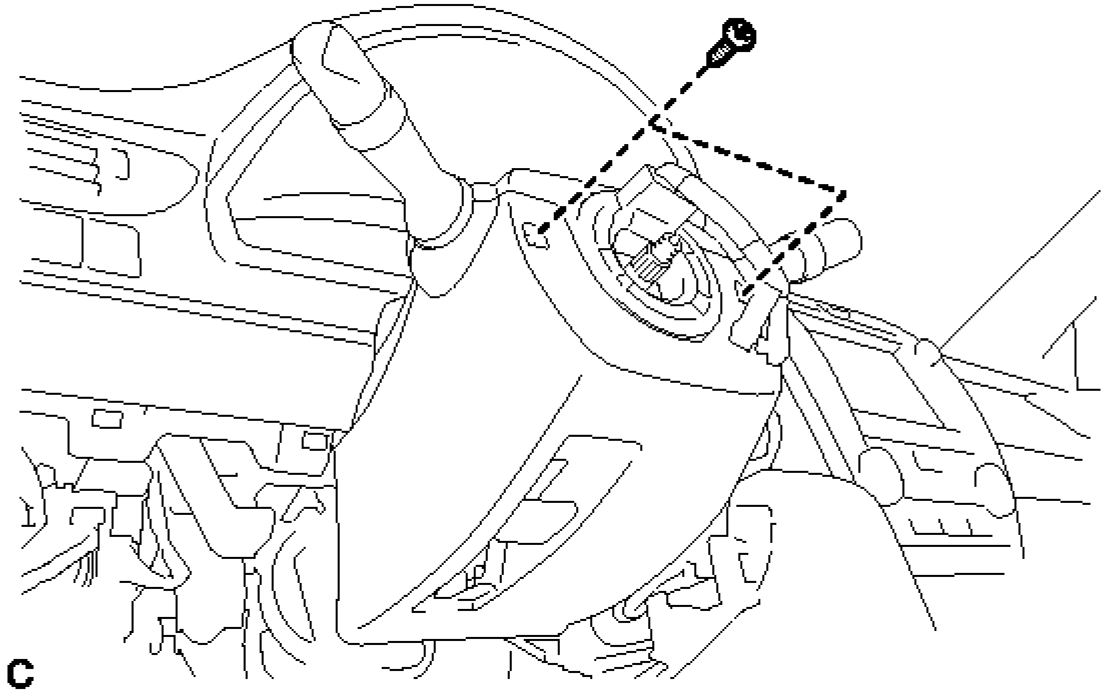

Fig. 86: Locating Lower Steering Column Cover Fasteners
Courtesy of TOYOTA MOTOR SALES, U.S.A., INC.

Torque: 2.0 N*m (20 kgf*cm, 18 in.*lbf)

c. Engage the claw.

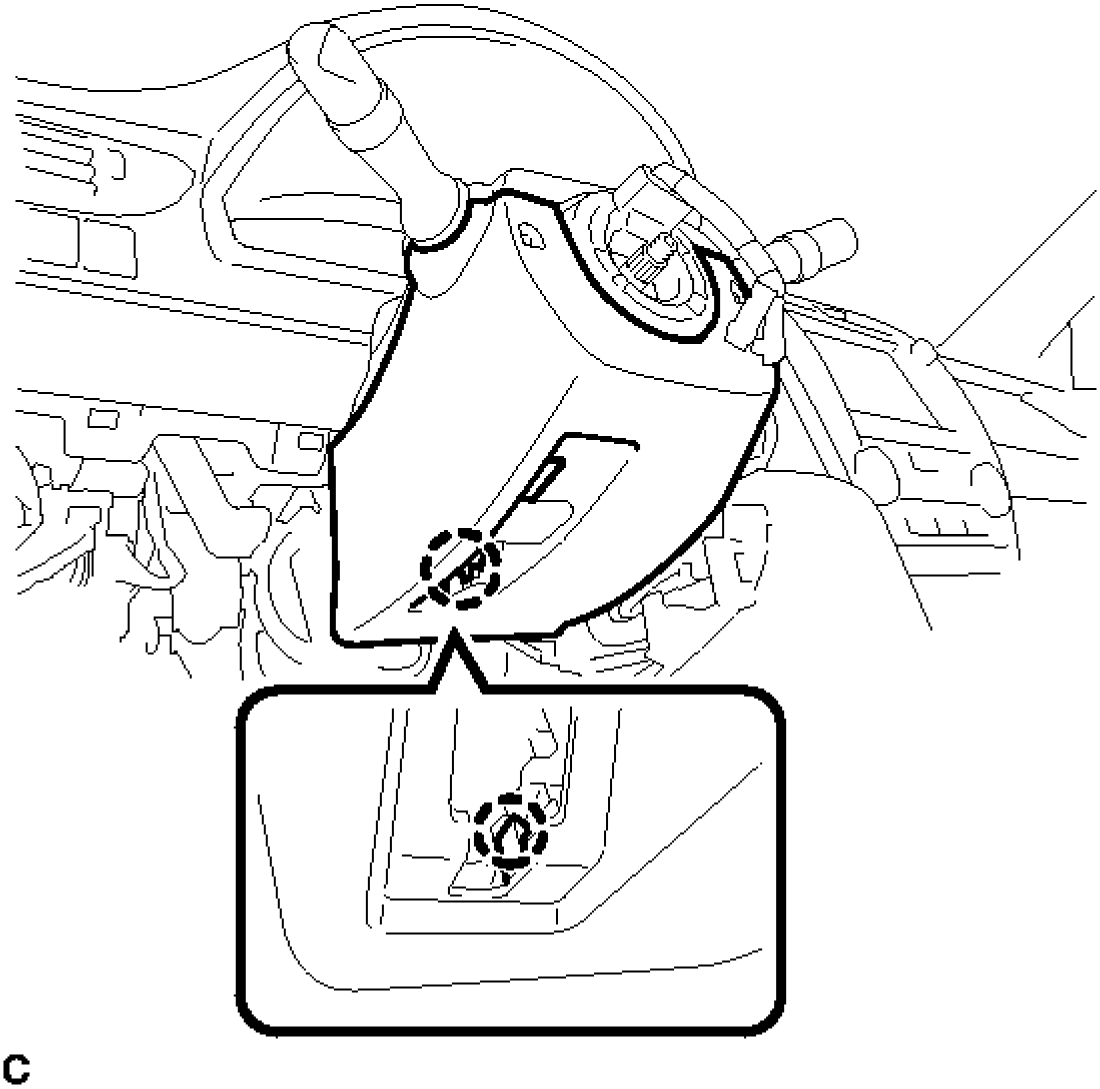

Fig. 87: Locating Lower Steering Column Cover Claw
Courtesy of TOYOTA MOTOR SALES, U.S.A., INC.

9. **TURN FRONT WHEELS TO FACE STRAIGHT AHEAD**
10. **INSPECT AND ADJUST SPIRAL CABLE WITH SENSOR SUB-ASSEMBLY** . Refer to **INSTALLATION - Step 7** .
11. **INSTALL STEERING WHEEL ASSEMBLY (for 3 Spoke)** . See step 11.
12. **INSTALL STEERING WHEEL ASSEMBLY (for 4 Spoke)** . See step 9.
13. **INSPECT STEERING WHEEL CENTER POINT**
14. **INSTALL HORN BUTTON ASSEMBLY**

    Refer to **INSTALLATION** .

15. **INSTALL LOWER NO. 1 INSTRUMENT PANEL AIRBAG ASSEMBLY**

Refer to **INSTALLATION** .

16. **INSTALL FRONT WHEEL LH**

    Torque: 103 N*m (1050 kgf*cm, 76 ft.*lbf)

17. **TORQUE SENSOR ZERO POINT CALIBRATION (for 2AR-FE without Wireless Door Lock)**

    Refer to **CALIBRATION** .

18. **TORQUE SENSOR ZERO POINT CALIBRATION (for 2AR-FE with Wireless Door Lock)**

    Refer to **CALIBRATION** .

STEERING WHEEL (FOR 3 SPOKE)

COMPONENTS

ILLUSTRATION

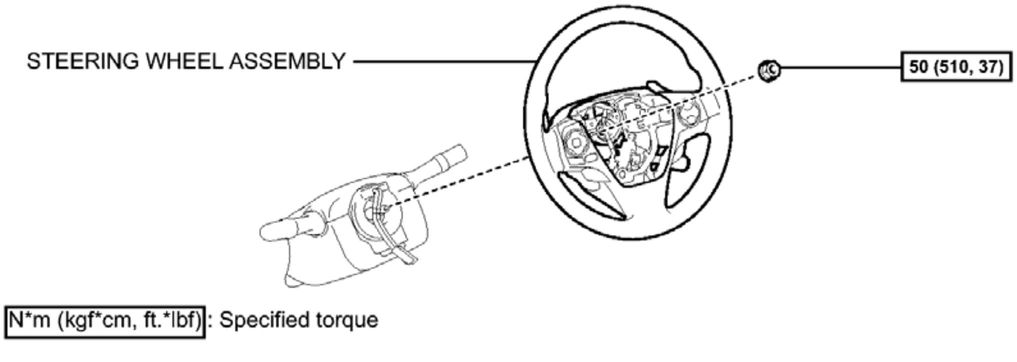
STEERING WHEEL ASSEMBLY
50 (510, 37)
N*m (kgf*cm, ft.*lbf): Specified torque
c

Fig. 88: Identifying Steering Wheel (For 3 Spoke) Replacement Components With Torque Specifications (1 Of 2)
Courtesy of TOYOTA MOTOR SALES, U.S.A., INC.

ILLUSTRATION

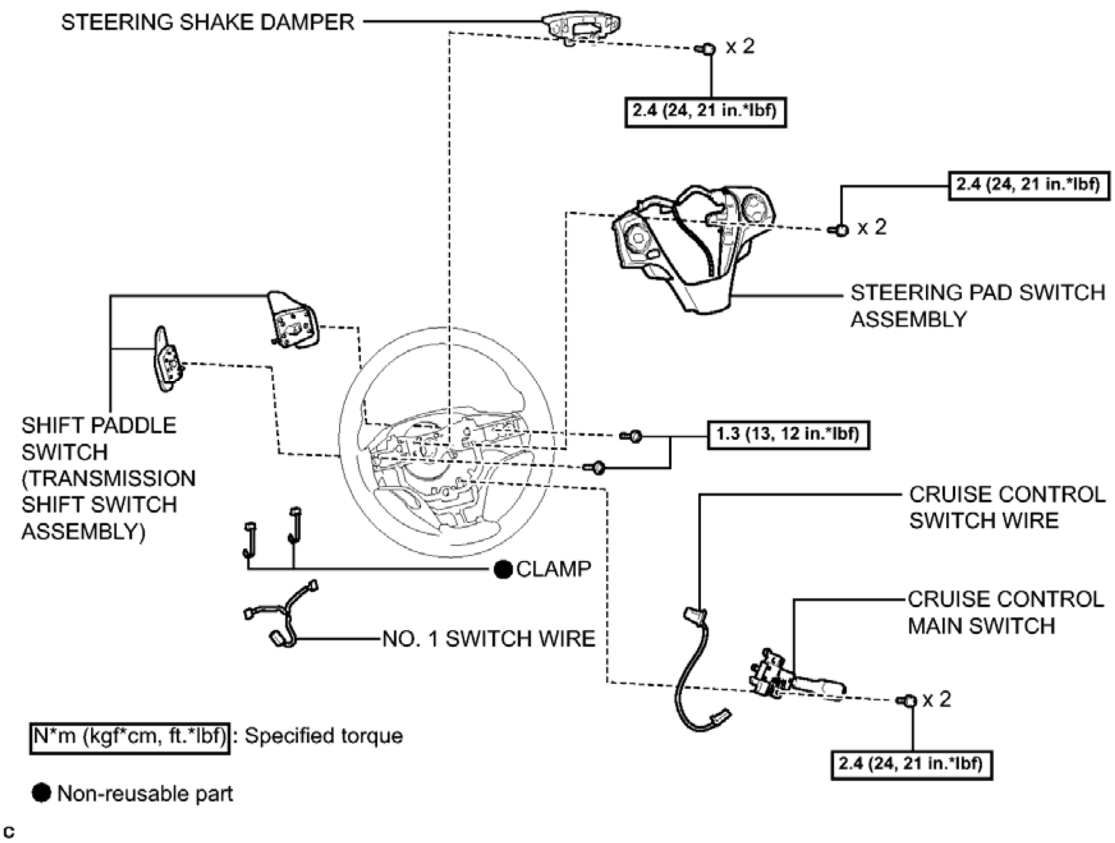
STEERING SHAKE DAMPER
x 2
2.4 (24, 21 in.*lbf)
2.4 (24, 21 in.*lbf)
x 2
STEERING PAD SWITCH ASSEMBLY
SHIFT PADDLE SWITCH (TRANSMISSION SHIFT SWITCH ASSEMBLY)
1.3 (13, 12 in.*lbf)
CRUISE CONTROL SWITCH WIRE
CLAMP
CRUISE CONTROL MAIN SWITCH
NO. 1 SWITCH WIRE
x 2
N*m (kgf*cm, ft.*lbf): Specified torque
2.4 (24, 21 in.*lbf)
Non-reusable part
c

Fig. 89: Identifying Steering Wheel (For 3 Spoke) Replacement Components With Torque Specifications (2 Of 2)
Courtesy of TOYOTA MOTOR SALES, U.S.A., INC.

REMOVAL

REMOVAL

NOTE:

- **Do not replace the spiral cable with the battery connected and the ignition switch ON.**
- **Do not rotate the spiral cable without the steering wheel with the battery connected and the ignition switch ON.**
- **Ensure that the steering wheel is installed and aligned straight when inspecting the steering sensor.**

1. **ALIGN FRONT WHEELS FACING STRAIGHT AHEAD**
2. **REMOVE HORN BUTTON ASSEMBLY**

   Refer to **REMOVAL** .

3. **REMOVE STEERING WHEEL ASSEMBLY**
   a. Remove the steering wheel assembly set nut.

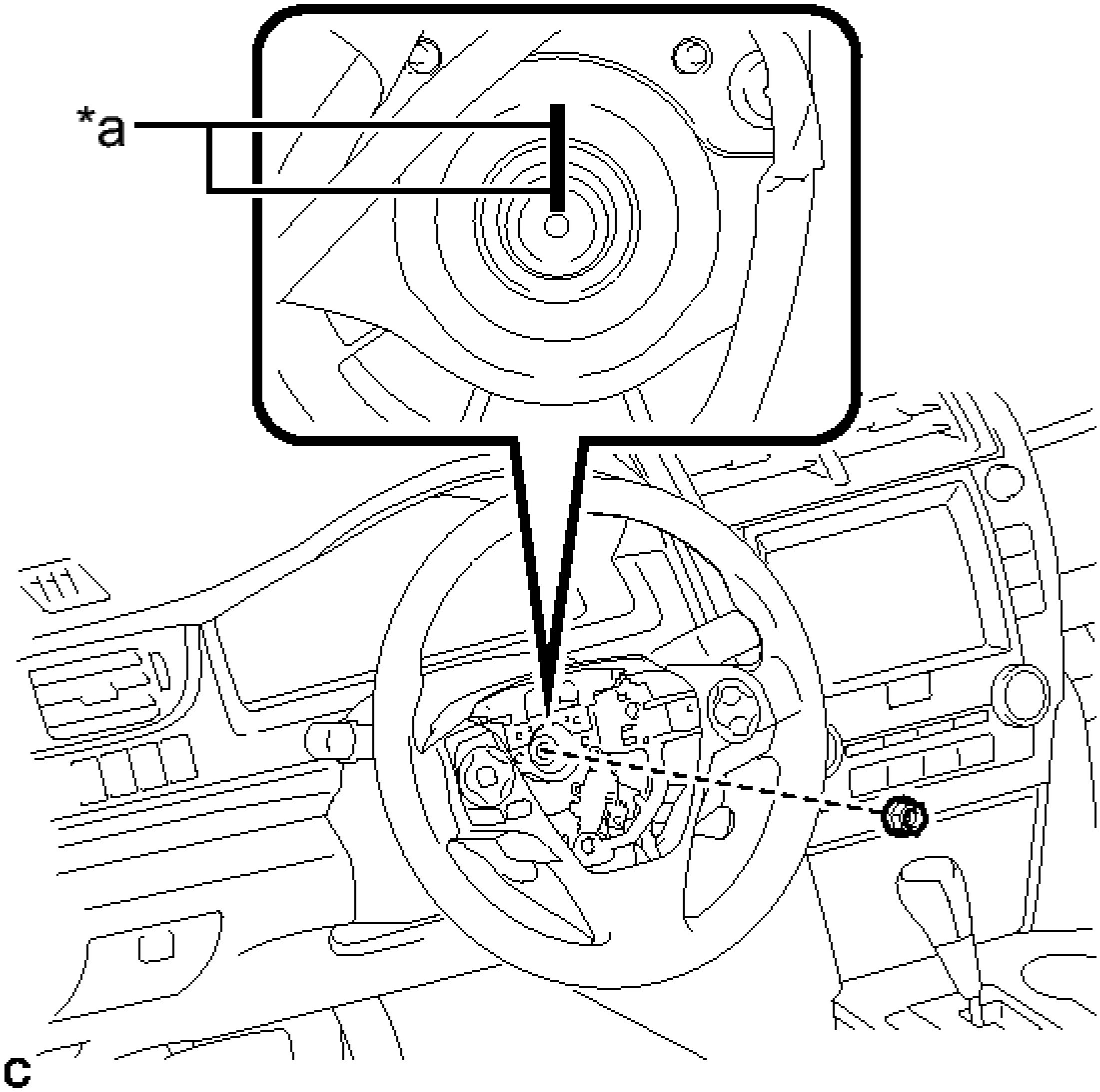

Fig. 90: Identifying Steering Wheel Assembly Matchmark And Nut
Courtesy of TOYOTA MOTOR SALES, U.S.A., INC.

TEXT IN ILLUSTRATION

*a	Matchmark

   b. Put matchmarks on the steering wheel assembly and steering main shaft.
   c. Disconnect the connectors from the spiral cable sub-assembly and steering wheel assembly.
   d. Using SST, remove the steering wheel assembly.

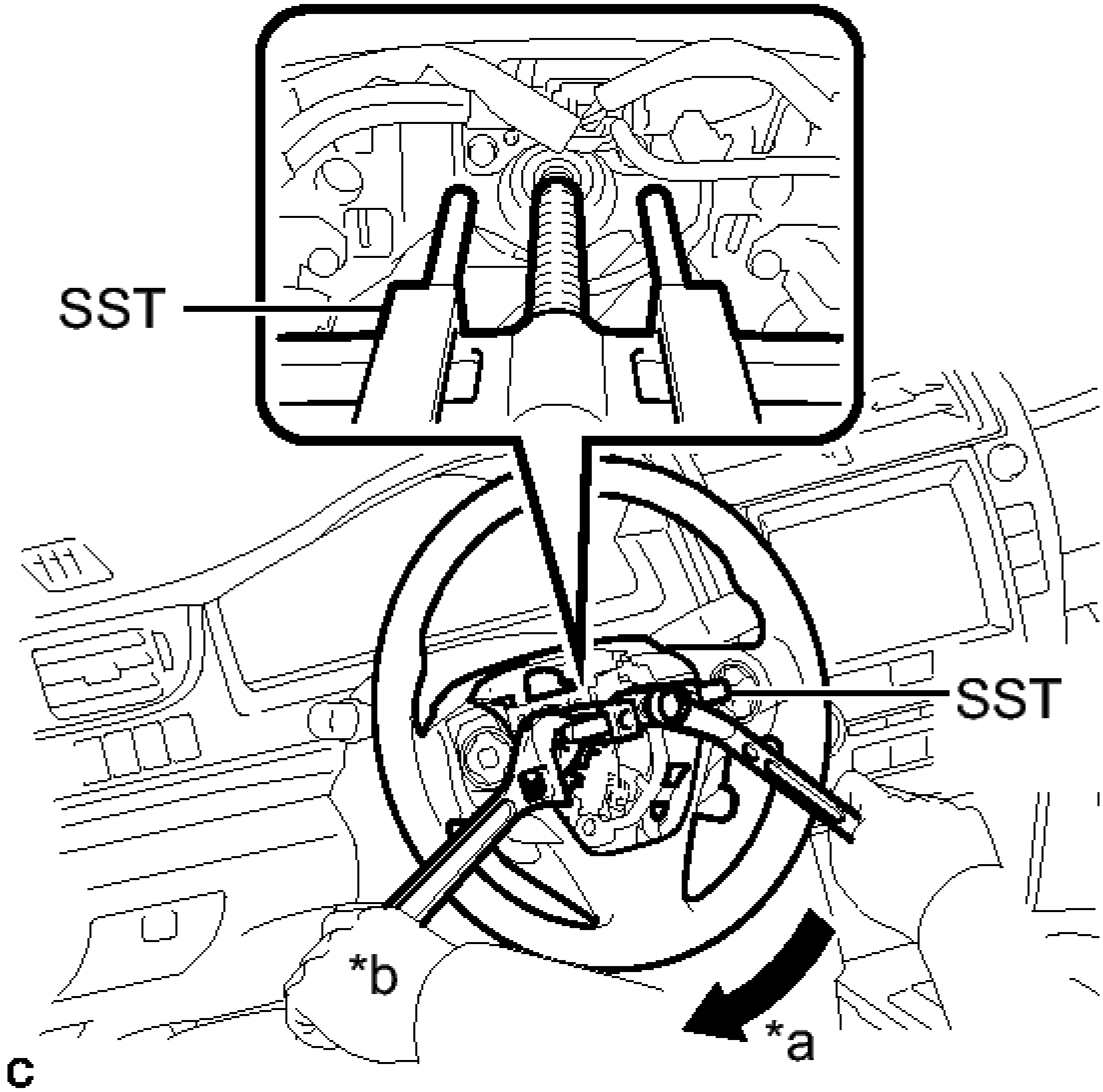

Fig. 91: Removing Steering Wheel Assembly Using SST
Courtesy of TOYOTA MOTOR SALES, U.S.A., INC.

TEXT IN ILLUSTRATION

*a	Turn
*b	Hold

- **SST: 09950-50013**
  09951-05010
  09952-05010
  09953-05020
  09954-05070

NOTE: **Apply a small amount of grease to the threads and tip of SST (09953-**

05020) before use.

4. **REMOVE STEERING PAD SWITCH ASSEMBLY** . See step 2.
5. **REMOVE SHIFT PADDLE SWITCH (TRANSMISSION SHIFT SWITCH ASSEMBLY) (for 2AR-FE)** . Refer to **REMOVAL - Step 5** .
6. **REMOVE SHIFT PADDLE SWITCH (TRANSMISSION SHIFT SWITCH ASSEMBLY) (for 2GR-FE)** . Refer to **REMOVAL - Step 5** .
7. **REMOVE NO. 1 SWITCH WIRE (for 2AR-FE)** . Refer to **REMOVAL - Step 6** .
8. **REMOVE NO. 1 SWITCH WIRE (for 2GR-FE)** . Refer to **REMOVAL - Step 6** .
9. **REMOVE CRUISE CONTROL MAIN SWITCH** . Refer to **REMOVAL - Step 2** .
10. **REMOVE CRUISE CONTROL SWITCH WIRE**
    a. Remove the cruise control switch wire.
11. **REMOVE STEERING SHAKE DAMPER**
    a. Remove the 2 screws and steering shake damper from the steering wheel sub-assembly.

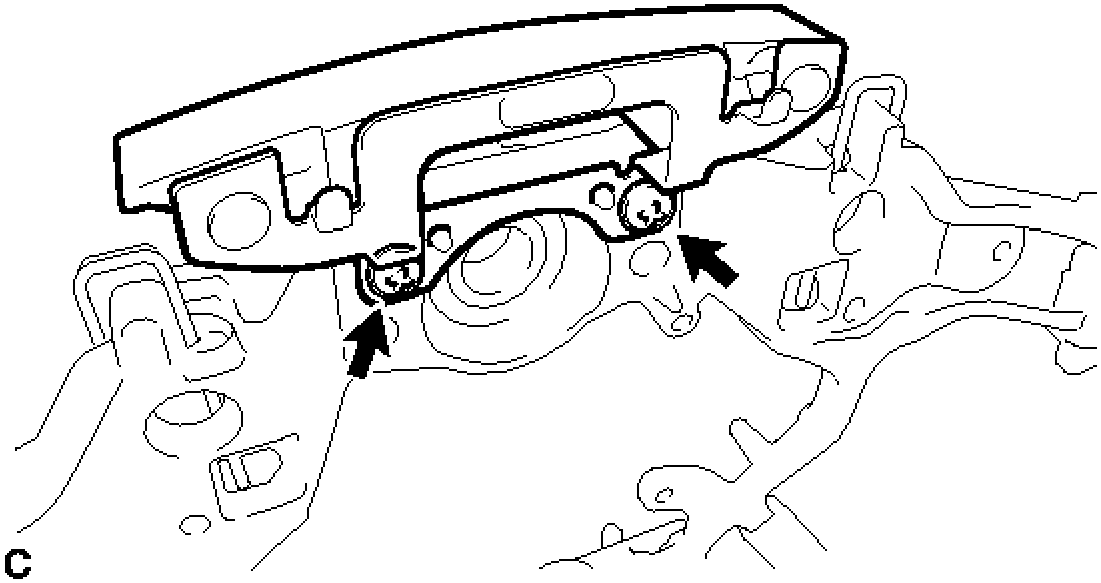

Fig. 92: Locating Steering Shake Damper Fasteners
Courtesy of TOYOTA MOTOR SALES, U.S.A., INC.

INSTALLATION

INSTALLATION

NOTE:

- **Do not replace the spiral cable with the battery connected and the ignition switch ON.**

- **Do not rotate the spiral cable without the steering wheel with the battery connected and the ignition switch ON.**
- **Ensure that the steering wheel is installed and aligned straight when inspecting the steering sensor.**

1. **INSTALL STEERING SHAKE DAMPER**
   1. Install the steering shake damper to the steering wheel sub-assembly with the 2 screws.

      Torque: 2.4 N*m (24 kgf*cm, 21 in.*lbf)
2. **INSTALL CRUISE CONTROL SWITCH WIRE**
   1. Install the cruise control switch wire.
3. **INSTALL CRUISE CONTROL MAIN SWITCH** . Refer to **INSTALLATION - Step 1** .
4. **CONNECT NO. 1 SWITCH WIRE (for 2AR-FE)** . Refer to **INSTALLATION - Step 1** .
5. **CONNECT NO. 1 SWITCH WIRE (for 2GR-FE)** . Refer to **INSTALLATION - Step 1** .
6. **INSTALL SHIFT PADDLE SWITCH (TRANSMISSION SHIFT SWITCH ASSEMBLY) (for 2AR-FE)** . Refer to **INSTALLATION - Step 2** .
7. **INSTALL SHIFT PADDLE SWITCH (TRANSMISSION SHIFT SWITCH ASSEMBLY) (for 2GR-FE)** . Refer to **INSTALLATION - Step 2** .
8. **INSTALL STEERING PAD SWITCH ASSEMBLY** . See step 1.
9. **ALIGN FRONT WHEELS FACING STRAIGHT AHEAD**
10. **INSPECT AND ADJUST SPIRAL CABLE WITH SENSOR SUB-ASSEMBLY** . Refer to **INSTALLATION - Step 7** .
11. **INSTALL STEERING WHEEL ASSEMBLY**
    1. Install the steering wheel assembly aligning the matchmarks on the steering wheel assembly and steering main shaft.

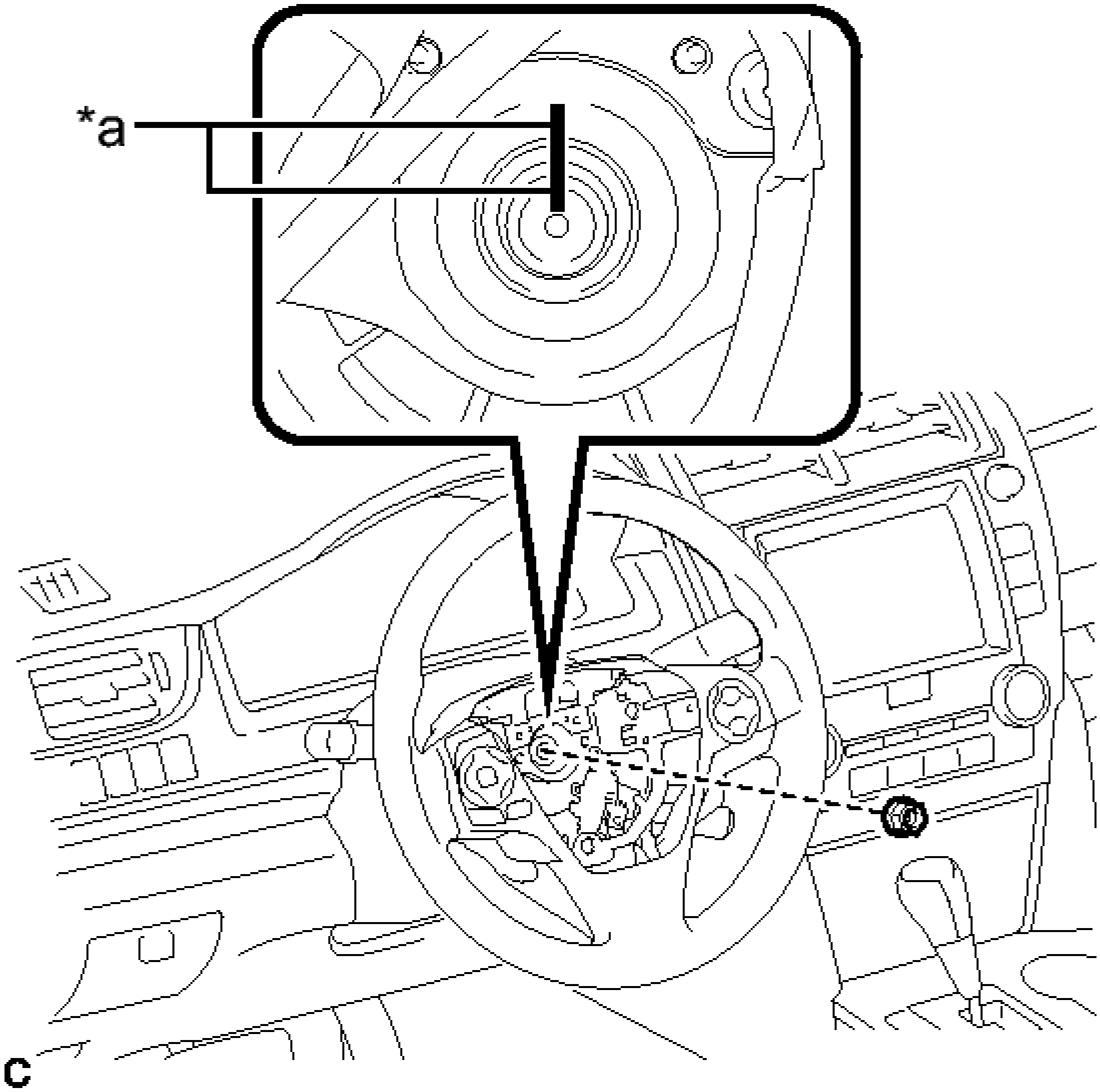

Fig. 93: Identifying Steering Wheel Assembly Matchmark And Nut
Courtesy of TOYOTA MOTOR SALES, U.S.A., INC.

TEXT IN ILLUSTRATION

*a	Matchmark

b. Install the steering wheel assembly set nut.

Torque: 50 N*m (510 kgf*cm, 37 ft.*lbf)

c. Connect the connectors to the spiral cable sub-assembly and steering wheel assembly.

12. **CHECK STEERING WHEEL CENTER POINT**
13. **INSTALL HORN BUTTON ASSEMBLY**

Refer to **INSTALLATION** .

STEERING WHEEL (FOR 4 SPOKE)

COMPONENTS

ILLUSTRATION

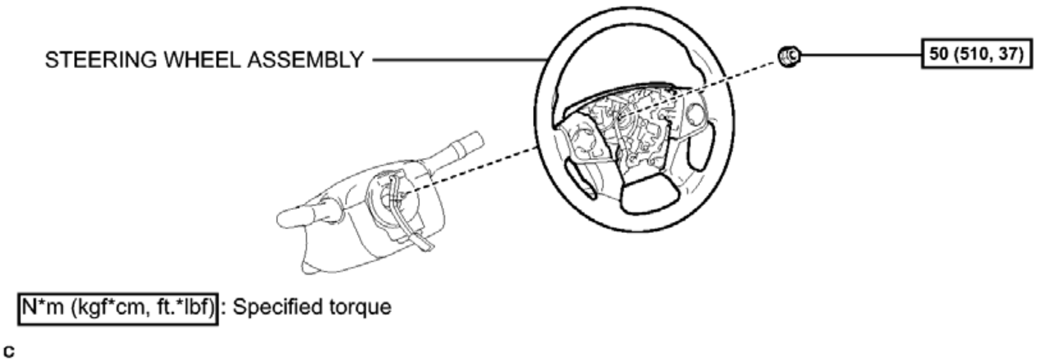
STEERING WHEEL ASSEMBLY
50 (510, 37)
N*m (kgf*cm, ft.*lbf): Specified torque
c

Fig. 94: Identifying Steering Wheel (For 4 Spoke) Replacement Components With Torque Specifications (1 Of 2)
Courtesy of TOYOTA MOTOR SALES, U.S.A., INC.

ILLUSTRATION

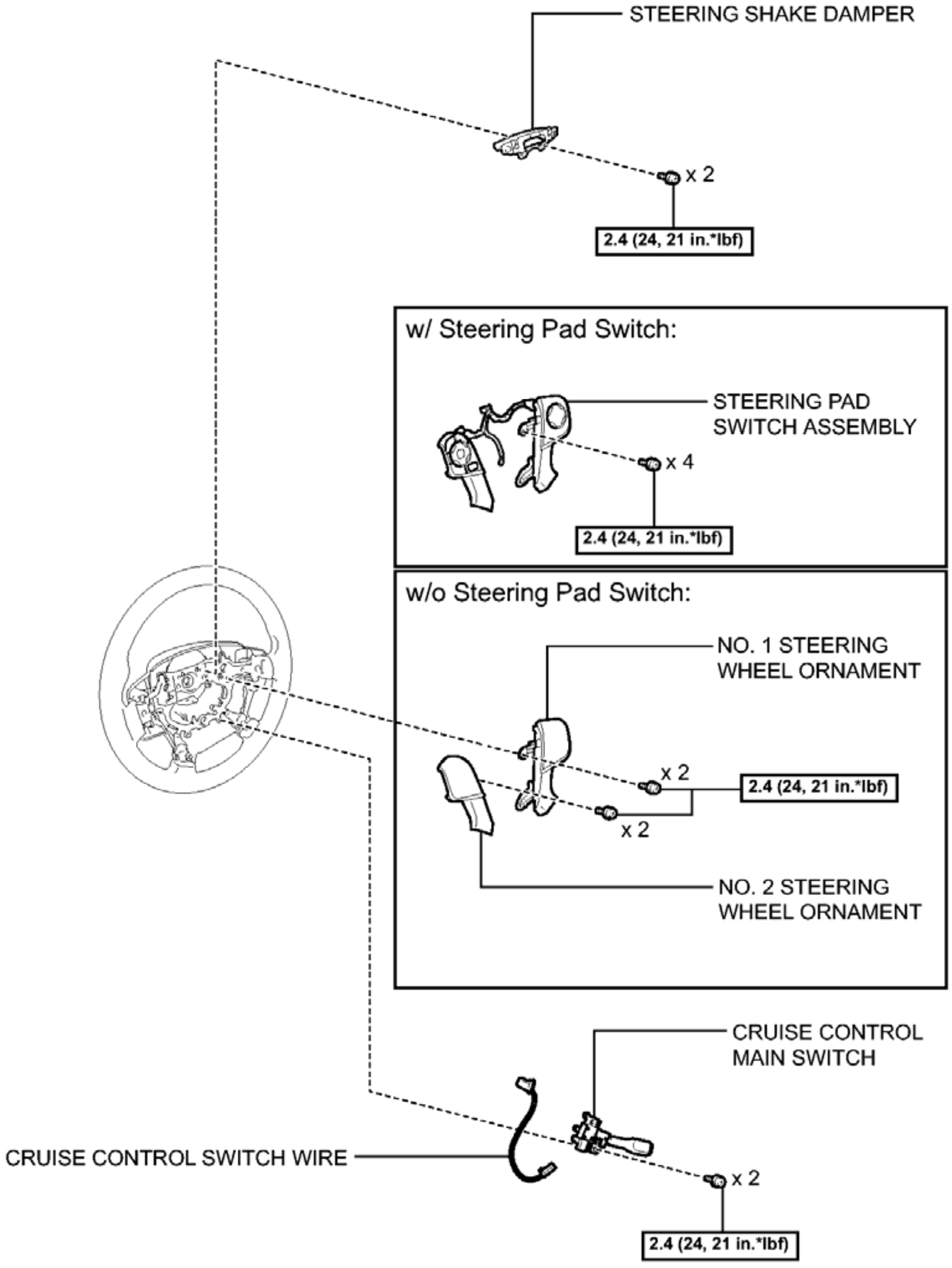
STEERING SHAKE DAMPER
x 2
2.4 (24, 21 in.*lbf)
w/ Steering Pad Switch:
STEERING PAD
SWITCH ASSEMBLY
x 4
2.4 (24, 21 in.*lbf)
w/o Steering Pad Switch:
NO. 1 STEERING
WHEEL ORNAMENT
x 2
2.4 (24, 21 in.*lbf)
x 2
NO. 2 STEERING
WHEEL ORNAMENT
CRUISE CONTROL
MAIN SWITCH
CRUISE CONTROL SWITCH WIRE
x 2
2.4 (24, 21 in.*lbf)
N*m (kgf*cm, ft.*lbf) : Specified torque

c

Fig. 95: Identifying Steering Wheel (For 4 Spoke) Replacement Components With Torque Specifications (2 Of 2)

Courtesy of TOYOTA MOTOR SALES, U.S.A., INC.

REMOVAL

REMOVAL

NOTE:

- **Do not replace the spiral cable with the battery connected and the ignition switch ON.**
- **Do not rotate the spiral cable without the steering wheel with the battery connected and the ignition switch ON.**
- **Ensure that the steering wheel is installed and aligned straight when inspecting the steering sensor.**

1. **ALIGN FRONT WHEELS FACING STRAIGHT AHEAD**
2. **REMOVE HORN BUTTON ASSEMBLY**

   Refer to **REMOVAL** .

3. **REMOVE STEERING WHEEL ASSEMBLY**
   a. Remove the steering wheel assembly set nut.

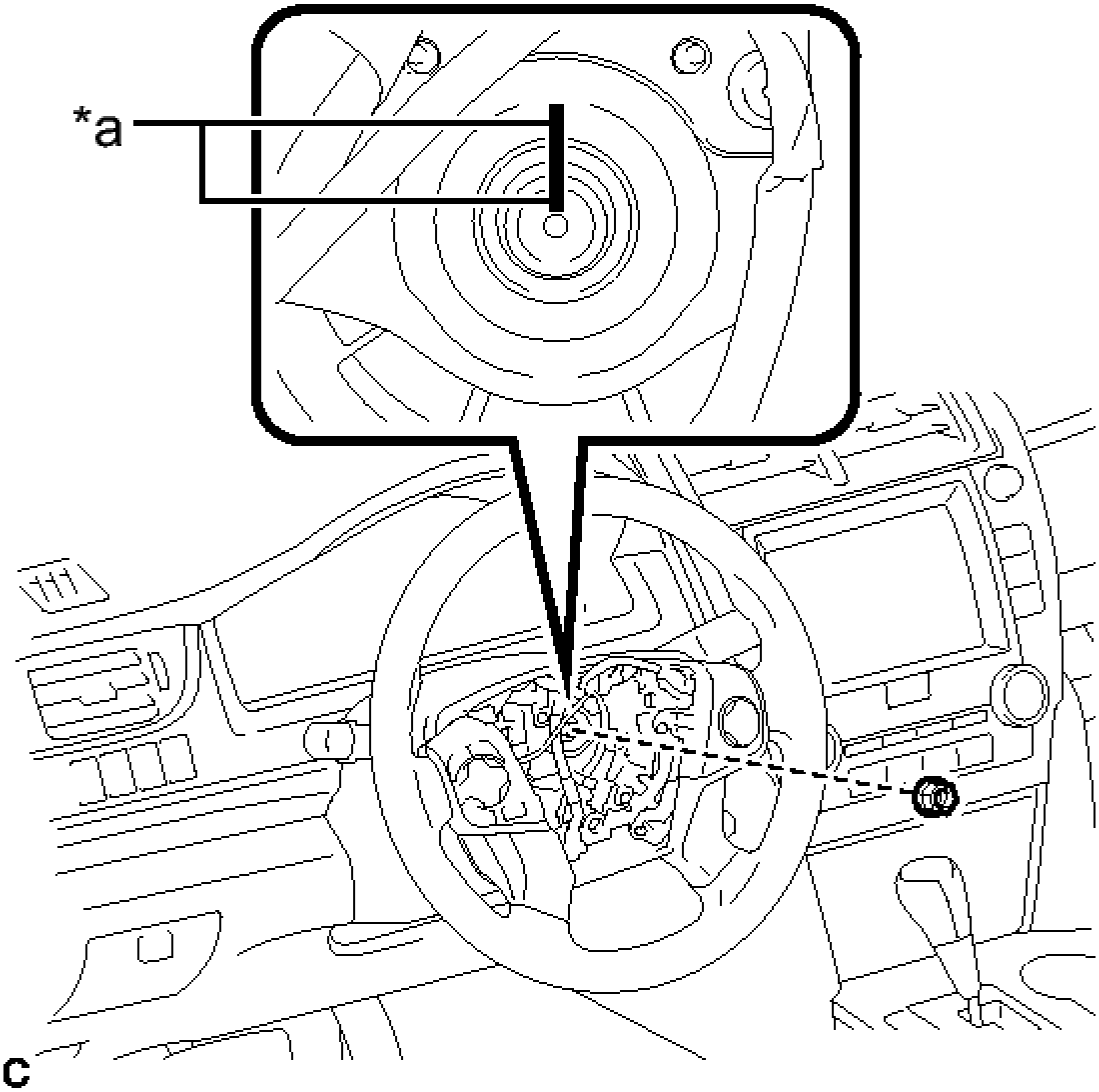

Fig. 96: Identifying Steering Wheel Assembly Matchmark And Nut
Courtesy of TOYOTA MOTOR SALES, U.S.A., INC.

TEXT IN ILLUSTRATION

*a	Matchmark

b. Put matchmarks on the steering wheel assembly and steering main shaft.
c. Disconnect the connectors from the spiral cable sub-assembly.
d. Using SST, remove the steering wheel assembly.

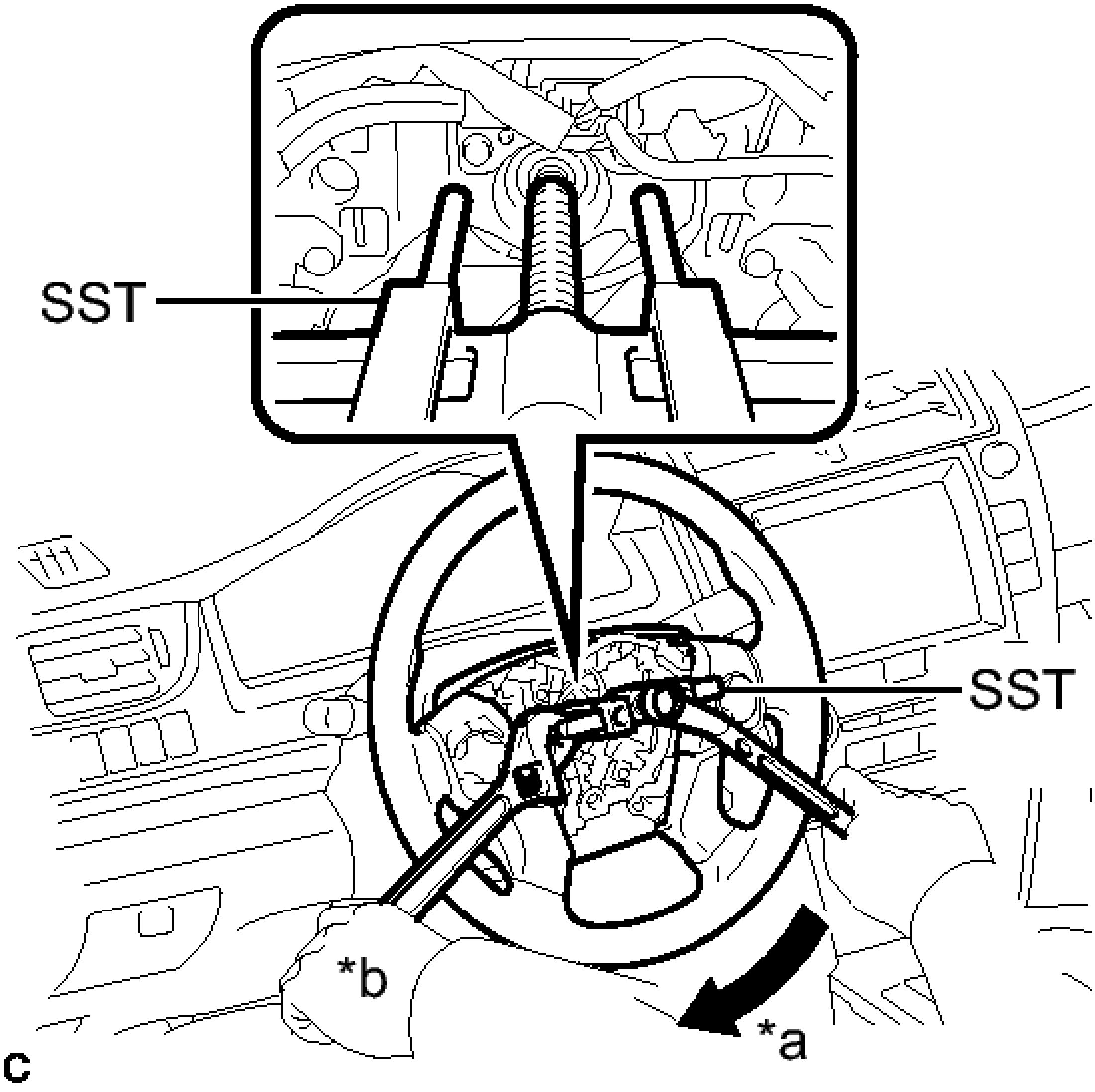

Fig. 97: Removing Steering Wheel Assembly Using SST
Courtesy of TOYOTA MOTOR SALES, U.S.A., INC.

TEXT IN ILLUSTRATION

*a	Turn
*b	Hold

- **SST: 09950-50013**
  09951-05010
  09952-05010
  09953-05020
  09954-05070

NOTE: **Apply a small amount of grease to the threads and tip of SST (09953-**

05020) before use.

4. **REMOVE NO. 1 STEERING WHEEL ORNAMENT (w/o Steering Pad Switch)**
    a. Remove the 2 screws.

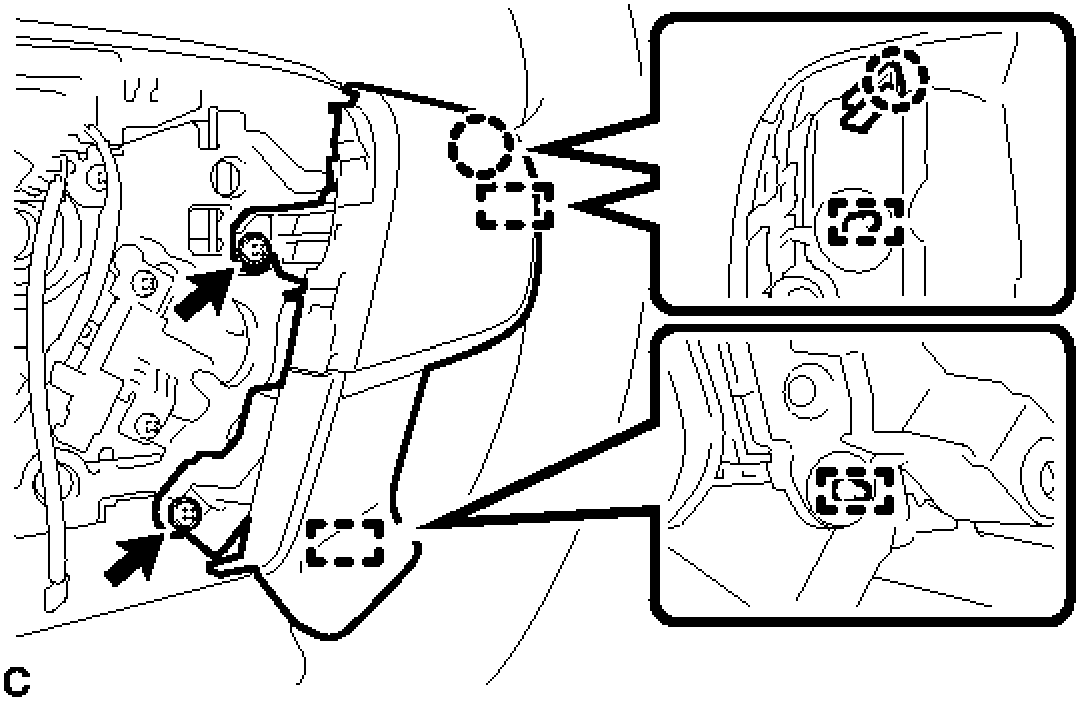

Fig. 98: Identifying No. 1 Steering Wheel Ornament (w/o Steering Pad Switch RH) Fasteners
Courtesy of TOYOTA MOTOR SALES, U.S.A., INC.

    b. Disengage the claw and 2 pins to remove the No. 1 steering wheel ornament from the steering wheel sub-assembly.
5. **REMOVE NO. 2 STEERING WHEEL ORNAMENT (w/o Steering Pad Switch)**

    HINT:

    Use the same procedure for the No. 1 steering wheel ornament.

6. **REMOVE STEERING PAD SWITCH ASSEMBLY (w/ Steering Pad Switch)** . See step 2.
7. **REMOVE CRUISE CONTROL MAIN SWITCH** . Refer to **REMOVAL - Step 2** .
8. **REMOVE CRUISE CONTROL SWITCH WIRE**
    a. Remove the cruise control switch wire.
9. **REMOVE STEERING SHAKE DAMPER**
    a. Remove the 2 screws and steering shake damper from the steering wheel sub-assembly.

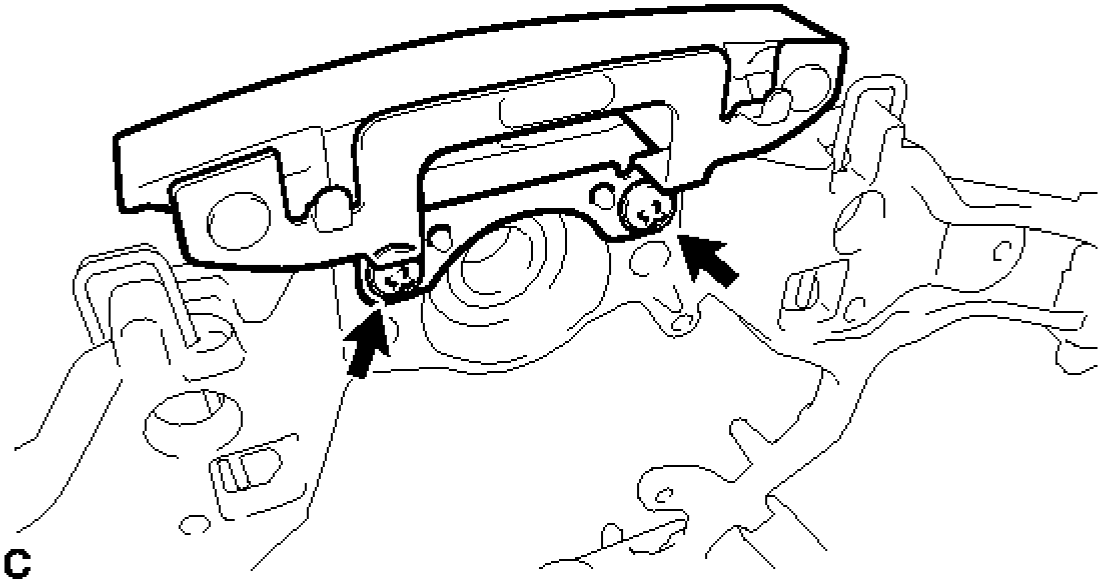

Fig. 99: Locating Steering Shake Damper Fasteners
Courtesy of TOYOTA MOTOR SALES, U.S.A., INC.

INSTALLATION

INSTALLATION

NOTE:

- **Do not replace the spiral cable with the battery connected and the ignition switch ON.**
- **Do not rotate the spiral cable without the steering wheel with the battery connected and the ignition switch ON.**
- **Ensure that the steering wheel is installed and aligned straight when inspecting the steering sensor.**

1. **INSTALL STEERING SHAKE DAMPER**
    a. Install the steering shake damper to the steering wheel sub-assembly with the 2 screws.

       Torque: 2.4 N*m (24 kgf*cm, 21 in.*lbf)
2. **INSTALL CRUISE CONTROL SWITCH WIRE**
    a. Install the cruise control switch wire.
3. **INSTALL CRUISE CONTROL MAIN SWITCH** . Refer to **INSTALLATION - Step 1** .
4. **INSTALL NO. 1 STEERING WHEEL ORNAMENT (w/o Steering Pad Switch)**
    a. Engage the claw and 2 pins to install the No. 1 steering wheel ornament to the steering wheel sub-assembly.

   b. Install the 2 screws.

      Torque: 2.4 N*m (24 kgf*cm, 21 in.*lbf)

5. **INSTALL NO. 2 STEERING WHEEL ORNAMENT (w/o Steering Pad Switch)**

   HINT:

   Use the same procedure for the No. 1 steering wheel ornament.

6. **INSTALL STEERING PAD SWITCH ASSEMBLY (w/ Steering Pad Switch)** . See step 1.
7. **ALIGN FRONT WHEELS FACING STRAIGHT AHEAD**
8. **INSPECT AND ADJUST SPIRAL CABLE WITH SENSOR SUB-ASSEMBLY** . Refer to **INSTALLATION - Step 7** .
9. **INSTALL STEERING WHEEL ASSEMBLY**
   a. Install the steering wheel assembly aligning the matchmarks on the steering wheel assembly and steering main shaft.

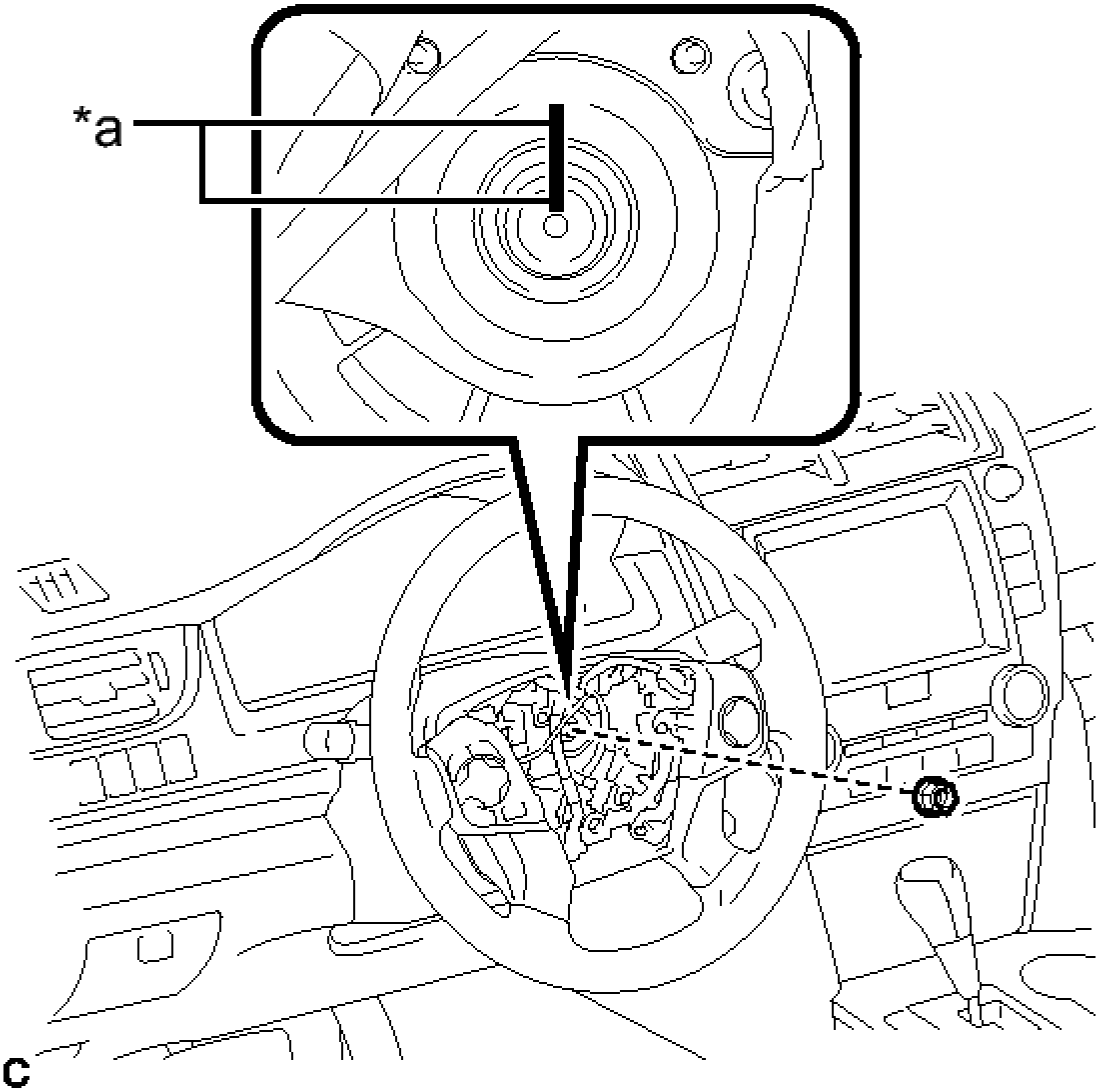

Fig. 100: Identifying Steering Wheel Assembly Matchmark And Nut
Courtesy of TOYOTA MOTOR SALES, U.S.A., INC.

TEXT IN ILLUSTRATION

*a	Matchmark

b. Install the steering wheel assembly set nut.

Torque: 50 N*m (510 kgf*cm, 37 ft.*lbf)

c. Connect the connectors to the spiral cable sub-assembly.

10. **CHECK STEERING WHEEL CENTER POINT**
11. **INSTALL HORN BUTTON ASSEMBLY**

Refer to **INSTALLATION** .

STEERING PAD SWITCH (FOR 3 SPOKE)

COMPONENTS

ILLUSTRATION

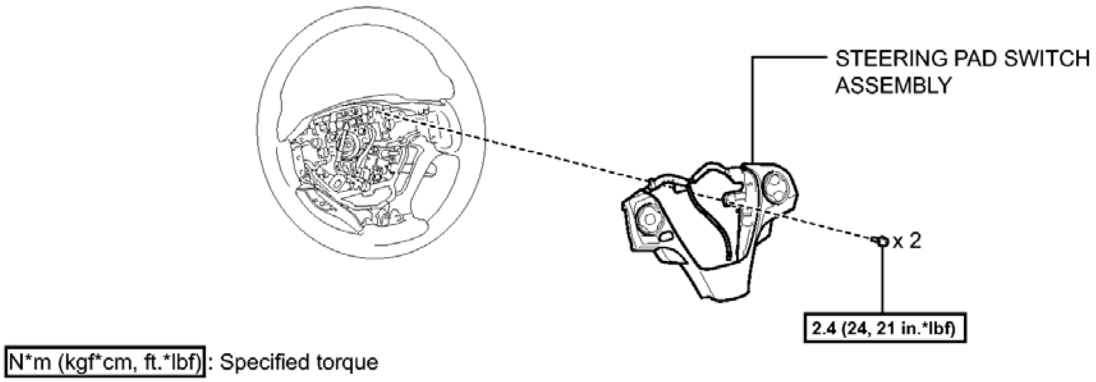
STEERING PAD SWITCH ASSEMBLY
x 2
2.4 (24, 21 in.*lbf)
N*m (kgf*cm, ft.*lbf): Specified torque

c

Fig. 101: Identifying Steering Pad Switch (For 3 Spoke) Replacement Components With Torque Specifications
Courtesy of TOYOTA MOTOR SALES, U.S.A., INC.

REMOVAL

REMOVAL

1. **REMOVE HORN BUTTON ASSEMBLY**

   Refer to **REMOVAL** .

2. **REMOVE STEERING PAD SWITCH ASSEMBLY**
   a. Disconnect the steering pad switch connector from the spiral cable sub-assembly.
   b. Disconnect the No. 1 switch wire connector.

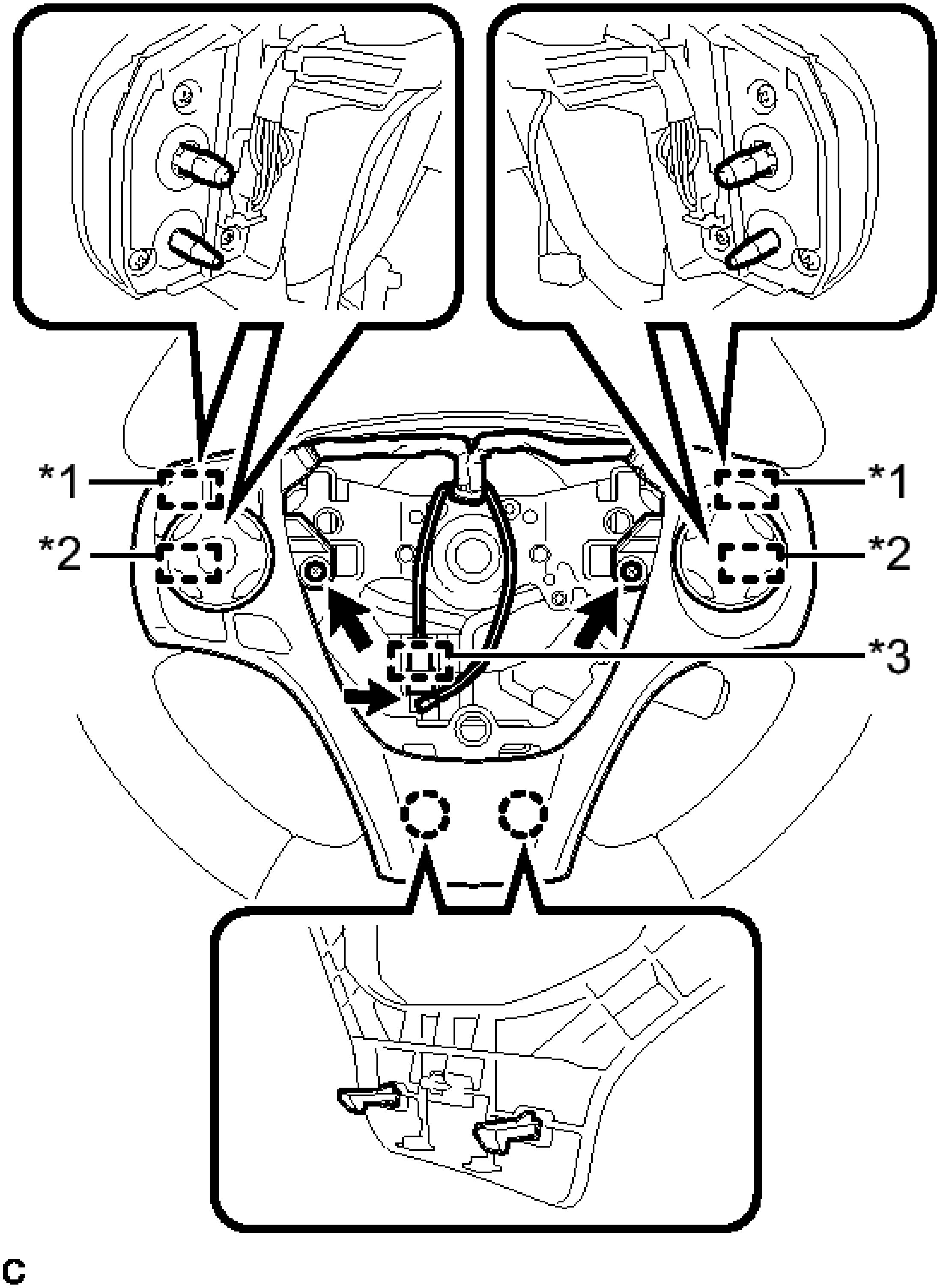

Fig. 102: Identifying Steering Pad Switch Assembly
Courtesy of TOYOTA MOTOR SALES, U.S.A., INC.

TEXT IN ILLUSTRATION

*1	Pin

*2	Guide
*3	Clamp

c. Disengage the clamp.
d. Remove the 2 screws.
e. Disengage the 2 claws, 2 pins and 2 guides to remove the steering pad switch assembly.

INSPECTION

INSPECTION

1. **INSPECT STEERING PAD SWITCH ASSEMBLY**
   a. Measure the resistance according to the value(s) in the table below.

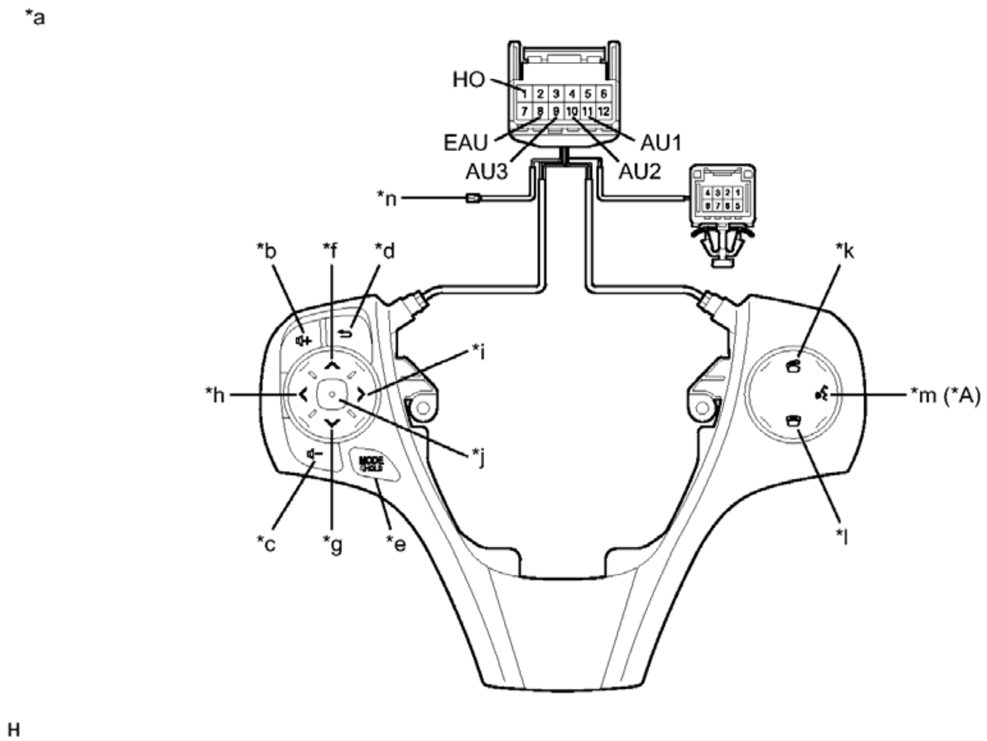
*a
HO
1 2 3 4 5 6
7 8 9 10 11 12
EAU
AU1
AU3
AU2
*n
4 3 2 1
8 7 6 5
*b
*f
*d
*k
*i
*h
*m (*A)
*j
MODE HOLD
*c
*g
*e
*l
H

Fig. 103: Inspecting Steering Pad Switch Assembly
Courtesy of TOYOTA MOTOR SALES, U.S.A., INC.

Standard Resistance

Tester Connection	Condition	Specified Condition
1 (HO) - Terminal-A	Always	Below 1 ohms
	No switch	95 to 105

11 (AU1) - 8 (EAU)	pushed	kohms
	Up switch pushed	Below 2.5 ohms
	Down switch pushed	313 to 345 ohms
	Volume+ switch pushed	950 to 1050 ohms
	Volume- switch pushed	2955 to 3265 ohms
10 (AU2) - 8 (EAU)	No switch pushed	95 to 105 kohms
	MODE/HOLD switch pushed	Below 2.5 ohms
	On hook switch pushed	313 to 345 ohms
	Off hook switch pushed	950 to 1050 ohms
	Voice switch pushed*1	2955 to 3265 ohms
9 (AU3) - 8 (EAU)	No switch pushed	95 to 105 kohms
	Enter switch pushed	Below 2.5 ohms
	Back switch pushed	313 to 345 ohms
	Right switch pushed	950 to 1050 ohms
	Left switch pushed	2955 to 3265 ohms

*1: w/ Voice Switch of Steering Pad Switch Assembly

HINT:

If the result is not as specified, replace the steering pad switch assembly.

TEXT IN ILLUSTRATION

	w/ Voice Switch of		

*A	Steering Pad Switch Assembly	-	-
*a	Component without harness connected (Steering Pad Switch Assembly)	*b	Volume+
*c	Volume-	*d	Back
*e	MODE/HOLD	*f	Up
*g	Down	*h	Left
*i	Right	*j	Enter
*k	Off hook	*l	On hook
*m	Voice	*n	Terminal-A

b. Check the illumination.

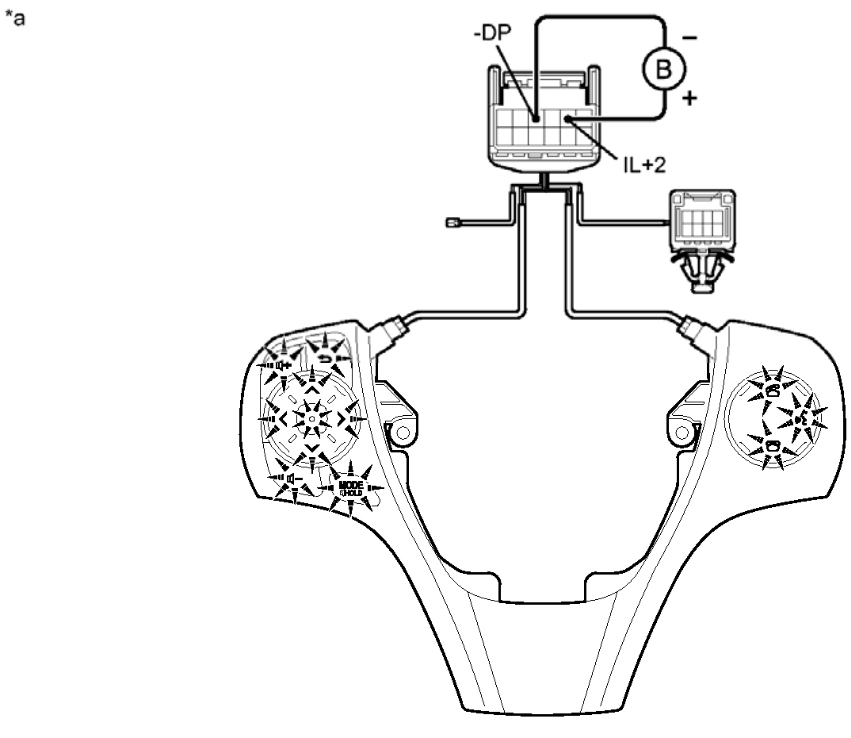

Fig. 104: Checking Steering Pad Switch Assembly Illumination
Courtesy of TOYOTA MOTOR SALES, U.S.A., INC.

1. Connect a battery positive (+) lead to terminal IL+2 and a negative (-) lead to terminal -DP of the steering pad switch assembly connector.

2. Check that the switch illumination comes on.

   OK

   Steering pad switch illumination comes on.

   HINT:

   If the result is not as specified, replace the steering pad switch assembly.

   TEXT IN ILLUSTRATION

*a	Component without harness connected (Steering Pad Switch Assembly)	-	-

INSTALLATION

INSTALLATION

1. **INSTALL STEERING PAD SWITCH ASSEMBLY**
   a. Engage the 2 claws, 2 pins and 2 guides to install the steering pad switch assembly.
   b. Install the 2 screws.

      Torque: 2.4 N*m (24 kgf*cm, 21 in.*lbf)

   c. Engage the clamp.
   d. Connect the No. 1 switch wire connector.
   e. Connect the steering pad switch connector to the spiral cable sub-assembly.
   f. Pass the wire harness over the 2 guides.

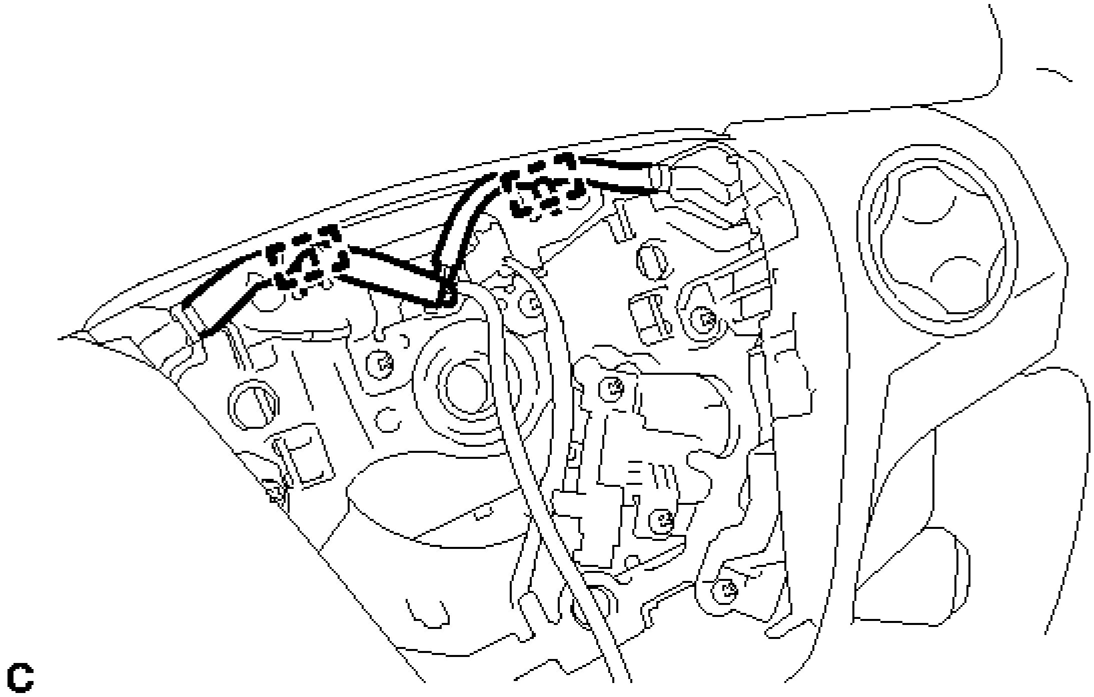

Fig. 105: Identifying Steering Pad Switch Assembly Wire Harness Guides
Courtesy of TOYOTA MOTOR SALES, U.S.A., INC.

2. **INSTALL HORN BUTTON ASSEMBLY**

   Refer to **INSTALLATION** .

STEERING PAD SWITCH (FOR 4 SPOKE)

COMPONENTS

ILLUSTRATION

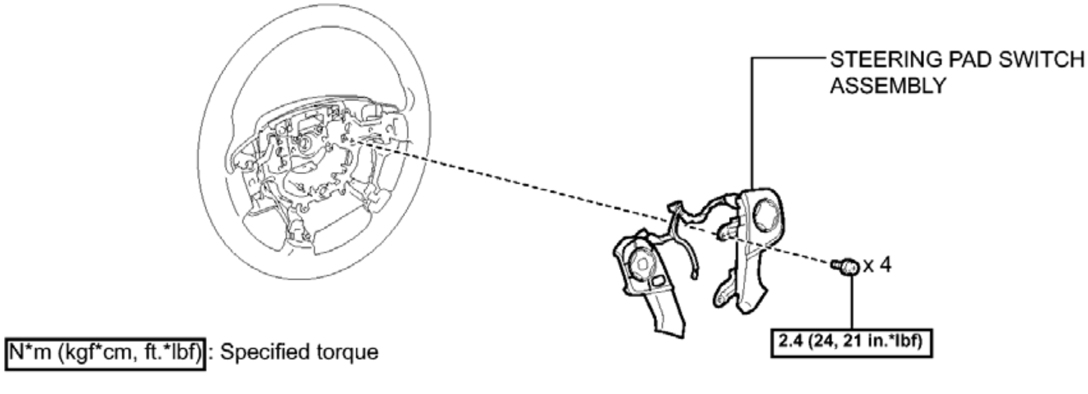
STEERING PAD SWITCH ASSEMBLY
x 4
2.4 (24, 21 in.*lbf)
N*m (kgf*cm, ft.*lbf): Specified torque
c

Fig. 106: Identifying Steering Pad Switch (For 4 Spoke) Replacement Components With Torque Specifications

Courtesy of TOYOTA MOTOR SALES, U.S.A., INC.

REMOVAL

REMOVAL

1. **REMOVE HORN BUTTON ASSEMBLY**

   Refer to **REMOVAL** .

2. **REMOVE STEERING PAD SWITCH ASSEMBLY**
   a. Disconnect the steering pad switch connector from the spiral cable sub-assembly.
   b. Remove the 2 screws.

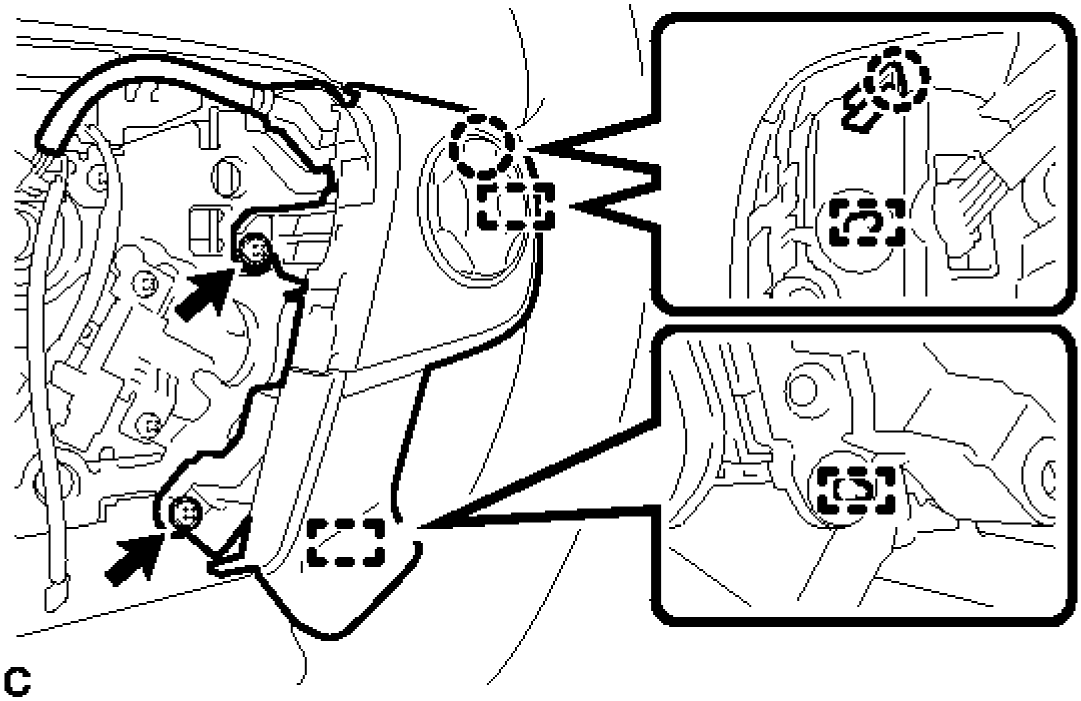

Fig. 107: Identifying Steering Pad Switch (RH Side) Fasteners
Courtesy of TOYOTA MOTOR SALES, U.S.A., INC.

   c. Disengage the claw and 2 pins to remove the steering pad switch assembly (RH side) from the steering wheel sub-assembly.
   d. Remove the 2 screws.

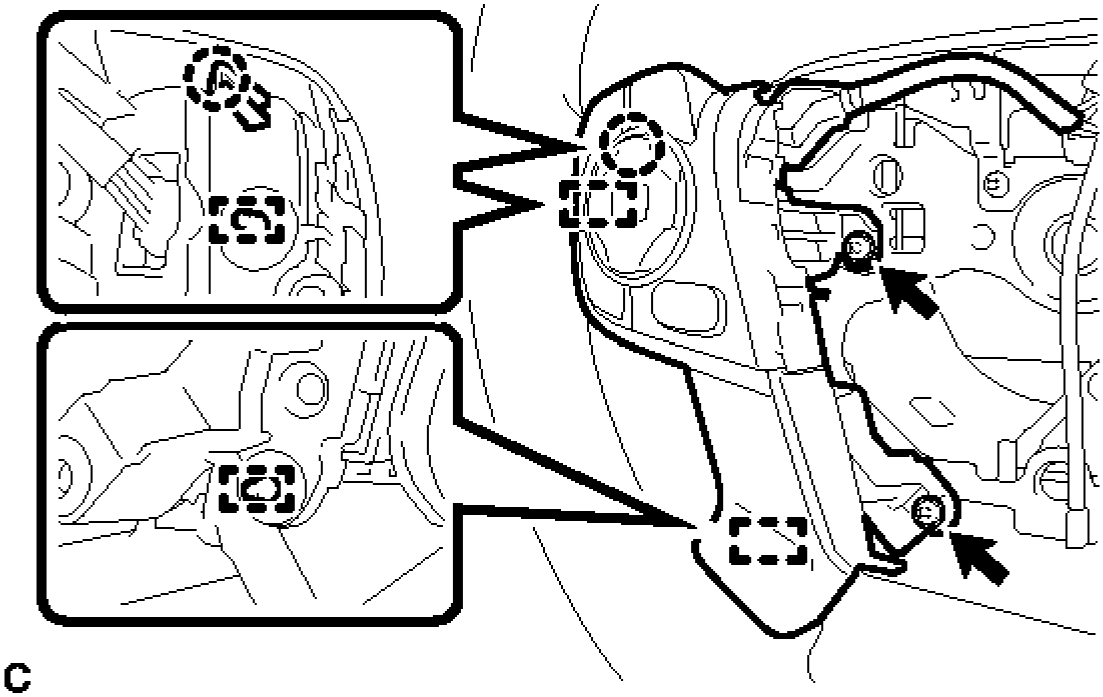

Fig. 108: Identifying Steering Pad Switch (LH Side) Fasteners
Courtesy of TOYOTA MOTOR SALES, U.S.A., INC.

e. Disengage the claw and 2 pins to remove the steering pad switch assembly (LH side) from the steering wheel sub-assembly.

INSPECTION

INSPECTION

1. **INSPECT STEERING PAD SWITCH ASSEMBLY**
    a. Measure the resistance according to the value(s) in the table below.

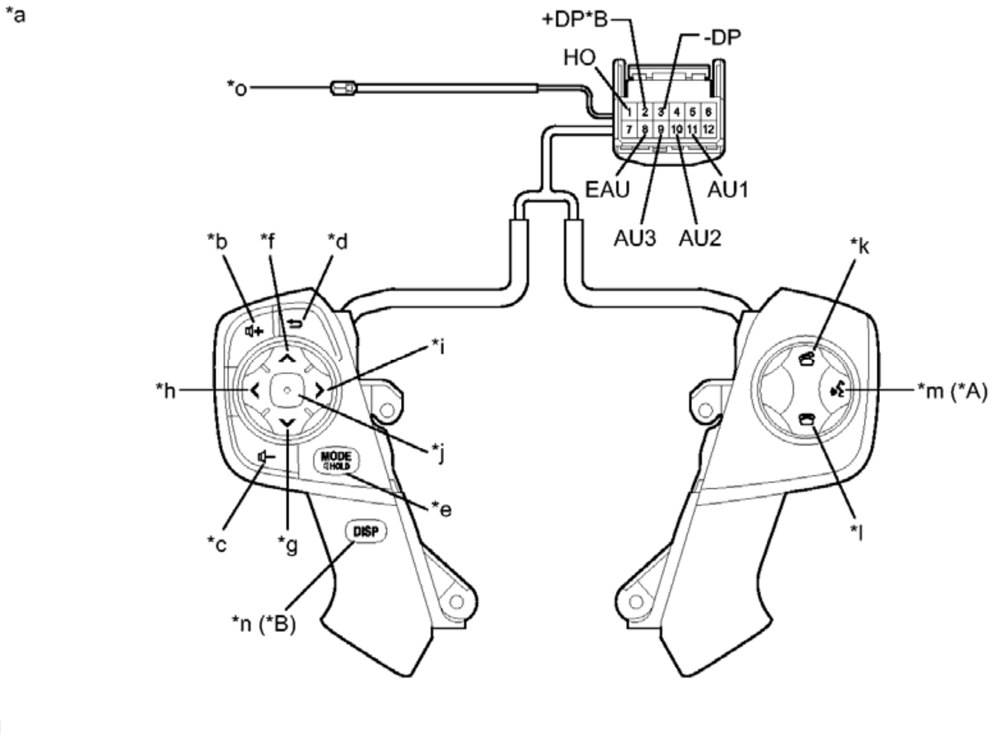
*a
+DP*B
-DP
HO
*o
1 2 3 4 5 6
7 8 9 10 11 12
EAU
AU1
AU3
AU2
*b
*f
*d
*k
*i
*h
*m (*A)
*j
MODE
HOLD
*e
*c
*g
*l
DISP
*n (*B)
H

Fig. 109: Inspecting Steering Pad Switch Assembly
Courtesy of TOYOTA MOTOR SALES, U.S.A., INC.

Standard Resistance

Tester Connection	Switch Condition	Specified Condition
1 (HO) - Terminal-A	Always	Below 1 ohms
2 (+DP) - 3 (-DP)*1	No switch pushed	95 to 105 kohms
	DISP switch pushed	Below 2.5 ohms
11 (AU1) - 8 (EAU)	No switch pushed	95 to 105 kohms
	Up switch pushed	Below 2.5 ohms
	Down switch pushed	313 to 345 ohms
	Volume+ switch pushed	950 to 1050 ohms
	Volume- switch pushed	2955 to 3265 ohms

10 (AU2) - 8 (EAU)	No switch pushed	95 to 105 kohms
	MODE/HOLD switch pushed	Below 2.5 ohms
	On hook switch pushed	313 to 345 ohms
	Off hook switch pushed	950 to 1050 ohms
	Voice switch pushed*2	2955 to 3265 ohms
9 (AU3) - 8 (EAU)	No switch pushed	95 to 105 kohms
	Enter switch pushed	Below 2.5 ohms
	Back switch pushed	313 to 345 ohms
	Right switch pushed	950 to 1050 ohms
	Left switch pushed	2955 to 3265 ohms

*1: w/ DISP Switch of Steering Pad Switch Assembly

*2: w/ Voice Switch of Steering Pad Switch Assembly

HINT:

If the result is not as specified, replace the steering pad switch assembly.

TEXT IN ILLUSTRATION

*A	w/ Voice Switch of Steering Pad Switch Assembly	*B	w/ DISP Switch of Steering Pad Switch Assembly
*a	Component without harness connected (Steering Pad Switch	*b	Volume+

	Assembly)		
*c	Volume-	*d	Back
*e	MODE/HOLD	*f	Up
*g	Down	*h	Left
*i	Right	*j	Enter
*k	Off hook	*l	On hook
*m	Voice	*n	DISP
*o	Terminal-A	-	-

b. Check the illumination.

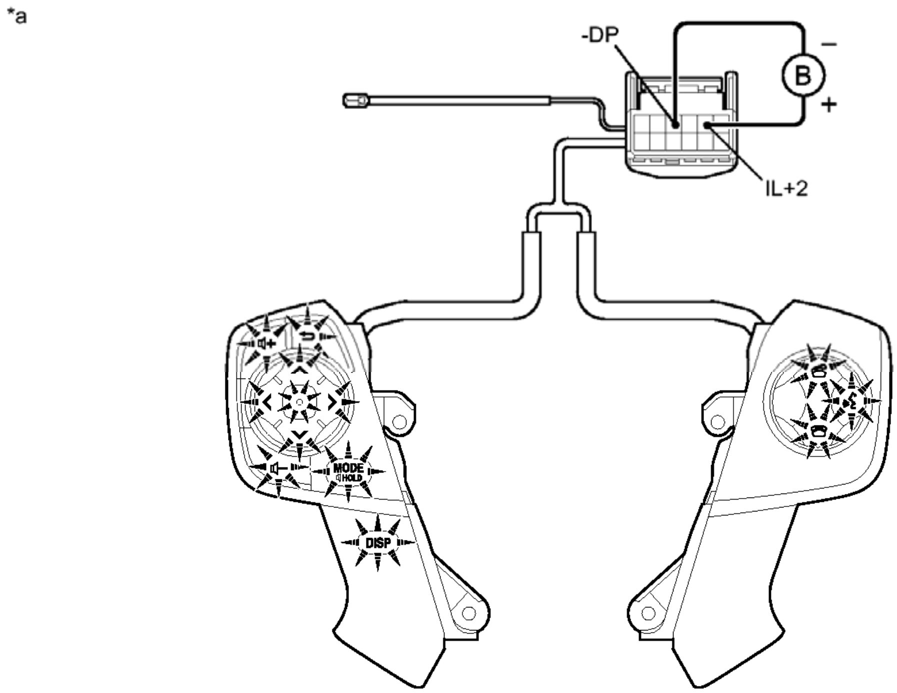

Fig. 110: Checking Steering Pad Switch Assembly Illumination
Courtesy of TOYOTA MOTOR SALES, U.S.A., INC.

1. Connect a battery positive (+) lead to terminal IL+2 and a negative (-) lead to terminal -DP of the steering pad switch assembly connector.
2. Check that the switch illumination comes on.

   OK

   Steering pad switch illumination comes on.

   HINT:

If the result is not as specified, replace the steering pad switch assembly.

TEXT IN ILLUSTRATION

*a	Component without harness connected (Steering Pad Switch Assembly)	-	-

INSTALLATION

INSTALLATION

1. **INSTALL STEERING PAD SWITCH ASSEMBLY**
   a. Engage the claw and 2 pins to install the steering pad switch assembly (RH side) to the steering wheel sub-assembly.
   b. Install the 2 screws.

      Torque: 2.4 N*m (24 kgf*cm, 21 in.*lbf)

   c. Engage the claw and 2 pins to install the steering pad switch assembly (LH side) to the steering wheel sub-assembly.
   d. Install the 2 screws.

      Torque: 2.4 N*m (24 kgf*cm, 21 in.*lbf)

   e. Connect the steering pad switch connector to the spiral cable sub-assembly.
   f. Pass the wire harness over the 2 guides.

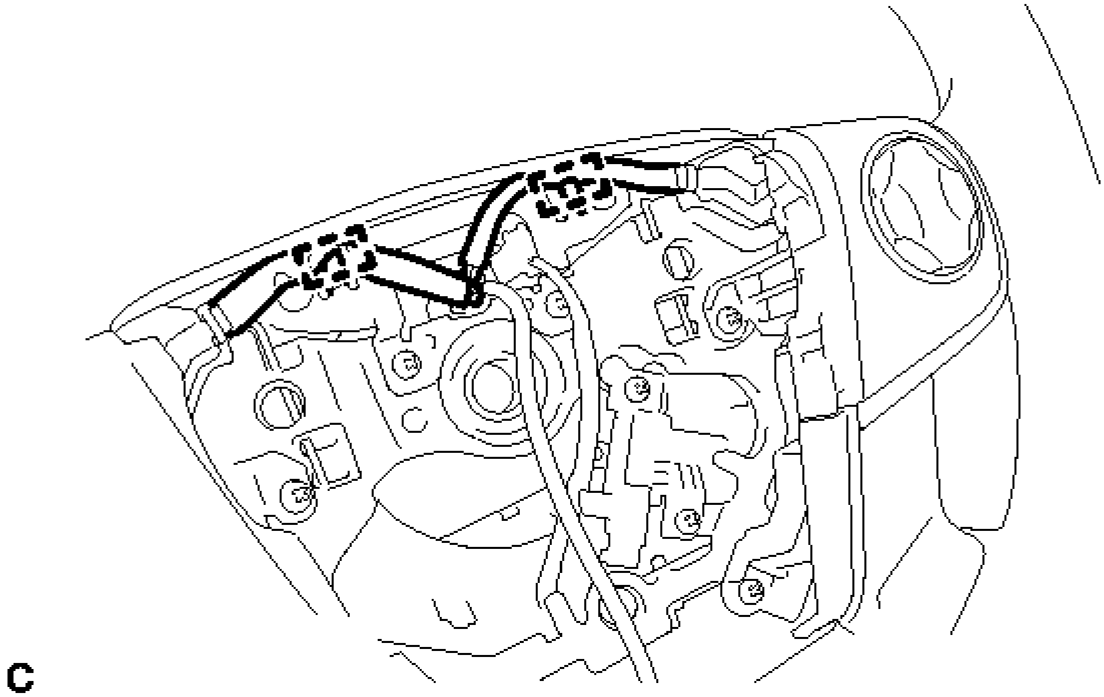

Fig. 111: Identifying Steering Pad Switch Assembly Wire Harness Guides
Courtesy of TOYOTA MOTOR SALES, U.S.A., INC.

2. **INSTALL HORN BUTTON ASSEMBLY**

   Refer to **INSTALLATION** .

2012-2017 STEERING

Steering Gear / Linkage (Service Information) - Camry (Hybrid)

STEERING GEAR

COMPONENTS

ILLUSTRATION

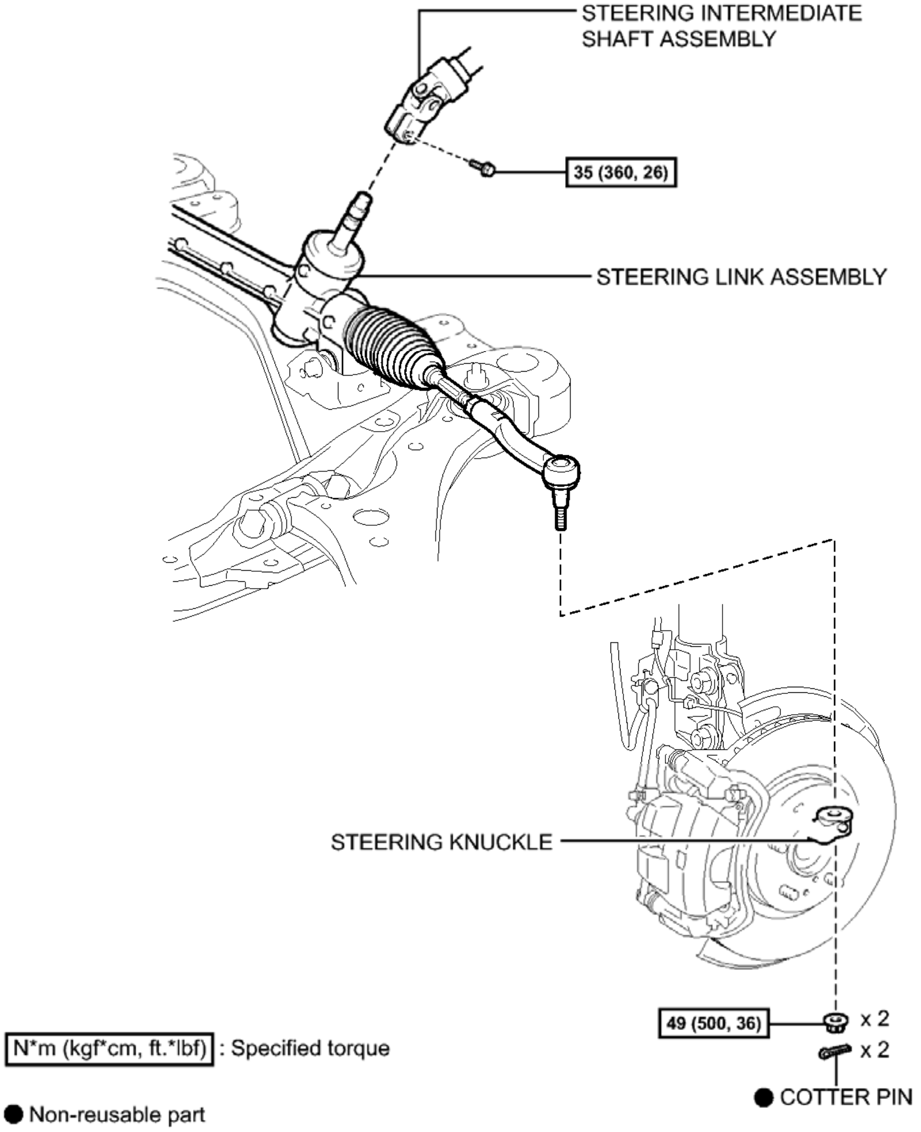
STEERING INTERMEDIATE SHAFT ASSEMBLY
35 (360, 26)
STEERING LINK ASSEMBLY
STEERING KNUCKLE
49 (500, 36)
x 2
x 2
● COTTER PIN
N*m (kgf*cm, ft.*lbf) : Specified torque
● Non-reusable part

c

Fig. 1: Identifying Steering Gear Replacement Components With Torque Specifications (1 Of 4)
Courtesy of TOYOTA MOTOR SALES, U.S.A., INC.

ILLUSTRATION

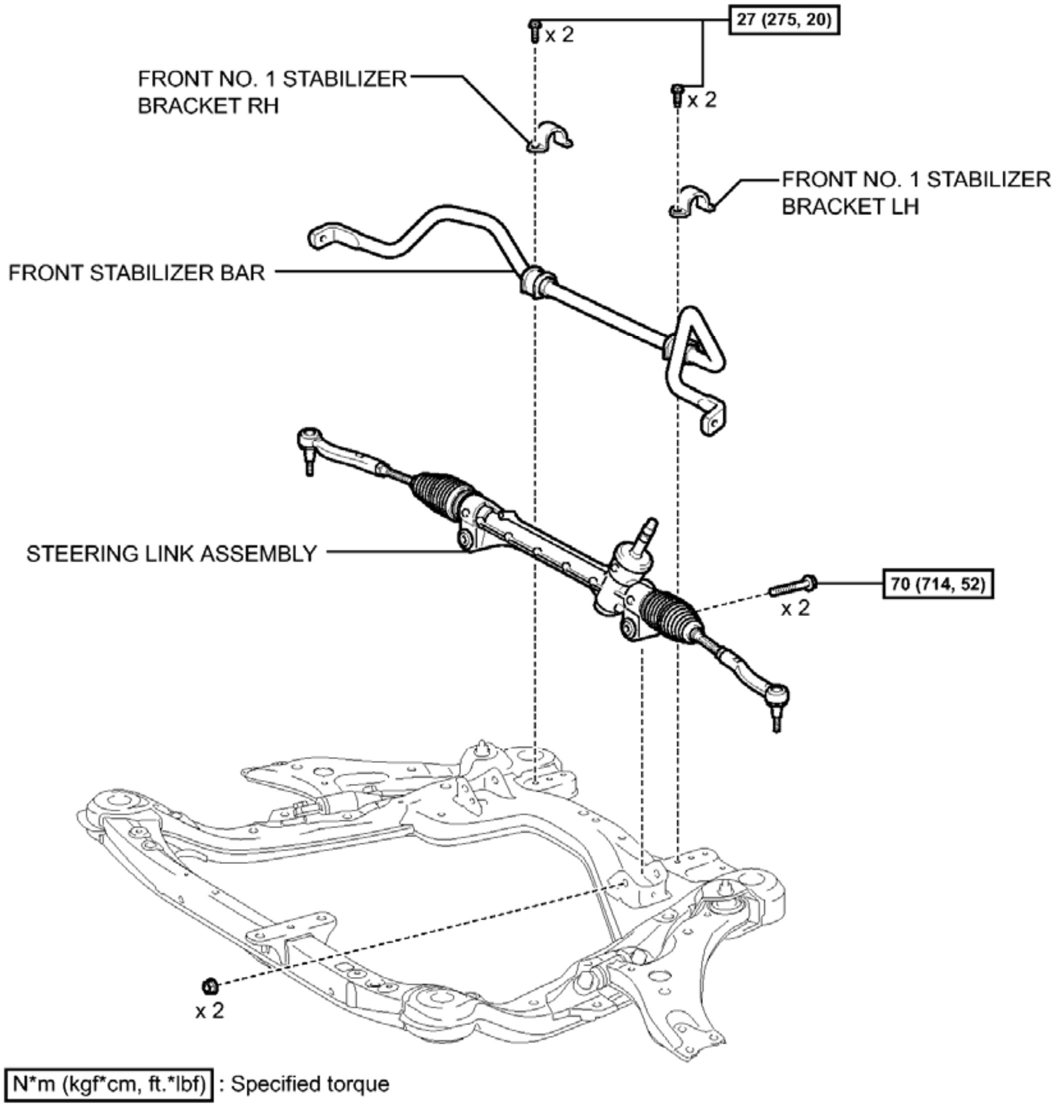
27 (275, 20)
x 2
x 2
FRONT NO. 1 STABILIZER BRACKET RH
FRONT NO. 1 STABILIZER BRACKET LH
FRONT STABILIZER BAR
STEERING LINK ASSEMBLY
70 (714, 52)
x 2
x 2
N*m (kgf*cm, ft.*lbf) : Specified torque

c

Fig. 2: Identifying Steering Gear Replacement Components With Torque Specifications (2 Of 4)
Courtesy of TOYOTA MOTOR SALES, U.S.A., INC.

ILLUSTRATION

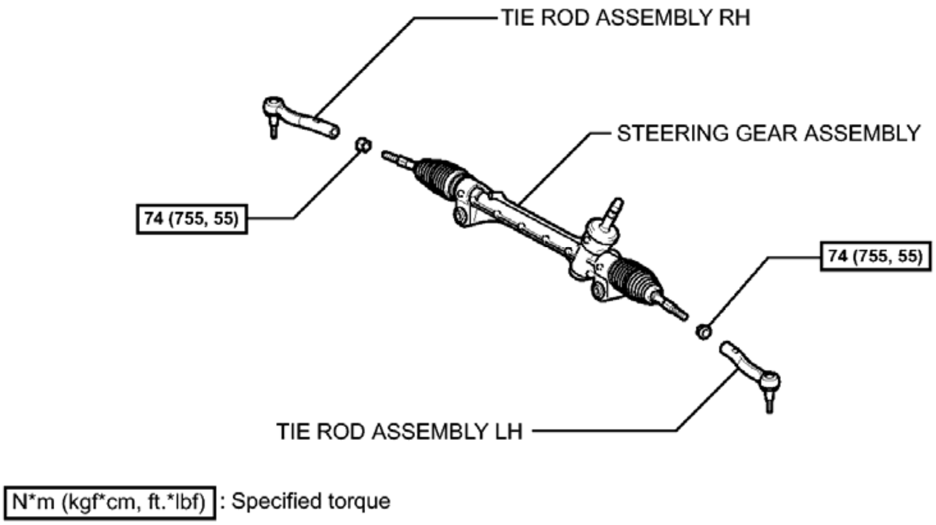
TIE ROD ASSEMBLY RH
STEERING GEAR ASSEMBLY
74 (755, 55)
74 (755, 55)
TIE ROD ASSEMBLY LH
N*m (kgf*cm, ft.*lbf) : Specified torque

c

Fig. 3: Identifying Steering Gear Replacement Components With Torque Specifications (3 Of 4)
Courtesy of TOYOTA MOTOR SALES, U.S.A., INC.

ILLUSTRATION

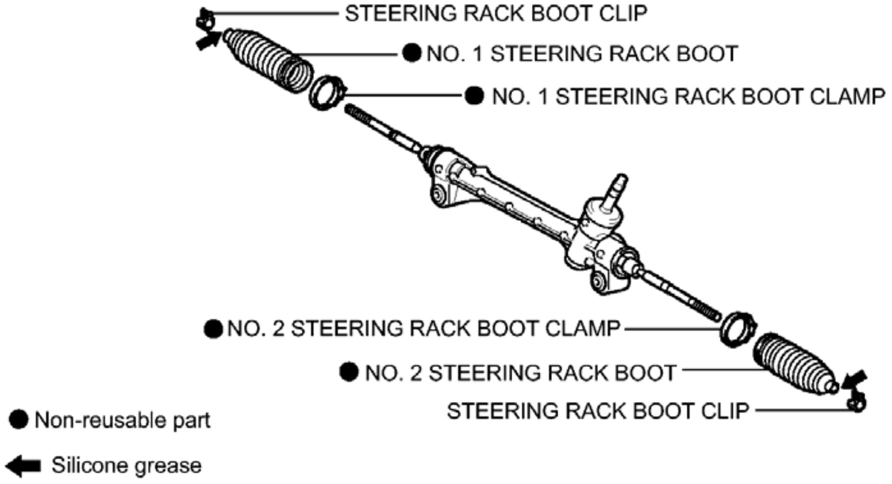
STEERING RACK BOOT CLIP
● NO. 1 STEERING RACK BOOT
● NO. 1 STEERING RACK BOOT CLAMP
● NO. 2 STEERING RACK BOOT CLAMP
● NO. 2 STEERING RACK BOOT
STEERING RACK BOOT CLIP
● Non-reusable part
← Silicone grease

c

Fig. 4: Identifying Steering Gear Replacement Components With Torque Specifications (4 Of 4)
Courtesy of TOYOTA MOTOR SALES, U.S.A., INC.

REMOVAL

REMOVAL

NOTE:

- **Be sure to align the front wheels straight ahead when removing and**

installing the steering gear assembly.

- **When disconnecting the steering intermediate shaft assembly and the pinion shaft of the steering gear assembly, be sure to place matchmarks before servicing.**

1. **PLACE FRONT WHEELS FACING STRAIGHT AHEAD**
2. **REMOVE FRONT WHEELS**
3. **SECURE STEERING WHEEL**
   a. Secure the steering wheel with the seat belt in order to prevent rotation.

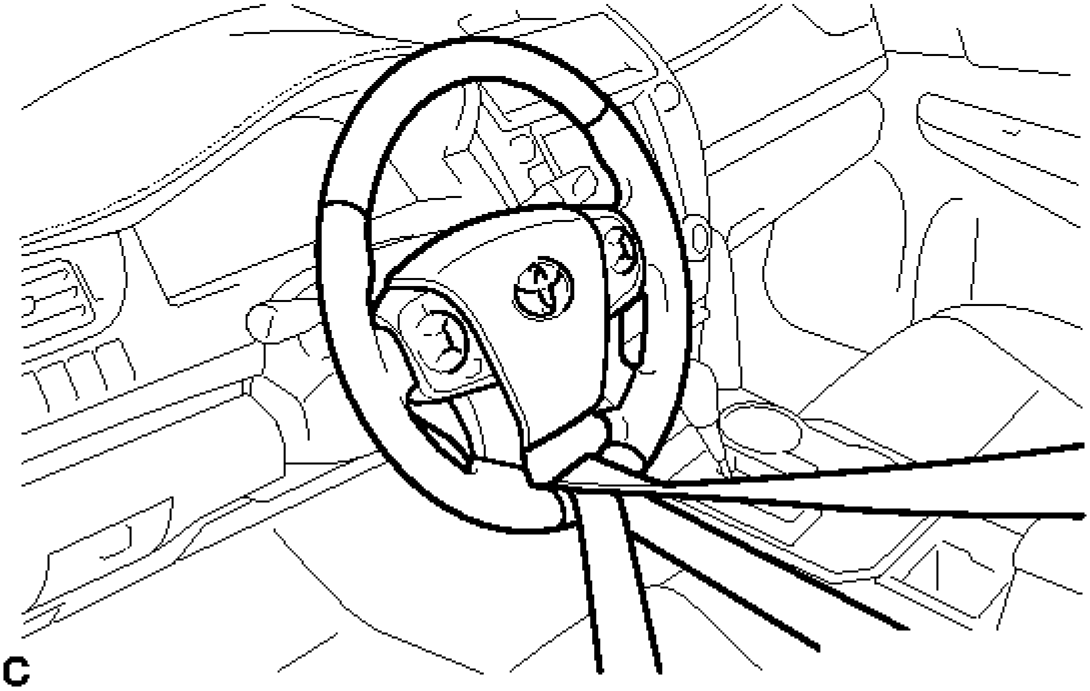

Fig. 5: Securing Steering Wheel With Seat Belt
Courtesy of TOYOTA MOTOR SALES, U.S.A., INC.

HINT:

This operation is useful to prevent damage to the spiral cable.

4. **SEPARATE STEERING INTERMEDIATE SHAFT ASSEMBLY**
   a. Put matchmarks on the steering intermediate shaft assembly and steering link assembly.

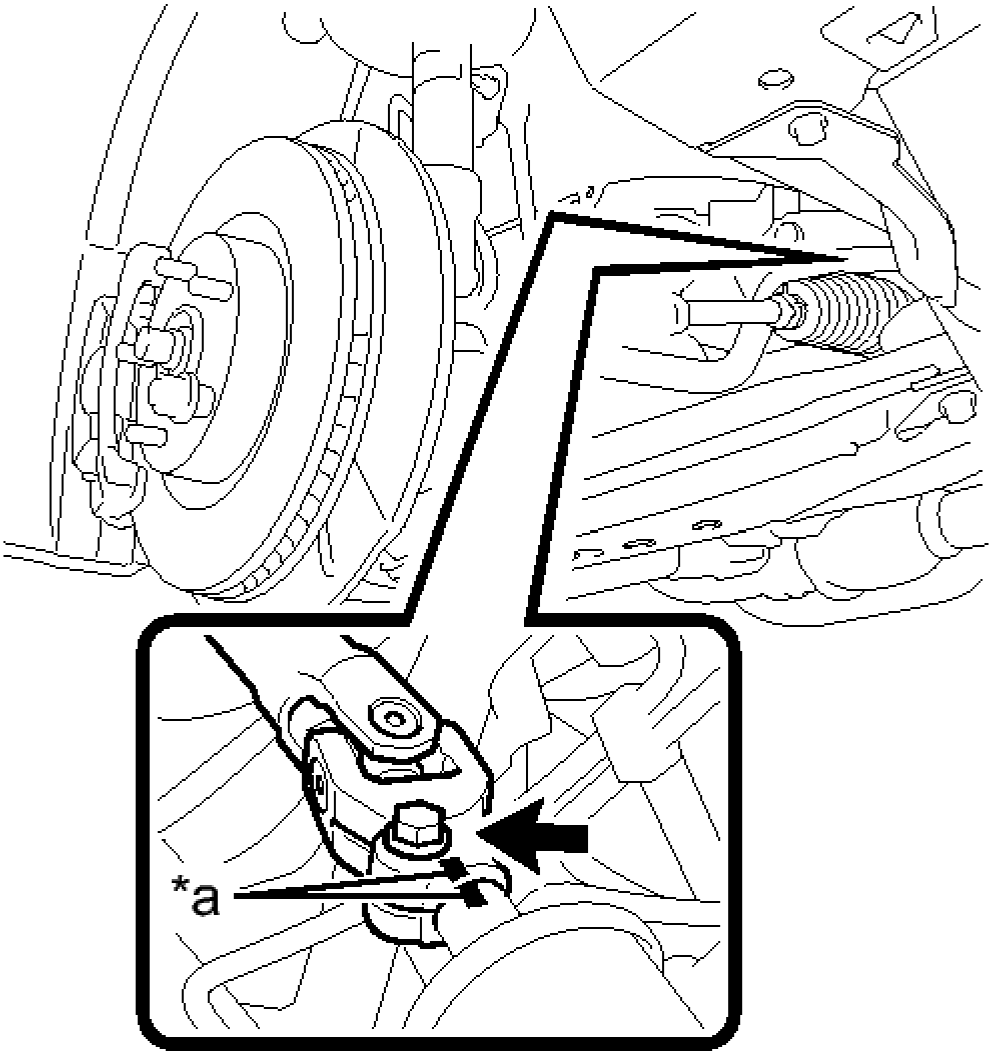

C

Fig. 6: Identifying Matchmarks On Steering Intermediate Shaft Assembly And Steering Link Assembly
Courtesy of TOYOTA MOTOR SALES, U.S.A., INC.

TEXT IN ILLUSTRATION

*a	Matchmark

  b. Remove the bolt.
  c. Separate the steering intermediate shaft assembly from the steering link assembly.

5. **SEPARATE TIE ROD ASSEMBLY LH**
  a. Remove the cotter pin and nut.

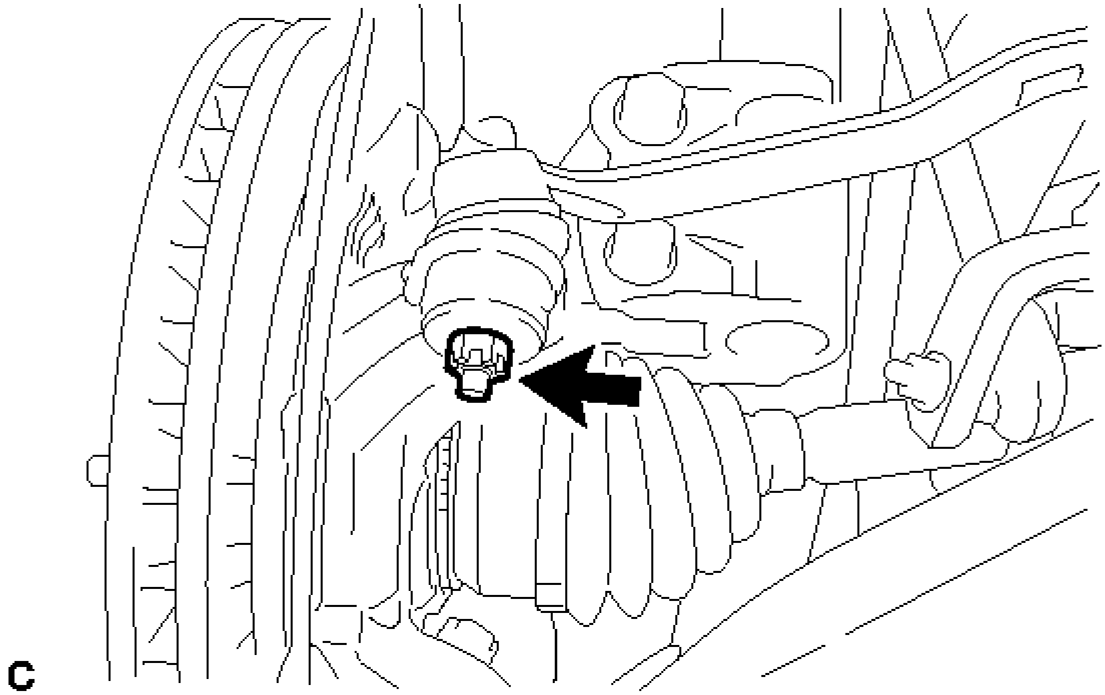

Fig. 7: Identifying Cotter Pin And Nut
Courtesy of TOYOTA MOTOR SALES, U.S.A., INC.

b. Install SST to the tie rod assembly LH.

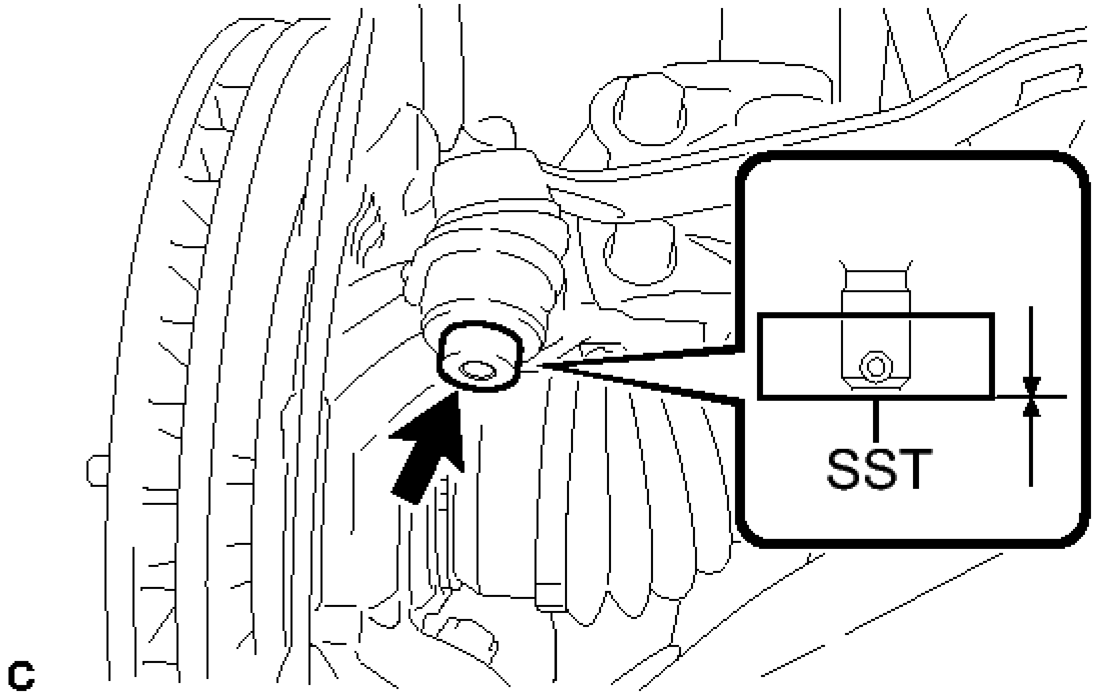

Fig. 8: Identifying Tie Rod Assembly With SST LH
Courtesy of TOYOTA MOTOR SALES, U.S.A., INC.

- **SST: 09960-20010**
  09961-02060

NOTE: **Make sure that the lower ends of the tie rod assembly LH and SST are aligned.**

c. Secure SST using a string.

NOTE: **Be sure to tighten the string firmly to secure SST to the steering knuckle to prevent SST from falling off.**

d. Using SST, separate the tie rod assembly LH from the steering knuckle.

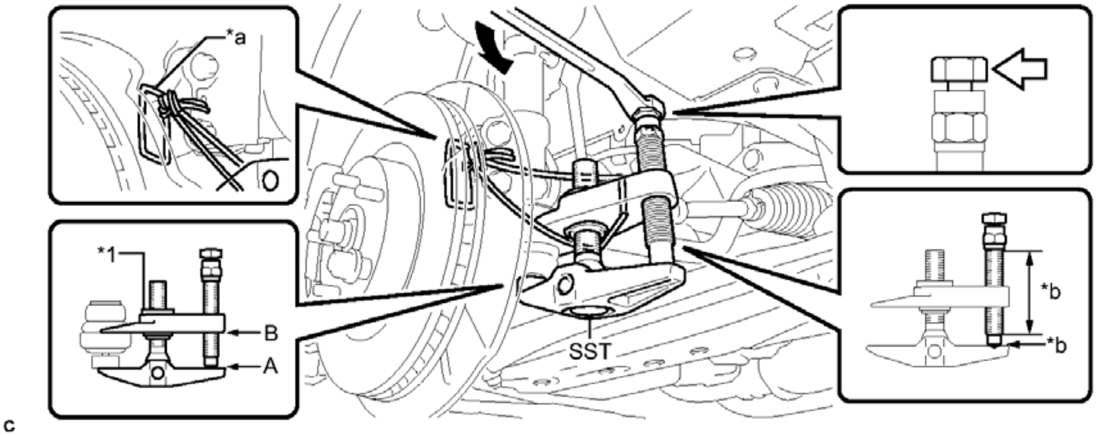

Fig. 9: Identifying Tie Rod Assembly Components LH
Courtesy of TOYOTA MOTOR SALES, U.S.A., INC.

TEXT IN ILLUSTRATION

*1	Center Nut	-	-
*a	String	*b	Grease Application Area
	Place the wrench here.	-	-

- **SST: 09960-20010**
  09961-02010

WARNING: **Apply grease to the bolt threads and the tip of SST.**

NOTE:

- **Install SST with the center nut so that A and B shown in the illustration are parallel. Otherwise, the dust cover may be damaged.**
- **Be sure to place the wrench on the part indicated in the illustration.**
- **Do not damage the front disc brake dust cover.**
- **Do not damage the ball joint dust cover.**
- **Do not damage the steering knuckle.**

6. **SEPARATE TIE ROD ASSEMBLY RH**

   HINT:

   Perform the same procedure as for the LH side.

7. **REMOVE ENGINE ASSEMBLY WITH TRANSAXLE**

   Refer to **REMOVAL**

8. **REMOVE FRONT NO. 1 STABILIZER BRACKET LH** . Refer to **REMOVAL - Step 4**
9. **REMOVE FRONT NO. 1 STABILIZER BRACKET RH**

   HINT:

   Perform the same procedure as for the LH side.

10. **REMOVE FRONT STABILIZER BAR** . Refer to **REMOVAL - Step 6**
11. **REMOVE STEERING LINK ASSEMBLY**
    a. Remove the 2 bolts, 2 nuts and steering link assembly.

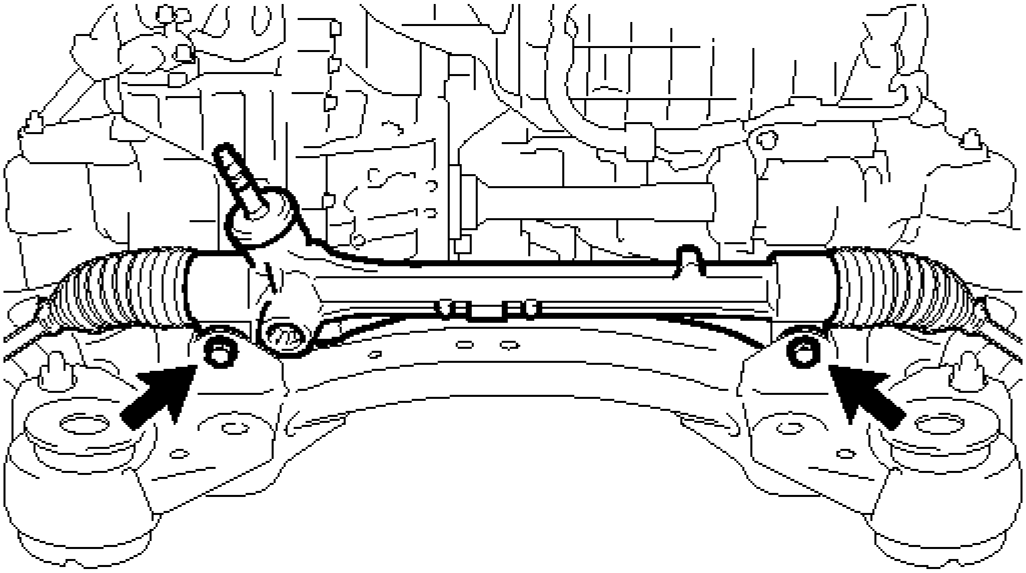

Fig. 10: Identifying Steering Link Assembly Bolts And Nuts
Courtesy of TOYOTA MOTOR SALES, U.S.A., INC.

NOTE: **Keep the nut from rotating while turning the bolt because the nut has its own stopper.**

12. **SECURE STEERING LINK ASSEMBLY**
    a. Using SST, secure the steering link assembly in a vise.

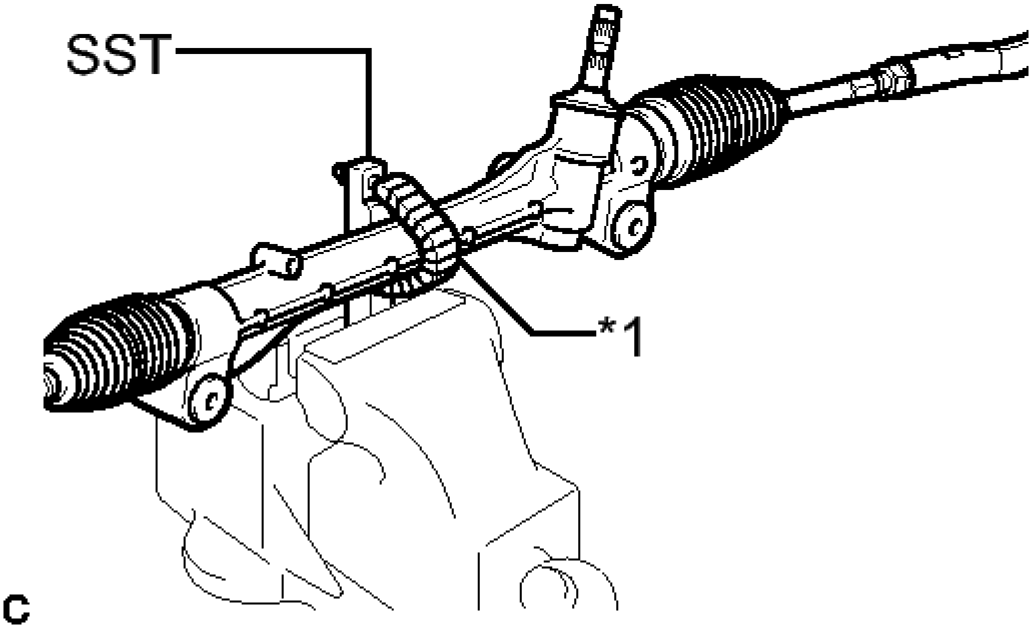

Fig. 11: Identifying Steering Link Assembly With SST
Courtesy of TOYOTA MOTOR SALES, U.S.A., INC.

TEXT IN ILLUSTRATION

*1	Protective Tape

- **SST: 09612-00012**

HINT:

Tape SST before use.

13. **REMOVE TIE ROD ASSEMBLY LH**
    a. Put matchmarks on the tie rod assembly LH and the steering rack end sub-assembly.

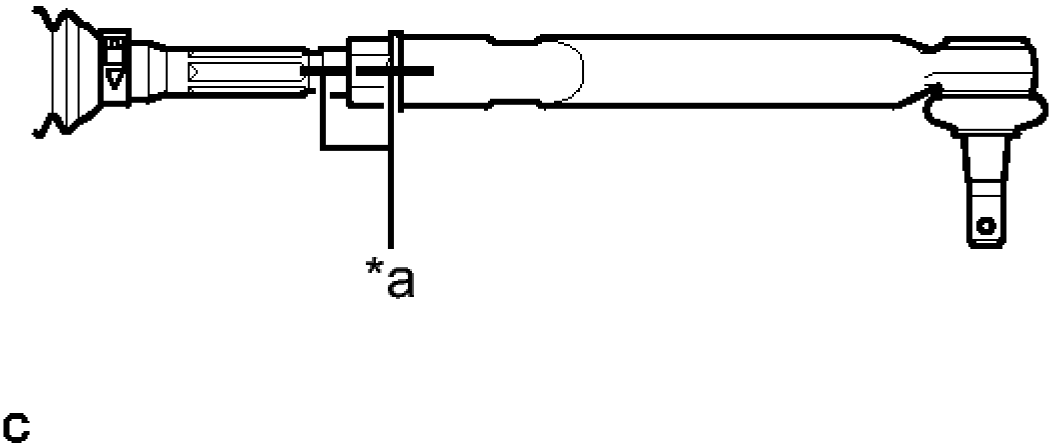

Fig. 12: Drawing Line On RH And LH Tie Rod Ends And Rack Ends
Courtesy of TOYOTA MOTOR SALES, U.S.A., INC.

TEXT IN ILLUSTRATION

*a	Matchmark

b. Remove the tie rod assembly LH and lock nut.

14. **REMOVE TIE ROD ASSEMBLY RH**

    HINT:

    Perform the same procedure as for the LH side.

DISASSEMBLY

DISASSEMBLY

1. **REMOVE STEERING RACK BOOT CLIP (for LH Side)**
    a. Using pliers, remove the steering rack boot clip.
2. **REMOVE STEERING RACK BOOT CLIP (for RH Side)**

    HINT:

    Perform the same procedure as for the LH side.

3. **REMOVE NO. 2 STEERING RACK BOOT CLAMP**

a. Using a screwdriver, remove the No. 2 steering rack boot clamp.

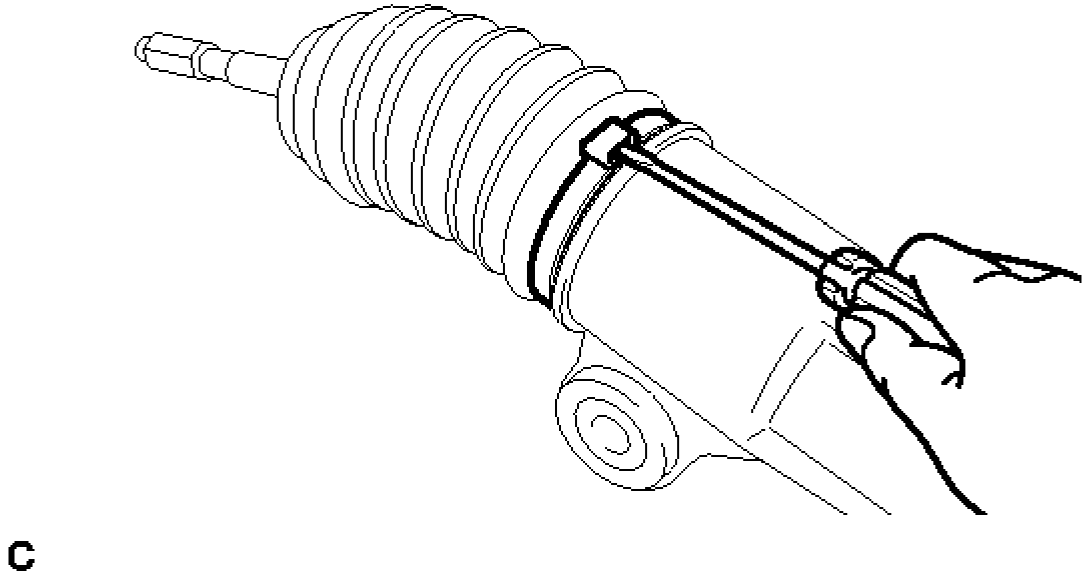

Fig. 13: Removing No. 2 Steering Rack Boot Clamp
Courtesy of TOYOTA MOTOR SALES, U.S.A., INC.

NOTE: Be careful not to damage the No. 2 steering rack boot.

4. **REMOVE NO. 1 STEERING RACK BOOT CLAMP**

   HINT:

   Perform the same procedure as for the No. 2 steering rack boot clamp.

5. **REMOVE NO. 2 STEERING RACK BOOT**
6. **REMOVE NO. 1 STEERING RACK BOOT**

INSPECTION

INSPECTION

1. **INSPECT TIE ROD ASSEMBLY**
   a. Secure the tie rod assembly in a vise.

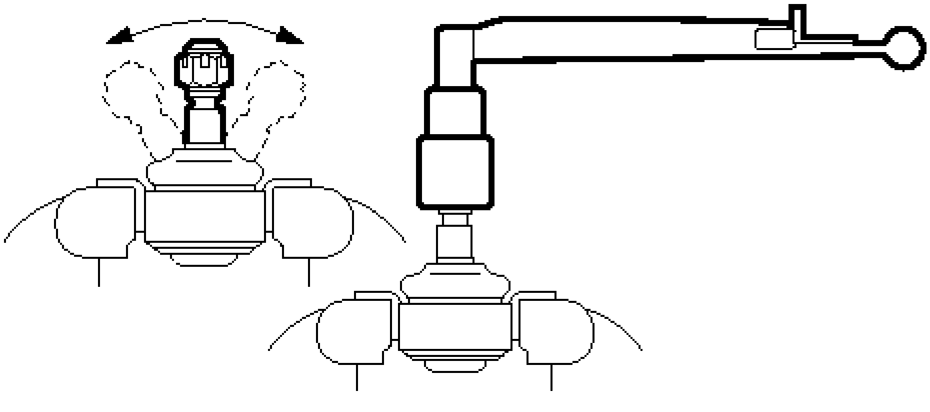

Fig. 14: Securing Tie Rod Assembly LH In Vise
Courtesy of TOYOTA MOTOR SALES, U.S.A., INC.

NOTE: **Do not overtighten the vise.**

b. Install the nut to the stud bolt.
c. Flip the ball joint back and forth 5 times.
d. Set a torque wrench to the nut, turn the ball joint continuously at a rate of 3 to 5 seconds per turn, and check the turning torque on the 5th turn.

Standard turning torque

1.0 to 4.0 N*m (10 to 40 kgf*cm, 9 to 35 in.*lbf)

HINT:

If the turning torque is not within the specified range, replace the tie rod assembly.

2. **INSPECT TOTAL PRELOAD**

NOTE: **Inspect the total preload in a no-load condition by removing the tie rod assembly RH and LH, and steering rack boots.**

a. Install SST to the pinion shaft and turn it left and right 5 times or more.
    - **SST: 09616-00020**

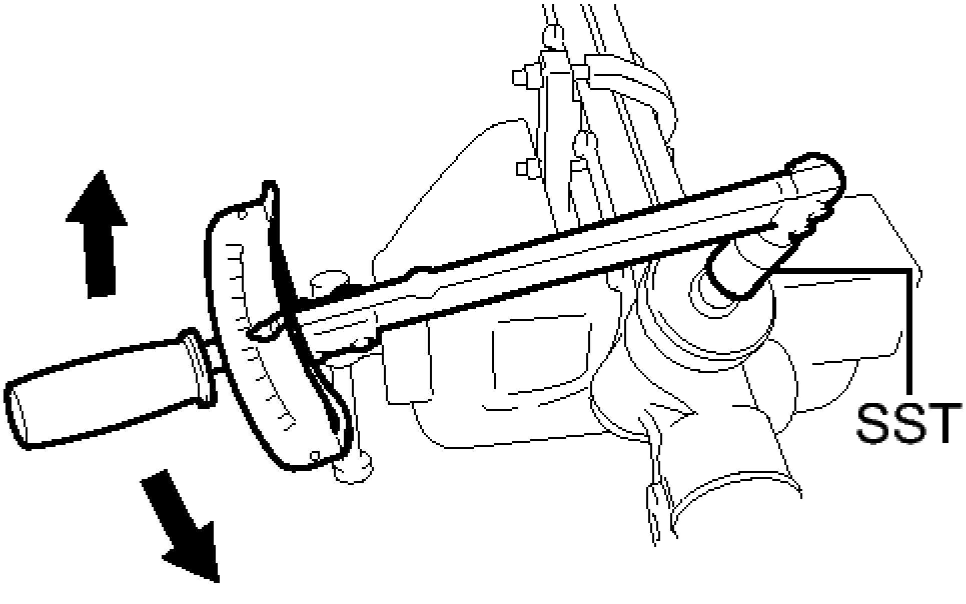

Fig. 15: Identifying Pinion Shaft And SST
Courtesy of TOYOTA MOTOR SALES, U.S.A., INC.

b. Set a torque wrench to SST and turn the pinion shaft continuously at a rate of 4 to 6 seconds per turn to inspect the total preload of the steering gear assembly.

Standard Preload

0.8 to 1.2 N*m (8 to 12 kgf*cm, 7 to 10 in.*lbf)

NOTE: **Inspect the total preload around the steering rack center position.**

HINT:

If the total preload is not within the specified range, replace the steering gear assembly with a new one.

REASSEMBLY

REASSEMBLY

1. **INSTALL NO. 2 STEERING RACK BOOT**
   a. Wipe the old grease off of the No. 2 steering rack boot and rack end mating groove.
   b. Apply silicone grease to the inside of the small opening of a new No. 2 steering rack boot.

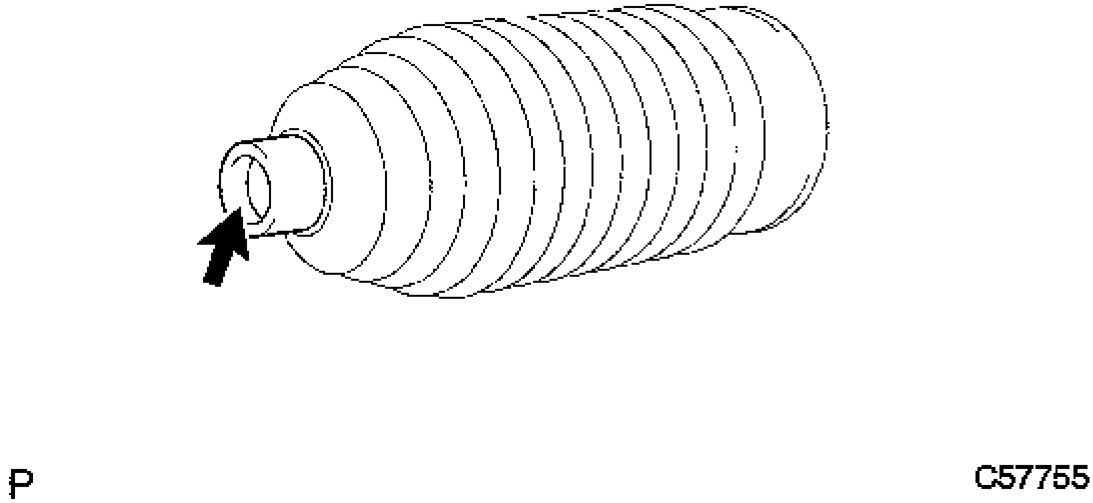

Fig. 16: Applying Silicon Grease To Inside Of Small End Of Rack Boot
Courtesy of TOYOTA MOTOR SALES, U.S.A., INC.

c. Install the No. 2 steering rack boot to the groove on the rack housing.

NOTE:

- **Be careful not to damage or twist the boot.**
- **Make sure that the boot is free of rust and foreign matter.**

2. **INSTALL NO. 1 STEERING RACK BOOT**

HINT:

Perform the same procedure as for the No. 2 steering rack boot.

3. **INSTALL NO. 2 STEERING RACK BOOT CLAMP**

a. Using SST, tighten a new No. 2 steering rack boot clamp as shown in the illustration.

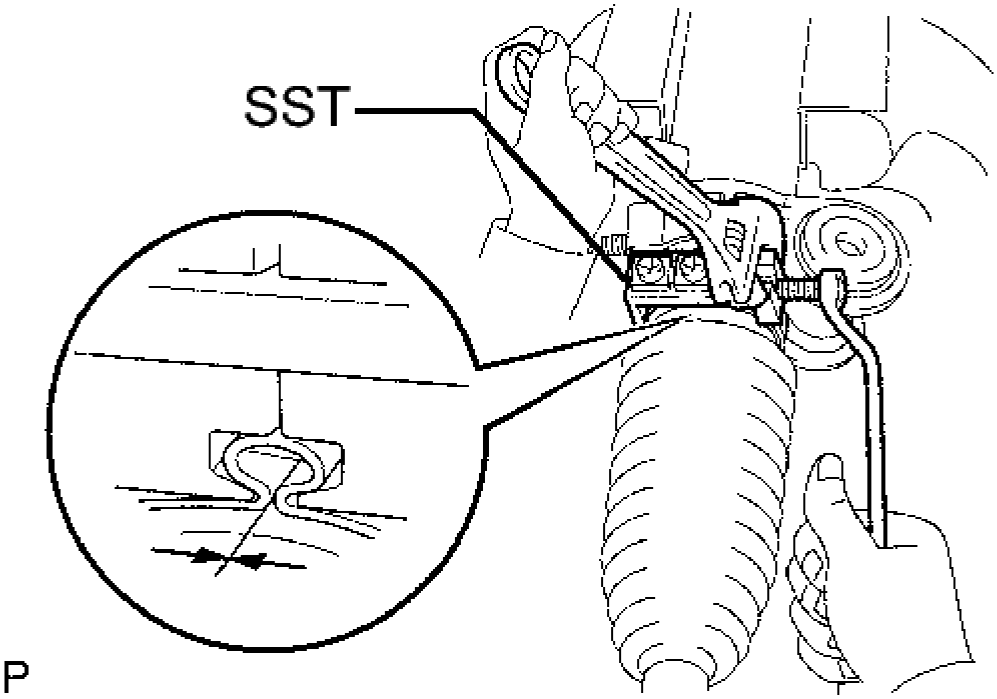

Fig. 17: Identifying SST & No. 2 Steering Rack Boot Clamp
Courtesy of TOYOTA MOTOR SALES, U.S.A., INC.

- **SST: 09521-24010**

Clearance

3.0 mm (0.118 in.) or less

NOTE: **Be careful not to damage the No. 2 steering rack boot.**

4. **INSTALL NO. 1 STEERING RACK BOOT CLAMP**

   HINT:

   Perform the same procedure as for the No. 2 steering rack boot clamp.

5. **INSTALL STEERING RACK BOOT CLIP (for LH Side)**
   a. Using pliers, install the steering rack boot clip.
6. **INSTALL STEERING RACK BOOT CLIP (for RH Side)**

   HINT:

   Perform the same procedure as for the LH side.

7. **INSPECT STEERING GEAR ASSEMBLY**
   a. Using SST, rotate the pinion shaft to see if both the left and the right steering rack boots expand

and contract smoothly.

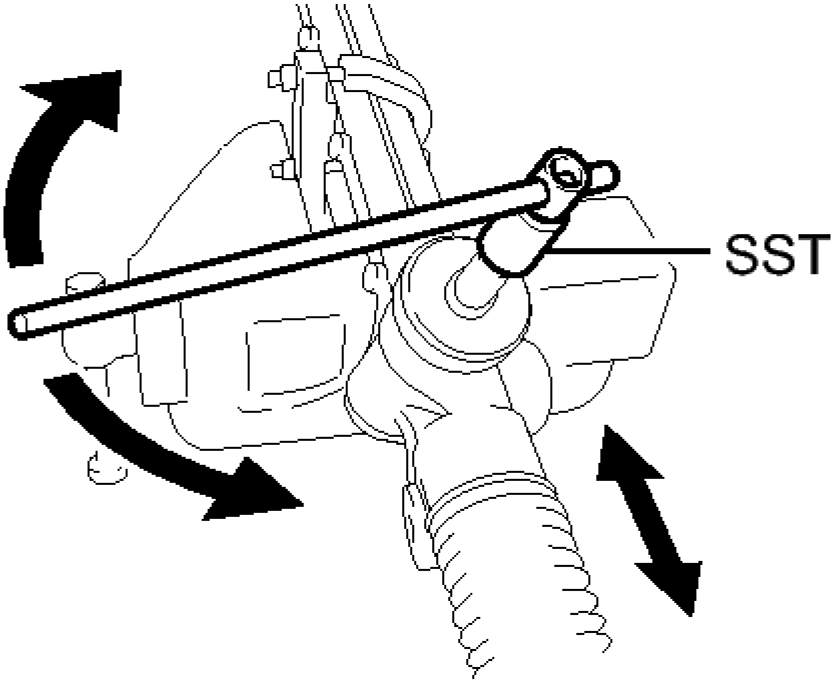

Fig. 18: Inspecting Steering Gear Assembly
Courtesy of TOYOTA MOTOR SALES, U.S.A., INC.

- **SST: 09616-00020**

HINT:

If the operation cannot be done as specified, use a new steering rack boot clamp and reinstall the steering rack boots.

INSTALLATION

INSTALLATION

1. **INSTALL TIE ROD ASSEMBLY LH**
    a. Install the lock nut and tie rod assembly LH to the steering rack end sub-assembly until the matchmarks are aligned.

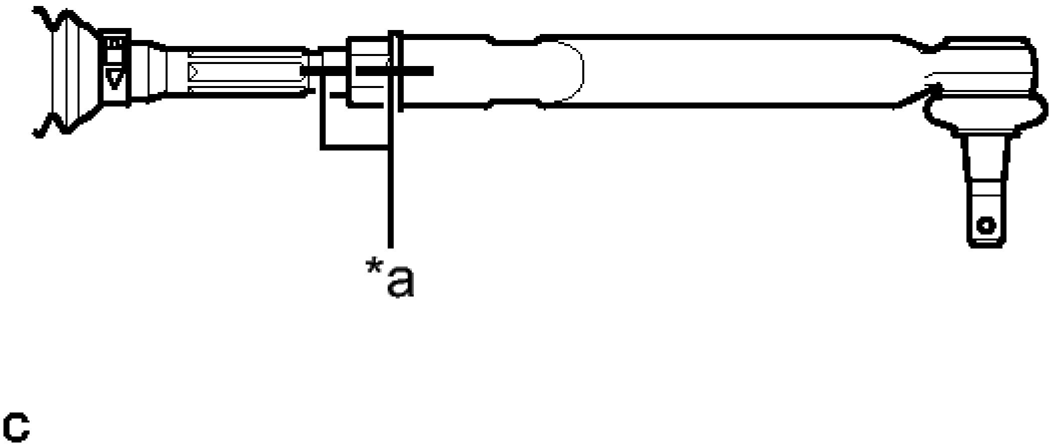

Fig. 19: Drawing Line On RH And LH Tie Rod Ends And Rack Ends
Courtesy of TOYOTA MOTOR SALES, U.S.A., INC.

TEXT IN ILLUSTRATION

*a	Matchmark

HINT:

After adjusting the front wheel alignment, tighten the lock nut.

2. **INSTALL TIE ROD ASSEMBLY RH**

   HINT:

   Perform the same procedure as for the LH side.

3. **INSTALL STEERING LINK ASSEMBLY**
   a. Install the steering link assembly with the 2 bolts and 2 nuts.

   Torque: 70 N*m (714 kgf*cm, 52 ft.*lbf)

   NOTE:

   - **Keep the nut from rotating while turning the bolt because the nut has its own stopper.**
   - **Make sure to tighten the bolts starting from the pinion shaft side.**

4. **INSTALL FRONT STABILIZER BAR** . Refer to **INSTALLATION - Step 2**
5. **INSTALL FRONT NO. 1 STABILIZER BRACKET LH** . Refer to **INSTALLATION - Step 3**
6. **INSTALL FRONT NO. 1 STABILIZER BRACKET RH**

   HINT:

   Perform the same procedure as for the LH side.

7. **INSTALL ENGINE ASSEMBLY WITH TRANSAXLE**

   Refer to **INSTALLATION - Step 15**

8. **CONNECT TIE ROD ASSEMBLY LH**
   a. Connect the tie rod assembly LH to the steering knuckle with the nut.

      Torque: 49 N*m (500 kgf*cm, 36 ft.*lbf)

   b. Install a new cotter pin.

      NOTE: **Further tighten the nut up to 60° if the holes for the cotter pin are not aligned.**

9. **CONNECT TIE ROD ASSEMBLY RH**

   HINT:

   Perform the same procedure as for the LH side.

10. **CONNECT STEERING INTERMEDIATE SHAFT ASSEMBLY**
    a. Align the matchmarks and install the steering intermediate shaft to the steering link assembly.

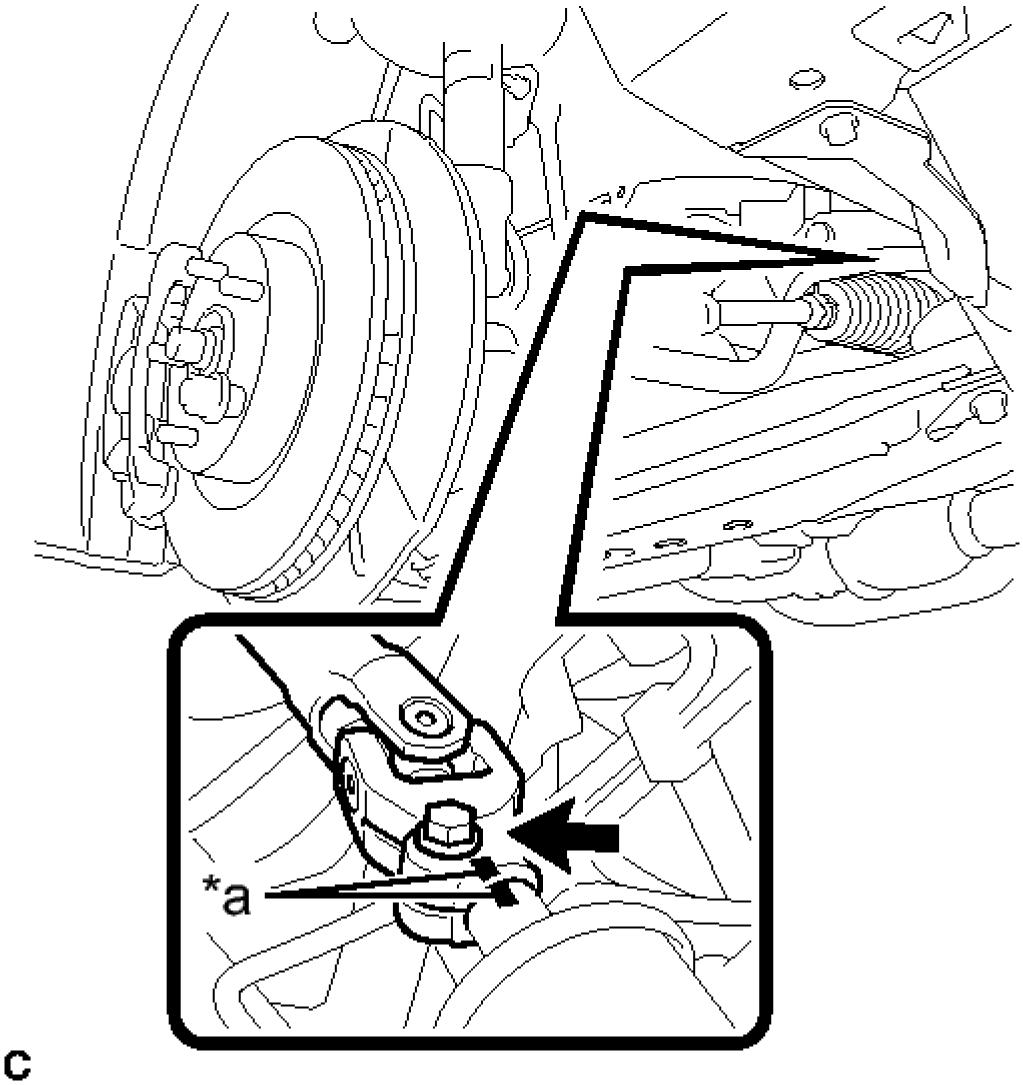

Fig. 20: Identifying Matchmarks On Steering Intermediate Shaft Assembly And Steering Link Assembly
Courtesy of TOYOTA MOTOR SALES, U.S.A., INC.

TEXT IN ILLUSTRATION

*a	Matchmark

b. Install the bolt.

   Torque: 35 N*m (360 kgf*cm, 26 ft.*lbf)

11. **INSTALL FRONT WHEELS**

    Torque: 103 N*m (1049 kgf*cm, 76 ft.*lbf)

12. **INSPECT AND ADJUST FRONT WHEEL ALIGNMENT**

Refer to **ADJUSTMENT**

13. **INSPECT STEERING WHEEL CENTER POINT**

2012-2017 STEERING

Steering Gear / Linkage (Service Information) - Camry (Except Hybrid)

STEERING GEAR

COMPONENTS

ILLUSTRATION

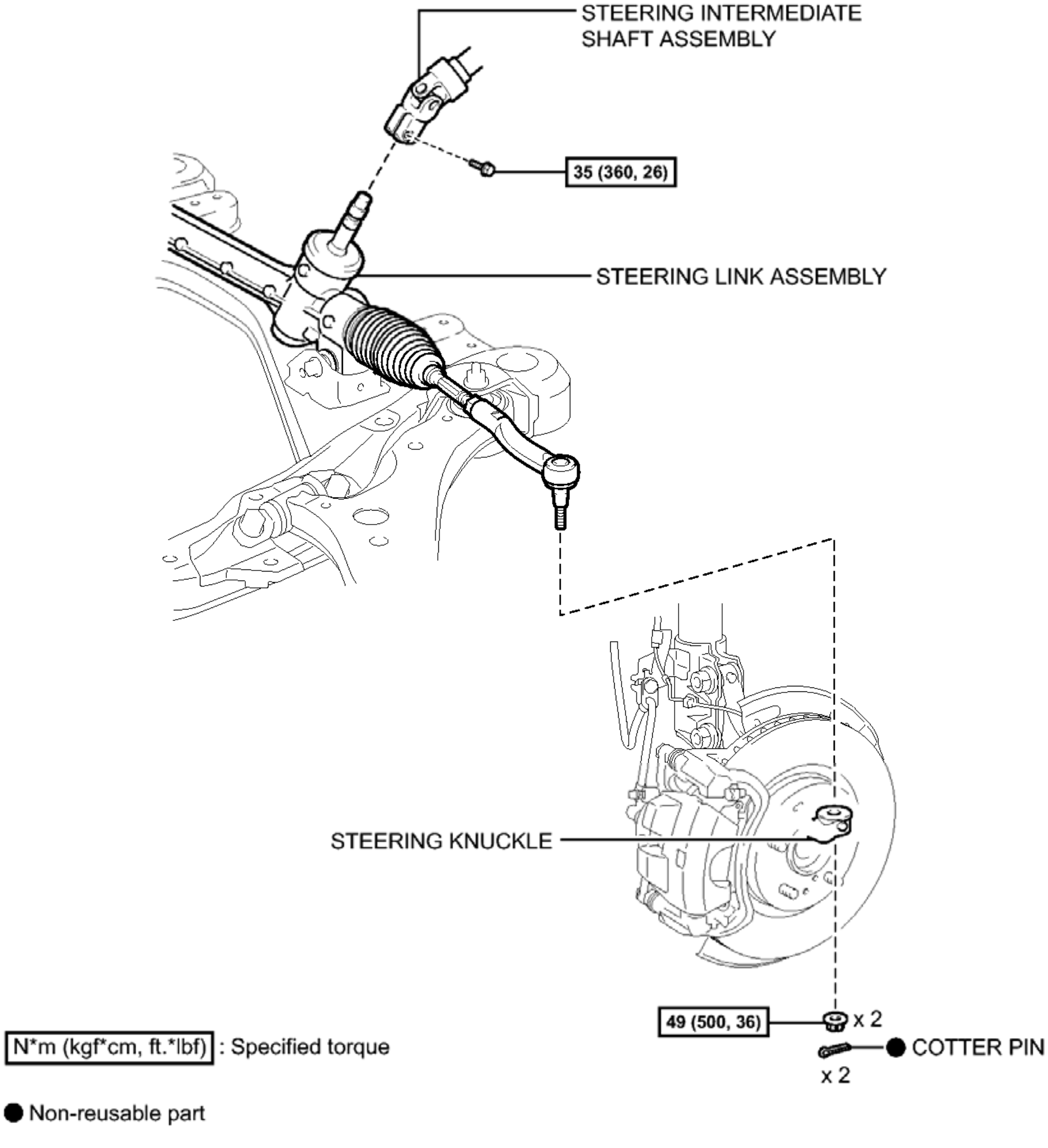
STEERING INTERMEDIATE SHAFT ASSEMBLY
35 (360, 26)
STEERING LINK ASSEMBLY
STEERING KNUCKLE
49 (500, 36)
x 2
● COTTER PIN
x 2
N*m (kgf*cm, ft.*lbf) : Specified torque
● Non-reusable part
c

Fig. 1: Identifying Steering Gear Replacement Components With Torque Specifications (1 Of 4)
Courtesy of TOYOTA MOTOR SALES, U.S.A., INC.

ILLUSTRATION

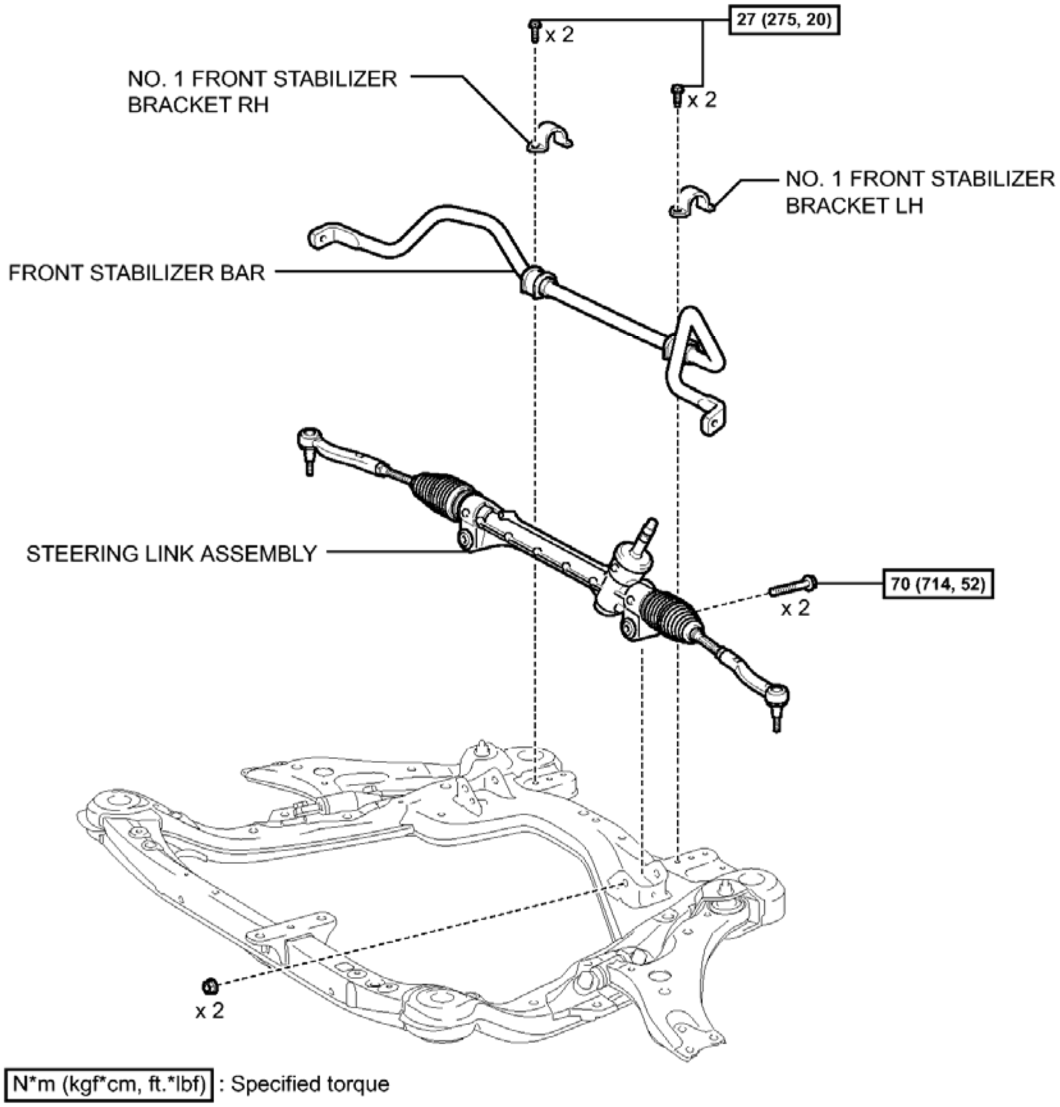
27 (275, 20)
x 2
x 2
NO. 1 FRONT STABILIZER BRACKET RH
NO. 1 FRONT STABILIZER BRACKET LH
FRONT STABILIZER BAR
STEERING LINK ASSEMBLY
70 (714, 52)
x 2
x 2
N*m (kgf*cm, ft.*lbf) : Specified torque

c

Fig. 2: Identifying Steering Gear Replacement Components With Torque Specifications (2 Of 4)
Courtesy of TOYOTA MOTOR SALES, U.S.A., INC.

ILLUSTRATION

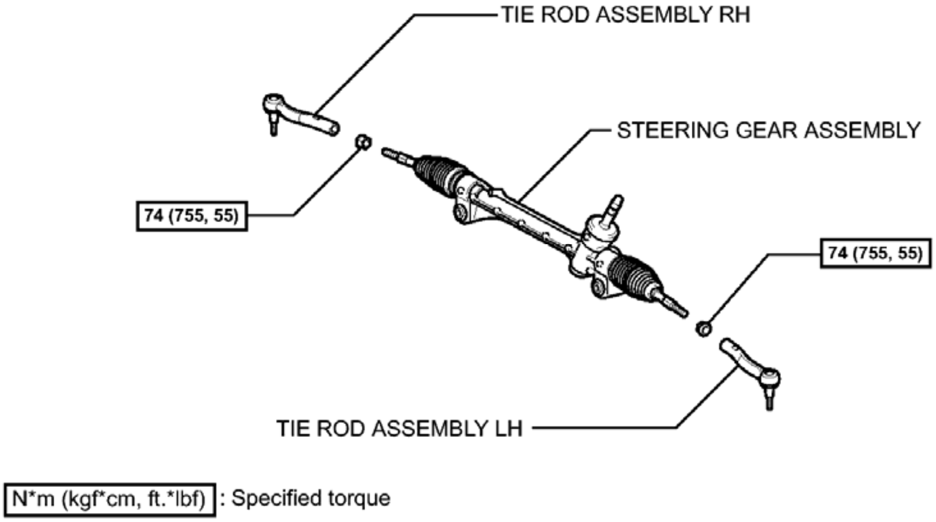
TIE ROD ASSEMBLY RH
STEERING GEAR ASSEMBLY
74 (755, 55)
74 (755, 55)
TIE ROD ASSEMBLY LH
N*m (kgf*cm, ft.*lbf) : Specified torque

c

Fig. 3: Identifying Steering Gear Replacement Components With Torque Specifications (3 Of 4)
Courtesy of TOYOTA MOTOR SALES, U.S.A., INC.

ILLUSTRATION

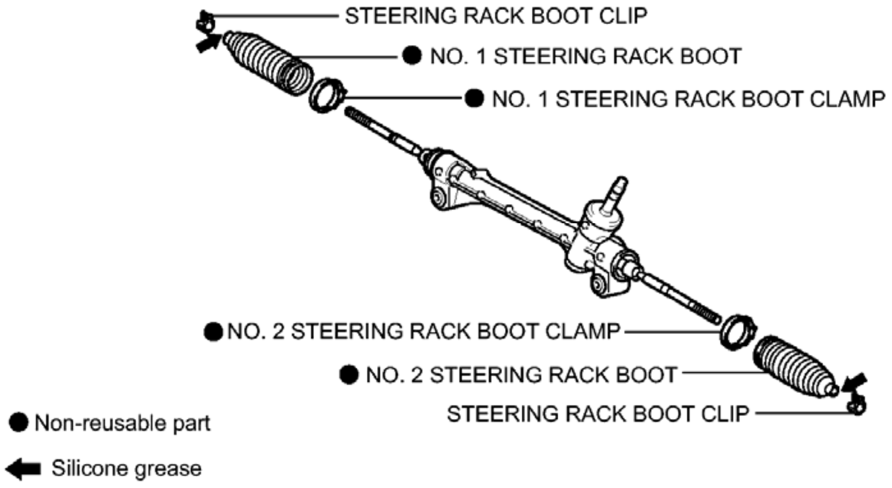
STEERING RACK BOOT CLIP
● NO. 1 STEERING RACK BOOT
● NO. 1 STEERING RACK BOOT CLAMP
● NO. 2 STEERING RACK BOOT CLAMP
● NO. 2 STEERING RACK BOOT
STEERING RACK BOOT CLIP
● Non-reusable part
⬅ Silicone grease

c

Fig. 4: Identifying Steering Gear Replacement Components With Torque Specifications (4 Of 4)
Courtesy of TOYOTA MOTOR SALES, U.S.A., INC.

REMOVAL

REMOVAL

NOTE:

- **Be sure to align the front wheels straight ahead when removing and**

installing the steering gear assembly.

- **When disconnecting the steering intermediate shaft assembly and the pinion shaft of the steering gear assembly, be sure to place matchmarks before servicing.**

1. **PLACE FRONT WHEELS FACING STRAIGHT AHEAD**
2. **REMOVE FRONT WHEELS**
3. **SECURE STEERING WHEEL**
    a. Secure the steering wheel with the seat belt in order to prevent rotation.

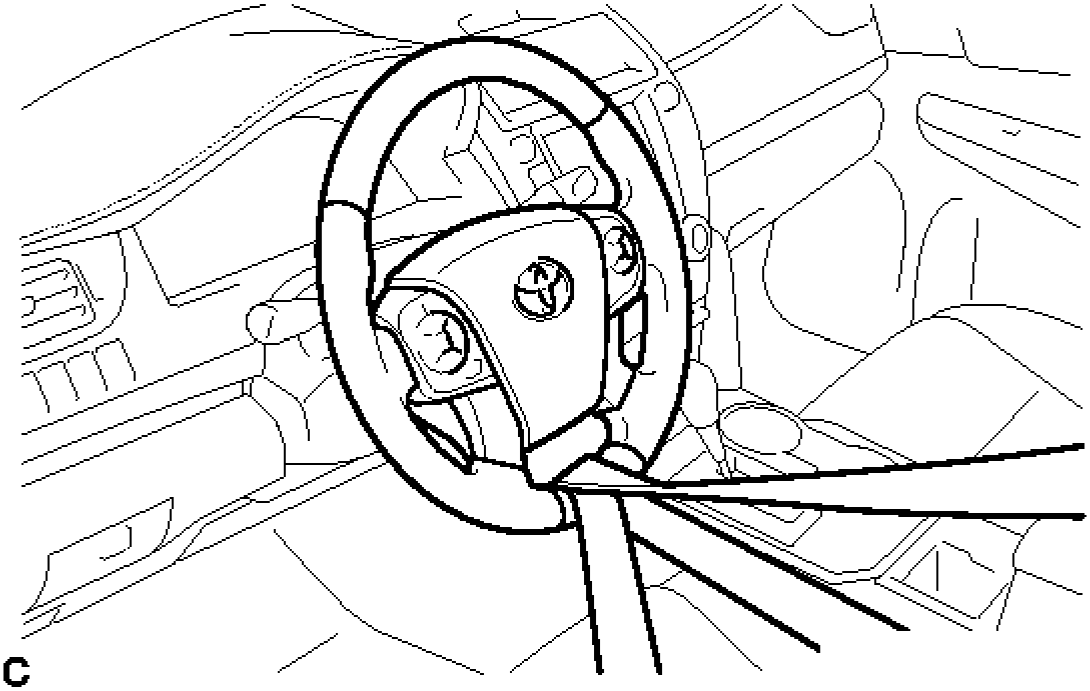

Fig. 5: Securing Steering Wheel With Seat Belt
Courtesy of TOYOTA MOTOR SALES, U.S.A., INC.

HINT:

This operation is useful to prevent damage to the spiral cable.

4. **SEPARATE STEERING INTERMEDIATE SHAFT ASSEMBLY**
    a. Put matchmarks on the steering intermediate shaft assembly and steering link assembly.

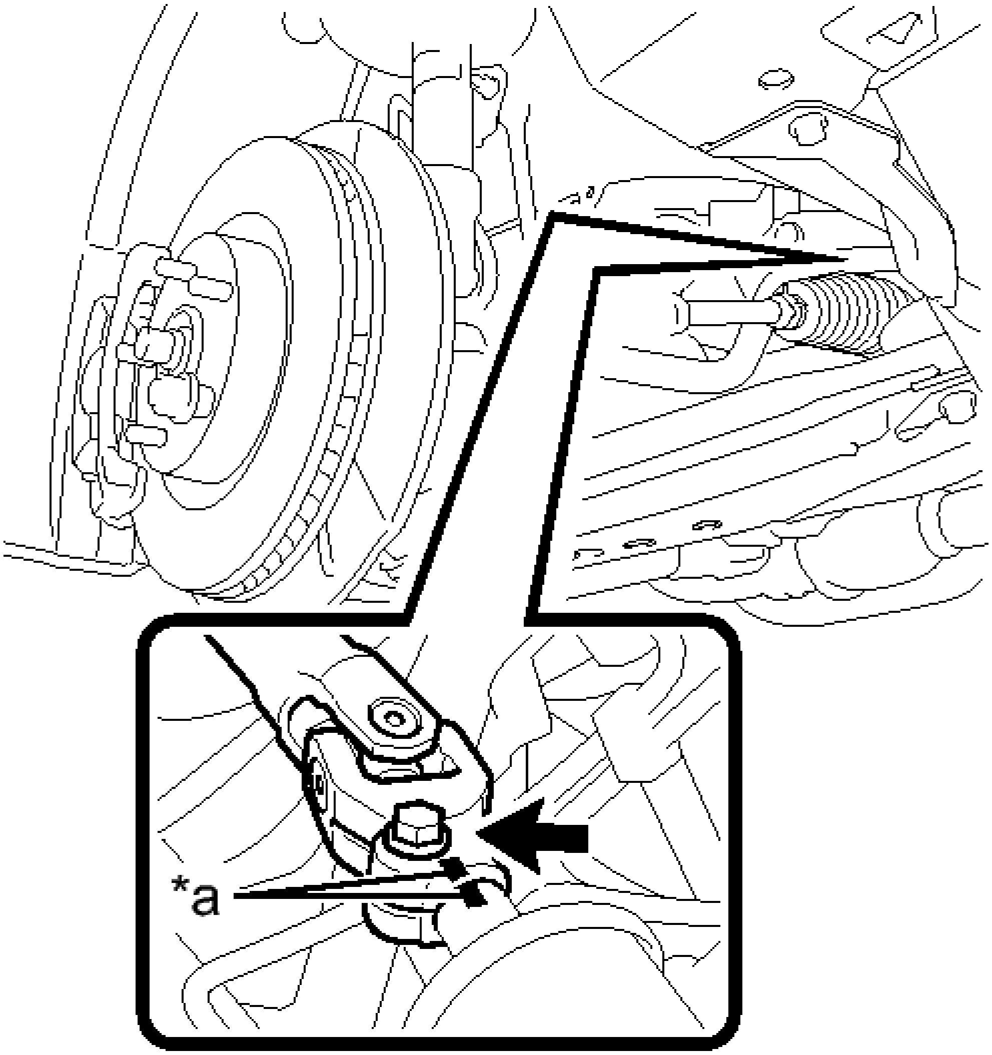

Fig. 6: Identifying Matchmarks On Steering Intermediate Shaft Assembly And Steering Link Assembly
Courtesy of TOYOTA MOTOR SALES, U.S.A., INC.

TEXT IN ILLUSTRATION

*a	Matchmark

b. Remove the bolt.
c. Separate the steering intermediate shaft assembly from the steering link assembly.

5. **SEPARATE TIE ROD ASSEMBLY LH**

a. Remove the cotter pin and nut.

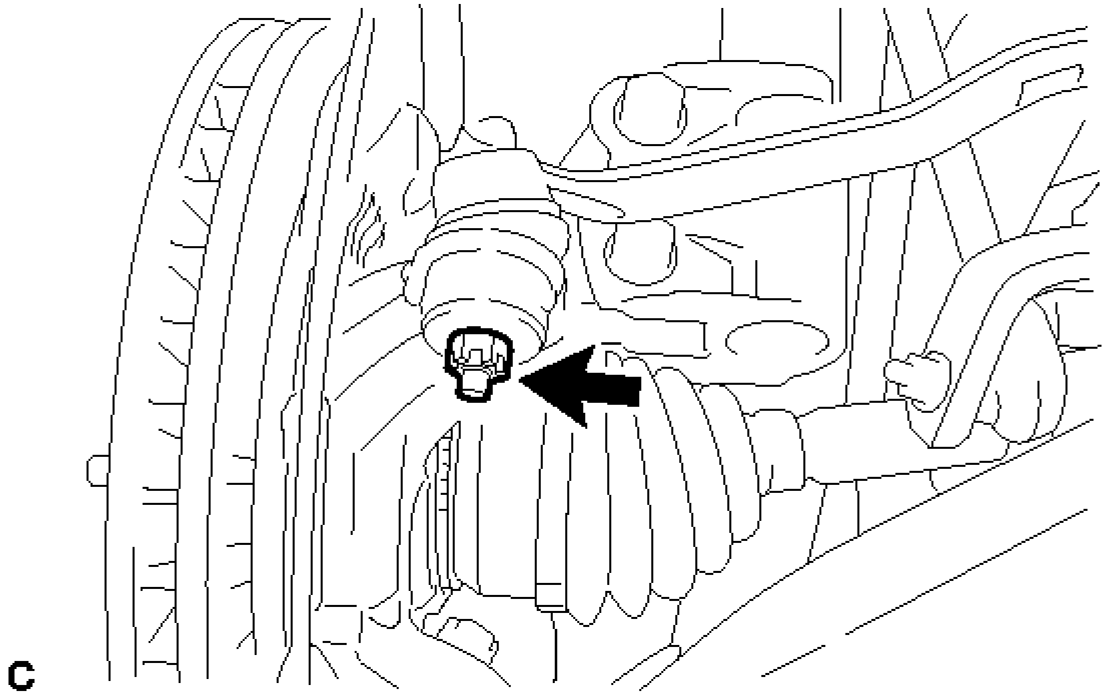

Fig. 7: Identifying Cotter Pin And Nut
Courtesy of TOYOTA MOTOR SALES, U.S.A., INC.

b. Install SST to the tie rod assembly LH.

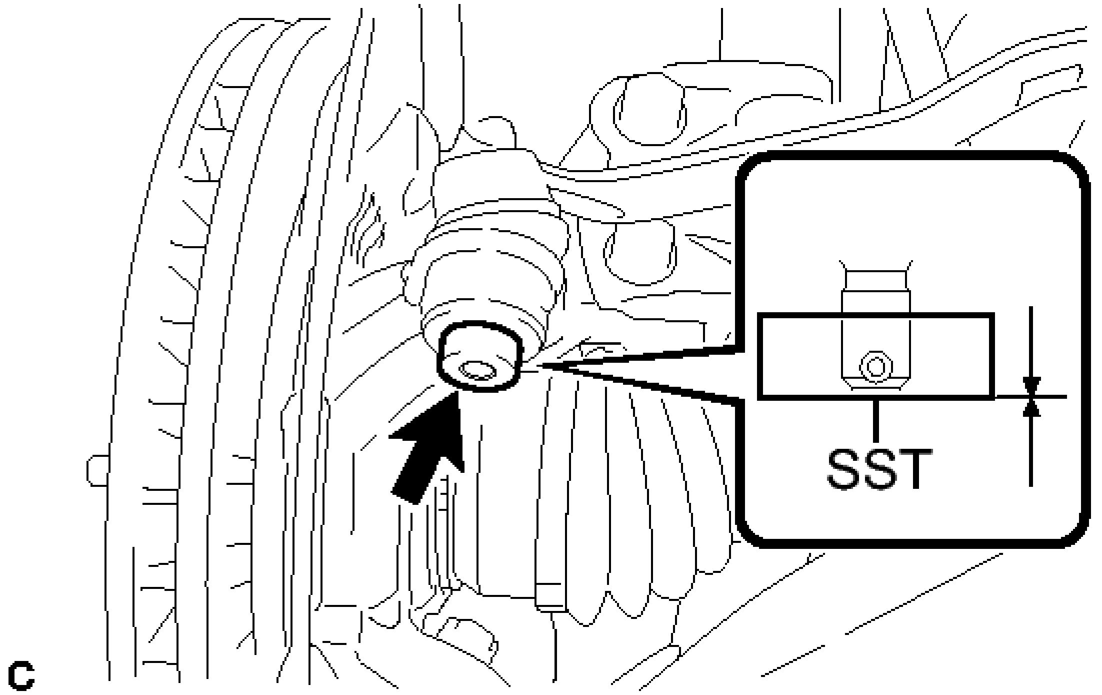

Fig. 8: Identifying Tie Rod Assembly With SST LH
Courtesy of TOYOTA MOTOR SALES, U.S.A., INC.

- **SST: 09960-20010**

  09961-02060

NOTE: **Make sure that the lower ends of the tie rod assembly LH and SST are aligned.**

c. Secure SST using a string.

NOTE: **Be sure to tighten the string firmly to secure SST to the steering knuckle to prevent SST from falling off.**

d. Using SST, separate the tie rod assembly LH from the steering knuckle.

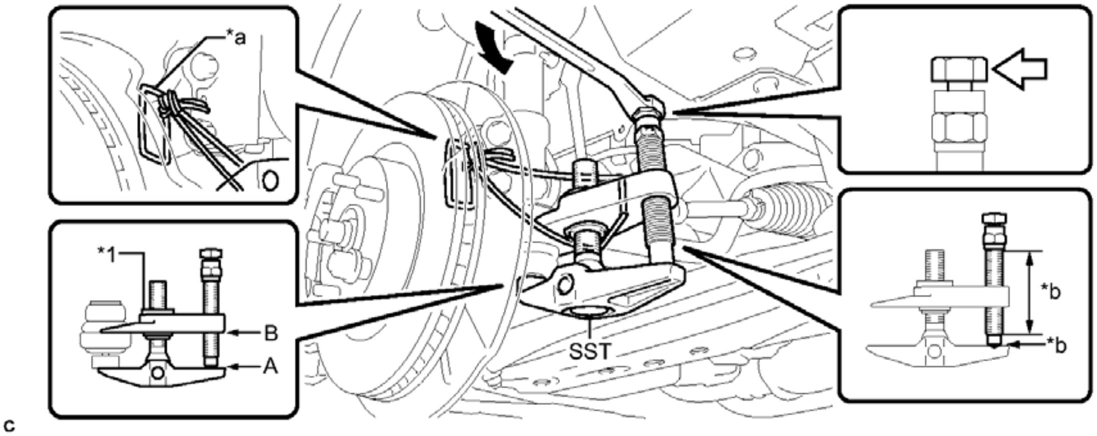

Fig. 9: Identifying Tie Rod Assembly Components LH
Courtesy of TOYOTA MOTOR SALES, U.S.A., INC.

TEXT IN ILLUSTRATION

*1	Center Nut	-	-
*a	String	*b	Grease Application Area
	Place the wrench here.	-	-

- **SST: 09960-20010**

  09961-02010

WARNING: **Apply grease to the bolt threads and the tip of SST.**

NOTE:

- **Install SST with the center nut so that A and B shown in the illustration are parallel. Otherwise, the dust cover may be damaged.**
- **Be sure to place the wrench on the part indicated in the illustration.**
- **Do not damage the front disc brake dust cover.**
- **Do not damage the ball joint dust cover.**
- **Do not damage the steering knuckle.**

6. **SEPARATE TIE ROD ASSEMBLY RH**

   HINT:

   Perform the same procedure as for the LH side.

7. **REMOVE ENGINE ASSEMBLY WITH TRANSAXLE**
   - for 2AR-FE: Refer to **REMOVAL**
   - for 2GR-FE: Refer to **REMOVAL**
8. **REMOVE NO. 1 FRONT STABILIZER BRACKET LH** . Refer to **REMOVAL - Step 4**
9. **REMOVE NO. 1 FRONT STABILIZER BRACKET RH**

   HINT:

   Perform the same procedure as for the LH side.

10. **REMOVE FRONT STABILIZER BAR** . Refer to **REMOVAL - Step 6**
11. **REMOVE STEERING LINK ASSEMBLY**
    a. Remove the 2 bolts, 2 nuts and steering link assembly.

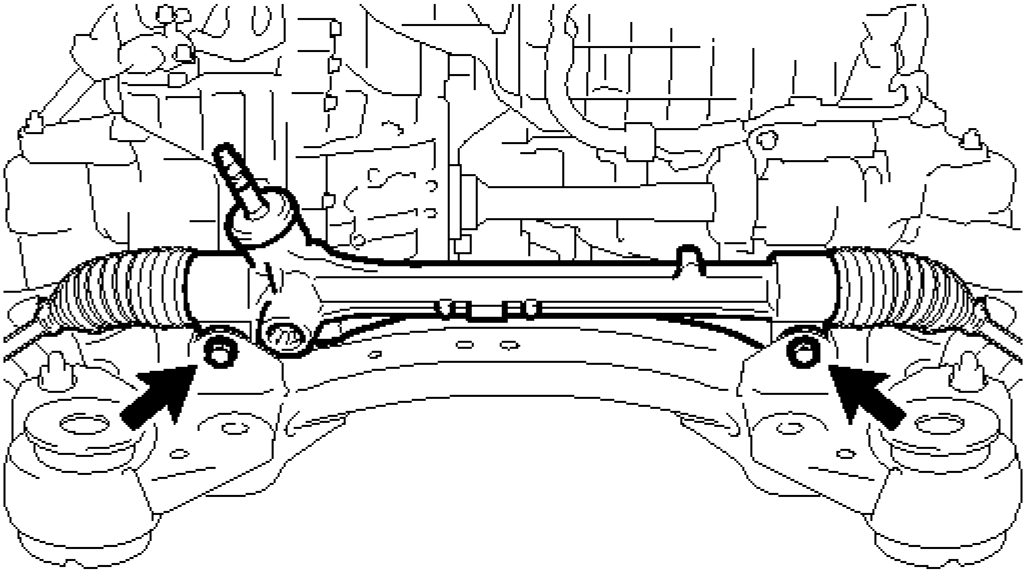

Fig. 10: Identifying Steering Link Assembly Bolts And Nuts
Courtesy of TOYOTA MOTOR SALES, U.S.A., INC.

NOTE: **Keep the nut from rotating while turning the bolt because the nut has its own stopper.**

12. **SECURE STEERING LINK ASSEMBLY**
    a. Using SST, secure the steering link assembly in a vise.

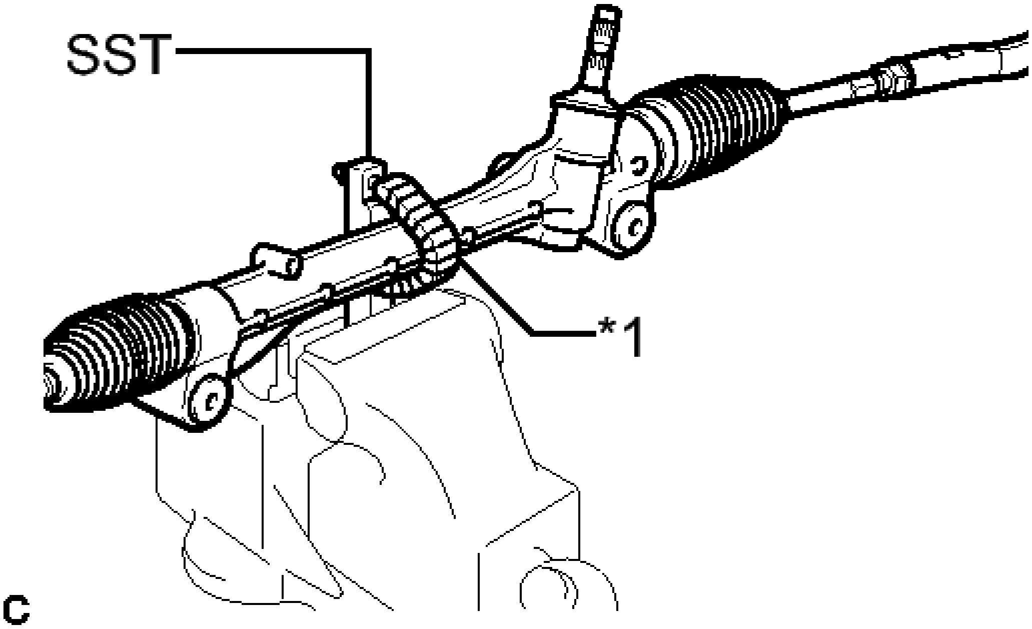

Fig. 11: Identifying Steering Link Assembly With SST
Courtesy of TOYOTA MOTOR SALES, U.S.A., INC.

TEXT IN ILLUSTRATION

*1	Protective Tape

- **SST: 09612-00012**

HINT:

Tape SST before use.

13. **REMOVE TIE ROD ASSEMBLY LH**
    a. Put matchmarks on the tie rod assembly LH and the steering rack end sub-assembly.

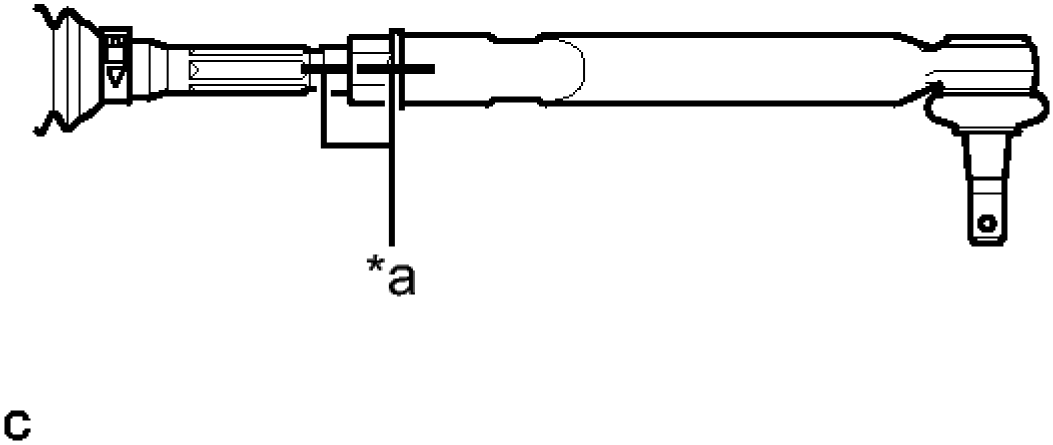

Fig. 12: Drawing Line On RH And LH Tie Rod Ends And Rack Ends
Courtesy of TOYOTA MOTOR SALES, U.S.A., INC.

TEXT IN ILLUSTRATION

*a	Matchmark

b. Remove the tie rod assembly LH and lock nut.

14. **REMOVE TIE ROD ASSEMBLY RH**

    HINT:

    Perform the same procedure as for the LH side.

DISASSEMBLY

DISASSEMBLY

1. **REMOVE STEERING RACK BOOT CLIP (for LH Side)**
    a. Using pliers, remove the steering rack boot clip.
2. **REMOVE STEERING RACK BOOT CLIP (for RH Side)**

    HINT:

    Perform the same procedure as for the LH side.

3. **REMOVE NO. 2 STEERING RACK BOOT CLAMP**

a. Using a screwdriver, remove the No. 2 steering rack boot clamp.

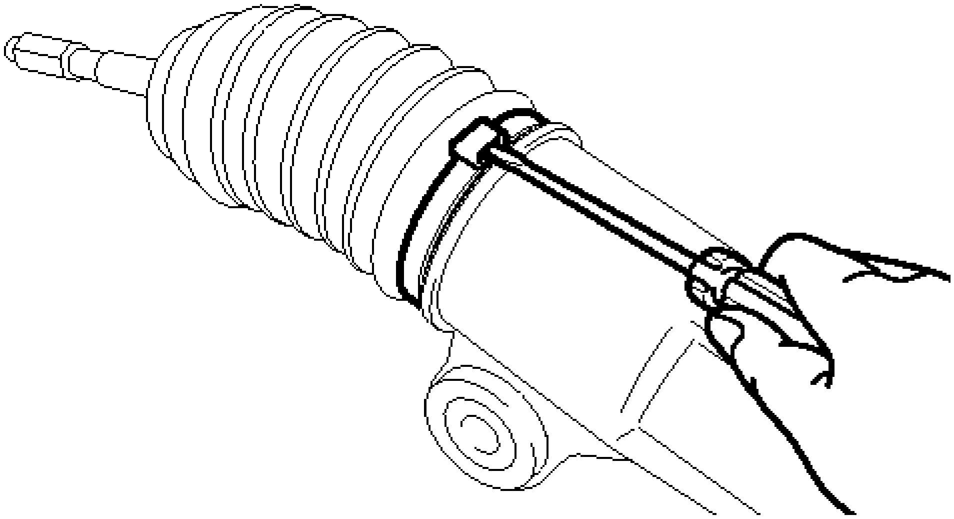

Fig. 13: Removing No. 2 Steering Rack Boot Clamp
Courtesy of TOYOTA MOTOR SALES, U.S.A., INC.

NOTE: **Be careful not to damage the No. 2 steering rack boot.**

4. **REMOVE NO. 1 STEERING RACK BOOT CLAMP**

   HINT:

   Perform the same procedure as for the No. 2 steering rack boot clamp.

5. **REMOVE NO. 2 STEERING RACK BOOT**
6. **REMOVE NO. 1 STEERING RACK BOOT**

INSPECTION

INSPECTION

1. **INSPECT TIE ROD ASSEMBLY**
   a. Secure the tie rod assembly in a vise.

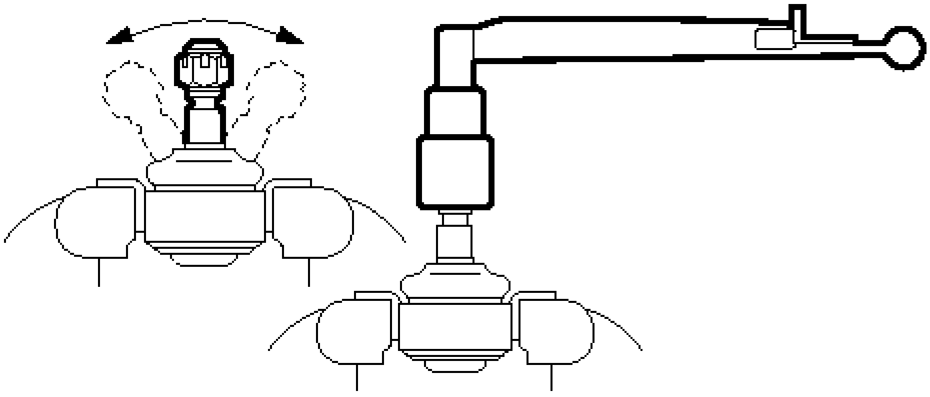

Fig. 14: Securing Tie Rod Assembly In Vise LH
Courtesy of TOYOTA MOTOR SALES, U.S.A., INC.

NOTE: Do not overtighten the vise.

b. Install the nut to the stud bolt.
c. Flip the ball joint back and forth 5 times.
d. Set a torque wrench to the nut, turn the ball joint continuously at a rate of 3 to 5 seconds per turn, and check the turning torque on the 5th turn.

Standard turning torque

1.0 to 4.0 N*m (10 to 40 kgf*cm, 9 to 35 in.*lbf)

HINT:

If the turning torque is not within the specified range, replace the tie rod assembly.

2. **INSPECT TOTAL PRELOAD**

NOTE: Inspect the total preload in a no-load condition by removing the tie rod assembly RH and LH, and steering rack boots.

a. Install SST to the pinion shaft and turn it left and right 5 times or more.
    - **SST: 09616-00020**

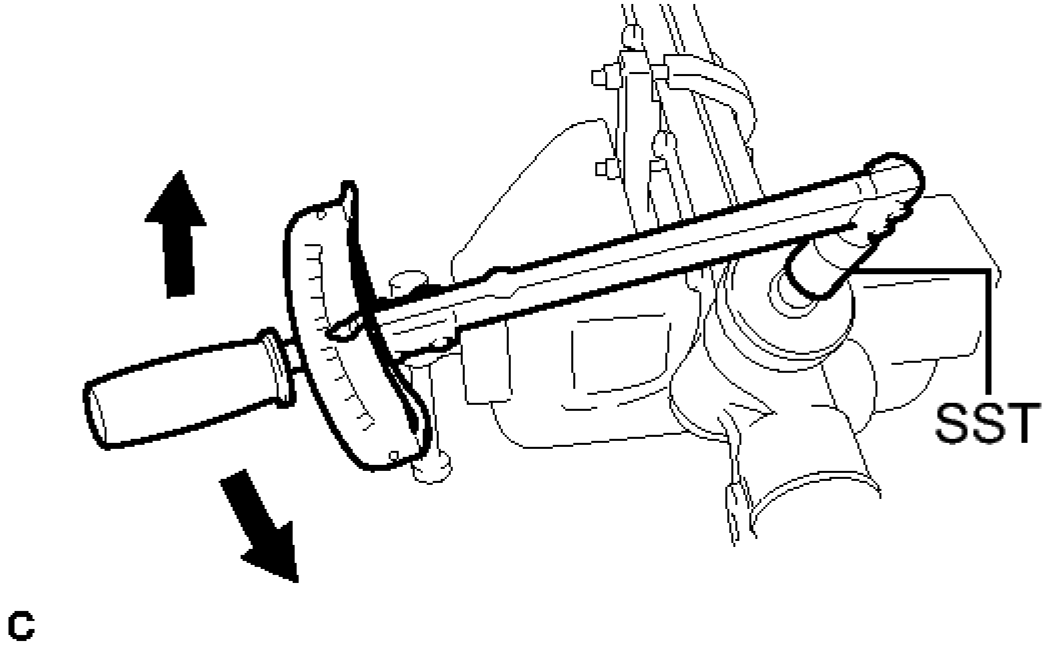

Fig. 15: Identifying Pinion Shaft And SST
Courtesy of TOYOTA MOTOR SALES, U.S.A., INC.

b. Set a torque wrench to SST and turn the pinion shaft continuously at a rate of 4 to 6 seconds per turn to inspect the total preload of the steering gear assembly.

STANDARD PRELOAD

Grade	Specified Value
w/o Wireless Door Lock System	0.7 to 1.1 N*m (7 to 11 kgf*cm, 6 to 9 in.*lbf)
w/ Wireless Door Lock System	0.8 to 1.2 N*m (8 to 12 kgf*cm, 7 to 10 in.*lbf)

NOTE: Inspect the total preload around the steering rack center position.

HINT:

If the total preload is not within the specified range, replace the steering gear assembly with a new one.

REASSEMBLY

REASSEMBLY

1. **INSTALL NO. 2 STEERING RACK BOOT**
   1. Wipe the old grease off of the No. 2 steering rack boot and rack end mating groove.
   2. Apply silicone grease to the inside of the small opening of a new No. 2 steering rack boot.

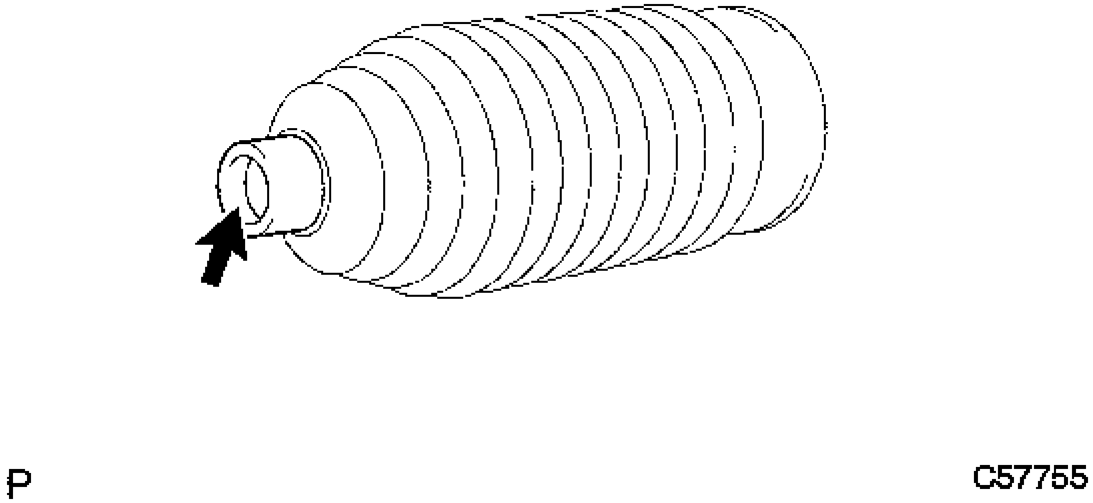

Fig. 16: Applying Silicon Grease To Inside Of Small End Of Rack Boot
Courtesy of TOYOTA MOTOR SALES, U.S.A., INC.

c. Install the No. 2 steering rack boot to the groove on the rack housing.

NOTE:

- **Be careful not to damage or twist the boot.**
- **Make sure that the boot is free of rust and foreign matter.**

2. **INSTALL NO. 1 STEERING RACK BOOT**

HINT:

Perform the same procedure as for the No. 2 steering rack boot.

3. **INSTALL NO. 2 STEERING RACK BOOT CLAMP**
   1. Using SST, tighten a new No. 2 steering rack boot clamp as shown in the illustration.

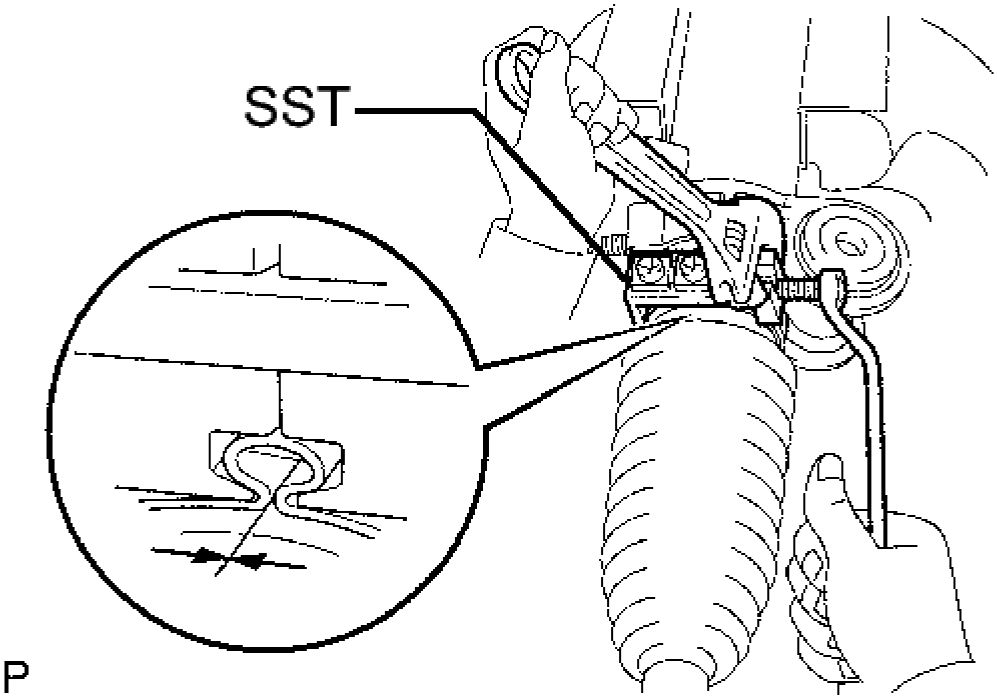

Fig. 17: Identifying SST & No. 2 Steering Rack Boot Clamp
Courtesy of TOYOTA MOTOR SALES, U.S.A., INC.

- **SST: 09521-24010**

Clearance

3.0 mm (0.118 in.) or less

NOTE: **Be careful not to damage the No. 2 steering rack boot.**

4. **INSTALL NO. 1 STEERING RACK BOOT CLAMP**

   HINT:

   Perform the same procedure as for the No. 2 steering rack boot clamp.

5. **INSTALL STEERING RACK BOOT CLIP (for LH Side)**
   a. Using pliers, install the steering rack boot clip.
6. **INSTALL STEERING RACK BOOT CLIP (for RH Side)**

   HINT:

   Perform the same procedure as for the LH side.

7. **INSPECT STEERING GEAR ASSEMBLY**
   a. Using SST, rotate the pinion shaft to see if both the left and the right steering rack boots expand

and contract smoothly.

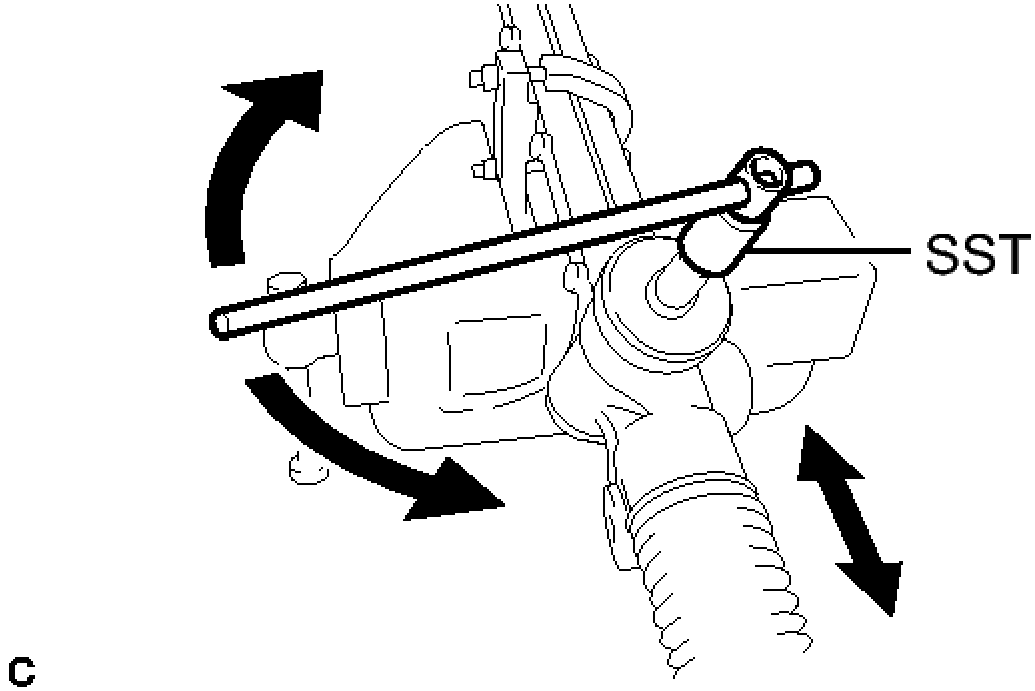

Fig. 18: Inspecting Steering Gear Assembly
Courtesy of TOYOTA MOTOR SALES, U.S.A., INC.

- **SST: 09616-00020**

HINT:

If the operation cannot be done as specified, use a new steering rack boot clamp and reinstall the steering rack boots.

INSTALLATION

INSTALLATION

1. **INSTALL TIE ROD ASSEMBLY LH**
    a. Install the lock nut and tie rod assembly LH to the steering rack end sub-assembly until the matchmarks are aligned.

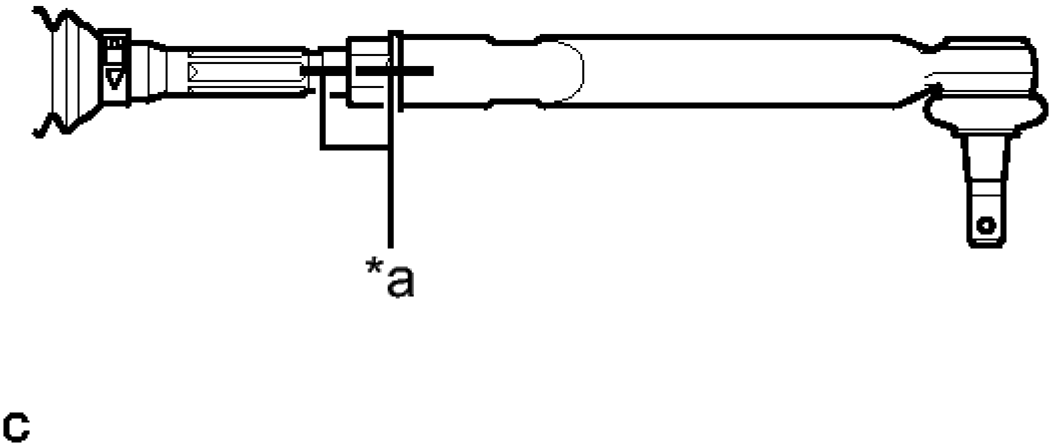

Fig. 19: Drawing Line On RH And LH Tie Rod Ends And Rack Ends
Courtesy of TOYOTA MOTOR SALES, U.S.A., INC.

TEXT IN ILLUSTRATION

*a	Matchmark

HINT:

After adjusting the front wheel alignment, tighten the lock nut.

2. **INSTALL TIE ROD ASSEMBLY RH**

   HINT:

   Perform the same procedure as for the LH side.

3. **INSTALL STEERING LINK ASSEMBLY**
   a. Install the steering link assembly with the 2 bolts and 2 nuts.

   Torque: 70 N*m (714 kgf*cm, 52 ft.*lbf)

   NOTE:

   - **Keep the nut from rotating while turning the bolt because the nut has its own stopper.**
   - **Make sure to tighten the bolts starting from the pinion shaft side.**

4. **INSTALL FRONT STABILIZER BAR** . Refer to **INSTALLATION - Step 2**
5. **INSTALL NO. 1 FRONT STABILIZER BRACKET LH** . Refer to **INSTALLATION - Step 3**
6. **INSTALL NO. 1 FRONT STABILIZER BRACKET RH**

   HINT:

   Perform the same procedure as for the LH side.

7. **INSTALL ENGINE ASSEMBLY WITH TRANSAXLE**
   - for 2AR-FE: Refer to **INSTALLATION**
   - for 2GR-FE: Refer to **INSTALLATION**
8. **CONNECT TIE ROD ASSEMBLY LH**
   a. Connect the tie rod assembly LH to the steering knuckle with the nut.

      Torque: 49 N*m (500 kgf*cm, 36 ft.*lbf)

   b. Install a new cotter pin.

      NOTE: **Further tighten the nut up to 60° if the holes for the cotter pin are not aligned.**

9. **CONNECT TIE ROD ASSEMBLY RH**

   HINT:

   Perform the same procedure as for the LH side.

10. **CONNECT STEERING INTERMEDIATE SHAFT ASSEMBLY**
    a. Align the matchmarks and install the steering intermediate shaft to the steering link assembly.

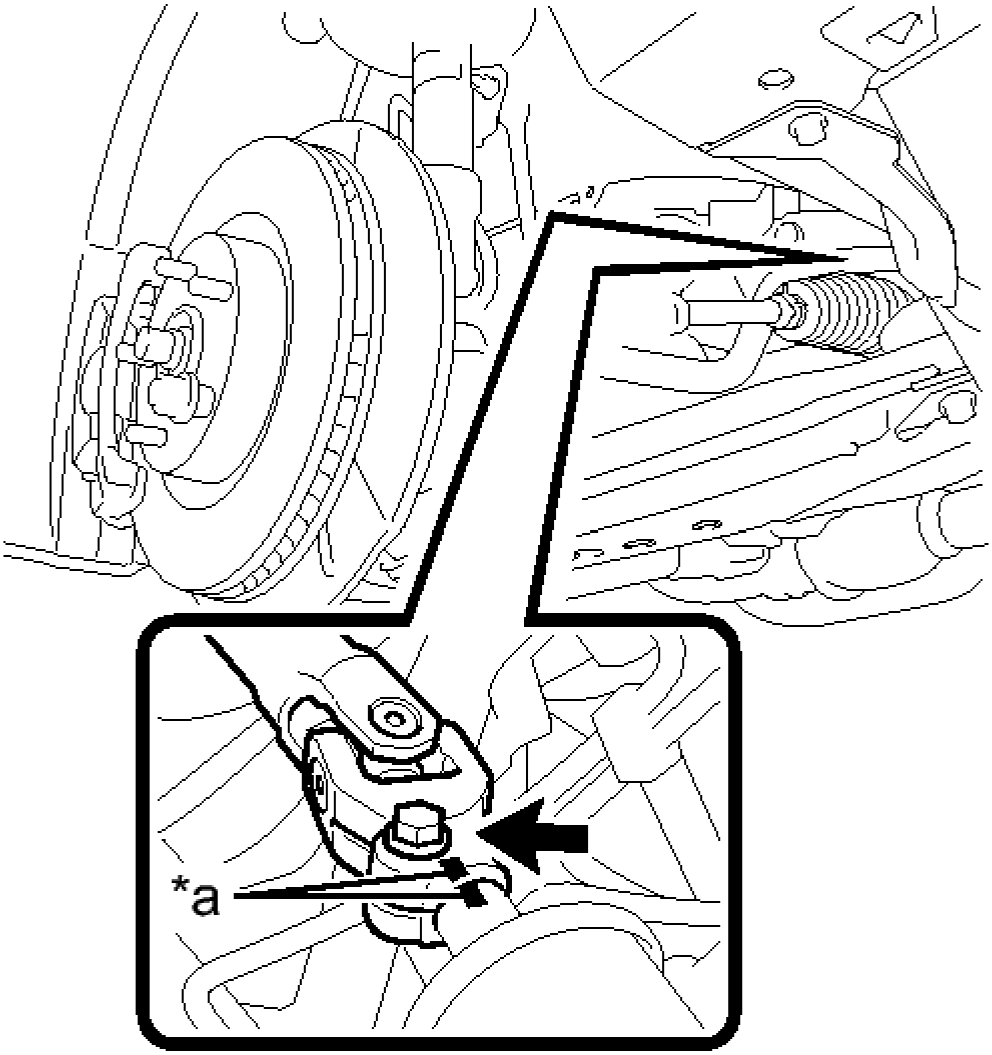

C

Fig. 20: Identifying Matchmarks On Steering Intermediate Shaft Assembly And Steering Link Assembly
Courtesy of TOYOTA MOTOR SALES, U.S.A., INC.

TEXT IN ILLUSTRATION

*a	Matchmark

b. Install the bolt.

   Torque: 35 N*m (360 kgf*cm, 26 ft.*lbf)

11. **INSTALL FRONT WHEELS**

    Torque: 103 N*m (1049 kgf*cm, 76 ft.*lbf)

12. **INSPECT AND ADJUST FRONT WHEEL ALIGNMENT**

Refer to **ADJUSTMENT**

13. **INSPECT STEERING WHEEL CENTER POINT**

2012-2017 STEERING

Steering Lock System (Diagnostics - Introduction) (Hybrid)

STEERING LOCK SYSTEM

PRECAUTION

PRECAUTION

1. **PRECAUTION FOR DISCONNECTING CABLE FROM NEGATIVE AUXILIARY BATTERY TERMINAL**

   NOTE: **When disconnecting the cable from the negative (-) auxiliary battery terminal, initialize the following system(s) after the cable is reconnected:**

System	See Procedure
Parking Assist Monitor System	Refer to **INITIALIZATION**

2. **PRECAUTIONS WHEN CHECKING FOR DTCS**
   a. When the cable is disconnected from the negative (-) auxiliary battery terminal, the DTCs stored in the steering lock ECU are cleared. Be sure to record any output DTCs immediately.
   b. Normally, with the power switch off, even if the Techstream is connected to the vehicle, the information stored in the smart key system related ECUs (the certification ECU (smart key ECU assembly), main body ECU, etc.) cannot be read. However, smart key system DTCs and Data List information can be confirmed even if the power switch is off using either of the two methods below:
      - Connect the Techstream to the vehicle, and turn a courtesy light switch on and off at intervals of 1.5 seconds or less until communication between the Techstream and vehicle begins (the Techstream screen changes when communication begins).
      - Connect the Techstream to the vehicle, select the vehicle type under manual mode, and then enter the following menus: Body Electrical / Smart Key / Trouble Codes.
3. **PRECAUTIONS WHEN REPLACING STEERING LOCK ECU (STEERING LOCK ACTUATOR ASSEMBLY)**
   a. If the steering lock ECU (steering lock actuator assembly) is replaced, be sure to confirm that the steering is unlocked by turning the steering wheel to the left and right before starting the hybrid control system. If the steering is locked for any reason, open and close a door with the power switch off, and then unlock the steering lock by pressing the power switch. This prevents the hybrid control system from starting while the steering is locked.
4. **PRECAUTION FOR REGISTRATION**
   a. If replacing any of the following parts, refer to the registration procedures. Refer to **REGISTRATION** .
      1. Certification ECU (Smart key ECU assembly)
      2. Power management control ECU

3. Steering lock ECU (Steering lock actuator assembly)
4. Electrical key transmitter sub-assembly (Key)

PARTS LOCATION

ILLUSTRATION

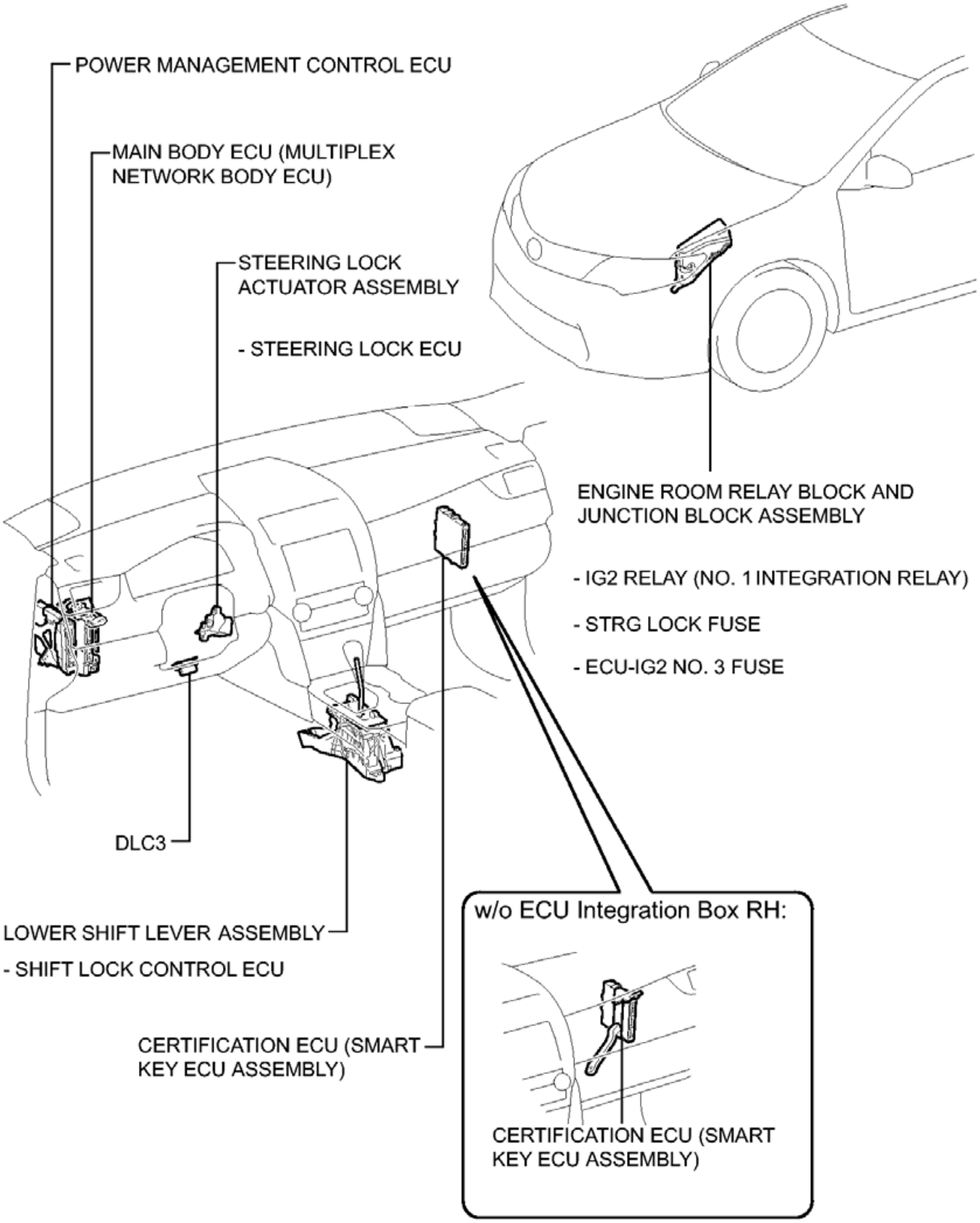
POWER MANAGEMENT CONTROL ECU
MAIN BODY ECU (MULTIPLEX NETWORK BODY ECU)
STEERING LOCK ACTUATOR ASSEMBLY
- STEERING LOCK ECU
ENGINE ROOM RELAY BLOCK AND JUNCTION BLOCK ASSEMBLY
- IG2 RELAY (NO. 1 INTEGRATION RELAY)
- STRG LOCK FUSE
- ECU-IG2 NO. 3 FUSE
DLC3
LOWER SHIFT LEVER ASSEMBLY
- SHIFT LOCK CONTROL ECU
CERTIFICATION ECU (SMART KEY ECU ASSEMBLY)
w/o ECU Integration Box RH:
CERTIFICATION ECU (SMART KEY ECU ASSEMBLY)

Fig. 1: Identifying Steering Lock System Components Location

Courtesy of TOYOTA MOTOR SALES, U.S.A., INC.

SYSTEM DIAGRAM

SYSTEM DIAGRAM

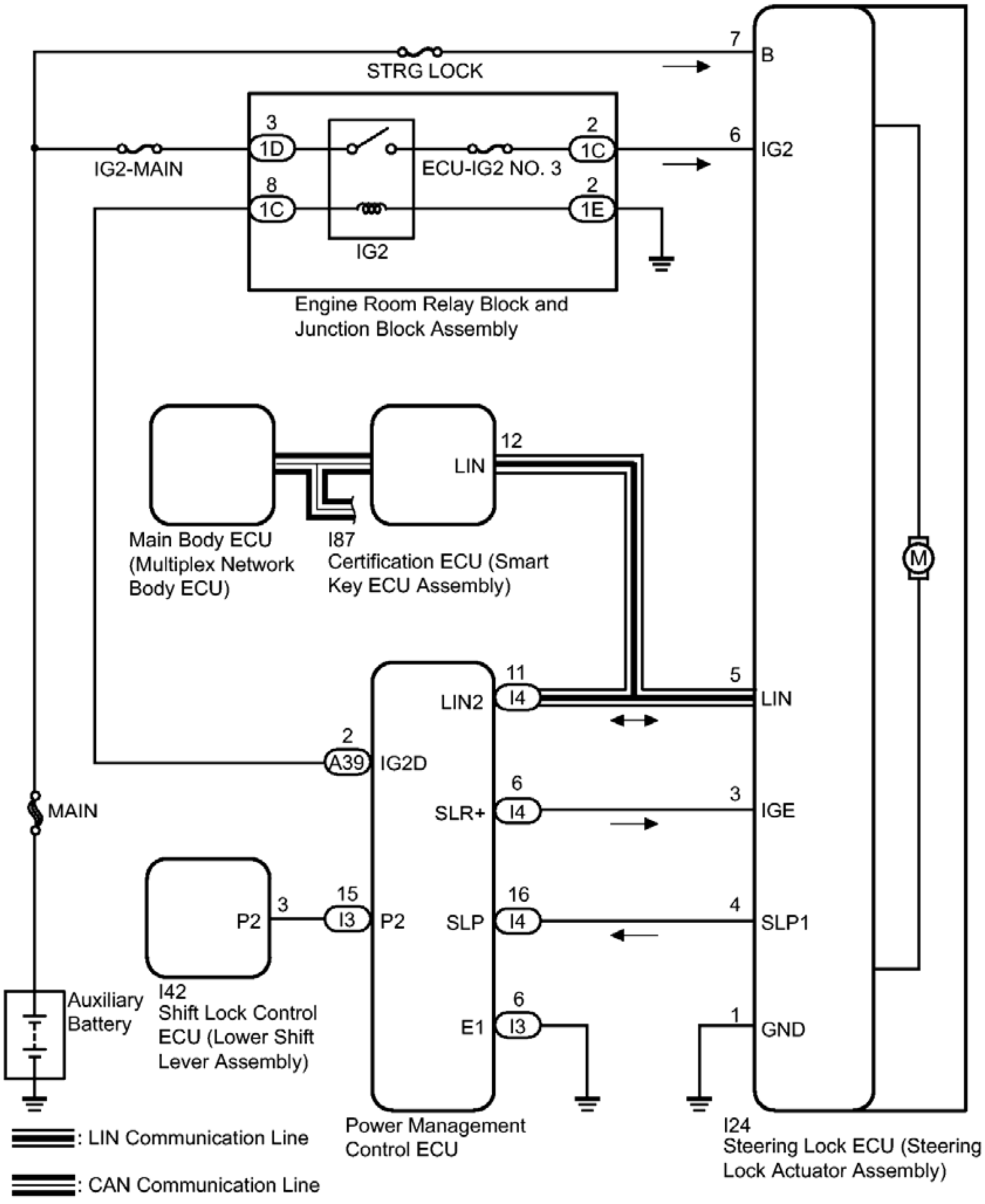
STRG LOCK
7
B
IG2-MAIN
3
1D
2
1C
ECU-IG2 NO. 3
6
IG2
8
1C
2
1E
IG2
Engine Room Relay Block and
Junction Block Assembly
12
LIN
Main Body ECU
(Multiplex Network
Body ECU)
I87
Certification ECU (Smart
Key ECU Assembly)
M
11
LIN2
I4
5
LIN
2
A39
IG2D
MAIN
6
SLR+
I4
3
IGE
3
P2
15
I3
P2
16
SLP
I4
4
SLP1
I42
Shift Lock Control
ECU (Lower Shift
Lever Assembly)
Auxiliary
Battery
6
E1
I3
1
GND
Power Management
Control ECU
I24
Steering Lock ECU (Steering
Lock Actuator Assembly)
: LIN Communication Line
: CAN Communication Line

Fig. 2: Steering Lock System Diagram

Courtesy of TOYOTA MOTOR SALES, U.S.A., INC.

CIRCUIT DESCRIPTION

Component		Outline
Steering Lock Actuator Assembly	Steering Lock ECU	The steering is locked and unlocked by communicating with the certification ECU (smart key ECU assembly) via LIN communication. When the following conditions are met, the steering can be unlocked. • The codes (L codes) of the certification ECU (smart key ECU assembly) and steering lock match. • The certification ECU (smart key ECU assembly) and key ID codes match.
Certification ECU (Smart Key ECU Assembly)		The ID code of the key the user is carrying is sent to the electrical key antenna. The certification ECU (smart key ECU assembly) compares the key ID code it receives from the electrical key antenna with its own ID code. If they match, the certification ECU (smart key ECU assembly) permits the steering lock ECU to turn the power on, start the hybrid control system and unlock and lock the steering.
Power Management Control ECU		Permits the steering lock ECU to supply power to activate the motor. The power management control ECU and certification ECU (smart key ECU assembly) permit hybrid control system start after receiving an unlock signal from the steering lock ECU.

SYSTEM DESCRIPTION

SYSTEM DESCRIPTION

1. **UNLOCK OPERATION CONDITIONS FOR STEERING LOCK**
    a. When the following condition is met, the unlock operation is performed.
        1. The power switch is on (ACC) or on (IG).

           HINT:

When the power switch is turned on (ACC) or on (IG) and the key and certification ECU (smart key ECU assembly) are verified, the steering is unlocked.

b. When any of the following conditions are met, key verification is performed.
    - The power switch is pressed.
    - The brake pedal is depressed so that the hybrid control system can be started.
    - 30 seconds elapse after opening and closing a door.

HINT:

- Key verification occurs when the code emitted from the key and the code stored by the certification ECU (smart key ECU assembly) are compared to check that they match.
- Certification ECU (smart key ECU assembly) verification occurs when the L code are verified while the hybrid control system is being started or the power switch is being pushed. The steering lock ECU uses the L code to determine whether the certification ECU (smart key ECU assembly) is authorized.

2. **LOCK OPERATION CONDITIONS FOR STEERING LOCK**
    a. When all of the following conditions are met and the certification ECU (smart key ECU assembly) has been verified, the lock operation is performed.
        1. The power switch is off.
        2. The shift lever is in P.
        3. A door is opened or a door lock operation (smart door lock, wireless door lock or key-linked lock operation*) is performed.

        HINT:

        *: This is the lock/unlock operation with the mechanical key.

3. **WARNING FUNCTION**
    a. A check smart key system message is displayed on the multi-information display in the combination meter assembly when one of the following occurs: 1) A vehicle speed signal malfunction is detected, 2) a malfunction that interferes with steering lock ECU operation is detected, or 3) an IG circuit malfunction is detected.

    If a malfunction which results in the message being displayed, the hybrid control system cannot be started once it is turned off.

    HINT:

    DTCs are stored in all cases listed above.

4. **STEERING LOCK ECU DESCRIPTION**
    a. The steering lock ECU is built into the steering lock actuator assembly of the steering column assembly.

b. The steering lock ECU is not connected to the CAN communication system. However, the steering lock ECU is connected to the certification ECU (smart key ECU assembly) via LIN communication and communicates with other components via CAN communication through the certification ECU (smart key ECU assembly).

HOW TO PROCEED WITH TROUBLESHOOTING

HOW TO PROCEED WITH TROUBLESHOOTING

HINT:

- Use the following procedures to troubleshoot the steering lock system.
- *: Use the Techstream.

1. **VEHICLE BROUGHT TO WORKSHOP**

   NEXT: Go to next step

2. **CUSTOMER PROBLEM ANALYSIS**
   a. Interview the customer and confirm the problem. Refer to **HOW TO PROCEED WITH TROUBLESHOOTING** .

   NEXT: Go to next step

3. **CHECK AUXILIARY BATTERY VOLTAGE**

   Standard Voltage

   11 to 14 V

   If the voltage is below 11 V, recharge or replace the auxiliary battery before proceeding to the next step.

   HINT:

   A simple method to determine whether the auxiliary battery is depleted is to operate the horn.

   NEXT: Go to next step

4. **CHECK DTC***
   a. Check for DTCs and make a note of any codes that are output. Refer to **DTC CHECK / CLEAR**.

   HINT:

   When DTCs indicating CAN and/or LIN communication system malfunctions are output, repair the CAN and/or LIN communication systems before performing diagnosis. Refer to **HOW TO PROCEED WITH TROUBLESHOOTING** for CAN and/or. Refer to **HOW TO PROCEED**

WITH TROUBLESHOOTING for LIN).

Result

Result	Proceed to
DTC is not output. (Problem symptom cannot be confirmed or reproduced.)	A
DTC is not output. (Problem symptom can be confirmed and reproduced.)	B
Steering lock system DTC is output.	C

HINT:

- When steering lock system DTCs are output, refer to Diagnostic Trouble Code Chart. Refer to **DIAGNOSTIC TROUBLE CODE CHART**.
- The steering lock system does not store past DTCs.

B --> Go to 6

C --> Go to 8

A: Go to next step

5. **SYMPTOM SIMULATION**
    a. Proceed to How to Proceed with Troubleshooting. Refer to **HOW TO PROCEED WITH TROUBLESHOOTING** .

    NEXT: Go to next step

6. **PROBLEM SYMPTOMS TABLE**
    a. Proceed to Problem Symptoms Table. Refer to **PROBLEM SYMPTOMS TABLE**.

    Result

Result	Proceed to
Fault is not listed in Problem Symptoms Table.	A
Fault is listed in Problem Symptoms Table.	B

B --> Go to 8

A: Go to next step

7. **OVERALL ANALYSIS AND TROUBLESHOOTING***
    a. Proceed to Data List / Active Test. Refer to **DATA LIST / ACTIVE TEST**.
    b. Proceed to Terminals of ECU. Refer to **TERMINALS OF ECU**.

NEXT --> Go to 9

8. **CIRCUIT INSPECTION***

   NEXT: Go to next step

9. **REPAIR OR REPLACE**

   NEXT: Go to next step

10. **CHECK DTC AGAIN***
    1. Clear the DTCs. Refer to **DTC CHECK / CLEAR**.
    2. Check for DTCs and make a note of any codes that are output. Refer to **DTC CHECK / CLEAR**.

       HINT:

       Perform the DTC output confirmation operation.

       Result

Result	**Proceed to**
DTC is not output.	A
Steering lock system DTC is output.	B

B --> GO TO DIAGNOSTIC TROUBLE CODE CHART. Refer to DIAGNOSTIC TROUBLE CODE CHART

A --> END

PROBLEM SYMPTOMS TABLE

PROBLEM SYMPTOMS TABLE

HINT:

- Use the table below to help determine the cause of problem symptoms. If multiple suspected areas are listed, the potential causes of the symptoms are listed in order of probability in the "Suspected Area" column of the table. Check each symptom by checking the suspected areas in the order they are listed. Replace parts as necessary.
- Inspect the fuses and relays related to this system before inspecting the suspected areas below.

STEERING LOCK SYSTEM

Symptom	Suspected Area	See
Steering lock does not operate.	Refer to "Unable to Lock Steering Wheel".	Refer to **Unable to Lock Steering Wheel**

Steering does not unlock (hybrid control system cannot be started).	Refer to "Unable to Unlock Steering Wheel (Hybrid Control System cannot Start)".	Refer to **Unable to Unlock Steering Wheel (Hybrid Control System cannot Start)**

TERMINALS OF ECU

TERMINALS OF ECU

1. **TERMINAL INSPECTION**

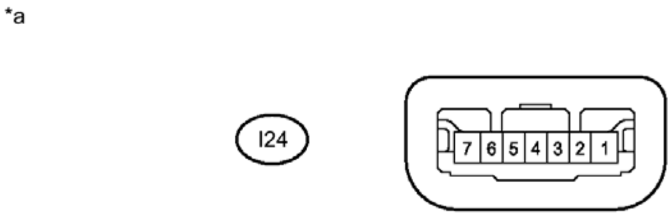

Fig. 3: Steering Lock ECU Connector Terminal Identification
Courtesy of TOYOTA MOTOR SALES, U.S.A., INC.

TEXT IN ILLUSTRATION

*a	Component without harness connected (Steering Lock ECU (Steering Lock Actuator Assembly))	-	-

a. Measure the voltage and resistance according to the value(s) in the table below.

Terminal No. (Symbol)	Input/Output	Wiring Color	Terminal Description	Condition	Specified Condition	Related Data List Item
I24-1 (GND) - Body ground	-	W-B - Body ground	Ground*	Always	Below 1 ohms	-
			Steering lock	Any door opened when conditions below met, and then steering lock motor activated: • Shift lever		

I24-3 (IGE) - I24-1 (GND)	Input	SB - W-B	motor activation command signal (motor activation command signal sent from certification ECU (smart key ECU assembly))	in P • Steering lock unlocked in advance by carrying key and turning power switch on (IG) • After above conditions met, power switch turned off	Pulse generation (see waveform)	**Smart Key** • Power Supply Short • Unlock Request Receive • Lock Request Receive
I24-4 (SLP1) - I24-1 (GND)	Output	P - W-B	Steering lock bar position signal (output signal from steering unlock sensor)	Steering locked --> unlocked	11 to 14 V --> Below 1.2 V	**Smart Key** • Push Start Error • Sensor Value
I24-5 (LIN) - I24-1 (GND)	Input/Output	Y - W-B	LIN communication line	-	-	**Smart Key** • Steering Lock Start Cond
I24-6 (IG2) - I24-1 (GND)	Input	LG - W-B	Power source mode signal (IG2 power supply input for entire steering lock actuator assembly)*	Power switch off --> power switch on (IG)	Below 1 V --> 11 to 14 V	**Smart Key** • Ignition Switch
I24-7 (B) - Body ground	Input	B - Body ground	Power source*	Always	11 to 14 V	-

*: When there is a problem with the power source input, the certification ECU (smart key ECU assembly) may store DTC B2786.

NOTE: **There is 1 motor and 2 sensors built into the steering lock actuator assembly.**

HINT:

- When taking measurements when the lock motor is stopped, it is not necessary to perform any operations.
- In order to take measurements when the lock motor is operating, perform either of the following operations:
  - To unlock the steering, carry the key and turn the power switch on (ACC) or on (IG) with the shift lever in P.
  - To lock the steering, turn the power switch off with the shift lever in P, and then open a door.

1. Waveform

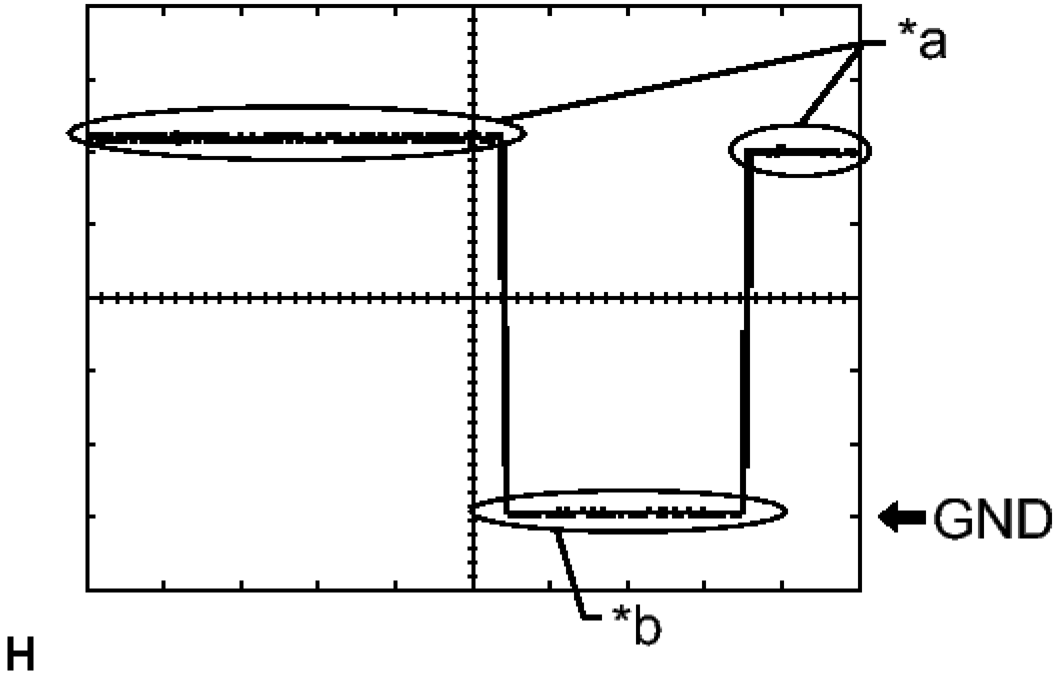

Fig. 4: Identifying Waveform
Courtesy of TOYOTA MOTOR SALES, U.S.A., INC.

Item	Content
Tester Connection	I24-3 (IGE) - I24-1 (GND)
Tool Setting	2 V/DIV., 200 ms./DIV.
Vehicle Condition	Steering lock motor not operating --> Steering lock motor operating --> Steering lock motor not operating

TEXT IN ILLUSTRATION

*a	Steering lock motor not operating
*b	Steering lock motor operating

DIAGNOSIS SYSTEM

DIAGNOSIS SYSTEM

1. **DESCRIPTION**
   a. The steering lock ECU stores DTCs when a malfunction occurs in the system. These DTCs can be confirmed by using the Techstream.

NOTE:

- **When using the Techstream with the power switch off to confirm DTCs or Data List information related to the smart key system, the Techstream may not operate unless either of the following is performed: 1) Turn a courtesy light switch on and off at intervals of 1.5 seconds or less until communication between the Techstream and vehicle begins, or 2) connect the Techstream to the vehicle, select the vehicle type under manual mode, and then enter the following menus: Body Electrical / Smart Key / Trouble Codes.**
- **Do not remove any fuses or disconnect the cable from the negative (-) auxiliary battery terminal before confirming and recording DTCs as the data stored in the ECUs will be cleared.**
- **DTCs may have been stored due to problems unrelated to the steering lock system. Be sure to confirm and record any DTCs output for other systems.**

   b. The steering lock ECU is not connected to the CAN communication system. Therefore, communication with the Techstream is performed via the certification ECU (smart key ECU assembly).

   c. The steering lock ECU only stores DTCs for currently existing malfunctions. Past DTCs are not stored.

DTC CHECK / CLEAR

DTC CHECK / CLEAR

NOTE:

- **The steering lock ECU does not store past DTCs. If any DTCs are output, confirm and record them as soon as possible. Do not turn the power switch off or clear the DTCs until the DTCs are confirmed and recorded.**
- **DTCs may have been stored due to problems unrelated to the steering lock system. Be sure to confirm and record any DTCs output for other systems.**

- **When using the Techstream with the power switch off, perform either of the following: 1) Turn a courtesy light switch on and off at intervals of 1.5 seconds or less until communication between the Techstream and vehicle begins, or 2) connect the Techstream to the vehicle, select the vehicle type under manual mode, and then enter the following menus: Body Electrical / Smart Key / Trouble Codes.**

1. **CHECK FOR DTC (POWER MANAGEMENT CONTROL ECU)**
    a. Turn the power switch off.
    b. Connect the Techstream to the DLC3.
    c. Turn the power switch on (IG).
    d. Turn the Techstream on.
    e. Enter the following menus: Body Electrical / Power Source Control / Trouble Codes.
    f. Check for DTCs.
2. **CHECK FOR DTC (MAIN BODY ECU)**
    a. Turn the power switch off.
    b. Connect the Techstream to the DLC3.
    c. Turn the power switch on (IG).
    d. Turn the Techstream on.
    e. Enter the following menus: Body Electrical / Main Body / Trouble Codes.
    f. Check for DTCs.
3. **CHECK FOR DTC (CERTIFICATION ECU (SMART KEY ECU ASSEMBLY))**

    HINT:

    The steering lock system DTCs are output from the steering lock ECU via the certification ECU (smart key ECU assembly).

    a. Turn the power switch off.
    b. Connect the Techstream to the DLC3.
    c. Turn the power switch on (IG).
    d. Turn the Techstream on.
    e. Enter the following menus: Body Electrical / Smart Key / Trouble Codes.
    f. Check for DTCs.
4. **CLEAR DTC (POWER MANAGEMENT CONTROL ECU)**
    a. Turn the power switch off.
    b. Connect the Techstream to the DLC3.
    c. Turn the power switch on (IG).
    d. Turn the Techstream on.
    e. Enter the following menus: Body Electrical / Power Source Control / Trouble Codes.

    f. Clear the DTCs.

5. **CLEAR DTC (MAIN BODY ECU)**
    a. Turn the power switch off.
    b. Connect the Techstream to the DLC3.
    c. Turn the power switch on (IG).
    d. Turn the Techstream on.
    e. Enter the following menus: Body Electrical / Main Body / Trouble Codes.
    f. Clear the DTCs.
6. **CLEAR DTC (CERTIFICATION ECU (SMART KEY ECU ASSEMBLY))**
    a. Turn the power switch off.
    b. Connect the Techstream to the DLC3.
    c. Turn the power switch on (IG).
    d. Turn the Techstream on.
    e. Enter the following menus: Body Electrical / Smart Key / Trouble Codes.
    f. Clear the DTCs.

DATA LIST / ACTIVE TEST

DATA LIST / ACTIVE TEST

1. **READ DATA LIST**

HINT:

Using the Techstream to read the Data List allows the values or states of switches, sensors, actuators and other items to be read without removing any parts. This non-intrusive inspection can be very useful because intermittent conditions or signals may be discovered before parts or wiring is disturbed. Reading the Data List information early in troubleshooting is one way to save diagnostic time.

NOTE: **In the table below, the values listed under "Normal Condition" are reference values. Do not depend solely on these reference values when deciding whether a part is faulty or not.**

    a. Turn the power switch off.
    b. Connect the Techstream to the DLC3.
    c. Turn the power switch on (IG).
    d. Turn the Techstream on.
    e. Enter the following menus: Body Electrical / (desired system) / Data List.
    f. According to the display on the Techstream, read the Data List.
    g. Using the Techstream, confirm the Data List items to help determine the cause of the problem.

NOTE:

- **The steering lock ECU communicates with the Techstream through the certification ECU (smart key ECU assembly) which uses CAN communication. If the CAN communication system or certification ECU (smart key ECU assembly) is malfunctioning, Data List items may not be normal.**
- **When using the Techstream with the power switch off, perform either of the following: 1) Turn a courtesy light switch on and off at intervals of 1.5 seconds or less until communication between the Techstream and vehicle begins, or 2) connect the Techstream to the vehicle, select the vehicle type under manual mode, and then enter the following menus: Body Electrical / Smart Key / Data List.**

POWER SOURCE CONTROL

Tester Display	Measurement Item/Range	Normal Condition	Diagnostic Note
Shift P Signal	Shift position (P) signal / ON or OFF	ON: Shift lever in P OFF: Shift lever not in P	• Use this item to determine if the shift position switch is malfunctioning. • The hybrid control system cannot be started when this item is "OFF".
Steering Unlock Switch	State of steering unlock sensor signal output from steering lock actuator assembly / ON or OFF	ON: Steering unlocked (Power switch on (ACC)) OFF: Steering locked (Power switch off door opened)	This item can be used to determine the cause of problems when the steering does not lock or unlock. **HINT:** • The steering is considered locked when the lock sensor is ON and the unlock sensor is OFF. • The steering is considered unlocked when the lock sensor is OFF and the unlock sensor is ON.
Str Lock/Unlock Wait T-Out	Steering lock or unlock malfunction / Yes or No	Yes: Steering lock/unlock timed out (Lock bar stuck, etc.) No: Steering locks/unlocks	The hybrid control system cannot be started when this item is "Yes".

		normally within specified time	

SMART KEY

Tester Display	Measurement Item/Range	Normal Condition	Diagnostic Note
Ignition Switch	State of certification ECU (smart key ECU assembly) IG power supply input / ON or OFF	ON: Power switch on (IG) OFF: Power switch off	This item displays "OFF" when the power switch is on (ACC).
#Codes	Number of DTCs / 0 to 255	Number of stored DTCs displayed	-
Immobilizer	State of immobilizer system determined by certification ECU (smart key ECU assembly) / Set or Unset	Set: Engine immobilizer set (Power switch off) Unset: Engine immobilizer unset (Power switch on (ACC) or on (IG))	• When the immobilizer cannot be unset, this item can be used to determine whether the certification ECU (smart key ECU assembly) is part of the problem. • The hybrid control system cannot be started when this item displays "Set". **HINT:** • The state of the immobilizer (whether it is set or unset) can be determined through the certification ECU (smart key ECU assembly). If this item displays "Set", the communication between the certification ECU (smart key ECU assembly) and steering lock ECU can be determined to be normal.

			- The security indicator light operation is only linked with the state of the immobilizer (set/unset), and is not related to the steering lock operation (lock/unlock), when the immobilizer is set, the security indicator light blinks.
Steering Lock Sleep Cond	Steering lock ECU sleep condition / Yes or No	-	-
Steering Lock Start Cond	Transmission state of steering lock ECU wake up signal / Yes or No	Yes: Wake up signal transmitted No: Wake up signal not transmitted	-
Engine Start Condition	State of hybrid control system permission signal determined by steering lock ECU and sent to certification ECU (smart key ECU assembly) / OK or NG	OK: Hybrid control system permitted NG: Hybrid control system prohibited	- When this item displays "OK", the certification ECU (smart key ECU assembly) has received an unlock confirmation signal from the steering lock ECU and has permitted fuel injection and hybrid control system combustion. - The hybrid control system cannot be started when this item displays "NG".
Sensor Value	Record of malfunction of position sensor in steering lock actuator assembly / OK or NG (Past)	OK: No record of lock/unlock sensor malfunction in steering lock actuator assembly NG (Past): Record of lock/unlock sensor in steering lock actuator assembly turning ON at same time exists	When this item displays "NG", the sensor inside the steering lock actuator assembly may be malfunctioning, or there may be a mechanical malfunction.
	Record of malfunction of signal sent to steering	OK: No record of	This item records malfunctions in the circuit

Power Supply Short	lock motor (steering lock actuator assembly) from power management control ECU (short circuit) / OK or NG (Past)	malfunction (short circuit) NG (Past): Record of malfunction (short circuit) exists	between the power management control ECU and steering lock motor (steering lock actuator assembly).
Motor Driver Short	Record of malfunction of motor activation circuit in steering lock actuator assembly (short circuit) (DTC B2781 stored) / OK or NG (Past)	OK: No record of malfunction (short circuit) NG (Past): Record of malfunction (short circuit) exists	This item records malfunctions in the motor activation circuit inside the steering lock actuator assembly (short circuit).
Lock/Unlock Receive	Reception state of steering lock or unlock request signal from certification ECU (smart key ECU assembly) / Yes or No	Yes: Record of receiving lock or unlock request signal exists No: No record of receiving lock or unlock request signal	-
Lock Bar Stuck Error	Record of lock bar not properly unlocking after being commanded to unlock for certain amount of time / OK or NG (Past)	OK: No record of stuck lock bar NG (Past): Record of stuck lock bar exists	-
Push Start Error	Record of malfunction of push-start function due to steering lock actuator assembly / OK or NG (Past)	OK: No record of push-start function malfunction NG (Past): Record push-start function malfunction exists	-
Engine Start Request	Reception state of hybrid control system permission signal determined by steering lock actuator assembly and sent to certification ECU (smart key ECU assembly) / OK or NG	OK: Receiving signal NG: Not receiving signal	• When this item displays "OK", the certification ECU (smart key ECU assembly) has received an unlock confirmation signal from the steering lock ECU and has permitted fuel injection and hybrid control system combustion. • The hybrid control system cannot be

			started when this item displays "NG".
L Code Check	Verification result between certification ECU (smart key ECU assembly) and steering lock ECU / OK or NG	OK: Verification result normal NG: Verification result abnormal	When a malfunction is present: - The ID code for the certification ECU (smart key ECU assembly) or steering lock ECU is not registered or the certification ECU (smart key ECU assembly) or steering lock ECU is malfunctioning. - The steering cannot be locked. - The steering cannot be unlocked (the hybrid control system cannot be started).
Unlock Request Receive	Reception state of steering unlock request signal by certification ECU (smart key ECU assembly) / OK or NG **HINT:** - The reception state is maintained for 10 seconds. - When 10 seconds or more elapse after receiving the signal, the item changes to "NG".	OK: Within 10 seconds of turning power switch on (IG) or on (ACC) or starting hybrid control system NG: Except above	- If the unlock signal has not been received, the hybrid control system cannot be started. - If this item does not change to "OK" even though the steering unlock conditions are met, the certification ECU (smart key ECU assembly) may be malfunctioning.
Lock Request Receive	Reception state of steering lock request signal by certification ECU (smart key ECU assembly) / OK or NG **HINT:** - The reception state is maintained	OK: Within 10 seconds of opening any door with power switch off and shift lever in P	If this item does not change to "OK" even though the steering lock conditions are met, the certification ECU (smart key ECU assembly)

	for 10 seconds. • When 10 seconds or more elapse after receiving the signal, the item changes to "NG".	NG: Except above	may be malfunctioning.
L Code Check(Past)	Verification result between certification ECU (smart key ECU assembly) and steering lock ECU (Past) / OK or NG (Past)	OK: Verification result normal NG (Past): Verification result abnormal (Past)	-
Steering Lock	State of whether steering lock ECU has determined steering is locked / Set or Unset	Set: Steering locked Unset: Steering unlocked	If this item displays "Unset", the steering does not lock.
Steering Unlock	State of whether steering lock ECU determined steering is unlocked / Set or Unset	Set: Steering unlocked Unset: Steering locked	If this item displays "Unset", the steering does not unlock (hybrid control system cannot be started).

HINT:

Unlock operation conditions for the steering lock:

When the following condition is met, the unlock operation is performed:

The power switch is on (ACC) or on (IG).

- When the power switch is turned on (ACC) or on (IG) and the key and certification ECU (smart key ECU assembly) are verified, the steering is unlocked.

When any of the following conditions are met, key verification is performed.

- The brake pedal is depressed so that the hybrid control system can be started.
- 30 seconds elapse after opening and closing a door.
- The power switch is pressed.

Key verification occurs when the code emitted from the key and the code stored in the certification ECU (smart key ECU assembly) are compared to check that they match.

Certification ECU (smart key ECU assembly) verification occurs when the L code are verified while the hybrid control system is being started or the power switch is being pushed. The steering lock ECU uses the L code to determine whether the certification ECU (smart key ECU assembly) is authorized.

Lock operation conditions for the steering:

When the following conditions are met and the certification ECU (smart key ECU assembly) has been verified, the lock operation is performed.

- The power switch is off.
- The shift lever is in P.
- A door is opened or a door lock operation (smart door lock, wireless door lock or key-linked lock) is performed.

HINT:

The following example shows the behavior of various Data List items when the shift lever is in P, the brake pedal is not depressed, the vehicle is normal and the power source mode changes.

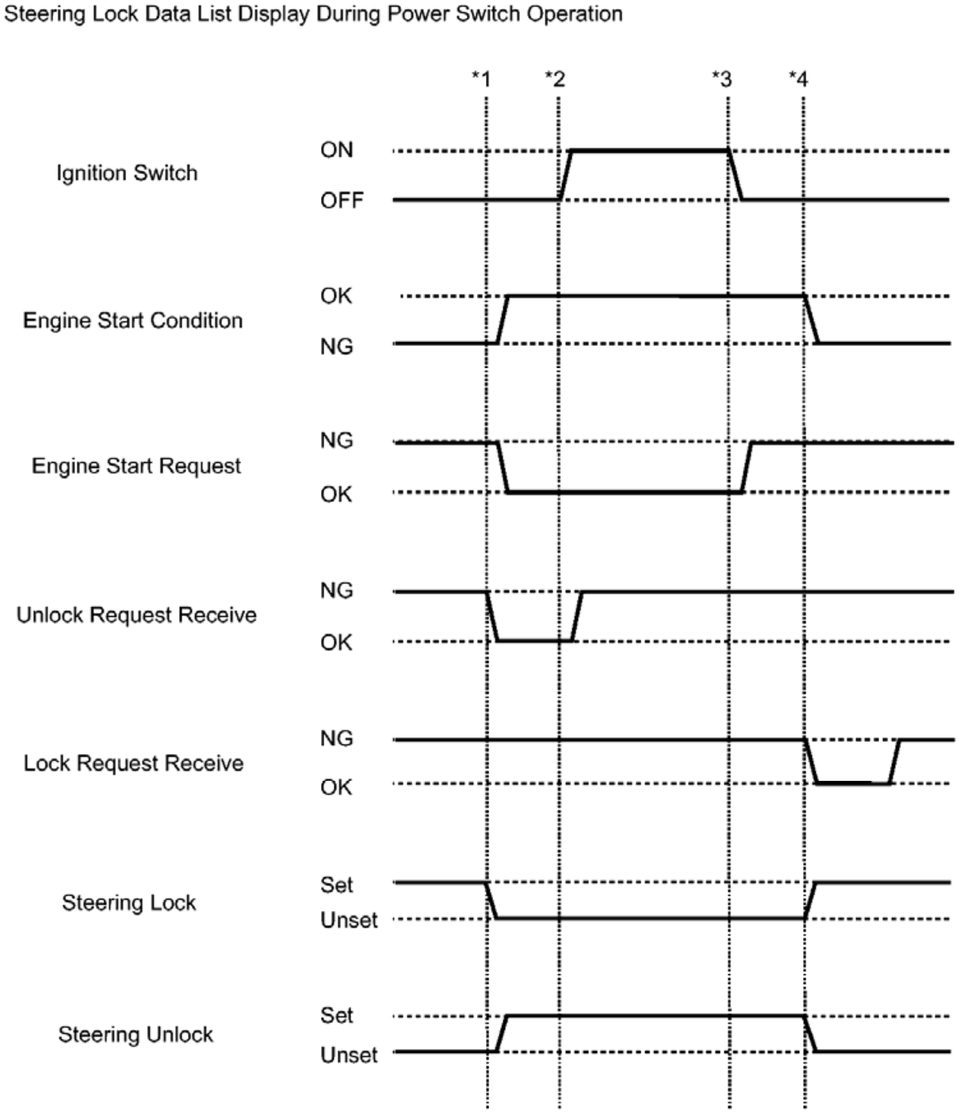
Steering Lock Data List Display During Power Switch Operation
*1
*2
*3
*4
Ignition Switch
ON
OFF
Engine Start Condition
OK
NG
Engine Start Request
NG
OK
Unlock Request Receive
NG
OK
Lock Request Receive
NG
OK
Steering Lock
Set
Unset
Steering Unlock
Set
Unset

Fig. 5: Steering Lock Data List
Courtesy of TOYOTA MOTOR SALES, U.S.A., INC.

HINT:

Get into the vehicle while carrying the key. With the power switch off, the shift lever in P and all the doors closed, perform the following procedures and check the power source mode.

*1: Without depressing the brake pedal, press the power switch and check that the power source mode changes on (ACC).

*2: Without depressing the brake pedal, press the power switch and check that the power source mode changes on (IG).

*3: Press the power switch and check that the power source mode changes off.

*4: Release the brake pedal, open the driver door and check that the steering locks.

MAIN BODY

Tester Display	Measurement Item/Range	Normal Condition	Diagnostic Note
FL Door Courtesy	Front door courtesy light switch assembly LH / ON or OFF	ON: Front door LH closed OFF: Front door LH open	If this item does not change according to the actual state of the driver door, there is a malfunction in the door courtesy light switch or related part.

2. **ACTIVE TEST**

HINT:

Using the Techstream to perform Active Tests allows relays, VSVs, actuators and other items to be operated without removing any parts. This non-intrusive functional inspection can be very useful because intermittent operation may be discovered before parts or wiring is disturbed. Performing Active Tests early in troubleshooting is one way to save diagnostic time. Data List information can be displayed while performing Active Tests.

a. Connect the Techstream to the DLC3.
b. Turn the power switch on (IG).
c. Turn the Techstream on.
d. Enter the following menus: Body Electrical / (desired system) / Active Test.
e. According to the display on the Techstream, perform the Active Test.

POWER SOURCE CONTROL

Tester Display	Test Part	Control Range	Diagnostic Note
P Supply for Steering Lock	Power management control ECU	OFF/ON **HINT:** OFF: Power is not supplied. ON: Power is supplied.	When performing this Active Test, make sure the following condition is met: The power switch is on (IG).

DIAGNOSTIC TROUBLE CODE CHART

DIAGNOSTIC TROUBLE CODE CHART

HINT:

If a trouble code is output during the DTC check, refer to the "See" column below.

STEERING LOCK SYSTEM

DTC Code	**Detection Item**	**See**
B2781	Open / Short in Steering Lock ECU	Refer to **DTC B2781: Open / Short in Steering Lock ECU**
B2782	Power Source Control ECU Malfunction	Refer to **DTC B2782: Power Source Control ECU Malfunction**
B2788	IG2 Signal Malfunction	Refer to **DTC B2788: IG2 Signal Malfunction**

2012-2017 ACCESSORIES & EQUIPMENT

Theft Deterrent System / Keyless Entry System (Service Information) - Camry (Hybrid)

GLASS BREAKAGE SENSOR

COMPONENTS

ILLUSTRATION

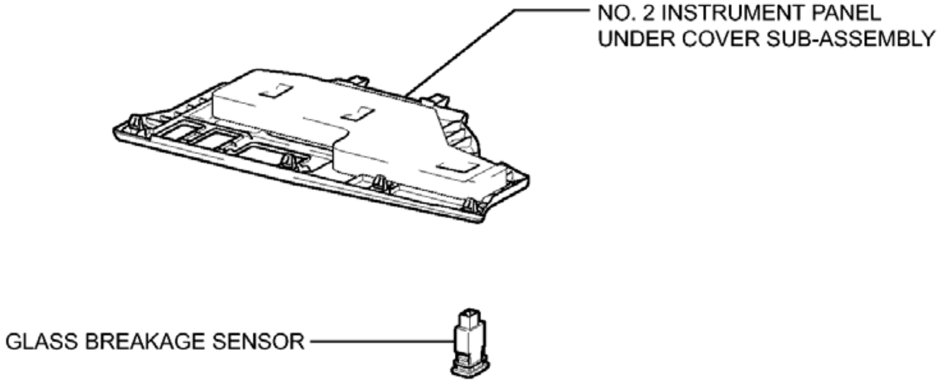
NO. 2 INSTRUMENT PANEL UNDER COVER SUB-ASSEMBLY
GLASS BREAKAGE SENSOR
P

Fig. 1: Identifying Glass Breakage Sensor Replacement Components
Courtesy of TOYOTA MOTOR SALES, U.S.A., INC.

REMOVAL

REMOVAL

1. **REMOVE NO. 2 INSTRUMENT PANEL UNDER COVER SUB-ASSEMBLY** . Refer to **REMOVAL - Step 35**
2. **REMOVE GLASS BREAKAGE SENSOR**
    a. Disengage the 2 claws and remove the glass breakage sensor.

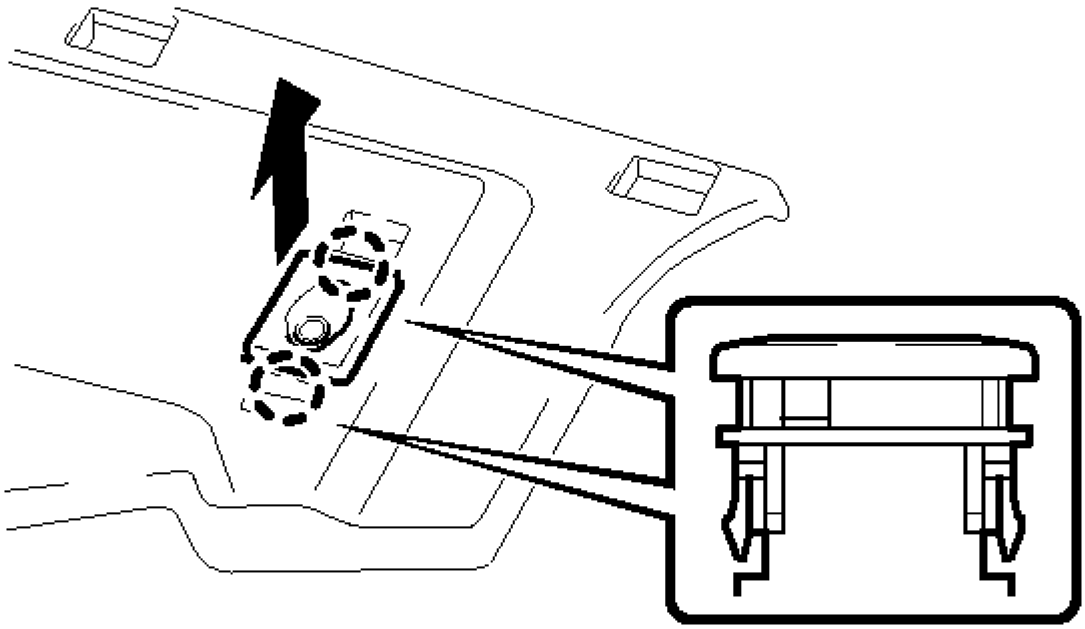

Fig. 2: Removing Glass Breakage Sensor Claws
Courtesy of TOYOTA MOTOR SALES, U.S.A., INC.

INSTALLATION

INSTALLATION

1. **INSTALL GLASS BREAKAGE SENSOR**
    a. Engage the 2 claws to install the glass breakage sensor.

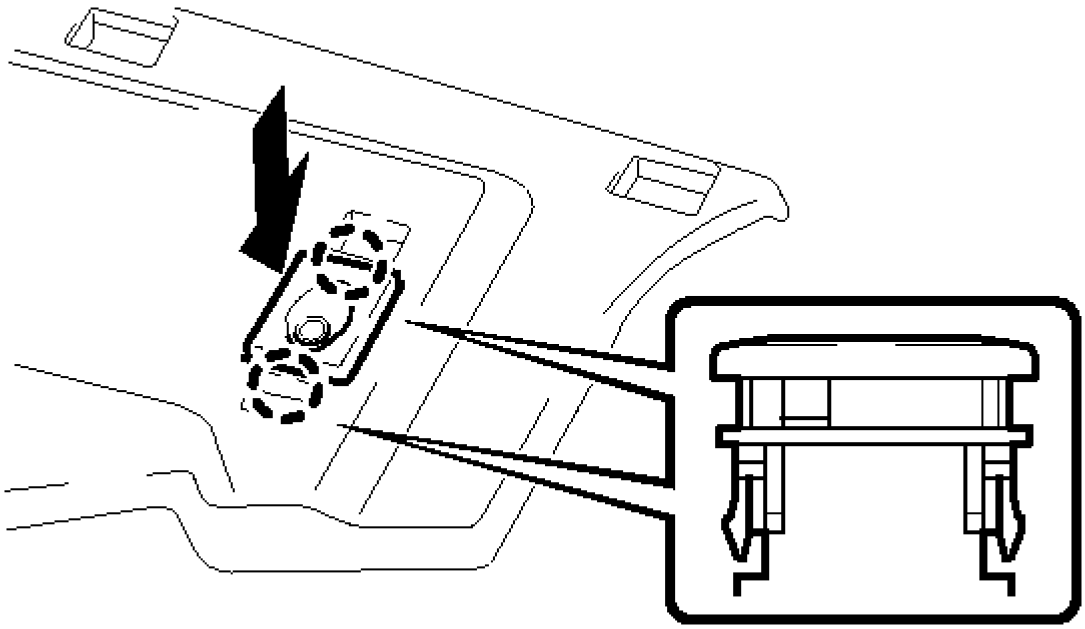

Fig. 3: Identifying Glass Breakage Sensor Claws
Courtesy of TOYOTA MOTOR SALES, U.S.A., INC.

2. **INSTALL NO. 2 INSTRUMENT PANEL UNDER COVER SUB-ASSEMBLY** . Refer to **INSTALLATION - Step 17**

GLASS BREAKAGE SENSOR ECU

COMPONENTS

ILLUSTRATION

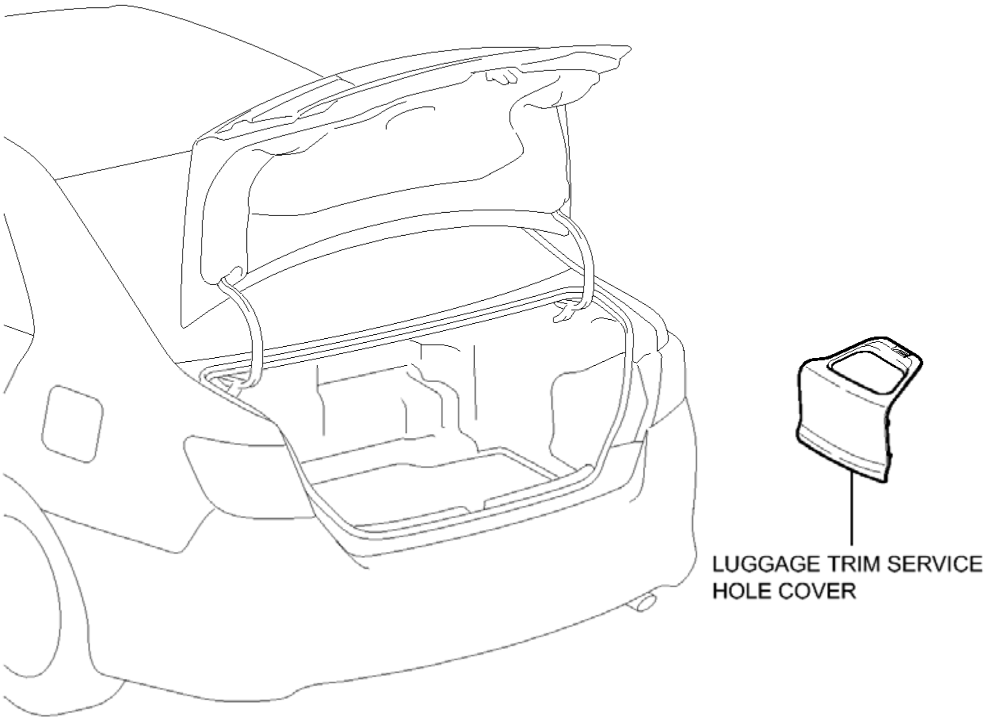
LUGGAGE TRIM SERVICE HOLE COVER
P

Fig. 4: Identifying Glass Breakage Sensor ECU Replacement Components With Torque Specifications (2 Of 2)
Courtesy of TOYOTA MOTOR SALES, U.S.A., INC.

ILLUSTRATION

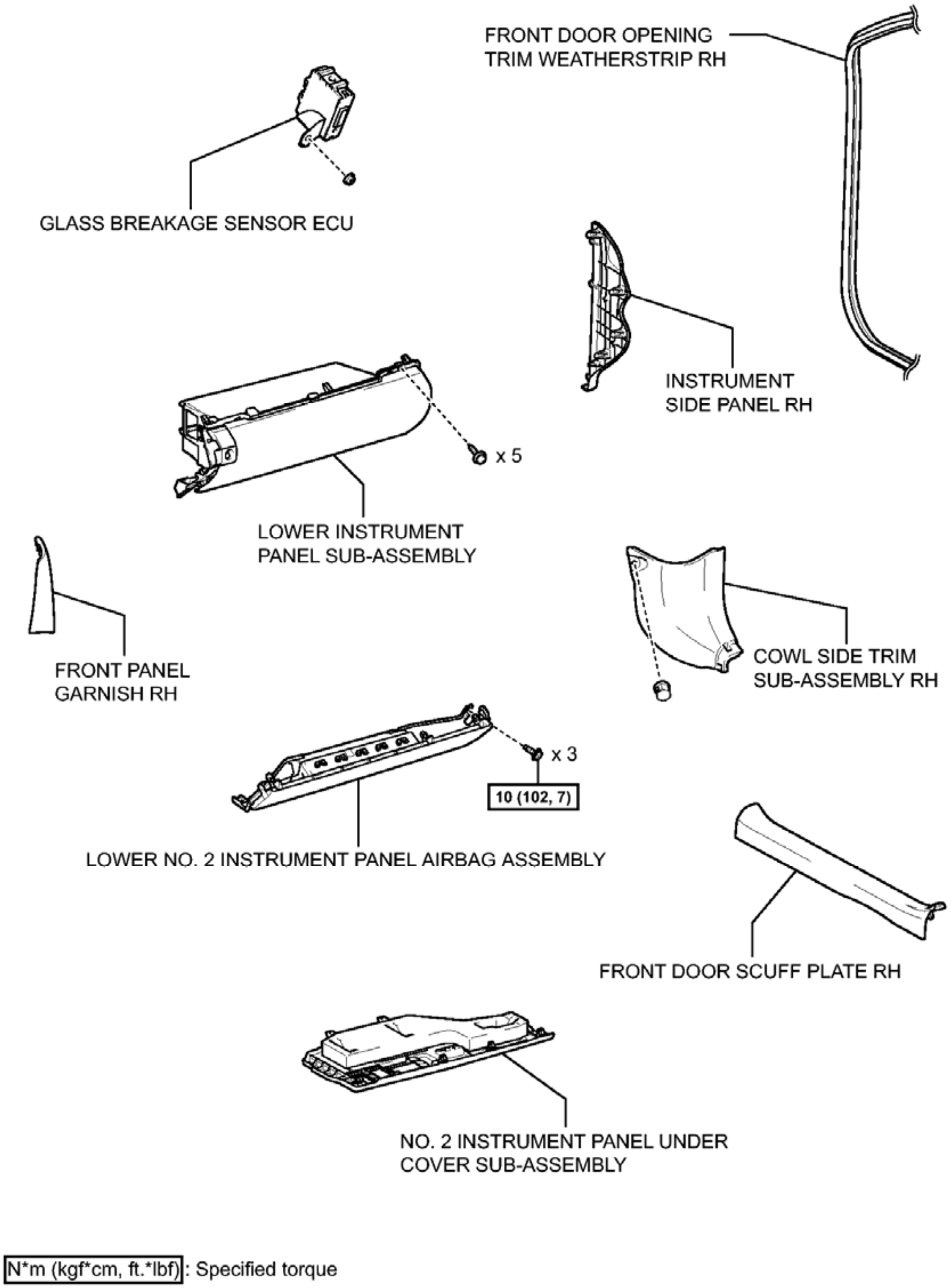
FRONT DOOR OPENING TRIM WEATHERSTRIP RH
GLASS BREAKAGE SENSOR ECU
INSTRUMENT SIDE PANEL RH
x 5
LOWER INSTRUMENT PANEL SUB-ASSEMBLY
FRONT PANEL GARNISH RH
COWL SIDE TRIM SUB-ASSEMBLY RH
x 3
10 (102, 7)
LOWER NO. 2 INSTRUMENT PANEL AIRBAG ASSEMBLY
FRONT DOOR SCUFF PLATE RH
NO. 2 INSTRUMENT PANEL UNDER COVER SUB-ASSEMBLY
N*m (kgf*cm, ft.*lbf): Specified torque

P

Fig. 5: Identifying Glass Breakage Sensor ECU Replacement Components With Torque Specifications (2 Of 2)

Courtesy of TOYOTA MOTOR SALES, U.S.A., INC.

REMOVAL

REMOVAL

1. **PRECAUTION**

   NOTE: **After turning the power switch off, waiting time may be required before disconnecting the cable from the negative (-) auxiliary battery terminal. Therefore, make sure to read the disconnecting the cable from the negative (-) auxiliary battery terminal notices before proceeding with work. Refer to PRECAUTION .**

2. **REMOVE LUGGAGE TRIM SERVICE HOLE COVER** . Refer to **REMOVAL - Step 2**
3. **DISCONNECT CABLE FROM NEGATIVE AUXILIARY BATTERY TERMINAL**

   WARNING: **Wait at least 90 seconds after disconnecting the cable from the negative (-) auxiliary battery terminal to disable the SRS system.**

   NOTE: **When disconnecting the cable, some systems need to be initialized after the cable is reconnected. Refer to INITIALIZATION .**

4. **REMOVE FRONT PANEL GARNISH RH** . Refer to **REMOVAL - Step 15**
5. **REMOVE FRONT DOOR SCUFF PLATE RH**

   HINT:

   Use the same procedure for the RH side and LH side. Refer to **REMOVAL - Step 4** .

6. **REMOVE COWL SIDE TRIM SUB-ASSEMBLY RH**

   HINT:

   Use the same procedure for the RH side and LH side. Refer to **REMOVAL - Step 5** .

7. **DISCONNECT FRONT DOOR OPENING TRIM WEATHERSTRIP RH** . Refer to **REMOVAL - Step 33**
8. **REMOVE INSTRUMENT SIDE PANEL RH** . Refer to **REMOVAL - Step 34**
9. **REMOVE NO. 2 INSTRUMENT PANEL UNDER COVER SUB-ASSEMBLY** . Refer to **REMOVAL - Step 35**
10. **REMOVE LOWER NO. 2 INSTRUMENT PANEL AIRBAG ASSEMBLY** . Refer to **REMOVAL - Step 9**
11. **REMOVE LOWER INSTRUMENT PANEL SUB-ASSEMBLY** . Refer to **REMOVAL - Step 37**
12. **REMOVE GLASS BREAKAGE SENSOR ECU**
    1. Disconnect the connector.

b. Remove the nut and glass breakage sensor ECU.

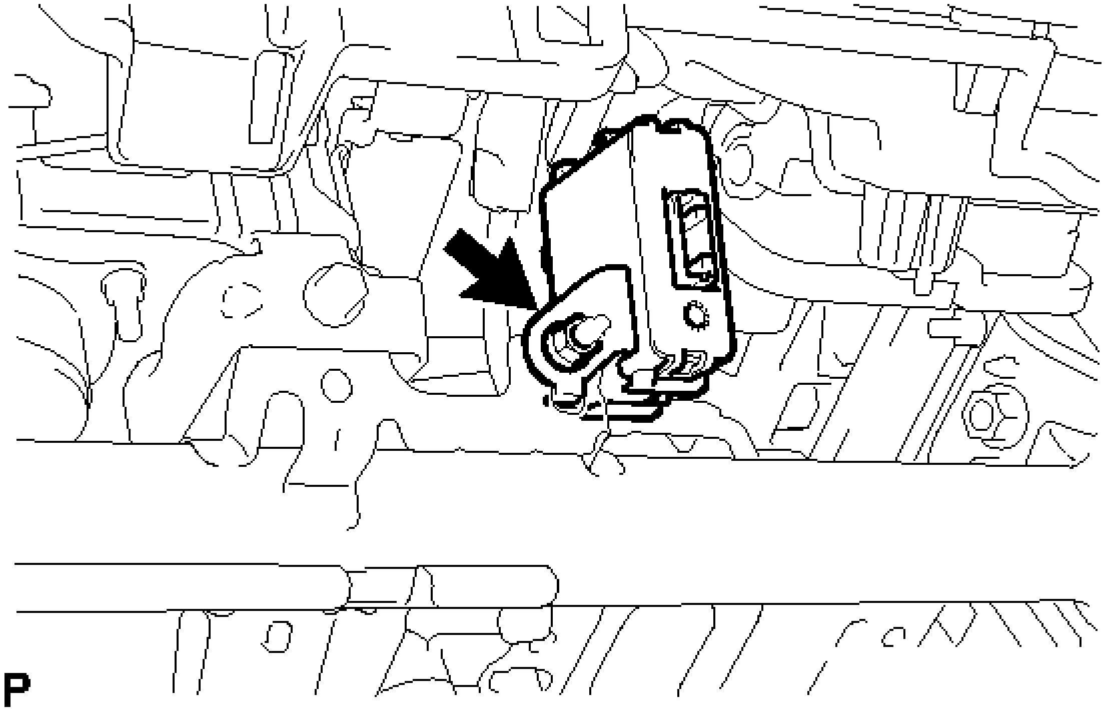

Fig. 6: Identifying Glass Breakage Sensor ECU And Fastener
Courtesy of TOYOTA MOTOR SALES, U.S.A., INC.

INSTALLATION

INSTALLATION

1. **INSTALL GLASS BREAKAGE SENSOR ECU**
    a. Install the glass breakage sensor ECU with the nut.
    b. Connect the connector.
2. **INSTALL LOWER INSTRUMENT PANEL SUB-ASSEMBLY** . Refer to **INSTALLATION - Step 15**
3. **INSTALL LOWER NO. 2 INSTRUMENT PANEL AIRBAG ASSEMBLY** . Refer to **INSTALLATION - Step 1**
4. **INSTALL NO. 2 INSTRUMENT PANEL UNDER COVER SUB-ASSEMBLY** . Refer to **INSTALLATION - Step 17**
5. **INSTALL INSTRUMENT SIDE PANEL RH** . Refer to **INSTALLATION - Step 18**
6. **INSTALL FRONT DOOR OPENING TRIM WEATHERSTRIP RH** . Refer to **INSTALLATION - Step 47**
7. **INSTALL COWL SIDE TRIM SUB-ASSEMBLY RH**

    HINT:

Use the same procedure for the RH side and LH side. Refer to **INSTALLATION - Step 44** .

8. **INSTALL FRONT DOOR SCUFF PLATE RH**

   HINT:

   Use the same procedure for the RH side and LH side. Refer to **INSTALLATION - Step 45** .

9. **INSTALL FRONT PANEL GARNISH RH** . Refer to **INSTALLATION - Step 37**
10. **CONNECT CABLE TO NEGATIVE AUXILIARY BATTERY TERMINAL**

    NOTE: **When disconnecting the cable, some systems need to be initialized after the cable is reconnected. Refer to INITIALIZATION .**

11. **INSTALL LUGGAGE TRIM SERVICE HOLE COVER** . Refer to **INSTALLATION - Step 3**
12. **INSPECT SRS WARNING LIGHT**
    - for Built-in Type Yaw Rate Sensor: Refer to **DIAGNOSIS SYSTEM**
    - for Separate Type Yaw Rate Sensor: Refer to **DIAGNOSIS SYSTEM**

ELECTRICAL KEY OSCILLATOR (FOR LUGGAGE COMPARTMENT)

COMPONENTS

ILLUSTRATION

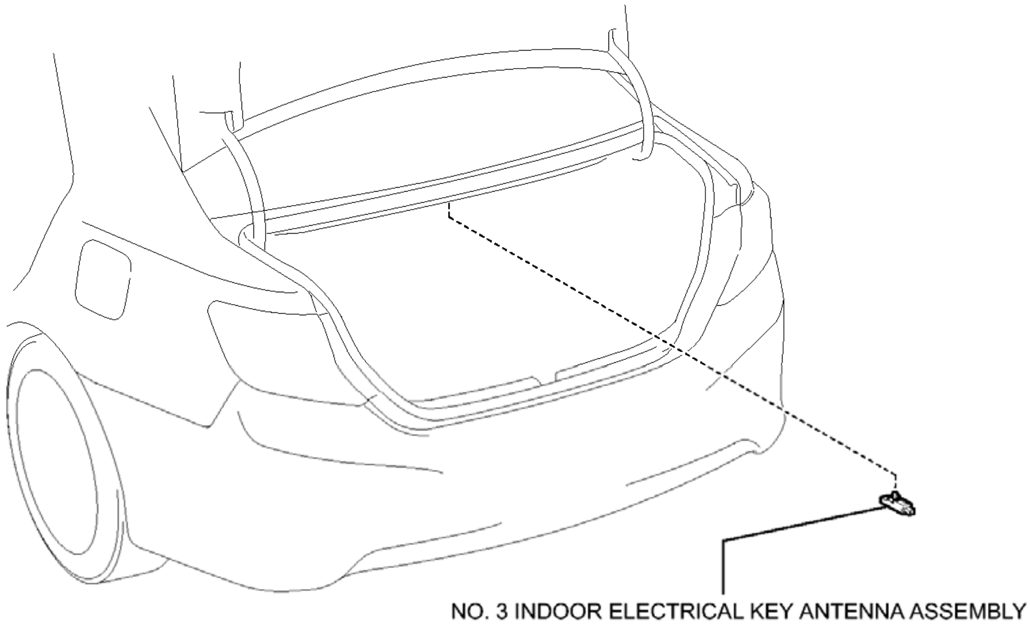

P

Fig. 7: Identifying Electrical Key Oscillator Replacement Components (For Luggage Compartment)
Courtesy of TOYOTA MOTOR SALES, U.S.A., INC.

REMOVAL

REMOVAL

1. **REMOVE NO. 3 INDOOR ELECTRICAL KEY ANTENNA ASSEMBLY**
   1. Disconnect the connector.

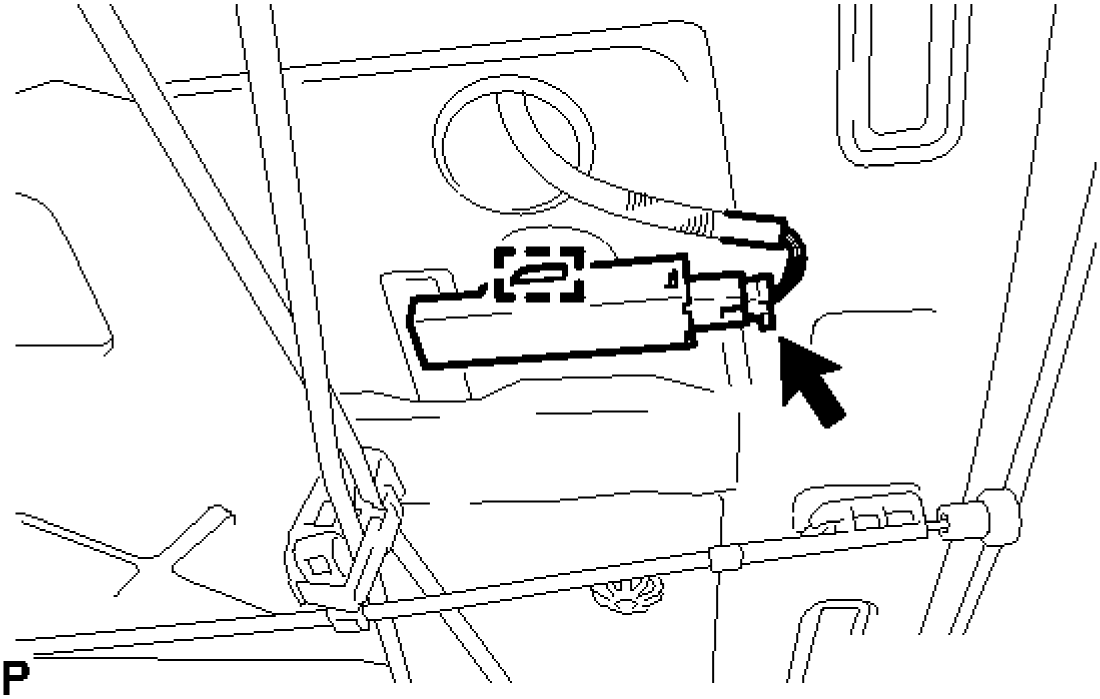

Fig. 8: Identifying No. 3 Indoor Electrical Key Antenna Assembly Connector
Courtesy of TOYOTA MOTOR SALES, U.S.A., INC.

   2. Disengage the clamp and remove the No. 3 indoor electrical key antenna assembly.

NOTE: **Be careful when removing the indoor electrical key antenna assembly. If the antenna is dropped, replace it with a new one.**

INSTALLATION

INSTALLATION

1. **INSTALL NO. 3 INDOOR ELECTRICAL KEY ANTENNA ASSEMBLY**
   1. Engage the clamp to install the No. 3 indoor electrical key antenna assembly.

NOTE: **Be careful when installing the indoor electrical key antenna**

assembly. If the antenna is dropped, replace it with a new one.

b. Connect the connector.

ELECTRICAL KEY OSCILLATOR (FOR OUTSIDE LUGGAGE COMPARTMENT)

COMPONENTS

ILLUSTRATION

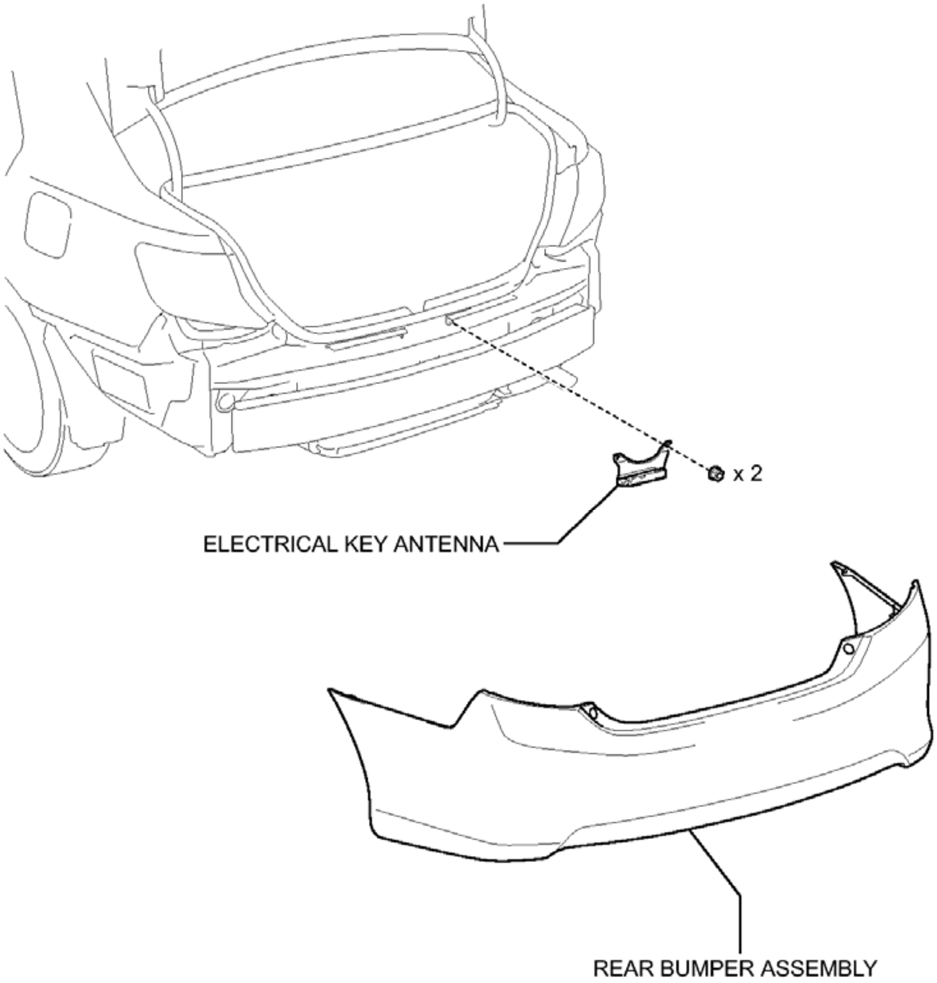
x 2
ELECTRICAL KEY ANTENNA
REAR BUMPER ASSEMBLY

P

Fig. 9: Identifying Electrical Key Oscillator Replacement Components (For Outside Luggage Compartment)
Courtesy of TOYOTA MOTOR SALES, U.S.A., INC.

REMOVAL

REMOVAL

1. **REMOVE REAR BUMPER ASSEMBLY**

   Refer to **REMOVAL**

2. **REMOVE ELECTRICAL KEY ANTENNA**
   1. Disconnect the connector.

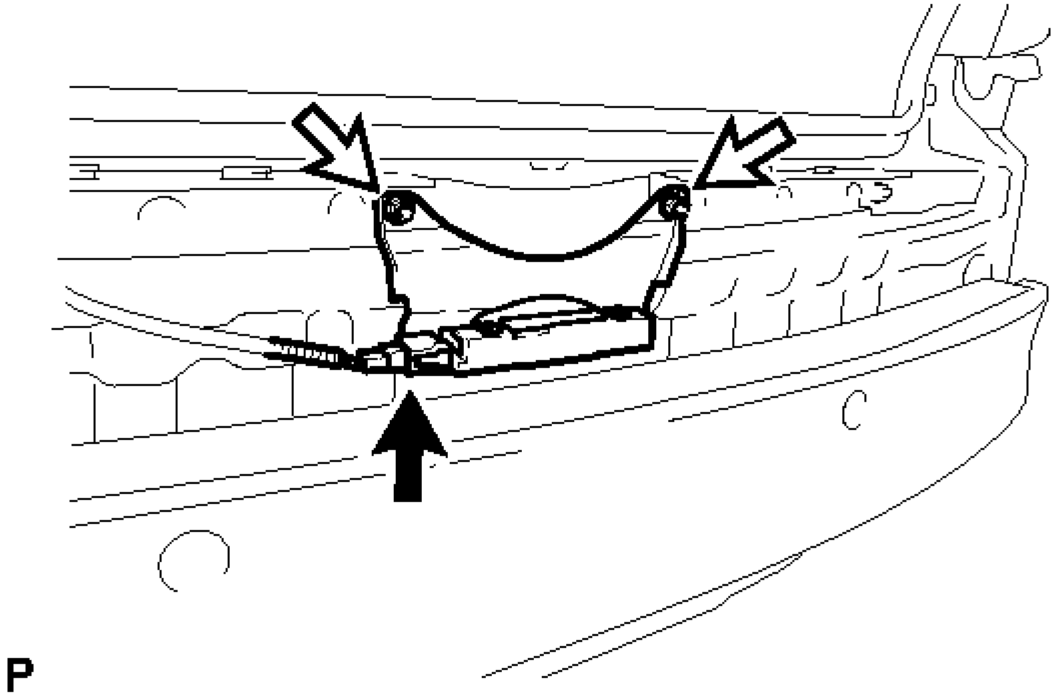

Fig. 10: Locating Electrical Key Antenna Connector And Fasteners
Courtesy of TOYOTA MOTOR SALES, U.S.A., INC.

   2. Remove the 2 nuts and electrical key antenna.

NOTE: **Be careful when removing the electrical key antenna. If the antenna is dropped, replace it with a new one.**

INSPECTION

INSPECTION

1. **INSPECT ELECTRICAL KEY ANTENNA (OUTSIDE LUGGAGE)**
   1. Measure the resistance according to the value(s) in the table below.

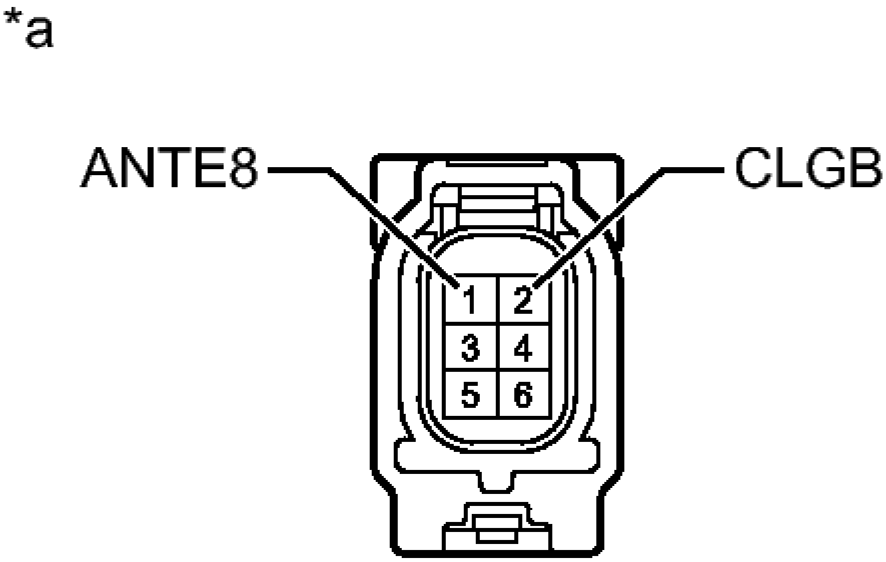

Fig. 11: Electrical Key Antenna Connector Terminal Identification (Outside Luggage)
Courtesy of TOYOTA MOTOR SALES, U.S.A., INC.

Standard Resistance

Tester Connection	Condition	Specified Condition
1 (ANTE8) - 2 (CLGB)	Always	Below 1 ohms

TEXT IN ILLUSTRATION

*a	Component without harness connected (Electrical Key Antenna (Outside Luggage))

INSTALLATION

INSTALLATION

1. **INSTALL ELECTRICAL KEY ANTENNA**
    a. Install the electrical key antenna with the 2 nuts.

NOTE: **Be careful when installing the electrical key antenna. If the antenna is dropped, replace it with a new one.**

   b. Connect the connector.

2. **INSTALL REAR BUMPER ASSEMBLY**

   Refer to **INSTALLATION**

ELECTRICAL KEY OSCILLATOR (FOR FRONT FLOOR)

COMPONENTS

ILLUSTRATION

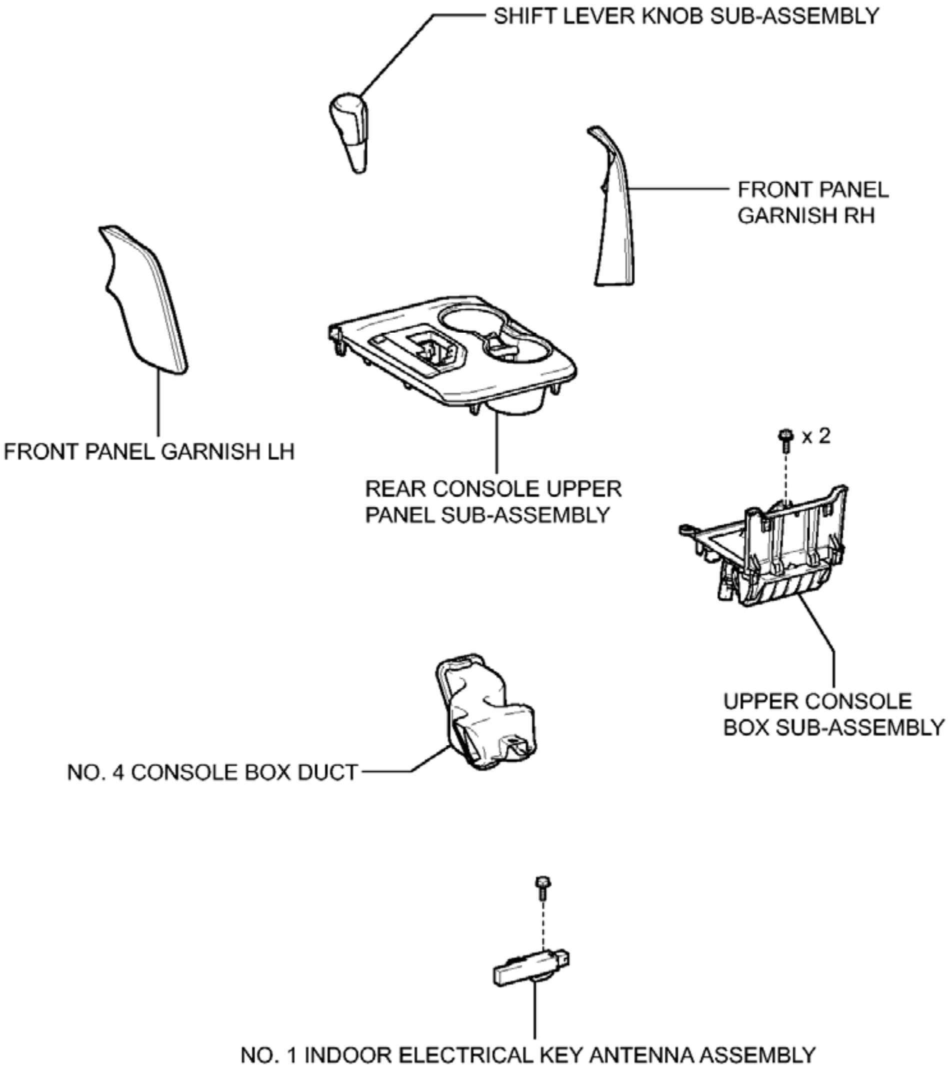
SHIFT LEVER KNOB SUB-ASSEMBLY
FRONT PANEL GARNISH RH
FRONT PANEL GARNISH LH
REAR CONSOLE UPPER PANEL SUB-ASSEMBLY
x 2
UPPER CONSOLE BOX SUB-ASSEMBLY
NO. 4 CONSOLE BOX DUCT
NO. 1 INDOOR ELECTRICAL KEY ANTENNA ASSEMBLY

P

Fig. 12: Identifying Electrical Key Oscillator Replacement Components (For Front Floor)
Courtesy of TOYOTA MOTOR SALES, U.S.A., INC.

REMOVAL

REMOVAL

1. **REMOVE SHIFT LEVER KNOB SUB-ASSEMBLY** . Refer to **REMOVAL - Step 16**
2. **REMOVE FRONT PANEL GARNISH LH** . Refer to **REMOVAL - Step 12**
3. **REMOVE FRONT PANEL GARNISH RH** . Refer to **REMOVAL - Step 15**
4. **REMOVE REAR CONSOLE UPPER PANEL SUB-ASSEMBLY** . Refer to **REMOVAL - Step 17**
5. **REMOVE UPPER CONSOLE BOX SUB-ASSEMBLY** . Refer to **REMOVAL - Step 7**

6. **REMOVE NO. 4 CONSOLE BOX DUCT** . Refer to **REMOVAL - Step 8**
7. **REMOVE NO. 1 INDOOR ELECTRICAL KEY ANTENNA ASSEMBLY**
   1. Disengage the clamp.

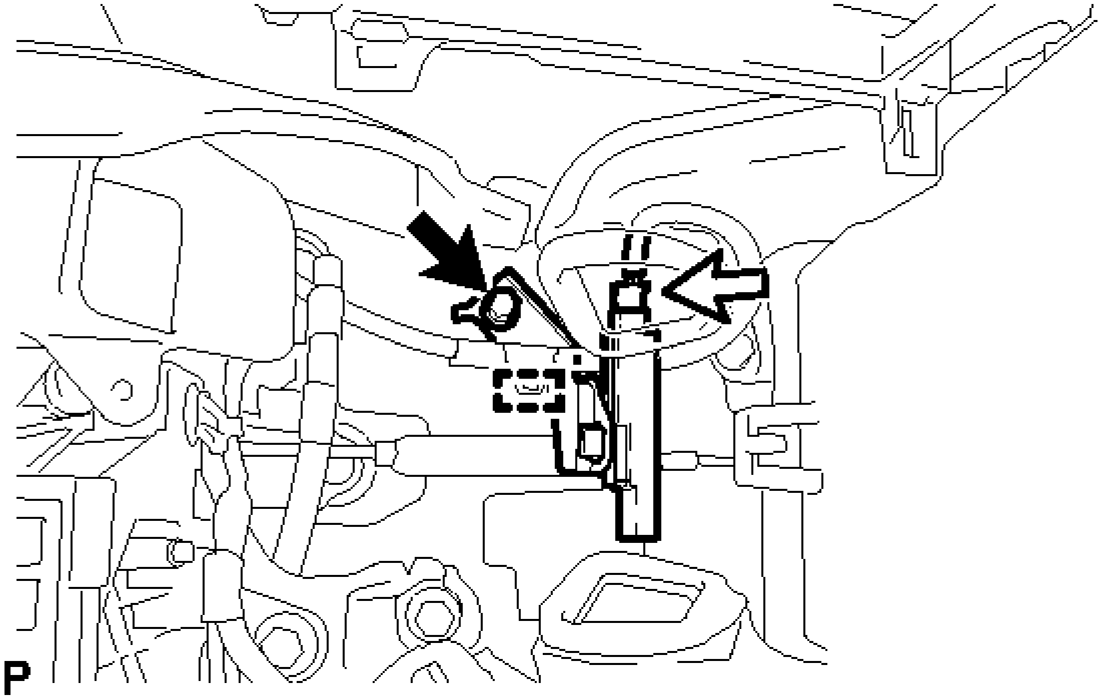

Fig. 13: Locating No. 1 Indoor Electrical Key Antenna Assembly Connector And Bolt
Courtesy of TOYOTA MOTOR SALES, U.S.A., INC.

   2. Remove the bolt.
   3. Disconnect the connector and remove the No. 1 indoor electrical key antenna assembly.

NOTE: **Be careful when removing the indoor electrical key antenna assembly. If the antenna is dropped, replace it with a new one.**

INSTALLATION

INSTALLATION

1. **INSTALL NO. 1 INDOOR ELECTRICAL KEY ANTENNA ASSEMBLY**
   1. Connect the connector.
   2. Install the No. 1 indoor electrical key antenna assembly with the bolt.

NOTE: **Be careful when installing the indoor electrical key antenna assembly. If the antenna is dropped, replace it with a new one.**

   3. Engage the clamp.

2. **INSTALL NO. 4 CONSOLE BOX DUCT** . Refer to **INSTALLATION - Step 3**
3. **INSTALL UPPER CONSOLE BOX SUB-ASSEMBLY** . Refer to **INSTALLATION - Step 4**
4. **INSTALL REAR CONSOLE UPPER PANEL SUB-ASSEMBLY** . Refer to **INSTALLATION - Step 35**
5. **INSTALL FRONT PANEL GARNISH RH** . Refer to **INSTALLATION - Step 37**
6. **INSTALL FRONT PANEL GARNISH LH** . Refer to **INSTALLATION - Step 40**
7. **INSTALL SHIFT LEVER KNOB SUB-ASSEMBLY** . Refer to **INSTALLATION - Step 36**

ELECTRICAL KEY OSCILLATOR (FOR CENTER FLOOR)

COMPONENTS

ILLUSTRATION

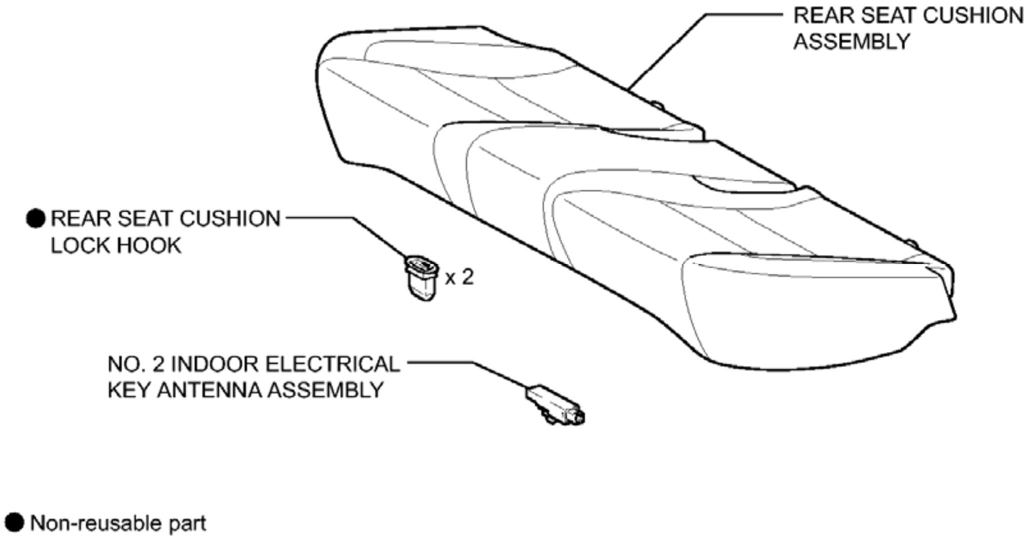
REAR SEAT CUSHION ASSEMBLY
● REAR SEAT CUSHION LOCK HOOK
x 2
NO. 2 INDOOR ELECTRICAL KEY ANTENNA ASSEMBLY
● Non-reusable part
P

Fig. 14: Identifying Electrical Key Oscillator Replacement Components (For Center Floor)
Courtesy of TOYOTA MOTOR SALES, U.S.A., INC.

REMOVAL

REMOVAL

1. **REMOVE REAR SEAT CUSHION ASSEMBLY** . Refer to **REMOVAL - Step 4**
2. **REMOVE REAR SEAT CUSHION LOCK HOOK** . Refer to **REMOVAL - Step 5**
3. **REMOVE NO. 2 INDOOR ELECTRICAL KEY ANTENNA ASSEMBLY**
    a. Disconnect the connector.

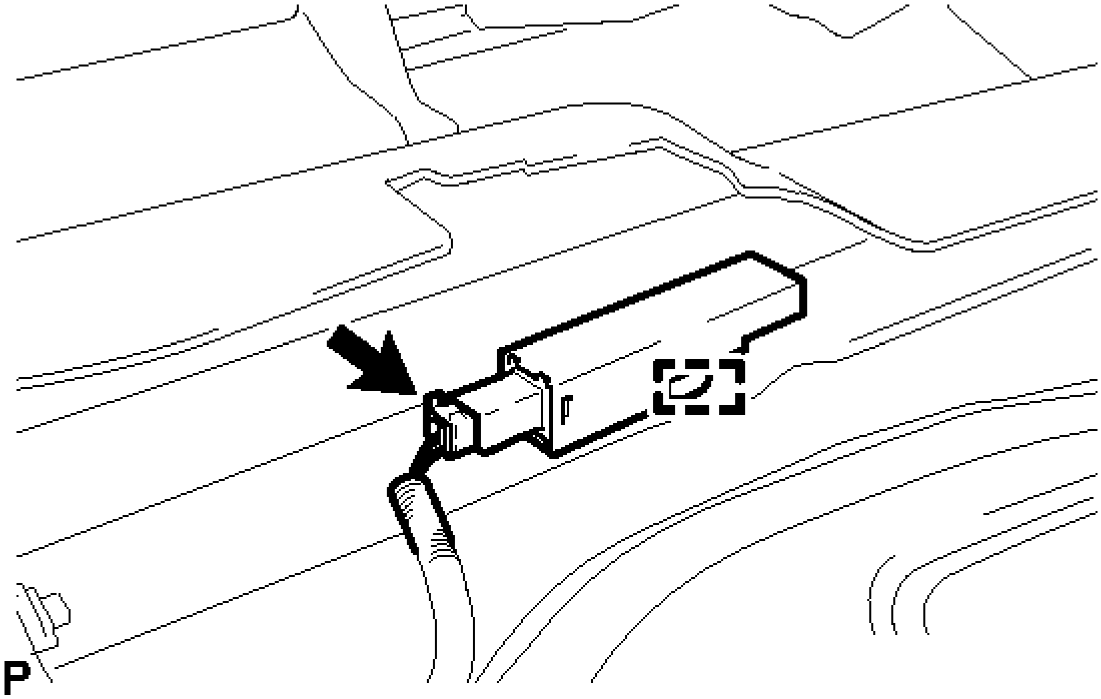

Fig. 15: Locating No. 2 Indoor Electrical Key Antenna Assembly Connector And Clamp
Courtesy of TOYOTA MOTOR SALES, U.S.A., INC.

b. Disengage the clamp and remove the No. 2 indoor electrical key antenna assembly.

NOTE: Be careful when removing the indoor electrical key antenna assembly. If the antenna is dropped, replace it with a new one.

INSTALLATION

INSTALLATION

1. **INSTALL NO. 2 INDOOR ELECTRICAL KEY ANTENNA ASSEMBLY**
   a. Engage the clamp and Install the No. 2 indoor electrical key antenna assembly.

   NOTE: Be careful when installing the indoor electrical key antenna assembly. If the antenna is dropped, replace it with a new one.

   b. Connect the connector.
2. **INSTALL REAR SEAT CUSHION LOCK HOOK** . Refer to **INSTALLATION - Step 6**
3. **INSTALL REAR SEAT CUSHION ASSEMBLY** . Refer to **INSTALLATION - Step 7**

ENGINE HOOD COURTESY SWITCH

COMPONENTS

ILLUSTRATION

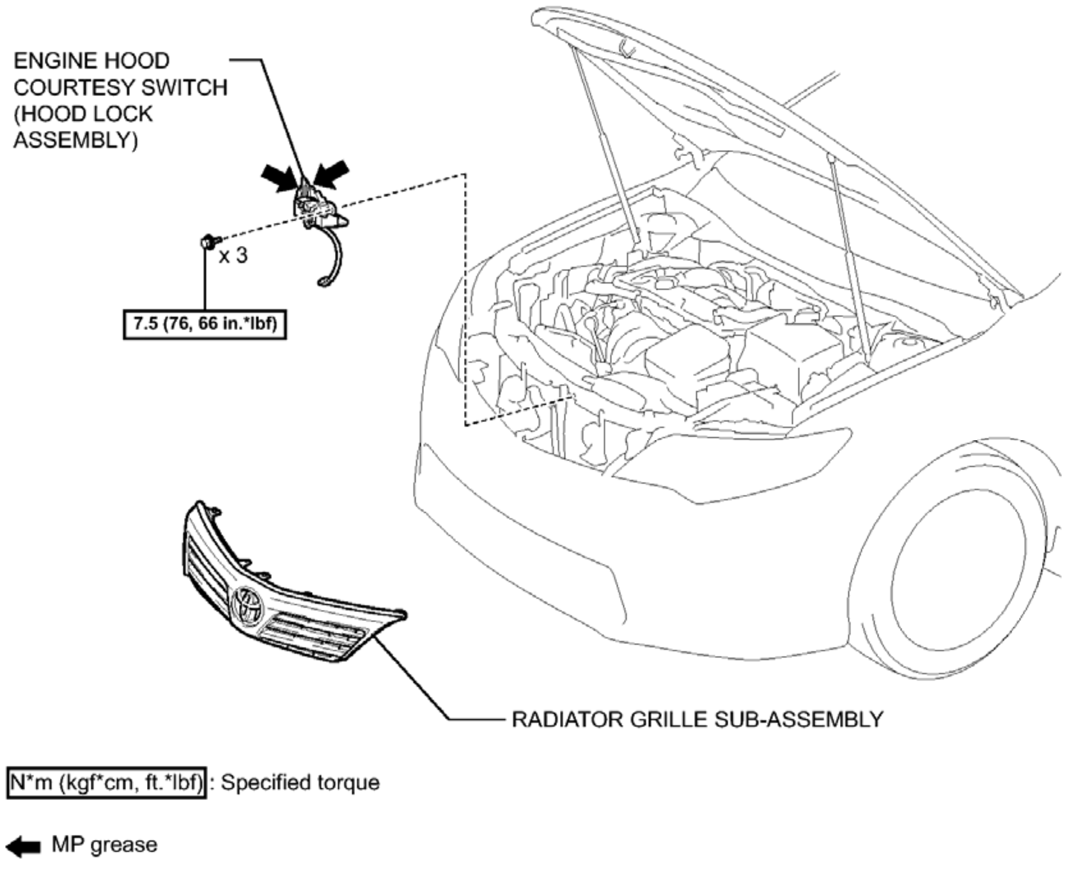
ENGINE HOOD COURTESY SWITCH (HOOD LOCK ASSEMBLY)
x 3
7.5 (76, 66 in.*lbf)
RADIATOR GRILLE SUB-ASSEMBLY
N*m (kgf*cm, ft.*lbf) : Specified torque
MP grease
P

Fig. 16: Identifying Engine Hood Courtesy Switch Replacement Components With Torque Specifications
Courtesy of TOYOTA MOTOR SALES, U.S.A., INC.

REMOVAL

REMOVAL

1. **REMOVE RADIATOR GRILLE SUB-ASSEMBLY**

   Refer to **REMOVAL**

2. **REMOVE ENGINE HOOD COURTESY SWITCH (HOOD LOCK ASSEMBLY)** . Refer to **REMOVAL - Step 9**

INSPECTION

INSPECTION

1. **INSPECT ENGINE HOOD COURTESY SWITCH (HOOD LOCK ASSEMBLY)**
   a. Measure the resistance according to the value(s) in the table below.

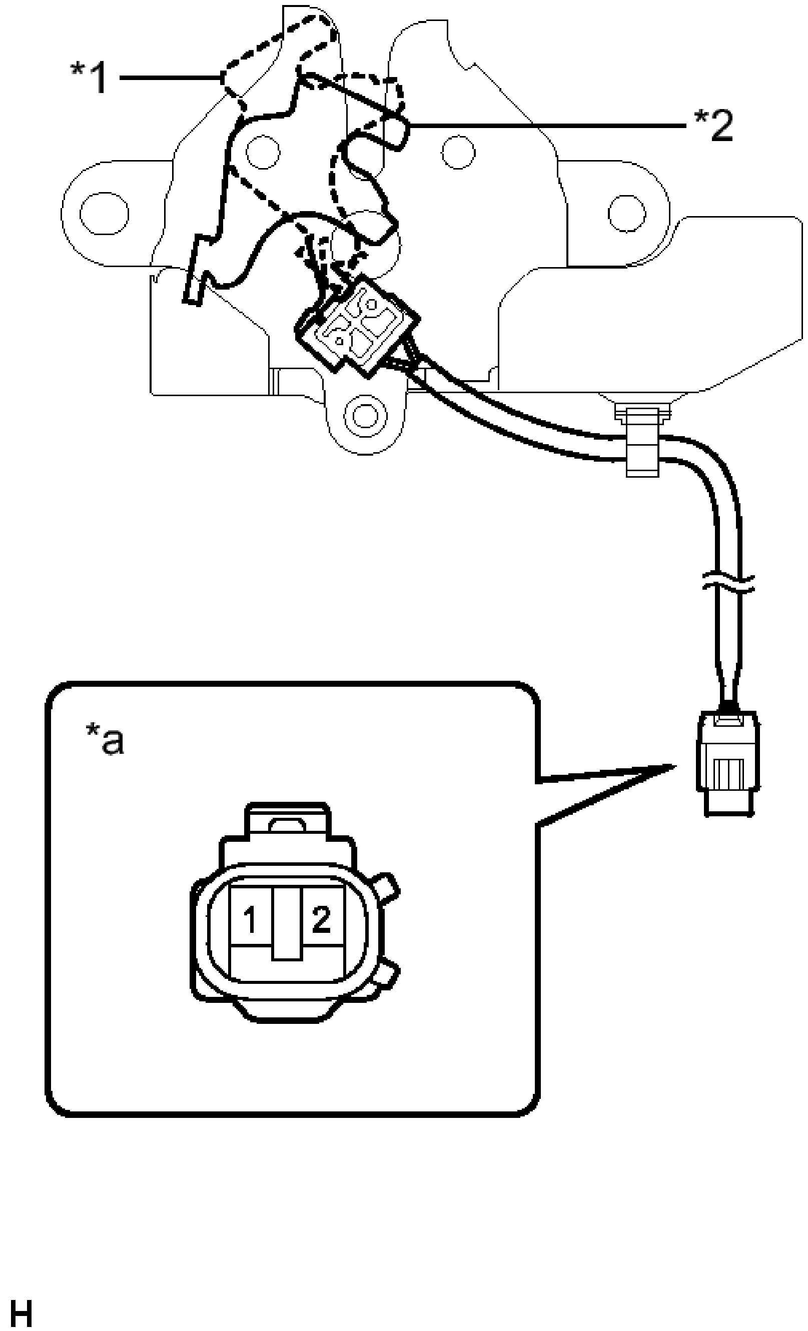

Fig. 17: Inspecting Engine Hood Courtesy Switch (Hood Lock Assembly)
Courtesy of TOYOTA MOTOR SALES, U.S.A., INC.

Standard Resistance

Tester Connection	**Switch Condition**	**Specified Condition**
1 - 2	Opened	10 kohms or higher
1 - 2	Locked	Below 1 ohms

TEXT IN ILLUSTRATION

*1	Opened
*2	Locked
*a	Component without harness connected (Engine Hood Courtesy Switch (Hood Lock Assembly))

If the result is not as specified, replace the engine hood courtesy switch (hood lock assembly).

INSTALLATION

INSTALLATION

1. **INSTALL ENGINE HOOD COURTESY SWITCH (HOOD LOCK ASSEMBLY)** . Refer to **INSTALLATION - Step 2**
2. **INSTALL RADIATOR GRILLE SUB-ASSEMBLY**

   Refer to **INSTALLATION**

3. **INSPECT HOOD SUB-ASSEMBLY** . Refer to **ON-VEHICLE INSPECTION - Step 1**
4. **ADJUST HOOD SUB-ASSEMBLY**

   Refer to **ADJUSTMENT**

SECURITY HORN ASSEMBLY

COMPONENTS

ILLUSTRATION

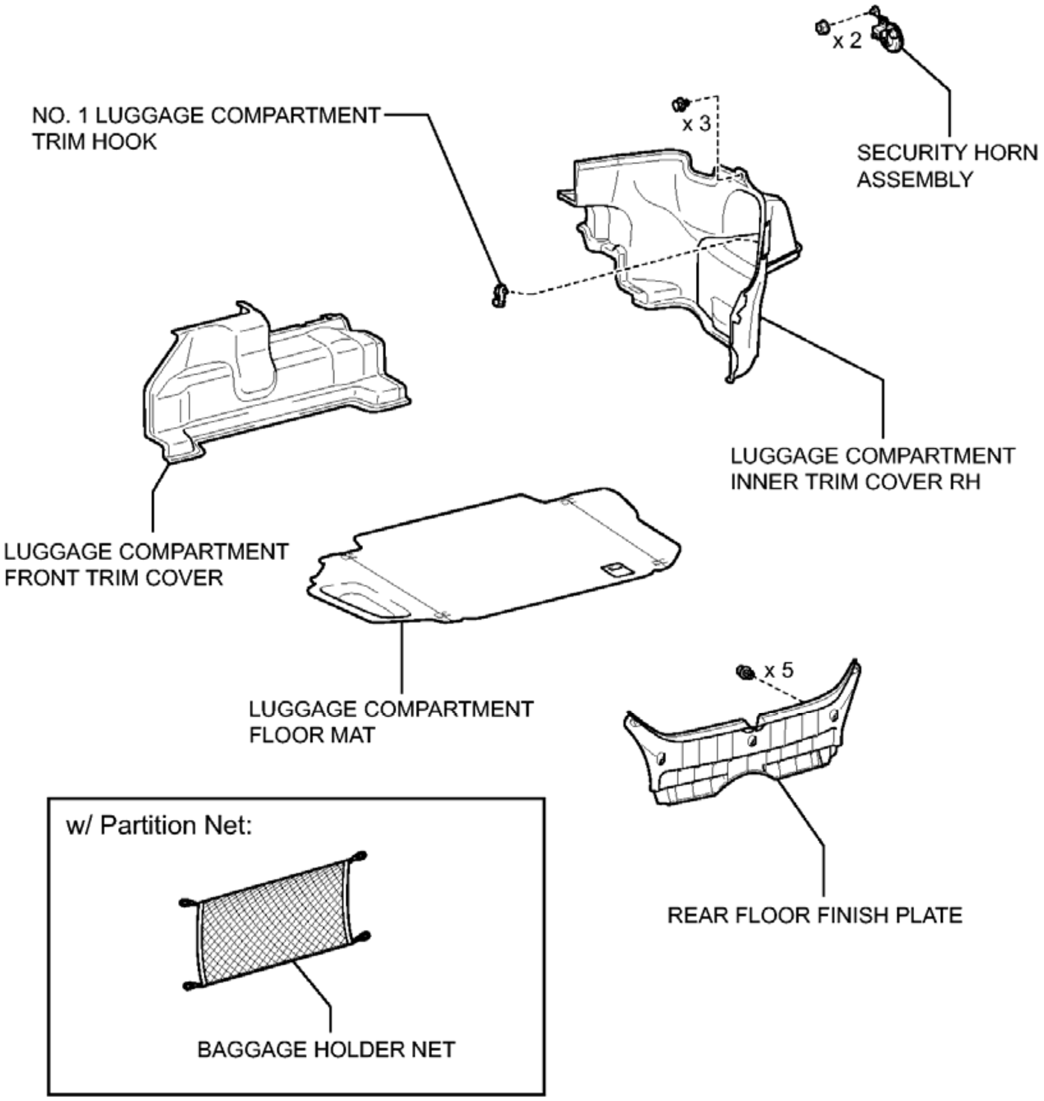
x 2
SECURITY HORN ASSEMBLY
x 3
NO. 1 LUGGAGE COMPARTMENT TRIM HOOK
LUGGAGE COMPARTMENT INNER TRIM COVER RH
LUGGAGE COMPARTMENT FRONT TRIM COVER
LUGGAGE COMPARTMENT FLOOR MAT
x 5
REAR FLOOR FINISH PLATE
w/ Partition Net:
BAGGAGE HOLDER NET
P

Fig. 18: Identifying Security Horn Assembly Replacement Components
Courtesy of TOYOTA MOTOR SALES, U.S.A., INC.

REMOVAL

REMOVAL

1. **REMOVE LUGGAGE COMPARTMENT FLOOR MAT** . Refer to **REMOVAL - Step 1**
2. **REMOVE BAGGAGE HOLDER NET (w/ Partition Net)** . Refer to **REMOVAL - Step 3**
3. **REMOVE LUGGAGE COMPARTMENT FRONT TRIM COVER** . Refer to **REMOVAL - Step 6**
4. **REMOVE REAR FLOOR FINISH PLATE** . Refer to **REMOVAL - Step 4**
5. **REMOVE NO. 1 LUGGAGE COMPARTMENT TRIM HOOK**

HINT:

Use the same procedure for the RH side and LH side. Refer to **REMOVAL - Step 18** .

6. **REMOVE LUGGAGE COMPARTMENT INNER TRIM COVER RH** . Refer to **REMOVAL - Step 8**
7. **REMOVE SECURITY HORN ASSEMBLY**
   a. Remove the 2 nuts.

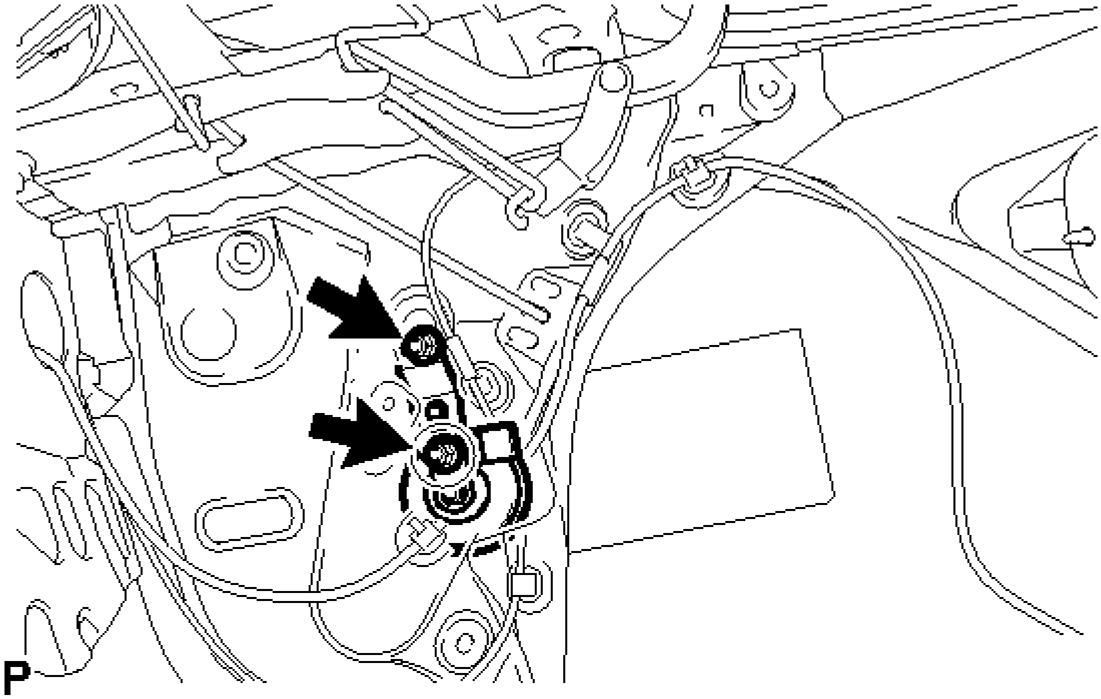

Fig. 19: Identifying Security Horn Assembly Nuts And Connector
Courtesy of TOYOTA MOTOR SALES, U.S.A., INC.

   b. Disconnect the connector and remove the security horn assembly.

INSPECTION

INSPECTION

1. **INSPECT SECURITY HORN ASSEMBLY**
   a. Check the operation of the security horn assembly.

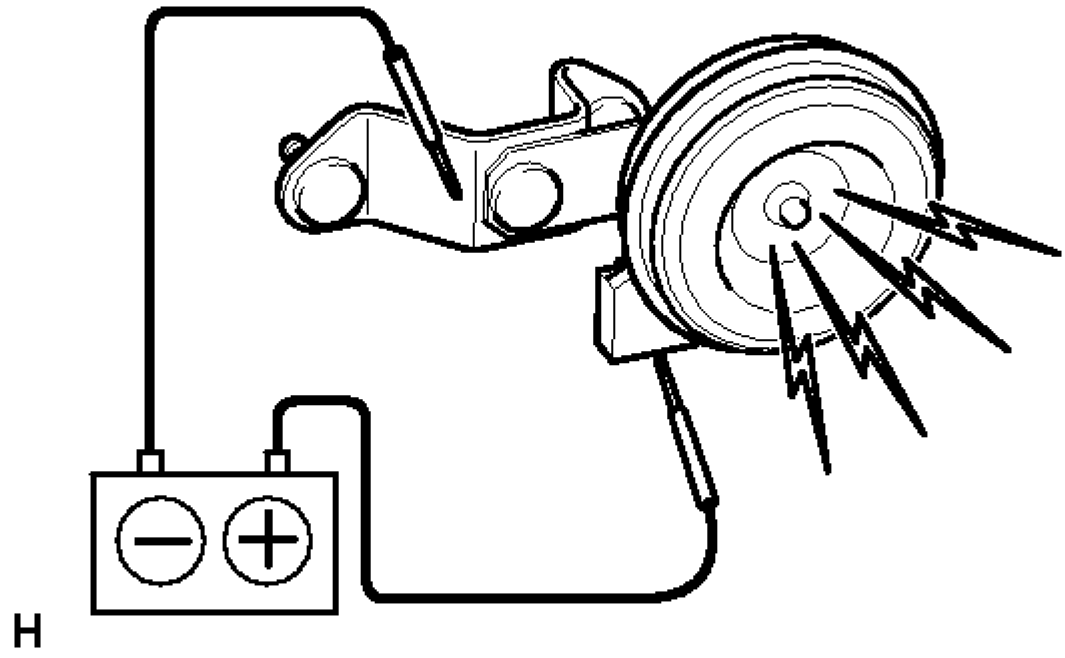

Fig. 20: Inspecting Security Horn Assembly
Courtesy of TOYOTA MOTOR SALES, U.S.A., INC.

OK

Measurement Condition	Specified Condition
Auxiliary battery positive (+) --> Terminal 1	Horn sounds
Auxiliary battery negative (-) --> Horn body	

If the result is not as specified, replace the security horn assembly.

INSTALLATION

INSTALLATION

1. **INSTALL SECURITY HORN ASSEMBLY**
    a. Connect the connector.
    b. Install the security horn assembly with the 2 nuts.
2. **INSTALL LUGGAGE COMPARTMENT INNER TRIM COVER RH** . Refer to **INSTALLATION**

- Step 7

3. **INSTALL NO. 1 LUGGAGE COMPARTMENT TRIM HOOK**

   HINT:

   Use the same procedure for the RH side and LH side. Refer to **INSTALLATION - Step 4** .

4. **INSTALL REAR FLOOR FINISH PLATE** . Refer to **INSTALLATION - Step 10**
5. **INSTALL LUGGAGE COMPARTMENT FRONT TRIM COVER** . Refer to **INSTALLATION - Step 9**
6. **INSTALL BAGGAGE HOLDER NET (w/ Partition Net)** . Refer to **INSTALLATION - Step 11**
7. **INSTALL LUGGAGE COMPARTMENT FLOOR MAT** . Refer to **INSTALLATION - Step 13**

CERTIFICATION ECU

COMPONENTS

ILLUSTRATION

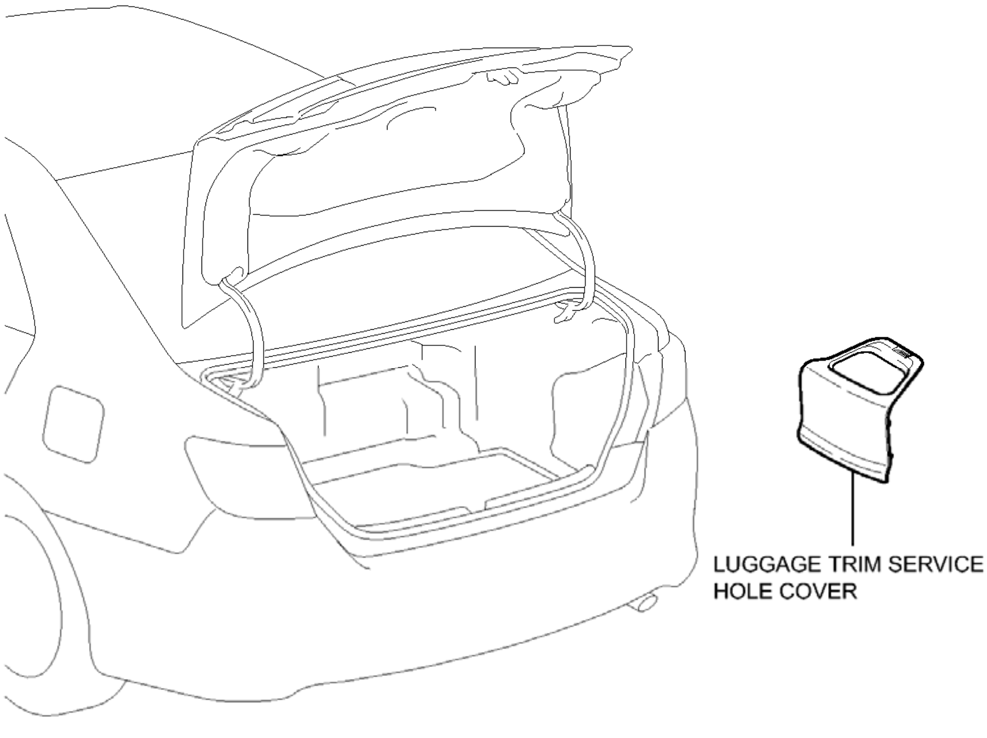

Fig. 21: Identifying Certification ECU Replacement Components With Torque Specifications (1 Of 3)
Courtesy of TOYOTA MOTOR SALES, U.S.A., INC.

ILLUSTRATION

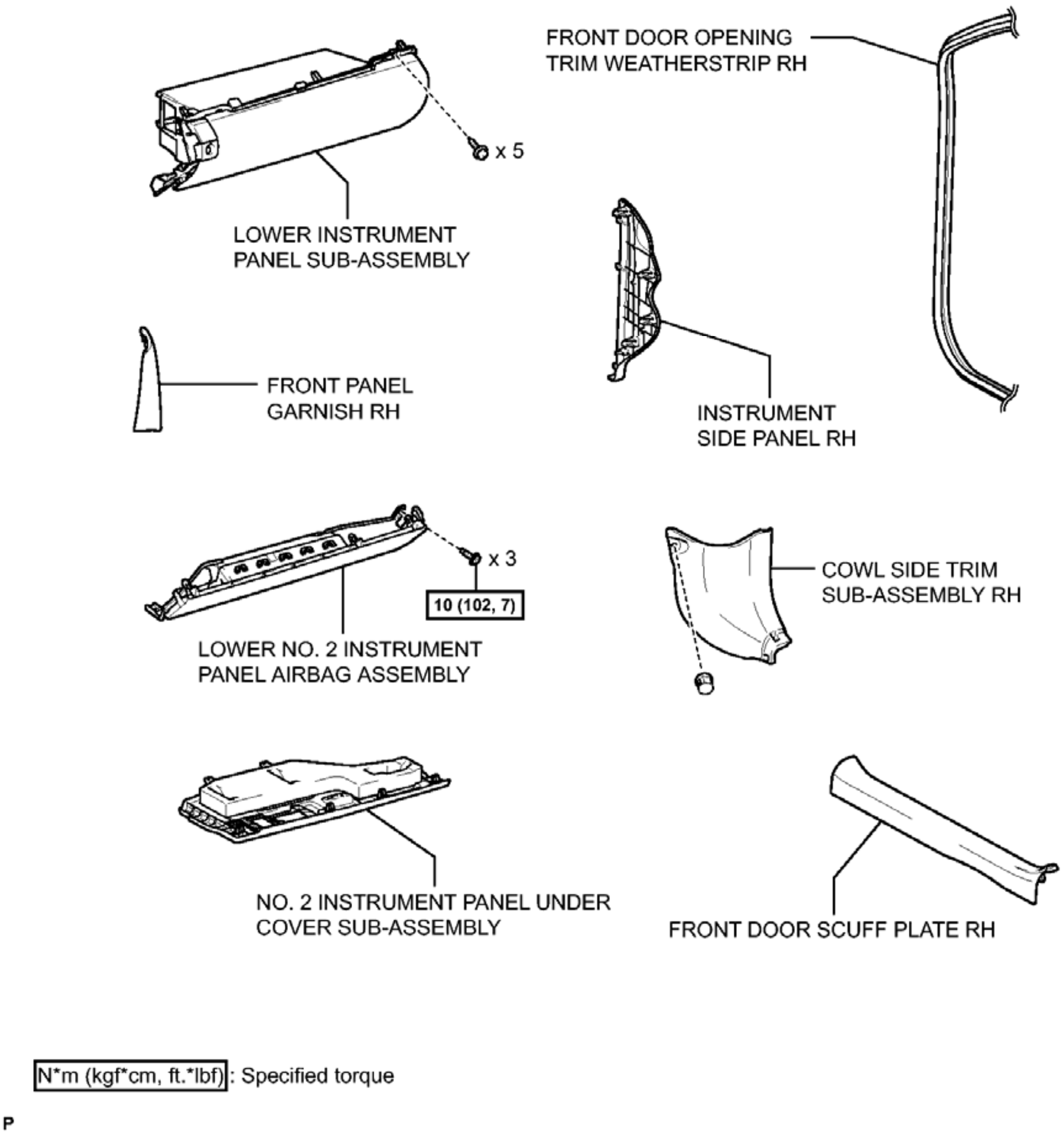
FRONT DOOR OPENING TRIM WEATHERSTRIP RH
x 5
LOWER INSTRUMENT PANEL SUB-ASSEMBLY
FRONT PANEL GARNISH RH
INSTRUMENT SIDE PANEL RH
x 3
10 (102, 7)
LOWER NO. 2 INSTRUMENT PANEL AIRBAG ASSEMBLY
COWL SIDE TRIM SUB-ASSEMBLY RH
NO. 2 INSTRUMENT PANEL UNDER COVER SUB-ASSEMBLY
FRONT DOOR SCUFF PLATE RH
N*m (kgf*cm, ft.*lbf): Specified torque
P

Fig. 22: Identifying Certification ECU Replacement Components With Torque Specifications (2 Of 3)
Courtesy of TOYOTA MOTOR SALES, U.S.A., INC.

ILLUSTRATION

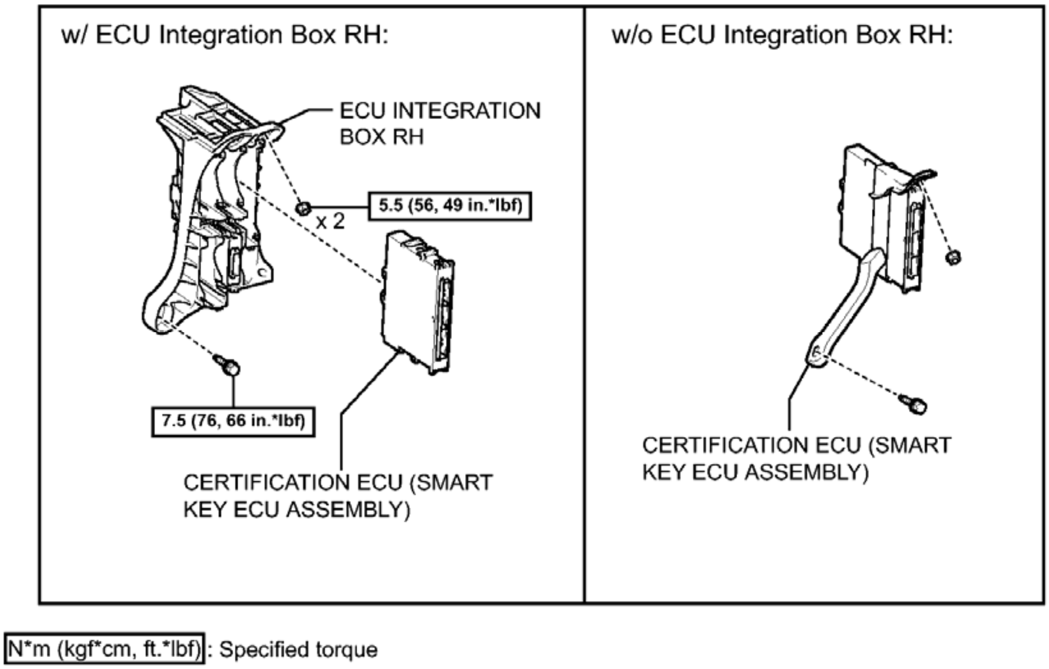
w/ ECU Integration Box RH:
ECU INTEGRATION BOX RH
5.5 (56, 49 in.*lbf)
x 2
7.5 (76, 66 in.*lbf)
CERTIFICATION ECU (SMART KEY ECU ASSEMBLY)
w/o ECU Integration Box RH:
CERTIFICATION ECU (SMART KEY ECU ASSEMBLY)
N*m (kgf*cm, ft.*lbf): Specified torque

P

Fig. 23: Identifying Certification ECU Replacement Components With Torque Specifications (3 Of 3)
Courtesy of TOYOTA MOTOR SALES, U.S.A., INC.

REMOVAL

REMOVAL

1. **PRECAUTION**

   NOTE: **After turning the power switch off, waiting time may be required before disconnecting the cable from the negative (-) auxiliary battery terminal. Therefore, make sure to read the disconnecting the cable from the negative (-) auxiliary battery terminal notices before proceeding with work. Refer to PRECAUTION .**

2. **REMOVE LUGGAGE TRIM SERVICE HOLE COVER** . Refer to **REMOVAL - Step 2**
3. **DISCONNECT CABLE FROM NEGATIVE AUXILIARY BATTERY TERMINAL**

   WARNING: **Wait at least 90 seconds after disconnecting the cable from the negative (-) auxiliary battery terminal to disable the SRS system.**

   NOTE: **When disconnecting the cable, some systems need to be initialized after the cable is reconnected. Refer to INITIALIZATION .**

4. **REMOVE FRONT PANEL GARNISH RH** . Refer to **REMOVAL - Step 15**

5. **REMOVE FRONT DOOR SCUFF PLATE RH**

   HINT:

   Use the same procedure for the RH side and LH side. Refer to **REMOVAL - Step 4** .

6. **REMOVE COWL SIDE TRIM SUB-ASSEMBLY RH**

   HINT:

   Use the same procedure for the RH side and LH side. Refer to **REMOVAL - Step 5** .

7. **DISCONNECT FRONT DOOR OPENING TRIM WEATHERSTRIP RH** . Refer to **REMOVAL - Step 33**
8. **REMOVE INSTRUMENT SIDE PANEL RH** . Refer to **REMOVAL - Step 34**
9. **REMOVE NO. 2 INSTRUMENT PANEL UNDER COVER SUB-ASSEMBLY** . Refer to **REMOVAL - Step 35**
10. **REMOVE LOWER NO. 2 INSTRUMENT PANEL AIRBAG ASSEMBLY** . Refer to **REMOVAL - Step 9**
11. **REMOVE LOWER INSTRUMENT PANEL SUB-ASSEMBLY** . Refer to **REMOVAL - Step 37**
12. **REMOVE ECU INTEGRATION BOX RH (w/ ECU Integration Box RH)**
    1. Disconnect each connector and disengage the clamp.

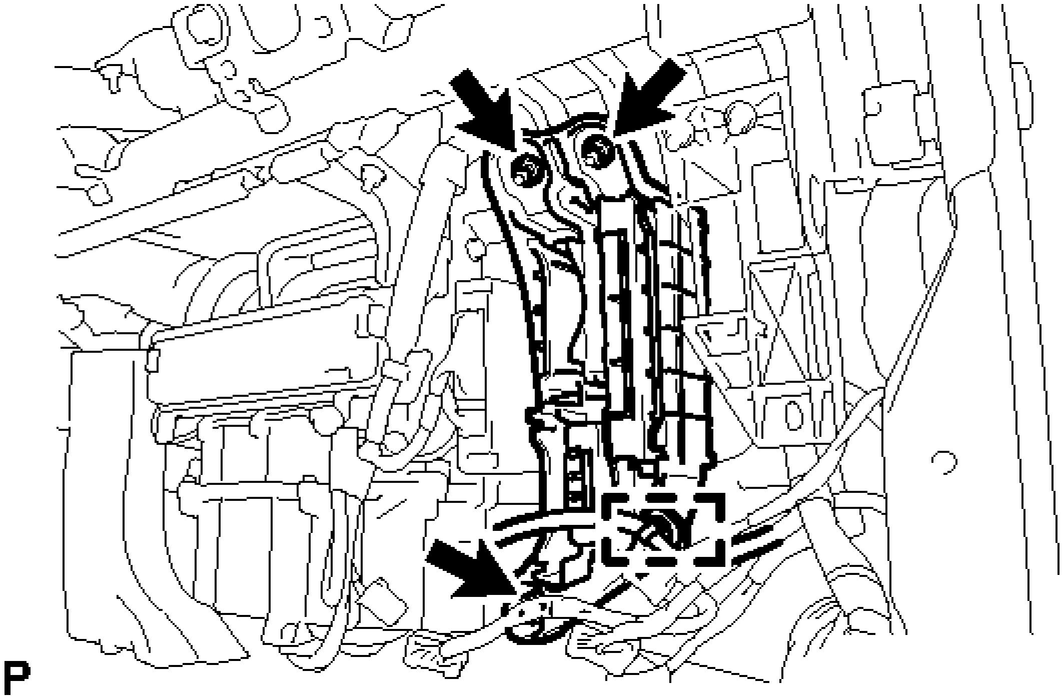

Fig. 24: Locating ECU Integration Box RH Fasteners
Courtesy of TOYOTA MOTOR SALES, U.S.A., INC.

b. Remove the bolt, 2 nuts and the ECU integration box RH.

13. **REMOVE CERTIFICATION ECU (SMART KEY ECU ASSEMBLY)**
    a. w/ ECU Integration Box RH:
        1. Disengage the 2 claws and remove the certification ECU (smart key ECU assembly).

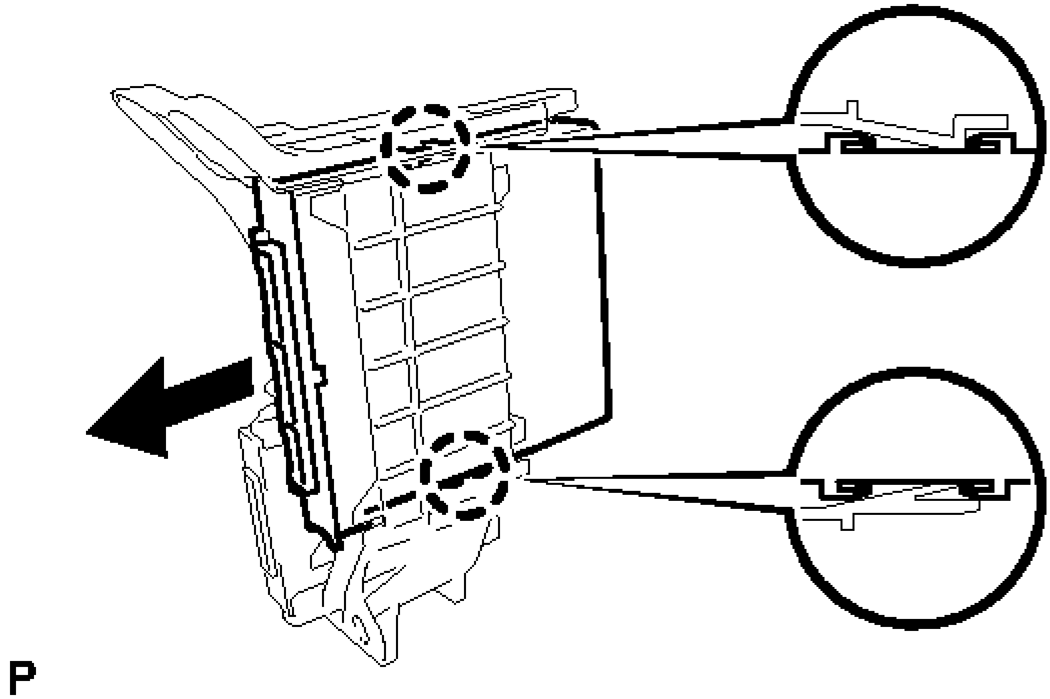

Fig. 25: Removing Certification ECU (Smart Key ECU Assembly)
Courtesy of TOYOTA MOTOR SALES, U.S.A., INC.

b. w/o ECU Integration Box RH:
   1. Disconnect each connector.
   2. Remove the bolt, nut and certification ECU (smart key ECU assembly).

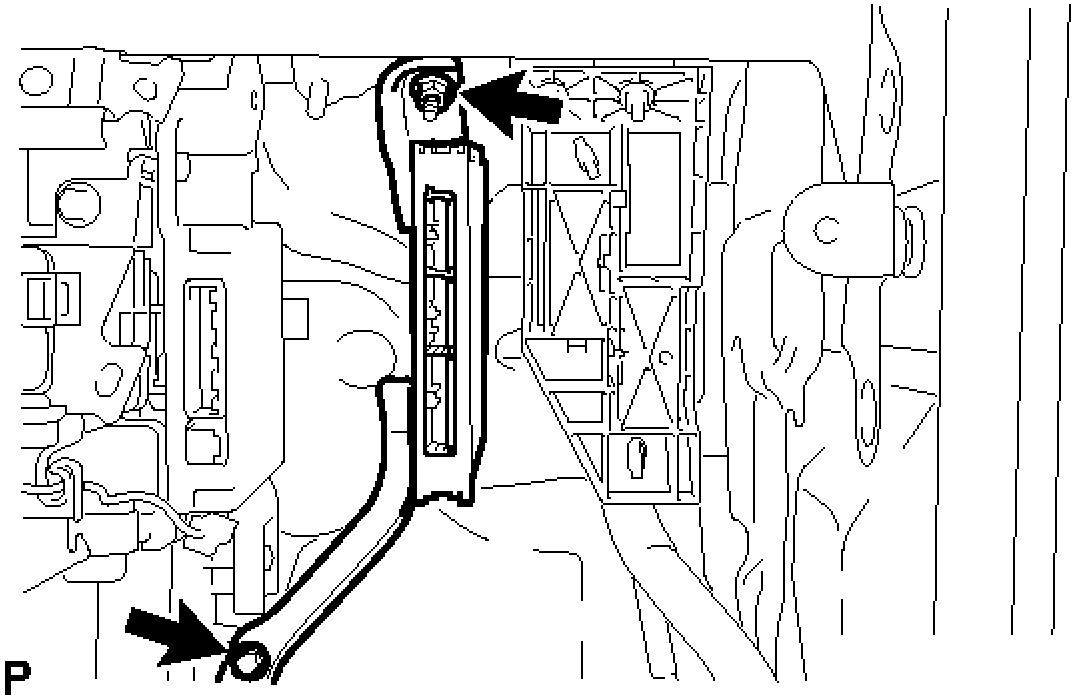

Fig. 26: Locating Certification ECU (Smart Key ECU Assembly) Fasteners
Courtesy of TOYOTA MOTOR SALES, U.S.A., INC.

INSTALLATION

INSTALLATION

1. **INSTALL CERTIFICATION ECU (SMART KEY ECU ASSEMBLY)**
   a. w/ ECU Integration Box RH:
      1. Engage the 2 claws and install the certification ECU (smart key ECU assembly).
   b. w/o ECU Integration Box RH:
      1. Install the certification ECU (smart key ECU assembly) with the nut and bolt.
      2. Connect each connector.
2. **INSTALL ECU INTEGRATION BOX RH (w/ ECU Integration Box RH)**
   a. Install the ECU integration box RH with the 2 nuts and bolt.

      Nut

      Torque: 5.5 N*m (56 kgf*cm, 49 in.*lbf)

      Bolt

      Torque: 7.5 N*m (76 kgf*cm, 66 in.*lbf)

   b. Engage the clamp.

c. Connect each connector.

3. **INSTALL LOWER INSTRUMENT PANEL SUB-ASSEMBLY** . Refer to **INSTALLATION - Step 15**
4. **INSTALL LOWER NO. 2 INSTRUMENT PANEL AIRBAG ASSEMBLY** . Refer to **INSTALLATION - Step 1**
5. **INSTALL NO. 2 INSTRUMENT PANEL UNDER COVER SUB-ASSEMBLY** . Refer to **INSTALLATION - Step 17**
6. **INSTALL INSTRUMENT SIDE PANEL RH** . Refer to **INSTALLATION - Step 18**
7. **INSTALL FRONT DOOR OPENING TRIM WEATHERSTRIP RH** . Refer to **INSTALLATION - Step 47**
8. **INSTALL COWL SIDE TRIM SUB-ASSEMBLY RH**

   HINT:

   Use the same procedure for the RH side and LH side. Refer to **INSTALLATION - Step 44** .

9. **INSTALL FRONT DOOR SCUFF PLATE RH**

   HINT:

   Use the same procedure for the RH side and LH side. Refer to **INSTALLATION - Step 45** .

10. **INSTALL FRONT PANEL GARNISH RH** . Refer to **INSTALLATION - Step 37**
11. **CONNECT CABLE TO NEGATIVE AUXILIARY BATTERY TERMINAL**

    NOTE: **When disconnecting the cable, some systems need to be initialized after the cable is reconnected. Refer to INITIALIZATION .**

12. **INSTALL LUGGAGE TRIM SERVICE HOLE COVER** . Refer to **INSTALLATION - Step 3**
13. **REGISTER KEY**

    NOTE: **If the certification ECU (smart key ECU assembly) is replaced, refer to Registration. Refer to REGISTRATION .**

14. **INSPECT SRS WARNING LIGHT**
    - for Built-in Type Yaw Rate Sensor: Refer to **DIAGNOSIS SYSTEM**
    - for Separate Type Yaw Rate Sensor: Refer to **DIAGNOSIS SYSTEM**

GLASS BREAKAGE SENSOR

COMPONENTS

ILLUSTRATION

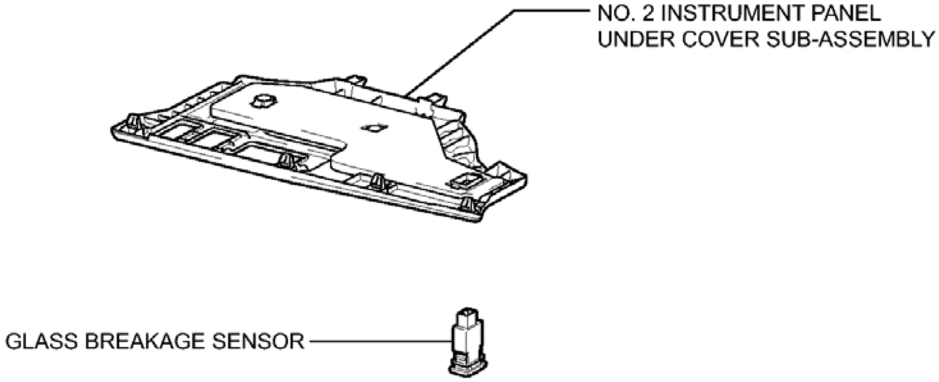
NO. 2 INSTRUMENT PANEL UNDER COVER SUB-ASSEMBLY
GLASS BREAKAGE SENSOR

P

Fig. 1: Identifying Glass Breakage Sensor Replacement Components
Courtesy of TOYOTA MOTOR SALES, U.S.A., INC.

REMOVAL

REMOVAL

1. **REMOVE NO. 2 INSTRUMENT PANEL UNDER COVER SUB-ASSEMBLY** . Refer to **REMOVAL - Step 36** .
2. **REMOVE GLASS BREAKAGE SENSOR**
    a. Disengage the 2 claws and remove the glass breakage sensor.

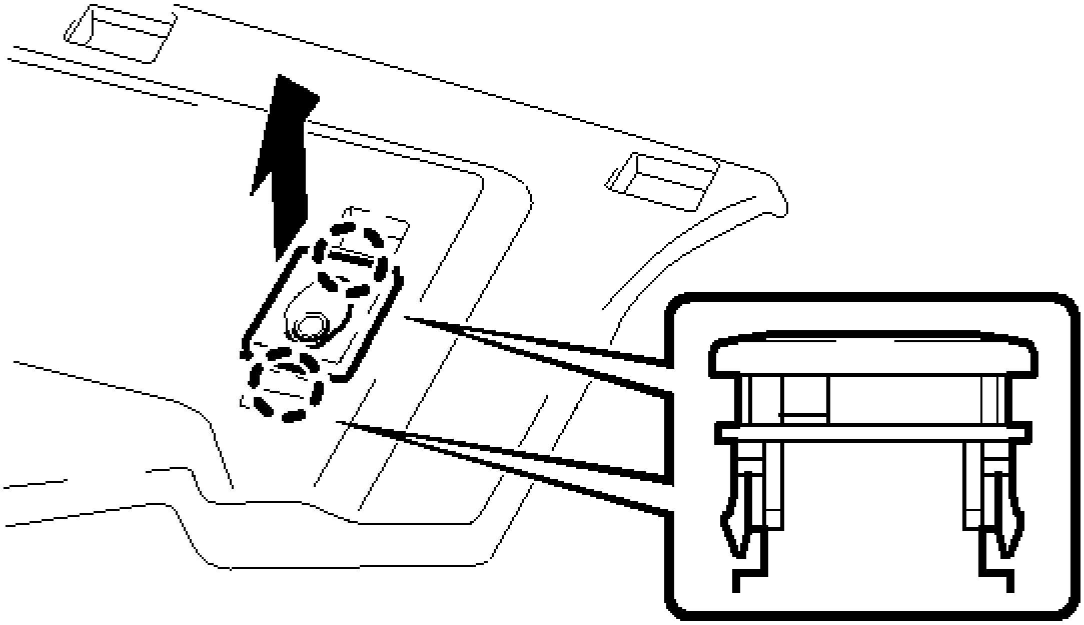

P

Fig. 2: Removing Glass Breakage Sensor
Courtesy of TOYOTA MOTOR SALES, U.S.A., INC.

INSTALLATION

INSTALLATION

1. **INSTALL GLASS BREAKAGE SENSOR**
    a. Engage the 2 claws to install the glass breakage sensor.

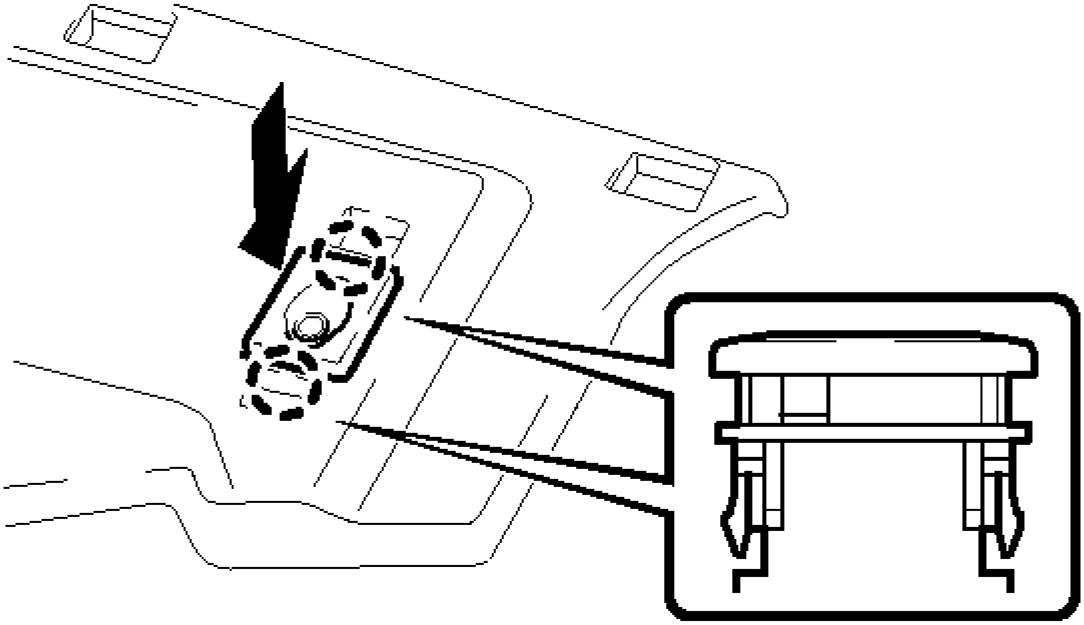

Fig. 3: Installing Glass Breakage Sensor
Courtesy of TOYOTA MOTOR SALES, U.S.A., INC.

2. **INSTALL NO. 2 INSTRUMENT PANEL UNDER COVER SUB-ASSEMBLY** . Refer to **INSTALLATION - Step 17** .

GLASS BREAKAGE SENSOR ECU

COMPONENTS

ILLUSTRATION

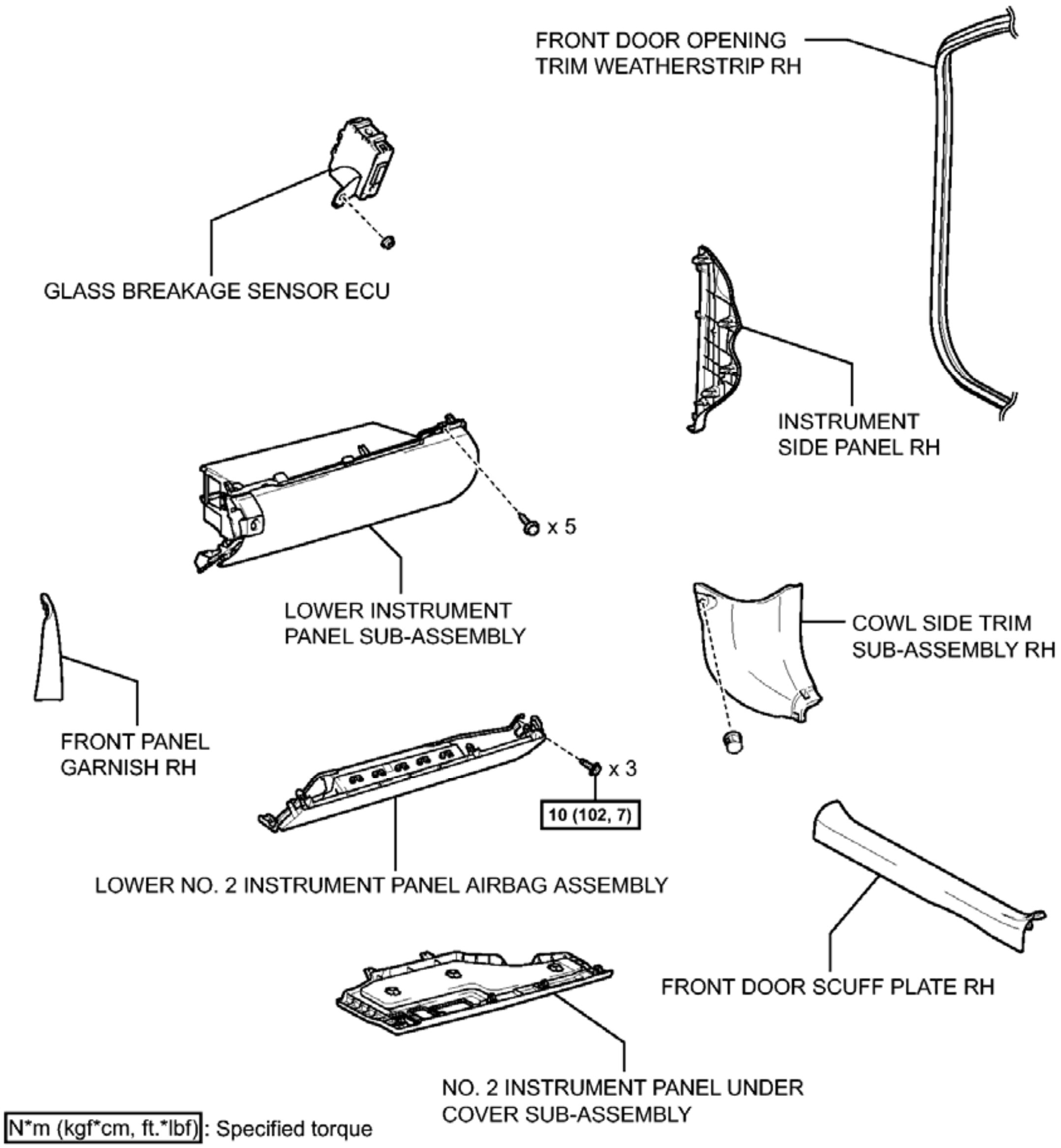
FRONT DOOR OPENING TRIM WEATHERSTRIP RH
GLASS BREAKAGE SENSOR ECU
INSTRUMENT SIDE PANEL RH
x 5
LOWER INSTRUMENT PANEL SUB-ASSEMBLY
COWL SIDE TRIM SUB-ASSEMBLY RH
FRONT PANEL GARNISH RH
x 3
10 (102, 7)
LOWER NO. 2 INSTRUMENT PANEL AIRBAG ASSEMBLY
FRONT DOOR SCUFF PLATE RH
NO. 2 INSTRUMENT PANEL UNDER COVER SUB-ASSEMBLY
N*m (kgf*cm, ft.*lbf): Specified torque
P

Fig. 4: Identifying Glass Breakage Sensor ECU Replacement Components With Torque Specifications
Courtesy of TOYOTA MOTOR SALES, U.S.A., INC.

REMOVAL

REMOVAL

1. **PRECAUTION**

NOTE: After turning the ignition switch off, waiting time may be required before disconnecting the cable from the negative (-) battery terminal. Therefore, make sure to read the disconnecting the cable from the negative (-) battery terminal notice before proceeding with work. Refer to PRECAUTION .

2. **DISCONNECT CABLE FROM NEGATIVE BATTERY TERMINAL**

   WARNING: **Wait at least 90 seconds after disconnecting the cable from the negative (-) battery terminal to disable the SRS system.**

   NOTE: **When disconnecting the cable, some systems need to be initialized after the cable is reconnected. Refer to INITIALIZATION .**

3. **REMOVE FRONT PANEL GARNISH RH** . Refer to **REMOVAL - Step 14** .
4. **REMOVE FRONT DOOR SCUFF PLATE RH**

   HINT:

   Use the same procedure for the RH side and LH side. Refer to **REMOVAL - Step 3** .

5. **REMOVE COWL SIDE TRIM SUB-ASSEMBLY RH**

   HINT:

   Use the same procedure for the RH side and LH side. Refer to **REMOVAL - Step 4** .

6. **DISCONNECT FRONT DOOR OPENING TRIM WEATHERSTRIP RH** . Refer to **REMOVAL - Step 34** .
7. **REMOVE INSTRUMENT SIDE PANEL RH** . Refer to **REMOVAL - Step 35** .
8. **REMOVE NO. 2 INSTRUMENT PANEL UNDER COVER SUB-ASSEMBLY** . Refer to **REMOVAL - Step 36** .
9. **REMOVE LOWER NO. 2 INSTRUMENT PANEL AIRBAG ASSEMBLY** . Refer to **REMOVAL - Step 8** .
10. **REMOVE LOWER INSTRUMENT PANEL SUB-ASSEMBLY** . Refer to **REMOVAL - Step 38** .
11. **REMOVE GLASS BREAKAGE SENSOR ECU**
    a. Disconnect the connector.
    b. Remove the nut and glass breakage sensor ECU.

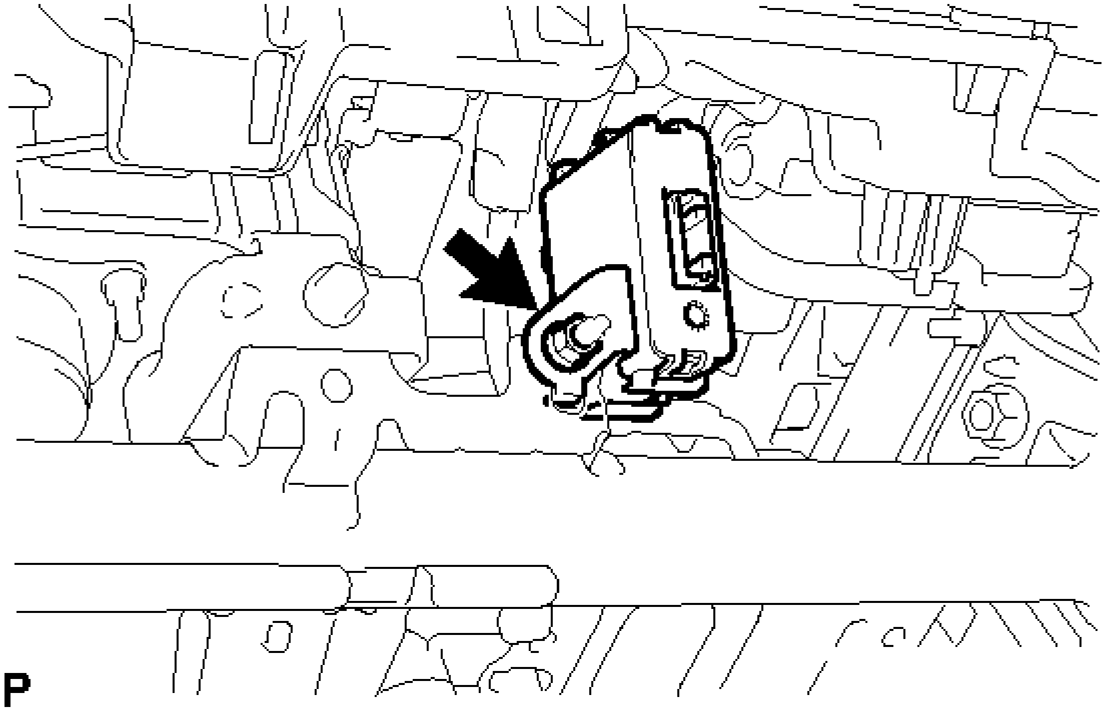

Fig. 5: Identifying Glass Breakage Sensor ECU And Fastener
Courtesy of TOYOTA MOTOR SALES, U.S.A., INC.

INSTALLATION

INSTALLATION

1. **INSTALL GLASS BREAKAGE SENSOR ECU**
    a. Install the glass breakage sensor ECU with the nut.
    b. Connect the connector.
2. **INSTALL LOWER INSTRUMENT PANEL SUB-ASSEMBLY** . Refer to **INSTALLATION - Step 15** .
3. **INSTALL LOWER NO. 2 INSTRUMENT PANEL AIRBAG ASSEMBLY** . Refer to **INSTALLATION - Step 1** .
4. **INSTALL NO. 2 INSTRUMENT PANEL UNDER COVER SUB-ASSEMBLY** . Refer to **INSTALLATION - Step 17** .
5. **INSTALL INSTRUMENT SIDE PANEL RH** . Refer to **INSTALLATION - Step 18** .
6. **INSTALL FRONT DOOR OPENING TRIM WEATHERSTRIP RH** . Refer to **INSTALLATION - Step 46** .
7. **INSTALL COWL SIDE TRIM SUB-ASSEMBLY RH**

    HINT:

    Use the same procedure for the RH side and LH side. Refer to **INSTALLATION - Step 43** .

8. **INSTALL FRONT DOOR SCUFF PLATE RH**

   HINT:

   Use the same procedure for the RH side and LH side. Refer to **INSTALLATION - Step 44** .

9. **INSTALL FRONT PANEL GARNISH RH** . Refer to **INSTALLATION - Step 39** .
10. **CONNECT CABLE TO NEGATIVE BATTERY TERMINAL**

    NOTE: **When disconnecting the cable, some systems need to be initialized after the cable is reconnected. Refer to INITIALIZATION .**

11. **INSPECT SRS WARNING LIGHT**
    - For Built-in Type Yaw Rate Sensor: Refer to **DIAGNOSIS SYSTEM**
    - For Separate Type Yaw Rate Sensor: Refer to **DIAGNOSIS SYSTEM**

ELECTRICAL KEY OSCILLATOR (FOR LUGGAGE COMPARTMENT)

COMPONENTS

ILLUSTRATION

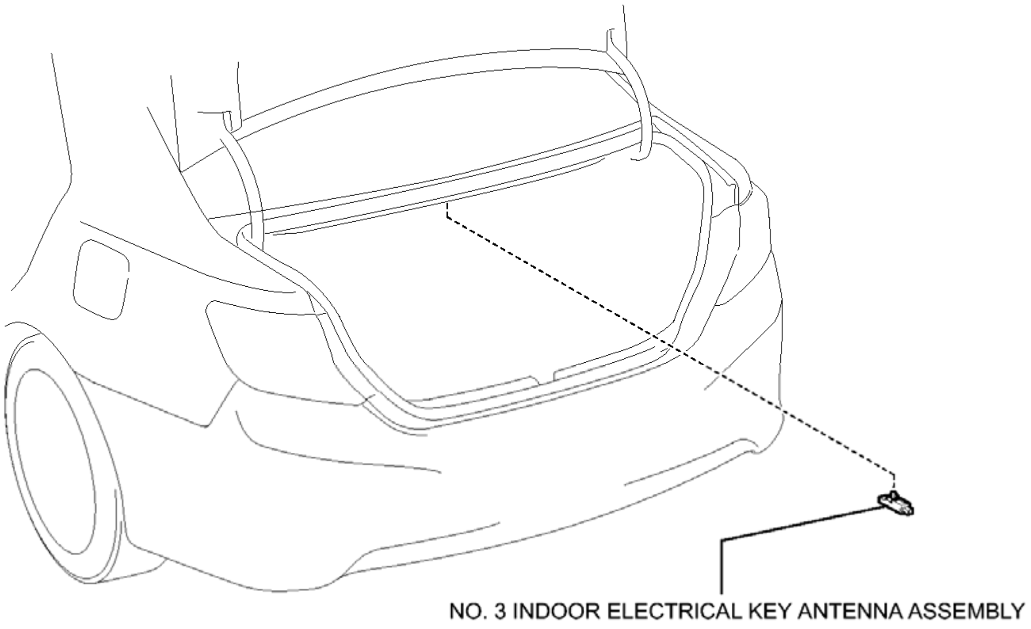

P

Fig. 6: Identifying Electrical Key Oscillator (For Luggage Compartment) Replacement Components
Courtesy of TOYOTA MOTOR SALES, U.S.A., INC.

REMOVAL

REMOVAL

1. **REMOVE NO. 3 INDOOR ELECTRICAL KEY ANTENNA ASSEMBLY**
   a. Disconnect the connector.

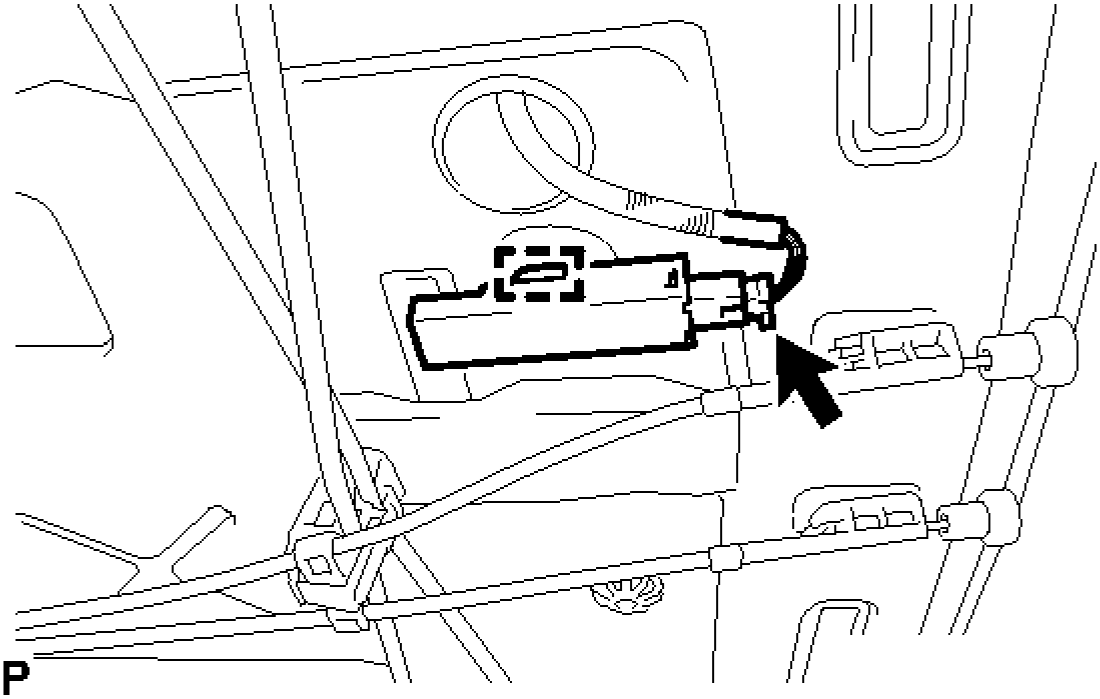

Fig. 7: Locating No. 3 Indoor Electrical Key Antenna Assembly Connector And Clamp
Courtesy of TOYOTA MOTOR SALES, U.S.A., INC.

   b. Disengage the clamp and remove the No. 3 indoor electrical key antenna assembly.

NOTE:	**Be careful when removing the indoor electrical key antenna assembly. If the antenna is dropped, replace it with a new one.**

INSTALLATION

INSTALLATION

1. **INSTALL NO. 3 INDOOR ELECTRICAL KEY ANTENNA ASSEMBLY**
   a. Engage the clamp to install the No. 3 indoor electrical key antenna assembly.

NOTE:	**Be careful when installing the indoor electrical key antenna assembly. If the antenna is dropped, replace it with a new one.**

   b. Connect the connector.

ELECTRICAL KEY OSCILLATOR (FOR OUTSIDE LUGGAGE COMPARTMENT)

COMPONENTS

ILLUSTRATION

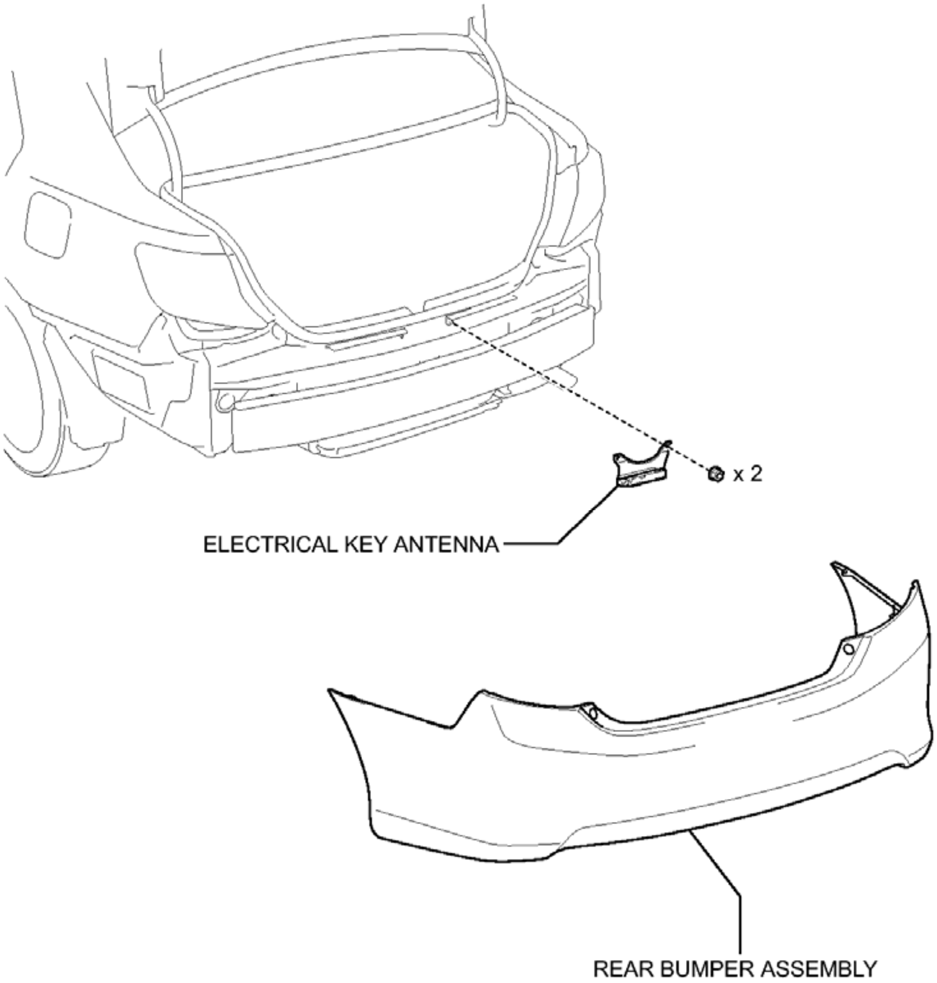
x 2
ELECTRICAL KEY ANTENNA
REAR BUMPER ASSEMBLY

P

Fig. 8: Identifying Electrical Key Oscillator (For Outside Luggage Compartment) Replacement Components
Courtesy of TOYOTA MOTOR SALES, U.S.A., INC.

REMOVAL

REMOVAL

1. **REMOVE REAR BUMPER ASSEMBLY**

Refer to **REMOVAL** .

2. **REMOVE ELECTRICAL KEY ANTENNA**
    a. Disconnect the connector.

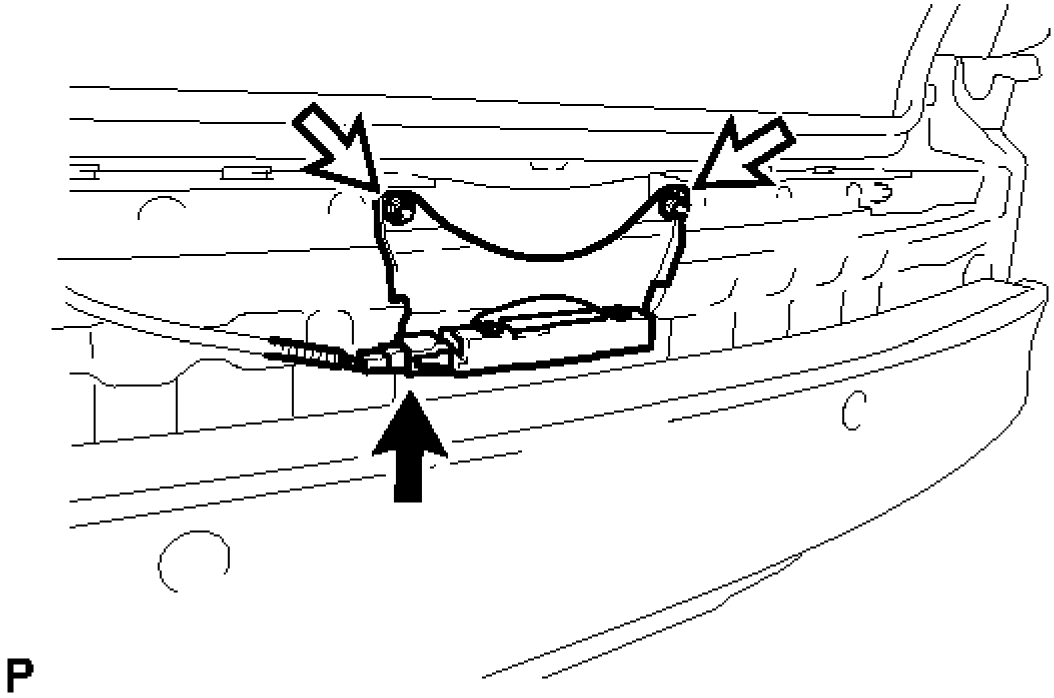

Fig. 9: Locating Electrical Key Antenna Connector And Fasteners
Courtesy of TOYOTA MOTOR SALES, U.S.A., INC.

    b. Remove the 2 nuts and electrical key antenna.

NOTE: **Be careful when removing the electrical key antenna. If the antenna is dropped, replace it with a new one.**

INSPECTION

INSPECTION

1. **INSPECT ELECTRICAL KEY ANTENNA (OUTSIDE LUGGAGE)**
    a. Measure the resistance according to the value(s) in the table below.

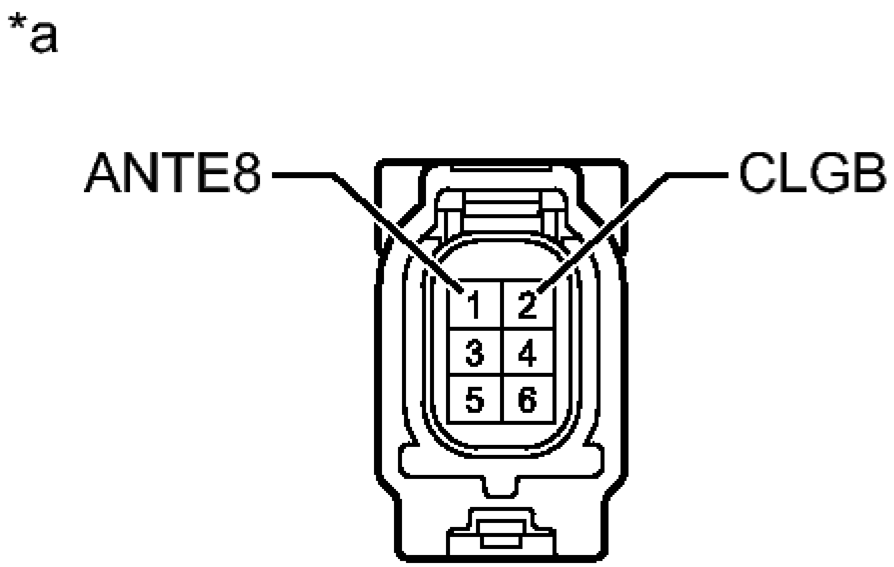

Fig. 10: Inspecting Electrical Key Antenna (Outside Luggage) Connector Terminals
Courtesy of TOYOTA MOTOR SALES, U.S.A., INC.

Standard Resistance

Tester Connection	Condition	Specified Condition
1 (ANTE8) - 2 (CLGB)	Always	Below 1 ohms

TEXT IN ILLUSTRATION

*a	Component without harness connected (Electrical Key Antenna (Outside Luggage))

INSTALLATION

INSTALLATION

1. **INSTALL ELECTRICAL KEY ANTENNA**
    a. Install the electrical key antenna with the 2 nuts.

NOTE: **Be careful when installing the electrical key antenna. If the antenna is dropped, replace it with a new one.**

b. Connect the connector.

2. **INSTALL REAR BUMPER ASSEMBLY**

   Refer to **INSTALLATION** .

ELECTRICAL KEY OSCILLATOR (FOR FRONT FLOOR)

COMPONENTS

ILLUSTRATION

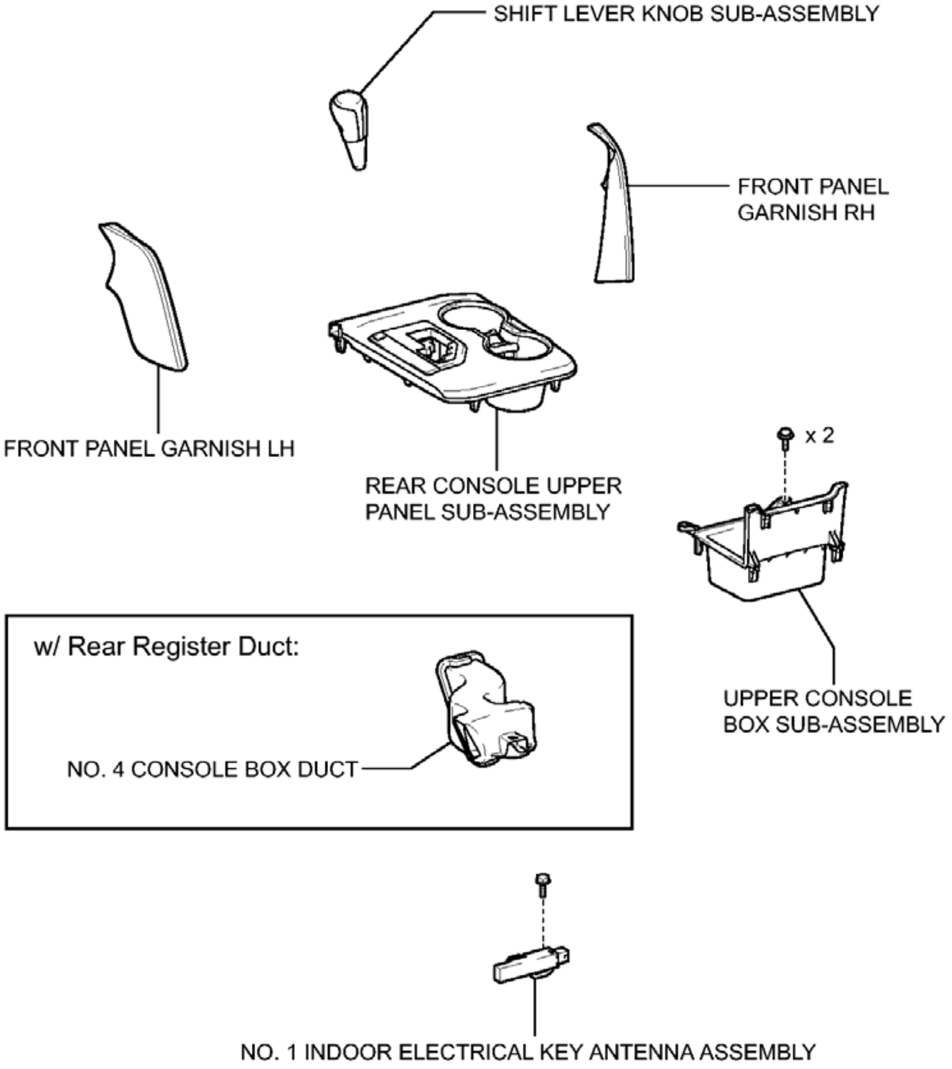
SHIFT LEVER KNOB SUB-ASSEMBLY
FRONT PANEL GARNISH RH
FRONT PANEL GARNISH LH
REAR CONSOLE UPPER PANEL SUB-ASSEMBLY
x 2
w/ Rear Register Duct:
NO. 4 CONSOLE BOX DUCT
UPPER CONSOLE BOX SUB-ASSEMBLY
NO. 1 INDOOR ELECTRICAL KEY ANTENNA ASSEMBLY
P

Fig. 11: Identifying Electrical Key Oscillator (For Front Floor) Replacement Components
Courtesy of TOYOTA MOTOR SALES, U.S.A., INC.

REMOVAL

REMOVAL

1. **REMOVE SHIFT LEVER KNOB SUB-ASSEMBLY** . Refer to **REMOVAL - Step 15** .
2. **REMOVE FRONT PANEL GARNISH LH** . Refer to **REMOVAL - Step 11** .
3. **REMOVE FRONT PANEL GARNISH RH** . Refer to **REMOVAL - Step 14** .
4. **REMOVE REAR CONSOLE UPPER PANEL SUB-ASSEMBLY** . Refer to **REMOVAL - Step 16** .
5. **REMOVE UPPER CONSOLE BOX SUB-ASSEMBLY** . Refer to **REMOVAL - Step 5** .

6. **REMOVE NO. 4 CONSOLE BOX DUCT (w/ Rear Register Duct)** . Refer to **REMOVAL - Step 6** .
7. **REMOVE NO. 1 INDOOR ELECTRICAL KEY ANTENNA ASSEMBLY**
   a. Disengage the clamp.

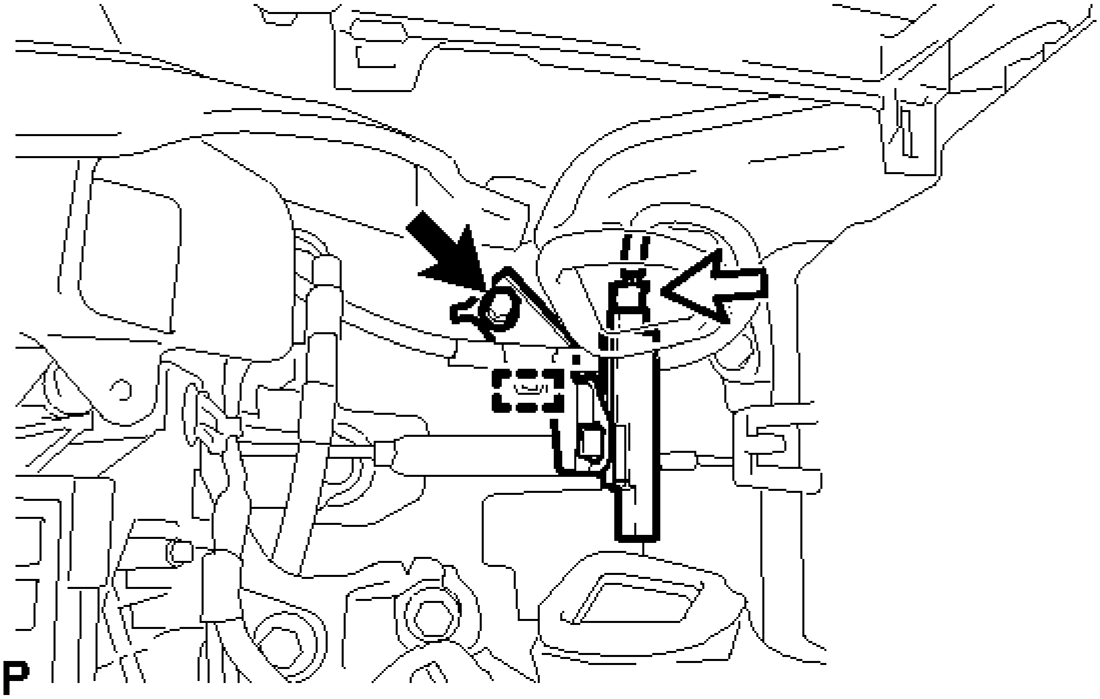

Fig. 12: Locating No. 1 Indoor Electrical Key Antenna Assembly Connector And Bolt
Courtesy of TOYOTA MOTOR SALES, U.S.A., INC.

   b. Remove the bolt.
   c. Disconnect the connector and remove the No. 1 indoor electrical key antenna assembly.

NOTE: **Be careful when removing the indoor electrical key antenna assembly. If the antenna is dropped, replace it with a new one.**

INSTALLATION

INSTALLATION

1. **INSTALL NO. 1 INDOOR ELECTRICAL KEY ANTENNA ASSEMBLY**
   a. Connect the connector.
   b. Install the No. 1 indoor electrical key antenna assembly with the bolt.

NOTE: **Be careful when installing the indoor electrical key antenna assembly. If the antenna is dropped, replace it with a new one.**

   c. Engage the clamp.

2. **INSTALL NO. 4 CONSOLE BOX DUCT (w/ Rear Register Duct)** . Refer to **INSTALLATION - Step 3** .
3. **INSTALL UPPER CONSOLE BOX SUB-ASSEMBLY** . Refer to **INSTALLATION - Step 4** .
4. **INSTALL REAR CONSOLE UPPER PANEL SUB-ASSEMBLY** . Refer to **INSTALLATION - Step 37** .
5. **INSTALL FRONT PANEL GARNISH RH** . Refer to **INSTALLATION - Step 39** .
6. **INSTALL FRONT PANEL GARNISH LH** . Refer to **INSTALLATION - Step 42** .
7. **INSTALL SHIFT LEVER KNOB SUB-ASSEMBLY** . Refer to **INSTALLATION - Step 38** .

ELECTRICAL KEY OSCILLATOR (FOR CENTER FLOOR)

COMPONENTS

ILLUSTRATION

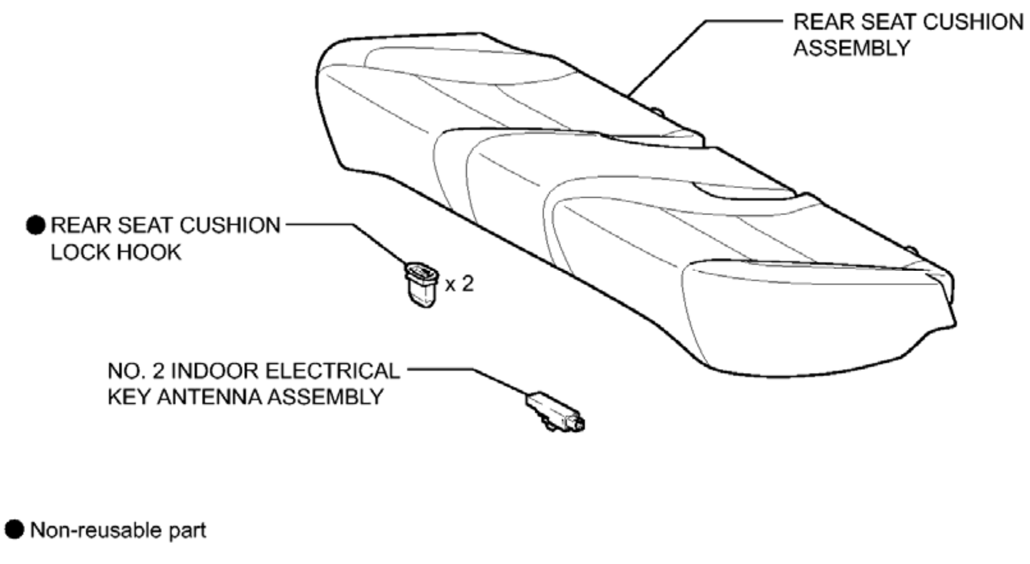
REAR SEAT CUSHION ASSEMBLY
● REAR SEAT CUSHION LOCK HOOK
x 2
NO. 2 INDOOR ELECTRICAL KEY ANTENNA ASSEMBLY
● Non-reusable part
P

Fig. 13: Identifying Electrical Key Oscillator (For Center Floor) Replacement Components
Courtesy of TOYOTA MOTOR SALES, U.S.A., INC.

REMOVAL

REMOVAL

1. **REMOVE REAR SEAT CUSHION ASSEMBLY** . Refer to **REMOVAL - Step 3** .
2. **REMOVE REAR SEAT CUSHION LOCK HOOK** . Refer to **REMOVAL - Step 4** .
3. **REMOVE NO. 2 INDOOR ELECTRICAL KEY ANTENNA ASSEMBLY**
    a. Disconnect the connector.

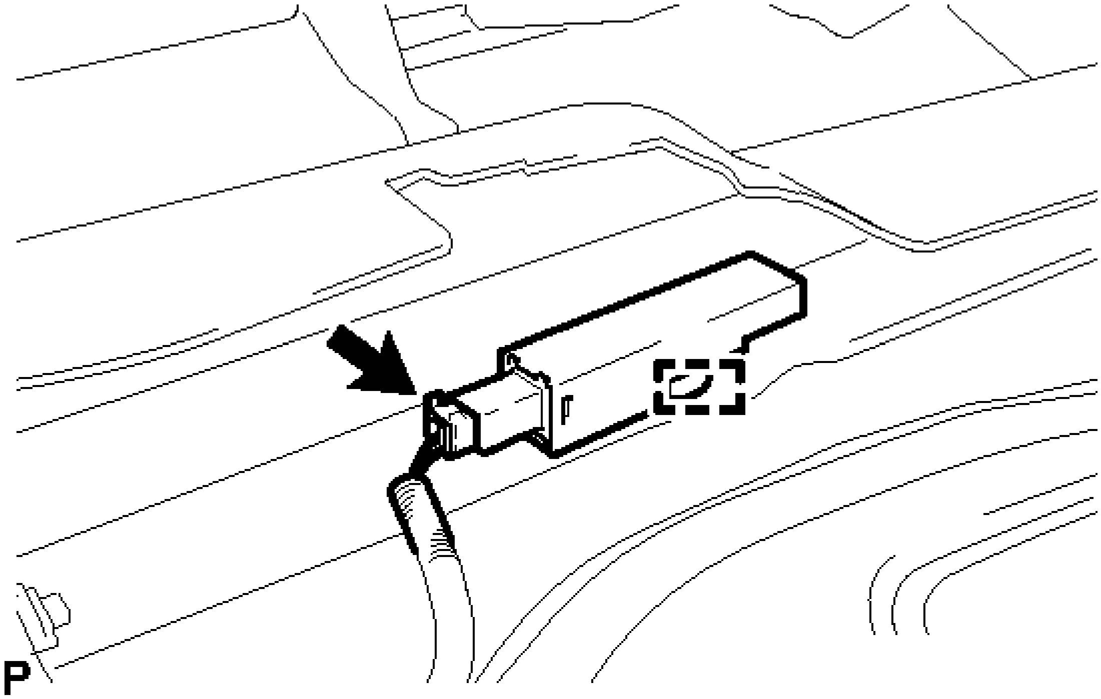

Fig. 14: Locating No. 2 Indoor Electrical Key Antenna Assembly Connector And Clamp
Courtesy of TOYOTA MOTOR SALES, U.S.A., INC.

b. Disengage the clamp and remove the No. 2 indoor electrical key antenna assembly.

NOTE: **Be careful when removing the indoor electrical key antenna assembly. If the antenna is dropped, replace it with a new one.**

INSTALLATION

INSTALLATION

1. **INSTALL NO. 2 INDOOR ELECTRICAL KEY ANTENNA ASSEMBLY**
   a. Engage the clamp and Install the No. 2 indoor electrical key antenna assembly.

   NOTE: **Be careful when installing the indoor electrical key antenna assembly. If the antenna is dropped, replace it with a new one.**

   b. Connect the connector.
2. **INSTALL REAR SEAT CUSHION LOCK HOOK** . Refer to **INSTALLATION - Step 6** .
3. **INSTALL REAR SEAT CUSHION ASSEMBLY** . Refer to **INSTALLATION - Step 7** .

ENGINE HOOD COURTESY SWITCH

COMPONENTS

ILLUSTRATION

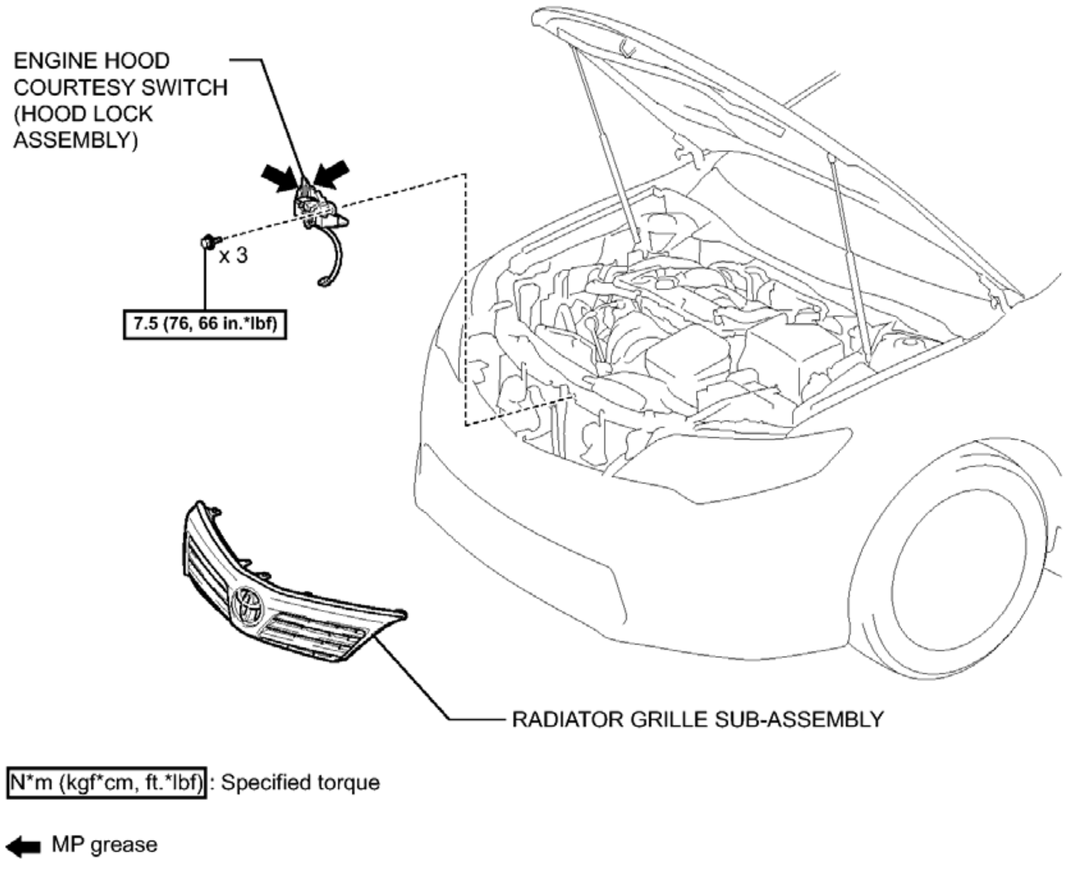
ENGINE HOOD COURTESY SWITCH (HOOD LOCK ASSEMBLY)
x 3
7.5 (76, 66 in.*lbf)
RADIATOR GRILLE SUB-ASSEMBLY
N*m (kgf*cm, ft.*lbf): Specified torque
MP grease
P

Fig. 15: Identifying Engine Hood Courtesy Switch Replacement Components With Torque Specifications
Courtesy of TOYOTA MOTOR SALES, U.S.A., INC.

REMOVAL

REMOVAL

1. **REMOVE RADIATOR GRILLE SUB-ASSEMBLY**

   Refer to **REMOVAL** .

2. **REMOVE ENGINE HOOD COURTESY SWITCH (HOOD LOCK ASSEMBLY)** . Refer to **REMOVAL - Step 9** .

INSPECTION

INSPECTION

1. **INSPECT ENGINE HOOD COURTESY SWITCH (HOOD LOCK ASSEMBLY)**
   a. Measure the resistance according to the value(s) in the table below.

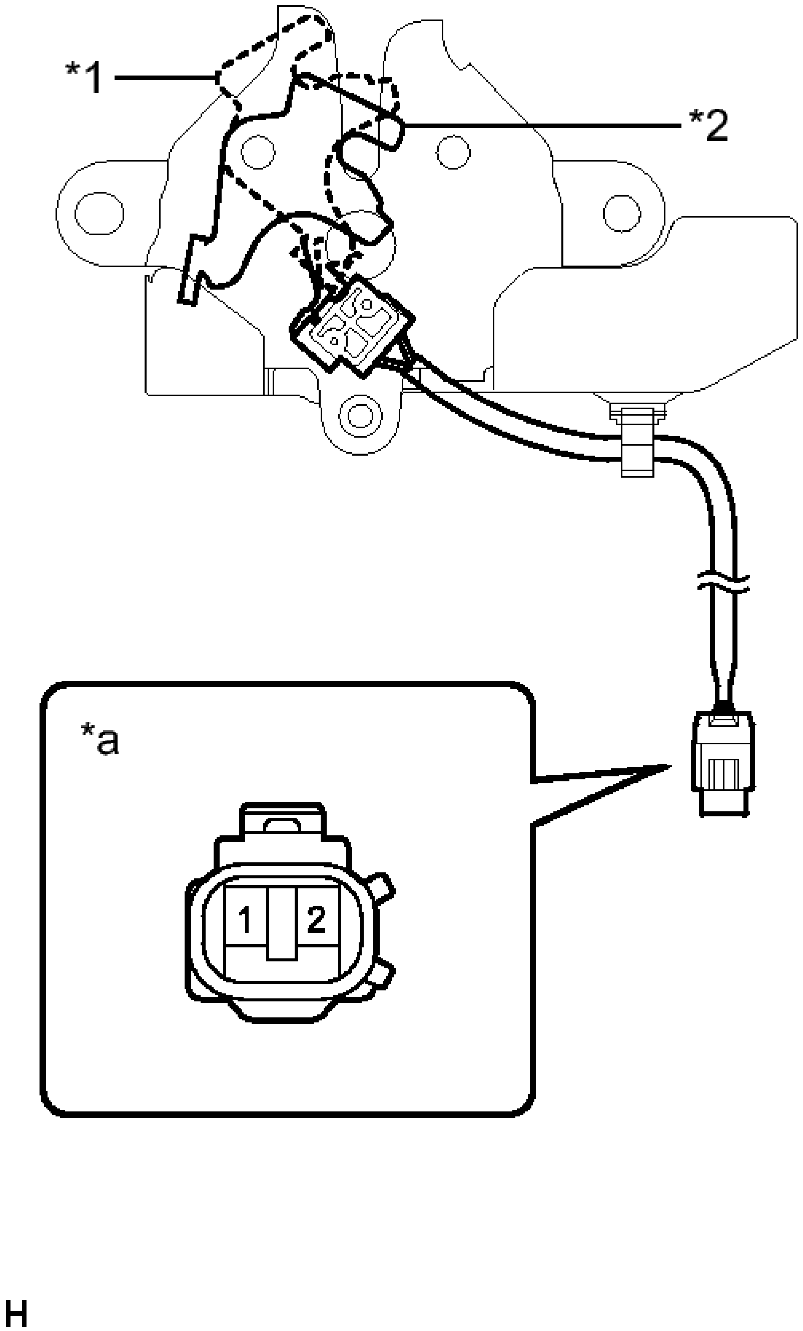

Fig. 16: Inspecting Engine Hood Courtesy Switch (Hood Lock Assembly)
Courtesy of TOYOTA MOTOR SALES, U.S.A., INC.

Standard Resistance

Tester Connection	Switch Condition	Specified Condition
1 - 2	Opened	10 kohms or higher
1 - 2	Locked	Below 1 ohms

TEXT IN ILLUSTRATION

*1	Opened
*2	Locked
*a	Component without harness connected (Engine Hood Courtesy Switch (Hood Lock Assembly))

If the result is not as specified, replace the engine hood courtesy switch (hood lock assembly).

INSTALLATION

INSTALLATION

1. **INSTALL ENGINE HOOD COURTESY SWITCH (HOOD LOCK ASSEMBLY)** . Refer to **INSTALLATION - Step 2** .
2. **INSTALL RADIATOR GRILLE SUB-ASSEMBLY**

   Refer to **INSTALLATION** .

3. **INSPECT HOOD SUB-ASSEMBLY** . Refer to **ON-VEHICLE INSPECTION - Step 1** .
4. **ADJUST HOOD SUB-ASSEMBLY**

   Refer to **ADJUSTMENT** .

TRANSPONDER KEY AMPLIFIER

COMPONENTS

ILLUSTRATION

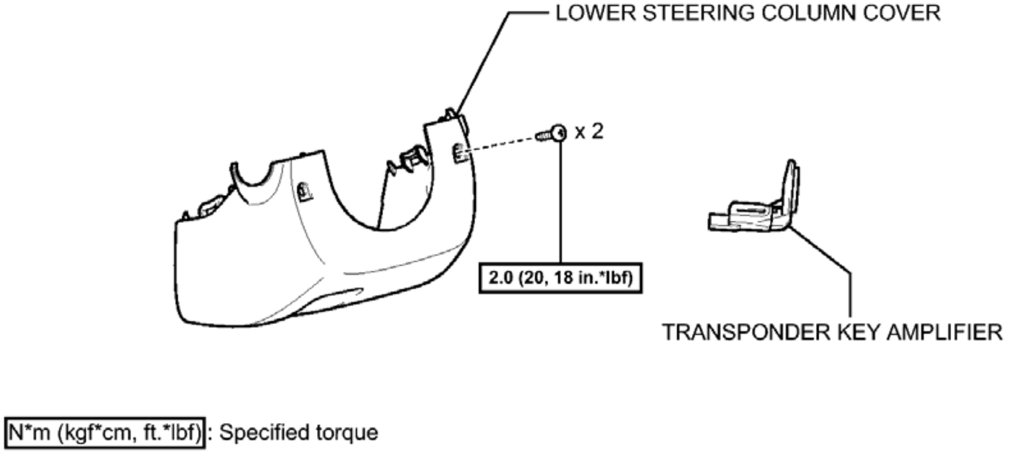
LOWER STEERING COLUMN COVER
x 2
2.0 (20, 18 in.*lbf)
TRANSPONDER KEY AMPLIFIER
N*m (kgf*cm, ft.*lbf): Specified torque
P

Fig. 17: Identifying Transponder Key Amplifier Replacement Components With Torque Specifications
Courtesy of TOYOTA MOTOR SALES, U.S.A., INC.

REMOVAL

REMOVAL

1. **REMOVE LOWER STEERING COLUMN COVER** . Refer to **REMOVAL - Step 1** .
2. **REMOVE TRANSPONDER KEY AMPLIFIER**
    a. Disengage the 2 claws and disconnect the transponder key amplifier.

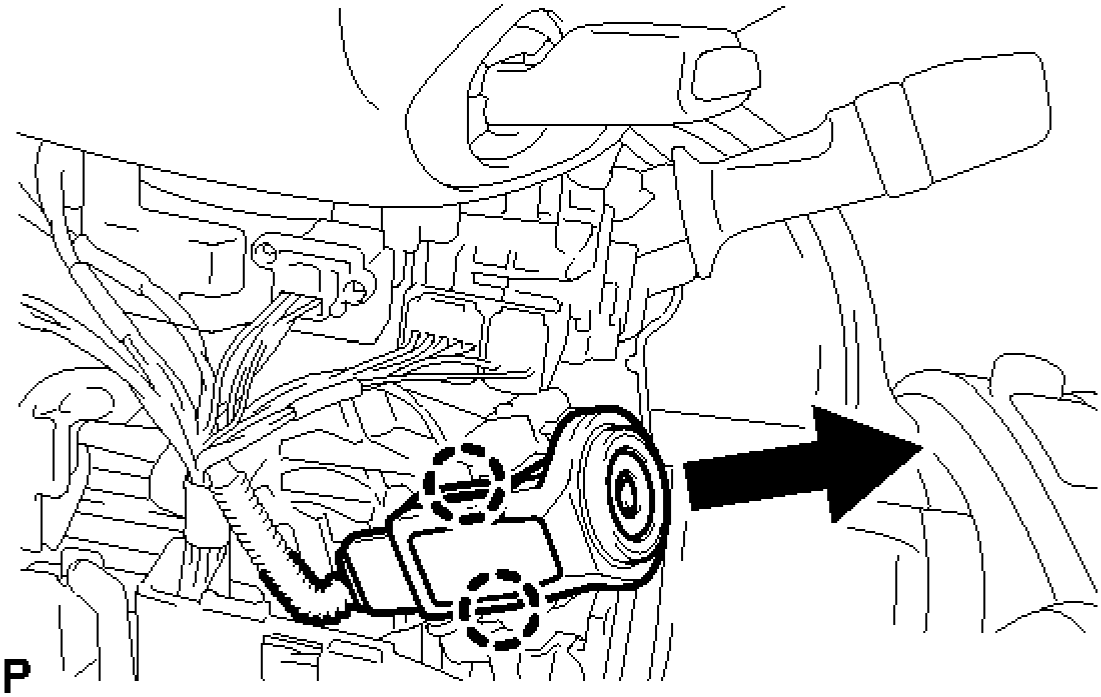

Fig. 18: Removing Transponder Key Amplifier
Courtesy of TOYOTA MOTOR SALES, U.S.A., INC.

b. Disconnect the connector and remove the transponder key amplifier.

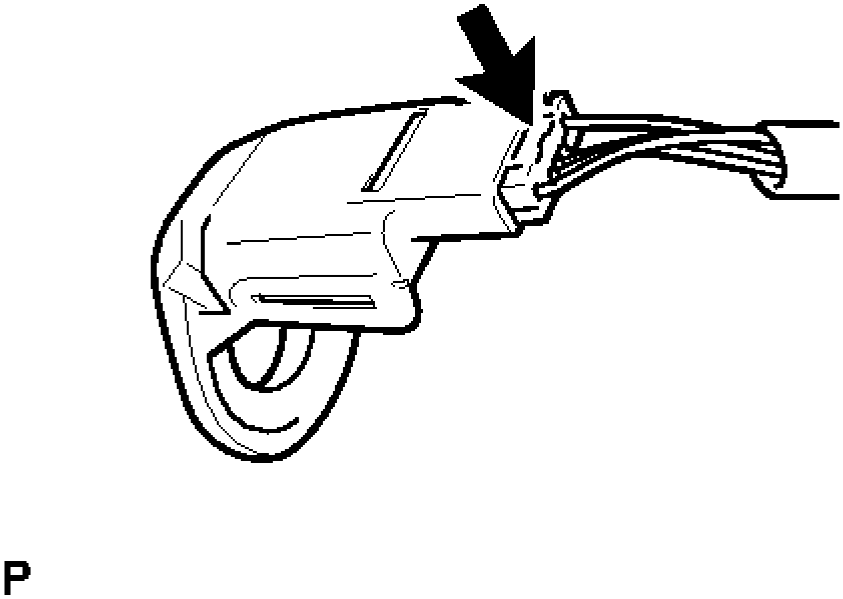

Fig. 19: Locating Transponder Key Amplifier Connector
Courtesy of TOYOTA MOTOR SALES, U.S.A., INC.

INSTALLATION

INSTALLATION

1. **INSTALL TRANSPONDER KEY AMPLIFIER**
    1. Connect the connector to the transponder key amplifier.
    2. Engage the 2 claws to install the transponder key amplifier.

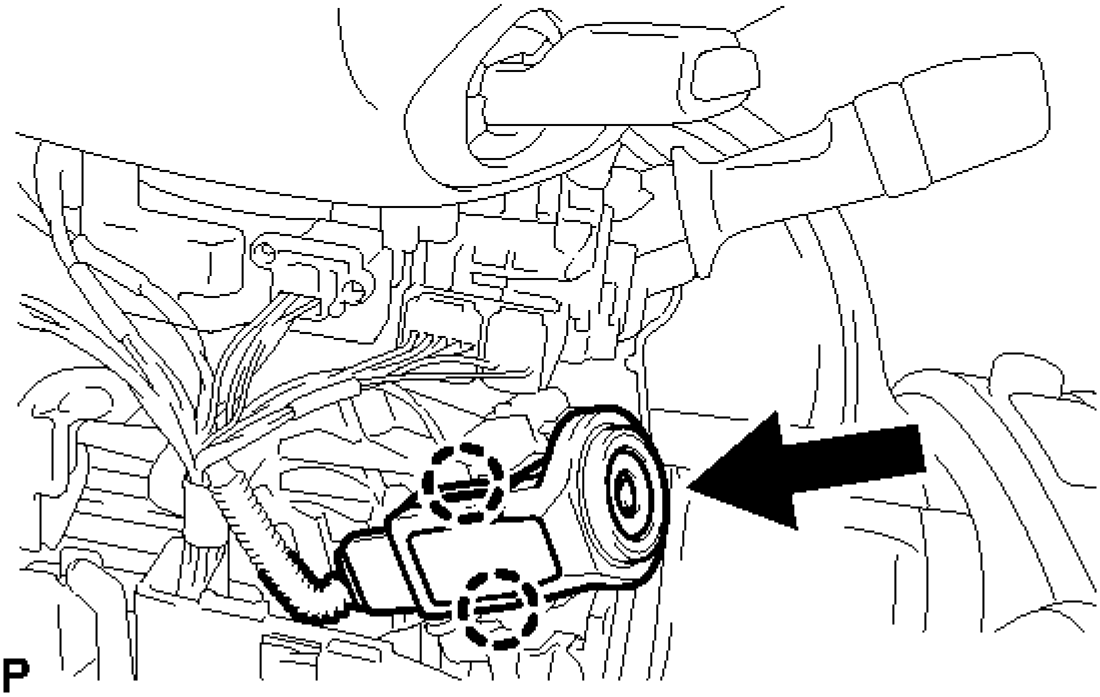

Fig. 20: Installing Transponder Key Amplifier
Courtesy of TOYOTA MOTOR SALES, U.S.A., INC.

2. **INSTALL LOWER STEERING COLUMN COVER** . Refer to **INSTALLATION - Step 3** .

SECURITY HORN ASSEMBLY

COMPONENTS

ILLUSTRATION

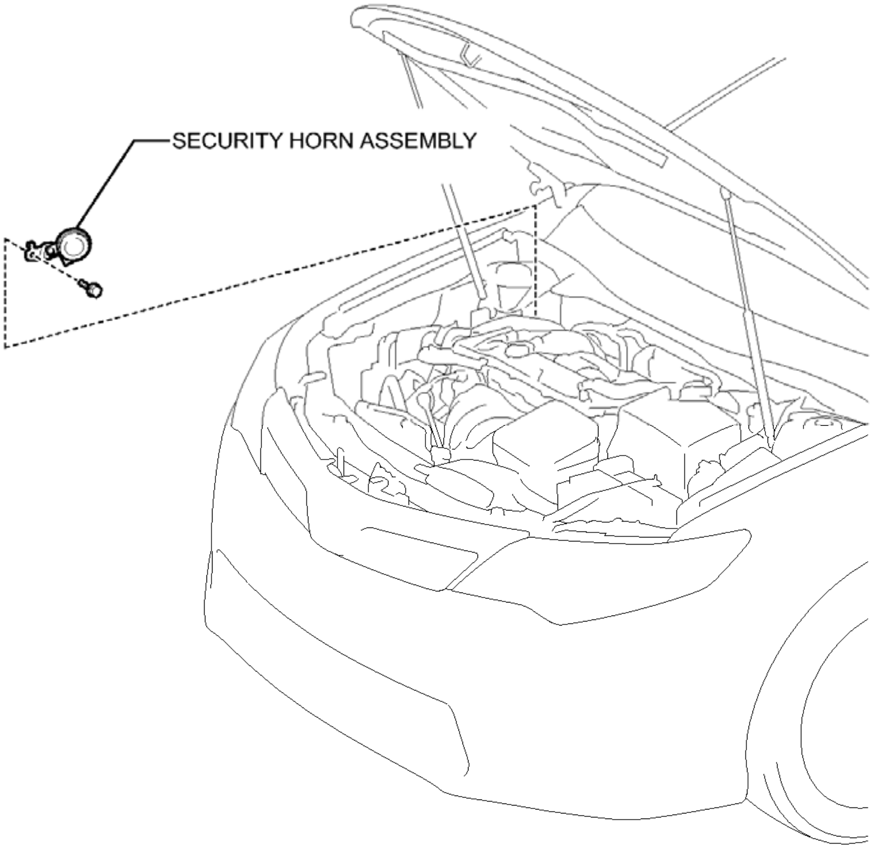
SECURITY HORN ASSEMBLY

P

Fig. 21: Identifying Security Horn Assembly Replacement Components
Courtesy of TOYOTA MOTOR SALES, U.S.A., INC.

REMOVAL

REMOVAL

1. **REMOVE SECURITY HORN ASSEMBLY**
    a. Remove the bolt.

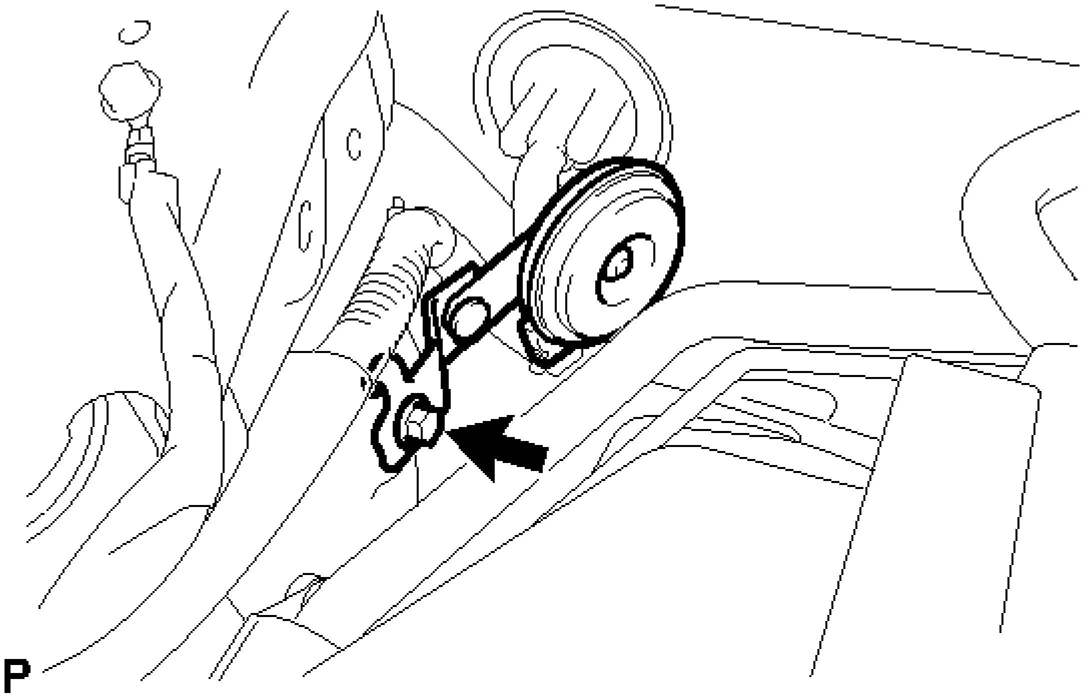

Fig. 22: Locating Security Horn Assembly Bolt
Courtesy of TOYOTA MOTOR SALES, U.S.A., INC.

b. Disconnect the connector and remove the security horn assembly.

INSPECTION

INSPECTION

1. **INSPECT SECURITY HORN ASSEMBLY**
    a. Check the operation of the horn.

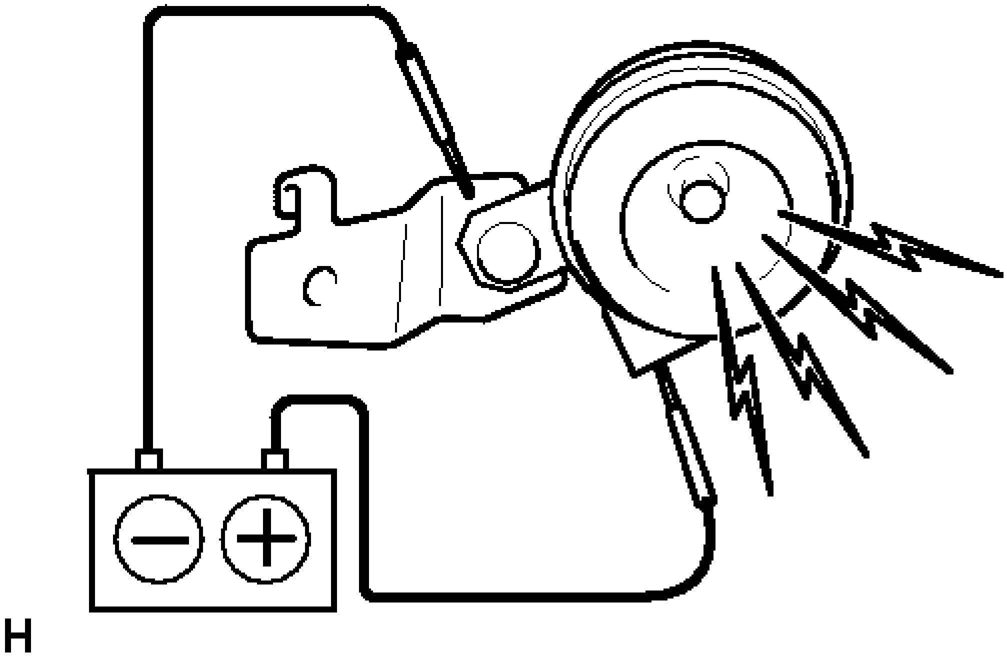

Fig. 23: Inspecting Security Horn Assembly
Courtesy of TOYOTA MOTOR SALES, U.S.A., INC.

OK

Measurement Condition	Specified Condition
Battery positive (+) --> Terminal 1	Horn sounds
Battery negative (-) --> Horn body	

If the result is not as specified, replace the security horn assembly.

INSTALLATION

INSTALLATION

1. **INSTALL SECURITY HORN ASSEMBLY**
   a. Connect the connector.
   b. Install the security horn assembly with the bolt.

TRANSPONDER KEY ECU

COMPONENTS

ILLUSTRATION

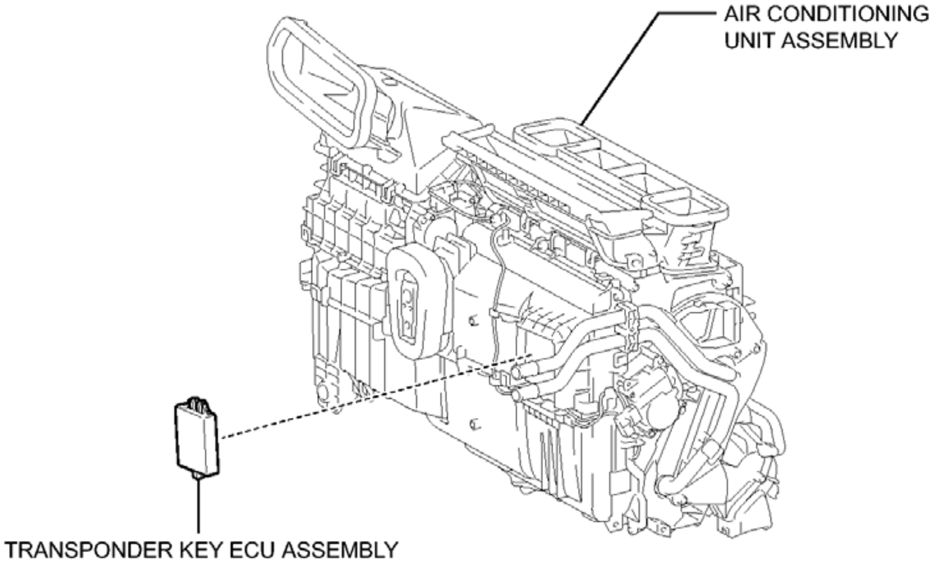
AIR CONDITIONING UNIT ASSEMBLY
TRANSPONDER KEY ECU ASSEMBLY

P

Fig. 24: Identifying Transponder Key ECU Replacement Components
Courtesy of TOYOTA MOTOR SALES, U.S.A., INC.

REMOVAL

REMOVAL

1. **REMOVE AIR CONDITIONING UNIT ASSEMBLY**

   Refer to **REMOVAL** .

2. **REMOVE TRANSPONDER KEY ECU ASSEMBLY**
   1. Disengage the claw and 2 guides, and remove the transponder key ECU assembly.

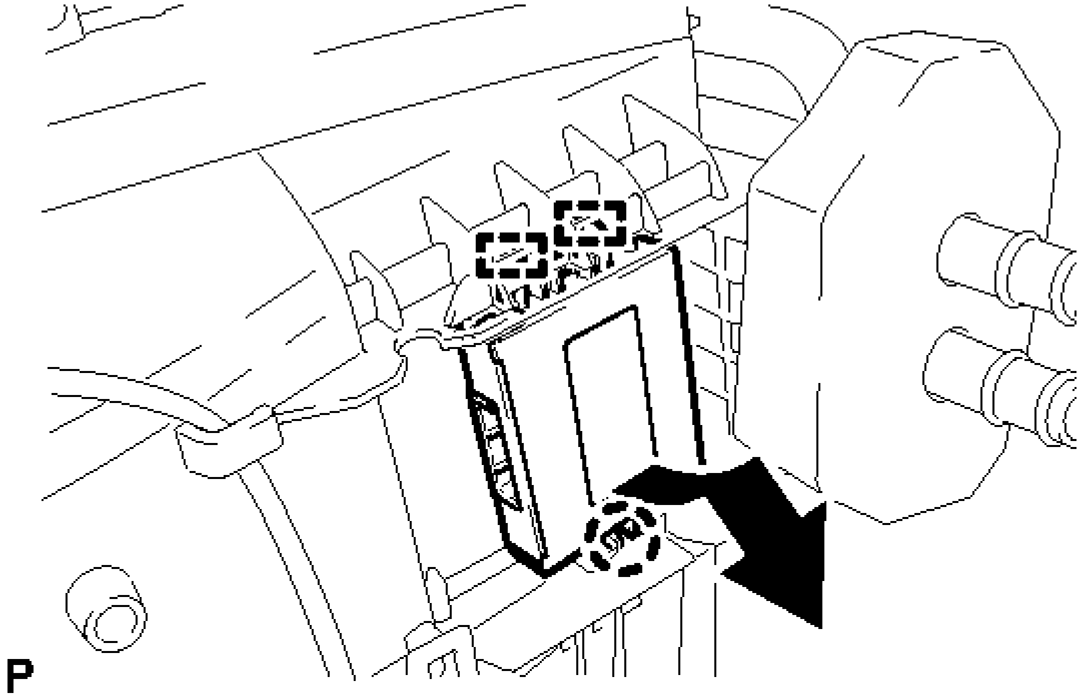

Fig. 25: Removing Transponder Key ECU Assembly
Courtesy of TOYOTA MOTOR SALES, U.S.A., INC.

INSTALLATION

INSTALLATION

1. **INSTALL TRANSPONDER KEY ECU ASSEMBLY**
   a. Engage the 2 guides and claw to install the transponder key ECU assembly.

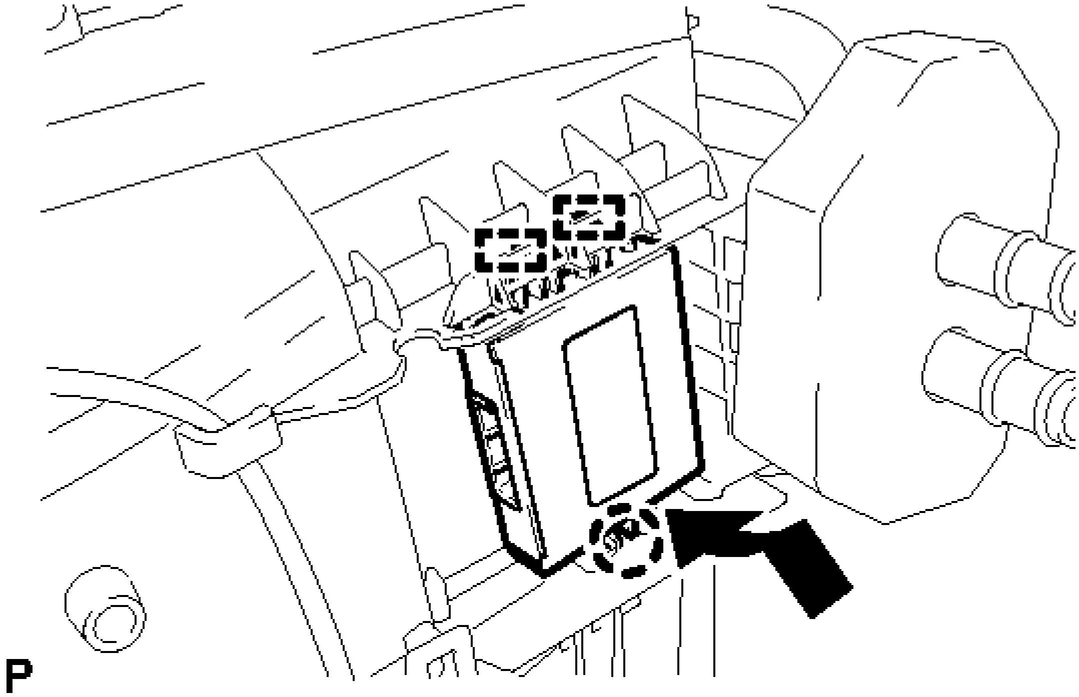

Fig. 26: Installing Transponder Key ECU Assembly
Courtesy of TOYOTA MOTOR SALES, U.S.A., INC.

2. **INSTALL AIR CONDITIONING UNIT ASSEMBLY**

   Refer to INSTALLATION .

3. **REGISTER KEY**

   NOTE: If the transponder key ECU assembly is replaced, refer to REGISTRATION .

CERTIFICATION ECU

COMPONENTS

ILLUSTRATION

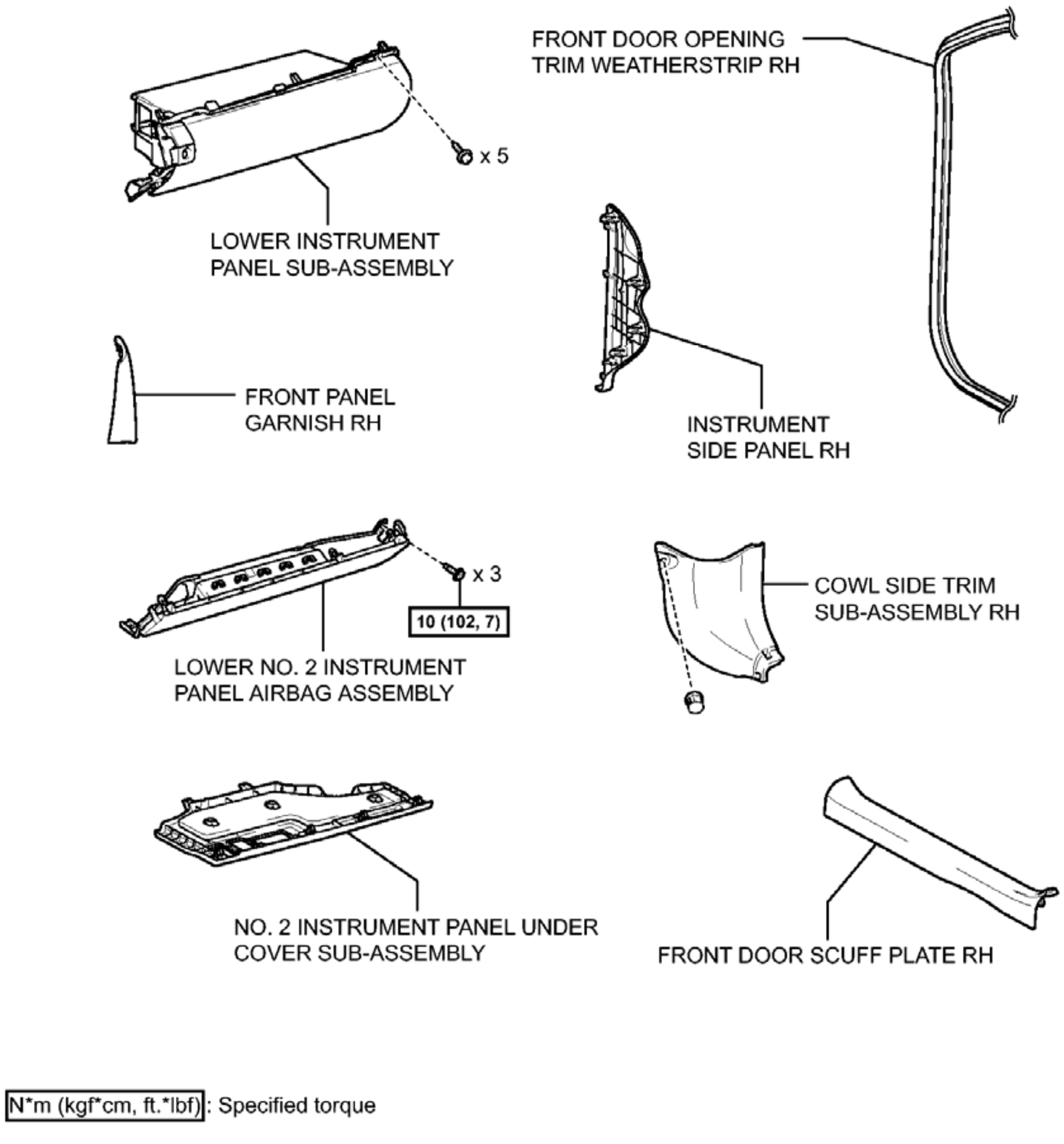
FRONT DOOR OPENING TRIM WEATHERSTRIP RH
x 5
LOWER INSTRUMENT PANEL SUB-ASSEMBLY
FRONT PANEL GARNISH RH
INSTRUMENT SIDE PANEL RH
x 3
10 (102, 7)
COWL SIDE TRIM SUB-ASSEMBLY RH
LOWER NO. 2 INSTRUMENT PANEL AIRBAG ASSEMBLY
NO. 2 INSTRUMENT PANEL UNDER COVER SUB-ASSEMBLY
FRONT DOOR SCUFF PLATE RH
N*m (kgf*cm, ft.*lbf): Specified torque
P

Fig. 27: Identifying Certification ECU Replacement Components With Torque Specifications (1 Of 2)
Courtesy of TOYOTA MOTOR SALES, U.S.A., INC.

ILLUSTRATION

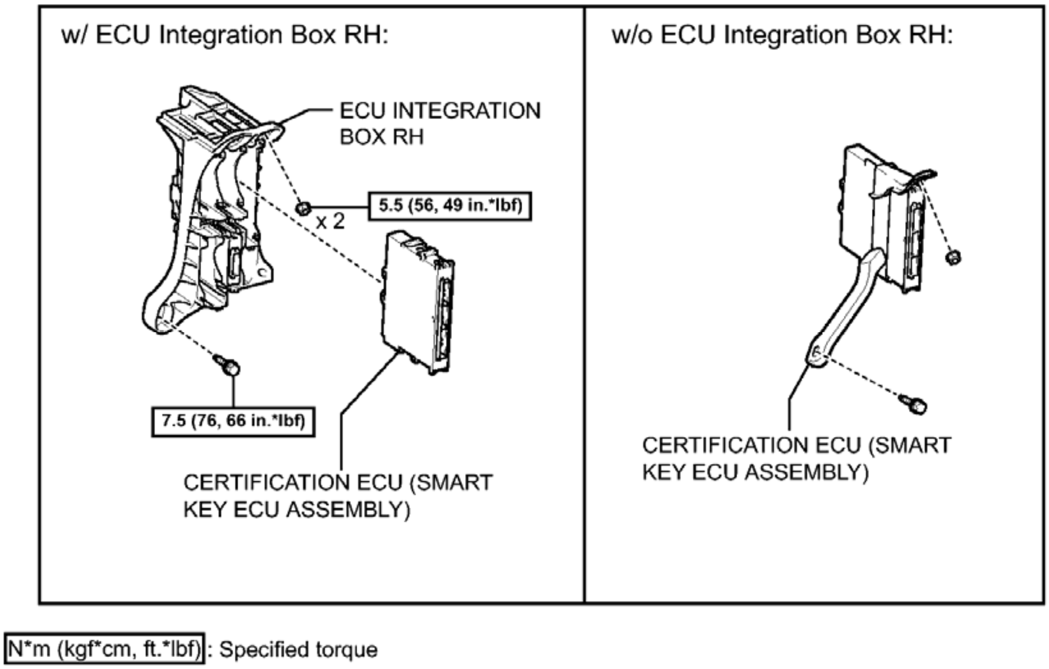
w/ ECU Integration Box RH:
ECU INTEGRATION BOX RH
5.5 (56, 49 in.*lbf)
x 2
7.5 (76, 66 in.*lbf)
CERTIFICATION ECU (SMART KEY ECU ASSEMBLY)
w/o ECU Integration Box RH:
CERTIFICATION ECU (SMART KEY ECU ASSEMBLY)
N*m (kgf*cm, ft.*lbf): Specified torque

P

Fig. 28: Identifying Certification ECU Replacement Components With Torque Specifications (2 Of 2)
Courtesy of TOYOTA MOTOR SALES, U.S.A., INC.

REMOVAL

REMOVAL

1. **PRECAUTION**

   NOTE: **After turning the ignition switch off, waiting time may be required before disconnecting the cable from the negative (-) battery terminal. Therefore, make sure to read the disconnecting the cable from the negative (-) battery terminal notice before proceeding with work. Refer to PRECAUTION .**

2. **DISCONNECT CABLE FROM NEGATIVE BATTERY TERMINAL**

   WARNING: **Wait at least 90 seconds after disconnecting the cable from the negative (-) battery terminal to disable the SRS system.**

   NOTE: **When disconnecting the cable, some systems need to be initialized after the cable is reconnected. Refer to INITIALIZATION .**

3. **REMOVE FRONT PANEL GARNISH RH** . Refer to **REMOVAL - Step 14** .
4. **REMOVE FRONT DOOR SCUFF PLATE RH**

HINT:

Use the same procedure for the RH side and LH side. Refer to **REMOVAL - Step 3** .

5. **REMOVE COWL SIDE TRIM SUB-ASSEMBLY RH**

   HINT:

   Use the same procedure for the RH side and LH side. Refer to **REMOVAL - Step 4** .

6. **DISCONNECT FRONT DOOR OPENING TRIM WEATHERSTRIP RH** . Refer to **REMOVAL - Step 34** .
7. **REMOVE INSTRUMENT SIDE PANEL RH** . Refer to **REMOVAL - Step 35** .
8. **REMOVE NO. 2 INSTRUMENT PANEL UNDER COVER SUB-ASSEMBLY** . Refer to **REMOVAL - Step 36** .
9. **REMOVE LOWER NO. 2 INSTRUMENT PANEL AIRBAG ASSEMBLY** . Refer to **REMOVAL - Step 8** .
10. **REMOVE LOWER INSTRUMENT PANEL SUB-ASSEMBLY** . Refer to **REMOVAL - Step 38** .
11. **REMOVE ECU INTEGRATION BOX RH (w/ ECU Integration Box RH)**
    a. Disconnect each connector and disengage the clamp.

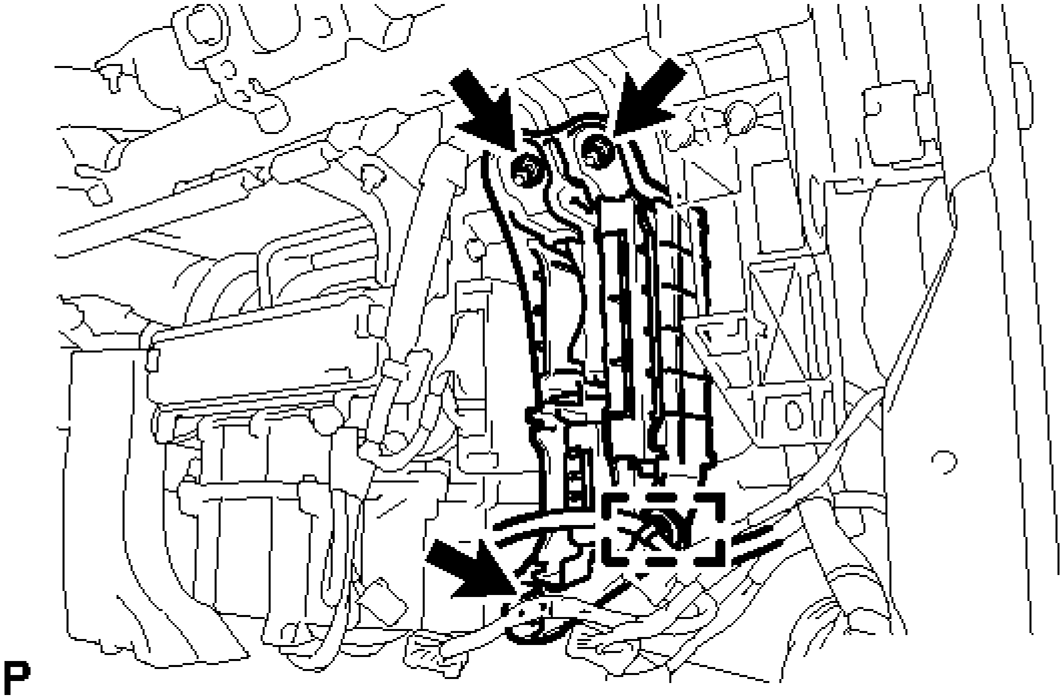

Fig. 29: Locating ECU Integration Box RH Fasteners
Courtesy of TOYOTA MOTOR SALES, U.S.A., INC.

    b. Remove the bolt, 2 nuts and the ECU integration box RH.

12. **REMOVE CERTIFICATION ECU (SMART KEY ECU ASSEMBLY)**

a. w/ ECU Integration Box RH:
    1. Disengage the 2 claws and remove the certification ECU (smart key ECU assembly).

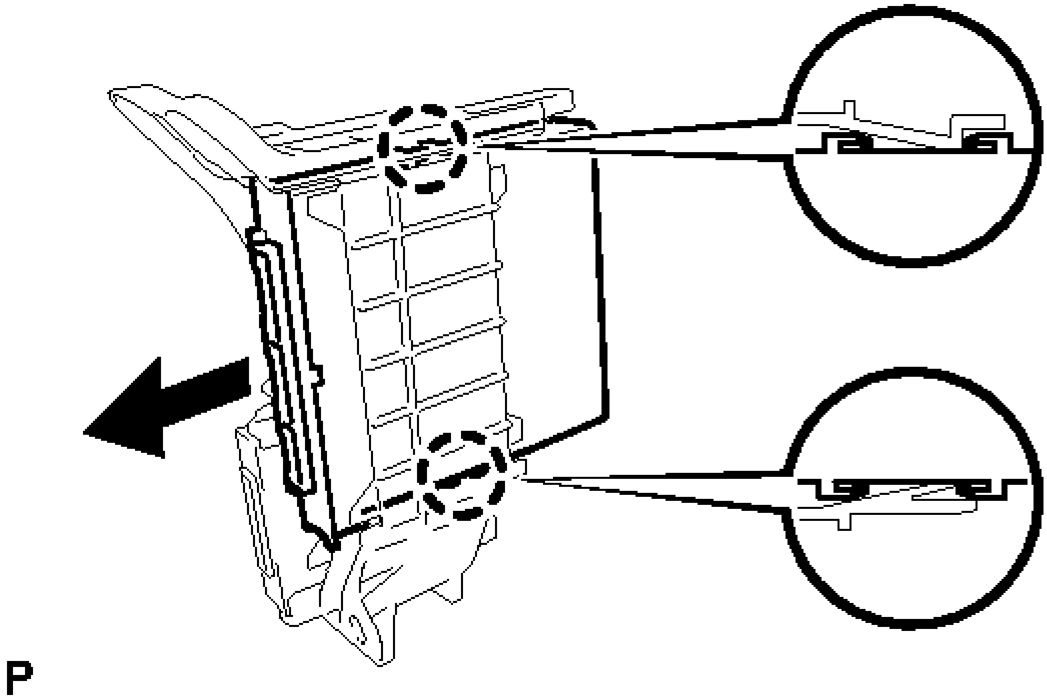

Fig. 30: Removing Certification ECU (Smart Key ECU Assembly)
Courtesy of TOYOTA MOTOR SALES, U.S.A., INC.

b. w/o ECU Integration Box RH:
    1. Disconnect each connector.
    2. Remove the bolt, nut and certification ECU (smart key ECU assembly).

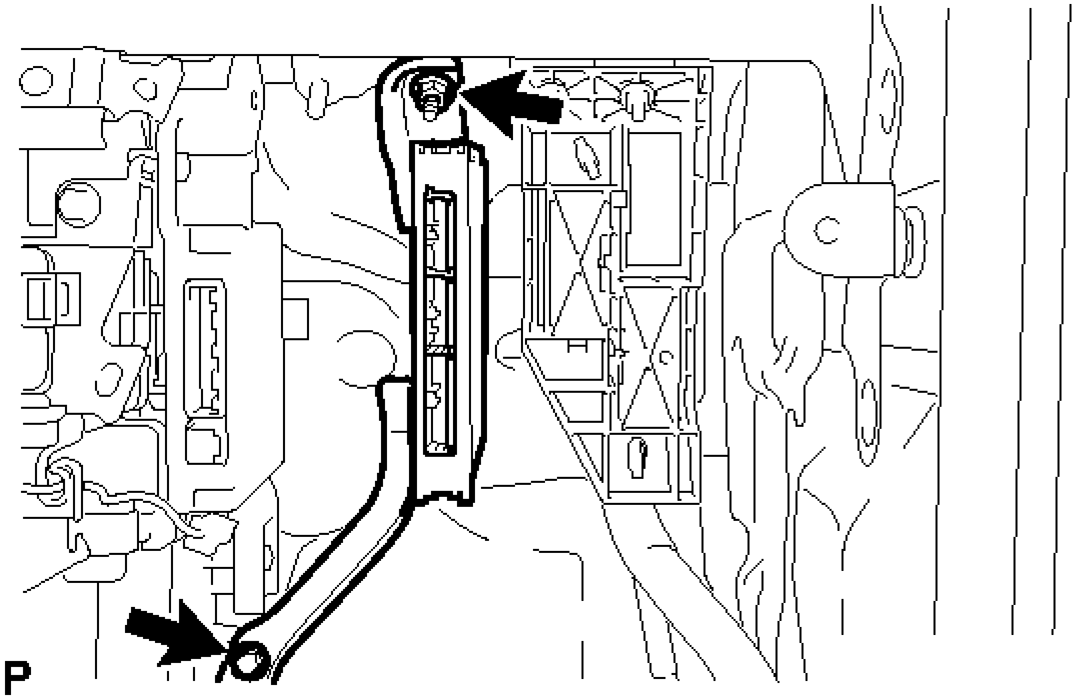

Fig. 31: Locating Certification ECU (Smart Key ECU Assembly) Fasteners
Courtesy of TOYOTA MOTOR SALES, U.S.A., INC.

INSTALLATION

INSTALLATION

1. **INSTALL CERTIFICATION ECU (SMART KEY ECU ASSEMBLY)**
    a. w/ ECU Integration Box RH:
        1. Engage the 2 claws and install the certification ECU (smart key ECU assembly).
    b. w/o ECU Integration Box RH:
        1. Install the certification ECU (smart key ECU assembly) with the nut and bolt.
        2. Connect each connector.
2. **INSTALL ECU INTEGRATION BOX RH (w/ ECU Integration Box RH)**
    a. Install the ECU integration box RH with the 2 nuts and bolt.

        Nut

        Torque: 5.5 N*m (56 kgf*cm, 49 in.*lbf)

        Bolt

        Torque: 7.5 N*m (76 kgf*cm, 66 in.*lbf)

    b. Engage the clamp.

   c. Connect each connector.

3. **INSTALL LOWER INSTRUMENT PANEL SUB-ASSEMBLY** . Refer to **INSTALLATION - Step 15** .
4. **INSTALL LOWER NO. 2 INSTRUMENT PANEL AIRBAG ASSEMBLY** . Refer to **INSTALLATION - Step 1** .
5. **INSTALL NO. 2 INSTRUMENT PANEL UNDER COVER SUB-ASSEMBLY** . Refer to **INSTALLATION - Step 17** .
6. **INSTALL INSTRUMENT SIDE PANEL RH** . Refer to **INSTALLATION - Step 18** .
7. **INSTALL FRONT DOOR OPENING TRIM WEATHERSTRIP RH** . Refer to **INSTALLATION - Step 46** .
8. **INSTALL COWL SIDE TRIM SUB-ASSEMBLY RH**

   HINT:

   Use the same procedure for the RH side and LH side. Refer to **INSTALLATION - Step 43** .

9. **INSTALL FRONT DOOR SCUFF PLATE RH**

   HINT:

   Use the same procedure for the RH side and LH side. Refer to **INSTALLATION - Step 44** .

10. **INSTALL FRONT PANEL GARNISH RH** . Refer to **INSTALLATION - Step 39** .
11. **CONNECT CABLE TO NEGATIVE BATTERY TERMINAL**

    NOTE: **When disconnecting the cable, some systems need to be initialized after the cable is reconnected. Refer to INITIALIZATION .**

12. **REGISTER KEY**

    NOTE: **If the certification ECU (smart key ECU assembly) is replaced, refer to REGISTRATION .**

13. **INSPECT SRS WARNING LIGHT**
    - For Built-in Type Yaw Rate Sensor: Refer to **DIAGNOSIS SYSTEM**
    - For Separate Type Yaw Rate Sensor: Refer to **DIAGNOSIS SYSTEM**

REMOTE ENGINE STARTER ECU

COMPONENTS

ILLUSTRATION

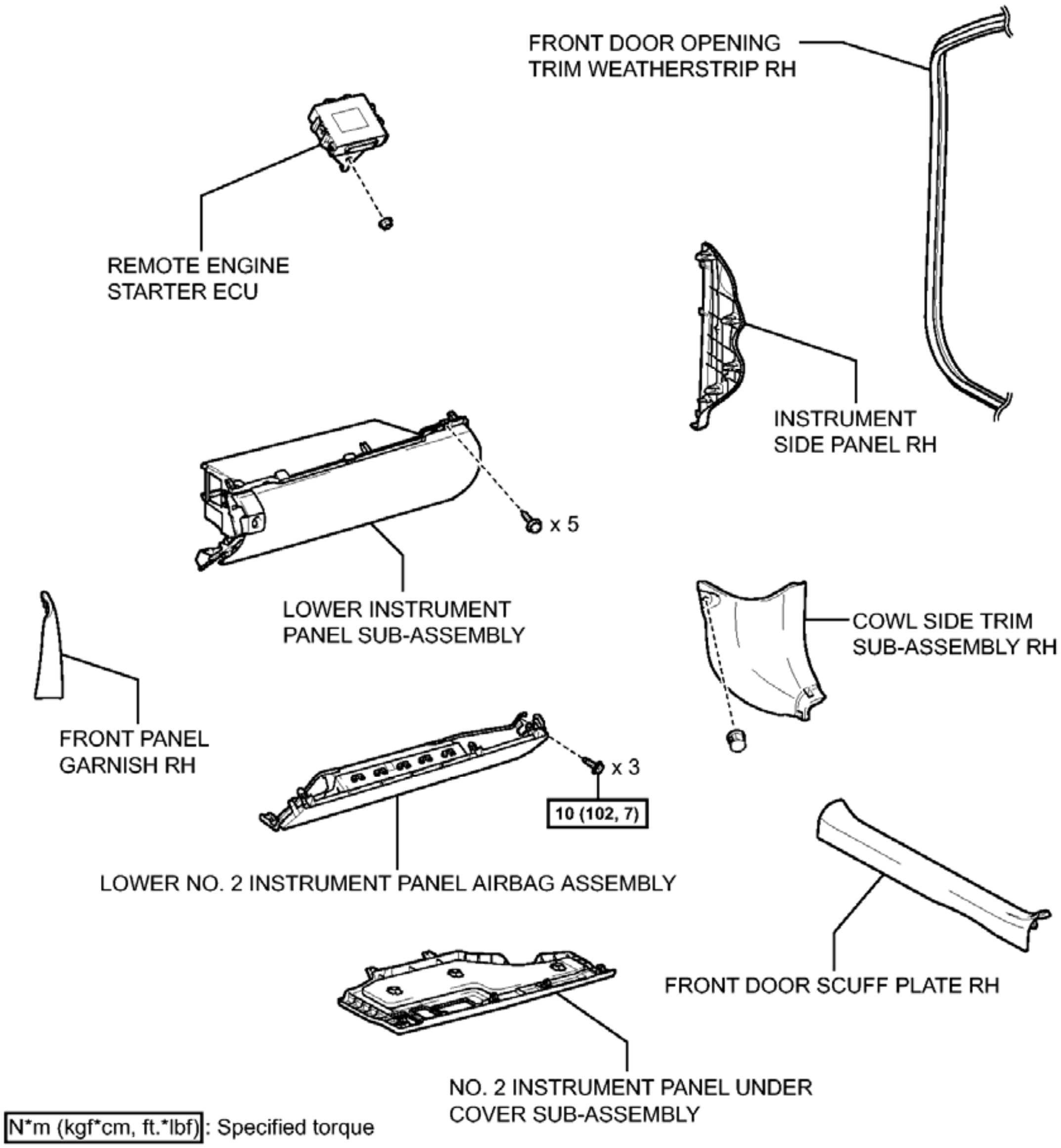
FRONT DOOR OPENING TRIM WEATHERSTRIP RH
REMOTE ENGINE STARTER ECU
INSTRUMENT SIDE PANEL RH
x 5
LOWER INSTRUMENT PANEL SUB-ASSEMBLY
COWL SIDE TRIM SUB-ASSEMBLY RH
FRONT PANEL GARNISH RH
x 3
10 (102, 7)
LOWER NO. 2 INSTRUMENT PANEL AIRBAG ASSEMBLY
FRONT DOOR SCUFF PLATE RH
NO. 2 INSTRUMENT PANEL UNDER COVER SUB-ASSEMBLY
N*m (kgf*cm, ft.*lbf): Specified torque

P

Fig. 32: Identifying Remote Engine Starter ECU Replacement Components With Torque Specifications
Courtesy of TOYOTA MOTOR SALES, U.S.A., INC.

REMOVAL

REMOVAL

1. **PRECAUTION**

NOTE: **After turning the ignition switch off, waiting time may be required before disconnecting the cable from the negative (-) battery terminal. Therefore, make sure to read the disconnecting the cable from the negative (-) battery terminal notice before proceeding with work. Refer to PRECAUTION .**

2. **DISCONNECT CABLE FROM NEGATIVE BATTERY TERMINAL**

   WARNING: **Wait at least 90 seconds after disconnecting the cable from the negative (-) battery terminal to disable the SRS system.**

   NOTE: **When disconnecting the cable, some systems need to be initialized after the cable is reconnected. Refer to INITIALIZATION .**

3. **REMOVE FRONT PANEL GARNISH RH** . Refer to **REMOVAL - Step 14** .
4. **REMOVE FRONT DOOR SCUFF PLATE RH**

   HINT:

   Use the same procedure for the RH side and LH side. Refer to **REMOVAL - Step 3** .

5. **REMOVE COWL SIDE TRIM SUB-ASSEMBLY RH**

   HINT:

   Use the same procedure for the RH side and LH side. Refer to **REMOVAL - Step 4** .

6. **DISCONNECT FRONT DOOR OPENING TRIM WEATHERSTRIP RH** . Refer to **REMOVAL - Step 34** .
7. **REMOVE INSTRUMENT SIDE PANEL RH** . Refer to **REMOVAL - Step 35** .
8. **REMOVE NO. 2 INSTRUMENT PANEL UNDER COVER SUB-ASSEMBLY** . Refer to **REMOVAL - Step 36** .
9. **REMOVE LOWER NO. 2 INSTRUMENT PANEL AIRBAG ASSEMBLY** . Refer to **REMOVAL - Step 8** .
10. **REMOVE LOWER INSTRUMENT PANEL SUB-ASSEMBLY** . Refer to **REMOVAL - Step 38** .
11. **REMOVE REMOTE ENGINE STARTER ECU**
    1. Disconnect the connector.
    2. Remove the nut and remote engine starter ECU.

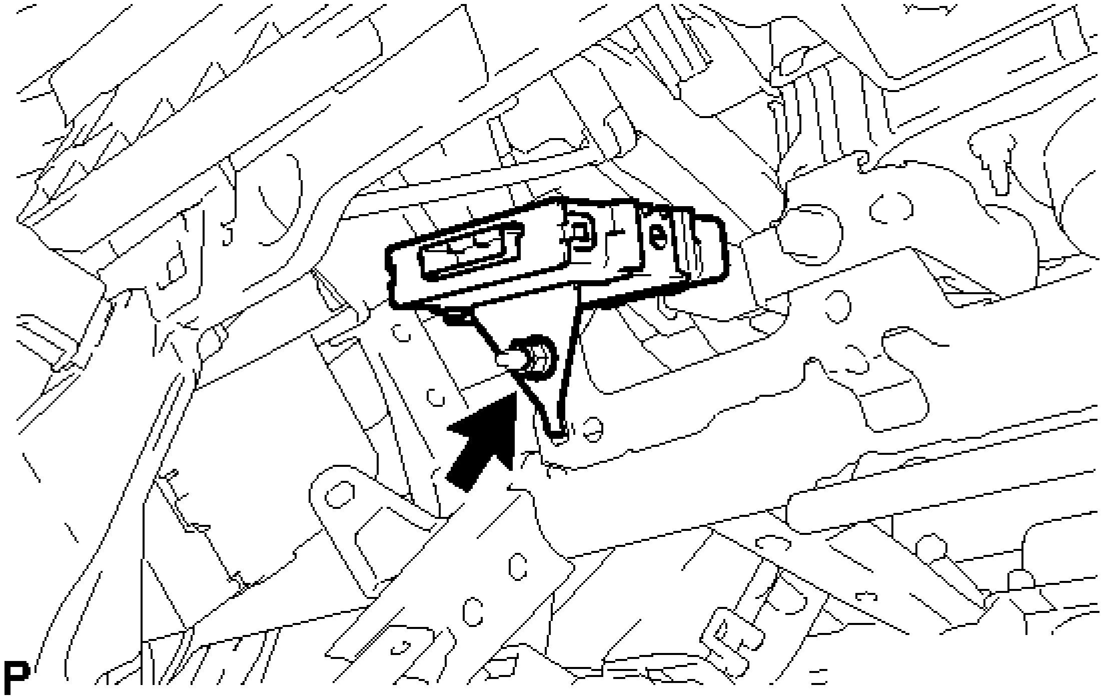

Fig. 33: Locating Remote Engine Starter ECU Fastener
Courtesy of TOYOTA MOTOR SALES, U.S.A., INC.

INSTALLATION

INSTALLATION

1. **INSTALL REMOTE ENGINE STARTER ECU**
    a. Install the remote engine starter ECU with the nut.
    b. Connect the connector.
2. **INSTALL LOWER INSTRUMENT PANEL SUB-ASSEMBLY** . Refer to **INSTALLATION - Step 15** .
3. **INSTALL LOWER NO. 2 INSTRUMENT PANEL AIRBAG ASSEMBLY** . Refer to **INSTALLATION - Step 1** .
4. **INSTALL NO. 2 INSTRUMENT PANEL UNDER COVER SUB-ASSEMBLY** . Refer to **INSTALLATION - Step 17** .
5. **INSTALL INSTRUMENT SIDE PANEL RH** . Refer to **INSTALLATION - Step 18** .
6. **INSTALL FRONT DOOR OPENING TRIM WEATHERSTRIP RH** . Refer to **INSTALLATION - Step 46** .
7. **INSTALL COWL SIDE TRIM SUB-ASSEMBLY RH**

    HINT:

    Use the same procedure for the RH side and LH side. Refer to **INSTALLATION - Step 43** .

8. **INSTALL FRONT DOOR SCUFF PLATE RH**

   HINT:

   Use the same procedure for the RH side and LH side. Refer to **INSTALLATION - Step 44** .

9. **INSTALL FRONT PANEL GARNISH RH** . Refer to **INSTALLATION - Step 39** .
10. **CONNECT CABLE TO NEGATIVE BATTERY TERMINAL**

    NOTE: **When disconnecting the cable, some systems need to be initialized after the cable is reconnected. Refer to INITIALIZATION .**

11. **INSPECT SRS WARNING LIGHT**
    - For Built-in Type Yaw Rate Sensor: Refer to **DIAGNOSIS SYSTEM**
    - For Separate Type Yaw Rate Sensor: Refer to **DIAGNOSIS SYSTEM**
12. **REGISTRATION**

    NOTE: **If the remote engine starter ECU is replaced, refer to REGISTRATION .**

WHEEL ALIGNMENT SPECIFICATIONS

4RUNNER

4RUNNER GRN280L-GKAGKA SR5

Measurement	Minimum	Preferred	Maximum
Left Front Caster (°)	2.92	3.67	4.42
Right Front Caster (°)	2.92	3.67	4.42
Left Front Camber (°)	-1.33	-0.58	0.17
Right Front Camber (°)	-1.33	-0.58	0.17
Front Toe (°)	-0.06	0.1	0.26
Left SAI (°)	11.93	12.68	13.43
Right SAI (°)	11.93	12.68	13.43
Left Rear Camber (°)	0	0	0
Right Rear Camber (°)	0	0	0
Rear Toe (°)	0	0	0
Thrust Angle	0	0	0
Left Toe Out, Inward (°)	0	0	0
Right Toe Out, Inward (°)	0	0	0
Left Toe Out, Outward (°)	0	0	0
Right Toe Out, Outward (°)	0	29.82	31.32
Left Max Turn, Inward (°)	32.82	29.82	31.32
Right Max Turn, Inward (°)	32.82	29.57	29.57
Left Max Turn, Outward (°)	29.57	29.57	29.57
Right Max Turn, Outward (°)	29.57	-	-

4RUNNER GRN280L-GKAGKA S-Runner

Measurement	Minimum	Preferred	Maximum
Left Front Caster (°)	2.92	3.67	4.42
Right Front Caster (°)	2.92	3.67	4.42
Left Front Camber (°)	-1.37	-0.62	0.13
Right Front Camber (°)	-1.37	-0.62	0.13
Front Toe (°)	-0.08	0.08	0.24
Left SAI (°)	11.95	12.7	13.45
Right SAI (°)	11.95	12.7	13.45
Left Rear Camber (°)	0	0	0
Right Rear Camber (°)	0	0	0
Rear Toe (°)	0	0	0

Thrust Angle	0	0	0
Left Toe Out, Inward (°)	0	0	0
Right Toe Out, Inward (°)	0	0	0
Left Toe Out, Outward (°)	0	0	0
Right Toe Out, Outward (°)	0	29.8	31.3
Left Max Turn, Inward (°)	32.8	29.8	31.3
Right Max Turn, Inward (°)	32.8	29.55	29.55
Left Max Turn, Outward (°)	29.55	29.55	29.55
Right Max Turn, Outward (°)	29.55	-	-

4RUNNER GRN280L-GKAGKA X-Runner

Measurement	Minimum	Preferred	Maximum
Left Front Caster (°)	3.08	3.83	4.58
Right Front Caster (°)	3.08	3.83	4.58
Left Front Camber (°)	-1.38	-0.63	0.12
Right Front Camber (°)	-1.38	-0.63	0.12
Front Toe (°)	-0.08	0.08	0.24
Left SAI (°)	11.98	12.73	13.48
Right SAI (°)	11.98	12.73	13.48
Left Rear Camber (°)	0	0	0
Right Rear Camber (°)	0	0	0
Rear Toe (°)	0	0	0
Thrust Angle	0	0	0
Left Toe Out, Inward (°)	0	0	0
Right Toe Out, Inward (°)	0	0	0
Left Toe Out, Outward (°)	0	0	0
Right Toe Out, Outward (°)	0	29.78	31.28
Left Max Turn, Inward (°)	32.78	29.78	31.28
Right Max Turn, Inward (°)	32.78	29.52	29.52
Left Max Turn, Outward (°)	29.52	29.52	29.52
Right Max Turn, Outward (°)	29.52	-	-

4RUNNER GRN285L-GKAGKA SR5

Measurement	Minimum	Preferred	Maximum
Left Front Caster (°)	2.47	3.22	3.97
Right Front Caster (°)	2.47	3.22	3.97
Left Front Camber (°)	-0.75	0	0.75
Right Front Camber (°)	-0.75	0	0.75
Front Toe (°)	-0.06	0.1	0.26
Left SAI (°)	11.42	12.17	12.92
Right SAI (°)	11.42	12.17	12.92

Left Rear Camber (°)	0	0	0
Right Rear Camber (°)	0	0	0
Rear Toe (°)	0	0	0
Thrust Angle	0	0	0
Left Toe Out, Inward (°)	0	0	0
Right Toe Out, Inward (°)	0	0	0
Left Toe Out, Outward (°)	0	0	0
Right Toe Out, Outward (°)	0	30.35	31.85
Left Max Turn, Inward (°)	33.35	30.35	31.85
Right Max Turn, Inward (°)	33.35	29.48	29.48
Left Max Turn, Outward (°)	29.48	29.48	29.48
Right Max Turn, Outward (°)	29.48	-	-

4RUNNER GRN285L-GKAGKA S-Runner

Measurement	Minimum	Preferred	Maximum
Left Front Caster (°)	2.5	3.25	4
Right Front Caster (°)	2.5	3.25	4
Left Front Camber (°)	-0.77	-0.02	0.73
Right Front Camber (°)	-0.77	-0.02	0.73
Front Toe (°)	-0.08	0.08	0.24
Left SAI (°)	11.43	12.18	12.93
Right SAI (°)	11.43	12.18	12.93
Left Rear Camber (°)	0	0	0
Right Rear Camber (°)	0	0	0
Rear Toe (°)	0	0	0
Thrust Angle	0	0	0
Left Toe Out, Inward (°)	0	0	0
Right Toe Out, Inward (°)	0	0	0
Left Toe Out, Outward (°)	0	0	0
Right Toe Out, Outward (°)	0	30.33	31.83
Left Max Turn, Inward (°)	33.33	30.33	31.83
Right Max Turn, Inward (°)	33.33	29.47	29.47
Left Max Turn, Outward (°)	29.47	29.47	29.47
Right Max Turn, Outward (°)	29.47	-	-

4RUNNER GRN285L-GKAGKA Trail Edition

Measurement	Minimum	Preferred	Maximum
Left Front Caster (°)	2.52	3.27	4.02
Right Front Caster (°)	2.52	3.27	4.02
Left Front Camber (°)	-0.8	-0.05	0.7
Right Front Camber (°)	-0.8	-0.05	0.7

Front Toe (°)	-0.08	0.08	0.24
Left SAI (°)	11.45	12.2	12.95
Right SAI (°)	11.45	12.2	12.95
Left Rear Camber (°)	0	0	0
Right Rear Camber (°)	0	0	0
Rear Toe (°)	0	0	0
Thrust Angle	0	0	0
Left Toe Out, Inward (°)	0	0	0
Right Toe Out, Inward (°)	0	0	0
Left Toe Out, Outward (°)	0	0	0
Right Toe Out, Outward (°)	0	30.33	31.83
Left Max Turn, Inward (°)	33.33	30.33	31.83
Right Max Turn, Inward (°)	33.33	29.45	29.45
Left Max Turn, Outward (°)	29.45	29.45	29.45
Right Max Turn, Outward (°)	29.45	-	-

4RUNNER GRN285L-GKAGKA Trail Edition (w/ KDSS)

Measurement	Minimum	Preferred	Maximum
Left Front Caster (°)	2.6	3.35	4.1
Right Front Caster (°)	2.6	3.35	4.1
Left Front Camber (°)	-0.87	-0.12	0.63
Right Front Camber (°)	-0.87	-0.12	0.63
Front Toe (°)	-0.11	0.05	0.21
Left SAI (°)	11.52	12.27	13.02
Right SAI (°)	11.52	12.27	13.02
Left Rear Camber (°)	0	0	0
Right Rear Camber (°)	0	0	0
Rear Toe (°)	0	0	0
Thrust Angle	0	0	0
Left Toe Out, Inward (°)	0	0	0
Right Toe Out, Inward (°)	0	0	0
Left Toe Out, Outward (°)	0	0	0
Right Toe Out, Outward (°)	0	30.28	31.78
Left Max Turn, Inward (°)	33.28	30.28	31.78
Right Max Turn, Inward (°)	33.28	29.38	29.38
Left Max Turn, Outward (°)	29.38	29.38	29.38
Right Max Turn, Outward (°)	29.38	-	-

4RUNNER GRN285L-GKAGKA X-Runner

Measurement	Minimum	Preferred	Maximum
Left Front Caster (°)	2.62	3.37	4.12

Right Front Caster (°)	2.62	3.37	4.12
Left Front Camber (°)	-0.85	-0.1	0.65
Right Front Camber (°)	-0.85	-0.1	0.65
Front Toe (°)	-0.09	0.07	0.23
Left SAI (°)	11.5	12.25	13
Right SAI (°)	11.5	12.25	13
Left Rear Camber (°)	0	0	0
Right Rear Camber (°)	0	0	0
Rear Toe (°)	0	0	0
Thrust Angle	0	0	0
Left Toe Out, Inward (°)	0	0	0
Right Toe Out, Inward (°)	0	0	0
Left Toe Out, Outward (°)	0	0	0
Right Toe Out, Outward (°)	0	30.3	31.8
Left Max Turn, Inward (°)	33.3	30.3	31.8
Right Max Turn, Inward (°)	33.3	29.4	29.4
Left Max Turn, Outward (°)	29.4	29.4	29.4
Right Max Turn, Outward (°)	29.4	-	-

AVALON

AVALON Limited

Measurement	Minimum	Preferred	Maximum
Left Front Caster (°)	2.05	2.8	3.55
Right Front Caster (°)	2.05	2.8	3.55
Left Front Camber (°)	-1.47	-0.72	0.03
Right Front Camber (°)	-1.47	-0.72	0.03
Front Toe (°)	-0.1	0	0.1
Left SAI (°)	11.58	12.33	13.08
Right SAI (°)	11.58	12.33	13.08
Left Rear Camber (°)	-2	-1.25	-0.5
Right Rear Camber (°)	-2	-1.25	-0.5
Rear Toe (°)	0.2	0.4	0.6
Thrust Angle	0	0	0
Left Toe Out, Inward (°)	0	0	0
Right Toe Out, Inward (°)	0	0	0
Left Toe Out, Outward (°)	0	0	0
Right Toe Out, Outward (°)	0	36.45	38.45
Left Max Turn, Inward (°)	40.45	36.45	38.45
Right Max Turn, Inward (°)	40.45	33.67	33.67
Left Max Turn, Outward (°)	33.67	33.67	33.67

Right Max Turn, Outward (°)	33.67	-	-

AVALON XLS

Measurement	Minimum	Preferred	Maximum
Left Front Caster (°)	1.95	2.7	3.45
Right Front Caster (°)	1.95	2.7	3.45
Left Front Camber (°)	-1.47	-0.72	0.03
Right Front Camber (°)	-1.47	-0.72	0.03
Front Toe (°)	-0.1	0	0.1
Left SAI (°)	11.58	12.33	13.08
Right SAI (°)	11.58	12.33	13.08
Left Rear Camber (°)	-1.97	-1.22	-0.47
Right Rear Camber (°)	-1.97	-1.22	-0.47
Rear Toe (°)	0.2	0.4	0.6
Thrust Angle	0	0	0
Left Toe Out, Inward (°)	0	0	0
Right Toe Out, Inward (°)	0	0	0
Left Toe Out, Outward (°)	0	0	0
Right Toe Out, Outward (°)	0	36.48	38.48
Left Max Turn, Inward (°)	40.48	36.48	38.48
Right Max Turn, Inward (°)	40.48	33.72	33.72
Left Max Turn, Outward (°)	33.72	33.72	33.72
Right Max Turn, Outward (°)	33.72	-	-

CAMRY

CAMRY 2AR-FE 205/65 R16

Measurement	Minimum	Preferred	Maximum
Left Front Caster (°)	2.17	2.92	3.67
Right Front Caster (°)	2.17	2.92	3.67
Left Front Camber (°)	-1.42	-0.67	0.08
Right Front Camber (°)	-1.42	-0.67	0.08
Front Toe (°)	-0.17	0	0.17
Left SAI (°)	12.25	12.25	12.25
Right SAI (°)	12.25	12.25	12.25
Left Rear Camber (°)	-1.95	-1.2	-0.45
Right Rear Camber (°)	-1.95	-1.2	-0.45
Rear Toe (°)	0.04	0.21	0.38
Thrust Angle	0	0	0
Left Toe Out, Inward (°)	0	0	0
Right Toe Out, Inward (°)	0	0	0
Left Toe Out, Outward (°)	0	0	0

Right Toe Out, Outward (°)	0	35.25	37.25
Left Max Turn, Inward (°)	39.25	35.25	37.25
Right Max Turn, Inward (°)	39.25	30.83	32.83
Left Max Turn, Outward (°)	34.83	30.83	32.83
Right Max Turn, Outward (°)	34.83	-	-

CAMRY 2AR-FE 215/55 R17 ASV50L-CETGKA and ASV50L-SETGKA

Measurement	Minimum	Preferred	Maximum
Left Front Caster (°)	2.17	2.92	3.67
Right Front Caster (°)	2.17	2.92	3.67
Left Front Camber (°)	-1.42	-0.67	0.08
Right Front Camber (°)	-1.42	-0.67	0.08
Front Toe (°)	-0.17	0	0.17
Left SAI (°)	12.25	12.25	12.25
Right SAI (°)	12.25	12.25	12.25
Left Rear Camber (°)	-1.98	-1.23	-0.48
Right Rear Camber (°)	-1.98	-1.23	-0.48
Rear Toe (°)	0.04	0.21	0.38
Thrust Angle	0	0	0
Left Toe Out, Inward (°)	0	0	0
Right Toe Out, Inward (°)	0	0	0
Left Toe Out, Outward (°)	0	0	0
Right Toe Out, Outward (°)	0	35.25	37.25
Left Max Turn, Inward (°)	39.25	35.25	37.25
Right Max Turn, Inward (°)	39.25	30.83	32.83
Left Max Turn, Outward (°)	34.83	30.83	32.83
Right Max Turn, Outward (°)	34.83	-	-

CAMRY 2AR-FE 215/55 R17 ASV50L-CETNKA and ASV50L-SETNKA

Measurement	Minimum	Preferred	Maximum
Left Front Caster (°)	2.17	2.92	3.67
Right Front Caster (°)	2.17	2.92	3.67
Left Front Camber (°)	-1.42	-0.67	0.08
Right Front Camber (°)	-1.42	-0.67	0.08
Front Toe (°)	-0.17	0	0.17
Left SAI (°)	12.25	12.25	12.25
Right SAI (°)	12.25	12.25	12.25
Left Rear Camber (°)	-1.93	-1.18	-0.43
Right Rear Camber (°)	-1.93	-1.18	-0.43
Rear Toe (°)	0.04	0.21	0.38
Thrust Angle	0	0	0

Left Toe Out, Inward (°)	0	0	0
Right Toe Out, Inward (°)	0	0	0
Left Toe Out, Outward (°)	0	0	0
Right Toe Out, Outward (°)	0	35.33	37.33
Left Max Turn, Inward (°)	39.33	35.33	37.33
Right Max Turn, Inward (°)	39.33	30.83	32.83
Left Max Turn, Outward (°)	34.83	30.83	32.83
Right Max Turn, Outward (°)	34.83	-	-

CAMRY 2AR-FE 215/55 R17 ASV50L-CETSKA

Measurement	**Minimum**	**Preferred**	**Maximum**
Left Front Caster (°)	2.17	2.92	3.67
Right Front Caster (°)	2.17	2.92	3.67
Left Front Camber (°)	-1.42	-0.67	0.08
Right Front Camber (°)	-1.42	-0.67	0.08
Front Toe (°)	-0.17	0	0.17
Left SAI (°)	12.25	12.25	12.25
Right SAI (°)	12.25	12.25	12.25
Left Rear Camber (°)	-1.95	-1.2	-0.45
Right Rear Camber (°)	-1.95	-1.2	-0.45
Rear Toe (°)	0.04	0.21	0.38
Thrust Angle	0	0	0
Left Toe Out, Inward (°)	0	0	0
Right Toe Out, Inward (°)	0	0	0
Left Toe Out, Outward (°)	0	0	0
Right Toe Out, Outward (°)	0	35.25	37.25
Left Max Turn, Inward (°)	39.25	35.25	37.25
Right Max Turn, Inward (°)	39.25	30.83	32.83
Left Max Turn, Outward (°)	34.83	30.83	32.83
Right Max Turn, Outward (°)	34.83	-	-

CAMRY 2AR-FE 225/45 R18

Measurement	**Minimum**	**Preferred**	**Maximum**
Left Front Caster (°)	2.17	2.92	3.67
Right Front Caster (°)	2.17	2.92	3.67
Left Front Camber (°)	-1.42	-0.67	0.08
Right Front Camber (°)	-1.42	-0.67	0.08
Front Toe (°)	-0.17	0	0.17
Left SAI (°)	12.25	12.25	12.25
Right SAI (°)	12.25	12.25	12.25
Left Rear Camber (°)	-1.95	-1.2	-0.45

Right Rear Camber (°)	-1.95	-1.2	-0.45
Rear Toe (°)	0.04	0.21	0.38
Thrust Angle	0	0	0
Left Toe Out, Inward (°)	0	0	0
Right Toe Out, Inward (°)	0	0	0
Left Toe Out, Outward (°)	0	0	0
Right Toe Out, Outward (°)	0	35.25	37.25
Left Max Turn, Inward (°)	39.25	35.25	37.25
Right Max Turn, Inward (°)	39.25	30.83	32.83
Left Max Turn, Outward (°)	34.83	30.83	32.83
Right Max Turn, Outward (°)	34.83	-	-

CAMRY 2GR-FE 215/55 R17

Measurement	**Minimum**	**Preferred**	**Maximum**
Left Front Caster (°)	2.25	3	3.75
Right Front Caster (°)	2.25	3	3.75
Left Front Camber (°)	-1.42	-0.67	0.08
Right Front Camber (°)	-1.42	-0.67	0.08
Front Toe (°)	-0.17	0	0.17
Left SAI (°)	12.25	12.25	12.25
Right SAI (°)	12.25	12.25	12.25
Left Rear Camber (°)	-2.02	-1.27	-0.52
Right Rear Camber (°)	-2.02	-1.27	-0.52
Rear Toe (°)	0.04	0.21	0.38
Thrust Angle	0	0	0
Left Toe Out, Inward (°)	0	0	0
Right Toe Out, Inward (°)	0	0	0
Left Toe Out, Outward (°)	0	0	0
Right Toe Out, Outward (°)	0	35.17	37.17
Left Max Turn, Inward (°)	39.17	35.17	37.17
Right Max Turn, Inward (°)	39.17	30.83	32.83
Left Max Turn, Outward (°)	34.83	30.83	32.83
Right Max Turn, Outward (°)	34.83	-	-

CAMRY 2GR-FE 225/45 R18

Measurement	**Minimum**	**Preferred**	**Maximum**
Left Front Caster (°)	2.25	3	3.75
Right Front Caster (°)	2.25	3	3.75
Left Front Camber (°)	-1.42	-0.67	0.08
Right Front Camber (°)	-1.42	-0.67	0.08
Front Toe (°)	-0.17	0	0.17

Left SAI (°)	12.25	12.25	12.25
Right SAI (°)	12.25	12.25	12.25
Left Rear Camber (°)	-1.98	-1.23	-0.48
Right Rear Camber (°)	-1.98	-1.23	-0.48
Rear Toe (°)	0.04	0.21	0.38
Thrust Angle	0	0	0
Left Toe Out, Inward (°)	0	0	0
Right Toe Out, Inward (°)	0	0	0
Left Toe Out, Outward (°)	0	0	0
Right Toe Out, Outward (°)	0	35.28	37.28
Left Max Turn, Inward (°)	39.28	35.28	37.28
Right Max Turn, Inward (°)	39.28	30.51	32.51
Left Max Turn, Outward (°)	34.51	30.51	32.51
Right Max Turn, Outward (°)	34.51	-	-

CAMRY HV (Hybrid) 205/65 R16

Measurement	Minimum	Preferred	Maximum
Left Front Caster (°)	2.17	2.92	3.67
Right Front Caster (°)	2.17	2.92	3.67
Left Front Camber (°)	-1.42	-0.67	0.08
Right Front Camber (°)	-1.42	-0.67	0.08
Front Toe (°)	-0.17	0	0.17
Left SAI (°)	12.25	12.25	12.25
Right SAI (°)	12.25	12.25	12.25
Left Rear Camber (°)	-1.93	-1.18	-0.43
Right Rear Camber (°)	-1.93	-1.18	-0.43
Rear Toe (°)	0.04	0.21	0.38
Thrust Angle	0	0	0
Left Toe Out, Inward (°)	0	0	0
Right Toe Out, Inward (°)	0	0	0
Left Toe Out, Outward (°)	0	0	0
Right Toe Out, Outward (°)	0	35.25	37.25
Left Max Turn, Inward (°)	39.25	35.25	37.25
Right Max Turn, Inward (°)	39.25	30.83	32.83
Left Max Turn, Outward (°)	34.83	30.83	32.83
Right Max Turn, Outward (°)	34.83	-	-

CAMRY HV (Hybrid) 215/55 R17

Measurement	Minimum	Preferred	Maximum
Left Front Caster (°)	2.17	2.92	3.67
Right Front Caster (°)	2.17	2.92	3.67

Left Front Camber (°)	-1.42	-0.67	0.08
Right Front Camber (°)	-1.42	-0.67	0.08
Front Toe (°)	-0.17	0	0.17
Left SAI (°)	12.25	12.25	12.25
Right SAI (°)	12.25	12.25	12.25
Left Rear Camber (°)	-1.98	-1.23	-0.48
Right Rear Camber (°)	-1.98	-1.23	-0.48
Rear Toe (°)	0.04	0.21	0.38
Thrust Angle	0	0	0
Left Toe Out, Inward (°)	0	0	0
Right Toe Out, Inward (°)	0	0	0
Left Toe Out, Outward (°)	0	0	0
Right Toe Out, Outward (°)	0	35.17	37.17
Left Max Turn, Inward (°)	39.17	35.17	37.17
Right Max Turn, Inward (°)	39.17	30.83	32.83
Left Max Turn, Outward (°)	34.83	30.83	32.83
Right Max Turn, Outward (°)	34.83	-	-

COROLLA

COROLLA Except TMC Made 2AZ-FE 205/55 R16 except XRS to 07/2013

Measurement	Minimum	Preferred	Maximum
Left Front Caster (°)	2	2.75	3.5
Right Front Caster (°)	2	2.75	3.5
Left Front Camber (°)	-1.2	-0.45	0.3
Right Front Camber (°)	-1.2	-0.45	0.3
Front Toe (°)	-0.2	0	0.2
Left SAI (°)	12.27	12.27	12.27
Right SAI (°)	12.27	12.27	12.27
Left Rear Camber (°)	-1.93	-1.43	-0.93
Right Rear Camber (°)	-1.93	-1.43	-0.93
Rear Toe (°)	0.02	0.27	0.52
Thrust Angle	0	0	0
Left Toe Out, Inward (°)	0	0	0
Right Toe Out, Inward (°)	0	0	0
Left Toe Out, Outward (°)	0	0	0
Right Toe Out, Outward (°)	0	35.32	37.32
Left Max Turn, Inward (°)	39.32	35.32	37.32
Right Max Turn, Inward (°)	39.32	32.3	32.3
Left Max Turn, Outward (°)	32.3	32.3	32.3
Right Max Turn, Outward (°)	32.3	-	-

COROLLA Except TMC Made 2AZ-FE 205/55 R16 XRS to 07/2013

Measurement	Minimum	Preferred	Maximum
Left Front Caster (°)	2	2.75	3.5
Right Front Caster (°)	2	2.75	3.5
Left Front Camber (°)	-1.2	-0.45	0.3
Right Front Camber (°)	-1.2	-0.45	0.3
Front Toe (°)	-0.2	0	0.2
Left SAI (°)	12.27	12.27	12.27
Right SAI (°)	12.27	12.27	12.27
Left Rear Camber (°)	-1.97	-1.47	-0.97
Right Rear Camber (°)	-1.97	-1.47	-0.97
Rear Toe (°)	0.02	0.27	0.52
Thrust Angle	0	0	0
Left Toe Out, Inward (°)	0	0	0
Right Toe Out, Inward (°)	0	0	0
Left Toe Out, Outward (°)	0	0	0
Right Toe Out, Outward (°)	0	35.32	37.32
Left Max Turn, Inward (°)	39.32	35.32	37.32
Right Max Turn, Inward (°)	39.32	32.3	32.3
Left Max Turn, Outward (°)	32.3	32.3	32.3
Right Max Turn, Outward (°)	32.3	-	-

COROLLA Except TMC Made 2AZ-FE 215/45 R17 except XRS to 07/2013

Measurement	Minimum	Preferred	Maximum
Left Front Caster (°)	2.17	2.92	3.67
Right Front Caster (°)	2.17	2.92	3.67
Left Front Camber (°)	-1.37	-0.62	0.13
Right Front Camber (°)	-1.37	-0.62	0.13
Front Toe (°)	-0.2	0	0.2
Left SAI (°)	12.62	12.62	12.62
Right SAI (°)	12.62	12.62	12.62
Left Rear Camber (°)	-1.957	-1.47	-0.97
Right Rear Camber (°)	-1.97	-1.47	-0.97
Rear Toe (°)	0.02	0.27	0.52
Thrust Angle	0	0	0
Left Toe Out, Inward (°)	0	0	0
Right Toe Out, Inward (°)	0	0	0
Left Toe Out, Outward (°)	0	0	0
Right Toe Out, Outward (°)	0	34.98	36.98
Left Max Turn, Inward (°)	38.98	34.98	36.98
Right Max Turn, Inward (°)	38.98	32.02	32.02

Left Max Turn, Outward (°)	32.02	32.02	32.02
Right Max Turn, Outward (°)	32.02	-	-

COROLLA Except TMC Made 2AZ-FE 215/45 R17 XRS to 07/2013

Measurement	Minimum	Preferred	Maximum
Left Front Caster (°)	2.17	2.92	3.67
Right Front Caster (°)	2.17	2.92	3.67
Left Front Camber (°)	-1.37	-0.62	0.13
Right Front Camber (°)	-1.37	-0.62	0.13
Front Toe (°)	-0.2	0	0.2
Left SAI (°)	12.62	12.62	12.62
Right SAI (°)	12.62	12.62	12.62
Left Rear Camber (°)	-1.97	-1.47	-0.97
Right Rear Camber (°)	-1.97	-1.47	-0.97
Rear Toe (°)	0.02	0.27	0.52
Thrust Angle	0	0	0
Left Toe Out, Inward (°)	0	0	0
Right Toe Out, Inward (°)	0	0	0
Left Toe Out, Outward (°)	0	0	0
Right Toe Out, Outward (°)	0	34.98	36.98
Left Max Turn, Inward (°)	38.98	34.98	36.98
Right Max Turn, Inward (°)	38.98	32.02	32.02
Left Max Turn, Outward (°)	32.02	32.02	32.02
Right Max Turn, Outward (°)	32.02	-	-

COROLLA Except TMC Made 2ZR-FE 195/65 R15 except XRS to 07/2013

Measurement	Minimum	Preferred	Maximum
Left Front Caster (°)	2.08	2.83	3.58
Right Front Caster (°)	2.08	2.83	3.58
Left Front Camber (°)	-1.32	-0.57	0.18
Right Front Camber (°)	-1.32	-0.57	0.18
Front Toe (°)	-0.2	0	0.2
Left SAI (°)	12.53	12.53	12.53
Right SAI (°)	12.53	12.53	12.53
Left Rear Camber (°)	-1.95	-1.45	-0.95
Right Rear Camber (°)	-1.95	-1.45	-0.95
Rear Toe (°)	0.02	0.27	0.52
Thrust Angle	0	0	0
Left Toe Out, Inward (°)	0	0	0
Right Toe Out, Inward (°)	0	0	0
Left Toe Out, Outward (°)	0	0	0

Right Toe Out, Outward (°)	0	36.22	38.22
Left Max Turn, Inward (°)	40.22	36.22	38.22
Right Max Turn, Inward (°)	40.22	32.83	32.83
Left Max Turn, Outward (°)	32.83	32.83	32.83
Right Max Turn, Outward (°)	32.83	-	-

COROLLA Except TMC Made 2ZR-FE 195/65 R15 XRS to 07/2013

Measurement	**Minimum**	**Preferred**	**Maximum**
Left Front Caster (°)	2.08	2.83	3.58
Right Front Caster (°)	2.08	2.83	3.58
Left Front Camber (°)	-1.32	-0.57	0.18
Right Front Camber (°)	-1.32	-0.57	0.18
Front Toe (°)	-0.2	0	0.2
Left SAI (°)	12.53	12.53	12.53
Right SAI (°)	12.53	12.53	12.53
Left Rear Camber (°)	-1.97	-1.47	-0.97
Right Rear Camber (°)	-1.97	-1.47	-0.97
Rear Toe (°)	0.02	0.27	0.52
Thrust Angle	0	0	0
Left Toe Out, Inward (°)	0	0	0
Right Toe Out, Inward (°)	0	0	0
Left Toe Out, Outward (°)	0	0	0
Right Toe Out, Outward (°)	0	36.22	38.22
Left Max Turn, Inward (°)	40.22	36.22	38.22
Right Max Turn, Inward (°)	40.22	32.83	32.83
Left Max Turn, Outward (°)	32.83	32.83	32.83
Right Max Turn, Outward (°)	32.83	-	-

COROLLA Except TMC Made 2ZR-FE 205/55 R16 except XRS to 07/2013

Measurement	**Minimum**	**Preferred**	**Maximum**
Left Front Caster (°)	2.08	2.83	3.58
Right Front Caster (°)	2.08	2.83	3.58
Left Front Camber (°)	-1.33	-0.58	0.17
Right Front Camber (°)	-1.33	-0.58	0.17
Front Toe (°)	-0.2	0	0.2
Left SAI (°)	12.53	12.53	12.53
Right SAI (°)	12.53	12.53	12.53
Left Rear Camber (°)	-1.95	-1.45	-0.95
Right Rear Camber (°)	-1.95	-1.45	-0.95
Rear Toe (°)	0.02	0.27	0.52
Thrust Angle	0	0	0

Left Toe Out, Inward (°)	0	0	0
Right Toe Out, Inward (°)	0	0	0
Left Toe Out, Outward (°)	0	0	0
Right Toe Out, Outward (°)	0	36.22	38.22
Left Max Turn, Inward (°)	40.22	36.22	38.22
Right Max Turn, Inward (°)	40.22	32.83	32.83
Left Max Turn, Outward (°)	32.83	32.83	32.83
Right Max Turn, Outward (°)	32.83	-	-

COROLLA Except TMC Made 2ZR-FE 205/55 R16 XRS to 07/2013

Measurement	**Minimum**	**Preferred**	**Maximum**
Left Front Caster (°)	2.08	2.83	3.58
Right Front Caster (°)	2.08	2.83	3.58
Left Front Camber (°)	-1.33	-0.58	0.17
Right Front Camber (°)	-1.33	-0.58	0.17
Front Toe (°)	-0.2	0	0.2
Left SAI (°)	12.53	12.53	12.53
Right SAI (°)	12.53	12.53	12.53
Left Rear Camber (°)	-1.97	-1.47	-0.97
Right Rear Camber (°)	-1.97	-1.47	-0.97
Rear Toe (°)	0.02	0.27	0.52
Thrust Angle	0	0	0
Left Toe Out, Inward (°)	0	0	0
Right Toe Out, Inward (°)	0	0	0
Left Toe Out, Outward (°)	0	0	0
Right Toe Out, Outward (°)	0	36.22	38.22
Left Max Turn, Inward (°)	40.22	36.22	38.22
Right Max Turn, Inward (°)	40.22	32.83	32.83
Left Max Turn, Outward (°)	32.83	32.83	32.83
Right Max Turn, Outward (°)	32.83	-	-

COROLLA Except TMC Made 2ZR-FE 215/45 R17 except XRS to 07/2013

Measurement	**Minimum**	**Preferred**	**Maximum**
Left Front Caster (°)	2.17	2.92	3.67
Right Front Caster (°)	2.17	2.92	3.67
Left Front Camber (°)	-1.37	-0.62	0.13
Right Front Camber (°)	-1.37	-0.62	0.13
Front Toe (°)	-0.2	0	0.2
Left SAI (°)	12.62	12.62	12.62
Right SAI (°)	12.62	12.62	12.62
Left Rear Camber (°)	-1.97	-1.47	-0.97

Right Rear Camber (°)	-1.97	-1.47	-0.97
Rear Toe (°)	0.02	0.27	0.52
Thrust Angle	0	0	0
Left Toe Out, Inward (°)	0	0	0
Right Toe Out, Inward (°)	0	0	0
Left Toe Out, Outward (°)	0	0	0
Right Toe Out, Outward (°)	0	34.98	36.98
Left Max Turn, Inward (°)	38.98	34.98	36.98
Right Max Turn, Inward (°)	38.98	32.02	32.02
Left Max Turn, Outward (°)	32.02	32.02	32.02
Right Max Turn, Outward (°)	32.02	-	-

COROLLA Except TMC Made 2ZR-FE 215/45 R17 XRS to 07/2013

Measurement	Minimum	Preferred	Maximum
Left Front Caster (°)	2.17	2.92	3.67
Right Front Caster (°)	2.17	2.92	3.67
Left Front Camber (°)	-1.37	-0.62	0.13
Right Front Camber (°)	-1.37	-0.62	0.13
Front Toe (°)	-0.2	0	0.2
Left SAI (°)	12.62	12.62	12.62
Right SAI (°)	12.62	12.62	12.62
Left Rear Camber (°)	-1.97	-1.47	-0.97
Right Rear Camber (°)	-1.97	-1.47	-0.97
Rear Toe (°)	0.02	0.27	0.52
Thrust Angle	0	0	0
Left Toe Out, Inward (°)	0	0	0
Right Toe Out, Inward (°)	0	0	0
Left Toe Out, Outward (°)	0	0	0
Right Toe Out, Outward (°)	0	34.98	36.98
Left Max Turn, Inward (°)	38.98	34.98	36.98
Right Max Turn, Inward (°)	38.98	32.02	32.02
Left Max Turn, Outward (°)	32.02	32.02	32.02
Right Max Turn, Outward (°)	32.02	-	-

COROLLA TMC Made 2ZR-FE 195/65 R15 to 07/2013

Measurement	Minimum	Preferred	Maximum
Left Front Caster (°)	2.08	2.83	3.58
Right Front Caster (°)	2.08	2.83	3.58
Left Front Camber (°)	-1.33	-0.58	0.17
Right Front Camber (°)	-1.33	-0.58	0.17
Front Toe (°)	-0.2	0	0.2

Left SAI (°)	12.53	12.53	12.53
Right SAI (°)	12.53	12.53	12.53
Left Rear Camber (°)	-1.97	-1.47	-0.97
Right Rear Camber (°)	-1.97	-1.47	-0.97
Rear Toe (°)	0.02	0.27	0.52
Thrust Angle	0	0	0
Left Toe Out, Inward (°)	0	0	0
Right Toe Out, Inward (°)	0	0	0
Left Toe Out, Outward (°)	0	0	0
Right Toe Out, Outward (°)	0	36.22	38.22
Left Max Turn, Inward (°)	40.22	36.22	38.22
Right Max Turn, Inward (°)	40.22	32.83	32.83
Left Max Turn, Outward (°)	32.83	32.83	32.83
Right Max Turn, Outward (°)	32.83	-	-

COROLLA TMC Made 2ZR-FE 205/55 R16 to 07/2013

Measurement	**Minimum**	**Preferred**	**Maximum**
Left Front Caster (°)	2.1	2.85	3.6
Right Front Caster (°)	2.1	2.85	3.6
Left Front Camber (°)	-1.33	-0.58	0.17
Right Front Camber (°)	-1.33	-0.58	0.17
Front Toe (°)	-0.2	0	0.2
Left SAI (°)	12.53	12.53	12.53
Right SAI (°)	12.53	12.53	12.53
Left Rear Camber (°)	-1.97	-1.47	-0.97
Right Rear Camber (°)	-1.97	-1.47	-0.97
Rear Toe (°)	0.02	0.27	0.52
Thrust Angle	0	0	0
Left Toe Out, Inward (°)	0	0	0
Right Toe Out, Inward (°)	0	0	0
Left Toe Out, Outward (°)	0	0	0
Right Toe Out, Outward (°)	0	36.22	38.22
Left Max Turn, Inward (°)	40.22	36.22	38.22
Right Max Turn, Inward (°)	40.22	32.83	32.83
Left Max Turn, Outward (°)	32.83	32.83	32.83
Right Max Turn, Outward (°)	32.83	-	-

FJ CRUISER

FJ CRUISER GSJ10L-GKASKA

Measurement	**Minimum**	**Preferred**	**Maximum**
Left Front Caster (°)	3.72	4.22	4.72

Right Front Caster (°)	3.72	4.22	4.72
Left Front Camber (°)	-1.06	-0.56	-0.06
Right Front Camber (°)	-1.06	-0.56	-0.06
Front Toe (°)	-0.08	0.08	0.24
Left SAI (°)	12.58	13.08	13.58
Right SAI (°)	12.58	13.08	13.58
Left Rear Camber (°)	0	0	0
Right Rear Camber (°)	0	0	0
Rear Toe (°)	0	0	0
Thrust Angle	0	0	0
Left Toe Out, Inward (°)	0	0	0
Right Toe Out, Inward (°)	0	0	0
Left Toe Out, Outward (°)	0	0	0
Right Toe Out, Outward (°)	0	30.74	32.74
Left Max Turn, Inward (°)	33.74	30.74	32.74
Right Max Turn, Inward (°)	33.74	28.93	28.93
Left Max Turn, Outward (°)	28.93	28.93	28.93
Right Max Turn, Outward (°)	28.93	-	-

FJ CRUISER GSJ15L-GKASKA

Measurement	Minimum	Preferred	Maximum
Left Front Caster (°)	2.79	3.29	3.79
Right Front Caster (°)	2.79	3.29	3.79
Left Front Camber (°)	-0.36	0.14	0.64
Right Front Camber (°)	-0.36	0.14	0.64
Front Toe (°)	-0.08	0.08	0.24
Left SAI (°)	11.85	12.35	12.85
Right SAI (°)	11.85	12.35	12.85
Left Rear Camber (°)	0	0	0
Right Rear Camber (°)	0	0	0
Rear Toe (°)	0	0	0
Thrust Angle	0	0	0
Left Toe Out, Inward (°)	0	0	0
Right Toe Out, Inward (°)	0	0	0
Left Toe Out, Outward (°)	0	0	0
Right Toe Out, Outward (°)	0	31.16	33.16
Left Max Turn, Inward (°)	34.16	31.16	33.16
Right Max Turn, Inward (°)	34.16	29.63	29.63
Left Max Turn, Outward (°)	29.63	29.63	29.63
Right Max Turn, Outward (°)	29.63	-	-

FJ CRUISER GSJ15L-GKASKA Offroad

Measurement	Minimum	Preferred	Maximum
Left Front Caster (°)	2.79	3.29	3.79
Right Front Caster (°)	2.79	3.29	3.79
Left Front Camber (°)	-0.36	0.14	0.64
Right Front Camber (°)	-0.36	0.14	0.64
Front Toe (°)	-0.08	0.08	0.24
Left SAI (°)	11.85	12.35	12.85
Right SAI (°)	11.85	12.35	12.85
Left Rear Camber (°)	0	0	0
Right Rear Camber (°)	0	0	0
Rear Toe (°)	0	0	0
Thrust Angle	0	0	0
Left Toe Out, Inward (°)	0	0	0
Right Toe Out, Inward (°)	0	0	0
Left Toe Out, Outward (°)	0	0	0
Right Toe Out, Outward (°)	0	31.16	33.16
Left Max Turn, Inward (°)	34.16	31.16	33.16
Right Max Turn, Inward (°)	34.16	29.63	29.63
Left Max Turn, Outward (°)	29.63	29.63	29.63
Right Max Turn, Outward (°)	29.63	-	-

FJ CRUISER GSJ15L-GKFSKA

Measurement	Minimum	Preferred	Maximum
Left Front Caster (°)	2.78	3.28	3.78
Right Front Caster (°)	2.78	3.28	3.78
Left Front Camber (°)	-0.36	0.14	0.64
Right Front Camber (°)	-0.36	0.14	0.64
Front Toe (°)	-0.08	0.08	0.24
Left SAI (°)	11.85	12.35	12.85
Right SAI (°)	11.85	12.35	12.85
Left Rear Camber (°)	0	0	0
Right Rear Camber (°)	0	0	0
Rear Toe (°)	0	0	0
Thrust Angle	0	0	0
Left Toe Out, Inward (°)	0	0	0
Right Toe Out, Inward (°)	0	0	0
Left Toe Out, Outward (°)	0	0	0
Right Toe Out, Outward (°)	0	31.17	33.17
Left Max Turn, Inward (°)	34.17	31.17	33.17
Right Max Turn, Inward (°)	34.17	29.63	29.63

Left Max Turn, Outward (°)	29.63	29.63	29.63
Right Max Turn, Outward (°)	29.63	-	-

FJ CRUISER GSJ15L-GKFSKA Offroad

Measurement	Minimum	Preferred	Maximum
Left Front Caster (°)	2.79	3.29	3.79
Right Front Caster (°)	2.79	3.29	3.79
Left Front Camber (°)	-0.36	0.14	0.64
Right Front Camber (°)	-0.36	0.14	0.64
Front Toe (°)	-0.08	0.08	0.24
Left SAI (°)	11.85	12.35	12.85
Right SAI (°)	11.85	12.35	12.85
Left Rear Camber (°)	0	0	0
Right Rear Camber (°)	0	0	0
Rear Toe (°)	0	0	0
Thrust Angle	0	0	0
Left Toe Out, Inward (°)	0	0	0
Right Toe Out, Inward (°)	0	0	0
Left Toe Out, Outward (°)	0	0	0
Right Toe Out, Outward (°)	0	31.17	33.17
Left Max Turn, Inward (°)	34.17	31.17	33.17
Right Max Turn, Inward (°)	34.17	29.63	29.63
Left Max Turn, Outward (°)	29.63	29.63	29.63
Right Max Turn, Outward (°)	29.63	-	-

HIGHLANDER

HIGHLANDER 1AR-FE 2WD

Measurement	Minimum	Preferred	Maximum
Left Front Caster (°)	1.83	2.58	3.33
Right Front Caster (°)	1.83	2.58	3.33
Left Front Camber (°)	-1.38	-0.63	0.12
Right Front Camber (°)	-1.38	-0.63	0.12
Front Toe (°)	-0.16	0.04	0.24
Left SAI (°)	10.27	11.02	11.77
Right SAI (°)	10.27	11.02	11.77
Left Rear Camber (°)	-1.78	-1.03	-0.28
Right Rear Camber (°)	-1.78	-1.03	-0.28
Rear Toe (°)	0.15	0.35	0.55
Thrust Angle	0	0	0
Left Toe Out, Inward (°)	0	0	0
Right Toe Out, Inward (°)	0	0	0

Left Toe Out, Outward (°)	0	0	0
Right Toe Out, Outward (°)	0	33.62	35.12
Left Max Turn, Inward (°)	36.62	33.62	35.12
Right Max Turn, Inward (°)	36.62	31.33	31.33
Left Max Turn, Outward (°)	31.33	31.33	31.33
Right Max Turn, Outward (°)	31.33	-	-

HIGHLANDER 2GR-FE 2WD

Measurement	Minimum	Preferred	Maximum
Left Front Caster (°)	1.87	2.62	3.37
Right Front Caster (°)	1.87	2.62	3.37
Left Front Camber (°)	-1.38	-0.63	0.12
Right Front Camber (°)	-1.38	-0.63	0.12
Front Toe (°)	-0.16	0.04	0.24
Left SAI (°)	10.27	11.02	11.77
Right SAI (°)	10.27	11.02	11.77
Left Rear Camber (°)	-1.75	-1	-0.25
Right Rear Camber (°)	-1.75	-1	-0.25
Rear Toe (°)	0.14	0.34	0.54
Thrust Angle	0	0	0
Left Toe Out, Inward (°)	0	0	0
Right Toe Out, Inward (°)	0	0	0
Left Toe Out, Outward (°)	0	0	0
Right Toe Out, Outward (°)	0	33.62	35.12
Left Max Turn, Inward (°)	36.62	33.62	35.12
Right Max Turn, Inward (°)	36.62	31.33	31.33
Left Max Turn, Outward (°)	31.33	31.33	31.33
Right Max Turn, Outward (°)	31.33	-	-

HIGHLANDER 2GR-FE 4WD

Measurement	Minimum	Preferred	Maximum
Left Front Caster (°)	1.87	2.62	3.37
Right Front Caster (°)	1.87	2.62	3.37
Left Front Camber (°)	-1.38	-0.63	0.12
Right Front Camber (°)	-1.38	-0.63	0.12
Front Toe (°)	-0.16	0.04	0.24
Left SAI (°)	10.27	11.02	11.77
Right SAI (°)	10.27	11.02	11.77
Left Rear Camber (°)	-1.35	-0.6	0.15
Right Rear Camber (°)	-1.35	-0.6	0.15
Rear Toe (°)	0.09	0.29	0.49

Thrust Angle	0	0	0
Left Toe Out, Inward (°)	0	0	0
Right Toe Out, Inward (°)	0	0	0
Left Toe Out, Outward (°)	0	0	0
Right Toe Out, Outward (°)	0	33.62	35.12
Left Max Turn, Inward (°)	36.62	33.62	35.12
Right Max Turn, Inward (°)	36.62	31.33	31.33
Left Max Turn, Outward (°)	31.33	31.33	31.33
Right Max Turn, Outward (°)	31.33	-	-

HIGHLANDER HV Hybrid (E-4WD) - 01/2014

Measurement	Minimum	Preferred	Maximum
Left Front Caster (°)	1.83	2.58	3.33
Right Front Caster (°)	1.83	2.58	3.33
Left Front Camber (°)	-1.38	-0.63	0.12
Right Front Camber (°)	-1.38	-0.63	0.12
Front Toe (°)	-0.16	0.04	0.24
Left SAI (°)	10.25	11	11.75
Right SAI (°)	10.25	11	11.75
Left Rear Camber (°)	-1.3	-0.55	0.2
Right Rear Camber (°)	-1.3	-0.55	0.2
Rear Toe (°)	-0.06	0.14	0.34
Thrust Angle	0	0	0
Left Toe Out, Inward (°)	0	0	0
Right Toe Out, Inward (°)	0	0	0
Left Toe Out, Outward (°)	0	0	0
Right Toe Out, Outward (°)	0	33.13	35.13
Left Max Turn, Inward (°)	37.13	33.13	35.13
Right Max Turn, Inward (°)	37.13	31.37	31.37
Left Max Turn, Outward (°)	31.37	31.37	31.37
Right Max Turn, Outward (°)	31.37	-	-

MATRIX

MATRIX 2WD 2AZ-FE Engine 205/55 R16 Tires Double Wishbone

Measurement	Minimum	Preferred	Maximum
Left Front Caster (°)	2.15	2.9	3.65
Right Front Caster (°)	2.15	2.9	3.65
Left Front Camber (°)	-1.32	-0.57	0.18
Right Front Camber (°)	-1.32	-0.57	0.18
Front Toe (°)	-0.2	0	0.2
Left SAI (°)	12.38	12.38	12.38

Right SAI (°)	12.38	12.38	12.38
Left Rear Camber (°)	-1.8	-1.05	-0.3
Right Rear Camber (°)	-1.8	-1.05	-0.3
Rear Toe (°)	0	0.25	0.5
Thrust Angle	0	0	0
Left Toe Out, Inward (°)	0	0	0
Right Toe Out, Inward (°)	0	0	0
Left Toe Out, Outward (°)	0	0	0
Right Toe Out, Outward (°)	0	34.65	36.65
Left Max Turn, Inward (°)	38.65	34.65	36.65
Right Max Turn, Inward (°)	38.65	32.18	32.18
Left Max Turn, Outward (°)	32.18	32.18	32.18
Right Max Turn, Outward (°)	32.18	-	-

MATRIX 2WD 2AZ-FE Engine 205/55 R16 Tires Torsion Beam Axle (VL)

Measurement	Minimum	Preferred	Maximum
Left Front Caster (°)	2.15	2.9	3.65
Right Front Caster (°)	2.15	2.9	3.65
Left Front Camber (°)	-1.32	-0.57	0.18
Right Front Camber (°)	-1.32	-0.57	0.18
Front Toe (°)	-0.2	0	0.2
Left SAI (°)	12.38	12.38	12.38
Right SAI (°)	12.38	12.38	12.38
Left Rear Camber (°)	-1.97	-1.47	-0.97
Right Rear Camber (°)	-1.97	-1.47	-0.97
Rear Toe (°)	0.02	0.29	0.56
Thrust Angle	0	0	0
Left Toe Out, Inward (°)	0	0	0
Right Toe Out, Inward (°)	0	0	0
Left Toe Out, Outward (°)	0	0	0
Right Toe Out, Outward (°)	0	34.65	36.65
Left Max Turn, Inward (°)	38.65	34.65	36.65
Right Max Turn, Inward (°)	38.65	32.18	32.18
Left Max Turn, Outward (°)	32.18	32.18	32.18
Right Max Turn, Outward (°)	32.18	-	-

MATRIX 2WD 2AZ-FE Engine 215/45 R17 Tires Double Wishbone

Measurement	Minimum	Preferred	Maximum
Left Front Caster (°)	2.13	2.88	3.63
Right Front Caster (°)	2.13	2.88	3.63
Left Front Camber (°)	-1.32	-0.57	0.18

Right Front Camber (°)	-1.32	-0.57	0.18
Front Toe (°)	-0.2	0	0.2
Left SAI (°)	12.38	12.38	12.38
Right SAI (°)	12.38	12.38	12.38
Left Rear Camber (°)	-1.8	-1.05	-0.3
Right Rear Camber (°)	-1.8	-1.05	-0.3
Rear Toe (°)	0	0.25	0.5
Thrust Angle	0	0	0
Left Toe Out, Inward (°)	0	0	0
Right Toe Out, Inward (°)	0	0	0
Left Toe Out, Outward (°)	0	0	0
Right Toe Out, Outward (°)	0	34.65	36.65
Left Max Turn, Inward (°)	38.65	34.65	36.65
Right Max Turn, Inward (°)	38.65	32.18	32.18
Left Max Turn, Outward (°)	32.18	32.18	32.18
Right Max Turn, Outward (°)	32.18	-	-

MATRIX 2WD 2AZ-FE Engine 215/45 R17 Tires Torsion Beam Axle (VL)

Measurement	Minimum	Preferred	Maximum
Left Front Caster (°)	2.13	2.88	3.63
Right Front Caster (°)	2.13	2.88	3.63
Left Front Camber (°)	-1.32	-0.57	0.18
Right Front Camber (°)	-1.32	-0.57	0.18
Front Toe (°)	-0.2	0	0.2
Left SAI (°)	12.38	12.38	12.38
Right SAI (°)	12.38	12.38	12.38
Left Rear Camber (°)	-1.97	-1.47	-0.97
Right Rear Camber (°)	-1.97	-1.47	-0.97
Rear Toe (°)	0.02	0.29	0.56
Thrust Angle	0	0	0
Left Toe Out, Inward (°)	0	0	0
Right Toe Out, Inward (°)	0	0	0
Left Toe Out, Outward (°)	0	0	0
Right Toe Out, Outward (°)	0	34.65	36.65
Left Max Turn, Inward (°)	38.65	34.65	36.65
Right Max Turn, Inward (°)	38.65	32.18	32.18
Left Max Turn, Outward (°)	32.18	32.18	32.18
Right Max Turn, Outward (°)	32.18	-	-

MATRIX 2WD 2AZ-FE Engine 215/45 R18 Tires Double Wishbone

Measurement	Minimum	Preferred	Maximum

Left Front Caster (°)	2.25	3	3.75
Right Front Caster (°)	2.25	3	3.75
Left Front Camber (°)	-1.32	-0.57	0.18
Right Front Camber (°)	-1.32	-0.57	0.18
Front Toe (°)	-0.2	0	0.2
Left SAI (°)	12.38	12.38	12.38
Right SAI (°)	12.38	12.38	12.38
Left Rear Camber (°)	-1.8	-1.05	-0.3
Right Rear Camber (°)	-1.8	-1.05	-0.3
Rear Toe (°)	0	0.25	0.5
Thrust Angle	0	0	0
Left Toe Out, Inward (°)	0	0	0
Right Toe Out, Inward (°)	0	0	0
Left Toe Out, Outward (°)	0	0	0
Right Toe Out, Outward (°)	0	32.38	34.38
Left Max Turn, Inward (°)	36.38	32.38	34.38
Right Max Turn, Inward (°)	36.38	30.62	30.62
Left Max Turn, Outward (°)	30.62	30.62	30.62
Right Max Turn, Outward (°)	30.62	-	-

MATRIX 2WD 2AZ-FE Engine 215/45 R18 Tires Torsion Beam Axle (VL)

Measurement	Minimum	Preferred	Maximum
Left Front Caster (°)	2.25	3	3.75
Right Front Caster (°)	2.25	3	3.75
Left Front Camber (°)	-1.32	-0.57	0.18
Right Front Camber (°)	-1.32	-0.57	0.18
Front Toe (°)	-0.2	0	0.2
Left SAI (°)	12.38	12.38	12.38
Right SAI (°)	12.38	12.38	12.38
Left Rear Camber (°)	-1.97	-1.47	-0.97
Right Rear Camber (°)	-1.97	-1.47	-0.97
Rear Toe (°)	0.02	0.29	0.56
Thrust Angle	0	0	0
Left Toe Out, Inward (°)	0	0	0
Right Toe Out, Inward (°)	0	0	0
Left Toe Out, Outward (°)	0	0	0
Right Toe Out, Outward (°)	0	32.38	34.38
Left Max Turn, Inward (°)	36.38	32.38	34.38
Right Max Turn, Inward (°)	36.38	30.62	30.62
Left Max Turn, Outward (°)	30.62	30.62	30.62
Right Max Turn, Outward (°)	30.62	-	-

MATRIX 2WD 2ZR-FE Engine 205/55 R16 Tires Double Wishbone

Measurement	Minimum	Preferred	Maximum
Left Front Caster (°)	2.18	2.93	3.68
Right Front Caster (°)	2.18	2.93	3.68
Left Front Camber (°)	-1.32	-0.57	0.18
Right Front Camber (°)	-1.32	-0.57	0.18
Front Toe (°)	-0.2	0	0.2
Left SAI (°)	12.48	12.48	12.48
Right SAI (°)	12.48	12.48	12.48
Left Rear Camber (°)	-1.8	-1.05	-0.3
Right Rear Camber (°)	-1.8	-1.05	-0.3
Rear Toe (°)	0	0.25	0.5
Thrust Angle	0	0	0
Left Toe Out, Inward (°)	0	0	0
Right Toe Out, Inward (°)	0	0	0
Left Toe Out, Outward (°)	0	0	0
Right Toe Out, Outward (°)	0	35.13	37.13
Left Max Turn, Inward (°)	39.13	35.13	37.13
Right Max Turn, Inward (°)	39.13	32.12	32.12
Left Max Turn, Outward (°)	32.12	32.12	32.12
Right Max Turn, Outward (°)	32.12	-	-

MATRIX 2WD 2ZR-FE Engine 205/55 R16 Tires Torsion Beam Axle (VL)

Measurement	Minimum	Preferred	Maximum
Left Front Caster (°)	2.18	2.93	3.68
Right Front Caster (°)	2.18	2.93	3.68
Left Front Camber (°)	-1.32	-0.57	0.18
Right Front Camber (°)	-1.32	-0.57	0.18
Front Toe (°)	-0.2	0	0.2
Left SAI (°)	12.48	12.48	12.48
Right SAI (°)	12.48	12.48	12.48
Left Rear Camber (°)	-1.97	-1.47	-0.97
Right Rear Camber (°)	-1.97	-1.47	-0.97
Rear Toe (°)	0.02	0.29	0.56
Thrust Angle	0	0	0
Left Toe Out, Inward (°)	0	0	0
Right Toe Out, Inward (°)	0	0	0
Left Toe Out, Outward (°)	0	0	0
Right Toe Out, Outward (°)	0	35.13	37.13
Left Max Turn, Inward (°)	39.13	35.13	37.13
Right Max Turn, Inward (°)	39.13	32.12	32.12

Left Max Turn, Outward (°)	32.12	32.12	32.12
Right Max Turn, Outward (°)	32.12	-	-

MATRIX 2WD 2ZR-FE Engine 215/45 R17 Tires Double Wishbone

Measurement	Minimum	Preferred	Maximum
Left Front Caster (°)	2.17	2.92	3.67
Right Front Caster (°)	2.17	2.92	3.67
Left Front Camber (°)	-1.32	-0.57	0.18
Right Front Camber (°)	-1.32	-0.57	0.18
Front Toe (°)	-0.2	0	0.2
Left SAI (°)	12.48	12.48	12.48
Right SAI (°)	12.48	12.48	12.48
Left Rear Camber (°)	-1.8	-1.05	-0.3
Right Rear Camber (°)	-1.8	-1.05	-0.3
Rear Toe (°)	0	0.25	0.5
Thrust Angle	0	0	0
Left Toe Out, Inward (°)	0	0	0
Right Toe Out, Inward (°)	0	0	0
Left Toe Out, Outward (°)	0	0	0
Right Toe Out, Outward (°)	0	35.13	37.13
Left Max Turn, Inward (°)	39.13	35.13	37.13
Right Max Turn, Inward (°)	39.13	32.12	32.12
Left Max Turn, Outward (°)	32.12	32.12	32.12
Right Max Turn, Outward (°)	32.12	-	-

MATRIX 2WD 2ZR-FE Engine 215/45 R17 Tires Torsion Beam Axle (VL)

Measurement	Minimum	Preferred	Maximum
Left Front Caster (°)	2.17	2.92	3.67
Right Front Caster (°)	2.17	2.92	3.67
Left Front Camber (°)	-1.32	-0.57	0.18
Right Front Camber (°)	-1.32	-0.57	0.18
Front Toe (°)	-0.2	0	0.2
Left SAI (°)	12.48	12.48	12.48
Right SAI (°)	12.48	12.48	12.48
Left Rear Camber (°)	-1.97	-1.47	-0.97
Right Rear Camber (°)	-1.97	-1.47	-0.97
Rear Toe (°)	0.02	0.29	0.56
Thrust Angle	0	0	0
Left Toe Out, Inward (°)	0	0	0
Right Toe Out, Inward (°)	0	0	0
Left Toe Out, Outward (°)	0	0	0

Right Toe Out, Outward (°)	0	35.13	37.13
Left Max Turn, Inward (°)	39.13	35.13	37.13
Right Max Turn, Inward (°)	39.13	32.12	32.12
Left Max Turn, Outward (°)	32.12	32.12	32.12
Right Max Turn, Outward (°)	32.12	-	-

MATRIX 4WD 2AZ-FE Engine 205/55 R16 Tires Double Wishbone

Measurement	Minimum	Preferred	Maximum
Left Front Caster (°)	2.27	3.02	3.77
Right Front Caster (°)	2.27	3.02	3.77
Left Front Camber (°)	-1.33	-0.58	0.17
Right Front Camber (°)	-1.33	-0.58	0.17
Front Toe (°)	-0.2	0	0.2
Left SAI (°)	12.28	12.28	12.28
Right SAI (°)	12.28	12.28	12.28
Left Rear Camber (°)	-1.8	-1.05	-0.3
Right Rear Camber (°)	-1.8	-1.05	-0.3
Rear Toe (°)	0	0.25	0.5
Thrust Angle	0	0	0
Left Toe Out, Inward (°)	0	0	0
Right Toe Out, Inward (°)	0	0	0
Left Toe Out, Outward (°)	0	0	0
Right Toe Out, Outward (°)	0	34.48	36.48
Left Max Turn, Inward (°)	38.48	34.48	36.48
Right Max Turn, Inward (°)	38.48	31.97	31.97
Left Max Turn, Outward (°)	31.97	31.97	31.97
Right Max Turn, Outward (°)	31.97	-	-

MATRIX 4WD 2AZ-FE Engine 205/55 R16 Tires Torsion Beam Axle (VL)

Measurement	Minimum	Preferred	Maximum
Left Front Caster (°)	2.27	3.02	3.77
Right Front Caster (°)	2.27	3.02	3.77
Left Front Camber (°)	-1.33	-0.58	0.17
Right Front Camber (°)	-1.33	-0.58	0.17
Front Toe (°)	-0.2	0	0.2
Left SAI (°)	12.28	12.28	12.28
Right SAI (°)	12.28	12.28	12.28
Left Rear Camber (°)	-1.97	-1.47	-0.97
Right Rear Camber (°)	-1.97	-1.47	-0.97
Rear Toe (°)	0.02	0.29	0.56
Thrust Angle	0	0	0

Left Toe Out, Inward (°)	0	0	0
Right Toe Out, Inward (°)	0	0	0
Left Toe Out, Outward (°)	0	0	0
Right Toe Out, Outward (°)	0	34.48	36.48
Left Max Turn, Inward (°)	38.48	34.48	36.48
Right Max Turn, Inward (°)	38.48	31.97	31.97
Left Max Turn, Outward (°)	31.97	31.97	31.97
Right Max Turn, Outward (°)	31.97	-	-

MATRIX 4WD 2AZ-FE Engine 215/45 R17 Tires Double Wishbone

Measurement	Minimum	Preferred	Maximum
Left Front Caster (°)	2.25	3	3.75
Right Front Caster (°)	2.25	3	3.75
Left Front Camber (°)	-1.33	-0.58	0.17
Right Front Camber (°)	-1.33	-0.58	0.17
Front Toe (°)	-0.2	0	0.2
Left SAI (°)	12.28	12.28	12.28
Right SAI (°)	12.28	12.28	12.28
Left Rear Camber (°)	-1.8	-1.05	-0.3
Right Rear Camber (°)	-1.8	-1.05	-0.3
Rear Toe (°)	0	0.25	0.5
Thrust Angle	0	0	0
Left Toe Out, Inward (°)	0	0	0
Right Toe Out, Inward (°)	0	0	0
Left Toe Out, Outward (°)	0	0	0
Right Toe Out, Outward (°)	0	34.48	36.48
Left Max Turn, Inward (°)	38.48	34.48	36.48
Right Max Turn, Inward (°)	38.48	31.97	31.97
Left Max Turn, Outward (°)	31.97	31.97	31.97
Right Max Turn, Outward (°)	31.97	-	-

MATRIX 4WD 2AZ-FE Engine 215/45 R17 Tires Torsion Beam Axle (VL)

Measurement	Minimum	Preferred	Maximum
Left Front Caster (°)	2.25	3	3.75
Right Front Caster (°)	2.25	3	3.75
Left Front Camber (°)	-1.33	-0.58	0.17
Right Front Camber (°)	-1.33	-0.58	0.17
Front Toe (°)	-0.2	0	0.2
Left SAI (°)	12.28	12.28	12.28
Right SAI (°)	12.28	12.28	12.28
Left Rear Camber (°)	-1.97	-1.47	-0.97

Right Rear Camber (°)	-1.97	-1.47	-0.97
Rear Toe (°)	0.02	0.29	0.56
Thrust Angle	0	0	0
Left Toe Out, Inward (°)	0	0	0
Right Toe Out, Inward (°)	0	0	0
Left Toe Out, Outward (°)	0	0	0
Right Toe Out, Outward (°)	0	34.48	36.48
Left Max Turn, Inward (°)	38.48	34.48	36.48
Right Max Turn, Inward (°)	38.48	31.97	31.97
Left Max Turn, Outward (°)	31.97	31.97	31.97
Right Max Turn, Outward (°)	31.97	-	-

PRIUS

PRIUS 195/65 R15 With Rough Road Suspension

Measurement	**Minimum**	**Preferred**	**Maximum**
Left Front Caster (°)	4.92	5.67	6.42
Right Front Caster (°)	4.92	5.67	6.42
Left Front Camber (°)	-0.87	-0.12	0.63
Right Front Camber (°)	-0.87	-0.12	0.63
Front Toe (°)	0.1	0.3	0.5
Left SAI (°)	11.87	11.87	11.87
Right SAI (°)	11.87	11.87	11.87
Left Rear Camber (°)	-1.98	-1.48	-0.98
Right Rear Camber (°)	-1.98	-1.48	-0.98
Rear Toe (°)	-0.13	0.17	0.47
Thrust Angle	0	0	0
Left Toe Out, Inward (°)	0	0	0
Right Toe Out, Inward (°)	0	0	0
Left Toe Out, Outward (°)	0	0	0
Right Toe Out, Outward (°)	0	35.7	37.7
Left Max Turn, Inward (°)	39.7	35.7	37.7
Right Max Turn, Inward (°)	39.7	32.22	32.22
Left Max Turn, Outward (°)	32.22	32.22	32.22
Right Max Turn, Outward (°)	32.22	-	-

PRIUS 195/65 R15 With Standard Suspension

Measurement	**Minimum**	**Preferred**	**Maximum**
Left Front Caster (°)	5.13	5.88	6.63
Right Front Caster (°)	5.13	5.88	6.63
Left Front Camber (°)	-0.97	-0.22	0.53
Right Front Camber (°)	-0.97	-0.22	0.53

Front Toe (°)	0	0.2	0.4
Left SAI (°)	12.27	12.27	12.27
Right SAI (°)	12.27	12.27	12.27
Left Rear Camber (°)	-1.98	-1.48	-0.98
Right Rear Camber (°)	-1.98	-1.48	-0.98
Rear Toe (°)	-0.01	0.29	0.59
Thrust Angle	0	0	0
Left Toe Out, Inward (°)	0	0	0
Right Toe Out, Inward (°)	0	0	0
Left Toe Out, Outward (°)	0	0	0
Right Toe Out, Outward (°)	0	38.83	40.83
Left Max Turn, Inward (°)	42.83	38.83	40.83
Right Max Turn, Inward (°)	42.83	33.83	33.83
Left Max Turn, Outward (°)	33.83	33.83	33.83
Right Max Turn, Outward (°)	33.83	-	-

PRIUS 215/45 R17

Measurement	Minimum	Preferred	Maximum
Left Front Caster (°)	5.08	5.83	6.58
Right Front Caster (°)	5.08	5.83	6.58
Left Front Camber (°)	-0.95	-0.2	0.55
Right Front Camber (°)	-0.95	-0.2	0.55
Front Toe (°)	0	0.2	0.4
Left SAI (°)	12.17	12.17	12.17
Right SAI (°)	12.17	12.17	12.17
Left Rear Camber (°)	-1.97	-1.47	-0.97
Right Rear Camber (°)	-1.97	-1.47	-0.97
Rear Toe (°)	-0.05	0.25	0.55
Thrust Angle	0	0	0
Left Toe Out, Inward (°)	0	0	0
Right Toe Out, Inward (°)	0	0	0
Left Toe Out, Outward (°)	0	0	0
Right Toe Out, Outward (°)	0	35.45	37.45
Left Max Turn, Inward (°)	39.45	35.45	37.45
Right Max Turn, Inward (°)	39.45	31.93	31.93
Left Max Turn, Outward (°)	31.93	31.93	31.93
Right Max Turn, Outward (°)	31.93	-	-

PRIUS C. 175/65R15 NHP10L-AHXGBA NHP10L-AHXVBA - 11/2013

Measurement	Minimum	Preferred	Maximum
Left Front Caster (°)	4.2	4.95	5.7

Right Front Caster (°)	4.2	4.95	5.7
Left Front Camber (°)	-1.02	-0.27	0.48
Right Front Camber (°)	-1.02	-0.27	0.48
Front Toe (°)	-0.11	0.1	0.31
Left SAI (°)	11.52	11.52	11.52
Right SAI (°)	11.52	11.52	11.52
Left Rear Camber (°)	-1.47	-0.97	-0.47
Right Rear Camber (°)	-1.47	-0.97	-0.47
Rear Toe (°)	0.08	0.33	0.58
Thrust Angle	0	0	0
Left Toe Out, Inward (°)	0	0	0
Right Toe Out, Inward (°)	0	0	0
Left Toe Out, Outward (°)	0	0	0
Right Toe Out, Outward (°)	0	38.7	40.7
Left Max Turn, Inward (°)	42.7	38.7	40.7
Right Max Turn, Inward (°)	42.7	35.03	35.03
Left Max Turn, Outward (°)	35.03	35.03	35.03
Right Max Turn, Outward (°)	35.03	-	-

PRIUS C. 175/65R15 NHP10L-AHXGBA NHP10L-AHXVBA Vehicles with white ID mark on the bottom of the rear coil spring - 11/2013

Measurement	Minimum	Preferred	Maximum
Left Front Caster (°)	4.13	4.88	5.63
Right Front Caster (°)	4.13	4.88	5.63
Left Front Camber (°)	-0.98	-0.23	0.52
Right Front Camber (°)	-0.98	-0.23	0.52
Front Toe (°)	-0.11	0.1	0.31
Left SAI (°)	11.43	11.43	11.43
Right SAI (°)	11.43	11.43	11.43
Left Rear Camber (°)	-1.45	-0.95	-0.45
Right Rear Camber (°)	-1.45	-0.95	-0.45
Rear Toe (°)	0.08	0.33	0.58
Thrust Angle	0	0	0
Left Toe Out, Inward (°)	0	0	0
Right Toe Out, Inward (°)	0	0	0
Left Toe Out, Outward (°)	0	0	0
Right Toe Out, Outward (°)	0	38.78	40.78
Left Max Turn, Inward (°)	42.78	38.78	40.78
Right Max Turn, Inward (°)	42.78	35.13	35.13
Left Max Turn, Outward (°)	35.13	35.13	35.13
Right Max Turn, Outward (°)	35.13	-	-

PRIUS C. 175/65R15 NHP10L-AHXRBA - 11/2013

Measurement	Minimum	Preferred	Maximum
Left Front Caster (°)	4.18	4.93	5.68
Right Front Caster (°)	4.18	4.93	5.68
Left Front Camber (°)	-0.98	-0.23	0.52
Right Front Camber (°)	-0.98	-0.23	0.52
Front Toe (°)	-0.11	0.1	0.31
Left SAI (°)	11.47	11.47	11.47
Right SAI (°)	11.47	11.47	11.47
Left Rear Camber (°)	-1.47	-0.97	-0.47
Right Rear Camber (°)	-1.47	-0.97	-0.47
Rear Toe (°)	0.08	0.33	0.58
Thrust Angle	0	0	0
Left Toe Out, Inward (°)	0	0	0
Right Toe Out, Inward (°)	0	0	0
Left Toe Out, Outward (°)	0	0	0
Right Toe Out, Outward (°)	0	38.75	40.75
Left Max Turn, Inward (°)	42.75	38.75	40.75
Right Max Turn, Inward (°)	42.75	35.08	35.08
Left Max Turn, Outward (°)	35.08	35.08	35.08
Right Max Turn, Outward (°)	35.08	-	-

PRIUS C. 175/65R15 NHP10L-AHXRBA Vehicles with white ID mark on the bottom of the rear coil spring - 11/2013

Measurement	Minimum	Preferred	Maximum
Left Front Caster (°)	4.1	4.85	5.6
Right Front Caster (°)	4.1	4.85	5.6
Left Front Camber (°)	-0.93	-0.18	0.57
Right Front Camber (°)	-0.93	-0.18	0.57
Front Toe (°)	-0.11	0.1	0.31
Left SAI (°)	11.37	11.37	11.37
Right SAI (°)	11.37	11.37	11.37
Left Rear Camber (°)	-1.45	-0.95	-0.45
Right Rear Camber (°)	-1.45	-0.95	-0.45
Rear Toe (°)	0.08	0.33	0.58
Thrust Angle	0	0	0
Left Toe Out, Inward (°)	0	0	0
Right Toe Out, Inward (°)	0	0	0
Left Toe Out, Outward (°)	0	0	0
Right Toe Out, Outward (°)	0	38.87	40.87
Left Max Turn, Inward (°)	42.87	38.87	40.87

Right Max Turn, Inward (°)	42.87	35.22	35.22
Left Max Turn, Outward (°)	35.22	35.22	35.22
Right Max Turn, Outward (°)	35.22	-	-

PRIUS C. 195/50 R16 - 11/2013

Measurement	Minimum	Preferred	Maximum
Left Front Caster (°)	4.23	4.98	5.73
Right Front Caster (°)	4.23	4.98	5.73
Left Front Camber (°)	-1.02	-0.27	0.48
Right Front Camber (°)	-1.02	-0.27	0.48
Front Toe (°)	-0.11	0.1	0.31
Left SAI (°)	11.53	11.53	11.53
Right SAI (°)	11.53	11.53	11.53
Left Rear Camber (°)	-1.47	-0.97	-0.47
Right Rear Camber (°)	-1.47	-0.97	-0.47
Rear Toe (°)	0.1	0.35	0.6
Thrust Angle	0	0	0
Left Toe Out, Inward (°)	0	0	0
Right Toe Out, Inward (°)	0	0	0
Left Toe Out, Outward (°)	0	0	0
Right Toe Out, Outward (°)	0	30.53	32.53
Left Max Turn, Inward (°)	34.53	30.53	32.53
Right Max Turn, Inward (°)	34.53	29.47	29.47
Left Max Turn, Outward (°)	29.47	29.47	29.47
Right Max Turn, Outward (°)	29.47	-	-

PRIUS PHV All Models

Measurement	Minimum	Preferred	Maximum
Left Front Caster (°)	5.13	5.88	6.63
Right Front Caster (°)	5.13	5.88	6.63
Left Front Camber (°)	-0.97	-0.22	0.53
Right Front Camber (°)	-0.97	-0.22	0.53
Front Toe (°)	0	0.2	0.4
Left SAI (°)	12.27	12.27	12.27
Right SAI (°)	12.27	12.27	12.27
Left Rear Camber (°)	-1.98	-1.48	-0.98
Right Rear Camber (°)	-1.98	-1.48	-0.98
Rear Toe (°)	-0.01	0.29	0.59
Thrust Angle	0	0	0
Left Toe Out, Inward (°)	0	0	0
Right Toe Out, Inward (°)	0	0	0

Left Toe Out, Outward (°)	0	0	0
Right Toe Out, Outward (°)	0	38.83	40.83
Left Max Turn, Inward (°)	42.83	38.83	40.83
Right Max Turn, Inward (°)	42.83	33.83	33.83
Left Max Turn, Outward (°)	33.83	33.83	33.83
Right Max Turn, Outward (°)	33.83	-	-

PRIUS V 205/60 R16

Measurement	Minimum	Preferred	Maximum
Left Front Caster (°)	5.18	5.93	6.68
Right Front Caster (°)	5.18	5.93	6.68
Left Front Camber (°)	-0.97	-0.22	0.53
Right Front Camber (°)	-0.97	-0.22	0.53
Front Toe (°)	-0.03	0.17	0.37
Left SAI (°)	12.17	12.17	12.17
Right SAI (°)	12.17	12.17	12.17
Left Rear Camber (°)	-1.93	-1.43	-0.93
Right Rear Camber (°)	-1.93	-1.43	-0.93
Rear Toe (°)	-0.06	0.23	0.52
Thrust Angle	0	0	0
Left Toe Out, Inward (°)	0	0	0
Right Toe Out, Inward (°)	0	0	0
Left Toe Out, Outward (°)	0	0	0
Right Toe Out, Outward (°)	0	37.22	39.22
Left Max Turn, Inward (°)	41.22	37.22	39.22
Right Max Turn, Inward (°)	41.22	33.02	33.02
Left Max Turn, Outward (°)	33.02	33.02	33.02
Right Max Turn, Outward (°)	33.02	-	-

PRIUS V 215/50 R17

Measurement	Minimum	Preferred	Maximum
Left Front Caster (°)	5.18	5.93	6.68
Right Front Caster (°)	5.18	5.93	6.68
Left Front Camber (°)	-0.97	-0.22	0.53
Right Front Camber (°)	-0.97	-0.22	0.53
Front Toe (°)	-0.03	0.17	0.37
Left SAI (°)	12.18	12.18	12.18
Right SAI (°)	12.18	12.18	12.18
Left Rear Camber (°)	-1.93	-1.43	-0.93
Right Rear Camber (°)	-1.93	-1.43	-0.93
Rear Toe (°)	-0.06	0.23	0.52

Thrust Angle	0	0	0
Left Toe Out, Inward (°)	0	0	0
Right Toe Out, Inward (°)	0	0	0
Left Toe Out, Outward (°)	0	0	0
Right Toe Out, Outward (°)	0	33.92	35.92
Left Max Turn, Inward (°)	37.92	33.92	35.92
Right Max Turn, Inward (°)	37.92	30.98	30.98
Left Max Turn, Outward (°)	30.98	30.98	30.98
Right Max Turn, Outward (°)	30.98	-	-

RAV4

RAV4 215/70 R16

Measurement	Minimum	Preferred	Maximum
Left Front Caster (°)	4.97	5.72	6.47
Right Front Caster (°)	4.97	5.72	6.47
Left Front Camber (°)	-0.88	-0.13	0.62
Right Front Camber (°)	-0.88	-0.13	0.62
Front Toe (°)	-0.08	0.08	0.24
Left SAI (°)	10.77	11.27	11.77
Right SAI (°)	10.77	11.27	11.77
Left Rear Camber (°)	-1.67	-0.92	-0.17
Right Rear Camber (°)	-1.67	-0.92	-0.17
Rear Toe (°)	0.01	0.18	0.35
Thrust Angle	0	0	0
Left Toe Out, Inward (°)	0	0	0
Right Toe Out, Inward (°)	0	0	0
Left Toe Out, Outward (°)	0	0	0
Right Toe Out, Outward (°)	0	36.9	38.9
Left Max Turn, Inward (°)	40.9	36.9	38.9
Right Max Turn, Inward (°)	40.9	32.3	32.3
Left Max Turn, Outward (°)	32.3	32.3	32.3
Right Max Turn, Outward (°)	32.3	-	-

RAV4 225/65 R17 and 235/55 R18 2AR-FE

Measurement	Minimum	Preferred	Maximum
Left Front Caster (°)	5.08	5.83	6.58
Right Front Caster (°)	5.08	5.83	6.58
Left Front Camber (°)	-0.93	-0.18	0.57
Right Front Camber (°)	-0.93	-0.18	0.57
Front Toe (°)	-0.08	0.08	0.24
Left SAI (°)	10.93	11.43	11.93

Right SAI (°)	10.93	11.43	11.93
Left Rear Camber (°)	-1.82	-1.07	-0.32
Right Rear Camber (°)	-1.82	-1.07	-0.32
Rear Toe (°)	0.01	0.18	0.35
Thrust Angle	0	0	0
Left Toe Out, Inward (°)	0	0	0
Right Toe Out, Inward (°)	0	0	0
Left Toe Out, Outward (°)	0	0	0
Right Toe Out, Outward (°)	0	36.7	38.7
Left Max Turn, Inward (°)	40.7	36.7	38.7
Right Max Turn, Inward (°)	40.7	32.2	32.2
Left Max Turn, Outward (°)	32.2	32.2	32.2
Right Max Turn, Outward (°)	32.2	-	-

RAV4 225/65 R17 and 235/55 R18 2GR-FE

Measurement	Minimum	Preferred	Maximum
Left Front Caster (°)	5.08	5.83	6.58
Right Front Caster (°)	5.08	5.83	6.58
Left Front Camber (°)	-0.93	-0.18	0.57
Right Front Camber (°)	-0.93	-0.18	0.57
Front Toe (°)	-0.08	0.08	0.24
Left SAI (°)	10.93	11.43	11.93
Right SAI (°)	10.93	11.43	11.93
Left Rear Camber (°)	-1.82	-1.07	-0.32
Right Rear Camber (°)	-1.82	-1.07	-0.32
Rear Toe (°)	0.01	0.18	0.35
Thrust Angle	0	0	0
Left Toe Out, Inward (°)	0	0	0
Right Toe Out, Inward (°)	0	0	0
Left Toe Out, Outward (°)	0	0	0
Right Toe Out, Outward (°)	0	33.8	35.8
Left Max Turn, Inward (°)	37.9	33.8	35.8
Right Max Turn, Inward (°)	37.9	30.5	30.5
Left Max Turn, Outward (°)	30.5	30.5	30.5
Right Max Turn, Outward (°)	30.5	-	-

RAV4 225/65 R17 w/third seat

Measurement	Minimum	Preferred	Maximum
Left Front Caster (°)	4.87	5.62	6.37
Right Front Caster (°)	4.87	5.62	6.37
Left Front Camber (°)	-0.93	-0.18	0.57

Right Front Camber (°)	-0.93	-0.18	0.57
Front Toe (°)	-0.08	0.08	0.24
Left SAI (°)	10.93	11.43	11.93
Right SAI (°)	10.93	11.43	11.93
Left Rear Camber (°)	-1.62	-0.87	-0.12
Right Rear Camber (°)	-1.62	-0.87	-0.12
Rear Toe (°)	0.01	0.18	0.35
Thrust Angle	0	0	0
Left Toe Out, Inward (°)	0	0	0
Right Toe Out, Inward (°)	0	0	0
Left Toe Out, Outward (°)	0	0	0
Right Toe Out, Outward (°)	0	33.8	35.8
Left Max Turn, Inward (°)	37.9	33.8	35.8
Right Max Turn, Inward (°)	37.9	30.5	30.5
Left Max Turn, Outward (°)	30.5	30.5	30.5
Right Max Turn, Outward (°)	30.5	-	-

RAV4 EV All Models

Measurement	Minimum	Preferred	Maximum
Left Front Caster (°)	5.08	5.83	6.58
Right Front Caster (°)	5.08	5.83	6.58
Left Front Camber (°)	-0.93	-0.18	0.57
Right Front Camber (°)	-0.93	-0.18	0.57
Front Toe (°)	-0.08	0.08	0.24
Left SAI (°)	10.93	11.43	11.93
Right SAI (°)	10.93	11.43	11.93
Left Rear Camber (°)	-1.82	-1.07	-0.32
Right Rear Camber (°)	-1.82	-1.07	-0.32
Rear Toe (°)	0.01	0.18	0.35
Thrust Angle	0	0	0
Left Toe Out, Inward (°)	0	0	0
Right Toe Out, Inward (°)	0	0	0
Left Toe Out, Outward (°)	0	0	0
Right Toe Out, Outward (°)	0	36.73	38.73
Left Max Turn, Inward (°)	40.73	36.73	38.73
Right Max Turn, Inward (°)	40.73	32.22	32.22
Left Max Turn, Outward (°)	32.22	32.22	32.22
Right Max Turn, Outward (°)	32.22	-	-

SEQUOIA

SEQUOIA UPK60L-GKTLKA 2WD Air Spring Rear Suspension P275/55R20 8JJ

Measurement	Minimum	Preferred	Maximum
Left Front Caster (°)	3	3.75	4.5
Right Front Caster (°)	3	3.75	4.5
Left Front Camber (°)	-0.88	-0.13	0.62
Right Front Camber (°)	-0.88	-0.13	0.62
Front Toe (°)	0.19	0.3	0.41
Left SAI (°)	12.39	13.14	13.89
Right SAI (°)	12.39	13.14	13.89
Left Rear Camber (°)	-2.43	-1.68	-0.93
Right Rear Camber (°)	-2.43	-1.68	-0.93
Rear Toe (°)	-0.09	-0.02	0.05
Thrust Angle	0	0	0
Left Toe Out, Inward (°)	0	0	0
Right Toe Out, Inward (°)	0	0	0
Left Toe Out, Outward (°)	0	0	0
Right Toe Out, Outward (°)	0	41.02	41.02
Left Max Turn, Inward (°)	41.02	41.02	41.02
Right Max Turn, Inward (°)	41.02	36.42	36.42
Left Max Turn, Outward (°)	36.42	36.42	36.42
Right Max Turn, Outward (°)	36.42	-	-

SEQUOIA UPK60L-GKTLKA 2WD Air Spring Rear Suspension P275/65R18 8JJ

Measurement	Minimum	Preferred	Maximum
Left Front Caster (°)	3	3.75	4.5
Right Front Caster (°)	3	3.75	4.5
Left Front Camber (°)	-0.88	-0.13	0.62
Right Front Camber (°)	-0.88	-0.13	0.62
Front Toe (°)	0.2	0.33	0.46
Left SAI (°)	12.39	13.14	13.89
Right SAI (°)	12.39	13.14	13.89
Left Rear Camber (°)	-2.43	-1.68	-0.93
Right Rear Camber (°)	-2.43	-1.68	-0.93
Rear Toe (°)	-0.09	-0.02	0.05
Thrust Angle	0	0	0
Left Toe Out, Inward (°)	0	0	0
Right Toe Out, Inward (°)	0	0	0
Left Toe Out, Outward (°)	0	0	0
Right Toe Out, Outward (°)	0	41.02	41.02
Left Max Turn, Inward (°)	41.02	41.02	41.02
Right Max Turn, Inward (°)	41.02	36.42	36.42
Left Max Turn, Outward (°)	36.42	36.42	36.42

Right Max Turn, Outward (°)	36.42	-	-

SEQUOIA UPK60L-GKTLKA 2WD Coil Spring Rear Suspension P275/55R20 8JJ

Measurement	**Minimum**	**Preferred**	**Maximum**
Left Front Caster (°)	3	3.75	4.5
Right Front Caster (°)	3	3.75	4.5
Left Front Camber (°)	-0.88	-0.13	0.62
Right Front Camber (°)	-0.88	-0.13	0.62
Front Toe (°)	0.19	0.3	0.41
Left SAI (°)	12.39	13.14	13.89
Right SAI (°)	12.39	13.14	13.89
Left Rear Camber (°)	-2.17	-1.42	-0.67
Right Rear Camber (°)	-2.17	-1.42	-0.67
Rear Toe (°)	-0.1	-0.03	0.04
Thrust Angle	0	0	0
Left Toe Out, Inward (°)	0	0	0
Right Toe Out, Inward (°)	0	0	0
Left Toe Out, Outward (°)	0	0	0
Right Toe Out, Outward (°)	0	41.02	41.02
Left Max Turn, Inward (°)	41.02	41.02	41.02
Right Max Turn, Inward (°)	41.02	36.42	36.42
Left Max Turn, Outward (°)	36.42	36.42	36.42
Right Max Turn, Outward (°)	36.42	-	-

SEQUOIA UPK60L-GKTLKA 2WD Coil Spring Rear Suspension P275/65R18 8JJ

Measurement	**Minimum**	**Preferred**	**Maximum**
Left Front Caster (°)	3	3.75	4.5
Right Front Caster (°)	3	3.75	4.5
Left Front Camber (°)	-0.88	-0.13	0.62
Right Front Camber (°)	-0.88	-0.13	0.62
Front Toe (°)	0.2	0.33	0.46
Left SAI (°)	12.39	13.14	13.89
Right SAI (°)	12.39	13.14	13.89
Left Rear Camber (°)	-2.17	-1.42	-0.67
Right Rear Camber (°)	-2.17	-1.42	-0.67
Rear Toe (°)	-0.1	-0.03	0.04
Thrust Angle	0	0	0
Left Toe Out, Inward (°)	0	0	0
Right Toe Out, Inward (°)	0	0	0
Left Toe Out, Outward (°)	0	0	0
Right Toe Out, Outward (°)	0	41.02	41.02

Left Max Turn, Inward (°)	41.02	41.02	41.02
Right Max Turn, Inward (°)	41.02	36.42	36.42
Left Max Turn, Outward (°)	36.42	36.42	36.42
Right Max Turn, Outward (°)	36.42	-	-

SEQUOIA UPK60L-GKTLKA 4WD Air Spring Rear Suspension P275/55R20 8JJ

Measurement	**Minimum**	**Preferred**	**Maximum**
Left Front Caster (°)	3	3.75	4.5
Right Front Caster (°)	3	3.75	4.5
Left Front Camber (°)	-0.88	-0.13	0.62
Right Front Camber (°)	-0.88	-0.13	0.62
Front Toe (°)	0.19	0.3	0.41
Left SAI (°)	12.39	13.14	13.89
Right SAI (°)	12.39	13.14	13.89
Left Rear Camber (°)	-2.3	-1.55	-0.8
Right Rear Camber (°)	-2.3	-1.55	-0.8
Rear Toe (°)	-0.1	-0.03	0.04
Thrust Angle	0	0	0
Left Toe Out, Inward (°)	0	0	0
Right Toe Out, Inward (°)	0	0	0
Left Toe Out, Outward (°)	0	0	0
Right Toe Out, Outward (°)	0	41.02	41.02
Left Max Turn, Inward (°)	41.02	41.02	41.02
Right Max Turn, Inward (°)	41.02	36.42	36.42
Left Max Turn, Outward (°)	36.42	36.42	36.42
Right Max Turn, Outward (°)	36.42	-	-

SEQUOIA UPK60L-GKTLKA 4WD Air Spring Rear Suspension P275/65R18 8JJ

Measurement	**Minimum**	**Preferred**	**Maximum**
Left Front Caster (°)	3	3.75	4.5
Right Front Caster (°)	3	3.75	4.5
Left Front Camber (°)	-0.88	-0.13	0.62
Right Front Camber (°)	-0.88	-0.13	0.62
Front Toe (°)	0.2	0.33	0.46
Left SAI (°)	12.39	13.14	13.89
Right SAI (°)	12.39	13.14	13.89
Left Rear Camber (°)	-2.3	-1.55	-0.8
Right Rear Camber (°)	-2.3	-1.55	-0.8
Rear Toe (°)	-0.1	-0.03	0.04
Thrust Angle	0	0	0
Left Toe Out, Inward (°)	0	0	0

Right Toe Out, Inward (°)	0	0	0
Left Toe Out, Outward (°)	0	0	0
Right Toe Out, Outward (°)	0	41.02	41.02
Left Max Turn, Inward (°)	41.02	41.02	41.02
Right Max Turn, Inward (°)	41.02	36.42	36.42
Left Max Turn, Outward (°)	36.42	36.42	36.42
Right Max Turn, Outward (°)	36.42	-	-

SEQUOIA UPK60L-GKTLKA 4WD Coil Spring Rear Suspension P275/55R20 8JJ

Measurement	Minimum	Preferred	Maximum
Left Front Caster (°)	3	3.75	4.5
Right Front Caster (°)	3	3.75	4.5
Left Front Camber (°)	-0.88	-0.13	0.62
Right Front Camber (°)	-0.88	-0.13	0.62
Front Toe (°)	0.19	0.3	0.41
Left SAI (°)	12.39	13.14	13.89
Right SAI (°)	12.39	13.14	13.89
Left Rear Camber (°)	-2.03	-1.28	-0.53
Right Rear Camber (°)	-2.03	-1.28	-0.53
Rear Toe (°)	-0.12	-0.05	0.02
Thrust Angle	0	0	0
Left Toe Out, Inward (°)	0	0	0
Right Toe Out, Inward (°)	0	0	0
Left Toe Out, Outward (°)	0	0	0
Right Toe Out, Outward (°)	0	41.02	41.02
Left Max Turn, Inward (°)	41.02	41.02	41.02
Right Max Turn, Inward (°)	41.02	36.42	36.42
Left Max Turn, Outward (°)	36.42	36.42	36.42
Right Max Turn, Outward (°)	36.42	-	-

SEQUOIA UPK60L-GKTLKA 4WD Coil Spring Rear Suspension P275/65R18 8JJ

Measurement	Minimum	Preferred	Maximum
Left Front Caster (°)	3	3.75	4.5
Right Front Caster (°)	3	3.75	4.5
Left Front Camber (°)	-0.88	-0.13	0.62
Right Front Camber (°)	-0.88	-0.13	0.62
Front Toe (°)	0.2	0.33	0.46
Left SAI (°)	12.39	13.14	13.89
Right SAI (°)	12.39	13.14	13.89
Left Rear Camber (°)	-2.03	-1.28	-0.53
Right Rear Camber (°)	-2.03	-1.28	-0.53

Rear Toe (°)	-0.12	-0.05	0.02
Thrust Angle	0	0	0
Left Toe Out, Inward (°)	0	0	0
Right Toe Out, Inward (°)	0	0	0
Left Toe Out, Outward (°)	0	0	0
Right Toe Out, Outward (°)	0	41.02	41.02
Left Max Turn, Inward (°)	41.02	41.02	41.02
Right Max Turn, Inward (°)	41.02	36.42	36.42
Left Max Turn, Outward (°)	36.42	36.42	36.42
Right Max Turn, Outward (°)	36.42	-	-

SEQUOIA UPK60L-GKTSKA 2WD Air Spring Rear Suspension P275/55R20 8JJ

Measurement	Minimum	Preferred	Maximum
Left Front Caster (°)	2.99	3.74	4.49
Right Front Caster (°)	2.99	3.74	4.49
Left Front Camber (°)	-0.88	-0.13	0.62
Right Front Camber (°)	-0.88	-0.13	0.62
Front Toe (°)	0.19	0.3	0.41
Left SAI (°)	12.39	13.14	13.89
Right SAI (°)	12.39	13.14	13.89
Left Rear Camber (°)	-2.43	-1.68	-0.93
Right Rear Camber (°)	-2.43	-1.68	-0.93
Rear Toe (°)	-0.09	-0.02	0.05
Thrust Angle	0	0	0
Left Toe Out, Inward (°)	0	0	0
Right Toe Out, Inward (°)	0	0	0
Left Toe Out, Outward (°)	0	0	0
Right Toe Out, Outward (°)	0	41.02	41.02
Left Max Turn, Inward (°)	41.02	41.02	41.02
Right Max Turn, Inward (°)	41.02	36.42	36.42
Left Max Turn, Outward (°)	36.42	36.42	36.42
Right Max Turn, Outward (°)	36.42	-	-

SEQUOIA UPK60L-GKTSKA 2WD Air Spring Rear Suspension P275/65R18 8JJ

Measurement	Minimum	Preferred	Maximum
Left Front Caster (°)	2.99	3.74	4.49
Right Front Caster (°)	2.99	3.74	4.49
Left Front Camber (°)	-0.88	-0.13	0.62
Right Front Camber (°)	-0.88	-0.13	0.62
Front Toe (°)	0.2	0.33	0.46
Left SAI (°)	12.39	13.14	13.89

Right SAI (°)	12.39	13.14	13.89
Left Rear Camber (°)	-2.43	-1.68	-0.93
Right Rear Camber (°)	-2.43	-1.68	-0.93
Rear Toe (°)	-0.09	-0.02	0.05
Thrust Angle	0	0	0
Left Toe Out, Inward (°)	0	0	0
Right Toe Out, Inward (°)	0	0	0
Left Toe Out, Outward (°)	0	0	0
Right Toe Out, Outward (°)	0	41.02	41.02
Left Max Turn, Inward (°)	41.02	41.02	41.02
Right Max Turn, Inward (°)	41.02	36.42	36.42
Left Max Turn, Outward (°)	36.42	36.42	36.42
Right Max Turn, Outward (°)	36.42	-	-

SEQUOIA UPK60L-GKTSKA 2WD Coil Spring Rear Suspension P275/55R20 8JJ

Measurement	Minimum	Preferred	Maximum
Left Front Caster (°)	2.98	3.73	4.48
Right Front Caster (°)	2.98	3.73	4.48
Left Front Camber (°)	-0.88	-0.13	0.62
Right Front Camber (°)	-0.88	-0.13	0.62
Front Toe (°)	0.19	0.3	0.41
Left SAI (°)	12.39	13.14	13.89
Right SAI (°)	12.39	13.14	13.89
Left Rear Camber (°)	-2.17	-1.42	-0.67
Right Rear Camber (°)	-2.17	-1.42	-0.67
Rear Toe (°)	-0.1	-0.03	0.04
Thrust Angle	0	0	0
Left Toe Out, Inward (°)	0	0	0
Right Toe Out, Inward (°)	0	0	0
Left Toe Out, Outward (°)	0	0	0
Right Toe Out, Outward (°)	0	41.02	41.02
Left Max Turn, Inward (°)	41.02	41.02	41.02
Right Max Turn, Inward (°)	41.02	36.42	36.42
Left Max Turn, Outward (°)	36.42	36.42	36.42
Right Max Turn, Outward (°)	36.42	-	-

SEQUOIA UPK60L-GKTSKA 2WD Coil Spring Rear Suspension P275/65R18 8JJ

Measurement	Minimum	Preferred	Maximum
Left Front Caster (°)	2.99	3.74	4.49
Right Front Caster (°)	2.99	3.74	4.49
Left Front Camber (°)	-0.88	-0.13	0.62

Right Front Camber (°)	-0.88	-0.13	0.62
Front Toe (°)	0.2	0.33	0.46
Left SAI (°)	12.39	13.14	13.89
Right SAI (°)	12.39	13.14	13.89
Left Rear Camber (°)	-2.17	-1.42	-0.67
Right Rear Camber (°)	-2.17	-1.42	-0.67
Rear Toe (°)	-0.1	-0.03	0.04
Thrust Angle	0	0	0
Left Toe Out, Inward (°)	0	0	0
Right Toe Out, Inward (°)	0	0	0
Left Toe Out, Outward (°)	0	0	0
Right Toe Out, Outward (°)	0	41.02	41.02
Left Max Turn, Inward (°)	41.02	41.02	41.02
Right Max Turn, Inward (°)	41.02	36.42	36.42
Left Max Turn, Outward (°)	36.42	36.42	36.42
Right Max Turn, Outward (°)	36.42	-	-

SEQUOIA UPK60L-GKTSKA 4WD Air Spring Rear Suspension P275/55R20 8JJ

Measurement	Minimum	Preferred	Maximum
Left Front Caster (°)	2.98	3.73	4.48
Right Front Caster (°)	2.98	3.73	4.48
Left Front Camber (°)	-0.88	-0.13	0.62
Right Front Camber (°)	-0.88	-0.13	0.62
Front Toe (°)	0.19	0.3	0.41
Left SAI (°)	12.39	13.14	13.89
Right SAI (°)	12.39	13.14	13.89
Left Rear Camber (°)	-2.3	-1.55	-0.8
Right Rear Camber (°)	-2.3	-1.55	-0.8
Rear Toe (°)	-0.1	-0.03	0.04
Thrust Angle	0	0	0
Left Toe Out, Inward (°)	0	0	0
Right Toe Out, Inward (°)	0	0	0
Left Toe Out, Outward (°)	0	0	0
Right Toe Out, Outward (°)	0	41.02	41.02
Left Max Turn, Inward (°)	41.02	41.02	41.02
Right Max Turn, Inward (°)	41.02	36.42	36.42
Left Max Turn, Outward (°)	36.42	36.42	36.42
Right Max Turn, Outward (°)	36.42	-	-

SEQUOIA UPK60L-GKTSKA 4WD Air Spring Rear Suspension P275/65R18 8JJ

Measurement	Minimum	Preferred	Maximum

Left Front Caster (°)	2.99	3.74	4.49
Right Front Caster (°)	2.99	3.74	4.49
Left Front Camber (°)	-0.88	-0.13	0.62
Right Front Camber (°)	-0.88	-0.13	0.62
Front Toe (°)	0.2	0.33	0.46
Left SAI (°)	12.39	13.14	13.89
Right SAI (°)	12.39	13.14	13.89
Left Rear Camber (°)	-2.3	-1.55	-0.8
Right Rear Camber (°)	-2.3	-1.55	-0.8
Rear Toe (°)	-0.1	-0.03	0.04
Thrust Angle	0	0	0
Left Toe Out, Inward (°)	0	0	0
Right Toe Out, Inward (°)	0	0	0
Left Toe Out, Outward (°)	0	0	0
Right Toe Out, Outward (°)	0	41.02	41.02
Left Max Turn, Inward (°)	41.02	41.02	41.02
Right Max Turn, Inward (°)	41.02	36.42	36.42
Left Max Turn, Outward (°)	36.42	36.42	36.42
Right Max Turn, Outward (°)	36.42	-	-

SEQUOIA UPK60L-GKTSKA 4WD Coil Spring Rear Suspension P275/55R20 8JJ

Measurement	Minimum	Preferred	Maximum
Left Front Caster (°)	2.98	3.73	4.48
Right Front Caster (°)	2.98	3.73	4.48
Left Front Camber (°)	-0.88	-0.13	0.62
Right Front Camber (°)	-0.88	-0.13	0.62
Front Toe (°)	0.19	0.3	0.41
Left SAI (°)	12.39	13.14	13.89
Right SAI (°)	12.39	13.14	13.89
Left Rear Camber (°)	-2.03	-1.28	-0.53
Right Rear Camber (°)	-2.03	-1.28	-0.53
Rear Toe (°)	-0.12	-0.05	0.02
Thrust Angle	0	0	0
Left Toe Out, Inward (°)	0	0	0
Right Toe Out, Inward (°)	0	0	0
Left Toe Out, Outward (°)	0	0	0
Right Toe Out, Outward (°)	0	41.02	41.02
Left Max Turn, Inward (°)	41.02	41.02	41.02
Right Max Turn, Inward (°)	41.02	36.42	36.42
Left Max Turn, Outward (°)	36.42	36.42	36.42
Right Max Turn, Outward (°)	36.42	-	-

SEQUOIA UPK60L-GKTSKA 4WD Coil Spring Rear Suspension P275/65R18 8JJ

Measurement	Minimum	Preferred	Maximum
Left Front Caster (°)	2.99	3.74	4.49
Right Front Caster (°)	2.99	3.74	4.49
Left Front Camber (°)	-0.88	-0.13	0.62
Right Front Camber (°)	-0.88	-0.13	0.62
Front Toe (°)	0.2	0.33	0.46
Left SAI (°)	12.39	13.14	13.89
Right SAI (°)	12.39	13.14	13.89
Left Rear Camber (°)	-2.03	-1.28	-0.53
Right Rear Camber (°)	-2.03	-1.28	-0.53
Rear Toe (°)	-0.12	-0.05	0.02
Thrust Angle	0	0	0
Left Toe Out, Inward (°)	0	0	0
Right Toe Out, Inward (°)	0	0	0
Left Toe Out, Outward (°)	0	0	0
Right Toe Out, Outward (°)	0	41.02	41.02
Left Max Turn, Inward (°)	41.02	41.02	41.02
Right Max Turn, Inward (°)	41.02	36.42	36.42
Left Max Turn, Outward (°)	36.42	36.42	36.42
Right Max Turn, Outward (°)	36.42	-	-

SEQUOIA UPK65L-GKTLKA 2WD Air Spring Rear Suspension P275/55R20 8JJ

Measurement	Minimum	Preferred	Maximum
Left Front Caster (°)	2.84	3.59	4.34
Right Front Caster (°)	2.84	3.59	4.34
Left Front Camber (°)	-0.76	-0.01	0.74
Right Front Camber (°)	-0.76	-0.01	0.74
Front Toe (°)	0.16	0.27	0.38
Left SAI (°)	12.29	13.04	13.79
Right SAI (°)	12.29	13.04	13.79
Left Rear Camber (°)	-2.43	-1.68	-0.93
Right Rear Camber (°)	-2.43	-1.68	-0.93
Rear Toe (°)	-0.09	-0.02	0.05
Thrust Angle	0	0	0
Left Toe Out, Inward (°)	0	0	0
Right Toe Out, Inward (°)	0	0	0
Left Toe Out, Outward (°)	0	0	0
Right Toe Out, Outward (°)	0	41.28	41.28
Left Max Turn, Inward (°)	41.28	41.28	41.28
Right Max Turn, Inward (°)	41.28	36.42	36.42

Left Max Turn, Outward (°)	36.42	36.42	36.42
Right Max Turn, Outward (°)	36.42	-	-

SEQUOIA UPK65L-GKTLKA 2WD Air Spring Rear Suspension P275/65R18 8JJ

Measurement	**Minimum**	**Preferred**	**Maximum**
Left Front Caster (°)	2.89	3.64	4.39
Right Front Caster (°)	2.89	3.64	4.39
Left Front Camber (°)	-0.76	-0.01	0.74
Right Front Camber (°)	-0.76	-0.01	0.74
Front Toe (°)	0.17	0.3	0.43
Left SAI (°)	12.29	13.04	13.79
Right SAI (°)	12.29	13.04	13.79
Left Rear Camber (°)	-2.43	-1.68	-0.93
Right Rear Camber (°)	-2.43	-1.68	-0.93
Rear Toe (°)	-0.09	-0.02	0.05
Thrust Angle	0	0	0
Left Toe Out, Inward (°)	0	0	0
Right Toe Out, Inward (°)	0	0	0
Left Toe Out, Outward (°)	0	0	0
Right Toe Out, Outward (°)	0	41.28	41.28
Left Max Turn, Inward (°)	41.28	41.28	41.28
Right Max Turn, Inward (°)	41.28	36.42	36.42
Left Max Turn, Outward (°)	36.42	36.42	36.42
Right Max Turn, Outward (°)	36.42	-	-

SEQUOIA UPK65L-GKTLKA 2WD Coil Spring Rear Suspension P275/55R20 8JJ

Measurement	**Minimum**	**Preferred**	**Maximum**
Left Front Caster (°)	2.84	3.59	4.34
Right Front Caster (°)	2.84	3.59	4.34
Left Front Camber (°)	-0.76	-0.01	0.74
Right Front Camber (°)	-0.76	-0.01	0.74
Front Toe (°)	0.16	0.27	0.38
Left SAI (°)	12.29	13.04	13.79
Right SAI (°)	12.29	13.04	13.79
Left Rear Camber (°)	-2.17	-1.42	-0.67
Right Rear Camber (°)	-2.17	-1.42	-0.67
Rear Toe (°)	-0.1	-0.03	0.04
Thrust Angle	0	0	0
Left Toe Out, Inward (°)	0	0	0
Right Toe Out, Inward (°)	0	0	0
Left Toe Out, Outward (°)	0	0	0

Right Toe Out, Outward (°)	0	41.28	41.28
Left Max Turn, Inward (°)	41.28	41.28	41.28
Right Max Turn, Inward (°)	41.28	36.42	36.42
Left Max Turn, Outward (°)	36.42	36.42	36.42
Right Max Turn, Outward (°)	36.42	-	-

SEQUOIA UPK65L-GKTLKA 2WD Coil Spring Rear Suspension P275/65R18 8JJ

Measurement	Minimum	Preferred	Maximum
Left Front Caster (°)	2.89	3.64	4.39
Right Front Caster (°)	2.89	3.64	4.39
Left Front Camber (°)	-0.76	-0.01	0.74
Right Front Camber (°)	-0.76	-0.01	0.74
Front Toe (°)	0.17	0.3	0.43
Left SAI (°)	12.29	13.04	13.79
Right SAI (°)	12.29	13.04	13.79
Left Rear Camber (°)	-2.17	-1.42	-0.67
Right Rear Camber (°)	-2.17	-1.42	-0.67
Rear Toe (°)	-0.1	-0.03	0.04
Thrust Angle	0	0	0
Left Toe Out, Inward (°)	0	0	0
Right Toe Out, Inward (°)	0	0	0
Left Toe Out, Outward (°)	0	0	0
Right Toe Out, Outward (°)	0	41.28	41.28
Left Max Turn, Inward (°)	41.28	41.28	41.28
Right Max Turn, Inward (°)	41.28	36.42	36.42
Left Max Turn, Outward (°)	36.42	36.42	36.42
Right Max Turn, Outward (°)	36.42	-	-

SEQUOIA UPK65L-GKTLKA 4WD Air Spring Rear Suspension P275/55R20 8JJ

Measurement	Minimum	Preferred	Maximum
Left Front Caster (°)	2.84	3.59	4.34
Right Front Caster (°)	2.84	3.59	4.34
Left Front Camber (°)	-0.76	-0.01	0.74
Right Front Camber (°)	-0.76	-0.01	0.74
Front Toe (°)	0.16	0.27	0.38
Left SAI (°)	12.29	13.04	13.79
Right SAI (°)	12.29	13.04	13.79
Left Rear Camber (°)	-2.3	-1.55	-0.8
Right Rear Camber (°)	-2.3	-1.55	-0.8
Rear Toe (°)	-0.1	-0.03	0.04
Thrust Angle	0	0	0

Left Toe Out, Inward (°)	0	0	0
Right Toe Out, Inward (°)	0	0	0
Left Toe Out, Outward (°)	0	0	0
Right Toe Out, Outward (°)	0	41.28	41.28
Left Max Turn, Inward (°)	41.28	41.28	41.28
Right Max Turn, Inward (°)	41.28	36.42	36.42
Left Max Turn, Outward (°)	36.42	36.42	36.42
Right Max Turn, Outward (°)	36.42	-	-

SEQUOIA UPK65L-GKTLKA 4WD Air Spring Rear Suspension P275/65R18 8JJ

Measurement	Minimum	Preferred	Maximum
Left Front Caster (°)	2.89	3.64	4.39
Right Front Caster (°)	2.89	3.64	4.39
Left Front Camber (°)	-0.76	-0.01	0.74
Right Front Camber (°)	-0.76	-0.01	0.74
Front Toe (°)	0.17	0.3	0.43
Left SAI (°)	12.29	13.04	13.79
Right SAI (°)	12.29	13.04	13.79
Left Rear Camber (°)	-2.3	-1.55	-0.8
Right Rear Camber (°)	-2.3	-1.55	-0.8
Rear Toe (°)	-0.1	-0.03	0.04
Thrust Angle	0	0	0
Left Toe Out, Inward (°)	0	0	0
Right Toe Out, Inward (°)	0	0	0
Left Toe Out, Outward (°)	0	0	0
Right Toe Out, Outward (°)	0	41.28	41.28
Left Max Turn, Inward (°)	41.28	41.28	41.28
Right Max Turn, Inward (°)	41.28	36.42	36.42
Left Max Turn, Outward (°)	36.42	36.42	36.42
Right Max Turn, Outward (°)	36.42	-	-

SEQUOIA UPK65L-GKTLKA 4WD Coil Spring Rear Suspension P275/55R20 8JJ

Measurement	Minimum	Preferred	Maximum
Left Front Caster (°)	2.84	3.59	4.34
Right Front Caster (°)	2.84	3.59	4.34
Left Front Camber (°)	-0.76	-0.01	0.74
Right Front Camber (°)	-0.76	-0.01	0.74
Front Toe (°)	0.16	0.27	0.38
Left SAI (°)	12.29	13.04	13.79
Right SAI (°)	12.29	13.04	13.79
Left Rear Camber (°)	-2.03	-1.28	-0.53

Right Rear Camber (°)	-2.03	-1.28	-0.53
Rear Toe (°)	-0.12	-0.05	0.02
Thrust Angle	0	0	0
Left Toe Out, Inward (°)	0	0	0
Right Toe Out, Inward (°)	0	0	0
Left Toe Out, Outward (°)	0	0	0
Right Toe Out, Outward (°)	0	41.28	41.28
Left Max Turn, Inward (°)	41.28	41.28	41.28
Right Max Turn, Inward (°)	41.28	36.42	36.42
Left Max Turn, Outward (°)	36.42	36.42	36.42
Right Max Turn, Outward (°)	36.42	-	-

SEQUOIA UPK65L-GKTLKA 4WD Coil Spring Rear Suspension P275/65R18 8JJ

Measurement	Minimum	Preferred	Maximum
Left Front Caster (°)	2.89	3.64	4.39
Right Front Caster (°)	2.89	3.64	4.39
Left Front Camber (°)	-0.76	-0.01	0.74
Right Front Camber (°)	-0.76	-0.01	0.74
Front Toe (°)	0.17	0.3	0.43
Left SAI (°)	12.29	13.04	13.79
Right SAI (°)	12.29	13.04	13.79
Left Rear Camber (°)	-2.03	-1.28	-0.53
Right Rear Camber (°)	-2.03	-1.28	-0.53
Rear Toe (°)	-0.12	-0.05	0.02
Thrust Angle	0	0	0
Left Toe Out, Inward (°)	0	0	0
Right Toe Out, Inward (°)	0	0	0
Left Toe Out, Outward (°)	0	0	0
Right Toe Out, Outward (°)	0	41.28	41.28
Left Max Turn, Inward (°)	41.28	41.28	41.28
Right Max Turn, Inward (°)	41.28	36.42	36.42
Left Max Turn, Outward (°)	36.42	36.42	36.42
Right Max Turn, Outward (°)	36.42	-	-

SEQUOIA UPK65L-GKTSKA 2WD Air Spring Rear Suspension P275/55R20 8JJ

Measurement	Minimum	Preferred	Maximum
Left Front Caster (°)	2.83	3.58	4.33
Right Front Caster (°)	2.83	3.58	4.33
Left Front Camber (°)	-0.76	-0.01	0.74
Right Front Camber (°)	-0.76	-0.01	0.74
Front Toe (°)	0.16	0.27	0.38

Left SAI (°)	12.3	13.05	13.8
Right SAI (°)	12.3	13.05	13.8
Left Rear Camber (°)	-2.43	-1.68	-0.93
Right Rear Camber (°)	-2.43	-1.68	-0.93
Rear Toe (°)	-0.09	-0.02	0.05
Thrust Angle	0	0	0
Left Toe Out, Inward (°)	0	0	0
Right Toe Out, Inward (°)	0	0	0
Left Toe Out, Outward (°)	0	0	0
Right Toe Out, Outward (°)	0	41.28	41.28
Left Max Turn, Inward (°)	41.28	41.28	41.28
Right Max Turn, Inward (°)	41.28	36.41	36.41
Left Max Turn, Outward (°)	36.41	36.41	36.41
Right Max Turn, Outward (°)	36.41	-	-

SEQUOIA UPK65L-GKTSKA 2WD Air Spring Rear Suspension P275/65R18 8JJ

Measurement	Minimum	Preferred	Maximum
Left Front Caster (°)	2.88	3.63	4.38
Right Front Caster (°)	2.88	3.63	4.38
Left Front Camber (°)	-0.76	-0.01	0.74
Right Front Camber (°)	-0.76	-0.01	0.74
Front Toe (°)	0.17	0.3	0.43
Left SAI (°)	12.3	13.05	13.8
Right SAI (°)	12.3	13.05	13.8
Left Rear Camber (°)	-2.43	-1.68	-0.93
Right Rear Camber (°)	-2.43	-1.68	-0.93
Rear Toe (°)	-0.09	-0.02	0.05
Thrust Angle	0	0	0
Left Toe Out, Inward (°)	0	0	0
Right Toe Out, Inward (°)	0	0	0
Left Toe Out, Outward (°)	0	0	0
Right Toe Out, Outward (°)	0	41.28	41.28
Left Max Turn, Inward (°)	41.28	41.28	41.28
Right Max Turn, Inward (°)	41.28	36.41	36.41
Left Max Turn, Outward (°)	36.41	36.41	36.41
Right Max Turn, Outward (°)	36.41	-	-

SEQUOIA UPK65L-GKTSKA 2WD Coil Spring Rear Suspension P275/55R20 8JJ

Measurement	Minimum	Preferred	Maximum
Left Front Caster (°)	2.83	3.58	4.33
Right Front Caster (°)	2.83	3.58	4.33

Left Front Camber (°)	-0.76	-0.01	0.74
Right Front Camber (°)	-0.76	-0.01	0.74
Front Toe (°)	0.16	0.27	0.38
Left SAI (°)	12.3	13.05	13.8
Right SAI (°)	12.3	13.05	13.8
Left Rear Camber (°)	-2.17	-1.42	-0.67
Right Rear Camber (°)	-2.17	-1.42	-0.67
Rear Toe (°)	-0.1	-0.03	0.04
Thrust Angle	0	0	0
Left Toe Out, Inward (°)	0	0	0
Right Toe Out, Inward (°)	0	0	0
Left Toe Out, Outward (°)	0	0	0
Right Toe Out, Outward (°)	0	41.28	41.28
Left Max Turn, Inward (°)	41.28	41.28	41.28
Right Max Turn, Inward (°)	41.28	36.41	36.41
Left Max Turn, Outward (°)	36.41	36.41	36.41
Right Max Turn, Outward (°)	36.41	-	-

SEQUOIA UPK65L-GKTSKA 2WD Coil Spring Rear Suspension P275/65R18 8JJ

Measurement	**Minimum**	**Preferred**	**Maximum**
Left Front Caster (°)	2.88	3.63	4.38
Right Front Caster (°)	2.88	3.63	4.38
Left Front Camber (°)	-0.76	-0.01	0.74
Right Front Camber (°)	-0.76	-0.01	0.74
Front Toe (°)	0.17	0.3	0.43
Left SAI (°)	12.3	13.05	13.8
Right SAI (°)	12.3	13.05	13.8
Left Rear Camber (°)	-2.17	-1.42	-0.67
Right Rear Camber (°)	-2.17	-1.42	-0.67
Rear Toe (°)	-0.12	-0.05	0.02
Thrust Angle	0	0	0
Left Toe Out, Inward (°)	0	0	0
Right Toe Out, Inward (°)	0	0	0
Left Toe Out, Outward (°)	0	0	0
Right Toe Out, Outward (°)	0	41.28	41.28
Left Max Turn, Inward (°)	41.28	41.28	41.28
Right Max Turn, Inward (°)	41.28	36.41	36.41
Left Max Turn, Outward (°)	36.41	36.41	36.41
Right Max Turn, Outward (°)	36.41	-	-

SEQUOIA UPK65L-GKTSKA 4WD Air Spring Rear Suspension P275/55R20 8JJ

Measurement	Minimum	Preferred	Maximum
Left Front Caster (°)	2.83	3.58	4.33
Right Front Caster (°)	2.83	3.58	4.33
Left Front Camber (°)	-0.76	-0.01	0.74
Right Front Camber (°)	-0.76	-0.01	0.74
Front Toe (°)	0.16	0.27	0.38
Left SAI (°)	12.3	13.05	13.8
Right SAI (°)	12.3	13.05	13.8
Left Rear Camber (°)	-2.3	-1.55	-0.8
Right Rear Camber (°)	-2.3	-1.55	-0.8
Rear Toe (°)	-0.1	-0.03	0.04
Thrust Angle	0	0	0
Left Toe Out, Inward (°)	0	0	0
Right Toe Out, Inward (°)	0	0	0
Left Toe Out, Outward (°)	0	0	0
Right Toe Out, Outward (°)	0	41.28	41.28
Left Max Turn, Inward (°)	41.28	41.28	41.28
Right Max Turn, Inward (°)	41.28	36.41	36.41
Left Max Turn, Outward (°)	36.41	36.41	36.41
Right Max Turn, Outward (°)	36.41	-	-

SEQUOIA UPK65L-GKTSKA 4WD Air Spring Rear Suspension P275/65R18 8JJ

Measurement	Minimum	Preferred	Maximum
Left Front Caster (°)	2.88	3.63	4.38
Right Front Caster (°)	2.88	3.63	4.38
Left Front Camber (°)	-0.76	-0.01	0.74
Right Front Camber (°)	-0.76	-0.01	0.74
Front Toe (°)	0.17	0.3	0.43
Left SAI (°)	12.3	13.05	13.8
Right SAI (°)	12.3	13.05	13.8
Left Rear Camber (°)	-2.3	-1.55	-0.8
Right Rear Camber (°)	-2.3	-1.55	-0.8
Rear Toe (°)	-0.1	-0.03	0.04
Thrust Angle	0	0	0
Left Toe Out, Inward (°)	0	0	0
Right Toe Out, Inward (°)	0	0	0
Left Toe Out, Outward (°)	0	0	0
Right Toe Out, Outward (°)	0	41.28	41.28
Left Max Turn, Inward (°)	41.28	41.28	41.28
Right Max Turn, Inward (°)	41.28	36.41	36.41
Left Max Turn, Outward (°)	36.41	36.41	36.41

Right Max Turn, Outward (°)	36.41	-	-

SEQUOIA UPK65L-GKTSKA 4WD Coil Spring Rear Suspension P275/55R20 8JJ

Measurement	Minimum	Preferred	Maximum
Left Front Caster (°)	2.83	3.58	4.33
Right Front Caster (°)	2.83	3.58	4.33
Left Front Camber (°)	-0.76	-0.01	0.74
Right Front Camber (°)	-0.76	-0.01	0.74
Front Toe (°)	0.16	0.27	0.38
Left SAI (°)	12.3	13.05	13.8
Right SAI (°)	12.3	13.05	13.8
Left Rear Camber (°)	-2.03	-1.28	-0.53
Right Rear Camber (°)	-2.03	-1.28	-0.53
Rear Toe (°)	-0.12	-0.05	0.02
Thrust Angle	0	0	0
Left Toe Out, Inward (°)	0	0	0
Right Toe Out, Inward (°)	0	0	0
Left Toe Out, Outward (°)	0	0	0
Right Toe Out, Outward (°)	0	41.28	41.28
Left Max Turn, Inward (°)	41.28	41.28	41.28
Right Max Turn, Inward (°)	41.28	36.41	36.41
Left Max Turn, Outward (°)	36.41	36.41	36.41
Right Max Turn, Outward (°)	36.41	-	-

SEQUOIA UPK65L-GKTSKA 4WD Coil Spring Rear Suspension P275/65R18 8JJ

Measurement	Minimum	Preferred	Maximum
Left Front Caster (°)	2.88	3.63	4.38
Right Front Caster (°)	2.88	3.63	4.38
Left Front Camber (°)	-0.76	-0.01	0.74
Right Front Camber (°)	-0.76	-0.01	0.74
Front Toe (°)	0.17	0.3	0.43
Left SAI (°)	12.3	13.05	13.8
Right SAI (°)	12.3	13.05	13.8
Left Rear Camber (°)	-2.03	-1.28	-0.53
Right Rear Camber (°)	-2.03	-1.28	-0.53
Rear Toe (°)	-0.12	-0.05	0.02
Thrust Angle	0	0	0
Left Toe Out, Inward (°)	0	0	0
Right Toe Out, Inward (°)	0	0	0
Left Toe Out, Outward (°)	0	0	0
Right Toe Out, Outward (°)	0	41.28	41.28

Left Max Turn, Inward (°)	41.28	41.28	41.28
Right Max Turn, Inward (°)	41.28	36.41	36.41
Left Max Turn, Outward (°)	36.41	36.41	36.41
Right Max Turn, Outward (°)	36.41	-	-

SEQUOIA USK60L-GKTLKA 2WD Air Spring Rear Suspension P275/55R20 8JJ

Measurement	**Minimum**	**Preferred**	**Maximum**
Left Front Caster (°)	3.02	3.77	4.52
Right Front Caster (°)	3.02	3.77	4.52
Left Front Camber (°)	-0.91	-0.16	0.59
Right Front Camber (°)	-0.91	-0.16	0.59
Front Toe (°)	0.15	0.26	0.37
Left SAI (°)	12.43	13.18	13.93
Right SAI (°)	12.43	13.18	13.93
Left Rear Camber (°)	-2.43	-1.68	-0.93
Right Rear Camber (°)	-2.43	-1.68	-0.93
Rear Toe (°)	-0.09	-0.02	0.05
Thrust Angle	0	0	0
Left Toe Out, Inward (°)	0	0	0
Right Toe Out, Inward (°)	0	0	0
Left Toe Out, Outward (°)	0	0	0
Right Toe Out, Outward (°)	0	-41	-41
Left Max Turn, Inward (°)	-41	-41	-41
Right Max Turn, Inward (°)	-41	36.38	36.38
Left Max Turn, Outward (°)	36.38	36.38	36.38
Right Max Turn, Outward (°)	36.38	-	-

SEQUOIA USK60L-GKTLKA 2WD Air Spring Rear Suspension P275/65R18 8JJ

Measurement	**Minimum**	**Preferred**	**Maximum**
Left Front Caster (°)	3.02	3.77	4.52
Right Front Caster (°)	3.02	3.77	4.52
Left Front Camber (°)	-0.91	-0.16	0.59
Right Front Camber (°)	-0.91	-0.16	0.59
Front Toe (°)	0.15	0.28	0.41
Left SAI (°)	12.43	13.18	13.93
Right SAI (°)	12.43	13.18	13.93
Left Rear Camber (°)	-2.43	-1.68	-0.93
Right Rear Camber (°)	-2.43	-1.68	-0.93
Rear Toe (°)	-0.09	-0.02	0.05
Thrust Angle	0	0	0
Left Toe Out, Inward (°)	0	0	0

Right Toe Out, Inward (°)	0	0	0
Left Toe Out, Outward (°)	0	0	0
Right Toe Out, Outward (°)	0	-41	-41
Left Max Turn, Inward (°)	-41	-41	-41
Right Max Turn, Inward (°)	-41	36.38	36.38
Left Max Turn, Outward (°)	36.38	36.38	36.38
Right Max Turn, Outward (°)	36.38	-	-

SEQUOIA USK60L-GKTLKA 2WD Coil Spring Rear Suspension P275/55R20 8JJ

Measurement	Minimum	Preferred	Maximum
Left Front Caster (°)	3.02	3.77	4.52
Right Front Caster (°)	3.02	3.77	4.52
Left Front Camber (°)	-0.91	-0.16	0.59
Right Front Camber (°)	-0.91	-0.16	0.59
Front Toe (°)	0.15	0.26	0.37
Left SAI (°)	12.43	13.18	13.93
Right SAI (°)	12.43	13.18	13.93
Left Rear Camber (°)	-2.17	-1.42	-0.67
Right Rear Camber (°)	-2.17	-1.42	-0.67
Rear Toe (°)	-0.1	-0.03	0.04
Thrust Angle	0	0	0
Left Toe Out, Inward (°)	0	0	0
Right Toe Out, Inward (°)	0	0	0
Left Toe Out, Outward (°)	0	0	0
Right Toe Out, Outward (°)	0	-41	-41
Left Max Turn, Inward (°)	-41	-41	-41
Right Max Turn, Inward (°)	-41	36.38	36.38
Left Max Turn, Outward (°)	36.38	36.38	36.38
Right Max Turn, Outward (°)	36.38	-	-

SEQUOIA USK60L-GKTLKA 2WD Coil Spring Rear Suspension P275/65R18 8JJ

Measurement	Minimum	Preferred	Maximum
Left Front Caster (°)	3.02	3.77	4.52
Right Front Caster (°)	3.02	3.77	4.52
Left Front Camber (°)	-0.91	-0.16	0.59
Right Front Camber (°)	-0.91	-0.16	0.59
Front Toe (°)	0.15	0.28	0.41
Left SAI (°)	12.43	13.18	13.93
Right SAI (°)	12.43	13.18	13.93
Left Rear Camber (°)	-2.17	-1.42	-0.67
Right Rear Camber (°)	-2.17	-1.42	-0.67

Rear Toe (°)	-0.1	-0.03	0.04
Thrust Angle	0	0	0
Left Toe Out, Inward (°)	0	0	0
Right Toe Out, Inward (°)	0	0	0
Left Toe Out, Outward (°)	0	0	0
Right Toe Out, Outward (°)	0	-41	-41
Left Max Turn, Inward (°)	-41	-41	-41
Right Max Turn, Inward (°)	-41	36.38	36.38
Left Max Turn, Outward (°)	36.38	36.38	36.38
Right Max Turn, Outward (°)	36.38	-	-

SEQUOIA USK60L-GKTLKA 4WD Air Spring Rear Suspension P275/55R20 8JJ

Measurement	Minimum	Preferred	Maximum
Left Front Caster (°)	3.02	3.77	4.52
Right Front Caster (°)	3.02	3.77	4.52
Left Front Camber (°)	-0.91	-0.16	0.59
Right Front Camber (°)	-0.91	-0.16	0.59
Front Toe (°)	0.15	0.26	0.37
Left SAI (°)	12.43	13.18	13.93
Right SAI (°)	12.43	13.18	13.93
Left Rear Camber (°)	-2.3	-1.55	-0.8
Right Rear Camber (°)	-2.3	-1.55	-0.8
Rear Toe (°)	-0.1	-0.03	0.04
Thrust Angle	0	0	0
Left Toe Out, Inward (°)	0	0	0
Right Toe Out, Inward (°)	0	0	0
Left Toe Out, Outward (°)	0	0	0
Right Toe Out, Outward (°)	0	-41	-41
Left Max Turn, Inward (°)	-41	-41	-41
Right Max Turn, Inward (°)	-41	36.38	36.38
Left Max Turn, Outward (°)	36.38	36.38	36.38
Right Max Turn, Outward (°)	36.38	-	-

SEQUOIA USK60L-GKTLKA 4WD Air Spring Rear Suspension P275/65R18 8JJ

Measurement	Minimum	Preferred	Maximum
Left Front Caster (°)	3.02	3.77	4.52
Right Front Caster (°)	3.02	3.77	4.52
Left Front Camber (°)	-0.91	-0.16	0.59
Right Front Camber (°)	-0.91	-0.16	0.59
Front Toe (°)	0.15	0.28	0.41
Left SAI (°)	12.43	13.18	13.93

Right SAI (°)	12.43	13.18	13.93
Left Rear Camber (°)	-2.3	-1.55	-0.8
Right Rear Camber (°)	-2.3	-1.55	-0.8
Rear Toe (°)	-0.1	-0.03	0.04
Thrust Angle	0	0	0
Left Toe Out, Inward (°)	0	0	0
Right Toe Out, Inward (°)	0	0	0
Left Toe Out, Outward (°)	0	0	0
Right Toe Out, Outward (°)	0	-41	-41
Left Max Turn, Inward (°)	-41	-41	-41
Right Max Turn, Inward (°)	-41	36.38	36.38
Left Max Turn, Outward (°)	36.38	36.38	36.38
Right Max Turn, Outward (°)	36.38	-	-

SEQUOIA USK60L-GKTLKA 4WD Coil Spring Rear Suspension P275/55R20 8JJ

Measurement	Minimum	Preferred	Maximum
Left Front Caster (°)	3.02	3.77	4.52
Right Front Caster (°)	3.02	3.77	4.52
Left Front Camber (°)	-0.91	-0.16	0.59
Right Front Camber (°)	-0.91	-0.16	0.59
Front Toe (°)	0.15	0.26	0.37
Left SAI (°)	12.43	13.18	13.93
Right SAI (°)	12.43	13.18	13.93
Left Rear Camber (°)	-2.03	-1.28	-0.53
Right Rear Camber (°)	-2.03	-1.28	-0.53
Rear Toe (°)	-0.12	-0.05	0.02
Thrust Angle	0	0	0
Left Toe Out, Inward (°)	0	0	0
Right Toe Out, Inward (°)	0	0	0
Left Toe Out, Outward (°)	0	0	0
Right Toe Out, Outward (°)	0	-41	-41
Left Max Turn, Inward (°)	-41	-41	-41
Right Max Turn, Inward (°)	-41	36.38	36.38
Left Max Turn, Outward (°)	36.38	36.38	36.38
Right Max Turn, Outward (°)	36.38	-	-

SEQUOIA USK60L-GKTLKA 4WD Coil Spring Rear Suspension P275/65R18 8JJ

Measurement	Minimum	Preferred	Maximum
Left Front Caster (°)	3.02	3.77	4.52
Right Front Caster (°)	3.02	3.77	4.52
Left Front Camber (°)	-0.91	-0.16	0.59

Right Front Camber (°)	-0.91	-0.16	0.59
Front Toe (°)	0.15	0.28	0.41
Left SAI (°)	12.43	13.18	13.93
Right SAI (°)	12.43	13.18	13.93
Left Rear Camber (°)	-2.03	-1.28	-0.53
Right Rear Camber (°)	-2.03	-1.28	-0.53
Rear Toe (°)	-0.12	-0.05	0.02
Thrust Angle	0	0	0
Left Toe Out, Inward (°)	0	0	0
Right Toe Out, Inward (°)	0	0	0
Left Toe Out, Outward (°)	0	0	0
Right Toe Out, Outward (°)	0	-41	-41
Left Max Turn, Inward (°)	-41	-41	-41
Right Max Turn, Inward (°)	-41	36.38	36.38
Left Max Turn, Outward (°)	36.38	36.38	36.38
Right Max Turn, Outward (°)	36.38	-	-

SEQUOIA USK60L-GKTSKA 2WD Air Spring Rear Suspension P275/55R20 8JJ

Measurement	Minimum	Preferred	Maximum
Left Front Caster (°)	3.01	3.76	4.51
Right Front Caster (°)	3.01	3.76	4.51
Left Front Camber (°)	-0.92	-0.17	0.58
Right Front Camber (°)	-0.92	-0.17	0.58
Front Toe (°)	0.13	0.24	0.35
Left SAI (°)	12.44	13.19	13.94
Right SAI (°)	12.44	13.19	13.94
Left Rear Camber (°)	-2.43	-1.68	-0.93
Right Rear Camber (°)	-2.43	-1.68	-0.93
Rear Toe (°)	-0.09	-0.02	0.05
Thrust Angle	0	0	0
Left Toe Out, Inward (°)	0	0	0
Right Toe Out, Inward (°)	0	0	0
Left Toe Out, Outward (°)	0	0	0
Right Toe Out, Outward (°)	0	-40.99	-40.99
Left Max Turn, Inward (°)	-40.99	-40.99	-40.99
Right Max Turn, Inward (°)	-40.99	36.36	36.36
Left Max Turn, Outward (°)	36.36	36.36	36.36
Right Max Turn, Outward (°)	36.36	-	-

SEQUOIA USK60L-GKTSKA 2WD Air Spring Rear Suspension P275/65R18 8JJ

Measurement	Minimum	Preferred	Maximum

Left Front Caster (°)	3.01	3.76	4.51
Right Front Caster (°)	3.01	3.76	4.51
Left Front Camber (°)	-0.92	-0.17	0.58
Right Front Camber (°)	-0.92	-0.17	0.58
Front Toe (°)	0.14	0.27	0.4
Left SAI (°)	12.44	13.19	13.94
Right SAI (°)	12.44	13.19	13.94
Left Rear Camber (°)	-2.43	-1.68	-0.93
Right Rear Camber (°)	-2.43	-1.68	-0.93
Rear Toe (°)	-0.09	-0.02	0.05
Thrust Angle	0	0	0
Left Toe Out, Inward (°)	0	0	0
Right Toe Out, Inward (°)	0	0	0
Left Toe Out, Outward (°)	0	0	0
Right Toe Out, Outward (°)	0	-40.99	-40.99
Left Max Turn, Inward (°)	-40.99	-40.99	-40.99
Right Max Turn, Inward (°)	-40.99	36.36	36.36
Left Max Turn, Outward (°)	36.36	36.36	36.36
Right Max Turn, Outward (°)	36.36	-	-

SEQUOIA USK60L-GKTSKA 2WD Coil Spring Rear Suspension P275/55R20 8JJ

Measurement	Minimum	Preferred	Maximum
Left Front Caster (°)	3.01	3.76	4.51
Right Front Caster (°)	3.01	3.76	4.51
Left Front Camber (°)	-0.92	-0.17	0.58
Right Front Camber (°)	-0.92	-0.17	0.58
Front Toe (°)	0.13	0.24	0.35
Left SAI (°)	12.44	13.19	13.94
Right SAI (°)	12.44	13.19	13.94
Left Rear Camber (°)	-2.17	-1.42	-0.67
Right Rear Camber (°)	-2.17	-1.42	-0.67
Rear Toe (°)	-0.1	-0.03	0.04
Thrust Angle	0	0	0
Left Toe Out, Inward (°)	0	0	0
Right Toe Out, Inward (°)	0	0	0
Left Toe Out, Outward (°)	0	0	0
Right Toe Out, Outward (°)	0	-40.99	-40.99
Left Max Turn, Inward (°)	-40.99	-40.99	-40.99
Right Max Turn, Inward (°)	-40.99	36.36	36.36
Left Max Turn, Outward (°)	36.36	36.36	36.36
Right Max Turn, Outward (°)	36.36	-	-

SEQUOIA USK60L-GKTSKA 2WD Coil Spring Rear Suspension P275/65R18 8JJ

Measurement	Minimum	Preferred	Maximum
Left Front Caster (°)	3.01	3.76	4.51
Right Front Caster (°)	3.01	3.76	4.51
Left Front Camber (°)	-0.92	-0.17	0.58
Right Front Camber (°)	-0.92	-0.17	0.58
Front Toe (°)	0.14	0.27	0.4
Left SAI (°)	12.44	13.19	13.94
Right SAI (°)	12.44	13.19	13.94
Left Rear Camber (°)	-2.17	-1.42	-0.67
Right Rear Camber (°)	-2.17	-1.42	-0.67
Rear Toe (°)	-0.1	-0.03	0.04
Thrust Angle	0	0	0
Left Toe Out, Inward (°)	0	0	0
Right Toe Out, Inward (°)	0	0	0
Left Toe Out, Outward (°)	0	0	0
Right Toe Out, Outward (°)	0	-40.99	-40.99
Left Max Turn, Inward (°)	-40.99	-40.99	-40.99
Right Max Turn, Inward (°)	-40.99	36.36	36.36
Left Max Turn, Outward (°)	36.36	36.36	36.36
Right Max Turn, Outward (°)	36.36	-	-

SEQUOIA USK60L-GKTSKA 4WD Air Spring Rear Suspension P275/55R20 8JJ

Measurement	Minimum	Preferred	Maximum
Left Front Caster (°)	3.01	3.76	4.51
Right Front Caster (°)	3.01	3.76	4.51
Left Front Camber (°)	-0.92	-0.17	0.58
Right Front Camber (°)	-0.92	-0.17	0.58
Front Toe (°)	0.13	0.24	0.35
Left SAI (°)	12.44	13.19	13.94
Right SAI (°)	12.44	13.19	13.94
Left Rear Camber (°)	-2.3	-1.55	-0.8
Right Rear Camber (°)	-2.3	-1.55	-0.8
Rear Toe (°)	-0.1	-0.03	0.04
Thrust Angle	0	0	0
Left Toe Out, Inward (°)	0	0	0
Right Toe Out, Inward (°)	0	0	0
Left Toe Out, Outward (°)	0	0	0
Right Toe Out, Outward (°)	0	-40.99	-40.99
Left Max Turn, Inward (°)	-40.99	-40.99	-40.99
Right Max Turn, Inward (°)	-40.99	36.36	36.36

Left Max Turn, Outward (°)	36.36	36.36	36.36
Right Max Turn, Outward (°)	36.36	-	-

SEQUOIA USK60L-GKTSKA 4WD Air Spring Rear Suspension P275/65R18 8JJ

Measurement	Minimum	Preferred	Maximum
Left Front Caster (°)	3.01	3.76	4.51
Right Front Caster (°)	3.01	3.76	4.51
Left Front Camber (°)	-0.92	-0.17	0.58
Right Front Camber (°)	-0.92	-0.17	0.58
Front Toe (°)	0.14	0.27	0.4
Left SAI (°)	12.44	13.19	13.94
Right SAI (°)	12.44	13.19	13.94
Left Rear Camber (°)	-2.3	-1.55	-0.8
Right Rear Camber (°)	-2.3	-1.55	-0.8
Rear Toe (°)	-0.1	-0.03	0.04
Thrust Angle	0	0	0
Left Toe Out, Inward (°)	0	0	0
Right Toe Out, Inward (°)	0	0	0
Left Toe Out, Outward (°)	0	0	0
Right Toe Out, Outward (°)	0	-40.99	-40.99
Left Max Turn, Inward (°)	-40.99	-40.99	-40.99
Right Max Turn, Inward (°)	-40.99	36.36	36.36
Left Max Turn, Outward (°)	36.36	36.36	36.36
Right Max Turn, Outward (°)	36.36	-	-

SEQUOIA USK60L-GKTSKA 4WD Coil Spring Rear Suspension P275/55R20 8JJ

Measurement	Minimum	Preferred	Maximum
Left Front Caster (°)	3.01	3.76	4.51
Right Front Caster (°)	3.01	3.76	4.51
Left Front Camber (°)	-0.92	-0.17	0.58
Right Front Camber (°)	-0.92	-0.17	0.58
Front Toe (°)	0.13	0.24	0.35
Left SAI (°)	12.44	13.19	13.94
Right SAI (°)	12.44	13.19	13.94
Left Rear Camber (°)	-2.03	-1.28	-0.53
Right Rear Camber (°)	-2.03	-1.28	-0.53
Rear Toe (°)	-0.12	-0.05	0.02
Thrust Angle	0	0	0
Left Toe Out, Inward (°)	0	0	0
Right Toe Out, Inward (°)	0	0	0
Left Toe Out, Outward (°)	0	0	0

Right Toe Out, Outward (°)	0	-40.99	-40.99
Left Max Turn, Inward (°)	-40.99	-40.99	-40.99
Right Max Turn, Inward (°)	-40.99	36.36	36.36
Left Max Turn, Outward (°)	36.36	36.36	36.36
Right Max Turn, Outward (°)	36.36	-	-

SEQUOIA USK60L-GKTSKA 4WD Coil Spring Rear Suspension P275/65R18 8JJ

Measurement	Minimum	Preferred	Maximum
Left Front Caster (°)	3.01	3.76	4.51
Right Front Caster (°)	3.01	3.76	4.51
Left Front Camber (°)	-0.92	-0.17	0.58
Right Front Camber (°)	-0.92	-0.17	0.58
Front Toe (°)	0.14	0.27	0.4
Left SAI (°)	12.44	13.19	13.94
Right SAI (°)	12.44	13.19	13.94
Left Rear Camber (°)	-2.03	-1.28	-0.53
Right Rear Camber (°)	-2.03	-1.28	-0.53
Rear Toe (°)	-0.12	-0.05	0.02
Thrust Angle	0	0	0
Left Toe Out, Inward (°)	0	0	0
Right Toe Out, Inward (°)	0	0	0
Left Toe Out, Outward (°)	0	0	0
Right Toe Out, Outward (°)	0	-40.99	-40.99
Left Max Turn, Inward (°)	-40.99	-40.99	-40.99
Right Max Turn, Inward (°)	-40.99	36.36	36.36
Left Max Turn, Outward (°)	36.36	36.36	36.36
Right Max Turn, Outward (°)	36.36	-	-

SEQUOIA USK60L-GKTZKA 2WD Air Spring Rear Suspension P275/65R18 8JJ

Measurement	Minimum	Preferred	Maximum
Left Front Caster (°)	3.19	3.94	4.69
Right Front Caster (°)	3.19	3.94	4.69
Left Front Camber (°)	-0.9	-0.15	0.6
Right Front Camber (°)	-0.9	-0.15	0.6
Front Toe (°)	0.16	0.27	0.38
Left SAI (°)	12.42	13.17	13.92
Right SAI (°)	12.42	13.17	13.92
Left Rear Camber (°)	-2.43	-1.68	-0.93
Right Rear Camber (°)	-2.43	-1.68	-0.93
Rear Toe (°)	-0.09	-0.02	0.05
Thrust Angle	0	0	0

Left Toe Out, Inward (°)	0	0	0
Right Toe Out, Inward (°)	0	0	0
Left Toe Out, Outward (°)	0	0	0
Right Toe Out, Outward (°)	0	-41.01	-41.01
Left Max Turn, Inward (°)	-41.01	-41.01	-41.01
Right Max Turn, Inward (°)	-41.01	36.39	36.39
Left Max Turn, Outward (°)	36.39	36.39	36.39
Right Max Turn, Outward (°)	36.39	-	-

SEQUOIA USK60L-GKTZKA 2WD Coil Spring Rear Suspension P275/65R18 8JJ

Measurement	Minimum	Preferred	Maximum
Left Front Caster (°)	3.19	3.94	4.69
Right Front Caster (°)	3.19	3.94	4.69
Left Front Camber (°)	-0.9	-0.15	0.6
Right Front Camber (°)	-0.9	-0.15	0.6
Front Toe (°)	0.16	0.27	0.38
Left SAI (°)	12.42	13.17	13.92
Right SAI (°)	12.42	13.17	13.92
Left Rear Camber (°)	-2.17	-1.42	-0.67
Right Rear Camber (°)	-2.17	-1.42	-0.67
Rear Toe (°)	-0.1	-0.03	0.04
Thrust Angle	0	0	0
Left Toe Out, Inward (°)	0	0	0
Right Toe Out, Inward (°)	0	0	0
Left Toe Out, Outward (°)	0	0	0
Right Toe Out, Outward (°)	0	-41.01	-41.01
Left Max Turn, Inward (°)	-41.01	-41.01	-41.01
Right Max Turn, Inward (°)	-41.01	36.39	36.39
Left Max Turn, Outward (°)	36.39	36.39	36.39
Right Max Turn, Outward (°)	36.39	-	-

SEQUOIA USK60L-GKTZKA 4WD Air Spring Rear Suspension P275/65R18 8JJ

Measurement	Minimum	Preferred	Maximum
Left Front Caster (°)	3.19	3.94	4.69
Right Front Caster (°)	3.19	3.94	4.69
Left Front Camber (°)	-0.9	-0.15	0.6
Right Front Camber (°)	-0.9	-0.15	0.6
Front Toe (°)	0.16	0.27	0.38
Left SAI (°)	12.42	13.17	13.92
Right SAI (°)	12.42	13.17	13.92
Left Rear Camber (°)	-2.3	-1.55	-0.8

Right Rear Camber (°)	-2.3	-1.55	-0.8
Rear Toe (°)	-0.1	-0.03	0.04
Thrust Angle	0	0	0
Left Toe Out, Inward (°)	0	0	0
Right Toe Out, Inward (°)	0	0	0
Left Toe Out, Outward (°)	0	0	0
Right Toe Out, Outward (°)	0	-41.01	-41.01
Left Max Turn, Inward (°)	-41.01	-41.01	-41.01
Right Max Turn, Inward (°)	-41.01	36.39	36.39
Left Max Turn, Outward (°)	36.39	36.39	36.39
Right Max Turn, Outward (°)	36.39	-	-

SEQUOIA USK60L-GKTZKA 4WD Coil Spring Rear Suspension P275/65R18 8JJ

Measurement	Minimum	Preferred	Maximum
Left Front Caster (°)	3.19	3.94	4.69
Right Front Caster (°)	3.19	3.94	4.69
Left Front Camber (°)	-0.9	-0.15	0.6
Right Front Camber (°)	-0.9	-0.15	0.6
Front Toe (°)	0.16	0.27	0.38
Left SAI (°)	12.42	13.17	13.92
Right SAI (°)	12.42	13.17	13.92
Left Rear Camber (°)	-2.03	-1.28	-0.53
Right Rear Camber (°)	-2.03	-1.28	-0.53
Rear Toe (°)	-0.12	-0.05	0.02
Thrust Angle	0	0	0
Left Toe Out, Inward (°)	0	0	0
Right Toe Out, Inward (°)	0	0	0
Left Toe Out, Outward (°)	0	0	0
Right Toe Out, Outward (°)	0	-41.01	-41.01
Left Max Turn, Inward (°)	-41.01	-41.01	-41.01
Right Max Turn, Inward (°)	-41.01	36.39	36.39
Left Max Turn, Outward (°)	36.39	36.39	36.39
Right Max Turn, Outward (°)	36.39	-	-

SEQUOIA USK65L-GKTLGA 2WD Air Spring Rear Suspension P275/55R20 8JJ

Measurement	Minimum	Preferred	Maximum
Left Front Caster (°)	2.84	3.59	4.34
Right Front Caster (°)	2.84	3.59	4.34
Left Front Camber (°)	-0.76	-0.01	0.74
Right Front Camber (°)	-0.76	-0.01	0.74
Front Toe (°)	0.16	0.27	0.38

Left SAI (°)	12.3	13.05	13.8
Right SAI (°)	12.3	13.05	13.8
Left Rear Camber (°)	-2.43	-1.68	-0.93
Right Rear Camber (°)	-2.43	-1.68	-0.93
Rear Toe (°)	-0.09	-0.02	0.05
Thrust Angle	0	0	0
Left Toe Out, Inward (°)	0	0	0
Right Toe Out, Inward (°)	0	0	0
Left Toe Out, Outward (°)	0	0	0
Right Toe Out, Outward (°)	0	-41.28	-41.28
Left Max Turn, Inward (°)	-41.28	-41.28	-41.28
Right Max Turn, Inward (°)	-41.28	36.41	36.41
Left Max Turn, Outward (°)	36.41	36.41	36.41
Right Max Turn, Outward (°)	36.41	-	-

SEQUOIA USK65L-GKTLGA 2WD Air Spring Rear Suspension P275/65R18 8JJ

Measurement	Minimum	Preferred	Maximum
Left Front Caster (°)	2.9	3.65	4.4
Right Front Caster (°)	2.9	3.65	4.4
Left Front Camber (°)	-0.76	-0.01	0.74
Right Front Camber (°)	-0.76	-0.01	0.74
Front Toe (°)	0.17	0.3	0.43
Left SAI (°)	12.3	13.05	13.8
Right SAI (°)	12.3	13.05	13.8
Left Rear Camber (°)	-2.43	-1.68	-0.93
Right Rear Camber (°)	-2.43	-1.68	-0.93
Rear Toe (°)	-0.09	-0.02	0.05
Thrust Angle	0	0	0
Left Toe Out, Inward (°)	0	0	0
Right Toe Out, Inward (°)	0	0	0
Left Toe Out, Outward (°)	0	0	0
Right Toe Out, Outward (°)	0	-41.28	-41.28
Left Max Turn, Inward (°)	-41.28	-41.28	-41.28
Right Max Turn, Inward (°)	-41.28	36.4	36.4
Left Max Turn, Outward (°)	36.4	36.4	36.4
Right Max Turn, Outward (°)	36.4	-	-

SEQUOIA USK65L-GKTLGA 2WD Coil Spring Rear Suspension P275/55R20 8JJ

Measurement	Minimum	Preferred	Maximum
Left Front Caster (°)	2.84	3.59	4.34
Right Front Caster (°)	2.84	3.59	4.34

Left Front Camber (°)	-0.76	-0.01	0.74
Right Front Camber (°)	-0.76	-0.01	0.74
Front Toe (°)	0.16	0.27	0.38
Left SAI (°)	12.3	13.05	13.8
Right SAI (°)	12.3	13.05	13.8
Left Rear Camber (°)	-2.17	-1.42	-0.67
Right Rear Camber (°)	-2.17	-1.42	-0.67
Rear Toe (°)	-0.1	-0.03	0.04
Thrust Angle	0	0	0
Left Toe Out, Inward (°)	0	0	0
Right Toe Out, Inward (°)	0	0	0
Left Toe Out, Outward (°)	0	0	0
Right Toe Out, Outward (°)	0	-41.28	-41.28
Left Max Turn, Inward (°)	-41.28	-41.28	-41.28
Right Max Turn, Inward (°)	-41.28	36.41	36.41
Left Max Turn, Outward (°)	36.41	36.41	36.41
Right Max Turn, Outward (°)	36.41	-	-

SEQUOIA USK65L-GKTLGA 2WD Coil Spring Rear Suspension P275/65R18 8JJ

Measurement	**Minimum**	**Preferred**	**Maximum**
Left Front Caster (°)	2.9	3.65	4.4
Right Front Caster (°)	2.9	3.65	4.4
Left Front Camber (°)	-0.76	-0.01	0.74
Right Front Camber (°)	-0.76	-0.01	0.74
Front Toe (°)	0.17	0.3	0.43
Left SAI (°)	12.3	13.05	13.8
Right SAI (°)	12.3	13.05	13.8
Left Rear Camber (°)	-2.17	-1.42	-0.67
Right Rear Camber (°)	-2.17	-1.42	-0.67
Rear Toe (°)	-0.1	-0.03	0.04
Thrust Angle	0	0	0
Left Toe Out, Inward (°)	0	0	0
Right Toe Out, Inward (°)	0	0	0
Left Toe Out, Outward (°)	0	0	0
Right Toe Out, Outward (°)	0	-41.28	-41.28
Left Max Turn, Inward (°)	-41.28	-41.28	-41.28
Right Max Turn, Inward (°)	-41.28	36.41	36.41
Left Max Turn, Outward (°)	36.41	36.41	36.41
Right Max Turn, Outward (°)	36.41	-	-

SEQUOIA USK65L-GKTLGA 4WD Air Spring Rear Suspension P275/55R20 8JJ

Measurement	Minimum	Preferred	Maximum
Left Front Caster (°)	2.84	3.59	4.34
Right Front Caster (°)	2.84	3.59	4.34
Left Front Camber (°)	-0.76	-0.01	0.74
Right Front Camber (°)	-0.76	-0.01	0.74
Front Toe (°)	0.16	0.27	0.38
Left SAI (°)	12.3	13.05	13.8
Right SAI (°)	12.3	13.05	13.8
Left Rear Camber (°)	-2.3	-1.55	-0.8
Right Rear Camber (°)	-2.3	-1.55	-0.8
Rear Toe (°)	-0.1	-0.03	0.04
Thrust Angle	0	0	0
Left Toe Out, Inward (°)	0	0	0
Right Toe Out, Inward (°)	0	0	0
Left Toe Out, Outward (°)	0	0	0
Right Toe Out, Outward (°)	0	-41.28	-41.28
Left Max Turn, Inward (°)	-41.28	-41.28	-41.28
Right Max Turn, Inward (°)	-41.28	36.41	36.41
Left Max Turn, Outward (°)	36.41	36.41	36.41
Right Max Turn, Outward (°)	36.41	-	-

SEQUOIA USK65L-GKTLGA 4WD Air Spring Rear Suspension P275/65R18 8JJ

Measurement	Minimum	Preferred	Maximum
Left Front Caster (°)	2.9	3.65	4.4
Right Front Caster (°)	2.9	3.65	4.4
Left Front Camber (°)	-0.76	-0.01	0.74
Right Front Camber (°)	-0.76	-0.01	0.74
Front Toe (°)	0.17	0.3	0.43
Left SAI (°)	12.3	13.05	13.8
Right SAI (°)	12.3	13.05	13.8
Left Rear Camber (°)	-2.3	-1.55	-0.8
Right Rear Camber (°)	-2.3	-1.55	-0.8
Rear Toe (°)	-0.1	-0.03	0.04
Thrust Angle	0	0	0
Left Toe Out, Inward (°)	0	0	0
Right Toe Out, Inward (°)	0	0	0
Left Toe Out, Outward (°)	0	0	0
Right Toe Out, Outward (°)	0	-41.28	-41.28
Left Max Turn, Inward (°)	-41.28	-41.28	-41.28
Right Max Turn, Inward (°)	-41.28	36.4	36.4
Left Max Turn, Outward (°)	36.4	36.4	36.4

Right Max Turn, Outward (°)	36.4	-	-

SEQUOIA USK65L-GKTLGA 4WD Coil Spring Rear Suspension P275/55R20 8JJ

Measurement	Minimum	Preferred	Maximum
Left Front Caster (°)	2.84	3.59	4.34
Right Front Caster (°)	2.84	3.59	4.34
Left Front Camber (°)	-0.76	-0.01	0.74
Right Front Camber (°)	-0.76	-0.01	0.74
Front Toe (°)	0.16	0.27	0.38
Left SAI (°)	12.3	13.05	13.8
Right SAI (°)	12.3	13.05	13.8
Left Rear Camber (°)	-2.03	-1.28	-0.53
Right Rear Camber (°)	-2.03	-1.28	-0.53
Rear Toe (°)	-0.12	-0.05	0.02
Thrust Angle	0	0	0
Left Toe Out, Inward (°)	0	0	0
Right Toe Out, Inward (°)	0	0	0
Left Toe Out, Outward (°)	0	0	0
Right Toe Out, Outward (°)	0	-41.28	-41.28
Left Max Turn, Inward (°)	-41.28	-41.28	-41.28
Right Max Turn, Inward (°)	-41.28	36.41	36.41
Left Max Turn, Outward (°)	36.41	36.41	36.41
Right Max Turn, Outward (°)	36.41	-	-

SEQUOIA USK65L-GKTLGA 4WD Coil Spring Rear Suspension P275/65R18 8JJ

Measurement	Minimum	Preferred	Maximum
Left Front Caster (°)	2.9	3.65	4.4
Right Front Caster (°)	2.9	3.65	4.4
Left Front Camber (°)	-0.76	-0.01	0.74
Right Front Camber (°)	-0.76	-0.01	0.74
Front Toe (°)	0.17	0.3	0.43
Left SAI (°)	12.3	13.05	13.8
Right SAI (°)	12.3	13.05	13.8
Left Rear Camber (°)	-2.03	-1.28	-0.53
Right Rear Camber (°)	-2.03	-1.28	-0.53
Rear Toe (°)	-0.12	-0.05	0.02
Thrust Angle	0	0	0
Left Toe Out, Inward (°)	0	0	0
Right Toe Out, Inward (°)	0	0	0
Left Toe Out, Outward (°)	0	0	0
Right Toe Out, Outward (°)	0	-41.28	-41.28

Left Max Turn, Inward (°)	-41.28	-41.28	-41.28
Right Max Turn, Inward (°)	-41.28	36.41	36.41
Left Max Turn, Outward (°)	36.41	36.41	36.41
Right Max Turn, Outward (°)	36.41	-	-

SEQUOIA USK65L-GKTLKA 2WD Air Spring Rear Suspension P275/55R20 8JJ

Measurement	Minimum	Preferred	Maximum
Left Front Caster (°)	2.84	3.59	4.34
Right Front Caster (°)	2.84	3.59	4.34
Left Front Camber (°)	-0.76	-0.01	0.74
Right Front Camber (°)	-0.76	-0.01	0.74
Front Toe (°)	0.16	0.27	0.38
Left SAI (°)	12.3	13.05	13.8
Right SAI (°)	12.3	13.05	13.8
Left Rear Camber (°)	-2.43	-1.68	-0.93
Right Rear Camber (°)	-2.43	-1.68	-0.93
Rear Toe (°)	-0.09	-0.02	0.05
Thrust Angle	0	0	0
Left Toe Out, Inward (°)	0	0	0
Right Toe Out, Inward (°)	0	0	0
Left Toe Out, Outward (°)	0	0	0
Right Toe Out, Outward (°)	0	-41.28	-41.28
Left Max Turn, Inward (°)	-41.28	-41.28	-41.28
Right Max Turn, Inward (°)	-41.28	36.41	36.41
Left Max Turn, Outward (°)	36.41	36.41	36.41
Right Max Turn, Outward (°)	36.41	-	-

SEQUOIA USK65L-GKTLKA 2WD Air Spring Rear Suspension P275/65R18 8JJ

Measurement	Minimum	Preferred	Maximum
Left Front Caster (°)	2.9	3.65	4.4
Right Front Caster (°)	2.9	3.65	4.4
Left Front Camber (°)	-0.76	-0.01	0.74
Right Front Camber (°)	-0.76	-0.01	0.74
Front Toe (°)	0.17	0.3	0.43
Left SAI (°)	12.3	13.05	13.8
Right SAI (°)	12.3	13.05	13.8
Left Rear Camber (°)	-2.43	-1.68	-0.93
Right Rear Camber (°)	-2.43	-1.68	-0.93
Rear Toe (°)	-0.09	-0.02	0.05
Thrust Angle	0	0	0
Left Toe Out, Inward (°)	0	0	0

Right Toe Out, Inward (°)	0	0	0
Left Toe Out, Outward (°)	0	0	0
Right Toe Out, Outward (°)	0	-41.28	-41.28
Left Max Turn, Inward (°)	-41.28	-41.28	-41.28
Right Max Turn, Inward (°)	-41.28	36.41	36.41
Left Max Turn, Outward (°)	36.41	36.41	36.41
Right Max Turn, Outward (°)	36.41	-	-

SEQUOIA USK65L-GKTLKA 2WD Coil Spring Rear Suspension P275/55R20 8JJ

Measurement	Minimum	Preferred	Maximum
Left Front Caster (°)	2.84	3.59	4.34
Right Front Caster (°)	2.84	3.59	4.34
Left Front Camber (°)	-0.76	-0.01	0.74
Right Front Camber (°)	-0.76	-0.01	0.74
Front Toe (°)	0.16	0.27	0.38
Left SAI (°)	12.3	13.05	13.8
Right SAI (°)	12.3	13.05	13.8
Left Rear Camber (°)	-2.17	-1.42	-0.67
Right Rear Camber (°)	-2.17	-1.42	-0.67
Rear Toe (°)	-0.1	-0.03	0.04
Thrust Angle	0	0	0
Left Toe Out, Inward (°)	0	0	0
Right Toe Out, Inward (°)	0	0	0
Left Toe Out, Outward (°)	0	0	0
Right Toe Out, Outward (°)	0	-41.28	-41.28
Left Max Turn, Inward (°)	-41.28	-41.28	-41.28
Right Max Turn, Inward (°)	-41.28	36.41	36.41
Left Max Turn, Outward (°)	36.41	36.41	36.41
Right Max Turn, Outward (°)	36.41	-	-

SEQUOIA USK65L-GKTLKA 2WD Coil Spring Rear Suspension P275/65R18 8JJ

Measurement	Minimum	Preferred	Maximum
Left Front Caster (°)	2.9	3.65	4.4
Right Front Caster (°)	2.9	3.65	4.4
Left Front Camber (°)	-0.76	-0.01	0.74
Right Front Camber (°)	-0.76	-0.01	0.74
Front Toe (°)	0.17	0.3	0.43
Left SAI (°)	12.3	13.05	13.8
Right SAI (°)	12.3	13.05	13.8
Left Rear Camber (°)	-2.17	-1.42	-0.67
Right Rear Camber (°)	-2.17	-1.42	-0.67

Rear Toe (°)	-0.1	-0.03	0.04
Thrust Angle	0	0	0
Left Toe Out, Inward (°)	0	0	0
Right Toe Out, Inward (°)	0	0	0
Left Toe Out, Outward (°)	0	0	0
Right Toe Out, Outward (°)	0	-41.28	-41.28
Left Max Turn, Inward (°)	-41.28	-41.28	-41.28
Right Max Turn, Inward (°)	-41.28	36.41	36.41
Left Max Turn, Outward (°)	36.41	36.41	36.41
Right Max Turn, Outward (°)	36.41	-	-

SEQUOIA USK65L-GKTLKA 4WD Air Spring Rear Suspension P275/55R20 8JJ

Measurement	Minimum	Preferred	Maximum
Left Front Caster (°)	2.84	3.59	4.34
Right Front Caster (°)	2.84	3.59	4.34
Left Front Camber (°)	-0.76	-0.01	0.74
Right Front Camber (°)	-0.76	-0.01	0.74
Front Toe (°)	0.16	0.27	0.38
Left SAI (°)	12.3	13.05	13.8
Right SAI (°)	12.3	13.05	13.8
Left Rear Camber (°)	-2.3	-1.55	-0.8
Right Rear Camber (°)	-2.3	-1.55	-0.8
Rear Toe (°)	-0.1	-0.03	0.04
Thrust Angle	0	0	0
Left Toe Out, Inward (°)	0	0	0
Right Toe Out, Inward (°)	0	0	0
Left Toe Out, Outward (°)	0	0	0
Right Toe Out, Outward (°)	0	-41.28	-41.28
Left Max Turn, Inward (°)	-41.28	-41.28	-41.28
Right Max Turn, Inward (°)	-41.28	36.41	36.41
Left Max Turn, Outward (°)	36.41	36.41	36.41
Right Max Turn, Outward (°)	36.41	-	-

SEQUOIA USK65L-GKTLKA 4WD Air Spring Rear Suspension P275/65R18 8JJ

Measurement	Minimum	Preferred	Maximum
Left Front Caster (°)	2.9	3.65	4.4
Right Front Caster (°)	2.9	3.65	4.4
Left Front Camber (°)	-0.76	-0.01	0.74
Right Front Camber (°)	-0.76	-0.01	0.74
Front Toe (°)	0.17	0.3	0.43
Left SAI (°)	12.3	13.05	13.8

Right SAI (°)	12.3	13.05	13.8
Left Rear Camber (°)	-2.3	-1.55	-0.8
Right Rear Camber (°)	-2.3	-1.55	-0.8
Rear Toe (°)	-0.1	-0.03	0.04
Thrust Angle	0	0	0
Left Toe Out, Inward (°)	0	0	0
Right Toe Out, Inward (°)	0	0	0
Left Toe Out, Outward (°)	0	0	0
Right Toe Out, Outward (°)	0	-41.28	-41.28
Left Max Turn, Inward (°)	-41.28	-41.28	-41.28
Right Max Turn, Inward (°)	-41.28	36.41	36.41
Left Max Turn, Outward (°)	36.41	36.41	36.41
Right Max Turn, Outward (°)	36.41	-	-

SEQUOIA USK65L-GKTLKA 4WD Coil Spring Rear Suspension P275/55R20 8JJ

Measurement	Minimum	Preferred	Maximum
Left Front Caster (°)	2.84	3.59	4.34
Right Front Caster (°)	2.84	3.59	4.34
Left Front Camber (°)	-0.76	-0.01	0.74
Right Front Camber (°)	-0.76	-0.01	0.74
Front Toe (°)	0.16	0.27	0.38
Left SAI (°)	12.3	13.05	13.8
Right SAI (°)	12.3	13.05	13.8
Left Rear Camber (°)	-2.03	-1.28	-0.53
Right Rear Camber (°)	-2.03	-1.28	-0.53
Rear Toe (°)	-0.12	-0.05	0.02
Thrust Angle	0	0	0
Left Toe Out, Inward (°)	0	0	0
Right Toe Out, Inward (°)	0	0	0
Left Toe Out, Outward (°)	0	0	0
Right Toe Out, Outward (°)	0	-41.28	-41.28
Left Max Turn, Inward (°)	-41.28	-41.28	-41.28
Right Max Turn, Inward (°)	-41.28	36.41	36.41
Left Max Turn, Outward (°)	36.41	36.41	36.41
Right Max Turn, Outward (°)	36.41	-	-

SEQUOIA USK65L-GKTLKA 4WD Coil Spring Rear Suspension P275/65R18 8JJ

Measurement	Minimum	Preferred	Maximum
Left Front Caster (°)	2.9	3.65	4.4
Right Front Caster (°)	2.9	3.65	4.4
Left Front Camber (°)	-0.76	-0.01	0.74

Right Front Camber (°)	-0.76	-0.01	0.74
Front Toe (°)	0.17	0.3	0.43
Left SAI (°)	12.3	13.05	13.8
Right SAI (°)	12.3	13.05	13.8
Left Rear Camber (°)	-2.03	-1.28	-0.53
Right Rear Camber (°)	-2.03	-1.28	-0.53
Rear Toe (°)	-0.12	-0.05	0.02
Thrust Angle	0	0	0
Left Toe Out, Inward (°)	0	0	0
Right Toe Out, Inward (°)	0	0	0
Left Toe Out, Outward (°)	0	0	0
Right Toe Out, Outward (°)	0	-41.28	-41.28
Left Max Turn, Inward (°)	-41.28	-41.28	-41.28
Right Max Turn, Inward (°)	-41.28	36.41	36.41
Left Max Turn, Outward (°)	36.41	36.41	36.41
Right Max Turn, Outward (°)	36.41	-	-

SEQUOIA USK65L-GKTSGA 2WD Air Spring Rear Suspension P275/55R20 8JJ

Measurement	Minimum	Preferred	Maximum
Left Front Caster (°)	2.84	3.59	4.34
Right Front Caster (°)	2.84	3.59	4.34
Left Front Camber (°)	-0.77	-0.02	0.73
Right Front Camber (°)	-0.77	-0.02	0.73
Front Toe (°)	0.15	0.26	0.37
Left SAI (°)	12.3	13.05	13.8
Right SAI (°)	12.3	13.05	13.8
Left Rear Camber (°)	-2.43	-1.68	-0.93
Right Rear Camber (°)	-2.43	-1.68	-0.93
Rear Toe (°)	-0.09	-0.02	0.05
Thrust Angle	0	0	0
Left Toe Out, Inward (°)	0	0	0
Right Toe Out, Inward (°)	0	0	0
Left Toe Out, Outward (°)	0	0	0
Right Toe Out, Outward (°)	0	-41.28	-41.28
Left Max Turn, Inward (°)	-41.28	-41.28	-41.28
Right Max Turn, Inward (°)	-41.28	36.4	36.4
Left Max Turn, Outward (°)	36.4	36.4	36.4
Right Max Turn, Outward (°)	36.4	-	-

SEQUOIA USK65L-GKTSGA 2WD Air Spring Rear Suspension P275/65R18 8JJ

Measurement	Minimum	Preferred	Maximum

Left Front Caster (°)	2.89	3.64	4.39
Right Front Caster (°)	2.89	3.64	4.39
Left Front Camber (°)	-0.77	-0.02	0.73
Right Front Camber (°)	-0.77	-0.02	0.73
Front Toe (°)	0.16	0.29	0.42
Left SAI (°)	12.3	13.05	13.8
Right SAI (°)	12.3	13.05	13.8
Left Rear Camber (°)	-2.43	-1.68	-0.93
Right Rear Camber (°)	-2.43	-1.68	-0.93
Rear Toe (°)	-0.09	-0.02	0.05
Thrust Angle	0	0	0
Left Toe Out, Inward (°)	0	0	0
Right Toe Out, Inward (°)	0	0	0
Left Toe Out, Outward (°)	0	0	0
Right Toe Out, Outward (°)	0	-41.28	-41.28
Left Max Turn, Inward (°)	-41.28	-41.28	-41.28
Right Max Turn, Inward (°)	-41.28	36.4	36.4
Left Max Turn, Outward (°)	36.4	36.4	36.4
Right Max Turn, Outward (°)	36.4	-	-

SEQUOIA USK65L-GKTSGA 2WD Coil Spring Rear Suspension P275/55R20 8JJ

Measurement	Minimum	Preferred	Maximum
Left Front Caster (°)	2.84	3.59	4.34
Right Front Caster (°)	2.84	3.59	4.34
Left Front Camber (°)	-0.77	-0.02	0.73
Right Front Camber (°)	-0.77	-0.02	0.73
Front Toe (°)	0.15	0.26	0.37
Left SAI (°)	12.3	13.05	13.8
Right SAI (°)	12.3	13.05	13.8
Left Rear Camber (°)	-2.17	-1.42	-0.67
Right Rear Camber (°)	-2.17	-1.42	-0.67
Rear Toe (°)	-0.1	-0.03	0.04
Thrust Angle	0	0	0
Left Toe Out, Inward (°)	0	0	0
Right Toe Out, Inward (°)	0	0	0
Left Toe Out, Outward (°)	0	0	0
Right Toe Out, Outward (°)	0	-41.28	-41.28
Left Max Turn, Inward (°)	-41.28	-41.28	-41.28
Right Max Turn, Inward (°)	-41.28	36.4	36.4
Left Max Turn, Outward (°)	36.4	36.4	36.4
Right Max Turn, Outward (°)	36.4	-	-

SEQUOIA USK65L-GKTSGA 2WD Coil Spring Rear Suspension P275/65R18 8JJ

Measurement	**Minimum**	**Preferred**	**Maximum**
Left Front Caster (°)	2.89	3.64	4.39
Right Front Caster (°)	2.89	3.64	4.39
Left Front Camber (°)	-0.77	-0.02	0.73
Right Front Camber (°)	-0.77	-0.02	0.73
Front Toe (°)	0.16	0.29	0.42
Left SAI (°)	12.3	13.05	13.8
Right SAI (°)	12.3	13.05	13.8
Left Rear Camber (°)	-2.17	-1.42	-0.67
Right Rear Camber (°)	-2.17	-1.42	-0.67
Rear Toe (°)	-0.1	-0.03	0.04
Thrust Angle	0	0	0
Left Toe Out, Inward (°)	0	0	0
Right Toe Out, Inward (°)	0	0	0
Left Toe Out, Outward (°)	0	0	0
Right Toe Out, Outward (°)	0	-41.28	-41.28
Left Max Turn, Inward (°)	-41.28	-41.28	-41.28
Right Max Turn, Inward (°)	-41.28	36.4	36.4
Left Max Turn, Outward (°)	36.4	36.4	36.4
Right Max Turn, Outward (°)	36.4	-	-

SEQUOIA USK65L-GKTSGA 4WD Air Spring Rear Suspension P275/55R20 8JJ

Measurement	**Minimum**	**Preferred**	**Maximum**
Left Front Caster (°)	2.84	3.59	4.34
Right Front Caster (°)	2.84	3.59	4.34
Left Front Camber (°)	-0.77	-0.02	0.73
Right Front Camber (°)	-0.77	-0.02	0.73
Front Toe (°)	0.15	0.26	0.37
Left SAI (°)	12.3	13.05	13.8
Right SAI (°)	12.3	13.05	13.8
Left Rear Camber (°)	-2.3	-1.55	-0.8
Right Rear Camber (°)	-2.3	-1.55	-0.8
Rear Toe (°)	-0.1	-0.03	0.04
Thrust Angle	0	0	0
Left Toe Out, Inward (°)	0	0	0
Right Toe Out, Inward (°)	0	0	0
Left Toe Out, Outward (°)	0	0	0
Right Toe Out, Outward (°)	0	-41.28	-41.28
Left Max Turn, Inward (°)	-41.28	-41.28	-41.28
Right Max Turn, Inward (°)	-41.28	36.4	36.4

Left Max Turn, Outward (°)	36.4	36.4	36.4
Right Max Turn, Outward (°)	36.4	-	-

SEQUOIA USK65L-GKTSGA 4WD Air Spring Rear Suspension P275/65R18 8JJ

Measurement	Minimum	Preferred	Maximum
Left Front Caster (°)	2.89	3.64	4.39
Right Front Caster (°)	2.89	3.64	4.39
Left Front Camber (°)	-0.77	-0.02	0.73
Right Front Camber (°)	-0.77	-0.02	0.73
Front Toe (°)	0.16	0.29	0.42
Left SAI (°)	12.3	13.05	13.8
Right SAI (°)	12.3	13.05	13.8
Left Rear Camber (°)	-2.3	-1.55	-0.8
Right Rear Camber (°)	-2.3	-1.55	-0.8
Rear Toe (°)	-0.1	-0.03	0.04
Thrust Angle	0	0	0
Left Toe Out, Inward (°)	0	0	0
Right Toe Out, Inward (°)	0	0	0
Left Toe Out, Outward (°)	0	0	0
Right Toe Out, Outward (°)	0	-41.28	-41.28
Left Max Turn, Inward (°)	-41.28	-41.28	-41.28
Right Max Turn, Inward (°)	-41.28	36.4	36.4
Left Max Turn, Outward (°)	36.4	36.4	36.4
Right Max Turn, Outward (°)	36.4	-	-

SEQUOIA USK65L-GKTSGA 4WD Coil Spring Rear Suspension P275/55R20 8JJ

Measurement	Minimum	Preferred	Maximum
Left Front Caster (°)	2.84	3.59	4.34
Right Front Caster (°)	2.84	3.59	4.34
Left Front Camber (°)	-0.77	-0.02	0.73
Right Front Camber (°)	-0.77	-0.02	0.73
Front Toe (°)	0.15	0.26	0.37
Left SAI (°)	12.3	13.05	13.8
Right SAI (°)	12.3	13.05	13.8
Left Rear Camber (°)	-2.03	-1.28	-0.53
Right Rear Camber (°)	-2.03	-1.28	-0.53
Rear Toe (°)	-0.12	-0.05	0.02
Thrust Angle	0	0	0
Left Toe Out, Inward (°)	0	0	0
Right Toe Out, Inward (°)	0	0	0
Left Toe Out, Outward (°)	0	0	0

Right Toe Out, Outward (°)	0	-41.28	-41.28
Left Max Turn, Inward (°)	-41.28	-41.28	-41.28
Right Max Turn, Inward (°)	-41.28	36.4	36.4
Left Max Turn, Outward (°)	36.4	36.4	36.4
Right Max Turn, Outward (°)	36.4	-	-

SEQUOIA USK65L-GKTSGA 4WD Coil Spring Rear Suspension P275/65R18 8JJ

Measurement	Minimum	Preferred	Maximum
Left Front Caster (°)	2.89	3.64	4.39
Right Front Caster (°)	2.89	3.64	4.39
Left Front Camber (°)	-0.77	-0.02	0.73
Right Front Camber (°)	-0.77	-0.02	0.73
Front Toe (°)	0.16	0.29	0.42
Left SAI (°)	12.3	13.05	13.8
Right SAI (°)	12.3	13.05	13.8
Left Rear Camber (°)	-2.03	-1.28	-0.53
Right Rear Camber (°)	-2.03	-1.28	-0.53
Rear Toe (°)	-0.12	-0.05	0.02
Thrust Angle	0	0	0
Left Toe Out, Inward (°)	0	0	0
Right Toe Out, Inward (°)	0	0	0
Left Toe Out, Outward (°)	0	0	0
Right Toe Out, Outward (°)	0	-41.28	-41.28
Left Max Turn, Inward (°)	-41.28	-41.28	-41.28
Right Max Turn, Inward (°)	-41.28	36.4	36.4
Left Max Turn, Outward (°)	36.4	36.4	36.4
Right Max Turn, Outward (°)	36.4	-	-

SEQUOIA USK65L-GKTSKA 2WD Air Spring Rear Suspension P275/55R20 8JJ

Measurement	Minimum	Preferred	Maximum
Left Front Caster (°)	2.84	3.59	4.34
Right Front Caster (°)	2.84	3.59	4.34
Left Front Camber (°)	-0.77	-0.02	0.73
Right Front Camber (°)	-0.77	-0.02	0.73
Front Toe (°)	0.15	0.26	0.37
Left SAI (°)	12.3	13.05	13.8
Right SAI (°)	12.3	13.05	13.8
Left Rear Camber (°)	-2.43	-1.68	-0.93
Right Rear Camber (°)	-2.43	-1.68	-0.93
Rear Toe (°)	-0.09	-0.02	0.05
Thrust Angle	0	0	0

Left Toe Out, Inward (°)	0	0	0
Right Toe Out, Inward (°)	0	0	0
Left Toe Out, Outward (°)	0	0	0
Right Toe Out, Outward (°)	0	-41.28	-41.28
Left Max Turn, Inward (°)	-41.28	-41.28	-41.28
Right Max Turn, Inward (°)	-41.28	36.4	36.4
Left Max Turn, Outward (°)	36.4	36.4	36.4
Right Max Turn, Outward (°)	36.4	-	-

SEQUOIA USK65L-GKTSKA 2WD Air Spring Rear Suspension P275/65R18 8JJ

Measurement	**Minimum**	**Preferred**	**Maximum**
Left Front Caster (°)	2.89	3.64	4.39
Right Front Caster (°)	2.89	3.64	4.39
Left Front Camber (°)	-0.77	-0.02	0.73
Right Front Camber (°)	-0.77	-0.02	0.73
Front Toe (°)	0.16	0.29	0.42
Left SAI (°)	12.3	13.05	13.8
Right SAI (°)	12.3	13.05	13.8
Left Rear Camber (°)	-2.43	-1.68	-0.93
Right Rear Camber (°)	-2.43	-1.68	-0.93
Rear Toe (°)	-0.09	-0.02	0.05
Thrust Angle	0	0	0
Left Toe Out, Inward (°)	0	0	0
Right Toe Out, Inward (°)	0	0	0
Left Toe Out, Outward (°)	0	0	0
Right Toe Out, Outward (°)	0	-41.28	-41.28
Left Max Turn, Inward (°)	-41.28	-41.28	-41.28
Right Max Turn, Inward (°)	-41.28	36.4	36.4
Left Max Turn, Outward (°)	36.4	36.4	36.4
Right Max Turn, Outward (°)	36.4	-	-

SEQUOIA USK65L-GKTSKA 2WD Coil Spring Rear Suspension P275/55R20 8JJ

Measurement	**Minimum**	**Preferred**	**Maximum**
Left Front Caster (°)	2.84	3.59	4.34
Right Front Caster (°)	2.84	3.59	4.34
Left Front Camber (°)	-0.77	-0.02	0.73
Right Front Camber (°)	-0.77	-0.02	0.73
Front Toe (°)	0.15	0.26	0.37
Left SAI (°)	12.3	13.05	13.8
Right SAI (°)	12.3	13.05	13.8
Left Rear Camber (°)	-2.17	-1.42	-0.67

Right Rear Camber (°)	-2.17	-1.42	-0.67
Rear Toe (°)	-0.1	-0.03	0.04
Thrust Angle	0	0	0
Left Toe Out, Inward (°)	0	0	0
Right Toe Out, Inward (°)	0	0	0
Left Toe Out, Outward (°)	0	0	0
Right Toe Out, Outward (°)	0	-41.28	-41.28
Left Max Turn, Inward (°)	-41.28	-41.28	-41.28
Right Max Turn, Inward (°)	-41.28	36.4	36.4
Left Max Turn, Outward (°)	36.4	36.4	36.4
Right Max Turn, Outward (°)	36.4	-	-

SEQUOIA USK65L-GKTSKA 2WD Coil Spring Rear Suspension P275/65R18 8JJ

Measurement	Minimum	Preferred	Maximum
Left Front Caster (°)	2.89	3.64	4.39
Right Front Caster (°)	2.89	3.64	4.39
Left Front Camber (°)	-0.77	-0.02	0.73
Right Front Camber (°)	-0.77	-0.02	0.73
Front Toe (°)	0.16	0.29	0.42
Left SAI (°)	12.3	13.05	13.8
Right SAI (°)	12.3	13.05	13.8
Left Rear Camber (°)	-2.17	-1.42	-0.67
Right Rear Camber (°)	-2.17	-1.42	-0.67
Rear Toe (°)	-0.1	-0.03	0.04
Thrust Angle	0	0	0
Left Toe Out, Inward (°)	0	0	0
Right Toe Out, Inward (°)	0	0	0
Left Toe Out, Outward (°)	0	0	0
Right Toe Out, Outward (°)	0	-41.28	-41.28
Left Max Turn, Inward (°)	-41.28	-41.28	-41.28
Right Max Turn, Inward (°)	-41.28	36.4	36.4
Left Max Turn, Outward (°)	36.4	36.4	36.4
Right Max Turn, Outward (°)	36.4	-	-

SEQUOIA USK65L-GKTSKA 4WD Air Spring Rear Suspension P275/55R20 8JJ

Measurement	Minimum	Preferred	Maximum
Left Front Caster (°)	2.84	3.59	4.34
Right Front Caster (°)	2.84	3.59	4.34
Left Front Camber (°)	-0.77	-0.02	0.73
Right Front Camber (°)	-0.77	-0.02	0.73
Front Toe (°)	0.15	0.26	0.37

Left SAI (°)	12.3	13.05	13.8
Right SAI (°)	12.3	13.05	13.8
Left Rear Camber (°)	-2.3	-1.55	-0.8
Right Rear Camber (°)	-2.3	-1.55	-0.8
Rear Toe (°)	-0.1	-0.03	0.04
Thrust Angle	0	0	0
Left Toe Out, Inward (°)	0	0	0
Right Toe Out, Inward (°)	0	0	0
Left Toe Out, Outward (°)	0	0	0
Right Toe Out, Outward (°)	0	-41.28	-41.28
Left Max Turn, Inward (°)	-41.28	-41.28	-41.28
Right Max Turn, Inward (°)	-41.28	36.4	36.4
Left Max Turn, Outward (°)	36.4	36.4	36.4
Right Max Turn, Outward (°)	36.4	-	-

SEQUOIA USK65L-GKTSKA 4WD Air Spring Rear Suspension P275/65R18 8JJ

Measurement	Minimum	Preferred	Maximum
Left Front Caster (°)	2.89	3.64	4.39
Right Front Caster (°)	2.89	3.64	4.39
Left Front Camber (°)	-0.77	-0.02	0.73
Right Front Camber (°)	-0.77	-0.02	0.73
Front Toe (°)	0.16	0.29	0.42
Left SAI (°)	12.3	13.05	13.8
Right SAI (°)	12.3	13.05	13.8
Left Rear Camber (°)	-2.3	-1.55	-0.8
Right Rear Camber (°)	-2.3	-1.55	-0.8
Rear Toe (°)	-0.1	-0.03	0.04
Thrust Angle	0	0	0
Left Toe Out, Inward (°)	0	0	0
Right Toe Out, Inward (°)	0	0	0
Left Toe Out, Outward (°)	0	0	0
Right Toe Out, Outward (°)	0	-41.28	-41.28
Left Max Turn, Inward (°)	-41.28	-41.28	-41.28
Right Max Turn, Inward (°)	-41.28	36.4	36.4
Left Max Turn, Outward (°)	36.4	36.4	36.4
Right Max Turn, Outward (°)	36.4	-	-

SEQUOIA USK65L-GKTSKA 4WD Coil Spring Rear Suspension P275/55R20 8JJ

Measurement	Minimum	Preferred	Maximum
Left Front Caster (°)	2.84	3.59	4.34
Right Front Caster (°)	2.84	3.59	4.34

Left Front Camber (°)	-0.77	-0.02	0.73
Right Front Camber (°)	-0.77	-0.02	0.73
Front Toe (°)	0.15	0.26	0.37
Left SAI (°)	12.3	13.05	13.8
Right SAI (°)	12.3	13.05	13.8
Left Rear Camber (°)	-2.03	-1.28	-0.53
Right Rear Camber (°)	-2.03	-1.28	-0.53
Rear Toe (°)	-0.12	-0.05	0.02
Thrust Angle	0	0	0
Left Toe Out, Inward (°)	0	0	0
Right Toe Out, Inward (°)	0	0	0
Left Toe Out, Outward (°)	0	0	0
Right Toe Out, Outward (°)	0	-41.28	-41.28
Left Max Turn, Inward (°)	-41.28	-41.28	-41.28
Right Max Turn, Inward (°)	-41.28	36.4	36.4
Left Max Turn, Outward (°)	36.4	36.4	36.4
Right Max Turn, Outward (°)	36.4	-	-

SEQUOIA USK65L-GKTSKA 4WD Coil Spring Rear Suspension P275/65R18 8JJ

Measurement	**Minimum**	**Preferred**	**Maximum**
Left Front Caster (°)	2.89	3.64	4.39
Right Front Caster (°)	2.89	3.64	4.39
Left Front Camber (°)	-0.77	-0.02	0.73
Right Front Camber (°)	-0.77	-0.02	0.73
Front Toe (°)	0.16	0.29	0.42
Left SAI (°)	12.3	13.05	13.8
Right SAI (°)	12.3	13.05	13.8
Left Rear Camber (°)	-2.03	-1.28	-0.53
Right Rear Camber (°)	-2.03	-1.28	-0.53
Rear Toe (°)	-0.12	-0.05	0.02
Thrust Angle	0	0	0
Left Toe Out, Inward (°)	0	0	0
Right Toe Out, Inward (°)	0	0	0
Left Toe Out, Outward (°)	0	0	0
Right Toe Out, Outward (°)	0	-41.28	-41.28
Left Max Turn, Inward (°)	-41.28	-41.28	-41.28
Right Max Turn, Inward (°)	-41.28	36.4	36.4
Left Max Turn, Outward (°)	36.4	36.4	36.4
Right Max Turn, Outward (°)	36.4	-	-

SEQUOIA USK65L-GKTZGA 2WD Air Spring Rear Suspension P275/55R20 8JJ

Measurement	Minimum	Preferred	Maximum
Left Front Caster (°)	3.01	3.76	4.51
Right Front Caster (°)	3.01	3.76	4.51
Left Front Camber (°)	-0.75	0	0.75
Right Front Camber (°)	-0.75	0	0.75
Front Toe (°)	0.18	0.29	0.4
Left SAI (°)	12.28	13.03	13.78
Right SAI (°)	12.28	13.03	13.78
Left Rear Camber (°)	-2.43	-1.68	-0.93
Right Rear Camber (°)	-2.43	-1.68	-0.93
Rear Toe (°)	-0.09	-0.02	0.05
Thrust Angle	0	0	0
Left Toe Out, Inward (°)	0	0	0
Right Toe Out, Inward (°)	0	0	0
Left Toe Out, Outward (°)	0	0	0
Right Toe Out, Outward (°)	0	-41.29	-41.29
Left Max Turn, Inward (°)	-41.29	-41.29	-41.29
Right Max Turn, Inward (°)	-41.29	36.43	36.43
Left Max Turn, Outward (°)	36.43	36.43	36.43
Right Max Turn, Outward (°)	36.43	-	-

SEQUOIA USK65L-GKTZGA 2WD Coil Spring Rear Suspension P275/55R20 8JJ

Measurement	Minimum	Preferred	Maximum
Left Front Caster (°)	3.01	3.76	4.51
Right Front Caster (°)	3.01	3.76	4.51
Left Front Camber (°)	-0.75	0	0.75
Right Front Camber (°)	-0.75	0	0.75
Front Toe (°)	0.18	0.29	0.4
Left SAI (°)	12.28	13.03	13.78
Right SAI (°)	12.28	13.03	13.78
Left Rear Camber (°)	-2.17	-1.42	-0.67
Right Rear Camber (°)	-2.17	-1.42	-0.67
Rear Toe (°)	-0.1	-0.03	0.04
Thrust Angle	0	0	0
Left Toe Out, Inward (°)	0	0	0
Right Toe Out, Inward (°)	0	0	0
Left Toe Out, Outward (°)	0	0	0
Right Toe Out, Outward (°)	0	-41.29	-41.29
Left Max Turn, Inward (°)	-41.29	-41.29	-41.29
Right Max Turn, Inward (°)	-41.29	36.43	36.43
Left Max Turn, Outward (°)	36.43	36.43	36.43

Right Max Turn, Outward (°)	36.43	-	-

SEQUOIA USK65L-GKTZGA 4WD Air Spring Rear Suspension P275/55R20 8JJ

Measurement	Minimum	Preferred	Maximum
Left Front Caster (°)	3.01	3.76	4.51
Right Front Caster (°)	3.01	3.76	4.51
Left Front Camber (°)	-0.75	0	0.75
Right Front Camber (°)	-0.75	0	0.75
Front Toe (°)	0.18	0.29	0.4
Left SAI (°)	12.28	13.03	13.78
Right SAI (°)	12.28	13.03	13.78
Left Rear Camber (°)	-2.3	-1.55	-0.8
Right Rear Camber (°)	-2.3	-1.55	-0.8
Rear Toe (°)	-0.1	-0.03	0.04
Thrust Angle	0	0	0
Left Toe Out, Inward (°)	0	0	0
Right Toe Out, Inward (°)	0	0	0
Left Toe Out, Outward (°)	0	0	0
Right Toe Out, Outward (°)	0	-41.29	-41.29
Left Max Turn, Inward (°)	-41.29	-41.29	-41.29
Right Max Turn, Inward (°)	-41.29	36.43	36.43
Left Max Turn, Outward (°)	36.43	36.43	36.43
Right Max Turn, Outward (°)	36.43	-	-

SEQUOIA USK65L-GKTZGA 4WD Coil Spring Rear Suspension P275/55R20 8JJ

Measurement	Minimum	Preferred	Maximum
Left Front Caster (°)	3.01	3.76	4.51
Right Front Caster (°)	3.01	3.76	4.51
Left Front Camber (°)	-0.75	0	0.75
Right Front Camber (°)	-0.75	0	0.75
Front Toe (°)	0.18	0.29	0.4
Left SAI (°)	12.28	13.03	13.78
Right SAI (°)	12.28	13.03	13.78
Left Rear Camber (°)	-2.03	-1.28	-0.53
Right Rear Camber (°)	-2.03	-1.28	-0.53
Rear Toe (°)	-0.12	-0.05	0.02
Thrust Angle	0	0	0
Left Toe Out, Inward (°)	0	0	0
Right Toe Out, Inward (°)	0	0	0
Left Toe Out, Outward (°)	0	0	0
Right Toe Out, Outward (°)	0	-41.29	-41.29

Left Max Turn, Inward (°)	-41.29	-41.29	-41.29
Right Max Turn, Inward (°)	-41.29	36.43	36.43
Left Max Turn, Outward (°)	36.43	36.43	36.43
Right Max Turn, Outward (°)	36.43	-	-

SEQUOIA USK65L-GKTZKA 2WD Air Spring Rear Suspension P275/55R20 8JJ

Measurement	Minimum	Preferred	Maximum
Left Front Caster (°)	3.01	3.76	4.51
Right Front Caster (°)	3.01	3.76	4.51
Left Front Camber (°)	-0.75	0	0.75
Right Front Camber (°)	-0.75	0	0.75
Front Toe (°)	0.18	0.29	0.4
Left SAI (°)	12.28	13.03	13.78
Right SAI (°)	12.28	13.03	13.78
Left Rear Camber (°)	-2.43	-1.68	-0.93
Right Rear Camber (°)	-2.43	-1.68	-0.93
Rear Toe (°)	-0.09	-0.02	0.05
Thrust Angle	0	0	0
Left Toe Out, Inward (°)	0	0	0
Right Toe Out, Inward (°)	0	0	0
Left Toe Out, Outward (°)	0	0	0
Right Toe Out, Outward (°)	0	-41.29	-41.29
Left Max Turn, Inward (°)	-41.29	-41.29	-41.29
Right Max Turn, Inward (°)	-41.29	36.43	36.43
Left Max Turn, Outward (°)	36.43	36.43	36.43
Right Max Turn, Outward (°)	36.43	-	-

SEQUOIA USK65L-GKTZKA 2WD Coil Spring Rear Suspension P275/55R20 8JJ

Measurement	Minimum	Preferred	Maximum
Left Front Caster (°)	3.01	3.76	4.51
Right Front Caster (°)	3.01	3.76	4.51
Left Front Camber (°)	-0.75	0	0.75
Right Front Camber (°)	-0.75	0	0.75
Front Toe (°)	0.18	0.29	0.4
Left SAI (°)	12.28	13.03	13.78
Right SAI (°)	12.28	13.03	13.78
Left Rear Camber (°)	-2.17	-1.42	-0.67
Right Rear Camber (°)	-2.17	-1.42	-0.67
Rear Toe (°)	-0.1	-0.03	0.04
Thrust Angle	0	0	0
Left Toe Out, Inward (°)	0	0	0

Right Toe Out, Inward (°)	0	0	0
Left Toe Out, Outward (°)	0	0	0
Right Toe Out, Outward (°)	0	-41.29	-41.29
Left Max Turn, Inward (°)	-41.29	-41.29	-41.29
Right Max Turn, Inward (°)	-41.29	36.43	36.43
Left Max Turn, Outward (°)	36.43	36.43	36.43
Right Max Turn, Outward (°)	36.43	-	-

SEQUOIA USK65L-GKTZKA 4WD Air Spring Rear Suspension P275/55R20 8JJ

Measurement	Minimum	Preferred	Maximum
Left Front Caster (°)	3.01	3.76	4.51
Right Front Caster (°)	3.01	3.76	4.51
Left Front Camber (°)	-0.75	0	0.75
Right Front Camber (°)	-0.75	0	0.75
Front Toe (°)	0.18	0.29	0.4
Left SAI (°)	12.28	13.03	13.78
Right SAI (°)	12.28	13.03	13.78
Left Rear Camber (°)	-2.3	-1.55	-0.8
Right Rear Camber (°)	-2.3	-1.55	-0.8
Rear Toe (°)	-0.1	-0.03	0.04
Thrust Angle	0	0	0
Left Toe Out, Inward (°)	0	0	0
Right Toe Out, Inward (°)	0	0	0
Left Toe Out, Outward (°)	0	0	0
Right Toe Out, Outward (°)	0	-41.29	-41.29
Left Max Turn, Inward (°)	-41.29	-41.29	-41.29
Right Max Turn, Inward (°)	-41.29	36.43	36.43
Left Max Turn, Outward (°)	36.43	36.43	36.43
Right Max Turn, Outward (°)	36.43	-	-

SEQUOIA USK65L-GKTZKA 4WD Coil Spring Rear Suspension P275/55R20 8JJ

Measurement	Minimum	Preferred	Maximum
Left Front Caster (°)	3.01	3.76	4.51
Right Front Caster (°)	3.01	3.76	4.51
Left Front Camber (°)	-0.75	0	0.75
Right Front Camber (°)	-0.75	0	0.75
Front Toe (°)	0.18	0.29	0.4
Left SAI (°)	12.28	13.03	13.78
Right SAI (°)	12.28	13.03	13.78
Left Rear Camber (°)	-2.03	-1.28	-0.53
Right Rear Camber (°)	-2.03	-1.28	-0.53

Rear Toe (°)	-0.12	-0.05	0.02
Thrust Angle	0	0	0
Left Toe Out, Inward (°)	0	0	0
Right Toe Out, Inward (°)	0	0	0
Left Toe Out, Outward (°)	0	0	0
Right Toe Out, Outward (°)	0	-41.29	-41.29
Left Max Turn, Inward (°)	-41.29	-41.29	-41.29
Right Max Turn, Inward (°)	-41.29	36.43	36.43
Left Max Turn, Outward (°)	36.43	36.43	36.43
Right Max Turn, Outward (°)	36.43	-	-

SIENNA

SIENNA ASL30L-PFTEKA P235/60R17 2WD

Measurement	Minimum	Preferred	Maximum
Left Front Caster (°)	2.07	2.82	3.57
Right Front Caster (°)	2.07	2.82	3.57
Left Front Camber (°)	-1.2	-0.45	0.3
Right Front Camber (°)	-1.2	-0.45	0.3
Front Toe (°)	-0.13	0.07	0.27
Left SAI (°)	10.28	11.03	11.78
Right SAI (°)	10.28	11.03	11.78
Left Rear Camber (°)	-1.8	-1.05	-0.3
Right Rear Camber (°)	-1.8	-1.05	-0.3
Rear Toe (°)	0.06	0.33	0.6
Thrust Angle	0	0	0
Left Toe Out, Inward (°)	0	0	0
Right Toe Out, Inward (°)	0	0	0
Left Toe Out, Outward (°)	0	0	0
Right Toe Out, Outward (°)	0	-43.88	-41.88
Left Max Turn, Inward (°)	-39.88	-43.88	-41.88
Right Max Turn, Inward (°)	-39.88	36.27	36.27
Left Max Turn, Outward (°)	36.27	36.27	36.27
Right Max Turn, Outward (°)	36.27	-	-

SIENNA ASL30L-PFTEKA P235/60R17 4WD

Measurement	Minimum	Preferred	Maximum
Left Front Caster (°)	2.07	2.82	3.57
Right Front Caster (°)	2.07	2.82	3.57
Left Front Camber (°)	-1.2	-0.45	0.3
Right Front Camber (°)	-1.2	-0.45	0.3
Front Toe (°)	-0.13	0.07	0.27

Left SAI (°)	10.28	11.03	11.78
Right SAI (°)	10.28	11.03	11.78
Left Rear Camber (°)	-1.8	-1.05	-0.3
Right Rear Camber (°)	-1.8	-1.05	-0.3
Rear Toe (°)	0.06	0.33	0.6
Thrust Angle	0	0	0
Left Toe Out, Inward (°)	0	0	0
Right Toe Out, Inward (°)	0	0	0
Left Toe Out, Outward (°)	0	0	0
Right Toe Out, Outward (°)	0	-43.88	-41.88
Left Max Turn, Inward (°)	-39.88	-43.88	-41.88
Right Max Turn, Inward (°)	-39.88	36.27	36.27
Left Max Turn, Outward (°)	36.27	36.27	36.27
Right Max Turn, Outward (°)	36.27	-	-

SIENNA ASL30L-PRTEKA P235/60R17 2WD

Measurement	Minimum	Preferred	Maximum
Left Front Caster (°)	2.08	2.83	3.58
Right Front Caster (°)	2.08	2.83	3.58
Left Front Camber (°)	-1.2	-0.45	0.3
Right Front Camber (°)	-1.2	-0.45	0.3
Front Toe (°)	-0.13	0.07	0.27
Left SAI (°)	10.3	11.05	11.8
Right SAI (°)	10.3	11.05	11.8
Left Rear Camber (°)	-1.8	-1.05	-0.3
Right Rear Camber (°)	-1.8	-1.05	-0.3
Rear Toe (°)	0.06	0.33	0.6
Thrust Angle	0	0	0
Left Toe Out, Inward (°)	0	0	0
Right Toe Out, Inward (°)	0	0	0
Left Toe Out, Outward (°)	0	0	0
Right Toe Out, Outward (°)	0	-43.88	-41.88
Left Max Turn, Inward (°)	-39.88	-43.88	-41.88
Right Max Turn, Inward (°)	-39.88	36.27	36.27
Left Max Turn, Outward (°)	36.27	36.27	36.27
Right Max Turn, Outward (°)	36.27	-	-

SIENNA ASL30L-PRTEKA P235/60R17 4WD

Measurement	Minimum	Preferred	Maximum
Left Front Caster (°)	2.08	2.83	3.58
Right Front Caster (°)	2.08	2.83	3.58

Left Front Camber (°)	-1.2	-0.45	0.3
Right Front Camber (°)	-1.2	-0.45	0.3
Front Toe (°)	-0.13	0.07	0.27
Left SAI (°)	10.3	11.05	11.8
Right SAI (°)	10.3	11.05	11.8
Left Rear Camber (°)	-1.8	-1.05	-0.3
Right Rear Camber (°)	-1.8	-1.05	-0.3
Rear Toe (°)	0.06	0.33	0.6
Thrust Angle	0	0	0
Left Toe Out, Inward (°)	0	0	0
Right Toe Out, Inward (°)	0	0	0
Left Toe Out, Outward (°)	0	0	0
Right Toe Out, Outward (°)	0	-43.88	-41.88
Left Max Turn, Inward (°)	-39.88	-43.88	-41.88
Right Max Turn, Inward (°)	-39.88	36.27	36.27
Left Max Turn, Outward (°)	36.27	36.27	36.27
Right Max Turn, Outward (°)	36.27	-	-

SIENNA GSL30L-PFTDKA P235/60R17 2WD

Measurement	**Minimum**	**Preferred**	**Maximum**
Left Front Caster (°)	2.08	2.83	3.58
Right Front Caster (°)	2.08	2.83	3.58
Left Front Camber (°)	-1.17	-0.42	0.33
Right Front Camber (°)	-1.17	-0.42	0.33
Front Toe (°)	-0.1	0.1	0.3
Left SAI (°)	10.37	11.12	11.87
Right SAI (°)	10.37	11.12	11.87
Left Rear Camber (°)	-1.85	-1.1	-0.35
Right Rear Camber (°)	-1.85	-1.1	-0.35
Rear Toe (°)	0.08	0.35	0.62
Thrust Angle	0	0	0
Left Toe Out, Inward (°)	0	0	0
Right Toe Out, Inward (°)	0	0	0
Left Toe Out, Outward (°)	0	0	0
Right Toe Out, Outward (°)	0	-44.5	-42.5
Left Max Turn, Inward (°)	-40.5	-44.5	-42.5
Right Max Turn, Inward (°)	-40.5	36.57	36.57
Left Max Turn, Outward (°)	36.57	36.57	36.57
Right Max Turn, Outward (°)	36.57	-	-

SIENNA GSL30L-PFTDKA P235/60R17 4WD

Measurement	Minimum	Preferred	Maximum
Left Front Caster (°)	2.08	2.83	3.58
Right Front Caster (°)	2.08	2.83	3.58
Left Front Camber (°)	-1.17	-0.42	0.33
Right Front Camber (°)	-1.17	-0.42	0.33
Front Toe (°)	-0.1	0.1	0.3
Left SAI (°)	10.37	11.12	11.87
Right SAI (°)	10.37	11.12	11.87
Left Rear Camber (°)	-1.85	-1.1	-0.35
Right Rear Camber (°)	-1.85	-1.1	-0.35
Rear Toe (°)	0.08	0.35	0.62
Thrust Angle	0	0	0
Left Toe Out, Inward (°)	0	0	0
Right Toe Out, Inward (°)	0	0	0
Left Toe Out, Outward (°)	0	0	0
Right Toe Out, Outward (°)	0	-44.5	-42.5
Left Max Turn, Inward (°)	-40.5	-44.5	-42.5
Right Max Turn, Inward (°)	-40.5	36.57	36.57
Left Max Turn, Outward (°)	36.57	36.57	36.57
Right Max Turn, Outward (°)	36.57	-	-

SIENNA GSL30L-PFTEKA P235/60R17 2WD

Measurement	Minimum	Preferred	Maximum
Left Front Caster (°)	2.1	2.85	3.6
Right Front Caster (°)	2.1	2.85	3.6
Left Front Camber (°)	-1.18	-0.43	0.32
Right Front Camber (°)	-1.18	-0.43	0.32
Front Toe (°)	-0.12	0.08	0.28
Left SAI (°)	10.4	11.15	11.9
Right SAI (°)	10.4	11.15	11.9
Left Rear Camber (°)	-1.87	-1.12	-0.37
Right Rear Camber (°)	-1.87	-1.12	-0.37
Rear Toe (°)	0.08	0.35	0.62
Thrust Angle	0	0	0
Left Toe Out, Inward (°)	0	0	0
Right Toe Out, Inward (°)	0	0	0
Left Toe Out, Outward (°)	0	0	0
Right Toe Out, Outward (°)	0	-44.5	-42.5
Left Max Turn, Inward (°)	-40.5	-44.5	-42.5
Right Max Turn, Inward (°)	-40.5	36.57	36.57
Left Max Turn, Outward (°)	36.57	36.57	36.57

Right Max Turn, Outward (°)	36.57	-	-

SIENNA GSL30L-PFTEKA P235/60R17 4WD

Measurement	Minimum	Preferred	Maximum
Left Front Caster (°)	2.1	2.85	3.6
Right Front Caster (°)	2.1	2.85	3.6
Left Front Camber (°)	-1.18	-0.43	0.32
Right Front Camber (°)	-1.18	-0.43	0.32
Front Toe (°)	-0.12	0.08	0.28
Left SAI (°)	10.4	11.15	11.9
Right SAI (°)	10.4	11.15	11.9
Left Rear Camber (°)	-1.87	-1.12	-0.37
Right Rear Camber (°)	-1.87	-1.12	-0.37
Rear Toe (°)	0.08	0.35	0.62
Thrust Angle	0	0	0
Left Toe Out, Inward (°)	0	0	0
Right Toe Out, Inward (°)	0	0	0
Left Toe Out, Outward (°)	0	0	0
Right Toe Out, Outward (°)	0	-44.5	-42.5
Left Max Turn, Inward (°)	-40.5	-44.5	-42.5
Right Max Turn, Inward (°)	-40.5	36.57	36.57
Left Max Turn, Outward (°)	36.57	36.57	36.57
Right Max Turn, Outward (°)	36.57	-	-

SIENNA GSL30L-PFTQKA P235/50R19 2WD

Measurement	Minimum	Preferred	Maximum
Left Front Caster (°)	2.22	2.97	3.72
Right Front Caster (°)	2.22	2.97	3.72
Left Front Camber (°)	-1.22	-0.47	0.28
Right Front Camber (°)	-1.22	-0.47	0.28
Front Toe (°)	-0.13	0.07	0.27
Left SAI (°)	10.47	11.22	11.97
Right SAI (°)	10.47	11.22	11.97
Left Rear Camber (°)	-1.9	-1.15	-0.4
Right Rear Camber (°)	-1.9	-1.15	-0.4
Rear Toe (°)	0.08	0.35	0.62
Thrust Angle	0	0	0
Left Toe Out, Inward (°)	0	0	0
Right Toe Out, Inward (°)	0	0	0
Left Toe Out, Outward (°)	0	0	0
Right Toe Out, Outward (°)	0	-44.5	-42.5

Left Max Turn, Inward (°)	-40.5	-44.5	-42.5
Right Max Turn, Inward (°)	-40.5	36.57	36.57
Left Max Turn, Outward (°)	36.57	36.57	36.57
Right Max Turn, Outward (°)	36.57	-	-

SIENNA GSL30L-PFTQKA P235/50R19 4WD

Measurement	Minimum	Preferred	Maximum
Left Front Caster (°)	2.22	2.97	3.72
Right Front Caster (°)	2.22	2.97	3.72
Left Front Camber (°)	-1.22	-0.47	0.28
Right Front Camber (°)	-1.22	-0.47	0.28
Front Toe (°)	-0.13	0.07	0.27
Left SAI (°)	10.47	11.22	11.97
Right SAI (°)	10.47	11.22	11.97
Left Rear Camber (°)	-1.9	-1.15	-0.4
Right Rear Camber (°)	-1.9	-1.15	-0.4
Rear Toe (°)	0.08	0.35	0.62
Thrust Angle	0	0	0
Left Toe Out, Inward (°)	0	0	0
Right Toe Out, Inward (°)	0	0	0
Left Toe Out, Outward (°)	0	0	0
Right Toe Out, Outward (°)	0	-44.5	-42.5
Left Max Turn, Inward (°)	-40.5	-44.5	-42.5
Right Max Turn, Inward (°)	-40.5	36.57	36.57
Left Max Turn, Outward (°)	36.57	36.57	36.57
Right Max Turn, Outward (°)	36.57	-	-

SIENNA GSL30L-PFTQKA P235/55R18 2WD

Measurement	Minimum	Preferred	Maximum
Left Front Caster (°)	2.22	2.97	3.72
Right Front Caster (°)	2.22	2.97	3.72
Left Front Camber (°)	-1.22	-0.47	0.28
Right Front Camber (°)	-1.22	-0.47	0.28
Front Toe (°)	-0.13	0.07	0.27
Left SAI (°)	10.47	11.22	11.97
Right SAI (°)	10.47	11.22	11.97
Left Rear Camber (°)	-1.9	-1.15	-0.4
Right Rear Camber (°)	-1.9	-1.15	-0.4
Rear Toe (°)	0.08	0.35	0.62
Thrust Angle	0	0	0
Left Toe Out, Inward (°)	0	0	0

Right Toe Out, Inward (°)	0	0	0
Left Toe Out, Outward (°)	0	0	0
Right Toe Out, Outward (°)	0	-44.5	-42.5
Left Max Turn, Inward (°)	-40.5	-44.5	-42.5
Right Max Turn, Inward (°)	-40.5	36.57	36.57
Left Max Turn, Outward (°)	36.57	36.57	36.57
Right Max Turn, Outward (°)	36.57	-	-

SIENNA GSL30L-PFTQKA P235/55R18 4WD

Measurement	Minimum	Preferred	Maximum
Left Front Caster (°)	2.22	2.97	3.72
Right Front Caster (°)	2.22	2.97	3.72
Left Front Camber (°)	-1.22	-0.47	0.28
Right Front Camber (°)	-1.22	-0.47	0.28
Front Toe (°)	-0.13	0.07	0.27
Left SAI (°)	10.47	11.22	11.97
Right SAI (°)	10.47	11.22	11.97
Left Rear Camber (°)	-1.9	-1.15	-0.4
Right Rear Camber (°)	-1.9	-1.15	-0.4
Rear Toe (°)	0.08	0.35	0.62
Thrust Angle	0	0	0
Left Toe Out, Inward (°)	0	0	0
Right Toe Out, Inward (°)	0	0	0
Left Toe Out, Outward (°)	0	0	0
Right Toe Out, Outward (°)	0	-44.5	-42.5
Left Max Turn, Inward (°)	-40.5	-44.5	-42.5
Right Max Turn, Inward (°)	-40.5	36.57	36.57
Left Max Turn, Outward (°)	36.57	36.57	36.57
Right Max Turn, Outward (°)	36.57	-	-

SIENNA GSL30L-PFTQKA P235/60R17 2WD

Measurement	Minimum	Preferred	Maximum
Left Front Caster (°)	2.22	2.97	3.72
Right Front Caster (°)	2.22	2.97	3.72
Left Front Camber (°)	-1.22	-0.47	0.28
Right Front Camber (°)	-1.22	-0.47	0.28
Front Toe (°)	-0.13	0.07	0.27
Left SAI (°)	10.47	11.22	11.97
Right SAI (°)	10.47	11.22	11.97
Left Rear Camber (°)	-1.9	-1.15	-0.4
Right Rear Camber (°)	-1.9	-1.15	-0.4

Rear Toe (°)	0.08	0.35	0.62
Thrust Angle	0	0	0
Left Toe Out, Inward (°)	0	0	0
Right Toe Out, Inward (°)	0	0	0
Left Toe Out, Outward (°)	0	0	0
Right Toe Out, Outward (°)	0	-44.5	-42.5
Left Max Turn, Inward (°)	-40.5	-44.5	-42.5
Right Max Turn, Inward (°)	-40.5	36.57	36.57
Left Max Turn, Outward (°)	36.57	36.57	36.57
Right Max Turn, Outward (°)	36.57	-	-

SIENNA GSL30L-PFTQKA P235/60R17 4WD

Measurement	**Minimum**	**Preferred**	**Maximum**
Left Front Caster (°)	2.22	2.97	3.72
Right Front Caster (°)	2.22	2.97	3.72
Left Front Camber (°)	-1.22	-0.47	0.28
Right Front Camber (°)	-1.22	-0.47	0.28
Front Toe (°)	-0.13	0.07	0.27
Left SAI (°)	10.47	11.22	11.97
Right SAI (°)	10.47	11.22	11.97
Left Rear Camber (°)	-1.9	-1.15	-0.4
Right Rear Camber (°)	-1.9	-1.15	-0.4
Rear Toe (°)	0.08	0.35	0.62
Thrust Angle	0	0	0
Left Toe Out, Inward (°)	0	0	0
Right Toe Out, Inward (°)	0	0	0
Left Toe Out, Outward (°)	0	0	0
Right Toe Out, Outward (°)	0	-44.5	-42.5
Left Max Turn, Inward (°)	-40.5	-44.5	-42.5
Right Max Turn, Inward (°)	-40.5	36.57	36.57
Left Max Turn, Outward (°)	36.57	36.57	36.57
Right Max Turn, Outward (°)	36.57	-	-

SIENNA GSL30L-PRTEKA P235/60R17 2WD

Measurement	**Minimum**	**Preferred**	**Maximum**
Left Front Caster (°)	2.12	2.87	3.62
Right Front Caster (°)	2.12	2.87	3.62
Left Front Camber (°)	-1.18	-0.43	0.32
Right Front Camber (°)	-1.18	-0.43	0.32
Front Toe (°)	-0.12	0.08	0.28
Left SAI (°)	10.42	11.17	11.92

Right SAI (°)	10.42	11.17	11.92
Left Rear Camber (°)	-1.87	-1.12	-0.37
Right Rear Camber (°)	-1.87	-1.12	-0.37
Rear Toe (°)	0.08	0.35	0.62
Thrust Angle	0	0	0
Left Toe Out, Inward (°)	0	0	0
Right Toe Out, Inward (°)	0	0	0
Left Toe Out, Outward (°)	0	0	0
Right Toe Out, Outward (°)	0	-44.5	-42.5
Left Max Turn, Inward (°)	-40.5	-44.5	-42.5
Right Max Turn, Inward (°)	-40.5	36.57	36.57
Left Max Turn, Outward (°)	36.57	36.57	36.57
Right Max Turn, Outward (°)	36.57	-	-

SIENNA GSL30L-PRTEKA P235/60R17 4WD

Measurement	Minimum	Preferred	Maximum
Left Front Caster (°)	2.12	2.87	3.62
Right Front Caster (°)	2.12	2.87	3.62
Left Front Camber (°)	-1.18	-0.43	0.32
Right Front Camber (°)	-1.18	-0.43	0.32
Front Toe (°)	-0.12	0.08	0.28
Left SAI (°)	10.42	11.17	11.92
Right SAI (°)	10.42	11.17	11.92
Left Rear Camber (°)	-1.87	-1.12	-0.37
Right Rear Camber (°)	-1.87	-1.12	-0.37
Rear Toe (°)	0.08	0.35	0.62
Thrust Angle	0	0	0
Left Toe Out, Inward (°)	0	0	0
Right Toe Out, Inward (°)	0	0	0
Left Toe Out, Outward (°)	0	0	0
Right Toe Out, Outward (°)	0	-44.5	-42.5
Left Max Turn, Inward (°)	-40.5	-44.5	-42.5
Right Max Turn, Inward (°)	-40.5	36.57	36.57
Left Max Turn, Outward (°)	36.57	36.57	36.57
Right Max Turn, Outward (°)	36.57	-	-

SIENNA GSL30L-PRTQKA P235/55R18 2WD

Measurement	Minimum	Preferred	Maximum
Left Front Caster (°)	2.2	2.95	3.7
Right Front Caster (°)	2.2	2.95	3.7
Left Front Camber (°)	-1.2	-0.45	0.3

Right Front Camber (°)	-1.2	-0.45	0.3
Front Toe (°)	-0.13	0.07	0.27
Left SAI (°)	10.45	11.2	11.95
Right SAI (°)	10.45	11.2	11.95
Left Rear Camber (°)	-1.9	-1.15	-0.4
Right Rear Camber (°)	-1.9	-1.15	-0.4
Rear Toe (°)	0.08	0.35	0.62
Thrust Angle	0	0	0
Left Toe Out, Inward (°)	0	0	0
Right Toe Out, Inward (°)	0	0	0
Left Toe Out, Outward (°)	0	0	0
Right Toe Out, Outward (°)	0	-44.5	-42.5
Left Max Turn, Inward (°)	-40.5	-44.5	-42.5
Right Max Turn, Inward (°)	-40.5	36.57	36.57
Left Max Turn, Outward (°)	36.57	36.57	36.57
Right Max Turn, Outward (°)	36.57	-	-

SIENNA GSL30L-PRTQKA P235/55R18 4WD

Measurement	**Minimum**	**Preferred**	**Maximum**
Left Front Caster (°)	2.2	2.95	3.7
Right Front Caster (°)	2.2	2.95	3.7
Left Front Camber (°)	-1.2	-0.45	0.3
Right Front Camber (°)	-1.2	-0.45	0.3
Front Toe (°)	-0.13	0.07	0.27
Left SAI (°)	10.45	11.2	11.95
Right SAI (°)	10.45	11.2	11.95
Left Rear Camber (°)	-1.9	-1.15	-0.4
Right Rear Camber (°)	-1.9	-1.15	-0.4
Rear Toe (°)	0.08	0.35	0.62
Thrust Angle	0	0	0
Left Toe Out, Inward (°)	0	0	0
Right Toe Out, Inward (°)	0	0	0
Left Toe Out, Outward (°)	0	0	0
Right Toe Out, Outward (°)	0	-44.5	-42.5
Left Max Turn, Inward (°)	-40.5	-44.5	-42.5
Right Max Turn, Inward (°)	-40.5	36.57	36.57
Left Max Turn, Outward (°)	36.57	36.57	36.57
Right Max Turn, Outward (°)	36.57	-	-

SIENNA GSL30L-PRTQKA P235/60R17 2WD

Measurement	**Minimum**	**Preferred**	**Maximum**

Left Front Caster (°)	2.2	2.95	3.7
Right Front Caster (°)	2.2	2.95	3.7
Left Front Camber (°)	-1.2	-0.45	0.3
Right Front Camber (°)	-1.2	-0.45	0.3
Front Toe (°)	-0.13	0.07	0.27
Left SAI (°)	10.45	11.2	11.95
Right SAI (°)	10.45	11.2	11.95
Left Rear Camber (°)	-1.9	-1.15	-0.4
Right Rear Camber (°)	-1.9	-1.15	-0.4
Rear Toe (°)	0.08	0.35	0.62
Thrust Angle	0	0	0
Left Toe Out, Inward (°)	0	0	0
Right Toe Out, Inward (°)	0	0	0
Left Toe Out, Outward (°)	0	0	0
Right Toe Out, Outward (°)	0	-44.5	-42.5
Left Max Turn, Inward (°)	-40.5	-44.5	-42.5
Right Max Turn, Inward (°)	-40.5	36.57	36.57
Left Max Turn, Outward (°)	36.57	36.57	36.57
Right Max Turn, Outward (°)	36.57	-	-

SIENNA GSL30L-PRTQKA P235/60R17 4WD

Measurement	Minimum	Preferred	Maximum
Left Front Caster (°)	2.2	2.95	3.7
Right Front Caster (°)	2.2	2.95	3.7
Left Front Camber (°)	-1.2	-0.45	0.3
Right Front Camber (°)	-1.2	-0.45	0.3
Front Toe (°)	-0.13	0.07	0.27
Left SAI (°)	10.45	11.2	11.95
Right SAI (°)	10.45	11.2	11.95
Left Rear Camber (°)	-1.9	-1.15	-0.4
Right Rear Camber (°)	-1.9	-1.15	-0.4
Rear Toe (°)	0.08	0.35	0.62
Thrust Angle	0	0	0
Left Toe Out, Inward (°)	0	0	0
Right Toe Out, Inward (°)	0	0	0
Left Toe Out, Outward (°)	0	0	0
Right Toe Out, Outward (°)	0	-44.5	-42.5
Left Max Turn, Inward (°)	-40.5	-44.5	-42.5
Right Max Turn, Inward (°)	-40.5	36.57	36.57
Left Max Turn, Outward (°)	36.57	36.57	36.57
Right Max Turn, Outward (°)	36.57	-	-

SIENNA GSL30L-PRTSKA P235/50R19 2WD

Measurement	Minimum	Preferred	Maximum
Left Front Caster (°)	2.25	3	3.75
Right Front Caster (°)	2.25	3	3.75
Left Front Camber (°)	-1.27	-0.52	0.23
Right Front Camber (°)	-1.27	-0.52	0.23
Front Toe (°)	-0.13	0.07	0.27
Left SAI (°)	10.62	11.37	12.12
Right SAI (°)	10.62	11.37	12.12
Left Rear Camber (°)	-1.93	-1.18	-0.43
Right Rear Camber (°)	-1.93	-1.18	-0.43
Rear Toe (°)	0.08	0.35	0.62
Thrust Angle	0	0	0
Left Toe Out, Inward (°)	0	0	0
Right Toe Out, Inward (°)	0	0	0
Left Toe Out, Outward (°)	0	0	0
Right Toe Out, Outward (°)	0	-44.13	-42.13
Left Max Turn, Inward (°)	-40.13	-44.13	-42.13
Right Max Turn, Inward (°)	-40.13	36.32	36.32
Left Max Turn, Outward (°)	36.32	36.32	36.32
Right Max Turn, Outward (°)	36.32	-	-

SIENNA GSL30L-PRTSKA P235/50R19 4WD

Measurement	Minimum	Preferred	Maximum
Left Front Caster (°)	2.25	3	3.75
Right Front Caster (°)	2.25	3	3.75
Left Front Camber (°)	-1.27	-0.52	0.23
Right Front Camber (°)	-1.27	-0.52	0.23
Front Toe (°)	-0.13	0.07	0.27
Left SAI (°)	10.62	11.37	12.12
Right SAI (°)	10.62	11.37	12.12
Left Rear Camber (°)	-1.93	-1.18	-0.43
Right Rear Camber (°)	-1.93	-1.18	-0.43
Rear Toe (°)	0.08	0.35	0.62
Thrust Angle	0	0	0
Left Toe Out, Inward (°)	0	0	0
Right Toe Out, Inward (°)	0	0	0
Left Toe Out, Outward (°)	0	0	0
Right Toe Out, Outward (°)	0	-44.13	-42.13
Left Max Turn, Inward (°)	-40.13	-44.13	-42.13
Right Max Turn, Inward (°)	-40.13	36.32	36.32

Left Max Turn, Outward (°)	36.32	36.32	36.32
Right Max Turn, Outward (°)	36.32	-	-

SIENNA GSL33L-SBTDKA P235/60R17 2WD

Measurement	Minimum	Preferred	Maximum
Left Front Caster (°)	2.05	2.8	3.55
Right Front Caster (°)	2.05	2.8	3.55
Left Front Camber (°)	-1.15	-0.4	0.35
Right Front Camber (°)	-1.15	-0.4	0.35
Front Toe (°)	-0.1	0.1	0.3
Left SAI (°)	10.33	11.08	11.83
Right SAI (°)	10.33	11.08	11.83
Left Rear Camber (°)	-1.8	-1.05	-0.3
Right Rear Camber (°)	-1.8	-1.05	-0.3
Rear Toe (°)	0.06	0.33	0.6
Thrust Angle	0	0	0
Left Toe Out, Inward (°)	0	0	0
Right Toe Out, Inward (°)	0	0	0
Left Toe Out, Outward (°)	0	0	0
Right Toe Out, Outward (°)	0	-44.5	-42.5
Left Max Turn, Inward (°)	-40.5	-44.5	-42.5
Right Max Turn, Inward (°)	-40.5	36.57	36.57
Left Max Turn, Outward (°)	36.57	36.57	36.57
Right Max Turn, Outward (°)	36.57	-	-

SIENNA GSL33L-SBTDKA P235/60R17 4WD

Measurement	Minimum	Preferred	Maximum
Left Front Caster (°)	2.05	2.8	3.55
Right Front Caster (°)	2.05	2.8	3.55
Left Front Camber (°)	-1.15	-0.4	0.35
Right Front Camber (°)	-1.15	-0.4	0.35
Front Toe (°)	-0.1	0.1	0.3
Left SAI (°)	10.33	11.08	11.83
Right SAI (°)	10.33	11.08	11.83
Left Rear Camber (°)	-1.8	-1.05	-0.3
Right Rear Camber (°)	-1.8	-1.05	-0.3
Rear Toe (°)	0.06	0.33	0.6
Thrust Angle	0	0	0
Left Toe Out, Inward (°)	0	0	0
Right Toe Out, Inward (°)	0	0	0
Left Toe Out, Outward (°)	0	0	0

Right Toe Out, Outward (°)	0	-44.5	-42.5
Left Max Turn, Inward (°)	-40.5	-44.5	-42.5
Right Max Turn, Inward (°)	-40.5	36.57	36.57
Left Max Turn, Outward (°)	36.57	36.57	36.57
Right Max Turn, Outward (°)	36.57	-	-

SIENNA GSL35L-PFTDKA P235/55RF18 2WD

Measurement	Minimum	Preferred	Maximum
Left Front Caster (°)	2.05	2.8	3.55
Right Front Caster (°)	2.05	2.8	3.55
Left Front Camber (°)	-1.18	-0.43	0.32
Right Front Camber (°)	-1.18	-0.43	0.32
Front Toe (°)	-0.13	0.07	0.27
Left SAI (°)	10.25	11	11.75
Right SAI (°)	10.25	11	11.75
Left Rear Camber (°)	-2.13	-1.38	-0.63
Right Rear Camber (°)	-2.13	-1.38	-0.63
Rear Toe (°)	-0.02	0.25	0.52
Thrust Angle	0	0	0
Left Toe Out, Inward (°)	0	0	0
Right Toe Out, Inward (°)	0	0	0
Left Toe Out, Outward (°)	0	0	0
Right Toe Out, Outward (°)	0	-43.93	-41.93
Left Max Turn, Inward (°)	-39.93	-43.93	-41.93
Right Max Turn, Inward (°)	-39.93	36.3	36.3
Left Max Turn, Outward (°)	36.3	36.3	36.3
Right Max Turn, Outward (°)	36.3	-	-

SIENNA GSL35L-PFTDKA P235/55RF18 4WD

Measurement	Minimum	Preferred	Maximum
Left Front Caster (°)	2.05	2.8	3.55
Right Front Caster (°)	2.05	2.8	3.55
Left Front Camber (°)	-1.18	-0.43	0.32
Right Front Camber (°)	-1.18	-0.43	0.32
Front Toe (°)	-0.13	0.07	0.27
Left SAI (°)	10.25	11	11.75
Right SAI (°)	10.25	11	11.75
Left Rear Camber (°)	-2.13	-1.38	-0.63
Right Rear Camber (°)	-2.13	-1.38	-0.63
Rear Toe (°)	-0.02	0.25	0.52
Thrust Angle	0	0	0

Left Toe Out, Inward (°)	0	0	0
Right Toe Out, Inward (°)	0	0	0
Left Toe Out, Outward (°)	0	0	0
Right Toe Out, Outward (°)	0	-43.93	-41.93
Left Max Turn, Inward (°)	-39.93	-43.93	-41.93
Right Max Turn, Inward (°)	-39.93	36.3	36.3
Left Max Turn, Outward (°)	36.3	36.3	36.3
Right Max Turn, Outward (°)	36.3	-	-

SIENNA GSL35L-PFTEKA P235/55RF18 2WD

Measurement	Minimum	Preferred	Maximum
Left Front Caster (°)	2.07	2.82	3.57
Right Front Caster (°)	2.07	2.82	3.57
Left Front Camber (°)	-1.2	-0.45	0.3
Right Front Camber (°)	-1.2	-0.45	0.3
Front Toe (°)	-0.13	0.07	0.27
Left SAI (°)	10.28	11.03	11.78
Right SAI (°)	10.28	11.03	11.78
Left Rear Camber (°)	-2.13	-1.38	-0.63
Right Rear Camber (°)	-2.13	-1.38	-0.63
Rear Toe (°)	-0.02	0.25	0.52
Thrust Angle	0	0	0
Left Toe Out, Inward (°)	0	0	0
Right Toe Out, Inward (°)	0	0	0
Left Toe Out, Outward (°)	0	0	0
Right Toe Out, Outward (°)	0	-43.93	-41.93
Left Max Turn, Inward (°)	-39.93	-43.93	-41.93
Right Max Turn, Inward (°)	-39.93	36.3	36.3
Left Max Turn, Outward (°)	36.3	36.3	36.3
Right Max Turn, Outward (°)	36.3	-	-

SIENNA GSL35L-PFTEKA P235/55RF18 4WD

Measurement	Minimum	Preferred	Maximum
Left Front Caster (°)	2.07	2.82	3.57
Right Front Caster (°)	2.07	2.82	3.57
Left Front Camber (°)	-1.2	-0.45	0.3
Right Front Camber (°)	-1.2	-0.45	0.3
Front Toe (°)	-0.13	0.07	0.27
Left SAI (°)	10.28	11.03	11.78
Right SAI (°)	10.28	11.03	11.78
Left Rear Camber (°)	-2.13	-1.38	-0.63

Right Rear Camber (°)	-2.13	-1.38	-0.63
Rear Toe (°)	-0.02	0.25	0.52
Thrust Angle	0	0	0
Left Toe Out, Inward (°)	0	0	0
Right Toe Out, Inward (°)	0	0	0
Left Toe Out, Outward (°)	0	0	0
Right Toe Out, Outward (°)	0	-43.93	-41.93
Left Max Turn, Inward (°)	-39.93	-43.93	-41.93
Right Max Turn, Inward (°)	-39.93	36.3	36.3
Left Max Turn, Outward (°)	36.3	36.3	36.3
Right Max Turn, Outward (°)	36.3	-	-

SIENNA GSL35L-PFTQKA P235/55RF18 2WD

Measurement	Minimum	Preferred	Maximum
Left Front Caster (°)	2.18	2.93	3.68
Right Front Caster (°)	2.18	2.93	3.68
Left Front Camber (°)	-1.22	-0.47	0.28
Right Front Camber (°)	-1.22	-0.47	0.28
Front Toe (°)	-0.15	0.05	0.25
Left SAI (°)	10.33	11.08	11.83
Right SAI (°)	10.33	11.08	11.83
Left Rear Camber (°)	-2.18	-1.43	-0.68
Right Rear Camber (°)	-2.18	-1.43	-0.68
Rear Toe (°)	0	0.27	0.54
Thrust Angle	0	0	0
Left Toe Out, Inward (°)	0	0	0
Right Toe Out, Inward (°)	0	0	0
Left Toe Out, Outward (°)	0	0	0
Right Toe Out, Outward (°)	0	-43.93	-41.93
Left Max Turn, Inward (°)	-39.93	-43.93	-41.93
Right Max Turn, Inward (°)	-39.93	36.3	36.3
Left Max Turn, Outward (°)	36.3	36.3	36.3
Right Max Turn, Outward (°)	36.3	-	-

SIENNA GSL35L-PFTQKA P235/55RF18 4WD

Measurement	Minimum	Preferred	Maximum
Left Front Caster (°)	2.18	2.93	3.68
Right Front Caster (°)	2.18	2.93	3.68
Left Front Camber (°)	-1.22	-0.47	0.28
Right Front Camber (°)	-1.22	-0.47	0.28
Front Toe (°)	-0.15	0.05	0.25

Left SAI (°)	10.33	11.08	11.83
Right SAI (°)	10.33	11.08	11.83
Left Rear Camber (°)	-2.18	-1.43	-0.68
Right Rear Camber (°)	-2.18	-1.43	-0.68
Rear Toe (°)	0	0.27	0.54
Thrust Angle	0	0	0
Left Toe Out, Inward (°)	0	0	0
Right Toe Out, Inward (°)	0	0	0
Left Toe Out, Outward (°)	0	0	0
Right Toe Out, Outward (°)	0	-43.93	-41.93
Left Max Turn, Inward (°)	-39.93	-43.93	-41.93
Right Max Turn, Inward (°)	-39.93	36.3	36.3
Left Max Turn, Outward (°)	36.3	36.3	36.3
Right Max Turn, Outward (°)	36.3	-	-

VENZA

VENZA 1AR-FE 2WD

Measurement	Minimum	Preferred	Maximum
Left Front Caster (°)	1.9	2.65	3.4
Right Front Caster (°)	1.9	2.65	3.4
Left Front Camber (°)	-1.33	-0.58	0.17
Right Front Camber (°)	-1.33	-0.58	0.17
Front Toe (°)	-0.12	0.08	0.28
Left SAI (°)	9.95	10.7	11.45
Right SAI (°)	9.95	10.7	11.45
Left Rear Camber (°)	-1.97	-1.22	-0.47
Right Rear Camber (°)	-1.97	-1.22	-0.47
Rear Toe (°)	0.12	0.28	0.44
Thrust Angle	0	0	0
Left Toe Out, Inward (°)	0	0	0
Right Toe Out, Inward (°)	0	0	0
Left Toe Out, Outward (°)	0	0	0
Right Toe Out, Outward (°)	0	33.2	35.2
Left Max Turn, Inward (°)	37.2	33.2	35.2
Right Max Turn, Inward (°)	37.2	31.4	31.4
Left Max Turn, Outward (°)	31.4	31.4	31.4
Right Max Turn, Outward (°)	31.4	-	-

VENZA 1AR-FE AWD

Measurement	Minimum	Preferred	Maximum
Left Front Caster (°)	1.93	2.68	3.43

Right Front Caster (°)	1.93	2.68	3.43
Left Front Camber (°)	-1.35	-0.6	0.15
Right Front Camber (°)	-1.35	-0.6	0.15
Front Toe (°)	-0.12	0.08	0.28
Left SAI (°)	9.95	10.7	11.45
Right SAI (°)	9.95	10.7	11.45
Left Rear Camber (°)	-1.53	-0.78	-0.03
Right Rear Camber (°)	-1.53	-0.78	-0.03
Rear Toe (°)	0.11	0.27	0.43
Thrust Angle	0	0	0
Left Toe Out, Inward (°)	0	0	0
Right Toe Out, Inward (°)	0	0	0
Left Toe Out, Outward (°)	0	0	0
Right Toe Out, Outward (°)	0	33.2	35.2
Left Max Turn, Inward (°)	37.2	33.2	35.2
Right Max Turn, Inward (°)	37.2	31.4	31.4
Left Max Turn, Outward (°)	31.4	31.4	31.4
Right Max Turn, Outward (°)	31.4	-	-

VENZA 2GR-FE 2WD

Measurement	Minimum	Preferred	Maximum
Left Front Caster (°)	1.88	2.63	3.38
Right Front Caster (°)	1.88	2.63	3.38
Left Front Camber (°)	-1.35	-0.6	0.15
Right Front Camber (°)	-1.35	-0.6	0.15
Front Toe (°)	-0.12	0.08	0.28
Left SAI (°)	9.97	10.72	11.47
Right SAI (°)	9.97	10.72	11.47
Left Rear Camber (°)	-1.98	-1.23	-0.48
Right Rear Camber (°)	-1.98	-1.23	-0.48
Rear Toe (°)	0.12	0.28	0.44
Thrust Angle	0	0	0
Left Toe Out, Inward (°)	0	0	0
Right Toe Out, Inward (°)	0	0	0
Left Toe Out, Outward (°)	0	0	0
Right Toe Out, Outward (°)	0	33.2	35.2
Left Max Turn, Inward (°)	37.2	33.2	35.2
Right Max Turn, Inward (°)	37.2	31.4	31.4
Left Max Turn, Outward (°)	31.4	31.4	31.4
Right Max Turn, Outward (°)	31.4	-	-

VENZA 2GR-FE AWD

Measurement	Minimum	Preferred	Maximum
Left Front Caster (°)	1.92	2.67	3.42
Right Front Caster (°)	1.92	2.67	3.42
Left Front Camber (°)	-1.35	-0.6	0.15
Right Front Camber (°)	-1.35	-0.6	0.15
Front Toe (°)	-0.12	0.08	0.28
Left SAI (°)	9.97	10.72	11.47
Right SAI (°)	9.97	10.72	11.47
Left Rear Camber (°)	-1.55	-0.8	-0.05
Right Rear Camber (°)	-1.55	-0.8	-0.05
Rear Toe (°)	0.11	0.27	0.43
Thrust Angle	0	0	0
Left Toe Out, Inward (°)	0	0	0
Right Toe Out, Inward (°)	0	0	0
Left Toe Out, Outward (°)	0	0	0
Right Toe Out, Outward (°)	0	33.2	35.2
Left Max Turn, Inward (°)	37.2	33.2	35.2
Right Max Turn, Inward (°)	37.2	31.4	31.4
Left Max Turn, Outward (°)	31.4	31.4	31.4
Right Max Turn, Outward (°)	31.4	-	-

YARIS

YARIS Hatchback P175/65 R14 C50

Measurement	Minimum	Preferred	Maximum
Left Front Caster (°)	3.77	4.52	5.27
Right Front Caster (°)	3.77	4.52	5.27
Left Front Camber (°)	-0.75	0	0.75
Right Front Camber (°)	-0.75	0	0.75
Front Toe (°)	0.03	0.19	0.35
Left SAI (°)	10.72	10.72	10.72
Right SAI (°)	10.72	10.72	10.72
Left Rear Camber (°)	-1.4	-0.9	-0.4
Right Rear Camber (°)	-1.4	-0.9	-0.4
Rear Toe (°)	-0.06	0.42	0.9
Thrust Angle	0	0	0
Left Toe Out, Inward (°)	0	0	0
Right Toe Out, Inward (°)	0	0	0
Left Toe Out, Outward (°)	0	0	0
Right Toe Out, Outward (°)	0	39.28	41.28
Left Max Turn, Inward (°)	43.28	39.28	41.28

Right Max Turn, Inward (°)	43.28	35.57	35.57
Left Max Turn, Outward (°)	35.57	35.57	35.57
Right Max Turn, Outward (°)	35.57	-	-

YARIS Hatchback P175/65 R14 U340E

Measurement	Minimum	Preferred	Maximum
Left Front Caster (°)	3.75	4.5	5.25
Right Front Caster (°)	3.75	4.5	5.25
Left Front Camber (°)	-0.75	0	0.75
Right Front Camber (°)	-0.75	0	0.75
Front Toe (°)	0.03	0.19	0.35
Left SAI (°)	10.72	10.72	10.72
Right SAI (°)	10.72	10.72	10.72
Left Rear Camber (°)	-1.4	-0.9	-0.4
Right Rear Camber (°)	-1.4	-0.9	-0.4
Rear Toe (°)	-0.06	0.42	0.9
Thrust Angle	0	0	0
Left Toe Out, Inward (°)	0	0	0
Right Toe Out, Inward (°)	0	0	0
Left Toe Out, Outward (°)	0	0	0
Right Toe Out, Outward (°)	0	39.28	41.28
Left Max Turn, Inward (°)	43.28	39.28	41.28
Right Max Turn, Inward (°)	43.28	35.57	35.57
Left Max Turn, Outward (°)	35.57	35.57	35.57
Right Max Turn, Outward (°)	35.57	-	-

YARIS Hatchback P175/65 R15 C50

Measurement	Minimum	Preferred	Maximum
Left Front Caster (°)	4.22	4.98	5.73
Right Front Caster (°)	4.22	4.98	5.73
Left Front Camber (°)	-1.1	-0.35	0.4
Right Front Camber (°)	-1.1	-0.35	0.4
Front Toe (°)	-0.1	0.06	0.22
Left SAI (°)	11.35	11.35	11.35
Right SAI (°)	11.35	11.35	11.35
Left Rear Camber (°)	-1.45	-0.95	-0.45
Right Rear Camber (°)	-1.45	-0.95	-0.45
Rear Toe (°)	0.12	0.37	0.62
Thrust Angle	0	0	0
Left Toe Out, Inward (°)	0	0	0
Right Toe Out, Inward (°)	0	0	0

Left Toe Out, Outward (°)	0	0	0
Right Toe Out, Outward (°)	0	38.73	40.73
Left Max Turn, Inward (°)	42.73	38.73	40.73
Right Max Turn, Inward (°)	42.73	35.05	35.05
Left Max Turn, Outward (°)	35.05	35.05	35.05
Right Max Turn, Outward (°)	35.05	-	-

YARIS Hatchback P175/65 R15 U340E

Measurement	**Minimum**	**Preferred**	**Maximum**
Left Front Caster (°)	4.22	4.98	5.73
Right Front Caster (°)	4.22	4.98	5.73
Left Front Camber (°)	-1.1	-0.35	0.4
Right Front Camber (°)	-1.1	-0.35	0.4
Front Toe (°)	-0.1	0.06	0.22
Left SAI (°)	11.35	11.35	11.35
Right SAI (°)	11.35	11.35	11.35
Left Rear Camber (°)	-1.45	-0.95	-0.45
Right Rear Camber (°)	-1.45	-0.95	-0.45
Rear Toe (°)	0.12	0.37	0.62
Thrust Angle	0	0	0
Left Toe Out, Inward (°)	0	0	0
Right Toe Out, Inward (°)	0	0	0
Left Toe Out, Outward (°)	0	0	0
Right Toe Out, Outward (°)	0	38.73	40.73
Left Max Turn, Inward (°)	42.73	38.73	40.73
Right Max Turn, Inward (°)	42.73	35.05	35.05
Left Max Turn, Outward (°)	35.05	35.05	35.05
Right Max Turn, Outward (°)	35.05	-	-

YARIS Hatchback P185/60 R15 C50

Measurement	**Minimum**	**Preferred**	**Maximum**
Left Front Caster (°)	3.78	4.53	5.28
Right Front Caster (°)	3.78	4.53	5.28
Left Front Camber (°)	-0.75	0	0.75
Right Front Camber (°)	-0.75	0	0.75
Front Toe (°)	-0.07	0.07	0.21
Left SAI (°)	10.72	10.72	10.72
Right SAI (°)	10.72	10.72	10.72
Left Rear Camber (°)	-1.4	-0.9	-0.4
Right Rear Camber (°)	-1.4	-0.9	-0.4
Rear Toe (°)	0	0.25	0.5

Thrust Angle	0	0	0
Left Toe Out, Inward (°)	0	0	0
Right Toe Out, Inward (°)	0	0	0
Left Toe Out, Outward (°)	0	0	0
Right Toe Out, Outward (°)	0	39.28	41.28
Left Max Turn, Inward (°)	43.28	39.28	41.28
Right Max Turn, Inward (°)	43.28	35.57	35.57
Left Max Turn, Outward (°)	35.57	35.57	35.57
Right Max Turn, Outward (°)	35.57	-	-

YARIS Hatchback P185/60 R15 U340E

Measurement	Minimum	Preferred	Maximum
Left Front Caster (°)	3.77	4.52	5.27
Right Front Caster (°)	3.77	4.52	5.27
Left Front Camber (°)	-0.75	0	0.75
Right Front Camber (°)	-0.75	0	0.75
Front Toe (°)	-0.07	0.07	0.21
Left SAI (°)	10.72	10.72	10.72
Right SAI (°)	10.72	10.72	10.72
Left Rear Camber (°)	-1.4	-0.9	-0.4
Right Rear Camber (°)	-1.4	-0.9	-0.4
Rear Toe (°)	0	0.25	0.5
Thrust Angle	0	0	0
Left Toe Out, Inward (°)	0	0	0
Right Toe Out, Inward (°)	0	0	0
Left Toe Out, Outward (°)	0	0	0
Right Toe Out, Outward (°)	0	39.28	41.28
Left Max Turn, Inward (°)	43.28	39.28	41.28
Right Max Turn, Inward (°)	43.28	35.57	35.57
Left Max Turn, Outward (°)	35.57	35.57	35.57
Right Max Turn, Outward (°)	35.57	-	-

YARIS Hatchback P195/50 R16 C50

Measurement	Minimum	Preferred	Maximum
Left Front Caster (°)	4.25	5	5.75
Right Front Caster (°)	4.25	5	5.75
Left Front Camber (°)	-1.15	-0.4	0.35
Right Front Camber (°)	-1.15	-0.4	0.35
Front Toe (°)	-0.1	0.05	0.2
Left SAI (°)	11.43	11.43	11.43
Right SAI (°)	11.43	11.43	11.43

Left Rear Camber (°)	-1.45	-0.95	-0.45
Right Rear Camber (°)	-1.45	-0.95	-0.45
Rear Toe (°)	0.12	0.37	0.62
Thrust Angle	0	0	0
Left Toe Out, Inward (°)	0	0	0
Right Toe Out, Inward (°)	0	0	0
Left Toe Out, Outward (°)	0	0	0
Right Toe Out, Outward (°)	0	30.43	32.43
Left Max Turn, Inward (°)	34.43	30.43	32.43
Right Max Turn, Inward (°)	34.43	29.43	29.43
Left Max Turn, Outward (°)	29.43	29.43	29.43
Right Max Turn, Outward (°)	29.43	-	-

YARIS Hatchback P195/50 R16 U340E

Measurement	Minimum	Preferred	Maximum
Left Front Caster (°)	4.25	5	5.75
Right Front Caster (°)	4.25	5	5.75
Left Front Camber (°)	-1.15	-0.4	0.35
Right Front Camber (°)	-1.15	-0.4	0.35
Front Toe (°)	-0.1	0.05	0.2
Left SAI (°)	11.43	11.43	11.43
Right SAI (°)	11.43	11.43	11.43
Left Rear Camber (°)	-1.45	-0.95	-0.45
Right Rear Camber (°)	-1.45	-0.95	-0.45
Rear Toe (°)	0.12	0.37	0.62
Thrust Angle	0	0	0
Left Toe Out, Inward (°)	0	0	0
Right Toe Out, Inward (°)	0	0	0
Left Toe Out, Outward (°)	0	0	0
Right Toe Out, Outward (°)	0	30.43	32.43
Left Max Turn, Inward (°)	34.43	30.43	32.43
Right Max Turn, Inward (°)	34.43	29.43	29.43
Left Max Turn, Outward (°)	29.43	29.43	29.43
Right Max Turn, Outward (°)	29.43	-	-

YARIS Sedan except Rough Road 175/65 R14 and 185/60 R15

Measurement	Minimum	Preferred	Maximum
Left Front Caster (°)	3.9	4.65	5.4
Right Front Caster (°)	3.9	4.65	5.4
Left Front Camber (°)	-0.92	-0.17	0.58
Right Front Camber (°)	-0.92	-0.17	0.58

Front Toe (°)	-0.07	0.15	0.37
Left SAI (°)	11.27	11.27	11.27
Right SAI (°)	11.27	11.27	11.27
Left Rear Camber (°)	-1.68	-0.93	-0.18
Right Rear Camber (°)	-1.68	-0.93	-0.18
Rear Toe (°)	-0.05	0.28	0.61
Thrust Angle	0	0	0
Left Toe Out, Inward (°)	0	0	0
Right Toe Out, Inward (°)	0	0	0
Left Toe Out, Outward (°)	0	0	0
Right Toe Out, Outward (°)	0	38.95	40.95
Left Max Turn, Inward (°)	42.95	38.95	40.95
Right Max Turn, Inward (°)	42.95	35.29	35.29
Left Max Turn, Outward (°)	35.29	35.29	35.29
Right Max Turn, Outward (°)	35.29	-	-

YARIS Sedan Rough Road 175/65 R14 and 185/60 R15

Measurement	Minimum	Preferred	Maximum
Left Front Caster (°)	3.63	4.38	5.13
Right Front Caster (°)	3.63	4.38	5.13
Left Front Camber (°)	-0.65	0.1	0.85
Right Front Camber (°)	-0.65	0.1	0.85
Front Toe (°)	-0.07	0.15	0.37
Left SAI (°)	10.78	10.78	10.78
Right SAI (°)	10.78	10.78	10.78
Left Rear Camber (°)	-1.65	-0.9	-0.15
Right Rear Camber (°)	-1.65	-0.9	-0.15
Rear Toe (°)	-0.11	0.22	0.55
Thrust Angle	0	0	0
Left Toe Out, Inward (°)	0	0	0
Right Toe Out, Inward (°)	0	0	0
Left Toe Out, Outward (°)	0	0	0
Right Toe Out, Outward (°)	0	39.37	41.37
Left Max Turn, Inward (°)	43.37	39.37	41.37
Right Max Turn, Inward (°)	43.37	35.75	35.75
Left Max Turn, Outward (°)	35.75	35.75	35.75
Right Max Turn, Outward (°)	35.75	-	-

TACOMA

TACOMA 2WD GRN225L-CRFDKA P255/45R18

Measurement	Minimum	Preferred	Maximum

Left Front Caster (°)	4.4	5.15	5.9
Right Front Caster (°)	4.4	5.15	5.9
Left Front Camber (°)	-1.37	-0.62	0.13
Right Front Camber (°)	-1.37	-0.62	0.13
Front Toe (°)	-0.07	0.038	0.146
Left SAI (°)	10.78	11.53	12.28
Right SAI (°)	10.78	11.53	12.28
Left Rear Camber (°)	0	0	0
Right Rear Camber (°)	0	0	0
Rear Toe (°)	0	0	0
Thrust Angle	0	0	0
Left Toe Out, Inward (°)	0	0	0
Right Toe Out, Inward (°)	0	0	0
Left Toe Out, Outward (°)	0	0	0
Right Toe Out, Outward (°)	0	36.8	38.8
Left Max Turn, Inward (°)	39.8	36.8	38.8
Right Max Turn, Inward (°)	39.8	30.5	32.5
Left Max Turn, Outward (°)	33.5	30.5	32.5
Right Max Turn, Outward (°)	33.5	-	-

TACOMA 2WD TRN220L-TRMDKA P215/70R15

Measurement	**Minimum**	**Preferred**	**Maximum**
Left Front Caster (°)	3.21	3.96	4.71
Right Front Caster (°)	3.21	3.96	4.71
Left Front Camber (°)	-0.58	0.17	0.92
Right Front Camber (°)	-0.58	0.17	0.92
Front Toe (°)	-0.043	0.065	0.173
Left SAI (°)	10	10.75	11.5
Right SAI (°)	10	10.75	11.5
Left Rear Camber (°)	0	0	0
Right Rear Camber (°)	0	0	0
Rear Toe (°)	0	0	0
Thrust Angle	0	0	0
Left Toe Out, Inward (°)	0	0	0
Right Toe Out, Inward (°)	0	0	0
Left Toe Out, Outward (°)	0	0	0
Right Toe Out, Outward (°)	0	36.8	38.8
Left Max Turn, Inward (°)	39.8	36.8	38.8
Right Max Turn, Inward (°)	39.8	30.5	32.5
Left Max Turn, Outward (°)	33.5	30.5	32.5
Right Max Turn, Outward (°)	33.5	-	-

TACOMA 2WD TRN220L-TRPDKA P215/70R15

Measurement	Minimum	Preferred	Maximum
Left Front Caster (°)	3.2	3.95	4.7
Right Front Caster (°)	3.2	3.95	4.7
Left Front Camber (°)	-0.62	0.13	0.88
Right Front Camber (°)	-0.62	0.13	0.88
Front Toe (°)	-0.059	0.049	0.157
Left SAI (°)	10.05	10.8	11.55
Right SAI (°)	10.05	10.8	11.55
Left Rear Camber (°)	0	0	0
Right Rear Camber (°)	0	0	0
Rear Toe (°)	0	0	0
Thrust Angle	0	0	0
Left Toe Out, Inward (°)	0	0	0
Right Toe Out, Inward (°)	0	0	0
Left Toe Out, Outward (°)	0	0	0
Right Toe Out, Outward (°)	0	36.8	38.8
Left Max Turn, Inward (°)	39.8	36.8	38.8
Right Max Turn, Inward (°)	39.8	30.5	32.5
Left Max Turn, Outward (°)	33.5	30.5	32.5
Right Max Turn, Outward (°)	33.5	-	-

TACOMA 2WD TRN225L-CRMDKA P215/70R15

Measurement	Minimum	Preferred	Maximum
Left Front Caster (°)	3.4	4.15	4.9
Right Front Caster (°)	3.4	4.15	4.9
Left Front Camber (°)	-0.51	0.24	0.99
Right Front Camber (°)	-0.51	0.24	0.99
Front Toe (°)	-0.019	0.089	0.197
Left SAI (°)	9.94	10.69	11.44
Right SAI (°)	9.94	10.69	11.44
Left Rear Camber (°)	0	0	0
Right Rear Camber (°)	0	0	0
Rear Toe (°)	0	0	0
Thrust Angle	0	0	0
Left Toe Out, Inward (°)	0	0	0
Right Toe Out, Inward (°)	0	0	0
Left Toe Out, Outward (°)	0	0	0
Right Toe Out, Outward (°)	0	36.8	38.8
Left Max Turn, Inward (°)	39.8	36.8	38.8
Right Max Turn, Inward (°)	39.8	30.5	32.5

Left Max Turn, Outward (°)	33.5	30.5	32.5
Right Max Turn, Outward (°)	33.5	-	-

TACOMA 2WD TRN225L-CRPDKA P215/70R15

Measurement	Minimum	Preferred	Maximum
Left Front Caster (°)	3.43	4.18	4.93
Right Front Caster (°)	3.43	4.18	4.93
Left Front Camber (°)	-0.55	0.2	0.95
Right Front Camber (°)	-0.55	0.2	0.95
Front Toe (°)	-0.035	0.073	0.181
Left SAI (°)	9.98	10.73	11.48
Right SAI (°)	9.98	10.73	11.48
Left Rear Camber (°)	0	0	0
Right Rear Camber (°)	0	0	0
Rear Toe (°)	0	0	0
Thrust Angle	0	0	0
Left Toe Out, Inward (°)	0	0	0
Right Toe Out, Inward (°)	0	0	0
Left Toe Out, Outward (°)	0	0	0
Right Toe Out, Outward (°)	0	36.8	38.8
Left Max Turn, Inward (°)	39.8	36.8	38.8
Right Max Turn, Inward (°)	39.8	30.5	32.5
Left Max Turn, Outward (°)	33.5	30.5	32.5
Right Max Turn, Outward (°)	33.5	-	-

TACOMA 2WD TRN225L-PRPDKA P215/70R15

Measurement	Minimum	Preferred	Maximum
Left Front Caster (°)	3.56	4.31	5.06
Right Front Caster (°)	3.56	4.31	5.06
Left Front Camber (°)	-0.6	0.15	0.9
Right Front Camber (°)	-0.6	0.15	0.9
Front Toe (°)	-0.051	0.057	0.165
Left SAI (°)	10.02	10.77	11.52
Right SAI (°)	10.02	10.77	11.52
Left Rear Camber (°)	0	0	0
Right Rear Camber (°)	0	0	0
Rear Toe (°)	0	0	0
Thrust Angle	0	0	0
Left Toe Out, Inward (°)	0	0	0
Right Toe Out, Inward (°)	0	0	0
Left Toe Out, Outward (°)	0	0	0

Right Toe Out, Outward (°)	0	36.8	38.8
Left Max Turn, Inward (°)	39.8	36.8	38.8
Right Max Turn, Inward (°)	39.8	30.5	32.5
Left Max Turn, Outward (°)	33.5	30.5	32.5
Right Max Turn, Outward (°)	33.5	-	-

TACOMA 4WD and Prerunner GRN245L-CRADKA (FIRM SUSPENSION) P245/75R16

Measurement	Minimum	Preferred	Maximum
Left Front Caster (°)	0.97	1.72	2.47
Right Front Caster (°)	0.97	1.72	2.47
Left Front Camber (°)	-0.11	0.64	1.39
Right Front Camber (°)	-0.11	0.64	1.39
Front Toe (°)	0.048	0.156	0.264
Left SAI (°)	11.07	11.82	12.57
Right SAI (°)	11.07	11.82	12.57
Left Rear Camber (°)	0	0	0
Right Rear Camber (°)	0	0	0
Rear Toe (°)	0	0	0
Thrust Angle	0	0	0
Left Toe Out, Inward (°)	0	0	0
Right Toe Out, Inward (°)	0	0	0
Left Toe Out, Outward (°)	0	0	0
Right Toe Out, Outward (°)	0	37.3	39.3
Left Max Turn, Inward (°)	40.3	37.3	39.3
Right Max Turn, Inward (°)	40.3	32.9	34.9
Left Max Turn, Outward (°)	35.9	32.9	34.9
Right Max Turn, Outward (°)	35.9	-	-

TACOMA 4WD and Prerunner GRN245L-CRADKA (FIRM SUSPENSION) P265/65R17 US Territories

Measurement	Minimum	Preferred	Maximum
Left Front Caster (°)	0.91	1.66	2.41
Right Front Caster (°)	0.91	1.66	2.41
Left Front Camber (°)	-0.11	0.64	1.39
Right Front Camber (°)	-0.11	0.64	1.39
Front Toe (°)	0.049	0.157	0.261
Left SAI (°)	11.07	11.82	12.57
Right SAI (°)	11.07	11.82	12.57
Left Rear Camber (°)	0	0	0
Right Rear Camber (°)	0	0	0
Rear Toe (°)	0	0	0
Thrust Angle	0	0	0

Left Toe Out, Inward (°)	0	0	0
Right Toe Out, Inward (°)	0	0	0
Left Toe Out, Outward (°)	0	0	0
Right Toe Out, Outward (°)	0	37.3	39.3
Left Max Turn, Inward (°)	40.3	37.3	39.3
Right Max Turn, Inward (°)	40.3	32.9	34.9
Left Max Turn, Outward (°)	35.9	32.9	34.9
Right Max Turn, Outward (°)	35.9	-	-

TACOMA 4WD and Prerunner GRN245L-CRADKA (FIRM SUSPENSION) P265/70R16

Measurement	Minimum	Preferred	Maximum
Left Front Caster (°)	0.93	1.68	2.43
Right Front Caster (°)	0.93	1.68	2.43
Left Front Camber (°)	-0.14	0.61	1.36
Right Front Camber (°)	-0.14	0.61	1.36
Front Toe (°)	0.024	0.132	0.24
Left SAI (°)	11.1	11.85	12.6
Right SAI (°)	11.1	11.85	12.6
Left Rear Camber (°)	0	0	0
Right Rear Camber (°)	0	0	0
Rear Toe (°)	0	0	0
Thrust Angle	0	0	0
Left Toe Out, Inward (°)	0	0	0
Right Toe Out, Inward (°)	0	0	0
Left Toe Out, Outward (°)	0	0	0
Right Toe Out, Outward (°)	0	37.3	39.3
Left Max Turn, Inward (°)	40.3	37.3	39.3
Right Max Turn, Inward (°)	40.3	32.9	34.9
Left Max Turn, Outward (°)	35.9	32.9	34.9
Right Max Turn, Outward (°)	35.9	-	-

TACOMA 4WD and Prerunner GRN245L-CRADKA P245/75R16

Measurement	Minimum	Preferred	Maximum
Left Front Caster (°)	1.18	1.93	2.68
Right Front Caster (°)	1.18	1.93	2.68
Left Front Camber (°)	-0.11	0.64	1.39
Right Front Camber (°)	-0.11	0.64	1.39
Front Toe (°)	0.048	0.156	0.264
Left SAI (°)	11.07	11.82	12.57
Right SAI (°)	11.07	11.82	12.57
Left Rear Camber (°)	0	0	0

Right Rear Camber (°)	0	0	0
Rear Toe (°)	0	0	0
Thrust Angle	0	0	0
Left Toe Out, Inward (°)	0	0	0
Right Toe Out, Inward (°)	0	0	0
Left Toe Out, Outward (°)	0	0	0
Right Toe Out, Outward (°)	0	37.3	39.3
Left Max Turn, Inward (°)	40.3	37.3	39.3
Right Max Turn, Inward (°)	40.3	32.9	34.9
Left Max Turn, Outward (°)	35.9	32.9	34.9
Right Max Turn, Outward (°)	35.9	-	-

TACOMA 4WD and Prerunner GRN245L-CRADKA P245/75R16 4- Leaf Spring Canada

Measurement	Minimum	Preferred	Maximum
Left Front Caster (°)	0.97	1.72	2.47
Right Front Caster (°)	0.97	1.72	2.47
Left Front Camber (°)	-0.11	0.64	1.39
Right Front Camber (°)	-0.11	0.64	1.39
Front Toe (°)	0.048	0.156	0.264
Left SAI (°)	11.07	11.82	12.57
Right SAI (°)	11.07	11.82	12.57
Left Rear Camber (°)	0	0	0
Right Rear Camber (°)	0	0	0
Rear Toe (°)	0	0	0
Thrust Angle	0	0	0
Left Toe Out, Inward (°)	0	0	0
Right Toe Out, Inward (°)	0	0	0
Left Toe Out, Outward (°)	0	0	0
Right Toe Out, Outward (°)	0	37.3	39.3
Left Max Turn, Inward (°)	40.3	37.3	39.3
Right Max Turn, Inward (°)	40.3	32.9	34.9
Left Max Turn, Outward (°)	35.9	32.9	34.9
Right Max Turn, Outward (°)	35.9	-	-

TACOMA 4WD and Prerunner GRN245L-CRADKA P265/65R17

Measurement	Minimum	Preferred	Maximum
Left Front Caster (°)	1.13	1.88	2.63
Right Front Caster (°)	1.13	1.88	2.63
Left Front Camber (°)	-0.11	0.64	1.39
Right Front Camber (°)	-0.11	0.64	1.39
Front Toe (°)	0.049	0.157	0.265

Left SAI (°)	11.07	11.82	12.57
Right SAI (°)	11.07	11.82	12.57
Left Rear Camber (°)	0	0	0
Right Rear Camber (°)	0	0	0
Rear Toe (°)	0	0	0
Thrust Angle	0	0	0
Left Toe Out, Inward (°)	0	0	0
Right Toe Out, Inward (°)	0	0	0
Left Toe Out, Outward (°)	0	0	0
Right Toe Out, Outward (°)	0	37.3	39.3
Left Max Turn, Inward (°)	40.3	37.3	39.3
Right Max Turn, Inward (°)	40.3	32.9	34.9
Left Max Turn, Outward (°)	35.9	32.9	34.9
Right Max Turn, Outward (°)	35.9	-	-

TACOMA 4WD and Prerunner GRN245L-CRADKA P265/65R17 4- Leaf Spring Canada

Measurement	Minimum	Preferred	Maximum
Left Front Caster (°)	0.91	1.66	2.41
Right Front Caster (°)	0.91	1.66	2.41
Left Front Camber (°)	-0.11	0.64	1.39
Right Front Camber (°)	-0.11	0.64	1.39
Front Toe (°)	0.049	0.157	0.265
Left SAI (°)	11.07	11.82	12.57
Right SAI (°)	11.07	11.82	12.57
Left Rear Camber (°)	0	0	0
Right Rear Camber (°)	0	0	0
Rear Toe (°)	0	0	0
Thrust Angle	0	0	0
Left Toe Out, Inward (°)	0	0	0
Right Toe Out, Inward (°)	0	0	0
Left Toe Out, Outward (°)	0	0	0
Right Toe Out, Outward (°)	0	37.3	39.3
Left Max Turn, Inward (°)	40.3	37.3	39.3
Right Max Turn, Inward (°)	40.3	32.9	34.9
Left Max Turn, Outward (°)	35.9	32.9	34.9
Right Max Turn, Outward (°)	35.9	-	-

TACOMA 4WD and Prerunner GRN245L-CRADKA P265/70R16

Measurement	Minimum	Preferred	Maximum
Left Front Caster (°)	1.14	1.89	2.64
Right Front Caster (°)	1.14	1.89	2.64

Left Front Camber (°)	-0.14	0.61	1.36
Right Front Camber (°)	-0.14	0.61	1.36
Front Toe (°)	0.024	0.132	0.24
Left SAI (°)	11.1	11.85	12.6
Right SAI (°)	11.1	11.85	12.6
Left Rear Camber (°)	0	0	0
Right Rear Camber (°)	0	0	0
Rear Toe (°)	0	0	0
Thrust Angle	0	0	0
Left Toe Out, Inward (°)	0	0	0
Right Toe Out, Inward (°)	0	0	0
Left Toe Out, Outward (°)	0	0	0
Right Toe Out, Outward (°)	0	37.3	39.3
Left Max Turn, Inward (°)	40.3	37.3	39.3
Right Max Turn, Inward (°)	40.3	32.9	34.9
Left Max Turn, Outward (°)	35.9	32.9	34.9
Right Max Turn, Outward (°)	35.9	-	-

TACOMA 4WD and Prerunner GRN245L-CRADKA P265/70R16 4- Leaf Spring Canada

Measurement	**Minimum**	**Preferred**	**Maximum**
Left Front Caster (°)	0.93	1.68	2.43
Right Front Caster (°)	0.93	1.68	2.43
Left Front Camber (°)	-0.14	0.61	1.36
Right Front Camber (°)	-0.14	0.61	1.36
Front Toe (°)	0.024	0.132	0.24
Left SAI (°)	11.1	11.85	12.6
Right SAI (°)	11.1	11.85	12.6
Left Rear Camber (°)	0	0	0
Right Rear Camber (°)	0	0	0
Rear Toe (°)	0	0	0
Thrust Angle	0	0	0
Left Toe Out, Inward (°)	0	0	0
Right Toe Out, Inward (°)	0	0	0
Left Toe Out, Outward (°)	0	0	0
Right Toe Out, Outward (°)	0	37.3	39.3
Left Max Turn, Inward (°)	40.3	37.3	39.3
Right Max Turn, Inward (°)	40.3	32.9	34.9
Left Max Turn, Outward (°)	35.9	32.9	34.9
Right Max Turn, Outward (°)	35.9	-	-

TACOMA 4WD and Prerunner GRN245L-CRFDKA (FIRM SUSPENSION) P245/75R16

Measurement	Minimum	Preferred	Maximum
Left Front Caster (°)	0.92	1.67	2.42
Right Front Caster (°)	0.92	1.67	2.42
Left Front Camber (°)	-0.1	0.65	1.4
Right Front Camber (°)	-0.1	0.65	1.4
Front Toe (°)	0.059	0.167	0.275
Left SAI (°)	11.05	11.8	12.55
Right SAI (°)	11.05	11.8	12.55
Left Rear Camber (°)	0	0	0
Right Rear Camber (°)	0	0	0
Rear Toe (°)	0	0	0
Thrust Angle	0	0	0
Left Toe Out, Inward (°)	0	0	0
Right Toe Out, Inward (°)	0	0	0
Left Toe Out, Outward (°)	0	0	0
Right Toe Out, Outward (°)	0	37.3	39.3
Left Max Turn, Inward (°)	40.3	37.3	39.3
Right Max Turn, Inward (°)	40.3	32.9	34.9
Left Max Turn, Outward (°)	35.9	32.9	34.9
Right Max Turn, Outward (°)	35.9	-	-

TACOMA 4WD and Prerunner GRN245L-CRFDKA (FIRM SUSPENSION) P265/65R17 US Territories

Measurement	Minimum	Preferred	Maximum
Left Front Caster (°)	0.88	1.63	2.38
Right Front Caster (°)	0.88	1.63	2.38
Left Front Camber (°)	-0.1	0.65	1.4
Right Front Camber (°)	-0.1	0.65	1.4
Front Toe (°)	0.061	0.169	0.277
Left SAI (°)	11.05	11.8	12.55
Right SAI (°)	11.05	11.8	12.55
Left Rear Camber (°)	0	0	0
Right Rear Camber (°)	0	0	0
Rear Toe (°)	0	0	0
Thrust Angle	0	0	0
Left Toe Out, Inward (°)	0	0	0
Right Toe Out, Inward (°)	0	0	0
Left Toe Out, Outward (°)	0	0	0
Right Toe Out, Outward (°)	0	37.3	39.3
Left Max Turn, Inward (°)	40.3	37.3	39.3
Right Max Turn, Inward (°)	40.3	32.9	34.9
Left Max Turn, Outward (°)	35.9	32.9	34.9

Right Max Turn, Outward (°)	35.9	-	-

TACOMA 4WD and Prerunner GRN245L-CRFDKA (FIRM SUSPENSION) P265/70R16

Measurement	Minimum	Preferred	Maximum
Left Front Caster (°)	0.9	1.65	2.4
Right Front Caster (°)	0.9	1.65	2.4
Left Front Camber (°)	-0.13	0.62	1.37
Right Front Camber (°)	-0.13	0.62	1.37
Front Toe (°)	0.036	0.144	0.252
Left SAI (°)	11.08	11.83	12.58
Right SAI (°)	11.08	11.83	12.58
Left Rear Camber (°)	0	0	0
Right Rear Camber (°)	0	0	0
Rear Toe (°)	0	0	0
Thrust Angle	0	0	0
Left Toe Out, Inward (°)	0	0	0
Right Toe Out, Inward (°)	0	0	0
Left Toe Out, Outward (°)	0	0	0
Right Toe Out, Outward (°)	0	37.3	39.3
Left Max Turn, Inward (°)	40.3	37.3	39.3
Right Max Turn, Inward (°)	40.3	32.9	34.9
Left Max Turn, Outward (°)	35.9	32.9	34.9
Right Max Turn, Outward (°)	35.9	-	-

TACOMA 4WD and Prerunner GRN245L-CRFDKA P245/75R16

Measurement	Minimum	Preferred	Maximum
Left Front Caster (°)	1.13	1.88	2.63
Right Front Caster (°)	1.13	1.88	2.63
Left Front Camber (°)	-0.1	0.65	1.4
Right Front Camber (°)	-0.1	0.65	1.4
Front Toe (°)	0.059	0.167	0.275
Left SAI (°)	11.05	11.8	12.55
Right SAI (°)	11.05	11.8	12.55
Left Rear Camber (°)	0	0	0
Right Rear Camber (°)	0	0	0
Rear Toe (°)	0	0	0
Thrust Angle	0	0	0
Left Toe Out, Inward (°)	0	0	0
Right Toe Out, Inward (°)	0	0	0
Left Toe Out, Outward (°)	0	0	0
Right Toe Out, Outward (°)	0	37.3	39.3

Left Max Turn, Inward (°)	40.3	37.3	39.3
Right Max Turn, Inward (°)	40.3	32.9	34.9
Left Max Turn, Outward (°)	35.9	32.9	34.9
Right Max Turn, Outward (°)	35.9	-	-

TACOMA 4WD and Prerunner GRN245L-CRFDKA P245/75R16 4- Leaf Spring Canada

Measurement	**Minimum**	**Preferred**	**Maximum**
Left Front Caster (°)	0.92	1.67	2.42
Right Front Caster (°)	0.92	1.67	2.42
Left Front Camber (°)	-0.1	0.65	1.4
Right Front Camber (°)	-0.1	0.65	1.4
Front Toe (°)	0.059	0.167	0.275
Left SAI (°)	11.05	11.8	12.55
Right SAI (°)	11.05	11.8	12.55
Left Rear Camber (°)	0	0	0
Right Rear Camber (°)	0	0	0
Rear Toe (°)	0	0	0
Thrust Angle	0	0	0
Left Toe Out, Inward (°)	0	0	0
Right Toe Out, Inward (°)	0	0	0
Left Toe Out, Outward (°)	0	0	0
Right Toe Out, Outward (°)	0	37.3	39.3
Left Max Turn, Inward (°)	40.3	37.3	39.3
Right Max Turn, Inward (°)	40.3	32.9	34.9
Left Max Turn, Outward (°)	35.9	32.9	34.9
Right Max Turn, Outward (°)	35.9	-	-

TACOMA 4WD and Prerunner GRN245L-CRFDKA P265/65R17

Measurement	**Minimum**	**Preferred**	**Maximum**
Left Front Caster (°)	1.09	1.84	2.59
Right Front Caster (°)	1.09	1.84	2.59
Left Front Camber (°)	-0.1	0.65	1.4
Right Front Camber (°)	-0.1	0.65	1.4
Front Toe (°)	0.059	0.169	0.277
Left SAI (°)	11.05	11.8	12.55
Right SAI (°)	11.05	11.8	12.55
Left Rear Camber (°)	0	0	0
Right Rear Camber (°)	0	0	0
Rear Toe (°)	0	0	0
Thrust Angle	0	0	0
Left Toe Out, Inward (°)	0	0	0

Right Toe Out, Inward (°)	0	0	0
Left Toe Out, Outward (°)	0	0	0
Right Toe Out, Outward (°)	0	37.3	39.3
Left Max Turn, Inward (°)	40.3	37.3	39.3
Right Max Turn, Inward (°)	40.3	32.9	34.9
Left Max Turn, Outward (°)	35.9	32.9	34.9
Right Max Turn, Outward (°)	35.9	-	-

TACOMA 4WD and Prerunner GRN245L-CRFDKA P265/65R17 4- Leaf Spring Canada

Measurement	Minimum	Preferred	Maximum
Left Front Caster (°)	0.88	1.63	2.38
Right Front Caster (°)	0.88	1.63	2.38
Left Front Camber (°)	-0.1	0.65	1.4
Right Front Camber (°)	-0.1	0.65	1.4
Front Toe (°)	0.061	0.169	0.277
Left SAI (°)	11.05	11.8	12.55
Right SAI (°)	11.05	11.8	12.55
Left Rear Camber (°)	0	0	0
Right Rear Camber (°)	0	0	0
Rear Toe (°)	0	0	0
Thrust Angle	0	0	0
Left Toe Out, Inward (°)	0	0	0
Right Toe Out, Inward (°)	0	0	0
Left Toe Out, Outward (°)	0	0	0
Right Toe Out, Outward (°)	0	37.3	39.3
Left Max Turn, Inward (°)	40.3	37.3	39.3
Right Max Turn, Inward (°)	40.3	32.9	34.9
Left Max Turn, Outward (°)	35.9	32.9	34.9
Right Max Turn, Outward (°)	35.9	-	-

TACOMA 4WD and Prerunner GRN245L-CRFDKA P265/70R16

Measurement	Minimum	Preferred	Maximum
Left Front Caster (°)	1.11	1.86	2.61
Right Front Caster (°)	1.11	1.86	2.61
Left Front Camber (°)	-0.13	0.62	1.37
Right Front Camber (°)	-0.13	0.62	1.37
Front Toe (°)	0.036	0.144	0.252
Left SAI (°)	11.08	11.83	12.58
Right SAI (°)	11.08	11.83	12.58
Left Rear Camber (°)	0	0	0
Right Rear Camber (°)	0	0	0

Rear Toe (°)	0	0	0
Thrust Angle	0	0	0
Left Toe Out, Inward (°)	0	0	0
Right Toe Out, Inward (°)	0	0	0
Left Toe Out, Outward (°)	0	0	0
Right Toe Out, Outward (°)	0	37.3	39.3
Left Max Turn, Inward (°)	40.3	37.3	39.3
Right Max Turn, Inward (°)	40.3	32.9	34.9
Left Max Turn, Outward (°)	35.9	32.9	34.9
Right Max Turn, Outward (°)	35.9	-	-

TACOMA 4WD and Prerunner GRN245L-CRFDKA P265/70R16 4- Leaf Spring Canada

Measurement	Minimum	Preferred	Maximum
Left Front Caster (°)	0.9	1.65	2.4
Right Front Caster (°)	0.9	1.65	2.4
Left Front Camber (°)	-0.13	0.62	1.37
Right Front Camber (°)	-0.13	0.62	1.37
Front Toe (°)	0.036	0.144	0.252
Left SAI (°)	11.08	11.83	12.58
Right SAI (°)	11.08	11.83	12.58
Left Rear Camber (°)	0	0	0
Right Rear Camber (°)	0	0	0
Rear Toe (°)	0	0	0
Thrust Angle	0	0	0
Left Toe Out, Inward (°)	0	0	0
Right Toe Out, Inward (°)	0	0	0
Left Toe Out, Outward (°)	0	0	0
Right Toe Out, Outward (°)	0	37.3	39.3
Left Max Turn, Inward (°)	40.3	37.3	39.3
Right Max Turn, Inward (°)	40.3	32.9	34.9
Left Max Turn, Outward (°)	35.9	32.9	34.9
Right Max Turn, Outward (°)	35.9	-	-

TACOMA 4WD and Prerunner GRN245L-PRADKA (FIRM SUSPENSION) P245/75R16

Measurement	Minimum	Preferred	Maximum
Left Front Caster (°)	1.07	1.82	2.57
Right Front Caster (°)	1.07	1.82	2.57
Left Front Camber (°)	-0.13	0.62	1.37
Right Front Camber (°)	-0.13	0.62	1.37
Front Toe (°)	0.036	0.144	0.252
Left SAI (°)	11.08	11.83	12.58

Right SAI (°)	11.08	11.83	12.58
Left Rear Camber (°)	0	0	0
Right Rear Camber (°)	0	0	0
Rear Toe (°)	0	0	0
Thrust Angle	0	0	0
Left Toe Out, Inward (°)	0	0	0
Right Toe Out, Inward (°)	0	0	0
Left Toe Out, Outward (°)	0	0	0
Right Toe Out, Outward (°)	0	37.3	39.3
Left Max Turn, Inward (°)	40.3	37.3	39.3
Right Max Turn, Inward (°)	40.3	32.9	34.9
Left Max Turn, Outward (°)	35.9	32.9	34.9
Right Max Turn, Outward (°)	35.9	-	-

TACOMA 4WD and Prerunner GRN245L-PRADKA (FIRM SUSPENSION) P265/60R18 US Territories

Measurement	Minimum	Preferred	Maximum
Left Front Caster (°)	1.02	1.77	2.52
Right Front Caster (°)	1.02	1.77	2.52
Left Front Camber (°)	-0.13	0.62	1.37
Right Front Camber (°)	-0.13	0.62	1.37
Front Toe (°)	0.038	0.146	0.254
Left SAI (°)	11.08	11.83	12.58
Right SAI (°)	11.08	11.83	12.58
Left Rear Camber (°)	0	0	0
Right Rear Camber (°)	0	0	0
Rear Toe (°)	0	0	0
Thrust Angle	0	0	0
Left Toe Out, Inward (°)	0	0	0
Right Toe Out, Inward (°)	0	0	0
Left Toe Out, Outward (°)	0	0	0
Right Toe Out, Outward (°)	0	37.3	39.3
Left Max Turn, Inward (°)	40.3	37.3	39.3
Right Max Turn, Inward (°)	40.3	32.9	34.9
Left Max Turn, Outward (°)	35.9	32.9	34.9
Right Max Turn, Outward (°)	35.9	-	-

TACOMA 4WD and Prerunner GRN245L-PRADKA (FIRM SUSPENSION) P265/65R17 US Territories

Measurement	Minimum	Preferred	Maximum
Left Front Caster (°)	1	1.75	2.5
Right Front Caster (°)	1	1.75	2.5
Left Front Camber (°)	-0.13	0.62	1.37

Right Front Camber (°)	-0.13	0.62	1.37
Front Toe (°)	0.038	0.146	0.254
Left SAI (°)	11.08	11.83	12.58
Right SAI (°)	11.08	11.83	12.58
Left Rear Camber (°)	0	0	0
Right Rear Camber (°)	0	0	0
Rear Toe (°)	0	0	0
Thrust Angle	0	0	0
Left Toe Out, Inward (°)	0	0	0
Right Toe Out, Inward (°)	0	0	0
Left Toe Out, Outward (°)	0	0	0
Right Toe Out, Outward (°)	0	37.3	39.3
Left Max Turn, Inward (°)	40.3	37.3	39.3
Right Max Turn, Inward (°)	40.3	32.9	34.9
Left Max Turn, Outward (°)	35.9	32.9	34.9
Right Max Turn, Outward (°)	35.9	-	-

TACOMA 4WD and Prerunner GRN245L-PRADKA (FIRM SUSPENSION) P265/70R16

Measurement	**Minimum**	**Preferred**	**Maximum**
Left Front Caster (°)	1.03	1.78	2.53
Right Front Caster (°)	1.03	1.78	2.53
Left Front Camber (°)	-0.16	0.59	1.34
Right Front Camber (°)	-0.16	0.59	1.34
Front Toe (°)	0.013	0.121	0.229
Left SAI (°)	11.11	11.86	12.61
Right SAI (°)	11.11	11.86	12.61
Left Rear Camber (°)	0	0	0
Right Rear Camber (°)	0	0	0
Rear Toe (°)	0	0	0
Thrust Angle	0	0	0
Left Toe Out, Inward (°)	0	0	0
Right Toe Out, Inward (°)	0	0	0
Left Toe Out, Outward (°)	0	0	0
Right Toe Out, Outward (°)	0	37.3	39.3
Left Max Turn, Inward (°)	40.3	37.3	39.3
Right Max Turn, Inward (°)	40.3	32.9	34.9
Left Max Turn, Outward (°)	35.9	32.9	34.9
Right Max Turn, Outward (°)	35.9	-	-

TACOMA 4WD and Prerunner GRN245L-PRADKA P245/75R16

Measurement	**Minimum**	**Preferred**	**Maximum**

Left Front Caster (°)	1.28	2.03	2.78
Right Front Caster (°)	1.28	2.03	2.78
Left Front Camber (°)	-0.13	0.62	1.37
Right Front Camber (°)	-0.13	0.62	1.37
Front Toe (°)	0.036	0.144	0.252
Left SAI (°)	11.08	11.83	12.58
Right SAI (°)	11.08	11.83	12.58
Left Rear Camber (°)	0	0	0
Right Rear Camber (°)	0	0	0
Rear Toe (°)	0	0	0
Thrust Angle	0	0	0
Left Toe Out, Inward (°)	0	0	0
Right Toe Out, Inward (°)	0	0	0
Left Toe Out, Outward (°)	0	0	0
Right Toe Out, Outward (°)	0	37.3	39.3
Left Max Turn, Inward (°)	40.3	37.3	39.3
Right Max Turn, Inward (°)	40.3	32.9	34.9
Left Max Turn, Outward (°)	35.9	32.9	34.9
Right Max Turn, Outward (°)	35.9	-	-

TACOMA 4WD and Prerunner GRN245L-PRADKA P265/60R18

Measurement	Minimum	Preferred	Maximum
Left Front Caster (°)	1.23	1.98	2.73
Right Front Caster (°)	1.23	1.98	2.73
Left Front Camber (°)	-0.13	0.62	1.37
Right Front Camber (°)	-0.13	0.62	1.37
Front Toe (°)	0.036	0.144	0.252
Left SAI (°)	11.08	11.83	12.58
Right SAI (°)	11.08	11.83	12.58
Left Rear Camber (°)	0	0	0
Right Rear Camber (°)	0	0	0
Rear Toe (°)	0	0	0
Thrust Angle	0	0	0
Left Toe Out, Inward (°)	0	0	0
Right Toe Out, Inward (°)	0	0	0
Left Toe Out, Outward (°)	0	0	0
Right Toe Out, Outward (°)	0	37.3	39.3
Left Max Turn, Inward (°)	40.3	37.3	39.3
Right Max Turn, Inward (°)	40.3	32.9	34.9
Left Max Turn, Outward (°)	35.9	32.9	34.9
Right Max Turn, Outward (°)	35.9	-	-

TACOMA 4WD and Prerunner GRN245L-PRADKA P265/65R17

Measurement	Minimum	Preferred	Maximum
Left Front Caster (°)	1.21	1.96	2.71
Right Front Caster (°)	1.21	1.96	2.71
Left Front Camber (°)	-0.13	0.62	1.37
Right Front Camber (°)	-0.13	0.62	1.37
Front Toe (°)	0.038	0.146	0.252
Left SAI (°)	11.08	11.83	12.58
Right SAI (°)	11.08	11.83	12.58
Left Rear Camber (°)	0	0	0
Right Rear Camber (°)	0	0	0
Rear Toe (°)	0	0	0
Thrust Angle	0	0	0
Left Toe Out, Inward (°)	0	0	0
Right Toe Out, Inward (°)	0	0	0
Left Toe Out, Outward (°)	0	0	0
Right Toe Out, Outward (°)	0	37.3	39.3
Left Max Turn, Inward (°)	40.3	37.3	39.3
Right Max Turn, Inward (°)	40.3	32.9	34.9
Left Max Turn, Outward (°)	35.9	32.9	34.9
Right Max Turn, Outward (°)	35.9	-	-

TACOMA 4WD and Prerunner GRN245L-PRADKA P265/70R16

Measurement	Minimum	Preferred	Maximum
Left Front Caster (°)	1.25	2	2.75
Right Front Caster (°)	1.25	2	2.75
Left Front Camber (°)	-0.16	0.59	1.34
Right Front Camber (°)	-0.16	0.59	1.34
Front Toe (°)	0.013	0.121	0.229
Left SAI (°)	11.11	11.86	12.61
Right SAI (°)	11.11	11.86	12.61
Left Rear Camber (°)	0	0	0
Right Rear Camber (°)	0	0	0
Rear Toe (°)	0	0	0
Thrust Angle	0	0	0
Left Toe Out, Inward (°)	0	0	0
Right Toe Out, Inward (°)	0	0	0
Left Toe Out, Outward (°)	0	0	0
Right Toe Out, Outward (°)	0	37.3	39.3
Left Max Turn, Inward (°)	40.3	37.3	39.3
Right Max Turn, Inward (°)	40.3	32.9	34.9

Left Max Turn, Outward (°)	35.9	32.9	34.9
Right Max Turn, Outward (°)	35.9	-	-

TACOMA 4WD and Prerunner GRN245L-PRFDKA (FIRM SUSPENSION) P245/75R16

Measurement	Minimum	Preferred	Maximum
Left Front Caster (°)	1.04	1.79	2.54
Right Front Caster (°)	1.04	1.79	2.54
Left Front Camber (°)	-0.11	0.64	1.39
Right Front Camber (°)	-0.11	0.64	1.39
Front Toe (°)	0.048	0.156	0.264
Left SAI (°)	11.07	11.82	12.57
Right SAI (°)	11.07	11.82	12.57
Left Rear Camber (°)	0	0	0
Right Rear Camber (°)	0	0	0
Rear Toe (°)	0	0	0
Thrust Angle	0	0	0
Left Toe Out, Inward (°)	0	0	0
Right Toe Out, Inward (°)	0	0	0
Left Toe Out, Outward (°)	0	0	0
Right Toe Out, Outward (°)	0	37.3	39.3
Left Max Turn, Inward (°)	40.3	37.3	39.3
Right Max Turn, Inward (°)	40.3	32.9	34.9
Left Max Turn, Outward (°)	35.9	32.9	34.9
Right Max Turn, Outward (°)	35.9	-	-

TACOMA 4WD and Prerunner GRN245L-PRFDKA (FIRM SUSPENSION) P265/65R17 US Territories

Measurement	Minimum	Preferred	Maximum
Left Front Caster (°)	0.99	1.74	2.49
Right Front Caster (°)	0.99	1.74	2.49
Left Front Camber (°)	-0.11	0.64	1.39
Right Front Camber (°)	-0.11	0.64	1.39
Front Toe (°)	0.049	0.157	0.265
Left SAI (°)	11.07	11.82	12.57
Right SAI (°)	11.07	11.82	12.57
Left Rear Camber (°)	0	0	0
Right Rear Camber (°)	0	0	0
Rear Toe (°)	0	0	0
Thrust Angle	0	0	0
Left Toe Out, Inward (°)	0	0	0
Right Toe Out, Inward (°)	0	0	0
Left Toe Out, Outward (°)	0	0	0

Right Toe Out, Outward (°)	0	37.3	39.3
Left Max Turn, Inward (°)	40.3	37.3	39.3
Right Max Turn, Inward (°)	40.3	32.9	34.9
Left Max Turn, Outward (°)	35.9	32.9	34.9
Right Max Turn, Outward (°)	35.9	-	-

TACOMA 4WD and Prerunner GRN245L-PRFDKA (FIRM SUSPENSION) P265/70R16

Measurement	Minimum	Preferred	Maximum
Left Front Caster (°)	1	1.75	2.5
Right Front Caster (°)	1	1.75	2.5
Left Front Camber (°)	-0.14	0.61	1.36
Right Front Camber (°)	-0.14	0.61	1.36
Front Toe (°)	0.024	0.132	0.24
Left SAI (°)	11.1	11.85	12.6
Right SAI (°)	11.1	11.85	12.6
Left Rear Camber (°)	0	0	0
Right Rear Camber (°)	0	0	0
Rear Toe (°)	0	0	0
Thrust Angle	0	0	0
Left Toe Out, Inward (°)	0	0	0
Right Toe Out, Inward (°)	0	0	0
Left Toe Out, Outward (°)	0	0	0
Right Toe Out, Outward (°)	0	37.3	39.3
Left Max Turn, Inward (°)	40.3	37.3	39.3
Right Max Turn, Inward (°)	40.3	32.9	34.9
Left Max Turn, Outward (°)	35.9	32.9	34.9
Right Max Turn, Outward (°)	35.9	-	-

TACOMA 4WD and Prerunner GRN245L-PRFDKA P245/75R16

Measurement	Minimum	Preferred	Maximum
Left Front Caster (°)	1.25	2	2.75
Right Front Caster (°)	1.25	2	2.75
Left Front Camber (°)	-0.11	0.64	1.39
Right Front Camber (°)	-0.11	0.64	1.39
Front Toe (°)	0.048	0.156	0.264
Left SAI (°)	11.07	11.82	12.57
Right SAI (°)	11.07	11.82	12.57
Left Rear Camber (°)	0	0	0
Right Rear Camber (°)	0	0	0
Rear Toe (°)	0	0	0
Thrust Angle	0	0	0

Left Toe Out, Inward (°)	0	0	0
Right Toe Out, Inward (°)	0	0	0
Left Toe Out, Outward (°)	0	0	0
Right Toe Out, Outward (°)	0	37.3	39.3
Left Max Turn, Inward (°)	40.3	37.3	39.3
Right Max Turn, Inward (°)	40.3	32.9	34.9
Left Max Turn, Outward (°)	35.9	32.9	34.9
Right Max Turn, Outward (°)	35.9	-	-

TACOMA 4WD and Prerunner GRN245L-PRFDKA P245/75R16 4- Leaf Spring Canada

Measurement	Minimum	Preferred	Maximum
Left Front Caster (°)	1.04	1.79	2.54
Right Front Caster (°)	1.04	1.79	2.54
Left Front Camber (°)	-0.11	0.64	1.39
Right Front Camber (°)	-0.11	0.64	1.39
Front Toe (°)	0.048	0.156	0.264
Left SAI (°)	11.07	11.82	12.57
Right SAI (°)	11.07	11.82	12.57
Left Rear Camber (°)	0	0	0
Right Rear Camber (°)	0	0	0
Rear Toe (°)	0	0	0
Thrust Angle	0	0	0
Left Toe Out, Inward (°)	0	0	0
Right Toe Out, Inward (°)	0	0	0
Left Toe Out, Outward (°)	0	0	0
Right Toe Out, Outward (°)	0	37.3	39.3
Left Max Turn, Inward (°)	40.3	37.3	39.3
Right Max Turn, Inward (°)	40.3	32.9	34.9
Left Max Turn, Outward (°)	35.9	32.9	34.9
Right Max Turn, Outward (°)	35.9	-	-

TACOMA 4WD and Prerunner GRN245L-PRFDKA P265/65R17

Measurement	Minimum	Preferred	Maximum
Left Front Caster (°)	1.2	1.95	2.7
Right Front Caster (°)	1.2	1.95	2.7
Left Front Camber (°)	-0.11	0.64	1.39
Right Front Camber (°)	-0.11	0.64	1.39
Front Toe (°)	0.049	0.157	0.265
Left SAI (°)	11.07	11.82	12.57
Right SAI (°)	11.07	11.82	12.57
Left Rear Camber (°)	0	0	0

Right Rear Camber (°)	0	0	0
Rear Toe (°)	0	0	0
Thrust Angle	0	0	0
Left Toe Out, Inward (°)	0	0	0
Right Toe Out, Inward (°)	0	0	0
Left Toe Out, Outward (°)	0	0	0
Right Toe Out, Outward (°)	0	37.3	39.3
Left Max Turn, Inward (°)	40.3	37.3	39.3
Right Max Turn, Inward (°)	40.3	32.9	34.9
Left Max Turn, Outward (°)	35.9	32.9	34.9
Right Max Turn, Outward (°)	35.9	-	-

TACOMA 4WD and Prerunner GRN245L-PRFDKA P265/65R17 4- Leaf Spring Canada

Measurement	Minimum	Preferred	Maximum
Left Front Caster (°)	0.99	1.74	2.49
Right Front Caster (°)	0.99	1.74	2.49
Left Front Camber (°)	-0.11	0.64	1.39
Right Front Camber (°)	-0.11	0.64	1.39
Front Toe (°)	0.049	0.157	0.265
Left SAI (°)	11.07	11.82	12.57
Right SAI (°)	11.07	11.82	12.57
Left Rear Camber (°)	0	0	0
Right Rear Camber (°)	0	0	0
Rear Toe (°)	0	0	0
Thrust Angle	0	0	0
Left Toe Out, Inward (°)	0	0	0
Right Toe Out, Inward (°)	0	0	0
Left Toe Out, Outward (°)	0	0	0
Right Toe Out, Outward (°)	0	37.3	39.3
Left Max Turn, Inward (°)	40.3	37.3	39.3
Right Max Turn, Inward (°)	40.3	32.9	34.9
Left Max Turn, Outward (°)	35.9	32.9	34.9
Right Max Turn, Outward (°)	35.9	-	-

TACOMA 4WD and Prerunner GRN245L-PRFDKA P265/70R16

Measurement	Minimum	Preferred	Maximum
Left Front Caster (°)	1.21	1.96	2.71
Right Front Caster (°)	1.21	1.96	2.71
Left Front Camber (°)	-0.14	0.61	1.36
Right Front Camber (°)	-0.14	0.61	1.36
Front Toe (°)	0.024	0.132	0.24

Left SAI (°)	11.1	11.85	12.6
Right SAI (°)	11.1	11.85	12.6
Left Rear Camber (°)	0	0	0
Right Rear Camber (°)	0	0	0
Rear Toe (°)	0	0	0
Thrust Angle	0	0	0
Left Toe Out, Inward (°)	0	0	0
Right Toe Out, Inward (°)	0	0	0
Left Toe Out, Outward (°)	0	0	0
Right Toe Out, Outward (°)	0	37.3	39.3
Left Max Turn, Inward (°)	40.3	37.3	39.3
Right Max Turn, Inward (°)	40.3	32.9	34.9
Left Max Turn, Outward (°)	35.9	32.9	34.9
Right Max Turn, Outward (°)	35.9	-	-

TACOMA 4WD and Prerunner GRN245L-PRFDKA P265/70R16 4- Leaf Spring Canada

Measurement	Minimum	Preferred	Maximum
Left Front Caster (°)	1	1.75	2.5
Right Front Caster (°)	1	1.75	2.5
Left Front Camber (°)	-0.14	0.61	1.36
Right Front Camber (°)	-0.14	0.61	1.36
Front Toe (°)	0.024	0.132	0.24
Left SAI (°)	11.1	11.85	12.6
Right SAI (°)	11.1	11.85	12.6
Left Rear Camber (°)	0	0	0
Right Rear Camber (°)	0	0	0
Rear Toe (°)	0	0	0
Thrust Angle	0	0	0
Left Toe Out, Inward (°)	0	0	0
Right Toe Out, Inward (°)	0	0	0
Left Toe Out, Outward (°)	0	0	0
Right Toe Out, Outward (°)	0	37.3	39.3
Left Max Turn, Inward (°)	40.3	37.3	39.3
Right Max Turn, Inward (°)	40.3	32.9	34.9
Left Max Turn, Outward (°)	35.9	32.9	34.9
Right Max Turn, Outward (°)	35.9	-	-

TACOMA 4WD and Prerunner GRN250L-PRADKA (FIRM SUSPENSION) P245/75R16

Measurement	Minimum	Preferred	Maximum
Left Front Caster (°)	1.19	1.94	2.69
Right Front Caster (°)	1.19	1.94	2.69

Left Front Camber (°)	-0.1	0.65	1.4
Right Front Camber (°)	-0.1	0.65	1.4
Front Toe (°)	0.058	0.167	0.271
Left SAI (°)	11.05	11.8	12.55
Right SAI (°)	11.05	11.8	12.55
Left Rear Camber (°)	0	0	0
Right Rear Camber (°)	0	0	0
Rear Toe (°)	0	0	0
Thrust Angle	0	0	0
Left Toe Out, Inward (°)	0	0	0
Right Toe Out, Inward (°)	0	0	0
Left Toe Out, Outward (°)	0	0	0
Right Toe Out, Outward (°)	0	37.3	39.3
Left Max Turn, Inward (°)	40.3	37.3	39.3
Right Max Turn, Inward (°)	40.3	32.9	34.9
Left Max Turn, Outward (°)	35.9	32.9	34.9
Right Max Turn, Outward (°)	35.9	-	-

TACOMA 4WD and Prerunner GRN250L-PRADKA (FIRM SUSPENSION) P265/60R18 US Territories

Measurement	**Minimum**	**Preferred**	**Maximum**
Left Front Caster (°)	1.14	1.89	2.64
Right Front Caster (°)	1.14	1.89	2.64
Left Front Camber (°)	-0.1	0.65	1.4
Right Front Camber (°)	-0.1	0.65	1.4
Front Toe (°)	0.061	0.169	0.277
Left SAI (°)	11.05	11.8	12.55
Right SAI (°)	11.05	11.8	12.55
Left Rear Camber (°)	0	0	0
Right Rear Camber (°)	0	0	0
Rear Toe (°)	0	0	0
Thrust Angle	0	0	0
Left Toe Out, Inward (°)	0	0	0
Right Toe Out, Inward (°)	0	0	0
Left Toe Out, Outward (°)	0	0	0
Right Toe Out, Outward (°)	0	37.3	39.3
Left Max Turn, Inward (°)	40.3	37.3	39.3
Right Max Turn, Inward (°)	40.3	32.9	34.9
Left Max Turn, Outward (°)	35.9	32.9	34.9
Right Max Turn, Outward (°)	35.9	-	-

TACOMA 4WD and Prerunner GRN250L-PRADKA (FIRM SUSPENSION) P265/65R17 US Territories

Measurement	Minimum	Preferred	Maximum
Left Front Caster (°)	1.15	1.9	2.65
Right Front Caster (°)	1.15	1.9	2.65
Left Front Camber (°)	-0.1	0.65	1.4
Right Front Camber (°)	-0.1	0.65	1.4
Front Toe (°)	0.061	0.169	0.277
Left SAI (°)	11.05	11.8	12.55
Right SAI (°)	11.05	11.8	12.55
Left Rear Camber (°)	0	0	0
Right Rear Camber (°)	0	0	0
Rear Toe (°)	0	0	0
Thrust Angle	0	0	0
Left Toe Out, Inward (°)	0	0	0
Right Toe Out, Inward (°)	0	0	0
Left Toe Out, Outward (°)	0	0	0
Right Toe Out, Outward (°)	0	37.3	39.3
Left Max Turn, Inward (°)	40.3	37.3	39.3
Right Max Turn, Inward (°)	40.3	32.9	34.9
Left Max Turn, Outward (°)	35.9	32.9	34.9
Right Max Turn, Outward (°)	35.9	-	-

TACOMA 4WD and Prerunner GRN250L-PRADKA P245/75R16

Measurement	Minimum	Preferred	Maximum
Left Front Caster (°)	1.38	2.13	2.88
Right Front Caster (°)	1.38	2.13	2.88
Left Front Camber (°)	-0.1	0.65	1.4
Right Front Camber (°)	-0.1	0.65	1.4
Front Toe (°)	0.059	0.167	0.271
Left SAI (°)	11.05	11.8	12.55
Right SAI (°)	11.05	11.8	12.55
Left Rear Camber (°)	0	0	0
Right Rear Camber (°)	0	0	0
Rear Toe (°)	0	0	0
Thrust Angle	0	0	0
Left Toe Out, Inward (°)	0	0	0
Right Toe Out, Inward (°)	0	0	0
Left Toe Out, Outward (°)	0	0	0
Right Toe Out, Outward (°)	0	37.3	39.3
Left Max Turn, Inward (°)	40.3	37.3	39.3
Right Max Turn, Inward (°)	40.3	32.9	34.9
Left Max Turn, Outward (°)	35.9	32.9	34.9

Right Max Turn, Outward (°)	35.9	-	-

TACOMA 4WD and Prerunner GRN250L-PRADKA P245/75R16 4- Leaf Spring Canada

Measurement	Minimum	Preferred	Maximum
Left Front Caster (°)	1.19	1.94	2.69
Right Front Caster (°)	1.19	1.94	2.69
Left Front Camber (°)	-0.1	0.65	1.4
Right Front Camber (°)	-0.1	0.65	1.4
Front Toe (°)	0.059	0.167	0.281
Left SAI (°)	11.05	11.8	12.55
Right SAI (°)	11.05	11.8	12.55
Left Rear Camber (°)	0	0	0
Right Rear Camber (°)	0	0	0
Rear Toe (°)	0	0	0
Thrust Angle	0	0	0
Left Toe Out, Inward (°)	0	0	0
Right Toe Out, Inward (°)	0	0	0
Left Toe Out, Outward (°)	0	0	0
Right Toe Out, Outward (°)	0	37.3	39.3
Left Max Turn, Inward (°)	40.3	37.3	39.3
Right Max Turn, Inward (°)	40.3	32.9	34.9
Left Max Turn, Outward (°)	35.9	32.9	34.9
Right Max Turn, Outward (°)	35.9	-	-

TACOMA 4WD and Prerunner GRN250L-PRADKA P265/60R18

Measurement	Minimum	Preferred	Maximum
Left Front Caster (°)	1.33	2.08	2.83
Right Front Caster (°)	1.33	2.08	2.83
Left Front Camber (°)	-0.1	0.65	1.4
Right Front Camber (°)	-0.1	0.65	1.4
Front Toe (°)	0.061	0.169	0.277
Left SAI (°)	11.05	11.8	12.55
Right SAI (°)	11.05	11.8	12.55
Left Rear Camber (°)	0	0	0
Right Rear Camber (°)	0	0	0
Rear Toe (°)	0	0	0
Thrust Angle	0	0	0
Left Toe Out, Inward (°)	0	0	0
Right Toe Out, Inward (°)	0	0	0
Left Toe Out, Outward (°)	0	0	0
Right Toe Out, Outward (°)	0	37.3	39.3

Left Max Turn, Inward (°)	40.3	37.3	39.3
Right Max Turn, Inward (°)	40.3	32.9	34.9
Left Max Turn, Outward (°)	35.9	32.9	34.9
Right Max Turn, Outward (°)	35.9	-	-

TACOMA 4WD and Prerunner GRN250L-PRADKA P265/60R18 4- Leaf Spring Canada

Measurement	Minimum	Preferred	Maximum
Left Front Caster (°)	1.14	1.89	2.64
Right Front Caster (°)	1.14	1.89	2.64
Left Front Camber (°)	-0.1	0.65	1.4
Right Front Camber (°)	-0.1	0.65	1.4
Front Toe (°)	0.061	0.169	0.277
Left SAI (°)	11.05	11.8	12.55
Right SAI (°)	11.05	11.8	12.55
Left Rear Camber (°)	0	0	0
Right Rear Camber (°)	0	0	0
Rear Toe (°)	0	0	0
Thrust Angle	0	0	0
Left Toe Out, Inward (°)	0	0	0
Right Toe Out, Inward (°)	0	0	0
Left Toe Out, Outward (°)	0	0	0
Right Toe Out, Outward (°)	0	37.3	39.3
Left Max Turn, Inward (°)	40.3	37.3	39.3
Right Max Turn, Inward (°)	40.3	32.9	34.9
Left Max Turn, Outward (°)	35.9	32.9	34.9
Right Max Turn, Outward (°)	35.9	-	-

TACOMA 4WD and Prerunner GRN250L-PRADKA P265/65R17

Measurement	Minimum	Preferred	Maximum
Left Front Caster (°)	1.35	2.1	2.85
Right Front Caster (°)	1.35	2.1	2.85
Left Front Camber (°)	-0.1	0.65	1.4
Right Front Camber (°)	-0.1	0.65	1.4
Front Toe (°)	0.061	0.169	0.277
Left SAI (°)	11.05	11.8	12.55
Right SAI (°)	11.05	11.8	12.55
Left Rear Camber (°)	0	0	0
Right Rear Camber (°)	0	0	0
Rear Toe (°)	0	0	0
Thrust Angle	0	0	0
Left Toe Out, Inward (°)	0	0	0

Right Toe Out, Inward (°)	0	0	0
Left Toe Out, Outward (°)	0	0	0
Right Toe Out, Outward (°)	0	37.3	39.3
Left Max Turn, Inward (°)	40.3	37.3	39.3
Right Max Turn, Inward (°)	40.3	32.9	34.9
Left Max Turn, Outward (°)	35.9	32.9	34.9
Right Max Turn, Outward (°)	35.9	-	-

TACOMA 4WD and Prerunner GRN250L-PRADKA P265/65R17 4- Leaf Spring Canada

Measurement	Minimum	Preferred	Maximum
Left Front Caster (°)	1.15	1.9	2.65
Right Front Caster (°)	1.15	1.9	2.65
Left Front Camber (°)	-0.1	0.65	1.4
Right Front Camber (°)	-0.1	0.65	1.4
Front Toe (°)	0.061	0.169	0.277
Left SAI (°)	11.05	11.8	12.55
Right SAI (°)	11.05	11.8	12.55
Left Rear Camber (°)	0	0	0
Right Rear Camber (°)	0	0	0
Rear Toe (°)	0	0	0
Thrust Angle	0	0	0
Left Toe Out, Inward (°)	0	0	0
Right Toe Out, Inward (°)	0	0	0
Left Toe Out, Outward (°)	0	0	0
Right Toe Out, Outward (°)	0	37.3	39.3
Left Max Turn, Inward (°)	40.3	37.3	39.3
Right Max Turn, Inward (°)	40.3	32.9	34.9
Left Max Turn, Outward (°)	35.9	32.9	34.9
Right Max Turn, Outward (°)	35.9	-	-

TACOMA 4WD and Prerunner GRN265L-CRADKA (FIRM SUSPENSION) P245/75R16 US Territories

Measurement	Minimum	Preferred	Maximum
Left Front Caster (°)	0.9	1.65	2.4
Right Front Caster (°)	0.9	1.65	2.4
Left Front Camber (°)	-0.08	0.67	1.42
Right Front Camber (°)	-0.08	0.67	1.42
Front Toe (°)	0.071	0.179	0.287
Left SAI (°)	11.03	11.78	12.53
Right SAI (°)	11.03	11.78	12.53
Left Rear Camber (°)	0	0	0
Right Rear Camber (°)	0	0	0

Rear Toe (°)	0	0	0
Thrust Angle	0	0	0
Left Toe Out, Inward (°)	0	0	0
Right Toe Out, Inward (°)	0	0	0
Left Toe Out, Outward (°)	0	0	0
Right Toe Out, Outward (°)	0	37.3	39.3
Left Max Turn, Inward (°)	40.3	37.3	39.3
Right Max Turn, Inward (°)	40.3	32.9	34.9
Left Max Turn, Outward (°)	35.9	32.9	34.9
Right Max Turn, Outward (°)	35.9	-	-

TACOMA 4WD and Prerunner GRN265L-CRADKA P245/75R16 US Territories

Measurement	**Minimum**	**Preferred**	**Maximum**
Left Front Caster (°)	1.11	1.86	2.61
Right Front Caster (°)	1.11	1.86	2.61
Left Front Camber (°)	-0.08	0.67	1.42
Right Front Camber (°)	-0.08	0.67	1.42
Front Toe (°)	0.071	0.179	0.287
Left SAI (°)	11.03	11.78	12.53
Right SAI (°)	11.03	11.78	12.53
Left Rear Camber (°)	0	0	0
Right Rear Camber (°)	0	0	0
Rear Toe (°)	0	0	0
Thrust Angle	0	0	0
Left Toe Out, Inward (°)	0	0	0
Right Toe Out, Inward (°)	0	0	0
Left Toe Out, Outward (°)	0	0	0
Right Toe Out, Outward (°)	0	37.3	39.3
Left Max Turn, Inward (°)	40.3	37.3	39.3
Right Max Turn, Inward (°)	40.3	32.9	34.9
Left Max Turn, Outward (°)	35.9	32.9	34.9
Right Max Turn, Outward (°)	35.9	-	-

TACOMA 4WD and Prerunner GRN265L-CRADKA P265/65R17 US Territories

Measurement	**Minimum**	**Preferred**	**Maximum**
Left Front Caster (°)	1.06	1.81	2.56
Right Front Caster (°)	1.06	1.81	2.56
Left Front Camber (°)	-0.08	0.67	1.42
Right Front Camber (°)	-0.08	0.67	1.42
Front Toe (°)	0.072	0.18	0.288
Left SAI (°)	11.03	11.78	12.53

Right SAI (°)	11.03	11.78	12.53
Left Rear Camber (°)	0	0	0
Right Rear Camber (°)	0	0	0
Rear Toe (°)	0	0	0
Thrust Angle	0	0	0
Left Toe Out, Inward (°)	0	0	0
Right Toe Out, Inward (°)	0	0	0
Left Toe Out, Outward (°)	0	0	0
Right Toe Out, Outward (°)	0	37.3	39.3
Left Max Turn, Inward (°)	40.3	37.3	39.3
Right Max Turn, Inward (°)	40.3	32.9	34.9
Left Max Turn, Outward (°)	35.9	32.9	34.9
Right Max Turn, Outward (°)	35.9	-	-

TACOMA 4WD and Prerunner GRN265L-CRADKA P265/70R16 US Territories

Measurement	Minimum	Preferred	Maximum
Left Front Caster (°)	1.12	1.87	2.62
Right Front Caster (°)	1.12	1.87	2.62
Left Front Camber (°)	-0.14	0.61	1.36
Right Front Camber (°)	-0.14	0.61	1.36
Front Toe (°)	0.024	0.132	0.24
Left SAI (°)	11.1	11.85	12.6
Right SAI (°)	11.1	11.85	12.6
Left Rear Camber (°)	0	0	0
Right Rear Camber (°)	0	0	0
Rear Toe (°)	0	0	0
Thrust Angle	0	0	0
Left Toe Out, Inward (°)	0	0	0
Right Toe Out, Inward (°)	0	0	0
Left Toe Out, Outward (°)	0	0	0
Right Toe Out, Outward (°)	0	37.3	39.3
Left Max Turn, Inward (°)	40.3	37.3	39.3
Right Max Turn, Inward (°)	40.3	32.9	34.9
Left Max Turn, Outward (°)	35.9	32.9	34.9
Right Max Turn, Outward (°)	35.9	-	-

TACOMA 4WD and Prerunner GRN265L-PRADKA (FIRM SUSPENSION) P245/75R16

Measurement	Minimum	Preferred	Maximum
Left Front Caster (°)	1.04	1.79	2.54
Right Front Caster (°)	1.04	1.79	2.54
Left Front Camber (°)	-0.11	0.64	1.39

Right Front Camber (°)	-0.11	0.64	1.39
Front Toe (°)	0.048	0.156	0.264
Left SAI (°)	11.07	11.82	12.57
Right SAI (°)	11.07	11.82	12.57
Left Rear Camber (°)	0	0	0
Right Rear Camber (°)	0	0	0
Rear Toe (°)	0	0	0
Thrust Angle	0	0	0
Left Toe Out, Inward (°)	0	0	0
Right Toe Out, Inward (°)	0	0	0
Left Toe Out, Outward (°)	0	0	0
Right Toe Out, Outward (°)	0	37.3	39.3
Left Max Turn, Inward (°)	40.3	37.3	39.3
Right Max Turn, Inward (°)	40.3	32.9	34.9
Left Max Turn, Outward (°)	35.9	32.9	34.9
Right Max Turn, Outward (°)	35.9	-	-

TACOMA 4WD and Prerunner GRN265L-PRADKA P245/75R16 US Territories

Measurement	Minimum	Preferred	Maximum
Left Front Caster (°)	1.25	2	2.75
Right Front Caster (°)	1.25	2	2.75
Left Front Camber (°)	-0.11	0.64	1.39
Right Front Camber (°)	-0.11	0.64	1.39
Front Toe (°)	0.048	0.156	0.264
Left SAI (°)	11.07	11.82	12.57
Right SAI (°)	11.07	11.82	12.57
Left Rear Camber (°)	0	0	0
Right Rear Camber (°)	0	0	0
Rear Toe (°)	0	0	0
Thrust Angle	0	0	0
Left Toe Out, Inward (°)	0	0	0
Right Toe Out, Inward (°)	0	0	0
Left Toe Out, Outward (°)	0	0	0
Right Toe Out, Outward (°)	0	37.3	39.3
Left Max Turn, Inward (°)	40.3	37.3	39.3
Right Max Turn, Inward (°)	40.3	32.9	34.9
Left Max Turn, Outward (°)	35.9	32.9	34.9
Right Max Turn, Outward (°)	35.9	-	-

TACOMA 4WD and Prerunner GRN265L-PRADKA P265/60R18 US Territories

Measurement	Minimum	Preferred	Maximum

Left Front Caster (°)	1.18	1.93	2.68
Right Front Caster (°)	1.18	1.93	2.68
Left Front Camber (°)	-0.11	0.64	1.39
Right Front Camber (°)	-0.11	0.64	1.39
Front Toe (°)	0.049	0.157	0.265
Left SAI (°)	11.07	11.82	12.57
Right SAI (°)	11.07	11.82	12.57
Left Rear Camber (°)	0	0	0
Right Rear Camber (°)	0	0	0
Rear Toe (°)	0	0	0
Thrust Angle	0	0	0
Left Toe Out, Inward (°)	0	0	0
Right Toe Out, Inward (°)	0	0	0
Left Toe Out, Outward (°)	0	0	0
Right Toe Out, Outward (°)	0	37.3	39.3
Left Max Turn, Inward (°)	40.3	37.3	39.3
Right Max Turn, Inward (°)	40.3	32.9	34.9
Left Max Turn, Outward (°)	35.9	32.9	34.9
Right Max Turn, Outward (°)	35.9	-	-

TACOMA 4WD and Prerunner GRN265L-PRADKA P265/65R17 US Territories

Measurement	**Minimum**	**Preferred**	**Maximum**
Left Front Caster (°)	1.18	1.93	2.68
Right Front Caster (°)	1.18	1.93	2.68
Left Front Camber (°)	-0.11	0.64	1.39
Right Front Camber (°)	-0.11	0.64	1.39
Front Toe (°)	0.049	0.157	0.265
Left SAI (°)	11.07	11.82	12.57
Right SAI (°)	11.07	11.82	12.57
Left Rear Camber (°)	0	0	0
Right Rear Camber (°)	0	0	0
Rear Toe (°)	0	0	0
Thrust Angle	0	0	0
Left Toe Out, Inward (°)	0	0	0
Right Toe Out, Inward (°)	0	0	0
Left Toe Out, Outward (°)	0	0	0
Right Toe Out, Outward (°)	0	37.3	39.3
Left Max Turn, Inward (°)	40.3	37.3	39.3
Right Max Turn, Inward (°)	40.3	32.9	34.9
Left Max Turn, Outward (°)	35.9	32.9	34.9
Right Max Turn, Outward (°)	35.9	-	-

TACOMA 4WD and Prerunner GRN265L-PRADKA P265/70R16 US Territories

Measurement	Minimum	Preferred	Maximum
Left Front Caster (°)	1.25	2	2.75
Right Front Caster (°)	1.25	2	2.75
Left Front Camber (°)	-0.17	0.58	1.33
Right Front Camber (°)	-0.17	0.58	1.33
Front Toe (°)	0.002	0.11	0.218
Left SAI (°)	11.13	11.88	12.63
Right SAI (°)	11.13	11.88	12.63
Left Rear Camber (°)	0	0	0
Right Rear Camber (°)	0	0	0
Rear Toe (°)	0	0	0
Thrust Angle	0	0	0
Left Toe Out, Inward (°)	0	0	0
Right Toe Out, Inward (°)	0	0	0
Left Toe Out, Outward (°)	0	0	0
Right Toe Out, Outward (°)	0	37.3	39.3
Left Max Turn, Inward (°)	40.3	37.3	39.3
Right Max Turn, Inward (°)	40.3	32.9	34.9
Left Max Turn, Outward (°)	35.9	32.9	34.9
Right Max Turn, Outward (°)	35.9	-	-

TACOMA 4WD and Prerunner GRN270L-PRADKA (FIRM SUSPENSION) P245/75R16 US Territories

Measurement	Minimum	Preferred	Maximum
Left Front Caster (°)	1.09	1.84	2.59
Right Front Caster (°)	1.09	1.84	2.59
Left Front Camber (°)	-0.08	0.67	1.42
Right Front Camber (°)	-0.08	0.67	1.42
Front Toe (°)	0.071	0.179	0.287
Left SAI (°)	11.03	11.78	12.53
Right SAI (°)	11.03	11.78	12.53
Left Rear Camber (°)	0	0	0
Right Rear Camber (°)	0	0	0
Rear Toe (°)	0	0	0
Thrust Angle	0	0	0
Left Toe Out, Inward (°)	0	0	0
Right Toe Out, Inward (°)	0	0	0
Left Toe Out, Outward (°)	0	0	0
Right Toe Out, Outward (°)	0	37.3	39.3
Left Max Turn, Inward (°)	40.3	37.3	39.3
Right Max Turn, Inward (°)	40.3	32.9	34.9

Left Max Turn, Outward (°)	35.9	32.9	34.9
Right Max Turn, Outward (°)	35.9	-	-

TACOMA 4WD and Prerunner GRN270L-PRADKA P245/75R16 US Territories

Measurement	Minimum	Preferred	Maximum
Left Front Caster (°)	1.28	2.03	2.78
Right Front Caster (°)	1.28	2.03	2.78
Left Front Camber (°)	-0.08	0.67	1.42
Right Front Camber (°)	-0.08	0.67	1.42
Front Toe (°)	0.071	0.179	0.287
Left SAI (°)	11.03	11.78	12.53
Right SAI (°)	11.03	11.78	12.53
Left Rear Camber (°)	0	0	0
Right Rear Camber (°)	0	0	0
Rear Toe (°)	0	0	0
Thrust Angle	0	0	0
Left Toe Out, Inward (°)	0	0	0
Right Toe Out, Inward (°)	0	0	0
Left Toe Out, Outward (°)	0	0	0
Right Toe Out, Outward (°)	0	37.3	39.3
Left Max Turn, Inward (°)	40.3	37.3	39.3
Right Max Turn, Inward (°)	40.3	32.9	34.9
Left Max Turn, Outward (°)	35.9	32.9	34.9
Right Max Turn, Outward (°)	35.9	-	-

TACOMA 4WD and Prerunner GRN270L-PRADKA P265/60R18 US Territories

Measurement	Minimum	Preferred	Maximum
Left Front Caster (°)	1.23	1.98	2.73
Right Front Caster (°)	1.23	1.98	2.73
Left Front Camber (°)	-0.08	0.67	1.42
Right Front Camber (°)	-0.08	0.67	1.42
Front Toe (°)	0.07	0.18	0.29
Left SAI (°)	11.03	11.78	12.53
Right SAI (°)	11.03	11.78	12.53
Left Rear Camber (°)	0	0	0
Right Rear Camber (°)	0	0	0
Rear Toe (°)	0	0	0
Thrust Angle	0	0	0
Left Toe Out, Inward (°)	0	0	0
Right Toe Out, Inward (°)	0	0	0
Left Toe Out, Outward (°)	0	0	0

Right Toe Out, Outward (°)	0	37.3	39.3
Left Max Turn, Inward (°)	40.3	37.3	39.3
Right Max Turn, Inward (°)	40.3	32.9	34.9
Left Max Turn, Outward (°)	35.9	32.9	34.9
Right Max Turn, Outward (°)	35.9	-	-

TACOMA 4WD and Prerunner GRN270L-PRADKA P265/65R17 US Territories

Measurement	Minimum	Preferred	Maximum
Left Front Caster (°)	1.23	1.98	2.73
Right Front Caster (°)	1.23	1.98	2.73
Left Front Camber (°)	-0.08	0.67	1.42
Right Front Camber (°)	-0.08	0.67	1.42
Front Toe (°)	0.07	0.18	0.29
Left SAI (°)	11.03	11.78	12.53
Right SAI (°)	11.03	11.78	12.53
Left Rear Camber (°)	0	0	0
Right Rear Camber (°)	0	0	0
Rear Toe (°)	0	0	0
Thrust Angle	0	0	0
Left Toe Out, Inward (°)	0	0	0
Right Toe Out, Inward (°)	0	0	0
Left Toe Out, Outward (°)	0	0	0
Right Toe Out, Outward (°)	0	37.3	39.3
Left Max Turn, Inward (°)	40.3	37.3	39.3
Right Max Turn, Inward (°)	40.3	32.9	34.9
Left Max Turn, Outward (°)	35.9	32.9	34.9
Right Max Turn, Outward (°)	35.9	-	-

TACOMA 4WD and Prerunner TRN240L-TRMDKA P245/75R16

Measurement	Minimum	Preferred	Maximum
Left Front Caster (°)	0.97	1.72	2.47
Right Front Caster (°)	0.97	1.72	2.47
Left Front Camber (°)	-0.11	0.64	1.39
Right Front Camber (°)	-0.11	0.64	1.39
Front Toe (°)	0.048	0.156	0.264
Left SAI (°)	11.07	11.82	12.57
Right SAI (°)	11.07	11.82	12.57
Left Rear Camber (°)	0	0	0
Right Rear Camber (°)	0	0	0
Rear Toe (°)	0	0	0
Thrust Angle	0	0	0

Left Toe Out, Inward (°)	0	0	0
Right Toe Out, Inward (°)	0	0	0
Left Toe Out, Outward (°)	0	0	0
Right Toe Out, Outward (°)	0	37.3	39.3
Left Max Turn, Inward (°)	40.3	37.3	39.3
Right Max Turn, Inward (°)	40.3	32.9	34.9
Left Max Turn, Outward (°)	35.9	32.9	34.9
Right Max Turn, Outward (°)	35.9	-	-

TACOMA 4WD and Prerunner TRN240L-TRPDKA P245/75R16

Measurement	Minimum	Preferred	Maximum
Left Front Caster (°)	1.04	1.79	2.54
Right Front Caster (°)	1.04	1.79	2.54
Left Front Camber (°)	-0.14	0.61	1.36
Right Front Camber (°)	-0.14	0.61	1.36
Front Toe (°)	0.025	0.133	0.241
Left SAI (°)	11.1	11.85	12.6
Right SAI (°)	11.1	11.85	12.6
Left Rear Camber (°)	0	0	0
Right Rear Camber (°)	0	0	0
Rear Toe (°)	0	0	0
Thrust Angle	0	0	0
Left Toe Out, Inward (°)	0	0	0
Right Toe Out, Inward (°)	0	0	0
Left Toe Out, Outward (°)	0	0	0
Right Toe Out, Outward (°)	0	37.3	39.3
Left Max Turn, Inward (°)	40.3	37.3	39.3
Right Max Turn, Inward (°)	40.3	32.9	34.9
Left Max Turn, Outward (°)	35.9	32.9	34.9
Right Max Turn, Outward (°)	35.9	-	-

TACOMA 4WD and Prerunner TRN245L-CRMDKA (FIRM SUSPENSION) P245/75R16

Measurement	Minimum	Preferred	Maximum
Left Front Caster (°)	0.93	1.68	2.43
Right Front Caster (°)	0.93	1.68	2.43
Left Front Camber (°)	-0.13	0.62	1.37
Right Front Camber (°)	-0.13	0.62	1.37
Front Toe (°)	0.036	0.144	0.252
Left SAI (°)	11.08	11.83	12.58
Right SAI (°)	11.08	11.83	12.58
Left Rear Camber (°)	0	0	0

Right Rear Camber (°)	0	0	0
Rear Toe (°)	0	0	0
Thrust Angle	0	0	0
Left Toe Out, Inward (°)	0	0	0
Right Toe Out, Inward (°)	0	0	0
Left Toe Out, Outward (°)	0	0	0
Right Toe Out, Outward (°)	0	37.3	39.3
Left Max Turn, Inward (°)	40.3	37.3	39.3
Right Max Turn, Inward (°)	40.3	32.9	34.9
Left Max Turn, Outward (°)	35.9	32.9	34.9
Right Max Turn, Outward (°)	35.9	-	-

TACOMA 4WD and Prerunner TRN245L-CRMDKA P245/75R16

Measurement	Minimum	Preferred	Maximum
Left Front Caster (°)	1.14	1.89	2.64
Right Front Caster (°)	1.14	1.89	2.64
Left Front Camber (°)	-0.13	0.62	1.37
Right Front Camber (°)	-0.13	0.62	1.37
Front Toe (°)	0.036	0.144	0.252
Left SAI (°)	11.08	11.83	12.58
Right SAI (°)	11.08	11.83	12.58
Left Rear Camber (°)	0	0	0
Right Rear Camber (°)	0	0	0
Rear Toe (°)	0	0	0
Thrust Angle	0	0	0
Left Toe Out, Inward (°)	0	0	0
Right Toe Out, Inward (°)	0	0	0
Left Toe Out, Outward (°)	0	0	0
Right Toe Out, Outward (°)	0	37.3	39.3
Left Max Turn, Inward (°)	40.3	37.3	39.3
Right Max Turn, Inward (°)	40.3	32.9	34.9
Left Max Turn, Outward (°)	35.9	32.9	34.9
Right Max Turn, Outward (°)	35.9	-	-

TACOMA 4WD and Prerunner TRN245L-CRMDKA P245/75R16 4- Leaf Spring Canada

Measurement	Minimum	Preferred	Maximum
Left Front Caster (°)	0.93	1.68	2.43
Right Front Caster (°)	0.93	1.68	2.43
Left Front Camber (°)	-0.13	0.62	1.37
Right Front Camber (°)	-0.13	0.62	1.37
Front Toe (°)	0.036	0.144	0.252

Left SAI (°)	11.08	11.83	12.58
Right SAI (°)	11.08	11.83	12.58
Left Rear Camber (°)	0	0	0
Right Rear Camber (°)	0	0	0
Rear Toe (°)	0	0	0
Thrust Angle	0	0	0
Left Toe Out, Inward (°)	0	0	0
Right Toe Out, Inward (°)	0	0	0
Left Toe Out, Outward (°)	0	0	0
Right Toe Out, Outward (°)	0	37.3	39.3
Left Max Turn, Inward (°)	40.3	37.3	39.3
Right Max Turn, Inward (°)	40.3	32.9	34.9
Left Max Turn, Outward (°)	35.9	32.9	34.9
Right Max Turn, Outward (°)	35.9	-	-

TACOMA 4WD and Prerunner TRN245L-CRPDKA (FIRM SUSPENSION) P245/75R16

Measurement	Minimum	Preferred	Maximum
Left Front Caster (°)	0.95	1.7	2.45
Right Front Caster (°)	0.95	1.7	2.45
Left Front Camber (°)	-0.14	0.61	1.36
Right Front Camber (°)	-0.14	0.61	1.36
Front Toe (°)	0.025	0.133	0.241
Left SAI (°)	11.1	11.85	12.6
Right SAI (°)	11.1	11.85	12.6
Left Rear Camber (°)	0	0	0
Right Rear Camber (°)	0	0	0
Rear Toe (°)	0	0	0
Thrust Angle	0	0	0
Left Toe Out, Inward (°)	0	0	0
Right Toe Out, Inward (°)	0	0	0
Left Toe Out, Outward (°)	0	0	0
Right Toe Out, Outward (°)	0	37.3	39.3
Left Max Turn, Inward (°)	40.3	37.3	39.3
Right Max Turn, Inward (°)	40.3	32.9	34.9
Left Max Turn, Outward (°)	35.9	32.9	34.9
Right Max Turn, Outward (°)	35.9	-	-

TACOMA 4WD and Prerunner TRN245L-CRPDKA P245/75R16

Measurement	Minimum	Preferred	Maximum
Left Front Caster (°)	1.16	1.91	2.66
Right Front Caster (°)	1.16	1.91	2.66

Left Front Camber (°)	-0.14	0.61	1.36
Right Front Camber (°)	-0.14	0.61	1.36
Front Toe (°)	0.025	0.133	0.241
Left SAI (°)	11.1	11.85	12.6
Right SAI (°)	11.1	11.85	12.6
Left Rear Camber (°)	0	0	0
Right Rear Camber (°)	0	0	0
Rear Toe (°)	0	0	0
Thrust Angle	0	0	0
Left Toe Out, Inward (°)	0	0	0
Right Toe Out, Inward (°)	0	0	0
Left Toe Out, Outward (°)	0	0	0
Right Toe Out, Outward (°)	0	37.3	39.3
Left Max Turn, Inward (°)	40.3	37.3	39.3
Right Max Turn, Inward (°)	40.3	32.9	34.9
Left Max Turn, Outward (°)	35.9	32.9	34.9
Right Max Turn, Outward (°)	35.9	-	-

TACOMA 4WD and Prerunner TRN245L-CRPDKA P245/75R16 4- Leaf Spring Canada

Measurement	Minimum	Preferred	Maximum
Left Front Caster (°)	0.95	1.7	2.45
Right Front Caster (°)	0.95	1.7	2.45
Left Front Camber (°)	-0.14	0.61	1.36
Right Front Camber (°)	-0.14	0.61	1.36
Front Toe (°)	0.025	0.133	0.241
Left SAI (°)	11.1	11.85	12.6
Right SAI (°)	11.1	11.85	12.6
Left Rear Camber (°)	0	0	0
Right Rear Camber (°)	0	0	0
Rear Toe (°)	0	0	0
Thrust Angle	0	0	0
Left Toe Out, Inward (°)	0	0	0
Right Toe Out, Inward (°)	0	0	0
Left Toe Out, Outward (°)	0	0	0
Right Toe Out, Outward (°)	0	37.3	39.3
Left Max Turn, Inward (°)	40.3	37.3	39.3
Right Max Turn, Inward (°)	40.3	32.9	34.9
Left Max Turn, Outward (°)	35.9	32.9	34.9
Right Max Turn, Outward (°)	35.9	-	-

TACOMA 4WD and Prerunner TRN265L-CRPDKA P245/75R16 US Territories

Measurement	Minimum	Preferred	Maximum
Left Front Caster (°)	1.09	1.84	2.59
Right Front Caster (°)	1.09	1.84	2.59
Left Front Camber (°)	-0.11	0.64	1.39
Right Front Camber (°)	-0.11	0.64	1.39
Front Toe (°)	0.048	0.156	0.264
Left SAI (°)	11.07	11.82	12.57
Right SAI (°)	11.07	11.82	12.57
Left Rear Camber (°)	0	0	0
Right Rear Camber (°)	0	0	0
Rear Toe (°)	0	0	0
Thrust Angle	0	0	0
Left Toe Out, Inward (°)	0	0	0
Right Toe Out, Inward (°)	0	0	0
Left Toe Out, Outward (°)	0	0	0
Right Toe Out, Outward (°)	0	37.3	39.3
Left Max Turn, Inward (°)	40.3	37.3	39.3
Right Max Turn, Inward (°)	40.3	32.9	34.9
Left Max Turn, Outward (°)	35.9	32.9	34.9
Right Max Turn, Outward (°)	35.9	-	-

TACOMA 4WD and Prerunner TRN265L-PRPDKA P245/75R16 US Territories

Measurement	Minimum	Preferred	Maximum
Left Front Caster (°)	1.21	1.96	2.71
Right Front Caster (°)	1.21	1.96	2.71
Left Front Camber (°)	-0.14	0.61	1.36
Right Front Camber (°)	-0.14	0.61	1.36
Front Toe (°)	0.025	0.133	0.241
Left SAI (°)	11.1	11.85	12.6
Right SAI (°)	11.1	11.85	12.6
Left Rear Camber (°)	0	0	0
Right Rear Camber (°)	0	0	0
Rear Toe (°)	0	0	0
Thrust Angle	0	0	0
Left Toe Out, Inward (°)	0	0	0
Right Toe Out, Inward (°)	0	0	0
Left Toe Out, Outward (°)	0	0	0
Right Toe Out, Outward (°)	0	37.3	39.3
Left Max Turn, Inward (°)	40.3	37.3	39.3
Right Max Turn, Inward (°)	40.3	32.9	34.9
Left Max Turn, Outward (°)	35.9	32.9	34.9

Right Max Turn, Outward (°)	35.9	-	-

TUNDRA

TUNDRA GSK50L-TRADKA P255/70R18 8J (STD) Regular Cab With Standard Deck

Measurement	Minimum	Preferred	Maximum
Left Front Caster (°)	1.95	2.7	3.45
Right Front Caster (°)	1.95	2.7	3.45
Left Front Camber (°)	-0.87	-0.12	0.63
Right Front Camber (°)	-0.87	-0.12	0.63
Front Toe (°)	0.03	0.19	0.35
Left SAI (°)	12.39	13.14	13.89
Right SAI (°)	12.39	13.14	13.89
Left Rear Camber (°)	0	0	0
Right Rear Camber (°)	0	0	0
Rear Toe (°)	0	0	0
Thrust Angle	0	0	0
Left Toe Out, Inward (°)	0	0	0
Right Toe Out, Inward (°)	0	0	0
Left Toe Out, Outward (°)	0	0	0
Right Toe Out, Outward (°)	0	-42.03	-40.53
Left Max Turn, Inward (°)	-39.03	-42.03	-40.53
Right Max Turn, Inward (°)	-39.03	36.43	36.43
Left Max Turn, Outward (°)	36.43	36.43	36.43
Right Max Turn, Outward (°)	36.43	-	-

TUNDRA GSK50L-TRADKA P275/65R18 8J (OPT) Regular Cab With Standard Deck

Measurement	Minimum	Preferred	Maximum
Left Front Caster (°)	1.95	2.7	3.45
Right Front Caster (°)	1.95	2.7	3.45
Left Front Camber (°)	-0.87	-0.12	0.63
Right Front Camber (°)	-0.87	-0.12	0.63
Front Toe (°)	0.03	0.19	0.35
Left SAI (°)	12.39	13.14	13.89
Right SAI (°)	12.39	13.14	13.89
Left Rear Camber (°)	0	0	0
Right Rear Camber (°)	0	0	0
Rear Toe (°)	0	0	0
Thrust Angle	0	0	0
Left Toe Out, Inward (°)	0	0	0
Right Toe Out, Inward (°)	0	0	0
Left Toe Out, Outward (°)	0	0	0

Right Toe Out, Outward (°)	0	-42.03	-40.53
Left Max Turn, Inward (°)	-39.03	-42.03	-40.53
Right Max Turn, Inward (°)	-39.03	36.41	36.41
Left Max Turn, Outward (°)	36.41	36.41	36.41
Right Max Turn, Outward (°)	36.41	-	-

TUNDRA GSK51L-CRASKA P255/70R18 8J (STD) Double Cab with Standard Deck

Measurement	Minimum	Preferred	Maximum
Left Front Caster (°)	2.02	2.77	3.52
Right Front Caster (°)	2.02	2.77	3.52
Left Front Camber (°)	-0.68	0.07	0.82
Right Front Camber (°)	-0.68	0.07	0.82
Front Toe (°)	0.22	0.38	0.54
Left SAI (°)	12.19	12.94	13.69
Right SAI (°)	12.19	12.94	13.69
Left Rear Camber (°)	0	0	0
Right Rear Camber (°)	0	0	0
Rear Toe (°)	0	0	0
Thrust Angle	0	0	0
Left Toe Out, Inward (°)	0	0	0
Right Toe Out, Inward (°)	0	0	0
Left Toe Out, Outward (°)	0	0	0
Right Toe Out, Outward (°)	0	-42.16	-40.66
Left Max Turn, Inward (°)	-39.16	-42.16	-40.66
Right Max Turn, Inward (°)	-39.16	36.71	36.71
Left Max Turn, Outward (°)	36.71	36.71	36.71
Right Max Turn, Outward (°)	36.71	-	-

TUNDRA GSK51L-CRASKA P275/65R18 8J (OPT) Double Cab with Standard Deck

Measurement	Minimum	Preferred	Maximum
Left Front Caster (°)	2.02	2.77	3.52
Right Front Caster (°)	2.02	2.77	3.52
Left Front Camber (°)	-0.68	0.07	0.82
Right Front Camber (°)	-0.68	0.07	0.82
Front Toe (°)	0.22	0.38	0.54
Left SAI (°)	12.19	12.94	13.69
Right SAI (°)	12.19	12.94	13.69
Left Rear Camber (°)	0	0	0
Right Rear Camber (°)	0	0	0
Rear Toe (°)	0	0	0
Thrust Angle	0	0	0

Left Toe Out, Inward (°)	0	0	0
Right Toe Out, Inward (°)	0	0	0
Left Toe Out, Outward (°)	0	0	0
Right Toe Out, Outward (°)	0	-42.16	-40.66
Left Max Turn, Inward (°)	-39.16	-42.16	-40.66
Right Max Turn, Inward (°)	-39.16	36.71	36.71
Left Max Turn, Outward (°)	36.71	36.71	36.71
Right Max Turn, Outward (°)	36.71	-	-

TUNDRA GSK51L-THADKA P255/70R18 8J (STD) Regular Cab with Long Deck

Measurement	Minimum	Preferred	Maximum
Left Front Caster (°)	2.11	2.86	3.61
Right Front Caster (°)	2.11	2.86	3.61
Left Front Camber (°)	-0.78	-0.03	0.72
Right Front Camber (°)	-0.78	-0.03	0.72
Front Toe (°)	0.11	0.27	0.43
Left SAI (°)	12.29	13.04	13.79
Right SAI (°)	12.29	13.04	13.79
Left Rear Camber (°)	0	0	0
Right Rear Camber (°)	0	0	0
Rear Toe (°)	0	0	0
Thrust Angle	0	0	0
Left Toe Out, Inward (°)	0	0	0
Right Toe Out, Inward (°)	0	0	0
Left Toe Out, Outward (°)	0	0	0
Right Toe Out, Outward (°)	0	-42.09	-40.59
Left Max Turn, Inward (°)	-39.09	-42.09	-40.59
Right Max Turn, Inward (°)	-39.09	36.56	36.56
Left Max Turn, Outward (°)	36.56	36.56	36.56
Right Max Turn, Outward (°)	36.56	-	-

TUNDRA GSK51L-THADKA P275/65R18 8J (OPT) Regular Cab with Long Deck

Measurement	Minimum	Preferred	Maximum
Left Front Caster (°)	2.11	2.86	3.61
Right Front Caster (°)	2.11	2.86	3.61
Left Front Camber (°)	-0.78	-0.03	0.72
Right Front Camber (°)	-0.78	-0.03	0.72
Front Toe (°)	0.11	0.27	0.43
Left SAI (°)	12.29	13.04	13.79
Right SAI (°)	12.29	13.04	13.79
Left Rear Camber (°)	0	0	0

Right Rear Camber (°)	0	0	0
Rear Toe (°)	0	0	0
Thrust Angle	0	0	0
Left Toe Out, Inward (°)	0	0	0
Right Toe Out, Inward (°)	0	0	0
Left Toe Out, Outward (°)	0	0	0
Right Toe Out, Outward (°)	0	-42.09	-40.59
Left Max Turn, Inward (°)	-39.09	-42.09	-40.59
Right Max Turn, Inward (°)	-39.09	36.56	36.56
Left Max Turn, Outward (°)	36.56	36.56	36.56
Right Max Turn, Outward (°)	36.56	-	-

TUNDRA UPK50L-TRTDKA P255/70R18 8J (STD) Regular Cab With Standard Deck

Measurement	Minimum	Preferred	Maximum
Left Front Caster (°)	1.76	2.51	3.26
Right Front Caster (°)	1.76	2.51	3.26
Left Front Camber (°)	-0.88	-0.13	0.62
Right Front Camber (°)	-0.88	-0.13	0.62
Front Toe (°)	0.02	0.18	0.34
Left SAI (°)	12.4	13.15	13.9
Right SAI (°)	12.4	13.15	13.9
Left Rear Camber (°)	0	0	0
Right Rear Camber (°)	0	0	0
Rear Toe (°)	0	0	0
Thrust Angle	0	0	0
Left Toe Out, Inward (°)	0	0	0
Right Toe Out, Inward (°)	0	0	0
Left Toe Out, Outward (°)	0	0	0
Right Toe Out, Outward (°)	0	-42.02	-40.52
Left Max Turn, Inward (°)	-39.02	-42.02	-40.52
Right Max Turn, Inward (°)	-39.02	36.41	36.41
Left Max Turn, Outward (°)	36.41	36.41	36.41
Right Max Turn, Outward (°)	36.41	-	-

TUNDRA UPK50L-TRTDKA P275/55R20 8J (OPT) Regular Cab With Standard Deck

Measurement	Minimum	Preferred	Maximum
Left Front Caster (°)	1.76	2.51	3.26
Right Front Caster (°)	1.76	2.51	3.26
Left Front Camber (°)	-0.88	-0.13	0.62
Right Front Camber (°)	-0.88	-0.13	0.62
Front Toe (°)	0.02	0.18	0.34

Left SAI (°)	12.4	13.15	13.9
Right SAI (°)	12.4	13.15	13.9
Left Rear Camber (°)	0	0	0
Right Rear Camber (°)	0	0	0
Rear Toe (°)	0	0	0
Thrust Angle	0	0	0
Left Toe Out, Inward (°)	0	0	0
Right Toe Out, Inward (°)	0	0	0
Left Toe Out, Outward (°)	0	0	0
Right Toe Out, Outward (°)	0	-42.02	-40.52
Left Max Turn, Inward (°)	-39.02	-42.02	-40.52
Right Max Turn, Inward (°)	-39.02	36.41	36.41
Left Max Turn, Outward (°)	36.41	36.41	36.41
Right Max Turn, Outward (°)	36.41	-	-

TUNDRA UPK50L-TRTDKA P275/65R18 8J (OFFROAD) Regular Cab With Standard Deck

Measurement	**Minimum**	**Preferred**	**Maximum**
Left Front Caster (°)	1.92	2.67	3.42
Right Front Caster (°)	1.92	2.67	3.42
Left Front Camber (°)	-0.91	-0.16	0.59
Right Front Camber (°)	-0.91	-0.16	0.59
Front Toe (°)	-0.01	0.15	0.31
Left SAI (°)	12.43	13.18	13.93
Right SAI (°)	12.43	13.18	13.93
Left Rear Camber (°)	0	0	0
Right Rear Camber (°)	0	0	0
Rear Toe (°)	0	0	0
Thrust Angle	0	0	0
Left Toe Out, Inward (°)	0	0	0
Right Toe Out, Inward (°)	0	0	0
Left Toe Out, Outward (°)	0	0	0
Right Toe Out, Outward (°)	0	-42	-40.5
Left Max Turn, Inward (°)	-39	-42	-40.5
Right Max Turn, Inward (°)	-39	36.37	36.37
Left Max Turn, Outward (°)	36.37	36.37	36.37
Right Max Turn, Outward (°)	36.37	-	-

TUNDRA UPK50L-TRTDKA P275/65R18 8J (OPT) Regular Cab With Standard Deck

Measurement	**Minimum**	**Preferred**	**Maximum**
Left Front Caster (°)	1.76	2.51	3.26
Right Front Caster (°)	1.76	2.51	3.26

Left Front Camber (°)	-0.88	-0.13	0.62
Right Front Camber (°)	-0.88	-0.13	0.62
Front Toe (°)	0.02	0.18	0.34
Left SAI (°)	12.4	13.15	13.9
Right SAI (°)	12.4	13.15	13.9
Left Rear Camber (°)	0	0	0
Right Rear Camber (°)	0	0	0
Rear Toe (°)	0	0	0
Thrust Angle	0	0	0
Left Toe Out, Inward (°)	0	0	0
Right Toe Out, Inward (°)	0	0	0
Left Toe Out, Outward (°)	0	0	0
Right Toe Out, Outward (°)	0	-42.02	-40.52
Left Max Turn, Inward (°)	-39.02	-42.02	-40.52
Right Max Turn, Inward (°)	-39.02	36.41	36.41
Left Max Turn, Outward (°)	36.41	36.41	36.41
Right Max Turn, Outward (°)	36.41	-	-

TUNDRA UPK51L-CRTLKA P275/55R20 8J (OPT) Double Cab with Standard Deck

Measurement	Minimum	Preferred	Maximum
Left Front Caster (°)	2.09	2.84	3.59
Right Front Caster (°)	2.09	2.84	3.59
Left Front Camber (°)	-0.69	0.06	0.81
Right Front Camber (°)	-0.69	0.06	0.81
Front Toe (°)	0.35	0.58	0.81
Left SAI (°)	12.2	12.95	13.7
Right SAI (°)	12.2	12.95	13.7
Left Rear Camber (°)	0	0	0
Right Rear Camber (°)	0	0	0
Rear Toe (°)	0	0	0
Thrust Angle	0	0	0
Left Toe Out, Inward (°)	0	0	0
Right Toe Out, Inward (°)	0	0	0
Left Toe Out, Outward (°)	0	0	0
Right Toe Out, Outward (°)	0	-42.15	-40.65
Left Max Turn, Inward (°)	-39.15	-42.15	-40.65
Right Max Turn, Inward (°)	-39.15	36.69	36.69
Left Max Turn, Outward (°)	36.69	36.69	36.69
Right Max Turn, Outward (°)	36.69	-	-

TUNDRA UPK51L-CRTLKA P275/65R18 8J (OFFROAD) Double Cab with Standard Deck

Measurement	Minimum	Preferred	Maximum
Left Front Caster (°)	2.23	2.98	3.73
Right Front Caster (°)	2.23	2.98	3.73
Left Front Camber (°)	-0.73	0.02	0.77
Right Front Camber (°)	-0.73	0.02	0.77
Front Toe (°)	0.32	0.57	0.82
Left SAI (°)	12.24	12.99	13.74
Right SAI (°)	12.24	12.99	13.74
Left Rear Camber (°)	0	0	0
Right Rear Camber (°)	0	0	0
Rear Toe (°)	0	0	0
Thrust Angle	0	0	0
Left Toe Out, Inward (°)	0	0	0
Right Toe Out, Inward (°)	0	0	0
Left Toe Out, Outward (°)	0	0	0
Right Toe Out, Outward (°)	0	-42.12	-40.62
Left Max Turn, Inward (°)	-39.12	-42.12	-40.62
Right Max Turn, Inward (°)	-39.12	36.63	36.63
Left Max Turn, Outward (°)	36.63	36.63	36.63
Right Max Turn, Outward (°)	36.63	-	-

TUNDRA UPK51L-CRTLKA P275/65R18 8J (STD) Double Cab with Standard Deck

Measurement	Minimum	Preferred	Maximum
Left Front Caster (°)	2.09	2.84	3.59
Right Front Caster (°)	2.09	2.84	3.59
Left Front Camber (°)	-0.69	0.06	0.81
Right Front Camber (°)	-0.69	0.06	0.81
Front Toe (°)	0.4	0.65	0.9
Left SAI (°)	12.2	12.95	13.7
Right SAI (°)	12.2	12.95	13.7
Left Rear Camber (°)	0	0	0
Right Rear Camber (°)	0	0	0
Rear Toe (°)	0	0	0
Thrust Angle	0	0	0
Left Toe Out, Inward (°)	0	0	0
Right Toe Out, Inward (°)	0	0	0
Left Toe Out, Outward (°)	0	0	0
Right Toe Out, Outward (°)	0	-42.15	-40.65
Left Max Turn, Inward (°)	-39.15	-42.15	-40.65
Right Max Turn, Inward (°)	-39.15	36.69	36.69
Left Max Turn, Outward (°)	36.69	36.69	36.69

Right Max Turn, Outward (°)	36.69	-	-

TUNDRA UPK51L-CRTSKA P255/70R18 8J (STD) Double Cab with Standard Deck

Measurement	**Minimum**	**Preferred**	**Maximum**
Left Front Caster (°)	2.03	2.78	3.53
Right Front Caster (°)	2.03	2.78	3.53
Left Front Camber (°)	-0.73	0.02	0.77
Right Front Camber (°)	-0.73	0.02	0.77
Front Toe (°)	0.16	0.32	0.48
Left SAI (°)	12.25	13	13.75
Right SAI (°)	12.25	13	13.75
Left Rear Camber (°)	0	0	0
Right Rear Camber (°)	0	0	0
Rear Toe (°)	0	0	0
Thrust Angle	0	0	0
Left Toe Out, Inward (°)	0	0	0
Right Toe Out, Inward (°)	0	0	0
Left Toe Out, Outward (°)	0	0	0
Right Toe Out, Outward (°)	0	-42.12	-40.62
Left Max Turn, Inward (°)	-39.12	-42.12	-40.62
Right Max Turn, Inward (°)	-39.12	36.62	36.62
Left Max Turn, Outward (°)	36.62	36.62	36.62
Right Max Turn, Outward (°)	36.62	-	-

TUNDRA UPK51L-CRTSKA P275/55R20 8J (OPT) Double Cab with Standard Deck

Measurement	**Minimum**	**Preferred**	**Maximum**
Left Front Caster (°)	2.03	2.78	3.53
Right Front Caster (°)	2.03	2.78	3.53
Left Front Camber (°)	-0.73	0.02	0.77
Right Front Camber (°)	-0.73	0.02	0.77
Front Toe (°)	0.16	0.32	0.48
Left SAI (°)	12.25	13	13.75
Right SAI (°)	12.25	13	13.75
Left Rear Camber (°)	0	0	0
Right Rear Camber (°)	0	0	0
Rear Toe (°)	0	0	0
Thrust Angle	0	0	0
Left Toe Out, Inward (°)	0	0	0
Right Toe Out, Inward (°)	0	0	0
Left Toe Out, Outward (°)	0	0	0
Right Toe Out, Outward (°)	0	-42.12	-40.62

Left Max Turn, Inward (°)	-39.12	-42.12	-40.62
Right Max Turn, Inward (°)	-39.12	36.62	36.62
Left Max Turn, Outward (°)	36.62	36.62	36.62
Right Max Turn, Outward (°)	36.62	-	-

TUNDRA UPK51L-CRTSKA P275/65R18 8J (OFFROAD) Double Cab with Standard Deck

Measurement	Minimum	Preferred	Maximum
Left Front Caster (°)	2.16	2.91	3.66
Right Front Caster (°)	2.16	2.91	3.66
Left Front Camber (°)	-0.77	-0.02	0.73
Right Front Camber (°)	-0.77	-0.02	0.73
Front Toe (°)	0.12	0.28	0.44
Left SAI (°)	12.27	13.02	13.77
Right SAI (°)	12.27	13.02	13.77
Left Rear Camber (°)	0	0	0
Right Rear Camber (°)	0	0	0
Rear Toe (°)	0	0	0
Thrust Angle	0	0	0
Left Toe Out, Inward (°)	0	0	0
Right Toe Out, Inward (°)	0	0	0
Left Toe Out, Outward (°)	0	0	0
Right Toe Out, Outward (°)	0	-42.09	-40.59
Left Max Turn, Inward (°)	-39.09	-42.09	-40.59
Right Max Turn, Inward (°)	-39.09	36.57	36.57
Left Max Turn, Outward (°)	36.57	36.57	36.57
Right Max Turn, Outward (°)	36.57	-	-

TUNDRA UPK51L-CRTSKA P275/65R18 8J (OPT) Double Cab with Standard Deck

Measurement	Minimum	Preferred	Maximum
Left Front Caster (°)	2.03	2.78	3.53
Right Front Caster (°)	2.03	2.78	3.53
Left Front Camber (°)	-0.73	0.02	0.77
Right Front Camber (°)	-0.73	0.02	0.77
Front Toe (°)	0.16	0.32	0.48
Left SAI (°)	12.25	13	13.75
Right SAI (°)	12.25	13	13.75
Left Rear Camber (°)	0	0	0
Right Rear Camber (°)	0	0	0
Rear Toe (°)	0	0	0
Thrust Angle	0	0	0
Left Toe Out, Inward (°)	0	0	0

Right Toe Out, Inward (°)	0	0	0
Left Toe Out, Outward (°)	0	0	0
Right Toe Out, Outward (°)	0	-42.12	-40.62
Left Max Turn, Inward (°)	-39.12	-42.12	-40.62
Right Max Turn, Inward (°)	-39.12	36.62	36.62
Left Max Turn, Outward (°)	36.62	36.62	36.62
Right Max Turn, Outward (°)	36.62	-	-

TUNDRA UPK51L-PSTLKA P275/55R20 8J (STD) CrewMax with Standard Deck

Measurement	Minimum	Preferred	Maximum
Left Front Caster (°)	2.26	3.01	3.76
Right Front Caster (°)	2.26	3.01	3.76
Left Front Camber (°)	-0.76	-0.01	0.74
Right Front Camber (°)	-0.76	-0.01	0.74
Front Toe (°)	0.24	0.47	0.7
Left SAI (°)	12.27	13.02	13.77
Right SAI (°)	12.27	13.02	13.77
Left Rear Camber (°)	0	0	0
Right Rear Camber (°)	0	0	0
Rear Toe (°)	0	0	0
Thrust Angle	0	0	0
Left Toe Out, Inward (°)	0	0	0
Right Toe Out, Inward (°)	0	0	0
Left Toe Out, Outward (°)	0	0	0
Right Toe Out, Outward (°)	0	-42.1	-40.6
Left Max Turn, Inward (°)	-39.1	-42.1	-40.6
Right Max Turn, Inward (°)	-39.1	36.59	36.59
Left Max Turn, Outward (°)	36.59	36.59	36.59
Right Max Turn, Outward (°)	36.59	-	-

TUNDRA UPK51L-PSTLKA P275/65R18 8J (OFFROAD) CrewMax with Standard Deck

Measurement	Minimum	Preferred	Maximum
Left Front Caster (°)	2.25	3	3.75
Right Front Caster (°)	2.25	3	3.75
Left Front Camber (°)	-0.78	-0.03	0.72
Right Front Camber (°)	-0.78	-0.03	0.72
Front Toe (°)	0.19	0.44	0.69
Left SAI (°)	12.29	13.04	13.79
Right SAI (°)	12.29	13.04	13.79
Left Rear Camber (°)	0	0	0
Right Rear Camber (°)	0	0	0

Rear Toe (°)	0	0	0
Thrust Angle	0	0	0
Left Toe Out, Inward (°)	0	0	0
Right Toe Out, Inward (°)	0	0	0
Left Toe Out, Outward (°)	0	0	0
Right Toe Out, Outward (°)	0	-42.09	-40.59
Left Max Turn, Inward (°)	-39.09	-42.09	-40.59
Right Max Turn, Inward (°)	-39.09	36.56	36.56
Left Max Turn, Outward (°)	36.56	36.56	36.56
Right Max Turn, Outward (°)	36.56	-	-

TUNDRA UPK51L-PSTLKA P275/65R18 8J (STD) CrewMax with Standard Deck

Measurement	**Minimum**	**Preferred**	**Maximum**
Left Front Caster (°)	2.26	3.01	3.76
Right Front Caster (°)	2.26	3.01	3.76
Left Front Camber (°)	-0.76	-0.01	0.74
Right Front Camber (°)	-0.76	-0.01	0.74
Front Toe (°)	0.28	0.53	0.78
Left SAI (°)	12.27	13.02	13.77
Right SAI (°)	12.27	13.02	13.77
Left Rear Camber (°)	0	0	0
Right Rear Camber (°)	0	0	0
Rear Toe (°)	0	0	0
Thrust Angle	0	0	0
Left Toe Out, Inward (°)	0	0	0
Right Toe Out, Inward (°)	0	0	0
Left Toe Out, Outward (°)	0	0	0
Right Toe Out, Outward (°)	0	-42.1	-40.6
Left Max Turn, Inward (°)	-39.1	-42.1	-40.6
Right Max Turn, Inward (°)	-39.1	36.59	36.59
Left Max Turn, Outward (°)	36.59	36.59	36.59
Right Max Turn, Outward (°)	36.59	-	-

TUNDRA UPK51L-PSTSKA P255/70R18 8J (5 Leaf Spring) CrewMax with Standard Deck

Measurement	**Minimum**	**Preferred**	**Maximum**
Left Front Caster (°)	2.22	2.97	3.72
Right Front Caster (°)	2.22	2.97	3.72
Left Front Camber (°)	-0.72	0.03	0.78
Right Front Camber (°)	-0.72	0.03	0.78
Front Toe (°)	0.18	0.34	0.5
Left SAI (°)	12.23	12.98	13.73

Right SAI (°)	12.23	12.98	13.73
Left Rear Camber (°)	0	0	0
Right Rear Camber (°)	0	0	0
Rear Toe (°)	0	0	0
Thrust Angle	0	0	0
Left Toe Out, Inward (°)	0	0	0
Right Toe Out, Inward (°)	0	0	0
Left Toe Out, Outward (°)	0	0	0
Right Toe Out, Outward (°)	0	-42.13	-40.63
Left Max Turn, Inward (°)	-39.13	-42.13	-40.63
Right Max Turn, Inward (°)	-39.13	36.65	36.65
Left Max Turn, Outward (°)	36.65	36.65	36.65
Right Max Turn, Outward (°)	36.65	-	-

TUNDRA UPK51L-PSTSKA P255/70R18 8J (STD) CrewMax with Standard Deck

Measurement	**Minimum**	**Preferred**	**Maximum**
Left Front Caster (°)	2.22	2.97	3.72
Right Front Caster (°)	2.22	2.97	3.72
Left Front Camber (°)	-0.72	0.03	0.78
Right Front Camber (°)	-0.72	0.03	0.78
Front Toe (°)	0.18	0.34	0.5
Left SAI (°)	12.23	12.98	13.73
Right SAI (°)	12.23	12.98	13.73
Left Rear Camber (°)	0	0	0
Right Rear Camber (°)	0	0	0
Rear Toe (°)	0	0	0
Thrust Angle	0	0	0
Left Toe Out, Inward (°)	0	0	0
Right Toe Out, Inward (°)	0	0	0
Left Toe Out, Outward (°)	0	0	0
Right Toe Out, Outward (°)	0	-42.13	-40.63
Left Max Turn, Inward (°)	-39.13	-42.13	-40.63
Right Max Turn, Inward (°)	-39.13	36.65	36.65
Left Max Turn, Outward (°)	36.65	36.65	36.65
Right Max Turn, Outward (°)	36.65	-	-

TUNDRA UPK51L-PSTSKA P275/55R20 8J (OPT) CrewMax with Standard Deck

Measurement	**Minimum**	**Preferred**	**Maximum**
Left Front Caster (°)	2.21	2.96	3.71
Right Front Caster (°)	2.21	2.96	3.71
Left Front Camber (°)	-0.72	0.03	0.78

Right Front Camber (°)	-0.72	0.03	0.78
Front Toe (°)	0.18	0.34	0.5
Left SAI (°)	12.23	12.98	13.73
Right SAI (°)	12.23	12.98	13.73
Left Rear Camber (°)	0	0	0
Right Rear Camber (°)	0	0	0
Rear Toe (°)	0	0	0
Thrust Angle	0	0	0
Left Toe Out, Inward (°)	0	0	0
Right Toe Out, Inward (°)	0	0	0
Left Toe Out, Outward (°)	0	0	0
Right Toe Out, Outward (°)	0	-42.13	-40.63
Left Max Turn, Inward (°)	-39.13	-42.13	-40.63
Right Max Turn, Inward (°)	-39.13	36.65	36.65
Left Max Turn, Outward (°)	36.65	36.65	36.65
Right Max Turn, Outward (°)	36.65	-	-

TUNDRA UPK51L-PSTSKA P275/65R18 8J (OFFROAD) CrewMax with Standard Deck

Measurement	Minimum	Preferred	Maximum
Left Front Caster (°)	2.21	2.96	3.71
Right Front Caster (°)	2.21	2.96	3.71
Left Front Camber (°)	-0.74	0.01	0.76
Right Front Camber (°)	-0.74	0.01	0.76
Front Toe (°)	0.15	0.31	0.47
Left SAI (°)	12.25	13	13.75
Right SAI (°)	12.25	13	13.75
Left Rear Camber (°)	0	0	0
Right Rear Camber (°)	0	0	0
Rear Toe (°)	0	0	0
Thrust Angle	0	0	0
Left Toe Out, Inward (°)	0	0	0
Right Toe Out, Inward (°)	0	0	0
Left Toe Out, Outward (°)	0	0	0
Right Toe Out, Outward (°)	0	-42.12	-40.62
Left Max Turn, Inward (°)	-39.12	-42.12	-40.62
Right Max Turn, Inward (°)	-39.12	36.65	36.65
Left Max Turn, Outward (°)	36.65	36.65	36.65
Right Max Turn, Outward (°)	36.65	-	-

TUNDRA UPK51L-PSTSKA P275/65R18 8J (STD) CrewMax with Standard Deck

Measurement	Minimum	Preferred	Maximum

Left Front Caster (°)	2.22	2.97	3.72
Right Front Caster (°)	2.22	2.97	3.72
Left Front Camber (°)	-0.72	0.03	0.78
Right Front Camber (°)	-0.72	0.03	0.78
Front Toe (°)	0.18	0.34	0.5
Left SAI (°)	12.23	12.98	13.73
Right SAI (°)	12.23	12.98	13.73
Left Rear Camber (°)	0	0	0
Right Rear Camber (°)	0	0	0
Rear Toe (°)	0	0	0
Thrust Angle	0	0	0
Left Toe Out, Inward (°)	0	0	0
Right Toe Out, Inward (°)	0	0	0
Left Toe Out, Outward (°)	0	0	0
Right Toe Out, Outward (°)	0	-42.13	-40.63
Left Max Turn, Inward (°)	-39.13	-42.13	-40.63
Right Max Turn, Inward (°)	-39.13	36.65	36.65
Left Max Turn, Outward (°)	36.65	36.65	36.65
Right Max Turn, Outward (°)	36.65	-	-

TUNDRA UPK51L-THTDKA P255/70R18 8J (STD) Regular Cab with Long Deck

Measurement	Minimum	Preferred	Maximum
Left Front Caster (°)	1.93	2.68	3.43
Right Front Caster (°)	1.93	2.68	3.43
Left Front Camber (°)	-0.8	-0.05	0.7
Right Front Camber (°)	-0.8	-0.05	0.7
Front Toe (°)	0.21	0.46	0.71
Left SAI (°)	12.31	13.06	13.81
Right SAI (°)	12.31	13.06	13.81
Left Rear Camber (°)	0	0	0
Right Rear Camber (°)	0	0	0
Rear Toe (°)	0	0	0
Thrust Angle	0	0	0
Left Toe Out, Inward (°)	0	0	0
Right Toe Out, Inward (°)	0	0	0
Left Toe Out, Outward (°)	0	0	0
Right Toe Out, Outward (°)	0	-42.08	-40.58
Left Max Turn, Inward (°)	-39.08	-42.08	-40.58
Right Max Turn, Inward (°)	-39.08	36.53	36.53
Left Max Turn, Outward (°)	36.53	36.53	36.53
Right Max Turn, Outward (°)	36.53	-	-

TUNDRA UPK51L-THTDKA P275/65R18 8J (OPT) Regular Cab with Long Deck

Measurement	Minimum	Preferred	Maximum
Left Front Caster (°)	1.93	2.68	3.43
Right Front Caster (°)	1.93	2.68	3.43
Left Front Camber (°)	-0.8	-0.05	0.7
Right Front Camber (°)	-0.8	-0.05	0.7
Front Toe (°)	0.21	0.46	0.71
Left SAI (°)	12.31	13.06	13.81
Right SAI (°)	12.31	13.06	13.81
Left Rear Camber (°)	0	0	0
Right Rear Camber (°)	0	0	0
Rear Toe (°)	0	0	0
Thrust Angle	0	0	0
Left Toe Out, Inward (°)	0	0	0
Right Toe Out, Inward (°)	0	0	0
Left Toe Out, Outward (°)	0	0	0
Right Toe Out, Outward (°)	0	-42.08	-40.58
Left Max Turn, Inward (°)	-39.08	-42.08	-40.58
Right Max Turn, Inward (°)	-39.08	36.53	36.53
Left Max Turn, Outward (°)	36.53	36.53	36.53
Right Max Turn, Outward (°)	36.53	-	-

TUNDRA UPK52L-CHTSKA P255/70R18 8J (STD) Double Cab with Long Deck

Measurement	Minimum	Preferred	Maximum
Left Front Caster (°)	2.21	2.96	3.71
Right Front Caster (°)	2.21	2.96	3.71
Left Front Camber (°)	-0.72	0.03	0.78
Right Front Camber (°)	-0.72	0.03	0.78
Front Toe (°)	0.35	0.6	0.85
Left SAI (°)	12.23	12.98	13.73
Right SAI (°)	12.23	12.98	13.73
Left Rear Camber (°)	0	0	0
Right Rear Camber (°)	0	0	0
Rear Toe (°)	0	0	0
Thrust Angle	0	0	0
Left Toe Out, Inward (°)	0	0	0
Right Toe Out, Inward (°)	0	0	0
Left Toe Out, Outward (°)	0	0	0
Right Toe Out, Outward (°)	0	-42.13	-40.63
Left Max Turn, Inward (°)	-39.13	-42.13	-40.63
Right Max Turn, Inward (°)	-39.13	36.65	36.65

Left Max Turn, Outward (°)	36.65	36.65	36.65
Right Max Turn, Outward (°)	36.65	-	-

TUNDRA UPK52L-CHTSKA P275/65R18 8J (OPT) Double Cab with Long Deck

Measurement	**Minimum**	**Preferred**	**Maximum**
Left Front Caster (°)	2.21	2.96	3.71
Right Front Caster (°)	2.21	2.96	3.71
Left Front Camber (°)	-0.72	0.03	0.78
Right Front Camber (°)	-0.72	0.03	0.78
Front Toe (°)	0.35	0.6	0.85
Left SAI (°)	12.23	12.98	13.73
Right SAI (°)	12.23	12.98	13.73
Left Rear Camber (°)	0	0	0
Right Rear Camber (°)	0	0	0
Rear Toe (°)	0	0	0
Thrust Angle	0	0	0
Left Toe Out, Inward (°)	0	0	0
Right Toe Out, Inward (°)	0	0	0
Left Toe Out, Outward (°)	0	0	0
Right Toe Out, Outward (°)	0	-42.13	-40.63
Left Max Turn, Inward (°)	-39.13	-42.13	-40.63
Right Max Turn, Inward (°)	-39.13	36.65	36.65
Left Max Turn, Outward (°)	36.65	36.65	36.65
Right Max Turn, Outward (°)	36.65	-	-

TUNDRA UPK55L-TRTDKA P255/70R18 8J (STD) Regular Cab With Standard Deck

Measurement	**Minimum**	**Preferred**	**Maximum**
Left Front Caster (°)	1.48	2.23	2.98
Right Front Caster (°)	1.48	2.23	2.98
Left Front Camber (°)	-0.59	0.16	0.91
Right Front Camber (°)	-0.59	0.16	0.91
Front Toe (°)	0.04	0.29	0.53
Left SAI (°)	12.11	12.86	13.61
Right SAI (°)	12.11	12.86	13.61
Left Rear Camber (°)	0	0	0
Right Rear Camber (°)	0	0	0
Rear Toe (°)	0	0	0
Thrust Angle	0	0	0
Left Toe Out, Inward (°)	0	0	0
Right Toe Out, Inward (°)	0	0	0
Left Toe Out, Outward (°)	0	0	0

Right Toe Out, Outward (°)	0	-42.4	-40.9
Left Max Turn, Inward (°)	-39.4	-42.4	-40.9
Right Max Turn, Inward (°)	-39.4	36.67	36.67
Left Max Turn, Outward (°)	36.67	36.67	36.67
Right Max Turn, Outward (°)	36.67	-	-

TUNDRA UPK55L-TRTDKA P275/55R20 8J (SPORT) Regular Cab With Standard Deck

Measurement	Minimum	Preferred	Maximum
Left Front Caster (°)	1.48	2.23	2.98
Right Front Caster (°)	1.48	2.23	2.98
Left Front Camber (°)	-0.59	0.16	0.91
Right Front Camber (°)	-0.59	0.16	0.91
Front Toe (°)	0.03	0.26	0.49
Left SAI (°)	12.11	12.86	13.61
Right SAI (°)	12.11	12.86	13.61
Left Rear Camber (°)	0	0	0
Right Rear Camber (°)	0	0	0
Rear Toe (°)	0	0	0
Thrust Angle	0	0	0
Left Toe Out, Inward (°)	0	0	0
Right Toe Out, Inward (°)	0	0	0
Left Toe Out, Outward (°)	0	0	0
Right Toe Out, Outward (°)	0	-42.4	-40.9
Left Max Turn, Inward (°)	-39.4	-42.4	-40.9
Right Max Turn, Inward (°)	-39.4	36.67	36.67
Left Max Turn, Outward (°)	36.67	36.67	36.67
Right Max Turn, Outward (°)	36.67	-	-

TUNDRA UPK55L-TRTDKA P275/65R18 8J (OFFROAD) Regular Cab With Standard Deck

Measurement	Minimum	Preferred	Maximum
Left Front Caster (°)	1.56	2.31	3.06
Right Front Caster (°)	1.56	2.31	3.06
Left Front Camber (°)	-0.61	0.14	0.89
Right Front Camber (°)	-0.61	0.14	0.89
Front Toe (°)	0.01	0.26	0.51
Left SAI (°)	12.13	12.88	13.63
Right SAI (°)	12.13	12.88	13.63
Left Rear Camber (°)	0	0	0
Right Rear Camber (°)	0	0	0
Rear Toe (°)	0	0	0
Thrust Angle	0	0	0

Left Toe Out, Inward (°)	0	0	0
Right Toe Out, Inward (°)	0	0	0
Left Toe Out, Outward (°)	0	0	0
Right Toe Out, Outward (°)	0	-42.38	-40.88
Left Max Turn, Inward (°)	-39.38	-42.38	-40.88
Right Max Turn, Inward (°)	-39.38	36.63	36.63
Left Max Turn, Outward (°)	36.63	36.63	36.63
Right Max Turn, Outward (°)	36.63	-	-

TUNDRA UPK55L-TRTDKA P275/65R18 8J (OPT) Regular Cab With Standard Deck

Measurement	Minimum	Preferred	Maximum
Left Front Caster (°)	1.48	2.23	2.98
Right Front Caster (°)	1.48	2.23	2.98
Left Front Camber (°)	-0.59	0.16	0.91
Right Front Camber (°)	-0.59	0.16	0.91
Front Toe (°)	0.04	0.29	0.53
Left SAI (°)	12.11	12.86	13.61
Right SAI (°)	12.11	12.86	13.61
Left Rear Camber (°)	0	0	0
Right Rear Camber (°)	0	0	0
Rear Toe (°)	0	0	0
Thrust Angle	0	0	0
Left Toe Out, Inward (°)	0	0	0
Right Toe Out, Inward (°)	0	0	0
Left Toe Out, Outward (°)	0	0	0
Right Toe Out, Outward (°)	0	-42.4	-40.9
Left Max Turn, Inward (°)	-39.4	-42.4	-40.9
Right Max Turn, Inward (°)	-39.4	36.67	36.67
Left Max Turn, Outward (°)	36.67	36.67	36.67
Right Max Turn, Outward (°)	36.67	-	-

TUNDRA UPK56L-CRTLKA P275/55R20 8J (OPT) Double Cab with Standard Deck

Measurement	Minimum	Preferred	Maximum
Left Front Caster (°)	1.77	2.52	3.27
Right Front Caster (°)	1.77	2.52	3.27
Left Front Camber (°)	-0.45	0.3	1.05
Right Front Camber (°)	-0.45	0.3	1.05
Front Toe (°)	0.3	0.53	0.76
Left SAI (°)	11.96	12.71	13.46
Right SAI (°)	11.96	12.71	13.46
Left Rear Camber (°)	0	0	0

Right Rear Camber (°)	0	0	0
Rear Toe (°)	0	0	0
Thrust Angle	0	0	0
Left Toe Out, Inward (°)	0	0	0
Right Toe Out, Inward (°)	0	0	0
Left Toe Out, Outward (°)	0	0	0
Right Toe Out, Outward (°)	0	-42.49	-40.99
Left Max Turn, Inward (°)	-39.49	-42.49	-40.99
Right Max Turn, Inward (°)	-39.49	36.9	36.9
Left Max Turn, Outward (°)	36.9	36.9	36.9
Right Max Turn, Outward (°)	36.9	-	-

TUNDRA UPK56L-CRTLKA P275/65R18 8J (OFFROAD) Double Cab with Standard Deck

Measurement	Minimum	Preferred	Maximum
Left Front Caster (°)	1.87	2.62	3.37
Right Front Caster (°)	1.87	2.62	3.37
Left Front Camber (°)	-0.47	0.28	1.03
Right Front Camber (°)	-0.47	0.28	1.03
Front Toe (°)	0.28	0.53	0.78
Left SAI (°)	11.99	12.74	13.49
Right SAI (°)	11.99	12.74	13.49
Left Rear Camber (°)	0	0	0
Right Rear Camber (°)	0	0	0
Rear Toe (°)	0	0	0
Thrust Angle	0	0	0
Left Toe Out, Inward (°)	0	0	0
Right Toe Out, Inward (°)	0	0	0
Left Toe Out, Outward (°)	0	0	0
Right Toe Out, Outward (°)	0	-42.47	-40.97
Left Max Turn, Inward (°)	-39.47	-42.47	-40.97
Right Max Turn, Inward (°)	-39.47	36.86	36.86
Left Max Turn, Outward (°)	36.86	36.86	36.86
Right Max Turn, Outward (°)	36.86	-	-

TUNDRA UPK56L-CRTLKA P275/65R18 8J (STD) Double Cab with Standard Deck

Measurement	Minimum	Preferred	Maximum
Left Front Caster (°)	1.77	2.52	3.27
Right Front Caster (°)	1.77	2.52	3.27
Left Front Camber (°)	-0.45	0.3	1.05
Right Front Camber (°)	-0.45	0.3	1.05
Front Toe (°)	0.34	0.59	0.84

Left SAI (°)	11.96	12.71	13.46
Right SAI (°)	11.96	12.71	13.46
Left Rear Camber (°)	0	0	0
Right Rear Camber (°)	0	0	0
Rear Toe (°)	0	0	0
Thrust Angle	0	0	0
Left Toe Out, Inward (°)	0	0	0
Right Toe Out, Inward (°)	0	0	0
Left Toe Out, Outward (°)	0	0	0
Right Toe Out, Outward (°)	0	-42.49	-40.99
Left Max Turn, Inward (°)	-39.49	-42.49	-40.99
Right Max Turn, Inward (°)	-39.49	36.9	36.9
Left Max Turn, Outward (°)	36.9	36.9	36.9
Right Max Turn, Outward (°)	36.9	-	-

TUNDRA UPK56L-CRTSKA P255/70R18 8J (STD) Double Cab with Standard Deck

Measurement	Minimum	Preferred	Maximum
Left Front Caster (°)	1.78	2.53	3.28
Right Front Caster (°)	1.78	2.53	3.28
Left Front Camber (°)	-0.46	0.29	1.04
Right Front Camber (°)	-0.46	0.29	1.04
Front Toe (°)	0.15	0.31	0.47
Left SAI (°)	11.98	12.73	13.48
Right SAI (°)	11.98	12.73	13.48
Left Rear Camber (°)	0	0	0
Right Rear Camber (°)	0	0	0
Rear Toe (°)	0	0	0
Thrust Angle	0	0	0
Left Toe Out, Inward (°)	0	0	0
Right Toe Out, Inward (°)	0	0	0
Left Toe Out, Outward (°)	0	0	0
Right Toe Out, Outward (°)	0	-42.48	-40.98
Left Max Turn, Inward (°)	-39.48	-42.48	-40.98
Right Max Turn, Inward (°)	-39.48	36.88	36.88
Left Max Turn, Outward (°)	36.88	36.88	36.88
Right Max Turn, Outward (°)	36.88	-	-

TUNDRA UPK56L-CRTSKA P275/55R20 8J (OPT) Double Cab with Standard Deck

Measurement	Minimum	Preferred	Maximum
Left Front Caster (°)	1.78	2.53	3.28
Right Front Caster (°)	1.78	2.53	3.28

Left Front Camber (°)	-0.46	0.29	1.04
Right Front Camber (°)	-0.46	0.29	1.04
Front Toe (°)	0.16	0.32	0.48
Left SAI (°)	11.98	12.73	13.48
Right SAI (°)	11.98	12.73	13.48
Left Rear Camber (°)	0	0	0
Right Rear Camber (°)	0	0	0
Rear Toe (°)	0	0	0
Thrust Angle	0	0	0
Left Toe Out, Inward (°)	0	0	0
Right Toe Out, Inward (°)	0	0	0
Left Toe Out, Outward (°)	0	0	0
Right Toe Out, Outward (°)	0	-42.48	-40.98
Left Max Turn, Inward (°)	-39.48	-42.48	-40.98
Right Max Turn, Inward (°)	-39.48	36.88	36.88
Left Max Turn, Outward (°)	36.88	36.88	36.88
Right Max Turn, Outward (°)	36.88	-	-

TUNDRA UPK56L-CRTSKA P275/65R18 8J (OFFROAD) Double Cab with Standard Deck

Measurement	Minimum	Preferred	Maximum
Left Front Caster (°)	1.88	2.63	3.38
Right Front Caster (°)	1.88	2.63	3.38
Left Front Camber (°)	-0.49	0.26	1.01
Right Front Camber (°)	-0.49	0.26	1.01
Front Toe (°)	0.12	0.28	0.44
Left SAI (°)	12	12.75	13.5
Right SAI (°)	12	12.75	13.5
Left Rear Camber (°)	0	0	0
Right Rear Camber (°)	0	0	0
Rear Toe (°)	0	0	0
Thrust Angle	0	0	0
Left Toe Out, Inward (°)	0	0	0
Right Toe Out, Inward (°)	0	0	0
Left Toe Out, Outward (°)	0	0	0
Right Toe Out, Outward (°)	0	-42.46	-41.96
Left Max Turn, Inward (°)	-39.46	-42.46	-41.96
Right Max Turn, Inward (°)	-39.46	36.83	36.83
Left Max Turn, Outward (°)	36.83	36.83	36.83
Right Max Turn, Outward (°)	36.83	-	-

TUNDRA UPK56L-CRTSKA P275/65R18 8J (OPT) Double Cab with Standard Deck

Measurement	**Minimum**	**Preferred**	**Maximum**
Left Front Caster (°)	1.78	2.53	3.28
Right Front Caster (°)	1.78	2.53	3.28
Left Front Camber (°)	-0.46	0.29	1.04
Right Front Camber (°)	-0.46	0.29	1.04
Front Toe (°)	0.15	0.31	0.47
Left SAI (°)	11.98	12.73	13.48
Right SAI (°)	11.98	12.73	13.48
Left Rear Camber (°)	0	0	0
Right Rear Camber (°)	0	0	0
Rear Toe (°)	0	0	0
Thrust Angle	0	0	0
Left Toe Out, Inward (°)	0	0	0
Right Toe Out, Inward (°)	0	0	0
Left Toe Out, Outward (°)	0	0	0
Right Toe Out, Outward (°)	0	-42.48	-40.98
Left Max Turn, Inward (°)	-39.48	-42.48	-40.98
Right Max Turn, Inward (°)	-39.48	36.88	36.88
Left Max Turn, Outward (°)	36.88	36.88	36.88
Right Max Turn, Outward (°)	36.88	-	-

TUNDRA UPK56L-PSTLKA P275/55R20 8J (STD) CrewMax with Standard Deck

Measurement	**Minimum**	**Preferred**	**Maximum**
Left Front Caster (°)	2	2.75	3.5
Right Front Caster (°)	2	2.75	3.5
Left Front Camber (°)	-0.49	0.26	1.01
Right Front Camber (°)	-0.49	0.26	1.01
Front Toe (°)	0.22	0.45	0.68
Left SAI (°)	12	12.75	13.5
Right SAI (°)	12	12.75	13.5
Left Rear Camber (°)	0	0	0
Right Rear Camber (°)	0	0	0
Rear Toe (°)	0	0	0
Thrust Angle	0	0	0
Left Toe Out, Inward (°)	0	0	0
Right Toe Out, Inward (°)	0	0	0
Left Toe Out, Outward (°)	0	0	0
Right Toe Out, Outward (°)	0	-42.46	-40.96
Left Max Turn, Inward (°)	-39.46	-42.46	-40.96
Right Max Turn, Inward (°)	-39.46	36.83	36.83
Left Max Turn, Outward (°)	36.83	36.83	36.83

Right Max Turn, Outward (°)	36.83	-	-

TUNDRA UPK56L-PSTLKA P275/65R18 8J (OFFROAD) CrewMax with Standard Deck

Measurement	**Minimum**	**Preferred**	**Maximum**
Left Front Caster (°)	1.89	2.64	3.39
Right Front Caster (°)	1.89	2.64	3.39
Left Front Camber (°)	-0.51	0.24	0.99
Right Front Camber (°)	-0.51	0.24	0.99
Front Toe (°)	0.2	0.45	0.7
Left SAI (°)	12.03	12.78	13.53
Right SAI (°)	12.03	12.78	13.53
Left Rear Camber (°)	0	0	0
Right Rear Camber (°)	0	0	0
Rear Toe (°)	0	0	0
Thrust Angle	0	0	0
Left Toe Out, Inward (°)	0	0	0
Right Toe Out, Inward (°)	0	0	0
Left Toe Out, Outward (°)	0	0	0
Right Toe Out, Outward (°)	0	-42.45	-40.95
Left Max Turn, Inward (°)	-39.45	-42.45	-40.95
Right Max Turn, Inward (°)	-39.45	36.79	36.79
Left Max Turn, Outward (°)	36.79	36.79	36.79
Right Max Turn, Outward (°)	36.79	-	-

TUNDRA UPK56L-PSTLKA P275/65R18 8J (STD) CrewMax with Standard Deck

Measurement	**Minimum**	**Preferred**	**Maximum**
Left Front Caster (°)	2	2.75	3.5
Right Front Caster (°)	2	2.75	3.5
Left Front Camber (°)	-0.49	0.26	1.01
Right Front Camber (°)	-0.49	0.26	1.01
Front Toe (°)	0.25	0.5	0.75
Left SAI (°)	12	12.75	13.5
Right SAI (°)	12	12.75	13.5
Left Rear Camber (°)	0	0	0
Right Rear Camber (°)	0	0	0
Rear Toe (°)	0	0	0
Thrust Angle	0	0	0
Left Toe Out, Inward (°)	0	0	0
Right Toe Out, Inward (°)	0	0	0
Left Toe Out, Outward (°)	0	0	0
Right Toe Out, Outward (°)	0	-42.46	-40.96

Left Max Turn, Inward (°)	-39.46	-42.46	-40.96
Right Max Turn, Inward (°)	-39.46	36.83	36.83
Left Max Turn, Outward (°)	36.83	36.83	36.83
Right Max Turn, Outward (°)	36.83	-	-

TUNDRA UPK56L-PSTSKA P255/70R18 8J (STD) CrewMax with Standard Deck

Measurement	Minimum	Preferred	Maximum
Left Front Caster (°)	1.97	2.72	3.47
Right Front Caster (°)	1.97	2.72	3.47
Left Front Camber (°)	-0.48	0.27	1.02
Right Front Camber (°)	-0.48	0.27	1.02
Front Toe (°)	0.13	0.29	0.45
Left SAI (°)	12	12.75	13.5
Right SAI (°)	12	12.75	13.5
Left Rear Camber (°)	0	0	0
Right Rear Camber (°)	0	0	0
Rear Toe (°)	0	0	0
Thrust Angle	0	0	0
Left Toe Out, Inward (°)	0	0	0
Right Toe Out, Inward (°)	0	0	0
Left Toe Out, Outward (°)	0	0	0
Right Toe Out, Outward (°)	0	-42.47	-40.97
Left Max Turn, Inward (°)	-39.47	-42.47	-40.97
Right Max Turn, Inward (°)	-39.47	36.84	36.84
Left Max Turn, Outward (°)	36.84	36.84	36.84
Right Max Turn, Outward (°)	36.84	-	-

TUNDRA UPK56L-PSTSKA P275/55R20 8J (OPT) CrewMax with Standard Deck

Measurement	Minimum	Preferred	Maximum
Left Front Caster (°)	1.97	2.72	3.47
Right Front Caster (°)	1.97	2.72	3.47
Left Front Camber (°)	-0.48	0.27	1.02
Right Front Camber (°)	-0.48	0.27	1.02
Front Toe (°)	0.13	0.29	0.45
Left SAI (°)	12	12.75	13.5
Right SAI (°)	12	12.75	13.5
Left Rear Camber (°)	0	0	0
Right Rear Camber (°)	0	0	0
Rear Toe (°)	0	0	0
Thrust Angle	0	0	0
Left Toe Out, Inward (°)	0	0	0

Right Toe Out, Inward (°)	0	0	0
Left Toe Out, Outward (°)	0	0	0
Right Toe Out, Outward (°)	0	-42.47	-40.97
Left Max Turn, Inward (°)	-39.47	-42.47	-40.97
Right Max Turn, Inward (°)	-39.47	36.84	36.84
Left Max Turn, Outward (°)	36.84	36.84	36.84
Right Max Turn, Outward (°)	36.84	-	-

TUNDRA UPK56L-PSTSKA P275/65R18 8J (OFFROAD) CrewMax with Standard Deck

Measurement	**Minimum**	**Preferred**	**Maximum**
Left Front Caster (°)	1.85	2.6	3.35
Right Front Caster (°)	1.85	2.6	3.35
Left Front Camber (°)	-0.51	0.24	0.99
Right Front Camber (°)	-0.51	0.24	0.99
Front Toe (°)	0.1	0.26	0.42
Left SAI (°)	12.03	12.78	13.53
Right SAI (°)	12.03	12.78	13.53
Left Rear Camber (°)	0	0	0
Right Rear Camber (°)	0	0	0
Rear Toe (°)	0	0	0
Thrust Angle	0	0	0
Left Toe Out, Inward (°)	0	0	0
Right Toe Out, Inward (°)	0	0	0
Left Toe Out, Outward (°)	0	0	0
Right Toe Out, Outward (°)	0	-42.45	-40.95
Left Max Turn, Inward (°)	-39.45	-42.45	-40.95
Right Max Turn, Inward (°)	-39.45	36.8	36.8
Left Max Turn, Outward (°)	36.8	36.8	36.8
Right Max Turn, Outward (°)	36.8	-	-

TUNDRA UPK56L-PSTSKA P275/65R18 8J (STD) CrewMax with Standard Deck

Measurement	**Minimum**	**Preferred**	**Maximum**
Left Front Caster (°)	1.96	2.71	3.46
Right Front Caster (°)	1.96	2.71	3.46
Left Front Camber (°)	-0.48	0.27	1.02
Right Front Camber (°)	-0.48	0.27	1.02
Front Toe (°)	0.13	0.29	0.45
Left SAI (°)	12	12.75	13.5
Right SAI (°)	12	12.75	13.5
Left Rear Camber (°)	0	0	0
Right Rear Camber (°)	0	0	0

Rear Toe (°)	0	0	0
Thrust Angle	0	0	0
Left Toe Out, Inward (°)	0	0	0
Right Toe Out, Inward (°)	0	0	0
Left Toe Out, Outward (°)	0	0	0
Right Toe Out, Outward (°)	0	-42.47	-40.97
Left Max Turn, Inward (°)	-39.47	-42.47	-40.97
Right Max Turn, Inward (°)	-39.47	36.84	36.84
Left Max Turn, Outward (°)	36.84	36.84	36.84
Right Max Turn, Outward (°)	36.84	-	-

TUNDRA UPK56L-THTDKA P255/70R18 8J (STD) Regular Cab with Long Deck

Measurement	Minimum	Preferred	Maximum
Left Front Caster (°)	1.65	2.4	3.15
Right Front Caster (°)	1.65	2.4	3.15
Left Front Camber (°)	-0.54	0.21	0.96
Right Front Camber (°)	-0.54	0.21	0.96
Front Toe (°)	0.15	0.4	0.65
Left SAI (°)	12.06	12.81	13.56
Right SAI (°)	12.06	12.81	13.56
Left Rear Camber (°)	0	0	0
Right Rear Camber (°)	0	0	0
Rear Toe (°)	0	0	0
Thrust Angle	0	0	0
Left Toe Out, Inward (°)	0	0	0
Right Toe Out, Inward (°)	0	0	0
Left Toe Out, Outward (°)	0	0	0
Right Toe Out, Outward (°)	0	-42.43	-40.93
Left Max Turn, Inward (°)	-39.43	-42.43	-40.93
Right Max Turn, Inward (°)	-39.43	36.75	36.75
Left Max Turn, Outward (°)	36.75	36.75	36.75
Right Max Turn, Outward (°)	36.75	-	-

TUNDRA UPK56L-THTDKA P275/65R18 8J (OPT) Regular Cab with Long Deck

Measurement	Minimum	Preferred	Maximum
Left Front Caster (°)	1.64	2.39	3.14
Right Front Caster (°)	1.64	2.39	3.14
Left Front Camber (°)	-0.54	0.21	0.96
Right Front Camber (°)	-0.54	0.21	0.96
Front Toe (°)	0.15	0.4	0.65
Left SAI (°)	12.06	12.81	13.56

Right SAI (°)	12.06	12.81	13.56
Left Rear Camber (°)	0	0	0
Right Rear Camber (°)	0	0	0
Rear Toe (°)	0	0	0
Thrust Angle	0	0	0
Left Toe Out, Inward (°)	0	0	0
Right Toe Out, Inward (°)	0	0	0
Left Toe Out, Outward (°)	0	0	0
Right Toe Out, Outward (°)	0	-42.43	-40.93
Left Max Turn, Inward (°)	-39.43	-42.43	-40.93
Right Max Turn, Inward (°)	-39.43	36.75	36.75
Left Max Turn, Outward (°)	36.75	36.75	36.75
Right Max Turn, Outward (°)	36.75	-	-

TUNDRA UPK57L-CHTSKA P255/70R18 8J (STD) Double Cab with Long Deck

Measurement	Minimum	Preferred	Maximum
Left Front Caster (°)	1.89	2.64	3.39
Right Front Caster (°)	1.89	2.64	3.39
Left Front Camber (°)	-0.45	0.3	1.05
Right Front Camber (°)	-0.45	0.3	1.05
Front Toe (°)	0.33	0.58	0.83
Left SAI (°)	11.97	12.72	13.47
Right SAI (°)	11.97	12.72	13.47
Left Rear Camber (°)	0	0	0
Right Rear Camber (°)	0	0	0
Rear Toe (°)	0	0	0
Thrust Angle	0	0	0
Left Toe Out, Inward (°)	0	0	0
Right Toe Out, Inward (°)	0	0	0
Left Toe Out, Outward (°)	0	0	0
Right Toe Out, Outward (°)	0	-42.48	-40.98
Left Max Turn, Inward (°)	-39.48	-42.48	-40.98
Right Max Turn, Inward (°)	-39.48	36.89	36.89
Left Max Turn, Outward (°)	36.89	36.89	36.89
Right Max Turn, Outward (°)	36.89	-	-

TUNDRA UPK57L-CHTSKA P275/65R18 8J (OPT) Double Cab with Long Deck

Measurement	Minimum	Preferred	Maximum
Left Front Caster (°)	1.88	2.63	3.38
Right Front Caster (°)	1.88	2.63	3.38
Left Front Camber (°)	-0.45	0.3	1.05

Right Front Camber (°)	-0.45	0.3	1.05
Front Toe (°)	0.33	0.58	0.83
Left SAI (°)	11.97	12.72	13.47
Right SAI (°)	11.97	12.72	13.47
Left Rear Camber (°)	0	0	0
Right Rear Camber (°)	0	0	0
Rear Toe (°)	0	0	0
Thrust Angle	0	0	0
Left Toe Out, Inward (°)	0	0	0
Right Toe Out, Inward (°)	0	0	0
Left Toe Out, Outward (°)	0	0	0
Right Toe Out, Outward (°)	0	-42.48	-40.98
Left Max Turn, Inward (°)	-39.48	-42.48	-40.98
Right Max Turn, Inward (°)	-39.48	36.89	36.89
Left Max Turn, Outward (°)	36.89	36.89	36.89
Right Max Turn, Outward (°)	36.89	-	-

TUNDRA USK50L-TRTDKA P255/70R18 8J (STD) Regular Cab With Standard Deck

Measurement	Minimum	Preferred	Maximum
Left Front Caster (°)	1.76	2.51	3.26
Right Front Caster (°)	1.76	2.51	3.26
Left Front Camber (°)	-0.97	-0.22	0.53
Right Front Camber (°)	-0.97	-0.22	0.53
Front Toe (°)	-0.06	0.19	0.44
Left SAI (°)	12.49	13.24	13.99
Right SAI (°)	12.49	13.24	13.99
Left Rear Camber (°)	0	0	0
Right Rear Camber (°)	0	0	0
Rear Toe (°)	0	0	0
Thrust Angle	0	0	0
Left Toe Out, Inward (°)	0	0	0
Right Toe Out, Inward (°)	0	0	0
Left Toe Out, Outward (°)	0	0	0
Right Toe Out, Outward (°)	0	-41.96	-40.46
Left Max Turn, Inward (°)	-38.96	-41.96	-40.46
Right Max Turn, Inward (°)	-38.96	36.25	36.25
Left Max Turn, Outward (°)	36.25	36.25	36.25
Right Max Turn, Outward (°)	36.25	-	-

TUNDRA USK50L-TRTDKA P275/55R20 8J (SPORT) Regular Cab With Standard Deck

Measurement	Minimum	Preferred	Maximum

Left Front Caster (°)	1.76	2.51	3.26
Right Front Caster (°)	1.76	2.51	3.26
Left Front Camber (°)	-0.97	-0.22	0.53
Right Front Camber (°)	-0.97	-0.22	0.53
Front Toe (°)	-0.04	0.17	0.4
Left SAI (°)	12.49	13.24	13.99
Right SAI (°)	12.49	13.24	13.99
Left Rear Camber (°)	0	0	0
Right Rear Camber (°)	0	0	0
Rear Toe (°)	0	0	0
Thrust Angle	0	0	0
Left Toe Out, Inward (°)	0	0	0
Right Toe Out, Inward (°)	0	0	0
Left Toe Out, Outward (°)	0	0	0
Right Toe Out, Outward (°)	0	-41.96	-40.46
Left Max Turn, Inward (°)	-38.96	-41.96	-40.46
Right Max Turn, Inward (°)	-38.96	36.25	36.25
Left Max Turn, Outward (°)	36.25	36.25	36.25
Right Max Turn, Outward (°)	36.25	-	-

TUNDRA USK50L-TRTDKA P275/65R18 8J (OFFROAD) Regular Cab With Standard Deck

Measurement	Minimum	Preferred	Maximum
Left Front Caster (°)	1.91	2.66	3.41
Right Front Caster (°)	1.91	2.66	3.41
Left Front Camber (°)	-1	-0.25	0.5
Right Front Camber (°)	-1	-0.25	0.5
Front Toe (°)	-0.1	0.15	0.4
Left SAI (°)	12.52	13.27	14.02
Right SAI (°)	12.52	13.27	14.02
Left Rear Camber (°)	0	0	0
Right Rear Camber (°)	0	0	0
Rear Toe (°)	0	0	0
Thrust Angle	0	0	0
Left Toe Out, Inward (°)	0	0	0
Right Toe Out, Inward (°)	0	0	0
Left Toe Out, Outward (°)	0	0	0
Right Toe Out, Outward (°)	0	-41.94	-40.44
Left Max Turn, Inward (°)	-38.94	-41.94	-40.44
Right Max Turn, Inward (°)	-38.94	36.25	36.25
Left Max Turn, Outward (°)	36.25	36.25	36.25
Right Max Turn, Outward (°)	36.25	-	-

TUNDRA USK50L-TRTDKA P275/65R18 8J (OPT) Regular Cab With Standard Deck

Measurement	**Minimum**	**Preferred**	**Maximum**
Left Front Caster (°)	1.76	2.51	3.26
Right Front Caster (°)	1.76	2.51	3.26
Left Front Camber (°)	-0.97	-0.22	0.53
Right Front Camber (°)	-0.97	-0.22	0.53
Front Toe (°)	-0.06	0.19	0.44
Left SAI (°)	12.49	13.24	13.99
Right SAI (°)	12.49	13.24	13.99
Left Rear Camber (°)	0	0	0
Right Rear Camber (°)	0	0	0
Rear Toe (°)	0	0	0
Thrust Angle	0	0	0
Left Toe Out, Inward (°)	0	0	0
Right Toe Out, Inward (°)	0	0	0
Left Toe Out, Outward (°)	0	0	0
Right Toe Out, Outward (°)	0	-41.96	-40.46
Left Max Turn, Inward (°)	-38.96	-41.96	-40.46
Right Max Turn, Inward (°)	-38.96	36.25	36.25
Left Max Turn, Outward (°)	36.25	36.25	36.25
Right Max Turn, Outward (°)	36.25	-	-

TUNDRA USK51L-CRTLKA P275/55R20 8J (OPT) Double Cab with Standard Deck

Measurement	**Minimum**	**Preferred**	**Maximum**
Left Front Caster (°)	2.1	2.85	3.6
Right Front Caster (°)	2.1	2.85	3.6
Left Front Camber (°)	-0.75	0	0.75
Right Front Camber (°)	-0.75	0	0.75
Front Toe (°)	0.16	0.31	0.47
Left SAI (°)	12.26	13.01	13.76
Right SAI (°)	12.26	13.01	13.76
Left Rear Camber (°)	0	0	0
Right Rear Camber (°)	0	0	0
Rear Toe (°)	0	0	0
Thrust Angle	0	0	0
Left Toe Out, Inward (°)	0	0	0
Right Toe Out, Inward (°)	0	0	0
Left Toe Out, Outward (°)	0	0	0
Right Toe Out, Outward (°)	0	-42.11	-40.61
Left Max Turn, Inward (°)	-39.11	-42.11	-40.61
Right Max Turn, Inward (°)	-39.11	36.6	36.6

Left Max Turn, Outward (°)	36.6	36.6	36.6
Right Max Turn, Outward (°)	36.6	-	-

TUNDRA USK51L-CRTLKA P275/65R18 8J (OFFROAD) Double Cab with Standard Deck

Measurement	Minimum	Preferred	Maximum
Left Front Caster (°)	2.21	2.96	3.71
Right Front Caster (°)	2.21	2.96	3.71
Left Front Camber (°)	-0.79	-0.04	0.71
Right Front Camber (°)	-0.79	-0.04	0.71
Front Toe (°)	0.11	0.27	0.43
Left SAI (°)	12.3	13.05	13.8
Right SAI (°)	12.3	13.05	13.8
Left Rear Camber (°)	0	0	0
Right Rear Camber (°)	0	0	0
Rear Toe (°)	0	0	0
Thrust Angle	0	0	0
Left Toe Out, Inward (°)	0	0	0
Right Toe Out, Inward (°)	0	0	0
Left Toe Out, Outward (°)	0	0	0
Right Toe Out, Outward (°)	0	-42.08	-40.58
Left Max Turn, Inward (°)	-39.08	-42.08	-40.58
Right Max Turn, Inward (°)	-39.08	36.55	36.55
Left Max Turn, Outward (°)	36.55	36.55	36.55
Right Max Turn, Outward (°)	36.55	-	-

TUNDRA USK51L-CRTLKA P275/65R18 8J (STD) Double Cab with Standard Deck

Measurement	Minimum	Preferred	Maximum
Left Front Caster (°)	2.11	2.86	3.61
Right Front Caster (°)	2.11	2.86	3.61
Left Front Camber (°)	-0.75	0	0.75
Right Front Camber (°)	-0.75	0	0.75
Front Toe (°)	0.16	0.31	0.47
Left SAI (°)	12.26	13.01	13.76
Right SAI (°)	12.26	13.01	13.76
Left Rear Camber (°)	0	0	0
Right Rear Camber (°)	0	0	0
Rear Toe (°)	0	0	0
Thrust Angle	0	0	0
Left Toe Out, Inward (°)	0	0	0
Right Toe Out, Inward (°)	0	0	0
Left Toe Out, Outward (°)	0	0	0

Right Toe Out, Outward (°)	0	-42.11	-40.61
Left Max Turn, Inward (°)	-39.11	-42.11	-40.61
Right Max Turn, Inward (°)	-39.11	36.6	36.6
Left Max Turn, Outward (°)	36.6	36.6	36.6
Right Max Turn, Outward (°)	36.6	-	-

TUNDRA USK51L-CRTSKA P255/70R18 8J (STD) Double Cab with Standard Deck

Measurement	Minimum	Preferred	Maximum
Left Front Caster (°)	2.1	2.85	3.6
Right Front Caster (°)	2.1	2.85	3.6
Left Front Camber (°)	-0.76	-0.01	0.74
Right Front Camber (°)	-0.76	-0.01	0.74
Front Toe (°)	0.13	0.29	0.45
Left SAI (°)	12.27	13.02	13.77
Right SAI (°)	12.27	13.02	13.77
Left Rear Camber (°)	0	0	0
Right Rear Camber (°)	0	0	0
Rear Toe (°)	0	0	0
Thrust Angle	0	0	0
Left Toe Out, Inward (°)	0	0	0
Right Toe Out, Inward (°)	0	0	0
Left Toe Out, Outward (°)	0	0	0
Right Toe Out, Outward (°)	0	-42.1	-40.6
Left Max Turn, Inward (°)	-39.1	-42.1	-40.6
Right Max Turn, Inward (°)	-39.1	36.58	36.58
Left Max Turn, Outward (°)	36.58	36.58	36.58
Right Max Turn, Outward (°)	36.58	-	-

TUNDRA USK51L-CRTSKA P275/55R20 8J (OPT) Double Cab with Standard Deck

Measurement	Minimum	Preferred	Maximum
Left Front Caster (°)	2.09	2.84	3.59
Right Front Caster (°)	2.09	2.84	3.59
Left Front Camber (°)	-0.76	-0.01	0.74
Right Front Camber (°)	-0.76	-0.01	0.74
Front Toe (°)	0.13	0.29	0.45
Left SAI (°)	12.28	13.03	13.78
Right SAI (°)	12.28	13.03	13.78
Left Rear Camber (°)	0	0	0
Right Rear Camber (°)	0	0	0
Rear Toe (°)	0	0	0
Thrust Angle	0	0	0

Left Toe Out, Inward (°)	0	0	0
Right Toe Out, Inward (°)	0	0	0
Left Toe Out, Outward (°)	0	0	0
Right Toe Out, Outward (°)	0	-42.1	-40.6
Left Max Turn, Inward (°)	-39.1	-42.1	-40.6
Right Max Turn, Inward (°)	-39.1	36.58	36.58
Left Max Turn, Outward (°)	36.58	36.58	36.58
Right Max Turn, Outward (°)	36.58	-	-

TUNDRA USK51L-CRTSKA P275/65R18 8J (OFFROAD) Double Cab with Standard Deck

Measurement	Minimum	Preferred	Maximum
Left Front Caster (°)	2.2	2.95	3.7
Right Front Caster (°)	2.2	2.95	3.7
Left Front Camber (°)	-0.8	-0.05	0.7
Right Front Camber (°)	-0.8	-0.05	0.7
Front Toe (°)	0.1	0.26	0.42
Left SAI (°)	12.31	13.06	13.81
Right SAI (°)	12.31	13.06	13.81
Left Rear Camber (°)	0	0	0
Right Rear Camber (°)	0	0	0
Rear Toe (°)	0	0	0
Thrust Angle	0	0	0
Left Toe Out, Inward (°)	0	0	0
Right Toe Out, Inward (°)	0	0	0
Left Toe Out, Outward (°)	0	0	0
Right Toe Out, Outward (°)	0	-42.08	-40.58
Left Max Turn, Inward (°)	-39.08	-42.08	-40.58
Right Max Turn, Inward (°)	-39.08	36.53	36.53
Left Max Turn, Outward (°)	36.53	36.53	36.53
Right Max Turn, Outward (°)	36.53	-	-

TUNDRA USK51L-CRTSKA P275/65R18 8J (OPT) Double Cab with Standard Deck

Measurement	Minimum	Preferred	Maximum
Left Front Caster (°)	2.09	2.84	3.59
Right Front Caster (°)	2.09	2.84	3.59
Left Front Camber (°)	-0.76	-0.01	0.74
Right Front Camber (°)	-0.76	-0.01	0.74
Front Toe (°)	0.13	0.29	0.45
Left SAI (°)	12.28	13.03	13.78
Right SAI (°)	12.28	13.03	13.78
Left Rear Camber (°)	0	0	0

Right Rear Camber (°)	0	0	0
Rear Toe (°)	0	0	0
Thrust Angle	0	0	0
Left Toe Out, Inward (°)	0	0	0
Right Toe Out, Inward (°)	0	0	0
Left Toe Out, Outward (°)	0	0	0
Right Toe Out, Outward (°)	0	-42.1	-40.6
Left Max Turn, Inward (°)	-39.1	-42.1	-40.6
Right Max Turn, Inward (°)	-39.1	36.58	36.58
Left Max Turn, Outward (°)	36.58	36.58	36.58
Right Max Turn, Outward (°)	36.58	-	-

TUNDRA USK51L-PSTLKA P275/55R20 8J (OPT) CrewMax with Standard Deck

Measurement	Minimum	Preferred	Maximum
Left Front Caster (°)	2.15	2.9	3.65
Right Front Caster (°)	2.15	2.9	3.65
Left Front Camber (°)	-0.78	-0.03	0.72
Right Front Camber (°)	-0.78	-0.03	0.72
Front Toe (°)	0.11	0.27	0.43
Left SAI (°)	12.29	13.04	13.79
Right SAI (°)	12.29	13.04	13.79
Left Rear Camber (°)	0	0	0
Right Rear Camber (°)	0	0	0
Rear Toe (°)	0	0	0
Thrust Angle	0	0	0
Left Toe Out, Inward (°)	0	0	0
Right Toe Out, Inward (°)	0	0	0
Left Toe Out, Outward (°)	0	0	0
Right Toe Out, Outward (°)	0	-42.09	-40.59
Left Max Turn, Inward (°)	-39.09	-42.09	-40.59
Right Max Turn, Inward (°)	-39.09	36.56	36.56
Left Max Turn, Outward (°)	36.56	36.56	36.56
Right Max Turn, Outward (°)	36.56	-	-

TUNDRA USK51L-PSTLKA P275/65R18 8J (OFFROAD) CrewMax with Standard Deck

Measurement	Minimum	Preferred	Maximum
Left Front Caster (°)	2.26	3.01	3.76
Right Front Caster (°)	2.26	3.01	3.76
Left Front Camber (°)	-0.8	-0.05	0.7
Right Front Camber (°)	-0.8	-0.05	0.7
Front Toe (°)	0.21	0.46	0.71

Left SAI (°)	12.3	13.05	13.8
Right SAI (°)	12.3	13.05	13.8
Left Rear Camber (°)	0	0	0
Right Rear Camber (°)	0	0	0
Rear Toe (°)	0	0	0
Thrust Angle	0	0	0
Left Toe Out, Inward (°)	0	0	0
Right Toe Out, Inward (°)	0	0	0
Left Toe Out, Outward (°)	0	0	0
Right Toe Out, Outward (°)	0	-42.08	-40.58
Left Max Turn, Inward (°)	-39.08	-42.08	-40.58
Right Max Turn, Inward (°)	-39.08	36.53	36.53
Left Max Turn, Outward (°)	36.53	36.53	36.53
Right Max Turn, Outward (°)	36.53	-	-

TUNDRA USK51L-PSTLKA P275/65R18 8J (STD) CrewMax with Standard Deck

Measurement	Minimum	Preferred	Maximum
Left Front Caster (°)	2.15	2.9	3.65
Right Front Caster (°)	2.15	2.9	3.65
Left Front Camber (°)	-0.78	-0.03	0.72
Right Front Camber (°)	-0.78	-0.03	0.72
Front Toe (°)	0.24	0.49	0.74
Left SAI (°)	12.29	13.04	13.79
Right SAI (°)	12.29	13.04	13.79
Left Rear Camber (°)	0	0	0
Right Rear Camber (°)	0	0	0
Rear Toe (°)	0	0	0
Thrust Angle	0	0	0
Left Toe Out, Inward (°)	0	0	0
Right Toe Out, Inward (°)	0	0	0
Left Toe Out, Outward (°)	0	0	0
Right Toe Out, Outward (°)	0	-42.09	-40.59
Left Max Turn, Inward (°)	-39.09	-42.09	-40.59
Right Max Turn, Inward (°)	-39.09	36.56	36.56
Left Max Turn, Outward (°)	36.56	36.56	36.56
Right Max Turn, Outward (°)	36.56	-	-

TUNDRA USK51L-PSTSKA P255/70R18 8J (STD) CrewMax with Standard Deck

Measurement	Minimum	Preferred	Maximum
Left Front Caster (°)	2.06	2.81	3.56
Right Front Caster (°)	2.06	2.81	3.56

Left Front Camber (°)	-0.78	-0.03	0.72
Right Front Camber (°)	-0.78	-0.03	0.72
Front Toe (°)	0.11	0.27	0.43
Left SAI (°)	12.29	13.04	13.79
Right SAI (°)	12.29	13.04	13.79
Left Rear Camber (°)	0	0	0
Right Rear Camber (°)	0	0	0
Rear Toe (°)	0	0	0
Thrust Angle	0	0	0
Left Toe Out, Inward (°)	0	0	0
Right Toe Out, Inward (°)	0	0	0
Left Toe Out, Outward (°)	0	0	0
Right Toe Out, Outward (°)	0	-42.09	-40.59
Left Max Turn, Inward (°)	-39.09	-42.09	-40.59
Right Max Turn, Inward (°)	-39.09	36.56	36.56
Left Max Turn, Outward (°)	36.56	36.56	36.56
Right Max Turn, Outward (°)	36.56	-	-

TUNDRA USK51L-PSTSKA P275/55R20 8J (OPT) CrewMax with Standard Deck

Measurement	**Minimum**	**Preferred**	**Maximum**
Left Front Caster (°)	2.06	2.81	3.56
Right Front Caster (°)	2.06	2.81	3.56
Left Front Camber (°)	-0.78	-0.03	0.72
Right Front Camber (°)	-0.78	-0.03	0.72
Front Toe (°)	0.12	0.28	0.44
Left SAI (°)	12.29	13.04	13.79
Right SAI (°)	12.29	13.04	13.79
Left Rear Camber (°)	0	0	0
Right Rear Camber (°)	0	0	0
Rear Toe (°)	0	0	0
Thrust Angle	0	0	0
Left Toe Out, Inward (°)	0	0	0
Right Toe Out, Inward (°)	0	0	0
Left Toe Out, Outward (°)	0	0	0
Right Toe Out, Outward (°)	0	-42.09	-40.59
Left Max Turn, Inward (°)	-39.09	-42.09	-40.59
Right Max Turn, Inward (°)	-39.09	36.56	36.56
Left Max Turn, Outward (°)	36.56	36.56	36.56
Right Max Turn, Outward (°)	36.56	-	-

TUNDRA USK51L-PSTSKA P275/65R18 8J (OFFROAD) CrewMax with Standard Deck

Measurement	Minimum	Preferred	Maximum
Left Front Caster (°)	2.17	2.92	3.67
Right Front Caster (°)	2.17	2.92	3.67
Left Front Camber (°)	-0.8	-0.05	0.7
Right Front Camber (°)	-0.8	-0.05	0.7
Front Toe (°)	0.1	0.26	0.42
Left SAI (°)	12.31	13.06	13.81
Right SAI (°)	12.31	13.06	13.81
Left Rear Camber (°)	0	0	0
Right Rear Camber (°)	0	0	0
Rear Toe (°)	0	0	0
Thrust Angle	0	0	0
Left Toe Out, Inward (°)	0	0	0
Right Toe Out, Inward (°)	0	0	0
Left Toe Out, Outward (°)	0	0	0
Right Toe Out, Outward (°)	0	-42.08	-40.58
Left Max Turn, Inward (°)	-39.08	-42.08	-40.58
Right Max Turn, Inward (°)	-39.08	36.53	36.53
Left Max Turn, Outward (°)	36.53	36.53	36.53
Right Max Turn, Outward (°)	36.53	-	-

TUNDRA USK51L-PSTSKA P275/65R18 8J (STD) CrewMax with Standard Deck

Measurement	Minimum	Preferred	Maximum
Left Front Caster (°)	2.06	2.81	3.56
Right Front Caster (°)	2.06	2.81	3.56
Left Front Camber (°)	-0.78	-0.03	0.72
Right Front Camber (°)	-0.78	-0.03	0.72
Front Toe (°)	0.11	0.27	0.43
Left SAI (°)	12.29	13.04	13.79
Right SAI (°)	12.29	13.04	13.79
Left Rear Camber (°)	0	0	0
Right Rear Camber (°)	0	0	0
Rear Toe (°)	0	0	0
Thrust Angle	0	0	0
Left Toe Out, Inward (°)	0	0	0
Right Toe Out, Inward (°)	0	0	0
Left Toe Out, Outward (°)	0	0	0
Right Toe Out, Outward (°)	0	-42.09	-40.59
Left Max Turn, Inward (°)	-39.09	-42.09	-40.59
Right Max Turn, Inward (°)	-39.09	36.56	36.56
Left Max Turn, Outward (°)	36.56	36.56	36.56

Right Max Turn, Outward (°)	36.56	-	-

TUNDRA USK51L-THTDKA P255/70R18 8J (STD) Regular Cab with Long Deck

Measurement	Minimum	Preferred	Maximum
Left Front Caster (°)	1.9	2.65	3.4
Right Front Caster (°)	1.9	2.65	3.4
Left Front Camber (°)	-0.86	-0.11	0.64
Right Front Camber (°)	-0.86	-0.11	0.64
Front Toe (°)	0.04	0.2	0.36
Left SAI (°)	12.38	13.13	13.88
Right SAI (°)	12.38	13.13	13.86
Left Rear Camber (°)	0	0	0
Right Rear Camber (°)	0	0	0
Rear Toe (°)	0	0	0
Thrust Angle	0	0	0
Left Toe Out, Inward (°)	0	0	0
Right Toe Out, Inward (°)	0	0	0
Left Toe Out, Outward (°)	0	0	0
Right Toe Out, Outward (°)	0	-42.03	-40.53
Left Max Turn, Inward (°)	-39.03	-42.03	-40.53
Right Max Turn, Inward (°)	-39.03	36.44	36.44
Left Max Turn, Outward (°)	36.44	36.44	36.44
Right Max Turn, Outward (°)	36.44	-	-

TUNDRA USK51L-THTDKA P275/65R18 8J (OPT) Regular Cab with Long Deck

Measurement	Minimum	Preferred	Maximum
Left Front Caster (°)	1.9	2.65	3.4
Right Front Caster (°)	1.9	2.65	3.4
Left Front Camber (°)	-0.86	-0.11	0.64
Right Front Camber (°)	-0.86	-0.11	0.64
Front Toe (°)	0.04	0.2	0.36
Left SAI (°)	12.38	13.13	13.88
Right SAI (°)	12.38	13.13	13.86
Left Rear Camber (°)	0	0	0
Right Rear Camber (°)	0	0	0
Rear Toe (°)	0	0	0
Thrust Angle	0	0	0
Left Toe Out, Inward (°)	0	0	0
Right Toe Out, Inward (°)	0	0	0
Left Toe Out, Outward (°)	0	0	0
Right Toe Out, Outward (°)	0	-42.03	-40.53

Left Max Turn, Inward (°)	-39.03	-42.03	-40.53
Right Max Turn, Inward (°)	-39.03	36.44	36.44
Left Max Turn, Outward (°)	36.44	36.44	36.44
Right Max Turn, Outward (°)	36.44	-	-

TUNDRA USK52L-CHTSKA P255/70R18 8J (STD) Double Cab with Long Deck

Measurement	Minimum	Preferred	Maximum
Left Front Caster (°)	2.24	2.99	3.74
Right Front Caster (°)	2.24	2.99	3.74
Left Front Camber (°)	-0.77	-0.02	0.73
Right Front Camber (°)	-0.77	-0.02	0.73
Front Toe (°)	0.12	0.28	0.44
Left SAI (°)	12.29	13.04	13.79
Right SAI (°)	12.29	13.04	13.79
Left Rear Camber (°)	0	0	0
Right Rear Camber (°)	0	0	0
Rear Toe (°)	0	0	0
Thrust Angle	0	0	0
Left Toe Out, Inward (°)	0	0	0
Right Toe Out, Inward (°)	0	0	0
Left Toe Out, Outward (°)	0	0	0
Right Toe Out, Outward (°)	0	-42.09	-40.59
Left Max Turn, Inward (°)	-39.09	-42.09	-40.59
Right Max Turn, Inward (°)	-39.09	36.56	36.56
Left Max Turn, Outward (°)	36.56	36.56	36.56
Right Max Turn, Outward (°)	36.56	-	-

TUNDRA USK52L-CHTSKA P275/65R18 8J (OPT) Double Cab with Long Deck

Measurement	Minimum	Preferred	Maximum
Left Front Caster (°)	2.24	2.99	3.74
Right Front Caster (°)	2.24	2.99	3.74
Left Front Camber (°)	-0.77	-0.02	0.73
Right Front Camber (°)	-0.77	-0.02	0.73
Front Toe (°)	0.12	0.28	0.44
Left SAI (°)	12.29	13.04	13.79
Right SAI (°)	12.29	13.04	13.79
Left Rear Camber (°)	0	0	0
Right Rear Camber (°)	0	0	0
Rear Toe (°)	0	0	0
Thrust Angle	0	0	0
Left Toe Out, Inward (°)	0	0	0

Right Toe Out, Inward (°)	0	0	0
Left Toe Out, Outward (°)	0	0	0
Right Toe Out, Outward (°)	0	-42.09	-40.59
Left Max Turn, Inward (°)	-39.09	-42.09	-40.59
Right Max Turn, Inward (°)	-39.09	36.56	36.56
Left Max Turn, Outward (°)	36.56	36.56	36.56
Right Max Turn, Outward (°)	36.56	-	-

TUNDRA USK55L-TRTDGA P255/70R18 8J (STD) Regular Cab With Standard Deck

Measurement	**Minimum**	**Preferred**	**Maximum**
Left Front Caster (°)	1.5	2.25	3
Right Front Caster (°)	1.5	2.25	3
Left Front Camber (°)	-0.61	0.14	0.89
Right Front Camber (°)	-0.61	0.14	0.89
Front Toe (°)	-0.02	0.14	0.3
Left SAI (°)	12.13	12.88	13.63
Right SAI (°)	12.13	12.88	13.63
Left Rear Camber (°)	0	0	0
Right Rear Camber (°)	0	0	0
Rear Toe (°)	0	0	0
Thrust Angle	0	0	0
Left Toe Out, Inward (°)	0	0	0
Right Toe Out, Inward (°)	0	0	0
Left Toe Out, Outward (°)	0	0	0
Right Toe Out, Outward (°)	0	-42.38	-40.88
Left Max Turn, Inward (°)	-39.38	-42.38	-40.88
Right Max Turn, Inward (°)	-39.38	36.64	36.64
Left Max Turn, Outward (°)	36.64	36.64	36.64
Right Max Turn, Outward (°)	36.64	-	-

TUNDRA USK55L-TRTDGA P275/55R20 8J (OPT) Regular Cab With Standard Deck

Measurement	**Minimum**	**Preferred**	**Maximum**
Left Front Caster (°)	1.5	2.25	3
Right Front Caster (°)	1.5	2.25	3
Left Front Camber (°)	-0.61	0.14	0.89
Right Front Camber (°)	-0.61	0.14	0.89
Front Toe (°)	-0.02	0.14	0.3
Left SAI (°)	12.13	12.88	13.63
Right SAI (°)	12.13	12.88	13.63
Left Rear Camber (°)	0	0	0
Right Rear Camber (°)	0	0	0

Rear Toe (°)	0	0	0
Thrust Angle	0	0	0
Left Toe Out, Inward (°)	0	0	0
Right Toe Out, Inward (°)	0	0	0
Left Toe Out, Outward (°)	0	0	0
Right Toe Out, Outward (°)	0	-42.38	-40.88
Left Max Turn, Inward (°)	-39.38	-42.38	-40.88
Right Max Turn, Inward (°)	-39.38	36.64	36.64
Left Max Turn, Outward (°)	36.64	36.64	36.64
Right Max Turn, Outward (°)	36.64	-	-

TUNDRA USK55L-TRTDGA P275/65R18 8J (OFFROAD) Regular Cab With Standard Deck

Measurement	Minimum	Preferred	Maximum
Left Front Caster (°)	1.58	2.33	3.08
Right Front Caster (°)	1.58	2.33	3.08
Left Front Camber (°)	-0.63	0.12	0.87
Right Front Camber (°)	-0.63	0.12	0.87
Front Toe (°)	-0.04	0.12	0.28
Left SAI (°)	12.15	12.9	13.65
Right SAI (°)	12.15	12.9	13.65
Left Rear Camber (°)	0	0	0
Right Rear Camber (°)	0	0	0
Rear Toe (°)	0	0	0
Thrust Angle	0	0	0
Left Toe Out, Inward (°)	0	0	0
Right Toe Out, Inward (°)	0	0	0
Left Toe Out, Outward (°)	0	0	0
Right Toe Out, Outward (°)	0	-42.37	-40.87
Left Max Turn, Inward (°)	-39.37	-42.37	-40.87
Right Max Turn, Inward (°)	-39.37	36.61	36.61
Left Max Turn, Outward (°)	36.61	36.61	36.61
Right Max Turn, Outward (°)	36.61	-	-

TUNDRA USK55L-TRTDGA P275/65R18 8J (OPT) Regular Cab With Standard Deck

Measurement	Minimum	Preferred	Maximum
Left Front Caster (°)	1.5	2.25	3
Right Front Caster (°)	1.5	2.25	3
Left Front Camber (°)	-0.61	0.14	0.89
Right Front Camber (°)	-0.61	0.14	0.89
Front Toe (°)	-0.02	0.14	0.3
Left SAI (°)	12.13	12.88	13.63

Right SAI (°)	12.13	12.88	13.63
Left Rear Camber (°)	0	0	0
Right Rear Camber (°)	0	0	0
Rear Toe (°)	0	0	0
Thrust Angle	0	0	0
Left Toe Out, Inward (°)	0	0	0
Right Toe Out, Inward (°)	0	0	0
Left Toe Out, Outward (°)	0	0	0
Right Toe Out, Outward (°)	0	-42.38	-40.88
Left Max Turn, Inward (°)	-39.38	-42.38	-40.88
Right Max Turn, Inward (°)	-39.38	36.64	36.64
Left Max Turn, Outward (°)	36.64	36.64	36.64
Right Max Turn, Outward (°)	36.64	-	-

TUNDRA USK55L-TRTDKA P255/70R18 8J (STD) Regular Cab With Standard Deck

Measurement	Minimum	Preferred	Maximum
Left Front Caster (°)	1.5	2.25	3
Right Front Caster (°)	1.5	2.25	3
Left Front Camber (°)	-0.61	0.14	0.89
Right Front Camber (°)	-0.61	0.14	0.89
Front Toe (°)	-0.02	0.14	0.3
Left SAI (°)	12.13	12.88	13.63
Right SAI (°)	12.13	12.88	13.63
Left Rear Camber (°)	0	0	0
Right Rear Camber (°)	0	0	0
Rear Toe (°)	0	0	0
Thrust Angle	0	0	0
Left Toe Out, Inward (°)	0	0	0
Right Toe Out, Inward (°)	0	0	0
Left Toe Out, Outward (°)	0	0	0
Right Toe Out, Outward (°)	0	-42.38	-40.88
Left Max Turn, Inward (°)	-39.38	-42.38	-40.88
Right Max Turn, Inward (°)	-39.38	36.64	36.64
Left Max Turn, Outward (°)	36.64	36.64	36.64
Right Max Turn, Outward (°)	36.64	-	-

TUNDRA USK55L-TRTDKA P275/55R20 8J (OPT) Regular Cab With Standard Deck

Measurement	Minimum	Preferred	Maximum
Left Front Caster (°)	1.5	2.25	3
Right Front Caster (°)	1.5	2.25	3
Left Front Camber (°)	-0.61	0.14	0.89

Right Front Camber (°)	-0.61	0.14	0.89
Front Toe (°)	-0.02	0.14	0.3
Left SAI (°)	12.13	12.88	13.63
Right SAI (°)	12.13	12.88	13.63
Left Rear Camber (°)	0	0	0
Right Rear Camber (°)	0	0	0
Rear Toe (°)	0	0	0
Thrust Angle	0	0	0
Left Toe Out, Inward (°)	0	0	0
Right Toe Out, Inward (°)	0	0	0
Left Toe Out, Outward (°)	0	0	0
Right Toe Out, Outward (°)	0	-42.38	-40.88
Left Max Turn, Inward (°)	-39.38	-42.38	-40.88
Right Max Turn, Inward (°)	-39.38	36.64	36.64
Left Max Turn, Outward (°)	36.64	36.64	36.64
Right Max Turn, Outward (°)	36.64	-	-

TUNDRA USK55L-TRTDKA P275/65R18 8J (OFFROAD) Regular Cab With Standard Deck

Measurement	Minimum	Preferred	Maximum
Left Front Caster (°)	1.58	2.33	3.08
Right Front Caster (°)	1.58	2.33	3.08
Left Front Camber (°)	-0.63	0.12	0.87
Right Front Camber (°)	-0.63	0.12	0.87
Front Toe (°)	-0.04	0.12	0.28
Left SAI (°)	12.15	12.9	13.65
Right SAI (°)	12.15	12.9	13.65
Left Rear Camber (°)	0	0	0
Right Rear Camber (°)	0	0	0
Rear Toe (°)	0	0	0
Thrust Angle	0	0	0
Left Toe Out, Inward (°)	0	0	0
Right Toe Out, Inward (°)	0	0	0
Left Toe Out, Outward (°)	0	0	0
Right Toe Out, Outward (°)	0	-42.37	-40.87
Left Max Turn, Inward (°)	-39.37	-42.37	-40.87
Right Max Turn, Inward (°)	-39.37	36.61	36.61
Left Max Turn, Outward (°)	36.61	36.61	36.61
Right Max Turn, Outward (°)	36.61	-	-

TUNDRA USK55L-TRTDKA P275/65R18 8J (OPT) Regular Cab With Standard Deck

Measurement	Minimum	Preferred	Maximum

Left Front Caster (°)	1.5	2.25	3
Right Front Caster (°)	1.5	2.25	3
Left Front Camber (°)	-0.61	0.14	0.89
Right Front Camber (°)	-0.61	0.14	0.89
Front Toe (°)	-0.02	0.14	0.3
Left SAI (°)	12.13	12.88	13.63
Right SAI (°)	12.13	12.88	13.63
Left Rear Camber (°)	0	0	0
Right Rear Camber (°)	0	0	0
Rear Toe (°)	0	0	0
Thrust Angle	0	0	0
Left Toe Out, Inward (°)	0	0	0
Right Toe Out, Inward (°)	0	0	0
Left Toe Out, Outward (°)	0	0	0
Right Toe Out, Outward (°)	0	-42.38	-40.88
Left Max Turn, Inward (°)	-39.38	-42.38	-40.88
Right Max Turn, Inward (°)	-39.38	36.64	36.64
Left Max Turn, Outward (°)	36.64	36.64	36.64
Right Max Turn, Outward (°)	36.64	-	-

TUNDRA USK56L-CRTLGA P275/55R20 8J (OPT) Double Cab with Standard Deck

Measurement	Minimum	Preferred	Maximum
Left Front Caster (°)	1.86	2.61	3.36
Right Front Caster (°)	1.86	2.61	3.36
Left Front Camber (°)	-0.46	0.29	1.04
Right Front Camber (°)	-0.46	0.29	1.04
Front Toe (°)	0.16	0.32	0.48
Left SAI (°)	11.98	12.73	13.48
Right SAI (°)	11.98	12.73	13.48
Left Rear Camber (°)	0	0	0
Right Rear Camber (°)	0	0	0
Rear Toe (°)	0	0	0
Thrust Angle	0	0	0
Left Toe Out, Inward (°)	0	0	0
Right Toe Out, Inward (°)	0	0	0
Left Toe Out, Outward (°)	0	0	0
Right Toe Out, Outward (°)	0	-42.48	-40.98
Left Max Turn, Inward (°)	-39.48	-42.48	-40.98
Right Max Turn, Inward (°)	-39.48	36.88	36.88
Left Max Turn, Outward (°)	36.88	36.88	36.88
Right Max Turn, Outward (°)	36.88	-	-

TUNDRA USK56L-CRTLGA P275/65R18 8J (OFFROAD) Double Cab with Standard Deck

Measurement	Minimum	Preferred	Maximum
Left Front Caster (°)	1.84	2.59	3.34
Right Front Caster (°)	1.84	2.59	3.34
Left Front Camber (°)	-0.49	0.26	1.01
Right Front Camber (°)	-0.49	0.26	1.01
Front Toe (°)	0.12	0.28	0.44
Left SAI (°)	12	12.75	13.5
Right SAI (°)	12	12.75	13.5
Left Rear Camber (°)	0	0	0
Right Rear Camber (°)	0	0	0
Rear Toe (°)	0	0	0
Thrust Angle	0	0	0
Left Toe Out, Inward (°)	0	0	0
Right Toe Out, Inward (°)	0	0	0
Left Toe Out, Outward (°)	0	0	0
Right Toe Out, Outward (°)	0	-42.46	-40.96
Left Max Turn, Inward (°)	-39.46	-42.46	-40.96
Right Max Turn, Inward (°)	-39.46	36.83	36.83
Left Max Turn, Outward (°)	36.83	36.83	36.83
Right Max Turn, Outward (°)	36.83	-	-

TUNDRA USK56L-CRTLGA P275/65R18 8J (STD) Double Cab with Standard Deck

Measurement	Minimum	Preferred	Maximum
Left Front Caster (°)	1.86	2.61	3.36
Right Front Caster (°)	1.86	2.61	3.36
Left Front Camber (°)	-0.46	0.29	1.04
Right Front Camber (°)	-0.46	0.29	1.04
Front Toe (°)	0.15	0.31	0.47
Left SAI (°)	11.98	12.73	13.48
Right SAI (°)	11.98	12.73	13.48
Left Rear Camber (°)	0	0	0
Right Rear Camber (°)	0	0	0
Rear Toe (°)	0	0	0
Thrust Angle	0	0	0
Left Toe Out, Inward (°)	0	0	0
Right Toe Out, Inward (°)	0	0	0
Left Toe Out, Outward (°)	0	0	0
Right Toe Out, Outward (°)	0	-42.48	-40.98
Left Max Turn, Inward (°)	-39.48	-42.48	-40.98
Right Max Turn, Inward (°)	-39.48	36.88	36.88

Left Max Turn, Outward (°)	36.88	36.88	36.88
Right Max Turn, Outward (°)	36.88	-	-

TUNDRA USK56L-CRTLKA P275/55R20 8J (OPT) Double Cab with Standard Deck

Measurement	Minimum	Preferred	Maximum
Left Front Caster (°)	1.86	2.61	3.36
Right Front Caster (°)	1.86	2.61	3.36
Left Front Camber (°)	-0.46	0.29	1.04
Right Front Camber (°)	-0.46	0.29	1.04
Front Toe (°)	0.16	0.32	0.48
Left SAI (°)	11.98	12.73	13.48
Right SAI (°)	11.98	12.73	13.48
Left Rear Camber (°)	0	0	0
Right Rear Camber (°)	0	0	0
Rear Toe (°)	0	0	0
Thrust Angle	0	0	0
Left Toe Out, Inward (°)	0	0	0
Right Toe Out, Inward (°)	0	0	0
Left Toe Out, Outward (°)	0	0	0
Right Toe Out, Outward (°)	0	-42.48	-40.98
Left Max Turn, Inward (°)	-39.48	-42.48	-40.98
Right Max Turn, Inward (°)	-39.48	36.88	36.88
Left Max Turn, Outward (°)	36.88	36.88	36.88
Right Max Turn, Outward (°)	36.88	-	-

TUNDRA USK56L-CRTLKA P275/65R18 8J (OFFROAD) Double Cab with Standard Deck

Measurement	Minimum	Preferred	Maximum
Left Front Caster (°)	1.84	2.59	3.34
Right Front Caster (°)	1.84	2.59	3.34
Left Front Camber (°)	-0.49	0.26	1.01
Right Front Camber (°)	-0.49	0.26	1.01
Front Toe (°)	0.12	0.28	0.44
Left SAI (°)	12	12.75	13.5
Right SAI (°)	12	12.75	13.5
Left Rear Camber (°)	0	0	0
Right Rear Camber (°)	0	0	0
Rear Toe (°)	0	0	0
Thrust Angle	0	0	0
Left Toe Out, Inward (°)	0	0	0
Right Toe Out, Inward (°)	0	0	0
Left Toe Out, Outward (°)	0	0	0

Right Toe Out, Outward (°)	0	-42.46	-40.96
Left Max Turn, Inward (°)	-39.46	-42.46	-40.96
Right Max Turn, Inward (°)	-39.46	36.83	36.83
Left Max Turn, Outward (°)	36.83	36.83	36.83
Right Max Turn, Outward (°)	36.83	-	-

TUNDRA USK56L-CRTLKA P275/65R18 8J (STD) Double Cab with Standard Deck

Measurement	Minimum	Preferred	Maximum
Left Front Caster (°)	1.86	2.61	3.36
Right Front Caster (°)	1.86	2.61	3.36
Left Front Camber (°)	-0.46	0.29	1.04
Right Front Camber (°)	-0.46	0.29	1.04
Front Toe (°)	0.15	0.31	0.47
Left SAI (°)	11.98	12.73	13.48
Right SAI (°)	11.98	12.73	13.48
Left Rear Camber (°)	0	0	0
Right Rear Camber (°)	0	0	0
Rear Toe (°)	0	0	0
Thrust Angle	0	0	0
Left Toe Out, Inward (°)	0	0	0
Right Toe Out, Inward (°)	0	0	0
Left Toe Out, Outward (°)	0	0	0
Right Toe Out, Outward (°)	0	-42.48	-40.98
Left Max Turn, Inward (°)	-39.48	-42.48	-40.98
Right Max Turn, Inward (°)	-39.48	36.88	36.88
Left Max Turn, Outward (°)	36.88	36.88	36.88
Right Max Turn, Outward (°)	36.88	-	-

TUNDRA USK56L-CRTSGA P255/70R18 8J (STD) Double Cab with Standard Deck

Measurement	Minimum	Preferred	Maximum
Left Front Caster (°)	1.86	2.61	3.36
Right Front Caster (°)	1.86	2.61	3.36
Left Front Camber (°)	-0.48	0.27	1.02
Right Front Camber (°)	-0.48	0.27	1.02
Front Toe (°)	0.14	0.3	0.46
Left SAI (°)	12	12.75	13.5
Right SAI (°)	12	12.75	13.5
Left Rear Camber (°)	0	0	0
Right Rear Camber (°)	0	0	0
Rear Toe (°)	0	0	0
Thrust Angle	0	0	0

Left Toe Out, Inward (°)	0	0	0
Right Toe Out, Inward (°)	0	0	0
Left Toe Out, Outward (°)	0	0	0
Right Toe Out, Outward (°)	0	-42.47	-40.97
Left Max Turn, Inward (°)	-39.47	-42.47	-40.97
Right Max Turn, Inward (°)	-39.47	36.85	36.85
Left Max Turn, Outward (°)	36.85	36.85	36.85
Right Max Turn, Outward (°)	36.85	-	-

TUNDRA USK56L-CRTSGA P275/55R20 8J (OPT) Double Cab with Standard Deck

Measurement	Minimum	Preferred	Maximum
Left Front Caster (°)	1.86	2.61	3.36
Right Front Caster (°)	1.86	2.61	3.36
Left Front Camber (°)	-0.48	0.27	1.02
Right Front Camber (°)	-0.48	0.27	1.02
Front Toe (°)	0.14	0.3	0.46
Left SAI (°)	12	12.75	13.5
Right SAI (°)	12	12.75	13.5
Left Rear Camber (°)	0	0	0
Right Rear Camber (°)	0	0	0
Rear Toe (°)	0	0	0
Thrust Angle	0	0	0
Left Toe Out, Inward (°)	0	0	0
Right Toe Out, Inward (°)	0	0	0
Left Toe Out, Outward (°)	0	0	0
Right Toe Out, Outward (°)	0	-42.47	-40.97
Left Max Turn, Inward (°)	-39.47	-42.47	-40.97
Right Max Turn, Inward (°)	-39.47	36.85	36.85
Left Max Turn, Outward (°)	36.85	36.85	36.85
Right Max Turn, Outward (°)	36.85	-	-

TUNDRA USK56L-CRTSGA P275/65R18 8J (OFFROAD) Double Cab with Standard Deck

Measurement	Minimum	Preferred	Maximum
Left Front Caster (°)	1.84	2.59	3.34
Right Front Caster (°)	1.84	2.59	3.34
Left Front Camber (°)	-0.51	0.24	0.99
Right Front Camber (°)	-0.51	0.24	0.99
Front Toe (°)	0.1	0.26	0.42
Left SAI (°)	12.02	12.77	13.52
Right SAI (°)	12.02	12.77	13.52
Left Rear Camber (°)	0	0	0

Right Rear Camber (°)	0	0	0
Rear Toe (°)	0	0	0
Thrust Angle	0	0	0
Left Toe Out, Inward (°)	0	0	0
Right Toe Out, Inward (°)	0	0	0
Left Toe Out, Outward (°)	0	0	0
Right Toe Out, Outward (°)	0	-42.45	-40.95
Left Max Turn, Inward (°)	-39.45	-42.45	-40.95
Right Max Turn, Inward (°)	-39.45	36.8	36.8
Left Max Turn, Outward (°)	36.8	36.8	36.8
Right Max Turn, Outward (°)	36.8	-	-

TUNDRA USK56L-CRTSGA P275/65R18 8J (OPT) Double Cab with Standard Deck

Measurement	Minimum	Preferred	Maximum
Left Front Caster (°)	1.85	2.6	3.35
Right Front Caster (°)	1.85	2.6	3.35
Left Front Camber (°)	-0.48	0.27	1.02
Right Front Camber (°)	-0.48	0.27	1.02
Front Toe (°)	0.14	0.3	0.46
Left SAI (°)	12	12.75	13.5
Right SAI (°)	12	12.75	13.5
Left Rear Camber (°)	0	0	0
Right Rear Camber (°)	0	0	0
Rear Toe (°)	0	0	0
Thrust Angle	0	0	0
Left Toe Out, Inward (°)	0	0	0
Right Toe Out, Inward (°)	0	0	0
Left Toe Out, Outward (°)	0	0	0
Right Toe Out, Outward (°)	0	-42.47	-40.97
Left Max Turn, Inward (°)	-39.47	-42.47	-40.97
Right Max Turn, Inward (°)	-39.47	36.85	36.85
Left Max Turn, Outward (°)	36.85	36.85	36.85
Right Max Turn, Outward (°)	36.85	-	-

TUNDRA USK56L-CRTSKA P255/70R18 8J (STD) Double Cab with Standard Deck

Measurement	Minimum	Preferred	Maximum
Left Front Caster (°)	1.86	2.61	3.36
Right Front Caster (°)	1.86	2.61	3.36
Left Front Camber (°)	-0.48	0.27	1.02
Right Front Camber (°)	-0.48	0.27	1.02
Front Toe (°)	0.14	0.3	0.46

Left SAI (°)	12	12.75	13.5
Right SAI (°)	12	12.75	13.5
Left Rear Camber (°)	0	0	0
Right Rear Camber (°)	0	0	0
Rear Toe (°)	0	0	0
Thrust Angle	0	0	0
Left Toe Out, Inward (°)	0	0	0
Right Toe Out, Inward (°)	0	0	0
Left Toe Out, Outward (°)	0	0	0
Right Toe Out, Outward (°)	0	-42.47	-40.97
Left Max Turn, Inward (°)	-39.47	-42.47	-40.97
Right Max Turn, Inward (°)	-39.47	36.85	36.85
Left Max Turn, Outward (°)	36.85	36.85	36.85
Right Max Turn, Outward (°)	36.85	-	-

TUNDRA USK56L-CRTSKA P275/55R20 8J (OPT) Double Cab with Standard Deck

Measurement	**Minimum**	**Preferred**	**Maximum**
Left Front Caster (°)	1.86	2.61	3.36
Right Front Caster (°)	1.86	2.61	3.36
Left Front Camber (°)	-0.48	0.27	1.02
Right Front Camber (°)	-0.48	0.27	1.02
Front Toe (°)	0.14	0.3	0.46
Left SAI (°)	12	12.75	13.5
Right SAI (°)	12	12.75	13.5
Left Rear Camber (°)	0	0	0
Right Rear Camber (°)	0	0	0
Rear Toe (°)	0	0	0
Thrust Angle	0	0	0
Left Toe Out, Inward (°)	0	0	0
Right Toe Out, Inward (°)	0	0	0
Left Toe Out, Outward (°)	0	0	0
Right Toe Out, Outward (°)	0	-42.47	-40.97
Left Max Turn, Inward (°)	-39.47	-42.47	-40.97
Right Max Turn, Inward (°)	-39.47	36.85	36.85
Left Max Turn, Outward (°)	36.85	36.85	36.85
Right Max Turn, Outward (°)	36.85	-	-

TUNDRA USK56L-CRTSKA P275/65R18 8J (OFFROAD) Double Cab with Standard Deck

Measurement	**Minimum**	**Preferred**	**Maximum**
Left Front Caster (°)	1.84	2.59	3.34
Right Front Caster (°)	1.84	2.59	3.34

Left Front Camber (°)	-0.51	0.24	0.99
Right Front Camber (°)	-0.51	0.24	0.99
Front Toe (°)	0.12	0.26	0.42
Left SAI (°)	12.02	12.77	13.52
Right SAI (°)	12.02	12.77	13.52
Left Rear Camber (°)	0	0	0
Right Rear Camber (°)	0	0	0
Rear Toe (°)	0	0	0
Thrust Angle	0	0	0
Left Toe Out, Inward (°)	0	0	0
Right Toe Out, Inward (°)	0	0	0
Left Toe Out, Outward (°)	0	0	0
Right Toe Out, Outward (°)	0	-42.45	-40.95
Left Max Turn, Inward (°)	-39.45	-42.45	-40.95
Right Max Turn, Inward (°)	-39.45	36.8	36.8
Left Max Turn, Outward (°)	36.8	36.8	36.8
Right Max Turn, Outward (°)	36.8	-	-

TUNDRA USK56L-CRTSKA P275/65R18 8J (OPT) Double Cab with Standard Deck

Measurement	Minimum	Preferred	Maximum
Left Front Caster (°)	1.85	2.6	3.35
Right Front Caster (°)	1.85	2.6	3.35
Left Front Camber (°)	-0.48	0.27	1.02
Right Front Camber (°)	-0.48	0.27	1.02
Front Toe (°)	0.14	0.3	0.46
Left SAI (°)	12	12.75	13.5
Right SAI (°)	12	12.75	13.5
Left Rear Camber (°)	0	0	0
Right Rear Camber (°)	0	0	0
Rear Toe (°)	0	0	0
Thrust Angle	0	0	0
Left Toe Out, Inward (°)	0	0	0
Right Toe Out, Inward (°)	0	0	0
Left Toe Out, Outward (°)	0	0	0
Right Toe Out, Outward (°)	0	-42.47	-40.97
Left Max Turn, Inward (°)	-39.47	-42.47	-40.97
Right Max Turn, Inward (°)	-39.47	36.85	36.85
Left Max Turn, Outward (°)	36.85	36.85	36.85
Right Max Turn, Outward (°)	36.85	-	-

TUNDRA USK56L-PSTLGA P275/55R20 8J (STD) CrewMax with Standard Deck

Measurement	Minimum	Preferred	Maximum
Left Front Caster (°)	1.91	2.66	3.41
Right Front Caster (°)	1.91	2.66	3.41
Left Front Camber (°)	-0.5	0.25	1
Right Front Camber (°)	-0.5	0.25	1
Front Toe (°)	0.11	0.27	0.43
Left SAI (°)	12.01	12.76	13.51
Right SAI (°)	12.01	12.76	13.51
Left Rear Camber (°)	0	0	0
Right Rear Camber (°)	0	0	0
Rear Toe (°)	0	0	0
Thrust Angle	0	0	0
Left Toe Out, Inward (°)	0	0	0
Right Toe Out, Inward (°)	0	0	0
Left Toe Out, Outward (°)	0	0	0
Right Toe Out, Outward (°)	0	-42.46	-40.96
Left Max Turn, Inward (°)	-39.46	-42.46	-40.96
Right Max Turn, Inward (°)	-39.46	36.82	36.82
Left Max Turn, Outward (°)	36.82	36.82	36.82
Right Max Turn, Outward (°)	36.82	-	-

TUNDRA USK56L-PSTLGA P275/65R18 8J (OFFROAD) CrewMax with Standard Deck

Measurement	Minimum	Preferred	Maximum
Left Front Caster (°)	1.95	2.7	3.45
Right Front Caster (°)	1.95	2.7	3.45
Left Front Camber (°)	-0.52	0.23	0.98
Right Front Camber (°)	-0.52	0.23	0.98
Front Toe (°)	0.08	0.24	0.4
Left SAI (°)	12.04	12.79	13.54
Right SAI (°)	12.04	12.79	13.54
Left Rear Camber (°)	0	0	0
Right Rear Camber (°)	0	0	0
Rear Toe (°)	0	0	0
Thrust Angle	0	0	0
Left Toe Out, Inward (°)	0	0	0
Right Toe Out, Inward (°)	0	0	0
Left Toe Out, Outward (°)	0	0	0
Right Toe Out, Outward (°)	0	-42.44	-40.94
Left Max Turn, Inward (°)	-39.44	-42.44	-40.94
Right Max Turn, Inward (°)	-39.44	36.78	36.78
Left Max Turn, Outward (°)	36.78	36.78	36.78

Right Max Turn, Outward (°)	36.78	-	-

TUNDRA USK56L-PSTLGA P275/65R18 8J (STD) CrewMax with Standard Deck

Measurement	Minimum	Preferred	Maximum
Left Front Caster (°)	1.91	2.66	3.41
Right Front Caster (°)	1.91	2.66	3.41
Left Front Camber (°)	-0.5	0.25	1
Right Front Camber (°)	-0.5	0.25	1
Front Toe (°)	0.11	0.27	0.43
Left SAI (°)	12.01	12.76	13.51
Right SAI (°)	12.01	12.76	13.51
Left Rear Camber (°)	0	0	0
Right Rear Camber (°)	0	0	0
Rear Toe (°)	0	0	0
Thrust Angle	0	0	0
Left Toe Out, Inward (°)	0	0	0
Right Toe Out, Inward (°)	0	0	0
Left Toe Out, Outward (°)	0	0	0
Right Toe Out, Outward (°)	0	-42.46	-40.96
Left Max Turn, Inward (°)	-39.46	-42.46	-40.96
Right Max Turn, Inward (°)	-39.46	36.82	36.82
Left Max Turn, Outward (°)	36.82	36.82	36.82
Right Max Turn, Outward (°)	36.82	-	-

TUNDRA USK56L-PSTLKA P275/55R20 8J (OPT) CrewMax with Standard Deck

Measurement	Minimum	Preferred	Maximum
Left Front Caster (°)	1.91	2.66	3.41
Right Front Caster (°)	1.91	2.66	3.41
Left Front Camber (°)	-0.5	0.25	1
Right Front Camber (°)	-0.5	0.25	1
Front Toe (°)	0.12	0.28	0.44
Left SAI (°)	12.01	12.76	13.51
Right SAI (°)	12.01	12.76	13.51
Left Rear Camber (°)	0	0	0
Right Rear Camber (°)	0	0	0
Rear Toe (°)	0	0	0
Thrust Angle	0	0	0
Left Toe Out, Inward (°)	0	0	0
Right Toe Out, Inward (°)	0	0	0
Left Toe Out, Outward (°)	0	0	0
Right Toe Out, Outward (°)	0	-42.46	-40.96

Left Max Turn, Inward (°)	-39.46	-42.46	-40.96
Right Max Turn, Inward (°)	-39.46	36.82	36.82
Left Max Turn, Outward (°)	36.82	36.82	36.82
Right Max Turn, Outward (°)	36.82	-	-

TUNDRA USK56L-PSTLKA P275/65R18 8J (OFFROAD) CrewMax with Standard Deck

Measurement	Minimum	Preferred	Maximum
Left Front Caster (°)	1.95	2.7	3.45
Right Front Caster (°)	1.95	2.7	3.45
Left Front Camber (°)	-0.52	0.23	0.98
Right Front Camber (°)	-0.52	0.23	0.98
Front Toe (°)	0.1	0.26	0.42
Left SAI (°)	12.04	12.79	13.54
Right SAI (°)	12.04	12.79	13.54
Left Rear Camber (°)	0	0	0
Right Rear Camber (°)	0	0	0
Rear Toe (°)	0	0	0
Thrust Angle	0	0	0
Left Toe Out, Inward (°)	0	0	0
Right Toe Out, Inward (°)	0	0	0
Left Toe Out, Outward (°)	0	0	0
Right Toe Out, Outward (°)	0	-42.44	-40.94
Left Max Turn, Inward (°)	-39.44	-42.44	-40.94
Right Max Turn, Inward (°)	-39.44	36.78	36.78
Left Max Turn, Outward (°)	36.78	36.78	36.78
Right Max Turn, Outward (°)	36.78	-	-

TUNDRA USK56L-PSTLKA P275/65R18 8J (STD) CrewMax with Standard Deck

Measurement	Minimum	Preferred	Maximum
Left Front Caster (°)	1.91	2.66	3.41
Right Front Caster (°)	1.91	2.66	3.41
Left Front Camber (°)	-0.5	0.25	1
Right Front Camber (°)	-0.5	0.25	1
Front Toe (°)	0.11	0.27	0.43
Left SAI (°)	12.01	12.76	13.51
Right SAI (°)	12.01	12.76	13.51
Left Rear Camber (°)	0	0	0
Right Rear Camber (°)	0	0	0
Rear Toe (°)	0	0	0
Thrust Angle	0	0	0
Left Toe Out, Inward (°)	0	0	0

Right Toe Out, Inward (°)	0	0	0
Left Toe Out, Outward (°)	0	0	0
Right Toe Out, Outward (°)	0	-42.46	-40.96
Left Max Turn, Inward (°)	-39.46	-42.46	-40.96
Right Max Turn, Inward (°)	-39.46	36.82	36.82
Left Max Turn, Outward (°)	36.82	36.82	36.82
Right Max Turn, Outward (°)	36.82	-	-

TUNDRA USK56L-PSTSGA P255/70R18 8J (STD) CrewMax with Standard Deck

Measurement	Minimum	Preferred	Maximum
Left Front Caster (°)	1.91	2.66	3.41
Right Front Caster (°)	1.91	2.66	3.41
Left Front Camber (°)	-0.51	0.24	0.99
Right Front Camber (°)	-0.51	0.24	0.99
Front Toe (°)	0.09	0.25	0.41
Left SAI (°)	12.03	12.78	13.53
Right SAI (°)	12.03	12.78	13.53
Left Rear Camber (°)	0	0	0
Right Rear Camber (°)	0	0	0
Rear Toe (°)	0	0	0
Thrust Angle	0	0	0
Left Toe Out, Inward (°)	0	0	0
Right Toe Out, Inward (°)	0	0	0
Left Toe Out, Outward (°)	0	0	0
Right Toe Out, Outward (°)	0	-42.45	-40.95
Left Max Turn, Inward (°)	-39.45	-42.45	-40.95
Right Max Turn, Inward (°)	-39.45	36.8	36.8
Left Max Turn, Outward (°)	36.8	36.8	36.8
Right Max Turn, Outward (°)	36.8	-	-

TUNDRA USK56L-PSTSGA P275/55R20 8J (OPT) CrewMax with Standard Deck

Measurement	Minimum	Preferred	Maximum
Left Front Caster (°)	1.9	2.65	3.4
Right Front Caster (°)	1.9	2.65	3.4
Left Front Camber (°)	-0.51	0.24	0.99
Right Front Camber (°)	-0.51	0.24	0.99
Front Toe (°)	0.1	0.26	0.42
Left SAI (°)	12.03	12.78	13.53
Right SAI (°)	12.03	12.78	13.53
Left Rear Camber (°)	0	0	0
Right Rear Camber (°)	0	0	0

Rear Toe (°)	0	0	0
Thrust Angle	0	0	0
Left Toe Out, Inward (°)	0	0	0
Right Toe Out, Inward (°)	0	0	0
Left Toe Out, Outward (°)	0	0	0
Right Toe Out, Outward (°)	0	-42.45	-40.95
Left Max Turn, Inward (°)	-39.45	-42.45	-40.95
Right Max Turn, Inward (°)	-39.45	36.8	36.8
Left Max Turn, Outward (°)	36.8	36.8	36.8
Right Max Turn, Outward (°)	36.8	-	-

TUNDRA USK56L-PSTSGA P275/65R18 8J (OFFROAD) CrewMax with Standard Deck

Measurement	Minimum	Preferred	Maximum
Left Front Caster (°)	1.94	2.69	3.44
Right Front Caster (°)	1.94	2.69	3.44
Left Front Camber (°)	-0.53	0.22	0.97
Right Front Camber (°)	-0.53	0.22	0.97
Front Toe (°)	0.07	0.23	0.39
Left SAI (°)	12.05	12.8	13.55
Right SAI (°)	12.05	12.8	13.55
Left Rear Camber (°)	0	0	0
Right Rear Camber (°)	0	0	0
Rear Toe (°)	0	0	0
Thrust Angle	0	0	0
Left Toe Out, Inward (°)	0	0	0
Right Toe Out, Inward (°)	0	0	0
Left Toe Out, Outward (°)	0	0	0
Right Toe Out, Outward (°)	0	-42.43	-40.93
Left Max Turn, Inward (°)	-39.43	-42.43	-40.93
Right Max Turn, Inward (°)	-39.43	36.76	36.76
Left Max Turn, Outward (°)	36.76	36.76	36.76
Right Max Turn, Outward (°)	36.76	-	-

TUNDRA USK56L-PSTSGA P275/65R18 8J (OPT) CrewMax with Standard Deck

Measurement	Minimum	Preferred	Maximum
Left Front Caster (°)	1.9	2.65	3.4
Right Front Caster (°)	1.9	2.65	3.4
Left Front Camber (°)	-0.51	0.24	0.99
Right Front Camber (°)	-0.51	0.24	0.99
Front Toe (°)	0.09	0.25	0.41
Left SAI (°)	12.03	12.78	13.53

Right SAI (°)	12.03	12.78	13.53
Left Rear Camber (°)	0	0	0
Right Rear Camber (°)	0	0	0
Rear Toe (°)	0	0	0
Thrust Angle	0	0	0
Left Toe Out, Inward (°)	0	0	0
Right Toe Out, Inward (°)	0	0	0
Left Toe Out, Outward (°)	0	0	0
Right Toe Out, Outward (°)	0	-42.45	-40.95
Left Max Turn, Inward (°)	-39.45	-42.45	-40.95
Right Max Turn, Inward (°)	-39.45	36.8	36.8
Left Max Turn, Outward (°)	36.8	36.8	36.8
Right Max Turn, Outward (°)	36.8	-	-

TUNDRA USK56L-PSTSKA P255/70R18 8J (STD) CrewMax with Standard Deck

Measurement	**Minimum**	**Preferred**	**Maximum**
Left Front Caster (°)	1.91	2.66	3.41
Right Front Caster (°)	1.91	2.66	3.41
Left Front Camber (°)	-0.51	0.24	0.99
Right Front Camber (°)	-0.51	0.24	0.99
Front Toe (°)	0.06	0.25	0.41
Left SAI (°)	12.03	12.78	13.53
Right SAI (°)	12.03	12.78	13.53
Left Rear Camber (°)	0	0	0
Right Rear Camber (°)	0	0	0
Rear Toe (°)	0	0	0
Thrust Angle	0	0	0
Left Toe Out, Inward (°)	0	0	0
Right Toe Out, Inward (°)	0	0	0
Left Toe Out, Outward (°)	0	0	0
Right Toe Out, Outward (°)	0	-42.45	-40.95
Left Max Turn, Inward (°)	-39.45	-42.45	-40.95
Right Max Turn, Inward (°)	-39.45	36.8	36.8
Left Max Turn, Outward (°)	36.8	36.8	36.8
Right Max Turn, Outward (°)	36.8	-	-

TUNDRA USK56L-PSTSKA P275/55R20 8J (OPT) CrewMax with Standard Deck

Measurement	**Minimum**	**Preferred**	**Maximum**
Left Front Caster (°)	1.9	2.65	3.4
Right Front Caster (°)	1.9	2.65	3.4
Left Front Camber (°)	-0.51	0.24	0.99

Right Front Camber (°)	-0.51	0.24	0.99
Front Toe (°)	0.1	0.26	0.42
Left SAI (°)	12.03	12.78	13.53
Right SAI (°)	12.03	12.78	13.53
Left Rear Camber (°)	0	0	0
Right Rear Camber (°)	0	0	0
Rear Toe (°)	0	0	0
Thrust Angle	0	0	0
Left Toe Out, Inward (°)	0	0	0
Right Toe Out, Inward (°)	0	0	0
Left Toe Out, Outward (°)	0	0	0
Right Toe Out, Outward (°)	0	-42.45	-40.95
Left Max Turn, Inward (°)	-39.45	-42.45	-40.95
Right Max Turn, Inward (°)	-39.45	36.8	36.8
Left Max Turn, Outward (°)	36.8	36.8	36.8
Right Max Turn, Outward (°)	36.8	-	-

TUNDRA USK56L-PSTSKA P275/65R18 8J (OFFROAD) CrewMax with Standard Deck

Measurement	Minimum	Preferred	Maximum
Left Front Caster (°)	1.94	2.69	3.44
Right Front Caster (°)	1.94	2.69	3.44
Left Front Camber (°)	-0.53	0.22	0.97
Right Front Camber (°)	-0.53	0.22	0.97
Front Toe (°)	0.07	0.23	0.39
Left SAI (°)	12.05	12.8	13.55
Right SAI (°)	12.05	12.8	13.55
Left Rear Camber (°)	0	0	0
Right Rear Camber (°)	0	0	0
Rear Toe (°)	0	0	0
Thrust Angle	0	0	0
Left Toe Out, Inward (°)	0	0	0
Right Toe Out, Inward (°)	0	0	0
Left Toe Out, Outward (°)	0	0	0
Right Toe Out, Outward (°)	0	-42.43	-40.93
Left Max Turn, Inward (°)	-39.43	-42.43	-40.93
Right Max Turn, Inward (°)	-39.43	36.76	36.76
Left Max Turn, Outward (°)	36.76	36.76	36.76
Right Max Turn, Outward (°)	36.76	-	-

TUNDRA USK56L-PSTSKA P275/65R18 8J (OPT) CrewMax with Standard Deck

Measurement	Minimum	Preferred	Maximum

Left Front Caster (°)	1.9	2.65	3.4
Right Front Caster (°)	1.9	2.65	3.4
Left Front Camber (°)	-0.51	0.24	0.99
Right Front Camber (°)	-0.51	0.24	0.99
Front Toe (°)	0.09	0.25	0.41
Left SAI (°)	12.03	12.78	13.53
Right SAI (°)	12.03	12.78	13.53
Left Rear Camber (°)	0	0	0
Right Rear Camber (°)	0	0	0
Rear Toe (°)	0	0	0
Thrust Angle	0	0	0
Left Toe Out, Inward (°)	0	0	0
Right Toe Out, Inward (°)	0	0	0
Left Toe Out, Outward (°)	0	0	0
Right Toe Out, Outward (°)	0	-42.45	-40.95
Left Max Turn, Inward (°)	-39.45	-42.45	-40.95
Right Max Turn, Inward (°)	-39.45	36.8	36.8
Left Max Turn, Outward (°)	36.8	36.8	36.8
Right Max Turn, Outward (°)	36.8	-	-

TUNDRA USK56L-THTDGA P255/70R18 8J (STD) Regular Cab with Long Deck

Measurement	**Minimum**	**Preferred**	**Maximum**
Left Front Caster (°)	1.59	2.34	3.09
Right Front Caster (°)	1.59	2.34	3.09
Left Front Camber (°)	-0.56	0.19	0.94
Right Front Camber (°)	-0.56	0.19	0.94
Front Toe (°)	0.04	0.2	0.36
Left SAI (°)	12.08	12.83	13.58
Right SAI (°)	12.08	12.83	13.58
Left Rear Camber (°)	0	0	0
Right Rear Camber (°)	0	0	0
Rear Toe (°)	0	0	0
Thrust Angle	0	0	0
Left Toe Out, Inward (°)	0	0	0
Right Toe Out, Inward (°)	0	0	0
Left Toe Out, Outward (°)	0	0	0
Right Toe Out, Outward (°)	0	-42.41	-40.91
Left Max Turn, Inward (°)	-39.41	-42.41	-40.91
Right Max Turn, Inward (°)	-39.41	36.71	36.71
Left Max Turn, Outward (°)	36.71	36.71	36.71
Right Max Turn, Outward (°)	36.71	-	-

TUNDRA USK56L-THTDGA P275/65R18 8J (OPT) Regular Cab with Long Deck

Measurement	Minimum	Preferred	Maximum
Left Front Caster (°)	1.59	2.34	3.09
Right Front Caster (°)	1.59	2.34	3.09
Left Front Camber (°)	-0.56	0.19	0.94
Right Front Camber (°)	-0.56	0.19	0.94
Front Toe (°)	0.04	0.2	0.36
Left SAI (°)	12.08	12.83	13.58
Right SAI (°)	12.08	12.83	13.58
Left Rear Camber (°)	0	0	0
Right Rear Camber (°)	0	0	0
Rear Toe (°)	0	0	0
Thrust Angle	0	0	0
Left Toe Out, Inward (°)	0	0	0
Right Toe Out, Inward (°)	0	0	0
Left Toe Out, Outward (°)	0	0	0
Right Toe Out, Outward (°)	0	-42.41	-40.91
Left Max Turn, Inward (°)	-39.41	-42.41	-40.91
Right Max Turn, Inward (°)	-39.41	36.71	36.71
Left Max Turn, Outward (°)	36.71	36.71	36.71
Right Max Turn, Outward (°)	36.71	-	-

TUNDRA USK56L-THTDKA P255/70R18 8J (STD) Regular Cab with Long Deck

Measurement	Minimum	Preferred	Maximum
Left Front Caster (°)	1.59	2.34	3.09
Right Front Caster (°)	1.59	2.34	3.09
Left Front Camber (°)	-0.56	0.19	0.94
Right Front Camber (°)	-0.56	0.19	0.94
Front Toe (°)	0.04	0.2	0.36
Left SAI (°)	12.08	12.83	13.58
Right SAI (°)	12.08	12.83	13.58
Left Rear Camber (°)	0	0	0
Right Rear Camber (°)	0	0	0
Rear Toe (°)	0	0	0
Thrust Angle	0	0	0
Left Toe Out, Inward (°)	0	0	0
Right Toe Out, Inward (°)	0	0	0
Left Toe Out, Outward (°)	0	0	0
Right Toe Out, Outward (°)	0	-42.41	-40.91
Left Max Turn, Inward (°)	-39.41	-42.41	-40.91
Right Max Turn, Inward (°)	-39.41	36.71	36.71

Left Max Turn, Outward (°)	36.71	36.71	36.71
Right Max Turn, Outward (°)	36.71	-	-

TUNDRA USK56L-THTDKA P275/65R18 8J (OPT) Regular Cab with Long Deck

Measurement	**Minimum**	**Preferred**	**Maximum**
Left Front Caster (°)	1.59	2.34	3.09
Right Front Caster (°)	1.59	2.34	3.09
Left Front Camber (°)	-0.56	0.19	0.94
Right Front Camber (°)	-0.56	0.19	0.94
Front Toe (°)	0.04	0.2	0.36
Left SAI (°)	12.08	12.83	13.58
Right SAI (°)	12.08	12.83	13.58
Left Rear Camber (°)	0	0	0
Right Rear Camber (°)	0	0	0
Rear Toe (°)	0	0	0
Thrust Angle	0	0	0
Left Toe Out, Inward (°)	0	0	0
Right Toe Out, Inward (°)	0	0	0
Left Toe Out, Outward (°)	0	0	0
Right Toe Out, Outward (°)	0	-42.41	-40.91
Left Max Turn, Inward (°)	-39.41	-42.41	-40.91
Right Max Turn, Inward (°)	-39.41	36.71	36.71
Left Max Turn, Outward (°)	36.71	36.71	36.71
Right Max Turn, Outward (°)	36.71	-	-

TUNDRA USK57L-CHTSGA P255/70R18 8J (STD) Double Cab with Long Deck

Measurement	**Minimum**	**Preferred**	**Maximum**
Left Front Caster (°)	1.95	2.7	3.45
Right Front Caster (°)	1.95	2.7	3.45
Left Front Camber (°)	-0.45	0.3	1.05
Right Front Camber (°)	-0.45	0.3	1.05
Front Toe (°)	0.16	0.32	0.48
Left SAI (°)	11.97	12.72	13.47
Right SAI (°)	11.97	12.72	13.47
Left Rear Camber (°)	0	0	0
Right Rear Camber (°)	0	0	0
Rear Toe (°)	0	0	0
Thrust Angle	0	0	0
Left Toe Out, Inward (°)	0	0	0
Right Toe Out, Inward (°)	0	0	0
Left Toe Out, Outward (°)	0	0	0

Right Toe Out, Outward (°)	0	-42.48	-40.98
Left Max Turn, Inward (°)	-39.48	-42.48	-40.98
Right Max Turn, Inward (°)	-39.48	36.89	36.89
Left Max Turn, Outward (°)	36.89	36.89	36.89
Right Max Turn, Outward (°)	36.89	-	-

TUNDRA USK57L-CHTSGA P275/65R18 8J (OPT) Double Cab with Long Deck

Measurement	Minimum	Preferred	Maximum
Left Front Caster (°)	1.95	2.7	3.45
Right Front Caster (°)	1.95	2.7	3.45
Left Front Camber (°)	-0.45	0.3	1.05
Right Front Camber (°)	-0.45	0.3	1.05
Front Toe (°)	0.16	0.32	0.48
Left SAI (°)	11.97	12.72	13.47
Right SAI (°)	11.97	12.72	13.47
Left Rear Camber (°)	0	0	0
Right Rear Camber (°)	0	0	0
Rear Toe (°)	0	0	0
Thrust Angle	0	0	0
Left Toe Out, Inward (°)	0	0	0
Right Toe Out, Inward (°)	0	0	0
Left Toe Out, Outward (°)	0	0	0
Right Toe Out, Outward (°)	0	-42.48	-40.98
Left Max Turn, Inward (°)	-39.48	-42.48	-40.98
Right Max Turn, Inward (°)	-39.48	36.89	36.89
Left Max Turn, Outward (°)	36.89	36.89	36.89
Right Max Turn, Outward (°)	36.89	-	-

TUNDRA USK57L-CHTSKA P255/70R18 8J (STD) Double Cab with Long Deck

Measurement	Minimum	Preferred	Maximum
Left Front Caster (°)	1.95	2.7	3.45
Right Front Caster (°)	1.95	2.7	3.45
Left Front Camber (°)	-0.45	0.3	1.05
Right Front Camber (°)	-0.45	0.3	1.05
Front Toe (°)	0.16	0.32	0.48
Left SAI (°)	11.97	12.72	13.47
Right SAI (°)	11.97	12.72	13.47
Left Rear Camber (°)	0	0	0
Right Rear Camber (°)	0	0	0
Rear Toe (°)	0	0	0
Thrust Angle	0	0	0

Left Toe Out, Inward (°)	0	0	0
Right Toe Out, Inward (°)	0	0	0
Left Toe Out, Outward (°)	0	0	0
Right Toe Out, Outward (°)	0	-42.48	-40.98
Left Max Turn, Inward (°)	-39.48	-42.48	-40.98
Right Max Turn, Inward (°)	-39.48	36.89	36.89
Left Max Turn, Outward (°)	36.89	36.89	36.89
Right Max Turn, Outward (°)	36.89	-	-

TUNDRA USK57L-CHTSKA P275/65R18 8J (OPT) Double Cab with Long Deck

Measurement	Minimum	Preferred	Maximum
Left Front Caster (°)	1.95	2.7	3.45
Right Front Caster (°)	1.95	2.7	3.45
Left Front Camber (°)	-0.45	0.3	1.05
Right Front Camber (°)	-0.45	0.3	1.05
Front Toe (°)	0.16	0.32	0.48
Left SAI (°)	11.97	12.72	13.47
Right SAI (°)	11.97	12.72	13.47
Left Rear Camber (°)	0	0	0
Right Rear Camber (°)	0	0	0
Rear Toe (°)	0	0	0
Thrust Angle	0	0	0
Left Toe Out, Inward (°)	0	0	0
Right Toe Out, Inward (°)	0	0	0
Left Toe Out, Outward (°)	0	0	0
Right Toe Out, Outward (°)	0	-42.48	-40.98
Left Max Turn, Inward (°)	-39.48	-42.48	-40.98
Right Max Turn, Inward (°)	-39.48	36.89	36.89
Left Max Turn, Outward (°)	36.89	36.89	36.89
Right Max Turn, Outward (°)	36.89	-	-

TIRE PRESSURE WARNING RECEIVER

COMPONENTS

ILLUSTRATION

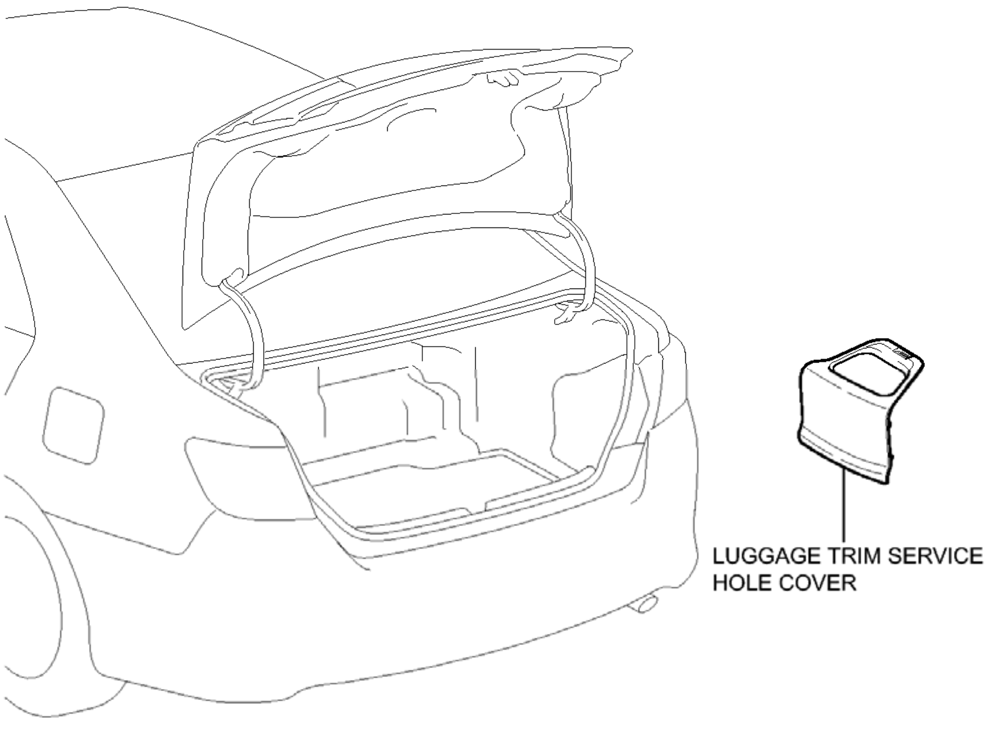
LUGGAGE TRIM SERVICE HOLE COVER
P

Fig. 1: Identifying Tire Pressure Warning Receiver Replacement Components With Torque Specifications (1 Of 2)
Courtesy of TOYOTA MOTOR SALES, U.S.A., INC.

ILLUSTRATION

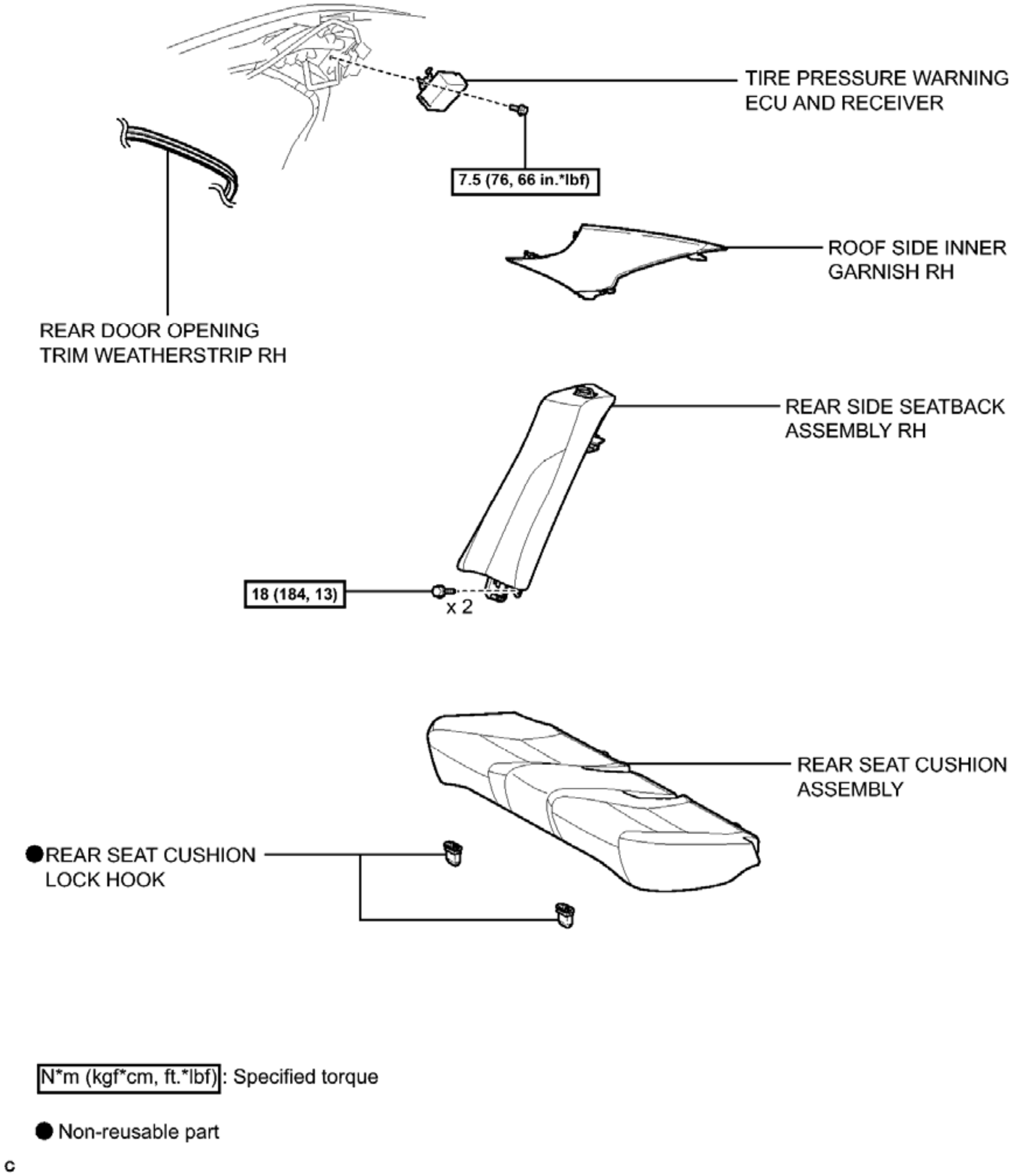
TIRE PRESSURE WARNING ECU AND RECEIVER
7.5 (76, 66 in.*lbf)
ROOF SIDE INNER GARNISH RH
REAR DOOR OPENING TRIM WEATHERSTRIP RH
REAR SIDE SEATBACK ASSEMBLY RH
18 (184, 13)
x 2
REAR SEAT CUSHION ASSEMBLY
● REAR SEAT CUSHION LOCK HOOK
N*m (kgf*cm, ft.*lbf) : Specified torque
● Non-reusable part
c

Fig. 2: Identifying Tire Pressure Warning Receiver Replacement Components With Torque Specifications (2 Of 2)
Courtesy of TOYOTA MOTOR SALES, U.S.A., INC.

REMOVAL

REMOVAL

1. **PRECAUTION**

WARNING: **Be sure to read Precaution thoroughly before servicing.**

for Separate Type Yaw Rate Sensor: Refer to PRECAUTION

for Built-in Type Yaw Rate Sensor: Refer to PRECAUTION

NOTE: **After turning the power switch off, waiting time may be required before disconnecting the cable from the negative (-) auxiliary battery terminal. Therefore, make sure to read the disconnecting the cable from the negative (-) auxiliary battery terminal notices before proceeding with work. Refer to PRECAUTION .**

2. **REMOVE LUGGAGE TRIM SERVICE HOLE COVER** . Refer to **REMOVAL - Step 2**
3. **DISCONNECT CABLE FROM NEGATIVE AUXILIARY BATTERY TERMINAL**

WARNING: **Wait at least 90 seconds after disconnecting the cable from the negative (-) auxiliary battery terminal to disable the SRS system.**

NOTE: **When disconnecting the cable, some systems need to be initialized after the cable is reconnected. Refer to INITIALIZATION .**

4. **REMOVE REAR SEAT CUSHION ASSEMBLY** . Refer to **REMOVAL - Step 4**
5. **REMOVE REAR SEAT CUSHION LOCK HOOK** . Refer to **REMOVAL - Step 5**
6. **REMOVE REAR SIDE SEATBACK ASSEMBLY RH** . Refer to **REMOVAL - Step 10**
7. **DISCONNECT REAR DOOR OPENING TRIM WEATHERSTRIP RH** . Refer to **REMOVAL - Step 14**
8. **REMOVE ROOF SIDE INNER GARNISH RH**

   HINT:

   Use the same procedure as for the LH side. Refer to **REMOVAL - Step 25** .

9. **REMOVE TIRE PRESSURE WARNING ECU AND RECEIVER**
   a. Remove the bolt.

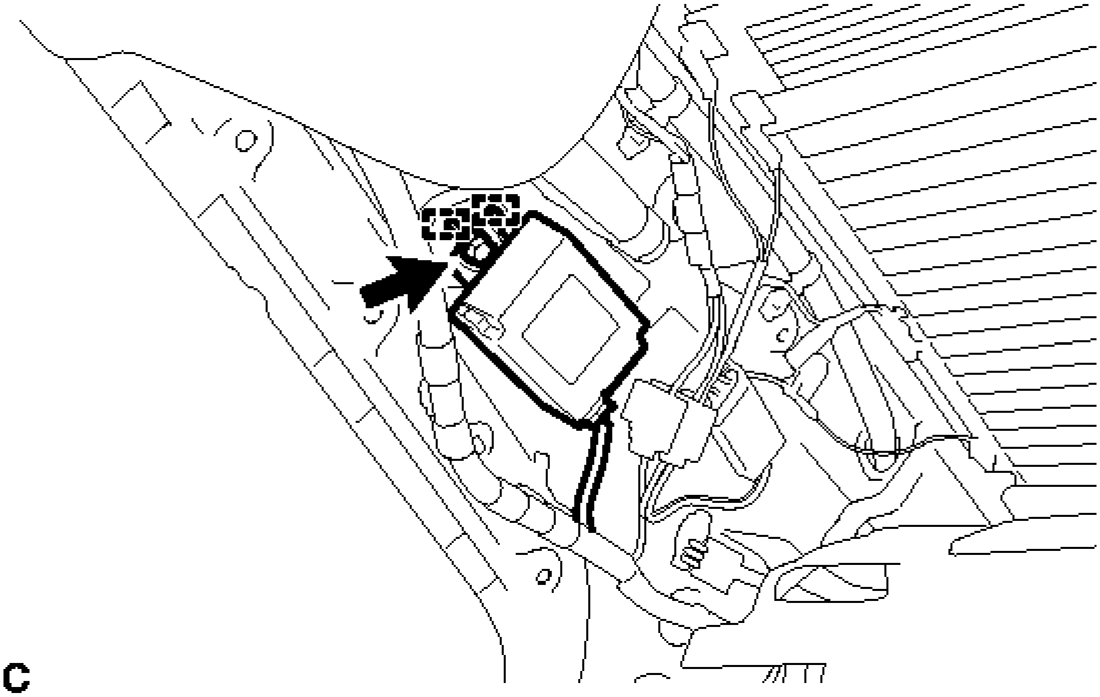

Fig. 3: Identifying Tire Pressure Warning ECU And Receiver Bolt
Courtesy of TOYOTA MOTOR SALES, U.S.A., INC.

b. Disengage the 2 tabs from the holes to remove the tire pressure warning ECU and receiver.
c. Disconnect the connector from the tire pressure warning ECU and receiver.

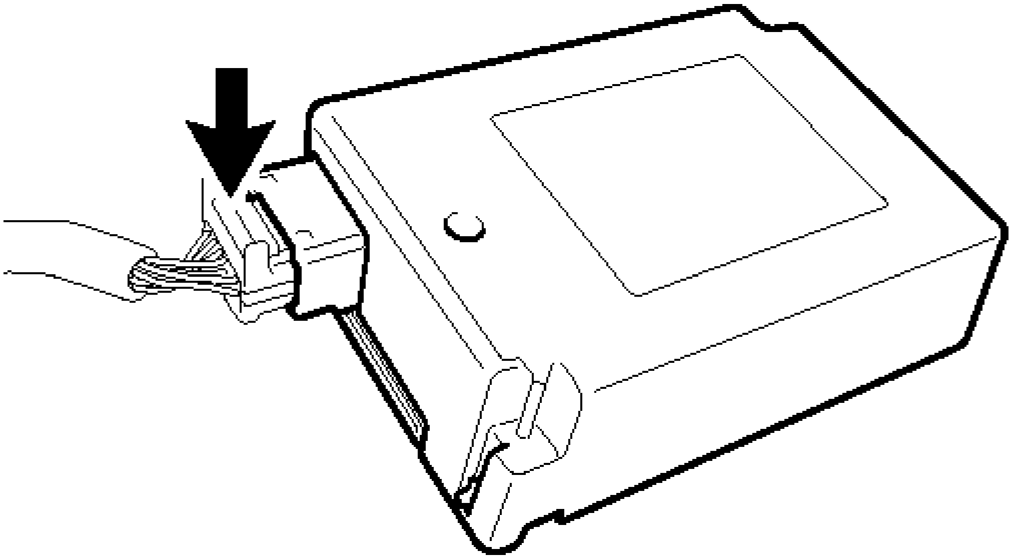

Fig. 4: Identifying Tire Pressure Warning ECU And Receiver Connector

INSTALLATION

INSTALLATION

1. **INSTALL TIRE PRESSURE WARNING ECU AND RECEIVER**
    1. Connect the connector to the tire pressure warning ECU and receiver.
    2. Engage the 2 tabs into the holes to temporarily install the tire pressure warning ECU and receiver.
    3. Install the bolt to install the tire pressure warning ECU and receiver.

       Torque: 7.5 N*m (76 kgf*cm, 66 in.*lbf)
2. **INSTALL ROOF SIDE INNER GARNISH RH**

   HINT:

   Use the same procedure as for the LH side. Refer to **INSTALLATION - Step 21** .
3. **INSTALL REAR DOOR OPENING TRIM WEATHERSTRIP RH** . Refer to **INSTALLATION - Step 33**
4. **INSTALL REAR SIDE SEATBACK ASSEMBLY RH** . Refer to **INSTALLATION - Step 2**
5. **INSTALL REAR SEAT CUSHION LOCK HOOK** . Refer to **INSTALLATION - Step 6**
6. **INSTALL REAR SEAT CUSHION ASSEMBLY** . Refer to **INSTALLATION - Step 7**
7. **CONNECT CABLE TO NEGATIVE AUXILIARY BATTERY TERMINAL**

   NOTE: When disconnecting the cable, some systems need to be initialized after the cable is reconnected. Refer to INITIALIZATION .
8. **INSTALL LUGGAGE TRIM SERVICE HOLE COVER** . Refer to **INSTALLATION - Step 3**
9. **REGISTER TRANSMITTER ID**

   Refer to **REGISTRATION**
10. **INSPECT TIRE PRESSURE WARNING SYSTEM**

    Refer to **TEST MODE PROCEDURE**
11. **PERFORM INITIALIZATION**

    Refer to **INITIALIZATION**
12. **INSPECT SRS WARNING LIGHT**

    for Separate Type Yaw Rate Sensor: Refer to **DIAGNOSIS SYSTEM**

for Built-in Type Yaw Rate Sensor: Refer to **DIAGNOSIS SYSTEM**

TIRE PRESSURE WARNING VALVE

COMPONENTS

ILLUSTRATION

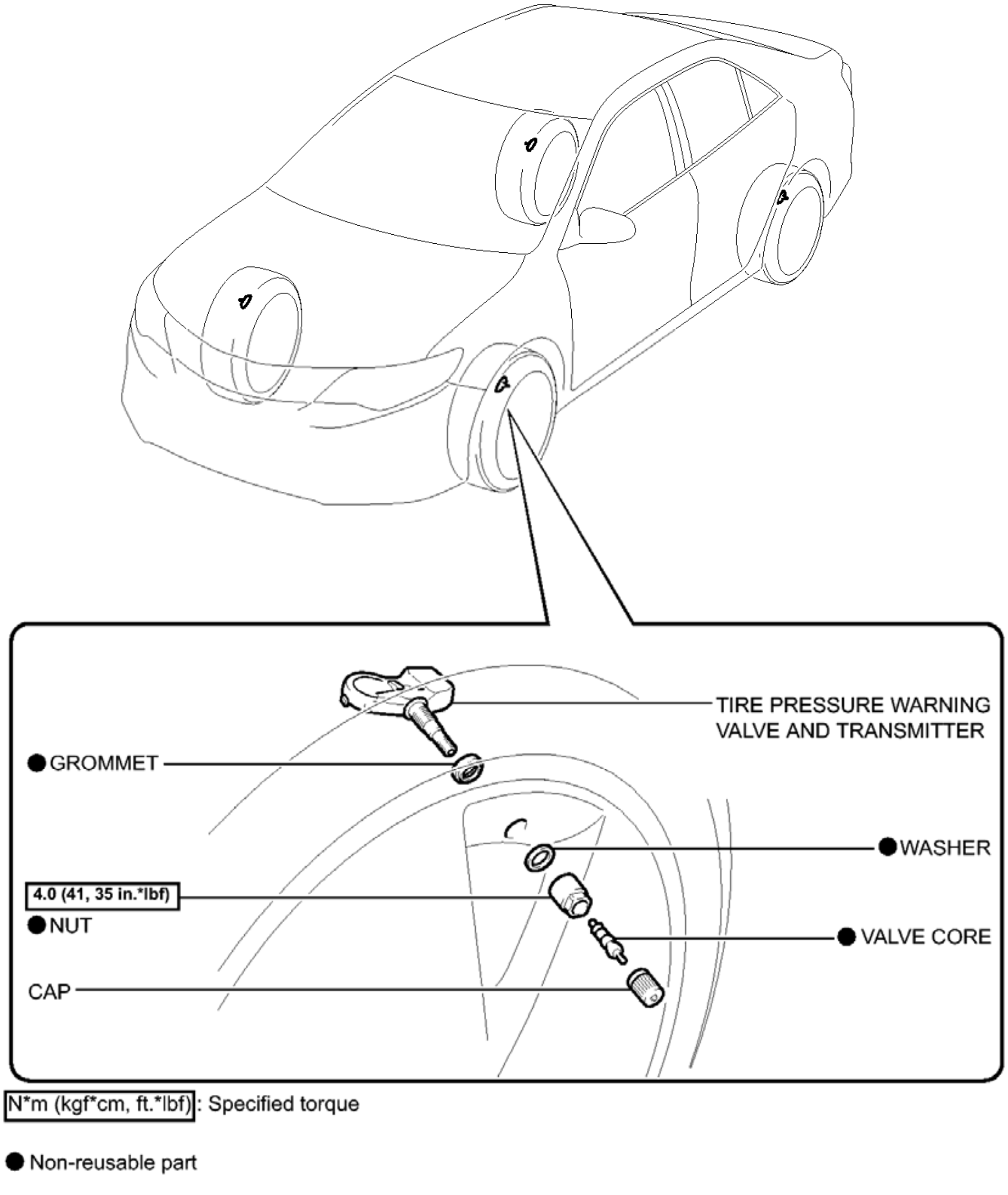
TIRE PRESSURE WARNING VALVE AND TRANSMITTER
● GROMMET
● WASHER
4.0 (41, 35 in.*lbf)
● NUT
● VALVE CORE
CAP
N*m (kgf*cm, ft.*lbf): Specified torque
● Non-reusable part
c

Fig. 5: Identifying Tire Pressure Warning Valve Replacement Components With Torque Specifications

Courtesy of TOYOTA MOTOR SALES, U.S.A., INC.

REMOVAL

REMOVAL

1. **REMOVE FRONT WHEEL**
2. **REMOVE REAR WHEEL**
3. **REMOVE TIRE PRESSURE WARNING VALVE AND TRANSMITTER**
    a. Remove the cap and valve core to release the air from the tire.

    NOTE: **Keep the removed cap.**

    b. After ensuring that a sufficient amount of air has been released, remove the nut and washer used to secure the tire pressure warning valve and transmitter. Drop the tire pressure warning valve and transmitter with the grommet into the tire.

    HINT:

    The grommet may remain attached to the rim.

    c. After dropping the tire pressure warning valve and transmitter into the tire, disengage the bead using the shoe of a tire remover.

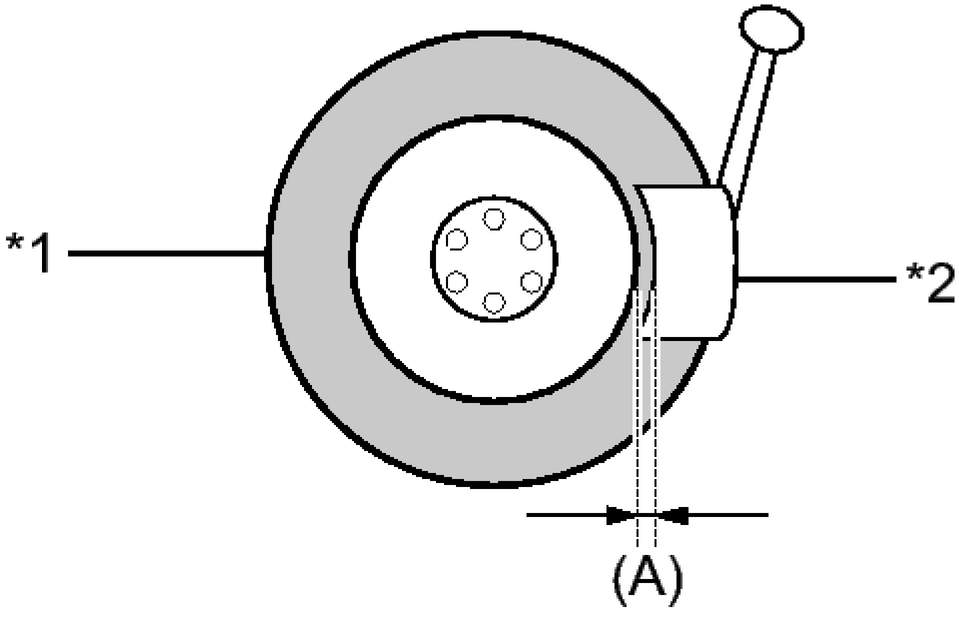

Fig. 6: Identifying Clearance Between Tire And Shoe
Courtesy of TOYOTA MOTOR SALES, U.S.A., INC.

TEXT IN ILLUSTRATION

*1	Tire
*2	Shoe

NOTE:

- **Be careful not to damage the tire pressure warning valve and transmitter due to interference between the valve and the tire bead.**
- **Set the tire remover shoe as shown in the illustration.**

  Width (A)

  10 to 20 mm (0.394 to 0.787 in.)

d. Separate the upper bead.
e. Take out the tire pressure warning valve and transmitter with the grommet from the tire and separate the lower bead.
f. Remove the grommet from the tire pressure warning valve and transmitter.

INSTALLATION

INSTALLATION

NOTE:

- **Always use a new grommet, washer, nut and valve core when installing the tire pressure warning valve and transmitter.**
- **Make sure not to damage the urethane covered backside of the tire pressure warning valve and transmitter (the surface opposite to the side with the ID code) with anything sharp.**
- **If installing a new tire pressure warning valve and transmitter, write down the ID number before installation.**
- **Check that there is no oil, water or lubricant around the rim hole, tire pressure warning valve and transmitter, washer and nut. Failing to do so may result in improper installation.**
- **Use only a specified cap. If an unspecified cap is used, it may seize to the tire pressure warning valve and transmitter.**

1. **INSTALL TIRE PRESSURE WARNING VALVE AND TRANSMITTER**

   a. Install a new grommet to the tire pressure warning valve and transmitter.
   b. Insert the tire pressure warning valve and transmitter into the valve installation hole from the inside of the rim so that the printed surface can be seen.

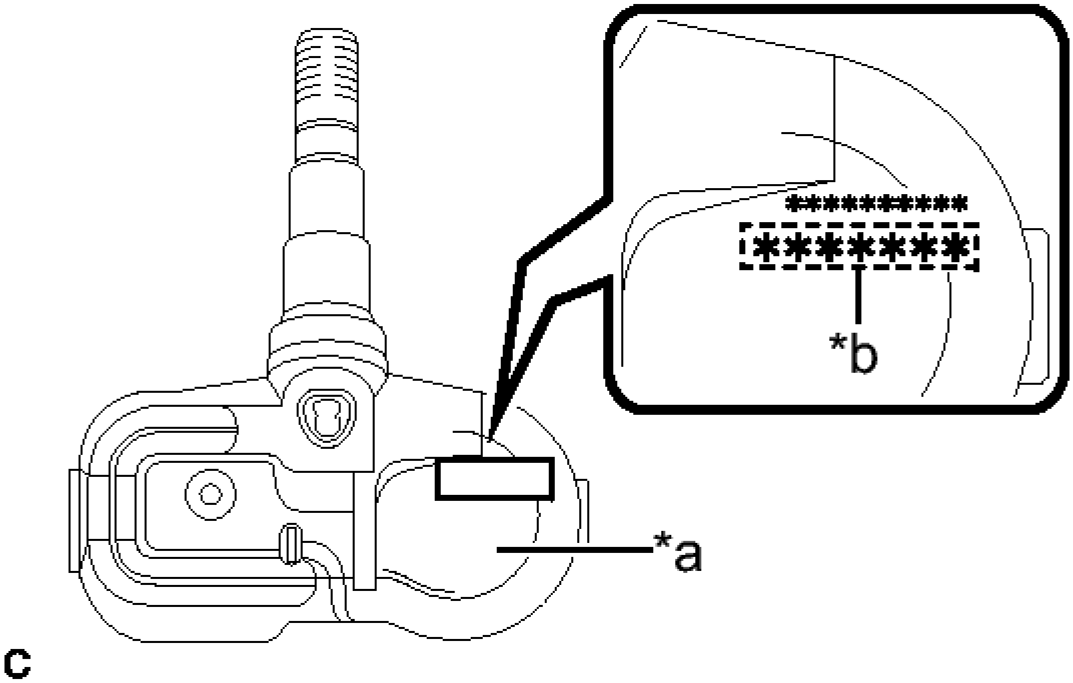

Fig. 7: Printed Surface & 7-digit Number Transmitter ID
Courtesy of TOYOTA MOTOR SALES, U.S.A., INC.

TEXT IN ILLUSTRATION

*a	Printed Surface
*b	7-digit Number Transmitter ID

NOTE:

- **Check that there is no visible deformation, damage, or other abnormalities on the tire pressure warning valve and transmitter.**
- **Check that there is no foreign matter on the grommet and around the rim hole.**
- **If the tire pressure warning valve and transmitter is installed upside down, it may be damaged or fail to transmit signals when driving at high speeds.**

c. From the outside of the rim, install a new washer onto the tire pressure warning valve and transmitter, and tighten a new nut.

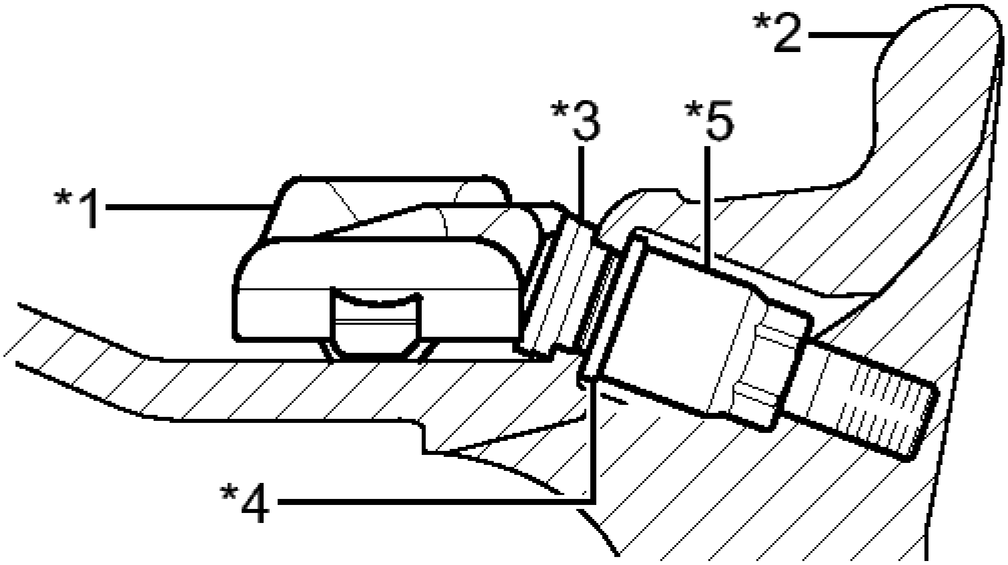

C

Fig. 8: Tire Pressure Warning Valve And Transmitter
Courtesy of TOYOTA MOTOR SALES, U.S.A., INC.

TEXT IN ILLUSTRATION

*1	Tire Pressure Warning Valve and Transmitter
*2	Rim
*3	Grommet
*4	Washer
*5	Nut

Torque: 4.0 N*m (41 kgf*cm, 35 in.*lbf)

NOTE:

- **No further tightening is required once the nut is tightened to the specified torque.**
- **Check that there is no foreign matter on the washer and nut.**

d. Set the wheel onto the mounting machine and install the lower bead. Position the main body of the tire pressure warning valve and transmitter in the shaded area shown in the illustration.

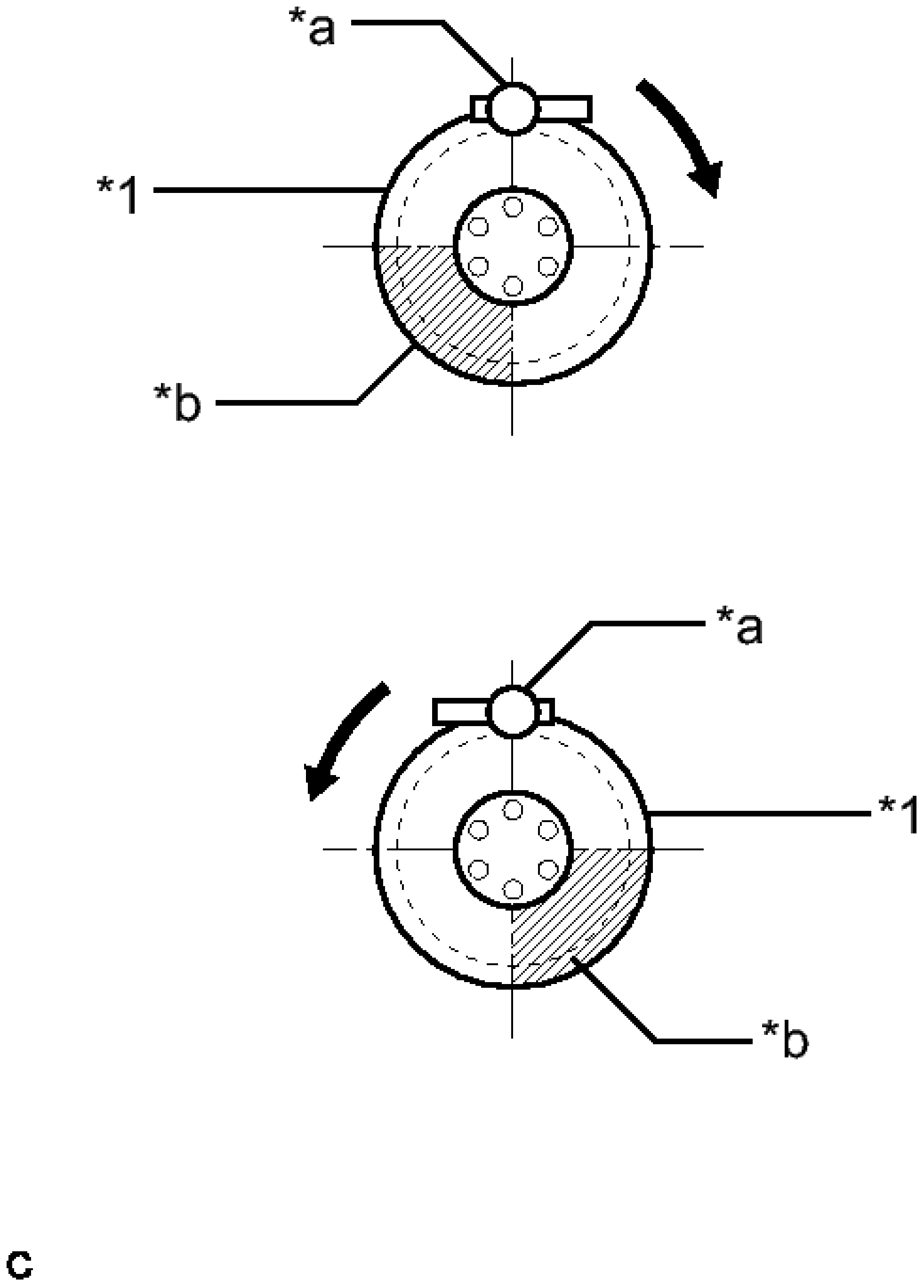

Fig. 9: Identifying Tire Pressure Warning Valve And Transmitter Placement
Courtesy of TOYOTA MOTOR SALES, U.S.A., INC.

TEXT IN ILLUSTRATION

*1	Rim

*a	Mount Tool of the Mounting Machine
*b	Area for Tire Pressure Warning Valve and Transmitter
·	Rim Rotating Direction

NOTE:

- **If the tire pressure warning valve and transmitter is positioned outside this area, it will interfere with the tire bead and may be damaged.**
- **If the use of lubricant is required when installing the bead, do not apply lubricant directly to the tire pressure warning valve and transmitter.**

e. Install the upper bead.

NOTE: **Make sure that the tire bead and tool do not interfere with the main body of the tire pressure warning valve and transmitter and that it is not clamped by the bead.**

f. Install the new valve core.

g. After the tire is inflated, the valve nut may be loose. Retighten the nut to the specified torque.

Torque: 4.0 N*m (41 kgf*cm, 35 in.*lbf)

NOTE: **No further tightening is required once the nut is tightened to the specified torque.**

h. Check for air leaks with soapy water.

If there is air leakage, push the valve core 2 or 3 times to remove any dirt attached to the valve core. If air continues to leak, replace the grommet, washer and nut.

i. Install the cap.

2. **INSTALL FRONT WHEEL**

Torque: 103 N*m (1049 kgf*cm, 76 ft.*lbf)

3. **INSTALL REAR WHEEL**

   Torque: 103 N*m (1049 kgf*cm, 76 ft.*lbf)

4. **INSPECT TIRES** . Refer to **INSPECTION - Step 1**
5. **REGISTER TRANSMITTER ID**

   Refer to **REGISTRATION**

6. **INSPECT TIRE PRESSURE WARNING SYSTEM**

   Refer to **TEST MODE PROCEDURE**

7. **PERFORM INITIALIZATION**

   Refer to **INITIALIZATION**

DISPOSAL

DISPOSAL

HINT:

The tire pressure warning valve and transmitter is powered by a lithium battery. When disposing of the tire pressure warning valve and transmitter, remove the battery and dispose of it correctly.

1. **DISPOSE OF TIRE PRESSURE WARNING VALVE AND TRANSMITTER**
   a. Cut the 2 terminals that connect the battery to the base board to remove the battery.

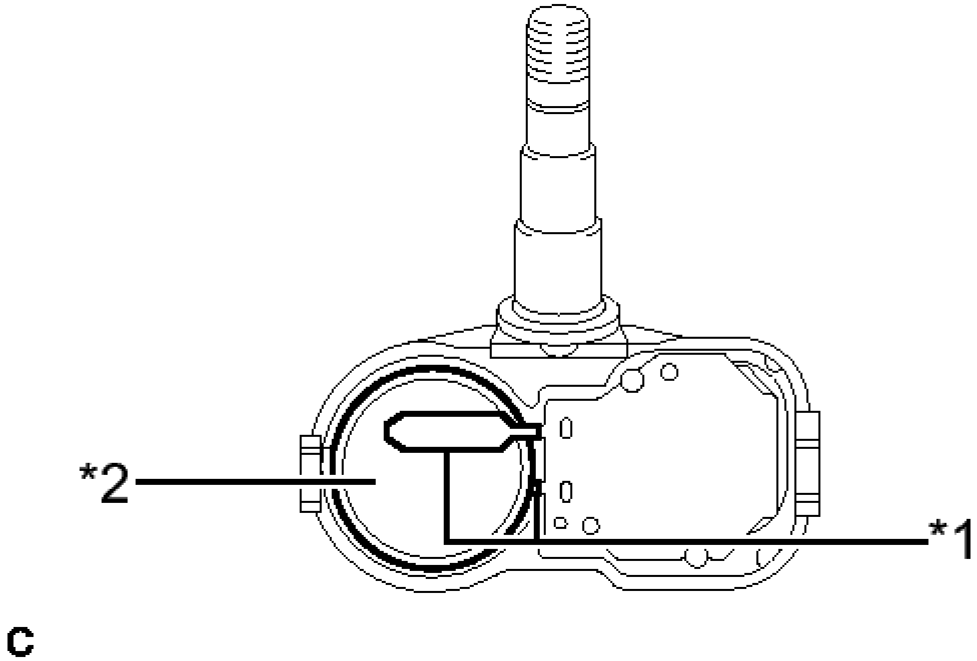

Fig. 10: Terminal & Lithium Battery
Courtesy of TOYOTA MOTOR SALES, U.S.A., INC.

TEXT IN ILLUSTRATION

*1	Terminal
*2	Lithium Battery

HINT:

The battery and base board are covered with urethane.

TIRE PRESSURE WARNING RESET SWITCH

COMPONENTS

ILLUSTRATION

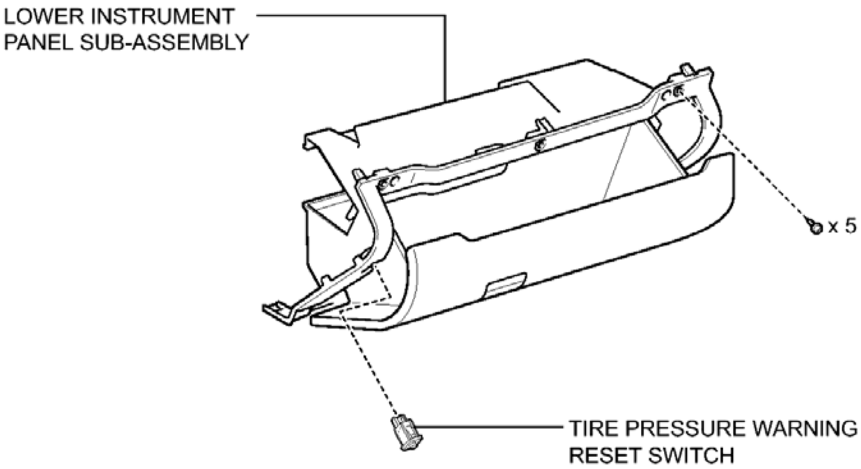
LOWER INSTRUMENT PANEL SUB-ASSEMBLY
x 5
TIRE PRESSURE WARNING RESET SWITCH
c

Fig. 11: Identifying Tire Pressure Warning Reset Switch Replacement Components
Courtesy of TOYOTA MOTOR SALES, U.S.A., INC.

REMOVAL

REMOVAL

1. **REMOVE LOWER NO. 2 INSTRUMENT PANEL AIRBAG ASSEMBLY**

   Refer to **REMOVAL**

2. **REMOVE LOWER INSTRUMENT PANEL SUB-ASSEMBLY** . Refer to **REMOVAL - Step 37**
3. **REMOVE TIRE PRESSURE WARNING RESET SWITCH**
   a. Disengage the 2 claws to remove the tire pressure warning reset switch from the lower instrument panel sub-assembly.

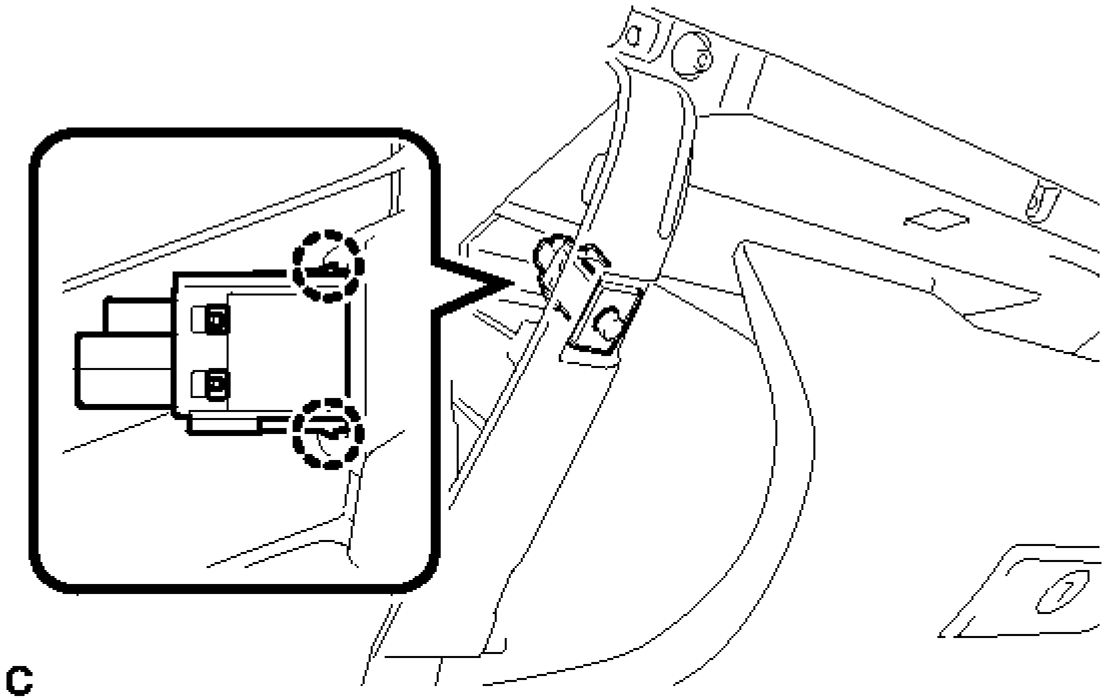

Fig. 12: Identifying Tire Pressure Warning Reset Switch Claws
Courtesy of TOYOTA MOTOR SALES, U.S.A., INC.

INSPECTION

INSPECTION

1. **INSPECT TIRE PRESSURE WARNING RESET SWITCH**
    a. Remove the tire pressure warning reset switch. Refer to **REMOVAL**.

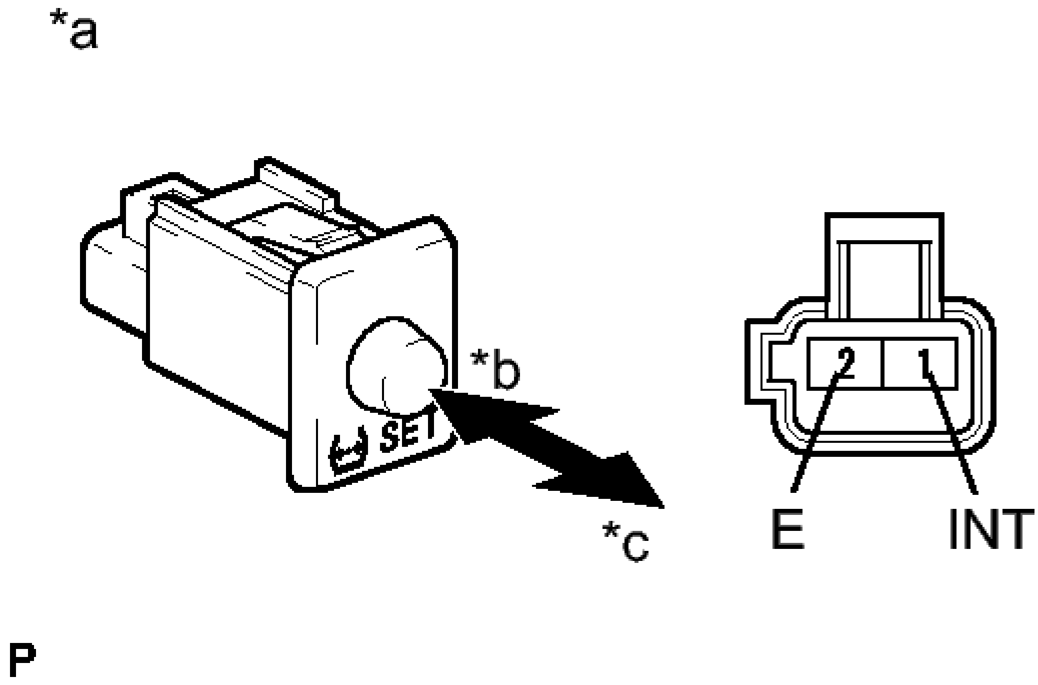

Fig. 13: Identifying Tire Pressure Warning Reset Switch
Courtesy of TOYOTA MOTOR SALES, U.S.A., INC.

b. Measure the resistance according to the value(s) in the table below.

Standard Resistance

Tester Connection	Switch Condition	Specified Condition
1 - 2	ON	Below 1 ohms
	OFF	10 kohms or higher

TEXT IN ILLUSTRATION

*a	Component without harness connected (Tire Pressure Warning Reset Switch)
*b	ON
*c	OFF

INSTALLATION

INSTALLATION

1. **INSTALL TIRE PRESSURE WARNING RESET SWITCH**
    a. Engage the 2 claws to install the tire pressure warning reset switch to the lower instrument panel sub-assembly.
2. **INSTALL LOWER INSTRUMENT PANEL SUB-ASSEMBLY** . Refer to **INSTALLATION - Step 15**
3. **INSTALL LOWER NO. 2 INSTRUMENT PANEL AIRBAG ASSEMBLY**

    Refer to **INSTALLATION**

4. **INSPECT TIRE PRESSURE WARNING SYSTEM**

    Refer to **TEST MODE PROCEDURE**

5. **PERFORM INITIALIZATION**

    Refer to **INITIALIZATION**

2012-2017 SUSPENSION

Tires / Wheel System (Service Information) - Camry (Except Hybrid)

TIRE PRESSURE WARNING RECEIVER

COMPONENTS

ILLUSTRATION

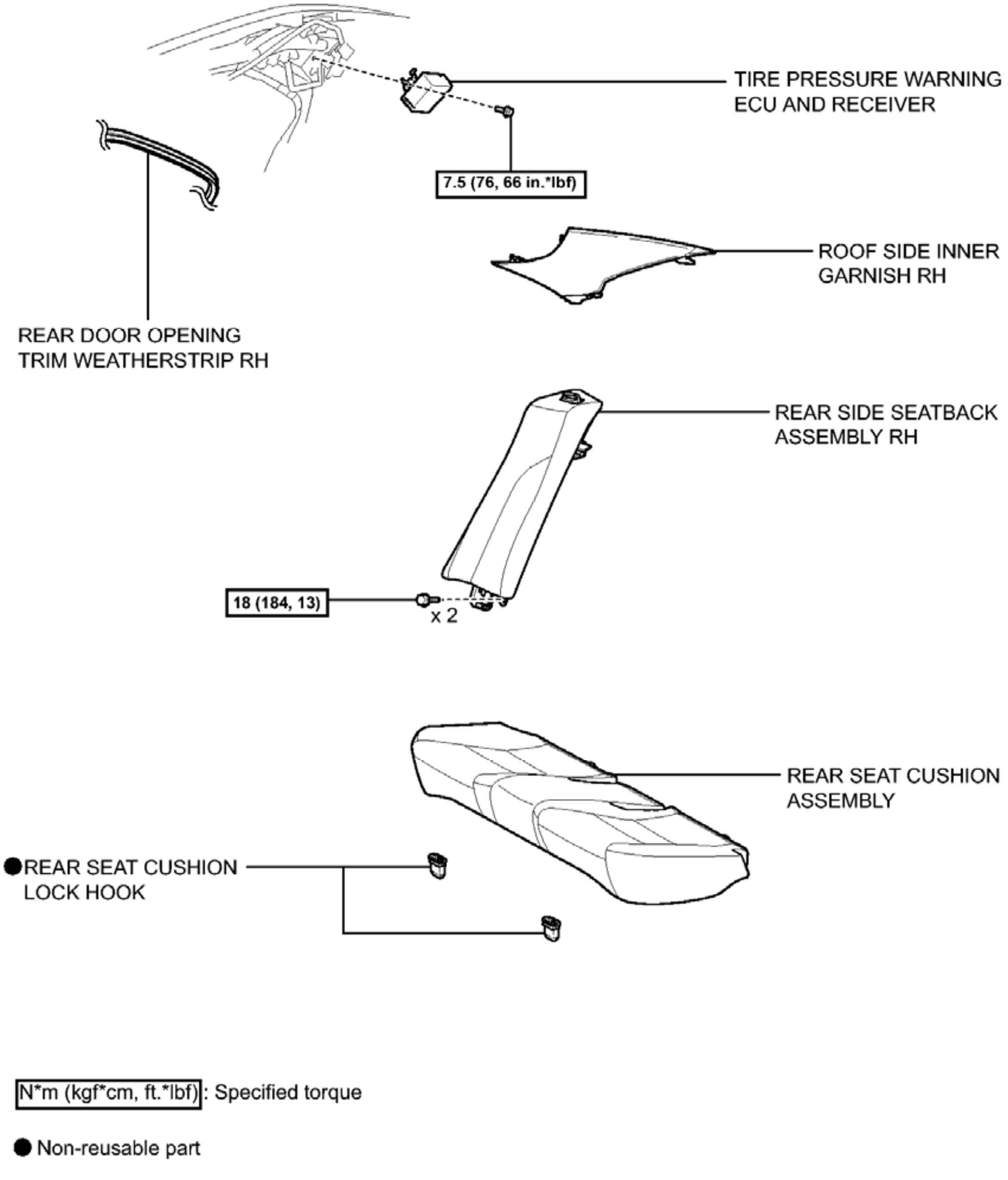
TIRE PRESSURE WARNING ECU AND RECEIVER
7.5 (76, 66 in.*lbf)
ROOF SIDE INNER GARNISH RH
REAR DOOR OPENING TRIM WEATHERSTRIP RH
REAR SIDE SEATBACK ASSEMBLY RH
18 (184, 13)
x 2
REAR SEAT CUSHION ASSEMBLY
● REAR SEAT CUSHION LOCK HOOK
N*m (kgf*cm, ft.*lbf): Specified torque
● Non-reusable part
c

Fig. 1: Identifying Tire Pressure Warning Receiver Replacement Components With Torque Specifications
Courtesy of TOYOTA MOTOR SALES, U.S.A., INC.

REMOVAL

REMOVAL

HINT:

The type of tire pressure warning ECU and receiver used on this model differs according to the specifications of the vehicles. The expressions listed in the table below are used in this service information.

Vehicle Specification	Part Name in Manual	Actual Part Name
w/ Wireless door lock control system	Tire pressure warning ECU and receiver	Door control and tire pressure monitoring system receiver assembly
w/o Wireless door lock control system		Tire pressure monitor receiver assembly

1. **PRECAUTION**

   WARNING: **Be sure to read Precaution thoroughly before servicing.**

   for Separate Type Yaw Rate Sensor: Refer to PRECAUTION

   for Built-in Type Yaw Rate Sensor: Refer to PRECAUTION

   NOTE: **After turning the ignition switch off, waiting time may be required before disconnecting the cable from the negative (-) battery terminal. Therefore, make sure to read the disconnecting the cable from the negative (-) battery terminal notices before proceeding with work. Refer to PRECAUTION .**

2. **DISCONNECT CABLE FROM NEGATIVE BATTERY TERMINAL**

   WARNING: **Wait at least 90 seconds after disconnecting the cable from the negative (-) battery terminal to disable the SRS system.**

   NOTE: **When disconnecting the cable, some systems need to be initialized after the cable is reconnected. Refer to INITIALIZATION .**

3. **REMOVE REAR SEAT CUSHION ASSEMBLY** . Refer to **REMOVAL - Step 3**
4. **REMOVE REAR SEAT CUSHION LOCK HOOK** . Refer to **REMOVAL - Step 4**
5. **REMOVE REAR SIDE SEATBACK ASSEMBLY RH** . Refer to **REMOVAL - Step 9**
6. **DISCONNECT REAR DOOR OPENING TRIM WEATHERSTRIP RH** . Refer to **REMOVAL - Step 13**
7. **REMOVE ROOF SIDE INNER GARNISH RH**

   HINT:

   Use the same procedure as for the LH side. Refer to **REMOVAL - Step 24** .

8. **REMOVE TIRE PRESSURE WARNING ECU AND RECEIVER**
   1. Remove the bolt.

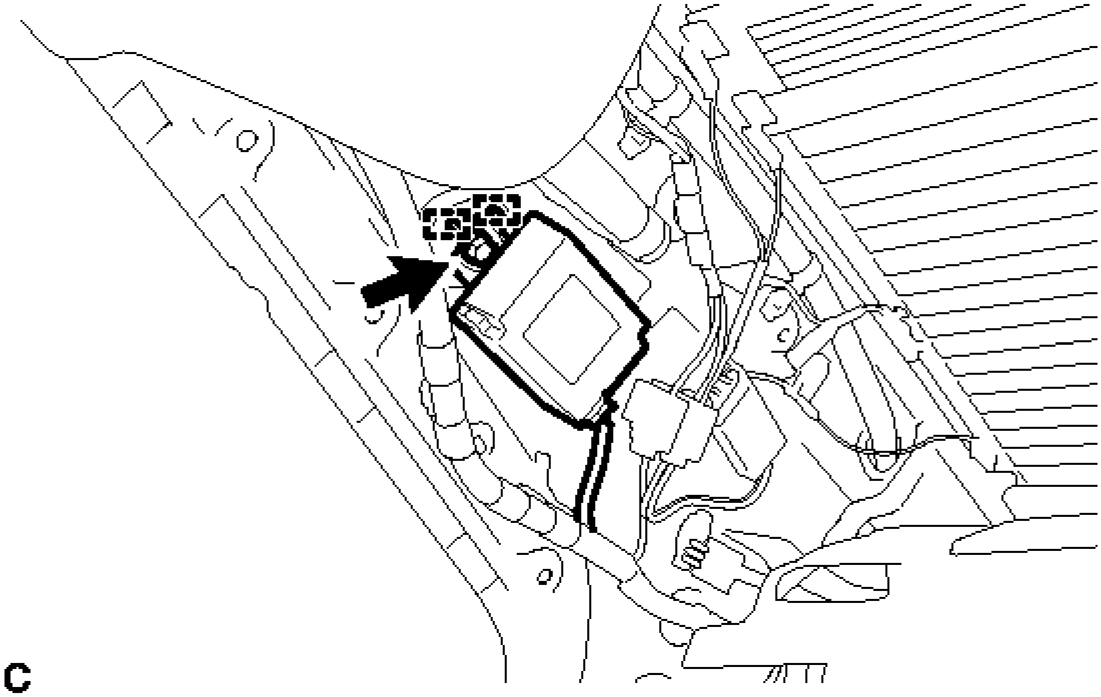

Fig. 2: Identifying Tire Pressure Warning ECU And Receiver Bolt
Courtesy of TOYOTA MOTOR SALES, U.S.A., INC.

b. Disengage the 2 tabs from the holes to remove the tire pressure warning ECU and receiver.
c. Disconnect the connector from the tire pressure warning ECU and receiver.

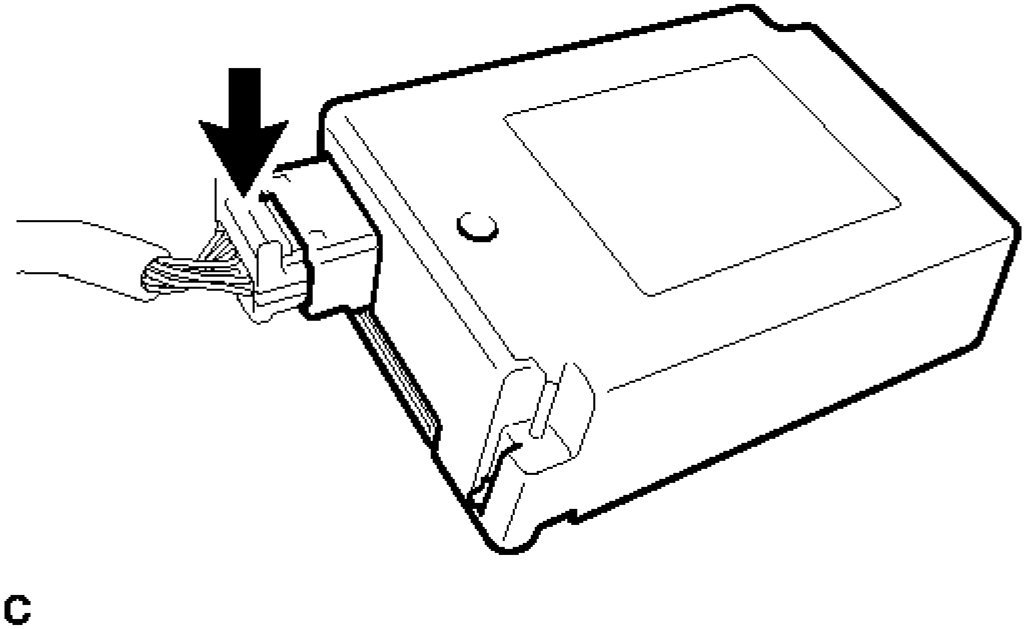

Fig. 3: Identifying Tire Pressure Warning ECU And Receiver Connector

INSTALLATION

INSTALLATION

1. **INSTALL TIRE PRESSURE WARNING ECU AND RECEIVER**
    a. Connect the connector to the tire pressure warning ECU and receiver.
    b. Engage the 2 tabs into the holes to temporarily install the tire pressure warning ECU and receiver.
    c. Install the bolt to install the tire pressure warning ECU and receiver.

    Torque: 7.5 N*m (76 kgf*cm, 66 in.*lbf)

2. **INSTALL ROOF SIDE INNER GARNISH RH**

    HINT:

    Use the same procedure as for the LH side. Refer to **INSTALLATION - Step 20** .

3. **INSTALL REAR DOOR OPENING TRIM WEATHERSTRIP RH** . Refer to **INSTALLATION - Step 32**
4. **INSTALL REAR SIDE SEATBACK ASSEMBLY RH** . Refer to **INSTALLATION - Step 1**
5. **INSTALL REAR SEAT CUSHION LOCK HOOK** . Refer to **INSTALLATION - Step 6**
6. **INSTALL REAR SEAT CUSHION ASSEMBLY** . Refer to **INSTALLATION - Step 7**
7. **CONNECT CABLE TO NEGATIVE BATTERY TERMINAL**

    NOTE: When disconnecting the cable, some systems need to be initialized after the cable is reconnected. Refer to INITIALIZATION .

8. **REGISTER TRANSMITTER ID**

    Refer to **REGISTRATION**

9. **INSPECT TIRE PRESSURE WARNING SYSTEM**

    Refer to **TEST MODE PROCEDURE**

10. **PERFORM INITIALIZATION**

    Refer to **INITIALIZATION**

11. **INSPECT SRS WARNING LIGHT**

    for Separate Type Yaw Rate Sensor: Refer to **DIAGNOSIS SYSTEM**

for Built-in Type Yaw Rate Sensor: Refer to **DIAGNOSIS SYSTEM**

TIRE PRESSURE WARNING VALVE

COMPONENTS

ILLUSTRATION

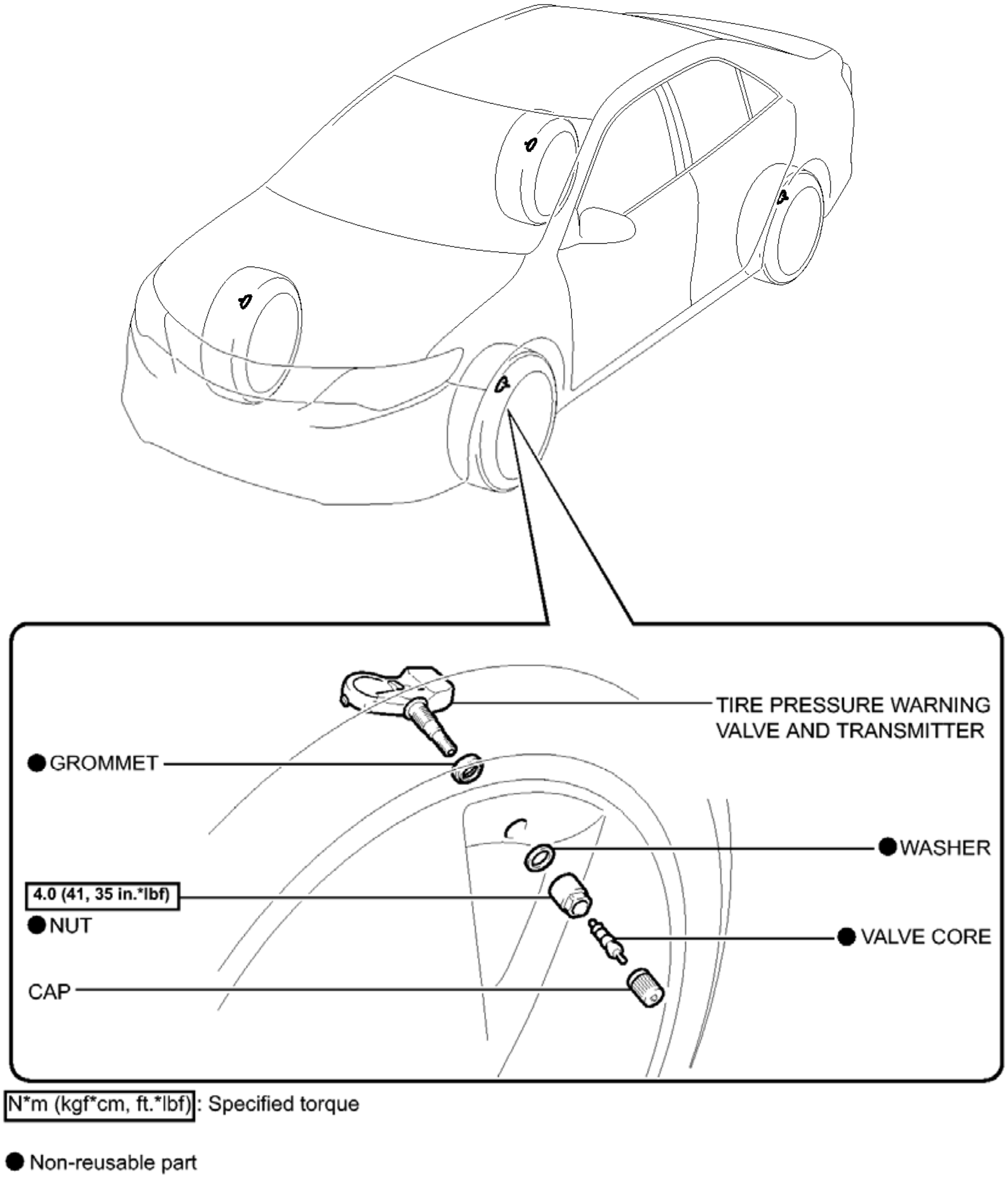
TIRE PRESSURE WARNING VALVE AND TRANSMITTER
● GROMMET
● WASHER
4.0 (41, 35 in.*lbf)
● NUT
● VALVE CORE
CAP
N*m (kgf*cm, ft.*lbf): Specified torque
● Non-reusable part
c

Fig. 4: Identifying Tire Pressure Warning Valve Replacement Components With Torque Specifications

Courtesy of TOYOTA MOTOR SALES, U.S.A., INC.

REMOVAL

REMOVAL

1. **REMOVE FRONT WHEEL**
2. **REMOVE REAR WHEEL**
3. **REMOVE TIRE PRESSURE WARNING VALVE AND TRANSMITTER**
    a. Remove the cap and valve core to release the air from the tire.

    NOTE: Keep the removed cap.

    b. After ensuring that a sufficient amount of air has been released, remove the nut and washer used to secure the tire pressure warning valve and transmitter. Drop the tire pressure warning valve and transmitter with the grommet into the tire.

    HINT:

    The grommet may remain attached to the rim.

    c. After dropping the tire pressure warning valve and transmitter into the tire, disengage the bead using the shoe of a tire remover.

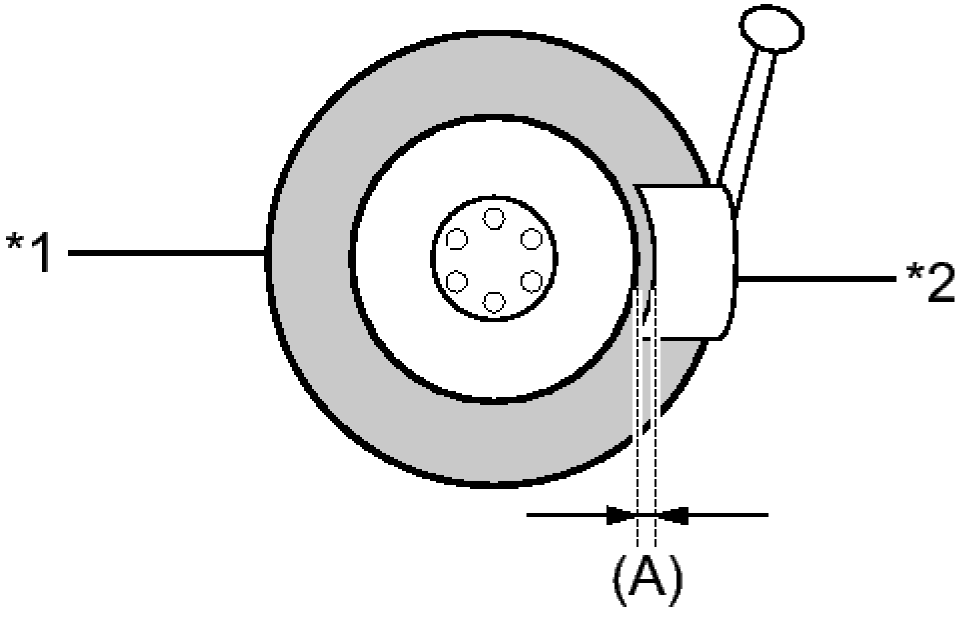

Fig. 5: Identifying Clearance Between Tire And Shoe
Courtesy of TOYOTA MOTOR SALES, U.S.A., INC.

TEXT IN ILLUSTRATION

*1	Tire
*2	Shoe

NOTE:

- **Be careful not to damage the tire pressure warning valve and transmitter due to interference between the valve and the tire bead.**
- **Set the tire remover shoe as shown in the illustration.**

  Width (A)

  10 to 20 mm (0.394 to 0.787 in.)

d. Separate the upper bead.
e. Take out the tire pressure warning valve and transmitter with the grommet from the tire and separate the lower bead.
f. Remove the grommet from the tire pressure warning valve and transmitter.

INSTALLATION

INSTALLATION

NOTE:

- **Always use a new grommet, washer, nut and valve core when installing the tire pressure warning valve and transmitter.**
- **Make sure not to damage the urethane covered backside of the tire pressure warning valve and transmitter (the surface opposite to the side with the ID code) with anything sharp.**
- **If installing a new tire pressure warning valve and transmitter, write down the ID number before installation.**
- **Check that there is no oil, water or lubricant around the rim hole, tire pressure warning valve and transmitter, washer and nut. Failing to do so may result in improper installation.**
- **Use only a specified cap. If an unspecified cap is used, it may seize to the tire pressure warning valve and transmitter.**

1. **INSTALL TIRE PRESSURE WARNING VALVE AND TRANSMITTER**
   a. Install a new grommet to the tire pressure warning valve and transmitter.
   b. Insert the tire pressure warning valve and transmitter into the valve installation hole from the inside of the rim so that the printed surface can be seen.

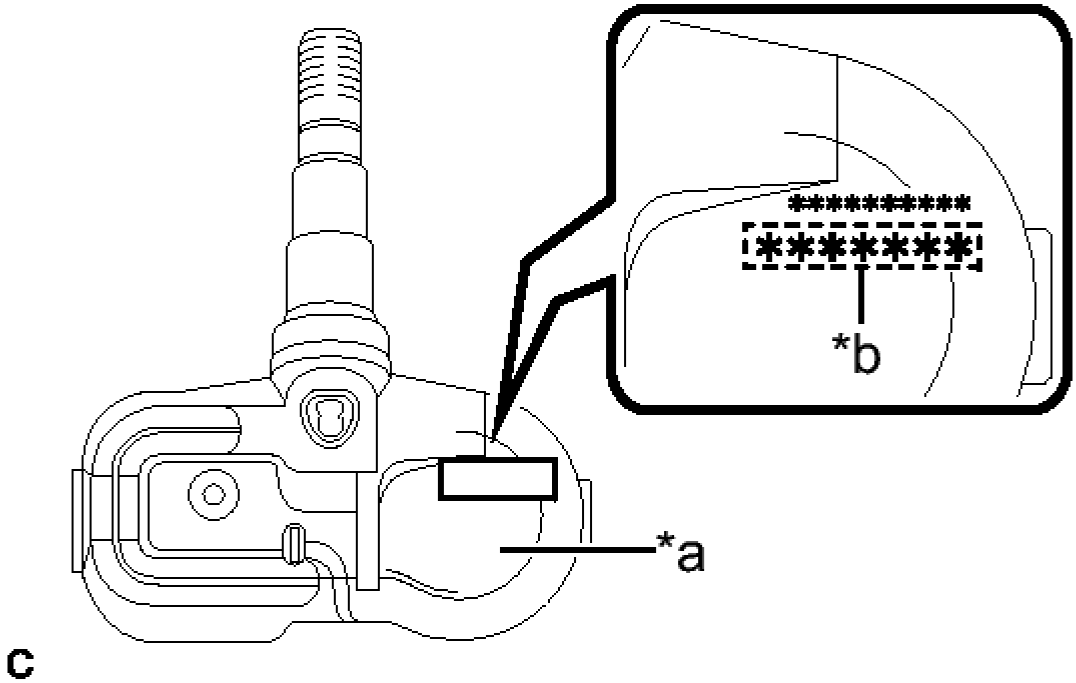

Fig. 6: Printed Surface & 7-digit Number Transmitter ID
Courtesy of TOYOTA MOTOR SALES, U.S.A., INC.

TEXT IN ILLUSTRATION

*a	Printed Surface
*b	7-digit Number Transmitter ID

NOTE:

- **Check that there is no visible deformation, damage, or other abnormalities on the tire pressure warning valve and transmitter.**
- **Check that there is no foreign matter on the grommet and around the rim hole.**
- **If the tire pressure warning valve and transmitter is installed upside down, it may be damaged or fail to transmit signals when driving at high speeds.**

c. From the outside of the rim, install a new washer onto the tire pressure warning valve and transmitter, and tighten a new nut.

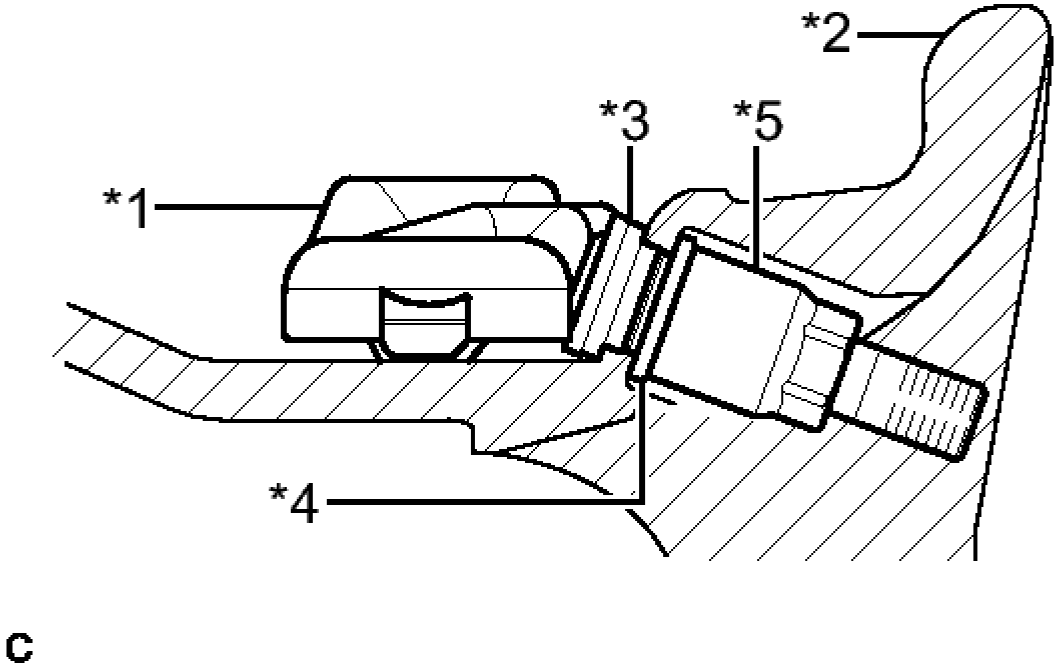

Fig. 7: Tire Pressure Warning Valve And Transmitter
Courtesy of TOYOTA MOTOR SALES, U.S.A., INC.

TEXT IN ILLUSTRATION

*1	Tire Pressure Warning Valve and Transmitter
*2	Rim
*3	Grommet
*4	Washer
*5	Nut

Torque: 4.0 N*m (41 kgf*cm, 35 in.*lbf)

NOTE:

- **No further tightening is required once the nut is tightened to the specified torque.**
- **Check that there is no foreign matter on the washer and nut.**

d. Set the wheel onto the mounting machine and install the lower bead. Position the main body of the tire pressure warning valve and transmitter in the shaded area shown in the illustration.

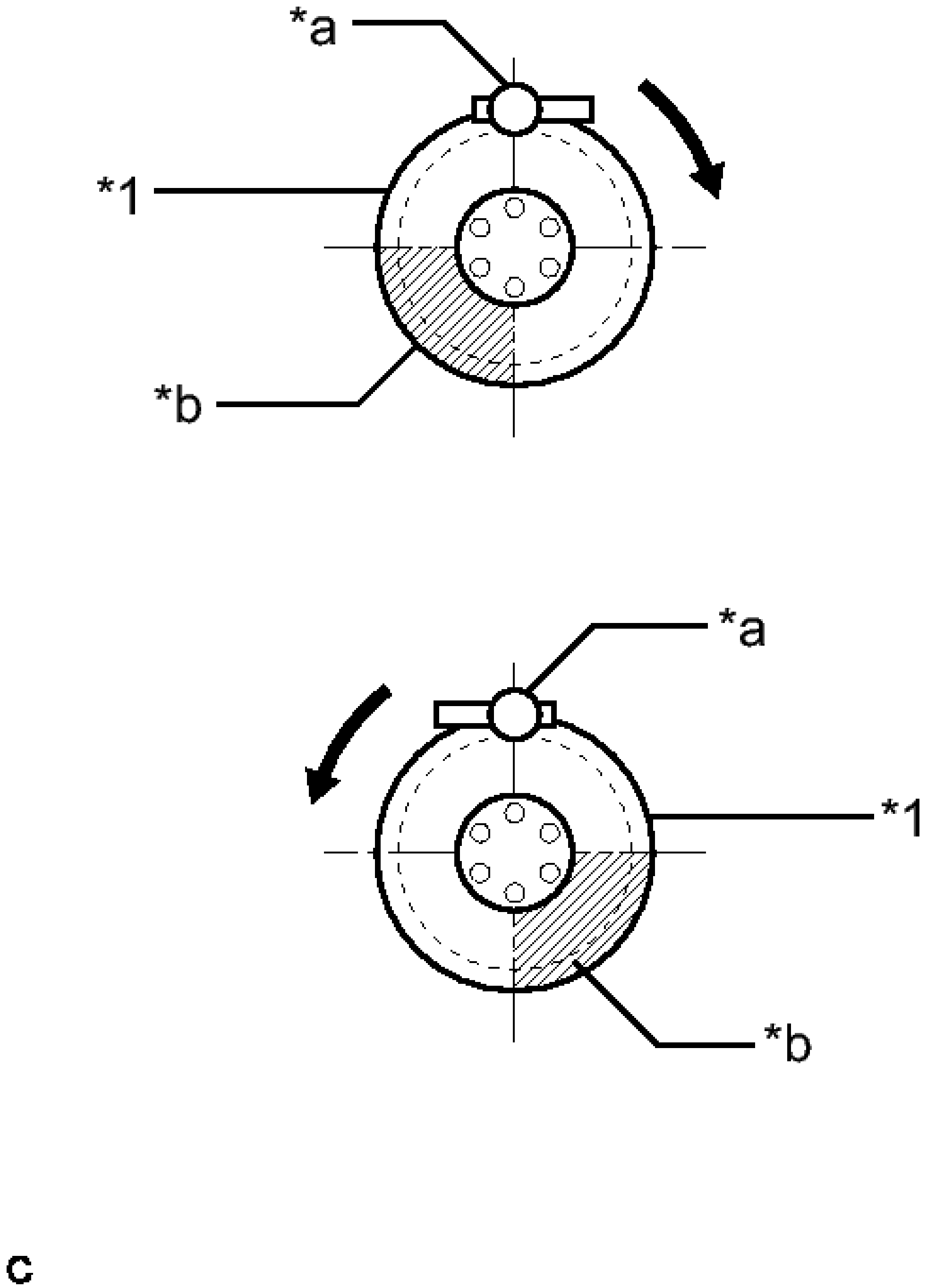

Fig. 8: Identifying Tire Pressure Warning Valve And Transmitter Placement
Courtesy of TOYOTA MOTOR SALES, U.S.A., INC.

TEXT IN ILLUSTRATION

*1	Rim

*a	Mount Tool of the Mounting Machine
*b	Area for Tire Pressure Warning Valve and Transmitter
→	Rim Rotating Direction

NOTE:

- **If the tire pressure warning valve and transmitter is positioned outside this area, it will interfere with the tire bead and may be damaged.**
- **If the use of lubricant is required when installing the bead, do not apply lubricant directly to the tire pressure warning valve and transmitter.**

e. Install the upper bead.

NOTE: **Make sure that the tire bead and tool do not interfere with the main body of the tire pressure warning valve and transmitter and that it is not clamped by the bead.**

f. Install the new valve core.

g. After the tire is inflated, the valve nut may be loose. Retighten the nut to the specified torque.

Torque: 4.0 N*m (41 kgf*cm, 35 in.*lbf)

NOTE: **No further tightening is required once the nut is tightened to the specified torque.**

h. Check for air leaks with soapy water.

If there is air leakage, push the valve core 2 or 3 times to remove any dirt attached to the valve core. If air continues to leak, replace the grommet, washer and nut.

i. Install the cap.

2. **INSTALL FRONT WHEEL**

Torque: 103 N*m (1049 kgf*cm, 76 ft.*lbf)

3. **INSTALL REAR WHEEL**

   Torque: 103 N*m (1049 kgf*cm, 76 ft.*lbf)

4. **INSPECT TIRES** . Refer to **INSPECTION - Step 1**
5. **REGISTER TRANSMITTER ID**

   Refer to **REGISTRATION**

6. **INSPECT TIRE PRESSURE WARNING SYSTEM**

   Refer to **TEST MODE PROCEDURE**

7. **PERFORM INITIALIZATION**

   Refer to **INITIALIZATION**

DISPOSAL

DISPOSAL

HINT:

The tire pressure warning valve and transmitter is powered by a lithium battery. When disposing of the tire pressure warning valve and transmitter, remove the battery and dispose of it correctly.

1. **DISPOSE OF TIRE PRESSURE WARNING VALVE AND TRANSMITTER**
   a. Cut the 2 terminals that connect the battery to the base board to remove the battery.

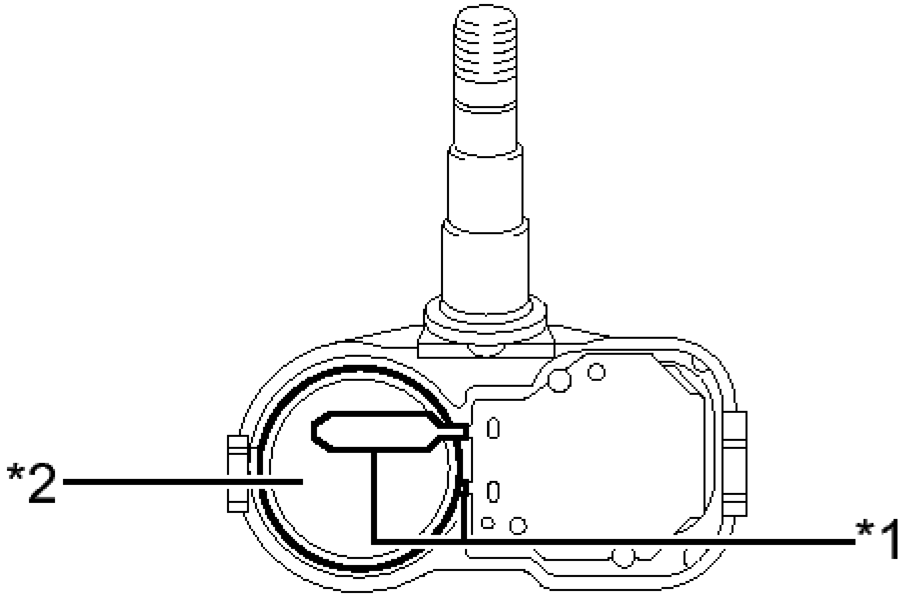

C

Fig. 9: Terminal & Lithium Battery
Courtesy of TOYOTA MOTOR SALES, U.S.A., INC.

TEXT IN ILLUSTRATION

*1	Terminal
*2	Lithium Battery

HINT:

The battery and base board are covered with urethane.

TIRE PRESSURE WARNING RESET SWITCH

COMPONENTS

ILLUSTRATION

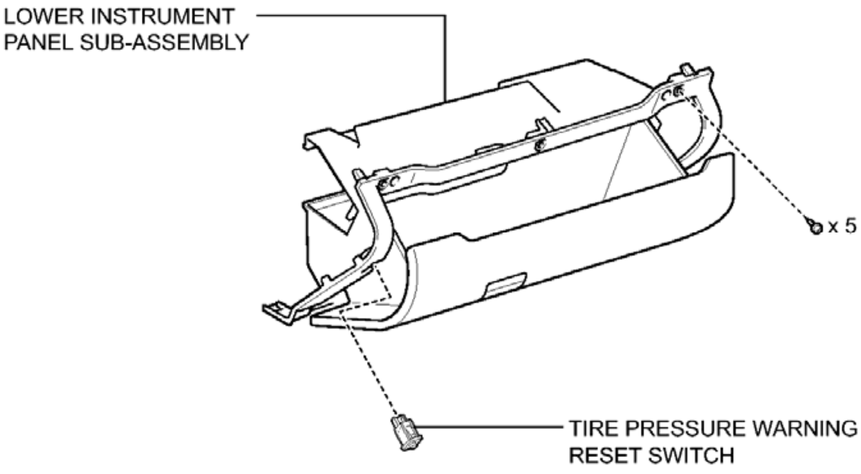
LOWER INSTRUMENT PANEL SUB-ASSEMBLY
x 5
TIRE PRESSURE WARNING RESET SWITCH

c

Fig. 10: Identifying Tire Pressure Warning Reset Switch Replacement Components
Courtesy of TOYOTA MOTOR SALES, U.S.A., INC.

REMOVAL

REMOVAL

1. **REMOVE LOWER NO. 2 INSTRUMENT PANEL AIRBAG ASSEMBLY**

   Refer to **REMOVAL**

2. **REMOVE LOWER INSTRUMENT PANEL SUB-ASSEMBLY** . Refer to **REMOVAL - Step 38**
3. **REMOVE TIRE PRESSURE WARNING RESET SWITCH**
   1. Disengage the 2 claws to remove the tire pressure warning reset switch from the lower instrument panel sub-assembly.

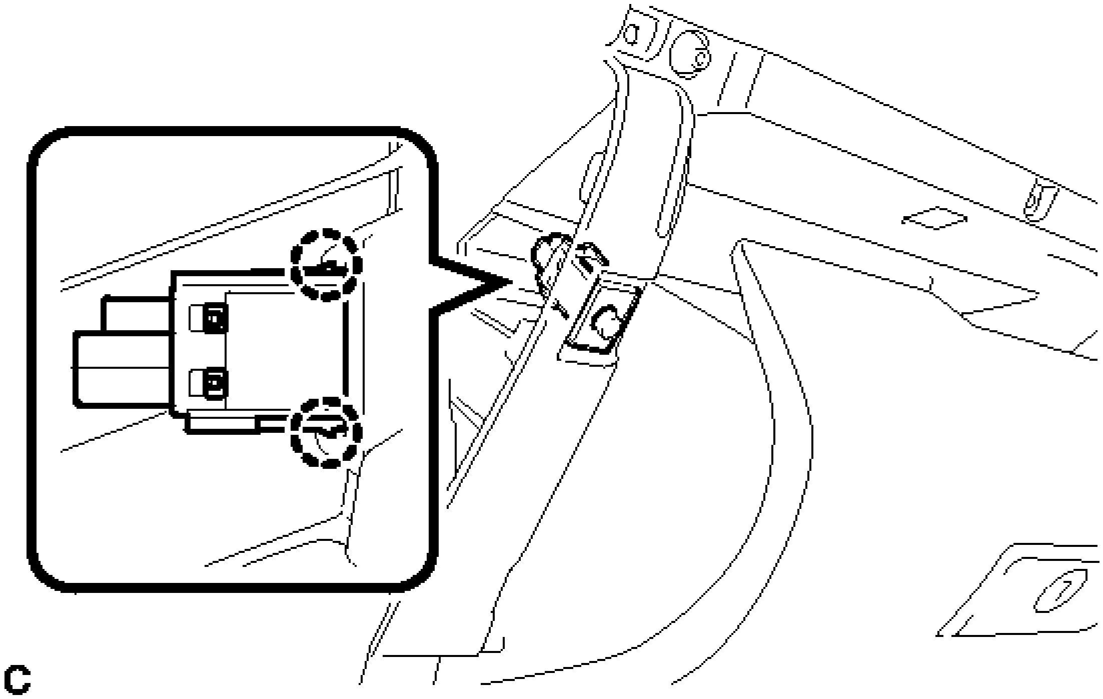

Fig. 11: Identifying Tire Pressure Warning Reset Switch Claws
Courtesy of TOYOTA MOTOR SALES, U.S.A., INC.

INSPECTION

INSPECTION

1. **INSPECT TIRE PRESSURE WARNING RESET SWITCH**
    a. Remove the tire pressure warning reset switch. Refer to **REMOVAL**.

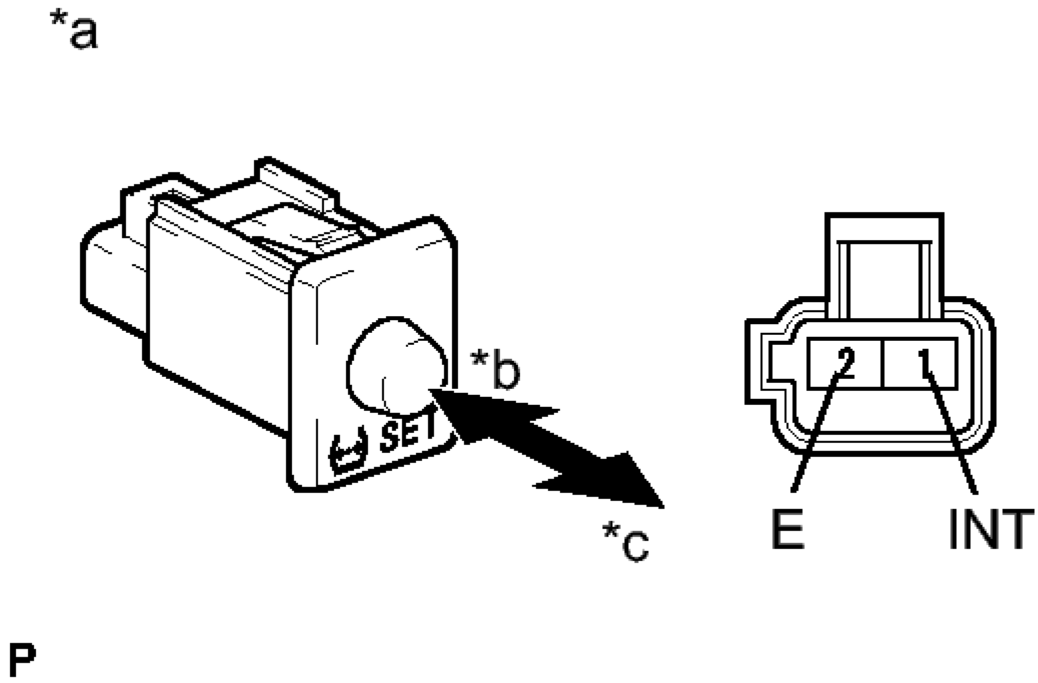

Fig. 12: Tire Pressure Warning Reset Switch Connector End View
Courtesy of TOYOTA MOTOR SALES, U.S.A., INC.

b. Measure the resistance according to the value(s) in the table below.

Standard Resistance

Tester Connection	Switch Condition	Specified Condition
1 - 2	ON	Below 1 ohms
	OFF	10 kohms or higher

TEXT IN ILLUSTRATION

*a	Component without harness connected (Tire Pressure Warning Reset Switch)
*b	ON
*c	OFF

INSTALLATION

INSTALLATION

1. **INSTALL TIRE PRESSURE WARNING RESET SWITCH**
    1. Engage the 2 claws to install the tire pressure warning reset switch to the lower instrument panel sub-assembly.
2. **INSTALL LOWER INSTRUMENT PANEL SUB-ASSEMBLY** . Refer to **INSTALLATION - Step 15**
3. **INSTALL LOWER NO. 2 INSTRUMENT PANEL AIRBAG ASSEMBLY**

    Refer to **INSTALLATION**

4. **INSPECT TIRE PRESSURE WARNING SYSTEM**

    Refer to **TEST MODE PROCEDURE**

5. **PERFORM INITIALIZATION**

    Refer to **INITIALIZATION**

2012-2017 ENGINE

Vacuum Switching Valve (For Intake Air Control System) (Service Information) - Camry (2GR-FE)

VACUUM SWITCHING VALVE (FOR INTAKE AIR CONTROL SYSTEM)

COMPONENTS

ILLUSTRATION

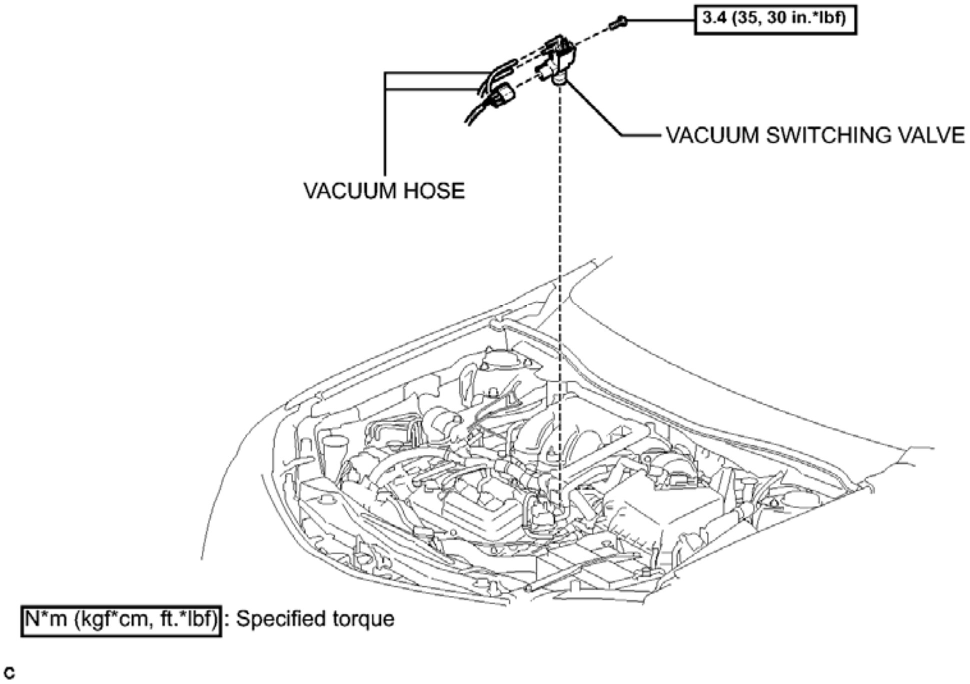
3.4 (35, 30 in.*lbf)
VACUUM SWITCHING VALVE
VACUUM HOSE
N*m (kgf*cm, ft.*lbf): Specified torque
c

Fig. 1: Identifying Vacuum Valve Replacement Components With Torque Specifications (For Intake Air Control System)
Courtesy of TOYOTA MOTOR SALES, U.S.A., INC.

REMOVAL

REMOVAL

1. **REMOVE VACUUM SWITCHING VALVE**
    a. Disconnect the connector and 2 vacuum hoses.

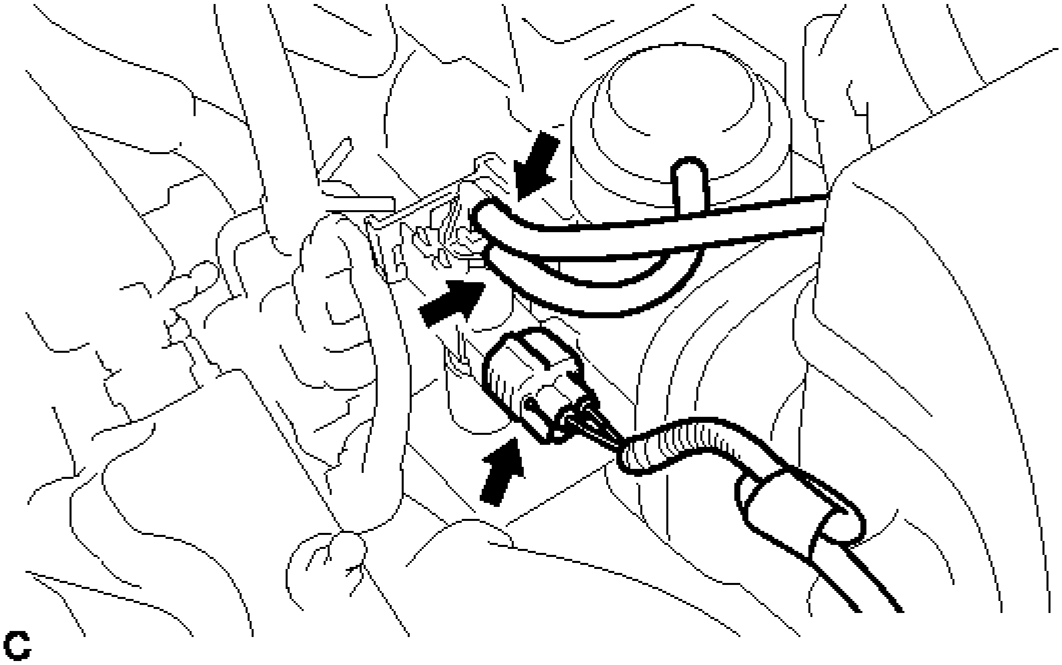

Fig. 2: Identifying Vacuum Switching Valve Connector And Hoses
Courtesy of TOYOTA MOTOR SALES, U.S.A., INC.

b. Remove the bolt and vacuum switching valve.

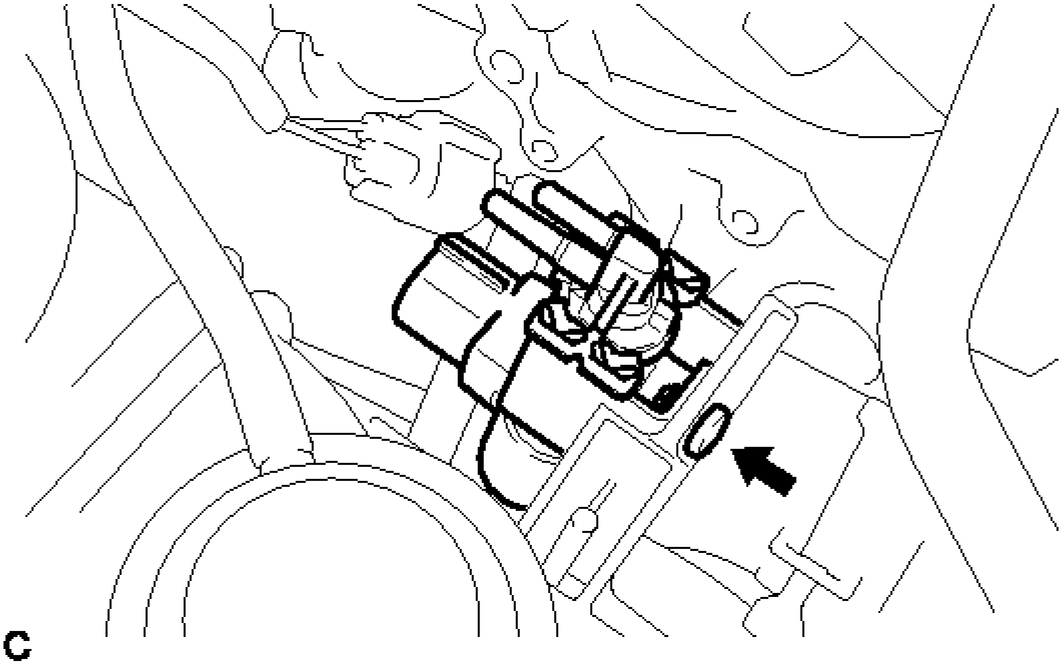

Fig. 3: Identifying Vacuum Switching Valve Bolt
Courtesy of TOYOTA MOTOR SALES, U.S.A., INC.

INSPECTION

INSPECTION

1. **INSPECT VACUUM SWITCHING VALVE**
   a. Measure the resistance according to the value(s) in the table below.

      Standard Resistance

Tester Connection	Condition	Specified Condition
1 - 2	20°C (68°F)	37 to 44 ohms
1 - Valve body	Always	10 kohms or higher
2 - Valve body		

      If the result is not as specified, replace the vacuum switching valve.

   b. Using a vacuum pump, check that air flows through the vacuum switching valve as specified.

      OK

Measurement Condition	Specified Condition
Battery voltage applied between terminals 1 and 2 and vacuum applied to port F.	Air is sucked into port E.
Battery voltage not applied between terminals 1 and 2 and vacuum applied to port E.	Air is sucked into filter.

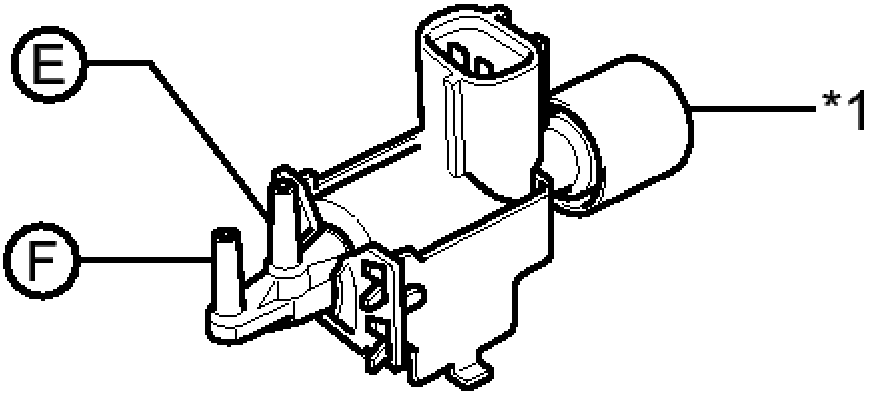

Fig. 4: Inspecting Vacuum Switching Valve Filter
Courtesy of TOYOTA MOTOR SALES, U.S.A., INC.

TEXT IN ILLUSTRATION

*1	Filter

If the result is not as specified, replace the vacuum switching valve.

INSTALLATION

INSTALLATION

1. **INSTALL VACUUM SWITCHING VALVE**
   a. Install the vacuum switching valve with the bolt.

      Torque: 3.4 N*m (35 kgf*cm, 30 in.*lbf)

   b. Connect the 2 vacuum hoses and connector.

VEHICLE APPROACHING SPEAKER ECU

COMPONENTS

ILLUSTRATION

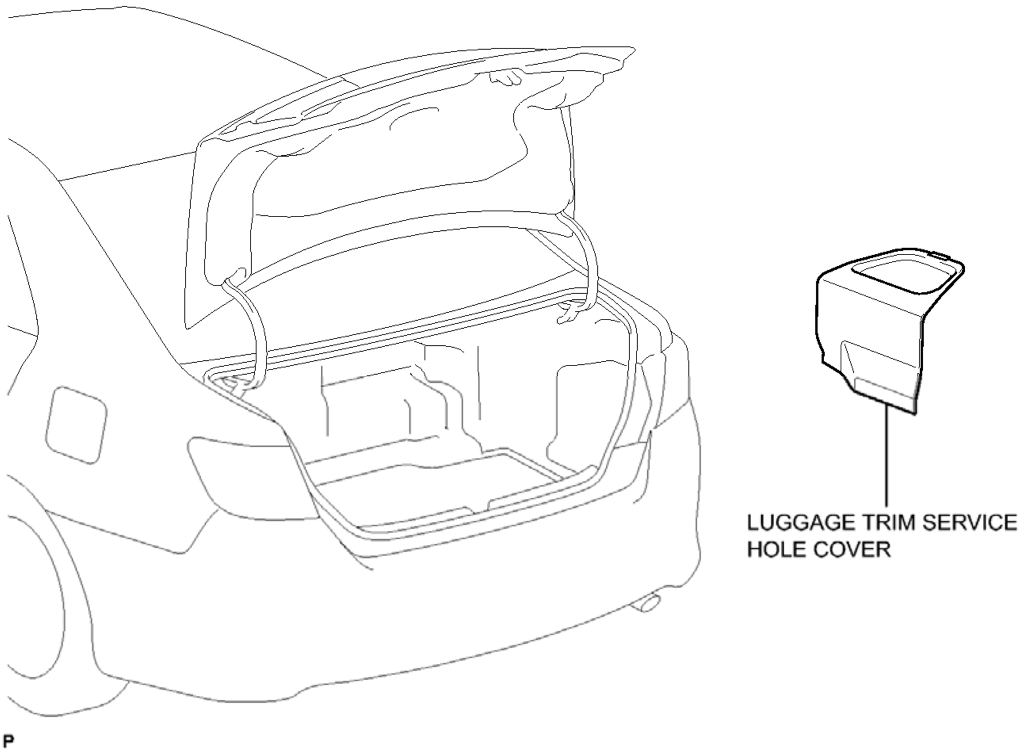

Fig. 1: Identifying Vehicle Approaching Speaker ECU Replacement Components With Torque Specifications (1 Of 3)
Courtesy of TOYOTA MOTOR SALES, U.S.A., INC.

ILLUSTRATION

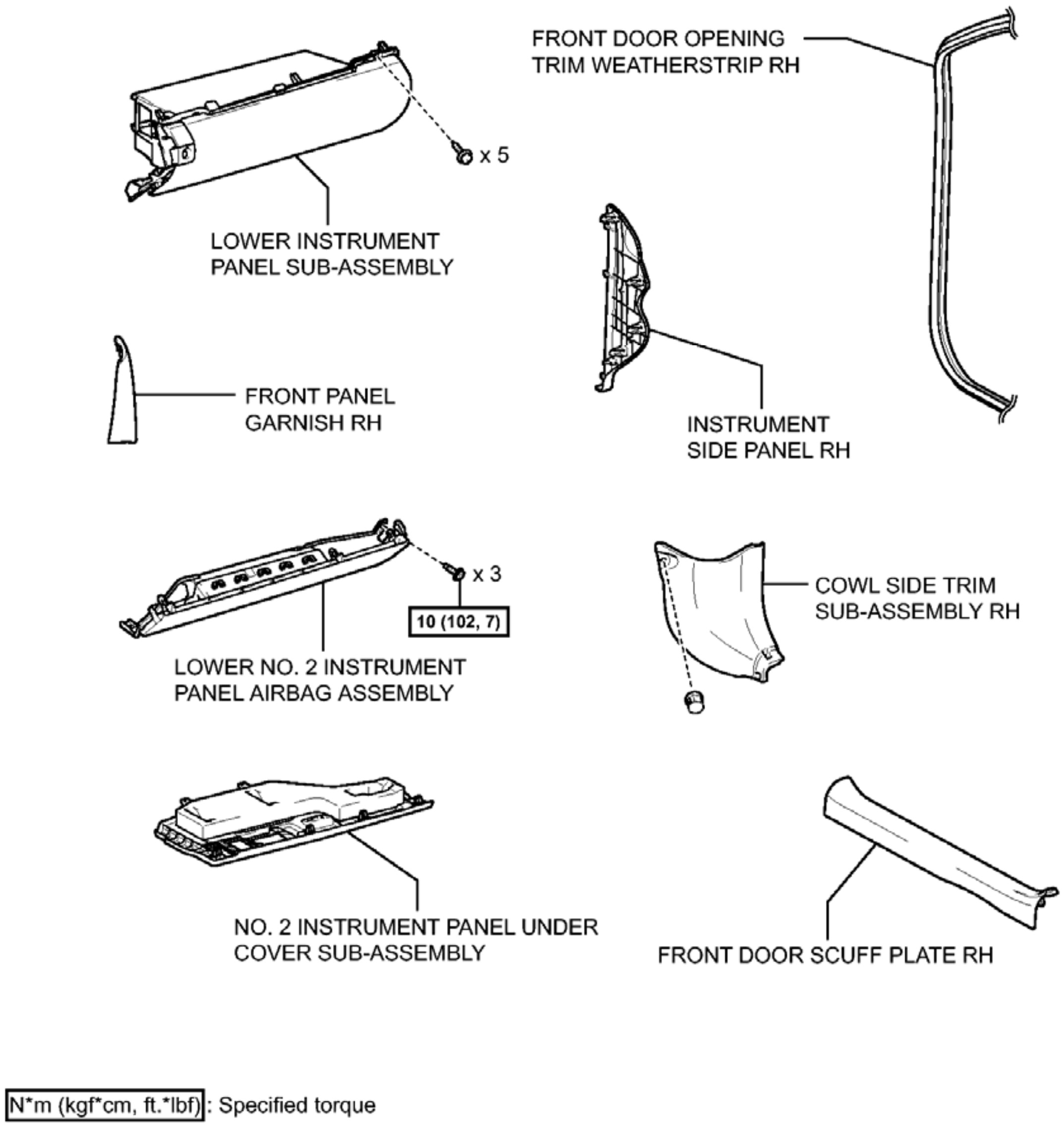
FRONT DOOR OPENING TRIM WEATHERSTRIP RH
x 5
LOWER INSTRUMENT PANEL SUB-ASSEMBLY
FRONT PANEL GARNISH RH
INSTRUMENT SIDE PANEL RH
x 3
10 (102, 7)
COWL SIDE TRIM SUB-ASSEMBLY RH
LOWER NO. 2 INSTRUMENT PANEL AIRBAG ASSEMBLY
NO. 2 INSTRUMENT PANEL UNDER COVER SUB-ASSEMBLY
FRONT DOOR SCUFF PLATE RH
N*m (kgf*cm, ft.*lbf): Specified torque

P

Fig. 2: Identifying Vehicle Approaching Speaker ECU Replacement Components With Torque Specifications (2 Of 3)
Courtesy of TOYOTA MOTOR SALES, U.S.A., INC.

ILLUSTRATION

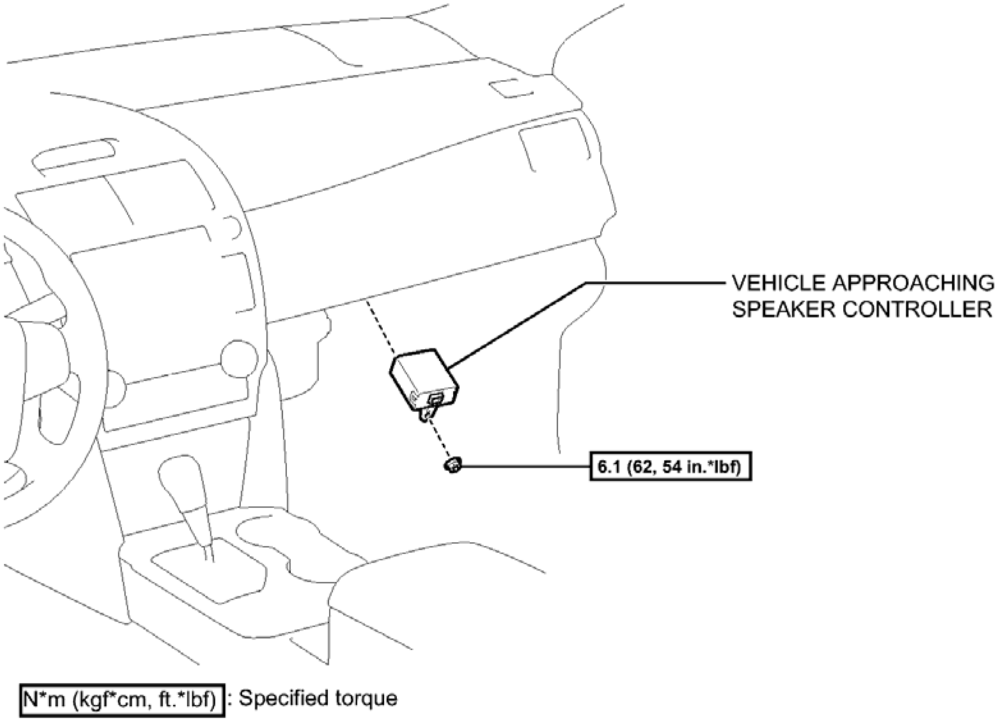
VEHICLE APPROACHING SPEAKER CONTROLLER
6.1 (62, 54 in.*lbf)
N*m (kgf*cm, ft.*lbf) : Specified torque
P

Fig. 3: Identifying Vehicle Approaching Speaker ECU Replacement Components With Torque Specifications (3 Of 3)
Courtesy of TOYOTA MOTOR SALES, U.S.A., INC.

REMOVAL

REMOVAL

1. **PRECAUTION**

   NOTE: **After turning the power switch off, waiting time may be required before disconnecting the cable from the negative (-) auxiliary battery terminal. Therefore, make sure to read the disconnecting the cable from the negative (-) auxiliary battery terminal notices before proceeding with work. Refer to PRECAUTION .**

2. **REMOVE LUGGAGE TRIM SERVICE HOLE COVER** . Refer to **REMOVAL - Step 2**
3. **DISCONNECT CABLE FROM AUXILIARY BATTERY NEGATIVE TERMINAL**

   WARNING: **Wait at least 90 seconds after disconnecting the cable from the negative (-) auxiliary battery terminal to disable the SRS system.**

   NOTE: **When disconnecting the cable, some systems need to be initialized after the cable is reconnected. Refer to INITIALIZATION .**

4. **REMOVE FRONT DOOR SCUFF PLATE RH**

   HINT:

   Use the same procedure as for the LH side. Refer to **REMOVAL - Step 4** .

5. **REMOVE COWL SIDE TRIM SUB-ASSEMBLY RH**

   HINT:

   Use the same procedure as for the LH side. Refer to **REMOVAL - Step 5** .

6. **DISCONNECT FRONT DOOR OPENING TRIM WEATHERSTRIP RH** . Refer to **REMOVAL - Step 33**
7. **REMOVE INSTRUMENT SIDE PANEL RH** . Refer to **REMOVAL - Step 34**
8. **REMOVE FRONT PANEL GARNISH RH** . Refer to **REMOVAL - Step 15**
9. **REMOVE NO. 2 INSTRUMENT PANEL UNDER COVER SUB-ASSEMBLY** . Refer to **REMOVAL - Step 35**
10. **REMOVE LOWER NO. 2 INSTRUMENT PANEL AIRBAG ASSEMBLY** . Refer to **REMOVAL - Step 9**
11. **REMOVE LOWER INSTRUMENT PANEL SUB-ASSEMBLY** . Refer to **REMOVAL - Step 37**
12. **REMOVE VEHICLE APPROACHING SPEAKER CONTROLLER**
    a. Disconnect the connector.

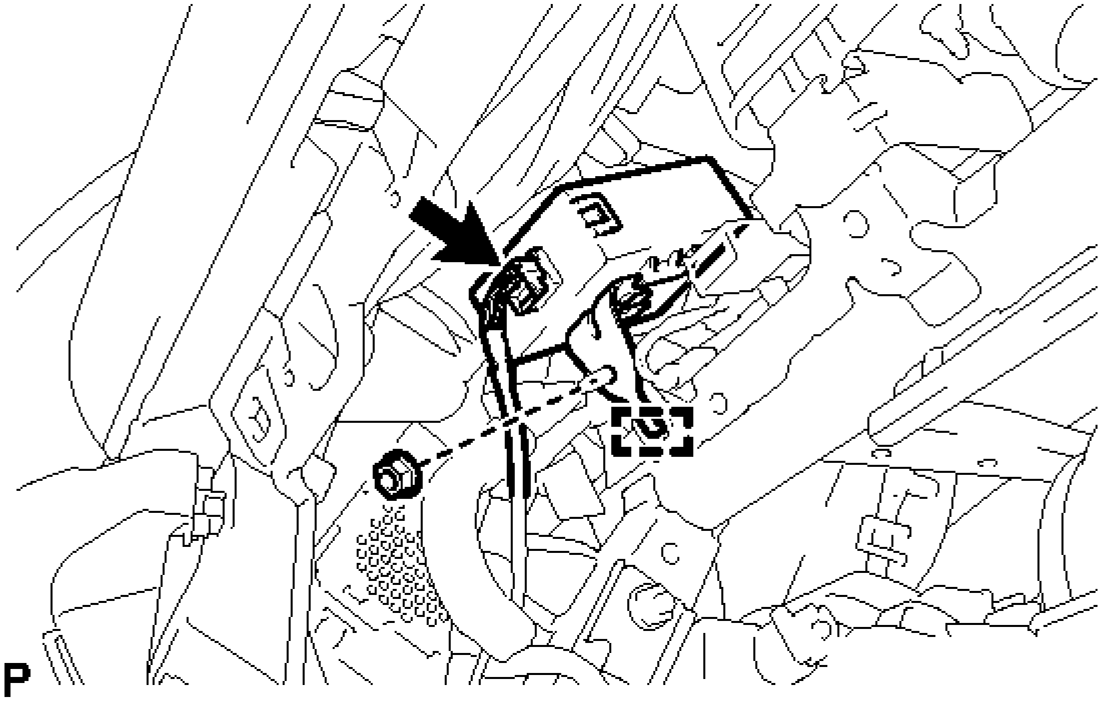

Fig. 4: Identifying Vehicle Approaching Speaker Controller Connector, Nut And Guide

Courtesy of TOYOTA MOTOR SALES, U.S.A., INC.

b. Remove the nut.
c. Disengage the guide to remove the vehicle approaching speaker controller.

INSTALLATION

INSTALLATION

1. **INSTALL VEHICLE APPROACHING SPEAKER CONTROLLER**
   a. Engage the guide.
   b. Install the nut to install the vehicle approaching speaker controller.

      Torque: 6.1 N*m (62 kgf*cm, 54 in.*lbf)

   c. Connect the connector.
2. **INSTALL LOWER INSTRUMENT PANEL SUB-ASSEMBLY** . Refer to **INSTALLATION - Step 15**
3. **INSTALL LOWER NO. 2 INSTRUMENT PANEL AIRBAG ASSEMBLY** . Refer to **INSTALLATION - Step 1**
4. **INSTALL NO. 2 INSTRUMENT PANEL UNDER COVER SUB-ASSEMBLY** . Refer to **INSTALLATION - Step 17**
5. **INSTALL FRONT PANEL GARNISH RH** . Refer to **INSTALLATION - Step 37**
6. **INSTALL INSTRUMENT SIDE PANEL RH** . Refer to **INSTALLATION - Step 18**
7. **INSTALL FRONT DOOR OPENING TRIM WEATHERSTRIP RH** . Refer to **INSTALLATION - Step 47**
8. **INSTALL COWL SIDE TRIM SUB-ASSEMBLY RH**

   HINT:

   Use the same procedure as for the LH side. Refer to **INSTALLATION - Step 47** .

9. **INSTALL FRONT DOOR SCUFF PLATE RH**

   HINT:

   Use the same procedure as for the LH side. Refer to **INSTALLATION - Step 48** .

10. **CONNECT CABLE TO AUXILIARY BATTERY NEGATIVE TERMINAL**

    NOTE: **When disconnecting the cable, some systems need to be initialized after the cable is reconnected. Refer to INITIALIZATION .**

11. **INSTALL LUGGAGE TRIM SERVICE HOLE COVER** . Refer to **INSTALLATION - Step 3**

12. **INSPECT SRS WARNING LIGHT**

    Refer to **DIAGNOSIS SYSTEM**

VEHICLE APPROACHING SPEAKER

COMPONENTS

ILLUSTRATION

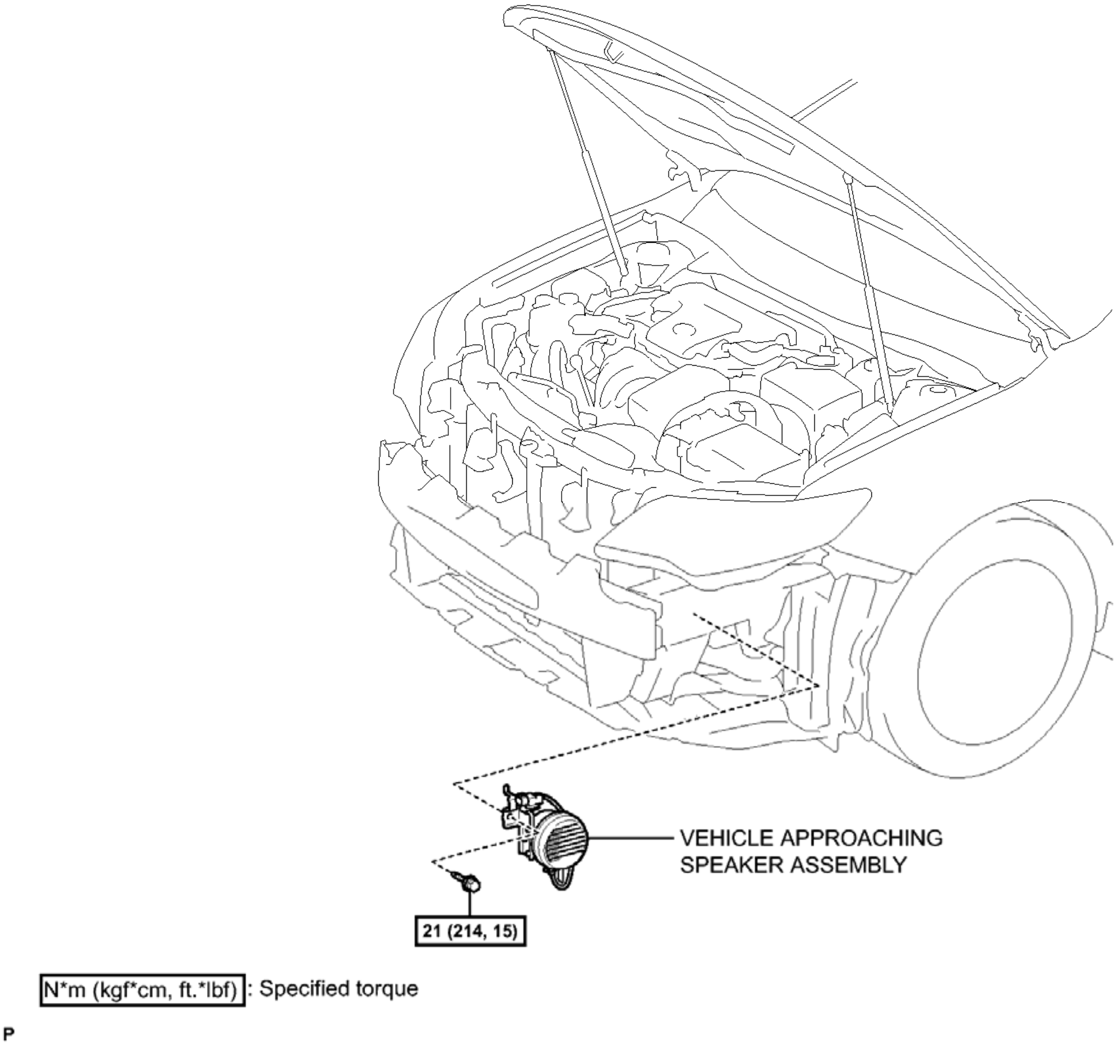
VEHICLE APPROACHING SPEAKER ASSEMBLY
21 (214, 15)
N*m (kgf*cm, ft.*lbf) : Specified torque
P

Fig. 5: Identifying Vehicle Approaching Speaker Replacement Components With Torque Specifications
Courtesy of TOYOTA MOTOR SALES, U.S.A., INC.

REMOVAL

REMOVAL

1. **REMOVE FRONT BUMPER ASSEMBLY**

   Refer to **REMOVAL**

2. **REMOVE VEHICLE APPROACHING SPEAKER ASSEMBLY**
   1. Disconnect the connector.

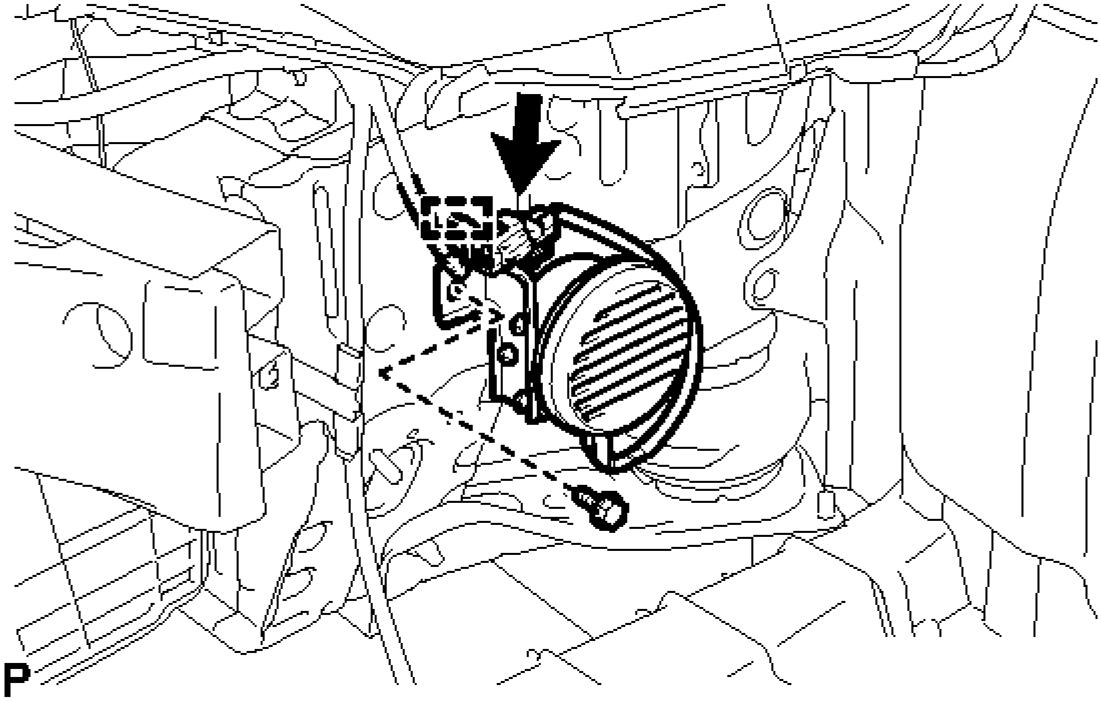

Fig. 6: Identifying Vehicle Approaching Speaker Assembly Connector, Bolt And Guide
Courtesy of TOYOTA MOTOR SALES, U.S.A., INC.

   2. Remove the bolt.
   3. Disengage the guide to remove the vehicle approaching speaker assembly.

INSPECTION

INSPECTION

1. **INSPECT VEHICLE APPROACHING SPEAKER ASSEMBLY**
   1. Measure the resistance according to the value(s) in the tables below.

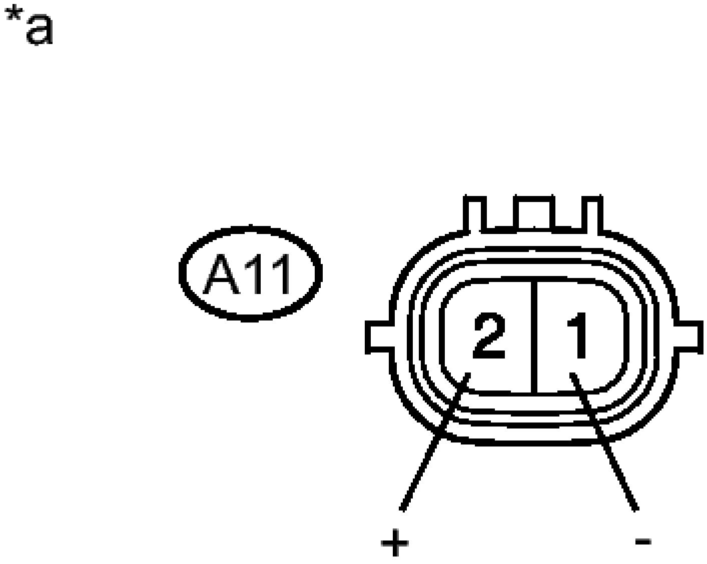

Fig. 7: Vehicle Approaching Speaker Assembly Connector Terminal Identification
Courtesy of TOYOTA MOTOR SALES, U.S.A., INC.

Standard Resistance

Tester Connection	Condition	Specified Condition
A11-2 (+) - A11-1 (-)	Always	6 to 10 ohms

TEXT IN ILLUSTRATION

*a	Component without harness connected (Vehicle Approaching Speaker Assembly)

HINT:

- Make sure that there are no problems such as looseness or play with the installation of the vehicle approaching speaker.
- Make sure that there are no abnormalities with the vehicle approaching speaker such as the presence of foreign material or tears in the paper of the speaker cone.

If the result is not as specified, replace the vehicle approaching speaker assembly.

INSTALLATION

INSTALLATION

1. **INSTALL VEHICLE APPROACHING SPEAKER ASSEMBLY**
   1. Engage the guide.
   2. Install the vehicle approaching speaker assembly with the bolt.

      Torque: 21 N*m (214 kgf*cm, 15 ft.*lbf)

   3. Connect the connector.
2. **INSTALL FRONT BUMPER ASSEMBLY**

   Refer to **INSTALLATION**

FRONT WHEEL ALIGNMENT

ADJUSTMENT

ADJUSTMENT

NOTE: **If the wheel alignment has been adjusted, or if suspension or underbody components have been removed/installed or replaced, be sure to perform the following initialization procedure in order for the system to function normally:**

Perform zero point calibration of the yaw rate and acceleration sensor.

1. **INSPECT TIRES** . Refer to **INSPECTION - Step 1**
2. **MEASURE VEHICLE HEIGHT**

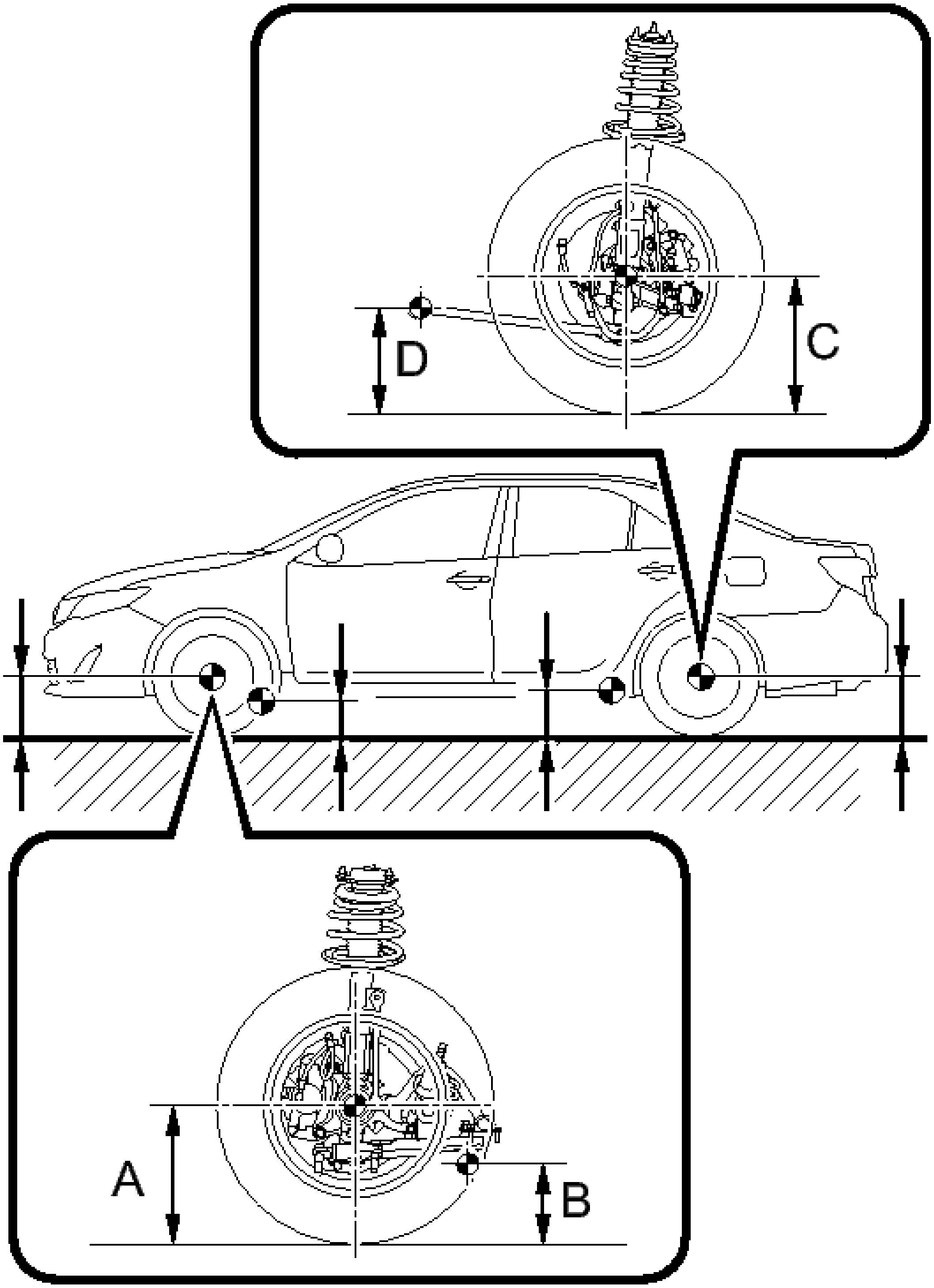

C

Fig. 1: Identifying Measurement Points
Courtesy of TOYOTA MOTOR SALES, U.S.A., INC.

NOTE:	- **Before inspecting the wheel alignment, adjust the vehicle height to the specified value.**

- **Be sure to perform measurement on a level surface.**
- **If it is necessary to go under the vehicle for measurement, confirm that the parking brake is applied and the vehicle is secured with chocks.**
- **Inspect while the vehicle is unloaded.**
- **The standard value shown here is a value that is used for adjusting the wheel alignment and does not indicate the height of an actual vehicle.**

a. Bounce the vehicle up and down at the corners to stabilize the suspension.

b. Measure the vehicle height.

Measurement points:

A: Ground clearance of front wheel center
B: Ground clearance of lower No. 2 suspension arm bushing set bolt center
C: Ground clearance of rear wheel center
D: Ground clearance of strut rod set bolt center

Vehicle Height (Unloaded Vehicle)

Tire Size	Front A - B	Rear C - D
205/65R16	123 mm (4.84 in.)	51 mm (2.00 in.)
215/55R17	126 mm (4.96 in.)	54 mm (2.13 in.)

3. **INSPECT CAMBER, CASTER AND STEERING AXIS INCLINATION**

NOTE: Inspect while the vehicle is unloaded.

a. Install a camber-caster-kingpin gauge and place the front wheels on the center of a turning radius gauge.

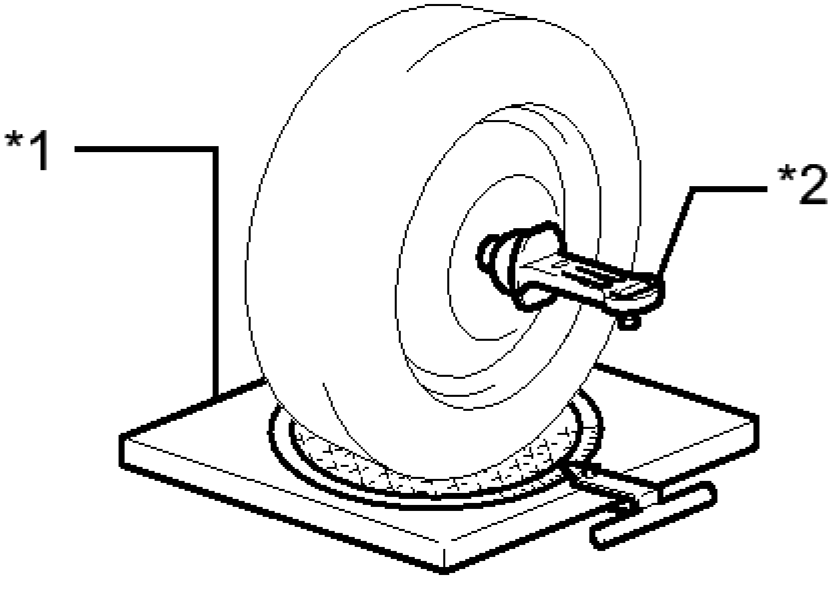

Fig. 2: Inspecting Camber, Caster And Steering Axis Inclination
Courtesy of TOYOTA MOTOR SALES, U.S.A., INC.

TEXT IN ILLUSTRATION

*1	Turning Radius Gauge
*2	Camber-caster-kingpin Gauge

b. Inspect the camber, caster and steering axis inclination.

Camber (Unloaded Vehicle)

Camber Inclination	Right-left Difference
-0°40' +/- 45' (-0.67° +/- 0.75°)	45' (0.75°) or less

Caster (Unloaded Vehicle)

Caster Inclination	Right-left Difference

2°55' +/- 45' (2.92° +/- 0.75°)	45' (0.75°) or less

Steering Axis Inclination (Unloaded Vehicle)

Steering Axis Inclination Reference
12° 15' (12.25°)

4. **ADJUST CAMBER**

NOTE: Inspect toe-in after the camber has been adjusted.

a. Remove the front wheel.
b. Remove the 2 nuts on the lower side of the front shock absorber.

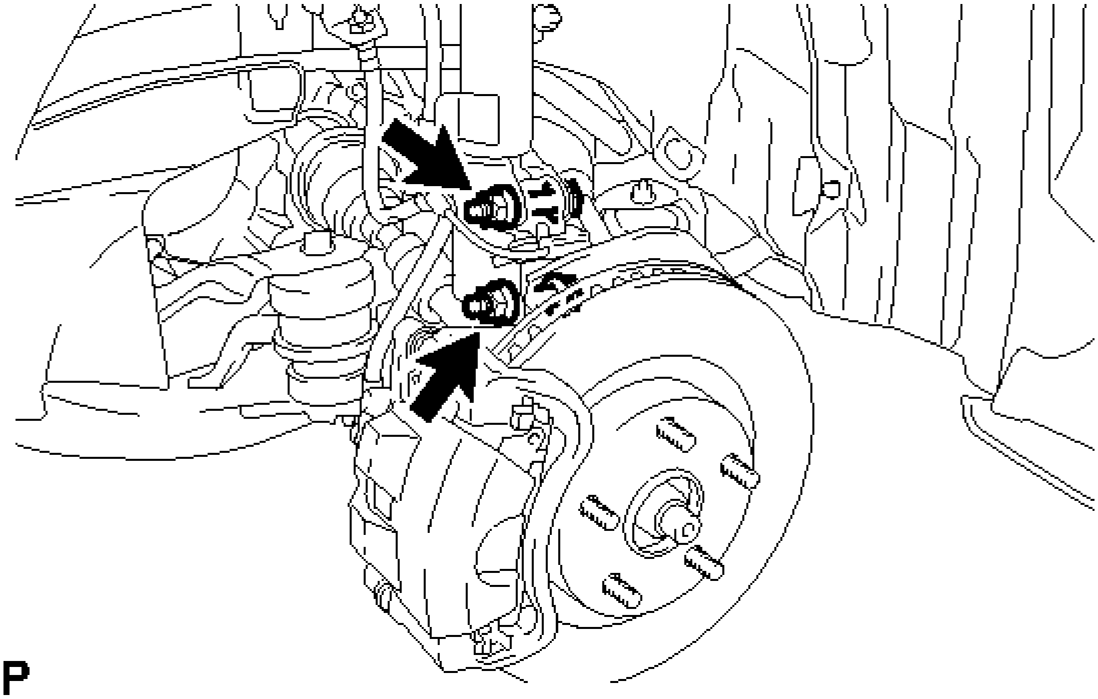

Fig. 3: Locating Front Shock Absorber Nuts
Courtesy of TOYOTA MOTOR SALES, U.S.A., INC.

NOTE: Keep the bolts inserted.

c. Remove the top and bottom bolts one at a time and confirm that the steering knuckle can move freely in the front shock absorber.

HINT:

- Reinstall each bolt after removing it and confirming steering knuckle movement.
- If the steering knuckle does not move freely in the front shock absorber, clean the installation surfaces of the front shock absorber and the steering knuckle.

d. Temporarily install the 2 nuts. (Step A)

e. Fully push or pull the front axle hub in the direction of the required adjustment. (Step B)

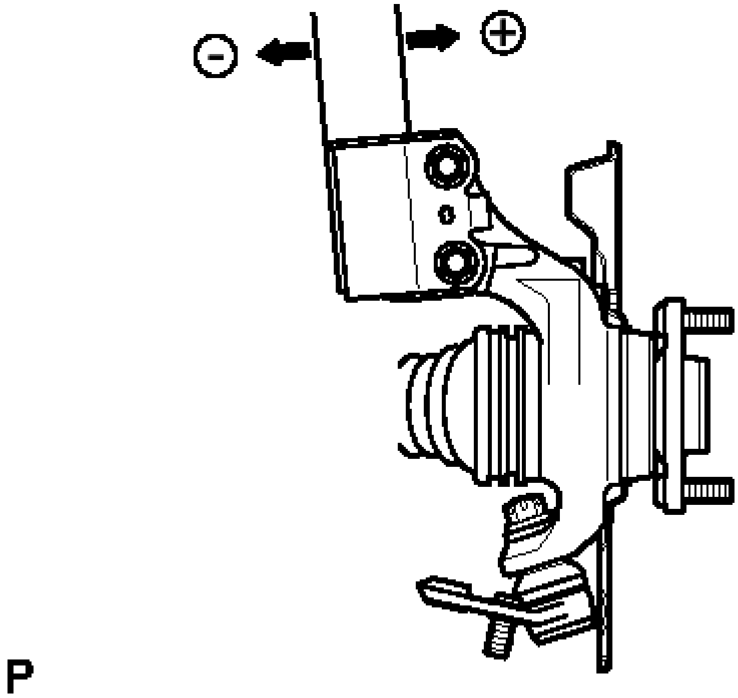

Fig. 4: Pushing / Pulling Front Axle Hub
Courtesy of TOYOTA MOTOR SALES, U.S.A., INC.

f. Tighten the nuts.

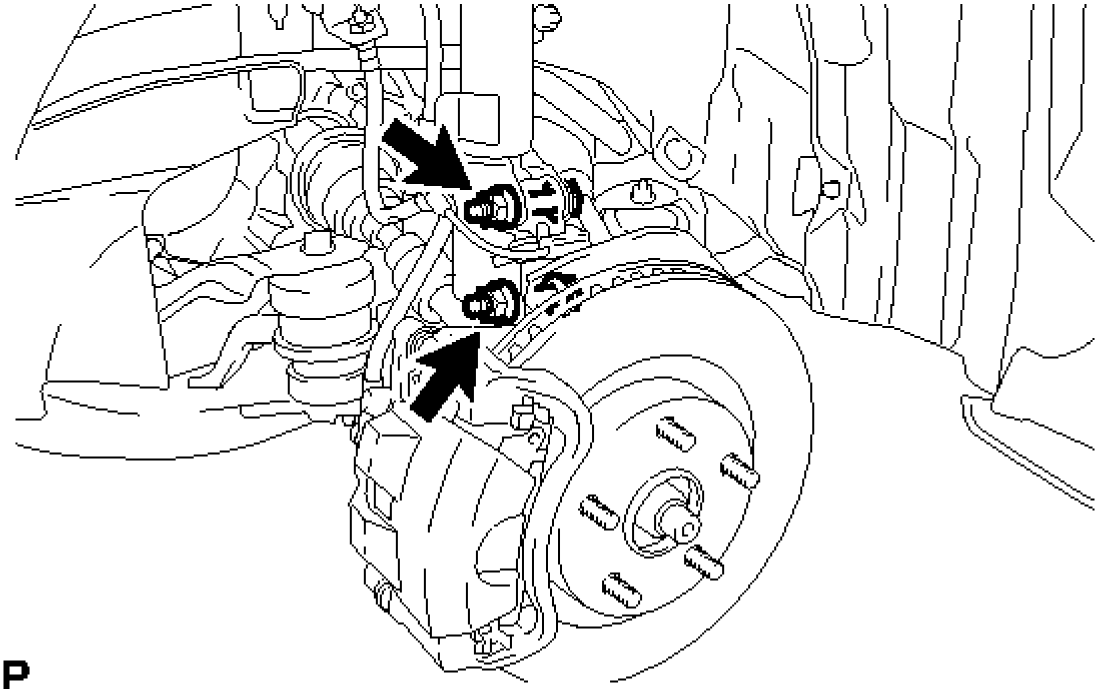

Fig. 5: Identifying Front Shock Absorber Nuts
Courtesy of TOYOTA MOTOR SALES, U.S.A., INC.

Torque: 290 N*m (2957 kgf*cm, 214 ft.*lbf)

NOTE: **Keep the bolts from rotating when tightening the nuts.**

g. Install the front wheel.

Torque: 103 N*m (1049 kgf*cm, 76 ft.*lbf)

h. Check the camber.

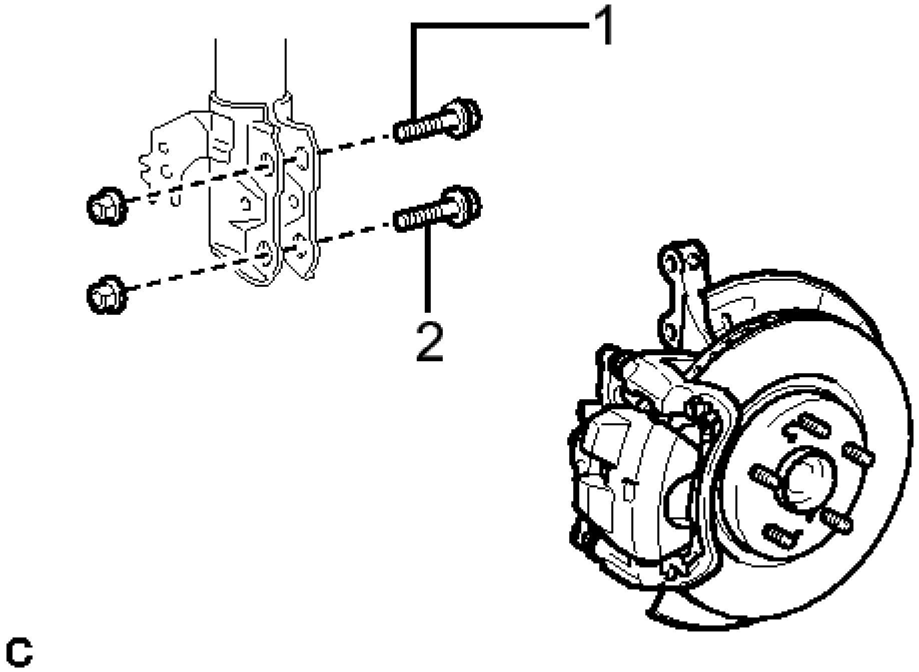

Fig. 6: Identifying Front Shock Absorber Bolts
Courtesy of TOYOTA MOTOR SALES, U.S.A., INC.

If the measured value is not within the specification, calculate the required adjustment amount using the formula below.

Camber adjustment amount = center of the specified range - measured value

Check the combination of the installed bolts. Select appropriate bolts from the tables below to adjust the camber to the specified values.

HINT:

Try to adjust the camber to the center of the specified values.

To move the axle hub toward (+) in step B	To move the axle hub toward (-) in step B
Refer to table (1) (To move	Refer to table (2) (To move

the axle hub toward the positive side)	the axle hub toward the negative side)

The body and suspension may be damaged if the camber cannot be correctly adjusted according to the tables above.

NOTE: **Replace the nut with a new one when replacing the bolt.**

1. Table (1) (To move the axle hub toward the positive side)

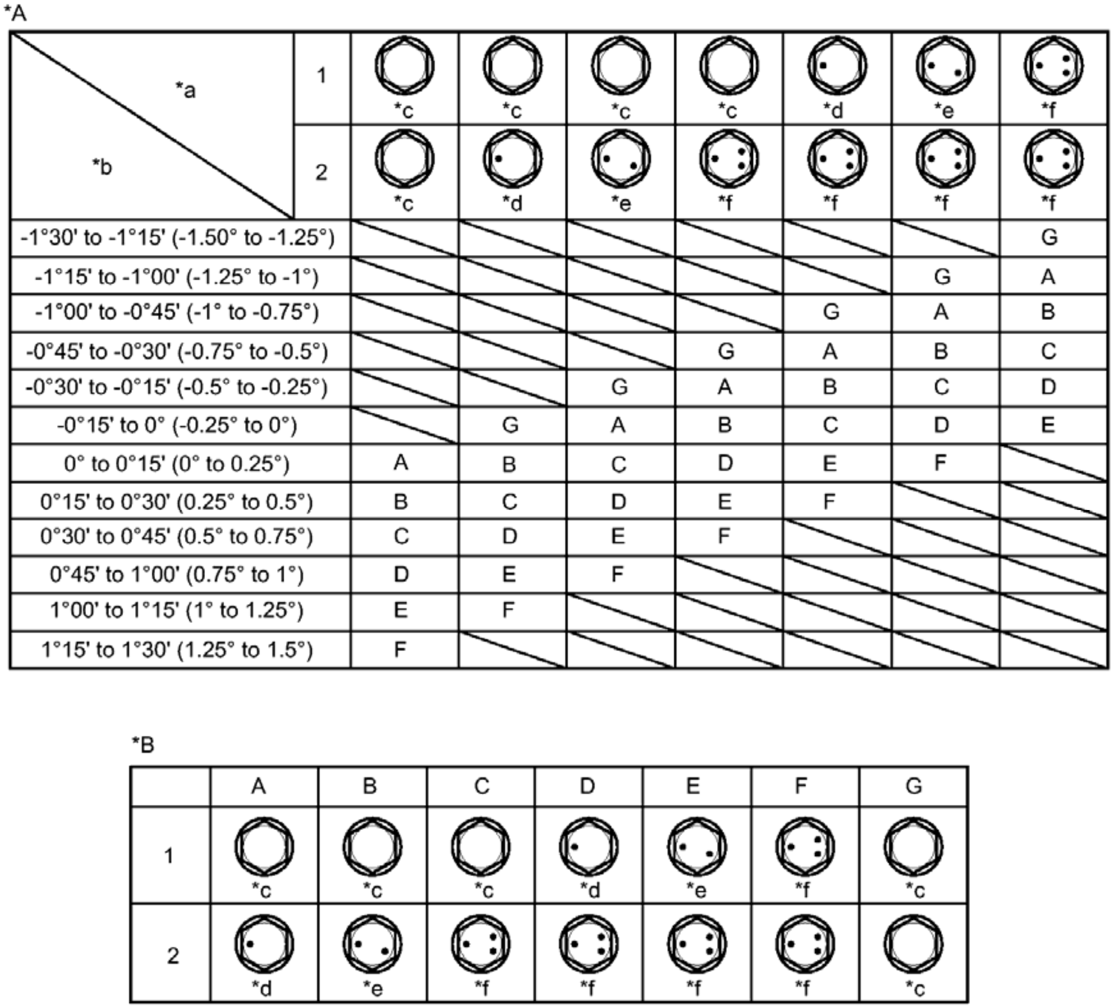

*A

*a / *b								
	1	*c	*c	*c	*c	*d	*e	*f
	2	*c	*d	*e	*f	*f	*f	*f
-1°30' to -1°15' (-1.50° to -1.25°)								G
-1°15' to -1°00' (-1.25° to -1°)							G	A
-1°00' to -0°45' (-1° to -0.75°)						G	A	B
-0°45' to -0°30' (-0.75° to -0.5°)					G	A	B	C
-0°30' to -0°15' (-0.5° to -0.25°)				G	A	B	C	D
-0°15' to 0° (-0.25° to 0°)			G	A	B	C	D	E
0° to 0°15' (0° to 0.25°)		A	B	C	D	E	F	
0°15' to 0°30' (0.25° to 0.5°)		B	C	D	E	F		
0°30' to 0°45' (0.5° to 0.75°)		C	D	E	F			
0°45' to 1°00' (0.75° to 1°)		D	E	F				
1°00' to 1°15' (1° to 1.25°)		E	F					
1°15' to 1°30' (1.25° to 1.5°)		F						

*B

	A	B	C	D	E	F	G
1	*c	*c	*c	*d	*e	*f	*c
2	*d	*e	*f	*f	*f	*f	*c

Fig. 7: Table 1: (Move The Axle Hub Toward The Positive Side) Selected Bolt Combination
Courtesy of TOYOTA MOTOR SALES, U.S.A., INC.

TEXT IN ILLUSTRATION

*A	Table (1) (To move the axle hub toward the positive side)	*B	Selected Bolt Combination
*a	Installed Bolt	*b	Adjusting Value
*c	90105-A0052	*d	90105-17013
*e	90105-17014	*f	90105-17015

2. Table (2) (To move the axle hub toward the negative side)

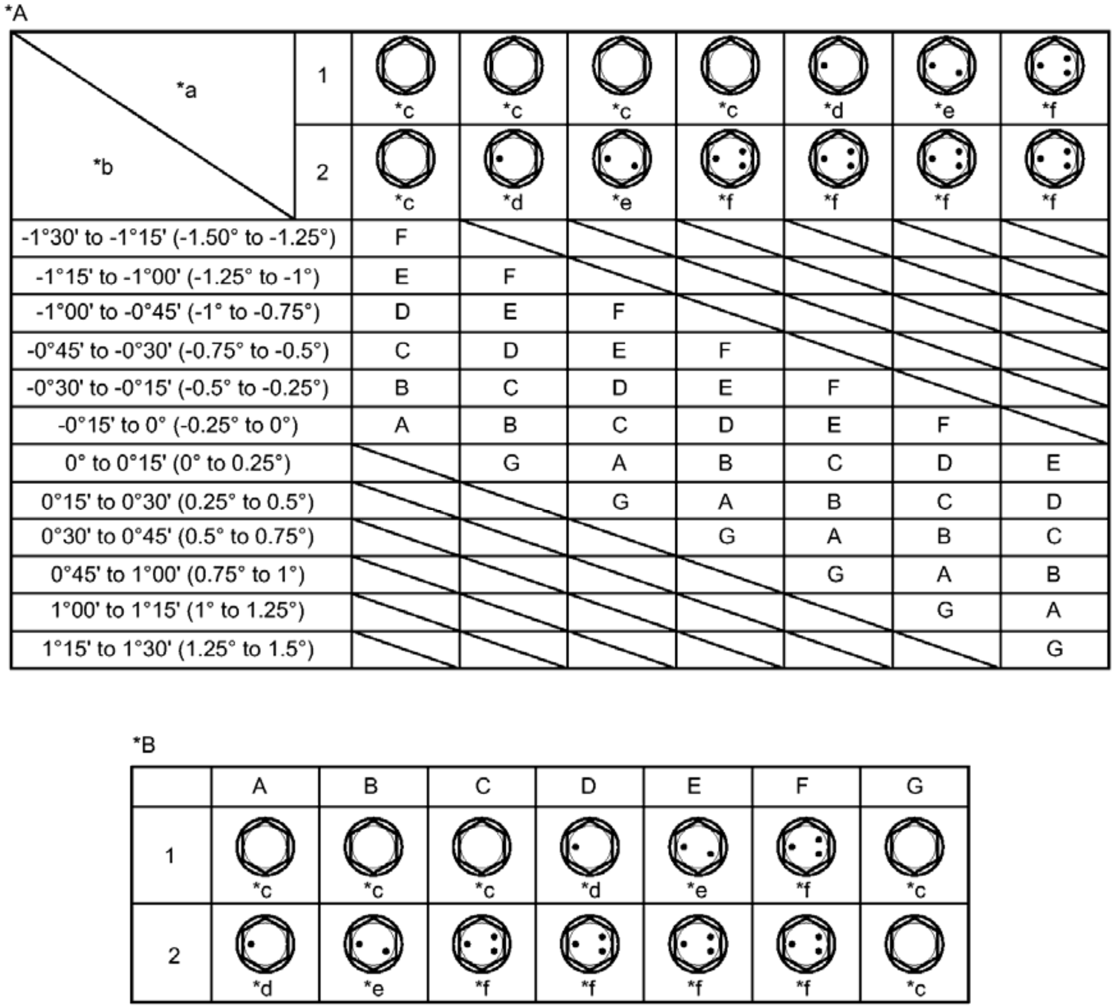

*A

*a *b								
	1	*c	*c	*c	*c	*d	*e	*f
	2	*c	*d	*e	*f	*f	*f	*f
-1°30' to -1°15' (-1.50° to -1.25°)		F						
-1°15' to -1°00' (-1.25° to -1°)		E	F					
-1°00' to -0°45' (-1° to -0.75°)		D	E	F				
-0°45' to -0°30' (-0.75° to -0.5°)		C	D	E	F			
-0°30' to -0°15' (-0.5° to -0.25°)		B	C	D	E	F		
-0°15' to 0° (-0.25° to 0°)		A	B	C	D	E	F	
0° to 0°15' (0° to 0.25°)			G	A	B	C	D	E
0°15' to 0°30' (0.25° to 0.5°)				G	A	B	C	D
0°30' to 0°45' (0.5° to 0.75°)					G	A	B	C
0°45' to 1°00' (0.75° to 1°)						G	A	B
1°00' to 1°15' (1° to 1.25°)							G	A
1°15' to 1°30' (1.25° to 1.5°)								G

*B

	A	B	C	D	E	F	G
1	*c	*c	*c	*d	*e	*f	*c
2	*d	*e	*f	*f	*f	*f	*c

Fig. 8: Table 2 (move The Axle Hub Toward The Negative Side) Selected Bolt Combination
Courtesy of TOYOTA MOTOR SALES, U.S.A., INC.

TEXT IN ILLUSTRATION

*A	Table (2) (To move the axle hub toward the negative side)	*B	Selected Bolt Combination
*a	Installed Bolt	*b	Adjusting Value
	90105-		90105-

*c	A0052	*d	17013
*e	90105-17014	*f	90105-17015

i. If the camber was out of adjustment in the previous step, perform the adjust camber steps mentioned above. In step (A), replace the existing bolts with the selected bolts.

HINT:

Replace one bolt at a time when replacing both bolts.

5. **INSPECT TOE-IN**

NOTE: Inspect while the vehicle is unloaded.

a. Bounce the vehicle up and down at the corners to stabilize the suspension.
b. Release the parking brake and move the shift lever to N.
c. Push the vehicle straight ahead approximately 5 m (16.4 ft.). (Step C)
d. Put tread center marks on the rearmost points of the front wheels and measure the distance between the marks (dimension B).

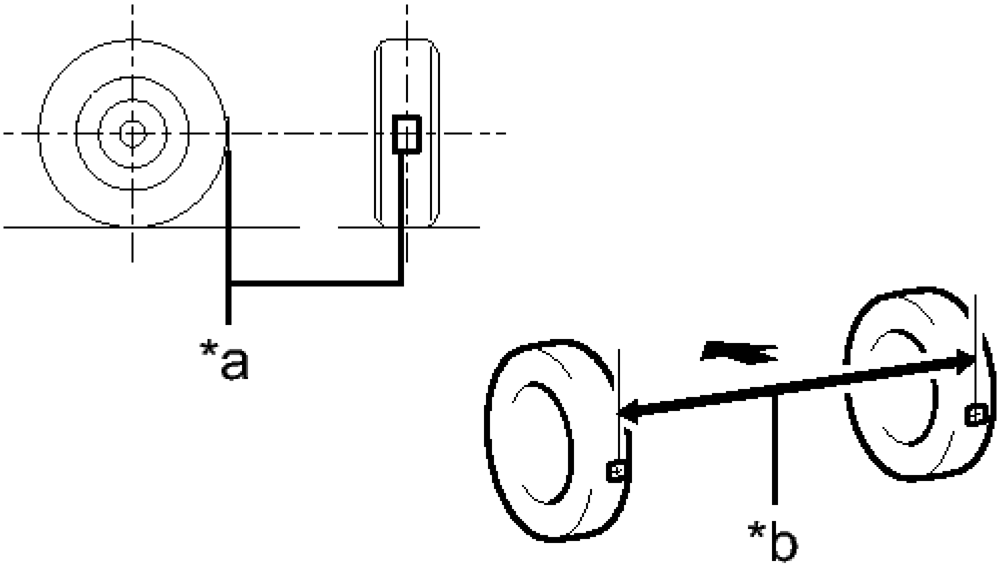

Fig. 9: Checking Toe In
Courtesy of TOYOTA MOTOR SALES, U.S.A., INC.

TEXT IN ILLUSTRATION

	Tread

*a	Center Mark
*b	Dimension B
·	Front of the Vehicle

e. Slowly push the vehicle straight ahead to cause the front wheels to rotate 180°. Use the front tire valve as a reference point.

   HINT:

   Do not allow the wheels to rotate more than 180°. If the wheels rotate more than 180°, perform the procedure from Step C again.

f. Measure the distance between the tread center marks on the front of the wheels (dimension A).

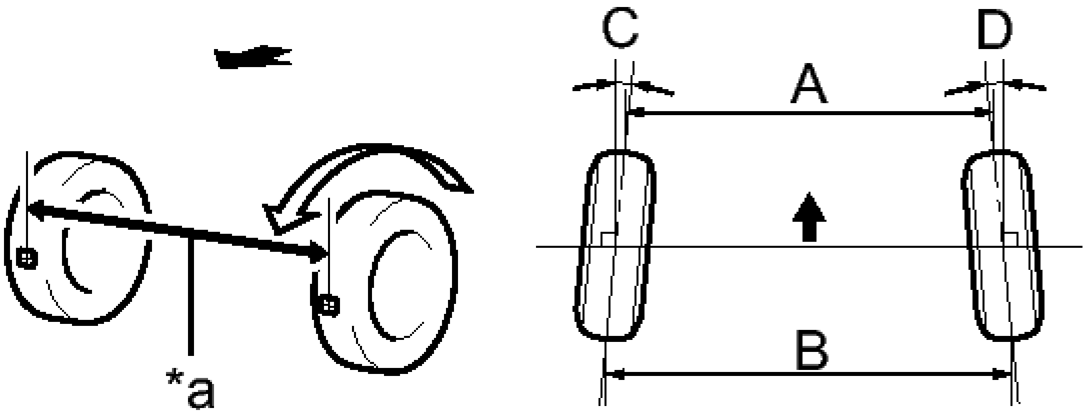

Fig. 10: Measuring Distance Between Tread Center Marks
Courtesy of TOYOTA MOTOR SALES, U.S.A., INC.

TEXT IN ILLUSTRATION

*a	Dimension A
·	Front of the

	Vehicle

Toe-in (Unloaded Vehicle)

Specified Condition
C + D: 0° 00' +/- 0° 10' (0.00° +/- 0.17°)
B - A: 0 +/- 2.0 mm (0 +/- 0.0787 in.)

HINT:

Measure "B - A" only when "C + D" cannot be measured.

If the toe-in is not within the specified range, adjust it at the rack ends.

6. **ADJUST TOE-IN**
   a. Make sure that the thread length of the right and left rack ends are approximately the same.

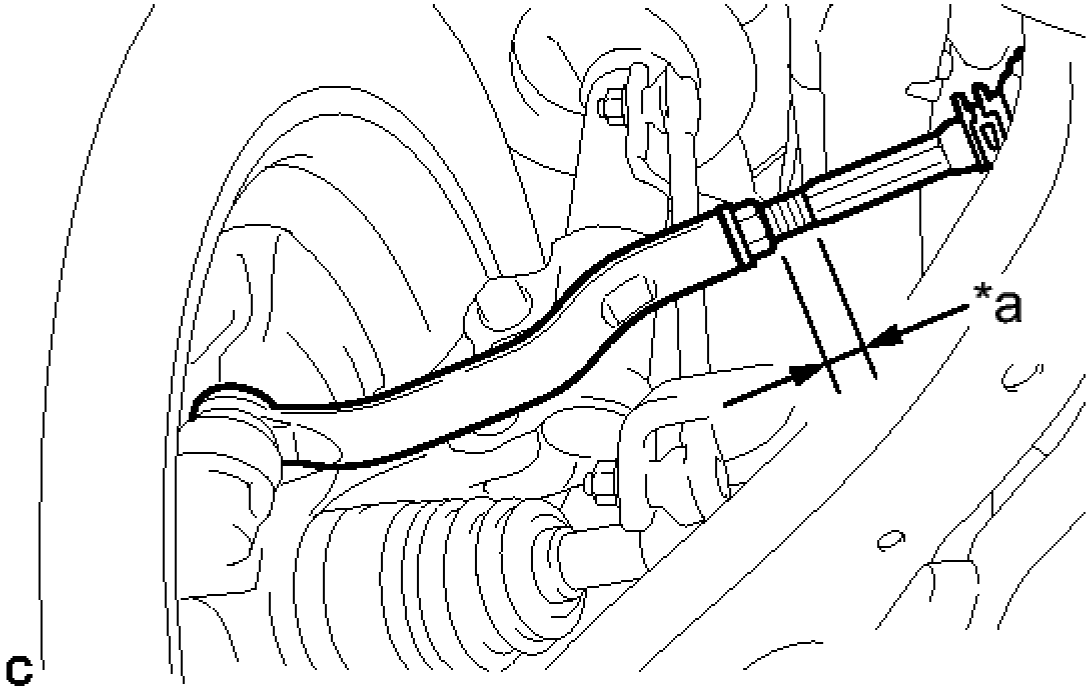

Fig. 11: Identifying Thread Length

Courtesy of TOYOTA MOTOR SALES, U.S.A., INC.

TEXT IN ILLUSTRATION

*a	Thread Length

Standard difference

1.5 mm (0.0591 in.) or less

b. Remove the boot clips.
c. Loosen the tie rod end lock nuts.

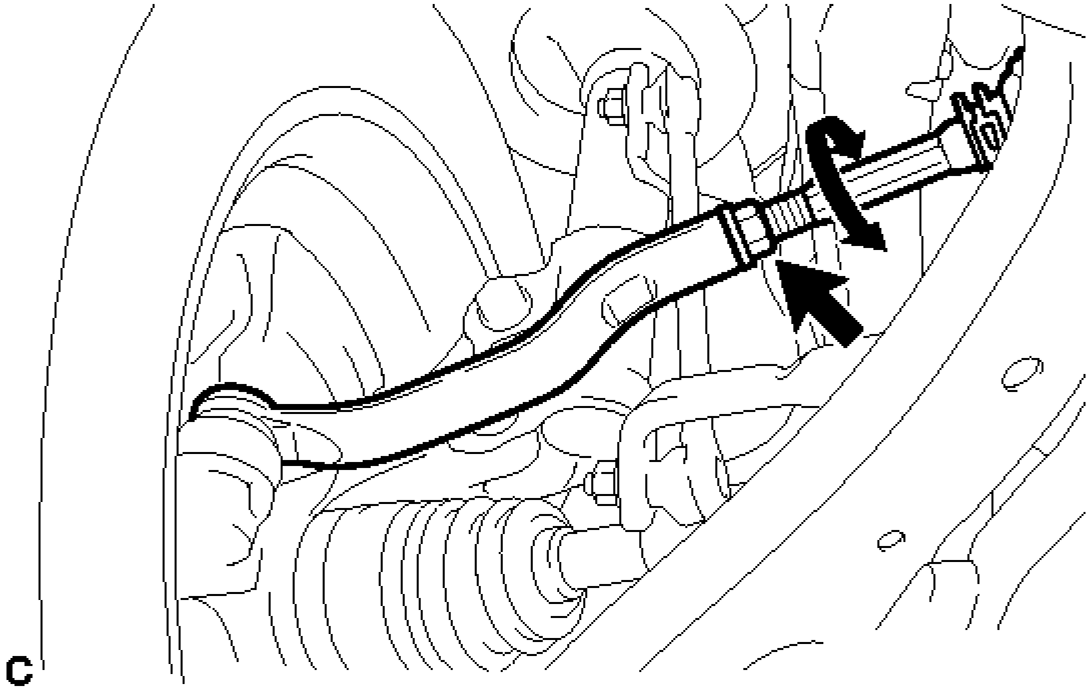

Fig. 12: Identifying Tie Rod End Lock Nuts
Courtesy of TOYOTA MOTOR SALES, U.S.A., INC.

d. Adjust the rack ends if the difference in thread length between the right and left rack ends is not within the specified range.
    1. If the toe-in measurement is greater than the specified range (too much toe-out), extend the shorter rack end so that the length difference is within the specified range.
    2. If the toe-in measurement is less than the specified range (too much toe-in), shorten the longer rack end so that the length difference is within the specified range.
    3. Measure the toe-in.
e. Turn the right and left rack ends by an equal amount to adjust the toe-in.
f. Make sure that the thread lengths of the right and left rack ends are the same.

g. Tighten the tie rod end lock nuts.

Torque: 74 N*m (755 kgf*cm, 55 ft.*lbf)

h. Place the boots on the seats and install the clips.

HINT:

Make sure that the boots are not twisted.

7. INSPECT WHEEL ANGLE

a. Put tread center marks on the rearmost points of a turning radius gauge.

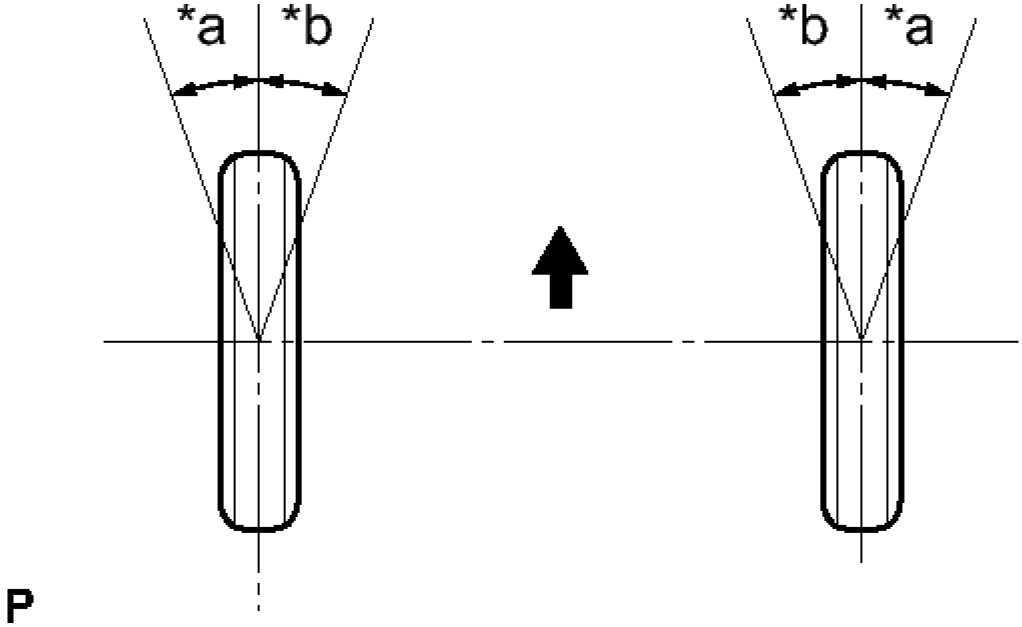

Fig. 13: Identifying Rearmost Points Of A Turning Radius Gauge
Courtesy of TOYOTA MOTOR SALES, U.S.A., INC.

TEXT IN ILLUSTRATION

*a	Inside
*b	Outside
·	Front of the Vehicle

b. Turn the steering wheel fully to the left and right and measure the turning angle.

NOTE: **Inspect while the vehicle is unloaded.**

Wheel Turning Angle (Unloaded Vehicle)

Tire Size	Inside Wheel	Outside Wheel
205/65R16	37°15' +/- 2° (37.25° +/- 2°)	32°50' +/- 2° (32.83° +/- 2°)
215/55R17	37°10' +/- 2° (37.17° +/- 2°)	32°50' +/- 2° (32.83° +/- 2°)

If the right and left inside wheel angles differ from the specified value, check and adjust the right and left rack end lengths.

8. **PLACE FRONT WHEELS FACING STRAIGHT AHEAD**
9. **PERFORM YAW RATE AND ACCELERATION SENSOR CALIBRATION**

   Refer to **CALIBRATION**

REAR WHEEL ALIGNMENT

ADJUSTMENT

ADJUSTMENT

NOTE: If the wheel alignment has been adjusted, or if suspension or underbody components have been removed/installed or replaced, be sure to perform the following initialization procedure in order for the system to function normally:

Perform zero point calibration of the yaw rate and acceleration sensor.

1. **INSPECT TIRES** . Refer to **INSPECTION - Step 1**
2. **MEASURE VEHICLE HEIGHT** See step 2
3. **INSPECT CAMBER**

   NOTE: Inspect while the vehicle is unloaded.

   a. Install a camber-caster-kingpin gauge.

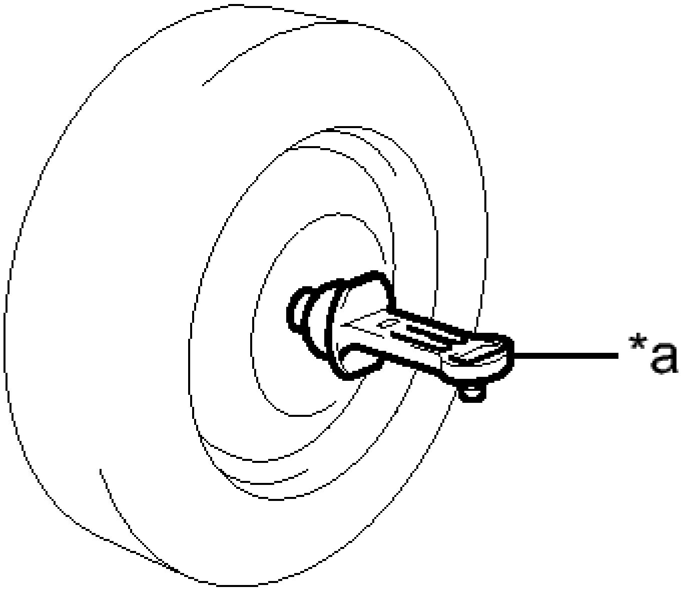

P

Fig. 14: Identifying Camber-Caster-Kingpin Gauge
Courtesy of TOYOTA MOTOR SALES, U.S.A., INC.

TEXT IN ILLUSTRATION

*a	Camber-caster-kingpin Gauge

b. Inspect the camber.

Camber (Unloaded Vehicle)

Tire Size	Camber Inclination	Right-left Difference
205/65R16	-1°11' +/- 45' (-1.18° +/- 0.75°)	45' (0.75°) or less
215/55R17	-1°14' +/- 45' (-1.23° +/- 0.75°)	

HINT:

Camber is not adjustable. If the measurement is not within the specified range, inspect the suspension parts for damage and/or wear, and replace them if necessary.

4. INSPECT TOE-IN

NOTE: Inspect while the vehicle is unloaded.

a. Bounce the vehicle up and down at the corners to stabilize the suspension.
b. Release the parking brake and move the shift lever to N.
c. Push the vehicle straight ahead approximately 5 m (16.4 ft.). (Step A)
d. Put tread center marks on the rearmost points of the rear wheels and measure the distance between the marks (dimension B).

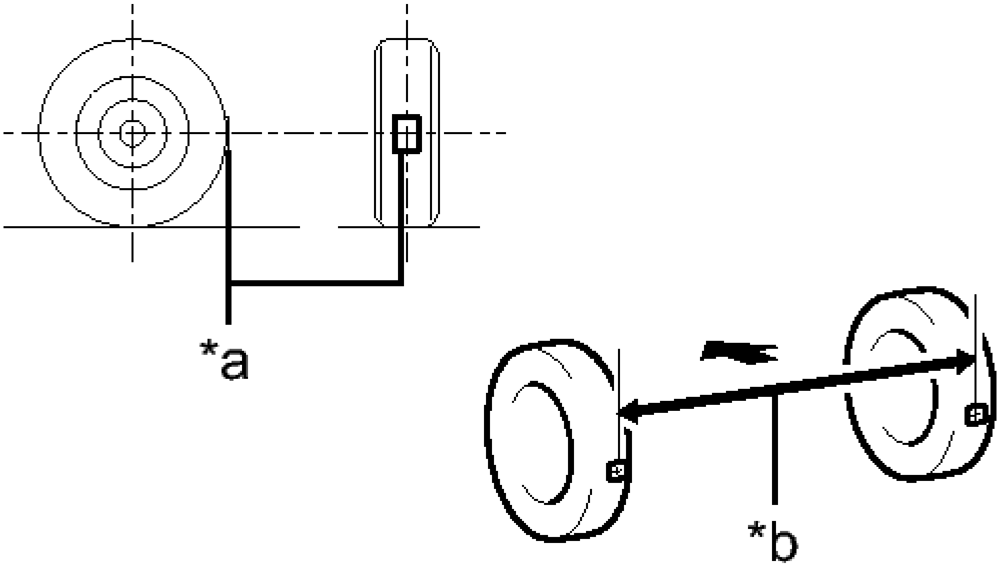

Fig. 15: Identifying Tread Center Marks On Rearmost Points Of Rear Wheels
Courtesy of TOYOTA MOTOR SALES, U.S.A., INC.

TEXT IN ILLUSTRATION

*a	Tread Center Mark
*b	Dimension B
·	Front of the Vehicle

e. Slowly push the vehicle straight ahead to cause the rear wheels to rotate 180°. Use the rear tire valve as a reference point.

HINT:

Do not allow the wheels to rotate more than 180°. If the wheels rotate more than 180°, perform the procedure from Step A again.

f. Measure the distance between the tread center marks on the front of the rear wheels (dimension A).

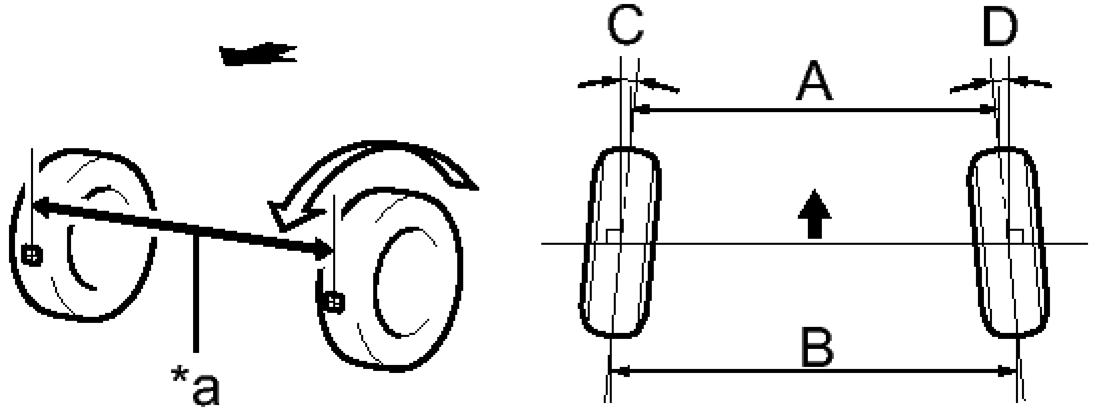

Fig. 16: Identifying Tread Center Marks On Front Of Rear Wheels
Courtesy of TOYOTA MOTOR SALES, U.S.A., INC.

TEXT IN ILLUSTRATION

*a	Dimension A
·	Front of the Vehicle

Toe-in (Unloaded Vehicle)

Specified Condition
C + D: 0° 13' +/- 0° 10' (0.21° +/- 0.17°)
B - A: 2.5

+/- 2.0 mm (0.0984 +/- 0.0787 in.)

HINT:

Measure "B - A" only when "C + D" cannot be measured.

If the toe-in is not within the specified range, adjust it at the rear No. 2 suspension arms.

5. **ADJUST TOE-IN**
   a. Measure the lengths of the right and left rear No. 2 suspension arms.

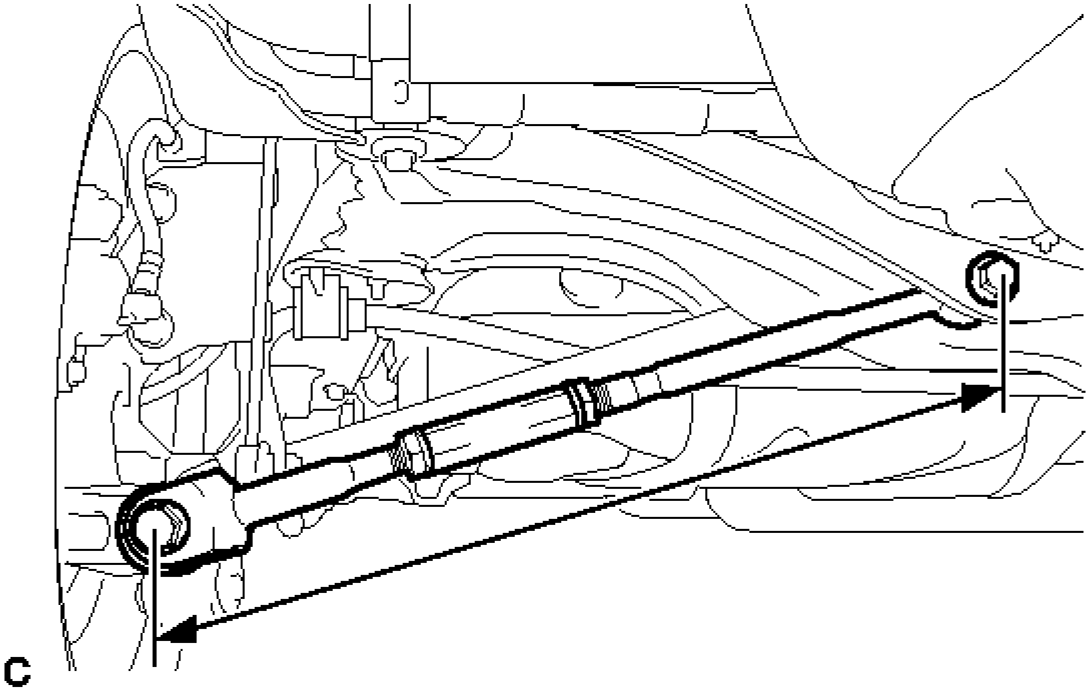

Fig. 17: Measuring The Lengths Of The Right And Left Rear No. 2 Suspension Arms
Courtesy of TOYOTA MOTOR SALES, U.S.A., INC.

Standard difference

1.5 mm (0.0591 in.) or less

   b. Loosen the 2 lock nuts.

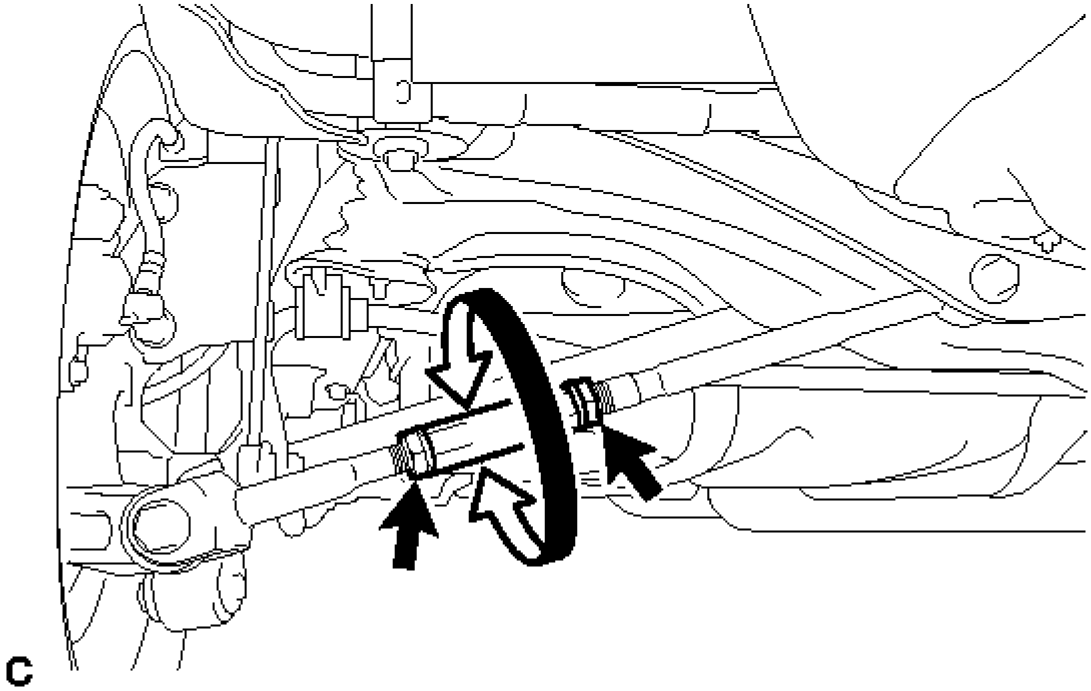

Fig. 18: Identifying Lock Nuts And Adjusting No. 2 Suspension Arm Assemblies
Courtesy of TOYOTA MOTOR SALES, U.S.A., INC.

c. If the length difference between the left and right rear No. 2 suspension arm assemblies is not within the specified range, adjust it by following the procedures below.
    1. If the toe-in measurement is greater than the specified range (too much toe-out), extend the shorter rear No. 2 suspension arm by rotating the adjusting tube so that the length difference is within the specified range.
    2. If the toe-in measurement is less than the specified range (too much toe-in), shorten the longer rear No. 2 suspension arm by rotating the adjusting tube so that the length difference is within the specified range.
    3. Measure the toe-in.

d. Turn the right and left adjusting tubes by an equal amount to adjust toe-in.

    HINT:

    - Try to adjust the toe-in to the center of the specified range.
    - One turn of each adjusting tube will adjust the toe-in by approximately 11.3 mm (0.445 in.).

e. Tighten the lock nuts while securing the adjusting tube in the order indicated below:
    1. Tighten the outside lock nut.
    2. Tighten the inside lock nut.
    3. Retighten the outside lock nut.

    Torque: 56 N*m (570 kgf*cm, 41 ft.*lbf)

6. **PLACE FRONT WHEELS FACING STRAIGHT AHEAD**
7. **PERFORM YAW RATE AND ACCELERATION SENSOR CALIBRATION**

   Refer to **CALIBRATION**

FRONT WHEEL ALIGNMENT

ADJUSTMENT

ADJUSTMENT

1. **INSPECT TIRES** . Refer to **INSPECTION - Step 1**
2. **MEASURE VEHICLE HEIGHT**

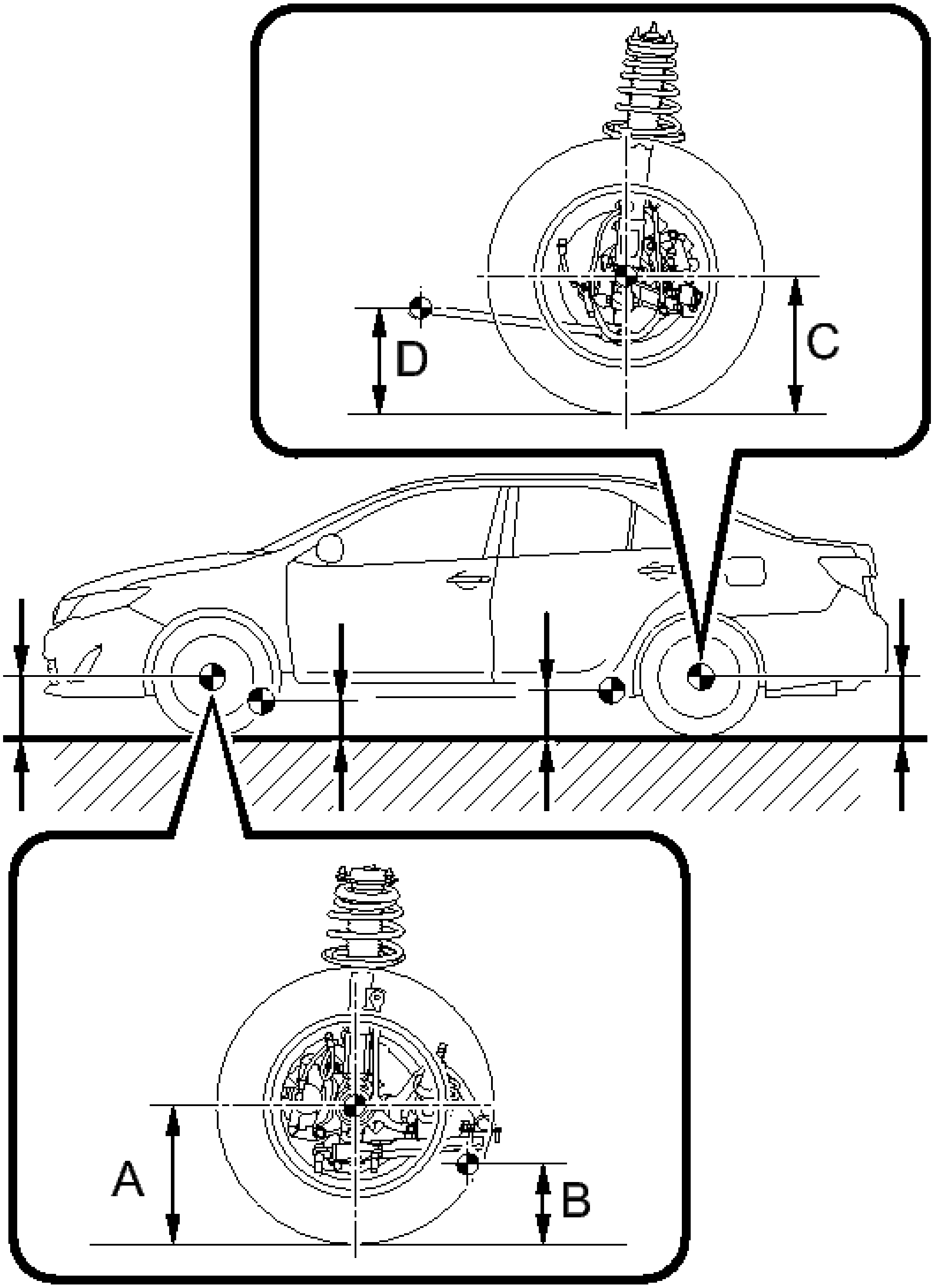

Fig. 1: Identifying Measurement Points
Courtesy of TOYOTA MOTOR SALES, U.S.A., INC.

NOTE:

- **Before inspecting the wheel alignment, adjust the vehicle height to the specified value.**

- **Be sure to perform measurement on a level surface.**
- **If it is necessary to go under the vehicle for measurement, confirm that the parking brake is applied and the vehicle is secured with chocks.**
- **Inspect while the vehicle is unloaded.**
- **The standard value shown here is a value that is used for adjusting the wheel alignment and does not indicate the height of an actual vehicle.**

a. Bounce the vehicle up and down at the corners to stabilize the suspension.
b. Measure the vehicle height.

Measurement points:

A: Ground clearance of front wheel center
B: Ground clearance of lower No. 2 suspension arm bushing set bolt center
C: Ground clearance of rear wheel center
D: Ground clearance of strut rod set bolt center

Vehicle Height (Unloaded Vehicle)

Engine	Tire Size	Front A - B	Rear C - D
2AR-FE	205/65R16	123 mm (4.84 in.)	52 mm (2.05 in.)
	215/55R17	122 mm (4.80 in.)*1 114 mm (4.49 in.) *1, *4	51 mm (2.01 in.) *1 44 mm (1.73 in.) *1, *4
		125 mm (4.92 in.)*2 115	54 mm (2.13 in.) *2

		mm (4.53 in.) *2, *4	46 mm (1.81 in.) *2, *4
		124 mm (4.88 in.)*3	52 mm (2.05 in.) *3
	225/45R18	123 mm (4.84 in.)	51 mm (2.01 in.)
2GR-FE	215/55R17	127 mm (5.00 in.) 117 mm (4.61 in.)*4	57 mm (2.24 in.) 48 mm (1.89 in.) *4
	225/45R18	123 mm (4.84 in.)	54 mm (2.13 in.)

*1: ASV50L-CETNKA and ASV50L-SETNKA

*2: ASV50L-CETGKA and ASV50L-SETGKA

*3: ASV50L-CETSKA

*4: For Mexico

3. INSPECT CAMBER, CASTER AND STEERING AXIS INCLINATION

NOTE: **Inspect while the vehicle is unloaded.**

a. Install a camber-caster-kingpin gauge and place the front wheels on the center of a turning radius gauge.

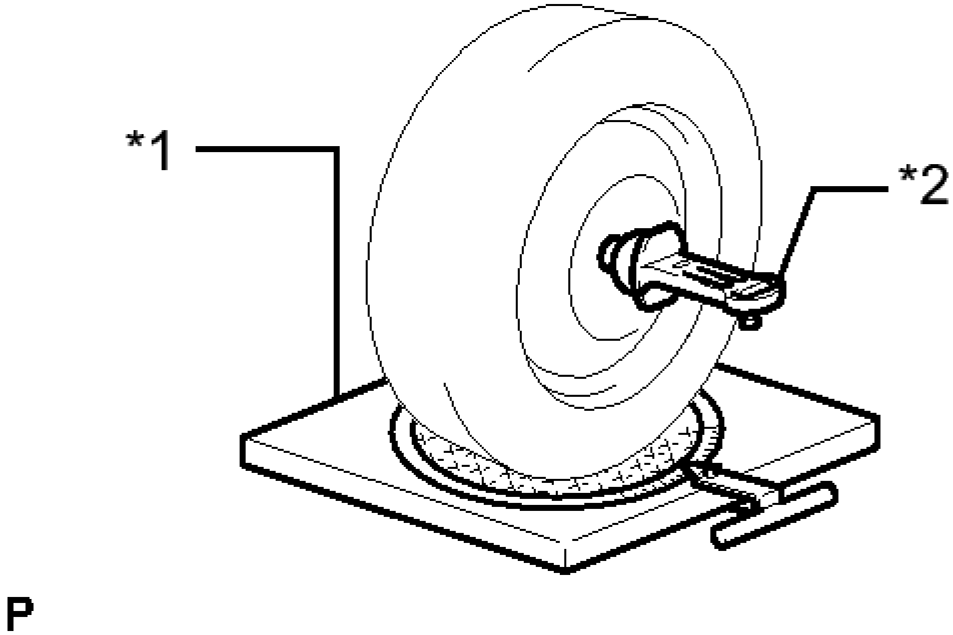

Fig. 2: Inspecting Camber, Caster And Steering Axis Inclination
Courtesy of TOYOTA MOTOR SALES, U.S.A., INC.

TEXT IN ILLUSTRATION

*1	Turning Radius Gauge
*2	Camber-caster-kingpin Gauge

b. Inspect the camber, caster and steering axis inclination.

Camber (Unloaded Vehicle)

Camber Inclination	Right-left Difference
-0°40' +/- 45' (-0.67° +/- 0.75°) -0°35' +/- 45' (-0.58° +/- 0.75°)*	45' (0.75°) or less

* For Mexico

Caster (Unloaded Vehicle)

Engine	Caster Inclination	Right-left Difference
2AR-FE	2°55' +/- 45' (2.92° +/- 0.75°)	45' (0.75°) or less
2GR-FE	3°00' +/- 45' (3.00° +/- 0.75°) 2°55' +/- 45' (2.92° +/- 0.75°)*	

* For Mexico

Steering Axis Inclination (Unloaded Vehicle)

Engine	Steering Axis Inclination Reference
2AR-FE	12° 15' (12.25°) 12° 00' (12.00°)*
2GR-FE	12° 15' (12.25°) 12° 05' (12.08°)*

* For Mexico

4. **ADJUST CAMBER**

NOTE: **Inspect toe-in after the camber has been adjusted.**

a. Remove the front wheel.
b. Remove the 2 nuts on the lower side of the front shock absorber.

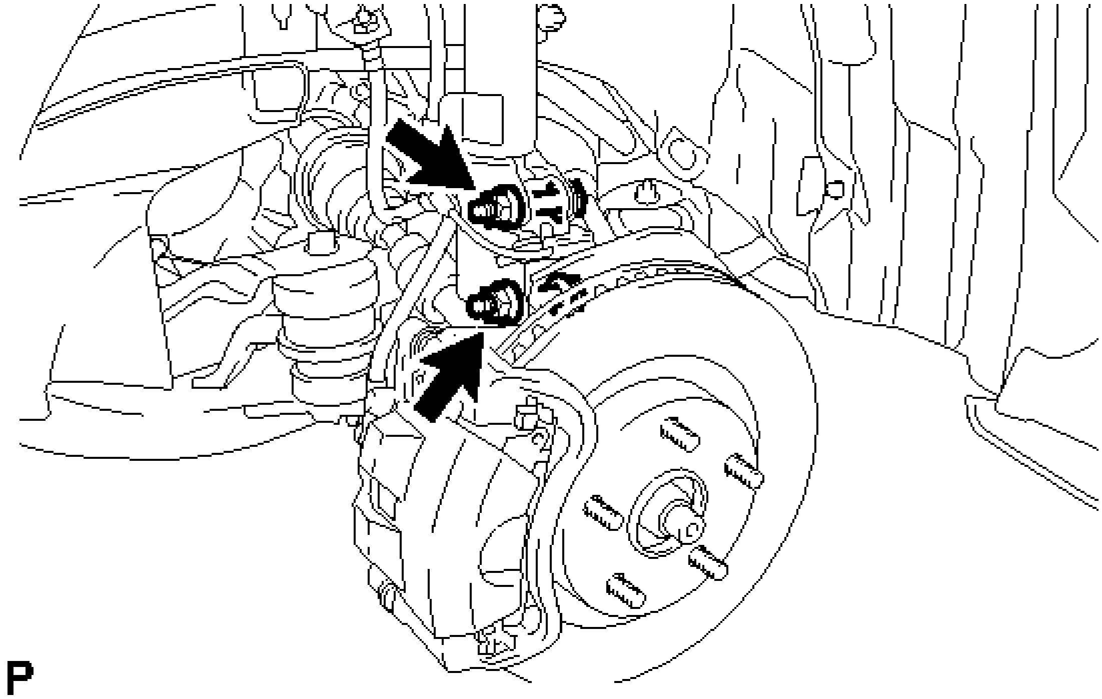

Fig. 3: Locating Front Shock Absorber Nuts
Courtesy of TOYOTA MOTOR SALES, U.S.A., INC.

NOTE: **Keep the bolts inserted.**

c. Remove the top and bottom bolts one at a time and confirm that the steering knuckle can move freely in the shock absorber.

HINT:

- Reinstall each bolt after removing it and confirming steering knuckle movement.
- If the steering knuckle does not move freely in the shock absorber, clean the installation surfaces of the front shock absorber and the steering knuckle.

d. Temporarily install the 2 nuts. (Step A)

e. Fully push or pull the front axle hub in the direction of the required adjustment. (Step B)

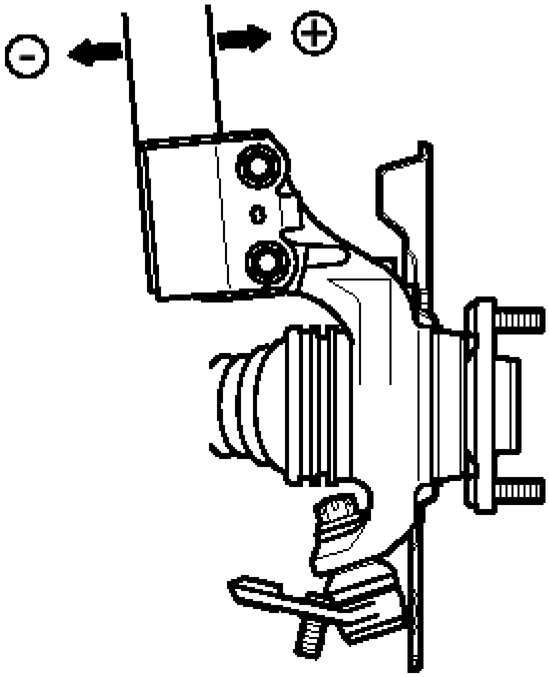

Fig. 4: Pushing / Pulling Front Axle Hub
Courtesy of TOYOTA MOTOR SALES, U.S.A., INC.

f. Tighten the nuts.

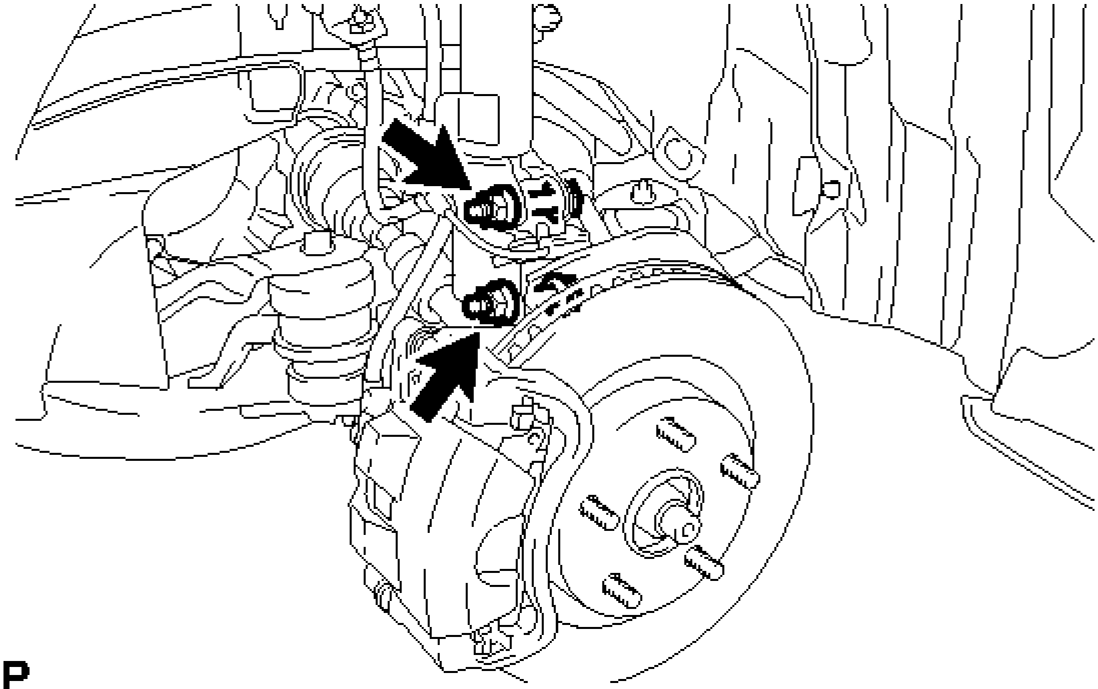

Fig. 5: Locating Front Shock Absorber Nuts
Courtesy of TOYOTA MOTOR SALES, U.S.A., INC.

Torque: 290 N*m (2957 kgf*cm, 214 ft.*lbf)

NOTE: **Keep the bolts from rotating when tightening the nuts.**

g. Install the front wheel.

Torque: 103 N*m (1049 kgf*cm, 76 ft.*lbf)

h. Check the camber.

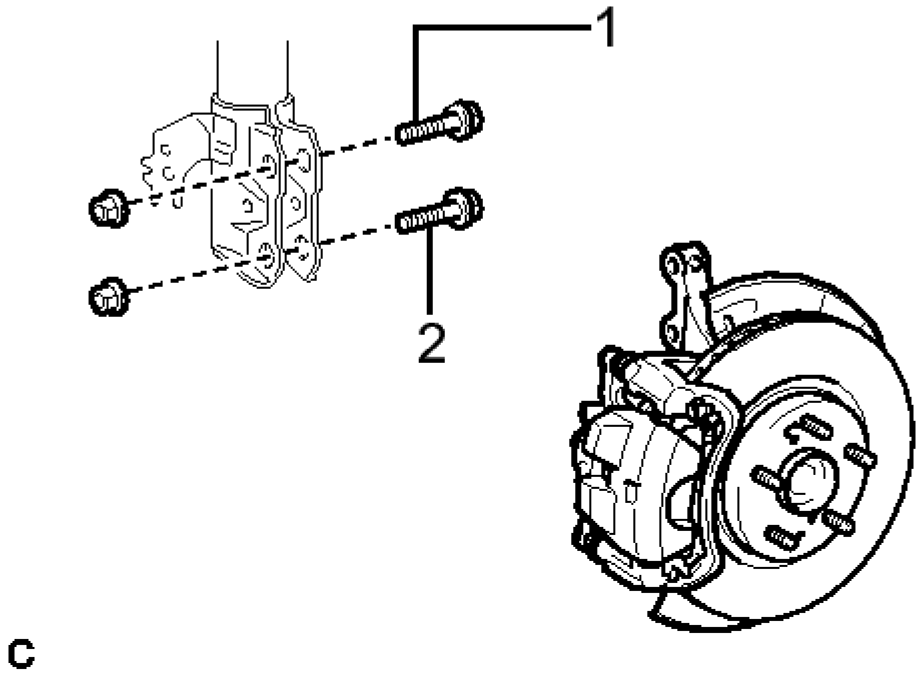

Fig. 6: Identifying Front Shock Absorber Bolts
Courtesy of TOYOTA MOTOR SALES, U.S.A., INC.

If the measured value is not within the specification, calculate the required adjustment amount using the formula below.

Camber adjustment amount = center of the specified range - measured value

Check the combination of the installed bolts. Select appropriate bolts from the tables below to adjust the camber to the specified values.

HINT:

Try to adjust the camber to the center of the specified values.

To move the axle hub toward (+) in	To move the axle hub toward (-) in

step B	step B
Refer to table (1) (To move the axle hub toward the positive side), see **TEXT IN ILLUSTRATION**	Refer to table (2) (To move the axle hub toward the negative side), see **TEXT IN ILLUSTRATION**

The body and suspension may be damaged if the camber cannot be correctly adjusted according to the tables above.

NOTE: **Replace the nut with a new one when replacing the bolt.**

1. Table (1) (To move the axle hub toward the positive side)

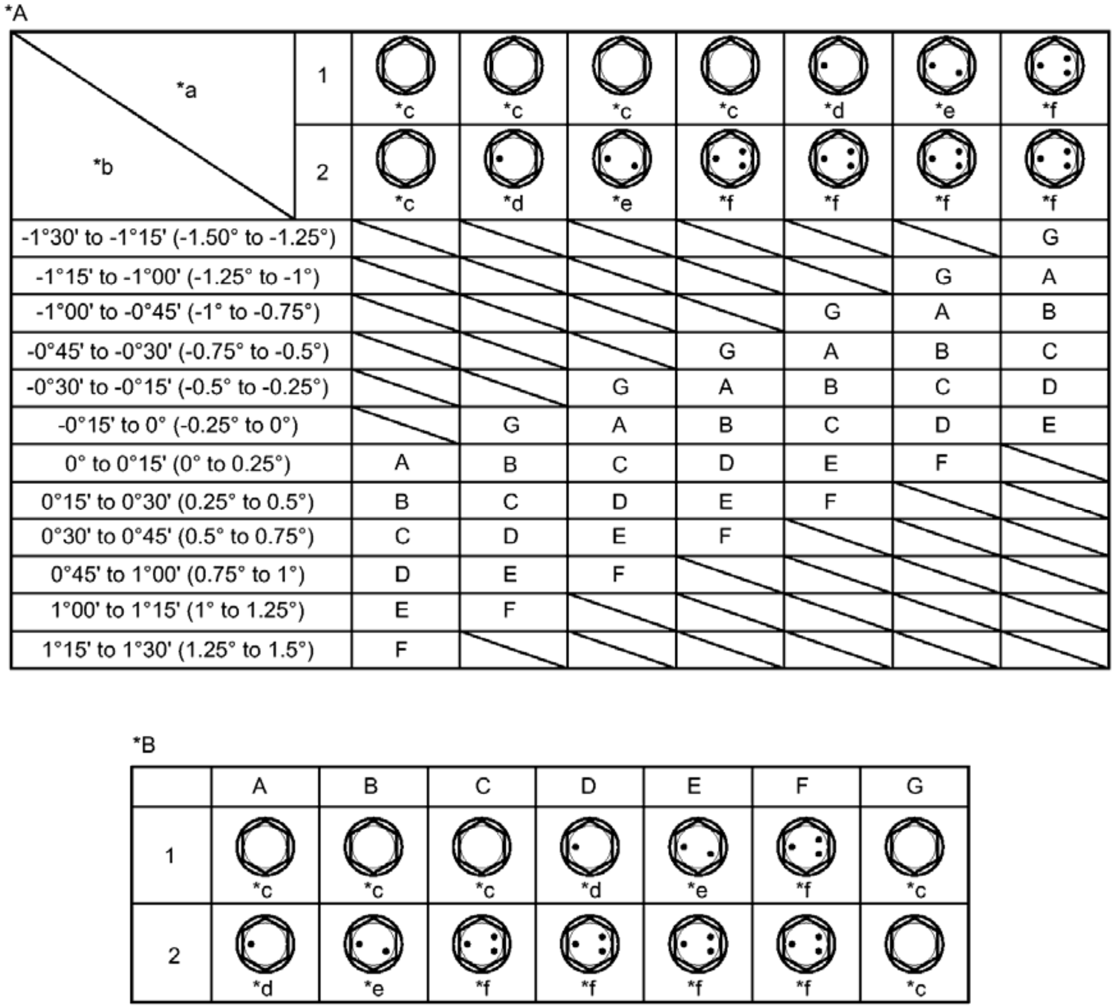

*A

*a / *b								
	1	*c	*c	*c	*c	*d	*e	*f
	2	*c	*d	*e	*f	*f	*f	*f
-1°30' to -1°15' (-1.50° to -1.25°)								G
-1°15' to -1°00' (-1.25° to -1°)							G	A
-1°00' to -0°45' (-1° to -0.75°)						G	A	B
-0°45' to -0°30' (-0.75° to -0.5°)					G	A	B	C
-0°30' to -0°15' (-0.5° to -0.25°)				G	A	B	C	D
-0°15' to 0° (-0.25° to 0°)			G	A	B	C	D	E
0° to 0°15' (0° to 0.25°)		A	B	C	D	E	F	
0°15' to 0°30' (0.25° to 0.5°)		B	C	D	E	F		
0°30' to 0°45' (0.5° to 0.75°)		C	D	E	F			
0°45' to 1°00' (0.75° to 1°)		D	E	F				
1°00' to 1°15' (1° to 1.25°)		E	F					
1°15' to 1°30' (1.25° to 1.5°)		F						

*B

	A	B	C	D	E	F	G
1	*c	*c	*c	*d	*e	*f	*c
2	*d	*e	*f	*f	*f	*f	*c

Fig. 7: Table 1: (Move The Axle Hub Toward The Positive Side) Selected Bolt Combination

Courtesy of TOYOTA MOTOR SALES, U.S.A., INC.

TEXT IN ILLUSTRATION

*A	Table (1) (To move the axle hub toward the positive side)	*B	Selected Bolt Combination
*a	Installed Bolt	*b	Adjusting Value
*c	90105-A0052	*d	90105-17013
*e	90105-17014	*f	90105-17015

2. Table (2) (To move the axle hub toward the negative side)

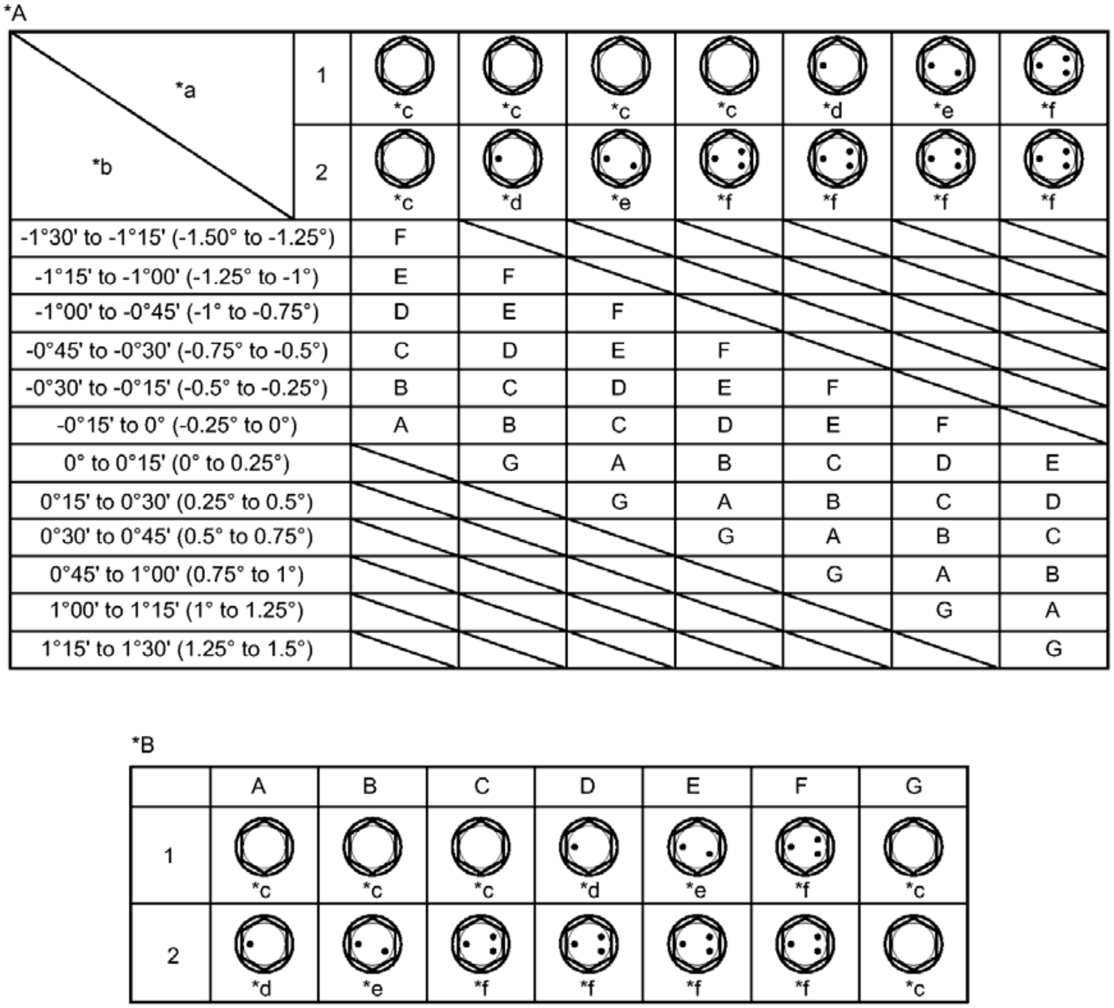

*A

*a / *b							
	1	*c	*c	*c	*c	*d	*e	*f
	2	*c	*d	*e	*f	*f	*f	*f
-1°30' to -1°15' (-1.50° to -1.25°)		F						
-1°15' to -1°00' (-1.25° to -1°)		E	F					
-1°00' to -0°45' (-1° to -0.75°)		D	E	F				
-0°45' to -0°30' (-0.75° to -0.5°)		C	D	E	F			
-0°30' to -0°15' (-0.5° to -0.25°)		B	C	D	E	F		
-0°15' to 0° (-0.25° to 0°)		A	B	C	D	E	F	
0° to 0°15' (0° to 0.25°)			G	A	B	C	D	E
0°15' to 0°30' (0.25° to 0.5°)				G	A	B	C	D
0°30' to 0°45' (0.5° to 0.75°)					G	A	B	C
0°45' to 1°00' (0.75° to 1°)						G	A	B
1°00' to 1°15' (1° to 1.25°)							G	A
1°15' to 1°30' (1.25° to 1.5°)								G

*B

	A	B	C	D	E	F	G
1	*c	*c	*c	*d	*e	*f	*c
2	*d	*e	*f	*f	*f	*f	*c

Fig. 8: Table 2 (move The Axle Hub Toward The Negative Side) Selected Bolt Combination
Courtesy of TOYOTA MOTOR SALES, U.S.A., INC.

TEXT IN ILLUSTRATION

*A	Table (2) (To move the axle hub toward the negative side)	*B	Selected Bolt Combination
*a	Installed Bolt	*b	Adjusting Value
	90105-		90105-

*c	A0052	*d	17013
*e	90105-17014	*f	90105-17015

i. If the camber was out of adjustment in the previous step, perform the adjust camber steps mentioned above. In step (A), replace the existing bolts with the selected bolts.

HINT:

Replace one bolt at a time when replacing both bolts.

5. **INSPECT TOE-IN**

NOTE: Inspect while the vehicle is unloaded.

a. Bounce the vehicle up and down at the corners to stabilize the suspension.
b. Release the parking brake and move the shift lever to N.
c. Push the vehicle straight ahead approximately 5 m (16.4 ft.). (Step C)
d. Put tread center marks on the rearmost points of the front wheels and measure the distance between the marks (dimension B).

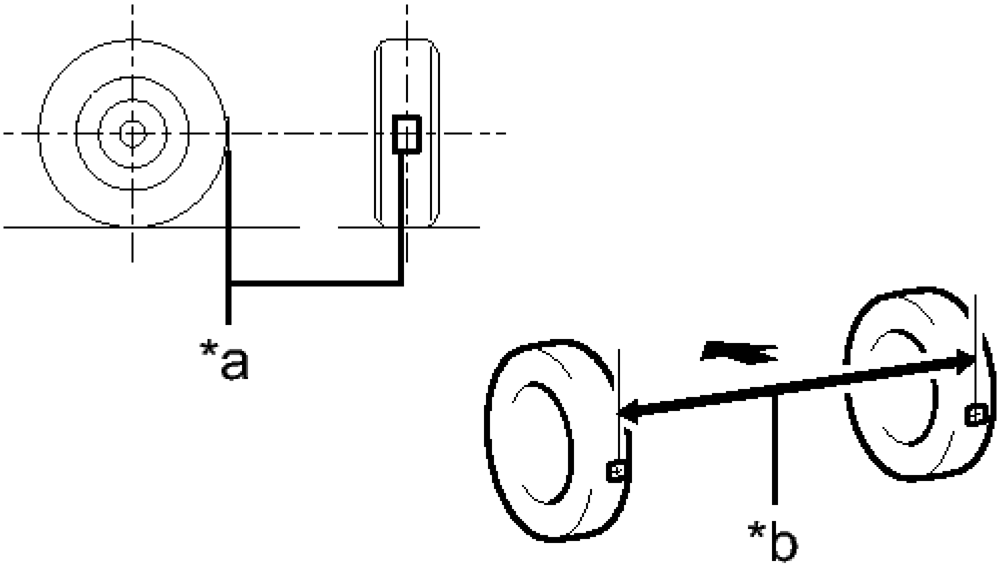

Fig. 9: Checking Toe In
Courtesy of TOYOTA MOTOR SALES, U.S.A., INC.

TEXT IN ILLUSTRATION

	Tread

*a	Center Mark
*b	Dimension B
·	Front of the Vehicle

e. Slowly push the vehicle straight ahead to cause the front wheels to rotate 180°. Use the front tire valve as a reference point.

   HINT:

   Do not allow the wheels to rotate more than 180°. If the wheels rotate more than 180°, perform the procedure from Step C again.

f. Measure the distance between the tread center marks on the front of the wheels (dimension A).

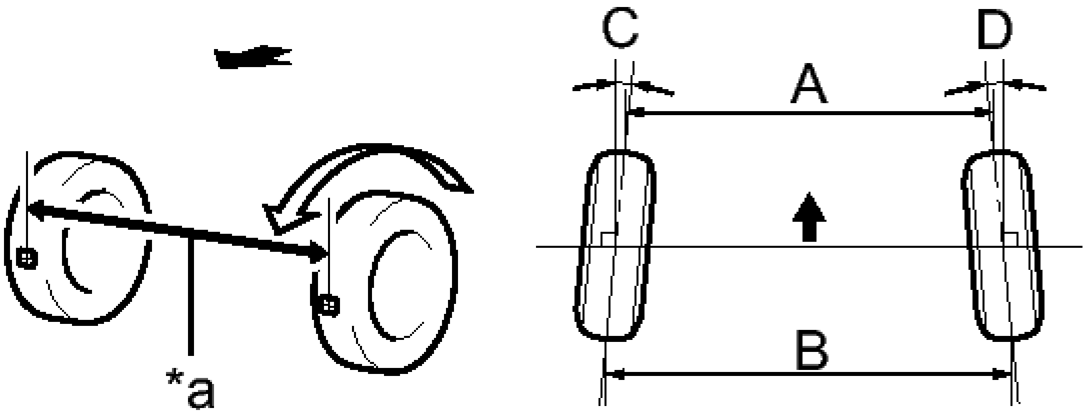

Fig. 10: Measuring Distance Between Tread Center Marks
Courtesy of TOYOTA MOTOR SALES, U.S.A., INC.

TEXT IN ILLUSTRATION

*a	Dimension A
·	Front of the

	Vehicle

Toe-in (Unloaded Vehicle)

Specified Condition
C + D: 0° 00' +/- 0° 10' (0.00° +/- 0.17°)
B - A: 0 +/- 2.0 mm (0 +/- 0.0787 in.)

HINT:

Measure "B - A" only when "C + D" cannot be measured.

If the toe-in is not within the specified range, adjust it at the rack ends.

6. **ADJUST TOE-IN**
    a. Make sure that the thread length of the right and left rack ends are approximately the same.

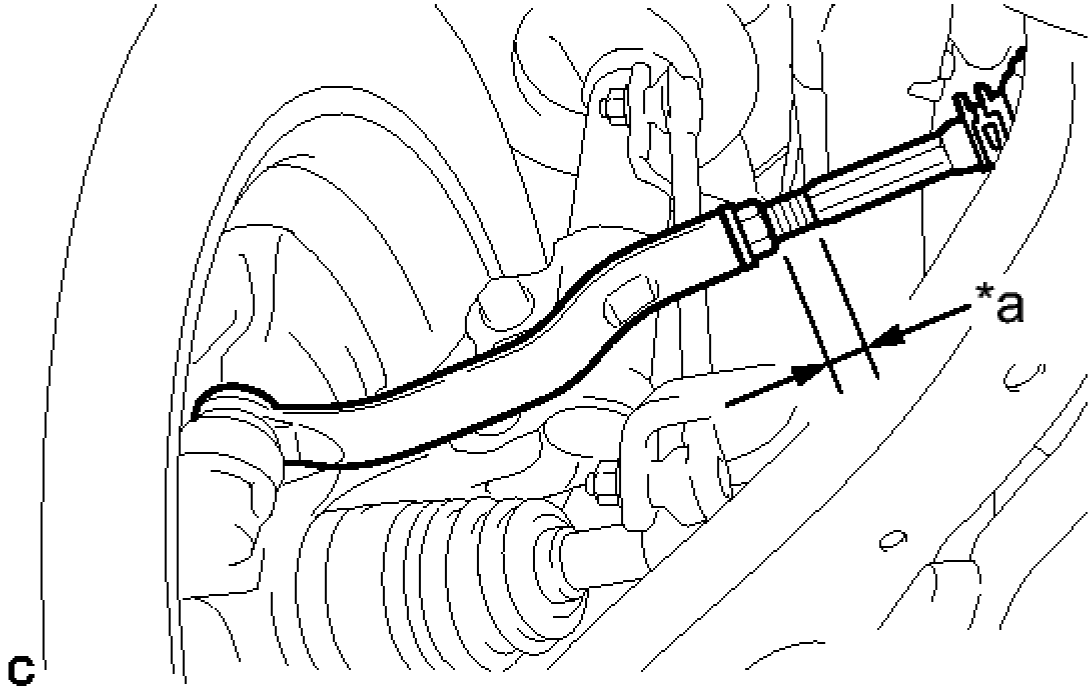

Fig. 11: Identifying Thread Length

Courtesy of TOYOTA MOTOR SALES, U.S.A., INC.

TEXT IN ILLUSTRATION

*a	Thread Length

Standard difference

1.5 mm (0.0591 in.) or less

b. Remove the boot clips.
c. Loosen the tie rod end lock nuts.

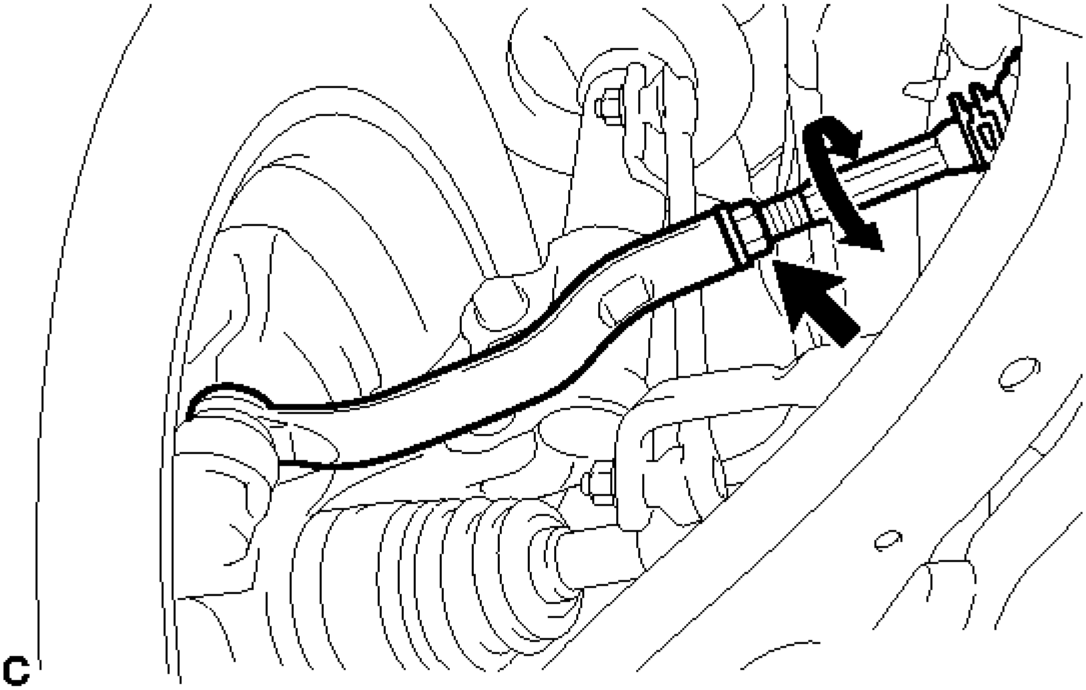

Fig. 12: Identifying Tie Rod End Lock Nuts
Courtesy of TOYOTA MOTOR SALES, U.S.A., INC.

d. Adjust the rack ends if the difference in thread length between the right and left rack ends is not within the specified range.
    1. If the toe-in measurement is greater than the specified range (too much toe-out), extend the shorter rack end so that the length difference is within the specified range.
    2. If the toe-in measurement is less than the specified range (too much toe-in), shorten the longer rack end so that the length difference is within the specified range.
    3. Measure the toe-in.
e. Turn the right and left rack ends by an equal amount to adjust the toe-in.
f. Make sure that the thread lengths of the right and left rack ends are the same.

g. Tighten the tie rod end lock nuts.

Torque: 74 N*m (755 kgf*cm, 55 ft.*lbf)

h. Place the boots on the seats and install the clips.

HINT:

Make sure that the boots are not twisted.

7. **INSPECT WHEEL ANGLE**

a. Put tread center marks on the rearmost points of a turning radius gauge.

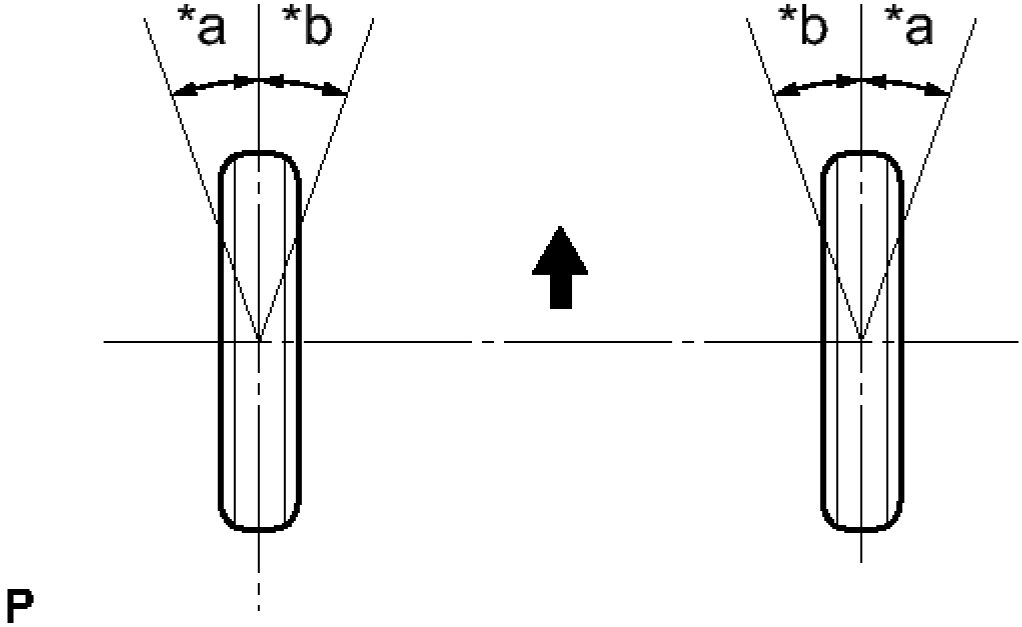

Fig. 13: Inspecting Wheel Angle
Courtesy of TOYOTA MOTOR SALES, U.S.A., INC.

TEXT IN ILLUSTRATION

*a	Inside
*b	Outside
·	Front of the Vehicle

b. Turn the steering wheel fully to the left and right and measure the turning angle.

NOTE: **Inspect while the vehicle is unloaded.**

Wheel Turning Angle (Unloaded Vehicle)

Engine	Tire Size	Inside Wheel	Outside Wheel
2AR-FE	205/65R16	37°15' +/- 2° (37.25° +/- 2°)	32°50' +/- 2° (32.83° +/- 2°)
	215/55R17	37°20' +/- 2° (37.33° +/- 2°) *1 37°35' +/- 2° (37.58° +/- 2°) *1, *4	32°50' +/- 2° (32.83° +/- 2°) *1 33°00' +/- 2° (33.00° +/- 2°) *1, *4
		37°15' +/- 2° (37.25° +/- 2°) *2 37°30' +/- 2° (37.50° +/- 2°) *2, *4	32°50' +/- 2° (32.83° +/- 2°) *2 33°00' +/- 2° (33.00° +/- 2°) *2, *4
		37°15' +/- 2° (37.25° +/- 2°) *3	32°50' +/- 2° (32.83° +/- 2°) *3
	225/45R18	37°15' +/- 2° (37.25° +/- 2°)	32°50' +/- 2° (32.83° +/- 2°)
2GR-FE	215/55R17	37°10' +/- 2° (37.17° +/- 2°) 37°30' +/- 2° (37.50° +/- 2°) *4	32°50' +/- 2° (32.83° +/- 2°) 33°00' +/- 2° (33.00° +/- 2°) *4
		37°20'	32°50'

	225/45R18	+/- 2° (37.33° +/- 2°)	+/- 2° (32.83° +/- 2°)

*1: ASV50L-CETNKA and ASV50L-SETNKA

*2: ASV50L-CETGKA and ASV50L-SETGKA

*3: ASV50L-CETSKA

*4: For Mexico

If the right and left inside wheel angles differ from the specified value, check and adjust the right and left rack end lengths.

REAR WHEEL ALIGNMENT

ADJUSTMENT

ADJUSTMENT

1. **INSPECT TIRES** . Refer to **INSPECTION - Step 1**
2. **MEASURE VEHICLE HEIGHT** See step 2
3. **INSPECT CAMBER**

NOTE: **Inspect while the vehicle is unloaded.**

a. Install a camber-caster-kingpin gauge.

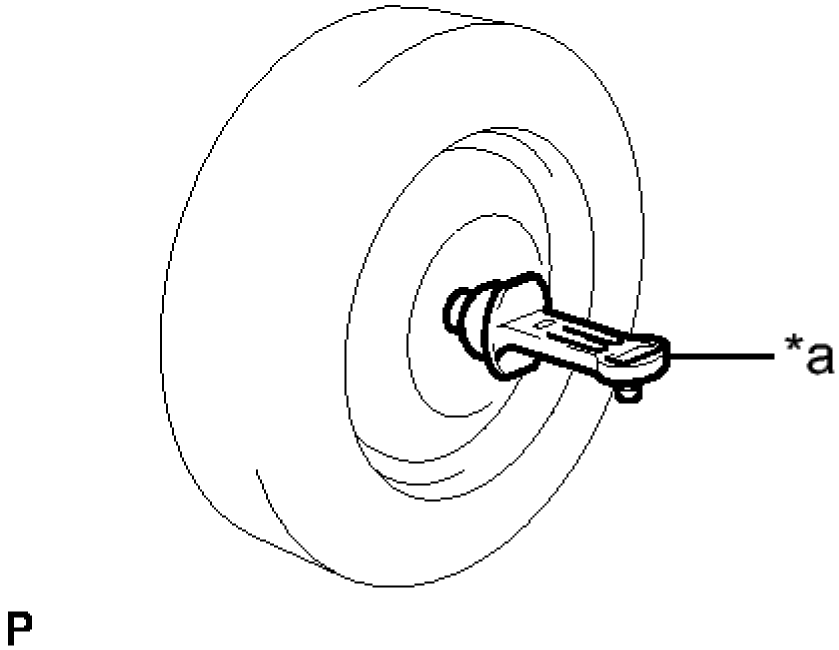

Fig. 14: Identifying Camber-Caster-Kingpin Gauge
Courtesy of TOYOTA MOTOR SALES, U.S.A., INC.

TEXT IN ILLUSTRATION

*a	Camber-caster-kingpin Gauge

b. Inspect the camber.

Camber (Unloaded Vehicle)

Engine	Tire Size	Camber Inclination	Right-left Difference
	205/65R16	-1°12' +/- 45' (-1.20° +/- 0.75°)	
		-1°11' +/- 45' (-1.18° +/- 0.75°) *1 -1°02' +/- 45' (-1.03° +/- 0.75°) *1, *4	
		-1°14' +/-	

2AR-FE	215/55R17	45' (-1.23° +/- 0.75°) *2 -1°05' +/- 45' (-1.08° +/- 0.75°) *2, *4	45' (0.75°) or less
		-1°12' +/- 45' (-1.20° +/- 0.75°) *3	
	225/45R18	-1°12' +/- 45' (-1.20° +/- 0.75°)	
2GR-FE	215/55R17	-1°16' +/- 45' (-1.27° +/- 0.75°) -1°08' +/- 45' (-1.13° +/- 0.75°) *4	
	225/45R18	-1°14' +/- 45' (-1.23° +/- 0.75°)	

*1: ASV50L-CETNKA and ASV50L-SETNKA

*2: ASV50L-CETGKA and ASV50L-SETGKA

*3: ASV50L-CETSKA

*4: For Mexico

HINT:

Camber is not adjustable. If the measurement is not within the specified range, inspect the suspension parts for damage and/or wear, and replace them if necessary.

4. **INSPECT TOE-IN**

NOTE: Inspect while the vehicle is unloaded.

a. Bounce the vehicle up and down at the corners to stabilize the suspension.
b. Release the parking brake and move the shift lever to N.
c. Push the vehicle straight ahead approximately 5 m (16.4 ft.). (Step A)
d. Put tread center marks on the rearmost points of the rear wheels and measure the distance between

the marks (dimension B).

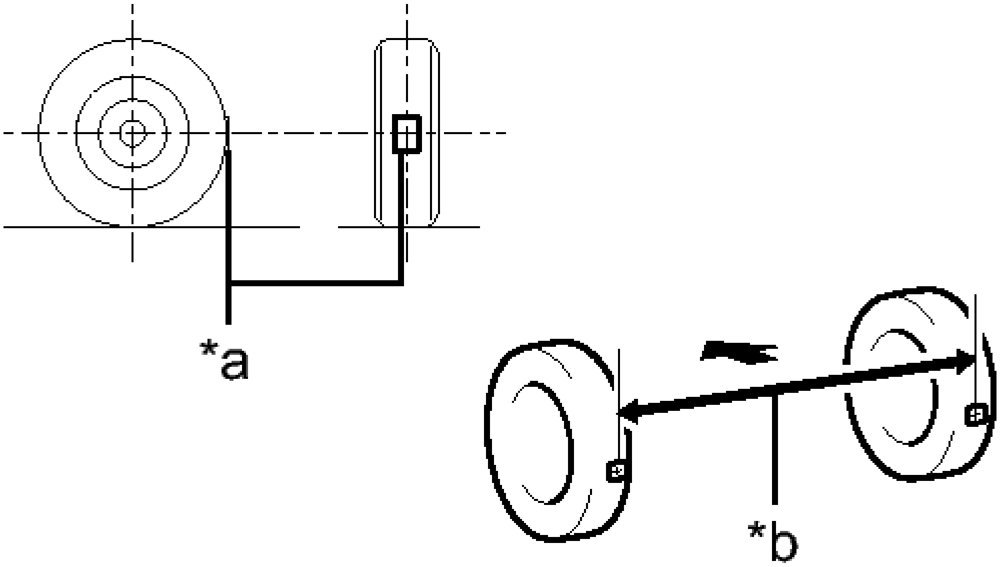

Fig. 15: Identifying Tread Center Marks On Rearmost Points Of Rear Wheels
Courtesy of TOYOTA MOTOR SALES, U.S.A., INC.

TEXT IN ILLUSTRATION

*a	Tread Center Mark
*b	Dimension B
	Front of the Vehicle

e. Slowly push the vehicle straight ahead to cause the rear wheels to rotate 180°. Use the rear tire valve as a reference point.

   HINT:

   Do not allow the wheels to rotate more than 180°. If the wheels rotate more than 180°, perform the procedure from Step A again.

f. Measure the distance between the tread center marks on the front of the rear wheels (dimension A).

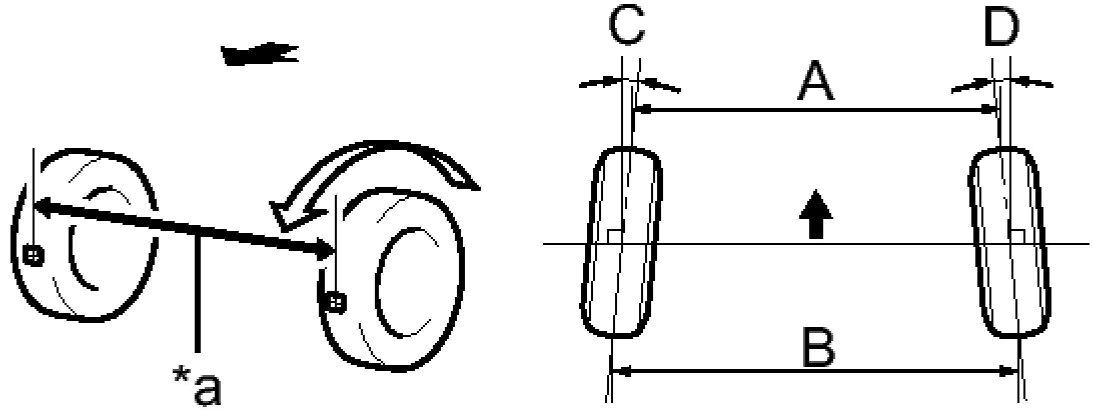

Fig. 16: Identifying Tread Center Marks On Front Of Rear Wheels
Courtesy of TOYOTA MOTOR SALES, U.S.A., INC.

TEXT IN ILLUSTRATION

*a	Dimension A
	Front of the Vehicle

Toe-in (Unloaded Vehicle)

Specified Condition
C + D: 0° 13' +/- 0° 10' (0.21° +/- 0.17°)
B - A: 2.5 +/- 2.0 mm (0.0984 +/- 0.0787 in.)

HINT:

Measure "B - A" only when "C + D" cannot be measured.

If the toe-in is not within the specified range, adjust it at the rear No. 2 suspension arms.

5. **ADJUST TOE-IN**
    a. Measure the lengths of the right and left rear No. 2 suspension arms.

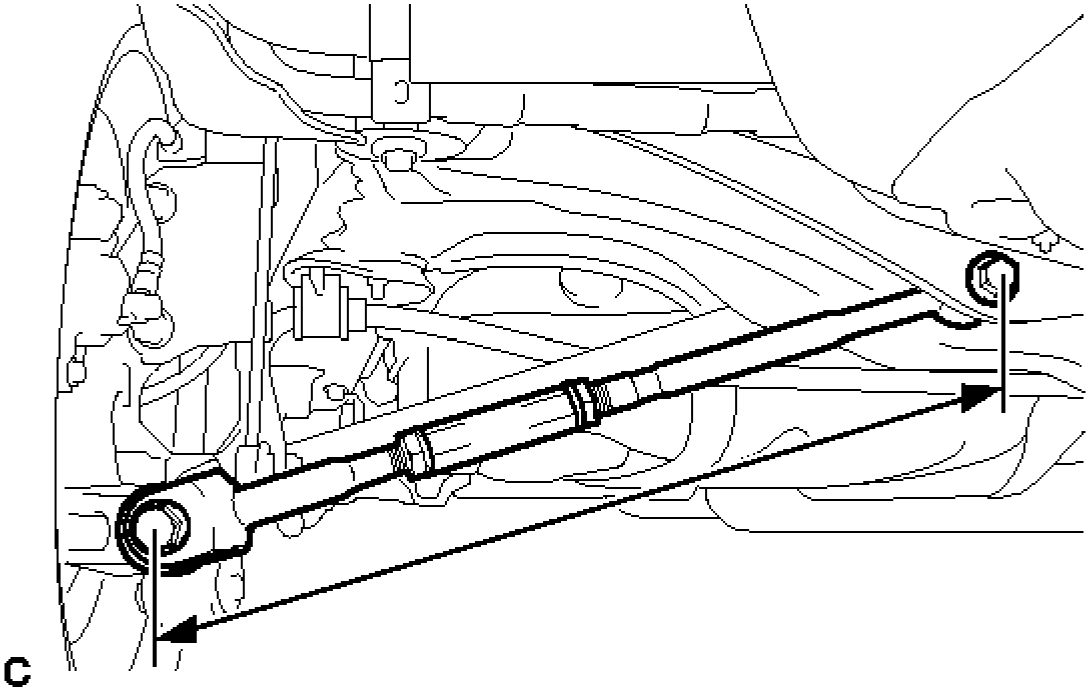

Fig. 17: Measuring The Lengths Of The Right And Left Rear No. 2 Suspension Arms
Courtesy of TOYOTA MOTOR SALES, U.S.A., INC.

Standard difference

1.5 mm (0.0591 in.) or less

    b. Loosen the 2 lock nuts.

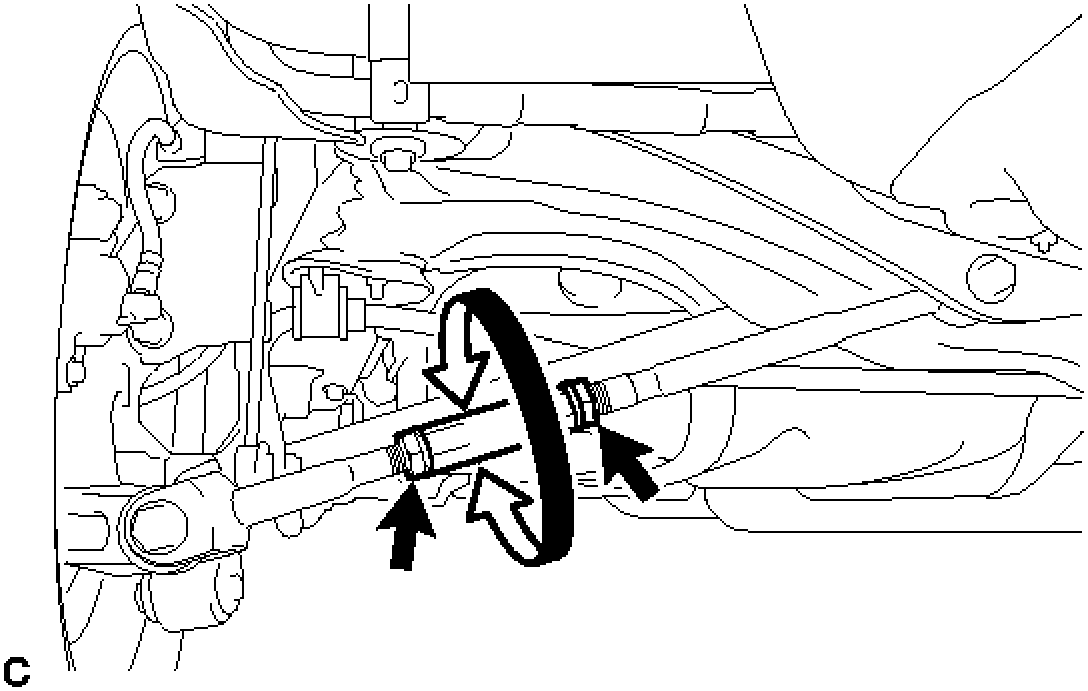

Fig. 18: Identifying Lock Nuts And Adjusting No. 2 Suspension Arm Assemblies
Courtesy of TOYOTA MOTOR SALES, U.S.A., INC.

c. If the length difference between the left and right rear No. 2 suspension arm assemblies is not within the specified range, adjust it by following the procedures below.
    1. If the toe-in measurement is greater than the specified range (too much toe-out), extend the shorter rear No. 2 suspension arm by rotating the adjusting tube so that the length difference is within the specified range.
    2. If the toe-in measurement is less than the specified range (too much toe-in), shorten the longer rear No. 2 suspension arm by rotating the adjusting tube so that the length difference is within the specified range.
    3. Measure the toe-in.

d. Turn the right and left adjusting tubes by an equal amount to adjust toe-in.

HINT:

- Try to adjust the toe-in to the center of the specified range.
- One turn of each adjusting tube will adjust the toe-in by approximately 11.3 mm (0.445 in.).

e. Tighten the lock nuts while securing the adjusting tube in the order indicated below:
    1. Tighten the outside lock nut.
    2. Tighten the inside lock nut.
    3. Retighten the outside lock nut.

Torque: 56 N*m (570 kgf*cm, 41 ft.*lbf)

2012-2017 ACCESSORIES & EQUIPMENT

Windows / Glass (Service Information) - Camry (Hybrid)

POWER WINDOW MASTER SWITCH

COMPONENTS

ILLUSTRATION

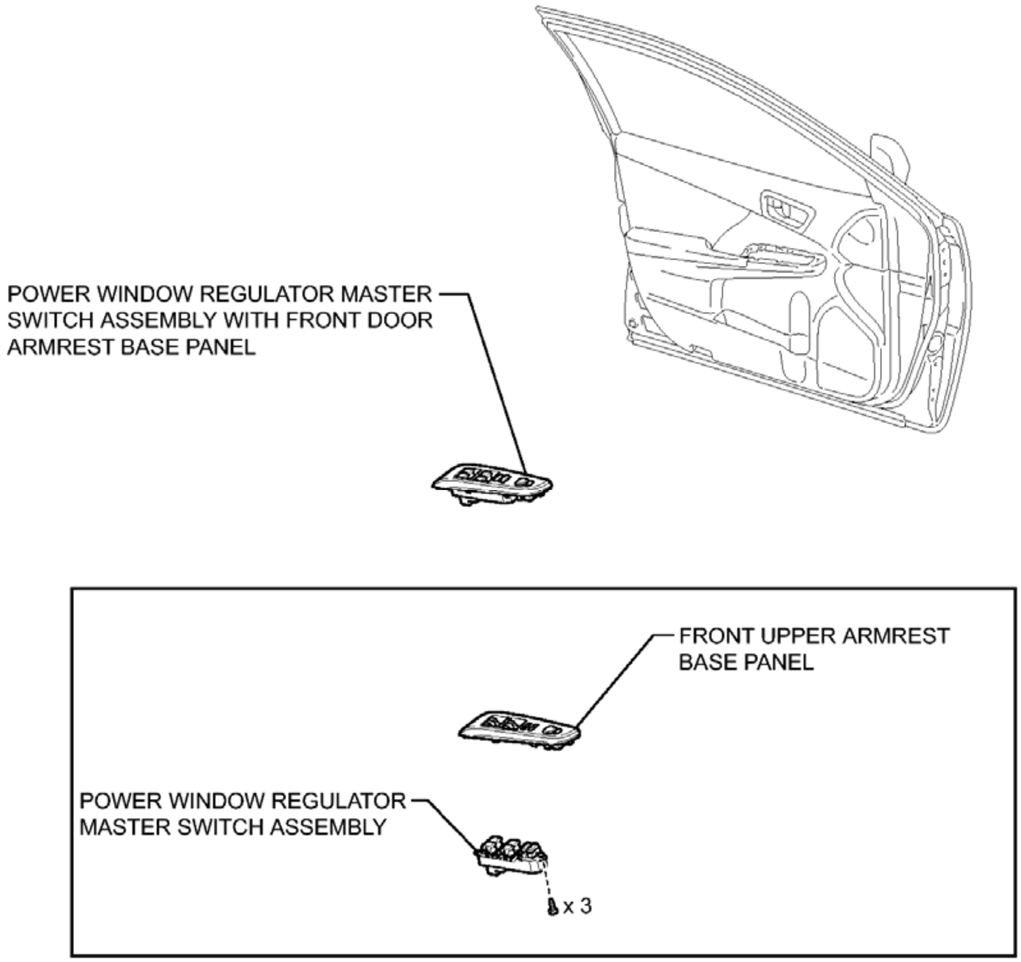
POWER WINDOW REGULATOR MASTER SWITCH ASSEMBLY WITH FRONT DOOR ARMREST BASE PANEL
FRONT UPPER ARMREST BASE PANEL
POWER WINDOW REGULATOR MASTER SWITCH ASSEMBLY
x 3

P

Fig. 1: Identifying Power Window Master Switch Replacement Components
Courtesy of TOYOTA MOTOR SALES, U.S.A., INC.

REMOVAL

REMOVAL

1. **REMOVE POWER WINDOW REGULATOR MASTER SWITCH ASSEMBLY WITH FRONT DOOR ARMREST BASE PANEL** . Refer to **DISASSEMBLY - Step 6**
2. **REMOVE POWER WINDOW REGULATOR MASTER SWITCH ASSEMBLY**
    a. Remove the 3 screws and power window regulator master switch assembly from the front upper armrest base panel.

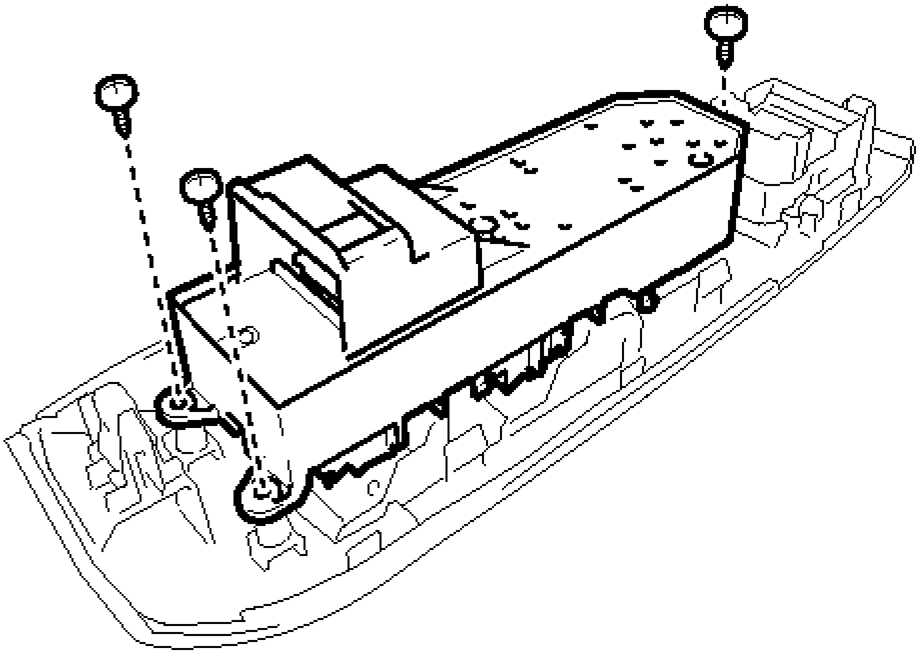

Fig. 2: Identifying Power Window Regulator Master Switch Assembly Fasteners
Courtesy of TOYOTA MOTOR SALES, U.S.A., INC.

INSPECTION

INSPECTION

1. **INSPECT POWER WINDOW REGULATOR MASTER SWITCH ASSEMBLY**
    a. Check the switch function.

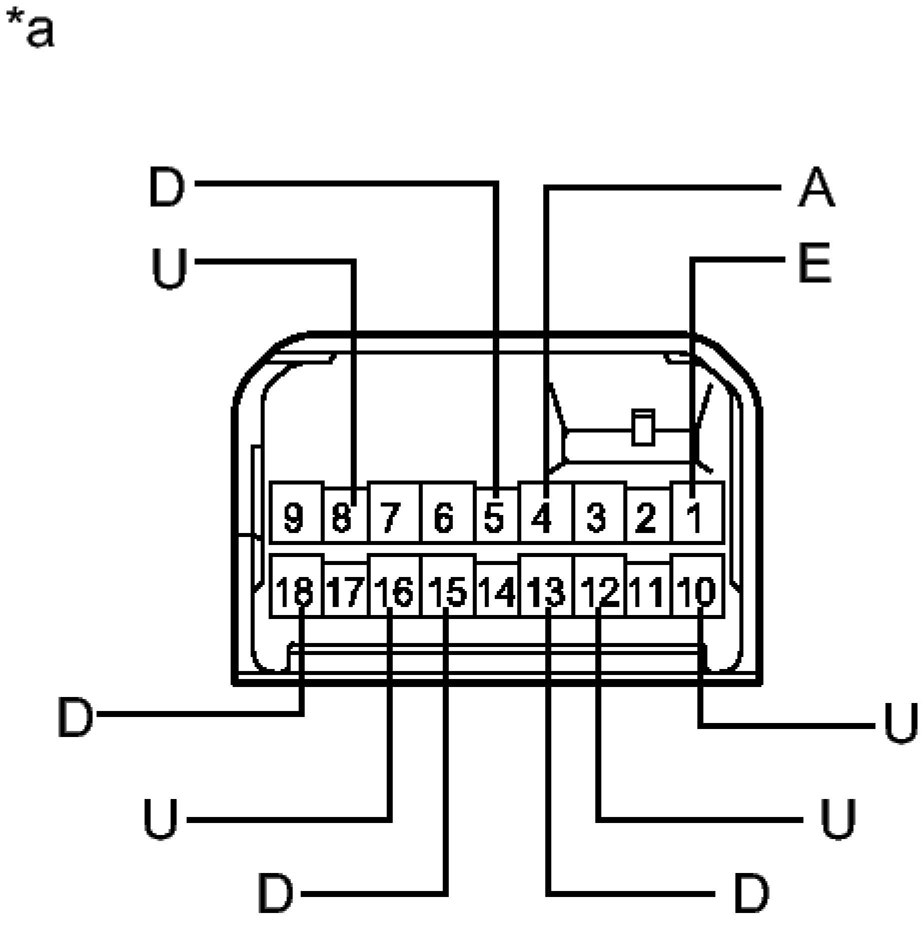
*a
D
A
U
E
9
8
7
6
5
4
3
2
1
18
17
16
15
14
13
12
11
10
D
U
U
U
D
D
H

Fig. 3: Inspecting Power Window Regulator Master Switch Assembly Connector Terminal Identification
Courtesy of TOYOTA MOTOR SALES, U.S.A., INC.

1. Measure the resistance according to the value(s) in the table below.

   Standard Resistance

Tester Connection	Switch Condition	Specified Condition
4 (A) - 1 (E)	Auto UP (for driver door)	Below 1 ohms
8 (U) - 1 (E)	Auto UP (for driver door)	Below 1 ohms

8 (U) - 1 (E)	Manual UP (for driver door)	Below 1 ohms
5 (D) - 1 (E)	Manual DOWN (for driver door)	Below 1 ohms
4 (A) - 1 (E)	Auto DOWN (for driver door)	Below 1 ohms
5 (D) - 1 (E)	Auto DOWN (for driver door)	Below 1 ohms
16 (U) - 1 (E)	Manual UP (for front passenger door)	Below 1 ohms
15 (D) - 1 (E)	Manual DOWN (for front passenger door)	Below 1 ohms
12 (U) - 1 (E)	Manual UP (for rear LH door)	Below 1 ohms
13 (D) - 1 (E)	Manual DOWN (for rear LH door)	Below 1 ohms
10 (U) - 1 (E)	Manual UP (for rear RH door)	Below 1 ohms
18 (D) - 1 (E)	Manual DOWN (for rear RH door)	Below 1 ohms

TEXT IN ILLUSTRATION

	Component without

*a	harness connected (Power Window Regulator Master Switch Assembly)

If the result is not as specified, replace the power window regulator master switch assembly.

b. Check that the LED illuminates.

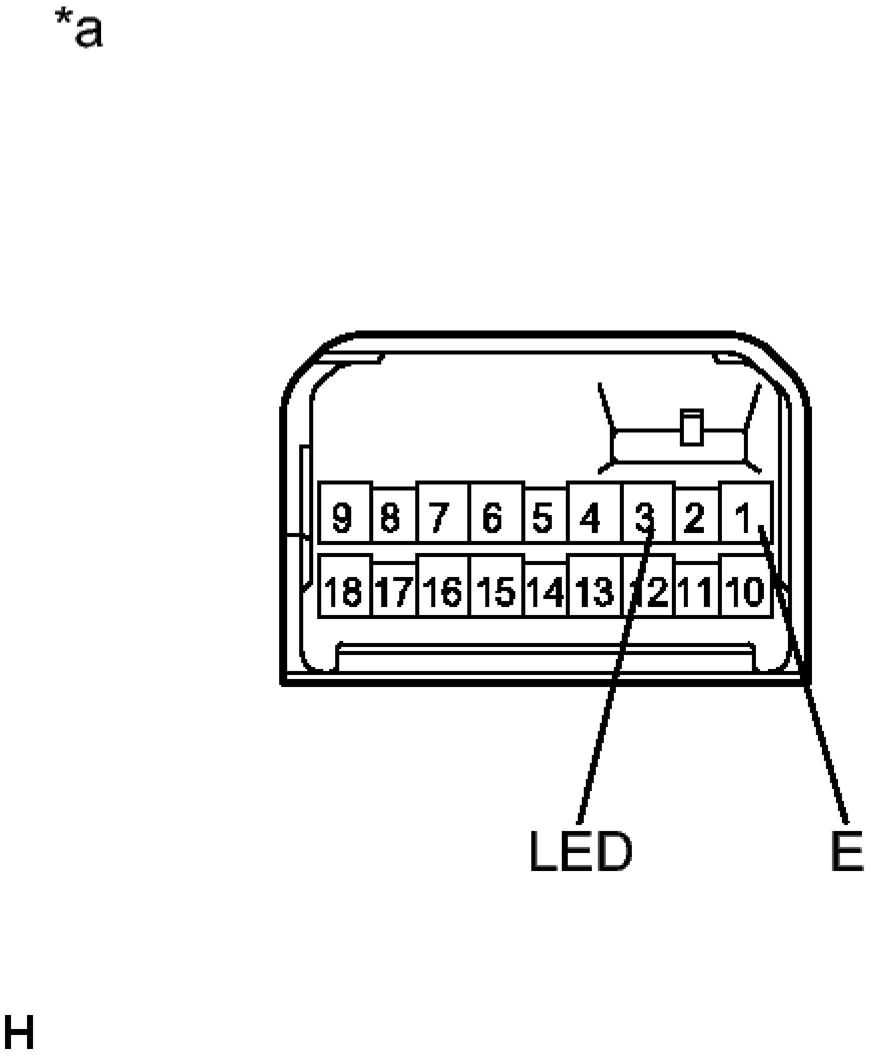
*a
9
8
7
6
5
4
3
2
1
18
17
16
15
14
13
12
11
10
LED
E
H

Fig. 4: Inspecting Power Window Regulator Master Switch Assembly Connector Terminal Identification
Courtesy of TOYOTA MOTOR SALES, U.S.A., INC.

1. Apply auxiliary battery voltage to the power window regulator master switch assembly and check that the LED illuminates.

   OK

Measurement Condition	Specified Condition
Auxiliary battery positive (+) --> 3 (LED) Auxiliary battery negative (-) --> 1 (E)	LED illuminates

   TEXT IN ILLUSTRATION

*a	Component without harness connected (Power Window Regulator Master Switch Assembly)

   If the result is not as specified, replace the power window regulator master switch assembly.

INSTALLATION

INSTALLATION

1. **INSTALL POWER WINDOW REGULATOR MASTER SWITCH ASSEMBLY**
   1. Install the power window regulator master switch assembly to the front upper armrest base panel with the 3 screws.
2. **INSTALL POWER WINDOW REGULATOR MASTER SWITCH ASSEMBLY WITH FRONT DOOR ARMREST BASE PANEL** . Refer to **REASSEMBLY - Step 42**

FRONT PASSENGER SIDE POWER WINDOW SWITCH

COMPONENTS

ILLUSTRATION

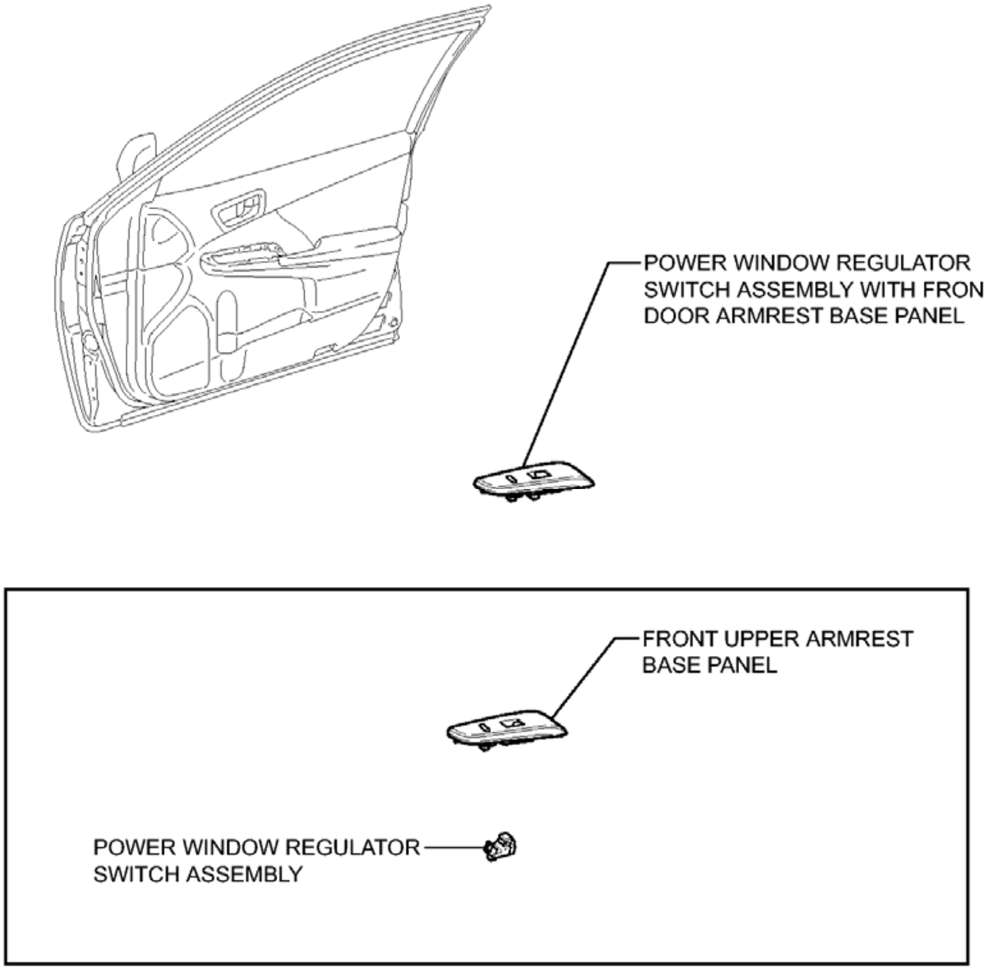
POWER WINDOW REGULATOR SWITCH ASSEMBLY WITH FRONT DOOR ARMREST BASE PANEL
FRONT UPPER ARMREST BASE PANEL
POWER WINDOW REGULATOR SWITCH ASSEMBLY
P

Fig. 5: Identifying Front Passenger Side Power Window Switch Replacement Components
Courtesy of TOYOTA MOTOR SALES, U.S.A., INC.

REMOVAL

REMOVAL

1. **REMOVE POWER WINDOW REGULATOR SWITCH ASSEMBLY WITH FRONT DOOR ARMREST BASE PANEL** . Refer to **DISASSEMBLY - Step 7**
2. **REMOVE POWER WINDOW REGULATOR SWITCH ASSEMBLY**
   a. Disengage the 2 claws and remove the power window regulator switch assembly from the front upper armrest base panel.

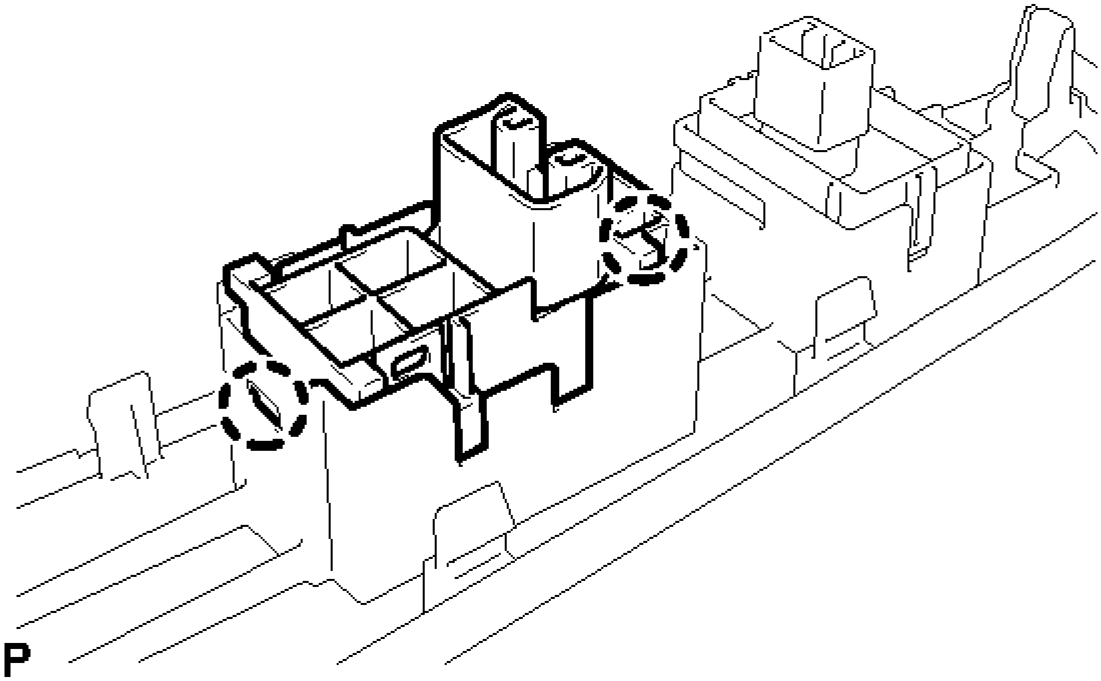

Fig. 6: Identifying Power Window Regulator Switch Assembly Claws
Courtesy of TOYOTA MOTOR SALES, U.S.A., INC.

INSPECTION

INSPECTION

1. **INSPECT POWER WINDOW REGULATOR SWITCH ASSEMBLY**
   a. Check the switch function.
      1. Measure the resistance when the switch is operated according to the value(s) in the table below.

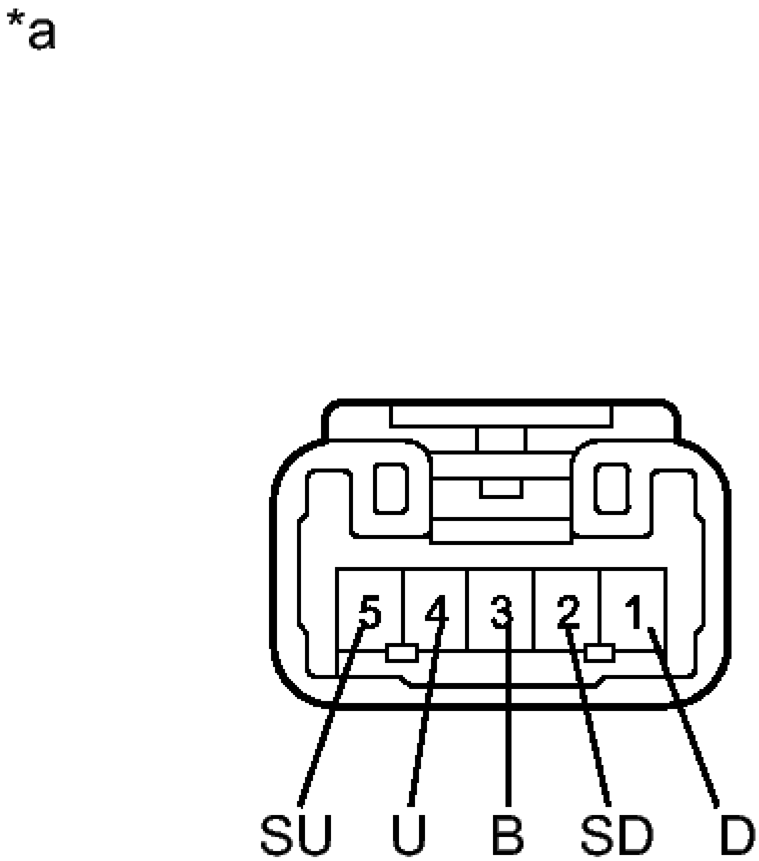

Fig. 7: Power Window Regulator Switch Connector Terminal Identification
Courtesy of TOYOTA MOTOR SALES, U.S.A., INC.

Standard Resistance

Tester Connection	Switch Condition	Specified Condition
1 (D) - 2 (SD)	UP	Below 1 ohms
3 (B) - 4 (U)		Below 1 ohms
1 (D) - 2 (SD)	off	Below 1 ohms
4 (U) - 5 (SU)		Below 1 ohms

4 (U) - 5 (SU)	DOWN	Below 1 ohms
1 (D) - 3 (B)		Below 1 ohms

TEXT IN ILLUSTRATION

*a	Component without harness connected (Power Window Regulator Switch Assembly (for Front Passenger Door))

If the result is not as specified, replace the power window regulator switch assembly (for front passenger door).

INSTALLATION

INSTALLATION

1. **INSTALL POWER WINDOW REGULATOR SWITCH ASSEMBLY**
    a. Engage the 2 claws to install the power window regulator switch assembly to the front upper armrest base panel.
2. **INSTALL POWER WINDOW REGULATOR SWITCH ASSEMBLY WITH FRONT DOOR ARMREST BASE PANEL** . Refer to **REASSEMBLY - Step 43**

REAR POWER WINDOW SWITCH

COMPONENTS

ILLUSTRATION

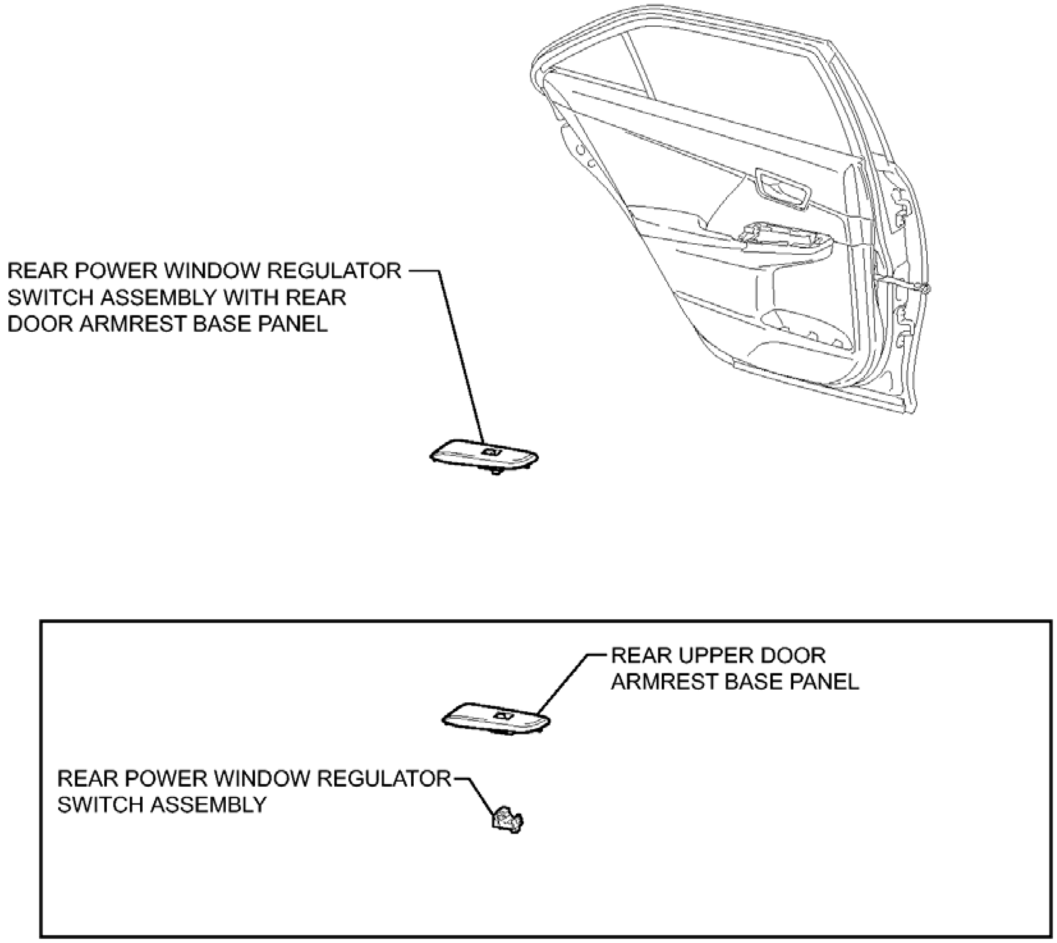
REAR POWER WINDOW REGULATOR SWITCH ASSEMBLY WITH REAR DOOR ARMREST BASE PANEL
REAR UPPER DOOR ARMREST BASE PANEL
REAR POWER WINDOW REGULATOR SWITCH ASSEMBLY

P

Fig. 8: Identifying Rear Power Window Switch Replacement Components
Courtesy of TOYOTA MOTOR SALES, U.S.A., INC.

REMOVAL

REMOVAL

1. **REMOVE REAR POWER WINDOW REGULATOR SWITCH ASSEMBLY WITH REAR DOOR ARMREST BASE PANEL** . Refer to **DISASSEMBLY - Step 5**
2. **REMOVE REAR POWER WINDOW REGULATOR SWITCH ASSEMBLY**
   a. Disengage the 2 claws and remove the rear power window regulator switch assembly from the rear upper door armrest base panel.

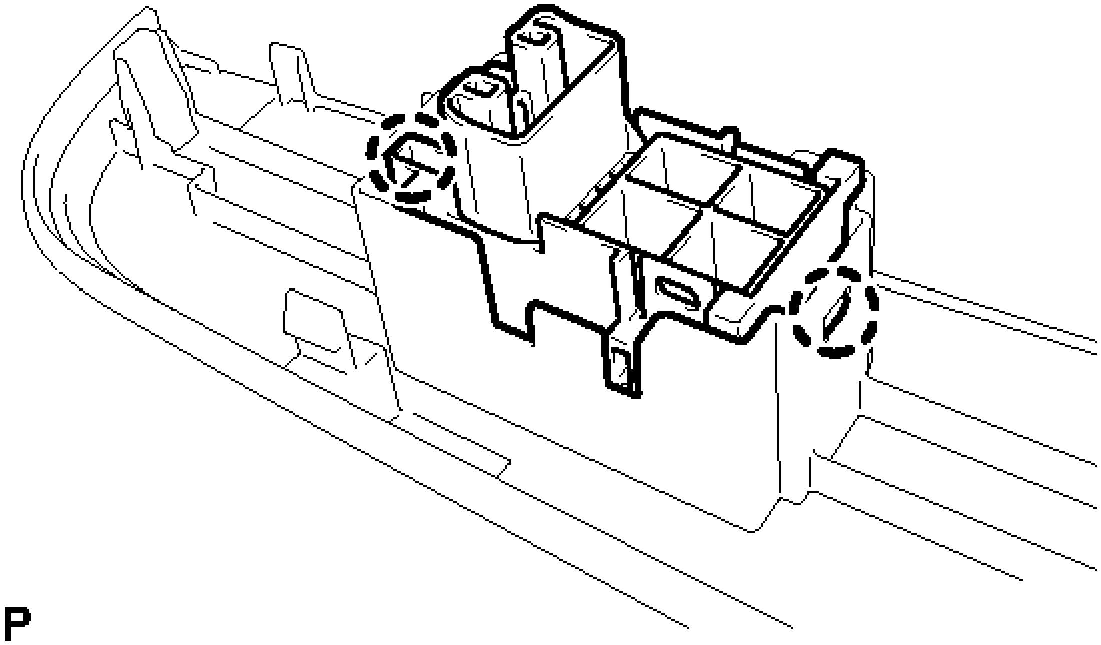

Fig. 9: Identifying Rear Power Window Regulator Switch Assembly Claws
Courtesy of TOYOTA MOTOR SALES, U.S.A., INC.

INSPECTION

INSPECTION

1. **INSPECT REAR POWER WINDOW REGULATOR SWITCH ASSEMBLY LH**
    a. Check the switch function.
        1. Measure the resistance when the switch is operated according to the value(s) in the table below.

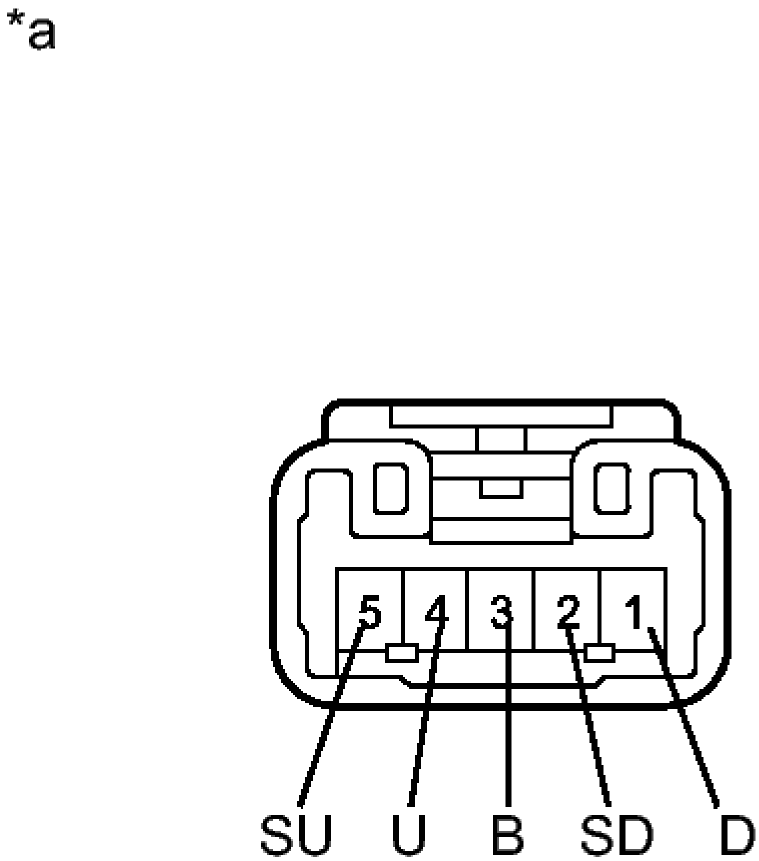

Fig. 10: Rear Power Window Regulator Switch Assembly Connector Terminal Identification
Courtesy of TOYOTA MOTOR SALES, U.S.A., INC.

Standard Resistance

Tester Connection	Switch Condition	Specified Condition
1 (D) - 2 (SD)	UP	Below 1 ohms
3 (B) - 4 (U)		Below 1 ohms
1 (D) - 2 (SD)	off	Below 1 ohms
4 (U) - 5		Below 1

(SU)		ohms
4 (U) - 5 (SU)	DOWN	Below 1 ohms
1 (D) - 3 (B)		Below 1 ohms

TEXT IN ILLUSTRATION

*a	Component without harness connected (Power Window Regulator Switch Assembly (for Rear LH Door))

If the result is not as specified, replace the power window regulator switch assembly (for rear LH door).

2. **INSPECT REAR POWER WINDOW REGULATOR SWITCH ASSEMBLY RH**
    a. Check the switch function.
        1. Measure the resistance when the switch is operated according to the value(s) in the table below.

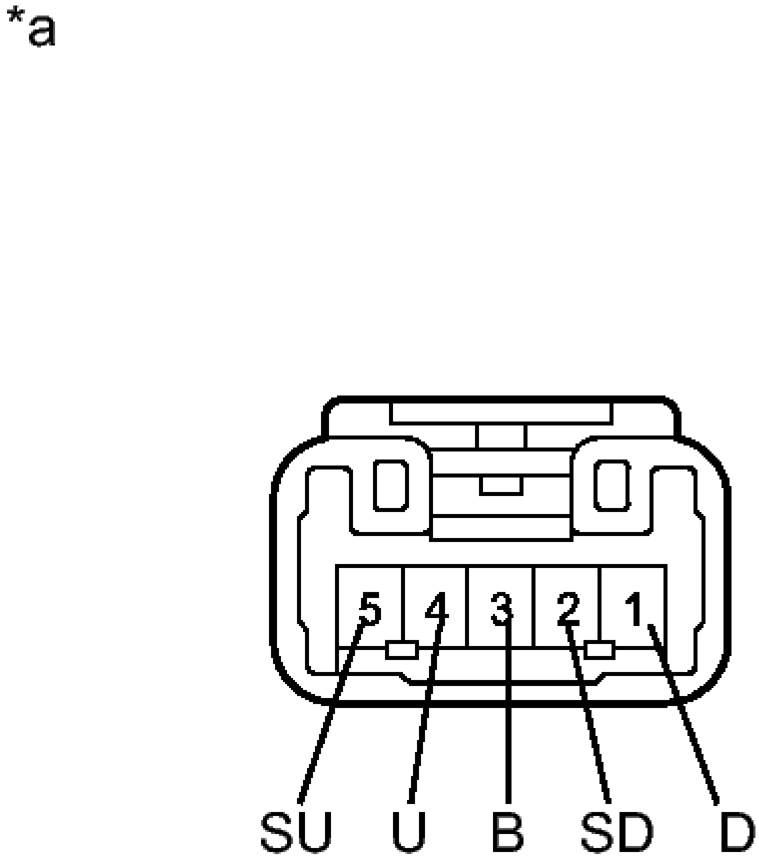

Fig. 11: Rear Power Window Regulator Switch Assembly Connector Terminal Identification
Courtesy of TOYOTA MOTOR SALES, U.S.A., INC.

Standard Resistance

Tester Connection	Switch Condition	Specified Condition
1 (D) - 2 (SD)	UP	Below 1 ohms
3 (B) - 4 (U)		Below 1 ohms
1 (D) - 2 (SD)	off	Below 1 ohms
4 (U) - 5		Below 1

(SU)		ohms
4 (U) - 5 (SU)	DOWN	Below 1 ohms
1 (D) - 3 (B)		Below 1 ohms

TEXT IN ILLUSTRATION

*a	Component without harness connected (Power Window Regulator Switch Assembly (for Rear RH Door))

If the result is not as specified, replace the power window regulator switch assembly (for rear RH door).

INSTALLATION

INSTALLATION

1. **INSTALL REAR POWER WINDOW REGULATOR SWITCH ASSEMBLY**
    a. Engage the 2 claws to install the rear power window regulator switch assembly to the rear upper door armrest base panel.
2. **INSTALL REAR POWER WINDOW REGULATOR SWITCH ASSEMBLY WITH REAR DOOR ARMREST BASE PANEL** . Refer to **REASSEMBLY - Step 32**

POWER WINDOW REGULATOR MOTOR (FOR FRONT DOOR)

COMPONENTS

ILLUSTRATION

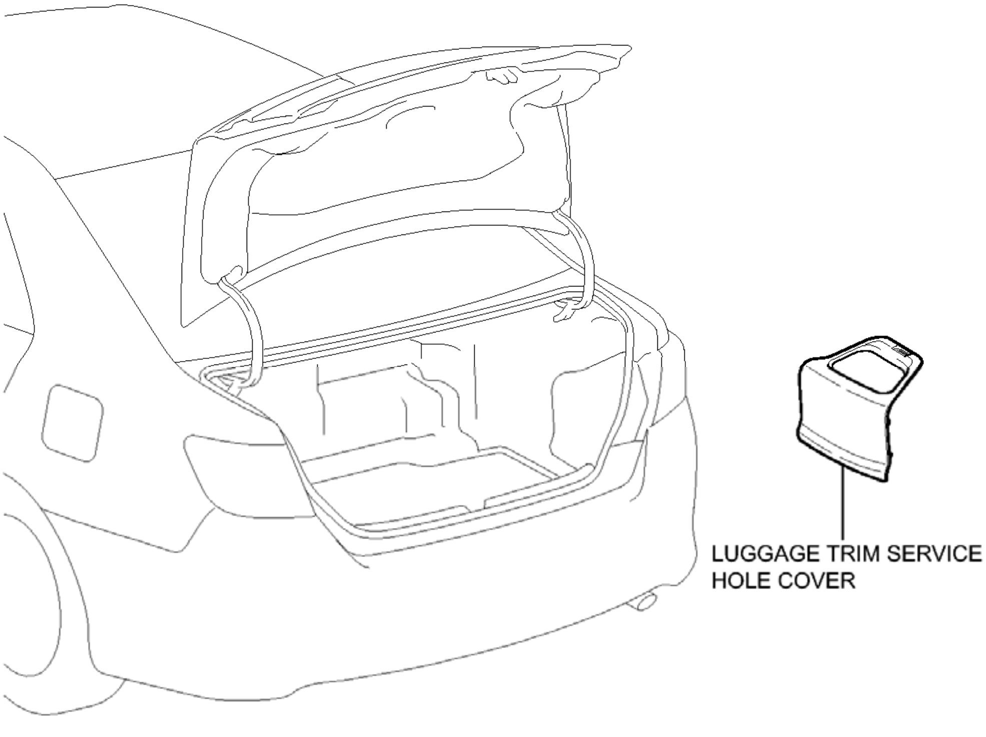
LUGGAGE TRIM SERVICE HOLE COVER
P

Fig. 12: Identifying Power Window Regulator Motor Replacement Components With Torque Specifications (For Front Door) (1 Of 3)
Courtesy of TOYOTA MOTOR SALES, U.S.A., INC.

ILLUSTRATION

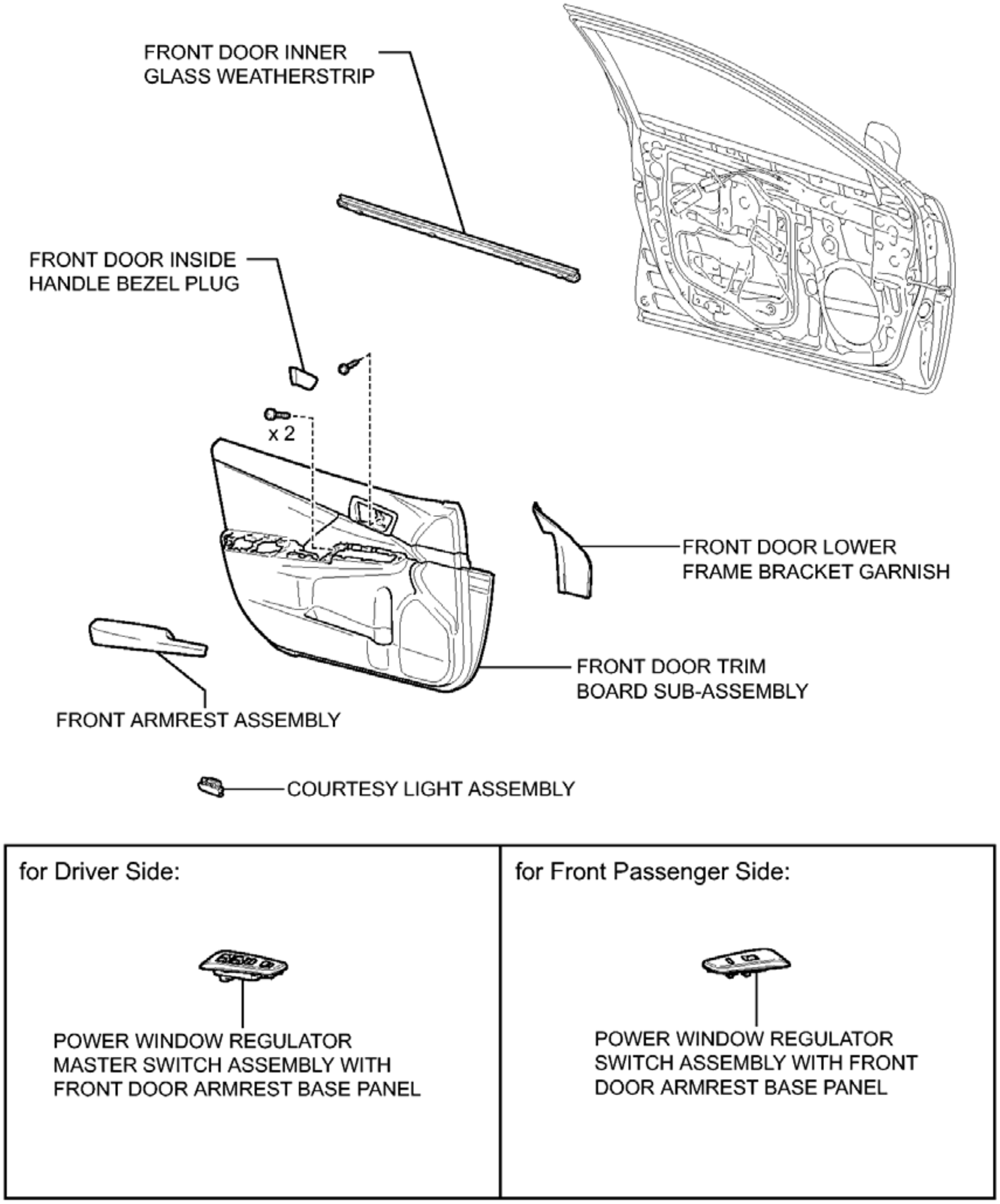
FRONT DOOR INNER
GLASS WEATHERSTRIP
FRONT DOOR INSIDE
HANDLE BEZEL PLUG
x 2
FRONT DOOR LOWER
FRAME BRACKET GARNISH
FRONT DOOR TRIM
BOARD SUB-ASSEMBLY
FRONT ARMREST ASSEMBLY
COURTESY LIGHT ASSEMBLY
for Driver Side:
POWER WINDOW REGULATOR
MASTER SWITCH ASSEMBLY WITH
FRONT DOOR ARMREST BASE PANEL
for Front Passenger Side:
POWER WINDOW REGULATOR
SWITCH ASSEMBLY WITH FRONT
DOOR ARMREST BASE PANEL

P

Fig. 13: Identifying Power Window Regulator Motor Replacement Components With Torque Specifications (For Front Door) (2 Of 3)
Courtesy of TOYOTA MOTOR SALES, U.S.A., INC.

ILLUSTRATION

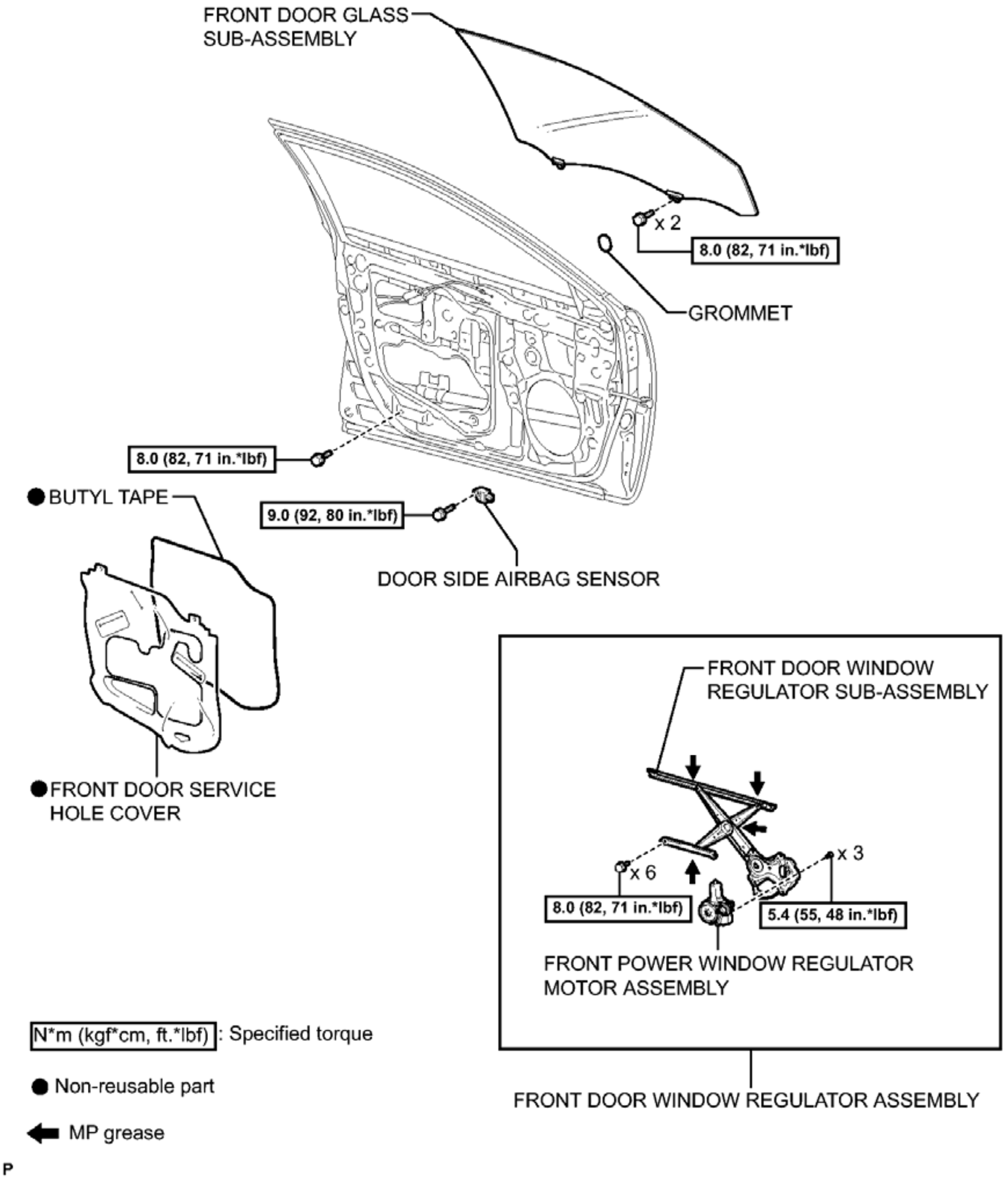
FRONT DOOR GLASS SUB-ASSEMBLY
x 2
8.0 (82, 71 in.*lbf)
GROMMET
8.0 (82, 71 in.*lbf)
● BUTYL TAPE
9.0 (92, 80 in.*lbf)
DOOR SIDE AIRBAG SENSOR
● FRONT DOOR SERVICE HOLE COVER
FRONT DOOR WINDOW REGULATOR SUB-ASSEMBLY
x 3
x 6
8.0 (82, 71 in.*lbf)
5.4 (55, 48 in.*lbf)
FRONT POWER WINDOW REGULATOR MOTOR ASSEMBLY
FRONT DOOR WINDOW REGULATOR ASSEMBLY
N*m (kgf*cm, ft.*lbf) : Specified torque
● Non-reusable part
MP grease
P

Fig. 14: Identifying Power Window Regulator Motor Replacement Components With Torque Specifications (For Front Door) (3 Of 3)
Courtesy of TOYOTA MOTOR SALES, U.S.A., INC.

REMOVAL

REMOVAL

HINT:

- Use the same procedure for both the RH and LH sides.
- The procedure described below is for the LH side.

1. **PRECAUTION**

   NOTE: **After turning the power switch off, waiting time may be required before disconnecting the cable from the negative (-) auxiliary battery terminal. Therefore, make sure to read the disconnecting the cable from the negative (-) auxiliary battery terminal notices before proceeding with work. Refer to PRECAUTION .**

2. **REMOVE LUGGAGE TRIM SERVICE HOLE COVER** . Refer to **REMOVAL - Step 2**
3. **DISCONNECT CABLE FROM AUXILIARY BATTERY NEGATIVE TERMINAL**

   WARNING: **Wait at least 90 seconds after disconnecting the cable from the negative (-) auxiliary battery terminal to disable the SRS system.**

   NOTE: **When disconnecting the cable, some systems need to be initialized after the cable is reconnected. Refer to INITIALIZATION .**

4. **REMOVE FRONT DOOR INSIDE HANDLE BEZEL PLUG** . Refer to **DISASSEMBLY - Step 4**
5. **REMOVE FRONT DOOR LOWER FRAME BRACKET GARNISH** . Refer to **DISASSEMBLY - Step 5**
6. **REMOVE POWER WINDOW REGULATOR MASTER SWITCH ASSEMBLY WITH FRONT DOOR ARMREST BASE PANEL (for Driver Side)** . Refer to **DISASSEMBLY - Step 6**
7. **REMOVE POWER WINDOW REGULATOR SWITCH ASSEMBLY WITH FRONT DOOR ARMREST BASE PANEL (for Front Passenger Side)** . Refer to **DISASSEMBLY - Step 7**
8. **REMOVE FRONT ARMREST ASSEMBLY** . Refer to **DISASSEMBLY - Step 8**
9. **REMOVE COURTESY LIGHT ASSEMBLY** . Refer to **REMOVAL - Step 1**
10. **REMOVE FRONT DOOR TRIM BOARD SUB-ASSEMBLY** . Refer to **DISASSEMBLY - Step 10**
11. **REMOVE FRONT DOOR INNER GLASS WEATHERSTRIP** . Refer to **DISASSEMBLY - Step 12**
12. **REMOVE DOOR SIDE AIRBAG SENSOR** . Refer to **REMOVAL - Step 11**
13. **REMOVE FRONT DOOR SERVICE HOLE COVER** . Refer to **DISASSEMBLY - Step 16**
14. **REMOVE FRONT DOOR GLASS SUB-ASSEMBLY** . Refer to **DISASSEMBLY - Step 17**
15. **REMOVE FRONT DOOR WINDOW REGULATOR ASSEMBLY** . Refer to **DISASSEMBLY - Step 18**
16. **REMOVE FRONT POWER WINDOW REGULATOR MOTOR ASSEMBLY** . Refer to **DISASSEMBLY - Step 19**

INSPECTION

INSPECTION

1. **INSPECT POWER WINDOW REGULATOR MOTOR ASSEMBLY LH**
    a. Apply positive (+) auxiliary battery voltage to connector terminal 2 (B).

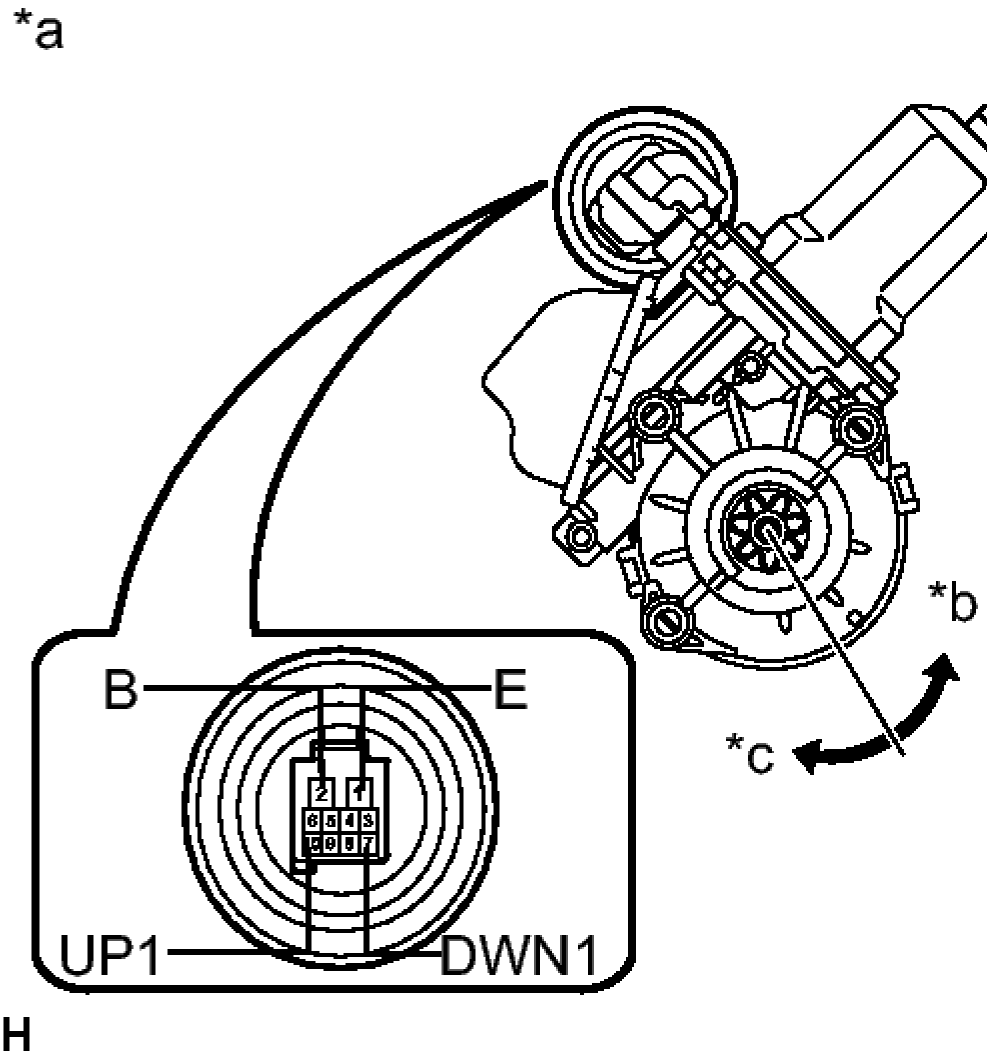

Fig. 15: Inspecting Power Window Regulator Motor Assembly LH
Courtesy of TOYOTA MOTOR SALES, U.S.A., INC.

NOTE: **Do not apply positive (+) auxiliary battery voltage to any terminals other than terminal 2 (B) to avoid damaging the pulse sensor inside the motor.**

b. Connect a ground lead to connector terminals 1 (E) and 7 (DWN1) or 10 (UP1).
c. Check that the motor gear rotates smoothly as follows:

OK

Measurement Condition	**Specified Condition**
1. Connect a positive (+) auxiliary battery lead to terminal 2 (B), connect a negative (-) auxiliary battery lead to terminal 1 (E), and keep them connected for 3 seconds or more. 2. With terminals 2 (B) and 1 (E) connected, connect a negative (-) auxiliary battery lead to terminal 10 (UP1). 3. Disconnect and reconnect the negative (-) auxiliary battery lead for terminal 10 (UP1) within 1 second.	Motor gear rotates clockwise

1. Connect the positive (+) auxiliary battery lead to terminal 2 (B), connect a negative (-) auxiliary battery lead to terminal 1 (E), and keep them connected for 3 seconds or more. 2. With terminals 2 (B) and 1 (E) connected, connect a negative (-) auxiliary battery lead to terminal 7 (DWN1). 3. Disconnect and reconnect the negative (-) auxiliary battery lead for terminal 7 (DWN1) within 1 second.	Motor gear rotates counterclockwise

TEXT IN ILLUSTRATION

*a	Component without harness connected (Power Window Regulator Motor Assembly LH)
*b	Counterclockwise
*c	Clockwise

If the result is not as specified, replace the power window regulator motor assembly LH.

NOTE: **Reset the power window regulator motor (initialize the pulse sensor) after installing the power window regulator motor and regulator assembly onto the door.**

2. **INSPECT POWER WINDOW REGULATOR MOTOR ASSEMBLY RH**
   a. Apply auxiliary battery voltage to the motor connector according to the table below.

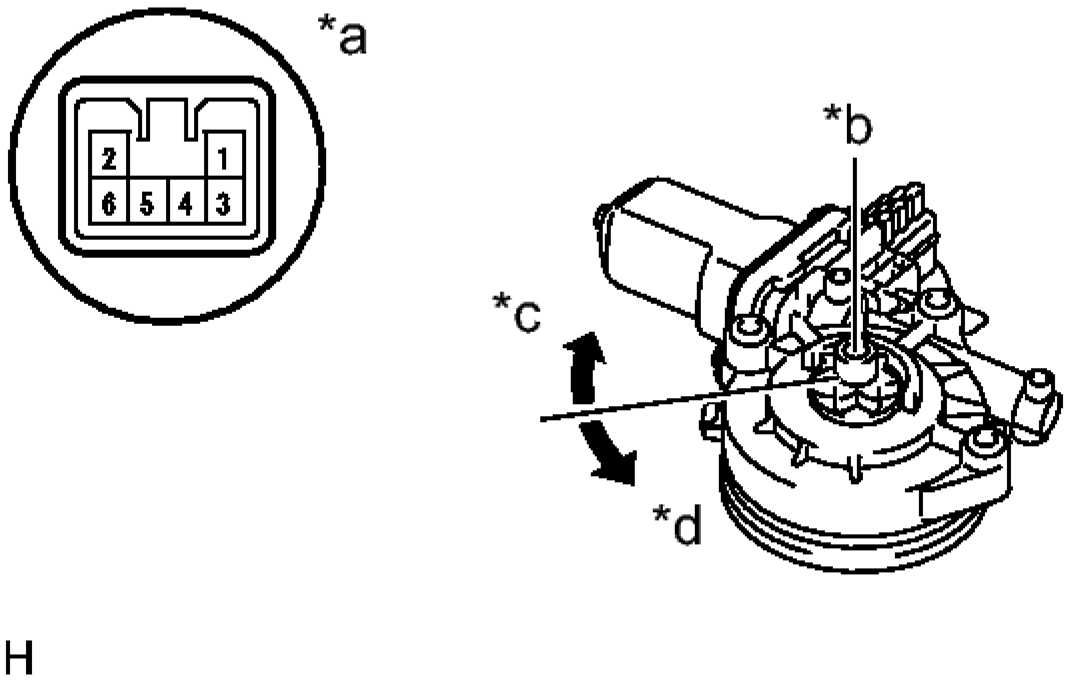

Fig. 16: Identifying Power Window Regulator Motor Assembly
Courtesy of TOYOTA MOTOR SALES, U.S.A., INC.

NOTE: **Do not apply auxiliary battery voltage to any terminals except terminals 1 and 2.**

Standard

Measurement Condition	Specified Condition
Auxiliary battery positive (+) --> Terminal 1 Auxiliary battery negative (-) --> Terminal 2	Motor gear rotates clockwise
Auxiliary battery positive (+) --> Terminal 2 Auxiliary battery negative (-) --> Terminal 1	Motor gear rotates counterclockwise

TEXT IN ILLUSTRATION

*a	Component without harness connected (Power Window Regulator Motor Assembly RH)
*b	Motor Gear
*c	Clockwise
*d	Counterclockwise

If the result is not as specified, replace the power window regulator motor assembly RH.

INSTALLATION

INSTALLATION

HINT:

- Use the same procedure for both the RH and LH sides.
- The procedure described below is for the LH side.

1. **PRECAUTION**

NOTE: **After turning the power switch off, waiting time may be required before disconnecting the cable from the negative (-) auxiliary battery terminal. Therefore, make sure to read the disconnecting the cable from the**

negative (-) auxiliary battery terminal notices before proceeding with work. Refer to PRECAUTION .

2. **INSTALL FRONT POWER WINDOW REGULATOR MOTOR ASSEMBLY** . Refer to **REASSEMBLY - Step 30**
3. **INSTALL FRONT DOOR WINDOW REGULATOR ASSEMBLY** . Refer to **REASSEMBLY - Step 31**
4. **INSTALL FRONT DOOR GLASS SUB-ASSEMBLY** . Refer to **REASSEMBLY - Step 32**
5. **INSTALL FRONT DOOR SERVICE HOLE COVER** . Refer to **REASSEMBLY - Step 33**
6. **INSTALL DOOR SIDE AIRBAG SENSOR** . Refer to **INSTALLATION - Step 1**
7. **INSTALL FRONT DOOR INNER GLASS WEATHERSTRIP** . Refer to **REASSEMBLY - Step 37**
8. **INSTALL FRONT DOOR TRIM BOARD SUB-ASSEMBLY** . Refer to **REASSEMBLY - Step 39**
9. **INSTALL COURTESY LIGHT ASSEMBLY** . Refer to **INSTALLATION - Step 1**
10. **INSTALL FRONT ARMREST ASSEMBLY** . Refer to **REASSEMBLY - Step 41**
11. **INSTALL POWER WINDOW REGULATOR MASTER SWITCH ASSEMBLY WITH FRONT DOOR ARMREST BASE PANEL (for Driver Side)** . Refer to **REASSEMBLY - Step 42**
12. **INSTALL POWER WINDOW REGULATOR SWITCH ASSEMBLY WITH FRONT DOOR ARMREST BASE PANEL (for Front Passenger Side)** . Refer to **REASSEMBLY - Step 43**
13. **INSTALL FRONT DOOR LOWER FRAME BRACKET GARNISH** . Refer to **REASSEMBLY - Step 44**
14. **INSTALL FRONT DOOR INSIDE HANDLE BEZEL PLUG** . Refer to **REASSEMBLY - Step 45**
15. **CONNECT CABLE TO AUXILIARY BATTERY NEGATIVE TERMINAL**

    NOTE: When disconnecting the cable, some systems need to be initialized after the cable is reconnected. Refer to INITIALIZATION .

16. **INSTALL LUGGAGE TRIM SERVICE HOLE COVER** . Refer to **INSTALLATION - Step 3**
17. **INITIALIZE POWER WINDOW CONTROL SYSTEM (for Driver Side)**

    Refer to **INITIALIZATION**

18. **INSPECT POWER WINDOW OPERATION**

    Refer to **OPERATION CHECK**

19. **INSPECT SRS WARNING LIGHT**

    for Separate Type Yaw Rate Sensor: Refer to **DIAGNOSIS SYSTEM**

    for Built-in Type Yaw Rate Sensor: Refer to **DIAGNOSIS SYSTEM**

POWER WINDOW REGULATOR MOTOR (FOR REAR DOOR)

COMPONENTS

ILLUSTRATION

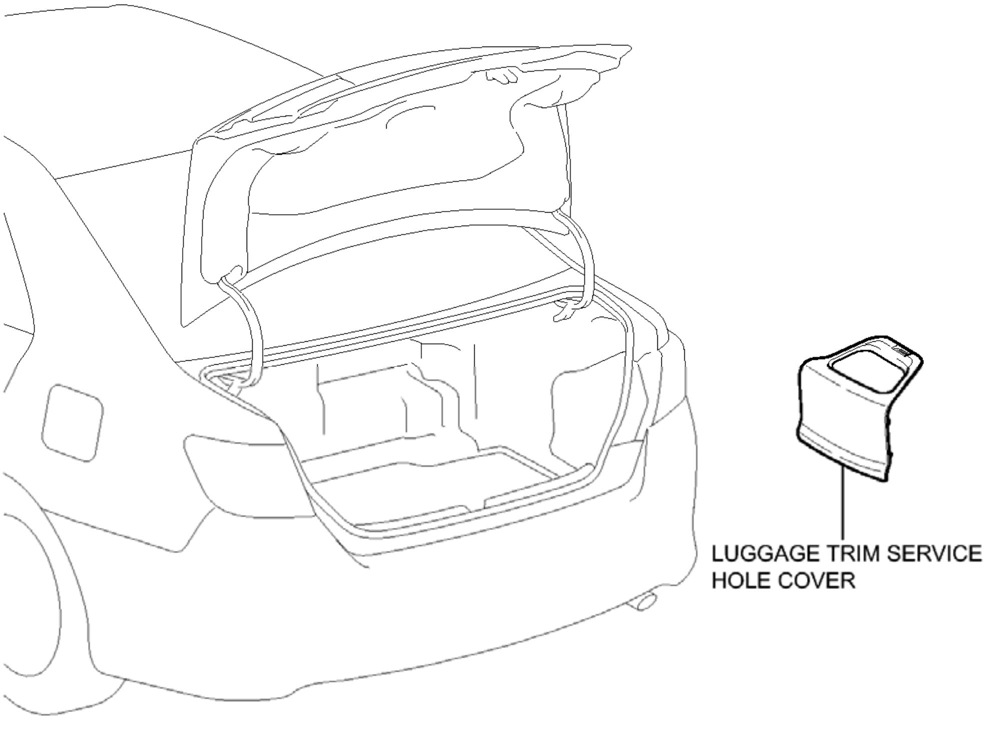
LUGGAGE TRIM SERVICE HOLE COVER
P

Fig. 17: Identifying Power Window Regulator Motor Replacement Components With Torque Specifications (For Rear Door) (1 Of 3)
Courtesy of TOYOTA MOTOR SALES, U.S.A., INC.

ILLUSTRATION

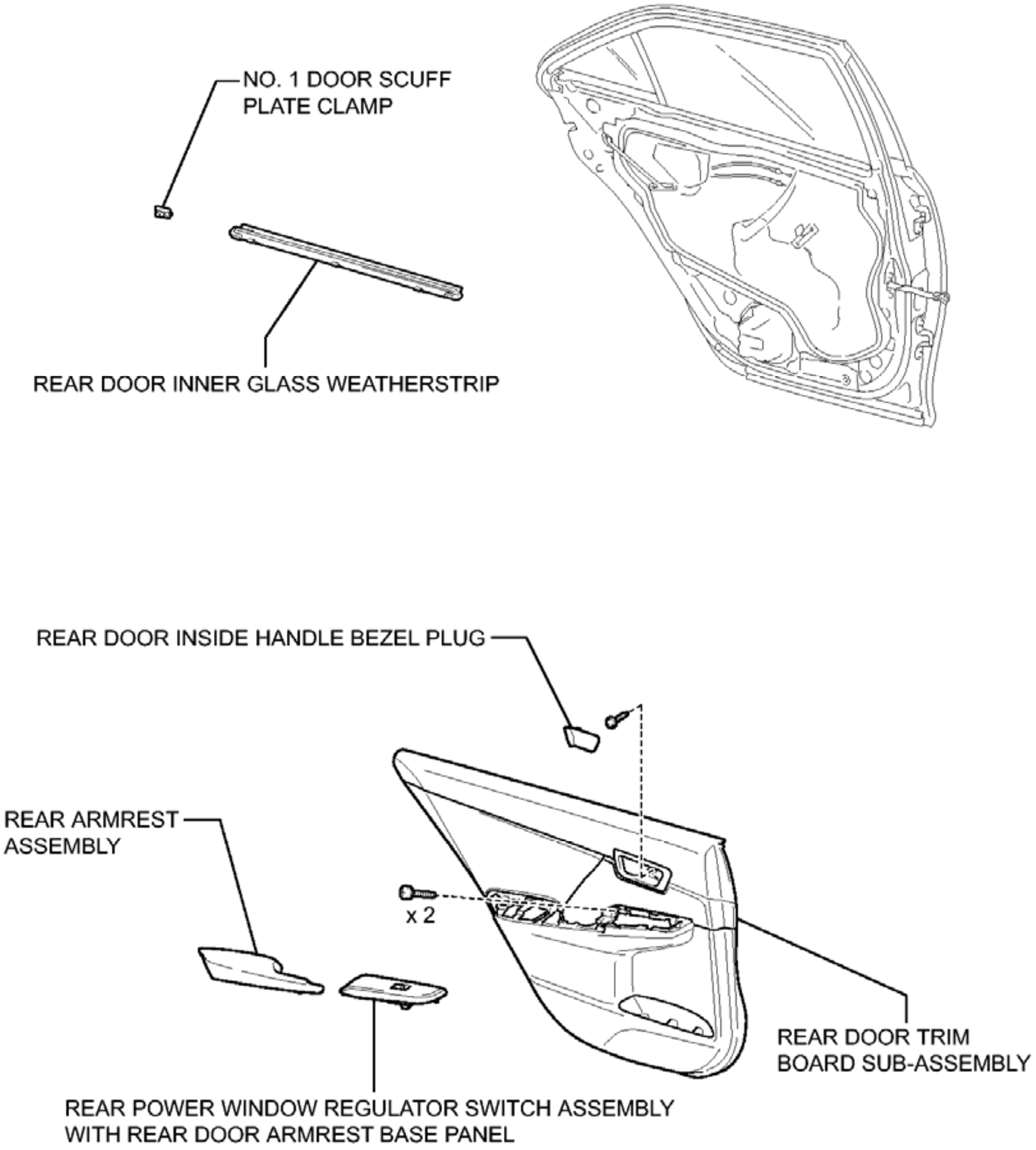
NO. 1 DOOR SCUFF PLATE CLAMP
REAR DOOR INNER GLASS WEATHERSTRIP
REAR DOOR INSIDE HANDLE BEZEL PLUG
REAR ARMREST ASSEMBLY
x 2
REAR DOOR TRIM BOARD SUB-ASSEMBLY
REAR POWER WINDOW REGULATOR SWITCH ASSEMBLY WITH REAR DOOR ARMREST BASE PANEL

P

Fig. 18: Identifying Power Window Regulator Motor Replacement Components With Torque Specifications (For Rear Door) (2 Of 3)
Courtesy of TOYOTA MOTOR SALES, U.S.A., INC.

ILLUSTRATION

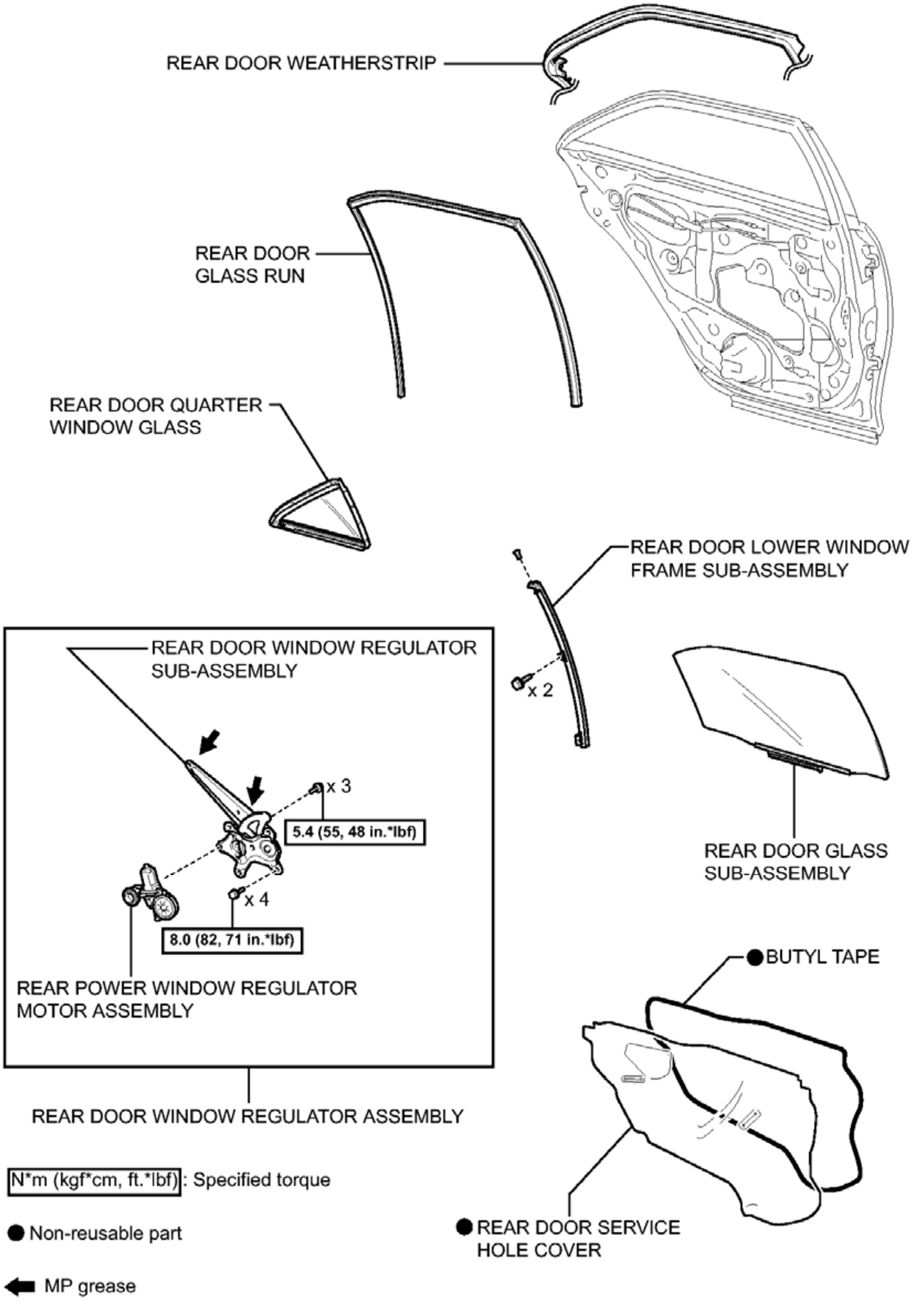
REAR DOOR WEATHERSTRIP
REAR DOOR GLASS RUN
REAR DOOR QUARTER WINDOW GLASS
REAR DOOR LOWER WINDOW FRAME SUB-ASSEMBLY
x 2
REAR DOOR WINDOW REGULATOR SUB-ASSEMBLY
x 3
5.4 (55, 48 in.*lbf)
x 4
8.0 (82, 71 in.*lbf)
REAR POWER WINDOW REGULATOR MOTOR ASSEMBLY
REAR DOOR WINDOW REGULATOR ASSEMBLY
REAR DOOR GLASS SUB-ASSEMBLY
● BUTYL TAPE
● REAR DOOR SERVICE HOLE COVER
N*m (kgf*cm, ft.*lbf): Specified torque
● Non-reusable part
MP grease
P

Fig. 19: Identifying Power Window Regulator Motor Replacement Components With Torque Specifications (For Rear Door) (3 Of 3)
Courtesy of TOYOTA MOTOR SALES, U.S.A., INC.

REMOVAL

REMOVAL

HINT:

- Use the same procedure for both the RH and LH sides.
- The procedure described below is for the LH side.

1. **PRECAUTION**

   NOTE: **After turning the power switch off, waiting time may be required before disconnecting the cable from the negative (-) auxiliary battery terminal. Therefore, make sure to read the disconnecting the cable from the negative (-) auxiliary battery terminal notices before proceeding with work. Refer to PRECAUTION .**

2. **REMOVE LUGGAGE TRIM SERVICE HOLE COVER** . Refer to **REMOVAL - Step 2**
3. **DISCONNECT CABLE FROM AUXILIARY BATTERY NEGATIVE TERMINAL**

   NOTE: **When disconnecting the cable, some systems need to be initialized after the cable is reconnected. Refer to INITIALIZATION .**

4. **REMOVE REAR DOOR INSIDE HANDLE BEZEL PLUG** . Refer to **DISASSEMBLY - Step 4**
5. **REMOVE REAR POWER WINDOW REGULATOR SWITCH ASSEMBLY WITH REAR DOOR ARMREST BASE PANEL** . Refer to **DISASSEMBLY - Step 5**
6. **REMOVE REAR ARMREST ASSEMBLY** . Refer to **DISASSEMBLY - Step 6**
7. **REMOVE REAR DOOR TRIM BOARD SUB-ASSEMBLY** . Refer to **DISASSEMBLY - Step 7**
8. **REMOVE REAR DOOR INNER GLASS WEATHERSTRIP** . Refer to **DISASSEMBLY - Step 9**
9. **REMOVE REAR DOOR SERVICE HOLE COVER** . Refer to **DISASSEMBLY - Step 10**
10. **DISCONNECT REAR DOOR WEATHERSTRIP**
    1. Disconnect the upper part of rear door weatherstrip as shown in the illustration.

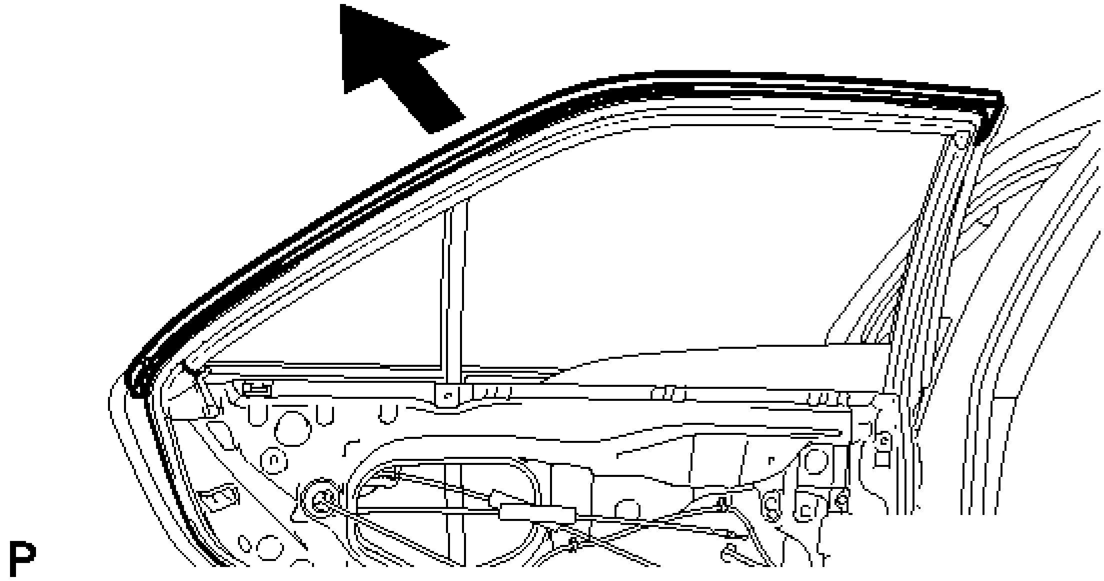

Fig. 20: Removing Rear Door Weatherstrip
Courtesy of TOYOTA MOTOR SALES, U.S.A., INC.

11. **REMOVE REAR DOOR GLASS RUN** . Refer to **DISASSEMBLY - Step 13**
12. **REMOVE REAR DOOR LOWER WINDOW FRAME SUB-ASSEMBLY** . Refer to **DISASSEMBLY - Step 14**
13. **REMOVE REAR DOOR QUARTER WINDOW GLASS**
    a. Remove the rear door quarter window glass with the rear door quarter window weatherstrip as shown in the illustration.

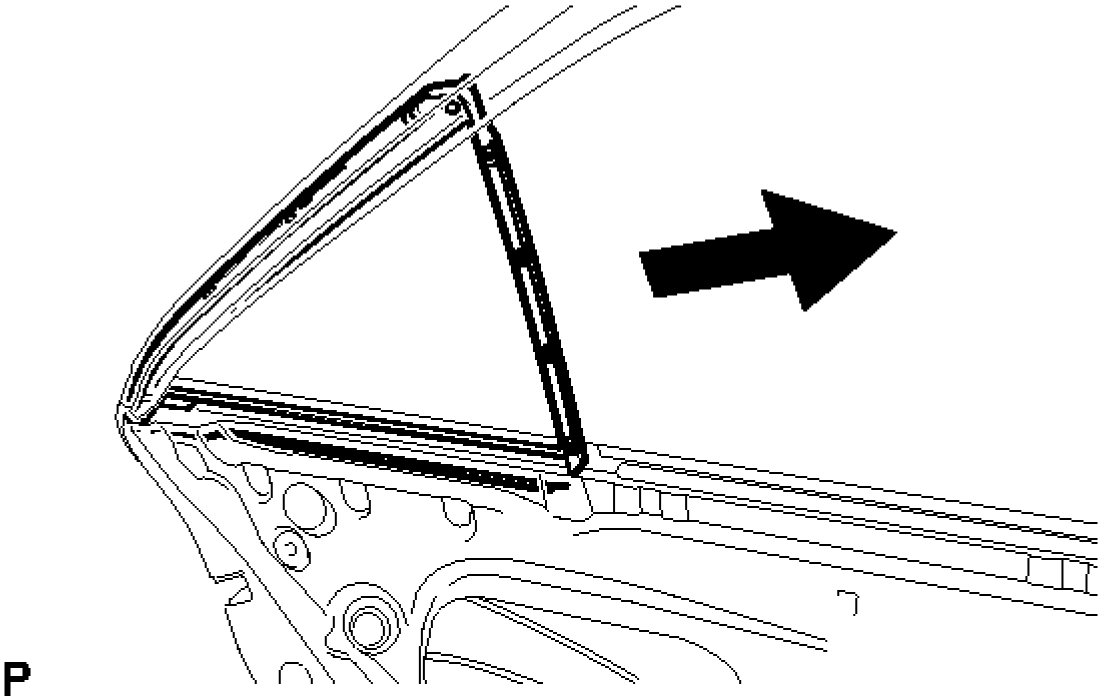

Fig. 21: Removing Rear Door Quarter Window Glass
Courtesy of TOYOTA MOTOR SALES, U.S.A., INC.

14. **REMOVE REAR DOOR GLASS SUB-ASSEMBLY** . Refer to **DISASSEMBLY - Step 16**
15. **REMOVE REAR DOOR WINDOW REGULATOR ASSEMBLY** . Refer to **DISASSEMBLY - Step 19**
16. **REMOVE REAR POWER WINDOW REGULATOR MOTOR ASSEMBLY** . Refer to **DISASSEMBLY - Step 20**

INSPECTION

INSPECTION

1. **INSPECT POWER WINDOW REGULATOR MOTOR ASSEMBLY LH**
    a. Apply auxiliary battery voltage to the motor connector according to the table below.

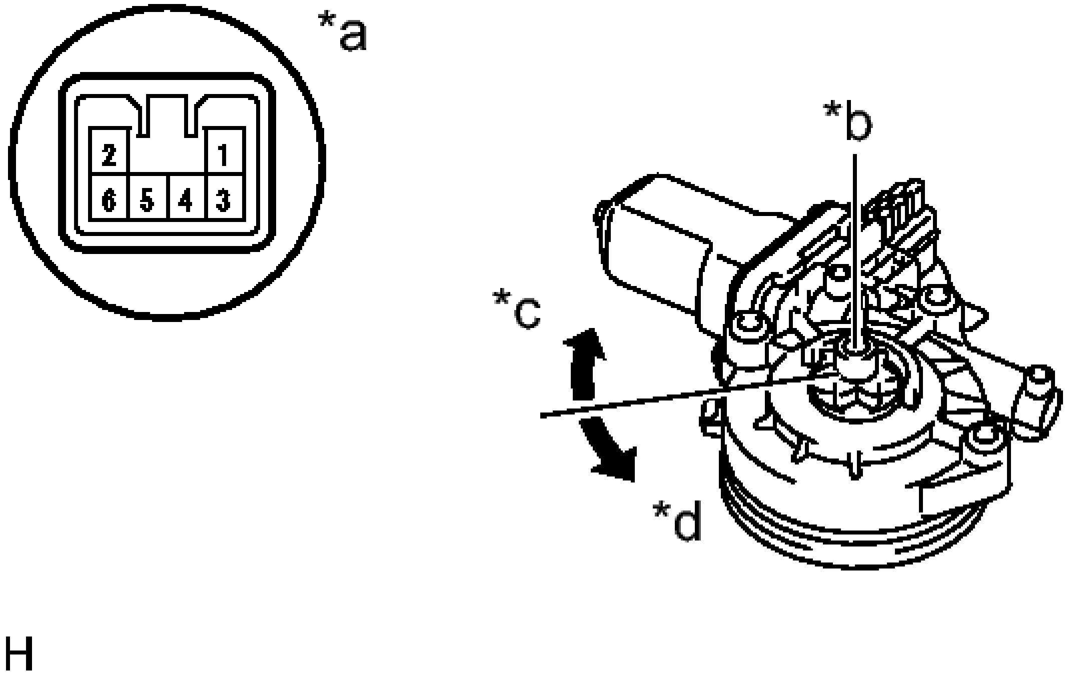

Fig. 22: Identifying Power Window Regulator Motor Assembly
Courtesy of TOYOTA MOTOR SALES, U.S.A., INC.

NOTE: **Do not apply auxiliary battery voltage to any terminals except terminals 1 and 2.**

Standard

Measurement Condition	Specified Condition
Auxiliary battery positive (+) --> Terminal 1 Auxiliary battery negative (-) --> Terminal 2	Motor gear rotates clockwise
Auxiliary battery positive (+) --> Terminal 2 Auxiliary battery negative (-) --> Terminal 1	Motor gear rotates counterclockwise

TEXT IN ILLUSTRATION

*a	Component without harness connected (Power Window Regulator Motor Assembly LH)
*b	Motor Gear
*c	Clockwise
*d	Counterclockwise

If the result is not as specified, replace the power window regulator motor assembly LH.

2. **INSPECT POWER WINDOW REGULATOR MOTOR ASSEMBLY RH**
   a. Apply auxiliary battery voltage to the motor connector according to the table below.

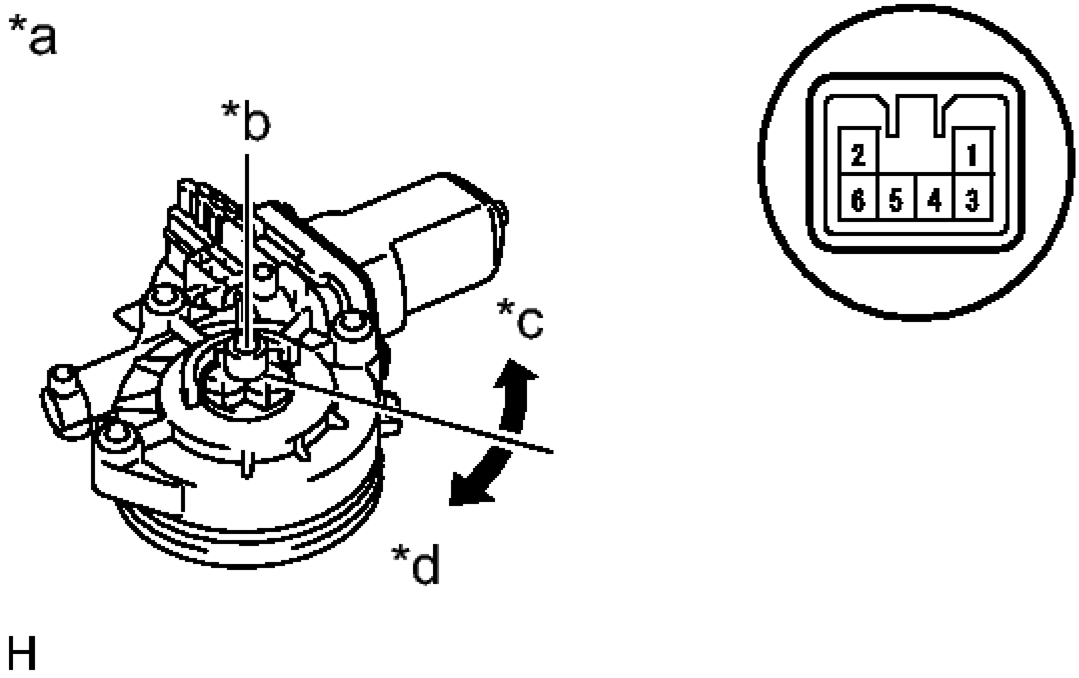

Fig. 23: Identifying Power Window Regulator Motor Assembly
Courtesy of TOYOTA MOTOR SALES, U.S.A., INC.

NOTE: **Do not apply auxiliary battery voltage to any terminals except terminals 1 and 2.**

Standard

Measurement Condition	**Specified Condition**

Auxiliary battery positive (+) --> Terminal 2 Auxiliary battery negative (-) --> Terminal 1	Motor gear rotates clockwise
Auxiliary battery positive (+) --> Terminal 1 Auxiliary battery negative (-) --> Terminal 2	Motor gear rotates counterclockwise

TEXT IN ILLUSTRATION

*a	Component without harness connected (Power Window Regulator Motor Assembly RH)
*b	Motor Gear
*c	Counterclockwise
*d	Clockwise

If the result is not as specified, replace the power window regulator motor assembly RH.

INSTALLATION

INSTALLATION

HINT:

- Use the same procedure for both the RH and LH sides.
- The procedure described below is for the LH side.

1. **INSTALL REAR POWER WINDOW REGULATOR MOTOR ASSEMBLY** . Refer to **REASSEMBLY - Step 17**
2. **INSTALL REAR DOOR WINDOW REGULATOR ASSEMBLY** . Refer to **REASSEMBLY - Step 18**
3. **INSTALL REAR DOOR GLASS SUB-ASSEMBLY** . Refer to **REASSEMBLY - Step 21**
4. **INSTALL REAR DOOR QUARTER WINDOW GLASS**

a. Install the rear door quarter window glass together with the rear door quarter window weatherstrip in the direction indicated by the arrow in the illustration.

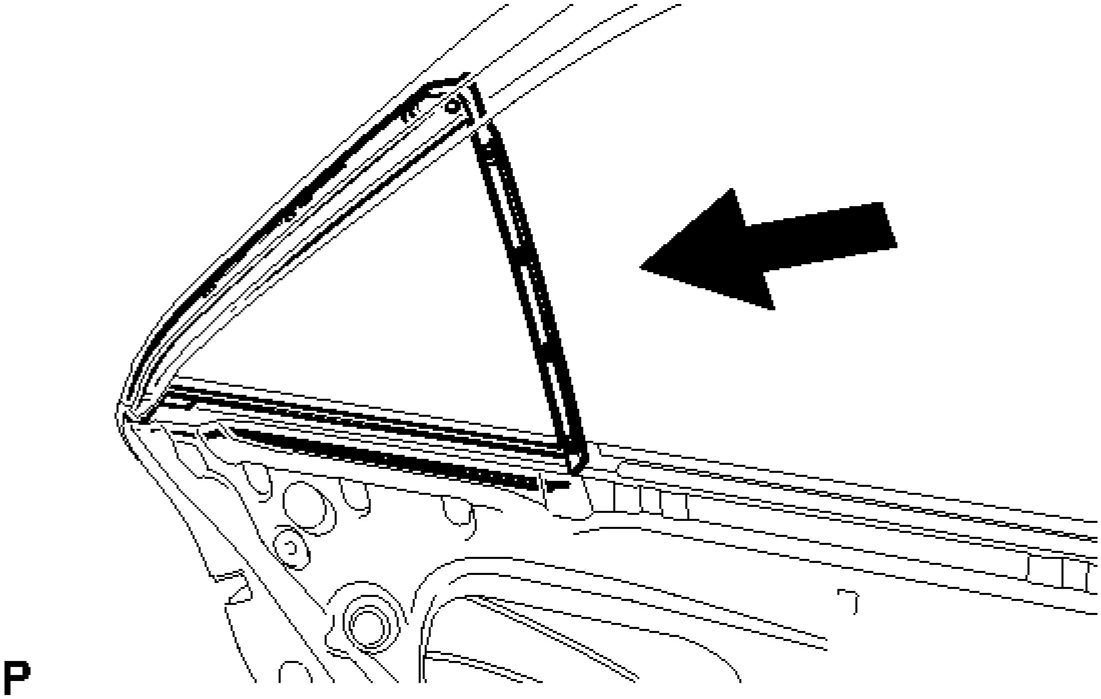

Fig. 24: Installing Rear Door Quarter Window Glass
Courtesy of TOYOTA MOTOR SALES, U.S.A., INC.

5. **INSTALL REAR DOOR LOWER WINDOW FRAME SUB-ASSEMBLY** . Refer to **REASSEMBLY - Step 23**
6. **INSTALL REAR DOOR GLASS RUN** . Refer to **REASSEMBLY - Step 24**
7. **INSTALL REAR DOOR WEATHERSTRIP**
   a. Install the upper part of rear door weatherstrip as shown in the illustration.

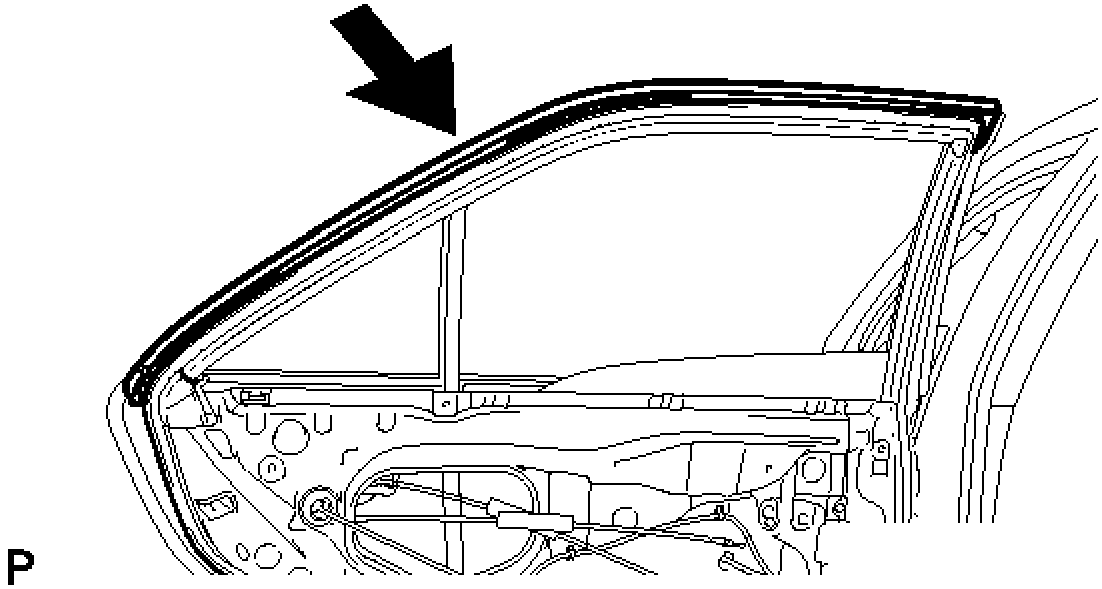

Fig. 25: Installing Rear Door Weatherstrip
Courtesy of TOYOTA MOTOR SALES, U.S.A., INC.

8. **INSTALL REAR DOOR SERVICE HOLE COVER** . Refer to **REASSEMBLY - Step 27**
9. **INSTALL REAR DOOR INNER GLASS WEATHERSTRIP** . Refer to **REASSEMBLY - Step 28**
10. **INSTALL REAR DOOR TRIM BOARD SUB-ASSEMBLY** . Refer to **REASSEMBLY - Step 30**
11. **INSTALL REAR ARMREST ASSEMBLY** . Refer to **REASSEMBLY - Step 31**
12. **INSTALL REAR POWER WINDOW REGULATOR SWITCH ASSEMBLY WITH REAR DOOR ARMREST BASE PANEL** . Refer to **REASSEMBLY - Step 32**
13. **INSTALL REAR DOOR INSIDE HANDLE BEZEL PLUG** . Refer to **REASSEMBLY - Step 33**
14. **CONNECT CABLE TO AUXILIARY BATTERY NEGATIVE TERMINAL**

    NOTE: **When disconnecting the cable, some systems need to be initialized after the cable is reconnected. Refer to INITIALIZATION**

15. **INSTALL LUGGAGE TRIM SERVICE HOLE COVER** . Refer to **INSTALLATION - Step 3**
16. **INSPECT POWER WINDOW OPERATION**

    Refer to **OPERATION CHECK**

WINDSHIELD GLASS

COMPONENTS

ILLUSTRATION

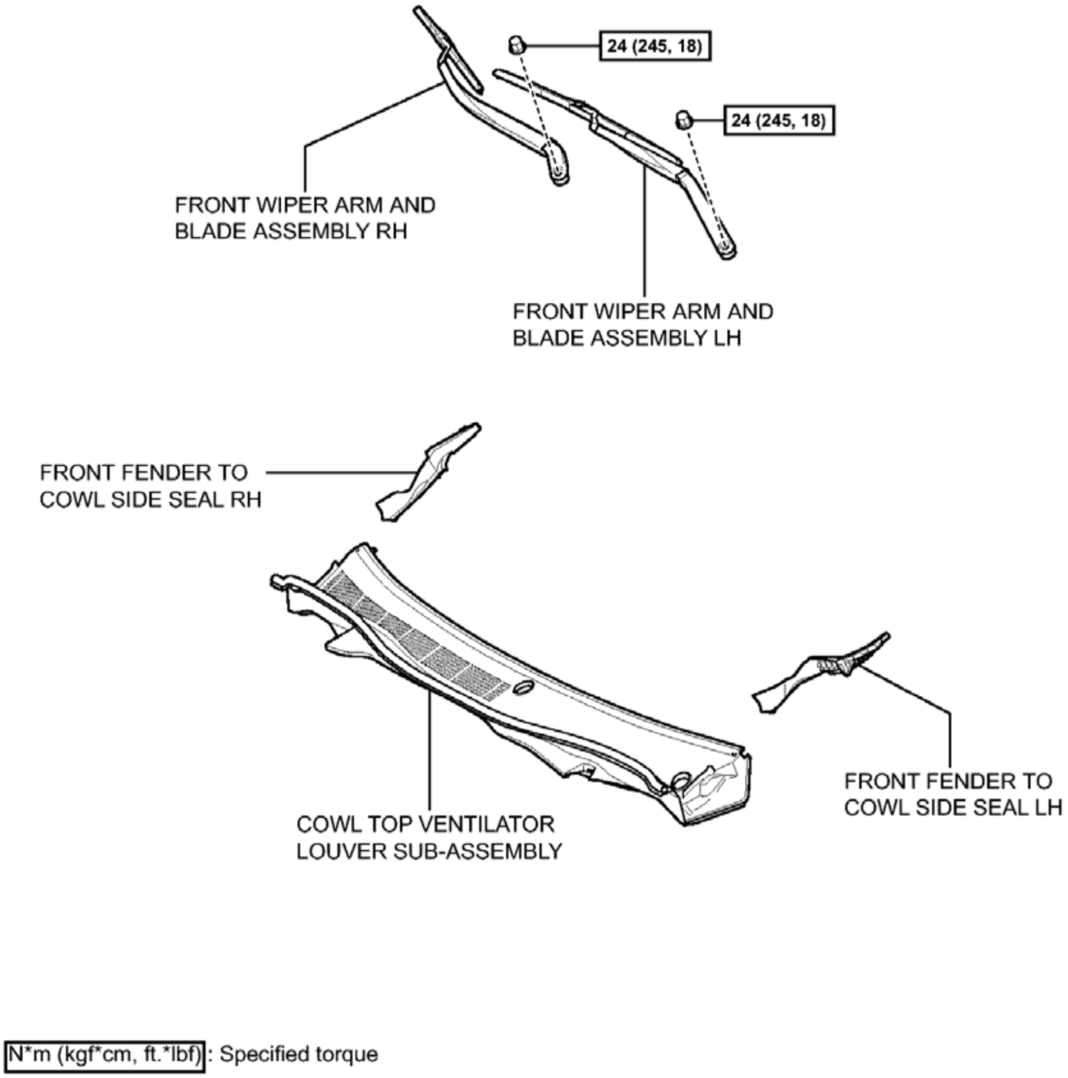
24 (245, 18)
24 (245, 18)
FRONT WIPER ARM AND BLADE ASSEMBLY RH
FRONT WIPER ARM AND BLADE ASSEMBLY LH
FRONT FENDER TO COWL SIDE SEAL RH
COWL TOP VENTILATOR LOUVER SUB-ASSEMBLY
FRONT FENDER TO COWL SIDE SEAL LH
N*m (kgf*cm, ft.*lbf): Specified torque
P

Fig. 26: Identifying Windshield Glass Replacement Components With Torque Specifications (1 Of 8)
Courtesy of TOYOTA MOTOR SALES, U.S.A., INC.

ILLUSTRATION

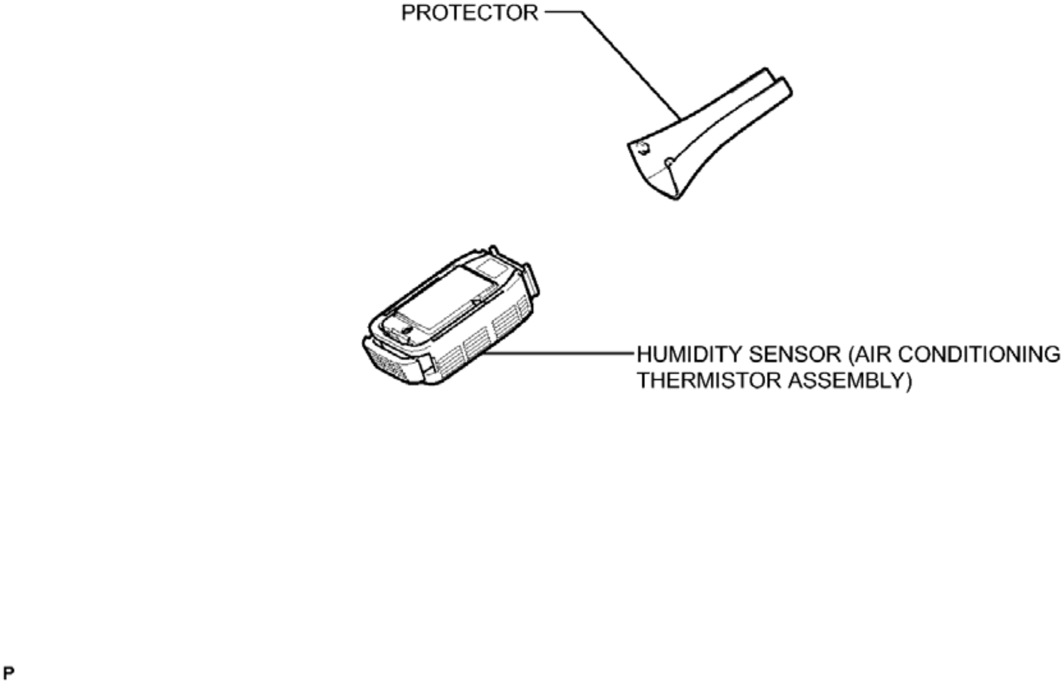
PROTECTOR
HUMIDITY SENSOR (AIR CONDITIONING THERMISTOR ASSEMBLY)
P

Fig. 27: Identifying Windshield Glass Replacement Components With Torque Specifications (2 Of 8)
Courtesy of TOYOTA MOTOR SALES, U.S.A., INC.

ILLUSTRATION

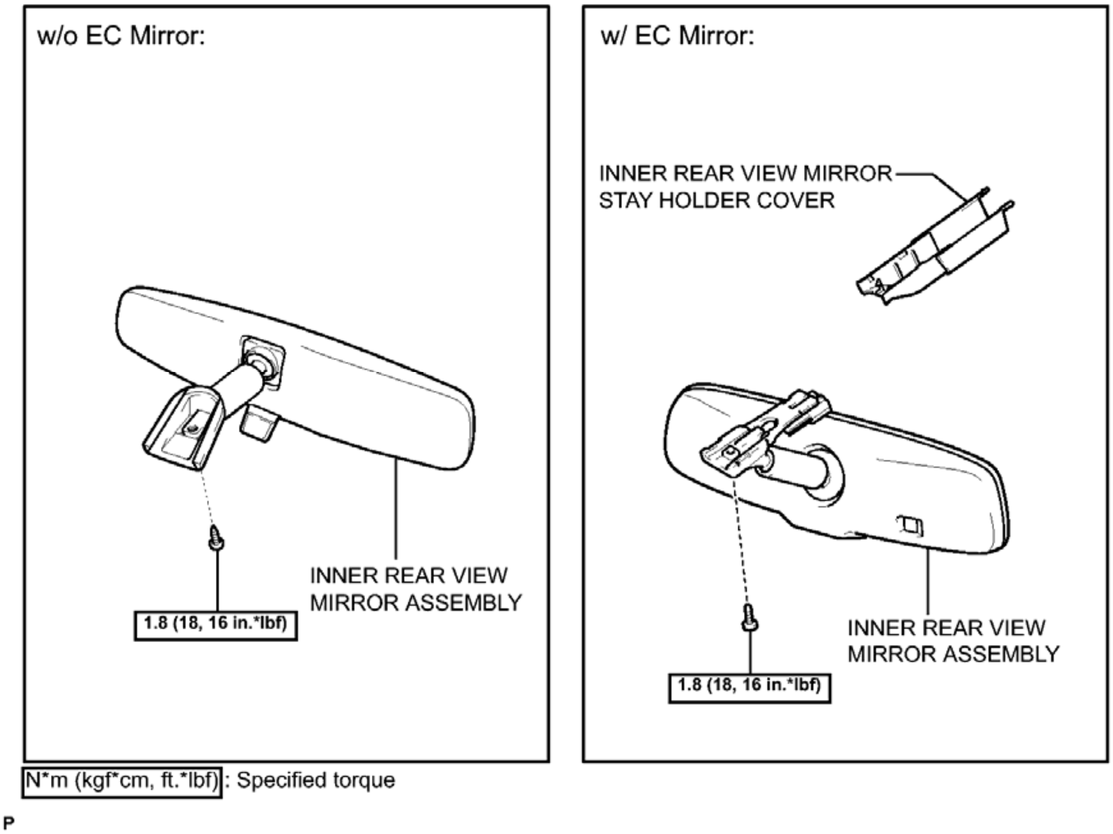
w/o EC Mirror:
INNER REAR VIEW
MIRROR ASSEMBLY
1.8 (18, 16 in.*lbf)
w/ EC Mirror:
INNER REAR VIEW MIRROR
STAY HOLDER COVER
INNER REAR VIEW
MIRROR ASSEMBLY
1.8 (18, 16 in.*lbf)
N*m (kgf*cm, ft.*lbf): Specified torque
P

Fig. 28: Identifying Windshield Glass Replacement Components With Torque Specifications (3 Of 8)
Courtesy of TOYOTA MOTOR SALES, U.S.A., INC.

ILLUSTRATION

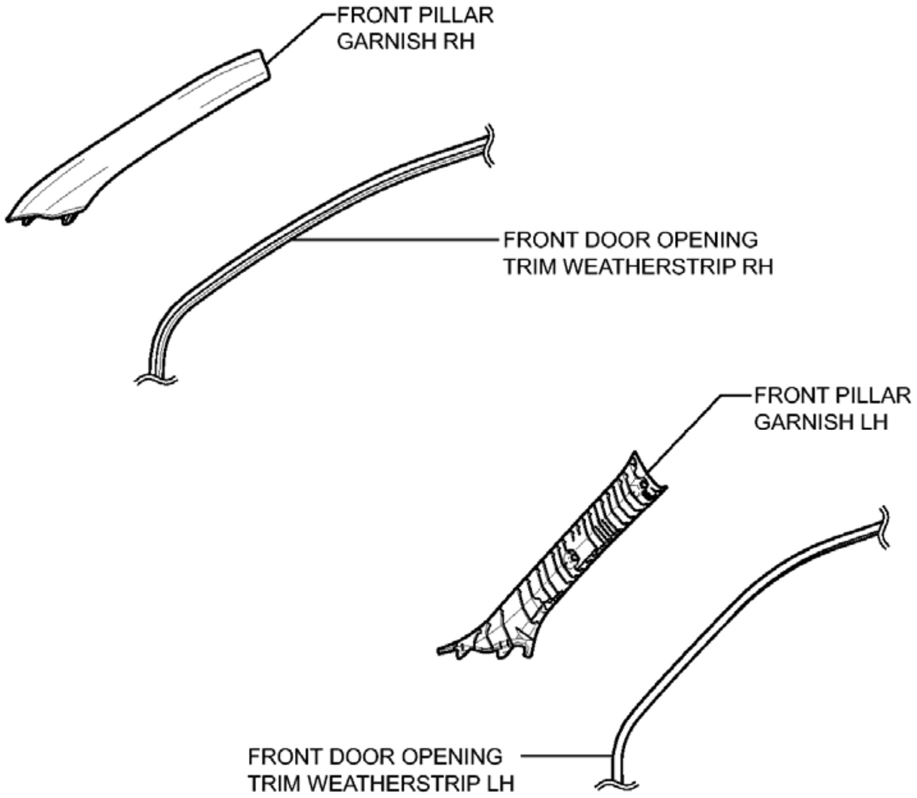
FRONT PILLAR GARNISH RH
FRONT DOOR OPENING TRIM WEATHERSTRIP RH
FRONT PILLAR GARNISH LH
FRONT DOOR OPENING TRIM WEATHERSTRIP LH
P

Fig. 29: Identifying Windshield Glass Replacement Components With Torque Specifications (4 Of 8)
Courtesy of TOYOTA MOTOR SALES, U.S.A., INC.

ILLUSTRATION

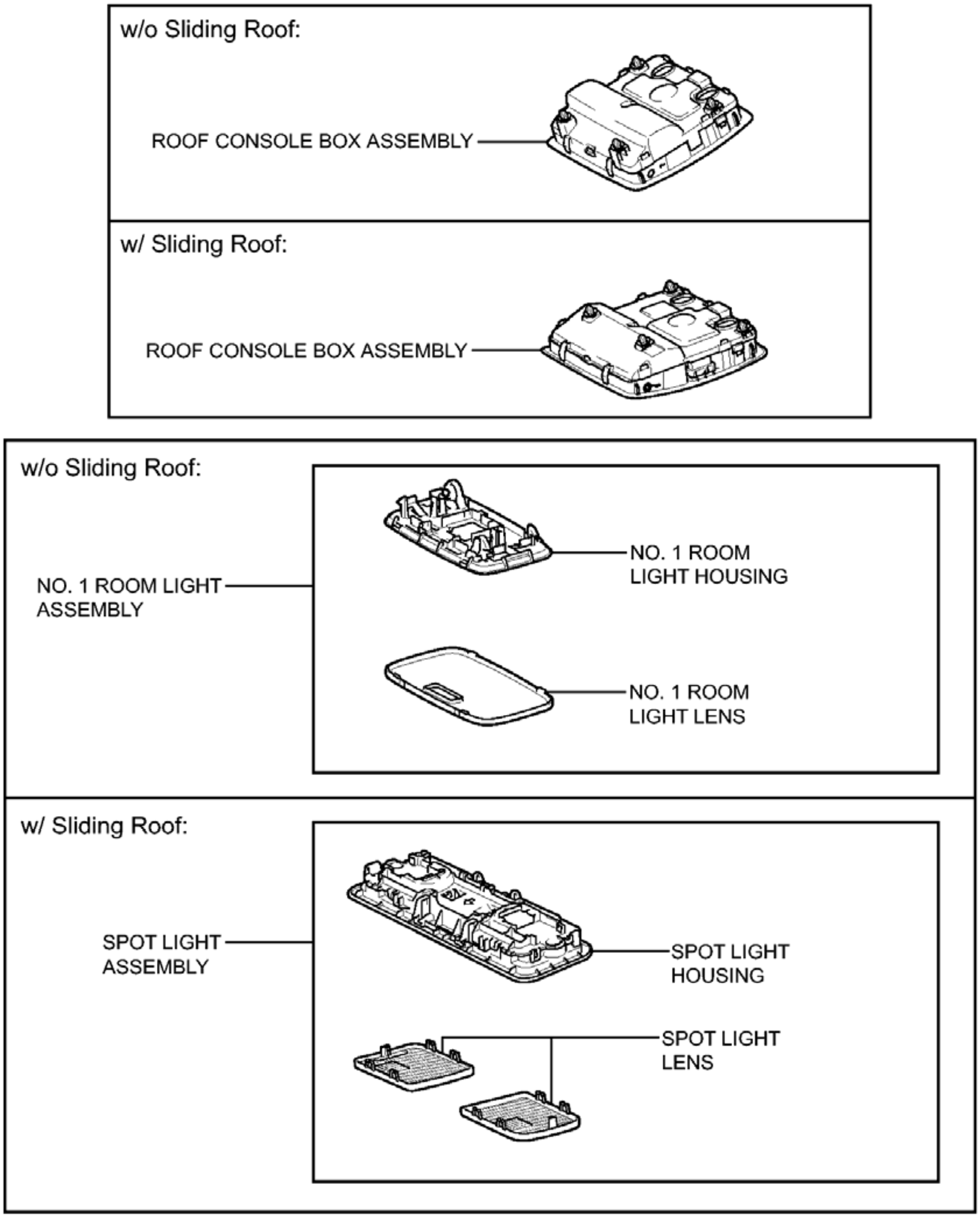
w/o Sliding Roof:
ROOF CONSOLE BOX ASSEMBLY
w/ Sliding Roof:
ROOF CONSOLE BOX ASSEMBLY
w/o Sliding Roof:
NO. 1 ROOM LIGHT ASSEMBLY
NO. 1 ROOM LIGHT HOUSING
NO. 1 ROOM LIGHT LENS
w/ Sliding Roof:
SPOT LIGHT ASSEMBLY
SPOT LIGHT HOUSING
SPOT LIGHT LENS

P

Fig. 30: Identifying Windshield Glass Replacement Components With Torque Specifications (5 Of 8)
Courtesy of TOYOTA MOTOR SALES, U.S.A., INC.

ILLUSTRATION

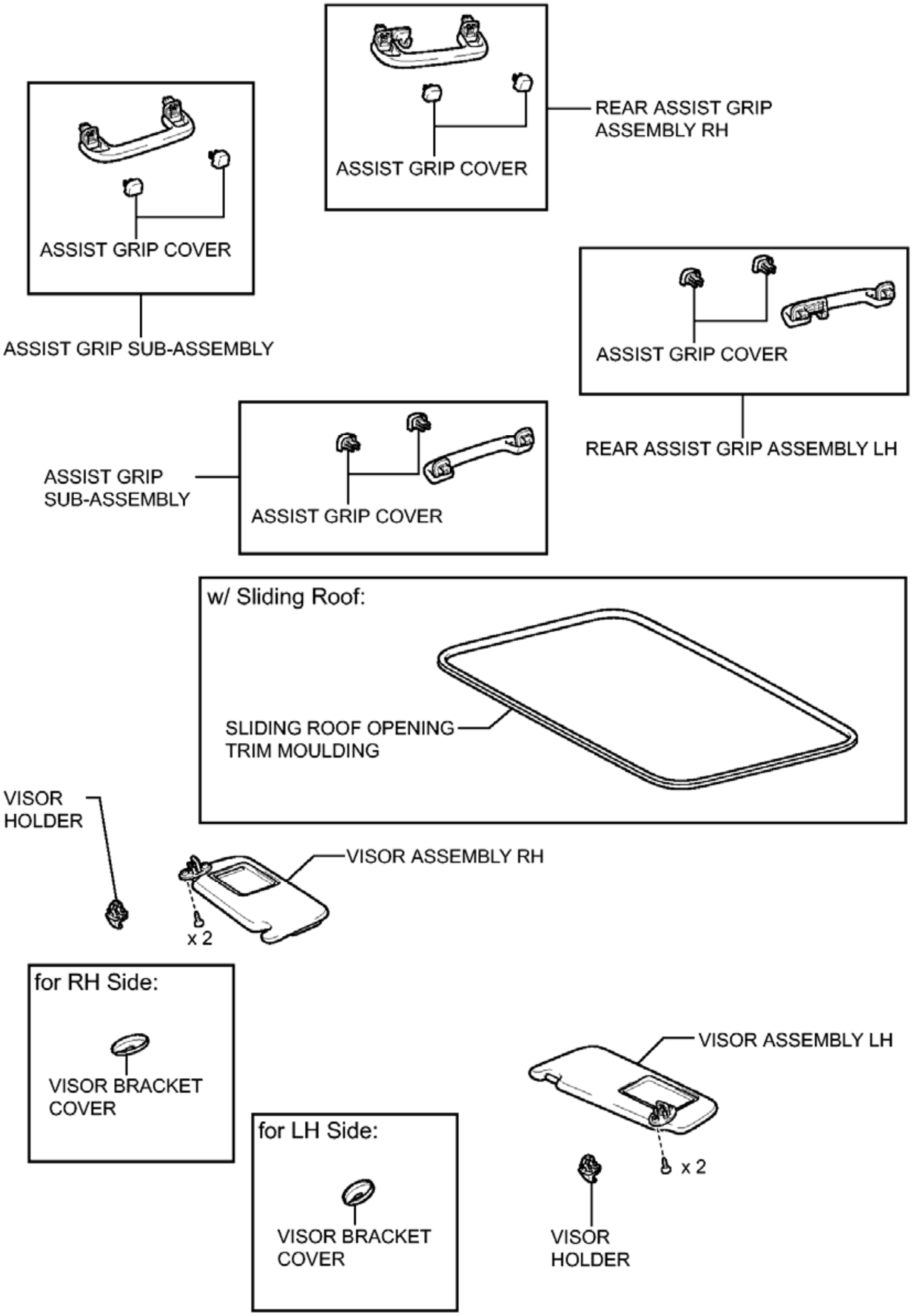
REAR ASSIST GRIP
ASSEMBLY RH
ASSIST GRIP COVER
ASSIST GRIP COVER
ASSIST GRIP SUB-ASSEMBLY
ASSIST GRIP COVER
REAR ASSIST GRIP ASSEMBLY LH
ASSIST GRIP
SUB-ASSEMBLY
ASSIST GRIP COVER
w/ Sliding Roof:
SLIDING ROOF OPENING
TRIM MOULDING
VISOR
HOLDER
VISOR ASSEMBLY RH
x 2
for RH Side:
VISOR BRACKET
COVER
VISOR ASSEMBLY LH
for LH Side:
VISOR BRACKET
COVER
x 2
VISOR
HOLDER
P

Fig. 31: Identifying Windshield Glass Replacement Components With Torque Specifications (6 Of 8)
Courtesy of TOYOTA MOTOR SALES, U.S.A., INC.

ILLUSTRATION

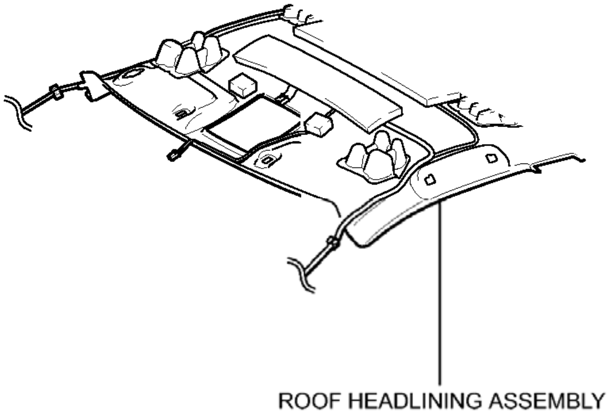
ROOF HEADLINING ASSEMBLY

P

Fig. 32: Identifying Windshield Glass Replacement Components With Torque Specifications (7 Of 8)
Courtesy of TOYOTA MOTOR SALES, U.S.A., INC.

ILLUSTRATION

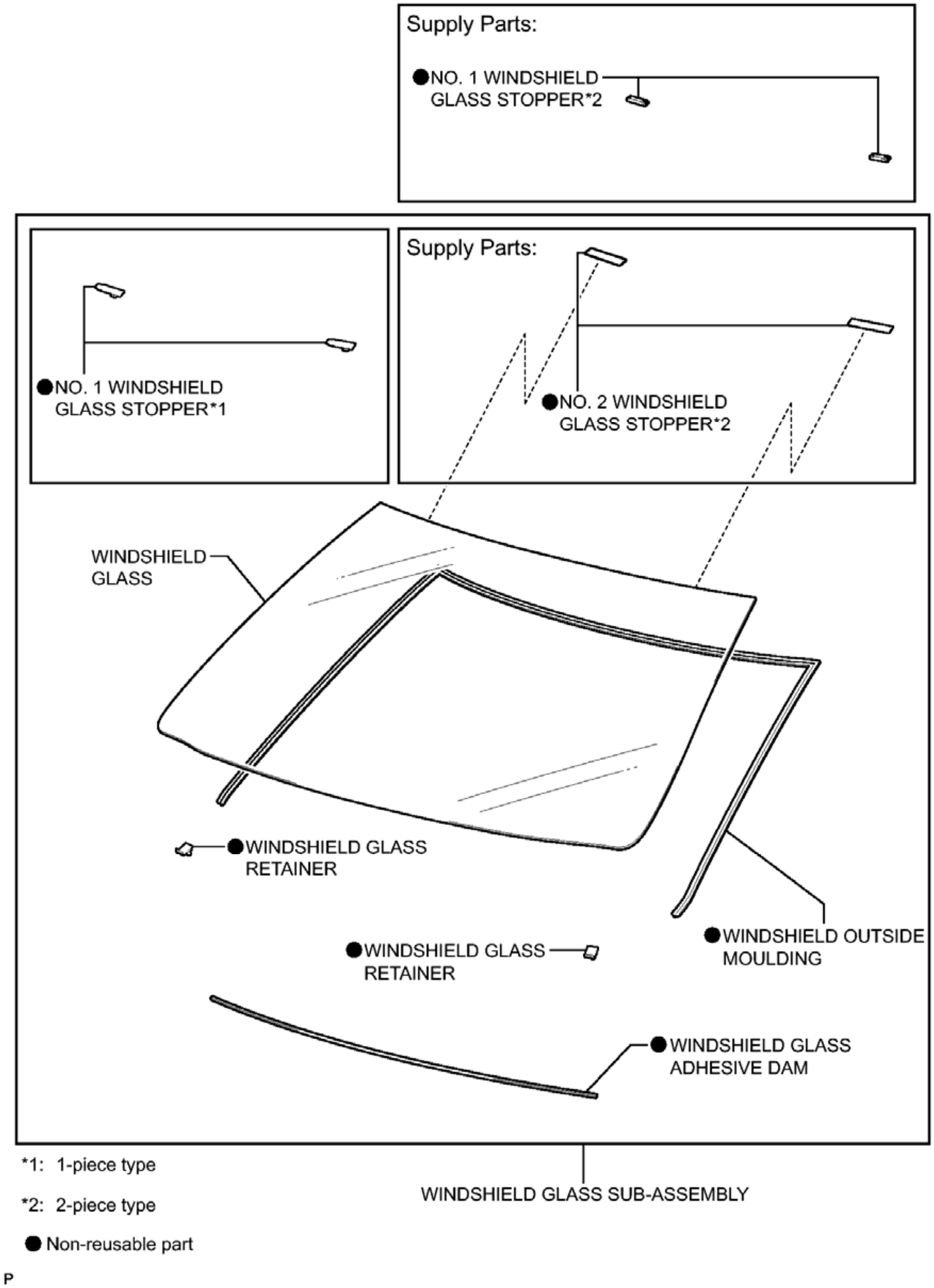
Supply Parts:
●NO. 1 WINDSHIELD GLASS STOPPER*2
●NO. 1 WINDSHIELD GLASS STOPPER*1
Supply Parts:
●NO. 2 WINDSHIELD GLASS STOPPER*2
WINDSHIELD GLASS
●WINDSHIELD GLASS RETAINER
●WINDSHIELD OUTSIDE MOULDING
●WINDSHIELD GLASS RETAINER
●WINDSHIELD GLASS ADHESIVE DAM
*1: 1-piece type
*2: 2-piece type
● Non-reusable part
WINDSHIELD GLASS SUB-ASSEMBLY
P

Fig. 33: Identifying Windshield Glass Replacement Components With Torque Specifications (8 Of 8)
Courtesy of TOYOTA MOTOR SALES, U.S.A., INC.

REMOVAL

REMOVAL

1. **REMOVE FRONT WIPER ARM AND BLADE ASSEMBLY LH** . Refer to **REMOVAL - Step 1**
2. **REMOVE FRONT WIPER ARM AND BLADE ASSEMBLY RH** . Refer to **REMOVAL - Step 2**
3. **REMOVE FRONT FENDER TO COWL SIDE SEAL LH** . Refer to **REMOVAL - Step 3**
4. **REMOVE FRONT FENDER TO COWL SIDE SEAL RH**

   HINT:

   Use the same procedure as for the LH side.

5. **REMOVE COWL TOP VENTILATOR LOUVER SUB-ASSEMBLY** . Refer to **REMOVAL - Step 5**
6. **REMOVE PROTECTOR** . Refer to **REMOVAL - Step 1**
7. **REMOVE HUMIDITY SENSOR (AIR CONDITIONING THERMISTOR ASSEMBLY)** . Refer to **REMOVAL - Step 2**
8. **REMOVE INNER REAR VIEW MIRROR ASSEMBLY (w/o EC Mirror)** . Refer to **REMOVAL - Step 1**
9. **REMOVE INNER REAR VIEW MIRROR STAY HOLDER COVER (w/ EC Mirror)** . Refer to **REMOVAL - Step 2**
10. **REMOVE INNER REAR VIEW MIRROR ASSEMBLY (w/ EC Mirror)** . Refer to **REMOVAL - Step 3**
11. **DISCONNECT FRONT DOOR OPENING TRIM WEATHERSTRIP LH** . Refer to **REMOVAL - Step 6**
12. **REMOVE FRONT PILLAR GARNISH LH** . Refer to **REMOVAL - Step 7**
13. **DISCONNECT FRONT DOOR OPENING TRIM WEATHERSTRIP RH** . Refer to **REMOVAL - Step 33**
14. **REMOVE FRONT PILLAR GARNISH RH**

    HINT:

    Use the same procedure as for the LH side.

15. **REMOVE ROOF CONSOLE BOX ASSEMBLY (w/o Sliding Roof)** . Refer to **REMOVAL - Step 1**
16. **REMOVE ROOF CONSOLE BOX ASSEMBLY (w/ Sliding Roof)** . Refer to **REMOVAL - Step 2**
17. **REMOVE NO. 1 ROOM LIGHT ASSEMBLY (w/o Sliding Roof)** . Refer to **REMOVAL - Step 1**
18. **REMOVE SPOT LIGHT ASSEMBLY (w/ Sliding Roof)** . Refer to **REMOVAL - Step 2**
19. **REMOVE ASSIST GRIP SUB-ASSEMBLY** . Refer to **REMOVAL - Step 42**
20. **REMOVE REAR ASSIST GRIP ASSEMBLY LH** . Refer to **REMOVAL - Step 43**
21. **REMOVE REAR ASSIST GRIP ASSEMBLY RH**

    HINT:

Use the same procedure as for the LH side.

22. **REMOVE VISOR BRACKET COVER (for LH Side)** . Refer to **REMOVAL - Step 46**
23. **REMOVE VISOR ASSEMBLY LH** . Refer to **REMOVAL - Step 47**
24. **REMOVE VISOR BRACKET COVER (for RH Side)**

    HINT:

    Use the same procedure as for the LH side.

25. **REMOVE VISOR ASSEMBLY RH**

    HINT:

    Use the same procedure as for the LH side.

26. **REMOVE VISOR HOLDER** . Refer to **REMOVAL - Step 50**
27. **REMOVE SLIDING ROOF OPENING TRIM MOULDING (w/ Sliding Roof)** . Refer to **REMOVAL - Step 45**
28. **REMOVE ROOF HEADLINING ASSEMBLY**
    a. Slightly lower the front section of the roof headlining assembly so that the windshield glass can be removed.

       NOTE: Do not damage the roof headlining assembly or body interior.

       HINT:

       It is not necessary to completely remove the roof headlining assembly.

29. **REMOVE WINDSHIELD GLASS SUB-ASSEMBLY**
    a. w/ Front Window Deicer System:
       1. Disengage each clamp and disconnect the connector.
    b. Apply protective tape to the area around the installation position of the windshield glass on the vehicle body to prevent it from being scratched.

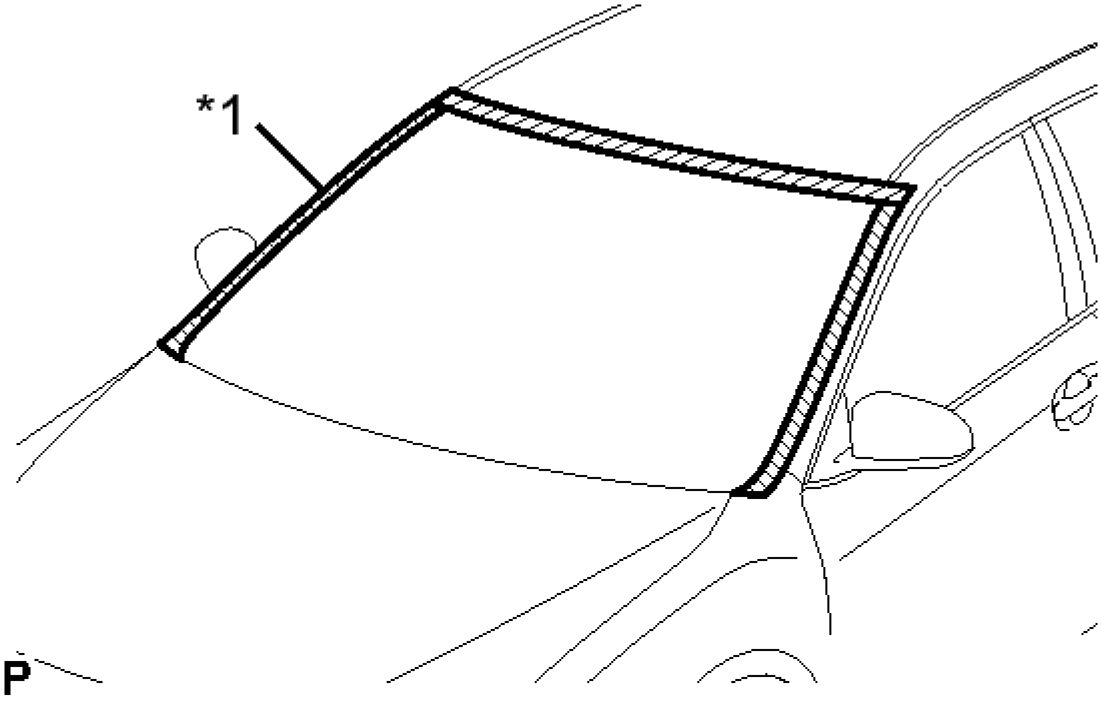

Fig. 34: Identifying Protective Tape Around Windshield Glass Sub-Assembly
Courtesy of TOYOTA MOTOR SALES, U.S.A., INC.

TEXT IN ILLUSTRATION

*1	Protective Tape

c. Pass a piano wire between the vehicle body and glass from the interior as shown in the illustration.

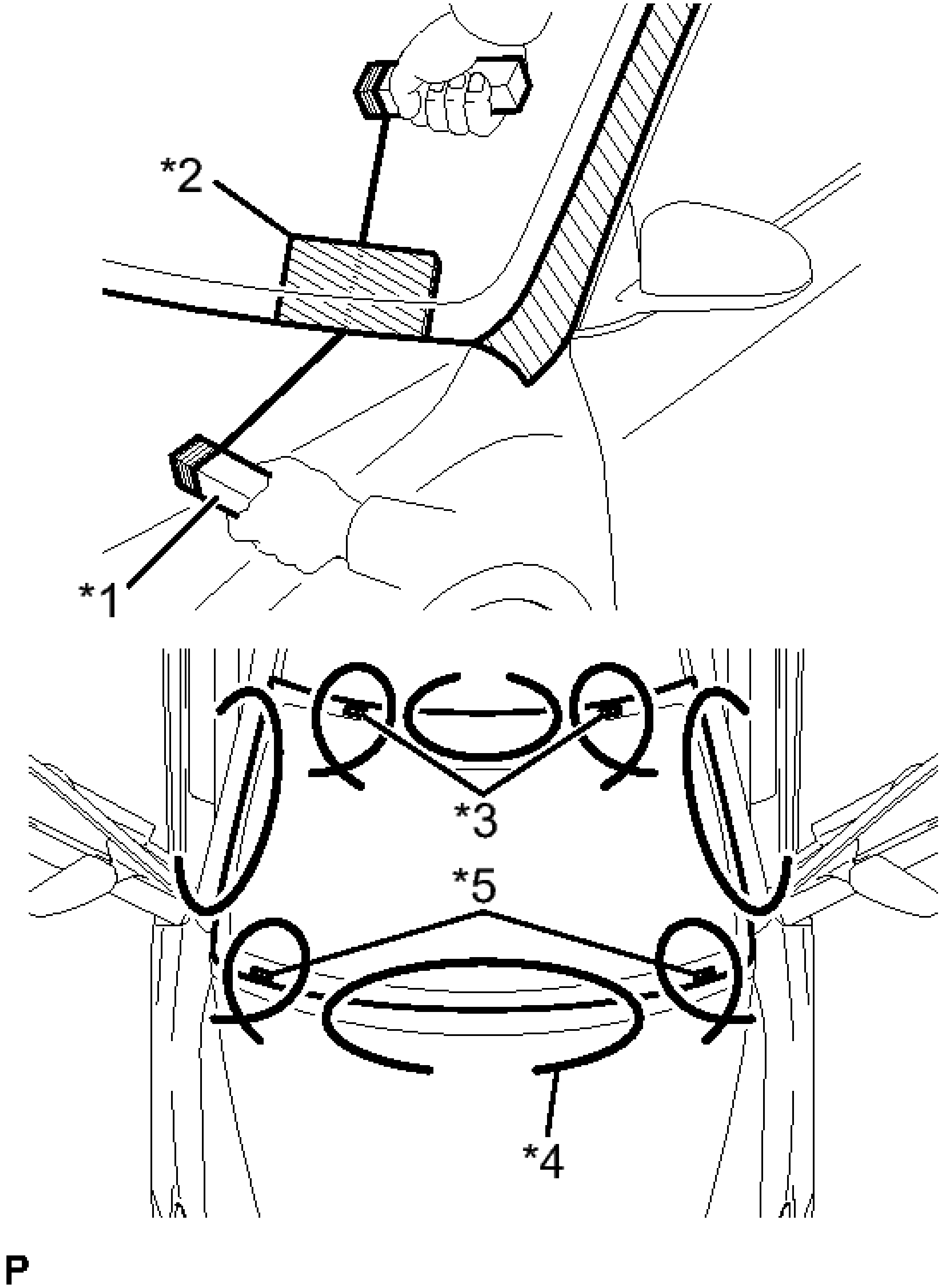

Fig. 35: Removing Windshield Glass Sub-Assembly
Courtesy of TOYOTA MOTOR SALES, U.S.A., INC.

TEXT IN ILLUSTRATION

	Wooden

*1	Block
*2	Plastic Sheet
*3	Stopper
*4	Piano Wire
*5	Windshield Glass Retainer

d. Tie both wire ends to wooden blocks or similar objects that can serve as handles.
e. Cut off the adhesive by pulling the piano wire around the windshield glass sub-assembly.

NOTE:

- **When separating the windshield glass sub-assembly, be careful not to damage the paint or interior and exterior ornaments.**
- **To prevent the safety pad from being scratched when removing the windshield glass, place a plastic sheet between the piano wire and safety pad.**

f. Place matchmarks on the windshield glass sub-assembly and vehicle body on the locations indicated in the illustration.

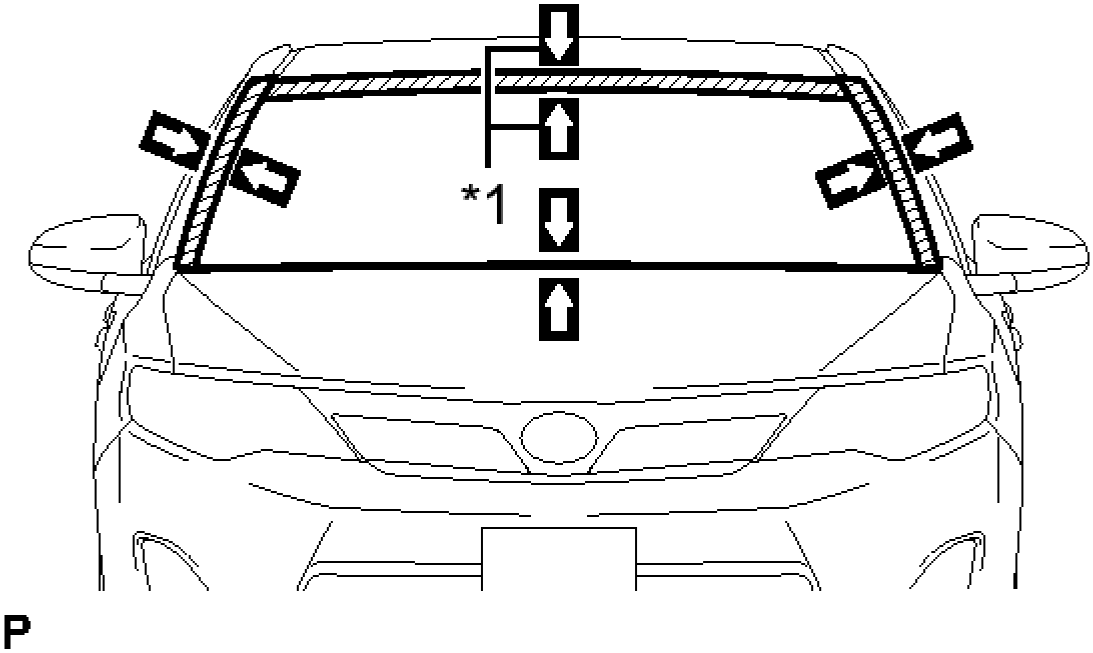

Fig. 36: Identifying Matchmarks On Windshield Glass Sub-Assembly
Courtesy of TOYOTA MOTOR SALES, U.S.A., INC.

TEXT IN ILLUSTRATION

*1	Matchmark

HINT:

Matchmarks are not necessary if the windshield glass sub-assembly is not going to be reused.

g. Disconnect the windshield glass stoppers.

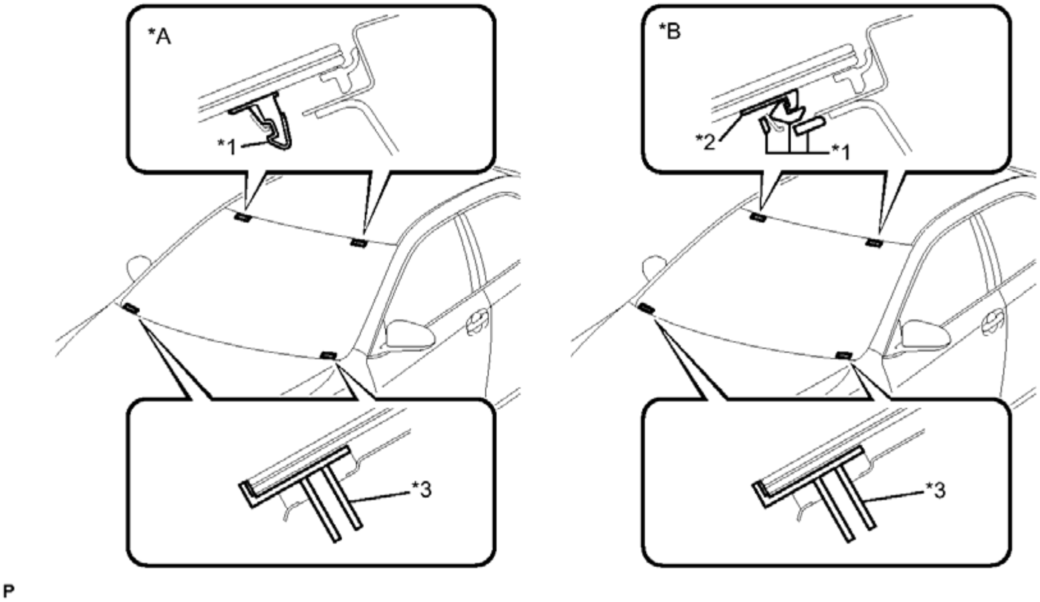

Fig. 37: Locating Windshield Glass Stoppers
Courtesy of TOYOTA MOTOR SALES, U.S.A., INC.

TEXT IN ILLUSTRATION

*A	1-piece Type	*B	2-pieceType
*1	No. 1 Windshield Glass Stopper	*2	No. 2 Windshield Glass Stopper
*3	Windshield Glass Retainer	-	-

NOTE:

- **There are No. 1 and No. 2 stoppers on the windshield glass as shown in the illustration. Be careful not to damage the windshield glass when cutting off the adhesive.**
- **To prevent the windshield glass from falling when performing this operation, be sure to hold the windshield glass using suction cups.**

HINT:

Depending on the vehicle, either 1-piece or 2-piece type stoppers may be present.

h. Using suction cups, remove the windshield glass sub-assembly.

NOTE:

- **Be careful not to drop the windshield glass sub-assembly.**
- **Leave as much adhesive on the vehicle body as possible when removing the windshield glass sub-assembly.**

30. REMOVE WINDSHIELD GLASS ADHESIVE DAM

a. When reusing the windshield glass:

1. Using a scraper, remove the windshield glass adhesive dam.

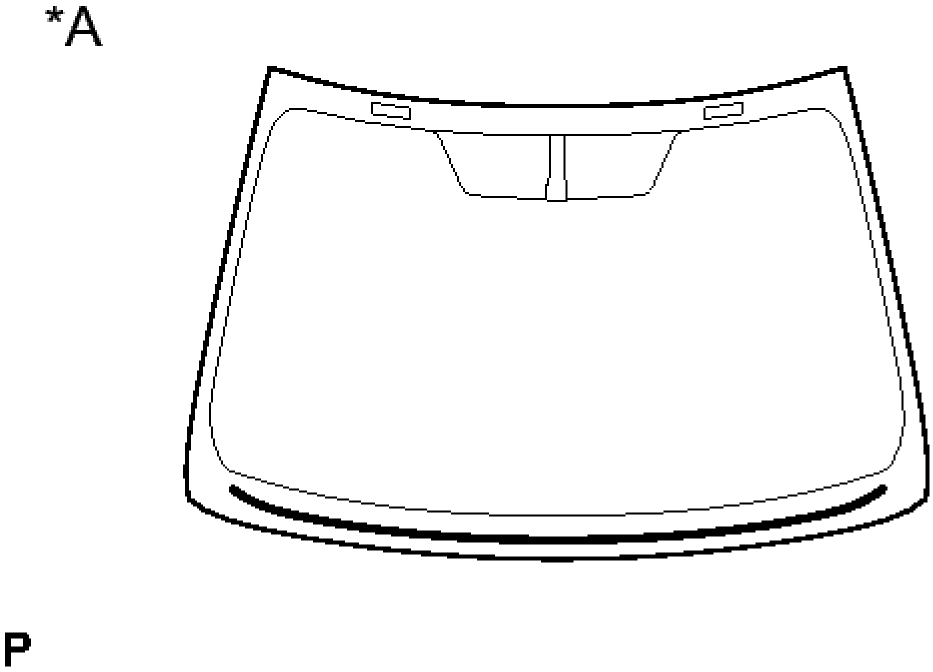

Fig. 38: Identifying Windshield Glass Adhesive Dam
Courtesy of TOYOTA MOTOR SALES, U.S.A., INC.

TEXT IN ILLUSTRATION

*A	Back Side

NOTE:

- **Be careful not to damage the windshield glass.**
- **Be sure to replace the window glass adhesive dam with a new one.**

31. REMOVE WINDSHIELD OUTSIDE MOULDING

a. When reusing the windshield glass:

1. Using a scraper, remove the windshield outside moulding.

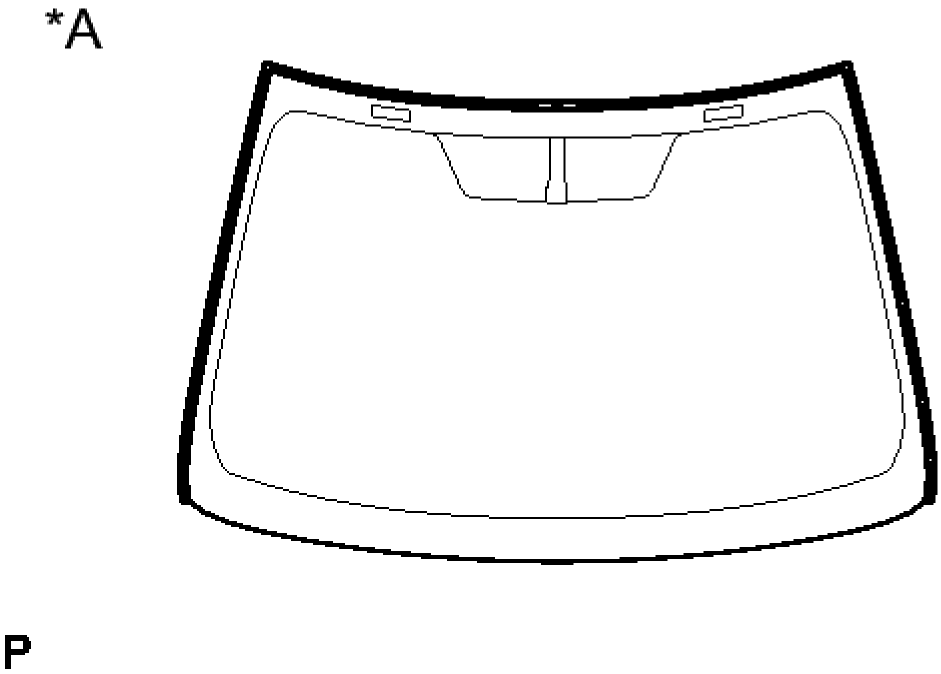

Fig. 39: Identifying Windshield Outside Moulding
Courtesy of TOYOTA MOTOR SALES, U.S.A., INC.

TEXT IN ILLUSTRATION

*A	Back Side

NOTE:

- **Be careful not to damage the windshield glass.**
- **Be sure to replace the windshield outside moulding with a new one.**

32. REMOVE NO. 1 WINDSHIELD GLASS STOPPER (for 1-piece Type)

a. When reusing the windshield glass:

1. Using a scraper, remove the 2 No. 1 windshield glass stoppers.

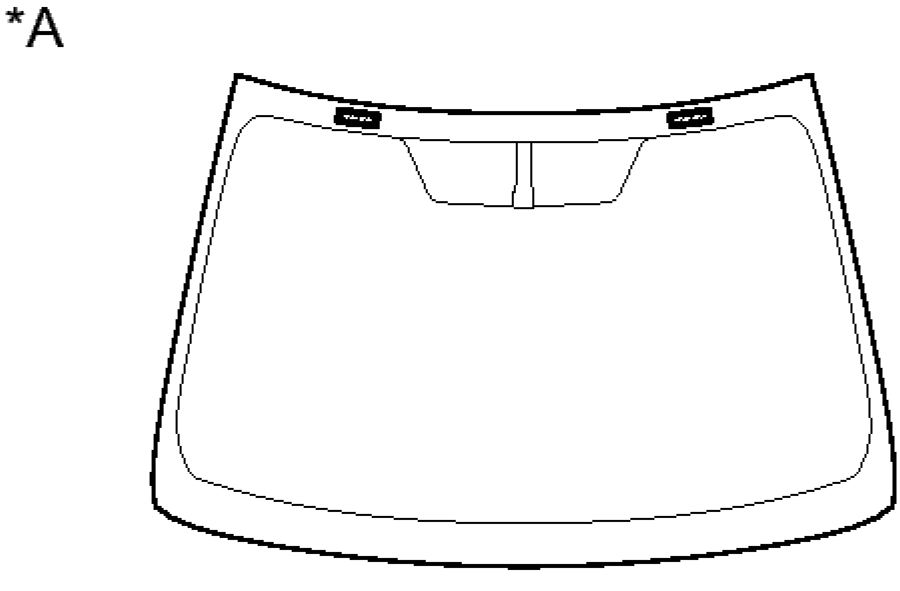

Fig. 40: Identifying No. 1 Windshield Glass Stopper (For 1-Piece Type)
Courtesy of TOYOTA MOTOR SALES, U.S.A., INC.

TEXT IN ILLUSTRATION

*A	Back Side

NOTE:

- **Be careful not to damage the windshield glass.**
- **Be sure to replace the 1-piece type No. 1 windshield glass stoppers with a new pair of 2-piece type No. 1 and No. 2 windshield glass stoppers.**

33. **REMOVE NO. 2 WINDSHIELD GLASS STOPPER (for 2-piece Type)**
    a. When reusing the windshield glass:
        1. Using a scraper, remove the 2 No. 2 windshield glass stoppers.

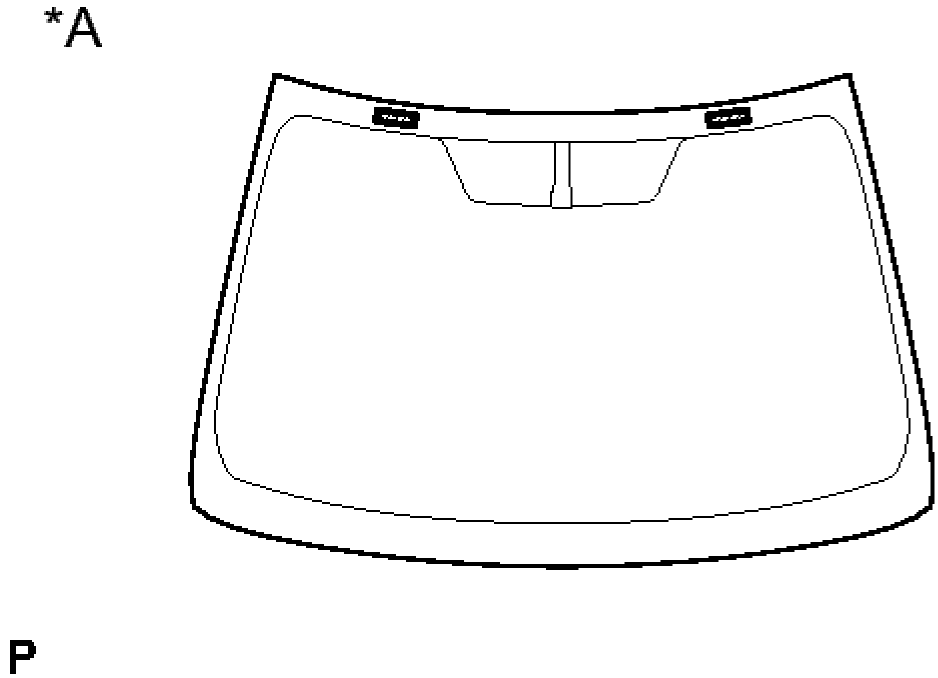

Fig. 41: Identifying No. 2 Windshield Glass Stopper (For 2-Piece Type)
Courtesy of TOYOTA MOTOR SALES, U.S.A., INC.

TEXT IN ILLUSTRATION

*A	Back Side

NOTE:

- **Be careful not to damage the windshield glass.**
- **Be sure to replace the No. 2 windshield glass stoppers with new ones.**

34. **REMOVE WINDSHIELD GLASS RETAINER**
    a. When reusing the windshield glass:
        1. Remove the 2 windshield glass retainers.

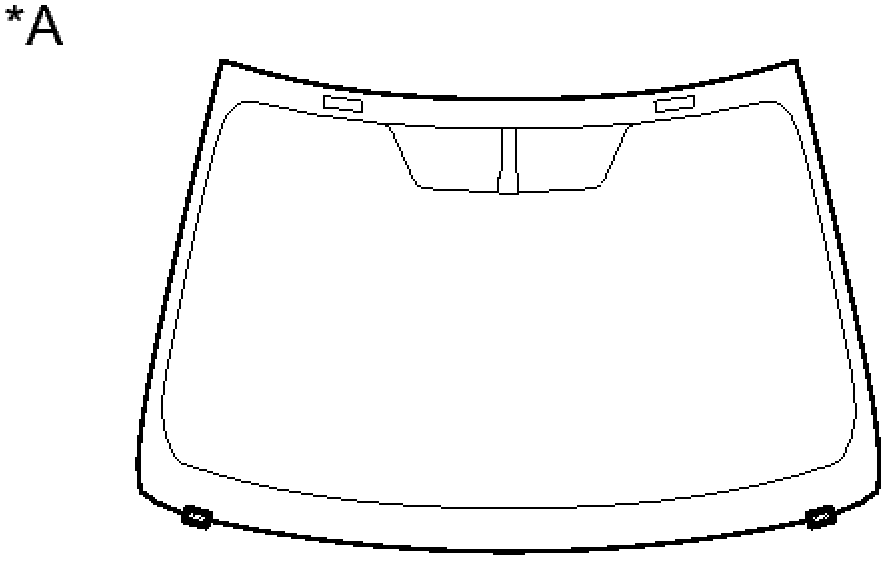

Fig. 42: Identifying Windshield Glass Retainer
Courtesy of TOYOTA MOTOR SALES, U.S.A., INC.

TEXT IN ILLUSTRATION

*A	Back Side

NOTE:

- **Be careful not to damage the windshield glass.**
- **Be sure to replace the windshield glass retainers with new ones.**

35. **REMOVE NO. 1 WINDSHIELD GLASS STOPPER (for 2-piece Type)**
    a. Remove the 2 No. 1 windshield glass stoppers.

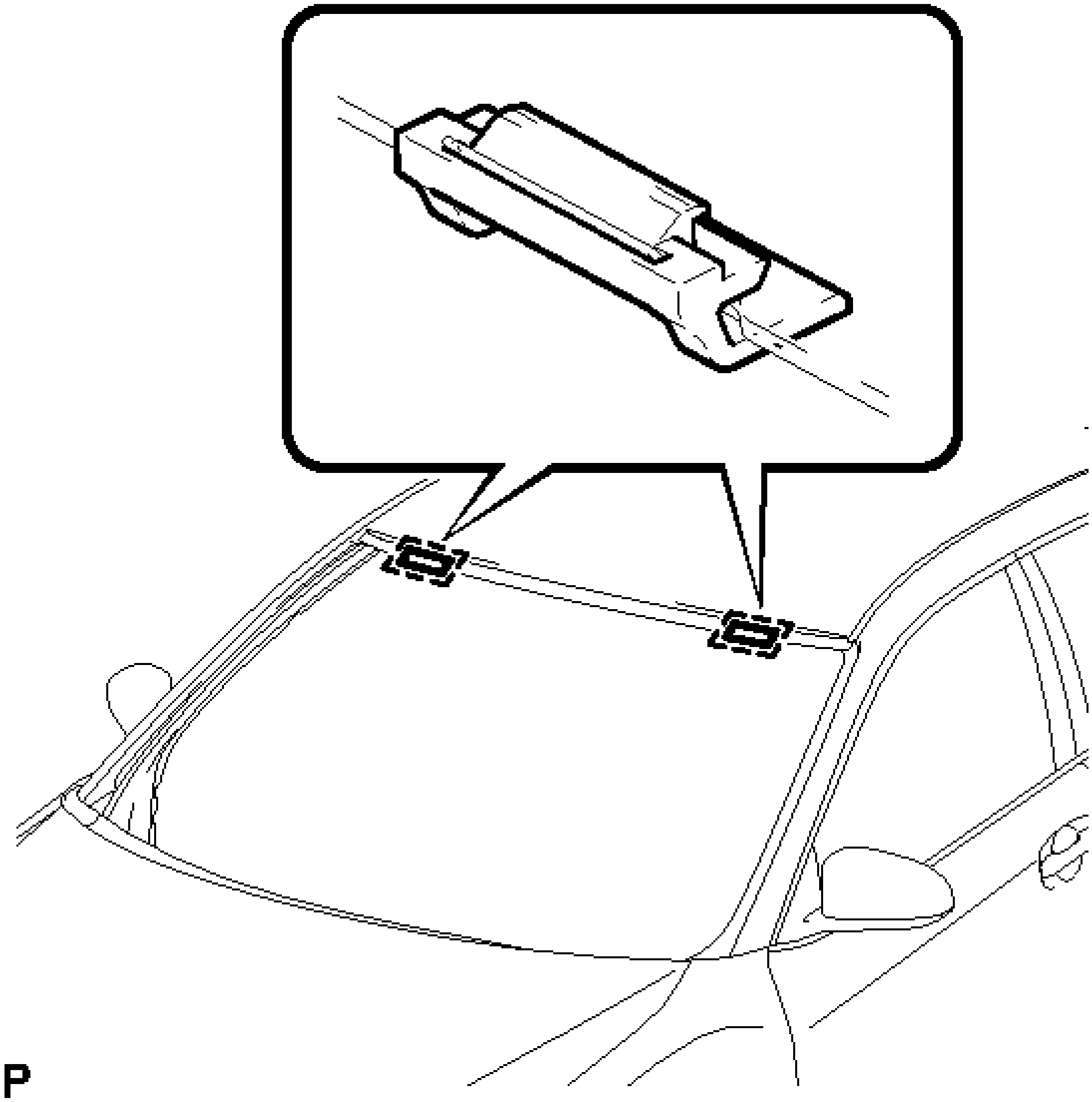

Fig. 43: Identifying No. 1 Windshield Glass Stopper (For 2-Piece Type)
Courtesy of TOYOTA MOTOR SALES, U.S.A., INC.

NOTE: **Be sure to replace the No. 1 windshield glass stoppers with new ones.**

36. **CLEAN WINDSHIELD GLASS**
    a. When reusing the windshield glass:
        1. Using a scraper, remove any adhesive dam and adhesive residue from the windshield glass.

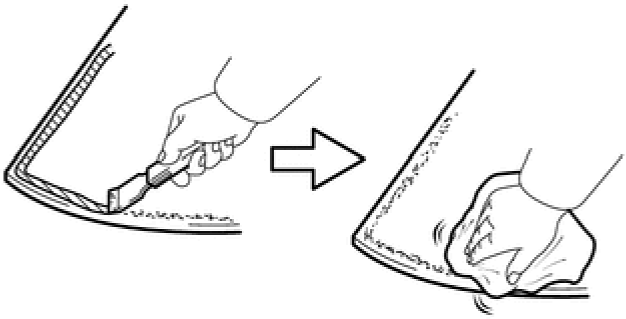

Fig. 44: Cleaning Windshield Glass
Courtesy of TOYOTA MOTOR SALES, U.S.A., INC.

NOTE: **Be careful not to damage the windshield glass.**

2. Clean the outer circumference of the windshield glass with a non-residue solvent.

NOTE:

- **Do not touch the windshield glass surface after cleaning it.**
- **Even if using a new windshield glass, clean the windshield glass with a non-residue solvent.**

37. **CLEAN VEHICLE BODY**
    a. Clean and shape the contact surfaces of the vehicle body.

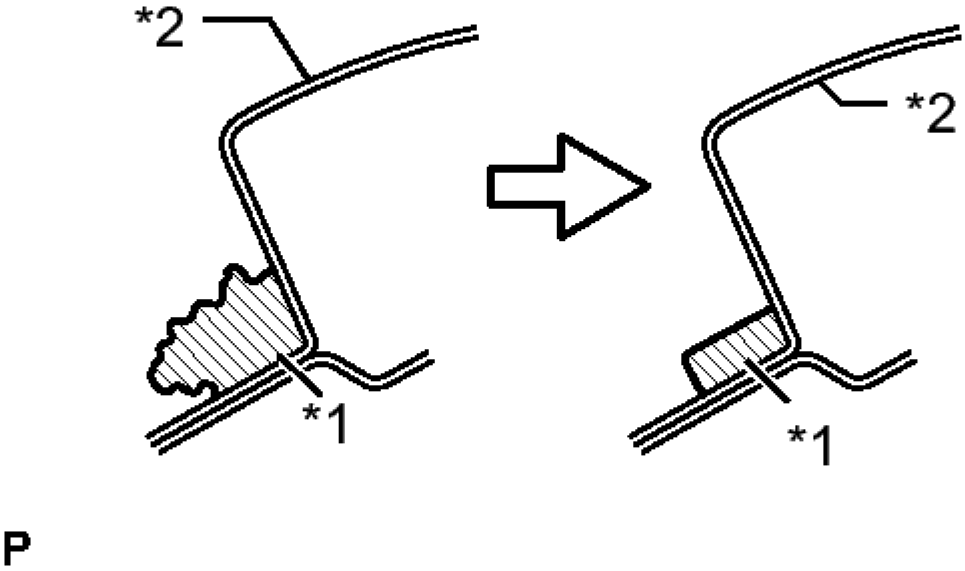

Fig. 45: Identifying Contact Surfaces Of Vehicle Body
Courtesy of TOYOTA MOTOR SALES, U.S.A., INC.

TEXT IN ILLUSTRATION

*1	Adhesive
*2	Body

1. Using a knife, cut away excess adhesive on the contact surfaces of the vehicle body as shown in the illustration.

   NOTE: **Be careful not to damage the vehicle body.**

   HINT:

   Leave as much adhesive on the vehicle body as possible.

2. Clean the contact surfaces of the vehicle body with a piece of cloth saturated with cleaner.

   HINT:

   Even if all the adhesive has been removed, clean the vehicle body.

INSTALLATION

INSTALLATION

1. **INSTALL NO. 2 WINDSHIELD GLASS STOPPER (for 2-piece Type)**
   a. Using a brush or sponge, coat the application area of 2 new No. 2 windshield glass stoppers with Primer G.

   NOTE:
   - **Do not apply too much primer.**
   - **Allow the primer to dry for 3 minutes or more.**
   - **Throw away any leftover primer.**

   HINT:

   If an area other than specified is coated by accident, wipe off the primer with a clean piece of cloth before it dries.

   b. Install the 2 new No. 2 windshield glass stoppers onto the windshield glass, as shown in the illustration.

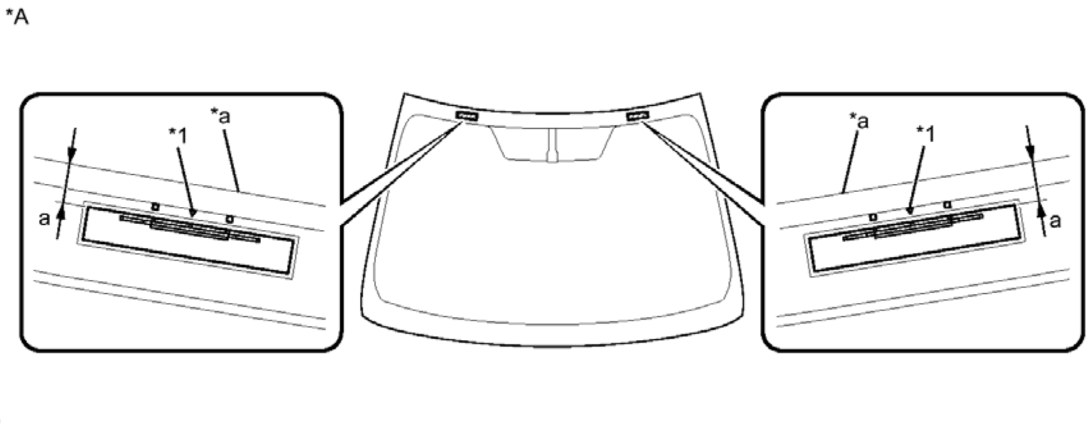

Fig. 46: Locating No. 2 Windshield Glass Stoppers
Courtesy of TOYOTA MOTOR SALES, U.S.A., INC.

TEXT IN ILLUSTRATION

*A	Back Side	-	-
*1	Ceramic Notch	-	-
*a	Windshield glass edge side	-	-

Standard Dimension

Area	Dimension
a	13.7 to 14.7 mm (0.539 to 0.578 in.)

NOTE: **Only 2-piece type windshield glass stoppers are provided as supply parts. Use the 2-piece type stoppers as replacements even if 1-piece type stoppers were originally installed.**

2. **INSTALL NO. 1 WINDSHIELD GLASS STOPPER (for 2-piece Type)**
    a. Install 2 new No. 1 windshield glass stoppers to the vehicle body as shown in the illustration.

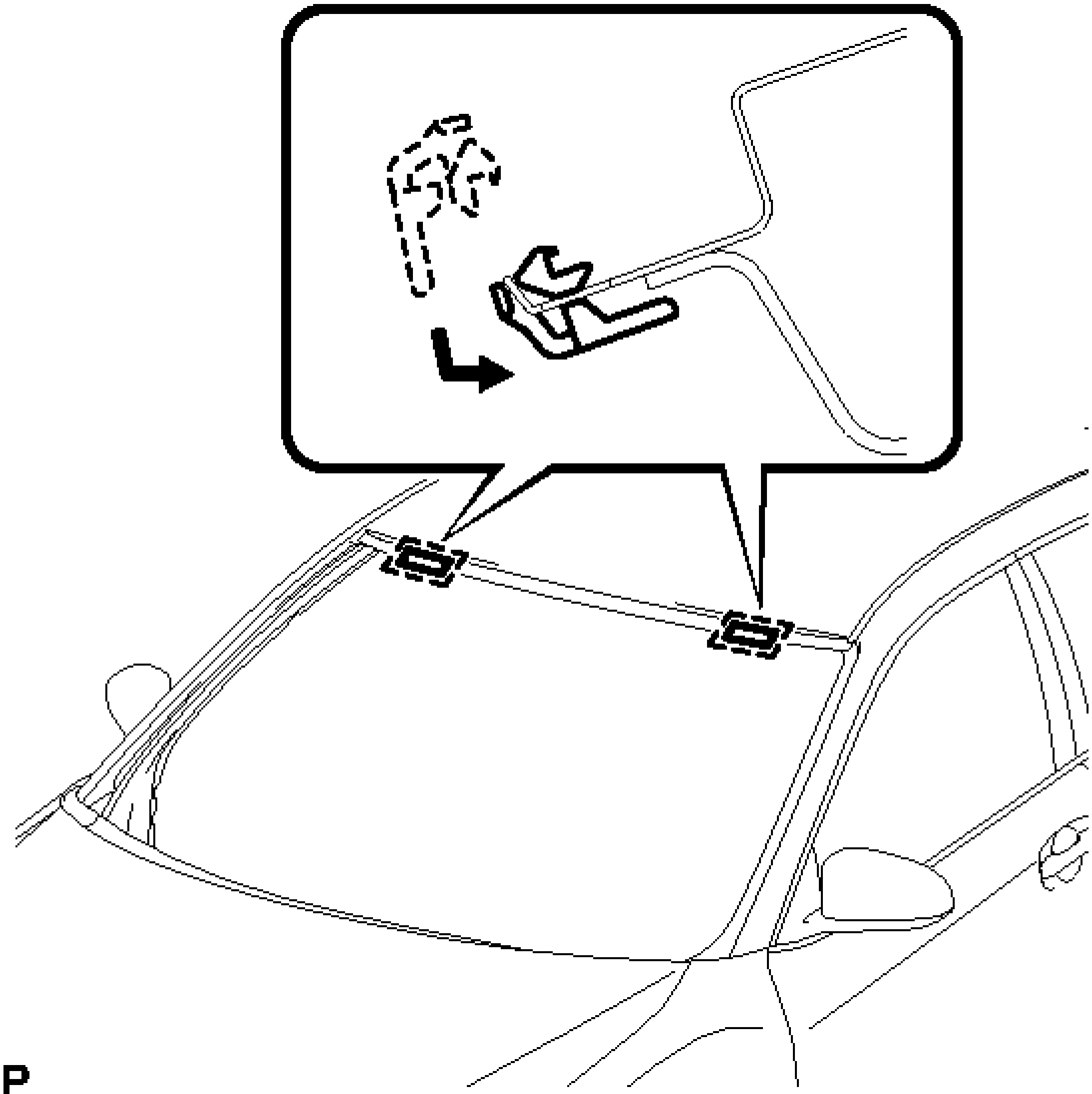

Fig. 47: Identifying No. 1 Windshield Glass Stopper (For 2-Piece Type)
Courtesy of TOYOTA MOTOR SALES, U.S.A., INC.

NOTE: **Only 2-piece type windshield glass stoppers are provided as supply parts. Use 2-piece type stoppers as replacements even if 1-piece type stoppers were originally installed.**

3. **INSTALL WINDSHIELD GLASS RETAINER**
   a. Using a brush or sponge, coat the application area of a new windshield outside moulding with Primer G.

NOTE:

- **Do not apply too much primer.**
- **Allow the primer to dry for 3 minutes or more.**
- **Throw away any leftover primer.**

HINT:

If an area other than specified is coated by accident, wipe off the primer with a clean piece of cloth before it dries.

b. Install the 2 windshield glass retainers onto the windshield glass as shown in the illustration.

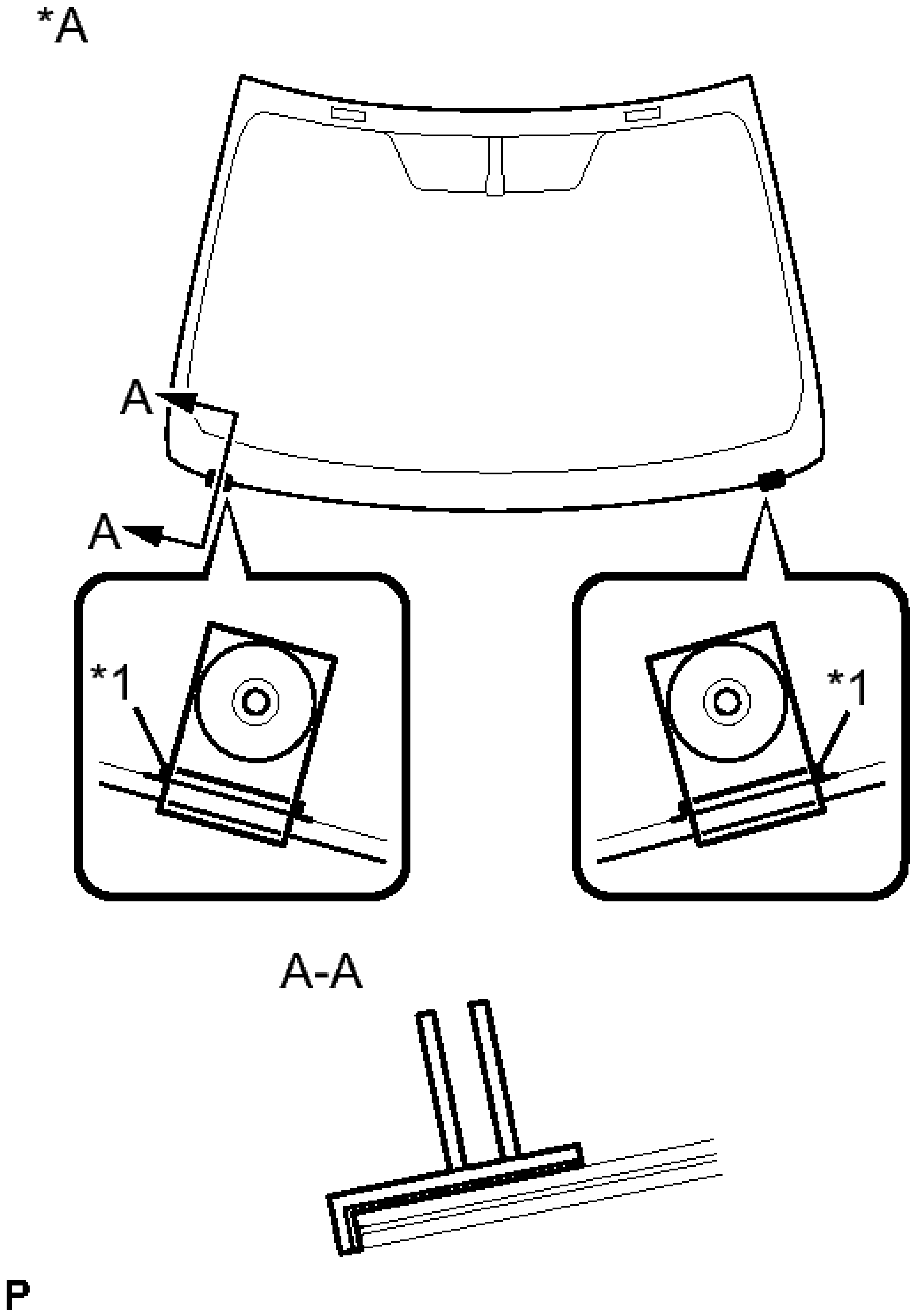

Fig. 48: Locating Windshield Glass Retainers
Courtesy of TOYOTA MOTOR SALES, U.S.A., INC.

TEXT IN ILLUSTRATION

	Back

*A	Side
*1	Ceramic Notch

4. **INSTALL WINDSHIELD OUTSIDE MOULDING**
   1. Using a brush or sponge, coat the application area of a new windshield outside moulding with Primer G.

      NOTE:

      - **Do not apply too much primer.**
      - **Allow the primer to dry for 3 minutes or more.**
      - **Throw away any leftover primer.**

      HINT:

      If an area other than specified is coated by accident, wipe off the primer with a clean piece of cloth before it dries.

   2. Install the windshield outside moulding onto the windshield glass as shown in the illustration.

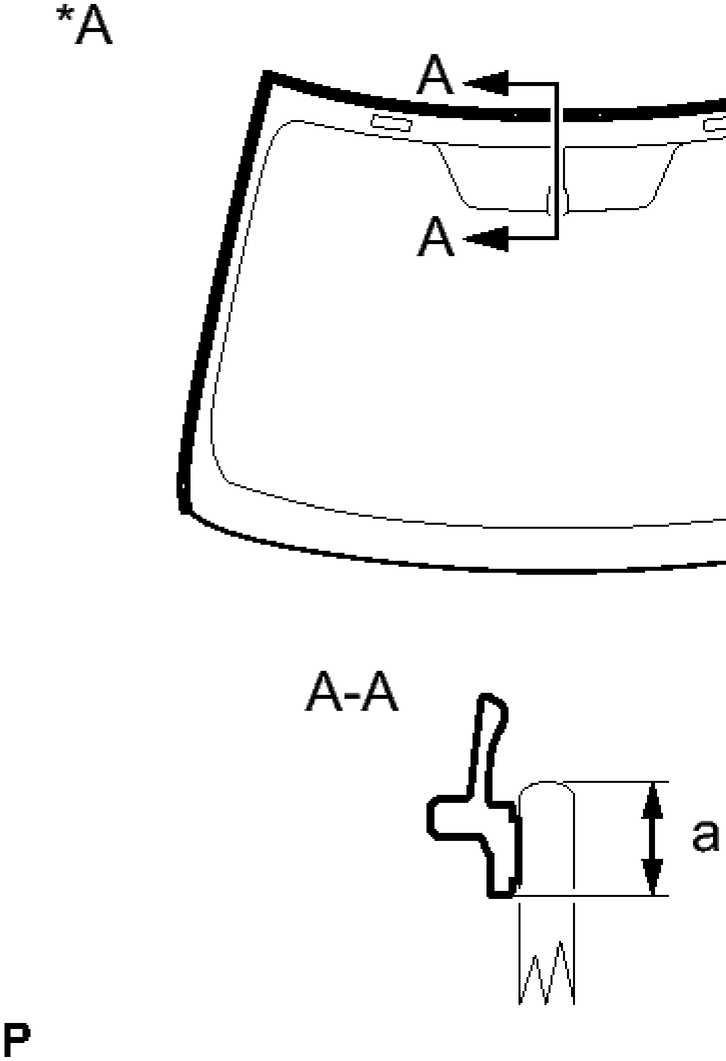

Fig. 49: Identifying Windshield Outside Moulding
Courtesy of TOYOTA MOTOR SALES, U.S.A., INC.

TEXT IN ILLUSTRATION

*A	Back Side

Standard Dimension

Area	Dimension
a	6.9 mm (0.272 in.)

5. **INSTALL WINDSHIELD GLASS ADHESIVE DAM**
    a. Using a brush or sponge, coat the application area of a new windshield glass adhesive dam with

Primer G.

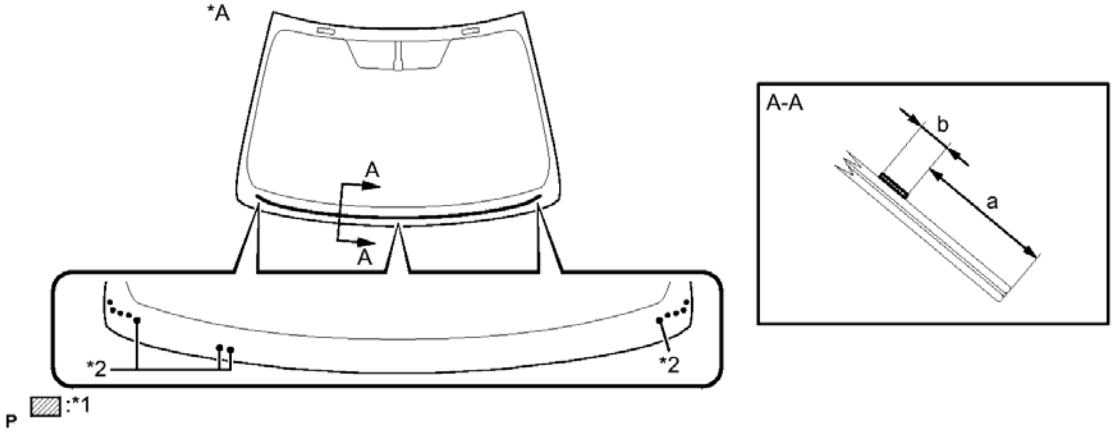

Fig. 50: Identifying Windshield Glass Adhesive Dam Dimensions
Courtesy of TOYOTA MOTOR SALES, U.S.A., INC.

TEXT IN ILLUSTRATION

*A	Back Side	-	-
*1	Primer G	*2	Ceramic Notch

Standard Dimension

Area	Dimension
a	32.5 mm (1.28 in.)
b	10.0 mm (0.394 in.)

NOTE:

- **Do not apply too much primer.**
- **Allow the primer to dry for 3 minutes or more.**
- **Throw away any leftover primer.**

HINT:

If an area other than specified is coated by accident, wipe off the primer with a clean piece of cloth before it dries.

b. Install the windshield glass adhesive dam onto the windshield glass as shown in the illustration.

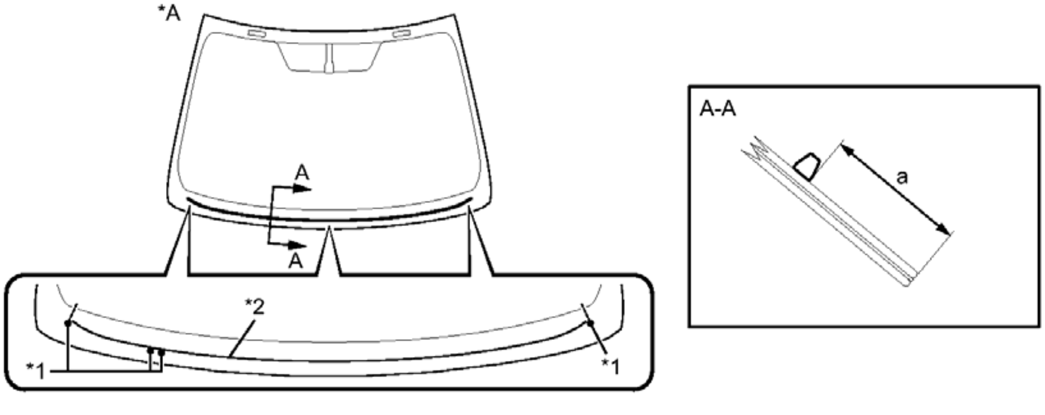

Fig. 51: Identifying Windshield Glass Adhesive Dam Dimensions
Courtesy of TOYOTA MOTOR SALES, U.S.A., INC.

TEXT IN ILLUSTRATION

*A	Back Side	-	-
*1	Ceramic Notch	*2	Windshield Glass Adhesive Dam

Standard Dimension

Area	**Dimension**
a	35.0 mm (1.38 in.)

6. **INSTALL WINDSHIELD GLASS SUB-ASSEMBLY**
    a. Position the windshield glass sub-assembly.

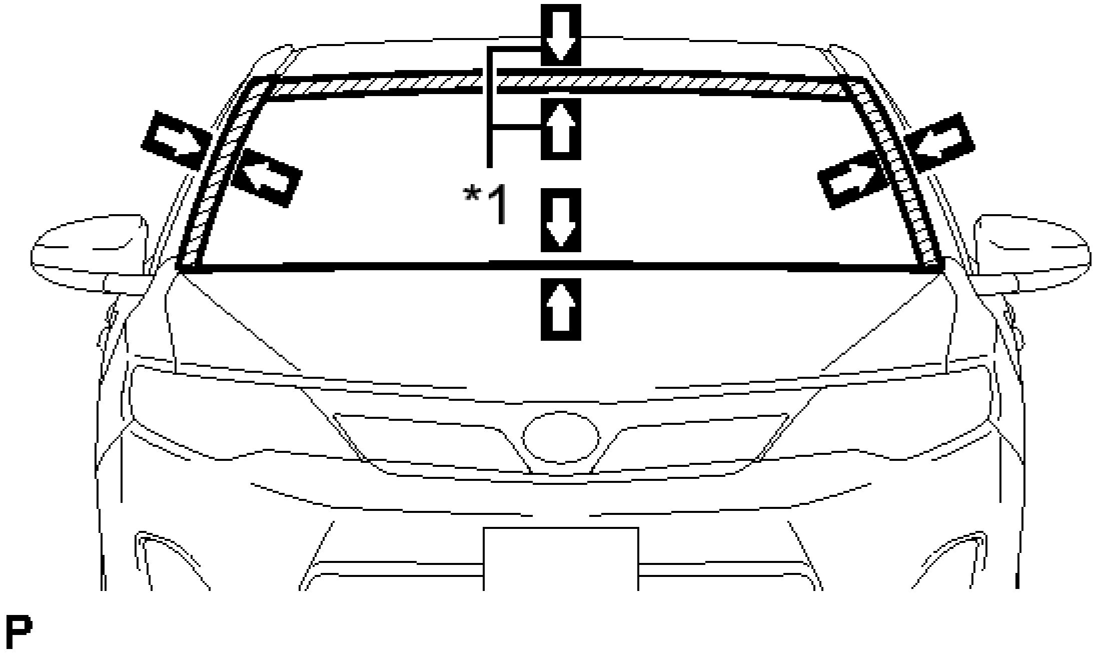

Fig. 52: Identifying Matchmarks On Windshield Glass Sub-Assembly
Courtesy of TOYOTA MOTOR SALES, U.S.A., INC.

TEXT IN ILLUSTRATION

*1	Matchmark

1. Using suction cups, place the windshield glass sub-assembly in the correct position.
2. Check that the whole contact surface of the windshield glass sub-assembly rim is perfectly even.
3. Align the matchmarks on the windshield glass sub-assembly and vehicle body.

   NOTE: **Check that the windshield glass stoppers are attached to the vehicle body correctly.**

4. Remove the windshield glass sub-assembly.

b. Using a brush, coat the installation surface on the vehicle body with Primer M.

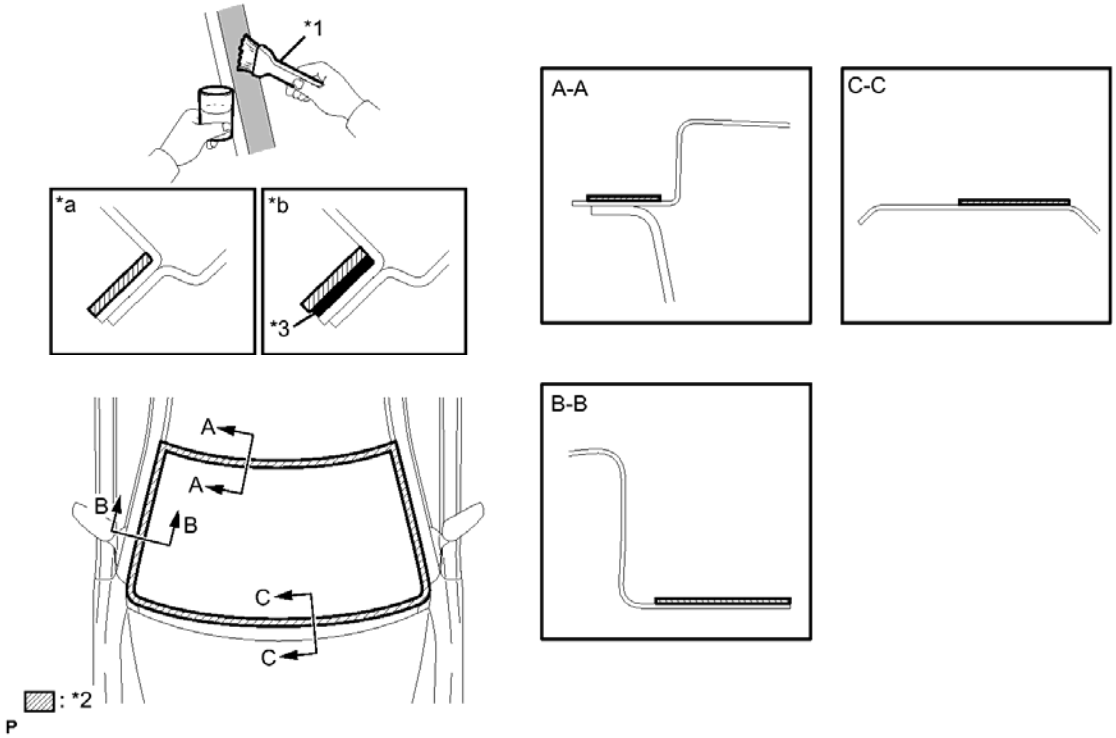

Fig. 53: Coating Windshield Glass Sub-Assembly
Courtesy of TOYOTA MOTOR SALES, U.S.A., INC.

TEXT IN ILLUSTRATION

*1	Brush	*2	Primer M
*3	Adhesive	-	-
*a	CORRECT	*b	INCORRECT

NOTE:

- **Do not coat the adhesive with Primer M.**
- **Do not apply too much primer.**
- **Allow the primer to dry for 3 minutes or more.**
- **Throw away any leftover primer.**

HINT:

If an area other than specified is coated by accident, wipe off the primer with a clean piece of cloth before it dries.

c. Using a brush or sponge, coat the application area of adhesive with Primer G.

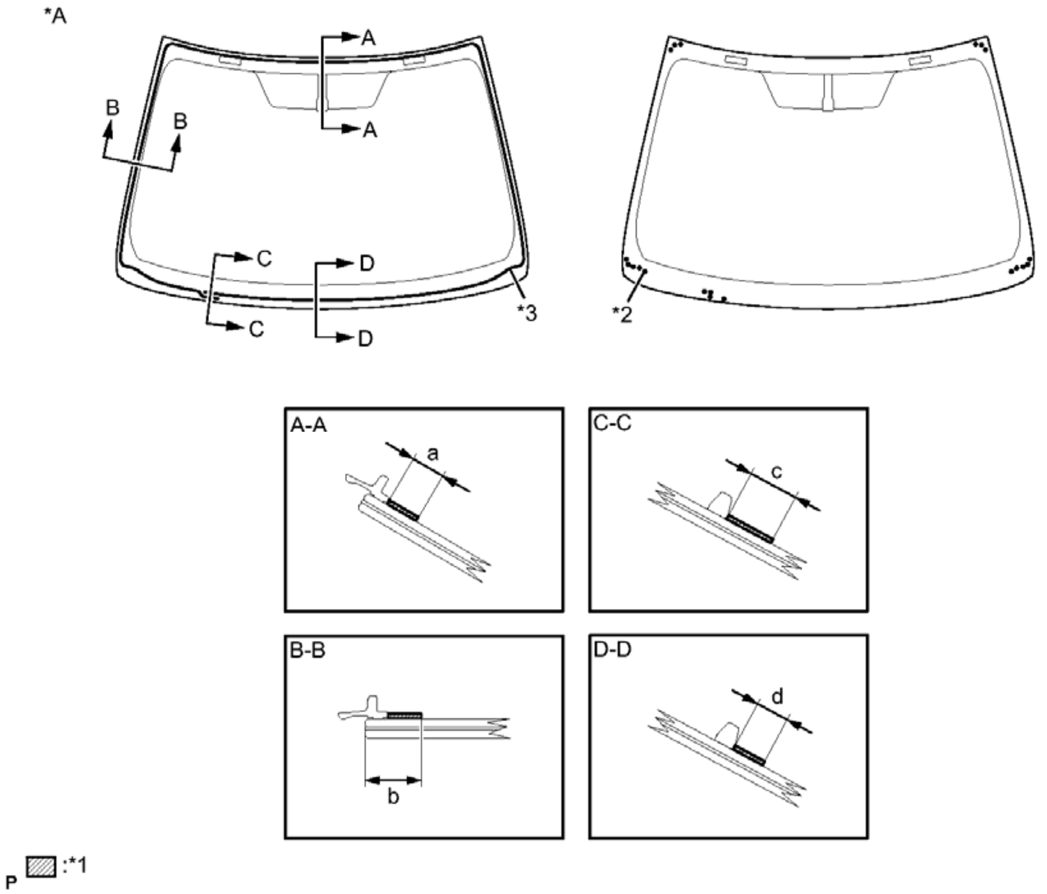
*A
A
A
B
B
C
C
D
D
*3
*2
A-A
a
C-C
c
B-B
b
D-D
d
▨ :*1
P

Fig. 54: Identifying Windshield Glass Adhesive Dimensions
Courtesy of TOYOTA MOTOR SALES, U.S.A., INC.

TEXT IN ILLUSTRATION

*A	Back Side	-	-
*1	Primer G	*2	Ceramic Notch
*3	Adhesive Center	-	-

Standard Dimension

Area	Dimension
a	9.6 mm (0.378 in.) or more
b	16.5 mm (0.650 in.) or more

c	18.5 mm (0.728 in.) or more
d	11.0 mm (0.433 in.) or more

NOTE:

- **Do not apply too much primer.**
- **Allow the primer to dry for 3 minutes or more.**
- **Throw away any leftover primer.**

HINT:

- Apply Primer G onto the ceramic notches.
- If an area other than specified is coated by accident, wipe off the primer with a clean piece of cloth before it dries.

d. Apply adhesive to the glass.

Adhesive

Toyota Genuine Windshield Glass Adhesive or equivalent

1. Cut off the tip of the cartridge nozzle as shown in the illustration.

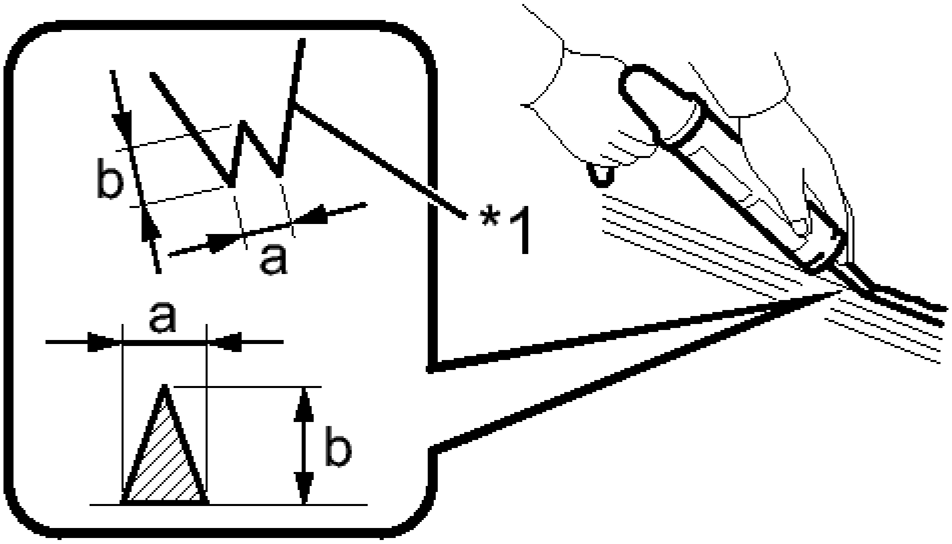

Fig. 55: Cutting Tip Of Cartridge Nozzle

Courtesy of TOYOTA MOTOR SALES, U.S.A., INC.

TEXT IN ILLUSTRATION

*1	Nozzle

Standard Dimension

Area	Dimension
a	8.0 mm (0.315 in.) or more
b	12.0 mm (0.472 in.) or more

HINT:

After cutting off the tip, use all adhesive within the time described in the table below.

Usage Time Frame

Temperature	Usage Time Frame
35°C (95°F)	15 minutes
20°C (68°F)	1 hour and 40 minutes
5°C (41°F)	8 hours

2. Load the sealer gun with the cartridge.
3. Apply adhesive to the windshield glass sub-assembly as shown in the illustration.

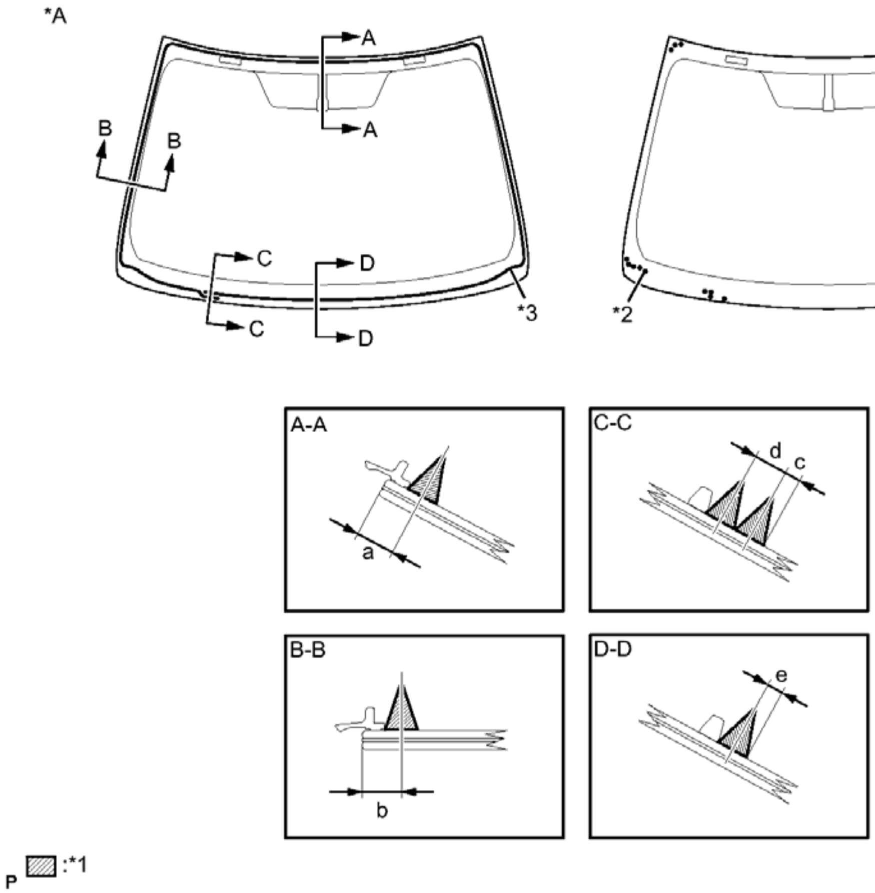
*A
A
A
B
B
C
C
D
D
*3
*2
A-A
a
C-C
d
c
B-B
b
D-D
e
P
▨ :*1

Fig. 56: Identifying Windshield Glass Adhesive Dimensions
Courtesy of TOYOTA MOTOR SALES, U.S.A., INC.

TEXT IN ILLUSTRATION

*A	Back Side	-	-
*1	Adhesive	*2	Ceramic Notch
*3	Adhesive Center	-	-

Standard Dimension

Area	Dimension
a	9.5 mm (0.374 in.)
b	9.5 mm (0.374 in.)
c	4.0 mm (0.157 in.)

d	8.0 mm (0.315 in.)
e	4.0 mm (0.157 in.)

HINT:

Apply adhesive onto the ceramic notches.

e. Install the windshield glass sub-assembly.

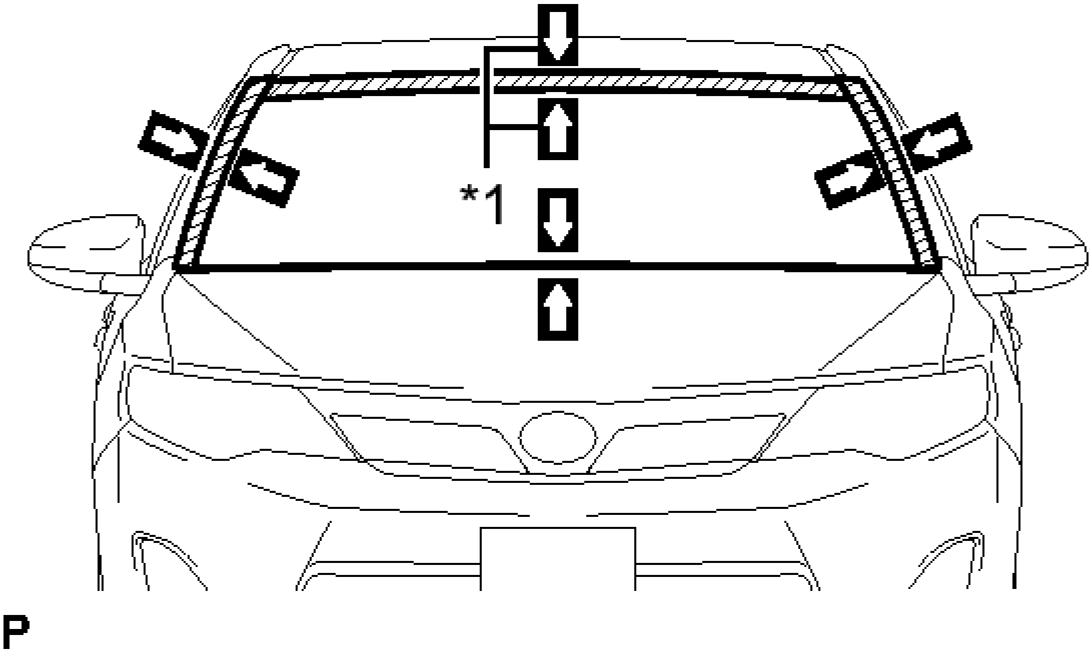

Fig. 57: Identifying Matchmarks On Windshield Glass Sub-Assembly
Courtesy of TOYOTA MOTOR SALES, U.S.A., INC.

TEXT IN ILLUSTRATION

*1	Matchmark

1. Using suction cups, position the windshield glass so that the matchmarks are aligned, and press it in gently along the rim.

NOTE:

- **Check that the windshield glass stoppers are attached to the vehicle body correctly.**
- **Check the clearance between the vehicle body and windshield glass sub-assembly.**

2. Lightly press the front surface of the windshield glass sub-assembly to ensure that the

windshield glass is securely fit to the vehicle body.

HINT:

Press the glass with a force of 98 N (10 kgf, 22.0 lbf) or more.

3. Using a scraper, remove any excess or protruding adhesive.
4. Hold the windshield glass using protective tape until the applied adhesive becomes hard.

NOTE: Do not drive the vehicle for the time described in the table below.

Minimum Time

Temperature	**Minimum Time prior to Driving Vehicle**
35°C (95°F)	1 hour and 30 minutes
20°C (68°F)	5 hours
5°C (41°F)	24 hours

f. w/ Front Window Deicer System:
   1. Engage the 3 clamps.
   2. Connect the connector.

7. **INSPECT FOR LEAK AND REPAIR**
   a. After the adhesive has hardened, apply water from the outside of the vehicle. Check that no water leaks into the cabin.
   b. If water leaks into the cabin, allow the water to dry and add adhesive.
   c. Remove the protective tape.
8. **INSTALL ROOF HEADLINING ASSEMBLY**
   a. Return the front section of the roof headlining assembly to the original position.
9. **INSTALL SLIDING ROOF OPENING TRIM MOULDING (w/ Sliding Roof)** . Refer to **INSTALLATION - Step 8**
10. **INSTALL VISOR HOLDER** . Refer to **INSTALLATION - Step 3**
11. **INSTALL VISOR ASSEMBLY LH** . Refer to **INSTALLATION - Step 4**
12. **INSTALL VISOR BRACKET COVER (for LH Side)** . Refer to **INSTALLATION - Step 5**
13. **INSTALL VISOR ASSEMBLY RH**

    HINT:

Use the same procedure as for the LH side.

14. **INSTALL VISOR BRACKET COVER (for RH Side)**

    HINT:

    Use the same procedure as for the LH side.

15. **INSTALL REAR ASSIST GRIP ASSEMBLY LH** . Refer to **INSTALLATION - Step 10**
16. **INSTALL REAR ASSIST GRIP ASSEMBLY RH**

    HINT:

    Use the same procedure as for the LH side.

17. **INSTALL ASSIST GRIP SUB-ASSEMBLY** . Refer to **INSTALLATION - Step 9**
18. **INSTALL NO. 1 ROOM LIGHT ASSEMBLY (w/o Sliding Roof)** . Refer to **INSTALLATION - Step 1**
19. **INSTALL SPOT LIGHT ASSEMBLY (w/ Sliding Roof)** . Refer to **INSTALLATION - Step 2**
20. **INSTALL ROOF CONSOLE BOX ASSEMBLY (w/o Sliding Roof)** . Refer to **INSTALLATION - Step 2**
21. **INSTALL ROOF CONSOLE BOX ASSEMBLY (w/ Sliding Roof)** . Refer to **INSTALLATION - Step 3**
22. **INSTALL FRONT PILLAR GARNISH LH** . Refer to **INSTALLATION - Step 42**
23. **INSTALL FRONT DOOR OPENING TRIM WEATHERSTRIP LH** . Refer to **INSTALLATION - Step 43**
24. **INSTALL FRONT PILLAR GARNISH RH**

    HINT:

    Use the same procedure as for the LH side.

25. **INSTALL FRONT DOOR OPENING TRIM WEATHERSTRIP RH** . Refer to **INSTALLATION - Step 47**
26. **INSTALL INNER REAR VIEW MIRROR ASSEMBLY (w/o EC Mirror)** . Refer to **INSTALLATION - Step 1**
27. **INSTALL INNER REAR VIEW MIRROR ASSEMBLY (w/ EC Mirror)** . Refer to **INSTALLATION - Step 2**
28. **INSTALL INNER REAR VIEW MIRROR STAY HOLDER COVER (w/ EC Mirror)** . Refer to **INSTALLATION - Step 3**
29. **INSTALL HUMIDITY SENSOR (AIR CONDITIONING THERMISTOR ASSEMBLY)** . Refer to **INSTALLATION - Step 1**
30. **INSTALL PROTECTOR** . Refer to **INSTALLATION - Step 2**
31. **INSTALL COWL TOP VENTILATOR LOUVER SUB-ASSEMBLY** . Refer to **INSTALLATION -**

Step 3

32. **INSTALL FRONT FENDER TO COWL SIDE SEAL LH** . Refer to **INSTALLATION - Step 4**
33. **INSTALL FRONT FENDER TO COWL SIDE SEAL RH**

    HINT:

    Use the same procedure as for the LH side.

34. **INSTALL FRONT WIPER ARM AND BLADE ASSEMBLY LH** . Refer to **INSTALLATION - Step 6**
35. **INSTALL FRONT WIPER ARM AND BLADE ASSEMBLY RH** . Refer to **INSTALLATION - Step 7**

BACK WINDOW GLASS

COMPONENTS

ILLUSTRATION

w/o Sliding Roof:

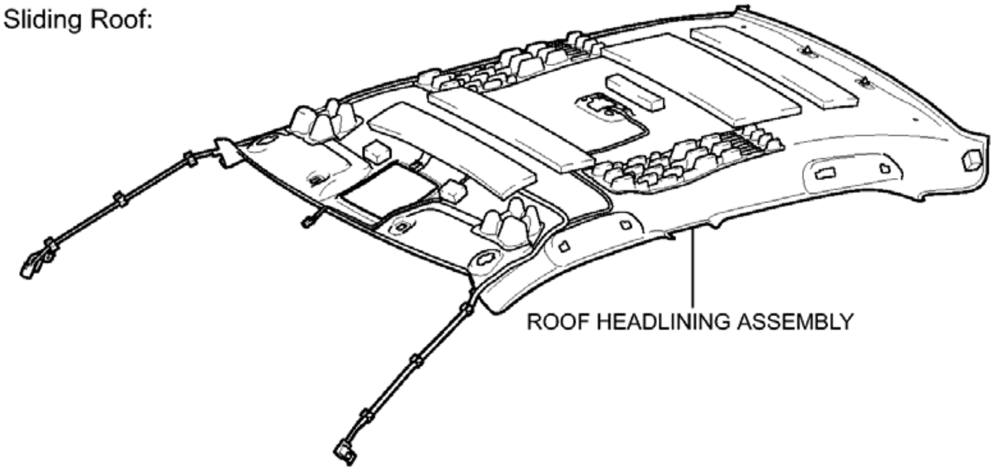
ROOF HEADLINING ASSEMBLY

w/ Sliding Roof:

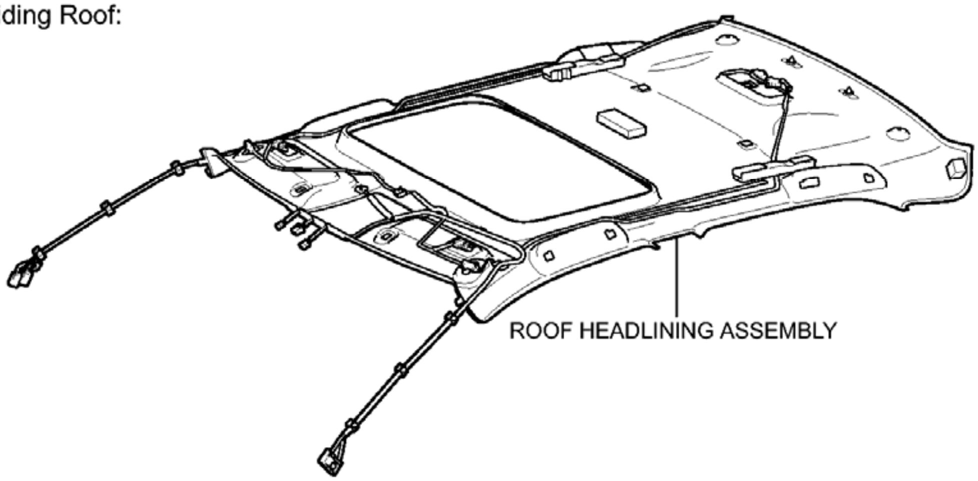
ROOF HEADLINING ASSEMBLY

P

Fig. 58: Identifying Back Window Glass Replacement Components With Torque Specifications (1 Of 3)
Courtesy of TOYOTA MOTOR SALES, U.S.A., INC.

ILLUSTRATION

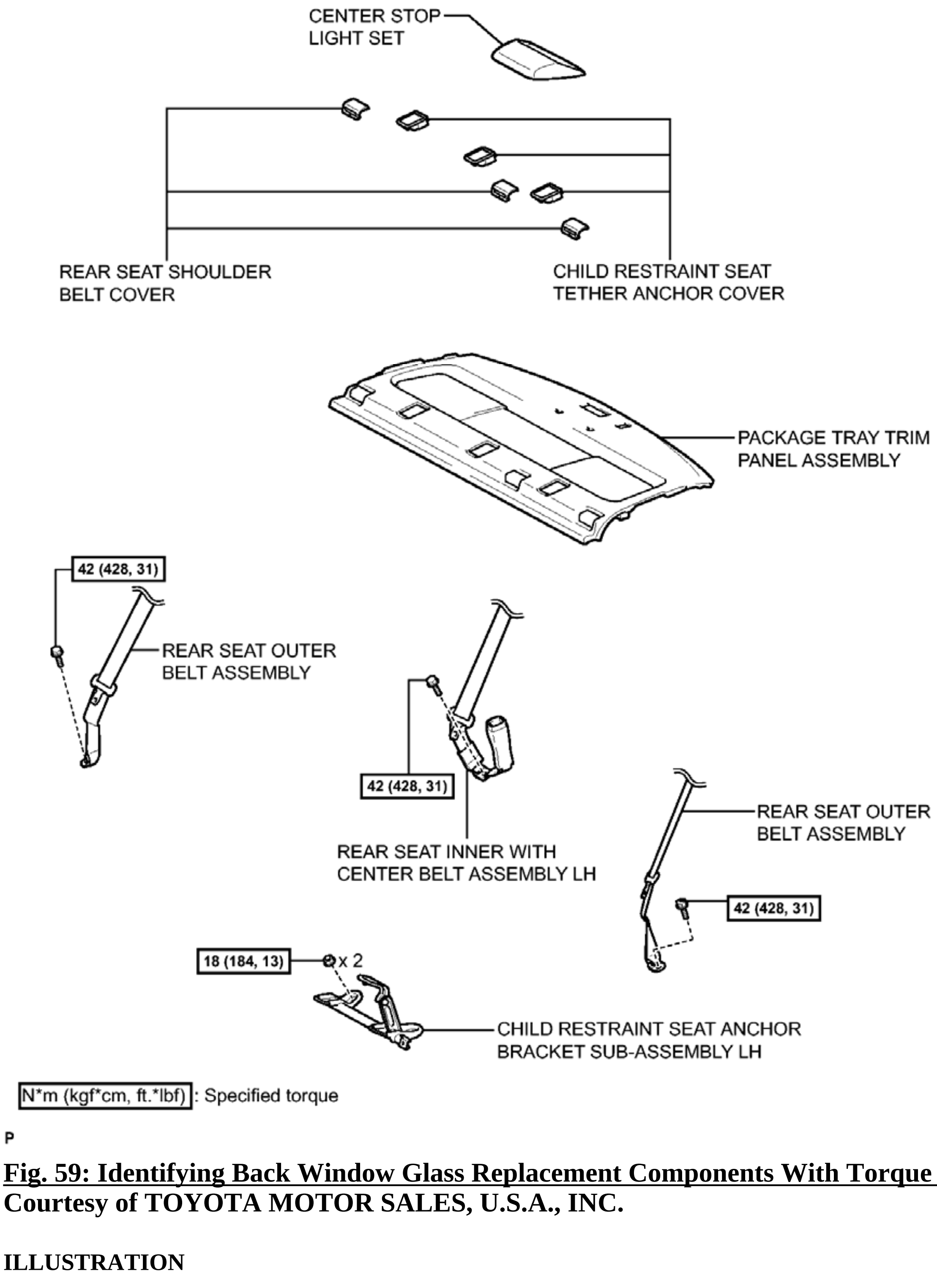
CENTER STOP
LIGHT SET
REAR SEAT SHOULDER
BELT COVER
CHILD RESTRAINT SEAT
TETHER ANCHOR COVER
PACKAGE TRAY TRIM
PANEL ASSEMBLY
42 (428, 31)
REAR SEAT OUTER
BELT ASSEMBLY
42 (428, 31)
REAR SEAT INNER WITH
CENTER BELT ASSEMBLY LH
REAR SEAT OUTER
BELT ASSEMBLY
42 (428, 31)
18 (184, 13)
x 2
CHILD RESTRAINT SEAT ANCHOR
BRACKET SUB-ASSEMBLY LH
N*m (kgf*cm, ft.*lbf) : Specified torque
P

Fig. 59: Identifying Back Window Glass Replacement Components With Torque Specifications (2 Of 3)
Courtesy of TOYOTA MOTOR SALES, U.S.A., INC.

ILLUSTRATION

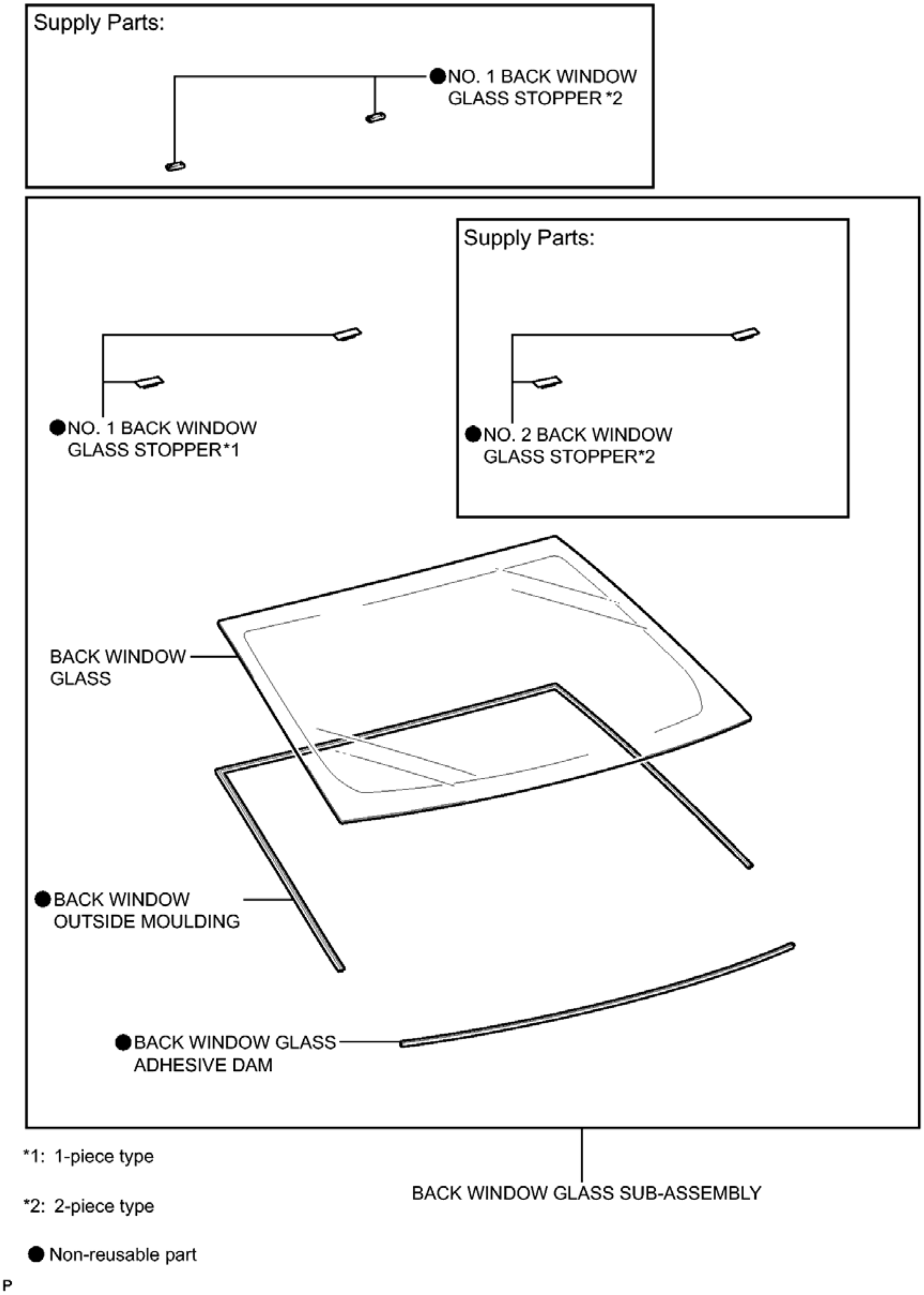
Supply Parts:
●NO. 1 BACK WINDOW GLASS STOPPER *2
Supply Parts:
●NO. 1 BACK WINDOW GLASS STOPPER*1
●NO. 2 BACK WINDOW GLASS STOPPER*2
BACK WINDOW GLASS
●BACK WINDOW OUTSIDE MOULDING
●BACK WINDOW GLASS ADHESIVE DAM
*1: 1-piece type
*2: 2-piece type
BACK WINDOW GLASS SUB-ASSEMBLY
● Non-reusable part
P

Fig. 60: Identifying Back Window Glass Replacement Components With Torque Specifications (3 Of 3)
Courtesy of TOYOTA MOTOR SALES, U.S.A., INC.

REMOVAL

REMOVAL

1. **REMOVE ROOF HEADLINING ASSEMBLY**

   Refer to **REMOVAL**

2. **DISCONNECT REAR SEAT OUTER BELT ASSEMBLY (for LH Side)** . Refer to **REMOVAL - Step 14**
3. **DISCONNECT REAR SEAT OUTER BELT ASSEMBLY (for RH Side)** . Refer to **REMOVAL - Step 15**
4. **REMOVE CHILD RESTRAINT SEAT ANCHOR BRACKET SUB-ASSEMBLY LH** . Refer to **REMOVAL - Step 11**
5. **DISCONNECT REAR SEAT INNER WITH CENTER BELT ASSEMBLY LH** . Refer to **REMOVAL - Step 20**
6. **REMOVE CENTER STOP LIGHT SET** . Refer to **REMOVAL - Step 1**
7. **REMOVE CHILD RESTRAINT SEAT TETHER ANCHOR COVER** . Refer to **REMOVAL - Step 19**
8. **REMOVE REAR SEAT SHOULDER BELT COVER** . Refer to **REMOVAL - Step 20**
9. **REMOVE PACKAGE TRAY TRIM PANEL ASSEMBLY** . Refer to **REMOVAL - Step 21**
10. **REMOVE BACK WINDOW GLASS SUB-ASSEMBLY**
    a. Disconnect each connector.
    b. Apply protective tape to the area around the installation position of the back window glass on the vehicle body to prevent it from being scratched.

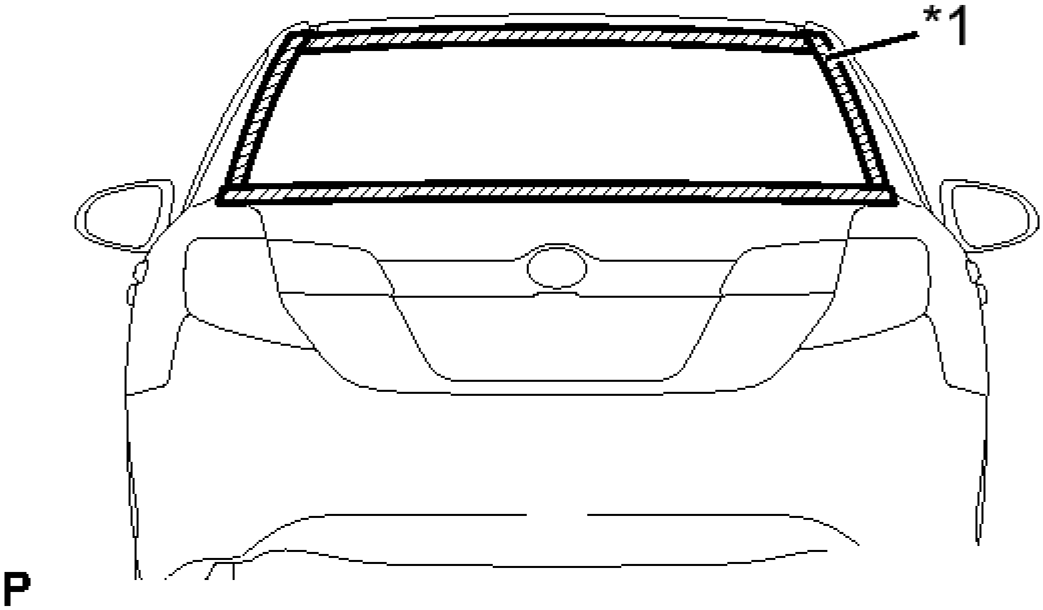

Fig. 61: Identifying Protective Tape Around Back Window Glass Sub-Assembly

Courtesy of TOYOTA MOTOR SALES, U.S.A., INC.

TEXT IN ILLUSTRATION

*1	Protective Tape

HINT:

Apply protective tape to the vehicle body to prevent it from being scratched.

c. Pass a piano wire between the vehicle body and glass from the interior.

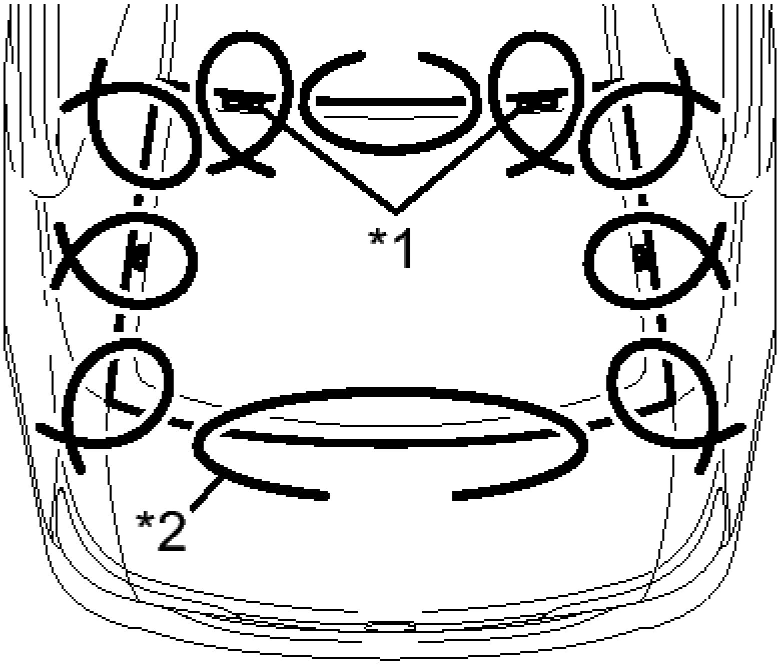

P

Fig. 62: Locating Back Window Glass Sub-Assembly Removal Points
Courtesy of TOYOTA MOTOR SALES, U.S.A., INC.

TEXT IN ILLUSTRATION

*1	Stopper
*2	Piano Wire

d. Tie both wire ends to wooden blocks or similar objects.
e. Cut off the adhesive by pulling the piano wire around the back window glass.

NOTE: **When separating the back window glass, take care not to damage the paint or interior and exterior ornaments.**

f. Place matchmarks on the back window glass and vehicle body on the locations indicated in the illustration.

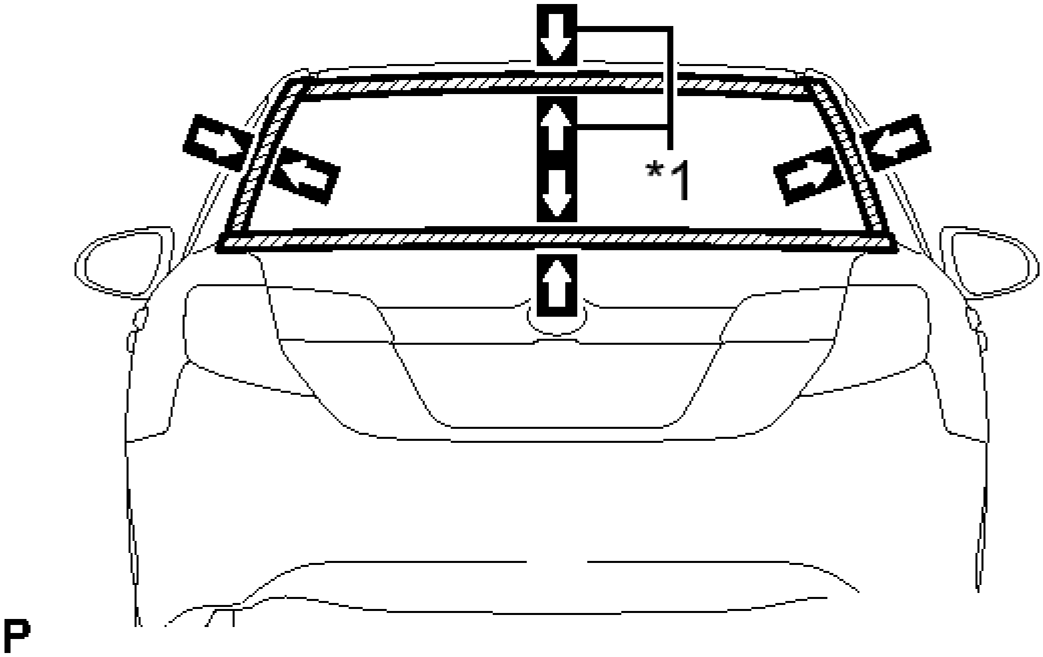

Fig. 63: Identifying Matchmarks On Back Window Glass Sub-Assembly
Courtesy of TOYOTA MOTOR SALES, U.S.A., INC.

TEXT IN ILLUSTRATION

*1	Matchmark

HINT:

Matchmarks are not needed to be placed if the back window glass will not be reused.

g. Disconnect the back window glass stoppers.

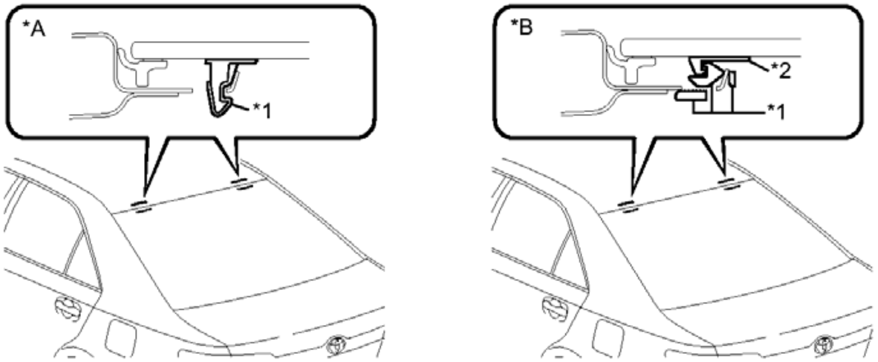

Fig. 64: Locating Back Window Glass Stoppers
Courtesy of TOYOTA MOTOR SALES, U.S.A., INC.

TEXT IN ILLUSTRATION

*A	1-piece type	*B	2-piece type
*1	No. 1 Back Window Glass Stopper	*2	No. 2 Back Window Glass Stopper

NOTE:

- **There are No. 1 and No. 2 stoppers on the back window glass as shown in the illustration. Be careful not to damage the back window glass when cutting off the adhesive.**
- **To prevent the back window glass from falling when performing this operation, be sure to hold the back window glass using suction cups.**

HINT:

Depending on the vehicle, either 1-piece or 2-piece type stoppers may be present.

h. Using suction cups, remove the back window glass sub-assembly.

NOTE:

- **Be careful not to drop the back window glass.**
- **Leave as much adhesive on the vehicle body as possible when removing the back window glass.**

11. **REMOVE BACK WINDOW GLASS ADHESIVE DAM**
    a. When reusing the back window glass:
        1. Using a scraper, remove the back window glass adhesive dam.

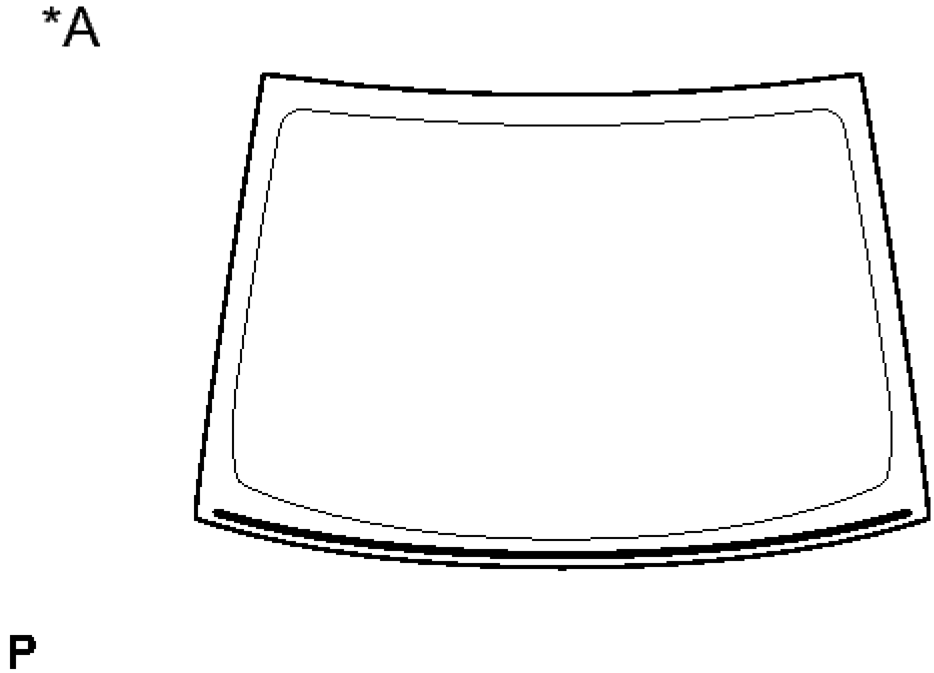

Fig. 65: Identifying Back Window Glass Adhesive Dam
Courtesy of TOYOTA MOTOR SALES, U.S.A., INC.

TEXT IN ILLUSTRATION

*A	Back Side

NOTE:

- **Be careful not to damage the back window glass.**
- **Be sure to replace the back window glass adhesive dam with a new one.**

12. **REMOVE BACK WINDOW OUTSIDE MOULDING**
    a. When reusing the back window glass:
        1. Using a scraper, remove the back window outside moulding.

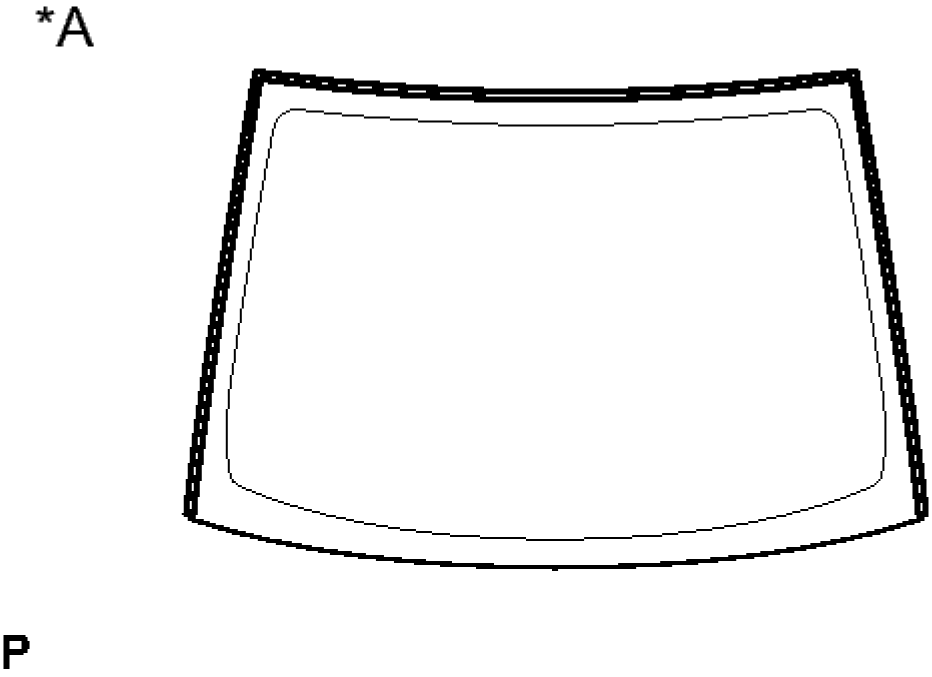

Fig. 66: Identifying Back Window Outside Moulding
Courtesy of TOYOTA MOTOR SALES, U.S.A., INC.

TEXT IN ILLUSTRATION

*A	Back Side

NOTE:

- **Be careful not to damage the back window glass.**
- **Be sure to replace the back window outside moulding with a new one.**

13. **REMOVE NO. 1 BACK WINDOW GLASS STOPPER (for 1-piece Type)**
    a. When reusing the back window glass:
        1. Using a scraper, remove the 2 No. 1 back window glass stoppers.

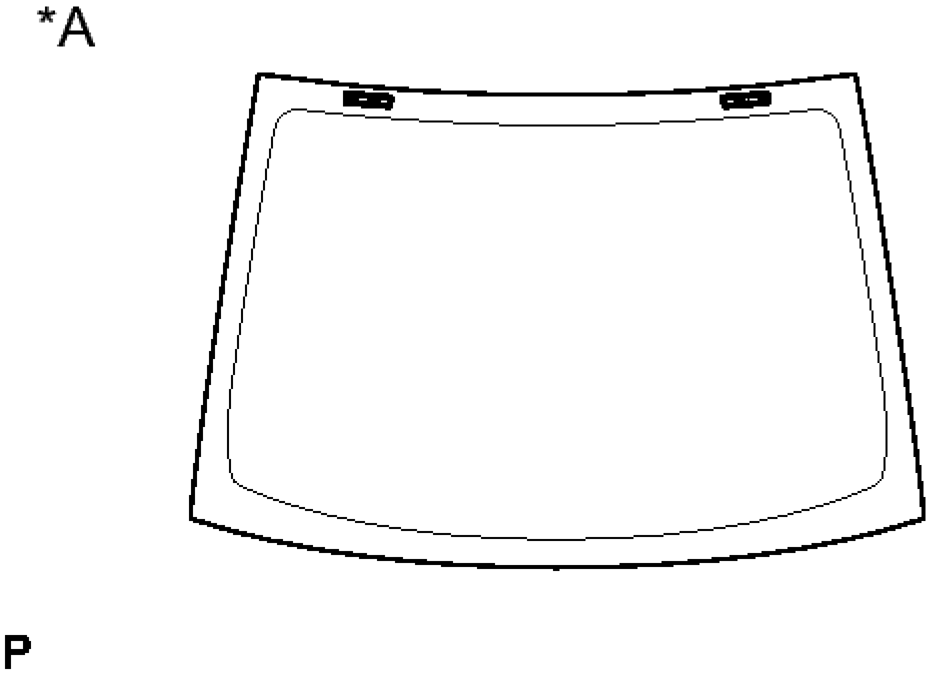

Fig. 67: Identifying No. 1 Back Window Glass Stopper (For 1-Piece Type)
Courtesy of TOYOTA MOTOR SALES, U.S.A., INC.

TEXT IN ILLUSTRATION

*A	Back Side

NOTE:

- **Be careful not to damage the back window glass.**
- **Be sure to replace the No. 1 back window glass stoppers with new ones.**

14. **REMOVE NO. 2 BACK WINDOW GLASS STOPPER (for 2-piece Type)**
    a. When reusing the back window glass:
        1. Using a scraper, remove the 2 No. 2 back window glass stoppers.

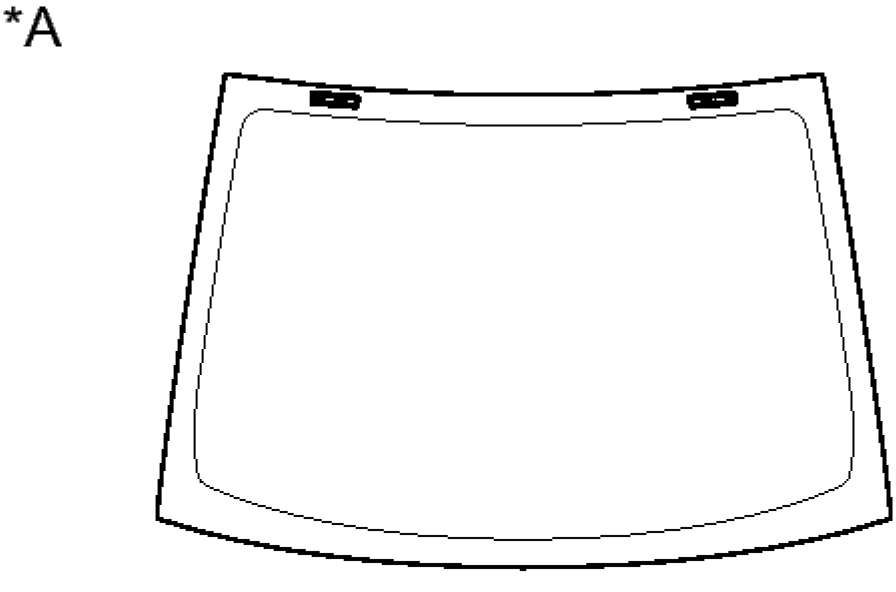

Fig. 68: Identifying No. 2 Back Window Glass Stopper (For 2-Piece Type)
Courtesy of TOYOTA MOTOR SALES, U.S.A., INC.

TEXT IN ILLUSTRATION

*A	Back Side

NOTE:

- **Be careful not to damage the back window glass.**
- **Be sure to replace the No. 2 back window glass stoppers with new ones.**

15. **REMOVE NO. 1 BACK WINDOW GLASS STOPPER (for 2-piece Type)**
    a. Remove the 2 No. 1 back window glass stoppers.

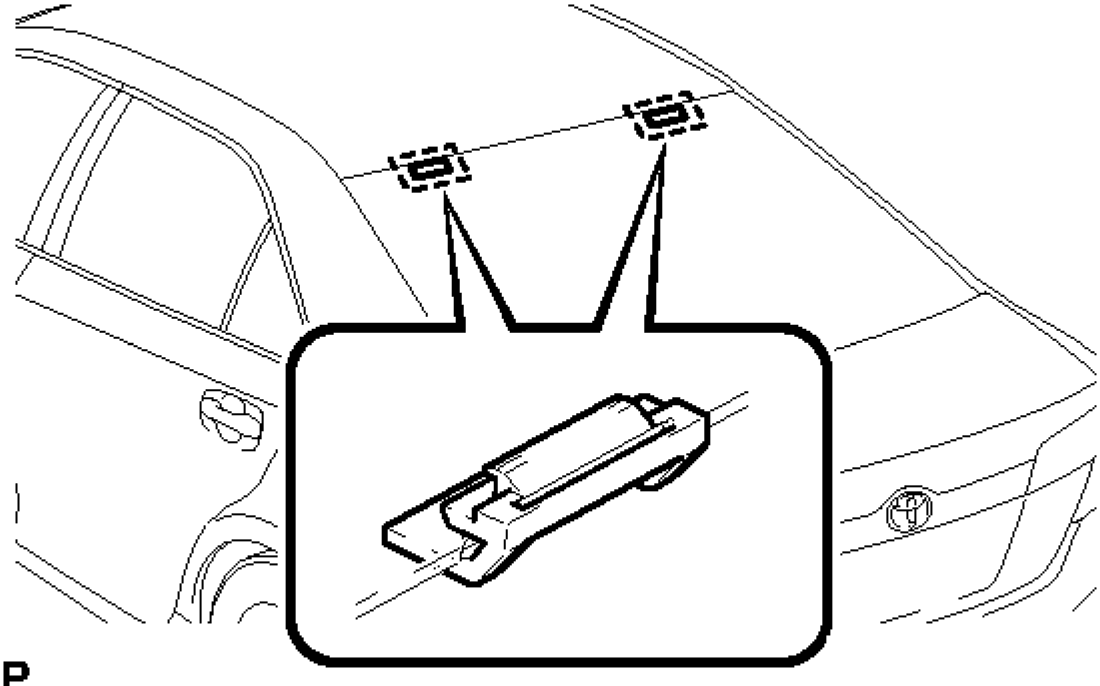

Fig. 69: Locating No. 1 Back Window Glass Stopper (For 2-Piece Type)
Courtesy of TOYOTA MOTOR SALES, U.S.A., INC.

NOTE: Be sure to replace the No. 1 back window glass stoppers with new ones.

16. **CLEAN BACK WINDOW GLASS**
    a. Using a scraper, remove any adhesive dam and adhesive residue from the back window glass.

    NOTE: Be careful not to damage the back window glass.

    b. Clean the outer circumference of the back window glass with a non-residue solvent.

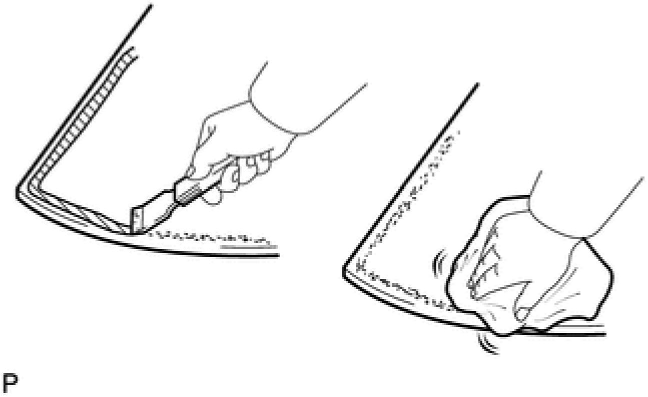

Fig. 70: Removing Adhesive Tape And Adhesive Residue Using Scraper
Courtesy of TOYOTA MOTOR SALES, U.S.A., INC.

NOTE:

- **Do not touch the glass surface after cleaning it.**
- **Be careful not to damage the glass.**
- **Even if using new glass, clean it with a non-residue solvent.**

17. CLEAN VEHICLE BODY

a. Clean and shape the contact surface of the vehicle body.

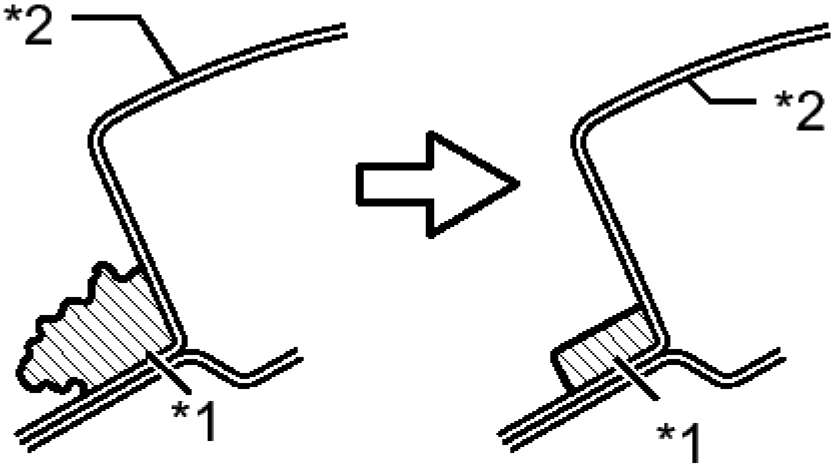

P

Fig. 71: Identifying Contact Surfaces Of Vehicle Body
Courtesy of TOYOTA MOTOR SALES, U.S.A., INC.

TEXT IN ILLUSTRATION

*1	Adhesive
*2	Body

1. Using a knife, cut away any rough adhesive on the contact surface of the vehicle body to ensure the appropriate surface shape.

   NOTE: **Be careful not to damage the vehicle body.**

   HINT:

   Leave as much adhesive on the vehicle body as possible.

2. Clean the contact surface of the vehicle body with a piece of cloth saturated with cleaner.

HINT:

Even if all the adhesive has been removed, clean the vehicle body.

INSTALLATION

INSTALLATION

1. **INSTALL NO. 2 BACK WINDOW GLASS STOPPER (for 2-piece Type)**
   a. Using a brush or sponge, coat the application area of 2 new No. 2 back window glass stoppers with Primer G.

   NOTE:

   - **Do not apply too much primer.**
   - **Allow the primer coating to dry for 3 minutes or more.**
   - **Throw away any leftover primer.**

   HINT:

   If an area other than specified is coated by accident, wipe off the primer with a clean piece of cloth before it dries.

   b. Install the 2 new No. 2 back window glass stoppers onto the back window glass as shown in the illustration.

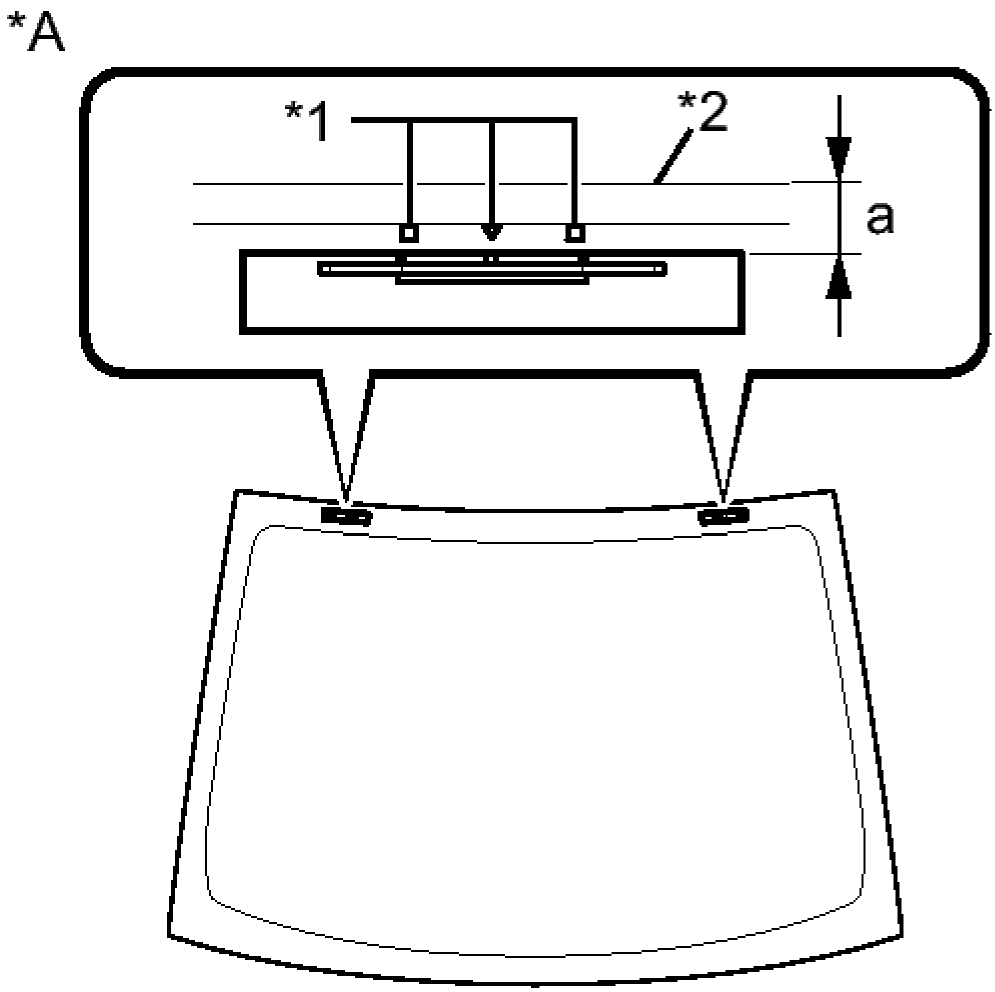

P

Fig. 72: Identifying No. 2 Back Window Glass Stopper (For 2-Piece Type)
Courtesy of TOYOTA MOTOR SALES, U.S.A., INC.

TEXT IN ILLUSTRATION

*A	Back Side
*1	Ceramic Notch
*2	Windshield glass edge side

Standard Dimension

Area	**Dimension**
	14.2 to

a	15.2 mm (0.559 to 0.598 in.)

HINT:

Only 2-piece type No. 2 back window glass stoppers are supplied. Use the 2-piece type stoppers even if a 1-piece type was used.

2. **INSTALL NO. 1 BACK WINDOW GLASS STOPPER (for 2-piece Type)**
   a. Install 2 new No. 1 back window glass stoppers to the vehicle body as shown in the illustration.

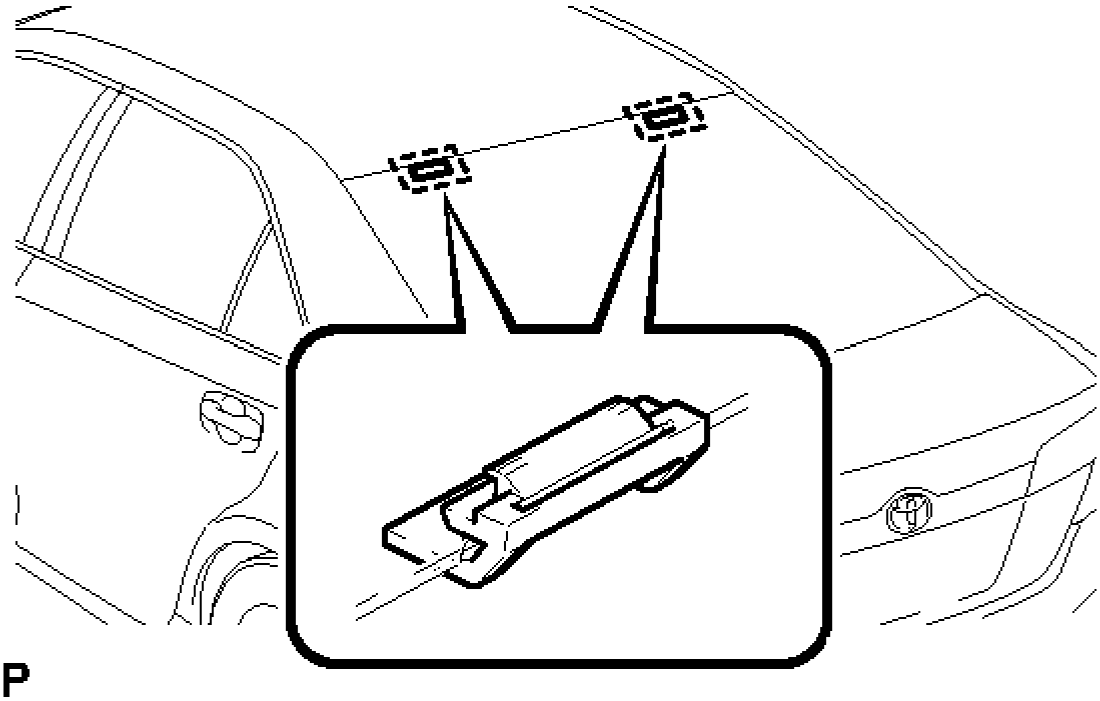

Fig. 73: Locating No. 1 Back Window Glass Stopper (For 2-Piece Type)
Courtesy of TOYOTA MOTOR SALES, U.S.A., INC.

HINT:

Only 2-piece type back window glass stoppers are provided as supply parts. Use 2-piece type stoppers as replacements even if a 1-piece type was originally installed.

3. **INSTALL BACK WINDOW OUTSIDE MOULDING**
   a. Using a brush or sponge, coat the application area of a new back window outside moulding with Primer G.

NOTE:	• **Do not apply too much primer.** • **Allow the primer coating to dry for 3 minutes or more.**

- **Throw away any leftover primer.**

HINT:

If an area other than specified is coated by accident, wipe off the primer with a clean piece of cloth before it dries.

b. Install the new back window outside moulding onto the back window glass as shown in the illustration.

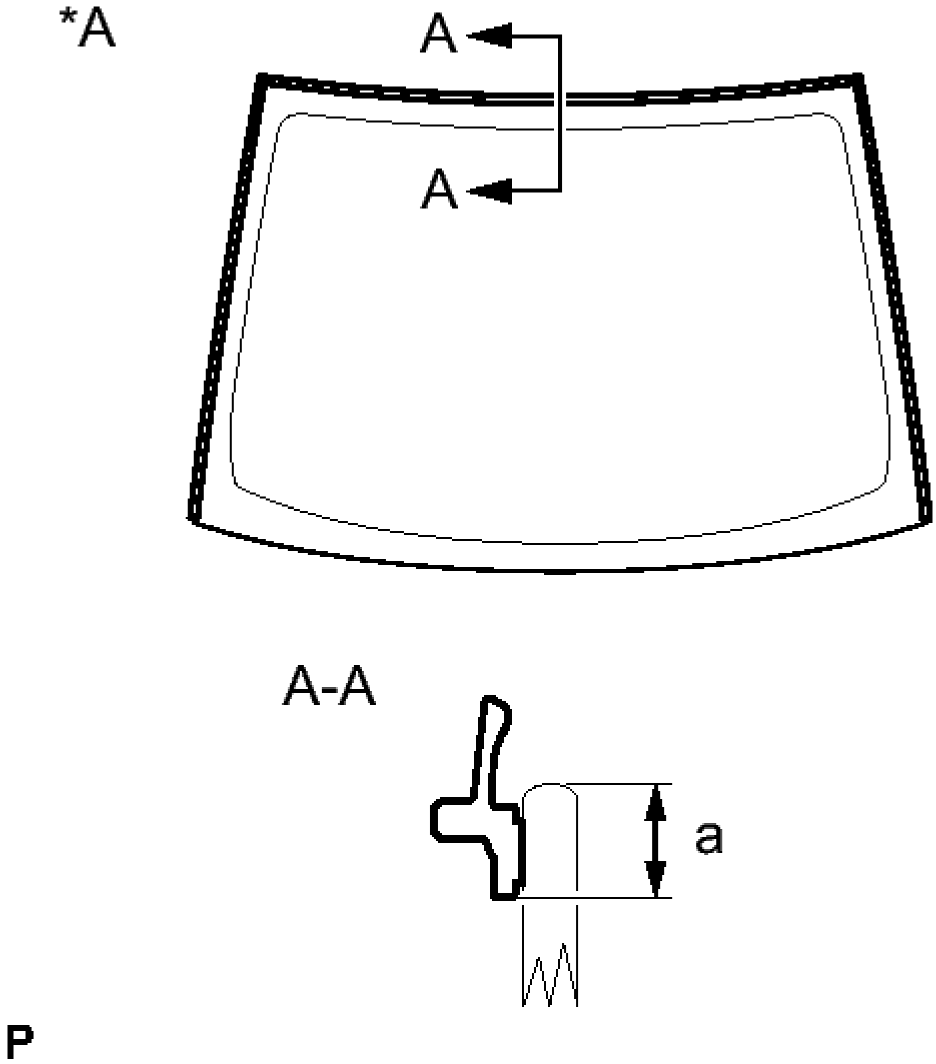

Fig. 74: Identifying Back Window Outside Moulding
Courtesy of TOYOTA MOTOR SALES, U.S.A., INC.

TEXT IN ILLUSTRATION

*A	Back

	Side

Standard Dimension

Area	Dimension
a	7.4 mm (0.291 in.)

4. **INSTALL BACK WINDOW GLASS ADHESIVE DAM**
   a. Using a brush or sponge, coat the application area of a new back window glass adhesive dam with Primer G.

      NOTE:

      - **Allow the primer coating to dry for 3 minutes or more.**
      - **Do not apply too much primer.**

   b. Install the new back window adhesive dam, applying double-sided tape all the way around the glass except where the dam is installed as shown in the illustration.

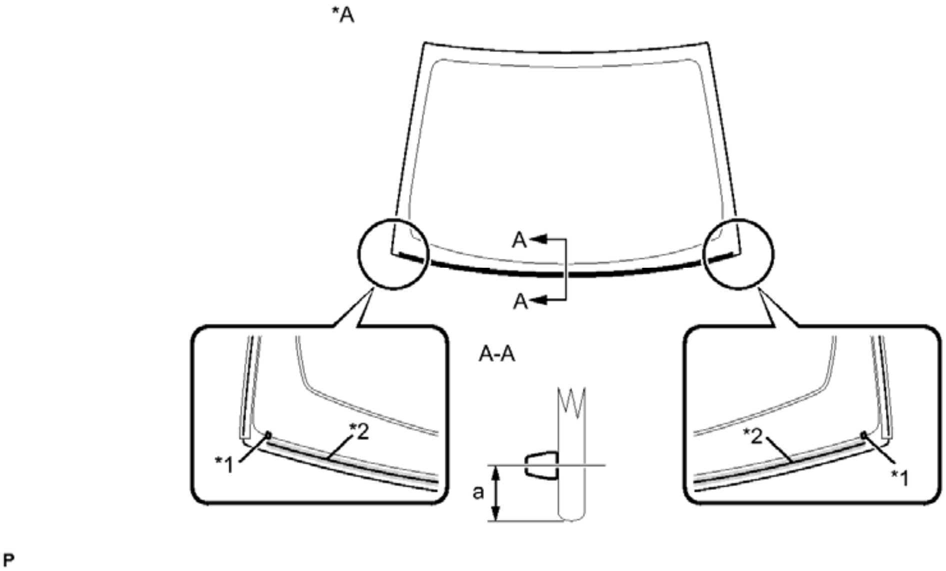

Fig. 75: Identifying Back Window Glass Adhesive Dam
Courtesy of TOYOTA MOTOR SALES, U.S.A., INC.

TEXT IN ILLUSTRATION

*A	Back Side	-	-
*1	Ceramic Notch	*2	Adhesive Center

Standard Dimension

Area	Dimension
a	10.0 mm (0.394 in.)

NOTE:

- **Do not apply too much primer.**
- **Allow the primer coating to dry for 3 minutes or more.**
- **Do not keep any of the opened Primer G for later use.**

HINT:

If an area other than specified is coated by accident, wipe off the primer with a clean piece of cloth before it dries.

5. **INSTALL BACK WINDOW GLASS SUB-ASSEMBLY**
    a. Position the back window glass.

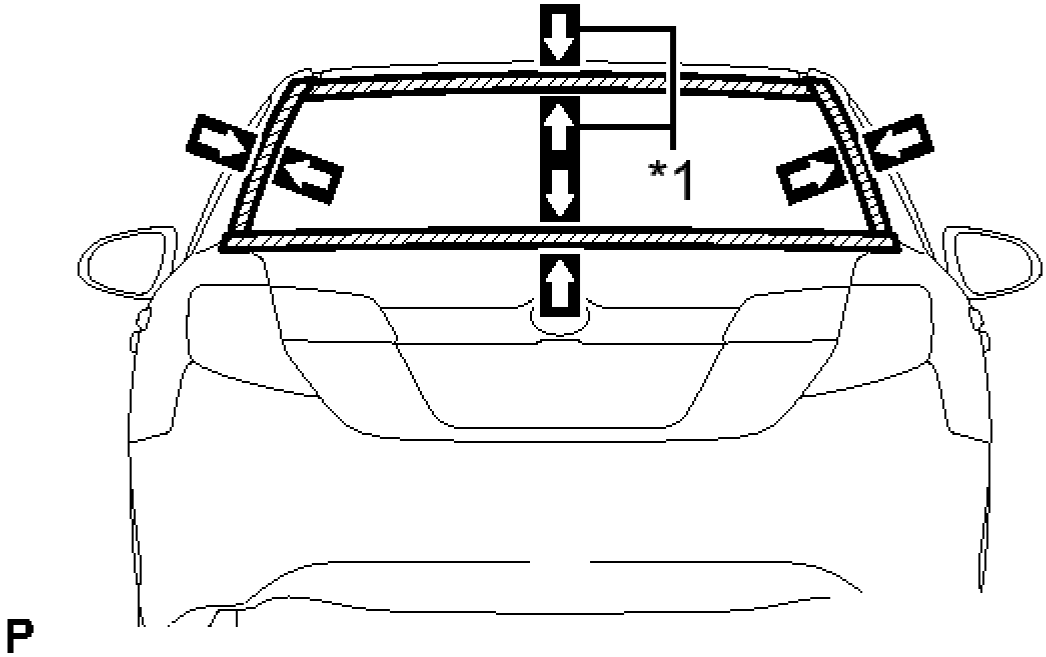

Fig. 76: Identifying Matchmarks On Back Window Glass Sub-Assembly
Courtesy of TOYOTA MOTOR SALES, U.S.A., INC.

TEXT IN ILLUSTRATION

*1	Matchmark

1. Using suction cups, place the back window glass in the correct position.
2. Check that the whole contact surface of the back window glass rim is perfectly even.
3. Align the matchmarks on the back window glass and vehicle body.

NOTE: **Check that the back window glass stoppers are attached to the vehicle body correctly.**

4. Remove the back window glass.

b. Using a brush, coat the installation surface on the vehicle body with Primer M.

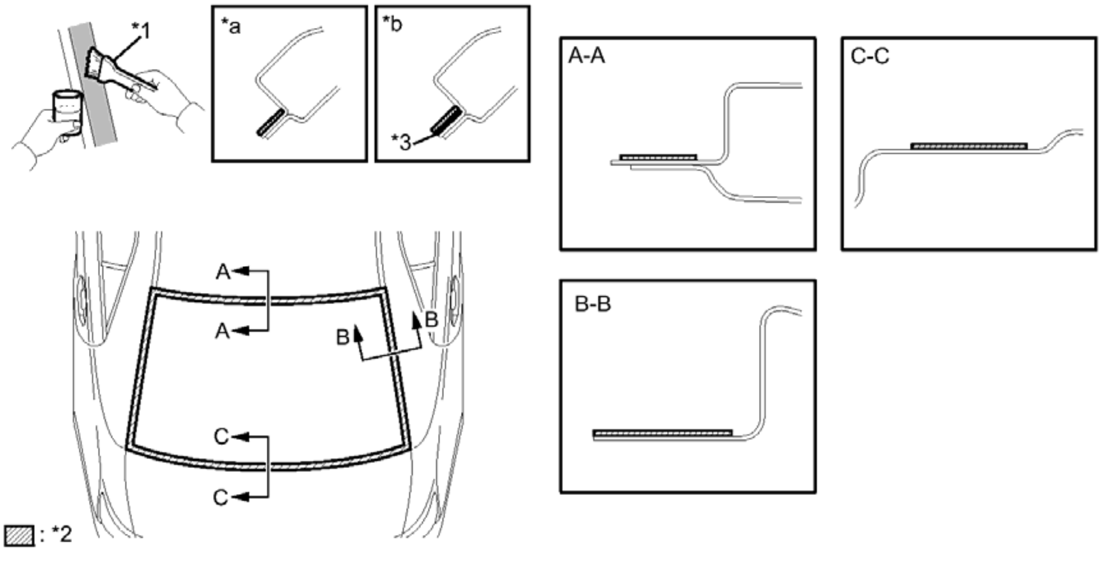

Fig. 77: Coating Back Windshield Glass Sub-Assembly
Courtesy of TOYOTA MOTOR SALES, U.S.A., INC.

TEXT IN ILLUSTRATION

*1	Brush	*2	Primer M
*3	Adhesive	-	-
*a	CORRECT	*b	INCORRECT

NOTE:

- **Do not coat the adhesive with Primer M.**
- **Do not apply too much primer.**
- **Allow the primer coating to dry for 3 minutes or more.**
- **Do not keep any of the opened Primer M for later use.**

HINT:

If an area other than specified is coated by accident, wipe off the primer with a clean piece of cloth before it dries.

c. Using a brush or sponge, coat the adhesive application area with Primer G.

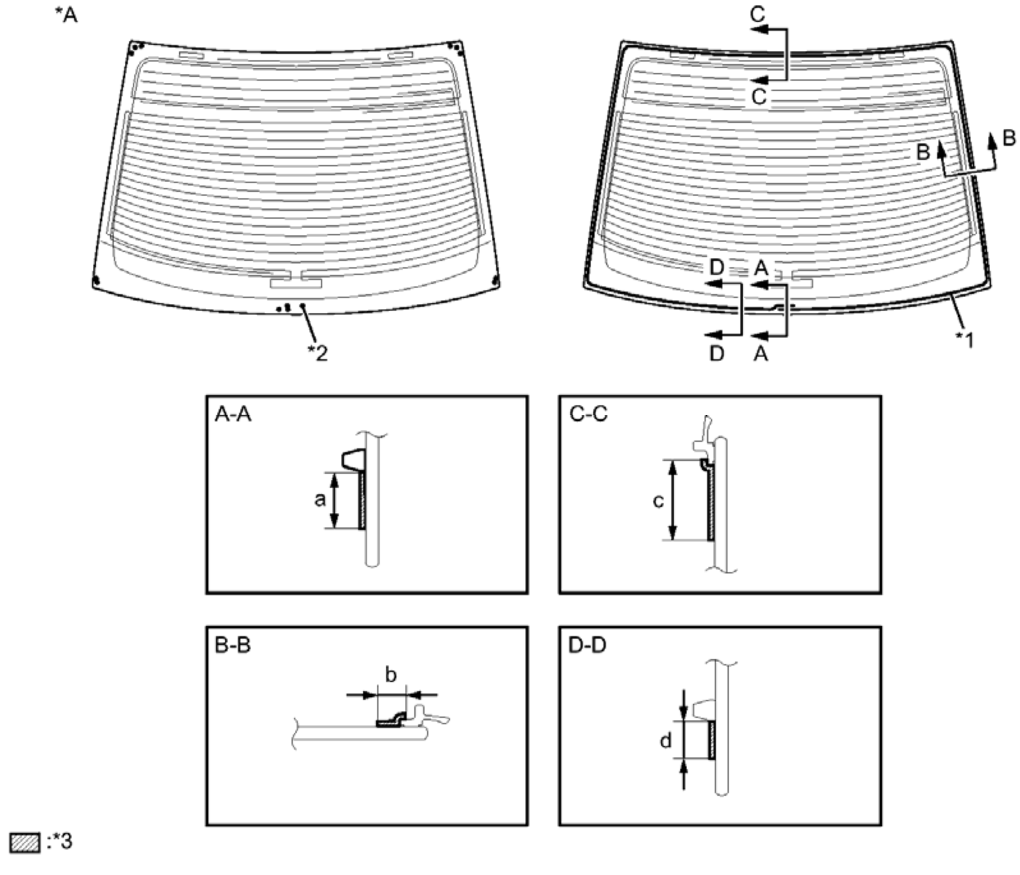
*A
C
C
B
B
D
A
*2
D
A
*1
A-A
a
C-C
c
B-B
b
D-D
d
▨ :*3
P

Fig. 78: Identifying Back Window Glass Sub-Assembly Adhesive Dimensions
Courtesy of TOYOTA MOTOR SALES, U.S.A., INC.

TEXT IN ILLUSTRATION

*A	Back Side	-	-
*1	Adhesive Center Line	*2	Ceramic Notch
*3	Primer G	-	-

Standard Dimension

Area	Dimension
a	18.5 mm (0.728 in.) or more
b	14.0 mm (0.551 in.) or more

c	14.0 mm (0.551 in.) or more
d	11.0 mm (0.433 in.) or more

NOTE:

- **Do not apply too much primer.**
- **Allow the primer coating to dry for 3 minutes or more.**
- **Do not keep any of the opened Primer G for later use.**

HINT:

If an area other than specified is coated by accident, wipe off the primer with a clean piece of cloth before it dries.

d. Apply adhesive to the glass.

Adhesive

Toyota Genuine Windshield Glass Adhesive or equivalent

1. Cut off the tip of the cartridge nozzle as shown in the illustration.

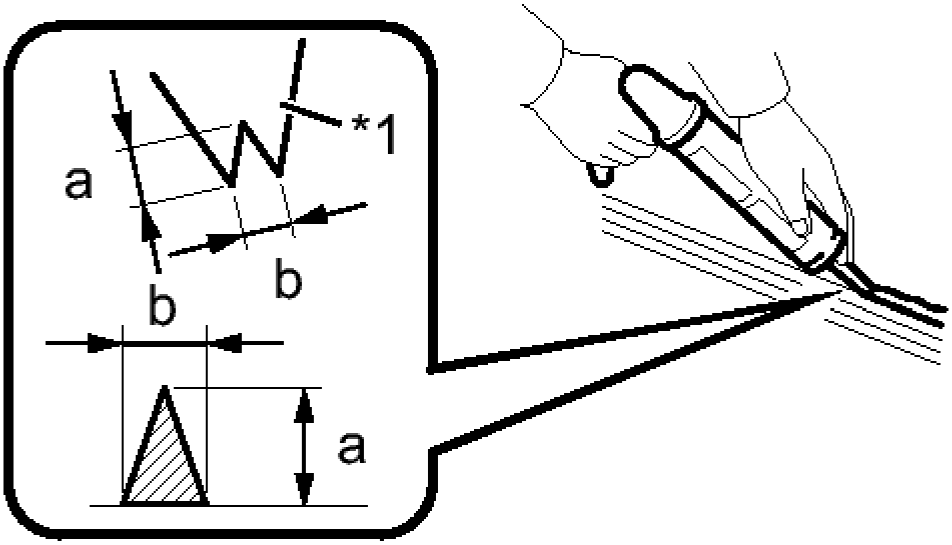

P

Fig. 79: Cutting Off Tip Of Cartridge Nozzle
Courtesy of TOYOTA MOTOR SALES, U.S.A., INC.

TEXT IN ILLUSTRATION

*1	Nozzle

Standard Dimension

Area	Dimension
a	12.0 mm (0.472 in.)
b	8.0 mm (0.315 in.)

HINT:

After cutting off the tip, use all adhesive within the time described in the table below.

Usage Time Frame

Temperature	Usage Time Frame
35°C (95°F)	15 minutes
20°C (68°F)	1 hour and 40 minutes
5°C (41°F)	8 hours

2. Load the sealer gun with the cartridge.
3. Apply adhesive to the back window glass as shown in the illustration.

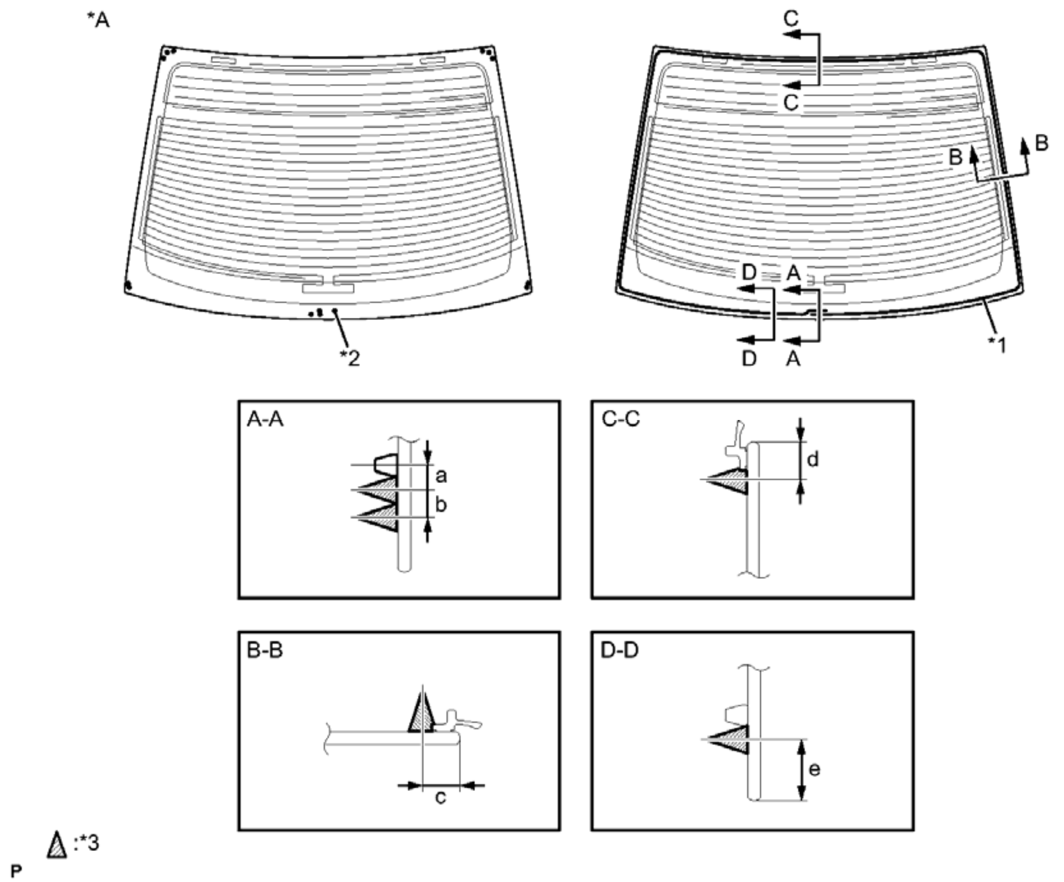
*A
C
C
B
B
D
A
D
A
*1
*2
A-A
a
b
C-C
d
B-B
c
D-D
e
:*3
P

Fig. 80: Identifying Back Window Glass Sub-Assembly Adhesive Dimensions
Courtesy of TOYOTA MOTOR SALES, U.S.A., INC.

TEXT IN ILLUSTRATION

*A	Back Side	-	-
*1	Adhesive Center Line	*2	Ceramic Notch
*3	Adhesive	-	-

Standard Dimension

Area	Dimension
a	6.5 mm (0.256 in.)
b	8.0 mm (0.315 in.)
c	10.0 mm (0.394 in.)

d	10.0 mm (0.394 in.)
e	16.5 mm (0.650 in.)

e. Install the back window glass sub-assembly.
   1. Using suction cups, position the back window glass so that the matchmarks are aligned, and press it in gently along the rim.

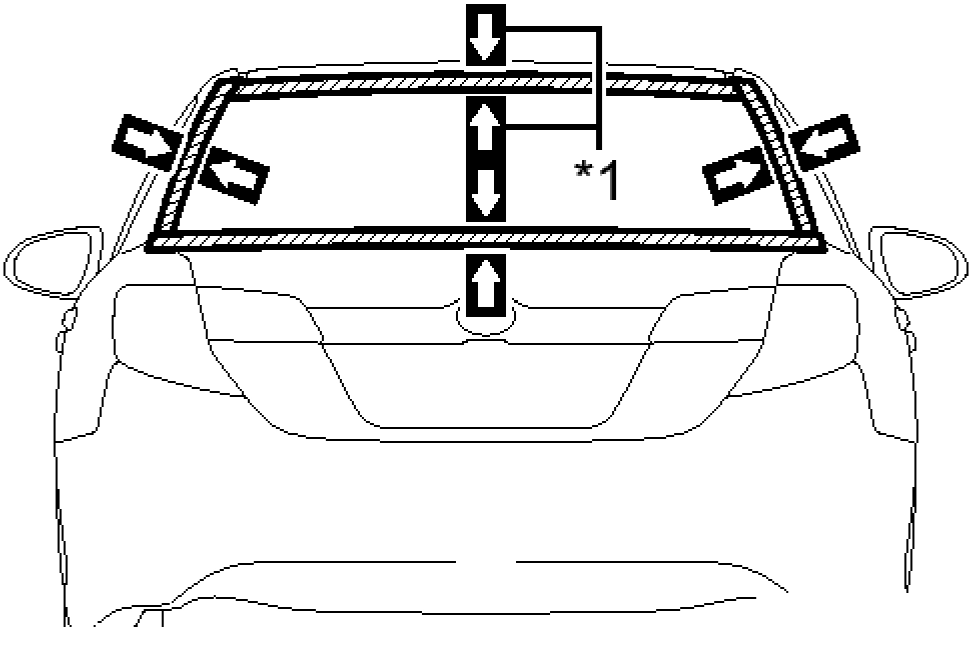

Fig. 81: Identifying Matchmarks On Back Window Glass Sub-Assembly
Courtesy of TOYOTA MOTOR SALES, U.S.A., INC.

TEXT IN ILLUSTRATION

*1	Matchmark

NOTE:

- **Check that the back window glass stoppers are attached to the vehicle body correctly.**
- **Check the clearance between the vehicle body and back window glass.**

   2. Lightly press the front surface of the back window glass to ensure a close fit.

HINT:

Press the glass with force of 98 N (10 kgf, 22.0 lbf) or more.

3. Using a scraper, remove any excess or protruding adhesive.
4. Hold the back window glass using protective tape until the applied adhesive becomes hard.

NOTE: **Do not drive the vehicle for the time described in the table below.**

Minimum Time

Temperature	Minimum Time Prior to Driving Vehicle
35°C (95°F)	1 hour and 30 minutes
20°C (68°F)	5 hours
5°C (41°F)	24 hours

f. Connect each connector.

6. **INSPECT FOR LEAKS AND REPAIR**
    a. After the adhesive has hardened, apply water from the outside of the vehicle. Check that no water leaks into the cabin.
    b. If water leaks into the cabin, allow the water to dry and add adhesive.
    c. Remove the protective tape.
7. **INSTALL PACKAGE TRAY TRIM PANEL ASSEMBLY** . Refer to **INSTALLATION - Step 3**
8. **INSTALL REAR SEAT SHOULDER BELT COVER** . Refer to **INSTALLATION - Step 4**
9. **INSTALL CHILD RESTRAINT SEAT TETHER ANCHOR COVER** . Refer to **INSTALLATION - Step 5**
10. **INSTALL CENTER STOP LIGHT SET** . Refer to **INSTALLATION - Step 1**
11. **CONNECT REAR SEAT INNER WITH CENTER BELT ASSEMBLY LH** . Refer to **INSTALLATION - Step 7**
12. **INSTALL CHILD RESTRAINT SEAT ANCHOR BRACKET SUB-ASSEMBLY LH** . Refer to **INSTALLATION - Step 1**
13. **CONNECT REAR SEAT OUTER BELT ASSEMBLY (for LH Side)** . Refer to **INSTALLATION - Step 9**
14. **CONNECT REAR SEAT OUTER BELT ASSEMBLY (for RH Side)** . Refer to **INSTALLATION - Step 10**
15. **INSTALL ROOF HEADLINING ASSEMBLY**

    Refer to **INSTALLATION**

WINDOW DEFOGGER WIRE

ON-VEHICLE INSPECTION

ON-VEHICLE INSPECTION

1. **CHECK REAR WINDOW DEFOGGER OPERATION**
    a. When the power switch is on (IG) and the rear window defogger switch is pressed, check that the rear window defogger operates.
2. **INSPECT REAR WINDOW DEFOGGER WIRE (BACK WINDOW GLASS)**

NOTE:

- **When cleaning the glass, wipe the glass along the wire using a soft and dry cloth. Take care not to damage the wires.**
- **Do not use detergents or glass cleaners that have abrasive ingredients.**
- **When measuring voltage, wrap a piece of tin foil around the tip of the negative tester probe and press the foil against the wire with your finger as shown in the illustration.**

a. Turn the power switch on (IG).

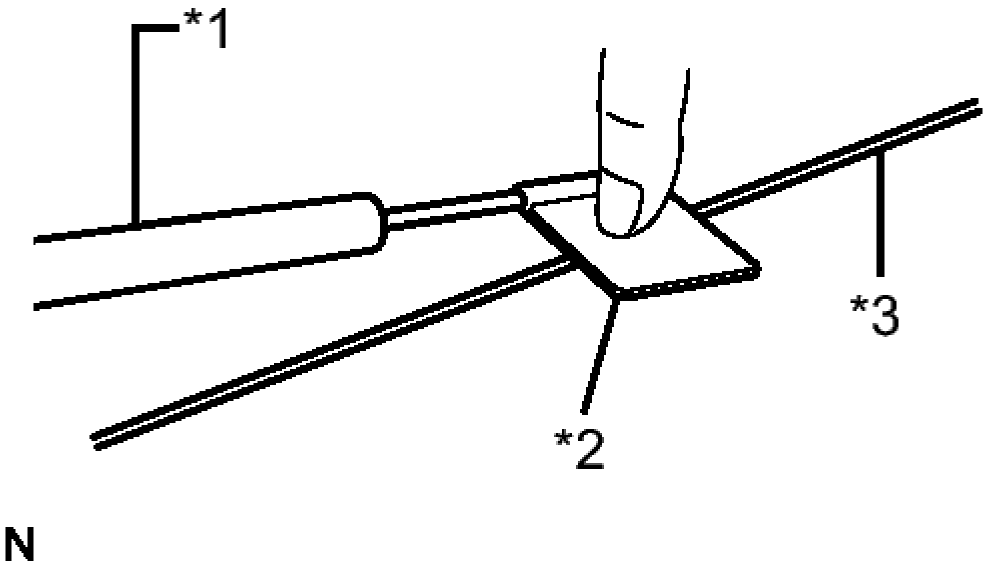

Fig. 82: Inspecting Rear Window Defogger Wire
Courtesy of TOYOTA MOTOR SALES, U.S.A., INC.

TEXT IN ILLUSTRATION

*1	Tester Probe
*2	Tin Foil
*3	Rear Window Defogger Wire

b. Turn the rear window defogger switch on.
c. Measure the voltage at the center of each rear window defogger wire to check the wire as shown in the illustration.

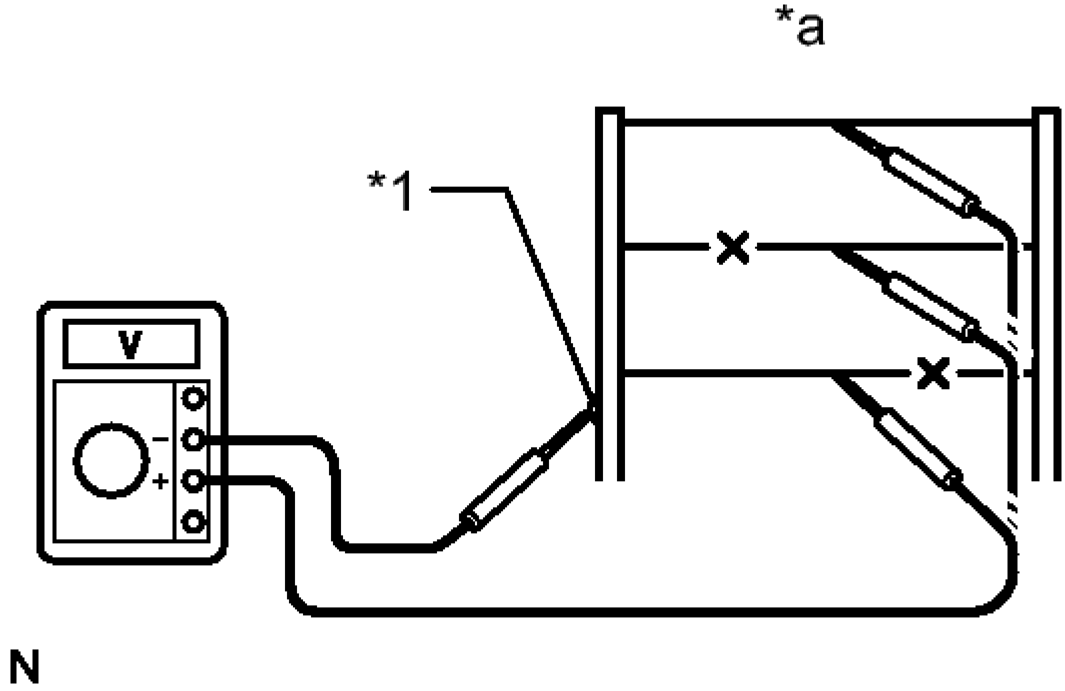

Fig. 83: Voltage At Center Of Each Rear Window Defogger Wire
Courtesy of TOYOTA MOTOR SALES, U.S.A., INC.

TEXT IN ILLUSTRATION

*1	Foil Strip
*a	At center

Result

Voltage	Criteria
4 to 6 V	Wire is not

	broken
11 to 14 V	Wire is broken between the center and ground side end
Below 1 V	Wire is broken between the center and auxiliary battery side end

HINT:

If the voltage is 11 to 14 V, the wire may be faulty between the center of the wire and the wire end on the ground side. If the voltage is below 1 V, the wire may be faulty between the center of the wire and the wire end on the auxiliary battery side.

d. Place the positive (+) lead of the voltmeter against the rear window defogger wire on the auxiliary battery side.

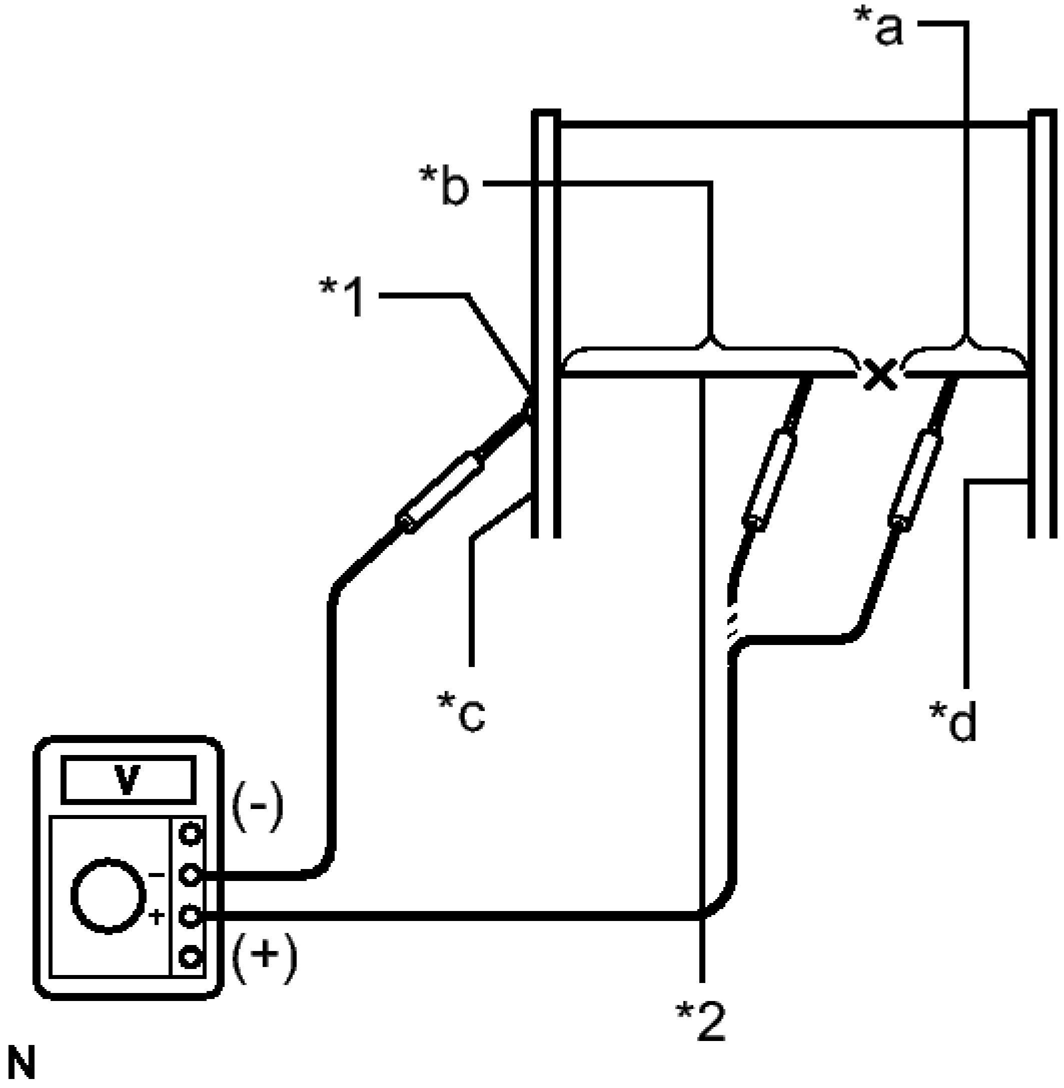

Fig. 84: Voltmeter Against Rear Window Defogger Wire
Courtesy of TOYOTA MOTOR SALES, U.S.A., INC.

TEXT IN ILLUSTRATION

*1	Foil Strip
*2	Broken Wire
*a	11 to 14 V
*b	Below 1 V
*c	Ground Side
*d	Auxiliary Battery

	Side

e. Place the negative (-) lead of the voltmeter with the foil strip against the wire on the ground side.

f. Slide the positive (+) lead from the auxiliary battery side to the ground side. The point where the voltage drops to below 1 V from 11 to 14 V is the place where the rear window defogger wire is broken.

HINT:

If the rear window defogger wire is not broken, the voltmeter should indicate 11 to 14 V at the auxiliary battery side. When the positive (+) lead is slide to the ground side, the voltage gradually decreases to below 1 V.

REPAIR

REPAIR

1. **REPAIR REAR WINDOW DEFOGGER WIRE (BACK WINDOW GLASS)**

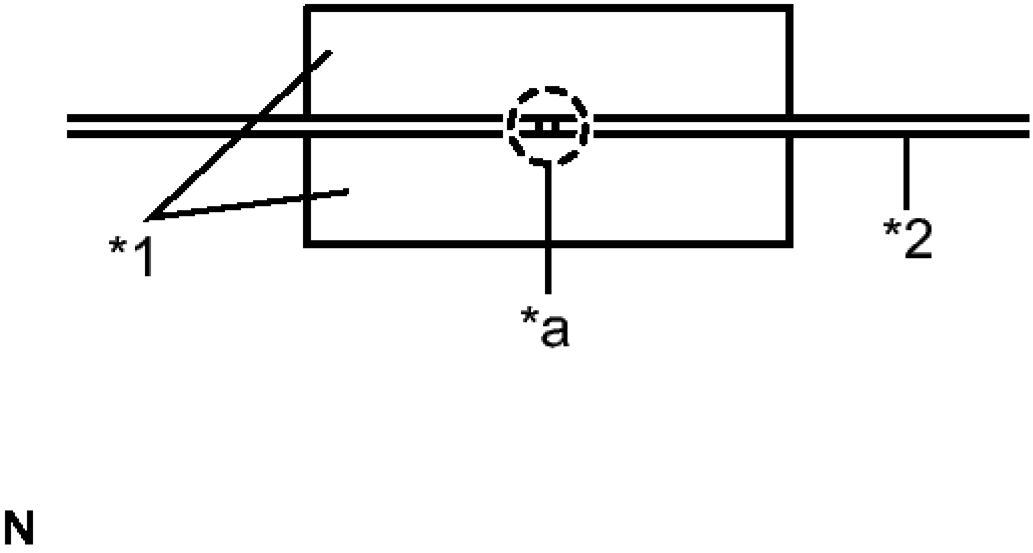

Fig. 85: Masking Tape & Broken Wire, Repair Point
Courtesy of TOYOTA MOTOR SALES, U.S.A., INC.

TEXT IN ILLUSTRATION

*1	Masking Tape
*2	Broken

	Wire
*a	Repair Point

a. Clean the broken wire tips with a grease, wax and silicone remover.
b. Place masking tape along both sides of the wire.
c. Thoroughly mix the repair agent (Dupont paste No. 4817 or equivalent).

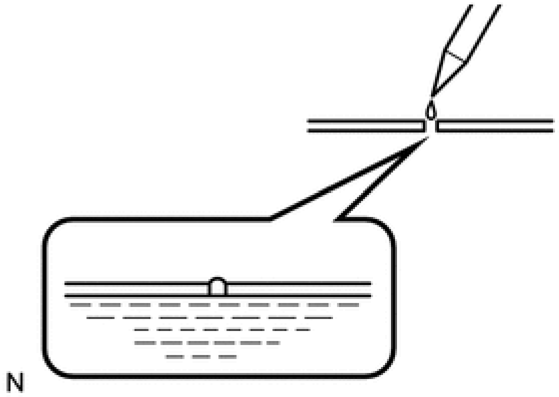

Fig. 86: Applying Small Amount Of Agent To Wire
Courtesy of TOYOTA MOTOR SALES, U.S.A., INC.

d. Using a fine tip brush, apply a small amount of the agent to the wire.
e. After a few minutes, remove the masking tape.

NOTE: **Do not use the rear window defogger for at least 24 hours after performing the repair.**

2012-2017 ACCESSORIES & EQUIPMENT

Windows / Glass (Service Information) (Except Hybrid) - Camry

POWER WINDOW MASTER SWITCH

COMPONENTS

ILLUSTRATION

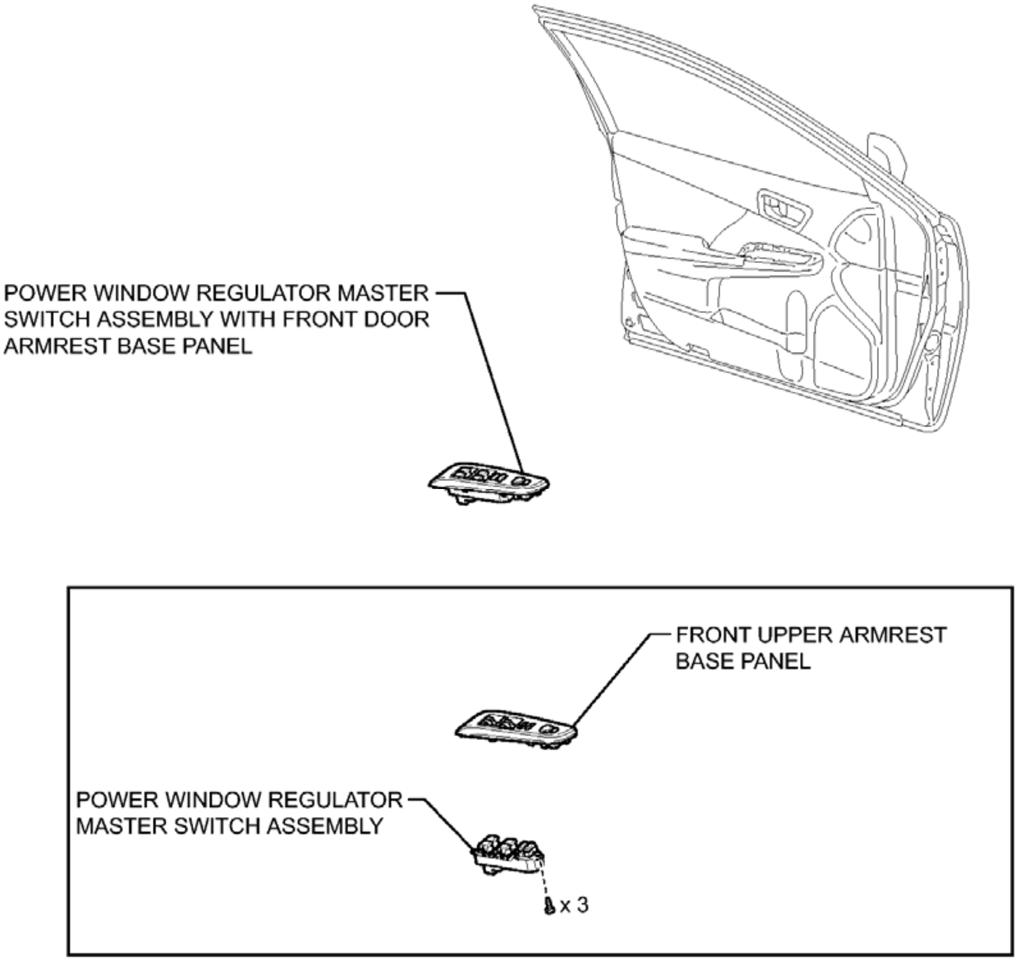
POWER WINDOW REGULATOR MASTER SWITCH ASSEMBLY WITH FRONT DOOR ARMREST BASE PANEL
FRONT UPPER ARMREST BASE PANEL
POWER WINDOW REGULATOR MASTER SWITCH ASSEMBLY
x 3

P

Fig. 1: Identifying Power Window Master Switch Replacement Components
Courtesy of TOYOTA MOTOR SALES, U.S.A., INC.

REMOVAL

REMOVAL

1. **REMOVE POWER WINDOW REGULATOR MASTER SWITCH ASSEMBLY WITH FRONT DOOR ARMREST BASE PANEL** . Refer to **DISASSEMBLY - Step 5** .
2. **REMOVE POWER WINDOW REGULATOR MASTER SWITCH ASSEMBLY**
    a. Remove the 3 screws and power window regulator master switch assembly from the front upper armrest base panel.

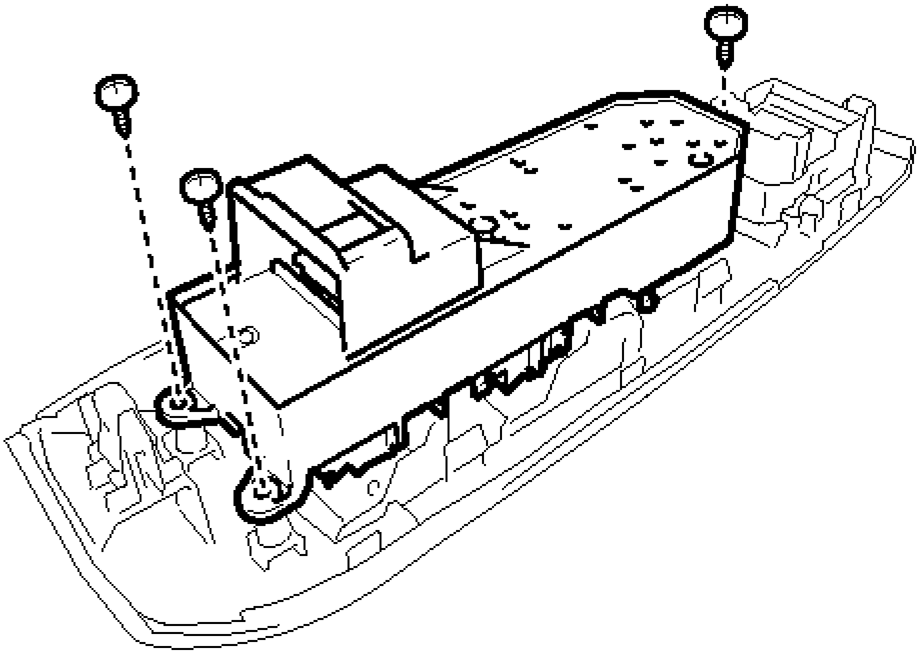

Fig. 2: Identifying Power Window Regulator Master Switch Assembly Fasteners
Courtesy of TOYOTA MOTOR SALES, U.S.A., INC.

INSPECTION

INSPECTION

1. **INSPECT POWER WINDOW REGULATOR MASTER SWITCH ASSEMBLY**
    a. Check the switch function.

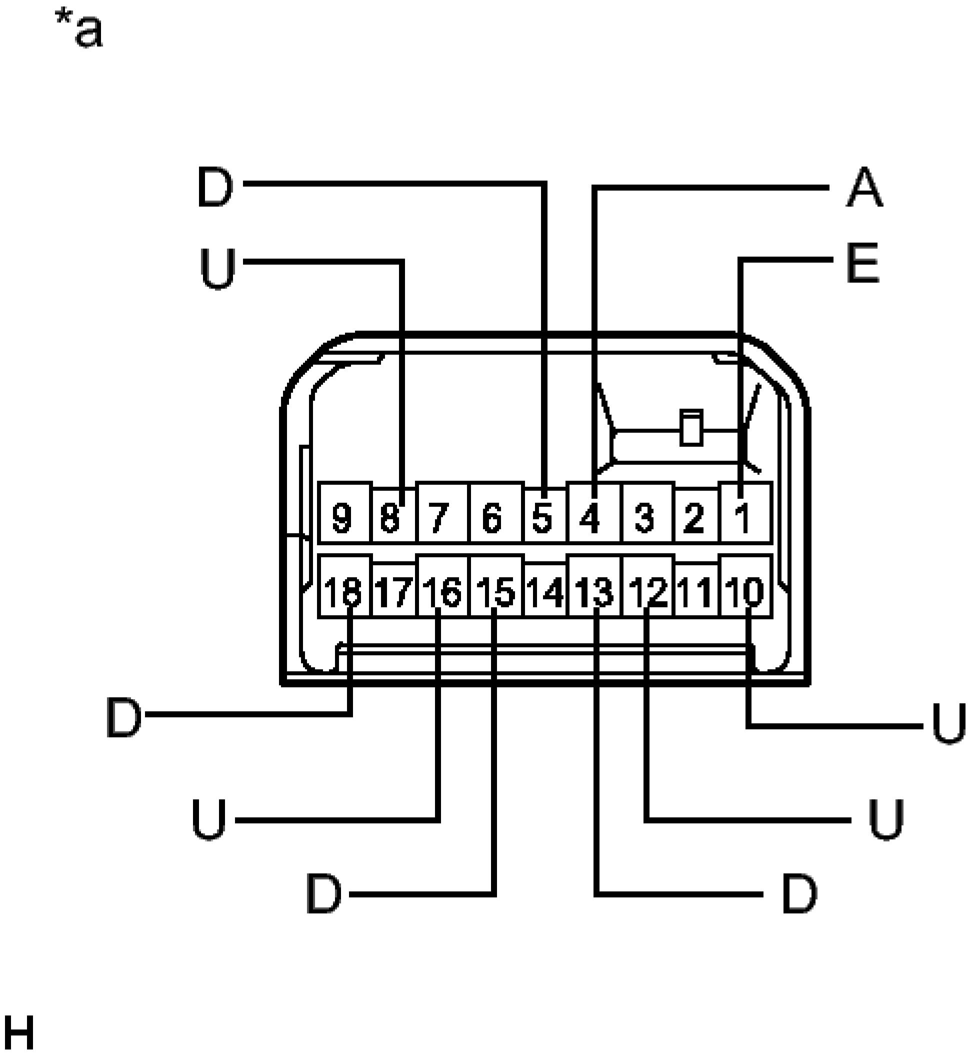
*a
D
A
U
E
9
8
7
6
5
4
3
2
1
18
17
16
15
14
13
12
11
10
D
U
U
U
D
D
H

Fig. 3: Inspecting Power Window Regulator Master Switch Assembly Connector Terminals
Courtesy of TOYOTA MOTOR SALES, U.S.A., INC.

1. Measure the resistance according to the value(s) in the table below.

   Standard Resistance

Tester Connection	Switch Condition	Specified Condition
4 (A) - 1 (E)	Auto UP (for driver door)	Below 1 ohms
8 (U) - 1 (E)	Auto UP (for driver door)	Below 1 ohms
	Manual	

8 (U) - 1 (E)	UP (for driver door)	Below 1 ohms
5 (D) - 1 (E)	Manual DOWN (for driver door)	Below 1 ohms
4 (A) - 1 (E)	Auto DOWN (for driver door)	Below 1 ohms
5 (D) - 1 (E)	Auto DOWN (for driver door)	Below 1 ohms
16 (U) - 1 (E)	Manual UP (for front passenger door)	Below 1 ohms
15 (D) - 1 (E)	Manual DOWN (for front passenger door)	Below 1 ohms
12 (U) - 1 (E)	Manual UP (for rear LH door)	Below 1 ohms
13 (D) - 1 (E)	Manual DOWN (for rear LH door)	Below 1 ohms
10 (U) - 1 (E)	Manual UP (for rear RH door)	Below 1 ohms
18 (D) - 1 (E)	Manual DOWN (for rear RH door)	Below 1 ohms

TEXT IN ILLUSTRATION

	Component without harness

*a	connected (Power Window Regulator Master Switch Assembly)

If the result is not as specified, replace the power window regulator master switch assembly.

b. Check that the LED illuminates.

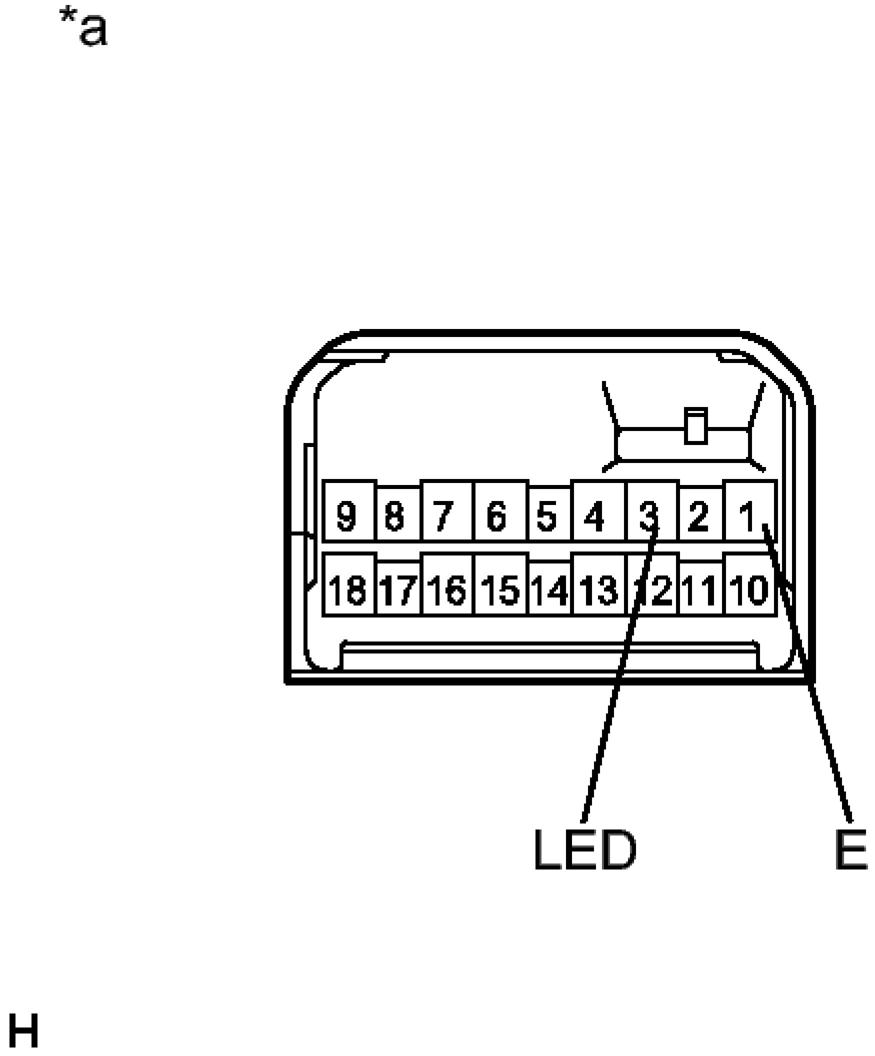

Fig. 4: Inspecting Power Window Regulator Master Switch Assembly Connector Terminals
Courtesy of TOYOTA MOTOR SALES, U.S.A., INC.

1. Apply battery voltage to the power window regulator master switch assembly and check that

the LED illuminates.

OK

Measurement Condition	Specified Condition
Battery positive (+) --> 3 (LED) Battery negative (-) --> 1 (E)	LED illuminates

TEXT IN ILLUSTRATION

*a	Component without harness connected (Power Window Regulator Master Switch Assembly)

If the result is not as specified, replace the power window regulator master switch assembly.

INSTALLATION

INSTALLATION

1. **INSTALL POWER WINDOW REGULATOR MASTER SWITCH ASSEMBLY**
    a. Install the power window regulator master switch assembly to the front upper armrest base panel with the 3 screws.
2. **INSTALL POWER WINDOW REGULATOR MASTER SWITCH ASSEMBLY WITH FRONT DOOR ARMREST BASE PANEL** . Refer to **REASSEMBLY - Step 43** .

FRONT PASSENGER SIDE POWER WINDOW SWITCH

COMPONENTS

ILLUSTRATION

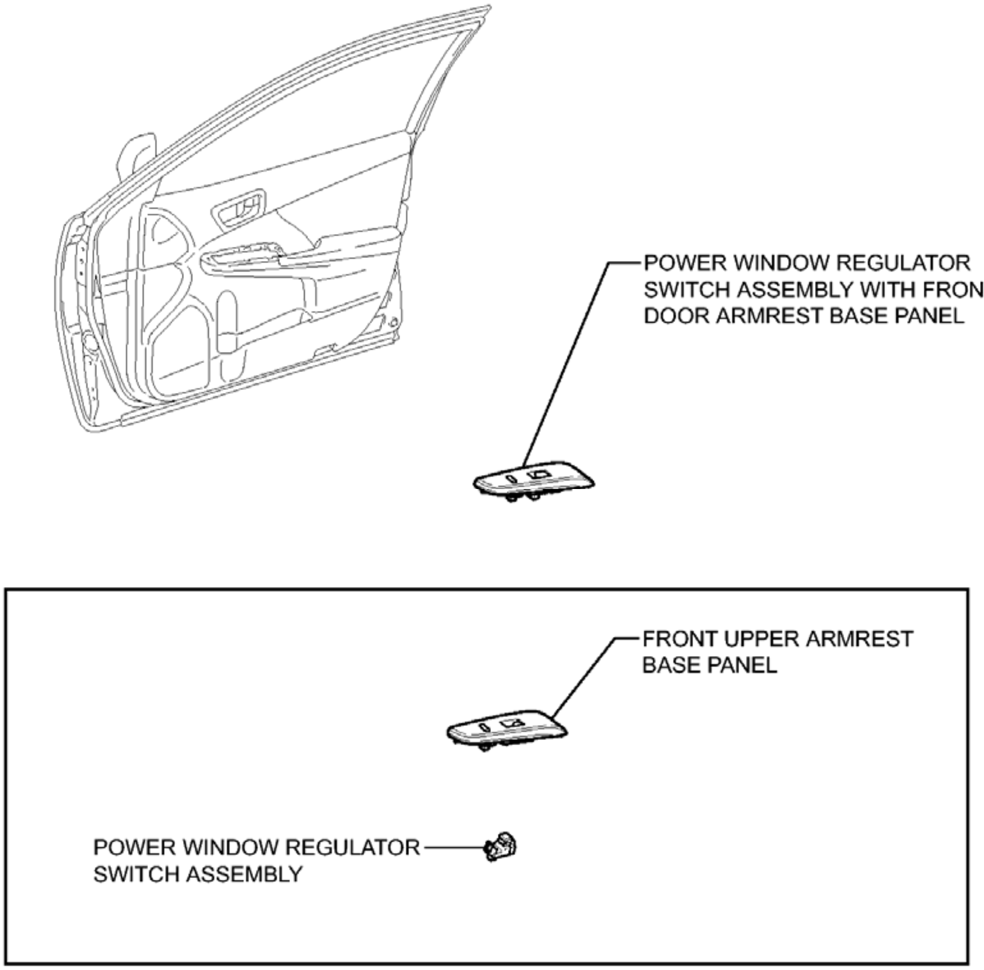
POWER WINDOW REGULATOR SWITCH ASSEMBLY WITH FRONT DOOR ARMREST BASE PANEL
FRONT UPPER ARMREST BASE PANEL
POWER WINDOW REGULATOR SWITCH ASSEMBLY

P

Fig. 5: Identifying Front Passenger Side Power Window Switch Replacement Components
Courtesy of TOYOTA MOTOR SALES, U.S.A., INC.

REMOVAL

REMOVAL

1. **REMOVE POWER WINDOW REGULATOR SWITCH ASSEMBLY WITH FRONT DOOR ARMREST BASE PANEL** . Refer to **DISASSEMBLY - Step 6** .
2. **REMOVE POWER WINDOW REGULATOR SWITCH ASSEMBLY**
   1. Disengage the 2 claws and remove the power window regulator switch assembly from the front upper armrest base panel.

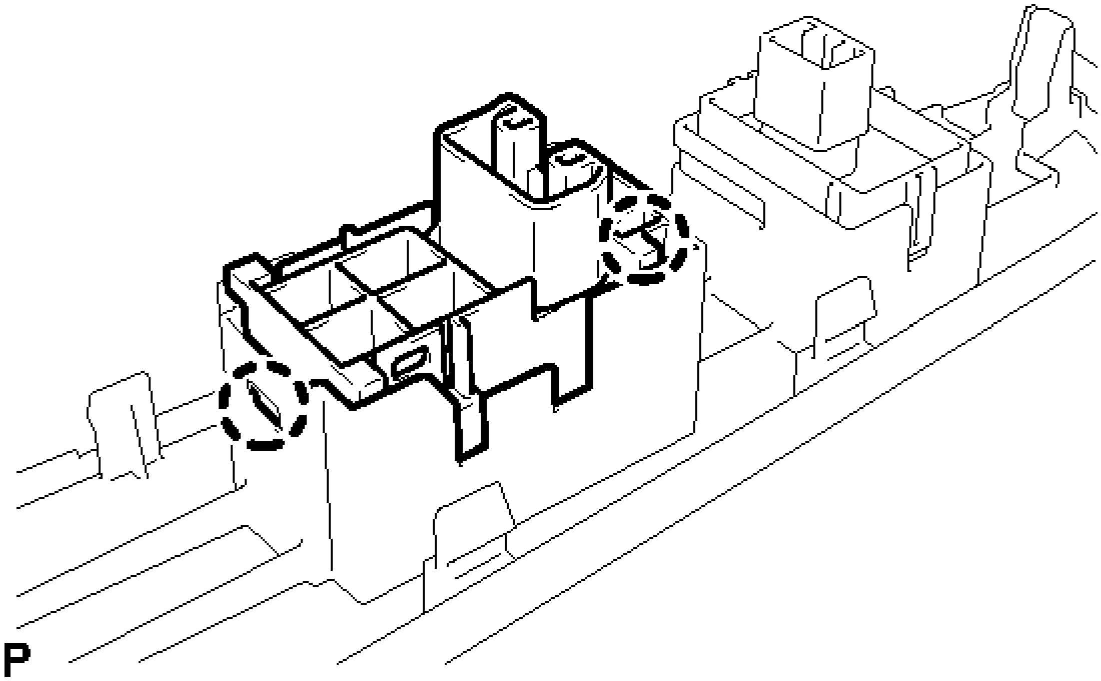

Fig. 6: Identifying Power Window Regulator Switch Assembly Claws
Courtesy of TOYOTA MOTOR SALES, U.S.A., INC.

INSPECTION

INSPECTION

1. **INSPECT POWER WINDOW REGULATOR SWITCH ASSEMBLY**
    a. Check the switch function.
        1. Measure the resistance when the switch is operated according to the value(s) in the table below.

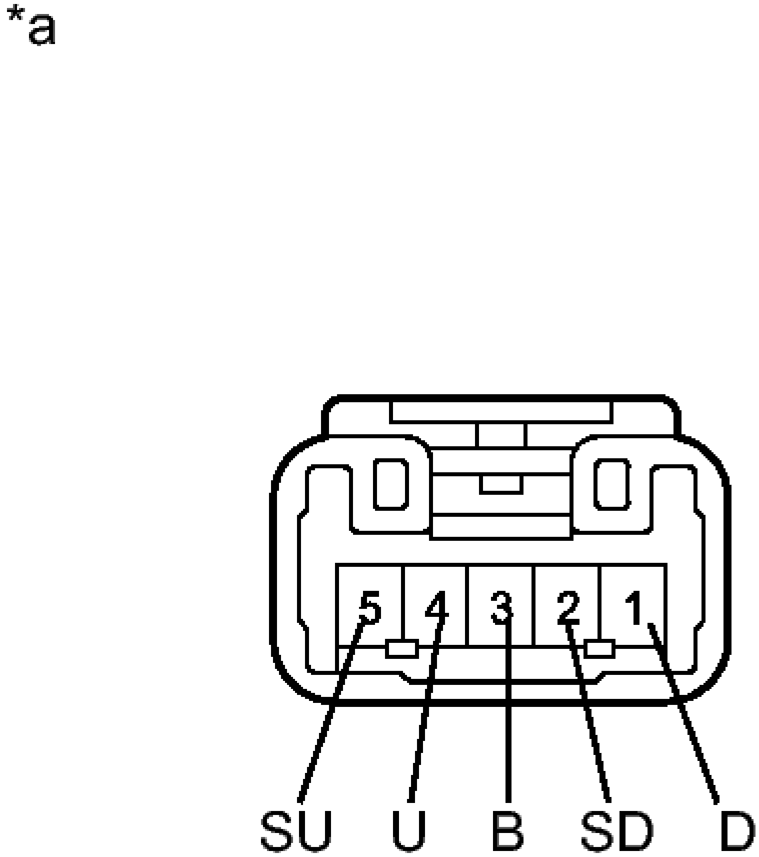

Fig. 7: Inspecting Power Window Regulator Switch Assembly Connector Terminals
Courtesy of TOYOTA MOTOR SALES, U.S.A., INC.

Standard Resistance

Tester Connection	Switch Condition	Specified Condition
1 (D) - 2 (SD)	UP	Below 1 ohms
3 (B) - 4 (U)		Below 1 ohms
1 (D) - 2 (SD)	off	Below 1 ohms
4 (U) - 5 (SU)		Below 1 ohms

4 (U) - 5 (SU)	DOWN	Below 1 ohms
1 (D) - 3 (B)		Below 1 ohms

TEXT IN ILLUSTRATION

*a	Component without harness connected (Power Window Regulator Switch Assembly (for Front Passenger Door))

If the result is not as specified, replace the power window regulator switch assembly (for front passenger door).

INSTALLATION

INSTALLATION

1. **INSTALL POWER WINDOW REGULATOR SWITCH ASSEMBLY**
    a. Engage the 2 claws to install the power window regulator switch assembly to the front upper armrest base panel.
2. **INSTALL POWER WINDOW REGULATOR SWITCH ASSEMBLY WITH FRONT DOOR ARMREST BASE PANEL** . Refer to **REASSEMBLY - Step 44** .

REAR POWER WINDOW SWITCH

COMPONENTS

ILLUSTRATION

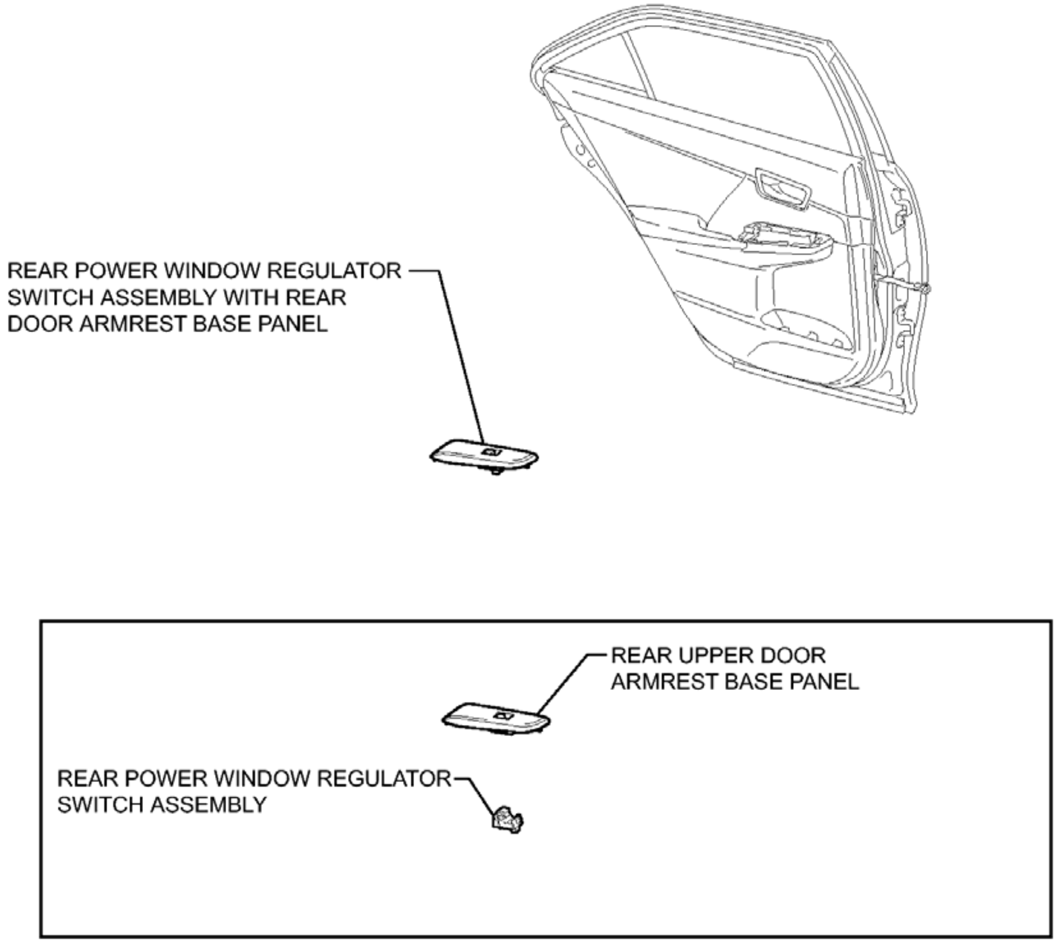
REAR POWER WINDOW REGULATOR SWITCH ASSEMBLY WITH REAR DOOR ARMREST BASE PANEL
REAR UPPER DOOR ARMREST BASE PANEL
REAR POWER WINDOW REGULATOR SWITCH ASSEMBLY

P

Fig. 8: Identifying Rear Power Window Switch Replacement Components
Courtesy of TOYOTA MOTOR SALES, U.S.A., INC.

REMOVAL

REMOVAL

1. **REMOVE REAR POWER WINDOW REGULATOR SWITCH ASSEMBLY WITH REAR DOOR ARMREST BASE PANEL** . Refer to **DISASSEMBLY - Step 4** .
2. **REMOVE REAR POWER WINDOW REGULATOR SWITCH ASSEMBLY**
    a. Disengage the 2 claws and remove the rear power window regulator switch assembly from the rear upper door armrest base panel.

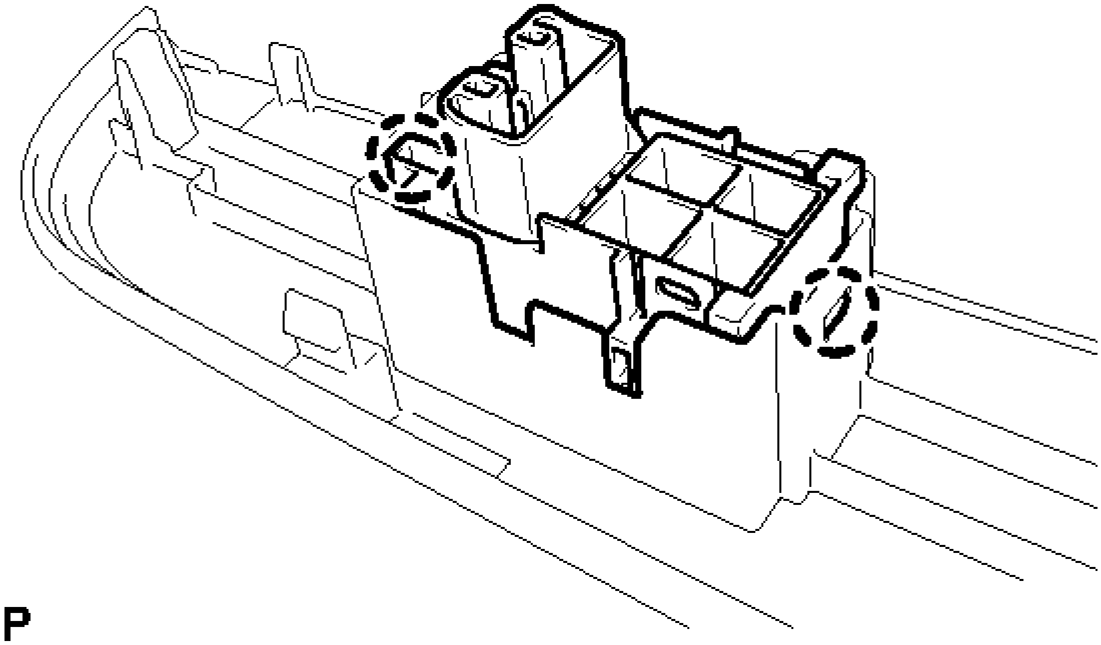

Fig. 9: Identifying Rear Power Window Regulator Switch Assembly Claws
Courtesy of TOYOTA MOTOR SALES, U.S.A., INC.

INSPECTION

INSPECTION

1. **INSPECT REAR POWER WINDOW REGULATOR SWITCH ASSEMBLY LH**
    a. Check the switch function.
        1. Measure the resistance when the switch is operated according to the value(s) in the table below.

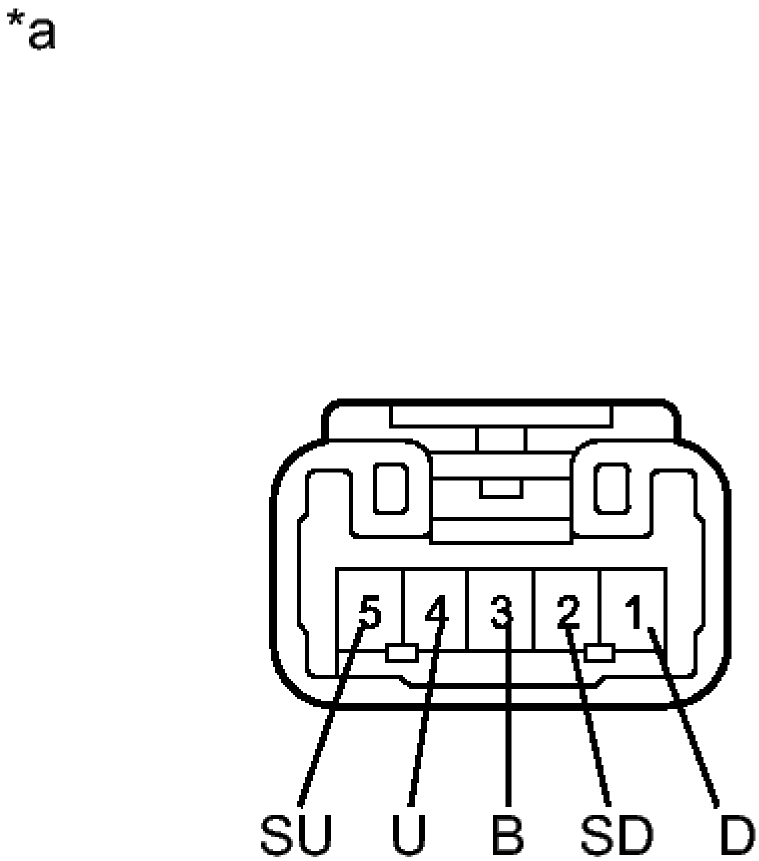

Fig. 10: Inspecting Power Window Regulator Switch Assembly Connector Terminals
Courtesy of TOYOTA MOTOR SALES, U.S.A., INC.

Standard Resistance

Tester Connection	Switch Condition	Specified Condition
1 (D) - 2 (SD)	UP	Below 1 ohms
3 (B) - 4 (U)		Below 1 ohms
1 (D) - 2 (SD)	off	Below 1 ohms
4 (U) - 5 (SU)		Below 1 ohms

4 (U) - 5 (SU)	DOWN	Below 1 ohms
1 (D) - 3 (B)		Below 1 ohms

TEXT IN ILLUSTRATION

*a	Component without harness connected (Power Window Regulator Switch Assembly (for Rear LH Door))

If the result is not as specified, replace the power window regulator switch assembly (for rear LH door).

2. **INSPECT REAR POWER WINDOW REGULATOR SWITCH ASSEMBLY RH**
    a. Check the switch function.
        1. Measure the resistance when the switch is operated according to the value(s) in the table below.

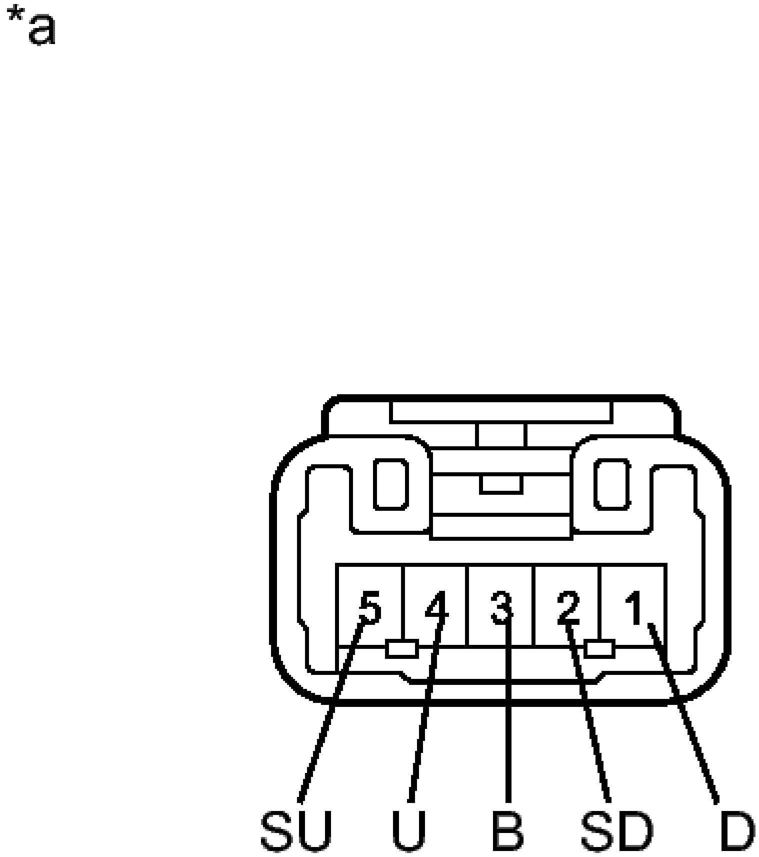

Fig. 11: Inspecting Power Window Regulator Switch Assembly Connector Terminals
Courtesy of TOYOTA MOTOR SALES, U.S.A., INC.

Standard Resistance

Tester Connection	Switch Condition	Specified Condition
1 (D) - 2 (SD)	UP	Below 1 ohms
3 (B) - 4 (U)		Below 1 ohms
1 (D) - 2 (SD)	off	Below 1 ohms
4 (U) - 5 (SU)		Below 1 ohms

4 (U) - 5 (SU)	DOWN	Below 1 ohms
1 (D) - 3 (B)		Below 1 ohms

TEXT IN ILLUSTRATION

*a	Component without harness connected (Power Window Regulator Switch Assembly (for Rear RH Door))

If the result is not as specified, replace the power window regulator switch assembly (for rear RH door).

INSTALLATION

INSTALLATION

1. **INSTALL REAR POWER WINDOW REGULATOR SWITCH ASSEMBLY**
    a. Engage the 2 claws to install the rear power window regulator switch assembly to the rear upper door armrest base panel.
2. **INSTALL REAR POWER WINDOW REGULATOR SWITCH ASSEMBLY WITH REAR DOOR ARMREST BASE PANEL** . Refer to **REASSEMBLY - Step 32** .

POWER WINDOW REGULATOR MOTOR (FOR FRONT DOOR)

COMPONENTS

ILLUSTRATION

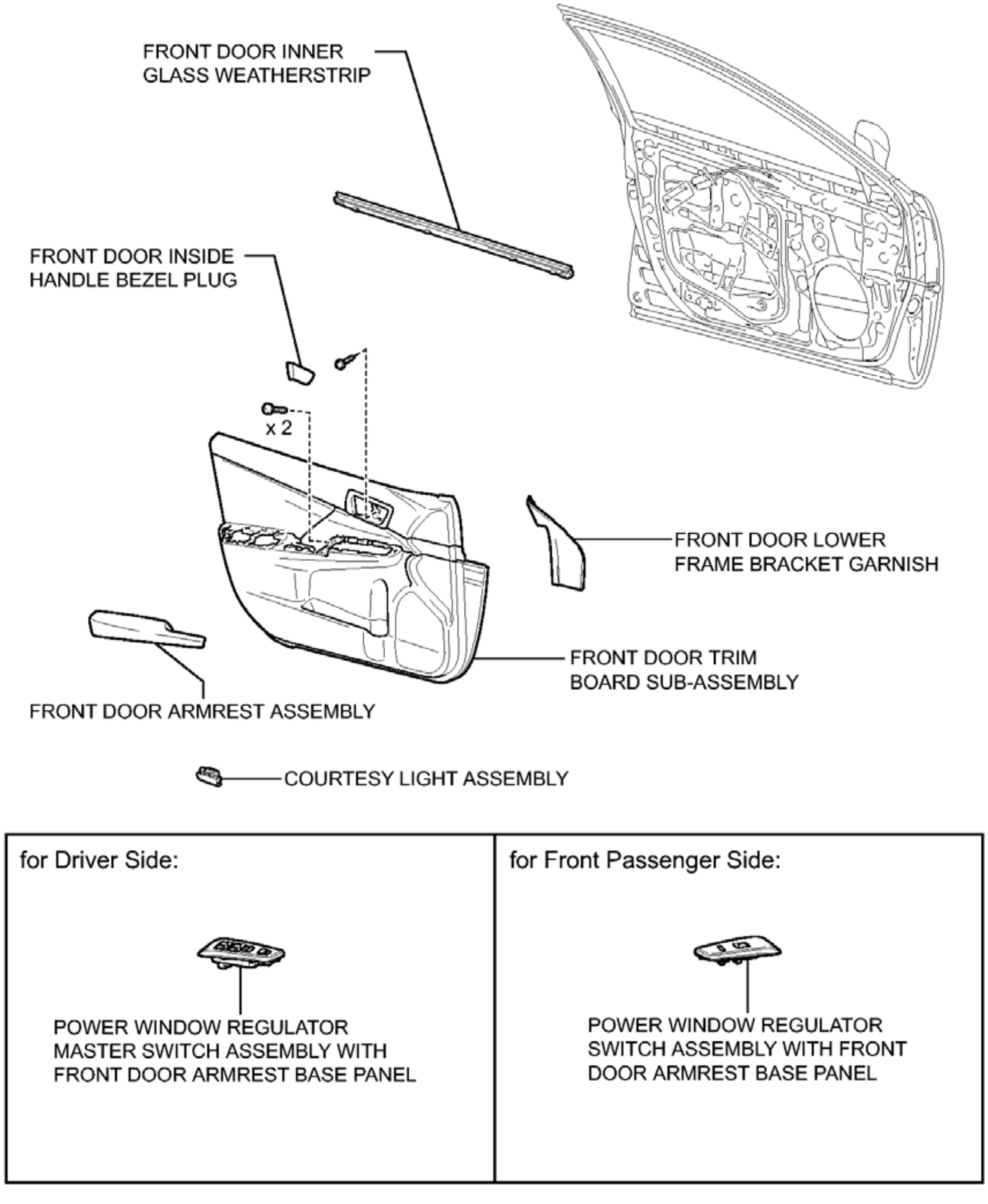
FRONT DOOR INNER GLASS WEATHERSTRIP
FRONT DOOR INSIDE HANDLE BEZEL PLUG
x 2
FRONT DOOR LOWER FRAME BRACKET GARNISH
FRONT DOOR TRIM BOARD SUB-ASSEMBLY
FRONT DOOR ARMREST ASSEMBLY
COURTESY LIGHT ASSEMBLY
for Driver Side:
POWER WINDOW REGULATOR MASTER SWITCH ASSEMBLY WITH FRONT DOOR ARMREST BASE PANEL
for Front Passenger Side:
POWER WINDOW REGULATOR SWITCH ASSEMBLY WITH FRONT DOOR ARMREST BASE PANEL
P

Fig. 12: Identifying Power Window Regulator Motor (For Front Door) Replacement Components (1 Of 2)

Courtesy of TOYOTA MOTOR SALES, U.S.A., INC.

ILLUSTRATION

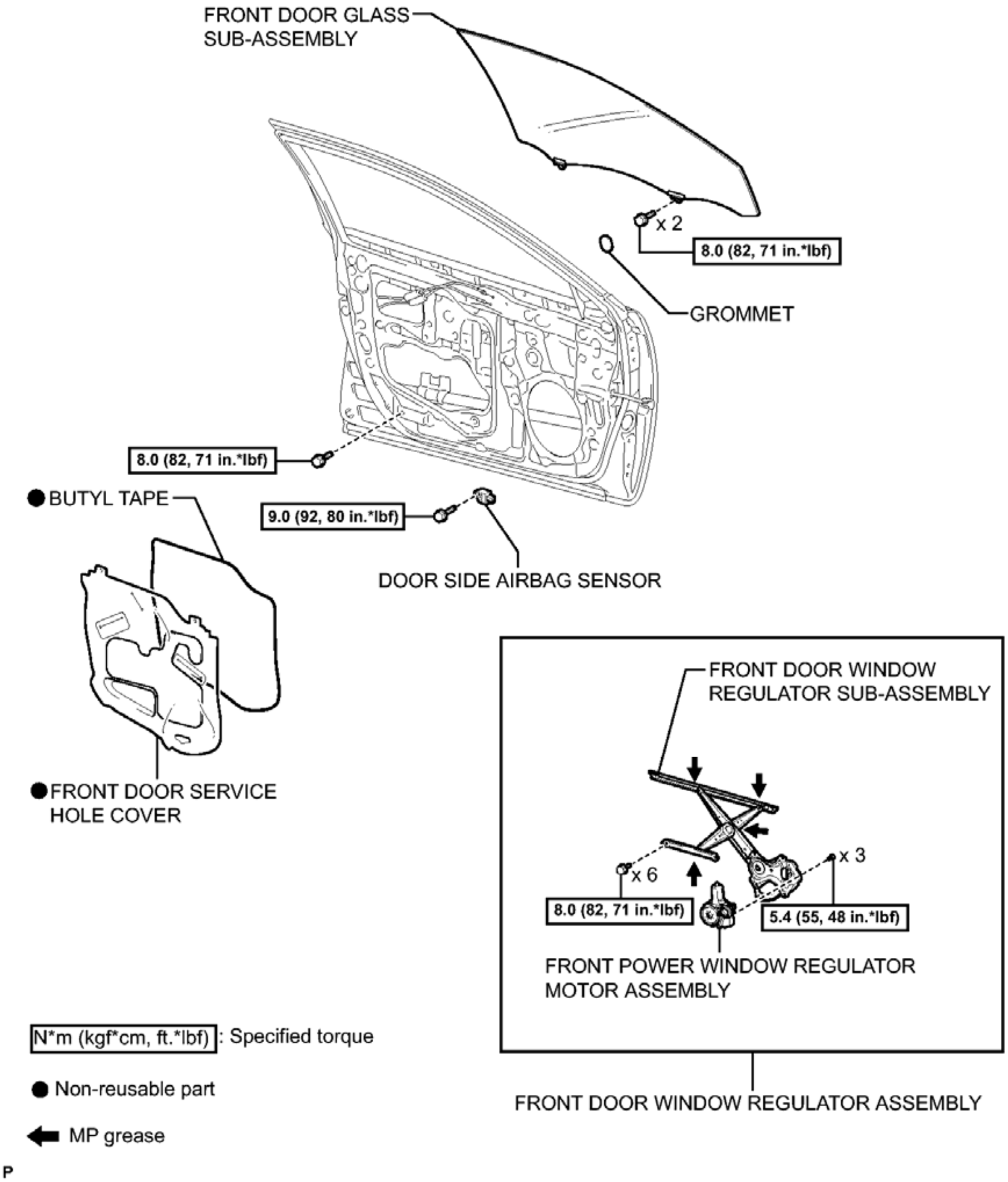
FRONT DOOR GLASS SUB-ASSEMBLY
x 2
8.0 (82, 71 in.*lbf)
GROMMET
8.0 (82, 71 in.*lbf)
● BUTYL TAPE
9.0 (92, 80 in.*lbf)
DOOR SIDE AIRBAG SENSOR
● FRONT DOOR SERVICE HOLE COVER
FRONT DOOR WINDOW REGULATOR SUB-ASSEMBLY
x 3
x 6
8.0 (82, 71 in.*lbf)
5.4 (55, 48 in.*lbf)
FRONT POWER WINDOW REGULATOR MOTOR ASSEMBLY
N*m (kgf*cm, ft.*lbf) : Specified torque
● Non-reusable part
MP grease
FRONT DOOR WINDOW REGULATOR ASSEMBLY
P

Fig. 13: Identifying Power Window Regulator Motor (For Front Door) Replacement Components With Torque Specifications (2 Of 2)
Courtesy of TOYOTA MOTOR SALES, U.S.A., INC.

REMOVAL

REMOVAL

HINT:

- Use the same procedure for both the RH and LH sides.
- The procedure described below is for the LH side.

1. **PRECAUTION**

   NOTE: **After turning the ignition switch off, waiting time may be required before disconnecting the cable from the negative (-) battery terminal. Therefore, make sure to read the disconnecting the cable from the negative (-) battery terminal notices before proceeding with work. Refer to PRECAUTION .**

2. **DISCONNECT CABLE FROM NEGATIVE BATTERY TERMINAL**

   WARNING: **Wait at least 90 seconds after disconnecting the cable from the negative (-) battery terminal to disable the SRS system.**

   NOTE: **When disconnecting the cable, some systems need to be initialized after the cable is reconnected. Refer to INITIALIZATION .**

3. **REMOVE FRONT DOOR INSIDE HANDLE BEZEL PLUG** . Refer to **DISASSEMBLY - Step 3** .
4. **REMOVE FRONT DOOR LOWER FRAME BRACKET GARNISH** . Refer to **DISASSEMBLY - Step 4** .
5. **REMOVE POWER WINDOW REGULATOR MASTER SWITCH ASSEMBLY WITH FRONT DOOR ARMREST BASE PANEL (for Driver Side)** . Refer to **DISASSEMBLY - Step 5** .
6. **REMOVE POWER WINDOW REGULATOR SWITCH ASSEMBLY WITH FRONT DOOR ARMREST BASE PANEL (for Front Passenger Side)** . Refer to **DISASSEMBLY - Step 6** .
7. **REMOVE FRONT DOOR ARMREST ASSEMBLY** . Refer to **DISASSEMBLY - Step 7** .
8. **REMOVE COURTESY LIGHT ASSEMBLY** . Refer to **REMOVAL - Step 1** .
9. **REMOVE FRONT DOOR TRIM BOARD SUB-ASSEMBLY** . Refer to **DISASSEMBLY - Step 9** .
10. **REMOVE FRONT DOOR INNER GLASS WEATHERSTRIP** . Refer to **DISASSEMBLY - Step 11** .
11. **REMOVE DOOR SIDE AIRBAG SENSOR** . Refer to **REMOVAL - Step 10** .
12. **REMOVE FRONT DOOR SERVICE HOLE COVER** . Refer to **DISASSEMBLY - Step 15** .
13. **REMOVE FRONT DOOR GLASS SUB-ASSEMBLY** . Refer to **DISASSEMBLY - Step 16** .
14. **REMOVE FRONT DOOR WINDOW REGULATOR ASSEMBLY** . Refer to **DISASSEMBLY - Step 17** .
15. **REMOVE FRONT POWER WINDOW REGULATOR MOTOR ASSEMBLY** . Refer to **DISASSEMBLY - Step 18** .

INSPECTION

INSPECTION

1. **INSPECT POWER WINDOW REGULATOR MOTOR ASSEMBLY LH**
    a. Apply positive (+) battery voltage to connector terminal 2 (B).

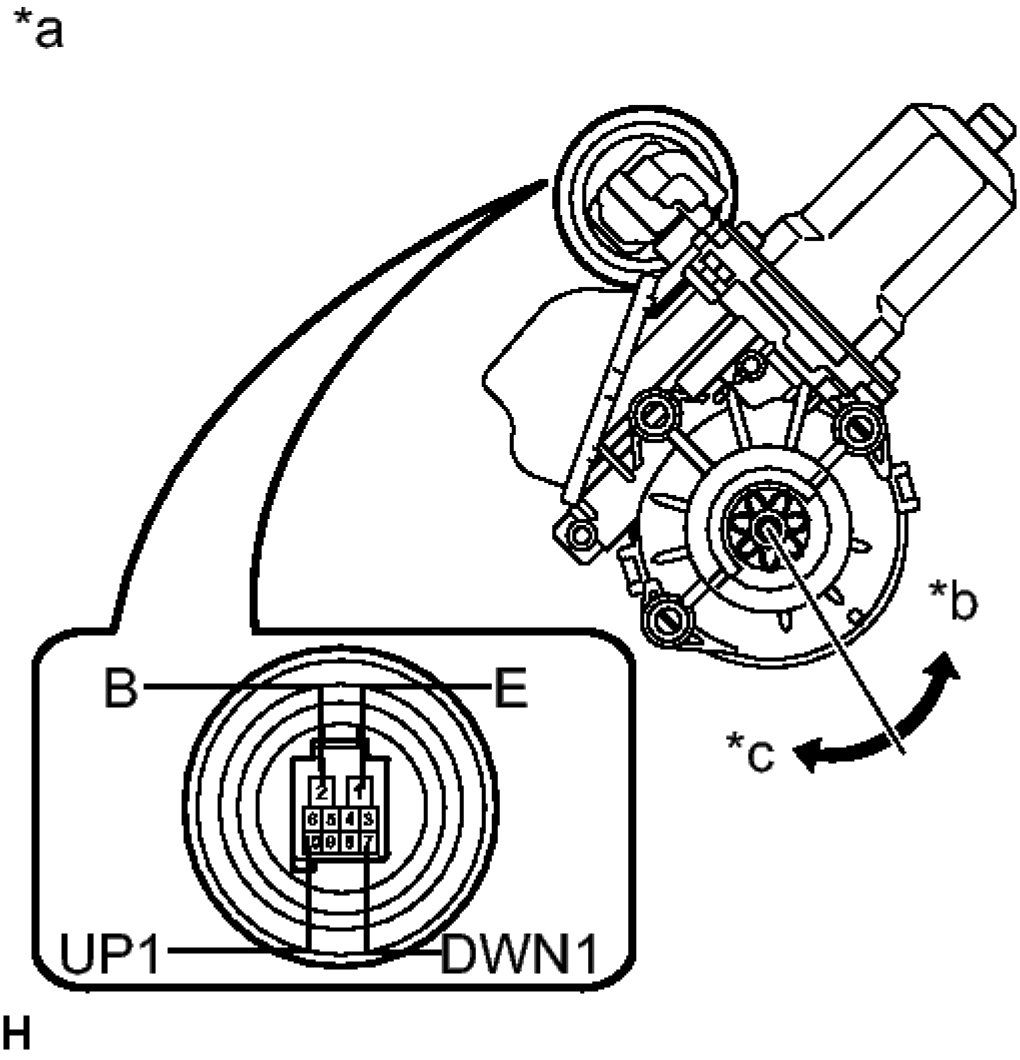

Fig. 14: Inspecting Power Window Regulator Motor Assembly LH
Courtesy of TOYOTA MOTOR SALES, U.S.A., INC.

NOTE: **Do not apply positive (+) battery voltage to any terminals other than terminal 2 (B) to avoid damaging the pulse sensor inside the motor.**

    b. Connect a ground lead to connector terminals 1 (E) and 7 (DWN1) or 10 (UP1).
    c. Check that the motor gear rotates smoothly as follows:

OK

Measurement	Specified

Condition	Condition
1. Connect a positive (+) battery lead to terminal 2 (B), connect a negative (-) battery lead to terminal 1 (E), and keep them connected for 3 seconds or more. 2. With terminals 2 (B) and 1 (E) connected, connect a negative (-) battery lead to terminal 10 (UP1). 3. Disconnect and reconnect the negative (-) battery lead for terminal 10 (UP1) within 1 second.	Motor gear rotates clockwise
1. Connect the positive (+) battery lead to terminal 2	

(B), connect a negative (-) battery lead to terminal 1 (E), and keep them connected for 3 seconds or more. 2. With terminals 2 (B) and 1 (E) connected, connect a negative (-) battery lead to terminal 7 (DWN1). 3. Disconnect and reconnect the negative (-) battery lead for terminal 7 (DWN1) within 1 second.	Motor gear rotates counterclockwise

TEXT IN ILLUSTRATION

*a	Component without harness connected (Power Window Regulator Motor Assembly LH)
*b	Counterclockwise
*c	Clockwise

If the result is not as specified, replace the power window regulator motor assembly LH.

NOTE: **Reset the power window regulator motor (initialize the pulse sensor) after installing the power window regulator motor and regulator assembly onto the door.**

2. **INSPECT POWER WINDOW REGULATOR MOTOR ASSEMBLY RH**
    a. Apply battery voltage to the motor connector according to the table below.

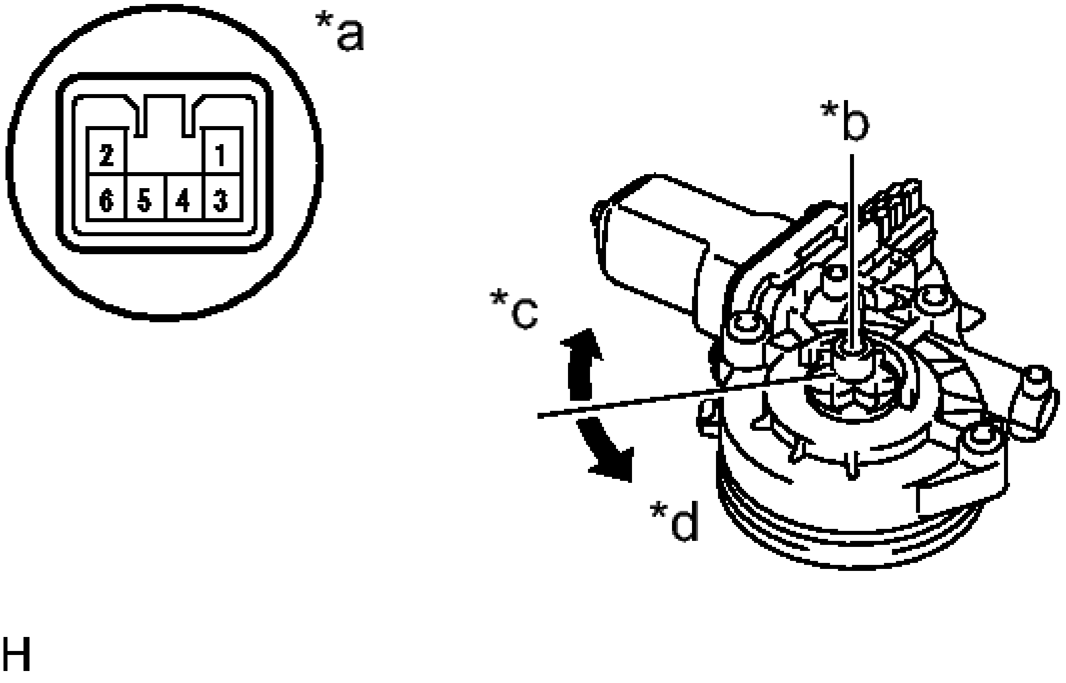

Fig. 15: Inspecting Power Window Regulator Motor Assembly
Courtesy of TOYOTA MOTOR SALES, U.S.A., INC.

NOTE: **Do not apply battery voltage to any terminals except terminals 1 and 2.**

Standard

Measurement Condition	Specified Condition
Battery positive (+) --> Terminal 1 Battery negative (-) --> Terminal 2	Motor gear rotates clockwise
Battery positive (+) --> Terminal 2	Motor gear

Battery negative (-) --> Terminal 1	rotates counterclockwise

TEXT IN ILLUSTRATION

*a	Component without harness connected (Power Window Regulator Motor Assembly RH)
*b	Motor Gear
*c	Clockwise
*d	Counterclockwise

If the result is not as specified, replace the power window regulator motor assembly RH.

INSTALLATION

INSTALLATION

HINT:

- Use the same procedure for both the RH and LH sides.
- The procedure described below is for the LH side.

1. **PRECAUTION**

   NOTE: After turning the ignition switch off, waiting time may be required before disconnecting the cable from the negative (-) battery terminal. Therefore, make sure to read the disconnecting the cable from the negative (-) battery terminal notices before proceeding with work. Refer to PRECAUTION .

2. **INSTALL FRONT POWER WINDOW REGULATOR MOTOR ASSEMBLY** . Refer to **REASSEMBLY - Step 31** .
3. **INSTALL FRONT DOOR WINDOW REGULATOR ASSEMBLY** . Refer to **REASSEMBLY - Step 32** .
4. **INSTALL FRONT DOOR GLASS SUB-ASSEMBLY** . Refer to **REASSEMBLY - Step 33** .
5. **INSTALL FRONT DOOR SERVICE HOLE COVER** . Refer to **REASSEMBLY - Step 34** .
6. **INSTALL DOOR SIDE AIRBAG SENSOR** . Refer to **INSTALLATION - Step 1** .
7. **INSTALL FRONT DOOR INNER GLASS WEATHERSTRIP** . Refer to **REASSEMBLY - Step 38** .
8. **INSTALL FRONT DOOR TRIM BOARD SUB-ASSEMBLY** . Refer to **REASSEMBLY - Step 40** .
9. **INSTALL COURTESY LIGHT ASSEMBLY** . Refer to **INSTALLATION - Step 1** .
10. **INSTALL FRONT DOOR ARMREST ASSEMBLY** . Refer to **REASSEMBLY - Step 42** .

11. **INSTALL POWER WINDOW REGULATOR MASTER SWITCH ASSEMBLY WITH FRONT DOOR ARMREST BASE PANEL (for Driver Side)** . Refer to **REASSEMBLY - Step 43** .
12. **INSTALL POWER WINDOW REGULATOR SWITCH ASSEMBLY WITH FRONT DOOR ARMREST BASE PANEL (for Front Passenger Side)** . Refer to **REASSEMBLY - Step 44** .
13. **INSTALL FRONT DOOR LOWER FRAME BRACKET GARNISH** . Refer to **REASSEMBLY - Step 45** .
14. **INSTALL FRONT DOOR INSIDE HANDLE BEZEL PLUG** . Refer to **REASSEMBLY - Step 46** .
15. **CONNECT CABLE TO NEGATIVE BATTERY TERMINAL**

    NOTE: **When disconnecting the cable, some systems need to be initialized after the cable is reconnected. Refer to INITIALIZATION .**

16. **INITIALIZE POWER WINDOW CONTROL SYSTEM (for Driver Side)**

    Refer to **INITIALIZATION** .

17. **INSPECT POWER WINDOW OPERATION**

    Refer to **OPERATION CHECK** .

18. **INSPECT SRS WARNING LIGHT**

    For Separate Type Yaw Rate Sensor: Refer to **DIAGNOSIS SYSTEM** .

    For Built-in Type Yaw Rate Sensor: Refer to **DIAGNOSIS SYSTEM** .

POWER WINDOW REGULATOR MOTOR (FOR REAR DOOR)

COMPONENTS

ILLUSTRATION

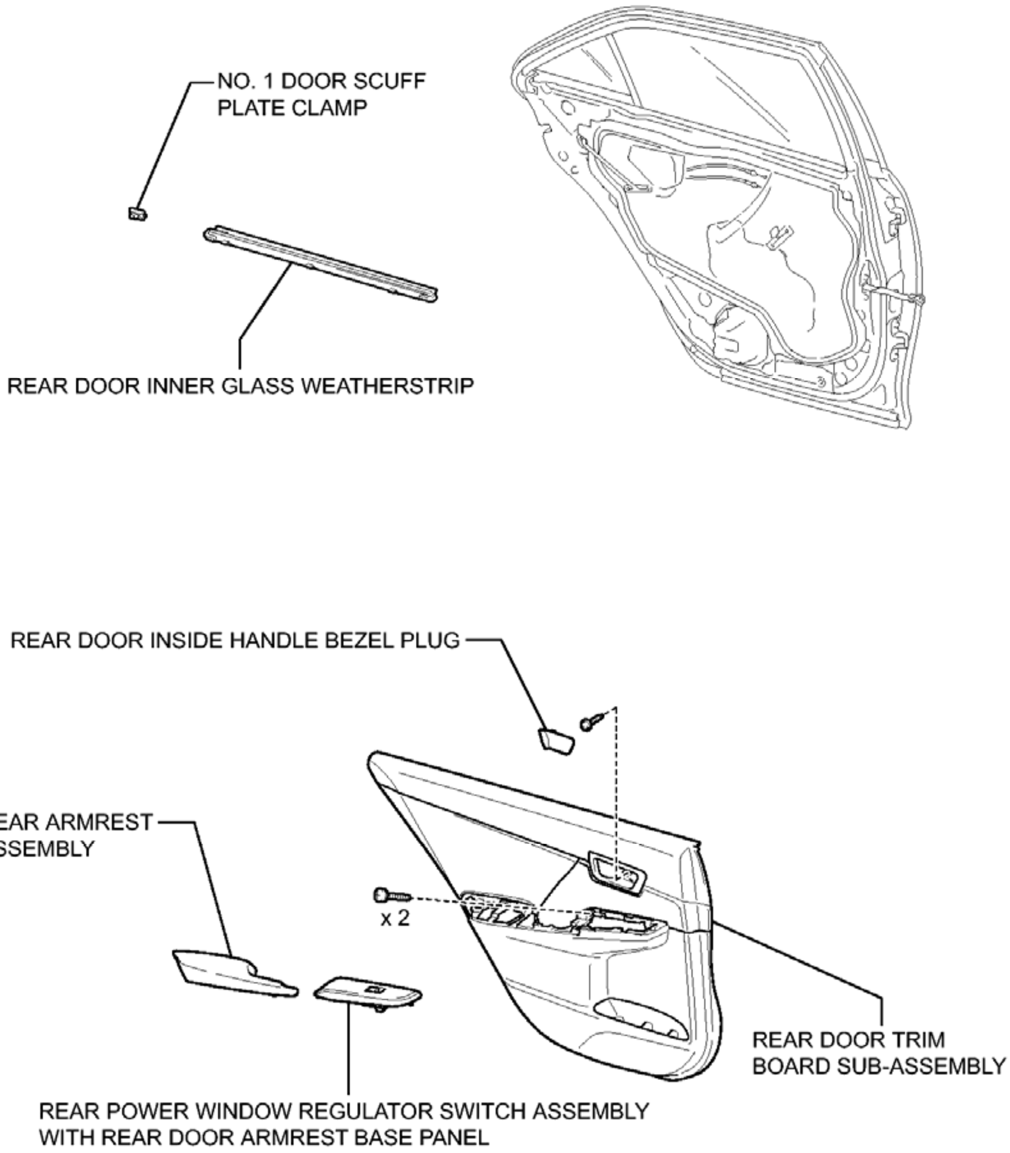
NO. 1 DOOR SCUFF PLATE CLAMP
REAR DOOR INNER GLASS WEATHERSTRIP
REAR DOOR INSIDE HANDLE BEZEL PLUG
REAR ARMREST ASSEMBLY
x 2
REAR DOOR TRIM BOARD SUB-ASSEMBLY
REAR POWER WINDOW REGULATOR SWITCH ASSEMBLY WITH REAR DOOR ARMREST BASE PANEL

P

Fig. 16: Identifying Power Window Regulator Motor (For Rear Door) Replacement Components (1 Of 2)
Courtesy of TOYOTA MOTOR SALES, U.S.A., INC.

ILLUSTRATION

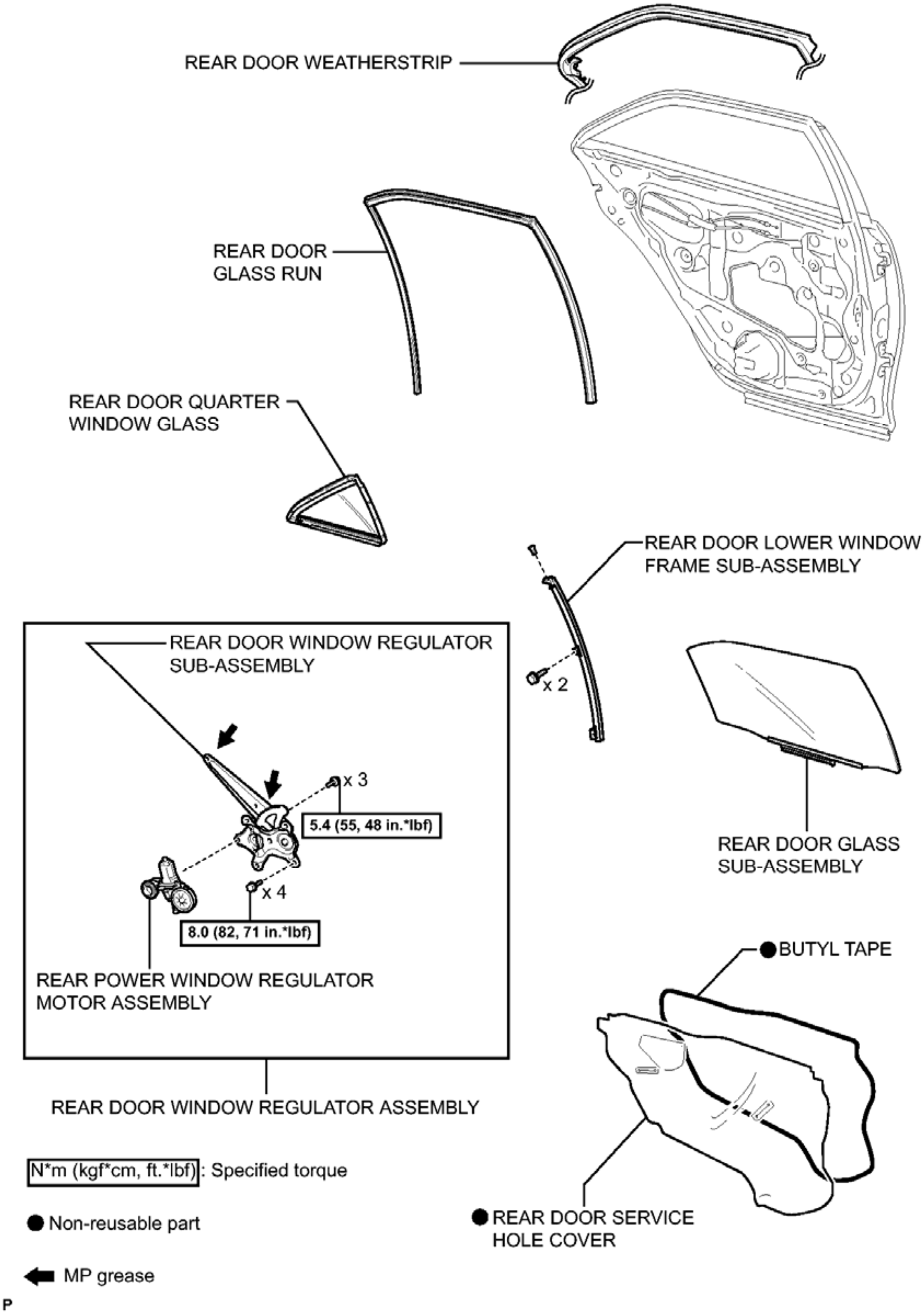
REAR DOOR WEATHERSTRIP
REAR DOOR GLASS RUN
REAR DOOR QUARTER WINDOW GLASS
REAR DOOR LOWER WINDOW FRAME SUB-ASSEMBLY
x 2
REAR DOOR WINDOW REGULATOR SUB-ASSEMBLY
x 3
5.4 (55, 48 in.*lbf)
x 4
8.0 (82, 71 in.*lbf)
REAR POWER WINDOW REGULATOR MOTOR ASSEMBLY
REAR DOOR WINDOW REGULATOR ASSEMBLY
REAR DOOR GLASS SUB-ASSEMBLY
● BUTYL TAPE
● REAR DOOR SERVICE HOLE COVER
N*m (kgf*cm, ft.*lbf) : Specified torque
● Non-reusable part
MP grease
P

Fig. 17: Identifying Power Window Regulator Motor (For Rear Door) Replacement Components With Torque Specifications (2 Of 2)

Courtesy of TOYOTA MOTOR SALES, U.S.A., INC.

REMOVAL

REMOVAL

HINT:

- Use the same procedure for both the RH and LH sides.
- The procedure described below is for the LH side.

1. **PRECAUTION**

   NOTE: After turning the ignition switch off, waiting time may be required before disconnecting the cable from the negative (-) battery terminal. Therefore, make sure to read the disconnecting the cable from the negative (-) battery terminal notices before proceeding with work. Refer to PRECAUTION .

2. **DISCONNECT CABLE FROM NEGATIVE BATTERY TERMINAL**

   NOTE: When disconnecting the cable, some systems need to be initialized after the cable is reconnected. Refer to INITIALIZATION .

3. **REMOVE REAR DOOR INSIDE HANDLE BEZEL PLUG** . Refer to **DISASSEMBLY - Step 3** .
4. **REMOVE REAR POWER WINDOW REGULATOR SWITCH ASSEMBLY WITH REAR DOOR ARMREST BASE PANEL** . Refer to **DISASSEMBLY - Step 4** .
5. **REMOVE REAR ARMREST ASSEMBLY** . Refer to **DISASSEMBLY - Step 5** .
6. **REMOVE REAR DOOR TRIM BOARD SUB-ASSEMBLY** . Refer to **DISASSEMBLY - Step 6** .
7. **REMOVE REAR DOOR INNER GLASS WEATHERSTRIP** . Refer to **DISASSEMBLY - Step 8** .
8. **REMOVE REAR DOOR SERVICE HOLE COVER** . Refer to **DISASSEMBLY - Step 9** .
9. **DISCONNECT REAR DOOR WEATHERSTRIP**
   a. Disconnect the upper part of rear door weatherstrip as shown in the illustration.

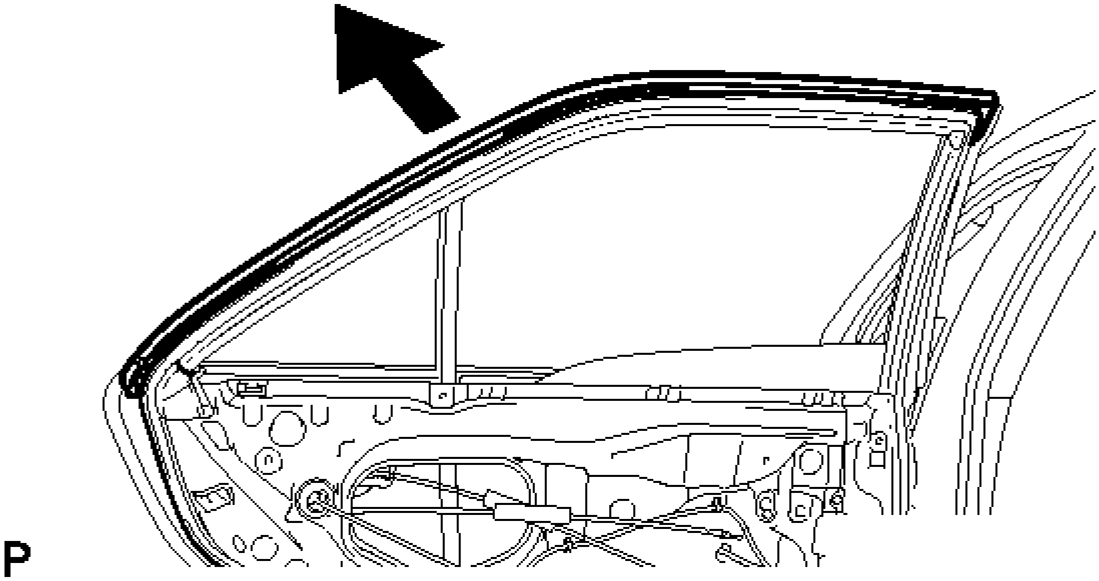

Fig. 18: Removing Rear Door Weatherstrip
Courtesy of TOYOTA MOTOR SALES, U.S.A., INC.

10. **REMOVE REAR DOOR GLASS RUN** . Refer to **DISASSEMBLY - Step 12** .
11. **REMOVE REAR DOOR LOWER WINDOW FRAME SUB-ASSEMBLY** . Refer to **DISASSEMBLY - Step 13** .
12. **REMOVE REAR DOOR QUARTER WINDOW GLASS**
    a. Remove the rear door quarter window glass with the rear door quarter window weatherstrip as shown in the illustration.

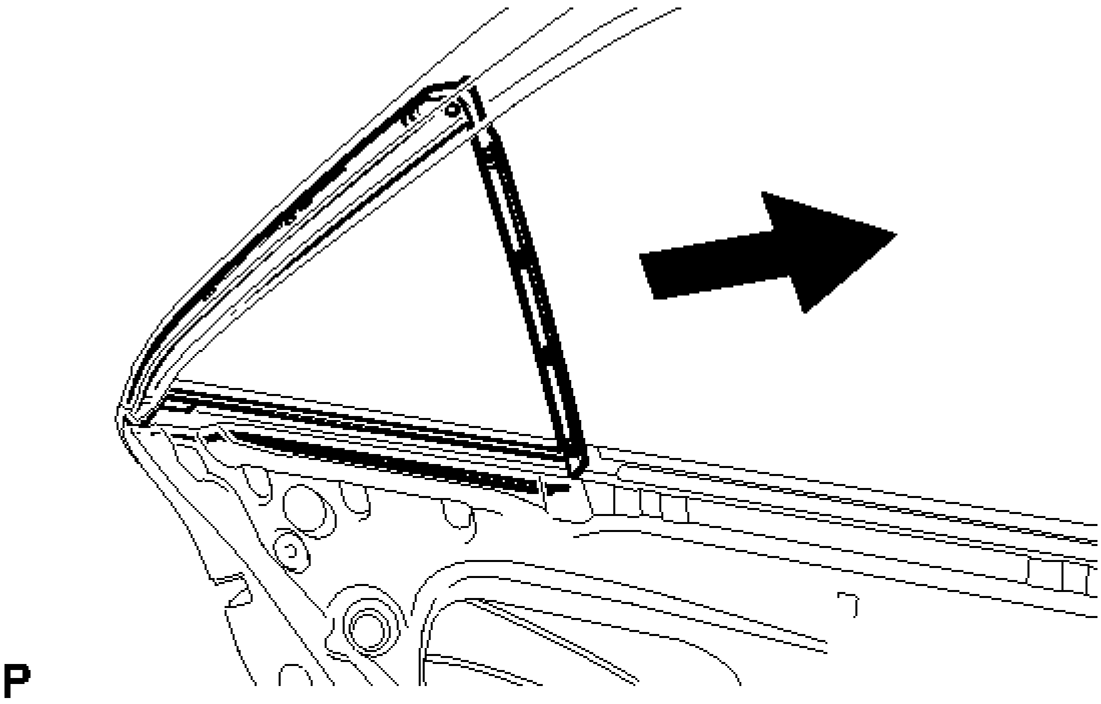

Fig. 19: Removing Rear Door Quarter Window Glass
Courtesy of TOYOTA MOTOR SALES, U.S.A., INC.

13. **REMOVE REAR DOOR GLASS SUB-ASSEMBLY** . Refer to **DISASSEMBLY - Step 15** .
14. **REMOVE REAR DOOR WINDOW REGULATOR ASSEMBLY** . Refer to **DISASSEMBLY - Step 18** .
15. **REMOVE REAR POWER WINDOW REGULATOR MOTOR ASSEMBLY** . Refer to **DISASSEMBLY - Step 19** .

INSPECTION

INSPECTION

1. **INSPECT POWER WINDOW REGULATOR MOTOR ASSEMBLY LH**
   a. Apply battery voltage to the motor connector according to the table below.

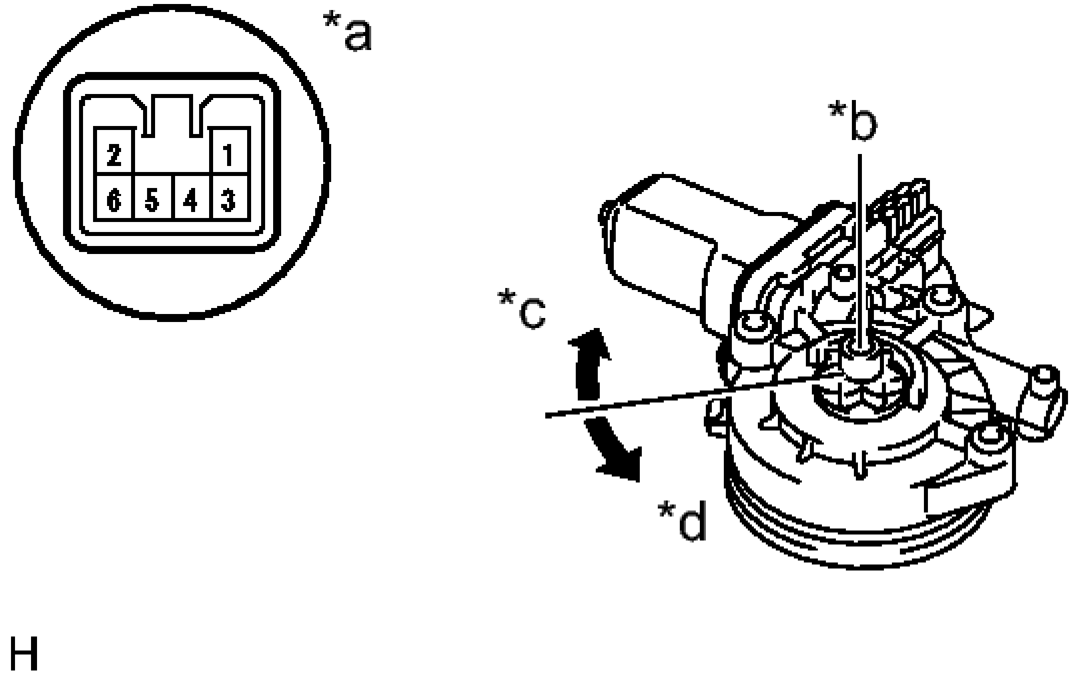

Fig. 20: Inspecting Power Window Regulator Motor Assembly
Courtesy of TOYOTA MOTOR SALES, U.S.A., INC.

NOTE: **Do not apply battery voltage to any terminals except terminals 1 and 2.**

Standard

Measurement Condition	Specified Condition
Battery positive (+) --> Terminal 1 Battery negative (-) --> Terminal 2	Motor gear rotates clockwise
Battery positive (+) --> Terminal 2 Battery negative (-) --> Terminal 1	Motor gear rotates counterclockwise

TEXT IN ILLUSTRATION

	Component without harness

*a	connected (Power Window Regulator Motor Assembly LH)
*b	Motor Gear
*c	Clockwise
*d	Counterclockwise

If the result is not as specified, replace the power window regulator motor assembly LH.

2. **INSPECT POWER WINDOW REGULATOR MOTOR ASSEMBLY RH**
   a. Apply battery voltage to the motor connector according to the table below.

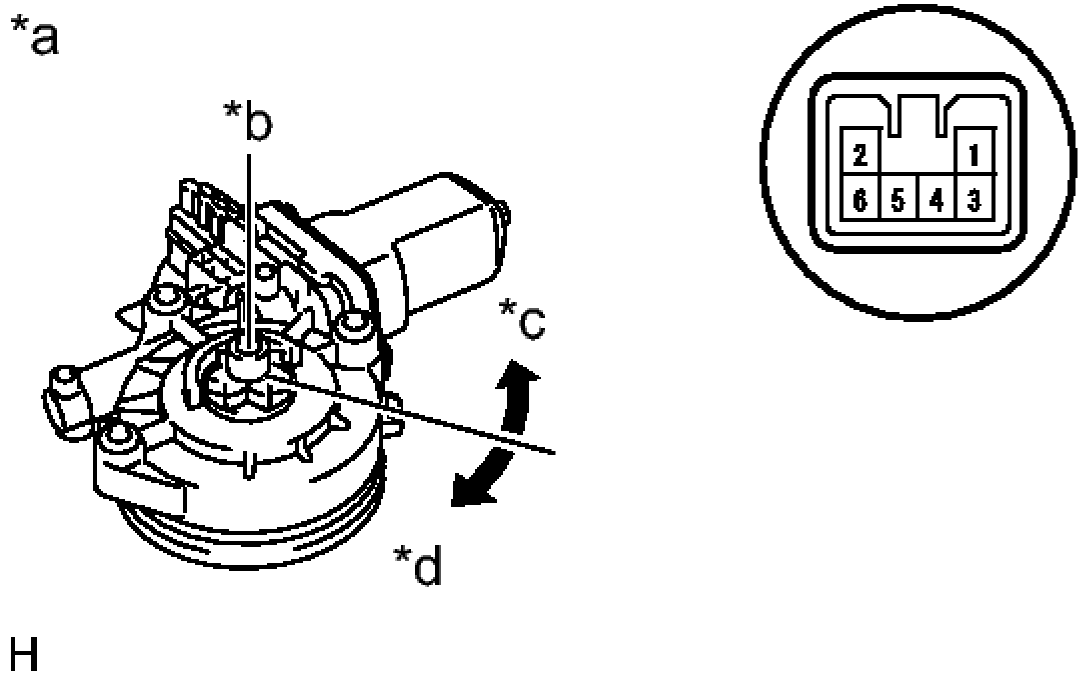

Fig. 21: Inspecting Power Window Regulator Motor Assembly RH
Courtesy of TOYOTA MOTOR SALES, U.S.A., INC.

NOTE: **Do not apply battery voltage to any terminals except terminals 1 and 2.**

Standard

Measurement Condition	Specified Condition
Battery positive (+) --> Terminal 2	Motor gear

Battery negative (-) --> Terminal 1	rotates clockwise
Battery positive (+) --> Terminal 1 Battery negative (-) --> Terminal 2	Motor gear rotates counterclockwise

TEXT IN ILLUSTRATION

*a	Component without harness connected (Power Window Regulator Motor Assembly RH)
*b	Motor Gear
*c	Counterclockwise
*d	Clockwise

If the result is not as specified, replace the power window regulator motor assembly RH.

INSTALLATION

INSTALLATION

HINT:

- Use the same procedure for both the RH and LH sides.
- The procedure described below is for the LH side.

1. **INSTALL REAR POWER WINDOW REGULATOR MOTOR ASSEMBLY** . Refer to **REASSEMBLY - Step 17** .
2. **INSTALL REAR DOOR WINDOW REGULATOR ASSEMBLY** . Refer to **REASSEMBLY - Step 18** .
3. **INSTALL REAR DOOR GLASS SUB-ASSEMBLY** . Refer to **REASSEMBLY - Step 21** .
4. **INSTALL REAR DOOR QUARTER WINDOW GLASS**
    a. Install the rear door quarter window glass together with the rear door quarter window weatherstrip in the direction indicated by the arrow in the illustration.

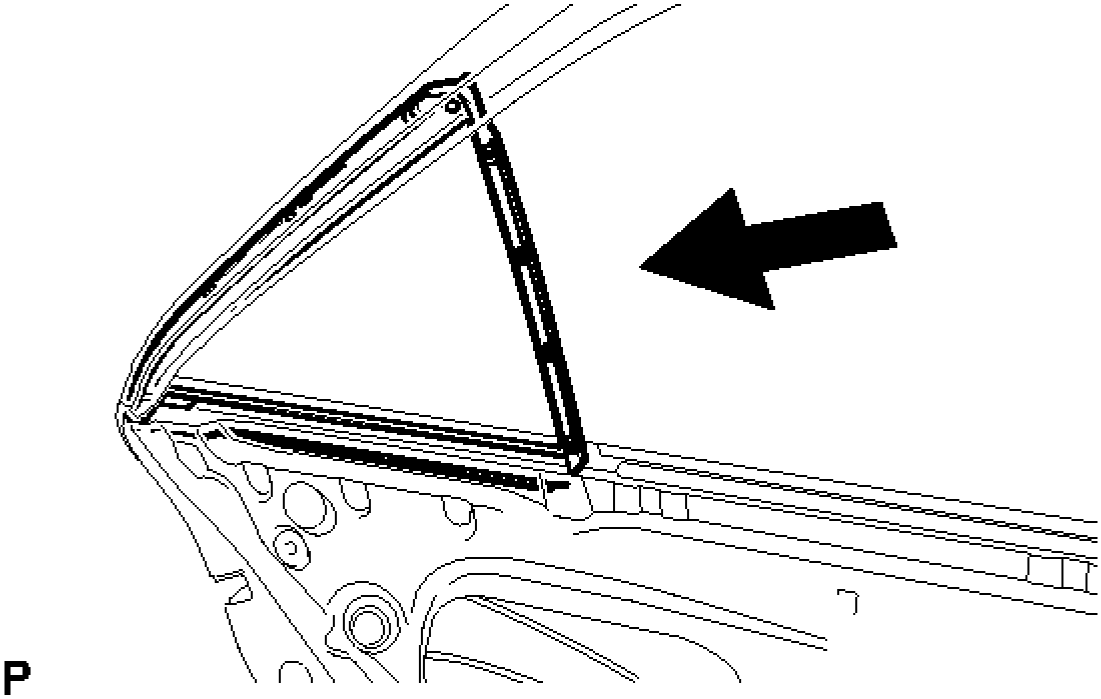

Fig. 22: Installing Rear Door Quarter Window Glass
Courtesy of TOYOTA MOTOR SALES, U.S.A., INC.

5. **INSTALL REAR DOOR LOWER WINDOW FRAME SUB-ASSEMBLY** . Refer to **REASSEMBLY - Step 23** .
6. **INSTALL REAR DOOR GLASS RUN** . Refer to **REASSEMBLY - Step 24** .
7. **INSTALL REAR DOOR WEATHERSTRIP**
    a. Install the upper part of rear door weatherstrip as shown in the illustration.

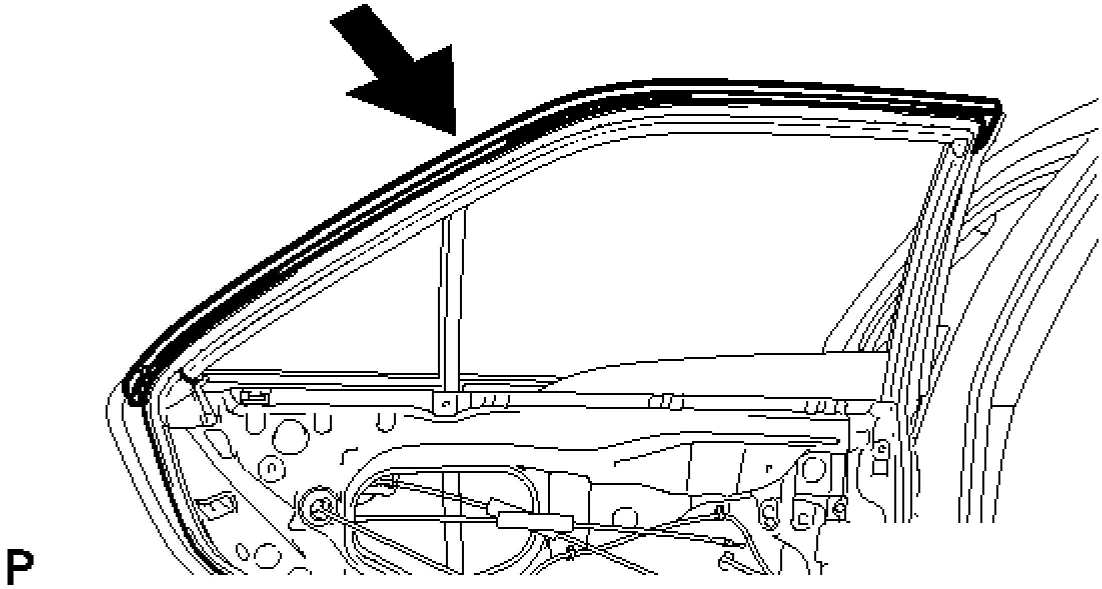

Fig. 23: Installing Rear Door Weatherstrip
Courtesy of TOYOTA MOTOR SALES, U.S.A., INC.

8. **INSTALL REAR DOOR SERVICE HOLE COVER** . Refer to **REASSEMBLY - Step 27** .
9. **INSTALL REAR DOOR INNER GLASS WEATHERSTRIP** . Refer to **REASSEMBLY - Step 28** .
10. **INSTALL REAR DOOR TRIM BOARD SUB-ASSEMBLY** . Refer to **REASSEMBLY - Step 30** .
11. **INSTALL REAR ARMREST ASSEMBLY** . Refer to **REASSEMBLY - Step 31** .
12. **INSTALL REAR POWER WINDOW REGULATOR SWITCH ASSEMBLY WITH REAR DOOR ARMREST BASE PANEL** . Refer to **REASSEMBLY - Step 32** .
13. **INSTALL REAR DOOR INSIDE HANDLE BEZEL PLUG** . Refer to **REASSEMBLY - Step 33** .
14. **CONNECT CABLE TO NEGATIVE BATTERY TERMINAL**

    NOTE: **When disconnecting the cable, some systems need to be initialized after the cable is reconnected. Refer to INITIALIZATION .**

15. **INITIALIZE POWER WINDOW CONTROL SYSTEM**

    Refer to **INITIALIZATION** .

16. **INSPECT POWER WINDOW OPERATION**

    Refer to **OPERATION CHECK** .

WINDSHIELD GLASS

COMPONENTS

ILLUSTRATION

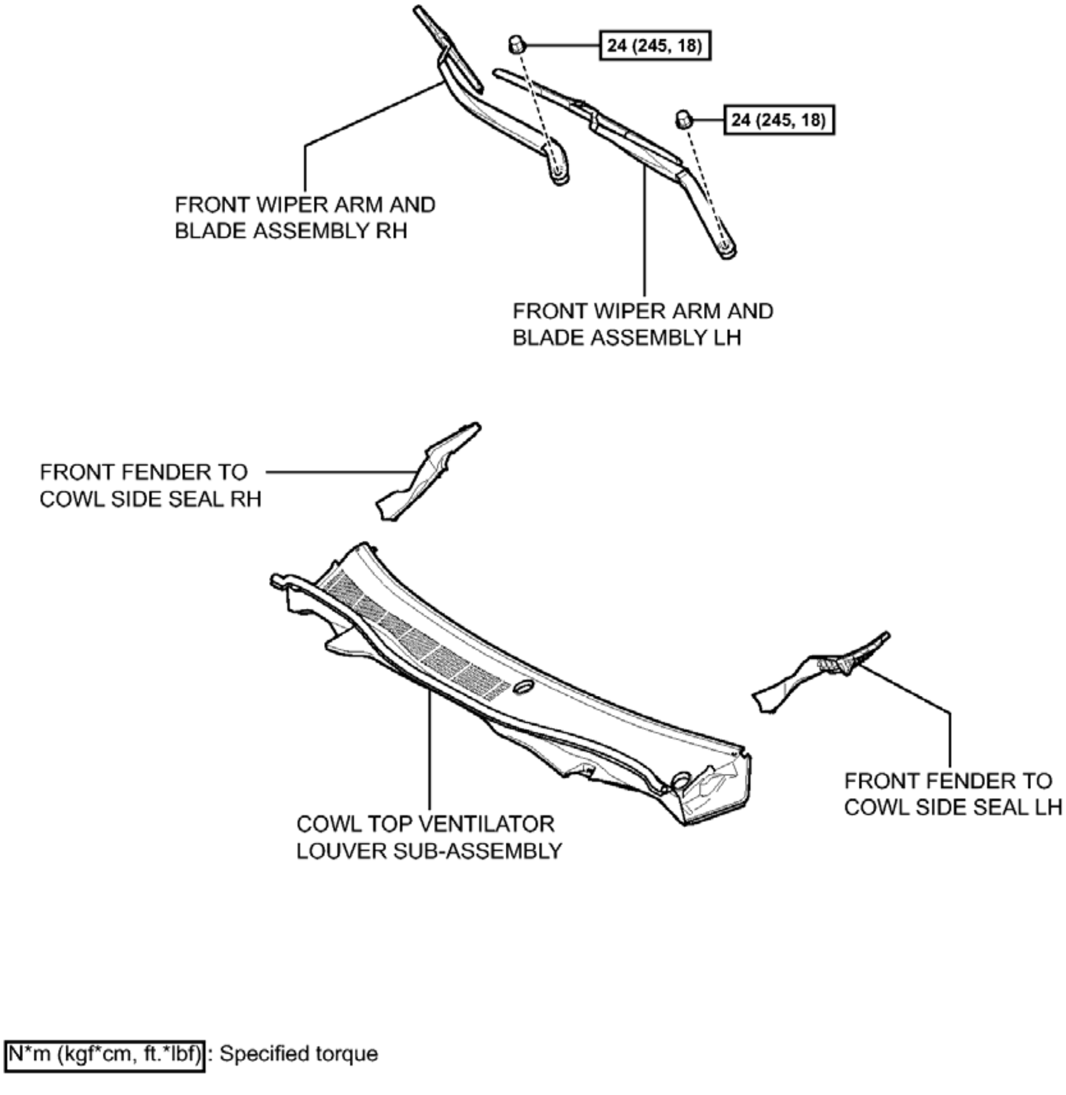
24 (245, 18)
24 (245, 18)
FRONT WIPER ARM AND BLADE ASSEMBLY RH
FRONT WIPER ARM AND BLADE ASSEMBLY LH
FRONT FENDER TO COWL SIDE SEAL RH
FRONT FENDER TO COWL SIDE SEAL LH
COWL TOP VENTILATOR LOUVER SUB-ASSEMBLY
N*m (kgf*cm, ft.*lbf): Specified torque
P

Fig. 24: Identifying Windshield Glass Replacement Components With Torque Specifications (1 Of 7)
Courtesy of TOYOTA MOTOR SALES, U.S.A., INC.

ILLUSTRATION

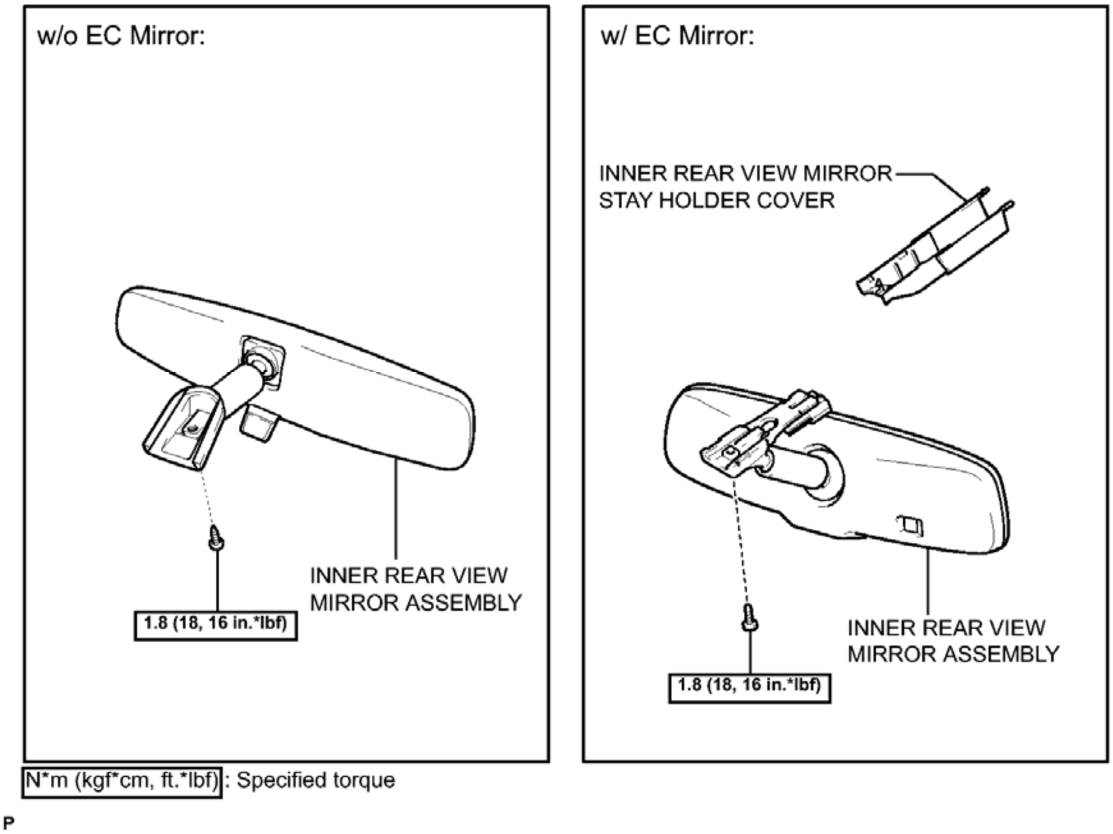
w/o EC Mirror:
INNER REAR VIEW MIRROR ASSEMBLY
1.8 (18, 16 in.*lbf)
w/ EC Mirror:
INNER REAR VIEW MIRROR STAY HOLDER COVER
INNER REAR VIEW MIRROR ASSEMBLY
1.8 (18, 16 in.*lbf)
N*m (kgf*cm, ft.*lbf): Specified torque
P

Fig. 25: Identifying Windshield Glass Replacement Components With Torque Specifications (2 Of 7)
Courtesy of TOYOTA MOTOR SALES, U.S.A., INC.

ILLUSTRATION

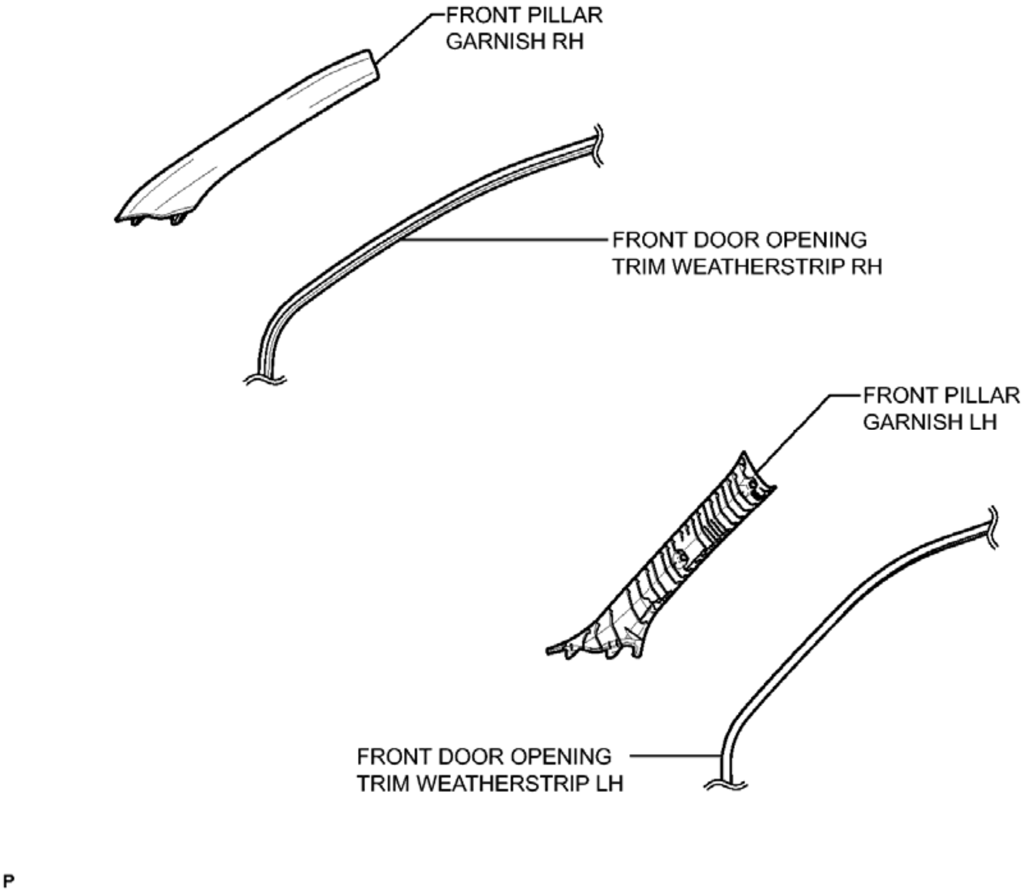
FRONT PILLAR GARNISH RH
FRONT DOOR OPENING TRIM WEATHERSTRIP RH
FRONT PILLAR GARNISH LH
FRONT DOOR OPENING TRIM WEATHERSTRIP LH
P

Fig. 26: Identifying Windshield Glass Replacement Components (3 Of 7)
Courtesy of TOYOTA MOTOR SALES, U.S.A., INC.

ILLUSTRATION

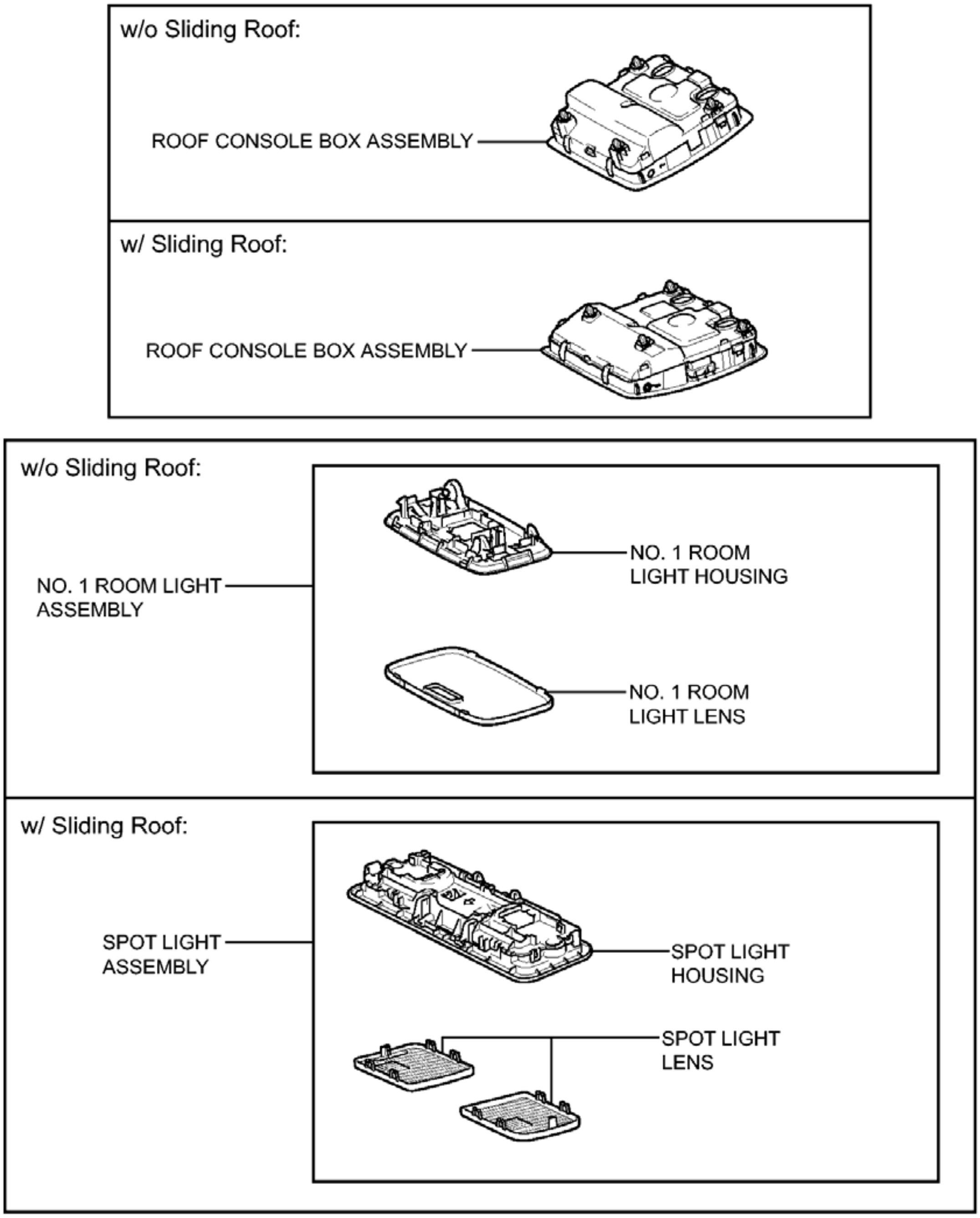
w/o Sliding Roof:
ROOF CONSOLE BOX ASSEMBLY
w/ Sliding Roof:
ROOF CONSOLE BOX ASSEMBLY
w/o Sliding Roof:
NO. 1 ROOM LIGHT ASSEMBLY
NO. 1 ROOM LIGHT HOUSING
NO. 1 ROOM LIGHT LENS
w/ Sliding Roof:
SPOT LIGHT ASSEMBLY
SPOT LIGHT HOUSING
SPOT LIGHT LENS

P

Fig. 27: Identifying Windshield Glass Replacement Components (4 Of 7)
Courtesy of TOYOTA MOTOR SALES, U.S.A., INC.

ILLUSTRATION

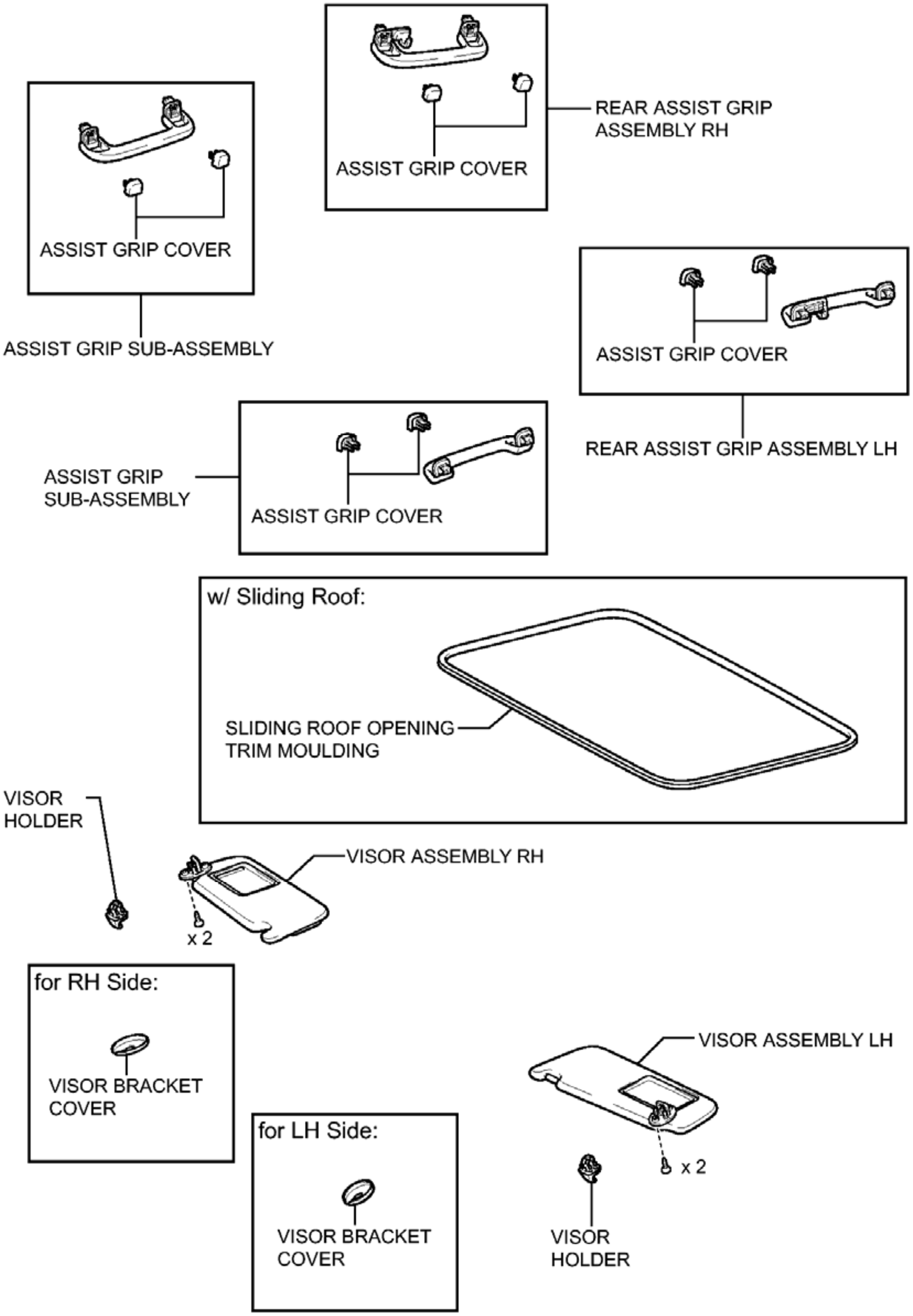
REAR ASSIST GRIP ASSEMBLY RH
ASSIST GRIP COVER
ASSIST GRIP COVER
ASSIST GRIP SUB-ASSEMBLY
ASSIST GRIP COVER
REAR ASSIST GRIP ASSEMBLY LH
ASSIST GRIP SUB-ASSEMBLY
ASSIST GRIP COVER
w/ Sliding Roof:
SLIDING ROOF OPENING TRIM MOULDING
VISOR HOLDER
VISOR ASSEMBLY RH
x 2
for RH Side:
VISOR BRACKET COVER
VISOR ASSEMBLY LH
for LH Side:
VISOR BRACKET COVER
x 2
VISOR HOLDER
P

Fig. 28: Identifying Windshield Glass Replacement Components (5 Of 7)
Courtesy of TOYOTA MOTOR SALES, U.S.A., INC.

ILLUSTRATION

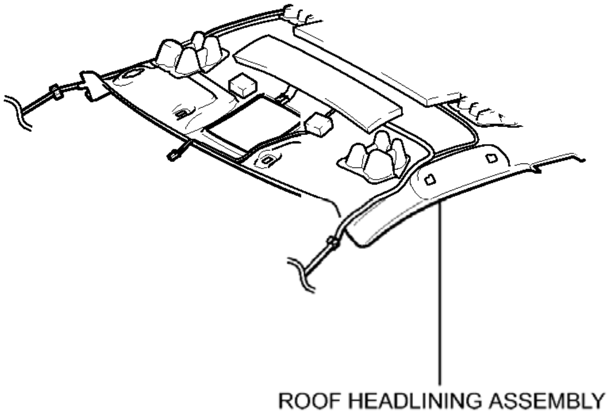
ROOF HEADLINING ASSEMBLY

P

Fig. 29: Identifying Windshield Glass Replacement Components (6 Of 7)
Courtesy of TOYOTA MOTOR SALES, U.S.A., INC.

ILLUSTRATION

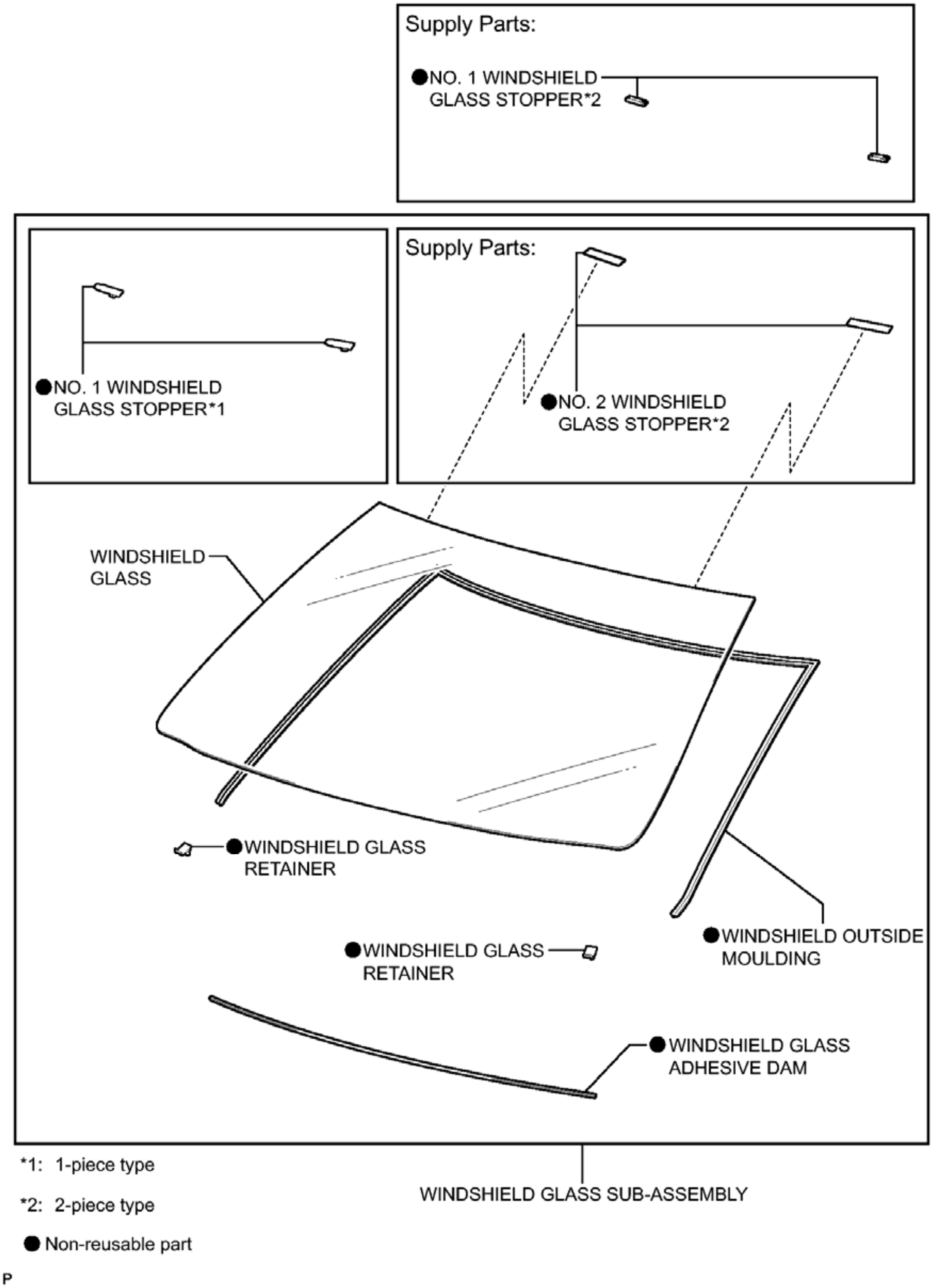
Supply Parts:
●NO. 1 WINDSHIELD GLASS STOPPER*2
●NO. 1 WINDSHIELD GLASS STOPPER*1
Supply Parts:
●NO. 2 WINDSHIELD GLASS STOPPER*2
WINDSHIELD GLASS
●WINDSHIELD GLASS RETAINER
●WINDSHIELD OUTSIDE MOULDING
●WINDSHIELD GLASS RETAINER
●WINDSHIELD GLASS ADHESIVE DAM
*1: 1-piece type
*2: 2-piece type
● Non-reusable part
WINDSHIELD GLASS SUB-ASSEMBLY
P

Fig. 30: Identifying Windshield Glass Replacement Components (7 Of 7)
Courtesy of TOYOTA MOTOR SALES, U.S.A., INC.

REMOVAL

REMOVAL

1. **REMOVE FRONT WIPER ARM AND BLADE ASSEMBLY LH** . Refer to **REMOVAL - Step 1** .
2. **REMOVE FRONT WIPER ARM AND BLADE ASSEMBLY RH** . Refer to **REMOVAL - Step 2** .
3. **REMOVE FRONT FENDER TO COWL SIDE SEAL LH** . Refer to **REMOVAL - Step 3** .
4. **REMOVE FRONT FENDER TO COWL SIDE SEAL RH**

   HINT:

   Use the same procedure as for the LH side.

5. **REMOVE COWL TOP VENTILATOR LOUVER SUB-ASSEMBLY** . Refer to **REMOVAL - Step 5** .
6. **REMOVE INNER REAR VIEW MIRROR ASSEMBLY (w/o EC Mirror)** . Refer to **REMOVAL - Step 1** .
7. **REMOVE INNER REAR VIEW MIRROR STAY HOLDER COVER (w/ EC Mirror)** . Refer to **REMOVAL - Step 2** .
8. **REMOVE INNER REAR VIEW MIRROR ASSEMBLY (w/ EC Mirror)** . Refer to **REMOVAL - Step 3** .
9. **DISCONNECT FRONT DOOR OPENING TRIM WEATHERSTRIP LH** . Refer to **REMOVAL - Step 5** .
10. **REMOVE FRONT PILLAR GARNISH LH** . Refer to **REMOVAL - Step 6** .
11. **DISCONNECT FRONT DOOR OPENING TRIM WEATHERSTRIP RH** . Refer to **REMOVAL - Step 34** .
12. **REMOVE FRONT PILLAR GARNISH RH**

    HINT:

    Use the same procedure as for the LH side.

13. **REMOVE ROOF CONSOLE BOX ASSEMBLY (w/o Sliding Roof)** . Refer to **REMOVAL - Step 1** .
14. **REMOVE ROOF CONSOLE BOX ASSEMBLY (w/ Sliding Roof)** . Refer to **REMOVAL - Step 2** .
15. **REMOVE NO. 1 ROOM LIGHT ASSEMBLY (w/o Sliding Roof)** . Refer to **REMOVAL - Step 1** .
16. **REMOVE SPOT LIGHT ASSEMBLY (w/ Sliding Roof)** . Refer to **REMOVAL - Step 2** .
17. **REMOVE ASSIST GRIP SUB-ASSEMBLY** . Refer to **REMOVAL - Step 40** .
18. **REMOVE REAR ASSIST GRIP ASSEMBLY LH** . Refer to **REMOVAL - Step 41** .
19. **REMOVE REAR ASSIST GRIP ASSEMBLY RH**

    HINT:

    Use the same procedure as for the LH side.

20. **REMOVE VISOR BRACKET COVER (for LH Side)** . Refer to **REMOVAL - Step 44** .

21. **REMOVE VISOR ASSEMBLY LH** . Refer to **REMOVAL - Step 45** .
22. **REMOVE VISOR BRACKET COVER (for RH Side)**

    HINT:

    Use the same procedure as for the LH side.

23. **REMOVE VISOR ASSEMBLY RH**

    HINT:

    Use the same procedure as for the LH side.

24. **REMOVE VISOR HOLDER** . Refer to **REMOVAL - Step 48** .
25. **REMOVE SLIDING ROOF OPENING TRIM MOULDING (w/ Sliding Roof)** . Refer to **REMOVAL - Step 43** .
26. **REMOVE ROOF HEADLINING ASSEMBLY**
    a. Slightly lower the front section of the roof headlining assembly so that the windshield glass can be removed.

       NOTE: Do not damage the roof headlining assembly or body interior.

       HINT:

       It is not necessary to completely remove the roof headlining assembly.

27. **REMOVE WINDSHIELD GLASS SUB-ASSEMBLY**
    a. w/ Front Window Deicer System:
        1. Disengage each clamp and disconnect the connector.
    b. Apply protective tape to the area around the installation position of the windshield glass on the vehicle body to prevent it from being scratched.

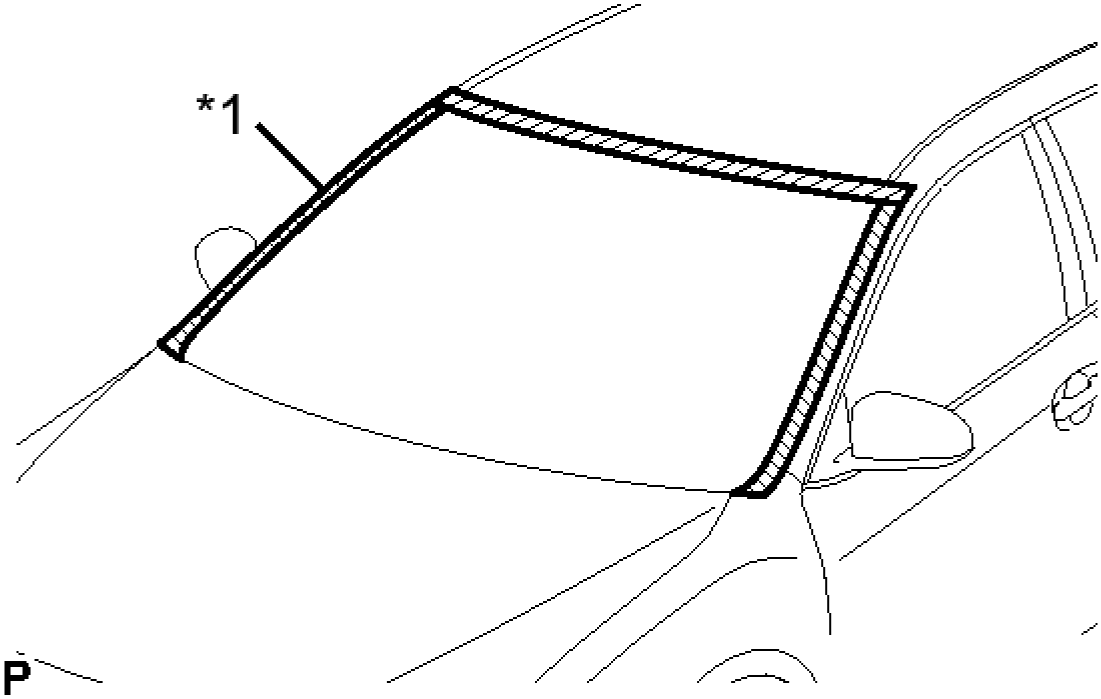

Fig. 31: Identifying Protective Tape Around Windshield Glass Sub-Assembly
Courtesy of TOYOTA MOTOR SALES, U.S.A., INC.

TEXT IN ILLUSTRATION

*1	Protective Tape

c. Pass a piano wire between the vehicle body and glass from the interior as shown in the illustration.

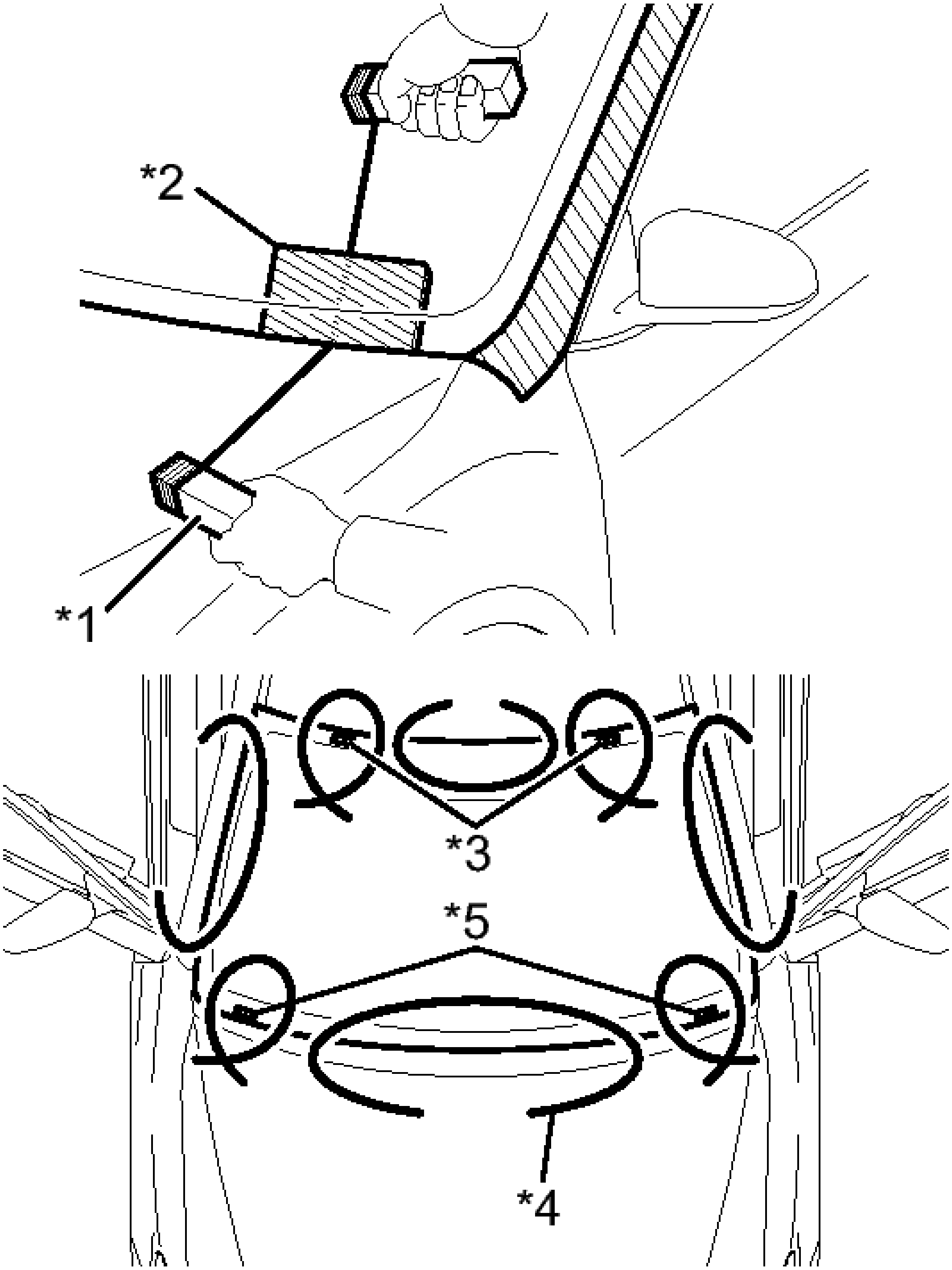

P

Fig. 32: Removing Windshield Glass Sub-Assembly
Courtesy of TOYOTA MOTOR SALES, U.S.A., INC.

TEXT IN ILLUSTRATION

	Wooden

*1	Block
*2	Plastic Sheet
*3	Stopper
*4	Piano Wire
*5	Windshield Glass Retainer

d. Tie both wire ends to wooden blocks or similar objects that can serve as handles.

e. Cut off the adhesive by pulling the piano wire around the windshield glass sub-assembly.

NOTE:

- **When separating the windshield glass sub-assembly, be careful not to damage the paint or interior and exterior ornaments.**
- **To prevent the safety pad from being scratched when removing the windshield glass, place a plastic sheet between the piano wire and safety pad.**

f. Place matchmarks on the windshield glass sub-assembly and vehicle body on the locations indicated in the illustration.

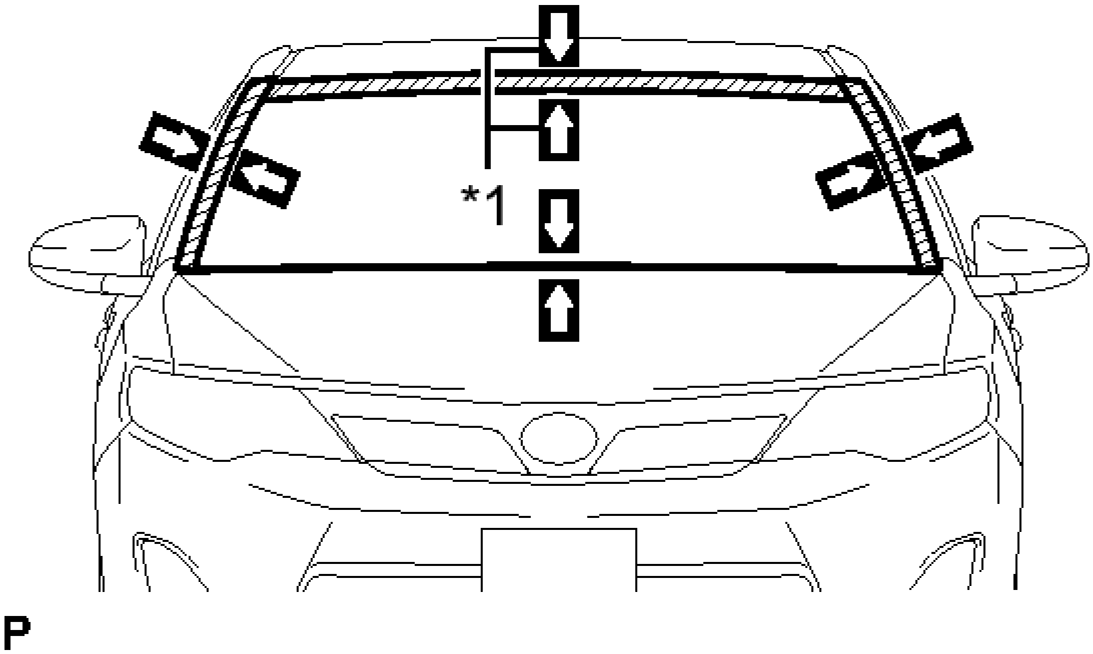

Fig. 33: Identifying Matchmarks On Windshield Glass Sub-Assembly
Courtesy of TOYOTA MOTOR SALES, U.S.A., INC.

TEXT IN ILLUSTRATION

*1	Matchmark

HINT:

Matchmarks are not necessary if the windshield glass sub-assembly is not going to be reused.

g. Disconnect the windshield glass stoppers.

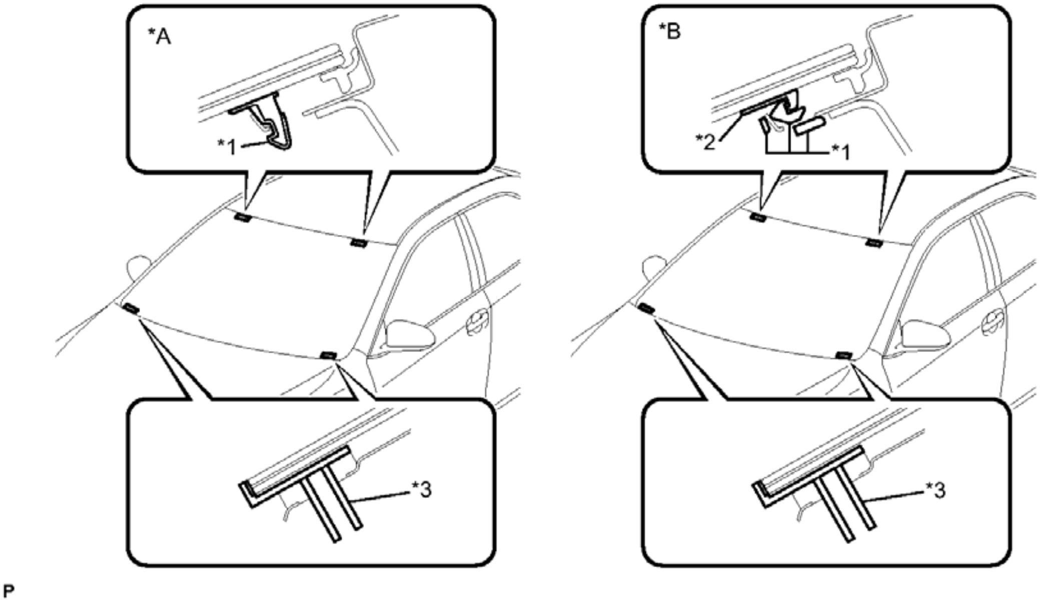

Fig. 34: Locating Windshield Glass Stoppers
Courtesy of TOYOTA MOTOR SALES, U.S.A., INC.

TEXT IN ILLUSTRATION

*A	1-piece Type	*B	2-pieceType
*1	No. 1 Windshield Glass Stopper	*2	No. 2 Windshield Glass Stopper
*3	Windshield Glass Retainer	-	-

NOTE:

- **There are No. 1 and No. 2 stoppers on the windshield glass as shown in the illustration. Be careful not to damage the windshield glass when cutting off the adhesive.**
- **To prevent the windshield glass from falling when performing this operation, be sure to hold the windshield glass using suction cups.**

HINT:

Depending on the vehicle, either 1-piece or 2-piece type stoppers may be present.

h. Using suction cups, remove the windshield glass sub-assembly.

NOTE:

- **Be careful not to drop the windshield glass sub-assembly.**
- **Leave as much adhesive on the vehicle body as possible when removing the windshield glass sub-assembly.**

28. **REMOVE WINDSHIELD GLASS ADHESIVE DAM**
    a. When reusing the windshield glass:
        1. Using a scraper, remove the windshield glass adhesive dam.

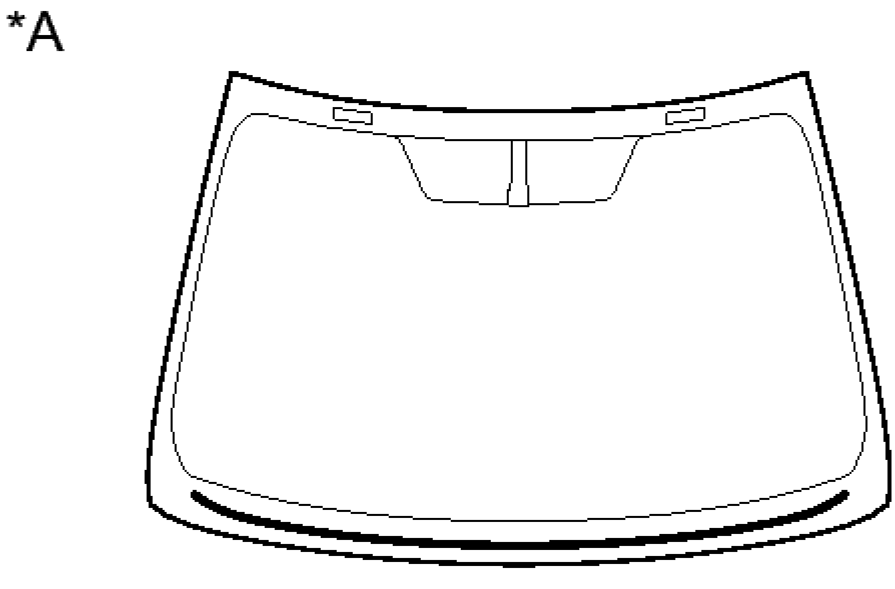

Fig. 35: Identifying Windshield Glass Adhesive Dam
Courtesy of TOYOTA MOTOR SALES, U.S.A., INC.

TEXT IN ILLUSTRATION

*A	Back Side

NOTE:

- **Be careful not to damage the windshield glass.**
- **Be sure to replace the window glass adhesive dam with a new one.**

29. **REMOVE WINDSHIELD OUTSIDE MOULDING**

a. When reusing the windshield glass:

1. Using a scraper, remove the windshield outside moulding.

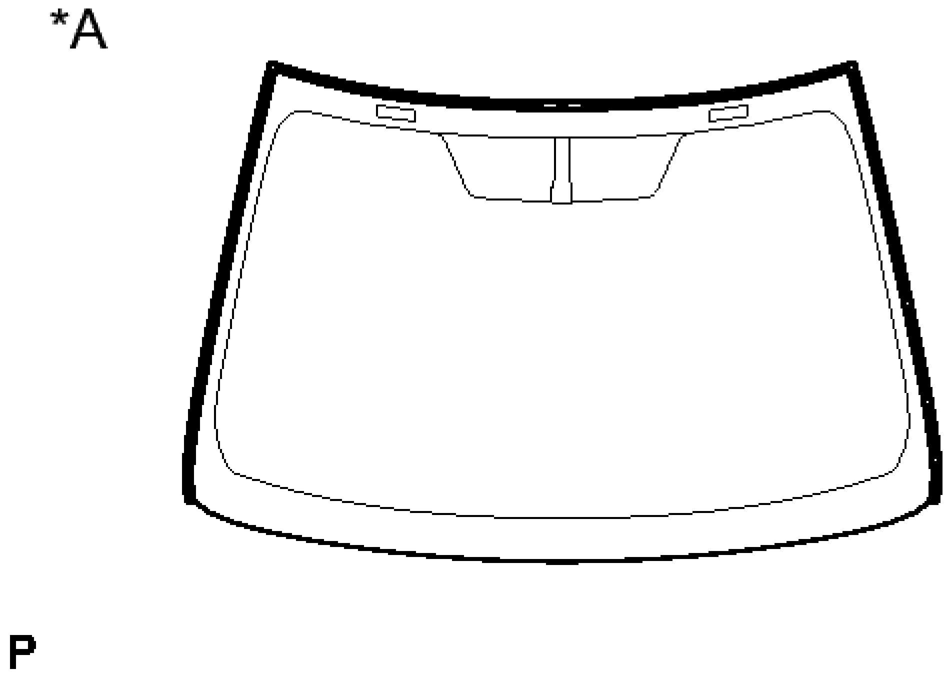

Fig. 36: Identifying Windshield Outside Moulding
Courtesy of TOYOTA MOTOR SALES, U.S.A., INC.

TEXT IN ILLUSTRATION

*A	Back Side

NOTE:

- **Be careful not to damage the windshield glass.**
- **Be sure to replace the windshield outside moulding with a new one.**

30. **REMOVE NO. 1 WINDSHIELD GLASS STOPPER (for 1-piece Type)**

a. When reusing the windshield glass:

1. Using a scraper, remove the 2 No. 1 windshield glass stoppers.

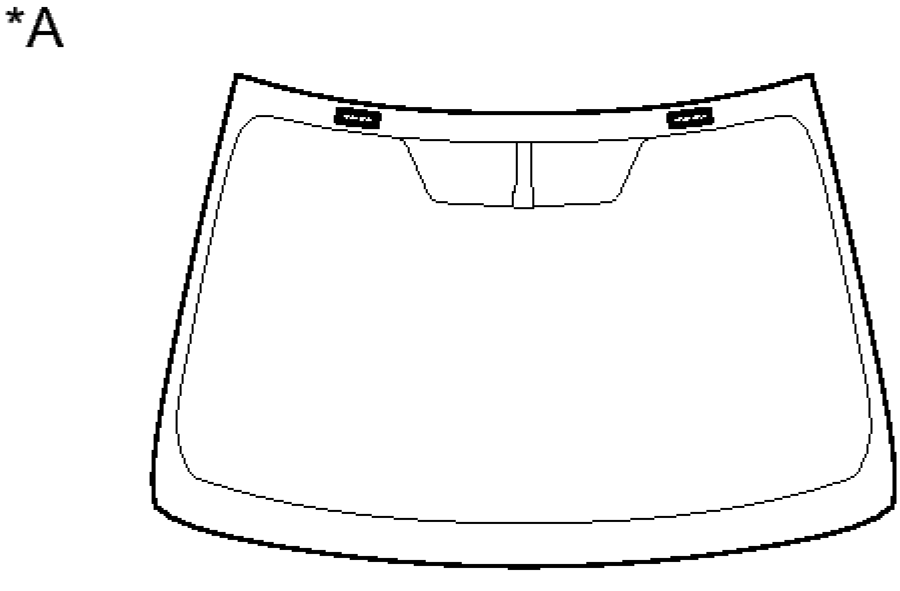

Fig. 37: Identifying No. 1 Windshield Glass Stopper (For 1-Piece Type)
Courtesy of TOYOTA MOTOR SALES, U.S.A., INC.

TEXT IN ILLUSTRATION

*A	Back Side

NOTE:

- **Be careful not to damage the windshield glass.**
- **Be sure to replace the 1-piece type No. 1 windshield glass stoppers with a new pair of 2-piece type No. 1 and No. 2 windshield glass stoppers.**

31. **REMOVE NO. 2 WINDSHIELD GLASS STOPPER (for 2-piece Type)**
    a. When reusing the windshield glass:
        1. Using a scraper, remove the 2 No. 2 windshield glass stoppers.

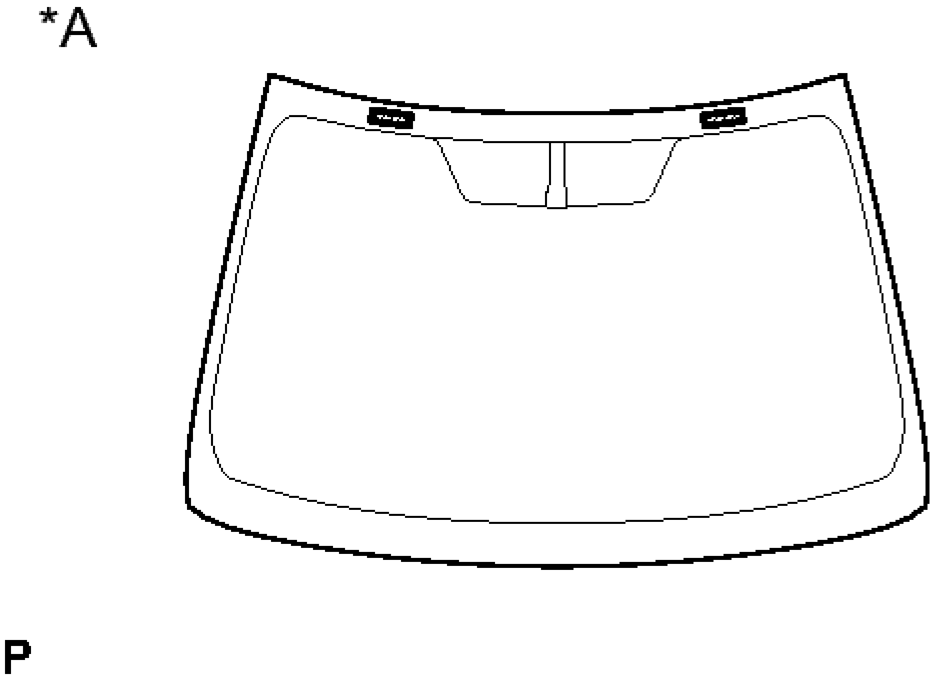

Fig. 38: Identifying No. 2 Windshield Glass Stopper (For 2-Piece Type)
Courtesy of TOYOTA MOTOR SALES, U.S.A., INC.

TEXT IN ILLUSTRATION

*A	Back Side

NOTE:

- **Be careful not to damage the windshield glass.**
- **Be sure to replace the No. 2 windshield glass stoppers with new ones.**

32. **REMOVE WINDSHIELD GLASS RETAINER**
    a. When reusing the windshield glass:
        1. Remove the 2 windshield glass retainers.

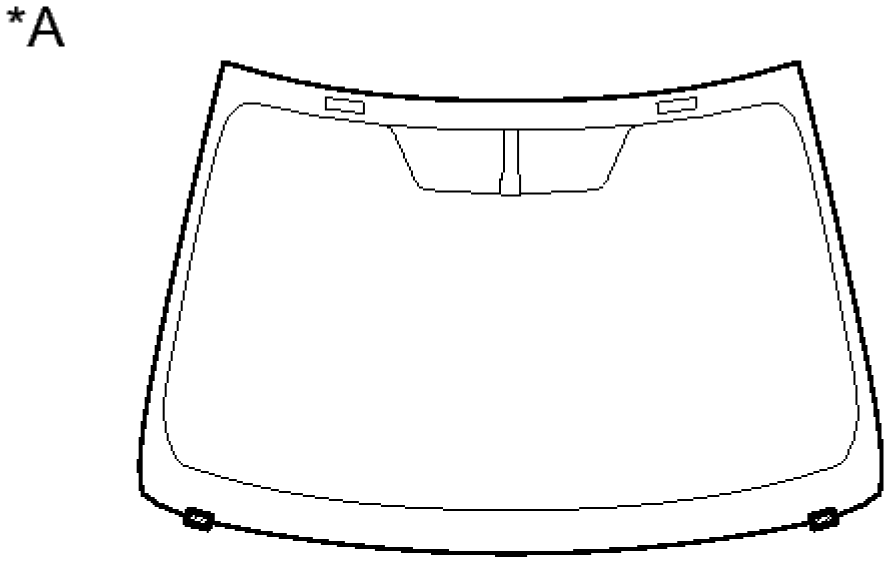

Fig. 39: Identifying Windshield Glass Retainer
Courtesy of TOYOTA MOTOR SALES, U.S.A., INC.

TEXT IN ILLUSTRATION

*A	Back Side

NOTE:

- **Be careful not to damage the windshield glass.**
- **Be sure to replace the windshield glass retainers with new ones.**

33. **REMOVE NO. 1 WINDSHIELD GLASS STOPPER (for 2-piece Type)**
    a. Remove the 2 No. 1 windshield glass stoppers.

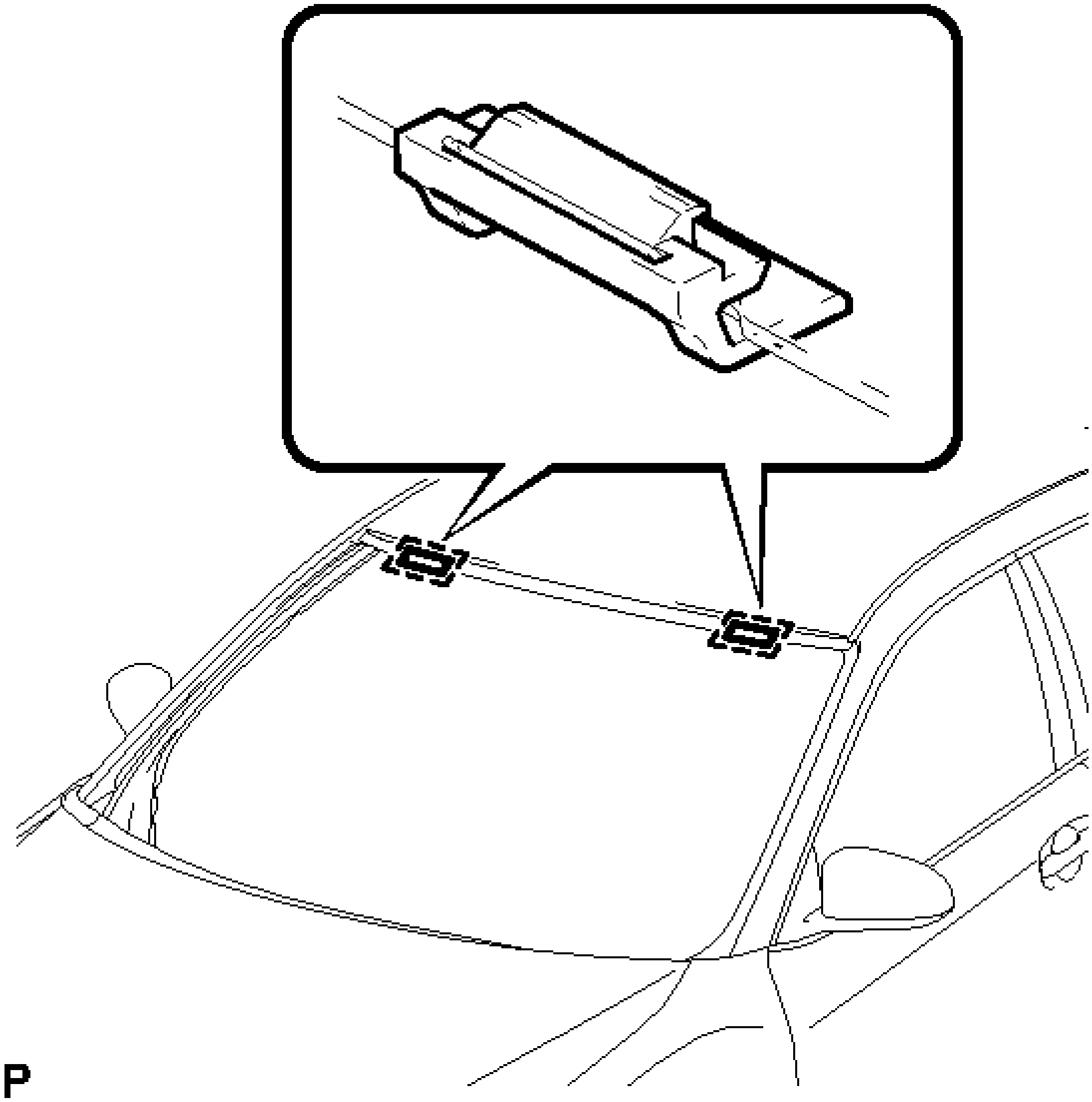

Fig. 40: Identifying No. 1 Windshield Glass Stopper (For 2-Piece Type)
Courtesy of TOYOTA MOTOR SALES, U.S.A., INC.

NOTE: **Be sure to replace the No. 1 windshield glass stoppers with new ones.**

34. **CLEAN WINDSHIELD GLASS**
    a. When reusing the windshield glass:
        1. Using a scraper, remove any adhesive dam and adhesive residue from the windshield glass.

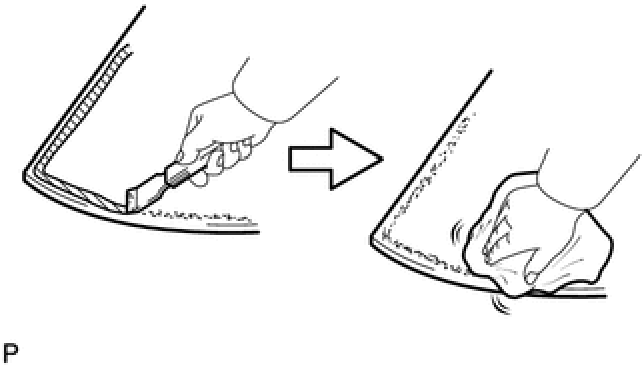

Fig. 41: Cleaning Windshield Glass
Courtesy of TOYOTA MOTOR SALES, U.S.A., INC.

NOTE: **Be careful not to damage the windshield glass.**

2. Clean the outer circumference of the windshield glass with a non-residue solvent.

NOTE:

- **Do not touch the windshield glass surface after cleaning it.**
- **Even if using a new windshield glass, clean the windshield glass with a non-residue solvent.**

35. **CLEAN VEHICLE BODY**
    a. Clean and shape the contact surfaces of the vehicle body.

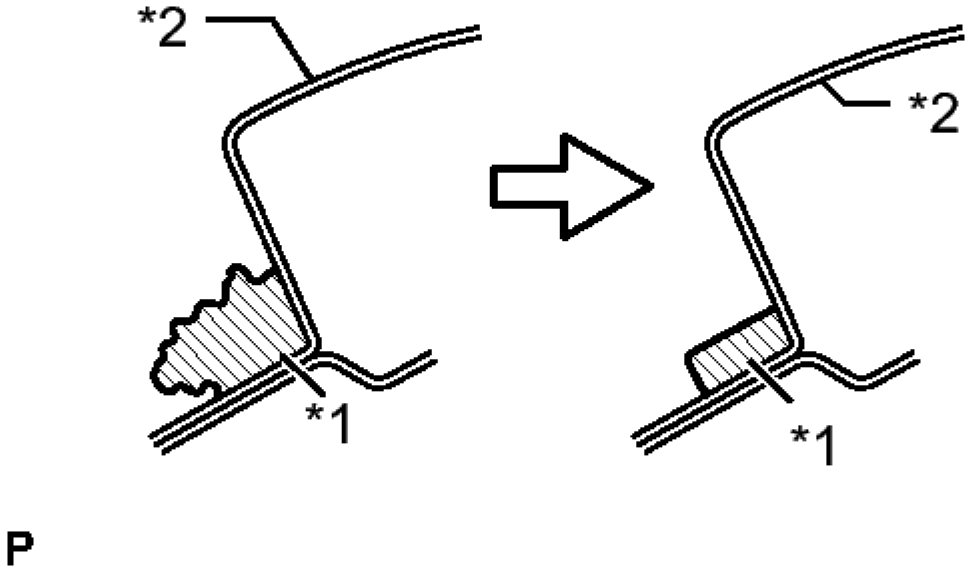

Fig. 42: Identifying Contact Surfaces Of Vehicle Body
Courtesy of TOYOTA MOTOR SALES, U.S.A., INC.

TEXT IN ILLUSTRATION

*1	Adhesive
*2	Body

1. Using a knife, cut away excess adhesive on the contact surfaces of the vehicle body as shown in the illustration.

   NOTE: **Be careful not to damage the vehicle body.**

   HINT:

   Leave as much adhesive on the vehicle body as possible.

2. Clean the contact surfaces of the vehicle body with a piece of cloth saturated with cleaner.

   HINT:

   Even if all the adhesive has been removed, clean the vehicle body.

INSTALLATION

INSTALLATION

1. **INSTALL NO. 2 WINDSHIELD GLASS STOPPER (for 2-piece Type)**
   a. Using a brush or sponge, coat the application area of 2 new No. 2 windshield glass stoppers with Primer G.

   NOTE:
   - **Do not apply too much primer.**
   - **Allow the primer to dry for 3 minutes or more.**
   - **Throw away any leftover primer.**

   HINT:

   If an area other than specified is coated by accident, wipe off the primer with a clean piece of cloth before it dries.

   b. Install the 2 new No. 2 windshield glass stoppers onto the windshield glass, as shown in the illustration.

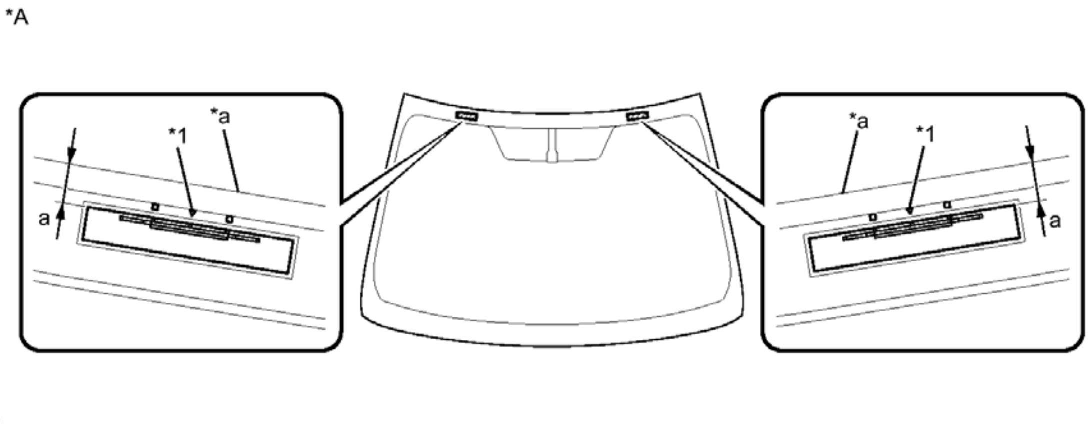

Fig. 43: Locating No. 2 Windshield Glass Stoppers
Courtesy of TOYOTA MOTOR SALES, U.S.A., INC.

TEXT IN ILLUSTRATION

*A	Back Side	-	-
*1	Ceramic Notch	-	-
*a	Windshield Glass Edge Side	-	-

Standard Dimension

Area	Dimension
a	13.7 to 14.7 mm (0.539 to 0.578 in.)

NOTE: **Only 2-piece type windshield glass stoppers are provided as supply parts. Use the 2-piece type stoppers as replacements even if 1-piece type stoppers were originally installed.**

2. **INSTALL NO. 1 WINDSHIELD GLASS STOPPER (for 2-piece Type)**
    a. Install 2 new No. 1 windshield glass stoppers to the vehicle body as shown in the illustration.

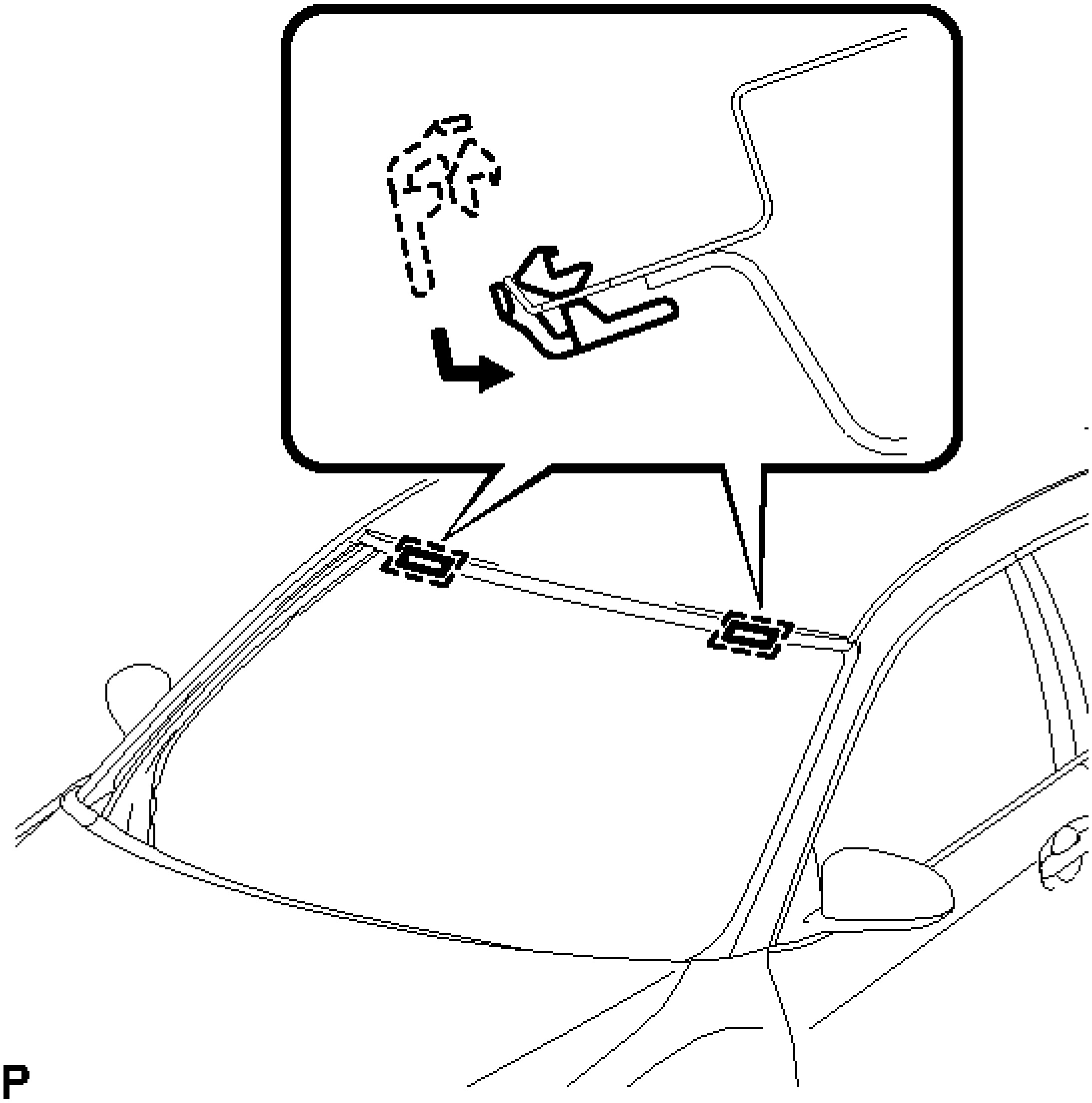

Fig. 44: Identifying No. 1 Windshield Glass Stopper (For 2-Piece Type)
Courtesy of TOYOTA MOTOR SALES, U.S.A., INC.

NOTE: **Only 2-piece type windshield glass stoppers are provided as supply parts. Use 2-piece type stoppers as replacements even if 1-piece type stoppers were originally installed.**

3. **INSTALL WINDSHIELD GLASS RETAINER**
   a. Using a brush or sponge, coat the application area of a new windshield outside moulding with Primer G.

NOTE:

- **Do not apply too much primer.**
- **Allow the primer to dry for 3 minutes or more.**
- **Throw away any leftover primer.**

HINT:

If an area other than specified is coated by accident, wipe off the primer with a clean piece of cloth before it dries.

b. Install the 2 windshield glass retainers onto the windshield glass as shown in the illustration.

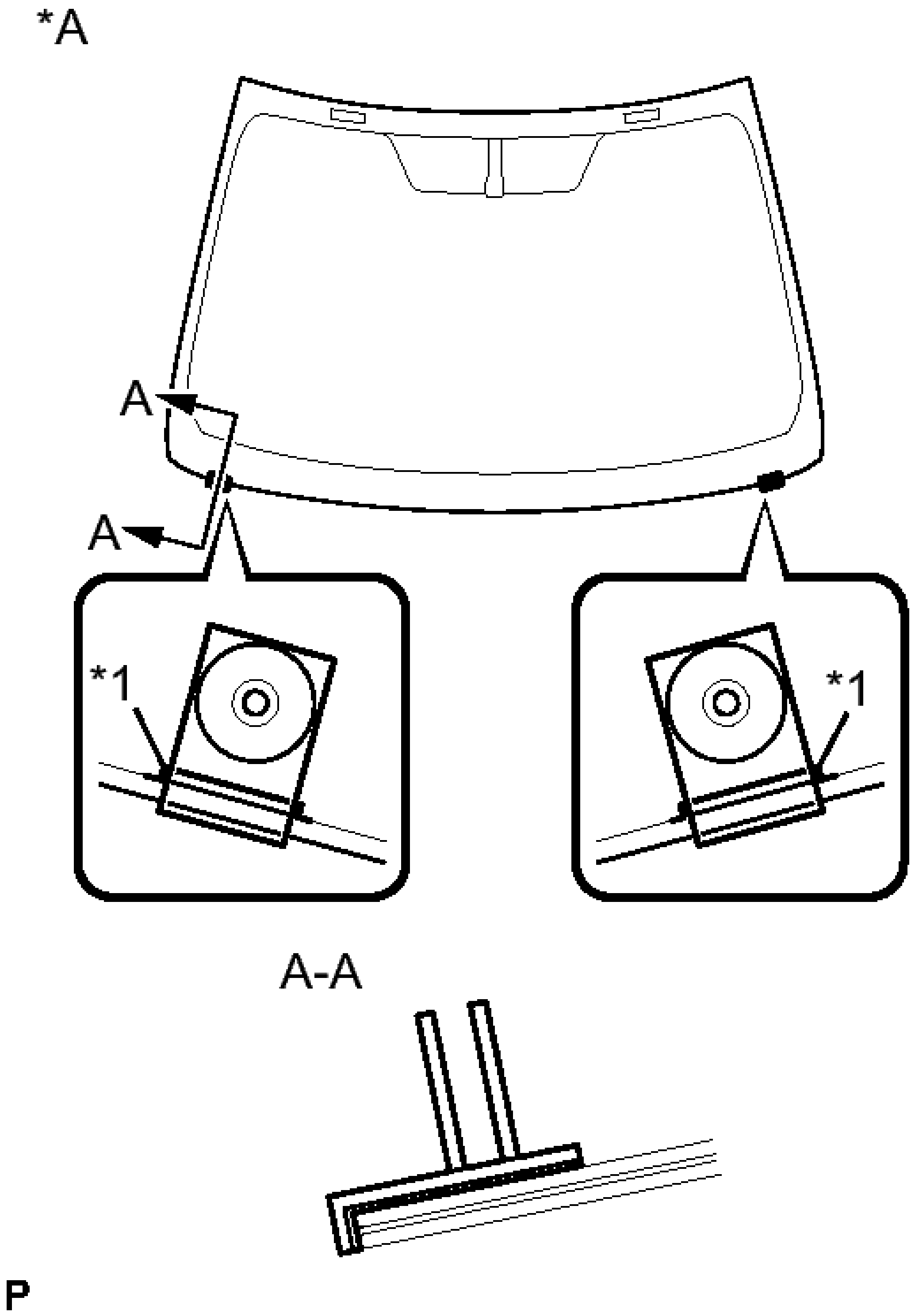

Fig. 45: Locating Windshield Glass Retainers
Courtesy of TOYOTA MOTOR SALES, U.S.A., INC.

TEXT IN ILLUSTRATION

	Back

*A	Side
*1	Ceramic Notch

4. **INSTALL WINDSHIELD OUTSIDE MOULDING**
   1. Using a brush or sponge, coat the application area of a new windshield outside moulding with Primer G.

      NOTE:

      - **Do not apply too much primer.**
      - **Allow the primer to dry for 3 minutes or more.**
      - **Throw away any leftover primer.**

      HINT:

      If an area other than specified is coated by accident, wipe off the primer with a clean piece of cloth before it dries.

   2. Install the windshield outside moulding onto the windshield glass as shown in the illustration.

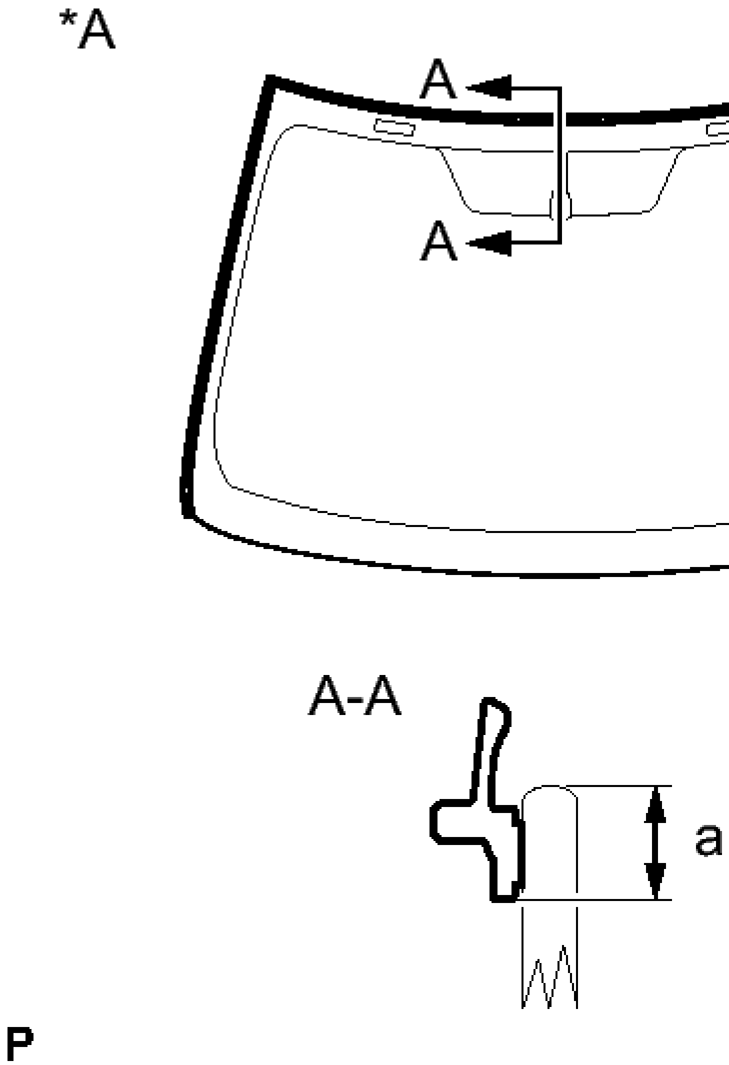

Fig. 46: Identifying Windshield Outside Moulding
Courtesy of TOYOTA MOTOR SALES, U.S.A., INC.

TEXT IN ILLUSTRATION

*A	Back Side

Standard Dimension

Area	Dimension
a	6.9 mm (0.272 in.)

5. **INSTALL WINDSHIELD GLASS ADHESIVE DAM**
    a. Using a brush or sponge, coat the application area of a new windshield glass adhesive dam with

Primer G.

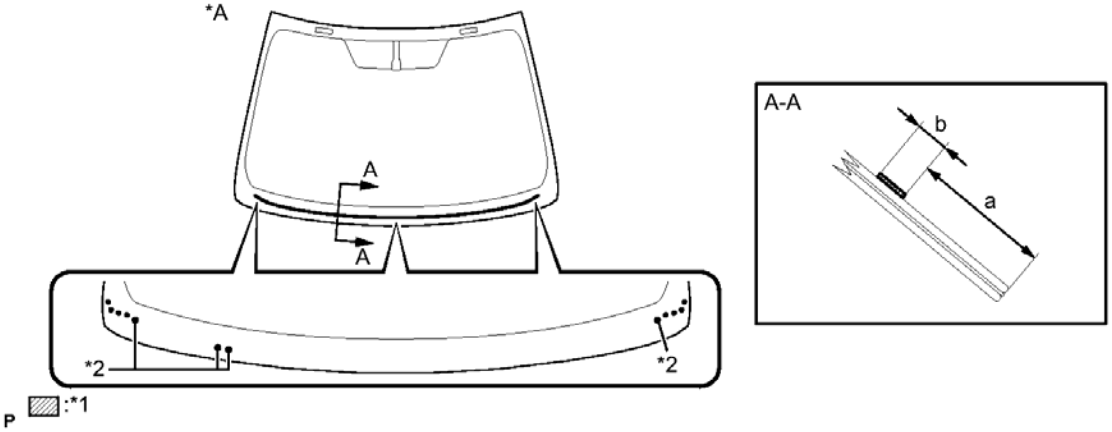

Fig. 47: Identifying Windshield Glass Adhesive Dam Dimensions
Courtesy of TOYOTA MOTOR SALES, U.S.A., INC.

TEXT IN ILLUSTRATION

*A	Back Side	-	-
*1	Primer G	*2	Ceramic Notch

Standard Dimension

Area	Dimension
a	32.5 mm (1.28 in.)
b	10.0 mm (0.394 in.)

NOTE:

- **Do not apply too much primer.**
- **Allow the primer to dry for 3 minutes or more.**
- **Throw away any leftover primer.**

HINT:

If an area other than specified is coated by accident, wipe off the primer with a clean piece of cloth before it dries.

b. Install the windshield glass adhesive dam onto the windshield glass as shown in the illustration.

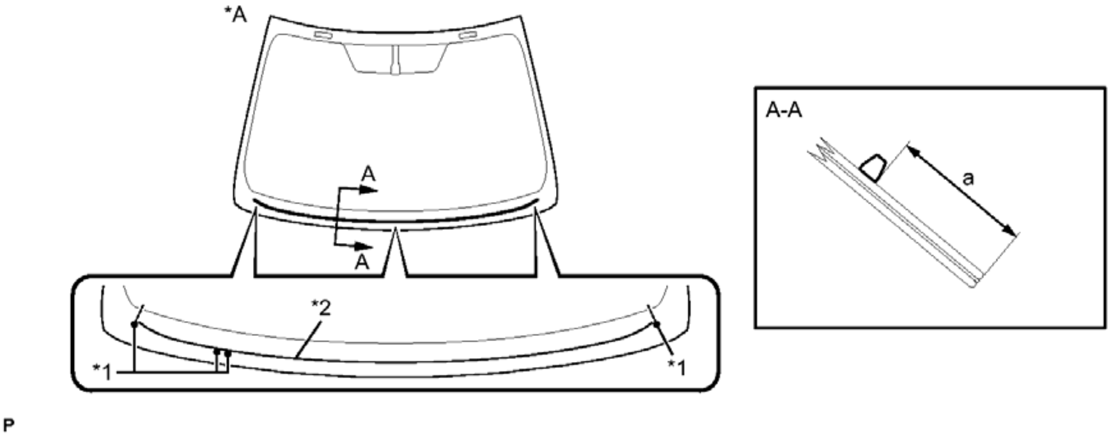

Fig. 48: Identifying Windshield Glass Adhesive Dam Dimensions
Courtesy of TOYOTA MOTOR SALES, U.S.A., INC.

TEXT IN ILLUSTRATION

*A	Back Side	-	-
*1	Ceramic Notch	*2	Windshield Glass Adhesive Dam

Standard Dimension

Area	Dimension
a	35.0 mm (1.38 in.)

6. **INSTALL WINDSHIELD GLASS SUB-ASSEMBLY**
    a. Position the windshield glass sub-assembly.

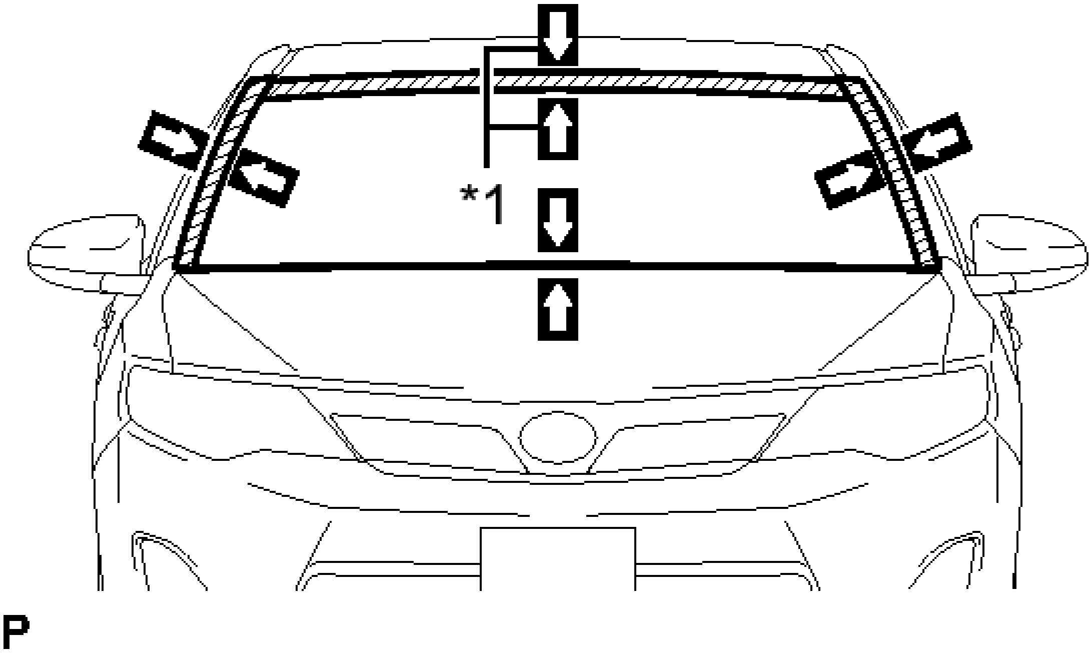

Fig. 49: Identifying Matchmarks On Windshield Glass Sub-Assembly
Courtesy of TOYOTA MOTOR SALES, U.S.A., INC.

TEXT IN ILLUSTRATION

*1	Matchmark

1. Using suction cups, place the windshield glass sub-assembly in the correct position.
2. Check that the whole contact surface of the windshield glass sub-assembly rim is perfectly even.
3. Align the matchmarks on the windshield glass sub-assembly and vehicle body.

   NOTE: **Check that the windshield glass stoppers are attached to the vehicle body correctly.**

4. Remove the windshield glass sub-assembly.

b. Using a brush, coat the installation surface on the vehicle body with Primer M.

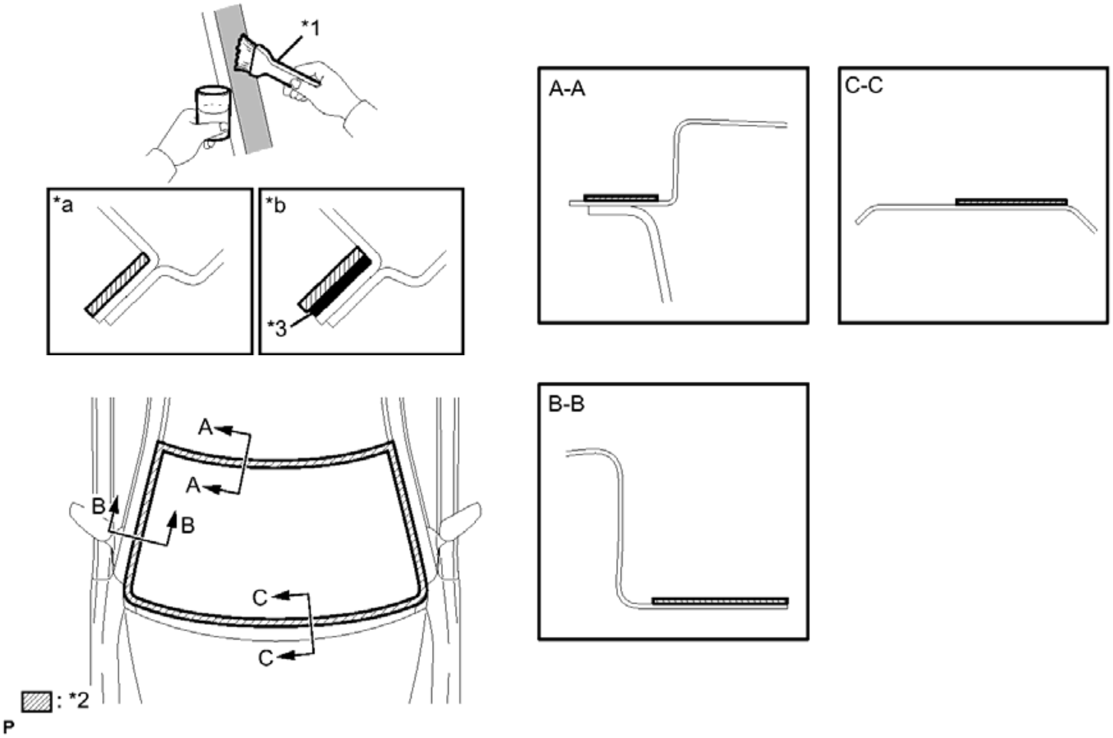

Fig. 50: Coating Windshield Glass Sub-Assembly
Courtesy of TOYOTA MOTOR SALES, U.S.A., INC.

TEXT IN ILLUSTRATION

*1	Brush	*2	Primer M
*3	Adhesive	-	-
*a	CORRECT	*b	INCORRECT

NOTE:

- **Do not coat the adhesive with Primer M.**
- **Do not apply too much primer.**
- **Allow the primer to dry for 3 minutes or more.**
- **Throw away any leftover primer.**

HINT:

If an area other than specified is coated by accident, wipe off the primer with a clean piece of cloth before it dries.

c. Using a brush or sponge, coat the application area of adhesive with Primer G.

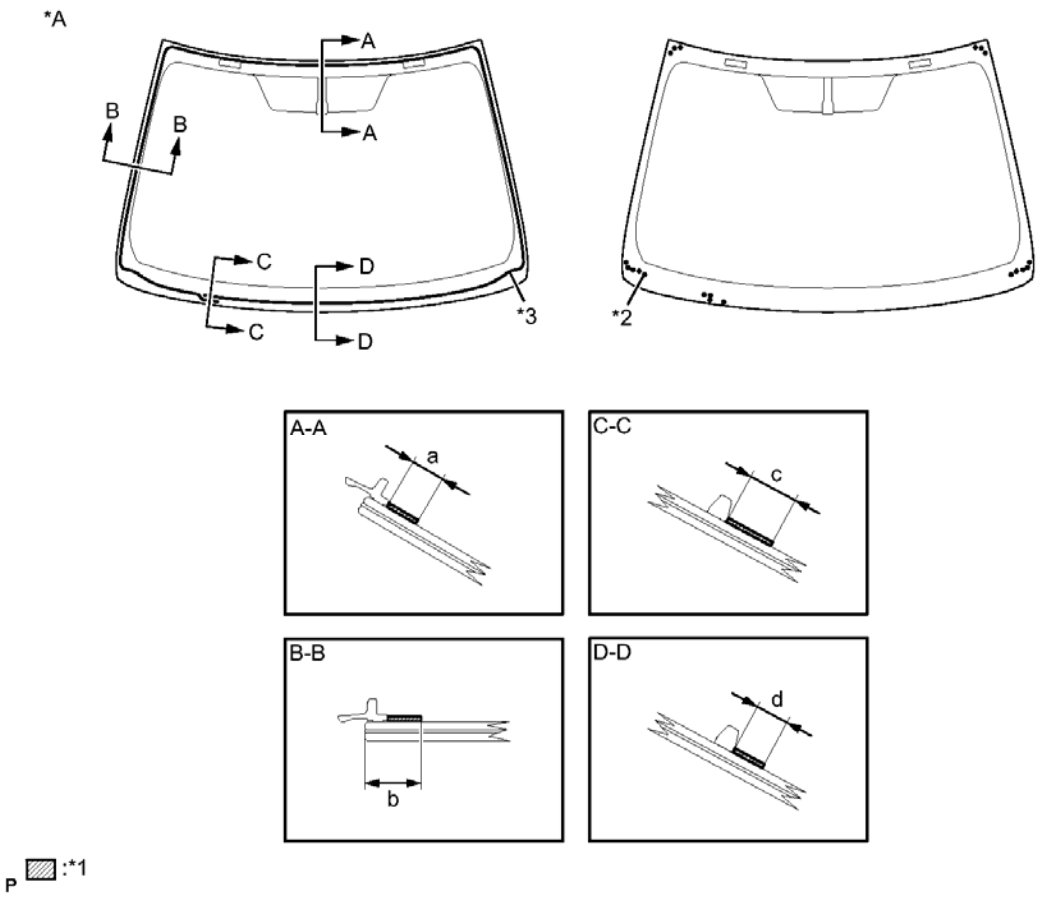
*A
A
A
B
B
C
C
D
D
*3
*2
A-A
a
C-C
c
B-B
b
D-D
d
P
▨ :*1

Fig. 51: Identifying Windshield Glass Adhesive Dimensions
Courtesy of TOYOTA MOTOR SALES, U.S.A., INC.

TEXT IN ILLUSTRATION

*A	Back Side	-	-
*1	Primer G	*2	Ceramic Notch
*3	Adhesive Center	-	-

Standard Dimension

Area	Dimension
a	9.6 mm (0.378 in.) or more
b	16.5 mm (0.650 in.) or more

c	18.5 mm (0.728 in.) or more
d	11.0 mm (0.433 in.) or more

NOTE:

- **Do not apply too much primer.**
- **Allow the primer to dry for 3 minutes or more.**
- **Throw away any leftover primer.**

HINT:

- Apply Primer G onto the ceramic notches.
- If an area other than specified is coated by accident, wipe off the primer with a clean piece of cloth before it dries.

d. Apply adhesive to the glass.

Adhesive

Toyota Genuine Windshield Glass Adhesive or equivalent

1. Cut off the tip of the cartridge nozzle as shown in the illustration.

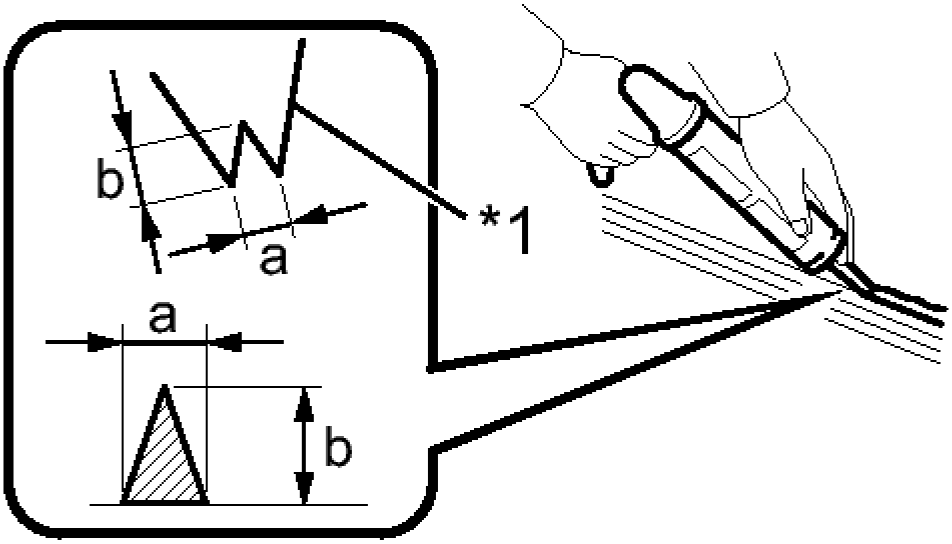

P

Fig. 52: Applying Adhesive To Glass

Courtesy of TOYOTA MOTOR SALES, U.S.A., INC.

TEXT IN ILLUSTRATION

*1	Nozzle

Standard Dimension

Area	Dimension
a	8.0 mm (0.315 in.) or more
b	12.0 mm (0.472 in.) or more

HINT:

After cutting off the tip, use all adhesive within the time described in the table below.

Usage Time Frame

Temperature	Usage Time Frame
35°C (95°F)	15 minutes
20°C (68°F)	1 hour and 40 minutes
5°C (41°F)	8 hours

2. Load the sealer gun with the cartridge.
3. Apply adhesive to the windshield glass sub-assembly as shown in the illustration.

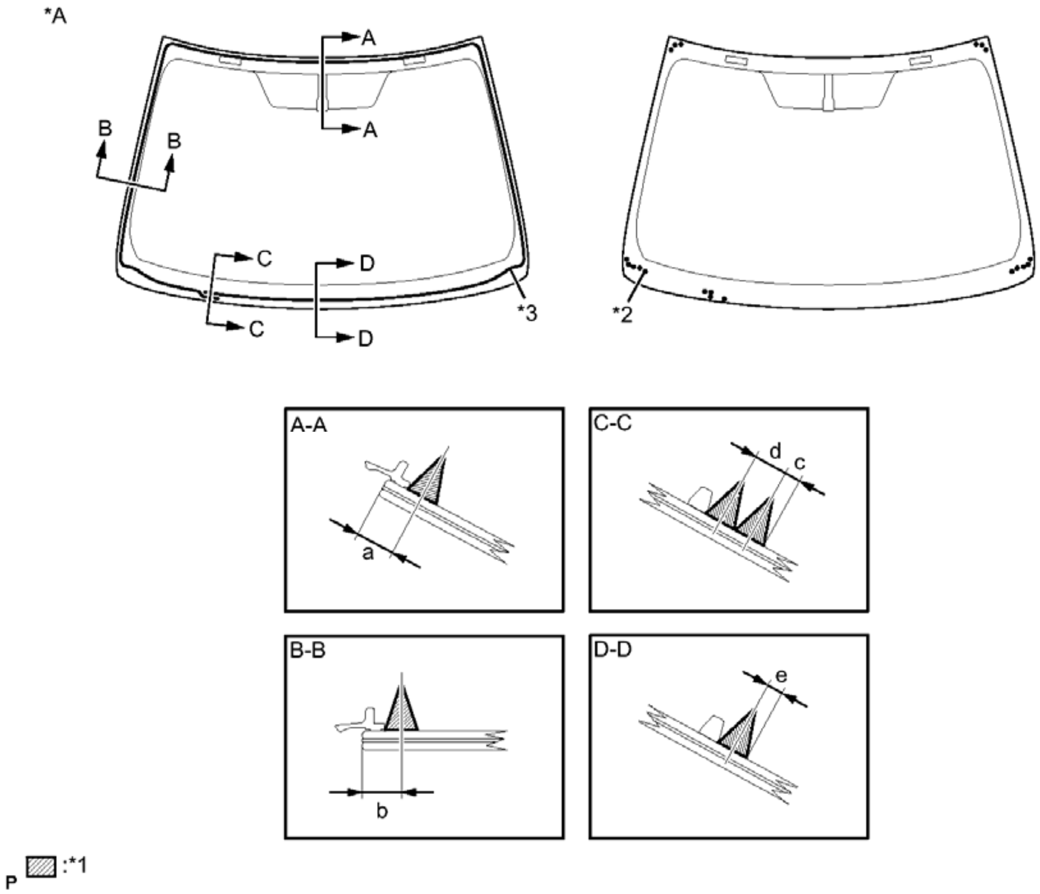
*A
A
A
B
B
C
C
D
D
*3
*2
A-A
a
C-C
d
c
B-B
b
D-D
e
P
▨ :*1

Fig. 53: Identifying Windshield Glass Adhesive Dimensions
Courtesy of TOYOTA MOTOR SALES, U.S.A., INC.

TEXT IN ILLUSTRATION

*A	Back Side	-	-
*1	Adhesive	*2	Ceramic Notch
*3	Adhesive Center	-	-

Standard Dimension

Area	Dimension
a	9.5 mm (0.374 in.)
b	9.5 mm (0.374 in.)
c	4.0 mm (0.157 in.)

d	8.0 mm (0.315 in.)
e	4.0 mm (0.157 in.)

HINT:

Apply adhesive onto the ceramic notches.

e. Install the windshield glass sub-assembly.

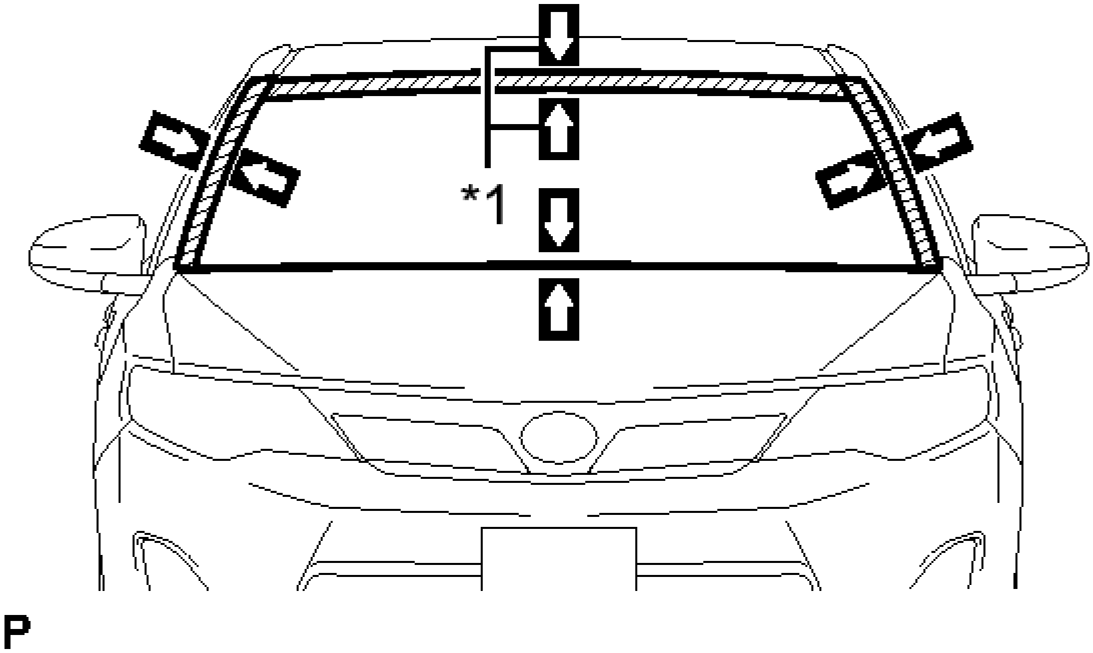

Fig. 54: Identifying Matchmarks On Windshield Glass Sub-Assembly
Courtesy of TOYOTA MOTOR SALES, U.S.A., INC.

TEXT IN ILLUSTRATION

*1	Matchmark

1. Using suction cups, position the windshield glass so that the matchmarks are aligned, and press it in gently along the rim.

   NOTE:

   - **Check that the windshield glass stoppers are attached to the vehicle body correctly.**
   - **Check the clearance between the vehicle body and windshield glass sub-assembly.**

2. Lightly press the front surface of the windshield glass sub-assembly to ensure that the

windshield glass is securely fit to the vehicle body.

HINT:

Press the glass with a force of 98 N (10 kgf, 22.0 lbf) or more.

3. Using a scraper, remove any excess or protruding adhesive.
4. Hold the windshield glass using protective tape until the applied adhesive becomes hard.

NOTE: **Do not drive the vehicle for the time described in the table below.**

Minimum Time

Temperature	Minimum Time prior to Driving Vehicle
35°C (95°F)	1 hour and 30 minutes
20°C (68°F)	5 hours
5°C (41°F)	24 hours

f. w/ Front Window Deicer System:
   1. Engage the 3 clamps.
   2. Connect the connector.

7. **INSPECT FOR LEAK AND REPAIR**
   a. After the adhesive has hardened, apply water from the outside of the vehicle. Check that no water leaks into the cabin.
   b. If water leaks into the cabin, allow the water to dry and add adhesive.
   c. Remove the protective tape.
8. **INSTALL ROOF HEADLINING ASSEMBLY**
   a. Return the front section of the roof headlining assembly to the original position.
9. **INSTALL SLIDING ROOF OPENING TRIM MOULDING (w/ Sliding Roof)** . Refer to **INSTALLATION - Step 8** .
10. **INSTALL VISOR HOLDER** . Refer to **INSTALLATION - Step 3** .
11. **INSTALL VISOR ASSEMBLY LH** . Refer to **INSTALLATION - Step 4** .
12. **INSTALL VISOR BRACKET COVER (for LH Side)** . Refer to **INSTALLATION - Step 5** .
13. **INSTALL VISOR ASSEMBLY RH**

    HINT:

Use the same procedure as for the LH side.

14. **INSTALL VISOR BRACKET COVER (for RH Side)**

    HINT:

    Use the same procedure as for the LH side.

15. **INSTALL REAR ASSIST GRIP ASSEMBLY LH** . Refer to **INSTALLATION - Step 10** .
16. **INSTALL REAR ASSIST GRIP ASSEMBLY RH**

    HINT:

    Use the same procedure as for the LH side.

17. **INSTALL ASSIST GRIP SUB-ASSEMBLY** . Refer to **INSTALLATION - Step 9** .
18. **INSTALL NO. 1 ROOM LIGHT ASSEMBLY (w/o Sliding Roof)** . Refer to **INSTALLATION - Step 1** .
19. **INSTALL SPOT LIGHT ASSEMBLY (w/ Sliding Roof)** . Refer to **INSTALLATION - Step 2** .
20. **INSTALL ROOF CONSOLE BOX ASSEMBLY (w/o Sliding Roof)** . Refer to **INSTALLATION - Step 2** .
21. **INSTALL ROOF CONSOLE BOX ASSEMBLY (w/ Sliding Roof)** . Refer to **INSTALLATION - Step 3** .
22. **INSTALL FRONT PILLAR GARNISH LH** . Refer to **INSTALLATION - Step 41** .
23. **INSTALL FRONT DOOR OPENING TRIM WEATHERSTRIP LH** . Refer to **INSTALLATION - Step 42** .
24. **INSTALL FRONT PILLAR GARNISH RH**

    HINT:

    Use the same procedure as for the LH side.

25. **INSTALL FRONT DOOR OPENING TRIM WEATHERSTRIP RH** . Refer to **INSTALLATION - Step 46** .
26. **INSTALL INNER REAR VIEW MIRROR ASSEMBLY (w/o EC Mirror)** . Refer to **INSTALLATION - Step 1** .
27. **INSTALL INNER REAR VIEW MIRROR ASSEMBLY (w/ EC Mirror)** . Refer to **INSTALLATION - Step 2** .
28. **INSTALL INNER REAR VIEW MIRROR STAY HOLDER COVER (w/ EC Mirror)** . Refer to **INSTALLATION - Step 3** .
29. **INSTALL COWL TOP VENTILATOR LOUVER SUB-ASSEMBLY** . Refer to **INSTALLATION - Step 3** .
30. **INSTALL FRONT FENDER TO COWL SIDE SEAL LH** . Refer to **INSTALLATION - Step 4** .
31. **INSTALL FRONT FENDER TO COWL SIDE SEAL RH**

HINT:

Use the same procedure as for the LH side.

32. **INSTALL FRONT WIPER ARM AND BLADE ASSEMBLY LH** . Refer to **INSTALLATION - Step 6** .
33. **INSTALL FRONT WIPER ARM AND BLADE ASSEMBLY RH** . Refer to **INSTALLATION - Step 7** .

BACK WINDOW GLASS

COMPONENTS

ILLUSTRATION

w/o Sliding Roof:

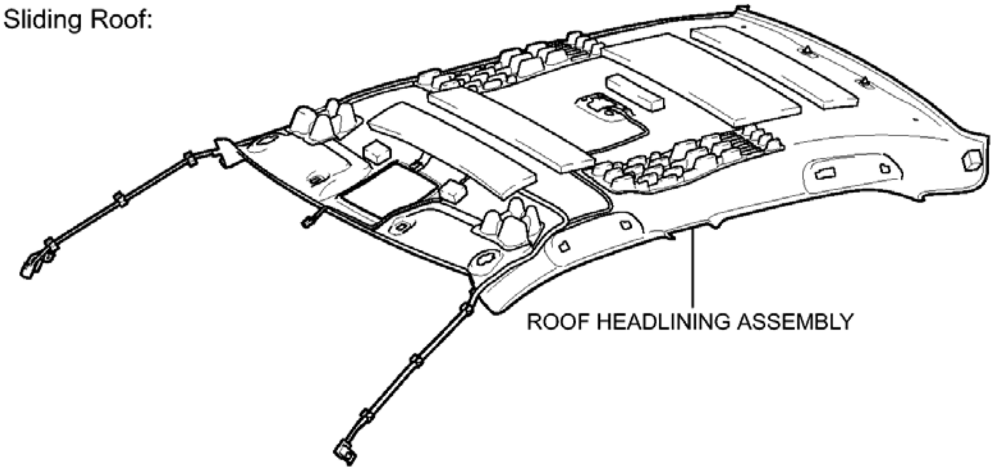
ROOF HEADLINING ASSEMBLY

w/ Sliding Roof:

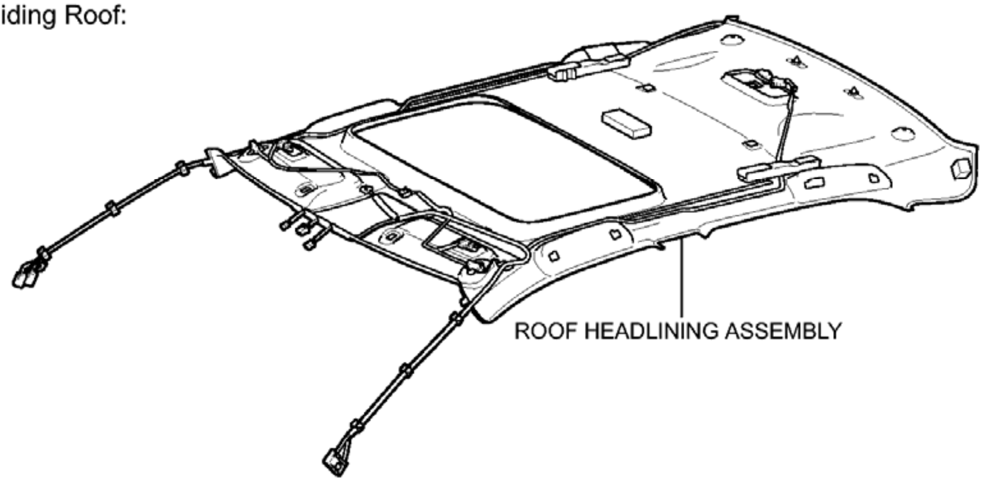
ROOF HEADLINING ASSEMBLY

P

Fig. 55: Identifying Back Window Glass Replacement Components (1 Of 3)
Courtesy of TOYOTA MOTOR SALES, U.S.A., INC.

ILLUSTRATION

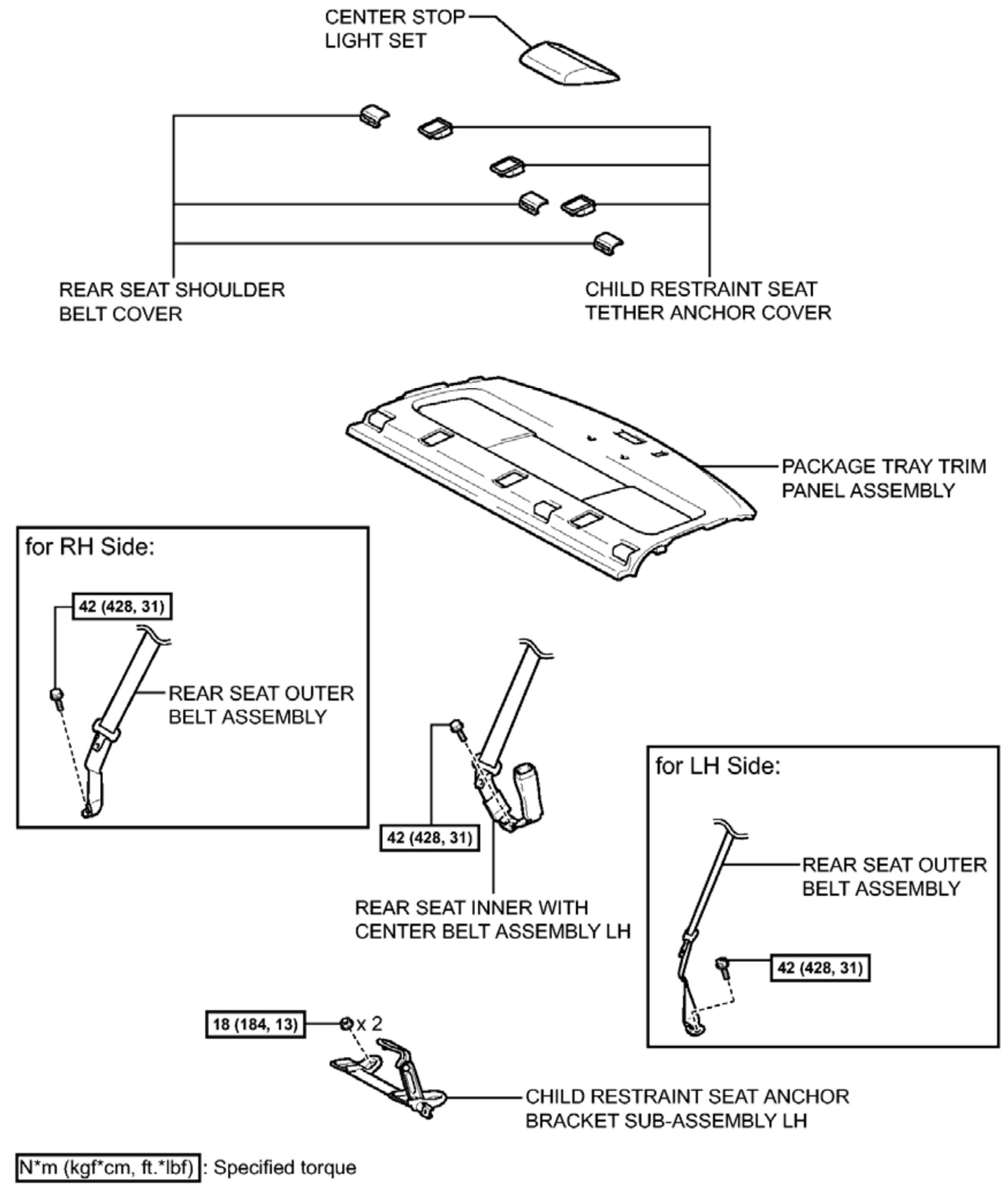
CENTER STOP LIGHT SET
REAR SEAT SHOULDER BELT COVER
CHILD RESTRAINT SEAT TETHER ANCHOR COVER
PACKAGE TRAY TRIM PANEL ASSEMBLY
for RH Side:
42 (428, 31)
REAR SEAT OUTER BELT ASSEMBLY
42 (428, 31)
REAR SEAT INNER WITH CENTER BELT ASSEMBLY LH
for LH Side:
REAR SEAT OUTER BELT ASSEMBLY
42 (428, 31)
18 (184, 13)
x 2
CHILD RESTRAINT SEAT ANCHOR BRACKET SUB-ASSEMBLY LH
N*m (kgf*cm, ft.*lbf) : Specified torque
P

Fig. 56: Identifying Back Window Glass Replacement Components With Torque Specifications (2 Of 3)
Courtesy of TOYOTA MOTOR SALES, U.S.A., INC.

ILLUSTRATION

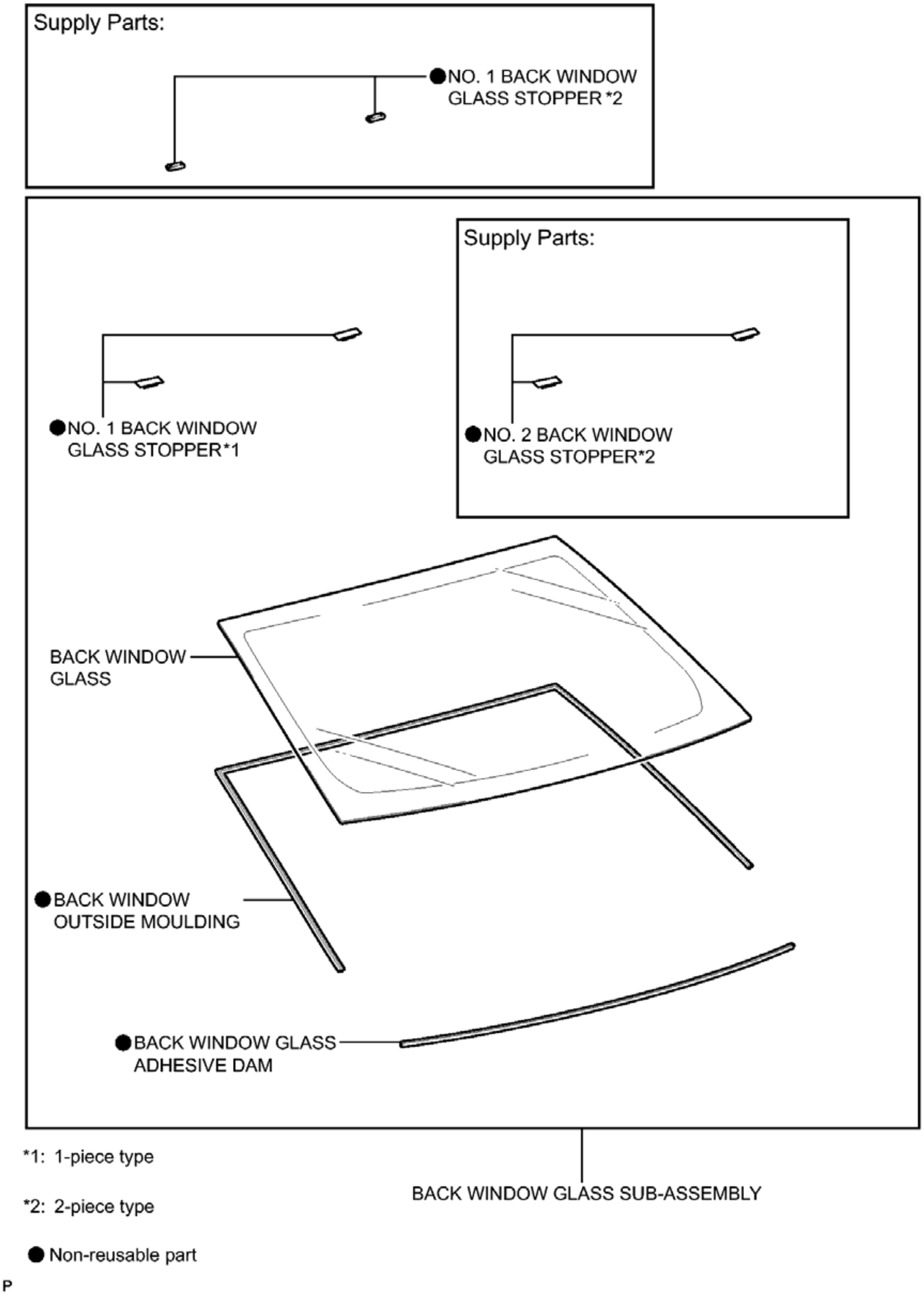
Supply Parts:
●NO. 1 BACK WINDOW GLASS STOPPER *2
Supply Parts:
●NO. 1 BACK WINDOW GLASS STOPPER*1
●NO. 2 BACK WINDOW GLASS STOPPER*2
BACK WINDOW GLASS
●BACK WINDOW OUTSIDE MOULDING
●BACK WINDOW GLASS ADHESIVE DAM
*1: 1-piece type
*2: 2-piece type
BACK WINDOW GLASS SUB-ASSEMBLY
● Non-reusable part
P

Fig. 57: Identifying Back Window Glass Replacement Components (3 Of 3)
Courtesy of TOYOTA MOTOR SALES, U.S.A., INC.

REMOVAL

REMOVAL

1. **REMOVE ROOF HEADLINING ASSEMBLY**

   Refer to **REMOVAL** .

2. **DISCONNECT REAR SEAT OUTER BELT ASSEMBLY (for LH Side)** . Refer to **REMOVAL - Step 13** .
3. **DISCONNECT REAR SEAT OUTER BELT ASSEMBLY (for RH Side)** . Refer to **REMOVAL - Step 14** .
4. **REMOVE CHILD RESTRAINT SEAT ANCHOR BRACKET SUB-ASSEMBLY LH** . Refer to **REMOVAL - Step 10** .
5. **DISCONNECT REAR SEAT INNER WITH CENTER BELT ASSEMBLY LH** . Refer to **REMOVAL - Step 19** .
6. **REMOVE CENTER STOP LIGHT SET** . Refer to **REMOVAL - Step 1** .
7. **REMOVE CHILD RESTRAINT SEAT TETHER ANCHOR COVER** . Refer to **REMOVAL - Step 18** .
8. **REMOVE REAR SEAT SHOULDER BELT COVER** . Refer to **REMOVAL - Step 19** .
9. **REMOVE PACKAGE TRAY TRIM PANEL ASSEMBLY** . Refer to **REMOVAL - Step 20** .
10. **REMOVE BACK WINDOW GLASS SUB-ASSEMBLY**
    1. Disconnect each connector.
    2. Apply protective tape to the area around the installation position of the back window glass on the vehicle body to prevent it from being scratched.

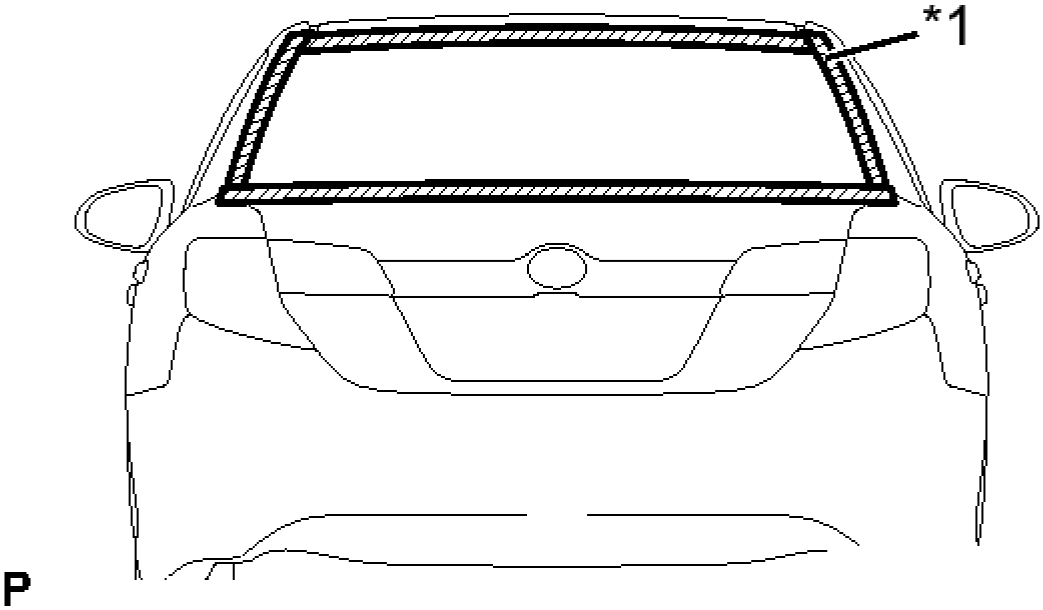

Fig. 58: Identifying Protective Tape Around Back Window Glass Sub-Assembly

Courtesy of TOYOTA MOTOR SALES, U.S.A., INC.

TEXT IN ILLUSTRATION

*1	Protective Tape

HINT:

Apply protective tape to the vehicle body to prevent it from being scratched.

c. Pass a piano wire between the vehicle body and glass from the interior.

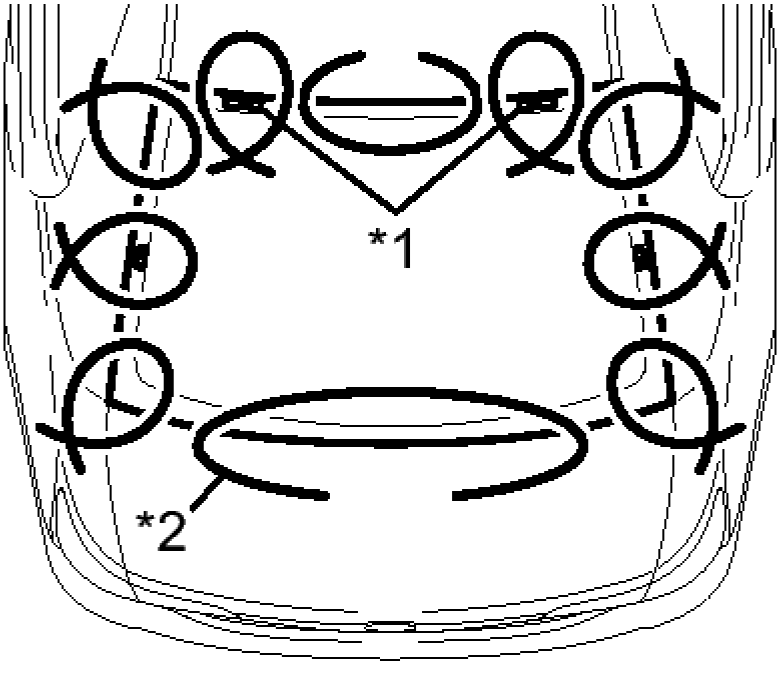

Fig. 59: Locating Back Window Glass Sub-Assembly Removal Points
Courtesy of TOYOTA MOTOR SALES, U.S.A., INC.

TEXT IN ILLUSTRATION

*1	Stopper
*2	Piano Wire

d. Tie both wire ends to wooden blocks or similar objects.
e. Cut off the adhesive by pulling the piano wire around the back window glass.

NOTE: **When separating the back window glass, take care not to damage the paint or interior and exterior ornaments.**

f. Place matchmarks on the back window glass and vehicle body on the locations indicated in the illustration.

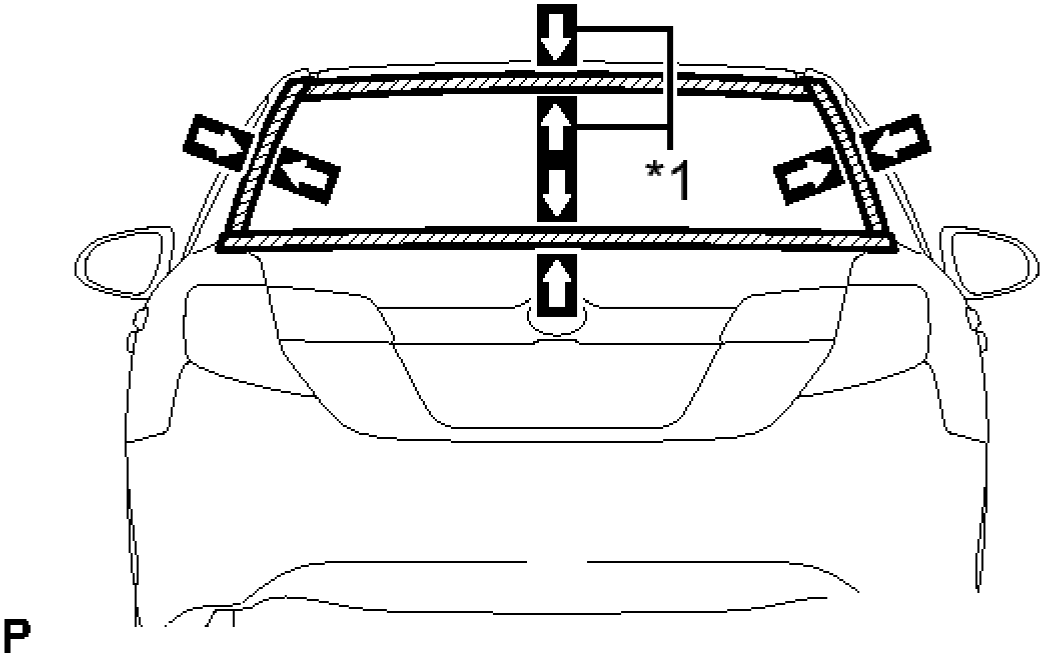

Fig. 60: Identifying Matchmarks On Back Window Glass Sub-Assembly
Courtesy of TOYOTA MOTOR SALES, U.S.A., INC.

TEXT IN ILLUSTRATION

*1	Matchmark

HINT:

Matchmarks are not needed to be placed if the back window glass will not be reused.

g. Disconnect the back window glass stoppers.

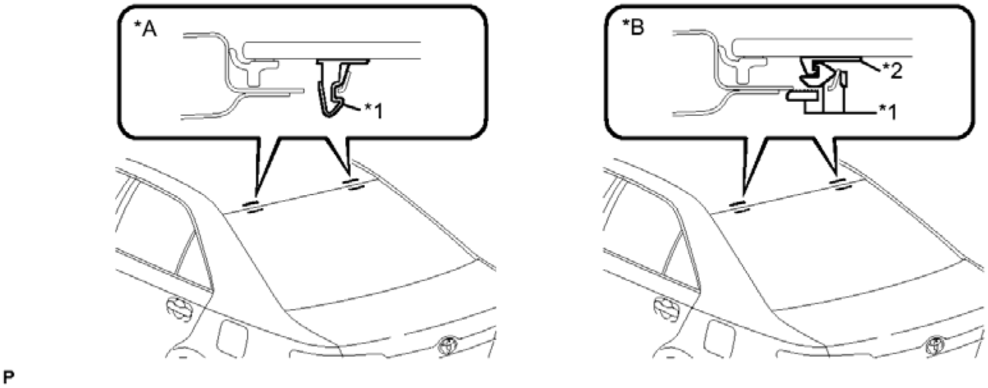

Fig. 61: Locating Back Window Glass Stoppers
Courtesy of TOYOTA MOTOR SALES, U.S.A., INC.

TEXT IN ILLUSTRATION

*A	1-piece type	*B	2-piece type
*1	No. 1 Back Window Glass Stopper	*2	No. 2 Back Window Glass Stopper

NOTE:

- **There are No. 1 and No. 2 stoppers on the back window glass as shown in the illustration. Be careful not to damage the back window glass when cutting off the adhesive.**
- **To prevent the back window glass from falling when performing this operation, be sure to hold the back window glass using suction cups.**

HINT:

Depending on the vehicle, either 1-piece or 2-piece type stoppers may be present.

h. Using suction cups, remove the back window glass sub-assembly.

NOTE:

- **Be careful not to drop the back window glass.**
- **Leave as much adhesive on the vehicle body as possible when removing the back window glass.**

11. **REMOVE BACK WINDOW GLASS ADHESIVE DAM**
    a. When reusing the back window glass:
        1. Using a scraper, remove the back window glass adhesive dam.

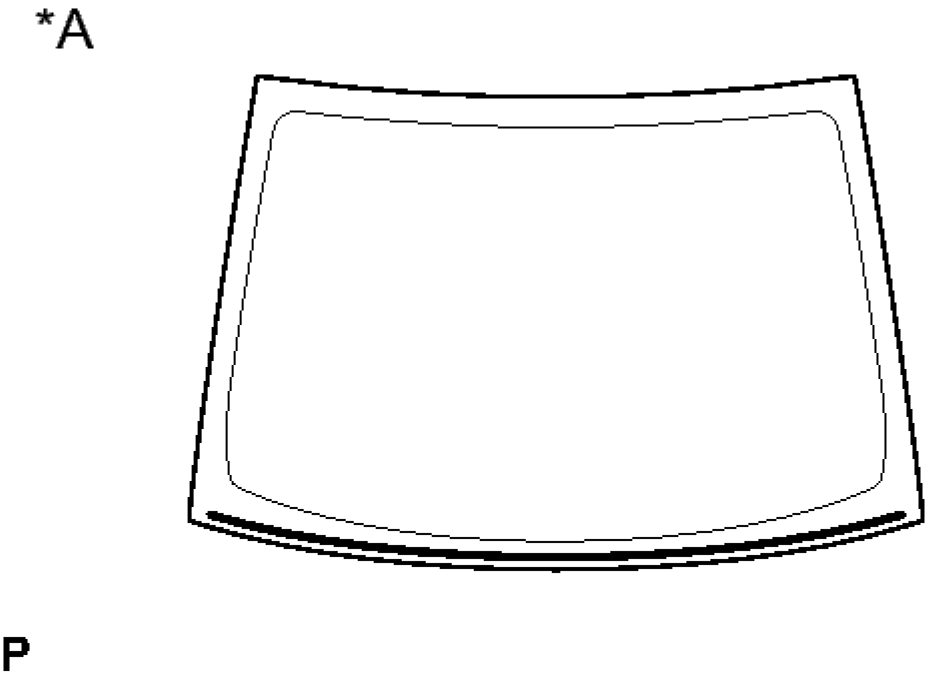

Fig. 62: Identifying Back Window Glass Adhesive Dam
Courtesy of TOYOTA MOTOR SALES, U.S.A., INC.

TEXT IN ILLUSTRATION

*1	Back Side

NOTE:

- **Be careful not to damage the back window glass.**
- **Be sure to replace the back window glass adhesive dam with a new one.**

12. **REMOVE BACK WINDOW OUTSIDE MOULDING**
    a. When reusing the back window glass:
        1. Using a scraper, remove the back window outside moulding.

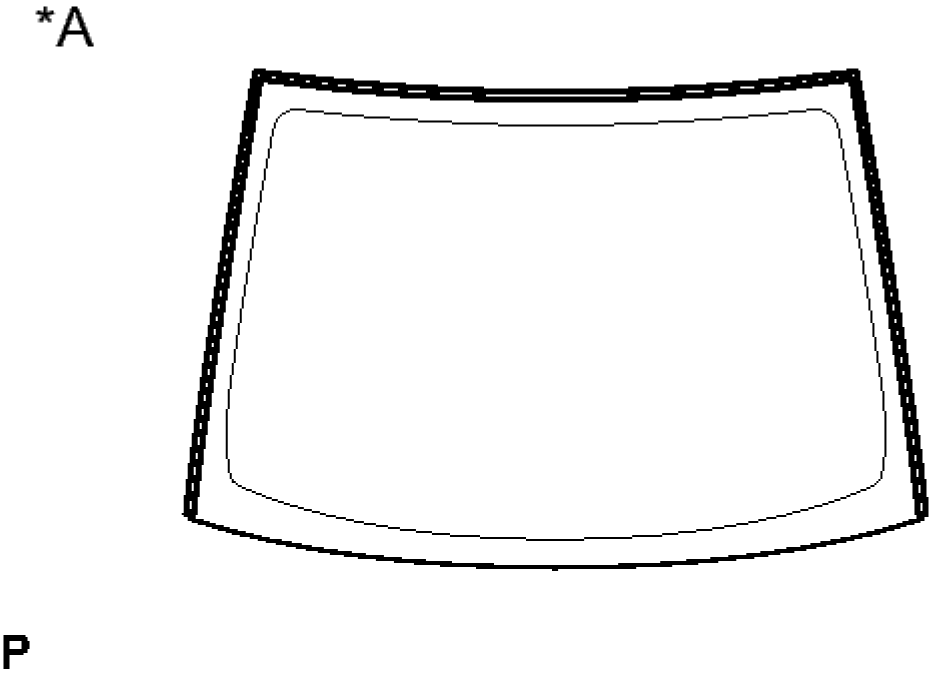

Fig. 63: Identifying Back Window Outside Moulding
Courtesy of TOYOTA MOTOR SALES, U.S.A., INC.

TEXT IN ILLUSTRATION

*1	Back Side

NOTE:

- **Be careful not to damage the back window glass.**
- **Be sure to replace the back window outside moulding with a new one.**

13. **REMOVE NO. 1 BACK WINDOW GLASS STOPPER (for 1-piece Type)**
    - a. When reusing the back window glass:
        1. Using a scraper, remove the 2 No. 1 back window glass stoppers.

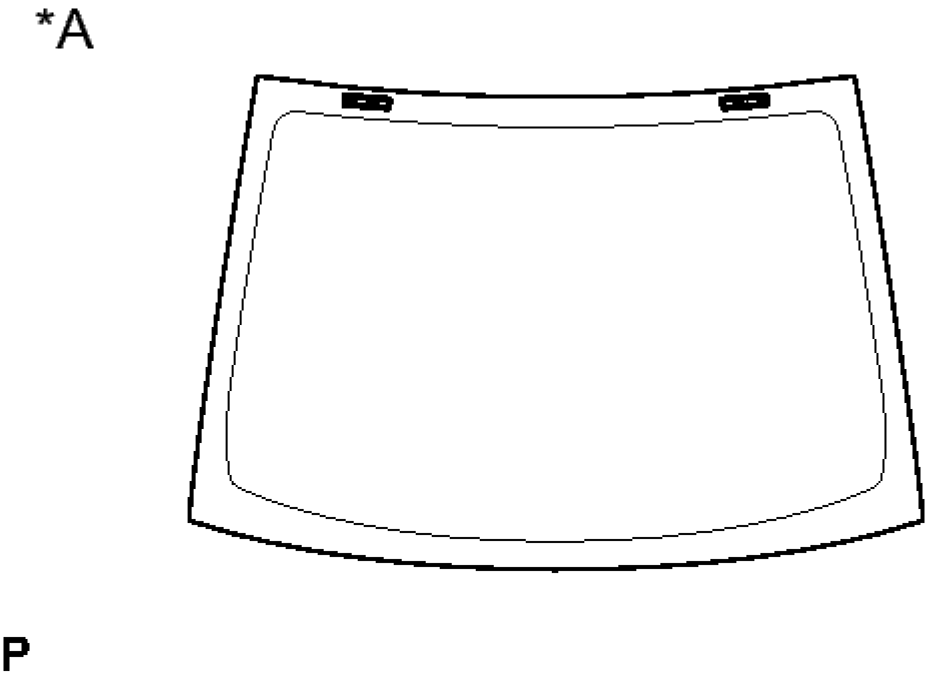

Fig. 64: Identifying No. 1 Back Window Glass Stopper (For 1-Piece Type)
Courtesy of TOYOTA MOTOR SALES, U.S.A., INC.

TEXT IN ILLUSTRATION

*1	Back Side

NOTE:

- **Be careful not to damage the back window glass.**
- **Be sure to replace the No. 1 back window glass stoppers with new ones.**

14. **REMOVE NO. 2 BACK WINDOW GLASS STOPPER (for 2-piece Type)**
    a. When reusing the back window glass:
        1. Using a scraper, remove the 2 No. 2 back window glass stoppers.

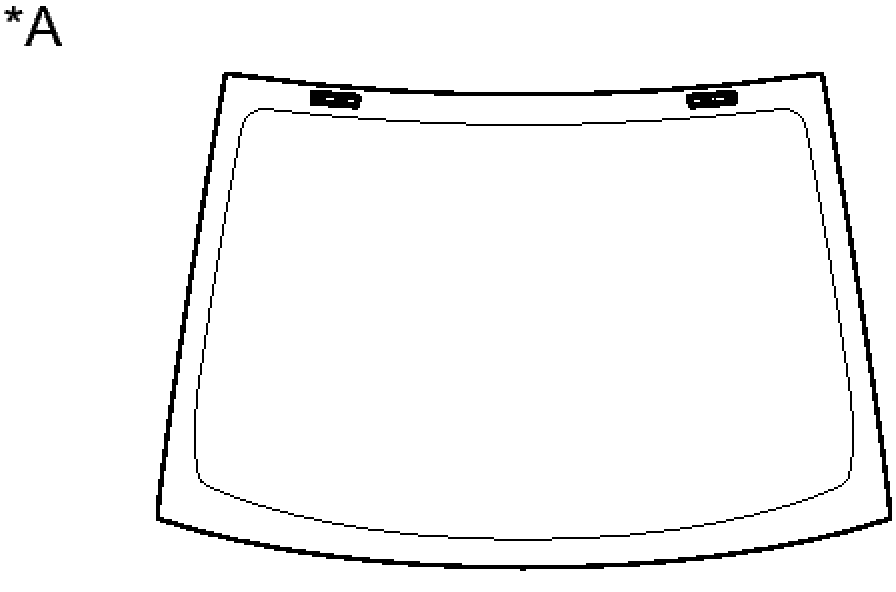

Fig. 65: Identifying No. 2 Back Window Glass Stopper (For 2-Piece Type)
Courtesy of TOYOTA MOTOR SALES, U.S.A., INC.

TEXT IN ILLUSTRATION

*1	Back Side

NOTE:

- **Be careful not to damage the back window glass.**
- **Be sure to replace the No. 2 back window glass stoppers with new ones.**

15. **REMOVE NO. 1 BACK WINDOW GLASS STOPPER (for 2-piece Type)**
    a. Remove the 2 No. 1 back window glass stoppers.

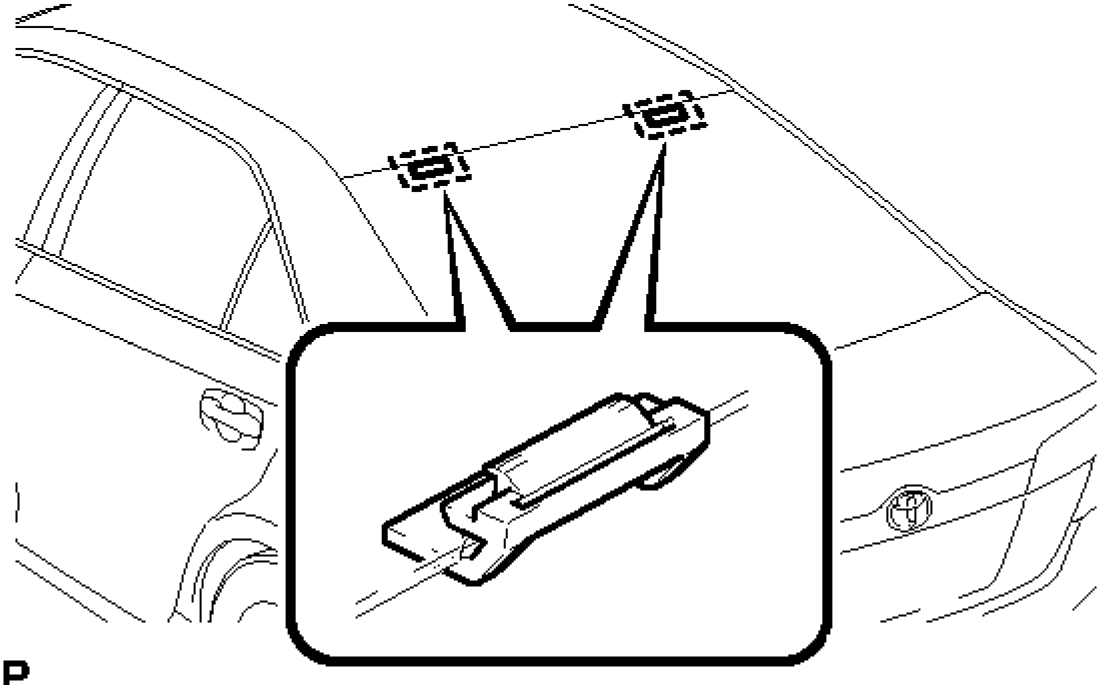

Fig. 66: Locating No. 1 Back Window Glass Stopper (For 2-Piece Type)
Courtesy of TOYOTA MOTOR SALES, U.S.A., INC.

NOTE: **Be sure to replace the No. 1 back window glass stoppers with new ones.**

16. **CLEAN BACK WINDOW GLASS**
    a. Using a scraper, remove any adhesive dam and adhesive residue from the back window glass.

    NOTE: **Be careful not to damage the back window glass.**

    b. Clean the outer circumference of the back window glass with a non-residue solvent.

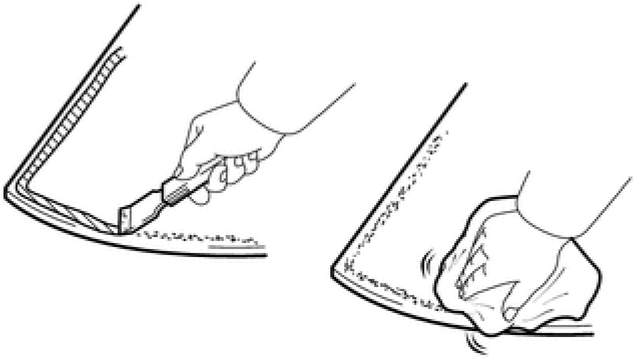

Fig. 67: Removing Adhesive Tape And Adhesive Sticking To Back Window Glass
Courtesy of TOYOTA MOTOR SALES, U.S.A., INC.

NOTE:

- **Do not touch the glass surface after cleaning it.**
- **Be careful not to damage the glass.**
- **Even if using new glass, clean it with a non-residue solvent.**

17. **CLEAN VEHICLE BODY**
    a. Clean and shape the contact surface of the vehicle body.

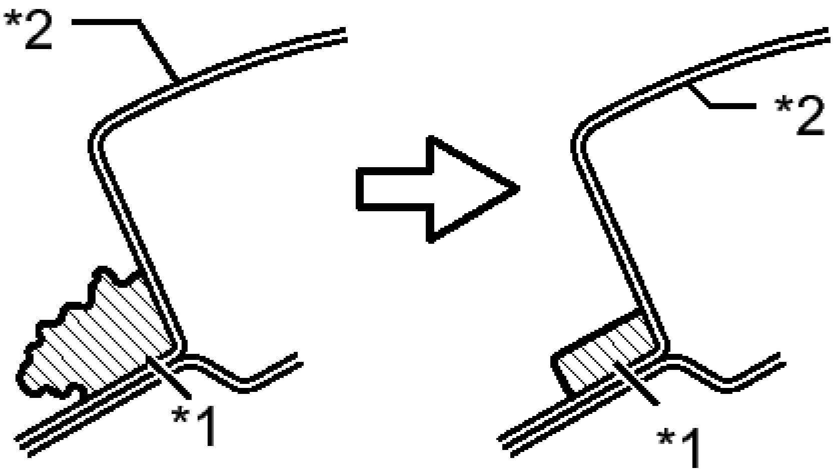

P

Fig. 68: Identifying Contact Surfaces Of Vehicle Body
Courtesy of TOYOTA MOTOR SALES, U.S.A., INC.

TEXT IN ILLUSTRATION

*1	Adhesive
*2	Body

1. Using a knife, cut away any rough adhesive on the contact surface of the vehicle body to ensure the appropriate surface shape.

   NOTE: **Be careful not to damage the vehicle body.**

   HINT:

   Leave as much adhesive on the vehicle body as possible.

2. Clean the contact surface of the vehicle body with a piece of cloth saturated with cleaner.

HINT:

Even if all the adhesive has been removed, clean the vehicle body.

INSTALLATION

INSTALLATION

1. **INSTALL NO. 2 BACK WINDOW GLASS STOPPER (for 2-piece Type)**
   a. Using a brush or sponge, coat the application area of 2 new No. 2 back window glass stoppers with Primer G.

   NOTE:

   - **Do not apply too much primer.**
   - **Allow the primer coating to dry for 3 minutes or more.**
   - **Throw away any leftover primer.**

   HINT:

   If an area other than specified is coated by accident, wipe off the primer with a clean piece of cloth before it dries.

   b. Install the 2 new No. 2 back window glass stoppers onto the back window glass as shown in the illustration.

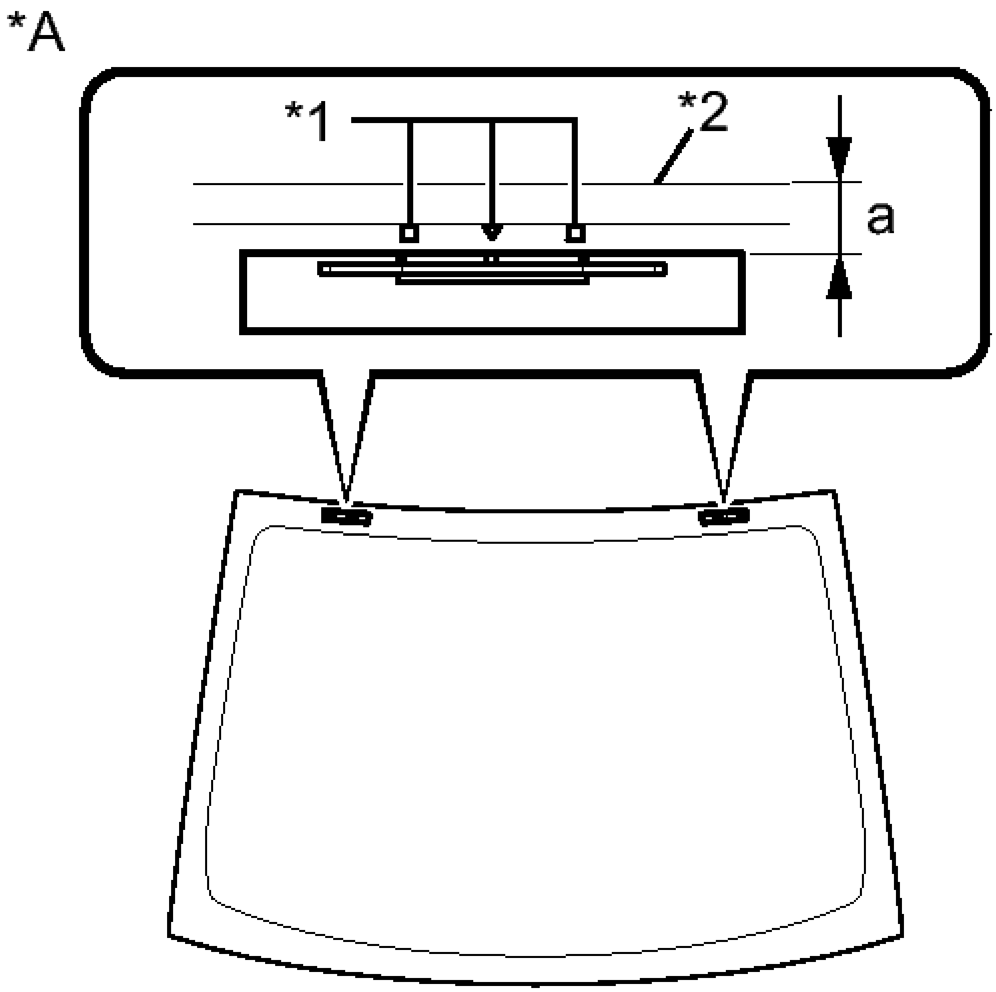

P

Fig. 69: Identifying No. 2 Back Window Glass Stopper (For 2-Piece Type)
Courtesy of TOYOTA MOTOR SALES, U.S.A., INC.

TEXT IN ILLUSTRATION

*A	Back Side
*1	Ceramic Notch
*2	Back Window Glass Edge Side

Standard Dimension

Area	Dimension
a	14.2 to 15.2 mm (0.559 to 0.598 in.)

HINT:

Only 2-piece type No. 2 back window glass stoppers are supplied. Use the 2-piece type stoppers even if a 1-piece type was used.

2. **INSTALL NO. 1 BACK WINDOW GLASS STOPPER (for 2-piece Type)**
   a. Install 2 new No. 1 back window glass stoppers to the vehicle body as shown in the illustration.

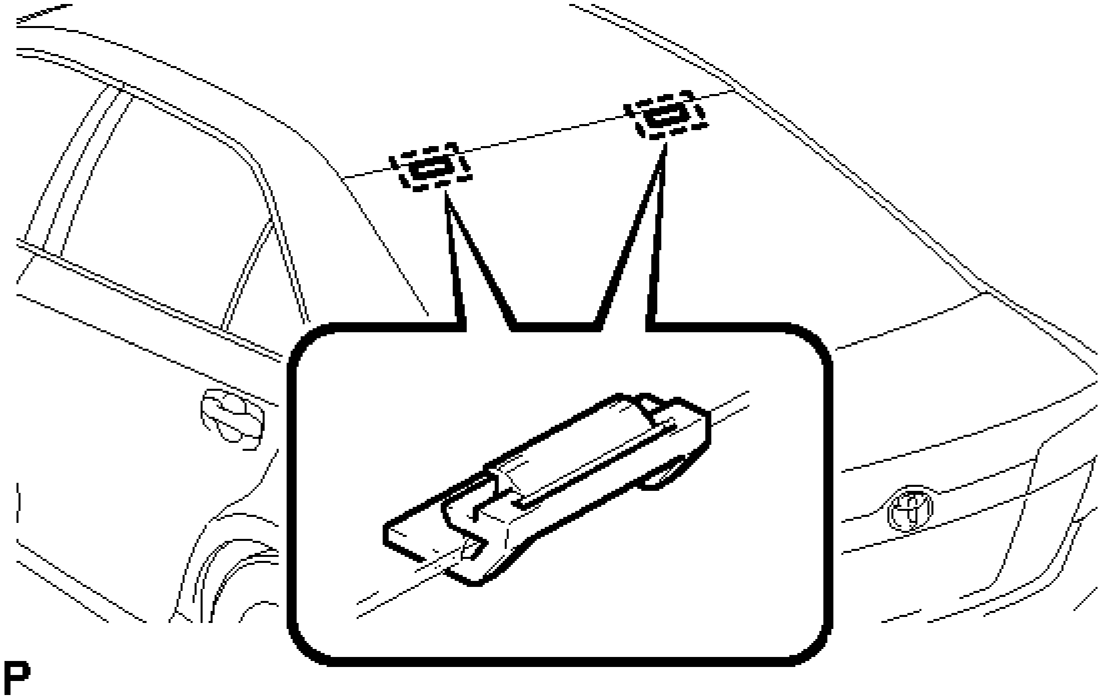

Fig. 70: Locating No. 1 Back Window Glass Stopper (For 2-Piece Type)
Courtesy of TOYOTA MOTOR SALES, U.S.A., INC.

HINT:

Only 2-piece type back window glass stoppers are provided as supply parts. Use 2-piece type stoppers as replacements even if a 1-piece type was originally installed.

3. **INSTALL BACK WINDOW OUTSIDE MOULDING**
   a. Using a brush or sponge, coat the application area of a new back window outside moulding with Primer G.

NOTE:

- **Do not apply too much primer.**
- **Allow the primer coating to dry for 3 minutes or more.**
- **Throw away any leftover primer.**

HINT:

If an area other than specified is coated by accident, wipe off the primer with a clean piece of cloth before it dries.

b. Install the new back window outside moulding onto the back window glass as shown in the illustration.

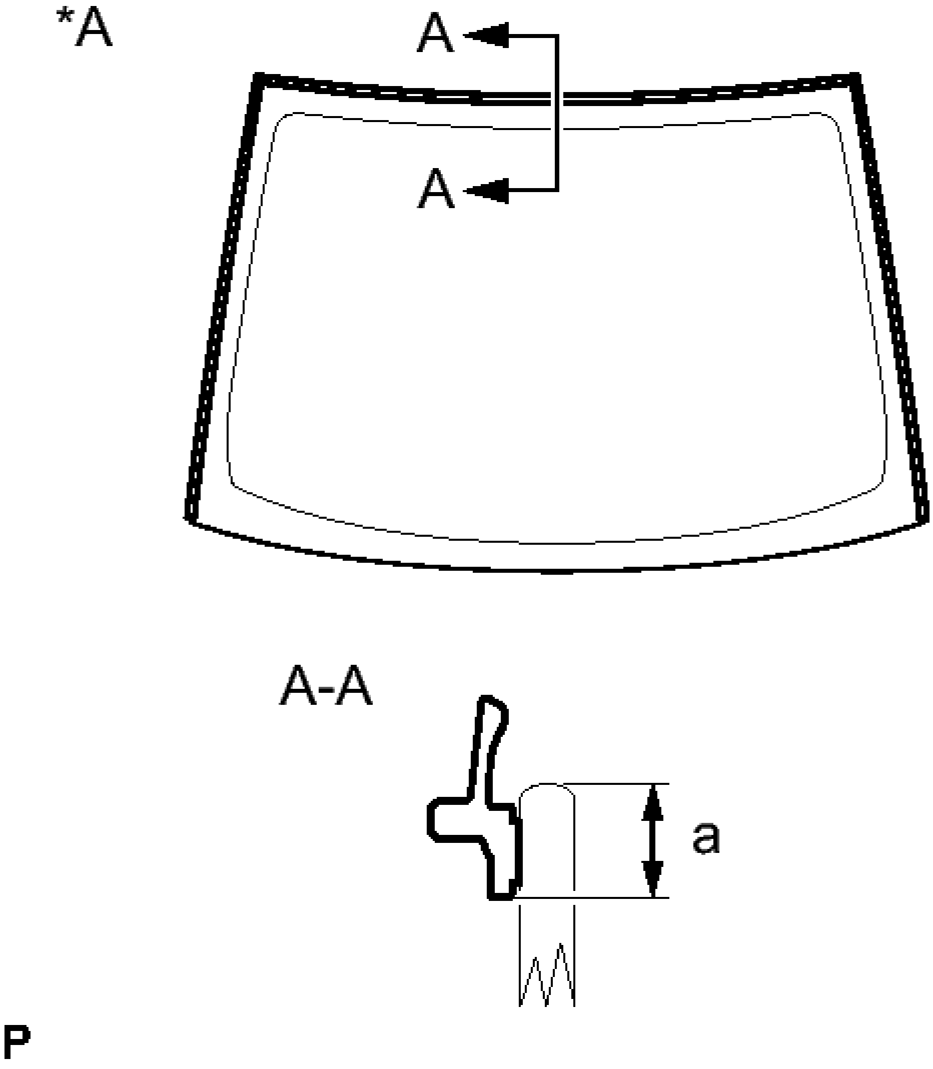

Fig. 71: Identifying Back Window Outside Moulding
Courtesy of TOYOTA MOTOR SALES, U.S.A., INC.

TEXT IN ILLUSTRATION

*A	Back Side

Standard Dimension

Area	Dimension
a	7.4 mm (0.291 in.)

4. **INSTALL BACK WINDOW GLASS ADHESIVE DAM**
   a. Using a brush or sponge, coat the application area of a new back window glass adhesive dam with Primer G.

NOTE:

- **Allow the primer coating to dry for 3 minutes or more.**
- **Do not apply too much primer.**

   b. Install the new back window adhesive dam, applying double-sided tape all the way around the glass except where the dam is installed as shown in the illustration.

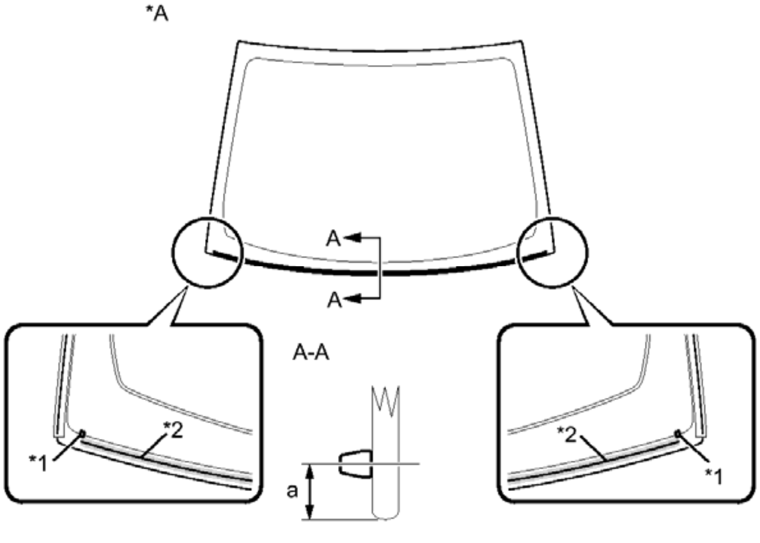

Fig. 72: Identifying Back Window Glass Adhesive Dam
Courtesy of TOYOTA MOTOR SALES, U.S.A., INC.

TEXT IN ILLUSTRATION

*A	Back Side	-	-
*1	Ceramic Notch	*2	Adhesive Center

Standard Dimension

Area	Dimension
a	10.0 mm (0.394 in.)

NOTE:

- **Do not apply too much primer.**
- **Allow the primer coating to dry for 3 minutes or more.**
- **Do not keep any of the opened Primer G for later use.**

HINT:

If an area other than specified is coated by accident, wipe off the primer with a clean piece of cloth before it dries.

5. **INSTALL BACK WINDOW GLASS SUB-ASSEMBLY**
   a. Position the back window glass.

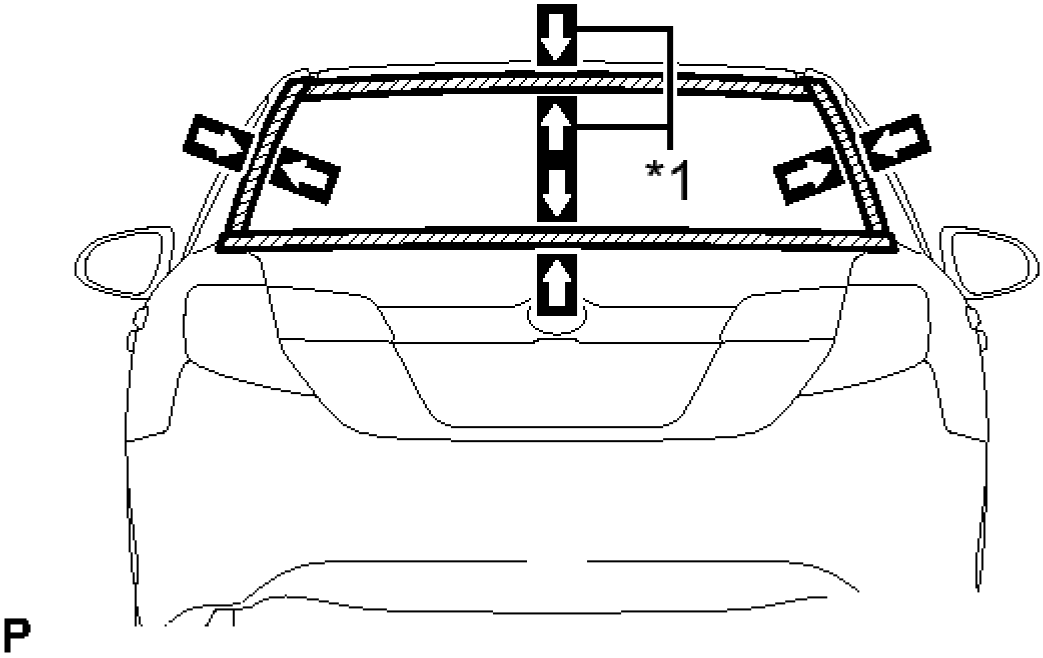

Fig. 73: Identifying Matchmarks On Back Window Glass Sub-Assembly
Courtesy of TOYOTA MOTOR SALES, U.S.A., INC.

TEXT IN ILLUSTRATION

*1	Matchmark

1. Using suction cups, place the back window glass in the correct position.

2. Check that the whole contact surface of the back window glass rim is perfectly even.
3. Align the matchmarks on the back window glass and vehicle body.

NOTE: **Check that the back window glass stoppers are attached to the vehicle body correctly.**

4. Remove the back window glass.

b. Using a brush, coat the installation surface on the vehicle body with Primer M.

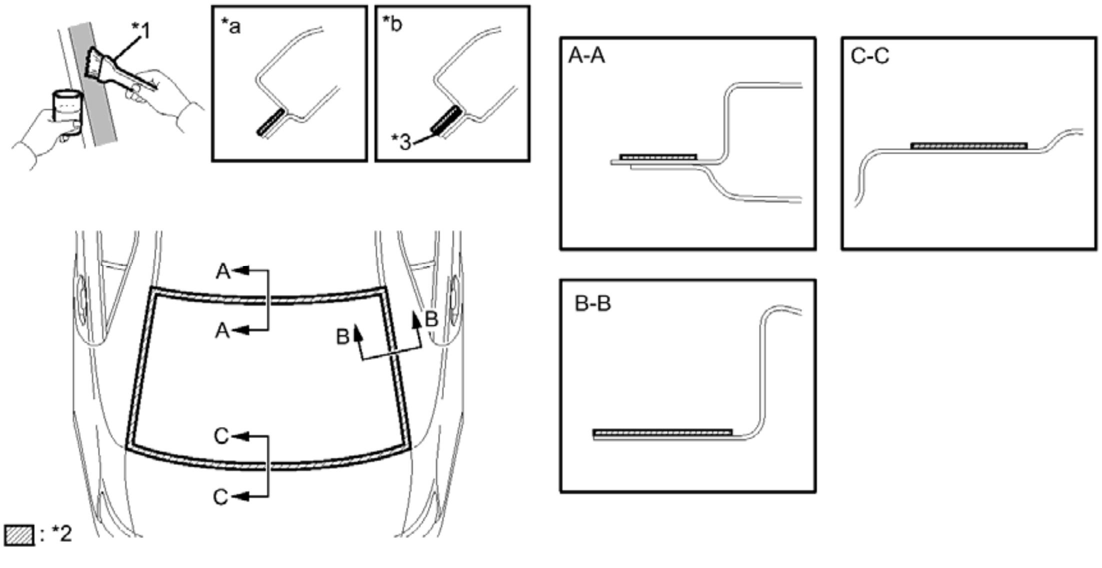

Fig. 74: Coating Back Windshield Glass Sub-Assembly
Courtesy of TOYOTA MOTOR SALES, U.S.A., INC.

TEXT IN ILLUSTRATION

*1	Brush	*2	Primer M
*3	Adhesive	-	-
*a	CORRECT	*b	INCORRECT

NOTE:

- **Do not coat the adhesive with Primer M.**
- **Do not apply too much primer.**
- **Allow the primer coating to dry for 3 minutes or more.**
- **Do not keep any of the opened Primer M for later use.**

HINT:

If an area other than specified is coated by accident, wipe off the primer with a clean piece of cloth before it dries.

c. Using a brush or sponge, coat the adhesive application area with Primer G.

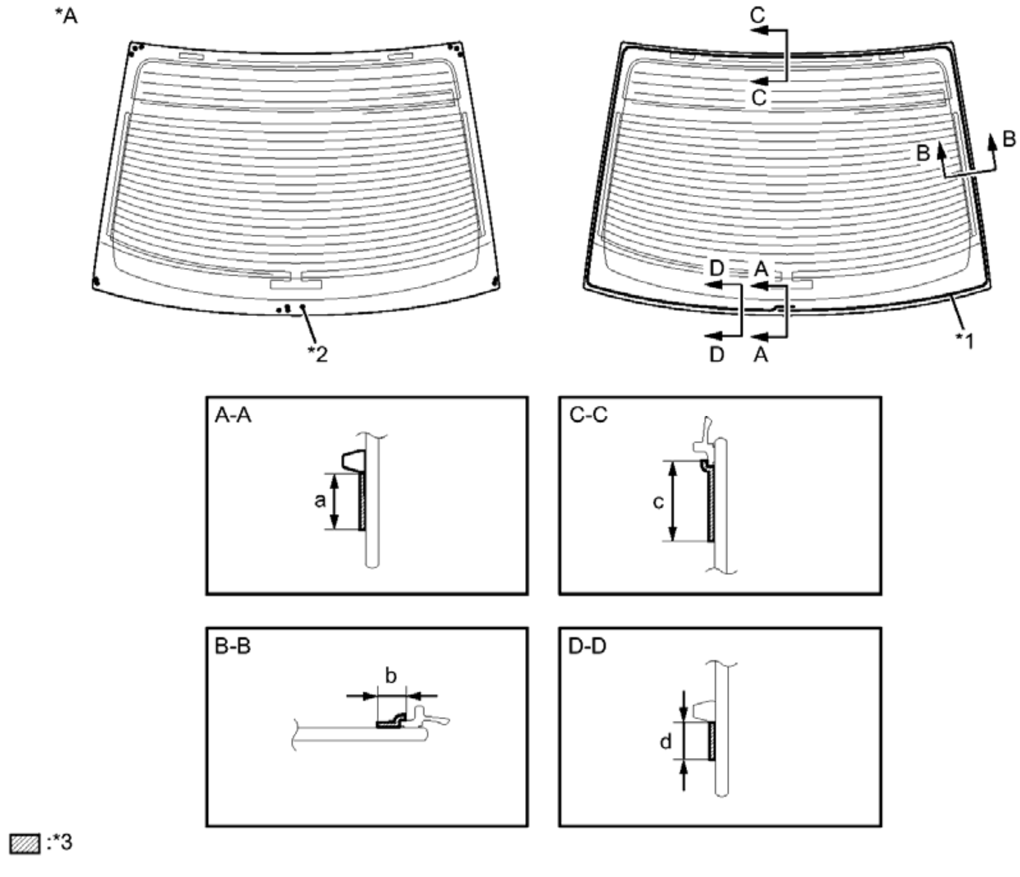

Fig. 75: Identifying Back Window Glass Sub-Assembly Adhesive Dimensions
Courtesy of TOYOTA MOTOR SALES, U.S.A., INC.

TEXT IN ILLUSTRATION

*A	Back Side	-	-
*1	Adhesive Center Line	*2	Ceramic Notch
*3	Primer G	-	-

Standard Dimension

Area	Dimension
a	18.5 mm (0.728 in.) or more
	14.0 mm

b	(0.551 in.) or more
c	14.0 mm (0.551 in.) or more
d	11.0 mm (0.433 in.) or more

NOTE:

- **Do not apply too much primer.**
- **Allow the primer coating to dry for 3 minutes or more.**
- **Do not keep any of the opened Primer G for later use.**

HINT:

If an area other than specified is coated by accident, wipe off the primer with a clean piece of cloth before it dries.

d. Apply adhesive to the glass.

Adhesive

Toyota Genuine Windshield Glass Adhesive or equivalent

1. Cut off the tip of the cartridge nozzle as shown in the illustration.

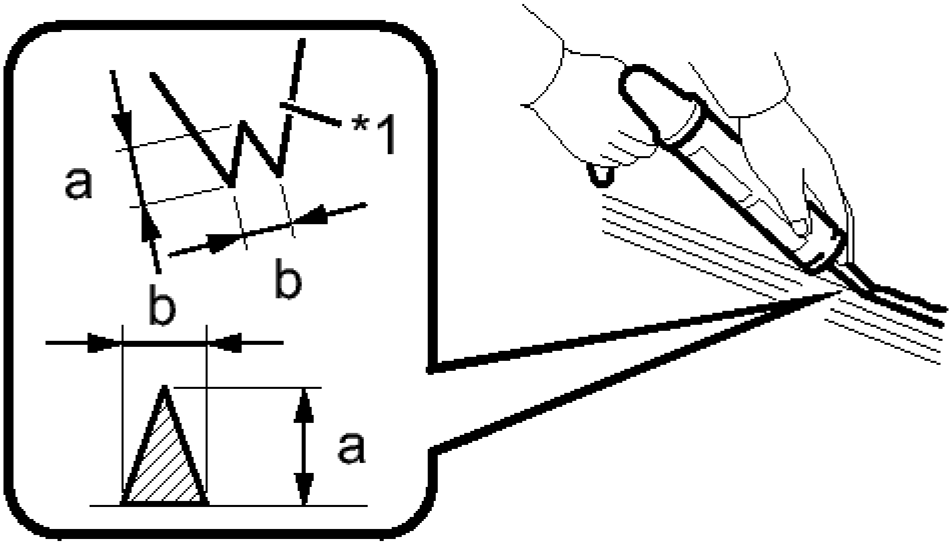

P

Fig. 76: Applying Adhesive To Glass
Courtesy of TOYOTA MOTOR SALES, U.S.A., INC.

TEXT IN ILLUSTRATION

*1	Nozzle

Standard Dimension

Area	Dimension
a	12.0 mm (0.472 in.)
b	8.0 mm (0.315 in.)

HINT:

After cutting off the tip, use all adhesive within the time described in the table below.

Usage Time Frame

Temperature	Usage Time Frame
35°C (95°F)	15 minutes
20°C (68°F)	1 hour and 40 minutes
5°C (41°F)	8 hours

2. Load the sealer gun with the cartridge.
3. Apply adhesive to the back window glass as shown in the illustration.

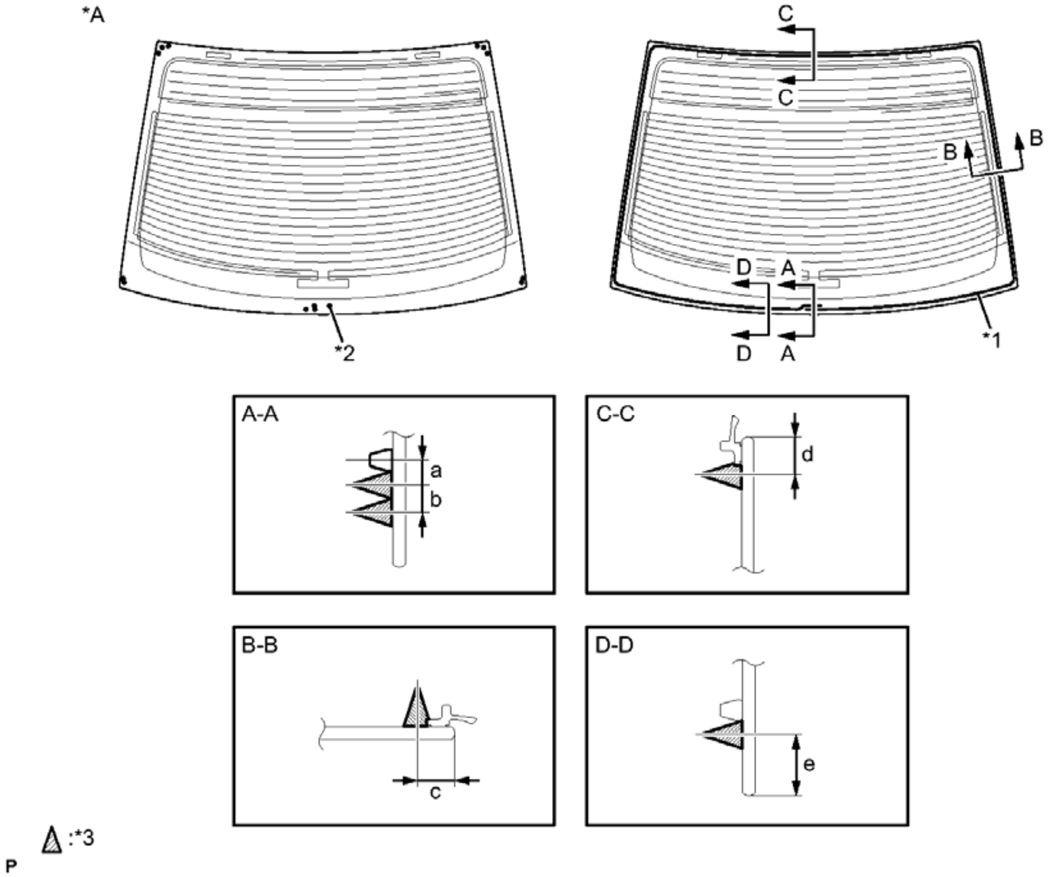
*A
C
C
B
B
D
A
D
A
*1
*2
A-A
a
b
C-C
d
B-B
c
D-D
e
:*3
P

Fig. 77: Identifying Back Window Glass Sub-Assembly Adhesive Dimensions
Courtesy of TOYOTA MOTOR SALES, U.S.A., INC.

TEXT IN ILLUSTRATION

*A	Back Side	-	-
*1	Adhesive Center Line	*2	Ceramic Notch
*3	Adhesive	-	-

Standard Dimension

Area	Dimension
a	6.5 mm (0.256 in.)
b	8.0 mm (0.315 in.)
c	10.0 mm (0.394 in.)

d	10.0 mm (0.394 in.)
e	16.5 mm (0.650 in.)

e. Install the back window glass sub-assembly.

1. Using suction cups, position the back window glass so that the matchmarks are aligned, and press it in gently along the rim.

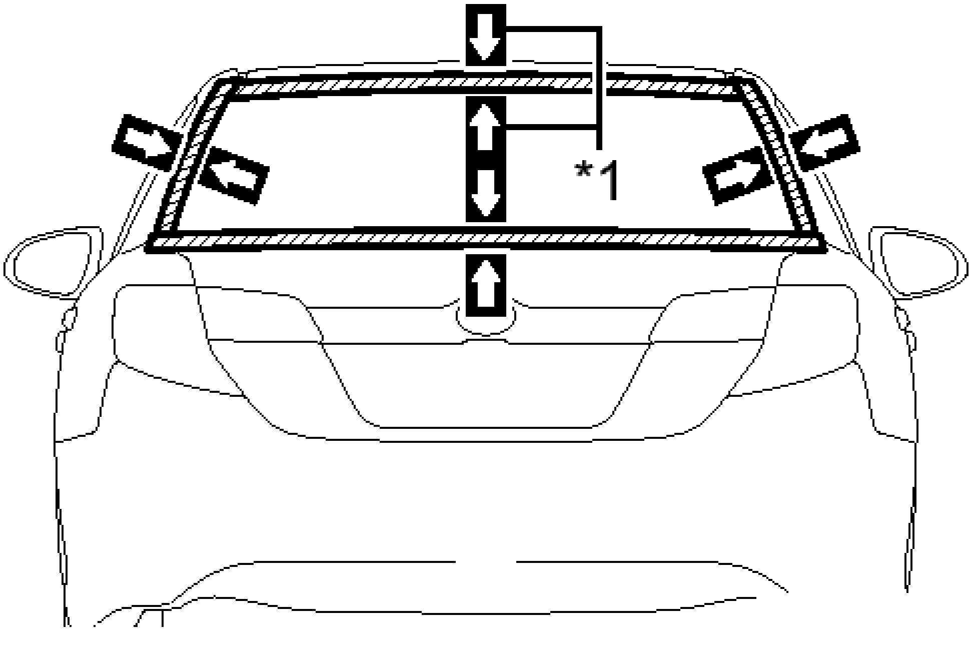

Fig. 78: Identifying Matchmarks On Back Window Glass Sub-Assembly
Courtesy of TOYOTA MOTOR SALES, U.S.A., INC.

TEXT IN ILLUSTRATION

*1	Matchmark

NOTE:

- **Check that the back window glass stoppers are attached to the vehicle body correctly.**
- **Check the clearance between the vehicle body and back window glass.**

2. Lightly press the front surface of the back window glass to ensure a close fit.

HINT:

Press the glass with force of 98 N (10 kgf, 22.0 lbf) or more.

3. Using a scraper, remove any excess or protruding adhesive.
4. Hold the back window glass using protective tape until the applied adhesive becomes hard.

NOTE: **Do not drive the vehicle for the time described in the table below.**

Minimum Time

Temperature	**Minimum Time Prior to Driving Vehicle**
35°C (95°F)	1 hour and 30 minutes
20°C (68°F)	5 hours
5°C (41°F)	24 hours

f. Connect each connector.

6. **INSPECT FOR LEAKS AND REPAIR**
    a. After the adhesive has hardened, apply water from the outside of the vehicle. Check that no water leaks into the cabin.
    b. If water leaks into the cabin, allow the water to dry and add adhesive.
    c. Remove the protective tape.
7. **INSTALL PACKAGE TRAY TRIM PANEL ASSEMBLY** . Refer to **INSTALLATION - Step 3** .
8. **INSTALL REAR SEAT SHOULDER BELT COVER** . Refer to **INSTALLATION - Step 4** .
9. **INSTALL CHILD RESTRAINT SEAT TETHER ANCHOR COVER** . Refer to **INSTALLATION - Step 5** .
10. **INSTALL CENTER STOP LIGHT SET** . Refer to **INSTALLATION - Step 1** .
11. **CONNECT REAR SEAT INNER WITH CENTER BELT ASSEMBLY LH** . Refer to **INSTALLATION - Step 7** .
12. **INSTALL CHILD RESTRAINT SEAT ANCHOR BRACKET SUB-ASSEMBLY LH** . Refer to **INSTALLATION - Step 1** .
13. **CONNECT REAR SEAT OUTER BELT ASSEMBLY (for RH Side)** . Refer to **INSTALLATION - Step 10** .
14. **CONNECT REAR SEAT OUTER BELT ASSEMBLY (for LH Side)** . Refer to **INSTALLATION - Step 9** .
15. **INSTALL ROOF HEADLINING ASSEMBLY**

    Refer to **INSTALLATION** .

WINDOW DEFOGGER WIRE

ON-VEHICLE INSPECTION

ON-VEHICLE INSPECTION

1. **CHECK REAR WINDOW DEFOGGER OPERATION**
   a. When the ignition switch is ON and the rear window defogger switch is pressed, check that the rear window defogger operates.
2. **INSPECT REAR WINDOW DEFOGGER WIRE (BACK WINDOW GLASS)**

NOTE:

- **When cleaning the glass, wipe the glass along the wire using a soft and dry cloth. Take care not to damage the wires.**
- **Do not use detergents or glass cleaners that have abrasive ingredients.**
- **When measuring voltage, wrap a piece of tin foil around the tip of the negative tester probe and press the foil against the wire with your finger as shown in the illustration.**

   a. Turn the ignition switch ON.

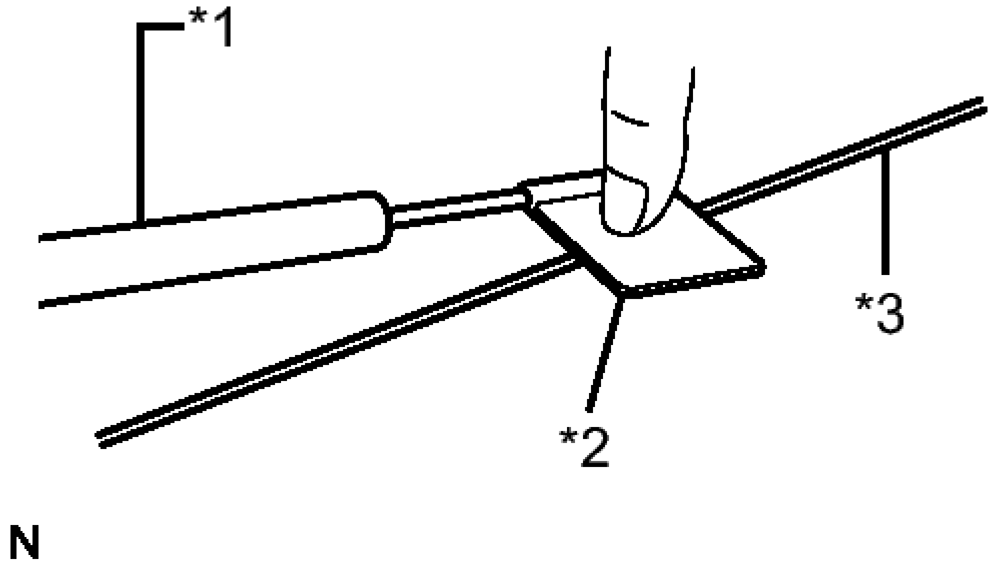

Fig. 79: Inspecting Rear Window Defogger Wire
Courtesy of TOYOTA MOTOR SALES, U.S.A., INC.

TEXT IN ILLUSTRATION

*1	Tester Probe
*2	Tin Foil
*3	Rear Window Defogger Wire

b. Turn the rear window defogger switch on.
c. Measure the voltage at the center of each rear window defogger wire to check the wire as shown in the illustration.

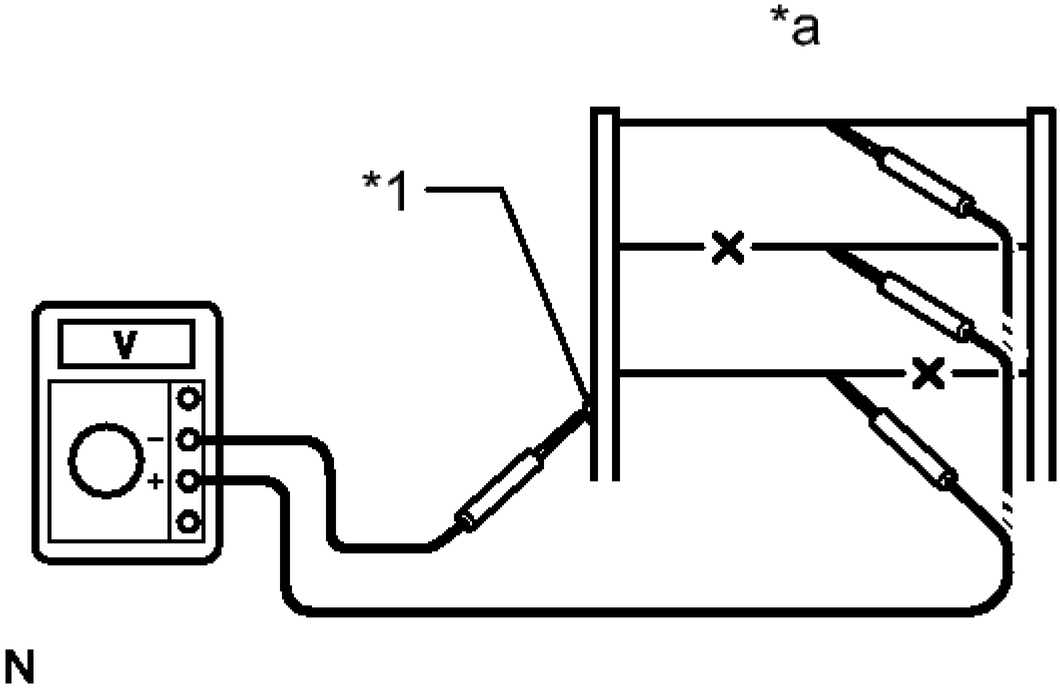

Fig. 80: Measuring Voltage At Center Of Each Rear Window Defogger Wire
Courtesy of TOYOTA MOTOR SALES, U.S.A., INC.

TEXT IN ILLUSTRATION

*1	Foil Strip
*a	At center

Result

Voltage	**Criteria**
4 to 6 V	Wire is not

	broken
11 to 14 V	Wire is broken between the center and ground side end
Below 1 V	Wire is broken between the center and battery side end

HINT:

If the voltage is 11 to 14 V, the wire may be faulty between the center of the wire and the wire end on the ground side. If the voltage is below 1 V, the wire may be faulty between the center of the wire and the wire end on the battery side.

d. Place the positive (+) lead of the voltmeter against the rear window defogger wire on the battery side.

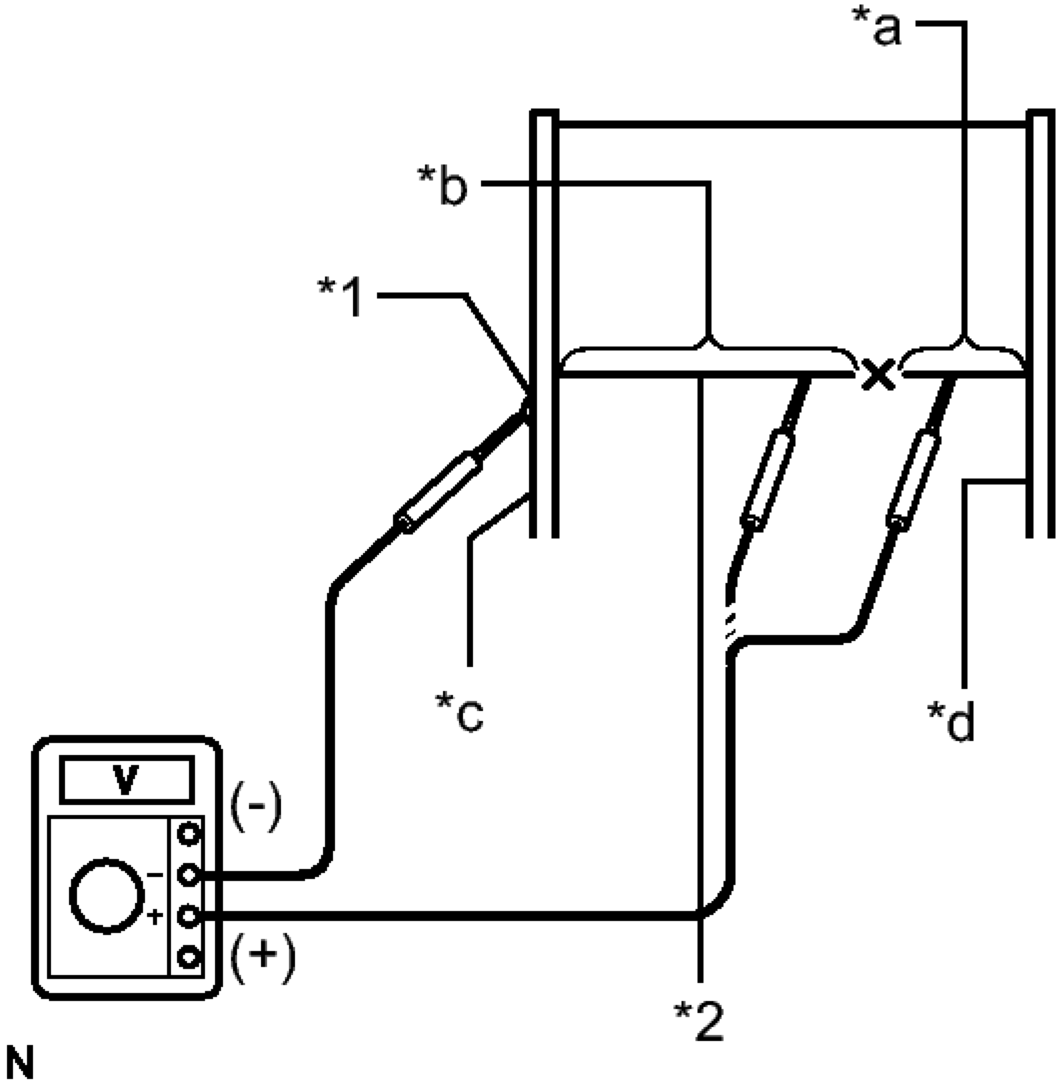

Fig. 81: Inspecting Rear Window Defogger Wire For Fault
Courtesy of TOYOTA MOTOR SALES, U.S.A., INC.

TEXT IN ILLUSTRATION

*1	Foil Strip
*2	Broken Wire
*a	11 to 14 V
*b	Below 1 V
*c	Ground Side
*d	Battery

	Side

e. Place the negative (-) lead of the voltmeter with the foil strip against the wire on the ground side.
f. Slide the positive (+) lead from the battery side to the ground side. The point where the voltage drops to below 1 V from 11 to 14 V is the place where the rear window defogger wire is broken.

HINT:

If the rear window defogger wire is not broken, the voltmeter should indicate 11 to 14 V at the battery side. When the positive (+) lead is slide to the ground side, the voltage gradually decreases to below 1 V.

REPAIR

REPAIR

1. **REPAIR REAR WINDOW DEFOGGER WIRE (BACK WINDOW GLASS)**

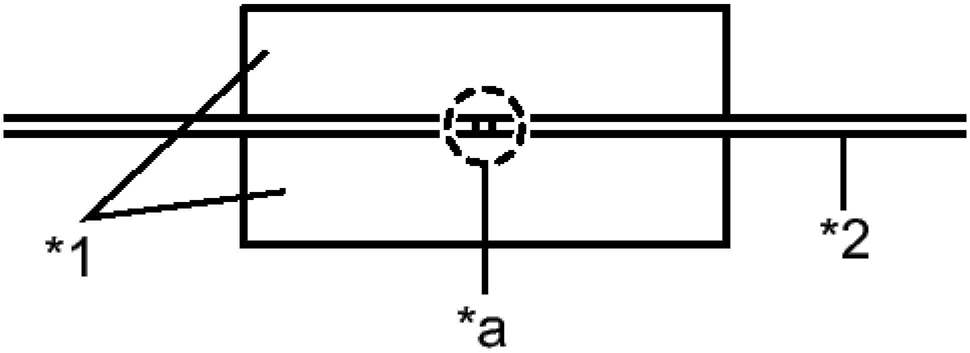

N

Fig. 82: Identifying Masking Tape & Broken Wire, Repair Point
Courtesy of TOYOTA MOTOR SALES, U.S.A., INC.

TEXT IN ILLUSTRATION

*1	Masking Tape
*2	Broken Wire

*a	Repair Point

a. Clean the broken wire tips with a grease, wax and silicone remover.
b. Place masking tape along both sides of the wire.
c. Thoroughly mix the repair agent (Dupont paste No. 4817 or equivalent).

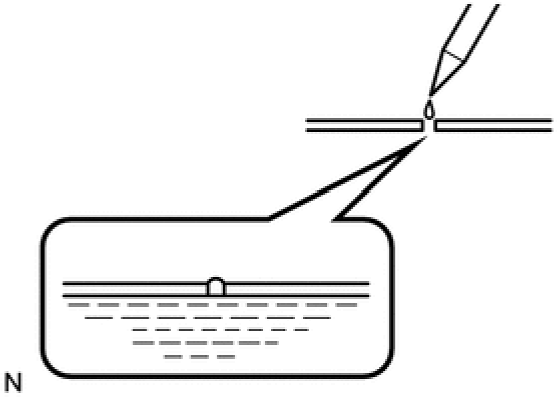

Fig. 83: Applying Small Amount Of Agent To Wire
Courtesy of TOYOTA MOTOR SALES, U.S.A., INC.

d. Using a fine tip brush, apply a small amount of the agent to the wire.
e. After a few minutes, remove the masking tape.

NOTE: **Do not use the rear window defogger for at least 24 hours after performing the repair.**

FRONT WIPER MOTOR

COMPONENTS

ILLUSTRATION

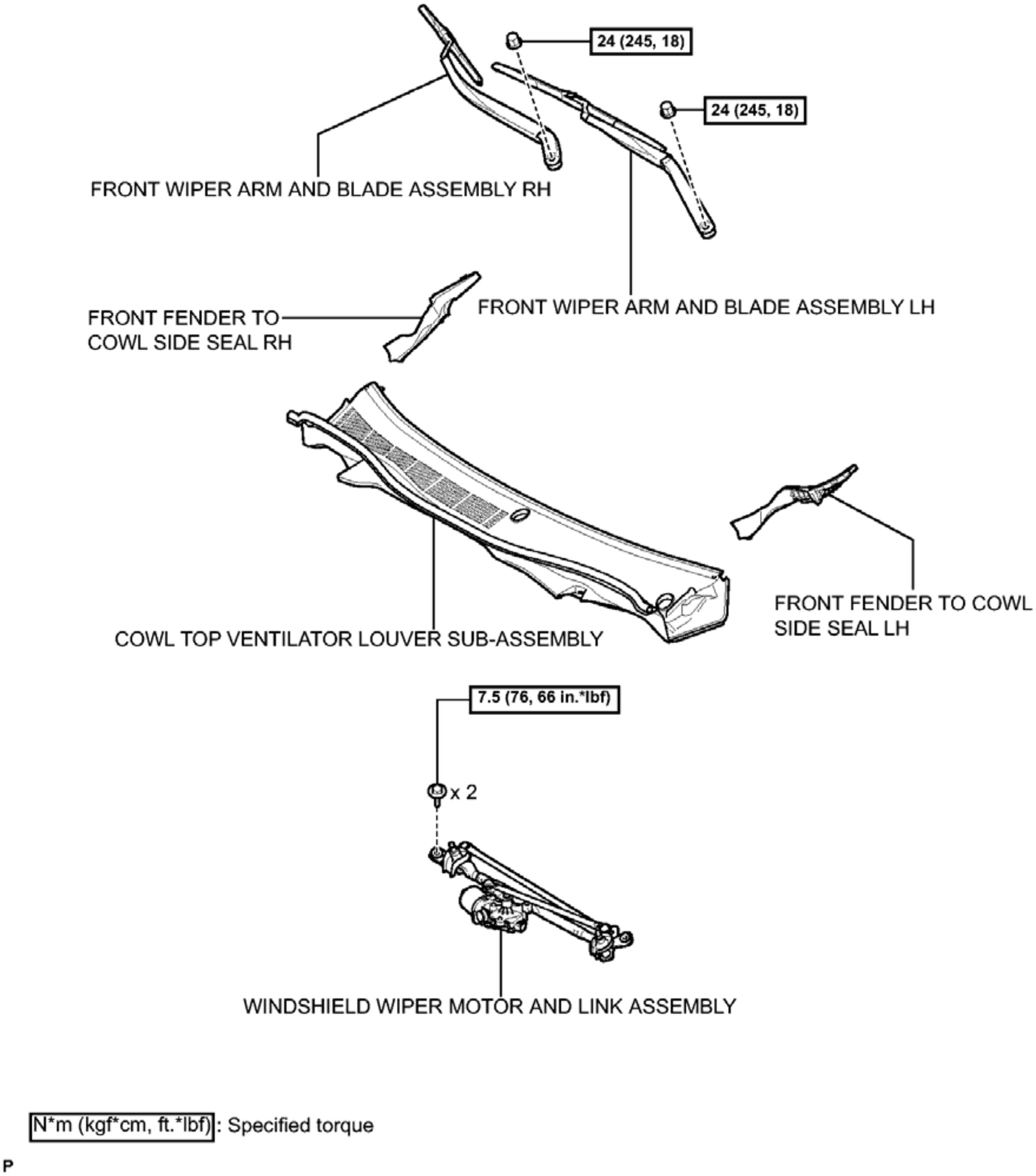
24 (245, 18)
24 (245, 18)
FRONT WIPER ARM AND BLADE ASSEMBLY RH
FRONT FENDER TO COWL SIDE SEAL RH
FRONT WIPER ARM AND BLADE ASSEMBLY LH
COWL TOP VENTILATOR LOUVER SUB-ASSEMBLY
FRONT FENDER TO COWL SIDE SEAL LH
7.5 (76, 66 in.*lbf)
x 2
WINDSHIELD WIPER MOTOR AND LINK ASSEMBLY
N*m (kgf*cm, ft.*lbf): Specified torque
P

Fig. 1: Identifying Front Wiper Motor Replacement Components With Torque Specifications (1 Of 2)
Courtesy of TOYOTA MOTOR SALES, U.S.A., INC.

ILLUSTRATION

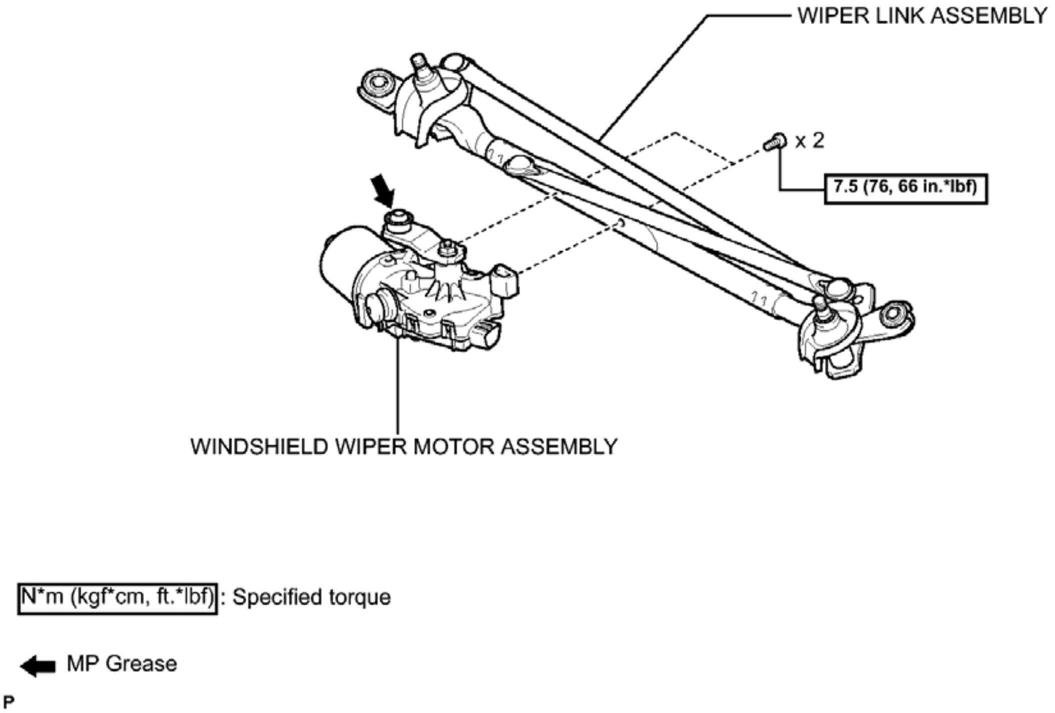
WIPER LINK ASSEMBLY
x 2
7.5 (76, 66 in.*lbf)
WINDSHIELD WIPER MOTOR ASSEMBLY
N*m (kgf*cm, ft.*lbf) : Specified torque
MP Grease
P

Fig. 2: Identifying Front Wiper Motor Replacement Components With Torque Specifications (2 Of 2)
Courtesy of TOYOTA MOTOR SALES, U.S.A., INC.

ON-VEHICLE INSPECTION

ON-VEHICLE INSPECTION

1. **INSPECT WINDSHIELD WIPER MOTOR ASSEMBLY**
    a. for RH Side:
        1. Check the stop (park) position.

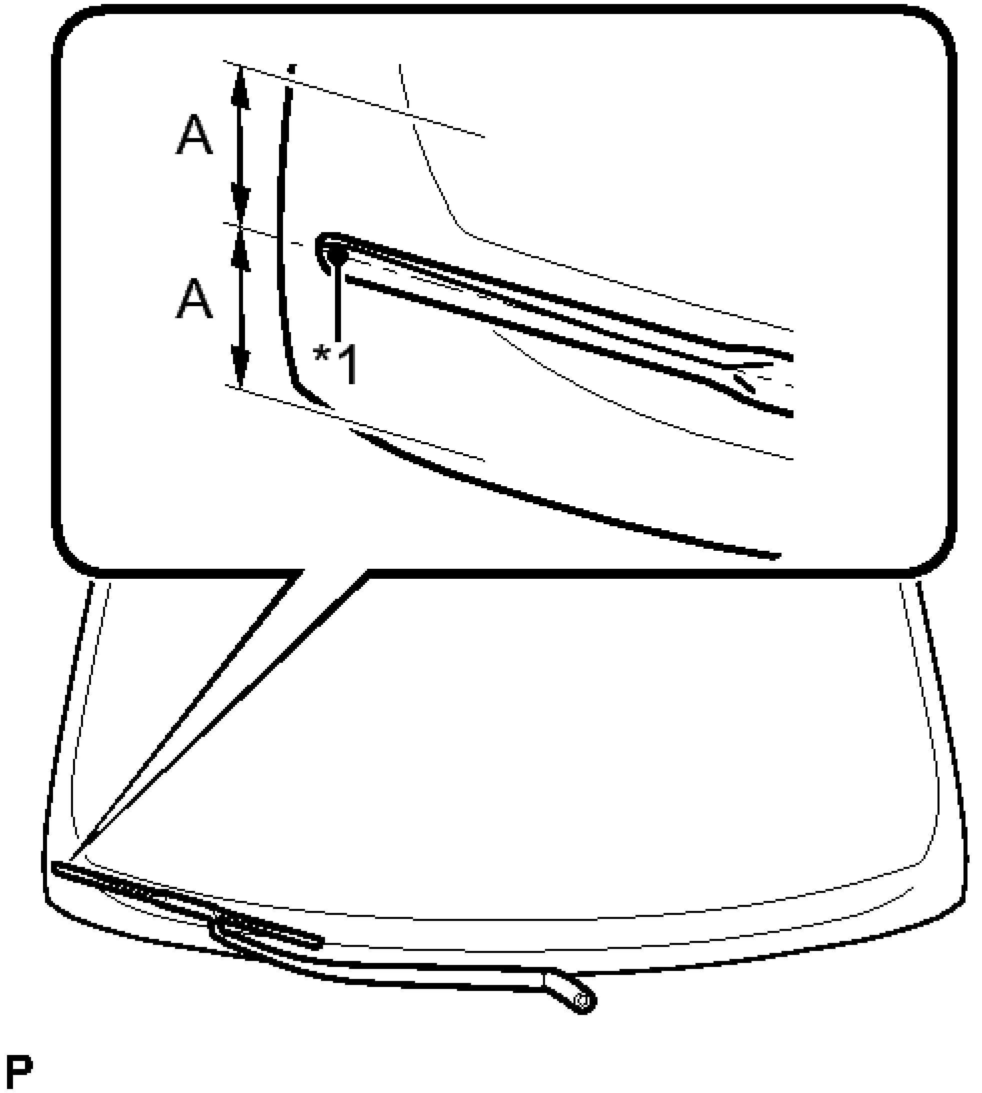

Fig. 3: Identifying Stop (Park) Position
Courtesy of TOYOTA MOTOR SALES, U.S.A., INC.

2. Operate the windshield wiper motor assembly.
3. Stop the windshield wiper motor assembly operation.
4. Check the automatic stop (park) position.

HINT:

After the front wiper motor is stopped, check the automatic stop position after lifting the wiper blade 2 times.

OK

The front wiper stops at the position shown in the illustration.

Area	Measurement
A	7.5mm (0.295 in.)

TEXT IN ILLUSTRATION

*1	Ceramic Dot

b. for LH Side:
   1. Operate the windshield wiper motor assembly.

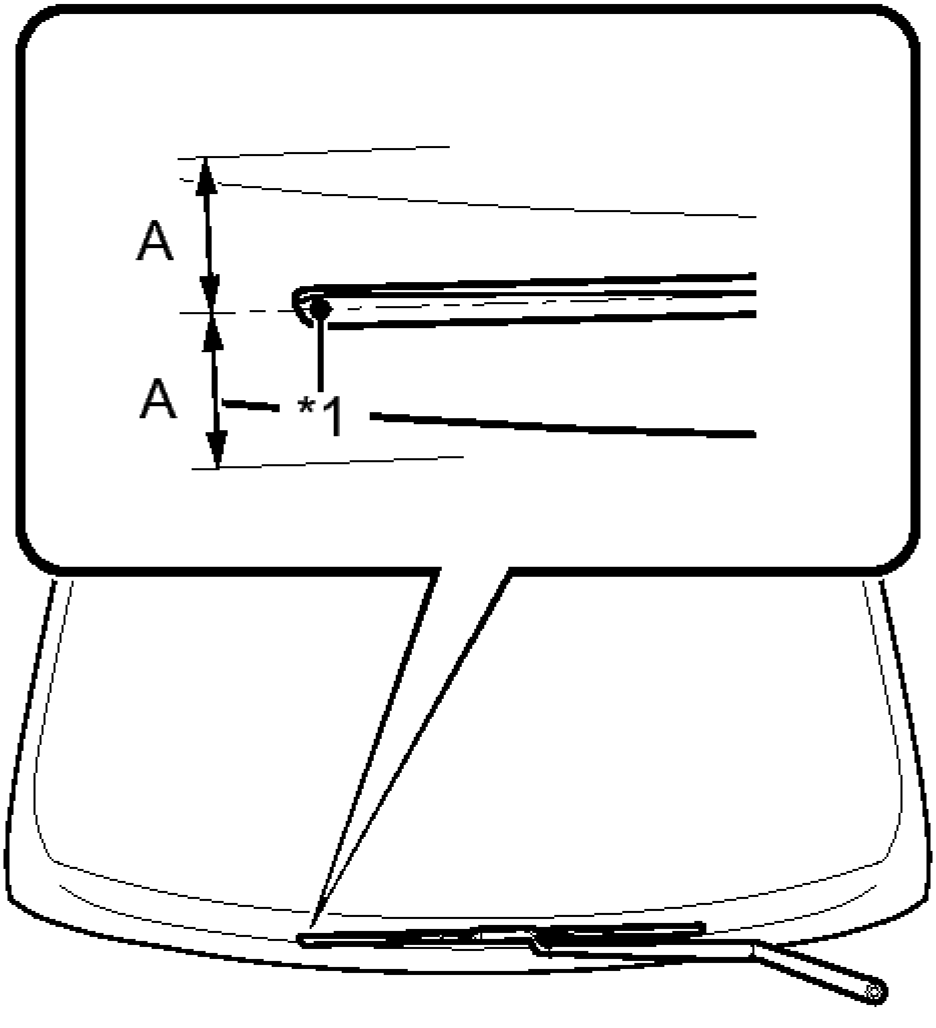

Fig. 4: Identifying Stop (Park) Position
Courtesy of TOYOTA MOTOR SALES, U.S.A., INC.

   2. Stop the windshield wiper motor assembly operation.

3. Check the automatic stop (park) position.

   HINT:

   After the front wiper motor is stopped, check the automatic stop position after lifting the wiper blade 2 times.

   OK

   The front wiper stops at the position shown in the illustration.

Area	Measurement
A	7.5mm (0.295 in.)

   TEXT IN ILLUSTRATION

*1	Ceramic Dot

REMOVAL

REMOVAL

1. **REMOVE FRONT WIPER ARM AND BLADE ASSEMBLY LH**
   a. Remove the nut and front wiper arm and blade assembly LH.

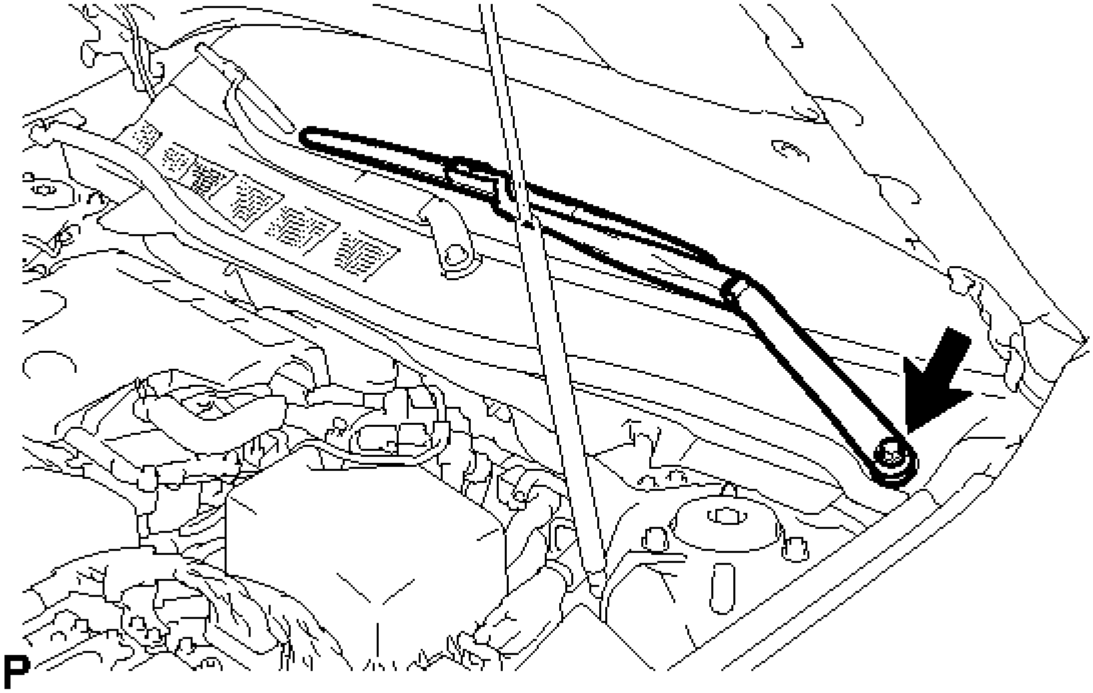

Fig. 5: Identifying Front Wiper Arm And Blade Assembly Nut LH
Courtesy of TOYOTA MOTOR SALES, U.S.A., INC.

2. **REMOVE FRONT WIPER ARM AND BLADE ASSEMBLY RH**
    a. Remove the nut and front wiper arm and blade assembly RH.

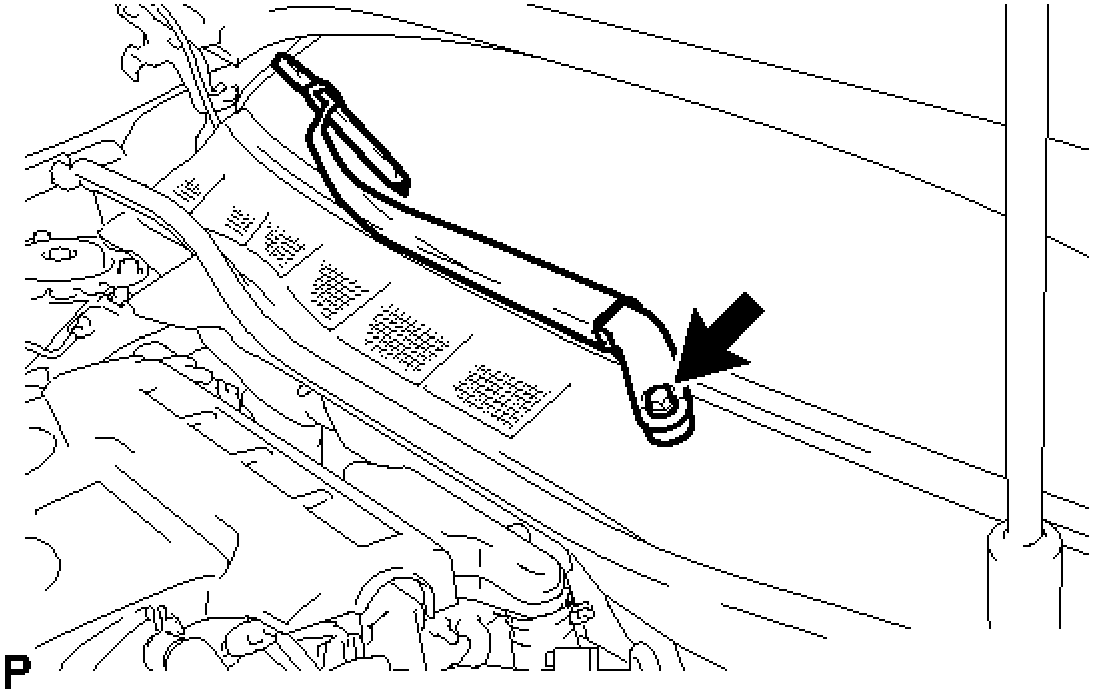

Fig. 6: Identifying Front Wiper Arm And Blade Assembly Nut RH
Courtesy of TOYOTA MOTOR SALES, U.S.A., INC.

3. **REMOVE FRONT FENDER TO COWL SIDE SEAL LH**
    a. Disengage the 2 clips and 3 guides, and remove the front fender to cowl side seal LH as shown in the illustration.

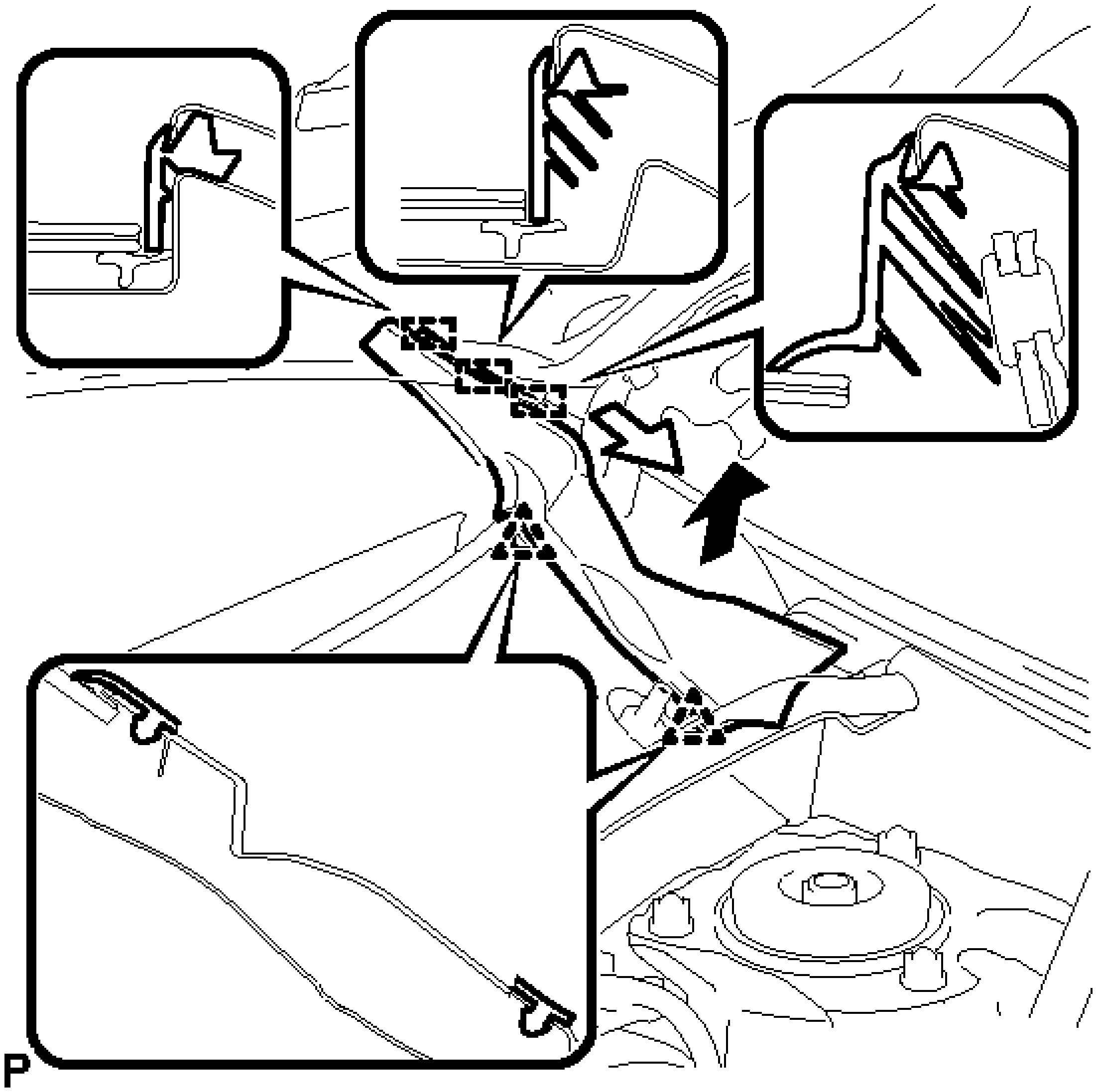

Fig. 7: Identifying Front Fender To Cowl Side Seal Guides And Clips LH
Courtesy of TOYOTA MOTOR SALES, U.S.A., INC.

4. **REMOVE FRONT FENDER TO COWL SIDE SEAL RH**

   HINT:

   Use the same procedure as for the LH side.

5. **REMOVE COWL TOP VENTILATOR LOUVER SUB-ASSEMBLY**
   a. Disengage the 6 claws and guide as shown in the illustration.

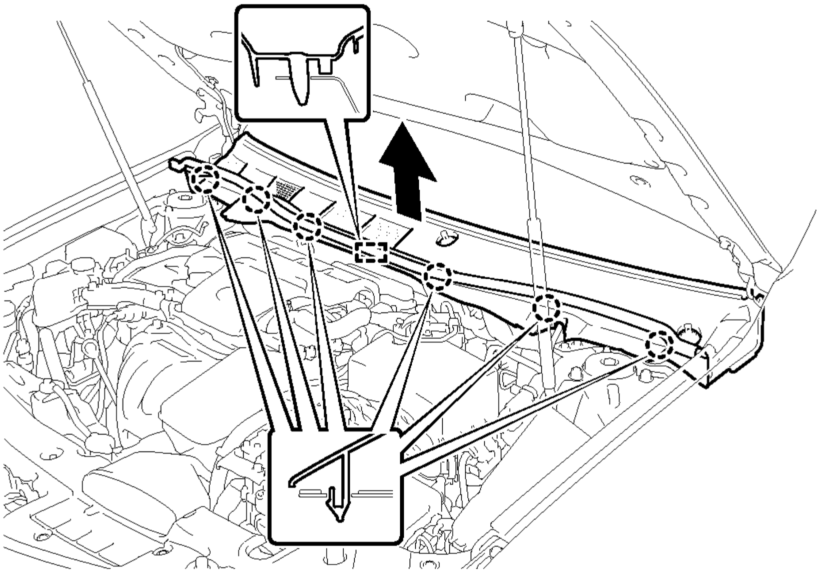

Fig. 8: Identifying Cowl Top Ventilator Louver Sub-Assembly Claws
Courtesy of TOYOTA MOTOR SALES, U.S.A., INC.

b. Disengage the 8 guides and pull out the cowl top ventilator louver sub-assembly as shown in the illustration.

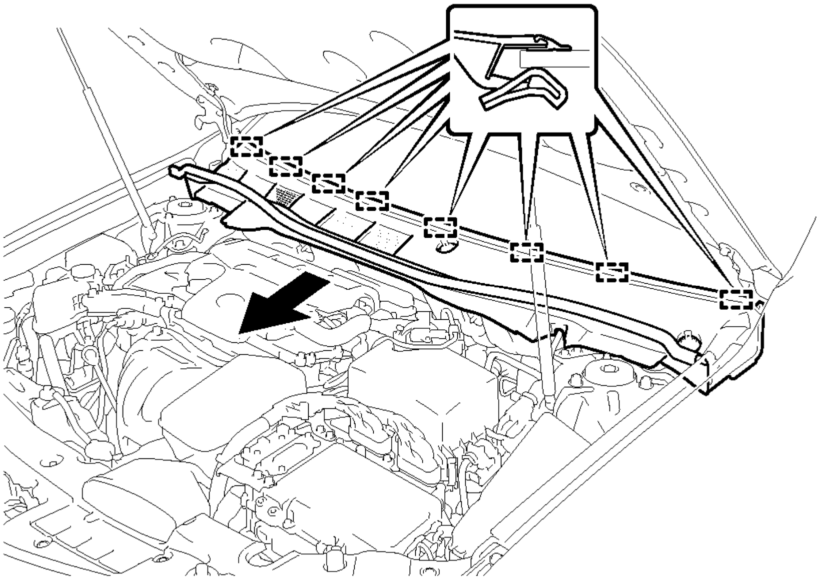

Fig. 9: Identifying Top Ventilator Louver Sub-Assembly Guides
Courtesy of TOYOTA MOTOR SALES, U.S.A., INC.

6. **REMOVE WINDSHIELD WIPER MOTOR AND LINK ASSEMBLY**
   a. Operate the wiper and stop the windshield wiper motor at the automatic stop position.
   b. Disconnect the connector.

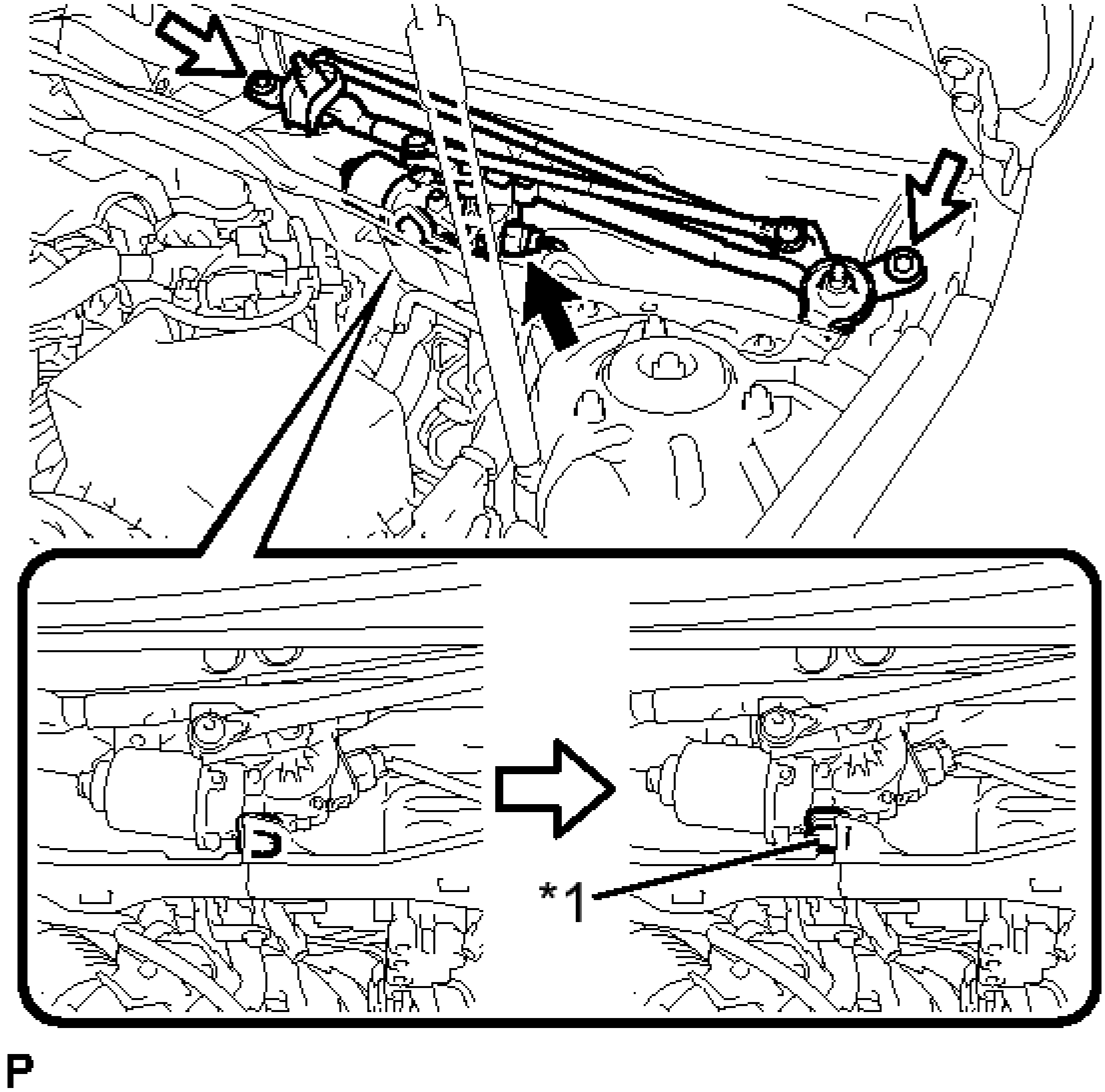

Fig. 10: Identifying Windshield Wiper Motor And Link Assembly Motor Grommet
Courtesy of TOYOTA MOTOR SALES, U.S.A., INC.

TEXT IN ILLUSTRATION

*1	Motor Grommet

c. Remove the 2 bolts.
d. Disengage the motor grommet and remove the windshield wiper motor and link assembly as shown in the illustration.

NOTE: **Be careful not to damage the windshield when removing the windshield wiper motor and link assembly.**

7. **REMOVE WINDSHIELD WIPER MOTOR ASSEMBLY**

a. Using a screwdriver, separate the No. 1 rod from the windshield wiper motor assembly as shown in the illustration.

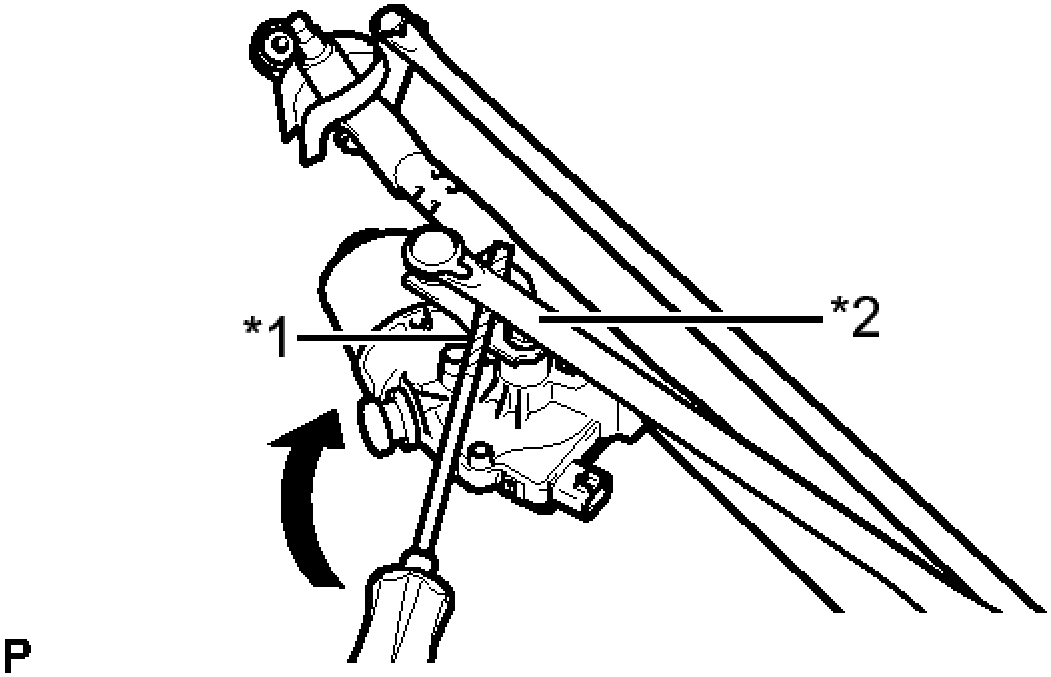

Fig. 11: Separating No. 1 Rod Using Screwdriver
Courtesy of TOYOTA MOTOR SALES, U.S.A., INC.

TEXT IN ILLUSTRATION

*1	Protective Tape
*2	No. 1 Rod

HINT:

Tape the screwdriver tip before use.

b. Using a T30 "TORX" socket wrench, remove the 2 bolts and windshield wiper motor assembly from the wiper link assembly.

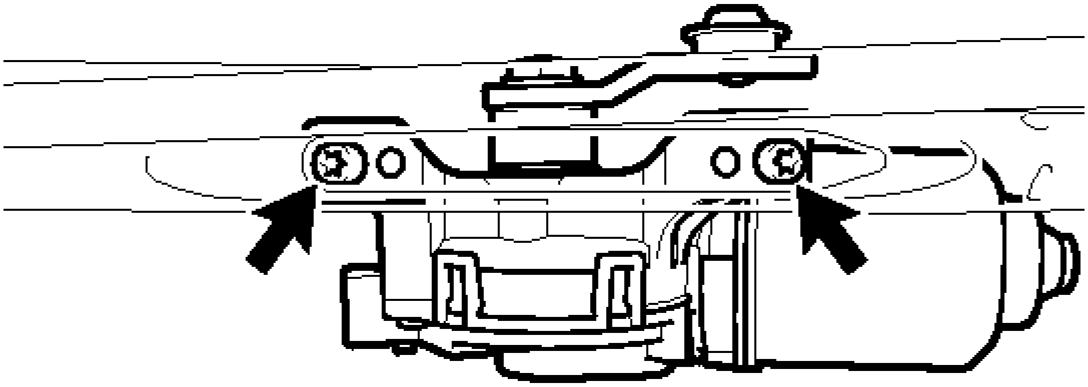

Fig. 12: Locating Windshield Wiper Motor Assembly Bolts
Courtesy of TOYOTA MOTOR SALES, U.S.A., INC.

INSPECTION

INSPECTION

WARNING: **Ensure that fingers or articles of clothing do not get caught in moving parts when performing this test.**

1. **INSPECT WINDSHIELD WIPER MOTOR ASSEMBLY**

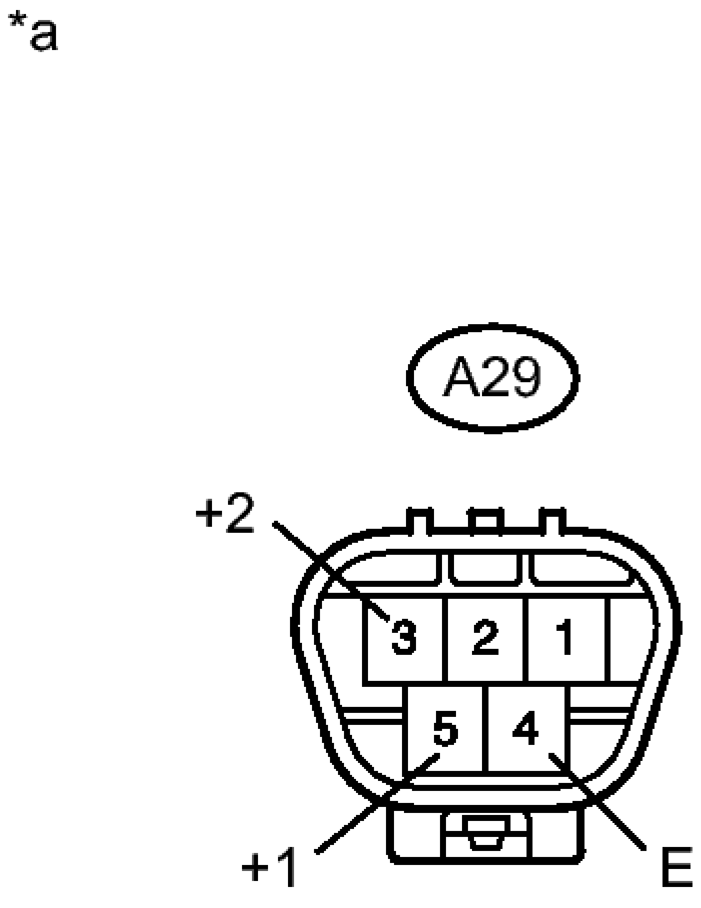

Fig. 13: Identifying Windshield Wiper Motor Assembly Connector Terminal Identification
Courtesy of TOYOTA MOTOR SALES, U.S.A., INC.

a. Check the LO operation.
    1. Connect a auxiliary battery positive (+) lead to terminal A29-5 (+1) and a negative (-) lead to terminal A29-4 (E), and check that the motor operates at low speed.

       OK

       Motor operates at low speed (LO).

b. Check the HI operation.
    1. Connect a auxiliary battery positive (+) lead to terminal A29-3 (+2) and a negative (-) lead to terminal A29-4 (E), and check that the motor operates at high speed.

       OK

Motor operates at high speed (HI).

TEXT IN ILLUSTRATION

*a	Component without harness connected (Windshield Wiper Motor Assembly)

If the result is not as specified, replace the windshield wiper motor assembly.

INSTALLATION

INSTALLATION

1. **INSTALL WINDSHIELD WIPER MOTOR ASSEMBLY**
   a. Using a T30 "TORX" socket wrench, install the windshield wiper motor assembly with the 2 bolts.

      Torque: 7.5 N*m (76 kgf*cm, 66 in.*lbf)

   b. Connect the connector.
   c. Turn the power switch on (IG).
   d. Operate the wiper and stop the windshield wiper motor assembly at the automatic stop position.
   e. Turn the power switch off.
   f. Disconnect the connector.
   g. Apply MP grease to the pivot of the windshield wiper motor assembly.

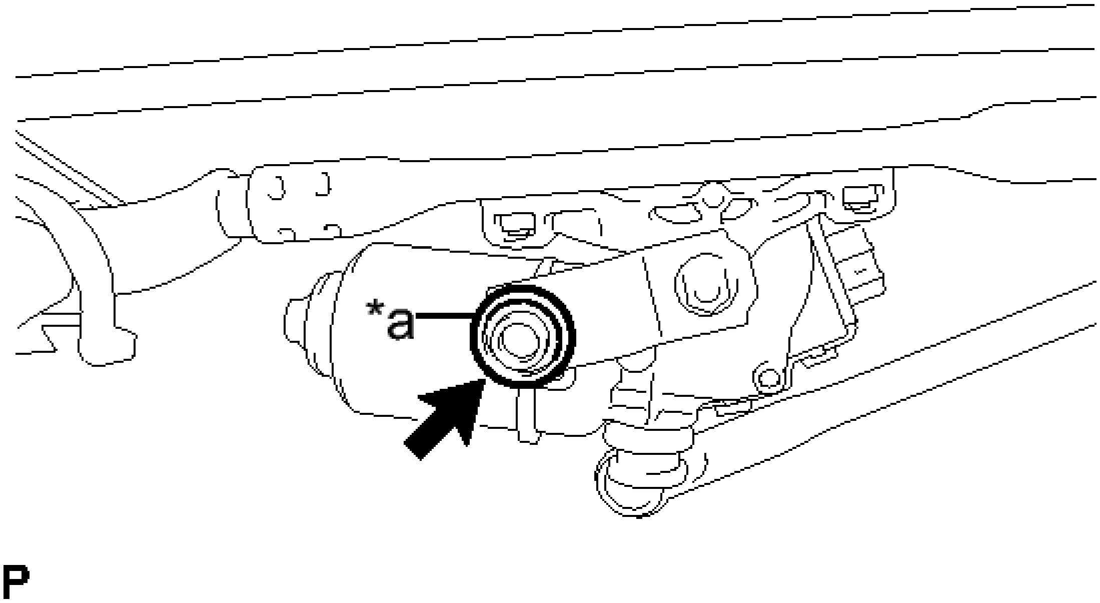

Fig. 14: Identifying Pivot Of Windshield Wiper Motor Assembly
Courtesy of TOYOTA MOTOR SALES, U.S.A., INC.

TEXT IN ILLUSTRATION

*a	Pivot of the windshield wiper motor assembly

h. Connect the No. 1 rod to the pivot of the windshield wiper motor assembly.

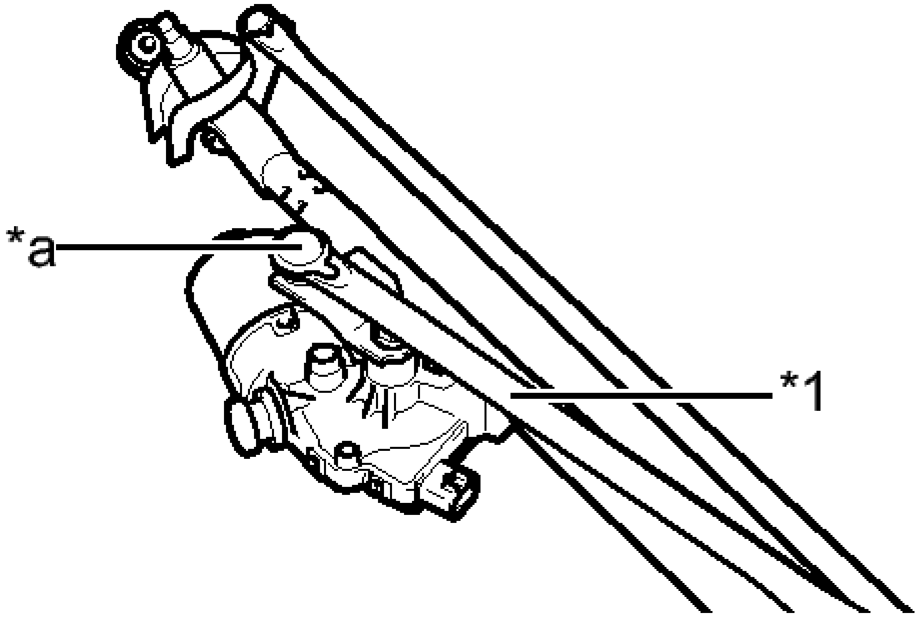

Fig. 15: Identifying No. 1 Rod And Pivot Windshield Wiper Motor Assembly
Courtesy of TOYOTA MOTOR SALES, U.S.A., INC.

TEXT IN ILLUSTRATION

*1	No. 1 Rod
*a	Pivot of the windshield wiper motor assembly

2. **INSTALL WINDSHIELD WIPER MOTOR AND LINK ASSEMBLY**
    a. Engage the motor grommet as shown in the illustration.

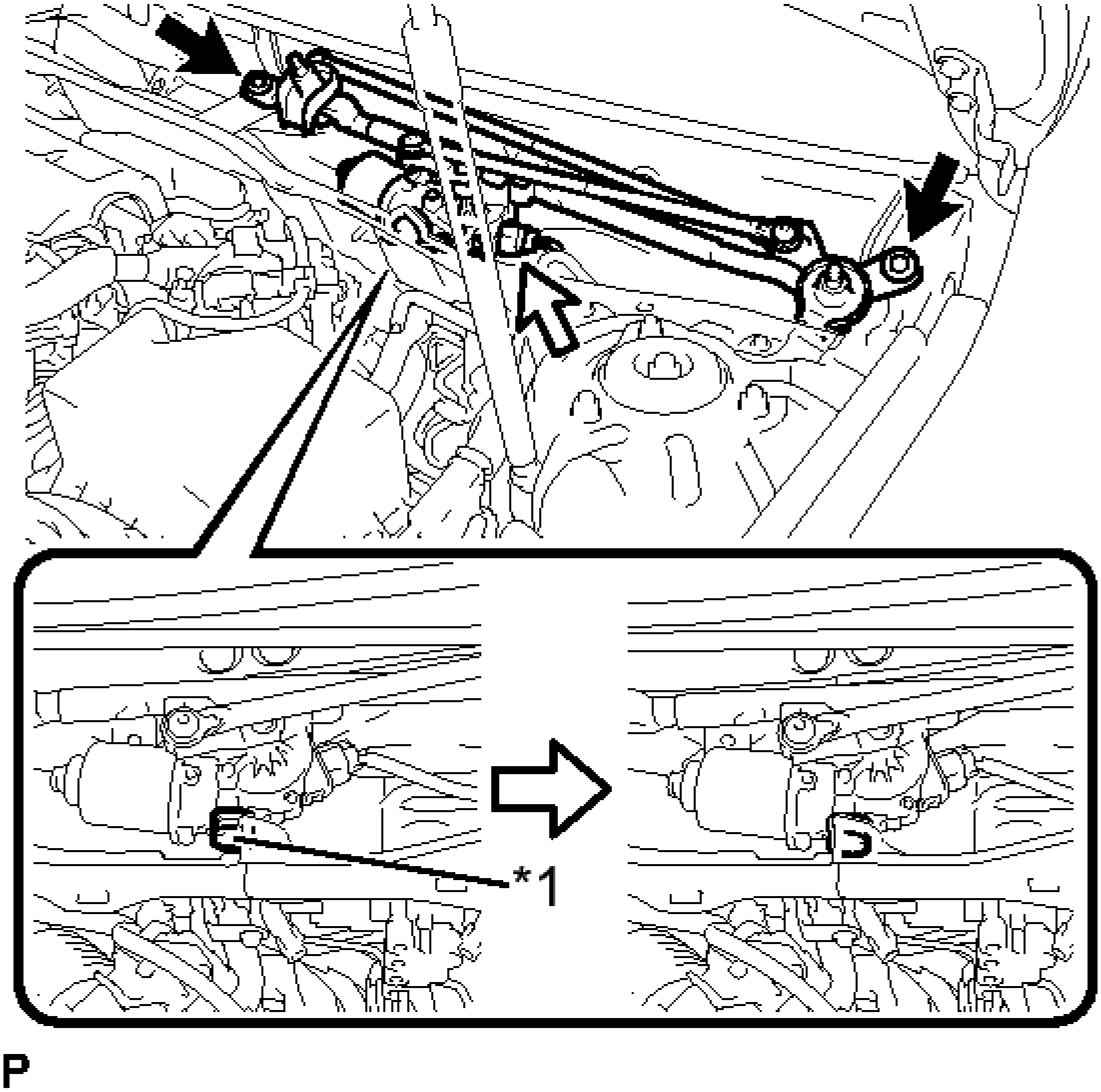

Fig. 16: Identifying Windshield Wiper Motor And Link Assembly Motor Grommet
Courtesy of TOYOTA MOTOR SALES, U.S.A., INC.

TEXT IN ILLUSTRATION

*1	Motor Grommet

NOTE: **Be careful not to damage the windshield when installing the windshield wiper motor and link assembly.**

b. Install the windshield wiper motor and link assembly with the 2 bolts.

Torque: 7.5 N*m (76 kgf*cm, 66 in.*lbf)

c. Connect the connector.

3. **INSTALL COWL TOP VENTILATOR LOUVER SUB-ASSEMBLY**
   a. Engage the 8 guides as shown in the illustration.

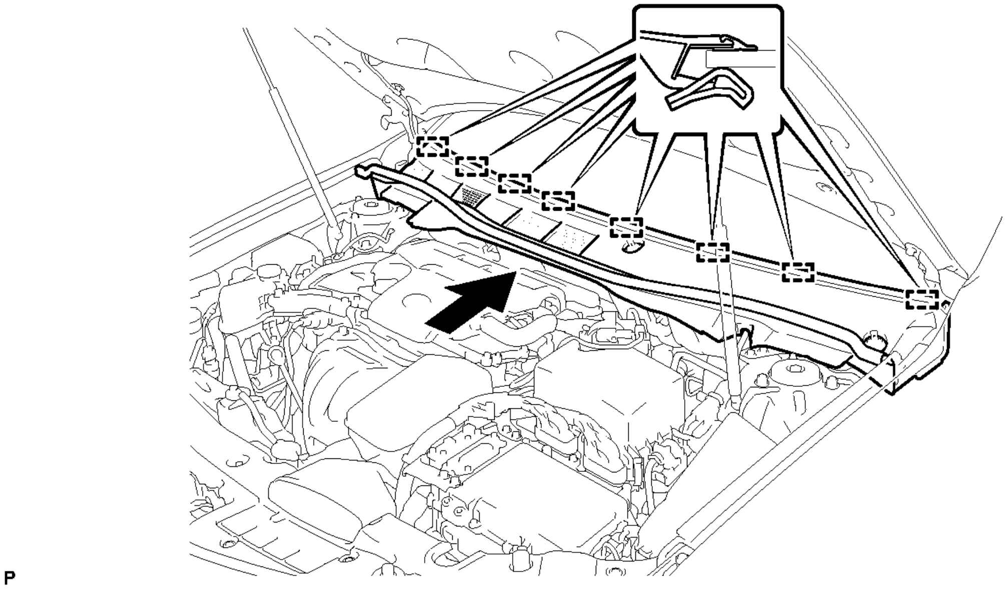

Fig. 17: Identifying Cowl Top Ventilator Louver Sub-Assembly Guides
Courtesy of TOYOTA MOTOR SALES, U.S.A., INC.

   b. Engage the 6 claws and guide to install the cowl top ventilator louver sub-assembly.

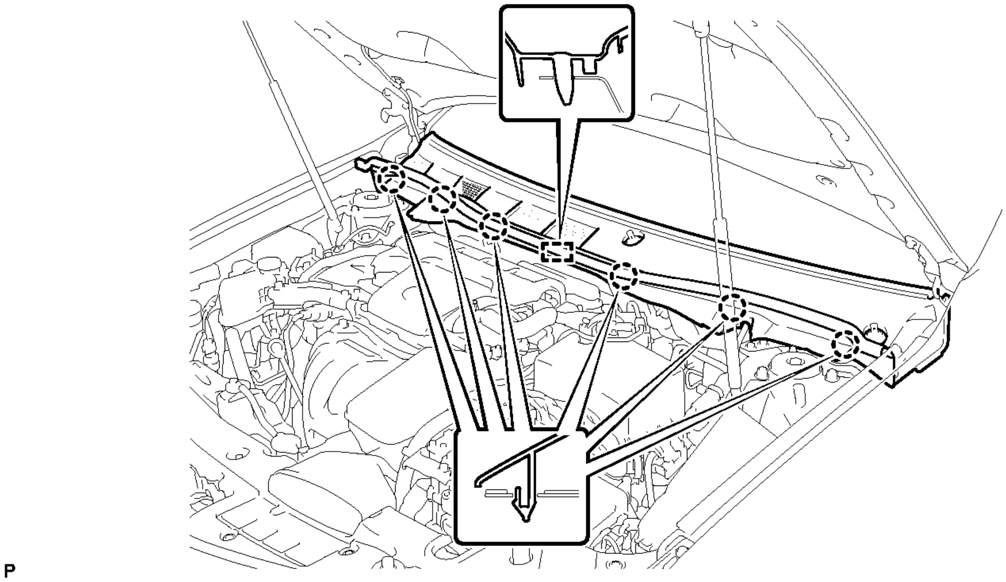

Fig. 18: Identifying Cowl Top Ventilator Louver Sub-Assembly Claws
Courtesy of TOYOTA MOTOR SALES, U.S.A., INC.

4. **INSTALL FRONT FENDER TO COWL SIDE SEAL LH**
   a. Engage the 3 guides and 2 clips to install the front fender to cowl side seal LH as shown in the

illustration.

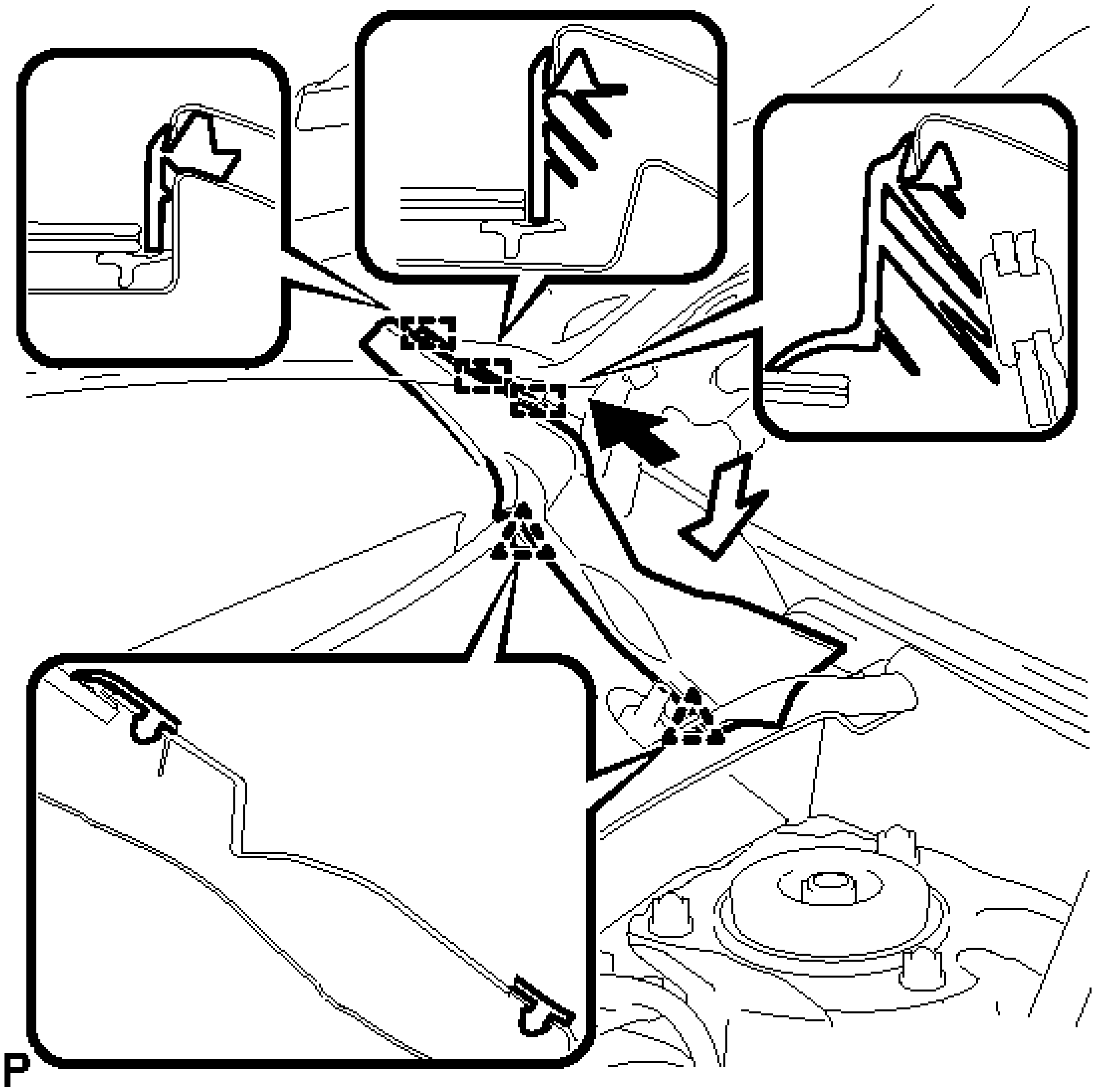

Fig. 19: Identifying Front Fender To Cowl Side Seal Guides And Clips LH
Courtesy of TOYOTA MOTOR SALES, U.S.A., INC.

5. **INSTALL FRONT FENDER TO COWL SIDE SEAL RH**

   HINT:

   Use the same procedure as for the LH side.

6. **INSTALL FRONT WIPER ARM AND BLADE ASSEMBLY LH**
   a. When reusing the front wiper arm and blade assembly LH:

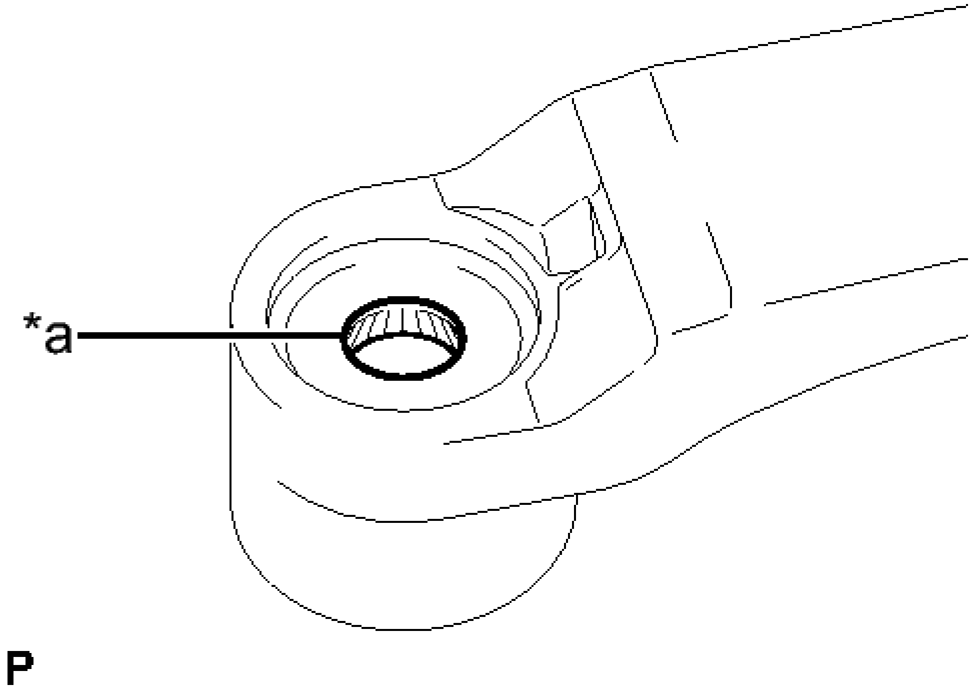

Fig. 20: Identifying Wiper Arm Serration
Courtesy of TOYOTA MOTOR SALES, U.S.A., INC.

1. Clean the wiper arm serrations.

   TEXT IN ILLUSTRATION

*a	Wiper Arm Serration

b. When reusing the windshield wiper link assembly:

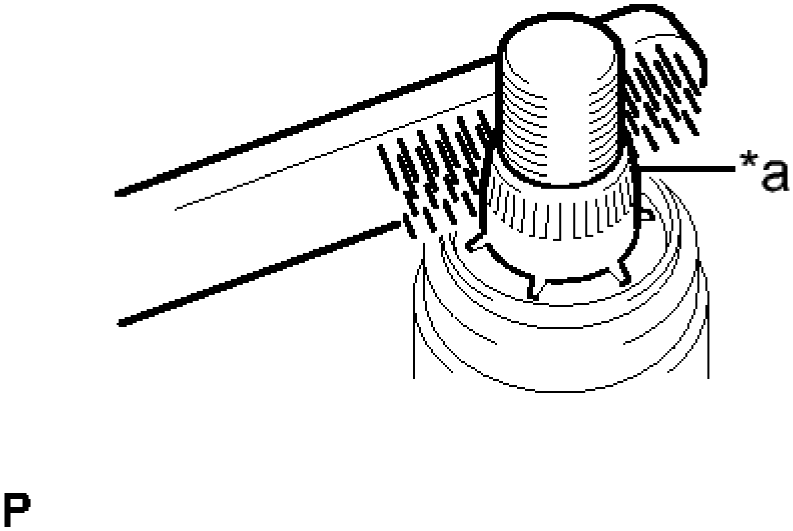

Fig. 21: Cleaning Wiper Pivot Serrations With Wire Brush
Courtesy of TOYOTA MOTOR SALES, U.S.A., INC.

1. Clean the wiper pivot serrations with a wire brush.

TEXT IN ILLUSTRATION

*a	Wiper Pivot Serration

c. Set the front wiper arm and blade assembly LH in the range shown in the illustration and then install the front wiper arm and blade assembly LH with the nut.

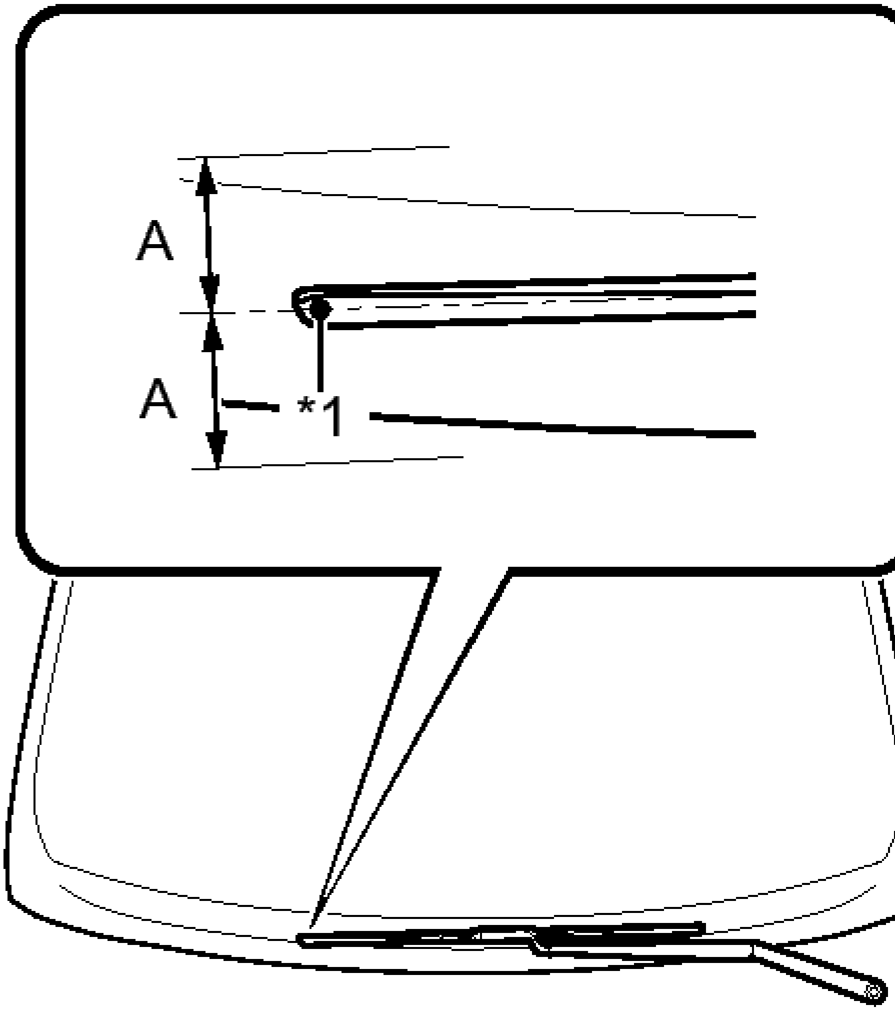

P

Fig. 22: Identifying Front Wiper And Blade Assembly LH
Courtesy of TOYOTA MOTOR SALES, U.S.A., INC.

Torque: 24 N*m (245 kgf*cm, 18 ft.*lbf)

Area	Measurement
A	7.5 mm (0.295 in.)

TEXT IN ILLUSTRATION

*1	Ceramic Dot

HINT:

Hold the wiper arm by hand while tightening the nut.

7. **INSTALL FRONT WIPER ARM AND BLADE ASSEMBLY RH**
   a. When reusing the front wiper arm and blade assembly RH:

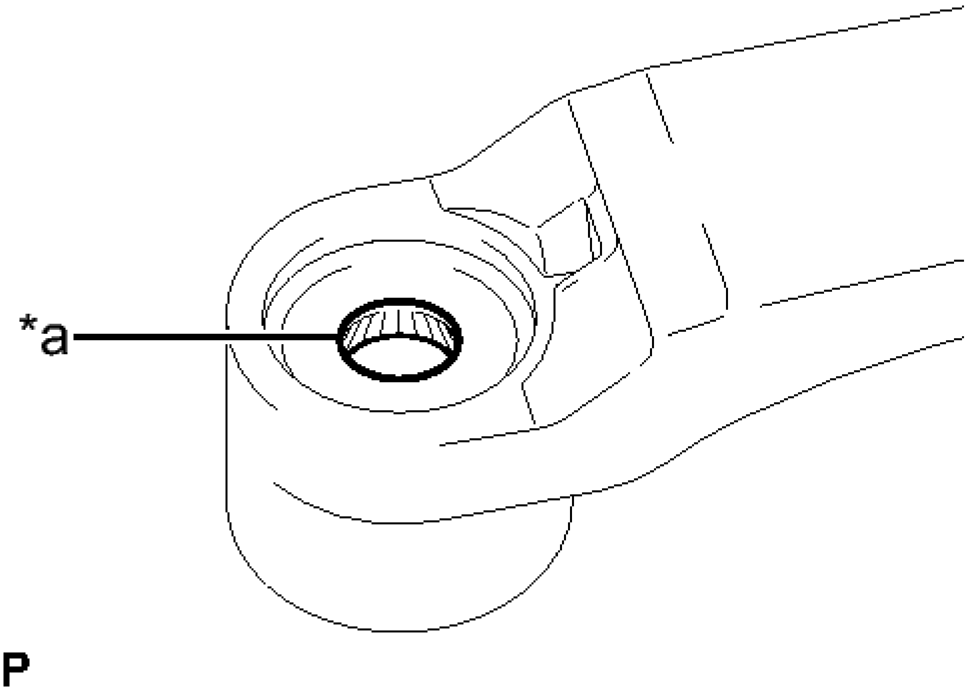

Fig. 23: Identifying Wiper Arm Serration
Courtesy of TOYOTA MOTOR SALES, U.S.A., INC.

      1. Clean the wiper arm serrations.

TEXT IN ILLUSTRATION

*a	Wiper Arm Serration

   b. When reusing the windshield wiper link assembly:

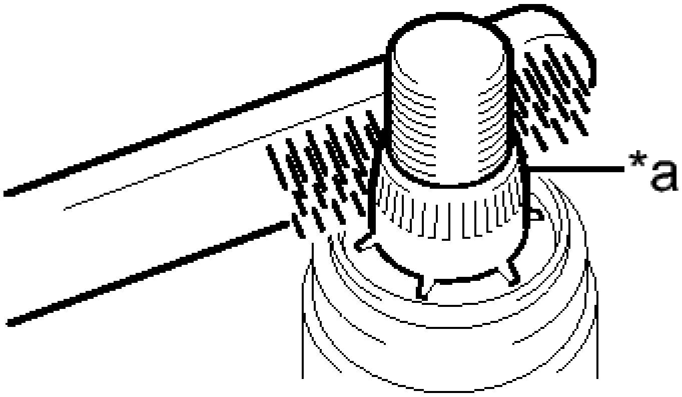

P

Fig. 24: Cleaning Wiper Pivot Serrations With Wire Brush
Courtesy of TOYOTA MOTOR SALES, U.S.A., INC.

1. Clean the wiper pivot serrations with a wire brush.

   TEXT IN ILLUSTRATION

*a	Wiper Pivot Serration

c. Set the front wiper arm and blade assembly RH in the range shown in the illustration and then install the front wiper arm and blade assembly RH with the nut.

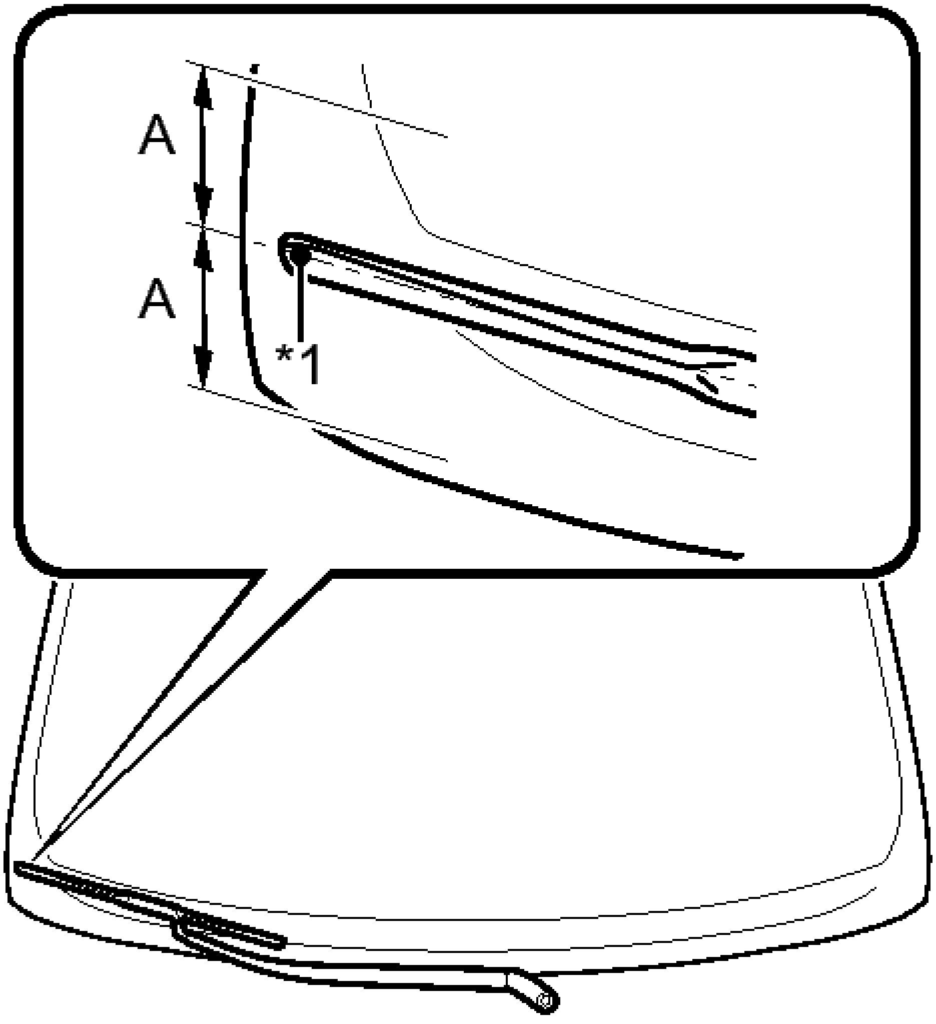

Fig. 25: Identifying Front Wiper Arm And Blade Assembly RH
Courtesy of TOYOTA MOTOR SALES, U.S.A., INC.

Torque: 24 N*m (245 kgf*cm, 18 ft.*lbf)

Area	Measurement
A	7.5 mm (0.295 in.)

TEXT IN ILLUSTRATION

*1	Ceramic Dot

HINT:

Hold the wiper arm by hand while tightening the nut.

d. Turn the power switch on (IG).
e. Operate the front wiper while spraying washer fluid onto the windshield glass. Make sure that the front wiper functions properly and the wiper does not come into contact with the vehicle body.
f. Lift each wiper arm twice after the wipers stop and check the wiper set position.
g. Turn the power switch off.

FRONT WIPER RUBBER

COMPONENTS

ILLUSTRATION

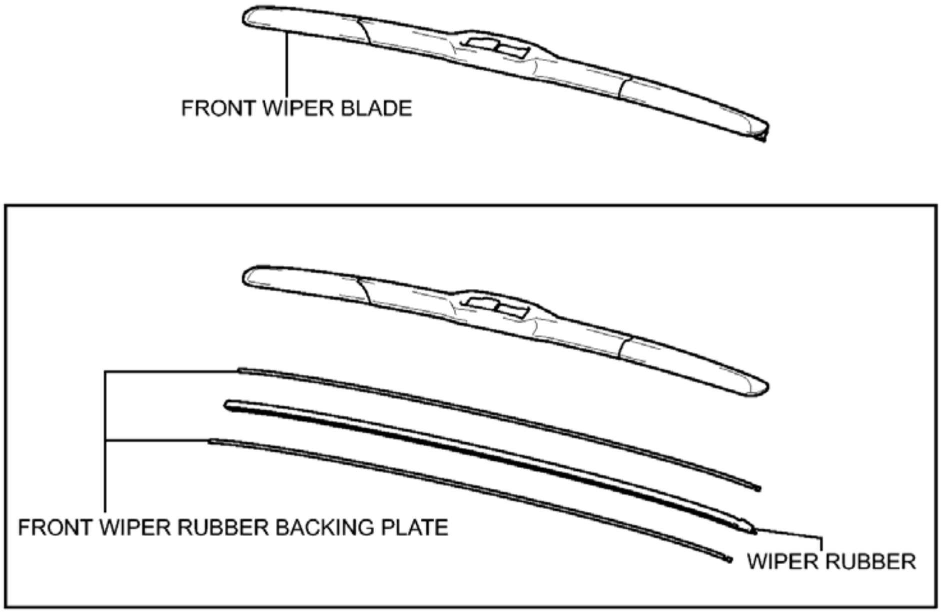

Fig. 26: Identifying Front Wiper Rubber Replacement Components
Courtesy of TOYOTA MOTOR SALES, U.S.A., INC.

REPLACEMENT

REPLACEMENT

1. **REMOVE FRONT WIPER BLADE**
   a. Pull up the holder of the front wiper blade.

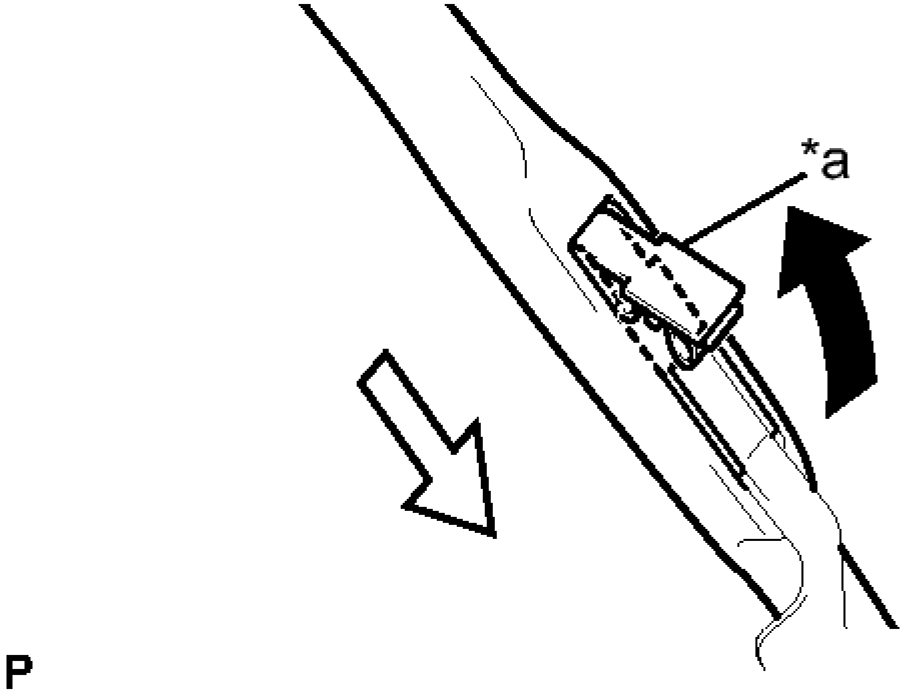

Fig. 27: Identifying Front Wiper Blade Holder
Courtesy of TOYOTA MOTOR SALES, U.S.A., INC.

TEXT IN ILLUSTRATION

*a	Holder

b. Remove the front wiper blade from the front wiper arm as shown in the illustration.

NOTE: **Do not lower the front wiper arm with the front wiper blade removed. The arm tip may damage the windshield surface.**

2. **REMOVE WIPER RUBBER**
    a. Remove the wiper rubber with the front wiper rubber backing plates from the front wiper blade.

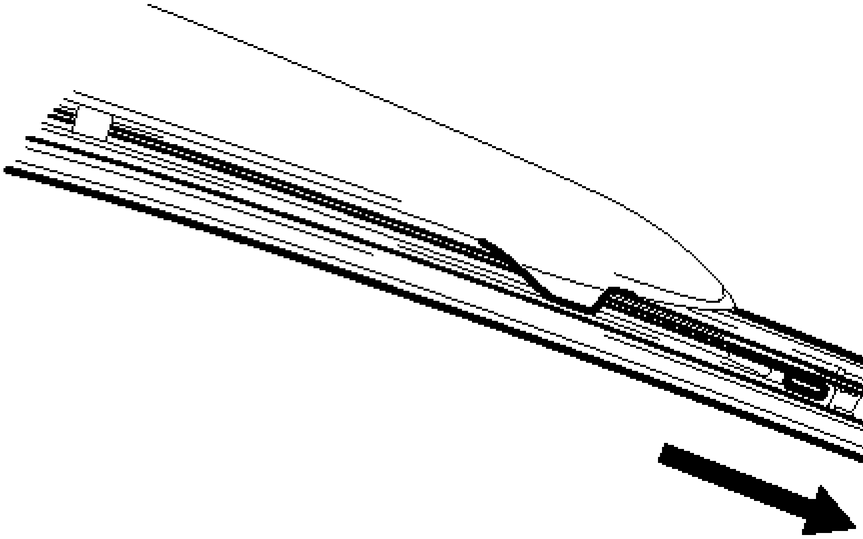

P

Fig. 28: Removing Wiper Rubber
Courtesy of TOYOTA MOTOR SALES, U.S.A., INC.

b. Remove the 2 front wiper rubber backing plates from the wiper rubber.

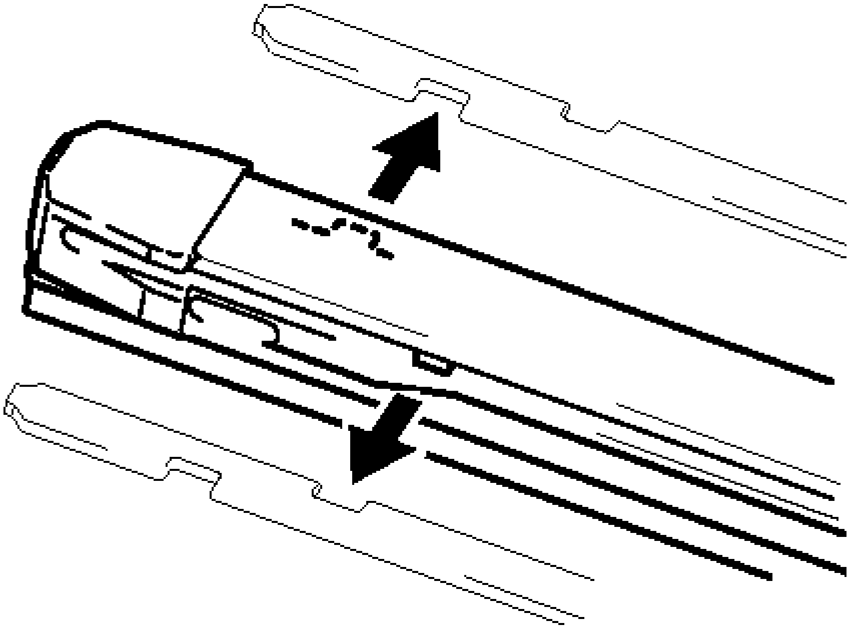

P

Fig. 29: Identifying Wiper Rubber Backing Plates
Courtesy of TOYOTA MOTOR SALES, U.S.A., INC.

3. **INSTALL WIPER RUBBER**

a. Install the 2 front wiper rubber backing plates to the wiper rubber.

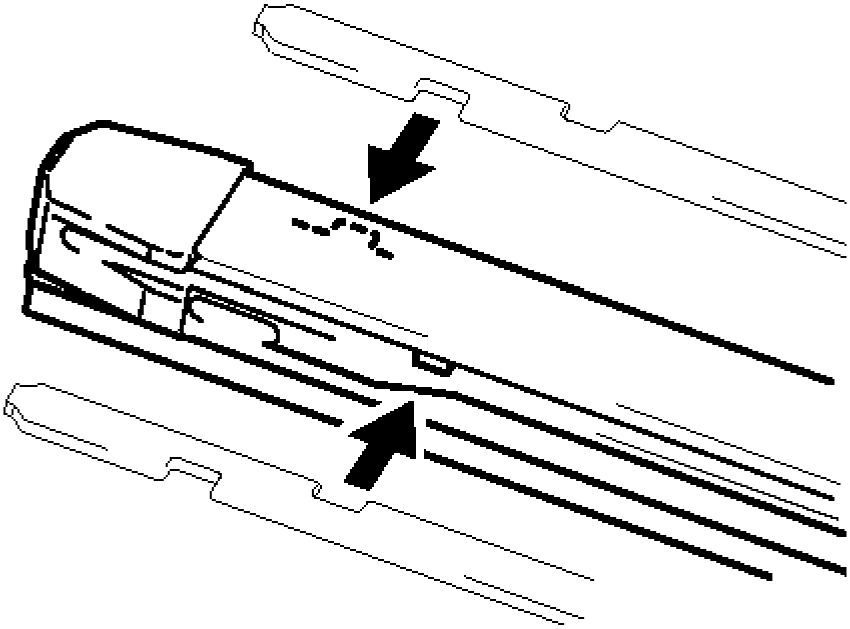

Fig. 30: Installing Wiper Rubber Backing Plates
Courtesy of TOYOTA MOTOR SALES, U.S.A., INC.

NOTE:

- **Align the protrusions on the wiper rubber and the notches of the backing plates.**
- **Align the curves of the backing plates and the glass.**

b. Install the wiper rubber to the front wiper blade as shown in the illustration.

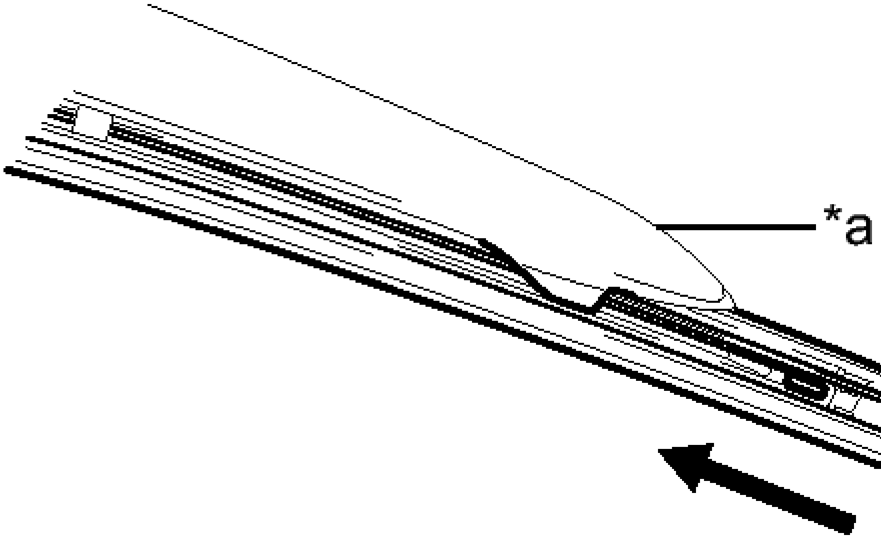

P

Fig. 31: Installing Wiper Rubber To Front Wiper Blade
Courtesy of TOYOTA MOTOR SALES, U.S.A., INC.

TEXT IN ILLUSTRATION

*a	Rear of the Wiper Blade

NOTE: **Push the wiper rubber into the front wiper blade strongly to engage them securely.**

4. **INSTALL FRONT WIPER BLADE**
    a. Install the front wiper blade as shown in the illustration.

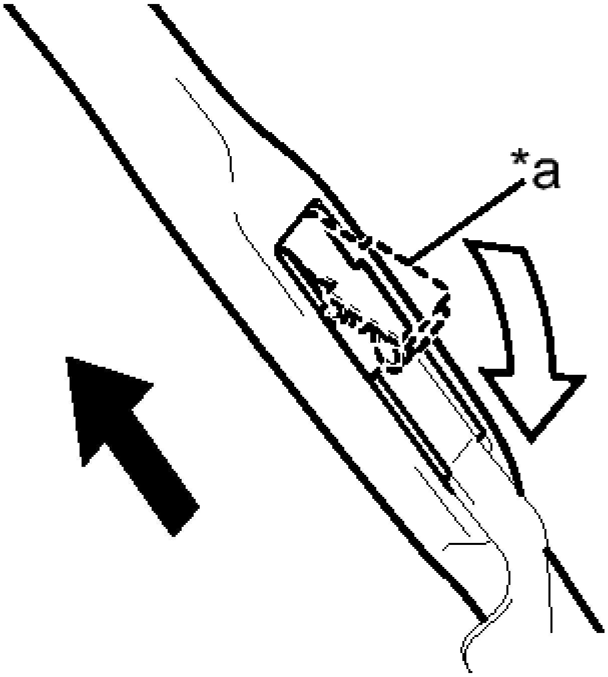

Fig. 32: Identifying Front Wiper Blade
Courtesy of TOYOTA MOTOR SALES, U.S.A., INC.

b. Install the holder of the front wiper blade.

TEXT IN ILLUSTRATION

*a	Holder

WIPER SWITCH

COMPONENTS

ILLUSTRATION

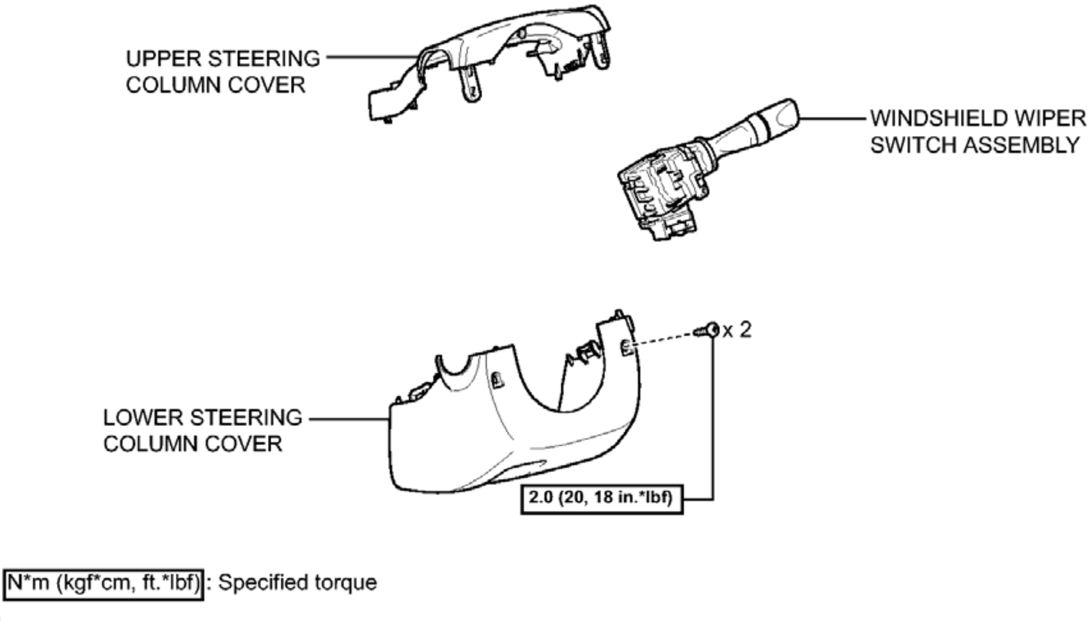
UPPER STEERING COLUMN COVER
WINDSHIELD WIPER SWITCH ASSEMBLY
x 2
LOWER STEERING COLUMN COVER
2.0 (20, 18 in.*lbf)
N*m (kgf*cm, ft.*lbf): Specified torque
P

Fig. 33: Identifying Wiper Switch Replacement Components With Torque Specifications
Courtesy of TOYOTA MOTOR SALES, U.S.A., INC.

ON-VEHICLE INSPECTION

ON-VEHICLE INSPECTION

1. **INSPECT WINDSHIELD WIPER SWITCH ASSEMBLY**
    a. Check the front wiper intermittent operation.
        1. Connect a voltmeter positive (+) lead to terminal I32-3 (+1) and a negative (-) lead to terminal I31-4 (EW).

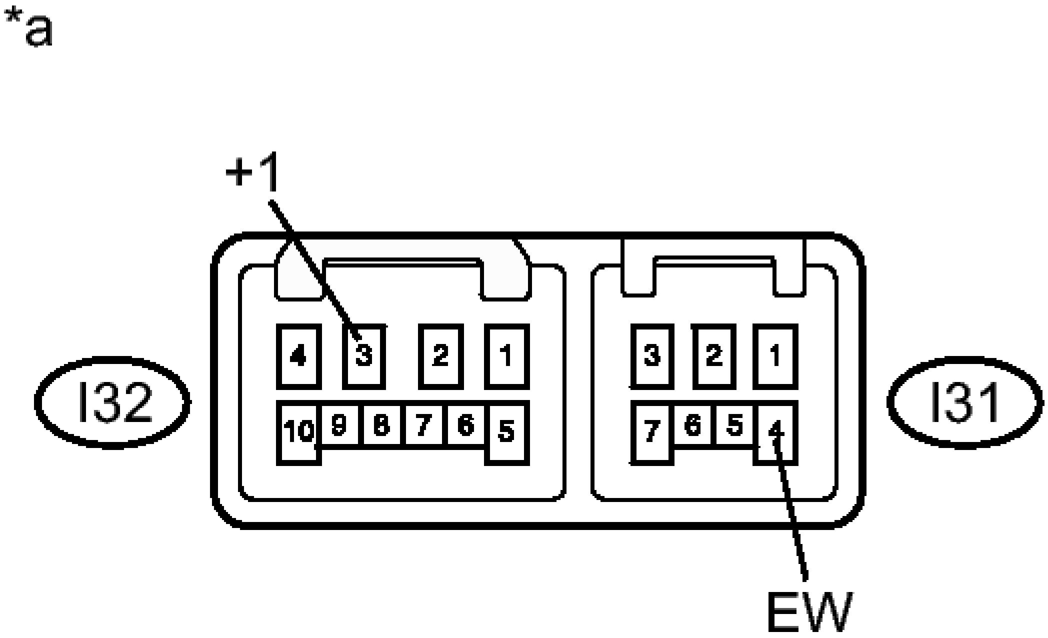

Fig. 34: Identifying Windshield Wiper Switch Assembly Connector Terminal Identification
Courtesy of TOYOTA MOTOR SALES, U.S.A., INC.

TEXT IN ILLUSTRATION

*a	Component with harness connected (Windshield Wiper Switch Assembly)

2. Turn the wiper switch to the INT position.
3. Operate the intermittent wiper relay and check the voltage between terminals I32-3 (+1) and I31-4 (EW).

   OK

   Voltage changes as shown in the illustration.

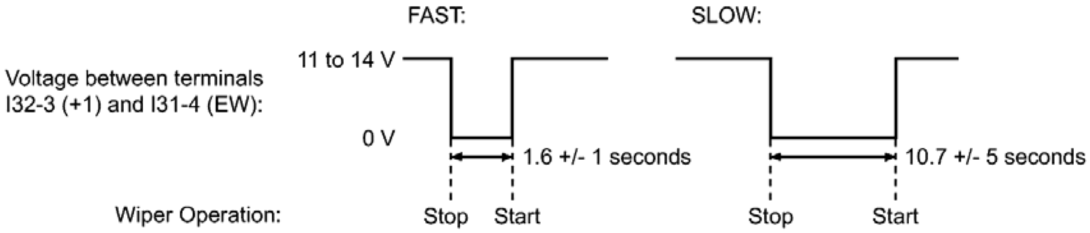

Fig. 35: Checking Intermittent Wiper Relay Voltage Graph (Fast & Slow)
Courtesy of TOYOTA MOTOR SALES, U.S.A., INC.

If the result is not as specified, replace the windshield wiper switch assembly.

b. Check the front washer operation.
   1. Connect a voltmeter positive (+) lead to terminal I32-3 (+1) and a negative (-) lead to terminal I31-4 (EW).

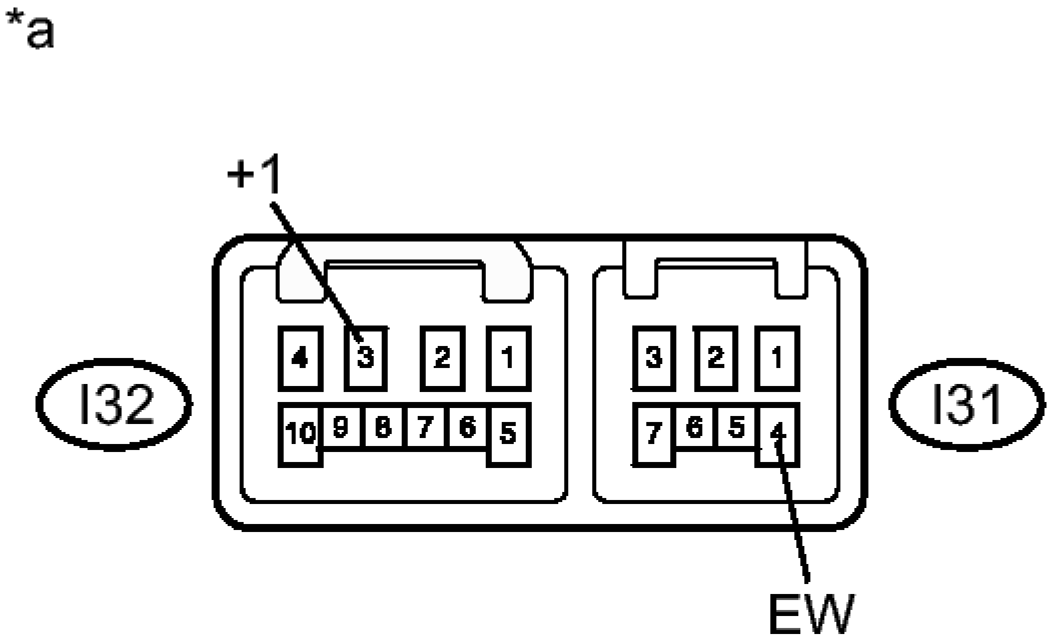

Fig. 36: Identifying Windshield Wiper Switch Assembly Connector Terminal Identification
Courtesy of TOYOTA MOTOR SALES, U.S.A., INC.

TEXT IN ILLUSTRATION

*a	Component with harness connected (Windshield

	Wiper Switch Assembly)

2. Turn the power switch on (IG).
3. Turn the washer switch on and off, and check the voltage between terminals I32-3 (+1) and I31-4 (EW).

   OK

   Voltage changes as shown in the following illustration.

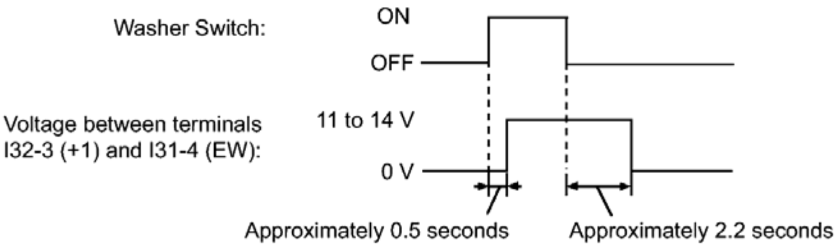

Fig. 37: Checking Washer Switch On And Off Voltage Graph
Courtesy of TOYOTA MOTOR SALES, U.S.A., INC.

If the result is not as specified, replace the windshield wiper switch assembly.

REMOVAL

REMOVAL

1. **REMOVE LOWER STEERING COLUMN COVER**

NOTE: **Removing the lower steering column cover in the incorrect order will cause the parts to break.**

   a. Release the tilt and telescopic lever, and fully extend and lower the steering column assembly.
   b. Lock the tilt and telescopic lever.
   c. Turn the steering wheel assembly to the left and remove the screw.

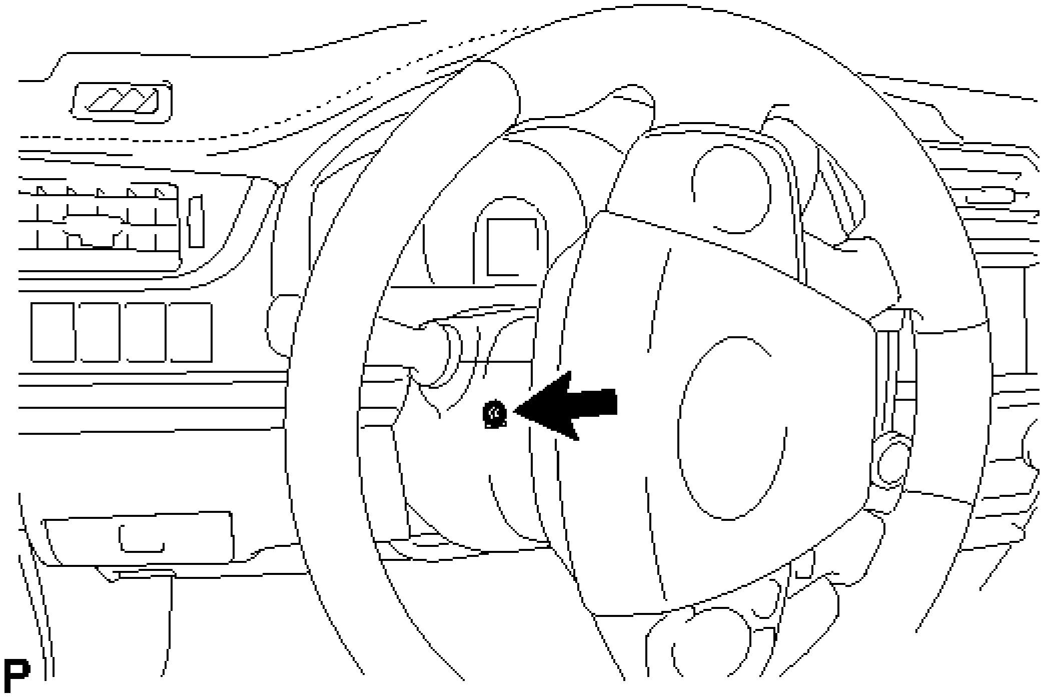

Fig. 38: Locating LH Lower Steering Column Cover Screw
Courtesy of TOYOTA MOTOR SALES, U.S.A., INC.

d. Turn the steering wheel assembly to the right and remove the screw.

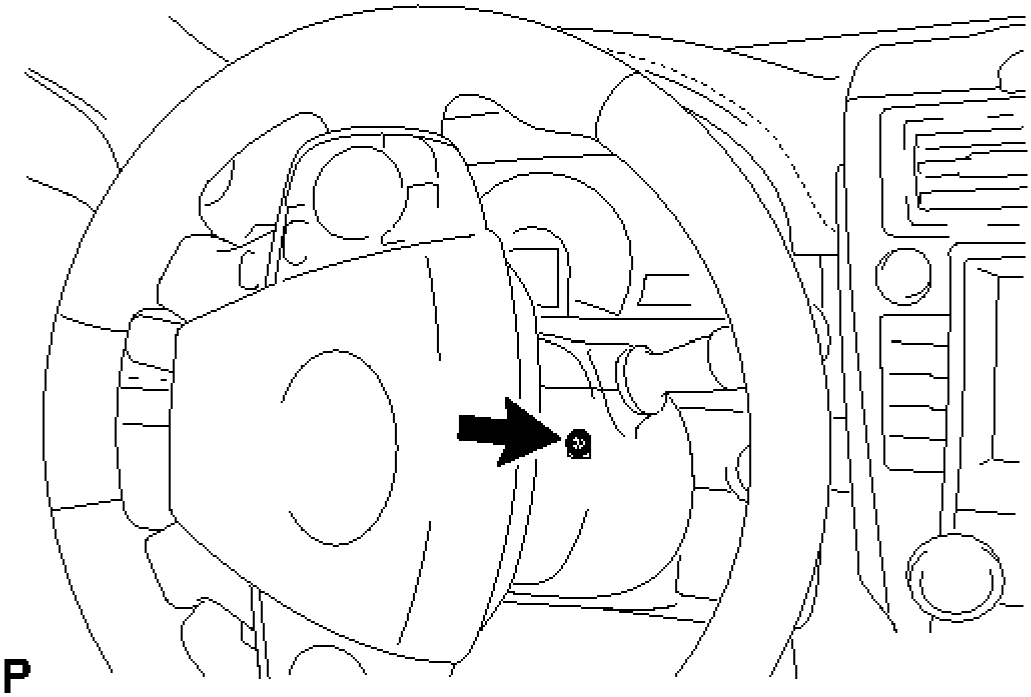

Fig. 39: Locating RH Lower Steering Column Cover Screw
Courtesy of TOYOTA MOTOR SALES, U.S.A., INC.

e. Push the right and left sides of the lower steering column cover to disengage the 2 claws.

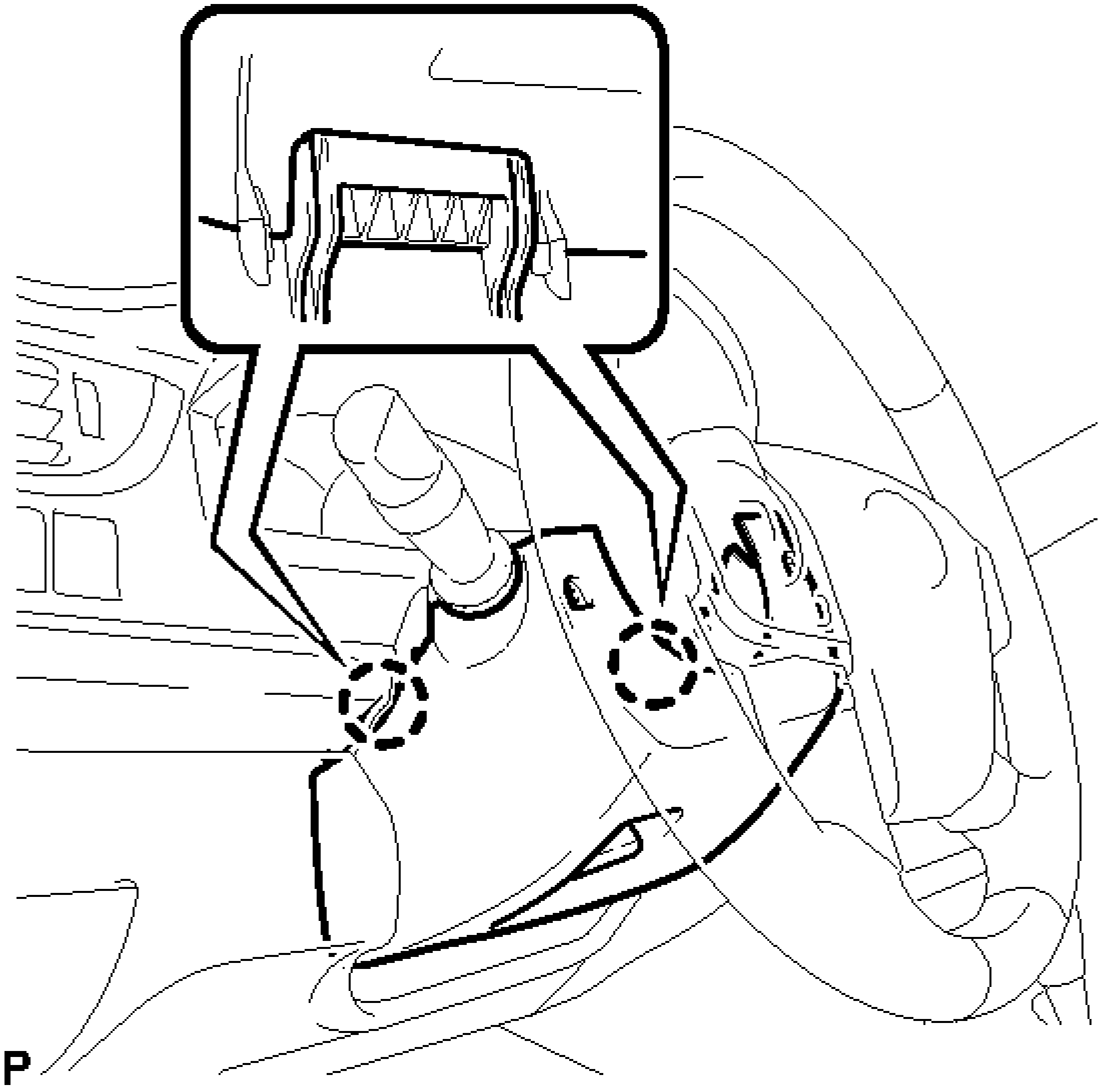

Fig. 40: Locating Lower Steering Column Cover Claws
Courtesy of TOYOTA MOTOR SALES, U.S.A., INC.

f. Insert your fingers into the opening of the tilt lever of the lower steering column cover to disengage the 2 claws.

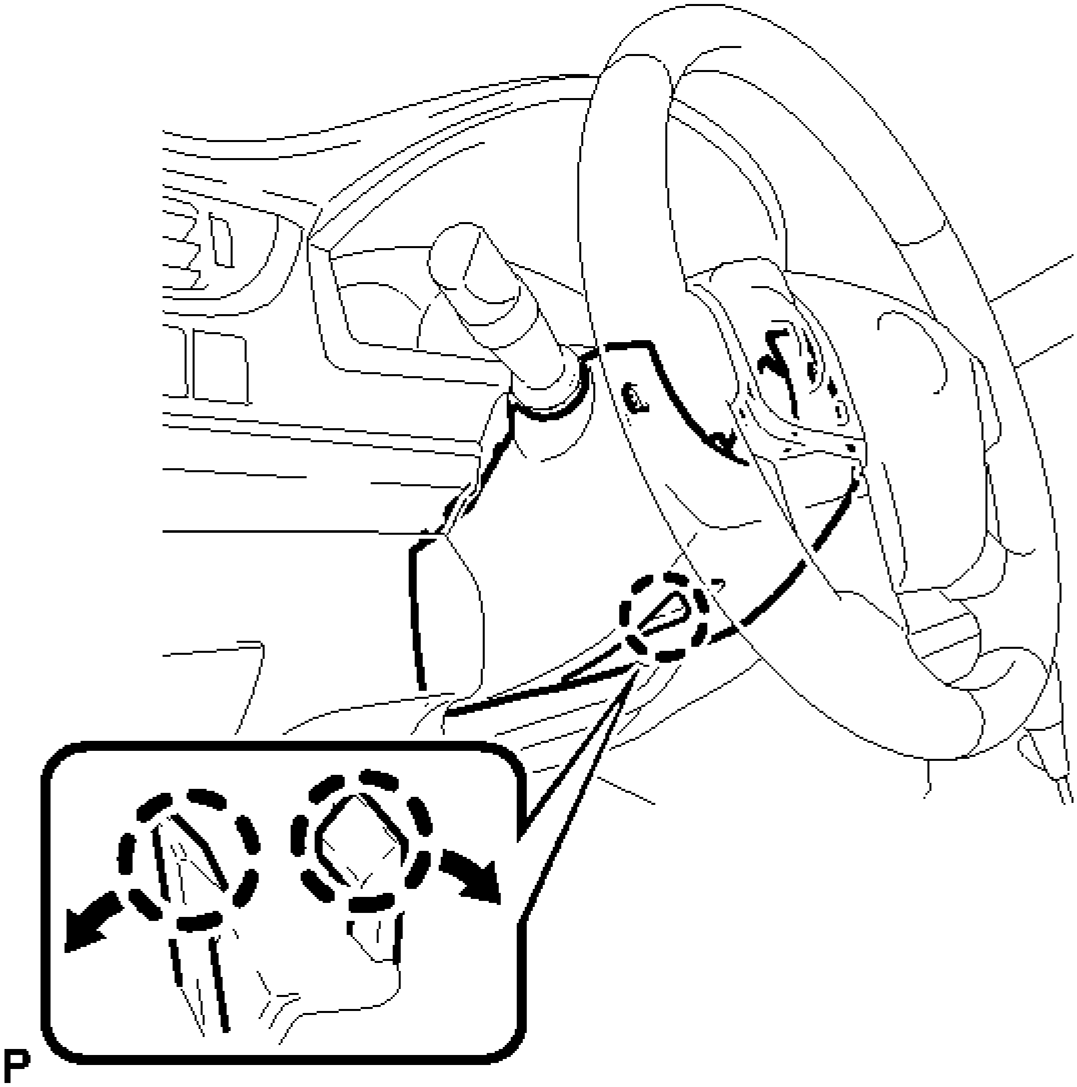

Fig. 41: Locating Lower Steering Column Cover Tilt Lever Claws
Courtesy of TOYOTA MOTOR SALES, U.S.A., INC.

HINT:

Spread the claws to disengage them.

2. **REMOVE UPPER STEERING COLUMN COVER**
   a. Disengage the 4 clips and 2 guides to separate the instrument cluster finish panel assembly from the upper steering column cover.

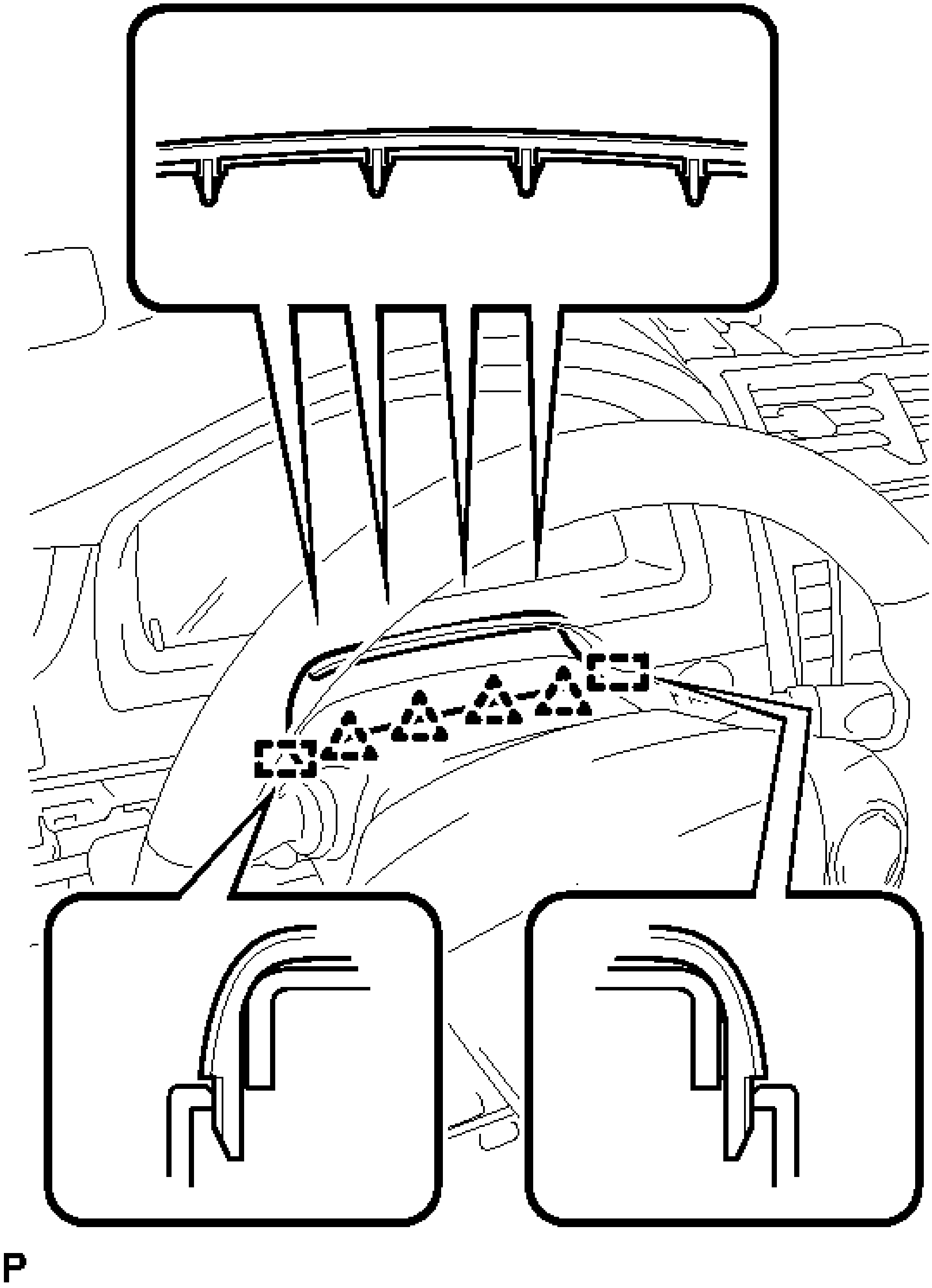

Fig. 42: Locating Upper Steering Column Cover Clips And Guides
Courtesy of TOYOTA MOTOR SALES, U.S.A., INC.

b. Disengage the 2 claws and remove the upper steering column cover.

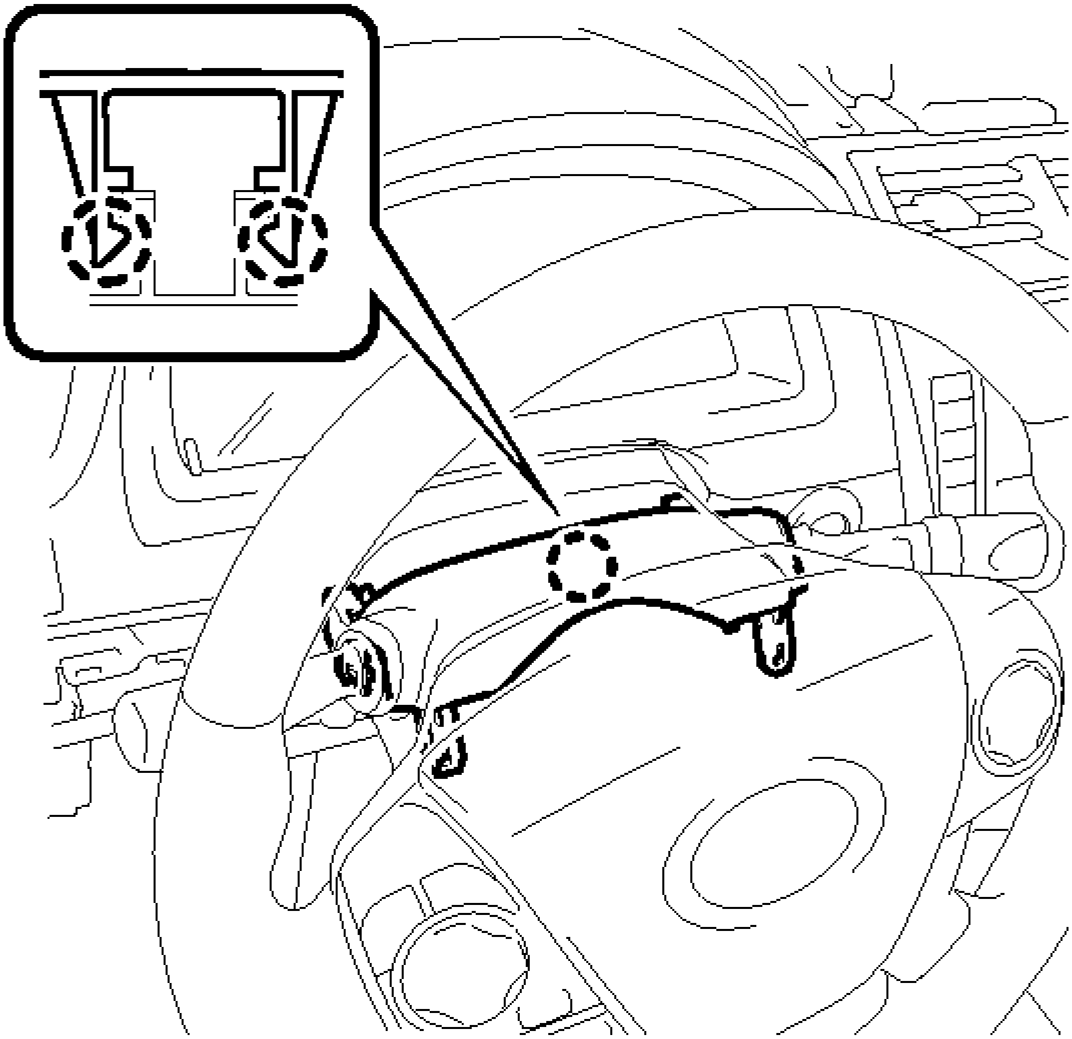

Fig. 43: Locating Upper Steering Column Cover Claws
Courtesy of TOYOTA MOTOR SALES, U.S.A., INC.

3. **REMOVE WINDSHIELD WIPER SWITCH ASSEMBLY**
   a. Disconnect the 2 connectors.

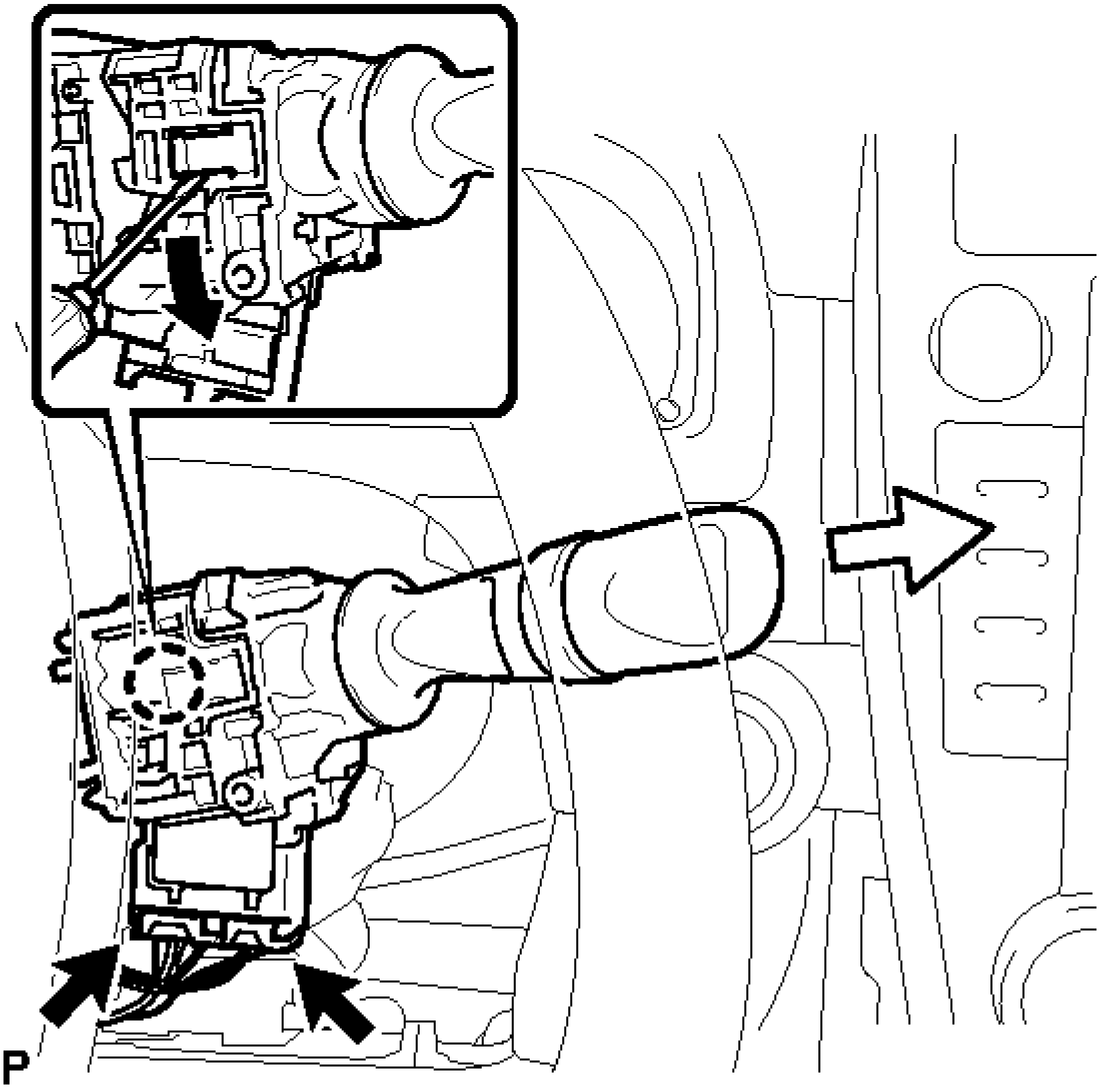

Fig. 44: Removing Windshield Wiper Switch Assembly
Courtesy of TOYOTA MOTOR SALES, U.S.A., INC.

b. Using a screwdriver, disengage the claw and remove the windshield wiper switch assembly as shown in the illustration.

NOTE: **If the claw is pulled with excessive force, it may break.**

INSPECTION

INSPECTION

1. **INSPECT WINDSHIELD WIPER SWITCH ASSEMBLY**
    a. Measure the resistance according to the value(s) in the table below.

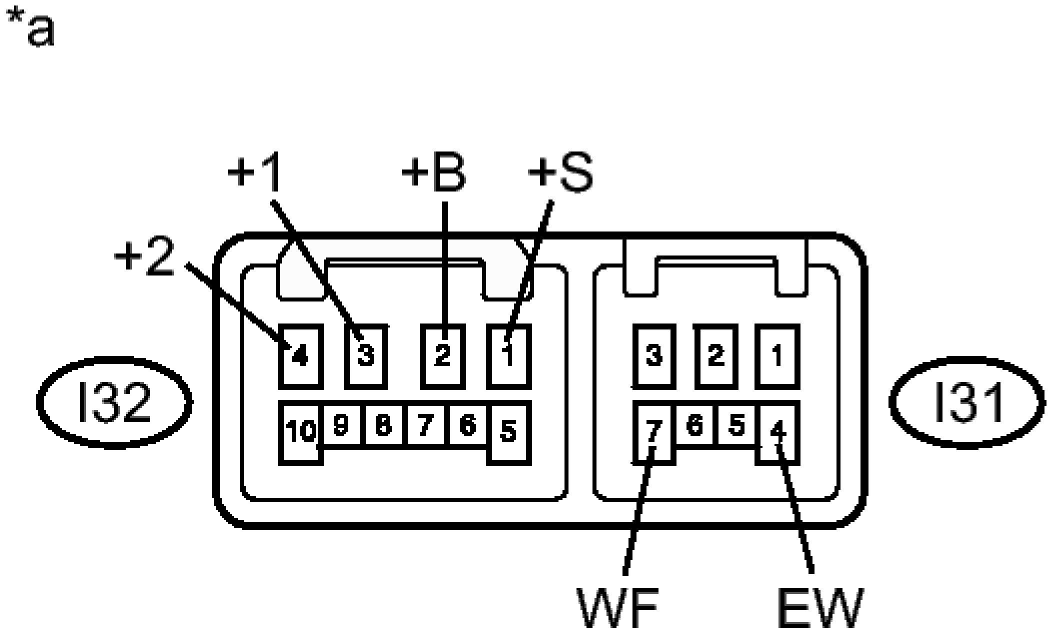

Fig. 45: Identifying Windshield Wiper Switch Assembly Connector Terminal Identification
Courtesy of TOYOTA MOTOR SALES, U.S.A., INC.

Standard Resistance

Front Washer Switch

FRONT WIPER SWITCH

Tester Connection	Switch Condition	Specified Condition
I32-1 (+S) - I32-3 (+1)	OFF	Below 1 ohms
	INT	
I32-2 (+B) - I32-3 (+1)	MIST	
	LO	
I32-2 (+B) - I32-4 (+2)	HI	

Tester Connection	Switch Condition	Specified Condition
I31-4 (EW) - I31-7 (WF)	ON	Below 1 ohms
	OFF	10 kohms or higher

If the result is not as specified, replace the windshield wiper switch assembly.

TEXT IN ILLUSTRATION

*a	Component without harness connected (Windshield Wiper Switch Assembly)

INSTALLATION

INSTALLATION

1. **INSTALL WINDSHIELD WIPER SWITCH ASSEMBLY**
    a. Engage the claw to install the windshield wiper switch assembly as shown in the illustration.

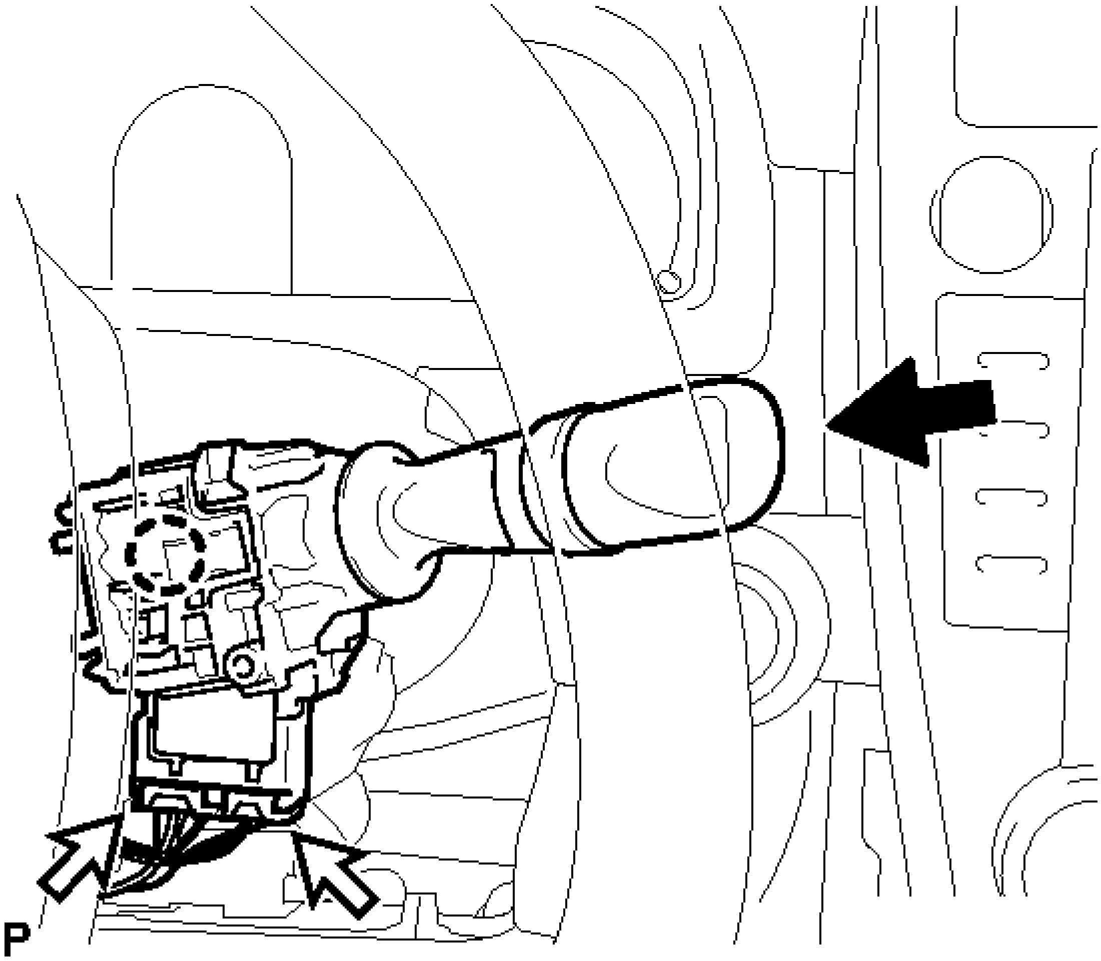

Fig. 46: Installing Windshield Wiper Switch Assembly
Courtesy of TOYOTA MOTOR SALES, U.S.A., INC.

b. Connect the 2 connectors.

2. **INSTALL UPPER STEERING COLUMN COVER**

NOTE: **If the lower steering column cover is installed in the incorrect order, it will not be possible to assemble the steering column cover.**

a. Engage the 2 claws to install the upper steering column cover.
b. Engage the 4 clips and 2 guides to install the instrument cluster finish panel to the upper steering column cover.

3. **INSTALL LOWER STEERING COLUMN COVER**

a. Engage the 2 claws.

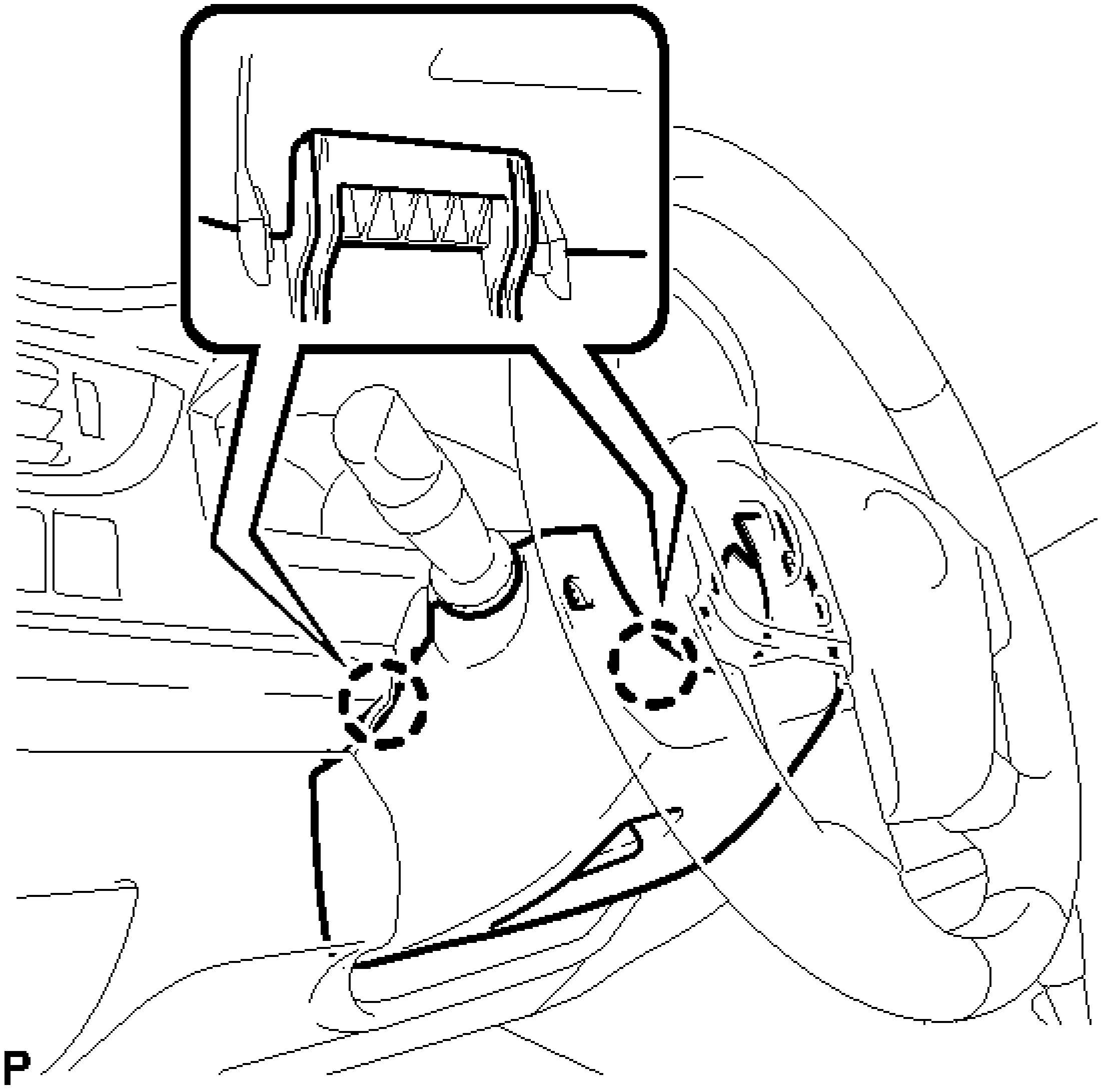

Fig. 47: Locating Lower Steering Column Cover Claws
Courtesy of TOYOTA MOTOR SALES, U.S.A., INC.

b. Engage the 2 claws.

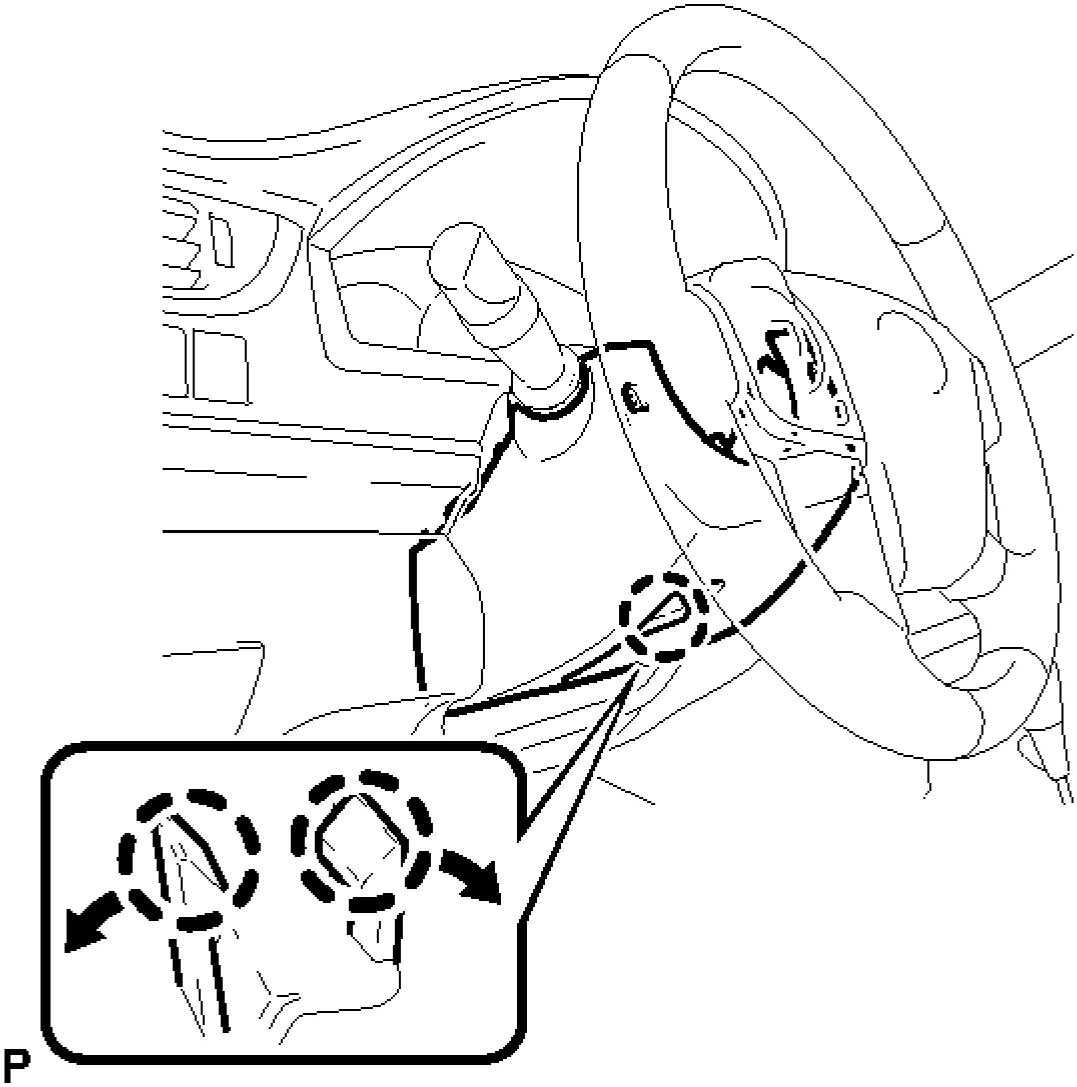

Fig. 48: Locating Lower Steering Column Cover Tilt Lever Claws
Courtesy of TOYOTA MOTOR SALES, U.S.A., INC.

HINT:

Press the area around the claws to engage them.

c. Turn the steering wheel assembly to the left to install the screw.

Torque: 2.0 N*m (20 kgf*cm, 18 in.*lbf)

d. Turn the steering wheel assembly to the right to install the lower steering column cover with screw.

Torque: 2.0 N*m (20 kgf*cm, 18 in.*lbf)

NOTE:

- **Confirm that the steering column cover does not touch the**

steering wheel.

- **If there is interference, confirm that the steering column cover claws are correctly engaged.**
- **Replace the steering column cover if any claws have been damaged.**

WASHER MOTOR

COMPONENTS

ILLUSTRATION

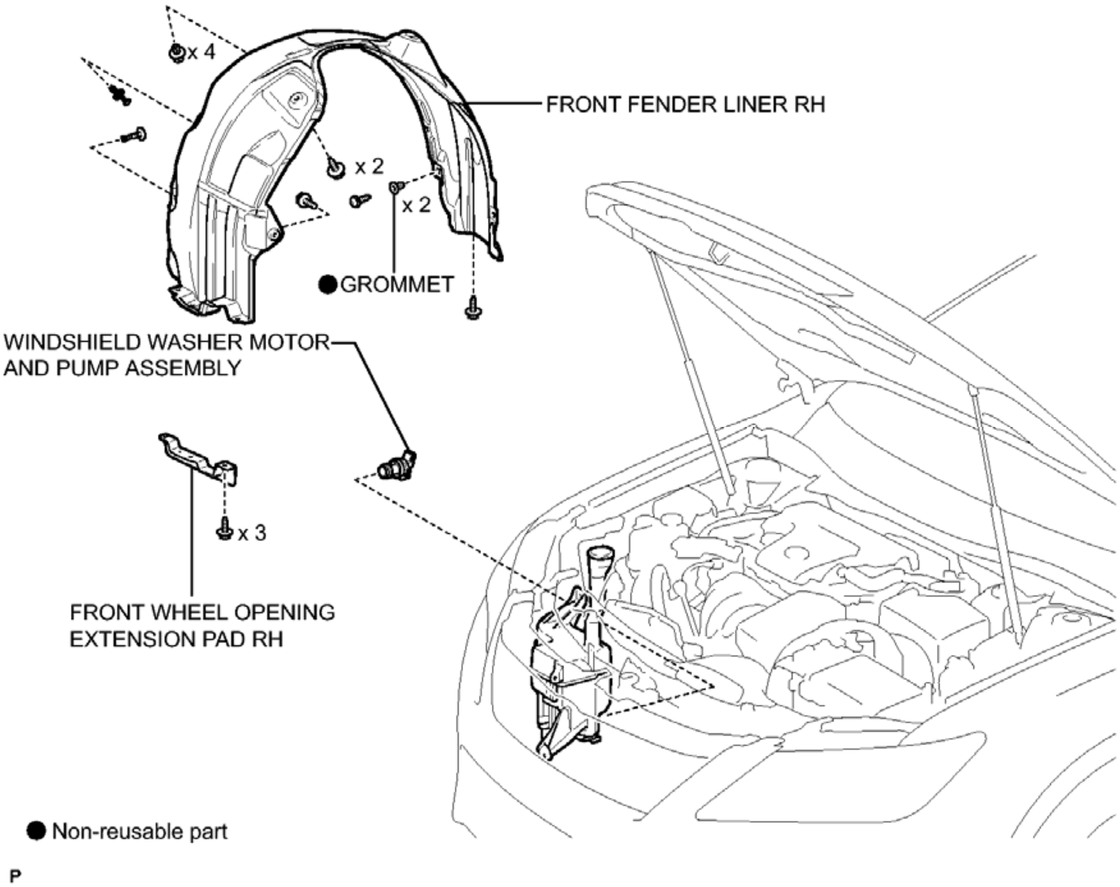
x 4
FRONT FENDER LINER RH
x 2
x 2
GROMMET
WINDSHIELD WASHER MOTOR AND PUMP ASSEMBLY
x 3
FRONT WHEEL OPENING EXTENSION PAD RH
● Non-reusable part
P

Fig. 49: Identifying Washer Motor Replacement Components
Courtesy of TOYOTA MOTOR SALES, U.S.A., INC.

REMOVAL

REMOVAL

1. **REMOVE FRONT WHEEL RH**
2. **REMOVE FRONT WHEEL OPENING EXTENSION PAD RH**

a. Remove the 3 screws and front wheel opening extension pad RH.

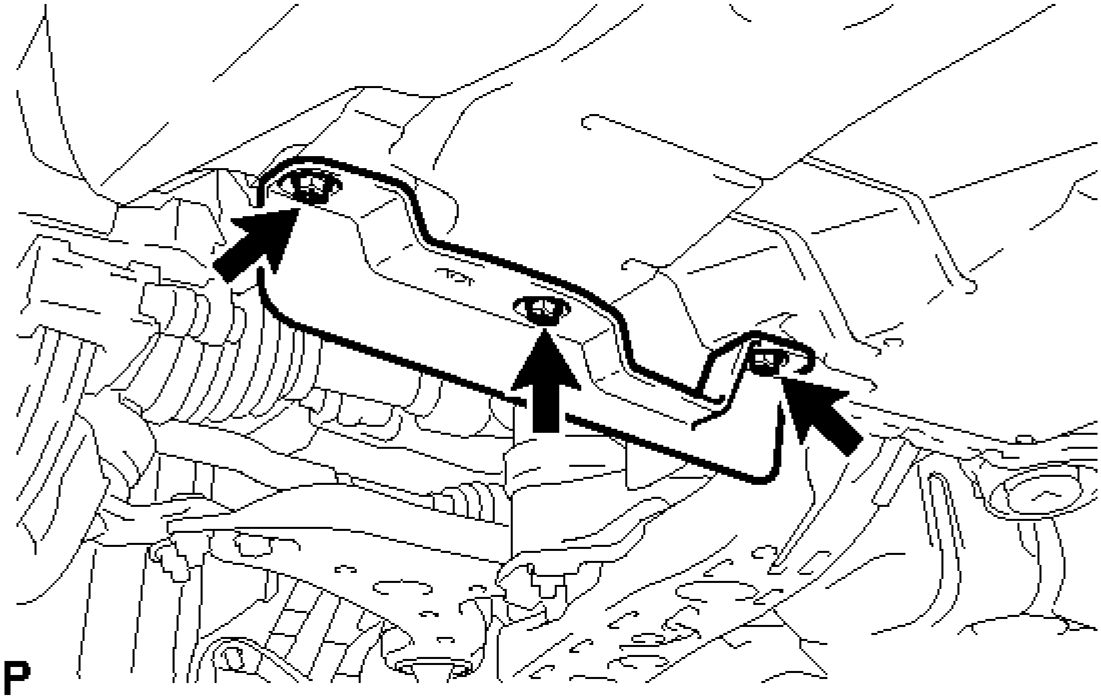

Fig. 50: Locating Front Wheel Opening Extension Pad And Screws RH
Courtesy of TOYOTA MOTOR SALES, U.S.A., INC.

3. **REMOVE FRONT FENDER LINER RH**
   a. Remove the clip.

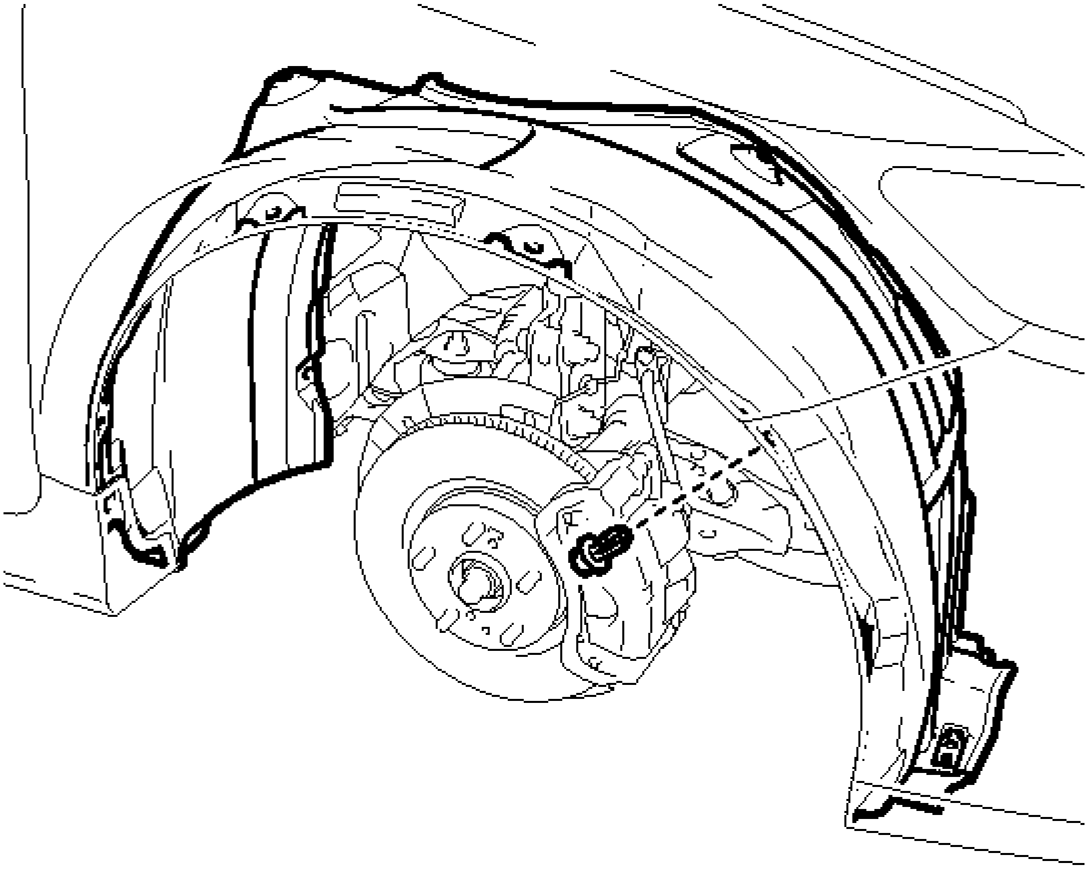

P

Fig. 51: Locating Front Fender Liner Clip RH
Courtesy of TOYOTA MOTOR SALES, U.S.A., INC.

b. Using a screwdriver, turn the pin 90 degrees counterclockwise and remove the pin hold clip.

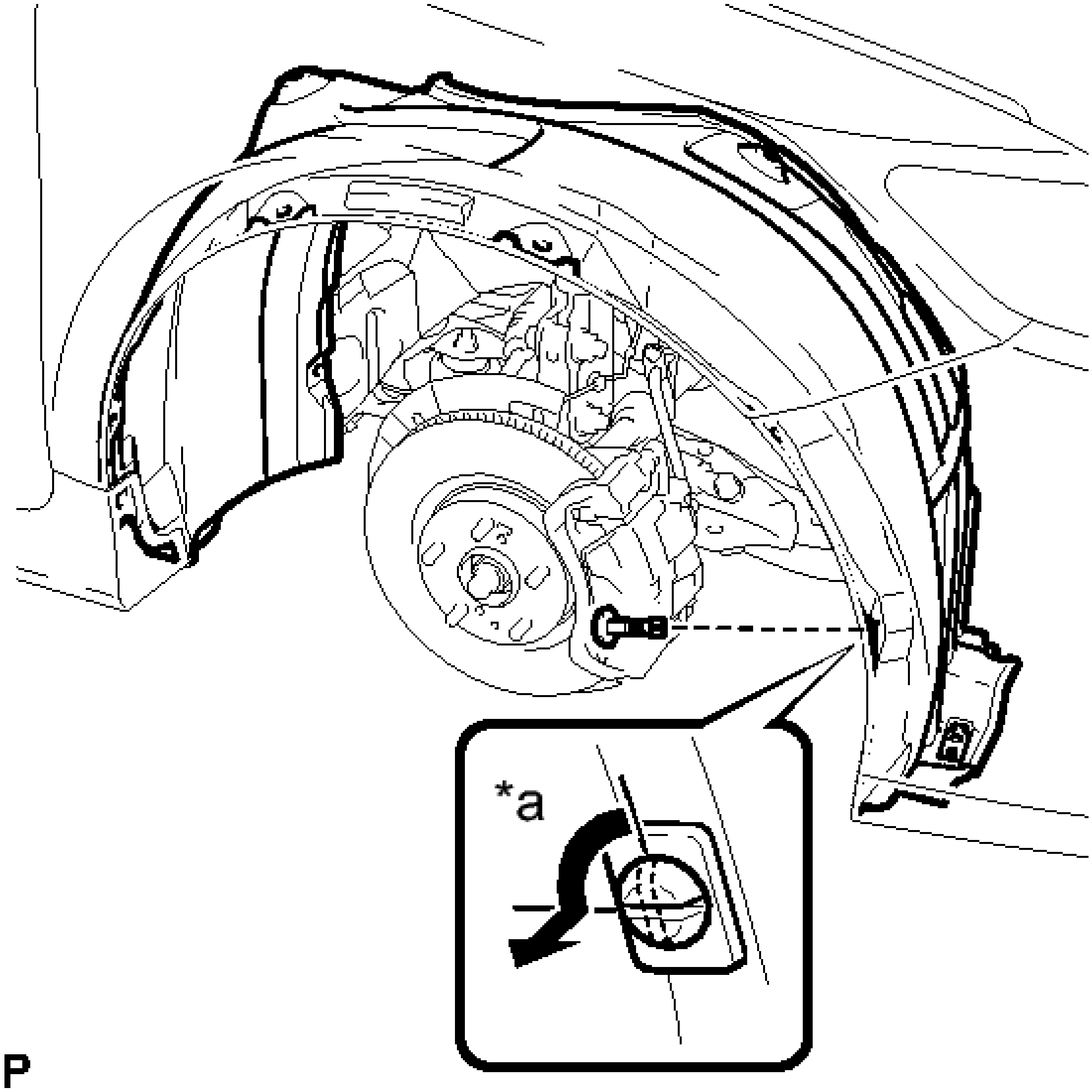

Fig. 52: Removing Front Fender Liner Clip RH
Courtesy of TOYOTA MOTOR SALES, U.S.A., INC.

TEXT IN ILLUSTRATION

*a	90°

c. Remove the 5 screws.

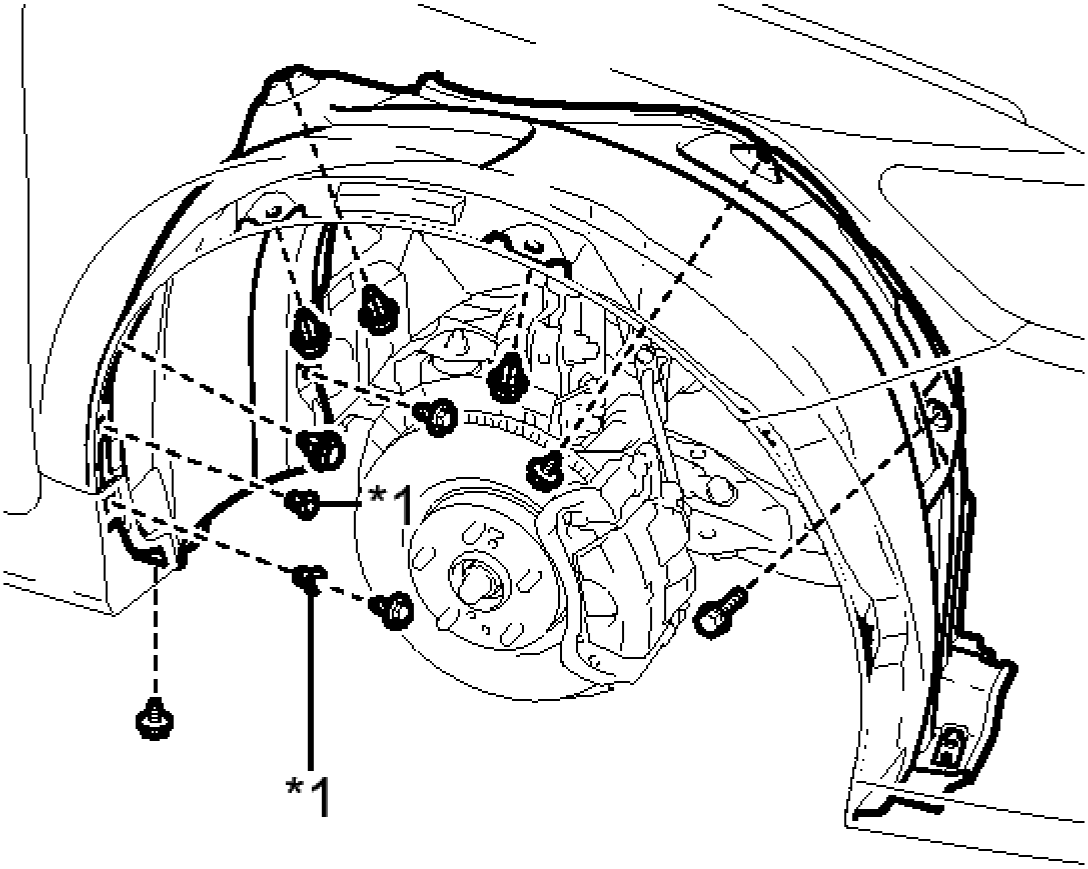

Fig. 53: Locating Front Fender Liner RH Fasteners
Courtesy of TOYOTA MOTOR SALES, U.S.A., INC.

d. Remove the 4 clips, 2 grommets and front fender liner RH.

HINT:

The grommets need to be replaced with new ones because they will break when they are removed.

TEXT IN ILLUSTRATION

*1	Grommet

4. **DRAIN WASHER FLUID**
   a. Disconnect the washer hose from the windshield washer motor and pump assembly, and drain the washer fluid.

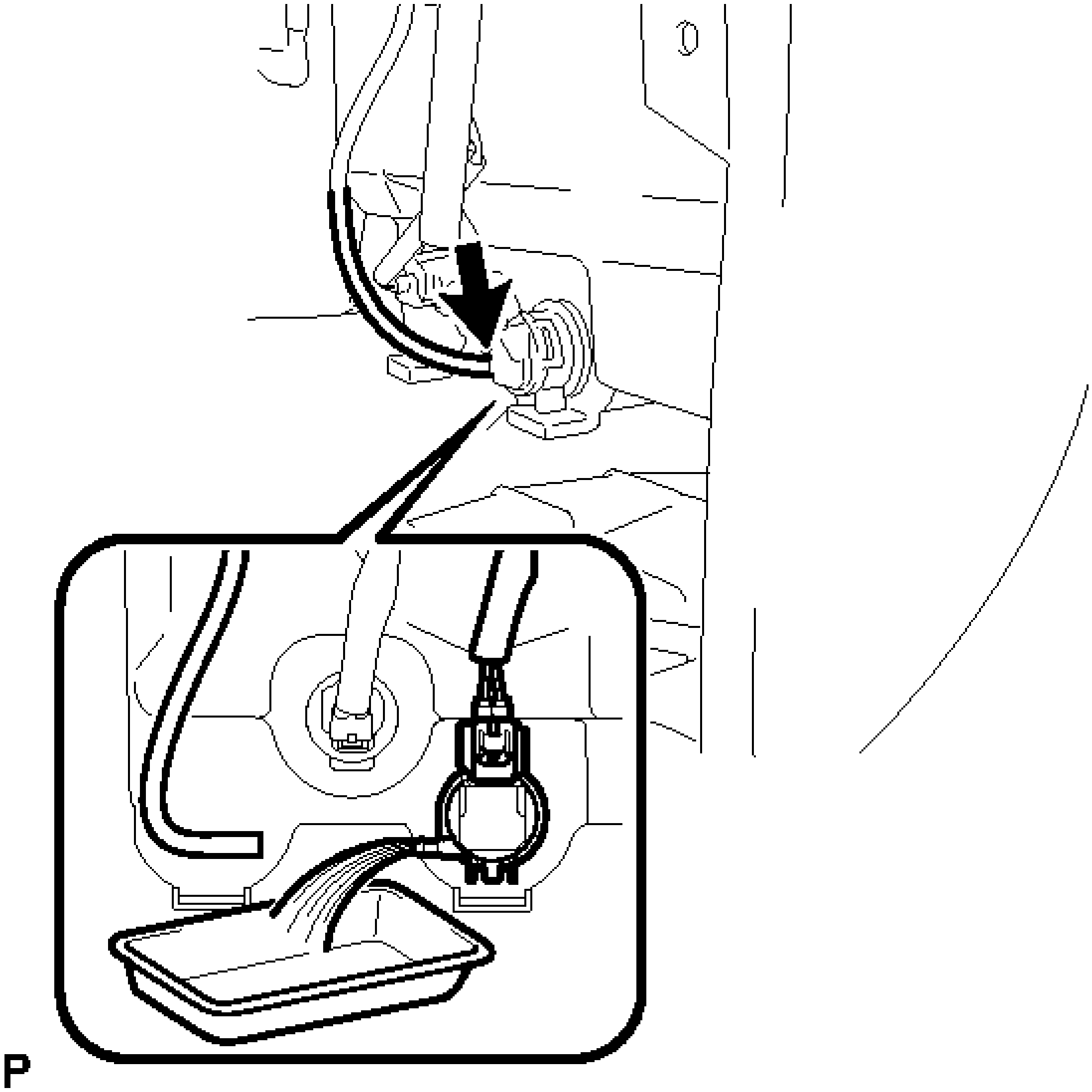

Fig. 54: Draining Washer Fluid
Courtesy of TOYOTA MOTOR SALES, U.S.A., INC.

HINT:

Use a container to collect the washer fluid.

5. **REMOVE WINDSHIELD WASHER MOTOR AND PUMP ASSEMBLY**
    a. Disconnect the connector.

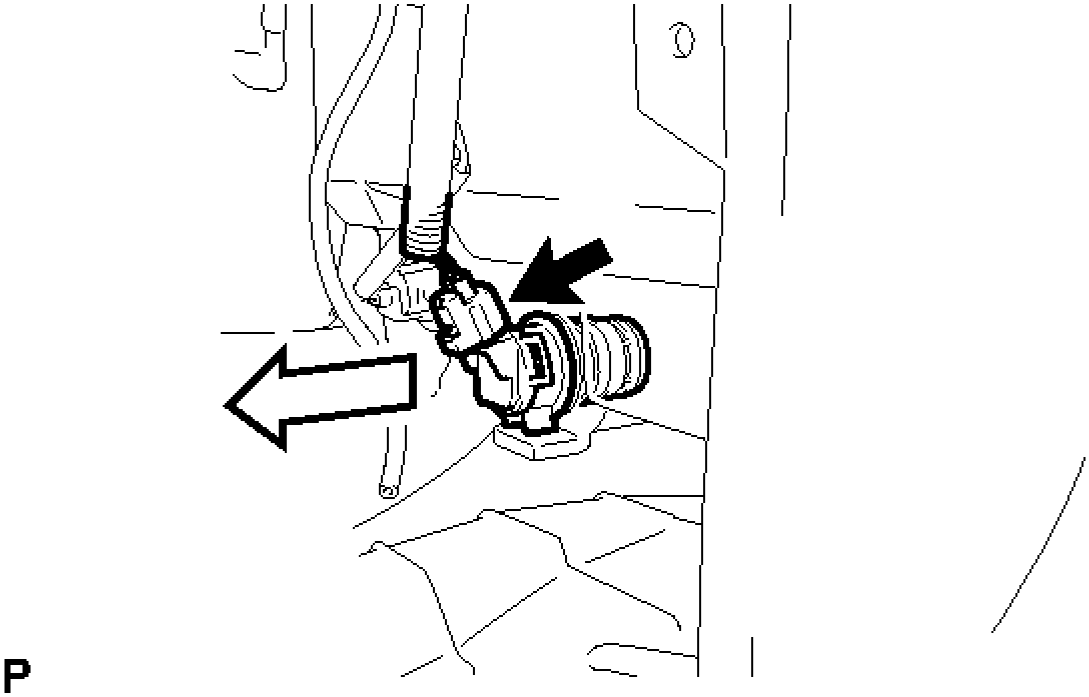

Fig. 55: Removing Windshield Washer Motor And Pump Assembly
Courtesy of TOYOTA MOTOR SALES, U.S.A., INC.

b. Remove the windshield washer motor and pump assembly as shown in the illustration.

INSPECTION

INSPECTION

1. **INSPECT WINDSHIELD WASHER MOTOR AND PUMP ASSEMBLY**
   a. Remove the washer jar.
   b. Disconnect the windshield washer motor and pump connector.

   HINT:

   The check should be performed with the windshield washer motor and pump installed on the washer jar.

   c. Fill the washer jar with washer fluid.
   d. Connect a auxiliary battery positive (+) lead to terminal A54-1 of the windshield washer motor and pump, and a negative (-) lead to terminal A54-2.

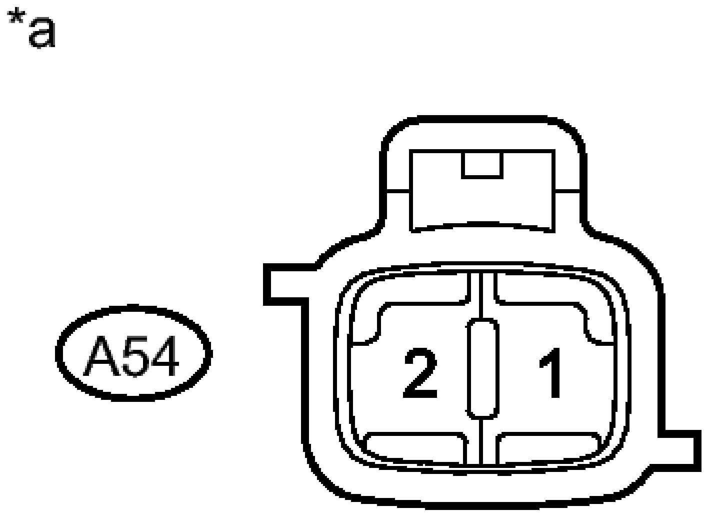

Fig. 56: Identifying A54 Connector Terminals
Courtesy of TOYOTA MOTOR SALES, U.S.A., INC.

e. Check that washer fluid flows from the washer jar.

OK

Washer fluid flows from the washer jar.

TEXT IN ILLUSTRATION

*a	Component without harness connected (Windshield Washer Motor and Pump Assembly)

If the result is not as specified, replace the windshield washer motor and pump assembly.

INSTALLATION

INSTALLATION

1. **INSTALL WINDSHIELD WASHER MOTOR AND PUMP ASSEMBLY**

a. Install the windshield washer motor and pump assembly.

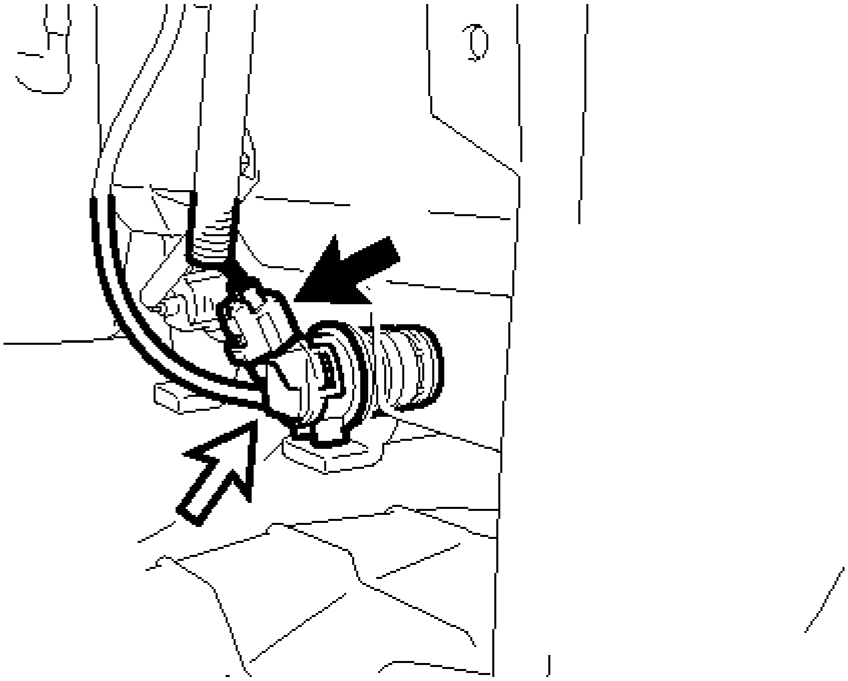

Fig. 57: Identifying Windshield Washer Motor And Pump Assembly Connector And Washer Hose
Courtesy of TOYOTA MOTOR SALES, U.S.A., INC.

b. Connect the connector.
c. Connect the washer hose.

2. **ADD WASHER FLUID**
   a. Add washer fluid to the washer jar.
3. **INSTALL FRONT FENDER LINER RH**
   a. Install the front fender liner RH with the 4 clips and 5 screws.
   b. Install 2 new grommets.
   c. Install the pin hold clip as shown in the illustration.

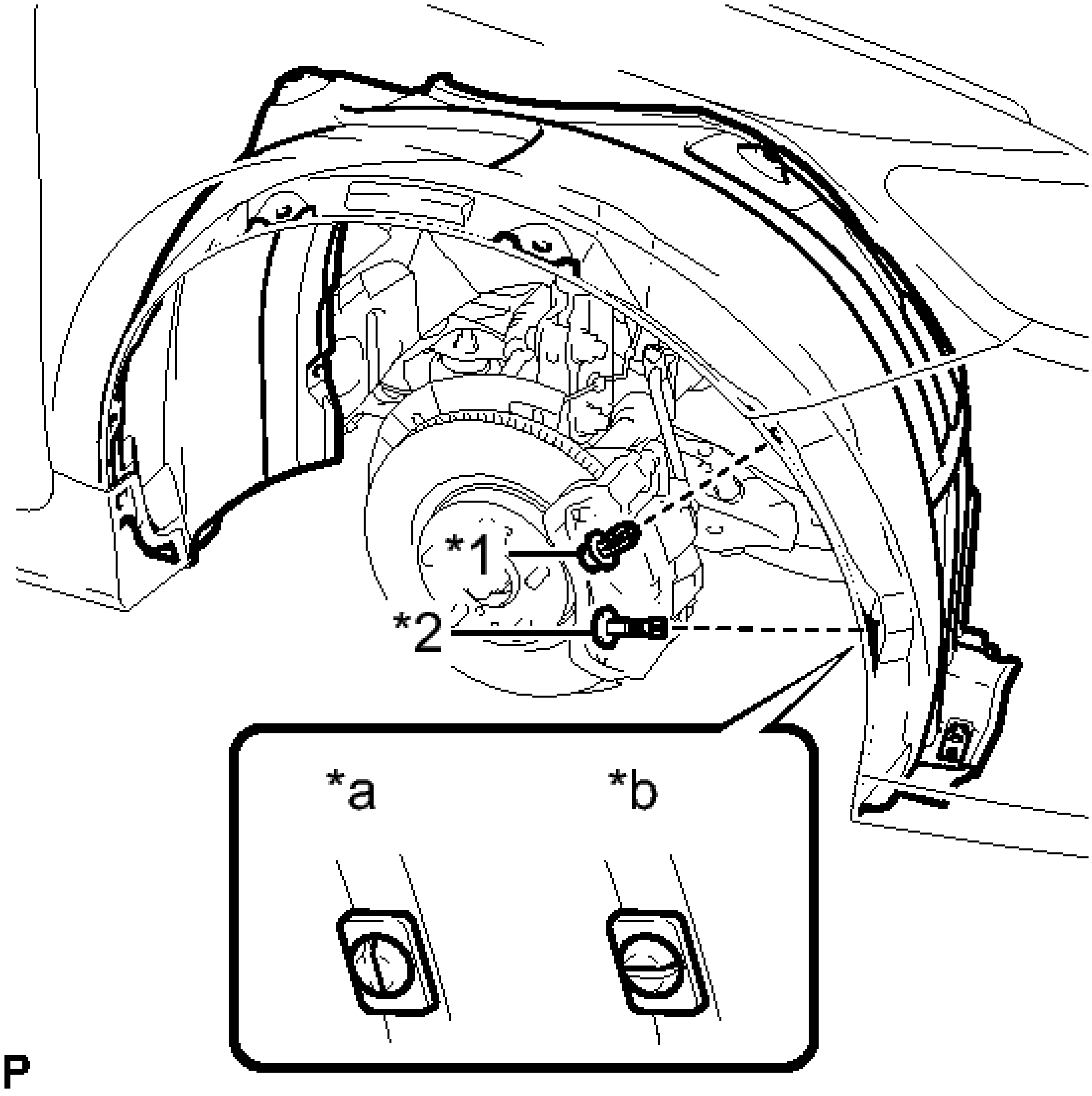

Fig. 58: Identifying Front Fender Liner RH Correct & Incorrect Installation
Courtesy of TOYOTA MOTOR SALES, U.S.A., INC.

TEXT IN ILLUSTRATION

*1	Clip
*2	Pin Hold Clip
*a	Correct
*b	Incorrect

NOTE: **Insert the pin hold clip with the slot aligned vertically. Do not rotate the clip after inserting it. After installation, confirm that the slot is aligned vertically.**

d. Install the clip.

4. **INSTALL FRONT WHEEL OPENING EXTENSION PAD RH**
    a. Install the front wheel opening extension pad RH with the 3 screws
5. **INSTALL FRONT WHEEL RH** . Refer to **INSTALLATION - Step 8**

WASHER NOZZLE

COMPONENTS

ILLUSTRATION

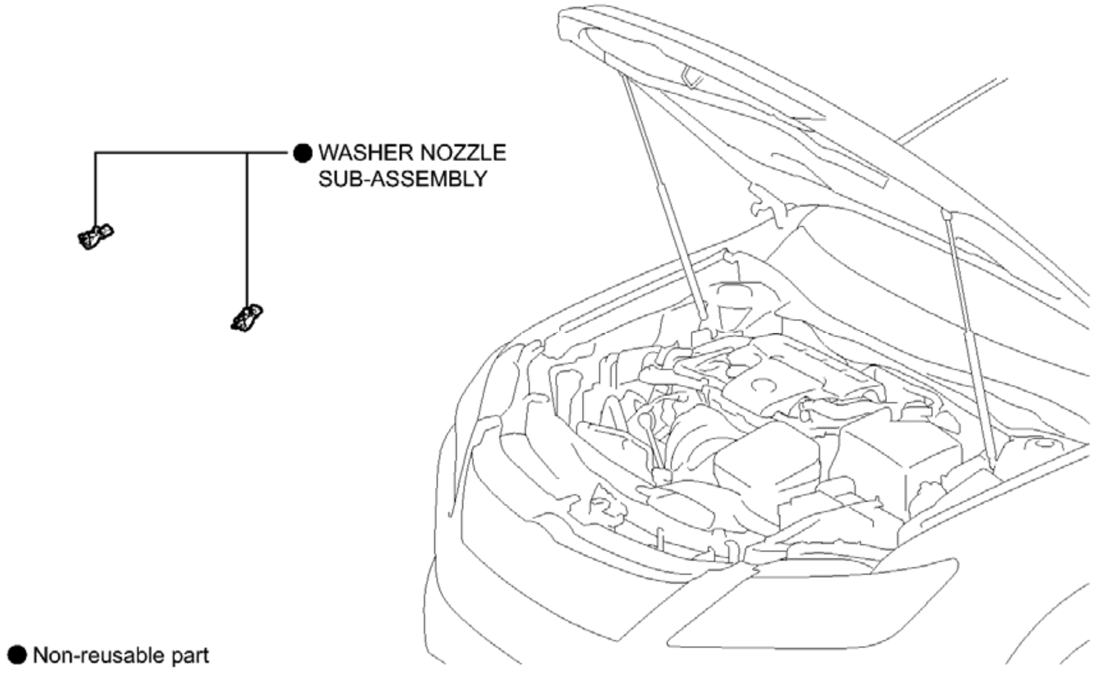

Fig. 59: Identifying Washer Nozzle Replacement Components
Courtesy of TOYOTA MOTOR SALES, U.S.A., INC.

ON-VEHICLE INSPECTION

ON-VEHICLE INSPECTION

1. **INSPECT WASHER NOZZLE SUB-ASSEMBLY**
    a. With the engine running, check the position that the washer fluid hits the windshield.

        Standard

        Washer fluid hits the windshield in the areas shown in the illustration.

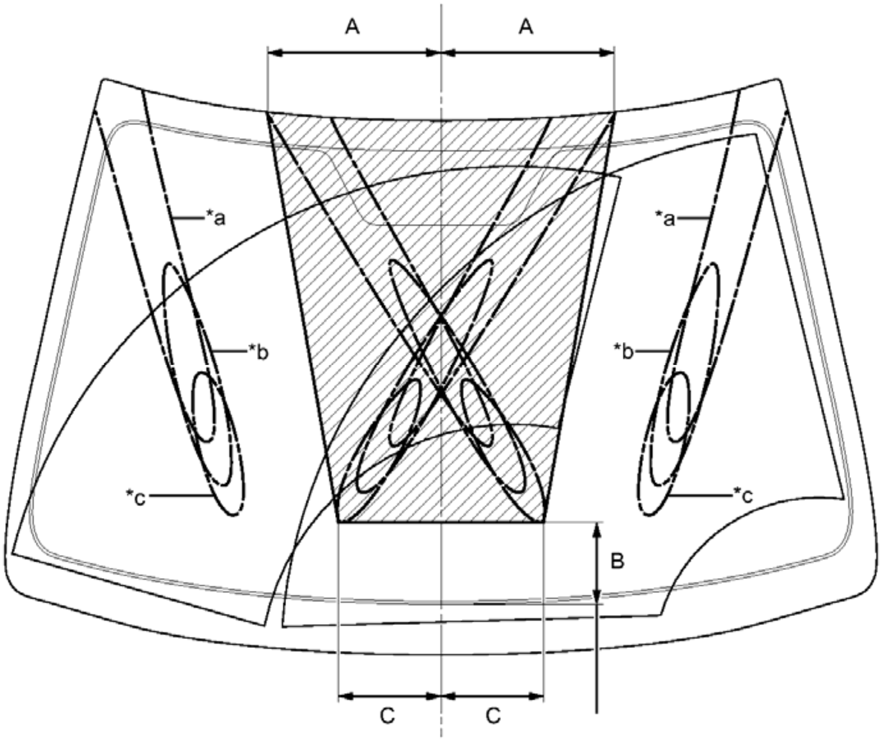

P

Fig. 60: Identifying Wiper Washer Nozzle Hitting Area
Courtesy of TOYOTA MOTOR SALES, U.S.A., INC.

STANDARD CLEARANCE

Area	Measurement	Area	Measurement
A	300.0 mm (11.8 in.)	B	145.0 mm (5.71 in.)
C	170.0 mm (6.69 in.)	-	-

TEXT IN ILLUSTRATION

*a	Upper Limit	*b	Standard
*c	Lower Limit	-	-

HINT:

If the result is not as specified, replace the washer nozzle sub-assembly.

REMOVAL

REMOVAL

1. **REMOVE WASHER NOZZLE SUB-ASSEMBLY**
    a. Using a screwdriver, disengage the 2 claws and separate the washer nozzle sub-assembly as shown in the illustration.

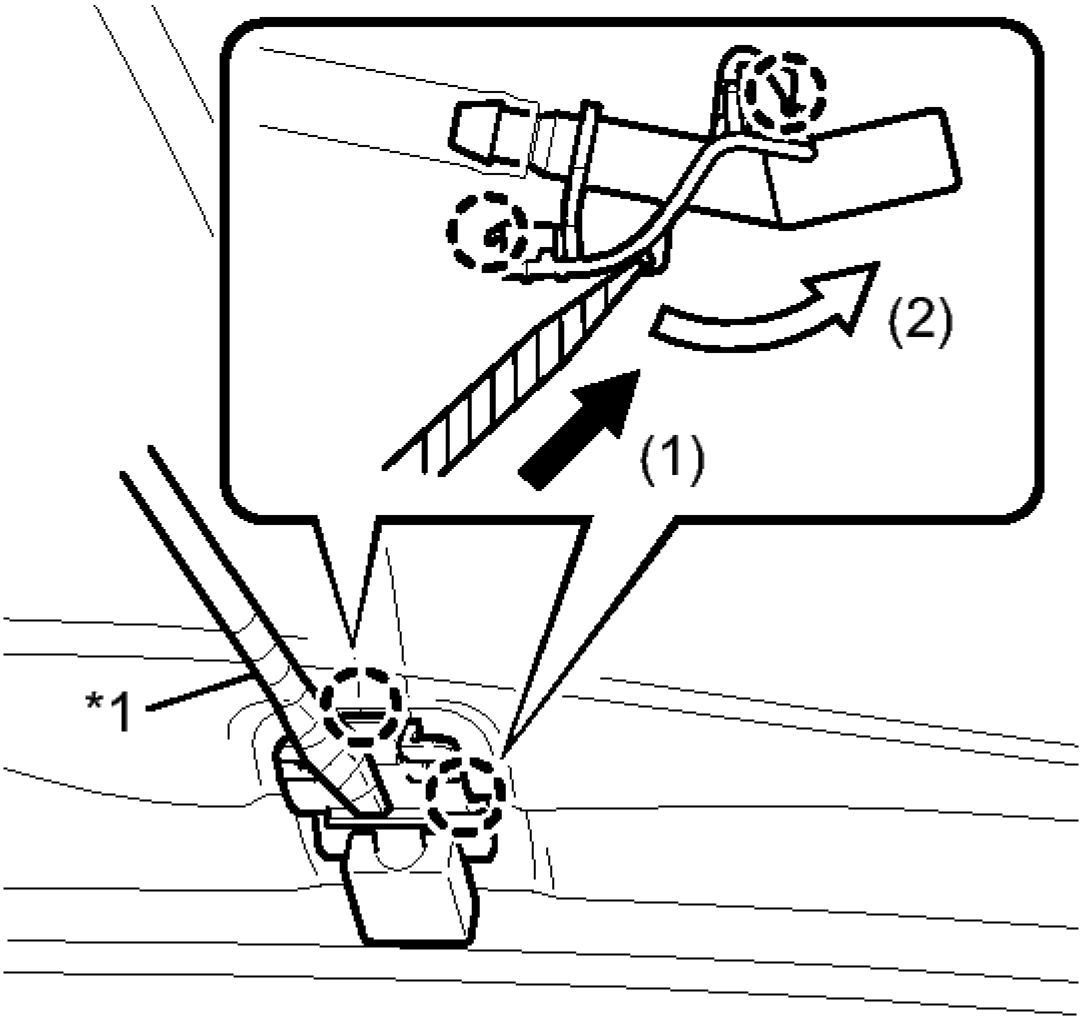

P

Fig. 61: Identifying Washer Nozzle Sub-Assembly Claws
Courtesy of TOYOTA MOTOR SALES, U.S.A., INC.

TEXT IN ILLUSTRATION

*1	Protective Tape

NOTE: **Be careful not to damage the windshield.**

HINT:

Tape the screwdriver tip before use.

b. Remove the washer nozzle sub-assembly from the washer hose.

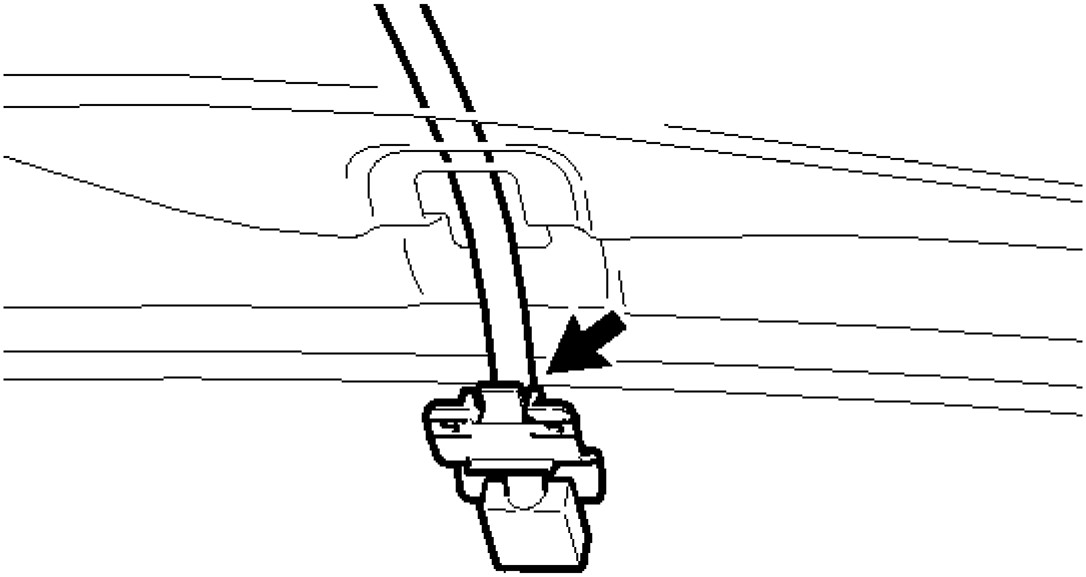

P

Fig. 62: Identifying Washer Nozzle Sub-Assembly
Courtesy of TOYOTA MOTOR SALES, U.S.A., INC.

NOTE: **Washer nozzles cannot be reused.**

ADJUSTMENT

ADJUSTMENT

1. **REMOVE WASHER NOZZLE SUB-ASSEMBLY** See step 1
2. **ADJUST WASHER NOZZLE SUB-ASSEMBLY**
   a. Select a washer nozzle so that the contact area is within the standard. Replace the washer nozzle with the selected one.

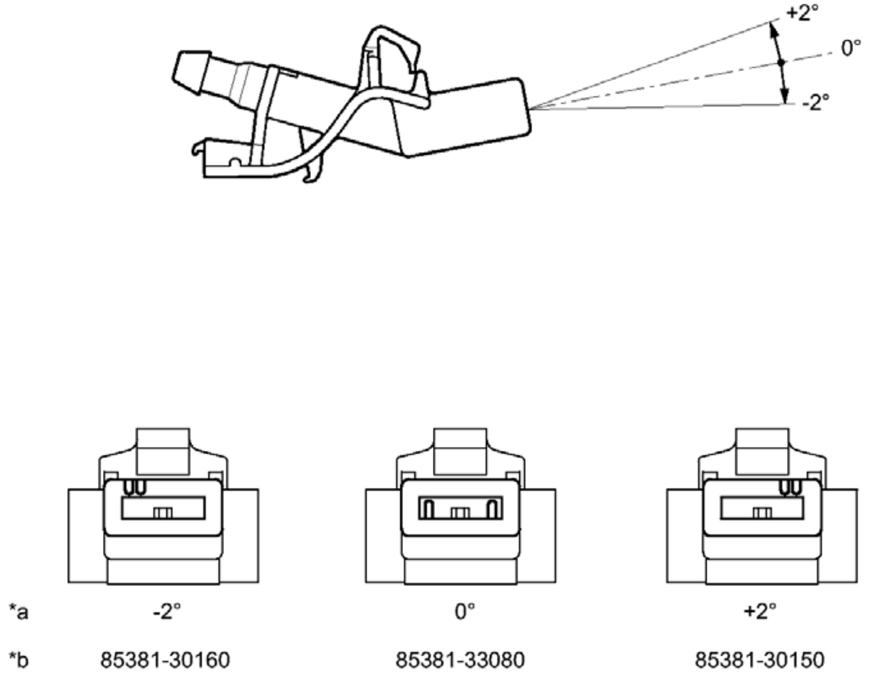
+2°
0°
-2°
*a
-2°
0°
+2°
*b
85381-30160
85381-33080
85381-30150
P

Fig. 63: Adjust Washer Nozzle
Courtesy of TOYOTA MOTOR SALES, U.S.A., INC.

TEXT IN ILLUSTRATION

*a	Washer Fluid Spray Angle	*b	Part Number

3. **INSTALL WASHER NOZZLE SUB-ASSEMBLY** See step 1

INSTALLATION

INSTALLATION

1. **INSTALL WASHER NOZZLE SUB-ASSEMBLY**
   a. Connect a new washer nozzle sub-assembly to the washer hose.
   b. Engage the 2 claws to install the washer nozzle sub-assembly as shown in the illustration.

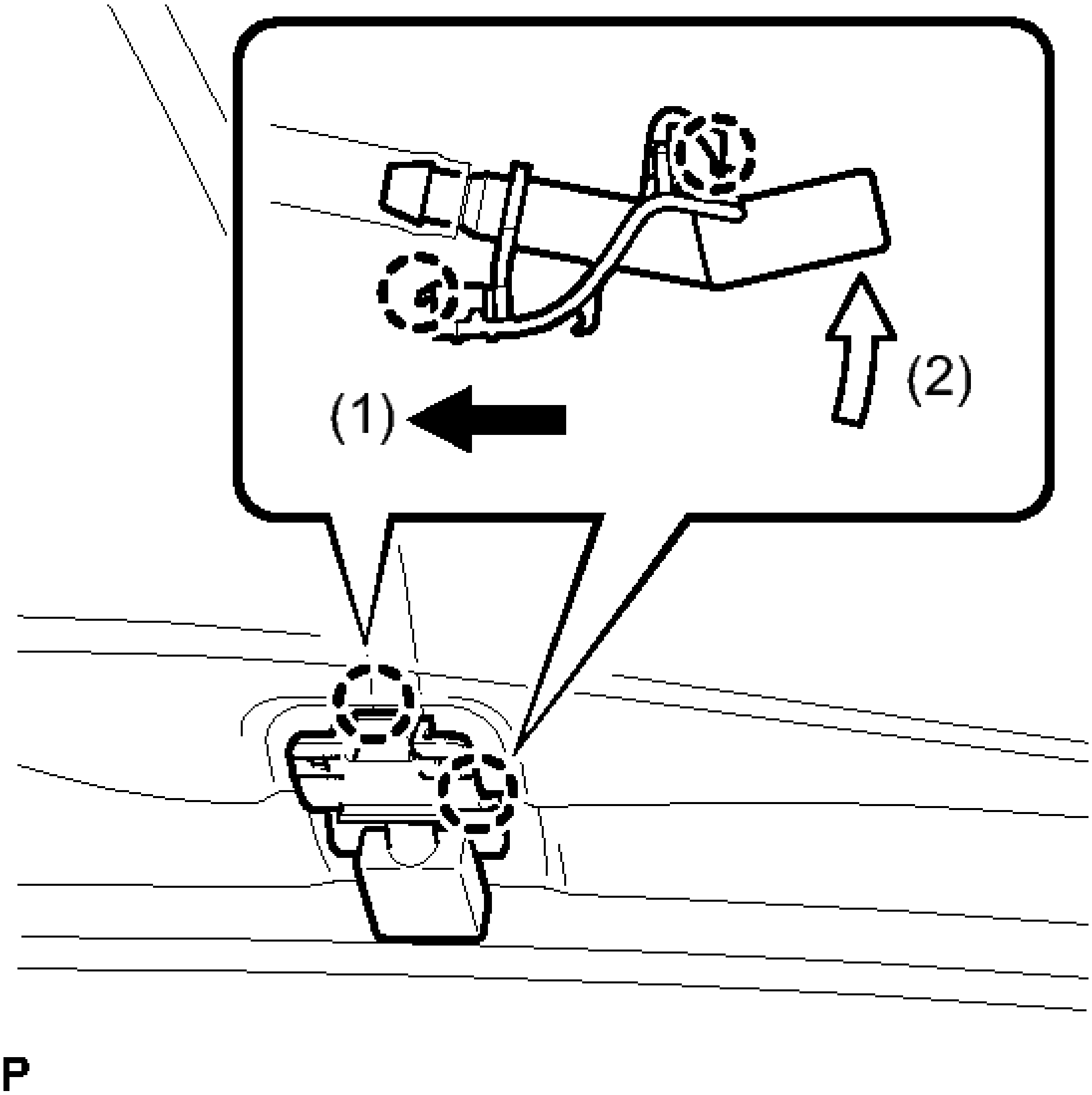

Fig. 64: Install Washer Nozzle Sub-Assembly
Courtesy of TOYOTA MOTOR SALES, U.S.A., INC.

2. **INSPECT WASHER NOZZLE SUB-ASSEMBLY** See step 1
3. **ADJUST WASHER NOZZLE SUB-ASSEMBLY** See step 2

WASHER LEVEL WARNING SWITCH

COMPONENTS

ILLUSTRATION

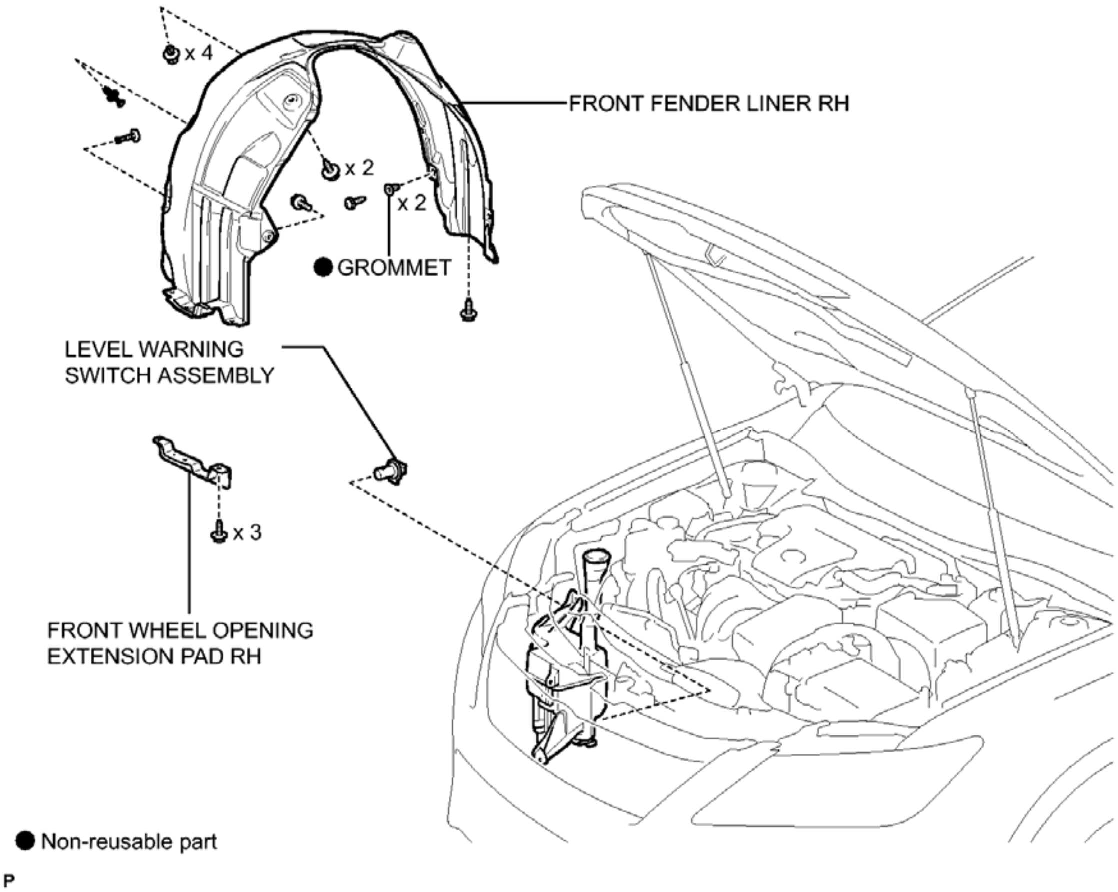
x 4
FRONT FENDER LINER RH
x 2
x 2
GROMMET
LEVEL WARNING SWITCH ASSEMBLY
x 3
FRONT WHEEL OPENING EXTENSION PAD RH
● Non-reusable part
P

Fig. 65: Identifying Washer Level Warning Switch Replacement Components
Courtesy of TOYOTA MOTOR SALES, U.S.A., INC.

REMOVAL

REMOVAL

1. **REMOVE FRONT WHEEL RH**
2. **REMOVE FRONT FENDER LINER RH** See step 3
3. **REMOVE FRONT WHEEL OPENING EXTENSION PAD RH** See step 2
4. **DRAIN WASHER FLUID** See step 4
5. **REMOVE LEVEL WARNING SWITCH ASSEMBLY**
    a. Disconnect the connector.

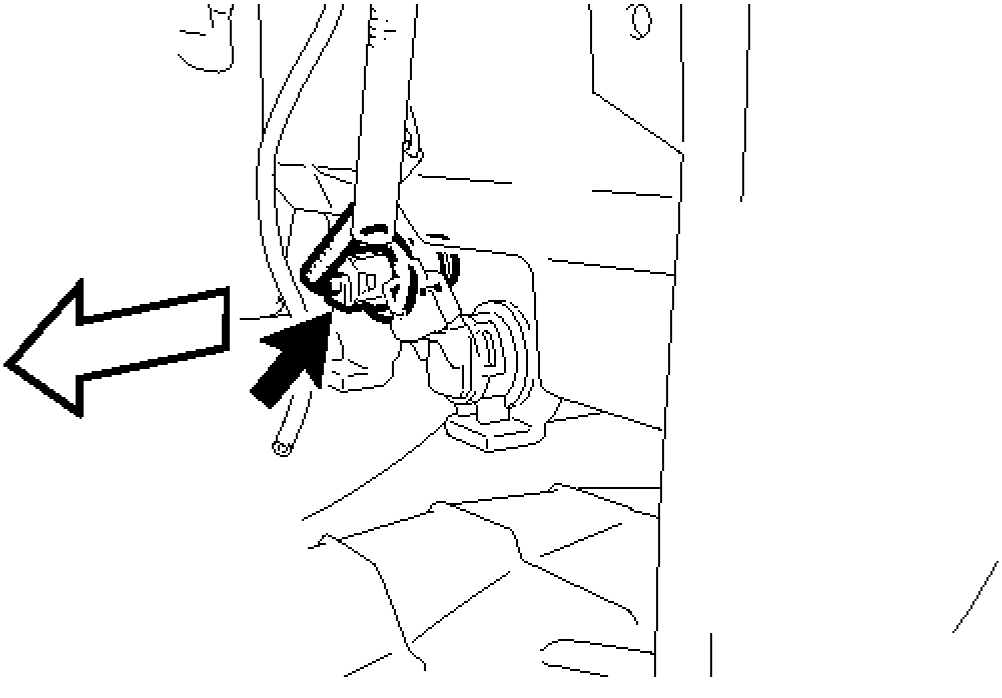

Fig. 66: Removing Level Warning Switch Assembly
Courtesy of TOYOTA MOTOR SALES, U.S.A., INC.

b. Remove the level warning switch assembly as shown in the illustration.

INSPECTION

INSPECTION

1. **INSPECT LEVEL WARNING SWITCH ASSEMBLY**

   HINT:

   The following check should be performed with the windshield washer motor and pump installed to the washer jar.

   a. Fill the washer jar with washer fluid.
   b. Measure the resistance according to the value(s) in the table below.

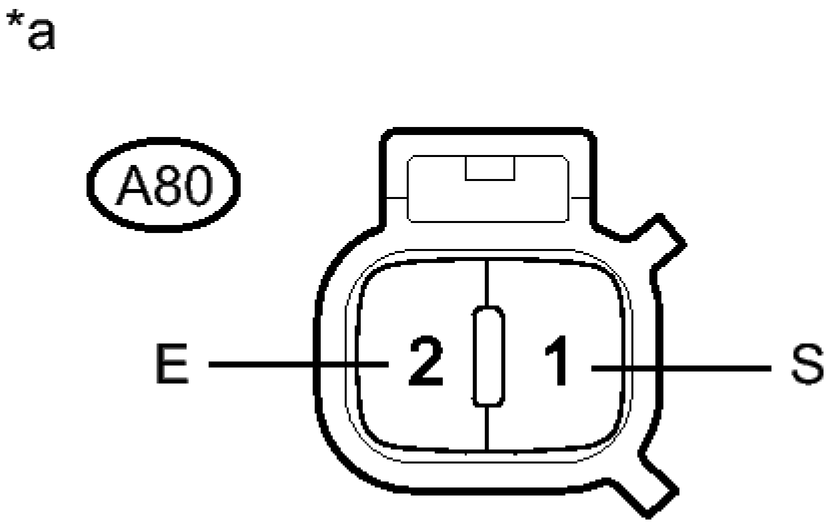

Fig. 67: Identifying Level Warning Switch Assembly Connector Terminal Identification
Courtesy of TOYOTA MOTOR SALES, U.S.A., INC.

Standard Resistance

Tester Connection	Condition	Specified Condition
A80-1 (S) - A80-2 (E)	Fluid volume is more than 800 ml	10 kohms or higher
	Fluid volume is less than 600 ml	Below 1 ohms

TEXT IN ILLUSTRATION

*a	Component without harness connected (Level Warning Switch Assembly)

If the result is not as specified, replace the level warning switch assembly.

INSTALLATION

INSTALLATION

1. **INSTALL LEVEL WARNING SWITCH ASSEMBLY**
    a. Install the level warning switch assembly.

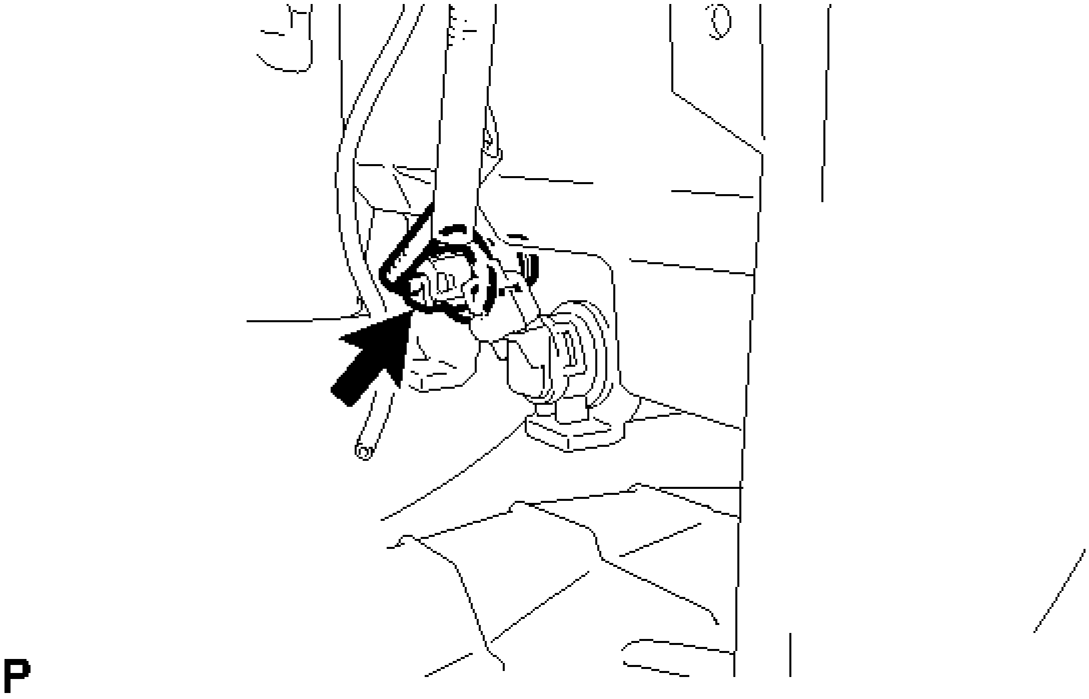

Fig. 68: Identifying Level Warning Switch Assembly Connector
Courtesy of TOYOTA MOTOR SALES, U.S.A., INC.

    b. Connect the connector.
    c. Connect the washer hose.

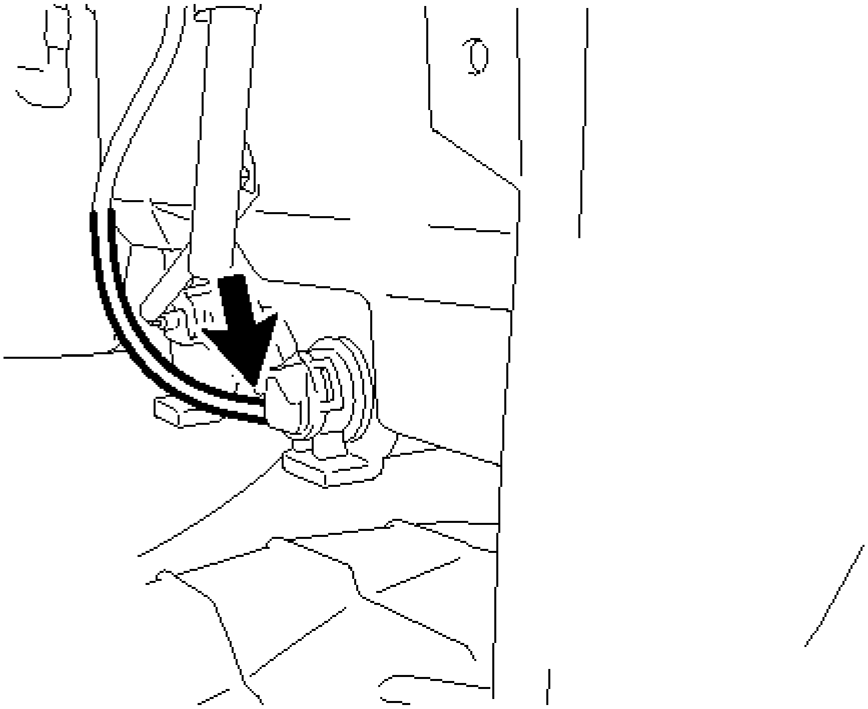

Fig. 69: Identifying Level Warning Switch Assembly Washer Hose
Courtesy of TOYOTA MOTOR SALES, U.S.A., INC.

2. **ADD WASHER FLUID** See step 2
3. **INSTALL FRONT FENDER LINER RH** See step 3
4. **INSTALL FRONT WHEEL OPENING EXTENSION PAD RH** See step 4
5. **INSTALL FRONT WHEEL RH** . Refer to **INSTALLATION - Step 8**

2012-2017 ACCESSORIES & EQUIPMENT

Wiper System / Washer System (Service Information) (Except Hybrid) - Camry

FRONT WIPER MOTOR

COMPONENTS

ILLUSTRATION

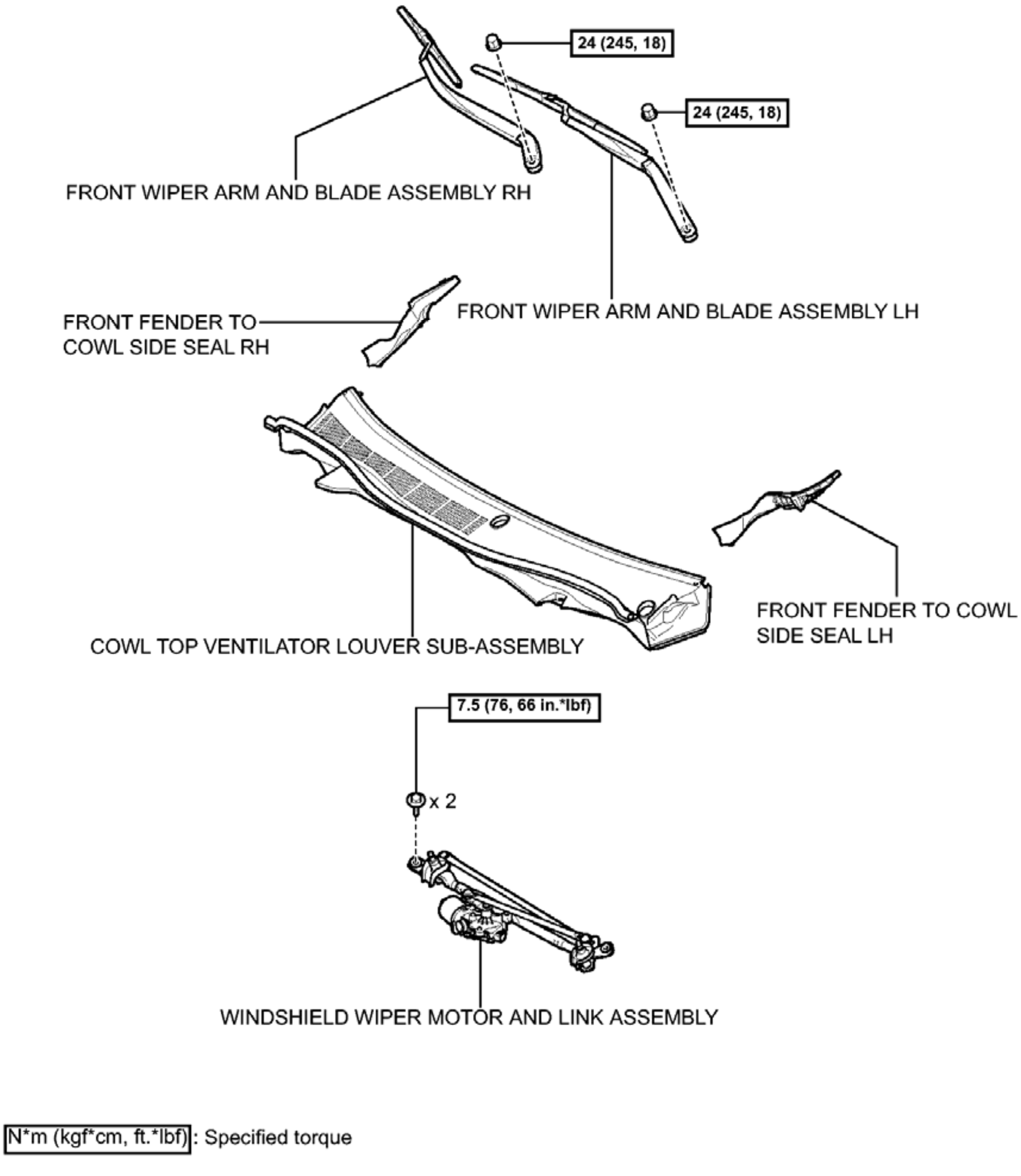
24 (245, 18)
24 (245, 18)
FRONT WIPER ARM AND BLADE ASSEMBLY RH
FRONT WIPER ARM AND BLADE ASSEMBLY LH
FRONT FENDER TO COWL SIDE SEAL RH
COWL TOP VENTILATOR LOUVER SUB-ASSEMBLY
FRONT FENDER TO COWL SIDE SEAL LH
7.5 (76, 66 in.*lbf)
x 2
WINDSHIELD WIPER MOTOR AND LINK ASSEMBLY
N*m (kgf*cm, ft.*lbf): Specified torque
P

Fig. 1: Identifying Front Wiper Motor Replacement Components With Torque Specifications (1 Of 2)
Courtesy of TOYOTA MOTOR SALES, U.S.A., INC.

ILLUSTRATION

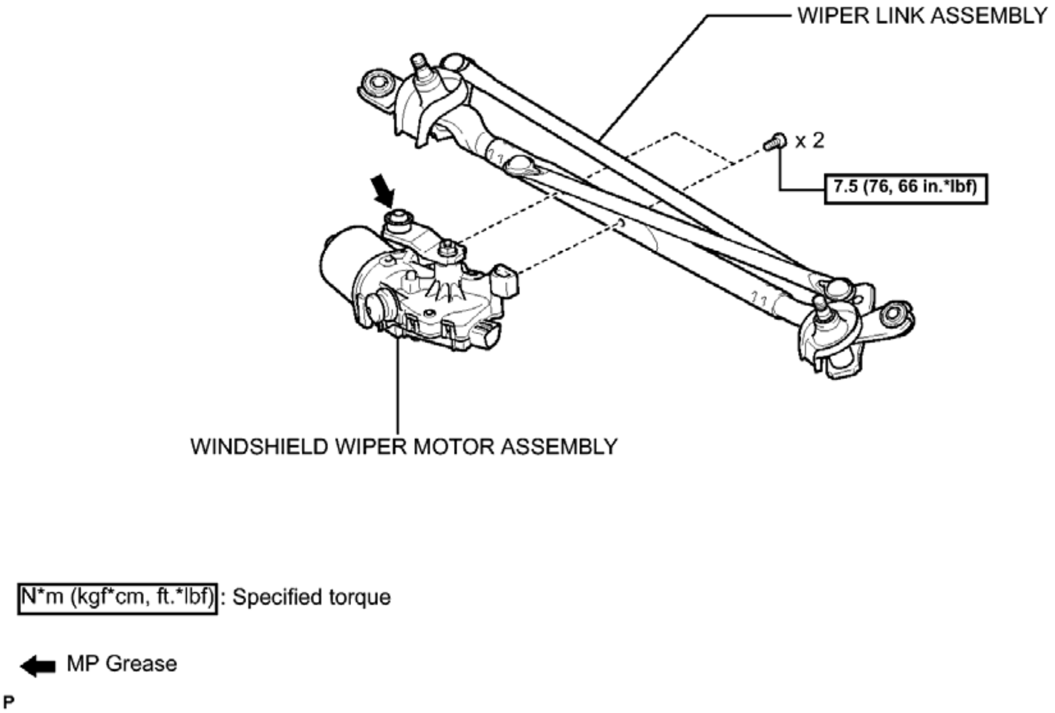
WIPER LINK ASSEMBLY
x 2
7.5 (76, 66 in.*lbf)
WINDSHIELD WIPER MOTOR ASSEMBLY
N*m (kgf*cm, ft.*lbf) : Specified torque
MP Grease
P

Fig. 2: Identifying Front Wiper Motor Replacement Components With Torque Specifications (2 Of 2)
Courtesy of TOYOTA MOTOR SALES, U.S.A., INC.

ON-VEHICLE INSPECTION

ON-VEHICLE INSPECTION

1. **INSPECT WINDSHIELD WIPER MOTOR ASSEMBLY**
   a. for RH Side:
      1. Check the stop (park) position.

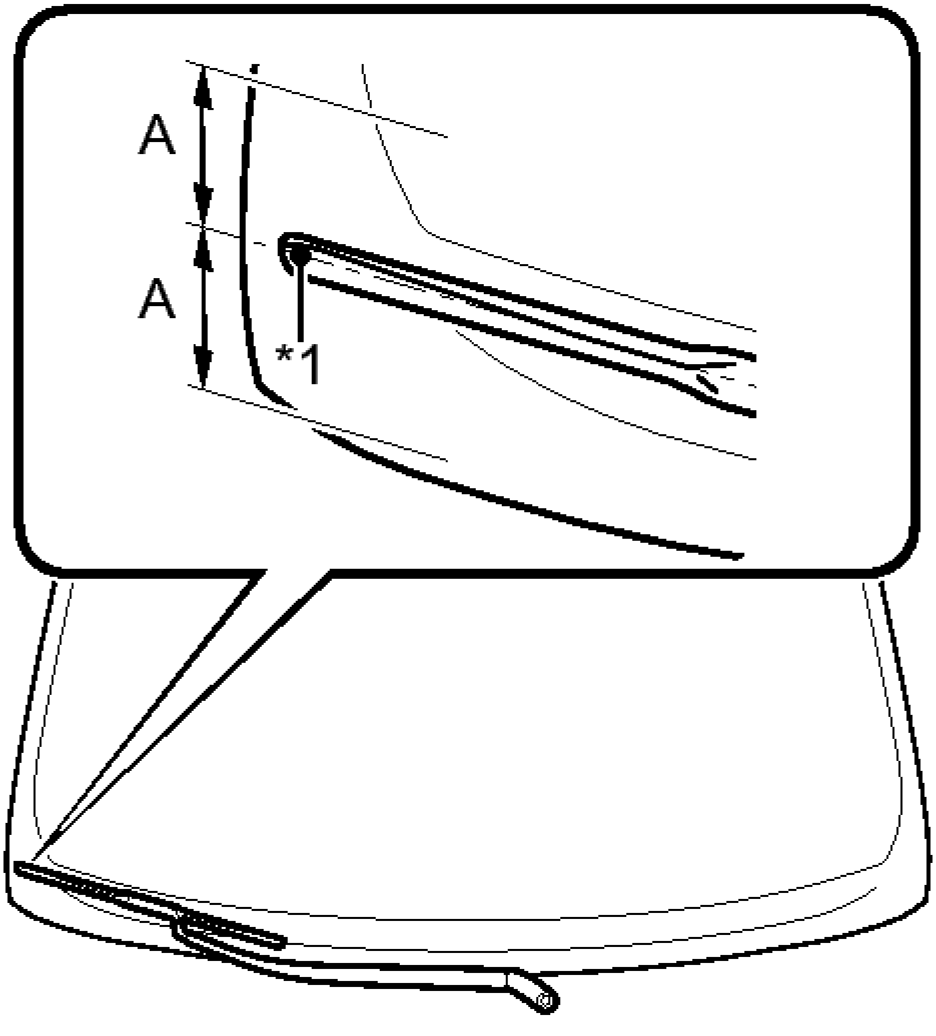

Fig. 3: Checking RH Wiper Blade Stop (Park) Position
Courtesy of TOYOTA MOTOR SALES, U.S.A., INC.

2. Operate the windshield wiper motor assembly.
3. Stop the windshield wiper motor assembly operation.
4. Check the automatic stop (park) position.

HINT:

After the front wiper motor is stopped, check the automatic stop position after lifting the wiper blade 2 times.

OK

The front wiper stops at the position shown in the illustration.

Area	Measurement
A	7.5 mm (0.295 in.)

TEXT IN ILLUSTRATION

*1	Ceramic Dot

b. for LH Side:
    1. Operate the windshield wiper motor assembly.

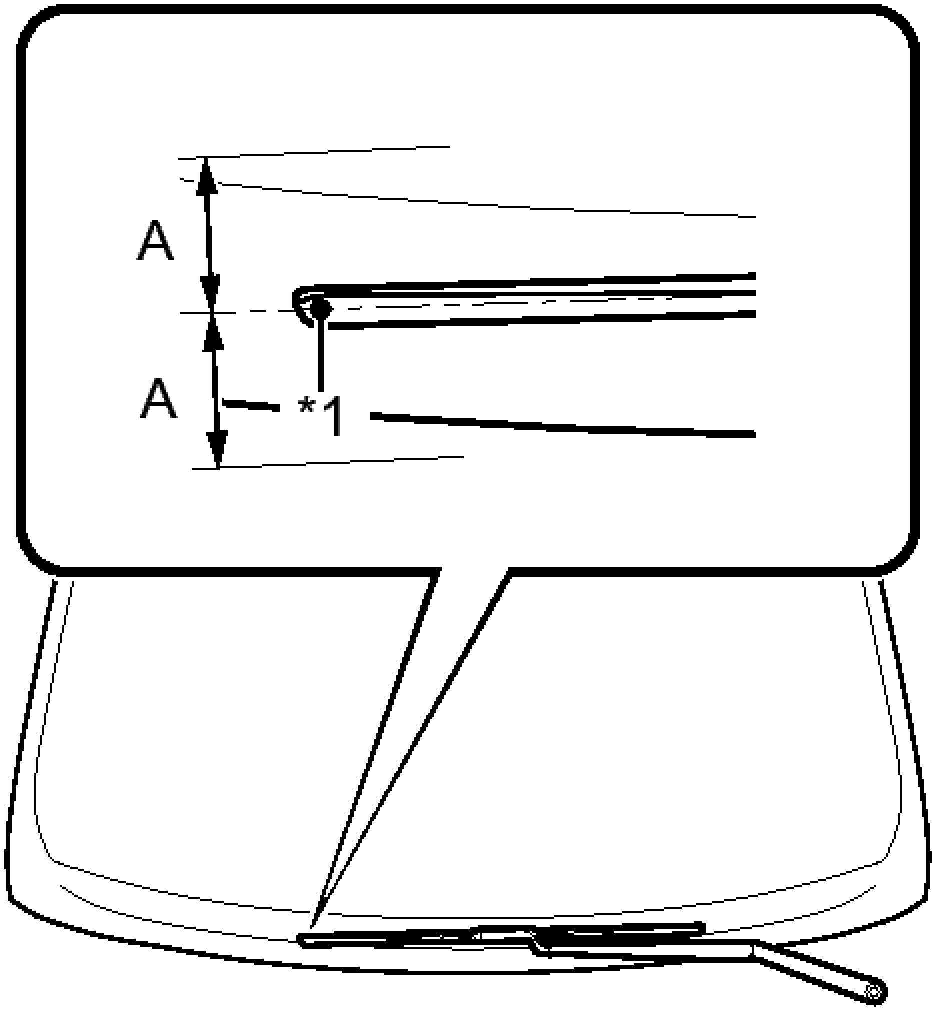

Fig. 4: Checking LH Wiper Blade Stop (Park) Position
Courtesy of TOYOTA MOTOR SALES, U.S.A., INC.

2. Stop the windshield wiper motor assembly operation.

3. Check the automatic stop (park) position.

   HINT:

   After the front wiper motor is stopped, check the automatic stop position after lifting the wiper blade 2 times.

   OK

   The front wiper stops at the position shown in the illustration.

Area	Measurement
A	7.5 mm (0.295 in.)

   TEXT IN ILLUSTRATION

*1	Ceramic Dot

REMOVAL

REMOVAL

1. **REMOVE FRONT WIPER ARM AND BLADE ASSEMBLY LH**
   1. Remove the nut and front wiper arm and blade assembly LH.

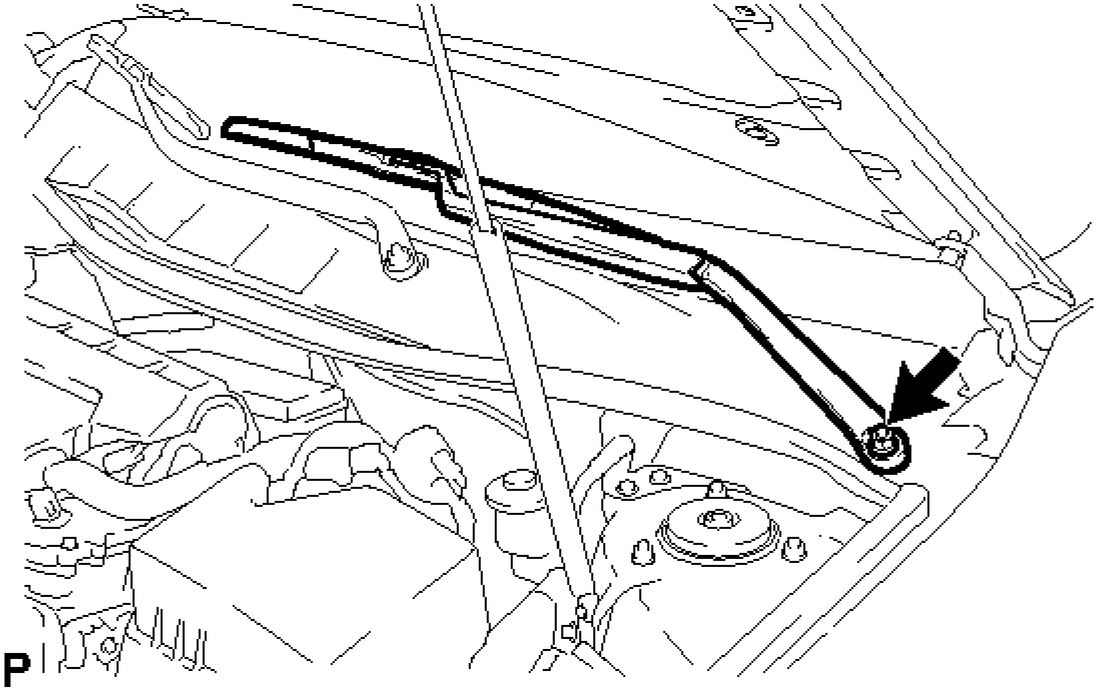

Fig. 5: Locating Front Wiper Arm And Blade Assembly LH Fastener
Courtesy of TOYOTA MOTOR SALES, U.S.A., INC.

2. **REMOVE FRONT WIPER ARM AND BLADE ASSEMBLY RH**
   a. Remove the nut and front wiper arm and blade assembly RH.

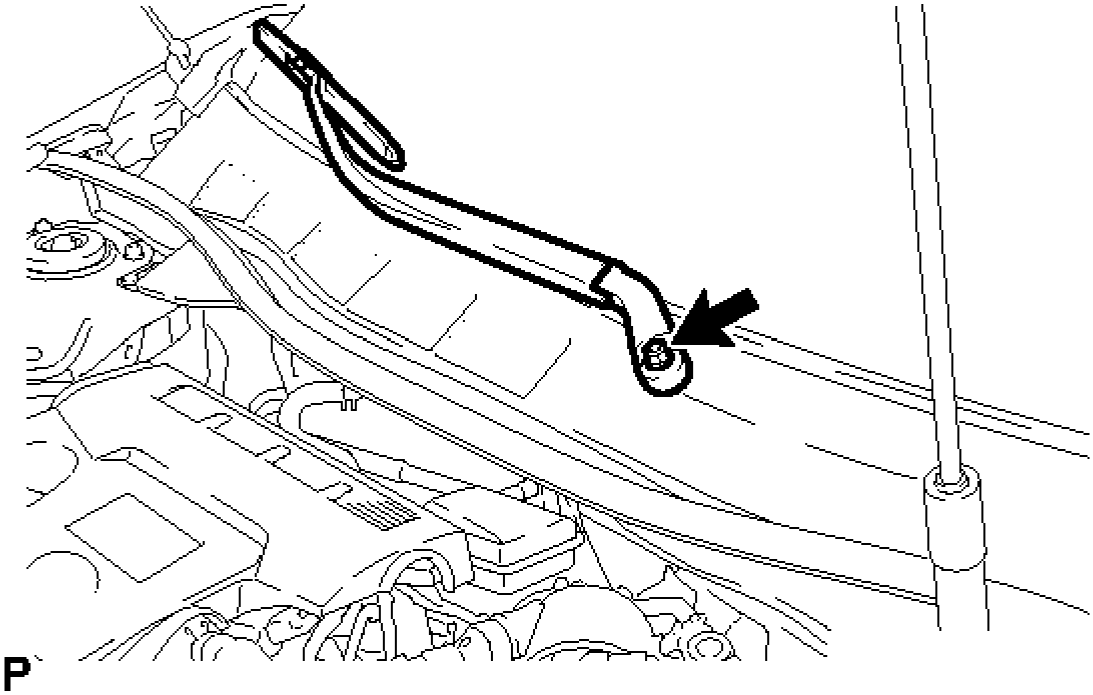

Fig. 6: Locating Front Wiper Arm And Blade Assembly RH Fastener
Courtesy of TOYOTA MOTOR SALES, U.S.A., INC.

3. **REMOVE FRONT FENDER TO COWL SIDE SEAL LH**
   a. Disengage the 2 clips and 3 guides, and remove the front fender to cowl side seal LH as shown in the illustration.

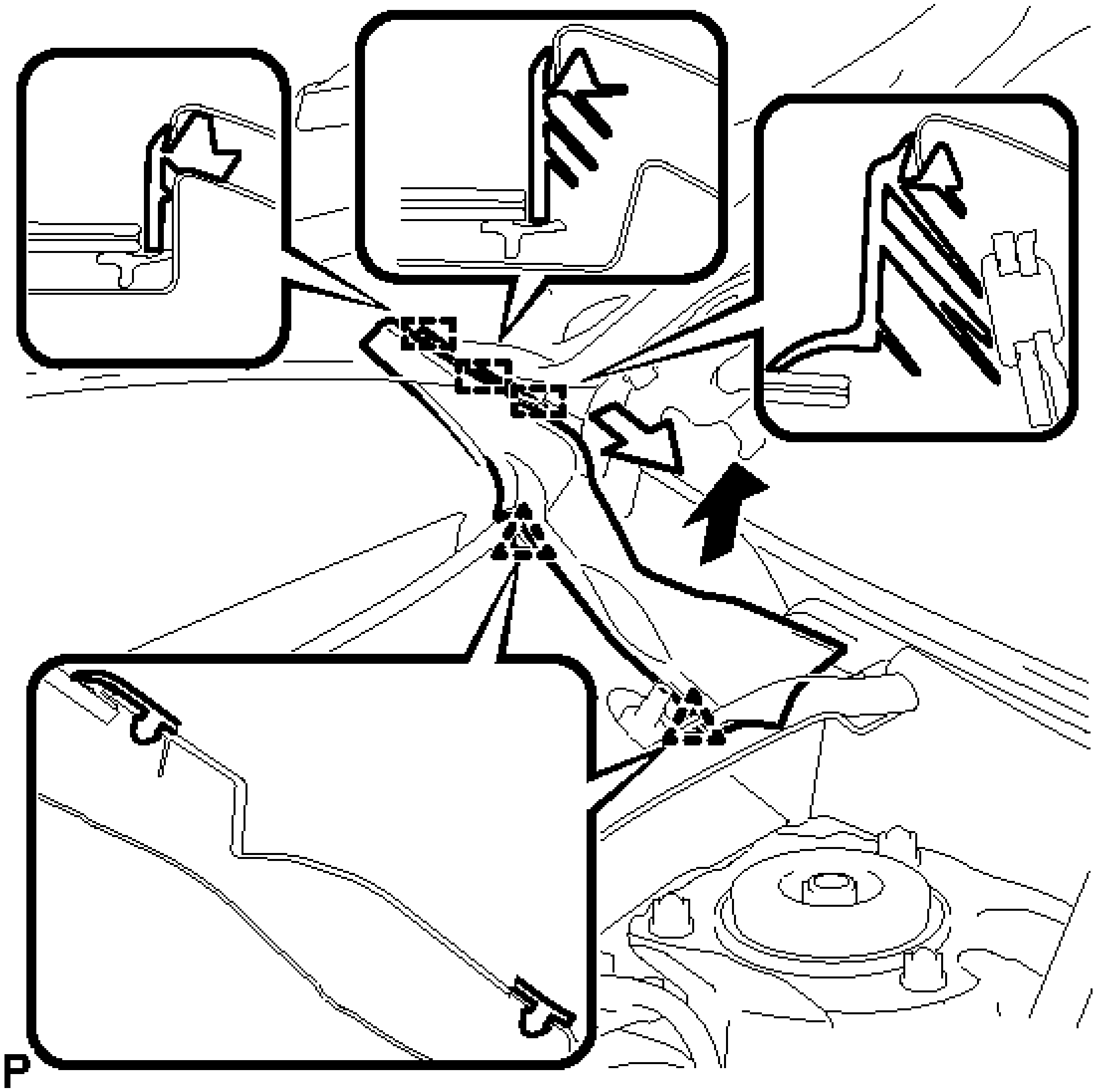

Fig. 7: Removing Front Fender To Cowl Side Seal LH
Courtesy of TOYOTA MOTOR SALES, U.S.A., INC.

4. **REMOVE FRONT FENDER TO COWL SIDE SEAL RH**

   HINT:

   Use the same procedure as for the LH side.

5. **REMOVE COWL TOP VENTILATOR LOUVER SUB-ASSEMBLY**
   1. Disengage the 6 claws and guide as shown in the illustration.

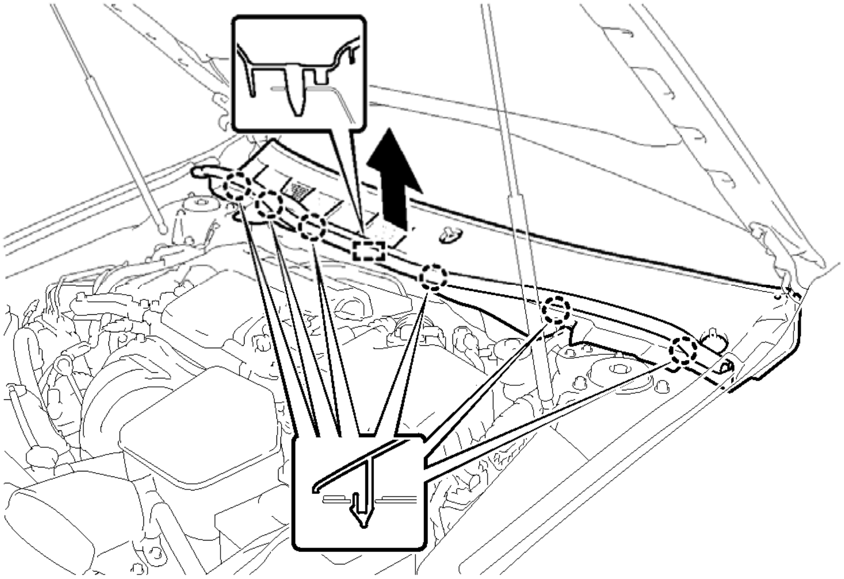

Fig. 8: Removing Cowl Top Ventilator Louver Sub-Assembly And Claws
Courtesy of TOYOTA MOTOR SALES, U.S.A., INC.

b. Disengage the 8 guides and pull out the cowl top ventilator louver sub-assembly as shown in the illustration.

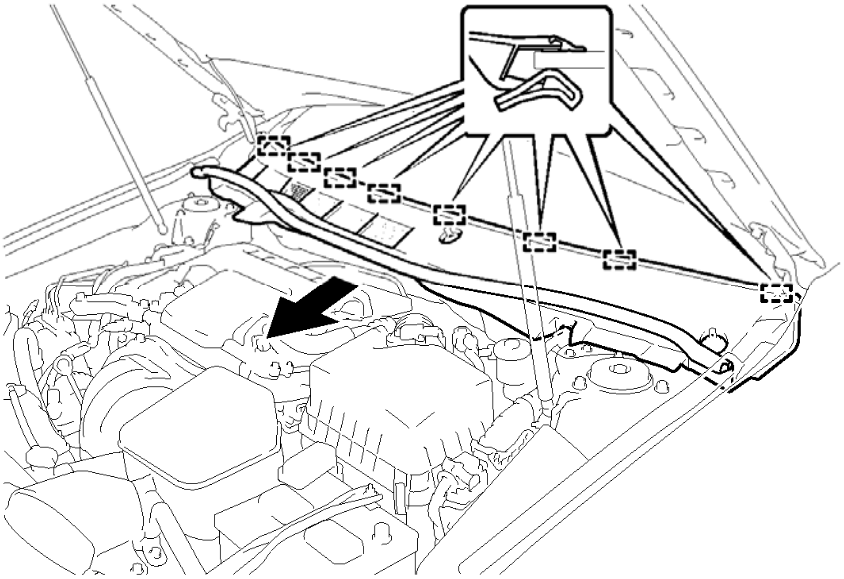

Fig. 9: Removing Cowl Top Ventilator Louver Sub-Assembly And Guides
Courtesy of TOYOTA MOTOR SALES, U.S.A., INC.

6. **REMOVE WINDSHIELD WIPER MOTOR AND LINK ASSEMBLY**
    a. Operate the wiper and stop the windshield wiper motor at the automatic stop position.
    b. Disconnect the connector.

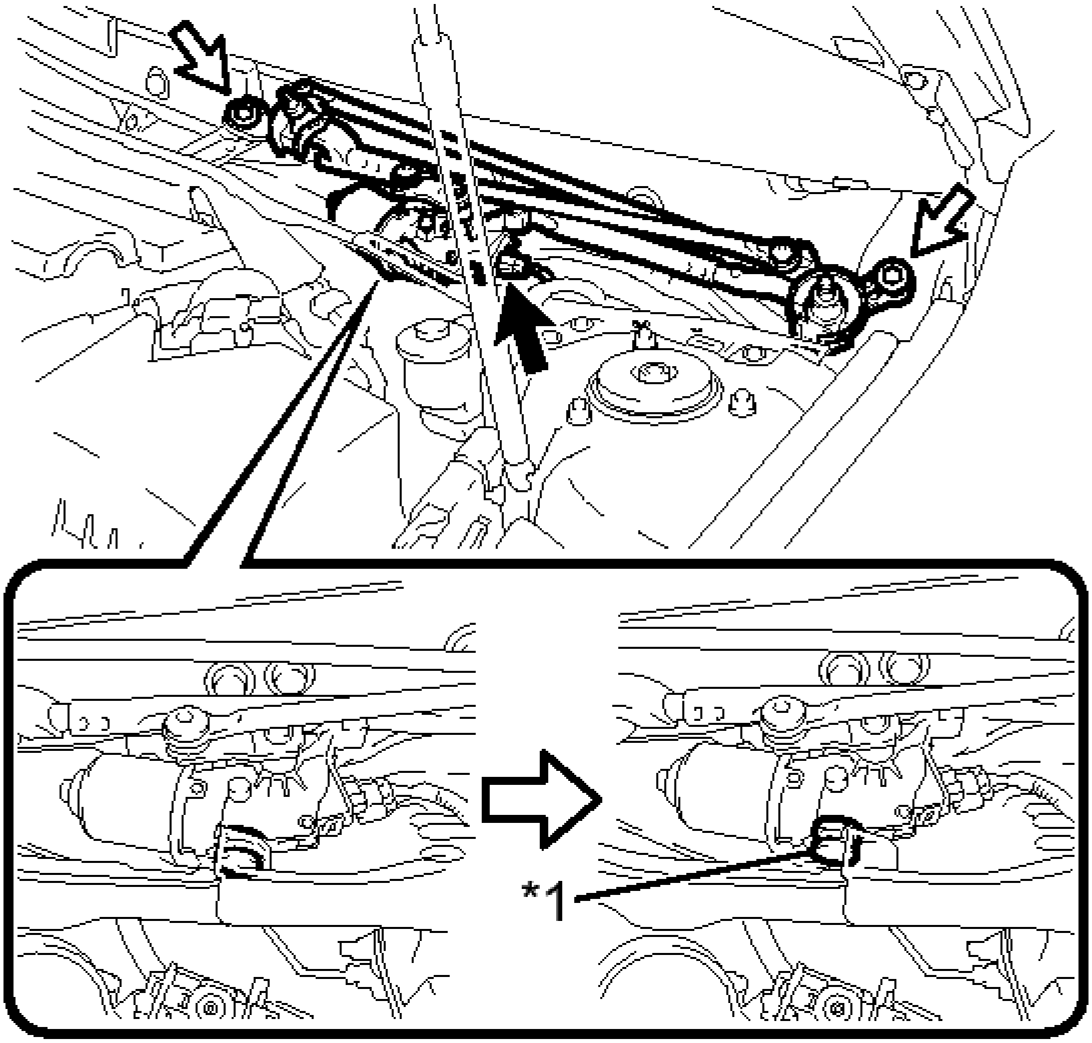

P

Fig. 10: Removing Windshield Wiper Motor And Link Assembly With Bolts
Courtesy of TOYOTA MOTOR SALES, U.S.A., INC.

TEXT IN ILLUSTRATION

*1	Motor Grommet

c. Remove the 2 bolts.
d. Disengage the motor grommet and remove the windshield wiper motor and link assembly as shown in the illustration.

NOTE: **Be careful not to damage the windshield when removing the windshield wiper motor and link assembly.**

7. **REMOVE WINDSHIELD WIPER MOTOR ASSEMBLY**

a. Using a screwdriver, separate the No. 1 rod from the windshield wiper motor assembly as shown in the illustration.

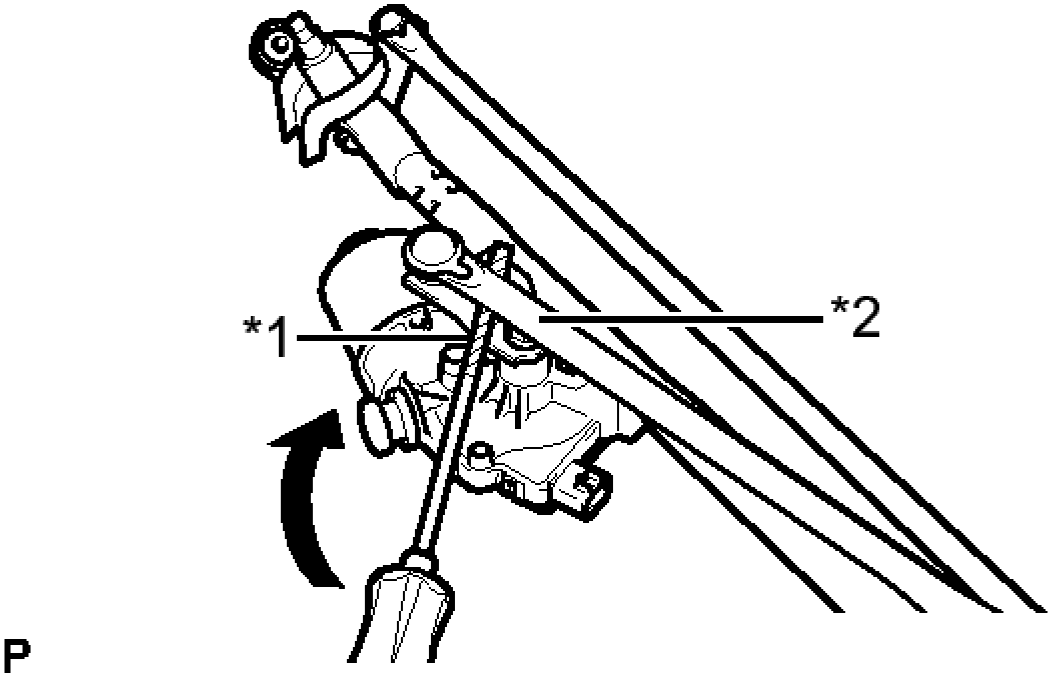

Fig. 11: Removing Windshield Wiper Motor Assembly
Courtesy of TOYOTA MOTOR SALES, U.S.A., INC.

TEXT IN ILLUSTRATION

*1	Protective Tape
*2	No. 1 Rod

HINT:

Tape the screwdriver tip before use.

b. Using a T30 "TORX" socket wrench, remove the 2 bolts and windshield wiper motor assembly from the wiper link assembly.

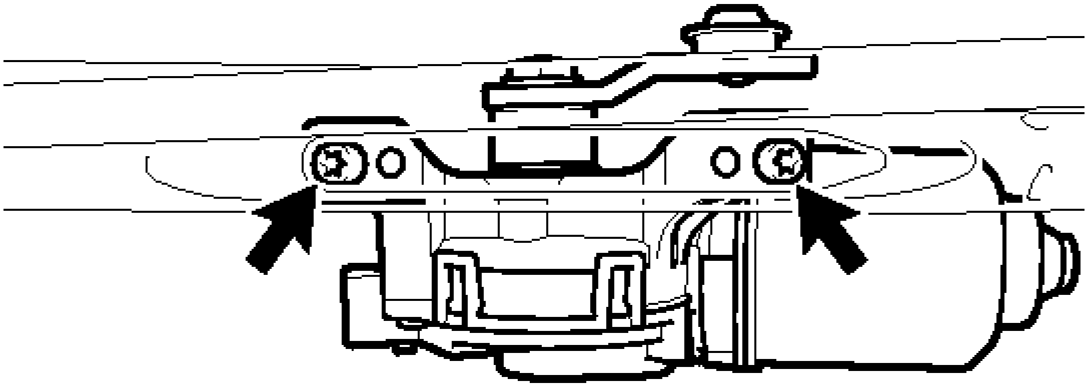

Fig. 12: Locating Windshield Wiper Motor Assembly Bolts
Courtesy of TOYOTA MOTOR SALES, U.S.A., INC.

INSPECTION

INSPECTION

WARNING: **Ensure that fingers or articles of clothing do not get caught in moving parts when performing this test.**

1. **INSPECT WINDSHIELD WIPER MOTOR ASSEMBLY**

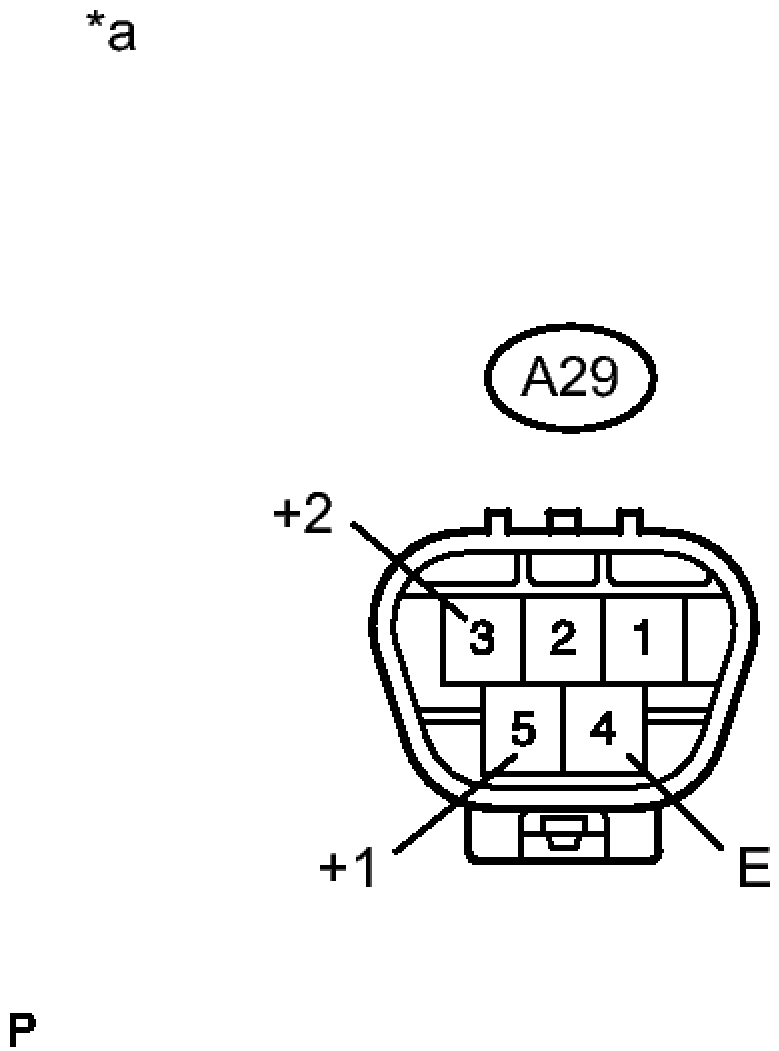

Fig. 13: Inspecting Windshield Wiper Motor Assembly Connector Terminals
Courtesy of TOYOTA MOTOR SALES, U.S.A., INC.

a. Check the LO operation.
   1. Connect a battery positive (+) lead to terminal A29-5 (+1) and a negative (-) lead to terminal A29-4 (E), and check that the motor operates at low speed.

      OK

      Motor operates at low speed (LO).

b. Check the HI operation.
   1. Connect a battery positive (+) lead to terminal A29-3 (+2) and a negative (-) lead to terminal A29-4 (E), and check that the motor operates at high speed.

      OK

Motor operates at high speed (HI).

TEXT IN ILLUSTRATION

*a	Component without harness connected (Windshield Wiper Motor Assembly)

If the result is not as specified, replace the windshield wiper motor assembly.

INSTALLATION

INSTALLATION

1. **INSTALL WINDSHIELD WIPER MOTOR ASSEMBLY**
    a. Using a T30 "TORX" socket wrench, install the windshield wiper motor assembly with the 2 bolts.

    Torque: 7.5 N*m (76 kgf*cm, 66 in.*lbf)

    b. Connect the connector.
    c. Turn the ignition switch to ON (IG).
    d. Operate the wiper and stop the windshield wiper motor assembly at the automatic stop position.
    e. Turn the ignition switch off.
    f. Disconnect the connector.
    g. Apply MP grease to the pivot of the windshield wiper motor assembly.

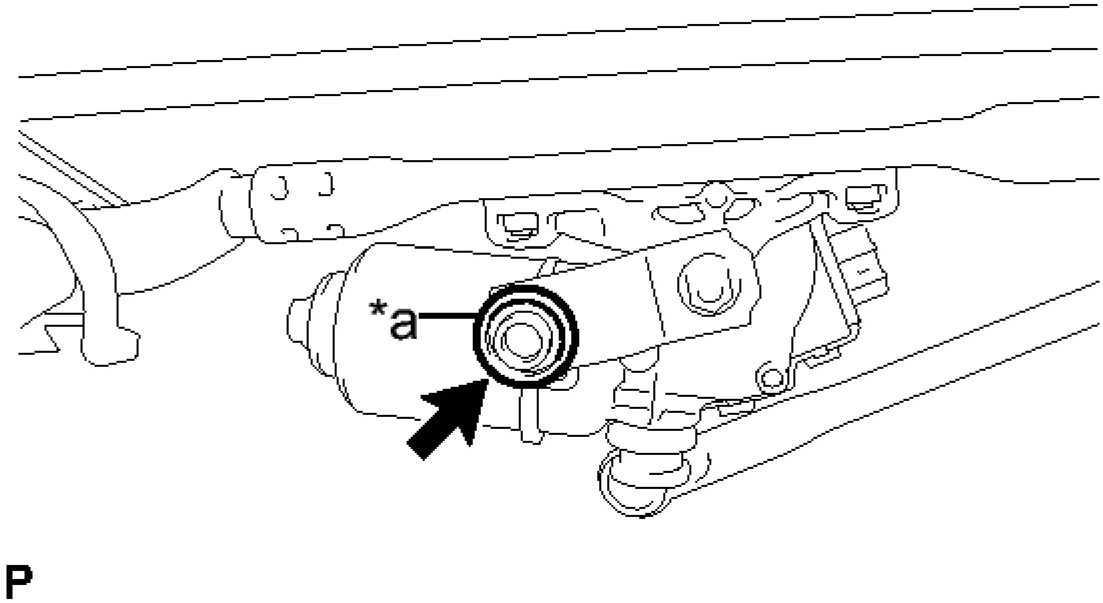

Fig. 14: Identifying Windshield Wiper Motor Assembly Pivot
Courtesy of TOYOTA MOTOR SALES, U.S.A., INC.

TEXT IN ILLUSTRATION

*a	Pivot of the windshield wiper motor assembly

h. Connect the No. 1 rod to the pivot of the windshield wiper motor assembly.

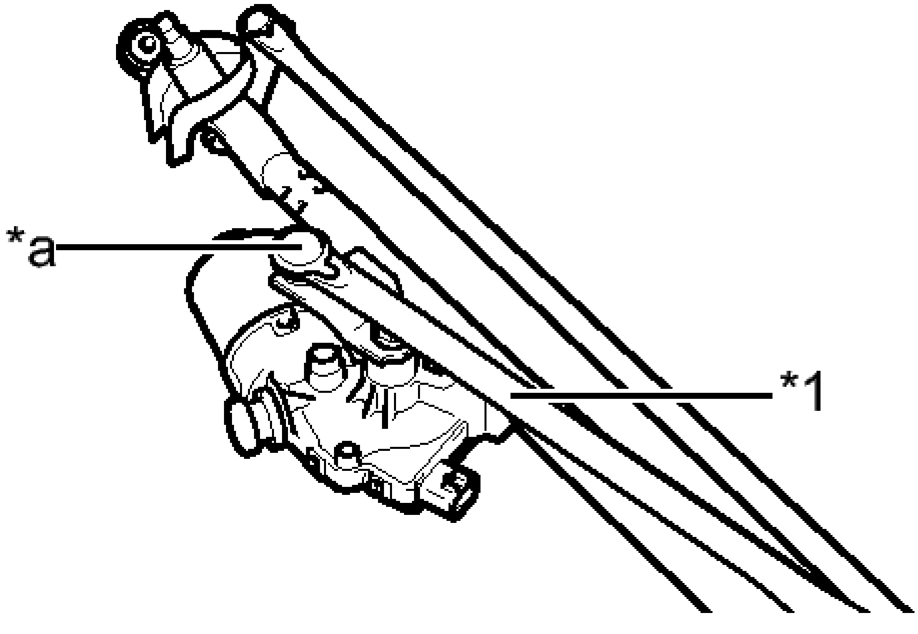

Fig. 15: Identifying Windshield Wiper Motor Assembly
Courtesy of TOYOTA MOTOR SALES, U.S.A., INC.

TEXT IN ILLUSTRATION

*1	No. 1 Rod
*a	Pivot of the windshield wiper motor assembly

2. **INSTALL WINDSHIELD WIPER MOTOR AND LINK ASSEMBLY**
    a. Engage the motor grommet as shown in the illustration.

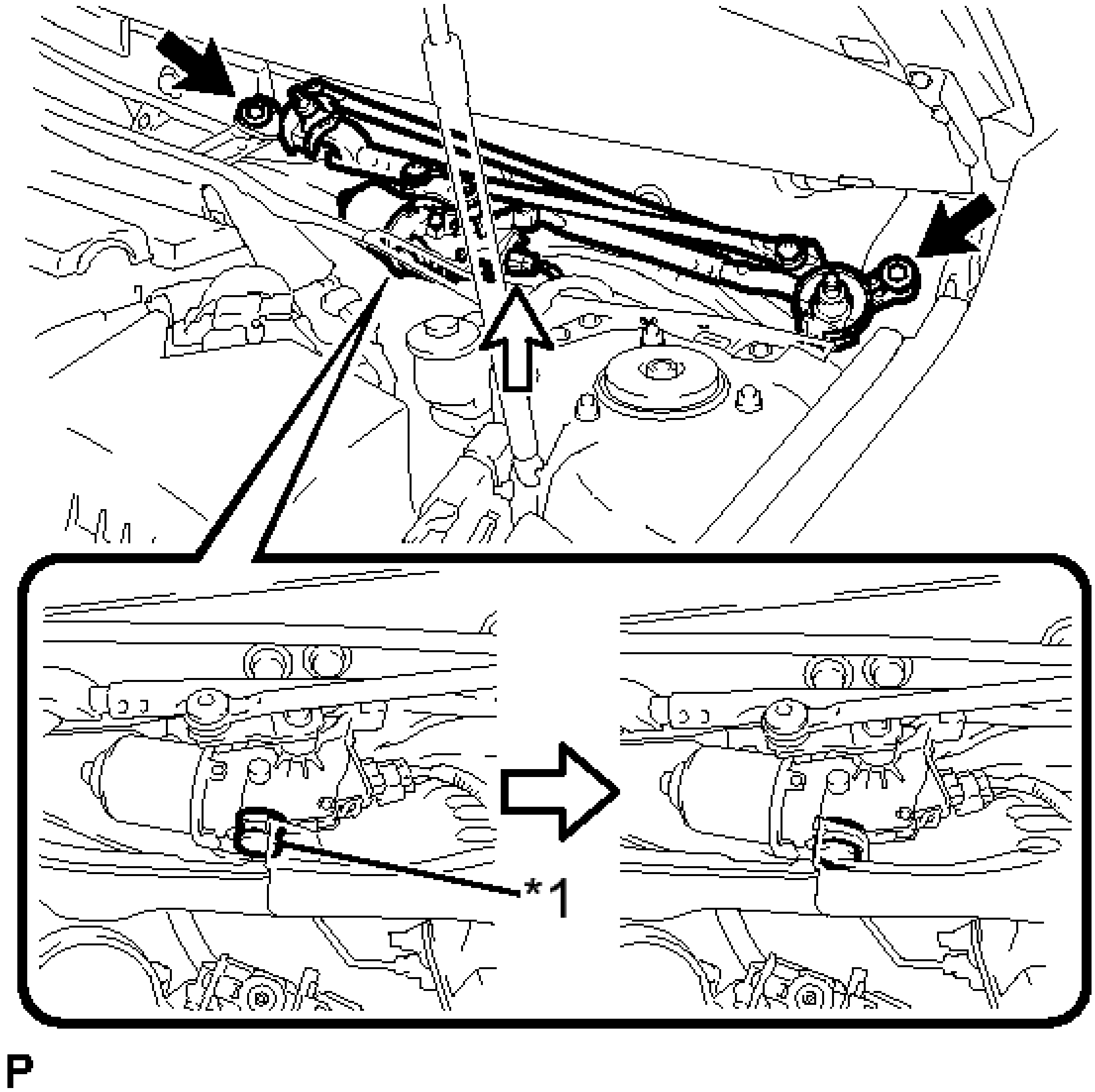

Fig. 16: Installing Windshield Wiper Motor And Link Assembly With Bolts
Courtesy of TOYOTA MOTOR SALES, U.S.A., INC.

TEXT IN ILLUSTRATION

*1	Motor Grommet

NOTE: **Be careful not to damage the windshield when installing the windshield wiper motor and link assembly.**

b. Install the windshield wiper motor and link assembly with the 2 bolts.

Torque: 7.5 N*m (76 kgf*cm, 66 in.*lbf)

c. Connect the connector.

3. **INSTALL COWL TOP VENTILATOR LOUVER SUB-ASSEMBLY**
    a. Engage the 8 guides as shown in the illustration.

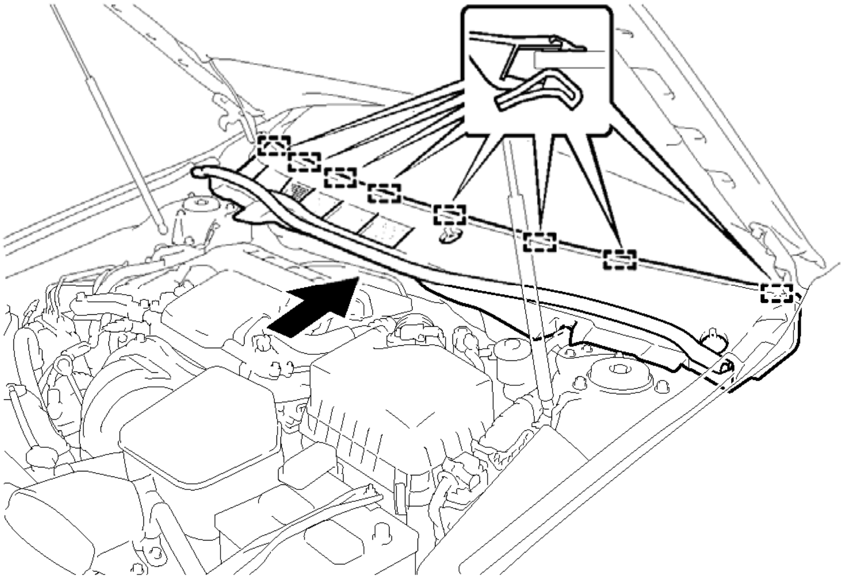

Fig. 17: Installing Cowl Top Ventilator Louver Sub-Assembly And Guides
Courtesy of TOYOTA MOTOR SALES, U.S.A., INC.

    b. Engage the 6 claws and guide to install the cowl top ventilator louver sub-assembly.

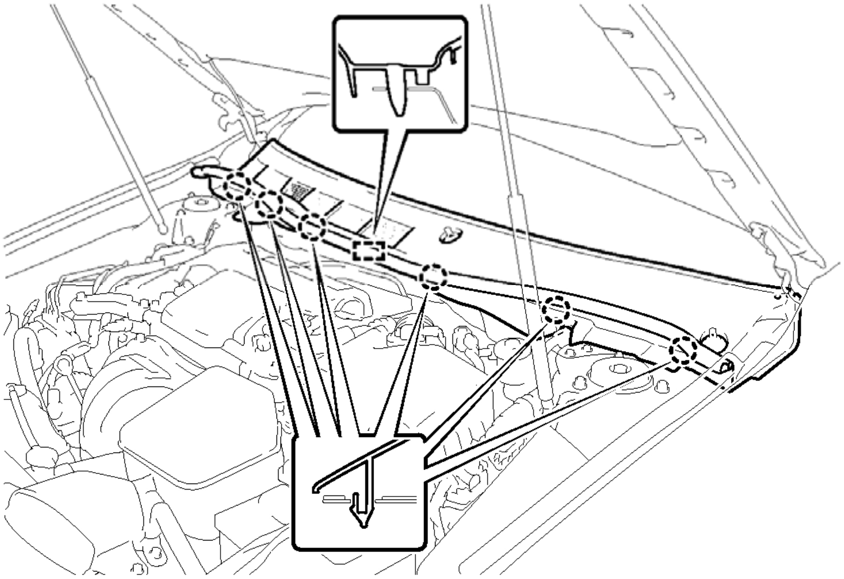

Fig. 18: Installing Cowl Top Ventilator Louver Sub-Assembly And Claws
Courtesy of TOYOTA MOTOR SALES, U.S.A., INC.

4. **INSTALL FRONT FENDER TO COWL SIDE SEAL LH**
    a. Engage the 3 guides and 2 clips to install the front fender to cowl side seal LH as shown in the

illustration.

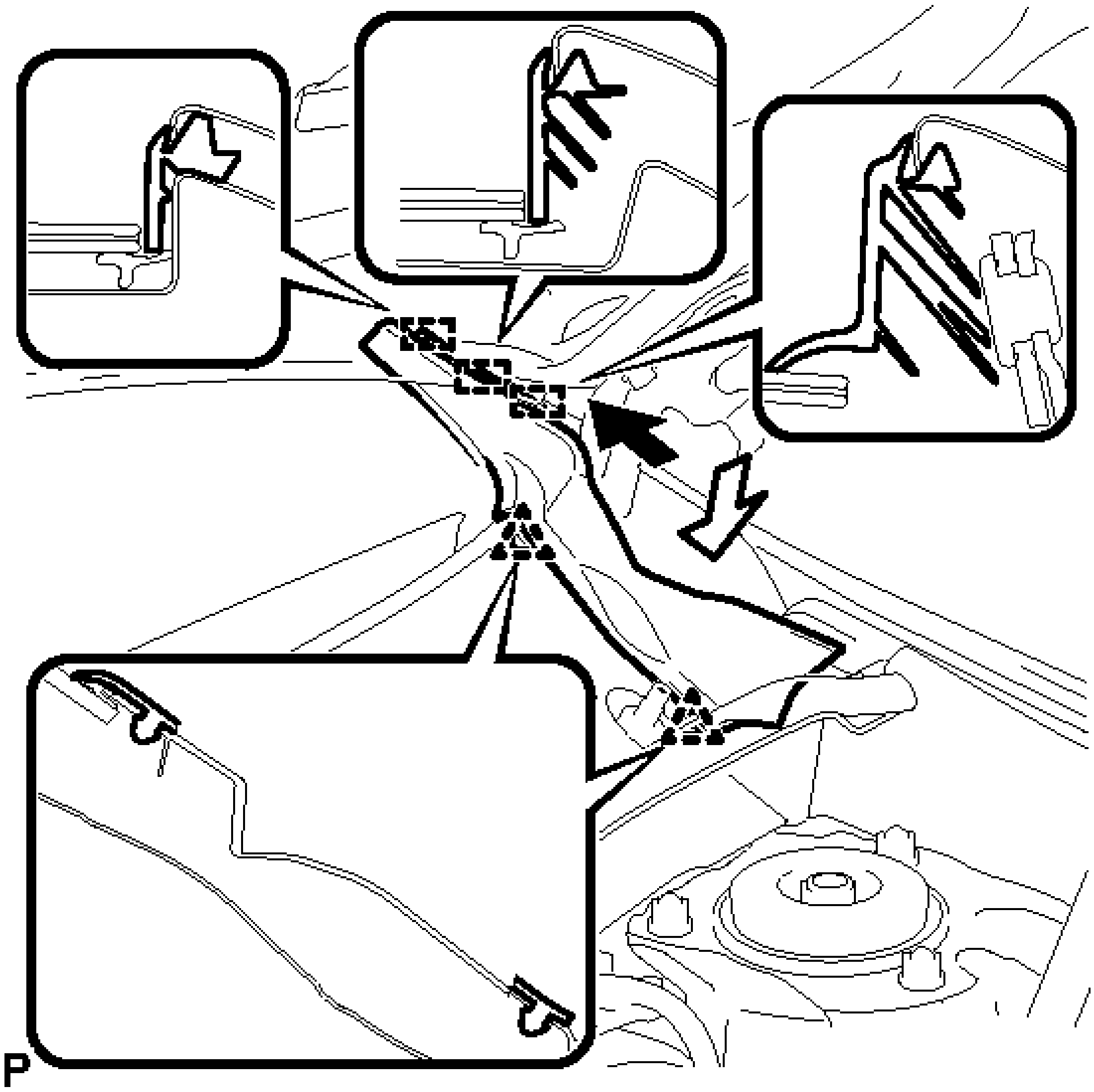

Fig. 19: Installing Front Fender To Cowl Side Seal LH
Courtesy of TOYOTA MOTOR SALES, U.S.A., INC.

5. **INSTALL FRONT FENDER TO COWL SIDE SEAL RH**

   HINT:

   Use the same procedure as for the LH side.

6. **INSTALL FRONT WIPER ARM AND BLADE ASSEMBLY LH**
   a. When reusing the front wiper arm and blade assembly LH:

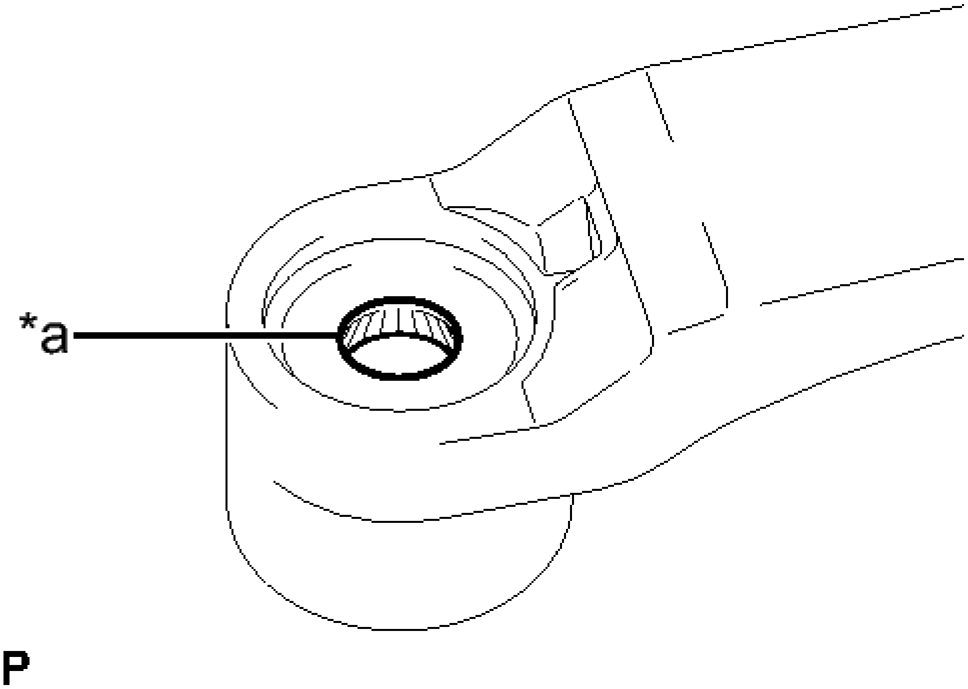

Fig. 20: Identifying Wiper Pivot Serration
Courtesy of TOYOTA MOTOR SALES, U.S.A., INC.

1. Clean the wiper arm serrations.

   TEXT IN ILLUSTRATION

*a	Wiper Arm Serration

b. When reusing the windshield wiper link assembly:

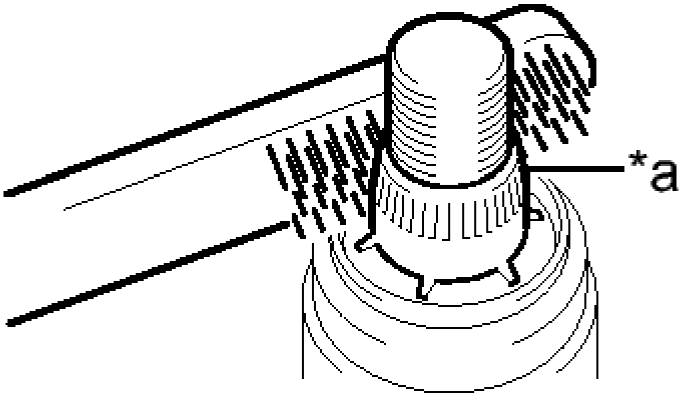

P

Fig. 21: Cleaning Wiper Pivot Serration
Courtesy of TOYOTA MOTOR SALES, U.S.A., INC.

1. Clean the wiper pivot serrations with a wire brush.

TEXT IN ILLUSTRATION

*a	Wiper Pivot Serration

c. Set the front wiper arm and blade assembly LH in the range shown in the illustration and then install the front wiper arm and blade assembly LH with the nut.

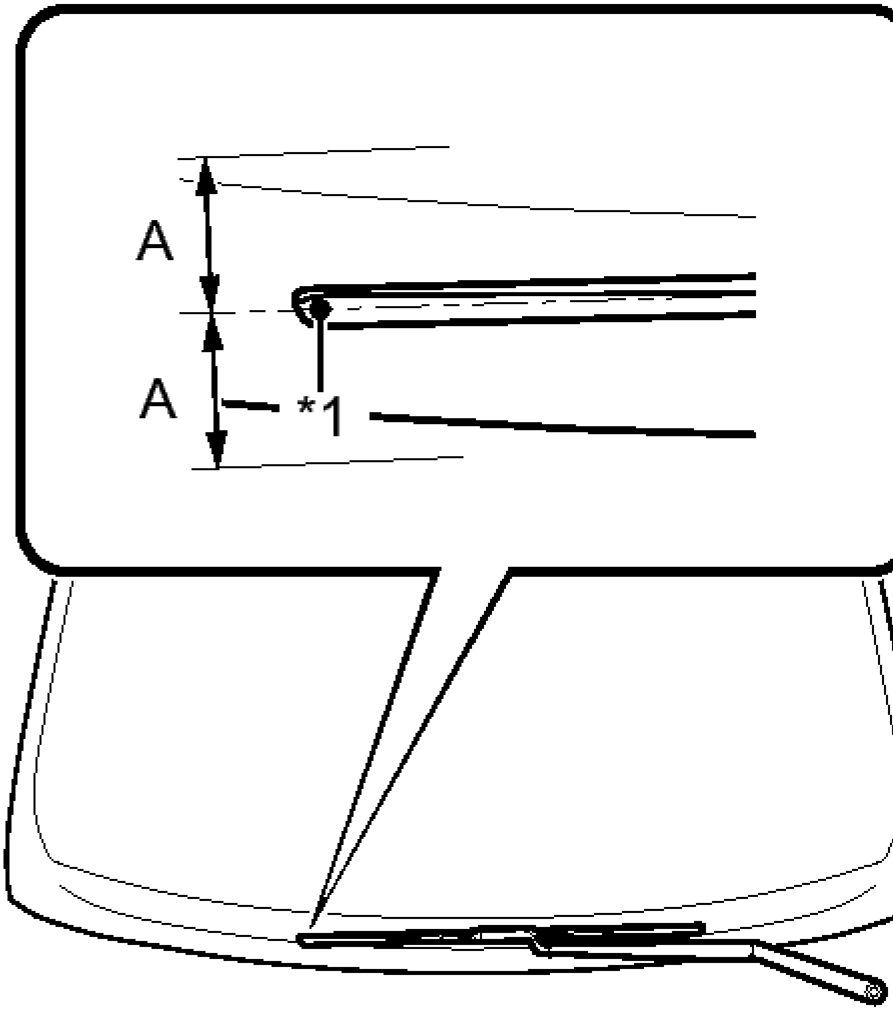

P

Fig. 22: Checking LH Wiper Blade Stop (Park) Position
Courtesy of TOYOTA MOTOR SALES, U.S.A., INC.

Torque: 24 N*m (245 kgf*cm, 18 ft.*lbf)

Area	Measurement
A	7.5 mm (0.295 in.)

TEXT IN ILLUSTRATION

*1	Ceramic Dot

HINT:

Hold the wiper arm by hand while tightening the nut.

7. **INSTALL FRONT WIPER ARM AND BLADE ASSEMBLY RH**
   a. When reusing the front wiper arm and blade assembly RH:

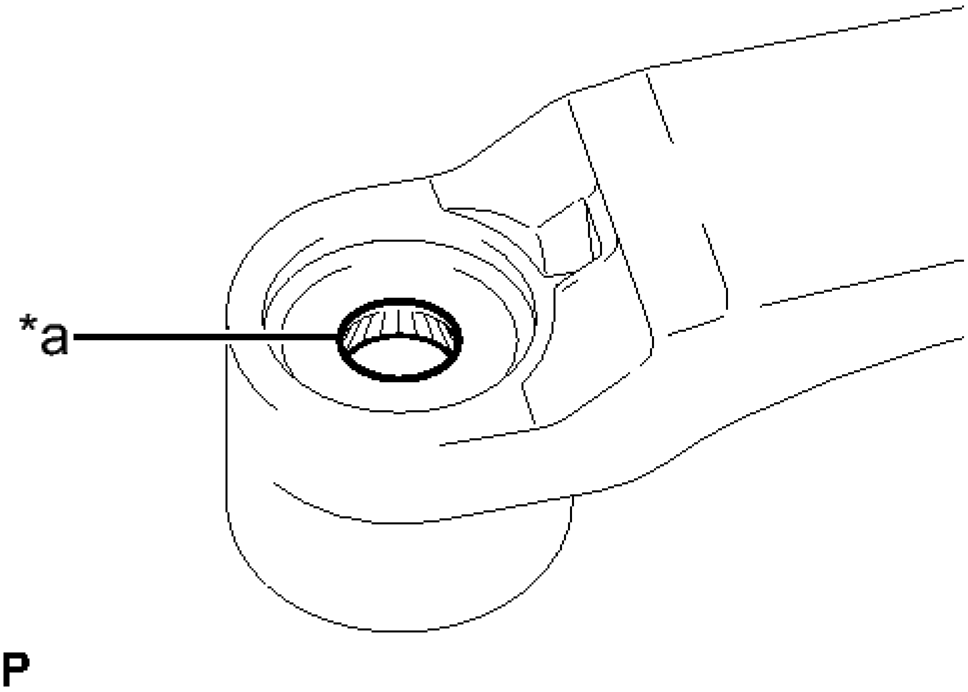

Fig. 23: Identifying Wiper Pivot Serration
Courtesy of TOYOTA MOTOR SALES, U.S.A., INC.

1. Clean the wiper arm serrations.

   TEXT IN ILLUSTRATION

*a	Wiper Arm Serration

   b. When reusing the windshield wiper link assembly:

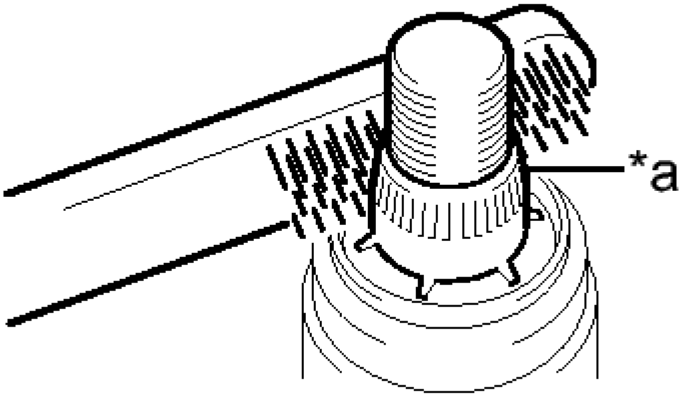

P

Fig. 24: Cleaning Wiper Pivot Serration
Courtesy of TOYOTA MOTOR SALES, U.S.A., INC.

1. Clean the wiper pivot serrations with a wire brush.

TEXT IN ILLUSTRATION

*a	Wiper Pivot Serration

c. Set the front wiper arm and blade assembly RH in the range shown in the illustration and then install the front wiper arm and blade assembly RH with the nut.

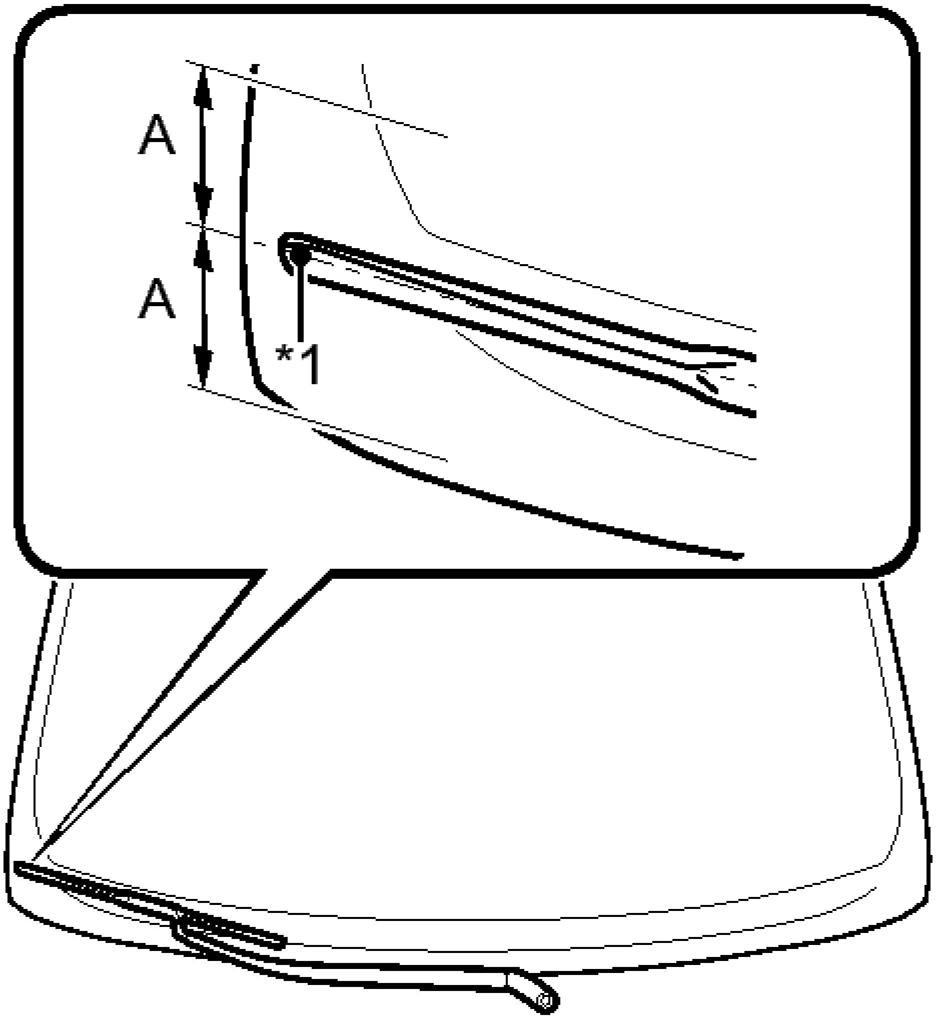

Fig. 25: Checking RH Wiper Blade Stop (Park) Position
Courtesy of TOYOTA MOTOR SALES, U.S.A., INC.

Torque: 24 N*m (245 kgf*cm, 18 ft.*lbf)

Area	Measurement
A	7.5 mm (0.295 in.)

TEXT IN ILLUSTRATION

*1	Ceramic Dot

HINT:

Hold the wiper arm by hand while tightening the nut.

d. Turn the ignition switch to ON (IG).
e. Operate the front wiper while spraying washer fluid onto the windshield glass. Make sure that the front wiper functions properly and the wiper does not come into contact with the vehicle body.
f. Lift each wiper arm twice after the wipers stop and check the wiper set position.
g. Turn the ignition switch off.

FRONT WIPER RUBBER

COMPONENTS

ILLUSTRATION

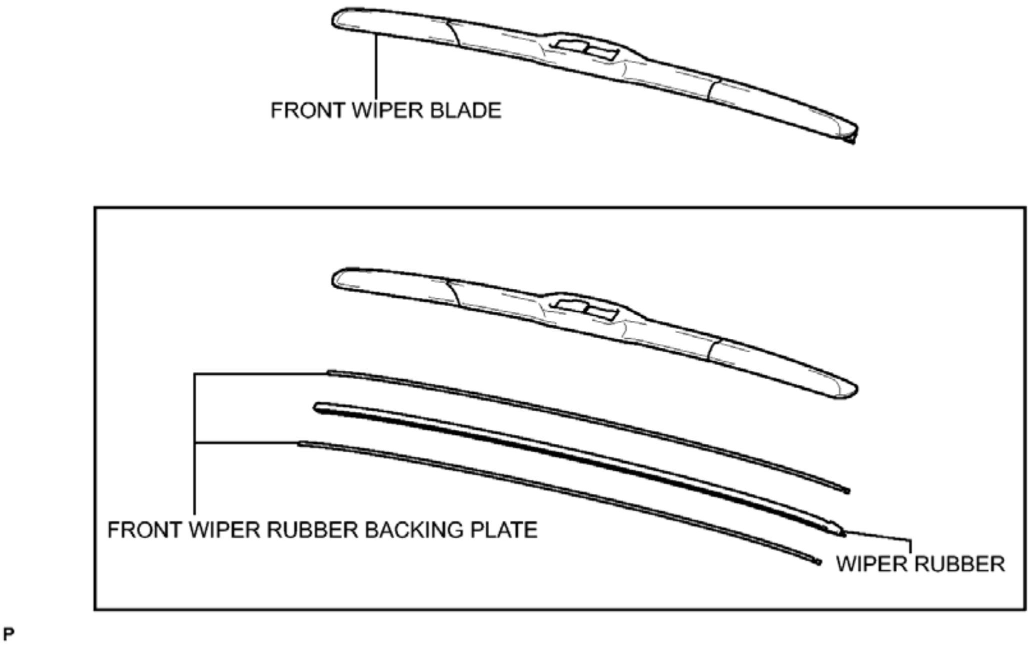

Fig. 26: Identifying Front Wiper Rubber Replacement Components
Courtesy of TOYOTA MOTOR SALES, U.S.A., INC.

REPLACEMENT

REPLACEMENT

1. **REMOVE FRONT WIPER BLADE**
    a. Pull up the holder of the front wiper blade.

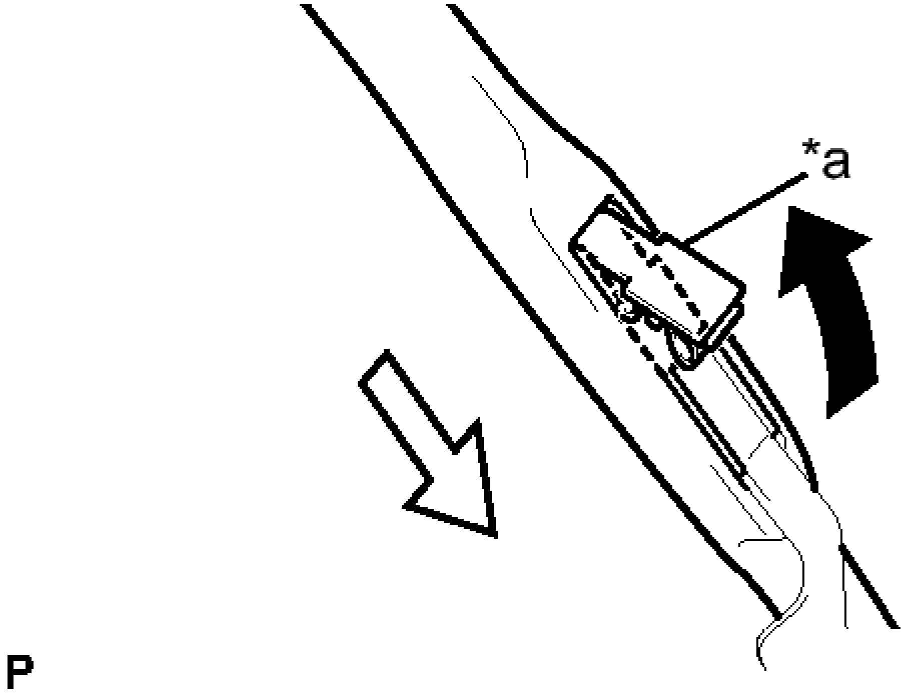

Fig. 27: Removing Front Wiper Blade
Courtesy of TOYOTA MOTOR SALES, U.S.A., INC.

TEXT IN ILLUSTRATION

*a	Holder

b. Remove the front wiper blade from the front wiper arm as shown in the illustration.

NOTE: **Do not lower the front wiper arm with the front wiper blade removed. The arm tip may damage the windshield surface.**

2. **REMOVE WIPER RUBBER**
    a. Remove the wiper rubber with the front wiper rubber backing plates from the front wiper blade.

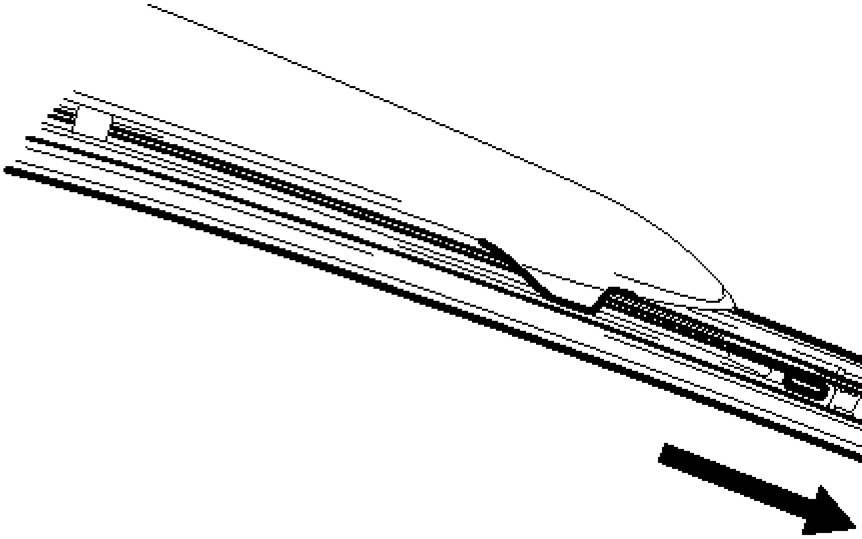

Fig. 28: Removing Wiper Rubber
Courtesy of TOYOTA MOTOR SALES, U.S.A., INC.

b. Remove the 2 front wiper rubber backing plates from the wiper rubber.

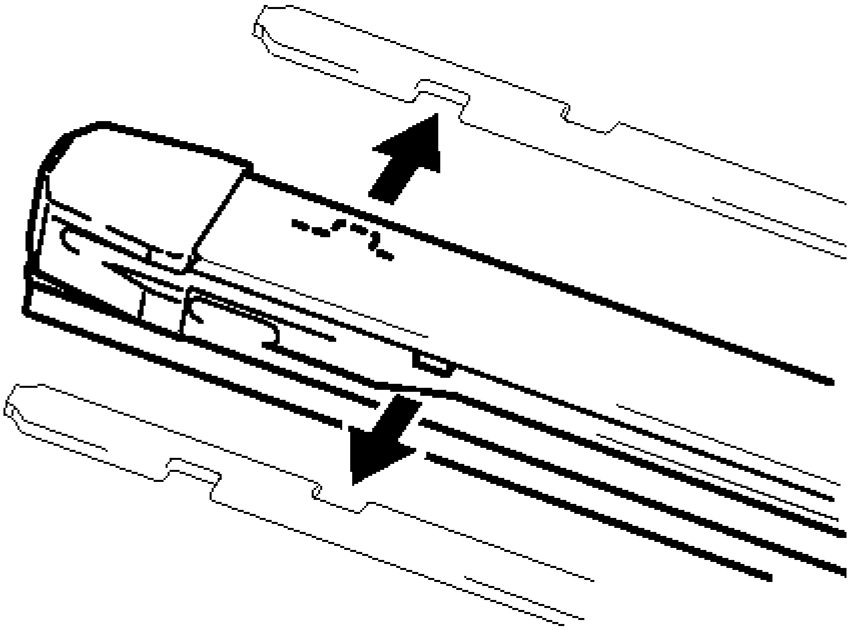

Fig. 29: Removing Wiper Rubber Backing Plates
Courtesy of TOYOTA MOTOR SALES, U.S.A., INC.

3. **INSTALL WIPER RUBBER**

   a. Install the 2 front wiper rubber backing plates to the wiper rubber.

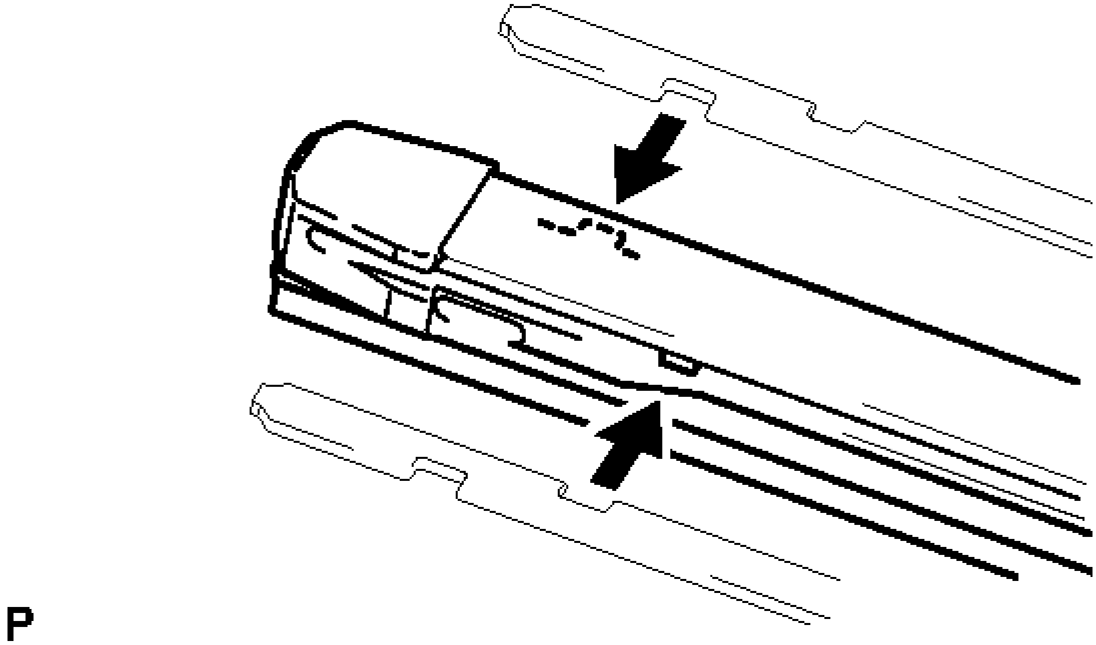

Fig. 30: Installing Wiper Rubber Backing Plates
Courtesy of TOYOTA MOTOR SALES, U.S.A., INC.

NOTE:

- **Align the protrusions on the wiper rubber and the notches of the backing plates.**
- **Align the curves of the backing plates and the glass.**

   b. Install the wiper rubber to the front wiper blade as shown in the illustration.

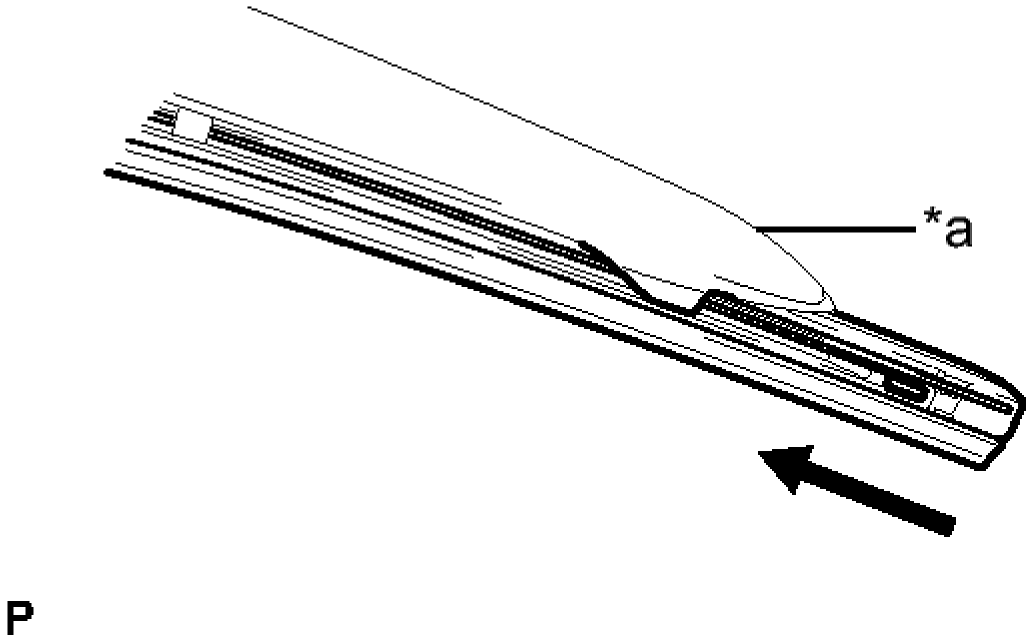

Fig. 31: Installing Wiper Rubber
Courtesy of TOYOTA MOTOR SALES, U.S.A., INC.

TEXT IN ILLUSTRATION

*a	Rear of the Wiper Blade

NOTE: **Push the wiper rubber into the front wiper blade strongly to engage them securely.**

4. **INSTALL FRONT WIPER BLADE**
    a. Install the front wiper blade as shown in the illustration.

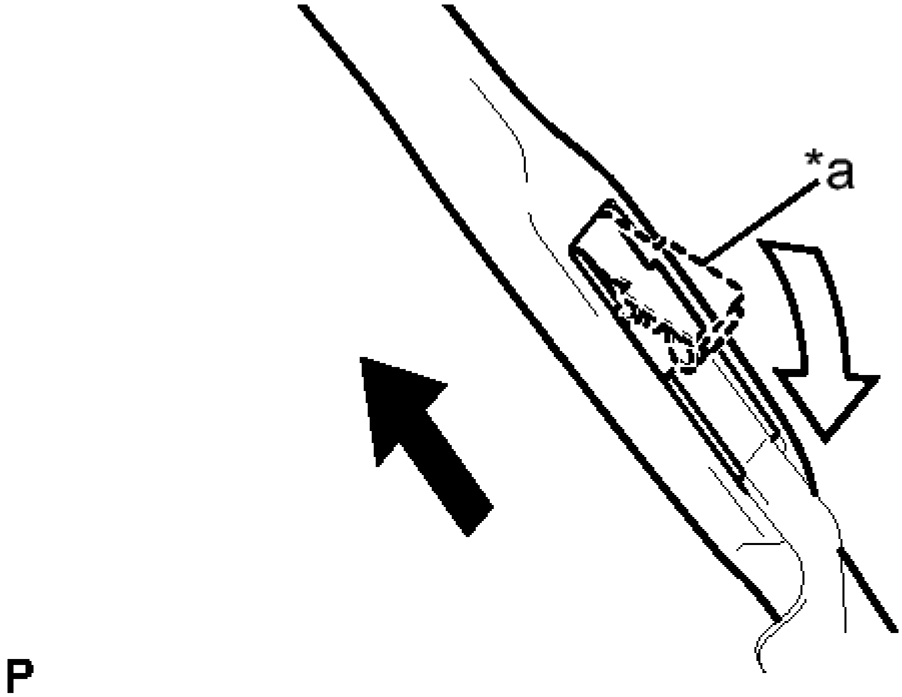

Fig. 32: Installing Front Wiper Blade
Courtesy of TOYOTA MOTOR SALES, U.S.A., INC.

b. Install the holder of the front wiper blade.

TEXT IN ILLUSTRATION

*a	Holder

WIPER SWITCH

COMPONENTS

ILLUSTRATION

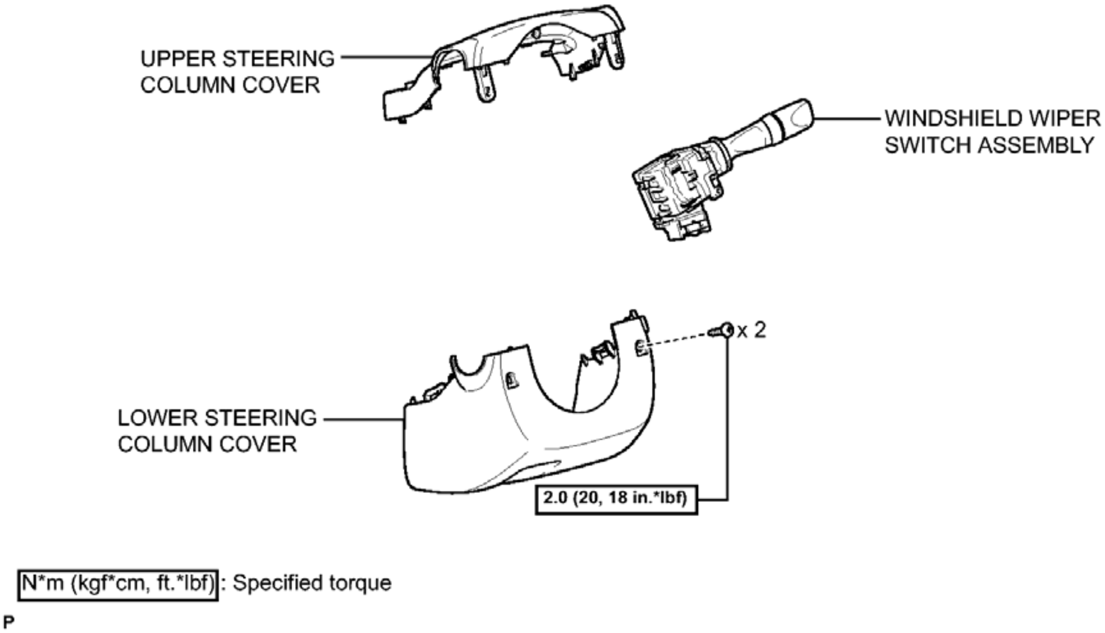
UPPER STEERING COLUMN COVER
WINDSHIELD WIPER SWITCH ASSEMBLY
x 2
LOWER STEERING COLUMN COVER
2.0 (20, 18 in.*lbf)
N*m (kgf*cm, ft.*lbf): Specified torque
P

Fig. 33: Identifying Wiper Switch Replacement Components With Torque Specifications
Courtesy of TOYOTA MOTOR SALES, U.S.A., INC.

ON-VEHICLE INSPECTION

ON-VEHICLE INSPECTION

1. **INSPECT WINDSHIELD WIPER SWITCH ASSEMBLY**
    a. Check the front wiper intermittent operation (w/ Intermittent timing adjustment).
        1. Connect a voltmeter positive (+) lead to terminal I32-3 (+1) and a negative (-) lead to terminal I31-4 (EW).

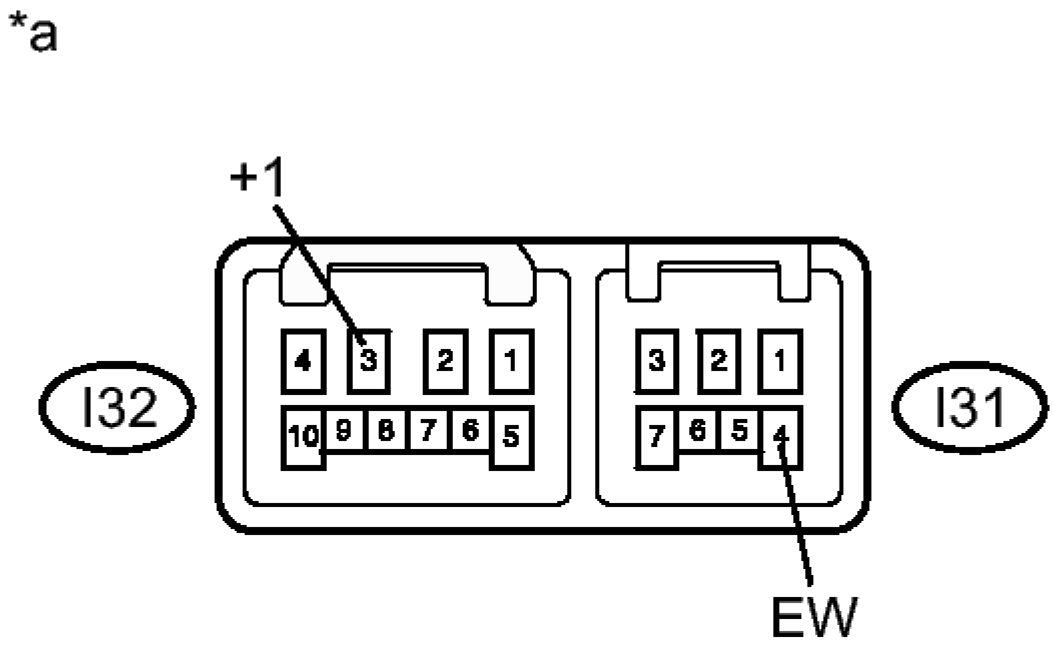

Fig. 34: Inspecting Windshield Wiper Switch Assembly Connector Terminals
Courtesy of TOYOTA MOTOR SALES, U.S.A., INC.

TEXT IN ILLUSTRATION

*a	Component with harness connected (Windshield Wiper Switch Assembly)

2. Turn the wiper switch to the INT position.
3. Operate the intermittent wiper relay and check the voltage between terminals I32-3 (+1) and I31-4 (EW).

   OK

   Voltage changes as shown in the illustration.

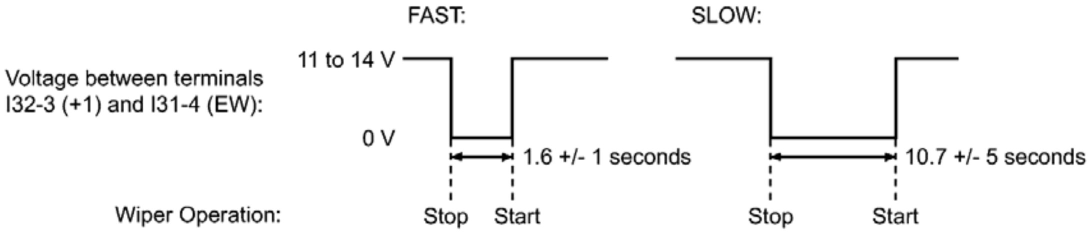

Fig. 35: Checking Intermittent Wiper Relay Voltage Graph (Fast & Slow)
Courtesy of TOYOTA MOTOR SALES, U.S.A., INC.

If the result is not as specified, replace the windshield wiper switch assembly.

b. Check the front wiper intermittent operation (w/o Intermittent timing adjustment).
    1. Connect a voltmeter positive (+) lead to terminal I32-3 (+1) and a negative (-) lead to terminal I31-4 (EW).

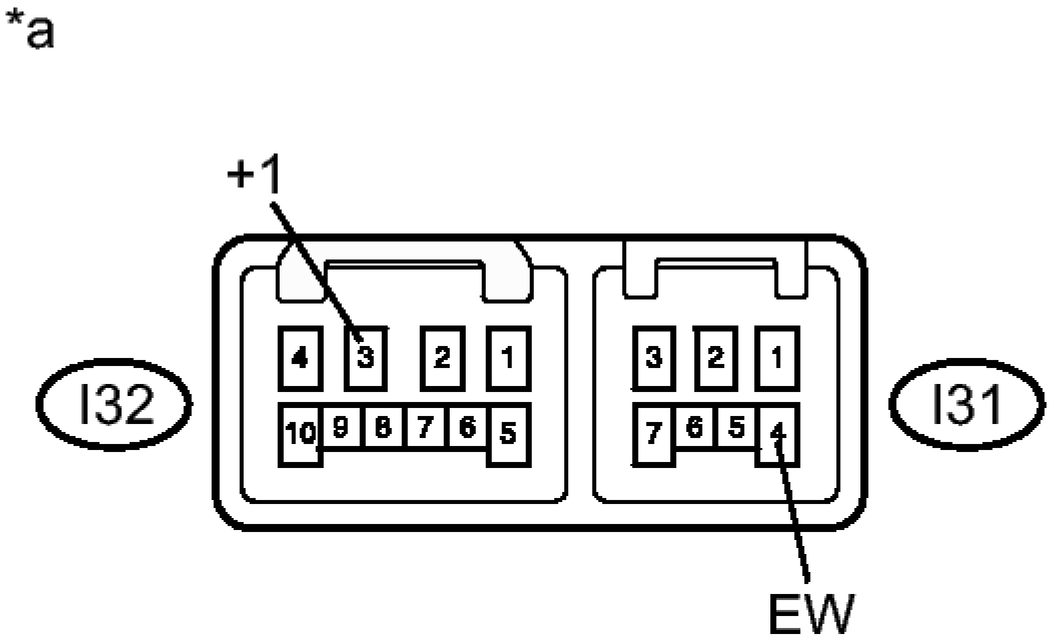

Fig. 36: Inspecting Windshield Wiper Switch Assembly Connector Terminals
Courtesy of TOYOTA MOTOR SALES, U.S.A., INC.

TEXT IN ILLUSTRATION

*a	Component with harness connected (Windshield Wiper

	Switch Assembly)

2. Turn the wiper switch to the INT position.
3. Operate the intermittent wiper relay and check the voltage between terminals I32-3 (+1) and I31-4 (EW).

   OK

   Voltage changes as shown in the illustration.

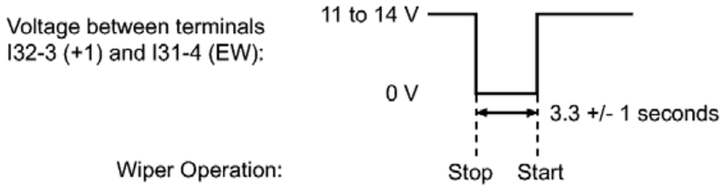

Fig. 37: Checking Intermittent Wiper Relay Voltage Graph
Courtesy of TOYOTA MOTOR SALES, U.S.A., INC.

If the result is not as specified, replace the windshield wiper switch assembly.

c. Check the front washer operation.
   1. Connect a voltmeter positive (+) lead to terminal I32-3 (+1) and a negative (-) lead to terminal I31-4 (EW).

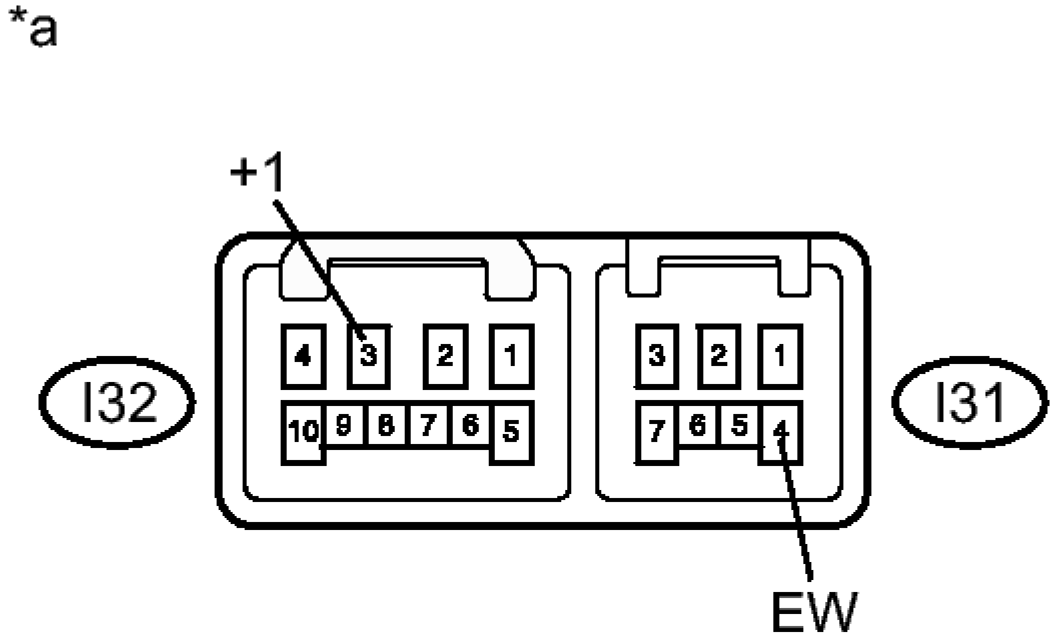

Fig. 38: Inspecting Windshield Wiper Switch Assembly Connector Terminals
Courtesy of TOYOTA MOTOR SALES, U.S.A., INC.

TEXT IN ILLUSTRATION

*a	Component with harness connected (Windshield Wiper Switch Assembly)

2. Turn the ignition switch to ON.
3. Turn the washer switch on and off, and check the voltage between terminals I32-3 (+1) and I31-4 (EW).

   OK

   Voltage changes as shown in the following illustration.

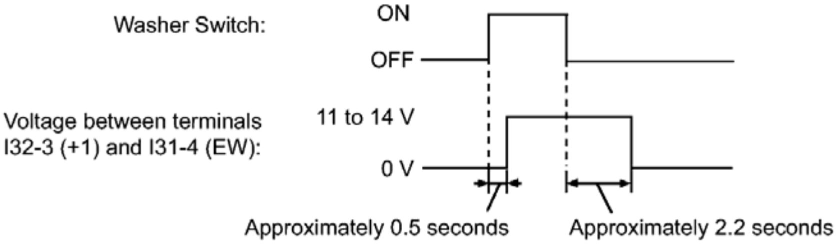

Fig. 39: Checking Washer Switch On And Off Voltage Graph
Courtesy of TOYOTA MOTOR SALES, U.S.A., INC.

If the result is not as specified, replace the windshield wiper switch assembly.

REMOVAL

REMOVAL

1. **REMOVE LOWER STEERING COLUMN COVER**

NOTE: **Removing the lower steering column cover in the incorrect order will cause the parts to break.**

a. Release the tilt and telescopic lever, and fully extend and lower the steering column assembly.
b. Lock the tilt and telescopic lever.
c. Turn the steering wheel assembly to the left and remove the screw.

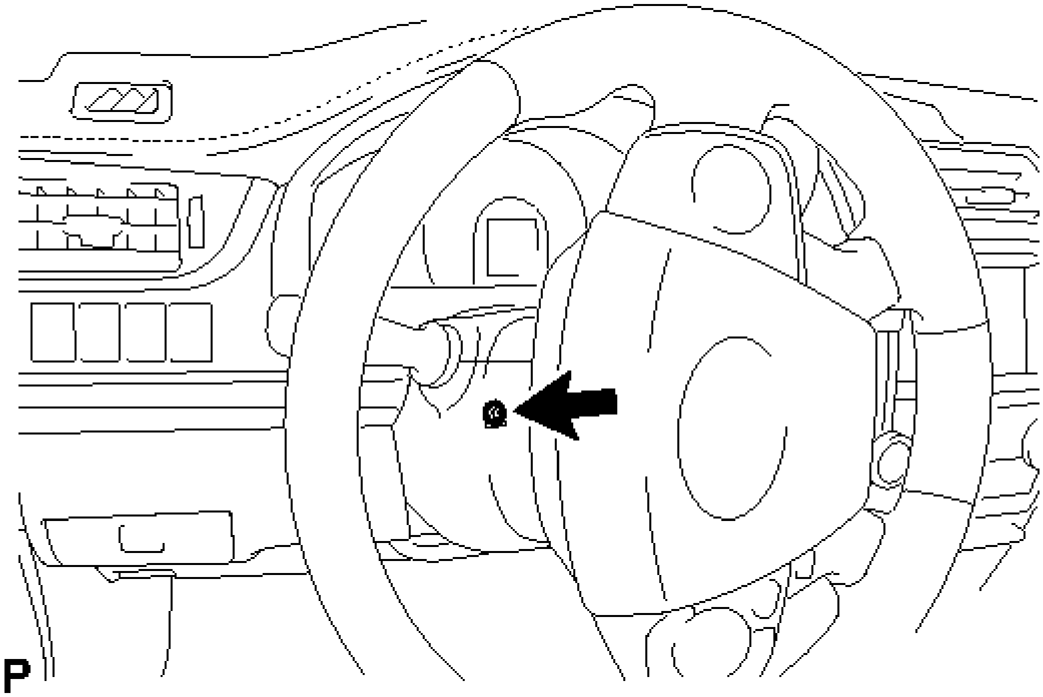

Fig. 40: Locating LH Lower Steering Column Cover Screw
Courtesy of TOYOTA MOTOR SALES, U.S.A., INC.

d. Turn the steering wheel assembly to the right and remove the screw.

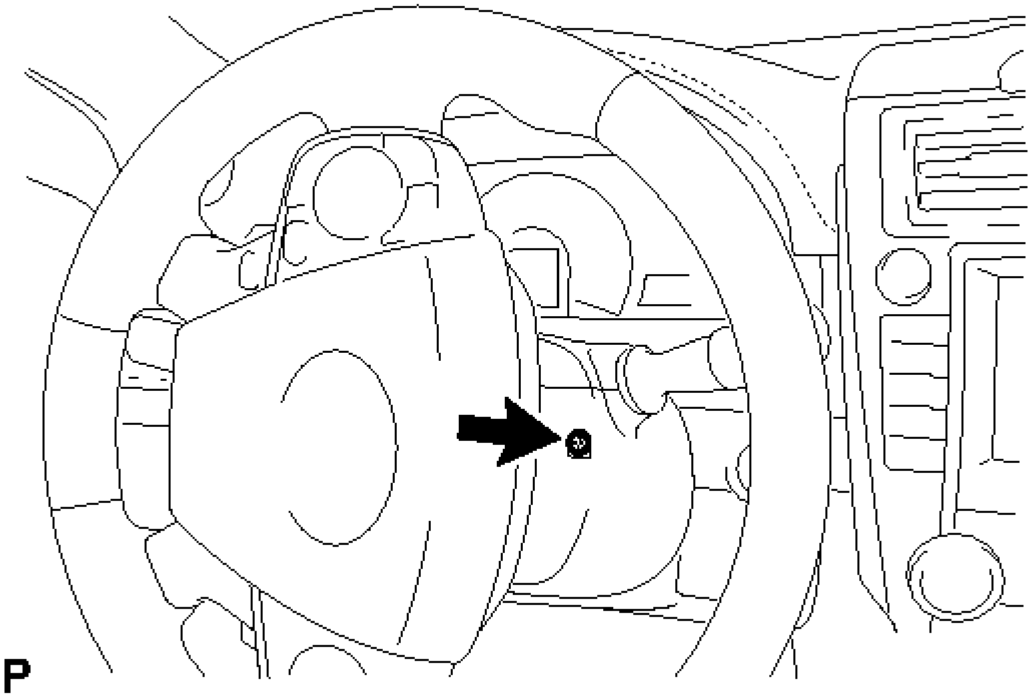

Fig. 41: Locating RH Lower Steering Column Cover Screw
Courtesy of TOYOTA MOTOR SALES, U.S.A., INC.

e. Push the right and left sides of the lower steering column cover to disengage the 2 claws.

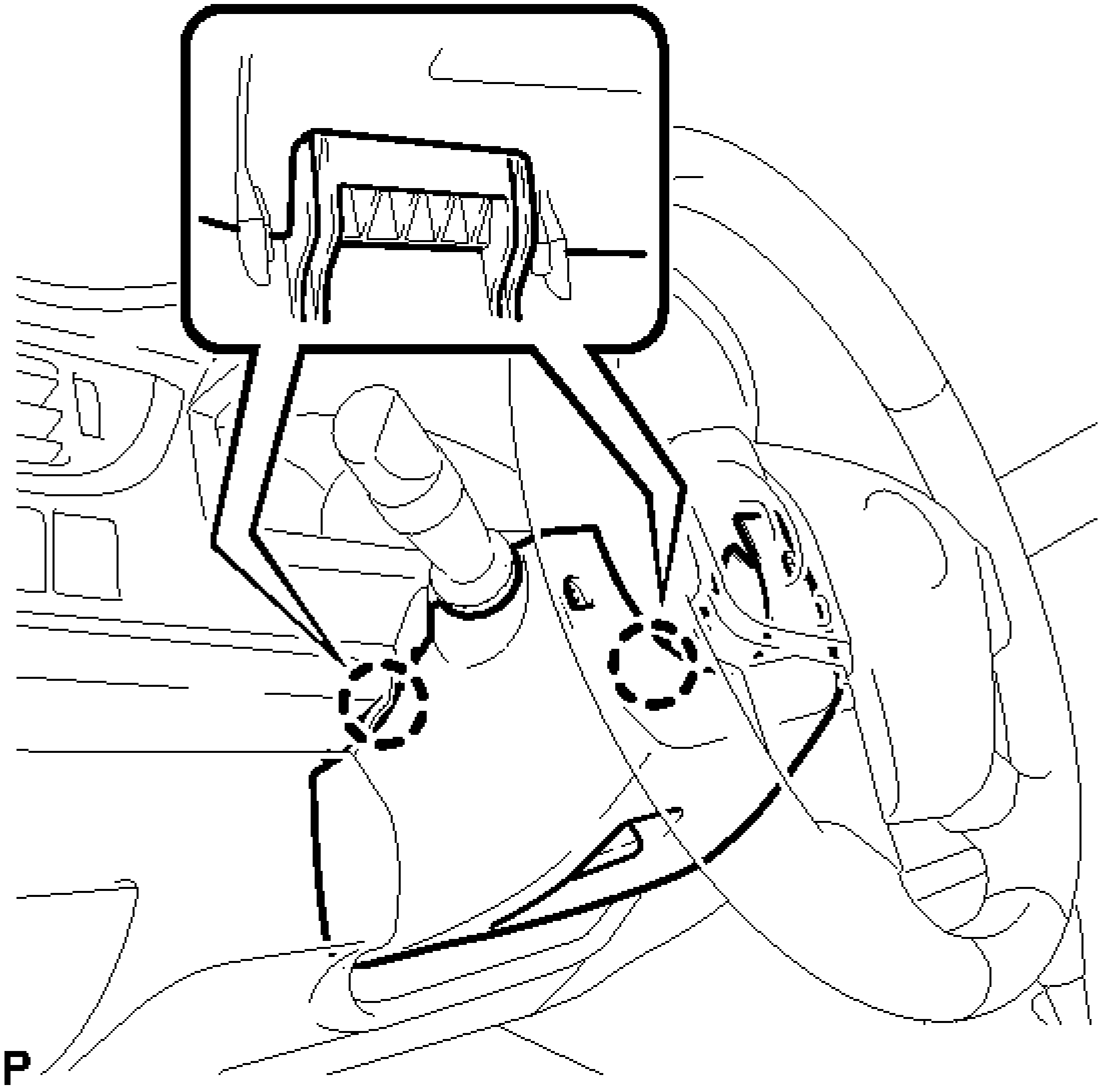

Fig. 42: Locating Lower Steering Column Cover Claws
Courtesy of TOYOTA MOTOR SALES, U.S.A., INC.

f. Insert your fingers into the opening of the tilt lever of the lower steering column cover to disengage the 2 claws.

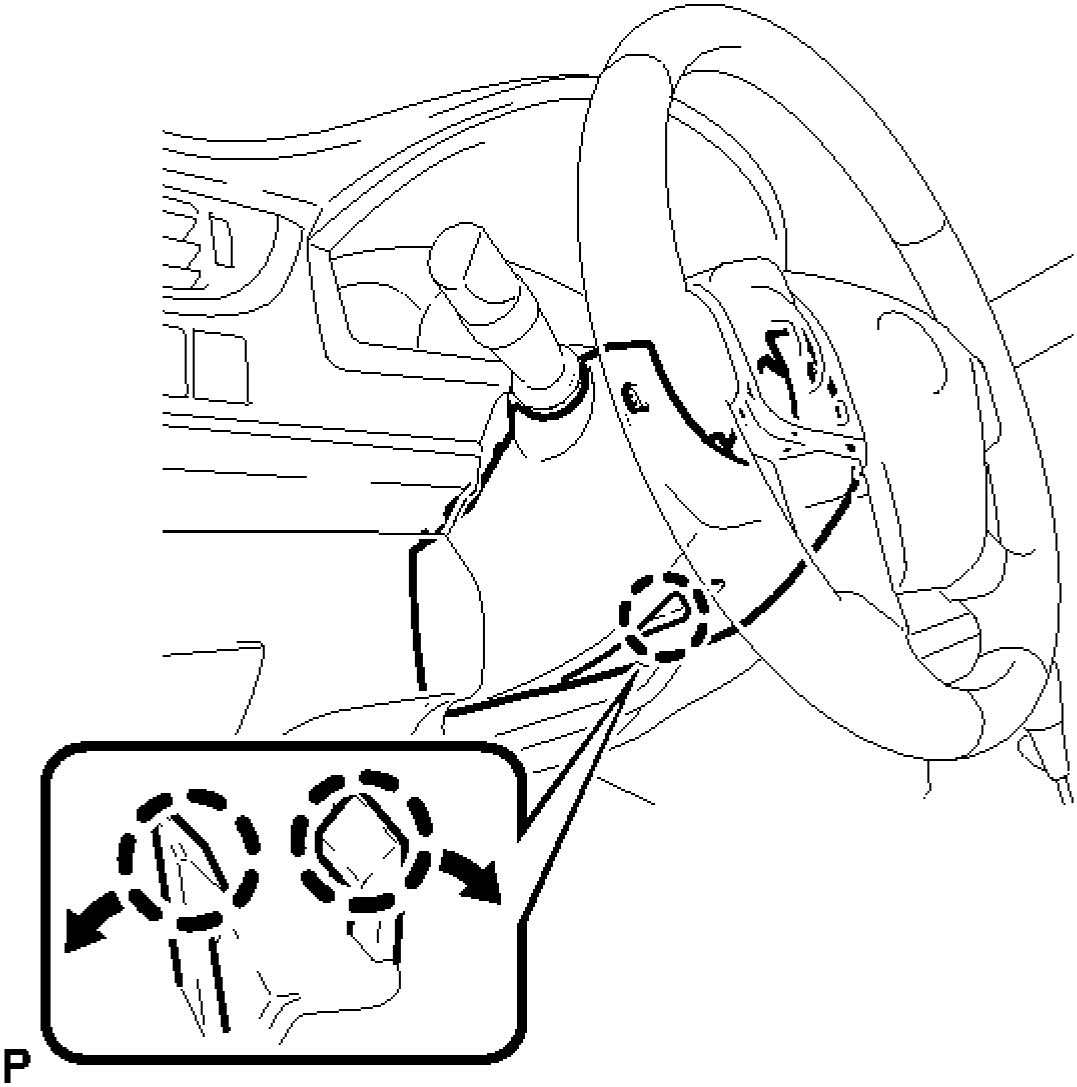

Fig. 43: Locating Lower Steering Column Cover Tilt Lever Claws
Courtesy of TOYOTA MOTOR SALES, U.S.A., INC.

HINT:

Spread the claws to disengage them.

2. **REMOVE UPPER STEERING COLUMN COVER**
   a. Disengage the 4 clips and 2 guides to separate the instrument cluster finish panel assembly from the upper steering column cover.

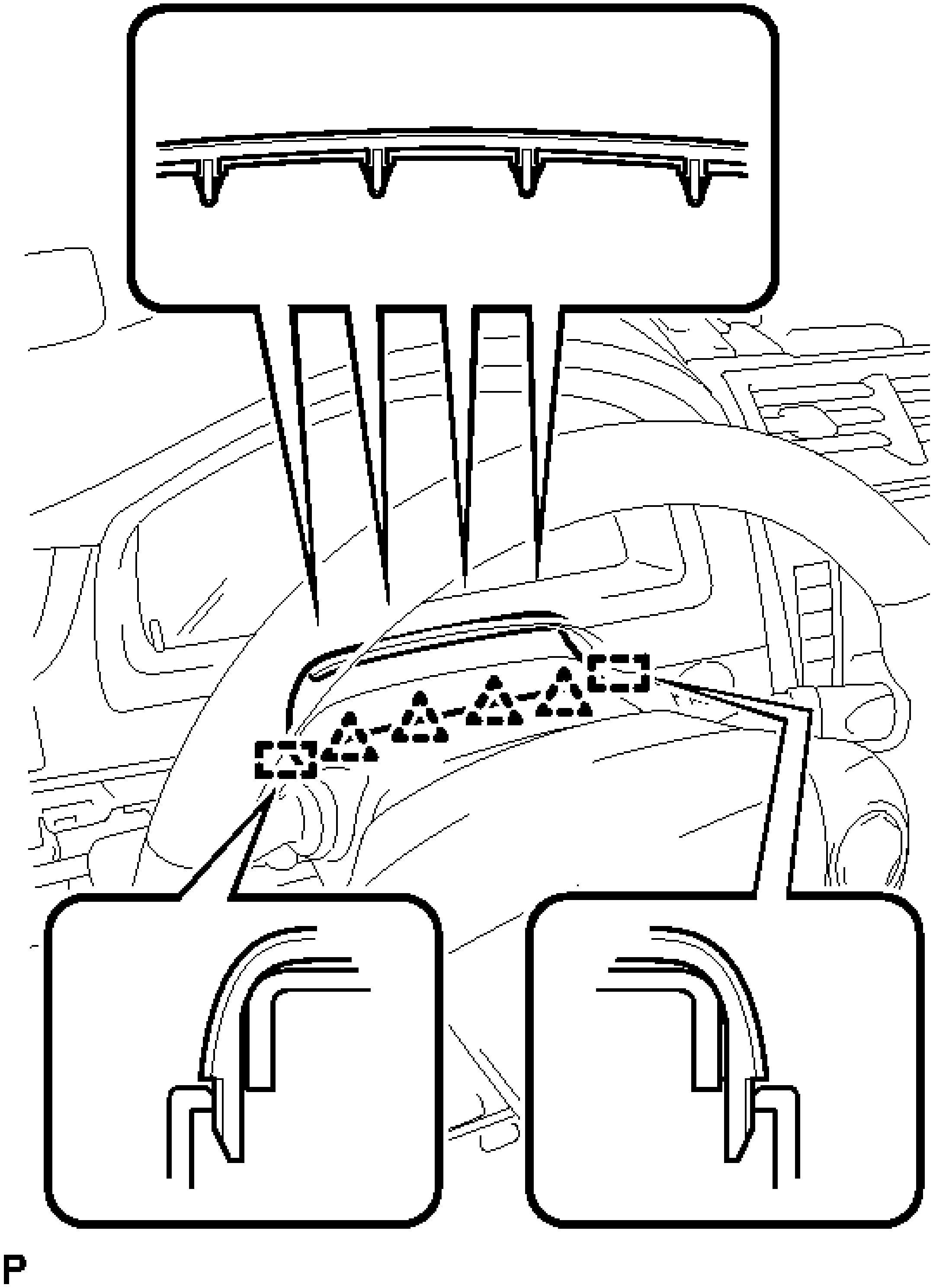

Fig. 44: Locating Upper Steering Column Cover Clips And Guides
Courtesy of TOYOTA MOTOR SALES, U.S.A., INC.

b. Disengage the 2 claws and remove the upper steering column cover.

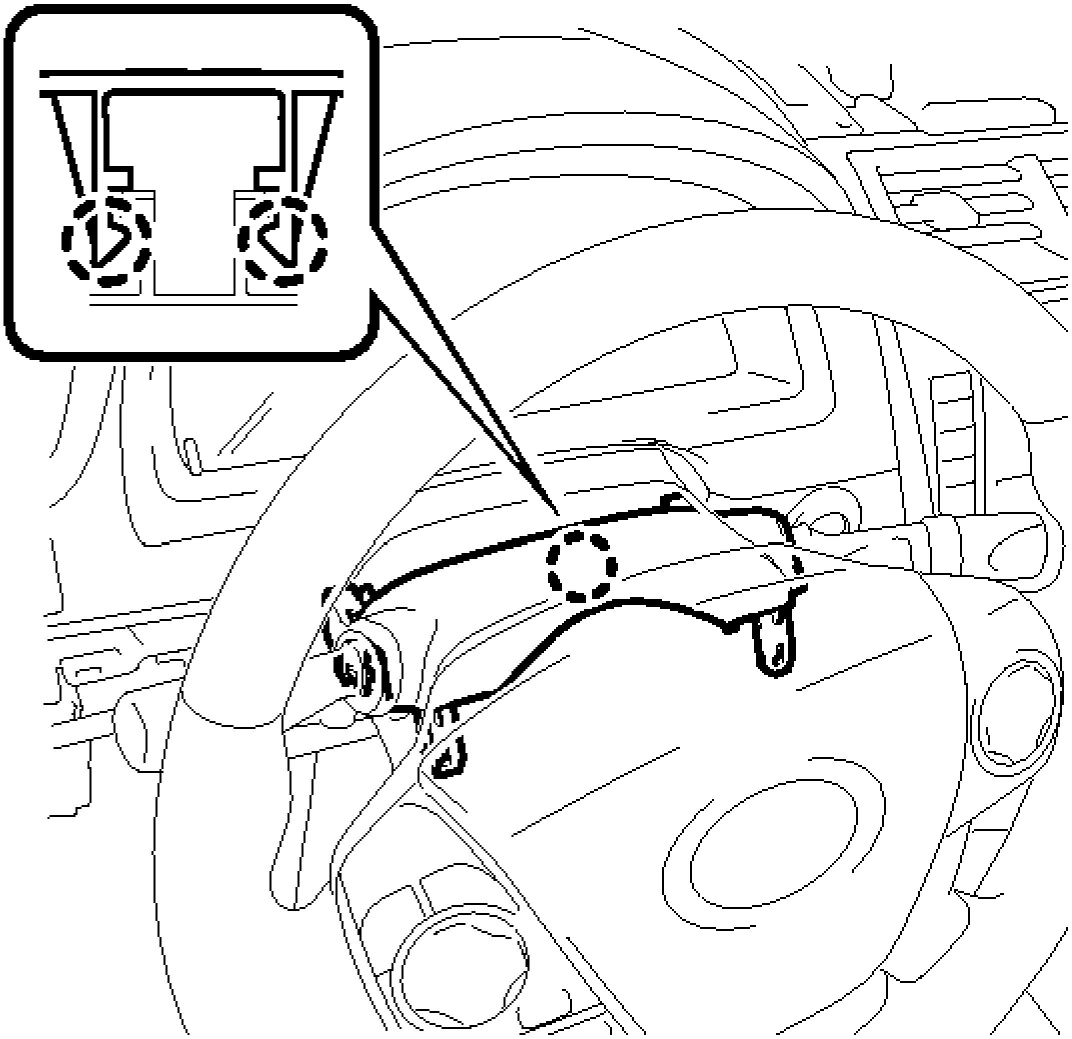

P

Fig. 45: Locating Upper Steering Column Cover Claws
Courtesy of TOYOTA MOTOR SALES, U.S.A., INC.

3. **REMOVE WINDSHIELD WIPER SWITCH ASSEMBLY**
    a. Disconnect the 2 connectors.

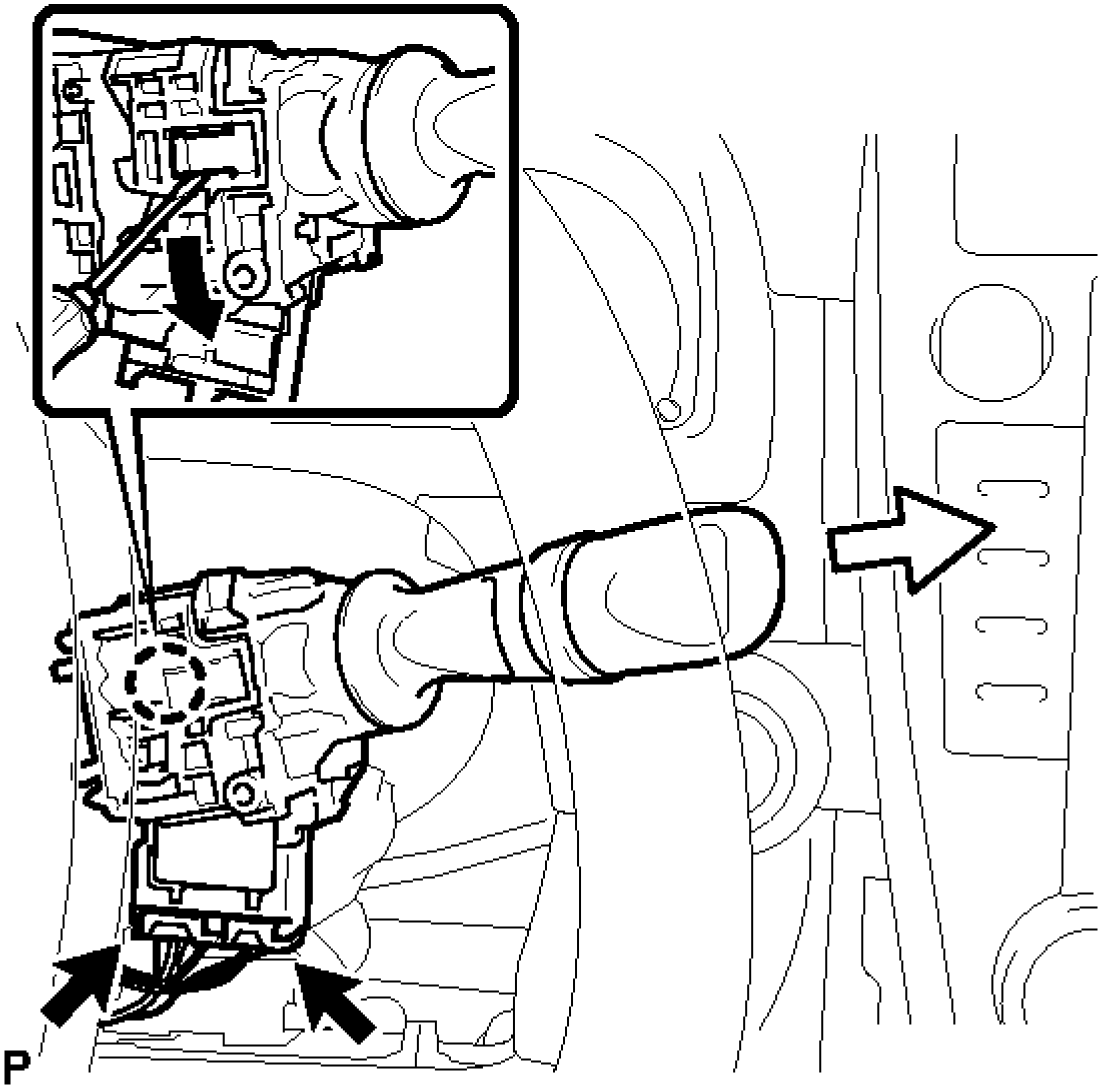

Fig. 46: Removing Windshield Wiper Switch Assembly
Courtesy of TOYOTA MOTOR SALES, U.S.A., INC.

b. Using a screwdriver, disengage the claw and remove the windshield wiper switch assembly as shown in the illustration.

NOTE: **If the claw is pulled with excessive force, it may break.**

INSPECTION

INSPECTION

1. **INSPECT WINDSHIELD WIPER SWITCH ASSEMBLY**
   a. Measure the resistance according to the value(s) in the table below.

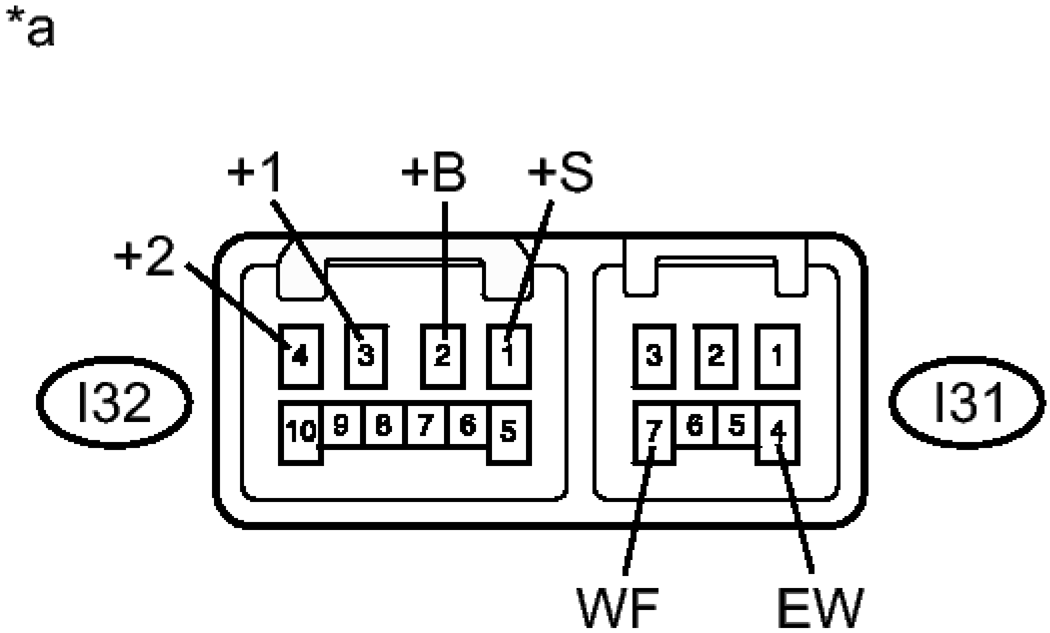

Fig. 47: Inspecting Windshield Wiper Switch Assembly Connector Terminals
Courtesy of TOYOTA MOTOR SALES, U.S.A., INC.

Standard Resistance

Front Washer Switch

FRONT WIPER SWITCH

Tester Connection	Switch Condition	Specified Condition
I32-1 (+S) - I32-3 (+1)	OFF	Below 1 ohms
	INT	
I32-2 (+B) - I32-3 (+1)	MIST	
	LO	
I32-2 (+B) - I32-4 (+2)	HI	

Tester Connection	Switch Condition	Specified Condition
I31-4 (EW) - I31-7 (WF)	ON	Below 1 ohms
	OFF	10 kohms or higher

TEXT IN ILLUSTRATION

*a	Component without harness connected (Windshield Wiper Switch Assembly)

If the result is not as specified, replace the windshield wiper switch assembly.

INSTALLATION

INSTALLATION

1. **INSTALL WINDSHIELD WIPER SWITCH ASSEMBLY**
    a. Engage the claw to install the windshield wiper switch assembly as shown in the illustration.

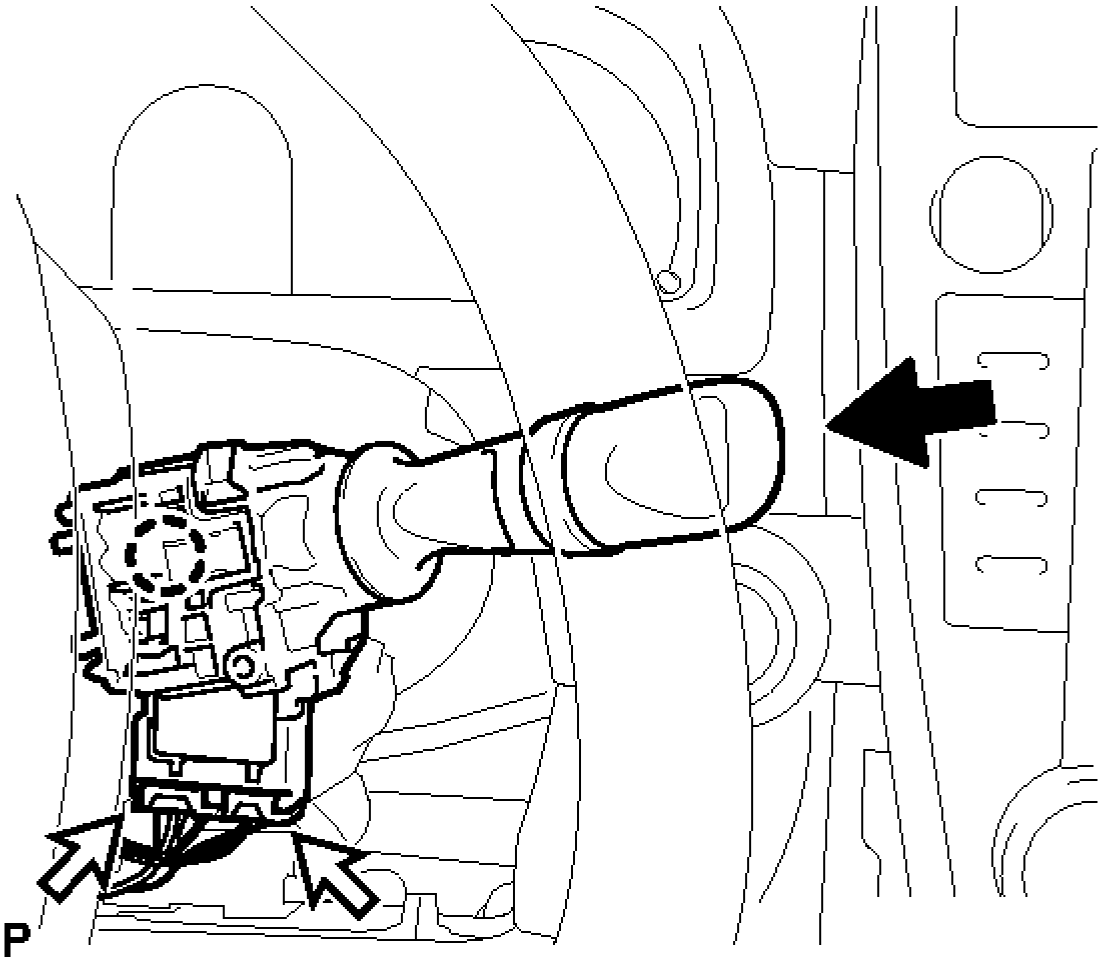

Fig. 48: Installing Windshield Wiper Switch Assembly
Courtesy of TOYOTA MOTOR SALES, U.S.A., INC.

b. Connect the 2 connectors.

2. **INSTALL UPPER STEERING COLUMN COVER**

NOTE: **If the lower steering column cover is installed in the incorrect order, it will not be possible to assemble the steering column cover.**

a. Engage the 2 claws to install the upper steering column cover.

b. Engage the 4 clips and 2 guides to install the instrument cluster finish panel to the upper steering column cover.

3. **INSTALL LOWER STEERING COLUMN COVER**

a. Engage the 2 claws.

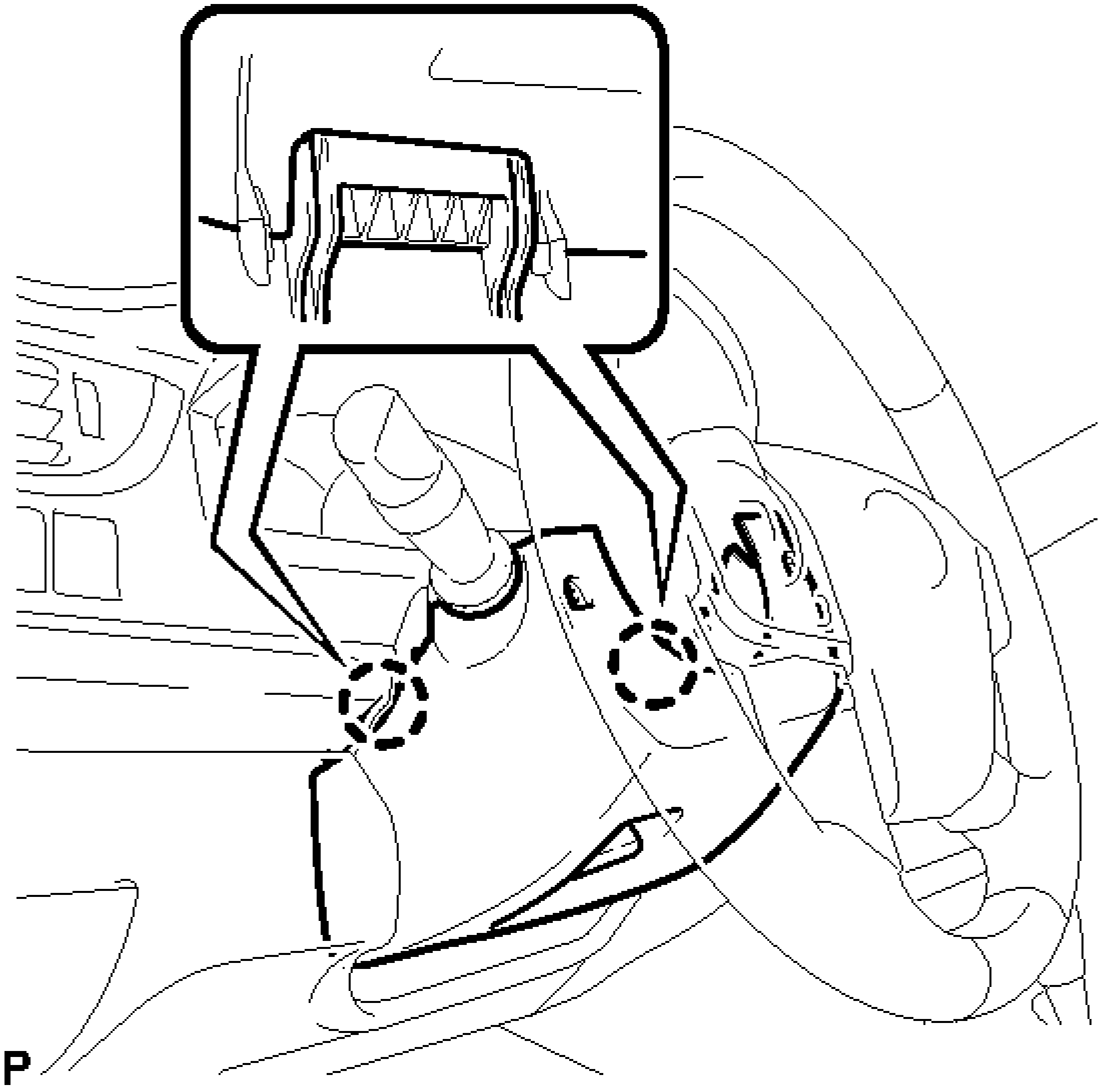

Fig. 49: Locating Lower Steering Column Cover Claws
Courtesy of TOYOTA MOTOR SALES, U.S.A., INC.

b. Engage the 2 claws.

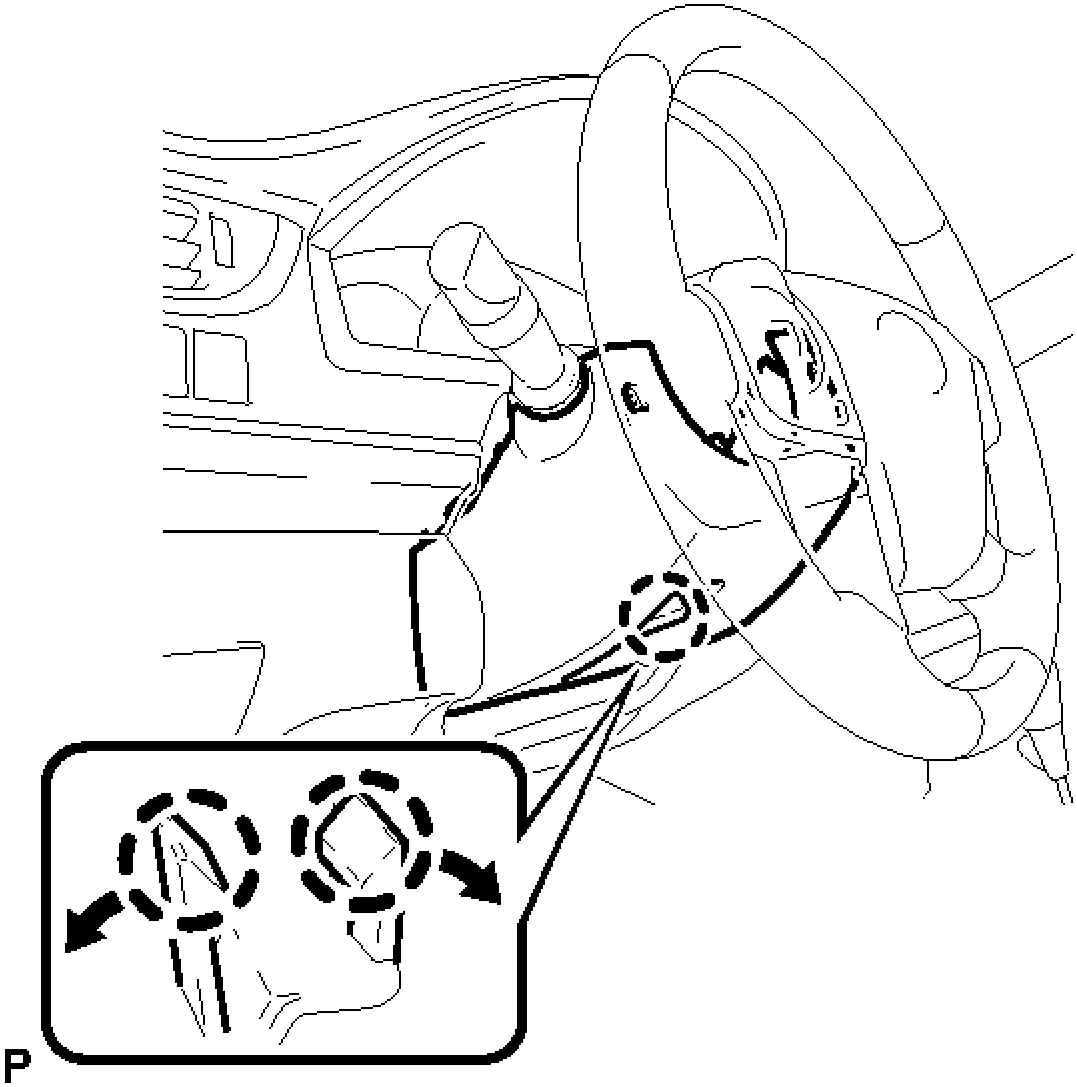

Fig. 50: Locating Lower Steering Column Cover Tilt Lever Claws
Courtesy of TOYOTA MOTOR SALES, U.S.A., INC.

HINT:

Press the area around the claws to engage them.

c. Turn the steering wheel assembly to the left to install the screw.

Torque: 2.0 N*m (20 kgf*cm, 18 in.*lbf)

d. Turn the steering wheel assembly to the right to install the lower steering column cover with screw.

Torque: 2.0 N*m (20 kgf*cm, 18 in.*lbf)

NOTE:

- **Check the steering column cover clearance to the steering**

wheel.

- **If the clearance is less than 3.5 mm, confirm the steering column cover claws are correctly engaged.**
- **Replace the steering column cover if any claws have been damaged.**

WASHER MOTOR

COMPONENTS

ILLUSTRATION

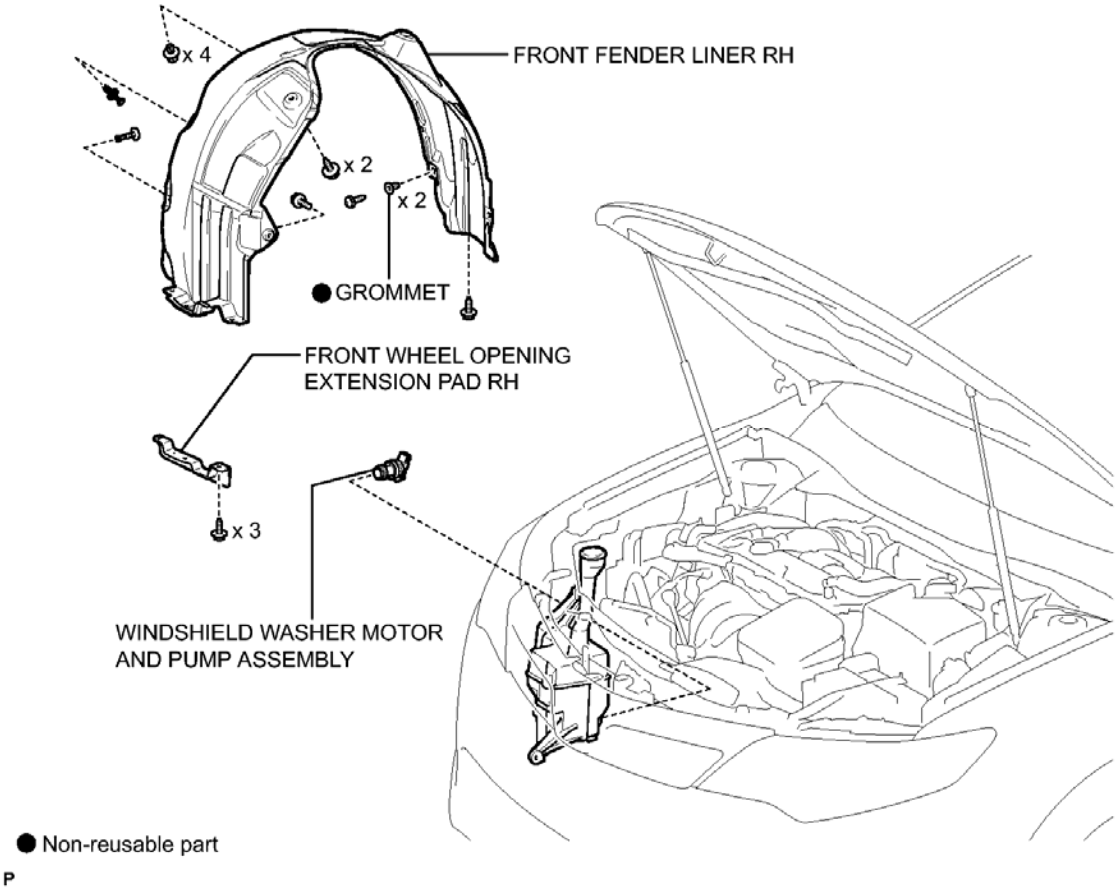
x 4
FRONT FENDER LINER RH
x 2
x 2
● GROMMET
FRONT WHEEL OPENING EXTENSION PAD RH
x 3
WINDSHIELD WASHER MOTOR AND PUMP ASSEMBLY
● Non-reusable part
P

Fig. 51: Identifying Washer Motor Replacement Components
Courtesy of TOYOTA MOTOR SALES, U.S.A., INC.

REMOVAL

REMOVAL

1. **REMOVE FRONT WHEEL RH**

2. **REMOVE FRONT WHEEL OPENING EXTENSION PAD RH**
    a. Remove the 3 screws and front wheel opening extension pad RH.

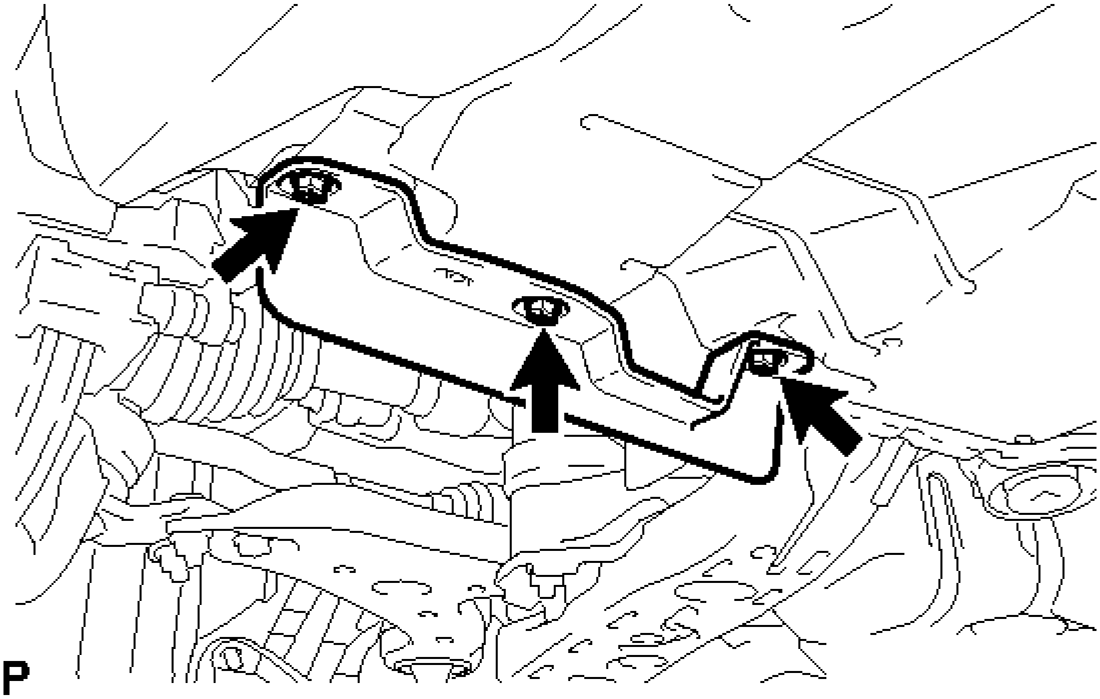

Fig. 52: Locating Front Wheel Opening Extension Pad RH And Fasteners
Courtesy of TOYOTA MOTOR SALES, U.S.A., INC.

3. **REMOVE FRONT FENDER LINER RH**
    a. Remove the clip.

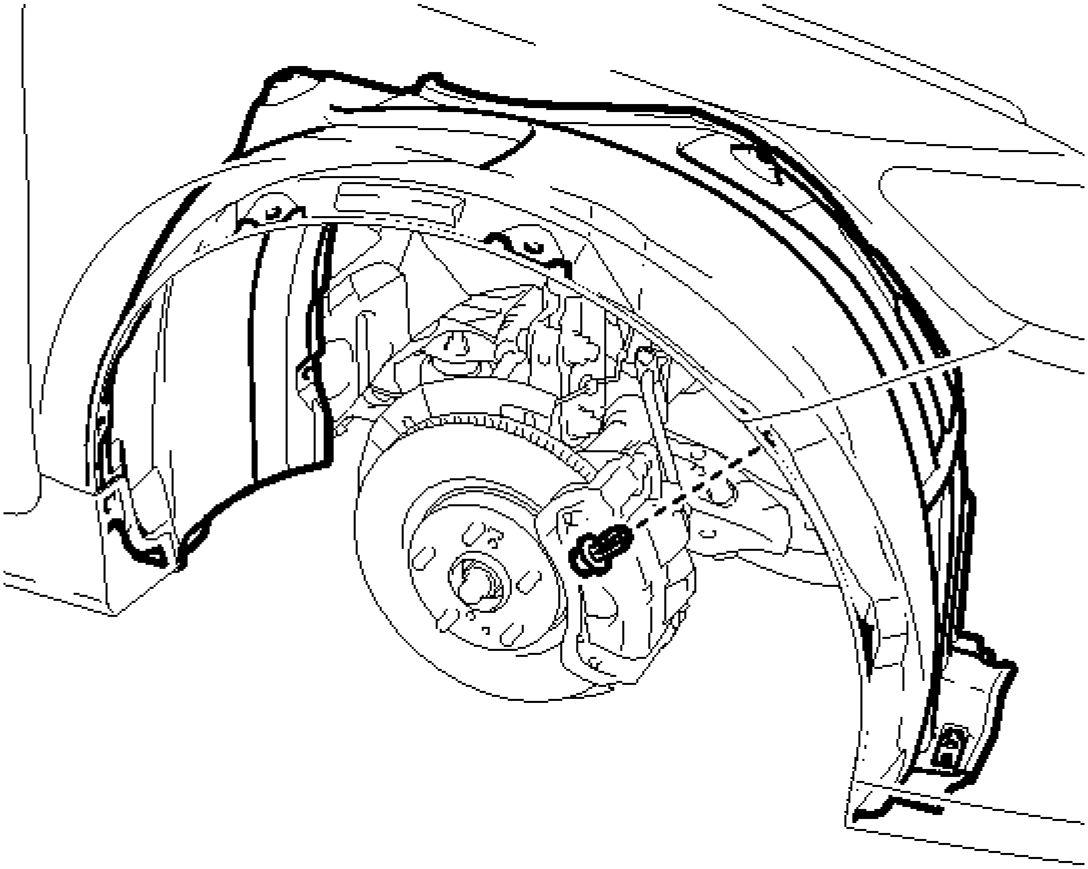

P

Fig. 53: Locating Front Fender Liner RH Clip
Courtesy of TOYOTA MOTOR SALES, U.S.A., INC.

b. Using a screwdriver, turn the pin 90 degrees counterclockwise and remove the pin hold clip.

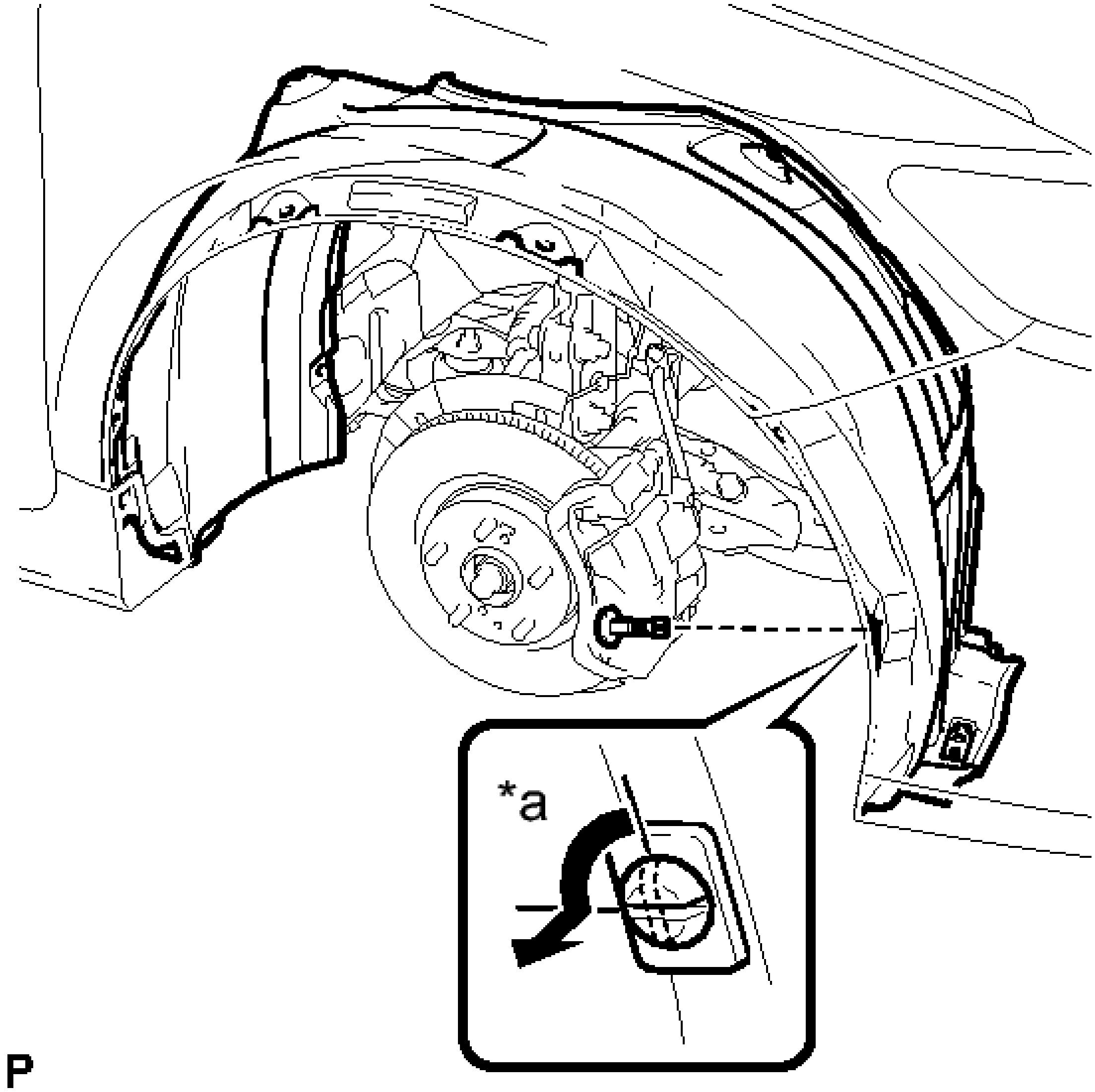

Fig. 54: Removing Front Fender Liner RH Clip
Courtesy of TOYOTA MOTOR SALES, U.S.A., INC.

TEXT IN ILLUSTRATION

*a	90°

c. Remove the 5 screws.

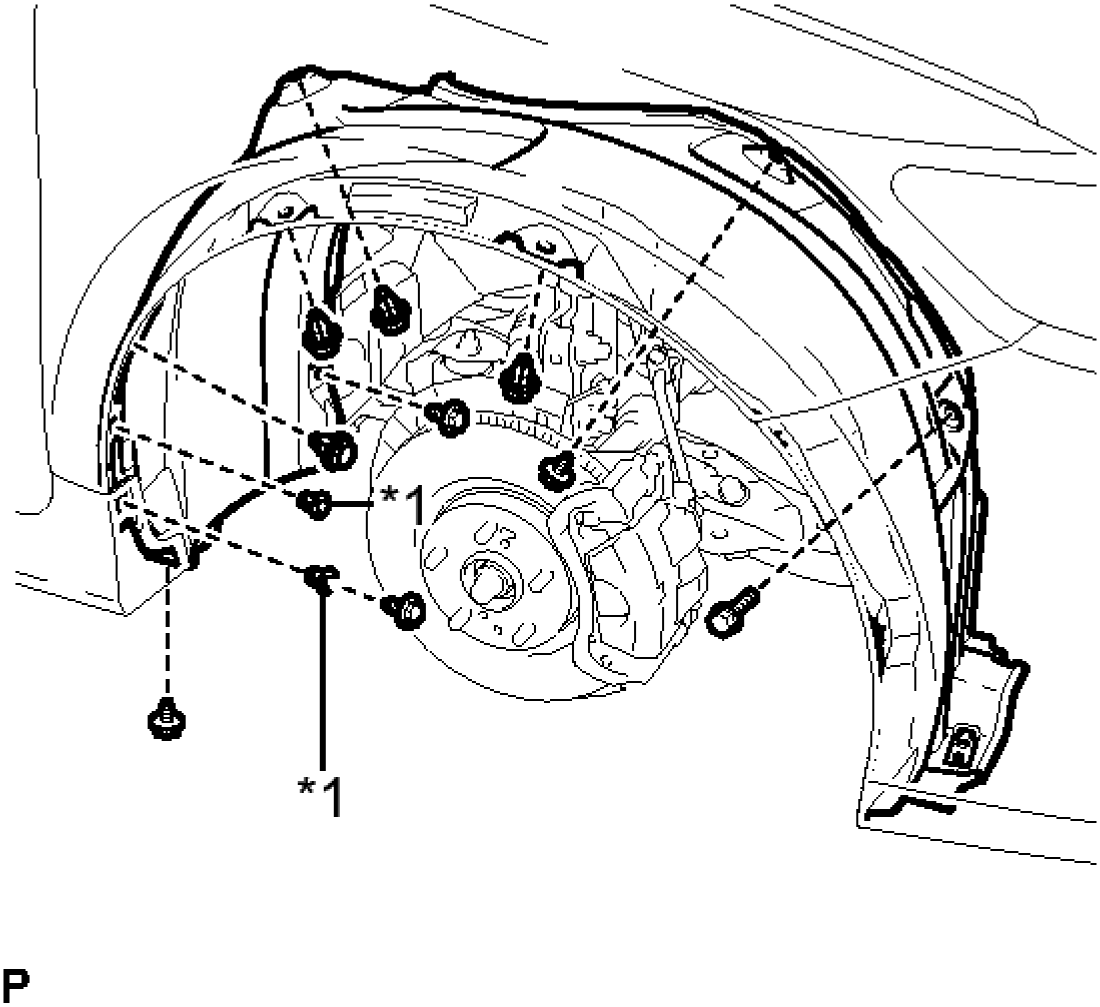

Fig. 55: Locating Front Fender Liner RH Fasteners
Courtesy of TOYOTA MOTOR SALES, U.S.A., INC.

d. Remove the 4 clips, 2 grommets and front fender liner RH.

HINT:

The grommets need to be replaced with new ones because they will break when they are removed.

TEXT IN ILLUSTRATION

*1	Grommet

4. **DRAIN WASHER FLUID**

a. Disconnect the washer hose from the windshield washer motor and pump assembly, and drain the washer fluid.

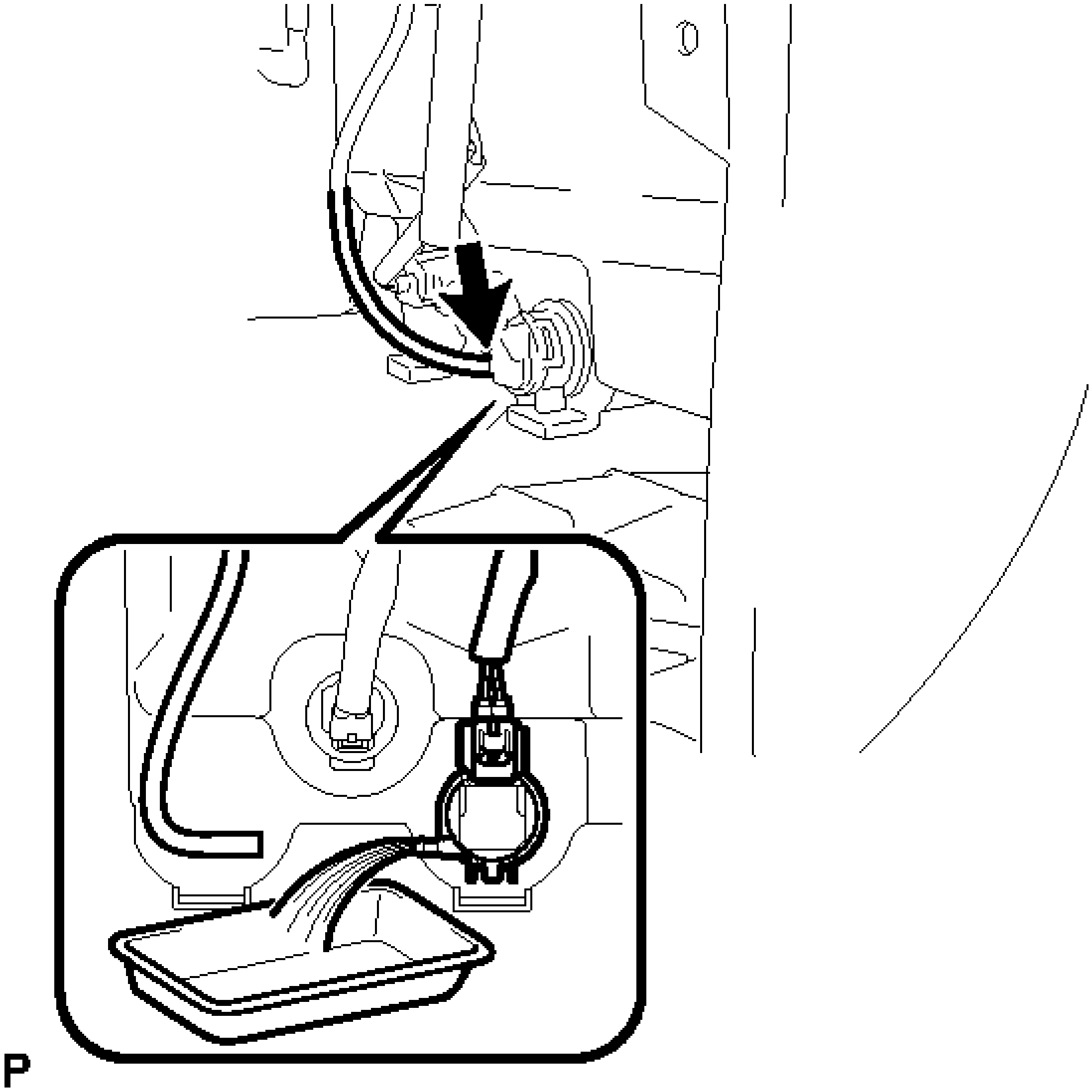

Fig. 56: Draining Washer Fluid
Courtesy of TOYOTA MOTOR SALES, U.S.A., INC.

HINT:

Use a container to collect the washer fluid.

5. **REMOVE WINDSHIELD WASHER MOTOR AND PUMP ASSEMBLY**
   a. Disconnect the connector.

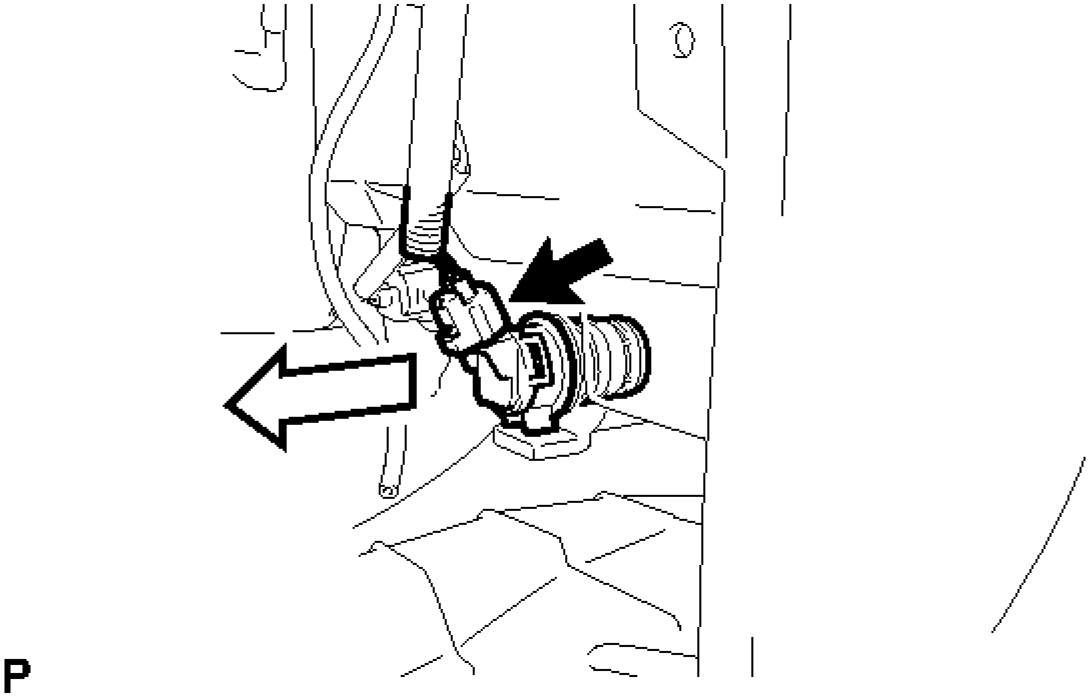

Fig. 57: Removing Windshield Washer Motor And Pump Assembly
Courtesy of TOYOTA MOTOR SALES, U.S.A., INC.

b. Remove the windshield washer motor and pump assembly as shown in the illustration.

INSPECTION

INSPECTION

1. **INSPECT WINDSHIELD WASHER MOTOR AND PUMP ASSEMBLY**
    a. Remove the washer jar.
    b. Disconnect the windshield washer motor and pump connector.

    HINT:

    The check should be performed with the windshield washer motor and pump installed on the washer jar.

    c. Fill the washer jar with washer fluid.
    d. Connect a battery positive (+) lead to terminal A54-1 of the windshield washer motor and pump, and a negative (-) lead to terminal A54-2.

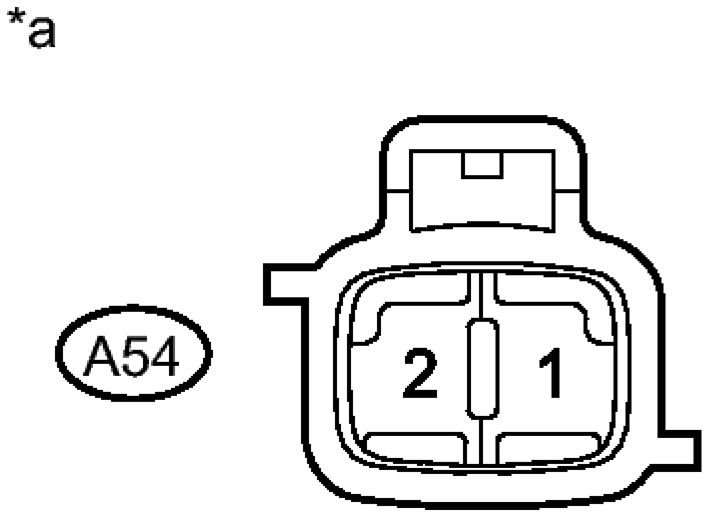

Fig. 58: Identifying A54 Connector Terminals
Courtesy of TOYOTA MOTOR SALES, U.S.A., INC.

e. Check that washer fluid flows from the washer jar.

OK

Washer fluid flows from the washer jar.

TEXT IN ILLUSTRATION

*a	Component without harness connected (Windshield Washer Motor and Pump Assembly)

If the result is not as specified, replace the windshield washer motor and pump assembly.

INSTALLATION

INSTALLATION

1. **INSTALL WINDSHIELD WASHER MOTOR AND PUMP ASSEMBLY**

a. Install the windshield washer motor and pump assembly.

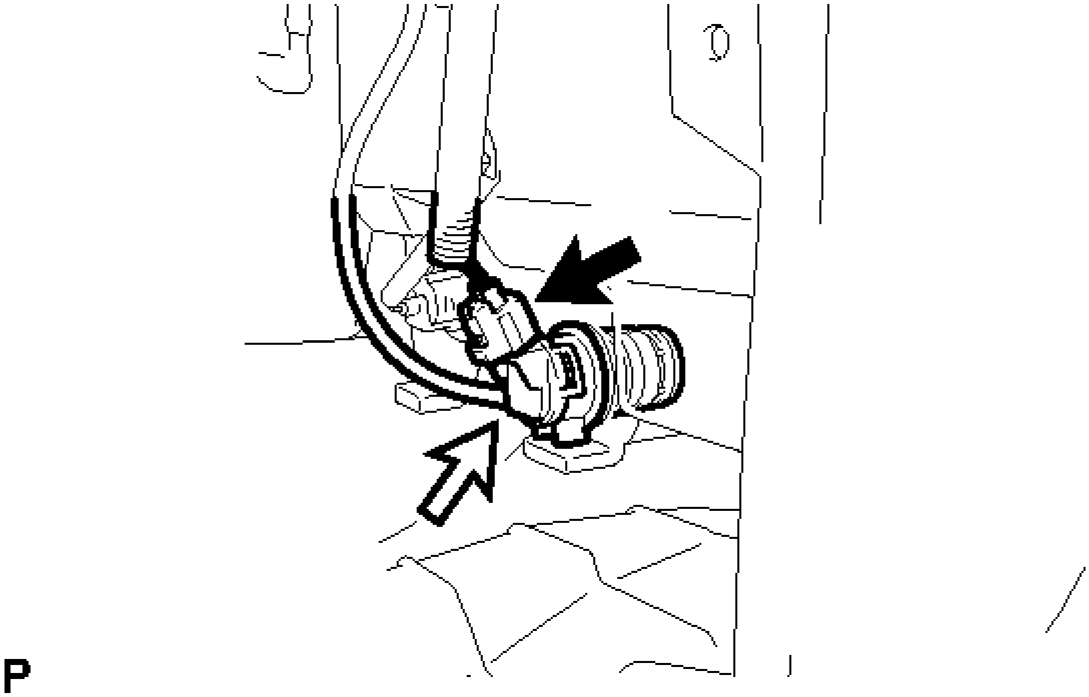

Fig. 59: Installing Windshield Washer Motor And Pump Assembly
Courtesy of TOYOTA MOTOR SALES, U.S.A., INC.

b. Connect the connector.
c. Connect the washer hose.

2. **ADD WASHER FLUID**
    a. Add washer fluid to the washer jar.
3. **INSTALL FRONT FENDER LINER RH**
    a. Install the front fender liner RH with the 4 clips and 5 screws.
    b. Install 2 new grommets.
    c. Install the pin hold clip as shown in the illustration.

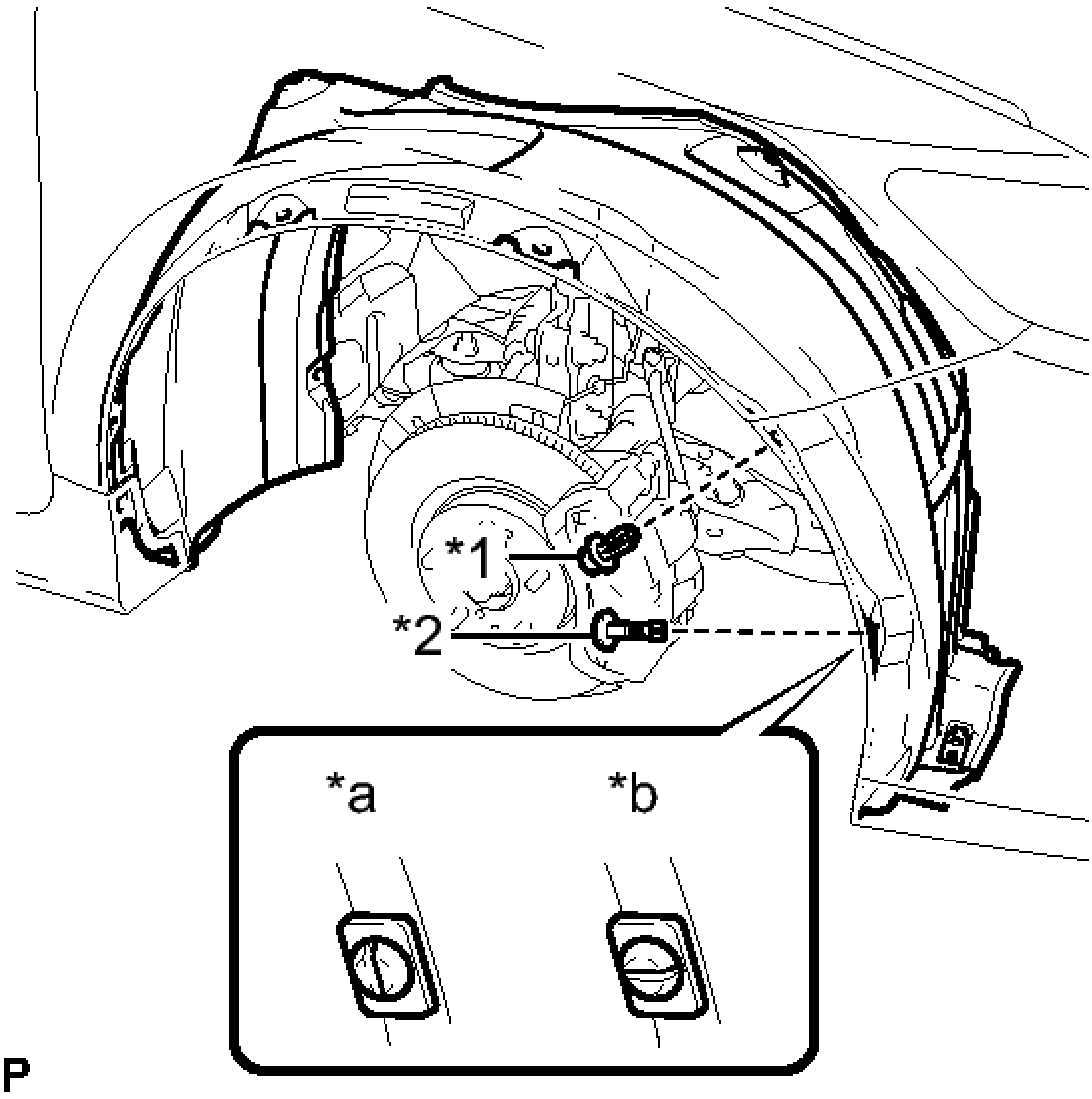

Fig. 60: Identifying Front Fender Liner RH Correct & Incorrect Installation
Courtesy of TOYOTA MOTOR SALES, U.S.A., INC.

TEXT IN ILLUSTRATION

*1	Clip
*2	Pin Hold Clip
*a	Correct
*b	Incorrect

NOTE: **Insert the pin hold clip with the slot aligned vertically. Do not rotate the clip after inserting it. After installation, confirm that the slot is aligned vertically.**

d. Install the clip.

4. **INSTALL FRONT WHEEL OPENING EXTENSION PAD RH**
    1. Install the front wheel opening extension pad RH with the 3 screws
5. **INSTALL FRONT WHEEL RH** . Refer to **INSTALLATION - Step 13** .

WASHER NOZZLE

COMPONENTS

ILLUSTRATION

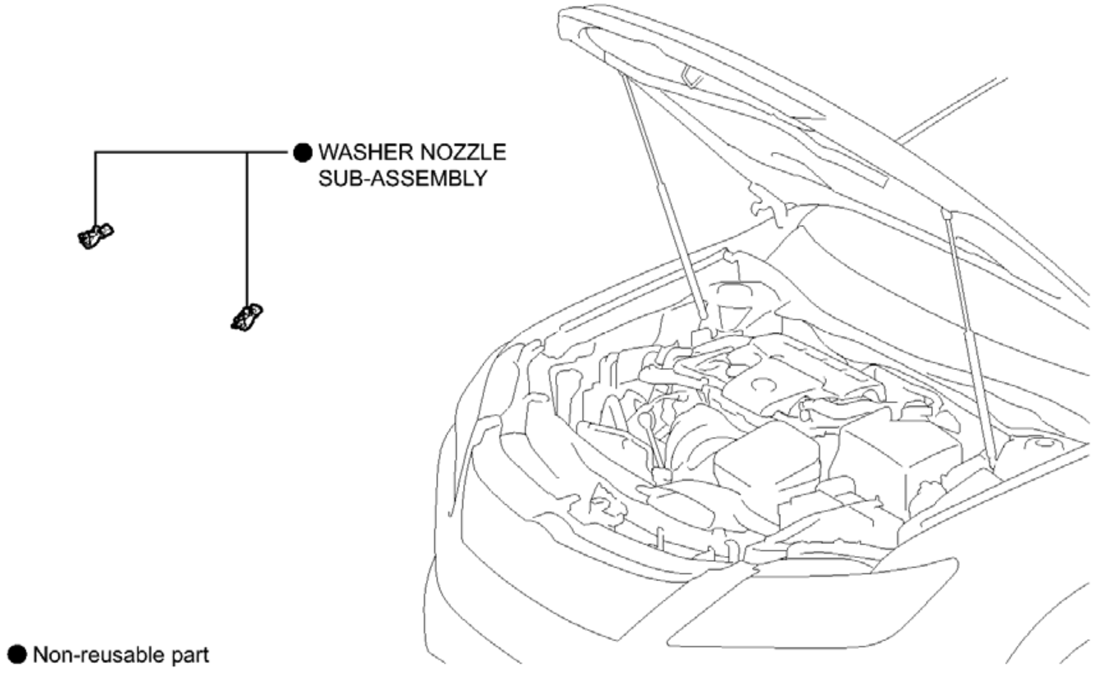

P

Fig. 61: Identifying Washer Nozzle Replacement Components
Courtesy of TOYOTA MOTOR SALES, U.S.A., INC.

ON-VEHICLE INSPECTION

ON-VEHICLE INSPECTION

1. **INSPECT WASHER NOZZLE SUB-ASSEMBLY**
    1. With the engine running, check the position that the washer fluid hits the windshield.

       Standard

       Washer fluid hits the windshield in the areas shown in the illustration.

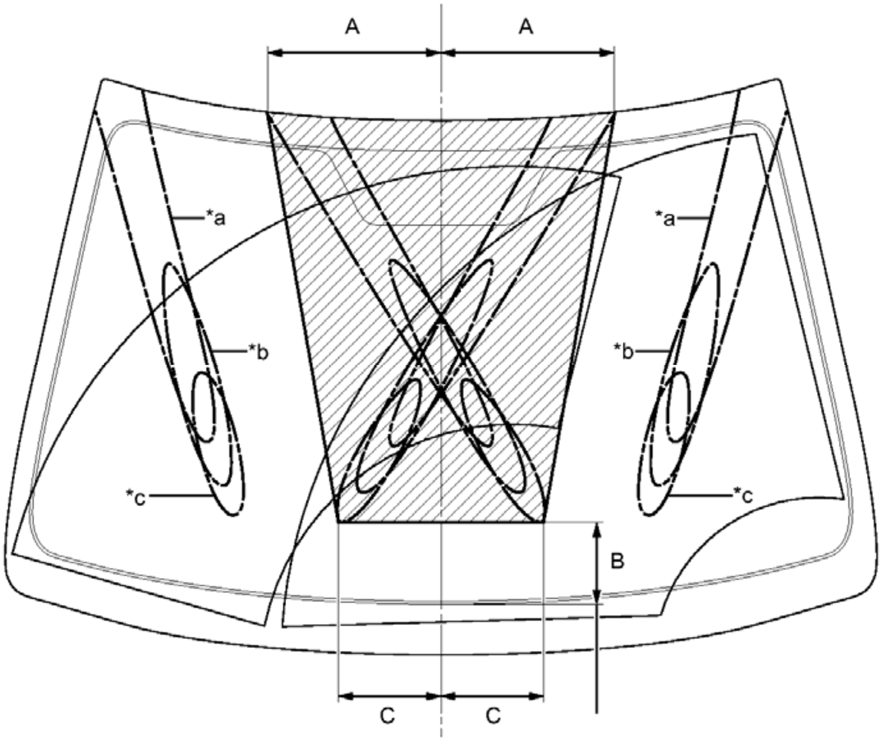

P

Fig. 62: Inspecting Washer Nozzle Sub-Assembly
Courtesy of TOYOTA MOTOR SALES, U.S.A., INC.

STANDARD CLEARANCE

Area	Measurement	Area	Measurement
A	300.0 mm (11.8 in.)	B	145.0 mm (5.71 in.)
C	170.0 mm (6.69 in.)	-	-

TEXT IN ILLUSTRATION

*a	Upper Limit	*b	Standard
*c	Lower Limit	-	-

HINT:

If the result is not as specified, replace the washer nozzle sub-assembly.

REMOVAL

REMOVAL

1. **REMOVE WASHER NOZZLE SUB-ASSEMBLY**
    a. Using a screwdriver, disengage the 2 claws and separate the washer nozzle sub-assembly as shown in the illustration.

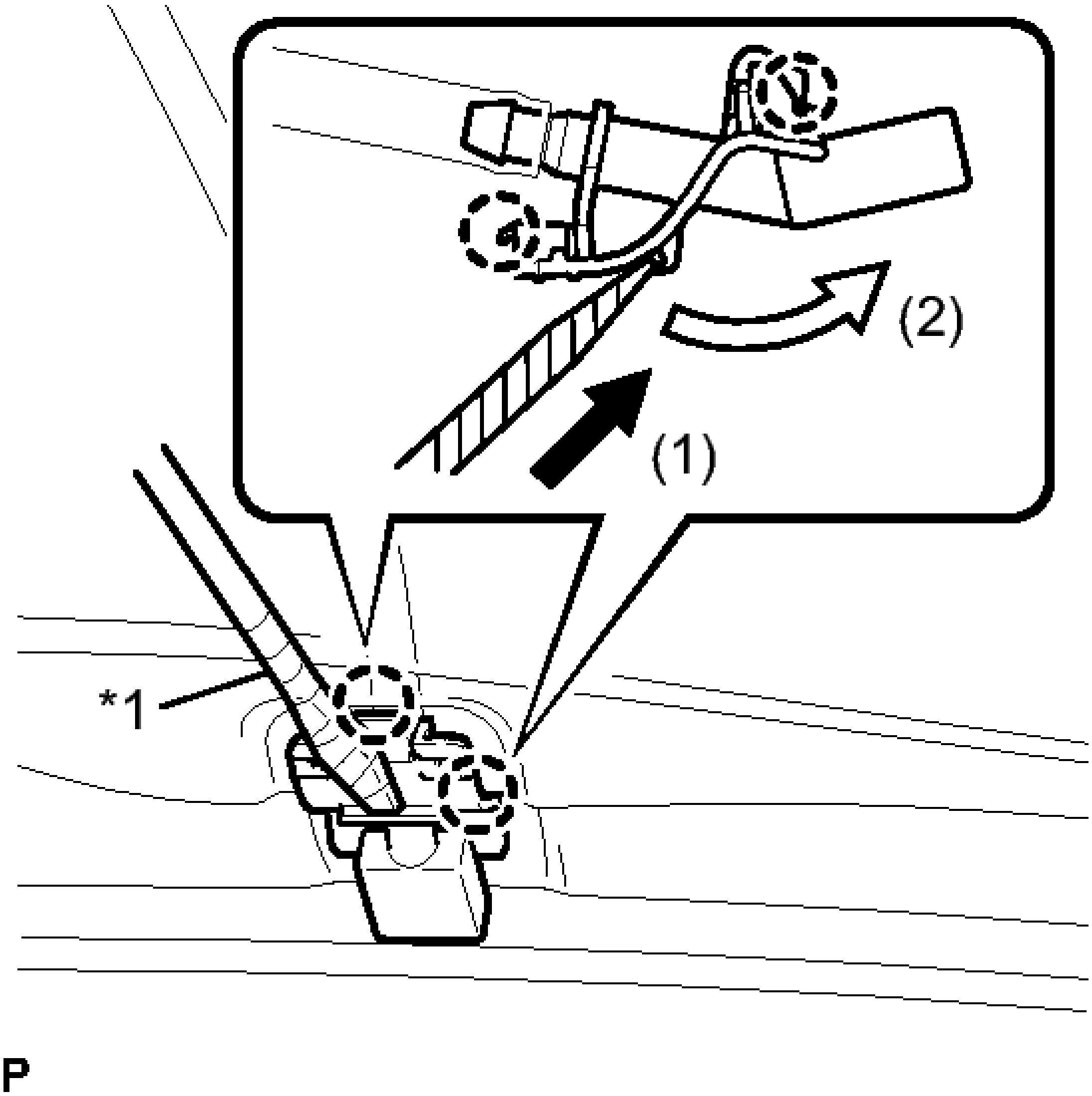

Fig. 63: Removing Washer Nozzle Sub-Assembly
Courtesy of TOYOTA MOTOR SALES, U.S.A., INC.

TEXT IN ILLUSTRATION

*1	Protective Tape

NOTE: **Be careful not to damage the windshield.**

HINT:

Tape the screwdriver tip before use.

b. Remove the washer nozzle sub-assembly from the washer hose.

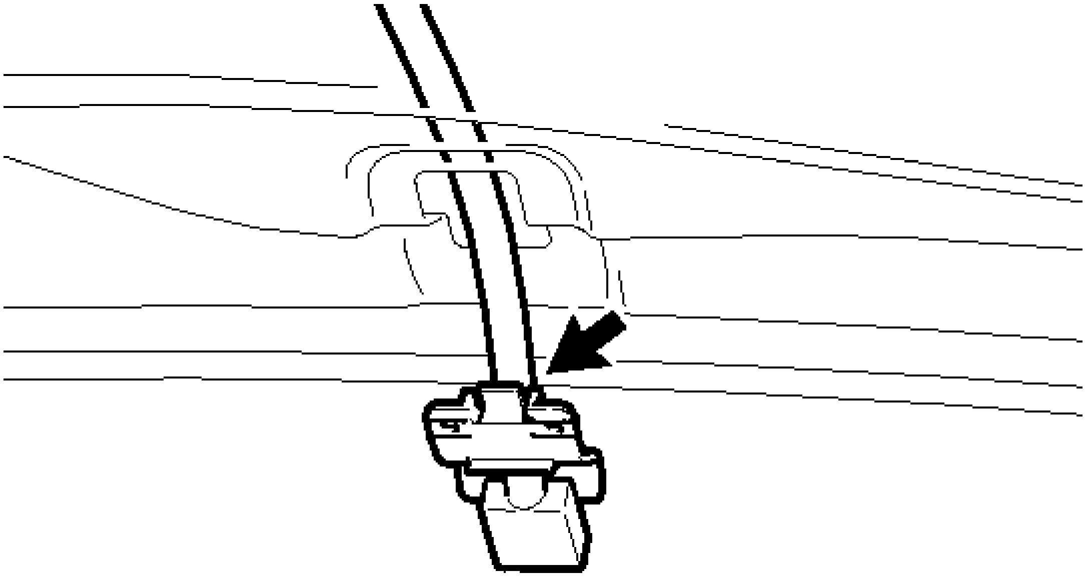

Fig. 64: Identifying Washer Nozzle Sub-Assembly
Courtesy of TOYOTA MOTOR SALES, U.S.A., INC.

NOTE: **Washer nozzles cannot be reused.**

ADJUSTMENT

ADJUSTMENT

1. **REMOVE WASHER NOZZLE SUB-ASSEMBLY** . See step 1.
2. **ADJUST WASHER NOZZLE SUB-ASSEMBLY**
   a. Select a washer nozzle so that the contact area is within the standard. Replace the washer nozzle with the selected one.

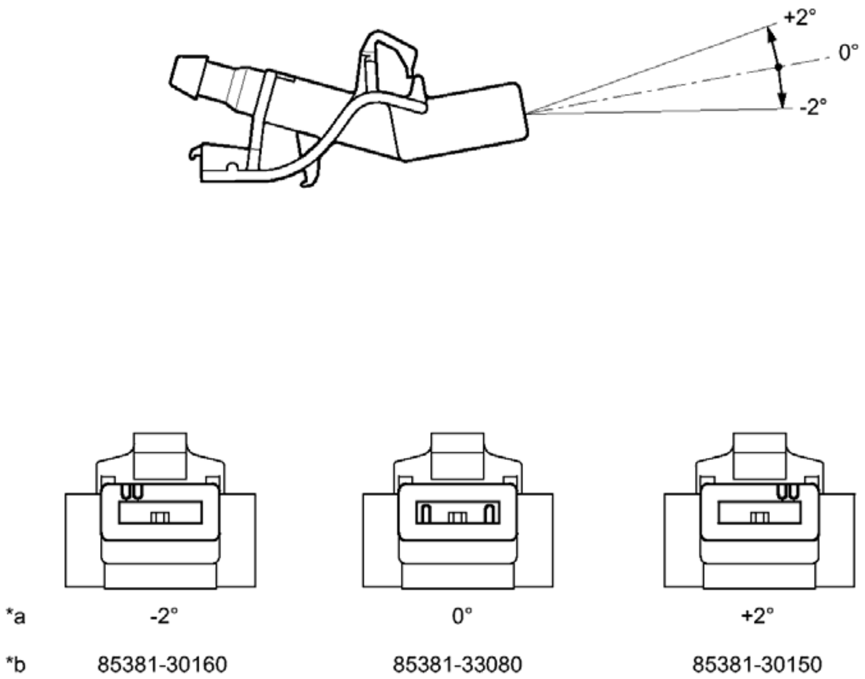
+2°
0°
-2°
*a
-2°
0°
+2°
*b
85381-30160
85381-33080
85381-30150
P

Fig. 65: Adjusting Washer Nozzle Sub-Assembly
Courtesy of TOYOTA MOTOR SALES, U.S.A., INC.

TEXT IN ILLUSTRATION

*a	Washer Fluid Spray Angle	*b	Part Number

3. **INSTALL WASHER NOZZLE SUB-ASSEMBLY** . See step 1.

INSTALLATION

INSTALLATION

1. **INSTALL WASHER NOZZLE SUB-ASSEMBLY**
    a. Connect a new washer nozzle sub-assembly to the washer hose.
    b. Engage the 2 claws to install the washer nozzle sub-assembly as shown in the illustration.

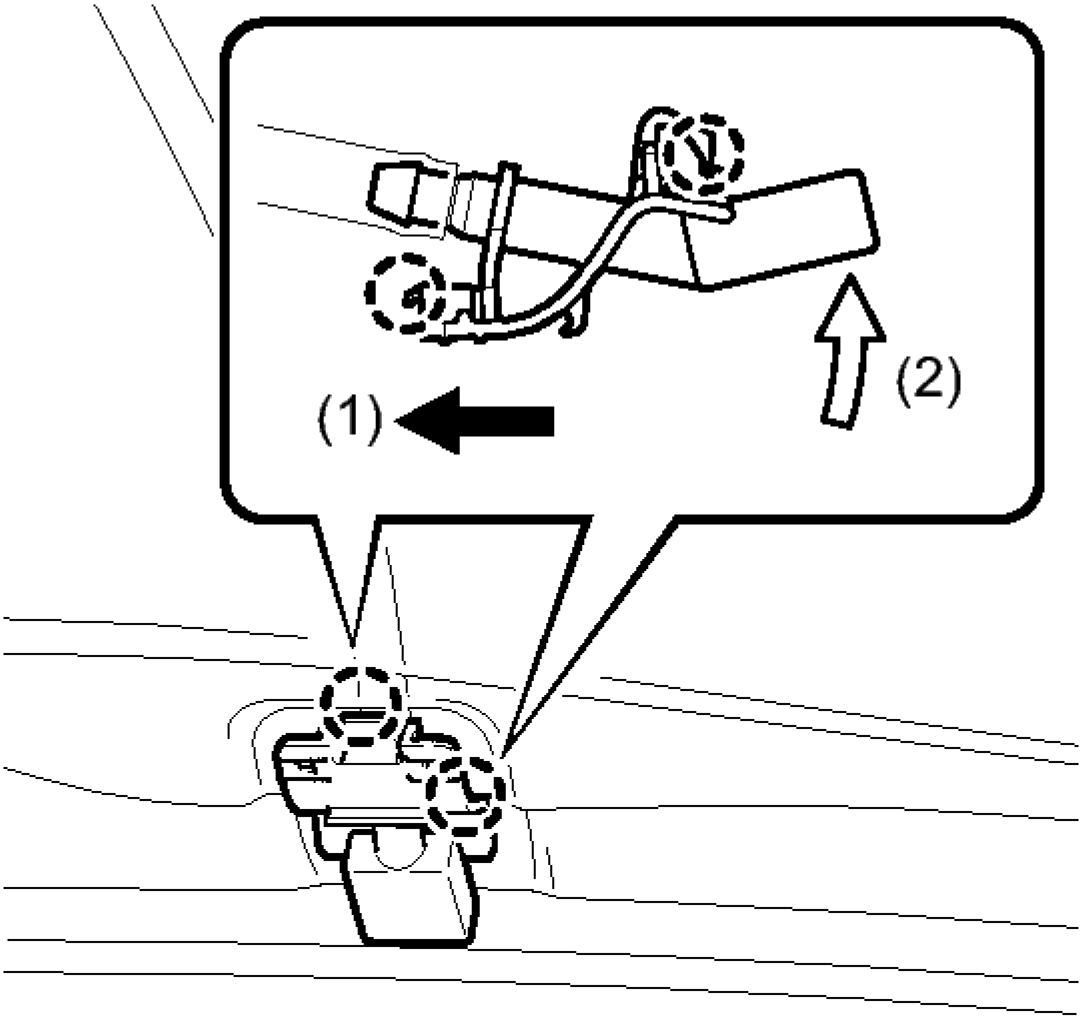

P

Fig. 66: Installing Washer Nozzle Sub-Assembly
Courtesy of TOYOTA MOTOR SALES, U.S.A., INC.

2. **INSPECT WASHER NOZZLE SUB-ASSEMBLY** . See step 1.
3. **ADJUST WASHER NOZZLE SUB-ASSEMBLY** . See step 2.

WASHER LEVEL WARNING SWITCH

COMPONENTS

ILLUSTRATION

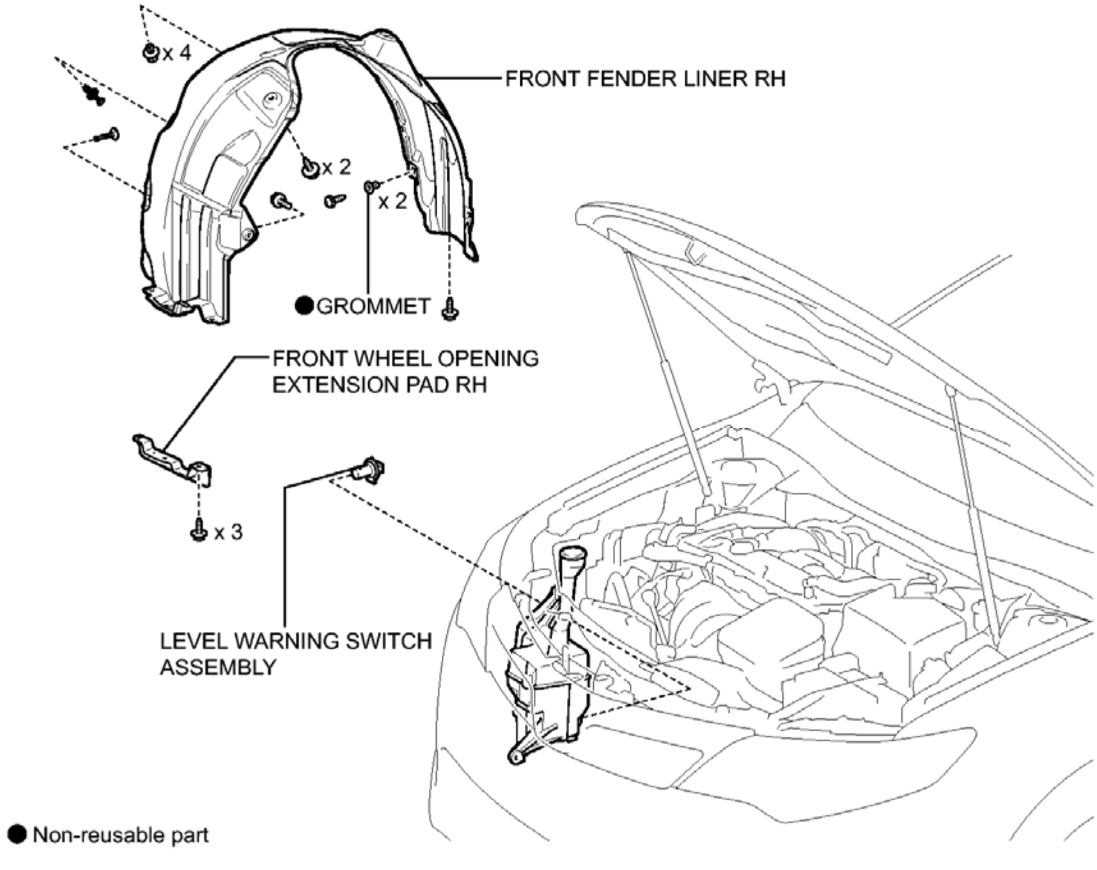
x 4
FRONT FENDER LINER RH
x 2
x 2
● GROMMET
FRONT WHEEL OPENING EXTENSION PAD RH
x 3
LEVEL WARNING SWITCH ASSEMBLY
● Non-reusable part
P

Fig. 67: Identifying Washer Level Warning Switch Replacement Components
Courtesy of TOYOTA MOTOR SALES, U.S.A., INC.

REMOVAL

REMOVAL

1. **REMOVE FRONT WHEEL RH**
2. **REMOVE FRONT FENDER LINER RH** . See step 3.
3. **REMOVE FRONT WHEEL OPENING EXTENSION PAD RH** . See step 2.
4. **DRAIN WASHER FLUID** . See step 4.
5. **REMOVE LEVEL WARNING SWITCH ASSEMBLY**
    a. Disconnect the connector.

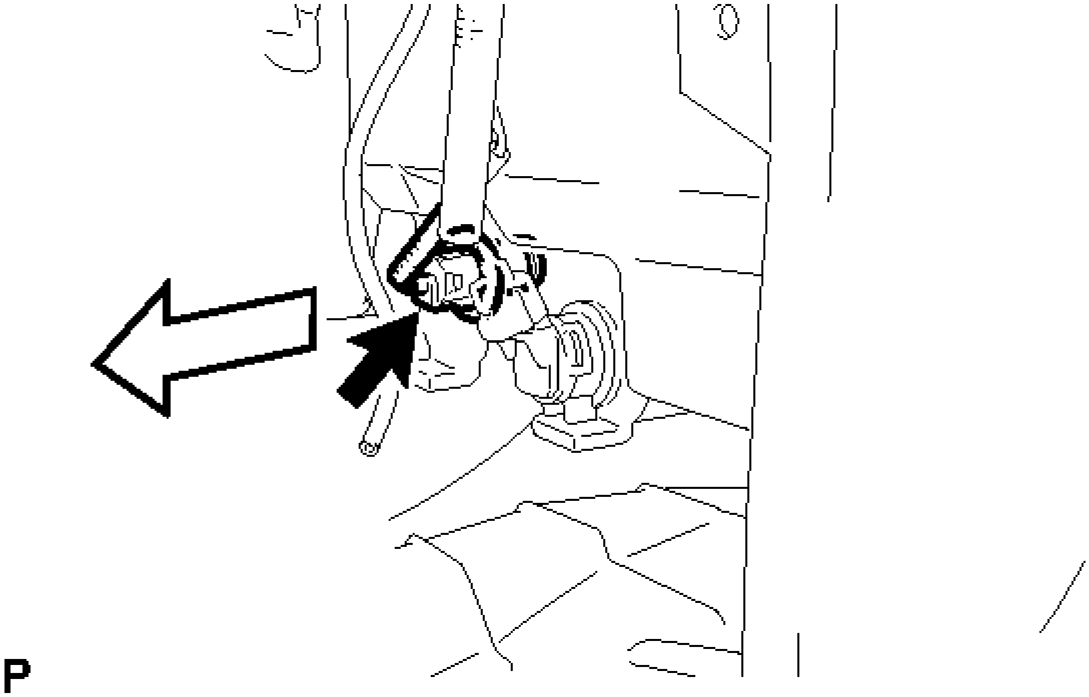

Fig. 68: Removing Level Warning Switch Assembly
Courtesy of TOYOTA MOTOR SALES, U.S.A., INC.

b. Remove the level warning switch assembly as shown in the illustration.

INSPECTION

INSPECTION

1. **INSPECT LEVEL WARNING SWITCH ASSEMBLY**

   HINT:

   The following check should be performed with the windshield washer motor and pump installed to the washer jar.

   a. Fill the washer jar with washer fluid.
   b. Measure the resistance according to the value(s) in the table below.

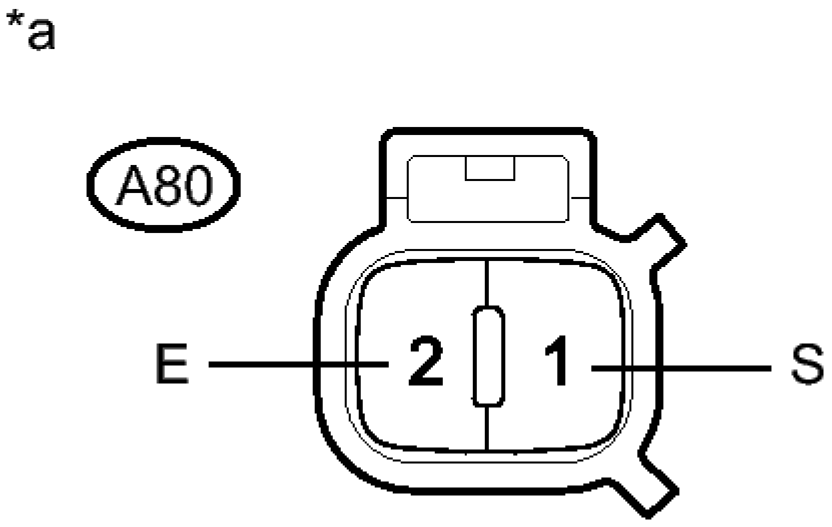

Fig. 69: Inspecting Level Warning Switch Assembly Connector Terminals
Courtesy of TOYOTA MOTOR SALES, U.S.A., INC.

Standard Resistance

Tester Connection	Condition	Specified Condition
A80-1 (S) - A80-2 (E)	Fluid volume is more than 800 ml	10 kohms or higher
	Fluid volume is less than 600 ml	Below 1 ohms

TEXT IN ILLUSTRATION

*a	Component without harness connected (Level Warning Switch Assembly)

If the result is not as specified, replace the level warning switch assembly.

INSTALLATION

INSTALLATION

1. **INSTALL LEVEL WARNING SWITCH ASSEMBLY**
    a. Install the level warning switch assembly.

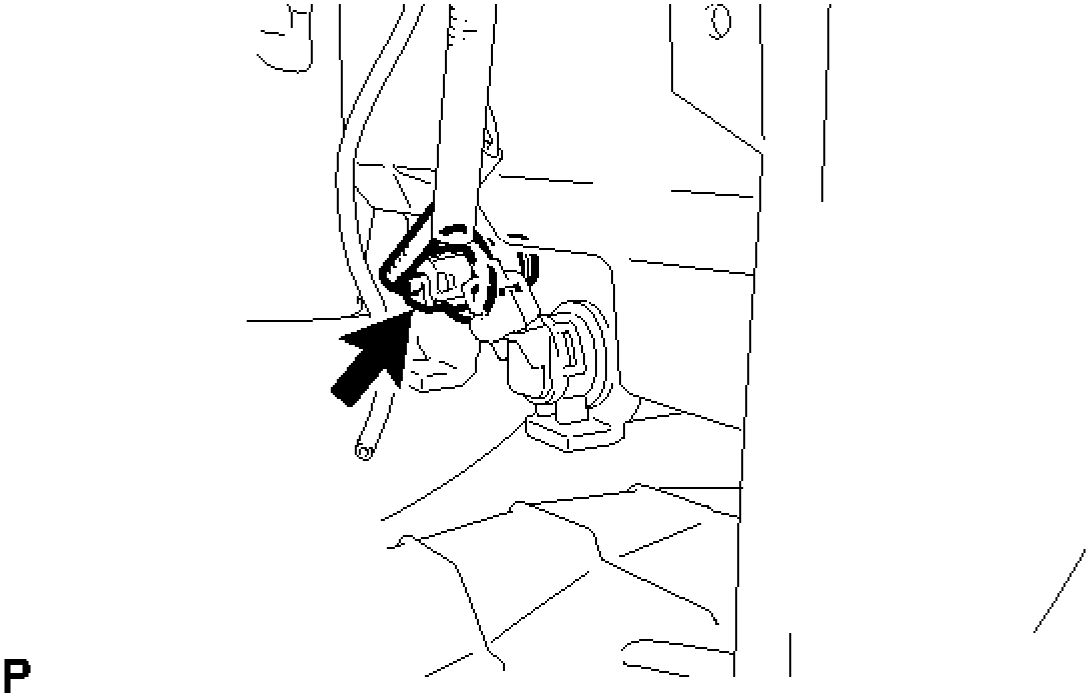

Fig. 70: Identifying Level Warning Switch Assembly Connector
Courtesy of TOYOTA MOTOR SALES, U.S.A., INC.

    b. Connect the connector.
    c. Connect the washer hose.

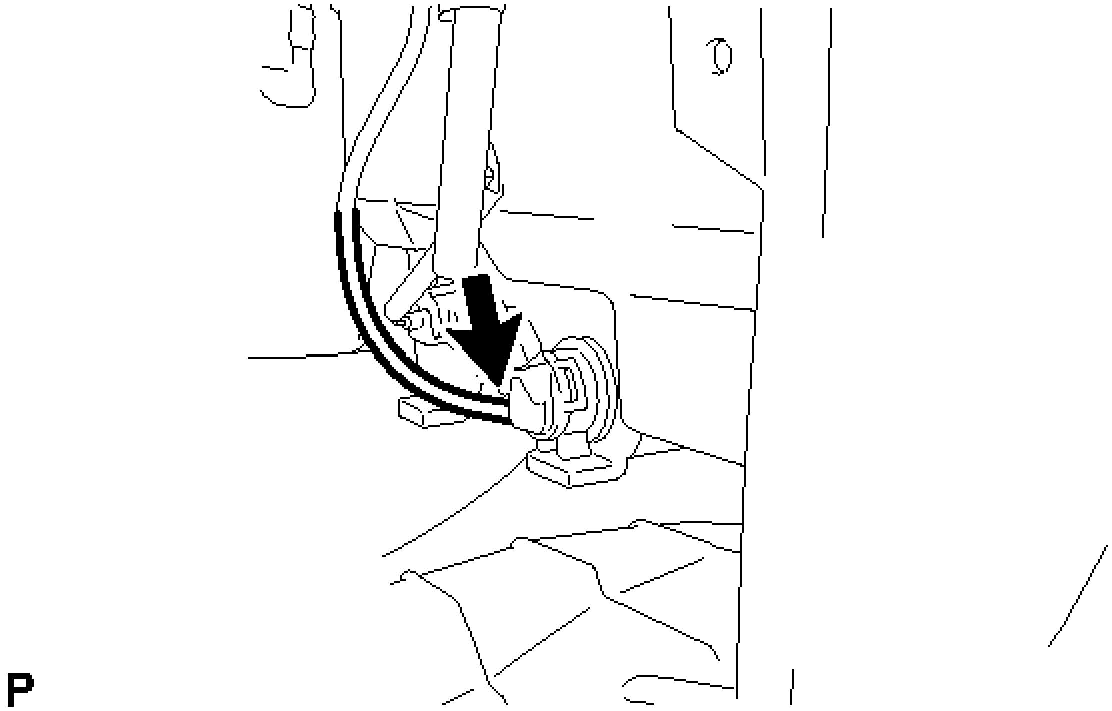

Fig. 71: Identifying Level Warning Switch Assembly Washer Hose
Courtesy of TOYOTA MOTOR SALES, U.S.A., INC.

2. **ADD WASHER FLUID** . See step 2.
3. **INSTALL FRONT FENDER LINER RH** . See step 3.
4. **INSTALL FRONT WHEEL OPENING EXTENSION PAD RH** . See step 4.
5. **INSTALL FRONT WHEEL RH** . Refer to **INSTALLATION - Step 13** .

AIR CONDITIONING

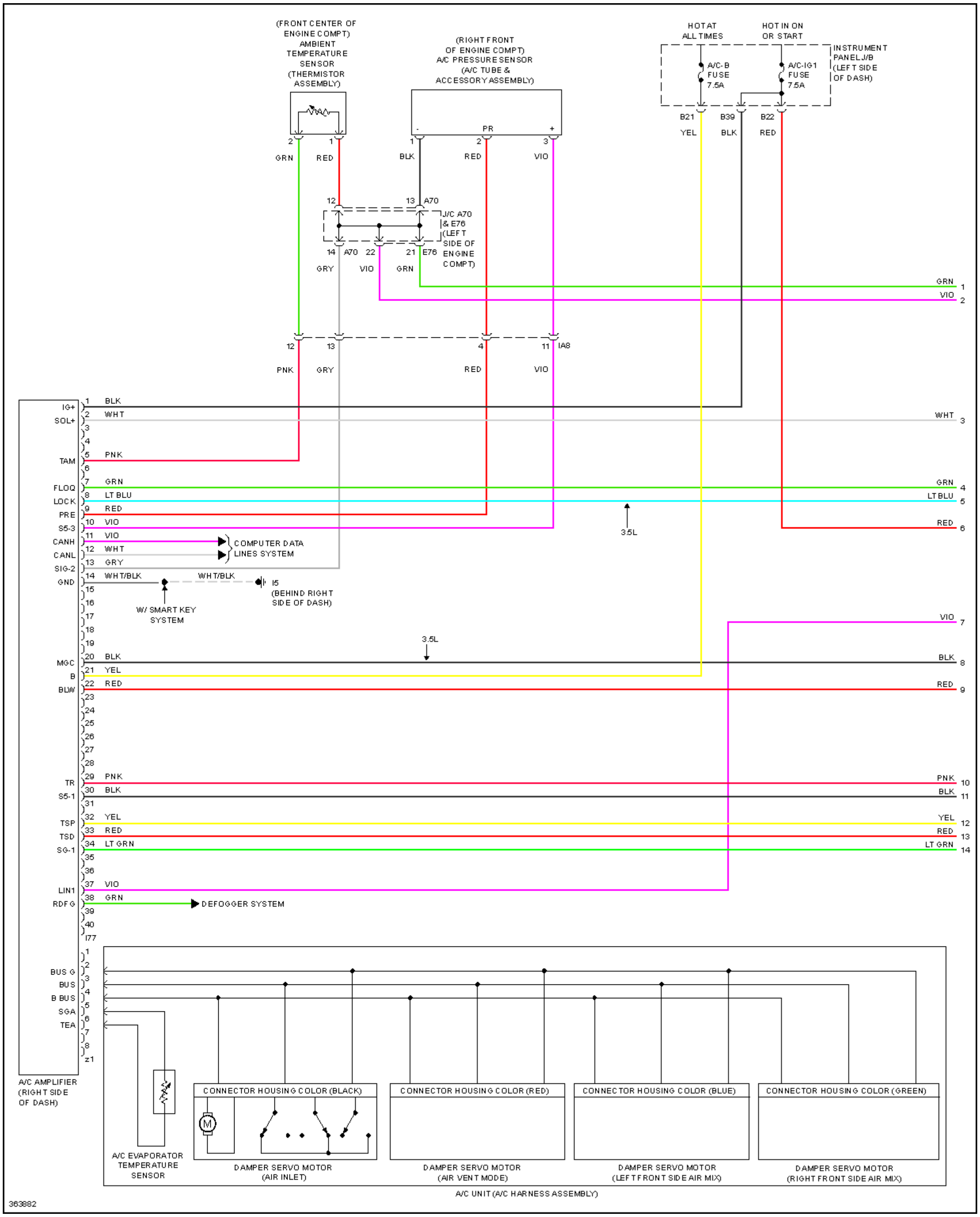
(FRONT CENTER OF ENGINE COMPT) AMBIENT TEMPERATURE SENSOR (THERMISTOR ASSEMBLY)
(RIGHT FRONT OF ENGINE COMPT) A/C PRESSURE SENSOR (A/C TUBE & ACCESSORY ASSEMBLY)
HOT AT ALL TIMES
HOT IN ON OR START
A/C-B FUSE 7.5A
A/C-IG1 FUSE 7.5A
INSTRUMENT PANEL J/B (LEFT SIDE OF DASH)
B21 YEL
B39 BLK
B22 RED
2 GRN
1 RED
1 BLK
2 RED
3 VIO
- PR +
12 13 A70
J/C A70 & E76 (LEFT SIDE OF ENGINE COMPT)
14 A70 22 21 E76
GRY VIO GRN
12 13 4 11 IA8
PNK GRY RED VIO
GRN 1
VIO 2
WHT 3
GRN 4
LT BLU 5
RED 6
VIO 7
BLK 8
RED 9
PNK 10
BLK 11
YEL 12
RED 13
LT GRN 14
3.5L
IG+ 1 BLK
SOL+ 2 WHT
3
4
TAM 5 PNK
6
FLOQ 7 GRN
LOCK 8 LT BLU
PRE 9 RED
S5-3 10 VIO
CANH 11 VIO
CANL 12 WHT
SIG-2 13 GRY
GND 14 WHT/BLK
COMPUTER DATA LINES SYSTEM
WHT/BLK
I5 (BEHIND RIGHT SIDE OF DASH)
W/ SMART KEY SYSTEM
15
16
17
18
19
MGC 20 BLK
B 21 YEL
BLW 22 RED
23
24
25
26
27
28
TR 29 PNK
S5-1 30 BLK
31
TSP 32 YEL
TSD 33 RED
SG-1 34 LT GRN
35
36
LIN1 37 VIO
RDFG 38 GRN
DEFOGGER SYSTEM
39
40
I77
1
BUS G 2
BUS 3
B BUS 4
SGA 5
TEA 6
7
8
z1
A/C AMPLIFIER (RIGHT SIDE OF DASH)
A/C EVAPORATOR TEMPERATURE SENSOR
CONNECTOR HOUSING COLOR (BLACK)
M
DAMPER SERVO MOTOR (AIR INLET)
CONNECTOR HOUSING COLOR (RED)
DAMPER SERVO MOTOR (AIR VENT MODE)
CONNECTOR HOUSING COLOR (BLUE)
DAMPER SERVO MOTOR (LEFT FRONT SIDE AIR MIX)
CONNECTOR HOUSING COLOR (GREEN)
DAMPER SERVO MOTOR (RIGHT FRONT SIDE AIR MIX)
A/C UNIT (A/C HARNESS ASSEMBLY)
363882

Fig. 1: Automatic A/C Circuit, Except Hybrid (1 of 3)

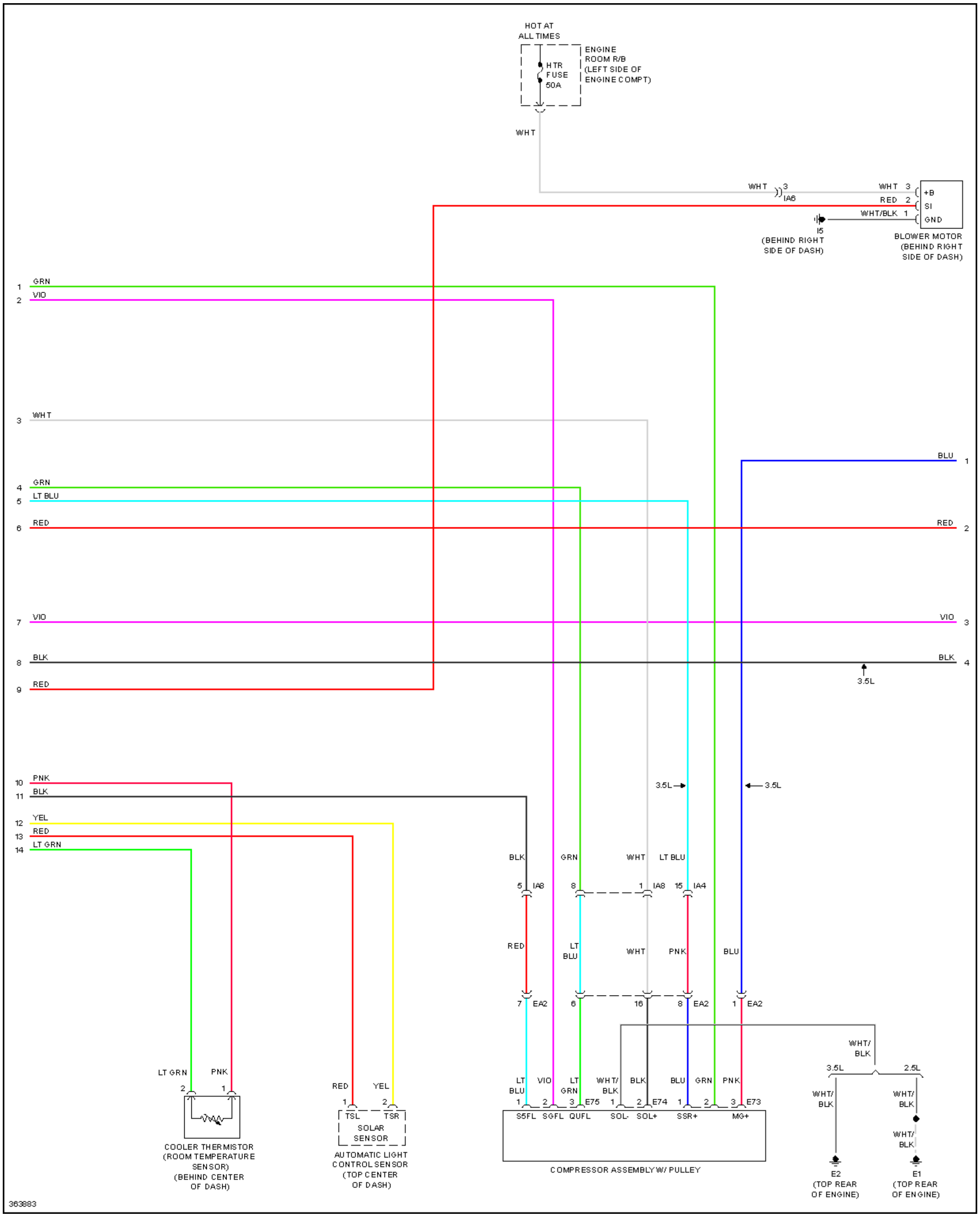
HOT AT
ALL TIMES
HTR
FUSE
50A
ENGINE
ROOM R/B
(LEFT SIDE OF
ENGINE COMPT)
WHT
WHT
3
IA6
WHT 3
RED 2
WHT/BLK 1
+B
SI
GND
I5
(BEHIND RIGHT
SIDE OF DASH)
BLOWER MOTOR
(BEHIND RIGHT
SIDE OF DASH)
1 GRN
2 VIO
3 WHT
BLU 1
4 GRN
5 LT BLU
6 RED
RED 2
7 VIO
VIO 3
8 BLK
BLK 4
3.5L
9 RED
10 PNK
11 BLK
12 YEL
13 RED
14 LT GRN
3.5L
3.5L
BLK
GRN
WHT
LT BLU
5 IA8
8
1 IA8
15 IA4
RED
LT
BLU
WHT
PNK
BLU
7 EA2
6
16
8 EA2
1 EA2
WHT/
BLK
3.5L
2.5L
LT GRN
PNK
2
1
RED
YEL
1
2
TSL
TSR
SOLAR
SENSOR
COOLER THERMISTOR
(ROOM TEMPERATURE
SENSOR)
(BEHIND CENTER
OF DASH)
AUTOMATIC LIGHT
CONTROL SENSOR
(TOP CENTER
OF DASH)
LT
BLU
VIO
LT
GRN
WHT/
BLK
BLK
BLU
GRN
PNK
1
2
3 E75
1
2 E74
1
2
3 E73
S5FL
SGFL
QUFL
SOL-
SOL+
SSR+
MG+
COMPRESSOR ASSEMBLY W/ PULLEY
WHT/
BLK
WHT/
BLK
WHT/
BLK
E2
(TOP REAR
OF ENGINE)
E1
(TOP REAR
OF ENGINE)
363883

Fig. 2: Automatic A/C Circuit, Except Hybrid (2 of 3)

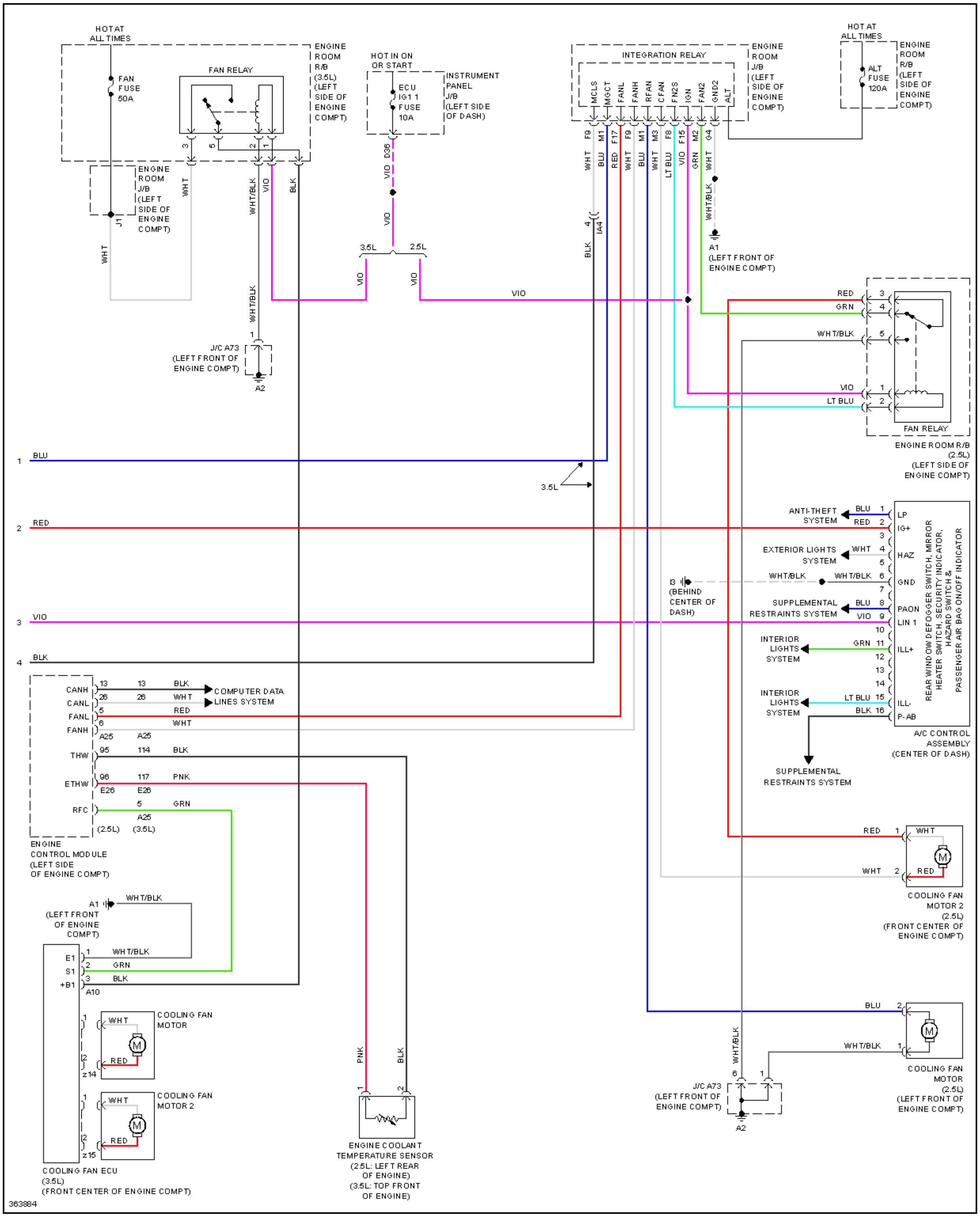
HOT AT ALL TIMES
FAN FUSE 50A
FAN RELAY
ENGINE ROOM R/B (3.5L) (LEFT SIDE OF ENGINE COMPT)
HOT IN ON OR START
ECU IG1 1 FUSE 10A
INSTRUMENT PANEL J/B (LEFT SIDE OF DASH)
INTEGRATION RELAY
MCLS MGCT FANL FANH RFAN M3 FN2S IGN FAN2 GND2 ALT
ENGINE ROOM J/B (LEFT SIDE OF ENGINE COMPT)
HOT AT ALL TIMES
ALT FUSE 120A
ENGINE ROOM R/B (LEFT SIDE OF ENGINE COMPT)
ENGINE ROOM J/B (LEFT SIDE OF ENGINE COMPT)
J1
D36
3.5L
2.5L
IA4
A1 (LEFT FRONT OF ENGINE COMPT)
J/C A73 (LEFT FRONT OF ENGINE COMPT)
A2
FAN RELAY
ENGINE ROOM R/B (2.5L) (LEFT SIDE OF ENGINE COMPT)
1 BLU
2 RED
3 VIO
4 BLK
3.5L
ANTI-THEFT SYSTEM
EXTERIOR LIGHTS SYSTEM
I3 (BEHIND CENTER OF DASH)
SUPPLEMENTAL RESTRAINTS SYSTEM
INTERIOR LIGHTS SYSTEM
INTERIOR LIGHTS SYSTEM
LP
IG+
HAZ
GND
PAON
LIN 1
ILL+
ILL-
P-AB
REAR WINDOW DEFOGGER SWITCH, MIRROR HEATER SWITCH, SECURITY INDICATOR, HAZARD SWITCH & PASSENGER AIR BAG ON/OFF INDICATOR
A/C CONTROL ASSEMBLY (CENTER OF DASH)
SUPPLEMENTAL RESTRAINTS SYSTEM
CANH
CANL
FANL
FANH
THW
ETHW
RFC
COMPUTER DATA LINES SYSTEM
A25
E26
(2.5L) (3.5L)
ENGINE CONTROL MODULE (LEFT SIDE OF ENGINE COMPT)
A1 (LEFT FRONT OF ENGINE COMPT)
E1
S1
+B1
A10
COOLING FAN MOTOR
z14
COOLING FAN MOTOR 2
z15
COOLING FAN ECU (3.5L) (FRONT CENTER OF ENGINE COMPT)
ENGINE COOLANT TEMPERATURE SENSOR (2.5L: LEFT REAR OF ENGINE) (3.5L: TOP FRONT OF ENGINE)
COOLING FAN MOTOR 2 (2.5L) (FRONT CENTER OF ENGINE COMPT)
COOLING FAN MOTOR (2.5L) (LEFT FRONT OF ENGINE COMPT)
J/C A73 (LEFT FRONT OF ENGINE COMPT)
A2
363884

Fig. 3: Automatic A/C Circuit, Except Hybrid (3 of 3)

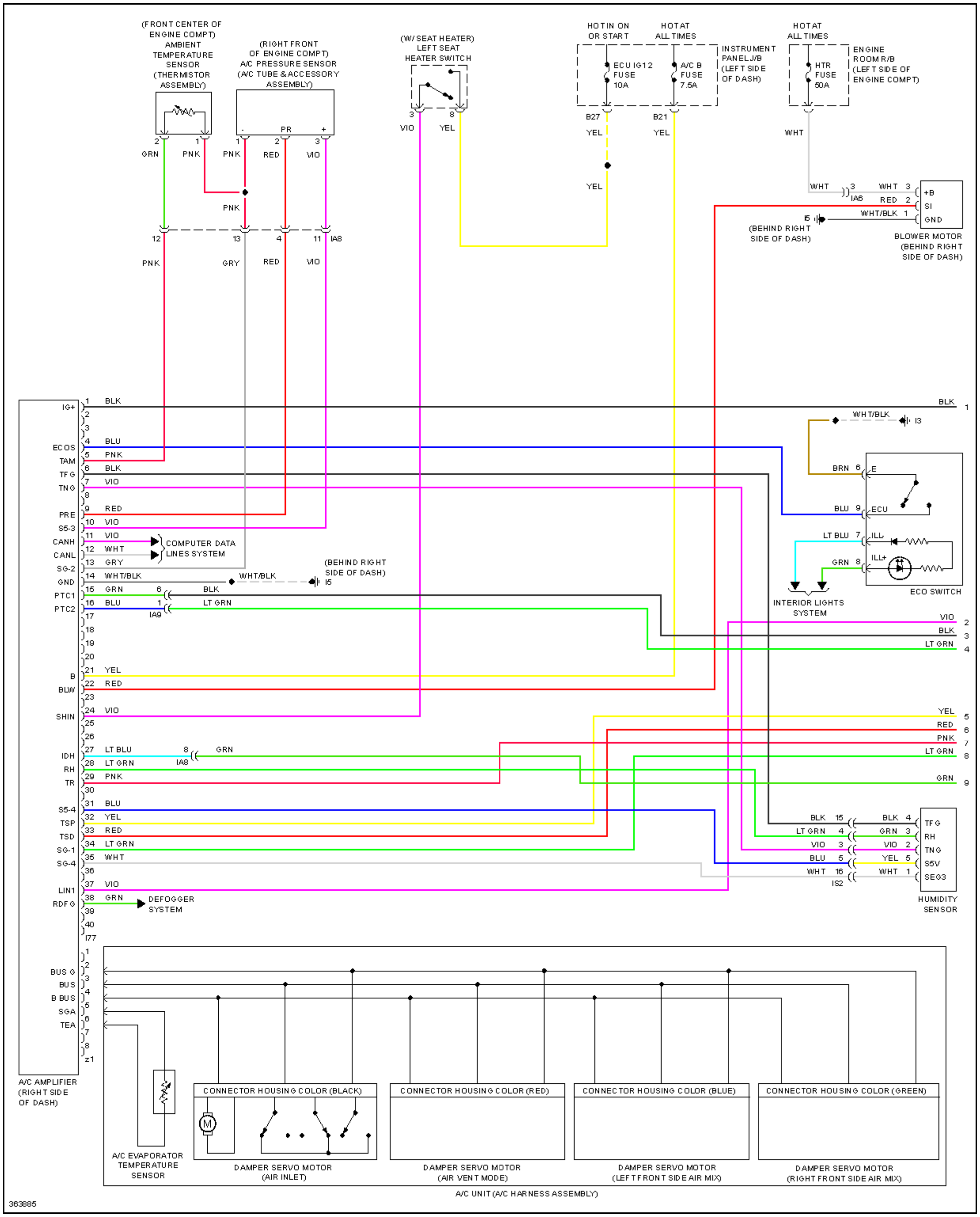
(FRONT CENTER OF ENGINE COMPT) AMBIENT TEMPERATURE SENSOR (THERMISTOR ASSEMBLY)
(RIGHT FRONT OF ENGINE COMPT) A/C PRESSURE SENSOR (A/C TUBE & ACCESSORY ASSEMBLY)
(W/ SEAT HEATER) LEFT SEAT HEATER SWITCH
HOT IN ON OR START
HOT AT ALL TIMES
ECU IG12 FUSE 10A
A/C B FUSE 7.5A
INSTRUMENT PANEL J/B (LEFT SIDE OF DASH)
HOT AT ALL TIMES
HTR FUSE 50A
ENGINE ROOM R/B (LEFT SIDE OF ENGINE COMPT)
B27
B21
IA6
IA8
IA9
I5
I3
IS2
I77
(BEHIND RIGHT SIDE OF DASH)
BLOWER MOTOR (BEHIND RIGHT SIDE OF DASH)
+B
SI
GND
ECO SWITCH
E
ECU
ILL-
ILL+
INTERIOR LIGHTS SYSTEM
COMPUTER DATA LINES SYSTEM
DEFOGGER SYSTEM
HUMIDITY SENSOR
TFG
RH
TNG
S5V
SEG3
IG+
ECOS
TAM
TFG
TNG
PRE
S5-3
CANH
CANL
SG-2
GND
PTC1
PTC2
B
BLW
SHIN
IDH
RH
TR
S5-4
TSP
TSD
SG-1
SG-4
LIN1
RDFG
BUS G
BUS
B BUS
SGA
TEA
A/C AMPLIFIER (RIGHT SIDE OF DASH)
A/C EVAPORATOR TEMPERATURE SENSOR
CONNECTOR HOUSING COLOR (BLACK)
CONNECTOR HOUSING COLOR (RED)
CONNECTOR HOUSING COLOR (BLUE)
CONNECTOR HOUSING COLOR (GREEN)
M
DAMPER SERVO MOTOR (AIR INLET)
DAMPER SERVO MOTOR (AIR VENT MODE)
DAMPER SERVO MOTOR (LEFT FRONT SIDE AIR MIX)
DAMPER SERVO MOTOR (RIGHT FRONT SIDE AIR MIX)
A/C UNIT (A/C HARNESS ASSEMBLY)
BLK
BLU
PNK
VIO
RED
WHT
GRY
WHT/BLK
GRN
LT GRN
LT BLU
YEL
BRN
363885

Fig. 4: Automatic A/C Circuit, Hybrid (1 of 3)

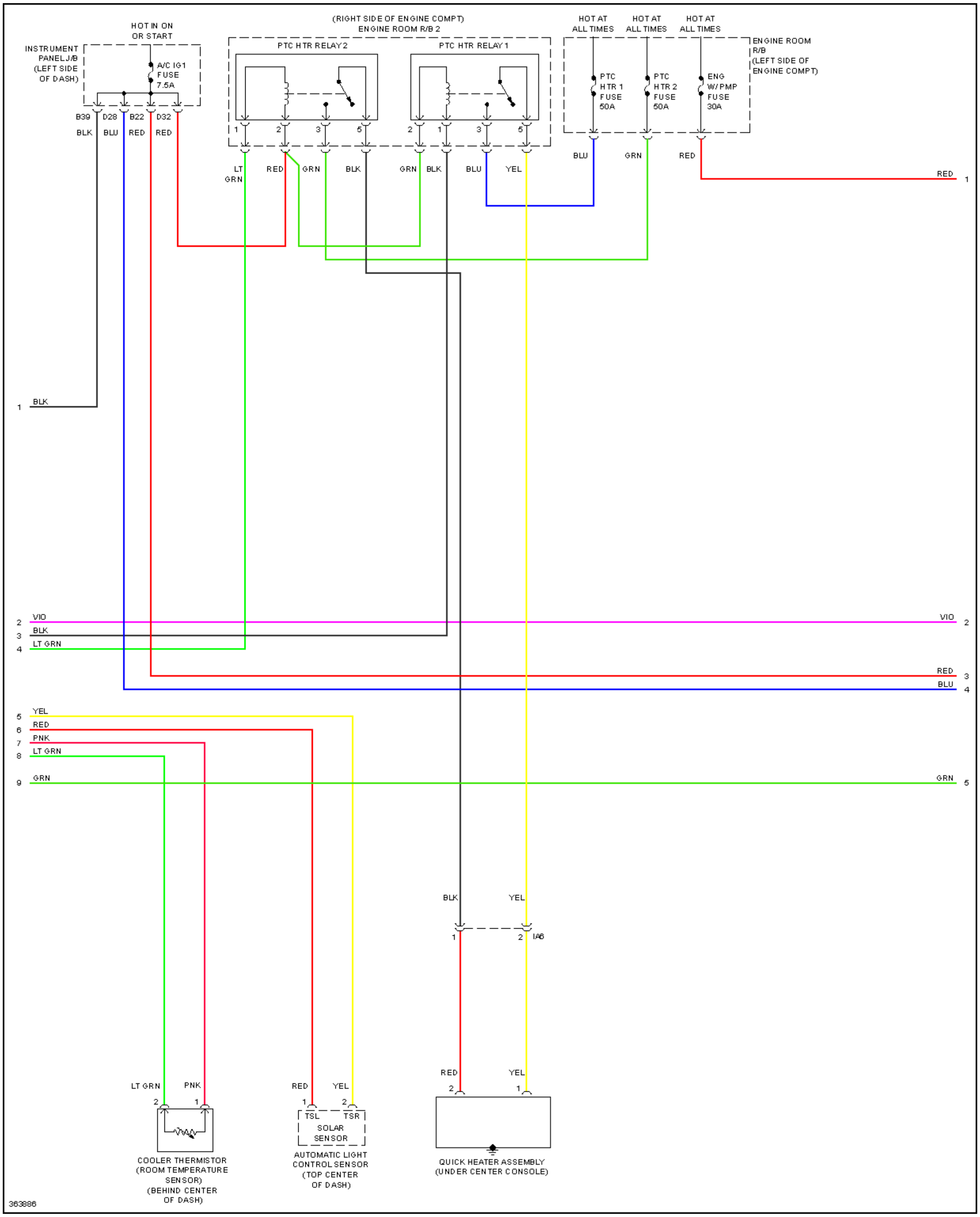
HOT IN ON OR START
INSTRUMENT PANEL J/B (LEFT SIDE OF DASH)
A/C IG1 FUSE 7.5A
B39
D28
B22
D32
BLK
BLU
RED
RED
(RIGHT SIDE OF ENGINE COMPT) ENGINE ROOM R/B 2
PTC HTR RELAY 2
PTC HTR RELAY 1
1
2
3
5
2
1
3
5
LT GRN
RED
GRN
BLK
GRN
BLK
BLU
YEL
HOT AT ALL TIMES
HOT AT ALL TIMES
HOT AT ALL TIMES
ENGINE ROOM R/B (LEFT SIDE OF ENGINE COMPT)
PTC HTR 1 FUSE 50A
PTC HTR 2 FUSE 50A
ENG W/ PMP FUSE 30A
BLU
GRN
RED
RED 1
1 BLK
2 VIO
3 BLK
4 LT GRN
VIO 2
RED 3
BLU 4
5 YEL
6 RED
7 PNK
8 LT GRN
9 GRN
GRN 5
BLK
YEL
1
2
IA6
RED
YEL
2
1
LT GRN
PNK
2
1
COOLER THERMISTOR (ROOM TEMPERATURE SENSOR) (BEHIND CENTER OF DASH)
RED
YEL
1
2
TSL
TSR
SOLAR SENSOR
AUTOMATIC LIGHT CONTROL SENSOR (TOP CENTER OF DASH)
QUICK HEATER ASSEMBLY (UNDER CENTER CONSOLE)
363886

Fig. 5: Automatic A/C Circuit, Hybrid (2 of 3)

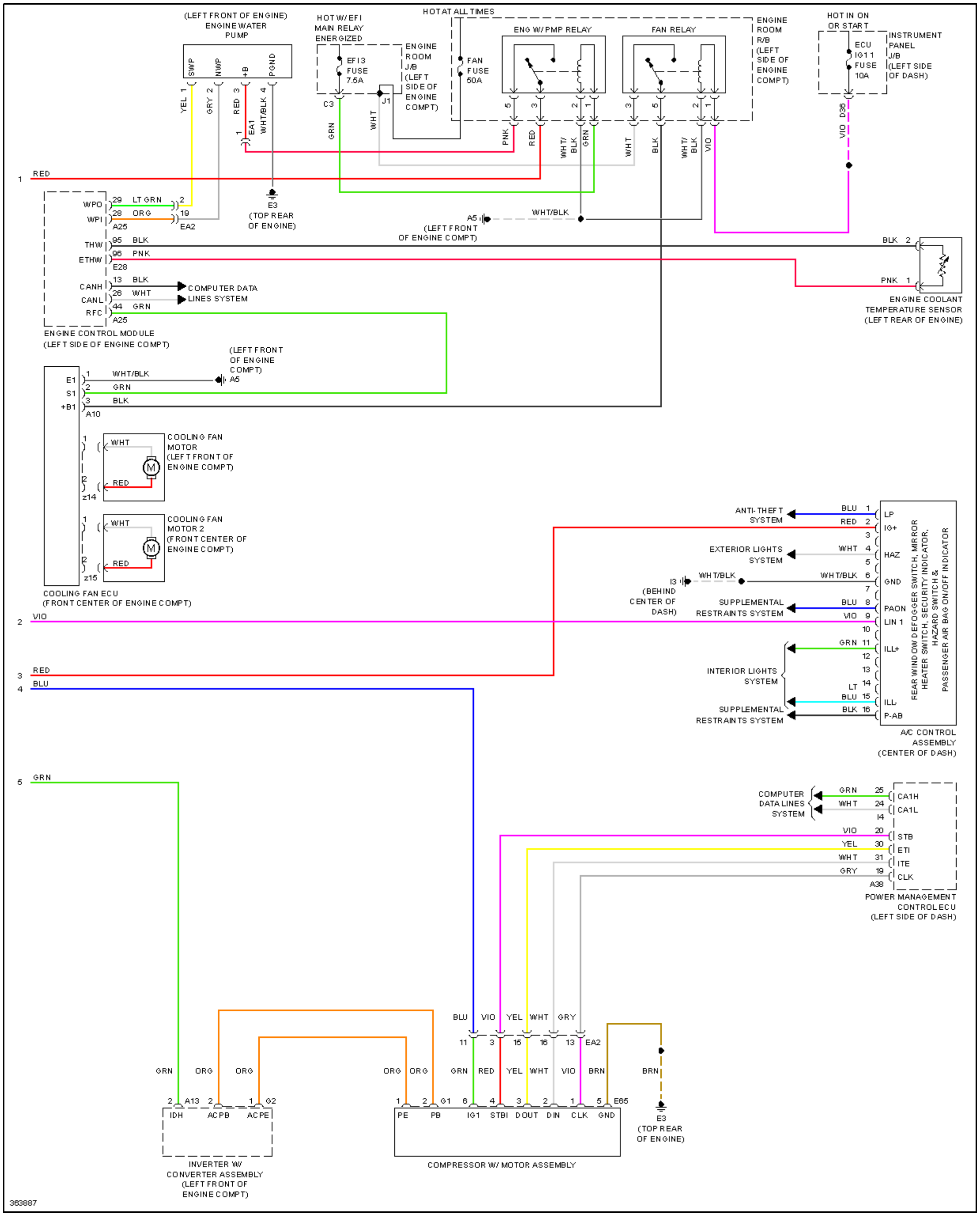
(LEFT FRONT OF ENGINE) ENGINE WATER PUMP
SWP
NWP
+B
PGND
HOT W/ EFI MAIN RELAY ENERGIZED
EF13 FUSE 7.5A
ENGINE ROOM J/B (LEFT SIDE OF ENGINE COMPT)
HOT AT ALL TIMES
FAN FUSE 50A
ENG W/ PMP RELAY
FAN RELAY
ENGINE ROOM R/B (LEFT SIDE OF ENGINE COMPT)
HOT IN ON OR START
ECU IG1 1 FUSE 10A
INSTRUMENT PANEL J/B (LEFT SIDE OF DASH)
E3 (TOP REAR OF ENGINE)
A5 (LEFT FRONT OF ENGINE COMPT)
ENGINE CONTROL MODULE (LEFT SIDE OF ENGINE COMPT)
WPO
WPI
THW
ETHW
CANH
CANL
RFC
COMPUTER DATA LINES SYSTEM
ENGINE COOLANT TEMPERATURE SENSOR (LEFT REAR OF ENGINE)
E1
S1
+B1
COOLING FAN MOTOR (LEFT FRONT OF ENGINE COMPT)
COOLING FAN MOTOR 2 (FRONT CENTER OF ENGINE COMPT)
COOLING FAN ECU (FRONT CENTER OF ENGINE COMPT)
ANTI-THEFT SYSTEM
EXTERIOR LIGHTS SYSTEM
I3 (BEHIND CENTER OF DASH)
SUPPLEMENTAL RESTRAINTS SYSTEM
INTERIOR LIGHTS SYSTEM
LP
IG+
HAZ
GND
PAON
LIN 1
ILL+
ILL-
P-AB
REAR WINDOW DEFOGGER SWITCH, MIRROR HEATER SWITCH, SECURITY INDICATOR, HAZARD SWITCH & PASSENGER AIR BAG ON/OFF INDICATOR
A/C CONTROL ASSEMBLY (CENTER OF DASH)
CA1H
CA1L
STB
ETI
ITE
CLK
POWER MANAGEMENT CONTROL ECU (LEFT SIDE OF DASH)
IDH
ACPB
ACPE
INVERTER W/ CONVERTER ASSEMBLY (LEFT FRONT OF ENGINE COMPT)
PE
PB
IG1
STBI
DOUT
DIN
CLK
GND
COMPRESSOR W/ MOTOR ASSEMBLY
E3 (TOP REAR OF ENGINE)
363887

Fig. 6: Automatic A/C Circuit, Hybrid (3 of 3)

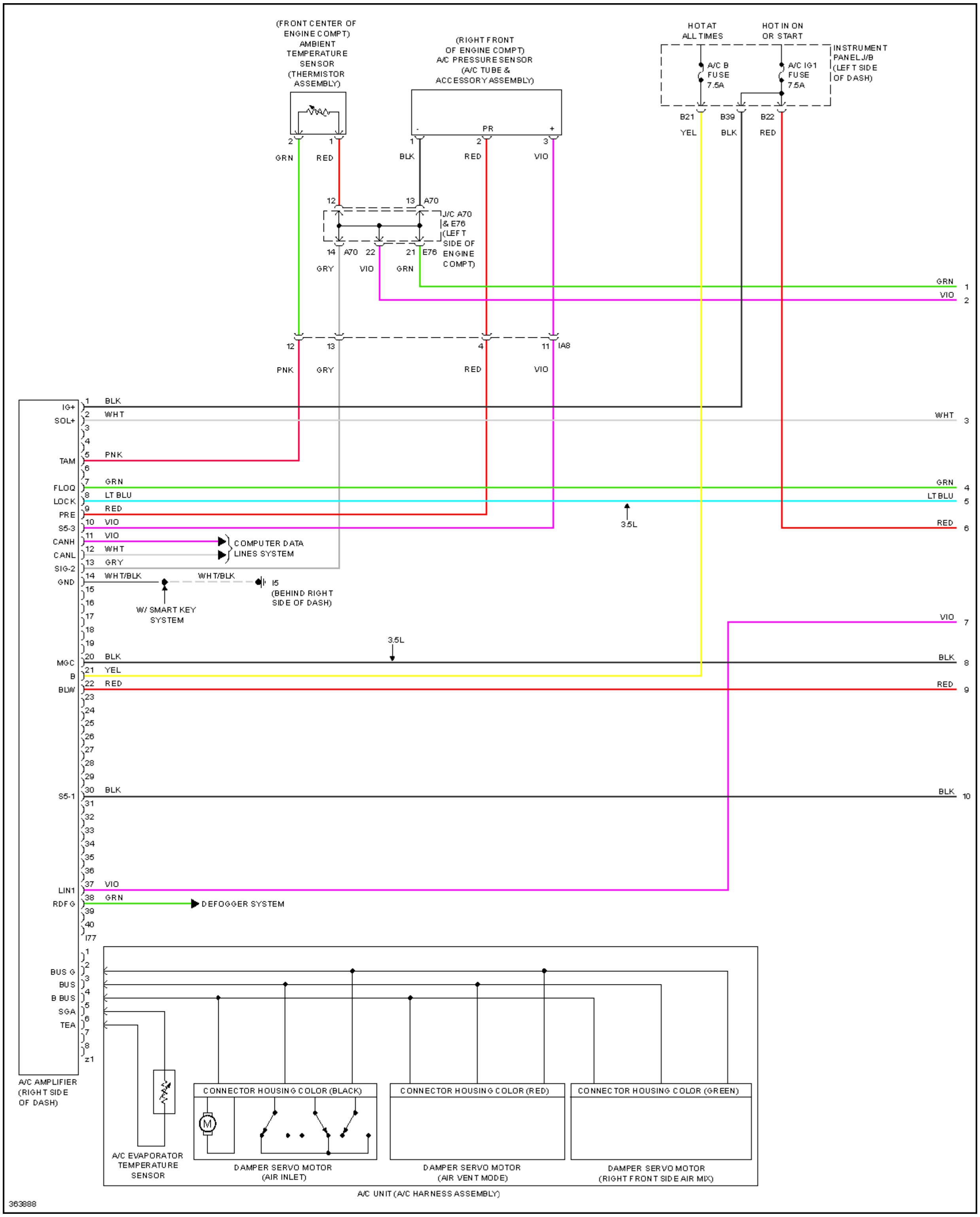
(FRONT CENTER OF ENGINE COMPT) AMBIENT TEMPERATURE SENSOR (THERMISTOR ASSEMBLY)
(RIGHT FRONT OF ENGINE COMPT) A/C PRESSURE SENSOR (A/C TUBE & ACCESSORY ASSEMBLY)
HOT AT ALL TIMES
HOT IN ON OR START
A/C B FUSE 7.5A
A/C IG1 FUSE 7.5A
INSTRUMENT PANEL J/B (LEFT SIDE OF DASH)
B21
B39
B22
YEL
BLK
RED
-
PR
+
2
1
GRN
RED
1
2
3
BLK
RED
VIO
12
13
A70
J/C A70 & E76 (LEFT SIDE OF ENGINE COMPT)
14
A70
22
21
E76
GRY
VIO
GRN
GRN 1
VIO 2
12
13
4
11
IA8
PNK
GRY
RED
VIO
IG+ 1 BLK
SOL+ 2 WHT
WHT 3
3
4
TAM 5 PNK
6
FLOQ 7 GRN
GRN 4
LOCK 8 LT BLU
LT BLU 5
PRE 9 RED
3.5L
S5-3 10 VIO
RED 6
CANH 11 VIO
CANL 12 WHT
COMPUTER DATA LINES SYSTEM
SIG-2 13 GRY
GND 14 WHT/BLK
WHT/BLK
I5 (BEHIND RIGHT SIDE OF DASH)
W/ SMART KEY SYSTEM
15
16
17
18
19
VIO 7
3.5L
MGC 20 BLK
BLK 8
B 21 YEL
BLW 22 RED
RED 9
23
24
25
26
27
28
29
S5-1 30 BLK
BLK 10
31
32
33
34
35
36
LIN1 37 VIO
RDFG 38 GRN
DEFOGGER SYSTEM
39
40
I77
1
BUS G 2
BUS 3
B BUS 4
SGA 5
TEA 6
7
8
Z1
A/C AMPLIFIER (RIGHT SIDE OF DASH)
A/C EVAPORATOR TEMPERATURE SENSOR
CONNECTOR HOUSING COLOR (BLACK)
M
DAMPER SERVO MOTOR (AIR INLET)
CONNECTOR HOUSING COLOR (RED)
DAMPER SERVO MOTOR (AIR VENT MODE)
CONNECTOR HOUSING COLOR (GREEN)
DAMPER SERVO MOTOR (RIGHT FRONT SIDE AIR MIX)
A/C UNIT (A/C HARNESS ASSEMBLY)
363888

Fig. 7: Manual A/C Circuit (1 of 3)

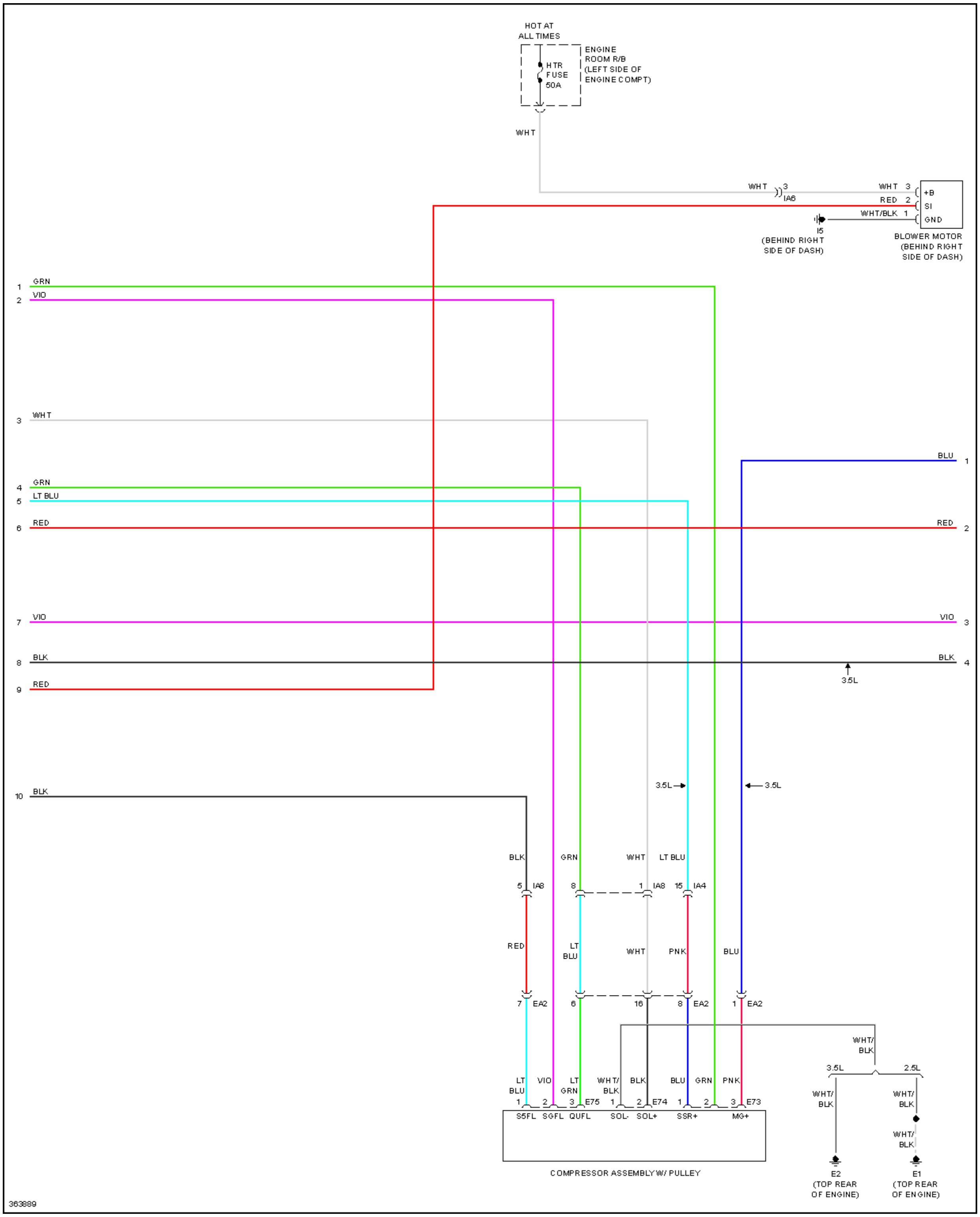
HOT AT
ALL TIMES
HTR
FUSE
50A
ENGINE
ROOM R/B
(LEFT SIDE OF
ENGINE COMPT)
WHT
WHT
3
IA6
WHT 3
RED 2
WHT/BLK 1
+B
SI
GND
I5
(BEHIND RIGHT
SIDE OF DASH)
BLOWER MOTOR
(BEHIND RIGHT
SIDE OF DASH)
1 GRN
2 VIO
3 WHT
4 GRN
5 LT BLU
6 RED
7 VIO
8 BLK
9 RED
10 BLK
BLU 1
RED 2
VIO 3
BLK 4
3.5L
3.5L
3.5L
BLK
GRN
WHT
LT BLU
5 IA8
8
1 IA8
15 IA4
RED
LT
BLU
WHT
PNK
BLU
7 EA2
6
16
8 EA2
1 EA2
WHT/
BLK
3.5L
2.5L
WHT/
BLK
WHT/
BLK
WHT/
BLK
LT
BLU
VIO
LT
GRN
WHT/
BLK
BLK
BLU
GRN
PNK
1
2
3 E75
1
2 E74
1
2
3 E73
S5FL
SGFL
QUFL
SOL-
SOL+
SSR+
MG+
COMPRESSOR ASSEMBLY W/ PULLEY
E2
(TOP REAR
OF ENGINE)
E1
(TOP REAR
OF ENGINE)
363889

Fig. 8: Manual A/C Circuit (2 of 3)

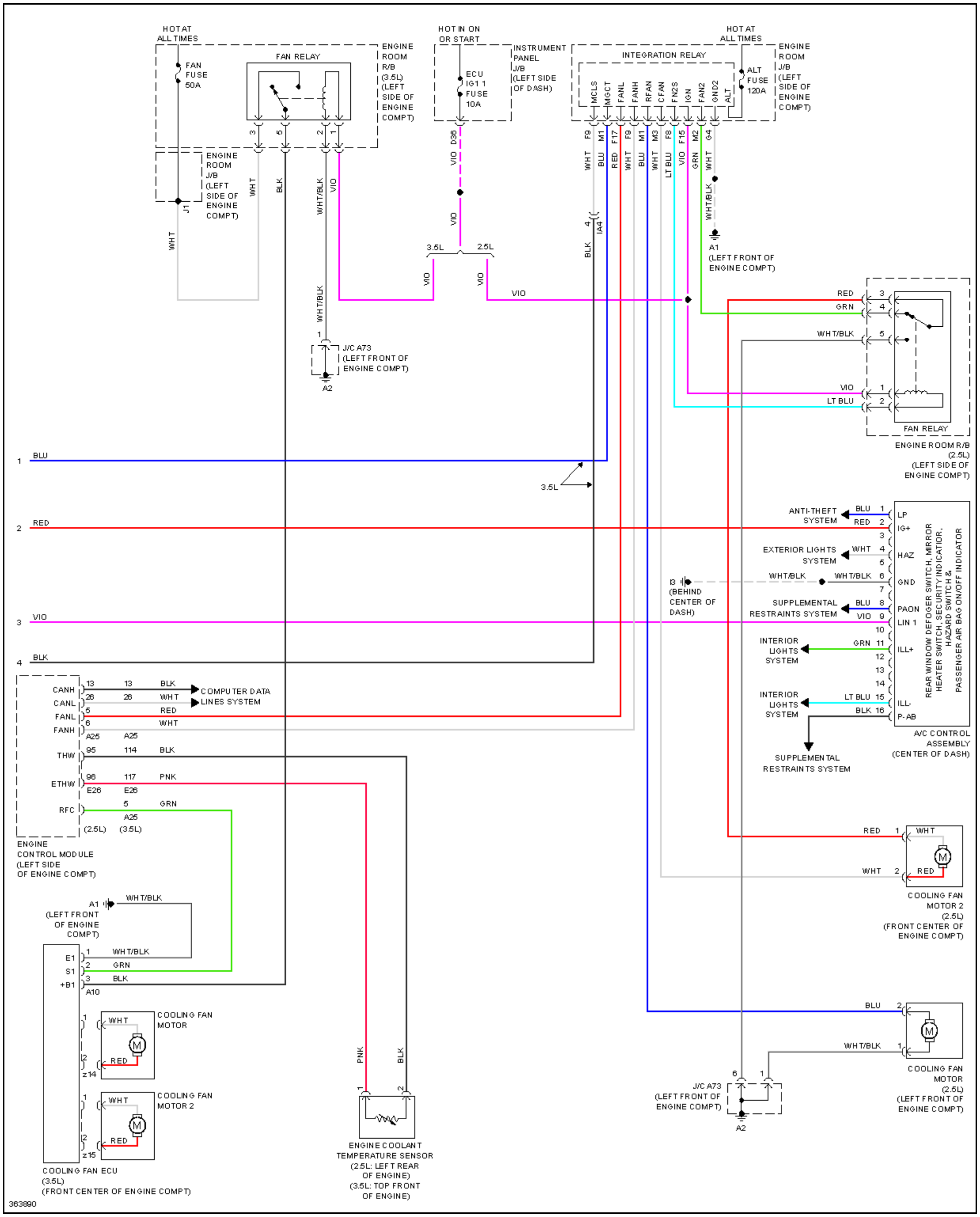
HOT AT ALL TIMES
FAN FUSE 50A
FAN RELAY
ENGINE ROOM R/B (3.5L) (LEFT SIDE OF ENGINE COMPT)
ENGINE ROOM J/B (LEFT SIDE OF ENGINE COMPT)
HOT IN ON OR START
ECU IG1 1 FUSE 10A
INSTRUMENT PANEL J/B (LEFT SIDE OF DASH)
HOT AT ALL TIMES
INTEGRATION RELAY
MCLS
MGCT
FANL
FANH
RFAN
CFAN
FN2S
IGN
FAN2
GND2
ALT
ALT FUSE 120A
ENGINE ROOM J/B (LEFT SIDE OF ENGINE COMPT)
J/C A73 (LEFT FRONT OF ENGINE COMPT)
A2
A1 (LEFT FRONT OF ENGINE COMPT)
3.5L
2.5L
IA4
FAN RELAY
ENGINE ROOM R/B (2.5L) (LEFT SIDE OF ENGINE COMPT)
ANTI-THEFT SYSTEM
EXTERIOR LIGHTS SYSTEM
IB (BEHIND CENTER OF DASH)
SUPPLEMENTAL RESTRAINTS SYSTEM
INTERIOR LIGHTS SYSTEM
INTERIOR LIGHTS SYSTEM
SUPPLEMENTAL RESTRAINTS SYSTEM
LP
IG+
HAZ
GND
PAON
LIN 1
ILL+
ILL-
P-AB
REAR WINDOW DEFOGGER SWITCH, MIRROR HEATER SWITCH, SECURITY INDICATOR, HAZARD SWITCH & PASSENGER AIR BAG ON/OFF INDICATOR
A/C CONTROL ASSEMBLY (CENTER OF DASH)
CANH
CANL
FANL
FANH
THW
ETHW
RFC
COMPUTER DATA LINES SYSTEM
ENGINE CONTROL MODULE (LEFT SIDE OF ENGINE COMPT)
(2.5L)
(3.5L)
COOLING FAN MOTOR 2 (2.5L) (FRONT CENTER OF ENGINE COMPT)
COOLING FAN MOTOR (2.5L) (LEFT FRONT OF ENGINE COMPT)
J/C A73 (LEFT FRONT OF ENGINE COMPT)
A1 (LEFT FRONT OF ENGINE COMPT)
E1
S1
+B1
A10
COOLING FAN MOTOR
COOLING FAN MOTOR 2
Z14
Z15
COOLING FAN ECU (3.5L) (FRONT CENTER OF ENGINE COMPT)
ENGINE COOLANT TEMPERATURE SENSOR (2.5L: LEFT REAR OF ENGINE) (3.5L: TOP FRONT OF ENGINE)
1 BLU
2 RED
3 VIO
4 BLK
363890

Fig. 9: Manual A/C Circuit (3 of 3)

ANTI-LOCK BRAKES

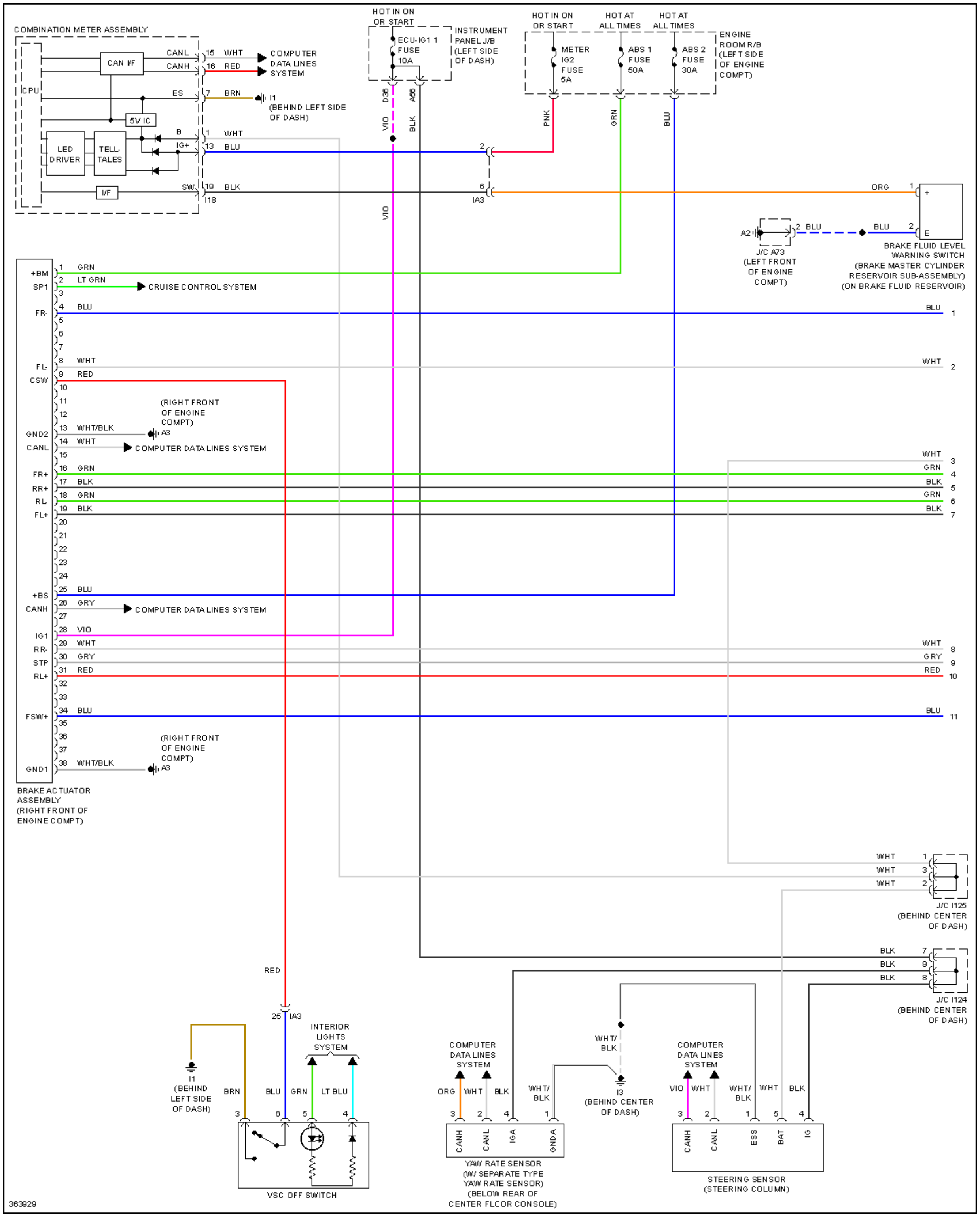
COMBINATION METER ASSEMBLY
CPU
CAN I/F
5V IC
LED DRIVER
TELL-TALES
I/F
CANL
CANH
ES
B
IG+
SW
I18
COMPUTER DATA LINES SYSTEM
I1 (BEHIND LEFT SIDE OF DASH)
HOT IN ON OR START
ECU-IG1 1 FUSE 10A
INSTRUMENT PANEL J/B (LEFT SIDE OF DASH)
D38
A56
VIO
BLK
HOT IN ON OR START
HOT AT ALL TIMES
HOT AT ALL TIMES
METER IG2 FUSE 5A
ABS 1 FUSE 50A
ABS 2 FUSE 30A
ENGINE ROOM R/B (LEFT SIDE OF ENGINE COMPT)
PNK
GRN
BLU
IA3
ORG
A2
J/C A73 (LEFT FRONT OF ENGINE COMPT)
BRAKE FLUID LEVEL WARNING SWITCH (BRAKE MASTER CYLINDER RESERVOIR SUB-ASSEMBLY) (ON BRAKE FLUID RESERVOIR)
+BM
SP1
FR-
FL-
CSW
GND2
CANL
FR+
RR+
RL-
FL+
+BS
CANH
IG1
RR-
STP
RL+
FSW+
GND1
CRUISE CONTROL SYSTEM
(RIGHT FRONT OF ENGINE COMPT)
A3
COMPUTER DATA LINES SYSTEM
BRAKE ACTUATOR ASSEMBLY (RIGHT FRONT OF ENGINE COMPT)
WHT
GRN
LT GRN
BLU
RED
WHT/BLK
BLK
GRY
VIO
J/C I125 (BEHIND CENTER OF DASH)
J/C I124 (BEHIND CENTER OF DASH)
I1 (BEHIND LEFT SIDE OF DASH)
BRN
LT BLU
INTERIOR LIGHTS SYSTEM
VSC OFF SWITCH
COMPUTER DATA LINES SYSTEM
WHT/BLK
I3 (BEHIND CENTER OF DASH)
CANH
CANL
IGA
GNDA
YAW RATE SENSOR (W/ SEPARATE TYPE YAW RATE SENSOR) (BELOW REAR OF CENTER FLOOR CONSOLE)
ESS
BAT
IG
STEERING SENSOR (STEERING COLUMN)
363929

Fig. 10: Anti-lock Brakes Circuit, Except Hybrid (1 of 2)

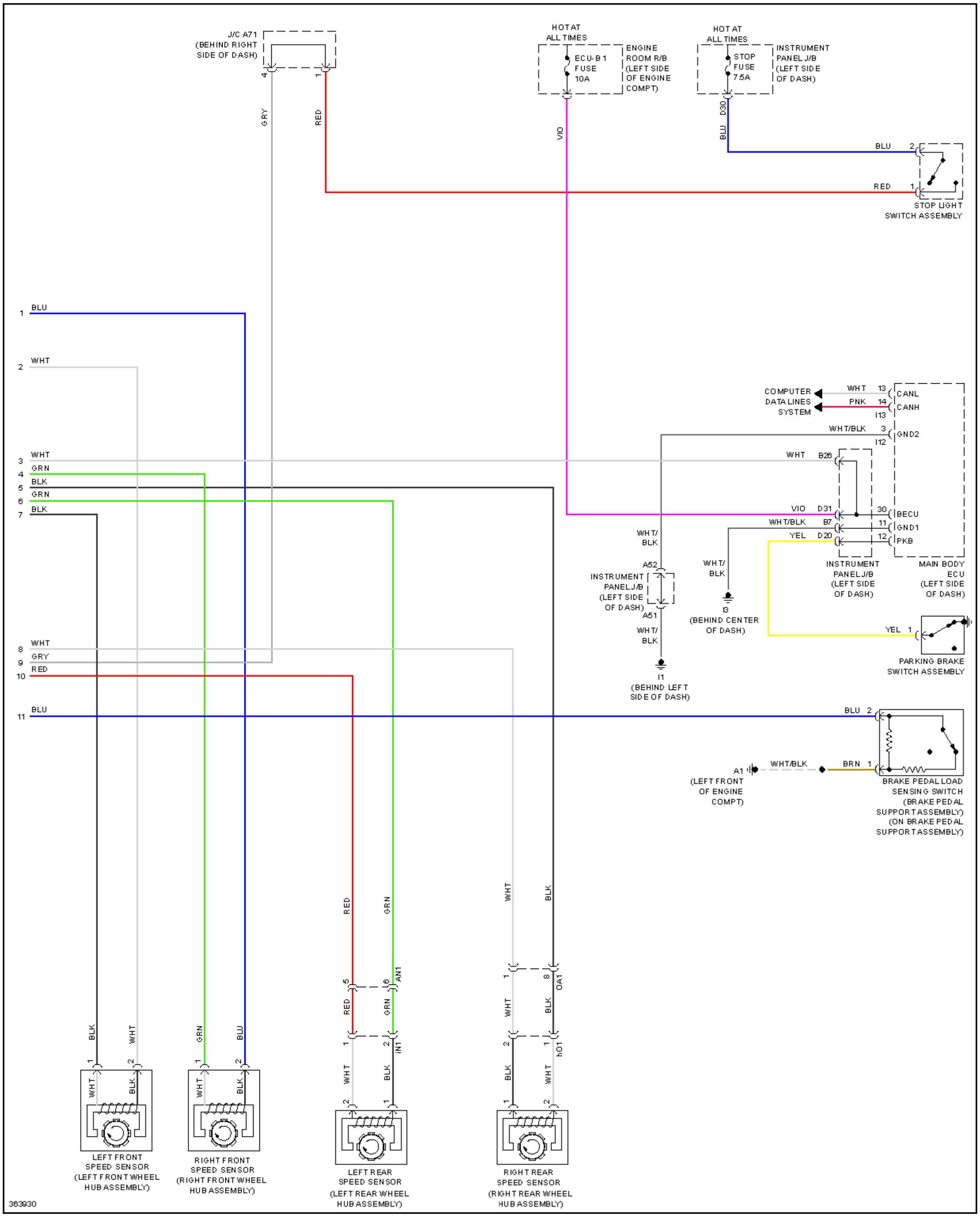
J/C A71 (BEHIND RIGHT SIDE OF DASH)
HOT AT ALL TIMES
ECU-B1 FUSE 10A
ENGINE ROOM R/B (LEFT SIDE OF ENGINE COMPT)
HOT AT ALL TIMES
STOP FUSE 7.5A
INSTRUMENT PANEL J/B (LEFT SIDE OF DASH)
GRY
RED
VIO
D30
BLU
BLU
RED
STOP LIGHT SWITCH ASSEMBLY
1 BLU
2 WHT
3 WHT
4 GRN
5 BLK
6 GRN
7 BLK
8 WHT
9 GRY
10 RED
11 BLU
COMPUTER DATA LINES SYSTEM
WHT 13 CANL
PNK 14 CANH
I13
WHT/BLK 3 GND2
I12
WHT B26
VIO D31 30 BECU
WHT/BLK B7 11 GND1
YEL D20 12 PKB
INSTRUMENT PANEL J/B (LEFT SIDE OF DASH)
MAIN BODY ECU (LEFT SIDE OF DASH)
WHT/BLK
A52
INSTRUMENT PANEL J/B (LEFT SIDE OF DASH)
A51
WHT/BLK
I1 (BEHIND LEFT SIDE OF DASH)
WHT/BLK
I3 (BEHIND CENTER OF DASH)
YEL 1
PARKING BRAKE SWITCH ASSEMBLY
BLU 2
A1 (LEFT FRONT OF ENGINE COMPT)
WHT/BLK
BRN 1
BRAKE PEDAL LOAD SENSING SWITCH (BRAKE PEDAL SUPPORT ASSEMBLY) (ON BRAKE PEDAL SUPPORT ASSEMBLY)
RED
GRN
WHT
BLK
AN1
IN1
OA1
hO1
BLK WHT GRN BLU
WHT BLK WHT BLK
WHT BLK BLK WHT
LEFT FRONT SPEED SENSOR (LEFT FRONT WHEEL HUB ASSEMBLY)
RIGHT FRONT SPEED SENSOR (RIGHT FRONT WHEEL HUB ASSEMBLY)
LEFT REAR SPEED SENSOR (LEFT REAR WHEEL HUB ASSEMBLY)
RIGHT REAR SPEED SENSOR (RIGHT REAR WHEEL HUB ASSEMBLY)
363930

Fig. 11: Anti-lock Brakes Circuit, Except Hybrid (2 of 2)

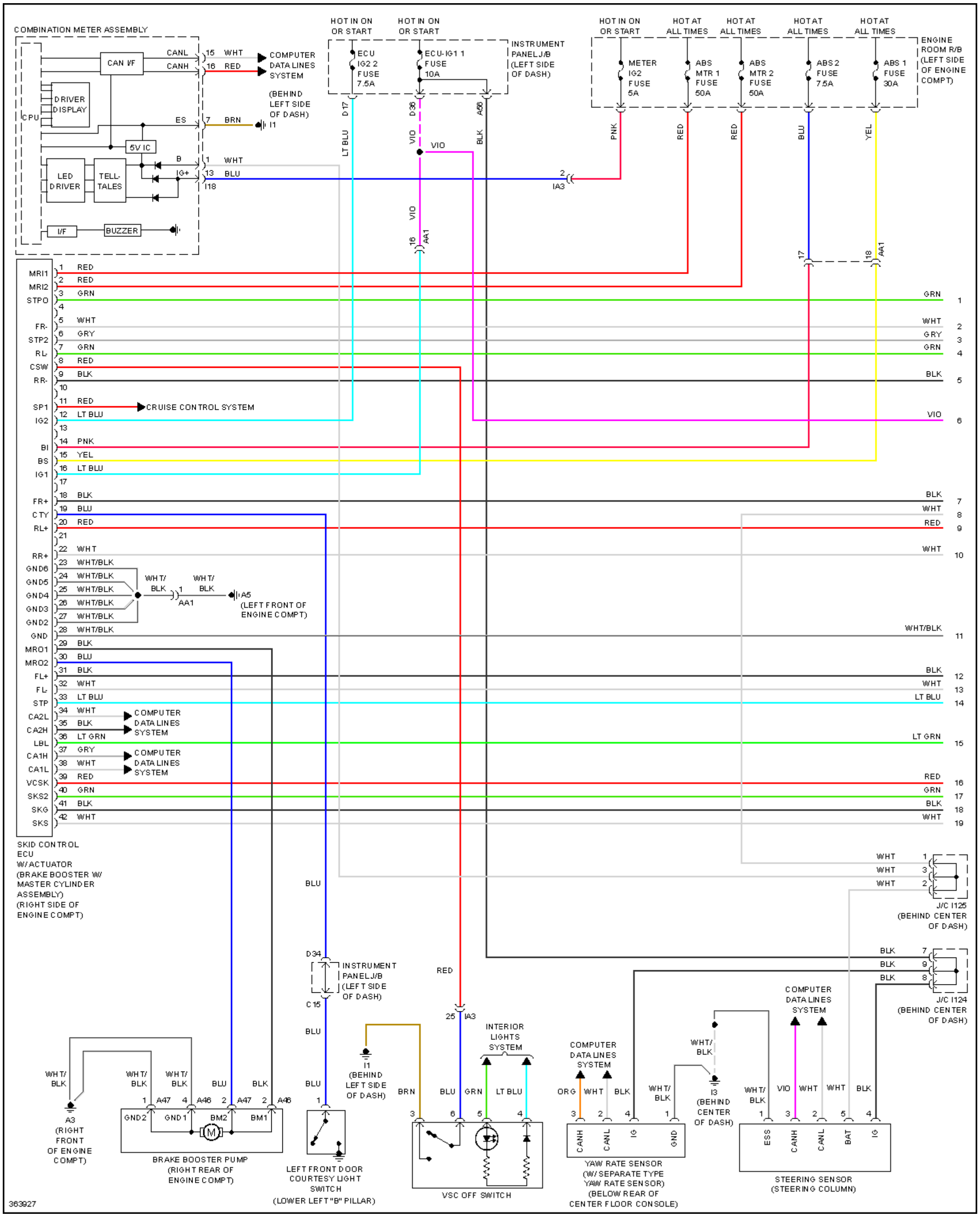
COMBINATION METER ASSEMBLY
CPU
CAN I/F
DRIVER DISPLAY
5V IC
LED DRIVER
TELL-TALES
I/F
BUZZER
CANL
CANH
ES
B
IG+
15 WHT
16 RED
COMPUTER DATA LINES SYSTEM
(BEHIND LEFT SIDE OF DASH)
7 BRN
I1
1 WHT
13 BLU
I18
HOT IN ON OR START
HOT IN ON OR START
ECU IG2 2 FUSE 7.5A
ECU-IG1 1 FUSE 10A
INSTRUMENT PANEL J/B (LEFT SIDE OF DASH)
D17
D36
A56
LT BLU
VIO
BLK
VIO
2
IA3
16
AA1
HOT IN ON OR START
HOT AT ALL TIMES
HOT AT ALL TIMES
HOT AT ALL TIMES
HOT AT ALL TIMES
METER IG2 FUSE 5A
ABS MTR 1 FUSE 50A
ABS MTR 2 FUSE 50A
ABS 2 FUSE 7.5A
ABS 1 FUSE 30A
ENGINE ROOM R/B (LEFT SIDE OF ENGINE COMPT)
PNK
RED
RED
BLU
YEL
17
18
AA1
MRI1 1 RED
MRI2 2 RED
STPO 3 GRN
4
FR- 5 WHT
STP2 6 GRY
RL- 7 GRN
CSW 8 RED
RR- 9 BLK
10
SP1 11 RED
CRUISE CONTROL SYSTEM
IG2 12 LT BLU
13
BI 14 PNK
BS 15 YEL
IG1 16 LT BLU
17
FR+ 18 BLK
CTY 19 BLU
RL+ 20 RED
21
RR+ 22 WHT
GND6 23 WHT/BLK
GND5 24 WHT/BLK
GND4 25 WHT/BLK
GND3 26 WHT/BLK
GND2 27 WHT/BLK
GND 28 WHT/BLK
MRO1 29 BLK
MRO2 30 BLU
FL+ 31 BLK
FL- 32 WHT
STP 33 LT BLU
CA2L 34 WHT
CA2H 35 BLK
LBL 36 LT GRN
CA1H 37 GRY
CA1L 38 WHT
VCSK 39 RED
SKS2 40 GRN
SKG 41 BLK
SKS 42 WHT
COMPUTER DATA LINES SYSTEM
COMPUTER DATA LINES SYSTEM
WHT/BLK
WHT/BLK
1
AA1
A5
(LEFT FRONT OF ENGINE COMPT)
GRN 1
WHT 2
GRY 3
GRN 4
BLK 5
VIO 6
BLK 7
WHT 8
RED 9
WHT 10
WHT/BLK 11
BLK 12
WHT 13
LT BLU 14
LT GRN 15
RED 16
GRN 17
BLK 18
WHT 19
SKID CONTROL ECU W/ ACTUATOR (BRAKE BOOSTER W/ MASTER CYLINDER ASSEMBLY) (RIGHT SIDE OF ENGINE COMPT)
WHT 1
WHT 3
WHT 2
J/C I125 (BEHIND CENTER OF DASH)
BLK 7
BLK 9
BLK 8
J/C I124 (BEHIND CENTER OF DASH)
BLU
D34
INSTRUMENT PANEL J/B (LEFT SIDE OF DASH)
C15
BLU
BLU
RED
25
IA3
WHT/BLK
A3 (RIGHT FRONT OF ENGINE COMPT)
WHT/BLK
WHT/BLK
BLU
BLK
1 A47
4 A46
2 A47
2 A46
GND2
GND1
BM2
BM1
M
BRAKE BOOSTER PUMP (RIGHT REAR OF ENGINE COMPT)
1
LEFT FRONT DOOR COURTESY LIGHT SWITCH (LOWER LEFT "B" PILLAR)
I1 (BEHIND LEFT SIDE OF DASH)
BRN
BLU
GRN
LT BLU
INTERIOR LIGHTS SYSTEM
3
6
5
4
VSC OFF SWITCH
COMPUTER DATA LINES SYSTEM
ORG
WHT
BLK
WHT/BLK
3
2
4
1
CANH
CANL
IG
GND
YAW RATE SENSOR (W/ SEPARATE TYPE YAW RATE SENSOR) (BELOW REAR OF CENTER FLOOR CONSOLE)
WHT/BLK
I3 (BEHIND CENTER OF DASH)
COMPUTER DATA LINES SYSTEM
WHT/BLK
VIO
WHT
WHT
BLK
1
3
2
5
4
ESS
CANH
CANL
BAT
IG
STEERING SENSOR (STEERING COLUMN)
363927

Fig. 12: Anti-lock Brakes Circuit, Hybrid (1 of 2)

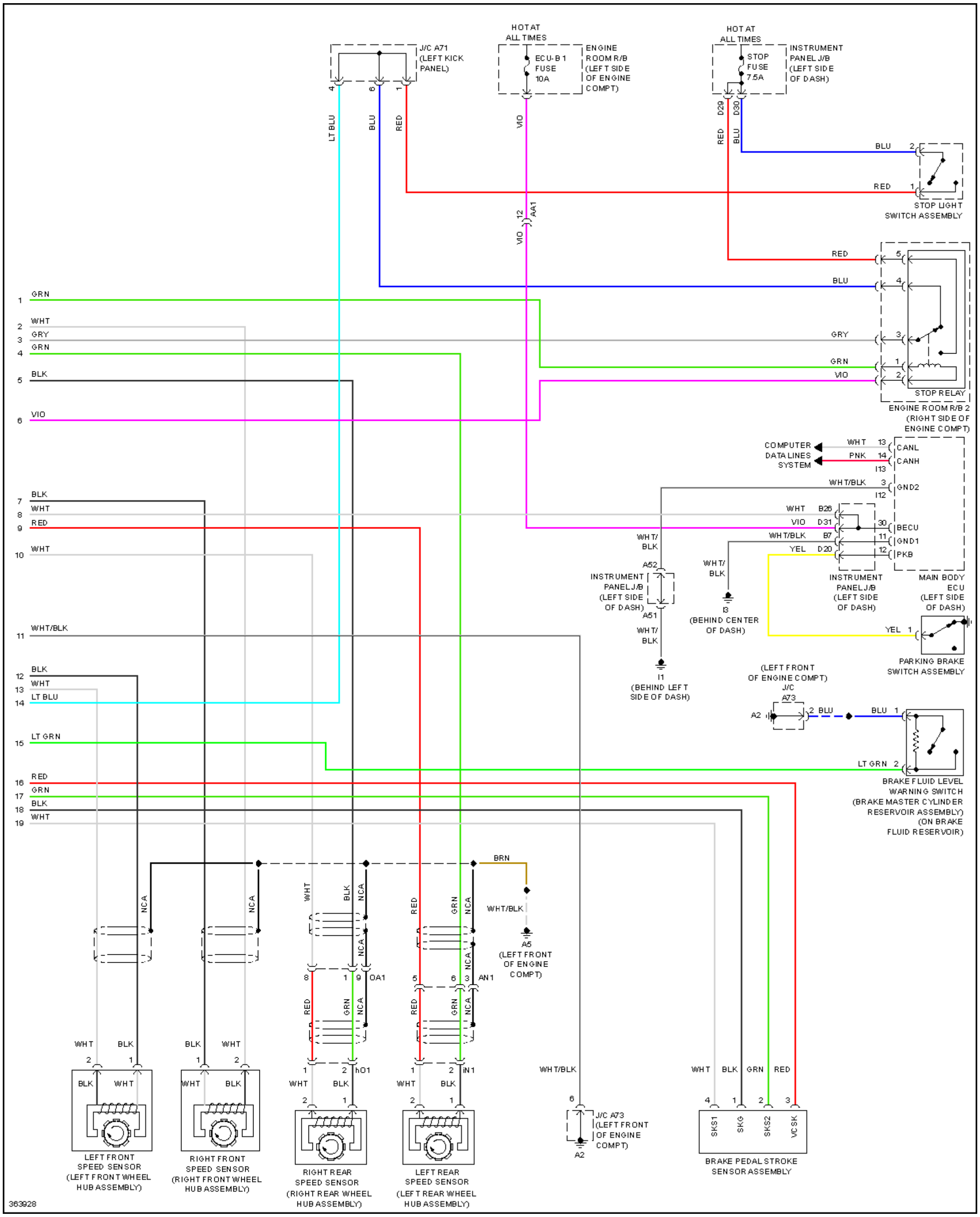
J/C A71 (LEFT KICK PANEL)
HOT AT ALL TIMES
ECU-B1 FUSE 10A
ENGINE ROOM R/B (LEFT SIDE OF ENGINE COMPT)
HOT AT ALL TIMES
STOP FUSE 7.5A
INSTRUMENT PANEL J/B (LEFT SIDE OF DASH)
LT BLU
BLU
RED
VIO
D29
D30
RED
BLU
BLU
RED
STOP LIGHT SWITCH ASSEMBLY
12 AA1
VIO
RED
BLU
GRY
GRN
VIO
STOP RELAY
ENGINE ROOM R/B 2 (RIGHT SIDE OF ENGINE COMPT)
1 GRN
2 WHT
3 GRY
4 GRN
5 BLK
6 VIO
7 BLK
8 WHT
9 RED
10 WHT
11 WHT/BLK
12 BLK
13 WHT
14 LT BLU
15 LT GRN
16 RED
17 GRN
18 BLK
19 WHT
COMPUTER DATA LINES SYSTEM
WHT 13 CANL
PNK 14 CANH
I13
WHT/BLK 3 GND2
I12
WHT B26
VIO D31
WHT/BLK B7
YEL D20
30 BECU
11 GND1
12 PKB
WHT/ BLK
A52
INSTRUMENT PANEL J/B (LEFT SIDE OF DASH)
A51
WHT/ BLK
I1 (BEHIND LEFT SIDE OF DASH)
WHT/ BLK
I3 (BEHIND CENTER OF DASH)
INSTRUMENT PANEL J/B (LEFT SIDE OF DASH)
MAIN BODY ECU (LEFT SIDE OF DASH)
YEL 1
PARKING BRAKE SWITCH ASSEMBLY
(LEFT FRONT OF ENGINE COMPT) J/C A73
A2
2 BLU
BLU 1
LT GRN 2
BRAKE FLUID LEVEL WARNING SWITCH (BRAKE MASTER CYLINDER RESERVOIR ASSEMBLY) (ON BRAKE FLUID RESERVOIR)
BRN
WHT/BLK
A5 (LEFT FRONT OF ENGINE COMPT)
NCA
WHT
BLK
RED
GRN
8 1 9 OA1
5 6 3 AN1
1 2 hO1
1 2 IN1
WHT BLK
BLK WHT
WHT
BLK
WHT BLK
WHT BLK
LEFT FRONT SPEED SENSOR (LEFT FRONT WHEEL HUB ASSEMBLY)
RIGHT FRONT SPEED SENSOR (RIGHT FRONT WHEEL HUB ASSEMBLY)
RIGHT REAR SPEED SENSOR (RIGHT REAR WHEEL HUB ASSEMBLY)
LEFT REAR SPEED SENSOR (LEFT REAR WHEEL HUB ASSEMBLY)
WHT/BLK
6
J/C A73 (LEFT FRONT OF ENGINE COMPT)
A2
WHT BLK GRN RED
4 1 2 3
SKS1 SKG SKS2 VCSK
BRAKE PEDAL STROKE SENSOR ASSEMBLY
363928

Fig. 13: Anti-lock Brakes Circuit, Hybrid (2 of 2)

ANTI-THEFT

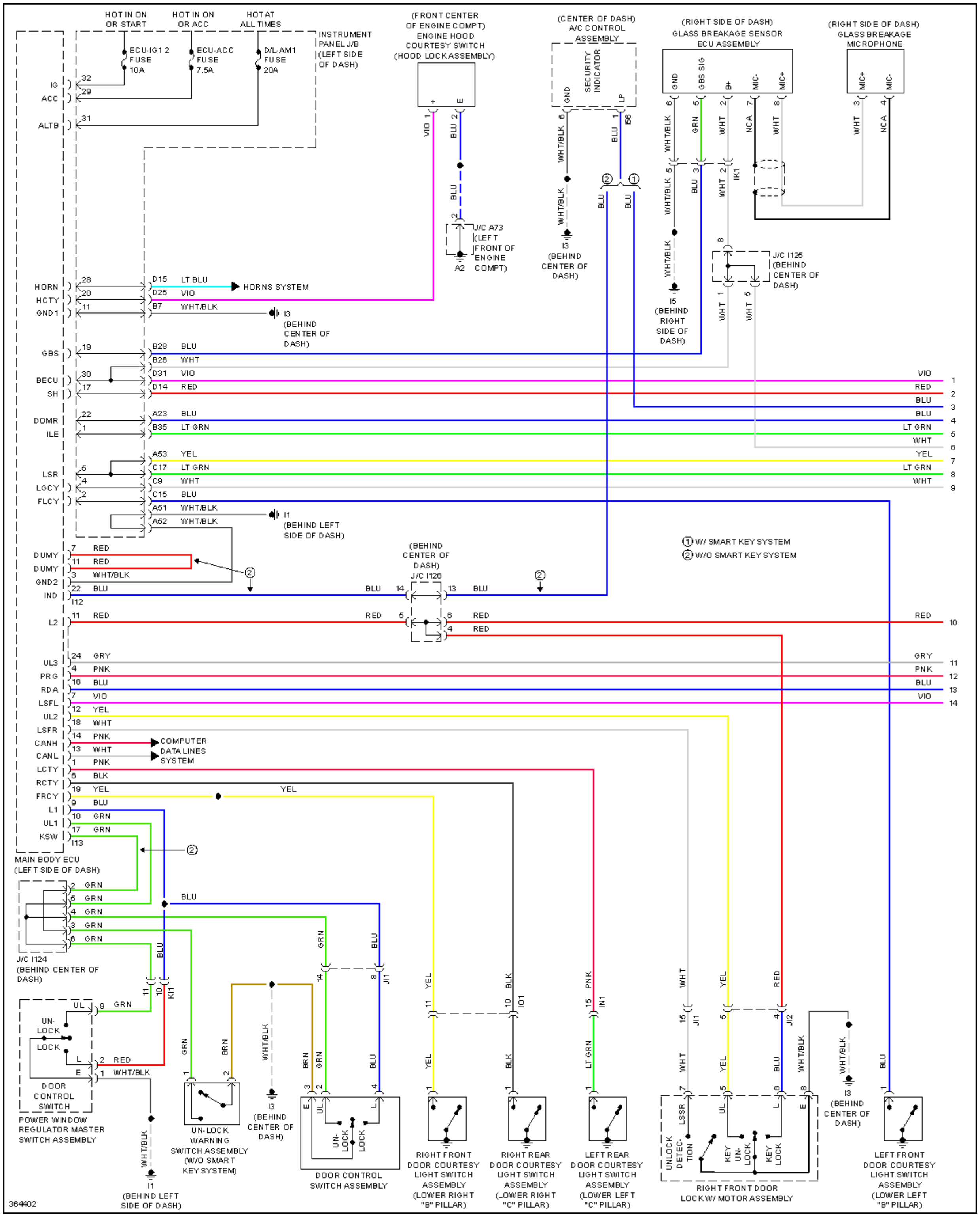
HOT IN ON OR START
HOT IN ON OR ACC
HOT AT ALL TIMES
ECU-IG1 2 FUSE 10A
ECU-ACC FUSE 7.5A
D/L-AM1 FUSE 20A
INSTRUMENT PANEL J/B (LEFT SIDE OF DASH)
(FRONT CENTER OF ENGINE COMPT) ENGINE HOOD COURTESY SWITCH (HOOD LOCK ASSEMBLY)
(CENTER OF DASH) A/C CONTROL ASSEMBLY
SECURITY INDICATOR
(RIGHT SIDE OF DASH) GLASS BREAKAGE SENSOR ECU ASSEMBLY
(RIGHT SIDE OF DASH) GLASS BREAKAGE MICROPHONE
IG
ACC
ALTB
HORN
HCTY
GND1
GBS
BECU
SH
DOMR
ILE
LSR
LGCY
FLCY
DUMY
DUMY
GND2
IND
L2
UL3
PRG
RDA
LSFL
UL2
LSFR
CANH
CANL
LCTY
RCTY
FRCY
L1
UL1
KSW
MAIN BODY ECU (LEFT SIDE OF DASH)
HORNS SYSTEM
J/C A73 (LEFT FRONT OF ENGINE COMPT)
I3 (BEHIND CENTER OF DASH)
I5 (BEHIND RIGHT SIDE OF DASH)
J/C I125 (BEHIND CENTER OF DASH)
I1 (BEHIND LEFT SIDE OF DASH)
① W/ SMART KEY SYSTEM
② W/O SMART KEY SYSTEM
(BEHIND CENTER OF DASH) J/C I126
COMPUTER DATA LINES SYSTEM
J/C I124 (BEHIND CENTER OF DASH)
DOOR CONTROL SWITCH
POWER WINDOW REGULATOR MASTER SWITCH ASSEMBLY
UN-LOCK WARNING SWITCH ASSEMBLY (W/O SMART KEY SYSTEM)
DOOR CONTROL SWITCH ASSEMBLY
RIGHT FRONT DOOR COURTESY LIGHT SWITCH ASSEMBLY (LOWER RIGHT "B" PILLAR)
RIGHT REAR DOOR COURTESY LIGHT SWITCH ASSEMBLY (LOWER RIGHT "C" PILLAR)
LEFT REAR DOOR COURTESY LIGHT SWITCH ASSEMBLY (LOWER LEFT "C" PILLAR)
RIGHT FRONT DOOR LOCK W/ MOTOR ASSEMBLY
LEFT FRONT DOOR COURTESY LIGHT SWITCH ASSEMBLY (LOWER LEFT "B" PILLAR)
364402

Fig. 14: Forced Entry Circuit, Except Hybrid (1 of 2)

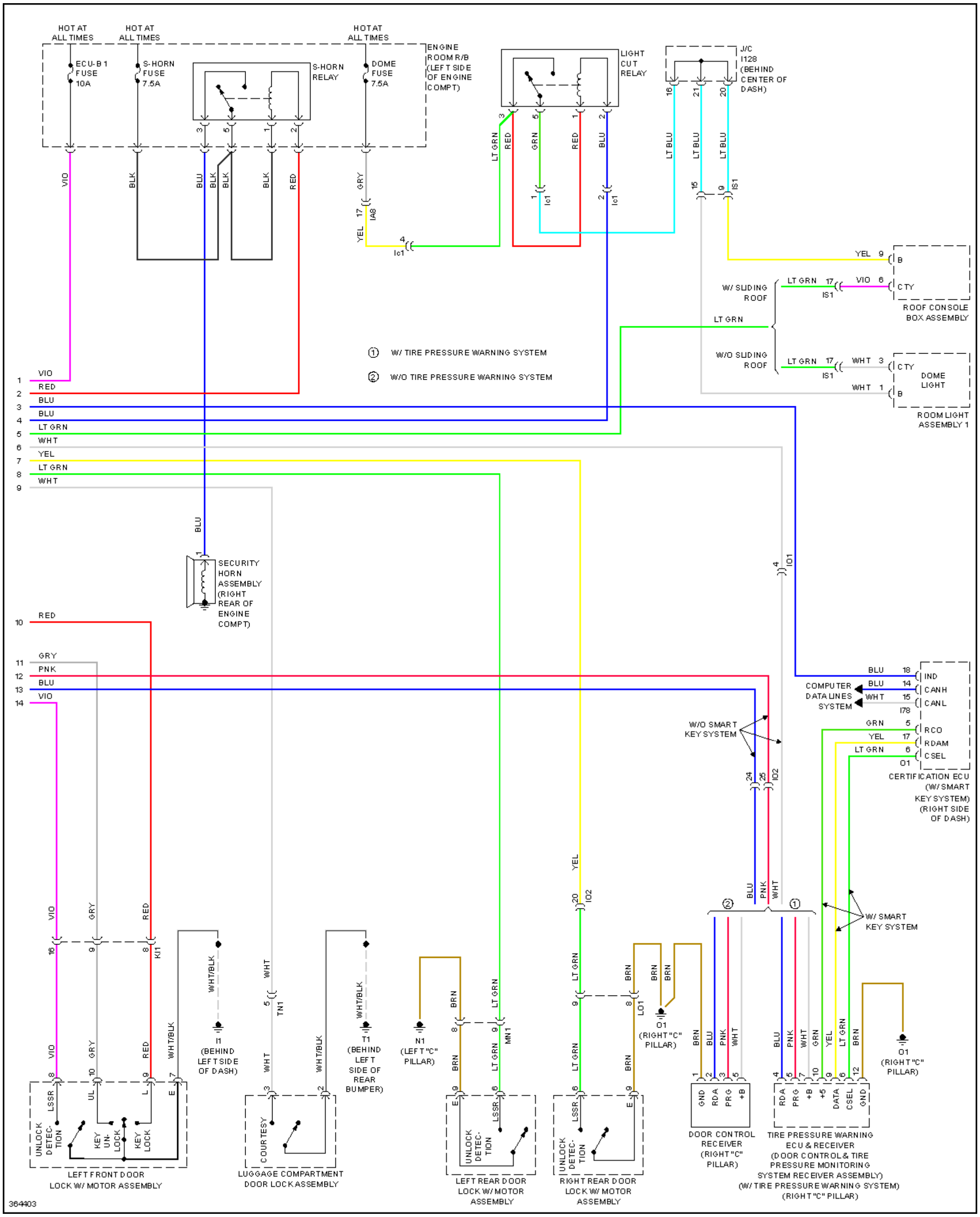
HOT AT ALL TIMES
HOT AT ALL TIMES
HOT AT ALL TIMES
ECU-B 1 FUSE 10A
S-HORN FUSE 7.5A
S-HORN RELAY
DOME FUSE 7.5A
ENGINE ROOM R/B (LEFT SIDE OF ENGINE COMPT)
LIGHT CUT RELAY
J/C I128 (BEHIND CENTER OF DASH)
VIO
BLK
BLU
BLK
BLK
BLK
RED
GRY
YEL
IA8
Ic1
LT GRN
RED
GRN
RED
BLU
LT BLU
LT BLU
LT BLU
IS1
YEL
B
W/ SLIDING ROOF
LT GRN
VIO
CTY
ROOF CONSOLE BOX ASSEMBLY
LT GRN
W/O SLIDING ROOF
LT GRN
WHT
CTY
DOME LIGHT
WHT
B
ROOM LIGHT ASSEMBLY 1
① W/ TIRE PRESSURE WARNING SYSTEM
② W/O TIRE PRESSURE WARNING SYSTEM
1 VIO
2 RED
3 BLU
4 BLU
5 LT GRN
6 WHT
7 YEL
8 LT GRN
9 WHT
SECURITY HORN ASSEMBLY (RIGHT REAR OF ENGINE COMPT)
10 RED
11 GRY
12 PNK
13 BLU
14 VIO
IO1
BLU 18 IND
COMPUTER DATA LINES SYSTEM
BLU 14 CANH
WHT 15 CANL
I78
GRN 5 RCO
YEL 17 RDAM
LT GRN 6 CSEL
O1
CERTIFICATION ECU (W/ SMART KEY SYSTEM) (RIGHT SIDE OF DASH)
W/O SMART KEY SYSTEM
IO2
W/ SMART KEY SYSTEM
VIO
GRY
RED
KI1
WHT/BLK
I1 (BEHIND LEFT SIDE OF DASH)
WHT
TN1
WHT/BLK
T1 (BEHIND LEFT SIDE OF REAR BUMPER)
N1 (LEFT "C" PILLAR)
BRN
LT GRN
MN1
YEL
IO2
LT GRN
BRN
LO1
O1 (RIGHT "C" PILLAR)
BLU PNK WHT
BRN BLU PNK WHT
BLU PNK WHT GRN YEL LT GRN BRN
O1 (RIGHT "C" PILLAR)
LSSR UL L E
UNLOCK DETEC-TION
KEY UN-LOCK
KEY LOCK
LEFT FRONT DOOR LOCK W/ MOTOR ASSEMBLY
COURTESY
LUGGAGE COMPARTMENT DOOR LOCK ASSEMBLY
E LSSR
UNLOCK DETEC-TION
LEFT REAR DOOR LOCK W/ MOTOR ASSEMBLY
LSSR E
UNLOCK DETEC-TION
RIGHT REAR DOOR LOCK W/ MOTOR ASSEMBLY
GND RDA PRG +B
DOOR CONTROL RECEIVER (RIGHT "C" PILLAR)
RDA PRG +B +5 DATA CSEL GND
TIRE PRESSURE WARNING ECU & RECEIVER (DOOR CONTROL & TIRE PRESSURE MONITORING SYSTEM RECEIVER ASSEMBLY) (W/ TIRE PRESSURE WARNING SYSTEM) (RIGHT "C" PILLAR)
364403

Fig. 15: Forced Entry Circuit, Except Hybrid (2 of 2)

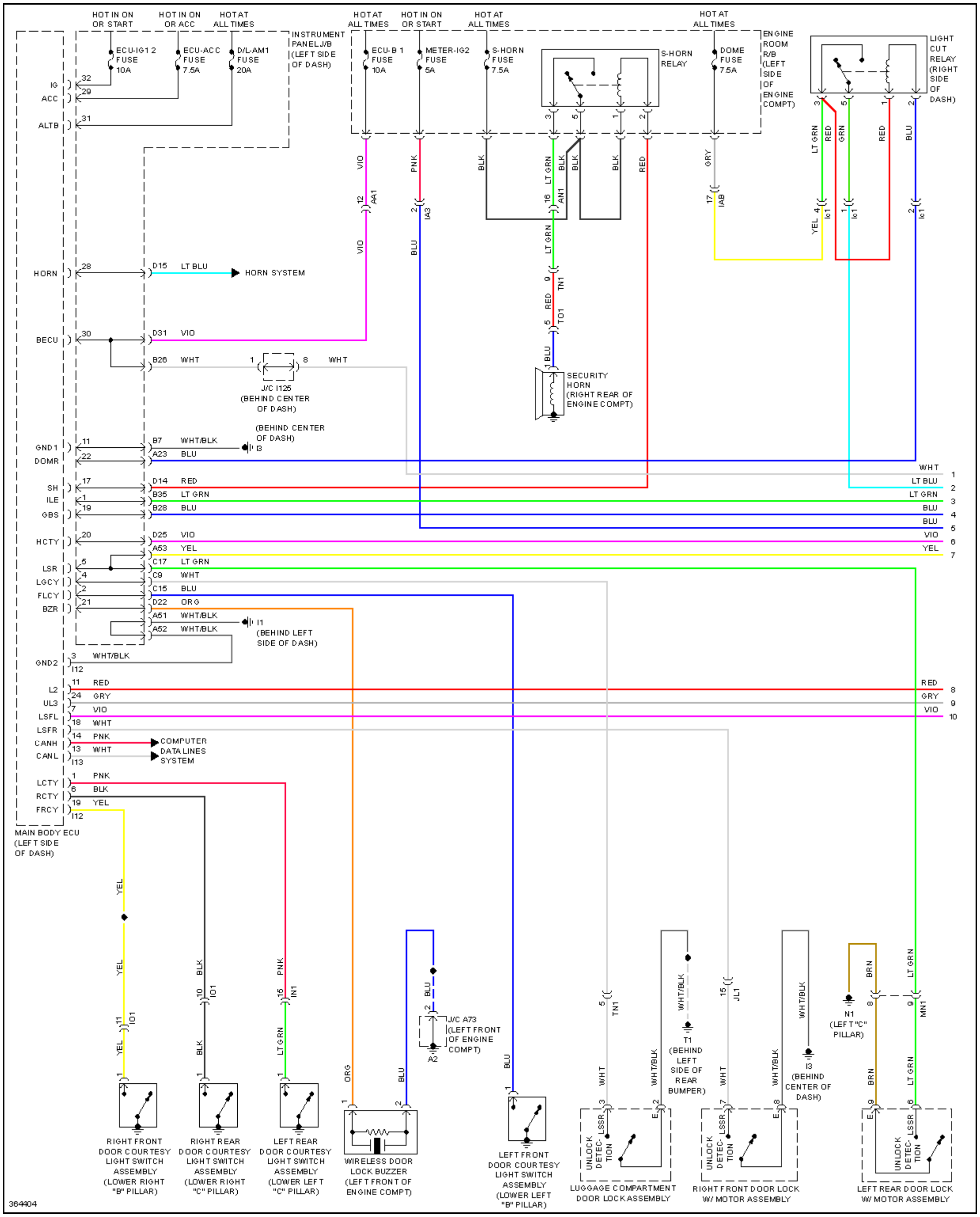
HOT IN ON OR START
HOT IN ON OR ACC
HOT AT ALL TIMES
ECU-IG1 2 FUSE 10A
ECU-ACC FUSE 7.5A
D/L-AM1 FUSE 20A
INSTRUMENT PANEL J/B (LEFT SIDE OF DASH)
HOT AT ALL TIMES
HOT IN ON OR START
HOT AT ALL TIMES
HOT AT ALL TIMES
ECU-B 1 FUSE 10A
METER-IG2 FUSE 5A
S-HORN FUSE 7.5A
S-HORN RELAY
DOME FUSE 7.5A
ENGINE ROOM R/B (LEFT SIDE OF ENGINE COMPT)
LIGHT CUT RELAY (RIGHT SIDE OF DASH)
IG
ACC
ALTB
HORN
BECU
GND1
DOMR
SH
ILE
GBS
HCTY
LSR
LGCY
FLCY
BZR
GND2
L2
UL3
LSFL
LSFR
CANH
CANL
LCTY
RCTY
FRCY
MAIN BODY ECU (LEFT SIDE OF DASH)
VIO
PNK
BLK
LT GRN
BLK
BLK
RED
GRY
LT GRN
RED
GRN
RED
BLU
AA1
IA3
AN1
IAB
YEL
Ic1
TN1
RED
TO1
BLU
SECURITY HORN (RIGHT REAR OF ENGINE COMPT)
D15 LT BLU
HORN SYSTEM
D31 VIO
B26 WHT
J/C I125 (BEHIND CENTER OF DASH)
WHT
(BEHIND CENTER OF DASH)
I3
B7 WHT/BLK
A23 BLU
D14 RED
B35 LT GRN
B28 BLU
D25 VIO
A53 YEL
C17 LT GRN
C9 WHT
C15 BLU
D22 ORG
A51 WHT/BLK
A52 WHT/BLK
I1 (BEHIND LEFT SIDE OF DASH)
WHT 1
LT BLU 2
LT GRN 3
BLU 4
BLU 5
VIO 6
YEL 7
3 WHT/BLK
I12
11 RED
24 GRY
7 VIO
18 WHT
14 PNK
13 WHT
I13
COMPUTER DATA LINES SYSTEM
RED 8
GRY 9
VIO 10
1 PNK
6 BLK
19 YEL
I12
YEL
IO1
BLK
PNK
IN1
LT GRN
ORG
BLU
J/C A73 (LEFT FRONT OF ENGINE COMPT)
A2
BLU
WHT
TN1
WHT/BLK
T1 (BEHIND LEFT SIDE OF REAR BUMPER)
JL1
WHT/BLK
I3 (BEHIND CENTER OF DASH)
BRN
N1 (LEFT "C" PILLAR)
LT GRN
MN1
RIGHT FRONT DOOR COURTESY LIGHT SWITCH ASSEMBLY (LOWER RIGHT "B" PILLAR)
RIGHT REAR DOOR COURTESY LIGHT SWITCH ASSEMBLY (LOWER RIGHT "C" PILLAR)
LEFT REAR DOOR COURTESY LIGHT SWITCH ASSEMBLY (LOWER LEFT "C" PILLAR)
WIRELESS DOOR LOCK BUZZER (LEFT FRONT OF ENGINE COMPT)
LEFT FRONT DOOR COURTESY LIGHT SWITCH ASSEMBLY (LOWER LEFT "B" PILLAR)
UNLOCK DETECTION
LSSR
E
LUGGAGE COMPARTMENT DOOR LOCK ASSEMBLY
RIGHT FRONT DOOR LOCK W/ MOTOR ASSEMBLY
LEFT REAR DOOR LOCK W/ MOTOR ASSEMBLY
364404

Fig. 16: Forced Entry Circuit, Hybrid (1 of 2)

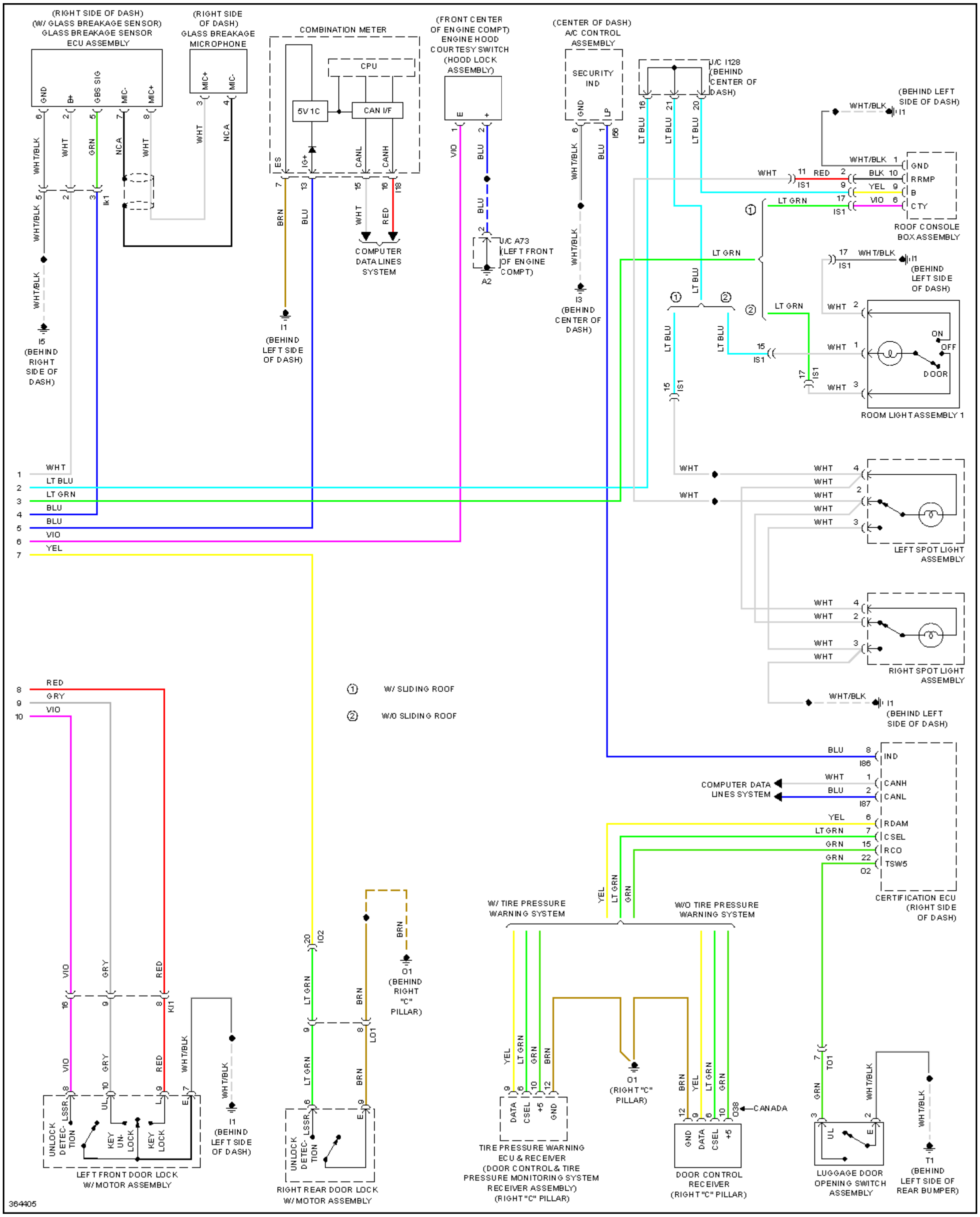
(RIGHT SIDE OF DASH) (W/ GLASS BREAKAGE SENSOR) GLASS BREAKAGE SENSOR ECU ASSEMBLY
GND
B+
GBS SIG
MIC-
MIC+
(RIGHT SIDE OF DASH) GLASS BREAKAGE MICROPHONE
MIC+
MIC-
COMBINATION METER
CPU
5V 1C
CAN I/F
ES
IG+
CANL
CANH
COMPUTER DATA LINES SYSTEM
(FRONT CENTER OF ENGINE COMPT) ENGINE HOOD COURTESY SWITCH (HOOD LOCK ASSEMBLY)
J/C A73 (LEFT FRONT OF ENGINE COMPT)
A2
(CENTER OF DASH) A/C CONTROL ASSEMBLY
SECURITY IND
GND
LP
I56
J/C I128 (BEHIND CENTER OF DASH)
(BEHIND LEFT SIDE OF DASH)
I1
GND
RRMP
B
CTY
ROOF CONSOLE BOX ASSEMBLY
IS1
I5 (BEHIND RIGHT SIDE OF DASH)
I1 (BEHIND LEFT SIDE OF DASH)
I3 (BEHIND CENTER OF DASH)
IK1
ON
OFF
DOOR
ROOM LIGHT ASSEMBLY 1
LEFT SPOT LIGHT ASSEMBLY
RIGHT SPOT LIGHT ASSEMBLY
I1 (BEHIND LEFT SIDE OF DASH)
① W/ SLIDING ROOF
② W/O SLIDING ROOF
IND
CANH
CANL
RDAM
CSEL
RCO
TSW5
I86
I87
O2
COMPUTER DATA LINES SYSTEM
CERTIFICATION ECU (RIGHT SIDE OF DASH)
W/ TIRE PRESSURE WARNING SYSTEM
W/O TIRE PRESSURE WARNING SYSTEM
IO2
LO1
O1 (BEHIND RIGHT "C" PILLAR)
KI1
UNLOCK DETECTION
KEY UNLOCK
KEY LOCK
LSSR
UL
L
E
I1 (BEHIND LEFT SIDE OF DASH)
LEFT FRONT DOOR LOCK W/ MOTOR ASSEMBLY
RIGHT REAR DOOR LOCK W/ MOTOR ASSEMBLY
DATA
CSEL
+5
GND
TIRE PRESSURE WARNING ECU & RECEIVER (DOOR CONTROL & TIRE PRESSURE MONITORING SYSTEM RECEIVER ASSEMBLY) (RIGHT "C" PILLAR)
O1 (RIGHT "C" PILLAR)
O38
CANADA
DOOR CONTROL RECEIVER (RIGHT "C" PILLAR)
TO1
LUGGAGE DOOR OPENING SWITCH ASSEMBLY
T1 (BEHIND LEFT SIDE OF REAR BUMPER)
1 WHT
2 LT BLU
3 LT GRN
4 BLU
5 BLU
6 VIO
7 YEL
8 RED
9 GRY
10 VIO
364405

Fig. 17: Forced Entry Circuit, Hybrid (2 of 2)

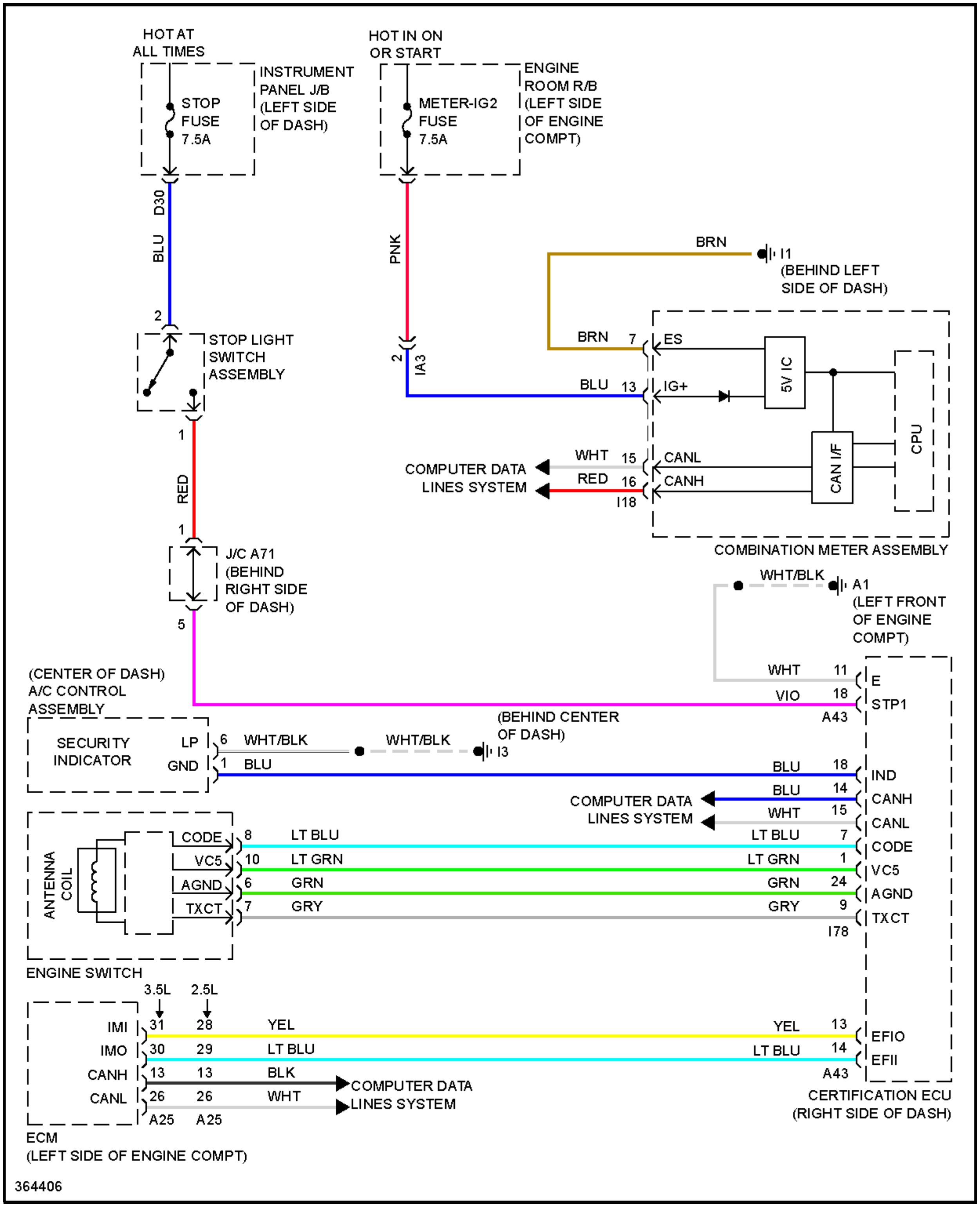
HOT AT ALL TIMES
INSTRUMENT PANEL J/B (LEFT SIDE OF DASH)
STOP FUSE 7.5A
HOT IN ON OR START
ENGINE ROOM R/B (LEFT SIDE OF ENGINE COMPT)
METER-IG2 FUSE 7.5A
D30
BLU
PNK
BRN
I1 (BEHIND LEFT SIDE OF DASH)
2
STOP LIGHT SWITCH ASSEMBLY
2
IA3
BRN 7 ES
BLU 13 IG+
5V IC
CPU
CAN I/F
COMPUTER DATA LINES SYSTEM
WHT 15 CANL
RED 16 CANH
I18
COMBINATION METER ASSEMBLY
1
RED
1
J/C A71 (BEHIND RIGHT SIDE OF DASH)
5
WHT/BLK
A1 (LEFT FRONT OF ENGINE COMPT)
(CENTER OF DASH) A/C CONTROL ASSEMBLY
WHT 11 E
VIO 18 STP1
A43
(BEHIND CENTER OF DASH)
SECURITY INDICATOR
LP 6 WHT/BLK
WHT/BLK I3
GND 1 BLU
BLU 18 IND
BLU 14 CANH
COMPUTER DATA LINES SYSTEM
WHT 15 CANL
ANTENNA COIL
CODE 8 LT BLU
LT BLU 7 CODE
VC5 10 LT GRN
LT GRN 1 VC5
AGND 6 GRN
GRN 24 AGND
TXCT 7 GRY
GRY 9 TXCT
I78
ENGINE SWITCH
3.5L
2.5L
IMI 31 28 YEL
YEL 13 EFIO
IMO 30 29 LT BLU
LT BLU 14 EFII
A43
CANH 13 13 BLK
CANL 26 26 WHT
COMPUTER DATA LINES SYSTEM
A25 A25
CERTIFICATION ECU (RIGHT SIDE OF DASH)
ECM (LEFT SIDE OF ENGINE COMPT)
364406

Fig. 18: Immobilizer Circuit, Except Hybrid W/ Smart Key System

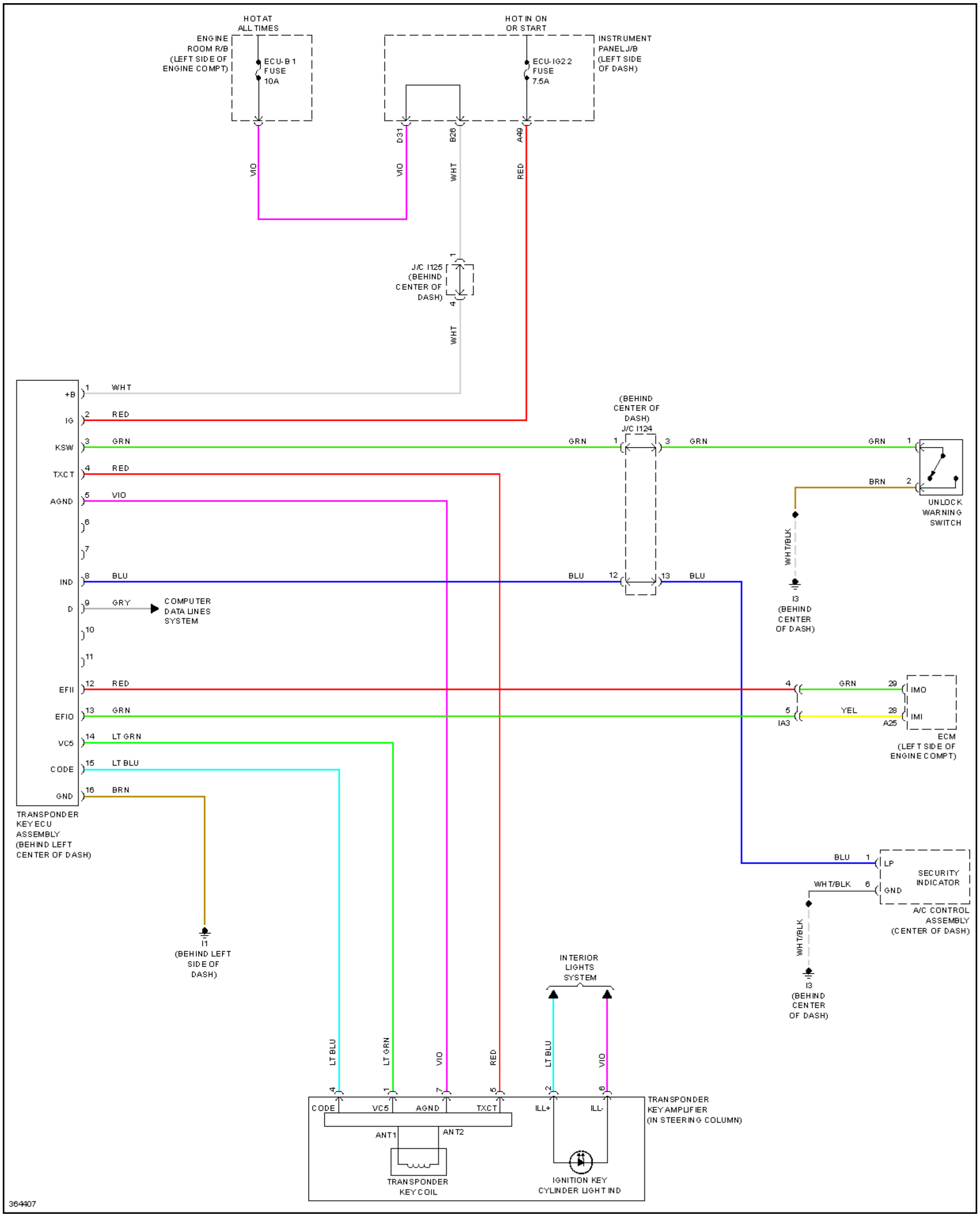
HOT AT ALL TIMES
ENGINE ROOM R/B (LEFT SIDE OF ENGINE COMPT)
ECU-B 1 FUSE 10A
HOT IN ON OR START
INSTRUMENT PANEL J/B (LEFT SIDE OF DASH)
ECU-IG2 2 FUSE 7.5A
D31
B26
A49
VIO
VIO
WHT
RED
1
J/C I125 (BEHIND CENTER OF DASH)
4
WHT
TRANSPONDER KEY ECU ASSEMBLY (BEHIND LEFT CENTER OF DASH)
+B
IG
KSW
TXCT
AGND
IND
D
EFII
EFIO
VC5
CODE
GND
1 WHT
2 RED
3 GRN
4 RED
5 VIO
6
7
8 BLU
9 GRY
10
11
12 RED
13 GRN
14 LT GRN
15 LT BLU
16 BRN
COMPUTER DATA LINES SYSTEM
(BEHIND CENTER OF DASH) J/C I124
GRN 1
3 GRN
BLU 12
13 BLU
GRN 1
BRN 2
UNLOCK WARNING SWITCH
WHT/BLK
I3 (BEHIND CENTER OF DASH)
4
GRN
29
IMO
5
YEL
28
IMI
IA3
A25
ECM (LEFT SIDE OF ENGINE COMPT)
BLU 1
LP
SECURITY INDICATOR
WHT/BLK 6
GND
A/C CONTROL ASSEMBLY (CENTER OF DASH)
WHT/BLK
I3 (BEHIND CENTER OF DASH)
I1 (BEHIND LEFT SIDE OF DASH)
INTERIOR LIGHTS SYSTEM
LT BLU
LT GRN
VIO
RED
LT BLU
VIO
4
1
7
5
2
6
CODE
VC5
AGND
TXCT
ILL+
ILL-
ANT1
ANT2
TRANSPONDER KEY COIL
IGNITION KEY CYLINDER LIGHT IND
TRANSPONDER KEY AMPLIFIER (IN STEERING COLUMN)
364407

Fig. 19: Immobilizer Circuit, Except Hybrid W/O Smart Key System

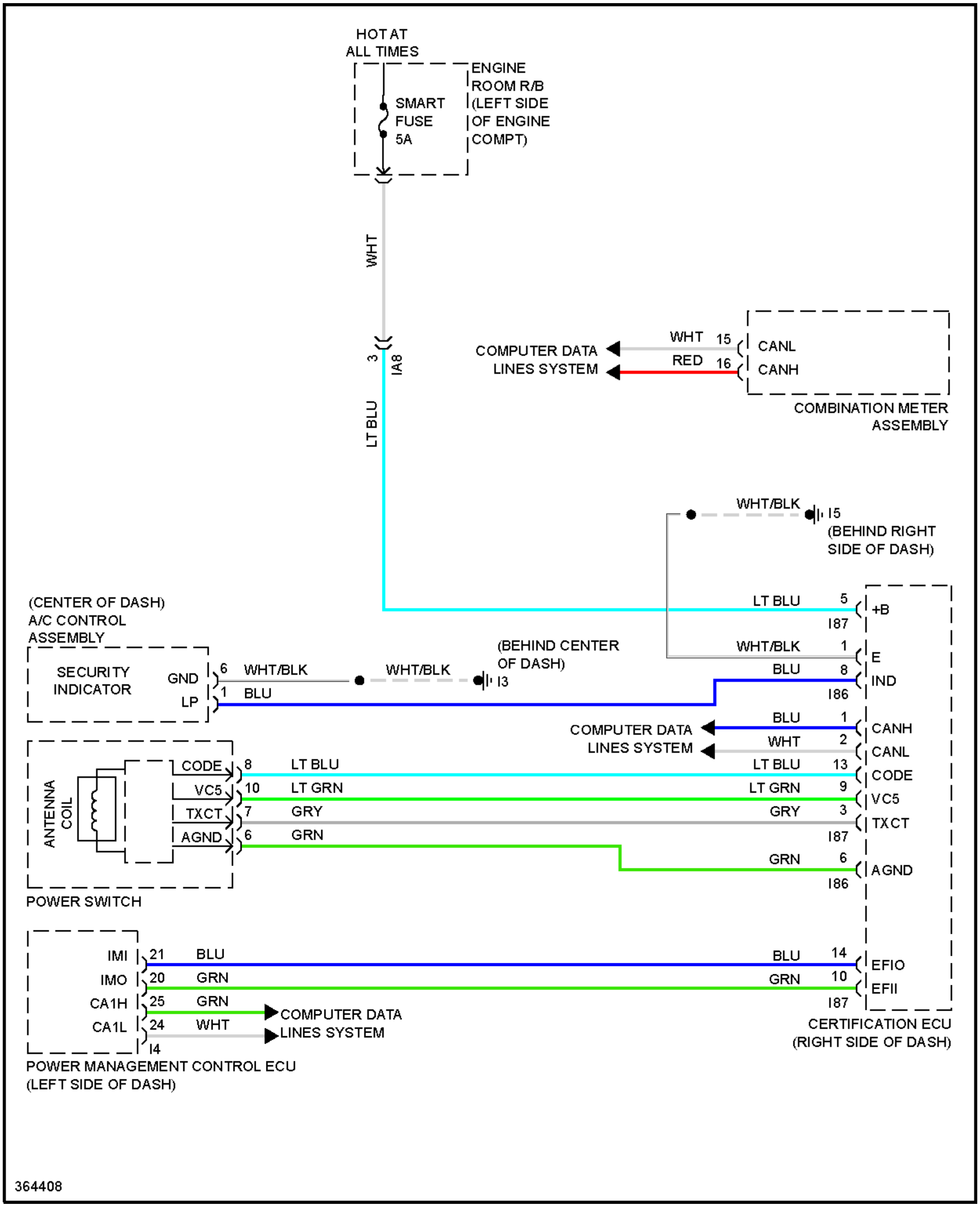
HOT AT ALL TIMES
SMART FUSE 5A
ENGINE ROOM R/B (LEFT SIDE OF ENGINE COMPT)
WHT
3
IA8
LT BLU
COMPUTER DATA LINES SYSTEM
WHT 15
RED 16
CANL
CANH
COMBINATION METER ASSEMBLY
WHT/BLK
I5 (BEHIND RIGHT SIDE OF DASH)
(CENTER OF DASH) A/C CONTROL ASSEMBLY
SECURITY INDICATOR
GND
LP
6 WHT/BLK
1 BLU
WHT/BLK
(BEHIND CENTER OF DASH)
I3
LT BLU 5 +B
I87
WHT/BLK 1 E
BLU 8 IND
I86
COMPUTER DATA LINES SYSTEM
BLU 1 CANH
WHT 2 CANL
ANTENNA COIL
CODE 8 LT BLU
VC5 10 LT GRN
TXCT 7 GRY
AGND 6 GRN
LT BLU 13 CODE
LT GRN 9 VC5
GRY 3 TXCT
I87
GRN 6 AGND
I86
POWER SWITCH
IMI 21 BLU
IMO 20 GRN
CA1H 25 GRN
CA1L 24 WHT
I4
COMPUTER DATA LINES SYSTEM
BLU 14 EFIO
GRN 10 EFII
I87
CERTIFICATION ECU (RIGHT SIDE OF DASH)
POWER MANAGEMENT CONTROL ECU (LEFT SIDE OF DASH)
364408

Fig. 20: Immobilizer Circuit, Hybrid

BODY CONTROL MODULES

2.5L

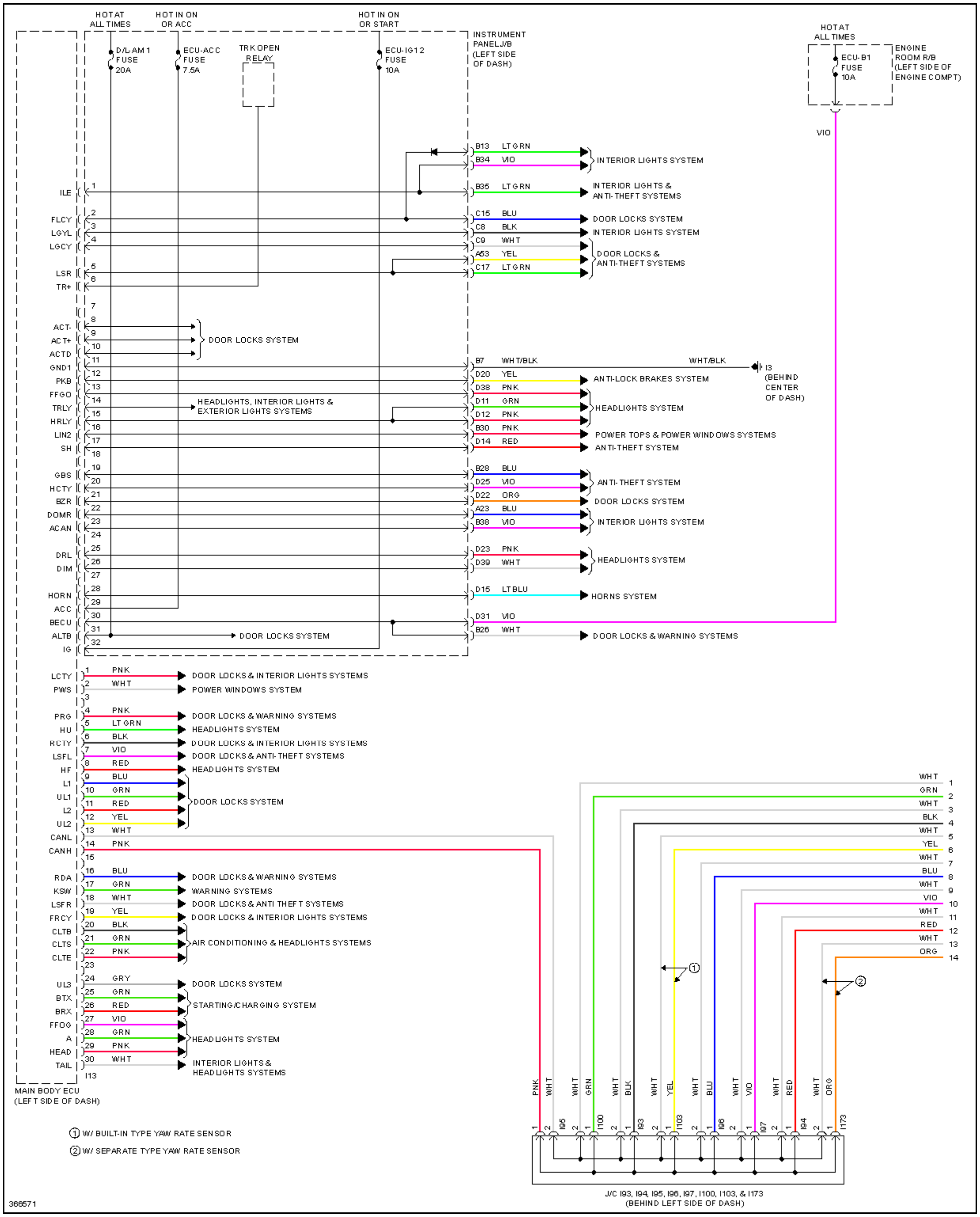
HOT AT ALL TIMES
HOT IN ON OR ACC
HOT IN ON OR START
D/L-AM 1 FUSE 20A
ECU-ACC FUSE 7.5A
TRK OPEN RELAY
ECU-IG1 2 FUSE 10A
INSTRUMENT PANEL J/B (LEFT SIDE OF DASH)
HOT AT ALL TIMES
ECU-B1 FUSE 10A
ENGINE ROOM R/B (LEFT SIDE OF ENGINE COMPT)
VIO
B13 LT GRN
B34 VIO
INTERIOR LIGHTS SYSTEM
ILE 1
B35 LT GRN
INTERIOR LIGHTS & ANTI-THEFT SYSTEMS
FLCY 2
C15 BLU
DOOR LOCKS SYSTEM
LGYL 3
C8 BLK
INTERIOR LIGHTS SYSTEM
LGCY 4
C9 WHT
A53 YEL
C17 LT GRN
DOOR LOCKS & ANTI-THEFT SYSTEMS
LSR 5
TR+ 6
7
ACT- 8
ACT+ 9
ACTD 10
DOOR LOCKS SYSTEM
GND1 11
B7 WHT/BLK
WHT/BLK
I3 (BEHIND CENTER OF DASH)
PKB 12
D20 YEL
ANTI-LOCK BRAKES SYSTEM
FFGO 13
D38 PNK
TRLY 14
D11 GRN
HEADLIGHTS, INTERIOR LIGHTS & EXTERIOR LIGHTS SYSTEMS
HRLY 15
D12 PNK
HEADLIGHTS SYSTEM
LIN2 16
B30 PNK
POWER TOPS & POWER WINDOWS SYSTEMS
SH 17
D14 RED
ANTI-THEFT SYSTEM
18
GBS 19
B28 BLU
HCTY 20
D25 VIO
ANTI-THEFT SYSTEM
BZR 21
D22 ORG
DOOR LOCKS SYSTEM
DOMR 22
A23 BLU
ACAN 23
B38 VIO
INTERIOR LIGHTS SYSTEM
24
DRL 25
D23 PNK
DIM 26
D39 WHT
HEADLIGHTS SYSTEM
27
HORN 28
D15 LT BLU
HORNS SYSTEM
ACC 29
BECU 30
D31 VIO
ALTB 31
DOOR LOCKS SYSTEM
B26 WHT
DOOR LOCKS & WARNING SYSTEMS
IG 32
LCTY 1 PNK
DOOR LOCKS & INTERIOR LIGHTS SYSTEMS
PWS 2 WHT
POWER WINDOWS SYSTEM
3
PRG 4 PNK
DOOR LOCKS & WARNING SYSTEMS
HU 5 LT GRN
HEADLIGHTS SYSTEM
RCTY 6 BLK
DOOR LOCKS & INTERIOR LIGHTS SYSTEMS
LSFL 7 VIO
DOOR LOCKS & ANTI-THEFT SYSTEMS
HF 8 RED
HEADLIGHTS SYSTEM
L1 9 BLU
UL1 10 GRN
L2 11 RED
UL2 12 YEL
DOOR LOCKS SYSTEM
CANL 13 WHT
CANH 14 PNK
15
RDA 16 BLU
DOOR LOCKS & WARNING SYSTEMS
KSW 17 GRN
WARNING SYSTEMS
LSFR 18 WHT
DOOR LOCKS & ANTI THEFT SYSTEMS
FRCY 19 YEL
DOOR LOCKS & INTERIOR LIGHTS SYSTEMS
CLTB 20 BLK
CLTS 21 GRN
CLTE 22 PNK
AIR CONDITIONING & HEADLIGHTS SYSTEMS
23
UL3 24 GRY
DOOR LOCKS SYSTEM
BTX 25 GRN
BRX 26 RED
STARTING/CHARGING SYSTEM
FFOG 27 VIO
A 28 GRN
HEAD 29 PNK
HEADLIGHTS SYSTEM
TAIL 30 WHT
INTERIOR LIGHTS & HEADLIGHTS SYSTEMS
I13
MAIN BODY ECU (LEFT SIDE OF DASH)
WHT 1
GRN 2
WHT 3
BLK 4
WHT 5
YEL 6
WHT 7
BLU 8
WHT 9
VIO 10
WHT 11
RED 12
WHT 13
ORG 14
①
②
PNK
WHT
WHT
GRN
WHT
BLK
WHT
YEL
WHT
BLU
WHT
VIO
WHT
RED
WHT
ORG
1 2 I95
2 1 I100
2 1 I93
2 1 I103
2 1 I96
2 1 I97
2 1 I94
2 1 I173
J/C I93, I94, I95, I96, I97, I100, I103, & I173 (BEHIND LEFT SIDE OF DASH)
① W/ BUILT-IN TYPE YAW RATE SENSOR
② W/ SEPARATE TYPE YAW RATE SENSOR
366571

Fig. 21: 2.5L, Body ECU Circuit, Except Hybrid (1 of 2)

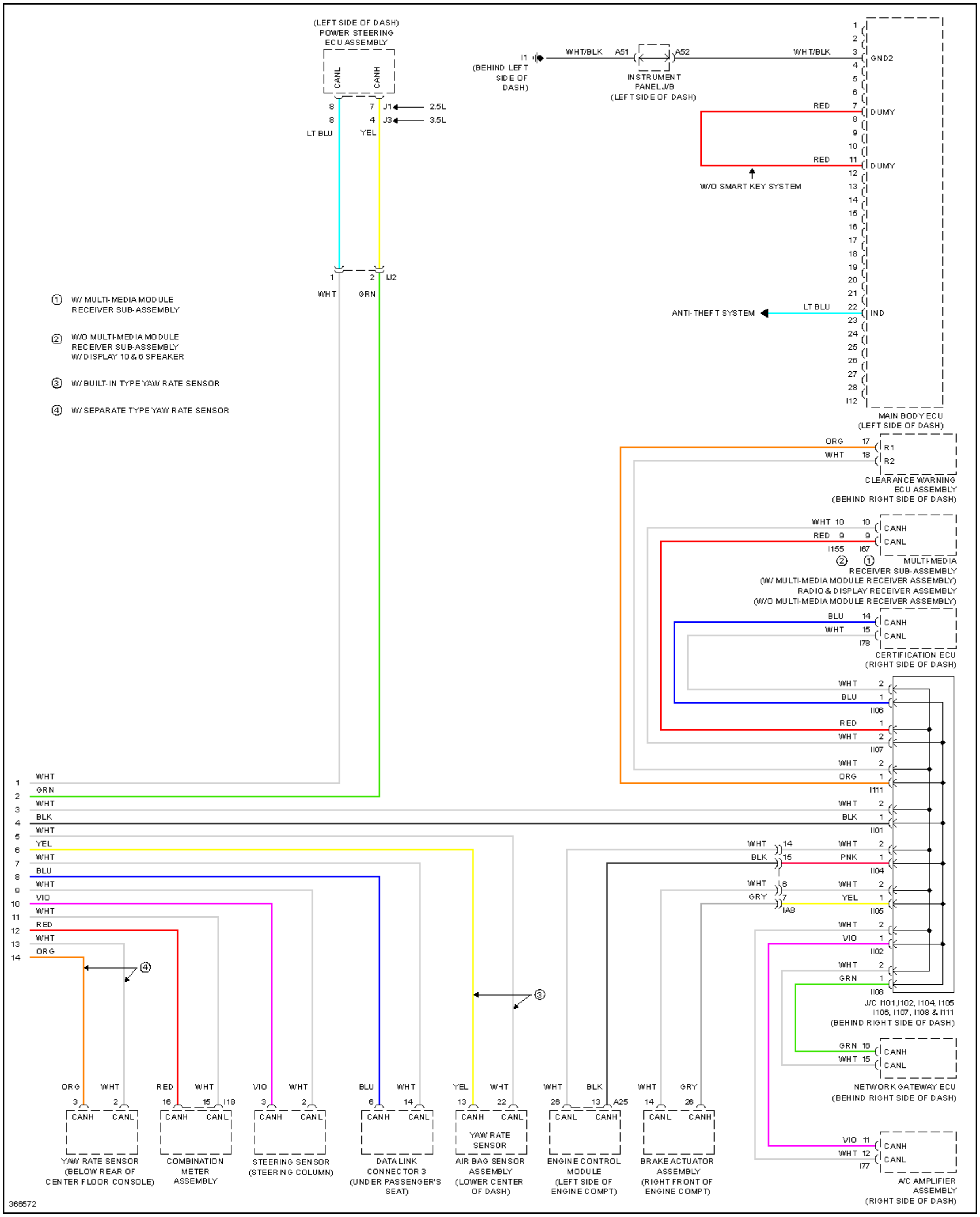
(LEFT SIDE OF DASH)
POWER STEERING
ECU ASSEMBLY
CANL
CANH
8
7
J1
2.5L
8
4
J3
3.5L
LT BLU
YEL
1
2
IJ2
WHT
GRN
① W/ MULTI-MEDIA MODULE RECEIVER SUB-ASSEMBLY
② W/O MULTI-MEDIA MODULE RECEIVER SUB-ASSEMBLY W/ DISPLAY 10 & 6 SPEAKER
③ W/ BUILT-IN TYPE YAW RATE SENSOR
④ W/ SEPARATE TYPE YAW RATE SENSOR
I1
(BEHIND LEFT SIDE OF DASH)
WHT/BLK
A51
A52
INSTRUMENT PANEL J/B
(LEFT SIDE OF DASH)
WHT/BLK
GND2
RED
DUMY
RED
DUMY
W/O SMART KEY SYSTEM
ANTI-THEFT SYSTEM
LT BLU
IND
I12
MAIN BODY ECU
(LEFT SIDE OF DASH)
1
2
3
4
5
6
7
8
9
10
11
12
13
14
15
16
17
18
19
20
21
22
23
24
25
26
27
28
ORG
17
R1
WHT
18
R2
CLEARANCE WARNING
ECU ASSEMBLY
(BEHIND RIGHT SIDE OF DASH)
WHT 10
10
CANH
RED 9
9
CANL
I155
I67
②
①
MULTI-MEDIA
RECEIVER SUB-ASSEMBLY
(W/ MULTI-MEDIA MODULE RECEIVER ASSEMBLY)
RADIO & DISPLAY RECEIVER ASSEMBLY
(W/O MULTI-MEDIA MODULE RECEIVER ASSEMBLY)
BLU
14
CANH
WHT
15
CANL
I78
CERTIFICATION ECU
(RIGHT SIDE OF DASH)
WHT 2
BLU 1
I106
RED 1
WHT 2
I107
WHT 2
ORG 1
I111
WHT 2
BLK 1
I101
WHT 14
BLK 15
WHT 2
PNK 1
I104
WHT 6
GRY 7
IA8
WHT 2
YEL 1
I105
WHT 2
VIO 1
I102
WHT 2
GRN 1
I108
J/C I101, I102, I104, I105
I106, I107, I108 & I111
(BEHIND RIGHT SIDE OF DASH)
GRN 16
CANH
WHT 15
CANL
NETWORK GATEWAY ECU
(BEHIND RIGHT SIDE OF DASH)
VIO 11
CANH
WHT 12
CANL
I77
A/C AMPLIFIER
ASSEMBLY
(RIGHT SIDE OF DASH)
1 WHT
2 GRN
3 WHT
4 BLK
5 WHT
6 YEL
7 WHT
8 BLU
9 WHT
10 VIO
11 WHT
12 RED
13 WHT
14 ORG
④
③
ORG
WHT
3
2
CANH
CANL
YAW RATE SENSOR
(BELOW REAR OF CENTER FLOOR CONSOLE)
RED
WHT
16
15
I18
CANH
CANL
COMBINATION METER ASSEMBLY
VIO
WHT
3
2
CANH
CANL
STEERING SENSOR
(STEERING COLUMN)
BLU
WHT
6
14
CANH
CANL
DATA LINK CONNECTOR 3
(UNDER PASSENGER'S SEAT)
YEL
WHT
13
22
CANH
CANL
YAW RATE SENSOR
AIR BAG SENSOR ASSEMBLY
(LOWER CENTER OF DASH)
WHT
BLK
26
13
A25
CANL
CANH
ENGINE CONTROL MODULE
(LEFT SIDE OF ENGINE COMPT)
WHT
GRY
14
26
CANL
CANH
BRAKE ACTUATOR ASSEMBLY
(RIGHT FRONT OF ENGINE COMPT)
366572

Fig. 22: 2.5L, Body ECU Circuit, Except Hybrid (2 of 2)

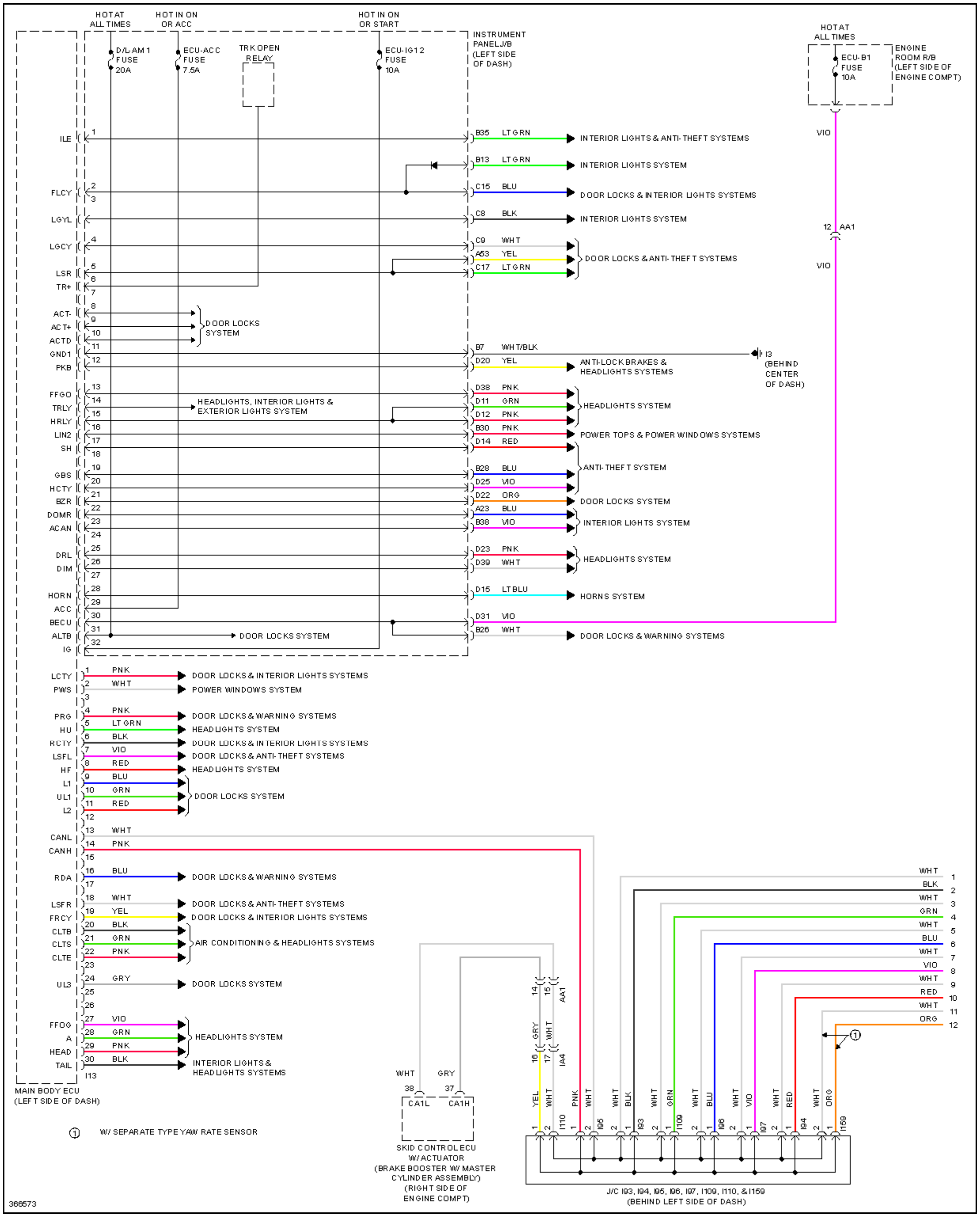
HOT AT ALL TIMES
HOT IN ON OR ACC
HOT IN ON OR START
D/L-AM 1 FUSE 20A
ECU-ACC FUSE 7.5A
TRK OPEN RELAY
ECU-IG1 2 FUSE 10A
INSTRUMENT PANEL J/B (LEFT SIDE OF DASH)
HOT AT ALL TIMES
ECU-B1 FUSE 10A
ENGINE ROOM R/B (LEFT SIDE OF ENGINE COMPT)
VIO
12 AA1
VIO
ILE
FLCY
LGYL
LGCY
LSR
TR+
ACT-
ACT+
ACTD
GND1
PKB
FFGO
TRLY
HRLY
LIN2
SH
GBS
HCTY
BZR
DOMR
ACAN
DRL
DIM
HORN
ACC
BECU
ALTB
IG
B35 LT GRN
INTERIOR LIGHTS & ANTI-THEFT SYSTEMS
B13 LT GRN
INTERIOR LIGHTS SYSTEM
C15 BLU
DOOR LOCKS & INTERIOR LIGHTS SYSTEMS
C8 BLK
INTERIOR LIGHTS SYSTEM
C9 WHT
A53 YEL
C17 LT GRN
DOOR LOCKS & ANTI-THEFT SYSTEMS
DOOR LOCKS SYSTEM
B7 WHT/BLK
I3 (BEHIND CENTER OF DASH)
D20 YEL
ANTI-LOCK BRAKES & HEADLIGHTS SYSTEMS
D38 PNK
D11 GRN
D12 PNK
HEADLIGHTS SYSTEM
HEADLIGHTS, INTERIOR LIGHTS & EXTERIOR LIGHTS SYSTEM
B30 PNK
POWER TOPS & POWER WINDOWS SYSTEMS
D14 RED
B28 BLU
D25 VIO
ANTI-THEFT SYSTEM
D22 ORG
DOOR LOCKS SYSTEM
A23 BLU
B38 VIO
INTERIOR LIGHTS SYSTEM
D23 PNK
D39 WHT
HEADLIGHTS SYSTEM
D15 LT BLU
HORNS SYSTEM
D31 VIO
B26 WHT
DOOR LOCKS SYSTEM
DOOR LOCKS & WARNING SYSTEMS
LCTY 1 PNK DOOR LOCKS & INTERIOR LIGHTS SYSTEMS
PWS 2 WHT POWER WINDOWS SYSTEM
PRG 4 PNK DOOR LOCKS & WARNING SYSTEMS
HU 5 LT GRN HEADLIGHTS SYSTEM
RCTY 6 BLK DOOR LOCKS & INTERIOR LIGHTS SYSTEMS
LSFL 7 VIO DOOR LOCKS & ANTI-THEFT SYSTEMS
HF 8 RED HEADLIGHTS SYSTEM
L1 9 BLU
UL1 10 GRN
L2 11 RED
DOOR LOCKS SYSTEM
CANL 13 WHT
CANH 14 PNK
RDA 16 BLU DOOR LOCKS & WARNING SYSTEMS
LSFR 18 WHT DOOR LOCKS & ANTI-THEFT SYSTEMS
FRCY 19 YEL DOOR LOCKS & INTERIOR LIGHTS SYSTEMS
CLTB 20 BLK
CLTS 21 GRN
CLTE 22 PNK
AIR CONDITIONING & HEADLIGHTS SYSTEMS
UL3 24 GRY DOOR LOCKS SYSTEM
FFOG 27 VIO
A 28 GRN
HEAD 29 PNK
HEADLIGHTS SYSTEM
TAIL 30 BLK
INTERIOR LIGHTS & HEADLIGHTS SYSTEMS
I13
MAIN BODY ECU (LEFT SIDE OF DASH)
① W/ SEPARATE TYPE YAW RATE SENSOR
WHT GRY
38 CA1L 37 CA1H
SKID CONTROL ECU W/ ACTUATOR (BRAKE BOOSTER W/ MASTER CYLINDER ASSEMBLY) (RIGHT SIDE OF ENGINE COMPT)
14 15 AA1
GRY WHT
16 17 IA4
YEL WHT PNK WHT WHT BLK WHT GRN WHT BLU WHT VIO WHT RED WHT ORG
I110 I95 I93 I109 I96 I97 I94 I159
WHT 1
BLK 2
WHT 3
GRN 4
WHT 5
BLU 6
WHT 7
VIO 8
WHT 9
RED 10
WHT 11
ORG 12
J/C I93, I94, I95, I96, I97, I109, I110, & I159 (BEHIND LEFT SIDE OF DASH)
366573

Fig. 23: 2.5L, Body ECU Circuit, Hybrid (1 of 2)

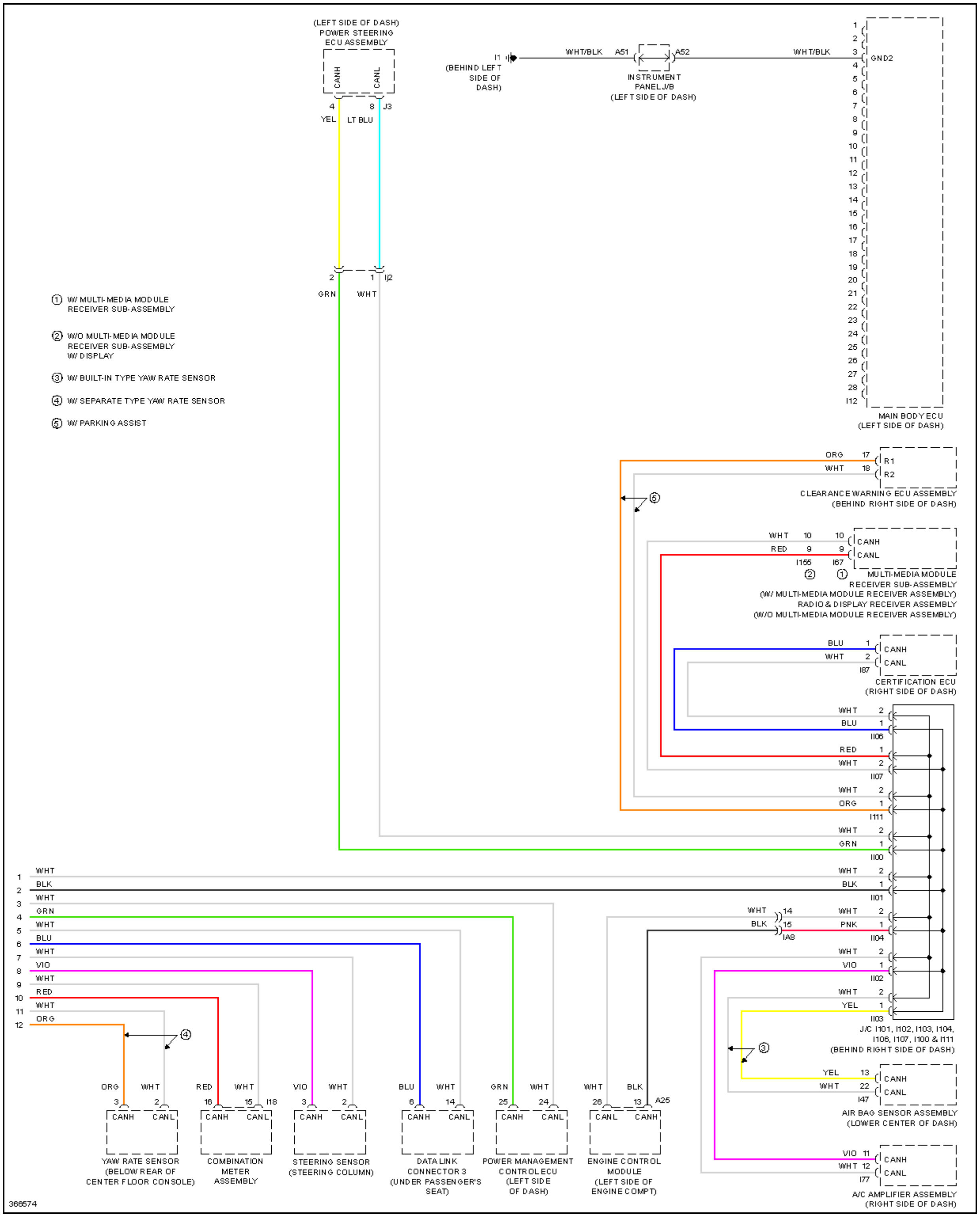
(LEFT SIDE OF DASH)
POWER STEERING
ECU ASSEMBLY
CANH
CANL
4
8
J3
YEL
LT BLU
2
1
I2
GRN
WHT
I1
(BEHIND LEFT SIDE OF DASH)
WHT/BLK
A51
A52
INSTRUMENT PANEL J/B
(LEFT SIDE OF DASH)
WHT/BLK
GND2
I12
MAIN BODY ECU
(LEFT SIDE OF DASH)
① W/ MULTI-MEDIA MODULE RECEIVER SUB-ASSEMBLY
② W/O MULTI-MEDIA MODULE RECEIVER SUB-ASSEMBLY W/ DISPLAY
③ W/ BUILT-IN TYPE YAW RATE SENSOR
④ W/ SEPARATE TYPE YAW RATE SENSOR
⑤ W/ PARKING ASSIST
ORG 17 R1
WHT 18 R2
CLEARANCE WARNING ECU ASSEMBLY
(BEHIND RIGHT SIDE OF DASH)
WHT 10 10 CANH
RED 9 9 CANL
I155
I67
MULTI-MEDIA MODULE RECEIVER SUB-ASSEMBLY
(W/ MULTI-MEDIA MODULE RECEIVER ASSEMBLY)
RADIO & DISPLAY RECEIVER ASSEMBLY
(W/O MULTI-MEDIA MODULE RECEIVER ASSEMBLY)
BLU 1 CANH
WHT 2 CANL
I87
CERTIFICATION ECU
(RIGHT SIDE OF DASH)
WHT 2
BLU 1
I106
RED 1
WHT 2
I107
WHT 2
ORG 1
I111
WHT 2
GRN 1
I100
WHT 2
BLK 1
I101
WHT 14
BLK 15
IA8
WHT 2
PNK 1
I104
WHT 2
VIO 1
I102
WHT 2
YEL 1
I103
J/C I101, I102, I103, I104, I106, I107, I100 & I111
(BEHIND RIGHT SIDE OF DASH)
YEL 13 CANH
WHT 22 CANL
I47
AIR BAG SENSOR ASSEMBLY
(LOWER CENTER OF DASH)
VIO 11 CANH
WHT 12 CANL
I77
A/C AMPLIFIER ASSEMBLY
(RIGHT SIDE OF DASH)
1 WHT
2 BLK
3 WHT
4 GRN
5 WHT
6 BLU
7 WHT
8 VIO
9 WHT
10 RED
11 WHT
12 ORG
ORG WHT 3 2 CANH CANL
YAW RATE SENSOR
(BELOW REAR OF CENTER FLOOR CONSOLE)
RED WHT 16 15 I18 CANH CANL
COMBINATION METER ASSEMBLY
VIO WHT 3 2 CANH CANL
STEERING SENSOR
(STEERING COLUMN)
BLU WHT 6 14 CANH CANL
DATA LINK CONNECTOR 3
(UNDER PASSENGER'S SEAT)
GRN WHT 25 24 CANH CANL
POWER MANAGEMENT CONTROL ECU
(LEFT SIDE OF DASH)
WHT BLK 26 13 A25 CANL CANH
ENGINE CONTROL MODULE
(LEFT SIDE OF ENGINE COMPT)
366574

Fig. 24: 2.5L, Body ECU Circuit, Hybrid (2 of 2)

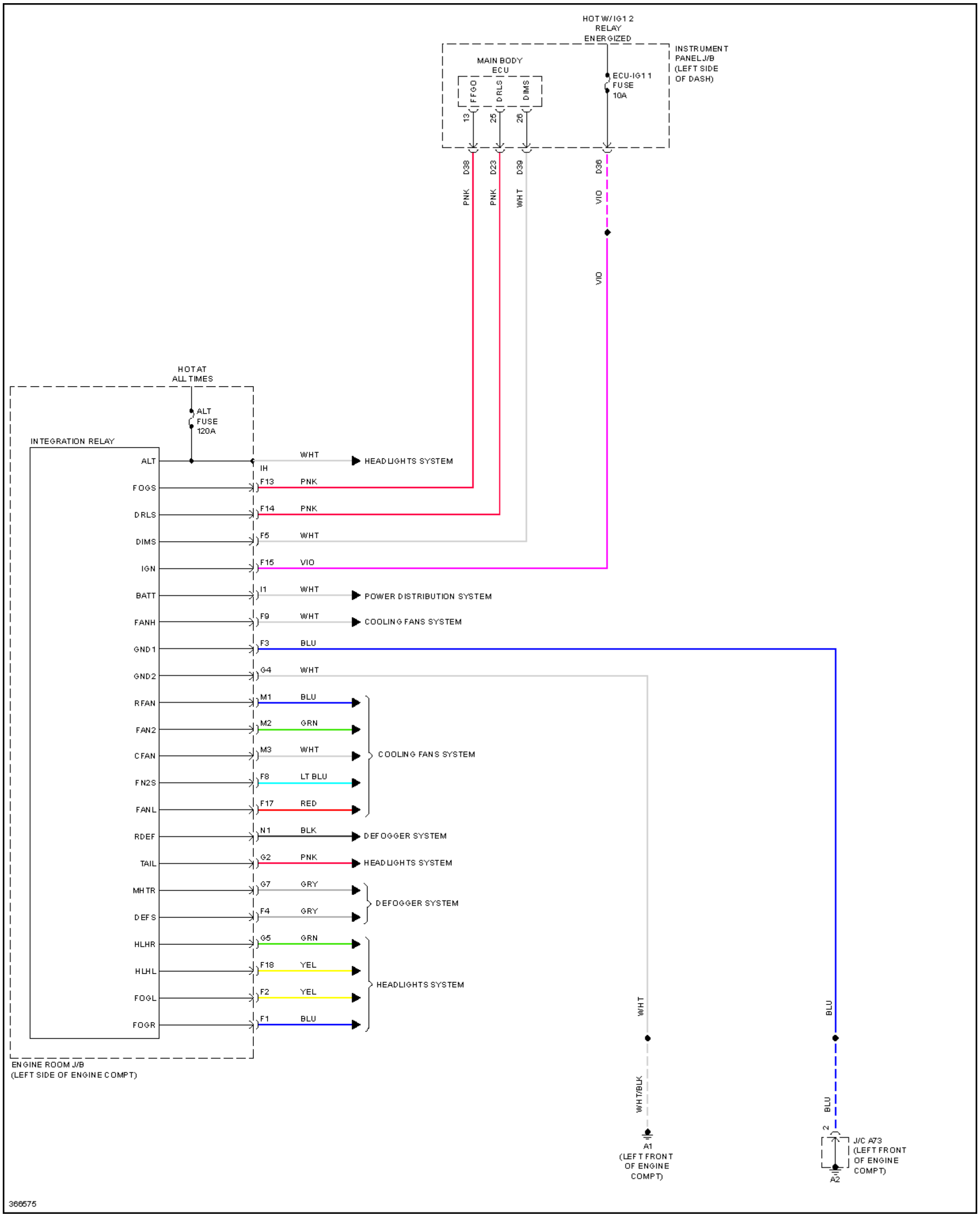
HOT W/ IG1 2 RELAY ENERGIZED
MAIN BODY ECU
FFGO
DRLS
DIMS
13
25
26
ECU-IG1 1 FUSE 10A
INSTRUMENT PANEL J/B (LEFT SIDE OF DASH)
D38
D23
D39
D36
PNK
PNK
WHT
VIO
VIO
HOT AT ALL TIMES
ALT FUSE 120A
INTEGRATION RELAY
ALT
FOGS
DRLS
DIMS
IGN
BATT
FANH
GND1
GND2
RFAN
FAN2
CFAN
FN2S
FANL
RDEF
TAIL
MHTR
DEFS
HLHR
HLHL
FOGL
FOGR
IH
F13
F14
F5
F15
I1
F9
F3
G4
M1
M2
M3
F8
F17
N1
G2
G7
F4
G5
F18
F2
F1
WHT
PNK
PNK
WHT
VIO
WHT
WHT
BLU
WHT
BLU
GRN
WHT
LT BLU
RED
BLK
PNK
GRY
GRY
GRN
YEL
YEL
BLU
HEADLIGHTS SYSTEM
POWER DISTRIBUTION SYSTEM
COOLING FANS SYSTEM
COOLING FANS SYSTEM
DEFOGGER SYSTEM
HEADLIGHTS SYSTEM
DEFOGGER SYSTEM
HEADLIGHTS SYSTEM
ENGINE ROOM J/B (LEFT SIDE OF ENGINE COMPT)
WHT
WHT/BLK
A1 (LEFT FRONT OF ENGINE COMPT)
BLU
BLU
2
J/C A73 (LEFT FRONT OF ENGINE COMPT)
A2
366575

Fig. 25: 2.5L, Integration Control and Panel Circuit, Except Hybrid

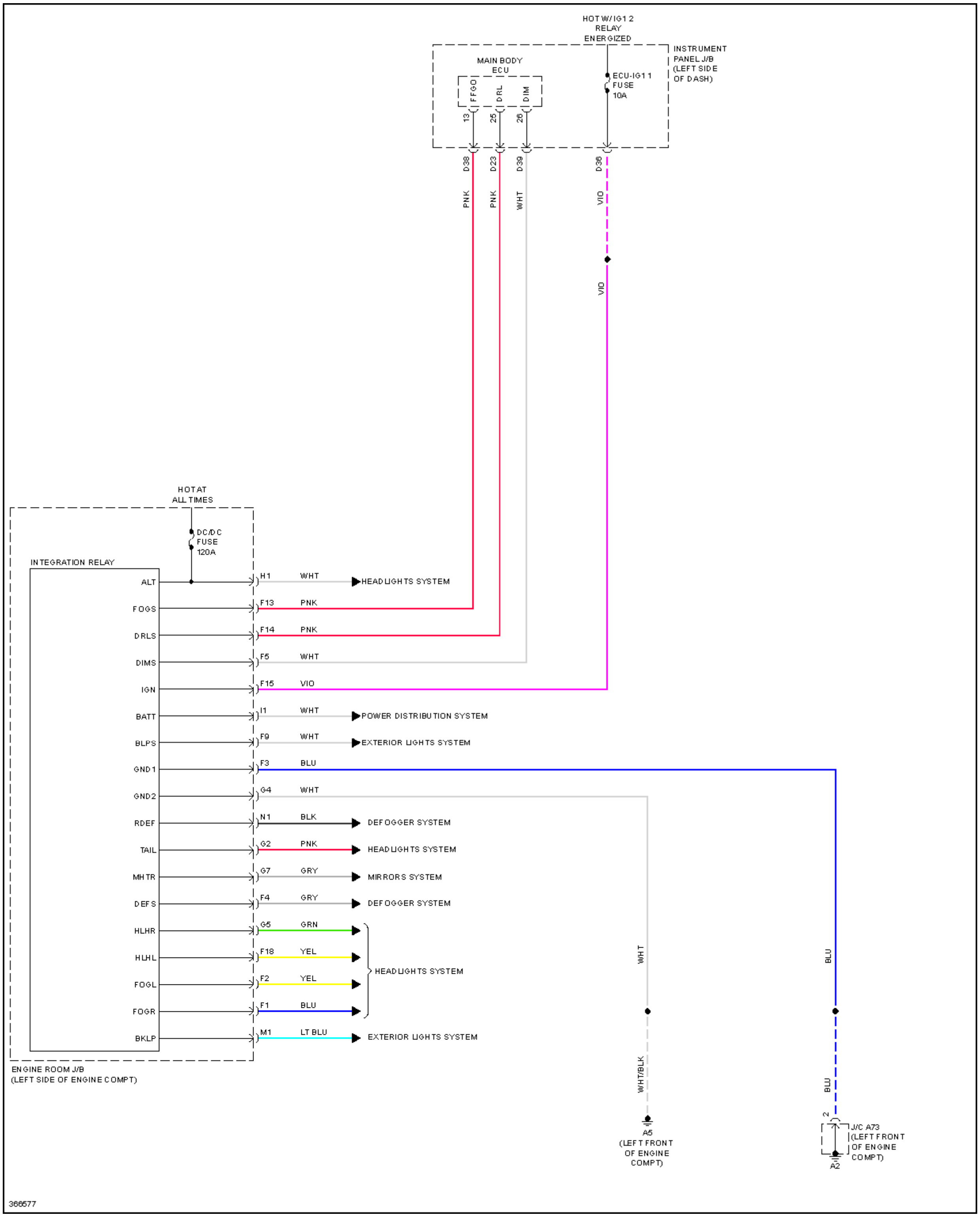
HOT W/ IG1 2
RELAY
ENERGIZED
INSTRUMENT
PANEL J/B
(LEFT SIDE
OF DASH)
MAIN BODY
ECU
FFGO
DRL
DIM
13
25
26
ECU-IG1 1
FUSE
10A
D38
D23
D39
D36
PNK
PNK
WHT
VIO
VIO
HOT AT
ALL TIMES
DC/DC
FUSE
120A
INTEGRATION RELAY
ALT
FOGS
DRLS
DIMS
IGN
BATT
BLPS
GND1
GND2
RDEF
TAIL
MHTR
DEFS
HLHR
HLHL
FOGL
FOGR
BKLP
H1
WHT
HEADLIGHTS SYSTEM
F13
PNK
F14
PNK
F5
WHT
F15
VIO
I1
WHT
POWER DISTRIBUTION SYSTEM
F9
WHT
EXTERIOR LIGHTS SYSTEM
F3
BLU
G4
WHT
N1
BLK
DEFOGGER SYSTEM
G2
PNK
HEADLIGHTS SYSTEM
G7
GRY
MIRRORS SYSTEM
F4
GRY
DEFOGGER SYSTEM
G5
GRN
F18
YEL
F2
YEL
F1
BLU
HEADLIGHTS SYSTEM
M1
LT BLU
EXTERIOR LIGHTS SYSTEM
ENGINE ROOM J/B
(LEFT SIDE OF ENGINE COMPT)
WHT
BLU
WHT/BLK
BLU
A5
(LEFT FRONT
OF ENGINE
COMPT)
2
J/C A73
(LEFT FRONT
OF ENGINE
COMPT)
A2
366577

Fig. 26: 2.5L, Integration Control and Panel Circuit, Hybrid

3.5L

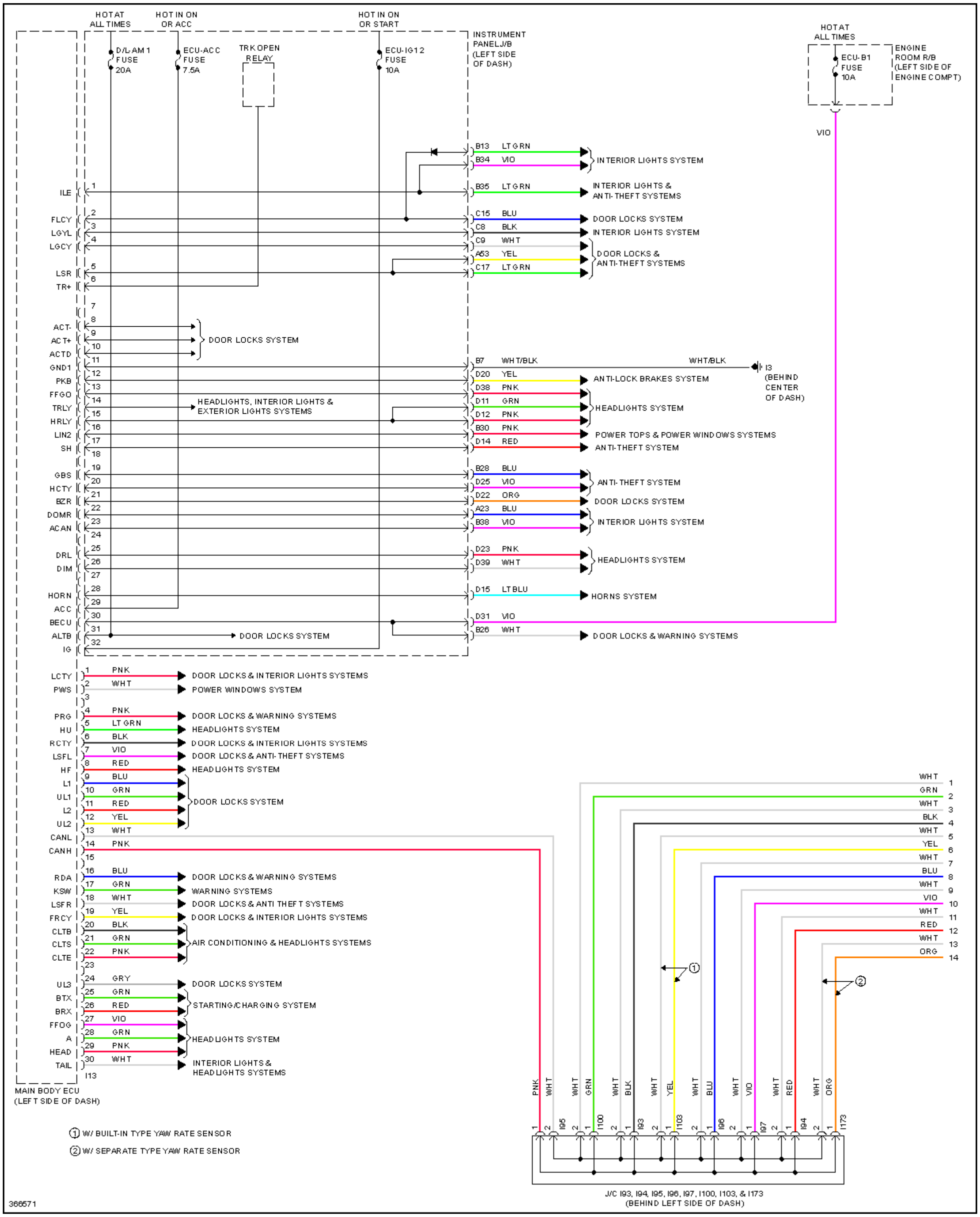
HOT AT ALL TIMES
HOT IN ON OR ACC
HOT IN ON OR START
D/L-AM 1 FUSE 20A
ECU-ACC FUSE 7.5A
TRK OPEN RELAY
ECU-IG1 2 FUSE 10A
INSTRUMENT PANEL J/B (LEFT SIDE OF DASH)
HOT AT ALL TIMES
ECU-B1 FUSE 10A
ENGINE ROOM R/B (LEFT SIDE OF ENGINE COMPT)
VIO
B13 LT GRN
B34 VIO
INTERIOR LIGHTS SYSTEM
B35 LT GRN
INTERIOR LIGHTS & ANTI-THEFT SYSTEMS
C15 BLU
DOOR LOCKS SYSTEM
C8 BLK
INTERIOR LIGHTS SYSTEM
C9 WHT
A53 YEL
C17 LT GRN
DOOR LOCKS & ANTI-THEFT SYSTEMS
ILE 1
FLCY 2
LGYL 3
LGCY 4
LSR 5
TR+ 6
7
ACT- 8
ACT+ 9
ACTD 10
DOOR LOCKS SYSTEM
GND1 11
PKB 12
FFGO 13
TRLY 14
HRLY 15
LIN2 16
SH 17
18
GBS 19
HCTY 20
BZR 21
DOMR 22
ACAN 23
24
DRL 25
DIM 26
27
HORN 28
ACC 29
BECU 30
ALTB 31
IG 32
B7 WHT/BLK
WHT/BLK
I3 (BEHIND CENTER OF DASH)
D20 YEL
ANTI-LOCK BRAKES SYSTEM
D38 PNK
HEADLIGHTS, INTERIOR LIGHTS & EXTERIOR LIGHTS SYSTEMS
D11 GRN
D12 PNK
HEADLIGHTS SYSTEM
B30 PNK
POWER TOPS & POWER WINDOWS SYSTEMS
D14 RED
ANTI-THEFT SYSTEM
B28 BLU
D25 VIO
ANTI-THEFT SYSTEM
D22 ORG
DOOR LOCKS SYSTEM
A23 BLU
B38 VIO
INTERIOR LIGHTS SYSTEM
D23 PNK
D39 WHT
HEADLIGHTS SYSTEM
D15 LT BLU
HORNS SYSTEM
D31 VIO
B26 WHT
DOOR LOCKS SYSTEM
DOOR LOCKS & WARNING SYSTEMS
LCTY 1 PNK DOOR LOCKS & INTERIOR LIGHTS SYSTEMS
PWS 2 WHT POWER WINDOWS SYSTEM
3
PRG 4 PNK DOOR LOCKS & WARNING SYSTEMS
HU 5 LT GRN HEADLIGHTS SYSTEM
RCTY 6 BLK DOOR LOCKS & INTERIOR LIGHTS SYSTEMS
LSFL 7 VIO DOOR LOCKS & ANTI-THEFT SYSTEMS
HF 8 RED HEADLIGHTS SYSTEM
L1 9 BLU
UL1 10 GRN
L2 11 RED
UL2 12 YEL
13 WHT
DOOR LOCKS SYSTEM
CANL 14 PNK
CANH 15
RDA 16 BLU DOOR LOCKS & WARNING SYSTEMS
KSW 17 GRN WARNING SYSTEMS
LSFR 18 WHT DOOR LOCKS & ANTI THEFT SYSTEMS
FRCY 19 YEL DOOR LOCKS & INTERIOR LIGHTS SYSTEMS
CLTB 20 BLK
CLTS 21 GRN
CLTE 22 PNK
AIR CONDITIONING & HEADLIGHTS SYSTEMS
23
UL3 24 GRY DOOR LOCKS SYSTEM
BTX 25 GRN
BRX 26 RED
STARTING/CHARGING SYSTEM
FFOG 27 VIO
A 28 GRN
HEAD 29 PNK
HEADLIGHTS SYSTEM
TAIL 30 WHT INTERIOR LIGHTS & HEADLIGHTS SYSTEMS
I13
MAIN BODY ECU (LEFT SIDE OF DASH)
WHT 1
GRN 2
WHT 3
BLK 4
WHT 5
YEL 6
WHT 7
BLU 8
WHT 9
VIO 10
WHT 11
RED 12
WHT 13
ORG 14
①
②
PNK WHT WHT GRN WHT BLK WHT YEL WHT BLU WHT VIO WHT RED WHT ORG
I95 I100 I93 I103 I96 I97 I94 I173
J/C I93, I94, I95, I96, I97, I100, I103, & I173 (BEHIND LEFT SIDE OF DASH)
① W/ BUILT-IN TYPE YAW RATE SENSOR
② W/ SEPARATE TYPE YAW RATE SENSOR
366571

Fig. 27: 3.5L, Body ECU Circuit (1 of 2)

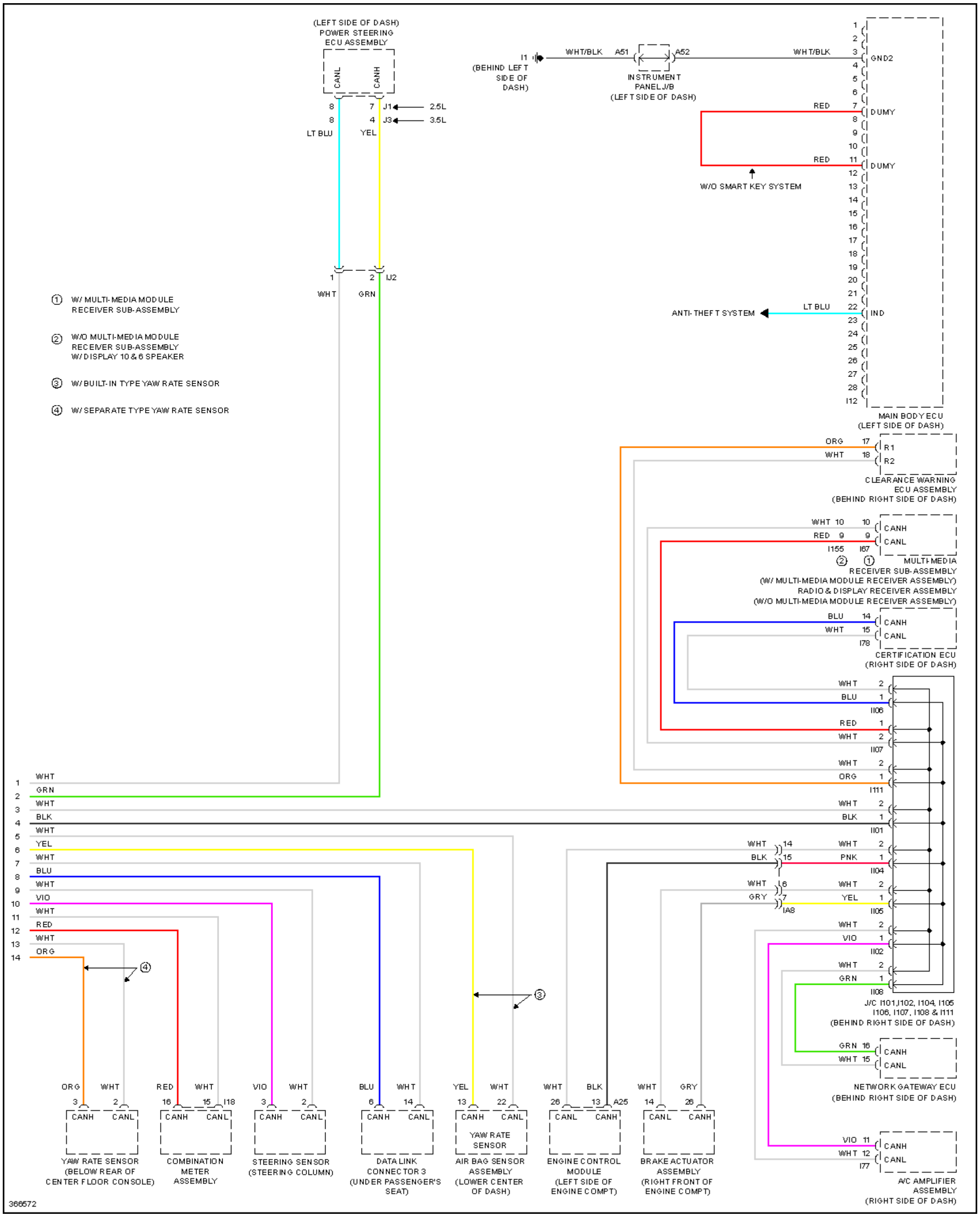
(LEFT SIDE OF DASH)
POWER STEERING
ECU ASSEMBLY
CANL
CANH
J1 2.5L
J3 3.5L
LT BLU
YEL
IJ2
WHT
GRN
I1
(BEHIND LEFT SIDE OF DASH)
WHT/BLK
A51
A52
INSTRUMENT PANEL J/B
(LEFT SIDE OF DASH)
GND2
RED
DUMY
W/O SMART KEY SYSTEM
ANTI-THEFT SYSTEM
LT BLU
IND
I12
MAIN BODY ECU
(LEFT SIDE OF DASH)
① W/ MULTI-MEDIA MODULE RECEIVER SUB-ASSEMBLY
② W/O MULTI-MEDIA MODULE RECEIVER SUB-ASSEMBLY W/ DISPLAY 10 & 6 SPEAKER
③ W/ BUILT-IN TYPE YAW RATE SENSOR
④ W/ SEPARATE TYPE YAW RATE SENSOR
ORG
WHT
R1
R2
CLEARANCE WARNING ECU ASSEMBLY
(BEHIND RIGHT SIDE OF DASH)
I155
I67
MULTI-MEDIA RECEIVER SUB-ASSEMBLY
(W/ MULTI-MEDIA MODULE RECEIVER ASSEMBLY)
RADIO & DISPLAY RECEIVER ASSEMBLY
(W/O MULTI-MEDIA MODULE RECEIVER ASSEMBLY)
BLU
I78
CERTIFICATION ECU
(RIGHT SIDE OF DASH)
I106
I107
I111
I101
I104
I105
I102
I108
IA8
PNK
GRY
VIO
J/C I101, I102, I104, I105
I106, I107, I108 & I111
(BEHIND RIGHT SIDE OF DASH)
NETWORK GATEWAY ECU
(BEHIND RIGHT SIDE OF DASH)
I77
A/C AMPLIFIER ASSEMBLY
(RIGHT SIDE OF DASH)
I18
A25
YAW RATE SENSOR
(BELOW REAR OF CENTER FLOOR CONSOLE)
COMBINATION METER ASSEMBLY
STEERING SENSOR
(STEERING COLUMN)
DATA LINK CONNECTOR 3
(UNDER PASSENGER'S SEAT)
YAW RATE SENSOR
AIR BAG SENSOR ASSEMBLY
(LOWER CENTER OF DASH)
ENGINE CONTROL MODULE
(LEFT SIDE OF ENGINE COMPT)
BRAKE ACTUATOR ASSEMBLY
(RIGHT FRONT OF ENGINE COMPT)
366572

Fig. 28: 3.5L, Body ECU Circuit (2 of 2)

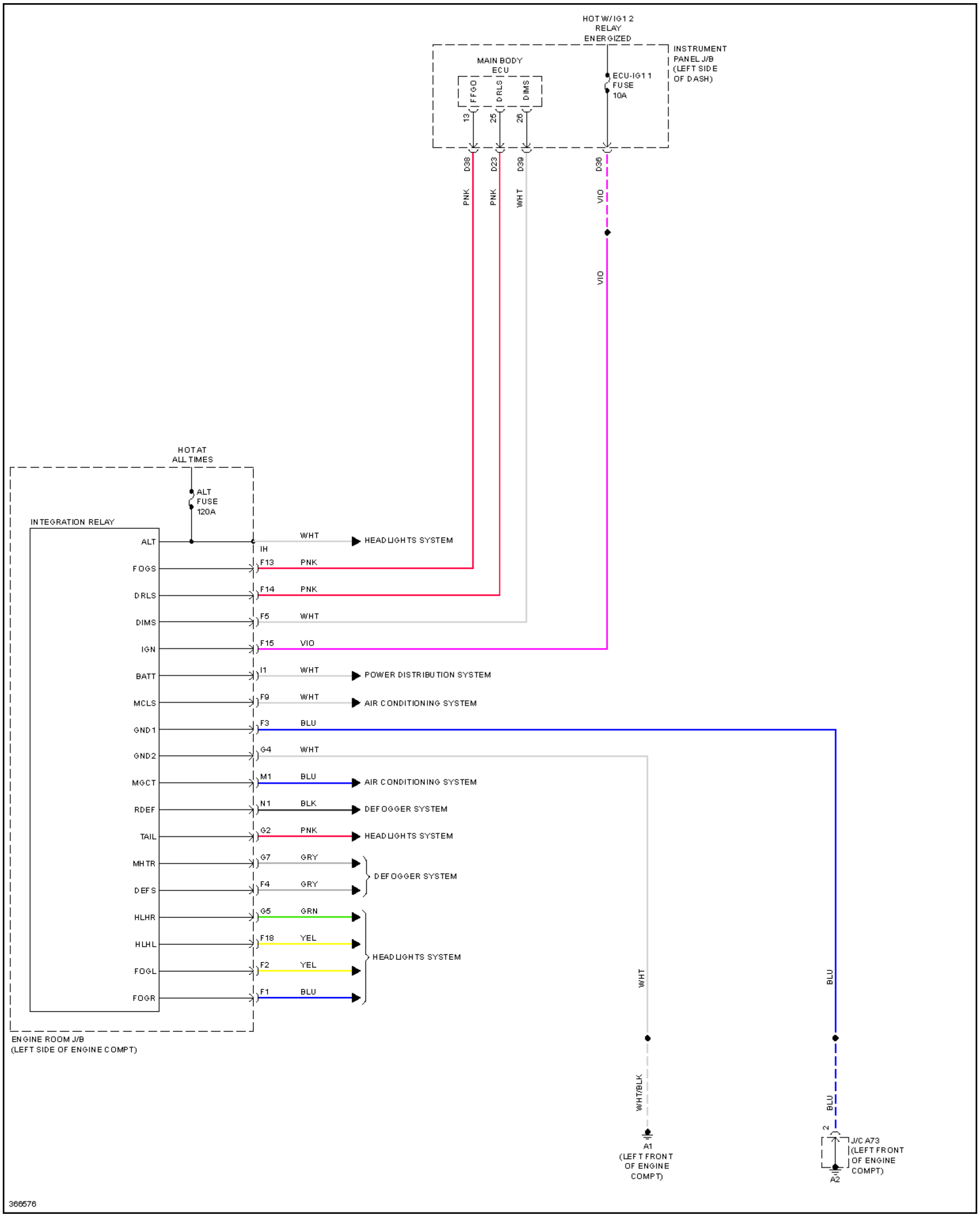
HOT W/ IG1 2
RELAY
ENERGIZED
MAIN BODY
ECU
FFGO
DRLS
DIMS
13
25
26
ECU-IG1 1
FUSE
10A
INSTRUMENT
PANEL J/B
(LEFT SIDE
OF DASH)
D38
D23
D39
D36
PNK
PNK
WHT
VIO
VIO
HOT AT
ALL TIMES
ALT
FUSE
120A
INTEGRATION RELAY
ALT
FOGS
DRLS
DIMS
IGN
BATT
MCLS
GND1
GND2
MGCT
RDEF
TAIL
MHTR
DEFS
HLHR
HLHL
FOGL
FOGR
IH
WHT
HEADLIGHTS SYSTEM
F13
PNK
F14
PNK
F5
WHT
F15
VIO
I1
WHT
POWER DISTRIBUTION SYSTEM
F9
WHT
AIR CONDITIONING SYSTEM
F3
BLU
G4
WHT
M1
BLU
AIR CONDITIONING SYSTEM
N1
BLK
DEFOGGER SYSTEM
G2
PNK
HEADLIGHTS SYSTEM
G7
GRY
F4
GRY
DEFOGGER SYSTEM
G5
GRN
F18
YEL
F2
YEL
F1
BLU
HEADLIGHTS SYSTEM
ENGINE ROOM J/B
(LEFT SIDE OF ENGINE COMPT)
WHT
BLU
WHT/BLK
BLU
2
A1
(LEFT FRONT
OF ENGINE
COMPT)
J/C A73
(LEFT FRONT
OF ENGINE
COMPT)
A2
366576

Fig. 29: 3.5L, Integration Control and Panel Circuit

COMPUTER DATA LINES

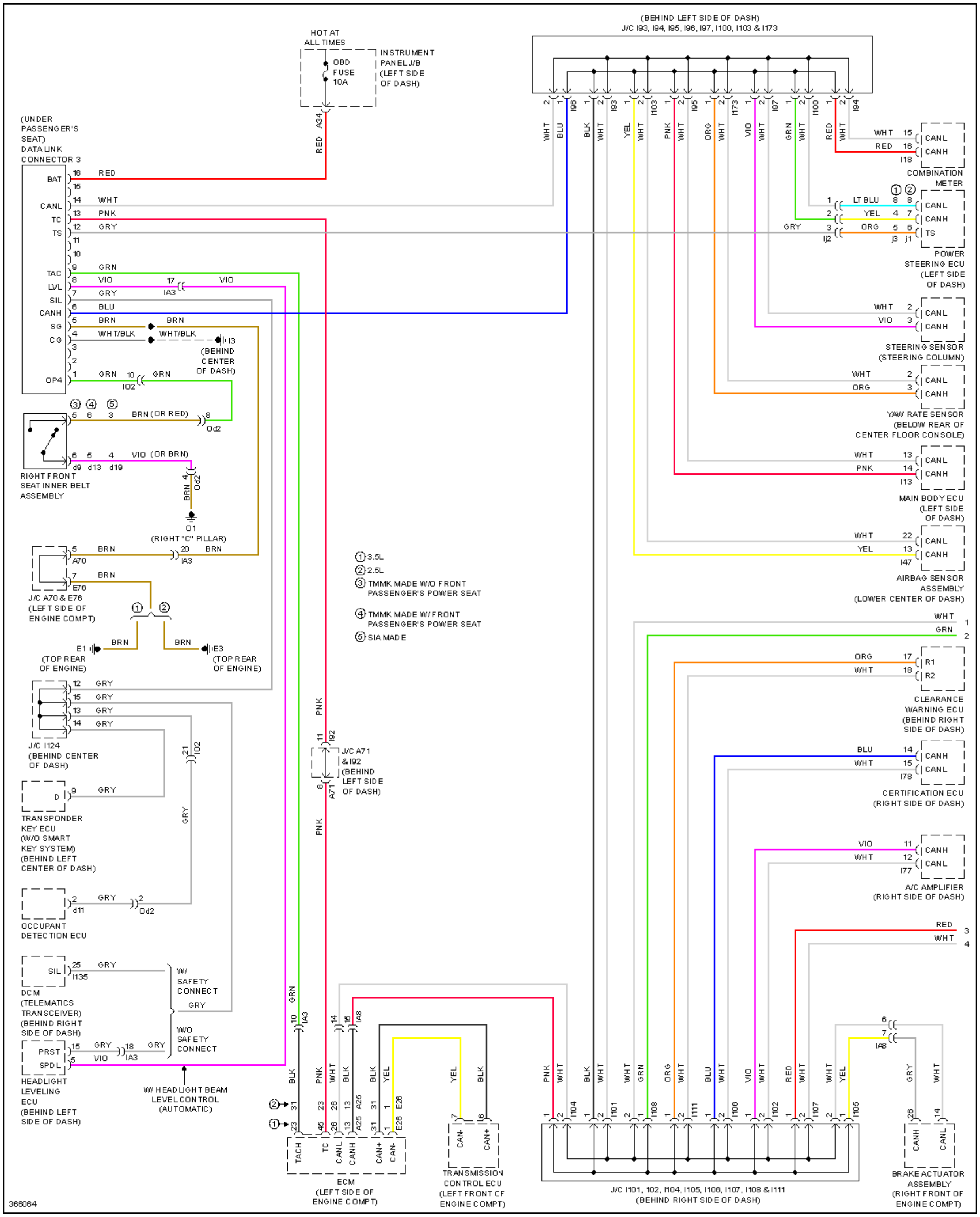
(BEHIND LEFT SIDE OF DASH)
J/C I93, I94, I95, I96, I97, I100, I103 & I173
HOT AT ALL TIMES
OBD FUSE 10A
INSTRUMENT PANEL J/B (LEFT SIDE OF DASH)
(UNDER PASSENGER'S SEAT) DATA LINK CONNECTOR 3
BAT
CANL
TC
TS
TAC
LVL
SIL
CANH
SG
CG
OP4
RED
WHT
PNK
GRY
GRN
VIO
BLU
BRN
WHT/BLK
BLK
YEL
ORG
LT BLU
(BEHIND CENTER OF DASH)
RIGHT FRONT SEAT INNER BELT ASSEMBLY
BRN (OR RED)
VIO (OR BRN)
(RIGHT "C" PILLAR)
J/C A70 & E76 (LEFT SIDE OF ENGINE COMPT)
(TOP REAR OF ENGINE)
J/C I124 (BEHIND CENTER OF DASH)
TRANSPONDER KEY ECU (W/O SMART KEY SYSTEM) (BEHIND LEFT CENTER OF DASH)
OCCUPANT DETECTION ECU
DCM (TELEMATICS TRANSCEIVER) (BEHIND RIGHT SIDE OF DASH)
W/ SAFETY CONNECT
W/O SAFETY CONNECT
PRST
SPDL
HEADLIGHT LEVELING ECU (BEHIND LEFT SIDE OF DASH)
W/ HEADLIGHT BEAM LEVEL CONTROL (AUTOMATIC)
J/C A71 & I92 (BEHIND LEFT SIDE OF DASH)
① 3.5L
② 2.5L
③ TMMK MADE W/O FRONT PASSENGER'S POWER SEAT
④ TMMK MADE W/ FRONT PASSENGER'S POWER SEAT
⑤ SIA MADE
TACH
TC
CANL
CANH
CAN+
CAN-
ECM (LEFT SIDE OF ENGINE COMPT)
TRANSMISSION CONTROL ECU (LEFT FRONT OF ENGINE COMPT)
J/C I101, 102, I104, I105, I106, I107, I108 & I111 (BEHIND RIGHT SIDE OF DASH)
BRAKE ACTUATOR ASSEMBLY (RIGHT FRONT OF ENGINE COMPT)
COMBINATION METER
POWER STEERING ECU (LEFT SIDE OF DASH)
STEERING SENSOR (STEERING COLUMN)
YAW RATE SENSOR (BELOW REAR OF CENTER FLOOR CONSOLE)
MAIN BODY ECU (LEFT SIDE OF DASH)
AIRBAG SENSOR ASSEMBLY (LOWER CENTER OF DASH)
R1
R2
CLEARANCE WARNING ECU (BEHIND RIGHT SIDE OF DASH)
CERTIFICATION ECU (RIGHT SIDE OF DASH)
A/C AMPLIFIER (RIGHT SIDE OF DASH)
366064

Fig. 30: Computer Data Lines Circuit, Except Hybrid (1 of 2)

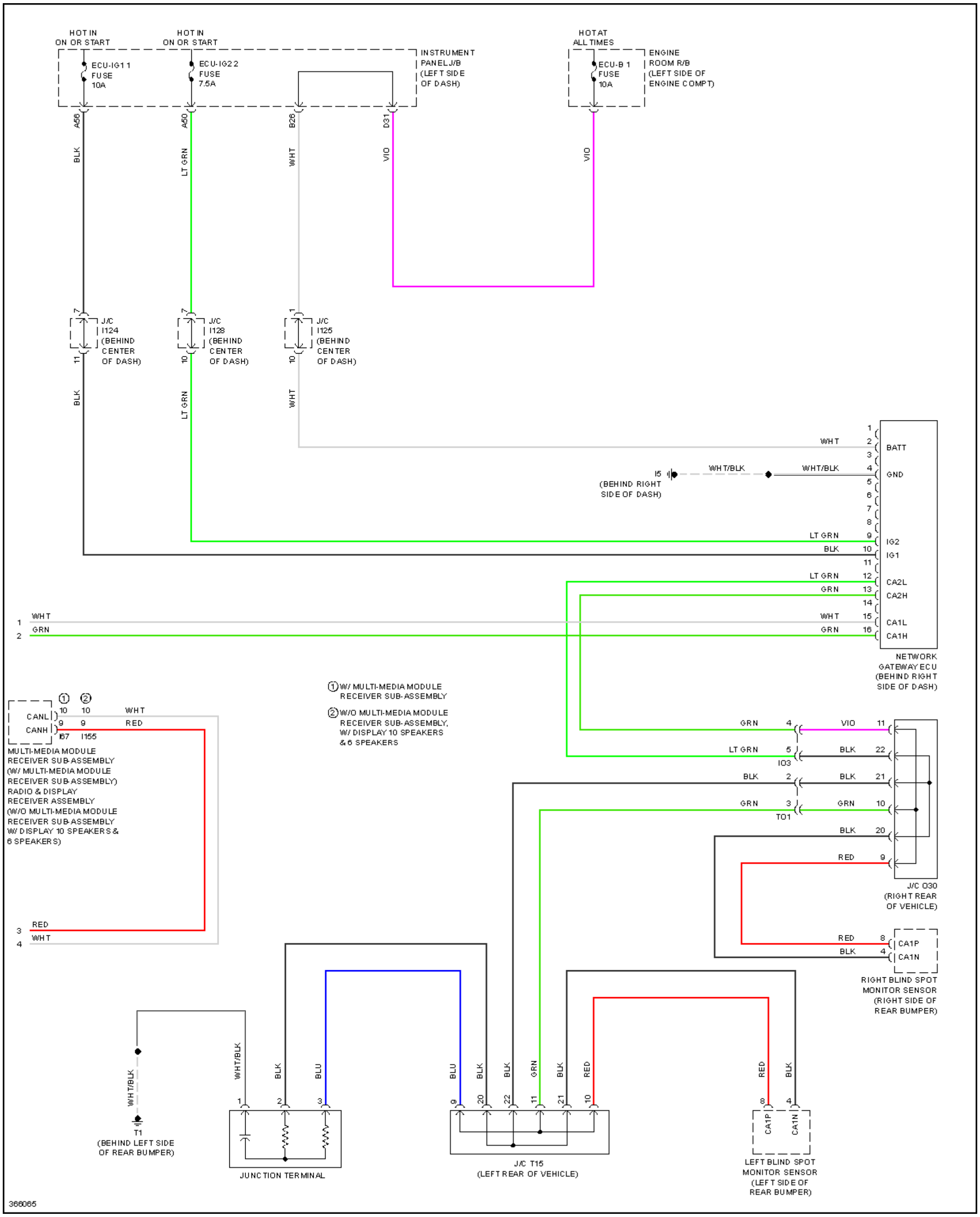
HOT IN ON OR START
HOT IN ON OR START
ECU-IG1 1 FUSE 10A
ECU-IG2 2 FUSE 7.5A
INSTRUMENT PANEL J/B (LEFT SIDE OF DASH)
HOT AT ALL TIMES
ECU-B 1 FUSE 10A
ENGINE ROOM R/B (LEFT SIDE OF ENGINE COMPT)
A56
A50
B26
D31
BLK
LT GRN
WHT
VIO
VIO
J/C I124 (BEHIND CENTER OF DASH)
J/C I128 (BEHIND CENTER OF DASH)
J/C I125 (BEHIND CENTER OF DASH)
I5 (BEHIND RIGHT SIDE OF DASH)
WHT/BLK
WHT/BLK
BATT
GND
IG2
IG1
CA2L
CA2H
CA1L
CA1H
NETWORK GATEWAY ECU (BEHIND RIGHT SIDE OF DASH)
① W/ MULTI-MEDIA MODULE RECEIVER SUB-ASSEMBLY
② W/O MULTI-MEDIA MODULE RECEIVER SUB-ASSEMBLY, W/ DISPLAY 10 SPEAKERS & 6 SPEAKERS
CANL
CANH
I67
I155
MULTI-MEDIA MODULE RECEIVER SUB-ASSEMBLY (W/ MULTI-MEDIA MODULE RECEIVER SUB-ASSEMBLY) RADIO & DISPLAY RECEIVER ASSEMBLY (W/O MULTI-MEDIA MODULE RECEIVER SUB-ASSEMBLY W/ DISPLAY 10 SPEAKERS & 6 SPEAKERS)
I03
T01
J/C O30 (RIGHT REAR OF VEHICLE)
CA1P
CA1N
RIGHT BLIND SPOT MONITOR SENSOR (RIGHT SIDE OF REAR BUMPER)
T1 (BEHIND LEFT SIDE OF REAR BUMPER)
JUNCTION TERMINAL
J/C T15 (LEFT REAR OF VEHICLE)
LEFT BLIND SPOT MONITOR SENSOR (LEFT SIDE OF REAR BUMPER)
366065

Fig. 31: Computer Data Lines Circuit, Except Hybrid (2 of 2)

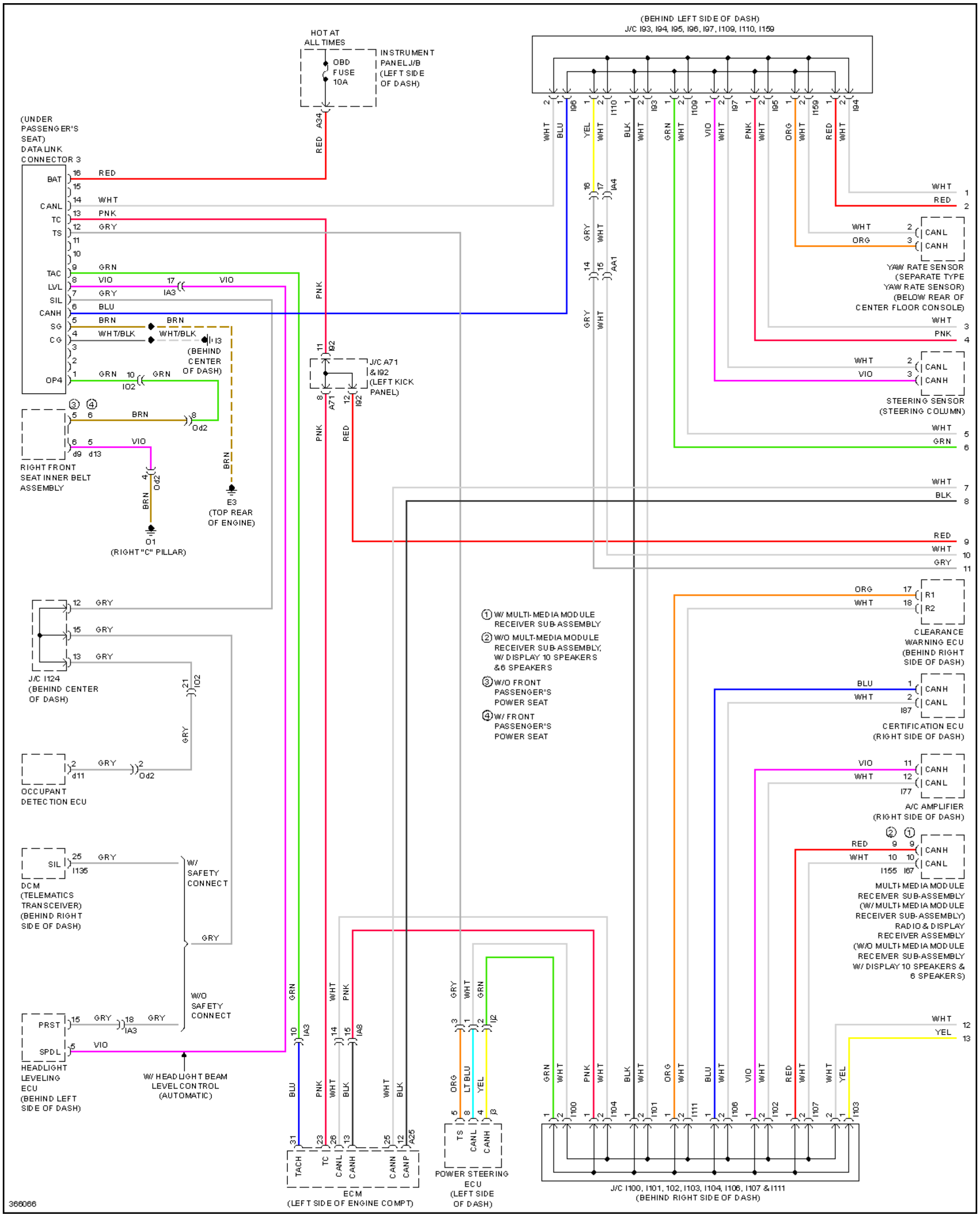
HOT AT ALL TIMES
OBD FUSE 10A
INSTRUMENT PANEL J/B (LEFT SIDE OF DASH)
(BEHIND LEFT SIDE OF DASH)
J/C I93, I94, I95, I96, I97, I109, I110, I159
(UNDER PASSENGER'S SEAT) DATA LINK CONNECTOR 3
BAT
CANL
TC
TS
TAC
LVL
SIL
CANH
SG
CG
OP4
J/C A71 & I92 (LEFT KICK PANEL)
I3 (BEHIND CENTER OF DASH)
E3 (TOP REAR OF ENGINE)
O1 (RIGHT "C" PILLAR)
RIGHT FRONT SEAT INNER BELT ASSEMBLY
YAW RATE SENSOR (SEPARATE TYPE YAW RATE SENSOR) (BELOW REAR OF CENTER FLOOR CONSOLE)
STEERING SENSOR (STEERING COLUMN)
CLEARANCE WARNING ECU (BEHIND RIGHT SIDE OF DASH)
CERTIFICATION ECU (RIGHT SIDE OF DASH)
A/C AMPLIFIER (RIGHT SIDE OF DASH)
MULTI-MEDIA MODULE RECEIVER SUB-ASSEMBLY (W/ MULTI-MEDIA MODULE RECEIVER SUB-ASSEMBLY) RADIO & DISPLAY RECEIVER ASSEMBLY (W/O MULTI-MEDIA MODULE RECEIVER SUB-ASSEMBLY & W/ DISPLAY 10 SPEAKERS & 6 SPEAKERS)
① W/ MULTI-MEDIA MODULE RECEIVER SUB-ASSEMBLY
② W/O MULT-MEDIA MODULE RECEIVER SUB-ASSEMBLY, W/ DISPLAY 10 SPEAKERS &6 SPEAKERS
③ W/O FRONT PASSENGER'S POWER SEAT
④ W/ FRONT PASSENGER'S POWER SEAT
J/C I124 (BEHIND CENTER OF DASH)
OCCUPANT DETECTION ECU
DCM (TELEMATICS TRANSCEIVER) (BEHIND RIGHT SIDE OF DASH)
W/ SAFETY CONNECT
W/O SAFETY CONNECT
HEADLIGHT LEVELING ECU (BEHIND LEFT SIDE OF DASH)
PRST
SPDL
W/ HEADLIGHT BEAM LEVEL CONTROL (AUTOMATIC)
ECM (LEFT SIDE OF ENGINE COMPT)
TACH
CANL
CANH
CANN
CANP
POWER STEERING ECU (LEFT SIDE OF DASH)
J/C I100, I101, 102, I103, I104, I106, I107 & I111 (BEHIND RIGHT SIDE OF DASH)
366066

Fig. 32: Computer Data Lines Circuit, Hybrid (1 of 2)

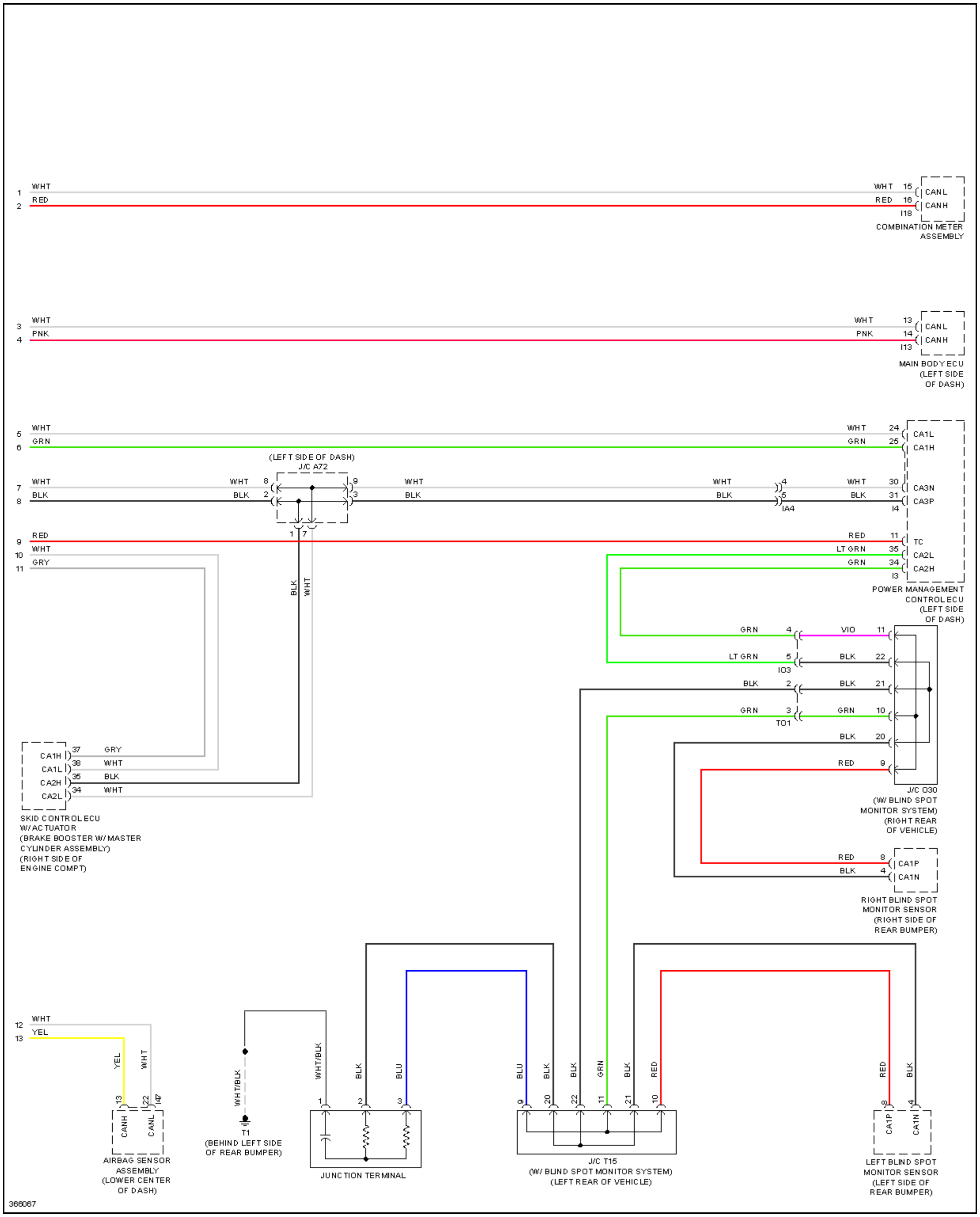
1 WHT
2 RED
WHT 15 CANL
RED 16 CANH
I18
COMBINATION METER ASSEMBLY
3 WHT
4 PNK
WHT 13 CANL
PNK 14 CANH
I13
MAIN BODY ECU (LEFT SIDE OF DASH)
5 WHT
6 GRN
WHT 24 CA1L
GRN 25 CA1H
(LEFT SIDE OF DASH)
J/C A72
7 WHT
8 BLK
WHT 8
BLK 2
9 WHT
3 BLK
WHT 4
BLK 5
IA4
WHT 30 CA3N
BLK 31 CA3P
I4
1 7
BLK
WHT
9 RED
10 WHT
11 GRY
RED 11 TC
LT GRN 35 CA2L
GRN 34 CA2H
I3
POWER MANAGEMENT CONTROL ECU (LEFT SIDE OF DASH)
GRN 4
VIO 11
LT GRN 5
BLK 22
IO3
BLK 2
BLK 21
GRN 3
GRN 10
TO1
BLK 20
RED 9
J/C O30 (W/ BLIND SPOT MONITOR SYSTEM) (RIGHT REAR OF VEHICLE)
RED 8 CA1P
BLK 4 CA1N
RIGHT BLIND SPOT MONITOR SENSOR (RIGHT SIDE OF REAR BUMPER)
CA1H 37 GRY
CA1L 38 WHT
CA2H 35 BLK
CA2L 34 WHT
SKID CONTROL ECU W/ ACTUATOR (BRAKE BOOSTER W/ MASTER CYLINDER ASSEMBLY) (RIGHT SIDE OF ENGINE COMPT)
12 WHT
13 YEL
YEL
WHT
13 CANH
22 CANL
I47
AIRBAG SENSOR ASSEMBLY (LOWER CENTER OF DASH)
WHT/BLK
T1 (BEHIND LEFT SIDE OF REAR BUMPER)
WHT/BLK
BLK
BLU
1 2 3
JUNCTION TERMINAL
BLU BLK BLK GRN BLK RED
9 20 22 11 21 10
J/C T15 (W/ BLIND SPOT MONITOR SYSTEM) (LEFT REAR OF VEHICLE)
RED BLK
8 CA1P
4 CA1N
LEFT BLIND SPOT MONITOR SENSOR (LEFT SIDE OF REAR BUMPER)
366067

Fig. 33: Computer Data Lines Circuit, Hybrid (2 of 2)

Fig. 33: Computer Data Lines Circuit, Hybrid (2 of 2)

COOLING FAN

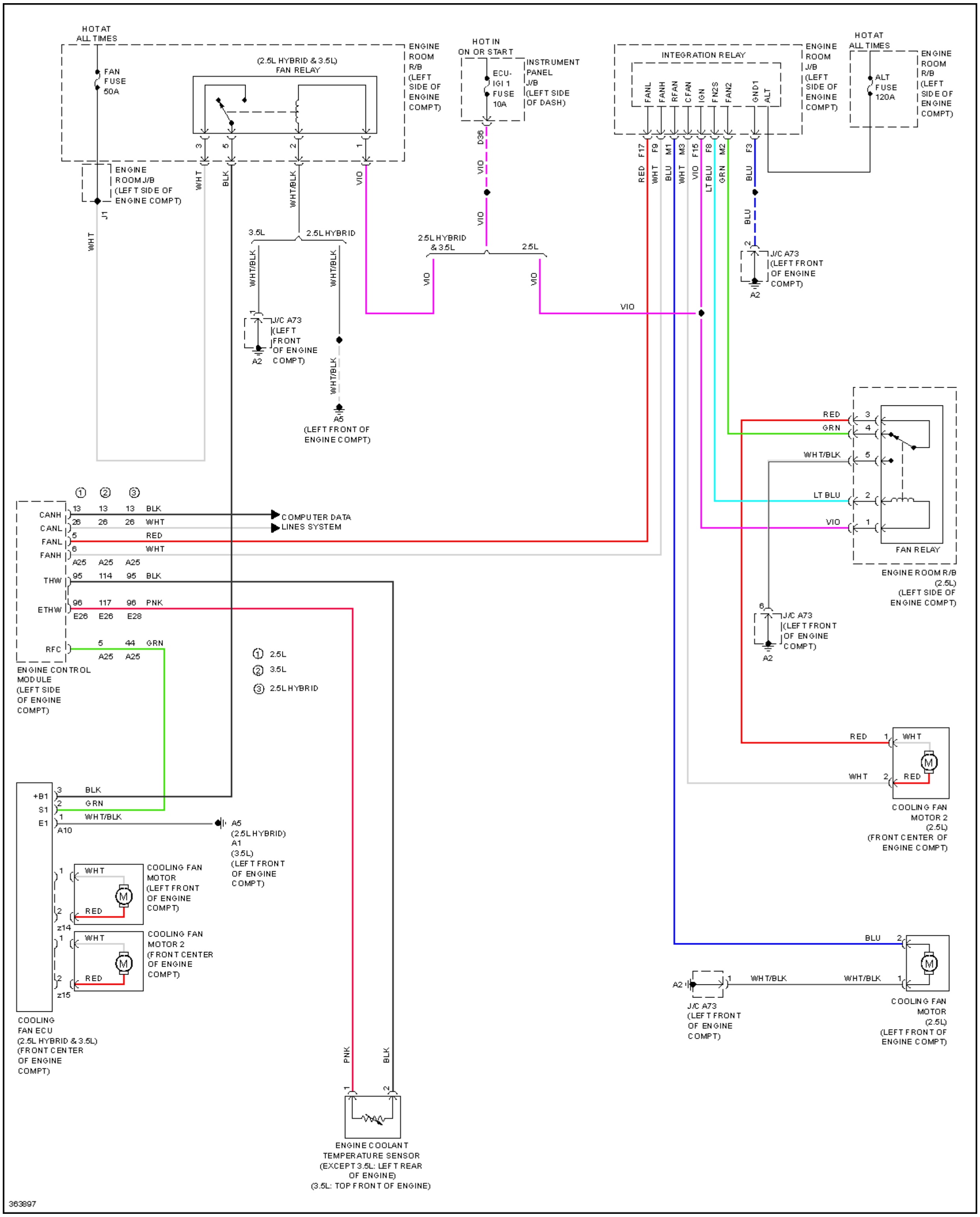
HOT AT ALL TIMES
FAN FUSE 50A
(2.5L HYBRID & 3.5L) FAN RELAY
ENGINE ROOM R/B (LEFT SIDE OF ENGINE COMPT)
ENGINE ROOM J/B (LEFT SIDE OF ENGINE COMPT)
J1
WHT
BLK
WHT/BLK
VIO
3.5L
2.5L HYBRID
J/C A73 (LEFT FRONT OF ENGINE COMPT)
A2
A5 (LEFT FRONT OF ENGINE COMPT)
HOT IN ON OR START
ECU-IGI 1 FUSE 10A
INSTRUMENT PANEL J/B (LEFT SIDE OF DASH)
D36
2.5L HYBRID & 3.5L
2.5L
INTEGRATION RELAY
FANL
FANH
RFAN
CFAN
IGN
FN2S
FAN2
GND1
ALT
ENGINE ROOM J/B (LEFT SIDE OF ENGINE COMPT)
F17
F9
M1
M3
F15
F8
M2
F3
RED
WHT
BLU
LT BLU
GRN
HOT AT ALL TIMES
ALT FUSE 120A
ENGINE ROOM R/B (LEFT SIDE OF ENGINE COMPT)
FAN RELAY
ENGINE ROOM R/B (2.5L) (LEFT SIDE OF ENGINE COMPT)
①
②
③
CANH
CANL
FANL
FANH
THW
ETHW
RFC
13
26
5
6
A25
95
114
96
117
E26
E28
44
PPK
COMPUTER DATA LINES SYSTEM
ENGINE CONTROL MODULE (LEFT SIDE OF ENGINE COMPT)
① 2.5L
② 3.5L
③ 2.5L HYBRID
+B1
S1
E1
A10
A5 (2.5L HYBRID) A1 (3.5L) (LEFT FRONT OF ENGINE COMPT)
COOLING FAN MOTOR (LEFT FRONT OF ENGINE COMPT)
COOLING FAN MOTOR 2 (FRONT CENTER OF ENGINE COMPT)
z14
z15
M
COOLING FAN ECU (2.5L HYBRID & 3.5L) (FRONT CENTER OF ENGINE COMPT)
PNK
ENGINE COOLANT TEMPERATURE SENSOR (EXCEPT 3.5L: LEFT REAR OF ENGINE) (3.5L: TOP FRONT OF ENGINE)
COOLING FAN MOTOR 2 (2.5L) (FRONT CENTER OF ENGINE COMPT)
COOLING FAN MOTOR (2.5L) (LEFT FRONT OF ENGINE COMPT)
363897

Fig. 34: Cooling Fan Circuit

CRUISE CONTROL

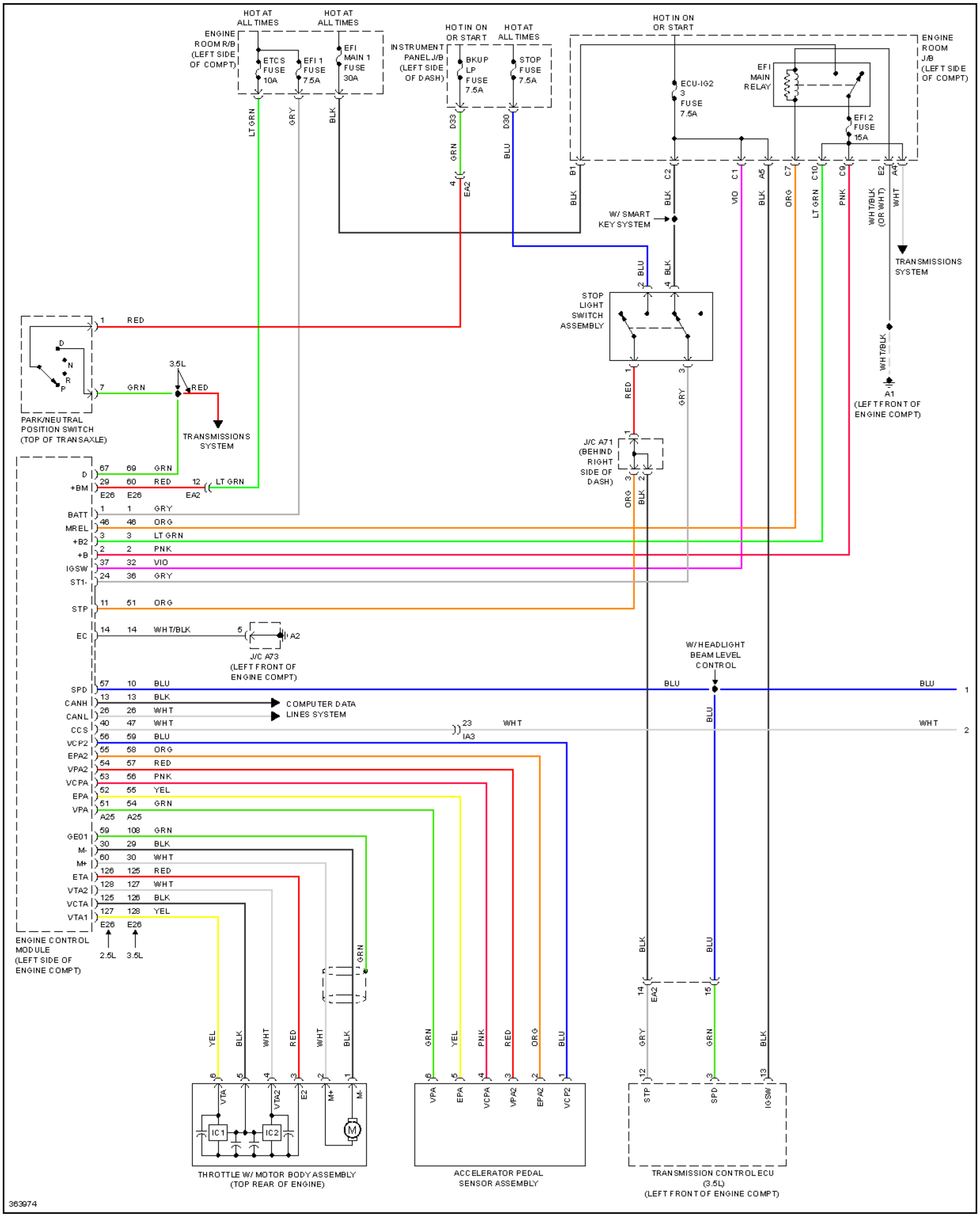
HOT AT ALL TIMES
HOT AT ALL TIMES
ENGINE ROOM R/B (LEFT SIDE OF COMPT)
ETCS FUSE 10A
EFI 1 FUSE 7.5A
EFI MAIN 1 FUSE 30A
HOT IN ON OR START
HOT AT ALL TIMES
INSTRUMENT PANEL J/B (LEFT SIDE OF DASH)
BKUP LP FUSE 7.5A
STOP FUSE 7.5A
HOT IN ON OR START
ECU-IG2 3 FUSE 7.5A
EFI MAIN RELAY
EFI 2 FUSE 15A
ENGINE ROOM J/B (LEFT SIDE OF COMPT)
LT GRN
GRY
BLK
D33
GRN
D30
BLU
4 EA2
B1 BLK
C2 BLK
C1 VIO
A5 BLK
C7 ORG
C10 LT GRN
C9 PNK
E2 WHT/BLK (OR WHT)
A4 WHT
W/ SMART KEY SYSTEM
TRANSMISSIONS SYSTEM
2 BLU
4 BLK
STOP LIGHT SWITCH ASSEMBLY
1 RED
WHT/BLK
A1 (LEFT FRONT OF ENGINE COMPT)
D N R P
PARK/NEUTRAL POSITION SWITCH (TOP OF TRANSAXLE)
1 RED
7 GRN
3.5L
RED
TRANSMISSIONS SYSTEM
1 RED
3 GRY
J/C A71 (BEHIND RIGHT SIDE OF DASH)
3 ORG
2 BLK
D 67 69 GRN
+BM 29 60 RED 12 LT GRN
E26 E26 EA2
BATT 1 1 GRY
MREL 46 46 ORG
+B2 3 3 LT GRN
+B 2 2 PNK
IGSW 37 32 VIO
ST1- 24 36 GRY
STP 11 51 ORG
EC 14 14 WHT/BLK 5 A2
J/C A73 (LEFT FRONT OF ENGINE COMPT)
W/ HEADLIGHT BEAM LEVEL CONTROL
SPD 57 10 BLU
BLU
BLU 1
CANH 13 13 BLK
COMPUTER DATA LINES SYSTEM
CANL 26 26 WHT
CCS 40 47 WHT 23 IA3 WHT
WHT 2
VCP2 56 59 BLU
EPA2 55 58 ORG
VPA2 54 57 RED
VCPA 53 56 PNK
EPA 52 55 YEL
VPA 51 54 GRN
A25 A25
GE01 59 108 GRN
M- 30 29 BLK
M+ 60 30 WHT
ETA 126 125 RED
VTA2 128 127 WHT
VCTA 125 126 BLK
VTA1 127 128 YEL
E26 E26
2.5L 3.5L
ENGINE CONTROL MODULE (LEFT SIDE OF ENGINE COMPT)
GRN
BLK
BLU
14 EA2
15
YEL BLK WHT RED WHT BLK
6 5 4 3 2 1
VTA VTA2 E2 M+ M-
IC1 IC2 M
THROTTLE W/ MOTOR BODY ASSEMBLY (TOP REAR OF ENGINE)
GRN YEL PNK RED ORG BLU
6 5 4 3 2 1
VPA EPA VCPA VPA2 EPA2 VCP2
ACCELERATOR PEDAL SENSOR ASSEMBLY
GRY GRN BLK
12 3 13
STP SPD IGSW
TRANSMISSION CONTROL ECU (3.5L) (LEFT FRONT OF ENGINE COMPT)
363974

Fig. 35: Cruise Control Circuit, Except Hybrid (1 of 2)

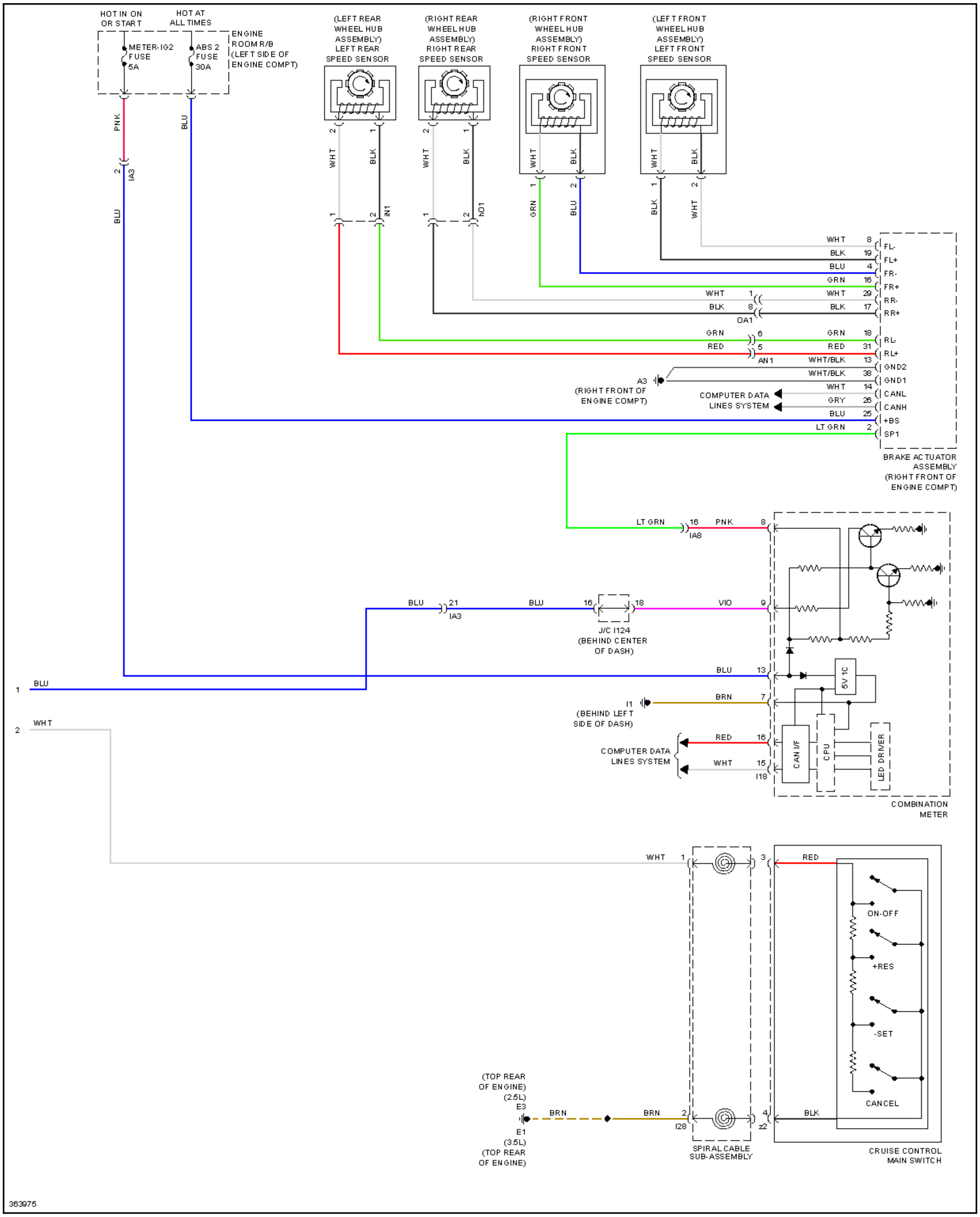
HOT IN ON OR START
HOT AT ALL TIMES
METER-IG2 FUSE 5A
ABS 2 FUSE 30A
ENGINE ROOM R/B (LEFT SIDE OF ENGINE COMPT)
(LEFT REAR WHEEL HUB ASSEMBLY) LEFT REAR SPEED SENSOR
(RIGHT REAR WHEEL HUB ASSEMBLY) RIGHT REAR SPEED SENSOR
(RIGHT FRONT WHEEL HUB ASSEMBLY) RIGHT FRONT SPEED SENSOR
(LEFT FRONT WHEEL HUB ASSEMBLY) LEFT FRONT SPEED SENSOR
PNK
BLU
IA3
WHT
BLK
GRN
IN1
HO1
OA1
AN1
RED
LT GRN
WHT/BLK
GRY
FL-
FL+
FR-
FR+
RR-
RR+
RL-
RL+
GND2
GND1
CANL
CANH
+BS
SP1
A3 (RIGHT FRONT OF ENGINE COMPT)
COMPUTER DATA LINES SYSTEM
BRAKE ACTUATOR ASSEMBLY (RIGHT FRONT OF ENGINE COMPT)
IA8
VIO
J/C I124 (BEHIND CENTER OF DASH)
BRN
I1 (BEHIND LEFT SIDE OF DASH)
I18
5V IC
CAN I/F
CPU
LED DRIVER
COMBINATION METER
1
2
ON-OFF
+RES
-SET
CANCEL
(TOP REAR OF ENGINE) (2.5L) E3
E1 (3.5L) (TOP REAR OF ENGINE)
I28
Z2
SPIRAL CABLE SUB-ASSEMBLY
CRUISE CONTROL MAIN SWITCH
363975

Fig. 36: Cruise Control Circuit, Except Hybrid (2 of 2)

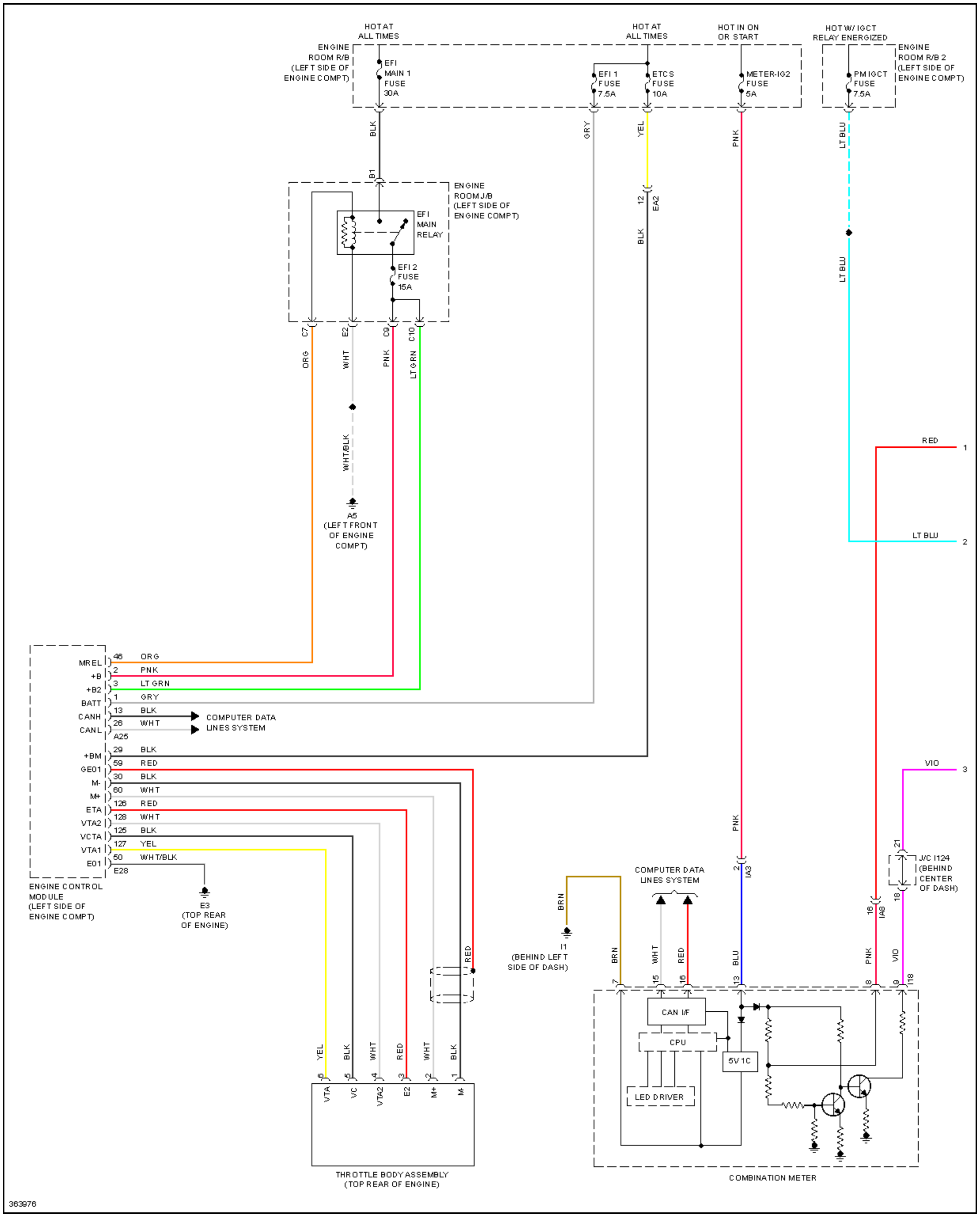
HOT AT ALL TIMES
HOT AT ALL TIMES
HOT IN ON OR START
HOT W/ IGCT RELAY ENERGIZED
ENGINE ROOM R/B (LEFT SIDE OF ENGINE COMPT)
EFI MAIN 1 FUSE 30A
EFI 1 FUSE 7.5A
ETCS FUSE 10A
METER-IG2 FUSE 5A
ENGINE ROOM R/B 2 (LEFT SIDE OF ENGINE COMPT)
PM IGCT FUSE 7.5A
BLK
GRY
YEL
PNK
LT BLU
B1
ENGINE ROOM J/B (LEFT SIDE OF ENGINE COMPT)
EFI MAIN RELAY
EFI 2 FUSE 15A
12
EA2
BLK
C7
E2
C9
C10
ORG
WHT
PNK
LT GRN
WHT/BLK
A5 (LEFT FRONT OF ENGINE COMPT)
RED
1
LT BLU
2
VIO
3
MREL
+B
+B2
BATT
CANH
CANL
+BM
GE01
M-
M+
ETA
VTA2
VCTA
VTA1
E01
46
2
3
1
13
26
A25
29
59
30
60
126
128
125
127
50
E28
ORG
PNK
LT GRN
GRY
BLK
WHT
COMPUTER DATA LINES SYSTEM
BLK
RED
BLK
WHT
RED
WHT
BLK
YEL
WHT/BLK
ENGINE CONTROL MODULE (LEFT SIDE OF ENGINE COMPT)
E3 (TOP REAR OF ENGINE)
RED
YEL
BLK
WHT
RED
WHT
BLK
6
5
4
3
2
1
VTA
VC
VTA2
E2
M+
M-
THROTTLE BODY ASSEMBLY (TOP REAR OF ENGINE)
BRN
I1 (BEHIND LEFT SIDE OF DASH)
COMPUTER DATA LINES SYSTEM
PNK
2
IA3
J/C I124 (BEHIND CENTER OF DASH)
21
18
16
IA8
BRN
WHT
RED
BLU
PNK
VIO
7
15
16
13
8
9
I18
CAN I/F
CPU
5V IC
LED DRIVER
COMBINATION METER
363976

Fig. 37: Cruise Control Circuit, Hybrid (1 of 2)

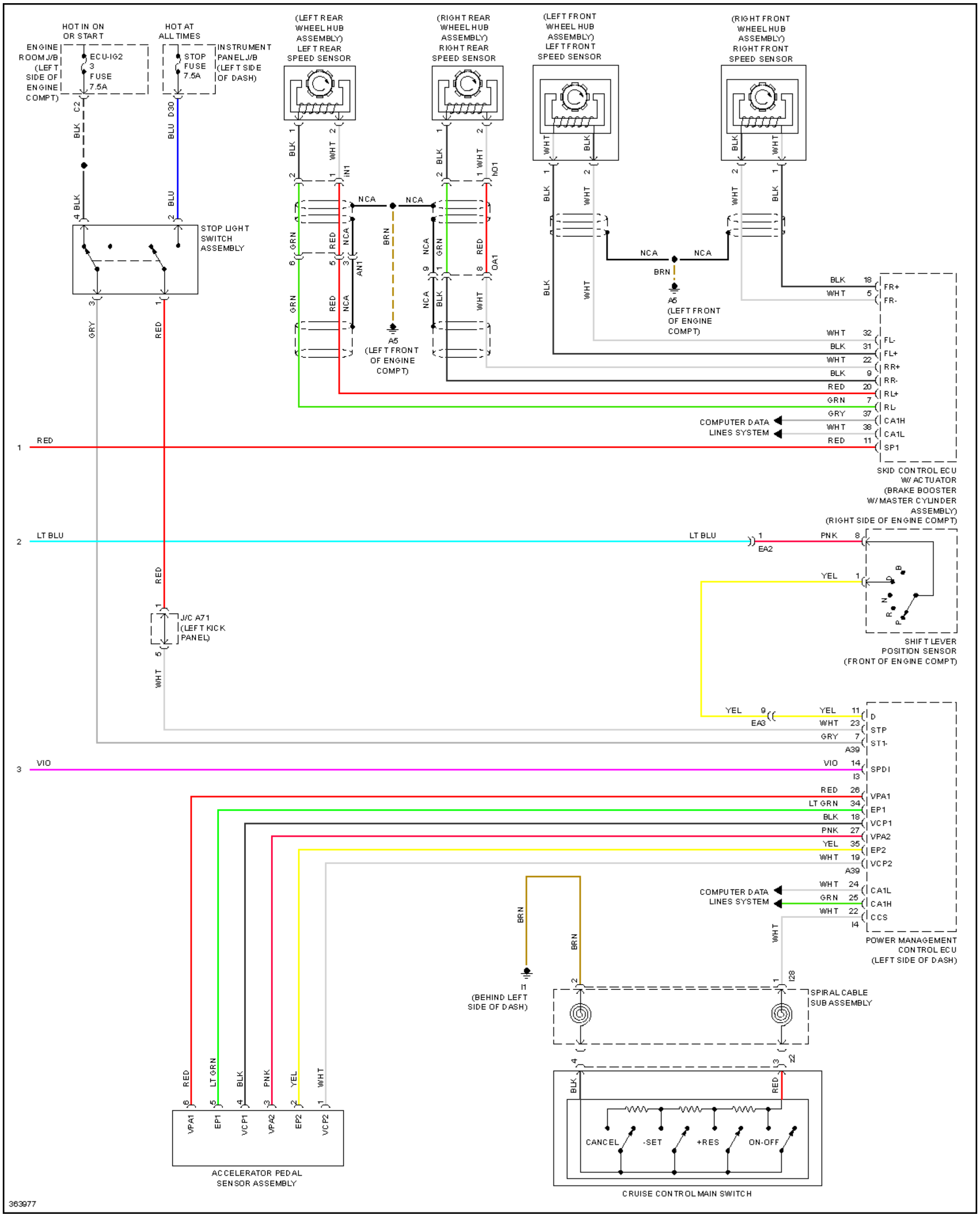
HOT IN ON OR START
HOT AT ALL TIMES
ENGINE ROOM J/B (LEFT SIDE OF ENGINE COMPT)
ECU-IG2 3 FUSE 7.5A
STOP FUSE 7.5A
INSTRUMENT PANEL J/B (LEFT SIDE OF DASH)
(LEFT REAR WHEEL HUB ASSEMBLY) LEFT REAR SPEED SENSOR
(RIGHT REAR WHEEL HUB ASSEMBLY) RIGHT REAR SPEED SENSOR
(LEFT FRONT WHEEL HUB ASSEMBLY) LEFT FRONT SPEED SENSOR
(RIGHT FRONT WHEEL HUB ASSEMBLY) RIGHT FRONT SPEED SENSOR
C2
D30
BLK
BLU
IN1
hO1
AN1
OA1
NCA
BRN
GRN
RED
WHT
STOP LIGHT SWITCH ASSEMBLY
A5 (LEFT FRONT OF ENGINE COMPT)
GRY
FR+
FR-
FL-
FL+
RR+
RR-
RL+
RL-
CA1H
CA1L
SP1
COMPUTER DATA LINES SYSTEM
SKID CONTROL ECU W/ ACTUATOR (BRAKE BOOSTER W/ MASTER CYLINDER ASSEMBLY) (RIGHT SIDE OF ENGINE COMPT)
1
2
3
RED
LT BLU
VIO
EA2
PNK
YEL
SHIFT LEVER POSITION SENSOR (FRONT OF ENGINE COMPT)
J/C A71 (LEFT KICK PANEL)
EA3
D
STP
ST1-
A39
SPDI
I3
VPA1
EP1
VCP1
VPA2
EP2
VCP2
LT GRN
CA1L
CA1H
CCS
I4
POWER MANAGEMENT CONTROL ECU (LEFT SIDE OF DASH)
I1 (BEHIND LEFT SIDE OF DASH)
I28
SPIRAL CABLE SUB ASSEMBLY
I22
ACCELERATOR PEDAL SENSOR ASSEMBLY
CANCEL
-SET
+RES
ON-OFF
CRUISE CONTROL MAIN SWITCH
363977

Fig. 38: Cruise Control Circuit, Hybrid (2 of 2)

DEFOGGERS

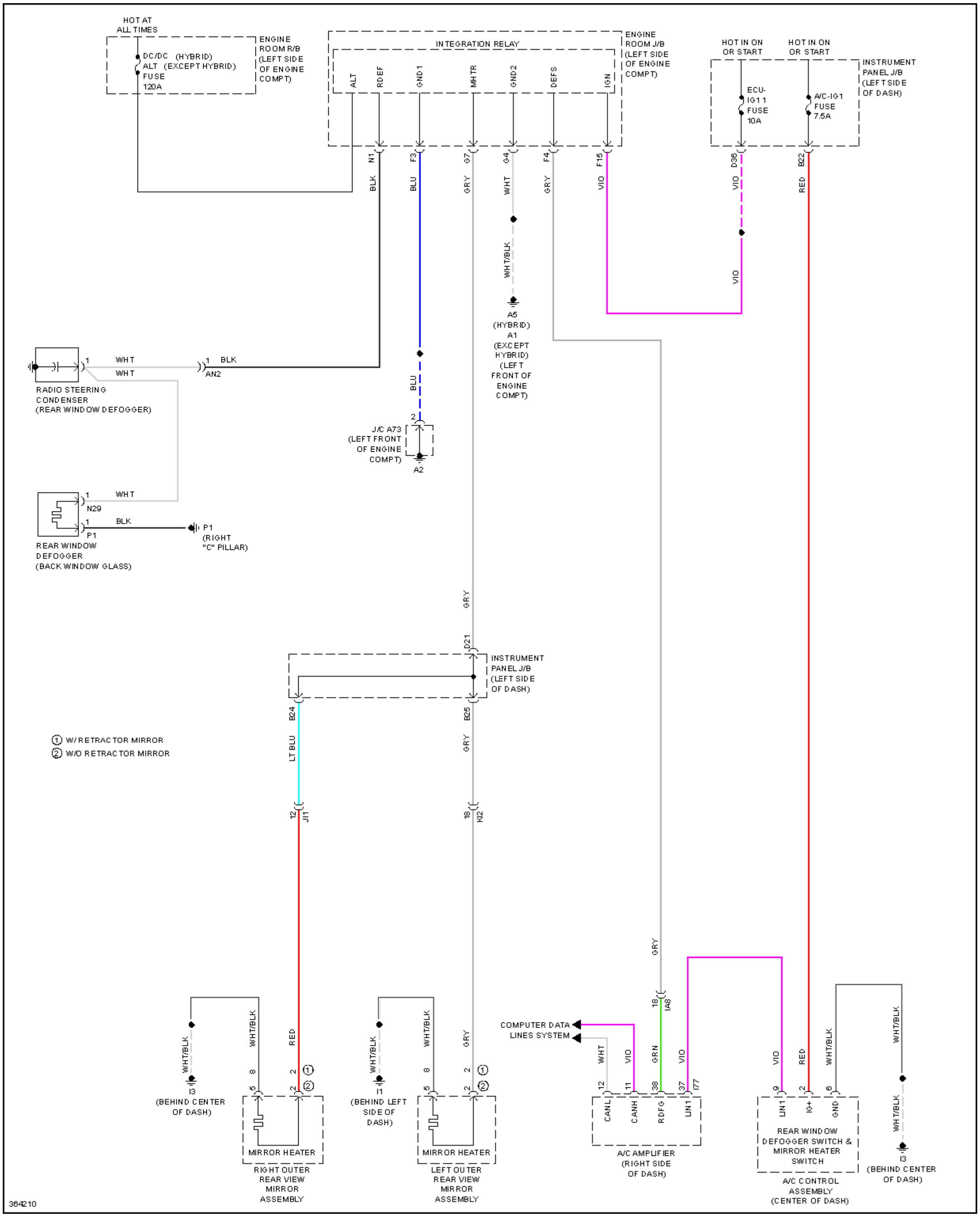
HOT AT ALL TIMES
DC/DC (HYBRID) ALT (EXCEPT HYBRID) FUSE 120A
ENGINE ROOM R/B (LEFT SIDE OF ENGINE COMPT)
INTEGRATION RELAY
ALT
RDEF
GND1
MHTR
GND2
DEFS
IGN
ENGINE ROOM J/B (LEFT SIDE OF ENGINE COMPT)
HOT IN ON OR START
HOT IN ON OR START
ECU-IG11 FUSE 10A
A/C-IG1 FUSE 7.5A
INSTRUMENT PANEL J/B (LEFT SIDE OF DASH)
N1
F3
G7
G4
F4
F15
D36
B22
BLK
BLU
GRY
WHT
GRY
VIO
VIO
RED
WHT/BLK
VIO
A5 (HYBRID) A1 (EXCEPT HYBRID) (LEFT FRONT OF ENGINE COMPT)
BLU
2
J/C A73 (LEFT FRONT OF ENGINE COMPT)
A2
1
WHT
WHT
1
BLK
AN2
RADIO STEERING CONDENSER (REAR WINDOW DEFOGGER)
1
WHT
N29
1
BLK
P1
P1 (RIGHT "C" PILLAR)
REAR WINDOW DEFOGGER (BACK WINDOW GLASS)
GRY
D21
INSTRUMENT PANEL J/B (LEFT SIDE OF DASH)
B24
B25
LT BLU
GRY
① W/ RETRACTOR MIRROR
② W/O RETRACTOR MIRROR
12
J11
18
K12
GRY
18
IA8
WHT/BLK
WHT/BLK
RED
8 2 ①
5 2 ②
I3 (BEHIND CENTER OF DASH)
MIRROR HEATER
RIGHT OUTER REAR VIEW MIRROR ASSEMBLY
WHT/BLK
WHT/BLK
GRY
8 2 ①
5 2 ②
I1 (BEHIND LEFT SIDE OF DASH)
MIRROR HEATER
LEFT OUTER REAR VIEW MIRROR ASSEMBLY
COMPUTER DATA LINES SYSTEM
WHT
VIO
GRN
VIO
12
11
38
37
I77
CANL
CANH
RDFG
LIN1
A/C AMPLIFIER (RIGHT SIDE OF DASH)
VIO
RED
WHT/BLK
9
2
6
LIN1
IG+
GND
REAR WINDOW DEFOGGER SWITCH & MIRROR HEATER SWITCH
A/C CONTROL ASSEMBLY (CENTER OF DASH)
WHT/BLK
WHT/BLK
I3 (BEHIND CENTER OF DASH)
364210

Fig. 39: Defoggers Circuit

ELECTRONIC POWER STEERING

2.5L

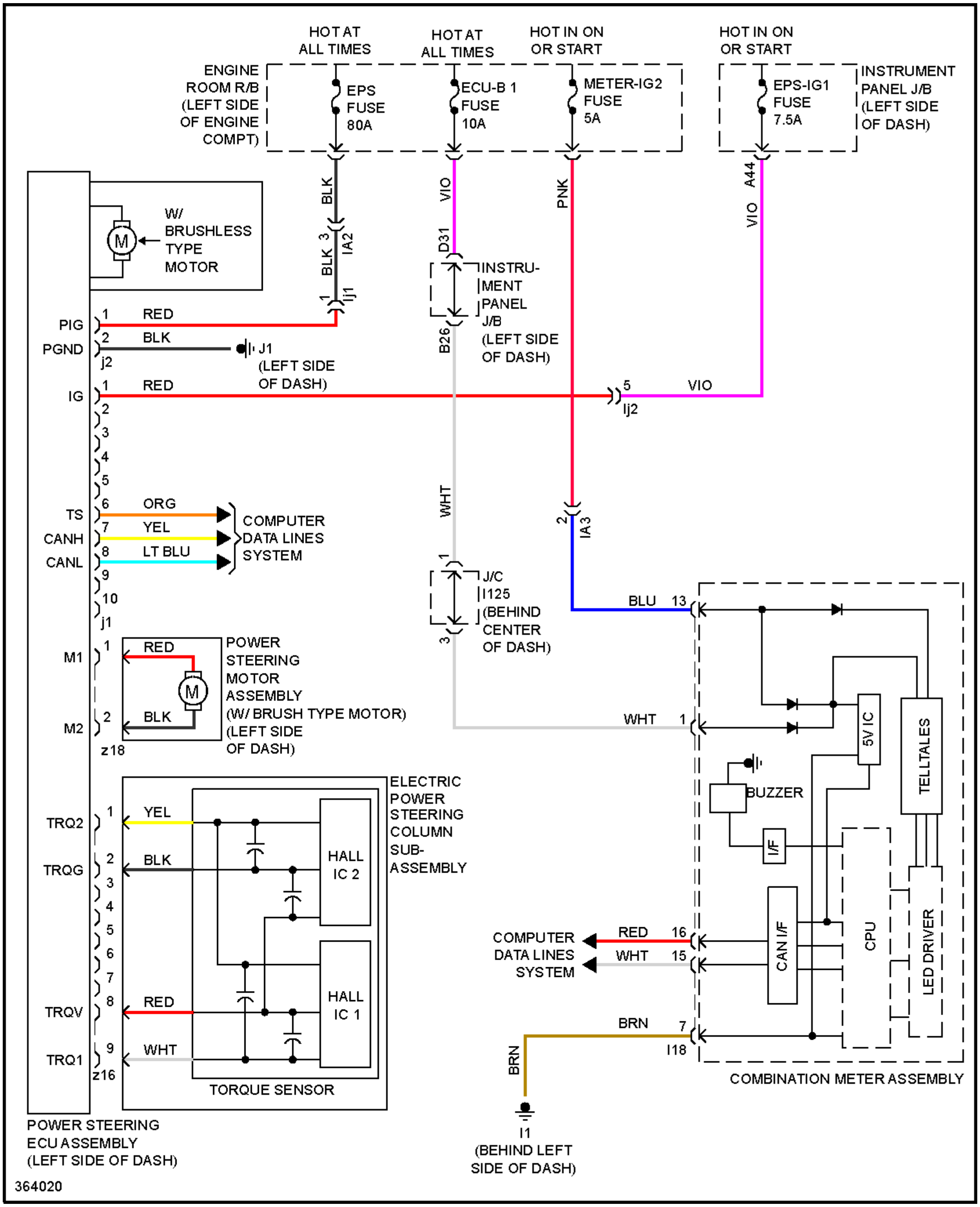
HOT AT ALL TIMES
HOT AT ALL TIMES
HOT IN ON OR START
HOT IN ON OR START
ENGINE ROOM R/B (LEFT SIDE OF ENGINE COMPT)
EPS FUSE 80A
ECU-B 1 FUSE 10A
METER-IG2 FUSE 5A
EPS-IG1 FUSE 7.5A
INSTRUMENT PANEL J/B (LEFT SIDE OF DASH)
BLK
VIO
PNK
A44
VIO
3
IA2
BLK
1
Ij1
D31
INSTRU-MENT PANEL J/B (LEFT SIDE OF DASH)
B26
W/ BRUSHLESS TYPE MOTOR
M
PIG
1
RED
PGND
2
BLK
j2
J1 (LEFT SIDE OF DASH)
IG
1
RED
5
VIO
Ij2
2
3
4
5
TS
6
ORG
CANH
7
YEL
CANL
8
LT BLU
9
10
j1
COMPUTER DATA LINES SYSTEM
WHT
2
IA3
1
J/C I125 (BEHIND CENTER OF DASH)
3
BLU
13
WHT
1
M1
1
RED
M
M2
2
BLK
z18
POWER STEERING MOTOR ASSEMBLY (W/ BRUSH TYPE MOTOR) (LEFT SIDE OF DASH)
5V IC
TELLTALES
BUZZER
I/F
CPU
CAN I/F
LED DRIVER
TRQ2
1
YEL
TRQG
2
BLK
3
4
5
6
7
TRQV
8
RED
TRQ1
9
WHT
z16
HALL IC 2
HALL IC 1
TORQUE SENSOR
ELECTRIC POWER STEERING COLUMN SUB-ASSEMBLY
COMPUTER DATA LINES SYSTEM
RED
16
WHT
15
BRN
7
I18
BRN
I1 (BEHIND LEFT SIDE OF DASH)
COMBINATION METER ASSEMBLY
POWER STEERING ECU ASSEMBLY (LEFT SIDE OF DASH)
364020

Fig. 40: 2.5L, Electronic Power Steering Circuit, Except Hybrid

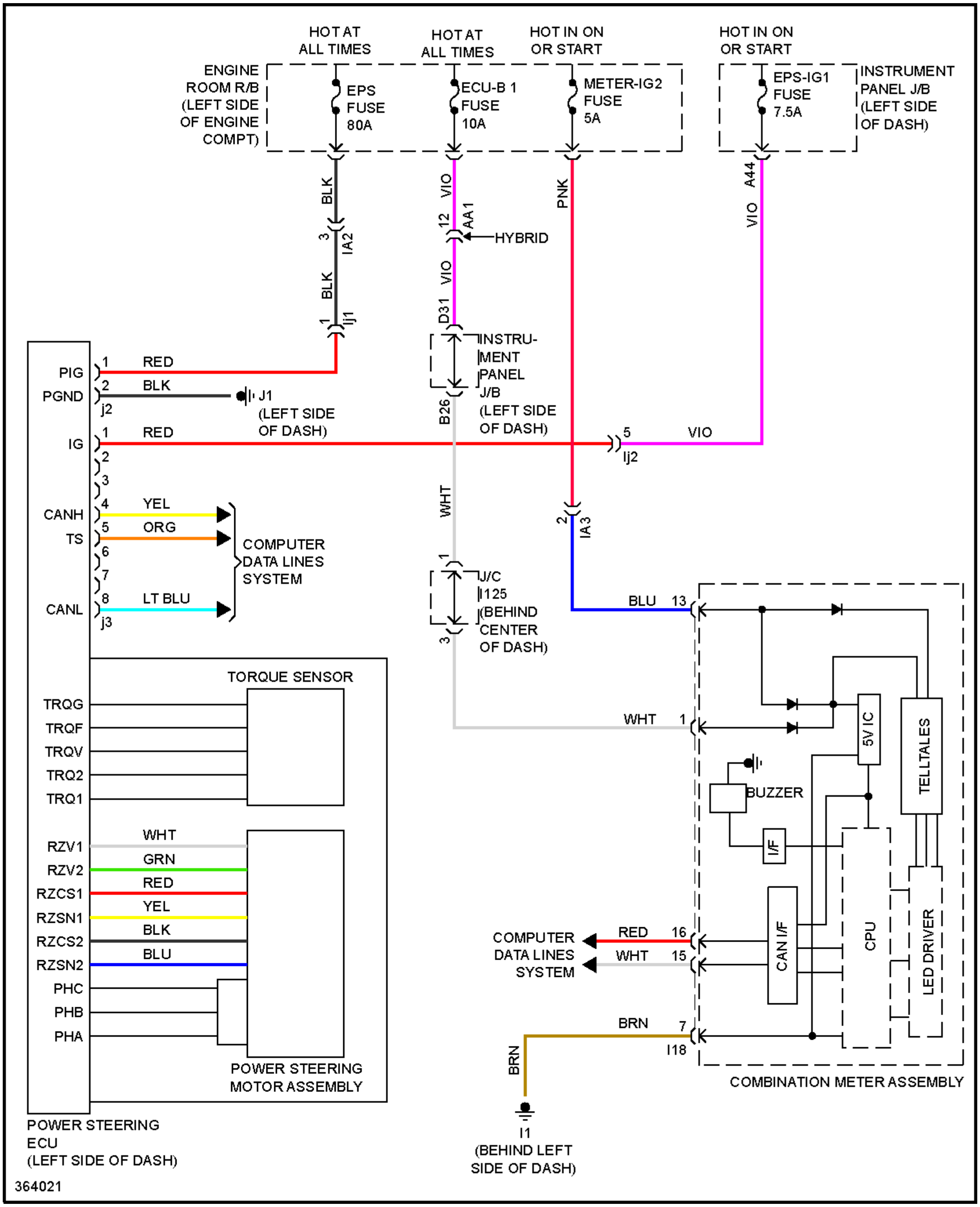
HOT AT ALL TIMES
HOT AT ALL TIMES
HOT IN ON OR START
HOT IN ON OR START
ENGINE ROOM R/B (LEFT SIDE OF ENGINE COMPT)
EPS FUSE 80A
ECU-B 1 FUSE 10A
METER-IG2 FUSE 5A
EPS-IG1 FUSE 7.5A
INSTRUMENT PANEL J/B (LEFT SIDE OF DASH)
BLK
VIO
PNK
A44
VIO
3
IA2
12
AA1
HYBRID
BLK
VIO
1
Ij1
D31
INSTRU-MENT PANEL J/B (LEFT SIDE OF DASH)
B26
PIG
PGND
1
RED
2
BLK
j2
J1 (LEFT SIDE OF DASH)
IG
1
RED
5
VIO
Ij2
2
3
4
YEL
CANH
5
ORG
TS
6
7
8
LT BLU
CANL
j3
COMPUTER DATA LINES SYSTEM
WHT
2
IA3
1
J/C I125 (BEHIND CENTER OF DASH)
3
BLU
13
WHT
1
TORQUE SENSOR
TRQG
TRQF
TRQV
TRQ2
TRQ1
RZV1
WHT
RZV2
GRN
RZCS1
RED
RZSN1
YEL
RZCS2
BLK
RZSN2
BLU
PHC
PHB
PHA
POWER STEERING MOTOR ASSEMBLY
POWER STEERING ECU (LEFT SIDE OF DASH)
5V IC
TELLTALES
BUZZER
I/F
CAN I/F
CPU
LED DRIVER
COMPUTER DATA LINES SYSTEM
RED
16
WHT
15
BRN
7
I18
BRN
I1 (BEHIND LEFT SIDE OF DASH)
COMBINATION METER ASSEMBLY
364021

Fig. 41: 2.5L, Electronic Power Steering Circuit, Hybrid

3.5L

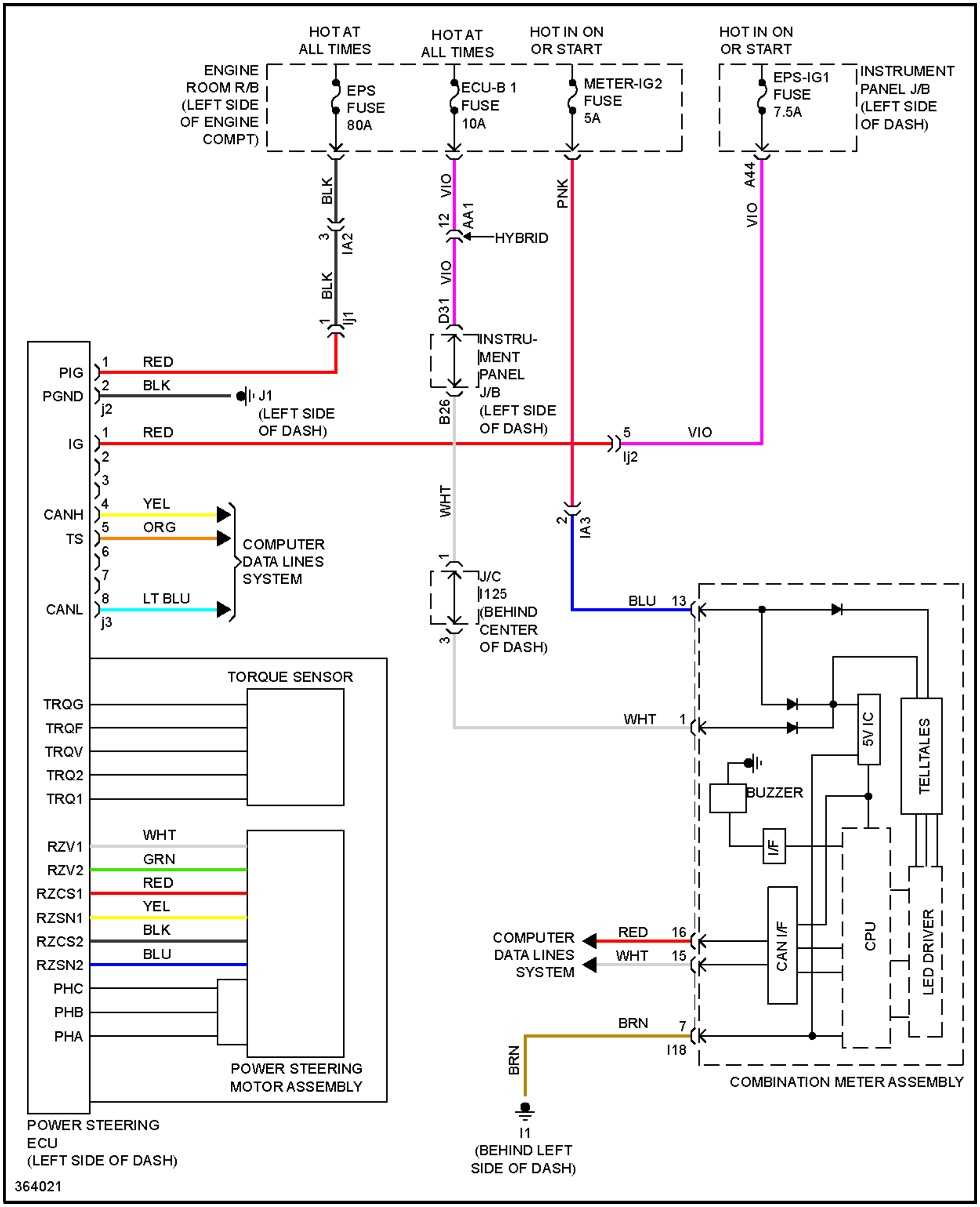
HOT AT ALL TIMES
HOT AT ALL TIMES
HOT IN ON OR START
HOT IN ON OR START
ENGINE ROOM R/B (LEFT SIDE OF ENGINE COMPT)
EPS FUSE 80A
ECU-B 1 FUSE 10A
METER-IG2 FUSE 5A
EPS-IG1 FUSE 7.5A
INSTRUMENT PANEL J/B (LEFT SIDE OF DASH)
BLK
VIO
PNK
A44
VIO
3
IA2
12
AA1
HYBRID
BLK
VIO
1
Ij1
D31
INSTRU-MENT PANEL J/B (LEFT SIDE OF DASH)
B26
PIG
1
RED
PGND
2
BLK
j2
J1 (LEFT SIDE OF DASH)
IG
1
RED
5
VIO
Ij2
2
3
WHT
CANH
4
YEL
TS
5
ORG
COMPUTER DATA LINES SYSTEM
6
7
2
IA3
CANL
8
LT BLU
j3
1
J/C I125 (BEHIND CENTER OF DASH)
3
BLU
13
WHT
1
TORQUE SENSOR
TRQG
TRQF
TRQV
TRQ2
TRQ1
5V IC
TELLTALES
BUZZER
I/F
RZV1
WHT
RZV2
GRN
RZCS1
RED
RZSN1
YEL
RZCS2
BLK
RZSN2
BLU
CPU
LED DRIVER
CAN I/F
COMPUTER DATA LINES SYSTEM
RED
16
WHT
15
PHC
PHB
PHA
BRN
7
I18
BRN
POWER STEERING MOTOR ASSEMBLY
COMBINATION METER ASSEMBLY
POWER STEERING ECU (LEFT SIDE OF DASH)
I1 (BEHIND LEFT SIDE OF DASH)
364021

Fig. 42: 3.5L, Electronic Power Steering Circuit

ENGINE PERFORMANCE

2.5L

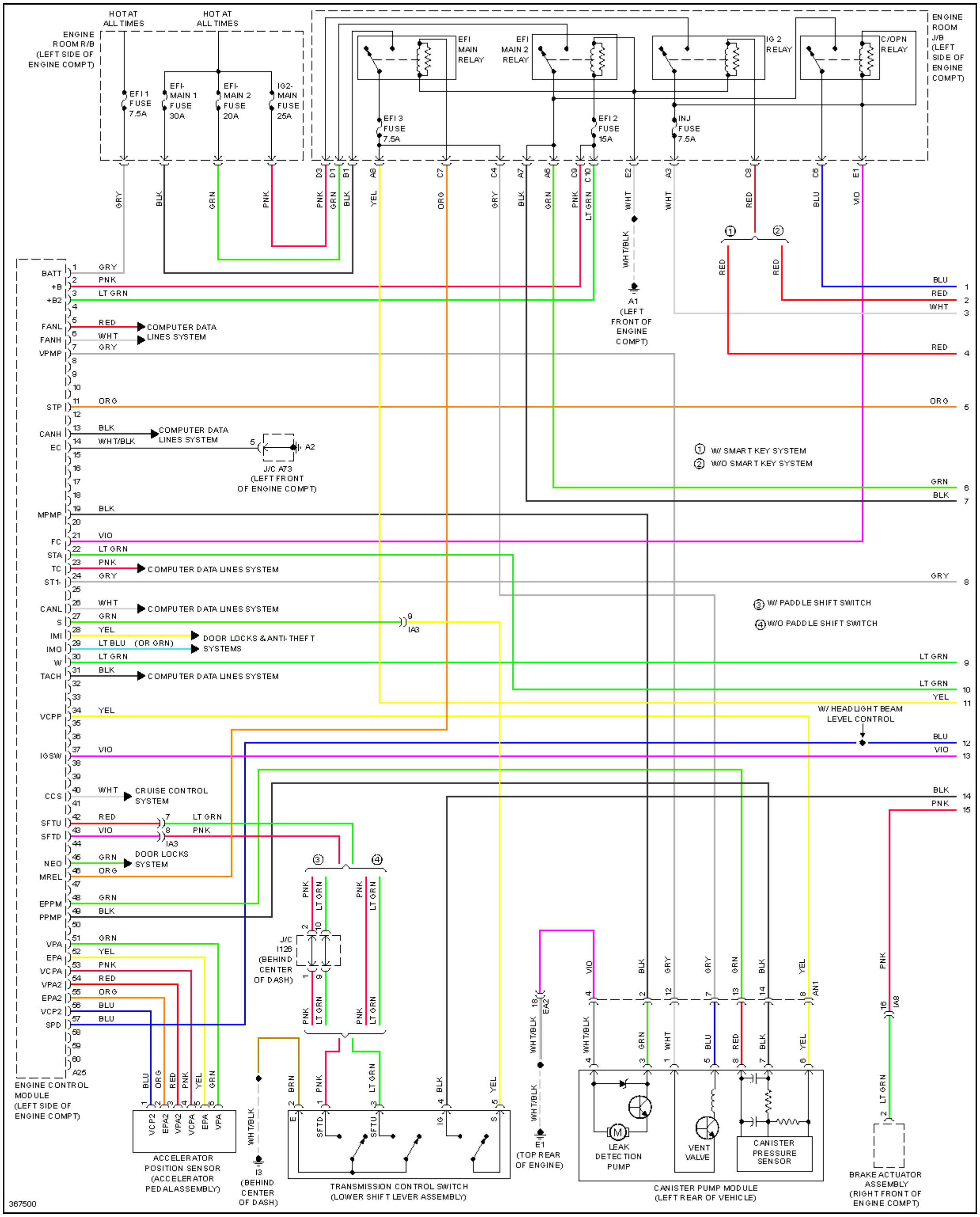
HOT AT ALL TIMES
HOT AT ALL TIMES
ENGINE ROOM R/B (LEFT SIDE OF ENGINE COMPT)
EFI 1 FUSE 7.5A
EFI-MAIN 1 FUSE 30A
EFI-MAIN 2 FUSE 20A
IG2-MAIN FUSE 25A
EFI MAIN RELAY
EFI MAIN 2 RELAY
IG 2 RELAY
C/OPN RELAY
ENGINE ROOM J/B (LEFT SIDE OF ENGINE COMPT)
EFI 3 FUSE 7.5A
EFI 2 FUSE 15A
INJ FUSE 7.5A
D3
D1
B1
A8
C7
C4
A7
A6
C9
C10
E2
A3
C8
C6
E1
GRY
BLK
GRN
PNK
PNK
GRN
BLK
YEL
ORG
GRY
BLK
GRN
PNK
LT GRN
WHT
WHT
RED
BLU
VIO
WHT/BLK
A1 (LEFT FRONT OF ENGINE COMPT)
①
②
RED
RED
BATT
+B
+B2
FANL
FANH
VPMP
STP
CANH
EC
MPMP
FC
STA
TC
ST1-
CANL
S
IMI
IMO
W
TACH
VCPP
IGSW
CCS
SFTU
SFTD
NEO
MREL
EPPM
PPMP
VPA
EPA
VCPA
VPA2
EPA2
VCP2
SPD
A25
1 GRY
2 PNK
3 LT GRN
4
5 RED
6 WHT
7 GRY
11 ORG
13 BLK
14 WHT/BLK
19 BLK
21 VIO
22 LT GRN
23 PNK
24 GRY
26 WHT
27 GRN
28 YEL
29 LT BLU (OR GRN)
30 LT GRN
31 BLK
34 YEL
37 VIO
40 WHT
42 RED
43 VIO
45 GRN
46 ORG
48 GRN
49 BLK
51 GRN
52 YEL
53 PNK
54 RED
55 ORG
56 BLU
57 BLU
COMPUTER DATA LINES SYSTEM
COMPUTER DATA LINES SYSTEM
5
A2
J/C A73 (LEFT FRONT OF ENGINE COMPT)
COMPUTER DATA LINES SYSTEM
COMPUTER DATA LINES SYSTEM
DOOR LOCKS & ANTI-THEFT SYSTEMS
COMPUTER DATA LINES SYSTEM
CRUISE CONTROL SYSTEM
DOOR LOCKS SYSTEM
9
IA3
7 LT GRN
8 PNK
IA3
① W/ SMART KEY SYSTEM
② W/O SMART KEY SYSTEM
③ W/ PADDLE SHIFT SWITCH
④ W/O PADDLE SHIFT SWITCH
W/ HEADLIGHT BEAM LEVEL CONTROL
BLU 1
RED 2
WHT 3
RED 4
ORG 5
GRN 6
BLK 7
GRY 8
LT GRN 9
LT GRN 10
YEL 11
BLU 12
VIO 13
BLK 14
PNK 15
③
④
PNK
LT GRN
PNK
LT GRN
J/C I126 (BEHIND CENTER OF DASH)
2
10
1
9
ENGINE CONTROL MODULE (LEFT SIDE OF ENGINE COMPT)
BLU
ORG
RED
PNK
YEL
GRN
VCP2
EPA2
VPA2
VCPA
EPA
VPA
ACCELERATOR POSITION SENSOR (ACCELERATOR PEDAL ASSEMBLY)
WHT/BLK
I3 (BEHIND CENTER OF DASH)
BRN
PNK
LT GRN
BLK
YEL
E
SFTD
SFTU
IG
S
TRANSMISSION CONTROL SWITCH (LOWER SHIFT LEVER ASSEMBLY)
WHT/BLK
18
EA2
WHT/BLK
E1
E1 (TOP REAR OF ENGINE)
VIO
BLK
GRY
GRY
GRN
BLK
YEL
AN1
WHT/BLK
GRN
WHT
BLU
RED
BLK
YEL
M
LEAK DETECTION PUMP
VENT VALVE
CANISTER PRESSURE SENSOR
CANISTER PUMP MODULE (LEFT REAR OF VEHICLE)
PNK
16
IA8
LT GRN
BRAKE ACTUATOR ASSEMBLY (RIGHT FRONT OF ENGINE COMPT)
367500

Fig. 43: 2.5L, Engine Performance Circuit (1 of 6)

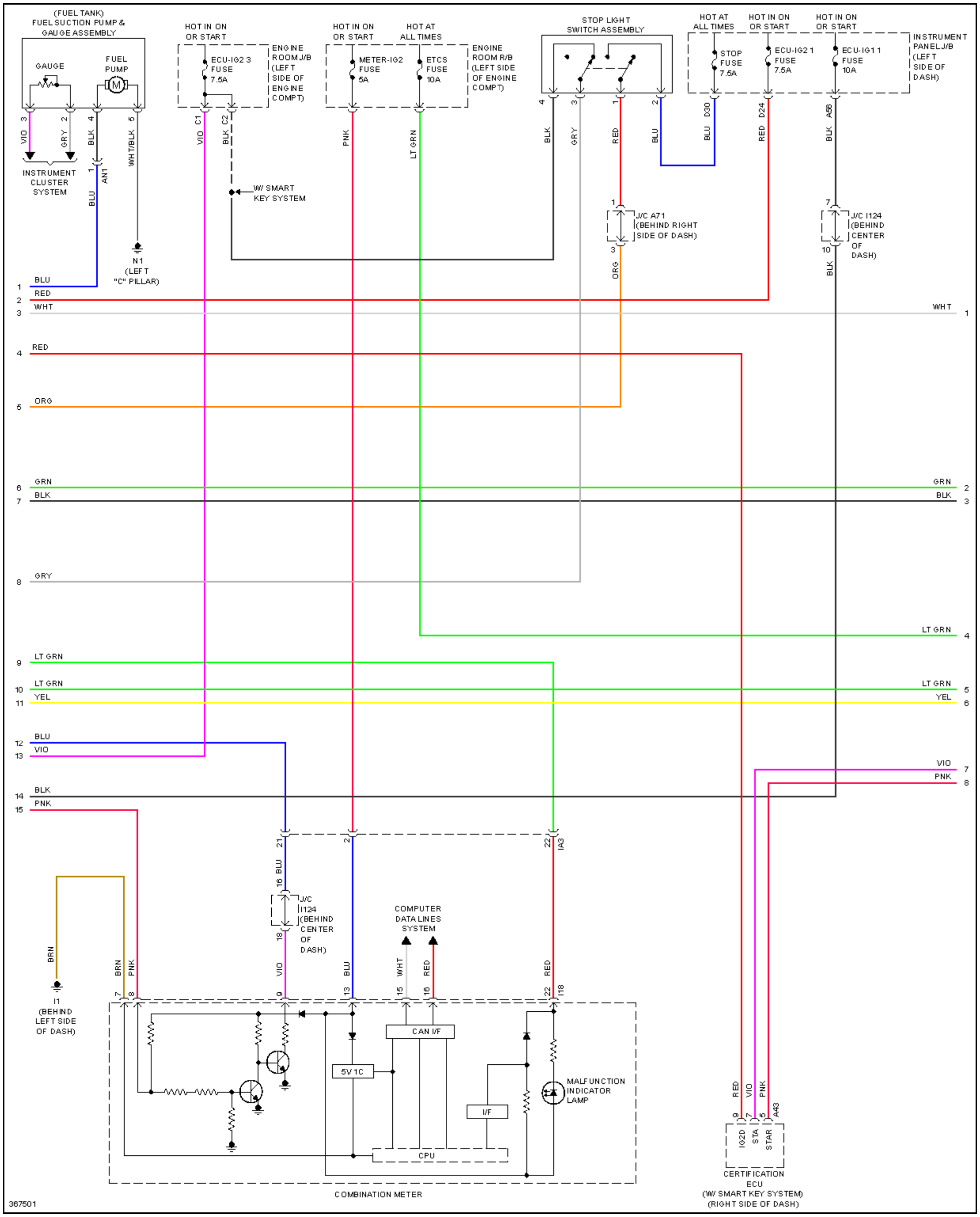
(FUEL TANK)
FUEL SUCTION PUMP & GAUGE ASSEMBLY
GAUGE
FUEL PUMP
M
HOT IN ON OR START
ECU-IG2 3 FUSE 7.5A
ENGINE ROOM J/B (LEFT SIDE OF ENGINE COMPT)
HOT IN ON OR START
HOT AT ALL TIMES
METER-IG2 FUSE 5A
ETCS FUSE 10A
ENGINE ROOM R/B (LEFT SIDE OF ENGINE COMPT)
STOP LIGHT SWITCH ASSEMBLY
HOT AT ALL TIMES
HOT IN ON OR START
HOT IN ON OR START
STOP FUSE 7.5A
ECU-IG2 1 FUSE 7.5A
ECU-IG1 1 FUSE 10A
INSTRUMENT PANEL J/B (LEFT SIDE OF DASH)
VIO 3
GRY 2
BLK 4
WHT/BLK 5
VIO C1
BLK C2
PNK
LT GRN
BLK 4
GRY 3
RED 1
BLU 2
BLU D30
RED D24
BLK A56
INSTRUMENT CLUSTER SYSTEM
1 AN1
BLU
W/ SMART KEY SYSTEM
N1 (LEFT "C" PILLAR)
J/C A71 (BEHIND RIGHT SIDE OF DASH)
1
3
ORG
J/C I124 (BEHIND CENTER OF DASH)
7
10
BLK
1 BLU
2 RED
3 WHT
WHT 1
4 RED
5 ORG
6 GRN
7 BLK
GRN 2
BLK 3
8 GRY
LT GRN 4
9 LT GRN
10 LT GRN
11 YEL
LT GRN 5
YEL 6
12 BLU
13 VIO
VIO 7
PNK 8
14 BLK
15 PNK
21
2
22 IA3
16 BLU
J/C I124 (BEHIND CENTER OF DASH)
18
VIO
BLU
COMPUTER DATA LINES SYSTEM
WHT
RED
RED
BRN
I1 (BEHIND LEFT SIDE OF DASH)
BRN 7
PNK 8
9
13
15
16
22 I18
CAN I/F
5V IC
I/F
CPU
MALFUNCTION INDICATOR LAMP
COMBINATION METER
RED 9 IG2D
VIO 7 STA
PNK 5 STAR A43
CERTIFICATION ECU (W/ SMART KEY SYSTEM) (RIGHT SIDE OF DASH)
367501

Fig. 44: 2.5L, Engine Performance Circuit (2 of 6)

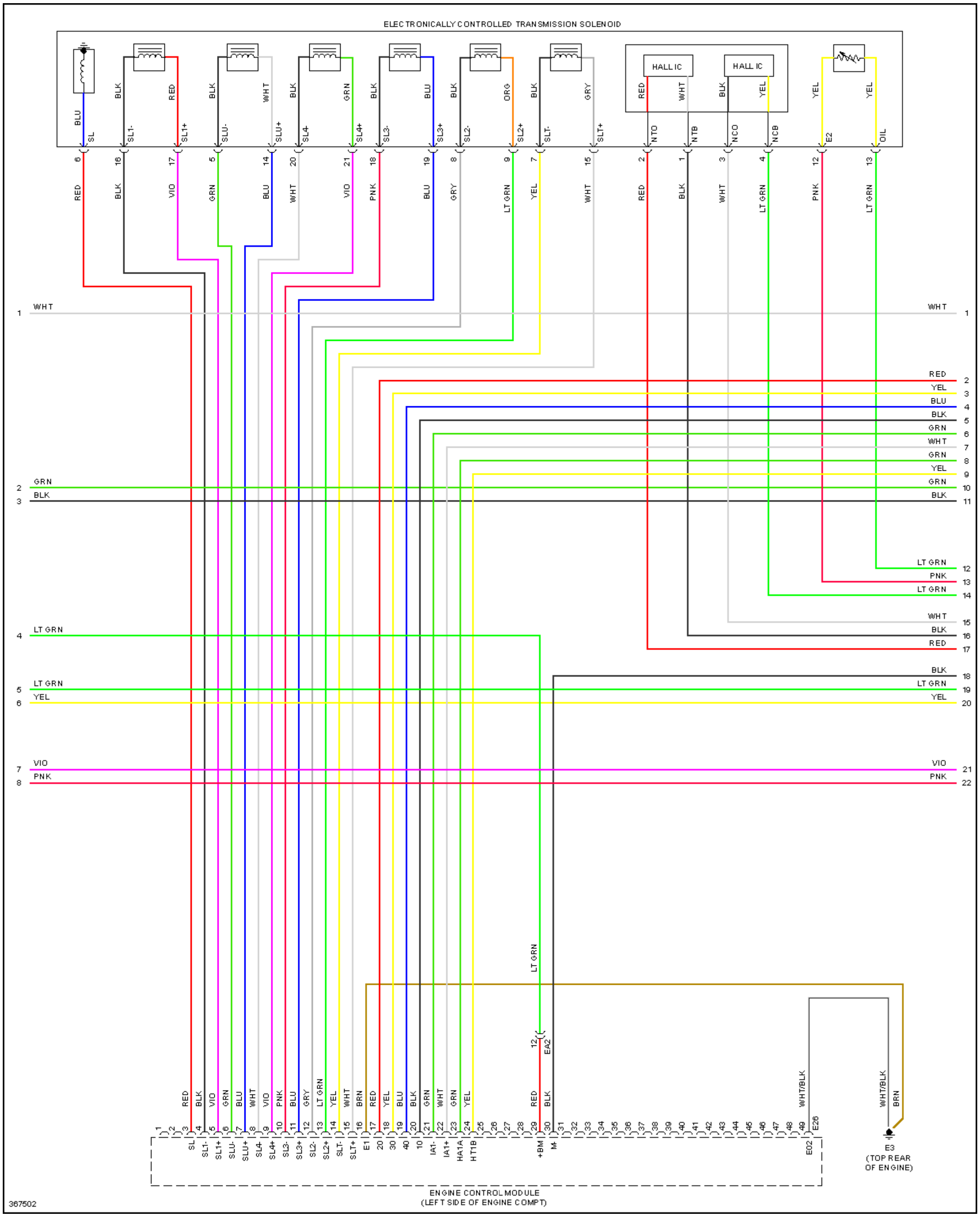
ELECTRONICALLY CONTROLLED TRANSMISSION SOLENOID
HALL IC
HALL IC
BLU
SL
BLK
SL1-
RED
SL1+
BLK
SLU-
WHT
SLU+
BLK
SL4-
GRN
SL4+
BLK
SL3-
BLU
SL3+
BLK
SL2-
ORG
SL2+
BLK
SLT-
GRY
SLT+
RED
NTO
WHT
NTB
BLK
NCO
YEL
NCB
YEL
E2
YEL
OIL
6
16
17
5
14
20
21
18
19
8
9
7
15
2
1
3
4
12
13
RED
BLK
VIO
GRN
BLU
WHT
VIO
PNK
BLU
GRY
LT GRN
YEL
WHT
RED
BLK
WHT
LT GRN
PNK
LT GRN
1 WHT
WHT 1
RED 2
YEL 3
BLU 4
BLK 5
GRN 6
WHT 7
GRN 8
YEL 9
2 GRN
GRN 10
3 BLK
BLK 11
LT GRN 12
PNK 13
LT GRN 14
WHT 15
4 LT GRN
BLK 16
RED 17
BLK 18
5 LT GRN
LT GRN 19
6 YEL
YEL 20
7 VIO
VIO 21
8 PNK
PNK 22
LT GRN
12
EA2
RED
BLK
VIO
GRN
BLU
WHT
VIO
PNK
BLU
GRY
LT GRN
YEL
WHT
BRN
RED
YEL
BLU
BLK
GRN
WHT
GRN
YEL
RED
BLK
WHT/BLK
WHT/BLK
BRN
1 2 3 4 5 6 7 8 9 10 11 12 13 14 15 16 17 18 19 20 21 22 23 24 25 26 27 28 29 30 31 32 33 34 35 36 37 38 39 40 41 42 43 44 45 46 47 48 49 E26
SL
SL1-
SL1+
SLU-
SLU+
SL4-
SL4+
SL3-
SL3+
SL2-
SL2+
SLT-
SLT+
E1
20
30
40
10
IA1-
IA1+
HA1A
HT1B
+BM
M-
E02
E3
(TOP REAR
OF ENGINE)
ENGINE CONTROL MODULE
(LEFT SIDE OF ENGINE COMPT)
367502

Fig. 45: 2.5L, Engine Performance Circuit (3 of 6)

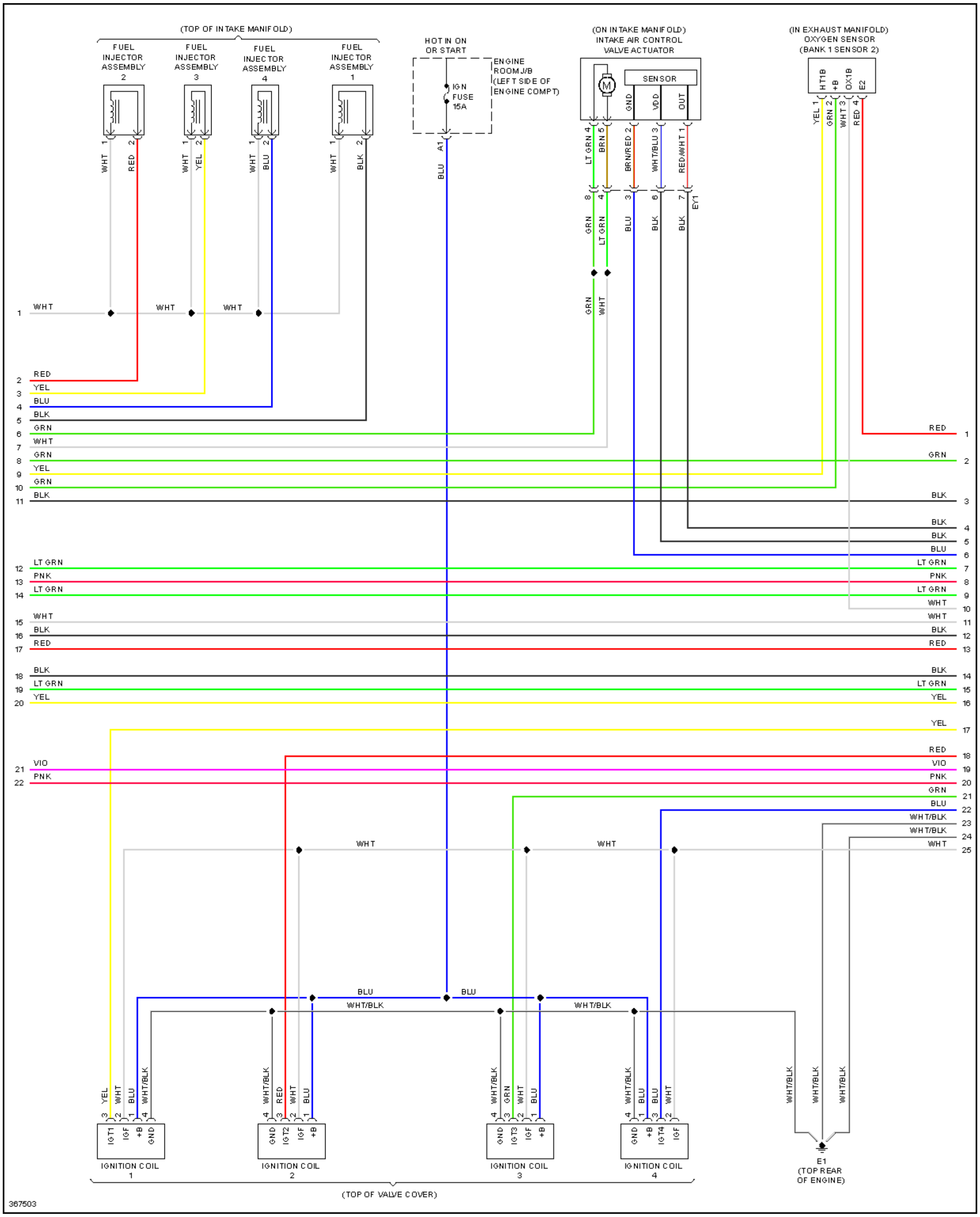
(TOP OF INTAKE MANIFOLD)
FUEL INJECTOR ASSEMBLY 2
FUEL INJECTOR ASSEMBLY 3
FUEL INJECTOR ASSEMBLY 4
FUEL INJECTOR ASSEMBLY 1
HOT IN ON OR START
ENGINE ROOM J/B (LEFT SIDE OF ENGINE COMPT)
IGN FUSE 15A
A1
(ON INTAKE MANIFOLD) INTAKE AIR CONTROL VALVE ACTUATOR
M
SENSOR
GND
VDD
OUT
LT GRN 4
BRN 5
BRN/RED 2
WHT/BLU 3
RED/WHT 1
EY1
(IN EXHAUST MANIFOLD) OXYGEN SENSOR (BANK 1 SENSOR 2)
HT1B
+B
OX1B
E2
YEL 1
GRN 2
WHT 3
RED 4
WHT
RED
YEL
BLU
BLK
GRN
LT GRN
PNK
VIO
WHT/BLK
IGT1
IGF
GND
IGT2
IGT3
IGT4
IGNITION COIL 1
IGNITION COIL 2
IGNITION COIL 3
IGNITION COIL 4
E1 (TOP REAR OF ENGINE)
(TOP OF VALVE COVER)
367503

Fig. 46: 2.5L, Engine Performance Circuit (4 of 6)

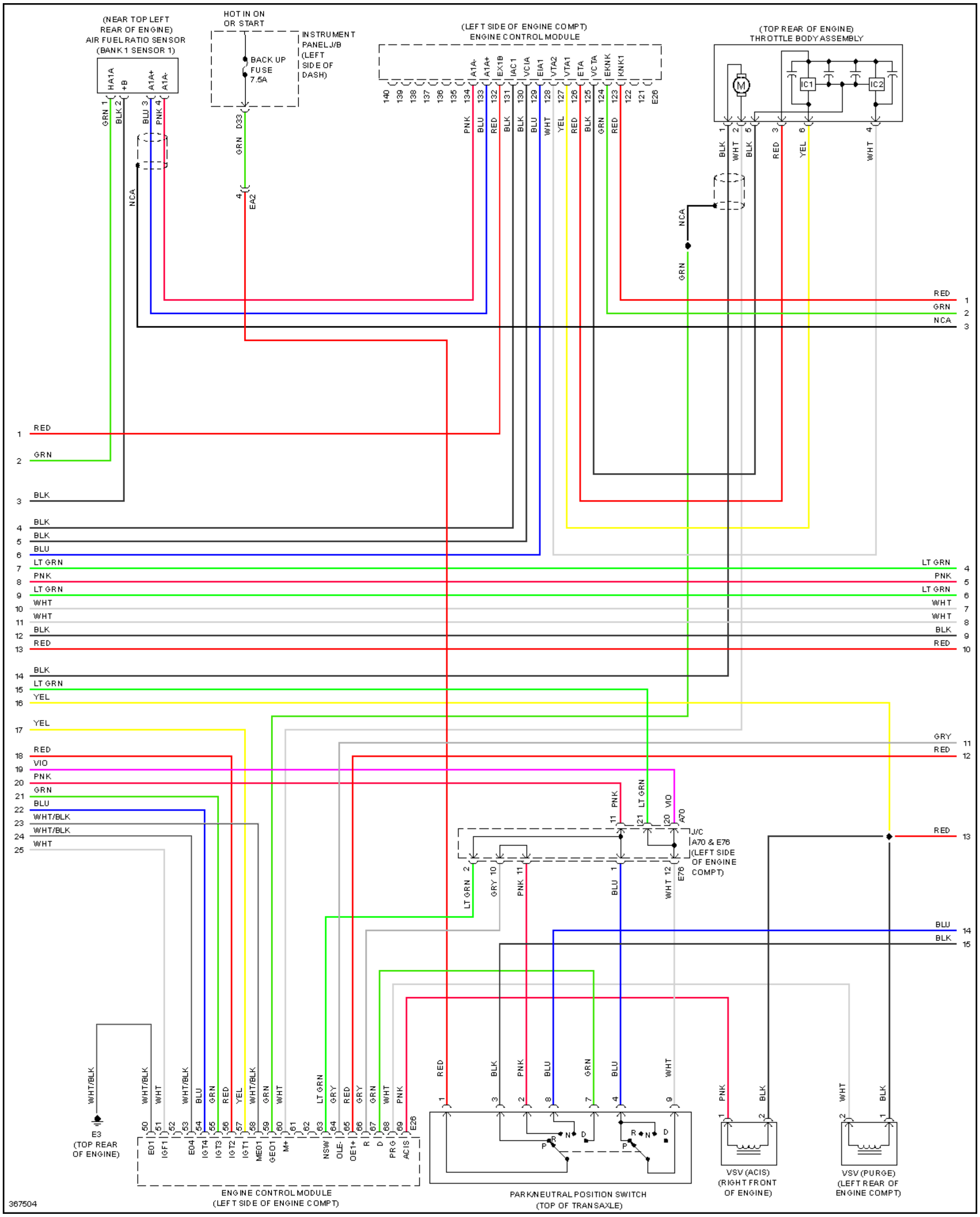

Fig. 47: 2.5L, Engine Performance Circuit (5 of 6)

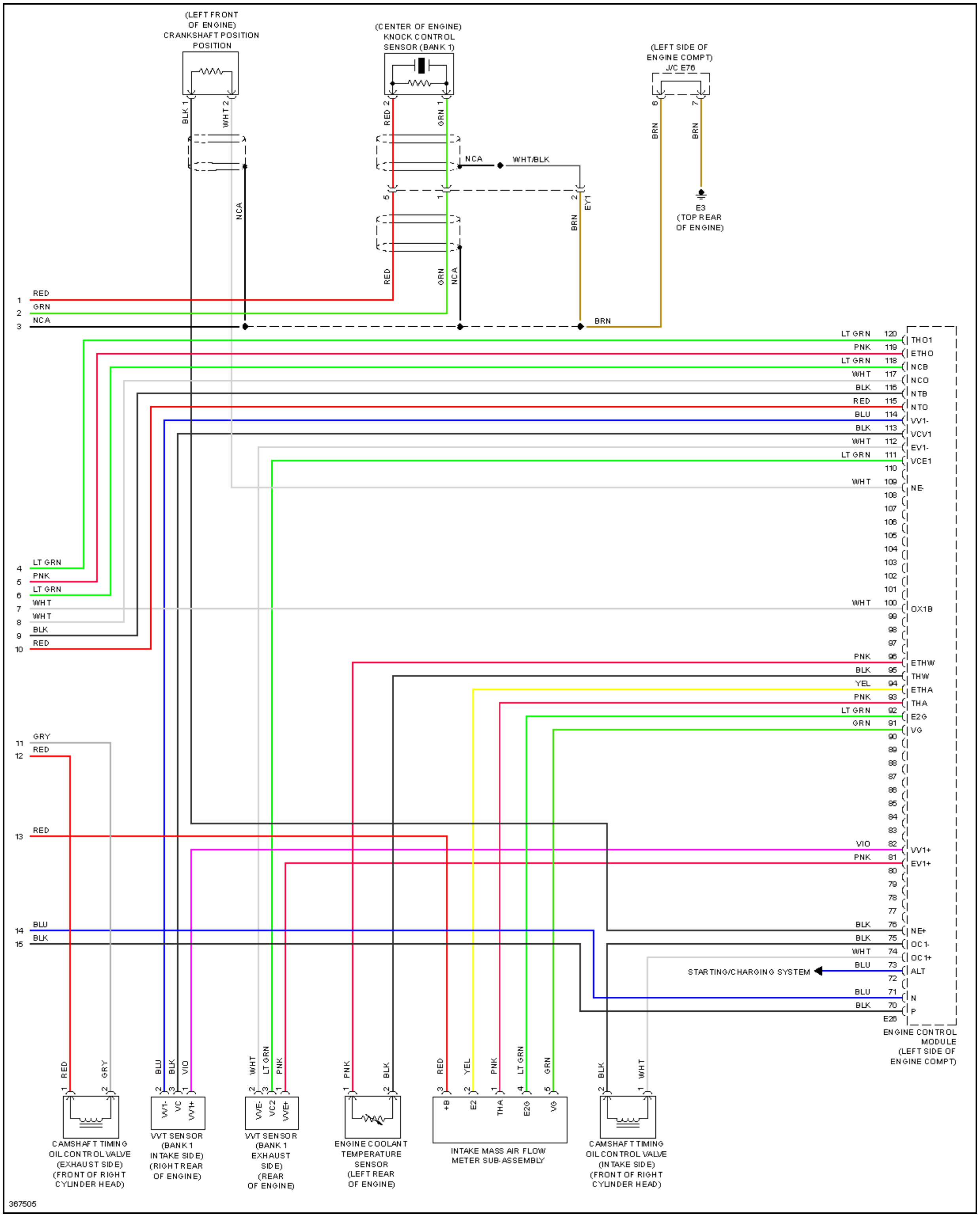
(LEFT FRONT OF ENGINE) CRANKSHAFT POSITION POSITION
(CENTER OF ENGINE) KNOCK CONTROL SENSOR (BANK 1)
(LEFT SIDE OF ENGINE COMPT) J/C E76
BLK 1
WHT 2
RED 2
GRN 1
6
7
BRN
BRN
NCA
WHT/BLK
5
1
2
EY1
BRN
E3 (TOP REAR OF ENGINE)
NCA
RED
GRN
NCA
1 RED
2 GRN
3 NCA
BRN
LT GRN 120 THO1
PNK 119 ETHO
LT GRN 118 NCB
WHT 117 NCO
BLK 116 NTB
RED 115 NTO
BLU 114 VV1-
BLK 113 VCV1
WHT 112 EV1-
LT GRN 111 VCE1
110
WHT 109 NE-
108
107
106
105
104
103
102
101
WHT 100 OX1B
99
98
97
PNK 96 ETHW
BLK 95 THW
YEL 94 ETHA
PNK 93 THA
LT GRN 92 E2G
GRN 91 VG
90
89
88
87
86
85
84
83
VIO 82 VV1+
PNK 81 EV1+
80
79
78
77
BLK 76 NE+
BLK 75 OC1-
WHT 74 OC1+
BLU 73 ALT
72
BLU 71 N
BLK 70 P
E26
ENGINE CONTROL MODULE (LEFT SIDE OF ENGINE COMPT)
STARTING/CHARGING SYSTEM
4 LT GRN
5 PNK
6 LT GRN
7 WHT
8 WHT
9 BLK
10 RED
11 GRY
12 RED
13 RED
14 BLU
15 BLK
RED 1
GRY 2
CAMSHAFT TIMING OIL CONTROL VALVE (EXHAUST SIDE) (FRONT OF RIGHT CYLINDER HEAD)
BLU 2 VV1-
BLK 3 VC
VIO 1 VV1+
VVT SENSOR (BANK 1 INTAKE SIDE) (RIGHT REAR OF ENGINE)
WHT 2 VVE-
LT GRN 3 VC2
PNK 1 VVE+
VVT SENSOR (BANK 1 EXHAUST SIDE) (REAR OF ENGINE)
PNK 1
BLK 2
ENGINE COOLANT TEMPERATURE SENSOR (LEFT REAR OF ENGINE)
RED 3 +B
YEL 2 E2
PNK 1 THA
LT GRN 4 E2G
GRN 5 VG
INTAKE MASS AIR FLOW METER SUB-ASSEMBLY
BLK 2
WHT 1
CAMSHAFT TIMING OIL CONTROL VALVE (INTAKE SIDE) (FRONT OF RIGHT CYLINDER HEAD)
367505

Fig. 48: 2.5L, Engine Performance Circuit (6 of 6)

2.5L HYBRID

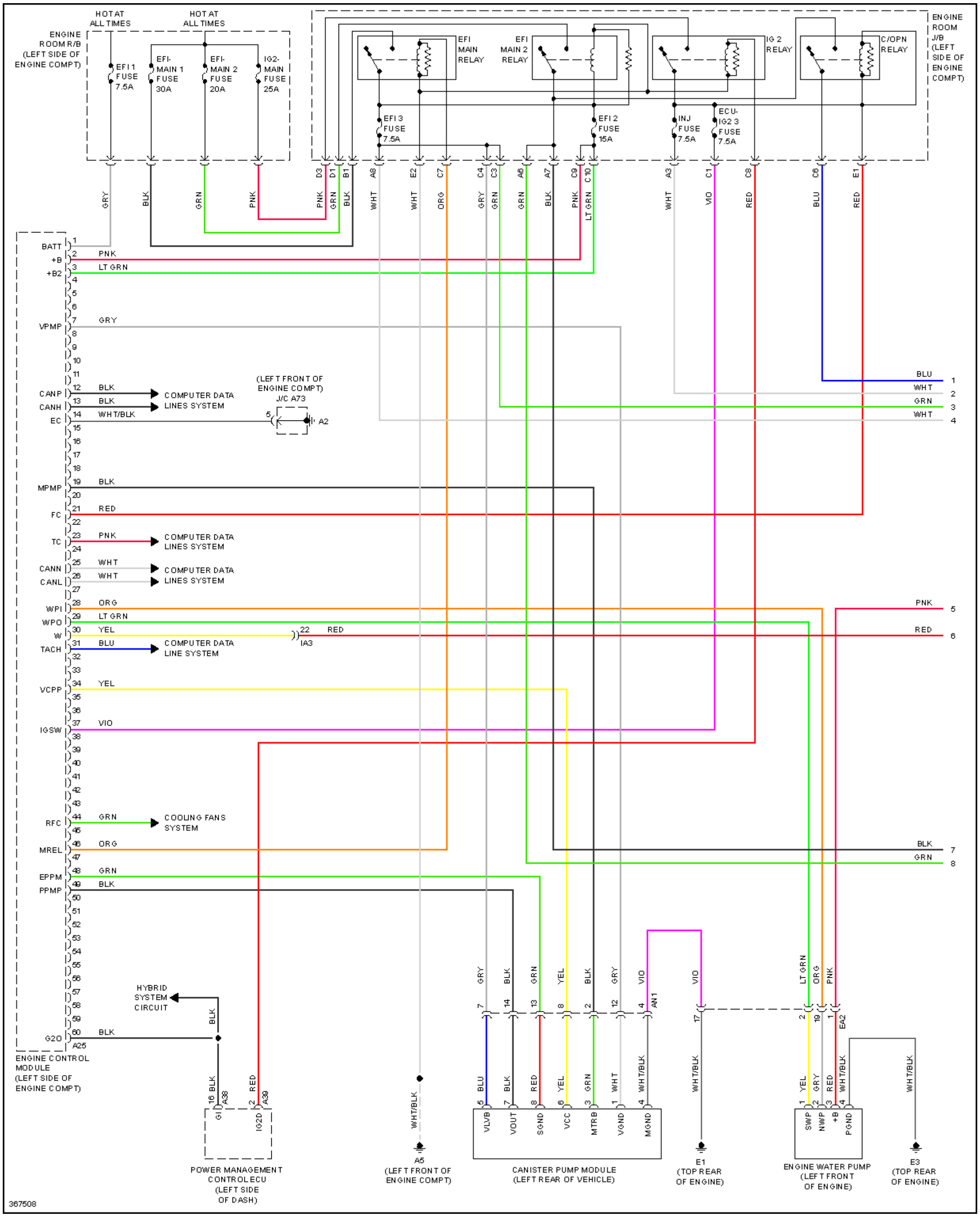
HOT AT ALL TIMES
HOT AT ALL TIMES
ENGINE ROOM R/B (LEFT SIDE OF ENGINE COMPT)
EFI 1 FUSE 7.5A
EFI-MAIN 1 FUSE 30A
EFI-MAIN 2 FUSE 20A
IG2-MAIN FUSE 25A
EFI MAIN RELAY
EFI MAIN 2 RELAY
IG 2 RELAY
C/OPN RELAY
ENGINE ROOM J/B (LEFT SIDE OF ENGINE COMPT)
EFI 3 FUSE 7.5A
EFI 2 FUSE 15A
INJ FUSE 7.5A
ECU-IG2 3 FUSE 7.5A
D3 D1 B1 A8 E2 C7 C4 C3 A6 A7 C9 C10 A3 C1 C8 C6 E1
GRY BLK GRN PNK PNK GRN BLK WHT WHT ORG GRY GRN GRN BLK PNK LT GRN WHT VIO RED BLU RED
BATT +B +B2 VPMP CANP CANH EC MPMP FC TC CANN CANL WPI WPO W TACH VCPP IGSW RFC MREL EPPM PPMP G2O
1 2 PNK 3 LT GRN 4 5 6 7 GRY 8 9 10 11 12 BLK 13 BLK 14 WHT/BLK 15 16 17 18 19 BLK 20 21 RED 22 23 PNK 24 25 WHT 26 WHT 27 28 ORG 29 LT GRN 30 YEL 31 BLU 32 33 34 YEL 35 36 37 VIO 38 39 40 41 42 43 44 GRN 45 46 ORG 47 48 GRN 49 BLK 50 51 52 53 54 55 56 57 58 59 60 BLK
A25
COMPUTER DATA LINES SYSTEM
(LEFT FRONT OF ENGINE COMPT) J/C A73
5 A2
COMPUTER DATA LINES SYSTEM
COMPUTER DATA LINES SYSTEM
22 RED IA3
COMPUTER DATA LINE SYSTEM
COOLING FANS SYSTEM
BLU 1 WHT 2 GRN 3 WHT 4
PNK 5 RED 6 BLK 7 GRN 8
HYBRID SYSTEM CIRCUIT
BLK
ENGINE CONTROL MODULE (LEFT SIDE OF ENGINE COMPT)
16 BLK A38 2 RED A39
GI IG2D
POWER MANAGEMENT CONTROL ECU (LEFT SIDE OF DASH)
WHT/BLK
A5 (LEFT FRONT OF ENGINE COMPT)
GRY BLK GRN YEL BLK GRY VIO VIO
7 14 13 8 2 12 4 AN1 17
BLU BLK RED YEL GRN WHT WHT/BLK WHT/BLK
5 7 8 6 3 1 4
VLVB VOUT SGND VCC MTRB VGND MGND
CANISTER PUMP MODULE (LEFT REAR OF VEHICLE)
E1 (TOP REAR OF ENGINE)
LT GRN ORG PNK
2 19 1 EA2
YEL GRY RED WHT/BLK
1 2 3 4
SWP NWP +B PGND
ENGINE WATER PUMP (LEFT FRONT OF ENGINE)
WHT/BLK
E3 (TOP REAR OF ENGINE)
367508

Fig. 49: 2.5L Hybrid, Engine Controls Circuit (1 of 4)

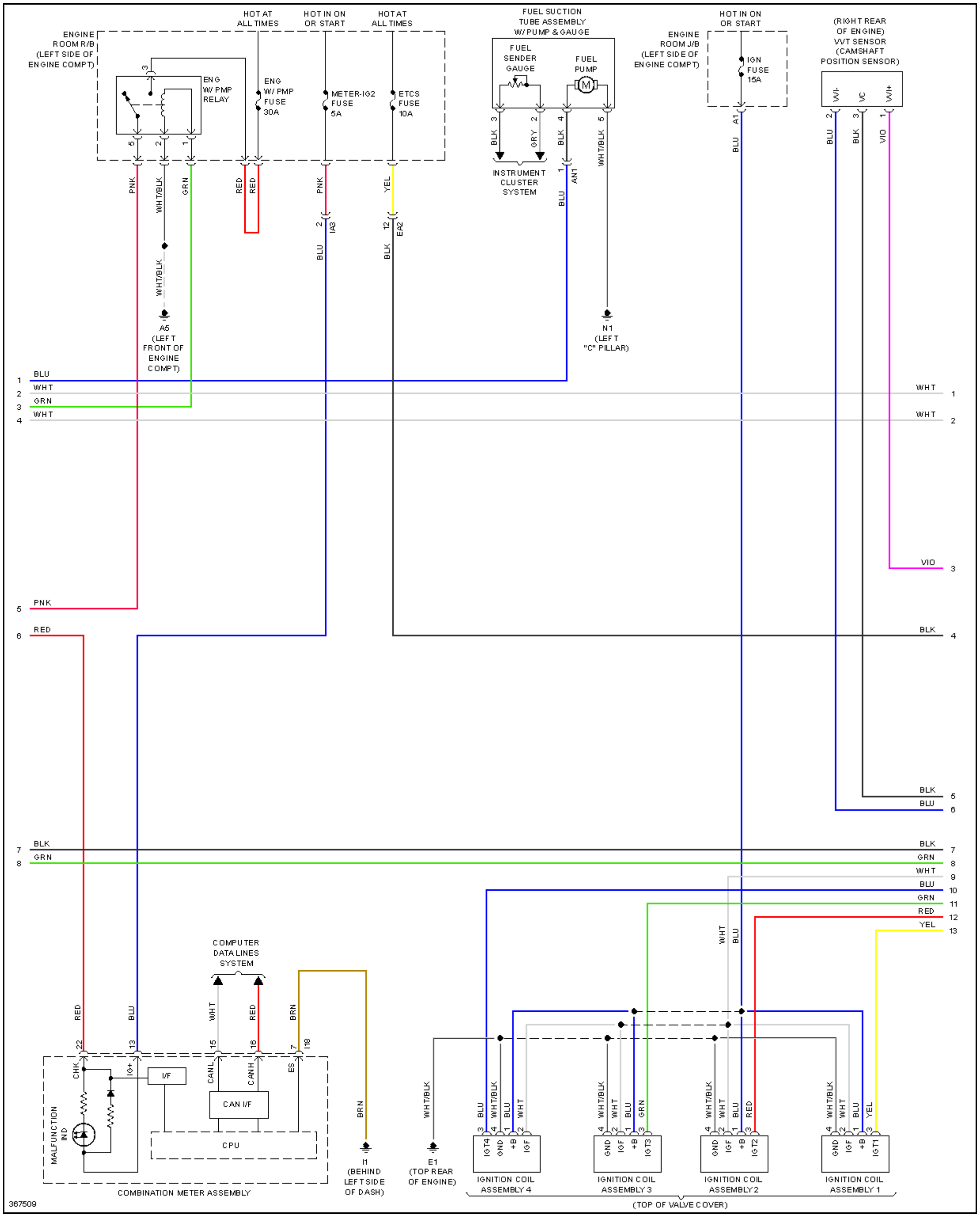
HOT AT ALL TIMES
HOT IN ON OR START
HOT AT ALL TIMES
FUEL SUCTION TUBE ASSEMBLY W/ PUMP & GAUGE
HOT IN ON OR START
(RIGHT REAR OF ENGINE) VVT SENSOR (CAMSHAFT POSITION SENSOR)
ENGINE ROOM R/B (LEFT SIDE OF ENGINE COMPT)
ENG W/ PMP RELAY
ENG W/ PMP FUSE 30A
METER-IG2 FUSE 5A
ETCS FUSE 10A
FUEL SENDER GAUGE
FUEL PUMP
M
ENGINE ROOM J/B (LEFT SIDE OF ENGINE COMPT)
IGN FUSE 15A
VVI-
VC
VVI+
INSTRUMENT CLUSTER SYSTEM
AN1
IA3
EA2
A1
A5 (LEFT FRONT OF ENGINE COMPT)
N1 (LEFT "C" PILLAR)
PNK
WHT/BLK
GRN
RED
YEL
BLU
BLK
GRY
VIO
WHT
BRN
COMPUTER DATA LINES SYSTEM
CHK
IG+
I/F
CANL
CANH
CAN I/F
ES
CPU
MALFUNCTION IND
COMBINATION METER ASSEMBLY
I1 (BEHIND LEFT SIDE OF DASH)
E1 (TOP REAR OF ENGINE)
IGT4
GND
+B
IGF
IGT3
IGT2
IGT1
IGNITION COIL ASSEMBLY 4
IGNITION COIL ASSEMBLY 3
IGNITION COIL ASSEMBLY 2
IGNITION COIL ASSEMBLY 1
(TOP OF VALVE COVER)
367509

Fig. 50: 2.5L Hybrid, Engine Controls Circuit (2 of 4)

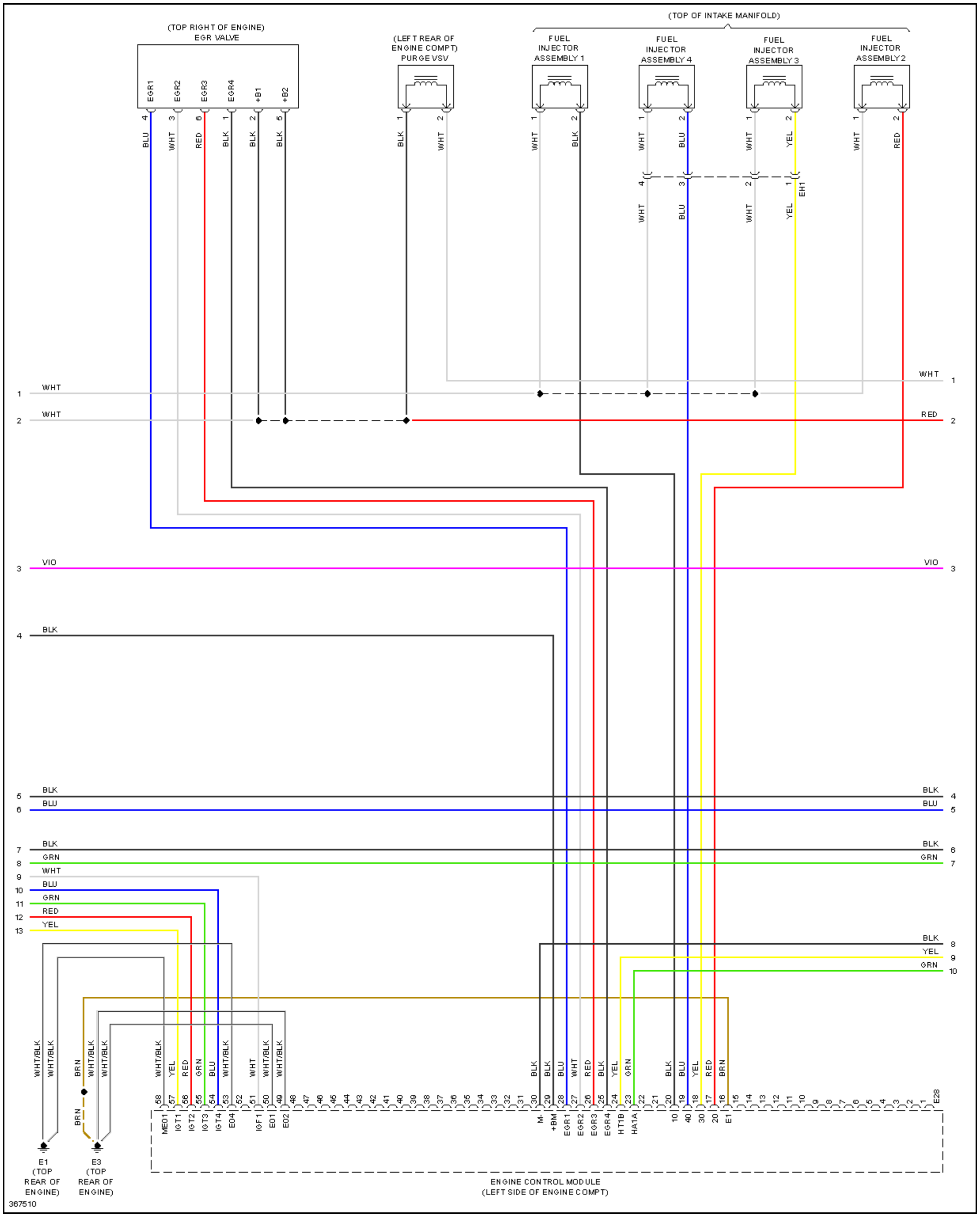
(TOP RIGHT OF ENGINE)
EGR VALVE
EGR1
EGR2
EGR3
EGR4
+B1
+B2
(LEFT REAR OF ENGINE COMPT)
PURGE VSV
(TOP OF INTAKE MANIFOLD)
FUEL INJECTOR ASSEMBLY 1
FUEL INJECTOR ASSEMBLY 4
FUEL INJECTOR ASSEMBLY 3
FUEL INJECTOR ASSEMBLY 2
EH1
BLU
WHT
RED
BLK
YEL
VIO
GRN
BRN
WHT/BLK
E1
(TOP REAR OF ENGINE)
E3
(TOP REAR OF ENGINE)
ME01
IGT1
IGT2
IGT3
IGT4
E04
IGF1
E01
E02
M-
+BM
EGR1
EGR2
EGR3
EGR4
HT1B
HA1A
10
40
30
20
E1
E28
ENGINE CONTROL MODULE
(LEFT SIDE OF ENGINE COMPT)
367510

Fig. 51: 2.5L Hybrid, Engine Controls Circuit (3 of 4)

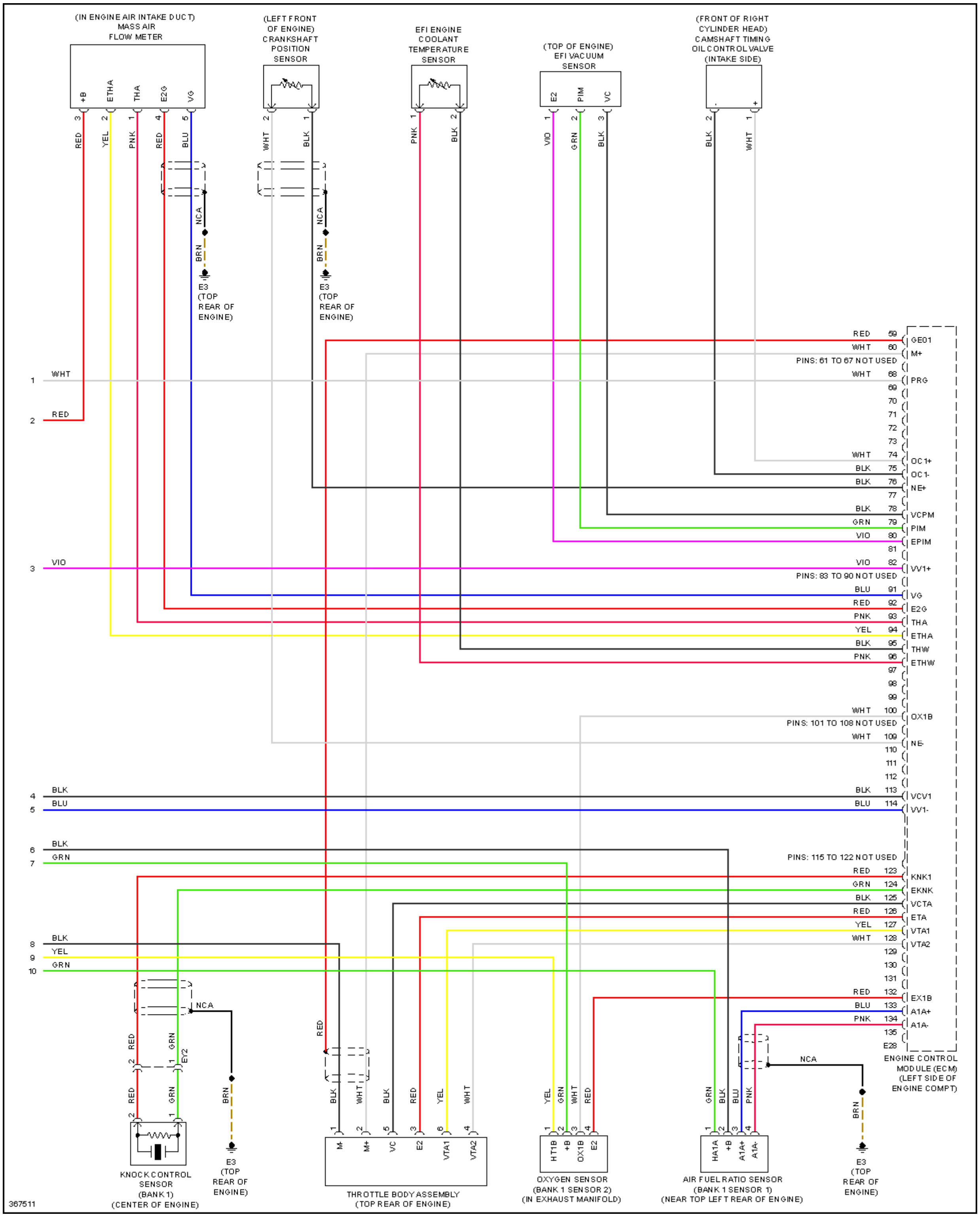
(IN ENGINE AIR INTAKE DUCT) MASS AIR FLOW METER
+B
ETHA
THA
E2G
VG
3 RED
2 YEL
1 PNK
4 RED
5 BLU
NCA
BRN
E3 (TOP REAR OF ENGINE)
(LEFT FRONT OF ENGINE) CRANKSHAFT POSITION SENSOR
2 WHT
1 BLK
NCA
BRN
E3 (TOP REAR OF ENGINE)
EFI ENGINE COOLANT TEMPERATURE SENSOR
1 PNK
2 BLK
(TOP OF ENGINE) EFI VACUUM SENSOR
E2
PIM
VC
1 VIO
2 GRN
3 BLK
(FRONT OF RIGHT CYLINDER HEAD) CAMSHAFT TIMING OIL CONTROL VALVE (INTAKE SIDE)
-
+
2 BLK
1 WHT
1 WHT
2 RED
3 VIO
4 BLK
5 BLU
6 BLK
7 GRN
8 BLK
9 YEL
10 GRN
RED 59 GE01
WHT 60 M+
PINS: 61 TO 67 NOT USED
WHT 68 PRG
69
70
71
72
73
WHT 74 OC1+
BLK 75 OC1-
BLK 76 NE+
77
BLK 78 VCPM
GRN 79 PIM
VIO 80 EPIM
81
VIO 82 VV1+
PINS: 83 TO 90 NOT USED
BLU 91 VG
RED 92 E2G
PNK 93 THA
YEL 94 ETHA
BLK 95 THW
PNK 96 ETHW
97
98
99
WHT 100 OX1B
PINS: 101 TO 108 NOT USED
WHT 109 NE-
110
111
112
BLK 113 VCV1
BLU 114 VV1-
PINS: 115 TO 122 NOT USED
RED 123 KNK1
GRN 124 EKNK
BLK 125 VCTA
RED 126 ETA
YEL 127 VTA1
WHT 128 VTA2
129
130
131
RED 132 EX1B
BLU 133 A1A+
PNK 134 A1A-
135
E28
ENGINE CONTROL MODULE (ECM) (LEFT SIDE OF ENGINE COMPT)
NCA
RED 2
GRN 1
EY2
BRN
KNOCK CONTROL SENSOR (BANK 1) (CENTER OF ENGINE)
E3 (TOP REAR OF ENGINE)
RED
BLK 1 M-
WHT 2 M+
BLK 5 VC
RED 3 E2
YEL 6 VTA1
WHT 4 VTA2
THROTTLE BODY ASSEMBLY (TOP REAR OF ENGINE)
YEL 1 HT1B
GRN 2 +B
WHT 3 OX1B
RED 4 E2
OXYGEN SENSOR (BANK 1 SENSOR 2) (IN EXHAUST MANIFOLD)
GRN 1 HA1A
BLK 2 +B
BLU 3 A1A+
PNK 4 A1A-
AIR FUEL RATIO SENSOR (BANK 1 SENSOR 1) (NEAR TOP LEFT REAR OF ENGINE)
NCA
BRN
E3 (TOP REAR OF ENGINE)
367511

Fig. 52: 2.5L Hybrid, Engine Controls Circuit (4 of 4)

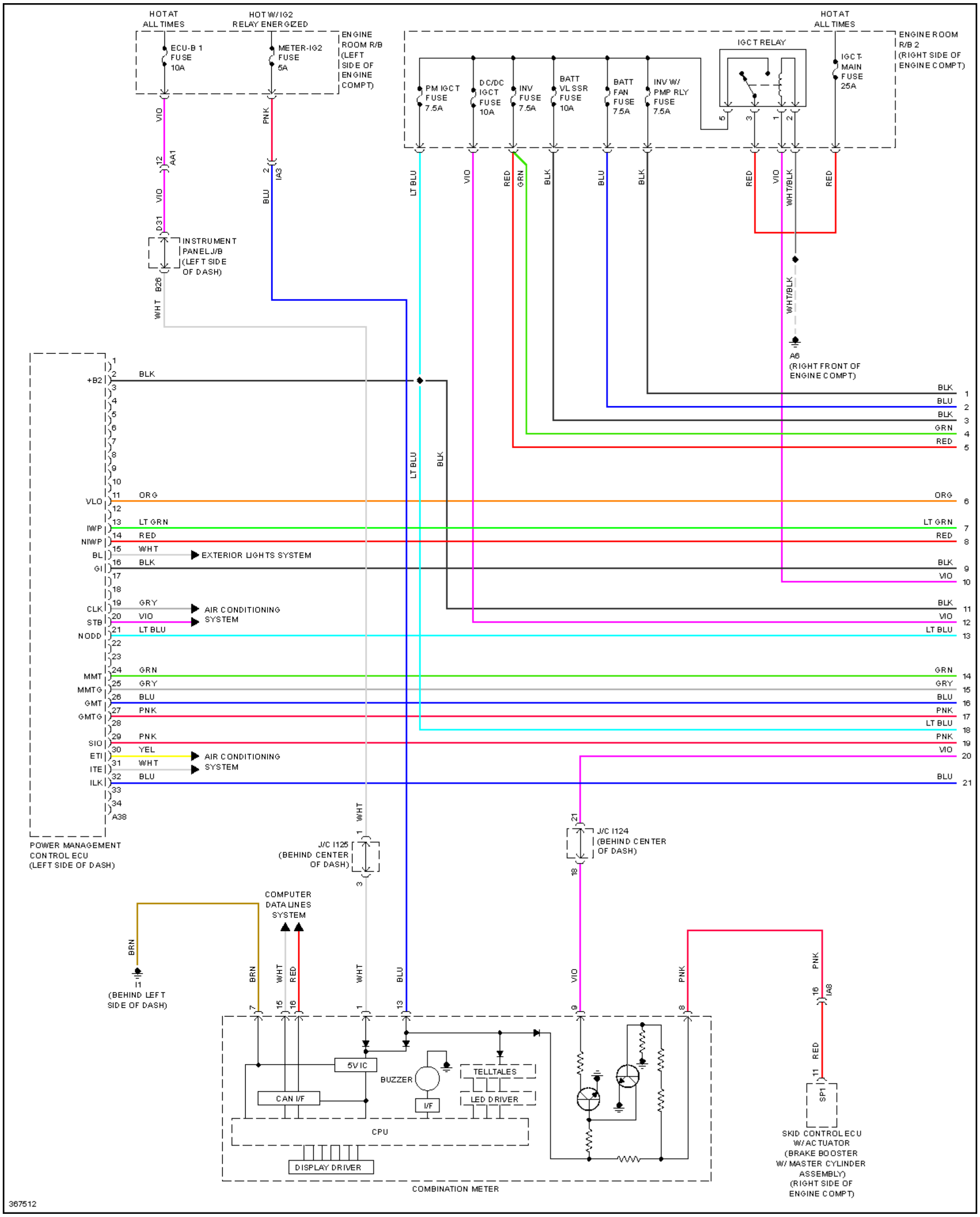
HOT AT ALL TIMES
HOT W/ IG2 RELAY ENERGIZED
ECU-B 1 FUSE 10A
METER-IG2 FUSE 5A
ENGINE ROOM R/B (LEFT SIDE OF ENGINE COMPT)
HOT AT ALL TIMES
ENGINE ROOM R/B 2 (RIGHT SIDE OF ENGINE COMPT)
IGCT RELAY
PM IGCT FUSE 7.5A
DC/DC IGCT FUSE 10A
INV FUSE 7.5A
BATT VLSSR FUSE 10A
BATT FAN FUSE 7.5A
INV W/ PMP RLY FUSE 7.5A
IGCT-MAIN FUSE 25A
5
3
1
2
VIO
12 AA1
VIO
D31
INSTRUMENT PANEL J/B (LEFT SIDE OF DASH)
B26
WHT
PNK
2 IA3
BLU
LT BLU
VIO
RED
GRN
BLK
BLU
BLK
RED
VIO
WHT/BLK
RED
WHT/BLK
A6 (RIGHT FRONT OF ENGINE COMPT)
+B2
VLO
IWP
NIWP
BL
GI
CLK
STB
NODD
MMT
MMTG
GMT
GMTG
SIO
ETI
ITE
ILK
1
2 BLK
3
4
5
6
7
8
9
10
11 ORG
12
13 LT GRN
14 RED
15 WHT
16 BLK
17
18
19 GRY
20 VIO
21 LT BLU
22
23
24 GRN
25 GRY
26 BLU
27 PNK
28
29 PNK
30 YEL
31 WHT
32 BLU
33
34
A38
EXTERIOR LIGHTS SYSTEM
AIR CONDITIONING SYSTEM
AIR CONDITIONING SYSTEM
LT BLU
BLK
BLK 1
BLU 2
BLK 3
GRN 4
RED 5
ORG 6
LT GRN 7
RED 8
BLK 9
VIO 10
BLK 11
VIO 12
LT BLU 13
GRN 14
GRY 15
BLU 16
PNK 17
LT BLU 18
PNK 19
VIO 20
BLU 21
POWER MANAGEMENT CONTROL ECU (LEFT SIDE OF DASH)
WHT
1
J/C I125 (BEHIND CENTER OF DASH)
3
21
J/C I124 (BEHIND CENTER OF DASH)
18
COMPUTER DATA LINES SYSTEM
BRN
I1 (BEHIND LEFT SIDE OF DASH)
BRN
WHT
RED
WHT
BLU
VIO
PNK
7
15
16
1
13
9
8
5V IC
CAN I/F
BUZZER
I/F
TELLTALES
LED DRIVER
CPU
DISPLAY DRIVER
COMBINATION METER
PNK
16 IA8
RED
11
SP1
SKID CONTROL ECU W/ ACTUATOR (BRAKE BOOSTER W/ MASTER CYLINDER ASSEMBLY) (RIGHT SIDE OF ENGINE COMPT)
367512

Fig. 53: 2.5L Hybrid, Hybrid System Circuit (1 of 6)

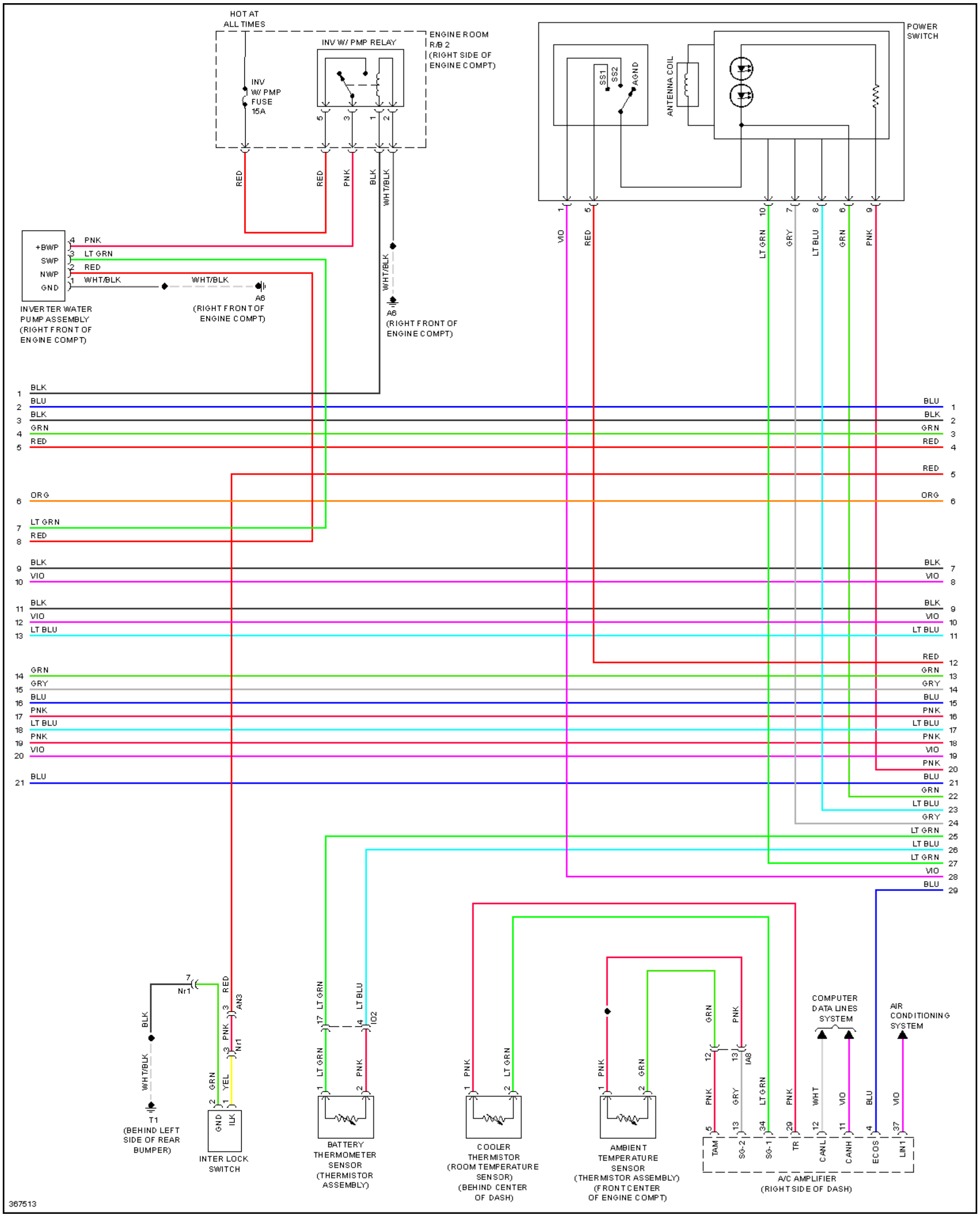
HOT AT ALL TIMES
ENGINE ROOM R/B 2 (RIGHT SIDE OF ENGINE COMPT)
INV W/ PMP RELAY
INV W/ PMP FUSE 15A
POWER SWITCH
SS1
SS2
AGND
ANTENNA COIL
+BWP
SWP
NWP
GND
INVERTER WATER PUMP ASSEMBLY (RIGHT FRONT OF ENGINE COMPT)
A6 (RIGHT FRONT OF ENGINE COMPT)
A6 (RIGHT FRONT OF ENGINE COMPT)
PNK
LT GRN
RED
WHT/BLK
BLK
BLU
GRN
ORG
VIO
LT BLU
GRY
YEL
Nr1
AN3
IO2
IA8
T1 (BEHIND LEFT SIDE OF REAR BUMPER)
ILK
INTER LOCK SWITCH
BATTERY THERMOMETER SENSOR (THERMISTOR ASSEMBLY)
COOLER THERMISTOR (ROOM TEMPERATURE SENSOR) (BEHIND CENTER OF DASH)
AMBIENT TEMPERATURE SENSOR (THERMISTOR ASSEMBLY) (FRONT CENTER OF ENGINE COMPT)
COMPUTER DATA LINES SYSTEM
AIR CONDITIONING SYSTEM
TAM
SG-2
SG-1
TR
CANL
CANH
ECOS
LIN1
A/C AMPLIFIER (RIGHT SIDE OF DASH)
367513

Fig. 54: 2.5L Hybrid, Hybrid System Circuit (2 of 6)

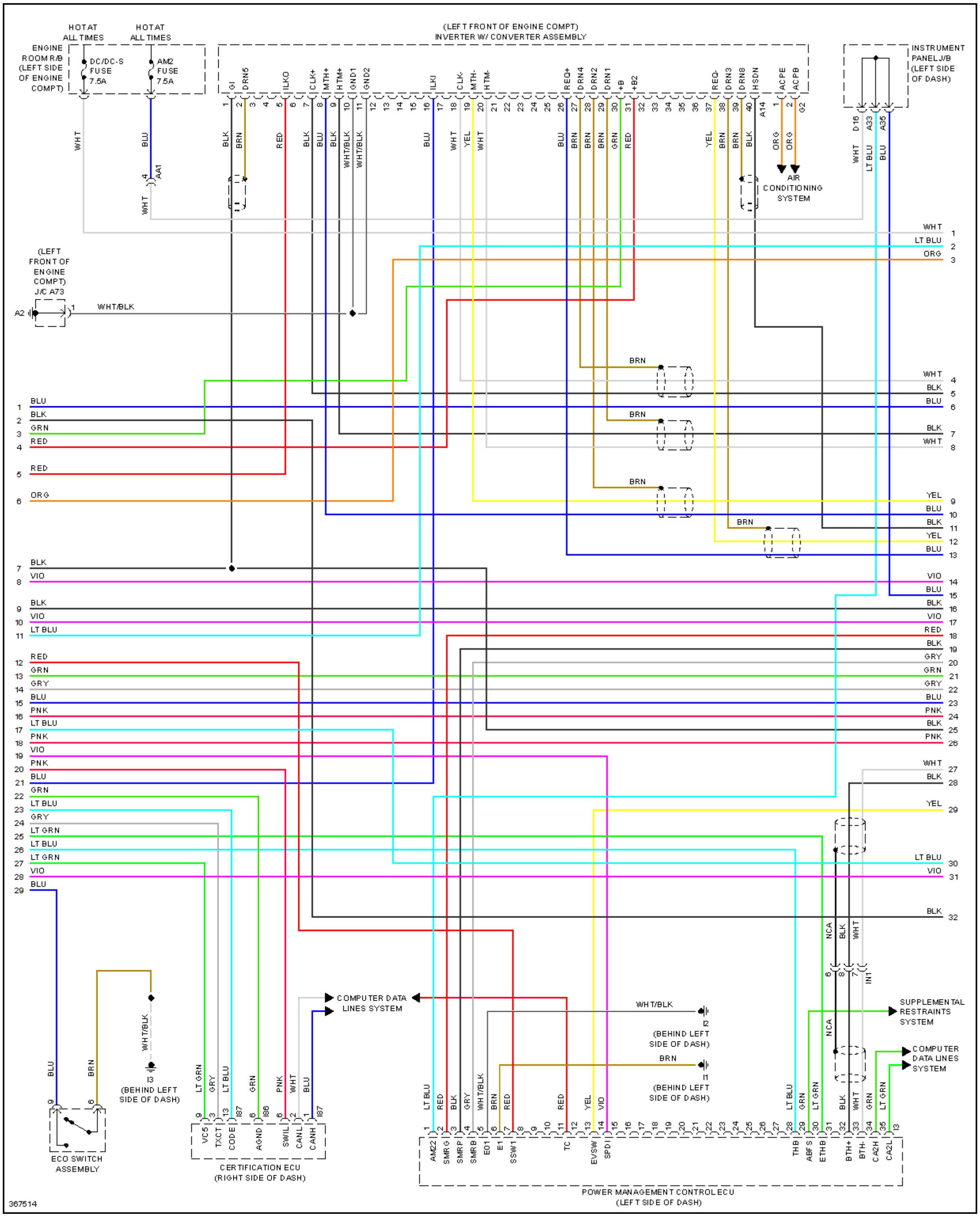
HOT AT ALL TIMES
HOT AT ALL TIMES
ENGINE ROOM R/B (LEFT SIDE OF ENGINE COMPT)
DC/DC-S FUSE 7.5A
AM2 FUSE 7.5A
(LEFT FRONT OF ENGINE COMPT) INVERTER W/ CONVERTER ASSEMBLY
GI
DRN5
ILKO
CLK+
MTH+
HTM+
GND1
GND2
ILKI
CLK-
MTH-
HTM-
REQ+
DRN4
DRN2
DRN1
+B
+B2
REQ-
DRN3
DRN8
HSDN
ACPE
ACPB
A14
G2
INSTRUMENT PANEL J/B (LEFT SIDE OF DASH)
D16
A33
A35
AIR CONDITIONING SYSTEM
(LEFT FRONT OF ENGINE COMPT) J/C A73
A2
WHT/BLK
AA1
BRN
COMPUTER DATA LINES SYSTEM
SUPPLEMENTAL RESTRAINTS SYSTEM
COMPUTER DATA LINES SYSTEM
I2
(BEHIND LEFT SIDE OF DASH)
I1
(BEHIND LEFT SIDE OF DASH)
I3
(BEHIND LEFT SIDE OF DASH)
IN1
NCA
ECO SWITCH ASSEMBLY
VC5
TXCT
CODE
AGND
SW/L
CANL
CANH
I87
I86
CERTIFICATION ECU (RIGHT SIDE OF DASH)
AM22
SMRG
SMRP
SMRB
E01
E1
SSW1
TC
EVSW
SPDI
THB
ABFS
ETHB
BTH+
BTH-
CA2H
CA2L
I3
POWER MANAGEMENT CONTROL ECU (LEFT SIDE OF DASH)
367514

Fig. 55: 2.5L Hybrid, Hybrid System Circuit (3 of 6)

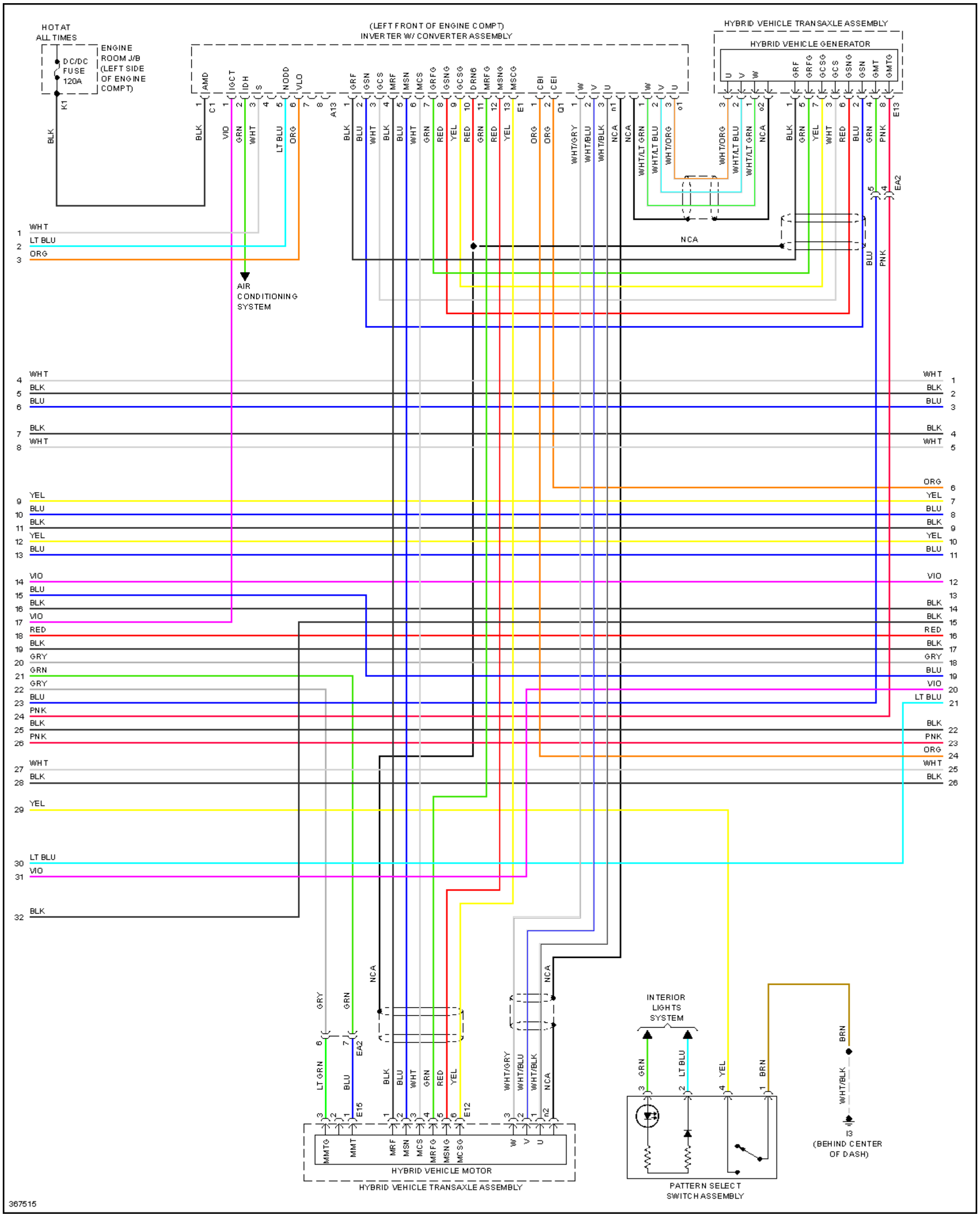
HOT AT ALL TIMES
DC/DC FUSE 120A
ENGINE ROOM J/B (LEFT SIDE OF ENGINE COMPT)
K1
(LEFT FRONT OF ENGINE COMPT) INVERTER W/ CONVERTER ASSEMBLY
AMD
IGCT
IDH
S
NODD
VLO
GRF
GSN
GCS
MRF
MSN
MCS
GRFG
GSNG
GCSG
DRN6
MRFG
MSNG
MSCG
CBI
CEI
W
V
U
C1
A13
E1
Q1
n1
o1
o2
HYBRID VEHICLE TRANSAXLE ASSEMBLY
HYBRID VEHICLE GENERATOR
GMT
GMTG
E13
EA2
NCA
AIR CONDITIONING SYSTEM
INTERIOR LIGHTS SYSTEM
PATTERN SELECT SWITCH ASSEMBLY
I3 (BEHIND CENTER OF DASH)
HYBRID VEHICLE MOTOR
HYBRID VEHICLE TRANSAXLE ASSEMBLY
MMTG
MMT
MRFG
MSNG
MCSG
E15
E12
n2
367515

Fig. 56: 2.5L Hybrid, Hybrid System Circuit (4 of 6)

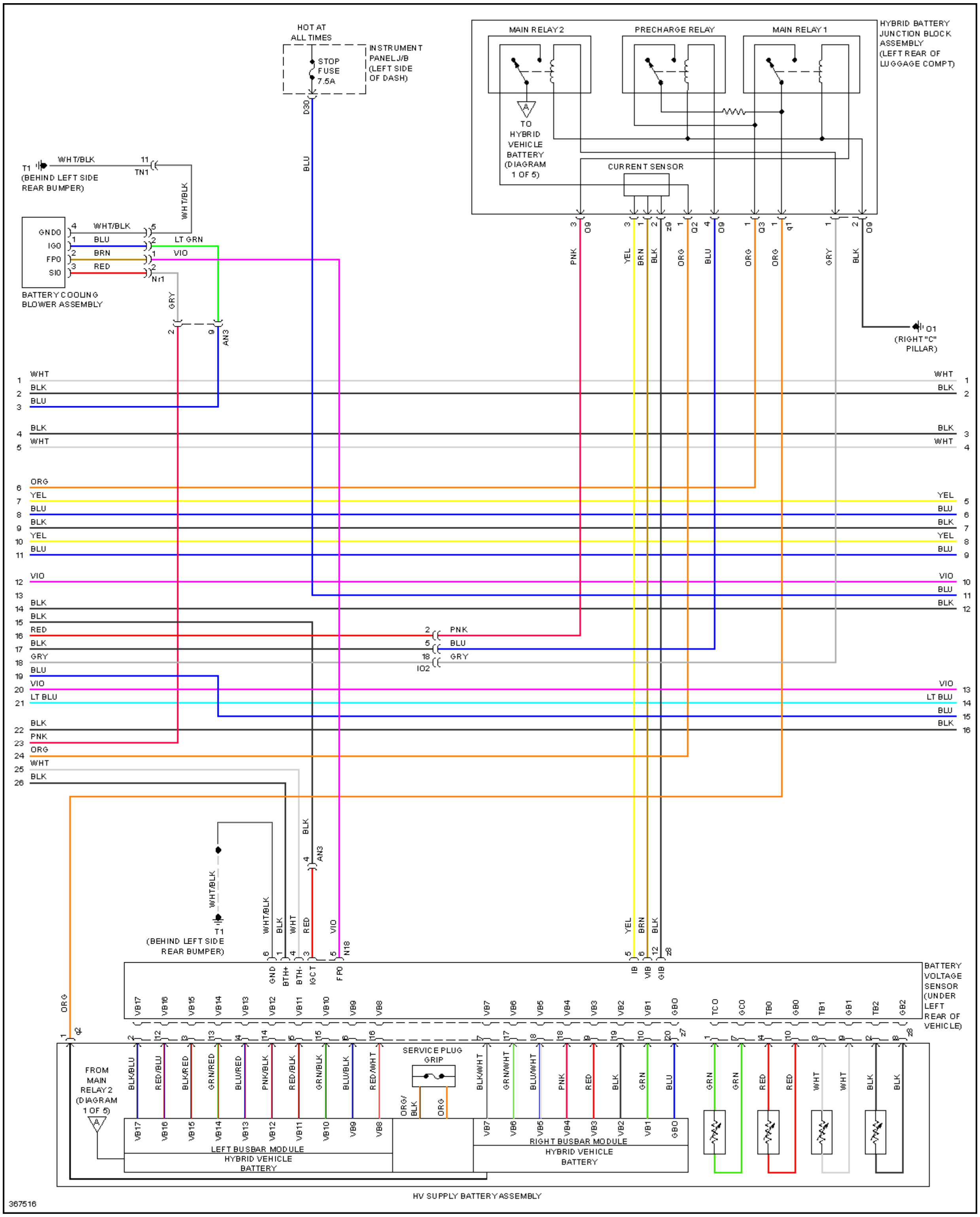
HOT AT ALL TIMES
INSTRUMENT PANEL J/B (LEFT SIDE OF DASH)
STOP FUSE 7.5A
D30
BLU
MAIN RELAY 2
PRECHARGE RELAY
MAIN RELAY 1
HYBRID BATTERY JUNCTION BLOCK ASSEMBLY (LEFT REAR OF LUGGAGE COMPT)
TO HYBRID VEHICLE BATTERY (DIAGRAM 1 OF 5)
CURRENT SENSOR
O9
Q2
Q3
q1
T1 (BEHIND LEFT SIDE REAR BUMPER)
WHT/BLK
TN1
GND0
IG0
FP0
SI0
BATTERY COOLING BLOWER ASSEMBLY
LT GRN
VIO
BRN
RED
Nr1
GRY
AN3
O1 (RIGHT "C" PILLAR)
WHT
BLK
BLU
ORG
YEL
PNK
LT BLU
IO2
N18
GND
BTH+
BTH-
IGCT
FP0
IB
VIB
GIB
z8
BATTERY VOLTAGE SENSOR (UNDER LEFT REAR OF VEHICLE)
VB17
VB16
VB15
VB14
VB13
VB12
VB11
VB10
VB9
VB8
VB7
VB6
VB5
VB4
VB3
VB2
VB1
GB0
TC0
GC0
TB0
GB0
TB1
GB1
TB2
GB2
FROM MAIN RELAY 2 (DIAGRAM 1 OF 5)
SERVICE PLUG GRIP
BLK/BLU
RED/BLU
BLK/RED
GRN/RED
BLU/RED
PNK/BLK
RED/BLK
GRN/BLK
BLU/BLK
RED/WHT
ORG/BLK
BLK/WHT
GRN/WHT
BLU/WHT
GRN
LEFT BUSBAR MODULE HYBRID VEHICLE BATTERY
RIGHT BUSBAR MODULE HYBRID VEHICLE BATTERY
HV SUPPLY BATTERY ASSEMBLY
367516

Fig. 57: 2.5L Hybrid, Hybrid System Circuit (5 of 6)

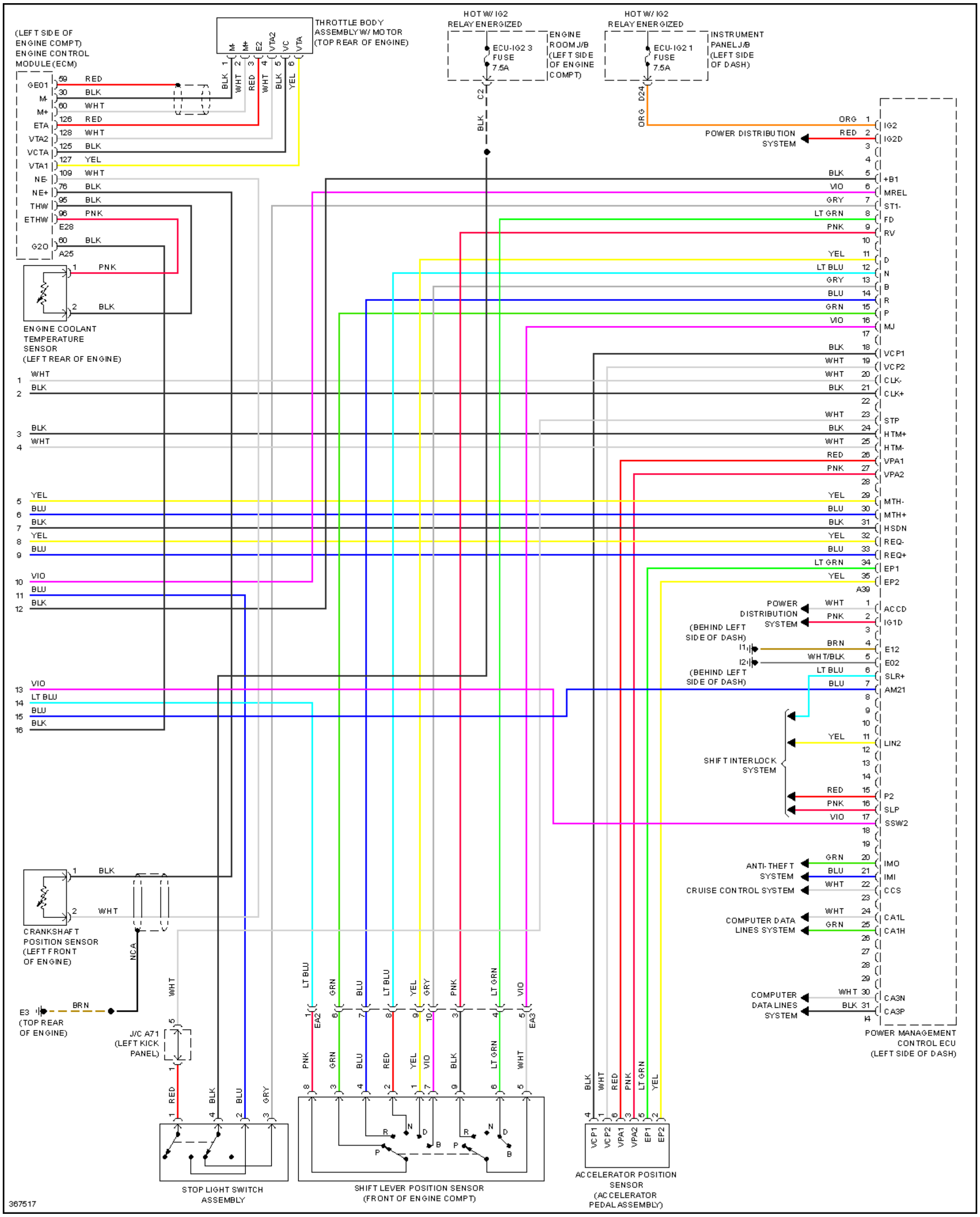
(LEFT SIDE OF ENGINE COMPT) ENGINE CONTROL MODULE (ECM)
GE01
M-
M+
ETA
VTA2
VCTA
VTA1
NE-
NE+
THW
ETHW
G2O
E28
A25
THROTTLE BODY ASSEMBLY W/ MOTOR (TOP REAR OF ENGINE)
M-
M+
E2
VTA2
VC
VTA
HOT W/ IG2 RELAY ENERGIZED
ECU-IG2 3 FUSE 7.5A
ENGINE ROOM J/B (LEFT SIDE OF ENGINE COMPT)
ECU-IG2 1 FUSE 7.5A
INSTRUMENT PANEL J/B (LEFT SIDE OF DASH)
C2
D24
ENGINE COOLANT TEMPERATURE SENSOR (LEFT REAR OF ENGINE)
CRANKSHAFT POSITION SENSOR (LEFT FRONT OF ENGINE)
NCA
E3 (TOP REAR OF ENGINE)
J/C A71 (LEFT KICK PANEL)
POWER DISTRIBUTION SYSTEM
IG2
IG2D
+B1
MREL
ST1-
FD
RV
D
N
B
R
P
MJ
VCP1
VCP2
CLK-
CLK+
STP
HTM+
HTM-
VPA1
VPA2
MTH-
MTH+
HSDN
REQ-
REQ+
EP1
EP2
A39
ACCD
IG1D
(BEHIND LEFT SIDE OF DASH)
I1
I2
E12
E02
SLR+
AM21
LIN2
SHIFT INTERLOCK SYSTEM
P2
SLP
SSW2
ANTI-THEFT SYSTEM
IMO
IMI
CRUISE CONTROL SYSTEM
CCS
COMPUTER DATA LINES SYSTEM
CA1L
CA1H
CA3N
CA3P
I4
POWER MANAGEMENT CONTROL ECU (LEFT SIDE OF DASH)
EA2
EA3
STOP LIGHT SWITCH ASSEMBLY
SHIFT LEVER POSITION SENSOR (FRONT OF ENGINE COMPT)
ACCELERATOR POSITION SENSOR (ACCELERATOR PEDAL ASSEMBLY)
367517

Fig. 58: 2.5L Hybrid, Hybrid System Circuit (6 of 6)

3.5L

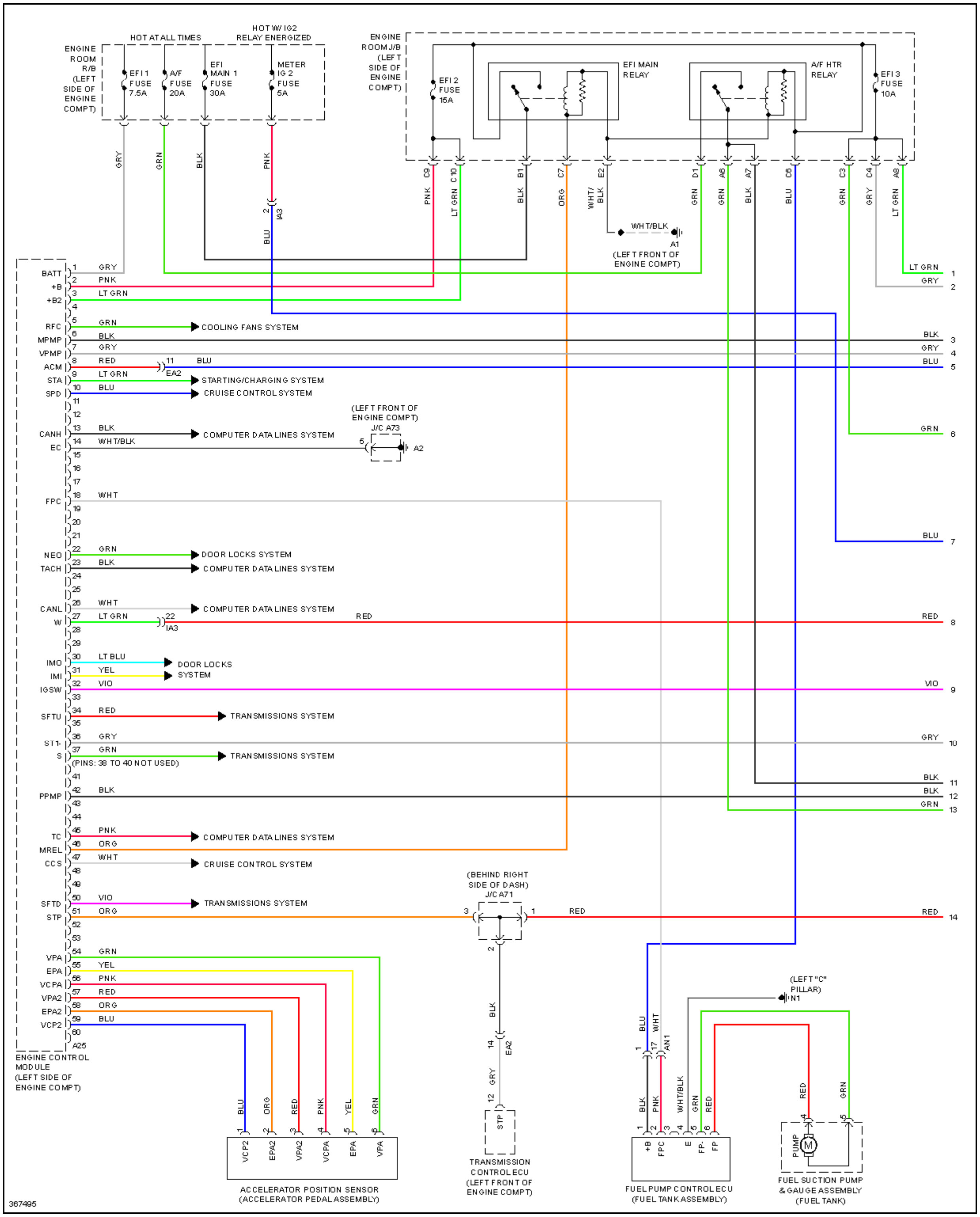
HOT AT ALL TIMES
HOT W/ IG2 RELAY ENERGIZED
ENGINE ROOM R/B (LEFT SIDE OF ENGINE COMPT)
EFI 1 FUSE 7.5A
A/F FUSE 20A
EFI MAIN 1 FUSE 30A
METER IG 2 FUSE 5A
ENGINE ROOM J/B (LEFT SIDE OF ENGINE COMPT)
EFI 2 FUSE 15A
EFI MAIN RELAY
A/F HTR RELAY
EFI 3 FUSE 10A
C9 C10 B1 C7 E2 D1 A6 A7 C6 C3 C4 A8
GRY GRN BLK PNK
IA3
WHT/BLK
A1
(LEFT FRONT OF ENGINE COMPT)
BATT
+B
+B2
RFC
MPMP
VPMP
ACM
STA
SPD
CANH
EC
FPC
NEO
TACH
CANL
W
IMO
IMI
IGSW
SFTU
ST1-
S
PPMP
TC
MREL
CCS
SFTD
STP
VPA
EPA
VCPA
VPA2
EPA2
VCP2
COOLING FANS SYSTEM
EA2
STARTING/CHARGING SYSTEM
CRUISE CONTROL SYSTEM
COMPUTER DATA LINES SYSTEM
(LEFT FRONT OF ENGINE COMPT)
J/C A73
A2
DOOR LOCKS SYSTEM
DOOR LOCKS SYSTEM
TRANSMISSIONS SYSTEM
(PINS: 38 TO 40 NOT USED)
A25
ENGINE CONTROL MODULE (LEFT SIDE OF ENGINE COMPT)
(BEHIND RIGHT SIDE OF DASH)
J/C A71
AN1
(LEFT "C" PILLAR)
N1
ACCELERATOR POSITION SENSOR (ACCELERATOR PEDAL ASSEMBLY)
VCP2 EPA2 VPA2 VCPA EPA VPA
STP
TRANSMISSION CONTROL ECU (LEFT FRONT OF ENGINE COMPT)
+B FPC E FP- FP
FUEL PUMP CONTROL ECU (FUEL TANK ASSEMBLY)
PUMP
M
FUEL SUCTION PUMP & GAUGE ASSEMBLY (FUEL TANK)
367495

Fig. 59: 3.5L, Engine Performance Circuit (1 of 5)

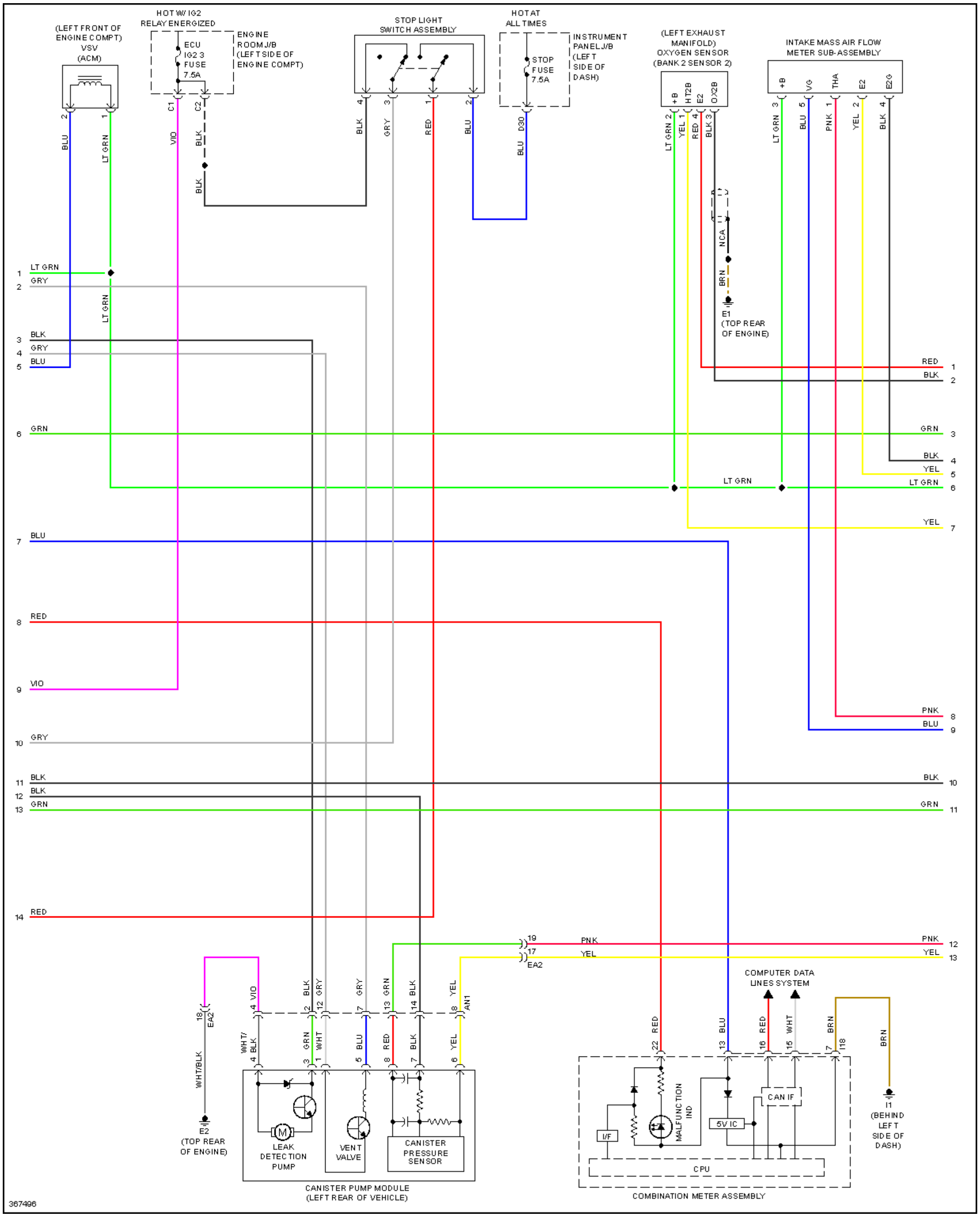
HOT W/ IG2 RELAY ENERGIZED
(LEFT FRONT OF ENGINE COMPT) VSV (ACM)
ECU IG2 3 FUSE 7.5A
ENGINE ROOM J/B (LEFT SIDE OF ENGINE COMPT)
STOP LIGHT SWITCH ASSEMBLY
HOT AT ALL TIMES
STOP FUSE 7.5A
INSTRUMENT PANEL J/B (LEFT SIDE OF DASH)
(LEFT EXHAUST MANIFOLD) OXYGEN SENSOR (BANK 2 SENSOR 2)
+B
HT2B
E2
OX2B
INTAKE MASS AIR FLOW METER SUB-ASSEMBLY
+B
VG
THA
E2
E2G
C1
C2
D30
NCA
E1 (TOP REAR OF ENGINE)
LT GRN
GRY
BLK
BLU
GRN
RED
VIO
YEL
PNK
WHT
BRN
WHT/BLK
19
17
EA2
18 EA2
AN1
E2 (TOP REAR OF ENGINE)
M
LEAK DETECTION PUMP
VENT VALVE
CANISTER PRESSURE SENSOR
CANISTER PUMP MODULE (LEFT REAR OF VEHICLE)
COMPUTER DATA LINES SYSTEM
MALFUNCTION IND
I/F
5V IC
CAN I/F
CPU
COMBINATION METER ASSEMBLY
I1 (BEHIND LEFT SIDE OF DASH)
367496

Fig. 60: 3.5L, Engine Performance Circuit (2 of 5)

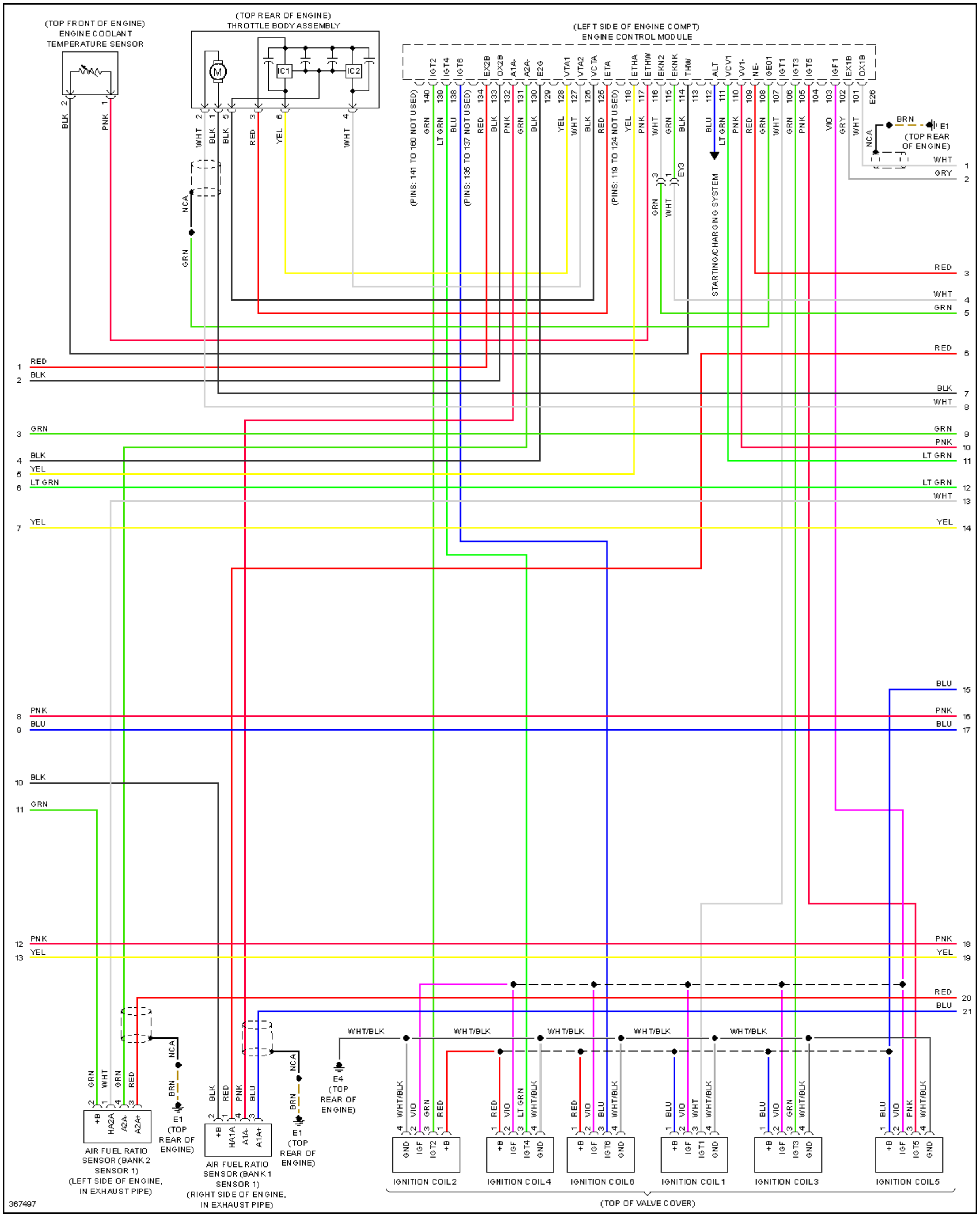
(TOP FRONT OF ENGINE)
ENGINE COOLANT TEMPERATURE SENSOR
(TOP REAR OF ENGINE)
THROTTLE BODY ASSEMBLY
M
IC1
IC2
(LEFT SIDE OF ENGINE COMPT)
ENGINE CONTROL MODULE
IGT2 IGT4 IGT6 EX2B OX2B A1A- A2A- E2G VTA1 VTA2 VCTA ETA ETHA ETHW EKN2 EKNK THW ALT VCV1 VV1- NE- GE01 IGT1 IGT3 IGT5 IGF1 EX1B OX1B E26
(PINS: 141 TO 160 NOT USED)
(PINS: 135 TO 137 NOT USED)
(PINS: 119 TO 124 NOT USED)
STARTING/CHARGING SYSTEM
EY3
NCA
BRN
E1
(TOP REAR OF ENGINE)
AIR FUEL RATIO SENSOR (BANK 2 SENSOR 1) (LEFT SIDE OF ENGINE, IN EXHAUST PIPE)
AIR FUEL RATIO SENSOR (BANK 1 SENSOR 1) (RIGHT SIDE OF ENGINE, IN EXHAUST PIPE)
+B HA2A A2A- A2A+
+B HA1A A1A- A1A+
E4 (TOP REAR OF ENGINE)
WHT/BLK
GND IGF IGT2 +B
IGNITION COIL 2
IGNITION COIL 4
IGNITION COIL 6
IGNITION COIL 1
IGNITION COIL 3
IGNITION COIL 5
(TOP OF VALVE COVER)
367497

Fig. 61: 3.5L, Engine Performance Circuit (3 of 5)

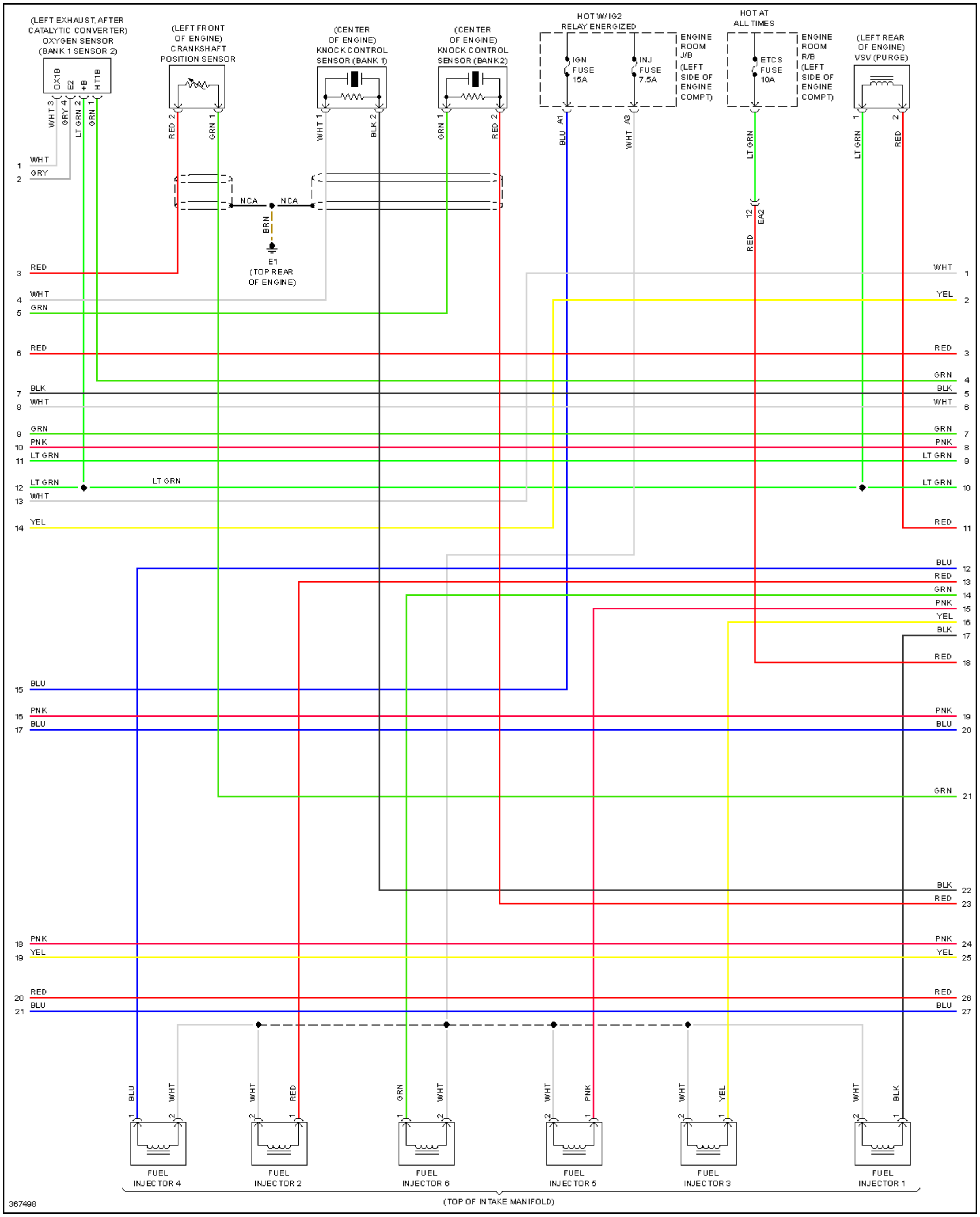
(LEFT EXHAUST, AFTER CATALYTIC CONVERTER) OXYGEN SENSOR (BANK 1 SENSOR 2)
OX1B
E2
+B
HT1B
WHT 3
GRY 4
LT GRN 2
GRN 1
(LEFT FRONT OF ENGINE) CRANKSHAFT POSITION SENSOR
RED 2
GRN 1
(CENTER OF ENGINE) KNOCK CONTROL SENSOR (BANK 1)
WHT 1
BLK 2
(CENTER OF ENGINE) KNOCK CONTROL SENSOR (BANK2)
GRN 1
RED 2
HOT W/ IG2 RELAY ENERGIZED
IGN FUSE 15A
INJ FUSE 7.5A
ENGINE ROOM J/B (LEFT SIDE OF ENGINE COMPT)
A1
BLU
A3
WHT
HOT AT ALL TIMES
ETCS FUSE 10A
ENGINE ROOM R/B (LEFT SIDE OF ENGINE COMPT)
LT GRN
12
EA2
RED
(LEFT REAR OF ENGINE) VSV (PURGE)
1
LT GRN
2
RED
NCA
NCA
BRN
E1 (TOP REAR OF ENGINE)
1 WHT
2 GRY
3 RED
4 WHT
5 GRN
6 RED
7 BLK
8 WHT
9 GRN
10 PNK
11 LT GRN
12 LT GRN
LT GRN
13 WHT
14 YEL
15 BLU
16 PNK
17 BLU
18 PNK
19 YEL
20 RED
21 BLU
WHT 1
YEL 2
RED 3
GRN 4
BLK 5
WHT 6
GRN 7
PNK 8
LT GRN 9
LT GRN 10
RED 11
BLU 12
RED 13
GRN 14
PNK 15
YEL 16
BLK 17
RED 18
PNK 19
BLU 20
GRN 21
BLK 22
RED 23
PNK 24
YEL 25
RED 26
BLU 27
BLU 1
WHT 2
FUEL INJECTOR 4
WHT 2
RED 1
FUEL INJECTOR 2
GRN 1
WHT 2
FUEL INJECTOR 6
WHT 2
PNK 1
FUEL INJECTOR 5
WHT 2
YEL 1
FUEL INJECTOR 3
WHT 2
BLK 1
FUEL INJECTOR 1
(TOP OF INTAKE MANIFOLD)
367498

Fig. 62: 3.5L, Engine Performance Circuit (4 of 5)

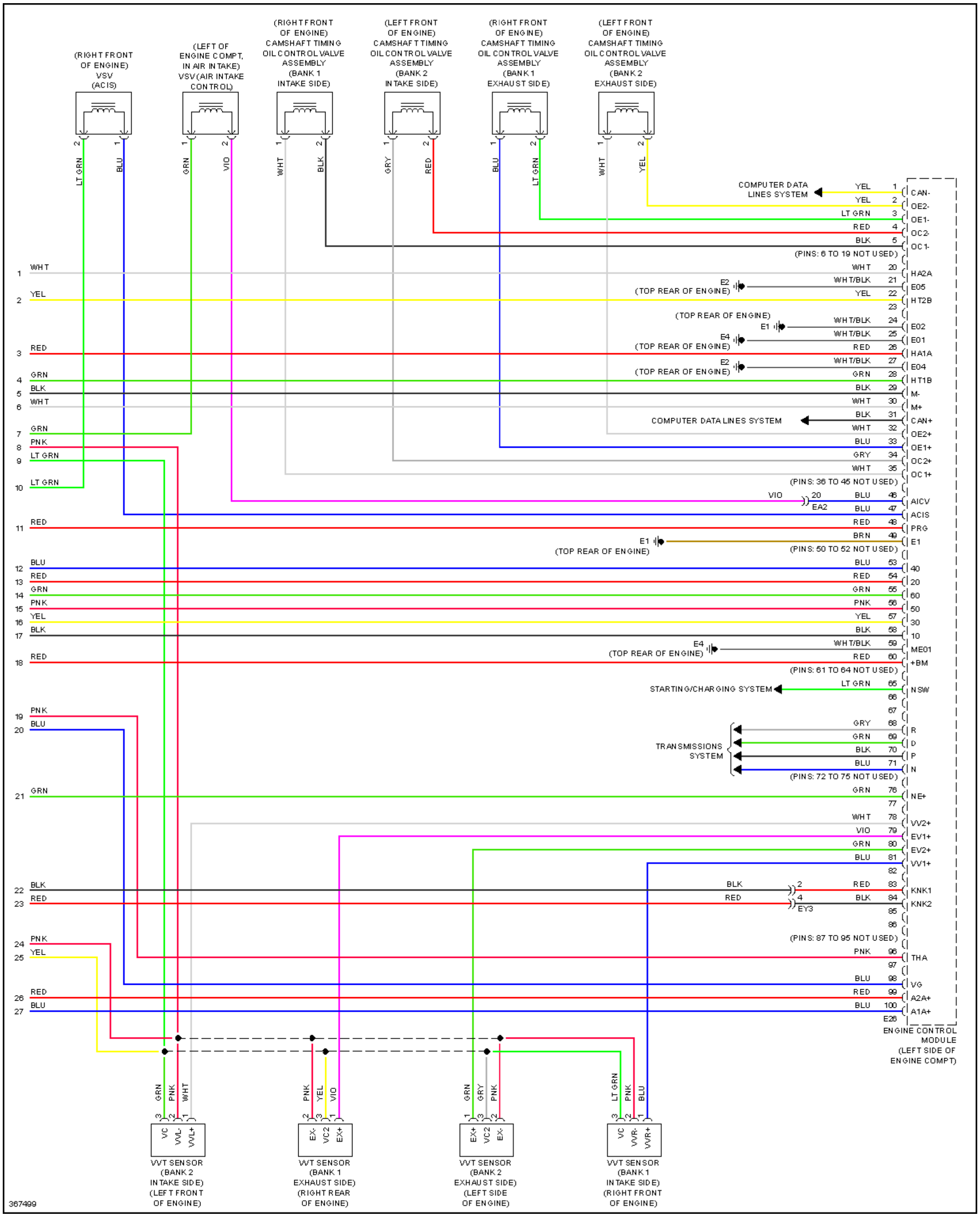
(RIGHT FRONT OF ENGINE) VSV (ACIS)
(LEFT OF ENGINE COMPT, IN AIR INTAKE) VSV (AIR INTAKE CONTROL)
(RIGHT FRONT OF ENGINE) CAMSHAFT TIMING OIL CONTROL VALVE ASSEMBLY (BANK 1 INTAKE SIDE)
(LEFT FRONT OF ENGINE) CAMSHAFT TIMING OIL CONTROL VALVE ASSEMBLY (BANK 2 INTAKE SIDE)
(RIGHT FRONT OF ENGINE) CAMSHAFT TIMING OIL CONTROL VALVE ASSEMBLY (BANK 1 EXHAUST SIDE)
(LEFT FRONT OF ENGINE) CAMSHAFT TIMING OIL CONTROL VALVE ASSEMBLY (BANK 2 EXHAUST SIDE)
2 LT GRN
1 BLU
1 GRN
2 VIO
1 WHT
2 BLK
1 GRY
2 RED
1 BLU
2 LT GRN
1 WHT
2 YEL
COMPUTER DATA LINES SYSTEM
YEL 1 CAN-
YEL 2 OE2-
LT GRN 3 OE1-
RED 4 OC2-
BLK 5 OC1-
(PINS: 6 TO 19 NOT USED)
1 WHT
WHT 20 HA2A
E2 (TOP REAR OF ENGINE) WHT/BLK 21 E05
2 YEL
YEL 22 HT2B
23
(TOP REAR OF ENGINE) E1 WHT/BLK 24 E02
E4 (TOP REAR OF ENGINE) WHT/BLK 25 E01
3 RED
RED 26 HA1A
E2 (TOP REAR OF ENGINE) WHT/BLK 27 E04
4 GRN
GRN 28 HT1B
5 BLK
BLK 29 M-
6 WHT
WHT 30 M+
COMPUTER DATA LINES SYSTEM BLK 31 CAN+
7 GRN
WHT 32 OE2+
8 PNK
BLU 33 OE1+
9 LT GRN
GRY 34 OC2+
WHT 35 OC1+
10 LT GRN
(PINS: 36 TO 45 NOT USED)
VIO 20 EA2 BLU 46 AICV
BLU 47 ACIS
11 RED
RED 48 PRG
E1 (TOP REAR OF ENGINE) BRN 49 E1
(PINS: 50 TO 52 NOT USED)
12 BLU
BLU 53 40
13 RED
RED 54 20
14 GRN
GRN 55 60
15 PNK
PNK 56 50
16 YEL
YEL 57 30
17 BLK
BLK 58 10
E4 (TOP REAR OF ENGINE) WHT/BLK 59 ME01
18 RED
RED 60 +BM
(PINS: 61 TO 64 NOT USED)
STARTING/CHARGING SYSTEM LT GRN 65 NSW
66
67
19 PNK
20 BLU
TRANSMISSIONS SYSTEM
GRY 68 R
GRN 69 D
BLK 70 P
BLU 71 N
(PINS: 72 TO 75 NOT USED)
21 GRN
GRN 76 NE+
77
WHT 78 VV2+
VIO 79 EV1+
GRN 80 EV2+
BLU 81 VV1+
82
22 BLK
BLK 2 RED 83 KNK1
23 RED
RED 4 EY3 BLK 84 KNK2
85
86
(PINS: 87 TO 95 NOT USED)
24 PNK
25 YEL
PNK 96 THA
97
BLU 98 VG
26 RED
RED 99 A2A+
27 BLU
BLU 100 A1A+
E26
ENGINE CONTROL MODULE (LEFT SIDE OF ENGINE COMPT)
3 GRN VC
2 PNK VVL-
1 WHT VVL+
VVT SENSOR (BANK 2 INTAKE SIDE) (LEFT FRONT OF ENGINE)
2 PNK EX-
3 YEL VC2
1 VIO EX+
VVT SENSOR (BANK 1 EXHAUST SIDE) (RIGHT REAR OF ENGINE)
1 GRN EX+
3 GRY VC2
2 PNK EX-
VVT SENSOR (BANK 2 EXHAUST SIDE) (LEFT SIDE OF ENGINE)
3 LT GRN VC
2 PNK VVR-
1 BLU VVR+
VVT SENSOR (BANK 1 INTAKE SIDE) (RIGHT FRONT OF ENGINE)
367499

Fig. 63: 3.5L, Engine Performance Circuit (5 of 5)

EXTERIOR LIGHTS

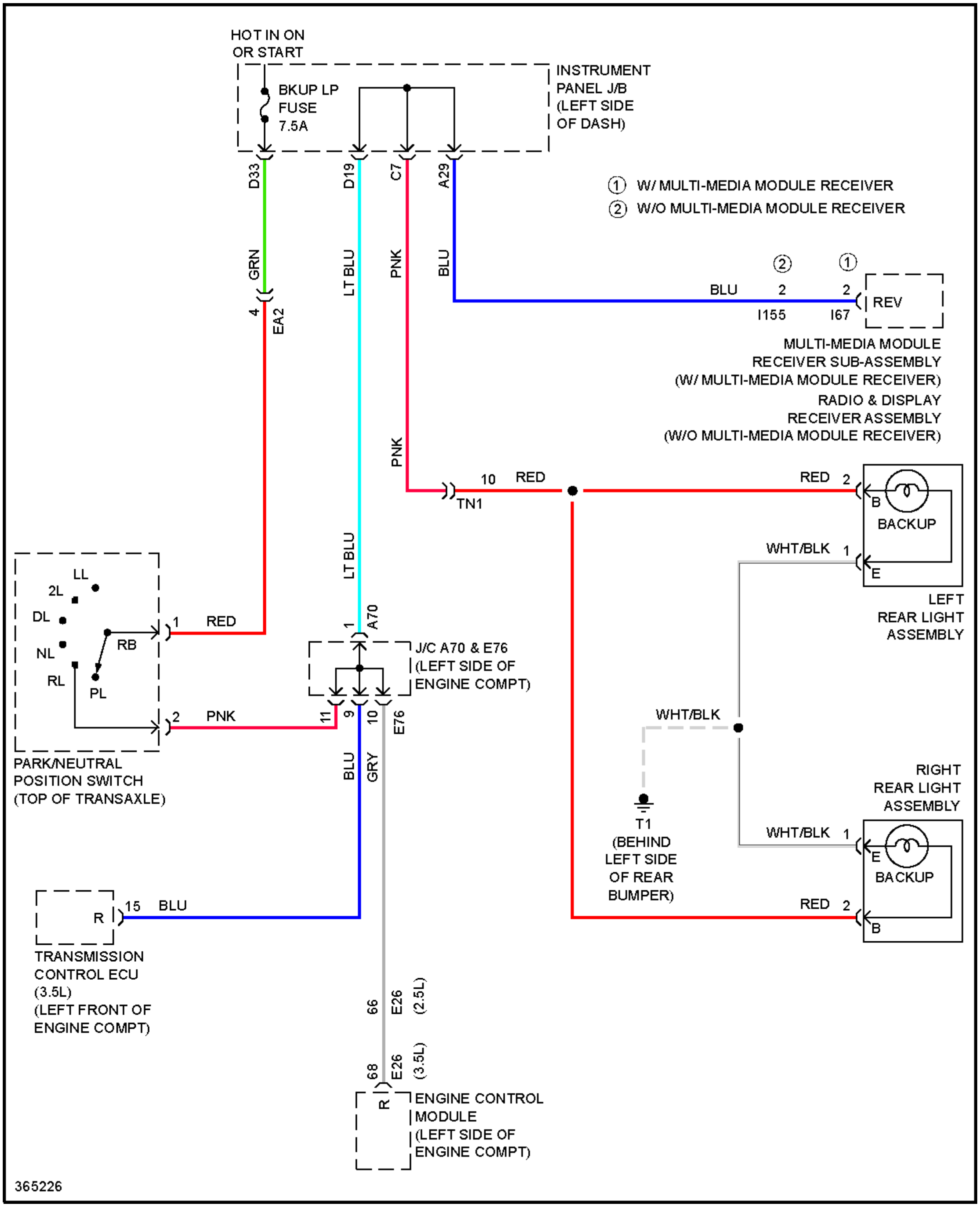
HOT IN ON OR START
BKUP LP FUSE 7.5A
INSTRUMENT PANEL J/B (LEFT SIDE OF DASH)
D33
D19
C7
A29
① W/ MULTI-MEDIA MODULE RECEIVER
② W/O MULTI-MEDIA MODULE RECEIVER
GRN
LT BLU
PNK
BLU
②
①
BLU
2
2
REV
I155
I67
4
EA2
MULTI-MEDIA MODULE RECEIVER SUB-ASSEMBLY (W/ MULTI-MEDIA MODULE RECEIVER)
RADIO & DISPLAY RECEIVER ASSEMBLY (W/O MULTI-MEDIA MODULE RECEIVER)
PNK
10
RED
TN1
RED
2
B
BACKUP
WHT/BLK
1
E
LEFT REAR LIGHT ASSEMBLY
LT BLU
LL
2L
DL
NL
RL
RB
PL
1
RED
1
A70
J/C A70 & E76 (LEFT SIDE OF ENGINE COMPT)
2
PNK
11
9
10
E76
BLU
GRY
WHT/BLK
PARK/NEUTRAL POSITION SWITCH (TOP OF TRANSAXLE)
T1 (BEHIND LEFT SIDE OF REAR BUMPER)
RIGHT REAR LIGHT ASSEMBLY
WHT/BLK
1
E
BACKUP
RED
2
B
R
15
BLU
TRANSMISSION CONTROL ECU (3.5L) (LEFT FRONT OF ENGINE COMPT)
66
E26
(2.5L)
68
E26
(3.5L)
R
ENGINE CONTROL MODULE (LEFT SIDE OF ENGINE COMPT)
365226

Fig. 64: Backup Lamps Circuit, Except Hybrid

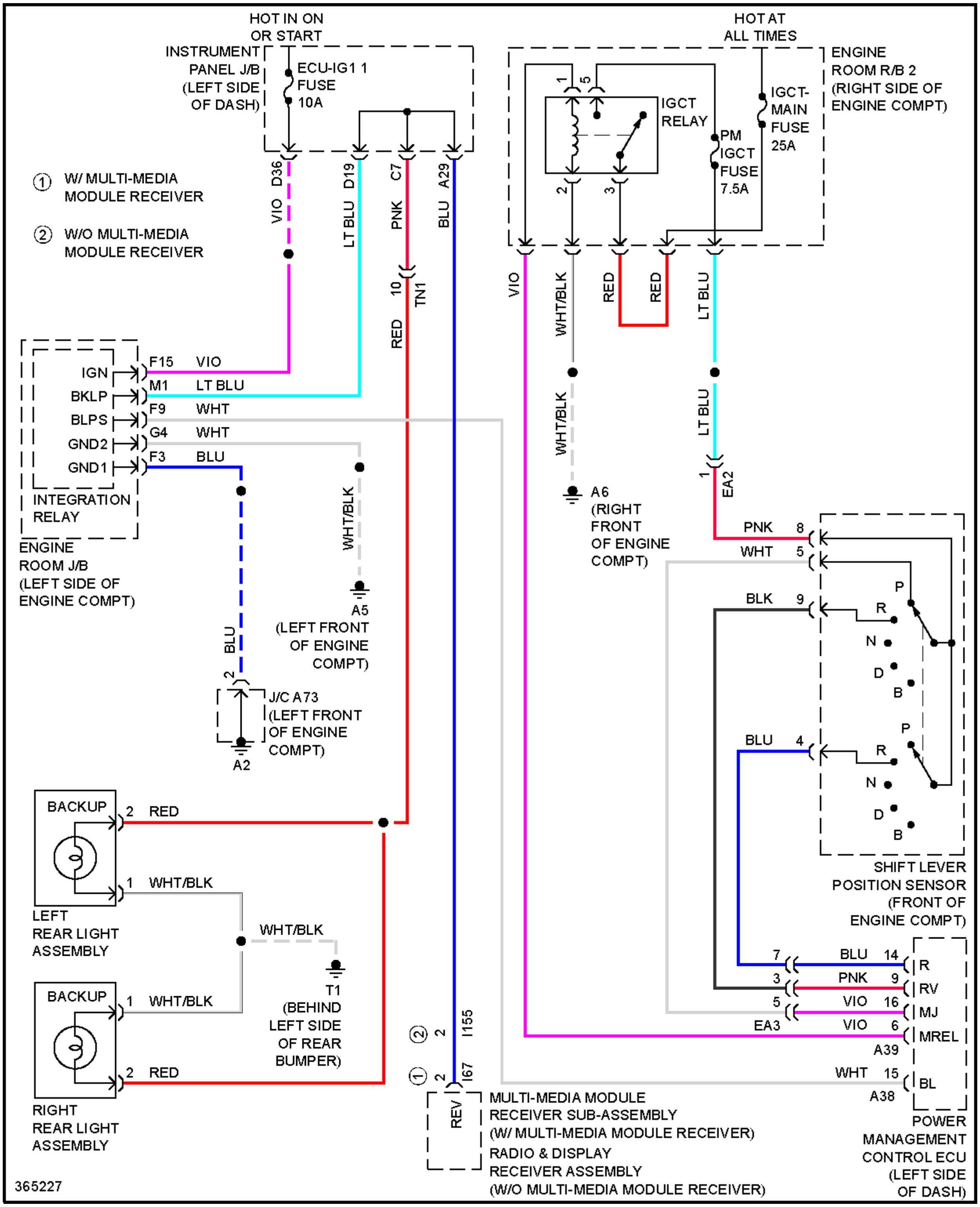
HOT IN ON OR START
INSTRUMENT PANEL J/B (LEFT SIDE OF DASH)
ECU-IG1 1 FUSE 10A
HOT AT ALL TIMES
ENGINE ROOM R/B 2 (RIGHT SIDE OF ENGINE COMPT)
IGCT RELAY
IGCT-MAIN FUSE 25A
PM IGCT FUSE 7.5A
① W/ MULTI-MEDIA MODULE RECEIVER
② W/O MULTI-MEDIA MODULE RECEIVER
D36 VIO
D19 LT BLU
C7 PNK
A29 BLU
10 TN1
RED
VIO
WHT/BLK
RED
RED
LT BLU
IGN
BKLP
BLPS
GND2
GND1
F15 VIO
M1 LT BLU
F9 WHT
G4 WHT
F3 BLU
INTEGRATION RELAY
ENGINE ROOM J/B (LEFT SIDE OF ENGINE COMPT)
WHT/BLK
A5 (LEFT FRONT OF ENGINE COMPT)
BLU
J/C A73 (LEFT FRONT OF ENGINE COMPT)
A2
A6 (RIGHT FRONT OF ENGINE COMPT)
1 EA2
PNK 8
WHT 5
BLK 9
BLU 4
P R N D B
SHIFT LEVER POSITION SENSOR (FRONT OF ENGINE COMPT)
BACKUP
2 RED
1 WHT/BLK
LEFT REAR LIGHT ASSEMBLY
WHT/BLK
T1 (BEHIND LEFT SIDE OF REAR BUMPER)
RIGHT REAR LIGHT ASSEMBLY
② 2 I155
① 2 I67
REV
MULTI-MEDIA MODULE RECEIVER SUB-ASSEMBLY (W/ MULTI-MEDIA MODULE RECEIVER)
RADIO & DISPLAY RECEIVER ASSEMBLY (W/O MULTI-MEDIA MODULE RECEIVER)
7 BLU 14 R
3 PNK 9 RV
5 VIO 16 MJ
EA3 VIO 6 MREL
A39
WHT 15 BL
A38
POWER MANAGEMENT CONTROL ECU (LEFT SIDE OF DASH)
365227

Fig. 65: Backup Lamps Circuit, Hybrid

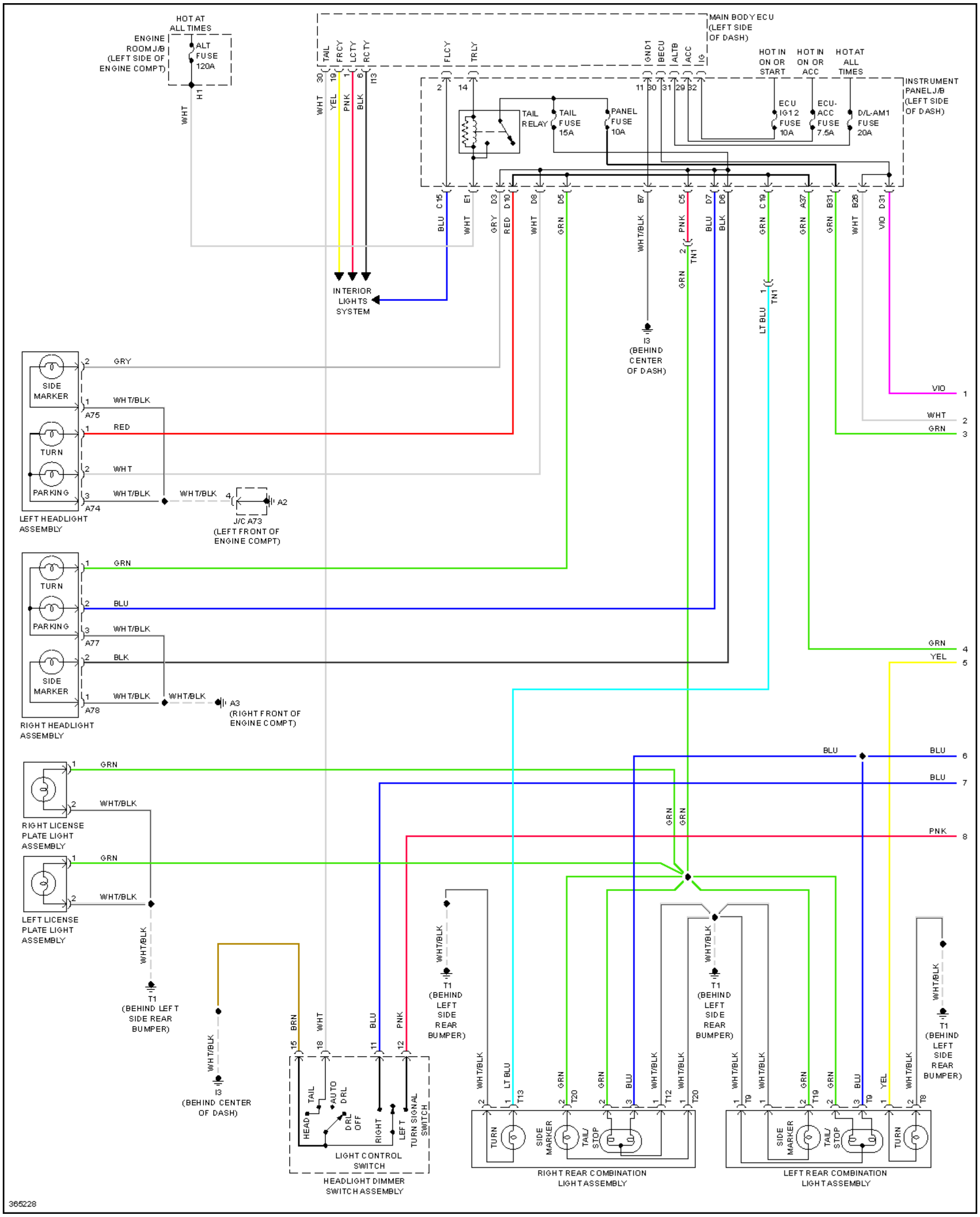
HOT AT ALL TIMES
ENGINE ROOM J/B (LEFT SIDE OF ENGINE COMPT)
ALT FUSE 120A
H1
WHT
MAIN BODY ECU (LEFT SIDE OF DASH)
TAIL
FRCY
LCTY
RCTY
FLCY
TRLY
GND1
BECU
ALTB
ACC
IG
HOT IN ON OR START
HOT IN ON OR ACC
HOT AT ALL TIMES
INSTRUMENT PANEL J/B (LEFT SIDE OF DASH)
TAIL RELAY
TAIL FUSE 15A
PANEL FUSE 10A
ECU IG1 2 FUSE 10A
ECU-ACC FUSE 7.5A
D/L-AM1 FUSE 20A
WHT
YEL
PNK
BLK
BLU
GRY
RED
GRN
WHT/BLK
LT BLU
VIO
BRN
C15
E1
D3
D10
D8
D5
B7
C5
D7
D6
C19
A37
B31
B26
D31
TN1
INTERIOR LIGHTS SYSTEM
I3 (BEHIND CENTER OF DASH)
SIDE MARKER
TURN
PARKING
A75
A74
LEFT HEADLIGHT ASSEMBLY
J/C A73 (LEFT FRONT OF ENGINE COMPT)
A2
A77
A78
RIGHT HEADLIGHT ASSEMBLY
A3 (RIGHT FRONT OF ENGINE COMPT)
RIGHT LICENSE PLATE LIGHT ASSEMBLY
LEFT LICENSE PLATE LIGHT ASSEMBLY
T1 (BEHIND LEFT SIDE REAR BUMPER)
I3 (BEHIND CENTER OF DASH)
HEAD
TAIL
AUTO DRL
DRL OFF
RIGHT
LEFT
TURN SIGNAL SWITCH
LIGHT CONTROL SWITCH
HEADLIGHT DIMMER SWITCH ASSEMBLY
T13
T20
T12
T9
T19
T8
SIDE MARKER
TAIL/STOP
RIGHT REAR COMBINATION LIGHT ASSEMBLY
LEFT REAR COMBINATION LIGHT ASSEMBLY
365228

Fig. 66: Exterior Lamps Circuit, Except Hybrid (1 of 2)

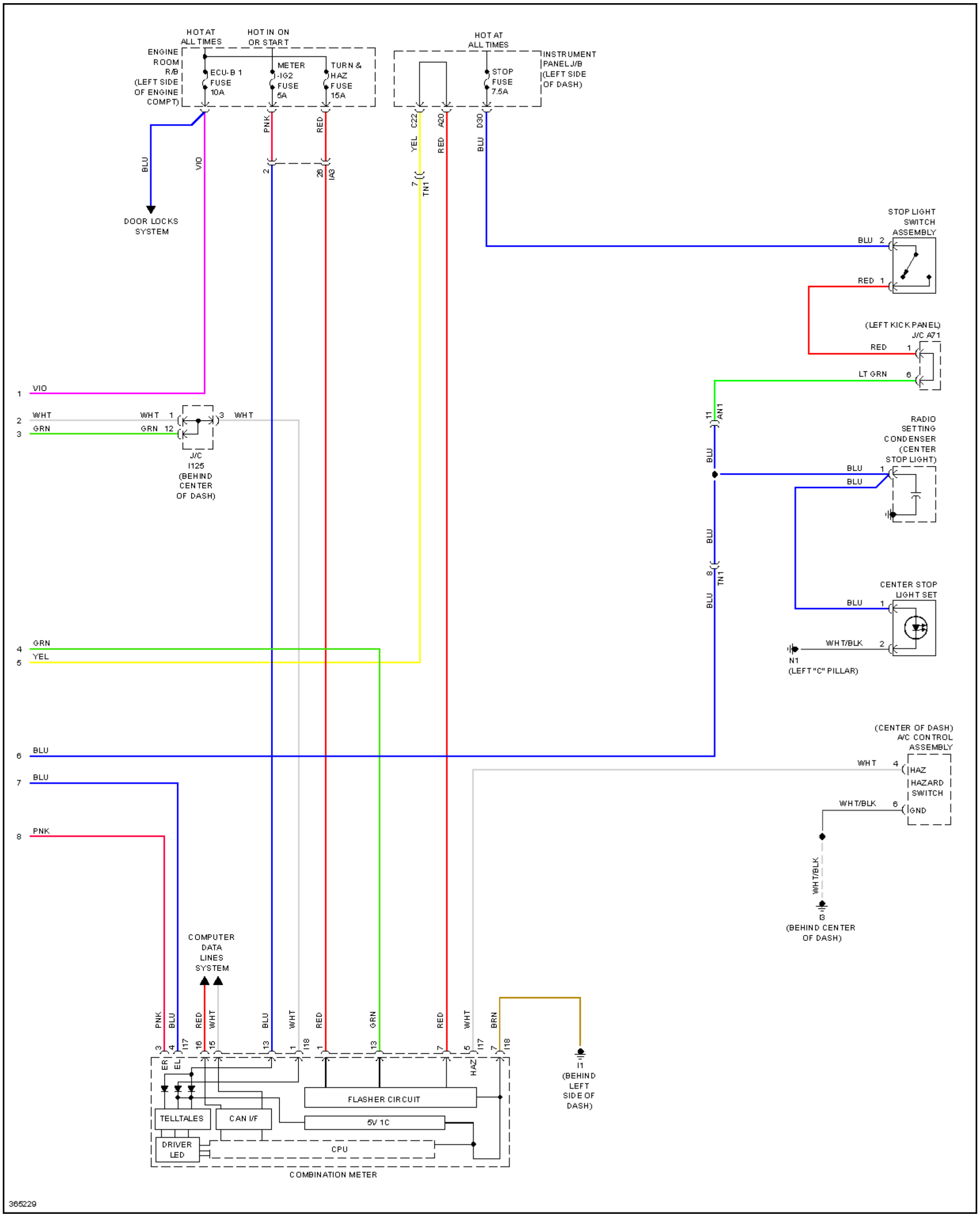
HOT AT ALL TIMES
HOT IN ON OR START
ENGINE ROOM R/B (LEFT SIDE OF ENGINE COMPT)
ECU-B 1 FUSE 10A
METER -IG2 FUSE 5A
TURN & HAZ FUSE 15A
HOT AT ALL TIMES
INSTRUMENT PANEL J/B (LEFT SIDE OF DASH)
STOP FUSE 7.5A
C22
A20
D30
BLU
VIO
PNK
RED
YEL
IA3
TN1
DOOR LOCKS SYSTEM
STOP LIGHT SWITCH ASSEMBLY
(LEFT KICK PANEL) J/C A71
LT GRN
AN1
RADIO SETTING CONDENSER (CENTER STOP LIGHT)
CENTER STOP LIGHT SET
WHT/BLK
N1 (LEFT "C" PILLAR)
WHT
GRN
J/C I125 (BEHIND CENTER OF DASH)
(CENTER OF DASH) A/C CONTROL ASSEMBLY
HAZ
HAZARD SWITCH
GND
I3 (BEHIND CENTER OF DASH)
COMPUTER DATA LINES SYSTEM
BRN
I17
I18
ER
EL
FLASHER CIRCUIT
TELLTALES
CAN I/F
5V 1C
DRIVER LED
CPU
COMBINATION METER
I1 (BEHIND LEFT SIDE OF DASH)
365229

Fig. 67: Exterior Lamps Circuit, Except Hybrid (2 of 2)

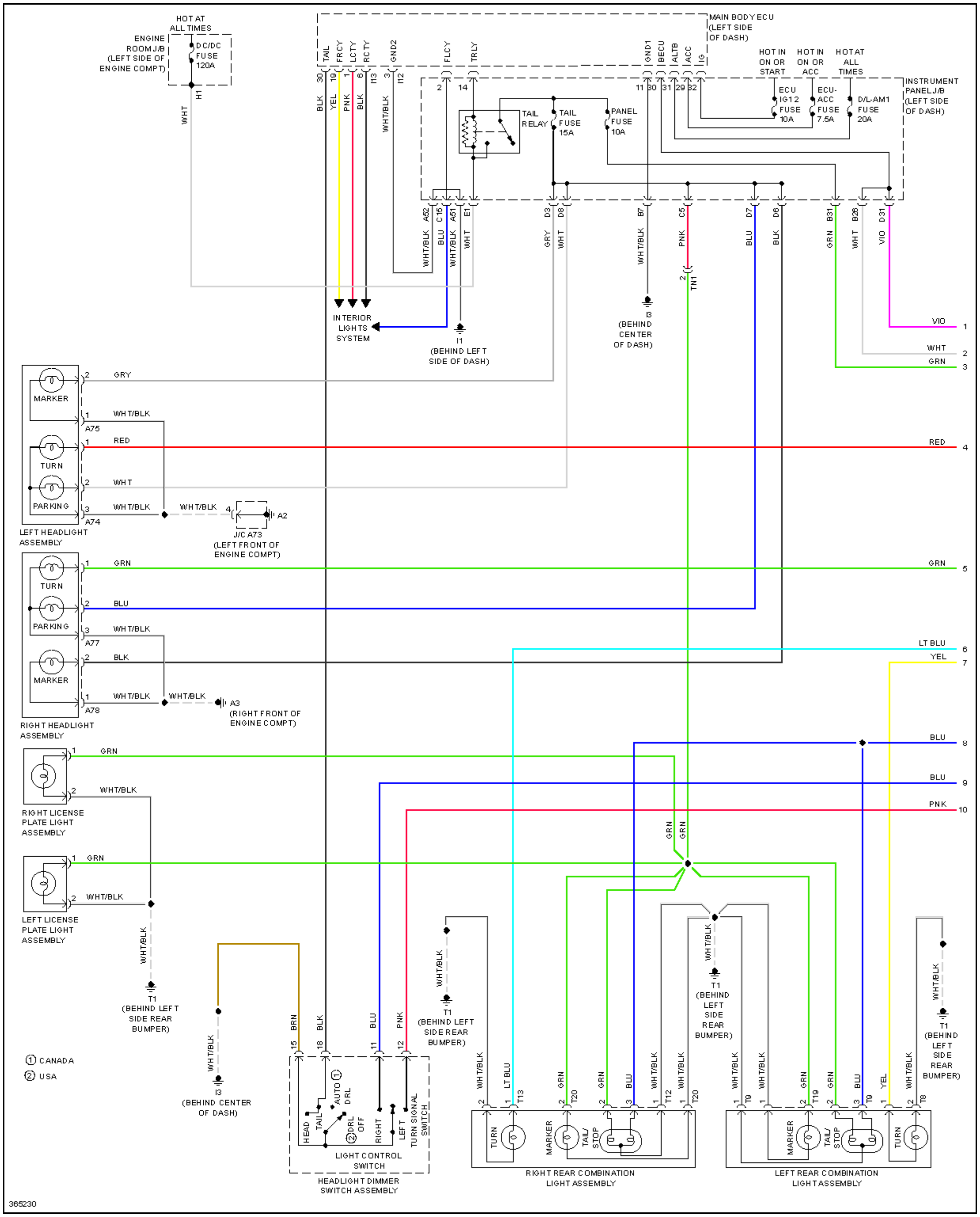
HOT AT ALL TIMES
ENGINE ROOM J/B (LEFT SIDE OF ENGINE COMPT)
DC/DC FUSE 120A
H1
WHT
MAIN BODY ECU (LEFT SIDE OF DASH)
TAIL
FRCY
LCTY
RCTY
GND2
FLCY
TRLY
GND1
BECU
ALTB
ACC
IG
HOT IN ON OR START
HOT IN ON OR ACC
HOT AT ALL TIMES
INSTRUMENT PANEL J/B (LEFT SIDE OF DASH)
ECU IG12 FUSE 10A
ECU-ACC FUSE 7.5A
D/L-AM1 FUSE 20A
TAIL RELAY
TAIL FUSE 15A
PANEL FUSE 10A
BLK
YEL
PNK
BLK
WHT/BLK
WHT/BLK
BLU
WHT/BLK
WHT
GRY
WHT
WHT/BLK
PNK
BLU
BLK
GRN
WHT
VIO
A52
C15
A51
E1
D3
D8
B7
C5
D7
D6
B31
B26
D31
TN1
INTERIOR LIGHTS SYSTEM
I1 (BEHIND LEFT SIDE OF DASH)
I3 (BEHIND CENTER OF DASH)
VIO 1
WHT 2
GRN 3
RED 4
GRN 5
LT BLU 6
YEL 7
BLU 8
BLU 9
PNK 10
MARKER
TURN
PARKING
A75
A74
GRY
WHT/BLK
RED
WHT
LEFT HEADLIGHT ASSEMBLY
J/C A73 (LEFT FRONT OF ENGINE COMPT)
A2
TURN
PARKING
MARKER
A77
A78
GRN
BLU
BLK
RIGHT HEADLIGHT ASSEMBLY
A3 (RIGHT FRONT OF ENGINE COMPT)
RIGHT LICENSE PLATE LIGHT ASSEMBLY
LEFT LICENSE PLATE LIGHT ASSEMBLY
T1 (BEHIND LEFT SIDE REAR BUMPER)
① CANADA
② USA
I3 (BEHIND CENTER OF DASH)
BRN
BLK
BLU
PNK
HEAD
TAIL
AUTO ①
DRL ②
DRL OFF ②
RIGHT
LEFT
TURN SIGNAL SWITCH
LIGHT CONTROL SWITCH
HEADLIGHT DIMMER SWITCH ASSEMBLY
T1 (BEHIND LEFT SIDE REAR BUMPER)
T13
T20
T12
T9
T19
T8
TURN
MARKER
TAIL/STOP
RIGHT REAR COMBINATION LIGHT ASSEMBLY
LEFT REAR COMBINATION LIGHT ASSEMBLY
LT BLU
GRN
BLU
YEL
WHT/BLK
365230

Fig. 68: Exterior Lamps Circuit, Hybrid (1 of 2)

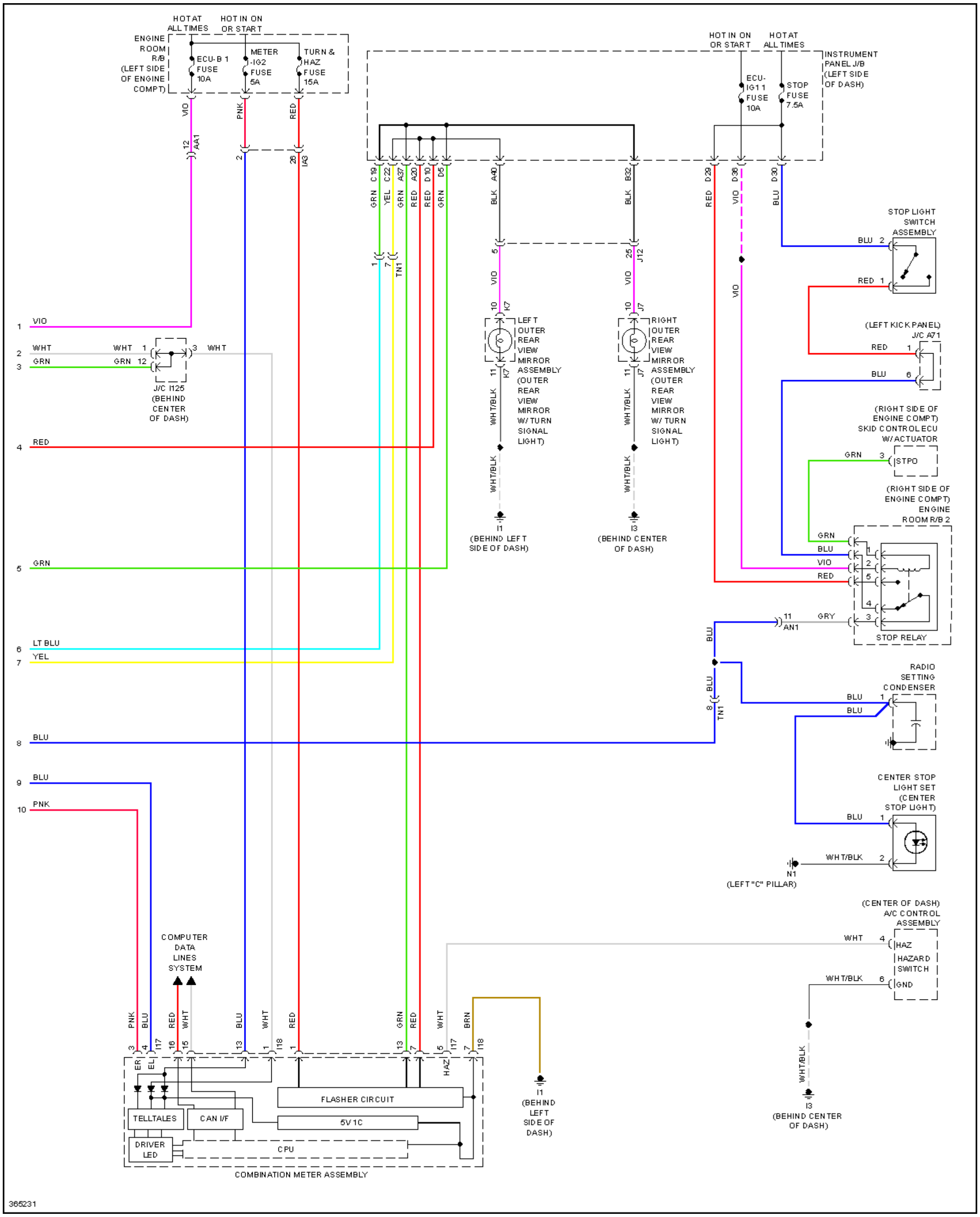
HOT AT ALL TIMES
HOT IN ON OR START
ENGINE ROOM R/B (LEFT SIDE OF ENGINE COMPT)
ECU-B 1 FUSE 10A
METER -IG2 FUSE 5A
TURN & HAZ FUSE 15A
HOT IN ON OR START
HOT AT ALL TIMES
INSTRUMENT PANEL J/B (LEFT SIDE OF DASH)
ECU-IG1 1 FUSE 10A
STOP FUSE 7.5A
VIO
PNK
RED
12 AA1
2
26 IA3
C19 C22 A37 A20 D10 D5
GRN YEL GRN RED RED GRN
A40 BLK
B32 BLK
D29 RED
D36 VIO
D30 BLU
1 7 TN1
5 VIO
25 J12 VIO
10 K7
10 J7
LEFT OUTER REAR VIEW MIRROR ASSEMBLY (OUTER REAR VIEW MIRROR W/ TURN SIGNAL LIGHT)
RIGHT OUTER REAR VIEW MIRROR ASSEMBLY (OUTER REAR VIEW MIRROR W/ TURN SIGNAL LIGHT)
11 K7 WHT/BLK
11 J7 WHT/BLK
I1 (BEHIND LEFT SIDE OF DASH)
I3 (BEHIND CENTER OF DASH)
STOP LIGHT SWITCH ASSEMBLY
BLU 2
RED 1
(LEFT KICK PANEL) J/C A71
RED 1
BLU 6
(RIGHT SIDE OF ENGINE COMPT) SKID CONTROL ECU W/ ACTUATOR
GRN 3 STPO
(RIGHT SIDE OF ENGINE COMPT) ENGINE ROOM R/B 2
GRN BLU VIO RED
1 2 5 4 3
GRY
11 AN1
STOP RELAY
BLU
8 TN1
RADIO SETTING CONDENSER
BLU 1
BLU
CENTER STOP LIGHT SET (CENTER STOP LIGHT)
BLU 1
WHT/BLK 2
N1 (LEFT "C" PILLAR)
(CENTER OF DASH) A/C CONTROL ASSEMBLY
WHT 4 HAZ
HAZARD SWITCH
WHT/BLK 6 GND
WHT/BLK
I3 (BEHIND CENTER OF DASH)
1 VIO
2 WHT
3 GRN
WHT 1
GRN 12
3 WHT
J/C I125 (BEHIND CENTER OF DASH)
4 RED
5 GRN
6 LT BLU
7 YEL
8 BLU
9 BLU
10 PNK
COMPUTER DATA LINES SYSTEM
PNK BLU RED WHT BLU WHT RED GRN RED WHT BRN
3 4 I17 16 15 13 1 I18 1 13 7 5 I17 7 I18
ER EL HAZ
TELLTALES
CAN I/F
DRIVER LED
FLASHER CIRCUIT
5V 1C
CPU
COMBINATION METER ASSEMBLY
I1 (BEHIND LEFT SIDE OF DASH)
365231

Fig. 69: Exterior Lamps Circuit, Hybrid (2 of 2)

GROUND DISTRIBUTION

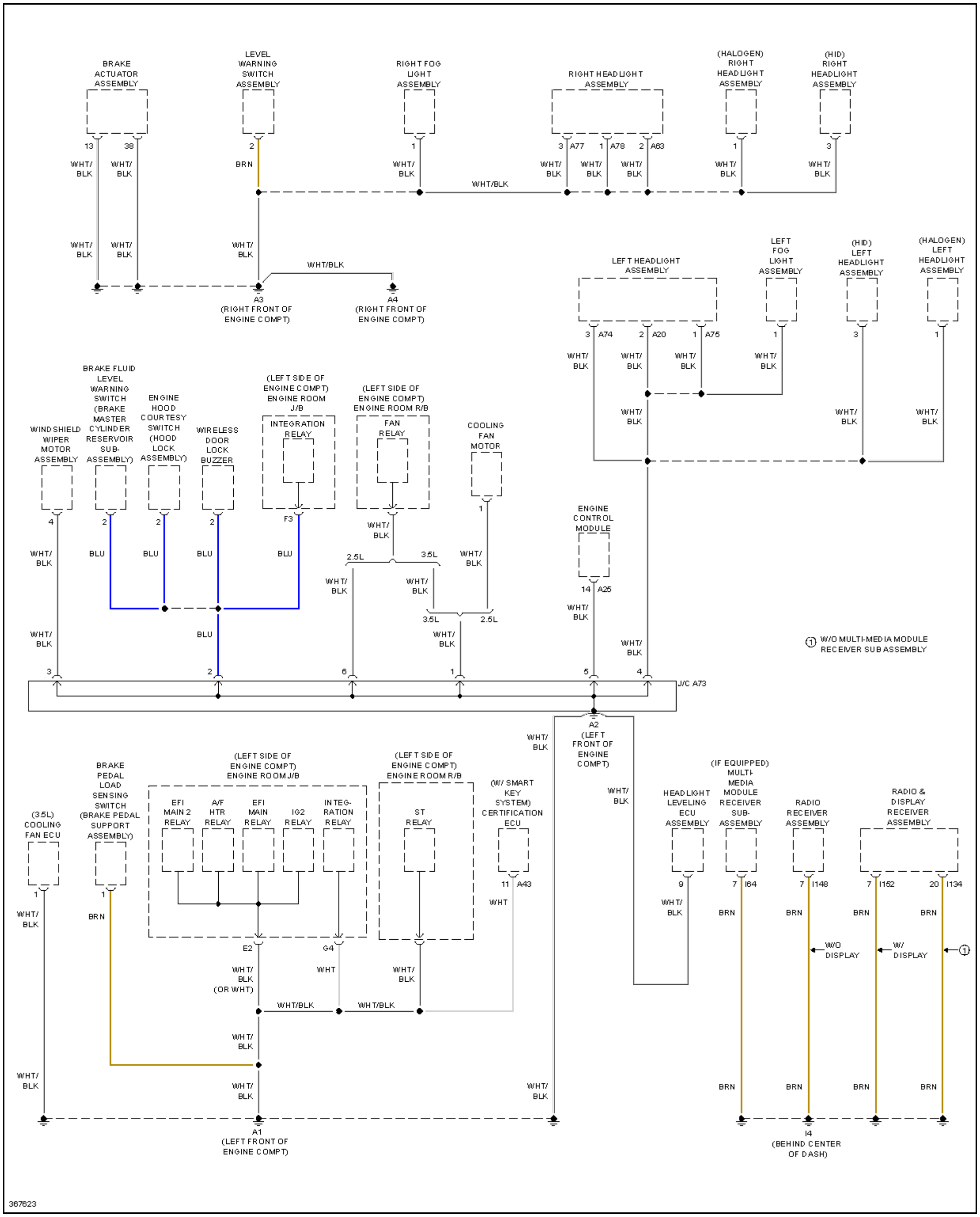
BRAKE ACTUATOR ASSEMBLY
13
38
WHT/ BLK
WHT/ BLK
LEVEL WARNING SWITCH ASSEMBLY
2
BRN
RIGHT FOG LIGHT ASSEMBLY
1
WHT/ BLK
RIGHT HEADLIGHT ASSEMBLY
3 A77
1 A78
2 A63
WHT/BLK
(HALOGEN) RIGHT HEADLIGHT ASSEMBLY
(HID) RIGHT HEADLIGHT ASSEMBLY
1
3
WHT/ BLK
WHT/BLK
A3 (RIGHT FRONT OF ENGINE COMPT)
A4 (RIGHT FRONT OF ENGINE COMPT)
LEFT HEADLIGHT ASSEMBLY
3 A74
2 A20
1 A75
LEFT FOG LIGHT ASSEMBLY
(HID) LEFT HEADLIGHT ASSEMBLY
(HALOGEN) LEFT HEADLIGHT ASSEMBLY
1
3
1
WINDSHIELD WIPER MOTOR ASSEMBLY
BRAKE FLUID LEVEL WARNING SWITCH (BRAKE MASTER CYLINDER RESERVOIR SUB-ASSEMBLY)
ENGINE HOOD COURTESY SWITCH (HOOD LOCK ASSEMBLY)
WIRELESS DOOR LOCK BUZZER
(LEFT SIDE OF ENGINE COMPT) ENGINE ROOM J/B
INTEGRATION RELAY
(LEFT SIDE OF ENGINE COMPT) ENGINE ROOM R/B
FAN RELAY
COOLING FAN MOTOR
4
2
2
2
F3
1
BLU
2.5L
3.5L
ENGINE CONTROL MODULE
14 A25
① W/O MULTI-MEDIA MODULE RECEIVER SUB ASSEMBLY
3
2
6
1
5
4
J/C A73
A2 (LEFT FRONT OF ENGINE COMPT)
(3.5L) COOLING FAN ECU
BRAKE PEDAL LOAD SENSING SWITCH (BRAKE PEDAL SUPPORT ASSEMBLY)
(LEFT SIDE OF ENGINE COMPT) ENGINE ROOM J/B
EFI MAIN 2 RELAY
A/F HTR RELAY
EFI MAIN RELAY
IG2 RELAY
INTEG-RATION RELAY
(LEFT SIDE OF ENGINE COMPT) ENGINE ROOM R/B
ST RELAY
(W/ SMART KEY SYSTEM) CERTIFICATION ECU
11 A43
WHT
HEADLIGHT LEVELING ECU ASSEMBLY
(IF EQUIPPED) MULTI-MEDIA MODULE RECEIVER SUB-ASSEMBLY
RADIO RECEIVER ASSEMBLY
RADIO & DISPLAY RECEIVER ASSEMBLY
9
7 I64
7 I148
7 I152
20 I134
W/O DISPLAY
W/ DISPLAY
E2
G4
WHT/ BLK (OR WHT)
A1 (LEFT FRONT OF ENGINE COMPT)
I4 (BEHIND CENTER OF DASH)
367623

Fig. 70: Ground Distribution Circuit, Except Hybrid (1 of 5)

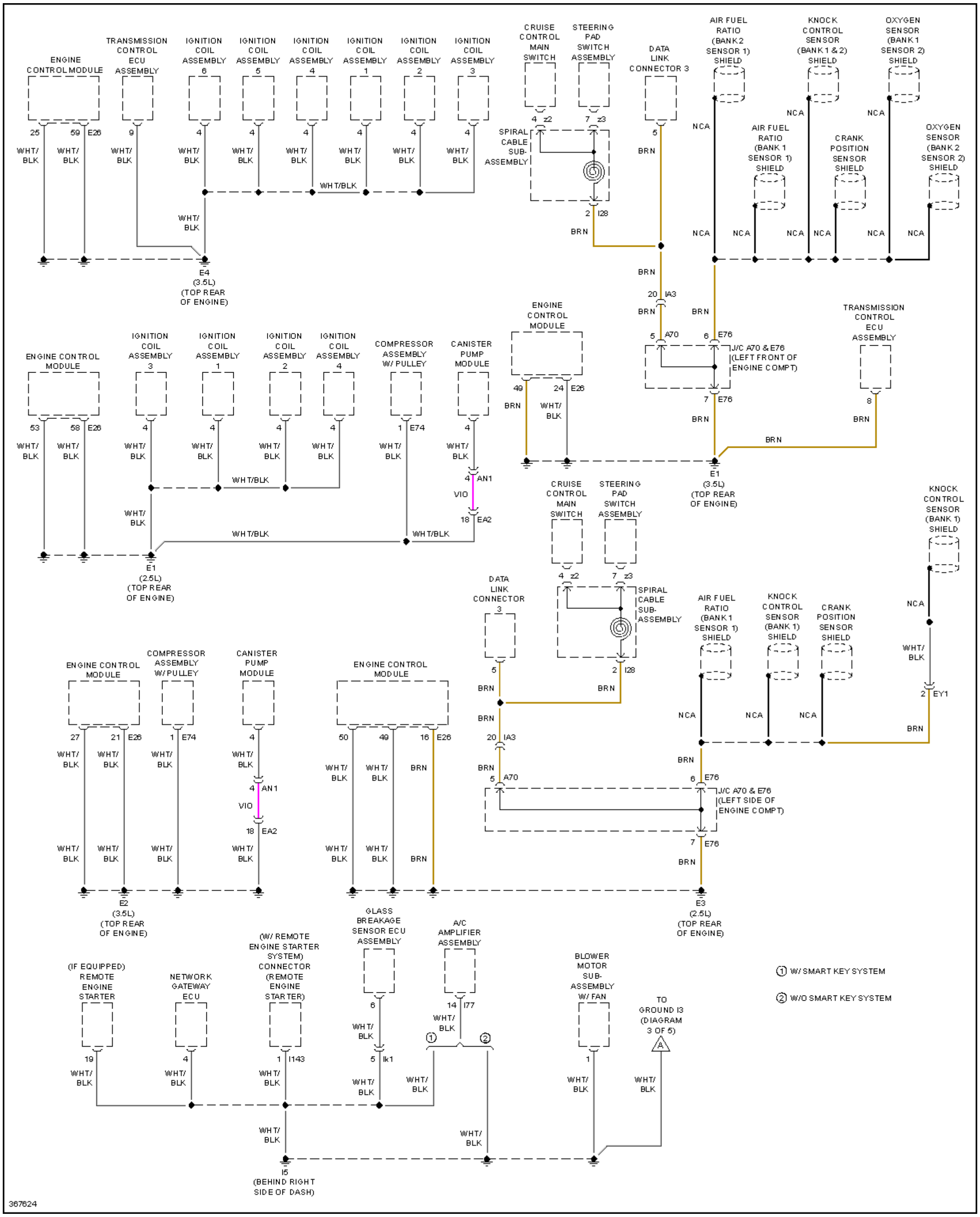
ENGINE CONTROL MODULE
TRANSMISSION CONTROL ECU ASSEMBLY
IGNITION COIL ASSEMBLY 6
IGNITION COIL ASSEMBLY 5
IGNITION COIL ASSEMBLY 4
IGNITION COIL ASSEMBLY 1
IGNITION COIL ASSEMBLY 2
IGNITION COIL ASSEMBLY 3
CRUISE CONTROL MAIN SWITCH
STEERING PAD SWITCH ASSEMBLY
DATA LINK CONNECTOR 3
AIR FUEL RATIO (BANK 2 SENSOR 1) SHIELD
KNOCK CONTROL SENSOR (BANK 1 & 2) SHIELD
OXYGEN SENSOR (BANK 1 SENSOR 2) SHIELD
AIR FUEL RATIO (BANK 1 SENSOR 1) SHIELD
CRANK POSITION SENSOR SHIELD
OXYGEN SENSOR (BANK 2 SENSOR 2) SHIELD
SPIRAL CABLE SUB-ASSEMBLY
25
59
E26
9
4
z2
7
z3
5
2
I28
WHT/BLK
BRN
NCA
E4 (3.5L) (TOP REAR OF ENGINE)
20
IA3
A70
6
E76
J/C A70 & E76 (LEFT FRONT OF ENGINE COMPT)
ENGINE CONTROL MODULE
49
24
E26
TRANSMISSION CONTROL ECU ASSEMBLY
8
E1 (3.5L) (TOP REAR OF ENGINE)
ENGINE CONTROL MODULE
IGNITION COIL ASSEMBLY 3
IGNITION COIL ASSEMBLY 1
IGNITION COIL ASSEMBLY 2
IGNITION COIL ASSEMBLY 4
COMPRESSOR ASSEMBLY W/ PULLEY
CANISTER PUMP MODULE
53
58
1
E74
AN1
VIO
18
EA2
E1 (2.5L) (TOP REAR OF ENGINE)
CRUISE CONTROL MAIN SWITCH
STEERING PAD SWITCH ASSEMBLY
KNOCK CONTROL SENSOR (BANK 1) SHIELD
DATA LINK CONNECTOR 3
SPIRAL CABLE SUB-ASSEMBLY
AIR FUEL RATIO (BANK 1 SENSOR 1) SHIELD
KNOCK CONTROL SENSOR (BANK 1) SHIELD
CRANK POSITION SENSOR SHIELD
EY1
J/C A70 & E76 (LEFT SIDE OF ENGINE COMPT)
ENGINE CONTROL MODULE
COMPRESSOR ASSEMBLY W/ PULLEY
CANISTER PUMP MODULE
ENGINE CONTROL MODULE
27
21
50
16
E2 (3.5L) (TOP REAR OF ENGINE)
E3 (2.5L) (TOP REAR OF ENGINE)
(IF EQUIPPED) REMOTE ENGINE STARTER
NETWORK GATEWAY ECU
(W/ REMOTE ENGINE STARTER SYSTEM) CONNECTOR (REMOTE ENGINE STARTER)
GLASS BREAKAGE SENSOR ECU ASSEMBLY
A/C AMPLIFIER ASSEMBLY
BLOWER MOTOR SUB-ASSEMBLY W/ FAN
TO GROUND I3 (DIAGRAM 3 OF 5)
A
19
I143
6
Ik1
14
I77
①
②
I5 (BEHIND RIGHT SIDE OF DASH)
① W/ SMART KEY SYSTEM
② W/O SMART KEY SYSTEM
367624

Fig. 71: Ground Distribution Circuit, Except Hybrid (2 of 5)

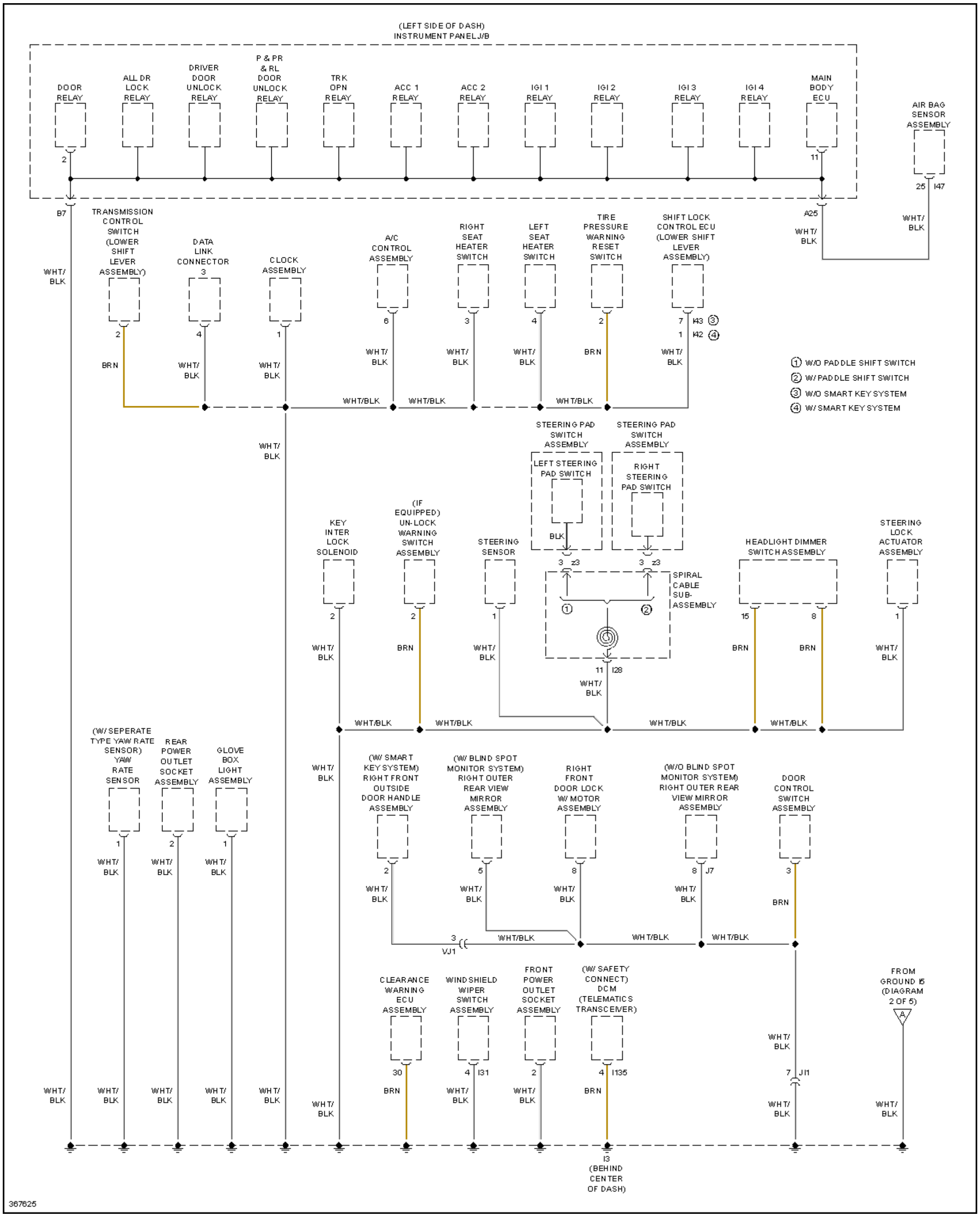
(LEFT SIDE OF DASH)
INSTRUMENT PANEL J/B
DOOR RELAY
ALL DR LOCK RELAY
DRIVER DOOR UNLOCK RELAY
P & PR & RL DOOR UNLOCK RELAY
TRK OPN RELAY
ACC 1 RELAY
ACC 2 RELAY
IGI 1 RELAY
IGI 2 RELAY
IGI 3 RELAY
IGI 4 RELAY
MAIN BODY ECU
AIR BAG SENSOR ASSEMBLY
25 I47
2
11
B7
A25
WHT/BLK
TRANSMISSION CONTROL SWITCH (LOWER SHIFT LEVER ASSEMBLY)
DATA LINK CONNECTOR 3
CLOCK ASSEMBLY
A/C CONTROL ASSEMBLY
RIGHT SEAT HEATER SWITCH
LEFT SEAT HEATER SWITCH
TIRE PRESSURE WARNING RESET SWITCH
SHIFT LOCK CONTROL ECU (LOWER SHIFT LEVER ASSEMBLY)
7 I43 ③
1 I42 ④
BRN
① W/O PADDLE SHIFT SWITCH
② W/ PADDLE SHIFT SWITCH
③ W/O SMART KEY SYSTEM
④ W/ SMART KEY SYSTEM
STEERING PAD SWITCH ASSEMBLY
LEFT STEERING PAD SWITCH
RIGHT STEERING PAD SWITCH
BLK
3 z3
SPIRAL CABLE SUB-ASSEMBLY
11 I28
KEY INTER LOCK SOLENOID
(IF EQUIPPED) UN-LOCK WARNING SWITCH ASSEMBLY
STEERING SENSOR
HEADLIGHT DIMMER SWITCH ASSEMBLY
STEERING LOCK ACTUATOR ASSEMBLY
(W/ SEPERATE TYPE YAW RATE SENSOR) YAW RATE SENSOR
REAR POWER OUTLET SOCKET ASSEMBLY
GLOVE BOX LIGHT ASSEMBLY
(W/ SMART KEY SYSTEM) RIGHT FRONT OUTSIDE DOOR HANDLE ASSEMBLY
(W/ BLIND SPOT MONITOR SYSTEM) RIGHT OUTER REAR VIEW MIRROR ASSEMBLY
RIGHT FRONT DOOR LOCK W/ MOTOR ASSEMBLY
(W/O BLIND SPOT MONITOR SYSTEM) RIGHT OUTER REAR VIEW MIRROR ASSEMBLY
DOOR CONTROL SWITCH ASSEMBLY
8 J7
3 VJ1
CLEARANCE WARNING ECU ASSEMBLY
WINDSHIELD WIPER SWITCH ASSEMBLY
FRONT POWER OUTLET SOCKET ASSEMBLY
(W/ SAFETY CONNECT) DCM (TELEMATICS TRANSCEIVER)
4 I31
4 I135
7 J11
FROM GROUND I5 (DIAGRAM 2 OF 5)
A
I3 (BEHIND CENTER OF DASH)
367625

Fig. 72: Ground Distribution Circuit, Except Hybrid (3 of 5)

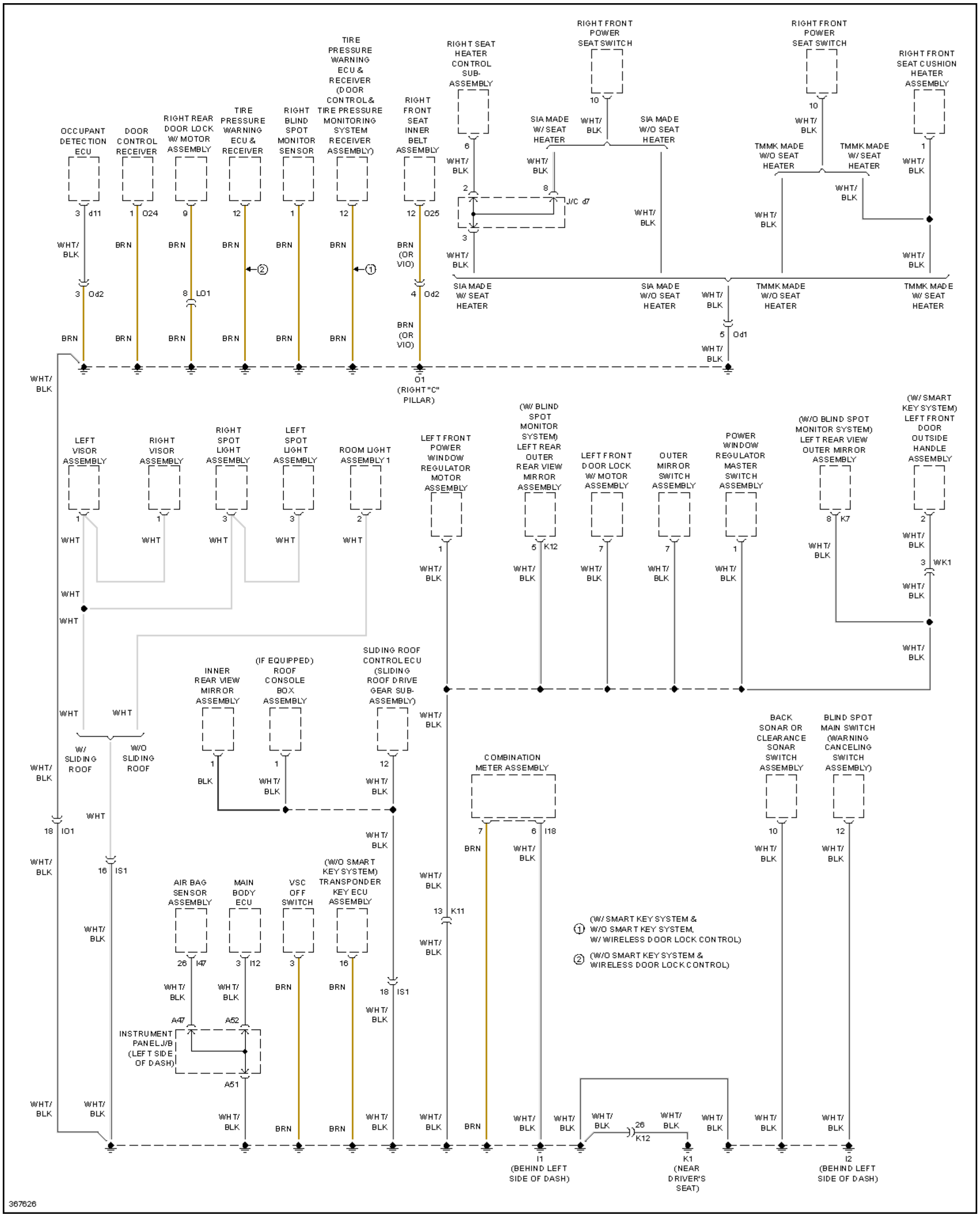
OCCUPANT DETECTION ECU
DOOR CONTROL RECEIVER
RIGHT REAR DOOR LOCK W/ MOTOR ASSEMBLY
TIRE PRESSURE WARNING ECU & RECEIVER
RIGHT BLIND SPOT MONITOR SENSOR
TIRE PRESSURE WARNING ECU & RECEIVER (DOOR CONTROL & TIRE PRESSURE MONITORING SYSTEM RECEIVER ASSEMBLY)
RIGHT FRONT SEAT INNER BELT ASSEMBLY
RIGHT SEAT HEATER CONTROL SUB-ASSEMBLY
RIGHT FRONT POWER SEAT SWITCH
SIA MADE W/ SEAT HEATER
SIA MADE W/O SEAT HEATER
RIGHT FRONT POWER SEAT SWITCH
RIGHT FRONT SEAT CUSHION HEATER ASSEMBLY
TMMK MADE W/O SEAT HEATER
TMMK MADE W/ SEAT HEATER
3 d11
1 O24
9
12
1
12
12 O25
6
10
10
1
2
8
J/C d7
3
WHT/BLK
BRN
BRN (OR VIO)
①
②
3 Od2
8 LO1
4 Od2
5 Od1
O1 (RIGHT "C" PILLAR)
LEFT VISOR ASSEMBLY
RIGHT VISOR ASSEMBLY
RIGHT SPOT LIGHT ASSEMBLY
LEFT SPOT LIGHT ASSEMBLY
ROOM LIGHT ASSEMBLY 1
LEFT FRONT POWER WINDOW REGULATOR MOTOR ASSEMBLY
(W/ BLIND SPOT MONITOR SYSTEM) LEFT REAR OUTER REAR VIEW MIRROR ASSEMBLY
LEFT FRONT DOOR LOCK W/ MOTOR ASSEMBLY
OUTER MIRROR SWITCH ASSEMBLY
POWER WINDOW REGULATOR MASTER SWITCH ASSEMBLY
(W/O BLIND SPOT MONITOR SYSTEM) LEFT REAR VIEW OUTER MIRROR ASSEMBLY
(W/ SMART KEY SYSTEM) LEFT FRONT DOOR OUTSIDE HANDLE ASSEMBLY
1
1
3
3
2
1
5 K12
7
7
1
8 K7
2
3 WK1
WHT
W/ SLIDING ROOF
W/O SLIDING ROOF
INNER REAR VIEW MIRROR ASSEMBLY
(IF EQUIPPED) ROOF CONSOLE BOX ASSEMBLY
SLIDING ROOF CONTROL ECU (SLIDING ROOF DRIVE GEAR SUB-ASSEMBLY)
1
1
12
BLK
COMBINATION METER ASSEMBLY
7
6 I18
BACK SONAR OR CLEARANCE SONAR SWITCH ASSEMBLY
BLIND SPOT MAIN SWITCH (WARNING CANCELING SWITCH ASSEMBLY)
10
12
18 IO1
16 IS1
13 K11
AIR BAG SENSOR ASSEMBLY
MAIN BODY ECU
VSC OFF SWITCH
(W/O SMART KEY SYSTEM) TRANSPONDER KEY ECU ASSEMBLY
26 I47
3 I12
3
16
18 IS1
A47
A52
INSTRUMENT PANEL J/B (LEFT SIDE OF DASH)
A51
26 K12
I1 (BEHIND LEFT SIDE OF DASH)
K1 (NEAR DRIVER'S SEAT)
I2 (BEHIND LEFT SIDE OF DASH)
① (W/ SMART KEY SYSTEM & W/O SMART KEY SYSTEM, W/ WIRELESS DOOR LOCK CONTROL)
② (W/O SMART KEY SYSTEM & WIRELESS DOOR LOCK CONTROL)
367626

Fig. 73: Ground Distribution Circuit, Except Hybrid (4 of 5)

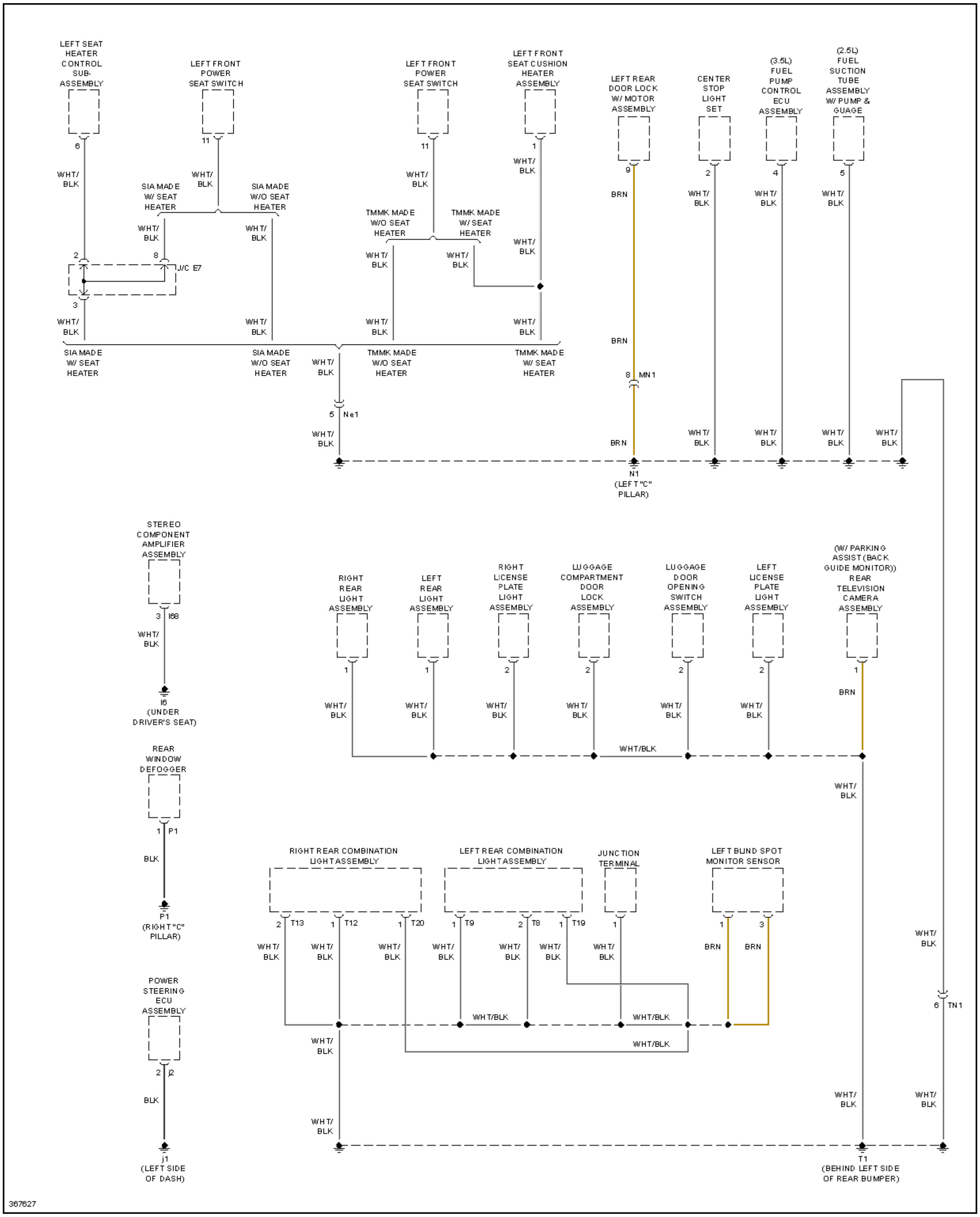
LEFT SEAT HEATER CONTROL SUB-ASSEMBLY
LEFT FRONT POWER SEAT SWITCH
LEFT FRONT POWER SEAT SWITCH
LEFT FRONT SEAT CUSHION HEATER ASSEMBLY
LEFT REAR DOOR LOCK W/ MOTOR ASSEMBLY
CENTER STOP LIGHT SET
(3.5L) FUEL PUMP CONTROL ECU ASSEMBLY
(2.5L) FUEL SUCTION TUBE ASSEMBLY W/ PUMP & GUAGE
6
11
11
1
9
2
4
5
WHT/ BLK
SIA MADE W/ SEAT HEATER
SIA MADE W/O SEAT HEATER
TMMK MADE W/O SEAT HEATER
TMMK MADE W/ SEAT HEATER
BRN
2
8
J/C E7
3
SIA MADE W/ SEAT HEATER
SIA MADE W/O SEAT HEATER
TMMK MADE W/O SEAT HEATER
TMMK MADE W/ SEAT HEATER
8 MN1
5 Ne1
N1 (LEFT "C" PILLAR)
STEREO COMPONENT AMPLIFIER ASSEMBLY
3 I68
I6 (UNDER DRIVER'S SEAT)
RIGHT REAR LIGHT ASSEMBLY
LEFT REAR LIGHT ASSEMBLY
RIGHT LICENSE PLATE LIGHT ASSEMBLY
LUGGAGE COMPARTMENT DOOR LOCK ASSEMBLY
LUGGAGE DOOR OPENING SWITCH ASSEMBLY
LEFT LICENSE PLATE LIGHT ASSEMBLY
(W/ PARKING ASSIST (BACK GUIDE MONITOR)) REAR TELEVISION CAMERA ASSEMBLY
WHT/BLK
REAR WINDOW DEFOGGER
1 P1
BLK
P1 (RIGHT "C" PILLAR)
RIGHT REAR COMBINATION LIGHT ASSEMBLY
LEFT REAR COMBINATION LIGHT ASSEMBLY
JUNCTION TERMINAL
LEFT BLIND SPOT MONITOR SENSOR
2 T13
1 T12
1 T20
1 T9
2 T8
1 T19
6 TN1
POWER STEERING ECU ASSEMBLY
2 J2
J1 (LEFT SIDE OF DASH)
T1 (BEHIND LEFT SIDE OF REAR BUMPER)
367627

Fig. 74: Ground Distribution Circuit, Except Hybrid (5 of 5)

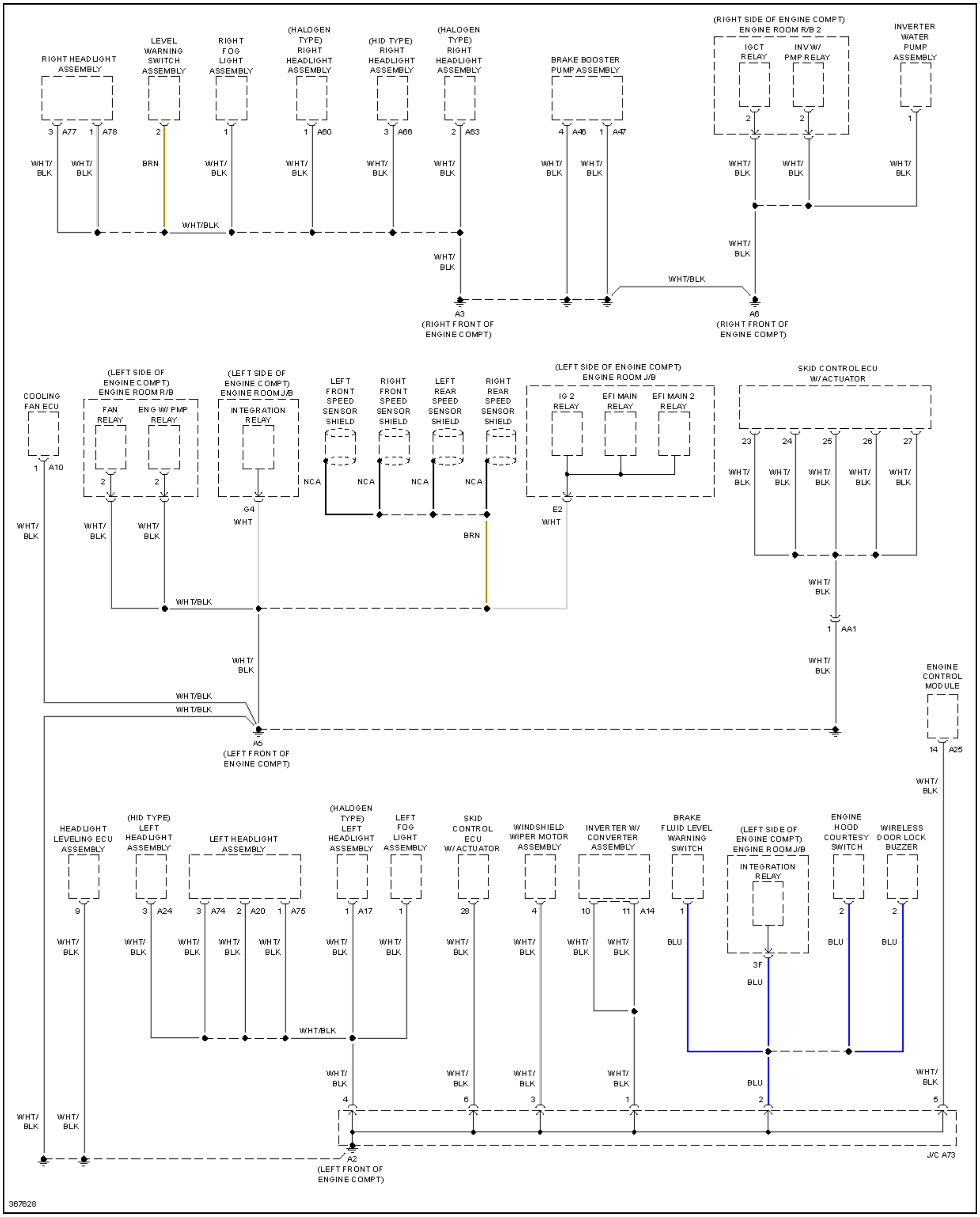
RIGHT HEADLIGHT ASSEMBLY
LEVEL WARNING SWITCH ASSEMBLY
RIGHT FOG LIGHT ASSEMBLY
(HALOGEN TYPE) RIGHT HEADLIGHT ASSEMBLY
(HID TYPE) RIGHT HEADLIGHT ASSEMBLY
(HALOGEN TYPE) RIGHT HEADLIGHT ASSEMBLY
BRAKE BOOSTER PUMP ASSEMBLY
(RIGHT SIDE OF ENGINE COMPT) ENGINE ROOM R/B 2
IGCT RELAY
INV W/ PMP RELAY
INVERTER WATER PUMP ASSEMBLY
3 A77 1 A78
2
1
1 A60
3 A66
2 A63
4 A46 1 A47
2
2
1
WHT/ BLK
BRN
WHT/BLK
A3 (RIGHT FRONT OF ENGINE COMPT)
A6 (RIGHT FRONT OF ENGINE COMPT)
COOLING FAN ECU
(LEFT SIDE OF ENGINE COMPT) ENGINE ROOM R/B
FAN RELAY
ENG W/ PMP RELAY
(LEFT SIDE OF ENGINE COMPT) ENGINE ROOM J/B
INTEGRATION RELAY
LEFT FRONT SPEED SENSOR SHIELD
RIGHT FRONT SPEED SENSOR SHIELD
LEFT REAR SENSOR SHIELD
RIGHT REAR SPEED SENSOR SHIELD
(LEFT SIDE OF ENGINE COMPT) ENGINE ROOM J/B
IG 2 RELAY
EFI MAIN RELAY
EFI MAIN 2 RELAY
SKID CONTROL ECU W/ ACTUATOR
1 A10
2
2
G4
WHT
NCA
NCA
NCA
NCA
BRN
E2
WHT
23 24 25 26 27
1 AA1
A5 (LEFT FRONT OF ENGINE COMPT)
ENGINE CONTROL MODULE
14 A25
HEADLIGHT LEVELING ECU ASSEMBLY
(HID TYPE) LEFT HEADLIGHT ASSEMBLY
LEFT HEADLIGHT ASSEMBLY
(HALOGEN TYPE) LEFT HEADLIGHT ASSEMBLY
LEFT FOG LIGHT ASSEMBLY
SKID CONTROL ECU W/ ACTUATOR
WINDSHIELD WIPER MOTOR ASSEMBLY
INVERTER W/ CONVERTER ASSEMBLY
BRAKE FLUID LEVEL WARNING SWITCH
(LEFT SIDE OF ENGINE COMPT) ENGINE ROOM J/B
INTEGRATION RELAY
ENGINE HOOD COURTESY SWITCH
WIRELESS DOOR LOCK BUZZER
9
3 A24
3 A74 2 A20 1 A75
1 A17
1
28
4
10 11 A14
1
3F
2
2
BLU
4 6 3 1 2 5
A2 (LEFT FRONT OF ENGINE COMPT)
J/C A73
367628

Fig. 75: Ground Distribution Circuit, Hybrid (1 of 5)

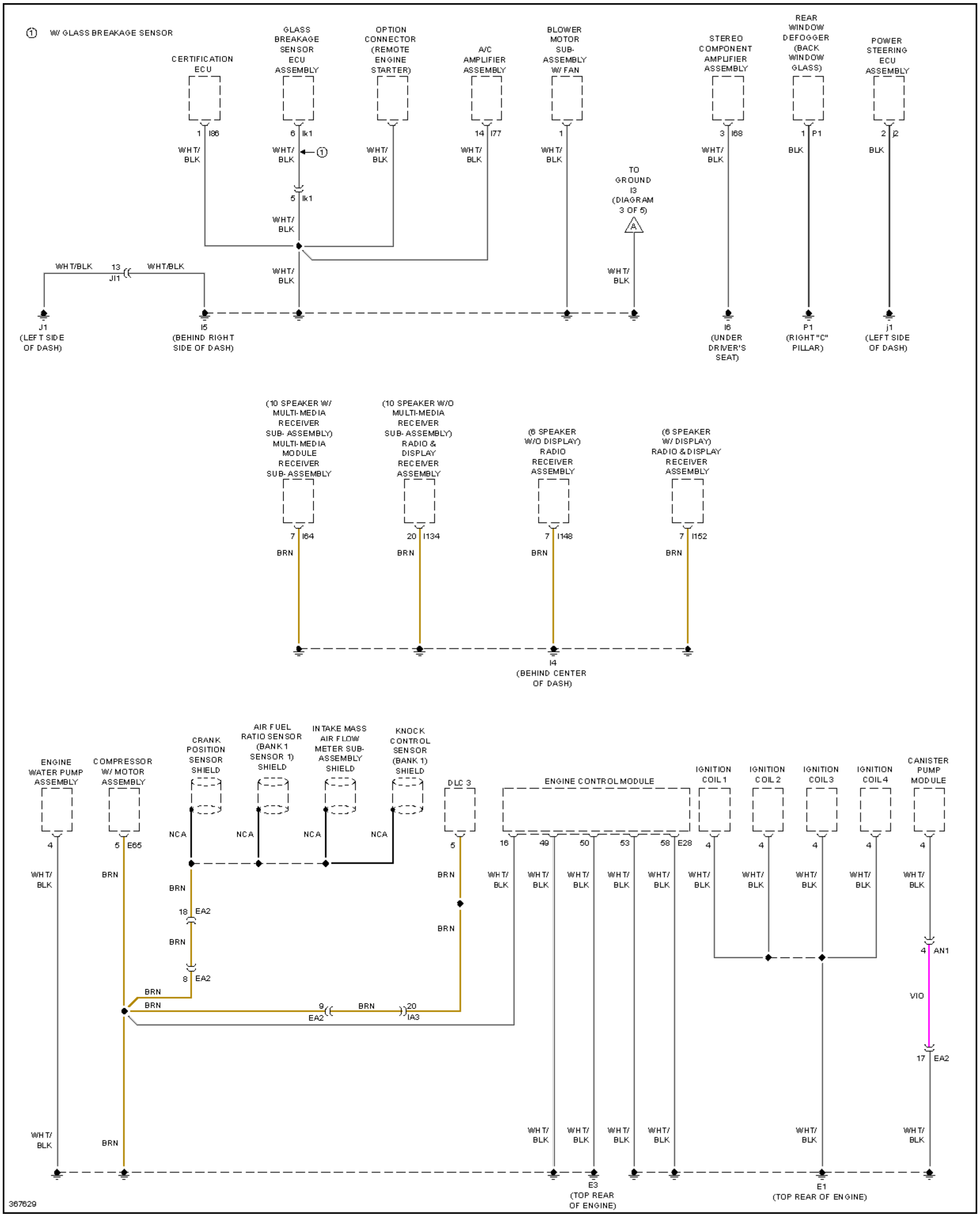
① W/ GLASS BREAKAGE SENSOR
CERTIFICATION ECU
GLASS BREAKAGE SENSOR ECU ASSEMBLY
OPTION CONNECTOR (REMOTE ENGINE STARTER)
A/C AMPLIFIER ASSEMBLY
BLOWER MOTOR SUB-ASSEMBLY W/ FAN
STEREO COMPONENT AMPLIFIER ASSEMBLY
REAR WINDOW DEFOGGER (BACK WINDOW GLASS)
POWER STEERING ECU ASSEMBLY
1
I86
6
Ik1
14
I77
1
3
I68
1
P1
2
J2
WHT/ BLK
WHT/ BLK
①
WHT/ BLK
WHT/ BLK
WHT/ BLK
WHT/ BLK
BLK
BLK
5
Ik1
WHT/ BLK
TO GROUND I3 (DIAGRAM 3 OF 5)
A
WHT/BLK
13
JI1
WHT/BLK
WHT/ BLK
WHT/ BLK
J1 (LEFT SIDE OF DASH)
I5 (BEHIND RIGHT SIDE OF DASH)
I6 (UNDER DRIVER'S SEAT)
P1 (RIGHT "C" PILLAR)
j1 (LEFT SIDE OF DASH)
(10 SPEAKER W/ MULTI-MEDIA RECEIVER SUB-ASSEMBLY) MULTI-MEDIA MODULE RECEIVER SUB-ASSEMBLY
(10 SPEAKER W/O MULTI-MEDIA RECEIVER SUB-ASSEMBLY) RADIO & DISPLAY RECEIVER ASSEMBLY
(6 SPEAKER W/O DISPLAY) RADIO RECEIVER ASSEMBLY
(6 SPEAKER W/ DISPLAY) RADIO & DISPLAY RECEIVER ASSEMBLY
7
I64
20
I134
7
I148
7
I152
BRN
BRN
BRN
BRN
I4 (BEHIND CENTER OF DASH)
ENGINE WATER PUMP ASSEMBLY
COMPRESSOR W/ MOTOR ASSEMBLY
CRANK POSITION SENSOR SHIELD
AIR FUEL RATIO SENSOR (BANK 1 SENSOR 1) SHIELD
INTAKE MASS AIR FLOW METER SUB-ASSEMBLY SHIELD
KNOCK CONTROL SENSOR (BANK 1) SHIELD
DLC 3
ENGINE CONTROL MODULE
IGNITION COIL 1
IGNITION COIL 2
IGNITION COIL 3
IGNITION COIL 4
CANISTER PUMP MODULE
4
5
E65
NCA
NCA
NCA
NCA
5
16
49
50
53
58
E28
4
4
4
4
4
WHT/ BLK
BRN
BRN
BRN
WHT/ BLK
WHT/ BLK
WHT/ BLK
WHT/ BLK
WHT/ BLK
WHT/ BLK
WHT/ BLK
WHT/ BLK
WHT/ BLK
WHT/ BLK
WHT/ BLK
18
EA2
BRN
BRN
8
EA2
BRN
BRN
9
EA2
BRN
20
IA3
4
AN1
VIO
17
EA2
WHT/ BLK
BRN
WHT/ BLK
WHT/ BLK
WHT/ BLK
WHT/ BLK
WHT/ BLK
WHT/ BLK
E3 (TOP REAR OF ENGINE)
E1 (TOP REAR OF ENGINE)
367629

Fig. 76: Ground Distribution Circuit, Hybrid (2 of 5)

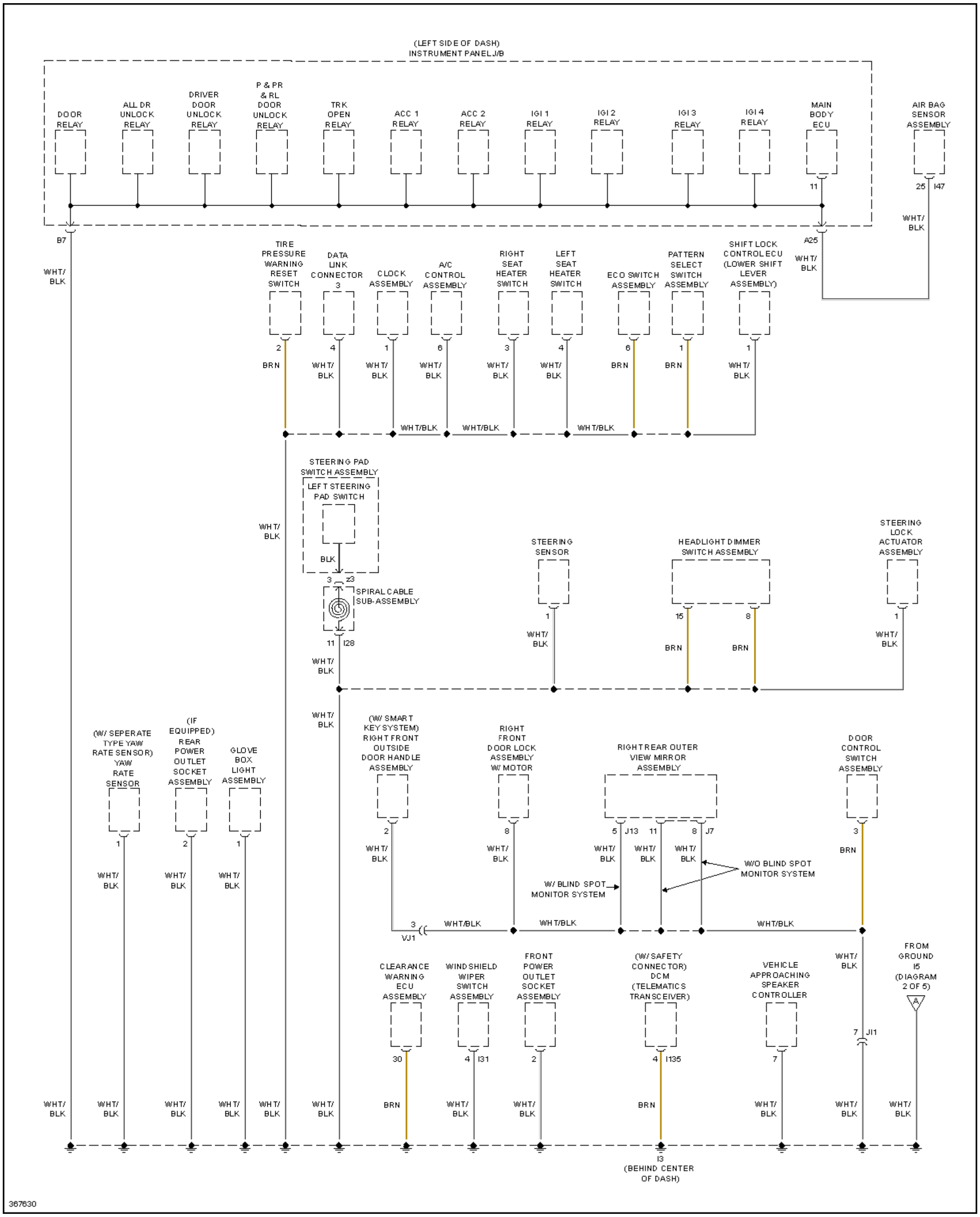
(LEFT SIDE OF DASH)
INSTRUMENT PANEL J/B
DOOR RELAY
ALL DR UNLOCK RELAY
DRIVER DOOR UNLOCK RELAY
P & PR & RL DOOR UNLOCK RELAY
TRK OPEN RELAY
ACC 1 RELAY
ACC 2 RELAY
IGI 1 RELAY
IGI 2 RELAY
IGI 3 RELAY
IGI 4 RELAY
MAIN BODY ECU
AIR BAG SENSOR ASSEMBLY
11
25
I47
B7
A25
WHT/BLK
TIRE PRESSURE WARNING RESET SWITCH
DATA LINK CONNECTOR 3
CLOCK ASSEMBLY
A/C CONTROL ASSEMBLY
RIGHT SEAT HEATER SWITCH
LEFT SEAT HEATER SWITCH
ECO SWITCH ASSEMBLY
PATTERN SELECT SWITCH ASSEMBLY
SHIFT LOCK CONTROL ECU (LOWER SHIFT LEVER ASSEMBLY)
2
4
1
6
3
4
6
1
1
BRN
WHT/BLK
STEERING PAD SWITCH ASSEMBLY
LEFT STEERING PAD SWITCH
BLK
3
Z3
SPIRAL CABLE SUB-ASSEMBLY
11
I28
STEERING SENSOR
HEADLIGHT DIMMER SWITCH ASSEMBLY
STEERING LOCK ACTUATOR ASSEMBLY
1
15
8
1
(W/ SEPERATE TYPE YAW RATE SENSOR) YAW RATE SENSOR
(IF EQUIPPED) REAR POWER OUTLET SOCKET ASSEMBLY
GLOVE BOX LIGHT ASSEMBLY
(W/ SMART KEY SYSTEM) RIGHT FRONT OUTSIDE DOOR HANDLE ASSEMBLY
RIGHT FRONT DOOR LOCK ASSEMBLY W/ MOTOR
RIGHT REAR OUTER VIEW MIRROR ASSEMBLY
DOOR CONTROL SWITCH ASSEMBLY
1
2
1
2
8
5
J13
11
8
J7
3
W/O BLIND SPOT MONITOR SYSTEM
W/ BLIND SPOT MONITOR SYSTEM
3
VJ1
CLEARANCE WARNING ECU ASSEMBLY
WINDSHIELD WIPER SWITCH ASSEMBLY
FRONT POWER OUTLET SOCKET ASSEMBLY
(W/ SAFETY CONNECTOR) DCM (TELEMATICS TRANSCEIVER)
VEHICLE APPROACHING SPEAKER CONTROLLER
FROM GROUND I5 (DIAGRAM 2 OF 5)
A
7
J11
30
4
I31
2
4
I135
7
I3
(BEHIND CENTER OF DASH)
367630

Fig. 77: Ground Distribution Circuit, Hybrid (3 of 5)

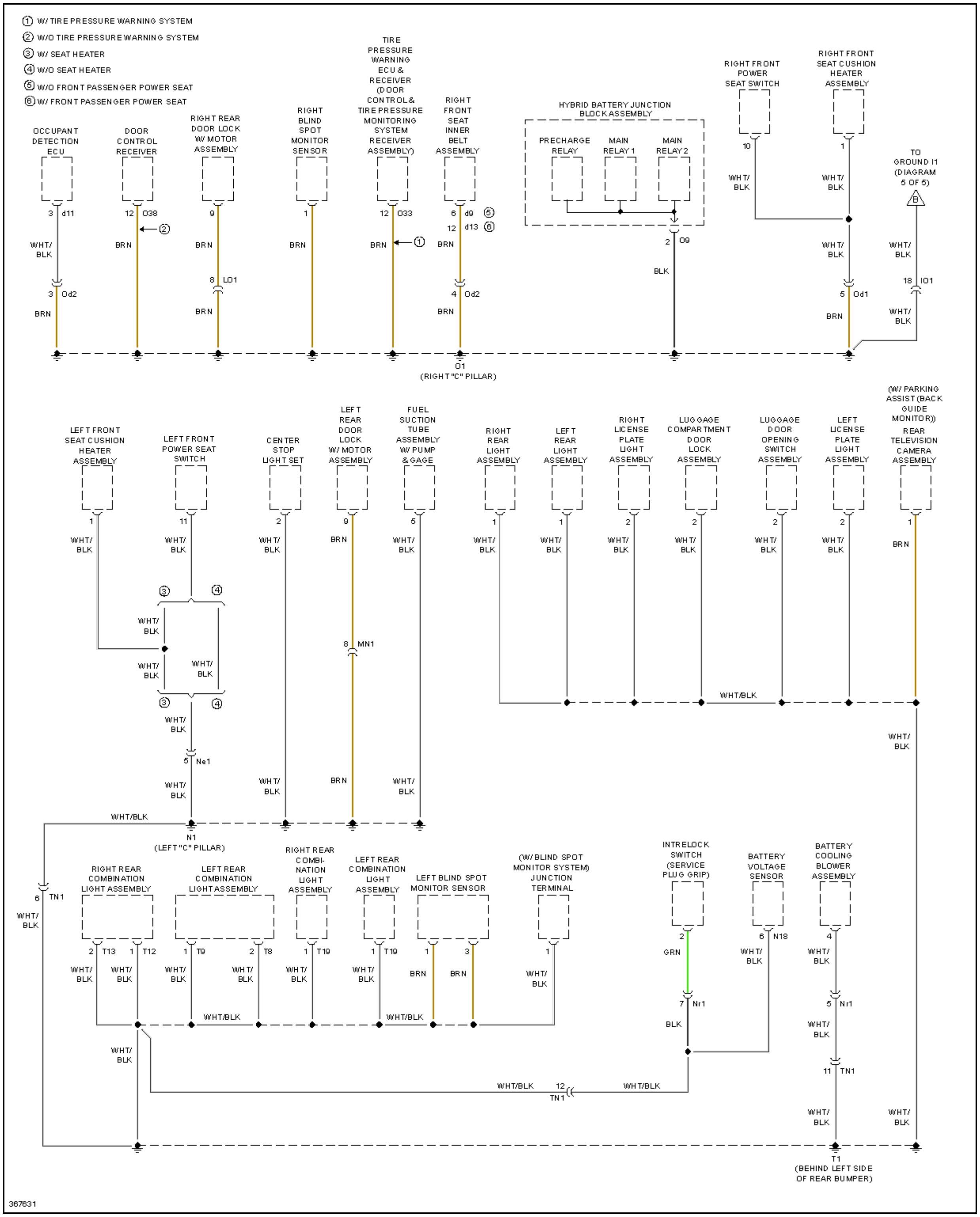
① W/ TIRE PRESSURE WARNING SYSTEM
② W/O TIRE PRESSURE WARNING SYSTEM
③ W/ SEAT HEATER
④ W/O SEAT HEATER
⑤ W/O FRONT PASSENGER POWER SEAT
⑥ W/ FRONT PASSENGER POWER SEAT
OCCUPANT DETECTION ECU
3 d11
WHT/ BLK
3 Od2
BRN
DOOR CONTROL RECEIVER
12 O38
②
BRN
RIGHT REAR DOOR LOCK W/ MOTOR ASSEMBLY
9
BRN
8 LO1
BRN
RIGHT BLIND SPOT MONITOR SENSOR
1
BRN
TIRE PRESSURE WARNING ECU & RECEIVER (DOOR CONTROL & TIRE PRESSURE MONITORING SYSTEM RECEIVER ASSEMBLY)
12 O33
①
BRN
RIGHT FRONT SEAT INNER BELT ASSEMBLY
6 d9 ⑤
12 d13 ⑥
BRN
4 Od2
BRN
O1
(RIGHT "C" PILLAR)
HYBRID BATTERY JUNCTION BLOCK ASSEMBLY
PRECHARGE RELAY
MAIN RELAY 1
MAIN RELAY 2
2 O9
BLK
RIGHT FRONT POWER SEAT SWITCH
10
WHT/ BLK
RIGHT FRONT SEAT CUSHION HEATER ASSEMBLY
1
WHT/ BLK
WHT/ BLK
5 Od1
BRN
TO GROUND I1 (DIAGRAM 5 OF 5)
B
WHT/ BLK
18 IO1
WHT/ BLK
LEFT FRONT SEAT CUSHION HEATER ASSEMBLY
1
WHT/ BLK
LEFT FRONT POWER SEAT SWITCH
11
WHT/ BLK
③
④
WHT/ BLK
WHT/ BLK
WHT/ BLK
③
④
WHT/ BLK
5 Ne1
WHT/ BLK
CENTER STOP LIGHT SET
2
WHT/ BLK
WHT/ BLK
LEFT REAR DOOR LOCK W/ MOTOR ASSEMBLY
9
BRN
8 MN1
BRN
FUEL SUCTION TUBE ASSEMBLY W/ PUMP & GAGE
5
WHT/ BLK
WHT/ BLK
WHT/BLK
N1
(LEFT "C" PILLAR)
RIGHT REAR LIGHT ASSEMBLY
1
WHT/ BLK
LEFT REAR LIGHT ASSEMBLY
1
WHT/ BLK
RIGHT LICENSE PLATE LIGHT ASSEMBLY
2
WHT/ BLK
LUGGAGE COMPARTMENT DOOR LOCK ASSEMBLY
2
WHT/ BLK
WHT/BLK
LUGGAGE DOOR OPENING SWITCH ASSEMBLY
2
WHT/ BLK
LEFT LICENSE PLATE LIGHT ASSEMBLY
2
WHT/ BLK
(W/ PARKING ASSIST (BACK GUIDE MONITOR)) REAR TELEVISION CAMERA ASSEMBLY
1
BRN
WHT/ BLK
6 TN1
WHT/ BLK
RIGHT REAR COMBINATION LIGHT ASSEMBLY
2 T13
1 T12
WHT/ BLK
WHT/ BLK
LEFT REAR COMBINATION LIGHT ASSEMBLY
1 T9
2 T8
WHT/ BLK
WHT/ BLK
WHT/BLK
RIGHT REAR COMBI- NATION LIGHT ASSEMBLY
1 T19
WHT/ BLK
LEFT REAR COMBINATION LIGHT ASSEMBLY
1 T19
WHT/ BLK
WHT/BLK
LEFT BLIND SPOT MONITOR SENSOR
1
3
BRN
BRN
(W/ BLIND SPOT MONITOR SYSTEM) JUNCTION TERMINAL
1
WHT/ BLK
WHT/ BLK
WHT/BLK
12
TN1
WHT/BLK
INTRELOCK SWITCH (SERVICE PLUG GRIP)
2
GRN
7 Nr1
BLK
BATTERY VOLTAGE SENSOR
6 N18
WHT/ BLK
BATTERY COOLING BLOWER ASSEMBLY
4
WHT/ BLK
5 Nr1
WHT/ BLK
11 TN1
WHT/ BLK
WHT/ BLK
T1
(BEHIND LEFT SIDE OF REAR BUMPER)
367631

Fig. 78: Ground Distribution Circuit, Hybrid (4 of 5)

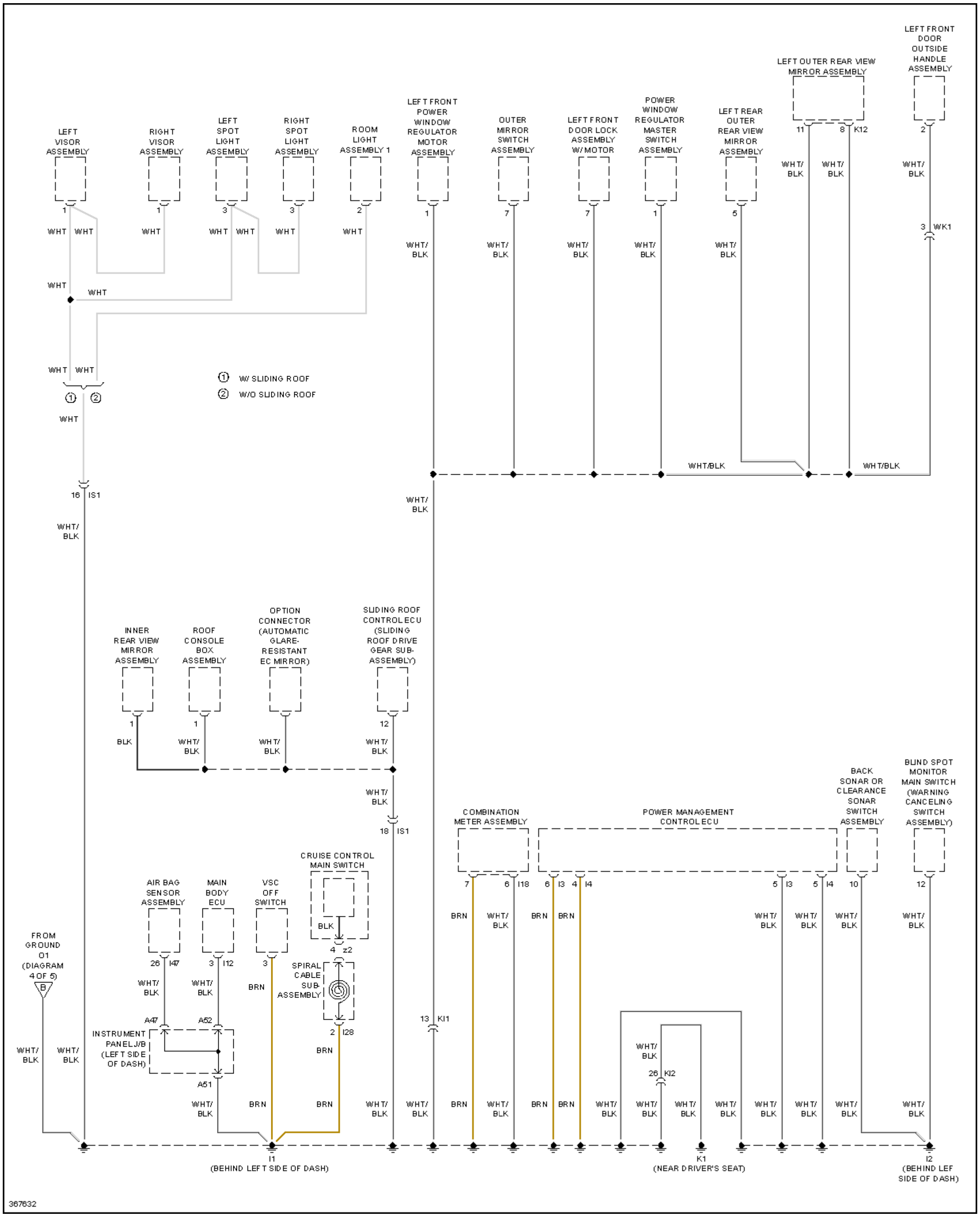
LEFT FRONT DOOR OUTSIDE HANDLE ASSEMBLY
LEFT OUTER REAR VIEW MIRROR ASSEMBLY
LEFT FRONT POWER WINDOW REGULATOR MOTOR ASSEMBLY
OUTER MIRROR SWITCH ASSEMBLY
LEFT FRONT DOOR LOCK ASSEMBLY W/ MOTOR
POWER WINDOW REGULATOR MASTER SWITCH ASSEMBLY
LEFT REAR OUTER REAR VIEW MIRROR ASSEMBLY
LEFT VISOR ASSEMBLY
RIGHT VISOR ASSEMBLY
LEFT SPOT LIGHT ASSEMBLY
RIGHT SPOT LIGHT ASSEMBLY
ROOM LIGHT ASSEMBLY 1
11
8 K12
2
WHT/ BLK
3 WK1
WHT
① W/ SLIDING ROOF
② W/O SLIDING ROOF
WHT/BLK
16 IS1
INNER REAR VIEW MIRROR ASSEMBLY
ROOF CONSOLE BOX ASSEMBLY
OPTION CONNECTOR (AUTOMATIC GLARE-RESISTANT EC MIRROR)
SLIDING ROOF CONTROL ECU (SLIDING ROOF DRIVE GEAR SUB-ASSEMBLY)
BLK
12
18 IS1
BACK SONAR OR CLEARANCE SONAR SWITCH ASSEMBLY
BLIND SPOT MONITOR MAIN SWITCH (WARNING CANCELING SWITCH ASSEMBLY)
COMBINATION METER ASSEMBLY
POWER MANAGEMENT CONTROL ECU
CRUISE CONTROL MAIN SWITCH
7
6 I18
6 I3
4 I4
5 I3
5 I4
10
BRN
AIR BAG SENSOR ASSEMBLY
MAIN BODY ECU
VSC OFF SWITCH
4 z2
26 I47
3 I12
SPIRAL CABLE SUB-ASSEMBLY
FROM GROUND 01 (DIAGRAM 4 OF 5)
B
A47
A52
INSTRUMENT PANEL J/B (LEFT SIDE OF DASH)
A51
13 KI1
2 I28
26 KI2
I1 (BEHIND LEFT SIDE OF DASH)
K1 (NEAR DRIVER'S SEAT)
I2 (BEHIND LEF SIDE OF DASH)
367632

Fig. 79: Ground Distribution Circuit, Hybrid (5 of 5)

HEADLIGHTS

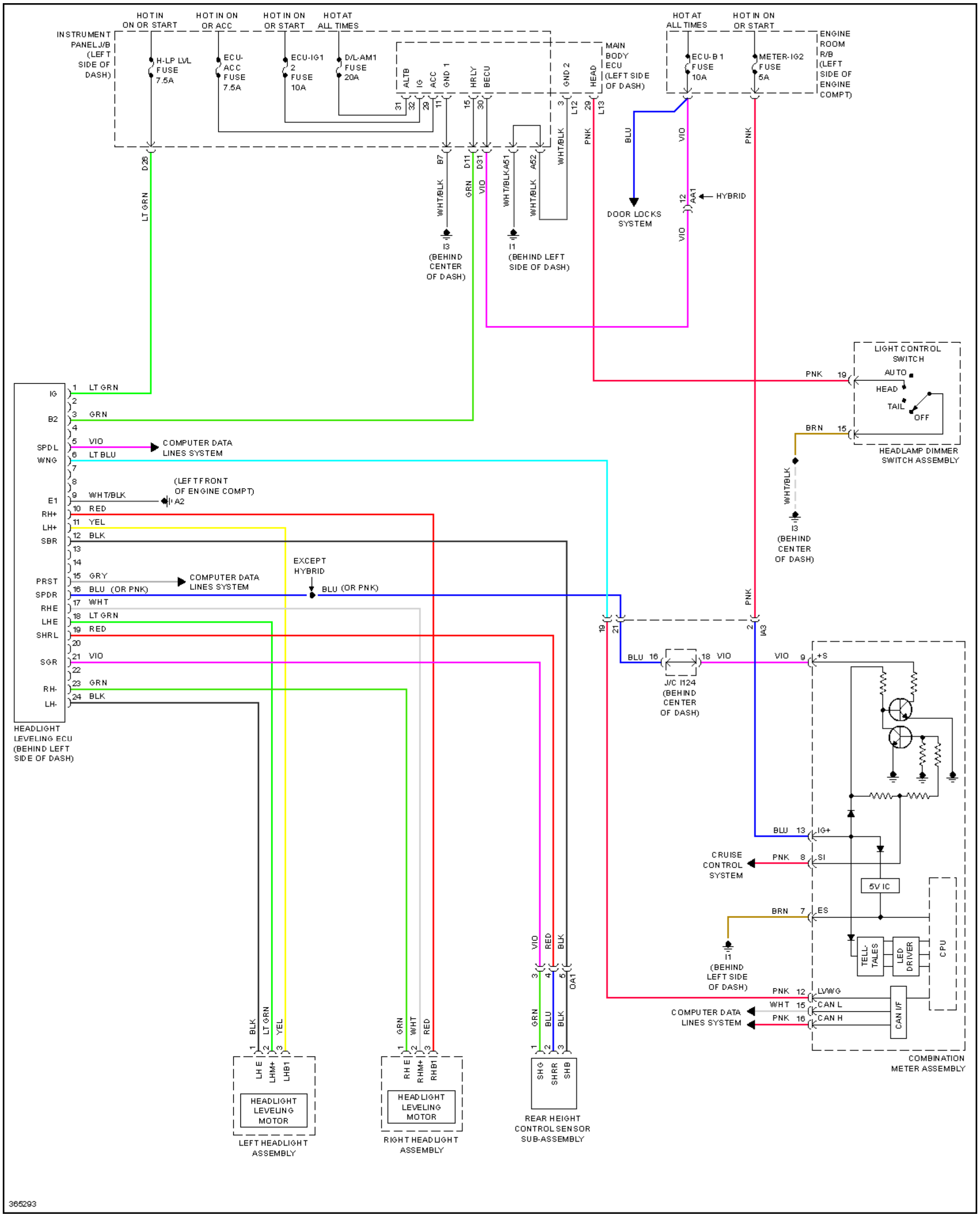
HOT IN ON OR START
HOT IN ON OR ACC
HOT IN ON OR START
HOT AT ALL TIMES
INSTRUMENT PANEL J/B (LEFT SIDE OF DASH)
H-LP LVL FUSE 7.5A
ECU-ACC FUSE 7.5A
ECU-IG1 2 FUSE 10A
D/L-AM1 FUSE 20A
ALTB
IG
ACC
GND 1
HRLY
BECU
GND 2
HEAD
MAIN BODY ECU (LEFT SIDE OF DASH)
31
32
29
11
15
30
3
L12
29
L13
HOT AT ALL TIMES
HOT IN ON OR START
ECU-B1 FUSE 10A
METER-IG2 FUSE 5A
ENGINE ROOM R/B (LEFT SIDE OF ENGINE COMPT)
D28
LT GRN
B7
D11
D31
WHT/BLK
GRN
VIO
WHT/BLK
A51
A52
WHT/BLK
WHT/BLK
PNK
BLU
VIO
PNK
I3 (BEHIND CENTER OF DASH)
I1 (BEHIND LEFT SIDE OF DASH)
DOOR LOCKS SYSTEM
12
AA1
HYBRID
VIO
LIGHT CONTROL SWITCH
AUTO
HEAD
TAIL
OFF
PNK
19
BRN
15
HEADLAMP DIMMER SWITCH ASSEMBLY
WHT/BLK
I3 (BEHIND CENTER OF DASH)
IG
B2
SPDL
WNG
E1
RH+
LH+
SBR
PRST
SPDR
RHE
LHE
SHRL
SGR
RH-
LH-
1 LT GRN
2
3 GRN
4
5 VIO
6 LT BLU
7
8
9 WHT/BLK
10 RED
11 YEL
12 BLK
13
14
15 GRY
16 BLU (OR PNK)
17 WHT
18 LT GRN
19 RED
20
21 VIO
22
23 GRN
24 BLK
COMPUTER DATA LINES SYSTEM
(LEFT FRONT OF ENGINE COMPT)
A2
COMPUTER DATA LINES SYSTEM
EXCEPT HYBRID
BLU (OR PNK)
HEADLIGHT LEVELING ECU (BEHIND LEFT SIDE OF DASH)
19
21
2
IA3
PNK
BLU
16
18
VIO
J/C I124 (BEHIND CENTER OF DASH)
VIO
9
+S
BLU
13
IG+
CRUISE CONTROL SYSTEM
PNK
8
SI
5V IC
BRN
7
ES
I1 (BEHIND LEFT SIDE OF DASH)
TELL-TALES
LED DRIVER
CPU
PNK
12
LVWG
WHT
15
CAN L
PNK
16
CAN H
COMPUTER DATA LINES SYSTEM
CAN I/F
COMBINATION METER ASSEMBLY
VIO
RED
BLK
3
4
5
OA1
GRN
BLU
BLK
1
2
3
SHG
SHRR
SHB
REAR HEIGHT CONTROL SENSOR SUB-ASSEMBLY
BLK
LT GRN
YEL
1
2
3
LHE
LHM+
LHB1
HEADLIGHT LEVELING MOTOR
LEFT HEADLIGHT ASSEMBLY
GRN
WHT
RED
1
2
3
RHE
RHM+
RHB1
HEADLIGHT LEVELING MOTOR
RIGHT HEADLIGHT ASSEMBLY
365293

Fig. 80: Headlamp Beam Adjustment Circuit

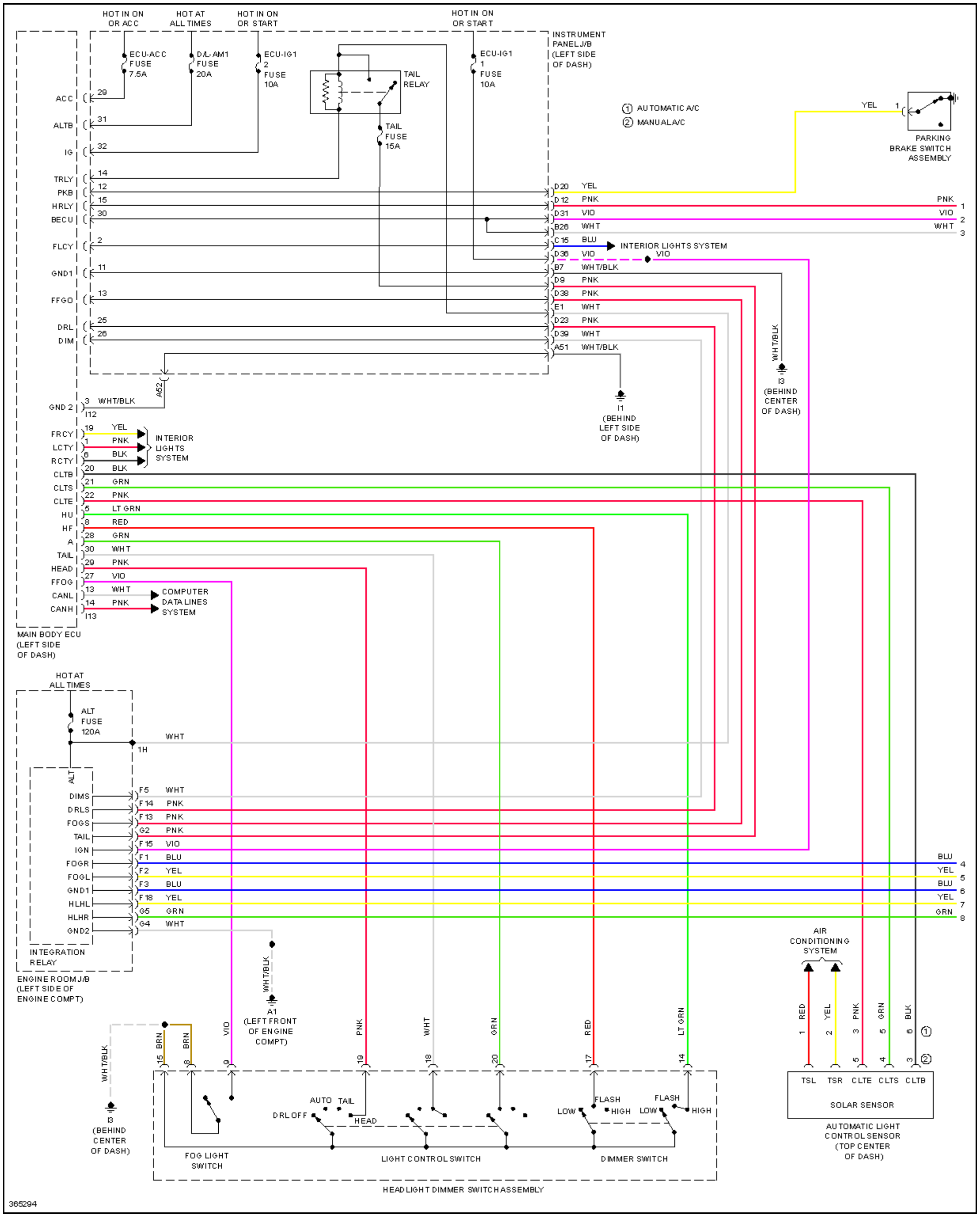
HOT IN ON OR ACC
HOT AT ALL TIMES
HOT IN ON OR START
HOT IN ON OR START
INSTRUMENT PANEL J/B (LEFT SIDE OF DASH)
ECU-ACC FUSE 7.5A
D/L-AM1 FUSE 20A
ECU-IG1 2 FUSE 10A
TAIL RELAY
ECU-IG1 1 FUSE 10A
TAIL FUSE 15A
① AUTOMATIC A/C
② MANUAL A/C
PARKING BRAKE SWITCH ASSEMBLY
INTERIOR LIGHTS SYSTEM
I3 (BEHIND CENTER OF DASH)
I1 (BEHIND LEFT SIDE OF DASH)
MAIN BODY ECU (LEFT SIDE OF DASH)
INTERIOR LIGHTS SYSTEM
COMPUTER DATA LINES SYSTEM
HOT AT ALL TIMES
ALT FUSE 120A
INTEGRATION RELAY
ENGINE ROOM J/B (LEFT SIDE OF ENGINE COMPT)
A1 (LEFT FRONT OF ENGINE COMPT)
AIR CONDITIONING SYSTEM
SOLAR SENSOR
AUTOMATIC LIGHT CONTROL SENSOR (TOP CENTER OF DASH)
I3 (BEHIND CENTER OF DASH)
FOG LIGHT SWITCH
LIGHT CONTROL SWITCH
DIMMER SWITCH
HEADLIGHT DIMMER SWITCH ASSEMBLY
AUTO TAIL DRL OFF HEAD
FLASH HIGH LOW
ACC ALTB IG TRLY PKB HRLY BECU FLCY GND1 FFGO DRL DIM GND 2
FRCY LCTY RCTY CLTB CLTS CLTE HU HF A TAIL HEAD FFOG CANL CANH
DIMS DRLS FOGS TAIL IGN FOGR FOGL GND1 HLHL HLHR GND2
TSL TSR CLTE CLTS CLTB
365294

Fig. 81: Headlamps Circuit, Except Hybrid (1 of 2)

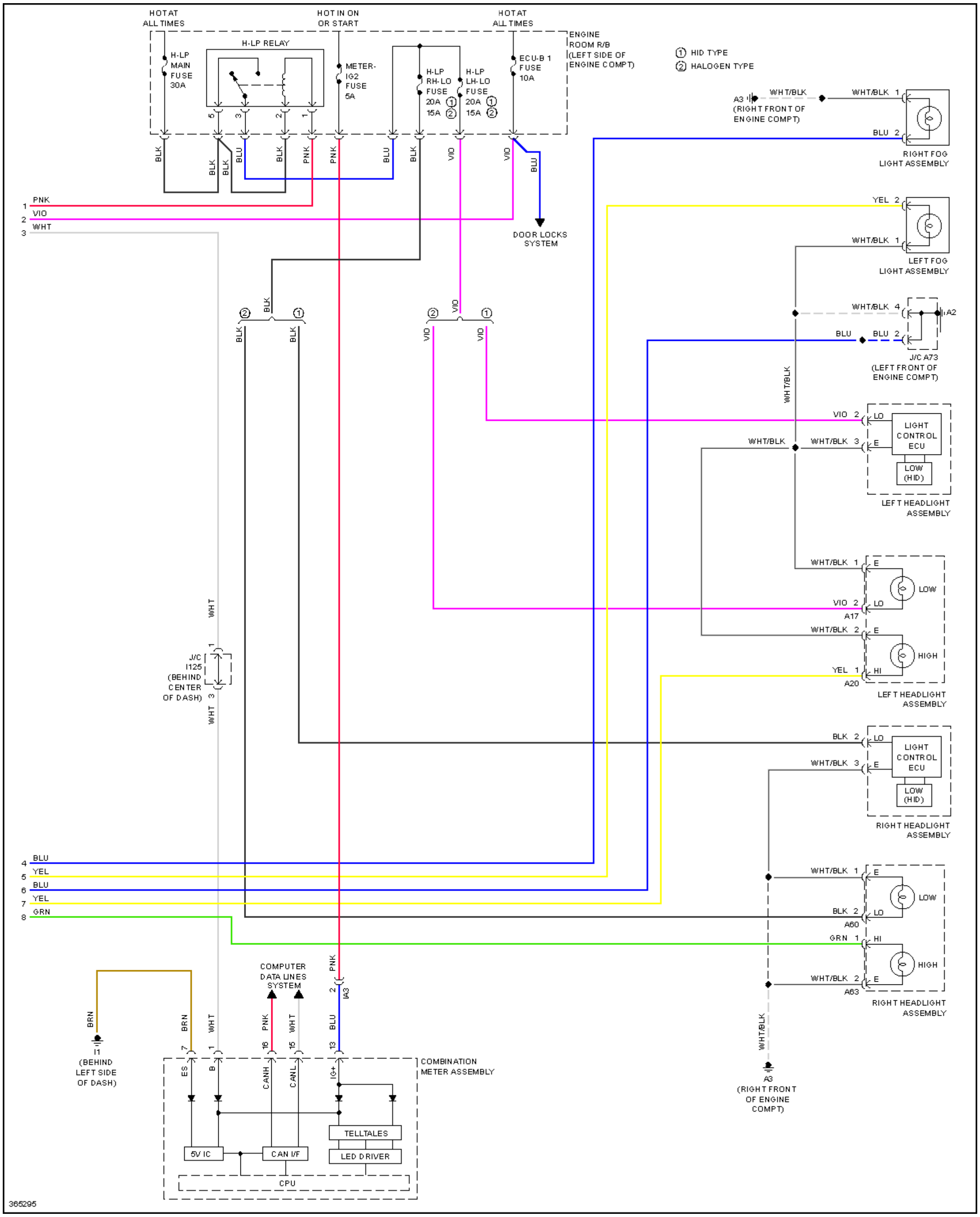
HOT AT ALL TIMES
HOT IN ON OR START
HOT AT ALL TIMES
ENGINE ROOM R/B (LEFT SIDE OF ENGINE COMPT)
① HID TYPE
② HALOGEN TYPE
H-LP RELAY
H-LP MAIN FUSE 30A
METER-IG2 FUSE 5A
H-LP RH-LO FUSE 20A ① 15A ②
H-LP LH-LO FUSE 20A ① 15A ②
ECU-B 1 FUSE 10A
DOOR LOCKS SYSTEM
1 PNK
2 VIO
3 WHT
4 BLU
5 YEL
6 BLU
7 YEL
8 GRN
A3 (RIGHT FRONT OF ENGINE COMPT)
WHT/BLK
BLU 2
RIGHT FOG LIGHT ASSEMBLY
YEL 2
WHT/BLK 1
LEFT FOG LIGHT ASSEMBLY
WHT/BLK 4
A2
BLU
BLU 2
J/C A73 (LEFT FRONT OF ENGINE COMPT)
VIO 2
LO
E
WHT/BLK 3
LIGHT CONTROL ECU
LOW (HID)
LEFT HEADLIGHT ASSEMBLY
WHT/BLK 1
LOW
VIO 2
A17
WHT/BLK 2
HIGH
YEL 1
HI
A20
LEFT HEADLIGHT ASSEMBLY
BLK 2
WHT/BLK 3
RIGHT HEADLIGHT ASSEMBLY
WHT/BLK 1
BLK 2
A60
GRN 1
WHT/BLK 2
A63
RIGHT HEADLIGHT ASSEMBLY
A3 (RIGHT FRONT OF ENGINE COMPT)
J/C I125 (BEHIND CENTER OF DASH)
I1 (BEHIND LEFT SIDE OF DASH)
BRN
COMPUTER DATA LINES SYSTEM
IA3
ES
B
CANH
CANL
IG+
5V IC
CAN I/F
CPU
TELLTALES
LED DRIVER
COMBINATION METER ASSEMBLY
365295

Fig. 82: Headlamps Circuit, Except Hybrid (2 of 2)

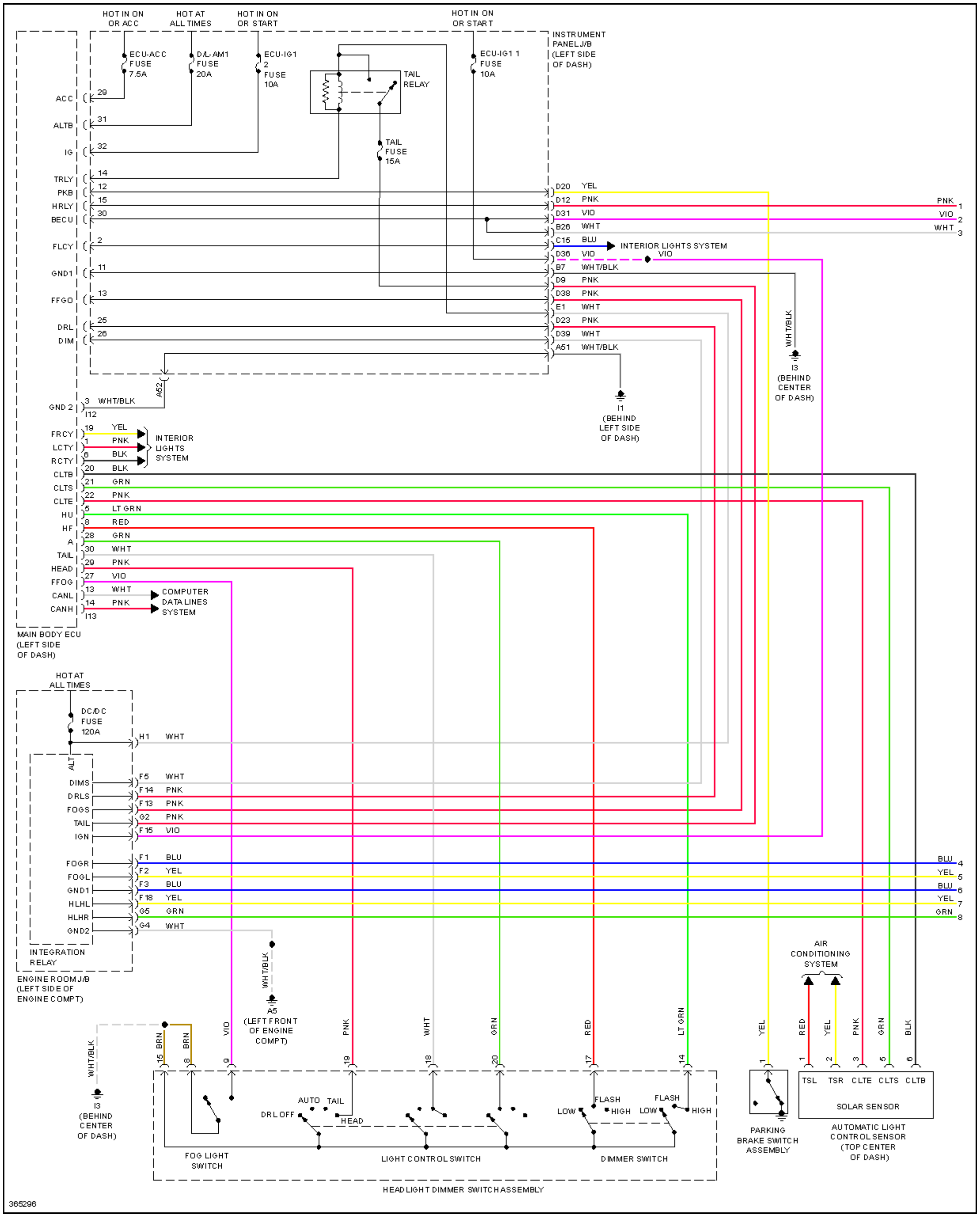
HOT IN ON OR ACC
HOT AT ALL TIMES
HOT IN ON OR START
HOT IN ON OR START
INSTRUMENT PANEL J/B (LEFT SIDE OF DASH)
ECU-ACC FUSE 7.5A
D/L-AM1 FUSE 20A
ECU-IG1 2 FUSE 10A
ECU-IG1 1 FUSE 10A
TAIL RELAY
TAIL FUSE 15A
ACC
ALTB
IG
TRLY
PKB
HRLY
BECU
FLCY
GND1
FFGO
DRL
DIM
GND 2
FRCY
LCTY
RCTY
CLTB
CLTS
CLTE
HU
HF
A
TAIL
HEAD
FFOG
CANL
CANH
MAIN BODY ECU (LEFT SIDE OF DASH)
D20 YEL
D12 PNK
D31 VIO
B26 WHT
C15 BLU
INTERIOR LIGHTS SYSTEM
D36 VIO
B7 WHT/BLK
D9 PNK
D38 PNK
E1 WHT
D23 PNK
D39 WHT
A51 WHT/BLK
A52
I12
I13
I1 (BEHIND LEFT SIDE OF DASH)
I3 (BEHIND CENTER OF DASH)
WHT/BLK
PNK 1
VIO 2
WHT 3
INTERIOR LIGHTS SYSTEM
COMPUTER DATA LINES SYSTEM
HOT AT ALL TIMES
DC/DC FUSE 120A
ALT
DIMS
DRLS
FOGS
TAIL
IGN
FOGR
FOGL
GND1
HLHL
HLHR
GND2
INTEGRATION RELAY
ENGINE ROOM J/B (LEFT SIDE OF ENGINE COMPT)
H1 WHT
F5 WHT
F14 PNK
F13 PNK
G2 PNK
F15 VIO
F1 BLU
F2 YEL
F3 BLU
F18 YEL
G5 GRN
G4 WHT
BLU 4
YEL 5
BLU 6
YEL 7
GRN 8
A5 (LEFT FRONT OF ENGINE COMPT)
AIR CONDITIONING SYSTEM
I3 (BEHIND CENTER OF DASH)
FOG LIGHT SWITCH
AUTO
TAIL
DRL OFF
HEAD
LIGHT CONTROL SWITCH
FLASH
LOW
HIGH
DIMMER SWITCH
HEADLIGHT DIMMER SWITCH ASSEMBLY
PARKING BRAKE SWITCH ASSEMBLY
TSL
TSR
CLTE
CLTS
CLTB
SOLAR SENSOR
AUTOMATIC LIGHT CONTROL SENSOR (TOP CENTER OF DASH)
365296

Fig. 83: Headlamps Circuit, Hybrid (1 of 2)

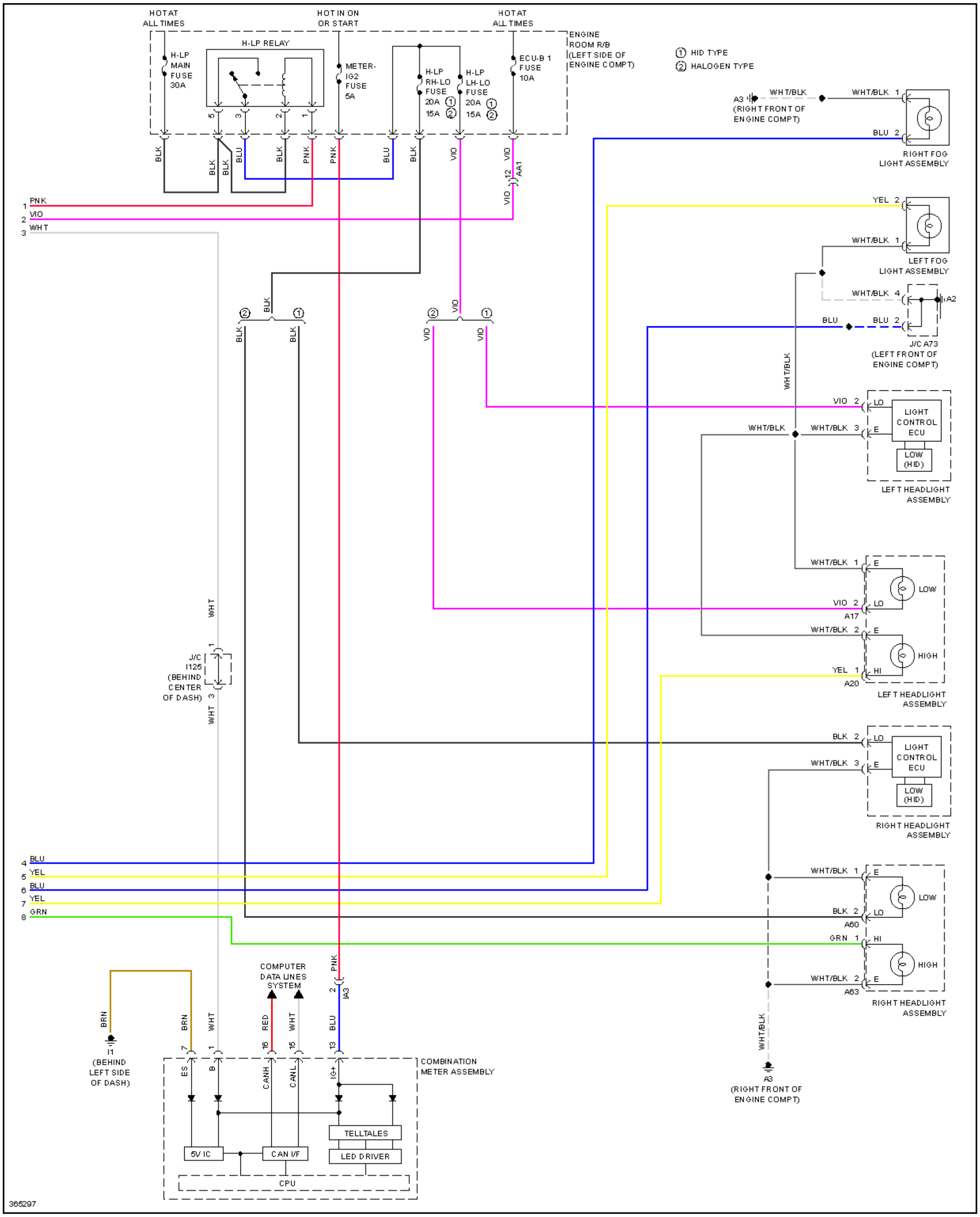
HOT AT ALL TIMES
HOT IN ON OR START
HOT AT ALL TIMES
ENGINE ROOM R/B (LEFT SIDE OF ENGINE COMPT)
H-LP RELAY
H-LP MAIN FUSE 30A
METER-IG2 FUSE 5A
H-LP RH-LO FUSE 20A ① 15A ②
H-LP LH-LO FUSE 20A ① 15A ②
ECU-B 1 FUSE 10A
① HID TYPE
② HALOGEN TYPE
A3 (RIGHT FRONT OF ENGINE COMPT)
RIGHT FOG LIGHT ASSEMBLY
LEFT FOG LIGHT ASSEMBLY
J/C A73 (LEFT FRONT OF ENGINE COMPT)
A2
LIGHT CONTROL ECU
LOW (HID)
LEFT HEADLIGHT ASSEMBLY
LOW
HIGH
A17
A20
LEFT HEADLIGHT ASSEMBLY
LIGHT CONTROL ECU
LOW (HID)
RIGHT HEADLIGHT ASSEMBLY
A60
A63
RIGHT HEADLIGHT ASSEMBLY
J/C I125 (BEHIND CENTER OF DASH)
AA1
IA3
COMPUTER DATA LINES SYSTEM
I1 (BEHIND LEFT SIDE OF DASH)
A3 (RIGHT FRONT OF ENGINE COMPT)
COMBINATION METER ASSEMBLY
ES
B
CANH
CANL
IG+
TELLTALES
LED DRIVER
5V IC
CAN I/F
CPU
1 PNK
2 VIO
3 WHT
4 BLU
5 YEL
6 BLU
7 YEL
8 GRN
365297

Fig. 84: Headlamps Circuit, Hybrid (2 of 2)

HORN

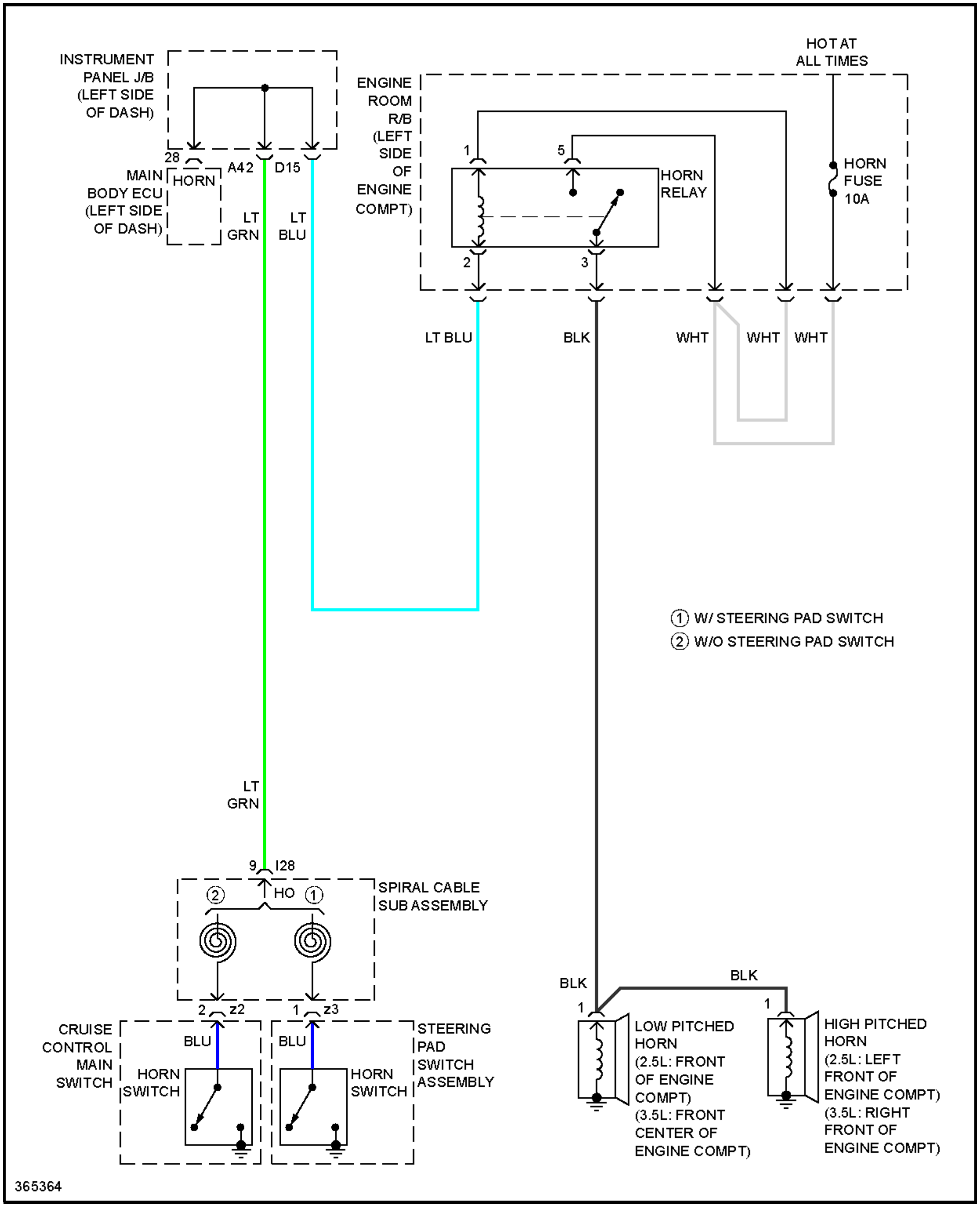
INSTRUMENT PANEL J/B (LEFT SIDE OF DASH)
28
A42
D15
MAIN BODY ECU (LEFT SIDE OF DASH)
HORN
LT GRN
LT BLU
ENGINE ROOM R/B (LEFT SIDE OF ENGINE COMPT)
HOT AT ALL TIMES
1
5
HORN RELAY
2
3
HORN FUSE 10A
LT BLU
BLK
WHT
WHT
WHT
① W/ STEERING PAD SWITCH
② W/O STEERING PAD SWITCH
LT GRN
9
I28
HO
②
①
SPIRAL CABLE SUB ASSEMBLY
2
z2
1
z3
CRUISE CONTROL MAIN SWITCH
BLU
HORN SWITCH
BLU
HORN SWITCH
STEERING PAD SWITCH ASSEMBLY
BLK
BLK
1
1
LOW PITCHED HORN (2.5L: FRONT OF ENGINE COMPT) (3.5L: FRONT CENTER OF ENGINE COMPT)
HIGH PITCHED HORN (2.5L: LEFT FRONT OF ENGINE COMPT) (3.5L: RIGHT FRONT OF ENGINE COMPT)
365364

Fig. 85: Horn Circuit, Except Hybrid

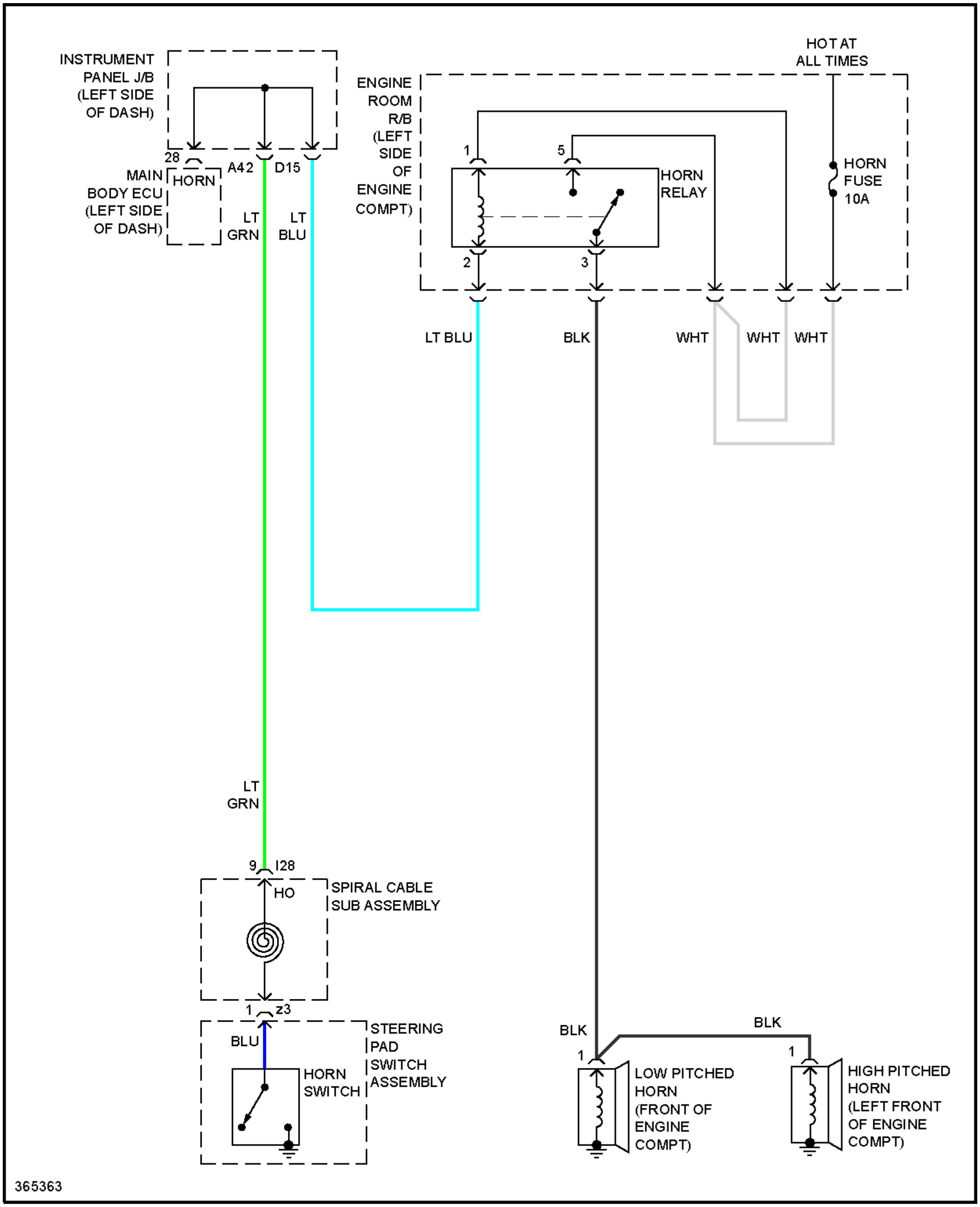
INSTRUMENT PANEL J/B (LEFT SIDE OF DASH)
HOT AT ALL TIMES
ENGINE ROOM R/B (LEFT SIDE OF ENGINE COMPT)
HORN RELAY
HORN FUSE 10A
28
A42
D15
MAIN BODY ECU (LEFT SIDE OF DASH)
HORN
LT GRN
LT BLU
1
5
2
3
LT BLU
BLK
WHT
WHT
WHT
LT GRN
9
I28
HO
SPIRAL CABLE SUB ASSEMBLY
1
z3
BLU
STEERING PAD SWITCH ASSEMBLY
HORN SWITCH
BLK
BLK
1
1
LOW PITCHED HORN (FRONT OF ENGINE COMPT)
HIGH PITCHED HORN (LEFT FRONT OF ENGINE COMPT)
365363

Fig. 86: Horn Circuit, Hybrid

INSTRUMENT CLUSTER

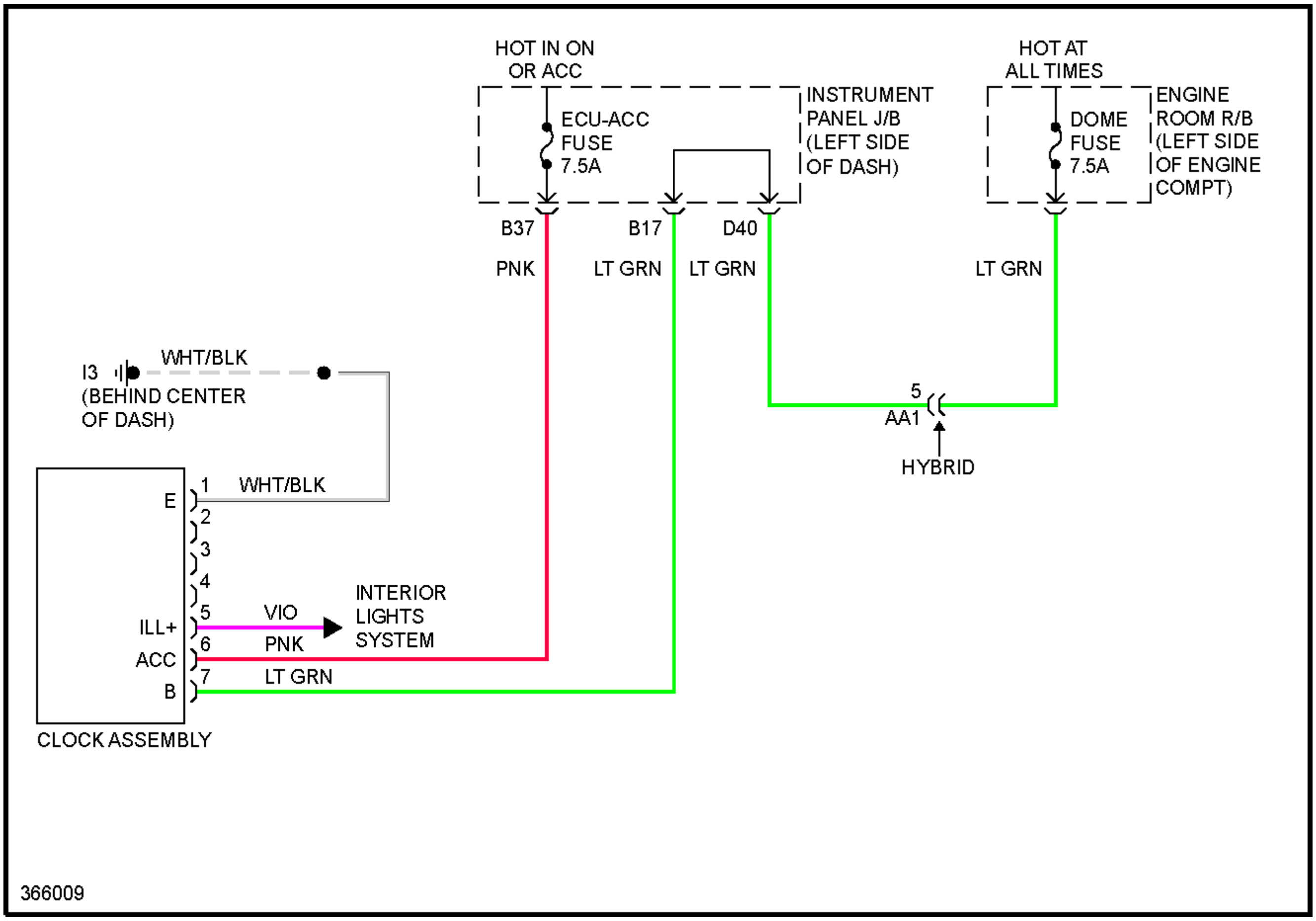
HOT IN ON
OR ACC
ECU-ACC
FUSE
7.5A
INSTRUMENT
PANEL J/B
(LEFT SIDE
OF DASH)
HOT AT
ALL TIMES
DOME
FUSE
7.5A
ENGINE
ROOM R/B
(LEFT SIDE
OF ENGINE
COMPT)
B37
B17
D40
PNK
LT GRN
LT GRN
LT GRN
5
AA1
HYBRID
I3
WHT/BLK
(BEHIND CENTER
OF DASH)
E
1
WHT/BLK
2
3
4
ILL+
5
VIO
INTERIOR
LIGHTS
SYSTEM
ACC
6
PNK
B
7
LT GRN
CLOCK ASSEMBLY
366009

Fig. 87: Clock Circuit

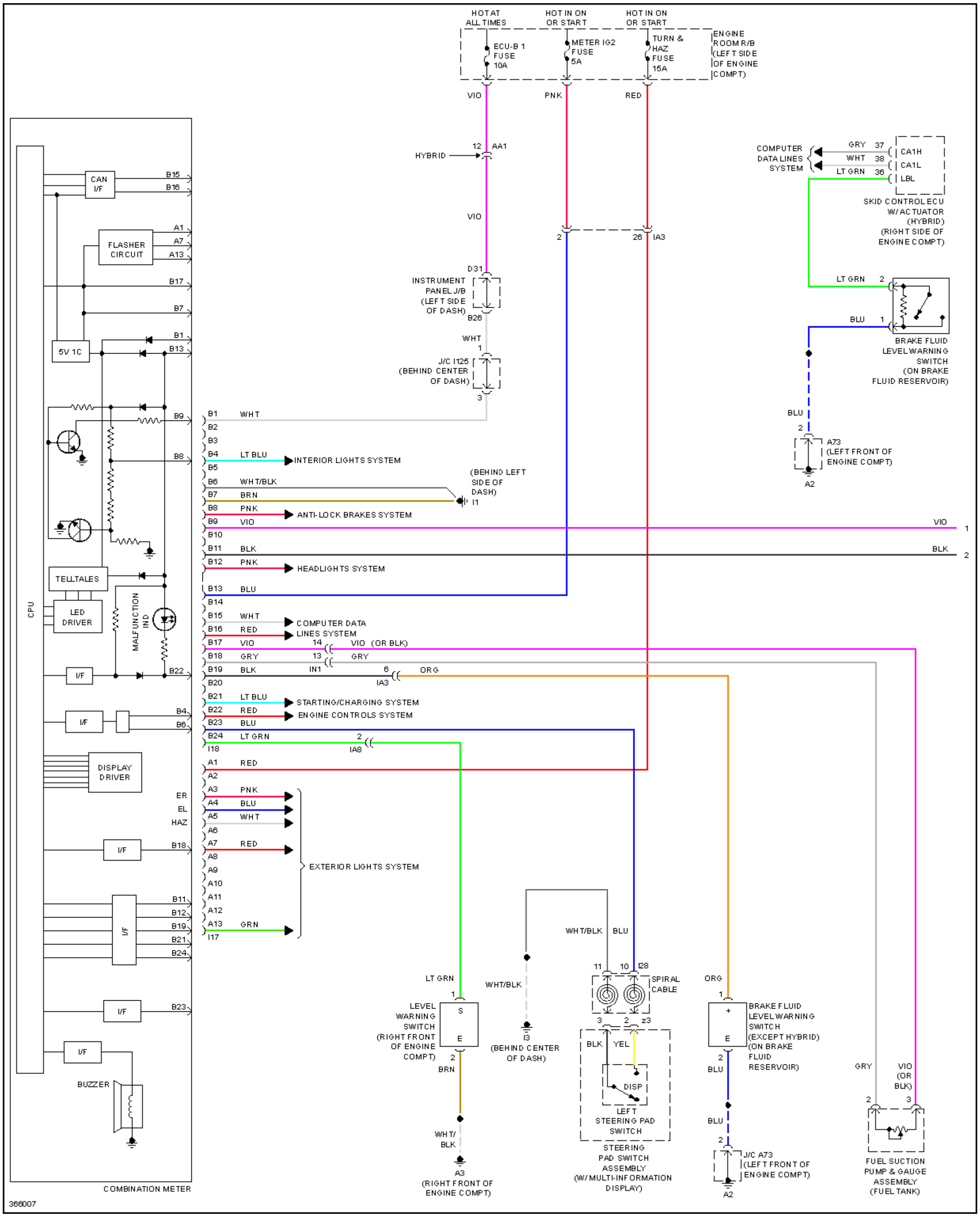
HOT AT ALL TIMES
HOT IN ON OR START
HOT IN ON OR START
ECU-B 1 FUSE 10A
METER IG2 FUSE 5A
TURN & HAZ FUSE 15A
ENGINE ROOM R/B (LEFT SIDE OF ENGINE COMPT)
VIO
PNK
RED
12 AA1
HYBRID
VIO
2
26 IA3
D31
INSTRUMENT PANEL J/B (LEFT SIDE OF DASH)
B26
WHT
1
J/C I125 (BEHIND CENTER OF DASH)
3
COMPUTER DATA LINES SYSTEM
GRY 37
WHT 38
LT GRN 36
CA1H
CA1L
LBL
SKID CONTROL ECU W/ ACTUATOR (HYBRID) (RIGHT SIDE OF ENGINE COMPT)
LT GRN 2
BLU 1
BRAKE FLUID LEVEL WARNING SWITCH (ON BRAKE FLUID RESERVOIR)
BLU
2
A73 (LEFT FRONT OF ENGINE COMPT)
A2
CPU
CAN I/F
B15
B16
FLASHER CIRCUIT
A1
A7
A13
B17
B7
5V 1C
B1
B13
B9
B8
TELLTALES
LED DRIVER
MALFUNCTION IND
I/F
B22
I/F
B4
B6
DISPLAY DRIVER
ER
EL
HAZ
I/F
B18
I/F
B11
B12
B19
B21
B24
I/F
B23
I/F
BUZZER
COMBINATION METER
366007
B1 WHT
B2
B3
B4 LT BLU
INTERIOR LIGHTS SYSTEM
B5
B6 WHT/BLK
B7 BRN
(BEHIND LEFT SIDE OF DASH)
I1
B8 PNK
ANTI-LOCK BRAKES SYSTEM
B9 VIO
VIO 1
B10
B11 BLK
BLK 2
B12 PNK
HEADLIGHTS SYSTEM
B13 BLU
B14
B15 WHT
B16 RED
COMPUTER DATA LINES SYSTEM
B17 VIO
14 VIO (OR BLK)
B18 GRY
13 GRY
B19 BLK
IN1
6 ORG
IA3
B20
B21 LT BLU
STARTING/CHARGING SYSTEM
B22 RED
ENGINE CONTROLS SYSTEM
B23 BLU
B24 LT GRN
2
IA8
I18
A1 RED
A2
A3 PNK
A4 BLU
A5 WHT
A6
A7 RED
A8
A9
A10
A11
A12
A13 GRN
I17
EXTERIOR LIGHTS SYSTEM
WHT/BLK
BLU
11
10
I28
SPIRAL CABLE
3
2
z3
BLK
YEL
DISP
LEFT STEERING PAD SWITCH
STEERING PAD SWITCH ASSEMBLY (W/ MULTI-INFORMATION DISPLAY)
WHT/BLK
I3 (BEHIND CENTER OF DASH)
LT GRN
1
S
E
LEVEL WARNING SWITCH (RIGHT FRONT OF ENGINE COMPT)
2
BRN
WHT/BLK
A3 (RIGHT FRONT OF ENGINE COMPT)
ORG
1
+
E
BRAKE FLUID LEVEL WARNING SWITCH (EXCEPT HYBRID) (ON BRAKE FLUID RESERVOIR)
2
BLU
BLU
2
J/C A73 (LEFT FRONT OF ENGINE COMPT)
A2
GRY
VIO (OR BLK)
2
3
FUEL SUCTION PUMP & GAUGE ASSEMBLY (FUEL TANK)

Fig. 88: Instrument Cluster Circuit (1 of 2)

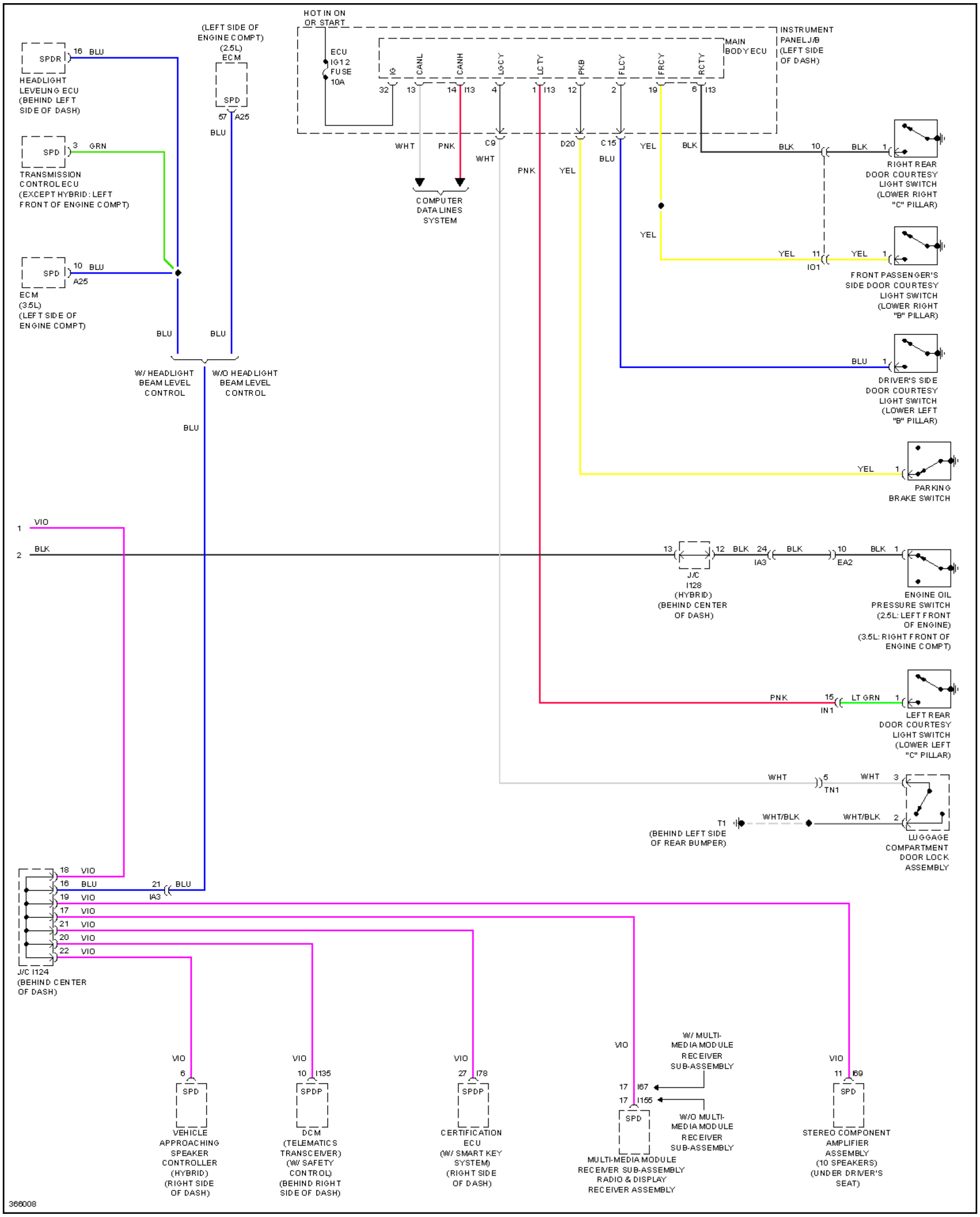
SPDR
16 BLU
HEADLIGHT LEVELING ECU (BEHIND LEFT SIDE OF DASH)
(LEFT SIDE OF ENGINE COMPT) (2.5L) ECM
SPD
57 A25
BLU
HOT IN ON OR START
ECU IG12 FUSE 10A
INSTRUMENT PANEL J/B (LEFT SIDE OF DASH)
MAIN BODY ECU
IG
CANL
CANH
LGCY
LCTY
PKB
FLCY
FRCY
RCTY
32
13
14 I13
4
1 I13
12
2
19
6 I13
SPD
3 GRN
TRANSMISSION CONTROL ECU (EXCEPT HYBRID: LEFT FRONT OF ENGINE COMPT)
WHT
PNK
C9
WHT
D20
C15
BLU
YEL
BLK
PNK
YEL
COMPUTER DATA LINES SYSTEM
BLK 10
BLK 1
RIGHT REAR DOOR COURTESY LIGHT SWITCH (LOWER RIGHT "C" PILLAR)
YEL
YEL 11
IO1
YEL 1
FRONT PASSENGER'S SIDE DOOR COURTESY LIGHT SWITCH (LOWER RIGHT "B" PILLAR)
SPD
10 BLU
A25
ECM (3.5L) (LEFT SIDE OF ENGINE COMPT)
BLU
BLU
W/ HEADLIGHT BEAM LEVEL CONTROL
W/O HEADLIGHT BEAM LEVEL CONTROL
BLU
BLU 1
DRIVER'S SIDE DOOR COURTESY LIGHT SWITCH (LOWER LEFT "B" PILLAR)
YEL 1
PARKING BRAKE SWITCH
1 VIO
2 BLK
13
12 BLK
24
IA3
BLK
10
EA2
BLK 1
J/C I128 (HYBRID) (BEHIND CENTER OF DASH)
ENGINE OIL PRESSURE SWITCH (2.5L: LEFT FRONT OF ENGINE) (3.5L: RIGHT FRONT OF ENGINE COMPT)
PNK
15
IN1
LT GRN 1
LEFT REAR DOOR COURTESY LIGHT SWITCH (LOWER LEFT "C" PILLAR)
WHT
5
TN1
WHT 3
WHT/BLK
WHT/BLK 2
T1
(BEHIND LEFT SIDE OF REAR BUMPER)
LUGGAGE COMPARTMENT DOOR LOCK ASSEMBLY
18 VIO
16 BLU
21 BLU
IA3
19 VIO
17 VIO
21 VIO
20 VIO
22 VIO
J/C I124 (BEHIND CENTER OF DASH)
W/ MULTI-MEDIA MODULE RECEIVER SUB-ASSEMBLY
VIO
6
SPD
VEHICLE APPROACHING SPEAKER CONTROLLER (HYBRID) (RIGHT SIDE OF DASH)
VIO
10 I135
SPDP
DCM (TELEMATICS TRANSCEIVER) (W/ SAFETY CONTROL) (BEHIND RIGHT SIDE OF DASH)
VIO
27 I78
SPDP
CERTIFICATION ECU (W/ SMART KEY SYSTEM) (RIGHT SIDE OF DASH)
VIO
17 I67
17 I155
SPD
W/O MULTI-MEDIA MODULE RECEIVER SUB-ASSEMBLY
MULTI-MEDIA MODULE RECEIVER SUB-ASSEMBLY RADIO & DISPLAY RECEIVER ASSEMBLY
VIO
11 I69
SPD
STEREO COMPONENT AMPLIFIER ASSEMBLY (10 SPEAKERS) (UNDER DRIVER'S SEAT)
366008

Fig. 89: Instrument Cluster Circuit (2 of 2)

INTERIOR LIGHTS

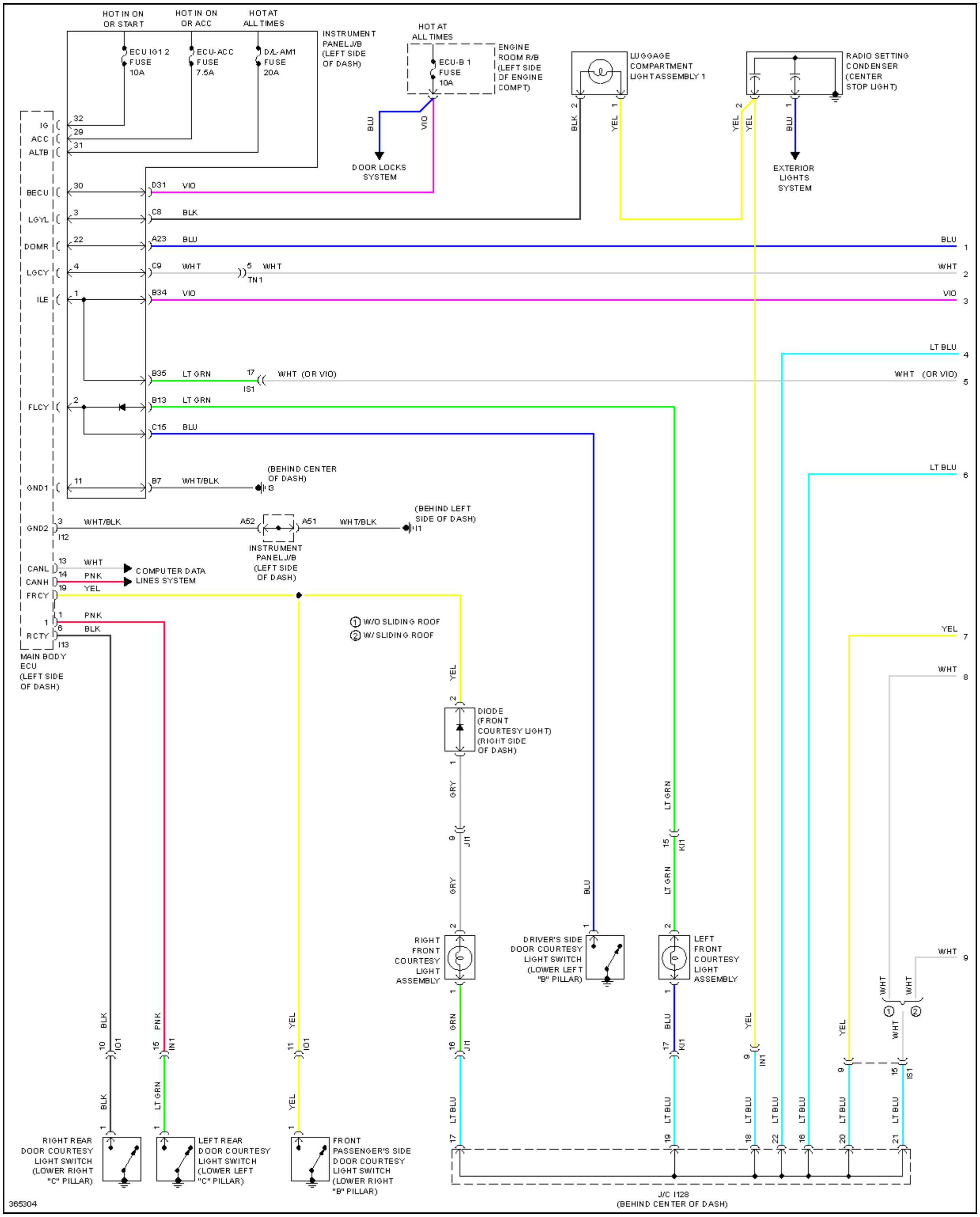
HOT IN ON OR START
HOT IN ON OR ACC
HOT AT ALL TIMES
ECU IG1 2 FUSE 10A
ECU-ACC FUSE 7.5A
D/L-AM1 FUSE 20A
INSTRUMENT PANEL J/B (LEFT SIDE OF DASH)
HOT AT ALL TIMES
ECU-B 1 FUSE 10A
ENGINE ROOM R/B (LEFT SIDE OF ENGINE COMPT)
LUGGAGE COMPARTMENT LIGHT ASSEMBLY 1
RADIO SETTING CONDENSER (CENTER STOP LIGHT)
BLU
VIO
DOOR LOCKS SYSTEM
BLK
YEL
YEL
YEL
BLU
EXTERIOR LIGHTS SYSTEM
IG
ACC
ALTB
BECU
LGYL
DOMR
LGCY
ILE
FLCY
GND1
GND2
CANL
CANH
FRCY
RCTY
32
29
31
30
D31 VIO
3
C8 BLK
22
A23 BLU
BLU 1
4
C9 WHT
5 WHT
TN1
WHT 2
1
B34 VIO
VIO 3
LT BLU 4
B35 LT GRN
17
IS1
WHT (OR VIO)
WHT (OR VIO) 5
2
B13 LT GRN
C15 BLU
LT BLU 6
11
B7 WHT/BLK
(BEHIND CENTER OF DASH)
I3
3 WHT/BLK
I12
A52
A51 WHT/BLK
(BEHIND LEFT SIDE OF DASH)
I1
INSTRUMENT PANEL J/B (LEFT SIDE OF DASH)
13 WHT
14 PNK
19 YEL
COMPUTER DATA LINES SYSTEM
① W/O SLIDING ROOF
② W/ SLIDING ROOF
1 PNK
1
6 BLK
I13
MAIN BODY ECU (LEFT SIDE OF DASH)
YEL 7
WHT 8
YEL
DIODE (FRONT COURTESY LIGHT) (RIGHT SIDE OF DASH)
GRY
9 J11
GRY
BLU
LT GRN
15 K11
LT GRN
RIGHT FRONT COURTESY LIGHT ASSEMBLY
DRIVER'S SIDE DOOR COURTESY LIGHT SWITCH (LOWER LEFT "B" PILLAR)
LEFT FRONT COURTESY LIGHT ASSEMBLY
WHT 9
WHT
WHT
①
②
WHT
BLK
PNK
YEL
GRN
BLU
YEL
YEL
10 IO1
15 IN1
11 IO1
16 J11
17 K11
9 IN1
9
15 IS1
BLK
LT GRN
YEL
LT BLU
LT BLU
LT BLU
LT BLU
LT BLU
LT BLU
LT BLU
RIGHT REAR DOOR COURTESY LIGHT SWITCH (LOWER RIGHT "C" PILLAR)
LEFT REAR DOOR COURTESY LIGHT SWITCH (LOWER LEFT "C" PILLAR)
FRONT PASSENGER'S SIDE DOOR COURTESY LIGHT SWITCH (LOWER RIGHT "B" PILLAR)
17
19
18
22
16
20
21
J/C I128 (BEHIND CENTER OF DASH)
365304

Fig. 90: Courtesy Lamps Circuit, Except Hybrid (1 of 2)

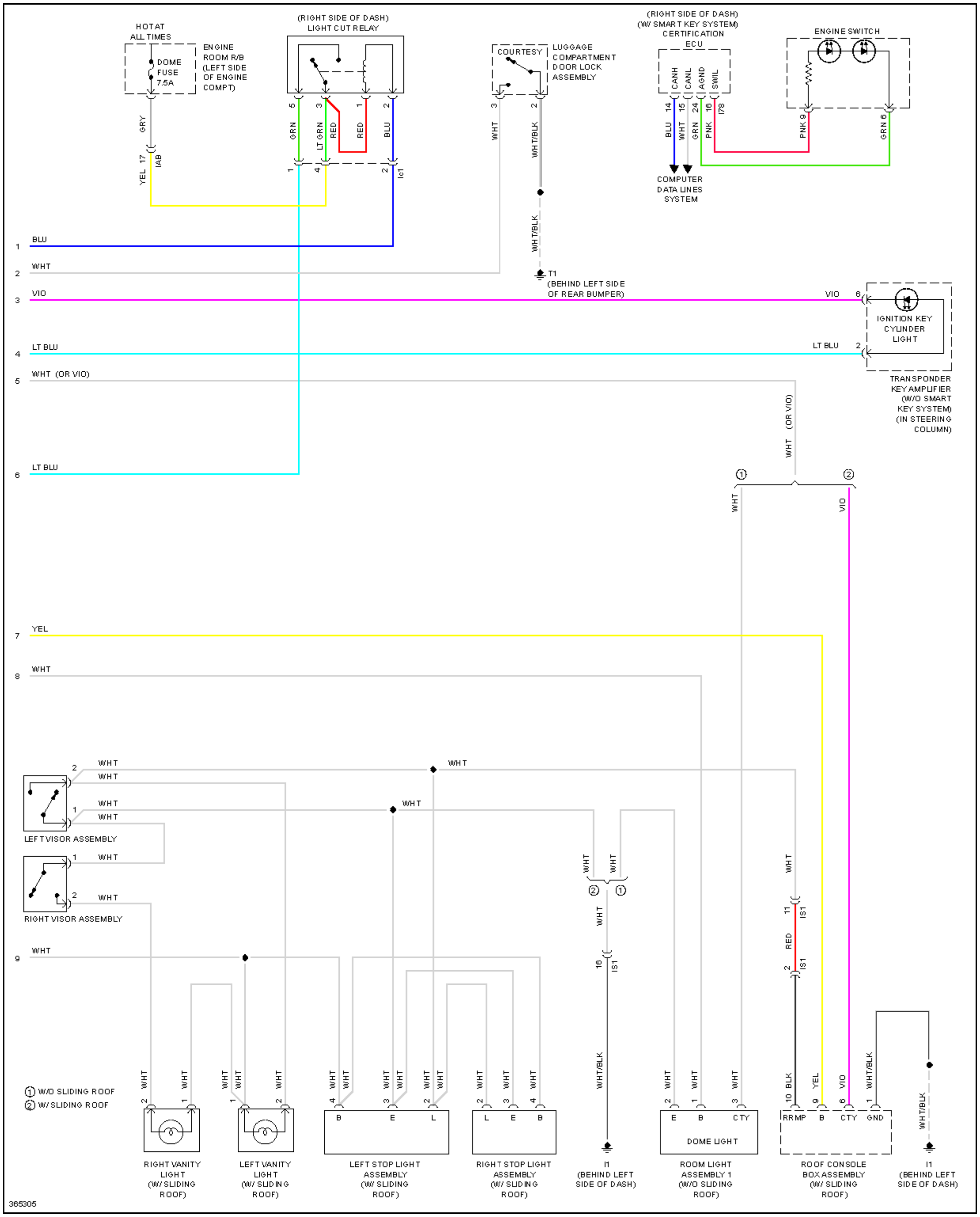
HOT AT ALL TIMES
DOME FUSE 7.5A
ENGINE ROOM R/B (LEFT SIDE OF ENGINE COMPT)
(RIGHT SIDE OF DASH) LIGHT CUT RELAY
COURTESY
LUGGAGE COMPARTMENT DOOR LOCK ASSEMBLY
(RIGHT SIDE OF DASH) (W/ SMART KEY SYSTEM) CERTIFICATION ECU
CANH
CANL
AGND
SWIL
ENGINE SWITCH
COMPUTER DATA LINES SYSTEM
GRY
YEL 17
IAB
GRN
LT GRN
RED
BLU
Io1
WHT
WHT/BLK
PNK 9
GRN 6
I78
T1 (BEHIND LEFT SIDE OF REAR BUMPER)
BLU
WHT
VIO
LT BLU
WHT (OR VIO)
LT BLU
IGNITION KEY CYLINDER LIGHT
TRANSPONDER KEY AMPLIFIER (W/O SMART KEY SYSTEM) (IN STEERING COLUMN)
YEL
WHT
LEFT VISOR ASSEMBLY
RIGHT VISOR ASSEMBLY
IS1
① W/O SLIDING ROOF
② W/ SLIDING ROOF
RIGHT VANITY LIGHT (W/ SLIDING ROOF)
LEFT VANITY LIGHT (W/ SLIDING ROOF)
LEFT STOP LIGHT ASSEMBLY (W/ SLIDING ROOF)
RIGHT STOP LIGHT ASSEMBLY (W/ SLIDING ROOF)
I1 (BEHIND LEFT SIDE OF DASH)
DOME LIGHT
ROOM LIGHT ASSEMBLY 1 (W/O SLIDING ROOF)
RRMP
B
CTY
GND
ROOF CONSOLE BOX ASSEMBLY (W/ SLIDING ROOF)
I1 (BEHIND LEFT SIDE OF DASH)
365305

Fig. 91: Courtesy Lamps Circuit, Except Hybrid (2 of 2)

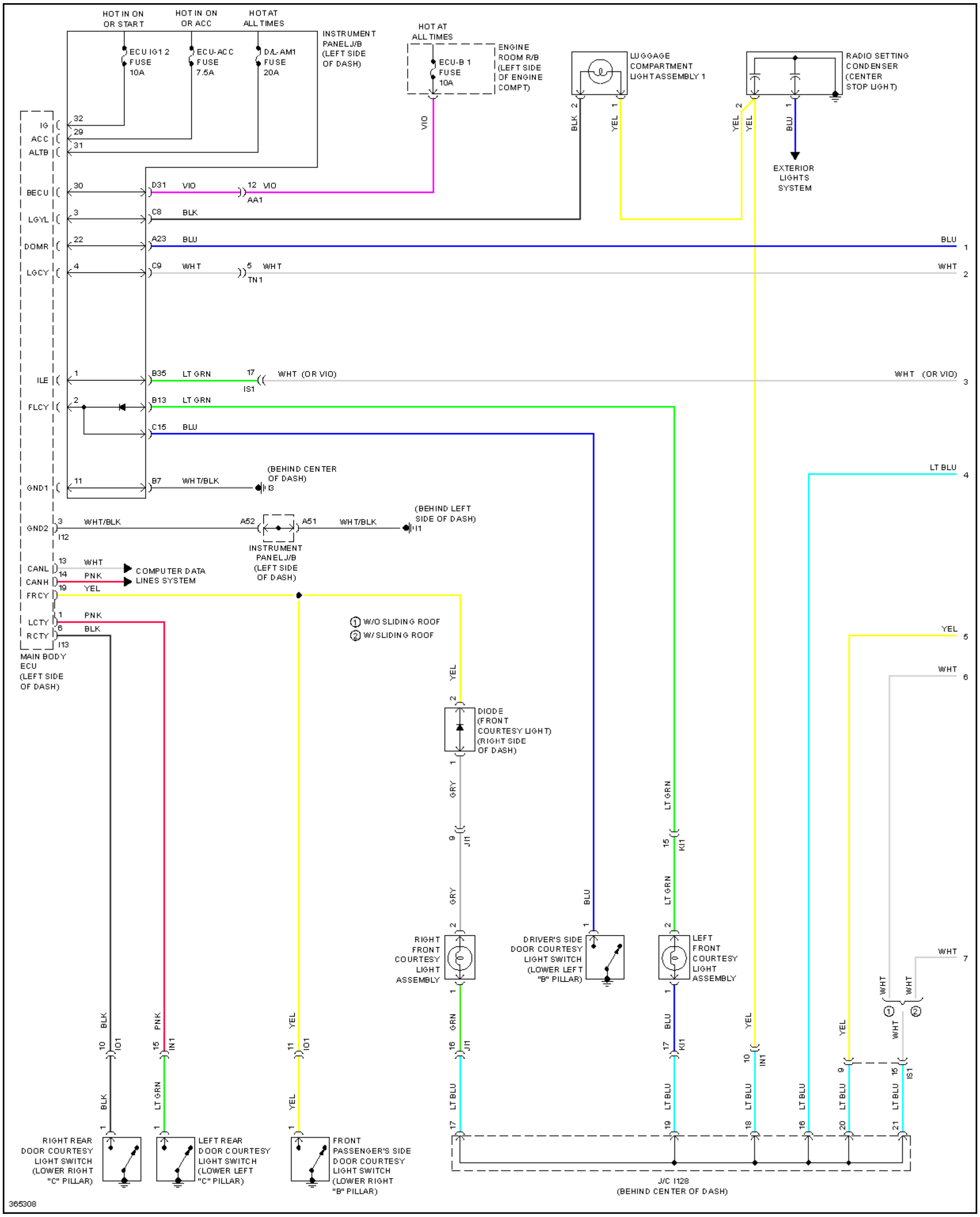
HOT IN ON OR START
HOT IN ON OR ACC
HOT AT ALL TIMES
ECU IG1 2 FUSE 10A
ECU-ACC FUSE 7.5A
D/L-AM1 FUSE 20A
INSTRUMENT PANEL J/B (LEFT SIDE OF DASH)
HOT AT ALL TIMES
ECU-B 1 FUSE 10A
ENGINE ROOM R/B (LEFT SIDE OF ENGINE COMPT)
LUGGAGE COMPARTMENT LIGHT ASSEMBLY 1
RADIO SETTING CONDENSER (CENTER STOP LIGHT)
EXTERIOR LIGHTS SYSTEM
IG
ACC
ALTB
BECU
LGYL
DOMR
LGCY
ILE
FLCY
GND1
GND2
CANL
CANH
FRCY
LCTY
RCTY
MAIN BODY ECU (LEFT SIDE OF DASH)
VIO
BLK
YEL
BLU
WHT
LT GRN
WHT (OR VIO)
WHT/BLK
PNK
GRY
GRN
LT BLU
D31
C8
A23
C9
B35
B13
C15
B7
AA1
TN1
IS1
I12
I13
(BEHIND CENTER OF DASH)
I3
A52
A51
(BEHIND LEFT SIDE OF DASH)
I1
INSTRUMENT PANEL J/B (LEFT SIDE OF DASH)
COMPUTER DATA LINES SYSTEM
① W/O SLIDING ROOF
② W/ SLIDING ROOF
DIODE (FRONT COURTESY LIGHT) (RIGHT SIDE OF DASH)
J11
K11
IN1
IO1
RIGHT FRONT COURTESY LIGHT ASSEMBLY
DRIVER'S SIDE DOOR COURTESY LIGHT SWITCH (LOWER LEFT "B" PILLAR)
LEFT FRONT COURTESY LIGHT ASSEMBLY
RIGHT REAR DOOR COURTESY LIGHT SWITCH (LOWER RIGHT "C" PILLAR)
LEFT REAR DOOR COURTESY LIGHT SWITCH (LOWER LEFT "C" PILLAR)
FRONT PASSENGER'S SIDE DOOR COURTESY LIGHT SWITCH (LOWER RIGHT "B" PILLAR)
J/C I128 (BEHIND CENTER OF DASH)
1
2
3
4
5
6
7
365308

Fig. 92: Courtesy Lamps Circuit, Hybrid (1 of 2)

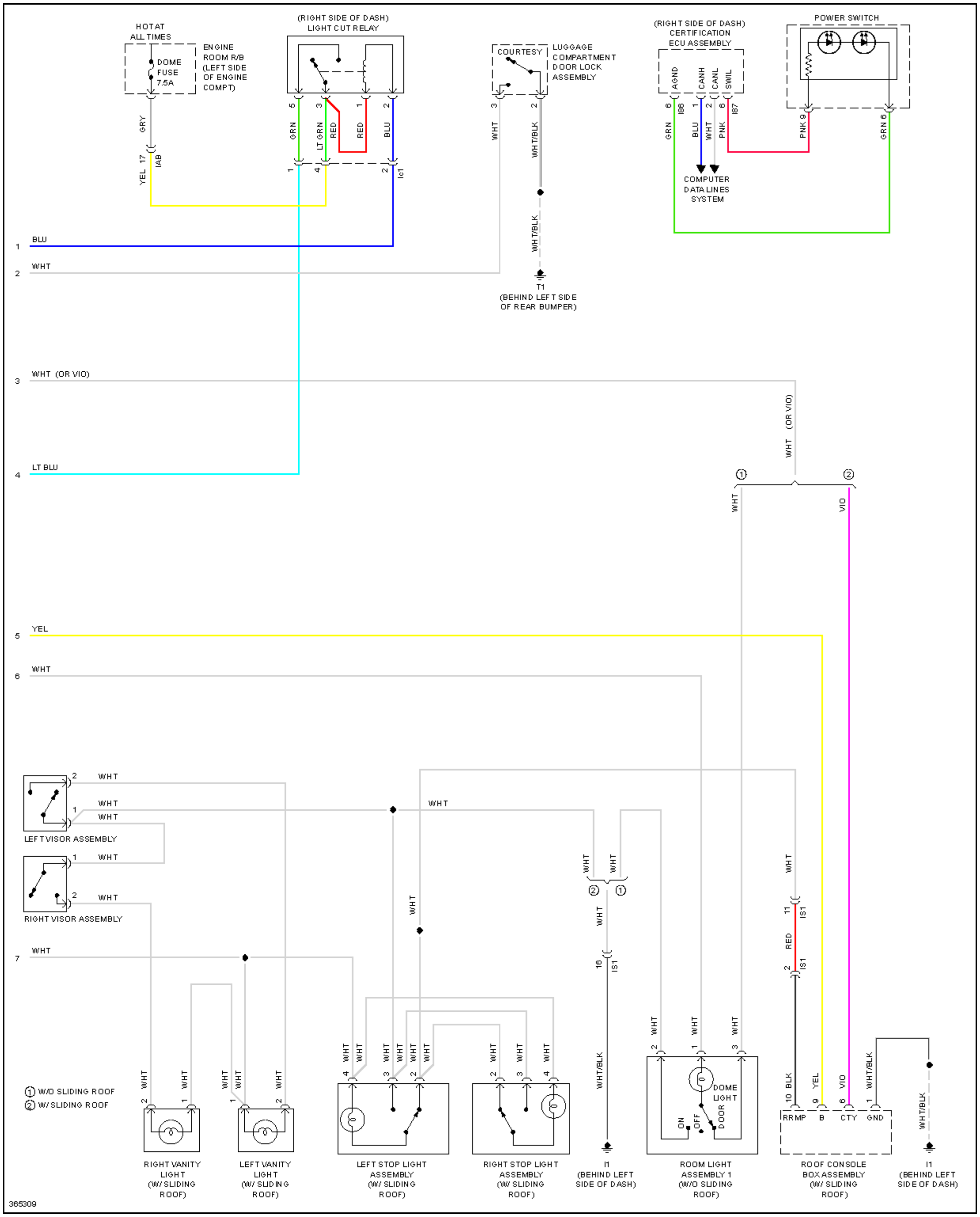
HOT AT ALL TIMES
DOME FUSE 7.5A
ENGINE ROOM R/B (LEFT SIDE OF ENGINE COMPT)
(RIGHT SIDE OF DASH) LIGHT CUT RELAY
COURTESY
LUGGAGE COMPARTMENT DOOR LOCK ASSEMBLY
(RIGHT SIDE OF DASH) CERTIFICATION ECU ASSEMBLY
AGND
CANH
CANL
SWIL
POWER SWITCH
GRY
YEL
IAB
GRN
LT GRN
RED
BLU
Ic1
WHT
WHT/BLK
I86
I87
PNK
COMPUTER DATA LINES SYSTEM
T1 (BEHIND LEFT SIDE OF REAR BUMPER)
BLU
WHT
WHT (OR VIO)
LT BLU
VIO
YEL
LEFT VISOR ASSEMBLY
RIGHT VISOR ASSEMBLY
IS1
RIGHT VANITY LIGHT (W/ SLIDING ROOF)
LEFT VANITY LIGHT (W/ SLIDING ROOF)
LEFT STOP LIGHT ASSEMBLY (W/ SLIDING ROOF)
RIGHT STOP LIGHT ASSEMBLY (W/ SLIDING ROOF)
I1 (BEHIND LEFT SIDE OF DASH)
DOME LIGHT
ON
OFF
DOOR
ROOM LIGHT ASSEMBLY 1 (W/O SLIDING ROOF)
RRMP
B
CTY
GND
ROOF CONSOLE BOX ASSEMBLY (W/ SLIDING ROOF)
I1 (BEHIND LEFT SIDE OF DASH)
① W/O SLIDING ROOF
② W/ SLIDING ROOF
365309

Fig. 93: Courtesy Lamps Circuit, Hybrid (2 of 2)

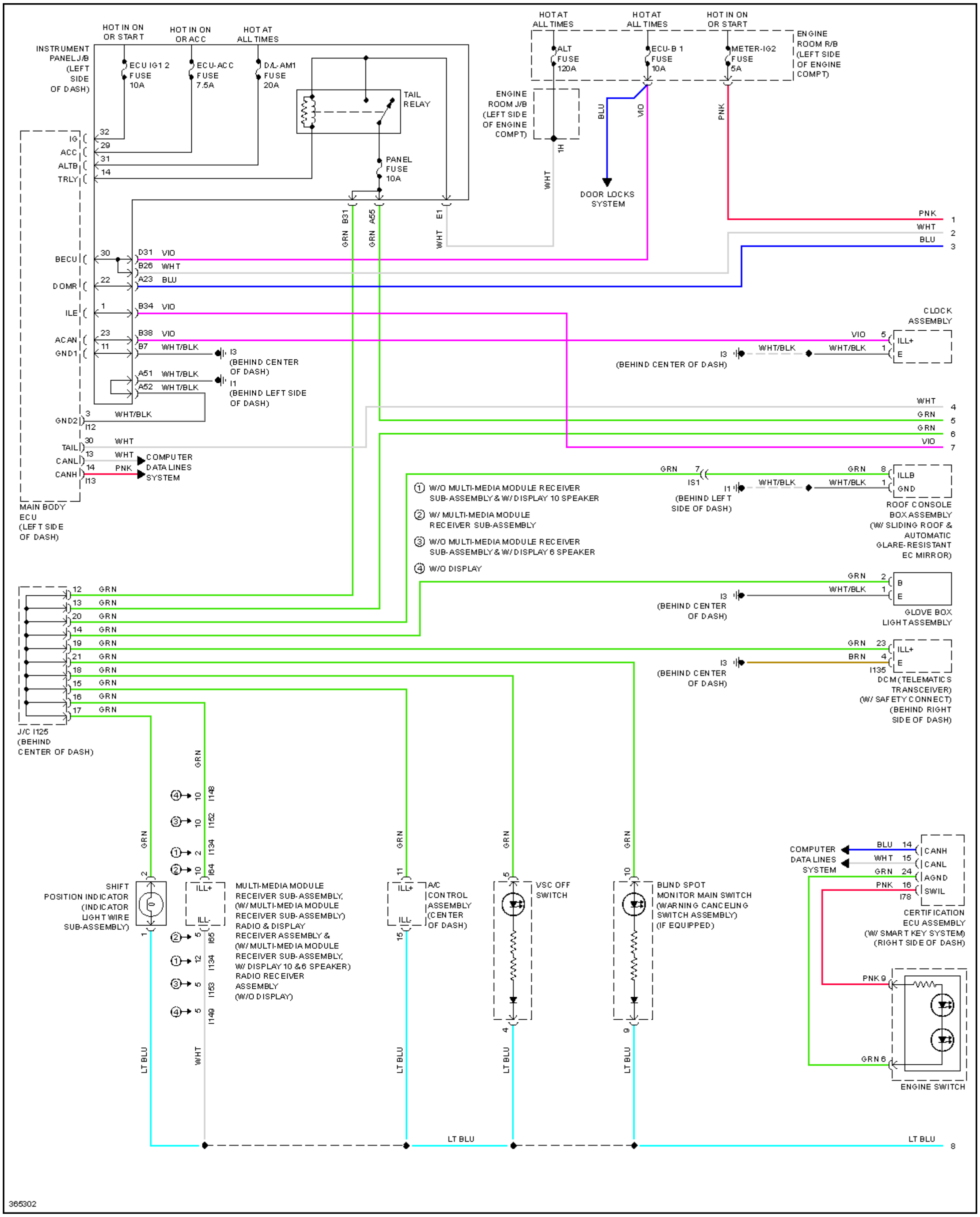
HOT IN ON OR START
HOT IN ON OR ACC
HOT AT ALL TIMES
INSTRUMENT PANEL J/B (LEFT SIDE OF DASH)
ECU IG1 2 FUSE 10A
ECU-ACC FUSE 7.5A
D/L-AM1 FUSE 20A
TAIL RELAY
PANEL FUSE 10A
HOT AT ALL TIMES
HOT AT ALL TIMES
HOT IN ON OR START
ALT FUSE 120A
ECU-B 1 FUSE 10A
METER-IG2 FUSE 5A
ENGINE ROOM R/B (LEFT SIDE OF ENGINE COMPT)
ENGINE ROOM J/B (LEFT SIDE OF ENGINE COMPT)
1H
WHT
BLU
VIO
PNK
DOOR LOCKS SYSTEM
GRN B31
GRN A55
WHT E1
IG 32
ACC 29
ALTB 31
TRLY 14
BECU 30
D31 VIO
B26 WHT
DOMR 22
A23 BLU
ILE 1
B34 VIO
ACAN 23
B38 VIO
GND1 11
B7 WHT/BLK
I3 (BEHIND CENTER OF DASH)
A51 WHT/BLK
A52 WHT/BLK
I1 (BEHIND LEFT SIDE OF DASH)
GND2 3 WHT/BLK
I12
TAIL 30 WHT
CANL 13 WHT
CANH 14 PNK
I13
COMPUTER DATA LINES SYSTEM
MAIN BODY ECU (LEFT SIDE OF DASH)
PNK 1
WHT 2
BLU 3
CLOCK ASSEMBLY
VIO 5 ILL+
WHT/BLK 1 E
I3 WHT/BLK
(BEHIND CENTER OF DASH)
WHT 4
GRN 5
GRN 6
VIO 7
GRN 7 IS1
GRN 8 ILLB
WHT/BLK 1 GND
I1 WHT/BLK
(BEHIND LEFT SIDE OF DASH)
ROOF CONSOLE BOX ASSEMBLY (W/ SLIDING ROOF & AUTOMATIC GLARE-RESISTANT EC MIRROR)
① W/O MULTI-MEDIA MODULE RECEIVER SUB-ASSEMBLY & W/ DISPLAY 10 SPEAKER
② W/ MULTI-MEDIA MODULE RECEIVER SUB-ASSEMBLY
③ W/O MULTI-MEDIA MODULE RECEIVER SUB-ASSEMBLY & W/ DISPLAY 6 SPEAKER
④ W/O DISPLAY
GRN 2 B
WHT/BLK 1 E
I3 (BEHIND CENTER OF DASH)
GLOVE BOX LIGHT ASSEMBLY
GRN 23 ILL+
BRN 4 E
I135
I3 (BEHIND CENTER OF DASH)
DCM (TELEMATICS TRANSCEIVER) (W/ SAFETY CONNECT) (BEHIND RIGHT SIDE OF DASH)
12 GRN
13 GRN
20 GRN
14 GRN
19 GRN
21 GRN
18 GRN
15 GRN
16 GRN
17 GRN
J/C I125 (BEHIND CENTER OF DASH)
GRN
④ 10 I148
③ 10 I152
① 2 I134
② 10 I64
ILL+
ILL-
② 5 I65
① 12 I134
③ 5 I153
④ 5 I149
MULTI-MEDIA MODULE RECEIVER SUB-ASSEMBLY, (W/ MULTI-MEDIA MODULE RECEIVER SUB-ASSEMBLY) RADIO & DISPLAY RECEIVER ASSEMBLY & (W/ MULTI-MEDIA MODULE RECEIVER SUB-ASSEMBLY, W/ DISPLAY 10 & 6 SPEAKER) RADIO RECEIVER ASSEMBLY (W/O DISPLAY)
GRN 2
SHIFT POSITION INDICATOR (INDICATOR LIGHT WIRE SUB-ASSEMBLY)
1 LT BLU
WHT
GRN 11 ILL+
ILL- 15 LT BLU
A/C CONTROL ASSEMBLY (CENTER OF DASH)
GRN 5
VSC OFF SWITCH
4 LT BLU
GRN 10
BLIND SPOT MONITOR MAIN SWITCH (WARNING CANCELING SWITCH ASSEMBLY) (IF EQUIPPED)
9 LT BLU
COMPUTER DATA LINES SYSTEM
BLU 14 CANH
WHT 15 CANL
GRN 24 AGND
PNK 16 SWIL
I78
CERTIFICATION ECU ASSEMBLY (W/ SMART KEY SYSTEM) (RIGHT SIDE OF DASH)
PNK 9
GRN 6
ENGINE SWITCH
LT BLU
LT BLU 8
365302

Fig. 94: Instrument Illumination Circuit, Except Hybrid (1 of 2)

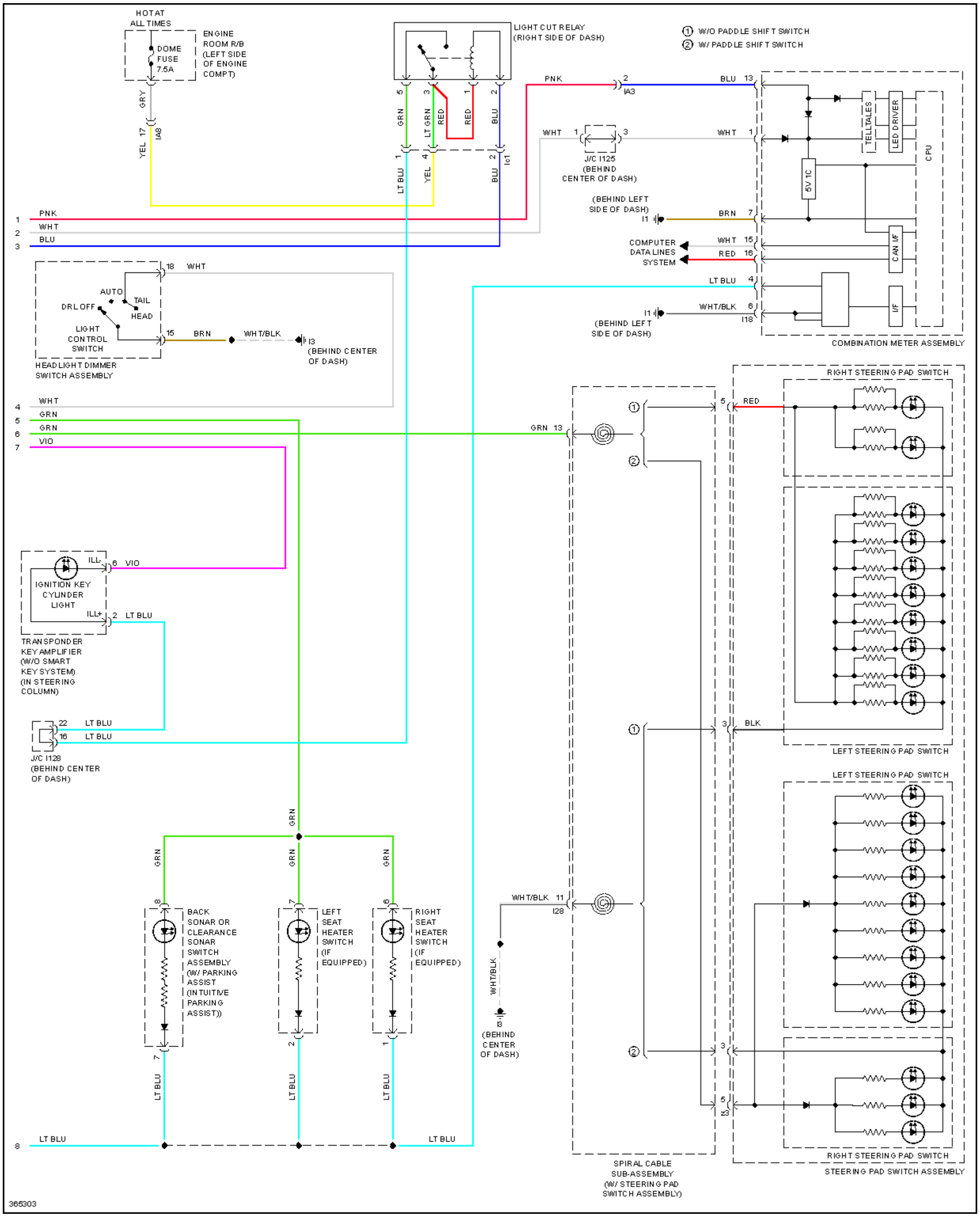
HOT AT ALL TIMES
DOME FUSE 7.5A
ENGINE ROOM R/B (LEFT SIDE OF ENGINE COMPT)
GRY
YEL 17 IA8
LIGHT CUT RELAY (RIGHT SIDE OF DASH)
GRN 5
LT GRN 3
RED
RED 1
BLU 2
LT BLU 1
YEL 4
BLU 2 Ic1
① W/O PADDLE SHIFT SWITCH
② W/ PADDLE SHIFT SWITCH
PNK
2 IA3
BLU 13
WHT 1
J/C I125 (BEHIND CENTER OF DASH)
3
WHT 1
(BEHIND LEFT SIDE OF DASH)
I1
BRN 7
COMPUTER DATA LINES SYSTEM
WHT 15
RED 16
LT BLU 4
WHT/BLK 6
I18
I1
(BEHIND LEFT SIDE OF DASH)
TELLTALES
LED DRIVER
5V 1C
CPU
CAN I/F
I/F
COMBINATION METER ASSEMBLY
1 PNK
2 WHT
3 BLU
AUTO
TAIL
DRL OFF
HEAD
LIGHT CONTROL SWITCH
18 WHT
15 BRN
WHT/BLK
I3 (BEHIND CENTER OF DASH)
HEADLIGHT DIMMER SWITCH ASSEMBLY
4 WHT
5 GRN
6 GRN
7 VIO
GRN 13
RIGHT STEERING PAD SWITCH
5 RED
①
②
ILL-
6 VIO
IGNITION KEY CYLINDER LIGHT
ILL+
2 LT BLU
TRANSPONDER KEY AMPLIFIER (W/O SMART KEY SYSTEM) (IN STEERING COLUMN)
22 LT BLU
16 LT BLU
J/C I128 (BEHIND CENTER OF DASH)
①
3 BLK
LEFT STEERING PAD SWITCH
LEFT STEERING PAD SWITCH
GRN
GRN
GRN
GRN
8
BACK SONAR OR CLEARANCE SONAR SWITCH ASSEMBLY (W/ PARKING ASSIST (INTUITIVE PARKING ASSIST))
7
LEFT SEAT HEATER SWITCH (IF EQUIPPED)
6
RIGHT SEAT HEATER SWITCH (IF EQUIPPED)
WHT/BLK 11
I28
WHT/BLK
I3 (BEHIND CENTER OF DASH)
②
3
5
Z3
7 LT BLU
2 LT BLU
1 LT BLU
8 LT BLU
LT BLU
SPIRAL CABLE SUB-ASSEMBLY (W/ STEERING PAD SWITCH ASSEMBLY)
RIGHT STEERING PAD SWITCH
STEERING PAD SWITCH ASSEMBLY
365303

Fig. 95: Instrument Illumination Circuit, Except Hybrid (2 of 2)

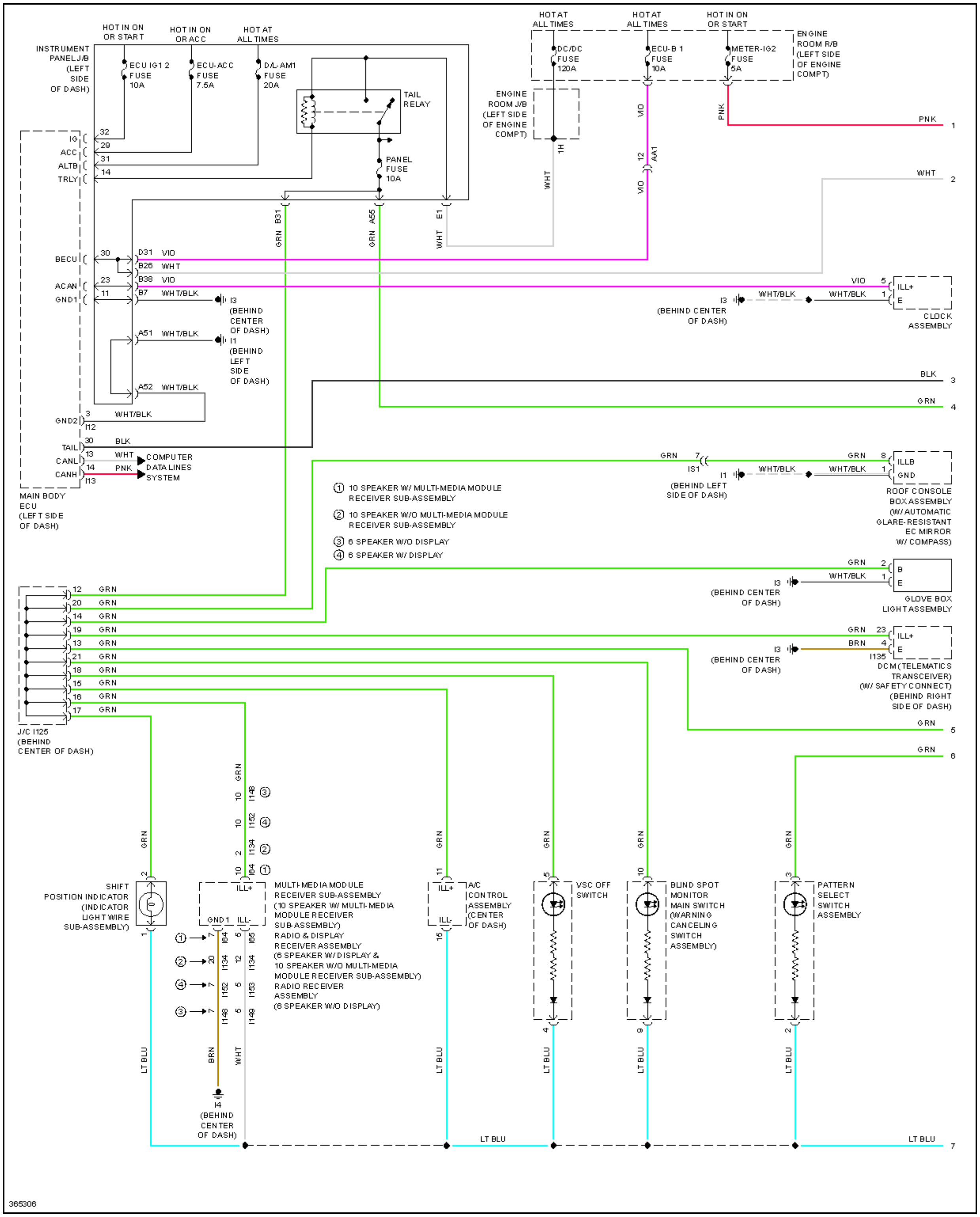
HOT IN ON OR START
HOT IN ON OR ACC
HOT AT ALL TIMES
INSTRUMENT PANEL J/B (LEFT SIDE OF DASH)
ECU IG1 2 FUSE 10A
ECU-ACC FUSE 7.5A
D/L-AM1 FUSE 20A
TAIL RELAY
PANEL FUSE 10A
HOT AT ALL TIMES
HOT AT ALL TIMES
HOT IN ON OR START
DC/DC FUSE 120A
ECU-B 1 FUSE 10A
METER-IG2 FUSE 5A
ENGINE ROOM R/B (LEFT SIDE OF ENGINE COMPT)
ENGINE ROOM J/B (LEFT SIDE OF ENGINE COMPT)
1H
12 AA1
VIO
PNK
WHT
PNK 1
WHT 2
IG
ACC
ALTB
TRLY
32
29
31
14
B31
A55
E1
GRN
WHT
BECU
ACAN
GND1
30
23
11
D31 VIO
B26 WHT
B38 VIO
B7 WHT/BLK
I3 (BEHIND CENTER OF DASH)
A51 WHT/BLK
I1 (BEHIND LEFT SIDE OF DASH)
A52 WHT/BLK
GND2
3 WHT/BLK
I12
TAIL
CANL
CANH
30 BLK
13 WHT
14 PNK
I13
COMPUTER DATA LINES SYSTEM
MAIN BODY ECU (LEFT SIDE OF DASH)
VIO 5 ILL+
WHT/BLK
WHT/BLK 1 E
I3 (BEHIND CENTER OF DASH)
CLOCK ASSEMBLY
BLK 3
GRN 4
GRN 7 IS1
I1 (BEHIND LEFT SIDE OF DASH)
GRN 8 ILLB
WHT/BLK 1 GND
ROOF CONSOLE BOX ASSEMBLY (W/ AUTOMATIC GLARE-RESISTANT EC MIRROR W/ COMPASS)
① 10 SPEAKER W/ MULTI-MEDIA MODULE RECEIVER SUB-ASSEMBLY
② 10 SPEAKER W/O MULTI-MEDIA MODULE RECEIVER SUB-ASSEMBLY
③ 6 SPEAKER W/O DISPLAY
④ 6 SPEAKER W/ DISPLAY
GRN 2 B
WHT/BLK 1 E
I3 (BEHIND CENTER OF DASH)
GLOVE BOX LIGHT ASSEMBLY
GRN 23 ILL+
BRN 4 E
I135
I3 (BEHIND CENTER OF DASH)
DCM (TELEMATICS TRANSCEIVER) (W/ SAFETY CONNECT) (BEHIND RIGHT SIDE OF DASH)
12 GRN
20 GRN
14 GRN
19 GRN
13 GRN
21 GRN
18 GRN
15 GRN
16 GRN
17 GRN
J/C I125 (BEHIND CENTER OF DASH)
GRN 5
GRN 6
GRN
10 I148 ③
10 I152 ④
2 I134 ②
10 I64 ①
SHIFT POSITION INDICATOR (INDICATOR LIGHT WIRE SUB-ASSEMBLY)
ILL+
GND1 ILL-
MULTI-MEDIA MODULE RECEIVER SUB-ASSEMBLY (10 SPEAKER W/ MULTI-MEDIA MODULE RECEIVER SUB-ASSEMBLY) RADIO & DISPLAY RECEIVER ASSEMBLY (6 SPEAKER W/ DISPLAY & 10 SPEAKER W/O MULTI-MEDIA MODULE RECEIVER SUB-ASSEMBLY) RADIO RECEIVER ASSEMBLY (6 SPEAKER W/O DISPLAY)
① 7 I64 5 I65
② 20 I134 12 I134
④ 7 I152 5 I153
③ 7 I148 5 I149
A/C CONTROL ASSEMBLY (CENTER OF DASH)
11 ILL+
15 ILL-
VSC OFF SWITCH
BLIND SPOT MONITOR MAIN SWITCH (WARNING CANCELING SWITCH ASSEMBLY)
PATTERN SELECT SWITCH ASSEMBLY
5
4
10
9
3
2
LT BLU
BRN
WHT
I4 (BEHIND CENTER OF DASH)
LT BLU
LT BLU 7
365306

Fig. 96: Instrument Illumination Circuit, Hybrid (1 of 2)

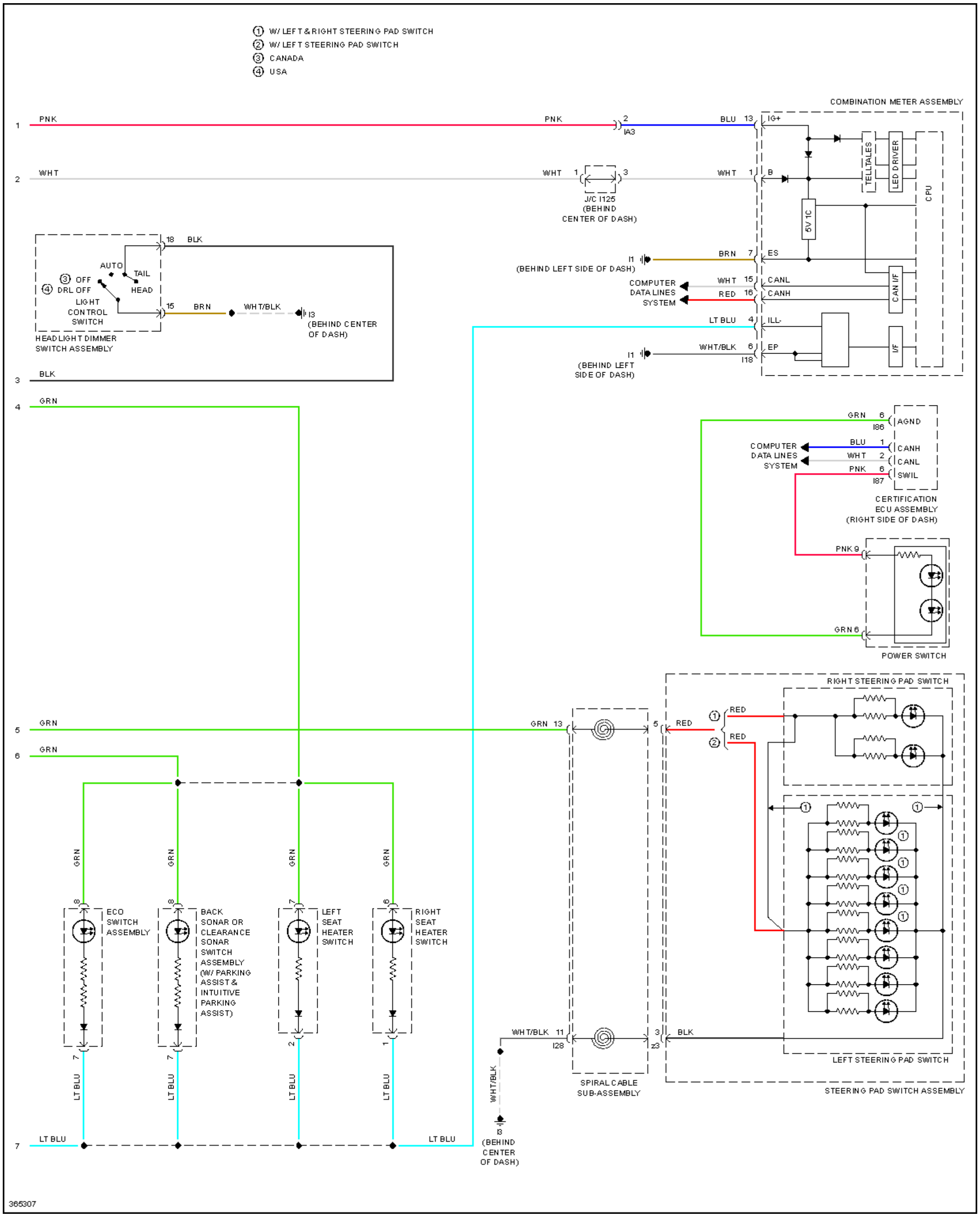
① W/ LEFT & RIGHT STEERING PAD SWITCH
② W/ LEFT STEERING PAD SWITCH
③ CANADA
④ USA
COMBINATION METER ASSEMBLY
1
PNK
PNK
2
IA3
BLU
13
IG+
TELLTALES
LED DRIVER
CPU
2
WHT
WHT
1
3
J/C I125
(BEHIND
CENTER OF DASH)
WHT
1
B
5V 1C
18
BLK
AUTO
TAIL
③ OFF
④ DRL OFF
HEAD
LIGHT
CONTROL
SWITCH
15
BRN
WHT/BLK
I3
(BEHIND CENTER
OF DASH)
HEADLIGHT DIMMER
SWITCH ASSEMBLY
I1
(BEHIND LEFT SIDE OF DASH)
BRN
7
ES
COMPUTER
DATA LINES
SYSTEM
WHT
15
CANL
RED
16
CANH
CAN I/F
LT BLU
4
ILL-
I1
(BEHIND LEFT
SIDE OF DASH)
WHT/BLK
6
I18
EP
I/F
3
BLK
4
GRN
GRN
6
I86
AGND
COMPUTER
DATA LINES
SYSTEM
BLU
1
CANH
WHT
2
CANL
PNK
6
I87
SWIL
CERTIFICATION
ECU ASSEMBLY
(RIGHT SIDE OF DASH)
PNK 9
GRN 6
POWER SWITCH
RIGHT STEERING PAD SWITCH
5
GRN
GRN
13
5
RED
①
RED
②
RED
6
GRN
①
①
①
①
①
①
①
GRN
GRN
GRN
GRN
8
8
7
6
ECO
SWITCH
ASSEMBLY
BACK
SONAR OR
CLEARANCE
SONAR
SWITCH
ASSEMBLY
(W/ PARKING
ASSIST &
INTUITIVE
PARKING
ASSIST)
LEFT
SEAT
HEATER
SWITCH
RIGHT
SEAT
HEATER
SWITCH
WHT/BLK
11
I28
3
z3
BLK
LEFT STEERING PAD SWITCH
SPIRAL CABLE
SUB-ASSEMBLY
STEERING PAD SWITCH ASSEMBLY
7
7
2
1
LT BLU
LT BLU
LT BLU
LT BLU
WHT/BLK
I3
(BEHIND
CENTER
OF DASH)
7
LT BLU
LT BLU
365307

Fig. 97: Instrument Illumination Circuit, Hybrid (2 of 2)

NAVIGATION

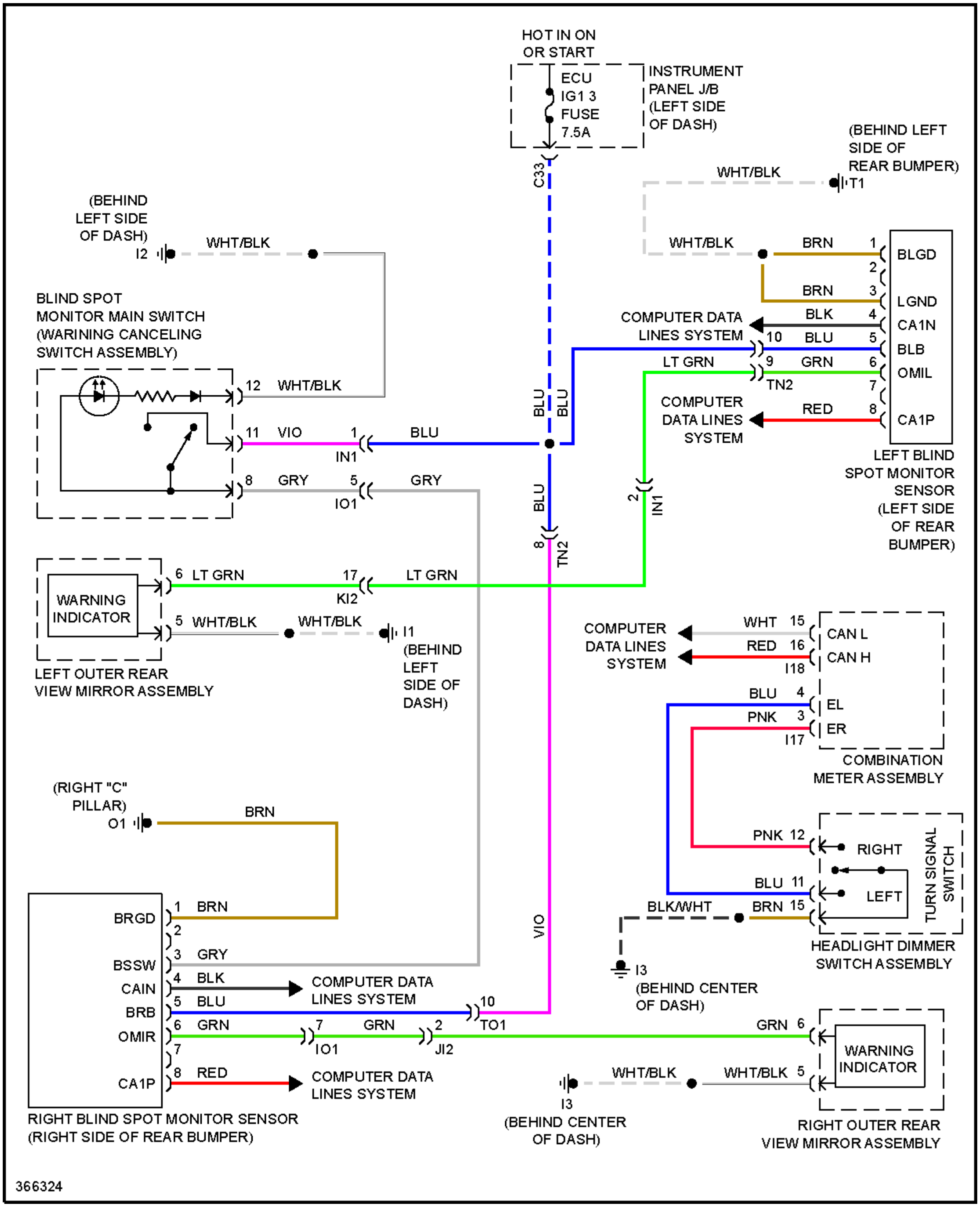
HOT IN ON OR START
ECU IG1 3 FUSE 7.5A
INSTRUMENT PANEL J/B (LEFT SIDE OF DASH)
C33
(BEHIND LEFT SIDE OF REAR BUMPER)
WHT/BLK
T1
(BEHIND LEFT SIDE OF DASH)
I2
WHT/BLK
WHT/BLK
BRN
1
BLGD
2
BRN
3
LGND
COMPUTER DATA LINES SYSTEM
BLK
4
CA1N
10
BLU
5
BLB
LT GRN
9
GRN
6
OMIL
TN2
7
BLIND SPOT MONITOR MAIN SWITCH (WARINING CANCELING SWITCH ASSEMBLY)
12
WHT/BLK
COMPUTER DATA LINES SYSTEM
RED
8
CA1P
BLU
BLU
11
VIO
1
BLU
IN1
LEFT BLIND SPOT MONITOR SENSOR (LEFT SIDE OF REAR BUMPER)
8
GRY
5
GRY
IO1
2
IN1
BLU
8
TN2
WARNING INDICATOR
6
LT GRN
17
LT GRN
KI2
5
WHT/BLK
WHT/BLK
I1
(BEHIND LEFT SIDE OF DASH)
LEFT OUTER REAR VIEW MIRROR ASSEMBLY
COMPUTER DATA LINES SYSTEM
WHT
15
CAN L
RED
16
CAN H
I18
BLU
4
EL
PNK
3
ER
I17
COMBINATION METER ASSEMBLY
(RIGHT "C" PILLAR)
O1
BRN
PNK
12
RIGHT
TURN SIGNAL SWITCH
BLU
11
LEFT
BLK/WHT
BRN
15
HEADLIGHT DIMMER SWITCH ASSEMBLY
BRGD
1
BRN
2
3
GRY
BSSW
4
BLK
CAIN
COMPUTER DATA LINES SYSTEM
5
BLU
BRB
10
TO1
VIO
I3
(BEHIND CENTER OF DASH)
6
GRN
OMIR
7
GRN
2
IO1
JI2
GRN
6
WARNING INDICATOR
7
8
RED
CA1P
COMPUTER DATA LINES SYSTEM
WHT/BLK
WHT/BLK
5
I3
(BEHIND CENTER OF DASH)
RIGHT BLIND SPOT MONITOR SENSOR (RIGHT SIDE OF REAR BUMPER)
RIGHT OUTER REAR VIEW MIRROR ASSEMBLY
366324

Fig. 98: Blind Spot Monitoring Circuit

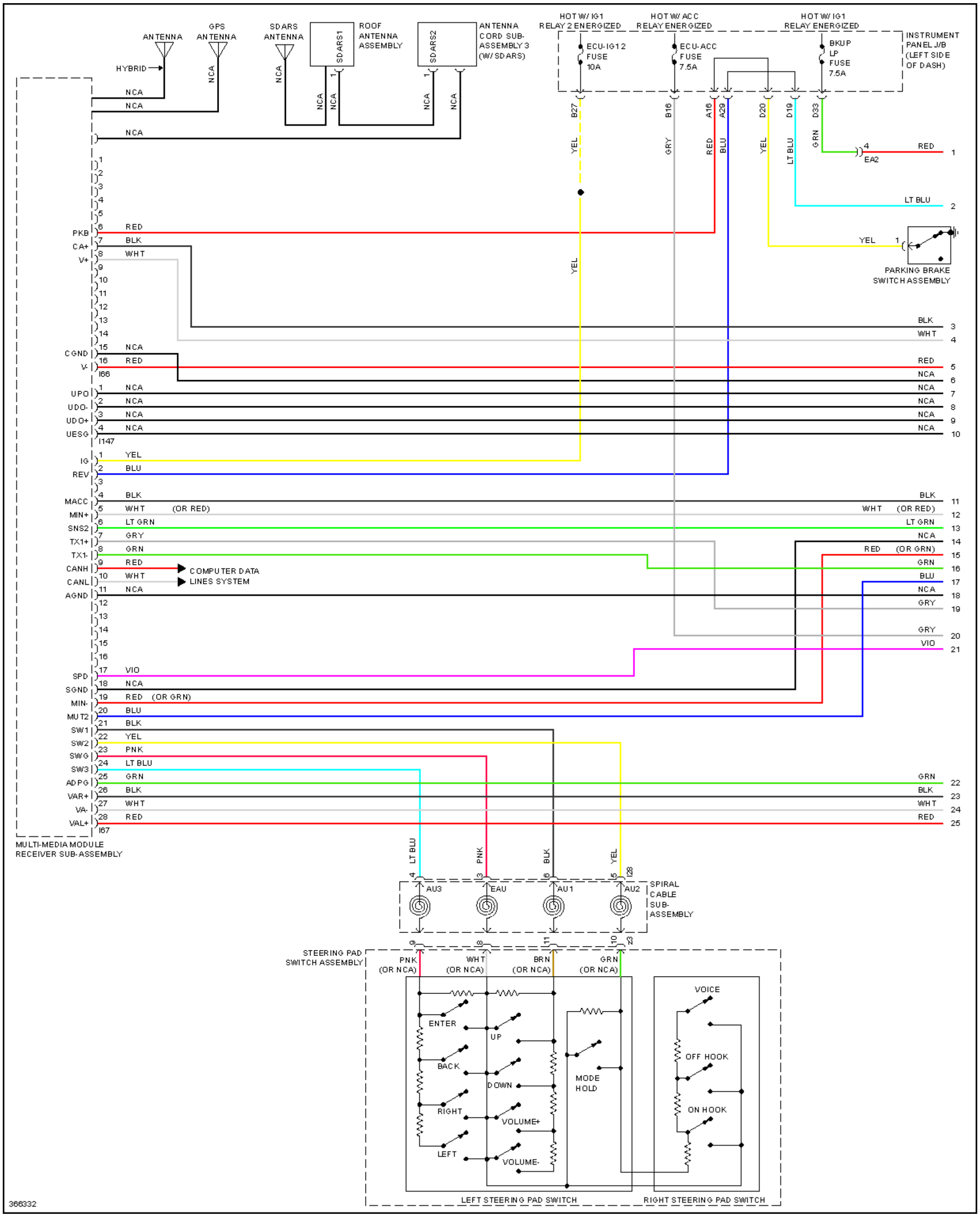
ANTENNA
GPS ANTENNA
SDARS ANTENNA
ROOF ANTENNA ASSEMBLY
SDARS1
SDARS2
ANTENNA CORD SUB-ASSEMBLY 3 (W/ SDARS)
HYBRID
NCA
HOT W/ IG1 RELAY 2 ENERGIZED
HOT W/ ACC RELAY ENERGIZED
HOT W/ IG1 RELAY ENERGIZED
ECU-IG1 2 FUSE 10A
ECU-ACC FUSE 7.5A
BKUP LP FUSE 7.5A
INSTRUMENT PANEL J/B (LEFT SIDE OF DASH)
B27
B16
A16
A29
D20
D19
D33
YEL
GRY
RED
BLU
LT BLU
GRN
EA2
PARKING BRAKE SWITCH ASSEMBLY
PKB
CA+
V+
CGND
V-
I66
UPO
UDO-
UDO+
UESG
I147
IG
REV
MACC
MIN+
SNS2
TX1+
TX1-
CANH
CANL
AGND
SPD
SGND
MIN-
MUT2
SW1
SW2
SWG
SW3
ADPG
VAR+
VA-
VAL+
I67
BLK
WHT
(OR RED)
LT GRN
(OR GRN)
VIO
PNK
COMPUTER DATA LINES SYSTEM
MULTI-MEDIA MODULE RECEIVER SUB-ASSEMBLY
AU3
EAU
AU1
AU2
SPIRAL CABLE SUB-ASSEMBLY
STEERING PAD SWITCH ASSEMBLY
PNK (OR NCA)
WHT (OR NCA)
BRN (OR NCA)
GRN (OR NCA)
ENTER
UP
BACK
DOWN
RIGHT
VOLUME+
LEFT
VOLUME-
MODE HOLD
VOICE
OFF HOOK
ON HOOK
LEFT STEERING PAD SWITCH
RIGHT STEERING PAD SWITCH
366332

Fig. 99: Navigation Circuit, 10-Speaker W/ Multi-Media Module (1 of 4)

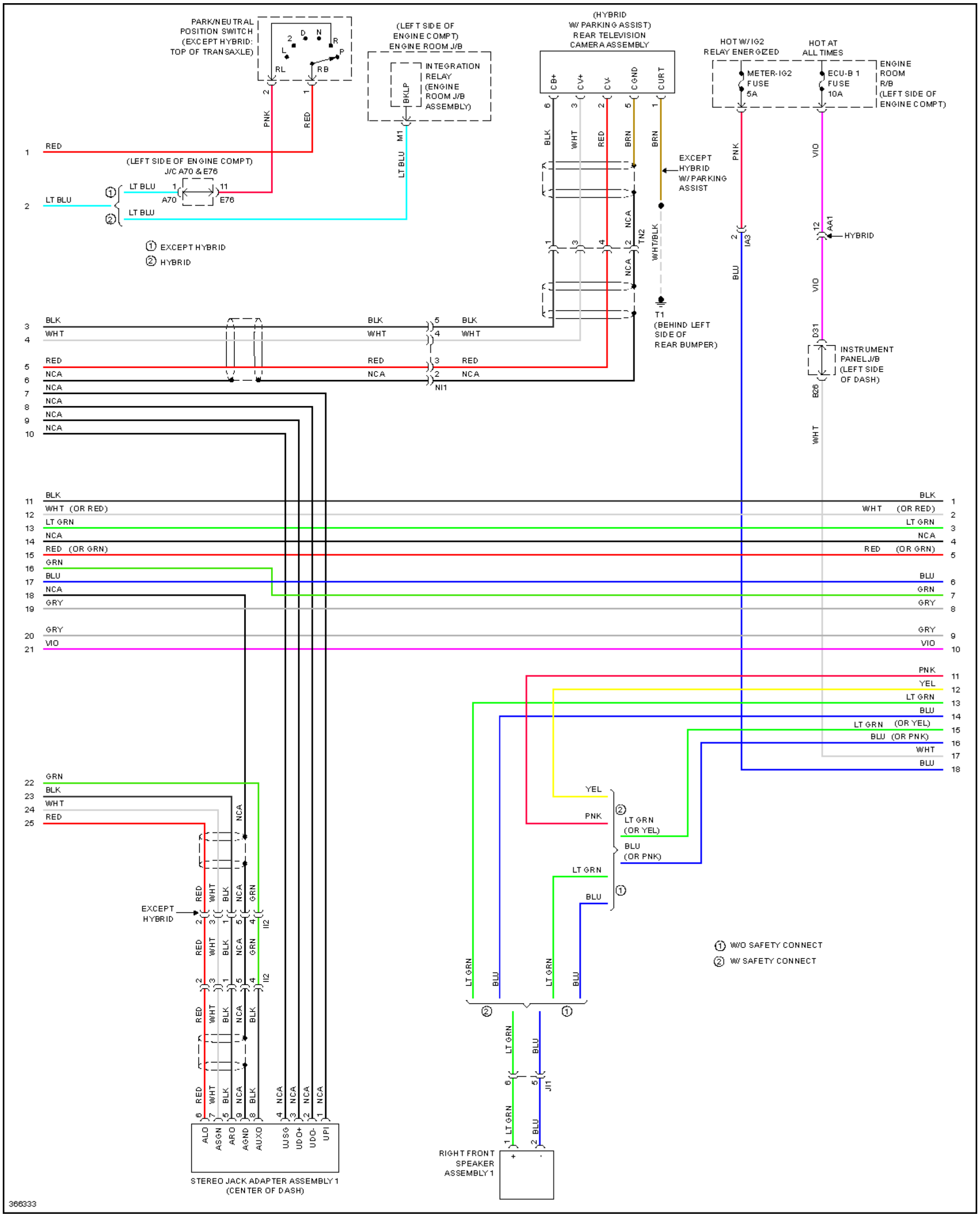
PARK/NEUTRAL POSITION SWITCH (EXCEPT HYBRID: TOP OF TRANSAXLE)
2 D N R L P RL RB
(LEFT SIDE OF ENGINE COMPT) ENGINE ROOM J/B
INTEGRATION RELAY (ENGINE ROOM J/B ASSEMBLY)
BKLP
M1
(HYBRID W/ PARKING ASSIST) REAR TELEVISION CAMERA ASSEMBLY
CB+ CV+ CV- CGND CURT
HOT W/ IG2 RELAY ENERGIZED
HOT AT ALL TIMES
METER-IG2 FUSE 5A
ECU-B 1 FUSE 10A
ENGINE ROOM R/B (LEFT SIDE OF ENGINE COMPT)
(LEFT SIDE OF ENGINE COMPT) J/C A70 & E76
A70 E76
① EXCEPT HYBRID
② HYBRID
EXCEPT HYBRID W/ PARKING ASSIST
TN2
T1 (BEHIND LEFT SIDE OF REAR BUMPER)
IA3
AA1
HYBRID
D31
INSTRUMENT PANEL J/B (LEFT SIDE OF DASH)
B26
NI1
RED LT BLU BLK WHT NCA PNK BRN VIO BLU WHT/BLK
WHT (OR RED)
LT GRN
RED (OR GRN)
GRN GRY YEL
LT GRN (OR YEL)
BLU (OR PNK)
EXCEPT HYBRID
II2
ALO ASGN ARO AGND AUXO USG UDO+ UDO- UPI
STEREO JACK ADAPTER ASSEMBLY 1 (CENTER OF DASH)
JI1
RIGHT FRONT SPEAKER ASSEMBLY 1
+ -
① W/O SAFETY CONNECT
② W/ SAFETY CONNECT
366333

Fig. 100: Navigation Circuit, 10-Speaker W/ Multi-Media Module (2 of 4)

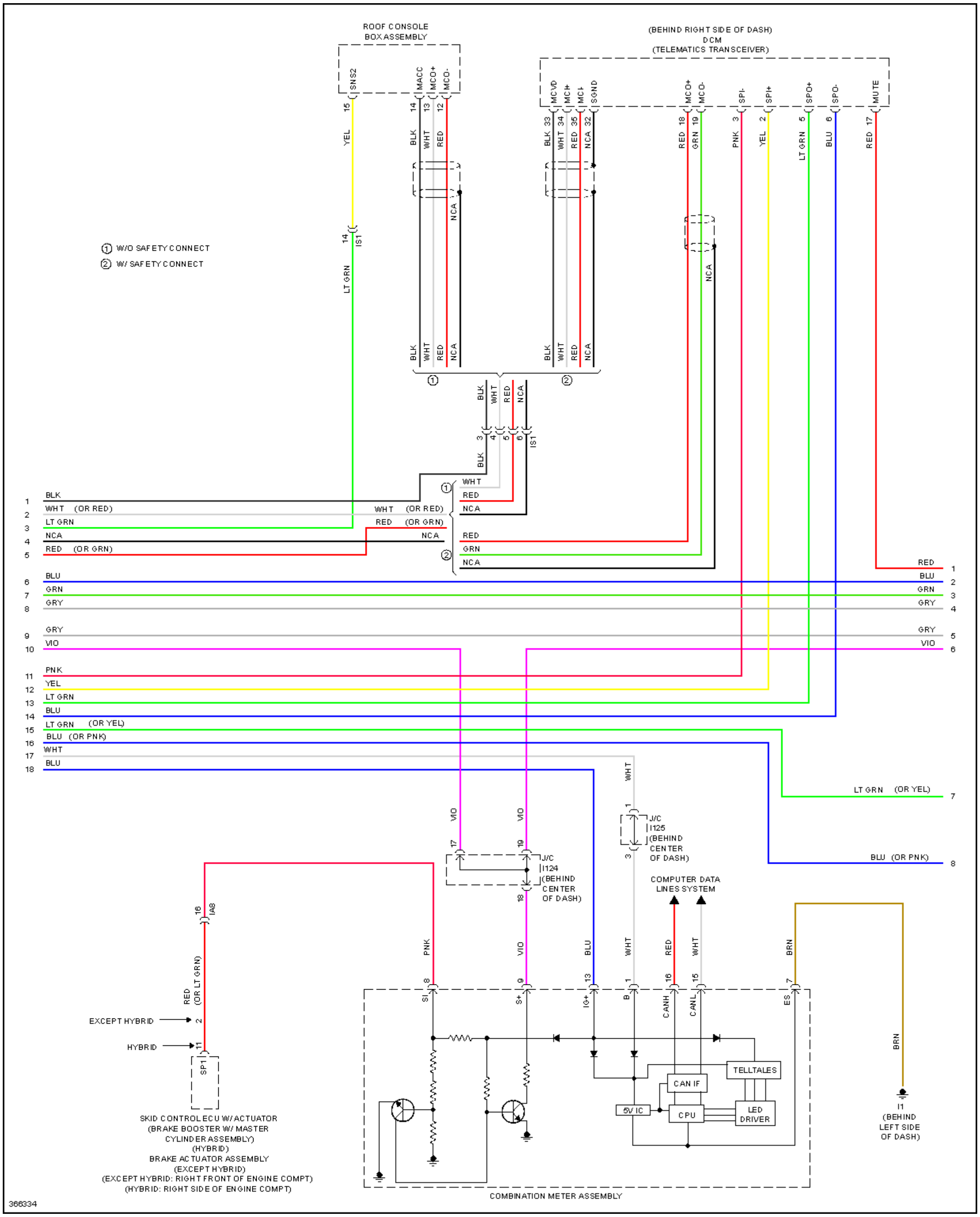
ROOF CONSOLE
BOX ASSEMBLY
SNS2
MACC
MCO+
MCO-
15
14
13
12
YEL
BLK
WHT
RED
NCA
14
IS1
LT GRN
(BEHIND RIGHT SIDE OF DASH)
DCM
(TELEMATICS TRANSCEIVER)
MCVD
MC+
MC-
SGND
MCO+
MCO-
SPI-
SPI+
SPO+
SPO-
MUTE
BLK 33
WHT 34
RED 35
NCA 32
RED 18
GRN 19
PNK 3
YEL 2
LT GRN 5
BLU 6
RED 17
NCA
① W/O SAFETY CONNECT
② W/ SAFETY CONNECT
BLK
WHT
RED
NCA
①
②
3
4
5
6
IS1
BLK
WHT
RED
NCA
RED
GRN
NCA
1 BLK
2 WHT (OR RED)
3 LT GRN
4 NCA
5 RED (OR GRN)
WHT (OR RED)
RED (OR GRN)
NCA
6 BLU
7 GRN
8 GRY
9 GRY
10 VIO
11 PNK
12 YEL
13 LT GRN
14 BLU
15 LT GRN (OR YEL)
16 BLU (OR PNK)
17 WHT
18 BLU
RED 1
BLU 2
GRN 3
GRY 4
GRY 5
VIO 6
LT GRN (OR YEL) 7
BLU (OR PNK) 8
WHT
1
J/C
I125
(BEHIND
CENTER
OF DASH)
3
VIO
VIO
17
19
J/C
I124
(BEHIND
CENTER
OF DASH)
18
COMPUTER DATA
LINES SYSTEM
16
IA8
RED
(OR LT GRN)
EXCEPT HYBRID
HYBRID
2
11
SP1
PNK
VIO
BLU
WHT
RED
WHT
BRN
8
9
13
1
16
15
7
SI
S+
IG+
B
CANH
CANL
ES
TELLTALES
CAN IF
5V IC
CPU
LED
DRIVER
BRN
I1
(BEHIND
LEFT SIDE
OF DASH)
SKID CONTROL ECU W/ ACTUATOR
(BRAKE BOOSTER W/ MASTER
CYLINDER ASSEMBLY)
(HYBRID)
BRAKE ACTUATOR ASSEMBLY
(EXCEPT HYBRID)
(EXCEPT HYBRID: RIGHT FRONT OF ENGINE COMPT)
(HYBRID: RIGHT SIDE OF ENGINE COMPT)
COMBINATION METER ASSEMBLY
366334

Fig. 101: Navigation Circuit, 10-Speaker W/ Multi-Media Module (3 of 4)

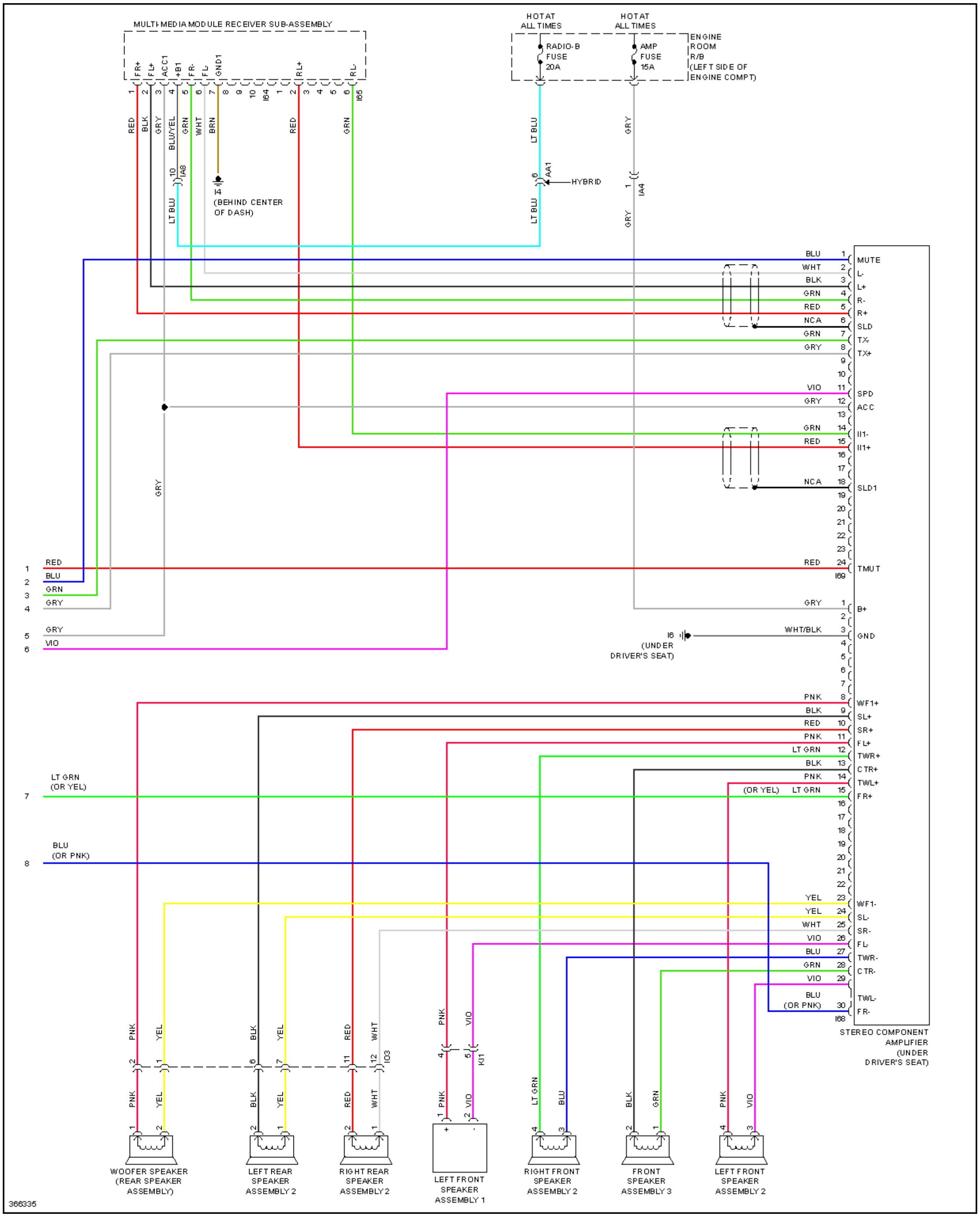
MULTI-MEDIA MODULE RECEIVER SUB-ASSEMBLY
FR+
FL+
ACC1
+B1
FR-
FL-
GND1
RL+
RL-
I64
I65
HOT AT ALL TIMES
HOT AT ALL TIMES
RADIO-B FUSE 20A
AMP FUSE 15A
ENGINE ROOM R/B (LEFT SIDE OF ENGINE COMPT)
RED
BLK
GRY
BLU/YEL
GRN
WHT
BRN
RED
GRN
LT BLU
GRY
IA8
I4 (BEHIND CENTER OF DASH)
AA1
HYBRID
IA4
LT BLU
LT BLU
GRY
MUTE
L-
L+
R-
R+
SLD
TX-
TX+
SPD
ACC
II1-
II1+
SLD1
TMUT
I69
BLU
WHT
BLK
GRN
RED
NCA
GRN
GRY
VIO
GRY
GRN
RED
NCA
RED
GRY
B+
I6 (UNDER DRIVER'S SEAT)
WHT/BLK
GND
RED
BLU
GRN
GRY
GRY
VIO
LT GRN (OR YEL)
BLU (OR PNK)
WF1+
SL+
SR+
FL+
TWR+
CTR+
TWL+
FR+
WF1-
SL-
SR-
FL-
TWR-
CTR-
TWL-
FR-
I68
PNK
BLK
RED
PNK
LT GRN
BLK
PNK
(OR YEL)
LT GRN
YEL
YEL
WHT
VIO
BLU
GRN
VIO
BLU (OR PNK)
STEREO COMPONENT AMPLIFIER (UNDER DRIVER'S SEAT)
PNK
YEL
BLK
YEL
RED
WHT
PNK
VIO
I03
KI1
LT GRN
BLU
BLK
GRN
PNK
VIO
WOOFER SPEAKER (REAR SPEAKER ASSEMBLY)
LEFT REAR SPEAKER ASSEMBLY 2
RIGHT REAR SPEAKER ASSEMBLY 2
LEFT FRONT SPEAKER ASSEMBLY 1
RIGHT FRONT SPEAKER ASSEMBLY 2
FRONT SPEAKER ASSEMBLY 3
LEFT FRONT SPEAKER ASSEMBLY 2
366335

Fig. 102: Navigation Circuit, 10-Speaker W/ Multi-Media Module (4 of 4)

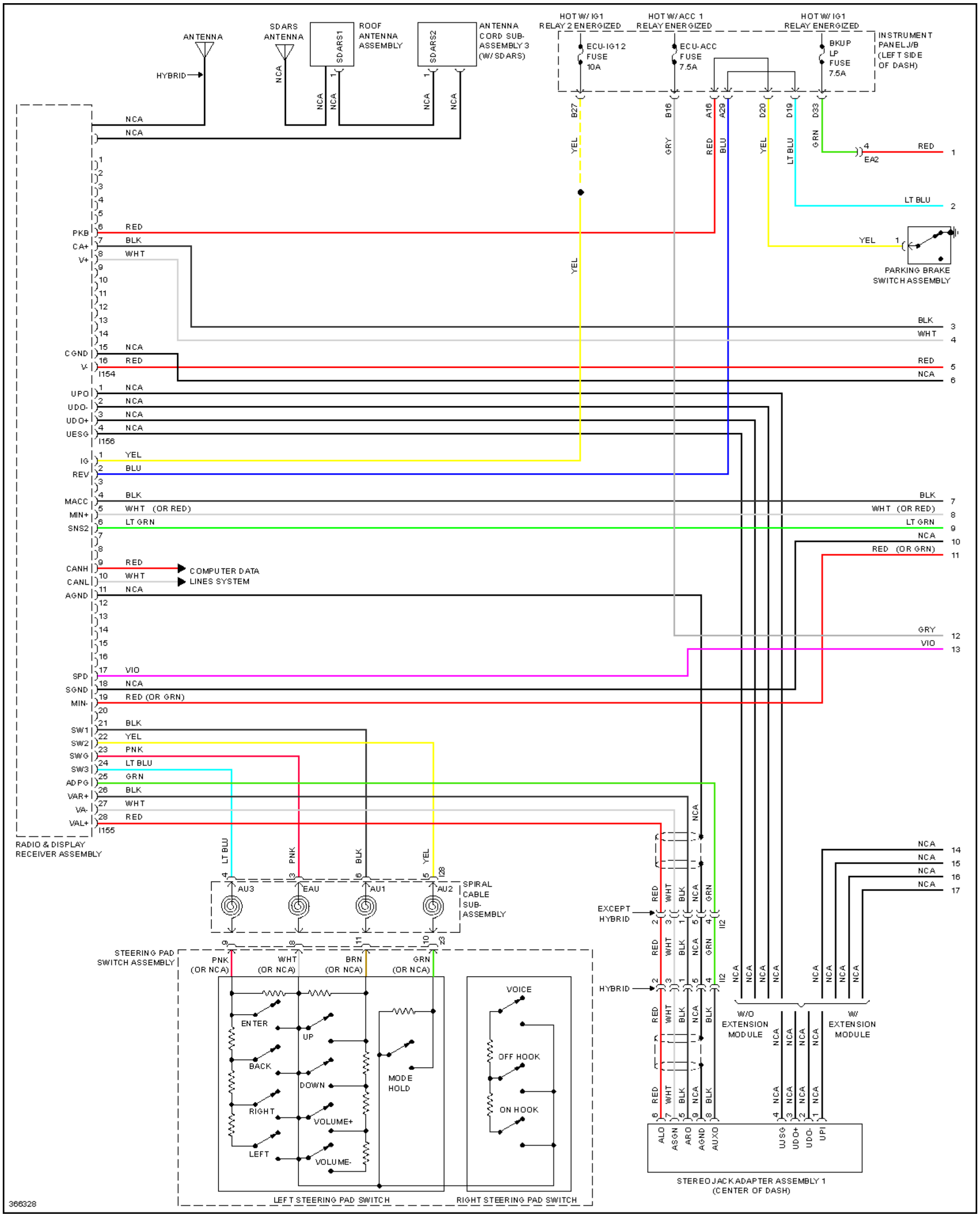
ANTENNA
HYBRID
SDARS ANTENNA
SDARS1
ROOF ANTENNA ASSEMBLY
SDARS2
ANTENNA CORD SUB-ASSEMBLY 3 (W/ SDARS)
HOT W/ IG1 RELAY 2 ENERGIZED
HOT W/ ACC 1 RELAY ENERGIZED
HOT W/ IG1 RELAY ENERGIZED
ECU-IG1 2 FUSE 10A
ECU-ACC FUSE 7.5A
BKUP LP FUSE 7.5A
INSTRUMENT PANEL J/B (LEFT SIDE OF DASH)
B27
B16
A16
A29
D20
D19
D33
EA2
PARKING BRAKE SWITCH ASSEMBLY
PKB
CA+
V+
CGND
V-
I154
UPO
UDO-
UDO+
UESG
I156
IG
REV
MACC
MIN+
SNS2
CANH
CANL
AGND
COMPUTER DATA LINES SYSTEM
SPD
SGND
MIN-
SW1
SW2
SWG
SW3
ADPG
VAR+
VA-
VAL+
I155
RADIO & DISPLAY RECEIVER ASSEMBLY
AU3
EAU
AU1
AU2
I28
SPIRAL CABLE SUB-ASSEMBLY
STEERING PAD SWITCH ASSEMBLY
ENTER
UP
BACK
DOWN
RIGHT
VOLUME+
LEFT
VOLUME-
MODE HOLD
VOICE
OFF HOOK
ON HOOK
LEFT STEERING PAD SWITCH
RIGHT STEERING PAD SWITCH
EXCEPT HYBRID
HYBRID
I12
W/O EXTENSION MODULE
W/ EXTENSION MODULE
ALO
ASGN
ARO
AGND
AUXO
UESG
UDO+
UDO-
UPI
STEREO JACK ADAPTER ASSEMBLY 1 (CENTER OF DASH)
366328

Fig. 103: Navigation Circuit, 10-Speaker W/O Multi-Media Module (1 of 4)

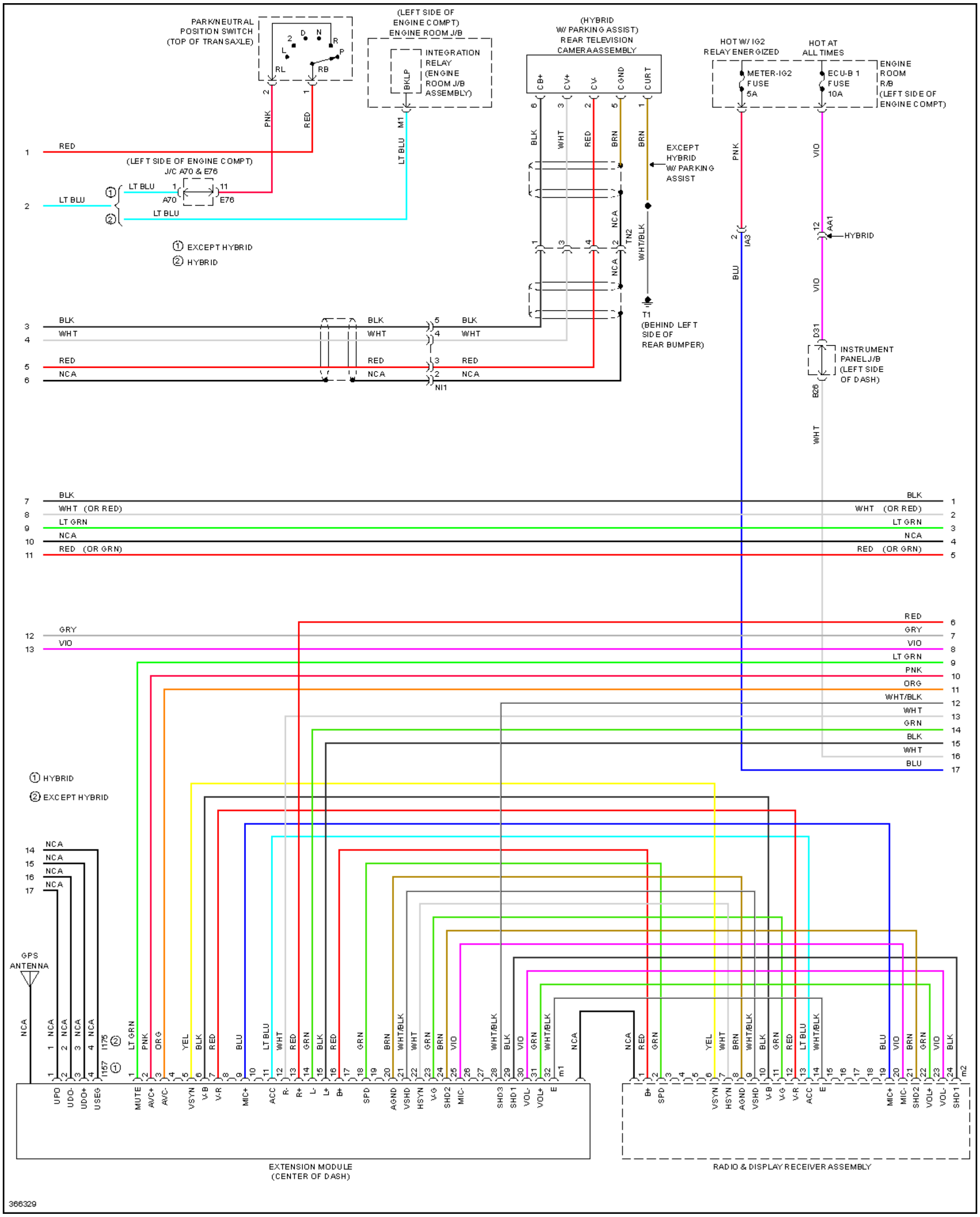
PARK/NEUTRAL POSITION SWITCH (TOP OF TRANSAXLE)
(LEFT SIDE OF ENGINE COMPT) ENGINE ROOM J/B
INTEGRATION RELAY (ENGINE ROOM J/B ASSEMBLY)
BKLP
(HYBRID W/ PARKING ASSIST) REAR TELEVISION CAMERA ASSEMBLY
CB+
CV+
CV-
CGND
CURT
HOT W/ IG2 RELAY ENERGIZED
HOT AT ALL TIMES
METER-IG2 FUSE 5A
ECU-B 1 FUSE 10A
ENGINE ROOM R/B (LEFT SIDE OF ENGINE COMPT)
(LEFT SIDE OF ENGINE COMPT) J/C A70 & E76
① EXCEPT HYBRID
② HYBRID
EXCEPT HYBRID W/ PARKING ASSIST
HYBRID
T1 (BEHIND LEFT SIDE OF REAR BUMPER)
INSTRUMENT PANEL J/B (LEFT SIDE OF DASH)
NI1
TN2
IA3
AA1
D31
B26
M1
A70
E76
① HYBRID
② EXCEPT HYBRID
GPS ANTENNA
I175 ②
I157 ①
m1
m2
UPO
UDO-
UDO+
USEG
MUTE
AVC+
AVC-
VSYN
V-B
V-R
MIC+
ACC
R-
R+
L-
L+
B+
SPD
AGND
VSHD
HSYN
V-G
SHD2
MIC-
SHD3
SHD1
VOL-
VOL+
E
EXTENSION MODULE (CENTER OF DASH)
RADIO & DISPLAY RECEIVER ASSEMBLY
366329

Fig. 104: Navigation Circuit, 10-Speaker W/O Multi-Media Module (2 of 4)

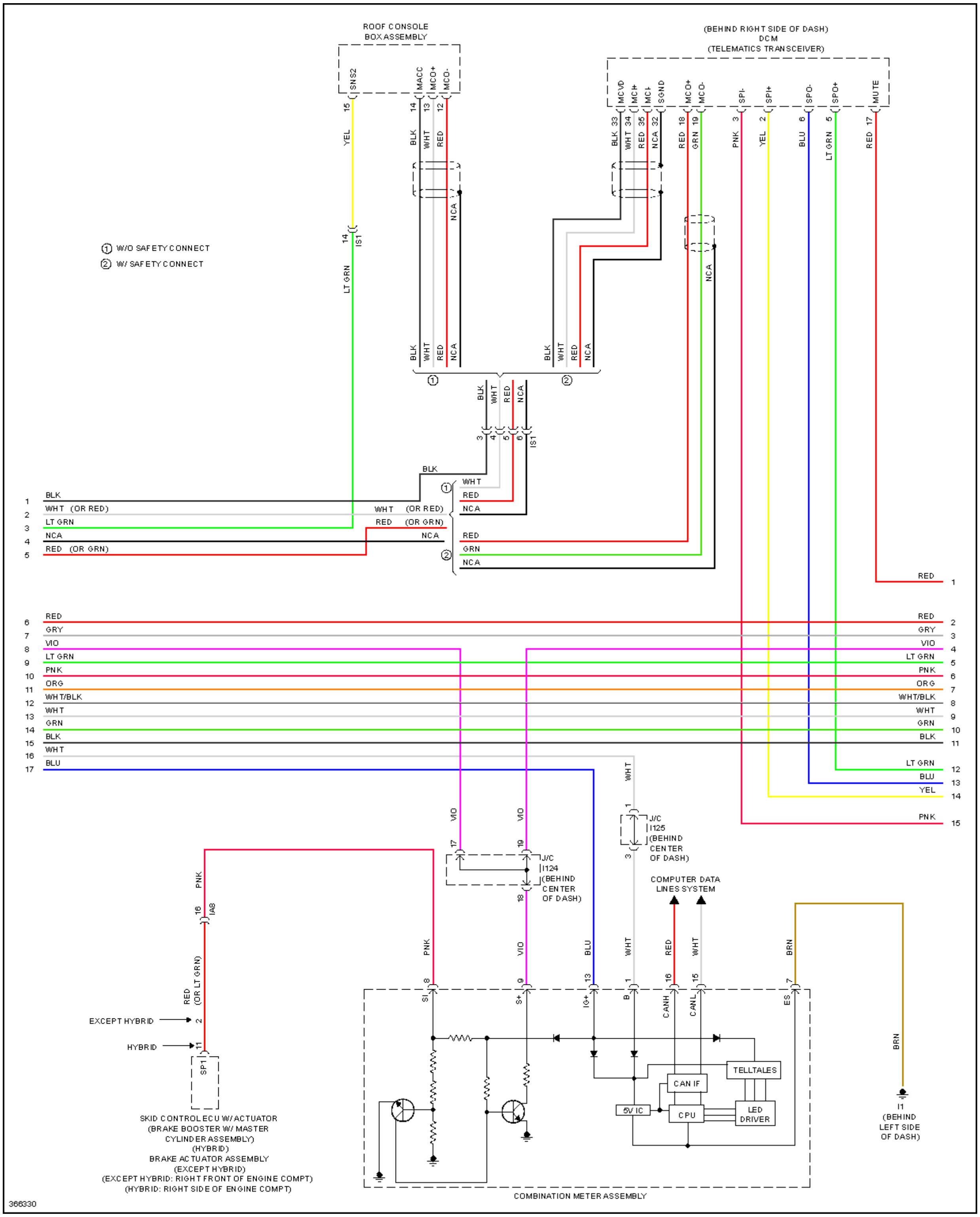
ROOF CONSOLE BOX ASSEMBLY
SNS2
MACC
MCO+
MCO-
(BEHIND RIGHT SIDE OF DASH)
DCM
(TELEMATICS TRANSCEIVER)
MCVD
MC#
MCI-
SGND
MCO+
MCO-
SPI-
SPI+
SPO-
SPO+
MUTE
YEL
BLK
WHT
RED
NCA
GRN
PNK
BLU
LT GRN
IS1
① W/O SAFETY CONNECT
② W/ SAFETY CONNECT
ORG
GRY
VIO
WHT/BLK
WHT (OR RED)
RED (OR GRN)
J/C
I125
(BEHIND CENTER OF DASH)
I124
(BEHIND CENTER OF DASH)
COMPUTER DATA LINES SYSTEM
BRN
IA8
RED (OR LT GRN)
EXCEPT HYBRID
HYBRID
SP1
SKID CONTROL ECU W/ ACTUATOR
(BRAKE BOOSTER W/ MASTER CYLINDER ASSEMBLY)
(HYBRID)
BRAKE ACTUATOR ASSEMBLY
(EXCEPT HYBRID)
(EXCEPT HYBRID: RIGHT FRONT OF ENGINE COMPT)
(HYBRID: RIGHT SIDE OF ENGINE COMPT)
SI
S+
IG+
B
CANH
CANL
ES
TELLTALES
CAN IF
5V IC
CPU
LED DRIVER
COMBINATION METER ASSEMBLY
I1
(BEHIND LEFT SIDE OF DASH)
366330

Fig. 105: Navigation Circuit, 10-Speaker W/O Multi-Media Module (3 of 4)

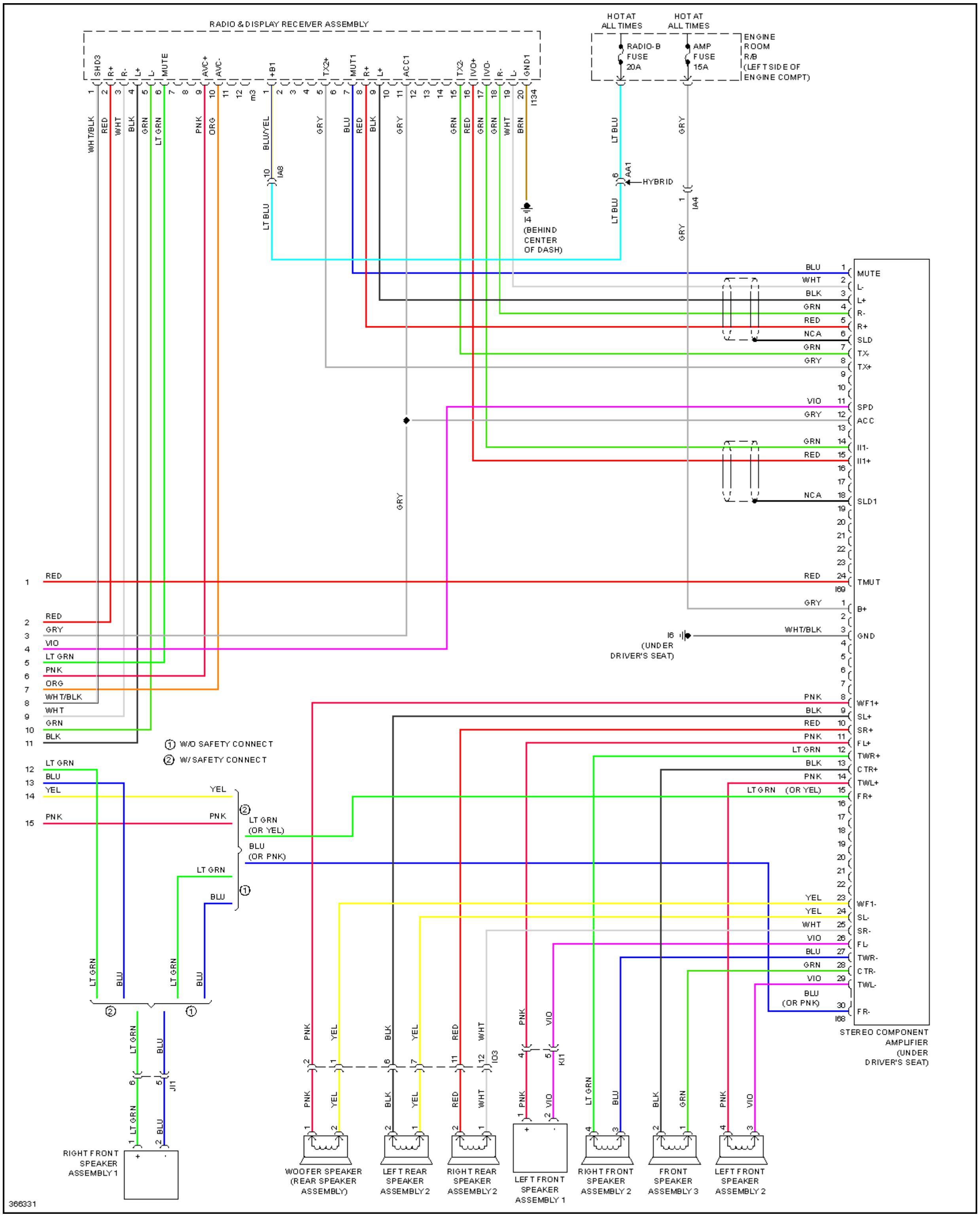
RADIO & DISPLAY RECEIVER ASSEMBLY
SHD3
R+
R-
L+
L-
MUTE
AVC+
AVC-
+B1
TX2+
MUT1
ACC1
TX2-
IVO+
IVO-
GND1
I134
HOT AT ALL TIMES
RADIO-B FUSE 20A
AMP FUSE 15A
ENGINE ROOM R/B (LEFT SIDE OF ENGINE COMPT)
HYBRID
AA1
IA8
IA4
I4 (BEHIND CENTER OF DASH)
WHT/BLK
RED
WHT
BLK
GRN
LT GRN
PNK
ORG
BLU/YEL
GRY
BLU
LT BLU
BRN
VIO
YEL
NCA
MUTE
SLD
TX-
TX+
SPD
ACC
II1-
II1+
SLD1
TMUT
I69
B+
GND
I6 (UNDER DRIVER'S SEAT)
WF1+
SL+
SR+
FL+
TWR+
CTR+
TWL+
FR+
WF1-
SL-
SR-
FL-
TWR-
CTR-
TWL-
FR-
LT GRN (OR YEL)
BLU (OR PNK)
I68
STEREO COMPONENT AMPLIFIER (UNDER DRIVER'S SEAT)
① W/O SAFETY CONNECT
② W/ SAFETY CONNECT
J11
I03
KI1
RIGHT FRONT SPEAKER ASSEMBLY 1
WOOFER SPEAKER (REAR SPEAKER ASSEMBLY)
LEFT REAR SPEAKER ASSEMBLY 2
RIGHT REAR SPEAKER ASSEMBLY 2
LEFT FRONT SPEAKER ASSEMBLY 1
RIGHT FRONT SPEAKER ASSEMBLY 2
FRONT SPEAKER ASSEMBLY 3
LEFT FRONT SPEAKER ASSEMBLY 2
366331

Fig. 106: Navigation Circuit, 10-Speaker W/O Multi-Media Module (4 of 4)

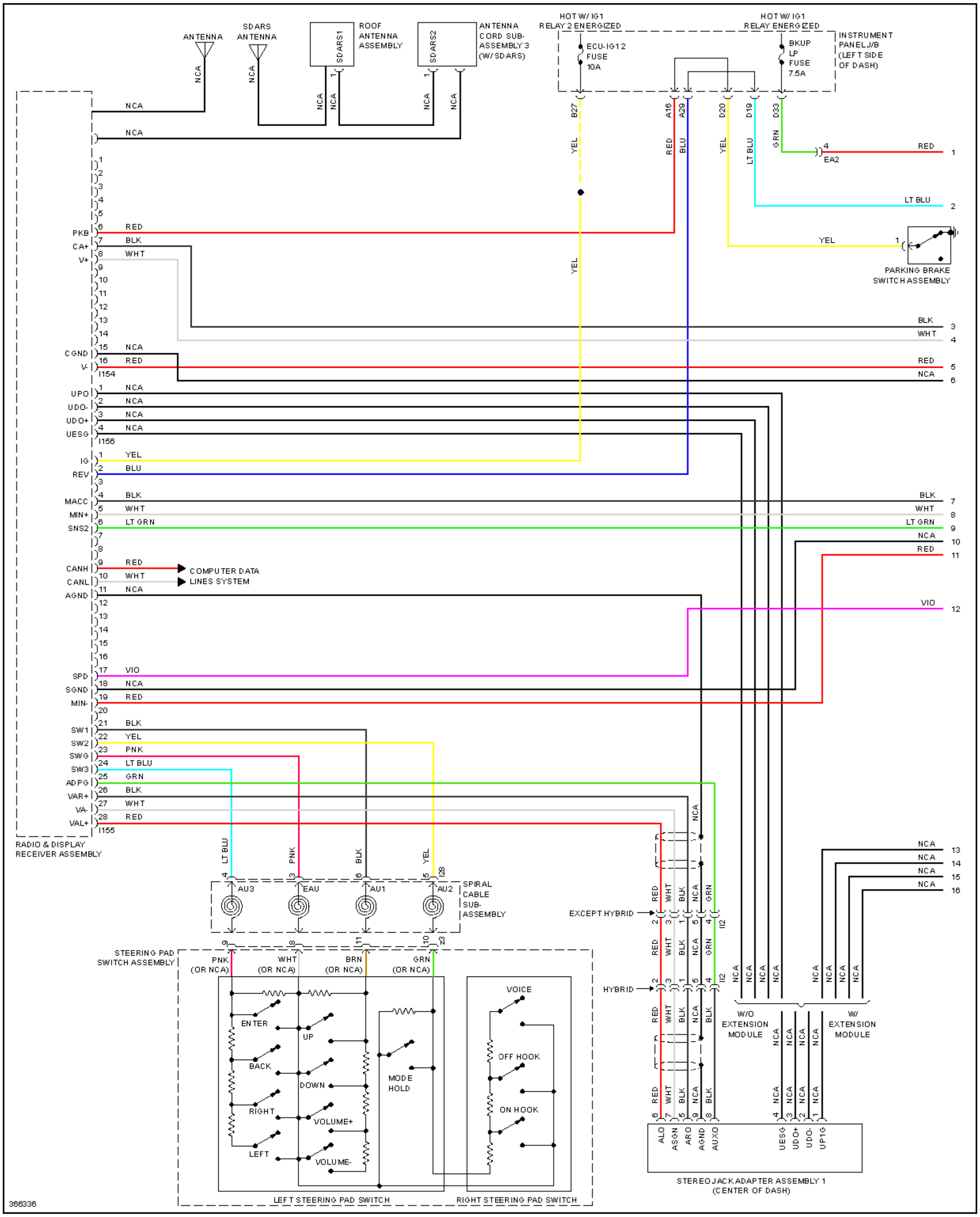
ANTENNA
SDARS ANTENNA
ROOF ANTENNA ASSEMBLY
SDARS1
SDARS2
ANTENNA CORD SUB-ASSEMBLY 3 (W/ SDARS)
HOT W/ IG1 RELAY 2 ENERGIZED
HOT W/ IG1 RELAY ENERGIZED
ECU-IG1 2 FUSE 10A
BKUP LP FUSE 7.5A
INSTRUMENT PANEL J/B (LEFT SIDE OF DASH)
EA2
PARKING BRAKE SWITCH ASSEMBLY
PKB
CA+
V+
CGND
V-
I154
UPO
UDO-
UDO+
UESG
I156
IG
REV
MACC
MIN+
SNS2
CANH
CANL
AGND
COMPUTER DATA LINES SYSTEM
SPD
SGND
MIN-
SW1
SW2
SWG
SW3
ADPG
VAR+
VA-
VAL+
I155
RADIO & DISPLAY RECEIVER ASSEMBLY
SPIRAL CABLE SUB-ASSEMBLY
AU3
EAU
AU1
AU2
EXCEPT HYBRID
HYBRID
I12
STEERING PAD SWITCH ASSEMBLY
PNK (OR NCA)
WHT (OR NCA)
BRN (OR NCA)
GRN (OR NCA)
ENTER
UP
BACK
DOWN
RIGHT
VOLUME+
LEFT
VOLUME-
MODE HOLD
VOICE
OFF HOOK
ON HOOK
LEFT STEERING PAD SWITCH
RIGHT STEERING PAD SWITCH
W/O EXTENSION MODULE
W/ EXTENSION MODULE
ALO
ASGN
ARO
AGND
AUXO
UESG
UDO+
UDO-
UPIG
STEREO JACK ADAPTER ASSEMBLY 1 (CENTER OF DASH)
366336

Fig. 107: Navigation Circuit, 6-Speaker (1 of 4)

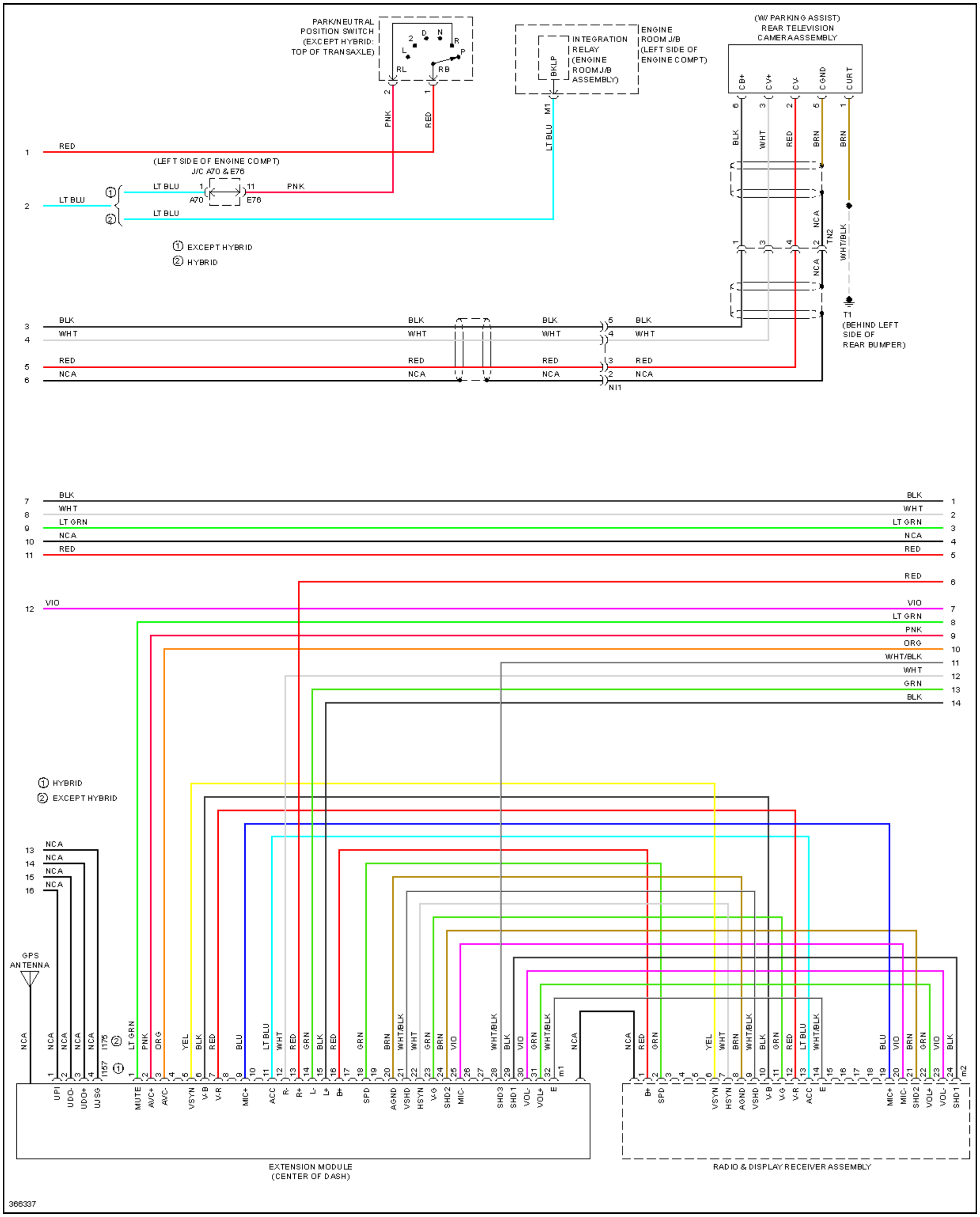
PARK/NEUTRAL POSITION SWITCH (EXCEPT HYBRID: TOP OF TRANSAXLE)
RL
RB
PNK
RED
INTEGRATION RELAY (ENGINE ROOM J/B ASSEMBLY)
BKLP
ENGINE ROOM J/B (LEFT SIDE OF ENGINE COMPT)
M1
LT BLU
(W/ PARKING ASSIST) REAR TELEVISION CAMERA ASSEMBLY
CB+
CV+
CV-
CGND
CURT
BLK
WHT
RED
BRN
NCA
TN2
WHT/BLK
T1 (BEHIND LEFT SIDE OF REAR BUMPER)
(LEFT SIDE OF ENGINE COMPT) J/C A70 & E76
A70
E76
① EXCEPT HYBRID
② HYBRID
NI1
VIO
LT GRN
ORG
① HYBRID
② EXCEPT HYBRID
GPS ANTENNA
I175
I157
UPI
UDO-
UDO+
UUSG
MUTE
AVC+
AVC-
VSYN
V-B
V-R
MIC+
ACC
R-
R+
L-
L+
B+
SPD
AGND
VSHD
HSYN
V-G
SHD2
MIC-
SHD3
SHD1
VOL-
VOL+
E
EXTENSION MODULE (CENTER OF DASH)
RADIO & DISPLAY RECEIVER ASSEMBLY
m1
m2
366337

Fig. 108: Navigation Circuit, 6-Speaker (2 of 4)

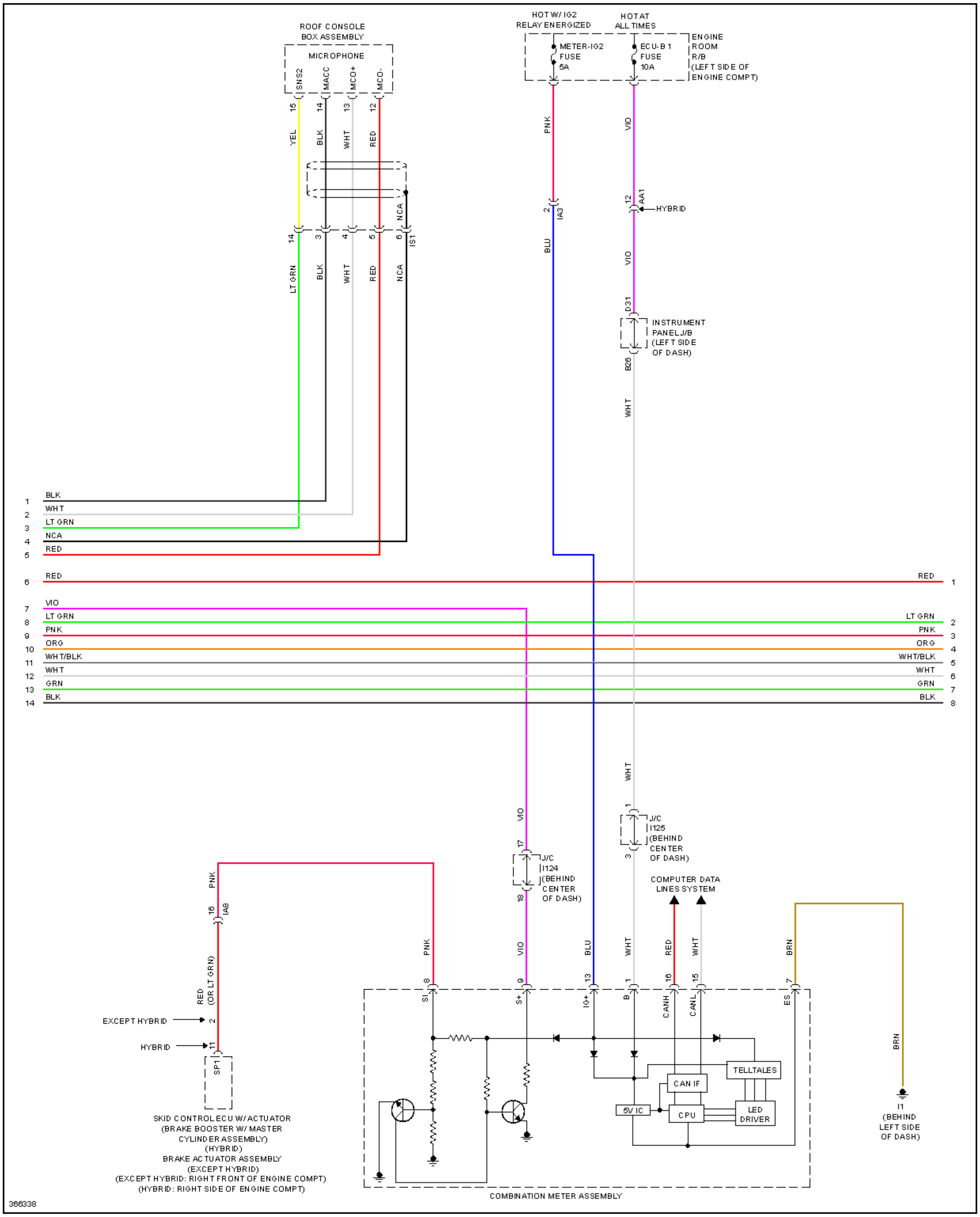
ROOF CONSOLE BOX ASSEMBLY
MICROPHONE
SNS2
MACC
MCO+
MCO-
15
14
13
12
YEL
BLK
WHT
RED
NCA
IS1
LT GRN
HOT W/ IG2 RELAY ENERGIZED
HOT AT ALL TIMES
METER-IG2 FUSE 5A
ECU-B1 FUSE 10A
ENGINE ROOM R/B (LEFT SIDE OF ENGINE COMPT)
PNK
VIO
IA3
BLU
AA1
HYBRID
D31
INSTRUMENT PANEL J/B (LEFT SIDE OF DASH)
B26
WHT
RED
ORG
WHT/BLK
GRN
J/C I125 (BEHIND CENTER OF DASH)
J/C I124 (BEHIND CENTER OF DASH)
COMPUTER DATA LINES SYSTEM
IA8
RED (OR LT GRN)
EXCEPT HYBRID
SP1
SKID CONTROL ECU W/ ACTUATOR (BRAKE BOOSTER W/ MASTER CYLINDER ASSEMBLY) (HYBRID)
BRAKE ACTUATOR ASSEMBLY (EXCEPT HYBRID)
(EXCEPT HYBRID: RIGHT FRONT OF ENGINE COMPT)
(HYBRID: RIGHT SIDE OF ENGINE COMPT)
SI
S+
IG+
B
CANH
CANL
ES
BRN
TELLTALES
CAN IF
5V IC
CPU
LED DRIVER
I1 (BEHIND LEFT SIDE OF DASH)
COMBINATION METER ASSEMBLY
366338

Fig. 109: Navigation Circuit, 6-Speaker (3 of 4)

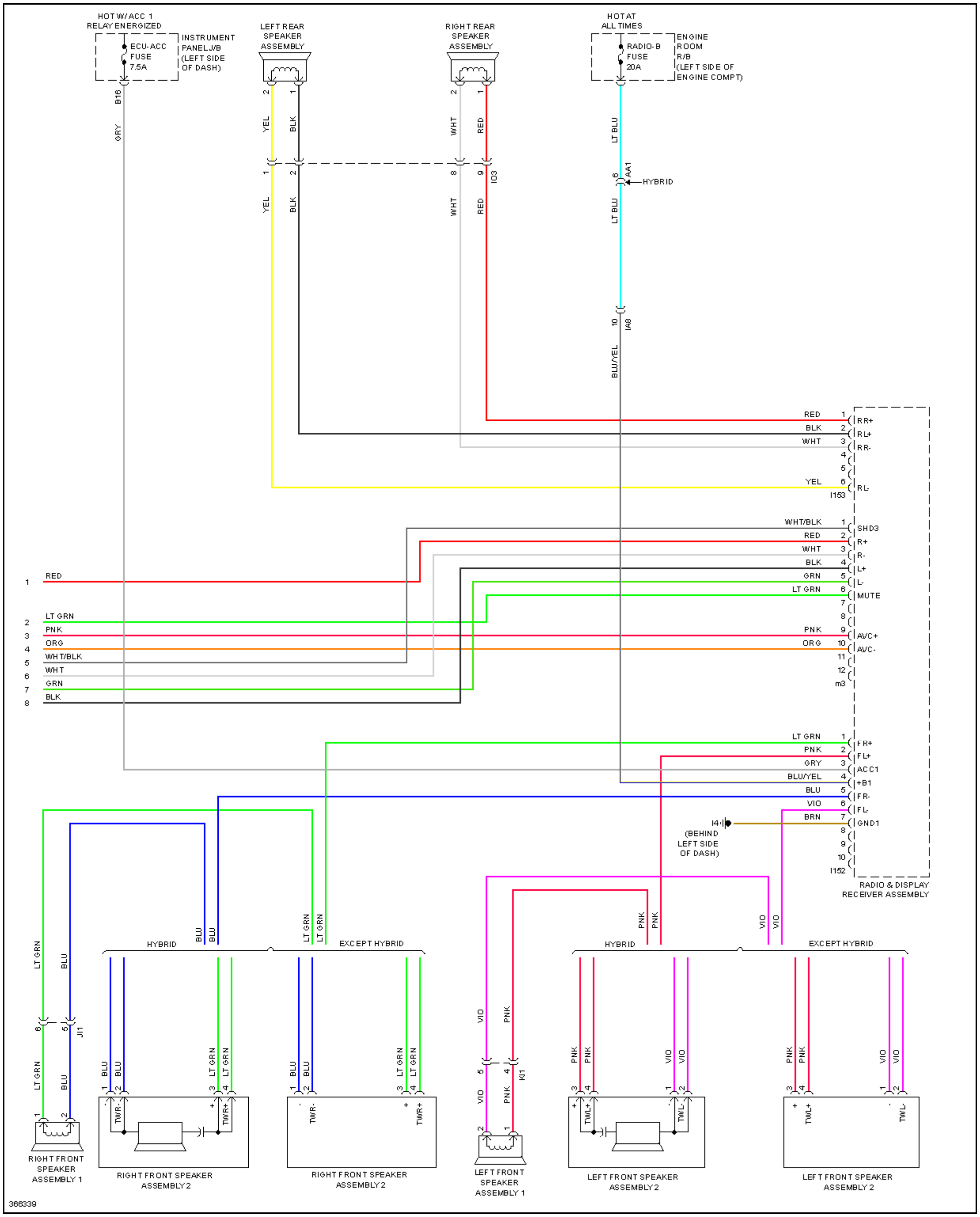
HOT W/ ACC 1 RELAY ENERGIZED
ECU-ACC FUSE 7.5A
INSTRUMENT PANEL J/B (LEFT SIDE OF DASH)
LEFT REAR SPEAKER ASSEMBLY
RIGHT REAR SPEAKER ASSEMBLY
HOT AT ALL TIMES
RADIO-B FUSE 20A
ENGINE ROOM R/B (LEFT SIDE OF ENGINE COMPT)
B16
GRY
YEL
BLK
WHT
RED
I03
LT BLU
AA1
HYBRID
I A8
BLU/YEL
RR+
RL+
RR-
RL-
I153
SHD3
R+
R-
L+
L-
MUTE
AVC+
AVC-
m3
WHT/BLK
LT GRN
GRN
PNK
ORG
FR+
FL+
ACC1
+B1
FR-
FL-
GND1
BRN
VIO
BLU
I4
(BEHIND LEFT SIDE OF DASH)
I152
RADIO & DISPLAY RECEIVER ASSEMBLY
HYBRID
EXCEPT HYBRID
J11
K11
TWR-
TWR+
TWL+
TWL-
RIGHT FRONT SPEAKER ASSEMBLY 1
RIGHT FRONT SPEAKER ASSEMBLY 2
LEFT FRONT SPEAKER ASSEMBLY 1
LEFT FRONT SPEAKER ASSEMBLY 2
366339

Fig. 110: Navigation Circuit, 6-Speaker (4 of 4)

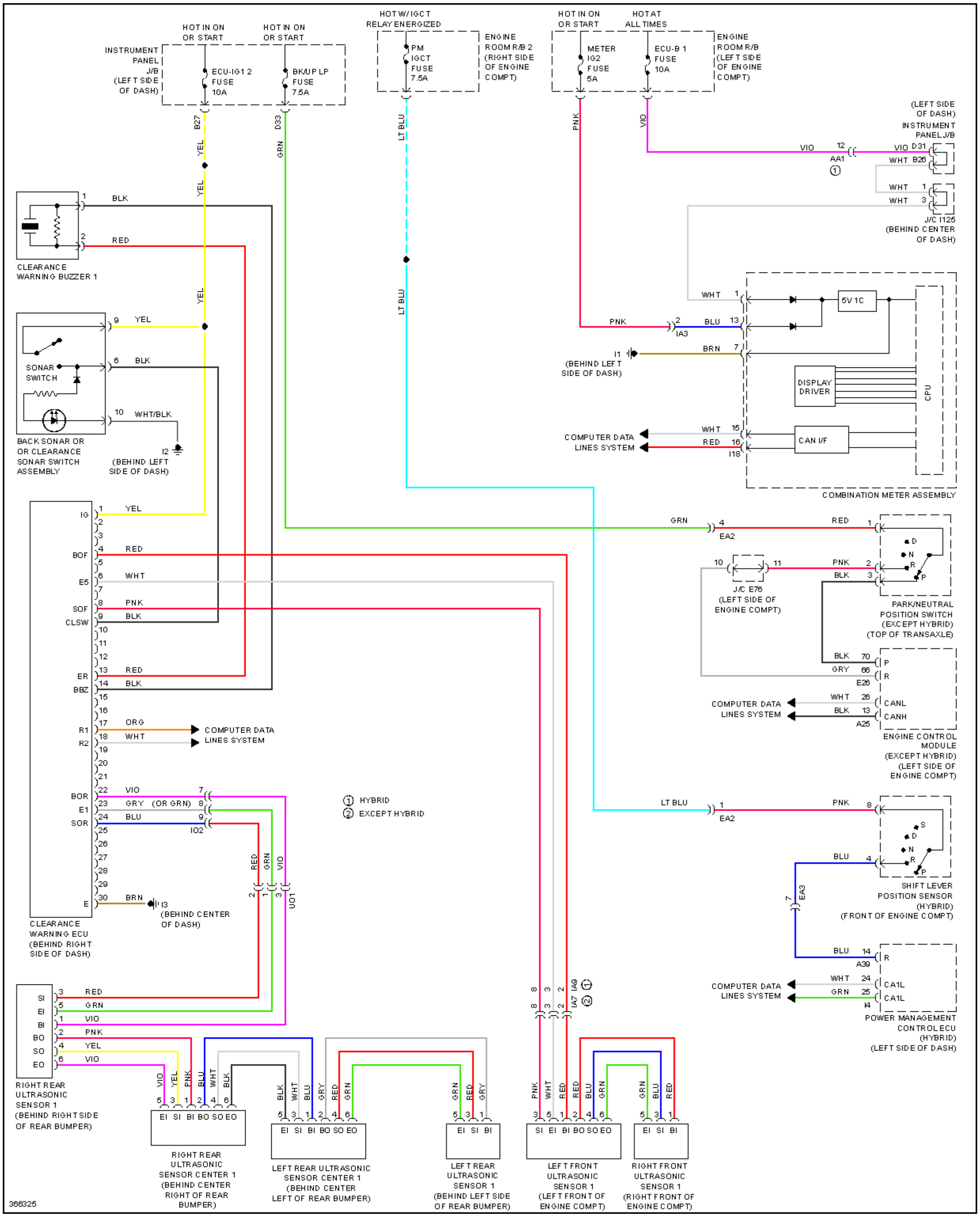
HOT IN ON OR START
HOT IN ON OR START
INSTRUMENT PANEL J/B (LEFT SIDE OF DASH)
ECU-IG1 2 FUSE 10A
BK/UP LP FUSE 7.5A
HOT W/IGCT RELAY ENERGIZED
PM IGCT FUSE 7.5A
ENGINE ROOM R/B 2 (RIGHT SIDE OF ENGINE COMPT)
HOT IN ON OR START
HOT AT ALL TIMES
METER IG2 FUSE 5A
ECU-B 1 FUSE 10A
ENGINE ROOM R/B (LEFT SIDE OF ENGINE COMPT)
B27
D33
YEL
GRN
LT BLU
PNK
VIO
(LEFT SIDE OF DASH) INSTRUMENT PANEL J/B
VIO 12 AA1 ①
VIO D31
WHT B26
WHT 1
WHT 3
J/C I125 (BEHIND CENTER OF DASH)
BLK
RED
CLEARANCE WARNING BUZZER 1
9 YEL
6 BLK
10 WHT/BLK
SONAR SWITCH
I2 (BEHIND LEFT SIDE OF DASH)
BACK SONAR OR OR CLEARANCE SONAR SWITCH ASSEMBLY
WHT 1
5V 1C
PNK 2 BLU 13 IA3
I1 (BEHIND LEFT SIDE OF DASH)
BRN 7
DISPLAY DRIVER
CPU
COMPUTER DATA LINES SYSTEM
WHT 15
RED 16
I18
CAN I/F
COMBINATION METER ASSEMBLY
IG 1 YEL
BOF 4 RED
E5 6 WHT
SOF 8 PNK
CLSW 9 BLK
ER 13 RED
BBZ 14 BLK
R1 17 ORG
R2 18 WHT
COMPUTER DATA LINES SYSTEM
BOR 22 VIO
E1 23 GRY (OR GRN)
SOR 24 BLU
IO2
E 30 BRN
I3 (BEHIND CENTER OF DASH)
CLEARANCE WARNING ECU (BEHIND RIGHT SIDE OF DASH)
RED GRN VIO
IO1
① HYBRID
② EXCEPT HYBRID
GRN 4 EA2
RED 1
D N R P
10 J/C E76 (LEFT SIDE OF ENGINE COMPT) 11
PNK 2
BLK 3
PARK/NEUTRAL POSITION SWITCH (EXCEPT HYBRID) (TOP OF TRANSAXLE)
BLK 70 P
GRY 66 R
E26
COMPUTER DATA LINES SYSTEM
WHT 26 CANL
BLK 13 CANH
A25
ENGINE CONTROL MODULE (EXCEPT HYBRID) (LEFT SIDE OF ENGINE COMPT)
LT BLU 1 EA2
PNK 8
S D N R P
BLU 4
7 EA3
SHIFT LEVER POSITION SENSOR (HYBRID) (FRONT OF ENGINE COMPT)
BLU 14 R
A39
COMPUTER DATA LINES SYSTEM
WHT 24 CA1L
GRN 25 CA1L
I4
POWER MANAGEMENT CONTROL ECU (HYBRID) (LEFT SIDE OF DASH)
IA7 IA9 ① ②
SI EI BI BO SO EO
3 RED
5 GRN
1 VIO
2 PNK
4 YEL
6 VIO
RIGHT REAR ULTRASONIC SENSOR 1 (BEHIND RIGHT SIDE OF REAR BUMPER)
RIGHT REAR ULTRASONIC SENSOR CENTER 1 (BEHIND CENTER RIGHT OF REAR BUMPER)
LEFT REAR ULTRASONIC SENSOR CENTER 1 (BEHIND CENTER LEFT OF REAR BUMPER)
LEFT REAR ULTRASONIC SENSOR 1 (BEHIND LEFT SIDE OF REAR BUMPER)
LEFT FRONT ULTRASONIC SENSOR 1 (LEFT FRONT OF ENGINE COMPT)
RIGHT FRONT ULTRASONIC SENSOR 1 (RIGHT FRONT OF ENGINE COMPT)
366325

Fig. 111: Parking Assistant Circuit

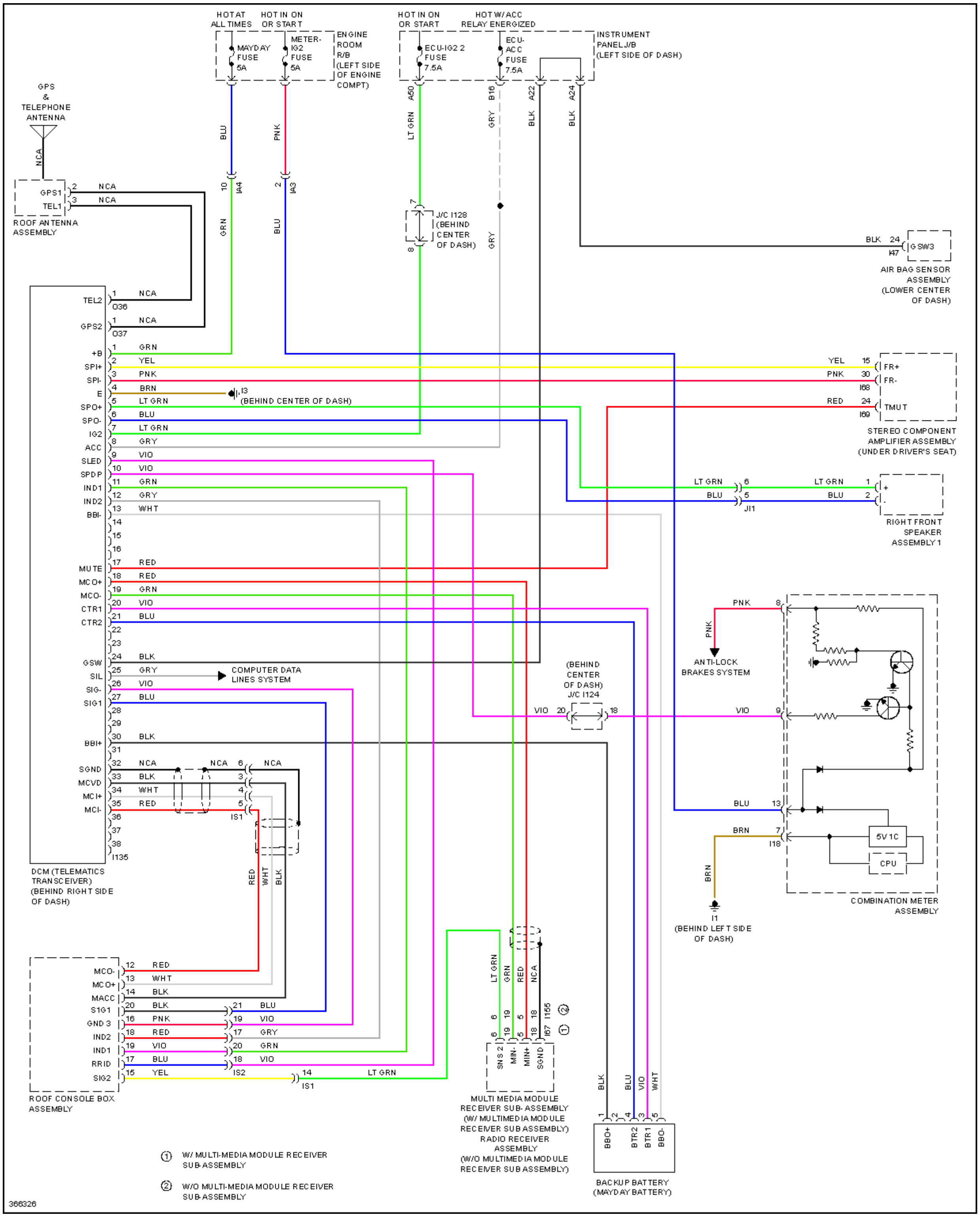
HOT AT ALL TIMES
HOT IN ON OR START
ENGINE ROOM R/B (LEFT SIDE OF ENGINE COMPT)
MAYDAY FUSE 5A
METER-IG2 FUSE 5A
HOT IN ON OR START
HOT W/ ACC RELAY ENERGIZED
ECU-IG2 2 FUSE 7.5A
ECU-ACC FUSE 7.5A
INSTRUMENT PANEL J/B (LEFT SIDE OF DASH)
A50
B16
A22
A24
GPS & TELEPHONE ANTENNA
NCA
GPS1
TEL1
ROOF ANTENNA ASSEMBLY
IA4
IA3
J/C I128 (BEHIND CENTER OF DASH)
BLK 24 I47 GSW3
AIR BAG SENSOR ASSEMBLY (LOWER CENTER OF DASH)
TEL2
GPS2
O36
O37
+B
SPI+
SPI-
E
SPO+
SPO-
IG2
ACC
SLED
SPDP
IND1
IND2
BBI-
MUTE
MCO+
MCO-
CTR1
CTR2
GSW
SIL
SIG-
SIG1
BBI+
SGND
MCVD
MCI+
MCI-
I135
I3 (BEHIND CENTER OF DASH)
COMPUTER DATA LINES SYSTEM
DCM (TELEMATICS TRANSCEIVER) (BEHIND RIGHT SIDE OF DASH)
FR+
FR-
TMUT
I68
I69
STEREO COMPONENT AMPLIFIER ASSEMBLY (UNDER DRIVER'S SEAT)
JI1
RIGHT FRONT SPEAKER ASSEMBLY 1
ANTI-LOCK BRAKES SYSTEM
(BEHIND CENTER OF DASH) J/C I124
5V IC
CPU
I18
COMBINATION METER ASSEMBLY
I1 (BEHIND LEFT SIDE OF DASH)
IS1
IS2
MCO-
MCO+
MACC
SIG1
GND 3
IND2
IND1
RRID
SIG2
ROOF CONSOLE BOX ASSEMBLY
SNS 2
MIN-
MIN+
SGND
I155
I67
MULTI MEDIA MODULE RECEIVER SUB-ASSEMBLY (W/ MULTIMEDIA MODULE RECEIVER SUB ASSEMBLY) RADIO RECEIVER ASSEMBLY (W/O MULTIMEDIA MODULE RECEIVER SUB ASSEMBLY)
BBO+
BTR2
BTR1
BBO-
BACKUP BATTERY (MAYDAY BATTERY)
① W/ MULTI-MEDIA MODULE RECEIVER SUB-ASSEMBLY
② W/O MULTI-MEDIA MODULE RECEIVER SUB-ASSEMBLY
366326

Fig. 112: Telematics Circuit

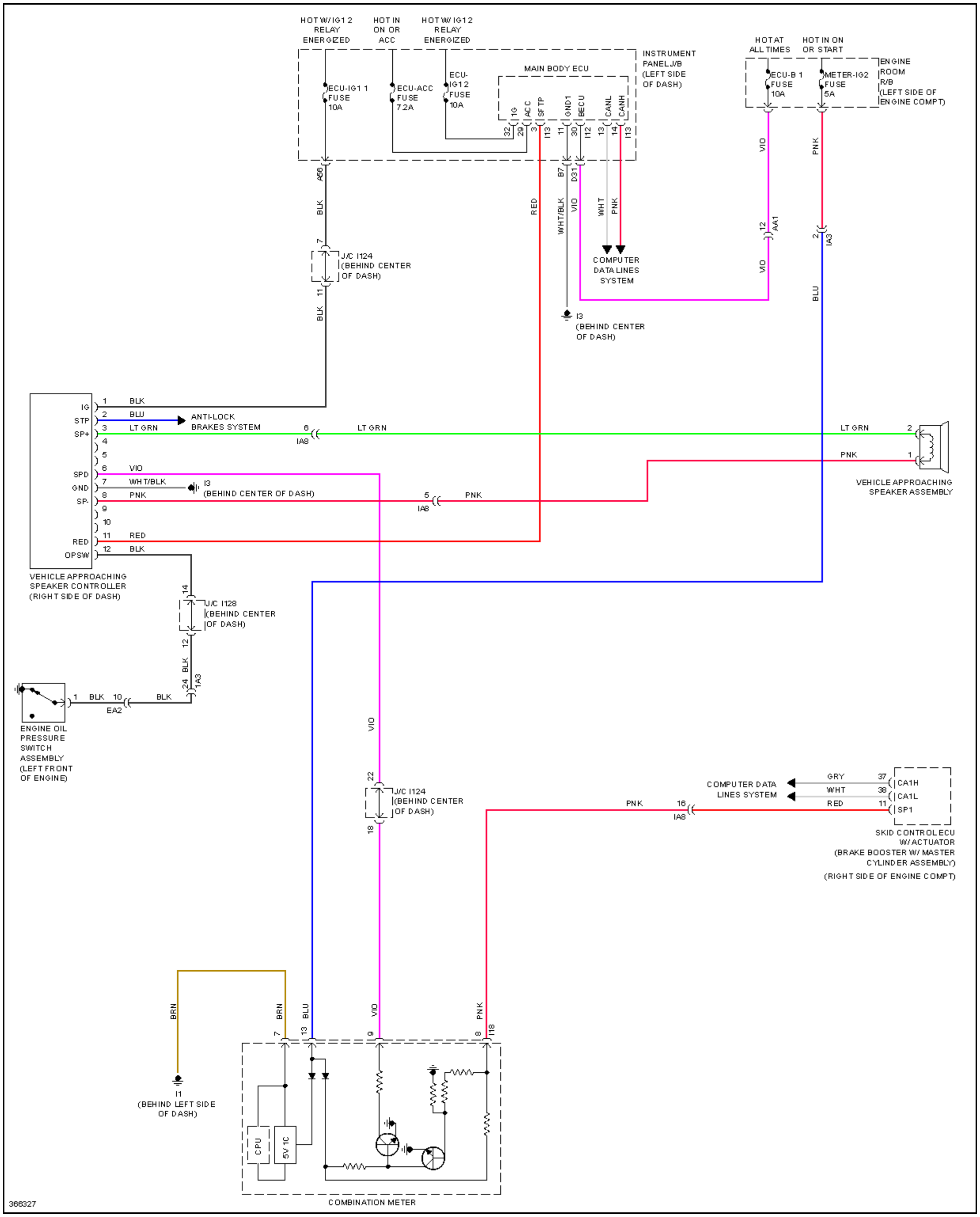
HOT W/ IG1 2 RELAY ENERGIZED
HOT IN ON OR ACC
HOT W/ IG1 2 RELAY ENERGIZED
INSTRUMENT PANEL J/B (LEFT SIDE OF DASH)
MAIN BODY ECU
ECU-IG1 1 FUSE 10A
ECU-ACC FUSE 7.2A
ECU-IG1 2 FUSE 10A
IG
ACC
SFTP
GND1
BECU
CANL
CANH
32
29
3
I13
11
30
I12
13
14
I13
A56
B7
D31
BLK
RED
WHT/BLK
VIO
WHT
PNK
COMPUTER DATA LINES SYSTEM
7
J/C I124 (BEHIND CENTER OF DASH)
11
BLK
I3 (BEHIND CENTER OF DASH)
HOT AT ALL TIMES
HOT IN ON OR START
ENGINE ROOM R/B (LEFT SIDE OF ENGINE COMPT)
ECU-B 1 FUSE 10A
METER-IG2 FUSE 5A
VIO
PNK
12
AA1
2
IA3
VIO
BLU
IG
STP
SP+
SPD
GND
SP-
RED
OPSW
1
2
3
4
5
6
7
8
9
10
11
12
BLK
BLU
LT GRN
VIO
WHT/BLK
PNK
RED
BLK
ANTI-LOCK BRAKES SYSTEM
6
IA8
LT GRN
I3 (BEHIND CENTER OF DASH)
5
IA8
PNK
LT GRN
2
PNK
1
VEHICLE APPROACHING SPEAKER ASSEMBLY
VEHICLE APPROACHING SPEAKER CONTROLLER (RIGHT SIDE OF DASH)
14
J/C I128 (BEHIND CENTER OF DASH)
12
BLK
24
IA3
1
BLK
10
EA2
BLK
ENGINE OIL PRESSURE SWITCH ASSEMBLY (LEFT FRONT OF ENGINE)
VIO
22
J/C I124 (BEHIND CENTER OF DASH)
18
COMPUTER DATA LINES SYSTEM
GRY
WHT
RED
37
38
11
CA1H
CA1L
SP1
PNK
16
IA8
SKID CONTROL ECU W/ ACTUATOR (BRAKE BOOSTER W/ MASTER CYLINDER ASSEMBLY) (RIGHT SIDE OF ENGINE COMPT)
BRN
BRN
BLU
VIO
PNK
7
13
9
8
I18
I1 (BEHIND LEFT SIDE OF DASH)
CPU
5V 1C
COMBINATION METER
366327

Fig. 113: Vehicle Proximity Notification Circuit

NAVIGATION

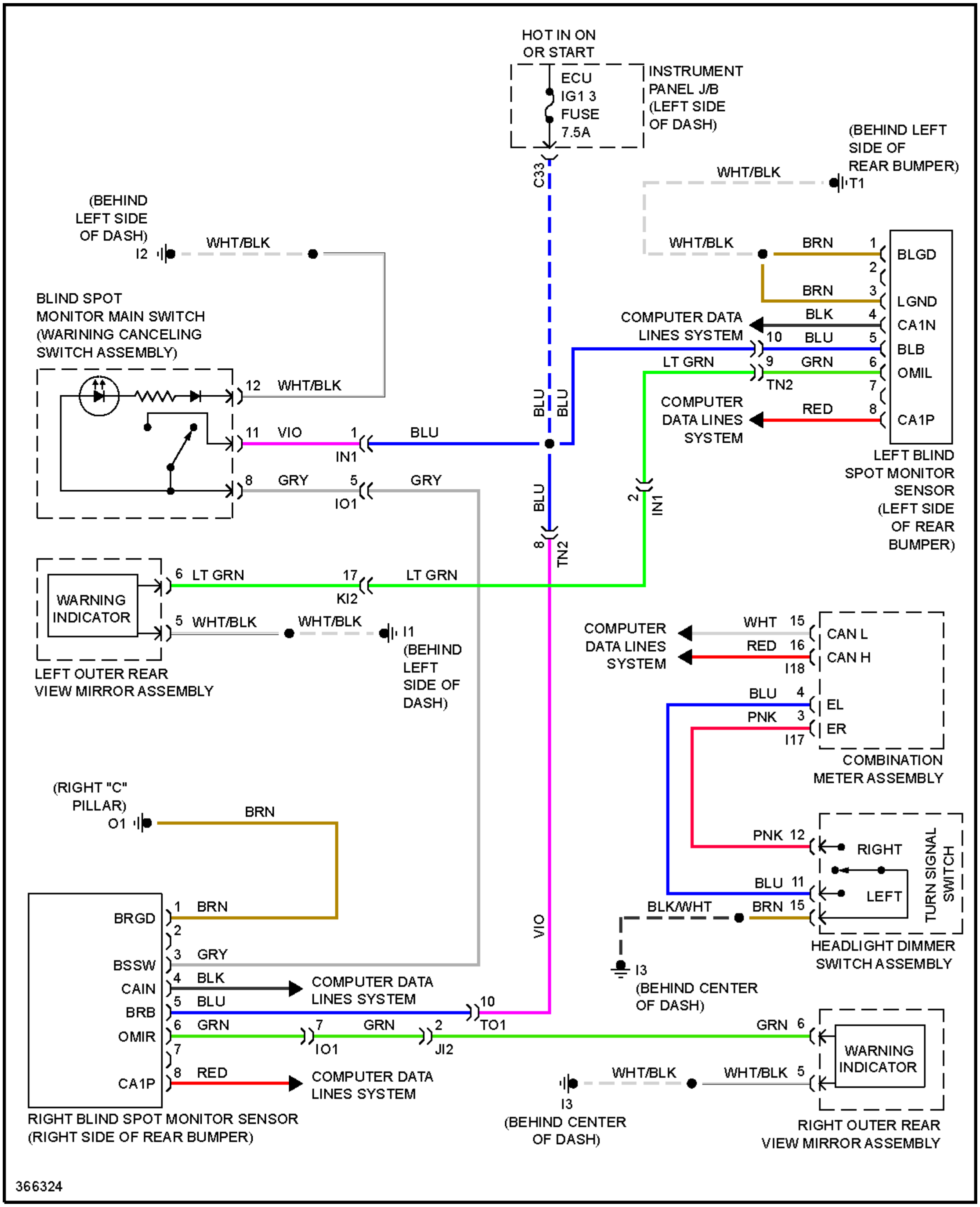
HOT IN ON
OR START
ECU
IG1 3
FUSE
7.5A
INSTRUMENT
PANEL J/B
(LEFT SIDE
OF DASH)
C33
(BEHIND LEFT
SIDE OF
REAR BUMPER)
WHT/BLK
T1
(BEHIND
LEFT SIDE
OF DASH)
I2
WHT/BLK
WHT/BLK
BRN
1
BLGD
2
BRN
3
LGND
BLINK SPOT
BLIND SPOT
MONITOR MAIN SWITCH
(WARINING CANCELING
SWITCH ASSEMBLY)
COMPUTER DATA
LINES SYSTEM
BLK
4
CA1N
10
BLU
5
BLB
LT GRN
9
GRN
6
OMIL
TN2
7
12
WHT/BLK
BLU
BLU
COMPUTER
DATA LINES
SYSTEM
RED
8
CA1P
11
VIO
1
BLU
IN1
LEFT BLIND
SPOT MONITOR
SENSOR
(LEFT SIDE
OF REAR
BUMPER)
8
GRY
5
GRY
IO1
BLU
2
IN1
8
TN2
6
LT GRN
17
LT GRN
KI2
WARNING
INDICATOR
5
WHT/BLK
WHT/BLK
I1
(BEHIND
LEFT
SIDE OF
DASH)
LEFT OUTER REAR
VIEW MIRROR ASSEMBLY
COMPUTER
DATA LINES
SYSTEM
WHT
15
CAN L
RED
16
CAN H
I18
BLU
4
EL
PNK
3
ER
I17
COMBINATION
METER ASSEMBLY
(RIGHT "C"
PILLAR)
O1
BRN
PNK
12
RIGHT
TURN SIGNAL
SWITCH
BLU
11
LEFT
BLK/WHT
BRN
15
HEADLIGHT DIMMER
SWITCH ASSEMBLY
BRGD
1
BRN
2
BSSW
3
GRY
CAIN
4
BLK
COMPUTER DATA
LINES SYSTEM
BRB
5
BLU
10
VIO
TO1
I3
(BEHIND CENTER
OF DASH)
OMIR
6
GRN
7
GRN
2
GRN
6
IO1
JI2
WARNING
INDICATOR
7
CA1P
8
RED
COMPUTER DATA
LINES SYSTEM
WHT/BLK
WHT/BLK
5
I3
(BEHIND CENTER
OF DASH)
RIGHT BLIND SPOT MONITOR SENSOR
(RIGHT SIDE OF REAR BUMPER)
RIGHT OUTER REAR
VIEW MIRROR ASSEMBLY
366324

Fig. 98: Blind Spot Monitoring Circuit

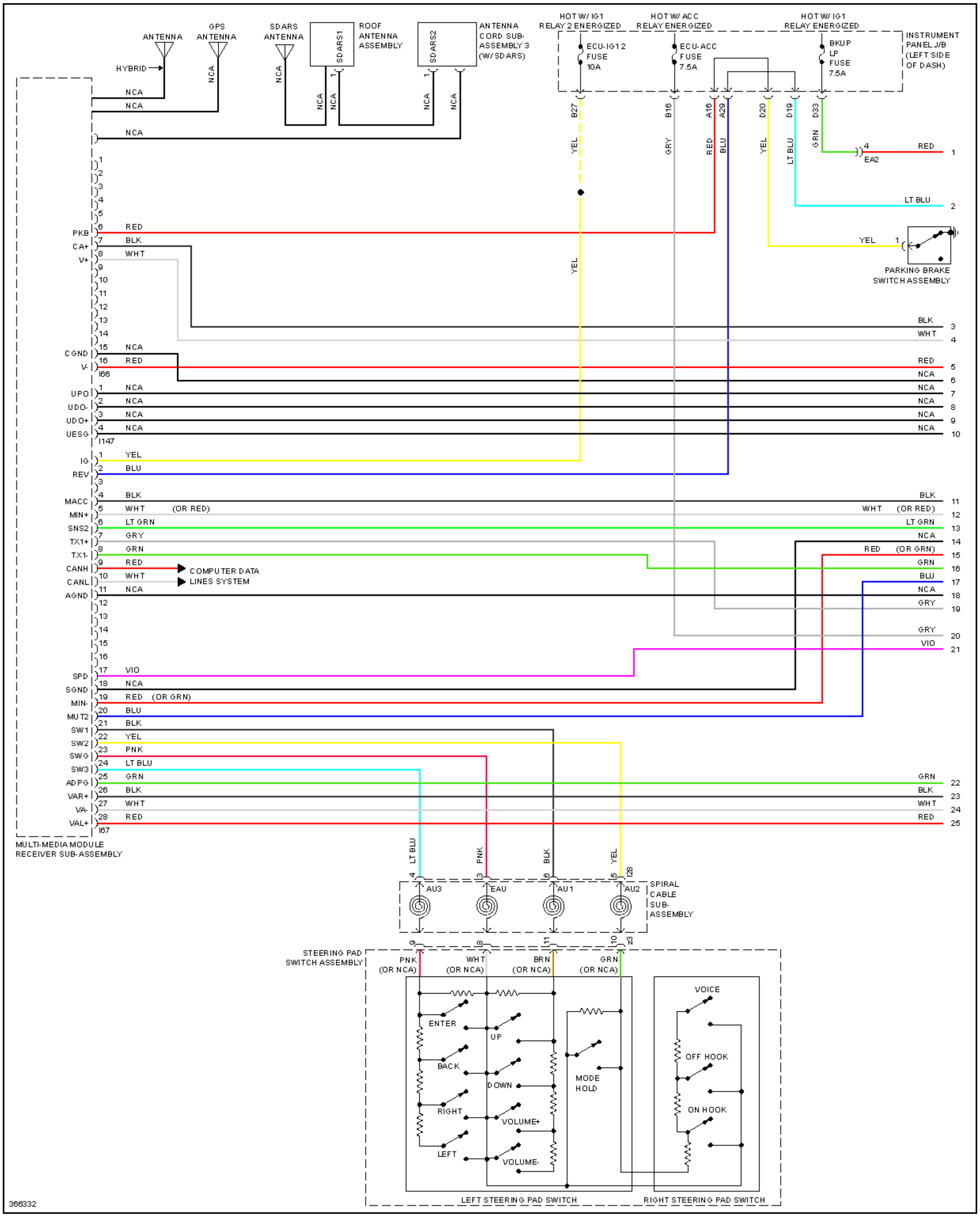
ANTENNA
GPS ANTENNA
SDARS ANTENNA
ROOF ANTENNA ASSEMBLY
SDARS1
SDARS2
ANTENNA CORD SUB-ASSEMBLY 3 (W/ SDARS)
HYBRID
NCA
HOT W/ IG1 RELAY 2 ENERGIZED
HOT W/ ACC RELAY ENERGIZED
HOT W/ IG1 RELAY ENERGIZED
ECU-IG1 2 FUSE 10A
ECU-ACC FUSE 7.5A
BKUP LP FUSE 7.5A
INSTRUMENT PANEL J/B (LEFT SIDE OF DASH)
B27
B16
A16
A29
D20
D19
D33
YEL
GRY
RED
BLU
LT BLU
GRN
EA2
PARKING BRAKE SWITCH ASSEMBLY
PKB
CA+
V+
CGND
V-
I66
UPO
UDO-
UDO+
UESG
I147
IG
REV
MACC
MIN+
SNS2
TX1+
TX1-
CANH
CANL
AGND
SPD
SGND
MIN-
MUT2
SW1
SW2
SWG
SW3
ADPG
VAR+
VA-
VAL+
I67
BLK
WHT
(OR RED)
LT GRN
(OR GRN)
VIO
PNK
COMPUTER DATA LINES SYSTEM
MULTI-MEDIA MODULE RECEIVER SUB-ASSEMBLY
AU3
EAU
AU1
AU2
SPIRAL CABLE SUB-ASSEMBLY
STEERING PAD SWITCH ASSEMBLY
PNK (OR NCA)
WHT (OR NCA)
BRN (OR NCA)
GRN (OR NCA)
ENTER
UP
BACK
DOWN
RIGHT
VOLUME+
LEFT
VOLUME-
MODE HOLD
VOICE
OFF HOOK
ON HOOK
LEFT STEERING PAD SWITCH
RIGHT STEERING PAD SWITCH
366332

Fig. 99: Navigation Circuit, 10-Speaker W/ Multi-Media Module (1 of 4)

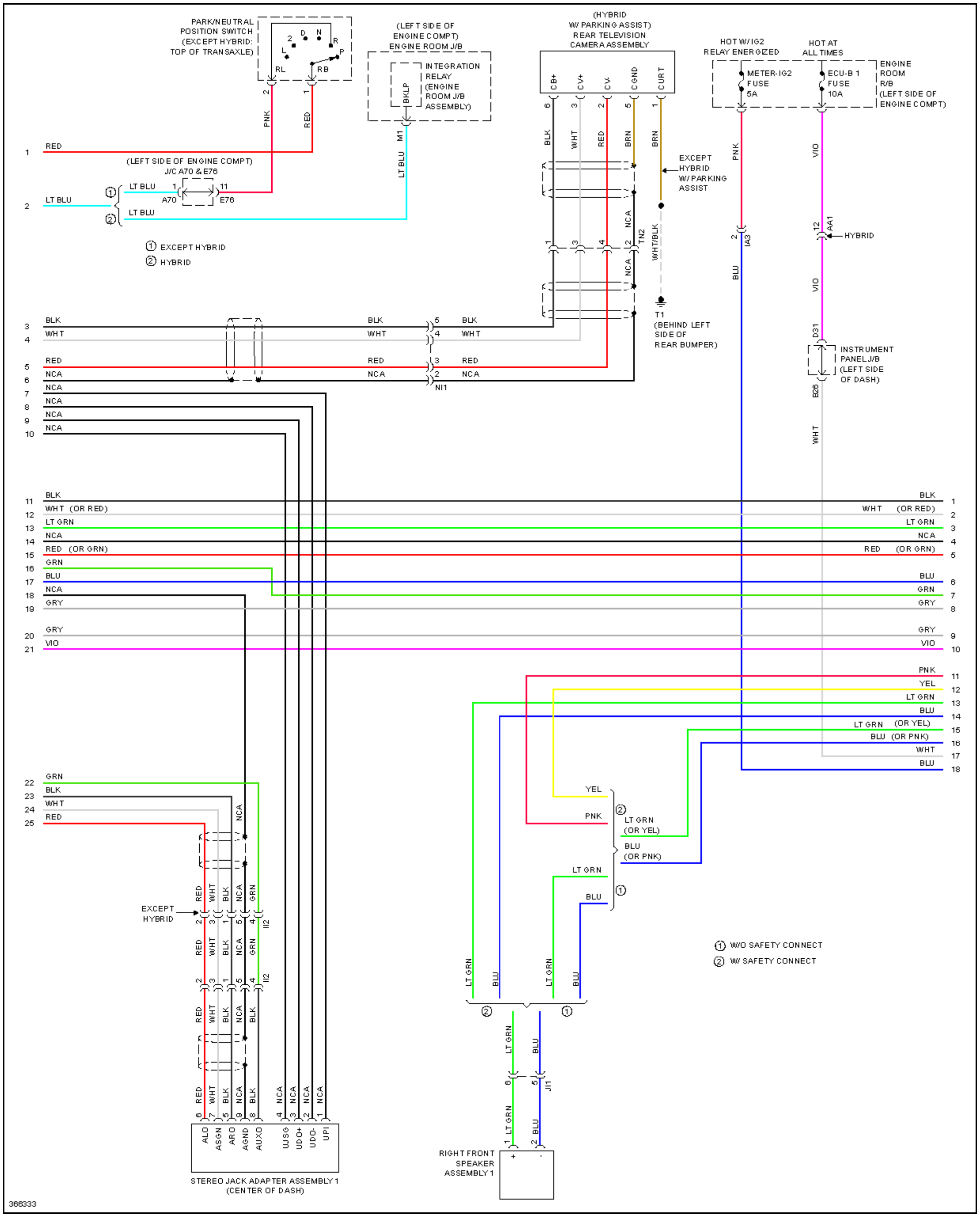
PARK/NEUTRAL POSITION SWITCH (EXCEPT HYBRID: TOP OF TRANSAXLE)
(LEFT SIDE OF ENGINE COMPT) ENGINE ROOM J/B
INTEGRATION RELAY (ENGINE ROOM J/B ASSEMBLY)
(HYBRID W/ PARKING ASSIST) REAR TELEVISION CAMERA ASSEMBLY
HOT W/ IG2 RELAY ENERGIZED
HOT AT ALL TIMES
METER-IG2 FUSE 5A
ECU-B 1 FUSE 10A
ENGINE ROOM R/B (LEFT SIDE OF ENGINE COMPT)
(LEFT SIDE OF ENGINE COMPT) J/C A70 & E76
① EXCEPT HYBRID
② HYBRID
EXCEPT HYBRID W/ PARKING ASSIST
T1 (BEHIND LEFT SIDE OF REAR BUMPER)
INSTRUMENT PANEL J/B (LEFT SIDE OF DASH)
HYBRID
EXCEPT HYBRID
① W/O SAFETY CONNECT
② W/ SAFETY CONNECT
STEREO JACK ADAPTER ASSEMBLY 1 (CENTER OF DASH)
RIGHT FRONT SPEAKER ASSEMBLY 1
ALO ASGN ARO AGND AUXD USG UDO+ UDO- UPI
CB+ CV+ CV- CGND CURT
BKLP
366333

Fig. 100: Navigation Circuit, 10-Speaker W/ Multi-Media Module (2 of 4)

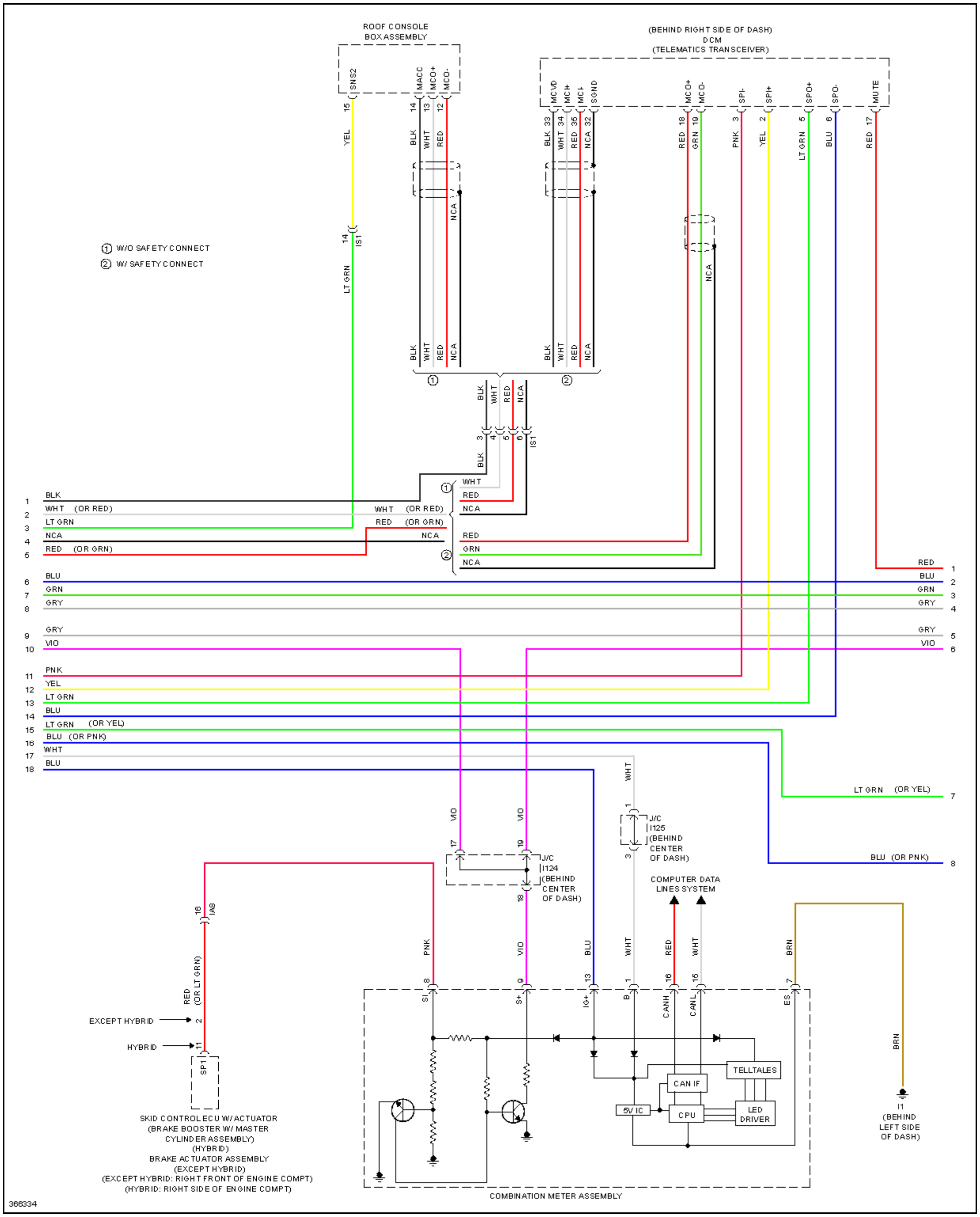
ROOF CONSOLE BOX ASSEMBLY
SNS2
MACC
MCO+
MCO-
(BEHIND RIGHT SIDE OF DASH)
DCM
(TELEMATICS TRANSCEIVER)
MCVD
MCI+
MCI-
SGND
MCO+
MCO-
SPI-
SPI+
SPO+
SPO-
MUTE
① W/O SAFETY CONNECT
② W/ SAFETY CONNECT
IS1
BLK
WHT (OR RED)
LT GRN
NCA
RED (OR GRN)
BLU
GRN
GRY
VIO
PNK
YEL
LT GRN (OR YEL)
BLU (OR PNK)
WHT
RED
J/C I125 (BEHIND CENTER OF DASH)
J/C I124 (BEHIND CENTER OF DASH)
COMPUTER DATA LINES SYSTEM
IA8
RED (OR LT GRN)
EXCEPT HYBRID
HYBRID
SP1
SKID CONTROL ECU W/ ACTUATOR (BRAKE BOOSTER W/ MASTER CYLINDER ASSEMBLY) (HYBRID)
BRAKE ACTUATOR ASSEMBLY (EXCEPT HYBRID)
(EXCEPT HYBRID: RIGHT FRONT OF ENGINE COMPT)
(HYBRID: RIGHT SIDE OF ENGINE COMPT)
SI
S+
IG+
B
CANH
CANL
ES
TELLTALES
CAN IF
5V IC
CPU
LED DRIVER
BRN
I1 (BEHIND LEFT SIDE OF DASH)
COMBINATION METER ASSEMBLY
366334

Fig. 101: Navigation Circuit, 10-Speaker W/ Multi-Media Module (3 of 4)

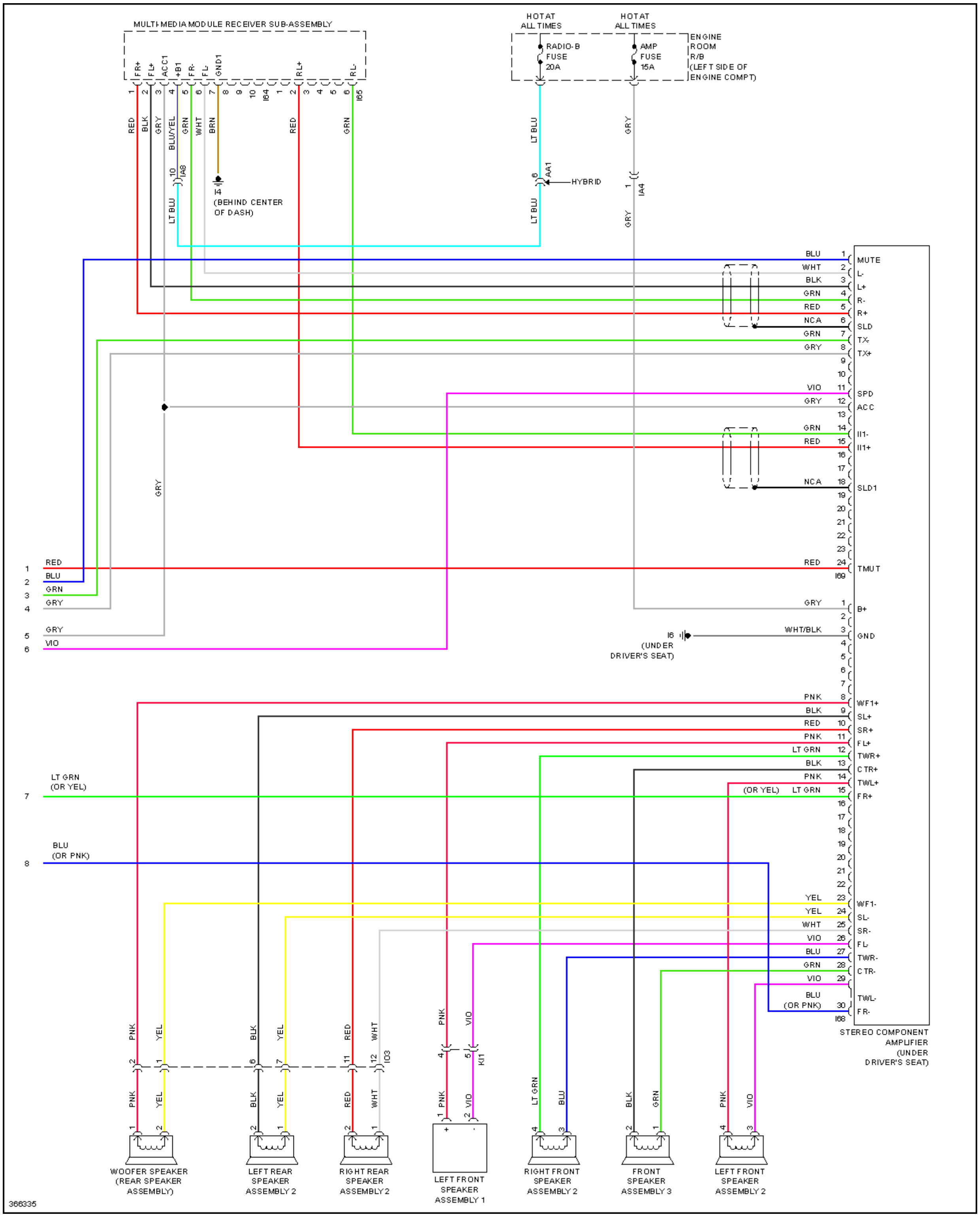
MULTI-MEDIA MODULE RECEIVER SUB-ASSEMBLY
FR+
FL+
ACC1
+B1
FR-
FL-
GND1
RL+
RL-
I64
I65
RED
BLK
GRY
BLU/YEL
GRN
WHT
BRN
LT BLU
IA8
I4
(BEHIND CENTER OF DASH)
HOT AT ALL TIMES
RADIO-B FUSE 20A
AMP FUSE 15A
ENGINE ROOM R/B (LEFT SIDE OF ENGINE COMPT)
AA1
HYBRID
IA4
MUTE
L-
L+
R-
R+
SLD
TX-
TX+
SPD
ACC
II1-
II1+
SLD1
TMUT
I69
NCA
VIO
B+
GND
I6
(UNDER DRIVER'S SEAT)
WHT/BLK
WF1+
SL+
SR+
FL+
TWR+
CTR+
TWL+
FR+
WF1-
SL-
SR-
FL-
TWR-
CTR-
TWL-
FR-
I68
STEREO COMPONENT AMPLIFIER (UNDER DRIVER'S SEAT)
LT GRN (OR YEL)
BLU (OR PNK)
PNK
YEL
LT GRN
I03
KI1
WOOFER SPEAKER (REAR SPEAKER ASSEMBLY)
LEFT REAR SPEAKER ASSEMBLY 2
RIGHT REAR SPEAKER ASSEMBLY 2
LEFT FRONT SPEAKER ASSEMBLY 1
RIGHT FRONT SPEAKER ASSEMBLY 2
FRONT SPEAKER ASSEMBLY 3
LEFT FRONT SPEAKER ASSEMBLY 2
366335

Fig. 102: Navigation Circuit, 10-Speaker W/ Multi-Media Module (4 of 4)

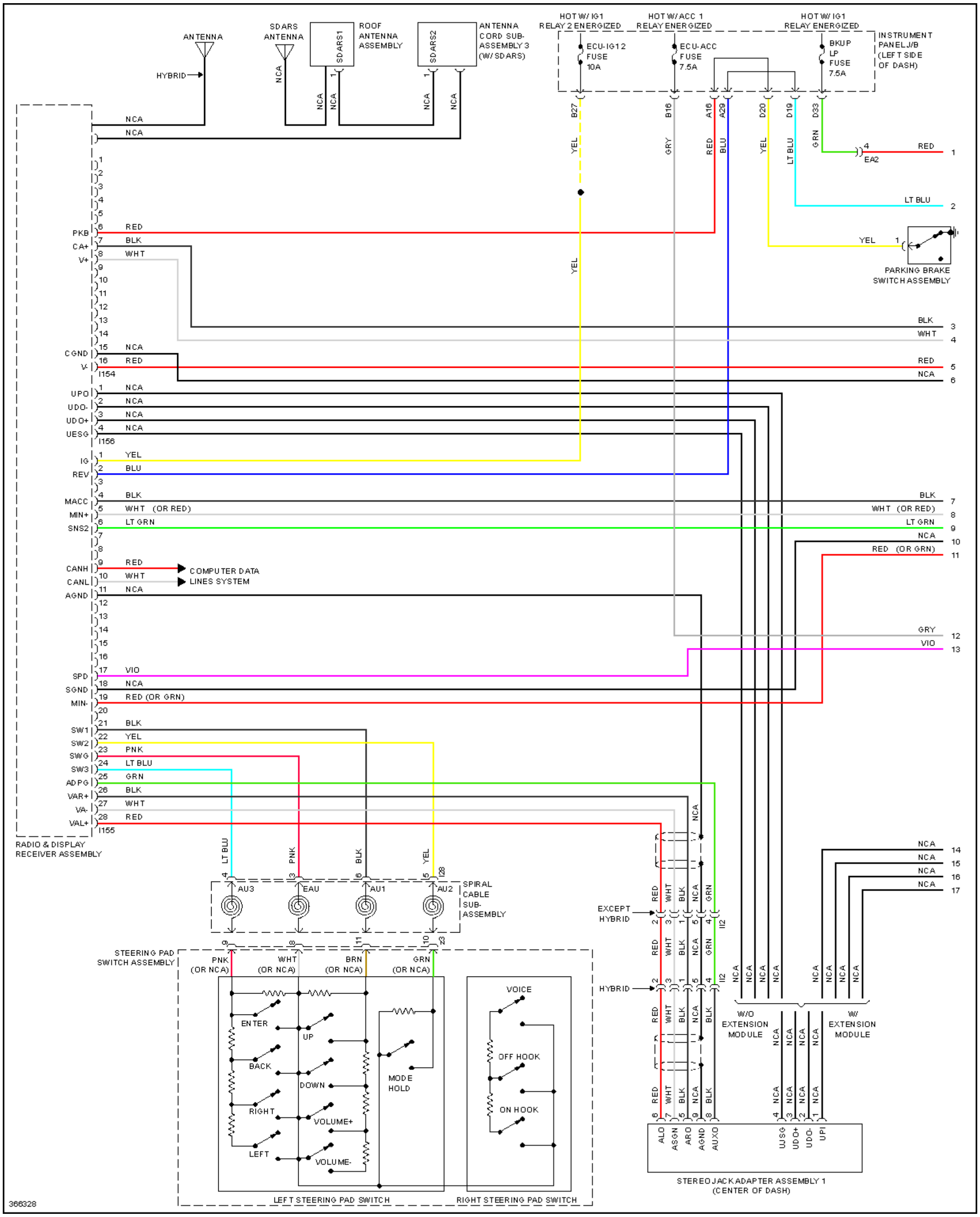
ANTENNA
HYBRID
SDARS ANTENNA
SDARS1
ROOF ANTENNA ASSEMBLY
SDARS2
ANTENNA CORD SUB-ASSEMBLY 3 (W/ SDARS)
HOT W/ IG1 RELAY 2 ENERGIZED
HOT W/ ACC 1 RELAY ENERGIZED
HOT W/ IG1 RELAY ENERGIZED
ECU-IG1 2 FUSE 10A
ECU-ACC FUSE 7.5A
BKUP LP FUSE 7.5A
INSTRUMENT PANEL J/B (LEFT SIDE OF DASH)
B27
B16
A16
A29
D20
D19
D33
YEL
GRY
RED
BLU
LT BLU
GRN
EA2
PARKING BRAKE SWITCH ASSEMBLY
PKB
CA+
V+
CGND
V-
I154
UPO
UDO-
UDO+
UESG
I156
IG
REV
MACC
MIN+
SNS2
CANH
CANL
AGND
COMPUTER DATA LINES SYSTEM
SPD
SGND
MIN-
SW1
SW2
SWG
SW3
ADPG
VAR+
VA-
VAL+
I155
RADIO & DISPLAY RECEIVER ASSEMBLY
NCA
BLK
WHT
WHT (OR RED)
LT GRN
RED (OR GRN)
VIO
PNK
AU3
EAU
AU1
AU2
I28
SPIRAL CABLE SUB-ASSEMBLY
STEERING PAD SWITCH ASSEMBLY
PNK (OR NCA)
WHT (OR NCA)
BRN (OR NCA)
GRN (OR NCA)
ENTER
UP
BACK
DOWN
RIGHT
VOLUME+
LEFT
VOLUME-
MODE HOLD
VOICE
OFF HOOK
ON HOOK
LEFT STEERING PAD SWITCH
RIGHT STEERING PAD SWITCH
EXCEPT HYBRID
HYBRID
I12
W/O EXTENSION MODULE
W/ EXTENSION MODULE
ALO
ASGN
ARO
AGND
AUXO
USG
UDO+
UDO-
UPI
STEREO JACK ADAPTER ASSEMBLY 1 (CENTER OF DASH)
366328

Fig. 103: Navigation Circuit, 10-Speaker W/O Multi-Media Module (1 of 4)

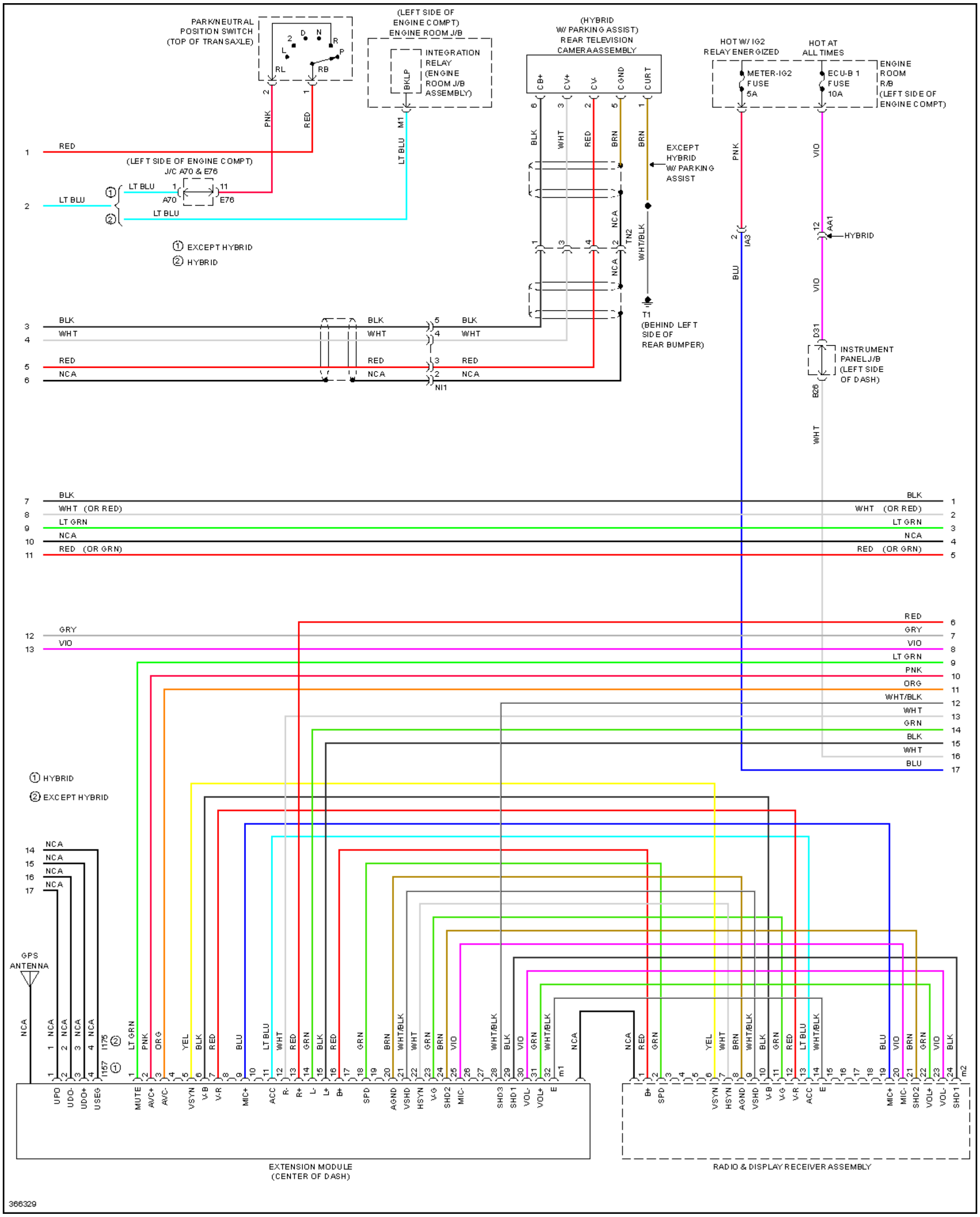
PARK/NEUTRAL POSITION SWITCH (TOP OF TRANSAXLE)
(LEFT SIDE OF ENGINE COMPT) ENGINE ROOM J/B
INTEGRATION RELAY (ENGINE ROOM J/B ASSEMBLY)
BKLP
(HYBRID W/ PARKING ASSIST) REAR TELEVISION CAMERA ASSEMBLY
CB+
CV+
CV-
CGND
CURT
HOT W/ IG2 RELAY ENERGIZED
HOT AT ALL TIMES
METER-IG2 FUSE 5A
ECU-B 1 FUSE 10A
ENGINE ROOM R/B (LEFT SIDE OF ENGINE COMPT)
(LEFT SIDE OF ENGINE COMPT) J/C A70 & E76
① EXCEPT HYBRID
② HYBRID
EXCEPT HYBRID W/ PARKING ASSIST
T1 (BEHIND LEFT SIDE OF REAR BUMPER)
HYBRID
INSTRUMENT PANEL J/B (LEFT SIDE OF DASH)
① HYBRID
② EXCEPT HYBRID
GPS ANTENNA
EXTENSION MODULE (CENTER OF DASH)
RADIO & DISPLAY RECEIVER ASSEMBLY
UPO
UDO-
UDO+
USEG
MUTE
AVC+
AVC-
VSYN
V-B
V-R
MIC+
ACC
R-
R+
L-
L+
B+
SPD
AGND
VSHD
HSYN
V-G
SHD2
MIC-
SHD3
SHD1
VOL-
VOL+
E
HSYN
MIC-
366329

Fig. 104: Navigation Circuit, 10-Speaker W/O Multi-Media Module (2 of 4)

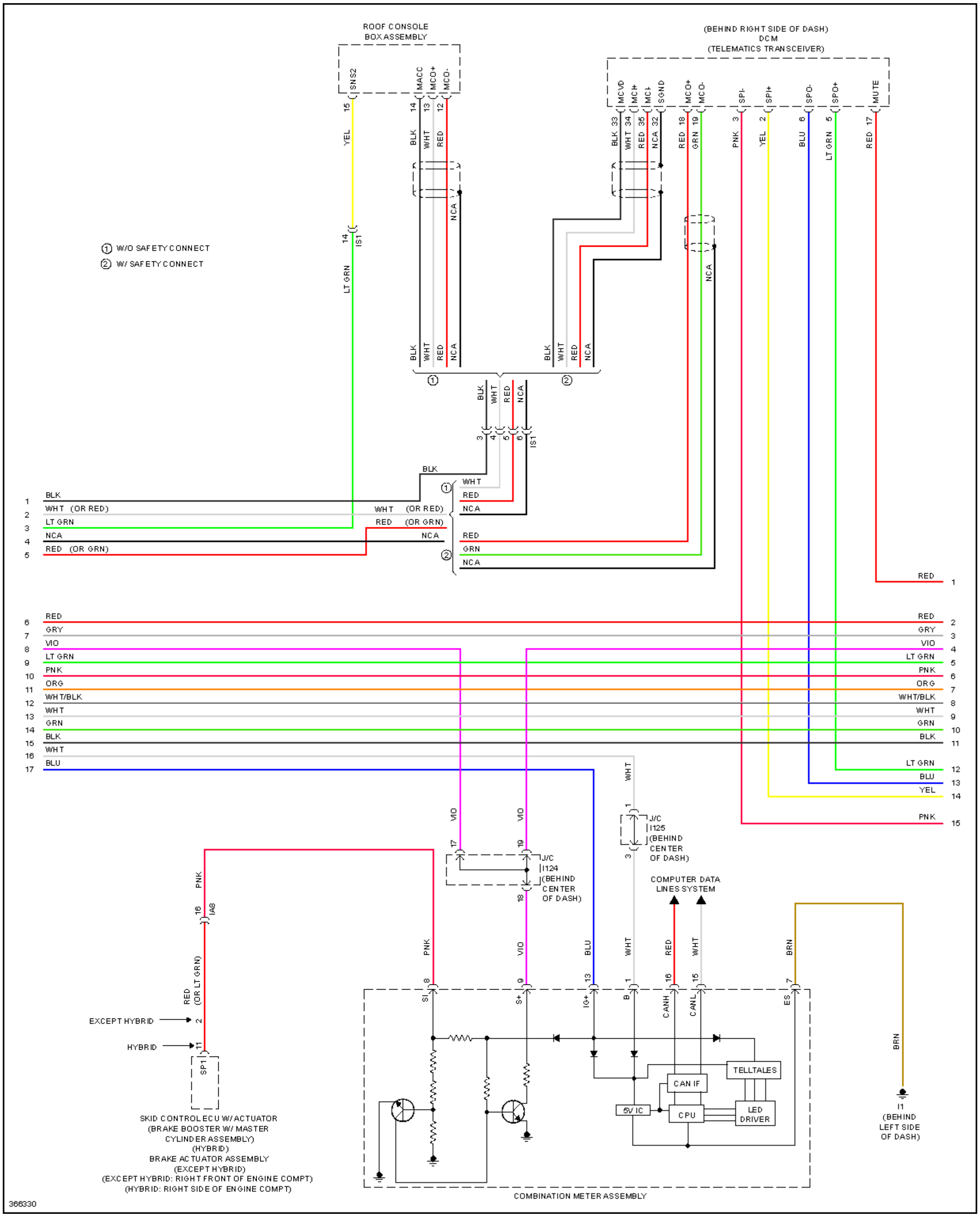
ROOF CONSOLE BOX ASSEMBLY
SNS2
MACC
MCO+
MCO-
(BEHIND RIGHT SIDE OF DASH)
DCM
(TELEMATICS TRANSCEIVER)
MCVD
MCI+
MCI-
SGND
MCO+
MCO-
SPI-
SPI+
SPO-
SPO+
MUTE
① W/O SAFETY CONNECT
② W/ SAFETY CONNECT
IS1
YEL
LT GRN
BLK
WHT
RED
NCA
GRN
PNK
BLU
BLK
WHT (OR RED)
LT GRN
NCA
RED (OR GRN)
WHT (OR RED)
RED (OR GRN)
RED
GRY
VIO
PNK
ORG
WHT/BLK
GRN
J/C I125 (BEHIND CENTER OF DASH)
J/C I124 (BEHIND CENTER OF DASH)
COMPUTER DATA LINES SYSTEM
IA8
RED (OR LT GRN)
EXCEPT HYBRID
HYBRID
SP1
SKID CONTROL ECU W/ ACTUATOR (BRAKE BOOSTER W/ MASTER CYLINDER ASSEMBLY) (HYBRID)
BRAKE ACTUATOR ASSEMBLY (EXCEPT HYBRID)
(EXCEPT HYBRID: RIGHT FRONT OF ENGINE COMPT)
(HYBRID: RIGHT SIDE OF ENGINE COMPT)
SI
S+
IG+
B
CANH
CANL
ES
TELLTALES
CAN IF
5V IC
CPU
LED DRIVER
COMBINATION METER ASSEMBLY
BRN
I1 (BEHIND LEFT SIDE OF DASH)
366330

Fig. 105: Navigation Circuit, 10-Speaker W/O Multi-Media Module (3 of 4)

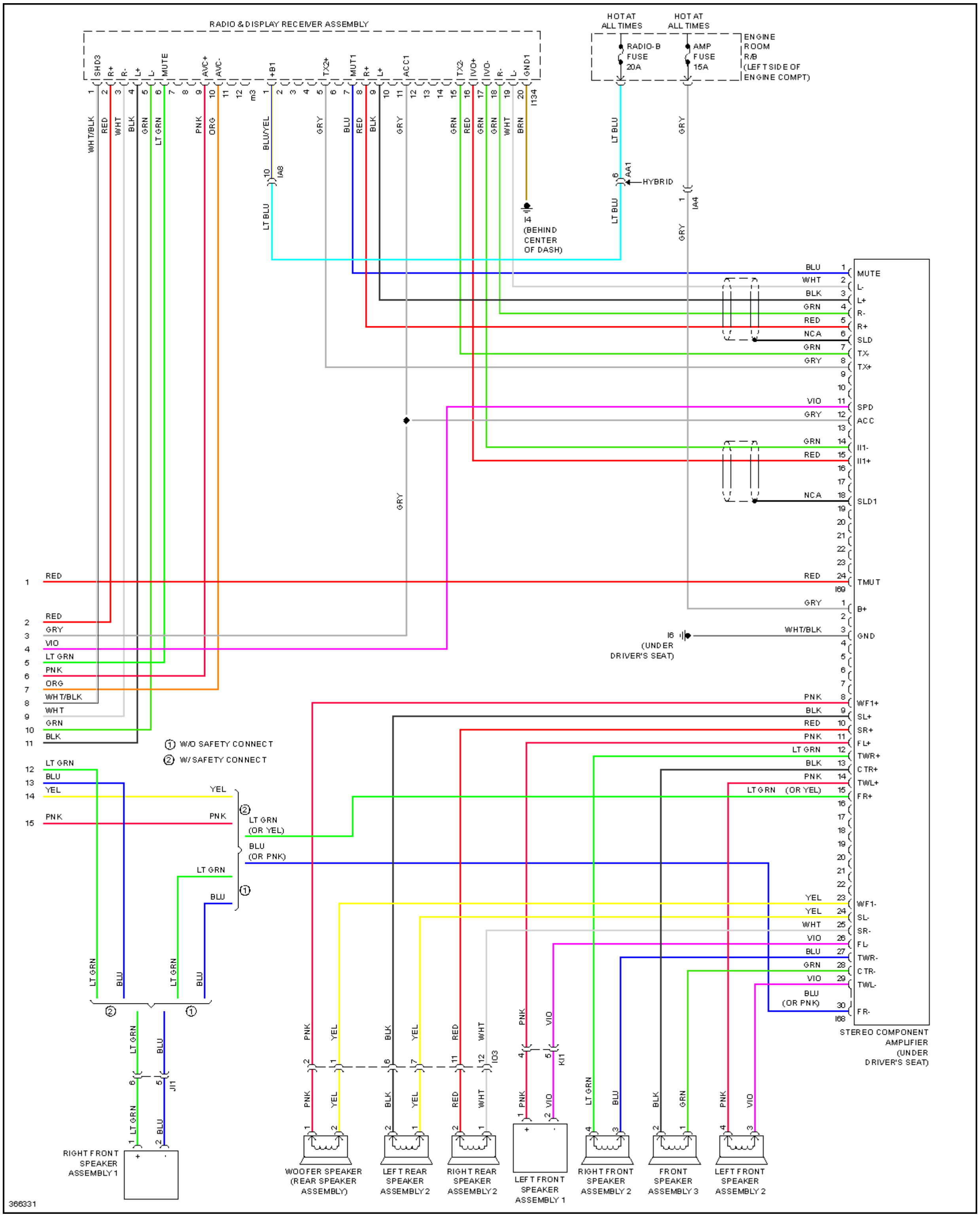
RADIO & DISPLAY RECEIVER ASSEMBLY
SHD3
R+
R-
L+
L-
MUTE
AVC+
AVC-
+B1
TX2+
MUT1
ACC1
TX2-
IVO+
IVO-
GND1
I134
HOT AT ALL TIMES
HOT AT ALL TIMES
RADIO-B FUSE 20A
AMP FUSE 15A
ENGINE ROOM R/B (LEFT SIDE OF ENGINE COMPT)
HYBRID
AA1
IA4
IA8
I4 (BEHIND CENTER OF DASH)
I6 (UNDER DRIVER'S SEAT)
MUTE
SLD
TX-
TX+
SPD
ACC
II1-
II1+
SLD1
TMUT
I69
B+
GND
WF1+
SL+
SR+
FL+
TWR+
CTR+
TWL+
FR+
WF1-
SL-
SR-
FL-
TWR-
CTR-
TWL-
FR-
I68
STEREO COMPONENT AMPLIFIER (UNDER DRIVER'S SEAT)
① W/O SAFETY CONNECT
② W/ SAFETY CONNECT
LT GRN (OR YEL)
BLU (OR PNK)
IO3
KI1
J11
RIGHT FRONT SPEAKER ASSEMBLY 1
WOOFER SPEAKER (REAR SPEAKER ASSEMBLY)
LEFT REAR SPEAKER ASSEMBLY 2
RIGHT REAR SPEAKER ASSEMBLY 2
LEFT FRONT SPEAKER ASSEMBLY 1
RIGHT FRONT SPEAKER ASSEMBLY 2
FRONT SPEAKER ASSEMBLY 3
LEFT FRONT SPEAKER ASSEMBLY 2
366331

Fig. 106: Navigation Circuit, 10-Speaker W/O Multi-Media Module (4 of 4)

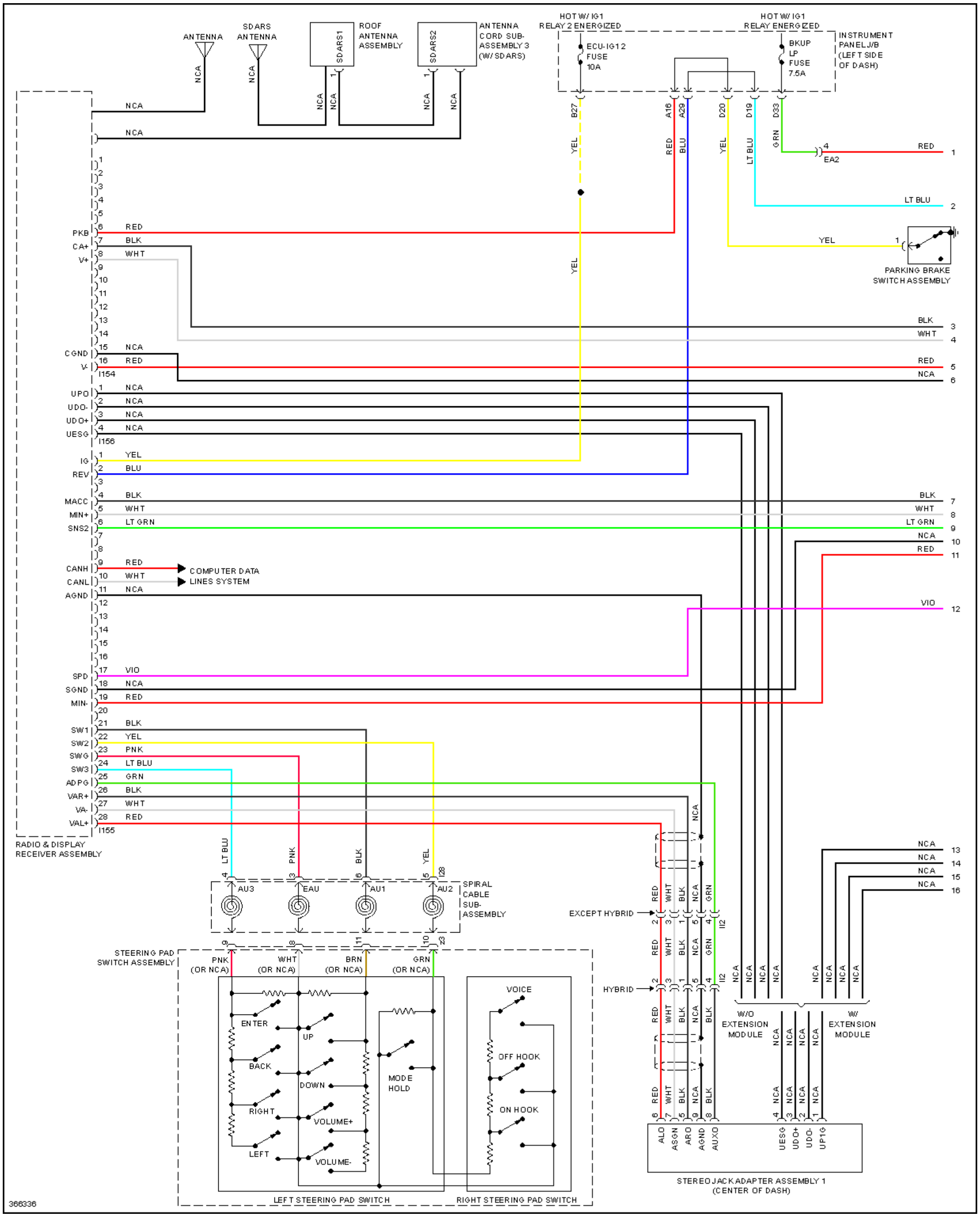
ANTENNA
SDARS ANTENNA
ROOF ANTENNA ASSEMBLY
SDARS1
SDARS2
ANTENNA CORD SUB-ASSEMBLY 3 (W/ SDARS)
HOT W/ IG1 RELAY 2 ENERGIZED
HOT W/ IG1 RELAY ENERGIZED
ECU-IG1 2 FUSE 10A
BKUP LP FUSE 7.5A
INSTRUMENT PANEL J/B (LEFT SIDE OF DASH)
B27
A16
A29
D20
D19
D33
EA2
PARKING BRAKE SWITCH ASSEMBLY
PKB
CA+
V+
CGND
V-
I154
UPO
UDO-
UDO+
UESG
I156
IG
REV
MACC
MIN+
SNS2
CANH
CANL
AGND
COMPUTER DATA LINES SYSTEM
SPD
SGND
MIN-
SW1
SW2
SWG
SW3
ADPG
VAR+
VA-
VAL+
I155
RADIO & DISPLAY RECEIVER ASSEMBLY
NCA
RED
BLK
WHT
YEL
BLU
LT BLU
LT GRN
GRN
VIO
PNK
BRN
AU3
EAU
AU1
AU2
SPIRAL CABLE SUB-ASSEMBLY
STEERING PAD SWITCH ASSEMBLY
PNK (OR NCA)
WHT (OR NCA)
BRN (OR NCA)
GRN (OR NCA)
ENTER
UP
BACK
DOWN
RIGHT
VOLUME+
LEFT
VOLUME-
MODE HOLD
VOICE
OFF HOOK
ON HOOK
LEFT STEERING PAD SWITCH
RIGHT STEERING PAD SWITCH
EXCEPT HYBRID
HYBRID
I12
W/O EXTENSION MODULE
W/ EXTENSION MODULE
ALO
ASGN
ARO
AGND
AUXO
UESG
UDO+
UDO-
UPIG
STEREO JACK ADAPTER ASSEMBLY 1 (CENTER OF DASH)
366336

Fig. 107: Navigation Circuit, 6-Speaker (1 of 4)

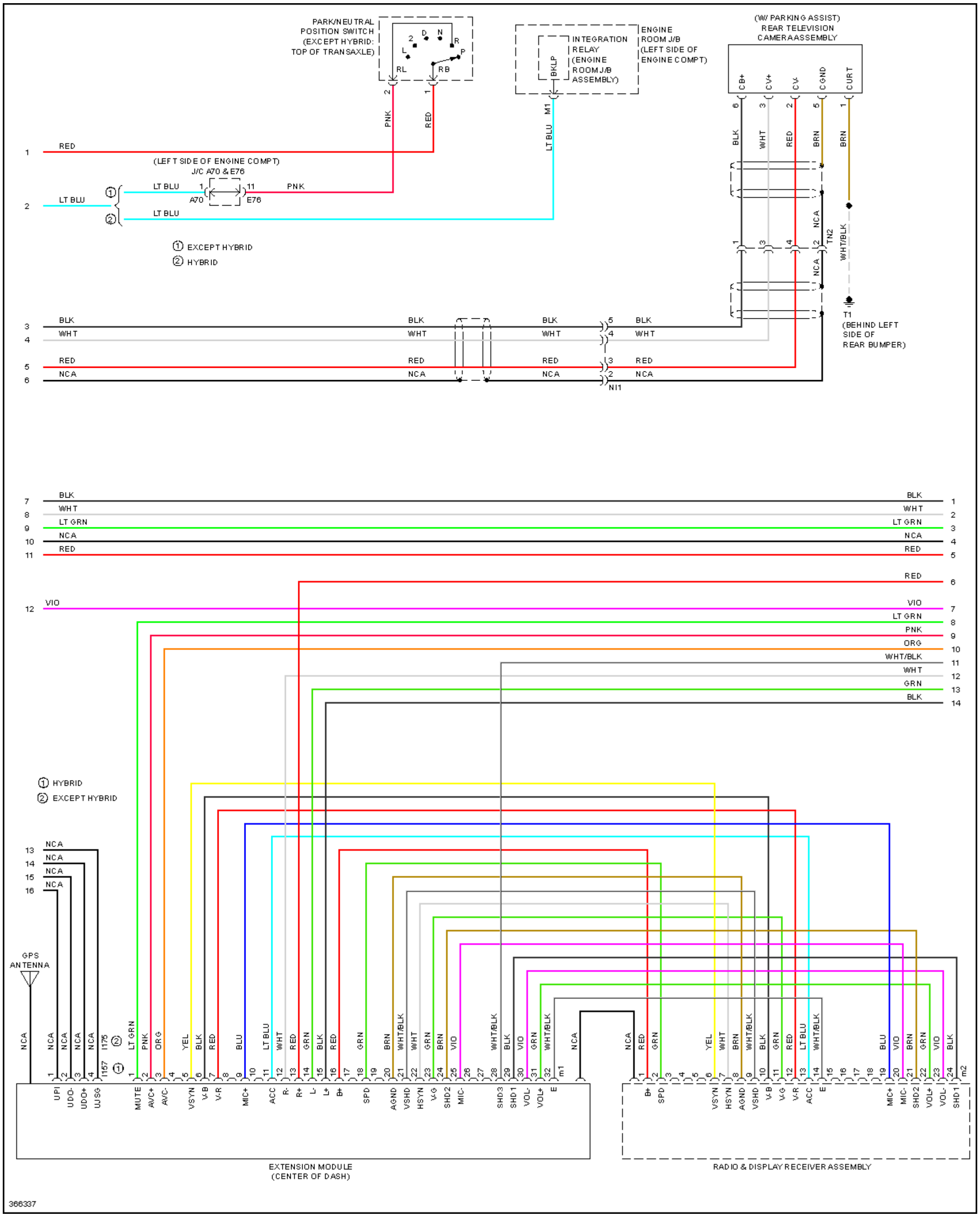
PARK/NEUTRAL POSITION SWITCH (EXCEPT HYBRID: TOP OF TRANSAXLE)
2 D N R L P RL RB
INTEGRATION RELAY (ENGINE ROOM J/B ASSEMBLY)
BKLP
ENGINE ROOM J/B (LEFT SIDE OF ENGINE COMPT)
(W/ PARKING ASSIST) REAR TELEVISION CAMERA ASSEMBLY
CB+ CV+ CV- CGND CURT
6 3 2 5 1
BLK WHT RED BRN BRN
2 PNK 1 RED M1 LT BLU
1 RED
(LEFT SIDE OF ENGINE COMPT) J/C A70 & E76
2 LT BLU ① LT BLU 1 11 PNK A70 E76
② LT BLU
① EXCEPT HYBRID
② HYBRID
NCA 1 3 4 2 TN2 WHT/BLK NCA
T1 (BEHIND LEFT SIDE OF REAR BUMPER)
3 BLK 4 WHT 5 RED 6 NCA
BLK WHT RED NCA
BLK WHT RED NCA 5 4 3 2 NI1
BLK WHT RED NCA
7 BLK 8 WHT 9 LT GRN 10 NCA 11 RED
BLK 1 WHT 2 LT GRN 3 NCA 4 RED 5
RED 6
12 VIO
VIO 7 LT GRN 8 PNK 9 ORG 10 WHT/BLK 11 WHT 12 GRN 13 BLK 14
① HYBRID
② EXCEPT HYBRID
13 NCA 14 NCA 15 NCA 16 NCA
GPS ANTENNA
NCA NCA NCA NCA NCA I175 ② LT GRN PNK ORG YEL BLK RED BLU LT BLU WHT RED GRN BLK RED GRN BRN WHT/BLK WHT GRN BRN VIO WHT/BLK BLK VIO GRN WHT/BLK NCA
1 2 3 4 I157 ① 1 2 3 4 5 6 7 8 9 10 11 12 13 14 15 16 17 18 19 20 21 22 23 24 25 26 27 28 29 30 31 32 m1
UPI UDO- UDO+ UDSG MUTE AVC+ AVC- VSYN V-B V-R MIC+ ACC R- R+ L- L+ B+ SPD AGND VSHD HSYN V-G SHD2 MIC- SHD3 SHD1 VOL- VOL+ E
EXTENSION MODULE (CENTER OF DASH)
NCA RED GRN YEL WHT BRN WHT/BLK BLK GRN RED LT BLU WHT/BLK BLU VIO BRN GRN VIO BLK
1 2 3 4 5 6 7 8 9 10 11 12 13 14 15 16 17 18 19 20 21 22 23 24 m2
B+ SPD VSYN HSYN AGND VSHD V-B V-G V-R ACC E MIC+ MIC- SHD2 VOL+ VOL- SHD1
RADIO & DISPLAY RECEIVER ASSEMBLY
366337

Fig. 108: Navigation Circuit, 6-Speaker (2 of 4)

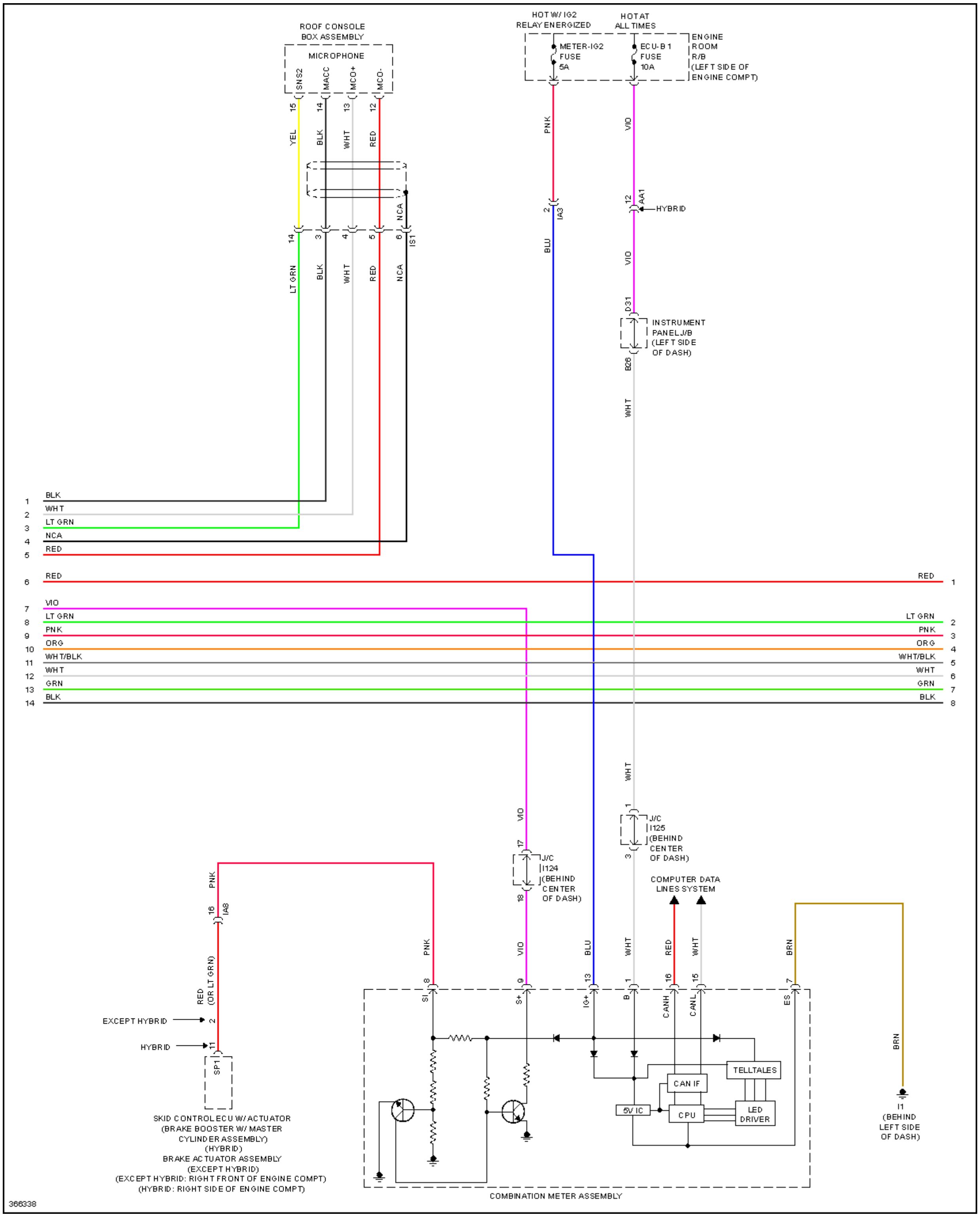
ROOF CONSOLE BOX ASSEMBLY
MICROPHONE
SNS2
MACC
MCO+
MCO-
15
14
13
12
YEL
BLK
WHT
RED
NCA
IS1
14
3
4
5
6
LT GRN
BLK
WHT
RED
NCA
HOT W/ IG2 RELAY ENERGIZED
HOT AT ALL TIMES
METER-IG2 FUSE 5A
ECU-B1 FUSE 10A
ENGINE ROOM R/B (LEFT SIDE OF ENGINE COMPT)
PNK
VIO
2
IA3
12
AA1
HYBRID
BLU
VIO
D31
INSTRUMENT PANEL J/B (LEFT SIDE OF DASH)
B26
WHT
1 BLK
2 WHT
3 LT GRN
4 NCA
5 RED
6 RED
7 VIO
8 LT GRN
9 PNK
10 ORG
11 WHT/BLK
12 WHT
13 GRN
14 BLK
RED 1
LT GRN 2
PNK 3
ORG 4
WHT/BLK 5
WHT 6
GRN 7
BLK 8
WHT
1
J/C I125 (BEHIND CENTER OF DASH)
3
VIO
17
J/C I124 (BEHIND CENTER OF DASH)
18
COMPUTER DATA LINES SYSTEM
PNK
16
IA8
RED (OR LT GRN)
EXCEPT HYBRID
2
HYBRID
11
SP1
PNK
VIO
BLU
WHT
RED
WHT
BRN
8
9
13
1
16
15
7
SI
S+
IG+
B
CANH
CANL
ES
TELLTALES
CAN IF
5V IC
CPU
LED DRIVER
BRN
I1 (BEHIND LEFT SIDE OF DASH)
SKID CONTROL ECU W/ ACTUATOR (BRAKE BOOSTER W/ MASTER CYLINDER ASSEMBLY) (HYBRID)
BRAKE ACTUATOR ASSEMBLY (EXCEPT HYBRID)
(EXCEPT HYBRID: RIGHT FRONT OF ENGINE COMPT)
(HYBRID: RIGHT SIDE OF ENGINE COMPT)
COMBINATION METER ASSEMBLY
366338

Fig. 109: Navigation Circuit, 6-Speaker (3 of 4)

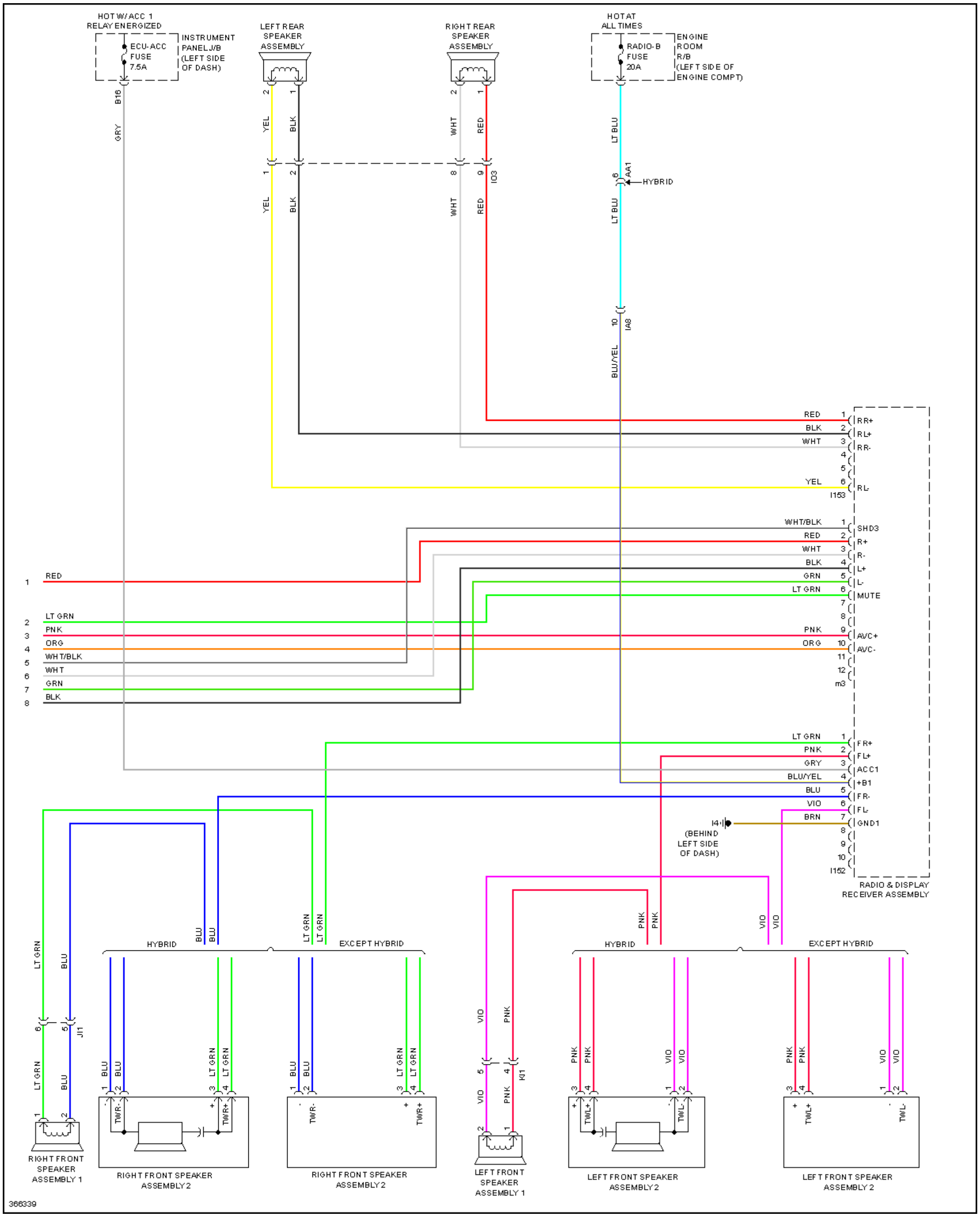
HOT W/ ACC 1
RELAY ENERGIZED
INSTRUMENT PANEL J/B (LEFT SIDE OF DASH)
ECU-ACC FUSE 7.5A
B16
GRY
LEFT REAR SPEAKER ASSEMBLY
2
1
YEL
BLK
1
2
YEL
BLK
RIGHT REAR SPEAKER ASSEMBLY
2
1
WHT
RED
8
9
IO3
WHT
RED
HOT AT ALL TIMES
RADIO-B FUSE 20A
ENGINE ROOM R/B (LEFT SIDE OF ENGINE COMPT)
LT BLU
6
AA1
HYBRID
LT BLU
10
IA8
BLU/YEL
RED 1 RR+
BLK 2 RL+
WHT 3 RR-
4
5
YEL 6 RL-
I153
WHT/BLK 1 SHD3
RED 2 R+
WHT 3 R-
BLK 4 L+
GRN 5 L-
LT GRN 6 MUTE
7
8
PNK 9 AVC+
ORG 10 AVC-
11
12
m3
1 RED
2 LT GRN
3 PNK
4 ORG
5 WHT/BLK
6 WHT
7 GRN
8 BLK
LT GRN 1 FR+
PNK 2 FL+
GRY 3 ACC1
BLU/YEL 4 +B1
BLU 5 FR-
VIO 6 FL-
BRN 7 GND1
8
9
10
I152
I4
(BEHIND LEFT SIDE OF DASH)
RADIO & DISPLAY RECEIVER ASSEMBLY
BLU
BLU
LT GRN
LT GRN
HYBRID
EXCEPT HYBRID
LT GRN
BLU
6
5
J11
LT GRN
BLU
1
2
RIGHT FRONT SPEAKER ASSEMBLY 1
BLU
BLU
1
2
-
TWR-
LT GRN
LT GRN
3
4
+
TWR+
RIGHT FRONT SPEAKER ASSEMBLY 2
BLU
BLU
1
2
-
TWR-
LT GRN
LT GRN
3
4
+
TWR+
RIGHT FRONT SPEAKER ASSEMBLY 2
VIO
PNK
5
4
KI1
VIO
PNK
2
1
LEFT FRONT SPEAKER ASSEMBLY 1
PNK
PNK
VIO
VIO
HYBRID
EXCEPT HYBRID
PNK
PNK
3
4
+
TWL+
VIO
VIO
1
2
-
TWL-
LEFT FRONT SPEAKER ASSEMBLY 2
PNK
PNK
3
4
+
TWL+
VIO
VIO
1
2
-
TWL-
LEFT FRONT SPEAKER ASSEMBLY 2
366339

Fig. 110: Navigation Circuit, 6-Speaker (4 of 4)

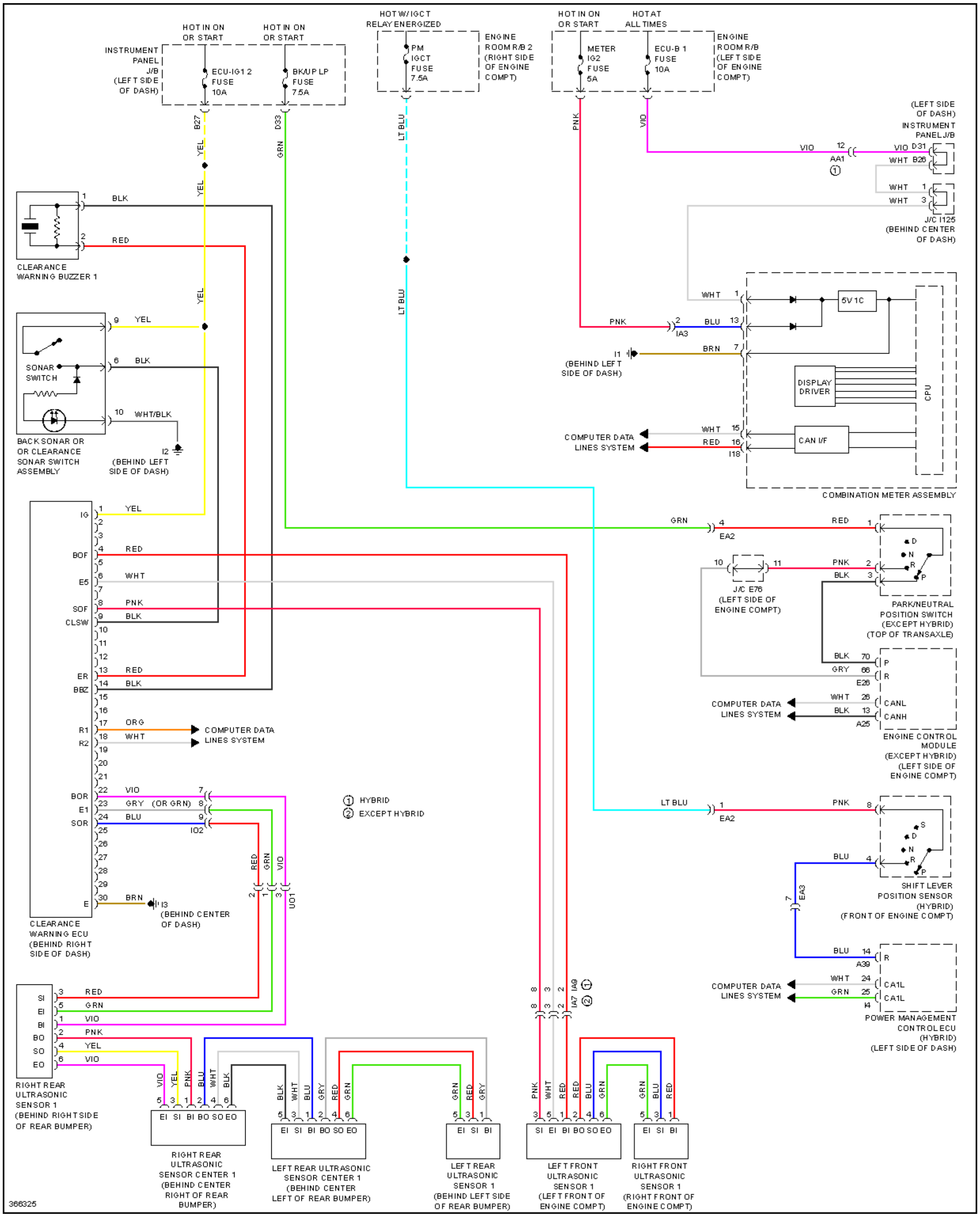
HOT IN ON OR START
HOT IN ON OR START
INSTRUMENT PANEL J/B (LEFT SIDE OF DASH)
ECU-IG1 2 FUSE 10A
BK/UP LP FUSE 7.5A
HOT W/ IGCT RELAY ENERGIZED
PM IGCT FUSE 7.5A
ENGINE ROOM R/B 2 (RIGHT SIDE OF ENGINE COMPT)
HOT IN ON OR START
HOT AT ALL TIMES
METER IG2 FUSE 5A
ECU-B 1 FUSE 10A
ENGINE ROOM R/B (LEFT SIDE OF ENGINE COMPT)
B27
D33
YEL
GRN
LT BLU
PNK
VIO
(LEFT SIDE OF DASH) INSTRUMENT PANEL J/B
VIO 12 AA1 ①
VIO D31
WHT B26
WHT 1
WHT 3
J/C I125 (BEHIND CENTER OF DASH)
BLK
RED
CLEARANCE WARNING BUZZER 1
YEL 9
BLK 6
WHT/BLK 10
SONAR SWITCH
BACK SONAR OR OR CLEARANCE SONAR SWITCH ASSEMBLY
I2 (BEHIND LEFT SIDE OF DASH)
WHT 1
PNK 2 BLU 13 IA3
5V IC
BRN 7
I1 (BEHIND LEFT SIDE OF DASH)
DISPLAY DRIVER
CPU
COMPUTER DATA LINES SYSTEM
WHT 15
RED 16
I18
CAN I/F
COMBINATION METER ASSEMBLY
IG 1 YEL
BOF 4 RED
E5 6 WHT
SOF 8 PNK
CLSW 9 BLK
ER 13 RED
BBZ 14 BLK
R1 17 ORG
R2 18 WHT
COMPUTER DATA LINES SYSTEM
BOR 22 VIO 7
E1 23 GRY (OR GRN) 8
SOR 24 BLU 9 IO2
E 30 BRN
I3 (BEHIND CENTER OF DASH)
CLEARANCE WARNING ECU (BEHIND RIGHT SIDE OF DASH)
RED GRN VIO
2 1 3 UO1
① HYBRID
② EXCEPT HYBRID
GRN 4 EA2
RED 1
D N R P
10 11
J/C E76 (LEFT SIDE OF ENGINE COMPT)
PNK 2
BLK 3
PARK/NEUTRAL POSITION SWITCH (EXCEPT HYBRID) (TOP OF TRANSAXLE)
BLK 70 P
GRY 66 R
E26
COMPUTER DATA LINES SYSTEM
WHT 26 CANL
BLK 13 CANH
A25
ENGINE CONTROL MODULE (EXCEPT HYBRID) (LEFT SIDE OF ENGINE COMPT)
LT BLU 1 EA2
PNK 8
S D N R P
BLU 4
7 EA3
SHIFT LEVER POSITION SENSOR (HYBRID) (FRONT OF ENGINE COMPT)
BLU 14 R
A39
COMPUTER DATA LINES SYSTEM
WHT 24 CA1L
GRN 25 CA1L
I4
POWER MANAGEMENT CONTROL ECU (HYBRID) (LEFT SIDE OF DASH)
8 3 2 IA7 ①
8 3 2 IA9 ②
SI 3 RED
EI 5 GRN
BI 1 VIO
BO 2 PNK
SO 4 YEL
EO 6 VIO
RIGHT REAR ULTRASONIC SENSOR 1 (BEHIND RIGHT SIDE OF REAR BUMPER)
VIO YEL PNK BLU WHT BLK
5 3 1 2 4 6
EI SI BI BO SO EO
RIGHT REAR ULTRASONIC SENSOR CENTER 1 (BEHIND CENTER RIGHT OF REAR BUMPER)
BLK WHT BLU GRY RED GRN
5 3 1 2 4 6
EI SI BI BO SO EO
LEFT REAR ULTRASONIC SENSOR CENTER 1 (BEHIND CENTER LEFT OF REAR BUMPER)
GRN RED GRY
5 3 1
EI SI BI
LEFT REAR ULTRASONIC SENSOR 1 (BEHIND LEFT SIDE OF REAR BUMPER)
PNK WHT RED RED BLU GRN
3 5 1 2 4 6
SI EI BI BO SO EO
LEFT FRONT ULTRASONIC SENSOR 1 (LEFT FRONT OF ENGINE COMPT)
GRN BLU RED
5 3 1
EI SI BI
RIGHT FRONT ULTRASONIC SENSOR 1 (RIGHT FRONT OF ENGINE COMPT)
366325

Fig. 111: Parking Assistant Circuit

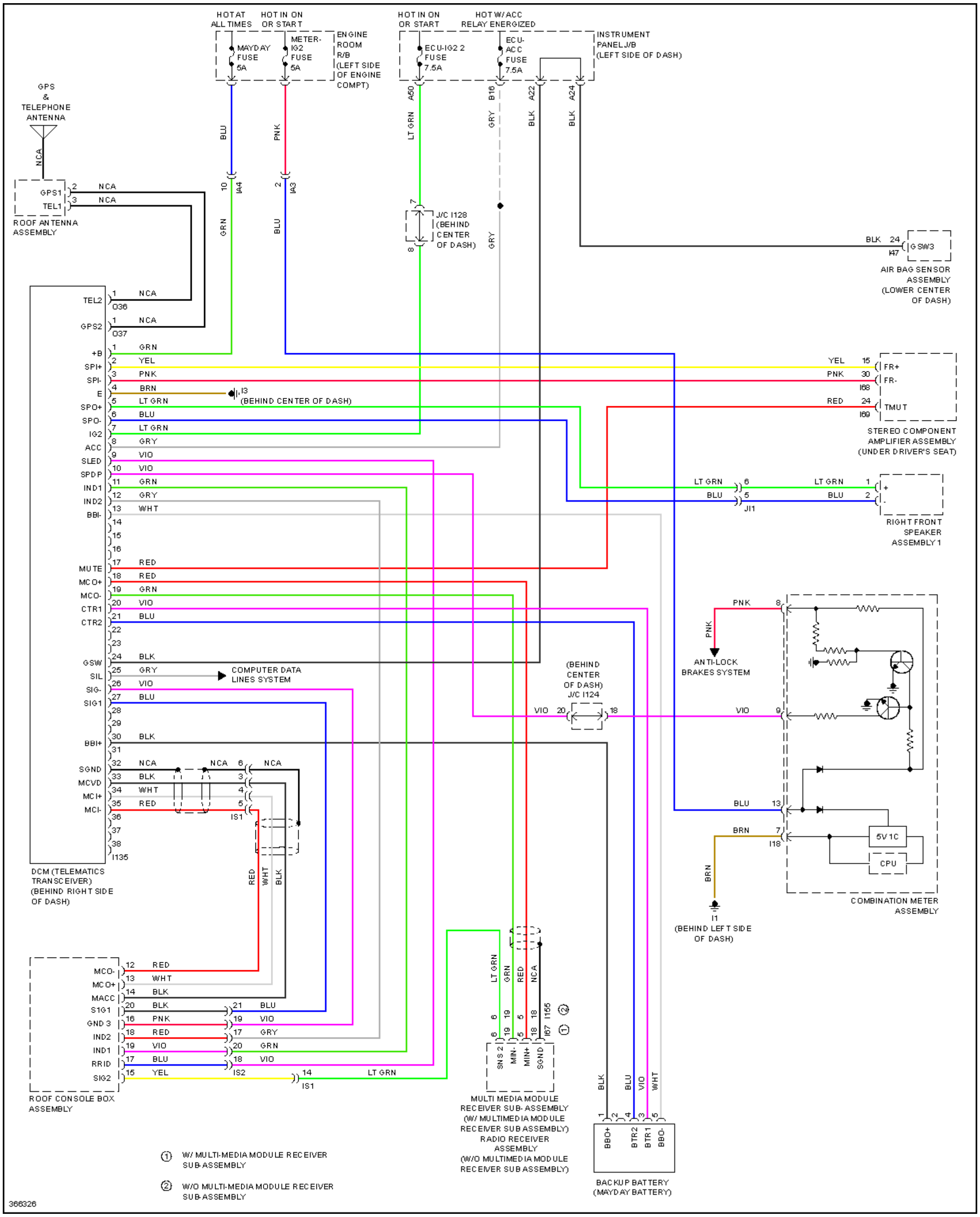
HOT AT ALL TIMES
HOT IN ON OR START
MAYDAY FUSE 5A
METER-IG2 FUSE 5A
ENGINE ROOM R/B (LEFT SIDE OF ENGINE COMPT)
HOT IN ON OR START
HOT W/ ACC RELAY ENERGIZED
ECU-IG2 2 FUSE 7.5A
ECU-ACC FUSE 7.5A
INSTRUMENT PANEL J/B (LEFT SIDE OF DASH)
A50
B16
A22
A24
BLU
PNK
LT GRN
GRY
BLK
BLK
10 IA4
2 IA3
GRN
BLU
7
8
J/C I128 (BEHIND CENTER OF DASH)
GRY
GPS & TELEPHONE ANTENNA
NCA
GPS1
TEL1
2 NCA
3 NCA
ROOF ANTENNA ASSEMBLY
BLK 24 I47 GSW3
AIR BAG SENSOR ASSEMBLY (LOWER CENTER OF DASH)
TEL2 1 NCA O36
GPS2 1 NCA O37
+B 1 GRN
SPI+ 2 YEL
SPI- 3 PNK
E 4 BRN
SPO+ 5 LT GRN
SPO- 6 BLU
IG2 7 LT GRN
ACC 8 GRY
SLED 9 VIO
SPDP 10 VIO
IND1 11 GRN
IND2 12 GRY
BBI- 13 WHT
14
15
16
MUTE 17 RED
MCO+ 18 RED
MCO- 19 GRN
CTR1 20 VIO
CTR2 21 BLU
22
23
GSW 24 BLK
SIL 25 GRY
SIG- 26 VIO
SIG1 27 BLU
28
29
30 BLK
BBI+ 31
SGND 32 NCA
MCVD 33 BLK
MCI+ 34 WHT
MCI- 35 RED
36
37
38
I135
I3 (BEHIND CENTER OF DASH)
COMPUTER DATA LINES SYSTEM
DCM (TELEMATICS TRANSCEIVER) (BEHIND RIGHT SIDE OF DASH)
YEL 15 FR+
PNK 30 FR-
I68
RED 24 TMUT
I69
STEREO COMPONENT AMPLIFIER ASSEMBLY (UNDER DRIVER'S SEAT)
LT GRN 6
BLU 5
JI1
LT GRN 1 +
BLU 2 -
RIGHT FRONT SPEAKER ASSEMBLY 1
PNK 8
PNK
ANTI-LOCK BRAKES SYSTEM
(BEHIND CENTER OF DASH) J/C I124
VIO 20
18
VIO 9
BLU 13
BRN 7
I18
5V IC
CPU
BRN
I1 (BEHIND LEFT SIDE OF DASH)
COMBINATION METER ASSEMBLY
NCA 6 NCA
3
4
5
IS1
RED
WHT
BLK
MCO- 12 RED
MCO+ 13 WHT
MACC 14 BLK
SIG1 20 BLK 21 BLU
GND 3 16 PNK 19 VIO
IND2 18 RED 17 GRY
IND1 19 VIO 20 GRN
RRID 17 BLU 18 VIO
SIG2 15 YEL IS2 14 LT GRN IS1
ROOF CONSOLE BOX ASSEMBLY
LT GRN
GRN
RED
NCA
6 19 5 18 I155 ②
8 19 5 18 I67 ①
SNS2
MIN-
MIN+
SGND
MULTI MEDIA MODULE RECEIVER SUB-ASSEMBLY (W/ MULTIMEDIA MODULE RECEIVER SUB ASSEMBLY) RADIO RECEIVER ASSEMBLY (W/O MULTIMEDIA MODULE RECEIVER SUB ASSEMBLY)
BLK
BLU
VIO
WHT
1 2 4 3 5
BBO+
BTR2
BTR1
BBO-
BACKUP BATTERY (MAYDAY BATTERY)
① W/ MULTI-MEDIA MODULE RECEIVER SUB-ASSEMBLY
② W/O MULTI-MEDIA MODULE RECEIVER SUB-ASSEMBLY
366326

Fig. 112: Telematics Circuit

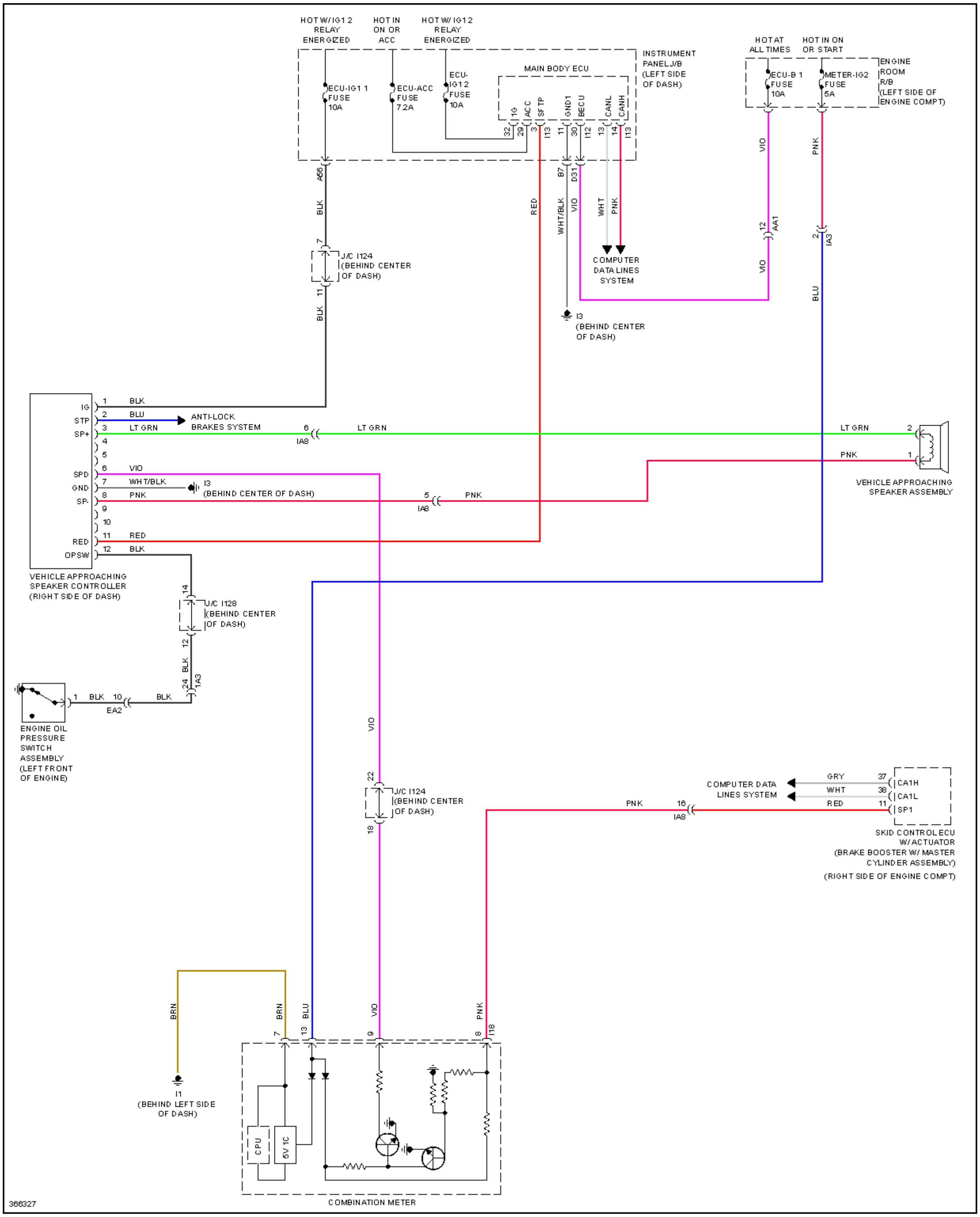
HOT W/ IG1 2 RELAY ENERGIZED
HOT IN ON OR ACC
HOT W/ IG1 2 RELAY ENERGIZED
INSTRUMENT PANEL J/B (LEFT SIDE OF DASH)
ECU-IG1 1 FUSE 10A
ECU-ACC FUSE 7.2A
ECU-IG1 2 FUSE 10A
MAIN BODY ECU
IG
ACC
SFTP
GND1
BECU
CANL
CANH
32
29
3
I13
11
30
I12
13
14
I13
HOT AT ALL TIMES
HOT IN ON OR START
ENGINE ROOM R/B (LEFT SIDE OF ENGINE COMPT)
ECU-B 1 FUSE 10A
METER-IG2 FUSE 5A
A56
BLK
7
J/C I124 (BEHIND CENTER OF DASH)
11
BLK
RED
B7
D31
WHT/BLK
VIO
WHT
PNK
COMPUTER DATA LINES SYSTEM
I3 (BEHIND CENTER OF DASH)
VIO
12
AA1
VIO
PNK
2
IA3
BLU
IG
STP
SP+
SPD
GND
SP-
RED
OPSW
1
2
3
4
5
6
7
8
9
10
11
12
BLK
BLU
LT GRN
VIO
WHT/BLK
PNK
RED
BLK
ANTI-LOCK BRAKES SYSTEM
6
IA8
LT GRN
I3 (BEHIND CENTER OF DASH)
5
IA8
PNK
LT GRN
2
PNK
1
VEHICLE APPROACHING SPEAKER ASSEMBLY
VEHICLE APPROACHING SPEAKER CONTROLLER (RIGHT SIDE OF DASH)
14
J/C I128 (BEHIND CENTER OF DASH)
12
BLK
24
IA3
1
BLK
10
EA2
BLK
ENGINE OIL PRESSURE SWITCH ASSEMBLY (LEFT FRONT OF ENGINE)
VIO
22
J/C I124 (BEHIND CENTER OF DASH)
18
COMPUTER DATA LINES SYSTEM
GRY
WHT
RED
37
38
11
CA1H
CA1L
SP1
PNK
16
IA8
SKID CONTROL ECU W/ ACTUATOR (BRAKE BOOSTER W/ MASTER CYLINDER ASSEMBLY) (RIGHT SIDE OF ENGINE COMPT)
BRN
BRN
BLU
VIO
PNK
7
13
9
8
I18
I1 (BEHIND LEFT SIDE OF DASH)
CPU
5V IC
COMBINATION METER
366327

Fig. 113: Vehicle Proximity Notification Circuit

POWER DISTRIBUTION

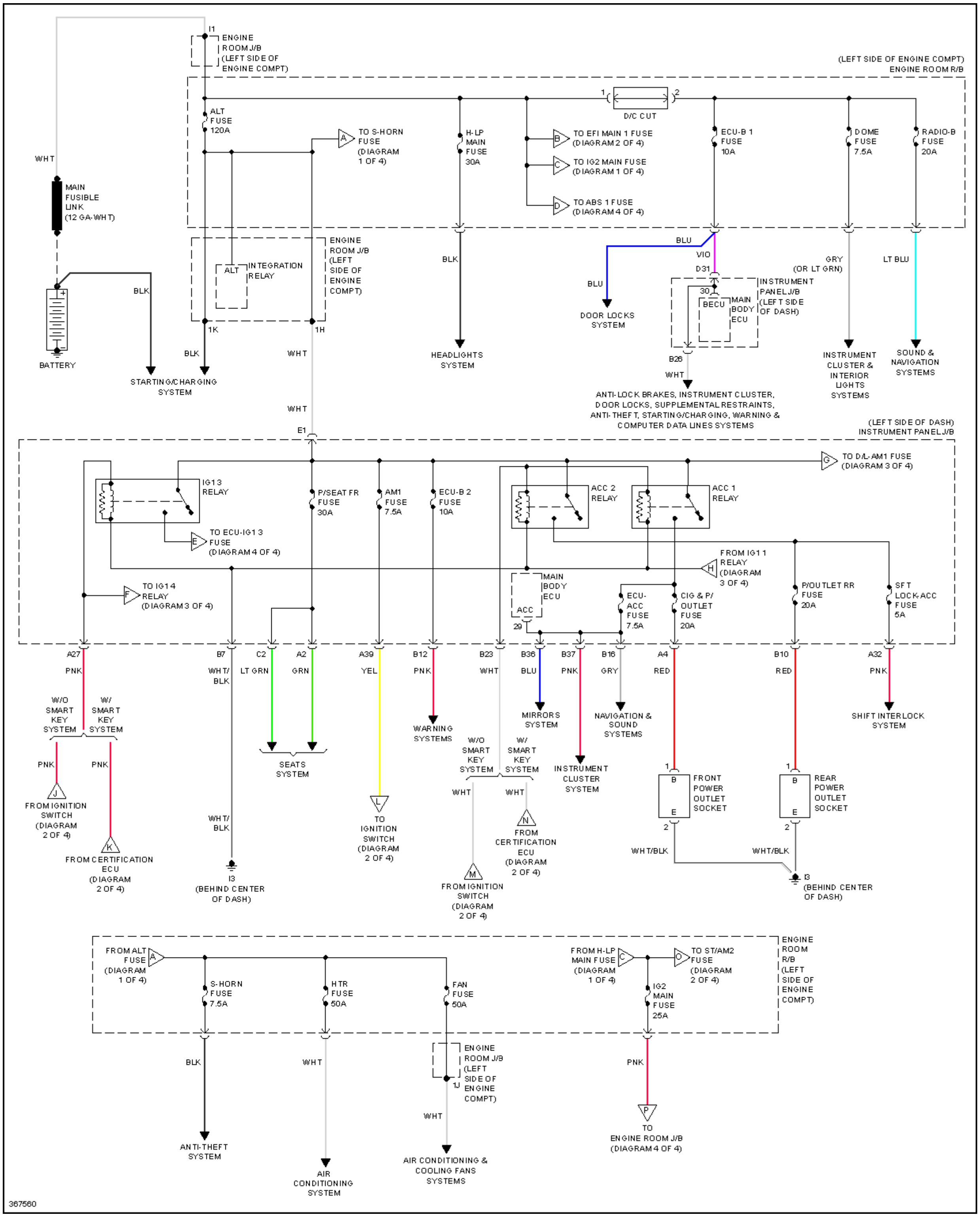
I1
ENGINE ROOM J/B (LEFT SIDE OF ENGINE COMPT)
(LEFT SIDE OF ENGINE COMPT) ENGINE ROOM R/B
1
D/C CUT
2
WHT
ALT FUSE 120A
A
TO S-HORN FUSE (DIAGRAM 1 OF 4)
H-LP MAIN FUSE 30A
B
TO EFI MAIN 1 FUSE (DIAGRAM 2 OF 4)
C
TO IG2 MAIN FUSE (DIAGRAM 1 OF 4)
D
TO ABS 1 FUSE (DIAGRAM 4 OF 4)
ECU-B 1 FUSE 10A
DOME FUSE 7.5A
RADIO-B FUSE 20A
MAIN FUSIBLE LINK (12 GA-WHT)
ENGINE ROOM J/B (LEFT SIDE OF ENGINE COMPT)
ALT
INTEGRATION RELAY
BLK
BLU
VIO
D31
BLU
30
BECU
MAIN BODY ECU
INSTRUMENT PANEL J/B (LEFT SIDE OF DASH)
GRY (OR LT GRN)
LT BLU
BLK
BATTERY
1K
1H
BLK
WHT
STARTING/CHARGING SYSTEM
HEADLIGHTS SYSTEM
DOOR LOCKS SYSTEM
B26
WHT
ANTI-LOCK BRAKES, INSTRUMENT CLUSTER, DOOR LOCKS, SUPPLEMENTAL RESTRAINTS, ANTI-THEFT, STARTING/CHARGING, WARNING & COMPUTER DATA LINES SYSTEMS
INSTRUMENT CLUSTER & INTERIOR LIGHTS SYSTEMS
SOUND & NAVIGATION SYSTEMS
WHT
E1
(LEFT SIDE OF DASH) INSTRUMENT PANEL J/B
G
TO D/L-AM1 FUSE (DIAGRAM 3 OF 4)
IG13 RELAY
P/SEAT FR FUSE 30A
AM1 FUSE 7.5A
ECU-B 2 FUSE 10A
ACC 2 RELAY
ACC 1 RELAY
E
TO ECU-IG13 FUSE (DIAGRAM 4 OF 4)
FROM IG11 RELAY (DIAGRAM 3 OF 4)
H
F
TO IG14 RELAY (DIAGRAM 3 OF 4)
MAIN BODY ECU
ACC
29
ECU-ACC FUSE 7.5A
CIG & P/OUTLET FUSE 20A
P/OUTLET RR FUSE 20A
SFT LOCK-ACC FUSE 5A
A27
B7
C2
A2
A39
B12
B23
B36
B37
B16
A4
B10
A32
PNK
WHT/BLK
LT GRN
GRN
YEL
PNK
WHT
BLU
PNK
GRY
RED
RED
PNK
W/O SMART KEY SYSTEM
W/ SMART KEY SYSTEM
PNK
PNK
J
FROM IGNITION SWITCH (DIAGRAM 2 OF 4)
K
FROM CERTIFICATION ECU (DIAGRAM 2 OF 4)
WHT/BLK
I3 (BEHIND CENTER OF DASH)
SEATS SYSTEM
L
TO IGNITION SWITCH (DIAGRAM 2 OF 4)
WARNING SYSTEMS
W/O SMART KEY SYSTEM
W/ SMART KEY SYSTEM
WHT
WHT
M
FROM IGNITION SWITCH (DIAGRAM 2 OF 4)
N
FROM CERTIFICATION ECU (DIAGRAM 2 OF 4)
MIRRORS SYSTEM
INSTRUMENT CLUSTER SYSTEM
NAVIGATION & SOUND SYSTEMS
1
B
E
2
FRONT POWER OUTLET SOCKET
WHT/BLK
1
B
E
2
REAR POWER OUTLET SOCKET
WHT/BLK
I3 (BEHIND CENTER OF DASH)
SHIFT INTERLOCK SYSTEM
FROM ALT FUSE (DIAGRAM 1 OF 4)
A
S-HORN FUSE 7.5A
HTR FUSE 50A
FAN FUSE 50A
FROM H-LP MAIN FUSE (DIAGRAM 1 OF 4)
C
O
TO ST/AM2 FUSE (DIAGRAM 2 OF 4)
IG2 MAIN FUSE 25A
ENGINE ROOM R/B (LEFT SIDE OF ENGINE COMPT)
BLK
WHT
ENGINE ROOM J/B (LEFT SIDE OF ENGINE COMPT)
1J
WHT
PNK
P
TO ENGINE ROOM J/B (DIAGRAM 4 OF 4)
ANTI-THEFT SYSTEM
AIR CONDITIONING SYSTEM
AIR CONDITIONING & COOLING FANS SYSTEMS
367560

Fig. 114: Power Distribution Circuit, Except Hybrid (1 of 4)

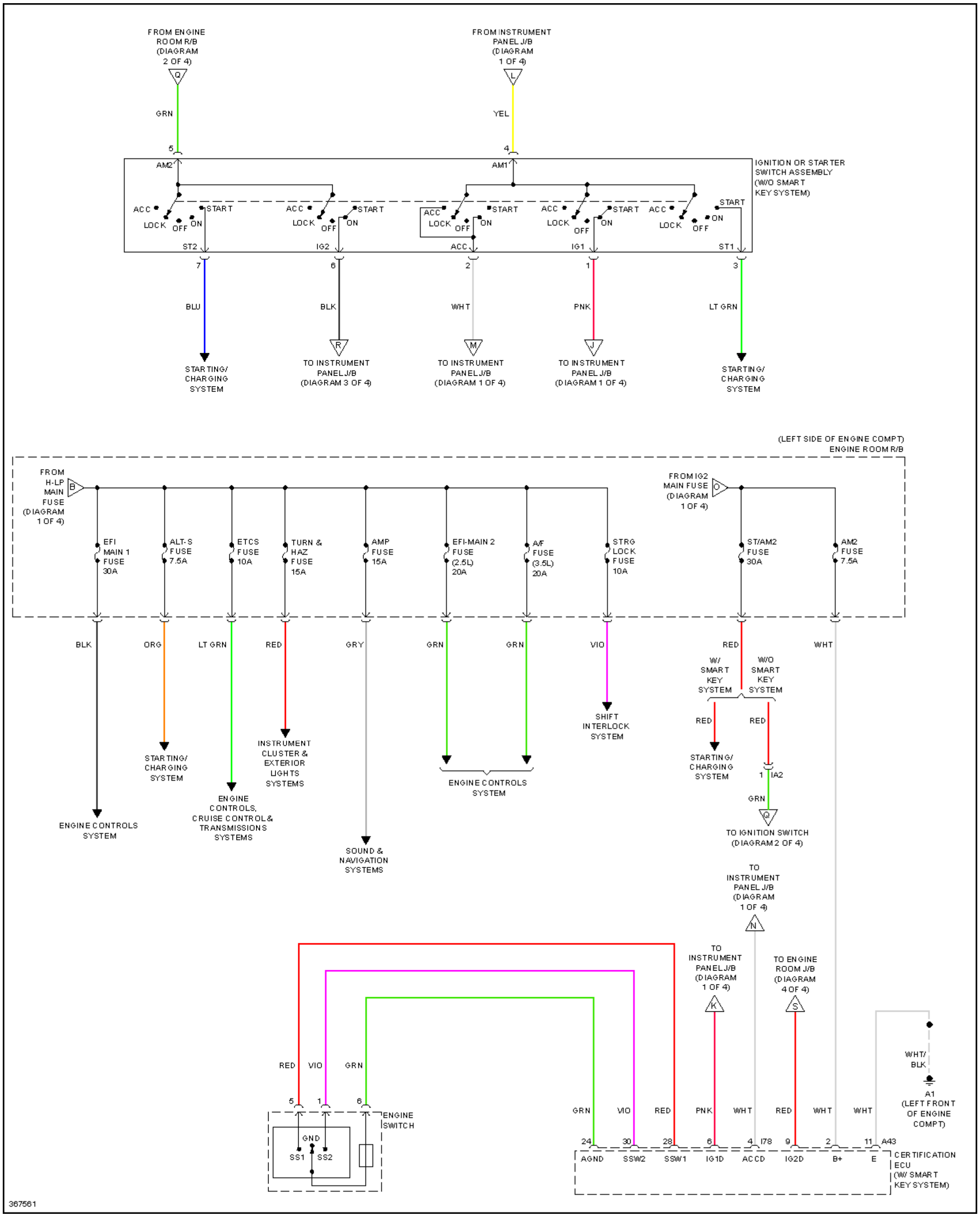
FROM ENGINE ROOM R/B (DIAGRAM 2 OF 4)
Q
GRN
5
AM2
FROM INSTRUMENT PANEL J/B (DIAGRAM 1 OF 4)
L
YEL
4
AM1
IGNITION OR STARTER SWITCH ASSEMBLY (W/O SMART KEY SYSTEM)
ACC
LOCK
OFF
ON
START
ST2
IG2
ACC
IG1
ST1
7
6
2
1
3
BLU
BLK
WHT
PNK
LT GRN
R
M
J
STARTING/ CHARGING SYSTEM
TO INSTRUMENT PANEL J/B (DIAGRAM 3 OF 4)
TO INSTRUMENT PANEL J/B (DIAGRAM 1 OF 4)
TO INSTRUMENT PANEL J/B (DIAGRAM 1 OF 4)
STARTING/ CHARGING SYSTEM
(LEFT SIDE OF ENGINE COMPT) ENGINE ROOM R/B
FROM H-LP MAIN FUSE (DIAGRAM 1 OF 4)
B
FROM IG2 MAIN FUSE (DIAGRAM 1 OF 4)
O
EFI MAIN 1 FUSE 30A
ALT-S FUSE 7.5A
ETCS FUSE 10A
TURN & HAZ FUSE 15A
AMP FUSE 15A
EFI-MAIN 2 FUSE (2.5L) 20A
A/F FUSE (3.5L) 20A
STRG LOCK FUSE 10A
ST/AM2 FUSE 30A
AM2 FUSE 7.5A
BLK
ORG
LT GRN
RED
GRY
GRN
GRN
VIO
RED
WHT
W/ SMART KEY SYSTEM
W/O SMART KEY SYSTEM
RED
RED
1
IA2
GRN
Q
ENGINE CONTROLS SYSTEM
STARTING/ CHARGING SYSTEM
ENGINE CONTROLS, CRUISE CONTROL & TRANSMISSIONS SYSTEMS
INSTRUMENT CLUSTER & EXTERIOR LIGHTS SYSTEMS
SOUND & NAVIGATION SYSTEMS
ENGINE CONTROLS SYSTEM
SHIFT INTERLOCK SYSTEM
STARTING/ CHARGING SYSTEM
TO IGNITION SWITCH (DIAGRAM 2 OF 4)
TO INSTRUMENT PANEL J/B (DIAGRAM 1 OF 4)
N
TO INSTRUMENT PANEL J/B (DIAGRAM 1 OF 4)
K
TO ENGINE ROOM J/B (DIAGRAM 4 OF 4)
S
RED
VIO
GRN
5
1
6
ENGINE SWITCH
GND
SS1
SS2
WHT/ BLK
A1 (LEFT FRONT OF ENGINE COMPT)
GRN
VIO
RED
PNK
WHT
RED
WHT
WHT
24
30
28
6
4
I78
9
2
11
A43
AGND
SSW2
SSW1
IG1D
ACCD
IG2D
B+
E
CERTIFICATION ECU (W/ SMART KEY SYSTEM)
367561

Fig. 115: Power Distribution Circuit, Except Hybrid (2 of 4)

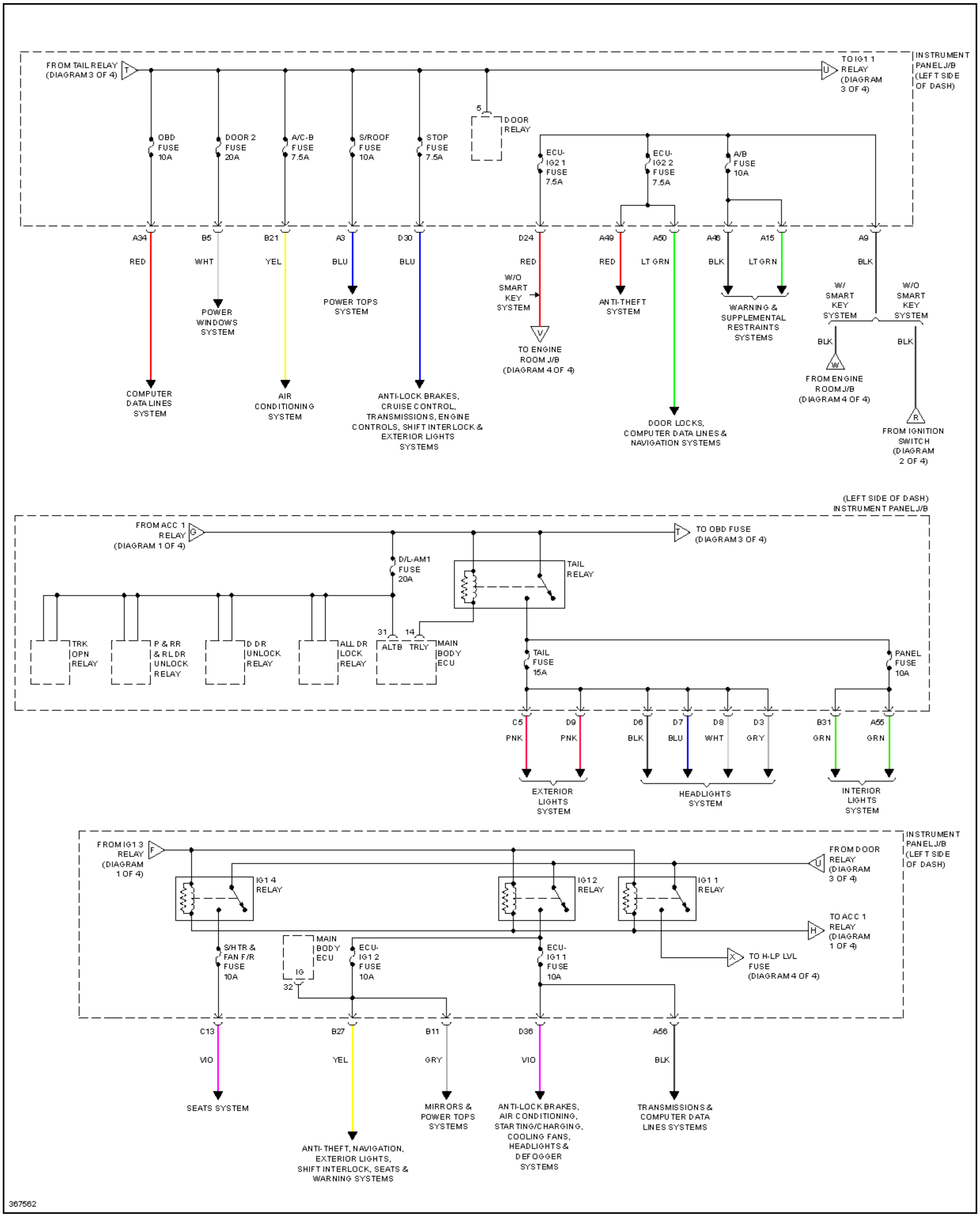
FROM TAIL RELAY (DIAGRAM 3 OF 4)
T
TO IG1 1 RELAY (DIAGRAM 3 OF 4)
U
INSTRUMENT PANEL J/B (LEFT SIDE OF DASH)
5
DOOR RELAY
OBD FUSE 10A
DOOR 2 FUSE 20A
A/C-B FUSE 7.5A
S/ROOF FUSE 10A
STOP FUSE 7.5A
ECU-IG2 1 FUSE 7.5A
ECU-IG2 2 FUSE 7.5A
A/B FUSE 10A
A34
B5
B21
A3
D30
D24
A49
A50
A46
A15
A9
RED
WHT
YEL
BLU
BLU
RED
RED
LT GRN
BLK
LT GRN
BLK
W/O SMART KEY SYSTEM
V
TO ENGINE ROOM J/B (DIAGRAM 4 OF 4)
POWER WINDOWS SYSTEM
POWER TOPS SYSTEM
ANTI-THEFT SYSTEM
WARNING & SUPPLEMENTAL RESTRAINTS SYSTEMS
W/ SMART KEY SYSTEM
W/O SMART KEY SYSTEM
BLK
BLK
W
FROM ENGINE ROOM J/B (DIAGRAM 4 OF 4)
R
FROM IGNITION SWITCH (DIAGRAM 2 OF 4)
COMPUTER DATA LINES SYSTEM
AIR CONDITIONING SYSTEM
ANTI-LOCK BRAKES, CRUISE CONTROL, TRANSMISSIONS, ENGINE CONTROLS, SHIFT INTERLOCK & EXTERIOR LIGHTS SYSTEMS
DOOR LOCKS, COMPUTER DATA LINES & NAVIGATION SYSTEMS
(LEFT SIDE OF DASH) INSTRUMENT PANEL J/B
FROM ACC 1 RELAY (DIAGRAM 1 OF 4)
G
T
TO OBD FUSE (DIAGRAM 3 OF 4)
D/L-AM1 FUSE 20A
TAIL RELAY
TRK OPN RELAY
P & RR & RL DR UNLOCK RELAY
D DR UNLOCK RELAY
ALL DR LOCK RELAY
31
14
ALTB
TRLY
MAIN BODY ECU
TAIL FUSE 15A
PANEL FUSE 10A
C5
D9
D6
D7
D8
D3
B31
A55
PNK
PNK
BLK
BLU
WHT
GRY
GRN
GRN
EXTERIOR LIGHTS SYSTEM
HEADLIGHTS SYSTEM
INTERIOR LIGHTS SYSTEM
FROM IG1 3 RELAY (DIAGRAM 1 OF 4)
F
INSTRUMENT PANEL J/B (LEFT SIDE OF DASH)
FROM DOOR RELAY (DIAGRAM 3 OF 4)
U
IG1 4 RELAY
IG1 2 RELAY
IG1 1 RELAY
TO ACC 1 RELAY (DIAGRAM 1 OF 4)
H
X
TO H-LP LVL FUSE (DIAGRAM 4 OF 4)
S/HTR & FAN F/R FUSE 10A
MAIN BODY ECU
IG
32
ECU-IG1 2 FUSE 10A
ECU-IG1 1 FUSE 10A
C13
B27
B11
D36
A56
VIO
YEL
GRY
VIO
BLK
SEATS SYSTEM
ANTI-THEFT, NAVIGATION, EXTERIOR LIGHTS, SHIFT INTERLOCK, SEATS & WARNING SYSTEMS
MIRRORS & POWER TOPS SYSTEMS
ANTI-LOCK BRAKES, AIR CONDITIONING, STARTING/CHARGING, COOLING FANS, HEADLIGHTS & DEFOGGER SYSTEMS
TRANSMISSIONS & COMPUTER DATA LINES SYSTEMS
367562

Fig. 116: Power Distribution Circuit, Except Hybrid (3 of 4)

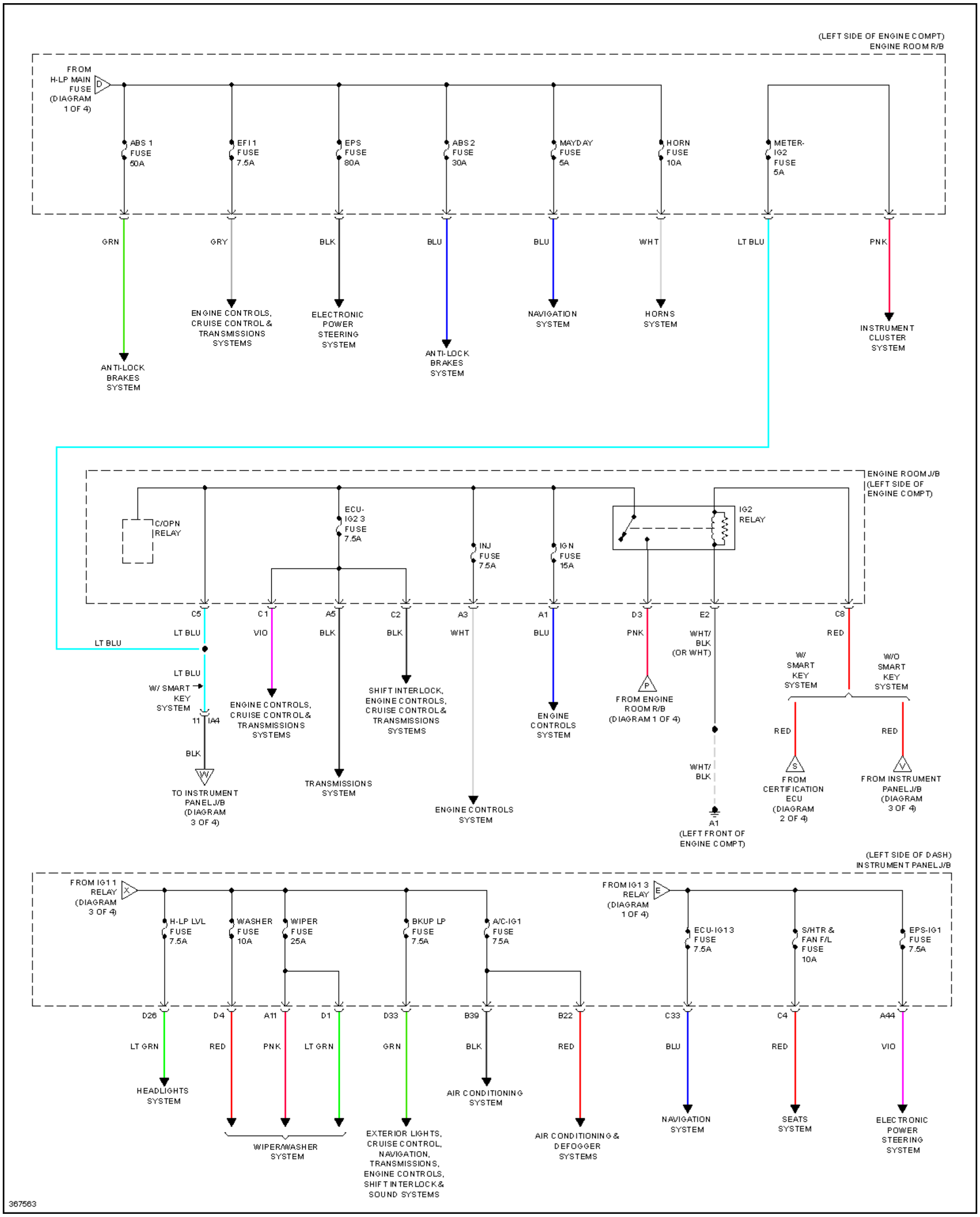
(LEFT SIDE OF ENGINE COMPT)
ENGINE ROOM R/B
FROM H-LP MAIN FUSE (DIAGRAM 1 OF 4)
D
ABS 1 FUSE 50A
EFI 1 FUSE 7.5A
EPS FUSE 80A
ABS 2 FUSE 30A
MAYDAY FUSE 5A
HORN FUSE 10A
METER-IG2 FUSE 5A
GRN
GRY
BLK
BLU
BLU
WHT
LT BLU
PNK
ANTI-LOCK BRAKES SYSTEM
ENGINE CONTROLS, CRUISE CONTROL & TRANSMISSIONS SYSTEMS
ELECTRONIC POWER STEERING SYSTEM
ANTI-LOCK BRAKES SYSTEM
NAVIGATION SYSTEM
HORNS SYSTEM
INSTRUMENT CLUSTER SYSTEM
ENGINE ROOM J/B (LEFT SIDE OF ENGINE COMPT)
C/OPN RELAY
ECU-IG2 3 FUSE 7.5A
INJ FUSE 7.5A
IGN FUSE 15A
IG2 RELAY
C5
C1
A5
C2
A3
A1
D3
E2
C8
LT BLU
LT BLU
VIO
BLK
BLK
WHT
BLU
PNK
WHT/ BLK (OR WHT)
RED
LT BLU
W/ SMART KEY SYSTEM
11
IA4
BLK
W
TO INSTRUMENT PANEL J/B (DIAGRAM 3 OF 4)
ENGINE CONTROLS, CRUISE CONTROL & TRANSMISSIONS SYSTEMS
TRANSMISSIONS SYSTEM
SHIFT INTERLOCK, ENGINE CONTROLS, CRUISE CONTROL & TRANSMISSIONS SYSTEMS
ENGINE CONTROLS SYSTEM
ENGINE CONTROLS SYSTEM
P
FROM ENGINE ROOM R/B (DIAGRAM 1 OF 4)
WHT/ BLK
A1
(LEFT FRONT OF ENGINE COMPT)
W/ SMART KEY SYSTEM
W/O SMART KEY SYSTEM
RED
RED
S
FROM CERTIFICATION ECU (DIAGRAM 2 OF 4)
V
FROM INSTRUMENT PANEL J/B (DIAGRAM 3 OF 4)
(LEFT SIDE OF DASH)
INSTRUMENT PANEL J/B
FROM IG1 1 RELAY (DIAGRAM 3 OF 4)
X
H-LP LVL FUSE 7.5A
WASHER FUSE 10A
WIPER FUSE 25A
BKUP LP FUSE 7.5A
A/C-IG1 FUSE 7.5A
FROM IG1 3 RELAY (DIAGRAM 1 OF 4)
E
ECU-IG1 3 FUSE 7.5A
S/HTR & FAN F/L FUSE 10A
EPS-IG1 FUSE 7.5A
D26
D4
A11
D1
D33
B39
B22
C33
C4
A44
LT GRN
RED
PNK
LT GRN
GRN
BLK
RED
BLU
RED
VIO
HEADLIGHTS SYSTEM
WIPER/WASHER SYSTEM
EXTERIOR LIGHTS, CRUISE CONTROL, NAVIGATION, TRANSMISSIONS, ENGINE CONTROLS, SHIFT INTERLOCK & SOUND SYSTEMS
AIR CONDITIONING SYSTEM
AIR CONDITIONING & DEFOGGER SYSTEMS
NAVIGATION SYSTEM
SEATS SYSTEM
ELECTRONIC POWER STEERING SYSTEM
367563

Fig. 117: Power Distribution Circuit, Except Hybrid (4 of 4)

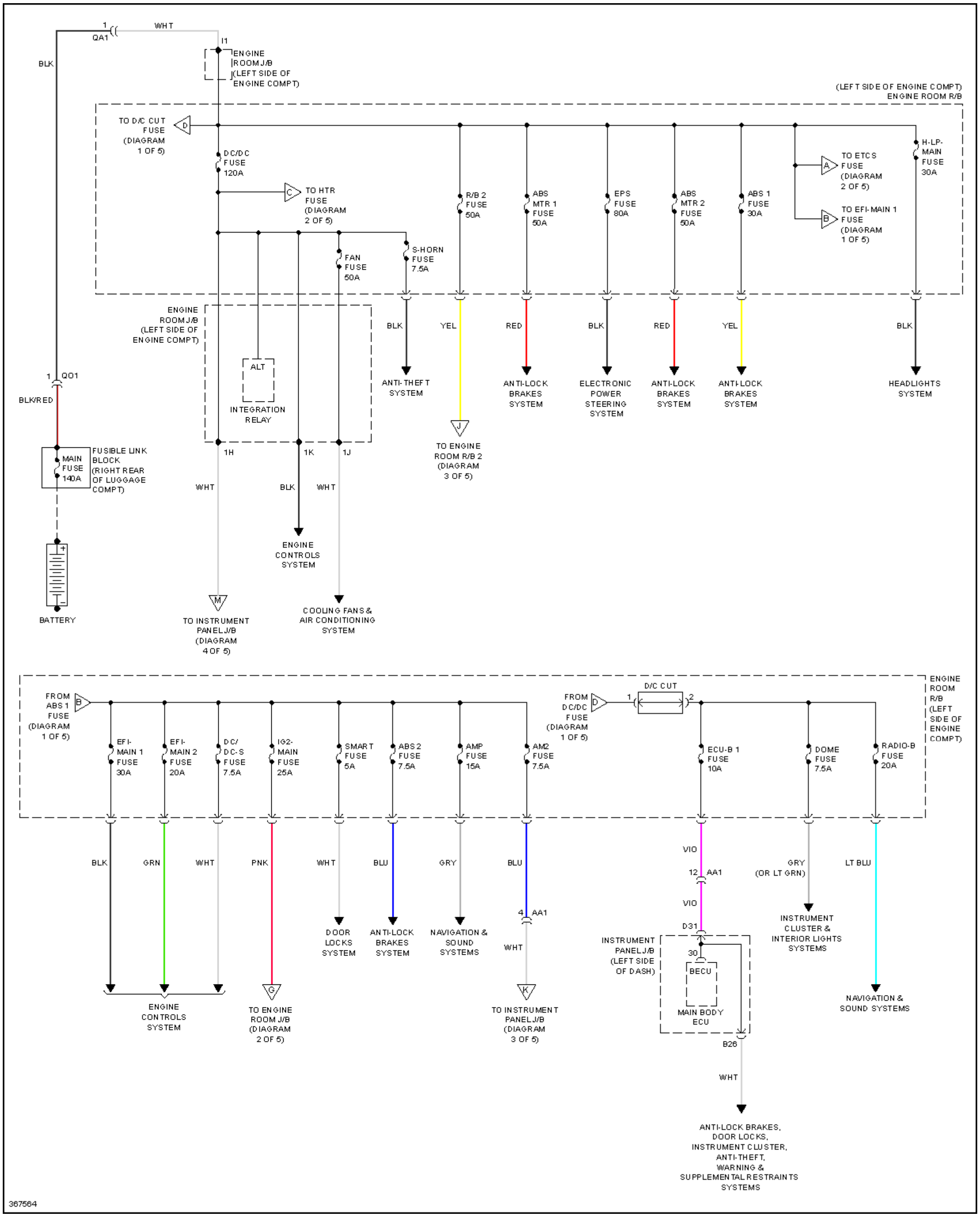
1
QA1
WHT
BLK
I1
ENGINE ROOM J/B (LEFT SIDE OF ENGINE COMPT)
(LEFT SIDE OF ENGINE COMPT) ENGINE ROOM R/B
TO D/C CUT FUSE (DIAGRAM 1 OF 5)
D
DC/DC FUSE 120A
C
TO HTR FUSE (DIAGRAM 2 OF 5)
FAN FUSE 50A
S-HORN FUSE 7.5A
R/B 2 FUSE 50A
ABS MTR 1 FUSE 50A
EPS FUSE 80A
ABS MTR 2 FUSE 50A
ABS 1 FUSE 30A
A
TO ETCS FUSE (DIAGRAM 2 OF 5)
B
TO EFI-MAIN 1 FUSE (DIAGRAM 1 OF 5)
H-LP-MAIN FUSE 30A
ENGINE ROOM J/B (LEFT SIDE OF ENGINE COMPT)
ALT
INTEGRATION RELAY
BLK
ANTI-THEFT SYSTEM
YEL
J
TO ENGINE ROOM R/B 2 (DIAGRAM 3 OF 5)
RED
ANTI-LOCK BRAKES SYSTEM
BLK
ELECTRONIC POWER STEERING SYSTEM
RED
ANTI-LOCK BRAKES SYSTEM
YEL
ANTI-LOCK BRAKES SYSTEM
BLK
HEADLIGHTS SYSTEM
1
QO1
BLK/RED
MAIN FUSE 140A
FUSIBLE LINK BLOCK (RIGHT REAR OF LUGGAGE COMPT)
+
-
BATTERY
1H
1K
1J
WHT
BLK
WHT
ENGINE CONTROLS SYSTEM
M
TO INSTRUMENT PANEL J/B (DIAGRAM 4 OF 5)
COOLING FANS & AIR CONDITIONING SYSTEM
FROM ABS 1 FUSE (DIAGRAM 1 OF 5)
B
EFI-MAIN 1 FUSE 30A
EFI-MAIN 2 FUSE 20A
DC/DC-S FUSE 7.5A
IG2-MAIN FUSE 25A
SMART FUSE 5A
ABS 2 FUSE 7.5A
AMP FUSE 15A
AM2 FUSE 7.5A
FROM DC/DC FUSE (DIAGRAM 1 OF 5)
D
D/C CUT
1
2
ECU-B 1 FUSE 10A
DOME FUSE 7.5A
RADIO-B FUSE 20A
ENGINE ROOM R/B (LEFT SIDE OF ENGINE COMPT)
BLK
GRN
WHT
PNK
WHT
BLU
GRY
BLU
VIO
12
AA1
VIO
GRY (OR LT GRN)
LT BLU
ENGINE CONTROLS SYSTEM
G
TO ENGINE ROOM J/B (DIAGRAM 2 OF 5)
DOOR LOCKS SYSTEM
ANTI-LOCK BRAKES SYSTEM
NAVIGATION & SOUND SYSTEMS
4
AA1
WHT
K
TO INSTRUMENT PANEL J/B (DIAGRAM 3 OF 5)
D31
INSTRUMENT PANEL J/B (LEFT SIDE OF DASH)
30
BECU
MAIN BODY ECU
B26
WHT
INSTRUMENT CLUSTER & INTERIOR LIGHTS SYSTEMS
NAVIGATION & SOUND SYSTEMS
ANTI-LOCK BRAKES, DOOR LOCKS, INSTRUMENT CLUSTER, ANTI-THEFT, WARNING & SUPPLEMENTAL RESTRAINTS SYSTEMS
367564

Fig. 118: Power Distribution Circuit, Hybrid (1 of 5)

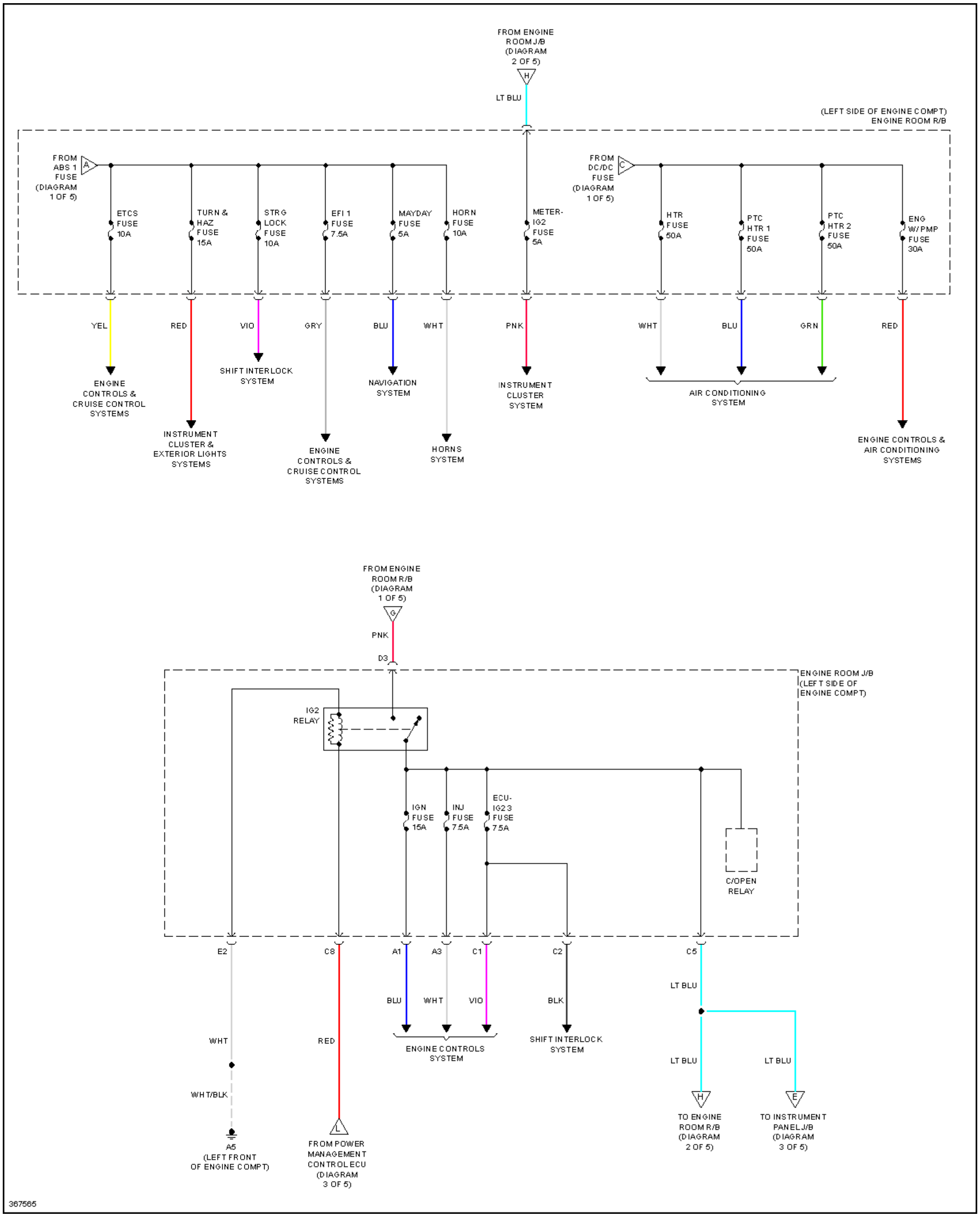
FROM ENGINE ROOM J/B (DIAGRAM 2 OF 5)
H
LT BLU
(LEFT SIDE OF ENGINE COMPT) ENGINE ROOM R/B
FROM ABS 1 FUSE (DIAGRAM 1 OF 5)
A
ETCS FUSE 10A
TURN & HAZ FUSE 15A
STRG LOCK FUSE 10A
EFI 1 FUSE 7.5A
MAYDAY FUSE 5A
HORN FUSE 10A
METER-IG2 FUSE 5A
FROM DC/DC FUSE (DIAGRAM 1 OF 5)
C
HTR FUSE 50A
PTC HTR 1 FUSE 50A
PTC HTR 2 FUSE 50A
ENG W/PMP FUSE 30A
YEL
RED
VIO
GRY
BLU
WHT
PNK
WHT
BLU
GRN
RED
ENGINE CONTROLS & CRUISE CONTROL SYSTEMS
INSTRUMENT CLUSTER & EXTERIOR LIGHTS SYSTEMS
SHIFT INTERLOCK SYSTEM
ENGINE CONTROLS & CRUISE CONTROL SYSTEMS
NAVIGATION SYSTEM
HORNS SYSTEM
INSTRUMENT CLUSTER SYSTEM
AIR CONDITIONING SYSTEM
ENGINE CONTROLS & AIR CONDITIONING SYSTEMS
FROM ENGINE ROOM R/B (DIAGRAM 1 OF 5)
G
PNK
D3
ENGINE ROOM J/B (LEFT SIDE OF ENGINE COMPT)
IG2 RELAY
IGN FUSE 15A
INJ FUSE 7.5A
ECU-IG2 3 FUSE 7.5A
C/OPEN RELAY
E2
C8
A1
A3
C1
C2
C5
WHT
RED
BLU
WHT
VIO
BLK
LT BLU
ENGINE CONTROLS SYSTEM
SHIFT INTERLOCK SYSTEM
WHT/BLK
A5 (LEFT FRONT OF ENGINE COMPT)
L
FROM POWER MANAGEMENT CONTROL ECU (DIAGRAM 3 OF 5)
LT BLU
LT BLU
H
E
TO ENGINE ROOM R/B (DIAGRAM 2 OF 5)
TO INSTRUMENT PANEL J/B (DIAGRAM 3 OF 5)
367565

Fig. 119: Power Distribution Circuit, Hybrid (2 of 5)

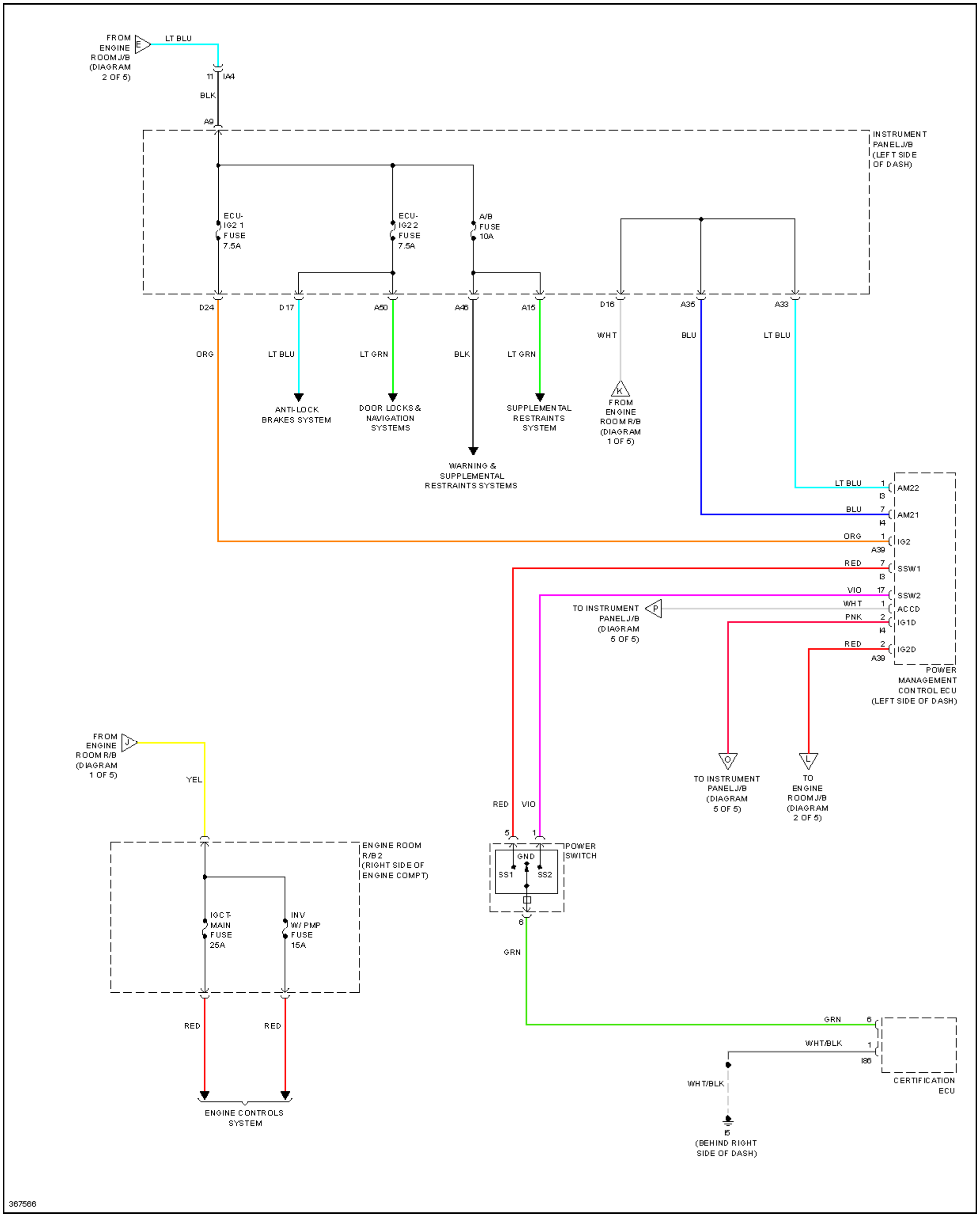
FROM ENGINE ROOM J/B (DIAGRAM 2 OF 5)
E
LT BLU
11
IA4
BLK
A9
INSTRUMENT PANEL J/B (LEFT SIDE OF DASH)
ECU-IG2 1 FUSE 7.5A
ECU-IG2 2 FUSE 7.5A
A/B FUSE 10A
D24
D17
A50
A46
A15
D16
A35
A33
ORG
LT BLU
LT GRN
BLK
LT GRN
WHT
BLU
LT BLU
ANTI-LOCK BRAKES SYSTEM
DOOR LOCKS & NAVIGATION SYSTEMS
WARNING & SUPPLEMENTAL RESTRAINTS SYSTEMS
SUPPLEMENTAL RESTRAINTS SYSTEM
K
FROM ENGINE ROOM R/B (DIAGRAM 1 OF 5)
LT BLU
1
AM22
I3
BLU
7
AM21
I4
ORG
1
IG2
A39
RED
7
SSW1
I3
VIO
17
SSW2
WHT
1
ACCD
PNK
2
IG1D
I4
RED
2
IG2D
A39
POWER MANAGEMENT CONTROL ECU (LEFT SIDE OF DASH)
TO INSTRUMENT PANEL J/B (DIAGRAM 5 OF 5)
P
O
TO INSTRUMENT PANEL J/B (DIAGRAM 5 OF 5)
L
TO ENGINE ROOM J/B (DIAGRAM 2 OF 5)
FROM ENGINE ROOM R/B (DIAGRAM 1 OF 5)
J
YEL
ENGINE ROOM R/B 2 (RIGHT SIDE OF ENGINE COMPT)
IGCT-MAIN FUSE 25A
INV W/ PMP FUSE 15A
RED
RED
ENGINE CONTROLS SYSTEM
RED
VIO
5
1
POWER SWITCH
GND
SS1
SS2
6
GRN
GRN
6
WHT/BLK
1
I86
CERTIFICATION ECU
WHT/BLK
I5
(BEHIND RIGHT SIDE OF DASH)
367566

Fig. 120: Power Distribution Circuit, Hybrid (3 of 5)

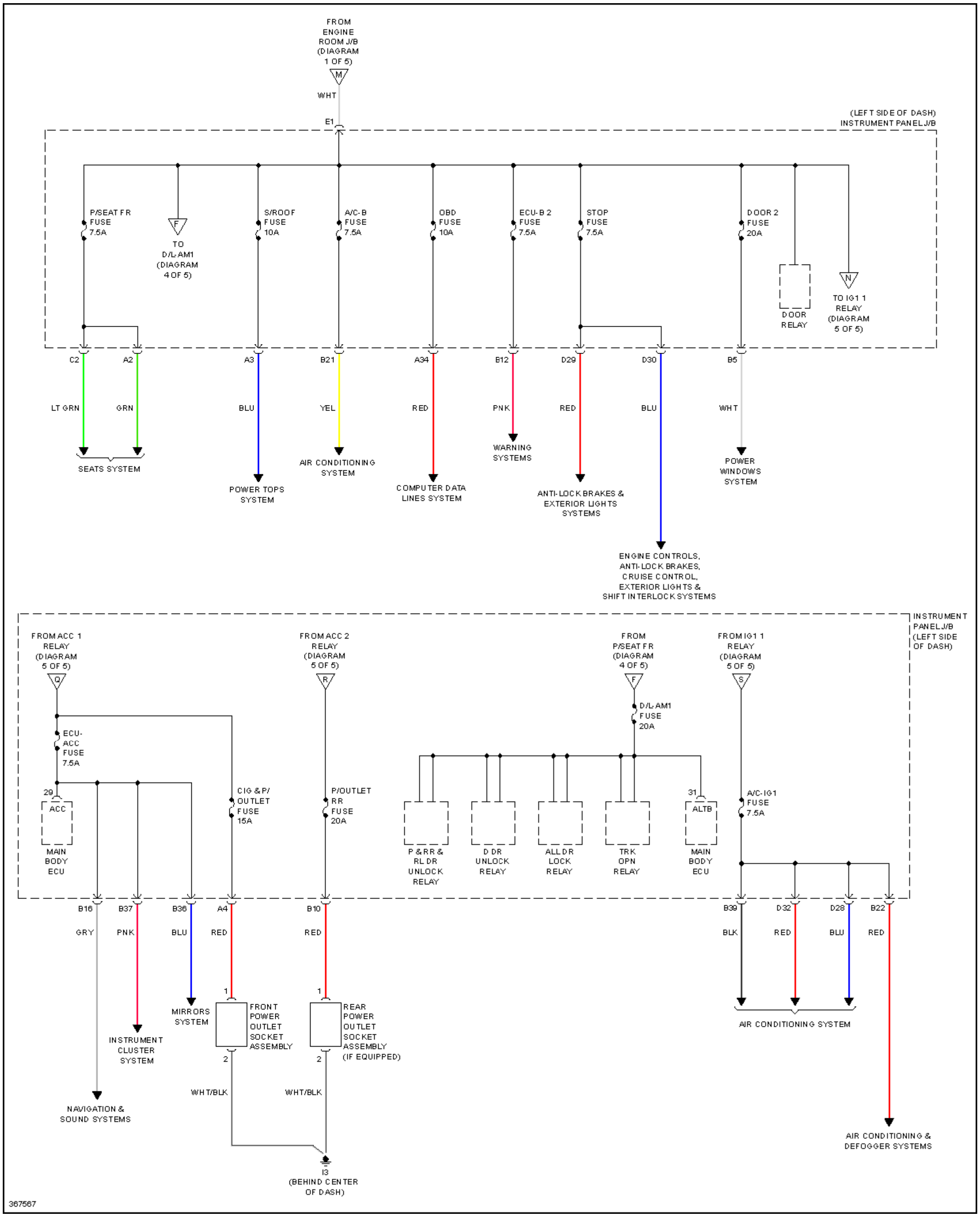
FROM ENGINE ROOM J/B (DIAGRAM 1 OF 5)
M
WHT
E1
(LEFT SIDE OF DASH) INSTRUMENT PANEL J/B
P/SEAT FR FUSE 7.5A
F
TO D/L-AM1 (DIAGRAM 4 OF 5)
S/ROOF FUSE 10A
A/C-B FUSE 7.5A
OBD FUSE 10A
ECU-B 2 FUSE 7.5A
STOP FUSE 7.5A
DOOR 2 FUSE 20A
DOOR RELAY
N
TO IG1 1 RELAY (DIAGRAM 5 OF 5)
C2
A2
A3
B21
A34
B12
D29
D30
B5
LT GRN
GRN
BLU
YEL
RED
PNK
RED
BLU
WHT
SEATS SYSTEM
POWER TOPS SYSTEM
AIR CONDITIONING SYSTEM
COMPUTER DATA LINES SYSTEM
WARNING SYSTEMS
ANTI-LOCK BRAKES & EXTERIOR LIGHTS SYSTEMS
POWER WINDOWS SYSTEM
ENGINE CONTROLS, ANTI-LOCK BRAKES, CRUISE CONTROL, EXTERIOR LIGHTS & SHIFT INTERLOCK SYSTEMS
INSTRUMENT PANEL J/B (LEFT SIDE OF DASH)
FROM ACC 1 RELAY (DIAGRAM 5 OF 5)
Q
FROM ACC 2 RELAY (DIAGRAM 5 OF 5)
R
FROM P/SEAT FR (DIAGRAM 4 OF 5)
F
FROM IG1 1 RELAY (DIAGRAM 5 OF 5)
S
ECU-ACC FUSE 7.5A
29
ACC
MAIN BODY ECU
CIG & P/OUTLET FUSE 15A
P/OUTLET RR FUSE 20A
D/L-AM1 FUSE 20A
P & RR & RL DR UNLOCK RELAY
D DR UNLOCK RELAY
ALL DR LOCK RELAY
TRK OPN RELAY
31
ALTB
MAIN BODY ECU
A/C-IG1 FUSE 7.5A
B16
B37
B36
A4
B10
B39
D32
D28
B22
GRY
PNK
BLU
RED
RED
BLK
RED
BLU
RED
1
FRONT POWER OUTLET SOCKET ASSEMBLY
2
1
REAR POWER OUTLET SOCKET ASSEMBLY (IF EQUIPPED)
2
MIRRORS SYSTEM
INSTRUMENT CLUSTER SYSTEM
NAVIGATION & SOUND SYSTEMS
WHT/BLK
WHT/BLK
I3 (BEHIND CENTER OF DASH)
AIR CONDITIONING SYSTEM
AIR CONDITIONING & DEFOGGER SYSTEMS
367567

Fig. 121: Power Distribution Circuit, Hybrid (4 of 5)

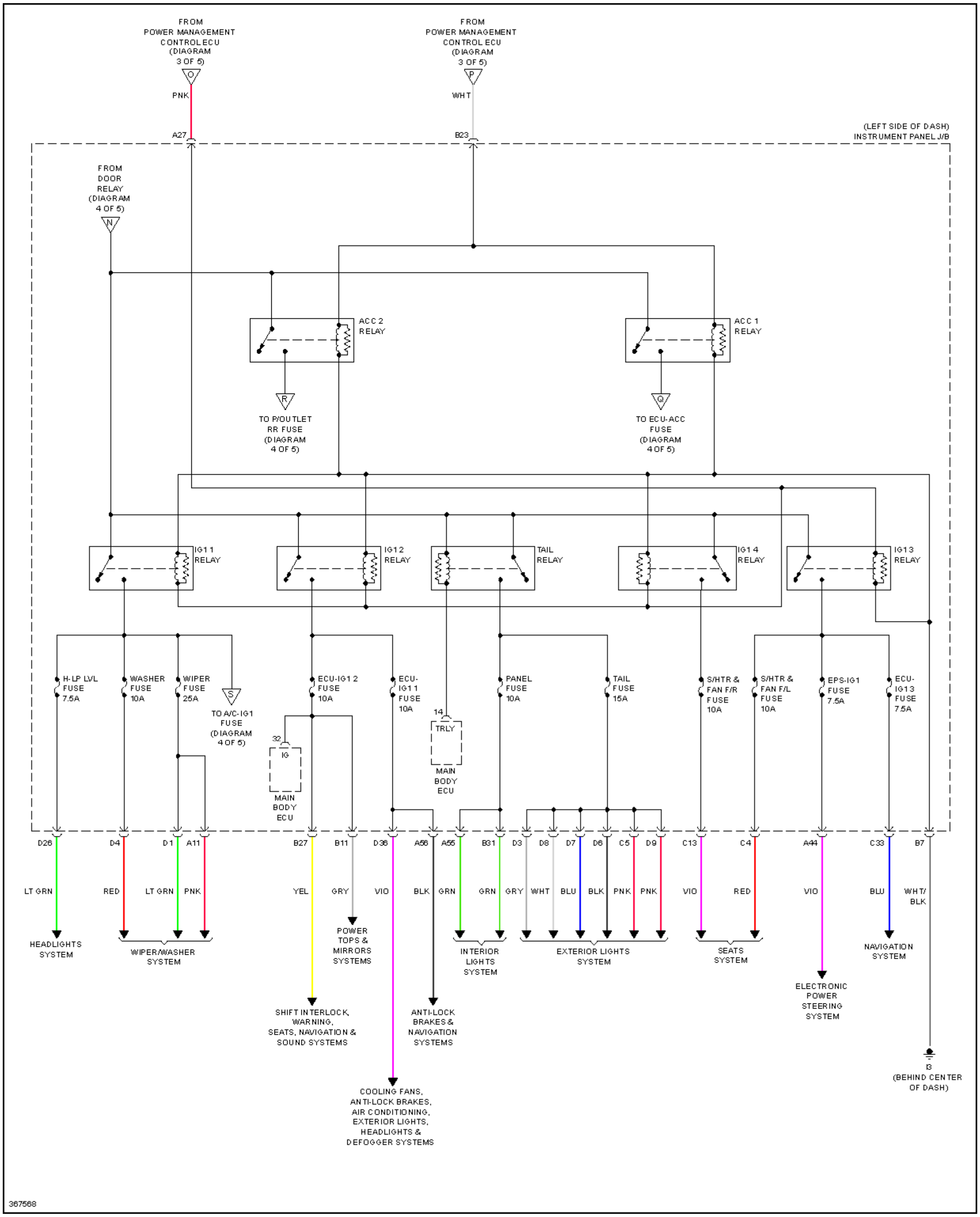
FROM POWER MANAGEMENT CONTROL ECU (DIAGRAM 3 OF 5)
O
PNK
A27
FROM POWER MANAGEMENT CONTROL ECU (DIAGRAM 3 OF 5)
P
WHT
B23
(LEFT SIDE OF DASH) INSTRUMENT PANEL J/B
FROM DOOR RELAY (DIAGRAM 4 OF 5)
N
ACC 2 RELAY
ACC 1 RELAY
R
TO P/OUTLET RR FUSE (DIAGRAM 4 OF 5)
Q
TO ECU-ACC FUSE (DIAGRAM 4 OF 5)
IG1 1 RELAY
IG1 2 RELAY
TAIL RELAY
IG1 4 RELAY
IG1 3 RELAY
H-LP LVL FUSE 7.5A
WASHER FUSE 10A
WIPER FUSE 25A
S
TO A/C-IG1 FUSE (DIAGRAM 4 OF 5)
ECU-IG1 2 FUSE 10A
32
IG
MAIN BODY ECU
ECU-IG1 1 FUSE 10A
14
TRLY
MAIN BODY ECU
PANEL FUSE 10A
TAIL FUSE 15A
S/HTR & FAN F/R FUSE 10A
S/HTR & FAN F/L FUSE 10A
EPS-IG1 FUSE 7.5A
ECU-IG1 3 FUSE 7.5A
D26
D4
D1
A11
B27
B11
D36
A56
A55
B31
D3
D8
D7
D6
C5
D9
C13
C4
A44
C33
B7
LT GRN
RED
LT GRN
PNK
YEL
GRY
VIO
BLK
GRN
GRN
GRY
WHT
BLU
BLK
PNK
PNK
VIO
RED
VIO
BLU
WHT/ BLK
HEADLIGHTS SYSTEM
WIPER/WASHER SYSTEM
POWER TOPS & MIRRORS SYSTEMS
SHIFT INTERLOCK, WARNING, SEATS, NAVIGATION & SOUND SYSTEMS
ANTI-LOCK BRAKES & NAVIGATION SYSTEMS
COOLING FANS, ANTI-LOCK BRAKES, AIR CONDITIONING, EXTERIOR LIGHTS, HEADLIGHTS & DEFOGGER SYSTEMS
INTERIOR LIGHTS SYSTEM
EXTERIOR LIGHTS SYSTEM
SEATS SYSTEM
ELECTRONIC POWER STEERING SYSTEM
NAVIGATION SYSTEM
I3 (BEHIND CENTER OF DASH)
367568

Fig. 122: Power Distribution Circuit, Hybrid (5 of 5)

POWER DOOR LOCKS

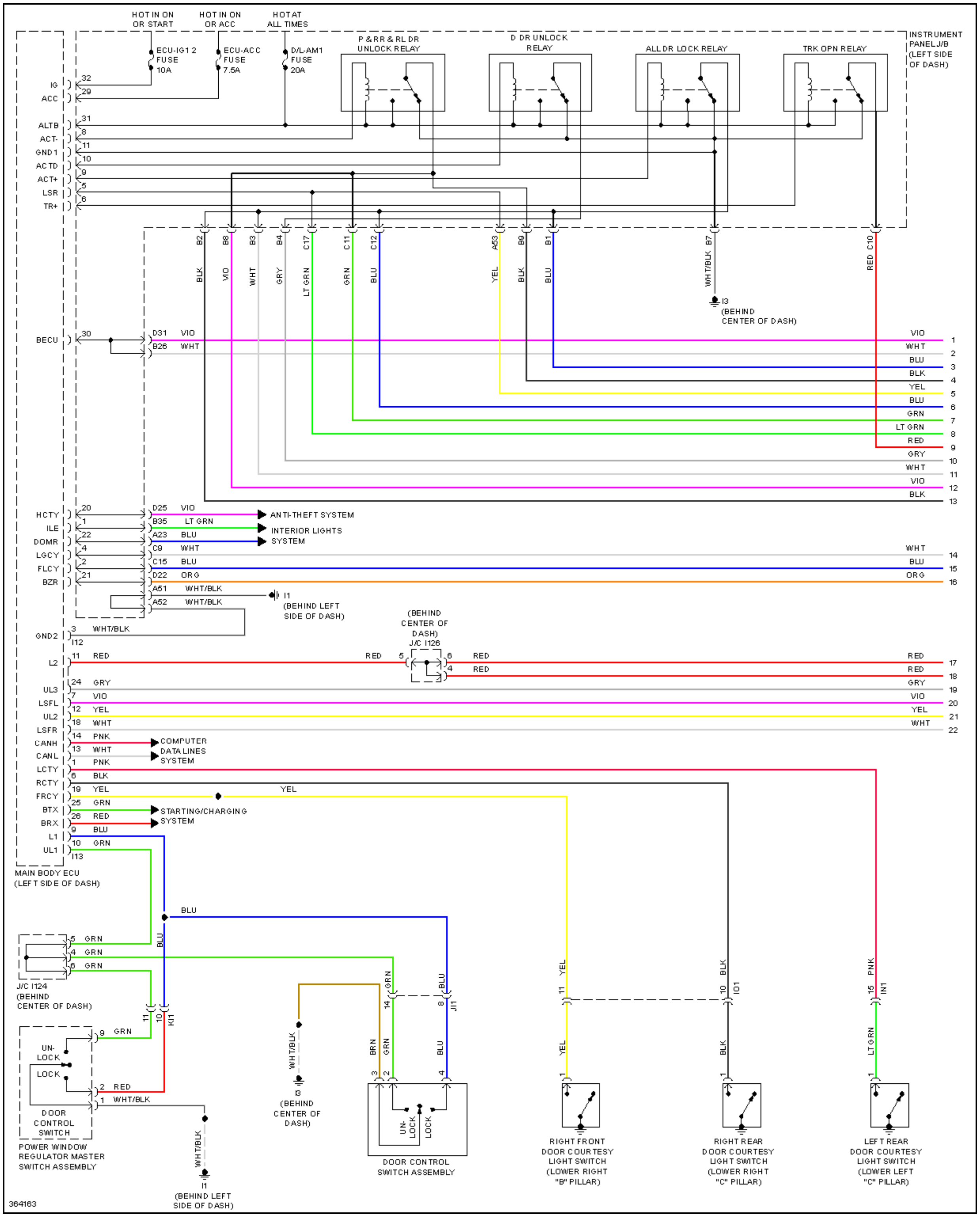
HOT IN ON OR START
HOT IN ON OR ACC
HOT AT ALL TIMES
ECU-IG1 2 FUSE 10A
ECU-ACC FUSE 7.5A
D/L-AM1 FUSE 20A
P & RR & RL DR UNLOCK RELAY
D DR UNLOCK RELAY
ALL DR LOCK RELAY
TRK OPN RELAY
INSTRUMENT PANEL J/B (LEFT SIDE OF DASH)
IG
ACC
ALTB
ACT-
GND1
ACTD
ACT+
LSR
TR+
BECU
HCTY
ILE
DOMR
LGCY
FLCY
BZR
GND2
L2
UL3
LSFL
UL2
LSFR
CANH
CANL
LCTY
RCTY
FRCY
BTX
BRX
L1
UL1
MAIN BODY ECU (LEFT SIDE OF DASH)
I3 (BEHIND CENTER OF DASH)
ANTI-THEFT SYSTEM
INTERIOR LIGHTS SYSTEM
I1 (BEHIND LEFT SIDE OF DASH)
(BEHIND CENTER OF DASH) J/C I126
COMPUTER DATA LINES SYSTEM
STARTING/CHARGING SYSTEM
J/C I124 (BEHIND CENTER OF DASH)
UN-LOCK
LOCK
DOOR CONTROL SWITCH
POWER WINDOW REGULATOR MASTER SWITCH ASSEMBLY
I1 (BEHIND LEFT SIDE OF DASH)
I3 (BEHIND CENTER OF DASH)
DOOR CONTROL SWITCH ASSEMBLY
RIGHT FRONT DOOR COURTESY LIGHT SWITCH (LOWER RIGHT "B" PILLAR)
RIGHT REAR DOOR COURTESY LIGHT SWITCH (LOWER RIGHT "C" PILLAR)
LEFT REAR DOOR COURTESY LIGHT SWITCH (LOWER LEFT "C" PILLAR)
KI1
JI1
IO1
IN1
364163

Fig. 123: Power Door Locks Circuit, Except Hybrid W/ Smart Key System (1 of 5)

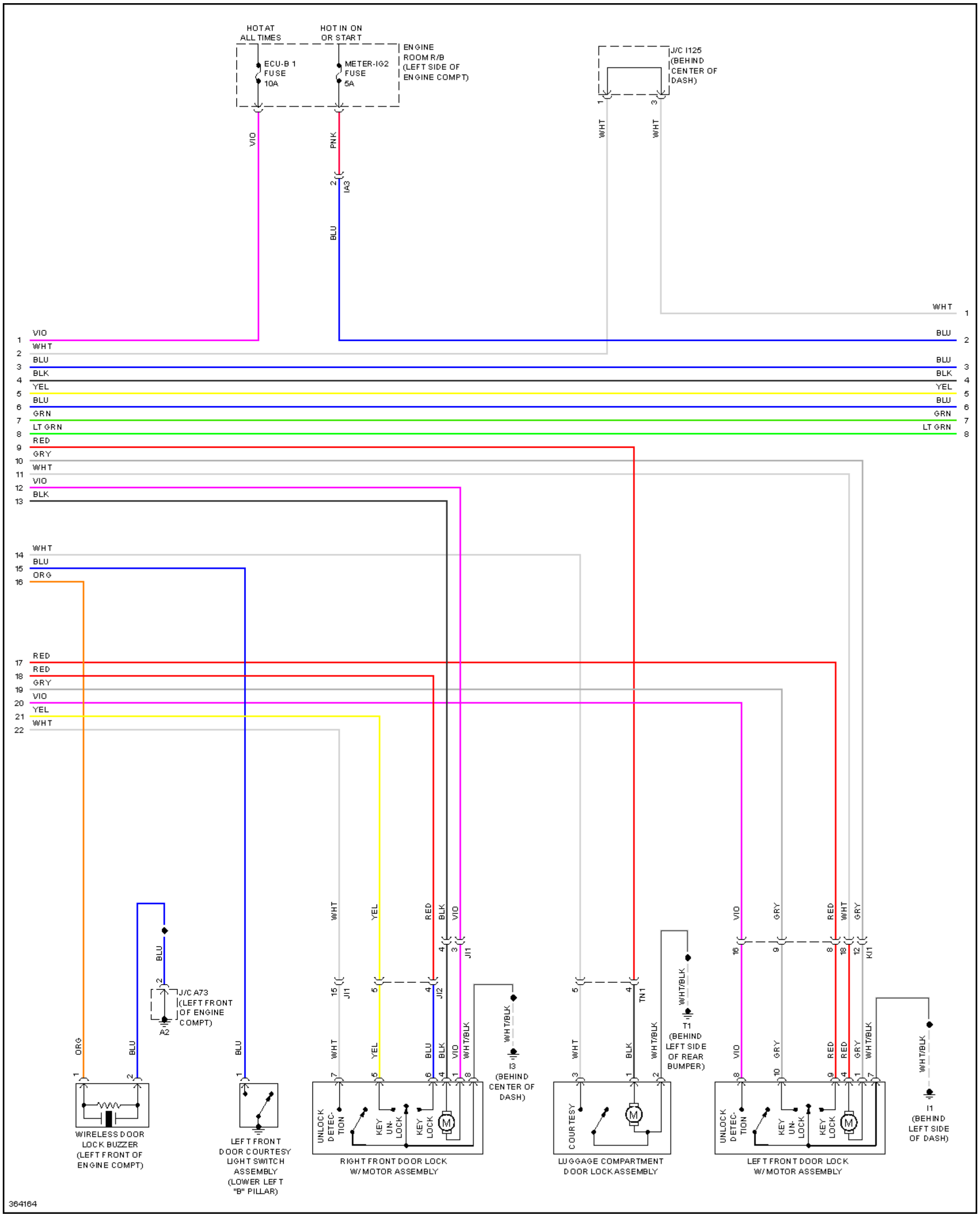
HOT AT ALL TIMES
HOT IN ON OR START
ECU-B 1 FUSE 10A
METER-IG2 FUSE 5A
ENGINE ROOM R/B (LEFT SIDE OF ENGINE COMPT)
J/C I125 (BEHIND CENTER OF DASH)
VIO
PNK
2 IA3
BLU
WHT
1 VIO
2 WHT
3 BLU
4 BLK
5 YEL
6 BLU
7 GRN
8 LT GRN
9 RED
10 GRY
11 WHT
12 VIO
13 BLK
14 WHT
15 BLU
16 ORG
17 RED
18 RED
19 GRY
20 VIO
21 YEL
22 WHT
WHT 1
BLU 2
BLU 3
BLK 4
YEL 5
BLU 6
GRN 7
LT GRN 8
J/C A73 (LEFT FRONT OF ENGINE COMPT)
A2
JI1
JI2
TN1
KI1
WHT/BLK
I3 (BEHIND CENTER OF DASH)
T1 (BEHIND LEFT SIDE OF REAR BUMPER)
I1 (BEHIND LEFT SIDE OF DASH)
WIRELESS DOOR LOCK BUZZER (LEFT FRONT OF ENGINE COMPT)
LEFT FRONT DOOR COURTESY LIGHT SWITCH ASSEMBLY (LOWER LEFT "B" PILLAR)
UNLOCK DETEC- TION
KEY UN- LOCK
KEY LOCK
M
RIGHT FRONT DOOR LOCK W/ MOTOR ASSEMBLY
COURTESY
LUGGAGE COMPARTMENT DOOR LOCK ASSEMBLY
LEFT FRONT DOOR LOCK W/ MOTOR ASSEMBLY
364164

Fig. 124: Power Door Locks Circuit, Except Hybrid W/ Smart Key System (2 of 5)

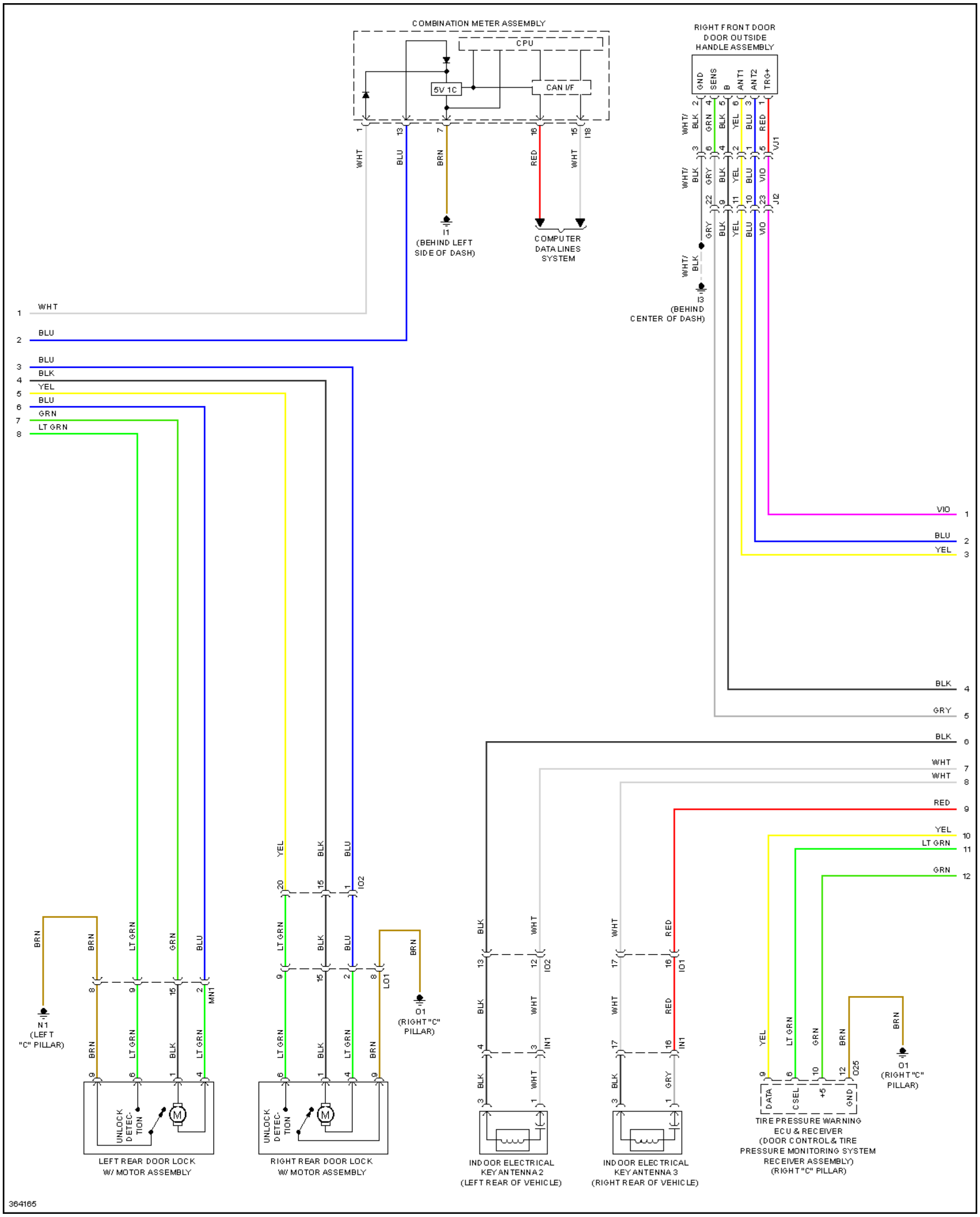
COMBINATION METER ASSEMBLY
CPU
5V 1C
CAN I/F
1
13
7
16
15
I18
WHT
BLU
BRN
RED
WHT
I1
(BEHIND LEFT SIDE OF DASH)
COMPUTER DATA LINES SYSTEM
RIGHT FRONT DOOR DOOR OUTSIDE HANDLE ASSEMBLY
GND
SENS
B
ANT1
ANT2
TRG+
WHT/ BLK
GRN
BLK
YEL
BLU
RED
VJ1
GRY
VIO
J12
I3
(BEHIND CENTER OF DASH)
1 WHT
2 BLU
3 BLU
4 BLK
5 YEL
6 BLU
7 GRN
8 LT GRN
VIO 1
BLU 2
YEL 3
BLK 4
GRY 5
BLK 6
WHT 7
WHT 8
RED 9
YEL 10
LT GRN 11
GRN 12
IO2
MN1
LO1
N1
(LEFT "C" PILLAR)
O1
(RIGHT "C" PILLAR)
UNLOCK DETEC-TION
M
LEFT REAR DOOR LOCK W/ MOTOR ASSEMBLY
RIGHT REAR DOOR LOCK W/ MOTOR ASSEMBLY
IO1
IN1
INDOOR ELECTRICAL KEY ANTENNA 2 (LEFT REAR OF VEHICLE)
INDOOR ELECTRICAL KEY ANTENNA 3 (RIGHT REAR OF VEHICLE)
DATA
CSEL
+5
GND
O25
TIRE PRESSURE WARNING ECU & RECEIVER (DOOR CONTROL & TIRE PRESSURE MONITORING SYSTEM RECEIVER ASSEMBLY) (RIGHT "C" PILLAR)
364165

Fig. 125: Power Door Locks Circuit, Except Hybrid W/ Smart Key System (3 of 5)

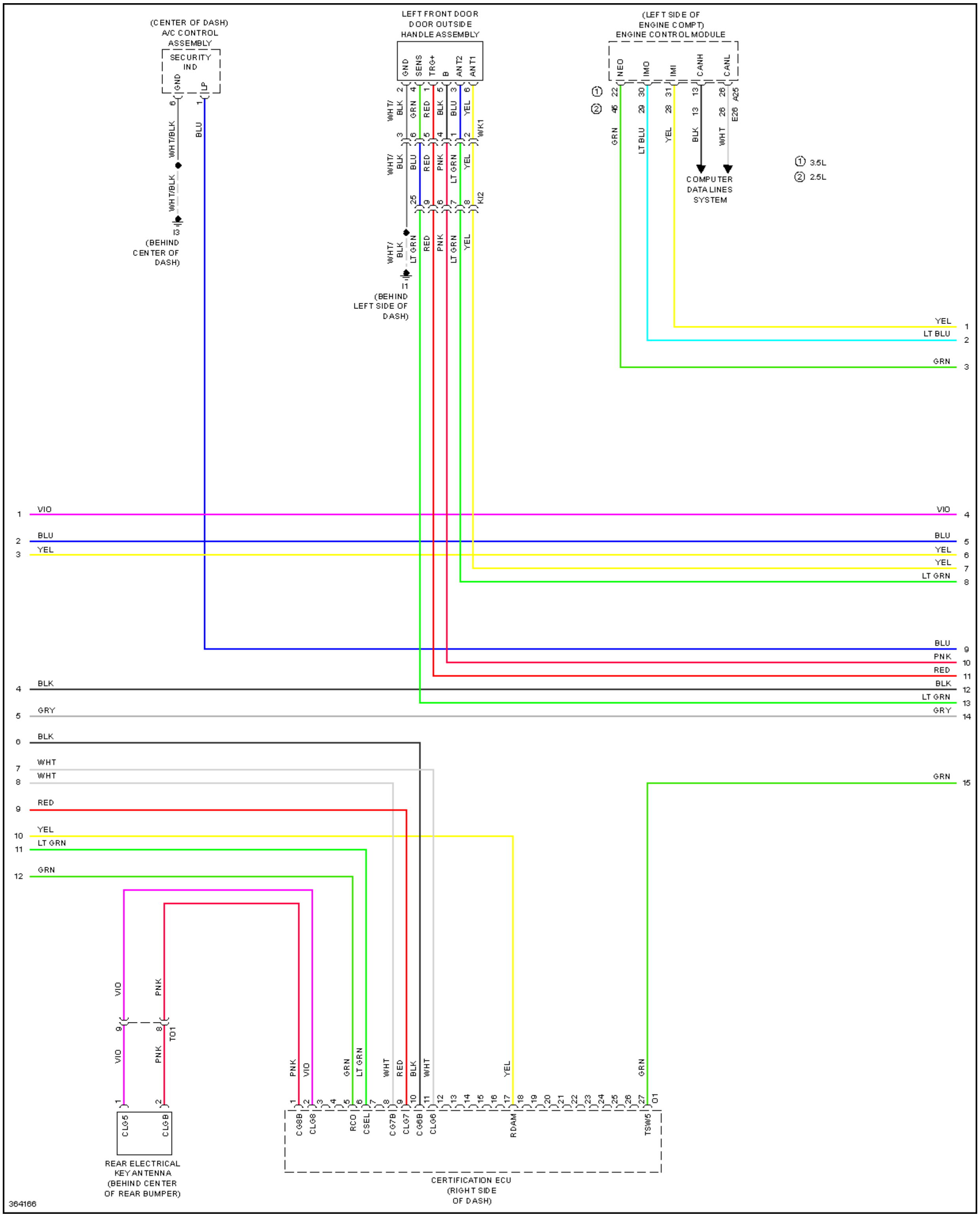
(CENTER OF DASH)
A/C CONTROL
ASSEMBLY
SECURITY
IND
GND
LP
WHT/BLK
BLU
I3
(BEHIND
CENTER OF
DASH)
LEFT FRONT DOOR
DOOR OUTSIDE
HANDLE ASSEMBLY
GND
SENS
TRG+
B
ANT2
ANT1
WHT/BLK
GRN
RED
BLK
BLU
YEL
WK1
PNK
LT GRN
KI2
I1
(BEHIND
LEFT SIDE OF
DASH)
(LEFT SIDE OF
ENGINE COMPT)
ENGINE CONTROL MODULE
NEO
IMO
IMI
CANH
CANL
① 3.5L
② 2.5L
GRN
LT BLU
YEL
BLK
WHT
A25
E26
COMPUTER
DATA LINES
SYSTEM
VIO
BLU
YEL
BLK
GRY
WHT
RED
LT GRN
GRN
PNK
VIO
T01
CLG5
CLGB
REAR ELECTRICAL
KEY ANTENNA
(BEHIND CENTER
OF REAR BUMPER)
CG8B
CLG8
RCO
CSEL
CG7B
CLG7
CG6B
CLG6
RDAM
TSW5
O1
CERTIFICATION ECU
(RIGHT SIDE
OF DASH)
364166

Fig. 126: Power Door Locks Circuit, Except Hybrid W/ Smart Key System (4 of 5)

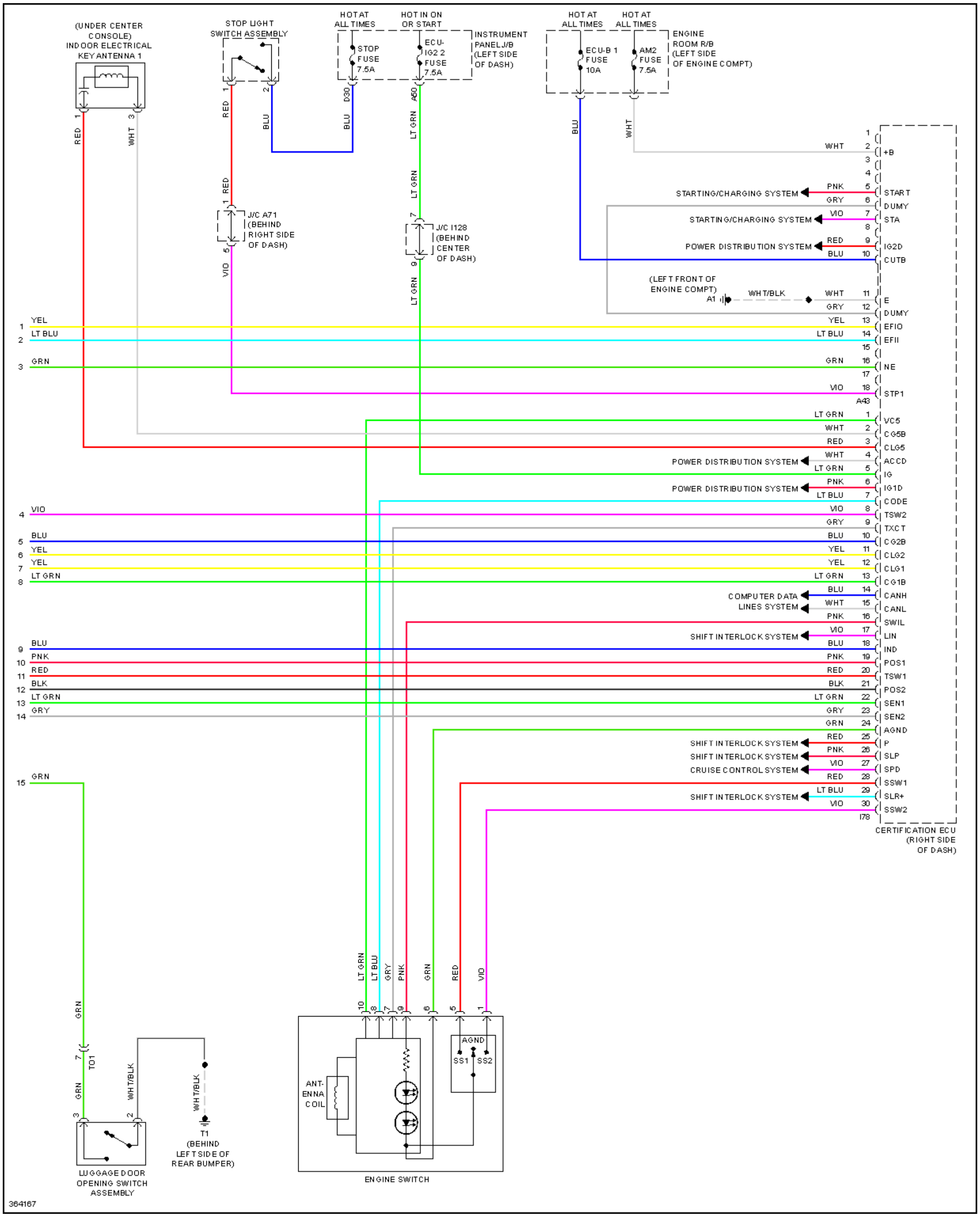
(UNDER CENTER CONSOLE) INDOOR ELECTRICAL KEY ANTENNA 1
STOP LIGHT SWITCH ASSEMBLY
HOT AT ALL TIMES
HOT IN ON OR START
STOP FUSE 7.5A
ECU-IG2 2 FUSE 7.5A
INSTRUMENT PANEL J/B (LEFT SIDE OF DASH)
HOT AT ALL TIMES
HOT AT ALL TIMES
ECU-B 1 FUSE 10A
AM2 FUSE 7.5A
ENGINE ROOM R/B (LEFT SIDE OF ENGINE COMPT)
J/C A71 (BEHIND RIGHT SIDE OF DASH)
J/C I128 (BEHIND CENTER OF DASH)
D30
A50
(LEFT FRONT OF ENGINE COMPT)
A1
WHT/BLK
STARTING/CHARGING SYSTEM
STARTING/CHARGING SYSTEM
POWER DISTRIBUTION SYSTEM
POWER DISTRIBUTION SYSTEM
POWER DISTRIBUTION SYSTEM
COMPUTER DATA LINES SYSTEM
SHIFT INTERLOCK SYSTEM
SHIFT INTERLOCK SYSTEM
SHIFT INTERLOCK SYSTEM
CRUISE CONTROL SYSTEM
SHIFT INTERLOCK SYSTEM
+B
START
DUMY
STA
IG2D
CUTB
E
DUMY
EFIO
EFII
NE
STP1
A43
VC5
CG5B
CLG5
ACCD
IG
IG1D
CODE
TSW2
TXCT
CG2B
CLG2
CLG1
CG1B
CANH
CANL
SWIL
LIN
IND
POS1
TSW1
POS2
SEN1
SEN2
AGND
P
SLP
SPD
SSW1
SLR+
SSW2
I78
CERTIFICATION ECU (RIGHT SIDE OF DASH)
1 YEL
2 LT BLU
3 GRN
4 VIO
5 BLU
6 YEL
7 YEL
8 LT GRN
9 BLU
10 PNK
11 RED
12 BLK
13 LT GRN
14 GRY
15 GRN
TO1
T1 (BEHIND LEFT SIDE OF REAR BUMPER)
LUGGAGE DOOR OPENING SWITCH ASSEMBLY
ANT-ENNA COIL
AGND
SS1
SS2
ENGINE SWITCH
364167

Fig. 127: Power Door Locks Circuit, Except Hybrid W/ Smart Key System (5 of 5)

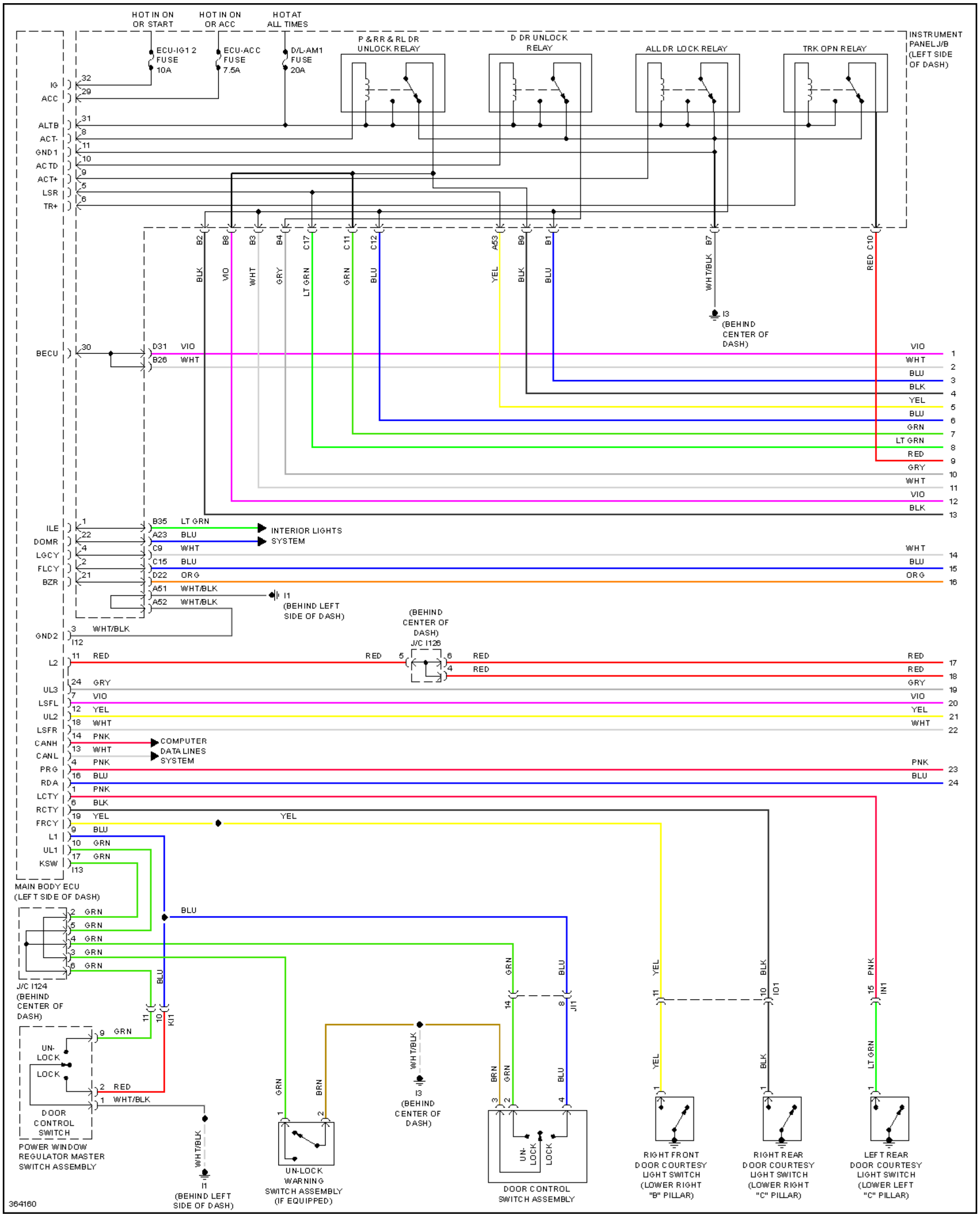
HOT IN ON OR START
HOT IN ON OR ACC
HOT AT ALL TIMES
ECU-IG1 2 FUSE 10A
ECU-ACC FUSE 7.5A
D/L-AM1 FUSE 20A
P & RR & RL DR UNLOCK RELAY
D DR UNLOCK RELAY
ALL DR LOCK RELAY
TRK OPN RELAY
INSTRUMENT PANEL J/B (LEFT SIDE OF DASH)
IG
ACC
ALTB
ACT-
GND1
ACTD
ACT+
LSR
TR+
BECU
ILE
DOMR
LGCY
FLCY
BZR
GND2
L2
UL3
LSFL
UL2
LSFR
CANH
CANL
PRG
RDA
LCTY
RCTY
FRCY
L1
UL1
KSW
MAIN BODY ECU (LEFT SIDE OF DASH)
B2 BLK
B8 VIO
B3 WHT
B4 GRY
C17 LT GRN
C11 GRN
C12 BLU
A53 YEL
B9 BLK
B1 BLU
B7 WHT/BLK
C10 RED
I3 (BEHIND CENTER OF DASH)
D31 VIO
B26 WHT
B35 LT GRN
A23 BLU
C9 WHT
C15 BLU
D22 ORG
A51 WHT/BLK
A52 WHT/BLK
INTERIOR LIGHTS SYSTEM
I1 (BEHIND LEFT SIDE OF DASH)
I12
(BEHIND CENTER OF DASH) J/C I126
COMPUTER DATA LINES SYSTEM
I13
J/C I124 (BEHIND CENTER OF DASH)
KI1
JI1
IO1
IN1
UN-LOCK
LOCK
DOOR CONTROL SWITCH
POWER WINDOW REGULATOR MASTER SWITCH ASSEMBLY
I1 (BEHIND LEFT SIDE OF DASH)
UN-LOCK WARNING SWITCH ASSEMBLY (IF EQUIPPED)
I3 (BEHIND CENTER OF DASH)
DOOR CONTROL SWITCH ASSEMBLY
RIGHT FRONT DOOR COURTESY LIGHT SWITCH (LOWER RIGHT "B" PILLAR)
RIGHT REAR DOOR COURTESY LIGHT SWITCH (LOWER RIGHT "C" PILLAR)
LEFT REAR DOOR COURTESY LIGHT SWITCH (LOWER LEFT "C" PILLAR)
1 VIO
2 WHT
3 BLU
4 BLK
5 YEL
6 BLU
7 GRN
8 LT GRN
9 RED
10 GRY
11 WHT
12 VIO
13 BLK
14 WHT
15 BLU
16 ORG
17 RED
18 RED
19 GRY
20 VIO
21 YEL
22 WHT
23 PNK
24 BLU
364160

Fig. 128: Power Door Locks Circuit, Except Hybrid W/O Smart Key System (1 of 3)

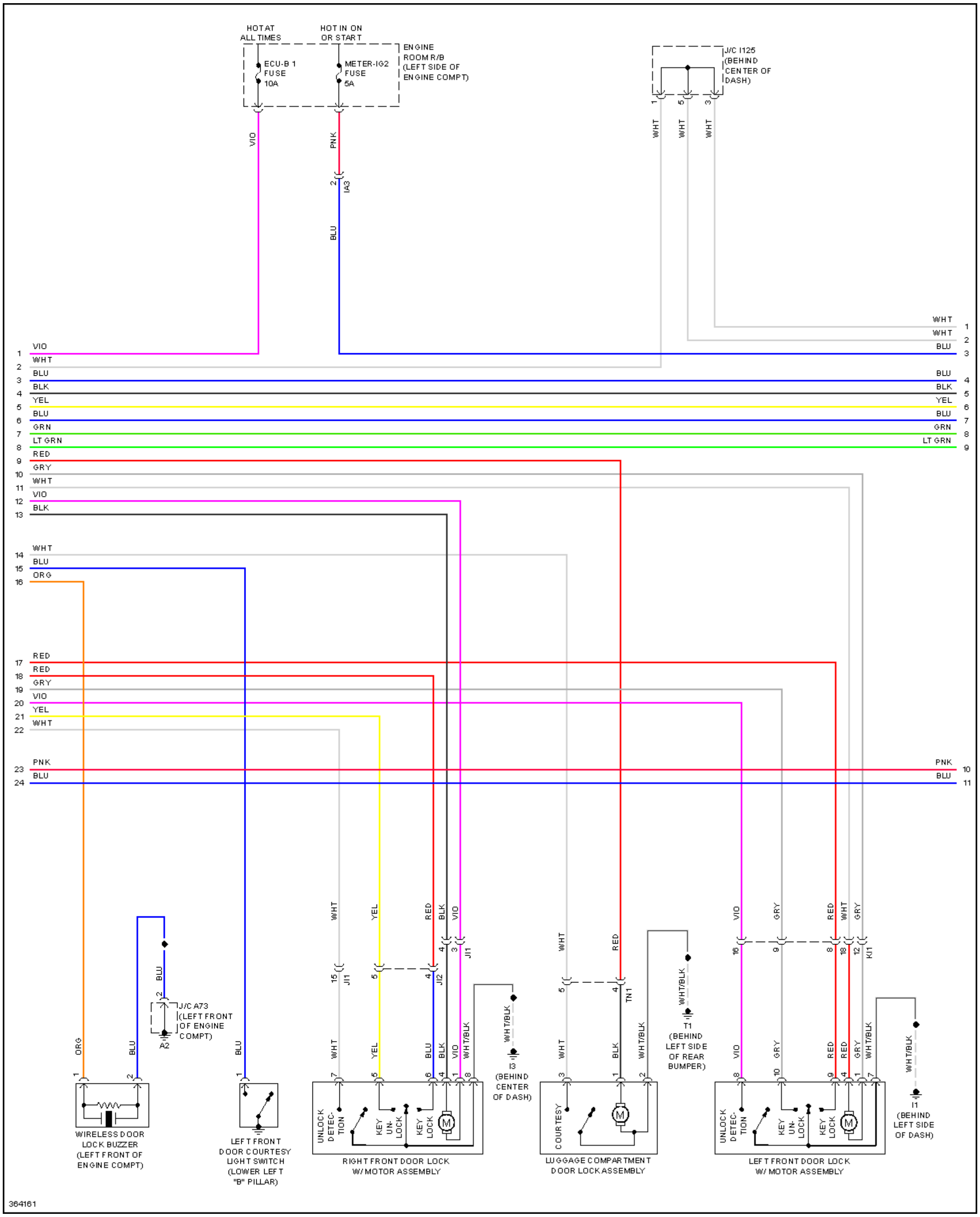
HOT AT ALL TIMES
HOT IN ON OR START
ECU-B 1 FUSE 10A
METER-IG2 FUSE 5A
ENGINE ROOM R/B (LEFT SIDE OF ENGINE COMPT)
J/C I125 (BEHIND CENTER OF DASH)
VIO
PNK
IA3
BLU
WHT
1 VIO
2 WHT
3 BLU
4 BLK
5 YEL
6 BLU
7 GRN
8 LT GRN
9 RED
10 GRY
11 WHT
12 VIO
13 BLK
14 WHT
15 BLU
16 ORG
17 RED
18 RED
19 GRY
20 VIO
21 YEL
22 WHT
23 PNK
24 BLU
WHT 1
WHT 2
BLU 3
BLU 4
BLK 5
YEL 6
BLU 7
GRN 8
LT GRN 9
PNK 10
BLU 11
J/C A73 (LEFT FRONT OF ENGINE COMPT)
A2
JI1
JI2
TN1
KI1
WHT/BLK
I3 (BEHIND CENTER OF DASH)
T1 (BEHIND LEFT SIDE OF REAR BUMPER)
I1 (BEHIND LEFT SIDE OF DASH)
UNLOCK DETEC-TION
KEY UN-LOCK
KEY LOCK
M
COURTESY
WIRELESS DOOR LOCK BUZZER (LEFT FRONT OF ENGINE COMPT)
LEFT FRONT DOOR COURTESY LIGHT SWITCH (LOWER LEFT "B" PILLAR)
RIGHT FRONT DOOR LOCK W/ MOTOR ASSEMBLY
LUGGAGE COMPARTMENT DOOR LOCK ASSEMBLY
LEFT FRONT DOOR LOCK W/ MOTOR ASSEMBLY
364161

Fig. 129: Power Door Locks Circuit, Except Hybrid W/O Smart Key System (2 of 3)

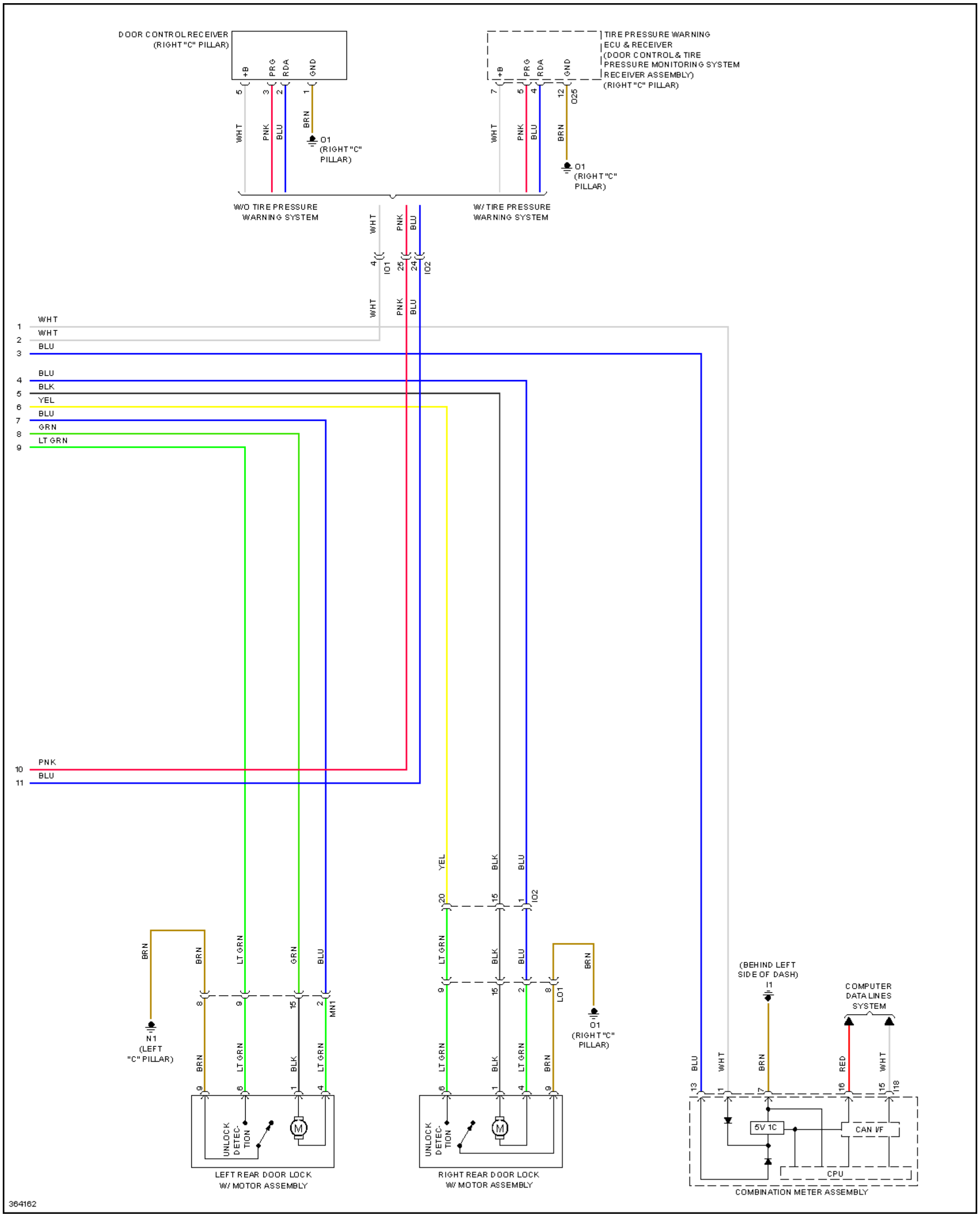
DOOR CONTROL RECEIVER (RIGHT "C" PILLAR)
+B
PRG
RDA
GND
5
3
2
1
WHT
PNK
BLU
BRN
O1 (RIGHT "C" PILLAR)
TIRE PRESSURE WARNING ECU & RECEIVER (DOOR CONTROL & TIRE PRESSURE MONITORING SYSTEM RECEIVER ASSEMBLY) (RIGHT "C" PILLAR)
7
5
4
12
O25
W/O TIRE PRESSURE WARNING SYSTEM
W/ TIRE PRESSURE WARNING SYSTEM
4
IO1
25
24
IO2
1 WHT
2 WHT
3 BLU
4 BLU
5 BLK
6 YEL
7 BLU
8 GRN
9 LT GRN
10 PNK
11 BLU
YEL
BLK
BLU
20
15
1
IO2
LT GRN
9
15
2
8
LO1
MN1
N1 (LEFT "C" PILLAR)
UNLOCK DETEC-TION
M
LEFT REAR DOOR LOCK W/ MOTOR ASSEMBLY
RIGHT REAR DOOR LOCK W/ MOTOR ASSEMBLY
(BEHIND LEFT SIDE OF DASH)
I1
COMPUTER DATA LINES SYSTEM
RED
13
11
17
16
15
118
5V 1C
CAN I/F
CPU
COMBINATION METER ASSEMBLY
364162

Fig. 130: Power Door Locks Circuit, Except Hybrid W/O Smart Key System (3 of 3)

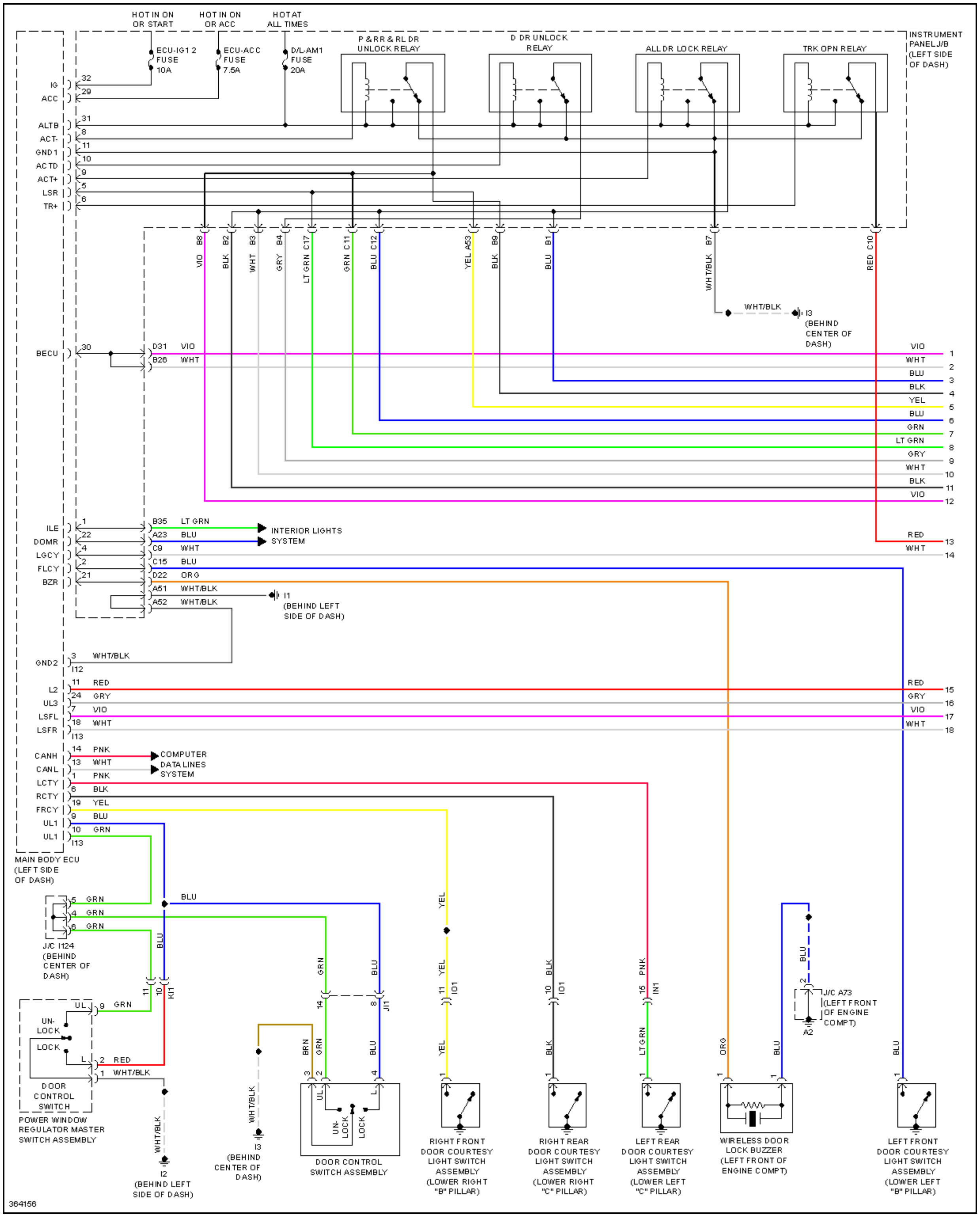
HOT IN ON OR START
HOT IN ON OR ACC
HOT AT ALL TIMES
ECU-IG1 2 FUSE 10A
ECU-ACC FUSE 7.5A
D/L-AM1 FUSE 20A
P & RR & RL DR UNLOCK RELAY
D DR UNLOCK RELAY
ALL DR LOCK RELAY
TRK OPN RELAY
INSTRUMENT PANEL J/B (LEFT SIDE OF DASH)
IG 32
ACC 29
ALTB 31
ACT- 8
GND1 11
ACTD 10
ACT+ 9
LSR 5
TR+ 6
B8 VIO
B2 BLK
B3 WHT
B4 GRY
C17 LT GRN
C11 GRN
C12 BLU
A53 YEL
B9 BLK
B1 BLU
B7 WHT/BLK
C10 RED
WHT/BLK
I3 (BEHIND CENTER OF DASH)
BECU 30
D31 VIO
B26 WHT
VIO 1
WHT 2
BLU 3
BLK 4
YEL 5
BLU 6
GRN 7
LT GRN 8
GRY 9
WHT 10
BLK 11
VIO 12
RED 13
WHT 14
ILE 1 B35 LT GRN
DOMR 22 A23 BLU
INTERIOR LIGHTS SYSTEM
LGCY 4 C9 WHT
FLCY 2 C15 BLU
BZR 21 D22 ORG
A51 WHT/BLK
A52 WHT/BLK
I1 (BEHIND LEFT SIDE OF DASH)
GND2 3 WHT/BLK I12
L2 11 RED
UL3 24 GRY
LSFL 7 VIO
LSFR 18 WHT I13
RED 15
GRY 16
VIO 17
WHT 18
CANH 14 PNK
CANL 13 WHT
COMPUTER DATA LINES SYSTEM
LCTY 1 PNK
RCTY 6 BLK
FRCY 19 YEL
UL1 9 BLU
UL1 10 GRN I13
MAIN BODY ECU (LEFT SIDE OF DASH)
5 GRN
4 GRN
6 GRN
BLU
J/C I124 (BEHIND CENTER OF DASH)
11 10 KI1
UL 9 GRN
UN-LOCK
LOCK
L 2 RED
1 WHT/BLK
DOOR CONTROL SWITCH
POWER WINDOW REGULATOR MASTER SWITCH ASSEMBLY
WHT/BLK
I2 (BEHIND LEFT SIDE OF DASH)
WHT/BLK
I3 (BEHIND CENTER OF DASH)
GRN 14
BLU 8 JI1
BRN 3
GRN 2
BLU 4
UL
UN-LOCK
LOCK
L
DOOR CONTROL SWITCH ASSEMBLY
YEL 11 IO1
BLK 10 IO1
PNK 15 IN1
LT GRN
ORG
BLU
J/C A73 (LEFT FRONT OF ENGINE COMPT)
A2
RIGHT FRONT DOOR COURTESY LIGHT SWITCH ASSEMBLY (LOWER RIGHT "B" PILLAR)
RIGHT REAR DOOR COURTESY LIGHT SWITCH ASSEMBLY (LOWER RIGHT "C" PILLAR)
LEFT REAR DOOR COURTESY LIGHT SWITCH ASSEMBLY (LOWER LEFT "C" PILLAR)
WIRELESS DOOR LOCK BUZZER (LEFT FRONT OF ENGINE COMPT)
LEFT FRONT DOOR COURTESY LIGHT SWITCH ASSEMBLY (LOWER LEFT "B" PILLAR)
364156

Fig. 131: Power Door Locks Circuit, Hybrid (1 of 4)

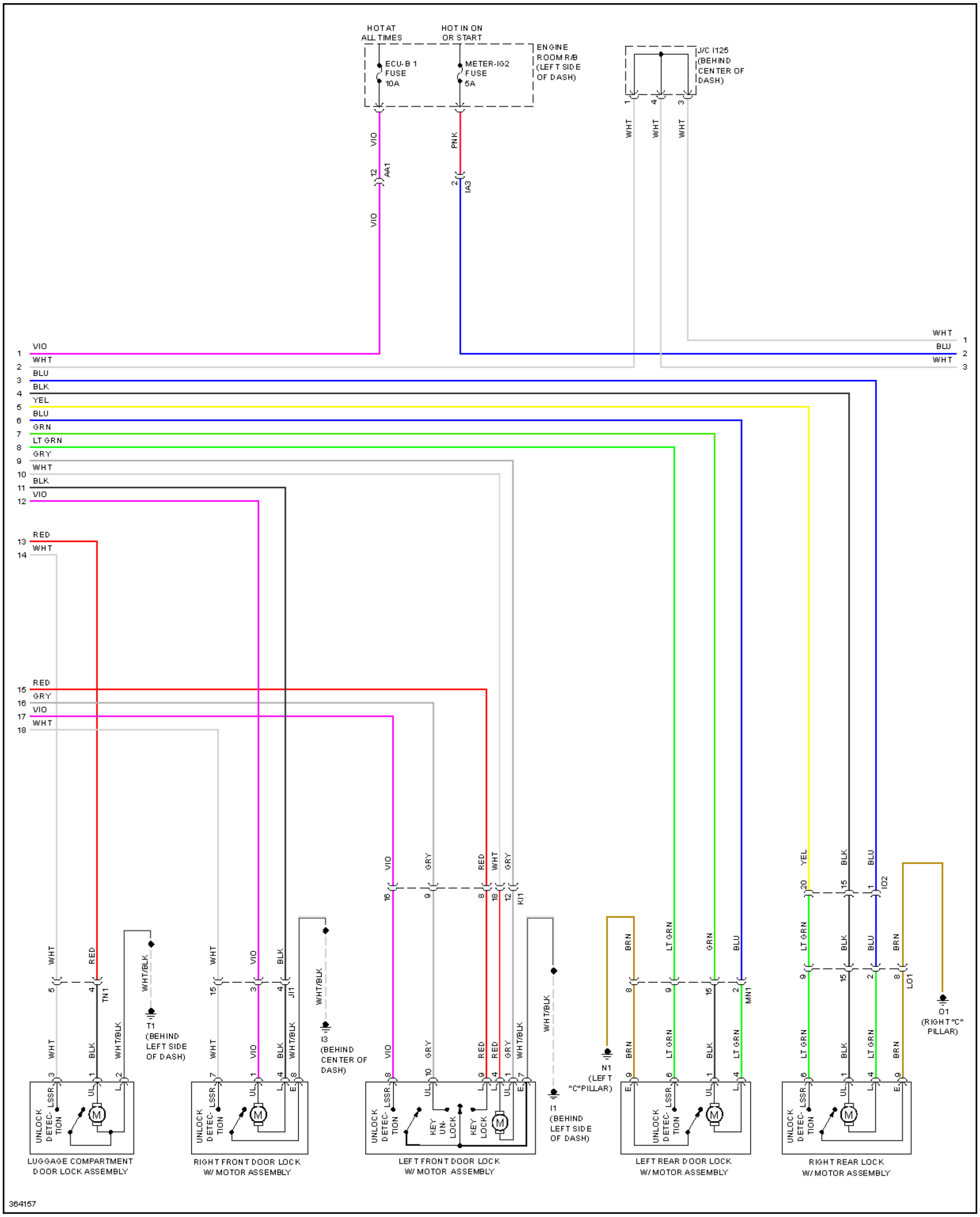
HOT AT ALL TIMES
HOT IN ON OR START
ECU-B 1 FUSE 10A
METER-IG2 FUSE 5A
ENGINE ROOM R/B (LEFT SIDE OF DASH)
J/C I125 (BEHIND CENTER OF DASH)
VIO
PNK
12 AA1
2 IA3
WHT
1 VIO
2 WHT
3 BLU
4 BLK
5 YEL
6 BLU
7 GRN
8 LT GRN
9 GRY
10 WHT
11 BLK
12 VIO
13 RED
14 WHT
15 RED
16 GRY
17 VIO
18 WHT
WHT 1
BLU 2
WHT 3
TN1
JI1
KI1
MN1
IO2
LO1
T1 (BEHIND LEFT SIDE OF DASH)
I3 (BEHIND CENTER OF DASH)
I1 (BEHIND LEFT SIDE OF DASH)
N1 (LEFT "C"PILLAR)
O1 (RIGHT "C" PILLAR)
WHT/BLK
BRN
LT GRN
GRN
BLK
BLU
YEL
RED
GRY
UNLOCK DETEC-TION
LSSR
UL
L
E
KEY UN-LOCK
KEY LOCK
M
LUGGAGE COMPARTMENT DOOR LOCK ASSEMBLY
RIGHT FRONT DOOR LOCK W/ MOTOR ASSEMBLY
LEFT FRONT DOOR LOCK W/ MOTOR ASSEMBLY
LEFT REAR DOOR LOCK W/ MOTOR ASSEMBLY
RIGHT REAR LOCK W/ MOTOR ASSEMBLY
364157

Fig. 132: Power Door Locks Circuit, Hybrid (2 of 4)

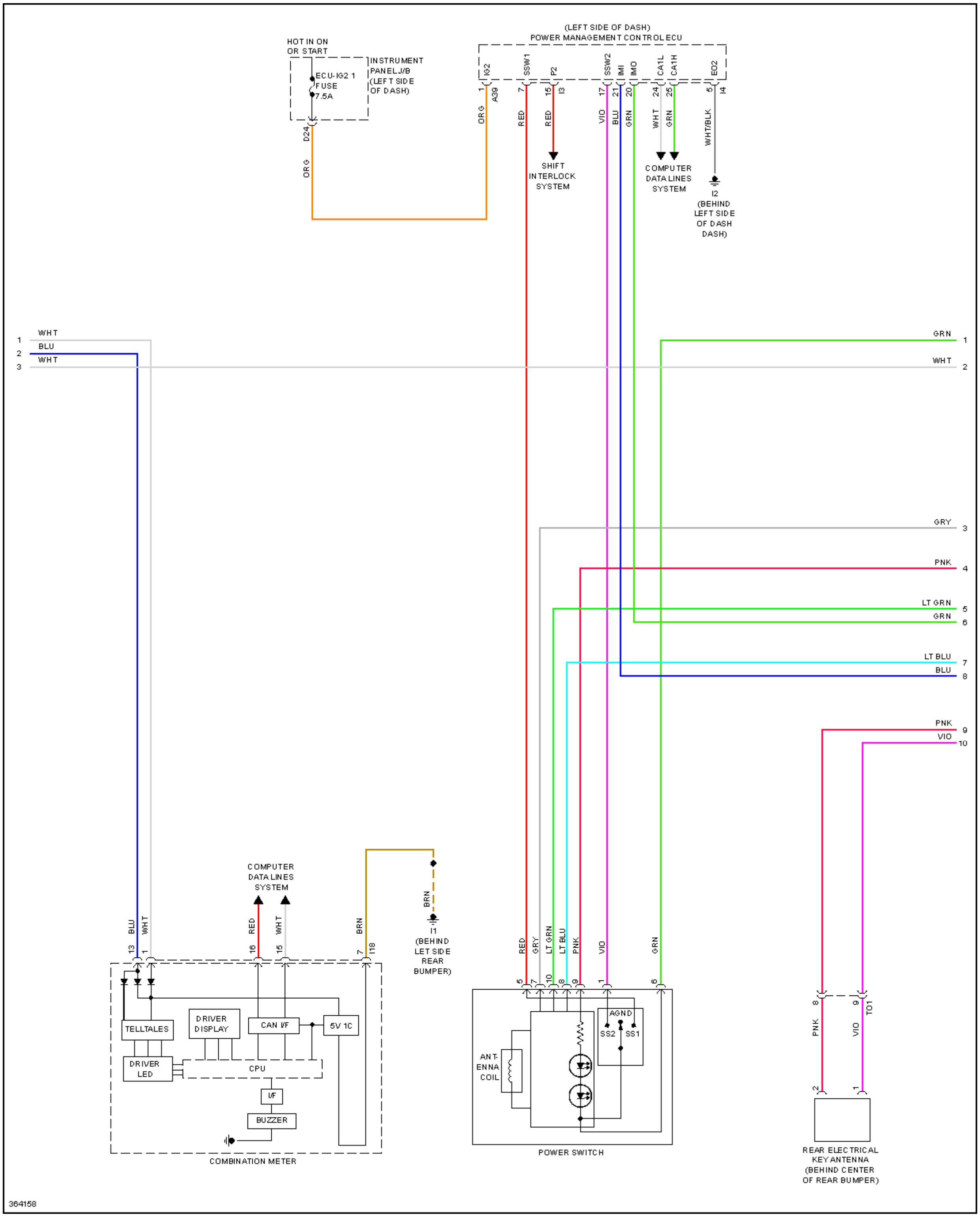
(LEFT SIDE OF DASH)
POWER MANAGEMENT CONTROL ECU
IG2
SSW1
P2
SSW2
IMI
IMO
CA1L
CA1H
ED2
A39
I3
I4
ORG
RED
VIO
BLU
GRN
WHT
WHT/BLK
SHIFT INTERLOCK SYSTEM
COMPUTER DATA LINES SYSTEM
I2 (BEHIND LEFT SIDE OF DASH DASH)
HOT IN ON OR START
INSTRUMENT PANEL J/B (LEFT SIDE OF DASH)
ECU-IG2 1 FUSE 7.5A
D24
GRY
PNK
LT GRN
LT BLU
BRN
I1 (BEHIND LET SIDE REAR BUMPER)
I18
TELLTALES
DRIVER DISPLAY
CAN I/F
5V IC
DRIVER LED
CPU
I/F
BUZZER
COMBINATION METER
ANT-ENNA COIL
AGND
SS2
SS1
POWER SWITCH
TO1
REAR ELECTRICAL KEY ANTENNA (BEHIND CENTER OF REAR BUMPER)
364158

Fig. 133: Power Door Locks Circuit, Hybrid (3 of 4)

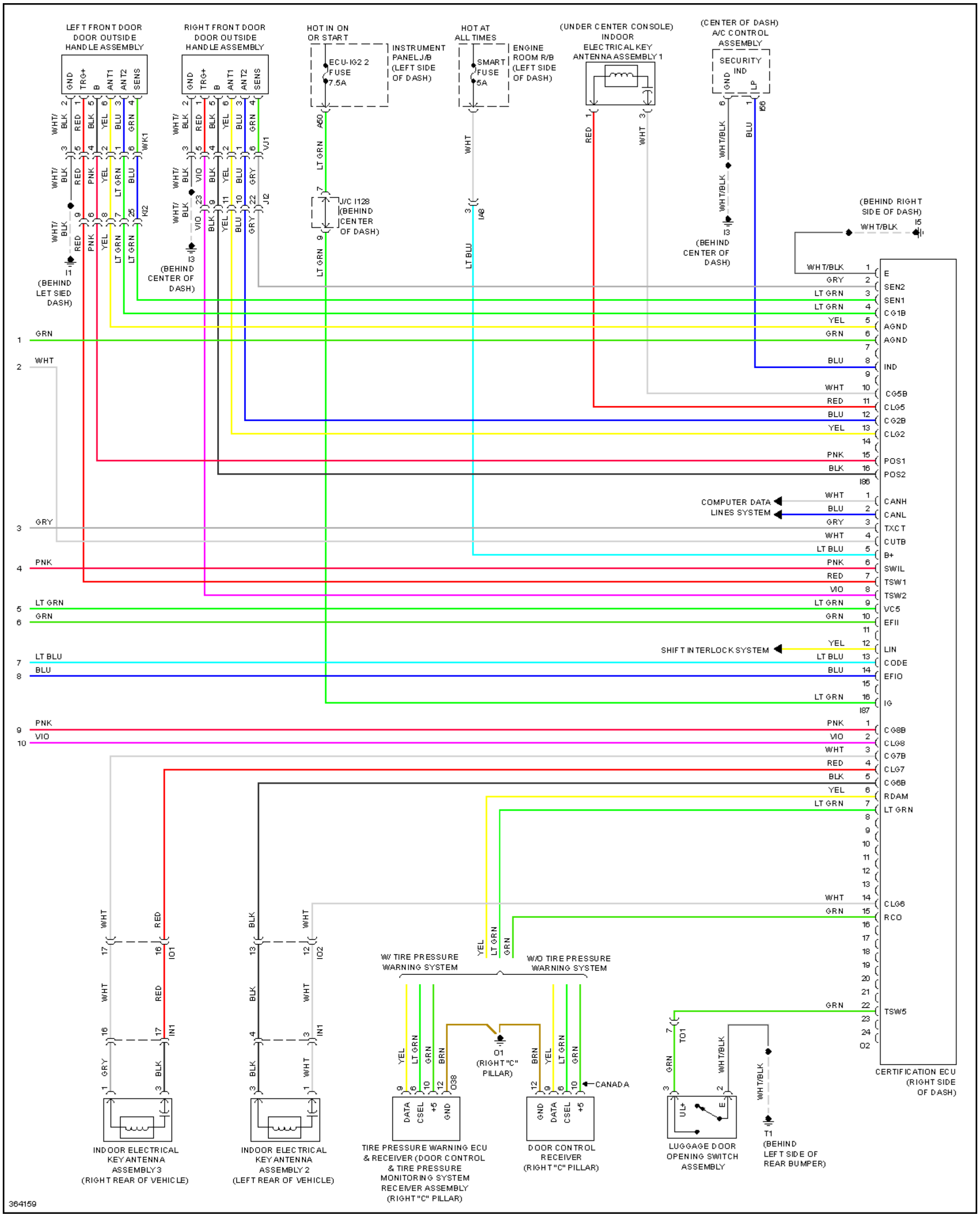
LEFT FRONT DOOR DOOR OUTSIDE HANDLE ASSEMBLY
GND
TRG+
B
ANT1
ANT2
SENS
RIGHT FRONT DOOR DOOR OUTSIDE HANDLE ASSEMBLY
HOT IN ON OR START
ECU-IG2 2 FUSE 7.5A
INSTRUMENT PANEL J/B (LEFT SIDE OF DASH)
HOT AT ALL TIMES
SMART FUSE 5A
ENGINE ROOM R/B (LEFT SIDE OF DASH)
(UNDER CENTER CONSOLE) INDOOR ELECTRICAL KEY ANTENNA ASSEMBLY 1
(CENTER OF DASH) A/C CONTROL ASSEMBLY
SECURITY IND
LP
WK1
WK2
VJ1
J12
A50
J/C I128 (BEHIND CENTER OF DASH)
IA8
I56
I1 (BEHIND LET SIED DASH)
I3 (BEHIND CENTER OF DASH)
(BEHIND RIGHT SIDE OF DASH)
I5
WHT/BLK
RED
BLK
YEL
BLU
GRN
LT GRN
PNK
VIO
GRY
WHT
LT BLU
E
SEN2
SEN1
CG1B
AGND
IND
CG5B
CLG5
CG2B
CLG2
POS1
POS2
I86
COMPUTER DATA LINES SYSTEM
CANH
CANL
TXCT
CUTB
B+
SWIL
TSW1
TSW2
VC5
EFII
SHIFT INTERLOCK SYSTEM
LIN
CODE
EFIO
IG
I87
CG8B
CLG8
CG7B
CLG7
CG6B
RDAM
CLG6
RCO
TSW5
O2
CERTIFICATION ECU (RIGHT SIDE OF DASH)
IO1
IO2
IN1
W/ TIRE PRESSURE WARNING SYSTEM
W/O TIRE PRESSURE WARNING SYSTEM
O1 (RIGHT "C" PILLAR)
O38
DATA
CSEL
+5
CANADA
TO1
UL+
T1 (BEHIND LEFT SIDE OF REAR BUMPER)
INDOOR ELECTRICAL KEY ANTENNA ASSEMBLY 3 (RIGHT REAR OF VEHICLE)
INDOOR ELECTRICAL KEY ANTENNA ASSEMBLY 2 (LEFT REAR OF VEHICLE)
TIRE PRESSURE WARNING ECU & RECEIVER (DOOR CONTROL & TIRE PRESSURE MONITORING SYSTEM RECEIVER ASSEMBLY (RIGHT "C" PILLAR)
DOOR CONTROL RECEIVER (RIGHT "C" PILLAR)
LUGGAGE DOOR OPENING SWITCH ASSEMBLY
364159

Fig. 134: Power Door Locks Circuit, Hybrid (4 of 4)

POWER MIRRORS

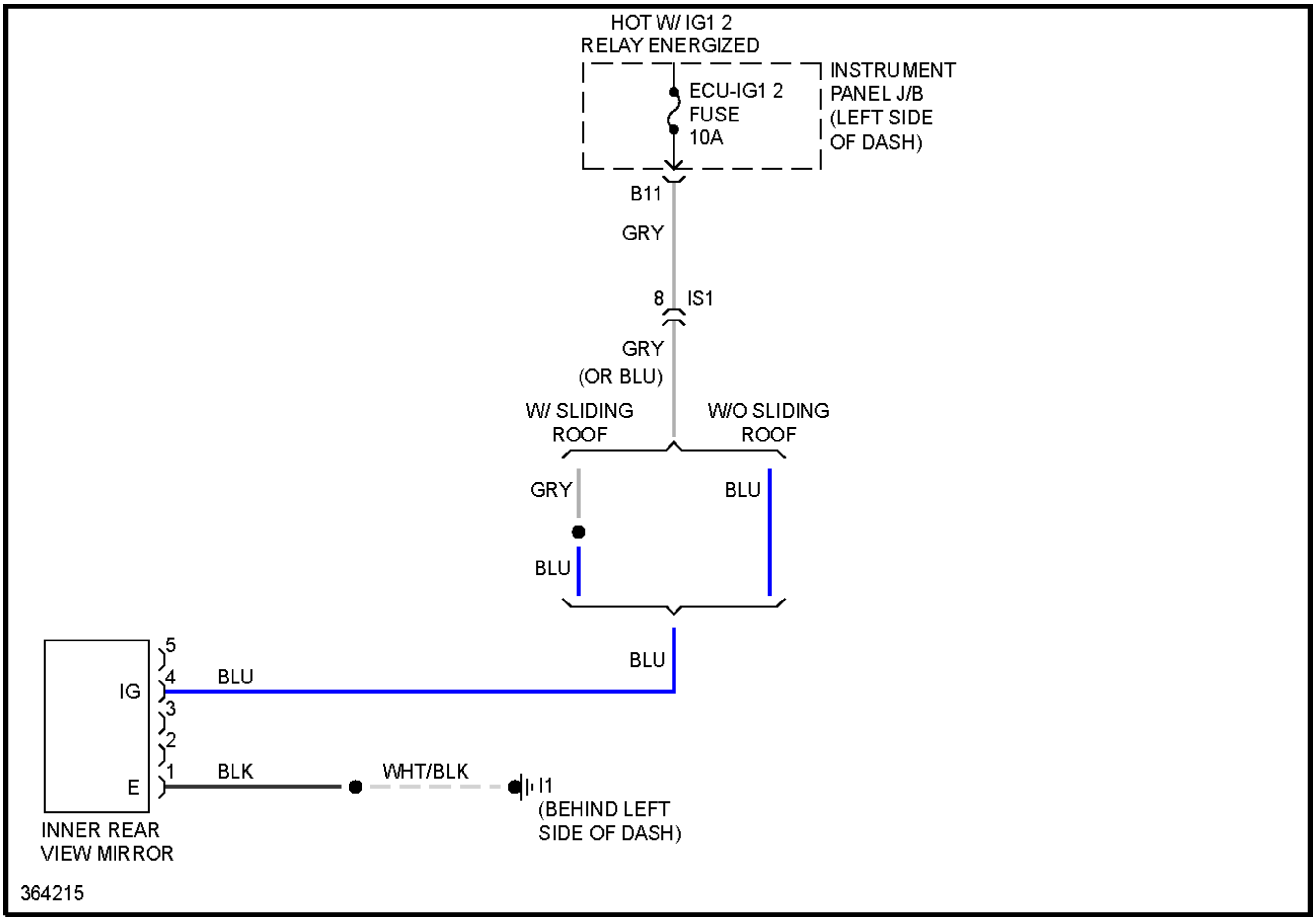
HOT W/ IG1 2
RELAY ENERGIZED
ECU-IG1 2
FUSE
10A
INSTRUMENT
PANEL J/B
(LEFT SIDE
OF DASH)
B11
GRY
8
IS1
GRY
(OR BLU)
W/ SLIDING
ROOF
W/O SLIDING
ROOF
GRY
BLU
BLU
BLU
5
4
IG
BLU
3
2
1
E
BLK
WHT/BLK
I1
(BEHIND LEFT
SIDE OF DASH)
INNER REAR
VIEW MIRROR
364215

Fig. 135: Electrochromic Mirror Circuit

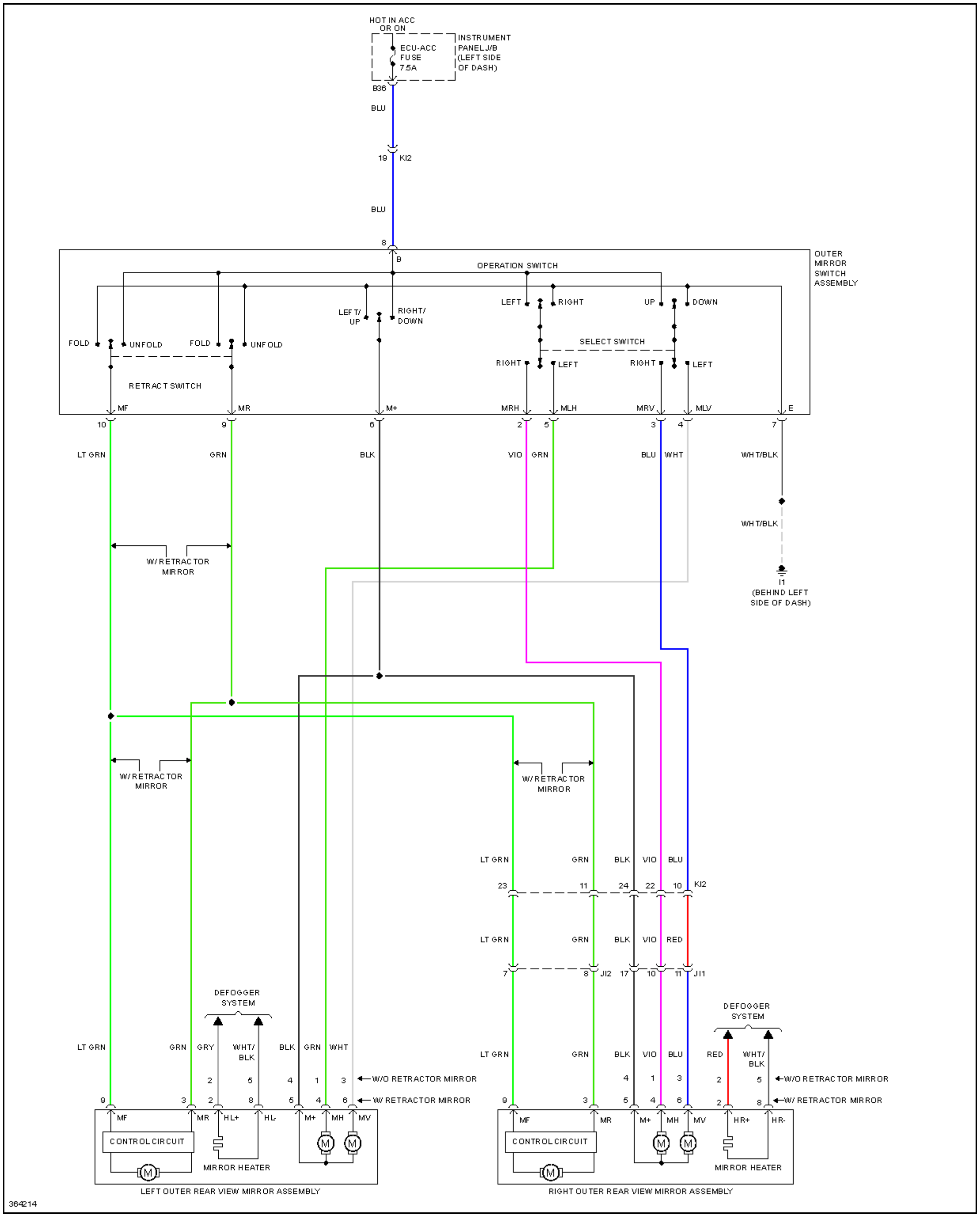
HOT IN ACC
OR ON
ECU-ACC
FUSE
7.5A
INSTRUMENT
PANEL J/B
(LEFT SIDE
OF DASH)
B36
BLU
19
KI2
BLU
8
B
OUTER
MIRROR
SWITCH
ASSEMBLY
OPERATION SWITCH
LEFT
RIGHT
UP
DOWN
LEFT/
UP
RIGHT/
DOWN
FOLD
UNFOLD
FOLD
UNFOLD
SELECT SWITCH
RIGHT
LEFT
RIGHT
LEFT
RETRACT SWITCH
MF
MR
M+
MRH
MLH
MRV
MLV
E
10
9
6
2
5
3
4
7
LT GRN
GRN
BLK
VIO
GRN
BLU
WHT
WHT/BLK
WHT/BLK
I1
(BEHIND LEFT
SIDE OF DASH)
W/ RETRACTOR
MIRROR
W/ RETRACTOR
MIRROR
W/ RETRACTOR
MIRROR
LT GRN
GRN
BLK
VIO
BLU
23
11
24
22
10
KI2
LT GRN
GRN
BLK
VIO
RED
7
8
JI2
17
10
11
JI1
DEFOGGER
SYSTEM
DEFOGGER
SYSTEM
LT GRN
GRN
GRY
WHT/
BLK
BLK
GRN
WHT
2
5
4
1
3
W/O RETRACTOR MIRROR
9
3
2
8
5
4
6
W/ RETRACTOR MIRROR
MF
MR
HL+
HL-
M+
MH
MV
CONTROL CIRCUIT
M
M
M
MIRROR HEATER
LEFT OUTER REAR VIEW MIRROR ASSEMBLY
LT GRN
GRN
BLK
VIO
BLU
RED
WHT/
BLK
4
1
3
2
5
W/O RETRACTOR MIRROR
9
3
5
4
6
2
8
W/ RETRACTOR MIRROR
MF
MR
M+
MH
MV
HR+
HR-
CONTROL CIRCUIT
M
M
M
MIRROR HEATER
RIGHT OUTER REAR VIEW MIRROR ASSEMBLY
364214

Fig. 136: Power Mirrors Circuit

POWER SEATS

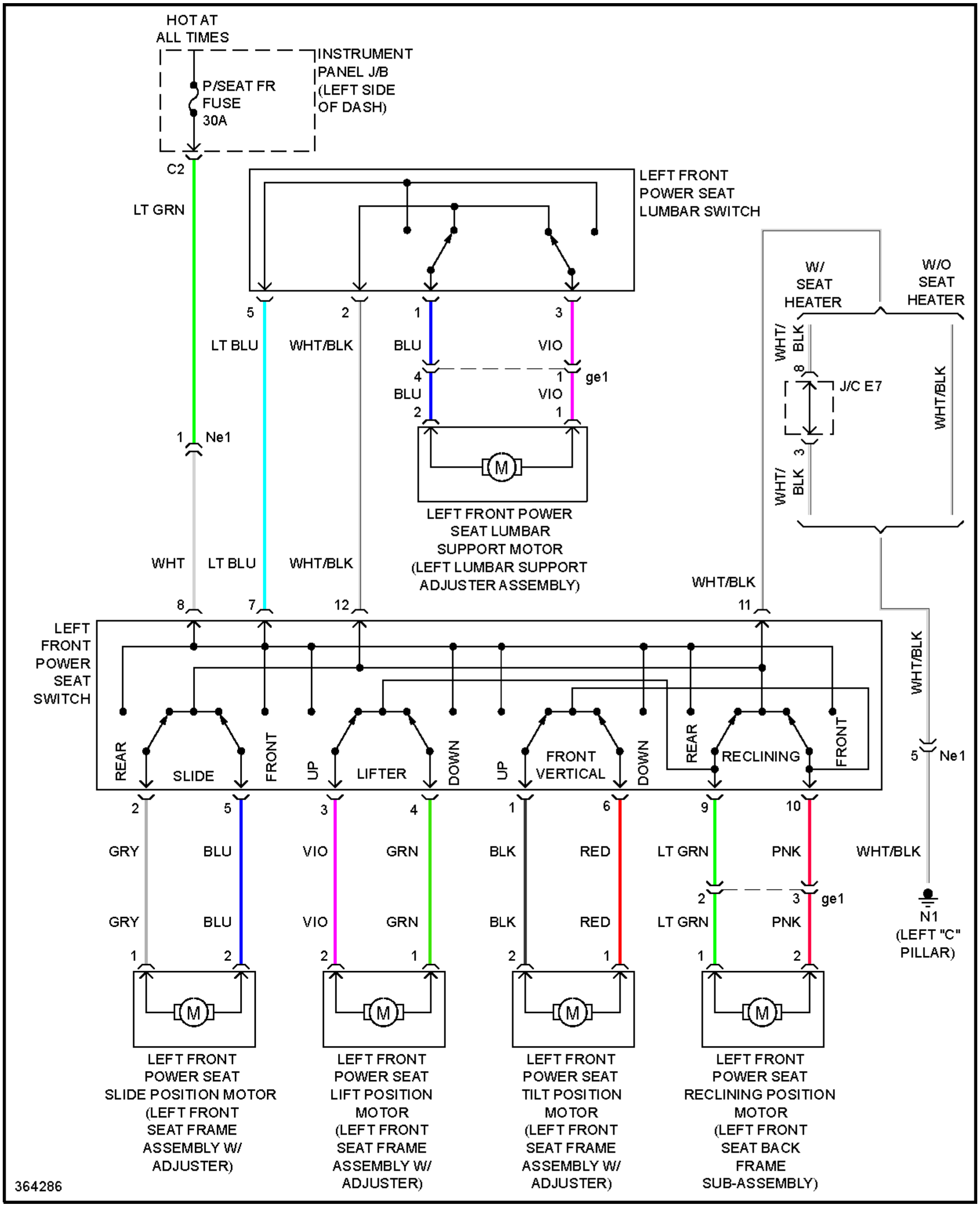
HOT AT ALL TIMES
INSTRUMENT PANEL J/B (LEFT SIDE OF DASH)
P/SEAT FR FUSE 30A
C2
LT GRN
LEFT FRONT POWER SEAT LUMBAR SWITCH
5
2
1
3
LT BLU
WHT/BLK
BLU
VIO
4
1
ge1
BLU
VIO
2
1
LEFT FRONT POWER SEAT LUMBAR SUPPORT MOTOR (LEFT LUMBAR SUPPORT ADJUSTER ASSEMBLY)
1
Ne1
W/ SEAT HEATER
W/O SEAT HEATER
WHT/BLK
8
J/C E7
3
WHT/BLK
WHT/BLK
WHT
LT BLU
WHT/BLK
WHT/BLK
8
7
12
11
LEFT FRONT POWER SEAT SWITCH
REAR
SLIDE
FRONT
UP
LIFTER
DOWN
UP
FRONT VERTICAL
DOWN
REAR
RECLINING
FRONT
WHT/BLK
2
5
3
4
1
6
9
10
GRY
BLU
VIO
GRN
BLK
RED
LT GRN
PNK
WHT/BLK
2
3
ge1
GRY
BLU
VIO
GRN
BLK
RED
LT GRN
PNK
5
Ne1
N1 (LEFT "C" PILLAR)
1
2
2
1
2
1
1
2
LEFT FRONT POWER SEAT SLIDE POSITION MOTOR (LEFT FRONT SEAT FRAME ASSEMBLY W/ ADJUSTER)
LEFT FRONT POWER SEAT LIFT POSITION MOTOR (LEFT FRONT SEAT FRAME ASSEMBLY W/ ADJUSTER)
LEFT FRONT POWER SEAT TILT POSITION MOTOR (LEFT FRONT SEAT FRAME ASSEMBLY W/ ADJUSTER)
LEFT FRONT POWER SEAT RECLINING POSITION MOTOR (LEFT FRONT SEAT BACK FRAME SUB-ASSEMBLY)
364286

Fig. 137: Driver Power Seat Circuit, SIA Made

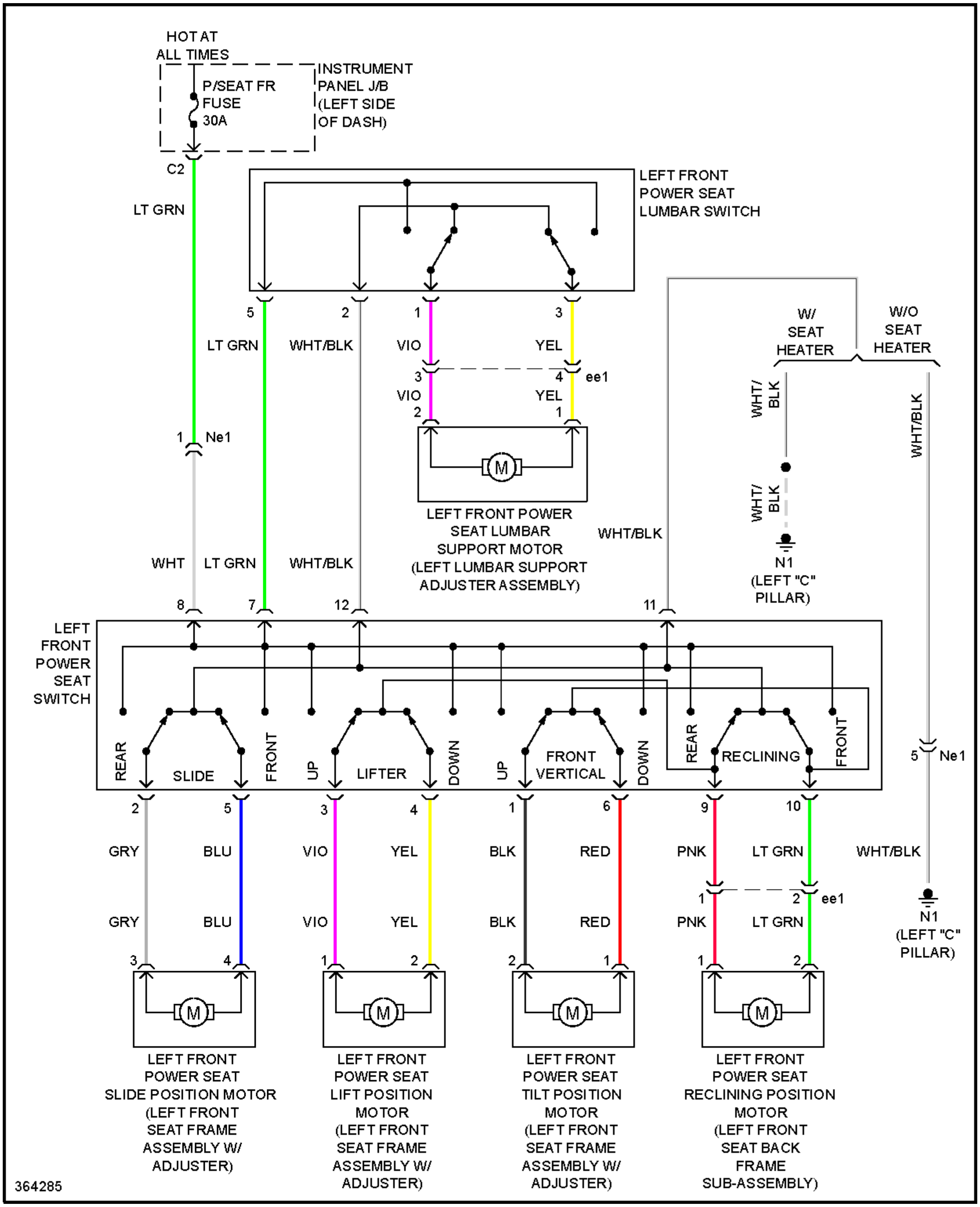
HOT AT
ALL TIMES
P/SEAT FR
FUSE
30A
INSTRUMENT
PANEL J/B
(LEFT SIDE
OF DASH)
C2
LT GRN
LEFT FRONT
POWER SEAT
LUMBAR SWITCH
5
2
1
3
LT GRN
WHT/BLK
VIO
YEL
3
4
ee1
VIO
YEL
2
1
M
LEFT FRONT POWER
SEAT LUMBAR
SUPPORT MOTOR
(LEFT LUMBAR SUPPORT
ADJUSTER ASSEMBLY)
1
Ne1
W/
SEAT
HEATER
W/O
SEAT
HEATER
WHT/
BLK
WHT/BLK
WHT/
BLK
N1
(LEFT "C"
PILLAR)
WHT/BLK
WHT
LT GRN
WHT/BLK
8
7
12
11
LEFT
FRONT
POWER
SEAT
SWITCH
REAR
SLIDE
FRONT
UP
LIFTER
DOWN
UP
FRONT
VERTICAL
DOWN
REAR
RECLINING
FRONT
5
Ne1
2
5
3
4
1
6
9
10
GRY
BLU
VIO
YEL
BLK
RED
PNK
LT GRN
WHT/BLK
1
2
ee1
GRY
BLU
VIO
YEL
BLK
RED
PNK
LT GRN
N1
(LEFT "C"
PILLAR)
3
4
1
2
2
1
1
2
M
M
M
M
LEFT FRONT
POWER SEAT
SLIDE POSITION MOTOR
(LEFT FRONT
SEAT FRAME
ASSEMBLY W/
ADJUSTER)
LEFT FRONT
POWER SEAT
LIFT POSITION
MOTOR
(LEFT FRONT
SEAT FRAME
ASSEMBLY W/
ADJUSTER)
LEFT FRONT
POWER SEAT
TILT POSITION
MOTOR
(LEFT FRONT
SEAT FRAME
ASSEMBLY W/
ADJUSTER)
LEFT FRONT
POWER SEAT
RECLINING POSITION
MOTOR
(LEFT FRONT
SEAT BACK
FRAME
SUB-ASSEMBLY)
364285

Fig. 138: Driver Power Seat Circuit, TMMK Made

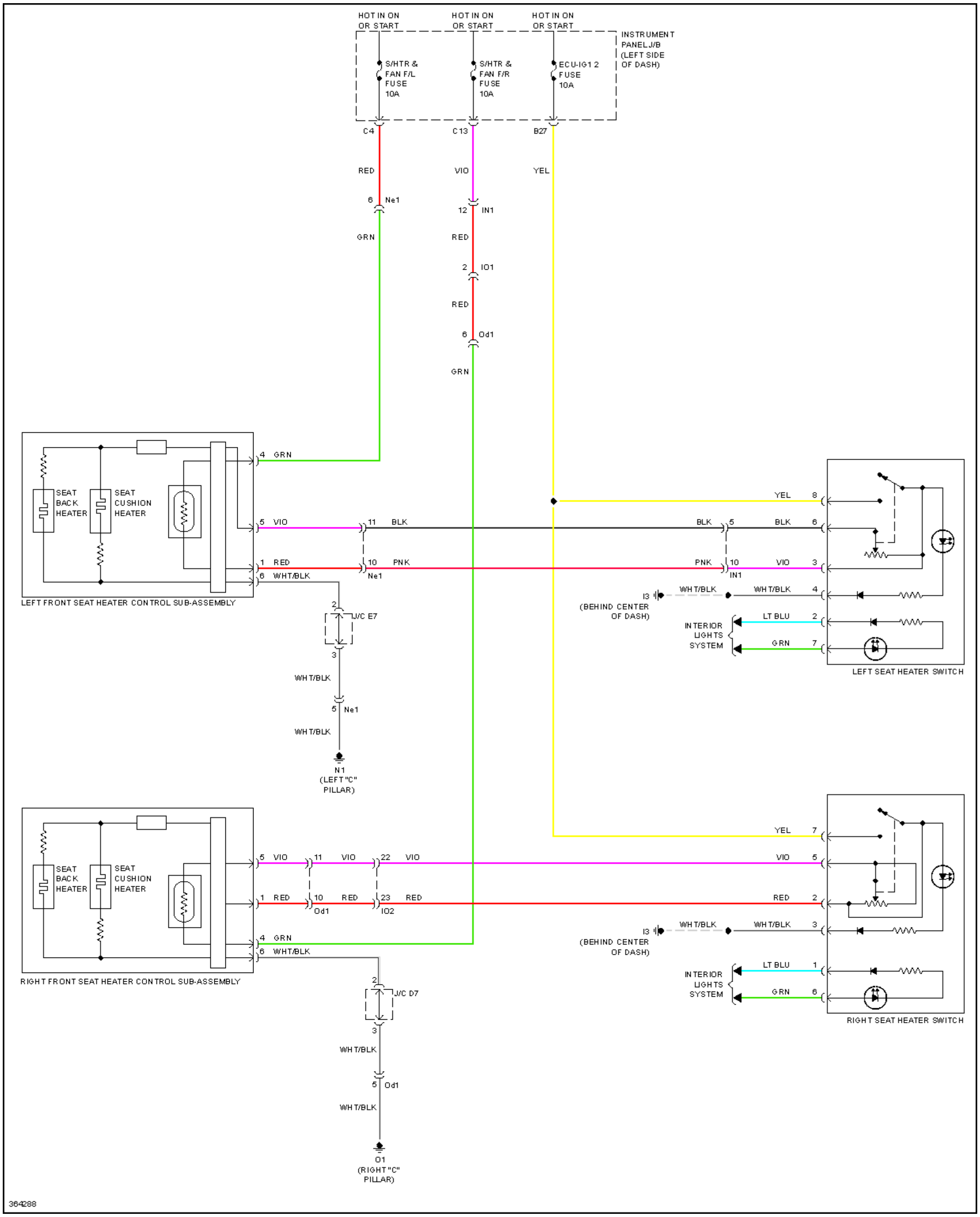
HOT IN ON OR START
HOT IN ON OR START
HOT IN ON OR START
INSTRUMENT PANEL J/B (LEFT SIDE OF DASH)
S/HTR & FAN F/L FUSE 10A
S/HTR & FAN F/R FUSE 10A
ECU-IG1 2 FUSE 10A
C4
C13
B27
RED
VIO
YEL
6 Ne1
12 IN1
GRN
RED
2 IO1
RED
6 Od1
GRN
SEAT BACK HEATER
SEAT CUSHION HEATER
4 GRN
5 VIO
11 BLK
BLK
5
BLK
6
1 RED
10 PNK
Ne1
PNK
10
IN1
VIO
3
6 WHT/BLK
LEFT FRONT SEAT HEATER CONTROL SUB-ASSEMBLY
YEL 8
I3
(BEHIND CENTER OF DASH)
WHT/BLK
WHT/BLK 4
INTERIOR LIGHTS SYSTEM
LT BLU 2
GRN 7
LEFT SEAT HEATER SWITCH
2
J/C E7
3
WHT/BLK
5 Ne1
WHT/BLK
N1 (LEFT "C" PILLAR)
SEAT BACK HEATER
SEAT CUSHION HEATER
5 VIO
11 VIO
22 VIO
VIO 5
1 RED
10 RED
Od1
23 RED
IO2
RED 2
4 GRN
6 WHT/BLK
RIGHT FRONT SEAT HEATER CONTROL SUB-ASSEMBLY
YEL 7
I3
(BEHIND CENTER OF DASH)
WHT/BLK
WHT/BLK 3
INTERIOR LIGHTS SYSTEM
LT BLU 1
GRN 6
RIGHT SEAT HEATER SWITCH
2
J/C D7
3
WHT/BLK
5 Od1
WHT/BLK
O1 (RIGHT "C" PILLAR)
364288

Fig. 139: Heated Seats Circuit, SIA Made

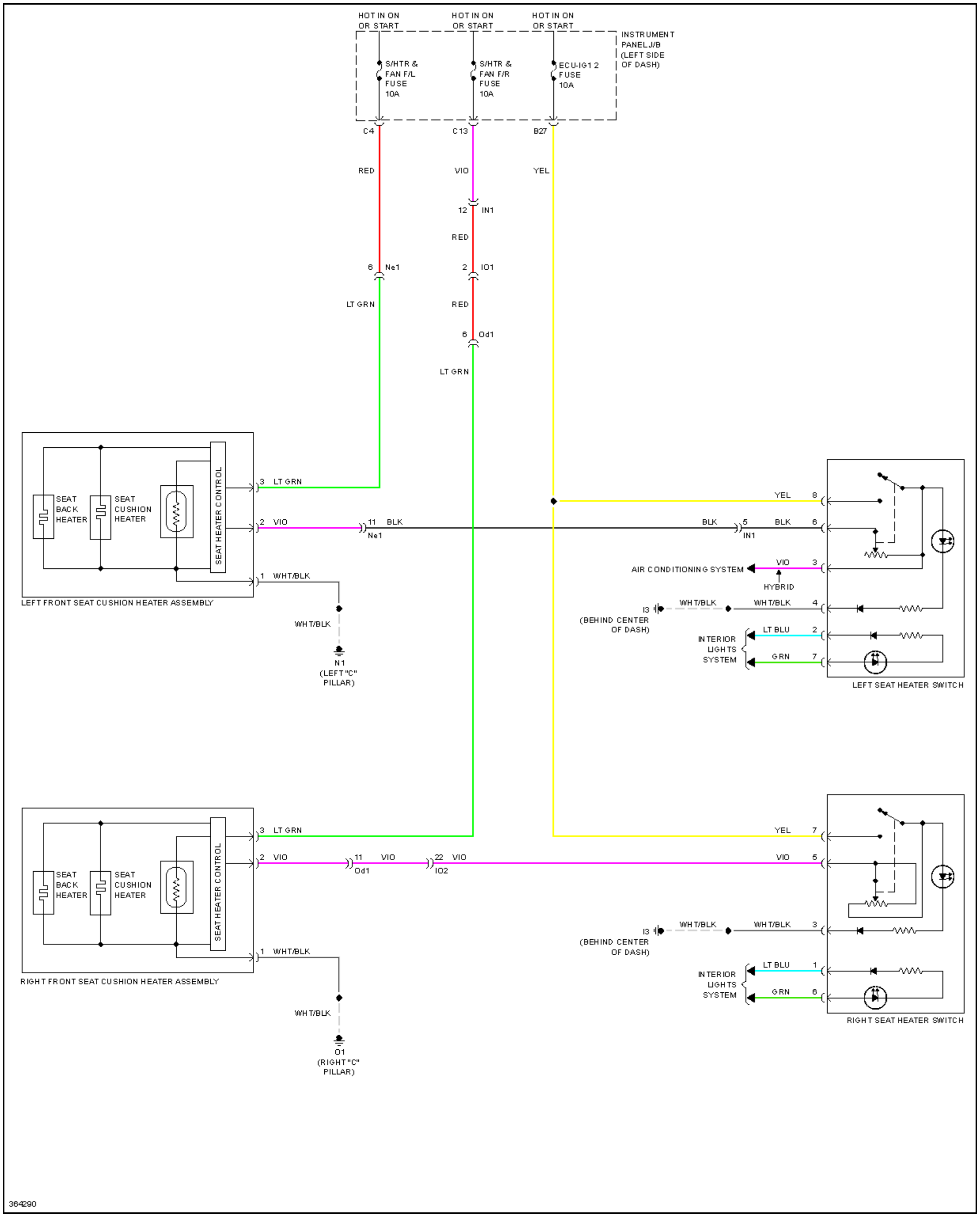
HOT IN ON OR START
HOT IN ON OR START
HOT IN ON OR START
INSTRUMENT PANEL J/B (LEFT SIDE OF DASH)
S/HTR & FAN F/L FUSE 10A
S/HTR & FAN F/R FUSE 10A
ECU-IG1 2 FUSE 10A
C4
C13
B27
RED
VIO
YEL
12 IN1
RED
6 Ne1
2 IO1
LT GRN
RED
6 Od1
LT GRN
SEAT BACK HEATER
SEAT CUSHION HEATER
SEAT HEATER CONTROL
3 LT GRN
2 VIO
11 BLK
Ne1
1 WHT/BLK
LEFT FRONT SEAT CUSHION HEATER ASSEMBLY
WHT/BLK
N1 (LEFT "C" PILLAR)
YEL 8
BLK 5 IN1
BLK 6
AIR CONDITIONING SYSTEM
VIO 3
HYBRID
I3 (BEHIND CENTER OF DASH)
WHT/BLK
WHT/BLK 4
INTERIOR LIGHTS SYSTEM
LT BLU 2
GRN 7
LEFT SEAT HEATER SWITCH
SEAT BACK HEATER
SEAT CUSHION HEATER
SEAT HEATER CONTROL
3 LT GRN
2 VIO
11 VIO
Od1
22 VIO
IO2
1 WHT/BLK
RIGHT FRONT SEAT CUSHION HEATER ASSEMBLY
WHT/BLK
O1 (RIGHT "C" PILLAR)
YEL 7
VIO 5
I3 (BEHIND CENTER OF DASH)
WHT/BLK
WHT/BLK 3
INTERIOR LIGHTS SYSTEM
LT BLU 1
GRN 6
RIGHT SEAT HEATER SWITCH
364290

Fig. 140: Heated Seats Circuit, TMMK Made

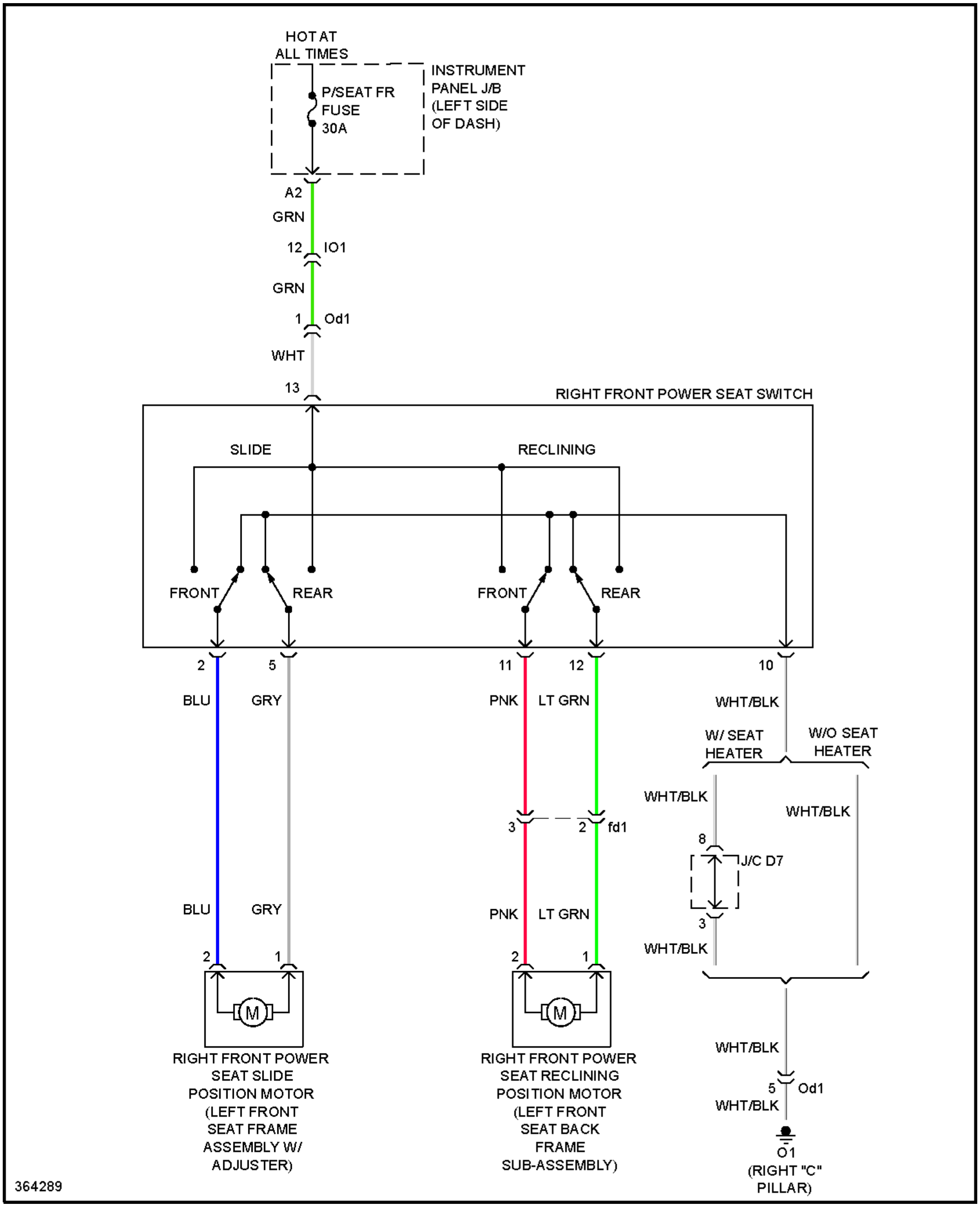
HOT AT ALL TIMES
INSTRUMENT PANEL J/B (LEFT SIDE OF DASH)
P/SEAT FR FUSE 30A
A2
GRN
12
IO1
GRN
1
Od1
WHT
13
RIGHT FRONT POWER SEAT SWITCH
SLIDE
RECLINING
FRONT
REAR
FRONT
REAR
2
5
11
12
10
BLU
GRY
PNK
LT GRN
WHT/BLK
W/ SEAT HEATER
W/O SEAT HEATER
WHT/BLK
WHT/BLK
3
2
fd1
8
J/C D7
3
BLU
GRY
PNK
LT GRN
WHT/BLK
2
1
2
1
M
M
RIGHT FRONT POWER SEAT SLIDE POSITION MOTOR (LEFT FRONT SEAT FRAME ASSEMBLY W/ ADJUSTER)
RIGHT FRONT POWER SEAT RECLINING POSITION MOTOR (LEFT FRONT SEAT BACK FRAME SUB-ASSEMBLY)
WHT/BLK
5
Od1
WHT/BLK
O1
(RIGHT "C" PILLAR)
364289

Fig. 141: Passenger Power Seat Circuit, SIA Made

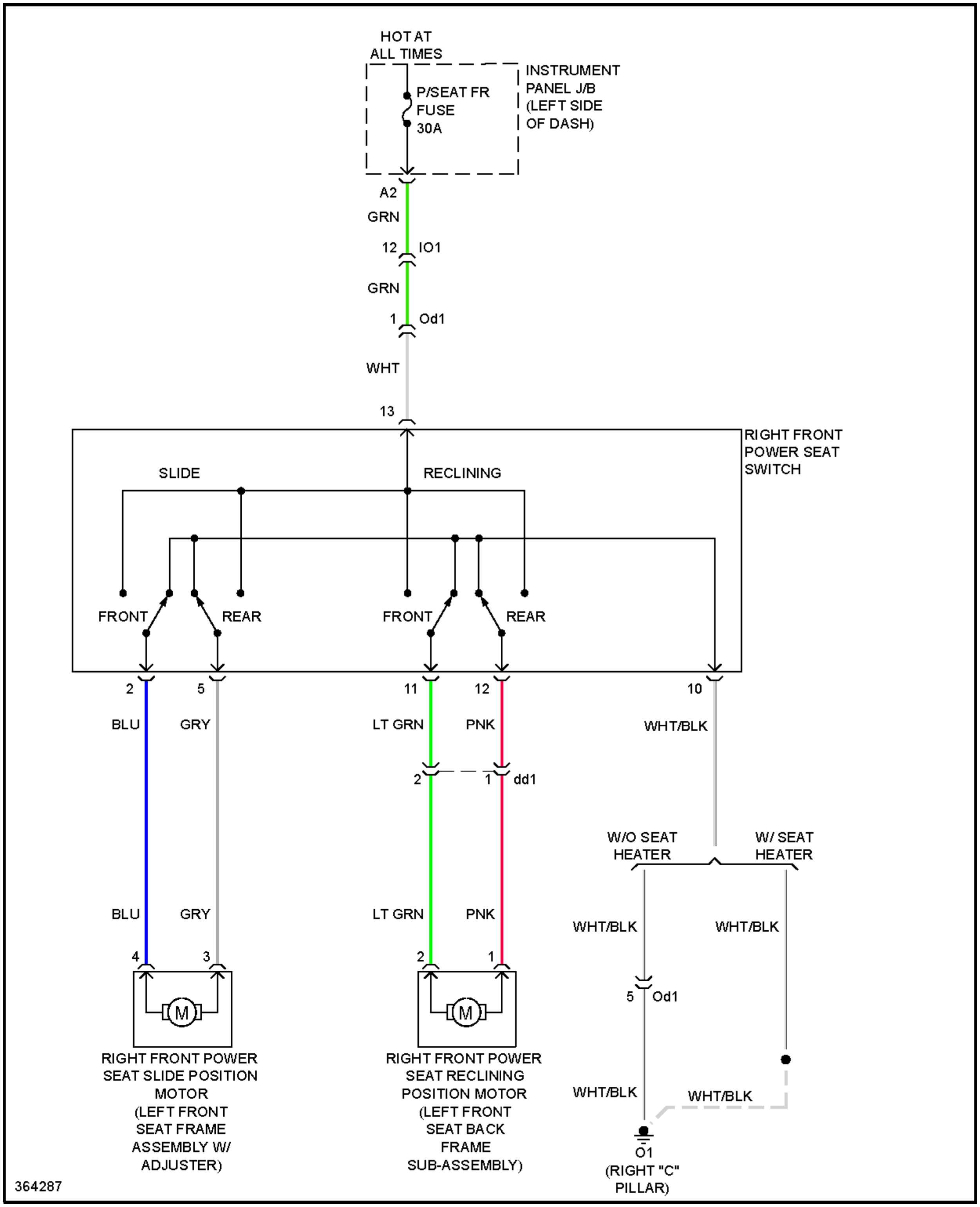
HOT AT
ALL TIMES
INSTRUMENT
PANEL J/B
(LEFT SIDE
OF DASH)
P/SEAT FR
FUSE
30A
A2
GRN
12
IO1
GRN
1
Od1
WHT
13
RIGHT FRONT
POWER SEAT
SWITCH
SLIDE
RECLINING
FRONT
REAR
FRONT
REAR
2
5
11
12
10
BLU
GRY
LT GRN
PNK
WHT/BLK
2
1
dd1
W/O SEAT
HEATER
W/ SEAT
HEATER
BLU
GRY
LT GRN
PNK
WHT/BLK
WHT/BLK
4
3
2
1
M
M
5
Od1
RIGHT FRONT POWER
SEAT SLIDE POSITION
MOTOR
(LEFT FRONT
SEAT FRAME
ASSEMBLY W/
ADJUSTER)
RIGHT FRONT POWER
SEAT RECLINING
POSITION MOTOR
(LEFT FRONT
SEAT BACK
FRAME
SUB-ASSEMBLY)
WHT/BLK
WHT/BLK
O1
(RIGHT "C"
PILLAR)
364287

Fig. 142: Passenger Power Seat Circuit, TMMK Made

POWER TOP/SUNROOF

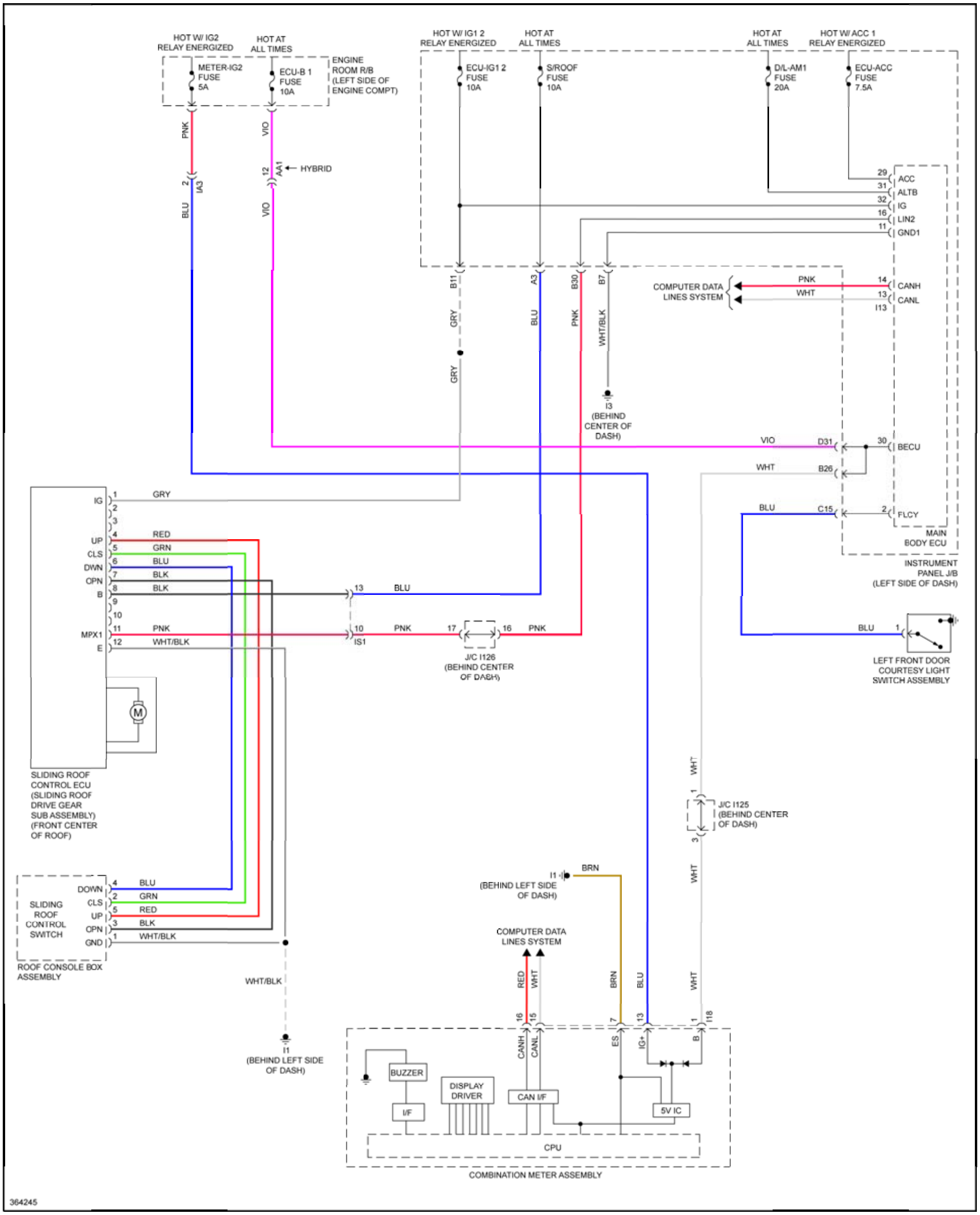
HOT W/ IG2 RELAY ENERGIZED
HOT AT ALL TIMES
METER-IG2 FUSE 5A
ECU-B 1 FUSE 10A
ENGINE ROOM R/B (LEFT SIDE OF ENGINE COMPT)
HOT W/ IG1 2 RELAY ENERGIZED
HOT AT ALL TIMES
ECU-IG1 2 FUSE 10A
S/ROOF FUSE 10A
HOT AT ALL TIMES
HOT W/ ACC 1 RELAY ENERGIZED
D/L-AM1 FUSE 20A
ECU-ACC FUSE 7.5A
PNK
VIO
HYBRID
AA1
12
2
IA3
BLU
VIO
29 ACC
31 ALTB
32 IG
16 LIN2
11 GND1
B11
A3
B30
B7
GRY
BLU
PNK
WHT/BLK
GRY
I3 (BEHIND CENTER OF DASH)
COMPUTER DATA LINES SYSTEM
PNK
WHT
14 CANH
13 CANL
I13
VIO
D31
30 BECU
WHT
B26
BLU
C15
2 FLCY
MAIN BODY ECU
INSTRUMENT PANEL J/B (LEFT SIDE OF DASH)
IG
UP
CLS
DWN
OPN
B
MPX1
E
1 GRY
2
3
4 RED
5 GRN
6 BLU
7 BLK
8 BLK
9
10
11 PNK
12 WHT/BLK
13 BLU
10 PNK
IS1
17
16 PNK
J/C I126 (BEHIND CENTER OF DASH)
M
BLU
1
LEFT FRONT DOOR COURTESY LIGHT SWITCH ASSEMBLY
SLIDING ROOF CONTROL ECU (SLIDING ROOF DRIVE GEAR SUB ASSEMBLY) (FRONT CENTER OF ROOF)
WHT
1
J/C I125 (BEHIND CENTER OF DASH)
3
WHT
I1 (BEHIND LEFT SIDE OF DASH)
BRN
SLIDING ROOF CONTROL SWITCH
DOWN 4 BLU
CLS 2 GRN
UP 5 RED
OPN 3 BLK
GND 1 WHT/BLK
ROOF CONSOLE BOX ASSEMBLY
WHT/BLK
I1 (BEHIND LEFT SIDE OF DASH)
COMPUTER DATA LINES SYSTEM
RED
WHT
BRN
BLU
WHT
16
15
7
13
1
I18
CANH
CANL
ES
IG+
B
BUZZER
I/F
DISPLAY DRIVER
CAN I/F
5V IC
CPU
COMBINATION METER ASSEMBLY
364245

Fig. 143: Power Top/Sunroof Circuit

POWER WINDOWS

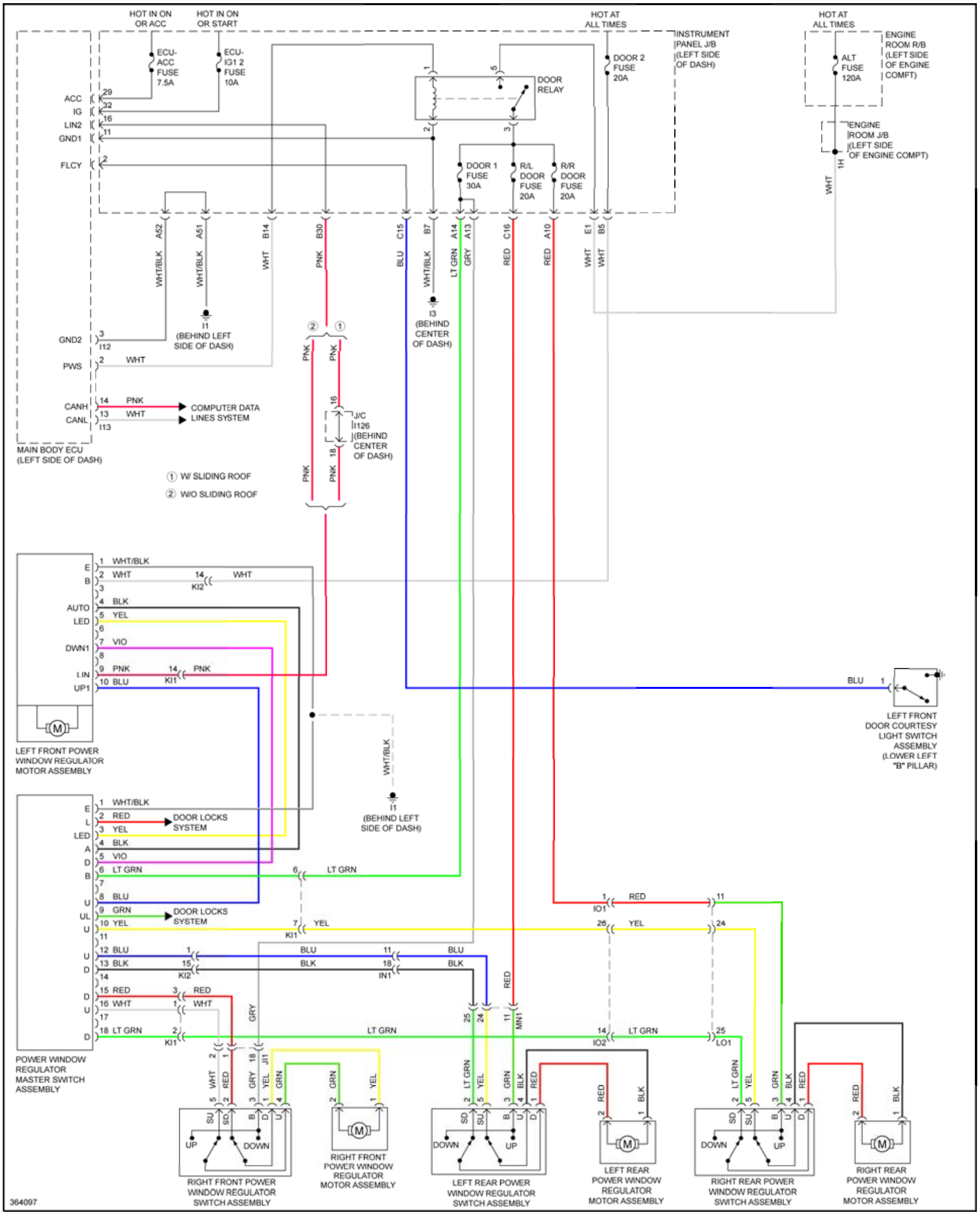
HOT IN ON OR ACC
HOT IN ON OR START
HOT AT ALL TIMES
HOT AT ALL TIMES
ECU-ACC FUSE 7.5A
ECU-IG1 2 FUSE 10A
DOOR RELAY
DOOR 2 FUSE 20A
INSTRUMENT PANEL J/B (LEFT SIDE OF DASH)
ALT FUSE 120A
ENGINE ROOM R/B (LEFT SIDE OF ENGINE COMPT)
ENGINE ROOM J/B (LEFT SIDE OF ENGINE COMPT)
DOOR 1 FUSE 30A
R/L DOOR FUSE 20A
R/R DOOR FUSE 20A
ACC
IG
LIN2
GND1
FLCY
GND2
PWS
CANH
CANL
MAIN BODY ECU (LEFT SIDE OF DASH)
COMPUTER DATA LINES SYSTEM
I1 (BEHIND LEFT SIDE OF DASH)
I3 (BEHIND CENTER OF DASH)
J/C I126 (BEHIND CENTER OF DASH)
① W/ SLIDING ROOF
② W/O SLIDING ROOF
A52
A51
B14
B30
C15
B7
A14
A13
C16
A10
E1
B5
1H
WHT/BLK
WHT
PNK
BLU
LT GRN
GRY
RED
LEFT FRONT POWER WINDOW REGULATOR MOTOR ASSEMBLY
E
B
AUTO
LED
DWN1
LIN
UP1
BLK
YEL
VIO
KI2
KI1
LEFT FRONT DOOR COURTESY LIGHT SWITCH ASSEMBLY (LOWER LEFT "B" PILLAR)
I1 (BEHIND LEFT SIDE OF DASH)
DOOR LOCKS SYSTEM
DOOR LOCKS SYSTEM
POWER WINDOW REGULATOR MASTER SWITCH ASSEMBLY
L
A
D
U
UL
GRN
IO1
IO2
IN1
LO1
MN1
JI1
SU
SD
UP
DOWN
RIGHT FRONT POWER WINDOW REGULATOR SWITCH ASSEMBLY
RIGHT FRONT POWER WINDOW REGULATOR MOTOR ASSEMBLY
LEFT REAR POWER WINDOW REGULATOR SWITCH ASSEMBLY
LEFT REAR POWER WINDOW REGULATOR MOTOR ASSEMBLY
RIGHT REAR POWER WINDOW REGULATOR SWITCH ASSEMBLY
RIGHT REAR POWER WINDOW REGULATOR MOTOR ASSEMBLY
364097

Fig. 144: Power Windows Circuit, Except Hybrid

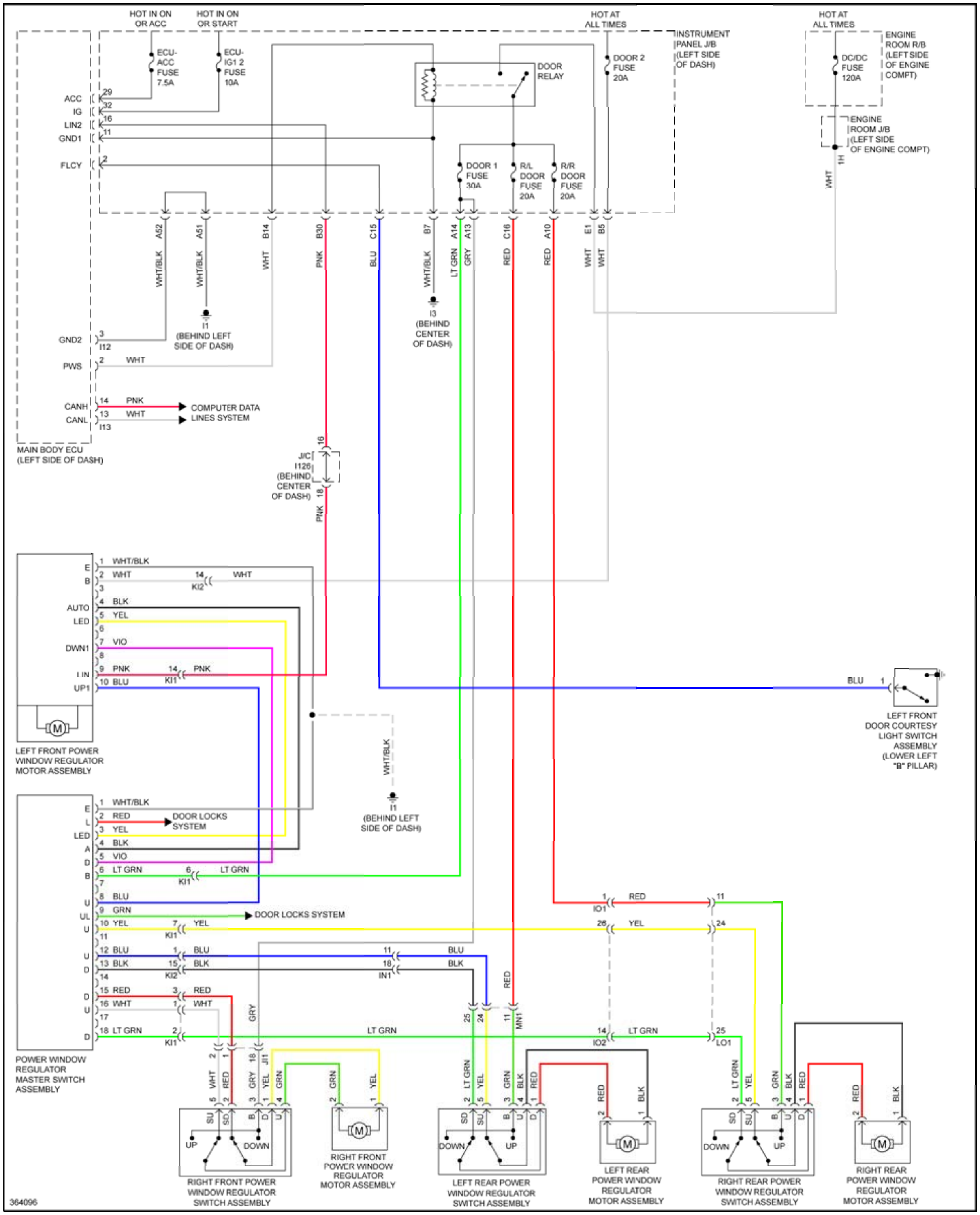
HOT IN ON OR ACC
HOT IN ON OR START
HOT AT ALL TIMES
HOT AT ALL TIMES
ECU-ACC FUSE 7.5A
ECU-IG1 2 FUSE 10A
DOOR RELAY
DOOR 2 FUSE 20A
INSTRUMENT PANEL J/B (LEFT SIDE OF DASH)
DC/DC FUSE 120A
ENGINE ROOM R/B (LEFT SIDE OF ENGINE COMPT)
ENGINE ROOM J/B (LEFT SIDE OF ENGINE COMPT)
DOOR 1 FUSE 30A
R/L DOOR FUSE 20A
R/R DOOR FUSE 20A
ACC
IG
LIN2
GND1
FLCY
GND2
PWS
CANH
CANL
MAIN BODY ECU (LEFT SIDE OF DASH)
I1 (BEHIND LEFT SIDE OF DASH)
I3 (BEHIND CENTER OF DASH)
COMPUTER DATA LINES SYSTEM
J/C I126 (BEHIND CENTER OF DASH)
LEFT FRONT POWER WINDOW REGULATOR MOTOR ASSEMBLY
LEFT FRONT DOOR COURTESY LIGHT SWITCH ASSEMBLY (LOWER LEFT "B" PILLAR)
I1 (BEHIND LEFT SIDE OF DASH)
DOOR LOCKS SYSTEM
DOOR LOCKS SYSTEM
POWER WINDOW REGULATOR MASTER SWITCH ASSEMBLY
RIGHT FRONT POWER WINDOW REGULATOR SWITCH ASSEMBLY
RIGHT FRONT POWER WINDOW REGULATOR MOTOR ASSEMBLY
LEFT REAR POWER WINDOW REGULATOR SWITCH ASSEMBLY
LEFT REAR POWER WINDOW REGULATOR MOTOR ASSEMBLY
RIGHT REAR POWER WINDOW REGULATOR SWITCH ASSEMBLY
RIGHT REAR POWER WINDOW REGULATOR MOTOR ASSEMBLY
UP
DOWN
WHT/BLK
WHT
PNK
BLU
LT GRN
GRY
RED
YEL
VIO
BLK
GRN
364096

Fig. 145: Power Windows Circuit, Hybrid

RADIO

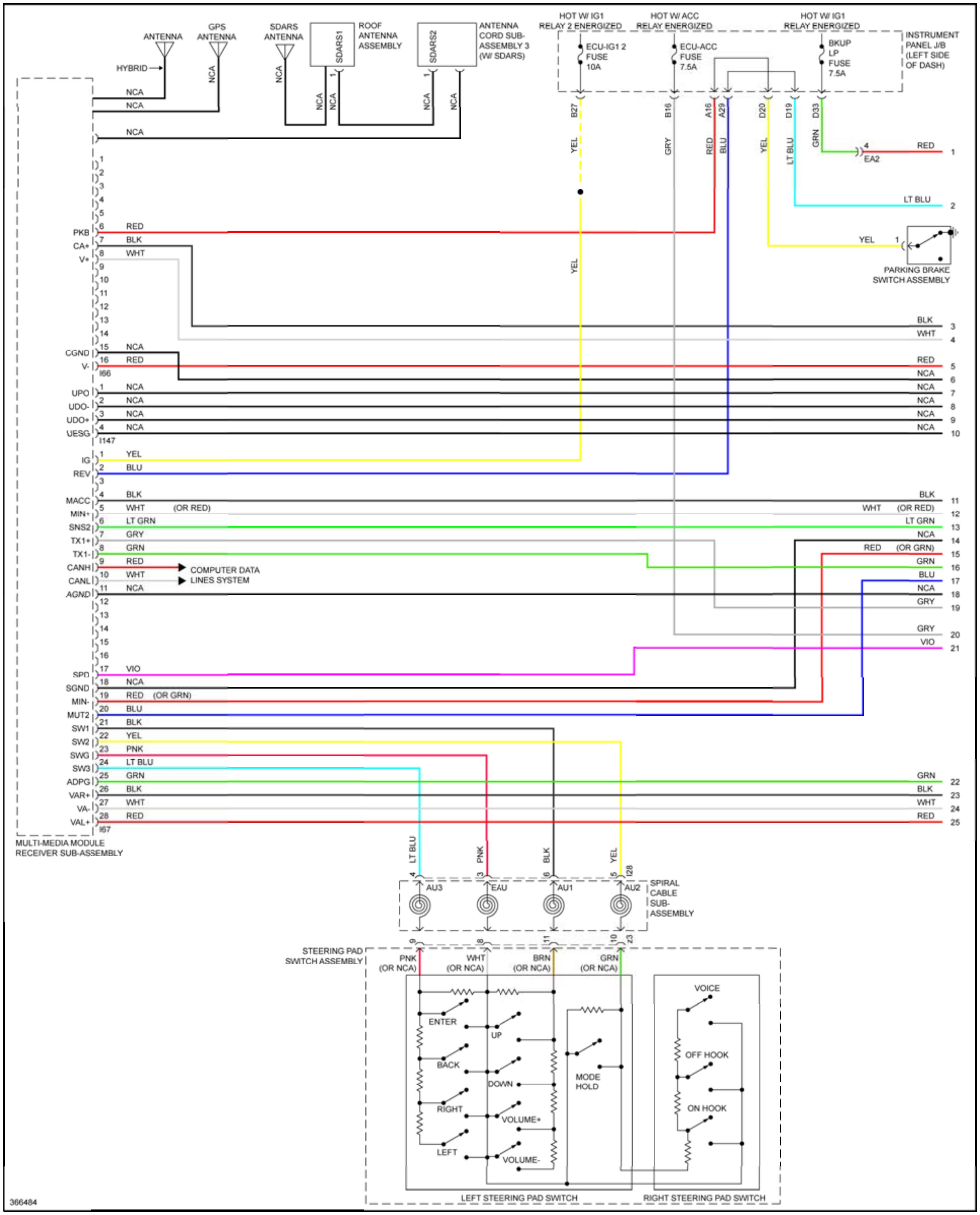
HOT W/ IG1
RELAY 2 ENERGIZED
HOT W/ ACC
RELAY ENERGIZED
HOT W/ IG1
RELAY ENERGIZED
INSTRUMENT PANEL J/B (LEFT SIDE OF DASH)
ECU-IG1 2 FUSE 10A
ECU-ACC FUSE 7.5A
BKUP LP FUSE 7.5A
ANTENNA
GPS ANTENNA
SDARS ANTENNA
HYBRID
ROOF ANTENNA ASSEMBLY
ANTENNA CORD SUB-ASSEMBLY 3 (W/ SDARS)
SDARS1
SDARS2
NCA
B27
B16
A16
A29
D20
D19
D33
YEL
GRY
RED
BLU
LT BLU
GRN
EA2
PARKING BRAKE SWITCH ASSEMBLY
PKB
CA+
V+
CGND
V-
I66
UPO
UDO-
UDO+
UESG
I147
IG
REV
MACC
MIN+
SNS2
TX1+
TX1-
CANH
CANL
AGND
COMPUTER DATA LINES SYSTEM
SPD
SGND
MIN-
MUT2
SW1
SW2
SWG
SW3
ADPG
VAR+
VA-
VAL+
I67
MULTI-MEDIA MODULE RECEIVER SUB-ASSEMBLY
BLK
WHT
VIO
PNK
(OR RED)
(OR GRN)
I28
AU3
EAU
AU1
AU2
SPIRAL CABLE SUB-ASSEMBLY
STEERING PAD SWITCH ASSEMBLY
PNK (OR NCA)
WHT (OR NCA)
BRN (OR NCA)
GRN (OR NCA)
ENTER
BACK
RIGHT
LEFT
UP
DOWN
VOLUME+
VOLUME-
MODE HOLD
VOICE
OFF HOOK
ON HOOK
LEFT STEERING PAD SWITCH
RIGHT STEERING PAD SWITCH
366484

Fig. 146: 10-Speaker System Circuit, W/ Multi-Media Module (1 of 4)

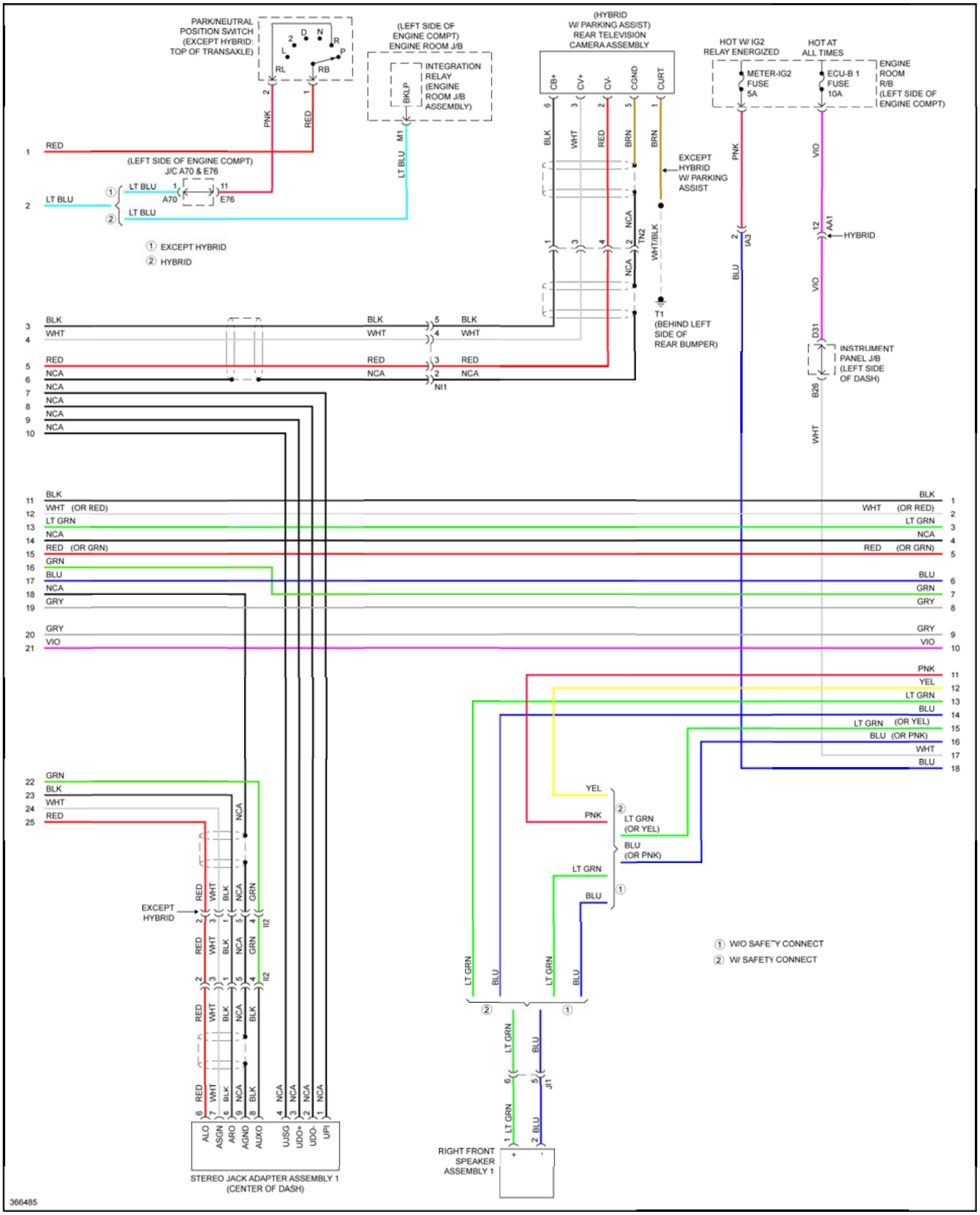
PARK/NEUTRAL POSITION SWITCH (EXCEPT HYBRID: TOP OF TRANSAXLE)
(LEFT SIDE OF ENGINE COMPT) ENGINE ROOM J/B
INTEGRATION RELAY (ENGINE ROOM J/B ASSEMBLY)
BKLP
(HYBRID W/ PARKING ASSIST) REAR TELEVISION CAMERA ASSEMBLY
CB+
CV+
CV-
CGND
CURT
HOT W/ IG2 RELAY ENERGIZED
HOT AT ALL TIMES
METER-IG2 FUSE 5A
ECU-B 1 FUSE 10A
ENGINE ROOM R/B (LEFT SIDE OF ENGINE COMPT)
(LEFT SIDE OF ENGINE COMPT) J/C A70 & E76
EXCEPT HYBRID W/ PARKING ASSIST
① EXCEPT HYBRID
② HYBRID
T1 (BEHIND LEFT SIDE OF REAR BUMPER)
INSTRUMENT PANEL J/B (LEFT SIDE OF DASH)
HYBRID
① W/O SAFETY CONNECT
② W/ SAFETY CONNECT
EXCEPT HYBRID
STEREO JACK ADAPTER ASSEMBLY 1 (CENTER OF DASH)
ALO
ASGN
ARO
AGND
AUXO
UJSG
UDO+
UDO-
UPI
RIGHT FRONT SPEAKER ASSEMBLY 1
366485

Fig. 147: 10-Speaker System Circuit, W/ Multi-Media Module (2 of 4)

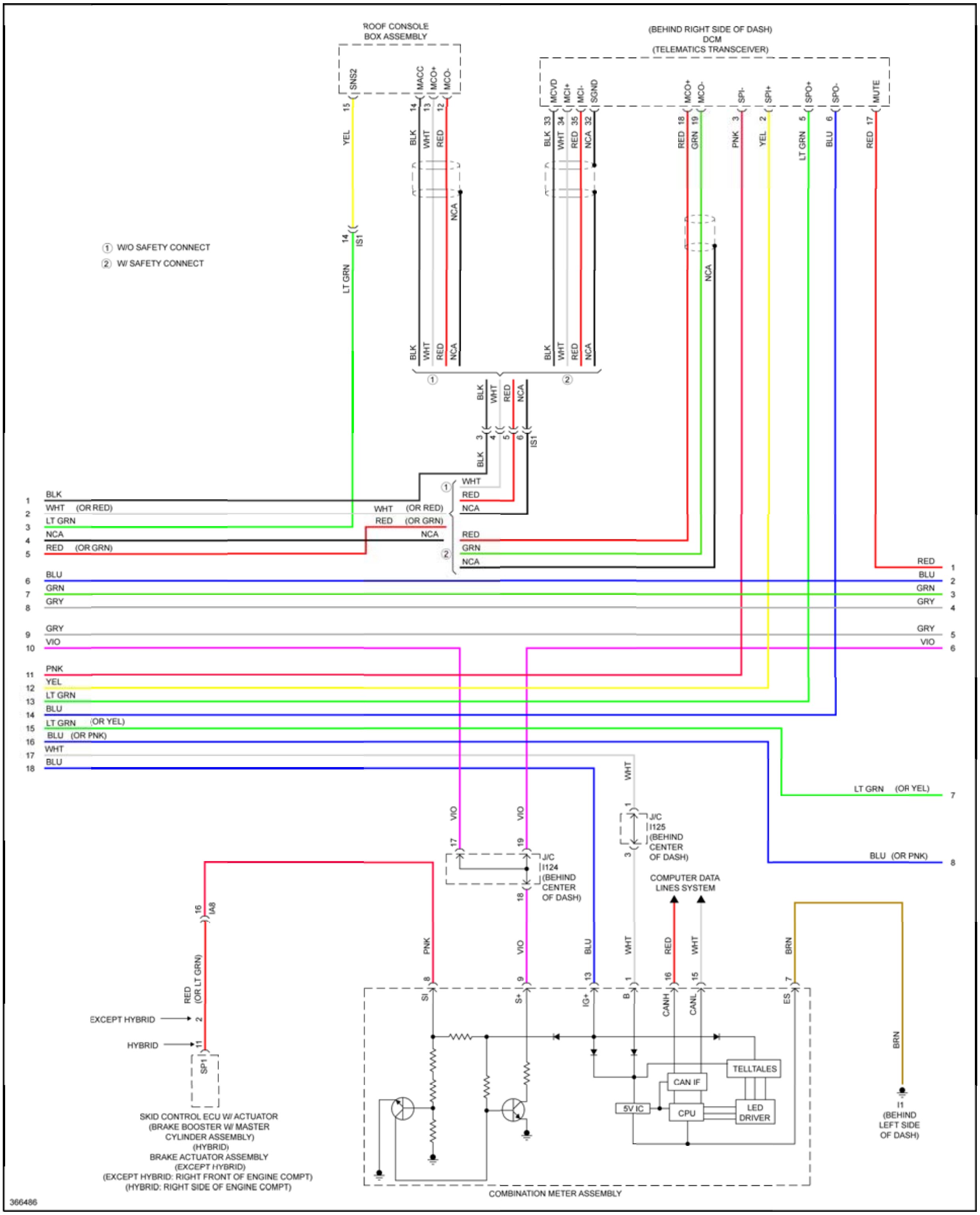
ROOF CONSOLE BOX ASSEMBLY
SNS2
MACC
MCO+
MCO-
15 YEL
14 BLK
13 WHT
12 RED
NCA
14 IS1
LT GRN
(BEHIND RIGHT SIDE OF DASH)
DCM
(TELEMATICS TRANSCEIVER)
MCVD
MCI+
MCI-
SGND
MCO+
MCO-
SPI-
SPI+
SPO+
SPO-
MUTE
BLK 33
WHT 34
RED 35
NCA 32
RED 18
GRN 19
PNK 3
YEL 2
LT GRN 5
BLU 6
RED 17
① W/O SAFETY CONNECT
② W/ SAFETY CONNECT
BLK
WHT
RED
NCA
①
②
3 4 5 6 IS1
1 BLK
2 WHT (OR RED)
3 LT GRN
4 NCA
5 RED (OR GRN)
6 BLU
7 GRN
8 GRY
9 GRY
10 VIO
11 PNK
12 YEL
13 LT GRN
14 BLU
15 LT GRN (OR YEL)
16 BLU (OR PNK)
17 WHT
18 BLU
WHT (OR RED)
RED (OR GRN)
NCA
WHT
RED
NCA
RED
GRN
NCA
RED 1
BLU 2
GRN 3
GRY 4
GRY 5
VIO 6
LT GRN (OR YEL) 7
BLU (OR PNK) 8
VIO
VIO
WHT
17
19
J/C
I124
(BEHIND
CENTER
OF DASH)
18
1
J/C
I125
(BEHIND
CENTER
OF DASH)
3
COMPUTER DATA
LINES SYSTEM
16 IA8
RED
(OR LT GRN)
EXCEPT HYBRID → 2
HYBRID → 11
SP1
PNK
VIO
BLU
WHT
RED
WHT
BRN
8 SI
9 S+
13 IG+
1 B
16 CANH
15 CANL
7 ES
TELLTALES
CAN IF
5V IC
CPU
LED
DRIVER
BRN
I1
(BEHIND
LEFT SIDE
OF DASH)
SKID CONTROL ECU W/ ACTUATOR
(BRAKE BOOSTER W/ MASTER
CYLINDER ASSEMBLY)
(HYBRID)
BRAKE ACTUATOR ASSEMBLY
(EXCEPT HYBRID)
(EXCEPT HYBRID: RIGHT FRONT OF ENGINE COMPT)
(HYBRID: RIGHT SIDE OF ENGINE COMPT)
COMBINATION METER ASSEMBLY
366486

Fig. 148: 10-Speaker System Circuit, W/ Multi-Media Module (3 of 4)

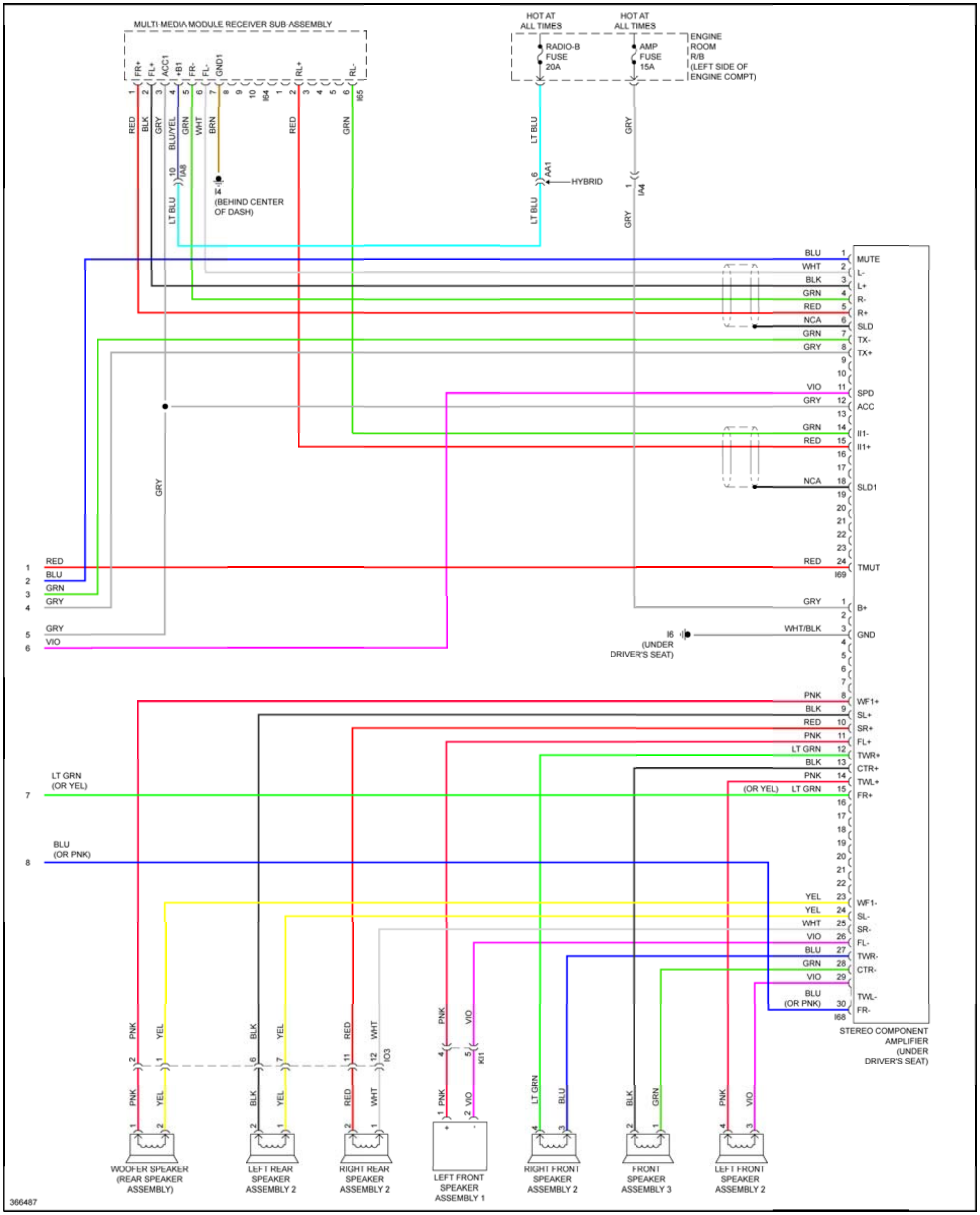
MULTI-MEDIA MODULE RECEIVER SUB-ASSEMBLY
FR+
FL+
ACC1
+B1
FR-
FL-
GND1
RL+
RL-
I64
I65
RED
BLK
GRY
BLU/YEL
GRN
WHT
BRN
10
IA8
LT BLU
I4
(BEHIND CENTER
OF DASH)
HOT AT
ALL TIMES
RADIO-B
FUSE
20A
AMP
FUSE
15A
ENGINE
ROOM
R/B
(LEFT SIDE OF
ENGINE COMPT)
LT BLU
AA1
HYBRID
GRY
IA4
MUTE
L-
L+
R-
R+
SLD
TX-
TX+
SPD
ACC
II1-
II1+
SLD1
TMUT
I69
B+
GND
I6
(UNDER
DRIVER'S SEAT)
WHT/BLK
NCA
VIO
WF1+
SL+
SR+
FL+
TWR+
CTR+
TWL+
FR+
WF1-
SL-
SR-
FL-
TWR-
CTR-
TWL-
FR-
I68
LT GRN
(OR YEL)
BLU
(OR PNK)
PNK
YEL
IO3
KI1
STEREO COMPONENT
AMPLIFIER
(UNDER
DRIVER'S SEAT)
WOOFER SPEAKER
(REAR SPEAKER
ASSEMBLY)
LEFT REAR
SPEAKER
ASSEMBLY 2
RIGHT REAR
SPEAKER
ASSEMBLY 2
LEFT FRONT
SPEAKER
ASSEMBLY 1
RIGHT FRONT
SPEAKER
ASSEMBLY 2
FRONT
SPEAKER
ASSEMBLY 3
LEFT FRONT
SPEAKER
ASSEMBLY 2
366487

Fig. 149: 10-Speaker System Circuit, W/ Multi-Media Module (4 of 4)

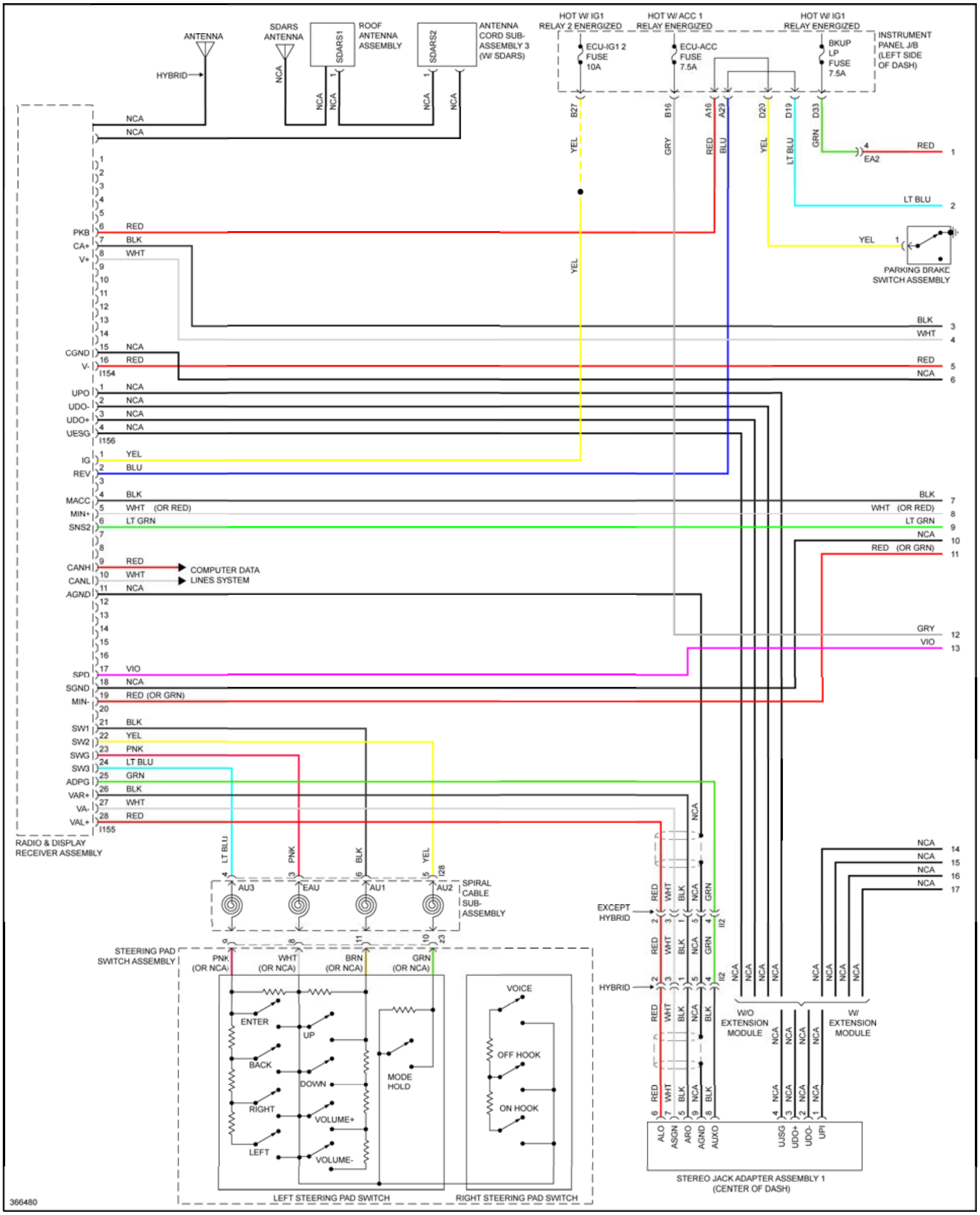
ANTENNA
HYBRID
SDARS ANTENNA
SDARS1
ROOF ANTENNA ASSEMBLY
SDARS2
ANTENNA CORD SUB-ASSEMBLY 3 (W/ SDARS)
HOT W/ IG1 RELAY 2 ENERGIZED
HOT W/ ACC 1 RELAY ENERGIZED
HOT W/ IG1 RELAY ENERGIZED
ECU-IG1 2 FUSE 10A
ECU-ACC FUSE 7.5A
BKUP LP FUSE 7.5A
INSTRUMENT PANEL J/B (LEFT SIDE OF DASH)
B27
B16
A16
A29
D20
D19
D33
YEL
GRY
RED
BLU
LT BLU
GRN
EA2
PARKING BRAKE SWITCH ASSEMBLY
PKB
CA+
V+
CGND
V-
I154
UPO
UDO-
UDO+
UESG
I156
IG
REV
MACC
MIN+
SNS2
CANH
CANL
AGND
COMPUTER DATA LINES SYSTEM
SPD
SGND
MIN-
SW1
SW2
SWG
SW3
ADPG
VAR+
VA-
VAL+
I155
RADIO & DISPLAY RECEIVER ASSEMBLY
NCA
BLK
WHT
WHT (OR RED)
LT GRN
RED (OR GRN)
VIO
PNK
I28
AU3
EAU
AU1
AU2
SPIRAL CABLE SUB-ASSEMBLY
STEERING PAD SWITCH ASSEMBLY
PNK (OR NCA)
WHT (OR NCA)
BRN (OR NCA)
GRN (OR NCA)
ENTER
UP
BACK
DOWN
RIGHT
VOLUME+
LEFT
VOLUME-
MODE HOLD
VOICE
OFF HOOK
ON HOOK
LEFT STEERING PAD SWITCH
RIGHT STEERING PAD SWITCH
EXCEPT HYBRID
HYBRID
I12
W/O EXTENSION MODULE
W/ EXTENSION MODULE
ALO
ASGN
ARO
AGND
AUXO
UJSG
UDO+
UDO-
UPI
STEREO JACK ADAPTER ASSEMBLY 1 (CENTER OF DASH)
366480

Fig. 150: 10-Speaker System Circuit, W/O Multi-Media Module (1 of 4)

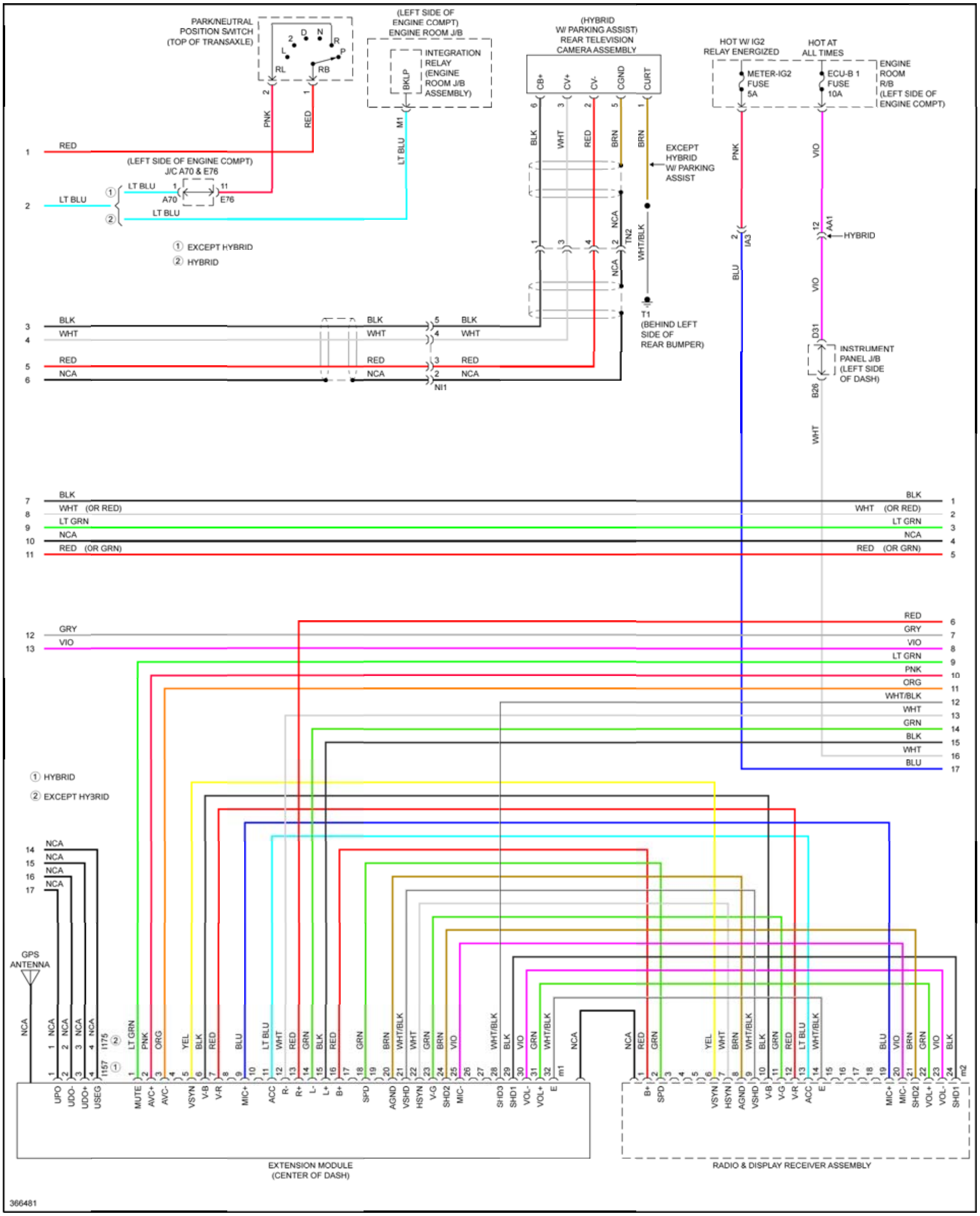
PARK/NEUTRAL POSITION SWITCH (TOP OF TRANSAXLE)
(LEFT SIDE OF ENGINE COMPT) ENGINE ROOM J/B
INTEGRATION RELAY (ENGINE ROOM J/B ASSEMBLY)
BKLP
(HYBRID W/ PARKING ASSIST) REAR TELEVISION CAMERA ASSEMBLY
CB+
CV+
CV-
CGND
CURT
HOT W/ IG2 RELAY ENERGIZED
HOT AT ALL TIMES
METER-IG2 FUSE 5A
ECU-B 1 FUSE 10A
ENGINE ROOM R/B (LEFT SIDE OF ENGINE COMPT)
(LEFT SIDE OF ENGINE COMPT) J/C A70 & E76
EXCEPT HYBRID W/ PARKING ASSIST
① EXCEPT HYBRID
② HYBRID
HYBRID
T1 (BEHIND LEFT SIDE OF REAR BUMPER)
INSTRUMENT PANEL J/B (LEFT SIDE OF DASH)
① HYBRID
② EXCEPT HYBRID
GPS ANTENNA
UPO
UDO-
UDO+
USEG
MUTE
AVC+
AVC-
VSYN
V-B
V-R
MIC+
ACC
R-
R+
L-
L+
B+
SPD
AGND
VSHD
HSYN
V-G
SHD2
MIC-
SHD3
SHD1
VOL-
VOL+
E
EXTENSION MODULE (CENTER OF DASH)
RADIO & DISPLAY RECEIVER ASSEMBLY
366481

Fig. 151: 10-Speaker System Circuit, W/O Multi-Media Module (2 of 4)

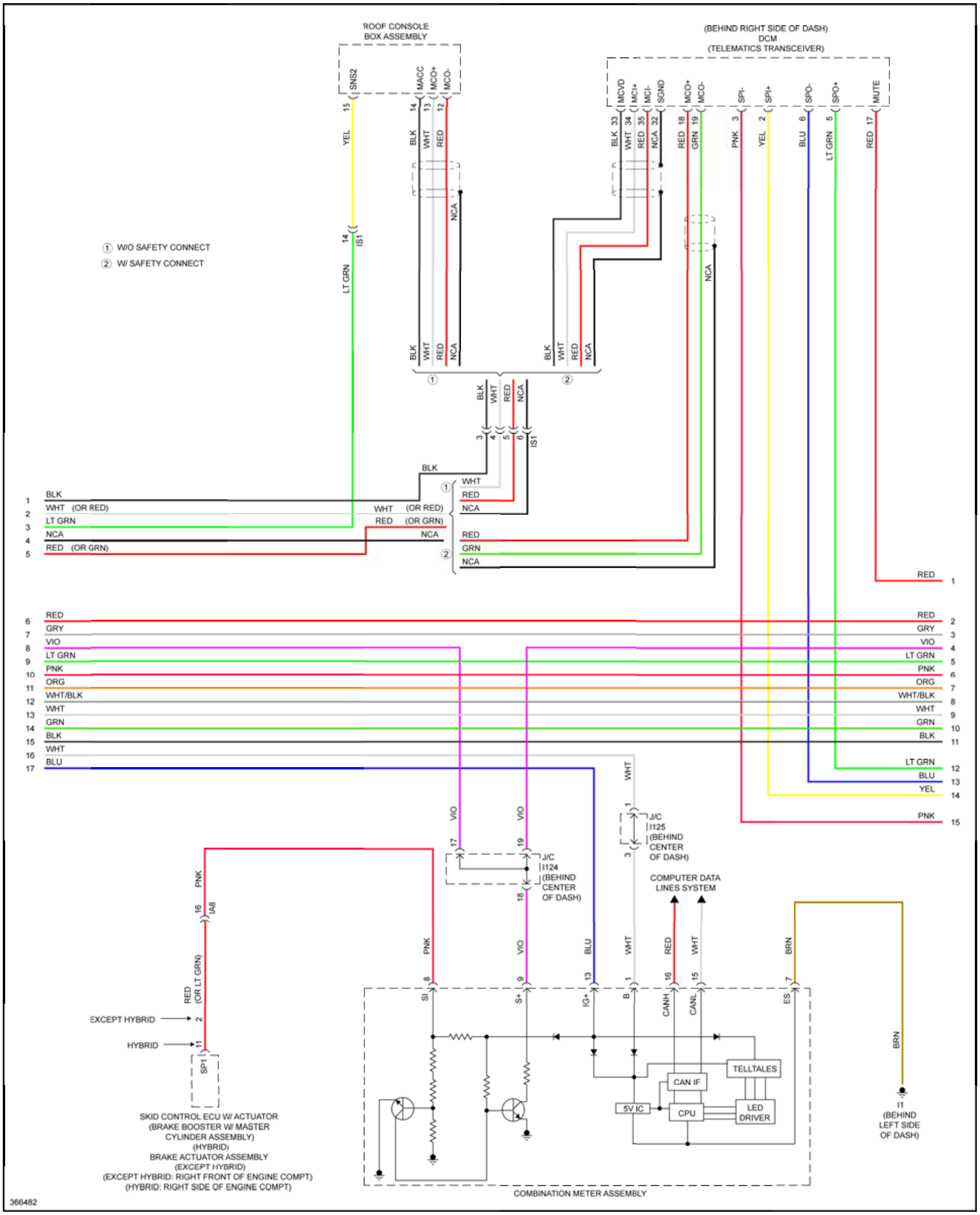
ROOF CONSOLE BOX ASSEMBLY
SNS2
MACC
MCO+
MCO-
(BEHIND RIGHT SIDE OF DASH)
DCM
(TELEMATICS TRANSCEIVER)
MCVD
MCI+
MCI-
SGND
MCO+
MCO-
SPI-
SPI+
SPO-
SPO+
MUTE
① W/O SAFETY CONNECT
② W/ SAFETY CONNECT
IS1
YEL
LT GRN
BLK
WHT
RED
NCA
GRN
PNK
BLU
J/C
I125
(BEHIND CENTER OF DASH)
J/C
I124
(BEHIND CENTER OF DASH)
COMPUTER DATA LINES SYSTEM
VIO
BRN
IA8
RED (OR LT GRN)
EXCEPT HYBRID
HYBRID
SP1
SKID CONTROL ECU W/ ACTUATOR
(BRAKE BOOSTER W/ MASTER CYLINDER ASSEMBLY)
(HYBRID)
BRAKE ACTUATOR ASSEMBLY
(EXCEPT HYBRID)
(EXCEPT HYBRID: RIGHT FRONT OF ENGINE COMPT)
(HYBRID: RIGHT SIDE OF ENGINE COMPT)
SI
S+
IG+
B
CANH
CANL
ES
TELLTALES
CAN IF
5V IC
CPU
LED DRIVER
COMBINATION METER ASSEMBLY
I1
(BEHIND LEFT SIDE OF DASH)
WHT (OR RED)
RED (OR GRN)
GRY
ORG
WHT/BLK
366482

Fig. 152: 10-Speaker System Circuit, W/O Multi-Media Module (3 of 4)

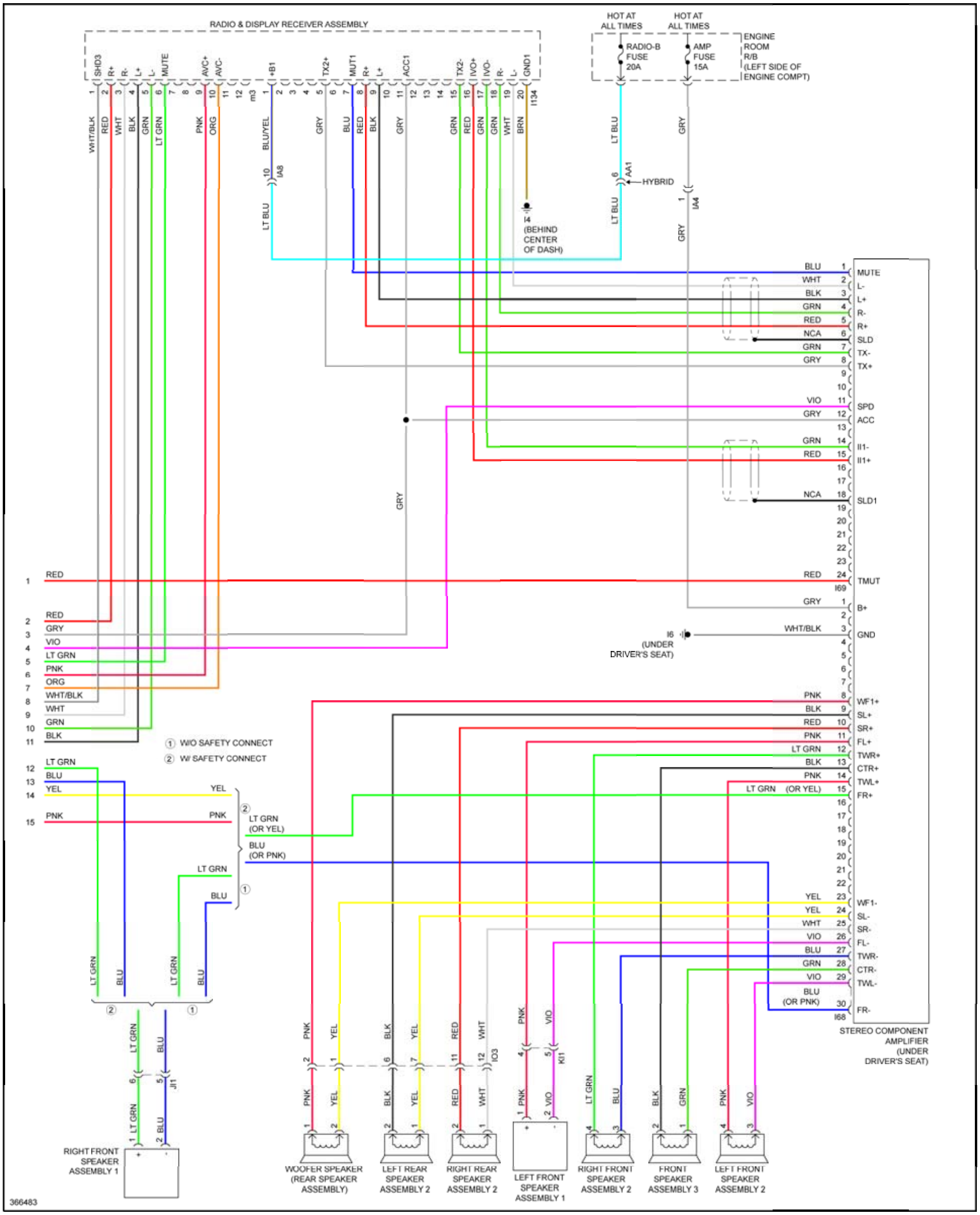
RADIO & DISPLAY RECEIVER ASSEMBLY
SHD3
R+
R-
L+
L-
MUTE
AVC+
AVC-
+B1
TX2+
MUT1
R+
L+
ACC1
TX2-
IVO+
IVO-
R-
L-
GND1
m3
I134
WHT/BLK
RED
WHT
BLK
GRN
LT GRN
PNK
ORG
BLU/YEL
GRY
BLU
RED
BLK
GRY
GRN
RED
GRN
GRN
WHT
BRN
IA8
LT BLU
I4
(BEHIND
CENTER
OF DASH)
HOT AT
ALL TIMES
HOT AT
ALL TIMES
RADIO-B
FUSE
20A
AMP
FUSE
15A
ENGINE
ROOM
R/B
(LEFT SIDE OF
ENGINE COMPT)
LT BLU
AA1
HYBRID
GRY
IA4
MUTE
L-
L+
R-
R+
SLD
TX-
TX+
SPD
ACC
II1-
II1+
SLD1
TMUT
I69
B+
GND
I6
(UNDER
DRIVER'S SEAT)
NCA
VIO
WF1+
SL+
SR+
FL+
TWR+
CTR+
TWL+
FR+
WF1-
SL-
SR-
FL-
TWR-
CTR-
TWL-
FR-
I68
LT GRN (OR YEL)
BLU
(OR PNK)
STEREO COMPONENT
AMPLIFIER
(UNDER
DRIVER'S SEAT)
① W/O SAFETY CONNECT
② W/ SAFETY CONNECT
YEL
PNK
LT GRN
(OR YEL)
BLU
(OR PNK)
LT GRN
BLU
J1
IO3
KI1
RIGHT FRONT
SPEAKER
ASSEMBLY 1
WOOFER SPEAKER
(REAR SPEAKER
ASSEMBLY)
LEFT REAR
SPEAKER
ASSEMBLY 2
RIGHT REAR
SPEAKER
ASSEMBLY 2
LEFT FRONT
SPEAKER
ASSEMBLY 1
RIGHT FRONT
SPEAKER
ASSEMBLY 2
FRONT
SPEAKER
ASSEMBLY 3
LEFT FRONT
SPEAKER
ASSEMBLY 2
366483

Fig. 153: 10-Speaker System Circuit, W/O Multi-Media Module (4 of 4)

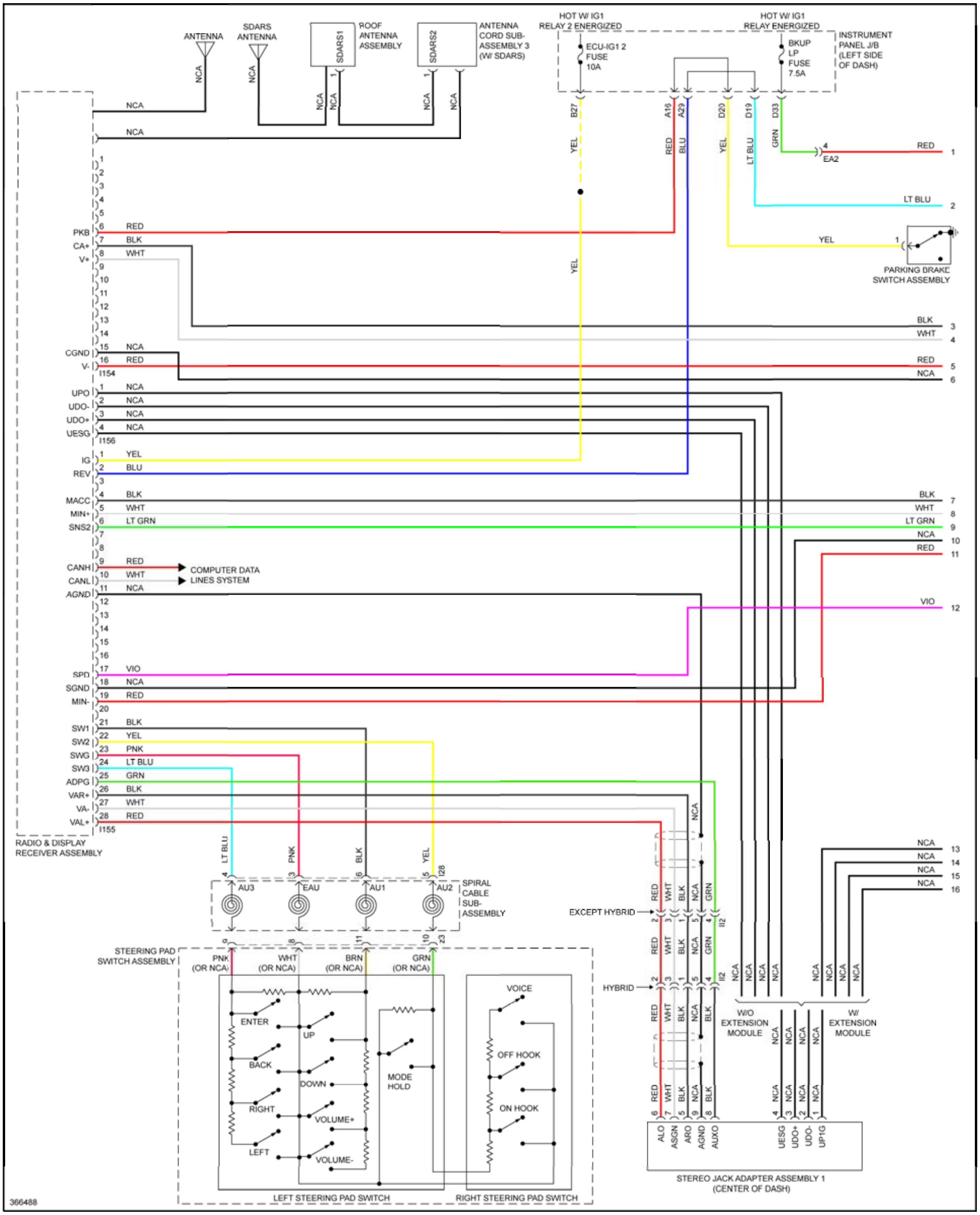
ANTENNA
SDARS ANTENNA
ROOF ANTENNA ASSEMBLY
SDARS1
SDARS2
ANTENNA CORD SUB-ASSEMBLY 3 (W/ SDARS)
HOT W/ IG1 RELAY 2 ENERGIZED
HOT W/ IG1 RELAY ENERGIZED
ECU-IG1 2 FUSE 10A
BKUP LP FUSE 7.5A
INSTRUMENT PANEL J/B (LEFT SIDE OF DASH)
B27
A16
A29
D20
D19
D33
EA2
PARKING BRAKE SWITCH ASSEMBLY
NCA
RED
BLK
WHT
YEL
BLU
LT BLU
GRN
LT GRN
VIO
PNK
BRN
PKB
CA+
V+
CGND
V-
I154
UPO
UDO-
UDO+
UESG
I156
IG
REV
MACC
MIN+
SNS2
CANH
CANL
AGND
SPD
SGND
MIN-
SW1
SW2
SWG
SW3
ADPG
VAR+
VA-
VAL+
I155
COMPUTER DATA LINES SYSTEM
RADIO & DISPLAY RECEIVER ASSEMBLY
I28
AU3
EAU
AU1
AU2
SPIRAL CABLE SUB-ASSEMBLY
STEERING PAD SWITCH ASSEMBLY
PNK (OR NCA)
WHT (OR NCA)
BRN (OR NCA)
GRN (OR NCA)
ENTER
UP
BACK
DOWN
RIGHT
VOLUME+
LEFT
VOLUME-
MODE HOLD
VOICE
OFF HOOK
ON HOOK
LEFT STEERING PAD SWITCH
RIGHT STEERING PAD SWITCH
EXCEPT HYBRID
HYBRID
II2
W/O EXTENSION MODULE
W/ EXTENSION MODULE
ALO
ASGN
ARO
AGND
AUXO
UESG
UDO+
UDO-
UP1G
STEREO JACK ADAPTER ASSEMBLY 1 (CENTER OF DASH)
366488

Fig. 154: 6-Speaker System Circuit, W/ Display (1 of 4)

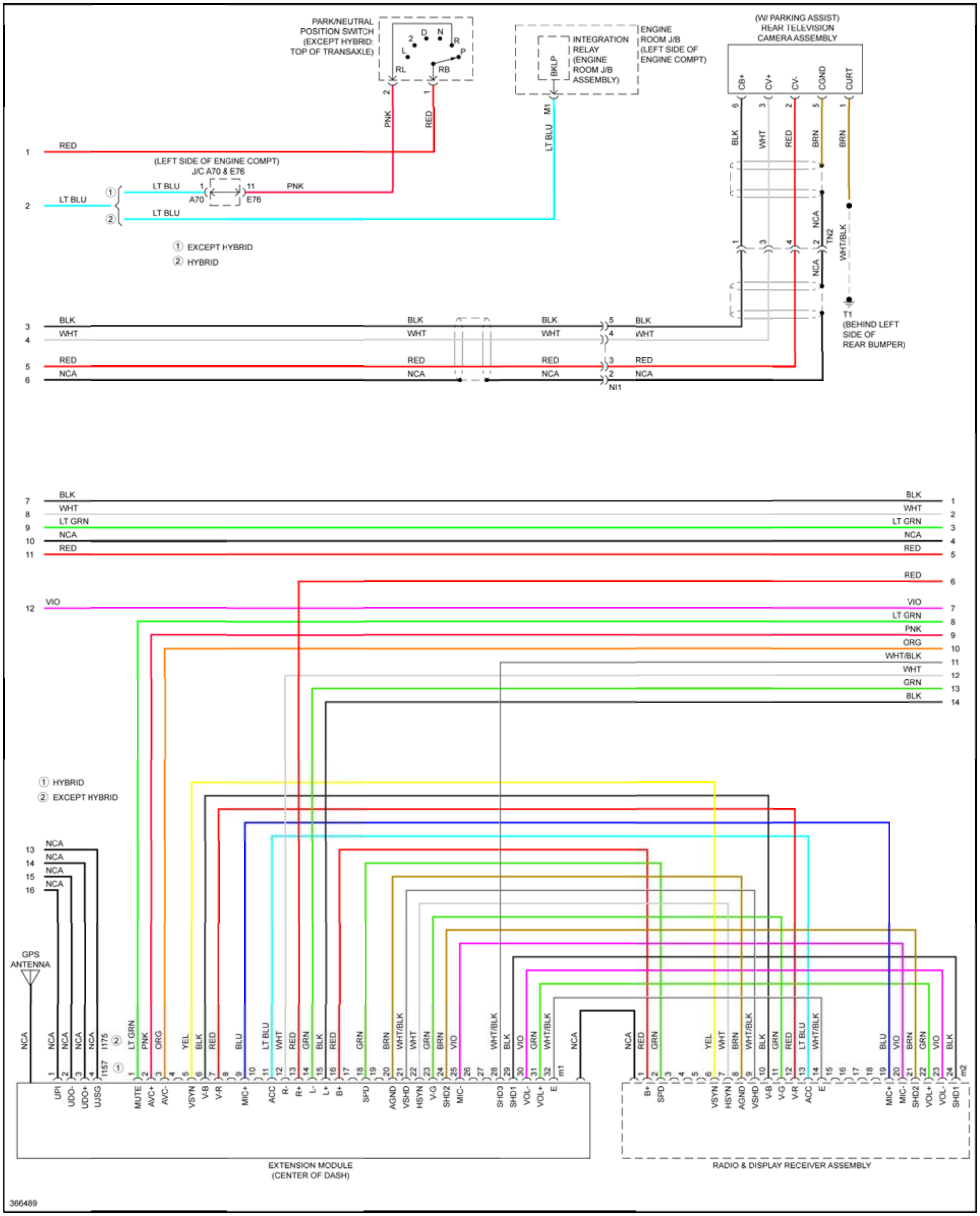
PARK/NEUTRAL POSITION SWITCH (EXCEPT HYBRID: TOP OF TRANSAXLE)
2 D N R L P RL RB
INTEGRATION RELAY (ENGINE ROOM J/B ASSEMBLY)
BKLP
ENGINE ROOM J/B (LEFT SIDE OF ENGINE COMPT)
M1
(W/ PARKING ASSIST) REAR TELEVISION CAMERA ASSEMBLY
CB+ CV+ CV- CGND CURT
PNK
RED
LT BLU
BLK WHT RED BRN BRN
(LEFT SIDE OF ENGINE COMPT) J/C A70 & E76
A70
E76
NCA
TN2
WHT/BLK
T1 (BEHIND LEFT SIDE OF REAR BUMPER)
① EXCEPT HYBRID
② HYBRID
NI1
① HYBRID
② EXCEPT HYBRID
GPS ANTENNA
I175
I157
UPI UDO- UDO+ UJSG MUTE AVC+ AVC- VSYN V-B V-R MIC+ ACC R- R+ L- L+ B+ SPD AGND VSHD HSYN V-G SHD2 MIC- SHD3 SHD1 VOL- VOL+ E
m1
m2
B+ SPD VSYN HSYN AGND VSHD V-B V-G V-R ACC E MIC+ MIC- SHD2 VOL+ VOL- SHD1
EXTENSION MODULE (CENTER OF DASH)
RADIO & DISPLAY RECEIVER ASSEMBLY
366489

Fig. 155: 6-Speaker System Circuit, W/ Display (2 of 4)

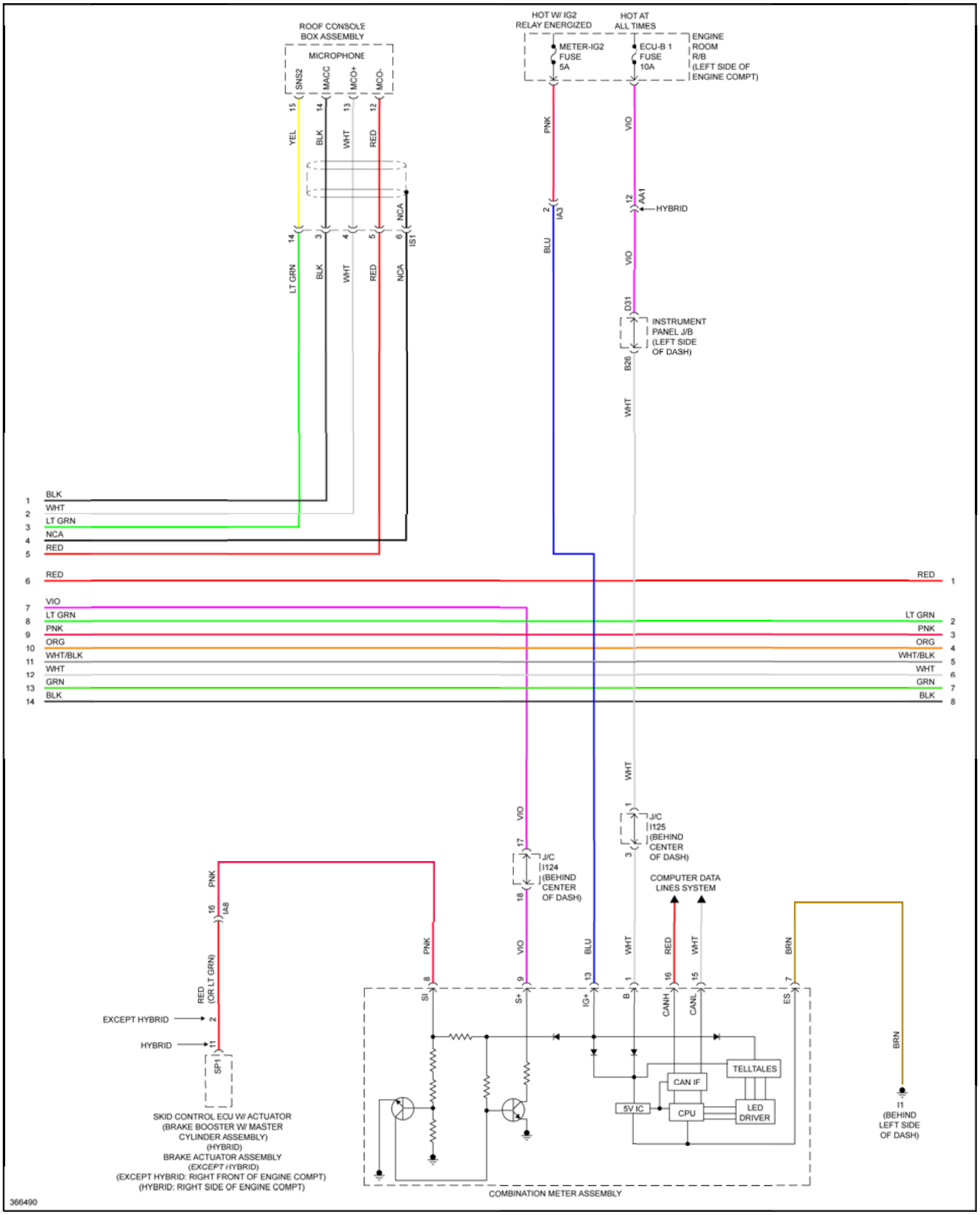
ROOF CONSOLE BOX ASSEMBLY
MICROPHONE
SNS2
MACC
MCO+
MCO-
15
14
13
12
YEL
BLK
WHT
RED
NCA
14
3
4
5
6
IS1
LT GRN
BLK
WHT
RED
NCA
HOT W/ IG2 RELAY ENERGIZED
HOT AT ALL TIMES
METER-IG2 FUSE 5A
ECU-B 1 FUSE 10A
ENGINE ROOM R/B (LEFT SIDE OF ENGINE COMPT)
PNK
VIO
2
IA3
12
AA1
HYBRID
BLU
VIO
D31
INSTRUMENT PANEL J/B (LEFT SIDE OF DASH)
B26
WHT
1 BLK
2 WHT
3 LT GRN
4 NCA
5 RED
6 RED
7 VIO
8 LT GRN
9 PNK
10 ORG
11 WHT/BLK
12 WHT
13 GRN
14 BLK
RED 1
LT GRN 2
PNK 3
ORG 4
WHT/BLK 5
WHT 6
GRN 7
BLK 8
WHT
1
J/C I125 (BEHIND CENTER OF DASH)
3
VIO
17
J/C I124 (BEHIND CENTER OF DASH)
18
COMPUTER DATA LINES SYSTEM
PNK
16
IA8
RED (OR LT GRN)
EXCEPT HYBRID
2
HYBRID
11
SP1
PNK
VIO
BLU
WHT
RED
WHT
BRN
8
9
13
1
16
15
7
SI
S+
IG+
B
CANH
CANL
ES
TELLTALES
CAN IF
5V IC
CPU
LED DRIVER
BRN
I1 (BEHIND LEFT SIDE OF DASH)
SKID CONTROL ECU W/ ACTUATOR (BRAKE BOOSTER W/ MASTER CYLINDER ASSEMBLY) (HYBRID)
BRAKE ACTUATOR ASSEMBLY (EXCEPT HYBRID)
(EXCEPT HYBRID: RIGHT FRONT OF ENGINE COMPT)
(HYBRID: RIGHT SIDE OF ENGINE COMPT)
COMBINATION METER ASSEMBLY
366490

Fig. 156: 6-Speaker System Circuit, W/ Display (3 of 4)

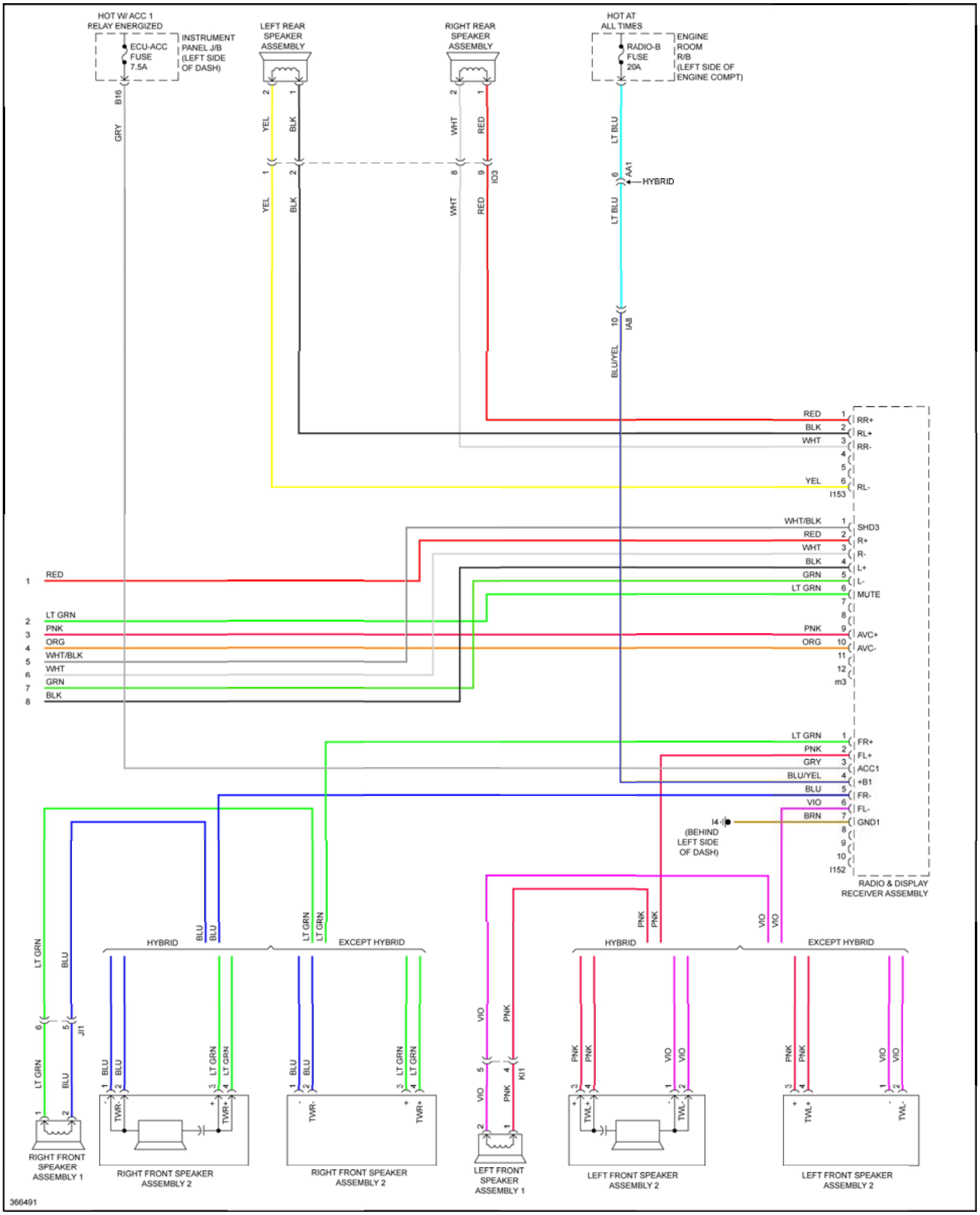
HOT W/ ACC 1 RELAY ENERGIZED
ECU-ACC FUSE 7.5A
INSTRUMENT PANEL J/B (LEFT SIDE OF DASH)
B16
GRY
LEFT REAR SPEAKER ASSEMBLY
RIGHT REAR SPEAKER ASSEMBLY
HOT AT ALL TIMES
RADIO-B FUSE 20A
ENGINE ROOM R/B (LEFT SIDE OF ENGINE COMPT)
YEL
BLK
WHT
RED
IO3
LT BLU
AA1
HYBRID
IA8
BLU/YEL
RR+
RL+
RR-
RL-
I153
SHD3
R+
R-
L+
L-
MUTE
AVC+
AVC-
m3
WHT/BLK
GRN
LT GRN
PNK
ORG
FR+
FL+
ACC1
+B1
FR-
FL-
GND1
I152
BRN
VIO
I4
(BEHIND LEFT SIDE OF DASH)
RADIO & DISPLAY RECEIVER ASSEMBLY
HYBRID
EXCEPT HYBRID
JI1
KI1
TWR-
TWR+
TWL+
TWL-
RIGHT FRONT SPEAKER ASSEMBLY 1
RIGHT FRONT SPEAKER ASSEMBLY 2
LEFT FRONT SPEAKER ASSEMBLY 1
LEFT FRONT SPEAKER ASSEMBLY 2
366491

Fig. 157: 6-Speaker System Circuit, W/ Display (4 of 4)

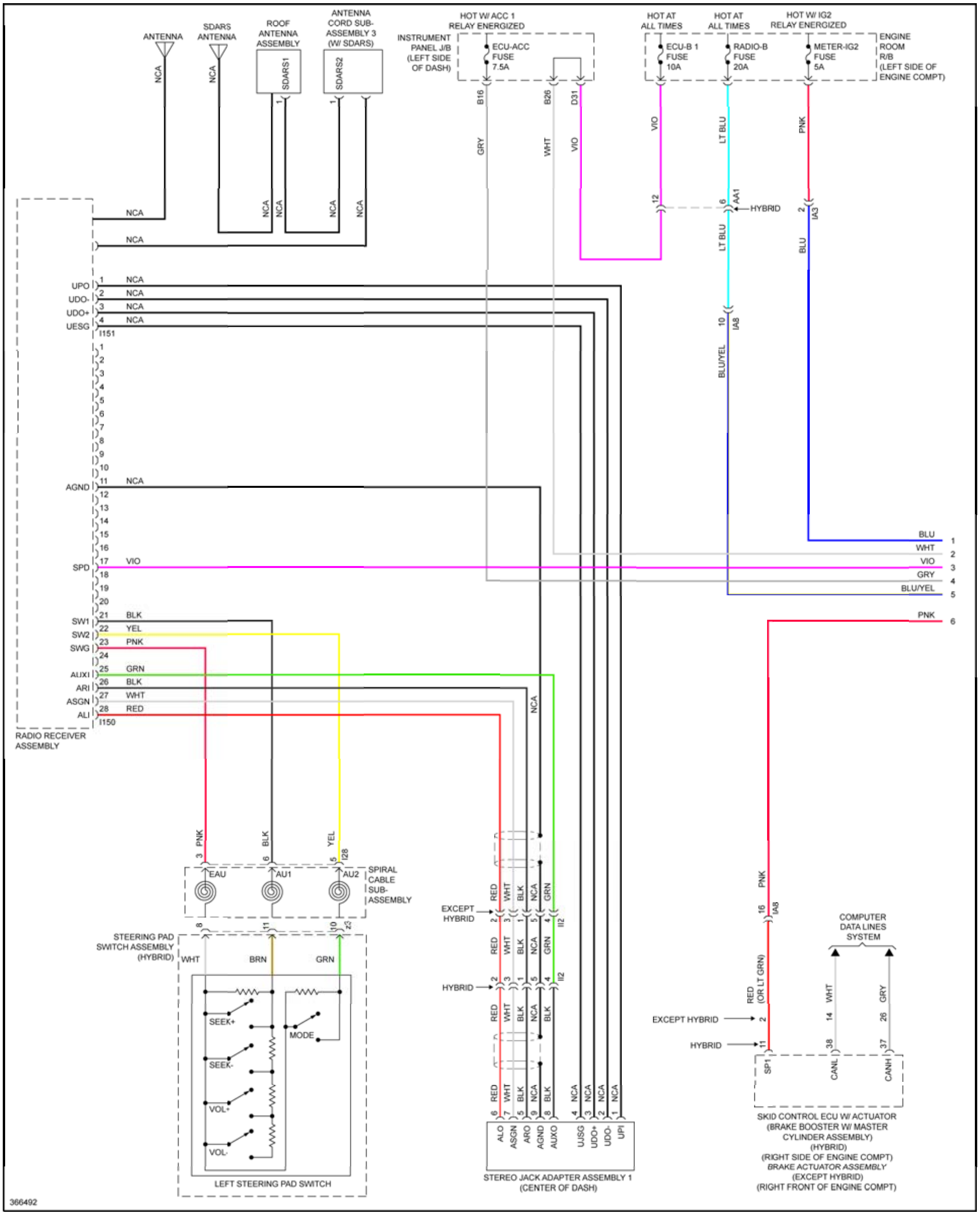
ANTENNA
SDARS ANTENNA
ROOF ANTENNA ASSEMBLY
ANTENNA CORD SUB-ASSEMBLY 3 (W/ SDARS)
SDARS1
SDARS2
HOT W/ ACC 1 RELAY ENERGIZED
INSTRUMENT PANEL J/B (LEFT SIDE OF DASH)
ECU-ACC FUSE 7.5A
HOT AT ALL TIMES
ECU-B 1 FUSE 10A
HOT AT ALL TIMES
RADIO-B FUSE 20A
HOT W/ IG2 RELAY ENERGIZED
METER-IG2 FUSE 5A
ENGINE ROOM R/B (LEFT SIDE OF ENGINE COMPT)
B16
B26
D31
GRY
WHT
VIO
LT BLU
PNK
AA1
HYBRID
IA3
BLU
IA8
BLU/YEL
NCA
UPO
UDO-
UDO+
UESG
I151
AGND
SPD
SW1
SW2
SWG
AUXI
ARI
ASGN
ALI
I150
BLK
YEL
GRN
RED
RADIO RECEIVER ASSEMBLY
EAU
AU1
AU2
I28
SPIRAL CABLE SUB-ASSEMBLY
STEERING PAD SWITCH ASSEMBLY (HYBRID)
BRN
SEEK+
SEEK-
MODE
VOL+
VOL-
LEFT STEERING PAD SWITCH
EXCEPT HYBRID
II2
ALO
ASGN
ARO
AGND
AUXO
UJSG
UDO+
UDO-
UPI
STEREO JACK ADAPTER ASSEMBLY 1 (CENTER OF DASH)
RED (OR LT GRN)
COMPUTER DATA LINES SYSTEM
SP1
CANL
CANH
SKID CONTROL ECU W/ ACTUATOR (BRAKE BOOSTER W/ MASTER CYLINDER ASSEMBLY) (HYBRID) (RIGHT SIDE OF ENGINE COMPT)
BRAKE ACTUATOR ASSEMBLY (EXCEPT HYBRID) (RIGHT FRONT OF ENGINE COMPT)
366492

Fig. 158: 6-Speaker System Circuit, W/O Display (1 of 2)

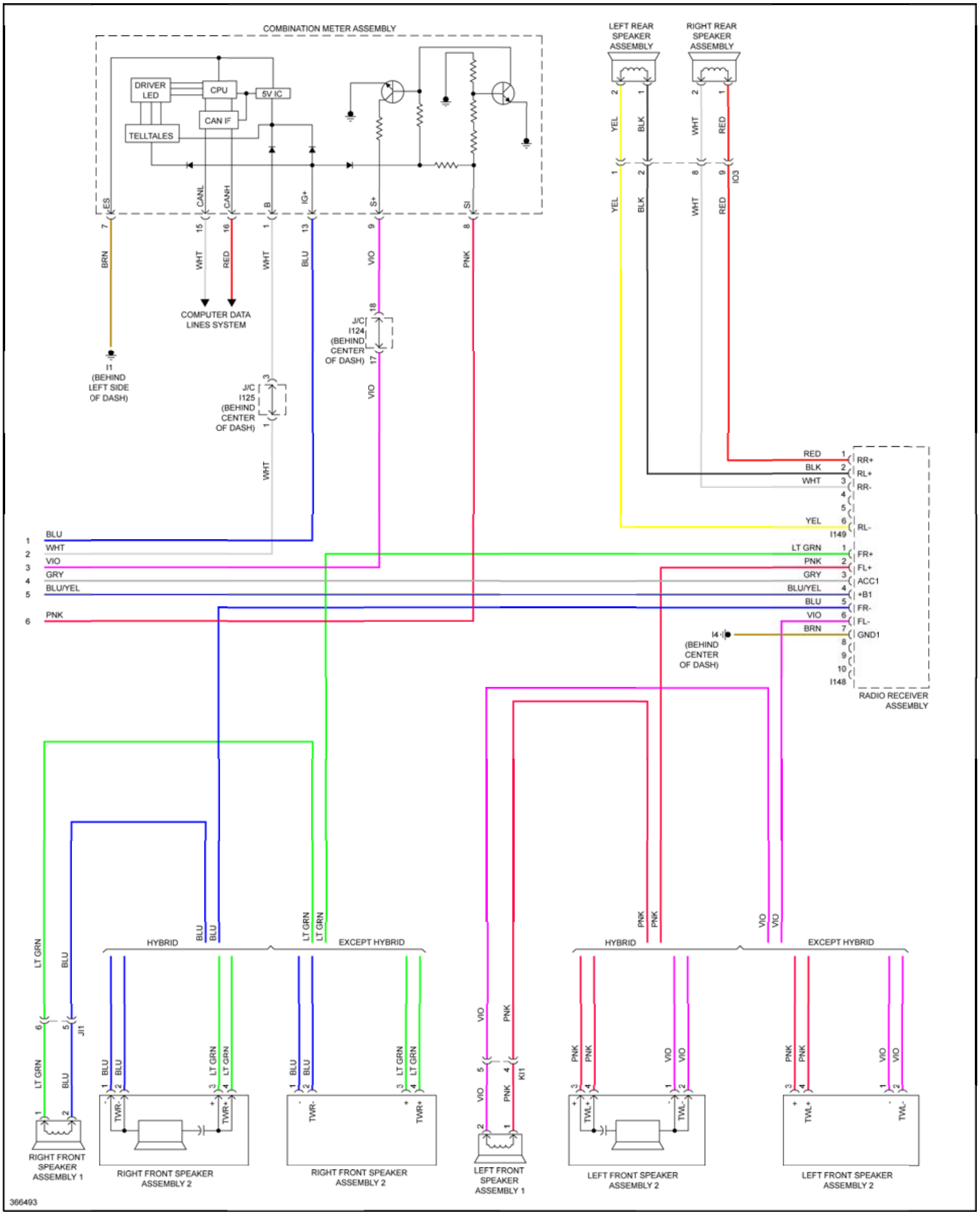
COMBINATION METER ASSEMBLY
DRIVER LED
CPU
5V IC
CAN IF
TELLTALES
ES
CANL
CANH
B
IG+
S+
SI
BRN
WHT
RED
BLU
VIO
PNK
COMPUTER DATA LINES SYSTEM
I1 (BEHIND LEFT SIDE OF DASH)
J/C I125 (BEHIND CENTER OF DASH)
J/C I124 (BEHIND CENTER OF DASH)
LEFT REAR SPEAKER ASSEMBLY
RIGHT REAR SPEAKER ASSEMBLY
YEL
BLK
IO3
RR+
RL+
RR-
RL-
I149
LT GRN
GRY
BLU/YEL
FR+
FL+
ACC1
+B1
FR-
FL-
GND1
I4 (BEHIND CENTER OF DASH)
I148
RADIO RECEIVER ASSEMBLY
HYBRID
EXCEPT HYBRID
JI1
KI1
TWR-
TWR+
TWL+
TWL-
RIGHT FRONT SPEAKER ASSEMBLY 1
RIGHT FRONT SPEAKER ASSEMBLY 2
LEFT FRONT SPEAKER ASSEMBLY 1
LEFT FRONT SPEAKER ASSEMBLY 2
366493

Fig. 159: 6-Speaker System Circuit, W/O Display (2 of 2)

SHIFT INTERLOCK

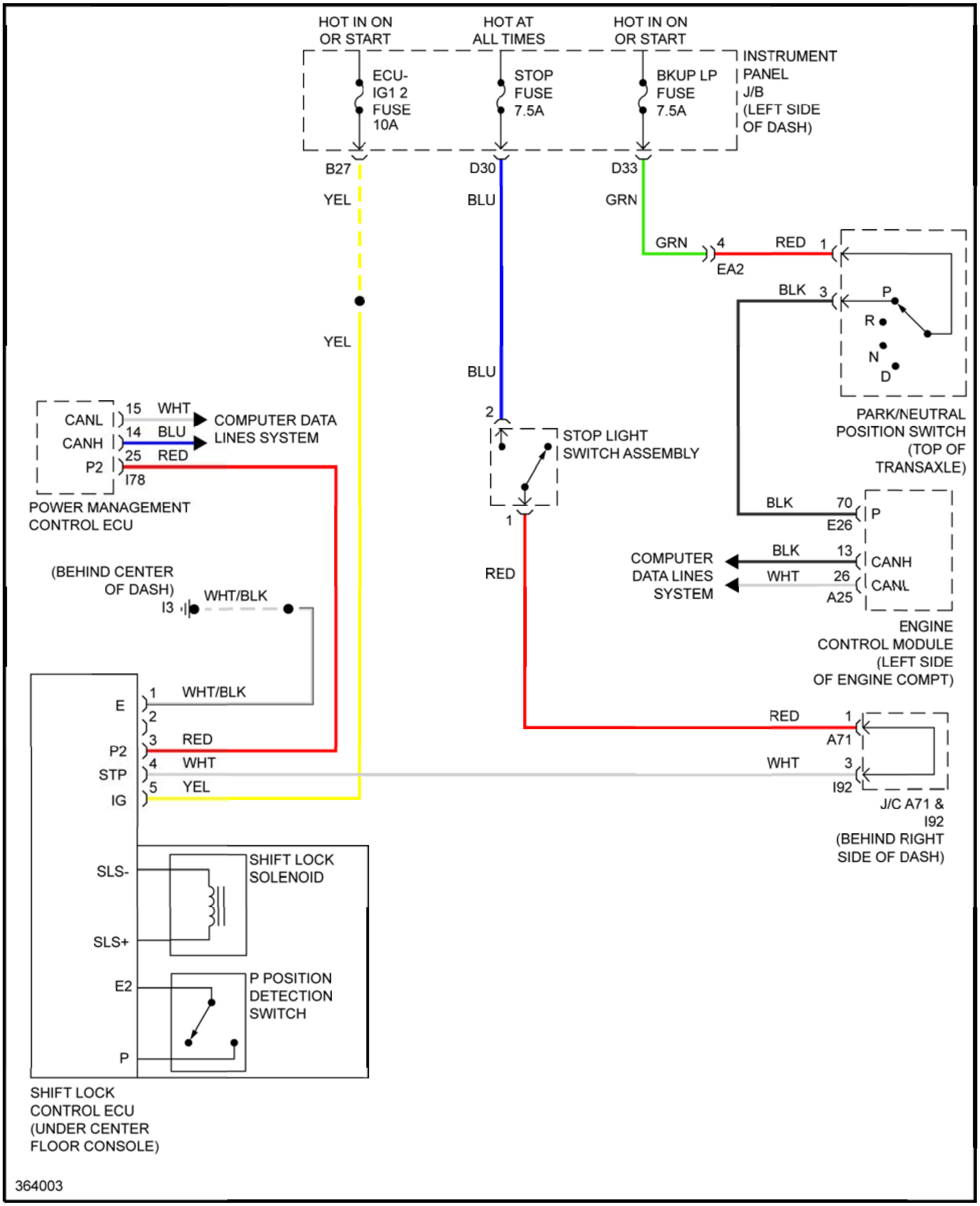
HOT IN ON OR START
HOT AT ALL TIMES
HOT IN ON OR START
INSTRUMENT PANEL J/B (LEFT SIDE OF DASH)
ECU-IG1 2 FUSE 10A
STOP FUSE 7.5A
BKUP LP FUSE 7.5A
B27
D30
D33
YEL
BLU
GRN
GRN
4
EA2
RED
1
BLK
3
P
R
N
D
PARK/NEUTRAL POSITION SWITCH (TOP OF TRANSAXLE)
YEL
BLU
CANL
CANH
P2
15
WHT
14
BLU
25
RED
I78
COMPUTER DATA LINES SYSTEM
POWER MANAGEMENT CONTROL ECU
2
STOP LIGHT SWITCH ASSEMBLY
1
BLK
70
E26
P
COMPUTER DATA LINES SYSTEM
BLK
13
CANH
WHT
26
CANL
A25
ENGINE CONTROL MODULE (LEFT SIDE OF ENGINE COMPT)
RED
(BEHIND CENTER OF DASH)
I3
WHT/BLK
E
1
WHT/BLK
2
P2
3
RED
STP
4
WHT
IG
5
YEL
RED
1
A71
WHT
3
I92
J/C A71 & I92 (BEHIND RIGHT SIDE OF DASH)
SLS-
SLS+
SHIFT LOCK SOLENOID
E2
P
P POSITION DETECTION SWITCH
SHIFT LOCK CONTROL ECU (UNDER CENTER FLOOR CONSOLE)
364003

Fig. 160: Shift Interlock Circuit, Except Hybrid W/ Smart Key System

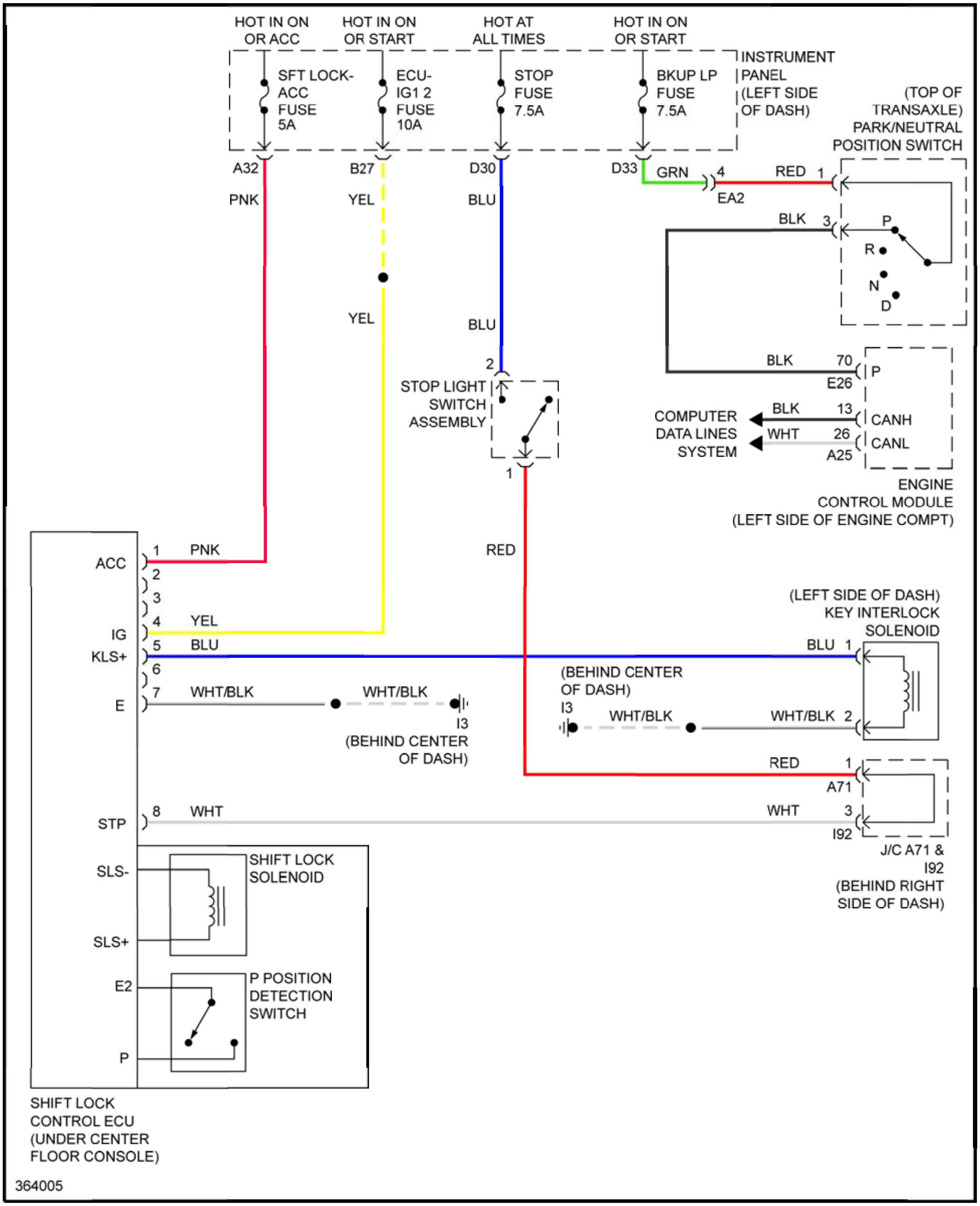
HOT IN ON OR ACC
HOT IN ON OR START
HOT AT ALL TIMES
HOT IN ON OR START
SFT LOCK-ACC FUSE 5A
ECU-IG1 2 FUSE 10A
STOP FUSE 7.5A
BKUP LP FUSE 7.5A
INSTRUMENT PANEL (LEFT SIDE OF DASH)
(TOP OF TRANSAXLE) PARK/NEUTRAL POSITION SWITCH
A32
B27
D30
D33
PNK
YEL
BLU
GRN
4
EA2
RED
1
BLK
3
P
R
N
D
YEL
YEL
BLU
BLU
2
STOP LIGHT SWITCH ASSEMBLY
1
BLK
70
E26
P
COMPUTER DATA LINES SYSTEM
BLK
13
CANH
WHT
26
CANL
A25
ENGINE CONTROL MODULE (LEFT SIDE OF ENGINE COMPT)
RED
ACC
1
PNK
2
3
IG
4
YEL
KLS+
5
BLU
6
E
7
WHT/BLK
WHT/BLK
I3
(BEHIND CENTER OF DASH)
(LEFT SIDE OF DASH) KEY INTERLOCK SOLENOID
BLU 1
(BEHIND CENTER OF DASH)
I3
WHT/BLK
WHT/BLK 2
RED
1
A71
STP
8
WHT
WHT
3
I92
J/C A71 & I92 (BEHIND RIGHT SIDE OF DASH)
SLS-
SLS+
SHIFT LOCK SOLENOID
E2
P
P POSITION DETECTION SWITCH
SHIFT LOCK CONTROL ECU (UNDER CENTER FLOOR CONSOLE)
364005

Fig. 161: Shift Interlock Circuit, Except Hybrid W/O Smart Key System

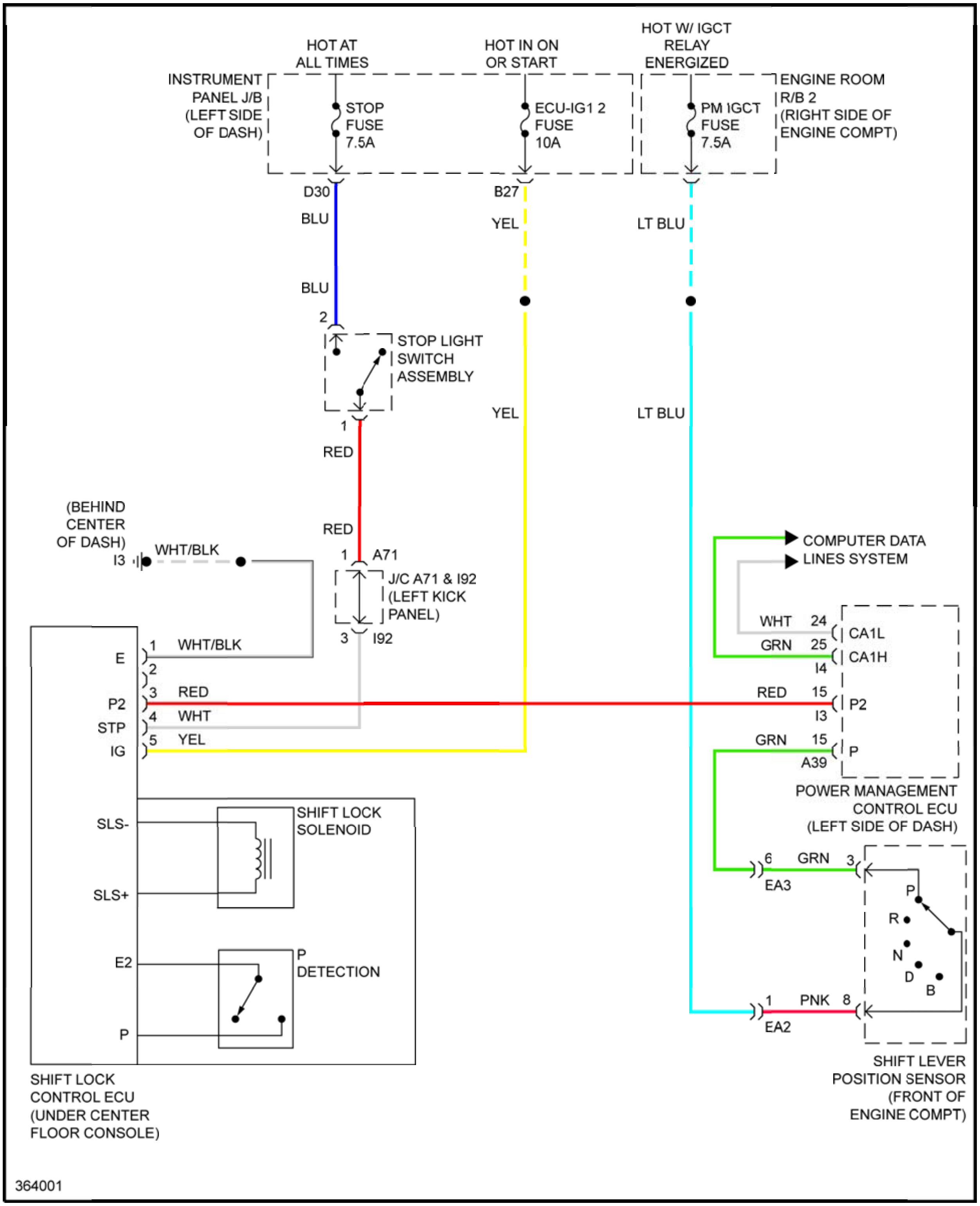
HOT AT ALL TIMES
HOT IN ON OR START
HOT W/ IGCT RELAY ENERGIZED
INSTRUMENT PANEL J/B (LEFT SIDE OF DASH)
STOP FUSE 7.5A
ECU-IG1 2 FUSE 10A
PM IGCT FUSE 7.5A
ENGINE ROOM R/B 2 (RIGHT SIDE OF ENGINE COMPT)
D30
B27
BLU
YEL
LT BLU
BLU
2
STOP LIGHT SWITCH ASSEMBLY
1
YEL
LT BLU
RED
RED
(BEHIND CENTER OF DASH)
I3
WHT/BLK
1
A71
J/C A71 & I92 (LEFT KICK PANEL)
3
I92
COMPUTER DATA LINES SYSTEM
WHT 24
CA1L
GRN 25
CA1H
I4
E
1 WHT/BLK
2
P2
3 RED
RED 15
P2
I3
STP
4 WHT
IG
5 YEL
GRN 15
P
A39
POWER MANAGEMENT CONTROL ECU (LEFT SIDE OF DASH)
SLS-
SHIFT LOCK SOLENOID
SLS+
6
GRN
3
EA3
P
R
N
D
B
E2
P DETECTION
P
1
PNK
8
EA2
SHIFT LOCK CONTROL ECU (UNDER CENTER FLOOR CONSOLE)
SHIFT LEVER POSITION SENSOR (FRONT OF ENGINE COMPT)
364001

Fig. 162: Shift Interlock Circuit, Hybrid

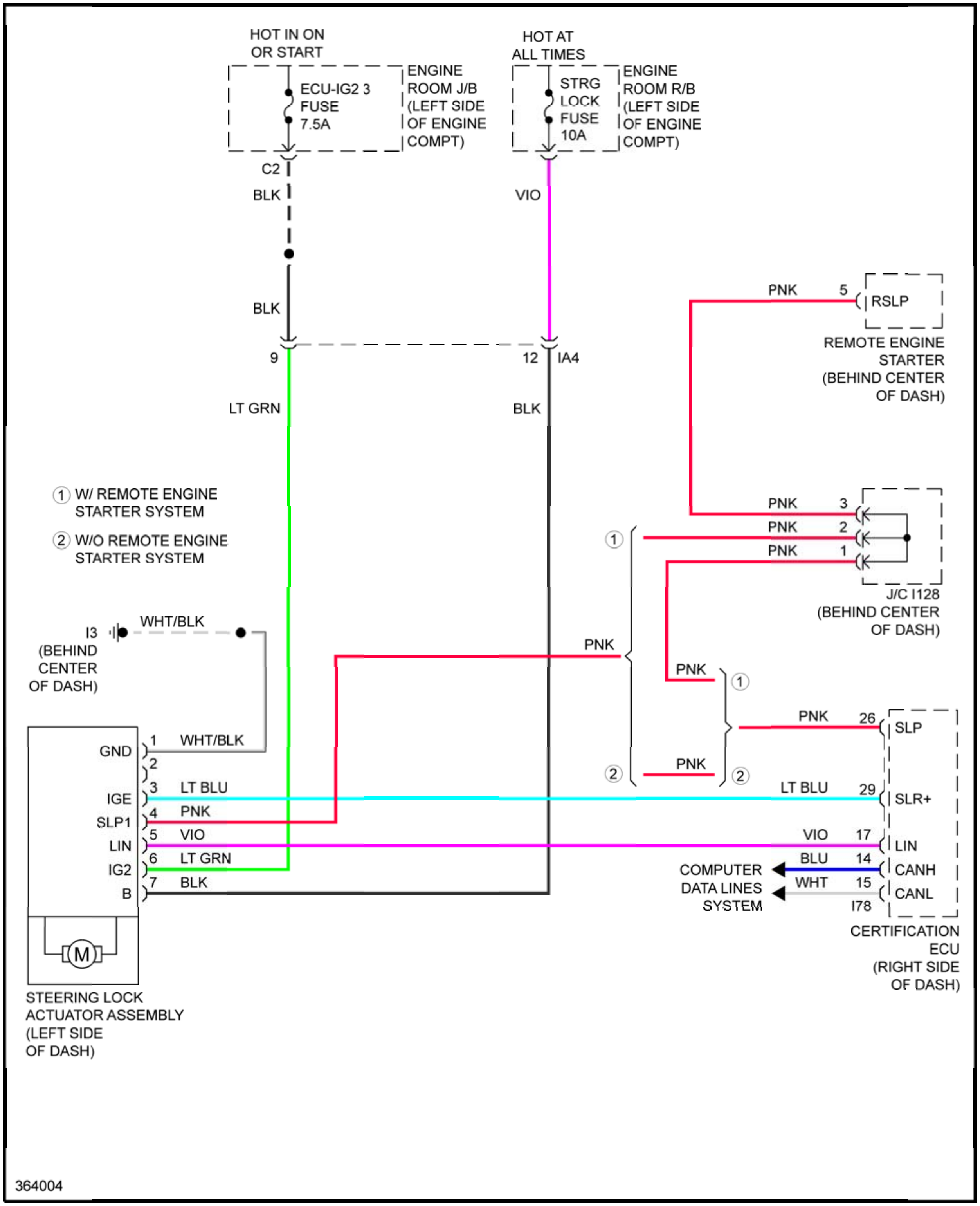
HOT IN ON
OR START
ECU-IG2 3
FUSE
7.5A
ENGINE
ROOM J/B
(LEFT SIDE
OF ENGINE
COMPT)
HOT AT
ALL TIMES
STRG
LOCK
FUSE
10A
ENGINE
ROOM R/B
(LEFT SIDE
OF ENGINE
COMPT)
C2
BLK
VIO
BLK
9
12
IA4
LT GRN
BLK
PNK
5
RSLP
REMOTE ENGINE
STARTER
(BEHIND CENTER
OF DASH)
① W/ REMOTE ENGINE
STARTER SYSTEM
② W/O REMOTE ENGINE
STARTER SYSTEM
PNK
3
PNK
2
PNK
1
①
J/C I128
(BEHIND CENTER
OF DASH)
I3
(BEHIND
CENTER
OF DASH)
WHT/BLK
PNK
PNK
①
PNK
26
SLP
②
PNK
②
GND
1
WHT/BLK
2
IGE
3
LT BLU
LT BLU
29
SLR+
SLP1
4
PNK
LIN
5
VIO
VIO
17
LIN
IG2
6
LT GRN
BLU
14
CANH
B
7
BLK
WHT
15
CANL
COMPUTER
DATA LINES
SYSTEM
I78
M
CERTIFICATION
ECU
(RIGHT SIDE
OF DASH)
STEERING LOCK
ACTUATOR ASSEMBLY
(LEFT SIDE
OF DASH)
364004

Fig. 163: Steering Lock Circuit, Except Hybrid

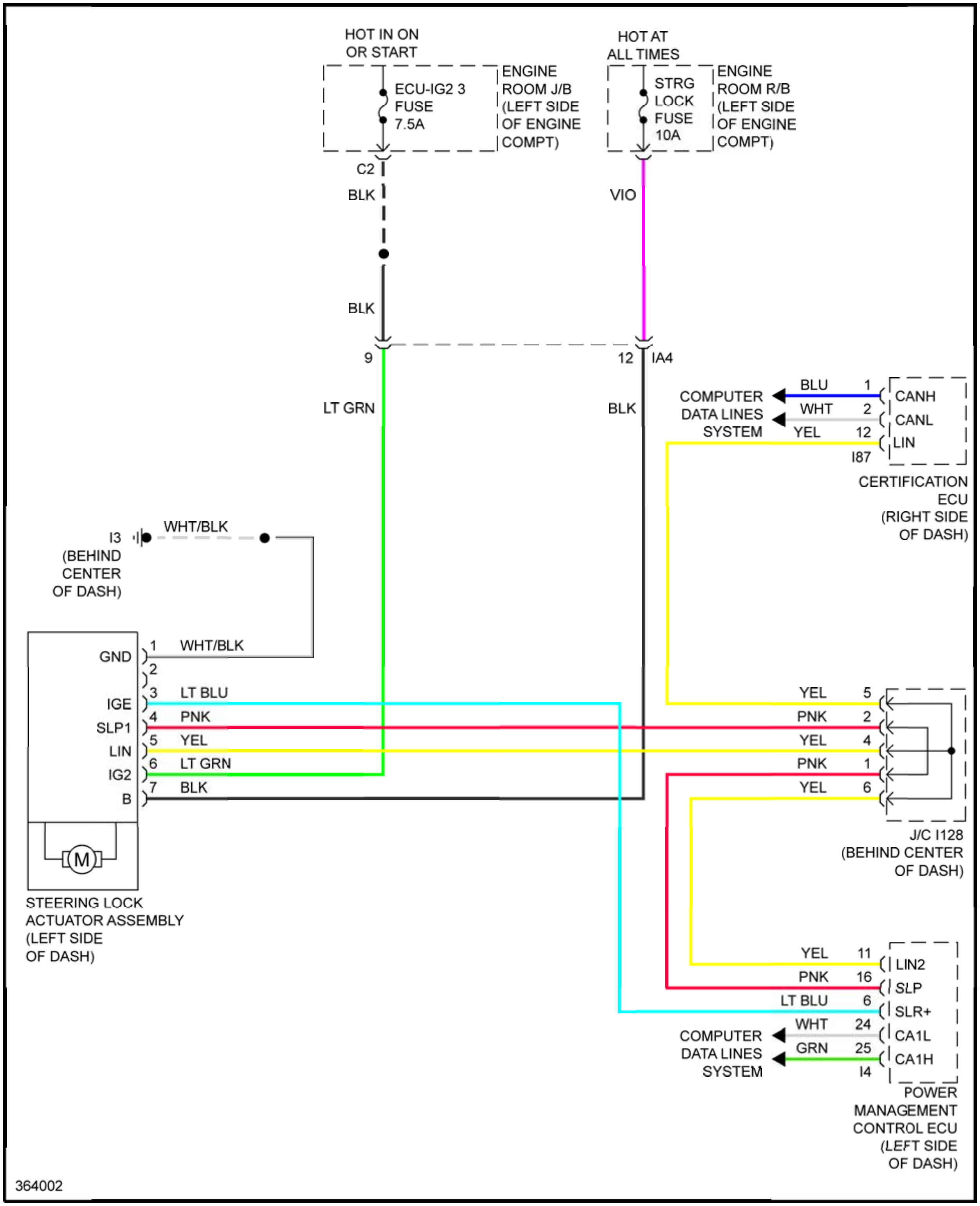
HOT IN ON OR START
ECU-IG2 3 FUSE 7.5A
ENGINE ROOM J/B (LEFT SIDE OF ENGINE COMPT)
HOT AT ALL TIMES
STRG LOCK FUSE 10A
ENGINE ROOM R/B (LEFT SIDE OF ENGINE COMPT)
C2
BLK
VIO
BLK
9
12
IA4
LT GRN
BLK
COMPUTER DATA LINES SYSTEM
BLU
1
CANH
WHT
2
CANL
YEL
12
LIN
I87
CERTIFICATION ECU (RIGHT SIDE OF DASH)
I3 (BEHIND CENTER OF DASH)
WHT/BLK
GND
1
WHT/BLK
2
IGE
3
LT BLU
SLP1
4
PNK
LIN
5
YEL
IG2
6
LT GRN
B
7
BLK
M
STEERING LOCK ACTUATOR ASSEMBLY (LEFT SIDE OF DASH)
YEL
5
PNK
2
YEL
4
PNK
1
YEL
6
J/C I128 (BEHIND CENTER OF DASH)
YEL
11
LIN2
PNK
16
SLP
LT BLU
6
SLR+
COMPUTER DATA LINES SYSTEM
WHT
24
CA1L
GRN
25
CA1H
I4
POWER MANAGEMENT CONTROL ECU (LEFT SIDE OF DASH)
364002

Fig. 164: Steering Lock Circuit, Hybrid

STARTING/CHARGING

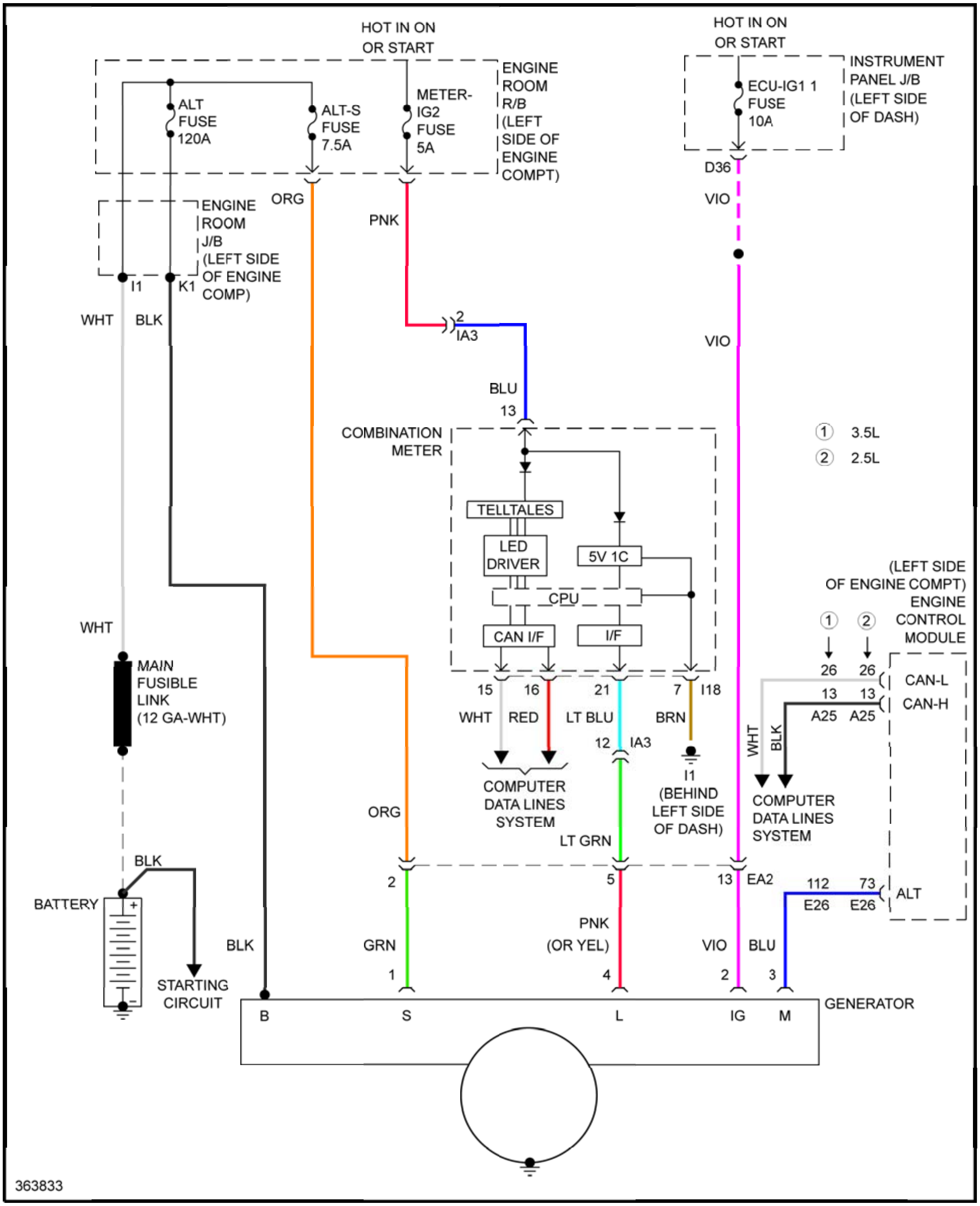
HOT IN ON OR START
HOT IN ON OR START
ENGINE ROOM R/B (LEFT SIDE OF ENGINE COMPT)
ALT FUSE 120A
ALT-S FUSE 7.5A
METER-IG2 FUSE 5A
INSTRUMENT PANEL J/B (LEFT SIDE OF DASH)
ECU-IG1 1 FUSE 10A
D36
VIO
ORG
PNK
ENGINE ROOM J/B (LEFT SIDE OF ENGINE COMP)
I1
K1
WHT
BLK
2
IA3
VIO
BLU
13
COMBINATION METER
① 3.5L
② 2.5L
TELLTALES
LED DRIVER
5V 1C
CPU
CAN I/F
I/F
WHT
MAIN FUSIBLE LINK (12 GA-WHT)
(LEFT SIDE OF ENGINE COMPT) ENGINE CONTROL MODULE
①
②
26
26
CAN-L
13
13
CAN-H
A25
A25
15
16
21
7
I18
WHT
RED
LT BLU
BRN
12
IA3
WHT
BLK
I1 (BEHIND LEFT SIDE OF DASH)
COMPUTER DATA LINES SYSTEM
COMPUTER DATA LINES SYSTEM
ORG
LT GRN
BLK
2
5
13
EA2
112
73
E26
E26
ALT
BATTERY
STARTING CIRCUIT
BLK
GRN
PNK (OR YEL)
VIO
BLU
1
4
2
3
GENERATOR
B
S
L
IG
M
363833

Fig. 165: Charging Circuit

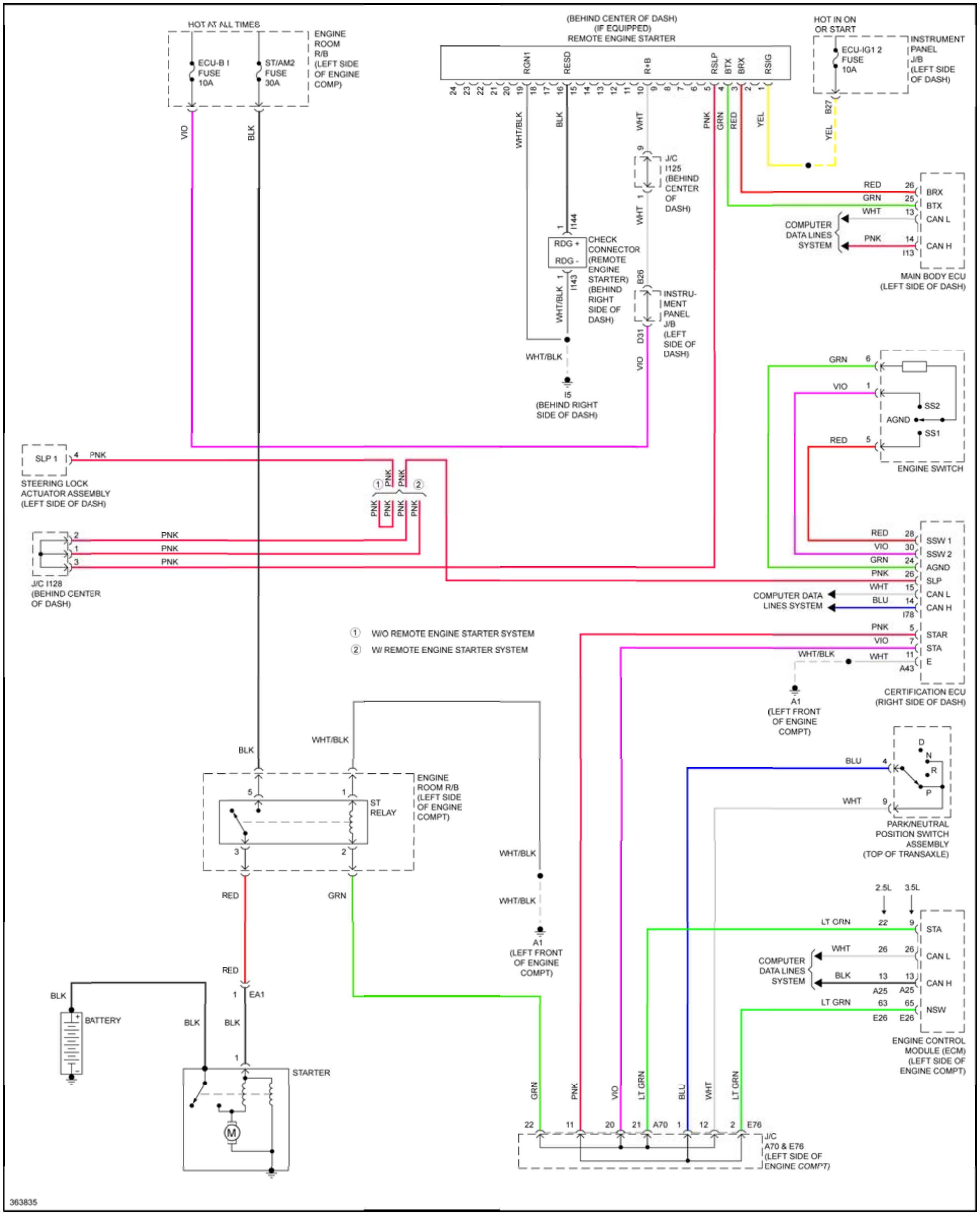
HOT AT ALL TIMES
ECU-B I FUSE 10A
ST/AM2 FUSE 30A
ENGINE ROOM R/B (LEFT SIDE OF ENGINE COMP)
VIO
BLK
(BEHIND CENTER OF DASH) (IF EQUIPPED) REMOTE ENGINE STARTER
RGN1
RESD
R+B
RSLP
BTX
BRX
RSIG
24 23 22 21 20 19 18 17 16 15 14 13 12 11 10 9 8 7 6 5 4 3 2 1
WHT/BLK
BLK
WHT
PNK
GRN
RED
YEL
HOT IN ON OR START
ECU-IG1 2 FUSE 10A
INSTRUMENT PANEL J/B (LEFT SIDE OF DASH)
B27
YEL
J/C I125 (BEHIND CENTER OF DASH)
I144
RDG +
RDG -
I143
CHECK CONNECTOR (REMOTE ENGINE STARTER) (BEHIND RIGHT SIDE OF DASH)
B26
D31
INSTRUMENT PANEL J/B (LEFT SIDE OF DASH)
WHT/BLK
I5 (BEHIND RIGHT SIDE OF DASH)
RED 26 BRX
GRN 25 BTX
WHT 13 CAN L
PNK 14 CAN H
I13
COMPUTER DATA LINES SYSTEM
MAIN BODY ECU (LEFT SIDE OF DASH)
GRN 6
VIO 1
SS2
AGND
SS1
RED 5
ENGINE SWITCH
SLP 1
4 PNK
STEERING LOCK ACTUATOR ASSEMBLY (LEFT SIDE OF DASH)
① ②
PNK
2 PNK
1 PNK
3 PNK
J/C I128 (BEHIND CENTER OF DASH)
RED 28 SSW 1
VIO 30 SSW 2
GRN 24 AGND
PNK 26 SLP
WHT 15 CAN L
BLU 14 CAN H
I78
COMPUTER DATA LINES SYSTEM
① W/O REMOTE ENGINE STARTER SYSTEM
② W/ REMOTE ENGINE STARTER SYSTEM
PNK 5 STAR
VIO 7 STA
WHT/BLK
WHT 11 E
A43
A1 (LEFT FRONT OF ENGINE COMPT)
CERTIFICATION ECU (RIGHT SIDE OF DASH)
BLK
WHT/BLK
5
1
ST RELAY
3
2
ENGINE ROOM R/B (LEFT SIDE OF ENGINE COMPT)
BLU 4
WHT 9
D N R P
PARK/NEUTRAL POSITION SWITCH ASSEMBLY (TOP OF TRANSAXLE)
WHT/BLK
A1 (LEFT FRONT OF ENGINE COMPT)
RED
GRN
2.5L 3.5L
LT GRN 22 9 STA
WHT 26 26 CAN L
BLK 13 13 CAN H
A25 A25
LT GRN 63 65 NSW
E26 E26
COMPUTER DATA LINES SYSTEM
ENGINE CONTROL MODULE (ECM) (LEFT SIDE OF ENGINE COMPT)
BLK
BATTERY
RED
1 EA1
BLK
BLK
1
STARTER
M
GRN
PNK
VIO
LT GRN
BLU
WHT
LT GRN
22 11 20 21 A70 1 12 2 E76
J/C A70 & E76 (LEFT SIDE OF ENGINE COMPT)
363835

Fig. 166: Starting Circuit, W/ Smart Key System

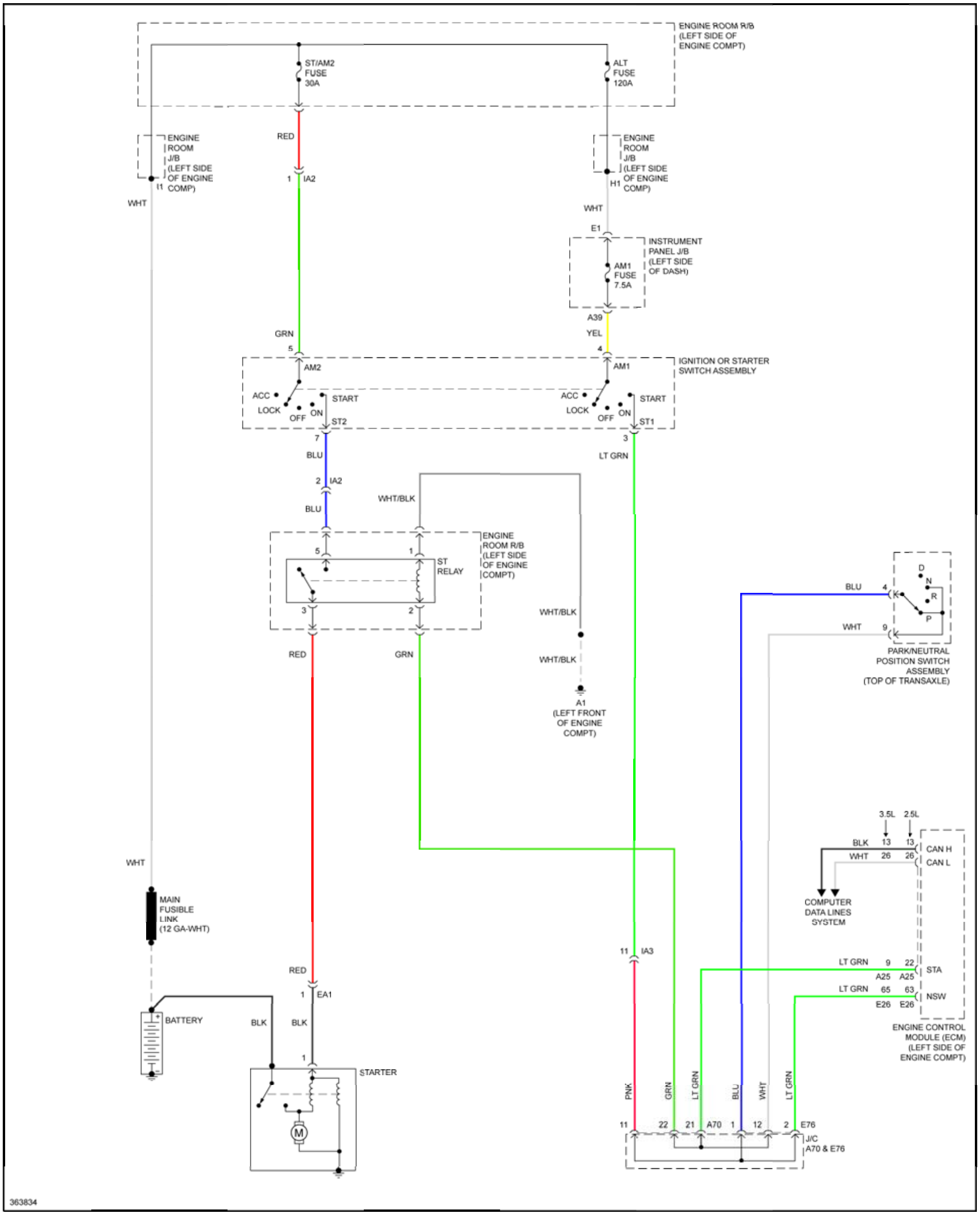
ENGINE ROOM R/B (LEFT SIDE OF ENGINE COMPT)
ST/AM2 FUSE 30A
ALT FUSE 120A
RED
ENGINE ROOM J/B (LEFT SIDE OF ENGINE COMP)
I1
WHT
1
IA2
ENGINE ROOM J/B (LEFT SIDE OF ENGINE COMP)
H1
WHT
E1
INSTRUMENT PANEL J/B (LEFT SIDE OF DASH)
AM1 FUSE 7.5A
A39
YEL
GRN
5
4
AM2
AM1
IGNITION OR STARTER SWITCH ASSEMBLY
ACC
LOCK
OFF
ON
START
ST2
ACC
LOCK
OFF
ON
START
ST1
7
3
BLU
LT GRN
2
IA2
BLU
WHT/BLK
ENGINE ROOM R/B (LEFT SIDE OF ENGINE COMPT)
5
1
ST RELAY
3
2
WHT/BLK
RED
GRN
WHT/BLK
A1 (LEFT FRONT OF ENGINE COMPT)
BLU
4
K
D
N
R
P
WHT
9
PARK/NEUTRAL POSITION SWITCH ASSEMBLY (TOP OF TRANSAXLE)
3.5L
2.5L
BLK
13
13
WHT
26
26
CAN H
CAN L
COMPUTER DATA LINES SYSTEM
WHT
MAIN FUSIBLE LINK (12 GA-WHT)
11
IA3
LT GRN
9
22
A25
A25
STA
LT GRN
65
63
E26
E26
NSW
ENGINE CONTROL MODULE (ECM) (LEFT SIDE OF ENGINE COMPT)
RED
1
EA1
BATTERY
BLK
BLK
1
STARTER
M
PNK
GRN
LT GRN
BLU
WHT
LT GRN
11
22
21
A70
1
12
2
E76
J/C A70 & E76
363834

Fig. 167: Starting Circuit, W/O Smart Key System

SUPPLEMENTAL RESTRAINTS

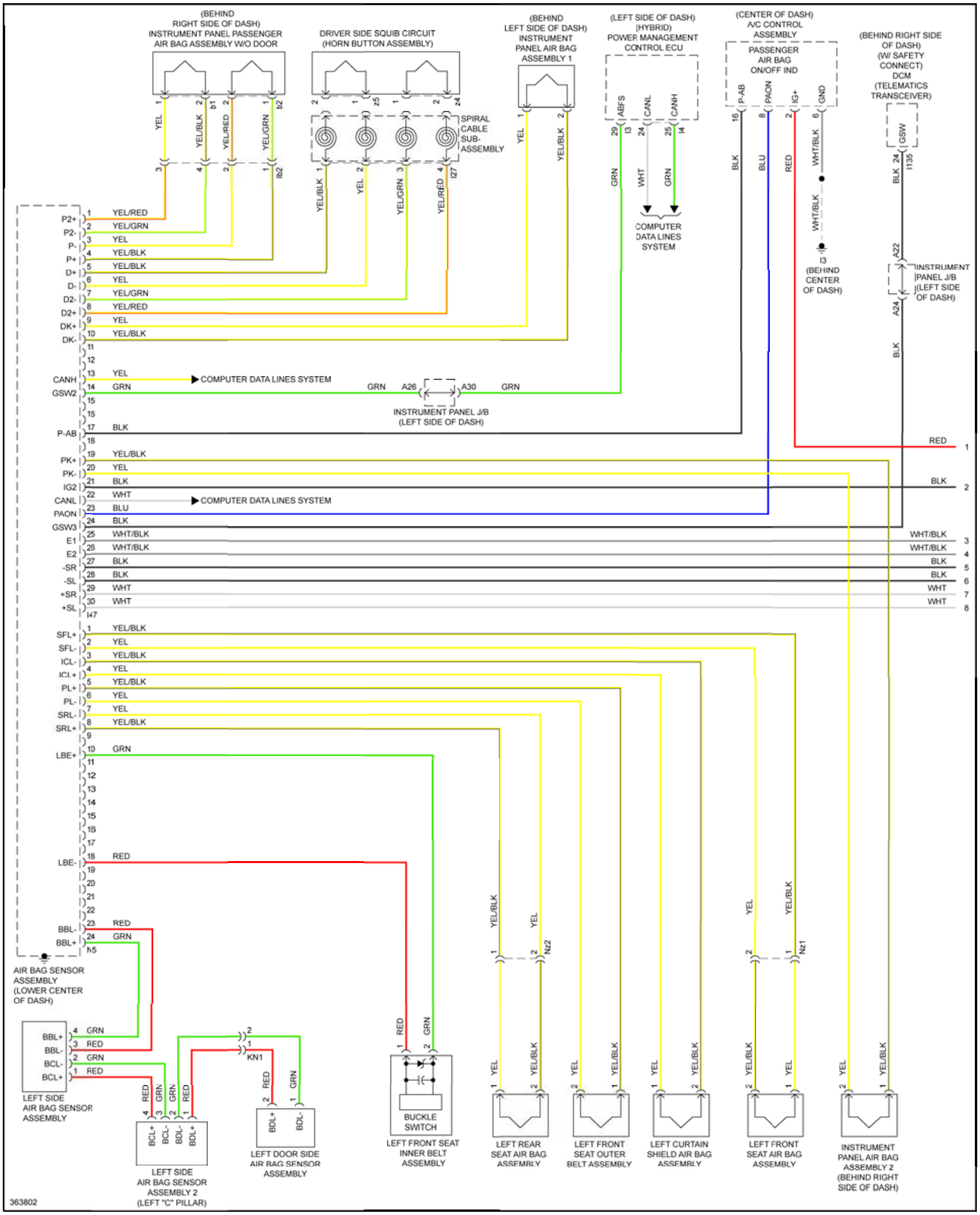
(BEHIND RIGHT SIDE OF DASH) INSTRUMENT PANEL PASSENGER AIR BAG ASSEMBLY W/O DOOR
DRIVER SIDE SQUIB CIRCUIT (HORN BUTTON ASSEMBLY)
(BEHIND LEFT SIDE OF DASH) INSTRUMENT PANEL AIR BAG ASSEMBLY 1
(LEFT SIDE OF DASH) (HYBRID) POWER MANAGEMENT CONTROL ECU
(CENTER OF DASH) A/C CONTROL ASSEMBLY
PASSENGER AIR BAG ON/OFF IND
(BEHIND RIGHT SIDE OF DASH) (W/ SAFETY CONNECT) DCM (TELEMATICS TRANSCEIVER)
SPIRAL CABLE SUB-ASSEMBLY
b1
b2
lb2
z5
z4
l27
ABFS
CANL
CANH
l3
l4
P-AB
PAON
IG+
GND
GSW
l135
COMPUTER DATA LINES SYSTEM
l3 (BEHIND CENTER OF DASH)
A22
A24
INSTRUMENT PANEL J/B (LEFT SIDE OF DASH)
A26
A30
P2+
P2-
P-
P+
D+
D-
D2-
D2+
DK+
DK-
CANH
GSW2
P-AB
PK+
PK-
IG2
CANL
PAON
GSW3
E1
E2
-SR
-SL
+SR
+SL
l47
SFL+
SFL-
ICL-
ICL+
PL+
PL-
SRL-
SRL+
LBE+
LBE-
BBL-
BBL+
N5
YEL/RED
YEL/GRN
YEL
YEL/BLK
GRN
BLK
WHT
BLU
WHT/BLK
RED
AIR BAG SENSOR ASSEMBLY (LOWER CENTER OF DASH)
BBL+
BBL-
BCL-
BCL+
LEFT SIDE AIR BAG SENSOR ASSEMBLY
BCL+
BCL-
BDL-
BDL+
LEFT SIDE AIR BAG SENSOR ASSEMBLY 2 (LEFT "C" PILLAR)
KN1
BDL+
BDL-
LEFT DOOR SIDE AIR BAG SENSOR ASSEMBLY
BUCKLE SWITCH
LEFT FRONT SEAT INNER BELT ASSEMBLY
Nz2
Nz1
LEFT REAR SEAT AIR BAG ASSEMBLY
LEFT FRONT SEAT OUTER BELT ASSEMBLY
LEFT CURTAIN SHIELD AIR BAG ASSEMBLY
LEFT FRONT SEAT AIR BAG ASSEMBLY
INSTRUMENT PANEL AIR BAG ASSEMBLY 2 (BEHIND RIGHT SIDE OF DASH)
363802

Fig. 168: Supplemental Restraints Circuit, W/ Built-in Type Yaw Rate Sensor (1 of 3)

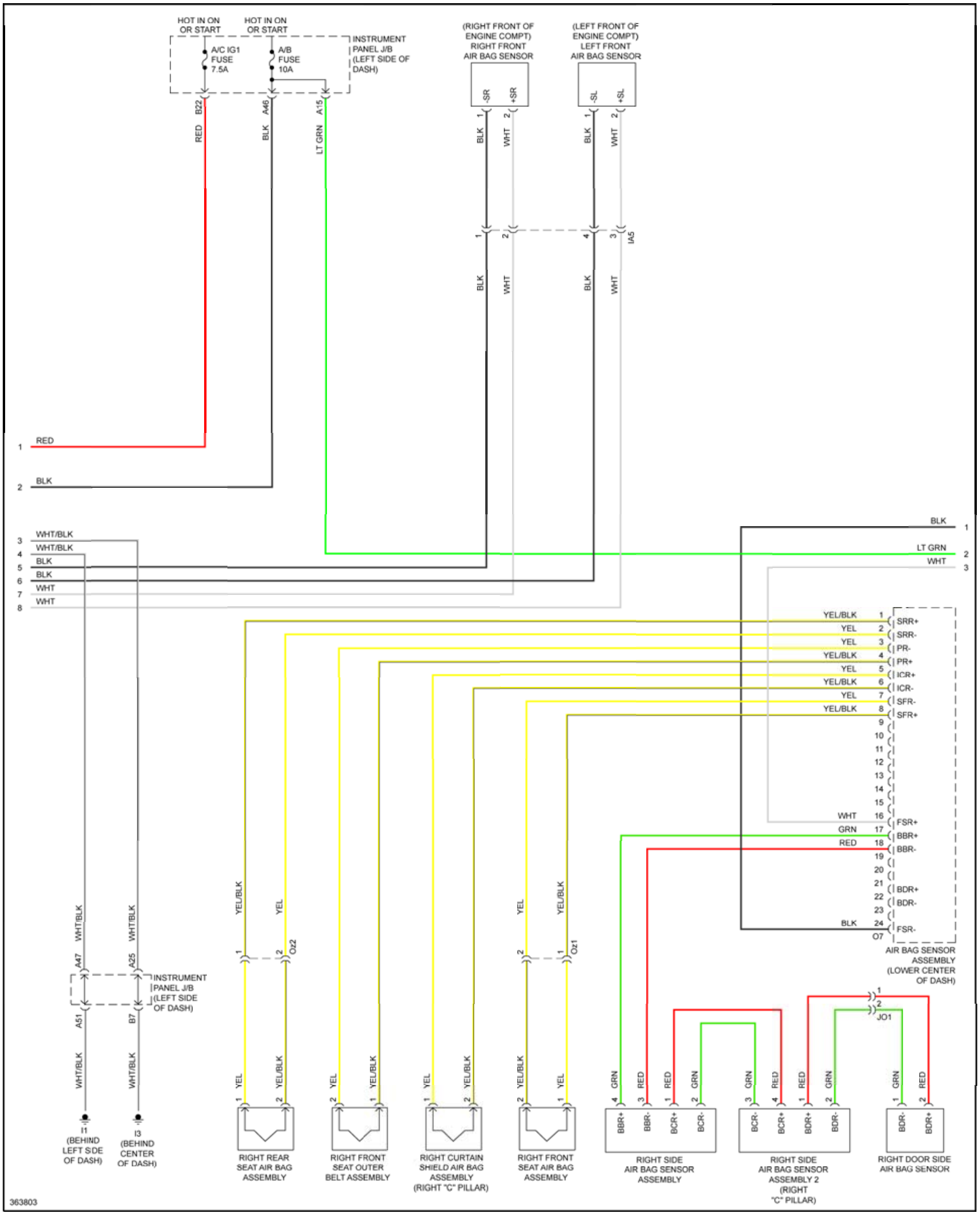
HOT IN ON OR START
HOT IN ON OR START
A/C IG1 FUSE 7.5A
A/B FUSE 10A
INSTRUMENT PANEL J/B (LEFT SIDE OF DASH)
B22
A46
A15
RED
BLK
LT GRN
(RIGHT FRONT OF ENGINE COMPT) RIGHT FRONT AIR BAG SENSOR
-SR
+SR
(LEFT FRONT OF ENGINE COMPT) LEFT FRONT AIR BAG SENSOR
-SL
+SL
BLK
WHT
IA5
1 RED
2 BLK
3 WHT/BLK
4 WHT/BLK
5 BLK
6 BLK
7 WHT
8 WHT
BLK 1
LT GRN 2
WHT 3
YEL/BLK 1 SRR+
YEL 2 SRR-
YEL 3 PR-
YEL/BLK 4 PR+
YEL 5 ICR+
YEL/BLK 6 ICR-
YEL 7 SFR-
YEL/BLK 8 SFR+
9
10
11
12
13
14
15
WHT 16 FSR+
GRN 17 BBR+
RED 18 BBR-
19
20
21 BDR+
22 BDR-
23
BLK 24 FSR-
O7
AIR BAG SENSOR ASSEMBLY (LOWER CENTER OF DASH)
WHT/BLK
A47
A25
INSTRUMENT PANEL J/B (LEFT SIDE OF DASH)
A51
B7
YEL/BLK
YEL
Oz2
Oz1
JO1
GRN
RED
I1 (BEHIND LEFT SIDE OF DASH)
I3 (BEHIND CENTER OF DASH)
RIGHT REAR SEAT AIR BAG ASSEMBLY
RIGHT FRONT SEAT OUTER BELT ASSEMBLY
RIGHT CURTAIN SHIELD AIR BAG ASSEMBLY (RIGHT "C" PILLAR)
RIGHT FRONT SEAT AIR BAG ASSEMBLY
BBR+
BBR-
BCR+
BCR-
RIGHT SIDE AIR BAG SENSOR ASSEMBLY
BCR-
BCR+
BDR+
BDR-
RIGHT SIDE AIR BAG SENSOR ASSEMBLY 2 (RIGHT "C" PILLAR)
BDR-
BDR+
RIGHT DOOR SIDE AIR BAG SENSOR
363803

Fig. 169: Supplemental Restraints Circuit, W/ Built-in Type Yaw Rate Sensor (2 of 3)

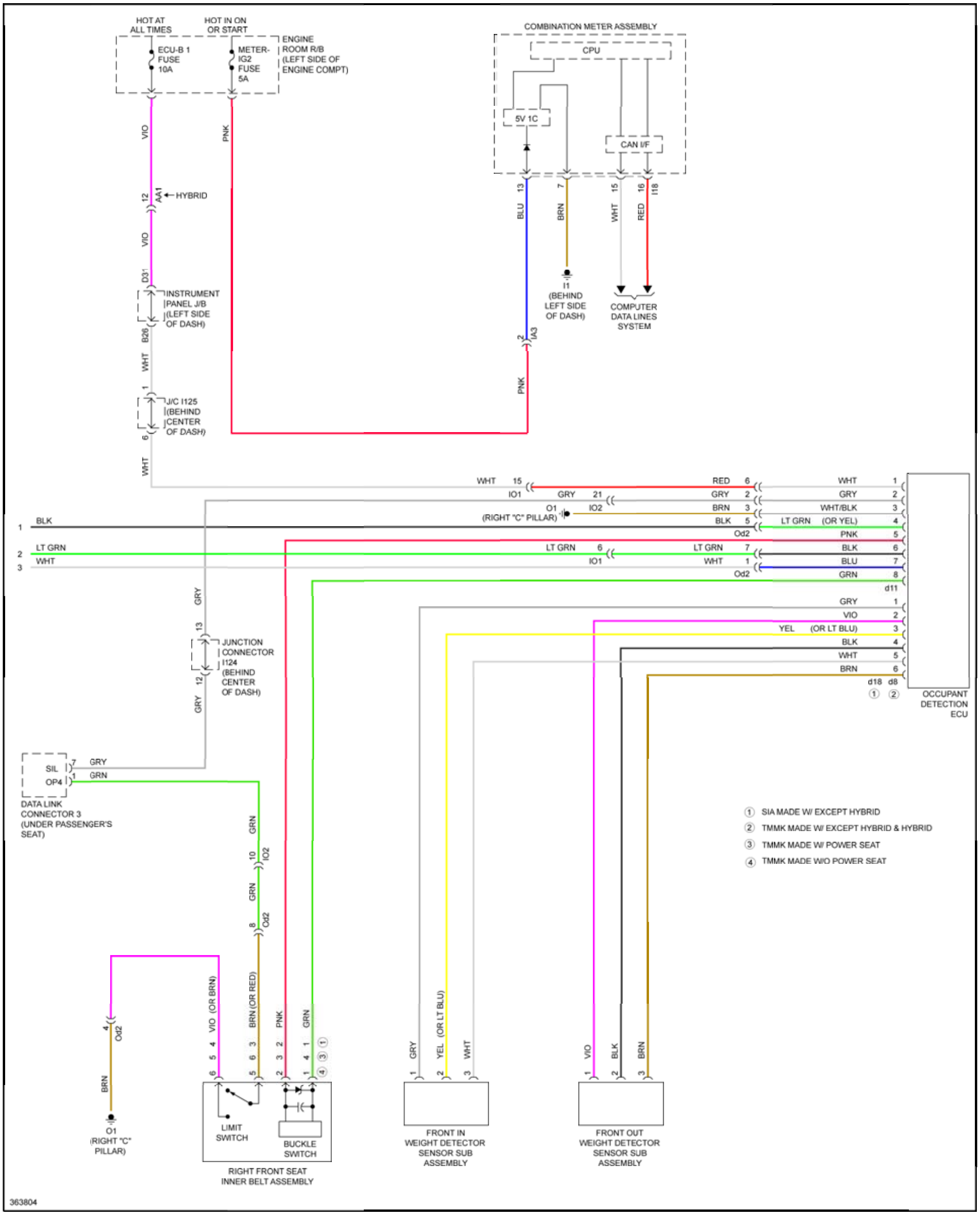
HOT AT ALL TIMES
HOT IN ON OR START
ECU-B 1 FUSE 10A
METER-IG2 FUSE 5A
ENGINE ROOM R/B (LEFT SIDE OF ENGINE COMPT)
VIO
PNK
AA1
HYBRID
D31
INSTRUMENT PANEL J/B (LEFT SIDE OF DASH)
B26
WHT
J/C I125 (BEHIND CENTER OF DASH)
COMBINATION METER ASSEMBLY
CPU
5V 1C
CAN I/F
BLU
BRN
RED
I18
IA3
I1 (BEHIND LEFT SIDE OF DASH)
COMPUTER DATA LINES SYSTEM
IO1
GRY
IO2
O1 (RIGHT "C" PILLAR)
BLK
LT GRN
Od2
WHT/BLK
LT GRN (OR YEL)
GRN
d11
YEL (OR LT BLU)
d18 d8
① ②
OCCUPANT DETECTION ECU
JUNCTION CONNECTOR I124 (BEHIND CENTER OF DASH)
SIL
OP4
DATA LINK CONNECTOR 3 (UNDER PASSENGER'S SEAT)
VIO (OR BRN)
BRN (OR RED)
① ③ ④
LIMIT SWITCH
BUCKLE SWITCH
RIGHT FRONT SEAT INNER BELT ASSEMBLY
O1 (RIGHT "C" PILLAR)
FRONT IN WEIGHT DETECTOR SENSOR SUB ASSEMBLY
FRONT OUT WEIGHT DETECTOR SENSOR SUB ASSEMBLY
① SIA MADE W/ EXCEPT HYBRID
② TMMK MADE W/ EXCEPT HYBRID & HYBRID
③ TMMK MADE W/ POWER SEAT
④ TMMK MADE W/O POWER SEAT
363804

Fig. 170: Supplemental Restraints Circuit, W/ Built-in Type Yaw Rate Sensor (3 of 3)

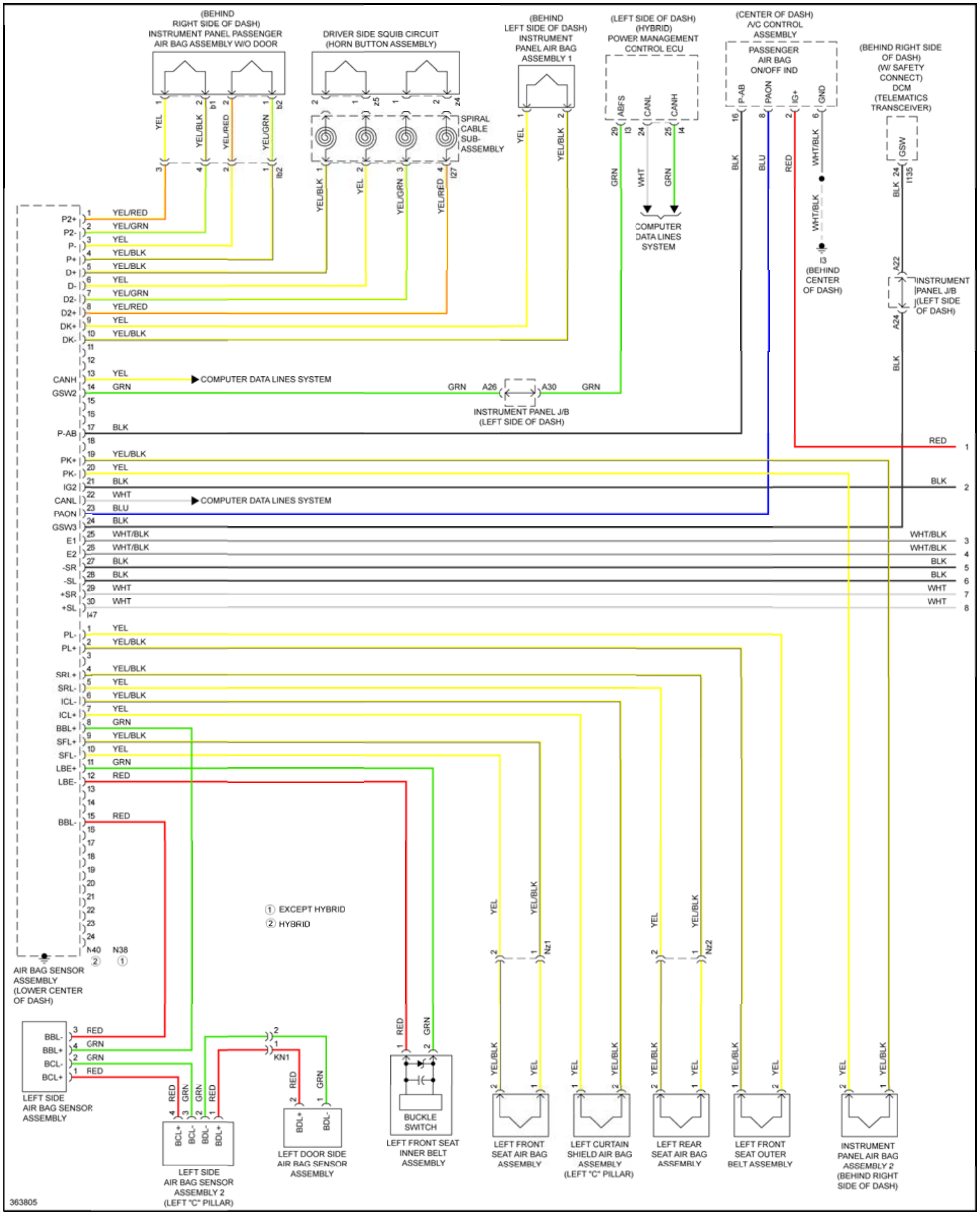
(BEHIND RIGHT SIDE OF DASH) INSTRUMENT PANEL PASSENGER AIR BAG ASSEMBLY W/O DOOR
DRIVER SIDE SQUIB CIRCUIT (HORN BUTTON ASSEMBLY)
(BEHIND LEFT SIDE OF DASH) INSTRUMENT PANEL AIR BAG ASSEMBLY 1
(LEFT SIDE OF DASH) (HYBRID) POWER MANAGEMENT CONTROL ECU
(CENTER OF DASH) A/C CONTROL ASSEMBLY
PASSENGER AIR BAG ON/OFF IND
(BEHIND RIGHT SIDE OF DASH) (W/ SAFETY CONNECT) DCM (TELEMATICS TRANSCEIVER)
SPIRAL CABLE SUB-ASSEMBLY
YEL
YEL/BLK
YEL/RED
YEL/GRN
b1
b2
Ib2
z5
z4
I27
ABFS
CANL
CANH
I3
I4
P-AB
PAON
IG+
GND
GSW
I135
COMPUTER DATA LINES SYSTEM
I3 (BEHIND CENTER OF DASH)
A22
A24
INSTRUMENT PANEL J/B (LEFT SIDE OF DASH)
P2+
P2-
P-
P+
D+
D-
D2-
D2+
DK+
DK-
CANH
GSW2
P-AB
PK+
PK-
IG2
CANL
PAON
GSW3
E1
E2
-SR
-SL
+SR
+SL
I47
PL-
PL+
SRL+
SRL-
ICL-
ICL+
BBL+
SFL+
SFL-
LBE+
LBE-
BBL-
N40 ②
N38 ①
▶COMPUTER DATA LINES SYSTEM
GRN A26 A30 GRN
INSTRUMENT PANEL J/B (LEFT SIDE OF DASH)
RED 1
BLK 2
WHT/BLK 3
WHT/BLK 4
BLK 5
BLK 6
WHT 7
WHT 8
① EXCEPT HYBRID
② HYBRID
Nz1
Nz2
AIR BAG SENSOR ASSEMBLY (LOWER CENTER OF DASH)
BBL-
BBL+
BCL-
BCL+
LEFT SIDE AIR BAG SENSOR ASSEMBLY
KN1
BCL+
BCL-
BDL-
BDL+
LEFT SIDE AIR BAG SENSOR ASSEMBLY 2 (LEFT "C" PILLAR)
BDL+
BDL-
LEFT DOOR SIDE AIR BAG SENSOR ASSEMBLY
BUCKLE SWITCH
LEFT FRONT SEAT INNER BELT ASSEMBLY
LEFT FRONT SEAT AIR BAG ASSEMBLY
LEFT CURTAIN SHIELD AIR BAG ASSEMBLY (LEFT "C" PILLAR)
LEFT REAR SEAT AIR BAG ASSEMBLY
LEFT FRONT SEAT OUTER BELT ASSEMBLY
INSTRUMENT PANEL AIR BAG ASSEMBLY 2 (BEHIND RIGHT SIDE OF DASH)
363805

Fig. 171: Supplemental Restraints Circuit, W/ Separate Type Yaw Rate Sensor (1 of 3)

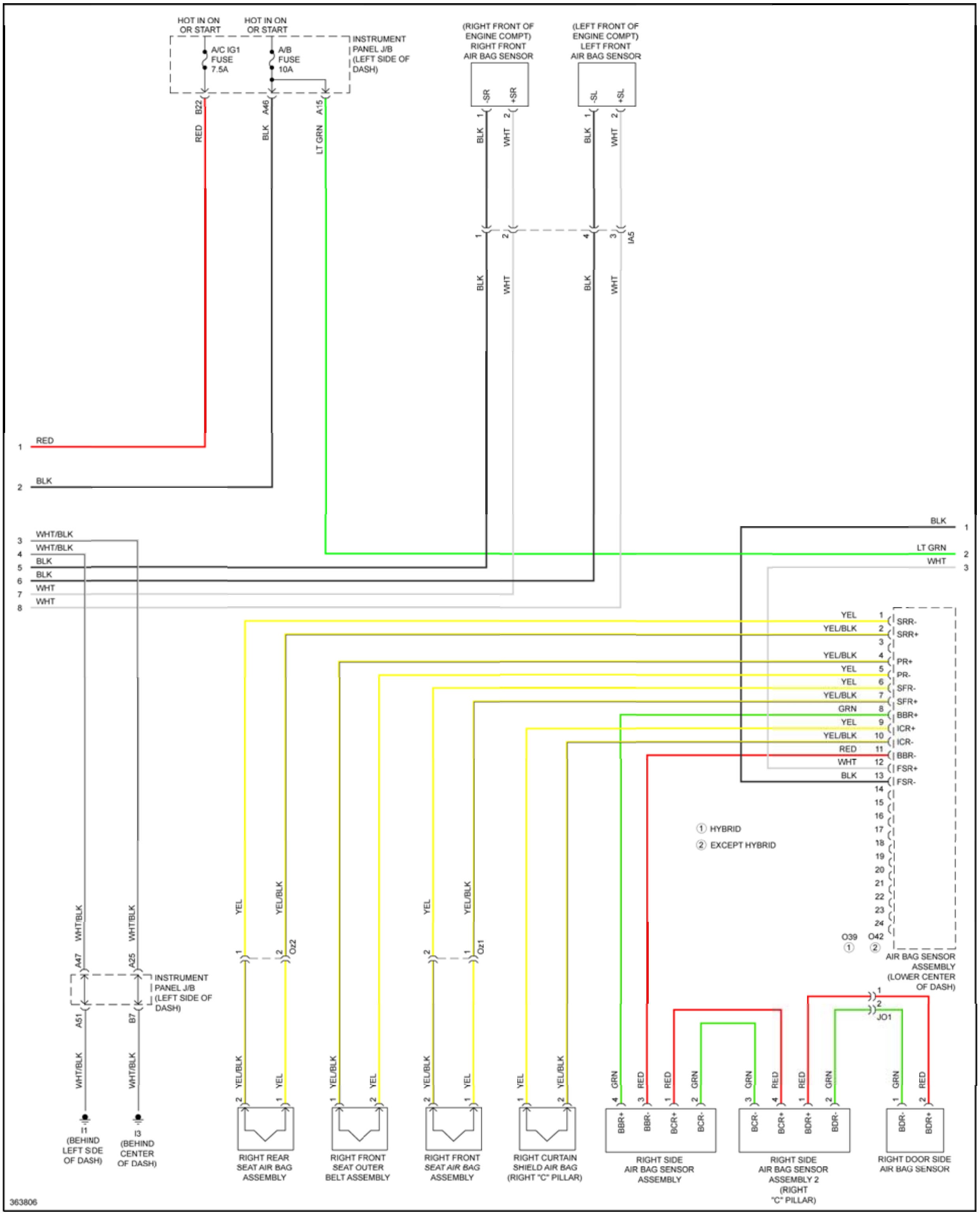
HOT IN ON OR START
HOT IN ON OR START
A/C IG1 FUSE 7.5A
A/B FUSE 10A
INSTRUMENT PANEL J/B (LEFT SIDE OF DASH)
B22
A46
A15
RED
BLK
LT GRN
(RIGHT FRONT OF ENGINE COMPT) RIGHT FRONT AIR BAG SENSOR
-SR
+SR
(LEFT FRONT OF ENGINE COMPT) LEFT FRONT AIR BAG SENSOR
-SL
+SL
BLK
WHT
IA5
1 RED
2 BLK
3 WHT/BLK
4 WHT/BLK
5 BLK
6 BLK
7 WHT
8 WHT
BLK 1
LT GRN 2
WHT 3
YEL 1 SRR-
YEL/BLK 2 SRR+
3
YEL/BLK 4 PR+
YEL 5 PR-
YEL 6 SFR-
YEL/BLK 7 SFR+
GRN 8 BBR+
YEL 9 ICR+
YEL/BLK 10 ICR-
RED 11 BBR-
WHT 12 FSR+
BLK 13 FSR-
14
15
16
17
18
19
20
21
22
23
24
① HYBRID
② EXCEPT HYBRID
O39 ①
O42 ②
AIR BAG SENSOR ASSEMBLY (LOWER CENTER OF DASH)
Oz2
Oz1
A47
A25
A51
B7
WHT/BLK
INSTRUMENT PANEL J/B (LEFT SIDE OF DASH)
I1 (BEHIND LEFT SIDE OF DASH)
I3 (BEHIND CENTER OF DASH)
YEL
YEL/BLK
RIGHT REAR SEAT AIR BAG ASSEMBLY
RIGHT FRONT SEAT OUTER BELT ASSEMBLY
RIGHT FRONT SEAT AIR BAG ASSEMBLY
RIGHT CURTAIN SHIELD AIR BAG (RIGHT "C" PILLAR)
JO1
GRN
RED
BBR+
BBR-
BCR+
BCR-
BDR+
BDR-
RIGHT SIDE AIR BAG SENSOR ASSEMBLY
RIGHT SIDE AIR BAG SENSOR ASSEMBLY 2 (RIGHT "C" PILLAR)
RIGHT DOOR SIDE AIR BAG SENSOR
363806

Fig. 172: Supplemental Restraints Circuit, W/ Separate Type Yaw Rate Sensor (2 of 3)

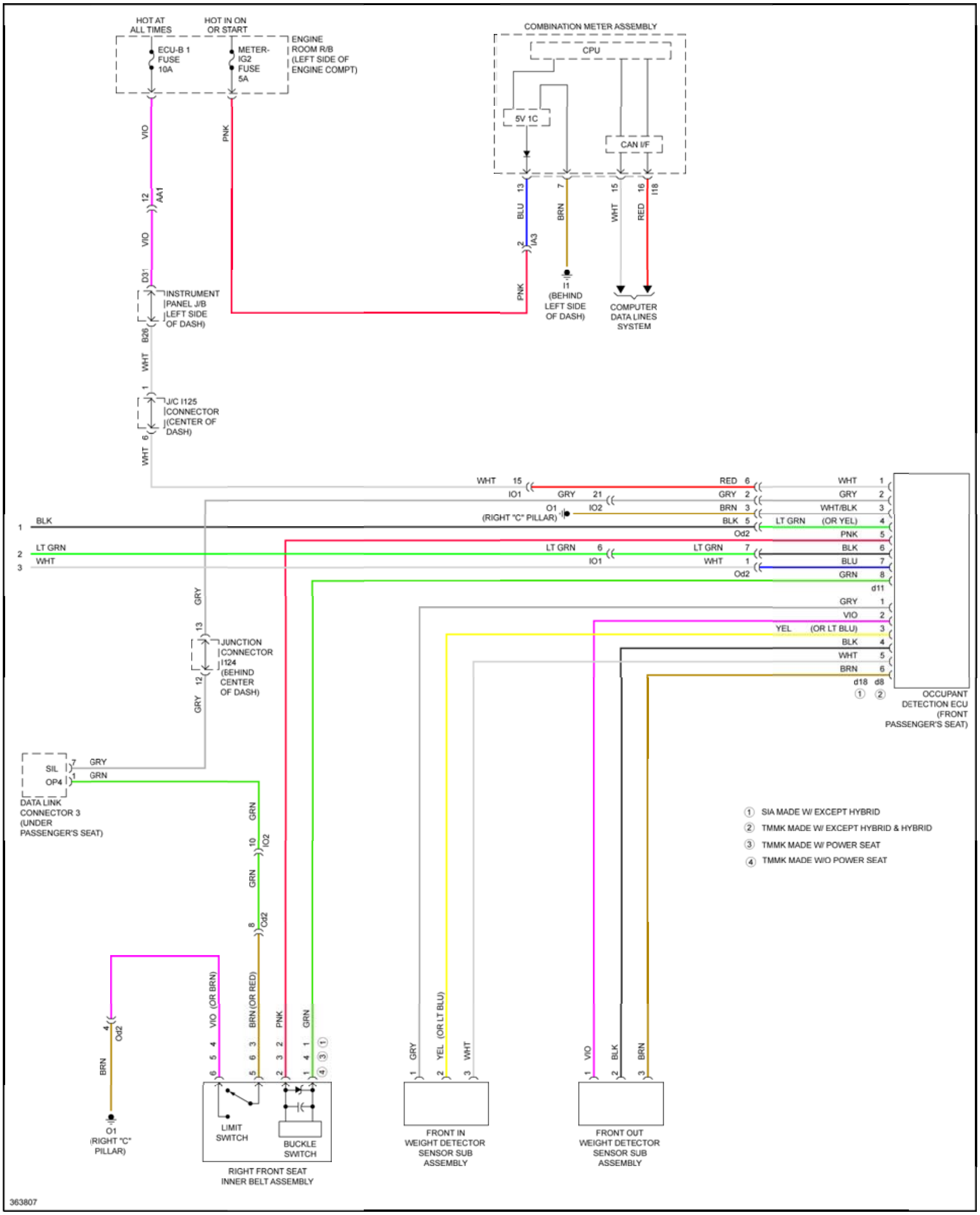
HOT AT ALL TIMES
HOT IN ON OR START
ECU-B 1 FUSE 10A
METER-IG2 FUSE 5A
ENGINE ROOM R/B (LEFT SIDE OF ENGINE COMPT)
COMBINATION METER ASSEMBLY
CPU
5V 1C
CAN I/F
VIO
PNK
AA1
D31
INSTRUMENT PANEL J/B LEFT SIDE OF DASH)
B26
WHT
J/C I125 CONNECTOR (CENTER OF DASH)
BLU
BRN
RED
IA3
I18
I1 (BEHIND LEFT SIDE OF DASH)
COMPUTER DATA LINES SYSTEM
IO1
IO2
O1 (RIGHT "C" PILLAR)
GRY
BLK
LT GRN
WHT/BLK
(OR YEL)
Od2
d11
GRN
YEL
(OR LT BLU)
d18
d8
OCCUPANT DETECTION ECU (FRONT PASSENGER'S SEAT)
JUNCTION CONNECTOR I124 (BEHIND CENTER OF DASH)
SIL
OP4
DATA LINK CONNECTOR 3 (UNDER PASSENGER'S SEAT)
① SIA MADE W/ EXCEPT HYBRID
② TMMK MADE W/ EXCEPT HYBRID & HYBRID
③ TMMK MADE W/ POWER SEAT
④ TMMK MADE W/O POWER SEAT
VIO (OR BRN)
BRN (OR RED)
O1 (RIGHT "C" PILLAR)
LIMIT SWITCH
BUCKLE SWITCH
RIGHT FRONT SEAT INNER BELT ASSEMBLY
YEL (OR LT BLU)
FRONT IN WEIGHT DETECTOR SENSOR SUB ASSEMBLY
FRONT OUT WEIGHT DETECTOR SENSOR SUB ASSEMBLY
363807

Fig. 173: Supplemental Restraints Circuit, W/ Separate Type Yaw Rate Sensor (3 of 3)

TRANSMISSION

2.5L

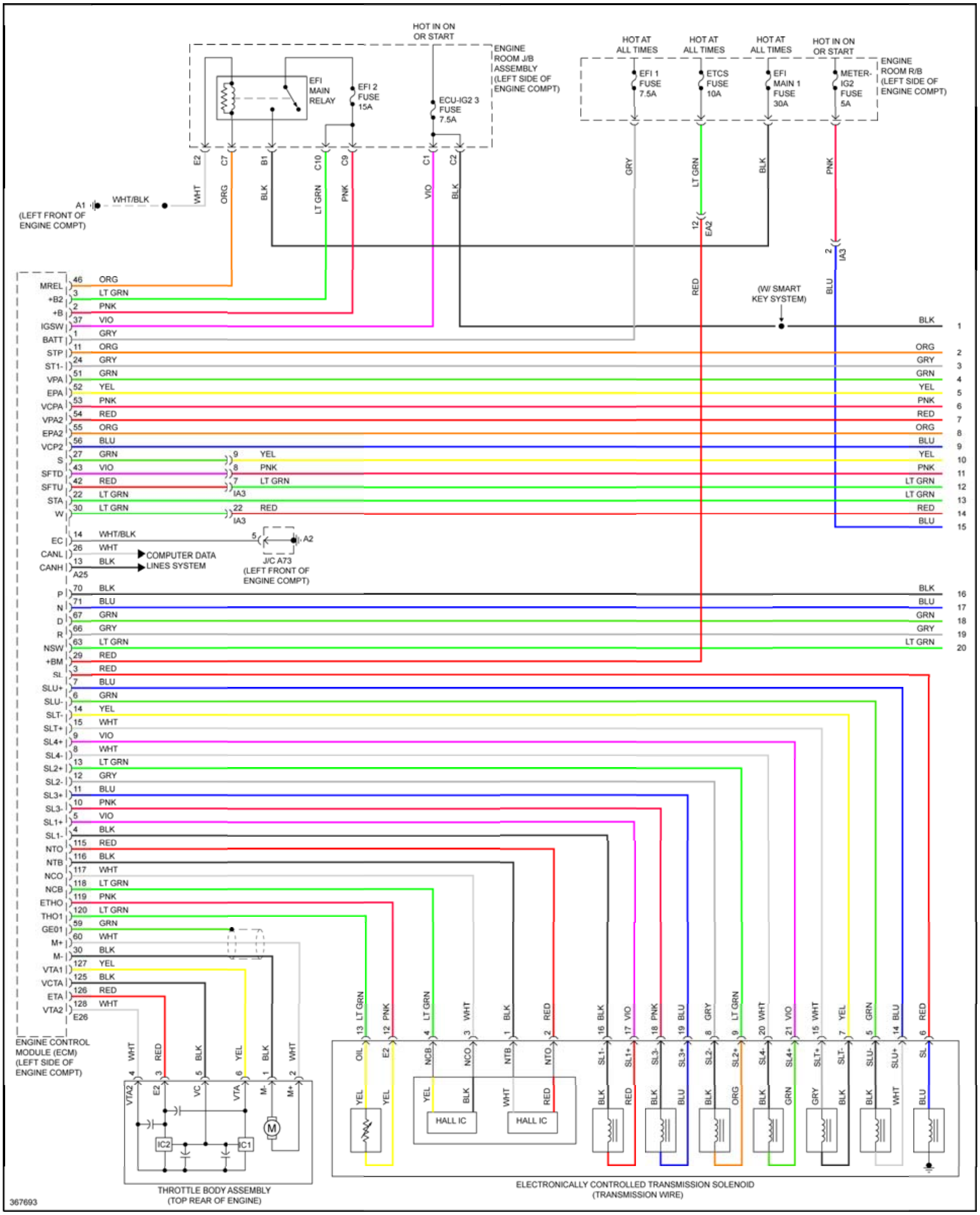
HOT IN ON OR START
ENGINE ROOM J/B ASSEMBLY (LEFT SIDE OF ENGINE COMPT)
EFI MAIN RELAY
EFI 2 FUSE 15A
ECU-IG2 3 FUSE 7.5A
HOT AT ALL TIMES
HOT AT ALL TIMES
HOT AT ALL TIMES
HOT IN ON OR START
EFI 1 FUSE 7.5A
ETCS FUSE 10A
EFI MAIN 1 FUSE 30A
METER-IG2 FUSE 5A
ENGINE ROOM R/B (LEFT SIDE OF ENGINE COMPT)
E2
C7
B1
C10
C9
C1
C2
WHT
ORG
BLK
LT GRN
PNK
VIO
BLK
GRY
LT GRN
BLK
PNK
A1
WHT/BLK
(LEFT FRONT OF ENGINE COMPT)
12
EA2
2
IA3
RED
BLU
(W/ SMART KEY SYSTEM)
MREL
+B2
+B
IGSW
BATT
STP
ST1-
VPA
EPA
VCPA
VPA2
EPA2
VCP2
S
SFTD
SFTU
STA
W
46 ORG
3 LT GRN
2 PNK
37 VIO
1 GRY
11 ORG
24 GRY
51 GRN
52 YEL
53 PNK
54 RED
55 ORG
56 BLU
27 GRN
43 VIO
42 RED
22 LT GRN
30 LT GRN
9 YEL
8 PNK
7 LT GRN
IA3
22 RED
IA3
BLK 1
ORG 2
GRY 3
GRN 4
YEL 5
PNK 6
RED 7
ORG 8
BLU 9
YEL 10
PNK 11
LT GRN 12
LT GRN 13
RED 14
BLU 15
EC
CANL
CANH
14 WHT/BLK
26 WHT
13 BLK
A25
COMPUTER DATA LINES SYSTEM
5
A2
J/C A73 (LEFT FRONT OF ENGINE COMPT)
P
N
D
R
NSW
+BM
SL
SLU+
SLU-
SLT-
SLT+
SL4+
SL4-
SL2+
SL2-
SL3+
SL3-
SL1+
SL1-
NTO
NTB
NCO
NCB
ETHO
THO1
GE01
M+
M-
VTA1
VCTA
ETA
VTA2
70 BLK
71 BLU
67 GRN
66 GRY
63 LT GRN
29 RED
3 RED
7 BLU
6 GRN
14 YEL
15 WHT
9 VIO
8 WHT
13 LT GRN
12 GRY
11 BLU
10 PNK
5 VIO
4 BLK
115 RED
116 BLK
117 WHT
118 LT GRN
119 PNK
120 LT GRN
59 GRN
60 WHT
30 BLK
127 YEL
125 BLK
126 RED
128 WHT
E26
BLK 16
BLU 17
GRN 18
GRY 19
LT GRN 20
ENGINE CONTROL MODULE (ECM) (LEFT SIDE OF ENGINE COMPT)
WHT
RED
BLK
YEL
BLK
WHT
4 VTA2
3 E2
5 VC
6 VTA
1 M-
2 M+
IC2
IC1
M
THROTTLE BODY ASSEMBLY (TOP REAR OF ENGINE)
13 LT GRN
12 PNK
4 LT GRN
3 WHT
1 BLK
2 RED
16 BLK
17 VIO
18 PNK
19 BLU
8 GRY
9 LT GRN
20 WHT
21 VIO
15 WHT
7 YEL
5 GRN
14 BLU
6 RED
OIL
E2
NCB
NCO
NTB
NTO
SL1-
SL1+
SL3-
SL3+
SL2-
SL2+
SL4-
SL4+
SLT+
SLT-
SLU-
SLU+
SL
YEL
YEL
YEL
BLK
WHT
RED
HALL IC
HALL IC
BLK
RED
BLK
BLU
BLK
ORG
BLK
GRN
GRY
BLK
BLK
WHT
BLU
ELECTRONICALLY CONTROLLED TRANSMISSION SOLENOID (TRANSMISSION WIRE)
367693

Fig. 174: 2.5L, Transmission Circuit (1 of 2)

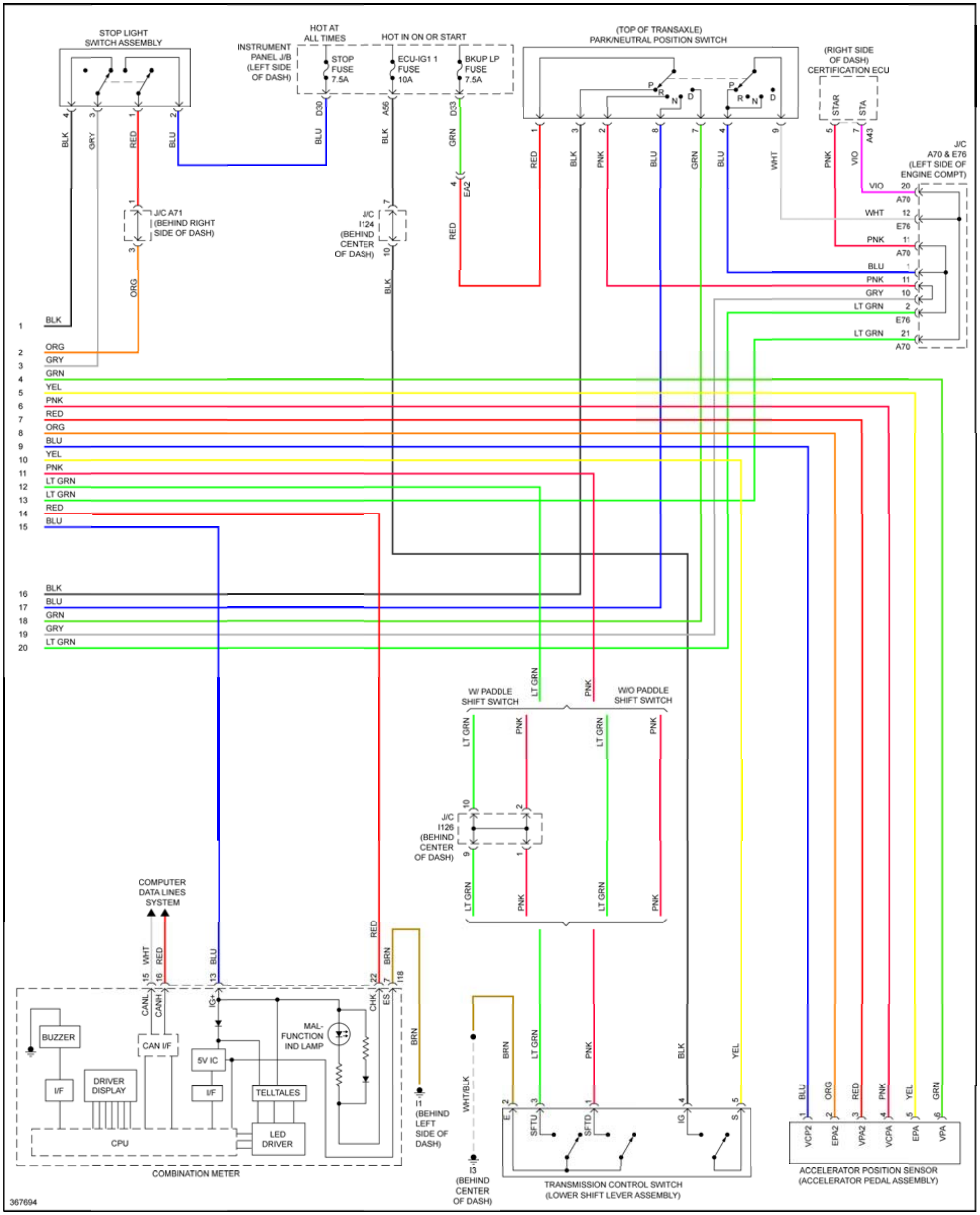
STOP LIGHT SWITCH ASSEMBLY
INSTRUMENT PANEL J/B (LEFT SIDE OF DASH)
HOT AT ALL TIMES
STOP FUSE 7.5A
HOT IN ON OR START
ECU-IG1 1 FUSE 10A
BKUP LP FUSE 7.5A
(TOP OF TRANSAXLE) PARK/NEUTRAL POSITION SWITCH
(RIGHT SIDE OF DASH) CERTIFICATION ECU
STAR
STA
A43
J/C A70 & E76 (LEFT SIDE OF ENGINE COMPT)
J/C A71 (BEHIND RIGHT SIDE OF DASH)
J/C I24 (BEHIND CENTER OF DASH)
EA2
D30
A56
D33
BLK
GRY
RED
BLU
GRN
ORG
WHT
PNK
VIO
LT GRN
YEL
W/ PADDLE SHIFT SWITCH
W/O PADDLE SHIFT SWITCH
J/C I126 (BEHIND CENTER OF DASH)
COMPUTER DATA LINES SYSTEM
BUZZER
I/F
DRIVER DISPLAY
CPU
CAN I/F
5V IC
MAL-FUNCTION IND LAMP
TELLTALES
LED DRIVER
CANL
CANH
IG+
CHK
ES
I18
COMBINATION METER
I1 (BEHIND LEFT SIDE OF DASH)
I3 (BEHIND CENTER OF DASH)
WHT/BLK
BRN
E
SFTU
SFTD
IG
S
TRANSMISSION CONTROL SWITCH (LOWER SHIFT LEVER ASSEMBLY)
VCP2
EPA2
VPA2
VCPA
EPA
VPA
ACCELERATOR POSITION SENSOR (ACCELERATOR PEDAL ASSEMBLY)
367694

Fig. 175: 2.5L, Transmission Circuit (2 of 2)

2.5L HYBRID

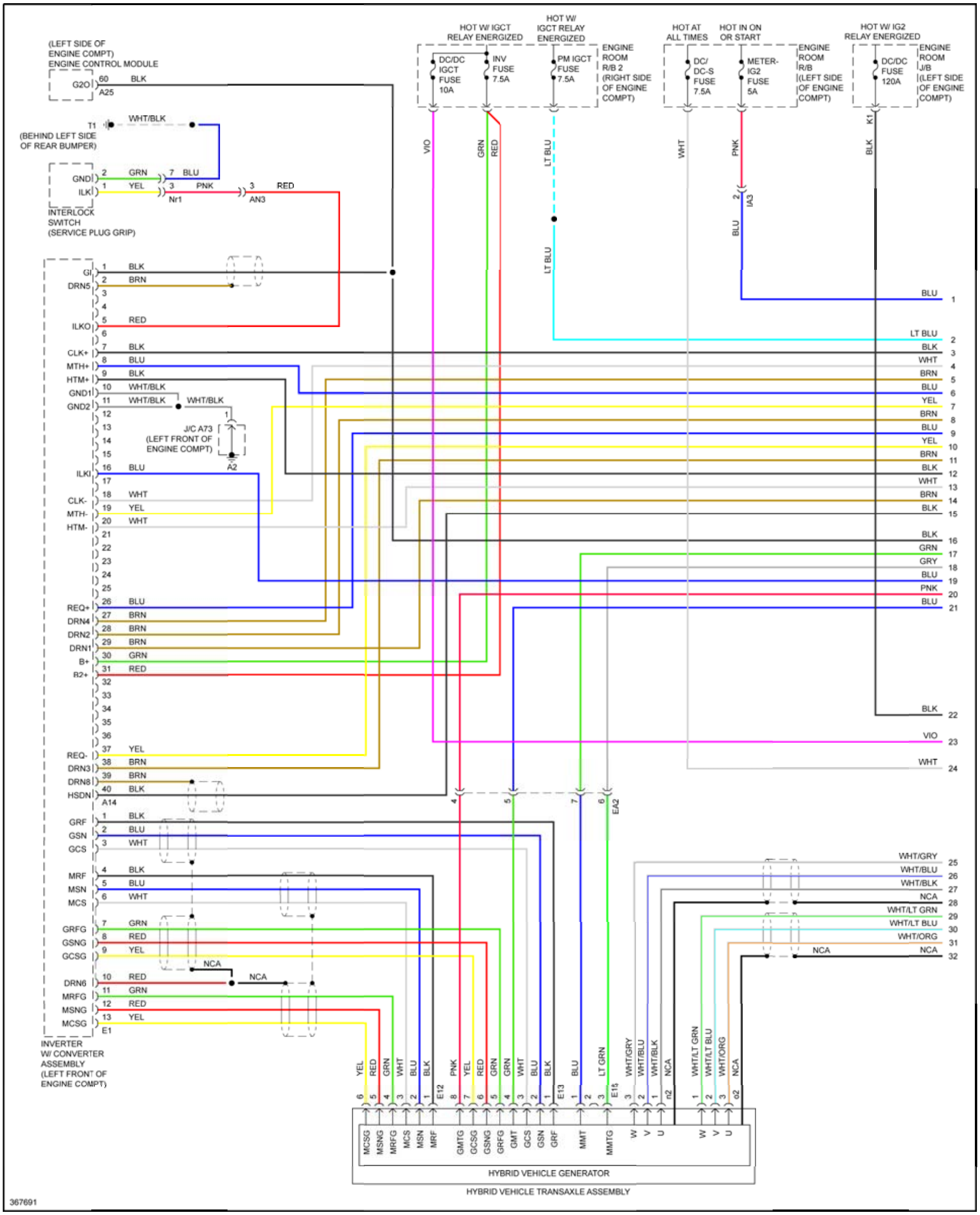
HOT W/ IGCT RELAY ENERGIZED
HOT W/ IGCT RELAY ENERGIZED
HOT AT ALL TIMES
HOT IN ON OR START
HOT W/ IG2 RELAY ENERGIZED
(LEFT SIDE OF ENGINE COMPT) ENGINE CONTROL MODULE
G2O
60
BLK
A25
DC/DC IGCT FUSE 10A
INV FUSE 7.5A
PM IGCT FUSE 7.5A
ENGINE ROOM R/B 2 (RIGHT SIDE OF ENGINE COMPT)
DC/ DC-S FUSE 7.5A
METER-IG2 FUSE 5A
ENGINE ROOM R/B (LEFT SIDE OF ENGINE COMPT)
DC/DC FUSE 120A
ENGINE ROOM J/B (LEFT SIDE OF ENGINE COMPT)
T1
WHT/BLK
(BEHIND LEFT SIDE OF REAR BUMPER)
GND
ILK
INTERLOCK SWITCH (SERVICE PLUG GRIP)
GRN
YEL
BLU
PNK
RED
Nr1
AN3
VIO
GRN
RED
LT BLU
WHT
PNK
BLK
K1
IA3
BLU
GI
DRN5
ILKO
CLK+
MTH+
HTM+
GND1
GND2
ILKI
CLK-
MTH-
HTM-
REQ+
DRN4
DRN2
DRN1
B+
B2+
REQ-
DRN3
DRN8
HSDN
A14
J/C A73 (LEFT FRONT OF ENGINE COMPT)
A2
GRF
GSN
GCS
MRF
MSN
MCS
GRFG
GSNG
GCSG
DRN6
MRFG
MSNG
MCSG
E1
NCA
INVERTER W/ CONVERTER ASSEMBLY (LEFT FRONT OF ENGINE COMPT)
EA2
E12
E13
E15
n2
o2
WHT/GRY
WHT/BLU
WHT/BLK
WHT/LT GRN
WHT/LT BLU
WHT/ORG
MCSG
MSNG
MRFG
MCS
MSN
MRF
GMTG
GCSG
GSNG
GRFG
GMT
GCS
GSN
GRF
MMT
MMTG
W
V
U
HYBRID VEHICLE GENERATOR
HYBRID VEHICLE TRANSAXLE ASSEMBLY
367691

Fig. 176: 2.5L Hybrid, Transmission Circuit (1 of 2)

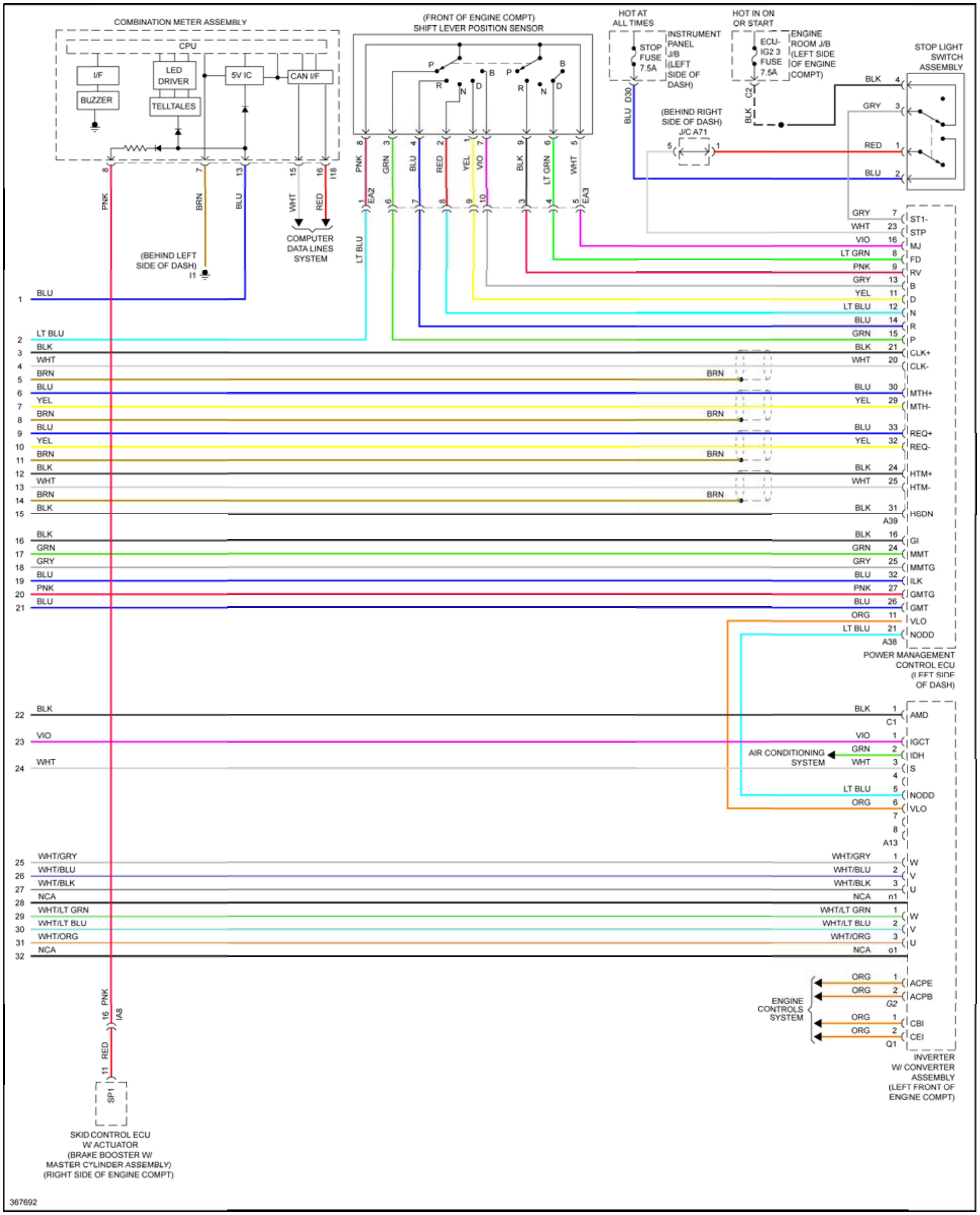
COMBINATION METER ASSEMBLY
CPU
I/F
BUZZER
LED DRIVER
TELLTALES
5V IC
CAN I/F
(FRONT OF ENGINE COMPT)
SHIFT LEVER POSITION SENSOR
P
B
R
N
D
HOT AT ALL TIMES
STOP FUSE 7.5A
INSTRUMENT PANEL J/B (LEFT SIDE OF DASH)
HOT IN ON OR START
ECU-IG2 3 FUSE 7.5A
ENGINE ROOM J/B (LEFT SIDE OF ENGINE COMPT)
STOP LIGHT SWITCH ASSEMBLY
D30
C2
(BEHIND RIGHT SIDE OF DASH)
J/C A71
EA2
EA3
I18
(BEHIND LEFT SIDE OF DASH)
I1
COMPUTER DATA LINES SYSTEM
ST1-
STP
MJ
FD
RV
B
D
N
R
P
CLK+
CLK-
MTH+
MTH-
REQ+
REQ-
HTM+
HTM-
HSDN
A39
GI
MMT
MMTG
ILK
GMTG
GMT
VLO
NODD
A38
POWER MANAGEMENT CONTROL ECU (LEFT SIDE OF DASH)
AMD
C1
IGCT
IDH
S
AIR CONDITIONING SYSTEM
A13
W
V
U
n1
o1
NCA
WHT/GRY
WHT/BLU
WHT/BLK
WHT/LT GRN
WHT/LT BLU
WHT/ORG
ACPE
ACPB
G2
CBI
CEI
Q1
ENGINE CONTROLS SYSTEM
INVERTER W/ CONVERTER ASSEMBLY (LEFT FRONT OF ENGINE COMPT)
IA8
SP1
SKID CONTROL ECU W/ ACTUATOR (BRAKE BOOSTER W/ MASTER CYLINDER ASSEMBLY) (RIGHT SIDE OF ENGINE COMPT)
367692

Fig. 177: 2.5L Hybrid, Transmission Circuit (2 of 2)

3.5L

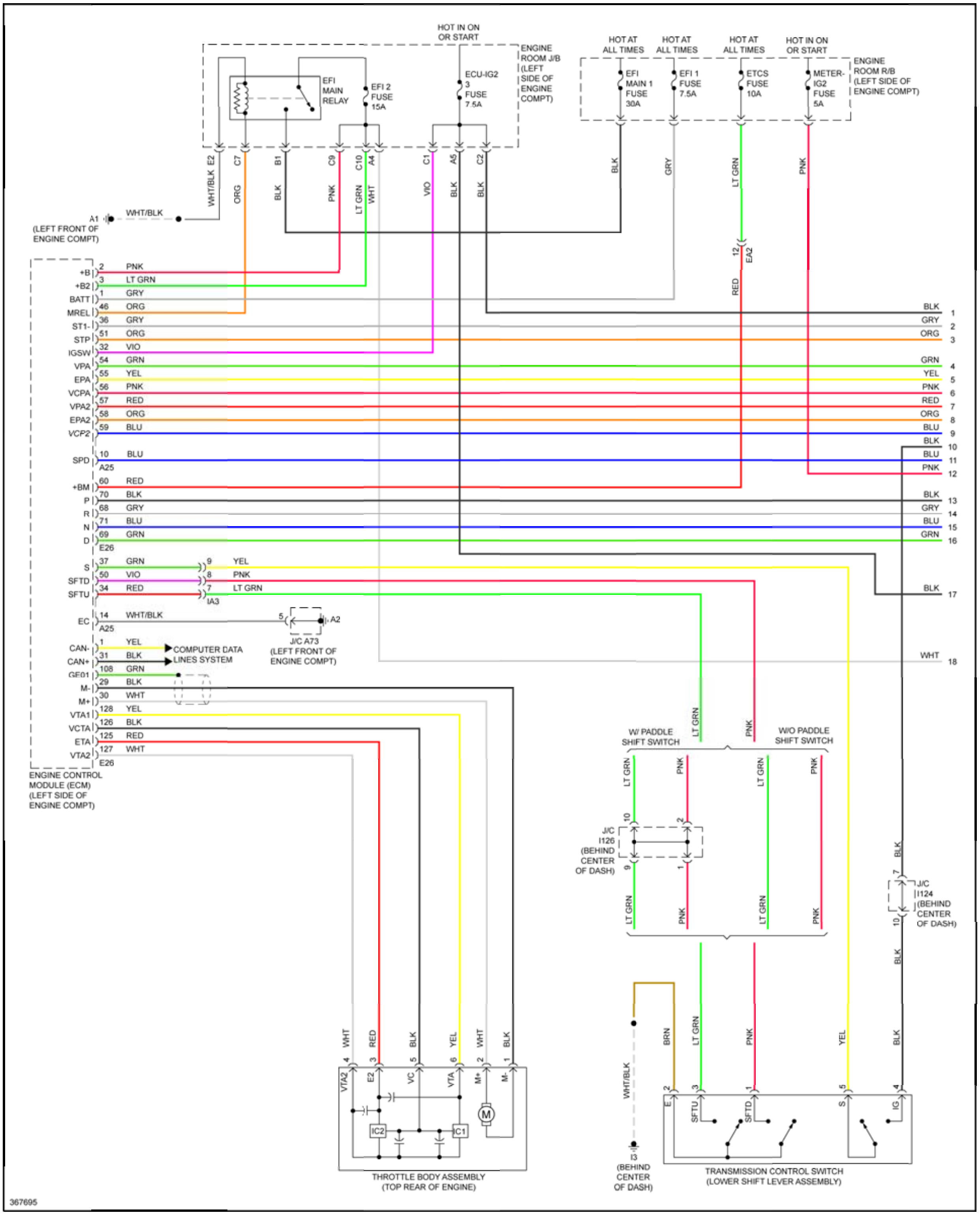
HOT IN ON OR START
ENGINE ROOM J/B (LEFT SIDE OF ENGINE COMPT)
EFI MAIN RELAY
EFI 2 FUSE 15A
ECU-IG2 3 FUSE 7.5A
HOT AT ALL TIMES
HOT AT ALL TIMES
HOT AT ALL TIMES
HOT IN ON OR START
EFI MAIN 1 FUSE 30A
EFI 1 FUSE 7.5A
ETCS FUSE 10A
METER-IG2 FUSE 5A
ENGINE ROOM R/B (LEFT SIDE OF ENGINE COMPT)
E2
C7
B1
C9
C10
A4
C1
A5
C2
WHT/BLK
ORG
BLK
PNK
LT GRN
WHT
VIO
BLK
BLK
BLK
GRY
LT GRN
PNK
A1
WHT/BLK
(LEFT FRONT OF ENGINE COMPT)
12
EA2
RED
+B 2 PNK
+B2 3 LT GRN
BATT 1 GRY
MREL 46 ORG
ST1- 36 GRY
STP 51 ORG
IGSW 32 VIO
VPA 54 GRN
EPA 55 YEL
VCPA 56 PNK
VPA2 57 RED
EPA2 58 ORG
VCP2 59 BLU
SPD 10 BLU
A25
+BM 60 RED
P 70 BLK
R 68 GRY
N 71 BLU
D 69 GRN
E26
S 37 GRN
SFTD 50 VIO
SFTU 34 RED
9 YEL
8 PNK
7 LT GRN
IA3
EC 14 WHT/BLK
A25
5
A2
J/C A73 (LEFT FRONT OF ENGINE COMPT)
CAN- 1 YEL
CAN+ 31 BLK
COMPUTER DATA LINES SYSTEM
GE01 108 GRN
M- 29 BLK
M+ 30 WHT
VTA1 128 YEL
VCTA 126 BLK
ETA 125 RED
VTA2 127 WHT
E26
ENGINE CONTROL MODULE (ECM) (LEFT SIDE OF ENGINE COMPT)
BLK 1
GRY 2
ORG 3
GRN 4
YEL 5
PNK 6
RED 7
ORG 8
BLU 9
BLK 10
BLU 11
PNK 12
BLK 13
GRY 14
BLU 15
GRN 16
BLK 17
WHT 18
LT GRN
PNK
W/ PADDLE SHIFT SWITCH
W/O PADDLE SHIFT SWITCH
LT GRN
PNK
LT GRN
PNK
10
2
J/C I126 (BEHIND CENTER OF DASH)
9
1
LT GRN
PNK
LT GRN
PNK
BLK
7
J/C I124 (BEHIND CENTER OF DASH)
10
BLK
WHT
RED
BLK
YEL
WHT
BLK
4
3
5
6
2
1
VTA2
E2
VC
VTA
M+
M-
M
IC2
IC1
THROTTLE BODY ASSEMBLY (TOP REAR OF ENGINE)
WHT/BLK
I3 (BEHIND CENTER OF DASH)
BRN
LT GRN
PNK
YEL
BLK
2
3
1
5
4
E
SFTU
SFTD
S
IG
TRANSMISSION CONTROL SWITCH (LOWER SHIFT LEVER ASSEMBLY)
367695

Fig. 178: 3.5L, Transmission Circuit (1 of 3)

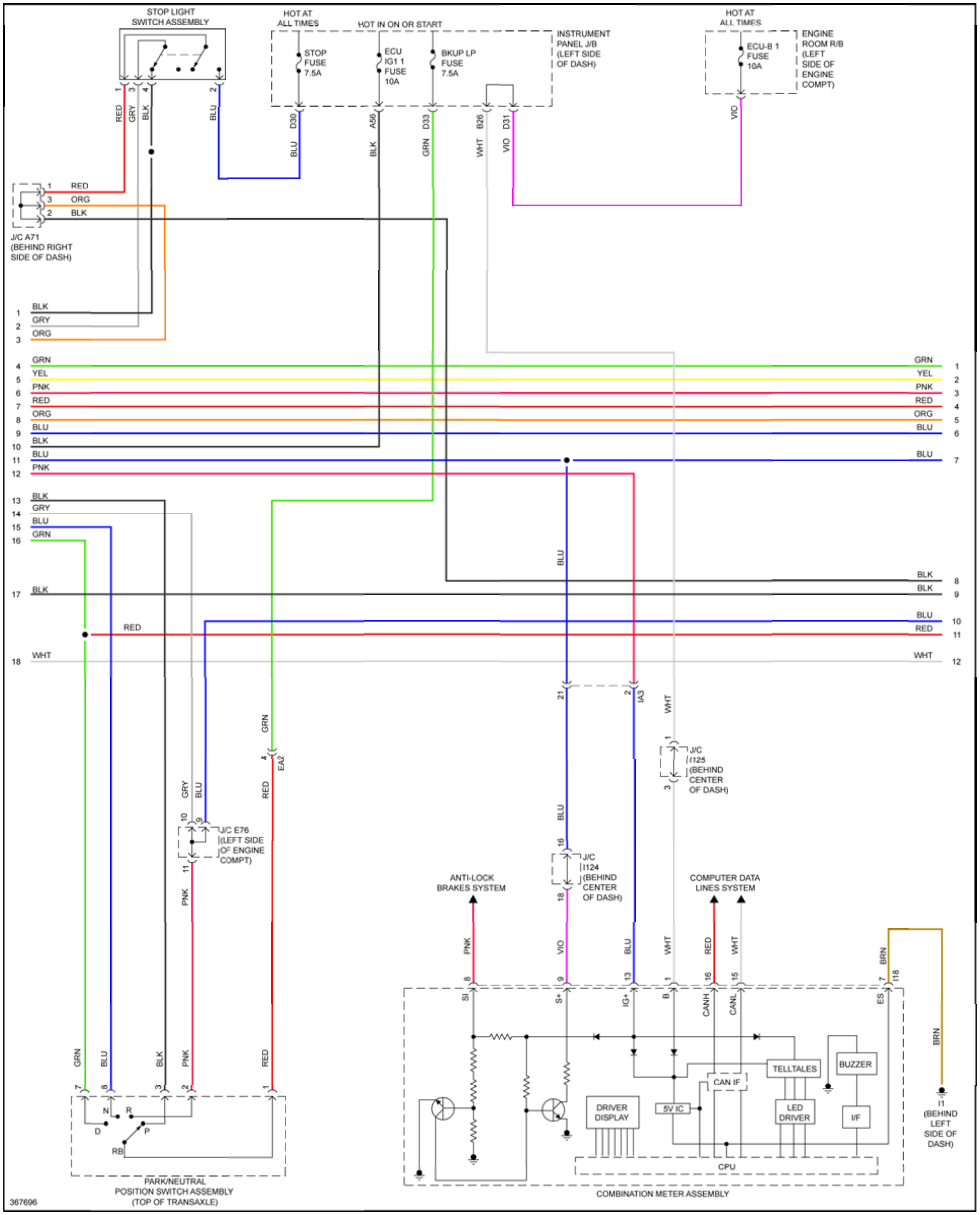
STOP LIGHT SWITCH ASSEMBLY
HOT AT ALL TIMES
HOT IN ON OR START
STOP FUSE 7.5A
ECU IG1 1 FUSE 10A
BKUP LP FUSE 7.5A
INSTRUMENT PANEL J/B (LEFT SIDE OF DASH)
HOT AT ALL TIMES
ECU-B 1 FUSE 10A
ENGINE ROOM R/B (LEFT SIDE OF ENGINE COMPT)
1 RED
3 GRY
4 BLK
2 BLU
D30 BLU
A56 BLK
D33 GRN
B26 WHT
D31 VIO
VIO
J/C A71 (BEHIND RIGHT SIDE OF DASH)
1 RED
3 ORG
2 BLK
1 BLK
2 GRY
3 ORG
4 GRN
5 YEL
6 PNK
7 RED
8 ORG
9 BLU
10 BLK
11 BLU
12 PNK
13 BLK
14 GRY
15 BLU
16 GRN
17 BLK
18 WHT
RED
GRN 1
YEL 2
PNK 3
RED 4
ORG 5
BLU 6
BLU 7
BLK 8
BLK 9
BLU 10
RED 11
WHT 12
BLU
21
2
IA3
WHT
J/C I125 (BEHIND CENTER OF DASH)
1
3
GRN
4
EA2
RED
GRY
BLU
10
9
J/C E76 (LEFT SIDE OF ENGINE COMPT)
11
PNK
BLU
16
J/C I124 (BEHIND CENTER OF DASH)
18
ANTI-LOCK BRAKES SYSTEM
COMPUTER DATA LINES SYSTEM
PNK
VIO
BLU
WHT
RED
WHT
BRN
8 SI
9 S+
13 IG+
1 B
16 CANH
15 CANL
7 ES
I18
TELLTALES
BUZZER
CAN IF
LED DRIVER
DRIVER DISPLAY
5V IC
I/F
CPU
BRN
I1 (BEHIND LEFT SIDE OF DASH)
COMBINATION METER ASSEMBLY
GRN 7
BLU 8
BLK 3
PNK 2
RED 1
N
R
D
P
RB
PARK/NEUTRAL POSITION SWITCH ASSEMBLY (TOP OF TRANSAXLE)
367696

Fig. 179: 3.5L, Transmission Circuit (2 of 3)

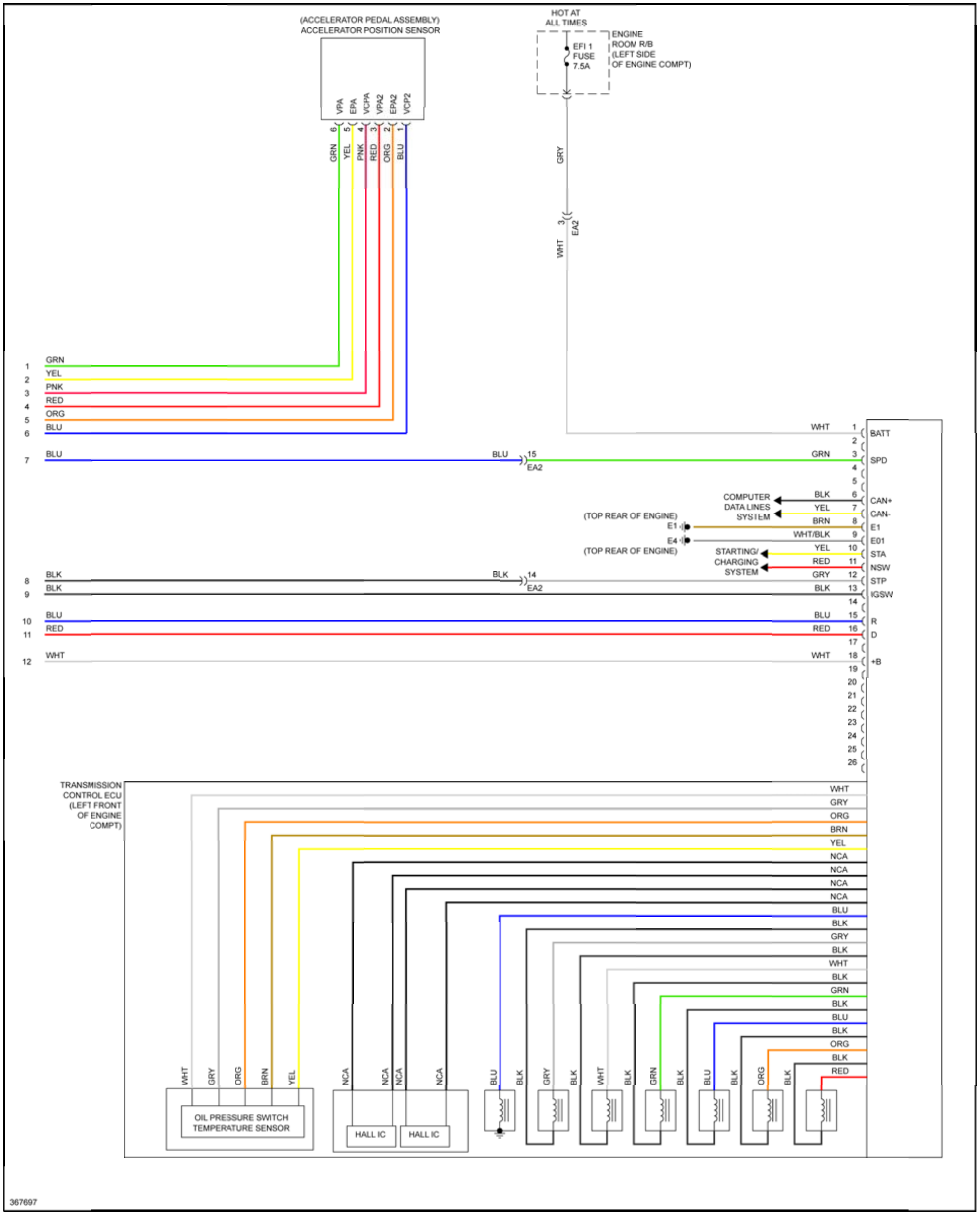
(ACCELERATOR PEDAL ASSEMBLY)
ACCELERATOR POSITION SENSOR
VPA
EPA
VCPA
VPA2
EPA2
VCP2
GRN
YEL
PNK
RED
ORG
BLU
HOT AT
ALL TIMES
EFI 1
FUSE
7.5A
ENGINE
ROOM R/B
(LEFT SIDE
OF ENGINE COMPT)
GRY
EA2
WHT
BATT
SPD
CAN+
CAN-
E1
E01
STA
NSW
STP
IGSW
R
D
+B
COMPUTER
DATA LINES
SYSTEM
(TOP REAR OF ENGINE)
E1
E4
(TOP REAR OF ENGINE)
STARTING/
CHARGING
SYSTEM
WHT/BLK
BLK
TRANSMISSION
CONTROL ECU
(LEFT FRONT
OF ENGINE
COMPT)
NCA
OIL PRESSURE SWITCH
TEMPERATURE SENSOR
HALL IC
HALL IC
367697

Fig. 180: 3.5L, Transmission Circuit (3 of 3)

TRUNK, TAILGATE, FUEL DOOR

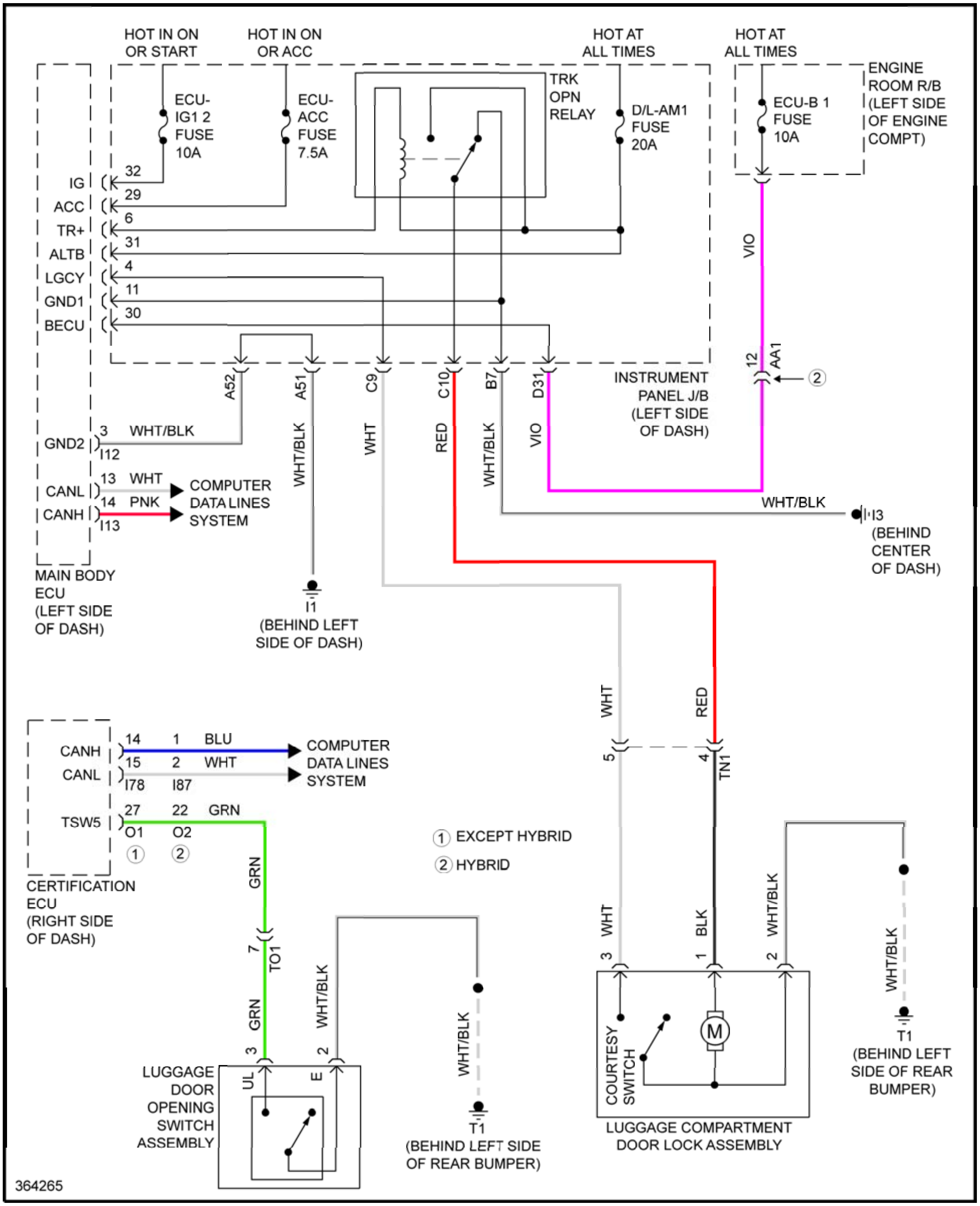
HOT IN ON OR START
HOT IN ON OR ACC
HOT AT ALL TIMES
HOT AT ALL TIMES
ECU-IG1 2 FUSE 10A
ECU-ACC FUSE 7.5A
TRK OPN RELAY
D/L-AM1 FUSE 20A
ECU-B 1 FUSE 10A
ENGINE ROOM R/B (LEFT SIDE OF ENGINE COMPT)
IG
ACC
TR+
ALTB
LGCY
GND1
BECU
32
29
6
31
4
11
30
A52
A51
C9
C10
B7
D31
12
AA1
2
VIO
INSTRUMENT PANEL J/B (LEFT SIDE OF DASH)
GND2
3
WHT/BLK
I12
CANL
CANH
13
WHT
14
PNK
I13
COMPUTER DATA LINES SYSTEM
WHT/BLK
WHT
RED
WHT/BLK
VIO
WHT/BLK
I3 (BEHIND CENTER OF DASH)
MAIN BODY ECU (LEFT SIDE OF DASH)
I1 (BEHIND LEFT SIDE OF DASH)
WHT
RED
5
4
TN1
CANH
CANL
14
1
BLU
15
2
WHT
I78
I87
COMPUTER DATA LINES SYSTEM
TSW5
27
22
GRN
O1
O2
1
2
CERTIFICATION ECU (RIGHT SIDE OF DASH)
1 EXCEPT HYBRID
2 HYBRID
GRN
7
TO1
GRN
WHT/BLK
WHT/BLK
3
2
UL
E
LUGGAGE DOOR OPENING SWITCH ASSEMBLY
T1 (BEHIND LEFT SIDE OF REAR BUMPER)
WHT
BLK
WHT/BLK
3
1
2
COURTESY SWITCH
M
LUGGAGE COMPARTMENT DOOR LOCK ASSEMBLY
WHT/BLK
T1 (BEHIND LEFT SIDE OF REAR BUMPER)
364265

Fig. 181: Tailgate Release Circuit

WARNING SYSTEMS

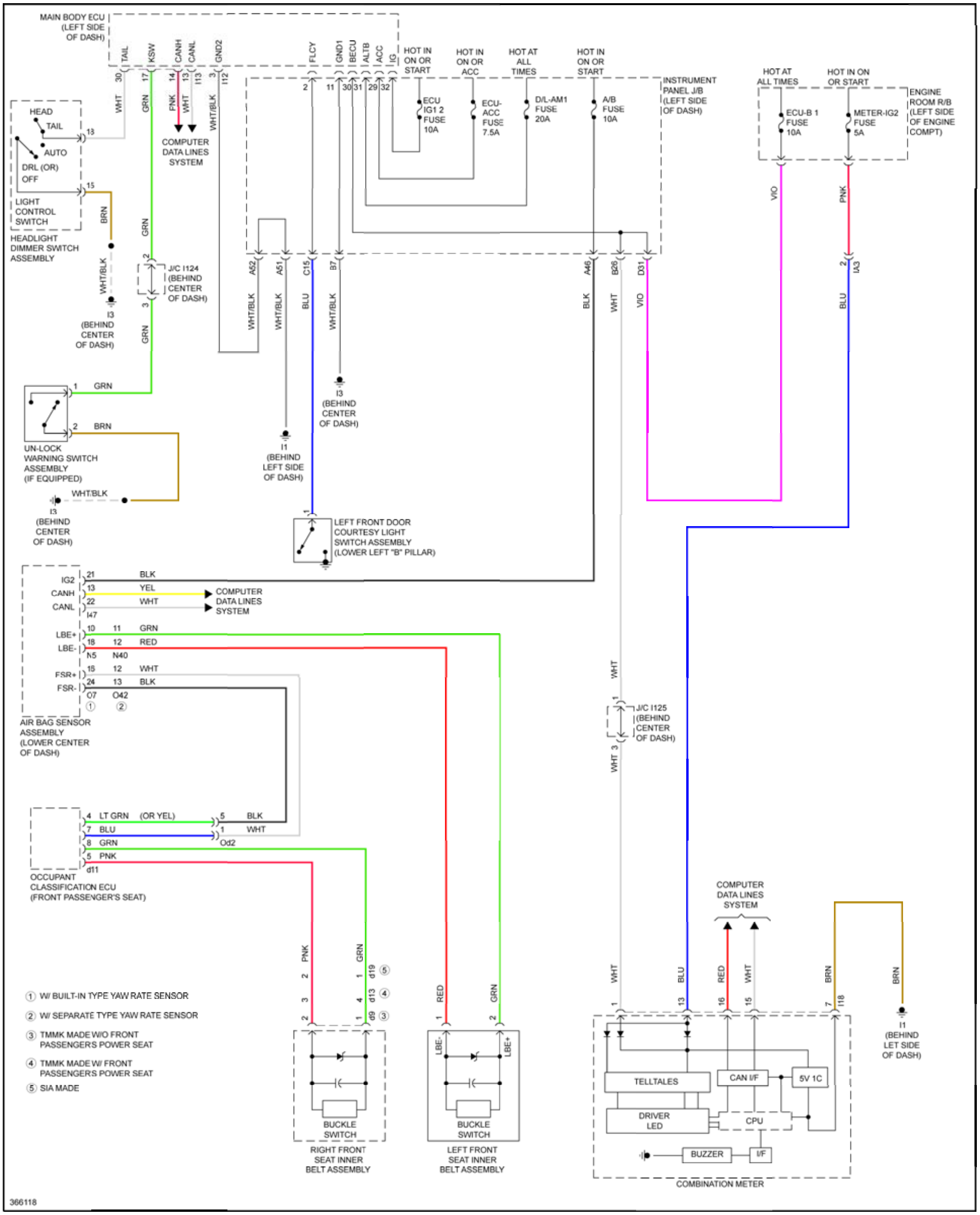
MAIN BODY ECU (LEFT SIDE OF DASH)
TAIL
KSW
CANH
CANL
GND2
FLCY
GND1
BECU
ALTB
ACC
IG
HOT IN ON OR START
HOT IN ON OR ACC
HOT AT ALL TIMES
HOT IN ON OR START
INSTRUMENT PANEL J/B (LEFT SIDE OF DASH)
ECU IG1 2 FUSE 10A
ECU-ACC FUSE 7.5A
D/L-AM1 FUSE 20A
A/B FUSE 10A
HOT AT ALL TIMES
HOT IN ON OR START
ENGINE ROOM R/B (LEFT SIDE OF ENGINE COMPT)
ECU-B 1 FUSE 10A
METER-IG2 FUSE 5A
HEAD
TAIL
AUTO
DRL (OR) OFF
LIGHT CONTROL SWITCH
HEADLIGHT DIMMER SWITCH ASSEMBLY
COMPUTER DATA LINES SYSTEM
J/C I124 (BEHIND CENTER OF DASH)
I3 (BEHIND CENTER OF DASH)
UN-LOCK WARNING SWITCH ASSEMBLY (IF EQUIPPED)
I3 (BEHIND CENTER OF DASH)
I1 (BEHIND LEFT SIDE OF DASH)
I3 (BEHIND CENTER OF DASH)
LEFT FRONT DOOR COURTESY LIGHT SWITCH ASSEMBLY (LOWER LEFT "B" PILLAR)
IG2
CANH
CANL
LBE+
LBE-
FSR+
FSR-
AIR BAG SENSOR ASSEMBLY (LOWER CENTER OF DASH)
COMPUTER DATA LINES SYSTEM
J/C I125 (BEHIND CENTER OF DASH)
OCCUPANT CLASSIFICATION ECU (FRONT PASSENGER'S SEAT)
① W/ BUILT-IN TYPE YAW RATE SENSOR
② W/ SEPARATE TYPE YAW RATE SENSOR
③ TMMK MADE W/O FRONT PASSENGERS POWER SEAT
④ TMMK MADE W/ FRONT PASSENGERS POWER SEAT
⑤ SIA MADE
BUCKLE SWITCH
RIGHT FRONT SEAT INNER BELT ASSEMBLY
LBE-
LBE+
BUCKLE SWITCH
LEFT FRONT SEAT INNER BELT ASSEMBLY
COMPUTER DATA LINES SYSTEM
TELLTALES
CAN I/F
5V 1C
DRIVER LED
CPU
BUZZER
I/F
COMBINATION METER
I1 (BEHIND LET SIDE OF DASH)
366118

Fig. 182: Key Reminder & Seat Belt Warning Circuit, Except Hybrid

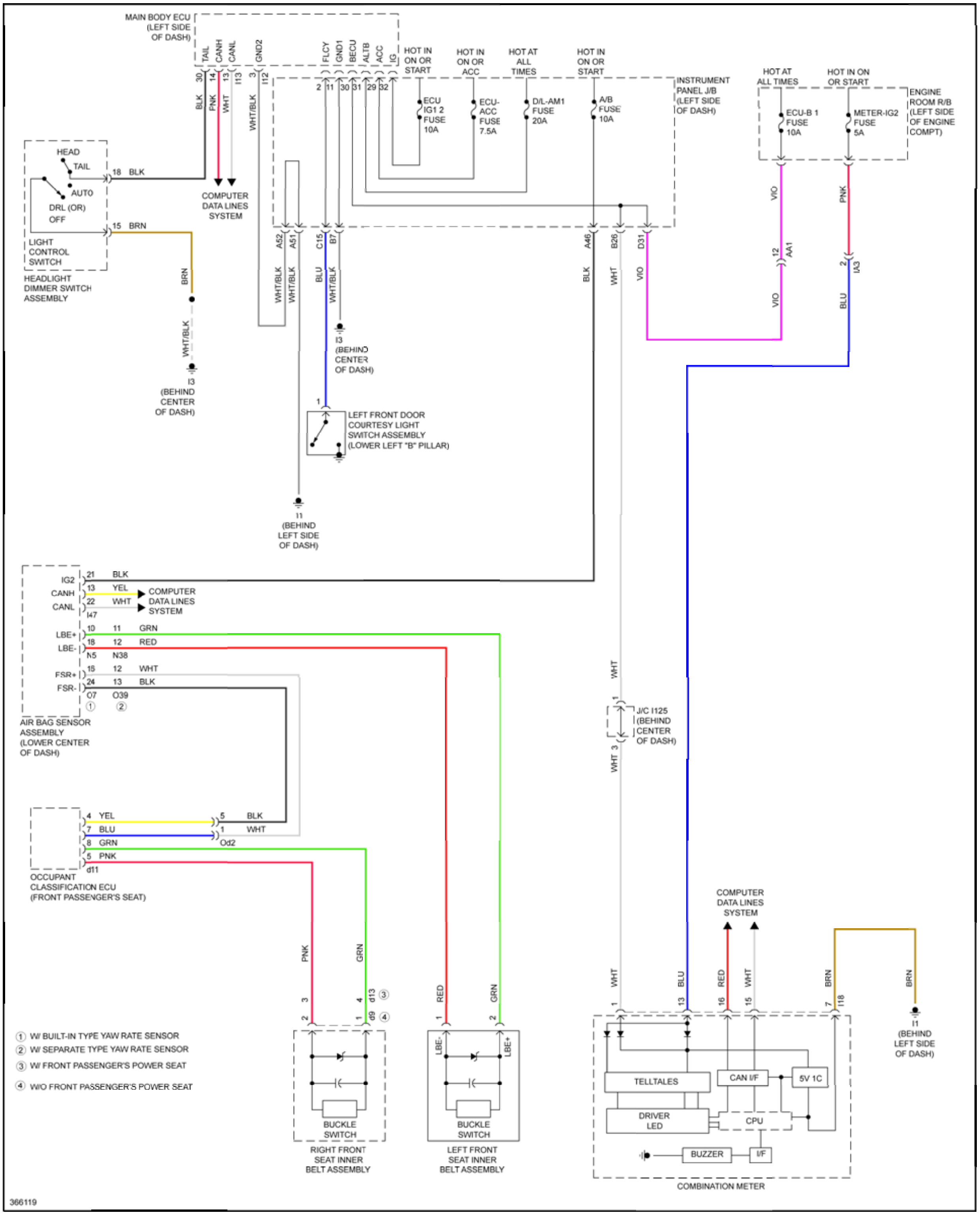
MAIN BODY ECU (LEFT SIDE OF DASH)
TAIL
CANH
CANL
GND2
FLCY
GND1
BECU
ALTB
ACC
IG
HOT IN ON OR START
HOT IN ON OR ACC
HOT AT ALL TIMES
HOT IN ON OR START
INSTRUMENT PANEL J/B (LEFT SIDE OF DASH)
HOT AT ALL TIMES
HOT IN ON OR START
ENGINE ROOM R/B (LEFT SIDE OF ENGINE COMPT)
ECU IG1 2 FUSE 10A
ECU-ACC FUSE 7.5A
D/L-AM1 FUSE 20A
A/B FUSE 10A
ECU-B 1 FUSE 10A
METER-IG2 FUSE 5A
HEAD
TAIL
AUTO
DRL (OR)
OFF
LIGHT CONTROL SWITCH
HEADLIGHT DIMMER SWITCH ASSEMBLY
COMPUTER DATA LINES SYSTEM
I3 (BEHIND CENTER OF DASH)
LEFT FRONT DOOR COURTESY LIGHT SWITCH ASSEMBLY (LOWER LEFT "B" PILLAR)
I1 (BEHIND LEFT SIDE OF DASH)
IG2
CANH
CANL
LBE+
LBE-
FSR+
FSR-
AIR BAG SENSOR ASSEMBLY (LOWER CENTER OF DASH)
OCCUPANT CLASSIFICATION ECU (FRONT PASSENGER'S SEAT)
J/C I125 (BEHIND CENTER OF DASH)
BUCKLE SWITCH
RIGHT FRONT SEAT INNER BELT ASSEMBLY
LEFT FRONT SEAT INNER BELT ASSEMBLY
TELLTALES
CAN I/F
5V 1C
DRIVER LED
CPU
BUZZER
I/F
COMBINATION METER
① W/ BUILT-IN TYPE YAW RATE SENSOR
② W/ SEPARATE TYPE YAW RATE SENSOR
③ W/ FRONT PASSENGER'S POWER SEAT
④ W/O FRONT PASSENGER'S POWER SEAT
366119

Fig. 183: Seat Belt Warning Circuit, Hybrid

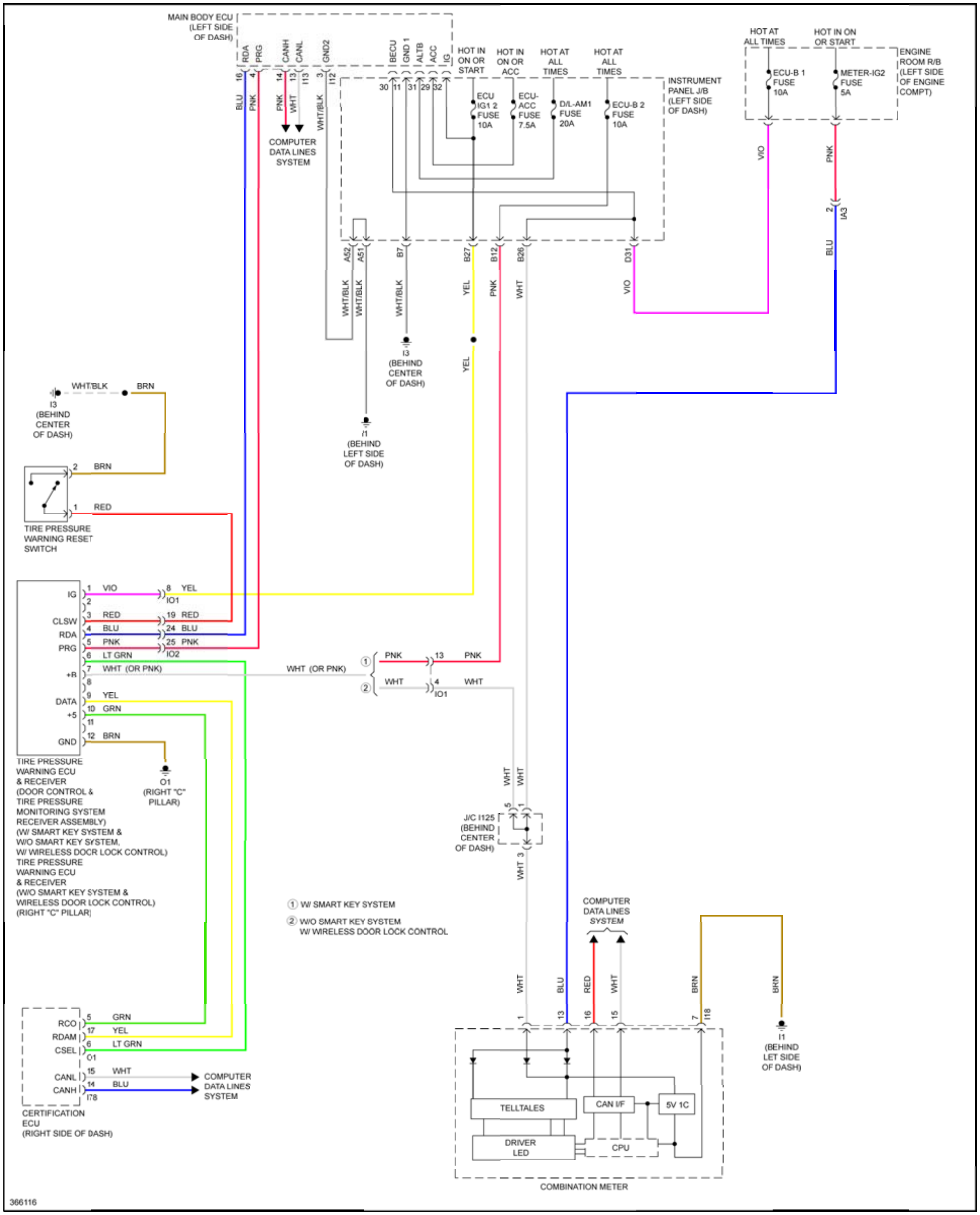
MAIN BODY ECU (LEFT SIDE OF DASH)
RDA
PRG
CANH
CANL
GND2
BECU
GND 1
ALTB
ACC
IG
16
4
14
13
I13
3
I12
30
I11
31
29
32
BLU
PNK
PNK
WHT
WHT/BLK
COMPUTER DATA LINES SYSTEM
HOT IN ON OR START
HOT IN ON OR ACC
HOT AT ALL TIMES
HOT AT ALL TIMES
ECU IG1 2 FUSE 10A
ECU-ACC FUSE 7.5A
D/L-AM1 FUSE 20A
ECU-B 2 FUSE 10A
INSTRUMENT PANEL J/B (LEFT SIDE OF DASH)
HOT AT ALL TIMES
HOT IN ON OR START
ECU-B 1 FUSE 10A
METER-IG2 FUSE 5A
ENGINE ROOM R/B (LEFT SIDE OF ENGINE COMPT)
VIO
PNK
2
IA3
BLU
A52
A51
B7
B27
B12
B26
D31
WHT/BLK
WHT/BLK
WHT/BLK
YEL
PNK
WHT
VIO
I3 (BEHIND CENTER OF DASH)
YEL
I1 (BEHIND LEFT SIDE OF DASH)
WHT/BLK
BRN
I3 (BEHIND CENTER OF DASH)
2
BRN
1
RED
TIRE PRESSURE WARNING RESET SWITCH
IG
CLSW
RDA
PRG
+B
DATA
+5
GND
1 VIO
2
3 RED
4 BLU
5 PNK
6 LT GRN
7 WHT (OR PNK)
8
9 YEL
10 GRN
11
12 BRN
8 YEL
IO1
19 RED
24 BLU
25 PNK
IO2
WHT (OR PNK)
① PNK
13 PNK
② WHT
4 WHT
IO1
O1 (RIGHT "C" PILLAR)
TIRE PRESSURE WARNING ECU & RECEIVER (DOOR CONTROL & TIRE PRESSURE MONITORING SYSTEM RECEIVER ASSEMBLY) (W/ SMART KEY SYSTEM & W/O SMART KEY SYSTEM, W/ WIRELESS DOOR LOCK CONTROL) TIRE PRESSURE WARNING ECU & RECEIVER (W/O SMART KEY SYSTEM & WIRELESS DOOR LOCK CONTROL) (RIGHT "C" PILLAR)
WHT
WHT
5
1
J/C I125 (BEHIND CENTER OF DASH)
WHT 3
① W/ SMART KEY SYSTEM
② W/O SMART KEY SYSTEM W/ WIRELESS DOOR LOCK CONTROL
COMPUTER DATA LINES SYSTEM
WHT
BLU
RED
WHT
BRN
BRN
1
13
16
15
7
I18
I1 (BEHIND LET SIDE OF DASH)
RCO
RDAM
CSEL
CANL
CANH
5 GRN
17 YEL
6 LT GRN
O1
15 WHT
14 BLU
I78
COMPUTER DATA LINES SYSTEM
CERTIFICATION ECU (RIGHT SIDE OF DASH)
TELLTALES
CAN I/F
5V 1C
DRIVER LED
CPU
COMBINATION METER
366116

Fig. 184: Tire Pressure Monitoring Circuit, Except Hybrid

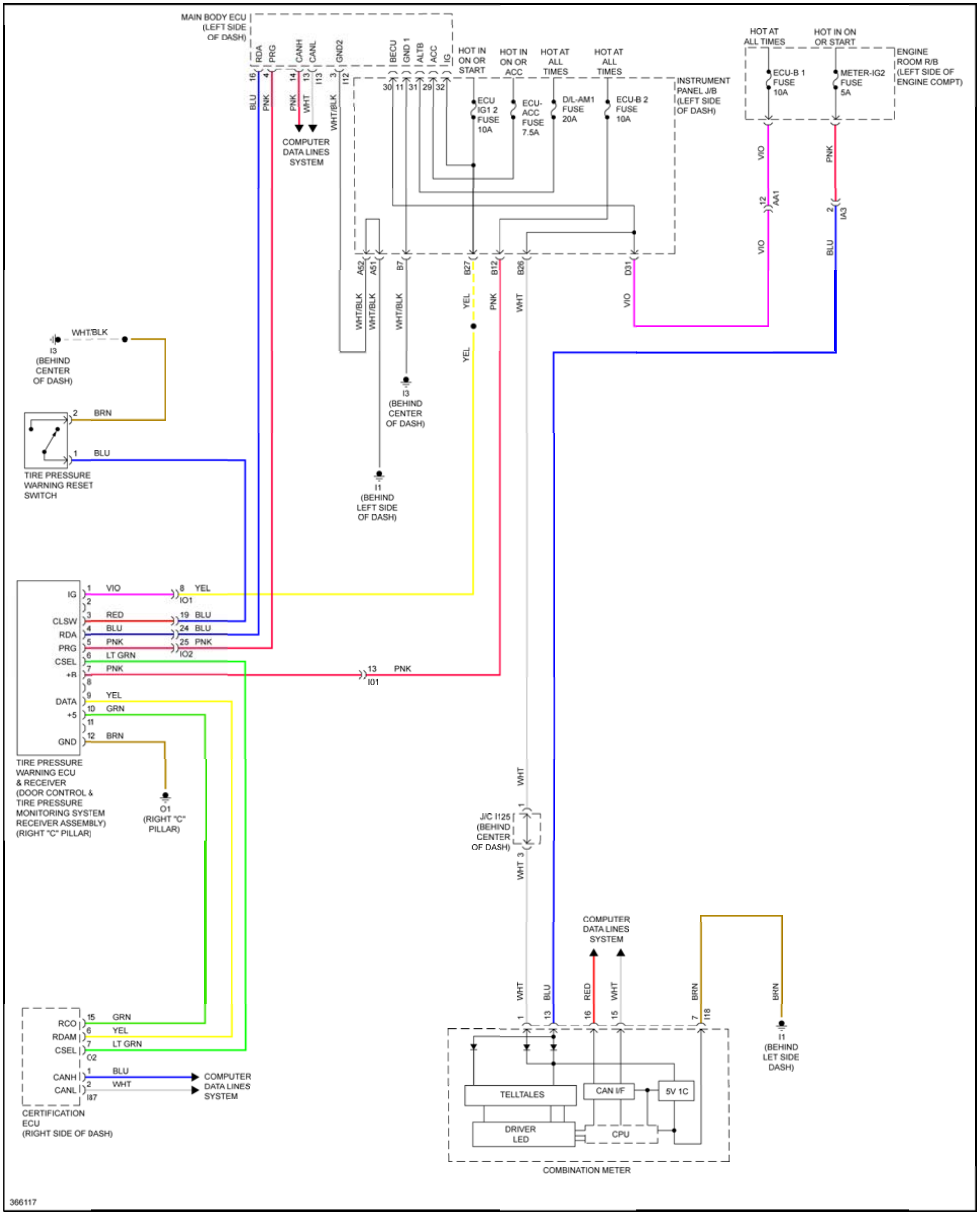
MAIN BODY ECU (LEFT SIDE OF DASH)
RDA
PRG
CANH
CANL
GND2
BECU
GND 1
ALTB
ACC
IG
16
4
14
13
I13
3
I12
BLU
PNK
PNK
WHT
WHT/BLK
COMPUTER DATA LINES SYSTEM
HOT IN ON OR START
HOT IN ON OR ACC
HOT AT ALL TIMES
HOT AT ALL TIMES
30
11
31
29
32
ECU IG1 2 FUSE 10A
ECU-ACC FUSE 7.5A
D/L-AM1 FUSE 20A
ECU-B 2 FUSE 10A
INSTRUMENT PANEL J/B (LEFT SIDE OF DASH)
HOT AT ALL TIMES
HOT IN ON OR START
ECU-B 1 FUSE 10A
METER-IG2 FUSE 5A
ENGINE ROOM R/B (LEFT SIDE OF ENGINE COMPT)
VIO
PNK
12
AA1
2
IA3
VIO
BLU
A52
A51
B7
B27
B12
B26
D31
WHT/BLK
WHT/BLK
WHT/BLK
YEL
PNK
WHT
VIO
YEL
I3 (BEHIND CENTER OF DASH)
I1 (BEHIND LEFT SIDE OF DASH)
WHT/BLK
I3 (BEHIND CENTER OF DASH)
2
BRN
1
BLU
TIRE PRESSURE WARNING RESET SWITCH
IG
CLSW
RDA
PRG
CSEL
+B
DATA
+5
GND
1
VIO
2
3
RED
4
BLU
5
PNK
6
LT GRN
7
PNK
8
9
YEL
10
GRN
11
12
BRN
8
YEL
I01
19
BLU
24
BLU
25
PNK
I02
13
PNK
I01
TIRE PRESSURE WARNING ECU & RECEIVER (DOOR CONTROL & TIRE PRESSURE MONITORING SYSTEM RECEIVER ASSEMBLY) (RIGHT "C" PILLAR)
O1 (RIGHT "C" PILLAR)
WHT
1
J/C I125 (BEHIND CENTER OF DASH)
WHT
3
RCO
RDAM
CSEL
CANH
CANL
15
GRN
6
YEL
7
LT GRN
O2
1
BLU
2
WHT
I87
COMPUTER DATA LINES SYSTEM
CERTIFICATION ECU (RIGHT SIDE OF DASH)
COMPUTER DATA LINES SYSTEM
WHT
BLU
RED
WHT
BRN
BRN
1
13
16
15
7
I18
I1 (BEHIND LET SIDE DASH)
TELLTALES
CAN I/F
5V 1C
DRIVER LED
CPU
COMBINATION METER
366117

Fig. 185: Tire Pressure Monitoring Circuit, Hybrid

WIPER/WASHER

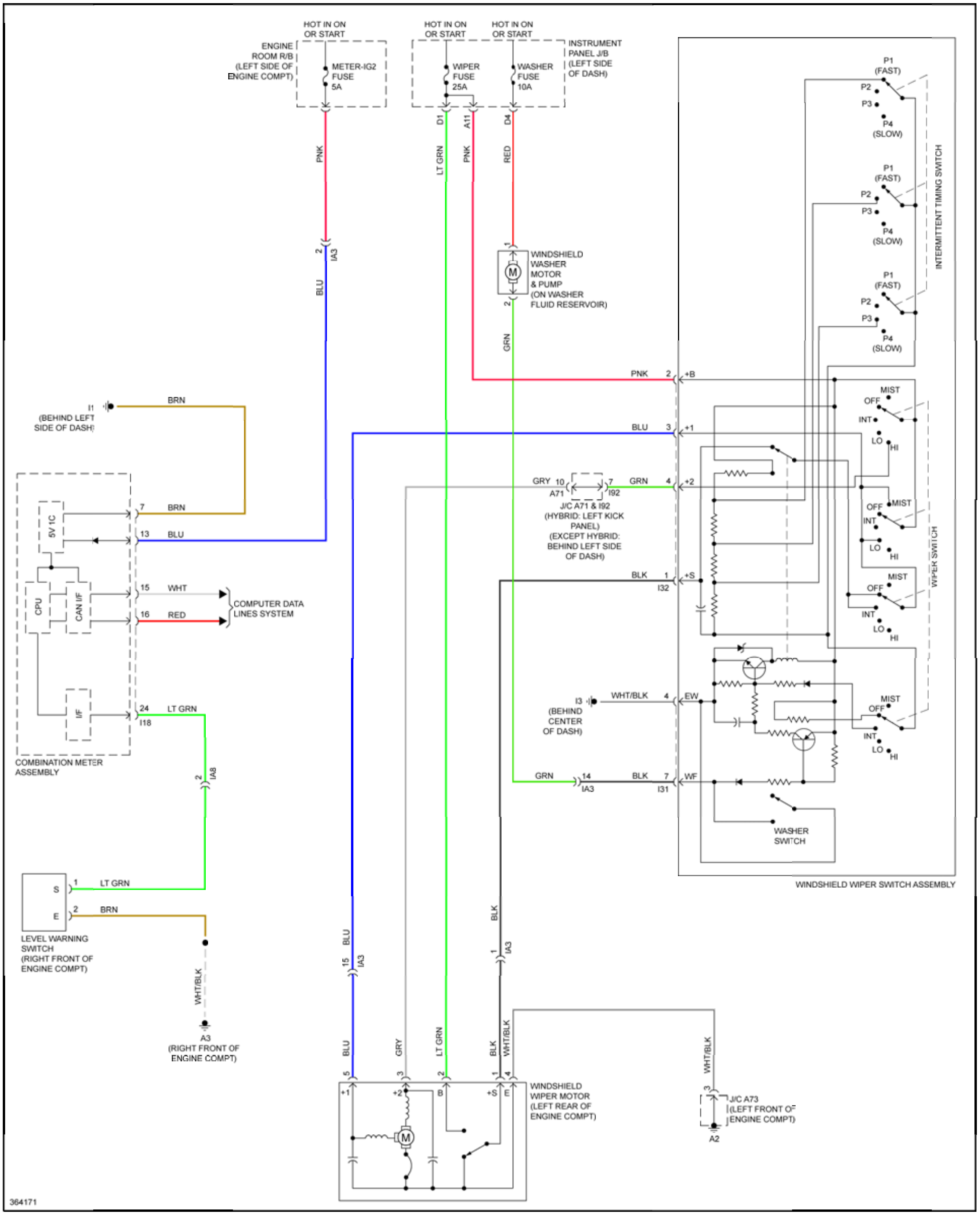
HOT IN ON OR START
ENGINE ROOM R/B (LEFT SIDE OF ENGINE COMPT)
METER-IG2 FUSE 5A
WIPER FUSE 25A
WASHER FUSE 10A
INSTRUMENT PANEL J/B (LEFT SIDE OF DASH)
D1
A11
D4
PNK
LT GRN
RED
BLU
2
IA3
1
WINDSHIELD WASHER MOTOR & PUMP (ON WASHER FLUID RESERVOIR)
GRN
P1 (FAST)
P2
P3
P4 (SLOW)
INTERMITTENT TIMING SWITCH
+B
+1
+2
+S
EW
WF
MIST
OFF
INT
LO
HI
WIPER SWITCH
I1 (BEHIND LEFT SIDE OF DASH)
BRN
GRY
A71
I92
J/C A71 & I92 (HYBRID: LEFT KICK PANEL) (EXCEPT HYBRID: BEHIND LEFT SIDE OF DASH)
BLK
I32
5V 1C
CPU
CAN I/F
I/F
WHT
COMPUTER DATA LINES SYSTEM
I18
COMBINATION METER ASSEMBLY
IA8
I3 (BEHIND CENTER OF DASH)
WHT/BLK
I31
WASHER SWITCH
WINDSHIELD WIPER SWITCH ASSEMBLY
S
E
LEVEL WARNING SWITCH (RIGHT FRONT OF ENGINE COMPT)
A3 (RIGHT FRONT OF ENGINE COMPT)
15
J/C A73 (LEFT FRONT OF ENGINE COMPT)
A2
B
WINDSHIELD WIPER MOTOR (LEFT REAR OF ENGINE COMPT)
M
364171

Fig. 186: Wiper/Washer Circuit